2015

WELCOME TO THE 2015 INTERNATIONAL CODE AND COMMENTARY

COMPLETE COLLECTION

2015 IBC® Code and Commentary, Volume 1

2015 IBC Code and Commentary, Volume 2

2015 IRC® Code and Commentary, Volume 1

2015 IRC Code and Commentary, Volume 2

2015 IFC® Code and Commentary

2015 IPC® Code and Commentary

2015 IMC® Code and Commentary

2015 IECC® Code and Commentary

2015 IEBC® Code and Commentary

2015 IPMC® Code and Commentary

2015 ISPSC™ Code and Commentary

2015 IFGC® Code and Commentary

Helpful Links

ICC website

ICC Product Store

Digital Product FAQ

ICC-ES Evaluation Reports

Please note, you need to be logged onto the Internet to use the web links.

IBC®

2015 CODE AND COMMENTARY

VOLUME 1

The complete IBC with commentary after each section



INTERNATIONAL CODE COUNCIL®

Copyright © 2015 ICC. ALL RIGHTS RESERVED. Accessed by David Dammon on Jun 21, 2017 12:30:52 PM pursuant to License Agreement with ICC. No further reproduction or distribution authorized. ANY UNAUTHORIZED REPRODUCTION OR DISTRIBUTION IS A VIOLATION OF THE FEDERAL COPYRIGHT ACT AND THE LICENSE AGREEMENT, AND SUBJECT TO CIVIL AND CRIMINAL PENALTIES THEREUNDER.

2015 IBC®

CODE AND COMMENTARY

VOLUME 1

The complete IBC with commentary after each section

INTERNATIONAL CODE COUNCIL®

Copyright © 2015 ICC. ALL RIGHTS RESERVED. Accessed by David Dammon on Jun 21, 2017 12:30:52 PM pursuant to License Agreement with ICC. No further reproduction or distribution authorized. ANY UNAUTHORIZED REPRODUCTION OR DISTRIBUTION IS A VIOLATION OF THE FEDERAL COPYRIGHT ACT AND THE LICENSE AGREEMENT, AND SUBJECT TO CIVIL AND CRIMINAL PENALTIES THEREUNDER.

2015 International Building Code® Commentary

First Printing: March 2015

ISBN: 978-1-60983-280-3 (soft-cover edition)

COPYRIGHT © 2015
by
INTERNATIONAL CODE COUNCIL, INC.

ALL RIGHTS RESERVED. This 2015 *International Building Code® Commentary—Volume I* is a copyrighted work owned by the International Code Council, Inc. Without advance written permission from the copyright owner, no part of this book may be reproduced, distributed or transmitted in any form or by any means, including, without limitation, electronic, optical or mechanical means (by way of example, and not limitation, photocopying, or recording by or in an information storage retrieval system). For information on permission to copy material exceeding fair use, please contact: Publications, 4051 Flossmoor Road, Country Club Hills, IL 60478. Phone 1-888-ICC-SAFE (422-7233).

Trademarks: "International Code Council," the "International Code Council" logo and the "International Building Code" are trademarks of the International Code Council, Inc.

PRINTED IN THE U.S.A.

INTERNATIONAL CODE COUNCIL®

Copyright © 2015 ICC. ALL RIGHTS RESERVED. Accessed by David Dammon on Jun 21, 2017 12:30:52 PM pursuant to License Agreement with ICC. No further reproduction or distribution authorized. ANY UNAUTHORIZED REPRODUCTION OR DISTRIBUTION IS A VIOLATION OF THE FEDERAL COPYRIGHT ACT AND THE LICENSE AGREEMENT, AND SUBJECT TO CIVIL AND CRIMINAL PENALTIES THEREUNDER.

PREFACE

The principal purpose of the Commentary is to provide a basic volume of knowledge and facts relating to building construction as it pertains to the regulations set forth in the 2015 *International Building Code*. The person who is serious about effectively designing, constructing and regulating buildings and structures will find the Commentary to be a reliable data source and reference to almost all components of the built environment.

As a follow-up to the *International Building Code*, we offer a companion document, the *International Building Code Commentary—Volume I*. Volume I covers Chapters 1 through 15 of the 2015 *International Building Code*. The basic appeal of the Commentary is thus: it provides in a small package and at reasonable cost thorough coverage of many issues likely to be dealt with when using the *International Building Code* — and then supplements that coverage with historical and technical background. Reference lists, information sources and bibliographies are also included.

Throughout all of this, effort has been made to keep the vast quantity of material accessible and its method of presentation useful. With a comprehensive yet concise summary of each section, the Commentary provides a convenient reference for regulations applicable to the construction of buildings and structures. In the chapters that follow, discussions focus on the full meaning and implications of the code text. Guidelines suggest the most effective method of application, and the consequences of not adhering to the code text. Illustrations are provided to aid understanding; they do not necessarily illustrate the only methods of achieving code compliance.

The format of the Commentary includes the full text of each section, table and figure in the code, followed immediately by the commentary applicable to that text. At the time of printing, the Commentary reflects the most up-to-date text of the 2015 *International Building Code*. As stated in the preface to the *International Building Code*, the content of sections in the code which begin with a letter designation (i.e., Section [F]307.1) are maintained by another code development committee. Each section's narrative includes a statement of its objective and intent, and usually includes a discussion about why the requirement commands the conditions set forth. Code text and commentary text are easily distinguished from each other. All code text is shown as it appears in the *International Building Code*, and all commentary is indented below the code text and begins with the symbol ❖.

Readers should note that the Commentary is to be used in conjunction with the *International Building Code* and not as a substitute for the code. The Commentary is advisory only; the code official alone possesses the authority and responsibility for interpreting the code.

Comments and recommendations are encouraged, for through your input, we can improve future editions. Please direct your comments to the Codes and Standards Development Department at the Chicago District Office.

The International Code Council would like to extend its thanks to the following individuals for their contributions to the technical content of this commentary:

Brian Black
John Woestman
David Cooper
Dave Collins
Vickie Lovell
John Valiulis
Marcelo Hirschler
Jeff Hugo
Kevin Brinkman
Gregory Cahanin
Rebecca Quinn
Joann Surmar
James Milke
Richard Walke
Dave Frable
Elley Klausbruckner
Dick Bukowski

INTERNATIONAL CODE COUNCIL®
Copyright © 2015 ICC. ALL RIGHTS RESERVED. Accessed by David Dammon on Jun 21, 2017 12:30:52 PM pursuant to License Agreement with ICC. No further reproduction or distribution authorized. ANY UNAUTHORIZED REPRODUCTION OR DISTRIBUTION IS A VIOLATION OF THE FEDERAL COPYRIGHT ACT AND THE LICENSE AGREEMENT, AND SUBJECT TO CIVIL AND CRIMINAL PENALTIES THEREUNDER.

S.I. CONVERSION CHART FOR ENGLISH UNITS

English Unit	Metric Equivalent
1 inch (in.)	25.4 millimeters (mm)
1 foot (ft.)	304.8 millimeters (mm)
1 square inch (in^2)	645.2 square millimeters (mm^2)
1 square foot (ft^2)	0.093 square meters (m^2)
1 cubic foot (ft^3)	0.028 cubic meters (m^3)
1 gallon (gal.)	.00379 cubic meters (m^3)
1 gallon (gal.)	3.79 liters (L)
1 pound (lb.)	0.454 kilograms (kg)
1 ton (T)	0.907 metric ton
1 ton (T)	907.2 kilograms (kg)
1 pound per square inch (psi)	6.894 kilo- Pascals (kPa)
1 pound per square inch (psi)	.0703 kilogram force per square centimeter
1 pound per square foot (psf)	47.88 Pascals (Pa)
1 pound per square foot (psf)	47.88 Newton per square meter (N/m^2)
1 foot candle	10.764 lux
1 inch water column	248.84 Pascal
1 degree	0.01745 radian
1 Btu/hr	0.2931 Watt
Temperature degrees Fahrenheit	1.8 x degrees C + 32.

INTERNATIONAL CODE COUNCIL®
Copyright © 2015 ICC. ALL RIGHTS RESERVED. Accessed by David Dammon on Jun 21, 2017 12:30:52 PM pursuant to License Agreement with ICC. No further reproduction or distribution authorized. ANY UNAUTHORIZED REPRODUCTION OR DISTRIBUTION IS A VIOLATION OF THE FEDERAL COPYRIGHT ACT AND THE LICENSE AGREEMENT, AND SUBJECT TO CIVIL AND CRIMINAL PENALTIES THEREUNDER.

TABLE OF CONTENTS

CHAPTER 1 SCOPE AND ADMINISTRATION . . . . . 1-1 – 1-28

PART 1—SCOPE AND APPLICATION. . . . . 1-2 – 1-6

PART 2—ADMINISTRATION AND ENFORCEMENT . . . . . 1-6 – 1-28

CHAPTER 2 DEFINITIONS . . . . . 2-1 – 2-108

CHAPTER 3 USE AND OCCUPANCY CLASSIFICATION . . . . . 3-1 – 3-46

CHAPTER 4 SPECIAL DETAILED REQUIREMENTS BASED ON USE AND OCCUPANCY . . . . . 4-1 – 4-146

CHAPTER 5 GENERAL BUILDING HEIGHTS AND AREAS. . . . . 5-1 – 5-56

CHAPTER 6 TYPES OF CONSTRUCTION . . . . . 6-1 – 6-18

CHAPTER 7 FIRE AND SMOKE PROTECTION FEATURES . . . . . 7-1 – 7-200

CHAPTER 8 INTERIOR FINISHES . . . . . 8-1 – 8-16

CHAPTER 9 FIRE PROTECTION SYSTEMS . . . . . 9-1 – 9-142

CHAPTER 10 MEANS OF EGRESS . . . . . 10-1 – 10-214

CHAPTER 11 ACCESSIBILITY . . . . . 11-1 – 11-80

CHAPTER 12 INTERIOR ENVIRONMENT . . . . . 12-1 – 12-22

CHAPTER 13 ENERGY EFFICIENCY. . . . . 13-1 – 13-2

CHAPTER 14 EXTERIOR WALLS. . . . . 14-1 – 14-50

CHAPTER 15 ROOF ASSEMBLIES AND ROOFTOP STRUCTURES . . . . . 15-1 – 15-40

INDEX . . . . . INDEX-1 – INDEX-38

INTERNATIONAL CODE COUNCIL®

Copyright © 2015 ICC. ALL RIGHTS RESERVED. Accessed by David Dammon on Jun 21, 2017 12:30:52 PM pursuant to License Agreement with ICC. No further reproduction or distribution authorized. ANY UNAUTHORIZED REPRODUCTION OR DISTRIBUTION IS A VIOLATION OF THE FEDERAL COPYRIGHT ACT AND THE LICENSE AGREEMENT, AND SUBJECT TO CIVIL AND CRIMINAL PENALTIES THEREUNDER.

INTERNATIONAL CODE COUNCIL®
Copyright © 2015 ICC. ALL RIGHTS RESERVED. Accessed by David Dammon on Jun 21, 2017 12:30:52 PM pursuant to License Agreement with ICC. No further reproduction or distribution authorized. ANY UNAUTHORIZED REPRODUCTION OR DISTRIBUTION IS A VIOLATION OF THE FEDERAL COPYRIGHT ACT AND THE LICENSE AGREEMENT, AND SUBJECT TO CIVIL AND CRIMINAL PENALTIES THEREUNDER.

Chapter 1:
Scope and Administration

General Comments

This chapter contains provisions for the application, enforcement and administration of subsequent requirements of the code. In addition to establishing the scope of the code, Chapter 1 identifies which buildings and structures come under its purview.

Chapter 1 is subdivided into two parts. Part 1 includes scope and application, Sections 101 and 102. Part 2 deals with administration and enforcement, Sections 103 through 116.

- Section 101 addresses the scope of the IBC and references the other *International Codes*® mentioned in the code.
- Section 102 establishes the applicability of the code and addresses existing structures.
- Section 103 establishes the department of building safety and the appointment of department personnel.
- Section 104 outlines the duties and authority of the building official with regard to permits, inspections and right of entry. It also establishes the authority of the building official to approve alternative materials, used materials and modifications.
- Section 105 states when permits are required and establishes procedures for the review of applications and the issuance of permits.
- Section 106 provides requirements for posting live loads greater than 50 pounds per square foot (psf) (2394 Pa).
- Section 107 describes the information that must be included on construction documents submitted with the application.
- Section 108 authorizes the building official to issue permits for temporary structures and uses.
- Section 109 establishes requirements for a fee schedule.
- Section 110 includes inspection duties of the building official or an inspection agency that has been approved by the building official.
- Section 111 details provisions for the issuance of certificates of occupancy.
- Section 112 gives the building official the authority to approve utility connections.
- Section 113 establishes the board of appeals and criteria for making applications for appeal.
- Section 114 addresses administrative provisions for violations, including provisions for unlawful acts, violation notices, prosecution and penalties.
- Section 115 describes procedures for stop work orders.
- Section 116 establishes the criteria for unsafe structures and equipment, and the procedures to be followed by the building official for abatement and notification to the responsible party.

Each state's building code enabling legislation, which is grounded within the police power of the state, is the source of all authority to enact building codes. In terms of how it is used, police power is the power of the state to legislate for the general welfare of its citizens. This power enables passage of such laws as building codes. If the state legislature has limited this power in any way, the municipality may not exceed these limitations. While the municipality may not further delegate its police power (e.g., by delegating the burden of determining code compliance to the building owner, contractor or architect), it may turn over the administration of the building code to a municipal official, such as a building official, provided that sufficient criteria are given to establish clearly the basis for decisions as to whether a proposed building conforms to the code.

Chapter 1 is largely concerned with maintaining "due process of law" in enforcing the building performance criteria contained in the body of the code. Only through careful observation of the administrative provisions can the building official reasonably hope to demonstrate that "equal protection under the law" has been provided. While it is generally assumed that the administration and enforcement section of a code is geared toward a building official, this is not entirely true. The provisions also establish the rights and privileges of the design professional, contractor and building owner. The position of the building official is merely to review the proposed and completed work and to determine if the construction conforms to the code requirements. The design professional is responsible for the design of a safe structure. The contractor is responsible for constructing the structure in compliance with the plans.

During the course of construction, the building official reviews the activity to ascertain that the spirit and intent of the law are being met and that the safety, health and welfare of the public will be protected. As a public servant, the building official enforces the code in an unbiased, proper manner. Every individual is guaranteed equal enforcement of the provisions of the code. Furthermore, design professionals, contractors and building owners have the right of due process for any requirement in the code.

INTERNATIONAL CODE COUNCIL®
Copyright © 2015 ICC. ALL RIGHTS RESERVED. Accessed by David Dammon on Jun 21, 2017 12:30:52 PM pursuant to License Agreement with ICC. No further reproduction or distribution authorized. ANY UNAUTHORIZED REPRODUCTION OR DISTRIBUTION IS A VIOLATION OF THE FEDERAL COPYRIGHT ACT AND THE LICENSE AGREEMENT, AND SUBJECT TO CIVIL AND CRIMINAL PENALTIES THEREUNDER.

Purpose

The building code, as with any other I-Code®, is intended to be adopted as a legally enforceable document to provide a reasonable level of safety, and protection of public health, general welfare and property. A building code cannot be effective without adequate provisions for its administration and enforcement. The official charged with the administration and enforcement of building regulations has a great responsibility, and with this responsibility goes authority. No matter how detailed the building code may be, the building official must, to some extent, exercise his or her own judgment in determining code compliance. The building official has the responsibility to establish that the homes in which the citizens of the community reside and the buildings in which they work are designed and constructed to be structurally stable with adequate means of egress, accessibility, light and ventilation, and to provide a minimum acceptable level of protection to life and property from fire.

Chapter 1 contains two parts. Part 1, Scope and Application, contains all issues related to the scope and intent of the code, as well as the applicability of this code relative to other standards and laws that might also be applicable on a given building project, such as federal or state. Part 2, Administration and Enforcement, contains all issues related to the duties and powers of the building official, the issuance of permits and certificates of occupancy, and other related operational items.

PART 1—SCOPE AND APPLICATION

SECTION 101
GENERAL

[A] 101.1 Title. These regulations shall be known as the *Building Code* of **[NAME OF JURISDICTION]**, hereinafter referred to as "this code."

❖ The purpose of this section is to identify the adopted regulations by inserting the name of the adopting jurisdiction into the code.

[A] 101.2 Scope. The provisions of this code shall apply to the construction, *alteration*, relocation, enlargement, replacement, *repair*, equipment, use and occupancy, location, maintenance, removal and demolition of every building or structure or any appurtenances connected or attached to such buildings or structures.

> **Exception:** Detached one- and two-family *dwellings* and multiple single-family *dwellings (townhouses)* not more than three *stories above grade plane* in height with a separate *means of egress*, and their accessory structures not more than three *stories above grade plane* in height, shall comply with the *International Residential Code*.

❖ This section establishes when the regulations contained in the code must be followed, whether all or in part. Something must happen (construction of a new building, modification to an existing one or allowing an existing building or structure to become unsafe) for the code to be applicable. While such activity may not be as significant as a new building, a fence is considered a structure and, therefore, its erection is within the scope of the code. The building code is not a maintenance document requiring periodic inspections that will, in turn, result in an enforcement action, although periodic inspections are addressed by the *International Fire Code*® (IFC®).

The exception indicates that detached one- and two-family dwellings and townhouses that are not more than three stories above grade and have separate means of egress are to comply with the *International Residential Code*® (IRC®). The definition of townhouse adds that an IRC townhouse must meet four criteria: 1. It is not more than three stories in height; 2. It has a separate means of egress; 3. Each unit extends from foundation to roof; and 4. There is open space on at least two sides.

This applies to all such structures, whether or not there are lot lines separating them, and also to accessory structures such as garages and pools. Accessory structures are also limited to not more than 3 stories in height. Such structures four stories or more in height are beyond the scope of the IRC and must comply with the provisions of the IBC and its referenced codes.

There are two exceptions in the IRC that allow for buildings otherwise required to be constructed in accordance with the IBC to be constructed in accordance with the IRC. These include live/work units (see Section 419) and small bed-and-breakfast style hotels where there are five or fewer guestrooms and the owner also lives in the hotel (see Section 310.5.2).

[A] 101.2.1 Appendices. Provisions in the appendices shall not apply unless specifically adopted.

❖ The provisions contained in Appendices A through M are not considered part of the code and are, therefore, not enforceable unless they are specifically included in the ordinance or other adopting law or regulation of the jurisdiction. See Section 1 of the sample legislation on page xix of the code for where the appendices to be adopted are to be specified in the adoption ordinance.

[A] 101.3 Intent. The purpose of this code is to establish the minimum requirements to provide a reasonable level of safety, public health and general welfare through structural

INTERNATIONAL CODE COUNCIL®
Copyright © 2015 ICC. ALL RIGHTS RESERVED. Accessed by David Dammon on Jun 21, 2017 12:30:52 PM pursuant to License Agreement with ICC. No further reproduction or distribution authorized. ANY UNAUTHORIZED REPRODUCTION OR DISTRIBUTION IS A VIOLATION OF THE FEDERAL COPYRIGHT ACT AND THE LICENSE AGREEMENT, AND SUBJECT TO CIVIL AND CRIMINAL PENALTIES THEREUNDER.

strength, *means of egress* facilities, stability, sanitation, adequate light and ventilation, energy conservation, and safety to life and property from fire and other hazards attributed to the built environment and to provide a reasonable level of safety to fire fighters and emergency responders during emergency operations.

❖ The intent of the code is to establish regulations providing for the safety, health and general welfare of building occupants, as well as for fire fighters and emergency responders during building emergencies. The intent becomes important in the application of such sections as Sections 102, 104.11 and 114, as well as any enforcement-oriented interpretive action or judgment. Like any code, the written text is subject to interpretation. Interpretations should not be affected by economics or the potential impact on any party. The only considerations should be safety of the occupants, protection of occupant's health and welfare and emergency responder safety.

[A] 101.4 Referenced codes. The other codes listed in Sections 101.4.1 through 101.4.7 and referenced elsewhere in this code shall be considered part of the requirements of this code to the prescribed extent of each such reference.

❖ The International Code Council® (ICC®) promulgates a complete set of codes to regulate the built environment. These codes are coordinated with each other so as to avoid conflicting provisions. When the code is adopted by a jurisdiction, the codes that regulate a building's electrical, fuel gas, mechanical and plumbing systems are also included in the adoption and are considered a part of the code. The *International Property Maintenance Code*® (IPMC®), *International Existing Building Code*® (IEBC®) and the IFC are also referenced and enable the building official to address unsafe conditions in existing structures. Various other sections of the code also specifically refer to these codes. Note that these codes are listed in Chapter 35 and further identified by the specific year of issue. Only that edition of the code is legally adopted and any future editions are not enforceable. New editions of the *International Codes*® are issued concurrently and new editions of the referenced codes are adopted with each new edition of the code. Adoption is done in this manner so that there are not conflicting provisions in these codes.

[A] 101.4.1 Gas. The provisions of the *International Fuel Gas Code* shall apply to the installation of gas piping from the point of delivery, gas appliances and related accessories as covered in this code. These requirements apply to gas piping systems extending from the point of delivery to the inlet connections of appliances and the installation and operation of residential and commercial gas appliances and related accessories.

❖ The *International Fuel Gas Code*® (IFGC®) regulates gas piping and appliances and is adopted by reference from this section, as well as other sections in the code, as the enforceable document for regulating gas systems. This section also establishes the scope of the IFGC as extending from the point of delivery to the inlet connections of each gas appliance. The "point of delivery" is defined in the IFGC as the outlet of the service meter, regulator or shutoff valve.

[A] 101.4.2 Mechanical. The provisions of the *International Mechanical Code* shall apply to the installation, *alterations*, *repairs* and replacement of mechanical systems, including equipment, appliances, fixtures, fittings and/or appurtenances, including ventilating, heating, cooling, air-conditioning and refrigeration systems, incinerators and other energy-related systems.

❖ The *International Mechanical Code*® (IMC®) regulates all aspects of a building's mechanical system, including ventilating, heating, air-conditioning and refrigeration systems, incinerators and other energy-related systems, and is adopted by reference from this section, as well as other sections in this code, as the enforceable document for regulating these systems.

[A] 101.4.3 Plumbing. The provisions of the *International Plumbing Code* shall apply to the installation, *alteration*, *repair* and replacement of plumbing systems, including equipment, appliances, fixtures, fittings and appurtenances, and where connected to a water or sewage system and all aspects of a medical gas system. The provisions of the *International Private Sewage Disposal Code* shall apply to private sewage disposal systems.

❖ The *International Plumbing Code*® (IPC®) regulates the components of a building's plumbing system, including water supply and distribution piping; sanitary and storm drainage systems; the fixtures and appliances connected thereto; and medical gas and oxygen systems, and is adopted by reference from this section, as well as other sections in this code, as the enforceable document for regulating these systems. The *International Private Sewage Disposal Code*® (IPSDC®) is also adopted as the enforceable document for regulating on-site sewage disposal systems.

[A] 101.4.4 Property maintenance. The provisions of the *International Property Maintenance Code* shall apply to existing structures and premises; equipment and facilities; light, ventilation, space heating, sanitation, life and fire safety hazards; responsibilities of *owners*, operators and occupants; and occupancy of existing premises and structures.

❖ The applicability of the code to existing structures is set forth in the IEBC and is generally limited to new work or changes in use that occur in these buildings. The IPMC, however, is specifically intended to apply to existing structures and their premises, providing a jurisdiction with an enforceable document protecting occupant safety, public health and general welfare, including in buildings that were constructed prior to the adoption of the current building code.

[A] 101.4.5 Fire prevention. The provisions of the *International Fire Code* shall apply to matters affecting or relating to

INTERNATIONAL CODE COUNCIL®
Copyright © 2015 ICC. ALL RIGHTS RESERVED. Accessed by David Dammon on Jun 21, 2017 12:30:52 PM pursuant to License Agreement with ICC. No further reproduction or distribution authorized. ANY UNAUTHORIZED REPRODUCTION OR DISTRIBUTION IS A VIOLATION OF THE FEDERAL COPYRIGHT ACT AND THE LICENSE AGREEMENT, AND SUBJECT TO CIVIL AND CRIMINAL PENALTIES THEREUNDER.

structures, processes and premises from the hazard of fire and explosion arising from the storage, handling or use of structures, materials or devices; from conditions hazardous to life, property or public welfare in the occupancy of structures or premises; and from the construction, extension, *repair, alteration* or removal of fire suppression, *automatic sprinkler systems* and alarm systems or fire hazards in the structure or on the premises from occupancy or operation.

❖ The IFC contains provisions which provide a reasonable level of safety for occupants from the hazards of fire and explosion that result from: materials, substances and operations that may be present in a structure; circumstances that endanger life, property or public welfare; and the modification or removal of fire suppression and alarm systems. Many of the provisions contained in the IBC, especially in Chapters 9 and 10, also appear in the IFC. So that all International Codes contain consistent provisions, only one development committee is responsible for considering proposed changes to such provisions. That committee is identified by a letter designation in brackets that appears at the beginning of affected sections. This is described more fully in the preface to the codes. The IFC also contains provisions that are specifically applicable to existing structures and uses and, like the IPMC, provides a jurisdiction with an enforceable document protecting occupant safety, public health and general welfare in all buildings.

[A] 101.4.6 Energy. The provisions of the *International Energy Conservation Code* shall apply to all matters governing the design and construction of buildings for energy efficiency.

❖ The *International Energy Conservation Code*® (IECC®) contains provisions for the efficient use of energy in buildings by regulating the design of building envelopes for thermal resistance and low air leakage, and the design and selection of mechanical systems for effective use of energy. The IECC® is adopted by reference in this section, as well as other sections in this code, as the enforceable document for regulating these systems.

[A] 101.4.7 Existing buildings. The provisions of the *International Existing Building Code* shall apply to matters governing the *repair*, *alteration*, change of occupancy, *addition* to and relocation of existing buildings.

❖ The *International Existing Building Code*® (IEBC®) is typically utilized when a building is undergoing some type of alteration, change of occupancy or addition. Maintenance of existing buildings is addressed in the IPMC and IFC. Three different options for compliance are provided within the IEBC.

In the 2012 IBC, Chapter 34 addressed existing buildings. This criterion was repeated in the IEBC as Chapter 4, Prescriptive Compliance Methods, and Chapter 14, Performance Compliance Methods. Now this information is only available in the IEBC.

SECTION 102
APPLICABILITY

[A] 102.1 General. Where there is a conflict between a general requirement and a specific requirement, the specific requirement shall be applicable. Where, in any specific case, different sections of this code specify different materials, methods of construction or other requirements, the most restrictive shall govern.

❖ In cases where the code establishes a specific requirement for a certain condition, that requirement is applicable even if it is less restrictive than a general requirement elsewhere in the code. As an example, the requirements contained in Section 402.8 for means of egress in a covered mall building would govern over any differing requirements located in Chapter 10, regardless of whether the requirements in Section 402.8 are more or less restrictive.

The most restrictive requirement is to apply where there may be different requirements in the code for a specific issue.

[A] 102.2 Other laws. The provisions of this code shall not be deemed to nullify any provisions of local, state or federal law.

❖ In some cases, other laws enacted by the jurisdiction or the state or federal government may be applicable to a condition that is also governed by a requirement in the code. In such circumstances, the requirements of the code are in addition to the other law that is still in effect, although the building official may not be responsible for its enforcement.

[A] 102.3 Application of references. References to chapter or section numbers, or to provisions not specifically identified by number, shall be construed to refer to such chapter, section or provision of this code.

❖ In a situation where the code may make reference to a chapter or section number or to another code provision without specifically identifying its location in the code, assume that the referenced section, chapter or provision is in the code and not in a referenced code or standard.

[A] 102.4 Referenced codes and standards. The codes and standards referenced in this code shall be considered part of the requirements of this code to the prescribed extent of each such reference and as further regulated in Sections 102.4.1 and 102.4.2.

❖ A referenced code, standard or portion thereof is an enforceable extension of the code as if the content of the standard were included in the body of the code. For example, Section 905.2 references NFPA 14 in its entirety for the installation of standpipe systems. In those cases when the code references only portions of a standard, the use and application of the referenced standard is limited to those portions that are specifically identified. For example, Section 412.4.6 requires that aircraft hangars must be provided with fire suppression systems as required in NFPA 409.

INTERNATIONAL CODE COUNCIL®
Copyright © 2015 ICC. ALL RIGHTS RESERVED. Accessed by David Dammon on Jun 21, 2017 12:30:52 PM pursuant to License Agreement with ICC. No further reproduction or distribution authorized. ANY UNAUTHORIZED REPRODUCTION OR DISTRIBUTION IS A VIOLATION OF THE FEDERAL COPYRIGHT ACT AND THE LICENSE AGREEMENT, AND SUBJECT TO CIVIL AND CRIMINAL PENALTIES THEREUNDER.

Section 412.4.6 cannot be construed to require compliance with NFPA 409 in its entirety. It is the intent of the code to be in harmony with the referenced standards. If conflicts occur because of scope or purpose, the code text governs.

[A] 102.4.1 Conflicts. Where conflicts occur between provisions of this code and referenced codes and standards, the provisions of this code shall apply.

❖ The use of referenced codes and standards to cover certain aspects of various occupancies and operations rather than write parallel or competing requirements into the code is a long-standing code development principle. Often, however, questions and potential conflicts in the use of referenced codes and standards can arise, which can lead to inconsistent enforcement of the code. In the code, several sections illustrate this concern, such as Section [F] 415.9.3.

> **Section [F] 415.9.3 Dry cleaning plants.** The construction and installation of dry cleaning plants shall be in accordance with the requirements of this code, the *International Mechanical Code*, the *International Plumbing Code* and NFPA 32. Dry cleaning solvents and systems shall be classified in accordance with the *International Fire Code*.

Based on this text, NFPA 32, Standard for Drycleaning Plants, 2011 edition, in Section 4.4.1.1 states, "General building and structure design and construction shall be in accordance with NFPA 5000, *Building Construction and Safety Code*®, except as modified herein." Since the extent of the reference to NFPA 32 in Section 415.9.3 includes "...construction...", it has happened that designers construed this to mean that the requirements for building construction of dry cleaning plants will be required to follow NFPA 5000 instead of the IBC.

Another example is in the IMC, which references ASHRAE 15 in Sections 1101.6 and 1108.1. ASHRAE 15 then references NFPA 54 (ANSI Z223.1), *National Fuel Gas Code*. This could lead code users to interpret the mechanical code to mean that the *National Fuel Gas Code* is applicable to specific situations rather than the IFGC.

In both cases, the reference is only applicable to the first referenced standard.

[A] 102.4.2 Provisions in referenced codes and standards. Where the extent of the reference to a referenced code or standard includes subject matter that is within the scope of this code or the International Codes listed in Section 101.4, the provisions of this code or the International Codes listed in Section 101.4, as applicable, shall take precedence over the provisions in the referenced code or standard.

❖ Section 102.4.2 expands upon the provisions of Section 102.4.1 by making it clear that, even if a referenced standard contains requirements that parallel the code (or the other referenced International Codes) in the standard's own duly referenced section(s), the provisions of the IBC (or the other referenced International Codes) will always take precedence. This proposed section does not intend to take the place of carefully scoped and referenced text for written standards for the International Codes but, rather, provides the policy underpinnings upon which sound code change proposals can be based.

[A] 102.5 Partial invalidity. In the event that any part or provision of this code is held to be illegal or void, this shall not have the effect of making void or illegal any of the other parts or provisions.

❖ Only invalid sections of the code (as established by the court of jurisdiction) can be set aside. This is essential to safeguard the application of the code text in situations where a provision is declared illegal or unconstitutional. This section preserves the legislative action that put the legal provisions in place.

[A] 102.6 Existing structures. The legal occupancy of any structure existing on the date of adoption of this code shall be permitted to continue without change, except as otherwise specifically provided in this code, the *International Existing Building Code*, the *International Property Maintenance Code* or the *International Fire Code*.

❖ An existing structure is generally "grandfathered" to be considered approved with code adoption, provided that the building meets a minimum level of safety. Frequently, the criteria for this level are the regulations (or code) under which the existing building was originally constructed. If there are no previous code criteria to apply, the building official must apply those provisions that are reasonably applicable to existing buildings. A specific level of safety in existing buildings is dictated by maintenance and hazard abatement provisions, as contained in this code, the IPMC and the IFC. These codes (see Sections 101.4.4 and 101.4.5) are applicable to existing buildings. Special attention should be paid to IFC Chapter 11, *Construction Requirements for Existing Buildings*. Additionally, IEBC (see Section 101.4.7) comprehensively identifies the pertinent requirements for existing buildings on which construction operations are intended or that undergo a change of occupancy.

[A] 102.6.1 Buildings not previously occupied. A building or portion of a building that has not been previously occupied or used for its intended purpose in accordance with the laws in existence at the time of its completion shall comply with the provisions of the *International Building Code* or *International Residential Code*, as applicable, for new construction or with any current permit for such occupancy.

❖ This section applies to any building that may have been completed but not occupied or used for its original intended purpose. The building remains a new structure in terms of code compliance until such time as it is occupied in whole or in part. Tenant buildouts are permitted to comply with the code adopted at the time of initial construction, unless that permit has expired. If the permit has expired, the tenant buildout

INTERNATIONAL CODE COUNCIL®
Copyright © 2015 ICC. ALL RIGHTS RESERVED. Accessed by David Dammon on Jun 21, 2017 12:30:52 PM pursuant to License Agreement with ICC. No further reproduction or distribution authorized. ANY UNAUTHORIZED REPRODUCTION OR DISTRIBUTION IS A VIOLATION OF THE FEDERAL COPYRIGHT ACT AND THE LICENSE AGREEMENT, AND SUBJECT TO CIVIL AND CRIMINAL PENALTIES THEREUNDER.

must comply with new construction requirements, similar to alterations to existing buildings. See Section 105.5 regarding the expiration and extensions available for permits.

[A] 102.6.2 Buildings previously occupied. The legal occupancy of any building existing on the date of adoption of this code shall be permitted to continue without change, except as otherwise specifically provided in this code, the *International Fire Code* or *International Property Maintenance Code*, or as is deemed necessary by the *building official* for the general safety and welfare of the occupants and the public.

❖ This section allows for buildings that were legally occupied in whole or in part at the time the code was adopted to continue as is. There is a maintenance concern that is addressed by the requirement that the building comply with either the IFC or the IPMC. These codes ensure that life safety systems, such as means of egress pathways and fire protection systems, are kept in place and continue to be able to protect the life and safety of the inhabitants of these existing structures.

PART 2—ADMINISTRATION AND ENFORCEMENT

SECTION 103
DEPARTMENT OF BUILDING SAFETY

[A] 103.1 Creation of enforcement agency. The Department of Building Safety is hereby created and the official in charge thereof shall be known as the *building official*.

❖ This section creates the building department and describes its composition (see Section 110 for a discussion of the inspection duties of the department). Appendix A contains qualifications for the employees of the building department involved in the enforcement of the code. A jurisdiction can establish the qualifications outlined in Appendix A for its employees by specifically referencing Appendix A in the adopting ordinance.

The executive official in charge of the building department is named the "building official" by this section. In actuality, the person who is in charge of the department may hold a different title, such as building commissioner, building inspector or construction official. For the purpose of the code, that person is referred to as the "building official."

[A] 103.2 Appointment. The *building official* shall be appointed by the chief appointing authority of the jurisdiction.

❖ This section establishes the building official as an appointed position of the jurisdiction.

[A] 103.3 Deputies. In accordance with the prescribed procedures of this jurisdiction and with the concurrence of the appointing authority, the *building official* shall have the authority to appoint a deputy building official, the related technical officers, inspectors, plan examiners and other employees. Such employees shall have powers as delegated by the *building official*. For the maintenance of existing properties, see the *International Property Maintenance Code*.

❖ This section provides the building official with the authority to appoint other individuals to assist with the administration and enforcement of the code. These individuals would have the authority and responsibility as designated by the building official. Such appointments, however, may be exercised only with the authorization of the chief appointing authority.

SECTION 104
DUTIES AND POWERS OF BUILDING OFFICIAL

[A] 104.1 General. The *building official* is hereby authorized and directed to enforce the provisions of this code. The *building official* shall have the authority to render interpretations of this code and to adopt policies and procedures in order to clarify the application of its provisions. Such interpretations, policies and procedures shall be in compliance with the intent and purpose of this code. Such policies and procedures shall not have the effect of waiving requirements specifically provided for in this code.

❖ The duty of the building official is to enforce the code, and he or she is the "authority having jurisdiction" for all matters relating to the code and its enforcement. It is the duty of the building official to interpret the code and to determine compliance. Code compliance will not always be easy to determine and will require judgment and expertise, particularly when enforcing the provisions of Sections 104.10 and 104.11. In exercising this authority, however, the building official cannot set aside or ignore any provision of the code.

[A] 104.2 Applications and permits. The *building official* shall receive applications, review *construction documents* and issue *permits* for the erection, and *alteration*, demolition and moving of buildings and structures, inspect the premises for which such *permits* have been issued and enforce compliance with the provisions of this code.

❖ The code enforcement process is normally initiated with an application for a permit. The building official is responsible for processing applications and issuing permits for the construction or modification of buildings in accordance with the code.

[A] 104.2.1 Determination of substantially improved or substantially damaged existing buildings and structures in flood hazard areas. For applications for reconstruction, rehabilitation, *repair*, *alteration*, *addition* or other improvement of existing buildings or structures located in *flood hazard areas*, the *building official* shall determine if the proposed work constitutes substantial improvement or *repair* of *substantial damage*. Where the *building official* determines that the proposed work constitutes *substantial improvement* or *repair* of *substantial damage*, and where required by this code, the *building official* shall require the building to meet the requirements of Section 1612.

❖ "Substantial damage" and "Substantial improvement" are defined in Section 202 and in federal regulations (see 44 CFR 59.1, Definitions). Long-term reduction

INTERNATIONAL CODE COUNCIL®
Copyright © 2015 ICC. ALL RIGHTS RESERVED. Accessed by David Dammon on Jun 21, 2017 12:30:52 PM pursuant to License Agreement with ICC. No further reproduction or distribution authorized. ANY UNAUTHORIZED REPRODUCTION OR DISTRIBUTION IS A VIOLATION OF THE FEDERAL COPYRIGHT ACT AND THE LICENSE AGREEMENT, AND SUBJECT TO CIVIL AND CRIMINAL PENALTIES THEREUNDER.

in exposure to flood hazards, including exposure of older buildings, is one of the purposes for regulating development in flood hazard areas. Existing buildings or structures located in flood hazard areas are to be brought into compliance with the flood-resistance provisions of Section 1612 when the cost of improvements or the cost of repair of damage equals or exceeds 50 percent of the market value of the building.

Applicants state the valuation of the proposed work as part of the information submitted to obtain a permit. If the proposed work will be performed on existing buildings or structures in flood hazard areas, including restoration of damage from any cause, this section requires the building official to determine the value of the proposed work. Guidance from the National Flood Insurance Program (NFIP) is in FEMA P-758, *Substantial Improvement/Substantial Damage Desk Reference*. This guidance advises that the value of the property owner's labor, as well as the value of donated labor and materials, must be included. For damaged buildings, the value of the proposed work is the value of work necessary to restore the building to its predamage condition, even if the applicant is proposing less work.

To make a determination about whether a proposed repair, reconstruction, rehabilitation, addition or improvement of a building or structure will constitute a substantial improvement or repair of substantial damage, the cost of the proposed work must be compared to the market value of the building or structure before the work is started or before the damage occurred. To determine market value, the building official may require the applicant to provide such information. Options for determining value are described in FEMA P-758. If the building official determines that the work is a substantial improvement or repair of substantial damage, the existing building must be brought into compliance with the flood-resistance provisions of Section 1612. See the IEBC for requirements for alterations.

[A] 104.3 Notices and orders. The *building official* shall issue necessary notices or orders to ensure compliance with this code.

❖ An important element of code enforcement is the necessary advisement of deficiencies and corrections, which is accomplished through written notices and orders. The building official is required to issue orders to abate illegal or unsafe conditions. Section 116.3 contains additional information for these notices.

[A] 104.4 Inspections. The *building official* shall make the required inspections, or the *building official* shall have the authority to accept reports of inspection by *approved agencies* or individuals. Reports of such inspections shall be in writing and be certified by a responsible officer of such *approved agency* or by the responsible individual. The *building official* is authorized to engage such expert opinion as deemed necessary to report upon unusual technical issues that arise, subject to the approval of the appointing authority.

❖ The building official is required to make inspections as necessary to determine compliance with the code, or to accept written reports of inspections by an approved agency. The inspection of the work in progress or accomplished is another significant element in determining code compliance. While a department does not have the resources to inspect every aspect of all work, the required inspections are those that are dictated by administrative rules and procedures based on many parameters, including available inspection resources. In order to expand the available resources for inspection purposes, the building official may approve an agency that, in his or her opinion, complies with the criteria set forth in Section 1703. When unusual, extraordinary or complex technical issues arise relative to building safety, the building official has the authority to seek the opinion and advice of experts. Since this usually involves the expenditure of funds, the approval of the jurisdiction's chief executive (or similar position) is required. A technical report from an expert requested by the building official can be used to assist in the approval process (also see Section 1704 for special inspection requirements).

[A] 104.5 Identification. The *building official* shall carry proper identification when inspecting structures or premises in the performance of duties under this code.

❖ This section requires the building official (including by definition all authorized designees) to carry identification in the course of conducting the duties of the position. This removes any question as to the purpose and authority of the inspector.

[A] 104.6 Right of entry. Where it is necessary to make an inspection to enforce the provisions of this code, or where the *building official* has reasonable cause to believe that there exists in a structure or upon a premises a condition that is contrary to or in violation of this code that makes the structure or premises unsafe, dangerous or hazardous, the *building official* is authorized to enter the structure or premises at reasonable times to inspect or to perform the duties imposed by this code, provided that if such structure or premises be occupied that credentials be presented to the occupant and entry requested. If such structure or premises is unoccupied, the *building official* shall first make a reasonable effort to locate the owner or other person having charge or control of the structure or premises and request entry. If entry is refused, the *building official* shall have recourse to the remedies provided by law to secure entry.

❖ The first part of this section establishes the right of the building official to enter the premises in order to make permit inspections required by Section 110.3. Permit application forms typically include a statement in the certification signed by the applicant (who is the owner or owner's agent) granting the building official

INTERNATIONAL CODE COUNCIL®
Copyright © 2015 ICC. ALL RIGHTS RESERVED. Accessed by David Dammon on Jun 21, 2017 12:30:52 PM pursuant to License Agreement with ICC. No further reproduction or distribution authorized. ANY UNAUTHORIZED REPRODUCTION OR DISTRIBUTION IS A VIOLATION OF THE FEDERAL COPYRIGHT ACT AND THE LICENSE AGREEMENT, AND SUBJECT TO CIVIL AND CRIMINAL PENALTIES THEREUNDER.

the authority to enter areas covered by the permit in order to enforce code provisions related to the permit. The right to enter other structures or premises is more limited. First, to protect the right of privacy, the owner or occupant must grant the building official permission before an interior inspection of the property can be conducted. Permission is not required for inspections that can be accomplished from within the public right-of-way. Second, such access may be denied by the owner or occupant. Unless the inspector has reasonable cause to believe that a violation of the code exists, access may be unattainable. Third, building officials must present proper identification (see Section 104.5) and request admittance during reasonable hours—usually the normal business hours of the establishment—to be admitted. Fourth, inspections must be aimed at securing or determining compliance with the provisions and intent of the regulations that are specifically within the established scope of the building official's authority.

Searches to gather information for the purpose of enforcing other codes, ordinances or regulations are considered unreasonable and are prohibited by the Fourth Amendment to the U.S. Constitution. "Reasonable cause" in the context of this section must be distinguished from "probable cause," which is required to gain access to property in criminal cases. The burden of proof establishing reasonable cause may vary among jurisdictions. Usually, an inspector must show that the property is subject to inspection under the provisions of the code; that the interests of the public health, safety and welfare outweigh the individual's right to maintain privacy; and that such an inspection is required solely to determine compliance with the provisions of the code.

Many jurisdictions do not recognize the concept of an administrative warrant and may require the building official to prove probable cause in order to gain access upon refusal. This burden of proof is usually more substantial, often requiring the building official to stipulate in advance why access is needed (usually access is restricted to gathering evidence for seeking an indictment or making an arrest); what specific items or information is sought; its relevance to the case against the individual subject; how knowledge of the relevance of the information or items sought was obtained, and how the evidence sought will be used. In all such cases, the right to privacy must always be weighed against the right of the building official to conduct an inspection to verify that public health, safety and welfare are not in jeopardy. Such important and complex constitutional issues should be discussed with the jurisdiction's legal counsel. Jurisdictions should establish procedures for securing the necessary court orders when an inspection is deemed necessary following a refusal.

[A] 104.7 Department records. The *building official* shall keep official records of applications received, *permits* and certificates issued, fees collected, reports of inspections, and notices and orders issued. Such records shall be retained in the official records for the period required for retention of public records.

❖ In keeping with the need for efficient business practices, the building official must keep official records pertaining to permit applications, permits, fees collected, inspections, notices and orders issued. Such documentation provides a valuable resource of information if questions arise regarding the department's actions with respect to a building. The code does not require that construction documents be kept after the project is complete. It requires that other documents be kept for the length of time mandated by a jurisdiction's or its state's laws, or administrative rules for retaining public records.

Certain records related to buildings in flood hazard areas must be retained permanently in accordance with the community's agreement with the National Flood Insurance Program, including the lowest floor elevation information collected pursuant to Sections 110.3.3, 110.3.10.1, and 1612.5; determinations made when work on existing buildings is proposed to determine if the work constitutes substantial improvement or repair of substantial damage; and modifications granted pursuant to Section 104.10.1. Communities agree to allow inspection of these records upon request by FEMA or the NFIP state coordinating agency.

[A] 104.8 Liability. The *building official*, member of the board of appeals or employee charged with the enforcement of this code, while acting for the jurisdiction in good faith and without malice in the discharge of the duties required by this code or other pertinent law or ordinance, shall not thereby be civilly or criminally rendered liable personally and is hereby relieved from personal liability for any damage accruing to persons or property as a result of any act or by reason of an act or omission in the discharge of official duties.

❖ The building official, other department employees and members of the appeals board are not intended to be held liable, either civilly or criminally, for those actions performed in accordance with the code in a reasonable and lawful manner. The responsibility of the building official in this regard is subject to local, state and federal laws that may supersede this provision.

[A] 104.8.1 Legal defense. Any suit or criminal complaint instituted against an officer or employee because of an act performed by that officer or employee in the lawful discharge of duties and under the provisions of this code shall be defended by legal representatives of the jurisdiction until the final termination of the proceedings. The *building official* or any subordinate shall not be liable for cost in any action, suit or proceeding that is instituted in pursuance of the provisions of this code.

❖ This section establishes that building officials (or subordinates) must not be liable for costs in any legal action instituted in response to the performance of lawful duties. These costs are to be borne by the state, county or municipality. The best way to be cer-

INTERNATIONAL CODE COUNCIL®
Copyright © 2015 ICC. ALL RIGHTS RESERVED. Accessed by David Dammon on Jun 21, 2017 12:30:52 PM pursuant to License Agreement with ICC. No further reproduction or distribution authorized. ANY UNAUTHORIZED REPRODUCTION OR DISTRIBUTION IS A VIOLATION OF THE FEDERAL COPYRIGHT ACT AND THE LICENSE AGREEMENT, AND SUBJECT TO CIVIL AND CRIMINAL PENALTIES THEREUNDER.

tain that the building official's action is a "lawful duty" is always to cite the applicable code section on which the enforcement action is based.

[A] 104.9 Approved materials and equipment. Materials, equipment and devices *approved* by the *building official* shall be constructed and installed in accordance with such approval.

❖ The code is a compilation of criteria with which materials, equipment, devices and systems must comply to be suitable for a particular application. The building official has a duty to evaluate such materials, equipment, devices and systems for code compliance and, when compliance is determined, approve the same for use. The materials, equipment, devices and systems must be constructed and installed in compliance with, and all conditions and limitations considered as a basis for, that approval. For example, the manufacturer's instructions and recommendations are to be followed if the approval of the material was based even in part on those instructions and recommendations. The approval authority given to the building official is a significant responsibility and is a key to code compliance. The approval process is first technical and then administrative and must be approached as such. For example, if data to determine code compliance are required, such data should be in the form of test reports or engineering analysis and not simply taken from a sales brochure.

[A] 104.9.1 Used materials and equipment. The use of used materials that meet the requirements of this code for new materials is permitted. Used equipment and devices shall not be reused unless *approved* by the *building official*.

❖ Code criteria for materials and equipment have changed over the years. Evaluation of testing and materials technology has permitted the development of new criteria that old materials may not satisfy. As a result, used materials are required to be evaluated in the same manner as new materials. Used materials, equipment and devices must be equivalent to that required by the code if they are to be used again in a new installation.

[A] 104.10 Modifications. Where there are practical difficulties involved in carrying out the provisions of this code, the *building official* shall have the authority to grant modifications for individual cases, upon application of the *owner* or the owner's authorized agent, provided that the *building official* shall first find that special individual reason makes the strict letter of this code impractical, the modification is in compliance with the intent and purpose of this code and that such modification does not lessen health, *accessibility*, life and fire safety or structural requirements. The details of action granting modifications shall be recorded and entered in the files of the department of building safety.

❖ The building official may amend or make exceptions to the code as needed where strict compliance is impractical. Only the building official has authority to grant modifications. Consideration of a particular difficulty is to be based on the application of the owner and a demonstration that the intent of the code is accomplished. This section is not intended to permit setting aside or ignoring a code provision; rather, it is intended to provide acceptance of equivalent protection. Such modifications do not, however, extend to actions that are necessary to correct violations of the code. In other words, a code violation or the expense of correcting one cannot constitute a practical difficulty.

[A] 104.10.1 Flood hazard areas. The *building official* shall not grant modifications to any provision required in *flood hazard areas* as established by Section 1612.3 unless a determination has been made that:

1. A showing of good and sufficient cause that the unique characteristics of the size, configuration or topography of the site render the elevation standards of Section 1612 inappropriate.
2. A determination that failure to grant the variance would result in exceptional hardship by rendering the lot undevelopable.
3. A determination that the granting of a variance will not result in increased flood heights, additional threats to public safety, extraordinary public expense, cause fraud on or victimization of the public, or conflict with existing laws or ordinances.
4. A determination that the variance is the minimum necessary to afford relief, considering the flood hazard.
5. Submission to the applicant of written notice specifying the difference between the *design flood elevation* and the elevation to which the building is to be built, stating that the cost of flood insurance will be commensurate with the increased risk resulting from the reduced floor elevation, and stating that construction below the *design flood elevation* increases risks to life and property.

❖ Before granting a modification related to the flood-resistant provisions of the code, the code official must consider the listed factors. This determination is consistent with the requirements of the National Flood Insurance Program regulations. The community must consider these factors in order to grant variances to provide relief from selected provisions for flood-resistant construction. A record of the determination must be retained as part of the community's permanent records.

Granting modifications from these provisions may place people and property at significant risk. Therefore, code officials are cautioned to carefully evaluate the impacts, particularly the impact of modifications to the requirements for elevated buildings. The factors that must be evaluated are listed and include: impacts on the site; the applicant and other parties who may be affected, such as adjacent property owners; and the community as a whole. Floodplain development that is not undertaken in accordance with the

INTERNATIONAL CODE COUNCIL®
Copyright © 2015 ICC. ALL RIGHTS RESERVED. Accessed by David Dammon on Jun 21, 2017 12:30:52 PM pursuant to License Agreement with ICC. No further reproduction or distribution authorized. ANY UNAUTHORIZED REPRODUCTION OR DISTRIBUTION IS A VIOLATION OF THE FEDERAL COPYRIGHT ACT AND THE LICENSE AGREEMENT, AND SUBJECT TO CIVIL AND CRIMINAL PENALTIES THEREUNDER.

flood-resistance provisions of the code will be exposed to increased flood damage.

Any modification granted must be the minimum necessary to afford relief. The code official must address each listed factor, especially the requirement to determine whether the failure to grant the modification would result in exceptional hardship. Modifications must be based solely on technical justifications and unique characteristics of a site, and not on the personal circumstances of an owner or applicant.

In guidance materials, FEMA cautions that financial hardship, inconvenience, aesthetic considerations, physical handicaps, personal preferences or the disapproval of one's neighbors do not qualify as exceptional hardships. Applicants sometimes request variances to the elevation requirements in order to improve access for the disabled and the elderly. Generally, variances of this nature should not be granted because these are personal circumstances that will change as the property changes ownership. Not only would persons of limited mobility be at risk, but a building that is below the required elevation would continue to be exposed to flood damage long after a personal need ends.

Code officials are cautioned that granting a modification under this section does not affect how the building will be rated for the purposes of federal flood insurance. Even if circumstances justify granting a modification related to the elevation of buildings, the rate used to calculate the cost of a federal flood insurance policy will be based on the risk to the building. Federal flood insurance, required by certain mortgage lenders, may be extremely expensive. Although an owner may not be required to purchase flood insurance, the requirement will be imposed on subsequent owners. The code official is to provide the applicant a written notice to this effect, along with the other cautions listed in this section.

[A] 104.11 Alternative materials, design and methods of construction and equipment. The provisions of this code are not intended to prevent the installation of any material or to prohibit any design or method of construction not specifically prescribed by this code, provided that any such alternative has been *approved*. An alternative material, design or method of construction shall be *approved* where the *building official* finds that the proposed design is satisfactory and complies with the intent of the provisions of this code, and that the material, method or work offered is, for the purpose intended, not less than the equivalent of that prescribed in this code in quality, strength, effectiveness, *fire resistance*, durability and safety. Where the alternative material, design or method of construction is not *approved*, the *building official* shall respond in writing, stating the reasons why the alternative was not *approved*.

❖ The code is not intended to inhibit innovative ideas or technological advances. A comprehensive regulatory document, such as a building code, cannot envision and then address all future innovations in the industry. As a result, a performance code must be applicable to and provide a basis for the approval of an increasing number of newly developed, innovative materials, systems and methods for which no code text or referenced standards yet exist. The fact that a material, product or method of construction is not addressed in the code is not an indication that such material, product or method is intended to be prohibited. The building official is expected to apply sound technical judgment in accepting materials, systems or methods that, while not anticipated by the drafters of the current code text, can be demonstrated to offer equivalent performance. The code regulates new and innovative construction practices while addressing the relative safety of building occupants. The building official is responsible for determining if a requested alternative provides the equivalent level of protection of public health, safety and welfare as required by the code. In order to ensure effective communication and due process of law, if an alternative is not approved, the building official should state in writing the reasons for the disapproval. This is similar to when a permit is rejected in Section 105.3.1.

[A] 104.11.1 Research reports. Supporting data, where necessary to assist in the approval of materials or assemblies not specifically provided for in this code, shall consist of valid research reports from *approved* sources.

❖ When an alternative material or method is proposed for construction, it is incumbent upon the building official to determine whether this alternative is, in fact, an equivalent to the methods prescribed by the code. Reports providing evidence of this equivalency are required to be supplied by an approved source, meaning a source that the building official finds to be reliable and accurate. The ICC Evaluation Service is an example of an agency that provides research reports for alternative materials and methods.

[A] 104.11.2 Tests. Whenever there is insufficient evidence of compliance with the provisions of this code, or evidence that a material or method does not conform to the requirements of this code, or in order to substantiate claims for alternative materials or methods, the *building official* shall have the authority to require tests as evidence of compliance to be made at no expense to the jurisdiction. Test methods shall be as specified in this code or by other recognized test standards. In the absence of recognized and accepted test methods, the *building official* shall approve the testing procedures. Tests shall be performed by an *approved agency*. Reports of such tests shall be retained by the *building official* for the period required for retention of public records.

❖ To provide the basis on which the building official can make a decision regarding an alternative material or method, sufficient technical data, test reports and documentation must be provided for evaluation. If evidence satisfactory to the building official indicates

INTERNATIONAL CODE COUNCIL®
Copyright © 2015 ICC. ALL RIGHTS RESERVED. Accessed by David Dammon on Jun 21, 2017 12:30:52 PM pursuant to License Agreement with ICC. No further reproduction or distribution authorized. ANY UNAUTHORIZED REPRODUCTION OR DISTRIBUTION IS A VIOLATION OF THE FEDERAL COPYRIGHT ACT AND THE LICENSE AGREEMENT, AND SUBJECT TO CIVIL AND CRIMINAL PENALTIES THEREUNDER.

that the alternative material or construction method is equivalent to that required by the code, he or she may approve it. Any such approval cannot have the effect of waiving any requirements of the code. The burden of proof of equivalence lies with the applicant who proposes the use of alternative materials or methods.

The building official must require the submission of appropriate information and data to assist in the determination of equivalency. This information must be submitted before a permit can be issued. The type of information required includes test data in accordance with referenced standards, evidence of compliance with the referenced standard specifications and design calculations. A research report issued by an authoritative agency is particularly useful in providing the building official with the technical basis for evaluation and approval of new and innovative materials and methods of construction. The use of authoritative research reports can greatly assist the building official by reducing the time-consuming engineering analysis necessary to review these materials and methods. Failure to substantiate adequately a request for the use of an alternative is a valid reason for the building official to deny a request. Any tests submitted in support of an application must have been performed by an agency approved by the building official based on evidence that the agency has the technical expertise, test equipment and quality assurance to properly conduct and report the necessary testing. The test reports submitted to the building official must be retained in accordance with the requirements of Section 104.7.

SECTION 105
PERMITS

[A] 105.1 Required. Any *owner* or owner's authorized agent who intends to construct, enlarge, alter, *repair*, move, demolish or change the occupancy of a building or structure, or to erect, install, enlarge, alter, *repair*, remove, convert or replace any electrical, gas, mechanical or plumbing system, the installation of which is regulated by this code, or to cause any such work to be performed, shall first make application to the *building official* and obtain the required *permit*.

❖ This section contains the administrative rules governing the issuance, suspension, revocation or modification of building permits. It also establishes how and by whom the application for a building permit is to be made, how it is to be processed, fees and what information it must contain or have attached to it.

In general, a permit is required for all activities that are regulated by the code or its referenced codes (see Section 101.4), and these activities cannot begin until the permit is issued, unless the activity is specifically exempted by Section 105.2. Only the owner or a person authorized by the owner can apply for the permit. Note that this section indicates a need for a permit for a change in occupancy, even if no work is contemplated. Although the occupancy of a building or portion thereof may change and the new activity is still classified in the same group, different code provisions may be applicable. The means of egress, structural loads and light and ventilation provisions are examples of requirements that are occupancy sensitive. The purpose of the permit is to cause the work to be reviewed, approved and inspected to determine compliance with the code.

[A] 105.1.1 Annual permit. Instead of an individual *permit* for each *alteration* to an already *approved* electrical, gas, mechanical or plumbing installation, the *building official* is authorized to issue an annual *permit* upon application therefor to any person, firm or corporation regularly employing one or more qualified tradepersons in the building, structure or on the premises owned or operated by the applicant for the *permit.*

❖ In some instances, such as large buildings or industrial facilities, the repair, replacement or alteration of electrical, gas, mechanical or plumbing systems occurs on a frequent basis, and this section allows the building official to issue an annual permit for this work. This relieves both the building department and the owners of such facilities from the burden of filing and processing individual applications for this activity; however, there are restrictions on who is entitled to these permits. They can be issued only for work on a previously approved installation and only to an individual or corporation that employs persons specifically qualified in the trade for which the permit is issued. If tradespeople who perform the work involved are required to be licensed in the jurisdiction, then only those persons would be permitted to perform the work. If trade licensing is not required, then the building official needs to review and approve the qualifications of the persons who will be performing the work. The annual permit can apply only to the individual property that is owned or operated by the applicant.

[A] 105.1.2 Annual permit records. The person to whom an annual *permit* is issued shall keep a detailed record of *alterations* made under such annual *permit*. The *building official* shall have access to such records at all times or such records shall be filed with the *building official* as designated.

❖ The work performed in accordance with an annual permit must be inspected by the building official, so it is necessary to know the location of such work and when it was performed. This can be accomplished by having records of the work available to the building official either at the premises or in the official's office, as determined by the official.

[A] 105.2 Work exempt from permit. Exemptions from *permit* requirements of this code shall not be deemed to grant authorization for any work to be done in any manner in viola-

INTERNATIONAL CODE COUNCIL®
Copyright © 2015 ICC. ALL RIGHTS RESERVED. Accessed by David Dammon on Jun 21, 2017 12:30:52 PM pursuant to License Agreement with ICC. No further reproduction or distribution authorized. ANY UNAUTHORIZED REPRODUCTION OR DISTRIBUTION IS A VIOLATION OF THE FEDERAL COPYRIGHT ACT AND THE LICENSE AGREEMENT, AND SUBJECT TO CIVIL AND CRIMINAL PENALTIES THEREUNDER.

tion of the provisions of this code or any other laws or ordinances of this jurisdiction. *Permits* shall not be required for the following:

Building:

1. One-story detached accessory structures used as tool and storage sheds, playhouses and similar uses, provided the floor area is not greater than 120 square feet (11 m^2).
2. Fences not over 7 feet (2134 mm) high.
3. Oil derricks.
4. Retaining walls that are not over 4 feet (1219 mm) in height measured from the bottom of the footing to the top of the wall, unless supporting a surcharge or impounding Class I, II or IIIA liquids.
5. Water tanks supported directly on grade if the capacity is not greater than 5,000 gallons (18 925 L) and the ratio of height to diameter or width is not greater than 2:1.
6. Sidewalks and driveways not more than 30 inches (762 mm) above adjacent grade, and not over any basement or *story* below and are not part of an *accessible route*.
7. Painting, papering, tiling, carpeting, cabinets, counter tops and similar finish work.
8. Temporary motion picture, television and theater stage sets and scenery.
9. Prefabricated *swimming pools* accessory to a Group R-3 occupancy that are less than 24 inches (610 mm) deep, are not greater than 5,000 gallons (18 925 L) and are installed entirely above ground.
10. Shade cloth structures constructed for nursery or agricultural purposes, not including service systems.
11. Swings and other playground equipment accessory to detached one- and two-family *dwellings*.
12. Window awnings in Group R-3 and U occupancies, supported by an exterior wall that do not project more than 54 inches (1372 mm) from the *exterior wall* and do not require additional support.
13. Nonfixed and movable fixtures, cases, racks, counters and partitions not over 5 feet 9 inches (1753 mm) in height.

Electrical:

Repairs and maintenance: Minor repair work, including the replacement of lamps or the connection of *approved* portable electrical equipment to *approved* permanently installed receptacles.

Radio and television transmitting stations: The provisions of this code shall not apply to electrical equipment used for radio and television transmissions, but do apply to equipment and wiring for a power supply and the installations of towers and antennas.

Temporary testing systems: A *permit* shall not be required for the installation of any temporary system required for the testing or servicing of electrical equipment or apparatus.

Gas:

1. Portable heating appliance.
2. Replacement of any minor part that does not alter approval of equipment or make such equipment unsafe.

Mechanical:

1. Portable heating appliance.
2. Portable ventilation equipment.
3. Portable cooling unit.
4. Steam, hot or chilled water piping within any heating or cooling equipment regulated by this code.
5. Replacement of any part that does not alter its approval or make it unsafe.
6. Portable evaporative cooler.
7. Self-contained refrigeration system containing 10 pounds (4.54 kg) or less of refrigerant and actuated by motors of 1 horsepower (0.75 kW) or less.

Plumbing:

1. The stopping of leaks in drains, water, soil, waste or vent pipe, provided, however, that if any concealed trap, drain pipe, water, soil, waste or vent pipe becomes defective and it becomes necessary to remove and replace the same with new material, such work shall be considered as new work and a *permit* shall be obtained and inspection made as provided in this code.
2. The clearing of stoppages or the repairing of leaks in pipes, valves or fixtures and the removal and reinstallation of water closets, provided such repairs do not involve or require the replacement or rearrangement of valves, pipes or fixtures.

❖ Section 105.1 essentially requires a permit for any activity involving work on a building, its systems and other structures. This section lists those activities that are permitted to take place without first obtaining a permit from the building department. Note that in some cases, such as Items 9, 10, 11 and 12, the work is exempt only for certain occupancies. It is further the intent of the code that even though work may be exempted for permit purposes, it must still comply with the code and the owner is responsible for proper and safe construction for all work being done. Work exempted by the codes adopted by reference in Section 101.4 is also included here. However, even if a permit is not required, construction must not violate any code provisions. For example: If you replace a sink faucet, you don't need a permit, but the faucet would still have to meet material standard and water flow requirements in Chapter 6 of the IPC.

In flood hazard areas, work exempt from a permit must still be undertaken in ways that minimize flood damage. Accessory structures below the design flood elevation must be anchored to prevent flotation, have

INTERNATIONAL CODE COUNCIL®
Copyright © 2015 ICC. ALL RIGHTS RESERVED. Accessed by David Dammon on Jun 21, 2017 12:30:52 PM pursuant to License Agreement with ICC. No further reproduction or distribution authorized. ANY UNAUTHORIZED REPRODUCTION OR DISTRIBUTION IS A VIOLATION OF THE FEDERAL COPYRIGHT ACT AND THE LICENSE AGREEMENT, AND SUBJECT TO CIVIL AND CRIMINAL PENALTIES THEREUNDER.

flood openings, be made of flood damage-resistant materials. Equipment and electrical service must also be elevated above the design flood elevation. Water tanks on grade must be anchored to prevent flotation, collapse or lateral movement. Additional descriptions of how the listed activities should be performed in order to meet the intent are found in the commentary for Appendix G.

[A] 105.2.1 Emergency repairs. Where equipment replacements and repairs must be performed in an emergency situation, the *permit* application shall be submitted within the next working business day to the *building official*.

❖ This section recognizes that in some cases, emergency replacement and repair work must be done as quickly as possible, so it is not practical to take the necessary time to apply for and obtain approval. A permit for the work must be obtained the next day that the building department is open for business. Any work performed before the permit is issued must be done in accordance with the code and corrected if not approved by the building official. For example, if a concealed trap failed on a Sunday, the plumber could replace the trap at that time, but he would have to apply for a permit on Monday and have the repair pass an inspection.

[A] 105.2.2 Repairs. Application or notice to the *building official* is not required for ordinary *repairs* to structures, replacement of lamps or the connection of *approved* portable electrical equipment to *approved* permanently installed receptacles. Such *repairs* shall not include the cutting away of any wall, partition or portion thereof, the removal or cutting of any structural beam or load-bearing support, or the removal or change of any required *means of egress*, or rearrangement of parts of a structure affecting the egress requirements; nor shall ordinary repairs include *addition* to, *alteration* of, replacement or relocation of any standpipe, water supply, sewer, drainage, drain leader, gas, soil, waste, vent or similar piping, electric wiring or mechanical or other work affecting public health or general safety.

❖ This section distinguishes between what might be termed by some as repairs but are in fact alterations, wherein the code is to be applicable, and ordinary repairs, which are maintenance activities that do not require a permit.

[A] 105.2.3 Public service agencies. A *permit* shall not be required for the installation, *alteration* or repair of generation, transmission, distribution or metering or other related equipment that is under the ownership and control of public service agencies by established right.

❖ Utilities that supply electricity, gas, water, telephone, television cable, etc., do not require permits for work involving the transmission lines and metering equipment that they own and control; that is, to their point of delivery. Utilities are typically regulated by other laws that give them specific rights and authority in this area. Any equipment or appliances installed or serviced by such agencies that are not owned by them and under their full control are not exempt from a permit.

[A] 105.3 Application for permit. To obtain a *permit*, the applicant shall first file an application therefor in writing on a form furnished by the department of building safety for that purpose. Such application shall:

1. Identify and describe the work to be covered by the *permit* for which application is made.
2. Describe the land on which the proposed work is to be done by legal description, street address or similar description that will readily identify and definitely locate the proposed building or work.
3. Indicate the use and occupancy for which the proposed work is intended.
4. Be accompanied by *construction documents* and other information as required in Section 107.
5. State the valuation of the proposed work.
6. Be signed by the applicant, or the applicant's authorized agent.
7. Give such other data and information as required by the *building official*.

❖ This section requires that a written application for a permit be filed on forms provided by the building department and details the information required on the application. Permit forms will typically have sufficient space to write a very brief description of the work to be accomplished, which is sufficient for only small jobs. For larger projects, the description will be augmented by construction documents as indicated in Item 4. As required by Section 105.1, the applicant must be the owner of the property or an authorized agent of the owner, such as an engineer, architect, contractor, tenant or other. The applicant must sign the application, and permit forms typically include a statement that if the applicant is not the owner, he or she has permission from the owner to make the application.

[A] 105.3.1 Action on application. The *building official* shall examine or cause to be examined applications for *permits* and amendments thereto within a reasonable time after filing. If the application or the *construction documents* do not conform to the requirements of pertinent laws, the *building official* shall reject such application in writing, stating the reasons therefor. If the *building official* is satisfied that the proposed work conforms to the requirements of this code and laws and ordinances applicable thereto, the *building official* shall issue a *permit* therefor as soon as practicable.

❖ This section requires the building official to act with reasonable speed on a permit application. In some instances, this time period is set by state or local law. The building official must refuse to issue a permit when the application and accompanying documents do not conform to the code. In order to ensure effective communication and due process of law, the reasons for denial of an application for a permit are

INTERNATIONAL CODE COUNCIL®
Copyright © 2015 ICC. ALL RIGHTS RESERVED. Accessed by David Dammon on Jun 21, 2017 12:30:52 PM pursuant to License Agreement with ICC. No further reproduction or distribution authorized. ANY UNAUTHORIZED REPRODUCTION OR DISTRIBUTION IS A VIOLATION OF THE FEDERAL COPYRIGHT ACT AND THE LICENSE AGREEMENT, AND SUBJECT TO CIVIL AND CRIMINAL PENALTIES THEREUNDER.

required to be in writing. Once the building official determines that the work described conforms to the code and other applicable laws, the permit must be issued upon payment of the fees required by Section 109.

[A] 105.3.2 Time limitation of application. An application for a *permit* for any proposed work shall be deemed to have been abandoned 180 days after the date of filing, unless such application has been pursued in good faith or a *permit* has been issued; except that the *building official* is authorized to grant one or more extensions of time for additional periods not exceeding 90 days each. The extension shall be requested in writing and justifiable cause demonstrated.

❖ Typically, an application for a permit is submitted and goes through a review process that ends with the issuance of a permit. If a permit has not been issued within 180 days after the date of filing, the application is considered abandoned, unless the applicant was diligent in efforts to obtain the permit. The building official has the authority to extend this time limitation (in increments of 90 days), provided there is reasonable cause. This would cover delays beyond the applicant's control, such as prerequisite permits or approvals from other authorities within the jurisdiction or state. The intent of this section is to limit the time between the review process and the issuance of a permit.

[A] 105.4 Validity of permit. The issuance or granting of a *permit* shall not be construed to be a *permit* for, or an approval of, any violation of any of the provisions of this code or of any other ordinance of the jurisdiction. *Permits* presuming to give authority to violate or cancel the provisions of this code or other ordinances of the jurisdiction shall not be valid. The issuance of a *permit* based on *construction documents* and other data shall not prevent the *building official* from requiring the correction of errors in the *construction documents* and other data. The *building official* is authorized to prevent occupancy or use of a structure where in violation of this code or of any other ordinances of this jurisdiction.

❖ This section states the fundamental premise that the permit is only a license to proceed with the work. It is not a license to violate, cancel or set aside any provisions of the code. This is significant because it means that despite any errors or oversights in the approval process, the permit applicant, not the building official, is responsible for code compliance. Also, the permit can be suspended or revoked in accordance with Section 105.6.

[A] 105.5 Expiration. Every *permit* issued shall become invalid unless the work on the site authorized by such *permit* is commenced within 180 days after its issuance, or if the work authorized on the site by such *permit* is suspended or abandoned for a period of 180 days after the time the work is commenced. The *building official* is authorized to grant, in writing, one or more extensions of time, for periods not more than 180 days each. The extension shall be requested in writing and justifiable cause demonstrated.

❖ The permit becomes invalid under two distinct situations—both based on a 180-day period. The first situation is when no work was initiated 180 days from issuance of a permit. The second situation is when the authorized work has stopped for 180 days. The person who was issued the permit should be notified, in writing, that the permit is invalid and what steps must be taken to reinstate it and restart the work. The building official has the authority to extend this time limitation (in increments of 180 days), provided the extension is requested in writing and there is reasonable cause, which typically includes events beyond the permit holder's control.

[A] 105.6 Suspension or revocation. The *building official* is authorized to suspend or revoke a *permit* issued under the provisions of this code wherever the *permit* is issued in error or on the basis of incorrect, inaccurate or incomplete information, or in violation of any ordinance or regulation or any of the provisions of this code.

❖ A permit is a license to proceed with the work. The building official, however, can suspend or revoke permits shown to be based, all or in part, on any false statement or misrepresentation of fact. A permit can also be suspended or revoked if it was issued in error, such as an omitted prerequisite approval or code violation indicated on the construction documents. An applicant may subsequently apply for a reinstatement of the permit with the appropriate corrections or modifications made to the application and construction documents.

[A] 105.7 Placement of permit. The building *permit* or copy shall be kept on the site of the work until the completion of the project.

❖ The permit, or copy thereof, is to be kept on the job site until the work is complete, and made available to the building official or representative to conveniently make required entries thereon.

SECTION 106
FLOOR AND ROOF DESIGN LOADS

[A] 106.1 Live loads posted. In commercial or industrial buildings, for each floor or portion thereof designed for *live loads* exceeding 50 psf (2.40 kN/m^2), such design *live loads* shall be conspicuously posted by the owner or the owner's authorized agent in that part of each *story* in which they apply, using durable signs. It shall be unlawful to remove or deface such notices.

❖ This section requires that live loads be posted for most occupancies, since many of the live loads specified in Table 1607.1 exceed 50 pounds per square foot (psf) (2.40 kN/m^2). Where part of the floor is

INTERNATIONAL CODE COUNCIL®
Copyright © 2015 ICC. ALL RIGHTS RESERVED. Accessed by David Dammon on Jun 21, 2017 12:30:52 PM pursuant to License Agreement with ICC. No further reproduction or distribution authorized. ANY UNAUTHORIZED REPRODUCTION OR DISTRIBUTION IS A VIOLATION OF THE FEDERAL COPYRIGHT ACT AND THE LICENSE AGREEMENT, AND SUBJECT TO CIVIL AND CRIMINAL PENALTIES THEREUNDER.

designed for 50 psf (2.40 kN/m^2) or less and part for more than 50 psf (2.40 kN/m^2), the live loads are required to be posted for those portions more than 50 psf (2.40 kN/m^2). The code requires that the posting be done in the part where it applies. For example, an assembly area such as a restaurant would need to have the live load posted in the dining room.

This live load posting gives the building department easy access to the information for field verification. It also serves as a notice of the loading restriction that is stated in Section 106.3.

[A] 106.2 Issuance of certificate of occupancy. A certificate of occupancy required by Section 111 shall not be issued until the floor load signs, required by Section 106.1, have been installed.

❖ The design live load signs required by Section 106.1 need to be in place prior to the occupancy of the building for reference purposes. They serve as a record of the structural design loads for future reference, particularly when a change in occupancy is contemplated.

[A] 106.3 Restrictions on loading. It shall be unlawful to place, or cause or permit to be placed, on any floor or roof of a building, structure or portion thereof, a load greater than is permitted by this code.

❖ The design live load signs required by Section 106.1 need to be in place prior to the occupancy of the building for reference purposes. They serve as a record of the structural design loads for future reference, particularly when a change in occupancy is contemplated.

SECTION 107
SUBMITTAL DOCUMENTS

[A] 107.1 General. Submittal documents consisting of *construction documents*, statement of *special inspections*, geotechnical report and other data shall be submitted in two or more sets with each *permit* application. The *construction documents* shall be prepared by a *registered design professional* where required by the statutes of the jurisdiction in which the project is to be constructed. Where special conditions exist, the *building official* is authorized to require additional *construction documents* to be prepared by a *registered design professional*.

Exception: The *building official* is authorized to waive the submission of *construction documents* and other data not required to be prepared by a *registered design professional* if it is found that the nature of the work applied for is such that review of *construction documents* is not necessary to obtain compliance with this code.

❖ This section establishes the requirement to provide the building official with construction drawings, specifications and other documents that describe the structure or system for which a permit is sought (see Section 202 for a complete definition). It describes the information that must be included in the documents, who must prepare them and procedures for approving them.

A detailed description of the work for which an application is made must be submitted. When the work can be briefly described on the application form and the services of a registered design professional are not required, the building official may utilize judgment in determining the need for detailed documents. An example of work that may not involve the submission of detailed construction documents is the replacement of an existing 60-amp electrical service with a 200-amp service. Other sections of the code also contain specific requirements for construction documents, such as Sections 1603, 1901.5, 2111.2, 2207.2 and 3103.2. These provisions are intended to reflect the minimum scope of information needed to determine code compliance. Although this section specifies that "one or more" sets of construction documents be submitted, note that Section 106.3.1 requires one set of approved documents be retained by the building official and one set be returned to the applicant, essentially requiring at least two sets of construction documents. The building official should establish a consistent policy of the number of sets required by the jurisdiction and make this information readily available to applicants.

This section also requires the building official to determine that any state professional registration laws be complied with as they apply to the preparation of construction documents.

[A] 107.2 Construction documents. *Construction documents* shall be in accordance with Sections 107.2.1 through 107.2.6.

❖ This section provides instructions regarding the information and form of construction documents.

[A] 107.2.1 Information on construction documents. *Construction documents* shall be dimensioned and drawn upon suitable material. Electronic media documents are permitted to be submitted where *approved* by the *building official*. *Construction documents* shall be of sufficient clarity to indicate the location, nature and extent of the work proposed and show in detail that it will conform to the provisions of this code and relevant laws, ordinances, rules and regulations, as determined by the *building official*.

❖ The construction documents are required to be of a quality and detail such that the building official can determine whether the work conforms to the code and other applicable laws and regulations. General statements on the documents, such as "all work must comply with the *International Building Code*®," are not an acceptable substitute for showing the required information. The following subsections and sections in other chapters indicated in the commentary to Sections 107.2.2 through 107.2.6 specify the detailed information that must be shown on the submitted documents. Where specifically allowed by the building official, documents can be submitted in electronic form.

[A] 107.2.2 Fire protection system shop drawings. Shop drawings for the *fire protection system(s)* shall be submitted

INTERNATIONAL CODE COUNCIL®
Copyright © 2015 ICC. ALL RIGHTS RESERVED. Accessed by David Dammon on Jun 21, 2017 12:30:52 PM pursuant to License Agreement with ICC. No further reproduction or distribution authorized. ANY UNAUTHORIZED REPRODUCTION OR DISTRIBUTION IS A VIOLATION OF THE FEDERAL COPYRIGHT ACT AND THE LICENSE AGREEMENT, AND SUBJECT TO CIVIL AND CRIMINAL PENALTIES THEREUNDER.

to indicate conformance to this code and the *construction documents* and shall be *approved* prior to the start of system installation. Shop drawings shall contain all information as required by the referenced installation standards in Chapter 9.

❖ Since the fire protection contractor(s) may not be selected at the time a permit is issued for construction of a building, detailed shop drawings for fire protection systems are not available. Because they provide the information necessary to determine code compliance, as specified in the appropriate referenced standard in Chapter 9, they must be submitted and approved by the building official before the contractor can begin installing the system. For example, the professional responsible for the design of an automatic sprinkler system should determine that the water supply is adequate, but will not be able to prepare a final set of hydraulic calculations if the specific materials and pipe sizes, lengths and arrangements have not been identified. Once the installing contractor is selected, specific hydraulic calculations can be prepared. Factors, such as classification of the hazard, amount of water supply available and the density or concentration to be achieved by the system, are to be included with the submission of the shop drawings. Specific data sheets identifying sprinklers, pipe dimensions, power requirements for smoke detectors, etc., should also be included with the submission.

[A] 107.2.3 Means of egress. The *construction documents* shall show in sufficient detail the location, construction, size and character of all portions of the *means of egress* including the path of the *exit discharge* to the *public way* in compliance with the provisions of this code. In other than occupancies in Groups R-2, R-3, and I-1, the *construction documents* shall designate the number of occupants to be accommodated on every floor, and in all rooms and spaces.

❖ The complete means of egress system is required to be indicated on the plans to allow the building official to initiate a review and identify pertinent code requirements for each component. Additionally, requiring such information to be reflected in the construction documents requires the designer not only to become familiar with the code, but also to be aware of egress principles, concepts and purposes. The need to ensure that the means of egress leads to a public way is also a consideration during the plan review. Such an evaluation cannot be made without the inclusion of a site plan, as required by Section 107.2.5.

Information essential for determining the required capacity (see Section 1005) and number (see Sections 1006) of egress components from a space must be provided. The designer must be aware of the occupancy of a space and properly identify that information, along with its resultant occupant load, on the construction documents. In occupancies in Groups I-1, R-2 and R-3, the occupant load can be readily determined with little difference in the number so that the designation of the occupant load on the construction documents is not required.

The exit discharge path to the public way must also be shown on the construction documents. The exit discharge path to the public way is an important component of the means of egress system for all buildings or structures. The exit discharge path needs to be delineated on the submitted and approved plans to ensure the path is reviewed for compliance with the provisions of the code. This will also provide an historical reference once the building is occupied to ensure the exit discharge path is maintained as intended for the life of the building or structure unless modifications are approved.

[A] 107.2.4 Exterior wall envelope. *Construction documents* for all buildings shall describe the *exterior wall envelope* in sufficient detail to determine compliance with this code. The *construction documents* shall provide details of the *exterior wall envelope* as required, including flashing, intersections with dissimilar materials, corners, end details, control joints, intersections at roof, eaves or parapets, means of drainage, water-resistive membrane and details around openings.

The *construction documents* shall include manufacturer's installation instructions that provide supporting documentation that the proposed penetration and opening details described in the *construction documents* maintain the weather resistance of the *exterior wall envelope*. The supporting documentation shall fully describe the *exterior wall* system that was tested, where applicable, as well as the test procedure used.

❖ This section specifically identifies details of exterior wall construction that are critical to the weather resistance of the wall and requires those details to be provided on the construction documents. Where the weather resistance of the exterior wall assembly is based on tests, the submitted documentation is to describe the details of the wall envelope and the test procedure that was used. This provides the building official with the information necessary to determine code compliance.

[A] 107.2.5 Site plan. The *construction documents* submitted with the application for *permit* shall be accompanied by a site plan showing to scale the size and location of new construction and existing structures on the site, distances from *lot lines*, the established street grades and the proposed finished grades and, as applicable, *flood hazard areas*, *floodways*, and *design flood elevations*; and it shall be drawn in accordance with an accurate boundary line survey. In the case of demolition, the site plan shall show construction to be demolished and the location and size of existing structures and construction that are to remain on the site or plot. The *building official* is authorized to waive or modify the requirement for a site plan where the application for *permit* is for *alteration* or *repair* or where otherwise warranted.

❖ Certain code requirements are dependent on the structure's location on the lot (see Sections 506.3, 507, 705, 1027 and 1206), the topography of the site (see Sections 1104, 1107.4, 1107.7.4 and 1804.4), and whether the site has flood hazard areas (see Sections 1612 and 1804.4). As a result, a scaled site

INTERNATIONAL CODE COUNCIL®
Copyright © 2015 ICC. ALL RIGHTS RESERVED. Accessed by David Dammon on Jun 21, 2017 12:30:52 PM pursuant to License Agreement with ICC. No further reproduction or distribution authorized. ANY UNAUTHORIZED REPRODUCTION OR DISTRIBUTION IS A VIOLATION OF THE FEDERAL COPYRIGHT ACT AND THE LICENSE AGREEMENT, AND SUBJECT TO CIVIL AND CRIMINAL PENALTIES THEREUNDER.

plan containing the data listed in this section is required to permit review for compliance. The building official can waive the requirement for a site plan when it is not required to determine code compliance, such as for work involving only interior alterations or repairs.

[A] 107.2.5.1 Design flood elevations. Where *design flood elevations* are not specified, they shall be established in accordance with Section 1612.3.1.

❖ Some Flood Insurance Rate Maps (FIRMs) prepared by FEMA show mapped special flood hazard areas that do not have either flood elevations or floodway designations (floodways are areas along riverine bodies of water where the water will be deeper and flow faster during flooding conditions). Section 1612.3 gives the authority to the code official to require use of data which may be obtained from other sources, or to require the applicant to develop flood hazard data.

[A] 107.2.6 Structural information. The *construction documents* shall provide the information specified in Section 1603.

❖ The purpose of this reference to Section 1603 is as a reminder that there are requirements for structural information to be part of the construction documents. Section 1603 requires the design professional to provide appropriate structural details, criteria and design load data for verifying compliance with the provisions of Chapters 16 through 23. See the commentary to Section 1603 for additional information.

[A] 107.3 Examination of documents. The *building official* shall examine or cause to be examined the accompanying submittal documents and shall ascertain by such examinations whether the construction indicated and described is in accordance with the requirements of this code and other pertinent laws or ordinances.

❖ The requirements of this section are related to those found in Section 105.3.1 regarding the action of the building official in response to a permit application. The building official can delegate review of the construction documents to subordinates as provided for in Section 103.3.

[A] 107.3.1 Approval of construction documents. When the *building official* issues a *permit*, the *construction documents* shall be *approved*, in writing or by stamp, as "Reviewed for Code Compliance." One set of *construction documents* so reviewed shall be retained by the *building official*. The other set shall be returned to the applicant, shall be kept at the site of work and shall be open to inspection by the *building official* or a duly authorized representative.

❖ The building official must stamp or otherwise endorse as "Reviewed for Code Compliance" the construction documents on which the permit is based. One set of approved construction documents must be kept on the construction site to serve as the basis for all subsequent inspections. To avoid confusion, the construction documents on the site must be the documents that were approved and stamped. This is because inspections are to be performed with regard to the approved documents, not the code itself. Additionally, the contractor cannot determine compliance with the approved construction documents unless they are readily available. If the approved construction documents are not available, the inspection should be postponed and work on the project halted.

[A] 107.3.2 Previous approvals. This code shall not require changes in the *construction documents*, construction or designated occupancy of a structure for which a lawful *permit* has been heretofore issued or otherwise lawfully authorized, and the construction of which has been pursued in good faith within 180 days after the effective date of this code and has not been abandoned.

❖ If a permit is issued and construction proceeds at a normal pace and a new edition of the code is adopted by the legislative body, requiring that the building be constructed to conform to the new code is unreasonable. This section provides for the continuity of permits issued under previous codes, as long as such permits are being "actively prosecuted" subsequent to the effective date of the ordinance adopting this edition of the code.

[A] 107.3.3 Phased approval. The *building official* is authorized to issue a *permit* for the construction of foundations or any other part of a building or structure before the *construction documents* for the whole building or structure have been submitted, provided that adequate information and detailed statements have been filed complying with pertinent requirements of this code. The holder of such *permit* for the foundation or other parts of a building or structure shall proceed at the holder's own risk with the building operation and without assurance that a *permit* for the entire structure will be granted.

❖ The building official has the authority to issue a partial permit to allow for the practice of "fast tracking" a job. Any construction under a partial permit is "at the holder's own risk" and "without assurance that a permit for the entire structure will be granted." The building official is under no obligation to accept work or issue a complete permit in violation of the code, ordinances or statutes simply because a partial permit had been issued. Fast tracking puts an unusual administrative and technical burden on the building official. The purpose is to proceed with construction while the design continues for other aspects of the work. Coordinating and correlating the code aspects into the project in phases requires attention to detail and project tracking so that all code issues are addressed. The coordination of these submittals is the responsibility of the registered design professional in responsible charge described in Section 107.3.4.

[A] 107.3.4 Design professional in responsible charge. Where it is required that documents be prepared by a *registered design professional*, the *building official* shall be authorized to require the *owner* or the owner's authorized agent to engage and designate on the building *permit* application a *registered design professional* who shall act as the *registered*

INTERNATIONAL CODE COUNCIL®
Copyright © 2015 ICC. ALL RIGHTS RESERVED. Accessed by David Dammon on Jun 21, 2017 12:30:52 PM pursuant to License Agreement with ICC. No further reproduction or distribution authorized. ANY UNAUTHORIZED REPRODUCTION OR DISTRIBUTION IS A VIOLATION OF THE FEDERAL COPYRIGHT ACT AND THE LICENSE AGREEMENT, AND SUBJECT TO CIVIL AND CRIMINAL PENALTIES THEREUNDER.

design professional in responsible charge. If the circumstances require, the *owner* or the owner's authorized agent shall designate a substitute *registered design professional in responsible charge* who shall perform the duties required of the original *registered design professional in responsible charge*. The *building official* shall be notified in writing by the *owner* or the owner's authorized agent if the *registered design professional in responsible charge* is changed or is unable to continue to perform the duties.

The *registered design professional in responsible charge* shall be responsible for reviewing and coordinating submittal documents prepared by others, including phased and deferred submittal items, for compatibility with the design of the building.

❖ At the time of permit application and at various intervals during a project, the code requires detailed technical information to be submitted to the building official. This will vary depending on the complexity of the project, but typically includes the construction documents with supporting information, applications utilizing the phased approval procedure in Section 107.3.3 and reports from engineers, inspectors and testing agencies required in Chapter 17. Since these documents and reports are prepared by numerous individuals, firms and agencies, it is necessary to have a single person charged with responsibility for coordinating their submittal to the building official. This person is the point of contact for the building official for all information relating to the project. Otherwise, the building official could waste time and effort attempting to locate the source of accurate information when trying to resolve an issue such as a discrepancy in plans submitted by different designers. The requirement that the owner or their representative engage a person to act as the design professional in responsible charge is applicable to projects where the construction documents are required by law to be prepared by a registered design professional (see Section 107.1) and where required by the building official. The person employed by the owner to act as the design professional in responsible charge must be identified on the permit application, but the owner can change the designated person at any time during the course of the review process or work, provided the building official is so notified in writing.

[A] 107.3.4.1 Deferred submittals. Deferral of any submittal items shall have the prior approval of the *building official*. The *registered design professional in responsible charge* shall list the deferred submittals on the *construction documents* for review by the *building official*.

Documents for deferred submittal items shall be submitted to the *registered design professional in responsible charge* who shall review them and forward them to the *building official* with a notation indicating that the deferred submittal documents have been reviewed and found to be in general conformance to the design of the building. The deferred submittal items shall not be installed until the deferred submittal documents have been *approved* by the *building official*.

❖ "Deferred submittals" is defined in Chapter 2. Often, especially on larger projects, details of certain building parts are not available at the time of permit issuance because they have not yet been designed; for example, exterior cladding, prefabricated items such as trusses and stairs and the components of fire protection systems (see Section 107.2.2). The design professional in responsible charge must identify on the construction documents the items to be included in any deferred submittals. Documents required for the approval of deferred items must be reviewed by the design professional in responsible charge for compatibility with the design of the building, forwarded to the building official with a notation that this is the case and approved by the building official before installation of the items. Sufficient time must be allowed for the approval process. Note that deferred submittals differ from the phased permits described in Section 107.3.3 in that they occur after the permit for the building is issued and are not for work covered by separate permits.

[A] 107.4 Amended construction documents. Work shall be installed in accordance with the *approved construction documents*, and any changes made during construction that are not in compliance with the *approved construction documents* shall be resubmitted for approval as an amended set of *construction documents*.

❖ Any amendments to the approved construction documents must be filed before constructing the amended item. In the broadest sense, amendments include all addenda, change orders, revised drawings and marked-up shop drawings. Building officials should maintain a policy that all amendments be submitted for review. Otherwise, a significant amendment may not be submitted because of misinterpretation, resulting in an activity that is not approved and that causes a needless delay in obtaining approval of the finished work.

[A] 107.5 Retention of construction documents. One set of *approved construction documents* shall be retained by the *building official* for a period of not less than 180 days from date of completion of the permitted work, or as required by state or local laws.

❖ A set of the approved construction documents must be kept by the building official as may be required by state or local laws, but for a period of not less than 180 days after the work is complete. Questions regarding an item shown on the approved documents may arise in the period immediately following completion of the work and the documents should be available for review. See Section 104.7 for requirements to retain other records that are generated as a result of the work.

INTERNATIONAL CODE COUNCIL®
Copyright © 2015 ICC. ALL RIGHTS RESERVED. Accessed by David Dammon on Jun 21, 2017 12:30:52 PM pursuant to License Agreement with ICC. No further reproduction or distribution authorized. ANY UNAUTHORIZED REPRODUCTION OR DISTRIBUTION IS A VIOLATION OF THE FEDERAL COPYRIGHT ACT AND THE LICENSE AGREEMENT, AND SUBJECT TO CIVIL AND CRIMINAL PENALTIES THEREUNDER.

SECTION 108
TEMPORARY STRUCTURES AND USES

[A] 108.1 General. The *building official* is authorized to issue a *permit* for temporary structures and temporary uses. Such *permits* shall be limited as to time of service, but shall not be permitted for more than 180 days. The *building official* is authorized to grant extensions for demonstrated cause.

❖ In the course of construction or other activities, structures that have a limited service life are often necessary. This section contains the administrative provisions that permit such temporary structures without full compliance with the code requirements for permanently occupied structures. This section should not be confused with the scope of Section 3103, which regulates temporary structures larger than 120 square feet (11 m^2) in area.

This section allows the building official to issue permits for temporary structures or uses. The applicant must specify the time period desired for the temporary structure or use, but the approval period cannot exceed 180 days. Structures or uses that are temporary but are anticipated to be in existence for more than 180 days are required to conform to code requirements for permanent structures and uses. The section also authorizes the building official to grant extensions to this time period if the applicant can provide a valid reason for the extension, which typically includes circumstances beyond the applicant's control. This provision is not intended to be used to circumvent the 180-day limitation.

[A] 108.2 Conformance. Temporary structures and uses shall comply with the requirements in Section 3103.

❖ By a reference to Section 3103, this indicates that structures that will be permitted for a period of 180 days or less will comply with the IFC and the IBC. IBC provisions (see Section 3103.1.1) include those dealing with structural strength, fire safety, means of egress, accessibility, light, ventilation and sanitation requirements. These categories of the code must be complied with, despite the fact that the structure will be removed or the use discontinued. These criteria are essential for measuring the safety of any structure or use, temporary or permanent; therefore, the application of these criteria to a temporary structure cannot be waived.

"Structural strength" refers to the ability of the temporary structure to resist anticipated live, environmental and dead loads (see Chapter 16). It also applies to anticipated live and dead loads imposed by a temporary use in an existing structure.

"Fire safety" provisions are those required by Chapters 7, 8 and 9, invoked by virtue of the structure's size, use or location on the property.

"Means of egress" refers to full compliance with Chapter 10.

"Accessibility" refers to full compliance with Chapter 11 for making buildings accessible to physically disabled persons, a requirement that is repeated in Section 1103.1.

"Light, ventilation and sanitary" requirements are those imposed by Chapter 12 of the code or applicable sections of the IPC or IMC.

If temporary structures are permitted in flood hazard areas established by Section 1612, a certain level of conformance is appropriate in order to minimize the likelihood of increasing flood heights or flood damage. Communities that participate in the NFIP must take the following measures into consideration: 1. Anchoring should be required to prevent flotation and movement during conditions of the base flood; 2. In A Zones, walled and roofed structures with floors below the elevation required by Section 1612 should have flood openings to minimize hydrostatic loads (see ASCE 24); 3. Portions of structures that are below the elevation required by Section 1612 must be constructed of flood damage-resistant materials; 4. If the structures have utility service or contain equipment, those elements should be elevated above the DFE; and 5. Placement in floodways and flood hazard areas subject to high-velocity wave action (V Zones) should be avoided.

[A] 108.3 Temporary power. The *building official* is authorized to give permission to temporarily supply and use power in part of an electric installation before such installation has been fully completed and the final certificate of completion has been issued. The part covered by the temporary certificate shall comply with the requirements specified for temporary lighting, heat or power in NFPA 70.

❖ Commonly, the electrical service on most construction sites is installed and energized long before all of the wiring is completed. This procedure allows the power supply to be increased as construction demands. However, temporary permission is not intended to waive the requirements set forth in NFPA 70. Construction power from the permanent wiring of the building does not require the installation of temporary ground-fault circuit-interrupter (GFCI) protection or the assured equipment grounding program, because the building wiring installed as required by the code should be as safe for use during construction as it would be for use after completion of the building.

[A] 108.4 Termination of approval. The *building official* is authorized to terminate such *permit* for a temporary structure or use and to order the temporary structure or use to be discontinued.

❖ This section provides the building official with the necessary authority to terminate the permit for a temporary structure or use. The building official can order that a temporary structure be removed or a temporary use be discontinued if conditions of the permit have been violated or the structure or use poses an imminent hazard to the public, in which case the provisions of Section 116 become applicable. This text is important because it allows the building official to act quickly when time is of the essence in order to protect public health, safety and welfare.

INTERNATIONAL CODE COUNCIL®
Copyright © 2015 ICC. ALL RIGHTS RESERVED. Accessed by David Dammon on Jun 21, 2017 12:30:52 PM pursuant to License Agreement with ICC. No further reproduction or distribution authorized. ANY UNAUTHORIZED REPRODUCTION OR DISTRIBUTION IS A VIOLATION OF THE FEDERAL COPYRIGHT ACT AND THE LICENSE AGREEMENT, AND SUBJECT TO CIVIL AND CRIMINAL PENALTIES THEREUNDER.

SECTION 109
FEES

[A] 109.1 Payment of fees. A *permit* shall not be valid until the fees prescribed by law have been paid, nor shall an amendment to a *permit* be released until the additional fee, if any, has been paid.

❖ The code anticipates that jurisdictions will establish their own fee schedules. It is the intent that the fees collected by the department for building permit issuance, plan review and inspection be adequate to cover the costs to the department in these areas. If the department has additional duties, then its budget will need to be supplemented from the general fund. This section requires that all fees be paid prior to permit issuance or release of an amendment to a permit. Since department operations are intended to be supported by fees paid by the user of department activities, it is important that these fees are received before incurring any expense. This philosophy has resulted in some departments having fees paid prior to the performance of two areas of work: plan review and inspection.

[A] 109.2 Schedule of permit fees. On buildings, structures, electrical, gas, mechanical, and plumbing systems or *alterations* requiring a *permit*, a fee for each *permit* shall be paid as required, in accordance with the schedule as established by the applicable governing authority.

❖ The jurisdiction inserts its desired fee schedule at this location. The fees are established by law, such as in an ordinance adopting the code (see page xv of the code for a sample), a separate ordinance or legally promulgated regulation, as required by state or local law. Fee schedules are often based on a valuation of the work to be performed. This concept is based on the proposition that the valuation of a project is related to the amount of work to be expended in plan review, inspections and administering the permit, plus an excess to cover department overhead.

To assist jurisdictions in establishing uniformity in fees, building evaluation data are published twice each year in ICC's *Building Safety Journal*.

[A] 109.3 Building permit valuations. The applicant for a *permit* shall provide an estimated *permit* value at time of application. *Permit* valuations shall include total value of work, including materials and labor, for which the *permit* is being issued, such as electrical, gas, mechanical, plumbing equipment and permanent systems. If, in the opinion of the *building official*, the valuation is underestimated on the application, the *permit* shall be denied, unless the applicant can show detailed estimates to meet the approval of the *building official*. Final building *permit* valuation shall be set by the *building official*.

❖ As indicated in Section 109.2, jurisdictions usually base their fees on the total value of the work being performed. This section requires the applicant to provide this figure, including materials and labor, for work for which the permit is sought. If the building official believes that the value provided by the applicant is underestimated, the permit is to be denied unless the applicant can substantiate the value by providing detailed estimates of the work to the satisfaction of the building official. For the construction of new buildings, the building valuation data referred to in Section 109.2 can be used by the building official as a yardstick against which to compare the applicant's estimate.

[A] 109.4 Work commencing before permit issuance. Any person who commences any work on a building, structure, electrical, gas, mechanical or plumbing system before obtaining the necessary *permits* shall be subject to a fee established by the *building official* that shall be in addition to the required *permit* fees.

❖ The building official will incur certain costs (e.g., inspection time and administrative) when investigating and citing a person who has commenced work without having obtained a permit. The building official is, therefore, entitled to recover these costs by establishing a fee, in addition to that collected when the required permit is issued, to be imposed on the responsible party. Note that this is not a penalty, as described in Section 114.4, for which the person can also be liable.

[A] 109.5 Related fees. The payment of the fee for the construction, *alteration*, removal or demolition for work done in connection to or concurrently with the work authorized by a building *permit* shall not relieve the applicant or holder of the *permit* from the payment of other fees that are prescribed by law.

❖ The fees for a building permit may be in addition to other fees required by the jurisdiction or others for related items, such as sewer connections, water service taps, driveways and signs. It cannot be construed that the building permit fee includes these other items.

[A] 109.6 Refunds. The *building official* is authorized to establish a refund policy.

❖ This section allows for a refund of fees, which may be full or partial, typically resulting from the revocation, abandonment or discontinuance of a building project for which a permit has been issued and fees have been collected. The refund of fees should be related to the cost of enforcement services not provided because of the termination of the project. The building official, when authorizing a fee refund, is authorizing the disbursement of public funds; therefore, the request for a refund must be in writing and for good cause.

SECTION 110
INSPECTIONS

[A] 110.1 General. Construction or work for which a *permit* is required shall be subject to inspection by the *building official* and such construction or work shall remain accessible and exposed for inspection purposes until *approved*. Approval as a result of an inspection shall not be construed to

INTERNATIONAL CODE COUNCIL®
Copyright © 2015 ICC. ALL RIGHTS RESERVED. Accessed by David Dammon on Jun 21, 2017 12:30:52 PM pursuant to License Agreement with ICC. No further reproduction or distribution authorized. ANY UNAUTHORIZED REPRODUCTION OR DISTRIBUTION IS A VIOLATION OF THE FEDERAL COPYRIGHT ACT AND THE LICENSE AGREEMENT, AND SUBJECT TO CIVIL AND CRIMINAL PENALTIES THEREUNDER.

be an approval of a violation of the provisions of this code or of other ordinances of the jurisdiction. Inspections presuming to give authority to violate or cancel the provisions of this code or of other ordinances of the jurisdiction shall not be valid. It shall be the duty of the *owner* or the owner's authorized agent to cause the work to remain accessible and exposed for inspection purposes. Neither the *building official* nor the jurisdiction shall be liable for expense entailed in the removal or replacement of any material required to allow inspection.

❖ The inspection function is one of the more important aspects of building department operations. This section authorizes the building official to inspect the work for which a permit has been issued and requires that the work to be inspected remains accessible to the building official until inspected and approved. Any expense incurred in removing or replacing material that conceals an item to be inspected is not the responsibility of the building official or the jurisdiction. As with the issuance of permits (see Section 105.4), approval as a result of an inspection is not a license to violate the code and an approval in violation of the code does not relieve the applicant from complying with the code and is not valid.

[A] 110.2 Preliminary inspection. Before issuing a *permit*, the *building official* is authorized to examine or cause to be examined buildings, structures and sites for which an application has been filed.

❖ The building official is granted authority to inspect the site before permit issuance. This may be necessary to verify existing conditions that impact the plan review and permit approval. This section provides the building official with the right-of-entry authority that otherwise does not occur until after the permit is issued (see Section 104.6).

[A] 110.3 Required inspections. The *building official*, upon notification, shall make the inspections set forth in Sections 110.3.1 through 110.3.10.

❖ The building official is required to verify that the building is constructed in accordance with the approved construction documents. It is the responsibility of the permit holder to notify the building official when the item is ready for inspection. The inspections that are necessary to provide such verification are listed in the following sections, with the caveat in Section 110.3.8 that inspections in addition to those listed here may be required depending on the work involved.

[A] 110.3.1 Footing and foundation inspection. Footing and foundation inspections shall be made after excavations for footings are complete and any required reinforcing steel is in place. For concrete foundations, any required forms shall be in place prior to inspection. Materials for the foundation shall be on the job, except where concrete is ready mixed in accordance with ASTM C94, the concrete need not be on the job.

❖ It is necessary for the building official to inspect the soil upon which the footing or foundation is to be placed. This inspection also includes any reinforcing steel, concrete forms and materials to be used in the foundation, except for ready-mixed concrete that is prepared off site.

[A] 110.3.2 Concrete slab and under-floor inspection. Concrete slab and under-floor inspections shall be made after in-slab or under-floor reinforcing steel and building service equipment, conduit, piping accessories and other ancillary equipment items are in place, but before any concrete is placed or floor sheathing installed, including the subfloor.

❖ The building official must be able to inspect the soil and any required under-slab drainage, waterproofing or dampproofing material, as well as reinforcing steel, conduit, piping and other service equipment embedded in or installed below a slab prior to placing the concrete. Similarly, items installed below a floor system other than concrete must be inspected before they are concealed by the floor sheathing or subfloor.

[A] 110.3.3 Lowest floor elevation. In *flood hazard areas*, upon placement of the lowest floor, including the *basement*, and prior to further vertical construction, the elevation certification required in Section 1612.5 shall be submitted to the *building official*.

❖ Where a structure is located in a flood hazard area, as established in Section 1612.5, the building official must be provided with surveyed documentation of specific elevations on buildings depending on flood zone: 1. The lowest floor elevation for structures located in flood hazard areas not subject to high-velocity wave action (called A Zones); or 2. The elevation of the lowest horizontal structural member for structures located in coastal high-hazard areas (called V Zones). This certification is the first of two such certifications. This certification must be submitted after the lowest floor is established and prior to any additional construction proceeding above this level, so that errors in the elevation can be corrected. Section 110.3.10.1 requires the second certification of elevations just prior to the final inspection.

Most communities use the Elevation Certificate form developed by FEMA, FEMA Form 086-0-33 (insurance agents are required to use this form to write NFIP flood insurance policies). The Elevation Certificate is also used to record information that is useful during final inspections, including flood openings, garage floor elevations, and the elevation of equipment that serves buildings. Section 104.7 requires the building official to maintain a copy of this certification in the department's permanent official records.

[A] 110.3.4 Frame inspection. Framing inspections shall be made after the roof deck or sheathing, all framing, *fireblocking* and bracing are in place and pipes, chimneys and vents to be concealed are complete and the rough electrical, plumbing, heating wires, pipes and ducts are *approved*.

❖ This section requires that the building official be able to inspect the framing members, such as studs, joists,

INTERNATIONAL CODE COUNCIL®
Copyright © 2015 ICC. ALL RIGHTS RESERVED. Accessed by David Dammon on Jun 21, 2017 12:30:52 PM pursuant to License Agreement with ICC. No further reproduction or distribution authorized. ANY UNAUTHORIZED REPRODUCTION OR DISTRIBUTION IS A VIOLATION OF THE FEDERAL COPYRIGHT ACT AND THE LICENSE AGREEMENT, AND SUBJECT TO CIVIL AND CRIMINAL PENALTIES THEREUNDER.

rafters and girders and other items, such as vents and chimneys, that will be concealed by wall construction. Rough electrical work, plumbing, heating wires, pipes and ducts must have already been approved in accordance with the applicable codes prior to this inspection.

[A] 110.3.5 Lath, gypsum board and gypsum panel product inspection. Lath, gypsum board and gypsum panel product inspections shall be made after lathing, gypsum board and gypsum panel products, interior and exterior, are in place, but before any plastering is applied or gypsum board and gypsum panel product joints and fasteners are taped and finished.

Exception: Gypsum board and gypsum panel products that are not part of a fire-resistance-rated assembly or a shear assembly.

❖ In order to verify that lath, gypsum board or gypsum wallboard products are properly attached to framing members, it is necessary for the building official to be able to conduct an inspection before the plaster or joint finish material is applied. This is required only for gypsum board or gypsum panel products that are part of either a fire-resistant assembly or a shear wall. See the definitions for gypsum board and gypsum panel products.

[A] 110.3.6 Fire- and smoke-resistant penetrations. Protection of joints and penetrations in *fire-resistance-rated* assemblies, *smoke barriers* and smoke partitions shall not be concealed from view until inspected and *approved*.

❖ The building official must have an opportunity to inspect joint protection required by Section 715 and penetration protection required by Section 714 for fire-resistance-rated assemblies, smoke barriers and smoke partitions before they become concealed from view.

[A] 110.3.7 Energy efficiency inspections. Inspections shall be made to determine compliance with Chapter 13 and shall include, but not be limited to, inspections for: envelope insulation R- and U-values, fenestration U-value, duct system R-value, and HVAC and water-heating equipment efficiency.

❖ Items installed in a building that are required by the IECC to comply with certain criteria, such as insulation material, windows, HVAC and water-heating equipment, must be inspected and approved.

[A] 110.3.8 Other inspections. In addition to the inspections specified in Sections 110.3.1 through 110.3.7, the *building official* is authorized to make or require other inspections of any construction work to ascertain compliance with the provisions of this code and other laws that are enforced by the department of building safety.

❖ Any item regulated by the code is subject to inspection by the building official to determine compliance with the applicable code provision, and no list can include all items in a given building. This section, therefore, gives the building official the authority to inspect any regulated items.

[A] 110.3.9 Special inspections. For *special inspections*, see Chapter 17.

❖ Special inspections are to be provided by the owner for the types of work required in Section 1704. The building official is to approve special inspectors and verify that the required special inspections have been conducted. See the commentary to Section 1704 for a complete discussion of this topic.

[A] 110.3.10 Final inspection. The final inspection shall be made after all work required by the building *permit* is completed.

❖ Special inspections are to be provided by the owner for the types of work required in Section 1704. The building official is to approve special inspectors and verify that the required special inspections have been conducted. See the commentary to Section 1704 for a complete discussion of this topic.

[A] 110.3.10.1 Flood hazard documentation. If located in a *flood hazard area*, documentation of the elevation of the lowest floor as required in Section 1612.5 shall be submitted to the *building official* prior to the final inspection.

❖ The lowest floor inspection called for in Section 110.3.3 of the code requires submission of documentation of elevations upon placement of the lowest floor and prior to further vertical construction. The purpose for submission at that time is to confirm compliance at a point during construction when insufficient elevation can be corrected most readily. The purpose of submission of elevation information when construction is completed is to confirm compliance. Work that is performed subsequent to the placement of the lowest floor may alter the reference level that is deemed the lowest floor. Building owners must provide this "as-built" documentation when they obtain federal flood insurance policies from the NFIP. Documentation of the "as-built" lowest floor elevations is required to be obtained and maintained by communities that participate in the NFIP. A building for which the community does not have this documentation is, by federal regulation, considered to be in violation of the minimum NFIP requirements (see definition of "violation" in 44 C.F.R. §59.2).

[A] 110.4 Inspection agencies. The *building official* is authorized to accept reports of *approved* inspection agencies, provided such agencies satisfy the requirements as to qualifications and reliability.

❖ As an alternative to the building official conducting the inspection, he or she is permitted to accept inspections of and reports by approved inspection agencies. Appropriate criteria on which to base approval of inspection agencies can be found in Section 1703.

[A] 110.5 Inspection requests. It shall be the duty of the holder of the building *permit* or their duly authorized agent to notify the *building official* when work is ready for inspection.

INTERNATIONAL CODE COUNCIL®
Copyright © 2015 ICC. ALL RIGHTS RESERVED. Accessed by David Dammon on Jun 21, 2017 12:30:52 PM pursuant to License Agreement with ICC. No further reproduction or distribution authorized. ANY UNAUTHORIZED REPRODUCTION OR DISTRIBUTION IS A VIOLATION OF THE FEDERAL COPYRIGHT ACT AND THE LICENSE AGREEMENT, AND SUBJECT TO CIVIL AND CRIMINAL PENALTIES THEREUNDER.

It shall be the duty of the *permit* holder to provide access to and means for inspections of such work that are required by this code.

❖ It is the responsibility of the permit holder or other authorized person, such as the contractor performing the work, to arrange for the required inspections when completed work is ready and to allow for sufficient time for the building official to schedule a visit to the site to prevent work from being concealed prior to being inspected. Access to the work to be inspected must be provided, including any special means such as a ladder.

[A] 110.6 Approval required. Work shall not be done beyond the point indicated in each successive inspection without first obtaining the approval of the *building official*. The *building official*, upon notification, shall make the requested inspections and shall either indicate the portion of the construction that is satisfactory as completed, or notify the *permit* holder or his or her agent wherein the same fails to comply with this code. Any portions that do not comply shall be corrected and such portion shall not be covered or concealed until authorized by the *building official*.

❖ This section establishes that work cannot progress beyond the point of a required inspection without the building official's approval. Upon making the inspection, the building official must either approve the completed work or notify the permit holder or other responsible party of that which does not comply with the code. Approvals and notices of noncompliance must be in writing, as required by Section 104.4, to avoid any misunderstanding as to what is required. Any item not approved cannot be concealed until it has been corrected and approved by the building official.

SECTION 111
CERTIFICATE OF OCCUPANCY

[A] 111.1 Use and occupancy. A building or structure shall not be used or occupied, and a change in the existing use or occupancy classification of a building or structure or portion thereof shall not be made, until the *building official* has issued a certificate of occupancy therefor as provided herein. Issuance of a certificate of occupancy shall not be construed as an approval of a violation of the provisions of this code or of other ordinances of the jurisdiction.

Exception: Certificates of occupancy are not required for work exempt from *permits* in accordance with Section 105.2.

❖ This section establishes that a new building or structure cannot be occupied until a certificate of occupancy is issued by the building official, which reflects the conclusion of the work allowed by the building permit. Also, no change in occupancy or the use of an existing building is permitted without first obtaining a certificate of occupancy for the new use.

The tool that the building official uses to control the uses and occupancies of various buildings and structures within the jurisdiction is the certificate of occupancy. It is unlawful to use or occupy a building or structure unless a certificate of occupancy has been issued. Its issuance does not relieve the building owner from the responsibility for correcting any code violation that may exist.

The exception simply states that when work is not under the monitor of the building department, there is no need to deal with a certificate of occupancy.

[A] 111.2 Certificate issued. After the *building official* inspects the building or structure and does not find violations of the provisions of this code or other laws that are enforced by the department of building safety, the *building official* shall issue a certificate of occupancy that contains the following:

1. The building *permit* number.
2. The address of the structure.
3. The name and address of the *owner* or the owner's authorized agent.
4. A description of that portion of the structure for which the certificate is issued.
5. A statement that the described portion of the structure has been inspected for compliance with the requirements of this code for the occupancy and division of occupancy and the use for which the proposed occupancy is classified.
6. The name of the *building official*.
7. The edition of the code under which the *permit* was issued.
8. The use and occupancy, in accordance with the provisions of Chapter 3.
9. The type of construction as defined in Chapter 6.
10. The design *occupant load*.
11. If an *automatic sprinkler system* is provided, whether the sprinkler system is required.
12. Any special stipulations and conditions of the building *permit*.

❖ The building official is required to issue a certificate of occupancy after a successful final inspection has been completed and all deficiencies and violations have been resolved. This section lists the information that must be included on the certificate. This information is useful to both the building official and the owner because it indicates the criteria under which the structure was evaluated and approved at the time the certificate was issued. This is important when applying the IEBC or IFC to existing buildings.

[A] 111.3 Temporary occupancy. The *building official* is authorized to issue a temporary certificate of occupancy before the completion of the entire work covered by the *permit*, provided that such portion or portions shall be occupied

INTERNATIONAL CODE COUNCIL®
Copyright © 2015 ICC. ALL RIGHTS RESERVED. Accessed by David Dammon on Jun 21, 2017 12:30:52 PM pursuant to License Agreement with ICC. No further reproduction or distribution authorized. ANY UNAUTHORIZED REPRODUCTION OR DISTRIBUTION IS A VIOLATION OF THE FEDERAL COPYRIGHT ACT AND THE LICENSE AGREEMENT, AND SUBJECT TO CIVIL AND CRIMINAL PENALTIES THEREUNDER.

safely. The *building official* shall set a time period during which the temporary certificate of occupancy is valid.

❖ The building official is permitted to issue a temporary certificate of occupancy for all or a portion of a building prior to the completion of all work. Such certification is to be issued only when the building or portion in question can be safely occupied prior to full completion. The certification is intended to acknowledge that some building features may not be completed even though the building is safe for occupancy, or that a portion of the building can be safely occupied while work continues in another area. This provision precludes the occupancy of a building or structure that does not contain all of the required fire protection systems and means of egress. Temporary certificates should be issued only when incidental construction remains, such as site work and interior work that is not regulated by the code and exterior decoration not necessary to the integrity of the building envelope. The building official should view the issuance of a temporary certificate of occupancy as substantial an act as the issuance of the final certificate. Indeed, the issuance of a temporary certificate of occupancy offers a greater potential for conflict because once the building or structure is occupied, it is very difficult to remove the occupants through legal means. The certificate must specify the time period for which it is valid.

[A] 111.4 Revocation. The *building official* is authorized to, in writing, suspend or revoke a certificate of occupancy or completion issued under the provisions of this code wherever the certificate is issued in error, or on the basis of incorrect information supplied, or where it is determined that the building or structure or portion thereof is in violation of any ordinance or regulation or any of the provisions of this code.

❖ This section is needed to give the building official the authority to revoke a certificate of occupancy for the reasons indicated in the code text. The building official may also suspend the certificate of occupancy until all of the code violations are corrected.

SECTION 112
SERVICE UTILITIES

[A] 112.1 Connection of service utilities. A person shall not make connections from a utility, source of energy, fuel or power to any building or system that is regulated by this code for which a *permit* is required, until released by the *building official*.

❖ This section establishes the authority of the building official to approve utility connections to a building for items such as water, sewer, electricity, gas and steam, and to require their disconnection when hazardous conditions or emergencies exist.

The approval of the building official is required before a connection can be made from a utility to a building system that is regulated by the code, including those referenced in Section 101.4. This includes utilities supplying water, sewer, electricity, gas and steam services. For the protection of building occupants, including workers, such systems must have had final inspection approvals, except as allowed by Section 112.2 for temporary connections.

[A] 112.2 Temporary connection. The *building official* shall have the authority to authorize the temporary connection of the building or system to the utility, source of energy, fuel or power.

❖ The building official is permitted to issue temporary authorization to make connections to the public utility system prior to the completion of all work. This acknowledges that, because of seasonal limitations, time constraints or the need for testing or partial operation of equipment, some building systems may be safely connected even though the building is not suitable for final occupancy. The temporary connection and utilization of connected equipment should be approved when the requesting permit holder has demonstrated to the building official's satisfaction that public health, safety and welfare will not be endangered.

[A] 112.3 Authority to disconnect service utilities. The *building official* shall have the authority to authorize disconnection of utility service to the building, structure or system regulated by this code and the referenced codes and standards set forth in Section 101.4 in case of emergency where necessary to eliminate an immediate hazard to life or property or where such utility connection has been made without the approval required by Section 112.1 or 112.2. The *building official* shall notify the serving utility, and wherever possible the *owner* and occupant of the building, structure or service system of the decision to disconnect prior to taking such action. If not notified prior to disconnecting, the *owner* or occupant of the building, structure or service system shall be notified in writing, as soon as practical thereafter.

❖ Disconnection of one or more of a building's utility services is the most radical method of hazard abatement available to the building official and should be reserved for cases in which all other lesser remedies have proven ineffective. Such an action must be preceded by written notice to the utility and the owner and occupants of the building. Disconnection must be accomplished within the time frame established by the building official in the notice. When the hazard to the public health, safety or welfare is so imminent as to mandate immediate disconnection, the building official has the authority and even the obligation to cause disconnection without notice. In such cases, the owner or occupants must be given written notice as soon as possible.

SECTION 113
BOARD OF APPEALS

[A] 113.1 General. In order to hear and decide appeals of orders, decisions or determinations made by the *building official* relative to the application and interpretation of this code,

INTERNATIONAL CODE COUNCIL®
Copyright © 2015 ICC. ALL RIGHTS RESERVED. Accessed by David Dammon on Jun 21, 2017 12:30:52 PM pursuant to License Agreement with ICC. No further reproduction or distribution authorized. ANY UNAUTHORIZED REPRODUCTION OR DISTRIBUTION IS A VIOLATION OF THE FEDERAL COPYRIGHT ACT AND THE LICENSE AGREEMENT, AND SUBJECT TO CIVIL AND CRIMINAL PENALTIES THEREUNDER.

there shall be and is hereby created a board of appeals. The board of appeals shall be appointed by the applicable governing authority and shall hold office at its pleasure. The board shall adopt rules of procedure for conducting its business.

❖ This section provides an aggrieved party with a material interest in the decision of the building official a process to appeal such a decision before a board of appeals. This provides a forum, other than the court of jurisdiction, in which to review the building official's actions.

This section literally allows any person to appeal a decision of the building official. In practice, this section has been interpreted to permit appeals only by those aggrieved parties with a material or definitive interest in the decision of the building official. An aggrieved party may not appeal a code requirement per se. The intent of the appeal process is not to waive or set aside a code requirement; rather, it is intended to provide a means of reviewing a building official's decision on an interpretation or application of the code or to review the equivalency of protection to the code requirements. The members of the appeals board are appointed by the "governing body" of the jurisdiction, typically a council or administrator, such as a mayor or city manager, and remain members until removed from office. The board must establish procedures for electing a chairperson, scheduling and conducting meetings and administration. Note that Appendix B contains complete, detailed requirements for creating an appeals board, including number of members, qualifications and administrative procedures. Jurisdictions desiring to utilize these requirements must include Appendix B in their adopting ordinance.

[A] 113.2 Limitations on authority. An application for appeal shall be based on a claim that the true intent of this code or the rules legally adopted thereunder have been incorrectly interpreted, the provisions of this code do not fully apply or an equally good or better form of construction is proposed. The board shall not have authority to waive requirements of this code.

❖ This section establishes the grounds for an appeal, which claims that the building official has misinterpreted or misapplied a code provision. The board is not allowed to set aside any of the technical requirements of the code. It is, however, allowed to consider alternative methods of compliance with the technical requirements (see Section 104.11).

[A] 113.3 Qualifications. The board of appeals shall consist of members who are qualified by experience and training to pass on matters pertaining to building construction and are not employees of the jurisdiction.

❖ It is important that the decisions of the appeals board are based purely on the technical merits involved in an appeal. It is not the place for policy or political deliberations. The members of the appeals board are, therefore, expected to have experience in building construction matters. Appendix B provides more detailed qualifications for appeals board members and can be adopted by jurisdictions desiring that level of expertise.

SECTION 114
VIOLATIONS

[A] 114.1 Unlawful acts. It shall be unlawful for any person, firm or corporation to erect, construct, alter, extend, *repair*, move, remove, demolish or occupy any building, structure or equipment regulated by this code, or cause same to be done, in conflict with or in violation of any of the provisions of this code.

❖ Violations of the code are prohibited and form the basis for all citations and correction notices.

[A] 114.2 Notice of violation. The *building official* is authorized to serve a notice of violation or order on the person responsible for the erection, construction, *alteration*, extension, *repair*, moving, removal, demolition or occupancy of a building or structure in violation of the provisions of this code, or in violation of a *permit* or certificate issued under the provisions of this code. Such order shall direct the discontinuance of the illegal action or condition and the abatement of the violation.

❖ The building official is required to notify the person responsible for the erection or use of a building found to be in violation of the code. The section that is allegedly being violated must be cited so that the responsible party can respond to the notice.

[A] 114.3 Prosecution of violation. If the notice of violation is not complied with promptly, the *building official* is authorized to request the legal counsel of the jurisdiction to institute the appropriate proceeding at law or in equity to restrain, correct or abate such violation, or to require the removal or termination of the unlawful occupancy of the building or structure in violation of the provisions of this code or of the order or direction made pursuant thereto.

❖ The building official must pursue, through the use of legal counsel of the jurisdiction, legal means to correct the violation. This is not optional.

Any extensions of time, so that the violations may be corrected voluntarily, must be for a reasonable and valid cause, otherwise the building official may be subject to criticism for "arbitrary and capricious" actions. In general, it is better to have a standard time limitation for correction of violations. Departures from this standard must be for a clear and reasonable purpose, usually stated in writing by the violator.

[A] 114.4 Violation penalties. Any person who violates a provision of this code or fails to comply with any of the requirements thereof or who erects, constructs, alters or repairs a building or structure in violation of the *approved construction documents* or directive of the *building official*, or of a *permit* or certificate issued under the provisions of this code, shall be subject to penalties as prescribed by law.

❖ Penalties for violating provisions of the code are typically contained in state law, particularly if the code is

INTERNATIONAL CODE COUNCIL®
Copyright © 2015 ICC. ALL RIGHTS RESERVED. Accessed by David Dammon on Jun 21, 2017 12:30:52 PM pursuant to License Agreement with ICC. No further reproduction or distribution authorized. ANY UNAUTHORIZED REPRODUCTION OR DISTRIBUTION IS A VIOLATION OF THE FEDERAL COPYRIGHT ACT AND THE LICENSE AGREEMENT, AND SUBJECT TO CIVIL AND CRIMINAL PENALTIES THEREUNDER.

adopted at that level, and the building department must follow those procedures. If there is no such procedure already in effect, one must be established with the aid of legal counsel.

SECTION 115
STOP WORK ORDER

[A] 115.1 Authority. Where the *building official* finds any work regulated by this code being performed in a manner either contrary to the provisions of this code or dangerous or unsafe, the *building official* is authorized to issue a stop work order.

❖ Whenever the building official finds any work regulated by this code being performed in a manner that is contrary to the provisions of this code, dangerous or unsafe, the building official is authorized to issue a stop work order.

This section provides for the suspension of work for which a permit was issued, pending the removal or correction of a severe violation or unsafe condition identified by the building official.

Normally, correction notices, issued in accordance with Section 110.6, are used to inform the permit holder of code violations. Stop work orders are issued when enforcement can be accomplished no other way or when a dangerous condition exists.

[A] 115.2 Issuance. The stop work order shall be in writing and shall be given to the *owner* of the property involved, the owner's authorized agent or the person performing the work. Upon issuance of a stop work order, the cited work shall immediately cease. The stop work order shall state the reason for the order and the conditions under which the cited work will be permitted to resume.

❖ Upon receipt of a violation notice from the building official, all construction activities identified in the notice must immediately cease, except as expressly permitted to correct the violation.

[A] 115.3 Unlawful continuance. Any person who shall continue any work after having been served with a stop work order, except such work as that person is directed to perform to remove a violation or unsafe condition, shall be subject to penalties as prescribed by law.

❖ This section states that the work in violation must terminate and that all other work, except that which is necessary to correct the violation or unsafe condition, must cease as well. As determined by the municipality or state, a penalty may be assessed for failure to comply with this section.

SECTION 116
UNSAFE STRUCTURES AND EQUIPMENT

[A] 116.1 Conditions. Structures or existing equipment that are or hereafter become unsafe, insanitary or deficient because of inadequate *means of egress* facilities, inadequate light and ventilation, or that constitute a fire hazard, or are otherwise dangerous to human life or the public welfare, or that involve illegal or improper occupancy or inadequate maintenance, shall be deemed an unsafe condition. Unsafe structures shall be taken down and removed or made safe, as the *building official* deems necessary and as provided for in this section. A vacant structure that is not secured against entry shall be deemed unsafe.

❖ This section describes the responsibility of the building official to investigate reports of unsafe structures and equipment and provides criteria for such determination.

Unsafe structures are defined as buildings or structures that are insanitary; are deficient in light, ventilation or adequate exit facilities; constitute a fire hazard; or are otherwise dangerous to human life.

This section establishes that unsafe buildings can result from illegal or improper occupancies. For example, prima facie evidence of an unsafe structure is an unsecured (open at door or window) vacant building. All unsafe buildings must either be demolished or made safe and secure as deemed appropriate by the building official.

[A] 116.2 Record. The *building official* shall cause a report to be filed on an unsafe condition. The report shall state the occupancy of the structure and the nature of the unsafe condition.

❖ The building official must file a report on each investigation of unsafe conditions, stating the occupancy of the structure and the nature of the unsafe condition. This report provides the basis for the notice described in Section 116.3.

[A] 116.3 Notice. If an unsafe condition is found, the *building official* shall serve on the *owner*, agent or person in control of the structure, a written notice that describes the condition deemed unsafe and specifies the required repairs or improvements to be made to abate the unsafe condition, or that requires the unsafe structure to be demolished within a stipulated time. Such notice shall require the person thus notified to declare immediately to the *building official* acceptance or rejection of the terms of the order.

❖ When a building is found to be unsafe, this information must be provided to the building owner or agent so that they have the opportunity to fix the problem or tear down the structure. The notice should include a time frame for when the items need to be addressed. After the building owner or agent receives the report (see Section 116.2), they must inform the building official how they will address the issues, or stipulate why they disagree with the findings.

[A] 116.4 Method of service. Such notice shall be deemed properly served if a copy thereof is (a) delivered to the *owner* personally; (b) sent by certified or registered mail addressed to the *owner* at the last known address with the return receipt requested; or (c) delivered in any other manner as prescribed by local law. If the certified or registered letter is returned showing that the letter was not delivered, a copy thereof shall be posted in a conspicuous place in or about the structure affected by such notice. Service of such notice in the foregoing manner upon the owner's agent or upon the person

INTERNATIONAL CODE COUNCIL®
Copyright © 2015 ICC. ALL RIGHTS RESERVED. Accessed by David Dammon on Jun 21, 2017 12:30:52 PM pursuant to License Agreement with ICC. No further reproduction or distribution authorized. ANY UNAUTHORIZED REPRODUCTION OR DISTRIBUTION IS A VIOLATION OF THE FEDERAL COPYRIGHT ACT AND THE LICENSE AGREEMENT, AND SUBJECT TO CIVIL AND CRIMINAL PENALTIES THEREUNDER.

responsible for the structure shall constitute service of notice upon the *owner*.

❖ The notice must be delivered to the owner in person, by certified mail or in some other lawful manner, such as delivery to a specified agent of the owner. If the owner or agent cannot be located, additional procedures are established, including posting the unsafe notice on the premises in question. Such action may be considered the equivalent of personal notice. However, it may or may not be deemed by the courts as representing a "good faith" effort to notify. In addition to complying with this section, therefore, public notice through the use of newspapers and other postings in a prominent location at the government center should be used.

[A] 116.5 Restoration. Where the structure or equipment determined to be unsafe by the *building official* is restored to a safe condition, to the extent that repairs, *alterations* or *additions* are made or a change of occupancy occurs during the restoration of the structure, such *repairs*, *alterations*, *additions* and change of occupancy shall comply with the requirements of Section 105.2.2 and the *International Existing Building Code*.

❖ This section provides that unsafe structures may be restored to a safe condition. This means that the cause of the unsafe structure notice can be abated without the structure being required to comply fully with the provisions for new construction. Any work done to eliminate the unsafe condition, as well as any change in occupancy that may occur, must comply with the code.

Bibliography

The following resource materials were used in the preparation of the commentary for this chapter of the code.

Legal Aspects of Code Administration. Country Club Hills, IL: International Code Council, 2002.

ASTM C94/C94M-13, *Specification for Ready-Mixed Concrete*, West Conshohocken, PA: ASTM International, 2013.

NFPA 14-13, *Standpipe and Hose Systems*. Quincy, MA: National Fire Protection Association, 2013.

NFPA 70-14, *National Electrical Code*. Quincy, MA: National Fire Protection Association, 2014.

NFPA 409-11, *Standard for Aircraft Hangars*. Quincy, MA: National Fire Protection Association, 2011.

INTERNATIONAL CODE COUNCIL®
Copyright © 2015 ICC. ALL RIGHTS RESERVED. Accessed by David Dammon on Jun 21, 2017 12:30:52 PM pursuant to License Agreement with ICC. No further reproduction or distribution authorized. ANY UNAUTHORIZED REPRODUCTION OR DISTRIBUTION IS A VIOLATION OF THE FEDERAL COPYRIGHT ACT AND THE LICENSE AGREEMENT, AND SUBJECT TO CIVIL AND CRIMINAL PENALTIES THEREUNDER.

INTERNATIONAL CODE COUNCIL®
Copyright © 2015 ICC. ALL RIGHTS RESERVED. Accessed by David Dammon on Jun 21, 2017 12:30:52 PM pursuant to License Agreement with ICC. No further reproduction or distribution authorized. ANY UNAUTHORIZED REPRODUCTION OR DISTRIBUTION IS A VIOLATION OF THE FEDERAL COPYRIGHT ACT AND THE LICENSE AGREEMENT, AND SUBJECT TO CIVIL AND CRIMINAL PENALTIES THEREUNDER.

Chapter 2: Definitions

General Comments

Nearly all terms defined in the code are listed and defined in Chapter 2. While many terms are used primarily in one chapter or another, the vast majority of terms are used outside of their chapter of primary significance. An example would be the term "fire barrier." The requirements for the construction of a fire barrier are found in Section 707, but fire barriers are required to provide fire-resistive separations by such diverse Sections as 508.4 for separated mixed occupancies, and 1022 for the enclosure of interior exit stairways.

There are some terms which have definitions that are specifically limited to the use of the term in a specific chapter or section of the code. This chapter specifically states where this is the case. There are other terms that have more than one definition. For example, "basement" is defined for general application, but is also defined differently as it applies to flood plain hazard regulation in Section 1612.

This chapter only provides a reference to definitions which, in Chapter 19, are amended versions of definitions in a referenced standard.

Purpose

Codes, by their very nature, are technical documents. As such, literally every word, term and punctuation mark can add to or change the meaning of the intended result. This is even more so with a performance-based code where the desired result often takes on more importance than the specific words. Furthermore, the code, with its broad scope of applicability, includes terms inherent in a variety of construction disciplines. These terms often have multiple meanings depending on the context or discipline being used at the time. For these reasons, it is necessary to maintain a consensus on the specific meaning of terms contained in the code. Chapter 2 performs this function by stating clearly what specific terms mean for the purpose of the code.

SECTION 201 GENERAL

❖ This section contains language and provisions that are supplemental to the use of Chapter 2. It gives guidance to the use of the defined words relevant to tense, gender and plurality. Finally, this section provides direction on how to apply terms that are not defined in the code.

201.1 Scope. Unless otherwise expressly stated, the following words and terms shall, for the purposes of this code, have the meanings shown in this chapter.

❖ The use of words and terms in the code is governed by the provisions of this section. This includes code-defined terms as well as those terms that are not defined in the code.

201.2 Interchangeability. Words used in the present tense include the future; words stated in the masculine gender include the feminine and neuter; the singular number includes the plural and the plural, the singular.

❖ While the definitions contained in Chapter 2 are to be taken literally, gender and tense are interchangeable.

201.3 Terms defined in other codes. Where terms are not defined in this code and are defined in the *International Energy Conservation Code*, *International Fuel Gas Code*, *International Fire Code*, *International Mechanical Code* or *International Plumbing Code*, such terms shall have the meanings ascribed to them as in those codes.

❖ Definitions that are applicable in other *International Codes*® (I-Codes®) are applicable everywhere the term is used in the code. Definitions of terms can help in the understanding and application of code requirements.

201.4 Terms not defined. Where terms are not defined through the methods authorized by this section, such terms shall have ordinarily accepted meanings such as the context implies.

❖ Words or terms not defined within the I-Code series are intended to be applied based on their "ordinarily accepted meanings." The intent of this statement is that a dictionary definition may suffice, provided it is in context. Often, construction terms used throughout the code are not specifically defined in the code or even in a dictionary. In such a case, the definitions contained in the referenced standards (see Chapter 35) and published textbooks on the subject in question are good resources.

INTERNATIONAL CODE COUNCIL®
Copyright © 2015 ICC. ALL RIGHTS RESERVED. Accessed by David Dammon on Jun 21, 2017 12:30:52 PM pursuant to License Agreement with ICC. No further reproduction or distribution authorized. ANY UNAUTHORIZED REPRODUCTION OR DISTRIBUTION IS A VIOLATION OF THE FEDERAL COPYRIGHT ACT AND THE LICENSE AGREEMENT, AND SUBJECT TO CIVIL AND CRIMINAL PENALTIES THEREUNDER.

SECTION 202
DEFINITIONS

24-HOUR BASIS. The actual time that a person is an occupant within a facility for the purpose of receiving care. It shall not include a facility that is open for 24 hours and is capable of providing care to someone visiting the facility during any segment of the 24 hours.

❖ Care offered on a 24-hour basis is used to differentiate groups and levels of protection between institutional facilities that typically house patients for more than a day, such as hospitals, detoxification facilities, foster care and nursing homes, from other care facilities that keep patients for only part of a day, such as day cares, clinics, day surgery centers and outpatient facilities. To better understand how these concepts work together, see the definitions for "Ambulatory care facility," "Custodial care," "Personal care," "Medical care" and "Incapable of self-preservation." Facilities that have patients/residents/customers who typically stay for 24 hours or more are considered to be providing care on a 24-hour care basis. However, a facility that operates 24 hours a day, such as a day care or an urgent care facility, would not be considered as providing care on a 24-hour basis if the clients did not stay 24 hours, but instead were in and out of the facility similar to one that closed for the night.

[BS] AAC MASONRY. *Masonry* made of autoclaved aerated concrete (AAC) units, manufactured without internal reinforcement and bonded together using thin- or thick-bed *mortar*.

❖ This definition establishes that the requirements of Chapter 21 apply to masonry units manufactured from autoclaved aerated concrete (AAC). AAC masonry units are low-density cementitious products first introduced into the 2005 edition of the *Building Requirements Code for Masonry Structures* (TMS 402/ACI 530/ASCE 5) and *Specifications for Masonry Structures* (TMS 602/ACI 530.1/ASCE 6), although its use has been prevalent in other countries for several decades. Besides being a relatively lightweight product, AAC is also considered to provide good thermal and acoustic insulation. AAC masonry units are bonded together using a thin-bed polymer mortar specifically manufactured for use with AAC masonry.

ACCESSIBLE. A *site*, *building*, *facility* or portion thereof that complies with Chapter 11.

❖ This definition identifies the fundamental concept of Chapter 11. Accessibility is deemed to be accomplished if a building, site or facility complies with the applicable provisions of Chapter 11 and ICC A117.1. It is not the intent of the code to accommodate fully every type and range of disability, as it would not be feasible to do so. The extent to which the code requires accessible features in the various occupancies covered by Chapter 11 (scoping) and the characteristics those features are required to meet through reference to ICC A117.1 (technical requirements) establish that which the code considers accessible.

There are elements that are related to accessibility, but also have requirements that are generally applicable for public safety. Examples are audible and visible alarms in Chapter 9; ramps, doors, protruding objects and accessible means of egress in Chapter 10; and elevator requirements in Chapter 30. These items have been "mainstreamed" into the code.

ACCESSIBLE MEANS OF EGRESS. A continuous and unobstructed way of egress travel from any *accessible* point in a *building* or *facility* to a *public way*.

❖ Accessible means of egress requirements are needed to provide those persons with physical disabilities or mobility impairments a means of egress to exit the building. Because of physical limitations, some occupants may need assistance to exit a building. See Section 1009 for requirements establishing areas where people can safely wait for assisted rescue. Chapter 4 of the IFC also includes requirements in the fire safety and evacuation plans for specific planning to address occupants who may need assistance in evacuation during emergencies. In addition, Chapter 9 of the code includes requirements for emergency evacuation notification for persons with hearing and vision disabilities.

The accessible means of egress requirements may not be the same route as that required for ingress into the building (see Sections 1104 and 1105). For example, a two-story building requires one accessible route to connect all accessible spaces within the building. The accessible route to the second level is typically by an elevator. During a fire emergency, persons with mobility impairments on the second level would be moving to the exit stairways for assisted rescue, not back to the way they came onto the level, via the elevator.

ACCESSIBLE ROUTE. A continuous, unobstructed path that complies with Chapter 11.

❖ There are typically more physical barriers in the built environment to people with a mobility impairment than in any other category of disability. An accessible route enables a person with a mobility impairment to approach and utilize a facility's accessible fixtures and features. While there are a variety of mobility devices, the design and construction of an accessible route is based predominantly on provisions necessary for accessibility to a person using a wheelchair. Accessible routes are required for both ingress and egress (see Sections 1009 and 1104).

An accessible route must also be safe and usable by people with other disabilities and those without disabilities. Therefore, requirements are set forth in consideration of those needs. For example, there are restrictions on objects that protrude into a circulation path in consideration of a person with a visual impairment as well as consideration of the possibility of smoke limiting visibility during an emergency.

INTERNATIONAL CODE COUNCIL®
Copyright © 2015 ICC. ALL RIGHTS RESERVED. Accessed by David Dammon on Jun 21, 2017 12:30:52 PM pursuant to License Agreement with ICC. No further reproduction or distribution authorized. ANY UNAUTHORIZED REPRODUCTION OR DISTRIBUTION IS A VIOLATION OF THE FEDERAL COPYRIGHT ACT AND THE LICENSE AGREEMENT, AND SUBJECT TO CIVIL AND CRIMINAL PENALTIES THEREUNDER.

ACCESSIBLE UNIT. A *dwelling unit* or *sleeping unit* that complies with this code and the provisions for Accessible units in ICC A117.1.

❖ There are three levels of accessibility described in the code pertaining to dwelling units: Accessible units (always spelled with a capital "A"), Type A units and Type B units. Accessible units are required to be constructed as fully accessible, meaning all required features are present at first occupancy. Unlike Type A and Type B units, Accessible units have no features left as adaptable. Accessible units provide a "higher" level of accessibility than Type A and Type B units and are mandated in all Group I occupancies (as a percentage), in Group R-1 occupancies (per Table 1107.6.1.1), in most Group R-2 congregate living (per Table 1107.6.1.1) and in Group R-4 (at least one unit). The technical criteria for Accessible dwelling units are identified in Section 1002 of the 2003 and 2009 ICC A117.1, whereas in the 1998 ICC A117.1, they were spread throughout Chapters 1 through 9. Also see the commentary for the definitions of "Dwelling unit" and "Sleeping unit," and Section 1107.2.

ACCREDITATION BODY. An *approved*, third-party organization that is independent of the grading and inspection agencies, and the lumber mills, and that initially accredits and subsequently monitors, on a continuing basis, the competency and performance of a grading or inspection agency related to carrying out specific tasks.

❖ The process of determining the grade of lumber not only includes the actual method of applying the grade stamp to the product, but also the certification of the grading agency and its methods of quality control, its rules and the work of its agents. For example, an independent third-party quality control program meeting the accreditation requirements of the American Lumber Standard Committee, Inc. (ALSC) or an equivalent process is required for all softwood lumber that is to be graded for use in construction in the United States.

[A] ADDITION. An extension or increase in floor area or height of a building or structure.

❖ This term is used to describe the condition when the floor area or height of an existing building or structure is increased. This term is only applicable to existing buildings, never new ones. This would include additional floor area that is added within an existing building, such as adding a new mezzanine. [See Section 101.4.7 for a reference to the *International Existing Building Code*® (IEBC®).]

[BS] ADHERED MASONRY VENEER. *Veneer* secured and supported through the adhesion of an *approved* bonding material applied to an *approved backing*.

❖ This type of masonry veneer relies on the backing surface for both vertical and lateral load resistance. The components of adhered masonry veneer construction generally include the masonry veneer, the adhering material and the backing to which the veneer is attached. It should be noted that the term "approve" means components are subject to approval by the building official or the authority having jurisdiction, in accordance with Section 104.

[BS] ADOBE CONSTRUCTION. Construction in which the exterior *load-bearing* and *nonload-bearing walls* and partitions are of unfired clay *masonry units*, and floors, roofs and interior framing are wholly or partly of wood or other *approved* materials.

Adobe, stabilized. Unfired clay *masonry units* to which admixtures, such as emulsified asphalt, are added during the manufacturing process to limit the units' water absorption so as to increase their durability.

Adobe, unstabilized. Unfired clay *masonry units* that do not meet the definition of "Adobe, stabilized."

❖ Adobe masonry was popular in the southwest United States due to the availability of soil for units, the frequent exposure to intense sunlight to dry the units, the thermal mass provided by the completed adobe structure and the low cost of this form of construction. This form of construction has relatively low strength, a lack of formalized design procedures and labor-intensive manufacture of units and construction of the building; thus, it has not been used as much in recent years.

Two types of adobe masonry, stabilized and unstabilized, are briefly described. Prescriptive design requirements for adobe masonry are contained in Section 2109.3.

In stabilized adobe, admixtures are used to produce more durable units (see Section 2109.3.2).

Unstabilized adobe does not contain stabilizers in the soil and is, therefore, not as durable as stabilized adobe (see Section 2109.3.1).

[F] AEROSOL. A product that is dispensed from an *aerosol container* by a propellant. Aerosol products shall be classified by means of the calculation of their chemical heats of combustion and shall be designated Level 1, Level 2 or Level 3.

Level 1 aerosol products. Those with a total chemical heat of combustion that is less than or equal to 8,600 British thermal units per pound (Btu/lb) (20 kJ/g).

Level 2 aerosol products. Those with a total chemical heat of combustion that is greater than 8,600 Btu/lb (20 kJ/g), but less than or equal to 13,000 Btu/lb (30 kJ/g).

Level 3 aerosol products. Those with a total chemical heat of combustion that is greater than 13,000 Btu/lb (30 kJ/g).

❖ The intent of the code is to regulate those aerosols that contain a flammable propellant, such as butane, isobutane or propane. An aerosol product such as whipped cream is a water-based material with a nonflammable propellant (nitrous oxide) and would, therefore, not be regulated as a hazardous material. The contents of the aerosol container may be dispensed in the form of a mist spray, foam, gel or aerated powder.

Because of the wide range of flammability of aerosol products, a classification system was established

INTERNATIONAL CODE COUNCIL®
Copyright © 2015 ICC. ALL RIGHTS RESERVED. Accessed by David Dammon on Jun 21, 2017 12:30:52 PM pursuant to License Agreement with ICC. No further reproduction or distribution authorized. ANY UNAUTHORIZED REPRODUCTION OR DISTRIBUTION IS A VIOLATION OF THE FEDERAL COPYRIGHT ACT AND THE LICENSE AGREEMENT, AND SUBJECT TO CIVIL AND CRIMINAL PENALTIES THEREUNDER.

to determine the required level of fire protection. Categories are defined according to the aerosol's chemical heat of combustion expressed in Btus per pound (Btu/lb). Aerosol category classifications of Levels 1, 2 and 3 are used to avoid confusion with flammable liquid classifications.

Examples of Level 1 aerosol products are shaving gel, whipped cream and air fresheners. Level 1 aerosols are not regulated as a hazardous material and are essentially exempt from the requirements of Sections 307 and 414. Examples of Level 2 aerosols include some hair sprays and insect repellents. Level 3 aerosols include carburetor cleaner and other petroleum-based aerosols.

While aerosols are defined as hazardous materials, note that they are not listed in Table 307.1(1) or 307.1(2) as having a maximum allowable quantity per control area. As stated in Item 12 in Section 307.1.1, a building or structure used for aerosol storage is classified as Group S-1, provided the requirements of the IFC are satisfied. Therefore, the Group H classification is not utilized since the design must satisfy the IFC in order to be in compliance.

[F] AEROSOL CONTAINER. A metal can or a glass or plastic bottle designed to dispense an aerosol.

❖ All design criteria for the aerosol container, including the maximum size and minimum strength, are set by the U.S. Department of Transportation (DOTn 49 CFR) and addressed in Section 5104 of the IFC.

[BS] AGGREGATE. In roofing, crushed stone, crushed slag or water-worn gravel used for surfacing for *roof coverings.*

❖ Aggregate is gravel, stone or slag used as a roof surfacing to provide a walking surface and protection to the roof covering. An aggregate typically is not used as a ballast material based on its small size.

AGRICULTURAL BUILDING. A structure designed and constructed to house farm implements, hay, grain, poultry, livestock or other horticultural products. This structure shall not be a place of human habitation or a place of employment where agricultural products are processed, treated or packaged, nor shall it be a place used by the public.

❖ This definition is needed for the proper application of the utility and miscellaneous occupancy group and Appendix C provisions. The use of the building is quite restricted such that buildings that include habitable or public spaces are not agricultural buildings by definition.

AIR-IMPERMEABLE INSULATION. An insulation having an air permeance equal to or less than 0.02 l/s × m2 at 75 pa pressure differential tested in accordance with ASTM E2178 or ASTM E283.

❖ In buildings with conditioned spaces, an air-impermeable layer may be required to prevent the movement of air through the building's thermal envelope. In some cases insulation will serve that purpose, provided it is insulation as defined here. Air leakage, also known as air infiltration, is also specifically addressed for both commercial and residential buildings under the *International Energy Conservation Code*® (IECC®).

AIR-INFLATED STRUCTURE. A structure that uses air-pressurized membrane beams, arches or other elements to enclose space. Occupants of such a structure do not occupy the pressurized area used to support the structure.

❖ This type of membrane structure is characterized by multiple layers arranged such that air-pressurized membrane beams, arches or similar elements are formed. These elements are pressurized with air and form the membrane structure. Note that the occupants of the structure are not subjected to the pressurized areas, because the pressurization is in the structural elements, not within the space used by the occupants.

AIR-SUPPORTED STRUCTURE. A structure wherein the shape of the structure is attained by air pressure and occupants of the structure are within the elevated pressure area. Air-supported structures are of two basic types:

Double skin. Similar to a single skin, but with an attached liner that is separated from the outer skin and provides an airspace which serves for insulation, acoustic, aesthetic or similar purposes.

Single skin. Where there is only the single outer skin and the air pressure is directly against that skin.

❖ An air-supported structure identifies those membrane structures that are completely pressurized for the purposes of supporting the membrane covering. Most "domed" sports arenas use air pressure within the structure to support the membrane covering. The membrane covering can consist of one layer or multiple layers; thus, air-supported structures are classified as either "single skin" or "double skin."

A double-skin, air-supported structure contains multiple layers of membrane sheathing. The membranes are usually separated by enough distance to allow for pressurized air or other materials to be inserted between the plies. The pressurized air or other materials usually serve to increase the insulating and acoustical properties.

A single-skin, air-supported structure consists of just one membrane covering that is directly supported by the interior pressurized air. No other membranes are provided for insulating or acoustical purposes. If the membrane covering consists of several laminated plies, such an arrangement is still considered a single-skin, air-supported structure.

AISLE. An unenclosed *exit access* component that defines and provides a path of egress travel.

❖ Aisles and aisle accessways are both utilized as part of the means of egress in facilities where tables, seats, displays or other furniture may limit the path of travel. The aisle accessways lead to the main aisles that lead to the exits from the space and building [see Commentary Figure 202(1)]. While both may result in a confined path of travel, an aisle is an unenclosed component, while a corridor would be an enclosed

INTERNATIONAL CODE COUNCIL®
Copyright © 2015 ICC. ALL RIGHTS RESERVED. Accessed by David Dammon on Jun 21, 2017 12:30:52 PM pursuant to License Agreement with ICC. No further reproduction or distribution authorized. ANY UNAUTHORIZED REPRODUCTION OR DISTRIBUTION IS A VIOLATION OF THE FEDERAL COPYRIGHT ACT AND THE LICENSE AGREEMENT, AND SUBJECT TO CIVIL AND CRIMINAL PENALTIES THEREUNDER.

component of the means of egress (see Sections 1018 and 1029 for requirements for aisles).

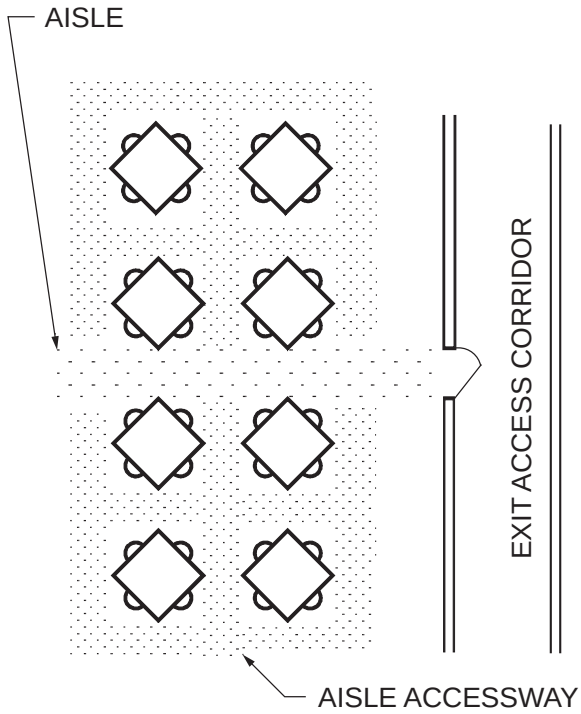

Figure 202(1)
AISLES AND AISLE ACCESSWAYS

AISLE ACCESSWAY. That portion of an *exit access* that leads to an *aisle*.

❖ As illustrated in Commentary Figure 202(1), an aisle accessway is intended for one-way travel or limited two-way travel. The space between tables, seats, displays or other furniture (i.e., aisle accessway) utilized for means of egress will lead to a main aisle (see Sections 1018 and 1029 for requirements for aisle accessways).

[F] ALARM NOTIFICATION APPLIANCE. A *fire alarm system* component such as a bell, horn, speaker, light or text display that provides audible, tactile or visible outputs, or any combination thereof.

❖ The code requires that fire alarm systems be equipped with approved alarm notification appliances so that in an emergency, the fire alarm system will notify the occupants of the need for evacuation or implementation of the fire emergency plan. Alarm notification devices required by the code are of two general types: visible and audible. Except for emergency voice/alarm communication systems, once the fire alarm system has been activated, all visible and audible communication alarms are required to activate. Emergency voice/alarm communication systems are special signaling systems that are activated selectively in response to specific emergency conditions but have the capability to be activated throughout the building if necessary.

[F] ALARM SIGNAL. A signal indicating an emergency requiring immediate action, such as a signal indicative of fire.

❖ This is a general term for all types of supervisory and trouble signals. An example would be a supervisory (tamper) switch on a sprinkler control valve. It could also be the response to a specific device that is not part of the alarm notification system but that causes a specific function such as a smoke detector for elevator recall. The activation of the device does not necessarily indicate that there is a fire; however, the level of protection may have been compromised (see the definition of "Fire alarm signal").

[F] ALARM VERIFICATION FEATURE. A feature of *automatic* fire detection and alarm systems to reduce unwanted alarms wherein *smoke detectors* report alarm conditions for a minimum period of time, or confirm alarm conditions within a given time period, after being *automatically* reset, in order to be accepted as a valid alarm-initiation signal.

❖ False fire (evacuation) alarms are a nuisance. For this reason, the code specifies that alarms activated by smoke detectors are not to be sounded until the alarm signal is verified by cross-zoned detectors in a single protected area or by system features that will retard the alarm until the signal is determined to be valid. Valid alarm initiation signals can be determined by detectors that report alarm conditions for a minimum period of time or that, after being reset, continue to report an alarm condition. The alarm verification feature may not retard signal activation for a period of more than 60 seconds and must not apply to alarm-initiating devices other than smoke detectors (which may be connected to the same circuit). Alarm verification is not the same as presignal features that delay an alarm signal for more than 1 minute and that are allowed only where specifically permitted by the authority having jurisdiction.

ALLOWABLE STRESS DESIGN. A method of proportioning structural members, such that elastically computed stresses produced in the members by *nominal loads* do not exceed *specified* allowable stresses (also called "working stress design").

❖ This definition describes the allowable stress design (ASD) method, which is one of the design approaches recognized under the code in Section 1604.1. In this approach, the computed stresses determined from the unfactored, or nominal, loads (see the definition for "Nominal loads") cannot exceed allowable stresses, which provide a factor of safety. The material chapters of the code specify either the allowable stresses for a given material or, in some cases, provide allowable capacities of specific assemblies, such as the wood structural panel shear wall capacities specified in Chapter 23.

INTERNATIONAL CODE COUNCIL®
Copyright © 2015 ICC. ALL RIGHTS RESERVED. Accessed by David Dammon on Jun 21, 2017 12:30:52 PM pursuant to License Agreement with ICC. No further reproduction or distribution authorized. ANY UNAUTHORIZED REPRODUCTION OR DISTRIBUTION IS A VIOLATION OF THE FEDERAL COPYRIGHT ACT AND THE LICENSE AGREEMENT, AND SUBJECT TO CIVIL AND CRIMINAL PENALTIES THEREUNDER.

[A] ALTERATION. Any construction or renovation to an *existing structure* other than *repair* or *addition.*

❖ The code utilizes this term to reflect construction operations intended for an existing building, but not within the scope of an addition or repair (see the definitions of "Addition" and "Repair"). (See Section 101.4.7 for a reference to the IEBC.)

ALTERNATING TREAD DEVICE. A device that has a series of steps between 50 and 70 degrees (0.87 and 1.22 rad) from horizontal, usually attached to a center support rail in an alternating manner so that the user does not have both feet on the same level at the same time.

❖ An alternating tread device is commonly used in areas that would otherwise be provided with a ladder where there is not adequate space for a full stairway. Where these devices are permitted is specifically listed in the code (i.e., Section 1006.2.2.1). The device is used extensively in industrial facilities for worker access to platforms or equipment. Requirements are found with stairways in Section 1011.

AMBULATORY CARE FACILITY. Buildings or portions thereof used to provide medical, surgical, psychiatric, nursing or similar care on a less than 24-hour basis to individuals who are rendered *incapable of self-preservation* by the services provided.

❖ The code provides different requirements for outpatient clinics, ambulatory care facilities and hospitals. Ambulatory care facilities, while still classified as a Group B occupancy, have additional standards above those of an outpatient clinic because its patients are temporarily unable to respond to emergencies due to treatment processes (see commentary, Section 422). Ambulatory care facilities include day surgery centers and similar facilities where patients may receive fairly intensive treatment, but do not stay at the facility more than a few hours. If patients are receiving care on a 24-hour basis, such facilities would be defined as hospitals (see definition of "24-hour basis").

ANCHOR BUILDING. An exterior perimeter building of a group other than H having direct access to a *covered or open mall building* but having required *means of egress* independent of the mall.

❖ A key to understanding what distinguishes an anchor building from a tenant space is that anchor buildings are typically retail establishments (Group M), although this may not always be the case. The anchor building is typically some facility that, by its nature, draws a considerable number of people. The tenants in the adjoining covered or open mall building then seek to capitalize on this traffic generated by the anchor building. The scale or size of the building is not a primary factor in determining whether it is an anchor building; rather, its function is such that it draws people to the site in sufficient numbers so that other facilities can benefit from being located in the same facility [see Commentary Figure 202(2)].

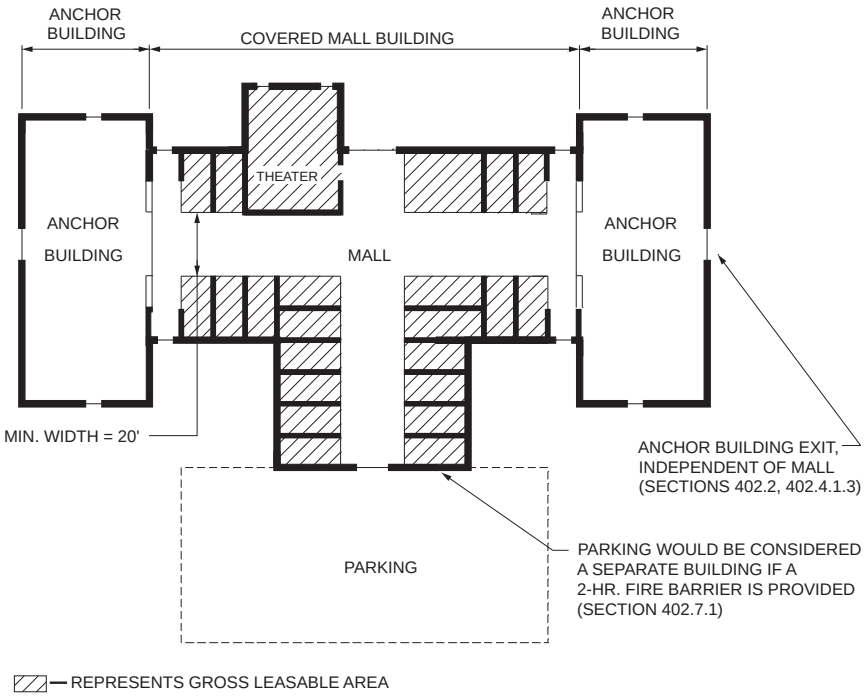

For SI: 1 foot = 304.8 mm.

Figure 202(2)
COVERED MALL BUILDING

INTERNATIONAL CODE COUNCIL®
Copyright © 2015 ICC. ALL RIGHTS RESERVED. Accessed by David Dammon on Jun 21, 2017 12:30:52 PM pursuant to License Agreement with ICC. No further reproduction or distribution authorized. ANY UNAUTHORIZED REPRODUCTION OR DISTRIBUTION IS A VIOLATION OF THE FEDERAL COPYRIGHT ACT AND THE LICENSE AGREEMENT, AND SUBJECT TO CIVIL AND CRIMINAL PENALTIES THEREUNDER.

Generally, the anchor building will have its own identity and there is a high probability that it will have separate management and its own hours of operation. This will necessitate a means of egress that does not rely on the mall being available for its patrons to enter or leave. Similarly, the means of egress from the covered or open mall building cannot rely on the anchor building being open and available for patrons to exit through. Therefore, egress facilities for the anchor building must be independent of those for the covered or open mall building. An anchor building is a separate building from the covered or open mall building and must comply with the provisions of the code for its own identity, except as modified by Section 402 (see Sections 402.4 and 402.4.2.2.).

[BS] ANCHORED MASONRY VENEER. *Veneer* secured with *approved* mechanical fasteners to an *approved backing*.

❖ This type of masonry veneer is generally supported from below and anchored to the sheathing, studs or other structural portion of the wall. Veneers provide little, if any, strength to the wall and are, therefore, considered to be nonstructural. Anchored masonry veneer is unique in that it is usually supported from below by a footing, lintels or shelf angles. Anchored masonry veneer must not, however, support loads other than its own dead loads, wind loads and seismic loads resulting from the dead load of the wall.

ANNULAR SPACE. The opening around the penetrating item.

❖ The annular space is the space created between the outer surface of a penetrating item and the construction penetrated. If left unfilled, the space can provide a means of free passage for smoke, fire and products of combustion [see Commentary Figure 202(3)] for an example of an annular space]. Sections 714.3.1, 714.3.2, 714.4.1.1 and 714.4.1.2 contain the requirements for protection of annular spaces. Tested and listed through-penetration firestop systems (see Sections 714.3.1.2 and 714.4.1.1.2), which are commonly used to seal these annular spaces, generally specify maximum and minimum allowable annular spaces, neither of which must be exceeded in order to ensure that the intended fire-resistance rating is achieved. The minimum and maximum annular space for a penetrating item is frequently not equal, as penetrating items are often located eccentrically in the hole (i.e., not perfectly centered).

[F] ANNUNCIATOR. A unit containing one or more indicator lamps, alphanumeric displays or other equivalent means in which each indication provides status information about a circuit, condition or location.

❖ This refers to the panel that displays the status of the monitored fire protection systems and devices. It is not the fire alarm control unit, though the control panel may include an annunciator.

[A] APPROVED. Acceptable to the *building official*.

❖ As related to the process of acceptance of building installations, including materials, equipment and construction systems, this definition identifies where the ultimate authority rests. Whenever this term is used, it intends that only the enforcing authority can accept a specific installation or component as complying with the code. For the code and the *International Residential Code*® (IRC®), the "building official" is identified as the person responsible for administering its provisions. For the *International Fire Code*® (IFC®), the "fire code official" is identified as the person responsible for administering IFC provisions. For the *International Energy Conservation Code*® (IECC®), *International Fuel Gas Code*® (IFGC®), *International Green Construction Code*® (IgCC®), *International Mechanical Code*® (IMC®), *International Plumbing Code*® (IPC®), *International Property Maintenance Code*® (IPMC®), *International Swimming Pool and Spa Code*® (ISPSC®) and *International Wildland-Urban Interface Code*® (IWUIC®), the "code official" is identified as the person responsible.

[A] APPROVED AGENCY. An established and recognized agency that is regularly engaged in conducting tests or furnishing inspection services, where such agency has been *approved* by the *building official*.

❖ Third-party testing or inspections may be needed for elements within the built environment. The basis for the building official's approval of any agency for a particular activity may include, but is not necessarily limited to, the capacity and capability of the agency to perform the work in accordance with Section 1705 and other applicable sections. This is typically done through a review of the résumés and references of the agency and its personnel. For this code, the building official is identified as the person responsible for approval.

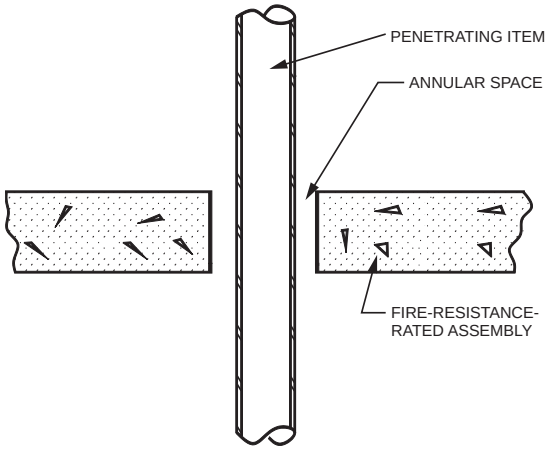

Figure 202(3)
EXAMPLE OF ANNULAR SPACE

INTERNATIONAL CODE COUNCIL®
Copyright © 2015 ICC. ALL RIGHTS RESERVED. Accessed by David Dammon on Jun 21, 2017 12:30:52 PM pursuant to License Agreement with ICC. No further reproduction or distribution authorized. ANY UNAUTHORIZED REPRODUCTION OR DISTRIBUTION IS A VIOLATION OF THE FEDERAL COPYRIGHT ACT AND THE LICENSE AGREEMENT, AND SUBJECT TO CIVIL AND CRIMINAL PENALTIES THEREUNDER.

[BS] APPROVED FABRICATOR. An established and qualified person, firm or corporation *approved* by the *building official* pursuant to Chapter 17 of this code.

❖ An approved fabricator is one who has received approval to perform work without a code-required special inspection. The approval is based upon review of the fabricator's written procedural and quality-control manuals, and periodic auditing of fabrication practices by an approved special inspection agency.

[A] APPROVED SOURCE. An independent person, firm or corporation, *approved* by the *building official*, who is competent and experienced in the application of engineering principles to materials, methods or systems analyses.

❖ The building official sometimes needs to rely on evaluation reports, analyses or other types of reports that purport to validate the use of a material, system or method as complying with the code. This definition establishes that the building official needs to rely on independent, competent individuals or agencies as the source of these reports.

[BS] AREA (for masonry).

Gross cross-sectional. The *area* delineated by the out-to-out *specified* dimensions of *masonry* in the plane under consideration.

Net cross-sectional. The *area* of *masonry units*, grout and *mortar* crossed by the plane under consideration based on out-to-out *specified* dimensions.

❖ Various areas are used for structural calculations in Chapter 21. It is important to use the appropriate areas required by the code, since they may give dramatically different results.

The gross cross-sectional area of the masonry is the specified masonry width (thickness) multiplied by the specified length, as illustrated in Commentary Figure 202(4). While subtraction of core areas of the masonry unit is not required, the space between wythes must be discounted in noncomposite walls. Empirical compressive stress design is based on the gross cross-sectional area of the masonry.

The net cross-sectional area encompasses the area of units, grout and mortar contained within the plane under consideration. For ungrouted masonry, this area is sometimes equal to the bedded area, or more often to the minimum specified area of the face shells. For grouted masonry, this also includes that area of cores, cells or spaces filled with grout.

AREA, BUILDING. The area included within surrounding *exterior walls* (or *exterior walls* and *fire walls*) exclusive of vent *shafts* and *courts*. Areas of the building not provided with surrounding walls shall be included in the building area if such areas are included within the horizontal projection of the roof or floor above.

❖ Allowable building areas (as established by the provisions of Chapter 5 and Table 506.2) are a function of the potential fire hazard and the level of fire endurance of the building's structural elements, as defined by the types of construction in Chapter 6. A building area is the "footprint" of the building; that is, the area measured within the perimeter formed by the inside surface of the exterior walls. This excludes spaces that are inside this perimeter and open to the outside atmosphere at the top, such as open shafts and courts (see Section 1206). When a portion of the building has no exterior walls, the area regulated by Chapter 5 is defined by the projection of the roof or floor above [see Commentary Figure 202(5)]. The roof overhang on portions of a building where there are exterior enclosure walls does not add to the building area because the area is defined by exterior walls.

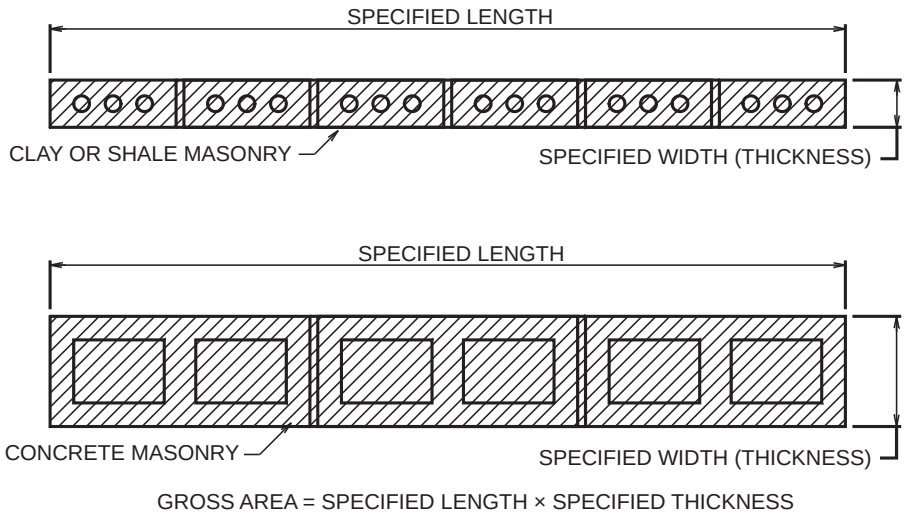

Figure 202(4)
GROSS CROSS-SECTIONAL AREA FOR SINGLE-WYTHE WALL UNDER LOAD

INTERNATIONAL CODE COUNCIL®
Copyright © 2015 ICC. ALL RIGHTS RESERVED. Accessed by David Dammon on Jun 21, 2017 12:30:52 PM pursuant to License Agreement with ICC. No further reproduction or distribution authorized. ANY UNAUTHORIZED REPRODUCTION OR DISTRIBUTION IS A VIOLATION OF THE FEDERAL COPYRIGHT ACT AND THE LICENSE AGREEMENT, AND SUBJECT TO CIVIL AND CRIMINAL PENALTIES THEREUNDER.

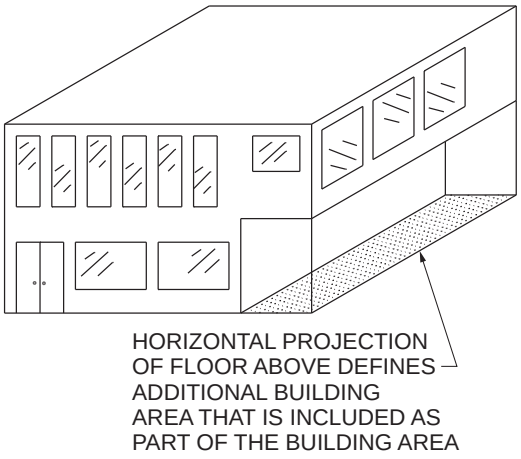

Figure 202(5)
BUILDING AREA—PROJECTED

AREA OF REFUGE. An area where persons unable to use *stairways* can remain temporarily to await instructions or assistance during emergency evacuation.

❖ The area of refuge is a temporary waiting area used during emergency evacuations for persons who are unable to exit the building using the stairways. The fire safety plans (in accordance with IFC Section 404) include the locations of areas of refuge so that the fire department will know where people may be waiting for rescue assistance. See Section 1009 for where areas of refuge are required at stairways and elevators. Areas of refuge have requirements for separation, size, signage, instructional information and two-way communication systems.

AREA OF SPORT ACTIVITY. That portion of an indoor or outdoor space where the play or practice of a sport occurs.

❖ The broad term, "area of sports activity," addresses indoor and outdoor courts, fields and other sport areas. Examples are basketball and tennis courts; practice areas for dance or gymnastics; baseball, soccer and football fields; skating rinks; running tracks; or skateboard parks. The application of the phrase "portion where the play or practice of a sport occurs," varies depending on the sports. Football fields include the playing field boundary lines, the end zones and the space between the boundary lines and safety border. Players may run or be pushed into this safety zone during play. In football, this safety zone is used as part of the playing field, and is therefore included in the area of sports activity. See the commentary for Section 1110 regarding the general accessible route allowances for areas of sports activity. Some of the areas listed under the recreational facilities addressed in Section 1110 (i.e., bowling lanes, exercise equipment facilities, golf courses, miniature golf, and pools) are considered areas of sports activity; however, they have additional requirements.

AREAWAY. A subsurface space adjacent to a building open at the top or protected at the top by a grating or *guard*.

❖ Areaways are often constructed to provide access to below-grade building services, including transformers, ventilation shafts and pipe tunnels.

ASSEMBLY SEATING, MULTILEVEL. See "Multilevel assembly seating."

ATRIUM. An opening connecting two or more *stories* other than enclosed *stairways*, elevators, hoistways, escalators, plumbing, electrical, air-conditioning or other equipment, which is closed at the top and not defined as a mall. *Stories*, as used in this definition, do not include balconies within assembly groups or *mezzanines* that comply with Section 505.

❖ The definition identifies that an atrium is a floor opening or a series of floor openings that connects the environments of adjacent stories. The definition of "Atrium" excludes enclosed stairways, elevators, hoistways and other similar openings in order to clarify that those elements would not fall under the purview as to what is considered an atrium, and therefore, the associated requirements found in Section 404 would not apply. What this does not preclude is the inclusion of elevators and open stairways within atriums. Such elements would need to be entirely within the atrium to meet the separation requirements found in Section 404.6. Building features, such as stairways, elevators, hoistways, escalators, plumbing, electrical, air conditioning or other equipment openings, are required to be enclosed in fire-resistance-rated shafts in accordance with Sections 712 and 713. Atriums are specified in Section 712.1.7 to address openings in horizontal assemblies. An atrium is not defined by size or use. A series of floor openings that are enclosed with exterior walls, yet open at the roof, would be considered a court and would be exempt from the requirements of Section 404. Balconies associated with assembly occupancies and mezzanines are not considered individual stories that would contribute to the classification of a space as an atrium.

ATTIC. The space between the ceiling beams of the top *story* and the roof rafters.

❖ The definition of "Attic" identifies the specific portion of a building or structure for the purpose of determining the applicability of requirements that are specific to attics, such as ventilation (see Section 1203) and draftstopping (see Section 718). Additionally, the code has access requirements (see Section 1209) and uniformly distributed live load requirements (see Table 1607.1) for attics. An attic is considered the space or area located immediately below the roof sheathing within the roof framing system of a building. Pitched roof systems, such as gabled, hip, sawtoothed or curved roofs, all create spaces between the roof sheathing and ceiling membrane, which are considered attics.

INTERNATIONAL CODE COUNCIL®
Copyright © 2015 ICC. ALL RIGHTS RESERVED. Accessed by David Dammon on Jun 21, 2017 12:30:52 PM pursuant to License Agreement with ICC. No further reproduction or distribution authorized. ANY UNAUTHORIZED REPRODUCTION OR DISTRIBUTION IS A VIOLATION OF THE FEDERAL COPYRIGHT ACT AND THE LICENSE AGREEMENT, AND SUBJECT TO CIVIL AND CRIMINAL PENALTIES THEREUNDER.

[F] AUDIBLE ALARM NOTIFICATION APPLIANCE. A notification appliance that alerts by the sense of hearing.

❖ Audible alarms that are part of a fire alarm system must be loud enough to be heard in every occupied space of a building. Section 907.5.2.1.1 prescribes the minimum sound pressure level for all audible alarm notification appliances depending on the occupancy of the building and the function of the space.

AUTOCLAVED AERATED CONCRETE (AAC). Low density cementitious product of calcium silicate hydrates, whose material specifications are defined in ASTM C1386.

❖ Autoclaved aerated concrete (AAC) is a relatively lightweight concrete product which is manufactured in panels that can be cut into smaller blocks to use as masonry units. The referenced material standard establishes the minimum compressive strength based on the class of the AAC. The definition of "AAC masonry" given above establishes that requirements in Chapter 21 apply to masonry units that consist of AAC.

[F] AUTOMATIC. As applied to fire protection devices, a device or system providing an emergency function without the necessity for human intervention and activated as a result of a predetermined temperature rise, rate of temperature rise or combustion products.

❖ This term, when used in conjunction with fire protection systems or devices, means that the system or device will perform its intended function without a person being present or performing any task in its control or operation. The device or system has the inherent capability to detect a developing fire condition and perform some predetermined function. Automatic devices and systems operate completely without human presence or intervention.

[F] AUTOMATIC FIRE-EXTINGUISHING SYSTEM. An *approved* system of devices and equipment which *automatically* detects a fire and discharges an *approved* fire-extinguishing agent onto or in the area of a fire.

❖ This term is the generic name for all types of automatic fire-extinguishing systems, including the most common type—the automatic sprinkler system. See Section 904 for requirements for particular alternative automatic fire-extinguishing systems, such as wet-chemical, dry-chemical, foam, carbon dioxide, Halon and clean-agent systems.

[F] AUTOMATIC SMOKE DETECTION SYSTEM. A *fire alarm system* that has initiation devices that utilize *smoke detectors* for protection of an area such as a room or space with detectors to provide early warning of fire.

❖ Chapter 9 provides requirements for various automatic protection systems including: "automatic fire detection system," "automatic sprinkler system," "automatic fire alarm system" and "automatic smoke detection system." Automatic smoke detection systems are required for various occupancies as specified in Section 907. They are required to increase the likelihood that fire is detected and occupants of the building are given an early warning.

[F] AUTOMATIC SPRINKLER SYSTEM. An *automatic sprinkler system*, for fire protection purposes, is an integrated system of underground and overhead piping designed in accordance with fire protection engineering standards. The system includes a suitable water supply. The portion of the system above the ground is a network of specially sized or hydraulically designed piping installed in a structure or area, generally overhead, and to which *automatic* sprinklers are connected in a systematic pattern. The system is usually activated by heat from a fire and discharges water over the fire area.

❖ An automatic sprinkler system is one type of automatic fire-extinguishing system. Automatic sprinkler systems are the most common, and their life safety attributes are widely recognized. The code specifies three types of automatic sprinkler systems: one installed in accordance with NFPA 13, one in accordance with NFPA 13R and the other in accordance with NFPA 13D. To be considered for most code design alternatives, a building's automatic sprinkler system must be installed throughout in accordance with NFPA 13 (see Section 903.3.1.1).

In a fire, sprinklers automatically open and discharge water onto the fire in a spray pattern that is designed to contain or extinguish the fire. Originally, automatic sprinkler systems were developed just for the protection of buildings and their contents. Because of the development and improvements in sprinkler head response time and water distribution, however, automatic sprinkler systems are now also considered life safety systems. Proper operation of an automatic sprinkler system requires careful selection of the sprinkler heads so that water in sufficient quantity at adequate pressure and properly distributed will be available to suppress the fire. Note that the context of the use of the term "fire area" in the last sentence of the definition is to refer to the area in which the fire is occurring, not in the context of the defined term "fire area."

There are many different types of automatic sprinkler systems—wet pipe, dry pipe, preaction, antifreeze and various combinations. Sprinklers can be pendant, upright or sidewall and can be designed for standard or extended coverage. Additional information can be found in NFPA 13.

[F] AUTOMATIC WATER MIST SYSTEM. A system consisting of a water supply, a pressure source, and a distribution piping system with attached nozzles, which, at or above a minimum operating pressure, defined by its listing, discharges water in fine droplets meeting the requirements of NFPA 750 for the purpose of the control, suppression or extinguishment of a fire. Such systems include wet-pipe, dry-pipe and pre-action types. The systems are designed as engineered, pre-engineered, local-application or total flooding systems.

❖ The code recognizes water mist systems as an alternative extinguishing system to automatic sprinkler

INTERNATIONAL CODE COUNCIL®
Copyright © 2015 ICC. ALL RIGHTS RESERVED. Accessed by David Dammon on Jun 21, 2017 12:30:52 PM pursuant to License Agreement with ICC. No further reproduction or distribution authorized. ANY UNAUTHORIZED REPRODUCTION OR DISTRIBUTION IS A VIOLATION OF THE FEDERAL COPYRIGHT ACT AND THE LICENSE AGREEMENT, AND SUBJECT TO CIVIL AND CRIMINAL PENALTIES THEREUNDER.

systems. However, no exceptions, reductions, or "tradeoffs" for water mist systems are granted or permitted by the code because such systems are not considered to be equivalent to automatic sprinkler systems. Automatic water mist systems have been approved by FM Global for occupancies similar to Light Hazard (as defined by NFPA 13) and listed by UL for occupancies similar to Ordinary Hazard Group I (as defined by NFPA 13). These listings permit automatic water mist systems to be installed as the primary suppression system in a variety of occupancy classifications.

Water mist systems are used for special applications in which creating a heat-absorbent vapor consisting of water droplets with a size of less than 1000 microns at the discharge nozzle is the primary extinguishing method. These systems are typically used where water damage may be an issue, or where water supplies are limited. The droplet size can be controlled by adjusting the discharge pressure through the nozzle. By creating a mist, an equal volume of water will create a larger total surface area exposed to the fire and thus better facilitate the absorption of heat, allowing more water droplets to turn to steam more quickly and thus more effectively cool the room.

[F] AVERAGE AMBIENT SOUND LEVEL. The root mean square, A-weighted sound pressure level measured over a 24-hour period, or the time any person is present, whichever time period is less.

❖ The ambient noise that can be expected depends on the occupancy of the building. To attract the attention of the occupants, the audible alarm devices must be heard above the ambient noise in the space. For this reason, the alarm devices must have minimum sound pressure levels above the average ambient sound level. Section 907.5.2.1.1 prescribes the minimum sound pressure levels for the audible alarm notification appliances for all occupancy conditions.

Although it is possible to measure the ambient sound within an occupied space, the alarm notification devices are usually designed and installed before buildings are occupied, thus it is typically a careful analysis of the types of uses within a space that will determine the average ambient sound level. If, after the building is occupied, the alarm notification devices are below expected audibility, a field measurement may be necessary to determine whether the design assumptions are correct.

AWNING. An architectural projection that provides weather protection, identity or decoration and is partially or wholly supported by the building to which it is attached. An awning is comprised of a lightweight *frame structure* over which a covering is attached.

❖ Similar to a canopy, an awning typically provides weather protection, signage or decoration. Its distinguishing characteristic is the lightweight frame structure. It is also supported, at least in part, by the building from which it projects. See Section 3105 for general requirements and Section 3202 for encroachment requirements. This definition helps to clarify the applicability of roof loads in Section 1607.12.4. Also see the definitions for "Retractable awning," "Canopy" and "Marquee."

BACKING. The wall or surface to which the *veneer* is secured.

❖ The backing is the portion of a structure that provides support for the exterior veneer. The backing also typically resists lateral and transverse loads imposed by the veneer and may be load bearing or nonload bearing.

BALANCED DOOR. A door equipped with double-pivoted hardware so designed as to cause a semicounterbalanced swing action when opening.

❖ Balanced doors are commonly used to decrease the force necessary to open the door or to reduce the length of the door swing. Balanced doors typically reduce the clear opening width more than normally hinged doors [see Commentary Figure 202(6) and Section 1010.1.10.2].

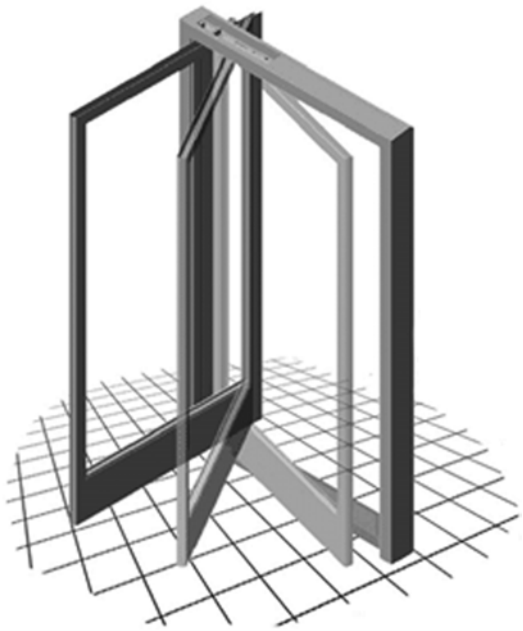

Figure 202(6)
BALANCED DOOR

[F] BALED COTTON. A natural seed fiber wrapped in and secured with industry accepted materials, usually consisting of burlap, woven polypropylene, polyethylene or cotton or sheet polyethylene, and secured with steel, synthetic or wire bands or wire; also includes linters (lint removed from the cottonseed) and motes (residual materials from the ginning process).

❖ This definition of standard "Baled cotton" is being included only to distinguish it from "Baled cotton,

INTERNATIONAL CODE COUNCIL®
Copyright © 2015 ICC. ALL RIGHTS RESERVED. Accessed by David Dammon on Jun 21, 2017 12:30:52 PM pursuant to License Agreement with ICC. No further reproduction or distribution authorized. ANY UNAUTHORIZED REPRODUCTION OR DISTRIBUTION IS A VIOLATION OF THE FEDERAL COPYRIGHT ACT AND THE LICENSE AGREEMENT, AND SUBJECT TO CIVIL AND CRIMINAL PENALTIES THEREUNDER.

densely packed" (see the commentary to the definition of "Baled cotton, densely packed"). The Joint Cotton Industry Bale Packaging Committee (JCIBPC) represents all parts of the cotton industry and sets standards and specifications for packaging of cotton bales, including bale density. The JCIBPC specifications for baling of cotton require that all cotton bales be secured with fixed-length wire bands, polyester plastic strapping or cold-rolled, high-tensile steel strapping, then covered in fully coated woven polyolefin, polyethylene film or burlap.

[F] BALED COTTON, DENSELY PACKED. Cotton made into banded bales with a packing density of not less than 22 pounds per cubic foot (360 kg/m^3), and dimensions complying with the following: a length of 55 inches (1397 mm), a width of 21 inches (533.4 mm) and a height of 27.6 to 35.4 inches (701 to 899 mm).

❖ Currently, over 99 percent of all U.S. cotton is pressed and stored as densely packed baled cotton, with bales meeting the weight and dimension requirements of ISO 8115. One reason that the cotton industry has chosen to use such bales is because they are very difficult to ignite, which allows the industry to transport them without being labeled as "flammable solids" or "dangerous goods" by national or international transport authorities. This definition is intended to be used to distinguish such bales from other combustible fibers.

In order to counteract some erroneous information regarding the combustibility characteristics of densely packed cotton bales, flammability research was conducted on baled cotton. The research demonstrated that densely packed baled cotton meeting the size and weight requirements of ISO 8115 is not a hazardous material. In view of that data, the U.S. Department of Transportation (U.S. Coast Guard), the United Nations (UN) and the International Maritime Organization (IMO) have all removed baled cotton from the list of hazardous materials and from the list of flammable solids, provided the cotton bales are the densely packed type that meet the standard noted above. The research conclusions were:

1. Standard cotton fiber "passed" the Department of Transportation's spontaneous combustion test: the cotton did not exceed the oven temperature and was not classified as self-heating.
2. Cotton, as densely packed baled cotton, did not cause sustained smoldering propagation: an electric heater placed within the bales was unable to cause sustained smoldering propagation, because of the lack of oxygen inside the densely packed bale.
3. Cotton, as densely packed baled cotton, was exposed to ignition from a cigarette and a match and performed very well: no propagating combustion with either.
4. Cotton, as densely packed baled cotton, was exposed to ignition from the gas burner source in ASTM E1590 (also known as California Technical Bulletin 129) of 12 L/min of propane gas for 180 seconds and passed all the criteria, including mass loss of less than 1.36 kg (3 pounds), heat release rate less than 100 kW and total heat release of less than 25 MJ in the first 10 minutes of the test.

[BS] BALLAST. In roofing, ballast comes in the form of large stones or paver systems or light-weight interlocking paver systems and is used to provide uplift resistance for roofing systems that are not adhered or mechanically attached to the *roof deck*.

❖ Ballast is a material, usually stone or concrete, that is used specifically to provide uplift resistance for roof coverings that are not otherwise attached to the structure.

[F] BARRICADE. A structure that consists of a combination of walls, floor and roof, which is designed to withstand the rapid release of energy in an *explosion* and which is fully confined, partially vented or fully vented; or other effective method of shielding from explosive materials by a natural or artificial barrier.

Artificial barricade. An artificial mound or revetment a minimum thickness of 3 feet (914 mm).

Natural barricade. Natural features of the ground, such as hills, or timber of sufficient density that the surrounding exposures that require protection cannot be seen from the magazine or building containing explosives when the trees are bare of leaves.

❖ Barricade means effectively screening a building containing explosives by means of natural or artifical barrier from a magazine, another building, a railway or a highway. When suitable natural features do not exist to protect adjacent people and structures from flying debris and blast effects if an explosion in a magazine occurs, an artificial barrier must be constructed. For further information, see Chapter 56 of the IFC.

[BS] BASE FLOOD. The *flood* having a 1-percent chance of being equaled or exceeded in any given year.

❖ This term is used to define the land area along a body of water that is subject to flooding and within which flood-resistant design and construction requirements are applied. Typically, an authority, such as FEMA or a state or local jurisdiction, prepares flood hazard maps. In doing so, the base flood is derived by applying hydrologic models or by examining regional or local flood history to determine the 1-percent annual chance event, also referred to as the "100-year flood." The 1-percent annual chance event has been the standard used to regulate flood hazard areas for more than 40 years.

[BS] BASE FLOOD ELEVATION. The elevation of the *base flood*, including wave height, relative to the National

INTERNATIONAL CODE COUNCIL®
Copyright © 2015 ICC. ALL RIGHTS RESERVED. Accessed by David Dammon on Jun 21, 2017 12:30:52 PM pursuant to License Agreement with ICC. No further reproduction or distribution authorized. ANY UNAUTHORIZED REPRODUCTION OR DISTRIBUTION IS A VIOLATION OF THE FEDERAL COPYRIGHT ACT AND THE LICENSE AGREEMENT, AND SUBJECT TO CIVIL AND CRIMINAL PENALTIES THEREUNDER.

Geodetic Vertical Datum (NGVD), North American Vertical Datum (NAVD) or other datum specified on the *Flood Insurance Rate Map* (FIRM).

❖ The base flood elevation is the height to which floodwaters are predicted to rise during passage or occurrence of the base flood. It is determined using commonly accepted computer models that estimate hydrologic and hydraulic conditions to determine the 1-percent annual chance (base) flood. Along rivers and streams, statistical methods and computer models may be used to estimate runoff and to develop flood elevations. The models take into consideration watershed characteristics, and the shape and nature of the flood plain, including natural ground contours and the presence of buildings, bridges and culverts. Along coastal areas, base flood elevations may be developed using models that take into account offshore bathymetry, historical storms and typical wind patterns. In many coastal areas, the base flood elevation includes wave heights.

[BS] BASEMENT (for flood loads). The portion of a building having its floor subgrade (below ground level) on all sides. This definition of "Basement" is limited in application to the provisions of Section 1612.

❖ ASCE 24 specifies that lowest floors, including the floors of basements that are below grade on all sides, must be elevated to or above the elevations required by ASCE 24, which vary based on the occupancy category and flood zone. Buildings that are specifically designed to be dry floodproofed in accordance with ASCE 24 may have their lowest floors (including basements) below the design flood elevation. In terms of National Flood Insurance Program (NFIP) flood insurance, buildings with basements (below grade on all sides) are subject to higher premium rates.

BASEMENT. A *story* that is not a *story above grade plane* (see "*Story above grade plane*"). This definition of "Basement" does not apply to the provisions of Section 1612 for flood *loads.*

❖ Unlike previous editions of the I-Codes, where a story was defined as a basement if any portion of the story was below grade, a basement is now defined as a story that has its floor surface below the adjoining ground level and that does not qualify as a story above grade plane (see the commentary to the definition of "Story above grade plane"). Commentary Figure 202(7) illustrates the application of the definition of "Story above grade plane." Since a basement is not a story above grade, it does not contribute to the height of the building for the purpose of applying the allowable building height in stories from Table 504.4. This definition of "Basement" applies to all sections of the code except for flood loads.

Basements in buildings that are located in flood hazard areas and subject to flood loads are defined differently than this general definition [see the definition of "Basement (for flood loads)"].

BEARING WALL STRUCTURE. A building or other structure in which vertical *loads* from floors and roofs are primarily supported by walls.

❖ This definition describes the structure types that are covered under Section 1615.4.

[BS] BED JOINT. The horizontal layer of *mortar* on which a *masonry unit* is laid.

❖ This is a horizontal mortar joint [see Commentary Figure 202(8)] that separates a course of masonry units from the ones above and supports the weight of the masonry. Unlike the head or collar joint, it is easily closed when the masonry unit is placed. For a masonry unit in the typical (stretcher) orientation, the bed joint faces are the top and bottom, while the bed surface of the masonry unit is the underside. A special type of bed joint is the base-course joint or starting joint placed over foundations.

BLEACHERS. Tiered seating supported on a dedicated structural system and two or more rows high and is not a building element (see "*Grandstand*").

❖ Bleachers, folding and telescopic seating, and grandstands are essentially unique forms of tiered seating that are supported on a dedicated structural system. All types are addressed in ICC 300, *Standard on Bleach-*

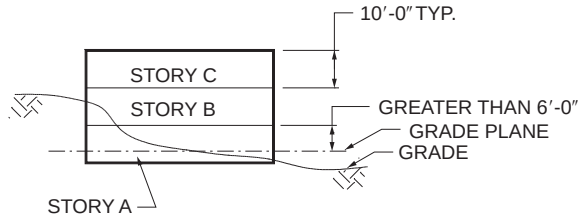

(A) STORY A IS NOT A BASEMENT BECAUSE STORY B IS MORE THAN 6 FEET ABOVE GRADE PLANE

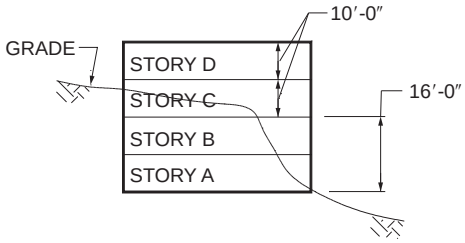

(B) STORY B IS NOT A BASEMENT BECAUSE THE FLOOR LEVEL OF STORY C IS MORE THAN 12′ ABOVE FINISHED GROUND LEVEL AT ONE POINT

For SI: 1 inch = 25.4 mm, 1 foot = 304.8 mm.

Figure 202(7)
STORY ABOVE GRADE AND BASEMENTS

INTERNATIONAL CODE COUNCIL®
Copyright © 2015 ICC. ALL RIGHTS RESERVED. Accessed by David Dammon on Jun 21, 2017 12:30:52 PM pursuant to License Agreement with ICC. No further reproduction or distribution authorized. ANY UNAUTHORIZED REPRODUCTION OR DISTRIBUTION IS A VIOLATION OF THE FEDERAL COPYRIGHT ACT AND THE LICENSE AGREEMENT, AND SUBJECT TO CIVIL AND CRIMINAL PENALTIES THEREUNDER.

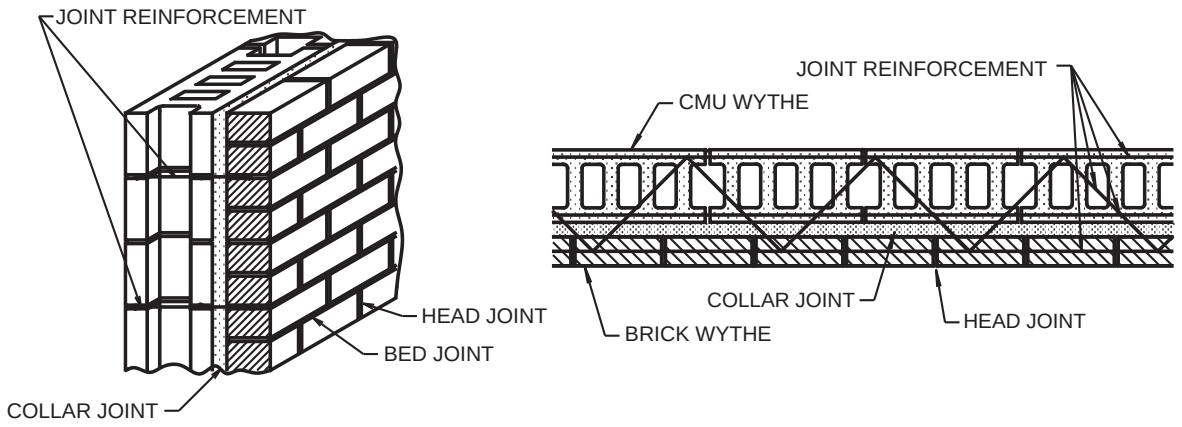

Figure 202(8)
MASONRY CONSTRUCTION TERMS

ers, Folding and Telescopic Seating and Grandstands, the safety standard for these types of seating arrangements (see Section 1029.1.1). Bleachers can have backrests or just seatboards. "Building element" is a defined term that is primarily used in conjunction with the structural elements regulated in Table 601. Bleachers have a separate structural system and are not considered a building element of the building or structure in which they are located. An individual bench seat directly attached to a floor system is not a bleacher. The terms "bleacher" and "grandstand" are basically interchangeable. There is no cutoff in size or number of seats that separates bleachers and grandstands.

BOARDING HOUSE. A building arranged or used for lodging for compensation, with or without meals, and not occupied as a single-family unit.

❖ A boarding house is a structure housing boarders in which the occupants are provided sleeping accommodations or meals and accommodations for a fee. The individual rooms used usually do not contain all of the permanent living provisions of a dwelling unit (e.g., permanent cooking facilities). Most often, the term "boarding house" describes a facility that is primarily for transient occupants; however, these facilities might also be used for nontransient purposes. Depending on the extent of transiency, a boarding house could be classified as Group R-1 when an occupant typically stays for not more than 30 days or Group R-2 when the length of stay is greater than 30 days [see Section 310 and Commentary Figure 202(9)]. Boarding houses are distinct from Lodging houses. Lodging houses allow transient guests within a residence that is also occupied by the owner or primary residents of the dwelling unit. Lodging houses are classified as Group R-3.

[F] BOILING POINT. The temperature at which the vapor pressure of a *liquid* equals the atmospheric pressure of 14.7 pounds per square inch (psia) (101 kPa) or 760 mm of mercury. Where an accurate boiling point is unavailable for the material in question, or for mixtures which do not have a constant boiling point, for the purposes of this classification, the 20-percent evaporated point of a distillation performed in accordance with ASTM D86 shall be used as the boiling point of the *liquid*.

❖ The boiling point of a liquid is significant in determining the appropriate division for Class I flammable liquids. Temperatures above the established boiling point for a given liquid would result in the atmospheric pressure no longer being able to keep the liquid in a liquid state. Liquids with low boiling points present a greater fire hazard because of the increased vapor pressure at normal ambient temperatures.

[BS] BRACED WALL LINE. A straight line through the building plan that represents the location of the lateral resistance provided by the wall bracing.

❖ A braced wall line consists of conventionally framed braced wall panels that provide lateral support for buildings constructed in accordance with the prescriptive conventional construction provisions of Section 2308.

[BS] BRACED WALL PANEL. A full-height section of wall constructed to resist in-plane shear loads through interaction of framing members, sheathing material and anchors. The panel's length meets the requirements of its particular bracing method and contributes toward the total amount of bracing required along its *braced wall line*.

❖ A braced wall panel is a segment of a braced wall line that is constructed in accordance with one of the bracing methods that are permitted in Section 2308. Braced wall panels are discussed in Section 2308.6. Braced wall panels are similar to shear walls but are designed by prescriptive rules rather than engineered like shear walls.

INTERNATIONAL CODE COUNCIL®
Copyright © 2015 ICC. ALL RIGHTS RESERVED. Accessed by David Dammon on Jun 21, 2017 12:30:52 PM pursuant to License Agreement with ICC. No further reproduction or distribution authorized. ANY UNAUTHORIZED REPRODUCTION OR DISTRIBUTION IS A VIOLATION OF THE FEDERAL COPYRIGHT ACT AND THE LICENSE AGREEMENT, AND SUBJECT TO CIVIL AND CRIMINAL PENALTIES THEREUNDER.

BREAKOUT. For revolving doors, a process whereby wings or door panels can be pushed open manually for *means of egress* travel.

❖ In addition to the swinging doors in the immediate area, revolving doors have a breakout feature as an additional safety requirement. The panels in the door can be operated manually to collapse or fold in the direction of egress during an emergency. This should increase the number of people that could exit per minute compared to using the revolving door in the standard manner.

[BS] BRICK.

❖ Brick is composed of masonry units that are generally prismatic (rectangular) in shape.

Calcium silicate (sand lime brick). A pressed and subsequently autoclaved unit that consists of sand and lime, with or without the inclusion of other materials.

❖ This solid brick unit is made principally from high-silica sand and lime.

Clay or shale. A solid or hollow *masonry unit* of clay or shale, usually formed into a rectangular *prism*, then burned or fired in a kiln; brick is a ceramic product.

❖ These masonry units are manufactured from surface clay, shale or fire clay. Different manufacturing processes and physical properties are associated with each material. Surface clays are found in sedimentary layers near the surface. Shales are clays subjected to geologic pressure, resulting in a solid state similar to slate. Fire clays are mined from deeper layers, resulting in more uniform properties. These units are formed into the desired shape by extrusion, molding or pressing. They are then fired in a kiln to increase their strength and durability.

Concrete. A concrete *masonry unit* made from Portland cement, water, and suitable aggregates, with or without the inclusion of other materials.

❖ Concrete brick units are made from a zero-slump mix of Portland cement (and possibly other cementitious materials), aggregates, water and admixtures. These units are solid or have a shallow depression called a "frog." Slump brick, for example, is a decorative concrete brick with bulged sides resulting from the consistency of the mix and the manufacturing process.

[A] BUILDING. Any structure used or intended for supporting or sheltering any use or occupancy.

❖ The code uses this term to identify those structures that provide shelter for a function or activity. See the definition for "Area, building" for situations when a single structure may be two or more "Buildings" created by fire walls.

BUILDING AREA. See "Area, building."

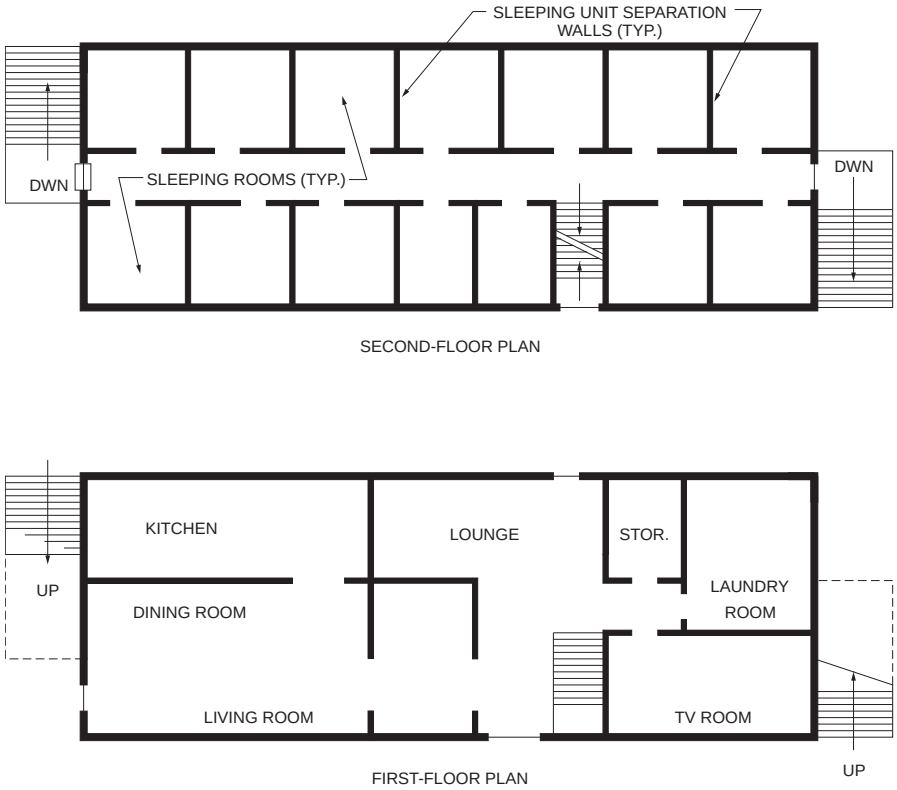

Figure 202(9)
GROUP R-2—BOARDING HOUSE
(OCCUPANTS PRIMARILY NONTRANSIENT)

INTERNATIONAL CODE COUNCIL®
Copyright © 2015 ICC. ALL RIGHTS RESERVED. Accessed by David Dammon on Jun 21, 2017 12:30:52 PM pursuant to License Agreement with ICC. No further reproduction or distribution authorized. ANY UNAUTHORIZED REPRODUCTION OR DISTRIBUTION IS A VIOLATION OF THE FEDERAL COPYRIGHT ACT AND THE LICENSE AGREEMENT, AND SUBJECT TO CIVIL AND CRIMINAL PENALTIES THEREUNDER.

BUILDING ELEMENT. A fundamental component of building construction, listed in Table 601, which may or may not be of fire-resistance-rated construction and is constructed of materials based on the building type of construction.

❖ Building elements include primary structural members, secondary structural members, exterior walls and interior partitions. The fire-resistance ratings of the elements are found in Tables 601 and 602.

BUILDING HEIGHT. See "Height, building."

BUILDING-INTEGRATED PHOTOVOLTAIC (BIPV) PRODUCT. A building product that incorporates photovoltaic modules and functions as a component of the building envelope.

❖ This definition clarifies which photovoltaic products must comply with the roof covering fire classifications required in Section 1505.

BUILDING LINE. The line established by law, beyond which a building shall not extend, except as specifically provided by law.

❖ This term defines the limitations or boundaries for construction of a building. This line is typically established by a zoning statute or rights-of-way dedication and is not specified in the code.

[A] BUILDING OFFICIAL. The officer or other designated authority charged with the administration and enforcement of this code, or a duly authorized representative.

❖ The statutory power to enforce the code is normally vested in a building department of a state, county or municipality that has a designated enforcement officer termed the "building official" (see Section 103.1).

For the code and IRC, the "building official" is identified as the designated enforcement officer. For the IFC, the "fire code official" is identified as the designated enforcement officer. For other I-Codes, the "code official" is identified as the designated enforcement officer.

[BS] BUILT-UP ROOF COVERING. Two or more layers of felt cemented together and surfaced with a cap sheet, mineral *aggregate*, smooth coating or similar surfacing material.

❖ Because of their low melting points and self-healing characteristics, built-up roofs are typically constructed of coal tar membranes that are commonly installed on lower slopes and dead-level roofs.

CABLE-RESTRAINED, AIR-SUPPORTED STRUCTURE. A structure in which the uplift is resisted by cables or webbings which are anchored to either foundations or dead men. Reinforcing cable or webbing is attached by various methods to the membrane or is an integral part of the membrane. This is not a cable-supported structure.

❖ This definition establishes a variation of the air-supported membrane structure. A single-skin or double-skin membrane is still pressurized by interior air, but does not have the strength or tearing resistance against the internal air pressure. A "fishnet" system of cable wires is placed over the exterior surface of the membrane or is integrally woven into the membrane material. The "fishnet" system is then tied to exterior walls of the building or other structural supports to resist the internal air pressure.

CANOPY. A permanent structure or architectural projection of rigid construction over which a covering is attached that provides weather protection, identity or decoration. A canopy is permitted to be structurally independent or supported by attachment to a building on one or more sides.

❖ A canopy can be either an architectural projection from a building, or it can be an independent structure. An example of the former is typically found covering an entrance walkway in front of a hotel or apartment building, or perhaps a fancy restaurant (see the figures in Chapter 31). An example of the latter is a canopy built over fuel pumps at a gasoline station. This definition distinguishes a canopy from an awning, which consists of a lightweight frame that is supported by the building from which it projects. In doing so, the definition clarifies the applicability of roof loads in Section 1607.12.4 (see Section 3105 for general requirements and Section 3202 for encroachment requirements).

[F] CARBON DIOXIDE EXTINGUISHING SYSTEMS. A system supplying carbon dioxide (CO_2) from a pressurized vessel through fixed pipes and nozzles. The system includes a manual- or *automatic*-actuating mechanism.

❖ Carbon dioxide (CO_2) extinguishing systems are useful in extinguishing fires in specific hazards or equipment in occupancies where an inert electrically nonconductive medium is essential or desirable and where cleanup of other extinguishing agents, such as dry-chemical residue, presents a problem. The system works by displacing the oxygen in an enclosed area by flooding the space with CO_2. To effectively flood the enclosure, automatic door and window closers and control dampers for the mechanical ventilation system must be installed.

These types of gaseous extinguishing systems have some inherent disadvantages that should be considered before selection. Because the oxygen is being displaced, occupants should not be in the space for a period after discharge, depending on the concentration of CO_2 to be achieved. Additionally, the discharge rate can result in a rapid increase in pressure within the space where the system is discharged. Where water is not a desired means of suppression, CO_2 and other gaseous suppression systems can be very effective. NFPA 12 contains minimum requirements for the design, installation, testing, inspection, approval, operation and maintenance of carbon dioxide extinguishing systems.

CARE SUITE. In Group I-2 occupancies, a group of treatment rooms, care recipient sleeping rooms and the support rooms or spaces and circulation space within the suite where

INTERNATIONAL CODE COUNCIL®
Copyright © 2015 ICC. ALL RIGHTS RESERVED. Accessed by David Dammon on Jun 21, 2017 12:30:52 PM pursuant to License Agreement with ICC. No further reproduction or distribution authorized. ANY UNAUTHORIZED REPRODUCTION OR DISTRIBUTION IS A VIOLATION OF THE FEDERAL COPYRIGHT ACT AND THE LICENSE AGREEMENT, AND SUBJECT TO CIVIL AND CRIMINAL PENALTIES THEREUNDER.

staff are in attendance for supervision of all care recipients within the suite, and the suite is in compliance with the requirements of Section 407.4.4.

❖ Care suites are designed to allow for a group of rooms to function as a unit in the treatment and care of patients. Suites are recognized to be an effective tool to provide flexibility in reaching an exit access due to functional considerations. Use of suites is a particularly useful tool at intensive care units and emergency departments in patient treatment areas. Suites allow staff to have clear and unobstructed supervision of patients/care recipients in specific treatment and sleeping rooms through the elimination of corridor width or rating requirements. The term is not intended to apply to day rooms or business sections of the hospital. This term is only applicable to suites of patient rooms in Group I-2 occupancies, and should not be confused with similar layouts in other parts of the hospital or within other occupancies that may be referred to as a "suite." Care suites are to meet the requirements of Section 407.

[BS] CAST STONE. A building stone manufactured from Portland cement concrete precast and used as a *trim*, *veneer* or facing on or in buildings or structures.

❖ Cast stone is a simulated stone precast from Portland cement concrete. This material is typically used for veneer, but can also be used in other applications.

[F] CEILING LIMIT. The maximum concentration of an air-borne contaminant to which one may be exposed. The ceiling limits utilized are those published in DOL 29 CFR Part 1910.1000. The ceiling Recommended Exposure Limit (REL-C) concentrations published by the U.S. National Institute for Occupational Safety and Health (NIOSH), Threshold Limit Value—Ceiling (TLV-C) concentrations published by the American Conference of Governmental Industrial Hygienists (ACGIH), Ceiling Workplace Environmental Exposure Level (WEEL-Ceiling) Guides published by the American Industrial Hygiene Association (AIHA), and other *approved*, consistent measures are allowed as surrogates for hazardous substances not lissZted in DOL 29 CFR Part 1910.1000.

❖ This term is used in Section 908.3 and indicates the threshold at which a gas detection system is required for highly toxic and toxic materials. It represents the maximum level of exposure for employees or occupants to hazardous air contaminants during any part of a normal workday. DOL 29 CFR Part 1910.1000 provides acceptable ceiling limits of contamination for various substances.

CEILING RADIATION DAMPER. A *listed* device installed in a ceiling membrane of a fire-resistance-rated floor/ceiling or roof/ceiling assembly to limit *automatically* the radiative heat transfer through an air inlet/outlet opening. Ceiling radiation dampers include air terminal units, ceiling dampers and ceiling air diffusers.

❖ See the commentary to the definition of "Damper."

CELL (Group I-3 occupancy). A room within a housing unit in a detention or correctional facility used to confine inmates or prisoners.

❖ Cells are the smallest unit in the portion of a Group I-3 prison or jail for the housing of inmates. In contrast to other occupancies, many of the provisions in Section 408 refer to cells. Requirements for Group I-3 occupancies in other chapters may refer to cells that are parts of housing units as "sleeping units."

[BS] CELL (masonry). A void space having a gross cross-sectional *area* greater than $1^1/_2$ square inches (967 mm^2).

❖ This term defines a large intentional void within a masonry unit. Grout and reinforcing steel are often placed in cells to form reinforced masonry.

CELL TIER. Levels of *cells* vertically stacked above one another within a *housing unit*.

❖ A tier is one level of cells. There can be multiple tiers within a single housing unit as well as more than one cell tier within a story [see the commentary for "Cell (Group I-3 occupancy)"].

[BS] CEMENT PLASTER. A mixture of Portland or blended cement, Portland cement or blended cement and hydrated lime, masonry cement or plastic cement and aggregate and other *approved* materials as specified in this code.

❖ Cement plaster (often referred to as "stucco") is a cementitious-based plaster material with excellent water-resistant properties. It is the only type of plaster that is permitted by the code to be used as an exterior wall covering and as a base coat and finish coat. Cement plaster can also be used as an interior finish wall covering, but is required by the code to be used in all interior wet areas such as toilet rooms, showers, saunas, steam rooms, indoor swimming pools or any other area that will be exposed to excessive amounts of moisture or humidity for prolonged periods of time.

CERAMIC FIBER BLANKET. A high-temperature *mineral wool* insulation material made of alumina-silica ceramic or calcium magnesium silicate soluble fibers and weighing 4 to 10 pounds per cubic foot (pcf) (64 to 160 kg/m^3).

❖ This form of insulation is used in conjunction with the provisions of Section 722.2.1.3.1, where joints in precast walls must be insulated (protected) in order to maintain the fire-resistance integrity of the precast wall panel (see Code Figure 722.2.1.3.1).

CERTIFICATE OF COMPLIANCE. A certificate stating that materials and products meet specified standards or that

INTERNATIONAL CODE COUNCIL®
Copyright © 2015 ICC. ALL RIGHTS RESERVED. Accessed by David Dammon on Jun 21, 2017 12:30:52 PM pursuant to License Agreement with ICC. No further reproduction or distribution authorized. ANY UNAUTHORIZED REPRODUCTION OR DISTRIBUTION IS A VIOLATION OF THE FEDERAL COPYRIGHT ACT AND THE LICENSE AGREEMENT, AND SUBJECT TO CIVIL AND CRIMINAL PENALTIES THEREUNDER.

work was done in compliance with *approved construction documents*.

❖ A certificate of compliance is a document issued by a supplier of materials and products that certifies they meet the specified requirements.

[A] CHANGE OF OCCUPANCY. A change in the purpose or level of activity within a building that involves a change in application of the requirements of this code.

❖ This term describes the condition when an existing building or structure is used for a different use or the same use with an increase in the level of activity (see Section 101.4.7 for a reference to the IEBC). This term is only applicable to existing buildings, never new ones. For example, Group B includes both beauty parlors and post offices. If a beauty shop moved into an old post office, while remaining a Group B building, it would be a change in the level of activity; therefore, this would be considered a change of occupancy.

[M] CHIMNEY. A primarily vertical structure containing one or more flues, for the purpose of carrying gaseous products of combustion and air from a fuel-burning appliance to the outdoor atmosphere.

❖ The IFGC and the IMC address the installation of chimneys and venting systems that are required to convey products of combustion from fuel-burning appliances to the atmosphere. The code regulates the construction of masonry chimneys in Section 2113. Chimneys differ from metal vents in the materials from which they are constructed and the type of appliance they are designed to serve. Chimneys can vent much hotter flue gases than metal vents.

Factory-built chimney. A *listed* and *labeled chimney* composed of factory-made components, assembled in the field in accordance with manufacturer's instructions and the conditions of the listing.

❖ A factory-built chimney is a manufactured, listed and labeled chimney that has been tested by an approved agency to determine its performance characteristics. Factory-built chimneys are manufactured in two basic designs: a double-wall insulated design, or a triple-wall air-cooled design. Both designs use stainless steel inner liners to resist the corrosive effects of combustion products.

Masonry chimney. A field-constructed *chimney* composed of solid masonry units, bricks, stones, or concrete.

❖ Masonry chimneys can have one or more flues within them, and are field constructed of brick, stone, concrete or fire-clay materials. Masonry chimneys can stand alone or be part of a masonry fireplace.

Metal chimney. A field-constructed *chimney* of metal.

❖ A metal chimney is an unlisted chimney constructed and installed in accordance with NFPA 211 and is sometimes referred to as a 'smokestack.' Metal chimneys are typically field constructed and installed in industrial structures.

[M] CHIMNEY TYPES.

❖ Provisions for several types of chimneys are contained in Chapter 21, as described below. The construction of the chimney is affected by the type of appliance and the temperature of the flue gases that are generated.

High-heat appliance type. An *approved* chimney for removing the products of combustion from fuel-burning, high-heat appliances producing combustion gases in excess of 2000°F (1093°C) measured at the appliance flue outlet (see Section 2113.11.3).

❖ High-heat chimneys are used in industrial applications, such as incinerators, kilns and blast furnaces. Section 2113.11.3 contains requirements for the construction and installation of chimneys for high-heat appliances.

Low-heat appliance type. An *approved* chimney for removing the products of combustion from fuel-burning, low-heat appliances producing combustion gases not in excess of 1000°F (538°C) under normal operating conditions, but capable of producing combustion gases of 1400°F (760°C) during intermittent forces firing for periods up to 1 hour. Temperatures shall be measured at the appliance flue outlet.

❖ Most domestic fuel-burning appliances are low-heat appliances. Low-heat appliances include solid fuel-burning appliances, such as room heaters and wood stoves. Section 2113 contains requirements for the construction and installation of chimneys for low-heat appliances.

Masonry type. A field-constructed chimney of solid *masonry units* or stones.

❖ Masonry chimneys can have one or more flues and are field constructed of masonry units, stone, concrete and fired-clay materials. Masonry chimneys can stand alone or be part of a masonry fireplace. Section 2113 contains requirements for the construction and installation of masonry chimneys.

Most masonry chimneys require a chimney liner that is resistant to heat and the corrosive action of the products of combustion. Chimney liners are generally made of fired-clay tile, refractory brick, poured-in-place refractory materials or stainless steel.

Medium-heat appliance type. An *approved* chimney for removing the products of combustion from fuel-burning, medium-heat appliances producing combustion gases not exceeding 2000°F (1093°C) measured at the appliance flue outlet (see Section 2113.11.2).

❖ Some examples of medium-heat appliances are annealing furnaces, galvanizing furnaces, pulp dryers and charcoal furnaces. Section 2113.11.2 contains requirements for the construction and installation of chimneys for medium-heat appliances.

INTERNATIONAL CODE COUNCIL®
Copyright © 2015 ICC. ALL RIGHTS RESERVED. Accessed by David Dammon on Jun 21, 2017 12:30:52 PM pursuant to License Agreement with ICC. No further reproduction or distribution authorized. ANY UNAUTHORIZED REPRODUCTION OR DISTRIBUTION IS A VIOLATION OF THE FEDERAL COPYRIGHT ACT AND THE LICENSE AGREEMENT, AND SUBJECT TO CIVIL AND CRIMINAL PENALTIES THEREUNDER.

CIRCULATION PATH. An exterior or interior way of passage from one place to another for pedestrians.

❖ Examples of circulation paths include sidewalks, walkways, corridors, aisles, courtyards, ramps, stairways and landings. While a stairway is never part of an accessible route, it can be part of a general circulation path for ambulatory persons. Not all floor areas are circulation paths. What part of a floor is not a circulation path will be subjective. For example, if a drinking fountain is moved into an alcove, it has been moved off the circulation path. So, while still being over a floor, it is no longer considered a protruding object.

[F] CLEAN AGENT. Electrically nonconducting, volatile or gaseous fire extinguishant that does not leave a residue upon vaporation.

❖ The two categories of clean agents are halocarbon compounds and inert gas agents. Halocarbon compounds include bromine, carbon, chloride, fluorine, hydrogen and iodine. Halocarbon compounds suppress the fire through a combination of breaking the chemical chain reaction of the fire, reducing the ambient oxygen supporting the fire and reducing the ambient temperature of the fire origin to reduce the propagation of fire. The clean agents that are inert gas agents contain primary components consisting of helium, neon or argon, or a combination of all three. Inert gases work by reducing the oxygen concentration around the fire origin to a level that does not support combustion (see commentary, Section 904.10).

[E] CLIMATE ZONE. A geographical region that has been assigned climatic criteria as specified in Chapters 3CE and 3RE of the *International Energy Conservation Code*.

❖ Each region is assigned a climate zone. The IECC provides a list of each county in the United States with the designated climate zone for each. These designations are also mapped. Climate zones for other regions are described. Climate zone is used to determine the requirements for a building's thermal envelope including insulation, fenestration and thermal barriers.

CLINIC, OUTPATIENT. Buildings or portions thereof used to provide *medical care* on less than a 24-hour basis to persons who are not rendered *incapable of self-preservation* by the services provided.

❖ Outpatient clinics generally consist of doctors' offices where various medical services can be provided. These clinics typically function during normal business hours (i.e., less than 24 hours) and, unlike ambulatory care facilities, the patients are generally ambulatory and capable of self-preservation. This definition clarifies the difference between ambulatory surgery centers (ambulatory care facilities) and the typical doctor's office. In many cities, outpatient clinics are open at all hours to be available to people who work a variety of shifts. The term "urgent care" is often used to describe such facilities. An outpatient facility that is open 24/7 may still be classified as a Group B occupancy, provided all patients are outpatients and individual patients are not treated for periods in excess of 24 hours. The latter would describe a Group I-2 hospital (see the commentaries to Sections 407 and 423).

[F] CLOSED SYSTEM. The *use* of a *solid* or *liquid hazardous material* involving a closed vessel or system that remains closed during normal operations where vapors emitted by the product are not liberated outside of the vessel or system and the product is not exposed to the atmosphere during normal operations; and all *uses* of *compressed gases.* Examples of closed systems for *solids* and *liquids* include product conveyed through a piping system into a closed vessel, system or piece of equipment.

❖ The difference between a closed system and an open system is whether the hazardous material involved in the process is exposed to the atmosphere. While not specific in the definition, certain gases are also allowed in closed systems, as indicated in Tables 307.7(1) and 307.7(2). Materials in closed or open systems are assumed to be "in use" as opposed to "in storage." Gases are always assumed to be in closed systems, since they would be immediately dispersed in an open system if exposed to the atmosphere without some means of containment (see the definition of "Open system").

[BS] COASTAL A ZONE. Area within a *special flood hazard area*, landward of a V zone or landward of an open coast without mapped *coastal high-hazard areas*. In a coastal A zone, the principal source of flooding must be astronomical tides, storm surges, seiches or tsunamis, not riverine flooding. During the base flood conditions, the potential for breaking wave height shall be greater than or equal to $1^1/_2$ feet (457 mm). The inland limit of the coastal A zone is (a) the Limit of Moderate Wave Action if delineated on a FIRM, or (b) designated by the authority having jurisdiction.

❖ For years, post-disaster investigations have identified wave-related damage in flood zones other than coastal high-hazard areas, especially in flood hazard areas that are immediately inland of coastal high-hazard areas (Zone V). If a Coastal A Zone is shown on the Flood Insurance Rate Map by the delineation of the inland extent of the $1^1/_2$-foot wave, or if a community designates such a zone by other means (such as a certain distance inland of the Zone V boundary), then ASCE 24 (referenced standard), requires buildings and structures in Coastal A Zones to be designed and constructed in accordance with the requirements for coastal high-hazard areas.

[BS] COASTAL HIGH-HAZARD AREA. Area within the *special flood hazard area* extending from offshore to the inland limit of a primary dune along an open coast and any other area that is subject to high-velocity wave action from storms or seismic sources, and shown on a Flood Insurance Rate Map (FIRM) or other flood hazard map as velocity Zone V, VO, VE or V1-30.

❖ Some coastal and lake shorelines experience flooding that includes wind-driven waves. The presence of

INTERNATIONAL CODE COUNCIL®
Copyright © 2015 ICC. ALL RIGHTS RESERVED. Accessed by David Dammon on Jun 21, 2017 12:30:52 PM pursuant to License Agreement with ICC. No further reproduction or distribution authorized. ANY UNAUTHORIZED REPRODUCTION OR DISTRIBUTION IS A VIOLATION OF THE FEDERAL COPYRIGHT ACT AND THE LICENSE AGREEMENT, AND SUBJECT TO CIVIL AND CRIMINAL PENALTIES THEREUNDER.

waves and the potential for local scour must be taken into consideration when determining flood loads. Coastal high-hazard areas are specifically designated on FEMA's flood hazard area maps and commonly are referred to as "V Zones." In these areas, wave heights are predicted to be greater than or equal to 3 feet (914 mm) or the wave runup elevations are predicted to reach 3 feet (914 mm) or more above grade.

[BS] COLLAR JOINT. Vertical longitudinal space between *wythes* of *masonry* or between *masonry wythe* and backup construction that is permitted to be filled with *mortar* or grout.

❖ A collar joint is a filled space between masonry wythes [see Commentary Figure 202(8)]. Care is necessary for proper construction of collar joints, particularly where solid filling is required.

[BS] COLLECTOR. A horizontal *diaphragm* element parallel and in line with the applied force that collects and transfers *diaphragm* shear forces to the vertical elements of the lateral force-resisting system or distributes forces within the *diaphragm*, or both.

❖ The collector is an element of the diaphragm that transfers the diaphragm shear from the point of application into the adjoining vertical lateral force-resisting elements, usually the shear walls.

COMBINATION FIRE/SMOKE DAMPER. A *listed* device installed in ducts and air transfer openings designed to close *automatically* upon the detection of heat and resist the passage of flame and smoke. The device is installed to operate *automatically*, controlled by a smoke detection system, and where required, is capable of being positioned from a *fire command center*

❖ A combination damper is used when the code requires not only a fire damper but also a smoke damper designed to limit the passage of smoke from one side of fire-resistance-rated construction to the other. Fire and smoke dampers are required at duct penetrations of shafts in accordance with Section 717.5.3. Both fire and smoke dampers are required at duct and air transfer openings in fire walls utilized as horizontal exits in accordance with Section 717.5.1.1. Subject to the exceptions listed, both shall also be required at duct penetrations of fire barrier walls utilized as horizontal exits in accordance with Section 717.5.2.1. The combination fire/smoke damper must be actuated automatically by a smoke detection system. Where the damper is part of a smoke control system in Section 909, it shall also be controlled from the fire command center.

[F] COMBUSTIBLE DUST. Finely divided *solid* material that is 420 microns or less in diameter and which, when dispersed in air in the proper proportions, could be ignited by a flame, spark or other source of ignition. Combustible dust will pass through a U.S. No. 40 standard sieve.

❖ Combustible dusts are combustible solids in a finely divided state that are suspended in the air. An explosion hazard exists when the concentration of the combustible dust is within the explosive limits and exposed to an ignition source of sufficient energy and duration to initiate self-sustained combustion. A review of the occupancy classification for Group H-2 in Section 307.4 indicates that combustible dusts are classified in that occupancy group. To apply this portion of Section 307.4, a determination of the deflagration hazard of the manufactured, generated or used combustible dust is required. This is typically determined by an engineering analysis based on the combustible dust dispersion and proportion. When the analysis determines that this dispersion and proportion of combustible dust can be ignited by an ignition source, then an occupancy classification of Group H-2 would be appropriate. Combustible dust that, as a material, does not rise to the defined level of hazard in a particular building, would not cause the building or portion thereof housing the hazard to be classified in Group H-2, but rather in the occupancy group that is most appropriate for the particular operation.

The original tabular maximum allowable quantity (MAQ) per control area for combustible dust included in the legacy building and fire codes was deleted because of its questionable value given the complexities of dust explosion hazards. In the 2012 edition of the code, a row for combustible dust was added to Table 307.1(1) along with a new Note q. The note reinforces the fact that determining a theoretical maximum allowable quantity of combustible dust and the potential for a dust explosion requires a thorough evaluation and technical report based on the provisions of Section 414.1.3. Such determination is complex and requires evaluation far beyond the simple 1 pound per 1,000 cubic feet (16 g/m^3) maximum allowable quantity previously used by the legacy codes. Critical factors, such as particle size, material density, humidity and oxygen concentration, play a major role in the evaluation of the dust hazard and are much too complex to be simply addressed.

[F] COMBUSTIBLE FIBERS. Readily ignitable and free-burning materials in a fibrous or shredded form, such as cocoa fiber, cloth, cotton, excelsior, hay, hemp, henequen, istle, jute, kapok, oakum, rags, sisal, Spanish moss, straw, tow, wastepaper, certain synthetic fibers or other like materials. This definition does not include densely packed baled cotton.

❖ Operations involving combustible fibers are typically associated with paper milling, recycling, cloth manufacturing, carpet and textile mills and agricultural operations, among others. The primary hazards associated with such operations involve the abundance of materials and their ready ignitability. Many organic fibers are prone to spontaneous ignition if improperly dried and kept in areas without sufficient ventilation. Densely packed baled cotton is a special type of combustible fiber that, based on its weight and dimension requirements, is not easily ignitable and is not a hazardous material.

INTERNATIONAL CODE COUNCIL®
Copyright © 2015 ICC. ALL RIGHTS RESERVED. Accessed by David Dammon on Jun 21, 2017 12:30:52 PM pursuant to License Agreement with ICC. No further reproduction or distribution authorized. ANY UNAUTHORIZED REPRODUCTION OR DISTRIBUTION IS A VIOLATION OF THE FEDERAL COPYRIGHT ACT AND THE LICENSE AGREEMENT, AND SUBJECT TO CIVIL AND CRIMINAL PENALTIES THEREUNDER.

[F] COMBUSTIBLE LIQUID. A *liquid* having a closed cup *flash point* at or above 100°F (38°C). Combustible liquids shall be subdivided as follows:

Class II. *Liquids* having a closed cup *flash point* at or above 100°F (38°C) and below 140°F (60°C).

Class IIIA. *Liquids* having a closed cup *flash point* at or above 140°F (60°C) and below 200°F (93°C).

Class IIIB. *Liquids* having a closed cup *flash point* at or above 200°F (93°C).

The category of combustible liquids does not include *compressed gases* or *cryogenic fluids*.

❖ Combustible liquids differ from flammable liquids in that the closed cup flash point of all combustible liquids is at or above 100°F (38°C) (see the definition of "Flash point"). There are three categories of combustible liquids. The range of their closed cup flash point dictates the class of combustible liquid. The flash point range of 100°F (38°C) to 140°F (60°C) for Class II liquids is based on a possible indoor ambient temperature exceeding 100°F (38°C). Only a moderate degree of heating would be required to bring the liquid to its flash point in this type of condition. Class III liquids, which have flash points higher than 140°F (38°C), would require a significant heat source besides ambient temperature conditions to reach their flash point (see the definition of "Flammable liquid"). Class IIIA has a closed cup flash point range of 140°F (93°C). Class IIIB has a closed cup flash point at or above 200°F (93°C). Combustible liquids are primarily considered Group H-2 materials except for Class II and IIIA liquids that are considered Group H-3 when used or stored in normally closed containers or systems pressurized at less than 15 psig (103.4 kPa). Motor oil is a typical example of a Class IIIB combustible liquid. Note that Class IIIB liquids are not regulated to be classified as Group H per Table 307.1(1). While cryogenic fluids and compressed gases may be combustible, they are to be regulated separately from combustible liquids.

COMMERCIAL MOTOR VEHICLE. A motor vehicle used to transport passengers or property where the motor vehicle:

1. Has a gross vehicle weight rating of 10,000 pounds (4540 kg) or more; or
2. Is designed to transport 16 or more passengers, including the driver.

❖ This definition provides the necessary clarification as to what constitutes a "commercial vehicle." This term has often been misinterpreted in previous editions. These criteria are from the DOT regulations 49 CFR 390.5, and correlate with Section 1607.7. Where vehicles of this size are present in buildings greater than 5,000 square feet (464 m^2) in area, the code requires an automatic sprinkler system be provided in repair garages, in commercial parking garages and in Group S-1 storage occupancies (see Section 903.2).

COMMON PATH OF EGRESS TRAVEL. That portion of the *exit access* travel distance measured from the most remote point within a *story* to that point where the occupants have separate access to two *exits* or *exit access* doorways.

❖ The common path of egress travel is a concept used to refine travel distance criteria. A common path of travel is the route an occupant will travel where the one way in is also the one way out, similar to a dead-end corridor or single-exit suite. Once occupants reach a point where two different routes are available, and the two different routes continue to two separate exits, then common path of travel is finished. The length of a common path of egress travel is limited so that the means of egress path of travel provides a choice before the occupant has traveled an excessive distance (see Section 1006). This reduces the possibility that, although the exits are remote from one another, a single fire condition will render both paths unavailable. The common path of egress travel is part of the overall exit access travel distance. To be compliant, the path of egress must meet criteria for both common path of egress travel and exit access travel distance.

COMMON USE. Interior or exterior *circulation paths*, rooms, spaces or elements that are not for public use and are made available for the shared use of two or more people.

❖ Some buildings include areas that are restricted to employees only or where public access is limited. Common-use spaces may be part of employee work areas but do not include public-use spaces. Any space that is shared by two or more persons, such as copy areas, break rooms, toilet rooms or circulation paths, are common use areas. A grade school classroom would be another example of a common use space (see also the commentary for the definition of "Public-use areas" and "Employee work area").

[F] COMPRESSED GAS. A material, or mixture of materials, that:

1. Is a gas at 68°F (20°C) or less at 14.7 pounds per square inch atmosphere (psia) (101 kPa) of pressure; and
2. Has a *boiling point* of 68°F (20°C) or less at 14.7 psia (101 kPa) which is either liquefied, nonliquefied or in solution, except those gases which have no other health- or physical-hazard properties are not considered to be compressed until the pressure in the packaging exceeds 41 psia (282 kPa) at 68°F (20°C).

The states of a compressed gas are categorized as follows:

1. Nonliquefied compressed gases are gases, other than those in solution, which are in a packaging under the charged pressure and are entirely gaseous at a temperature of 68°F (20°C).
2. Liquefied compressed gases are gases that, in a packaging under the charged pressure, are partially *liquid* at a temperature of 68°F (20°C).
3. Compressed gases in solution are nonliquefied gases that are dissolved in a solvent.

INTERNATIONAL CODE COUNCIL®
Copyright © 2015 ICC. ALL RIGHTS RESERVED. Accessed by David Dammon on Jun 21, 2017 12:30:52 PM pursuant to License Agreement with ICC. No further reproduction or distribution authorized. ANY UNAUTHORIZED REPRODUCTION OR DISTRIBUTION IS A VIOLATION OF THE FEDERAL COPYRIGHT ACT AND THE LICENSE AGREEMENT, AND SUBJECT TO CIVIL AND CRIMINAL PENALTIES THEREUNDER.

4. Compressed gas mixtures consist of a mixture of two or more compressed gases contained in a packaging, the hazard properties of which are represented by the properties of the mixture as a whole.

❖ This term refers to all types of gases that are under pressure at normal room or outdoor temperatures inside their containers, including, but not limited to, flammable, nonflammable, highly toxic, toxic, cryogenic and liquefied gases. The vapor pressure limitations provide the distinction between a liquid and a gas. Gases are materials that boil at a temperature of 68°F (20°C) or less at a pressure of 14.7 psia (101.3 kPa). Liquefied and nonliquefied compressed gases are determined by the state of the gas at a temperature of 68°F (20°C). Nonliquefied gases are entirely gaseous, while liquefied gases are partially liquid.

[BS] CONCRETE.

Carbonate aggregate. Concrete made with aggregates consisting mainly of calcium or magnesium carbonate, such as limestone or dolomite, and containing 40 percent or less quartz, chert or flint.

❖ Concrete made with this type of aggregate is listed in Tables 721.1(1) and 721.1(2) (Item 4) with prescriptive details regarding concrete fire-resistance ratings. This type of aggregate is also indicated for concrete assemblies that require calculations to determine the fire-resistance rating in accordance with Section 722.2 (i.e., Table 722.2.1.1). Concrete with this aggregate provides a lower fire resistance than others.

Cellular. A lightweight insulating concrete made by mixing a preformed foam with Portland cement slurry and having a dry unit weight of approximately 30 pcf (480 kg/m^3).

❖ Concrete made with this type of aggregate is listed in Table 721.1(3) with prescriptive details regarding concrete fire-resistance ratings. This type of aggregate is also indicated for concrete assemblies that require calculations to determine the fire-resistance rating in accordance with Section 722.2.1 [i.e., Table 722.2.1.2(1), Note a]. Concrete with this aggregate provides a higher fire resistance than others.

Lightweight aggregate. Concrete made with aggregates of expanded clay, shale, slag or slate or sintered fly ash or any natural lightweight aggregate meeting ASTM C330 and possessing equivalent fire-resistance properties and weighing 85 to 115 pcf (1360 to 1840 kg/m^3).

❖ Concrete made with this type of aggregate is listed in Tables 721.1(1), 721.1(2) and 721.1(3) with prescriptive details regarding concrete fire-resistance ratings. This type of aggregate is also indicated for concrete assemblies that require calculations to determine the fire-resistance rating in accordance with Section 722.2.1 (i.e., Table 722.2.1.1) (also see Section 702.1). Concrete with this aggregate provides a higher fire resistance than others.

Perlite. A lightweight insulating concrete having a dry unit weight of approximately 30 pcf (480 kg/m^3) made with perlite concrete aggregate. Perlite aggregate is produced from a volcanic rock which, when heated, expands to form a glass-like material of cellular structure.

❖ Concrete made with this type of aggregate is listed in Tables 721.1(1), 721.1(2) and 721.1(3) with prescriptive details regarding concrete fire-resistance ratings. This type of aggregate is also indicated for concrete assemblies that require calculations to determine the fire-resistance rating in accordance with Section 722.2.1 (i.e., Section 722.2.1.1.2). Concrete with this aggregate provides a higher fire resistance than others.

Sand-lightweight. Concrete made with a combination of expanded clay, shale, slag, slate, sintered fly ash, or any natural lightweight aggregate meeting ASTM C330 and possessing equivalent fire-resistance properties and natural sand. Its unit weight is generally between 105 and 120 pcf (1680 and 1920 kg/m^3).

❖ Concrete made with this type of aggregate is listed in Tables 721.1(1), 721.1(2) and 721.1(3) with prescriptive details regarding concrete fire-resistance ratings. This type of aggregate is also indicated for concrete assemblies that require calculations to determine the fire-resistance rating in accordance with Section 722.2.1 (i.e., Table 722.2.1.1) (also see Section 702.1). Concrete with this aggregate provides an average fire resistance compared to others.

Siliceous aggregate. Concrete made with normal-weight aggregates consisting mainly of silica or compounds other than calcium or magnesium carbonate, which contains more than 40-percent quartz, chert or flint.

❖ Concrete made with this type of aggregate is listed in Tables 721.1(1), 721.1(2) and 721.1(3) with prescriptive details regarding concrete fire-resistance ratings. This type of aggregate is also indicated for concrete assemblies that require calculations to determine the fire-resistance rating in accordance with Section 722.2.1 (i.e., Table 722.2.1.1). Concrete with this aggregate provides the lowest fire resistance.

Vermiculite. A light weight insulating concrete made with vermiculite concrete aggregate which is laminated micaceous material produced by expanding the ore at high temperatures. When added to a Portland cement slurry the resulting concrete has a dry unit weight of approximately 30 pcf (480 kg/m^3).

❖ Concrete made with this type of aggregate is listed in Tables 721.1(1), 721.1(2) and 720.1(3) with prescriptive details regarding concrete fire-resistance ratings. This type of aggregate is also indicated for concrete assemblies that require calculations to determine the fire-resistance rating in accordance with Section 722.2.1 [i.e., Table 722.2.1.2(1), Note a]. Concrete with this aggregate provides a higher fire resistance than others.

INTERNATIONAL CODE COUNCIL®
Copyright © 2015 ICC. ALL RIGHTS RESERVED. Accessed by David Dammon on Jun 21, 2017 12:30:52 PM pursuant to License Agreement with ICC. No further reproduction or distribution authorized. ANY UNAUTHORIZED REPRODUCTION OR DISTRIBUTION IS A VIOLATION OF THE FEDERAL COPYRIGHT ACT AND THE LICENSE AGREEMENT, AND SUBJECT TO CIVIL AND CRIMINAL PENALTIES THEREUNDER.

CONGREGATE LIVING FACILITIES. A building or part thereof that contains *sleeping units* where residents share bathroom or kitchen facilities, or both.

❖ Congregate living facilities are those pertaining to group housing (i.e., dormitories, fraternities, convents) that combine individual sleeping quarters with communal facilities for food, care, sanitation and recreation. The number of occupants in the facility determines the appropriate occupancy classification. There are two thesholds: 10 and 16. A congregate living facility with 16 or fewer nontransient residents falls in the R-3 classification. For above 16 nontransient residents, the classification is R-2. For transient residents, if there are 10 or fewer in the facility, it is also in the R-3 classification. If over 10 transient residents, it is an R-1 occupancy.

[F] CONSTANTLY ATTENDED LOCATION. A designated location at a facility staffed by trained personnel on a continuous basis where alarm or supervisory signals are monitored and facilities are provided for notification of the fire department or other emergency services.

❖ These locations are intended to receive trouble, supervisory and fire alarm signals transmitted by the fire protection equipment installed in a protected facility. It is the intent of Chapter 9 to have both an approved location and personnel who are acceptable to the code official responsible for actions taken when the fire protection system requires attention. The term "constantly attended" implies 24-hour surveillance of the system, at the designated location.

[A] CONSTRUCTION DOCUMENTS. Written, graphic and pictorial documents prepared or assembled for describing the design, location and physical characteristics of the elements of a project necessary for obtaining a building *permit*.

❖ To determine whether proposed construction is in compliance with code requirements, it is necessary that sufficient information be submitted to the building official for review. This typically consists of drawings (such as floor plans, elevations, sections and details), specifications and product information describing the proposed work.

CONSTRUCTION TYPES. See Section 602.

Type I. See Section 602.2.

Type II. See Section 602.2.

Type III. See Section 602.3.

Type IV. See Section 602.4.

Type V. See Section 602.5.

❖ Construction types are "defined" by the materials and fire-resistance rating of the construction as specified by the provisions in Chapter 6.

[F] CONTINUOUS GAS DETECTION SYSTEM. A gas detection system where the analytical instrument is maintained in continuous operation and sampling is performed without interruption. Analysis is allowed to be performed on a cyclical basis at intervals not to exceed 30 minutes.

❖ This term refers to a system that is capable of constantly monitoring the presence of highly toxic or toxic compressed gases at or below the permissible exposure limit (PEL) for the gas. A continuous gas detection system will provide notification of a leak or rupture in a compressed gas cylinder or tank in a storage or use condition.

[F] CONTROL AREA. Spaces within a building where quantities of *hazardous materials* not exceeding the maximum allowable quantities per control area are stored, dispensed, *used* or handled. See the definition of "Outdoor control area" in the *International Fire Code*.

❖ Control areas provide an alternative method for the use and storage of hazardous materials without classifying the building or structure as a high-hazard occupancy (Group H). This concept is based on regulating the allowable quantities of hazardous materials per control area, rather than per building area, by giving credit for further compartmentation through the use of fire barriers and horizontal assemblies having a minimum fire-resistance rating of not less than 1 hour. The maximum quantities of hazardous materials within a given control area cannot exceed the amounts for a given material listed in either Table 307.1(1) or 307.1(2) (see commentary, Section 414.2). Control areas are not limited to within buildings. A storage area that is exposed to the elements (wind, rain, snow, etc.) also cannot exceed the maximum allowable quantity.

CONTROLLED LOW-STRENGTH MATERIAL. A self-compacted, cementitious material used primarily as a backfill in place of compacted fill.

❖ The definition provided is from ACI 229R. This type of material is known by many "local" names (e.g., flowable fill) and is commonly used instead of a compacted backfill. Requirements for its use under the code are outlined in Section 1804.7.

CONVENTIONAL LIGHT-FRAME CONSTRUCTION. A type of construction whose primary structural elements are formed by a system of repetitive wood-framing members. See Section 2308 for conventional light-frame construction provisions.

❖ Conventional light-frame construction is one of the three methods for designing wood buildings or structures that are recognized in Chapter 23. Section 2308 provides prescriptive provisions and specifications for this method. Since it is a prescriptive approach, conventional construction is necessarily limited in applicability (see Section 2308.2).

CORNICE. A projecting horizontal molded element located at or near the top of an architectural feature.

❖ This definition facilitates the applicability of roof loads that are listed in Table 1607.1.

INTERNATIONAL CODE COUNCIL®
Copyright © 2015 ICC. ALL RIGHTS RESERVED. Accessed by David Dammon on Jun 21, 2017 12:30:52 PM pursuant to License Agreement with ICC. No further reproduction or distribution authorized. ANY UNAUTHORIZED REPRODUCTION OR DISTRIBUTION IS A VIOLATION OF THE FEDERAL COPYRIGHT ACT AND THE LICENSE AGREEMENT, AND SUBJECT TO CIVIL AND CRIMINAL PENALTIES THEREUNDER.

CORRIDOR. An enclosed *exit access* component that defines and provides a path of egress travel.

❖ Corridors are regulated in the code because they serve as principal elements of travel in many means of egress systems within buildings. Typically, corridors have walls that extend from the floor to the ceiling. They need not extend above the ceiling or have doors in their openings unless a fire-resistance rating is required (see Section 1020).

While both aisles and corridors may result in a confined path of travel, an aisle is an unenclosed or partially closed component, while a corridor would be an enclosed component of the means of egress. The enclosed character of the corridor restricts the sensory perception of the user. A fire located on the other side of the corridor wall, for example, may not be as readily seen, heard or smelled by the occupants traveling through the egress corridor. The code does not specifically state what is considered "enclosed" when corridors are not fire-resistance rated. When an egress path is bounded by partial-height walls, such as work-station partitions in an office, issues would be if the walls provided a confined path of travel and limited fire recognition in adjacent spaces by restricting line of sight, hearing and smell.

CORRIDOR, OPEN-ENDED. See "Open-ended corridor."

CORRIDOR DAMPER. A *listed* device intended for use where air ducts penetrate or terminate at horizontal openings in the ceilings of fire-resistance-rated corridors, where the corridor ceiling is permitted to be constructed as required for the corridor walls.

❖ Under certain conditions, the code allows the corridor enclosure to include ceiling constructed as a fire-rated assembly equivalent to that required for the corridor walls (fire partitions). Under most conditions, this would allow the fire partitions to be continuous only to the fire-rated ceiling assembly, rather than to the structure above. When ducts penetrate through or terminate at these ceiling assemblies, a corridor damper is required. Corridor damper requirements are included in Section 717.

[BS] CORROSION RESISTANCE. The ability of a material to withstand deterioration of its surface or its properties when exposed to its environment.

❖ There are different environments that contain different types of materials to which building construction materials are exposed. "Corrosion resistance" is not an absolute term; it is relative to the building material and where it is being used. For instance, some plastic polymers might resist corrosion when used in an exterior environment, but might not be resistant to corrosion from certain chemical gases that could be present in a laboratory.

[F] CORROSIVE. A chemical that causes visible destruction of, or irreversible alterations in, living tissue by chemical action at the point of contact. A chemical shall be considered corrosive if, when tested on the intact skin of albino rabbits by the method described in DOTn 49 CFR, Part 173.137, such chemical destroys or changes irreversibly the structure of the tissue at the point of contact following an exposure period of 4 hours. This term does not refer to action on inanimate surfaces.

❖ This definition is derived from DOL 29 CFR, Part 1910.1200. While corrosive materials do not present a fire, explosion or reactivity hazard, they do pose a handling and storage problem. Corrosive materials, therefore, are primarily considered a health hazard and are classified as Group H-4 material. Many corrosive chemicals are also strong oxidizing agents that require classification as a multiple hazard in accordance with Section 307.8.

COURT. An open, uncovered space, unobstructed to the sky, bounded on three or more sides by exterior building walls or other enclosing devices.

❖ Though not specifically identified in the definition, the provisions in the code for courts (see Section 1206) are only applicable to those areas created by the arrangement of exterior walls and used to provide natural light or ventilation (see Section 1206.1 and the definition of "Yard." See also the definition of "Egress court" for courts that are utilized for exit discharge.).

COVERED MALL BUILDING. A single building enclosing a number of tenants and occupants, such as retail stores, drinking and dining establishments, entertainment and amusement facilities, passenger transportation terminals, offices and other similar uses wherein two or more tenants have a main entrance into one or more malls. *Anchor buildings* shall not be considered as a part of the covered mall building. The term "covered mall building" shall include *open mall buildings* as defined below.

❖ The covered mall building is the entire area of the building (area of mall plus gross leasable area), excluding the anchor buildings. Passenger transportation terminals frequently are developed as wide concourses with small shops along the sides. For this reason, passenger transportation facilities are included. Transportation facilities used for freight or other purposes are not to be considered a covered mall building [see Commentary Figure 202(2)]. The term "covered mall building" also includes open mall buildings. Unless noted otherwise, open mall buildings shall comply with all the provisions for a covered mall building.

Mall. A roofed or covered common pedestrian area within a *covered mall building* that serves as access for two or more tenants and not to exceed three levels that are open to each other. The term "mall" shall include open malls as defined below.

❖ The mall is an interior, climate-controlled pedestrian way that is open to the tenant spaces within the mall building and typically connects to the anchor buildings. The term "mall" shall also include open malls. Unless noted otherwise, open malls must comply with all the provisions for malls.

INTERNATIONAL CODE COUNCIL®
Copyright © 2015 ICC. ALL RIGHTS RESERVED. Accessed by David Dammon on Jun 21, 2017 12:30:52 PM pursuant to License Agreement with ICC. No further reproduction or distribution authorized. ANY UNAUTHORIZED REPRODUCTION OR DISTRIBUTION IS A VIOLATION OF THE FEDERAL COPYRIGHT ACT AND THE LICENSE AGREEMENT, AND SUBJECT TO CIVIL AND CRIMINAL PENALTIES THEREUNDER.

Open mall. An unroofed common pedestrian way serving a number of tenants not exceeding three levels. Circulation at levels above grade shall be permitted to include open exterior balconies leading to *exits* discharging at grade.

❖ The open mall is an uncovered common pedestrian walk that is open to the sky above and to tenant spaces within the open mall building, and typically connects to the anchor buildings. The size of the openings to the sky is in accordance with Section 402.4.3. Unless noted otherwise, open malls must comply with all the provisions for malls.

Open mall building. Several structures housing a number of tenants, such as retail stores, drinking and dining establishments, entertainment and amusement facilities, offices, and other similar uses, wherein two or more tenants have a main entrance into one or more open malls. *Anchor buildings* are not considered as a part of the open mall building.

❖ The open mall building includes all of the buildings housing a number of tenants wherein two or more tenants have a main entrance into one or more open malls. Because the open mall is characterized by there not being a roof connecting one side of the pedestrian mall to the other, the covered mall "building" may actually be a collection of separate buildings which all rely on a shared pedestrian concourse for egress. Similar to the covered mall building, the open mall "building" does not include the anchor buildings. Unless noted otherwise, open mall buildings have to comply with all the provisions for covered mall buildings.

[BS] CRIPPLE WALL. A framed stud wall extending from the top of the foundation to the underside of floor framing for the lowest occupied floor level.

❖ Cripple walls are built on the top of footings or foundation walls. They can typically be found along the top of stepped foundation walls where the grade adjoining the structure changes height. Cripple walls must be properly braced to resist lateral forces. They are often treated the same as a first-story wall. Provisions for the bracing of cripple walls are located in Section 2308.6.6.

[F] CRITICAL CIRCUIT. A circuit that requires continuous operation to ensure safety of the structure and occupants.

❖ The purpose of this definition is to clarify the applicability of the provisions of Section 2702.3. Critical circuits are those electrical circuits supplying power to systems and equipment that are vital to the safety of building occupants and to the operational continuity of safety systems such as fire alarm systems, security systems, emergency communication systems and similar systems identified throughout the code, most notably in sections pertaining to emergency power. Although the term "critical circuit" is used widely throughout many industry standards, there is no specific definition for the term. As such, this definition was created based on definitions found in NFPA 70 and is similar to the definition of "Critical Operations Power Systems (COPS)" in that standard. See the commentary to Section 2702.3.

[BS] CROSS-LAMINATED TIMBER. A prefabricated engineered wood product consisting of not less than three layers of solid-sawn lumber or *structural composite lumber* where the adjacent layers are cross oriented and bonded with structural adhesive to form a solid wood element.

❖ This definition enables the code user to correctly apply the material standards in Section 2303 for these wood products.

[F] CRYOGENIC FLUID. A *liquid* having a *boiling point* lower than -150°F (-101°C) at 14.7 pounds per square inch atmosphere (psia) (an absolute pressure of 101 kPa).

❖ Cryogenic fluids present a hazard because they are extremely cold. Should a spill occur, their extremely cold temperature affects other compounds exposed to the spilled cryogenic fluid. Cryogenic fluids may be flammable or nonflammable. However, nonflammable cryogenics may possess properties that cause them to support combustion or react severely with other materials. The code is only intended to classify flammable or oxidizing cryogenic fluids as a hazardous material.

CUSTODIAL CARE. Assistance with day-to-day living tasks; such as assistance with cooking, taking medication, bathing, using toilet facilities and other tasks of daily living. Custodial care includes persons receiving care who have the ability to respond to emergency situations and evacuate at a slower rate and/or who have mental and psychiatric complications.

❖ Care facilities are used by patients of varying acuity seeking a broad spectrum of available support services. These facilities span a wide range of occupancy types including Groups E, I and R. There are three types of care defined in the codes: personal, custodial, and medical.

- Personal care is on one end of the care spectrum. It occurs in Group E for child daycare services for persons over $2^1/_2$ years of age. Occupants are supervised but do not need custodial or medical care.
- Custodial care occurs in Groups I-1, I-4 and R4, where occupants may be elderly or impaired, or require adult or child daycare of any age. Care recipients may need daily living assistance such as cooking, cleaning, bathing, or with taking medications. Persons who receive custodial care may or may not require assistance with evacuation depending on the occupancy and/or the "condition" in the occupancy. See also the commentary to Section 308.3 for Group I-1/R4 and Section 308.6 for Group I-4.
- Medical care occurs in Group I-2 on the opposite end of the spectrum, where care recipients are incapable of self-preservation. They may be completely bedridden, meaning bed movement

INTERNATIONAL CODE COUNCIL®
Copyright © 2015 ICC. ALL RIGHTS RESERVED. Accessed by David Dammon on Jun 21, 2017 12:30:52 PM pursuant to License Agreement with ICC. No further reproduction or distribution authorized. ANY UNAUTHORIZED REPRODUCTION OR DISTRIBUTION IS A VIOLATION OF THE FEDERAL COPYRIGHT ACT AND THE LICENSE AGREEMENT, AND SUBJECT TO CIVIL AND CRIMINAL PENALTIES THEREUNDER.

may be required during emergencies, and may be dependent on life support systems such as medical gases and emergency power to maintain life. This level of acuity is not allowed in custodial care or personal care.

There are two defining aspects of custodial care, which further differentiate it from medical care. The first is the evacuation capability of custodial care recipients. Custodial care recipients' evacuation capabilities are limited by the occupancy classification criteria or the occupancy condition in which care occurs. Groups I-1/R-4 Condition 1 only include occupants with the ability to self-evacuate. Groups I-1/R-4 Condition 2 include limited assistance with evacuation. Group R-4 also assumes that occupants may not be able to respond on their own during emergencies. The second differentiating aspect is that I-1 and R-4 custodial care recipients also participate in fire drills per the IFC, versus Group I-2 medical care which implements defend-in-place strategies during emergencies.

The level of care provided describes the condition and capabilities of an occupant which then indicates the appropriate standards for protection systems, both active and passive. See also the definition of "24-hour basis," "Ambulatory care facility," "Detoxification facility," "Foster care facility," "Group home," "Hospitals and psychiatric hospitals," "Medical care," "Nursing home," "Personal care services," and "Incapable of self-preservation."

[BS] DALLE GLASS. A decorative composite glazing material made of individual pieces of glass that are embedded in a cast matrix of concrete or epoxy.

❖ Dalle glass is a form of "stained" or "decorative" glass, and is more commonly known as "faceted" glass. Dalle glass is an outdated term and is rarely used. It can be prefabricated in panels that are set into framed openings, or it can be constructed in place, similar to the way a mason would construct a single wythe masonry wall. The actual glazing can be heavy pieces of flat or textured glass, irregular-shaped chunks of glass, glass shapes or translucent minerals cut to form geometric patterns or artistic scenes. Knowing that Dalle glass or faceted glass is a type of decorative glass is necessary because decorative glass is not required to be safety glazed in hazardous locations as required in Section 2406.4 (see Sections 2406.4.1, 2406.4.2 and 2406.4.3 for specific exceptions).

DAMPER. See "*Ceiling radiation damper*," "*Combination fire/smoke damper*," "*Corridor damper*," "*Fire damper*" and "*Smoke damper*."

❖ Dampers are used primarily in heating, ventilating and air-conditioning (HVAC) duct systems that pass through fire-resistance-rated walls, floors and ceilings. Dampers may also be required in rated walls independent of HVAC duct systems. Dampers are provided to maintain the fire-resistance rating of the penetrated assembly, to provide a barrier to resist smoke migration, or both. Damper types include fire dampers, smoke dampers, combination fire/smoke dampers, ceiling radiation dampers and corridor dampers.

[BS] DANGEROUS. Any building, structure or portion thereof that meets any of the conditions described below shall be deemed dangerous:

1. The building or structure has collapsed, has partially collapsed, has moved off its foundation or lacks the necessary support of the ground.
2. There exists a significant risk of collapse, detachment or dislodgment of any portion, member, appurtenance or ornamentation of the building or structure under service loads.

❖ This definition describes two conditions that are considered to be dangerous in buildings in regards to support, loading and the ability of the structure to resist loads

[F] DAY BOX. A portable magazine designed to hold explosive materials constructed in accordance with the requirements for a Type 3 magazine as defined and classified in Chapter 56 of the *International Fire Code*.

❖ A day box is an explosive magazine that is listed in Note e of Table 307.1(1). Where used, a day box will allow an increase in the maximum allowable quantities of hazardous materials.

[BS] DEAD LOAD. The weight of materials of construction incorporated into the building, including but not limited to walls, floors, roofs, ceilings, *stairways*, built-in partitions, finishes, cladding and other similarly incorporated architectural and structural items, and the weight of fixed service equipment, such as cranes, plumbing stacks and risers, electrical feeders, heating, ventilating and air-conditioning systems and *automatic sprinkler systems*.

❖ The definition of "Dead load" identifies the type of items that must be accounted for (also see Section 1607.12.3.1 for inclusion of items on landscaped roofs). This definition is necessary to distinguish dead loads from other loads, and for use in load combinations as specified by Section 1605. Dead loads are considered permanent in the load combinations. The nominal dead load is to be determined in accordance with Section 1606.

The weights of service equipment, such as plumbing stacks and risers; heating, ventilating and air-conditioning (HVAC) equipment; elevators and elevator machinery; fire protection systems and similar fixed equipment are to be included in the dead load. For the most part, tracking the weights of each utility system is not practical and the structural design is therefore based on a dead load allowance for these items. At times, the actual weight of equipment to be installed is unknown during the design phase of a building because the supplier of the equipment has

INTERNATIONAL CODE COUNCIL®
Copyright © 2015 ICC. ALL RIGHTS RESERVED. Accessed by David Dammon on Jun 21, 2017 12:30:52 PM pursuant to License Agreement with ICC. No further reproduction or distribution authorized. ANY UNAUTHORIZED REPRODUCTION OR DISTRIBUTION IS A VIOLATION OF THE FEDERAL COPYRIGHT ACT AND THE LICENSE AGREEMENT, AND SUBJECT TO CIVIL AND CRIMINAL PENALTIES THEREUNDER.

yet to be determined. The structural design must often proceed based on an estimated equipment dead load. For additional comments on dead load estimates, see the commentary to Section 1606.2.

[BS] DECORATIVE GLASS. A carved, leaded or *Dalle glass* or glazing material whose purpose is decorative or artistic, not functional; whose coloring, texture or other design qualities or components cannot be removed without destroying the glazing material and whose surface, or assembly into which it is incorporated, is divided into segments.

❖ This definition is needed to understand and properly apply exceptions to the requirements for safety glazing. Decorative glass is excluded at specific hazardous locations, and thus is not required to be safety glazing (see Sections 2406.4.1, 2406.4.2 and 2406.4.3).

[F] DECORATIVE MATERIALS. All materials applied over the building *interior finish* for decorative, acoustical or other effect including, but not limited to, curtains, draperies, fabrics and streamers; and all other materials utilized for decorative effect including, but not limited to, bulletin boards, artwork, posters, photographs, batting, cloth, cotton, hay, stalks, straw, vines, leaves, trees, moss and similar items, foam plastics and materials containing foam plastics. Decorative materials do not include wall coverings, ceiling coverings, floor coverings, ordinary window shades, *interior finish* and materials 0.025 inch (0.64 mm) or less in thickness applied directly to and adhering tightly to a substrate.

❖ The significance of this definition is to provide information as to what items are not regulated as decorative materials in the application of code requirements. While any dictionary would define floor coverings, window shades and wall paper as being "decorative" in a building interior, they are not considered decorative materials for the flame-resistance testing to which the code requirements are intended to apply.

[BS] DEEP FOUNDATION. A deep foundation is a foundation element that does not satisfy the definition of a *shallow foundation*.

❖ Chapter 18 identifies two major classifications for foundations; either shallow or deep. This definition clarifies that foundations not meeting the definition of "Shallow foundation" are, by default, considered to be deep foundations.

DEFEND-IN-PLACE. A method of emergency response that engages building components and trained staff to provide occupant safety during an emergency. Emergency response involves remaining in place, relocating within the building, or both, without evacuating the building.

❖ Nursing homes, hospitals and separated ambulatory care facilities may use defend-in-place methods as part of their strategy to deal with some emergency situations. Reasons why this may be a necessary option include situations such as a surgery or other procedure in process, emergency life monitoring/support equipment needed, or weather outside that could be hazardous to patient health. Defend-in-place, or protect in place, is a concept that has long been employed as the preferred method of fire response in nursing homes and hospitals due to the fragile nature of the occupants. Occupants in these settings are often dependent on the building infrastructure (i.e., medical gases, life support) and immediate evacuation would place their lives at risk.

These types of facilities are subdivided into different smoke compartments with refuge areas that can accommodate all building occupants. The IFC requires all staff to have training on the fire and safety evacuation plans and practice drills. The idea is for staff to move patients and guests to areas that are away from the area where there may be smoke, flames or other safety hazards, but not necessarily outside of the building. Typically, movement is into an adjacent smoke compartment. Patients or guests already in the smoke compartments away from the hazard are defended in place. Many hospital systems are on emergency or standby power to keep patient care in operation during an emergency.

These types of facilities will also have full evacuation plans for other types of emergencies, such as floods. See the IFC for specific requirements for fire and safety evacuation plans. These plans must be developed and reviewed with the fire department.

[A] DEFERRED SUBMITTAL. Those portions of the design that are not submitted at the time of the application and that are to be submitted to the *building official* within a specified period.

❖ Submittal documents are required at the time of permit application (See Section 107). If a building is "fast-track" or is a shell building, a complete set of construction documents for the building may not be available at the time of the initial permit application. So that a complete set of documents is available for the building department review and records, some of the construction drawings may be provided at a later time. A list of pending documents, specifying when they will be provided, must be included in the initial submittal and approved by the building official.

[F] DEFLAGRATION. An exothermic reaction, such as the extremely rapid oxidation of a flammable dust or vapor in air, in which the reaction progresses through the unburned material at a rate less than the velocity of sound. A deflagration can have an explosive effect.

❖ Materials that present a deflagration hazard usually burn very rapidly with the release of energy from a chemical reaction in the form of intense heat. Confined deflagration hazards under pressure can result in an explosion. Most hazardous materials that pose a severe deflagration hazard are classified as Group H-2 in accordance with Section 307.4 (see the definition of "Detonation").

[F] DELUGE SYSTEM. A sprinkler system employing open sprinklers attached to a piping system connected to a water supply through a valve that is opened by the operation of a detection system installed in the same areas as the sprin-

INTERNATIONAL CODE COUNCIL®
Copyright © 2015 ICC. ALL RIGHTS RESERVED. Accessed by David Dammon on Jun 21, 2017 12:30:52 PM pursuant to License Agreement with ICC. No further reproduction or distribution authorized. ANY UNAUTHORIZED REPRODUCTION OR DISTRIBUTION IS A VIOLATION OF THE FEDERAL COPYRIGHT ACT AND THE LICENSE AGREEMENT, AND SUBJECT TO CIVIL AND CRIMINAL PENALTIES THEREUNDER.

klers. When this valve opens, water flows into the piping system and discharges from all sprinklers attached thereto.

❖ A deluge system applies large quantities of water or foam throughout the protected area by means of a system of open sprinklers. In a fire, the system is activated by a fire detection system that makes it possible to apply water to a fire more quickly and to cover a larger area than with a conventional automatic sprinkler system, which depends on sprinklers being activated individually as the fire spreads. As the definition indicates, the sprinklers are open. There is no fusible link, so when water is admitted into the system by the fire detection system, it flows through the piping and is immediately discharged through the sprinkler heads.

Deluge systems are particularly beneficial in hazardous areas where the fuel loads (combustible contents) are of such a nature that fire may grow with exceptional rapidity and possibly flash ahead of the operations of conventional automatic sprinklers.

[BS] DESIGN DISPLACEMENT. See Section 1905.1.1.

❖ This definition is a modification of ACI 318 text and is therefore located in Section 1905.

[BS] DESIGN EARTHQUAKE GROUND MOTION. The earthquake ground motion that buildings and structures are specifically proportioned to resist in Section 1613.

❖ A structure must be designed for the level of ground motion corresponding to the design earthquake. This is determined in Section 1613.3.4 as two-thirds of the maximum earthquake ground motions with adjustments to account for the site's soil profile.

[BS] DESIGN FLOOD. The *flood* associated with the greater of the following two areas:

1. Area with a flood plain subject to a 1-percent or greater chance of *flooding* in any year.
2. Area designated as a *flood hazard area* on a community's flood hazard map, or otherwise legally designated.

❖ The design flood is either the base flood or another flood based on other criteria. A state or local jurisdiction may choose to prepare and adopt flood hazard maps that show flood hazard areas that are not on maps prepared by FEMA. These may be areas that FEMA did not study, or areas that were studied with different criteria. For example, as a general rule, FEMA is concerned primarily with inland flooding sources that have a drainage area of 1 square mile (2.590 km^2) or more. For another example, some communities elect to prepare flood hazard maps based on the assumption that the upland watershed is built out to existing zoning, often called "ultimate development," and sometimes the "flood of record" is the basis for regulation.

[BS] DESIGN FLOOD ELEVATION. The elevation of the "*design flood*," including wave height, relative to the datum specified on the community's legally designated flood hazard map. In areas designated as Zone AO, the *design flood elevation* shall be the elevation of the highest existing grade of the building's perimeter plus the depth number (in feet) specified on the flood hazard map. In areas designated as Zone AO where a depth number is not specified on the map, the depth number shall be taken as being equal to 2 feet (610 mm).

❖ The design flood elevation is the height to which floodwaters are predicted to rise during passage or occurrence of the design flood. Unless a community has adopted another flood hazard map or otherwise designated the design flood, the design flood elevation is the base flood elevation shown on the Flood Insurance Rate Maps (FIRM). The datum specified on the flood hazard map is important because it may differ from the datum used locally for other purposes. Also, the datum shown on the FIRM may change over time, as FEMA updates and revises the maps.

Some flood hazard maps have areas denoted as AO Zones, identifying areas subject to sheet flow flooding, shallow flooding or ponding. Specific instruction for these zones is provided in the code because the maps specify a flood depth above grade rather than a height above datum.

FEMA refers to some areas subject to shallow flooding and/or unpredictable flow paths as AH Zones. AH Zones have specified base flood elevations and they are treated the same as the other A Zones with base flood elevations.

[A] DESIGN PROFESSIONAL, REGISTERED. See "Registered design professional."

[A] DESIGN PROFESSIONAL IN RESPONSIBLE CHARGE, REGISTERED. See "Registered design professional in responsible charge."

[BS] DESIGN STRENGTH. The product of the nominal strength and a *resistance factor* (or strength reduction factor).

❖ This definition is needed to apply the strength design requirements in the code. The design strength is the nominal strength multiplied by a resistance or strength reduction factor that is less than one. The design strength and corresponding strength reduction factors are specified in the applicable material chapter of the code or a standard that is referenced therein.

[BS] DESIGNATED SEISMIC SYSTEM. Those nonstructural components that require design in accordance with Chapter 13 of ASCE 7 and for which the component importance factor, I_p, is greater than 1 in accordance with Section 13.1.3 of ASCE 7.

❖ Designated seismic systems are those architectural, electrical and mechanical components and systems in the referenced ASCE 7 provisions that are assigned a component importance factor of 1.5. The importance factor is an indication that, compared with nonstructural components with the typical factor of 1.0, there is a higher level of importance placed on the system so that it will remain operational during and after an earthquake. This definition is important

INTERNATIONAL CODE COUNCIL®
Copyright © 2015 ICC. ALL RIGHTS RESERVED. Accessed by David Dammon on Jun 21, 2017 12:30:52 PM pursuant to License Agreement with ICC. No further reproduction or distribution authorized. ANY UNAUTHORIZED REPRODUCTION OR DISTRIBUTION IS A VIOLATION OF THE FEDERAL COPYRIGHT ACT AND THE LICENSE AGREEMENT, AND SUBJECT TO CIVIL AND CRIMINAL PENALTIES THEREUNDER.

in correctly applying the provisions for special inspection and testing for designated seismic systems.

[F] DETACHED BUILDING. A separate single-*story* building, without a basement or crawl space, used for the storage or *use* of *hazardous materials* and located an *approved* distance from all structures.

❖ The term is used to define the type of structure the code recognizes for the use and storage of hazardous materials in excess of the maximum allowable quantities. While the definition addresses all hazardous materials, a detached storage building is only required for Group H-1, H-2 and H-3 structures as indicated in Sections 415.6.2 and 415.7, and Table 415.6.2. The location of the structure may be regulated by Section 415.6.1 based on the characteristics of the materials contained in the building.

[BS] DETAILED PLAIN CONCRETE STRUCTURAL WALL. See Section 1905.1.1

❖ This definition is a modification of ACI 318 text and is therefore located in Section 1905.

DETECTABLE WARNING. A standardized surface feature built in or applied to walking surfaces or other elements to warn visually impaired persons of hazards on a *circulation path*.

❖ A detectable warning is a change in texture that is detectable by a person with a vision impairment. Technical specifications for a detectable warning surface are set forth in ICC A117.1. Detectable warnings are only required for transit platform edges so that users can be confident of the warning that is intended to be communicated and not be confused by multiple, different surfaces intended to convey the same warning (see commentary, Section 1109.10).

[F] DETECTOR, HEAT. A fire detector that senses heat—either abnormally high temperature or rate of rise, or both.

❖ In a fire, heat is released that causes the temperature in a room or space to increase. Automatic fire detectors that sense abnormally high temperature or rate of temperature rise are known as heat detectors. These include fixed temperature detectors, rate compensation detectors and rate-of-rise detectors. The code requires all automatic fire detectors to be smoke detectors, except that heat detectors tested and approved in accordance with NFPA 72 may be used as an alternative to smoke detectors in rooms and spaces where, during normal operation, products of combustion are present in sufficient quantity to actuate a smoke detector.

[F] DETONATION. An exothermic reaction characterized by the presence of a shock wave in the material which establishes and maintains the reaction. The reaction zone progresses through the material at a rate greater than the velocity of sound. The principal heating mechanism is one of shock compression. Detonations have an explosive effect.

❖ Detonations are distinguished from deflagrations (which are produced by explosive gases, dusts, vapors and mists) by the speed with which they propagate a blast effect. Detonations occur much faster than deflagrations, since they propagate a combustion zone at a velocity greater than the speed of sound. Deflagrations propagate a combustion zone at a velocity less than the speed of sound. The speed of sound is approximately 1,100 feet per second (336 m/s) at sea level. Both detonations and deflagrations may produce explosive results when they occur in a confined space. Materials that are considered a detonation hazard are classified as Group H-1 materials in accordance with Section 307.3.

DETOXIFICATION FACILITIES. Facilities that provide treatment for substance abuse, serving care recipients who are *incapable of self-preservation* or who are harmful to themselves or others.

❖ Persons in detoxification facilities may be physically incapable of self-preservation, or they may be confined within an area of a building for care or security purposes. See the commentary to Sections 308 and 407, Group I-2.

Care facilities are used by patients of varying acuity seeking a broad spectrum of available support services. These facilities span a wide range of occupancy types including Groups E, I and R. The level of care provided describes the condition and capabilities of an occupant, which, in turn, indicates appropriate standards for protection systems, both passive and active. See also the definitions for "24-hour care," "Ambulatory care facility," "Group home," "Hospitals and psychiatric hospitals," "Incapable of self-preservation," "Medical care," "Nursing home" and "Personal care services."

[BS] DIAPHRAGM. A horizontal or sloped system acting to transmit lateral forces to vertical elements of the lateral force-resisting system. When the term "diaphragm" is used, it shall include horizontal bracing systems.

❖ Floor and roof diaphragms act to transfer the lateral forces, such as wind or seismic loads, to the vertical-resisting elements (e.g., shear walls, braced frames, moment frames, etc.), supporting them at their perimeter or intermittent locations.

Diaphragm, blocked. In *light-frame construction*, a diaphragm in which all sheathing edges not occurring on a framing member are supported on and fastened to blocking.

❖ Unblocked diaphragms can resist low and moderate in-plane shear forces. Diaphragm sheathing may be applied with the long dimension of the sheathing either perpendicular or parallel to the main framing members. When there is no blocking under the edge of the sheathing that is not supported by the main framing member, the diaphragm is considered to be unblocked. Tables in Chapter 23 provide different values for stapled structural sheathing when it is blocked and when it is not blocked. The ANSI/AWC *Special Design Provisions for Wind and Seismic* (SDPWS) contains separate tables for nailed diaphragms that are blocked and unblocked.

INTERNATIONAL CODE COUNCIL®
Copyright © 2015 ICC. ALL RIGHTS RESERVED. Accessed by David Dammon on Jun 21, 2017 12:30:52 PM pursuant to License Agreement with ICC. No further reproduction or distribution authorized. ANY UNAUTHORIZED REPRODUCTION OR DISTRIBUTION IS A VIOLATION OF THE FEDERAL COPYRIGHT ACT AND THE LICENSE AGREEMENT, AND SUBJECT TO CIVIL AND CRIMINAL PENALTIES THEREUNDER.

Diaphragm boundary. In *light-frame construction*, a location where shear is transferred into or out of the diaphragm sheathing. Transfer is either to a boundary element or to another force-resisting element.

❖ Diaphragm boundary is typically the connection between the floor or roof sheathing and the band board surrounding the diaphragm.

Diaphragm chord. A diaphragm boundary element perpendicular to the applied load that is assumed to take axial stresses due to the diaphragm moment.

❖ A diaphragm acts as a deep horizontal beam. The chords of the beam are the elements at the boundary of the diaphragm that are perpendicular to the direction of the applied load.

Diaphragm, unblocked. A diaphragm that has edge nailing at supporting members only. Blocking between supporting structural members at panel edges is not included. Diaphragm panels are field nailed to supporting members.

❖ Unblocked diaphragms can resist low and moderate shear forces. Diaphragm sheathing may be applied with the long dimension of the sheathing either perpendicular or parallel to the main framing members. When the edge of the sheathing is not supported by the main framing member, the diaphragm is considered to be unblocked. Various tables in Chapter 23 provide different values for structural sheathing when it is blocked and when it is not blocked.

DIMENSIONS (for Chapter 21).

❖ Different dimensions are used to designate sizes of masonry units and masonry elements. The terms denote the common meanings of various types of dimensions used in Chapter 21.

Nominal. The *specified dimension* plus an allowance for the *joints* with which the units are to be laid. Nominal dimensions are usually stated in whole numbers. Thickness is given first, followed by height and then length.

❖ The nominal dimensions of a masonry unit are the specified dimensions, plus the specified thickness of one mortar joint. Nominal dimensions are used for architectural layout of masonry structures. Commentary Figure 202(10) shows nominal dimensions for a specific concrete masonry unit.

Specified. Dimensions specified for the manufacture or construction of a unit, *joint* or element.

❖ The specified dimensions are prescribed in the construction documents. Commentary Figure 202(10) shows specified and nominal dimensions for a concrete masonry unit.

DIRECT ACCESS. A path of travel from a space to an immediately adjacent space through an opening in the common wall between the two spaces.

❖ This term is related to the interior exit stairway associated with the lobby required for fire service access elevators (FSAE) and occupant evacuation elevators (OEE). In order for FSAE and OEE to provide the protection and function necessary, a stairway needs to be located with the elevators themselves. See the commentary for Sections 3007.6.1 and 3008.6.1.

[F] DISPENSING. The pouring or transferring of any material from a container, tank or similar vessel, whereby vapors, dusts, fumes, mists or gases are liberated to the atmosphere.

❖ This term refers to a specific operation whereby the act of transferring a material occurs and has a hazard associated with the liberation of the material in the forms listed in the definition. It is not "handling" and should not be confused with that term (see the definitions of "Closed system" and "Handling").

DOOR, BALANCED. See "Balanced door."

DOOR, LOW-ENERGY POWER-OPERATED. See "Low-energy power-operated door."

DOOR, POWER-ASSISTED. See "Power-assisted door."

DOOR, POWER-OPERATED. See "Power-operated door."

DOORWAY, EXIT ACCESS. See "Exit access doorway."

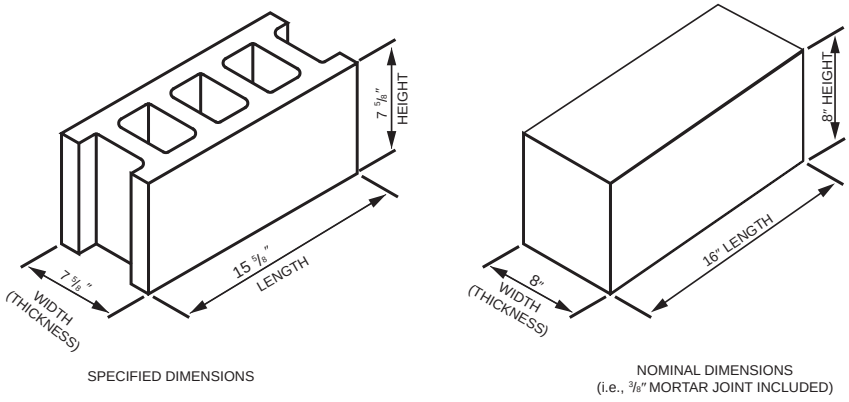

For SI: 1 inch = 25.4 mm.

Figure 202(10)
SPECIFIED AND NOMINAL DIMENSIONS FOR NOMINAL 8 × 8 × 16 CONCRETE MASONRY UNITS

INTERNATIONAL CODE COUNCIL®
Copyright © 2015 ICC. ALL RIGHTS RESERVED. Accessed by David Dammon on Jun 21, 2017 12:30:52 PM pursuant to License Agreement with ICC. No further reproduction or distribution authorized. ANY UNAUTHORIZED REPRODUCTION OR DISTRIBUTION IS A VIOLATION OF THE FEDERAL COPYRIGHT ACT AND THE LICENSE AGREEMENT, AND SUBJECT TO CIVIL AND CRIMINAL PENALTIES THEREUNDER.

DORMITORY. A space in a building where group sleeping accommodations are provided in one room, or in a series of closely associated rooms, for persons not members of the same family group, under joint occupancy and single management, as in college dormitories or fraternity houses.

❖ Dormitories typically consist of a large room serving as a community sleeping room or many smaller rooms grouped together and serving as private or semiprivate sleeping rooms (sleeping units). A typical setting for dormitories is on college campuses. However, sleeping areas of a fire station and similar lodging facilities for occupants not of the same family group are also considered dormitories. Dormitories most often are not the permanent residence of the occupants. They are typically occupied only for a designated period of time, such as a school year. Though limited, the period of occupancy is usually more than 30 days, which provides the occupant with a familiarity of the structure such that the occupancy is not considered transient. A dormitory is classified as Group R-2 (see Section 310.4).

Structures containing a dormitory often have a cafeteria or central eating area and common recreational areas. When such conditions exist, the structure must comply with the mixed occupancy provisions of the code [see Section 508 and Commentary Figure 202(11)].

DRAFTSTOP. A material, device or construction installed to restrict the movement of air within open spaces of concealed areas of building components such as crawl spaces, floor/ceiling assemblies, roof/ceiling assemblies and *attics*.

❖ Draftstopping is required in concealed combustible spaces to limit the movement of air, smoke and other products of combustion. Draftstopping materials are permitted to be combustible based on the rationale that a large and thick enough combustible material will act as a hindrance against the free movement of air, of flame/fire and of the products of combustion [see Commentary Figures 202(12) and 202(13) for typical draftstopping applications (also see Section 718)]. Although the term "draftstopping" would seem to imply that its primary purpose is to hinder the circulation of air within the space, its intended purpose is to stop the movement of fire and products of combustion, as evidenced by the fact that draftstopping can be omitted in some cases when appropriate automatic fire sprinkler protection is installed (see Sections 718.3 and 718.4).

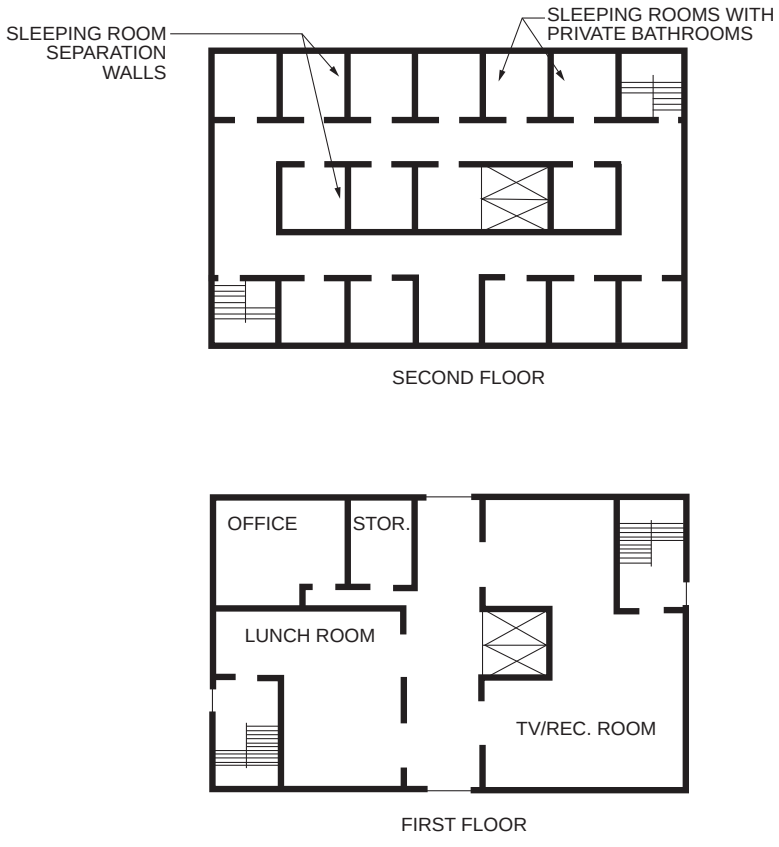

Figure 202(11)
GROUP R-2—DORMITORY
(OCCUPANTS PRIMARILY NONTRANSIENT)

INTERNATIONAL CODE COUNCIL®
Copyright © 2015 ICC. ALL RIGHTS RESERVED. Accessed by David Dammon on Jun 21, 2017 12:30:52 PM pursuant to License Agreement with ICC. No further reproduction or distribution authorized. ANY UNAUTHORIZED REPRODUCTION OR DISTRIBUTION IS A VIOLATION OF THE FEDERAL COPYRIGHT ACT AND THE LICENSE AGREEMENT, AND SUBJECT TO CIVIL AND CRIMINAL PENALTIES THEREUNDER.

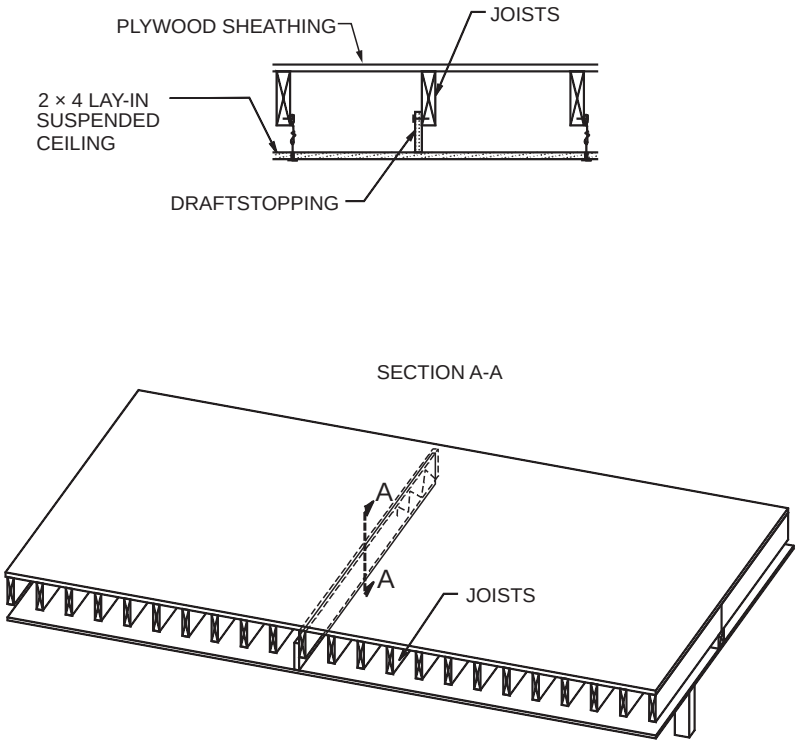

Figure 202(12)
EXAMPLE OF DRAFTSTOPPING

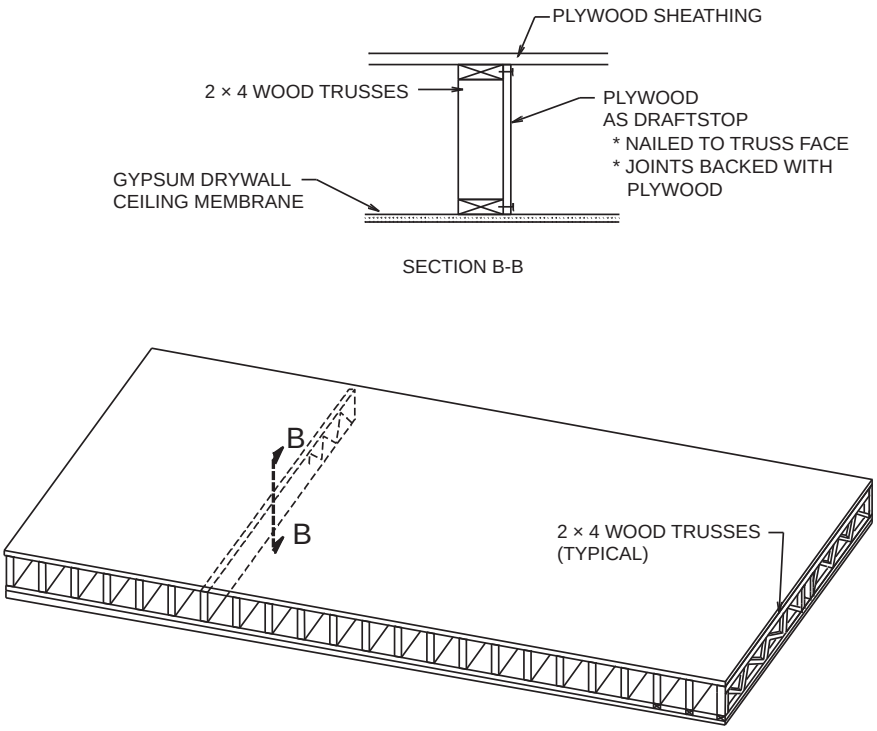

Figure 202(13)
EXAMPLE OF DRAFTSTOPPING

INTERNATIONAL CODE COUNCIL®
Copyright © 2015 ICC. ALL RIGHTS RESERVED. Accessed by David Dammon on Jun 21, 2017 12:30:52 PM pursuant to License Agreement with ICC. No further reproduction or distribution authorized. ANY UNAUTHORIZED REPRODUCTION OR DISTRIBUTION IS A VIOLATION OF THE FEDERAL COPYRIGHT ACT AND THE LICENSE AGREEMENT, AND SUBJECT TO CIVIL AND CRIMINAL PENALTIES THEREUNDER.

[BS] DRAG STRUT. See "Collector."

❖ The term "drag strut" is another term for "collector."

[BS] DRILLED SHAFT. A cast-in-place deep foundation element constructed by drilling a hole (with or without permanent casing) into soil or rock and filling it with fluid concrete.

❖ This definition clarifies a term that refers to a specific type of deep foundation element (see the requirements of Section 1810.3.9.5).

Socketed drilled shaft. A drilled shaft with a permanent pipe or tube casing that extends down to bedrock and an uncased socket drilled into the bedrock.

❖ This definition clarifies a term that refers to a specific type of deep foundation element (see the requirements of Sections 1810.3.9.6 and 1810.4.9).

[F] DRY-CHEMICAL EXTINGUISHING AGENT. A powder composed of small particles, usually of sodium bicarbonate, potassium bicarbonate, urea-potassium-based bicarbonate, potassium chloride or monoammonium phosphate, with added particulate material supplemented by special treatment to provide resistance to packing, resistance to moisture absorption (caking) and the proper flow capabilities.

❖ A dry-chemical system extinguishes a fire by placing a chemical barrier between the fire and oxygen, which acts to smother a fire. This system is best known for protecting commercial ranges, commercial fryers and exhaust hoods. Wet-chemical extinguishing systems, however, are more commonly used for new installations in commercial cooking equipment.

The type of dry chemical to be used in the extinguishing system is a function of the hazard expected. The type of dry chemical used in a system must not be changed unless it has been proven changeable by a testing laboratory, is recommended by the manufacturer of the equipment and is acceptable to the fire code official for the hazard expected. Additional guidance on the use of various dry-chemical agents can be found in NFPA 17, which gives minimum requirements for the design, installation, testing, inspection, approval, operation and maintenance of dry-chemical extinguishing systems.

[BS] DRY FLOODPROOFING. A combination of design modifications that results in a building or structure, including the attendant utilities and equipment and sanitary facilities, being water tight with walls substantially impermeable to the passage of water and with structural components having the capacity to resist *loads* as identified in ASCE 7.

❖ All residential buildings and most nonresidential buildings in flood hazard areas are elevated so that the lowest floors (including basements) are at or above the design flood elevation. Under certain circumstances, nonresidential buildings (and nonresidential portions of mixed-use buildings) may be designed and constructed to incorporate dry floodproofing modifications (structural and nonstructural additions, changes, adjustments or other measures) that are designed to keep water out, and to withstand hydrostatic and hydrodynamic loads.

DWELLING. A building that contains one or two *dwelling units* used, intended or designed to be used, rented, leased, let or hired out to be occupied for living purposes.

❖ Dwellings are buildings intended to serve as residences for one or two families. Dwellings can be owner occupied or rented. The term "dwelling," which refers to the building itself, is defined to distinguish it from the term "dwelling unit," which is a single living unit within a building. It is important to recognize that the code is not intended to regulate detached one- and two-family dwellings and townhouses that are regulated by the IRC (see Section 101.2). See also the definition for "Townhouse."

DWELLING UNIT. A single unit providing complete, independent living facilities for one or more persons, including permanent provisions for living, sleeping, eating, cooking and sanitation.

❖ A dwelling unit, as stated, is a residential unit that contains all of the necessary facilities for independent living. This provides a single, independent unit that serves a single family or single group of individuals. This terminology is used throughout the code for the determination of the application of various provisions. A dwelling unit is also distinguished from a sleeping unit, which does not have all of the features of a dwelling unit and must comply with a different set of requirements (see the definition for "Sleeping unit"). A building containing one or more dwelling units is a "dwelling" (see the definitions for "Dwelling" and "Townhouse"). A building containing three or more dwelling units is regulated as a Group R-2 occupancy. The most common term used for such a building is an apartment house or condominium. To be considered a Group R-3 occupancy, the structure must have one or two dwelling units, or be subdivided by fire walls between every unit or every two units.

DWELLING UNIT OR SLEEPING UNIT, MULTISTORY. See "Multistory unit."

EGRESS COURT. A *court* or *yard* which provides access to a *public way* for one or more *exits.*

❖ The egress court requirements address situations where the exit discharge portion of the means of egress passes through confined areas near the building and therefore faces a hazard not normally found in the exit discharge (see Section 1028.4).

ELECTRICAL CIRCUIT PROTECTIVE SYSTEM. A specific construction of devices, materials, or coatings installed as a fire-resistive barrier system applied to electrical system components, such as cable trays, conduits and other raceways, open run cables and conductors, cables, and conductors.

❖ Electrical circuit protective systems are used primarily for fire protection of wiring and cables that serve smokeproof enclosure ventilation systems and fire

INTERNATIONAL CODE COUNCIL®
Copyright © 2015 ICC. ALL RIGHTS RESERVED. Accessed by David Dammon on Jun 21, 2017 12:30:52 PM pursuant to License Agreement with ICC. No further reproduction or distribution authorized. ANY UNAUTHORIZED REPRODUCTION OR DISTRIBUTION IS A VIOLATION OF THE FEDERAL COPYRIGHT ACT AND THE LICENSE AGREEMENT, AND SUBJECT TO CIVIL AND CRIMINAL PENALTIES THEREUNDER.

service access elevators. These systems are an alternative to conventional rated construction such as fire barriers and horizontal assemblies.

[F] ELEVATOR GROUP. A grouping of elevators in a building located adjacent or directly across from one another that responds to common hall call buttons.

❖ This definition clarifies the application of the emergency voice/alarm communication system requirements in Section 907.5.2.2 as to the locations, called "paging zones," where system speakers are required (see commentary, Section 907.5.2.2).

[F] EMERGENCY ALARM SYSTEM. A system to provide indication and warning of emergency situations involving *hazardous materials*.

❖ Because of the potentially volatile nature of hazardous materials, an emergency alarm system is required outside of interior building rooms or areas containing hazardous materials in excess of the maximum allowable quantities permitted in Tables 307.1(1) and 307.1(2). The intent of the emergency alarm, upon actuation by an alarm-initiating device, is to alert the occupants to an emergency condition involving hazardous materials. The initiation of the emergency alarm can be by manual or automatic means depending on the hazard and the specific requirements for the type of hazard (see Section 908).

[F] EMERGENCY CONTROL STATION. An *approved* location on the premises where signals from emergency equipment are received and which is staffed by trained personnel.

❖ This definition identifies the room or area located in the hazardous production materials (HPM) facility that is utilized for the purpose of receiving various alarms and signals. The smoke detectors located in the building's recirculation ventilation ducts, the gas-monitoring/detection system and the telephone/fire protective signaling systems located outside of HPM storage rooms are all required to be connected to the emergency control station. The location of the emergency control station must be approved by the building official. An approved location should be based on personnel being able to adequately monitor the necessary alarms and signals, and on the fire department being able to gain access quickly when responding to emergency situations. Additionally, the room must be occupied by persons who are trained to respond to the various alarms and signals in the appropriate fashion.

EMERGENCY ESCAPE AND RESCUE OPENING. An operable window, door or other similar device that provides for a means of escape and access for rescue in the event of an emergency.

❖ These are commonly windows that are sized and located such that they can be used to exit a building directly from a basement or bedroom during an emergency condition. The openings are also used by emergency personnel to rescue the occupants in a building (see Section 1030). Windows are never considered to be exit or exit access components for purposes of meeting minimum number of exit requirements. An emergency escape and rescue opening could be a type of door, such as a basement door with direct access to an exterior stairway or a door to a balcony. Bulkhead style cellar doors could also be evaluated as possible emergency escape and rescue openings.

[F] EMERGENCY POWER SYSTEM. A source of automatic electric power of a required capacity and duration to operate required life safety, fire alarm, detection and ventilation systems in the event of a failure of the primary power. Emergency power systems are required for electrical loads where interruption of the primary power could result in loss of human life or serious injuries.

❖ Section 2702 of the code mandates the installation of emergency power systems and standby power systems for various buildings and occupancies in accordance with the IFC and NFPA 70, 110 and 111. This definition is intended to provide clarity for the fire code official as to exactly what systems are considered to be emergency power systems and is consistent with definitions in NFPA 110 and NFPA 111. A primary difference between emergency and standby power systems is that emergency power systems are essentially life safety systems (e.g., exit signage and egress illumination), whereas standby power systems focus more on the continued operation of critical equipment in a building (e.g., elevators, fire pumps). Another difference between the two is the time limit within which the power supply activates. More specifically, emergency power is available in 10 seconds after primary power fails, whereas standby power is available in 60 seconds. Both types of systems are required to operate for a minimum of two hours under full design load unless otherwise indicated in Section 2702. Emergency power systems are required for the following systems or features, among others:

1. Emergency voice/alarm communication systems (24-hour duration).
2. Emergency alarm systems.
3. Exit signs.
4. Means of egress illumination.
5. HPM facility equipment.

See also the commentary to the definition of "Standby power system" and Section 2702.

[F] EMERGENCY VOICE/ALARM COMMUNICATIONS. Dedicated manual or *automatic* facilities for originating and distributing voice instructions, as well as alert and

INTERNATIONAL CODE COUNCIL®
Copyright © 2015 ICC. ALL RIGHTS RESERVED. Accessed by David Dammon on Jun 21, 2017 12:30:52 PM pursuant to License Agreement with ICC. No further reproduction or distribution authorized. ANY UNAUTHORIZED REPRODUCTION OR DISTRIBUTION IS A VIOLATION OF THE FEDERAL COPYRIGHT ACT AND THE LICENSE AGREEMENT, AND SUBJECT TO CIVIL AND CRIMINAL PENALTIES THEREUNDER.

evacuation signals pertaining to a fire emergency, to the occupants of a building.

❖ An emergency voice/alarm communication system is a special feature of fire alarm systems in buildings with special evacuation considerations, such as a high-rise building or a large assembly space. Emergency voice/alarm communication systems automatically communicate a fire emergency message to all occupants of a building on a general or selective basis. Such systems also enable the fire service to manually transmit voice instructions to the building occupants about a fire emergency condition and the action to be taken for evacuation or movement to another area of the building. Although most systems use prerecorded messages, some now use computer synthesized voices to communicate messages that allow customized messages unique to the facility.

EMPLOYEE WORK AREA. All or any portion of a space used only by employees and only for work. *Corridors*, toilet rooms, kitchenettes and break rooms are not employee work areas.

❖ An employee work area is different in an office versus on a factory line. An employee work area will most likely expand past the station or desk where an employee performs his or her job. An employee work area could include common use spaces, but not public use spaces. Depending on the duties of the employee, it may also include copy areas, stock rooms, filing areas, an assembly line, etc. (see also the commentary for the definitions of "Common use" and "Public-use areas").

Note that not all employee-only areas are considered part of employee work areas (i.e., bathrooms, corridors, breakrooms).

[BS] ENGINEERED WOOD RIM BOARD. A full-depth structural composite lumber, wood structural panel, structural glued laminated timber or prefabricated wood I-joist member designed to transfer horizontal (shear) and vertical (compression) loads, provide attachment for diaphragm sheathing, siding and exterior deck ledgers, and provide lateral support at the ends of floor or roof joists or rafters.

❖ Engineered rim board is a key structural element in many engineered wood floor applications where both structural load path through the perimeter member and dimensional change compatibility are design considerations. Section 2303.1.13 provides the compliance standards for this product.

ENTRANCE, PUBLIC. See "Public entrance."

ENTRANCE, RESTRICTED. See "Restricted entrance."

ENTRANCE, SERVICE. See "Service entrance."

EQUIPMENT PLATFORM. An unoccupied, elevated platform used exclusively for mechanical systems or industrial process equipment, including the associated elevated walkways, stairways, alternating tread devices and ladders necessary to access the platform (see Section 505.3).

❖ A distinction is made between equipment platforms and mezzanines by way of this definition. Equipment platforms, covered in Section 505.3, are unoccupied and used exclusively for housing equipment and providing access thereto, and are not subject to the requirements for mezzanines. Their purpose could also be to allow access for maintenance, repair or modification of elevated or very large equipment. Equipment platforms allow efficient use of high bay areas by locating infrequently accessed equipment or processes overhead without the occupant load or increasing the hazard to occupants in the room. Elevated floor areas that do not meet this definition would be subject to the requirements for mezzanines.

ESSENTIAL FACILITIES. Buildings and other structures that are intended to remain operational in the event of extreme environmental loading from *flood*, wind, snow or earthquakes.

❖ This definition is needed to facilitate identification of Risk Category IV buildings under Section 1604.5. This is critical in determining the design earthquake, flood, snow and wind load criteria that apply to the facility.

[F] EXHAUSTED ENCLOSURE. An appliance or piece of equipment that consists of a top, a back and two sides providing a means of local exhaust for capturing gases, fumes, vapors and mists. Such enclosures include laboratory hoods, exhaust fume hoods and similar appliances and equipment used to locally retain and exhaust the gases, fumes, vapors and mists that could be released. Rooms or areas provided with general *ventilation*, in themselves, are not exhausted enclosures.

❖ Exhausted enclosures, such as laboratory hoods or exhaust fume hoods, are utilized to contain hazardous fumes and vapors. The use of an approved exhausted enclosure may allow an increase in the maximum allowable quantities per control area of a given hazardous material. Exhausted enclosures are typically utilized when highly toxic or toxic compressed gases are involved. The exhausted enclosures are required to be of noncombustible construction, have specific ventilation criteria and be protected by an approved fire-extinguishing system.

EXISTING STRUCTURE. A structure erected prior to the date of adoption of the appropriate code, or one for which a legal building *permit* has been issued. For application of provisions in *flood hazard areas*, an existing structure is any building or structure for which the start of construction commenced before the effective date of the community's first flood plain management code, ordinance or standard.

❖ This definition clarifies which buildings and structures would be considered as existing for the application of the flood provisions of the IEBC (see Section 101.4.7). More specifically, they are defined as buildings that were previously built or that have valid permits. Buildings without permits would not be legally considered existing as far as receiving any of the exceptions afforded to buildings undergoing repairs and alterations, thus full compliance with the code for new buildings would be required. For the application of flood

INTERNATIONAL CODE COUNCIL®
Copyright © 2015 ICC. ALL RIGHTS RESERVED. Accessed by David Dammon on Jun 21, 2017 12:30:52 PM pursuant to License Agreement with ICC. No further reproduction or distribution authorized. ANY UNAUTHORIZED REPRODUCTION OR DISTRIBUTION IS A VIOLATION OF THE FEDERAL COPYRIGHT ACT AND THE LICENSE AGREEMENT, AND SUBJECT TO CIVIL AND CRIMINAL PENALTIES THEREUNDER.

hazard area requirements, buildings and structures are considered to be "existing" if construction started before the local jurisdiction adopted its first regulation governing development in flood hazard areas. This distinction is important because all new construction, for which the start of construction is after the date of the first regulation, must be in full compliance with the regulation, including all subsequent alterations, improvements, repairs and additions.

EXIT. That portion of a *means of egress* system between the *exit access* and the *exit discharge* or *public way*. Exit components include exterior exit doors at the *level of exit discharge*, *interior exit stairways* and *ramps*, *exit passageways*, *exterior exit stairways* and *ramps* and *horizontal exits*.

❖ Exits are the critical element of the means of egress system that building occupants travel through to reach the exterior at the level of exit discharge. Exit stairways and ramps from upper and lower stories must be separated from adjacent areas with fire-resistance-rated construction. The fire-resistance-rated construction serves as a barrier between the fire and the means of egress and protects occupants while they travel through the exit. Separation by fire-resistance-rated construction is not required, however, where the exit leads directly to the exterior at the level of exit discharge (e.g., exterior door at grade). Commentary Figure 202(14) illustrates three different types of exits: interior exit stairway, exterior exit stairway and exterior exit door.

A horizontal exit, while not discharging to the outside, does discharge to another building or refuge area. The door to the refuge area is through a fire wall or fire barrier (see the definition for "Exit, horizontal" and Section 1026).

EXIT ACCESS. That portion of a *means of egress* system that leads from any occupied portion of a building or structure to an *exit*.

❖ The exit access portion of the means of egress consists of all floor areas that lead from usable spaces within the building to the exit or exits serving that floor area. Crawl spaces and concealed attic and roof spaces are not considered to be part of the exit access. As shown in Commentary Figure 202(15), the exit access begins at the furthest points within each room or space and ends at the entrance to the exit.

EXIT ACCESS DOORWAY. A door or access point along the path of egress travel from an occupied room, area or space where the path of egress enters an intervening room, *corridor*, *exit access stairway* or *ramp*.

❖ Exit access doorways are used to design many critical aspects of the means of egress, including arrangement, number, separation, opening protection and exit sign placement. The term "doorway" has traditionally been limited to those situations where an

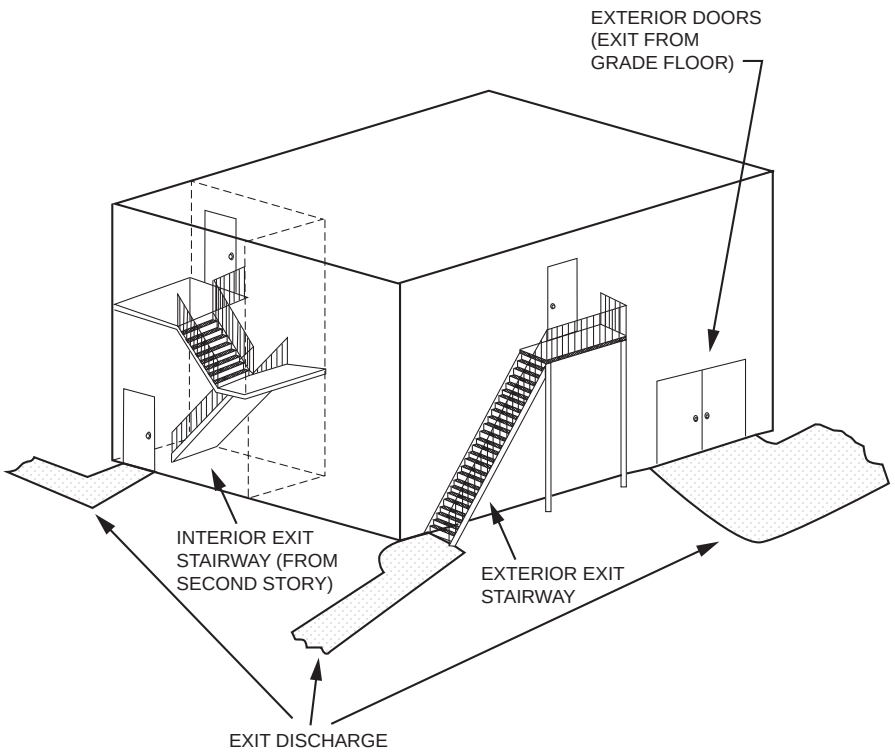

Figure 202(14)
EXIT

INTERNATIONAL CODE COUNCIL®
Copyright © 2015 ICC. ALL RIGHTS RESERVED. Accessed by David Dammon on Jun 21, 2017 12:30:52 PM pursuant to License Agreement with ICC. No further reproduction or distribution authorized. ANY UNAUTHORIZED REPRODUCTION OR DISTRIBUTION IS A VIOLATION OF THE FEDERAL COPYRIGHT ACT AND THE LICENSE AGREEMENT, AND SUBJECT TO CIVIL AND CRIMINAL PENALTIES THEREUNDER.

actual opening, either with or without a door, is present. With "access point," the term "exit access doorway" is inclusive of specific points in the means of egress, which may not include a "door," such as when an unenclosed exit access stairway is used in the egress path.

EXIT ACCESS RAMP. A *ramp* within the exit access portion of the means of egress system.

❖ Unenclosed ramps may serve as part of the route for exit access when floor levels have changes in elevation. For the limited situations where exit access ramps can be used between stories, see Sections 1006.3 and 1019. Exit access elements are included in the travel distance requirements unless specifically exempted (e.g., open parking garages, outdoor facilities) (see Section 1017.3.1).

EXIT ACCESS STAIRWAY. A *stairway* with the exit access portion of the means of egress system.

❖ Unenclosed steps and stairways may serve as part of the route for exit access when floor levels have changes in elevation. For the limited situations where exit access stairways can be used between stories, see Sections 1006.3 and 1019. Exit access elements are included in the travel distance requirements unless specifically exempted (e.g., open parking garages, outdoor facilities) (see Section 1017.3.1).

EXIT DISCHARGE. That portion of a *means of egress* system between the termination of an *exit* and a *public way*.

❖ The exit discharge will typically begin when the building occupants reach the exterior at or very near grade level. It provides occupants with a path of travel away from the building. All components between the building and the public way are considered to be the exit discharge, regardless of the distance. In areas of sloping terrain, it is possible to have steps or stairs in the exit discharge leading to the public way. The exit discharge is part of the means of egress and, therefore, its components are subject to the requirements of the code [see Commentary Figures 202(14) and 202(16) and Section 1028].

EXIT DISCHARGE, LEVEL OF. The *story* at the point at which an *exit* terminates and an *exit discharge* begins.

❖ The term is intended to describe the story where the transition from exit to exit discharge occurs. At this level, the occupant needs only to move in a substantially horizontal path to move along exit discharge [see Commentary Figure 202(17)]. Since the level is a volume rather than a horizontal plane, exterior exit steps may be part of the exit discharge when they provide access to the level that is closest to grade.

EXIT, HORIZONTAL. See "Horizontal exit."

EXIT PASSAGEWAY. An *exit* component that is separated from other interior spaces of a building or structure by fire-resistance-rated construction and opening protectives, and

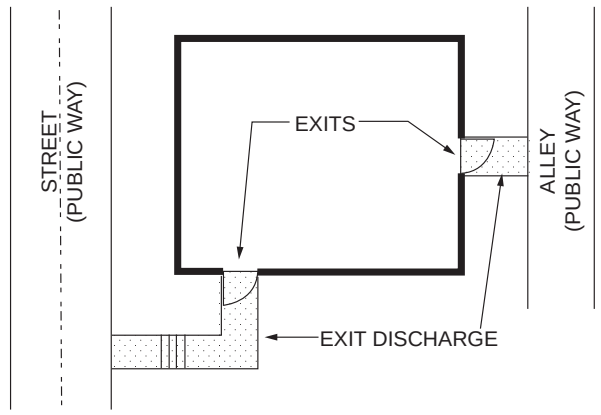

Figure 202(16)
EXIT DISCHARGE

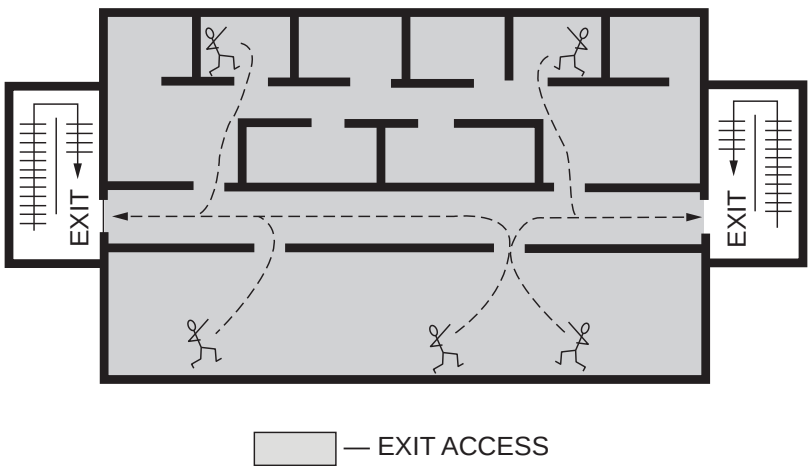

Figure 202(15)
EXIT ACCESS

INTERNATIONAL CODE COUNCIL®
Copyright © 2015 ICC. ALL RIGHTS RESERVED. Accessed by David Dammon on Jun 21, 2017 12:30:52 PM pursuant to License Agreement with ICC. No further reproduction or distribution authorized. ANY UNAUTHORIZED REPRODUCTION OR DISTRIBUTION IS A VIOLATION OF THE FEDERAL COPYRIGHT ACT AND THE LICENSE AGREEMENT, AND SUBJECT TO CIVIL AND CRIMINAL PENALTIES THEREUNDER.

provides for a protected path of egress travel in a horizontal direction to an *exit* or to the *exit discharge*.

❖ This term refers to a horizontal portion of the means of egress that serves as an exit element. Since an exit passageway is considered an exit element, it must be protected and separated as required by the code for exits (see Section 1024). Exit passageways between a vertical exit enclosure and an exterior exit door are typically found on the level of exit discharge to provide a protected path from a centrally located exit stairway to the exit discharge. In taller buildings that reduce floor sizes as they move up (sometimes called a wedding cake building), exit passageways may be utilized at "transfer floors" as stairway locations shift to move the vertical shafts out as the floor size increases. Exit passageways that lead to an exterior exit door are commonly used in malls to satisfy the travel distance in buildings having a large floor area.

EXPANDED VINYL WALL COVERING. Wall covering consisting of a woven textile backing, an expanded vinyl base coat layer and a nonexpanded vinyl skin coat. The expanded base coat layer is a homogeneous vinyl layer that contains a blowing agent. During processing, the blowing agent decomposes, causing this layer to expand by forming closed cells. The total thickness of the wall covering is approximately 0.055 inch to 0.070 inch (1.4 mm to 1.78 mm).

❖ Expanded vinyl wall coverings are manufactured with a textile backing, an expanded vinyl base coat layer consisting of closed cells and a vinyl skin coat. Expanded vinyl wall coverings are subject to the requirements of Section 803.7.

[F] EXPLOSION. An effect produced by the sudden violent expansion of gases, which may be accompanied by a shock wave or disruption, or both, of enclosing materials or structures. An explosion could result from any of the following:

1. Chemical changes such as rapid oxidation, *deflagration* or *detonation*, decomposition of molecules and runaway polymerization (usually *detonation*s).
2. Physical changes such as pressure tank ruptures.
3. Atomic changes (nuclear fission or fusion).

❖ Materials that pose a threat of explosion are classified as Group H-1 when present in quantities exceeding the maximum allowable quantities in Table 307.1(1), and are required to be kept in a detached storage building meeting the requirements of Section 415.7 of the code and Chapter 56 of the IFC.

[F] EXPLOSIVE. A chemical compound, mixture or device, the primary or common purpose of which is to function by explosion. The term includes, but is not limited to, dynamite, black powder, pellet powder, initiating explosives, detonators, safety fuses, squibs, detonating cord, igniter cord, igniters and display fireworks, 1.3G.

The term "explosive" includes any material determined to be within the scope of USC Title 18: Chapter 40 and also includes any material classified as an explosive other than consumer fireworks, 1.4G by the *hazardous materials* regulations of DOTn 49 CFR Parts 100-185.

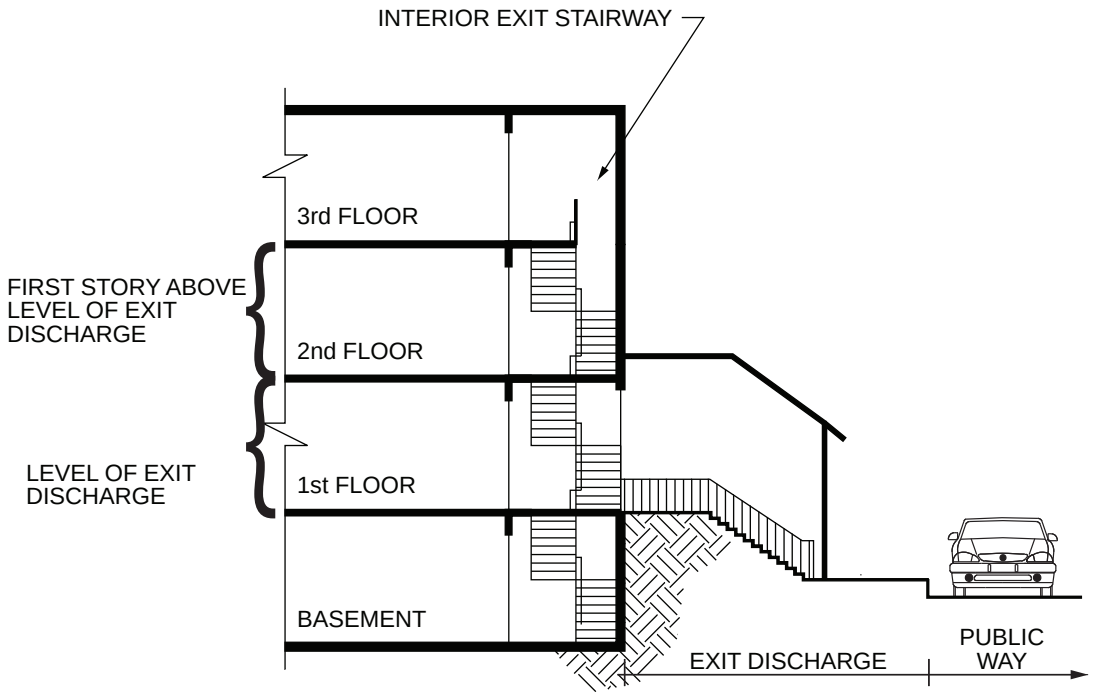

Figure 202(17)
EXIT DISCHARGE, LEVEL OF

INTERNATIONAL CODE COUNCIL®
Copyright © 2015 ICC. ALL RIGHTS RESERVED. Accessed by David Dammon on Jun 21, 2017 12:30:52 PM pursuant to License Agreement with ICC. No further reproduction or distribution authorized. ANY UNAUTHORIZED REPRODUCTION OR DISTRIBUTION IS A VIOLATION OF THE FEDERAL COPYRIGHT ACT AND THE LICENSE AGREEMENT, AND SUBJECT TO CIVIL AND CRIMINAL PENALTIES THEREUNDER.

High explosive. Explosive material, such as dynamite, which can be caused to detonate by means of a No. 8 test blasting cap when unconfined.

Low explosive. Explosive material that will burn or deflagrate when ignited. It is characterized by a rate of reaction that is less than the speed of sound. Examples of low explosives include, but are not limited to, black powder; safety fuse; igniters; igniter cord; fuse lighters; fireworks, 1.3G and propellants, 1.3C.

Mass-detonating explosives. Division 1.1, 1.2 and 1.5 explosives alone or in combination, or loaded into various types of ammunition or containers, most of which can be expected to explode virtually instantaneously when a small portion is subjected to fire, severe concussion, impact, the impulse of an initiating agent or the effect of a considerable discharge of energy from without. Materials that react in this manner represent a mass explosion hazard. Such an explosive will normally cause severe structural damage to adjacent objects. Explosive propagation could occur immediately to other items of ammunition and explosives stored sufficiently close to and not adequately protected from the initially exploding pile with a time interval short enough so that two or more quantities must be considered as one for quantity-distance purposes.

UN/DOTn Class 1 explosives. The former classification system used by DOTn included the terms "high" and "low" explosives as defined herein. The following terms further define explosives under the current system applied by DOTn for all explosive materials defined as hazard Class 1 materials. Compatibility group letters are used in concert with the division to specify further limitations on each division noted (i.e., the letter G identifies the material as a pyrotechnic substance or article containing a pyrotechnic substance and similar materials).

Division 1.1. Explosives that have a mass explosion hazard. A mass explosion is one which affects almost the entire load instantaneously.

Division 1.2. Explosives that have a projection hazard but not a mass explosion hazard.

Division 1.3. Explosives that have a fire hazard and either a minor blast hazard or a minor projection hazard or both, but not a mass explosion hazard.

Division 1.4. Explosives that pose a minor explosion hazard. The explosive effects are largely confined to the package and no projection of fragments of appreciable size or range is to be expected. An external fire must not cause virtually instantaneous explosion of almost the entire contents of the package.

Division 1.5. Very insensitive explosives. This division is comprised of substances that have a mass explosion hazard, but that are so insensitive there is very little probability of initiation or of transition from burning to *detonation* under normal conditions of transport.

Division 1.6. Extremely insensitive articles which do not have a mass explosion hazard. This division is comprised of articles that contain only extremely insensitive detonating substances and which demonstrate a negligible probability of accidental initiation or propagation.

❖ Explosives either detonate or deflagrate when initiated by heat, shock or electric current. While these materials are normally designed and intended to be initiated by detonators under controlled conditions, heat, shock or electric current from uncontrolled sources may initiate these materials to produce an explosion. DOTn classifies explosives in six classes according to the degree of hazard posed by the material. The most dangerous of these materials is capable of almost simultaneous detonation of all of the material in a single load or store. The least-sensitive explosives produce blasts limited to the packages in which they are transported. This definition of explosives includes materials such as detonators, blasting agents and water gels. Examples of these materials are listed in DOTy 27 CFR, Part 55.23.

Explosive materials are subdivided into high, low, mass-detonating and UN/DOTn Class 1 explosives. High explosives and mass-detonating explosives are typically classified as Group H-1 and present a detonation hazard. Low explosives more commonly are classified as Group H-2, as they tend to deflagrate or burn upon ignition. Mass-detonating devices present a greater threat to adjacent objects and structures. The IFC, therefore, contains provisions in the form of Table 5605.3 to deal with the separation distances for mass explosion hazards.

The definitions cited in this section are consistent with DOTn 49 CFR, Part 173.50. The hazards of this group of materials vary with the nature of the material, with some explosives being very sensitive and others less sensitive. Some explosives detonate, others deflagrate and the hazards of others are limited to intense burning. The classification system was designed to correlate with the system of classification developed under recommendations of the UN, wherein all explosive materials are placed into a hazard class of Class 1. This class is further divided into six divisions: Divisions 1.1 through 1.6.

EXTERIOR EXIT RAMP. An *exit* component that serves to meet one or more *means of egress* design requirements, such as required number of *exits* or *exit access* travel distance, and is open to *yards*, *courts* or *public ways*.

❖ Requirements for an exterior exit ramp are different from those for an interior exit ramp. Exterior exit ramps are typically outside of the building, provide exits from levels above or below the level of exit discharge, and are exposed to at least some elements of weather. The protection requirements, therefore, are for the exterior walls between the building and the ramp, rather than interior walls. For the ramp requirements, see Section 1012. For specifics for exterior exit ramps, see Section 1027

EXTERIOR EXIT STAIRWAY. An *exit* component that serves to meet one or more *means of egress* design require-

INTERNATIONAL CODE COUNCIL®
Copyright © 2015 ICC. ALL RIGHTS RESERVED. Accessed by David Dammon on Jun 21, 2017 12:30:52 PM pursuant to License Agreement with ICC. No further reproduction or distribution authorized. ANY UNAUTHORIZED REPRODUCTION OR DISTRIBUTION IS A VIOLATION OF THE FEDERAL COPYRIGHT ACT AND THE LICENSE AGREEMENT, AND SUBJECT TO CIVIL AND CRIMINAL PENALTIES THEREUNDER.

ments, such as required number of *exits* or *exit access* travel distance, and is open to *yards*, *courts* or *public ways*.

❖ Requirements for an exterior exit stairway are different from those for an interior exit stairway. Exterior exit stairways are typically outside of the building, provide exits from above or below the level of exit discharge, and are exposed to at least some elements of weather. The protection requirements, therefore, are for the exterior walls between the building and the stairway, rather than interior walls. For the stairway requirements, see Section 1011. For specifics for exterior exit stairways, see Section 1027.

EXTERIOR INSULATION AND FINISH SYSTEMS (EIFS). EIFS are nonstructural, nonload-bearing, *exterior wall* cladding systems that consist of an insulation board attached either adhesively or mechanically, or both, to the substrate; an integrally reinforced base coat and a textured protective finish coat.

❖ An exterior insulation and finish system (EIFS) is an exterior cladding that is specifically addressed in Section 1408. A definition is necessary in order to ensure the proper application of these requirements.

EXTERIOR INSULATION AND FINISH SYSTEMS (EIFS) WITH DRAINAGE. An EIFS that incorporates a means of drainage applied over a *water-resistive barrier*.

❖ Although EIFS and EIFS with drainage are somewhat similar, the presence of the water-resistive barrier makes it necessary to treat this material differently in code regulations.

EXTERIOR SURFACES. Weather-exposed surfaces.

❖ Exterior surfaces are the vertical and horizontal surfaces located on the outside of a building or structure and are subject to weather conditions, such as wind, changes in temperature, humidity, moisture and dampness. The commentary for the definition of "Weather-exposed surfaces" allows for specific exceptions to areas on the exterior of a building or structure that will not be exposed to direct contact with water, such as rain, sleet and frozen or melting snow.

EXTERIOR WALL. A wall, bearing or nonbearing, that is used as an enclosing wall for a building, other than a *fire wall*, and that has a slope of 60 degrees (1.05 rad) or greater with the horizontal plane.

❖ An exterior wall is defined as an exterior element that encloses a structure and that has a slope equal to or greater than 60 degrees (1.05 rad) from the horizontal plane. Exterior enclosing elements with slopes less than this are generally subjected to more severe weather exposure than vertical surfaces and thus may experience a greater amount of water intrusion. These sloped surfaces, which may include elements such as inset windowsills, sloped parapets and other architectural elements, should be designed to resist water penetration in a manner similar to a roof.

EXTERIOR WALL COVERING. A material or assembly of materials applied on the exterior side of *exterior walls* for the purpose of providing a weather-resisting barrier, insulation or for aesthetics, including but not limited to, *veneers*, siding, *exterior insulation and finish systems*, architectural *trim* and embellishments such as *cornices*, soffits, facias, gutters and leaders.

❖ Materials such as wood, masonry, metal, concrete, structural glass and plastics are used for exterior wall coverings. It should be noted that exterior wall coverings that are combustible are to meet the requirements for combustible materials found in Section 1406.2.

EXTERIOR WALL ENVELOPE. A system or assembly of *exterior wall* components, including *exterior wall* finish materials, that provides protection of the building structural members, including framing and sheathing materials, and conditioned interior space, from the detrimental effects of the exterior environment.

❖ This definition is needed for understanding the proper application of the weather protection requirements in Section 1403.2.

F RATING. The time period that the *through-penetration firestop system* limits the spread of fire through the penetration when tested in accordance with ASTM E814 or UL 1479.

❖ See the definition of "Through-penetration firestop system." The F rating is determined not only from a fire endurance test, but also includes a test for mechanical integrity of the through-penetration seal after fire exposure, known as the "hose stream test." The F rating indicates that the firestop system is capable of stopping the fire, flame and hot gases from passing through the assembly at the penetration.

FABRIC PARTITION. A partition consisting of a finished surface made of fabric, without a continuous rigid backing, that is directly attached to a framing system in which the vertical framing members are spaced greater than 4 feet (1219 mm) on center.

❖ This definition identifies which assemblies are considered fabric partitions for the purpose of applying the specific load criteria that is given in Section 1607.14.1. They are typically for uses such as office furniture panel systems, open floor plans in offices and similar occupancies.

[BS] FABRICATED ITEM. Structural, load-bearing or lateral load-resisting members of assemblies consisting of materials assembled prior to installation in a building or structure, or subjected to operations such as heat treatment, thermal cutting, cold working or reforming after manufacture and prior to installation in a building or structure. Materials produced in accordance with standards referenced by this code, such as rolled structural steel shapes, steel reinforcing bars, *masonry units* and *wood structural panels*, or in accordance with a referenced standard that provides requirements for quality con-

INTERNATIONAL CODE COUNCIL®
Copyright © 2015 ICC. ALL RIGHTS RESERVED. Accessed by David Dammon on Jun 21, 2017 12:30:52 PM pursuant to License Agreement with ICC. No further reproduction or distribution authorized. ANY UNAUTHORIZED REPRODUCTION OR DISTRIBUTION IS A VIOLATION OF THE FEDERAL COPYRIGHT ACT AND THE LICENSE AGREEMENT, AND SUBJECT TO CIVIL AND CRIMINAL PENALTIES THEREUNDER.

trol done under the supervision of a third-party quality control agency, are not "fabricated items."

❖ The term "fabricated item" can easily be misinterpreted to encompass a number of items for which the code does not intend special inspections; therefore, the term is defined to clarify the intent of the code (see Section 1704). Common construction items are often fabricated under standards that are referenced in the code and many of these provide for quality assurance by third-party supervision. Since special inspections are analogous to such quality assurance programs, in these cases it is not warranted to also require special inspections.

[F] FABRICATION AREA. An area within a semiconductor fabrication facility and related research and development areas in which there are processes using hazardous production materials. Such areas are allowed to include ancillary rooms or areas such as dressing rooms and offices that are directly related to the fabrication area processes.

❖ This definition describes the basic component of an HPM facility. The code uses this definition to provide certain material limitations on both a quantity and density basis, and to require enclosure of the fabrication areas with fire barrier assemblies. The fabrication area of an HPM facility is the area where the hazardous materials are actively handled and processed. The fabrication area includes accessory rooms and spaces, such as work stations and employee dressing rooms.

[A] FACILITY. All or any portion of buildings, structures, *site* improvements, elements and pedestrian or vehicular routes located on a *site*.

❖ This term is intentionally broad and includes all portions within a site and all aspects of that site that contain features required to be accessible. This includes parking areas, exterior walkways leading to accessible features, recreational facilities such as playgrounds and picnic areas, as well as any structures on the site (see also the commentary to the definition of "Site").

[BS] FACTORED LOAD. The product of a *nominal load* and a *load factor*.

❖ This definition explains the term "factored loads" so that the loads to be applied in strength design are clear. Factored loads are determined for strength design for load and resistance factor design (LRFD) by multiplying nominal load (see the definition of "Nominal loads") by a load factor, as in the load combinations of Section 1605.2. While this definition is clear for most loading, the exception would be the wind load, *W*, and earthquake load, *E*, both of which are computed directly at a strength level without the need for applying a load factor. This is evidenced by a load factor of 1.0 applied to earthquake and wind loads in the strength load combinations of Section 1605.2.

FENESTRATION. Skylights, roof windows, vertical windows (fixed or moveable), opaque doors, glazed doors, glazed block and combination opaque/glazed doors. Fenestration includes products with glass and nonglass glazing materials.

❖ The term "fenestration" refers to both opaque and glazed doors and the light transmitting areas of a wall or roof. It primarily means windows and skylights. The IECC sets performance requirements for fenestration by establishing separate requirements that differ from wall and roof requirements based on the type of fenestration. For certain categories of buildings, the total fenestration area is limited.

[BS] FIBER-CEMENT (BACKER BOARD, SIDING, SOFFIT, TRIM AND UNDERLAYMENT) PRODUCTS. Manufactured thin section composites of hydraulic cementitious matrices and discrete nonasbestos fibers.

❖ This definition enables the code user to apply the correct material requirements for fiber cement products in Chapters 14, 23 and 25.

[BS] FIBER-REINFORCED POLYMER. A polymeric composite material consisting of reinforcement fibers, such as glass, impregnated with a fiber-binding polymer which is then molded and hardened. Fiber-reinforced polymers are permitted to contain cores laminated between fiber-reinforced polymer facings.

❖ Fiber-reinforced polymer is used in building construction for purposes such as light-transmitting sheet panels, structural forms for concrete, sandwich panel construction and the replication of historic building ornamentation. The purpose of this definition is to describe the composition of this material in order to properly identify the element that is to comply with Section 2613.

[BS] FIBERBOARD. A fibrous, homogeneous panel made from lignocellulosic fibers (usually wood or cane) and having a density of less than 31 pounds per cubic foot (pcf) (497 kg/m^3) but more than 10 pcf (160 kg/m^3).

❖ Fiberboard is used primarily as an insulating board and for decorative purposes, but may also be used as wall or roof sheathing. The cellulosic components of fiberboard are broken down to individual fibers and molded to create the bond between the fibers. Other ingredients may be added during processing to provide or improve certain properties, such as strength and water resistance, in addition to surface finishes for decorative products. Fiberboard is used in all locations where panels are desirable, including wall sheathing, insulation of walls and roofs, roof decking, doors and interior finish.

[BS] FIELD NAILING. See "Nailing, field."

FIRE ALARM BOX, MANUAL. See "Manual fire alarm box."

[F] FIRE ALARM CONTROL UNIT. A system component that receives inputs from *automatic* and manual *fire*

INTERNATIONAL CODE COUNCIL®
Copyright © 2015 ICC. ALL RIGHTS RESERVED. Accessed by David Dammon on Jun 21, 2017 12:30:52 PM pursuant to License Agreement with ICC. No further reproduction or distribution authorized. ANY UNAUTHORIZED REPRODUCTION OR DISTRIBUTION IS A VIOLATION OF THE FEDERAL COPYRIGHT ACT AND THE LICENSE AGREEMENT, AND SUBJECT TO CIVIL AND CRIMINAL PENALTIES THEREUNDER.

alarm devices and may be capable of supplying power to detection devices and transponders or off-premises transmitters. The control unit may be capable of providing a transfer of power to the notification appliances and transfer of condition to relays or devices.

❖ The fire alarm control unit (panel) acts as a point where all signals initiated within the protected building are received before the signal is transmitted to a constantly attended location. As the name implies, it also contains controls to test and manually activate or silence systems.

[F] FIRE ALARM SIGNAL. A signal initiated by a *fire alarm-initiating device* such as a *manual fire alarm box, automatic fire detector,* waterflow switch or other device whose activation is indicative of the presence of a fire or fire signature.

❖ This signal is transmitted to a fire alarm control unit as a warning that requires immediate action. The personnel at the constantly attended location are trained to immediately respond to a fire alarm signal, which indicates the presence of a fire. A fire alarm signal assumes an actual fire has been detected (see the definition of "Alarm signal"). The fire alarm signal is not the signal used to notify the occupants of an emergency condition. Such an action would involve the audible alarm, visual alarm or emergency voice/alarm notification appliances.

[F] FIRE ALARM SYSTEM. A system or portion of a combination system consisting of components and circuits arranged to monitor and annunciate the status of *fire alarm* or *supervisory signal-initiating device*s and to initiate the appropriate response to those signals.

❖ Fire alarm systems are installed in buildings to limit fire casualties and property losses by notifying the occupants of the building, the local fire department or both of an emergency condition. The alarm notification appliances associated with fire alarm systems are intended to be evacuation alarms. All fire alarm systems must be designed and installed to comply with NFPA 72. The term is among the most generic used in the code. It does not necessarily imply an automatic or manual system, nor does it identify what type of notification, if any, should be provided. The definition indicates that an appropriate response must be provided but does not indicate what that response must be. The appropriate responses are identified within the respective sections of Section 907.

FIRE AREA. The aggregate floor area enclosed and bounded by *fire walls, fire barriers, exterior walls* or *horizontal assemblies* of a building. Areas of the building not provided with surrounding walls shall be included in the fire area if such areas are included within the horizontal projection of the roof or floor next above.

❖ This term is used to describe a specific and controlled area within a building that may consist of a portion of the floor area within a single story, one entire story or the combined floor area of several stories, depending on how these areas are enclosed and separated from other floor areas. Where a fire barrier with a fire-resistance rating in accordance with Section 707.3.10 divides the floor area of a one-story building, the floor area on each side of the wall would constitute a separate fire area. If a horizontal assembly separating the two stories in a two-story building is fire-resistance rated in accordance with Section 711.2.4, each story would be a separate fire area. In cases where mezzanines are present, the floor area of the mezzanine is included in the fire area calculations, even though the area of the mezzanine does not contribute to the building area calculations. See the commentary to Sections 707.3.10 and 711.2.4 for further information.

Note that fire walls are one way of creating fire areas but are typically used to create separate buildings.

FIRE BARRIER. A fire-resistance-rated wall assembly of materials designed to restrict the spread of fire in which continuity is maintained.

❖ The term represents wall assemblies with a fire-resistance rating that are constructed in accordance with Section 707. Even though the definition applies to walls, horizontal assemblies also can be fire barriers. See the definition of "Horizontal assembly" and the requirements in Section 711 that would apply to floor and roof assemblies designed to restrict the spread of fire. See Commentary Figure 202(18) for examples of fire barriers and Commentary Figure 202(29) for examples of horizontal assemblies.

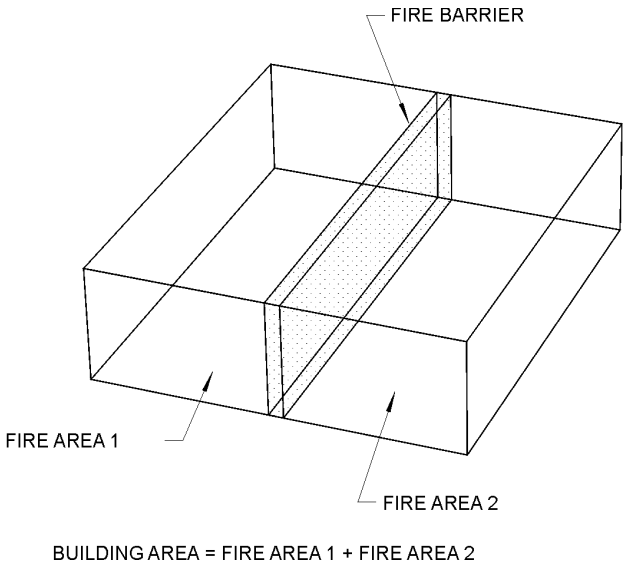

Figure 202(18)
EXAMPLE OF FIRE BARRIER

[F] FIRE COMMAND CENTER. The principal attended or unattended location where the status of detection, alarm com-

INTERNATIONAL CODE COUNCIL®
Copyright © 2015 ICC. ALL RIGHTS RESERVED. Accessed by David Dammon on Jun 21, 2017 12:30:52 PM pursuant to License Agreement with ICC. No further reproduction or distribution authorized. ANY UNAUTHORIZED REPRODUCTION OR DISTRIBUTION IS A VIOLATION OF THE FEDERAL COPYRIGHT ACT AND THE LICENSE AGREEMENT, AND SUBJECT TO CIVIL AND CRIMINAL PENALTIES THEREUNDER.

munications and control systems is displayed, and from which the systems can be manually controlled.

❖ Fire command centers are communication centers where dedicated manual and automatic facilities are located for the origination, control and transmission of information and instruction pertaining to a fire emergency to the occupants (including fire department personnel) of the building. Fire command centers must provide facilities for the control and display of the status of all fire protection (detection, signaling, etc.) systems. These stations must be located in secure areas as approved by the authority having jurisdiction. Often this is a location near the primary building entrance. Fire command centers also may be combined with other building operations and security facilities when permitted by the authority having jurisdiction; however, operating controls for use by the fire department must be clearly marked.

FIRE DAMPER. A *listed* device installed in ducts and air transfer openings designed to close *automatically* upon detection of heat and resist the passage of flame. Fire dampers are classified for use in either static systems that will *automatically* shut down in the event of a fire, or in dynamic systems that continue to operate during a fire. A dynamic fire damper is tested and rated for closure under elevated temperature airflow.

❖ See the commentary for all dampers with the definition of "Damper."

[F] FIRE DETECTOR, AUTOMATIC. A device designed to detect the presence of a fire signature and to initiate action.

❖ Automatic fire detectors include all approved devices designed to detect the presence of a fire and automatically initiate emergency action. These include smoke-sensing fire detectors, heat-sensing fire detectors, flame-sensing fire detectors, gas-sensing fire detectors and other fire detectors that operate on other principles as approved by the fire code official. Automatic fire detectors must be selected based on the type and size of fire to be detected and the response required. The automatic fire detector sends a signal to a processing unit to initiate some predetermined action. The processing unit may be internal to the device, as is the case with single-station smoke detectors, or it may be an external unit, as in the case of a fire alarm control unit. Automatic fire detectors must be approved, installed and tested to comply with the code and NFPA 72.

FIRE DOOR. The door component of a *fire door assembly*.

❖ A fire door is the primary component of a fire door assembly. The fire protection rating assigned to a tested fire door is only valid if the door is installed in a labeled frame with appropriate hardware. Installation requirements are contained in the referenced standard, NFPA 80. Door ratings are expressed in minutes or hours. Field modification of doors are primarily limited to the mounting of listed hardware.

FIRE DOOR ASSEMBLY. Any combination of a *fire door*, frame, hardware and other accessories that together provide a specific degree of fire protection to the opening.

❖ Fire door assemblies, (door, frame and hardware) are required to be tested using the appropriate standard and then installed in accordance with NFPA 80. Side-hinged doors, hardware and frames are often manufactured separately with manufacturers and listing agencies defining acceptable combinations of assembly components that have been tested together.

FIRE DOOR ASSEMBLY, FLOOR. See "Floor fire door assembly."

FIRE EXIT HARDWARE. *Panic hardware* that is *listed* for use on *fire door assemblies*.

❖ Where a door that is required to be of fire-resistance-rated construction also has panic hardware, the hardware is required to be listed for use on the fire door. Thus, fire door hardware has been tested to function properly when exposed to the effects of a fire (see the definition for "Panic hardware" and Section 1010.1.10).

[F] FIRE LANE. A road or other passageway developed to allow the passage of fire apparatus. A fire lane is not necessarily intended for vehicular traffic other than fire apparatus.

❖ The term "fire lane" is synonymous with the term "fire apparatus access road," both being a road that provides access from a fire station to a building, or portion thereof. However, it should be noted that the driving surface is not necessarily the same as that provided for a public road. The driving surface must be a surface that can be shown to adequately support the load of anticipated emergency vehicles.

FIRE PARTITION. A vertical assembly of materials designed to restrict the spread of fire in which openings are protected.

❖ Fire partitions are used as wall assemblies to separate adjacent tenant spaces in covered and open mall buildings, to separate dwelling units, to separate sleeping rooms, to enclose corridors and to enclose elevator lobbies. Section 708 establishes the construction requirements for fire partitions. The fire-resistance ratings, continuity requirements and opening protective requirements for fire partitions are usually less restrictive than those for fire barriers.

FIRE PROTECTION RATING. The period of time that an opening protective will maintain the ability to confine a fire as determined by tests specified in Section 715. Ratings are stated in hours or minutes.

❖ The term "fire protection rating" applies to the fire performance of an opening protective, such as a fire door, determined through tests performed in accordance with NFPA 252 or UL 10C.

[F] FIRE PROTECTION SYSTEM. *Approved* devices, equipment and systems or combinations of systems used to

INTERNATIONAL CODE COUNCIL®
Copyright © 2015 ICC. ALL RIGHTS RESERVED. Accessed by David Dammon on Jun 21, 2017 12:30:52 PM pursuant to License Agreement with ICC. No further reproduction or distribution authorized. ANY UNAUTHORIZED REPRODUCTION OR DISTRIBUTION IS A VIOLATION OF THE FEDERAL COPYRIGHT ACT AND THE LICENSE AGREEMENT, AND SUBJECT TO CIVIL AND CRIMINAL PENALTIES THEREUNDER.

detect a fire, activate an alarm, extinguish or control a fire, control or manage smoke and products of a fire or any combination thereof.

❖ A fire protection system is any approved device or equipment, used singly or in combination, manually or automatically, that is intended to detect a fire, notify the building occupants of a fire or suppress the fire. Fire protection systems include fire suppression systems, standpipe systems, fire alarm systems, fire detection systems, smoke control systems and smoke vents. All fire protection systems must be approved by the fire code official and tested in accordance with the referenced standards and Section 901.6.

FIRE-RATED GLAZING. Glazing with either a *fire protection rating* or a *fire-resistance rating*.

❖ Fire-rated glazing can be of two types—fire-resistance rating or fire protection rating. Fire-resistance-rated glazing is tested to ASTM E119 or UL 263, may be used in walls and is not considered as an opening. Fire-protection-rated glazing is tested to NFPA 257 or UL 9, and is usually in doors or limited size window openings in fire barriers and fire partitions

FIRE RESISTANCE. That property of materials or their assemblies that prevents or retards the passage of excessive heat, hot gases or flames under conditions of use.

❖ All materials offer some degree of fire resistance. A sheet of plywood has a low level of fire resistance as compared to a concrete block.The fire resistance of a material or an assembly is evaluated by testing performed in accordance with ASTM E119. Tested materials will be assigned a fire-resistance rating consistent with the demonstrated performance.

FIRE-RESISTANCE RATING. The period of time a building element, component or assembly maintains the ability to confine a fire, continues to perform a given structural function, or both, as determined by the tests, or the methods based on tests, prescribed in Section 703.

❖ This refers to the period of time a building element, component or assembly maintains the ability to confine a fire, continues to perform a given structural function, or both, as determined by tests or the methods based on tests prescribed in Section 703.

The fire-resistance rating is developed using standardized test methods (e.g., ASTM E119). Assemblies rated under these tests are deemed to be able to perform their function for a specified period of time under specific fire conditions (standard time-temperature curve).

The fire-resistance rating is not intended to be a prediction of the actual length of time that an assembly will perform its intended function under actual fire conditions. Although the time-temperature curves of standardized fire test methods are usually selected to approximate at least some real-life fire conditions, the very wide range of actual fire conditions makes the listed fire-resistance rating more of a nominal, comparative index than a predictor of fire-resistance time in any given fire incident.

FIRE-RESISTANT JOINT SYSTEM. An assemblage of specific materials or products that are designed, tested and fire-resistance rated in accordance with either ASTM E1966 or UL 2079 to resist for a prescribed period of time the passage of fire through *joints* made in or between fire-resistance-rated assemblies.

❖ In order to maintain the fire-resistant integrity of fire-resistance-rated assemblies, joints that occur within an assembly or between adjacent assemblies must be protected through an installation that has been tested in accordance with ASTM E1966 or UL 2079. Some common examples of applications where a fire-resistant joint system would be required are expansion joints in fire-resistance-rated floors or walls and the junction between fire-resistance-rated floors and walls [see Commentary Figure 202(19) for examples]. The regular joints that occur within a uniform assembly are most often tested as part of fire testing (e.g., in accordance with ASTM E119) for that entire assembly. The required details for these joints are specified in the listings for the underlying assembly. These joints do not need additional testing in accordance with ASTM E1966 or UL 2079. Examples of such joints are the joints between individual sheets of gypsum board in a gypsum-sheathed stud wall. Consequently, other than the joints covering or filling the gaps within an assembly, the need for ASTM E1966 or UL 2079 tested joint systems is usually for the joints between dissimilar assemblies or adjacent assemblies.

[F] FIRE SAFETY FUNCTIONS. Building and fire control functions that are intended to increase the level of life safety for occupants or to control the spread of harmful effects of fire.

❖ In many cases, automatic fire detectors are installed even in buildings not required to have a fire alarm system. These fire detectors perform specific functions such as releasing door hold-open devices, activating elevator recall, smoke damper activation or air distribution system shutdown (see Section 907.3).

FIRE SEPARATION DISTANCE. The distance measured from the building face to one of the following:

1. The closest interior *lot line*.
2. To the centerline of a street, an alley or *public way*.
3. To an imaginary line between two buildings on the lot.

The distance shall be measured at right angles from the face of the wall.

❖ Fire separation distance is the distance from the exterior wall of the building to one of the three following locations, measured perpendicular to the exterior wall face: an interior lot line [see Commentary Figure 202(20)]; the centerline of a street or public way [see Commentary Figure 202(21)]; or an imaginary line between two buildings on the same property [see Commentary Figure 202(22)]. The imaginary line can

INTERNATIONAL CODE COUNCIL®
Copyright © 2015 ICC. ALL RIGHTS RESERVED. Accessed by David Dammon on Jun 21, 2017 12:30:52 PM pursuant to License Agreement with ICC. No further reproduction or distribution authorized. ANY UNAUTHORIZED REPRODUCTION OR DISTRIBUTION IS A VIOLATION OF THE FEDERAL COPYRIGHT ACT AND THE LICENSE AGREEMENT, AND SUBJECT TO CIVIL AND CRIMINAL PENALTIES THEREUNDER.

be located anywhere between the two buildings; it is the designer's choice, but, once established, the location of the line applies to both buildings and cannot be revised.

The distance can vary with irregular-shaped lots and buildings, as shown in Commentary Figures 202(20) and 202(21). When applying the exterior wall requirements of Table 602, the required exterior wall fire-resistance rating might vary along a building side; for example, where the lot line is not parallel to the exterior wall.

FIRE WALL. A fire-resistance-rated wall having protected openings, which restricts the spread of fire and extends continuously from the foundation to or through the roof, with sufficient structural stability under fire conditions to allow collapse of construction on either side without collapse of the wall.

❖ Fire walls must meet the construction requirements in Section 706. The requirements for fire walls are much more restrictive than fire barriers or fire partitions. The material constituting the fire wall must be noncombustible in all construction types except Type V. The vertical and horizontal continuity requirements are much more restrictive, as are those for the opening protectives. A fire wall, unlike the fire barrier and fire partition, must be constructed so it will remain in place if the construction on either side of it collapses. However, the fire wall is not required to remain in place if construction on both sides of it collapses (i.e., the fire wall is not required to be a free-standing cantilever wall). Fire walls are used to divide a structure into separate buildings (see the definition of "Areas, building"). To be considered separate buildings, the division must be vertical. The code applies the term "fire wall" to vertically constructed assemblies only and not to horizontal assemblies.

FIRE WINDOW ASSEMBLY. A window constructed and glazed to give protection against the passage of fire.

❖ Fire windows are "opening protectives" and contain glazing (see Section 716.6). They are required to be tested in accordance with NFPA 257 or UL 9 and are then to be installed in accordance with NFPA 80.

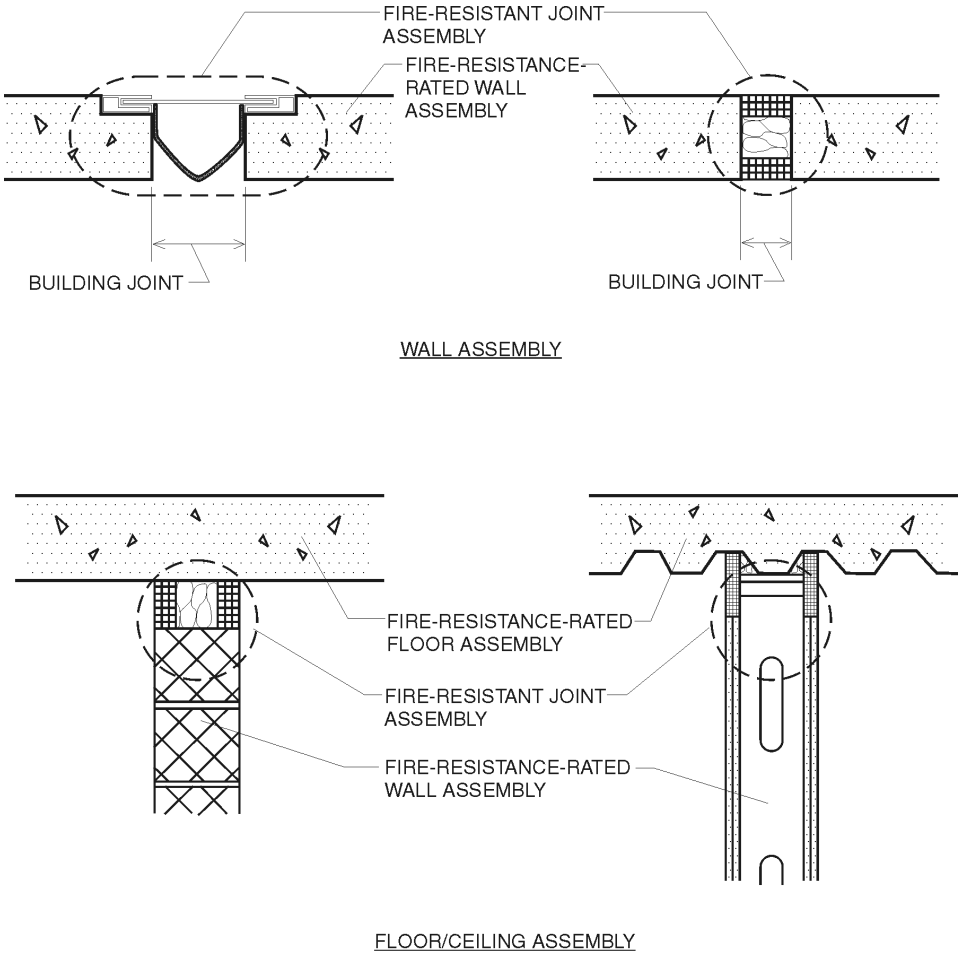

Figure 202(19)
EXAMPLES OF FIRE-RESISTANT JOINT SYSTEMS

INTERNATIONAL CODE COUNCIL®
Copyright © 2015 ICC. ALL RIGHTS RESERVED. Accessed by David Dammon on Jun 21, 2017 12:30:52 PM pursuant to License Agreement with ICC. No further reproduction or distribution authorized. ANY UNAUTHORIZED REPRODUCTION OR DISTRIBUTION IS A VIOLATION OF THE FEDERAL COPYRIGHT ACT AND THE LICENSE AGREEMENT, AND SUBJECT TO CIVIL AND CRIMINAL PENALTIES THEREUNDER.

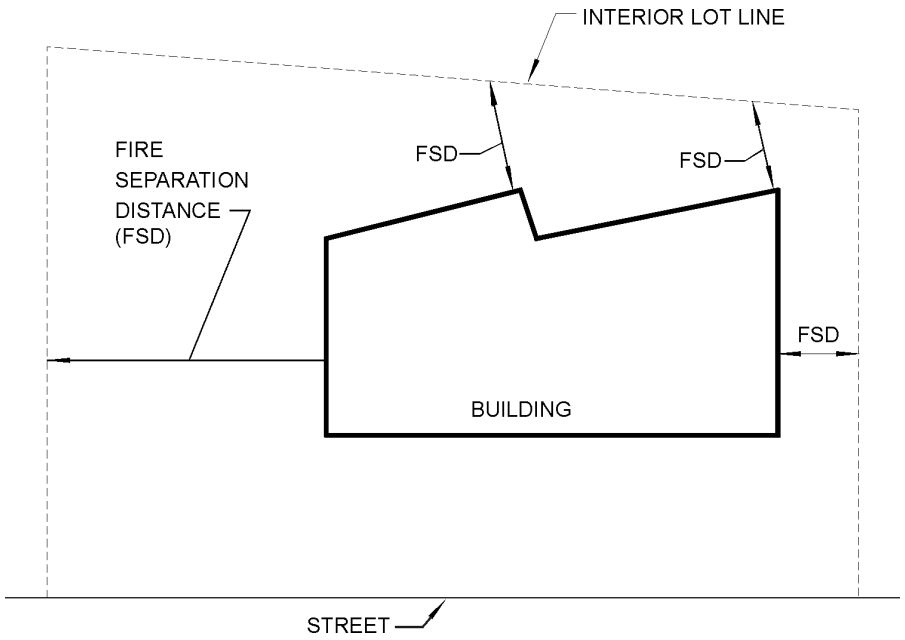

Figure 202(20)
FIRE SEPARATION DISTANCE MEASURED TO AN INTERIOR LOT LINE

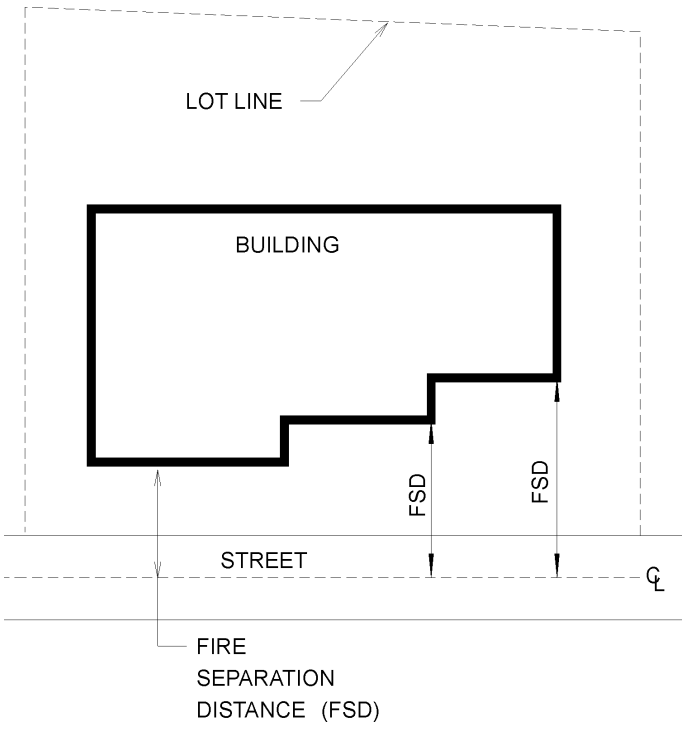

Figure 202(21)
FIRE SEPARATION DISTANCE MEASURED TO THE CENTERLINE OF ADJOINING STREET

INTERNATIONAL CODE COUNCIL®
Copyright © 2015 ICC. ALL RIGHTS RESERVED. Accessed by David Dammon on Jun 21, 2017 12:30:52 PM pursuant to License Agreement with ICC. No further reproduction or distribution authorized. ANY UNAUTHORIZED REPRODUCTION OR DISTRIBUTION IS A VIOLATION OF THE FEDERAL COPYRIGHT ACT AND THE LICENSE AGREEMENT, AND SUBJECT TO CIVIL AND CRIMINAL PENALTIES THEREUNDER.

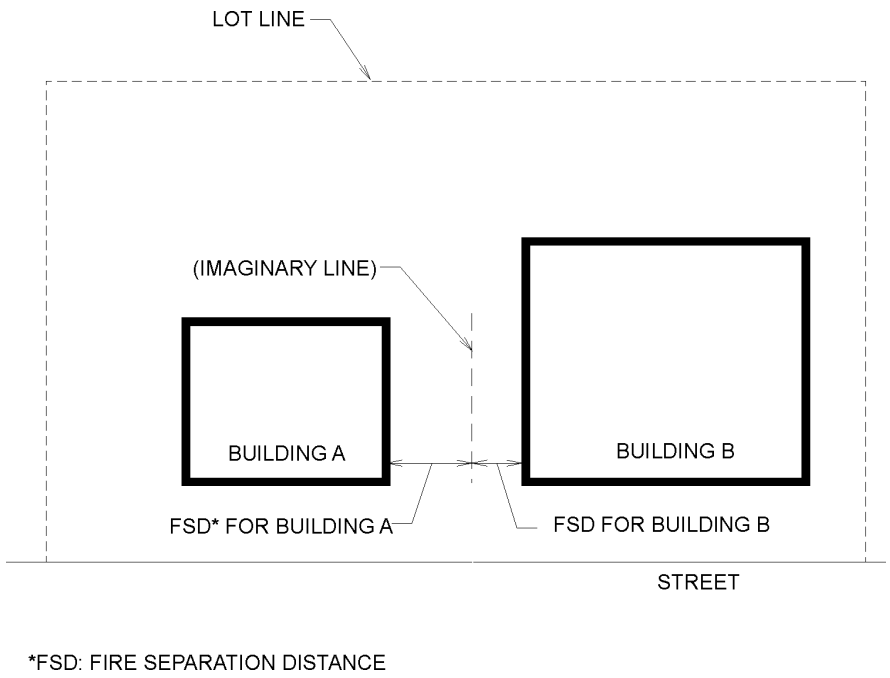

Figure 202(22)
FIRE SEPARATION DISTANCE MEASURED TO AN IMAGINARY LINE BETWEEN TWO BUILDINGS ON THE SAME LOT

FIREBLOCKING. Building materials, or materials *approved* for use as fireblocking, installed to resist the free passage of flame to other areas of the building through concealed spaces.

❖ Fireblocking is required to hinder the concealed spread of flame, heat and other products of combustion within hollow spaces inside of walls or floor/ceiling assemblies. This is done by periodically subdividing that space, as indicated in Section 718.2, using construction materials that have some resistance to fire and by sealing the openings around penetrations through those materials.

Some fireblocking materials are permitted to be combustible based on the rationale that a substantial combustible material will provide a barrier adequate to perform the intended function (also see Section 718).

[M] FIREPLACE. A hearth and fire chamber or similar prepared place in which a fire may be made and which is built in conjunction with a chimney.

❖ Requirements for masonry fireplaces are contained in Section 2111. Note that a chimney must be provided, as that is the means of conveying the products of combustion to the exterior of the building.

FIREPLACE THROAT. The opening between the top of the firebox and the smoke chamber.

❖ This definition is necessary for proper understanding of the code criteria for location and minimum cross-sectional area. This criterion is based on many years of successful performance and is needed to provide proper construction requirements (see Section 2111.8).

FIRESTOP, MEMBRANE-PENETRATION. See "Membrane-penetration firestop."

FIRESTOP, PENETRATION. See "Penetration firestop."

FIRESTOP SYSTEM, THROUGH-PENETRATION. See "Through-penetration firestop system."

[F] FIREWORKS. Any composition or device for the purpose of producing a visible or audible effect for entertainment purposes by combustion, *deflagration* or *detonation* that meets the definition of 1.4G fireworks or 1.3G fireworks.

Fireworks, 1.3G. Large fireworks devices, which are explosive materials, intended for use in fireworks displays and designed to produce audible or visible effects by combustion, *deflagration* or *detonation*. Such 1.3G fireworks include, but are not limited to, firecrackers containing more than 130 milligrams (2 grains) of explosive composition, aerial shells containing more than 40 grams of pyrotechnic composition, and other display pieces which exceed the limits for classification as 1.4G fireworks. Such 1.3G fireworks are also described as fireworks, UN0335 by the DOTn.

Fireworks, 1.4G. Small fireworks devices containing restricted amounts of pyrotechnic composition designed primarily to produce visible or audible effects by combustion. Such 1.4G fireworks which comply with the construction, chemical composition and labeling regulations of the DOTn for fireworks, UN0336, and the U.S. Con-

INTERNATIONAL CODE COUNCIL®
Copyright © 2015 ICC. ALL RIGHTS RESERVED. Accessed by David Dammon on Jun 21, 2017 12:30:52 PM pursuant to License Agreement with ICC. No further reproduction or distribution authorized. ANY UNAUTHORIZED REPRODUCTION OR DISTRIBUTION IS A VIOLATION OF THE FEDERAL COPYRIGHT ACT AND THE LICENSE AGREEMENT, AND SUBJECT TO CIVIL AND CRIMINAL PENALTIES THEREUNDER.

sumer Product Safety Commission (CPSC) as set forth in CPSC 16 CFR: Parts 1500 and 1507, are not explosive materials for the purpose of this code.

❖ Any device containing an explosive material that produces an audible or visible effect through combustion, deflagration, detonation or explosion is considered a firework. Fireworks are divided into two categories, 1.4G and 1.3G, based on the amount of pyrotechnic composition present.

The definitions of "Fireworks, 1.3G" and "Fireworks, 1.4G" are derived from the DOTn 49 CFR classification system for transporting explosives, and from NFPA 1124. The amount of pyrotechnic composition is the distinguishing factor between the two types of fireworks (see the commentary to the definition of "Pyrotechnic composition"). Fireworks that contain a limited amount of pyrotechnic composition are classified as 1.4G fireworks. Such fireworks represent a physical hazard (Group H-3), while display fireworks represent a detonation hazard (Group H-1).

The requirements for storage, display and labeling depend on the correct application of the definition of "Fireworks, 1.4G." This definition reflects the construction, chemical composition and labeling requirements of the U.S. Consumer Product Safety Commission (CPSC) found in 16 CFR, Parts 1500 and 1507. Also, 1.4G fireworks are not considered to be explosives in accordance with the provisions of Chapter 56 of the IFC.

FIXED BASE OPERATOR (FBO). A commercial business granted the right by the airport sponsor to operate on an airport and provide aeronautical services, such as fueling, hangaring, tie-down and parking, aircraft rental, aircraft maintenance and flight instruction.

❖ Fixed base operator (FBO) is an aviation industry term used to describe a firm that is permanently based at an airport and provides a variety of aircraft services. It is used in conjunction with Section 412.4.6 in the context of determining the appropriate level of fire suppression required in various aircraft hangars at an airport (see commentary, Section 412.4.6).

FIXED SEATING. Furniture or fixture designed and installed for the use of sitting and secured in place including bench-type seats and seats with or without backs or arm rests.

❖ Fixed seating is secured to the floor or is a part of a seating system. Some of the varieties are: bench seating such as in bleachers, which can come with or without back rests; theater seating with arms for each viewer and seats that flip up; lecture halls with individual seats with tablet arms that are fixed or retractable; pew-type seating in courtrooms or places of religious worship; or booths in a restaurant. To allow appropriate egress from these spaces, the occupant load tables allow for the individual seats to be counted to determine occupant load for the space. Space between the seats (i.e., aisle accessways) and aisles leading to the exits for these types of seating is addressed in Section 1029. Given their unique issues, bleachers, folding and telescopic seating and grandstands are referenced in ICC 300 in Section 1029.1.1.

FLAME SPREAD. The propagation of flame over a surface.

❖ The rate at which flames travel along the surface of a combustible finish material directly impacts the speed with which a fire spreads within a room or space and is, therefore, regulated by Chapter 8.

FLAME SPREAD INDEX. A comparative measure, expressed as a dimensionless number, derived from visual measurements of the spread of flame versus time for a material tested in accordance with ASTM E84 or UL 723.

❖ The ASTM E84 and UL 723 test methods render measurements of surface flame spread (and smoke density) in comparison with test results obtained by using select red oak as a control material. Red oak is used as a control material for furnace calibration because it is a fairly uniform grade of lumber that is readily available nationally, is uniform in thickness and moisture content, and generally gives consistent and reproducible results. The results of this test simply provide a relative understanding of flame spread potential. The flame spread index is sometimes abbreviated as FSI.

[F] FLAMMABLE GAS. A material that is a gas at 68°F (20°C) or less at 14.7 pounds per square inch atmosphere (psia) (101 kPa) of pressure [a material that has a *boiling point* of 68°F (20°C) or less at 14.7 psia (101 kPa)] which:

1. Is ignitable at 14.7 psia (101 kPa) when in a mixture of 13 percent or less by volume with air; or
2. Has a flammable range at 14.7 psia (101 kPa) with air of at least 12 percent, regardless of the lower limit.

The limits specified shall be determined at 14.7 psi (101 kPa) of pressure and a temperature of 68°F (20°C) in accordance with ASTM E681.

❖ This term essentially refers to any type of compressed gas that burns in normal concentrations of oxygen in the air (see the definition of "Compressed gas"). The definition is consistent with the provisions of ASTM E681.

[F] FLAMMABLE LIQUEFIED GAS. A liquefied compressed gas which, under a charged pressure, is partially liquid at a temperature of 68°F (20°C) and which is flammable.

❖ This term essentially refers to any type of liquefied compressed gas that burns in normal concentrations of oxygen in the air (see the definition of "Compressed gas").

[F] FLAMMABLE LIQUID. A *liquid* having a closed cup *flash point* below 100°F (38°C). Flammable liquids are further categorized into a group known as Class I liquids. The Class I category is subdivided as follows:

Class IA. *Liquids* having a *flash point* below 73°F (23°C) and a *boiling point* below 100°F (38°C).

INTERNATIONAL CODE COUNCIL®
Copyright © 2015 ICC. ALL RIGHTS RESERVED. Accessed by David Dammon on Jun 21, 2017 12:30:52 PM pursuant to License Agreement with ICC. No further reproduction or distribution authorized. ANY UNAUTHORIZED REPRODUCTION OR DISTRIBUTION IS A VIOLATION OF THE FEDERAL COPYRIGHT ACT AND THE LICENSE AGREEMENT, AND SUBJECT TO CIVIL AND CRIMINAL PENALTIES THEREUNDER.

Class IB. *Liquids* having a *flash point* below 73°F (23°C) and a *boiling point* at or above 100°F (38°C).

Class IC. *Liquids* having a *flash point* at or above 73°F (23°C) and below 100°F (38°C). The category of flammable liquids does not include *compressed gases* or *cryogenic fluids*.

❖ While all flammable liquids have a closed cup flash point less than 100°F (38°C), the further classification of the Class I liquid is dependent on the boiling point (see the definition of "Boiling point"). The 100°F (38°C) flash point limitation for flammable liquids assumes possible indoor ambient temperature conditions of 100°F (38°C).

[F] FLAMMABLE MATERIAL. A material capable of being readily ignited from common sources of heat or at a temperature of 600°F (316°C) or less.

❖ Many standardized tests, such as those contained in ASTM E136 and NFPA 701, have been developed to assess the flammability and fire hazards of materials. Both of these test standards include objective criteria for evaluating the combustibility of different materials, however, great care must be taken in conducting and evaluating the results of such tests.

[F] FLAMMABLE SOLID. A *solid*, other than a blasting agent or *explosive*, that is capable of causing fire through friction, absorption or moisture, spontaneous chemical change, or retained heat from manufacturing or processing, or which has an ignition temperature below 212°F (100°C) or which burns so vigorously and persistently when ignited as to create a serious hazard. A chemical shall be considered a flammable *solid* as determined in accordance with the test method of CPSC 16 CFR; Part 1500.44, if it ignites and burns with a self-sustained flame at a rate greater than 0.1 inch (2.5 mm) per second along its major axis.

❖ Flammable solids are combustible materials that ignite easily and burn rapidly. Solids that may cause a fire due to friction are considered flammable solids as are metal powders that can be readily ignited. Examples of flammable solids include nitrocellulose and combustible metals, such as magnesium and titanium. For further discussion of this material definition, see the commentary to it in Chapter 2 of the *International Fire Code® Commentary*.

[F] FLAMMABLE VAPORS OR FUMES. The concentration of flammable constituents in air that exceeds 25 percent of their *lower flammable limit (LFL).*

❖ Vapors or fumes are considered to be flammable when they exceed 25 percent of their LFL. The LFL of a given vapor in air is the concentration at which flame propagation could occur in the presence of an ignition source (see the definition of "Lower flammable limit").

[F] FLASH POINT. The minimum temperature in degrees Fahrenheit at which a *liquid* will give off sufficient vapors to form an ignitable mixture with air near the surface or in the container, but will not sustain combustion. The flash point of a *liquid* shall be determined by appropriate test procedure and apparatus as specified in ASTM D56, ASTM D93 or ASTM D3278.

❖ The flash point is the characteristic used in the classification of flammable and combustible liquids. The Tag Closed Tester (ASTM D56), the Pensky-Martens Closed Cup Tester (ASTM D93) and the Small Scale Closed-Cup Apparatus (ASTM D3278) are the referenced test procedures for determining the flash points of liquids. The applicability of the respective test method is dependent on the viscosity of the test liquid and the expected flash point.

FLIGHT. A continuous run of rectangular treads, *winders* or combination thereof from one landing to another.

❖ Two points of clarification for stairways have been addressed by the definition of "Flight." First, a flight is made up of the treads and risers that occur between landings. Therefore, a stairway connecting two stories that includes an intermediate landing consists of two flights. Secondly, the inclusion of winders within a stairway does not create multiple flights. Winders are simply treads within a flight and are often combined with rectangular treads within the same flight.

[BS] FLOOD or FLOODING. A general and temporary condition of partial or complete inundation of normally dry land from:

1. The overflow of inland or tidal waters.
2. The unusual and rapid accumulation or runoff of surface waters from any source.

❖ The term "flood" is broadly defined because the condition may occur near all types and sizes of bodies of water. Along streams and riverine areas, flooding results from the accumulation of rainfall runoff that drains from upland watersheds. Along coasts and the shorelines of large lakes, flooding is caused by wind-driven surges and waves that push water onshore, often augmented by tidal influences.

[BS] FLOOD DAMAGE-RESISTANT MATERIALS. Any construction material capable of withstanding direct and prolonged contact with floodwaters without sustaining any damage that requires more than cosmetic *repair*.

❖ A building or structure located within a flood hazard area will have certain structural and nonstructural elements below the design flood elevation, even when the lowest floor is elevated in compliance with the requirements of Section 1612. To minimize damage and facilitate cleanup, the materials used in those elements are to be resistant to damage by floodwater. In coastal high-hazard areas (commonly called "V zones"), walls that are designed to break away during the design flood may be wetted during floods of lesser magnitude. When flood damage-resistant materials are used, the owners are not faced with significant repairs. In riverine and inland coastal flood hazard areas (commonly called "A zones"), enclosures may be allowed if designed and constructed with openings that allow floodwater to enter and exit without causing structural damage. To minimize costs

INTERNATIONAL CODE COUNCIL®
Copyright © 2015 ICC. ALL RIGHTS RESERVED. Accessed by David Dammon on Jun 21, 2017 12:30:52 PM pursuant to License Agreement with ICC. No further reproduction or distribution authorized. ANY UNAUTHORIZED REPRODUCTION OR DISTRIBUTION IS A VIOLATION OF THE FEDERAL COPYRIGHT ACT AND THE LICENSE AGREEMENT, AND SUBJECT TO CIVIL AND CRIMINAL PENALTIES THEREUNDER.

and facilitate cleanup, materials used for those enclosures are to resist flood damage. Prolonged contact is generally considered to be partial or total inundation for at least 72 hours. In some instances, materials that are not flood damage-resistant materials, such as wiring for fire alarms and emergency lighting, are allowed below the flood elevation, if specifically required to address life safety and electrical code requirements for parking vehicles, building access and storage areas. For further guidance, refer to FEMA TB #2, *Flood Damage-Resistant Materials Requirements for Buildings Located in Special Flood Hazard Areas*.

FLOOD, DESIGN. See "Design flood."

FLOOD ELEVATION, DESIGN. See "Design flood elevation."

[BS] FLOOD HAZARD AREA. The greater of the following two areas:

1. The area within a flood plain subject to a 1-percent or greater chance of *flooding* in any year.
2. The area designated as a flood hazard area on a community's flood hazard map, or otherwise legally designated.

❖ FEMA prepares Flood Insurance Rate Maps (FIRMs) which delineate the land area that is subject to inundation by the 1-percent annual chance flood. Some states and local jurisdictions develop and adopt maps of flood hazard areas that are more extensive than the areas shown on FEMA's maps. For the purpose of the code, the flood hazard area within which the requirements are to be applied is the greater of the two delineated areas.

FLOOD HAZARD AREAS, SPECIAL. See "Special flood hazard area."

[BS] FLOOD HAZARD AREA SUBJECT TO HIGH-VELOCITY WAVE ACTION. Area within the *flood hazard area* that is subject to high-velocity wave action, and shown on a Flood Insurance Rate Map (FIRM) or other flood hazard map as Zone V, VO, VE or V1-30.

❖ Some coastal and lake shorelines experience flooding that includes wind-driven waves. Flood hazard areas that are anticipated to have high-velocity wave action, which changes anticipated flood loads, are specifically designated on FEMA's flood hazard area maps and commonly are referred to as "V Zones." In these areas, wave heights are predicted to be greater than or equal to 3 feet (914 mm), or the wave runup elevations are predicted to reach 3 feet (914 mm) or more above grade.

[BS] FLOOD INSURANCE RATE MAP (FIRM). An official map of a community on which the Federal Emergency Management Agency (FEMA) has delineated both the *special flood hazard areas* and the risk premium zones applicable to the community.

❖ The FIRM shows the flood hazard areas along bodies of water where some level of assessment or study by FEMA has determined that there is a risk of flooding. In addition to showing the extent of flood hazard areas, base flood elevations are shown where studies using detailed methods were conducted and floodways may be delineated. Users are cautioned that FIRMs may not show all bodies of water or all areas prone to flooding, including areas with local drainage problems.

[BS] FLOOD INSURANCE STUDY. The official report provided by the Federal Emergency Management Agency containing the Flood Insurance Rate Map (FIRM), the Flood Boundary and Floodway Map (FBFM), the water surface elevation of the *base flood* and supporting technical data.

❖ A Flood Insurance Study is prepared for each local jurisdiction for which FEMA has evaluated flood hazards. The report summarizes information that describes and supports the flood hazard area maps, including narratives of records of past floods, descriptions of the methodologies used, floodway data tables with additional information for waterways for which floodways have been designated, and tables with additional information for shoreline transects.

[BS] FLOODWAY. The channel of the river, creek or other watercourse and the adjacent land areas that must be reserved in order to discharge the *base flood* without cumulatively increasing the water surface elevation more than a designated height.

❖ FEMA delineates floodways along most rivers and streams that are studied using detailed methods. The floodway is the area that must be kept clear of encroachments, such as fill and buildings, in order to allow a base flood to pass without increasing the water surface more than a designated height. The designated height is found by referencing the floodway data table in the Flood Insurance Study. In general, floodways have faster flow velocities and deeper water than in adjacent floodway fringe areas.

FLOOR AREA, GROSS. The floor area within the inside perimeter of the *exterior walls* of the building under consideration, exclusive of vent *shafts* and *courts*, without deduction for *corridors*, *stairways*, *ramps*, closets, the thickness of interior walls, columns or other features. The floor area of a building, or portion thereof, not provided with surrounding *exterior walls* shall be the usable area under the horizontal projection of the roof or floor above. The gross floor area shall not include *shafts* with no openings or interior *courts*.

❖ Gross floor area is that area measured within the perimeter formed by the inside surface of the exterior walls. The area of all occupiable and nonoccupiable spaces, including mechanical and elevator shafts, toilet rooms, closets and mechanical equipment rooms, are included in the gross floor area. This area could also include any covered porches, carports or other exterior space intended to be used as part of the building's occupiable space. Both gross and net floor areas are used for the determination of occupant load in accordance with Table 1004.1.2.

INTERNATIONAL CODE COUNCIL®
Copyright © 2015 ICC. ALL RIGHTS RESERVED. Accessed by David Dammon on Jun 21, 2017 12:30:52 PM pursuant to License Agreement with ICC. No further reproduction or distribution authorized. ANY UNAUTHORIZED REPRODUCTION OR DISTRIBUTION IS A VIOLATION OF THE FEDERAL COPYRIGHT ACT AND THE LICENSE AGREEMENT, AND SUBJECT TO CIVIL AND CRIMINAL PENALTIES THEREUNDER.

FLOOR AREA, NET. The actual occupied area not including unoccupied accessory areas such as *corridors*, *stairways*, *ramps*, toilet rooms, mechanical rooms and closets.

❖ This area is intended to be only the room areas that are used for specific occupancy purposes and does not include circulation areas, such as corridors, ramps or stairways, or service and utility spaces, such as toilet rooms and mechanical and electrical equipment rooms. Net floor area is typically measured between inside faces of walls within a room. Floor area, net and gross, is utilized in Table 1004.1.2 to determine occupant load for a space.

FLOOR FIRE DOOR ASSEMBLY. A combination of a *fire door*, a frame, hardware and other accessories installed in a horizontal plane, which together provide a specific degree of fire protection to a through-opening in a fire-resistance-rated floor (see Section 712.1.13.1).

❖ Floor fire door assemblies are required to be tested in accordance with NFPA 288 and are used to protect openings in fire-resistance-rated floors. They are one alternative for protecting a floor opening, such as an access opening to mechanical equipment. See the commentary to Section 712.1.13.1 for additional information on floor fire door assemblies.

[F] FOAM-EXTINGUISHING SYSTEM. A special system discharging a foam made from concentrates, either mechanically or chemically, over the area to be protected.

❖ Foam-extinguishing systems must be of an approved type and installed and tested to comply with NFPA 11, 11A and 16. All foams are intended to exclude oxygen from the fire, cool the area of the fire and insulate adjoining surfaces from heat caused by fires. Foam systems are commonly used to extinguish flammable or combustible liquid fires (see commentary, Section 904.7). While water applied by an automatic sprinkler system can only act horizontally upon the surface that it reaches, foam-extinguishing agents have the ability to act vertically in addition to horizontally. Further, unlike gaseous extinguishing agents, foam does not dissipate rapidly where there is no confined space. Thus, foam systems are also used where there is a need to fill a nonconfined space with extinguishing material as in the case of certain industrial applications.

FOAM PLASTIC INSULATION. A plastic that is intentionally expanded by the use of a foaming agent to produce a reduced-density plastic containing voids consisting of open or closed cells distributed throughout the plastic for thermal insulating or acoustical purposes and that has a density less than 20 pounds per cubic foot (pcf) (320 kg/m^3).

❖ Foam plastic insulation is plastic that is imbedded with gas.

[BS] FOLDING AND TELESCOPIC SEATING. Tiered seating having an overall shape and size that is capable of being reduced for purposes of moving or storing and is not a building element.

❖ Bleachers, folding and telescopic seating and grandstands are essentially unique forms of tiered seating that are supported on a dedicated structural system. All types are addressed in ICC 300, the safety standard for these types of seating arrangements. Folding and telescopic seating is commonly used in gymnasiums and sports arenas where the seating can be configured in a variety of ways for various types of events. "Building element" is a defined term that is primarily used in conjunction with the structural elements regulated in Table 601. While telescopic seating may be attached to a wall, the system when pulled out or folded includes its main support system. Such seating is not considered a building element of the building or structure in which it is located (see Section 1029.1.1).

FOOD COURT. A public seating area located in the *mall* that serves adjacent food preparation tenant spaces.

❖ Typical mall building layouts include a central gathering area for food and drink consumption. These areas are usually located in the mall itself and chairs are provided for the public's use to consume the food and drink. This public area is usually surrounded by numerous tenant spaces where food is prepared and sold over the counter. A separate design occupant load is required to be calculated in accordance with Section 402.8.2.4.

FOSTER CARE FACILITIES. Facilities that provide care to more than five children, $2^1/_2$ years of age or less.

❖ Foster care facilities are group homes where children live, not day care facilities. By being under $2^1/_2$ years of age, children are assumed not capable of self-preservation, thus there is a need for higher levels of active and passive protection in the building (see the commentary to Group I-2 in Section 308.4). Group homes with children over $2^1/_2$ years of age would be classified as Group R-4 or I-1, depending on the number of children housed in the facility. The "more than five children" is intended to clarify that a foster care family would not be considered a Group I-2 facility. See also the definitions for "24-hour care," "Custodial care," "Group home," "Personal care" and "Incapable of self-preservation."

[BS] FOUNDATION PIER (for Chapter 21). An isolated vertical foundation member whose horizontal dimension measured at right angles to its thickness does not exceed three times its thickness and whose height is equal to or less than four times its thickness.

❖ This definition is intended specifically for masonry construction. Masonry foundation piers are similar to masonry columns, except that they are shorter and do not need to comply with the prescriptive reinforcement detailing requirements for masonry columns.

INTERNATIONAL CODE COUNCIL®
Copyright © 2015 ICC. ALL RIGHTS RESERVED. Accessed by David Dammon on Jun 21, 2017 12:30:52 PM pursuant to License Agreement with ICC. No further reproduction or distribution authorized. ANY UNAUTHORIZED REPRODUCTION OR DISTRIBUTION IS A VIOLATION OF THE FEDERAL COPYRIGHT ACT AND THE LICENSE AGREEMENT, AND SUBJECT TO CIVIL AND CRIMINAL PENALTIES THEREUNDER.

FRAME STRUCTURE. A building or other structure in which vertical *loads* from floors and roofs are primarily supported by columns.

❖ This definition describes the structure types that are covered under Section 1615.3.

GABLE. The triangular portion of a wall beneath the end of a dual-slope, pitched, or mono-slope roof or portion thereof and above the top plates of the story or level of the ceiling below.

❖ This definition enables the code user to correctly apply sheathing requirements found in Sections 2304 and 2308**.**

[F] GAS CABINET. A fully enclosed, ventilated noncombustible enclosure used to provide an isolated environment for *compressed gas* cylinders in storage or *use*. Doors and access ports for exchanging cylinders and accessing pressure-regulating controls are allowed to be included.

❖ Gas cabinets are used to provide adequate control for escaping gas in the event of a leaking cylinder of compressed gases. Gas cabinets are commonly used when dealing with highly toxic and toxic compressed gases. Sections 5003.8.6 and 6004.1.2 of the IFC provide additional construction and ventilation requirements for gas cabinets.

[F] GAS ROOM. A separately ventilated, fully enclosed room in which only *compressed gases* and associated equipment and supplies are stored or *used.*

❖ Gas rooms are used exclusively for the storage or use of hazardous gases in excess of the maximum allowable quantities permitted by Tables 307.1(1) and 307.1(2). Gas rooms are commonly used as an alternative storage area for HPM gases in a Group H-5 facility.

[F] GASEOUS HYDROGEN SYSTEM. An assembly of piping, devices and apparatus designed to generate, store, contain, distribute or transport a nontoxic, gaseous hydrogen-containing mixture having not less than 95-percent hydrogen gas by volume and not more than 1-percent oxygen by volume. Gaseous hydrogen systems consist of items such as *compressed gas* containers, reactors and appurtenances, including pressure regulators, pressure relief devices, manifolds, pumps, compressors and interconnecting piping and tubing and controls.

❖ This term includes the source of hydrogen and all piping and devices between the source and the equipment being used. The gas in a hydrogen system is above the upper flammable limit (UFL) and is therefore "too rich" to burn. Any leakage, however, can quickly create conditions that will be explosive under ambient conditions.

GLASS FIBERBOARD. Fibrous glass roof insulation consisting of inorganic glass fibers formed into rigid boards using a binder. The board has a top surface faced with asphalt and kraft reinforced with glass fiber.

❖ Depending on the type and location of insulation in walls, floors and roofs, the insulation may impact the fire-resistance rating (see Sections 703.2 and 721.1). Glass fiber insulation is specifically listed in Table 722.6.2(5).

GRADE FLOOR OPENING. A window or other opening located such that the sill height of the opening is not more than 44 inches (1118 mm) above or below the finished ground level adjacent to the opening.

❖ Openings used for emergency escape or rescue are clearly easier to use the closer they are to grade. This definition specifies that the maximum sill height above the exterior adjacent grade must be no more than 44 inches (1118 mm) to qualify as a grade floor opening (see Section 1030.2).

[BS] GRADE (LUMBER). The classification of lumber in regard to strength and utility in accordance with American Softwood Lumber Standard DOC PS 20 and the grading rules of an *approved* lumber rules-writing agency.

❖ The grade identifies the ability of a particular piece of lumber to resist applied loads. The mark is applied to solid sawn pieces of wood and includes the species, grade and whether it was finished (surfaced) green or dry. The species and grade designations on the grade mark, when used in conjunction with the design value in the NDS, provide all the information necessary to determine what load the piece of lumber is capable of holding. The ALSC provides facsimile sheets for agencies accredited to grade lumber. Although rare, fake grade stamps can be found in the marketplace.

GRADE PLANE. A reference plane representing the average of finished ground level adjoining the building at *exterior walls.* Where the finished ground level slopes away from the *exterior walls*, the reference plane shall be established by the lowest points within the area between the building and the *lot line* or, where the *lot line* is more than 6 feet (1829 mm) from the building, between the building and a point 6 feet (1829 mm) from the building.

❖ This term is used in the definitions of "Basement" and "Story above grade plane." It is critical in determining the height of a building and the number of stories, which are regulated by Chapter 5. Since the finished ground surface adjacent to the building may vary (depending on site conditions), the mean average taken at various points around the building constitutes the grade plane. One method of determining the grade plane elevation is illustrated in Commentary Figure 202(23), where the ground slopes uniformly along the length of each exterior wall.

Where a site has a more complex slope, a more detailed calculation that takes into account the various segments of the perimeter walls must be taken. Commentary Figure 202(24) shows an example of a complex finished grade. A full calculation will show the grade plane to be at an elevation of 498.64 feet (151 986 mm). If a calculation is done based on just the four extreme corners, grade plane would be thought to be 495.5 feet (151 029 mm), an error of more than 3 feet (914 mm).

INTERNATIONAL CODE COUNCIL®
Copyright © 2015 ICC. ALL RIGHTS RESERVED. Accessed by David Dammon on Jun 21, 2017 12:30:52 PM pursuant to License Agreement with ICC. No further reproduction or distribution authorized. ANY UNAUTHORIZED REPRODUCTION OR DISTRIBUTION IS A VIOLATION OF THE FEDERAL COPYRIGHT ACT AND THE LICENSE AGREEMENT, AND SUBJECT TO CIVIL AND CRIMINAL PENALTIES THEREUNDER.

Situations may arise where the ground adjacent to the building slopes away from the building because of site or landscaping considerations. In this case, the lowest finished ground level at any point between the building's exterior wall and a point 6 feet (1829 mm) from the building [or the lot line, if closer than 6 feet (1829 mm)] comes under consideration. These points are used to determine the elevation of the grade plane as illustrated in Commentary Figures 202(25) and 202(26).

In the context of the code, the term "grade" means the finished ground level at the exterior walls. While the grade plane is a hypothetical horizontal plane derived as indicated above, the grade is that which actually exists or is intended to exist at the completion of site work. The only situation where the grade plane and the grade are identical is when the site is perfectly level for a distance of 6 feet (1829 mm) from all exterior walls.

GRADE PLANE, STORY ABOVE. See "Story above grade plane."

GRANDSTAND. Tiered seating supported on a dedicated structural system and two or more rows high and is not a building element (see "*Bleachers*").

❖ Bleachers, folding and telescopic seating and grandstands are essentially unique forms of tiered seating supported on a dedicated structural system. All types are addressed in the safety standard for these types of seating arrangements, ICC 300. Grandstands can be found at a county fair ground, along a parade route or within indoor facilities. Examples are sports arenas and public auditoriums, as well as places of religious worship and gallery-type lecture halls. "Building element" is a defined term that is primarily used in conjunction with the structural elements regulated in Table 601. Grandstands have a separate structural system. Individual bench seats directly attached to a floor system are not a grandstand. The terms "bleacher" and "grandstand" are basically interchangeable. There is no cutoff in size or number of seats that separates bleachers and grandstands (see Section 1029.1.1).

GROSS LEASABLE AREA. The total floor area designed for tenant occupancy and exclusive use. The area of tenant occupancy is measured from the centerlines of joint partitions to the outside of the tenant walls. All tenant areas, including areas used for storage, shall be included in calculating gross leasable area.

❖ The gross leasable area represents the aggregate area available in a covered or open mall building for tenant occupancy. It does not include the area of the mall, unless portions of it are leased for the purposes of setting up separate tenant spaces (kiosks). The area is used to determine the design occupant load in accordance with Section 402.8.2.1.

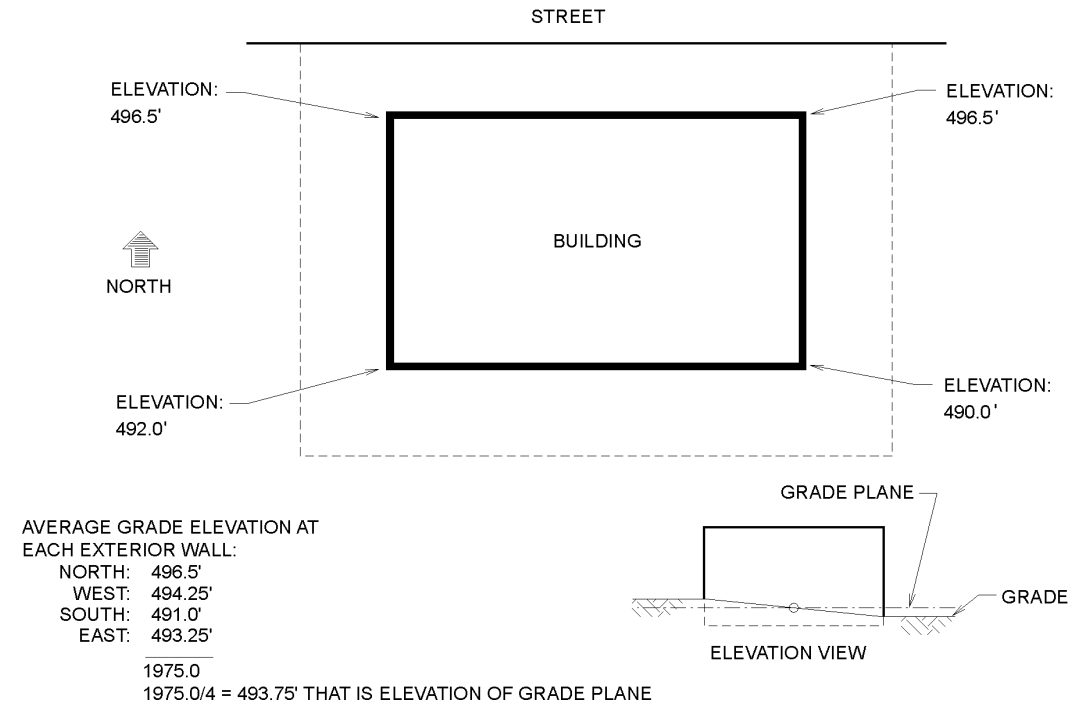

For SI: 1 foot = 304.8 mm.

Figure 202(23)
DETERMINATION OF GRADE PLANE ELEVATION WHERE GRADE SLOPES UNIFORMLY ALONG THE ENTIRE LENGTH OF THE EXTERIOR WALLS

INTERNATIONAL CODE COUNCIL®
Copyright © 2015 ICC. ALL RIGHTS RESERVED. Accessed by David Dammon on Jun 21, 2017 12:30:52 PM pursuant to License Agreement with ICC. No further reproduction or distribution authorized. ANY UNAUTHORIZED REPRODUCTION OR DISTRIBUTION IS A VIOLATION OF THE FEDERAL COPYRIGHT ACT AND THE LICENSE AGREEMENT, AND SUBJECT TO CIVIL AND CRIMINAL PENALTIES THEREUNDER.

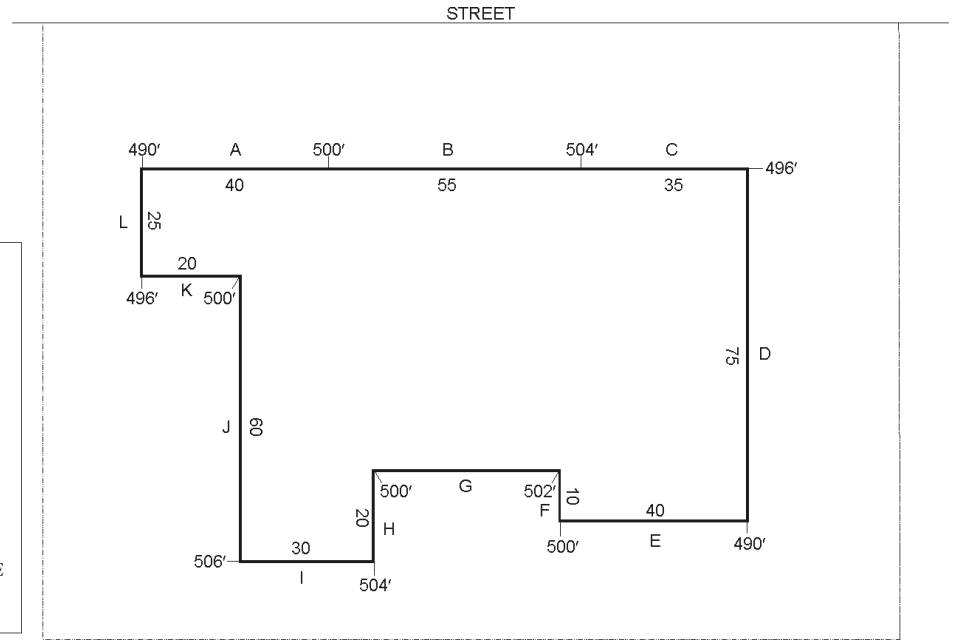

A — (490+500)/2 · 40 = 19,800
B — (500+504)/2 · 55 = 27,610
C — (504+496)/2 · 35 = 17,500
D — (496+490)/2 · 75 = 36,975
E — (490+500)/2 · 40 = 19,800
F — (500+502)/2 · 10 = 5,010
G — (502+500)/2 · 40 = 20,040
H — (500+504)/2 · 20 = 10,040
I — (504+506)/2 · 30 = 15,150
J — (506+500)/2 · 60 = 30,180
K — (500+496)/2 · 20 = 9,960
L — (496+490)/2 · 25 = 12,325

TOTAL PERIMETER 450 224,390

224,390/450 = 498.64 FEET – GRADE PLANE ELEVATION

For SI: 1 foot = 304.8 mm.

Figure 202(24)
DETERMINATION OF GRADE PLANE ELEVATIONS WHERE GRADE AND EXTERIOR WALLS ARE IRREGULAR

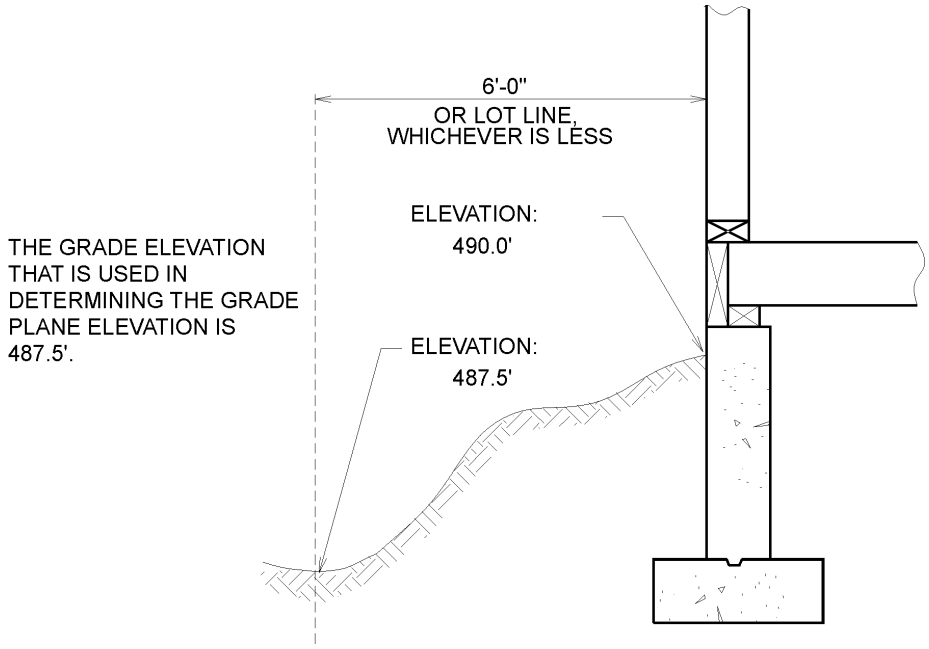

For SI: 1 inch = 25.4 mm, 1 foot = 304.8 mm.

Figure 202(25)
DETERMINATION OF GRADE PLANE WHERE GRADE SLOPES AWAY FROM THE EXTERIOR WALL

INTERNATIONAL CODE COUNCIL®
Copyright © 2015 ICC. ALL RIGHTS RESERVED. Accessed by David Dammon on Jun 21, 2017 12:30:52 PM pursuant to License Agreement with ICC. No further reproduction or distribution authorized. ANY UNAUTHORIZED REPRODUCTION OR DISTRIBUTION IS A VIOLATION OF THE FEDERAL COPYRIGHT ACT AND THE LICENSE AGREEMENT, AND SUBJECT TO CIVIL AND CRIMINAL PENALTIES THEREUNDER.

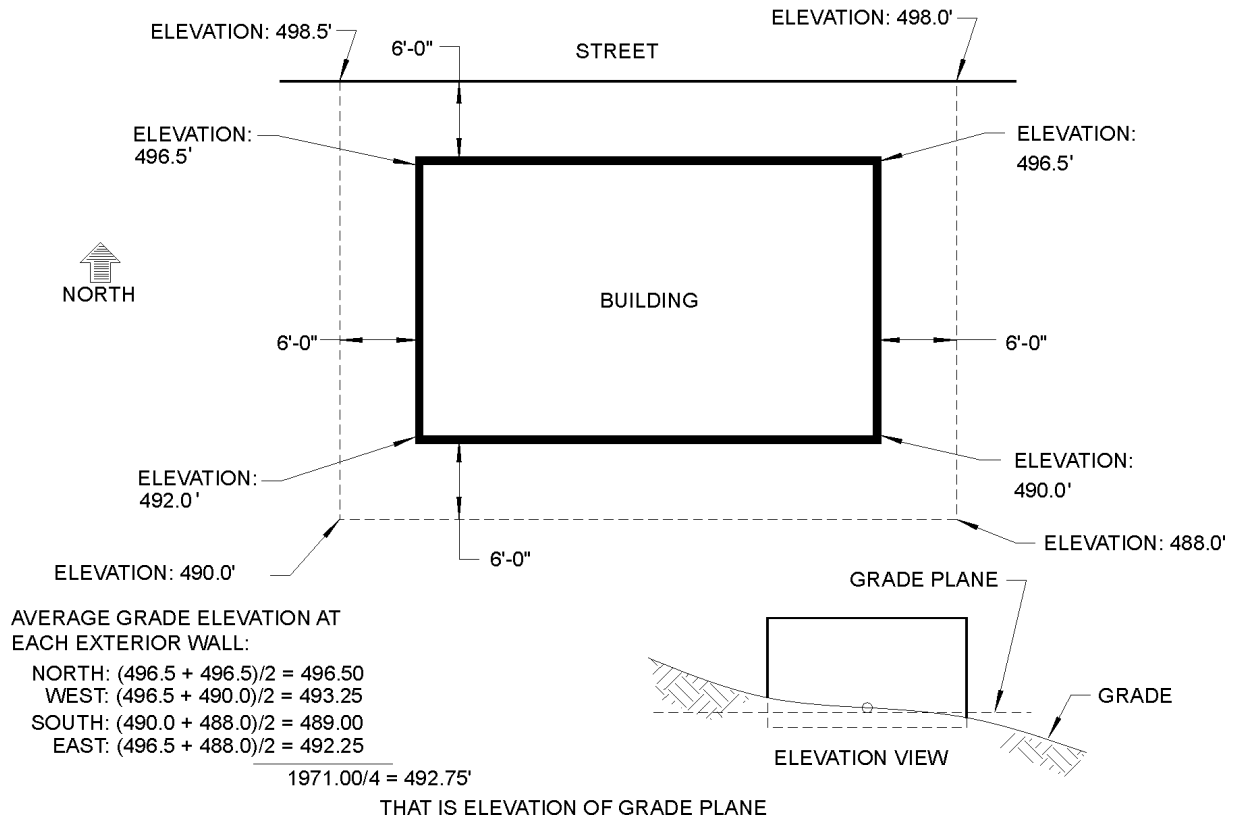

For SI: 1 inch = 25.4 mm, 1 foot = 304.8 mm.

Figure 202(26)
DETERMINATION OF GRADE PLANE ELEVATION WHERE GRADE DOES NOT SLOPE UNIFORMLY ALONG THE LENGTH OF THE EXTERIOR WALLS

GROUP HOME. A facility for social rehabilitation, substance abuse or mental health problems that contains a group housing arrangement that provides *custodial care* but does not provide medical care.

❖ The term "group home" is listed under Group I-1 and R-4 occupancies. See the commentary under "Custodial care." The number of occupants would differentiate which occupancy classification is applicable to the facility. Residents live in a supervised living arrangement. Facilities can be for persons with developmental, emotional, mental or physical difficulties or for persons recovering from drug or alcohol abuse. The intent of these facilities is to promote recovery, community integration and improved quality of life. While there may be security restrictions, occupants are not restrained (see Section 308, Group I-3 for restrained conditions). The focus is to increase an individual's capacity to be successful in living, working, learning and social environments to the best of their ability. See also the commentary for "24-hour basis," "Foster care facility," "Personal care services," "Custodial care," "Nursing home" and "Incapable of self-preservation."

[BS] GUARD. A building component or a system of building components located at or near the open sides of elevated walking surfaces that minimizes the possibility of a fall from the walking surface to a lower level.

❖ Guards are sometimes mistakenly referred to as "guardrails." In actuality, the guard consists of the entire vertical portion of the barrier, not just the top rail (see commentary for "Handrail" and Section 1015). The purpose of guards is to minimize the potential for falls at dropoffs adjacent to walking surfaces. Loading requirements for guards are located in Section 1607.8.

GUEST ROOM. A room used or intended to be used by one or more guests for living or sleeping purposes.

❖ Lodging houses with five or fewer guest rooms are allowed by the code as R-3 occupancies. They are also permitted under the IRC. See the definition of "Lodging house" and Section 310.5.

GYPSUM BOARD. The generic name for a family of sheet products consisting of a noncombustible core primarily of gypsum with paper surfacing. Gypsum wallboard, gypsum sheathing, gypsum base for gypsum veneer plaster, exterior

INTERNATIONAL CODE COUNCIL®
Copyright © 2015 ICC. ALL RIGHTS RESERVED. Accessed by David Dammon on Jun 21, 2017 12:30:52 PM pursuant to License Agreement with ICC. No further reproduction or distribution authorized. ANY UNAUTHORIZED REPRODUCTION OR DISTRIBUTION IS A VIOLATION OF THE FEDERAL COPYRIGHT ACT AND THE LICENSE AGREEMENT, AND SUBJECT TO CIVIL AND CRIMINAL PENALTIES THEREUNDER.

gypsum soffit board, predecorated gypsum board and water-resistant gypsum backing board complying with the standards listed in Tables 2506.2, 2507.2 and Chapter 35 are types of gypsum board.

❖ Gypsum board is the most commonly used material for interior wall covering. Gypsum board is also used for exterior sheathing, plaster lath and ceiling covering. Because it is installed in sheet form, it is less labor intensive and generally considered more cost effective than other wall and ceiling materials, such as plaster. Gypsum board requires a minimal amount of finishing and will readily accept paint, wallpaper, vinyl fabric, special textured paint and similar surface finish materials.

Gypsum board will be subject to severe failure when placed in direct contact with water or continuous moisture. For this reason, the code does not allow gypsum board to be used in wet areas unless it is provided with a finish material impervious to moisture.

[BS] GYPSUM PANEL PRODUCT. The general name for a family of sheet products consisting essentially of gypsum.

❖ This definition enables the code user to correctly apply the requirements for these products in Chapter 25. The wording, extracted from ASTM C11, was created by the gypsum manufacturing industry to describe gypsum sheet products that are manufactured either unfaced or with facing other than paper.

[BS] GYPSUM PLASTER. A mixture of calcined gypsum or calcined gypsum and lime and aggregate and other *approved* materials as specified in this code.

❖ Gypsum plaster is available in several forms and is designed for a variety of applications, including those where fire protection of building components, construction of fire-resistance-rated assemblies within the building or control of sound transmission is needed. Gypsum plaster can be applied using a two- or three-coat method, depending upon the backing or lathing system.

Gypsum plaster provides a hard, smooth finish surface that will readily receive most decorative finishes, such as paint, vinyl wall fabric, wallpaper and textured paint. Various aggregates can be added to the plaster composition to achieve different surface textures, from a smooth troweled to a heavily textured finish.

However, the code does not permit the use of gypsum plaster at exterior locations or at wet areas on the interior of the building.

[BS] GYPSUM VENEER PLASTER. *Gypsum plaster* applied to an *approved* base in one or more coats normally not exceeding $^1/_4$ inch (6.4 mm) in total thickness.

❖ Gypsum veneer plaster is specifically designed for use as a one-coat plaster veneer finish surface. Gypsum veneer plaster must be applied over a solid base such as gypsum board lath, gypsum base for veneer plaster, concrete or concrete unit masonry. Although gypsum veneer plaster is designed to be applied in one coat, it can be applied in two coats, as long as the maximum thickness does not exceed $^1/_4$ inch (6.4 mm).

Gypsum veneer plaster provides a hard, smooth finish surface, much like three-coat gypsum plaster, that will readily receive a variety of decorative finishes. Like gypsum plaster, the code does not permit the use of gypsum veneer plaster at exterior locations or at wet areas on the interior of the building.

HABITABLE SPACE. A space in a building for living, sleeping, eating or cooking. Bathrooms, toilet rooms, closets, halls, storage or utility spaces and similar areas are not considered habitable spaces.

❖ These spaces are normally considered inhabited in the course of residential living and provide the four basic characteristics associated with it: living, sleeping, eating and cooking. All habitable spaces are considered occupiable spaces, though other occupiable spaces, such as halls or utility rooms, are not considered habitable (see the definition of "Occupiable space").

[F] HALOGENATED EXTINGUISHING SYSTEM. A fire-extinguishing system using one or more atoms of an element from the halogen chemical series: fluorine, chlorine, bromine and iodine.

❖ Halon is a colorless, odorless gas that inhibits the chemical reaction of fire. Halon extinguishing systems are useful in occupancies such as computer rooms, where an electrically nonconductive medium is essential or desirable and where cleanup of other extinguishing agents presents a problem. The Halon extinguishing system must be of an approved type and installed and tested to comply with NFPA 12A.

Halon extinguishing agents have been identified as a source of emissions resulting in the depletion of the stratospheric ozone layer. For this reason, production of new supplies of Halon has been phased out. Alternative gaseous extinguishing agents, such as clean agents, have been developed as alternatives to Halon.

[F] HANDLING. The deliberate transport by any means to a point of storage or *use*.

❖ The term "handling" pertains to the transporting or movement of hazardous materials within a building. Handling presents a level of hazard less than that of use or dispensing operations but greater than storage. Material is handled only when it is transported from one point to another; it is the act of conveyance. The definition provides the means to determine proper controls necessary to provide safety in the transport mode. Specific handling requirements for various hazardous materials are contained in the IFC.

[BS] HANDRAIL. A horizontal or sloping rail intended for grasping by the hand for guidance or support.

❖ Handrails are provided along walking surfaces that lead from one elevation to another, such as ramps and stairways. Handrails may be any shape in cross

INTERNATIONAL CODE COUNCIL®
Copyright © 2015 ICC. ALL RIGHTS RESERVED. Accessed by David Dammon on Jun 21, 2017 12:30:52 PM pursuant to License Agreement with ICC. No further reproduction or distribution authorized. ANY UNAUTHORIZED REPRODUCTION OR DISTRIBUTION IS A VIOLATION OF THE FEDERAL COPYRIGHT ACT AND THE LICENSE AGREEMENT, AND SUBJECT TO CIVIL AND CRIMINAL PENALTIES THEREUNDER.

section provided that they can be gripped by hand for support and guidance and for checking possible falls on the adjacent walking surface. In addition to being necessary in normal day-to-day use, handrails are especially needed in times of emergency when the pace of egress travel is hurried and the probability for occupant instability while traveling along the sloped or stepped walking surface is greater. Handrails, by themselves, are not intended to be used in place of guards to limit falls at drop-offs. Where guards and handrails are used together, the handrail is a separate element typically attached to the inside surface of the guard. The top guard cannot be used as a required handrail, except within dwelling units where the height is restricted to that of a handrail (see Section 1014). See the commentary for "Guard." For loading on handrails, see Section 1607.8.

HARDBOARD. A fibrous-felted, homogeneous panel made from lignocellulosic fibers consolidated under heat and pressure in a hot press to a density not less than 31 pcf (497 kg/m^3).

❖ Hardboard is used for various interior applications, as well as siding applications. Other ingredients may be added during processing to provide or improve properties, such as strength, water resistance and general utility.

HARDWARE. See "Fire exit hardware" and "Panic hardware."

[F] HAZARDOUS MATERIALS. Those chemicals or substances that are *physical hazards* or *health hazards* as classified in Section 307 and the *International Fire Code*, whether the materials are in usable or waste condition.

❖ The term "hazardous materials" refers to those materials that present either a physical or health hazard. A specific listing of hazardous materials is indicated in Sections 307.3, 307.4, 307.5 and 307.6. An occupancy containing greater than the maximum allowable quantities per control area of these materials as indicated in Table 307.1(1) or 307.1(2) is classified in one of the four high-hazard occupancy classifications. Section 307.1.1 provides 14 instances where, under specific conditions of handling, use, storage or packaging, the presence of one or more hazardous substances does not result in an occupancy being classified one of the Group H occupancies.

[F] HAZARDOUS PRODUCTION MATERIAL (HPM). A *solid*, *liquid* or gas associated with semiconductor manufacturing that has a degree-of-hazard rating in health, flammability or instability of Class 3 or 4 as ranked by NFPA 704 and which is *used* directly in research, laboratory or production processes which have as their end product materials that are not hazardous.

❖ This definition identifies those specific materials that can be contained within an HPM facility. The restriction in the definition for only hazardous materials with a Class 3 or 4 rating is not intended to exclude materials that are less hazardous, but to clarify that materials of the indicated higher ranking are still permitted in an HPM facility without classifying the building as Group H. NFPA 704 is referenced in order to establish the degree of hazard ratings for all materials as related to health, flammability and instability risks.

[BS] HEAD JOINT. Vertical *mortar joint* placed between *masonry units* within the *wythe* at the time the *masonry units* are laid.

❖ Vertically oriented joints between masonry units are head joints [see Commentary Figure 202(8)].

[F] HEALTH HAZARD. A classification of a chemical for which there is statistically significant evidence that acute or chronic health effects are capable of occurring in exposed persons. The term "health hazard" includes chemicals that are *toxic* or *highly toxic*, and *corrosive*.

❖ Materials that present risks to people from handling or exposure are considered health hazards. Examples of these types of materials are indicated in Section 307.6. Buildings and structures containing materials that present a health hazard in excess of the maximum allowable quantities would be classified as Group H-4. Materials that present a health hazard may also present a physical hazard (see the definition of "Physical hazard") and must comply with the requirements of the code applicable to both hazards.

HEAT DETECTOR. See "Detector, heat."

HEIGHT, BUILDING. The vertical distance from *grade plane* to the average height of the highest roof surface.

❖ This definition establishes the two points of measurement that determine the height of a building. This measurement is used to determine compliance with the building height limitations of Sections 503.1 and 504 and Tables 504.3 and 504.4, which limit building height both in terms of the number of stories and the number of feet between the two points of measurement.

The lower point of measurement is the grade plane (see the definition of "Grade plane"). The upper point of measurement is the roof surface of the building, with consideration given to sloped roofs (such as a hip or gable roof). In the case of sloped roofs, the average height would be used as the upper point of measurement, rather than the eave line or the ridge line. The average height of the roof is the mid-height between the roof eave and the roof ridge, regardless of the shape of the roof.

This definition also indicates that building height is measured to the highest roof surface. In the case of a building with multiple roof levels, the highest of the various roof levels must be used to determine the building height. If the highest of the various roof levels is a sloped roof, then the average height of that sloped roof must be used. The average height of multiple roof levels is not to be used to determine the building height. Where structures are divided into multiple buildings by fire walls, building height is determinable for each building separately.

The distance that a building extends above ground also determines the relative hazards of that building.

INTERNATIONAL CODE COUNCIL®
Copyright © 2015 ICC. ALL RIGHTS RESERVED. Accessed by David Dammon on Jun 21, 2017 12:30:52 PM pursuant to License Agreement with ICC. No further reproduction or distribution authorized. ANY UNAUTHORIZED REPRODUCTION OR DISTRIBUTION IS A VIOLATION OF THE FEDERAL COPYRIGHT ACT AND THE LICENSE AGREEMENT, AND SUBJECT TO CIVIL AND CRIMINAL PENALTIES THEREUNDER.

Simply stated, a taller building presents relatively greater safety hazards than a shorter building for several reasons, including fire service access and time for occupant egress. The code specifically defines how building height is measured to enable various code requirements, such as type of construction and fire suppression, to be consistent with those relative hazards [see Commentary Figure 202(27) for the computation of building height in terms of feet and stories].

The term "height" is also used frequently in the code for other limitations related to, and sometimes not related to, "building height." For example, Section 1509 limits the height of a penthouse above the top of the roof. Since a "Penthouse" is defined as a structure that is built above the roof of a building, it is above the point to which "Building height" is measured. Therefore a penthouse would not affect the measurement of building height and can be located above the maximum allowed roof height provided it complies with the limitations of Section 1509. Other provisions such as Sections 1013 and 1406 specify requirements based on height, but such height is usually measured from a location other than grade plane and is not intended to be building height.

HELICAL PILE. Manufactured steel deep foundation element consisting of a central shaft and one or more helical bearing plates. A helical pile is installed by rotating it into the ground. Each helical bearing plate is formed into a screw thread with a uniform defined pitch.

❖ This definition clarifies a term that refers to a specific type of deep foundation element (see the design requirements in Section 1810.3.1.5).

HELIPAD. A structural surface that is used for the landing, taking off, taxiing and parking of helicopters.

❖ This definition provides a specific term that refers to the portion of a structure that is subject to the helicopter live loads in Section 1607.6.

HELIPORT. An area of land or water or a structural surface that is used, or intended for use, for the landing and taking off of helicopters, and any appurtenant areas that are used, or intended for use, for heliport buildings or other heliport facilities.

❖ A heliport includes not only the immediate landing and take-off pad, but also all other adjacent service areas. The fueling, maintenance, repairs or storage of helicopters may be done within or outside of a building or structure. These outside areas or enclosed spaces are considered as part of the heliport.

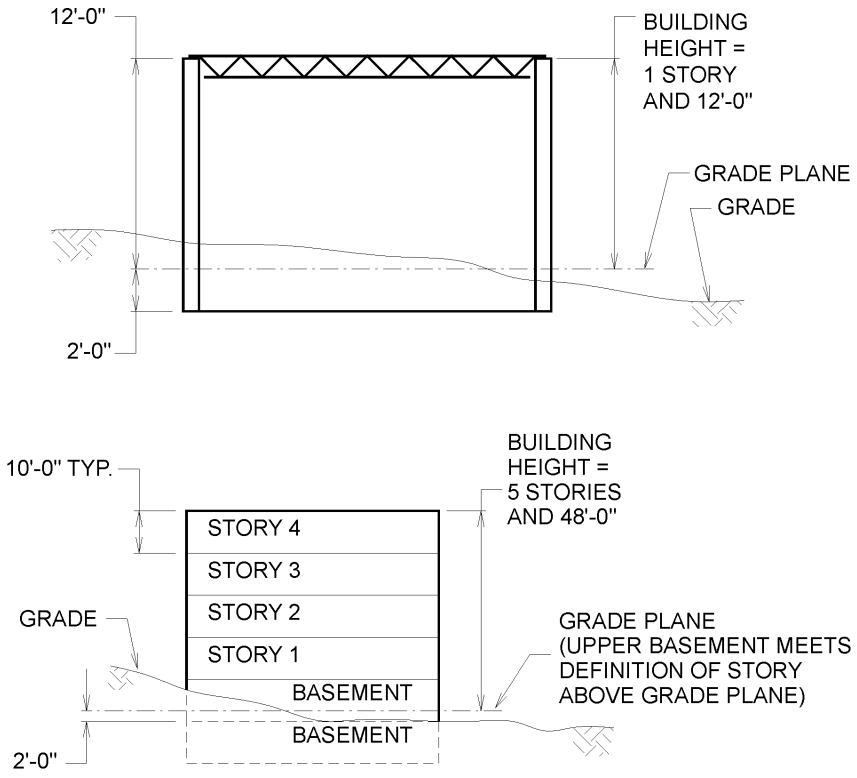

For SI: 1 inch = 25.4 mm, 1 foot = 304.8 mm.

Figure 202(27)
BUILDING HEIGHT

INTERNATIONAL CODE COUNCIL®
Copyright © 2015 ICC. ALL RIGHTS RESERVED. Accessed by David Dammon on Jun 21, 2017 12:30:52 PM pursuant to License Agreement with ICC. No further reproduction or distribution authorized. ANY UNAUTHORIZED REPRODUCTION OR DISTRIBUTION IS A VIOLATION OF THE FEDERAL COPYRIGHT ACT AND THE LICENSE AGREEMENT, AND SUBJECT TO CIVIL AND CRIMINAL PENALTIES THEREUNDER.

HELISTOP. The same as "heliport," except that no fueling, defueling, maintenance, repairs or storage of helicopters is permitted.

❖ A helistop, by definition, is limited only to the immediate landing and take-off pad. Examples of helistops would be the pad located on top of a hospital for the unloading of emergency room patients, a pad for discharging commuters outside of an office building or the pad used to load and unload tourists at a sightseeing attraction.

HIGH-PRESSURE DECORATIVE EXTERIOR-GRADE COMPACT LAMINATE (HPL). Panels consisting of layers of cellulose fibrous material impregnated with thermosetting resins and bonded together by a high-pressure process to form a homogeneous nonporous core suitable for exterior use.

❖ HPL is an exterior finish material. While in common use in Europe, HPL is finding expanded use elsewhere. The definition is based on the International Standard EN 428. Section 1409 specifies the requirements and uses for HPL.

HIGH-PRESSURE DECORATIVE EXTERIOR-GRADE COMPACT LAMINATE (HPL) SYSTEM. An *exterior wall covering* fabricated using HPL in a specific assembly including *joints*, seams, attachments, substrate, framing and other details as appropriate to a particular design.

❖ HPL systems are intended for exterior application for buildings. The definition is based on the International Standard EN 428. Section 1409 specifies the requirements and uses for HPL systems.

HIGH-RISE BUILDING. A building with an occupied floor located more than 75 feet (22 860 mm) above the lowest level of fire department vehicle access.

❖ Determining what qualifies as a high-rise building is a fairly unique measurement of height and is not based on the definition of "Building height." The critical measurement is from the lowest ground location where a fire department will be able to set its fire-fighting equipment to a floor level of occupied floors as shown in Commentary Figure 202(28). It is not a measurement from grade plane to top of the building. The basis of the measurement is analyzing the capability of fighting a fire and rescuing occupants from the outside the building. Once past a height of 75 feet (22 860 mm) above ground level, ground-based fire fighting will not be sufficient. High-rise buildings must comply with the requirements of Section 403.

[F] HIGHLY TOXIC. A material which produces a lethal dose or lethal concentration that falls within any of the following categories:

1. A chemical that has a median lethal dose (LD_{50}) of 50 milligrams or less per kilogram of body weight when administered orally to albino rats weighing between 200 and 300 grams each.
2. A chemical that has a median lethal dose (LD_{50}) of 200 milligrams or less per kilogram of body weight when administered by continuous contact for 24 hours (or less if death occurs within 24 hours) with the bare skin of albino rabbits weighing between 2 and 3 kilograms each.
3. A chemical that has a median lethal concentration (LC_{50}) in air of 200 parts per million by volume or less of gas or vapor, or 2 milligrams per liter or less of mist, fume or dust, when administered by continuous inhalation for 1 hour (or less if death occurs within 1 hour) to albino rats weighing between 200 and 300 grams each.

Mixtures of these materials with ordinary materials, such as water, might not warrant classification as *highly toxic*. While this system is basically simple in application, any hazard evaluation that is required for the precise categorization of this type of material shall be performed by experienced, technically competent persons.

❖ The definition is derived from DOL 29 CFR, Part 1910.1200. These materials are considered danger-

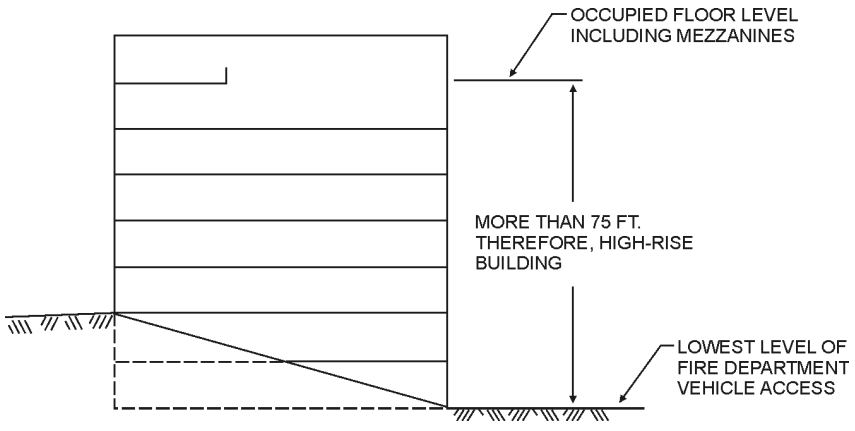

For SI: 1 foot = 304.8 mm.

Figure 202(28)
HIGH-RISE BUILDING

INTERNATIONAL CODE COUNCIL®
Copyright © 2015 ICC. ALL RIGHTS RESERVED. Accessed by David Dammon on Jun 21, 2017 12:30:52 PM pursuant to License Agreement with ICC. No further reproduction or distribution authorized. ANY UNAUTHORIZED REPRODUCTION OR DISTRIBUTION IS A VIOLATION OF THE FEDERAL COPYRIGHT ACT AND THE LICENSE AGREEMENT, AND SUBJECT TO CIVIL AND CRIMINAL PENALTIES THEREUNDER.

ous to humans when inhaled, absorbed or injected through the skin or ingested orally. Highly toxic materials present a health hazard and are subsequently listed as Group H-4 in Section 307.6. Examples of highly toxic materials include gases such as arsine, fluorine and hydrogen cyanide, liquid acrylic acid and calcium cyanide in solid form.

Mixtures of these materials with ordinary materials, such as water, might not warrant a highly toxic classification. While this system is basically simple in application, any hazard evaluation that is required for the precise categorization of this type of material is to be performed by experienced, technically competent persons. For further discussion of this material definition, see the commentary to it in Chapter 2 of the *International Fire Code and Commentary*.

[A] HISTORIC BUILDINGS. Buildings that are listed in or eligible for listing in the National Register of Historic Places, or designated as historic under an appropriate state or local law.

❖ Buildings technically considered historic must be designated as such through a federal, state or local law. In addition, there are buildings that have been reviewed for eligibility to be listed as a national historic building. Those listed as eligible for national listing also are considered historic for the purposes of the code. Buildings that are within a historic district are not necessarily, themselves, historic buildings. The determination of their designation as historic would depend on the specifics of the listing of the historic area. The IEBC provides specific provisions applying to historic buildings.

[BF] HORIZONTAL ASSEMBLY. A fire-resistance-rated floor or *roof assembly* of materials designed to restrict the spread of fire in which continuity is maintained.

❖ A horizontal assembly is a component for completing compartmentation. Horizontal assemblies have all openings and penetrations protected equal to the rating for the fire-resistance-rated floor or roof assembly [see Commentary Figure 202(29)].

HORIZONTAL EXIT. An *exit* component consisting of fire-resistance-rated construction and opening protectives intended to compartmentalize portions of a building thereby creating refuge areas that afford safety from the fire and smoke from the area of fire origin.

❖ This term refers to a fire-resistance-rated wall that subdivides a structure into multiple compartments and provides an effective barrier to protect occupants from a fire condition within one of the compartments. After occupants pass through a horizontal exit, they must be provided not only with sufficient space to gather but also with access to another exit, such as an exterior door or exit stairway, through which they can exit the building. Commentary Figure 202(30) depicts the exits serving a single building that is subdivided with a fire-resistance-rated wall (see Section 1026).

HOSPITALS AND PSYCHIATRIC HOSPITALS. Facilities that provide care or treatment for the medical, psychiatric, obstetrical, or surgical treatment of care recipients who are *incapable of self-preservation*.

❖ Persons in hospital facilities may be physically incapable of self-preservation, or at least extremely limited in their ability to evacuate. In psychiatric hospitals, they may be confined within an area of a building for care or security purposes. In consideration of an occupant's health, as well as safety, hospitals and nursing homes at least partially rely on defend-in-place strategies. See the commentary for Sections 308 and 407, Group I-2.

Care facilities are used by patients of varying acuity seeking a broad spectrum of available support services. These facilities span a wide range of occupancy types including Groups E, I and R. The level of

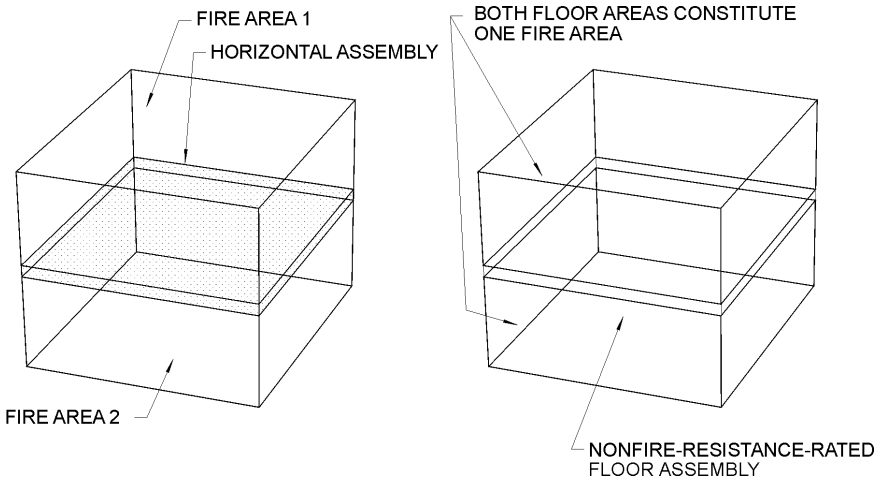

Figure 202(29)
EXAMPLES OF HORIZONTAL ASSEMBLIES

INTERNATIONAL CODE COUNCIL®
Copyright © 2015 ICC. ALL RIGHTS RESERVED. Accessed by David Dammon on Jun 21, 2017 12:30:52 PM pursuant to License Agreement with ICC. No further reproduction or distribution authorized. ANY UNAUTHORIZED REPRODUCTION OR DISTRIBUTION IS A VIOLATION OF THE FEDERAL COPYRIGHT ACT AND THE LICENSE AGREEMENT, AND SUBJECT TO CIVIL AND CRIMINAL PENALTIES THEREUNDER.

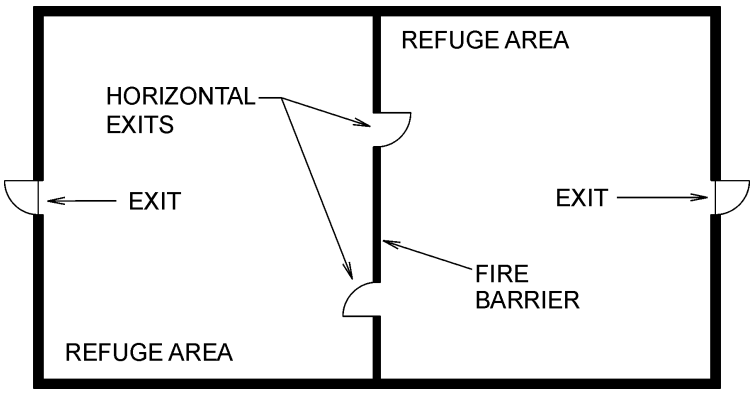

Figure 202(30)
HORIZONTAL EXIT

care provided describes the condition and capabilities of an occupant, which then indicates appropriate standards for protection systems, both passive and active. See also the definitions for "24-hour basis," "Care suites," "Custodial care," "Detoxification facilities," "Medical care," "Nursing homes" and "Incapable of self-preservation."

HOUSING UNIT. A *dormitory* or a group of *cells* with a common dayroom in Group I-3.

❖ A housing unit is a key delineation of space within a Group I-3 occupancy. Often inmates are restricted to their housing unit and not allowed to move freely outside of the unit. A housing unit can include more than one tier of cells. Because a housing unit is often designed as a multiple-level area with a shared day room, it will typically share a common atmosphere (see Section 408.5 for the protection of vertical openings). See also the commentaries for "Cell" and "Cell tier."

[F] HPM ROOM. A room used in conjunction with or serving a Group H-5 occupancy, where *HPM* is stored or *used* and which is classified as a Group H-2, H-3 or H-4 occupancy.

❖ An HPM room in a Group H-5 facility is utilized for the storage and use of hazardous production materials in excess of the maximum allowable quantities permitted in Table 307.1(1) or 307.1(2). The rooms are, therefore, considered a Group H-2, H-3 or H-4 occupancy depending on the type of hazardous material.

[BS] **HURRICANE-PRONE REGIONS.** Areas vulnerable to hurricanes defined as:

1. The U. S. Atlantic Ocean and Gulf of Mexico coasts where the ultimate design wind speed, V_{ult}, for Risk Category buildings is greater than 115 mph (51.4 m/s);
2. Hawaii, Puerto Rico, Guam, Virgin Islands and American Samoa.

❖ This definition identifies the areas where hurricane-force winds are expected.

[F] HYDROGEN FUEL GAS ROOM. A room or space that is intended exclusively to house a *gaseous hydrogen system*.

❖ This term refers to an enclosed space used exclusively for a gaseous hydrogen system that requires construction and protection unique to the hazards associated with this use. The room itself may be considered as an incidental accessory occupancy or a Group H occupancy, depending on the amount of hydrogen in such rooms. The definition itself should not be interpreted to prevent hydrogen piping systems from serving distributed hydrogen-using equipment and appliances located elsewhere on site or in the building. However, the amount of hydrogen within such piping needs to be evaluated with respect to the maximum allowable quantities in Table 307.1(1).

[BS] ICE-SENSITIVE STRUCTURE. A structure for which the effect of an atmospheric ice *load* governs the design of a structure or portion thereof. This includes, but is not limited to, lattice structures, guyed masts, overhead lines, light suspension and cable-stayed bridges, aerial cable systems (e.g., for ski lifts or logging operations), amusement rides, open catwalks and platforms, flagpoles and signs.

❖ This definition describes the type of structures that must consider atmospheric ice loading (see Section 1614).

[F] IMMEDIATELY DANGEROUS TO LIFE AND HEALTH (IDLH). The concentration of air-borne contaminants which poses a threat of death, immediate or delayed permanent adverse health effects, or effects that could prevent escape from such an environment. This contaminant concentration level is established by the National Institute of Occupational Safety and Health (NIOSH) based on both toxicity and flammability. It generally is expressed in parts per million by volume (ppmv/v) or milligrams per cubic meter (mg/m^3). If adequate data do not exist for precise establishment of IDLH concentrations, an independent certified industrial hygienist, industrial toxicologist, appropriate regulatory

INTERNATIONAL CODE COUNCIL®
Copyright © 2015 ICC. ALL RIGHTS RESERVED. Accessed by David Dammon on Jun 21, 2017 12:30:52 PM pursuant to License Agreement with ICC. No further reproduction or distribution authorized. ANY UNAUTHORIZED REPRODUCTION OR DISTRIBUTION IS A VIOLATION OF THE FEDERAL COPYRIGHT ACT AND THE LICENSE AGREEMENT, AND SUBJECT TO CIVIL AND CRIMINAL PENALTIES THEREUNDER.

agency or other source *approved* by the *building official* shall make such determination.

❖ The definition of "Immediately dangerous to life and health (IDLH)" is the minimum concentration of an airborne contaminant, such as a highly toxic compressed gas, that a person could be exposed to before the risk of permanent adverse side effects. IDLH is important in determining the design of treatment systems for highly toxic or toxic compressed gases.

[BS] IMPACT LOAD. The *load* resulting from moving machinery, elevators, craneways, vehicles and other similar forces and kinetic *loads*, pressure and possible surcharge from fixed or moving *loads.*

❖ This definition identifies the scope of the type of loading addressed in Section 1607.9. The effect of impact loads on a structure can be significantly higher than the weight of the impacting elements because of their movement or vibration.

INCAPABLE OF SELF-PRESERVATION. Persons who, because of age, physical limitations, mental limitations, chemical dependency or medical treatment, cannot respond as an individual to an emergency situation.

❖ Patients/residents of nursing homes and hospitals may be in situations where they are unable to self-evacuate due to physical limitations arising from, for example, medication, surgery, injury or connection to medical equipment.

Care facilities are used by patients of varying acuity seeking a broad spectrum of available support services. These facilities span a wide range of occupancy types including Groups E, I and R. There are three types of care defined in the codes: personal, custodial and medical. The level of care provided describes the condition and capabilities of an occupant, which then indicate appropriate standards for protection systems, both active and passive. See also the definitions for "24-hour basis," "Custodial care," "Detoxification facilities," "Foster care facility," "Group home," "Hospitals and psychiatric hospitals," "Medical care," "Nursing home" and "Personal care services."

[F] INCOMPATIBLE MATERIALS. Materials that, when mixed, have the potential to react in a manner that generates heat, fumes, gases or byproducts which are hazardous to life or property.

❖ These materials, whether in storage or in use, constitute a dangerous chemical combination. Determination of which chemicals in combination present a hazard is a difficult situation for the building official. Material Safety Data Sheets (MSDS) alone may not provide all of the necessary information. When in doubt, the building official should seek additional information from the manufacturer of the chemicals involved, the building owner or from experts who are knowledgeable in industrial hygiene or chemistry.

[F] INERT GAS. A gas that is capable of reacting with other materials only under abnormal conditions such as high temperatures, pressures and similar extrinsic physical forces. Within the context of the code, inert gases do not exhibit either physical or health hazard properties as defined (other than acting as a simple asphyxiant) or hazard properties other than those of a *compressed gas*. Some of the more common inert gases include argon, helium, krypton, neon, nitrogen and xenon.

❖ Inert gases do not react readily with other materials under normal temperature and pressure (NTP), but it is possible for a reaction to occur. For example, even nitrogen combines with some of the more active metals such as lithium and magnesium to form nitrides, and at high temperatures it will also combine with oxygen and other elements. The formation of compounds utilizing inert gases is also possible. Xenon combines with fluorine to form various fluorides, and with oxygen to form oxides. The compounds formed are crystalline solids. As indicated in Table 307.1(1), there are no maximum allowable quantities specified for inert gases. As such, inert gases are not regulated by the code as hazardous materials with respect to a potential Group H occupancy classification.

[F] INITIATING DEVICE. A system component that originates transmission of a change-of-state condition, such as in a *smoke detector*, *manual fire alarm box* or supervisory switch.

❖ All fire protection systems consist of devices, which upon use or actuation will initiate the intended operation. A manual fire alarm box, for example, upon actuation will transmit a fire alarm signal. In the case of a single-station device, the initiating device and the notification appliance are one and the same.

INTENDED TO BE OCCUPIED AS A RESIDENCE. This refers to a *dwelling unit* or *sleeping unit* that can or will be used all or part of the time as the occupant's place of abode.

❖ A unit that is a person's home, rather than a unit used for a more transient nature, is a place of abode. Fair housing regulations do not include a 30-day criteria for transient/nontransient, similar to what has been traditionally used by the building codes (see the commentary to Section 1107 for additional information); therefore, beach homes, timeshares and extended-stay hotels may be included.

INTERIOR EXIT RAMP. An *exit* component that serves to meet one or more *means of egress* design requirements, such as required number of *exits* or *exit access* travel distance, and provides for a protected path of egress travel to the *exit discharge* or *public way.*

❖ To qualify as an interior exit ramp, the ramp must be enclosed with a fire-rated enclosure in order to provide a protected path between the exit access and exit discharge. This enclosure must extend directly to the exterior at grade; extend through an exit passageway to grade; or comply with one of the allowances

INTERNATIONAL CODE COUNCIL®
Copyright © 2015 ICC. ALL RIGHTS RESERVED. Accessed by David Dammon on Jun 21, 2017 12:30:52 PM pursuant to License Agreement with ICC. No further reproduction or distribution authorized. ANY UNAUTHORIZED REPRODUCTION OR DISTRIBUTION IS A VIOLATION OF THE FEDERAL COPYRIGHT ACT AND THE LICENSE AGREEMENT, AND SUBJECT TO CIVIL AND CRIMINAL PENALTIES THEREUNDER.

for exit discharge through a lobby, vestibule or horizontal exit. Travel distance is measured to the entrance to the enclosure for the interior exit ramp. Ramps that are utilized by occupants for evacuation but do not meet the provisions for exits are considered exit access elements (see "Exit access ramp"). For exterior exit ramp requirements, see Section 1027.

INTERIOR EXIT STAIRWAY. An *exit* component that serves to meet one or more *means of egress* design requirements, such as required number of *exits* or *exit access* travel distance, and provides for a protected path of egress travel to the *exit discharge* or *public way*.

❖ To qualify as an interior exit stairway, the stairway must be enclosed with a fire-rated enclosure in order to provide a protected path between the exit access and exit discharge. This enclosure must extend directly to the exterior at grade; extend through an exit passageway to grade; or comply with one of the allowances for exit discharge through a lobby, vestibule or horizontal exit. Travel distance is measured to the entrance to the enclosure for the interior exit stairway. Stairways that are utilized by occupants for evacuation but do not meet the provisions for exits are considered exit access elements (see "Exit access stairway"). For exterior exit stairway requirements, see Section 1027.

INTERIOR FINISH. Interior finish includes *interior wall and ceiling finish* and *interior floor finish*.

❖ This is a general term that addresses all exposed surfaces, which includes walls, ceilings and floors. Interior finish material is exposed to the interior space enclosed by these building elements.

INTERIOR FLOOR FINISH. The exposed floor surfaces of buildings including coverings applied over a finished floor or *stair*, including risers.

❖ This definition clarifies which part of the interior finish is considered the floor. Floors are treated differently than walls and ceilings as they pose a minimal fire hazard in comparison to that potentially created by the interior finish on walls and ceilings (see commentary, Section 804). Materials that are installed above the structural floor element and exposed to the room or space are considered floor finish materials. Such materials are, therefore, subject to the requirements of Section 804. This section also restricts the combustibility and ability to propagate a fire based upon radiant exposure levels.

INTERIOR FLOOR-WALL BASE. *Interior floor finish trim* used to provide a functional or decorative border at the intersection of walls and floors.

❖ This definition, which addresses interior floor-wall base trim materials, provides an understanding and clarification of these types of products versus other interior trim materials. In many cases, floor-covering material is just seamlessly turned up or used at the intersection of the floor and the wall, thus becoming the floor-wall base trim. Because of their location at the floor line, floor-wall base materials are not likely to be involved in a fire until the floor covering is also involved, usually at room flashover (see also commentary, Section 806.6).

INTERIOR SURFACES. Surfaces other than weather exposed surfaces.

❖ Interior surfaces are all surfaces, exposed and unexposed to view, on the inside of a building or structure that are not subject to damage or failure of their intended purpose because of the effects of uncontrollable weather conditions, such as rain, sleet, snow and wind. Interior surfaces are generally exposed to mechanically controlled climatic conditions through air-conditioning, heating and humidity control. Because of these controls, interior surfaces require far fewer restrictions than exterior surfaces. Therefore, the quantities and types of materials and finishes permitted for use on interior surfaces are greatly increased.

INTERIOR WALL AND CEILING FINISH. The exposed *interior surfaces* of buildings, including but not limited to: fixed or movable walls and partitions; toilet room privacy partitions; columns; ceilings; and interior wainscoting, paneling or other finish applied structurally or for decoration, acoustical correction, surface insulation, structural fire resistance or similar purposes, but not including *trim*.

❖ A material that is applied to ceilings as well as walls, columns, partitions (including the privacy partitions in bathrooms that could pose a significant threat in larger bathrooms if unrated) and other vertical interior surfaces whether fixed or movable. The application of this material may be for structural, decorative, acoustical, structural fire resistance and other similar reasons. Trim, such as baseboard, door or window casing, is not considered interior wall and ceiling finish. Interior wall and ceiling finish is regulated by Section 803.

[BS] INTERLAYMENT. A layer of felt or nonbituminous saturated felt not less than 18 inches (457 mm) wide, shingled between each course of a wood-shake *roof covering*.

❖ According to Section 1507.9.5, interlayment is required to comply with ASTM D226, Type I, which is commonly referred to as No. 15 asphalt felt.

INTUMESCENT FIRE-RESISTANT COATINGS. Thin film liquid mixture applied to substrates by brush, roller, spray or trowel which expands into a protective foamed layer to provide fire-resistant protection of the substrates when exposed to flame or intense heat.

❖ Section 1705.15 requires special inspections for intumescent fire-resistant coatings in accordance with AWCI 12-B, based on the fire-resistance design. Because AWCI 12-B does not define or describe these materials, this definition facilitates correct application of the special inspections.

[BS] JOINT. The opening in or between adjacent assemblies that is created due to building tolerances, or is designed to

INTERNATIONAL CODE COUNCIL®
Copyright © 2015 ICC. ALL RIGHTS RESERVED. Accessed by David Dammon on Jun 21, 2017 12:30:52 PM pursuant to License Agreement with ICC. No further reproduction or distribution authorized. ANY UNAUTHORIZED REPRODUCTION OR DISTRIBUTION IS A VIOLATION OF THE FEDERAL COPYRIGHT ACT AND THE LICENSE AGREEMENT, AND SUBJECT TO CIVIL AND CRIMINAL PENALTIES THEREUNDER.

allow independent movement of the building in any plane caused by thermal, seismic, wind or any other loading.

❖ This term defines the void created when two assemblies meet and an open space occurs between the assemblies [see Commentary Figure 202(19) for examples of building joints].

[A] JURISDICTION. The governmental unit that has adopted this code under due legislative authority.

❖ The governmental unit such as a town, township, county, or state that has the legal authority under state statues to adopt a building code.

L RATING. The air leakage rating of a *through penetration firestop system* or a fire-resistant *joint* system when tested in accordance with UL 1479 or UL 2079, respectively.

❖ The term "L rating" is a companion rating similar to F ratings and T ratings. The term is already widely used in the industry. Air leakage for breaches of smoke barriers can be limited by adherence to the requirements in Section 714.4. Only through-penetrations and joints in smoke barriers are required to meet the limits on air leakage.

[A] LABEL. An identification applied on a product by the manufacturer that contains the name of the manufacturer, the function and performance characteristics of the product or material and the name and identification of an *approved agency*, and that indicates that the representative sample of the product or material has been tested and evaluated by an *approved agency* (see Section 1703.5, "Manufacturer's designation" and "Mark").

❖ A label provides verification of testing and inspection of materials, products or assemblies (see commentary Section 1703.5). See also the commentary for definitions of "Listed," "Mark," "Labeled" and "Manufacturer's designation."

[A] LABELED. Equipment, materials or products to which has been affixed a *label*, seal, symbol or other identifying *mark* of a nationally recognized testing laboratory, *approved* agency or other organization concerned with product evaluation that maintains periodic inspection of the production of the above-labeled items and whose labeling indicates either that the equipment, material or product meets identified standards or has been tested and found suitable for a specified purpose.

❖ The term is an adjective applied to equipment, materials and products that has been tested or otherwise determined to meet the intended purpose or meet a standard. The label is that of a laboratory or other agency qualified to do the evaluations (see commentary, Section 1703.5). See also the commentary for definitions of "Listed," "Mark," "Label" and "Manufacturer's designation."

LEVEL OF EXIT DISCHARGE. See "Exit discharge, level of."

LIGHT-DIFFUSING SYSTEM. Construction consisting in whole or in part of lenses, panels, grids or baffles made with light-transmitting plastics positioned below independently mounted electrical light sources, skylights or light-transmitting plastic roof panels. Lenses, panels, grids and baffles that are part of an electrical fixture shall not be considered as a light-diffusing system.

❖ Heat-resistant plastics, such as polystyrene and urea, are frequently used for light diffusion.

LIGHT-FRAME CONSTRUCTION. A type of construction whose vertical and horizontal structural elements are primarily formed by a system of repetitive wood or cold-formed steel framing members.

❖ The code uses the term "light frame" to distinguish this unique type of framing system from other structural systems. The structural integrity of light-frame construction is dependent upon numerous connections or frequent bracing. Other framing systems or terms commonly used in the building industry that are considered as light-frame construction include: "stick built," "platform frame," "western frame" and "balloon frame." Section 2211 pertains to light-frame cold-formed steel construction. Section 2308 defines a specific subcategory of light-frame construction called "conventional light-frame construction," which is limited to wood materials.

LIGHT-TRANSMITTING PLASTIC ROOF PANELS. Structural plastic panels other than skylights that are fastened to structural members, or panels or sheathing and that are used as light-transmitting media in the plane of the roof.

❖ Plastic roof panels are primarily used in areas where light transmission rather than visual clarity is the goal (e.g., factory and industrial applications). Even though they are used as light-transmitting media, they must support the loads and forces encountered, just like roof surfaces. Typical applications include factories, warehouses and greenhouses where glass breakage is a practical concern.

LIGHT-TRANSMITTING PLASTIC WALL PANELS. Plastic materials that are fastened to structural members, or to structural panels or sheathing, and that are used as light-transmitting media in *exterior walls.*

❖ This term is only applicable to plastic wall panels allowing the transmission of light. Even though they are used as light-transmitting media, they must support the loads and forces encountered, just like other wall surfaces. Foam core insulated panels are regulated by Section 2603 and are not considered plastic wall panels.

[BS] LIMIT OF MODERATE WAVE ACTION. Line shown on FIRMs to indicate the inland limit of the $1^1/_2$-foot (457 mm) breaking wave height during the base flood.

❖ FEMA shows a Limit of Moderate Wave Action line to delineate the inland extent of the Coastal A Zone (see commentary for Coastal A Zone). If this line is on the FIRM, then the code, by reference to ASCE 7 and ASCE 24, imposes requirements that apply in areas with wave action.

INTERNATIONAL CODE COUNCIL®
Copyright © 2015 ICC. ALL RIGHTS RESERVED. Accessed by David Dammon on Jun 21, 2017 12:30:52 PM pursuant to License Agreement with ICC. No further reproduction or distribution authorized. ANY UNAUTHORIZED REPRODUCTION OR DISTRIBUTION IS A VIOLATION OF THE FEDERAL COPYRIGHT ACT AND THE LICENSE AGREEMENT, AND SUBJECT TO CIVIL AND CRIMINAL PENALTIES THEREUNDER.

[BS] LIMIT STATE. A condition beyond which a structure or member becomes unfit for service and is judged to be no longer useful for its intended function (serviceability limit state) or to be unsafe (strength limit state).

❖ This definition is needed for a clear understanding of the load and resistance factor design (LRFD) methodology.

[F] LIQUID. A material that has a melting point that is equal to or less than 68°F (20°C) and a *boiling point* that is greater than 68°F (20°C) at 14.7 pounds per square inch absolute (psia) (101 kPa). When not otherwise identified, the term "liquid" includes both *flammable* and *combustible liquids.*

❖ This definition specifies the criteria to establish when material is considered a liquid based on its melting and boiling points. When the term "liquid" is referred to, it is intended to include both flammable and combustible liquids.

[F] LIQUID STORAGE ROOM. A room classified as a Group H-3 occupancy used for the storage of *flammable* or *combustible liquids* in a closed condition.

❖ Liquid storage rooms are utilized exclusively for the storage of flammable and combustible liquids in closed containers in excess of the maximum allowable quantities permitted by Tables 307.1(1) and 307.1(2). The storage room itself is considered a Group H-3 occupancy in accordance with Section 307.5.

[F] LIQUID USE, DISPENSING AND MIXING ROOM. A room in which Class I, II and IIIA *flammable* or *combustible liquids* are *used*, dispensed or mixed in open containers.

❖ This term refers to all nonstorage rooms utilized exclusively for flammable and combustible liquids other than Class IIIB liquids. Class IIIB liquids have a flash point in excess of 200°F (93°C) and are not considered hazardous.

[A] LISTED. Equipment, materials, products or services included in a list published by an organization acceptable to the *building* official and concerned with evaluation of products or services that maintains periodic inspection of production of listed equipment or materials or periodic evaluation of services and whose listing states either that the equipment, material, product or service meets identified standards or has been tested and found suitable for a specified purpose.

❖ When a product is listed and labeled, it indicates that it has been tested for conformance to an applicable standard and is subject to a third-party inspection quality assurance (QA) program. The QA verifies that the minimum level of quality required by the appropriate standard is maintained. Labeling provides a readily available source of information that is useful for field inspection of installed products. The label identifies the product or material and provides other information that can be further investigated if there is any question as to its suitability for the specific installation. The labeling agency performing the third-party inspection must be approved by the building official, and the basis for this approval may include, but is not limited to, the capacity and capability of the agency to perform the specific testing and inspection. See also the commentary for definitions of "Mark," "Label," "Labeled" and "Manufacturer's designation."

The question is often asked whether the listing of a product can be voided or violated. The use of a listing mark applied to a product is authorized by the listing agency and is a "statement" by the product manufacturer that the product, as manufactured, met all appropriate requirements (such as the criteria contained in a test standard) at the time of manufacture and shipment to a point-of-use or point-of-sale. After that point in time, any alteration or modification makes it impossible for the building official or the listing agency to determine if the product continues to meet the criteria by which its listing was originally attained. Listed products are subject to the review and approval of the building official. Where the building official determines that a field modification or alteration to the product is significant enough to call its impact on the listing into question, an evaluation in the field by representatives of the listing agency may be required in order to verify the continued compliance of the product with the original listing criteria. Such field evaluations or tests would be the responsibility of the permit holder and conducted at no cost to the jurisdiction (see Section 104.11.2).

LIVE/WORK UNIT. A *dwelling unit* or *sleeping unit* in which a significant portion of the space includes a nonresidential use that is operated by the tenant.

❖ Live/work dwelling units incorporate both living space and nonresidential use spaces. Live/work units are growing in popularity in urban centers to bring a mix of uses to neighborhoods. The provisions of Section 419 address building code issues, but local zoning regulations may also provide limits on use or location.

[BS] LIVE LOAD. A *load* produced by the use and occupancy of the building or other structure that does not include construction or environmental *loads* such as wind load, snow load, rain load, earthquake load, flood load or *dead load*.

❖ This definition identifies the scope of the type of loading included in Section 1607. Generally, live loads are not environmental loads or dead loads, but are transient in nature and will vary in magnitude over the life of a structure.

[BS] LIVE LOAD, ROOF. A *load* on a roof produced:

1. During maintenance by workers, equipment and materials;
2. During the life of the structure by movable objects such as planters or other similar small decorative appurtenances that are not occupancy related; or
3. By the use and occupancy of the roof such as for roof gardens or assembly areas.

❖ This definition is needed for the proper application of the load combinations in Chapter 16. This definition clarifies what is considered a roof live load, as well as

INTERNATIONAL CODE COUNCIL®
Copyright © 2015 ICC. ALL RIGHTS RESERVED. Accessed by David Dammon on Jun 21, 2017 12:30:52 PM pursuant to License Agreement with ICC. No further reproduction or distribution authorized. ANY UNAUTHORIZED REPRODUCTION OR DISTRIBUTION IS A VIOLATION OF THE FEDERAL COPYRIGHT ACT AND THE LICENSE AGREEMENT, AND SUBJECT TO CIVIL AND CRIMINAL PENALTIES THEREUNDER.

clarifying (implicitly) that snow loads are not considered roof live loads.

[BS] LOAD AND RESISTANCE FACTOR DESIGN (LRFD). A method of proportioning structural members and their connections using load and *resistance factors* such that no applicable *limit state* is reached when the structure is subjected to appropriate *load* combinations. The term "LRFD" is used in the design of steel and wood structures.

❖ This definition describes the load and resistance factor design (LRFD) method, which is one of the design approaches recognized under the code in Section 1604.1. It is needed for the proper application of the steel design requirements in Chapter 22 and the wood design requirements in Chapter 23.

[BS] LOAD EFFECTS. Forces and deformations produced in structural members by the applied *loads*.

❖ This definition is needed to properly apply the structural load requirements in Chapter 16. "Load effects" is a collective term used to refer to the internal member forces and member deformations that result from the applied loads.

[BS] LOAD FACTOR. A factor that accounts for deviations of the actual *load* from the *nominal load*, for uncertainties in the analysis that transforms the *load* into a *load effect*, and for the probability that more than one extreme *load* will occur simultaneously.

❖ This definition clarifies the application of the LRFD load combinations in Chapter 16.

[BS] LOADS. Forces or other actions that result from the weight of building materials, occupants and their possessions, environmental effects, differential movement and restrained dimensional changes. Permanent loads are those loads in which variations over time are rare or of small magnitude, such as *dead loads*. All other loads are variable loads (see "*Nominal loads*").

❖ This definition is needed for the proper application of the structural load requirements in Chapter 16. It also includes a definition of "Permanent loads" that serves as the distinction between variable loads and permanent loads. This is important in Section 1605.1, which requires all load combinations to be investigated with one or more of the variable loads taken as zero.

The distinction made between variable loads and permanent loads is fairly straightforward. Dead load is specifically mentioned because it is an ideal example of a load that does not vary over time. But dead load is not necessarily the only load that could be considered permanent. An additional complication is the definition of certain loads that may include both permanent and variable components. An indicator of this is provided in the load combinations in Section 1605. For instance, in the ASD basic load combinations given by Equations 16-11, 16-13 and 16-14, the variable loads are reduced by a factor of 0.75. Based on the application of the reduction factor in these load combinations, live load, L, roof live load, L_r, snow load, S, rain load, R, wind load, W, and earthquake load, E, are explicitly treated as variable loads. Since they are not reduced in these load combinations, pressure of a well-defined fluid, F, and lateral earth pressure, H, could be considered, at least in part, permanent loads.

LODGING HOUSE. A one-family dwelling where one or more occupants are primarily permanent in nature and rent is paid for guest rooms.

❖ The code establishes a lodging house as a Group R-3 occupancy where there are five or fewer guest rooms. This definition provides a distinction from Group R-1 occupancies where the occupants are expected to be transient. For a lodging house, there are one or more occupants who are permanent; this is their home.

[A] LOT. A portion or parcel of land considered as a unit.

❖ A lot is a legally recorded parcel of land, the boundaries of which are described on a deed. When code requirements are based on some element of a lot (such as yard area or lot line location), it is the physical attributes of the parcel of land that the code is addressing, not issues of ownership. Adjacent lots owned by the same party are treated as if they were owned by different parties because ownership can change at any time. However, a group of platted lots or subdivision lots could be joined together and "considered as a unit" for the purposes of the code. For example, a collection of platted lots could be used as a single building lot for the construction of a covered mall and its associated anchor buildings. Local jurisdictions may require for taxing or other purposes that the lots be legally joined, or merged, as well.

A condominium form of building ownership, whether a residential or commercial condominium, does not create separate lots (i.e., parcels of land) and such unit owners are treated as separate tenants, not separate lot owners. The lines separating one part of a condominium from another are not lot lines but lines indicating the limits of ownership. As such, walls constructed on lines separating condominium ownership would not need to be fire (or party) walls.

Legal property lines do not always constitute site boundaries (e.g., malls, condominiums, townhouses). A site could contain multiple legal "lot" divisions.

[A] LOT LINE. A line dividing one lot from another, or from a street or any public place.

❖ Lot lines are legally recorded divisions between two adjacent land parcels or lots. They are the reference point for the location of buildings for exterior separation and other code purposes (see the definition of "Lot" above).

LOW-ENERGY POWER-OPERATED DOOR. Swinging door which opens automatically upon an action by a pedestrian such as pressing a push plate or waving a hand in front of a sensor. The door closes automatically, and operates with

INTERNATIONAL CODE COUNCIL®
Copyright © 2015 ICC. ALL RIGHTS RESERVED. Accessed by David Dammon on Jun 21, 2017 12:30:52 PM pursuant to License Agreement with ICC. No further reproduction or distribution authorized. ANY UNAUTHORIZED REPRODUCTION OR DISTRIBUTION IS A VIOLATION OF THE FEDERAL COPYRIGHT ACT AND THE LICENSE AGREEMENT, AND SUBJECT TO CIVIL AND CRIMINAL PENALTIES THEREUNDER.

decreased forces and decreased speeds (see "Power-assisted door" and "Power-operated door").

❖ There are basically three different types of doors that provide some type of power assistance for entry: low-energy power-operated doors, power-assisted doors and power-operated doors. The low-energy power-operated door is typically a side-swinging door that also operates as a manual door. However, the door has the additional feature of automatic operation when a person pushes on a plate or sensor located on a wall or post near the door [see Commentary Figures 202(31), 202(32) and 202(33)]. The low-energy power-assisted door and power-assisted door both are operated by the user touching something; therefore, they both must comply with BMHA156.19.

[F] LOWER FLAMMABLE LIMIT (LFL). The minimum concentration of vapor in air at which propagation of flame will occur in the presence of an ignition source. The LFL is sometimes referred to as "LEL" or "lower explosive limit."

❖ When the vapor-to-air ratio is somewhere between the LFL and the UFL, fires and explosions can occur upon introduction of an ignition source. The UFL is the maximum vapor-to-air concentration above which propagation of flame will not occur. If a vapor-to-air mixture is below the LFL, it is described as being "too lean" to burn, and if it is above the UFL, it is "too rich" to burn. For further discussion of this material definition, see the commentary to it in Chapter 2 of the *International Fire Code Commentary*.

LOWEST FLOOR. The floor of the lowest enclosed area, including *basement*, but excluding any unfinished or flood-resistant enclosure, usable solely for vehicle parking, building access or limited storage provided that such enclosure is not built so as to render the structure in violation of Section 1612.

❖ The lowest floor is the most important reference point when designing and constructing a building or structure in a flood hazard area. The term is specifically defined to include basements, which are any areas that are below grade on all sides. For elevated buildings, compliance with the flood-resistant design and



Figure 202(31)
LOW-ENERGY POWER-OPERATED DOOR—
SINGLE LEAF WITH REMOTE PLATE



Figure 202(32)
LOW-ENERGY POWER-OPERATED DOOR—
DUAL ACTION, DOUBLE LEAF SWINGING TYPE



Figure 202(33)
LOW-ENERGY POWER-OPERATED DOOR—
DOUBLE LEAF SLIDING TYPE

INTERNATIONAL CODE COUNCIL®
Copyright © 2015 ICC. ALL RIGHTS RESERVED. Accessed by David Dammon on Jun 21, 2017 12:30:52 PM pursuant to License Agreement with ICC. No further reproduction or distribution authorized. ANY UNAUTHORIZED REPRODUCTION OR DISTRIBUTION IS A VIOLATION OF THE FEDERAL COPYRIGHT ACT AND THE LICENSE AGREEMENT, AND SUBJECT TO CIVIL AND CRIMINAL PENALTIES THEREUNDER.

construction provisions of the code is determined by an elevation survey that documents that the lowest floor, including the basement, is at or above the design flood elevation. It is important to note that enclosures may be built below elevated buildings provided they meet both the design criteria and use limitations (see ASCE 24). If compliant with the design criteria and use limitations, then enclosures are not considered the lowest floor. This distinction is also important because the premium rate used to determine the cost of a federal flood insurance policy is dependent on the elevation of the lowest floor, along with other factors.

[BS] MAIN WINDFORCE-RESISTING SYSTEM. An assemblage of structural elements assigned to provide support and stability for the overall structure. The system generally receives wind loading from more than one surface

❖ This definition identifies the structural components that are to comply with special inspection requirements. The main windforce-resisting system is the global structural system designed to resist wind loads on the building or structure.

MALL BUILDING, COVERED and MALL BUILDING, OPEN. See "Covered mall building."

[F] MANUAL FIRE ALARM BOX. A manually operated device used to initiate an *alarm signal*.

❖ Manual fire alarm boxes are commonly known as pull stations. Manual fire alarm boxes include all manual devices used to activate a manual fire alarm system and have many configurations, depending on the manufacturer. All manual fire alarm devices, however, must be approved and installed in accordance with NFPA 72 for the particular application. Manual fire alarm boxes may be combined in guard tour boxes.

[A] MANUFACTURER'S DESIGNATION. An identification applied on a product by the manufacturer indicating that a product or material complies with a specified standard or set of rules (see "*Label*" and "*Mark*").

❖ This represents terminology for a manufacturer's self-certification that a product complies with a given standard (see commentary, Section 1703.4). See also the commentary for definitions of "Listed," "Mark," "Label" and "Labeled."

[A] MARK. An identification applied on a product by the manufacturer indicating the name of the manufacturer and the function of a product or material (see "*Label*" and "Manufacturer's designation").

❖ A mark represents the manufacturer's identification placed on a product, stating who made the product and describing its function. There is, however, no certification of compliance to any particular standard and no third-party quality control (see commentary, Section 1703.4). Also see the commentary for definitions of "Listed," "Label," "Labeled" and "Manufacturer's designation."

MARQUEE. A *canopy* that has a top surface which is sloped less than 25 degrees from the horizontal and is located less than 10 feet (3048 mm) from operable openings above or adjacent to the level of the marquee.

❖ Marquees, unlike awnings, are fixed, permanent structures that justify sufficiently different requirements from those for other projections (see Section 3106 for code requirements for marquees). This definition also facilitates application of live loads in Table 1607.1

[BS] MASONRY. A built-up construction or combination of building units or materials of clay, shale, concrete, glass, gypsum, stone or other *approved* units bonded together with or without *mortar* or grout or other accepted methods of joining.

❖ The materials (other than gypsum) and elements constructed as stated in this definition are considered masonry construction and are regulated by Chapter 21. This term identifies the building elements of plain (unreinforced) masonry, reinforced masonry, grouted masonry, glass unit masonry and masonry veneer.

Glass unit masonry. Masonry composed of glass units bonded by *mortar*.

❖ Glass unit masonry consists of nonclad-bearing assemblies designed in accordance with Section 2110.

Plain masonry. Masonry in which the tensile resistance of the masonry is taken into consideration and the effects of stresses in reinforcement are neglected.

❖ Plain masonry has historically been referred to as "unreinforced masonry." Since such masonry may actually contain some reinforcement, however, the term "unreinforced" has fallen out of favor. When reinforcement is contained in plain masonry, its contribution to the strength of the system is required to be ignored. The bond between the masonry units and mortar is critical in the performance of plain masonry.

Reinforced masonry. Masonry construction in which reinforcement acting in conjunction with the masonry is used to resist forces.

❖ Reinforced masonry contains reinforcement (currently limited to steel reinforcement) and is designed considering the tensile strength of that reinforcement. Not all masonry containing reinforcement is considered reinforced masonry. Some plain masonry contains reinforcement (usually to reduce the size of any cracks that may form), but the contribution of that reinforcement is required to be neglected.

Solid masonry. Masonry consisting of solid masonry units laid contiguously with the *joints* between the units filled with *mortar*.

❖ This term describes single- or multiwythe walls composed of solid masonry units, including the thickness of the collar joint if it is filled with mortar or grout.

Unreinforced (plain) masonry. Masonry in which the tensile resistance of masonry is taken into consideration

INTERNATIONAL CODE COUNCIL®
Copyright © 2015 ICC. ALL RIGHTS RESERVED. Accessed by David Dammon on Jun 21, 2017 12:30:52 PM pursuant to License Agreement with ICC. No further reproduction or distribution authorized. ANY UNAUTHORIZED REPRODUCTION OR DISTRIBUTION IS A VIOLATION OF THE FEDERAL COPYRIGHT ACT AND THE LICENSE AGREEMENT, AND SUBJECT TO CIVIL AND CRIMINAL PENALTIES THEREUNDER.

and the resistance of the reinforcing steel, if present, is neglected.

❖ See the commentary for "Plain masonry."

[BS] MASONRY UNIT. *Brick*, tile, stone, glass block or concrete block conforming to the requirements specified in Section 2103.

❖ Masonry units are natural stone units or manufactured units of fired clay, shale, cementitious materials or glass.

Hollow. A masonry unit whose net cross-sectional *area* in any plane parallel to the load-bearing surface is less than 75 percent of its gross cross-sectional *area* measured in the same plane.

❖ Hollow masonry units are those having a specified net cross-sectional area less than 75 percent of their corresponding gross cross-sectional area. Where the specified net cross-sectional area is equal to or greater than 75 percent of the gross cross-sectional area, the unit is considered to be solid.

Solid. A masonry unit whose net cross-sectional *area* in every plane parallel to the load-bearing surface is 75 percent or more of its gross cross-sectional *area* measured in the same plane.

❖ Solid masonry units have a specified net cross-sectional area 75 percent or greater of their corresponding gross cross-sectional area. Where the specified net cross-sectional area is less than 75 percent of the gross cross-sectional area, the unit is considered to be hollow.

MASTIC FIRE-RESISTANT COATINGS. Liquid mixture applied to a substrate by brush, roller, spray or trowel that provides fire-resistant protection of a substrate when exposed to flame or intense heat.

❖ Section 1705.15 requires special inspections for mastic fire-resistant coatings in accordance with AWCI 12-B, based on the fire-resistance design. Because AWCI 12-B does not define or describe these materials, this definition facilitates correct application of the special inspections.

MEANS OF EGRESS. A continuous and unobstructed path of vertical and horizontal egress travel from any occupied portion of a building or structure to a *public way*. A means of egress consists of three separate and distinct parts: the *exit access*, the *exit* and the *exit discharge*.

❖ The means of egress is the path traveled by building occupants to leave the building and the site on which it is located. It includes all interior and exterior elements that the occupants must utilize as they make their way from every room and usable space within the building to a public way such as a street or alley. The elements that make up the means of egress create the lifeline that occupants utilize to travel out of the structure and to a safe distance from the structure. The means of egress provisions strive to provide a reasonable level of life safety in every structure. The means of egress provisions are subdivided into three distinct portions (see the definitions of "Exit access," "Exit" and "Exit discharge").

MECHANICAL-ACCESS OPEN PARKING GARAGES. *Open parking garages* employing parking machines, lifts, elevators or other mechanical devices for vehicles moving from and to street level and in which public occupancy is prohibited above the street level.

❖ These types of garages are constructed with most of the same attributes as other garages. They have numerous parking levels that house motor vehicles; however, public access to these upper levels is not permitted. Employees take control of the vehicles at the street level and drive into some sort of a vertical mechanical device, which conveys them to the upper parking levels. These structures are still provided with the required openings of Section 406.5.2.

MECHANICAL EQUIPMENT SCREEN. A rooftop structure, not covered by a roof, used to aesthetically conceal plumbing, electrical or mechanical equipment from view.

❖ These are used mainly for appearance and to conceal roof-mounted equipment from view.

MEDICAL CARE. Care involving medical or surgical procedures, nursing or for psychiatric purposes.

❖ Persons who need medical care are likely to be incapable of self-preservation or at least extremely limited in their ability to evacuate. In consideration of occupant health as well as safety, hospitals and nursing homes at least partially rely on defend-in-place strategies. See also the commentary for Section 308, Group I-2.

Care facilities are used by patients of varying acuity seeking a broad spectrum of available support services. These facilities span a wide range of occupancy types including Groups E, I and R. There are three types of care defined in the codes: personal, custodial and medical. On the lower end of the care spectrum (i.e., personal care) is when occupants are supervised but do not need custodial or medical care. Where occupants may be elderly or impaired (i.e., custodial care), they may need occasional daily living assistance such as cooking and cleaning. Persons who receive custodial care may or may not require assistance with evacuation depending on the occupancy and/or the "condition" of the occupancy. On the opposite end of the care spectrum, persons receiving care may be completely bedridden and dependent on medical gases and emergency power to maintain life (i.e., medical care). The level of care provided describes the condition and capabilities of an occupant, which then indicate appropriate standards for protection systems, both active and passive. See also the definitions for "24-hour basis," "Custodial care," "Detoxification facility," "Foster care facility," "Group home," "Hospitals and psychiatric hospitals," "Nursing home," "Personal care services," and "Incapable of self-preservation."

INTERNATIONAL CODE COUNCIL®
Copyright © 2015 ICC. ALL RIGHTS RESERVED. Accessed by David Dammon on Jun 21, 2017 12:30:52 PM pursuant to License Agreement with ICC. No further reproduction or distribution authorized. ANY UNAUTHORIZED REPRODUCTION OR DISTRIBUTION IS A VIOLATION OF THE FEDERAL COPYRIGHT ACT AND THE LICENSE AGREEMENT, AND SUBJECT TO CIVIL AND CRIMINAL PENALTIES THEREUNDER.

MEMBRANE-COVERED CABLE STRUCTURE. A nonpressurized structure in which a mast and cable system provides support and tension to the membrane weather barrier and the membrane imparts stability to the structure.

❖ This definition identifies a structure in which the membrane fabric is draped over a cable framework. These structures do not involve any interior air pressurization. The cable framework system is supported by a mast or other tower system. The cables are usually pretensioned to provide structural support for the rest of the exterior structure.

MEMBRANE-COVERED FRAME STRUCTURE. A nonpressurized building wherein the structure is composed of a rigid framework to support a tensioned membrane which provides the weather barrier.

❖ This type of membrane structure is the same as the membrane-covered cable structure, except that a trussed framework constructed of structural shapes provides the support instead of pretensioned cables. Again, no air pressurization is required or provided.

MEMBRANE PENETRATION. A breach in one side of a floor-ceiling, roof-ceiling or wall assembly to accommodate an item installed into or passing through the breach.

❖ This term refers to the situation where a penetration is made of a single layer of a fire-resistance-rated assembly. Sections 714.3.2 and 714.4.2 establish criteria where the penetration of a single membrane of an assembly is permitted while still considering the assembly to have the required fire-resistance rating [see Commentary Figure 202(34) for an example of a single membrane penetration].

Where a penetration is made completely through a fire-resistance-rated wall or floor/ceiling assembly, it must be protected in accordance with Section 714.3 or 714.4.1, as applicable for the assembly penetrated.

MEMBRANE-PENETRATION FIRESTOP. A material, device or construction installed to resist for a prescribed time period the passage of flame and heat through openings in a protective membrane in order to accommodate cables, cable trays, conduit, tubing, pipes or similar items.

❖ Sections 714.3.2 and 714.4.2 both refer to protection methods for membrane penetrations of fire-resistance-rated walls, floor/ceiling assemblies and roof/ceiling assemblies.

MEMBRANE-PENETRATION FIRESTOP SYSTEM. An assemblage consisting of a fire-resistance-rated floor-ceiling, roof-ceiling or wall assembly, one or more penetrating items installed into or passing through the breach in one side of the assembly and the materials or devices, or both, installed to resist the spread of fire into the assembly for a prescribed period of time.

❖ Membrane-penetration firestop systems maintain the required protection from the spread of fire, passage of hot gases and transfer of heat. A firestop usually refers to a single item, where a system is a combination of elements. See also the commentary to the definition of "Through-penetration firestop system."

MERCHANDISE PAD. A merchandise pad is an area for display of merchandise surrounded by *aisles*, permanent fix-

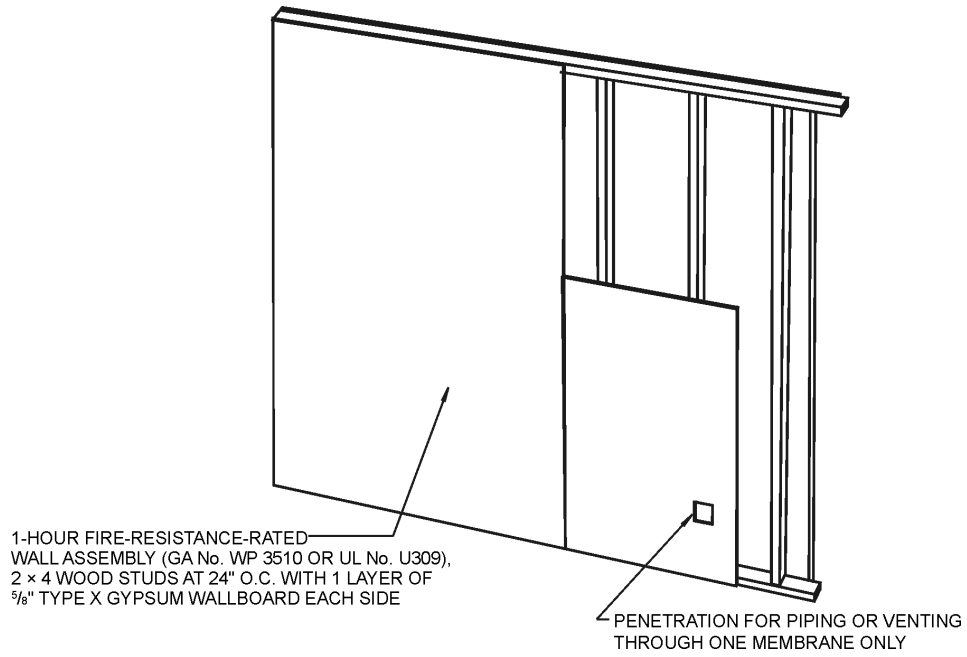

For SI: 1 inch = 25.4 mm.

Figure 202(34)
EXAMPLES OF SINGLE MEMBRANE PENETRATION

INTERNATIONAL CODE COUNCIL®
Copyright © 2015 ICC. ALL RIGHTS RESERVED. Accessed by David Dammon on Jun 21, 2017 12:30:52 PM pursuant to License Agreement with ICC. No further reproduction or distribution authorized. ANY UNAUTHORIZED REPRODUCTION OR DISTRIBUTION IS A VIOLATION OF THE FEDERAL COPYRIGHT ACT AND THE LICENSE AGREEMENT, AND SUBJECT TO CIVIL AND CRIMINAL PENALTIES THEREUNDER.

tures or walls. Merchandise pads contain elements such as nonfixed and moveable fixtures, cases, racks, counters and partitions as indicated in Section 105.2 from which customers browse or shop.

❖ Merchandise pads would most likely be found in large stores with changing displays of clothes or furniture. This is not a raised display-only area. These areas allow customers to move between displays or racks. In regard to means of egress, merchandise pads could be considered analogous to areas of fixed seating or groups of tables. The aisle accessways are within the merchandise pad and lead to the aisles on the outside edges of the merchandise pads. Not all stores will contain merchandise pads (e.g., a typical grocery store with fixed shelves and aisles).

METAL COMPOSITE MATERIAL (MCM). A factory-manufactured panel consisting of metal skins bonded to both faces of a solid plastic core.

❖ These types of panels are sandwich construction composed of thin metal (usually aluminum or steel) sheets covering a solid plastic core. The panels typically have thicknesses that do not exceed $^1/_4$ inch (6.4 mm). Metal composite material (MCM) panels are different from other types of sandwich panels in that they do not contain foam plastic cores and are not typically intended to provide thermal insulation.

METAL COMPOSITE MATERIAL (MCM) SYSTEM. An *exterior wall covering* fabricated using MCM in a specific assembly including *joints*, seams, attachments, substrate, framing and other details as appropriate to a particular design.

❖ The provisions of Section 1407 provide the components that are typically part of a metal composite material (MCM) installation. The components of the exterior wall-covering system consist of framing members for the attachment and support of the MCM panels; the types of joints and seams used to maintain the weather resistance of the system; and the means for attaching the entire system to the building substrate or structural frame.

[BS] METAL ROOF PANEL. An interlocking metal sheet having a minimum installed weather exposure of 3 square feet (0.279 m^2) per sheet.

❖ There are two general categories of metal roofing systems: architectural metal roofing and structural metal roofing. Architectural metal roofs are generally watershedding roof systems and structural metal roofs have hydrostatic (water barrier) characteristics. The difference between a "metal roof panel" and a "metal roof shingle" is the weather exposure (i.e., that portion of the roofing exposed) (see Section 1507.4).

[BS] METAL ROOF SHINGLE. An interlocking metal sheet having an installed weather exposure less than 3 square feet (0.279 m^2) per sheet.

❖ See the commentary for the definition of "Metal roof panel."

MEZZANINE. An intermediate level or levels between the floor and ceiling of any *story* and in accordance with Section 505.

❖ A common design feature in factories, warehouses and mercantile buildings is an intermediate loft, or platform, between the story levels of a building. This type of feature, or mezzanine, can be found in buildings of all occupancies. The code must deal with whether this intermediate level is another story of the building or whether it can simply be treated as part of the story in which it is contained. The basic rule is that the intermediate level must be less than one-third of the area of the story below (of the room in which it is located) in order to be considered a mezzanine. Requirements for mezzanines are found in Section 505.

[BS] MICROPILE. A micropile is a bored, grouted-in-place *deep foundation* element that develops its load-carrying capacity by means of a bond zone in soil, bedrock or a combination of soil and bedrock.

❖ This definition clarifies a term that refers to a specific type of deep foundation element. The term "micropile" is a reference to its relative size compared to conventional deep foundation elements. They are also referred to as "minipiles" or "pin piles."

MINERAL BOARD. A rigid felted thermal insulation board consisting of either felted *mineral fiber* or cellular beads of expanded aggregate formed into flat rectangular units.

❖ This form of insulation is listed in Table 721.1(2), Items 15-1.9, 15-1.10 and 15-1.11.

MINERAL FIBER. Insulation composed principally of fibers manufactured from rock, slag or glass, with or without binders.

❖ This term provides a definition for a type of insulation that is commonly used or accepted within rated assemblies [see Table 721.1(2), Item 15-1.11] or as a fireblocking material (see Section 718.2.1).

MINERAL WOOL. Synthetic vitreous fiber insulation made by melting predominately igneous rock or furnace slag, and other inorganic materials, and then physically forming the melt into fibers.

❖ This term provides a definition for a type of insulation that is commonly used or accepted within rated assemblies [see Table 721.1(2), Item 15-1.15] or as a fireblocking material (see Section 718.2.1).

[BS] MODIFIED BITUMEN ROOF COVERING. One or more layers of polymer-modified asphalt sheets. The sheet materials shall be fully adhered or mechanically attached to the substrate or held in place with an *approved* ballast layer.

❖ These are composite sheets consisting of copolymer-modified bitumen, often reinforced and sometimes surfaced with various types of films, foils and mats.

INTERNATIONAL CODE COUNCIL®
Copyright © 2015 ICC. ALL RIGHTS RESERVED. Accessed by David Dammon on Jun 21, 2017 12:30:52 PM pursuant to License Agreement with ICC. No further reproduction or distribution authorized. ANY UNAUTHORIZED REPRODUCTION OR DISTRIBUTION IS A VIOLATION OF THE FEDERAL COPYRIGHT ACT AND THE LICENSE AGREEMENT, AND SUBJECT TO CIVIL AND CRIMINAL PENALTIES THEREUNDER.

[BS] MORTAR. A mixture consisting of cementitious materials, fine aggregates, water, with or without admixtures, that is used to construct unit masonry assemblies.

❖ Mortar is the material that bonds masonry units and accessories together and compensates for dimensional variations of the units. Both the plastic and hardened properties of mortar are important for strong, durable, water-tight construction. Material requirements and referenced standards for several permitted mortar types are given in Section 2103.2.

[BS] MORTAR, SURFACE-BONDING. A mixture to bond concrete *masonry units* that contains hydraulic cement, glass fiber reinforcement with or without inorganic fillers or organic modifiers and water.

❖ This mortar is a packaged, dry, combined material permitted for use in the surface bonding of concrete masonry units that have not been prefaced, coated or painted. Masonry units are stacked without mortar joints and surface-bonding mortar is then applied to both sides of the wall surface, creating a structural element.

MULTILEVEL ASSEMBLY SEATING. Seating that is arranged in distinct levels where each level is comprised of either multiple rows, or a single row of box seats accessed from a separate level.

❖ Assembly rooms may include a sloped seating arrangement (i.e., either ramped or stepped) to improve the viewing of the event for the occupants. These spaces can be single- or multiple-level arrangements. For example, for an auditorium with a sloped floor, the entire main floor is a single level. A level can be a balcony or a separate section of seating in an arena or stadium, such as skyboxes. The upper-seating bowl in the coliseum is a separate level, as is the loge in the theater. However, it is not the intent of this provision that each row of seats be considered a separate level.

[F] MULTIPLE-STATION ALARM DEVICE. Two or more single-station alarm devices that can be interconnected such that actuation of one causes all integral or separate audible alarms to operate. A multiple-station alarm device can consist of one single-station alarm device having connections to other detectors or to a *manual fire alarm box*.

❖ This definition refers to a combination of similar or different types of alarm devices that could be interconnected. The actuation of any two devices, whether a smoke detector or manual fire alarm box, will activate the required audible alarms at all interconnected devices.

[F] MULTIPLE-STATION SMOKE ALARM. Two or more single-station alarm devices that are capable of interconnection such that actuation of one causes the appropriate *alarm signal* to operate in all interconnected alarms.

❖ In occupancies with sleeping areas, occupants must be notified of a fire so that they can promptly evacuate the premises. In accordance with the requirements of NFPA 72, multiple-station smoke alarms are self-contained, smoke-activated alarm devices built in accordance with UL 217 that can be interconnected with other devices so that all integral or separate alarms will operate when any one device is activated.

MULTISTORY UNIT. A *dwelling unit* or *sleeping unit* with *habitable space* located on more than one *story*.

❖ A multistory dwelling or sleeping unit has living, sleeping, eating, cooking or bathroom space on more than one floor level within the unit (see Section 1107.7.2). A residence with only a garage underneath or an unfinished basement would not be a multistory unit.

[BS] NAILING, BOUNDARY. A special nailing pattern required by design at the boundaries of *diaphragms*.

❖ When designing a diaphragm or a shear wall, the sheathing for those elements must be attached to provide the design resistance to the applied load. Shear capacity tables for wood structural panels specify the nail size and spacing to be used along the edge and in the field of each panel. Boundary nailing is the required nailing pattern for panels located along the edges of diaphragms and at other boundaries where the stresses are typically high.

[BS] NAILING, EDGE. A special nailing pattern required by design at the edges of each panel within the assembly of a *diaphragm* or *shear wall*.

❖ When designing a diaphragm or shear panel, the sheathing for those elements must be attached in a fashion that will provide resistance to the design load. Shear capacity tables for wood structural panels used as sheathing specify fastener size and spacing. Edge nailing occurs at diaphragm or shear wall edges. In some cases, such as at blocked diaphragm boundaries, the edge of the panel occurs at the diaphragm boundary, in which case the edge must be boundary nailed.

[BS] NAILING, FIELD. Nailing required between the sheathing panels and framing members at locations other than *boundary nailing* and *edge nailing*.

❖ When designing a diaphragm or shear panel, the sheathing for those elements must be attached in a fashion that will provide resistance to the applied load. Shear capacity tables for wood structural panels used as sheathing specify fastener size and spacing. For example, Note b in Table 2306.2(1) indicates that the maximum spacing for fasteners along intermediate framing members must be 12 inches (305 mm) on center.

[BS] NATURALLY DURABLE WOOD. The heartwood of the following species except for the occasional piece with corner sapwood, provided 90 percent or more of the width of each side on which it occurs is heartwood.

❖ Because of their natural ability to resist deterioration, the harder portions of some species of wood are considered to be naturally durable. The code specifies that “occasional” sapwood is permitted if heartwood constitutes 90 percent of each side.

INTERNATIONAL CODE COUNCIL®
Copyright © 2015 ICC. ALL RIGHTS RESERVED. Accessed by David Dammon on Jun 21, 2017 12:30:52 PM pursuant to License Agreement with ICC. No further reproduction or distribution authorized. ANY UNAUTHORIZED REPRODUCTION OR DISTRIBUTION IS A VIOLATION OF THE FEDERAL COPYRIGHT ACT AND THE LICENSE AGREEMENT, AND SUBJECT TO CIVIL AND CRIMINAL PENALTIES THEREUNDER.

Decay resistant. Redwood, cedar, black locust and black walnut.

❖ Redwood, cedar, black locust and black walnut lumber are known to resist deterioration due to the action of microbes that enter the wood fibers. The code defines these species of lumber as being decay resistant.

Termite resistant. Redwood, Alaska yellow cedar, Eastern red cedar and Western red cedar.

❖ Alaskan yellow cedar, redwood, Eastern red cedar and Western red cedar are considered to be resistant to infestation by termites and are thus listed as naturally durable.

[BS] NOMINAL LOADS. The magnitudes of the *loads* specified in Chapter 16 (dead, live, soil, wind, snow, rain, *flood* and earthquake).

❖ This definition explains the term "nominal loads" so that the loads to be applied are clear. For the most part, the loads determined in Chapter 16 are considered nominal loads, which are used directly in allowable stress design (ASD) or multiplied by a load factor for use in strength or load and resistance factor design (LRFD). The exceptions are earthquake-load effect, *E*, as well as the wind load, *W*, both of which are considered strength level loads.

[BS] NOMINAL SIZE (LUMBER). The commercial size designation of width and depth, in standard sawn lumber and glued-laminated lumber *grades*; somewhat larger than the standard net size of dressed lumber, in accordance with DOCPS 20 for sawn lumber and with the AWC NDS for glued-laminated lumber.

❖ Unless specifically required by the code, all dimensions listed for wood member sizes are nominal, not actual. U.S. Department of Commerce (DOC) PS 20 specifies the required minimum dimension of lumber for each stated nominal size. The process used to smooth and finish the surface of the lumber and to dry the wood removes a certain thickness of wood on each side of the piece; therefore, a 2 by 4 is approximately $1^1/_2$ inches by $3^1/_2$ inches (38 mm by 89 mm). The actual dimension of the lumber, otherwise known as dressed size, is limited to ensure consistency in lumber sizes, which is essential to the satisfactory construction of a wood-frame building.

NONCOMBUSTIBLE MEMBRANE STRUCTURE. A membrane structure in which the membrane and all component parts of the structure are noncombustible.

❖ Any membrane structure that is constructed of all noncombustible materials is classified by this definition. To qualify as noncombustible, the materials, including the membrane itself, must be tested in accordance with ASTM E136 and must satisfy the criteria in Section 703.4.

[BS] NONSTRUCTURAL CONCRETE. Any element made of plain or reinforced concrete that is not part of a structural system required to transfer either gravity or lateral loads to the ground.

❖ This definition enables the code user to correctly apply the durability requirements of Section 1904.

[F] NORMAL TEMPERATURE AND PRESSURE (NTP). A temperature of 70°F (21°C) and a pressure of 1 atmosphere [14.7 psia (101 kPa)].

❖ This term refers to the standard room temperature at atmospheric pressure. Atmospheric pressure results from the weight of air elevated above the earth's surface. At sea level, the atmosphere exerts a pressure of 14.7 pounds per square inch (psi) (101 kPa). The properties of commercially available compressed gases are indicated at their normal temperature and pressure (NTP).

NOSING. The leading edge of treads of *stairs* and of landings at the top of *stairway flights*.

❖ The front edge of the tread that is exposed to the user's foot provides the visual clue for the placement of the foot in both ascent and descent. The nosings of a stair are a reference point for the measurement of the tread depth and riser height. The line connecting the nosings serves as the reference for the measurement of handrail and guard heights as well as headroom. The code ensures their uniformity by limiting the projection of the tread and landing nosings that results in a stairway that is easy to use. If too large, they are a tripping hazard when walking up a stair. If too small in relation to tread depth, the effective tread depth required for heel clearance in descent is minimized. The code provides limits for both minimum and maximum nosing projections and establishes a minimum tread depth when no projection is required [see Commentary Figures 1011.5.2 and 1009.5.5(1)]. An exception to these limits exists in the requirements for both alternating tread devices and ships ladders where an exaggerated projected tread depth, required to provide for reasonable foot room, is unique to the steeper gradient and functional use of these devices.

NOTIFICATION ZONE. See "Zone, notification."

[F] NUISANCE ALARM. An alarm caused by mechanical failure, malfunction, improper installation or lack of proper maintenance, or an alarm activated by a cause that cannot be determined.

❖ A nuisance alarm is essentially any alarm that occurs as a result of a condition that does not arise during the normal operation of the equipment. A nuisance alarm is not the same as a false alarm. A person who intentionally initiates an alarm by using a manual pull station or a person who accidentally initiates a smoke detector is not initiating a nuisance alarm. A nuisance alarm is, by nature, a factor of the system itself.

INTERNATIONAL CODE COUNCIL®
Copyright © 2015 ICC. ALL RIGHTS RESERVED. Accessed by David Dammon on Jun 21, 2017 12:30:52 PM pursuant to License Agreement with ICC. No further reproduction or distribution authorized. ANY UNAUTHORIZED REPRODUCTION OR DISTRIBUTION IS A VIOLATION OF THE FEDERAL COPYRIGHT ACT AND THE LICENSE AGREEMENT, AND SUBJECT TO CIVIL AND CRIMINAL PENALTIES THEREUNDER.

NURSING HOMES. Facilities that provide care, including both intermediate care facilities and skilled nursing facilities where any of the persons are *incapable of self-preservation.*

❖ Persons in nursing homes may be physically incapable of self-preservation or at least extremely limited in their ability to evacuate. In dementia wards they may be confined within an area of a building for care or security purposes. In consideration of an occupant's health as well as safety, hospitals and nursing homes at least partially rely on defend-in-place strategies. See the commentary for Sections 308 and 407, Group I-2.

Care facilities are used by patients of varying acuity seeking a broad spectrum of available support services. These facilities span a wide range of occupancy types including Groups E, I and R. The level of care provided describes the condition and capabilities of an occupant which then indicates appropriate standards for protection systems, both passive and active. See also the definitions for "24-hour basis," "Care suites," "Custodial care," "Detoxification facilities," "Hospitals and psychiatric hospitals," "Medical care" and "Incapable of self-preservation."

OCCUPANT LOAD. The number of persons for which the *means of egress* of a building or portion thereof is designed.

❖ In addition to the limitation on the maximum occupant load for a space, the code also requires the determination of the occupant load that is to be utilized for the design of the means of egress system. The number for the floor area per occupant (occupant load factor) in Table 1004.1.2 reflects common and traditional occupant densities based on the empirical data for the density of similar spaces. This occupant load is also utilized to determine the required number of plumbing fixtures (see Chapter 29) and when automatic sprinkler systems or fire alarm and detection systems are required (see Chapter 9).

OCCUPIABLE SPACE. A room or enclosed space designed for human occupancy in which individuals congregate for amusement, educational or similar purposes or in which occupants are engaged at labor, and which is equipped with *means of egress* and light and *ventilation* facilities meeting the requirements of this code.

❖ Occupiable spaces are those areas designed for human occupancy. It applies to both residential and nonresidential spaces alike. Most spaces in a building are occupiable spaces. Based on the nature of the occupancy, various code sections apply. All habitable spaces are also considered occupiable (see the definition of "Habitable space"). However, all occupiable spaces are not habitable. Additionally, some spaces are neither habitable nor occupiable. The code identifies crawl spaces, attics, penthouses and elevated platforms (mechanical or industrial equipment) as unoccupied spaces. Since the code generally states how these spaces must be accessed, but does not specifically require means of egress, they would not be occupiable spaces. If access is limited to maintenance and service personnel, it is likely that a space is not occupiable.

OPEN-ENDED CORRIDOR. An interior corridor that is open on each end and connects to an exterior *stairway* or *ramp* at each end with no intervening doors or separation from the corridor.

❖ Breezeway configurations are common in hotels and apartment buildings, especially in areas where being open to the outside is considered an amenity. By essentially being open to the outside, the intent and level of safety is similar to an exterior egress balcony (See Section 1027.6, Exception 4 for requirements)

OPEN PARKING GARAGE. A structure or portion of a structure with the openings as described in Section 406.5.2 on two or more sides that is used for the parking or storage of private motor vehicles as described in Section 406.5.3.

❖ Open parking garages are defined as having uniformly distributed openings on no less than two sides totaling no less than 40 percent of the building perimeter. The aggregate area of the openings is to be a minimum of 20 percent of the total wall area of all perimeter walls (see Commentary Figure 406.5.2).

[F] OPEN SYSTEM. The *use* of a *solid* or *liquid hazardous material* involving a vessel or system that is continuously open to the atmosphere during normal operations and where vapors are liberated, or the product is exposed to the atmosphere during normal operations. Examples of open systems for *solids* and *liquids* include dispensing from or into open beakers or containers, dip tank and plating tank operations.

❖ See the commentary to the definition of "Closed system."

[F] OPERATING BUILDING. A building occupied in conjunction with the manufacture, transportation or *use* of explosive materials. Operating buildings are separated from one another with the use of intraplant or intraline distances.

❖ Magazines are used for the storage of explosive materials. Manufacturing or operating buildings used for the storage of explosives are not magazines and are not intended to be used for storage, although at times there may be storage incidental to the manufacturing function. This definition is included here to clarify this difference.

[BS] ORDINARY PRECAST STRUCTURAL WALL. See Section 1905.1.1.

❖ This definition is a modification of ACI 318 text and is therefore located in Section 1905.

[BS] ORDINARY REINFORCED CONCRETE STRUCTURAL WALL. See Section 1905.1.1.

❖ This definition is a modification of ACI 318 text and is therefore located in Section 1905.

[BS] ORDINARY STRUCTURAL PLAIN CONCRETE WALL. See Section 1905.1.1.

❖ This definition is a modification of ACI 318 text and is therefore located in Section 1905.

INTERNATIONAL CODE COUNCIL®
Copyright © 2015 ICC. ALL RIGHTS RESERVED. Accessed by David Dammon on Jun 21, 2017 12:30:52 PM pursuant to License Agreement with ICC. No further reproduction or distribution authorized. ANY UNAUTHORIZED REPRODUCTION OR DISTRIBUTION IS A VIOLATION OF THE FEDERAL COPYRIGHT ACT AND THE LICENSE AGREEMENT, AND SUBJECT TO CIVIL AND CRIMINAL PENALTIES THEREUNDER.

[F] ORGANIC PEROXIDE. An organic compound that contains the bivalent -O-O- structure and which may be considered to be a structural derivative of hydrogen peroxide where one or both of the hydrogen atoms have been replaced by an organic radical. Organic peroxides can pose an *explosion* hazard (*detonation* or *deflagration*) or they can be shock sensitive. They can also decompose into various unstable compounds over an extended period of time.

Class I. Those formulations that are capable of *deflagration* but not *detonation*.

Class II. Those formulations that burn very rapidly and that pose a moderate reactivity hazard.

Class III. Those formulations that burn rapidly and that pose a moderate reactivity hazard.

Class IV. Those formulations that burn in the same manner as ordinary combustibles and that pose a minimal reactivity hazard.

Class V. Those formulations that burn with less intensity than ordinary combustibles or do not sustain combustion and that pose no reactivity hazard.

Unclassified detonable. Organic peroxides that are capable of *detonation*. These peroxides pose an extremely high *explosion* hazard through rapid explosive decomposition.

❖ The chemical structure of organic peroxides differs from that of hydrogen peroxide (an oxidizer) in that an organic radical replaces the hydrogen atoms. Organic chemicals are all carbon based. As a result, organic peroxides pose varying degrees of fire or explosion hazards, in addition to their oxidizing properties. The classification of organic peroxides is based on the provisions of NFPA 432 (formerly NFPA 43B). Proper material classification of organic peroxides is essential to determining the appropriate occupancy classification of the structure. Examples of organic peroxides include acetyl cyclohexane, sulfonyl peroxide and benzoyl peroxide. The actual class of these materials is dependent on the percentage of concentration by weight. Most organic peroxides are available as liquids, pastes or solids in a powder form. For further discussion of this material definition, see the commentary to it in Chapter 2 of the *International Fire Code Commentary*.

[BS] ORTHOGONAL. To be in two horizontal directions, at 90 degrees (1.57 rad) to each other.

❖ This definition applies to the alternative seismic design category determination permitted under Section 1613.3.5.1. It makes it clear that the directions (axes) referred to are in the horizontal plane.

[BS] OTHER STRUCTURES (for Chapters 16-23). Structures, other than buildings, for which *loads* are specified in Chapter 16.

❖ This definition is needed for application of the minimum load requirements to structures other than buildings that are included in Chapter 16. Note that buildings are defined as "Structures used to support or shelter an occupancy."

OUTPATIENT CLINIC. See "Clinic, outpatient."

[A] OWNER. Any person, agent, operator, entity, firm or corporation having any legal or equitable interest in the property; or recorded in the official records of the state, county or municipality as holding an interest or title to the property; or otherwise having possession or control of the property, including the guardian of the estate of any such person, and the executor or administrator of the estate of such person if ordered to take possession of real property by a court.

❖ This term defines the person or other legal entity responsible for a building and its compliance with code requirements.

[F] OXIDIZER. A material that readily yields oxygen or other *oxidizing gas*, or that readily reacts to promote or initiate combustion of combustible materials and, if heated or contaminated, can result in vigorous self-sustained decomposition.

Class 4. An oxidizer that can undergo an explosive reaction due to contamination or exposure to thermal or physical shock and that causes a severe increase in the burning rate of combustible materials with which it comes into contact. Additionally, the oxidizer causes a severe increase in the burning rate and can cause spontaneous ignition of combustibles.

Class 3. An oxidizer that causes a severe increase in the burning rate of combustible materials with which it comes in contact.

Class 2. An oxidizer that will cause a moderate increase in the burning rate of combustible materials with which it comes in contact.

Class 1. An oxidizer that does not moderately increase the burning rate of combustible materials.

❖ The classification of oxidizers is based on the provisions of NFPA 430. Oxidizers, whether a solid, liquid or gas, yield oxygen or another oxidizing gas during a chemical reaction or readily react to oxidize combustibles. The rate of reaction varies with the class of oxidizer. Specific classification of oxidizers is important because of the varying degree of hazard. Examples of oxidizers include liquid hydrogen peroxide, nitric acid, sulfuric acid and solids such as sodium chlorite, chromic acid and calcium hypochlorite. Many commercially available swimming pool chemicals are indicative of Class 2 or 3 oxidizers. For further discussion of this material definition, see the commentary to it in Chapter 2 of the *International Fire Code Commentary*.

[F] OXIDIZING GAS. A gas that can support and accelerate combustion of other materials more than air does.

❖ Oxidizers sometimes yield oxidizing gases during a chemical reaction. These gases are capable of supporting and accelerating the combustion of other materials. Examples of oxidizing gases include bromine, chlorine and fluorine.

[BS] PANEL (PART OF A STRUCTURE). The section of a floor, wall or roof comprised between the supporting frame

INTERNATIONAL CODE COUNCIL®
Copyright © 2015 ICC. ALL RIGHTS RESERVED. Accessed by David Dammon on Jun 21, 2017 12:30:52 PM pursuant to License Agreement with ICC. No further reproduction or distribution authorized. ANY UNAUTHORIZED REPRODUCTION OR DISTRIBUTION IS A VIOLATION OF THE FEDERAL COPYRIGHT ACT AND THE LICENSE AGREEMENT, AND SUBJECT TO CIVIL AND CRIMINAL PENALTIES THEREUNDER.

of two adjacent rows of columns and girders or column bands of floor or roof construction.

❖ This definition is needed to apply the structural load requirements in Chapter 16.

PANIC HARDWARE. A door-latching assembly incorporating a device that releases the latch upon the application of a force in the direction of egress travel. See "Fire exit hardware."

❖ Panic hardware is commonly used in educational and assembly-type spaces where the number of occupants who would use a doorway during a short time frame in an emergency is high in relation to an occupancy with a less dense occupant load, such as an office building. The hardware is required so that the door can be easily opened during an emergency when pressure on a door from a crush of people could render normal hardware inoperable. Not all types of panic hardware are permitted on doors required to be fire-protection rated (see the definition for "Fire exit hardware" and Section 1010.1.10).

[BS] PARTICLEBOARD. A generic term for a panel primarily composed of cellulosic materials (usually wood), generally in the form of discrete pieces or particles, as distinguished from fibers. The cellulosic material is combined with synthetic resin or other suitable bonding system by a process in which the interparticle bond is created by the bonding system under heat and pressure.

❖ Particleboard is one of the family of wood-based products that can be used as wood panels. The definition describes the characteristics unique to particleboard as compared to other types of wood-based composite panels. Note that particleboard is not considered wood structural panel. Particleboard intended for use as wood structural panels is subject to the requirements of Section 2303.1.8, which references ANSI A208.1. Particleboard intended for use in shear panels is regulated by the requirements of Section 2306.3, which references the SDPWS.

PENETRATION FIRESTOP. A through-penetration firestop or a *membrane-penetration firestop*.

❖ See the commentaries for the definitions of "Membrane-penetration firestop" and "Through-penetration firestop system."

PENTHOUSE. An enclosed, unoccupied rooftop structure used for sheltering mechanical and electrical equipment, tanks, elevators and related machinery, and vertical *shaft* openings.

❖ Any enclosed structure that is located above the surrounding roof surfaces can be considered a penthouse as long as it meets the criteria within Section 1509.2. By complying with these requirements, the penthouse is considered to not contribute to the height of the building either in number of stories or feet above grade plane. If the penthouse does not meet these requirements, it must be considered as an additional story of the building.

[BS] PERFORMANCE CATEGORY. A designation of wood structural panels as related to the panel performance used in Chapter 23.

❖ The term "performance category" reflects the latest versions of the DOC PS 1 and PS 2 standards, which use terminologies of bond classification to reference glue type and performance categories to reference the thicknesses tolerance consistent with nominal panel thicknesses in the code. The performance category value is the "nominal panel thickness" or "panel thickness" (see Section 2303.1.4).

[A] PERMIT. An official document or certificate issued by the *building official* that authorizes performance of a specified activity.

❖ The permit constitutes a license issued by the building official to proceed with specific activity, such as construction of a building, in accordance with all applicable laws. For the code and the IRC, the "building official" is identified as the person responsible for issuing the permit. For the IFC, the "fire code official" is identified as the person responsible. For other I-Codes, the "code official" is identified as the person responsible.

[A] PERSON. An individual, heirs, executors, administrators or assigns, and also includes a firm, partnership or corporation, its or their successors or assigns, or the agent of any of the aforesaid.

❖ Corporations and other organizations listed in the definition are treated as persons under the law. Also, when the code provides for a penalty (see Section 114.4), the definition makes it clear that the individuals responsible for administering the activities of these various organizations are subject to these penalties.

PERSONAL CARE SERVICE. The care of persons who do not require *medical care*. Personal care involves responsibility for the safety of the persons while inside the building

❖ Persons who need personal care may need supervision, but they are capable of self-preservation (see the commentary for Section 305, Group E day care).

Care facilities are used by patients of varying acuity seeking a broad spectrum of available support services. These facilities span a wide range of occupancy types including Groups E, I and R. There are three types of care defined in the codes: personal, custodial and medical. On the lower end of the care spectrum (i.e., personal care) is when occupants are supervised but do not need custodial or medical care. Where occupants may be elderly or impaired (i.e., custodial care) they may need occasional daily living assistance such as cooking and cleaning. While occupants may take longer to evacuate than average, they are capable of self-preservation. On the opposite end of the care spectrum, persons receiving care may be completely bedridden and dependent on medical gases and emergency power to maintain life (i.e., medical care). The level of care provided

INTERNATIONAL CODE COUNCIL®
Copyright © 2015 ICC. ALL RIGHTS RESERVED. Accessed by David Dammon on Jun 21, 2017 12:30:52 PM pursuant to License Agreement with ICC. No further reproduction or distribution authorized. ANY UNAUTHORIZED REPRODUCTION OR DISTRIBUTION IS A VIOLATION OF THE FEDERAL COPYRIGHT ACT AND THE LICENSE AGREEMENT, AND SUBJECT TO CIVIL AND CRIMINAL PENALTIES THEREUNDER.

describes the condition and capabilities of an occupant which then indicates appropriate standards for protection systems and building. See also the definitions for "24-hour basis," "Custodial care," "Detoxification facility," "Foster care facility," "Group home," "Hospitals and psychiatric hospitals," "Medical care," "Nursing home," and "Incapable of self-preservation."

PHOTOLUMINESCENT. Having the property of emitting light that continues for a length of time after excitation by visible or invisible light has been removed.

❖ Examples of photoluminescent material are paint and tape that are charged by exposure to light. When the lights are turned off, the product will "glow" in the dark. Products utilized to meet the requirements for luminous egress path markings in high-rise buildings (see Sections 403.5.5 and 1025) or exit signs (see Section 1013.5) may be photoluminescent or self-luminous. A variety of materials can comply with the referenced standards for egress path markings, including ASTM E2072 and UL 1994; and for signs, UL 924.

PHOTOVOLTAIC MODULE. A complete, environmentally protected unit consisting of solar cells, optics and other components, exclusive of tracker, designed to generate DC power when exposed to sunlight.

❖ This definition provides clarification of requirements for photovoltaic modules that appear in Sections 1505 and 1510.

PHOTOVOLTAIC PANEL. A collection of modules mechanically fastened together, wired and designed to provide a field-installable unit.

❖ This definition provides clarification of roof requirements for photovoltaic panels that appear in Sections 1505 and 1510.

PHOTOVOLTAIC PANEL SYSTEM. A system that incorporates discrete photovoltaic panels, that converts solar radiation into electricity, including rack support systems.

❖ This definition provides clarification of requirements for photovoltaic panel systems in Chapter 15.

PHOTOVOLTAIC SHINGLES. A *roof covering* resembling shingles that incorporates photovoltaic modules.

❖ This definition provides clarification of roof-covering requirements that appear in Section 1507.17.

[F] PHYSICAL HAZARD. A chemical for which there is evidence that it is a *combustible liquid*, *cryogenic fluid*, *explosive*, flammable (*solid*, *liquid* or gas), *organic peroxide* (*solid* or *liquid*), *oxidizer* (*solid* or *liquid*), *oxidizing gas*, *pyrophoric* (*solid*, *liquid* or gas), *unstable (reactive) material* (*solid*, *liquid* or gas) or *water-reactive material* (*solid* or *liquid*).

❖ Those materials that present a detonation hazard, a deflagration hazard or that readily support combustion are considered physical hazards. Examples of the types of materials that present a physical hazard are included in the definition. Buildings and structures containing materials that present a physical hazard in excess of the maximum allowable quantity would be classified in Group H-1, H-2 or H-3. Materials that present a physical hazard may also present a health hazard (see the definition of "Health hazard").

[F] PHYSIOLOGICAL WARNING THRESHOLD LEVEL. A concentration of air-borne contaminants, normally expressed in parts per million (ppm) or milligrams per cubic meter (mg/m^3), that represents the concentration at which persons can sense the presence of the contaminant due to odor, irritation or other quick-acting physiological response. When used in conjunction with the permissible exposure limit (PEL) the physiological warning threshold levels are those consistent with the classification system used to establish the PEL. See the definition of "Permissible exposure limit (PEL)" in the *International Fire Code*.

❖ The term "physiological warning properties" is not defined. From a practical standpoint, the physiological warning properties are represented by a concentration of a contaminant that allows the average individual to sense its presence by a body warning signal including, but not limited to, odor, irritating effects such as stinging sensations, coughing, scratchy feeling in the throat, running of the eyes or nose and similar signals.

There may be a wide variability reported for some of the more common threshold levels including that of olfactory perception. Variations that may be encountered are due to a number of factors including the methods used in their determination, the population exposed and others. The requirements for gas detection established in the code are tied to the PEL, and there are several methods for determining the PEL inherent in the definition of that term. The intent of this definition is to link the determination of the physiological warning threshold level to the data used to determine the PEL.

For example, the PEL as established by DOL 29 CFR, Part 1910.1000 is primarily based on data developed by the American Conference of Governmental Industrial Hygienists (ACGIH) called threshold limit values (TLVs), as referenced in the definition of PEL found in Chapter 2 of the IFC. To substantiate the TLVs (PELs), the ACGIH publishes the *Documentation of the Threshold Limit Values* (TLVs®) and *Biological Exposure Indices* (BEIs®) where the user is provided with data used in their establishment. The significant commercially available toxic and highly toxic gases with published TLVs are listed by ACGIH, and perception thresholds are provided.

These warning properties are considered, as evidenced by the documentation, when the TLV and, hence, the PEL is established. It is appropriate that the data used in the base documents be used as the basis for determining the threshold level when such data are available. The use of data from other sources may be used in the absence of data within the system used for the establishment of the PEL, but where such data have been considered in determin-

INTERNATIONAL CODE COUNCIL®
Copyright © 2015 ICC. ALL RIGHTS RESERVED. Accessed by David Dammon on Jun 21, 2017 12:30:52 PM pursuant to License Agreement with ICC. No further reproduction or distribution authorized. ANY UNAUTHORIZED REPRODUCTION OR DISTRIBUTION IS A VIOLATION OF THE FEDERAL COPYRIGHT ACT AND THE LICENSE AGREEMENT, AND SUBJECT TO CIVIL AND CRIMINAL PENALTIES THEREUNDER.

ing the PEL, such data should take precedent.

By providing a definition for "Physiological warning threshold level" and guidance as to how it is to be applied, the code user is given guidance that carries out the intent of the provisions for gas detection that have been established in the code. See the commentary to Section 6004.2.2.10 of the IFC for further discussion of gas detection.

PLACE OF RELIGIOUS WORSHIP. See "Religious worship, place of."

PLASTIC, APPROVED. Any thermoplastic, thermosetting or reinforced thermosetting plastic material that conforms to combustibility classifications specified in the section applicable to the application and plastic type.

❖ This term applies to plastic that has properties that conform to the code requirements for its intended use.

PLASTIC COMPOSITE. A generic designation that refers to wood/plastic composites and plastic lumber.

❖ Plastic composites can be plastic lumber or wood/plastic composite lumber. These components are typically used for exterior decking and railing systems. See also the definitions for "Plastic lumber" and "Wood/plastic composite."

PLASTIC GLAZING. Plastic materials that are glazed or set in frame or sash and not held by mechanical fasteners that pass through the glazing material.

❖ In lieu of glass, plastic is permitted to be used as a glazing material. Plastic glazing is required to meet the same load requirements as glass.

[BS] PLASTIC LUMBER. A manufactured product made primarily of plastic materials (filled or unfilled) which is generally rectangular in cross section.

❖ Plastic lumber is manufactured of plastic and a uses a variety of materials to provide strength and stiffness. These components are typically used for exterior decking and railing systems. Chapter 26, which regulates plastic materials, contains requirements for plastic lumber used as exterior decking components, such as deck boards, stair treads, handrails and guardrails.

PLATFORM. A raised area within a building used for worship, the presentation of music, plays or other entertainment; the head table for special guests; the raised area for lecturers and speakers; boxing and wrestling rings; theater-in-the-round *stages*; and similar purposes wherein, other than horizontal sliding curtains, there are no overhead hanging curtains, drops, scenery or stage effects other than lighting and sound. A temporary platform is one installed for not more than 30 days.

❖ Platforms are raised areas that are used for public performances and presentations that, except for lighting, do not incorporate any overhead hanging curtains, drops, scenery or stage effects. Additionally, while it is not specified, the fuel load on platforms (e.g., a podium for a lecturer or a boxing ring) is anticipated to be low.

Thus, since the fuel load on platforms is ordinarily low and there is no fuel load overhead in areas that would be difficult to access, the code requirements for platforms are less stringent than for stages.

Since many platforms are installed and used on a temporary basis, this definition specifically defines temporary use as 30 days or less. Temporary use is less likely to accumulate additional fuel loads, storage or waste materials on, beneath or above the platform. Platforms are distinct from equipment platforms (see Section 505.3). A platform addressed by this definition is typically not considered a mezzanine (see Section 505.2).

POLYPROPYLENE SIDING. A shaped material, made principally from polypropylene homopolymer, or copolymer, which in some cases contains fillers or reinforcements, that is used to clad *exterior walls* of buildings.

❖ Polypropylene siding is an exterior finish product that is available in many textures, colors and profiles. These products come from various manufacturers with specific installation requirements with which compliance is very important. Specification and installation requirements for polypropylene siding are discussed in Sections 1404.12 and 1405.18. Proper installation will result in expected product performance at varying temperatures by allowing for the expansion and contraction of the siding materials and its components.

[BS] PORCELAIN TILE. Tile that conforms to the requirements of ANSI 137.1.3 for ceramic tile having an absorption of 0.5 percent or less in accordance with ANSI 137.4.1–Class Table and ANSI 137.1.6.1 Allowable Properties by Tile Type–Table 10.

❖ Porcelain tile is one of a myriad of types of ceramic tile. Its unique characteristics and extremely low absorption rate requires it be dealt with differently from other materials, especially when applied as an exterior adhered veneer. These materials fall outside the scope of TMS 402/ACI 530/ASCE 6. General installation limitations are found in Section 1405.10.2.

[BS] POSITIVE ROOF DRAINAGE. The drainage condition in which consideration has been made for all loading deflections of the *roof deck*, and additional slope has been provided to ensure drainage of the roof within 48 hours of precipitation.

❖ The primary purpose of positive roof drainage is to allow for prompt roof drainage, thereby preventing the roof from being damaged or adversely impacting the structural support due to the additional load.

POWER-ASSISTED DOOR. Swinging door which opens by reduced pushing or pulling force on the door-operating hardware. The door closes automatically after the pushing or pulling force is released and functions with decreased forces.

INTERNATIONAL CODE COUNCIL®
Copyright © 2015 ICC. ALL RIGHTS RESERVED. Accessed by David Dammon on Jun 21, 2017 12:30:52 PM pursuant to License Agreement with ICC. No further reproduction or distribution authorized. ANY UNAUTHORIZED REPRODUCTION OR DISTRIBUTION IS A VIOLATION OF THE FEDERAL COPYRIGHT ACT AND THE LICENSE AGREEMENT, AND SUBJECT TO CIVIL AND CRIMINAL PENALTIES THEREUNDER.

See "Low-energy power-operated door" and "Power-operated door."

❖ There are basically three different types of doors that provide some type of power assistance for entry: low-energy power-operated doors, power-assisted doors and power-operated doors. The power-assisted door is typically a side-swinging door that has the additional feature of powered assistance to move the door to the open position. When a door has power assistance, the force or effort it takes to open the door while it is being pushed or pulled is reduced as long as a user maintains pressure on the hardware. When the hardware is released, the door will move to the closed position. Power-assist doors are typically be used when a door is an unusual size or weight. The low-energy power-assisted door and power-assisted door both are operated by the user touching something; therefore they both must comply with BMHA156.19.

POWER-OPERATED DOOR. Swinging, sliding, or folding door which opens automatically when approached by a pedestrian or opens automatically upon an action by a pedestrian. The door closes automatically and includes provisions such as presence sensors to prevent entrapment. See "Low energy power-operated door" and "Power-assisted door."

❖ There are basically three different types of doors that provide some type of power assistance for entry: low-energy power-operated doors, power-assisted doors and power-operated doors. The power-operated door can be a sliding, hinged or side-swinging door that operates automatically by either a motion sensor or sensor mat when someone approaches the door. Power-operated doors are most commonly installed at the busy entrances of commercial buildings. As a door with hands-free operation, the power-operated door must comply with BMHA156.10.

[BS] PREFABRICATED WOOD I-JOIST. Structural member manufactured using sawn or structural composite lumber flanges and wood structural panel webs bonded together with exterior exposure adhesives, which forms an "I" cross-sectional shape.

❖ Wood I-joists are structural members typically used in floor and roof construction manufactured out of sawn or structural composite lumber flanges and structural panel webs, bonded together with exterior adhesives forming an "I" cross section. This definition explains which engineered wood products are considered prefabricated wood I-joists in order to clarify the requirements in Section 2303.1.2.

[BS] PRESTRESSED MASONRY. *Masonry* in which internal stresses have been introduced to counteract potential tensile stresses in *masonry* resulting from applied *loads*.

❖ The definition provides an understanding of the term "prestressed masonry," which is used to define particular types of shear wall systems recognized under the Masonry Standards Joint Committee (MSJC) Code (a.k.a. TMS 402/ACI 530/ASCE 5 – Building Code Requirements for Masonry Structures).

PRIMARY STRUCTURAL FRAME. The primary structural frame shall include all of the following structural members:

1. The columns.
2. Structural members having direct connections to the columns, including girders, beams, trusses and spandrels.
3. Members of the floor construction and roof construction having direct connections to the columns.
4. Bracing members that are essential to the vertical stability of the primary structural frame under gravity loading shall be considered part of the primary structural frame whether or not the bracing member carries gravity *loads.*

❖ The primary structural frame and secondary members must meet different standards of design and protection as specified in Chapters 6 and 7. The definitions of these two terms spell out which elements of a structure's framing system are part of the primary structural framing system essential to carrying the gravity loads of the building. Such elements are generally required to have greater fire-resistance protection (see commentary, Table 601 and Section 704).

PRIVATE GARAGE. A building or portion of a building in which motor vehicles used by the tenants of the building or buildings on the premises are stored or kept, without provisions for repairing or servicing such vehicles for profit.

❖ In Section 406, the code regulates two types of garages: private and public. Public garages are further broken into open or enclosed garages. Private garages are limited in size by Section 406.3 and can be accessory to either residential or nonresidential uses. The definition is intended to help distinguish private garages from public garages. Carports are also addressed in Section 406.3

PROSCENIUM WALL. The wall that separates the *stage* from the auditorium or assembly seating area.

❖ A proscenium wall separates the stage area from the audience. The performance on the stage is viewed through a large opening known as the main proscenium opening. Where the stage height is greater than 50 feet (15 240 mm), a proscenium wall of approved construction is required by Section 410.3.4.

PSYCHIATRIC HOSPITALS. See "Hospitals."

PUBLIC ENTRANCE. An entrance that is not a *service entrance* or a *restricted entrance*.

❖ A public entrance is one that provides access for the general public or employees, other than the service entrance or a restricted entrance (see the commentaries for the definitions of "Service entrance" and "Restricted entrance" and to Section 1105.1).

INTERNATIONAL CODE COUNCIL®
Copyright © 2015 ICC. ALL RIGHTS RESERVED. Accessed by David Dammon on Jun 21, 2017 12:30:52 PM pursuant to License Agreement with ICC. No further reproduction or distribution authorized. ANY UNAUTHORIZED REPRODUCTION OR DISTRIBUTION IS A VIOLATION OF THE FEDERAL COPYRIGHT ACT AND THE LICENSE AGREEMENT, AND SUBJECT TO CIVIL AND CRIMINAL PENALTIES THEREUNDER.

Entrances may be locked for security purposes, but if the door serves as an entrance for employees or residents with keys, that door would still be considered a public entrance. A sports facility where there is control at the entrance for ticket holders only would still be considered a public entrance

PUBLIC-USE AREAS. Interior or exterior rooms or spaces that are made available to the general public.

❖ This term is utilized to describe all interior and exterior spaces or rooms that may be occupied by the general public for any amount of time. Spaces that are utilized by the general public may be located in facilities that are publicly or privately owned. Examples include the lobby in an office building, a high-school gymnasium with assembly seating, an open-air stadium, a multipurpose room, an exposition hall, a restaurant dining room, a health club, etc. (see also the commentaries for the definitions of "Common use" and "Employee work area").

[A] PUBLIC WAY. A street, alley or other parcel of land open to the outside air leading to a street, that has been deeded, dedicated or otherwise permanently appropriated to the public for public use and which has a clear width and height of not less than 10 feet (3048 mm).

❖ Public ways serve a variety of purposes in the code, including the determination of the allowable area of a building (see Section 506.2); the use as an open space for unlimited area buildings (see Section 507); the measurement of fire separation distance (see Section 202); as well as many provisions for the means of egress (Chapter 10).

[F] PYROPHORIC. A chemical with an auto-ignition temperature in air, at or below a temperature of 130°F (54.4°C).

❖ The definition is derived from DOL 29 CFR, Part 1910.1200. Pyrophoric materials, whether in a gas, liquid or solid form, are capable of spontaneous ignition at low temperatures. Examples of pyrophoric materials include silane and phosphine gas; liquid diethylaluminum chloride; and inert solids, such as cesium, plutonium, potassium and robidium. For further discussion of this material definition, see the commentary to it in Chapter 2 of the *International Fire Code Commentary*.

[F] PYROTECHNIC COMPOSITION. A chemical mixture that produces visible light displays or sounds through a self-propagating, heat-releasing chemical reaction which is initiated by ignition.

❖ Pyrotechnic composition consists of those chemical components, including oxidizers, that cause fireworks to make noise or display light when ignited. The definition is derived from NFPA 1124. The amount of pyrotechnic composition is the determining factor in whether the storage area for consumer fireworks is classified as Group H-3. The pyrotechnic content of consumer fireworks is contained within a significant amount of packaging and nonexplosive materials used in their manufacture, which constitute the bulk of the weight of the fireworks devices.

RADIANT BARRIER. A material having a low-emittance surface of 0.1 or less installed in building assemblies.

❖ This definition enables the code user to correctly apply the material standards for these products in Section 1509.

RAMP. A walking surface that has a running slope steeper than one unit vertical in 20 units horizontal (5-percent slope).

❖ This definition is needed to determine the threshold at which the ramp requirements apply to a walking surface. Walking surfaces steeper than specified in the definition are subject to the ramp requirements in Sections 1012 and 1029.

RAMP-ACCESS OPEN PARKING GARAGES. *Open parking garages* employing a series of continuously rising floors or a series of interconnecting ramps between floors permitting the movement of vehicles under their own power from and to the street level.

❖ These types of garages employ vehicular ramps or sloped tiers that connect all of the levels of the structure. Whether the vehicles are self-parked or employee parked is immaterial.

RAMP, EXIT ACCESS. See "Exit access ramp."

RAMP, EXTERIOR EXIT. See "Exterior exit ramp."

RAMP, INTERIOR EXIT. See "Interior exit ramp."

[A] RECORD DRAWINGS. Drawings ("as builts") that document the location of all devices, appliances, wiring sequences, wiring methods and connections of the components of a *fire alarm system* as installed.

❖ To verify that the system has been installed to comply with the code and applicable referenced standards, complete as-built drawings of the fire alarm system must be available on site for review.

REFLECTIVE PLASTIC CORE INSULATION. An insulation material packaged in rolls, that is less than $^1/_2$ inch (12.7 mm) thick, with not less than one exterior low-emittance surface (0.1 or less) and a core material containing voids or cells.

❖ This is a product distinct from "foam plastic insulation." Its unique properties dictate the need for a different testing procedure as specified in Section 2614.

[A] REGISTERED DESIGN PROFESSIONAL. An individual who is registered or licensed to practice their respective design profession as defined by the statutory requirements of the professional registration laws of the state or *jurisdiction* in which the project is to be constructed.

❖ Legal qualifications for engineers and architects are established by the state having jurisdiction. Licensing and registration of engineers and architects are accomplished by written or oral examinations offered by states, or by reciprocity (licensing in other states).

INTERNATIONAL CODE COUNCIL®
Copyright © 2015 ICC. ALL RIGHTS RESERVED. Accessed by David Dammon on Jun 21, 2017 12:30:52 PM pursuant to License Agreement with ICC. No further reproduction or distribution authorized. ANY UNAUTHORIZED REPRODUCTION OR DISTRIBUTION IS A VIOLATION OF THE FEDERAL COPYRIGHT ACT AND THE LICENSE AGREEMENT, AND SUBJECT TO CIVIL AND CRIMINAL PENALTIES THEREUNDER.

[A] REGISTERED DESIGN PROFESSIONAL IN RESPONSIBLE CHARGE. A *registered design professional* engaged by the owner or the owner's authorized agent to review and coordinate certain aspects of the project, as determined by the *building official*, for compatibility with the design of the building or structure, including submittal documents prepared by others, deferred submittal documents and phased submittal documents.

❖ This definition refers to the registered design professional named by the owner or the owner's representative where required by Section 107.3.4, which states that the owner must designate a registered design profession when required by the laws applicable to the jurisdiction in which its building is constructed. The role of the registered design professional in responsible charge includes the review and coordination of the following items for compatibility with a project's design requirements:

1. Submittal documents prepared by others;
2. Deferred submittal documents;
3. Phases submittal documents; and
4. Special inspection reports.

RELIGIOUS WORSHIP, PLACE OF. A building or portion thereof intended for the performance of religious services.

❖ This term has been added to the code for the purpose of making the code more broadly applicable to the worship facilities of all religions. Major religions for the world include Christianity, Islam, Hinduism, Buddhism and Judaism, which use different terms to describe the main space used for religious services. The intent in the code is for the same application for all similar types of religious facilities. The term also makes it clear that it defines the room or sanctuary for the performance of religious worship services and not retreat complexes, rectories, convents and classroom or office areas.

[A] REPAIR. The reconstruction or renewal of any part of an existing building for the purpose of its maintenance or to correct damage.

❖ As indicated in Section 105.2.2, the repair of an item typically does not require a permit. This definition makes it clear that repair is limited to work on the item, and does not include complete or substantial replacement or other new work.

[EB] REROOFING. The process of recovering or replacing an existing *roof covering*. See "Roof recover" and "Roof replacement."

❖ This term refers to the process of covering an existing roof system with a new roofing system (see Section 1511).

RESIDENTIAL AIRCRAFT HANGAR. An accessory building less than 2,000 square feet (186 m^2) and 20 feet (6096 mm) in *building height* constructed on a one- or two-family property where aircraft are stored. Such use will be considered as a residential accessory use incidental to the dwelling.

❖ A residential aircraft hangar is considered an accessory or auxiliary structure to a residential house similar to any other shed or detached garage. One- or two-family dwellings are required to be constructed in accordance with the IRC (see Section 101.2). Although that code is also applicable to accessory structures associated with one- or two-family dwellings, it is clear that Section 412.5 of the code was intended to control aircraft hangars since the IRC is silent on the subject.

A residential aircraft hangar is limited to 2,000 square feet (186 m^2) in area and 20 feet (6096 mm) in height. The hangar must be integral to a residential home on the same property. As such, the hangar would be considered the same as the private garage used to store the home's motor vehicles.

[BS] RESISTANCE FACTOR. A factor that accounts for deviations of the actual strength from the *nominal strength* and the manner and consequences of failure (also called "strength reduction factor").

❖ This definition is needed to apply material strength adjustments by way of the resistance factor that is specified in structural material chapters and referenced structural standards.

[BS] RESTRICTED ENTRANCE. An entrance that is made available for *common use* on a controlled basis, but not public use, and that is not a *service entrance*.

❖ The key to this provision is that the entrance has a controlled access or some type of limiting basis. This may be an entrance for jurors only at a courthouse, visitors only at a jail or employees only at a factory. A sports facility where there is control at the entrance for ticket holders only, or a building with locked entrances, is not typically considered a restricted entrance (see the commentaries for the definitions of "Public entrance" and "Service entrance," and to Section 1105.1.3).

RETRACTABLE AWNING. A retractable *awning* is a cover with a frame that retracts against a building or other structure to which it is entirely supported.

❖ The key to this definition is that it provides for an element of building construction that is popular in residential construction. Retractable awnings are a subcategory of awnings, and therefore are included in the regulations in Section 3105.

[BS] RISK CATEGORY. A categorization of buildings and other structures for determination of *flood*, wind, snow, ice and earthquake *loads* based on the risk associated with unacceptable performance.

❖ Risk category is a classification given to all buildings in Section 1604.5 based on the nature of the occupancy. This classification serves as a threshold for

INTERNATIONAL CODE COUNCIL®
Copyright © 2015 ICC. ALL RIGHTS RESERVED. Accessed by David Dammon on Jun 21, 2017 12:30:52 PM pursuant to License Agreement with ICC. No further reproduction or distribution authorized. ANY UNAUTHORIZED REPRODUCTION OR DISTRIBUTION IS A VIOLATION OF THE FEDERAL COPYRIGHT ACT AND THE LICENSE AGREEMENT, AND SUBJECT TO CIVIL AND CRIMINAL PENALTIES THEREUNDER.

earthquake, flood, snow and wind load requirements (also see the definition of "Essential facilities" and the commentary to Section 1604.5).

[BS] RISK-TARGETED MAXIMUM CONSIDERED EARTHQUAKE (MCE_R) GROUND MOTION RESPONSE ACCELERATIONS. The most severe earthquake effects considered by this code, determined for the orientation that results in the largest maximum response to horizontal ground motions and with adjustment for targeted risk.

❖ This term refers to the mapped earthquake ground motions that are provided in Figures 1613.3.1(1) through 1613.3.1(8) for a Site Class B (rock) soil profile. It reflects the maximum level of earthquake ground shaking that is considered reasonable for the design of new structures.

[BS] ROOF ASSEMBLY (For application to Chapter 15 only). A system designed to provide weather protection and resistance to design *loads*. The system consists of a *roof covering* and *roof deck* or a single component serving as both the roof covering and the *roof deck*. A roof assembly includes the *roof deck, vapor retarder*, substrate or thermal barrier, insulation, *vapor retarder* and *roof covering*.

❖ With respect to its application as it relates to Chapter 15, a roof assembly is an assembly of interacting roof components (including the roof deck) designed to weatherproof and, normally, to insulate a building's top surface.

[BS] ROOF COVERING. The covering applied to the *roof deck* for weather resistance, fire classification or appearance.

❖ This definition identifies the specific membrane of the entire roof system that provides weather protection and any required resistance to exterior fire exposure. The code has specific performance and prescriptive requirements for this covering to provide a durable, weather-resistant surface for the entire structure. A roof covering is considered the membrane that provides the weather-resistance and fire-performance characteristics required by the code.

ROOF COVERING SYSTEM. See "Roof assembly."

[BS] ROOF DECK. The flat or sloped surface constructed on top of the *exterior walls* of a building or other supports for the purpose of enclosing the *story* below, or sheltering an area, to protect it from the elements, not including its supporting members or vertical supports.

❖ A roof deck is the structural surface to which the roofing and waterproofing system (including insulation) is applied.

ROOF DRAINAGE, POSITIVE. See "Positive roof drainage."

[EB] ROOF RECOVER. The process of installing an additional *roof covering* over a prepared existing *roof covering* without removing the existing *roof covering*.

❖ This term refers to the process of covering an existing roof system with a new roofing system.

[EB] ROOF REPAIR. Reconstruction or renewal of any part of an existing roof for the purposes of its maintenance.

❖ Roofs should be maintained for the purpose of protection. If a section is damaged, then it should be repaired immediately.

[EB] ROOF REPLACEMENT. The process of removing the existing *roof covering*, repairing any damaged substrate and installing a new *roof covering*.

❖ This definition refers to the process of covering an existing roof system with a new roofing system.

ROOF VENTILATION. The natural or mechanical process of supplying conditioned or unconditioned air to, or removing such air from, *attics*, cathedral ceilings or other enclosed spaces over which a *roof assembly* is installed.

❖ Ventilation of the attic prevents moisture condensation on cold surfaces and, therefore, will prevent dry rot on the bottom surface of shingles or wood roof decks.

ROOFTOP STRUCTURE. A structure erected on top of the *roof deck* or on top of any part of a building.

❖ This definition includes all appurtenances constructed and located above the surrounding roof surfaces. These items (water tanks or cooling towers) or architectural features (spires or cupolas) are regulated by specific code provisions.

[BS] RUNNING BOND. The placement of *masonry units* such that *head joints* in successive courses are horizontally offset at least one-quarter the unit length.

❖ Commentary Figure 202(35) illustrates the required overlap for running bonds. The minimum overlap is necessary to provide strength between units when masonry spans horizontally. Masonry not laid in running bond is often referred to as "stack bond" construction.

SALLYPORT. A security vestibule with two or more doors or gates where the intended purpose is to prevent continuous and unobstructed passage by allowing the release of only one door or gate at a time.

❖ While sallyports are not unique to Group 1-3 occupancies, they are essential to the control and safe movement of inmates in a Group 1-3 facility. Section 408.3.7 allows sallyports to be in the means of egress system. See the commentary for that section for an additional description of sallyport design and use.

SCISSOR STAIRWAY. Two interlocking *stairways* providing two separate paths of egress located within one *exit* enclosure.

❖ A scissor or interlocking stairway is sometimes used in high-rise buildings or to increase exit capacity of a stairwell enclosure. In this configuration, two independent stairway paths are located within the same exit enclosure and may or may not be visually open to one another. When interlocking stairways are separated from each other with compliant fire barriers and

INTERNATIONAL CODE COUNCIL®
Copyright © 2015 ICC. ALL RIGHTS RESERVED. Accessed by David Dammon on Jun 21, 2017 12:30:52 PM pursuant to License Agreement with ICC. No further reproduction or distribution authorized. ANY UNAUTHORIZED REPRODUCTION OR DISTRIBUTION IS A VIOLATION OF THE FEDERAL COPYRIGHT ACT AND THE LICENSE AGREEMENT, AND SUBJECT TO CIVIL AND CRIMINAL PENALTIES THEREUNDER.

horizontal assemblies, they are not considered scissor stairways (see Section 1007.1.1).

[BS] SCUPPER. An opening in a wall or parapet that allows water to drain from a roof.

❖ These devices are for the purpose of allowing overflowing water to drain off the roof. These devices are commonly larger than the roof drain.

SECONDARY MEMBERS. The following structural members shall be considered secondary members and not part of the *primary structural frame*:

1. Structural members not having direct connections to the columns.
2. Members of the floor construction and roof construction not having direct connections to the columns.
3. Bracing members other than those that are part of the *primary structural frame.*

❖ This term works in conjunction with the term "primary structural frame" to distinguish the level of fire-resistance protection needed by various elements of a building's structure. These requirements are found in Table 601 and Sections 704.

[BS] SEISMIC DESIGN CATEGORY. A classification assigned to a structure based on its *risk category* and the severity of the *design earthquake ground motion* at the site.

❖ The seismic design category serves as a trigger mechanism for many seismic requirements, including the following:

1. Permissible seismic force-resisting systems.
2. Limitations on height.
3. Consideration of structural irregularities.
4. The types of lateral-force analysis that may be used.
5. The need for additional special inspections.

The first step in the design of a structure for earthquake forces is the determination of its seismic design category. Each building is assigned the more restrictive seismic design category classification depending upon the site soil profile, the mapped spectral response accelerations at the site and the nature of the uses that occupy the building, using both Tables 1613.3.5(1) and 1613.3.5(2). The following outlines the procedure used to determine a structure's seismic design category.

Step 1: Determine the mapped maximum considered earthquake spectral response acceleration at short periods, S_s, and at 1-second period, S_1, for the site location from Figures 1613.3.1(1) through 1613.3.1(8).

Step 2: Determine the (soil) site class in accordance with Section 1613.3.2.

Step 3: Determine the site coefficients, F_a and F_v, from Tables 1613.3.3(1) and 1613.3.3(2), respectively.

Step 4: Determine the 5-percent damped design spectral response acceleration at short

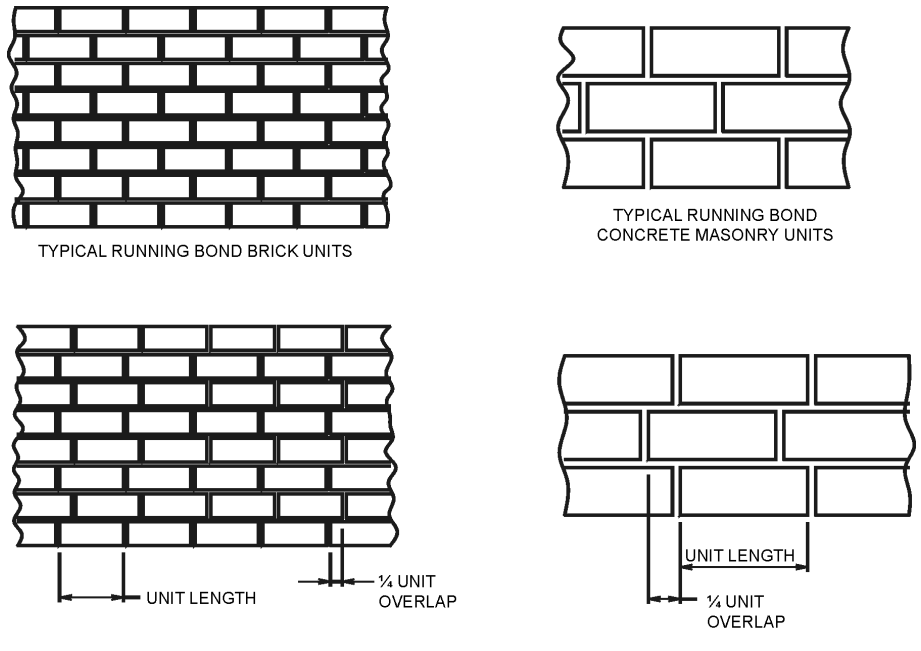

Figure 202(35)
RUNNING BOND MASONRY

INTERNATIONAL CODE COUNCIL®
Copyright © 2015 ICC. ALL RIGHTS RESERVED. Accessed by David Dammon on Jun 21, 2017 12:30:52 PM pursuant to License Agreement with ICC. No further reproduction or distribution authorized. ANY UNAUTHORIZED REPRODUCTION OR DISTRIBUTION IS A VIOLATION OF THE FEDERAL COPYRIGHT ACT AND THE LICENSE AGREEMENT, AND SUBJECT TO CIVIL AND CRIMINAL PENALTIES THEREUNDER.

periods, S_{DS}, and at 1-second period, S_{D1}, as follows:

$$S_{DS} = (^2/_3)(F_a)(S_s)$$

$$S_{D1} = (^2/_3)(F_v)(S_1)$$

Step 5: Determine the seismic design category as prescribed by Tables 1613.3.5(1) and 1613.3.5(2).

The highest of the seismic design categories from the two tables is the category assigned to the building, unless Section 1613.3.5.1 is applicable. For example, if the seismic design category from Table 1613.3.5(1) is D and from Table 1613.3.5(2) it is C, then the building would be assigned to Seismic Design Category D.

[BS] SEISMIC FORCE-RESISTING SYSTEM. That part of the structural system that has been considered in the design to provide the required resistance to the prescribed seismic forces.

❖ This definition is needed for the correct application of special inspections of seismic force-resisting systems. Unless classified as Seismic Design Category A, the type of seismic-force-resisting system must be selected to conform to Section 12.2 of ASCE 7. Providing a level of detailing that is appropriate for the selected system is critical to complying with the code's earthquake provisions.

SELF-CLOSING. As applied to a *fire door* or other opening protective, means equipped with an device that will ensure closing after having been opened.

❖ A self-closing opening protective refers to a fire or smoke door assembly equipped with a listed closer for doors that must be maintained in the normally closed position. When the door is opened and released, the self-closing feature returns the door to the closed position. It is important to distinguish between the terms "self-closing" and "automatic closing" because they are not interchangeable. "Automatic closing" refers to an opening protective that is normally in the open position (see Section 716.5.9.2). Opening protectives with automatic closers are often held open and then returned to the closed position upon activation of fire detectors or smoke detectors or loss of power, which automatically releases the hold-open device and allows the door to close.

SELF-LUMINOUS. Illuminated by a self-contained power source, other than batteries, and operated independently of external power sources.

❖ Self-luminous products do not need an outside light source to charge them like photoluminescent materials do. Products utilized to meet the requirements for luminous egress path markings in high-rise buildings (see Sections 403.5.5 and 1025) or exit signs (see Section 1013.5) may be photoluminescent or self-luminous. A variety of materials can comply with the referenced standards for egress path markings (UL 1994 and ASTM E2072) and for signs (UL 924).

SELF-PRESERVATION, INCAPABLE OF. See "Incapable of self-preservation."

SELF-SERVICE STORAGE FACILITY. Real property designed and used for the purpose of renting or leasing individual storage spaces to customers for the purpose of storing and removing personal property on a self-service basis.

❖ A portion or space within these facilities can be rented by persons to store personal property. Movement of items into and out of the space is handled by the individual.

[F] SERVICE CORRIDOR. A fully enclosed passage used for transporting *HPM* and purposes other than required *means of egress*.

❖ Though HPM facility occupants may be exposed to limited HPM quantities during the course of their employment, their means of egress are protected from the HPM hazards by confining the HPM being transferred to its own passageway. A service corridor is only required when the HPM must be carried from a storage room or external area to a fabrication area through a passageway.

SERVICE ENTRANCE. An entrance intended primarily for delivery of goods or services.

❖ This entrance is utilized primarily for accepting or sending deliveries of goods and services. Often this entrance is directly associated with a loading dock, and is not considered a public or restricted entrance (see the commentary for the definitions of "Service entrance" and "Public entrance" and to Section 1105.1.5).

SHAFT. An enclosed space extending through one or more *stories* of a building, connecting vertical openings in successive floors, or floors and roof.

❖ Shafts are successive openings in the floors. A shaft is required to be enclosed with fire-resistance-rated assemblies to help prevent the vertical spread of fire and resist the spread of products of combustion from story to story. Provisions for vertical shafts are found in Section 713. These provisions are applicable to vertical openings required to be enclosed in fire-resistant shaft construction, such as for elevators and enclosed exit stairways.

SHAFT ENCLOSURE. The walls or construction forming the boundaries of a *shaft*.

❖ Fire-resistance-rated walls forming shaft enclosures must be constructed as fire barrier walls in accordance with Section 707. Usually, vertical ducts penetrating multiple floors or buildings are required to be in shaft enclosures. Unlike a common chase wall, a shaft wall must be fire-resistance rated from the room side and from the shaft side.

[BS] SHALLOW FOUNDATION. A shallow foundation is an individual or strip footing, a mat foundation, a slab-on-grade foundation or a similar foundation element.

❖ Chapter 18 identifies two major classifications for foundations; either shallow or deep. This definition

INTERNATIONAL CODE COUNCIL®
Copyright © 2015 ICC. ALL RIGHTS RESERVED. Accessed by David Dammon on Jun 21, 2017 12:30:52 PM pursuant to License Agreement with ICC. No further reproduction or distribution authorized. ANY UNAUTHORIZED REPRODUCTION OR DISTRIBUTION IS A VIOLATION OF THE FEDERAL COPYRIGHT ACT AND THE LICENSE AGREEMENT, AND SUBJECT TO CIVIL AND CRIMINAL PENALTIES THEREUNDER.

clarifies the type of foundations that are considered to be shallow foundations. All others are, by default, considered to be deep foundations.

[BS] SHEAR WALL (for Chapter 23). A wall designed to resist lateral forces parallel to the plane of a wall.

❖ Shear walls are the supporting elements for the lateral forces that are applied to a floor or roof diaphragm. They function structurally to provide a path for these loads to the foundation. Typically in wood framing these walls are framed with studs and have wood structural panel sheathing attached to the outside using specific nailing patterns to provide the necessary strength and stiffness. They also may have a tie-down attached at either or both ends of the wall to prevent overturning. Guidance for design of wood shear walls can be found in APA Research Report 154.

Shear wall, perforated. A wood structural panel sheathed wall with openings, that has not been specifically designed and detailed for force transfer around openings.

❖ This term refers to shear walls that are designed by using the provisions of ANSI/AWC *Special Design Provisions for Wind and Seismic* (SDPWS) as an alternative to the traditional segmented shear wall design methodology. Aspect ratio limits apply to shear wall segments within the perforated shear wall as described by the definition of "Perforated shear wall segment." This method of shear wall design utilizes empirically determined reductions of wood structural panel shear wall capacities that are based on the maximum opening height, as well as the percentage of a particular shear wall that qualifies as a perforated shear wall segment. This method recognizes the strength and stiffness of sheathed areas above and below openings without the need to specifically design and detail for force transfer around the openings. It is not expected that sheathed wall areas above and below openings behave as coupling beams acting end to end, but rather that they provide local restraint at their ends. As a consequence, significantly reduced capacities are attributed to interior perforated shear wall segments with limited overturning restraint. Further background on the development of provisions for perforated shear walls and example problems are provided in the National Earthquake Hazards Reduction Program (NEHRP) *Recommended Provisions for Seismic Regulations for New Buildings and Other Structures*, Part 2 Commentary (FEMA 450-2). Other resources and articles on perforated shear wall design are available from the American Wood Council at www.awc.org.

Shear wall segment, perforated. A section of shear wall with full-height sheathing that meets the height-to-width ratio limits of Section 4.3.4 of AWC SDPWS.

❖ This term refers to a fully sheathed portion of a perforated shear wall that also meets the limit on height-to-width ratio. Only these portions of the perforated shear wall are considered in determining the percentage of full-height sheathing.

[BS] SHINGLE FASHION. A method of installing roof or wall coverings, water-resistive barriers, flashing or other building components such that upper layers of material are placed overlapping lower layers of material to provide for drainage via gravity and moisture control.

❖ This term is used to describe the required method of applying moisture control layers such as roof underlayment and water-resistive barriers to the building. The intent is to direct the user to place upper layers of material lapping over lower layers of material, in the fashion of placing roof shingles, so moisture is provided with a clear path to drain down and away from the building.

[BS] SINGLE-PLY MEMBRANE. A roofing membrane that is field applied using one layer of membrane material (either homogeneous or composite) rather than multiple layers.

❖ This is a flexible or semiflexible roof covering or waterproofing layer, whose primary function is the exclusion of water.

[F] SINGLE-STATION SMOKE ALARM. An assembly incorporating the detector, the control equipment and the alarm-sounding device in one unit, operated from a power supply either in the unit or obtained at the point of installation.

❖ A single-station smoke alarm is a self-contained alarm device that detects visible or invisible particles of combustion. Its function is to detect a fire in the immediate area of the detector location. Single-station smoke alarms are individual units with the capability to stand alone. Where single-station smoke alarms are interconnected with other single-station devices, they would be considered a multiple-station smoke alarm system. Single-station smoke alarms are not capable of notifying or controlling any other fire protection equipment or systems. They may be battery powered, directly connected to the building power supply, or a combination of both. Single-station smoke alarms must be built to comply with UL 217, and are to be installed as required by Section 907.2.11.

SITE. A parcel of land bounded by a *lot line* or a designated portion of a public right-of-way.

❖ A site, for purposes of accessibility requirements, is the same as that which is considered in the application of other code requirements. The property within the boundaries of the site is under the control of the owner. The owner can be held responsible for code compliance of the site and all facilities on it. Legal property lines do not always constitute site boundaries (e.g., malls, condominiums, townhouses). A site could contain multiple legal "lot" divisions.

INTERNATIONAL CODE COUNCIL®
Copyright © 2015 ICC. ALL RIGHTS RESERVED. Accessed by David Dammon on Jun 21, 2017 12:30:52 PM pursuant to License Agreement with ICC. No further reproduction or distribution authorized. ANY UNAUTHORIZED REPRODUCTION OR DISTRIBUTION IS A VIOLATION OF THE FEDERAL COPYRIGHT ACT AND THE LICENSE AGREEMENT, AND SUBJECT TO CIVIL AND CRIMINAL PENALTIES THEREUNDER.

[BS] SITE CLASS. A classification assigned to a site based on the types of soils present and their engineering properties as defined in Section 1613.3.2.

❖ This definition is necessary because the earthquake load on a structure is greatly affected by the soil at the site. There are six site classes in the provisions that are referenced in Section 1613.3.2.

[BS] SITE COEFFICIENTS. The values of F_a and F_v indicated in Tables 1613.3.3(1) and 1613.3.3(2), respectively.

❖ The site coefficients F_a and F_v are used to adjust the mapped ground motions to account for the characteristics of the site's soil profile when determining the soil-adjusted earthquake spectral response accelerations in Section 1613.3.3. These coefficients are functions of the soil (site class), as well as the seismicity at the site of the structure.

SITE-FABRICATED STRETCH SYSTEM. A system, fabricated on site and intended for acoustical, tackable or aesthetic purposes, that is composed of three elements:

1. A frame (constructed of plastic, wood, metal or other material) used to hold fabric in place;
2. A core material (infill, with the correct properties for the application); and
3. An outside layer, composed of a textile, fabric or vinyl, that is stretched taut and held in place by tension or mechanical fasteners via the frame.

❖ Site-fabricated stretch systems are interior finish materials that are pulled taut across walls or ceilings with a frame that holds a fabric and core. These systems are now being used extensively because they can stretch to cover decorative walls and ceilings with unusual looks and shapes. The systems consist of three parts: a fabric (or vinyl), a frame and an infill core material. This type of product is not exclusive to any particular manufacturer. It is important to point out that these materials are not curtains or drapes because they are not free hanging (see commentary, Section 803.10).

SKYLIGHT, UNIT. A factory-assembled, glazed fenestration unit, containing one panel of glazing material that allows for natural lighting through an opening in the *roof assembly* while preserving the weather-resistant barrier of the roof.

❖ This is a specific type of sloped glazing assembly that is factory assembled. The code contains specific provisions that are appropriate for this type of building component. Factory-assembled units, as opposed to site-built skylights, can be designed, tested and rated as one component that incorporates both glazing and framing, if applicable. The individual components of site-built glazing must be designed to resist the design loads of the codes individually, and are not usually rated as an assembly.

SKYLIGHTS AND SLOPED GLAZING. Glass or other transparent or translucent glazing material installed at a slope of 15 degrees (0.26 rad) or more from vertical. Glazing material in skylights, including *unit skylights*, *tubular daylighting devices*, solariums, *sunrooms*, roofs and sloped walls, are included in this definition.

❖ The code regulates skylights and sloped glazing since their failure could result in injury and building damage (see Section 2405 for the code requirements). Fenestration is a key element in a building's thermal envelope.

SLEEPING UNIT. A room or space in which people sleep, which can also include permanent provisions for living, eating, and either sanitation or kitchen facilities but not both. Such rooms and spaces that are also part of a *dwelling unit* are not sleeping units.

❖ This definition is included to coordinate the *Fair Housing Act Guidelines* with the code. The definition for "Sleeping unit" clarifies the differences between sleeping units and dwelling units. In addition, using the term "sleeping unit" for spaces where people sleep will replace a multitude of other terms (i.e., patient room, cell, guestroom) so that there is consistent application across occupancies. Some examples of sleeping units are hotel guest rooms; dormitories; bedrooms in boarding houses; patient sleeping rooms in hospitals, nursing homes or assisted living facilities; or housing cells in a jail. Another example would be a studio apartment with a kitchenette (i.e., countertop microwave, sink, refrigerator). Since the cooking arrangements are not the traditional permanent appliances (i.e., a cooktop, range or oven), this configuration would be considered a sleeping unit, and not a dwelling unit. As defined in the code, a "Dwelling unit" must contain permanent facilities for living, sleeping, eating, cooking and sanitation.

[F] SMOKE ALARM. A single- or multiple-station alarm responsive to smoke. See "Multiple-station smoke alarm" and "Single-station smoke alarm."

❖ This is a general term that applies to both single- and multiple-station smoke alarms that are not part of an automatic fire detection system. It is the generic term for any device that both detects the products of combustion and initiates an alarm signal for occupant notification.

SMOKE BARRIER. A continuous membrane, either vertical or horizontal, such as a wall, floor or ceiling assembly, that is designed and constructed to restrict the movement of smoke.

❖ A smoke barrier is a fire-resistance-rated assembly that is different from a fire partition, fire barrier or fire wall. Smoke barriers include walls and floor/ceiling assemblies that are constructed with a 1-hour fire-resistance rating and are one of the components in a smoke compartment. In Group I-2 and I-3 occupancies, the smoke barriers are intended to create adjacent smoke compartments to which building occupants can be safely and promptly relocated during a fire, thus preventing the need to have complete and immediate egress from the building. For these occupancies, complete egress from the building would not be practical in most cases, due to restric-

INTERNATIONAL CODE COUNCIL®
Copyright © 2015 ICC. ALL RIGHTS RESERVED. Accessed by David Dammon on Jun 21, 2017 12:30:52 PM pursuant to License Agreement with ICC. No further reproduction or distribution authorized. ANY UNAUTHORIZED REPRODUCTION OR DISTRIBUTION IS A VIOLATION OF THE FEDERAL COPYRIGHT ACT AND THE LICENSE AGREEMENT, AND SUBJECT TO CIVIL AND CRIMINAL PENALTIES THEREUNDER.

tions on the mobility of the occupants. To maintain tenability in the adjacent smoke compartment, the smoke barrier is therefore intended to resist the spread of fire and hinder the movement of smoke. Smoke barriers are also used to compartment a building into separate smoke control zones when using the provisions of Section 909. The construction requirements for a smoke barrier provide resistance to the transmission of smoke [see Commentary Figure 202(36) and Section 709].

SMOKE COMPARTMENT. A space within a building enclosed by *smoke barriers* on all sides, including the top and bottom.

❖ Smoke compartments create spaces that protect occupants from the products of combustion produced by a fire in an adjacent smoke compartment and restrict smoke to the compartment of fire origin.

SMOKE DAMPER. A *listed* device installed in ducts and air transfer openings designed to resist the passage of smoke. The device is installed to operate *automatically*, controlled by a smoke detection system, and where required, is capable of being positioned from a *fire command center*.

❖ See the commentary for all dampers under the definition of "Damper."

[F] SMOKE DETECTOR. A *listed* device that senses visible or invisible particles of combustion.

❖ These devices are considered early-warning devices and have saved many people from smoke inhalation and burns. Smoke detectors have a wide range of uses, from sophisticated fire detection systems for industrial and commercial uses to residential. A smoke detector is a device, typically listed in accordance with UL 268, that activates a fire alarm system. These system smoke detectors contain only the components required to detect the products of combustion and activate a fire alarm system and are, therefore, different from single- and multiple-station smoke alarms.

Smoke detectors typically consist of two types: ionization and photoelectric. An ionization detector contains a small amount of radioactive material that ionizes the air in a sensing chamber and causes a current to flow through the air between two charged electrodes. When smoke enters the chamber, the particles cause a reduction in the current. When the level of conductance decreases to a preset level, the detector responds with an alarm.

A photoelectric smoke detector consists primarily of a light source, a light beam and a photosensitive device. When smoke particles enter the light beam, they reduce the light intensity in the photosensitive device. When obscuration reaches a preset level, the detector initiates an alarm.

SMOKE-DEVELOPED INDEX. A comparative measure, expressed as a dimensionless number, derived from measurements of smoke obscuration versus time for a material tested in accordance with ASTM E84.

❖ The ASTM E84 test method of measuring the density of smoke emitted from combustible materials determines the smoke-developed index. This value is only comparative and provides only a relative understanding of the smoke generation potential of a material. The smoke-developed index is sometimes abbreviated as SDI.

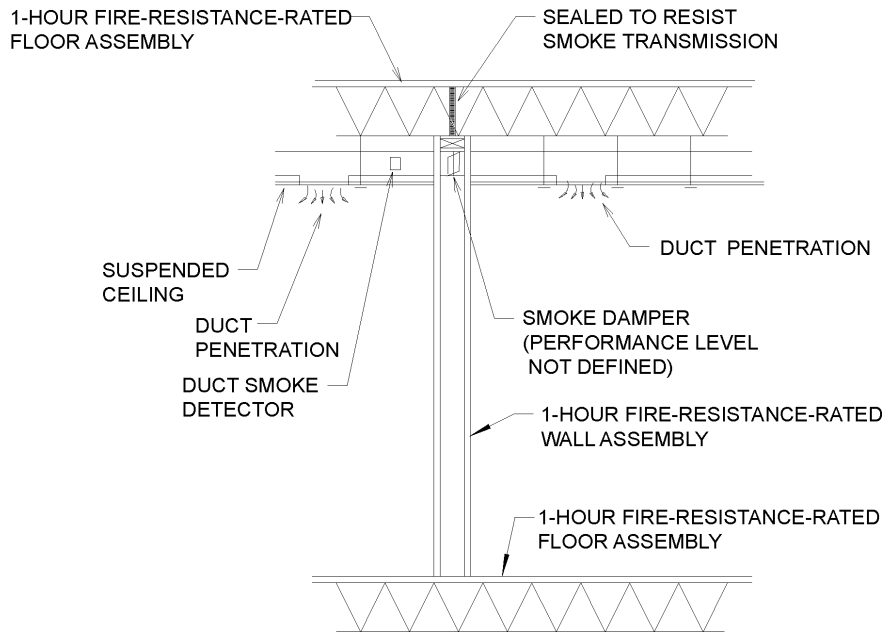

Figure 202(36)
SMOKE BARRIER

INTERNATIONAL CODE COUNCIL®
Copyright © 2015 ICC. ALL RIGHTS RESERVED. Accessed by David Dammon on Jun 21, 2017 12:30:52 PM pursuant to License Agreement with ICC. No further reproduction or distribution authorized. ANY UNAUTHORIZED REPRODUCTION OR DISTRIBUTION IS A VIOLATION OF THE FEDERAL COPYRIGHT ACT AND THE LICENSE AGREEMENT, AND SUBJECT TO CIVIL AND CRIMINAL PENALTIES THEREUNDER.

SMOKE-PROTECTED ASSEMBLY SEATING. Seating served by *means of egress* that is not subject to smoke accumulation within or under a structure.

❖ An example of smoke-protected assembly seating is an open outdoor grandstand or an indoor arena with a smoke control system. The code has less stringent requirements for certain aspects of smoke-protected assembly seating than for seating that is not smoke protected, since occupants are subject to less hazard from the accumulation of smoke and fumes during a fire event. For example, an assembly dead-end aisle is permitted to be longer for a smoke-protected assembly area. For smoke control system requirements, see Section 909.

SMOKEPROOF ENCLOSURE. An *exit stairway* designed and constructed so that the movement of the products of combustion produced by a fire occurring in any part of the building into the enclosure is limited.

❖ A smokeproof enclosure is intended to provide an effective barrier to the entry of smoke into an exit stairway, thereby offering an additional level of protection for occupants of high-rise and underground structures.

[F] SOLID. A material that has a melting point, decomposes or sublimes at a temperature greater than 68°F (20°C).

❖ The temperature at which a solid melts is the melting point. A material will begin to melt as heat is added to it and, thus, eventually change to a liquid state.

SPECIAL AMUSEMENT BUILDING. A special amusement building is any temporary or permanent building or portion thereof that is occupied for amusement, entertainment or educational purposes and that contains a device or system that conveys passengers or provides a walkway along, around or over a course in any direction so arranged that the *means of egress* path is not readily apparent due to visual or audio distractions or is intentionally confounded or is not readily available because of the nature of the attraction or mode of conveyance through the building or structure.

❖ In general, a special amusement building is a building or portion thereof in which people gather (thus, an assembly occupancy) and in which egress is either not readily apparent due to distractions, is intentionally confounded (e.g., a maze) or is not readily available. The definition includes all such facilities, including portable and temporary structures. The hazard associated with such buildings is not related to the permanence or length of use; therefore, seasonal uses (such as haunted houses at Halloween) and portable uses (carnival rides) are included if they meet the criteria in the definition.

[BS] SPECIAL FLOOD HAZARD AREA. The land area subject to flood hazards and shown on a *Flood Insurance Rate Map* or other flood hazard map as Zone A, AE, A1-30, A99, AR, AO, AH, V, VO, VE or V1-30.

❖ This term is used in the definition of "Flood insurance study" and in Section 1612.3, in which the flood hazard area is established. The special flood hazard area shown on maps prepared by FEMA is the area associated with the base flood.

[BS] SPECIAL INSPECTION. Inspection of construction requiring the expertise of an *approved special inspector* in order to ensure compliance with this code and the *approved construction documents*.

❖ This category of inspection is intended to apply to those material installations that require a special level of knowledge and attention. For example, special inspections are required for the installation of high-strength bolts, welded connections, concrete reinforcement, prestressed concrete, fabrication of laminated wood structural elements and pile installations to comply with the contract documents and the standards under which they are assembled.

Continuous special inspection. Special inspection by the *special inspector* who is present when and where the work to be inspected is being performed.

❖ Continuous special inspection is the constant monitoring by a special inspector of specific tasks. These inspections must be carried out continuously over the duration of the particular tasks. "Full-time" should not be construed as requiring the special inspector to be present when these tasks are not being performed.

Periodic special inspection. Special inspection by the *special inspector* who is intermittently present where the work to be inspected has been or is being performed.

❖ Periodic special inspection allows intermittent monitoring of specified tasks designated in the statement of special inspections as requiring periodic inspection. To avoid misunderstandings, the frequency or timing of these inspections should be established before a permit is issued.

[BS] SPECIAL INSPECTOR. A qualified person employed or retained by an *approved* agency and *approved* by the *building official* as having the competence necessary to inspect a particular type of construction requiring *special inspection.*

❖ This definition facilitates the application of Chapter 17.

[BS] SPECIAL STRUCTURAL WALL. See Section 1905.1.1.

❖ This definition is a modification of ACI 318 text and is therefore located in Section 1905.

[BS] SPECIFIED COMPRESSIVE STRENGTH OF MASONRY, f'_m. Minimum compressive strength, expressed as force per unit of net cross-sectional area, required of the *masonry* used in construction by the *approved construction documents*, and upon which the project design is based. Whenever the quantity f'_m is under the radical sign, the square root of numerical value only is intended and the result has units of pounds per square inch (psi) (MPa).

❖ Engineered design of structural masonry is based on the specified compressive strength of the masonry, f'_m. This specified strength is required to be shown on the approved construction documents. Strength of

INTERNATIONAL CODE COUNCIL®
Copyright © 2015 ICC. ALL RIGHTS RESERVED. Accessed by David Dammon on Jun 21, 2017 12:30:52 PM pursuant to License Agreement with ICC. No further reproduction or distribution authorized. ANY UNAUTHORIZED REPRODUCTION OR DISTRIBUTION IS A VIOLATION OF THE FEDERAL COPYRIGHT ACT AND THE LICENSE AGREEMENT, AND SUBJECT TO CIVIL AND CRIMINAL PENALTIES THEREUNDER.

the constructed masonry, determined by the unit strength method or prism strength method, is required to equal or exceed the specified compressive strength of masonry.

[BS] SPLICE. The result of a factory and/or field method of joining or connecting two or more lengths of a *fire-resistant joint system* into a continuous entity.

❖ In many instances, the actual length of a joint required to be protected by a fire-resistant joint system exceeds the length of the joint system, especially when a prefabricated system is used. When two or more lengths of a joint system are necessary to protect a joint, the ends of each section must be joined by a splice to maintain the fire-resistive integrity of the assembly. Splices may be either factory or field installed, but in either case, the splice must be tested in accordance with UL 2079.

SPORT ACTIVITY, AREA OF. See "Area of sport activity."

SPRAYED FIRE-RESISTANT MATERIALS. Cementitious or fibrous materials that are sprayed to provide fire-resistant protection of the substrates.

❖ The cementitious or fibrous material is pneumatically projected onto a surface such that the density, thickness and cohesion/adhesion of the material will provide fire resistance to the surface.

STAGE. A space within a building utilized for entertainment or presentations, which includes overhead hanging curtains, drops, scenery or stage effects other than lighting and sound.

❖ The building feature known as a "stage" is defined as the area or space where the performers are located. The presentation area is usually elevated to provide clear sightlines for the audience. The stage area also includes the wing areas and backstage areas where curtains and scenery are placed.

STAIR. A change in elevation, consisting of one or more risers.

❖ All steps, even a single step, are defined as a stair. This makes the stair requirements applicable to all steps unless specifically exempt in the code.

STAIRWAY. One or more *flights* of *stairs*, either exterior or interior, with the necessary landings and platforms connecting them, to form a continuous and uninterrupted passage from one level to another.

❖ It is important to note that this definition characterizes a stairway as connecting one level to another. The term "level" is not to be confused with "story." Steps that connect two levels, one of which is not considered a "story" of the structure, would be considered a stairway. For example, a set of steps between the basement level in an areaway and the outside ground level would be considered a stairway. A series of steps between the floor of a story and a mezzanine within that story would also be considered a stairway (see definitions for "Flight," "Exit access stairway," "Exterior exit stairway," "Interior exit stairway" and Sections 1011, 1019, 1023 and 1027).

STAIRWAY, EXIT ACCESS. See "Exit access stairway."

STAIRWAY, EXTERIOR EXIT. See "Exterior exit stairway."

STAIRWAY, INTERIOR EXIT. See "Interior exit stairway."

STAIRWAY, SCISSOR. See "Scissor stairway."

STAIRWAY, SPIRAL. A *stairway* having a closed circular form in its plan view with uniform section-shaped treads attached to and radiating from a minimum-diameter supporting column.

❖ Spiral stairways are permitted as part of a means of egress in limited circumstances given in Section 1011.10. Spiral staircases could be used for supplemental/convenience stairways in other locations. Spiral stairways are commonly used where a small number of occupants use the stairway and the floor space for the stair is very limited. Spiral stairways are typically supported by a center pole. Requirements are found with stairways in Section 1011.10.

[F] STANDBY POWER SYSTEM. A source of automatic electric power of a required capacity and duration to operate required building, hazardous materials or ventilation systems in the event of a failure of the primary power. Standby power systems are required for electrical loads where interruption of the primary power could create hazards or hamper rescue or fire-fighting operations.

❖ Section 2702 of the code mandates the installation of emergency power systems and standby power systems for various buildings and occupancies in accordance with the IFC and NFPA 70, 110 and 111. This definition is consistent with definitions in NFPA 110 and NFPA 111 and is intended to provide clarity for the fire code official as to which systems are considered to be standby power systems. A primary difference between emergency and standby power systems is that emergency power systems are essentially life safety systems (e.g., exit signage and egress illumination), whereas standby power systems focus more on the continued operation of critical equipment in a building (e.g., elevators, fire pumps). Another difference between the two is the time limit within which the power supply activates. More specifically, emergency power is available in 10 seconds after primary power fails, whereas standby power is available in 60 seconds. Both types of system are required to operate for a minimum of two hours under full design load unless otherwise indicated in Section 2702. Standby power systems are required for the following systems or features, among others:

1. Elevator and platform lift operation.
2. Emergency responder radio coverage systems.
3. Horizontal sliding exit doors.

INTERNATIONAL CODE COUNCIL®
Copyright © 2015 ICC. ALL RIGHTS RESERVED. Accessed by David Dammon on Jun 21, 2017 12:30:52 PM pursuant to License Agreement with ICC. No further reproduction or distribution authorized. ANY UNAUTHORIZED REPRODUCTION OR DISTRIBUTION IS A VIOLATION OF THE FEDERAL COPYRIGHT ACT AND THE LICENSE AGREEMENT, AND SUBJECT TO CIVIL AND CRIMINAL PENALTIES THEREUNDER.

4. Smoke control systems.
5. High-rise building fire command centers.

See also the commentary to Section 202, the definition of "Emergency power system" and Section 2702.

[F] STANDPIPE SYSTEM, CLASSES OF. Standpipe classes are as follows:

❖ A standpipe system is typically an arrangement of vertical piping located in exit stairways that allows fire-fighting personnel to connect hand-carried hoses at each level to manually extinguish fires. Section 905 and NFPA 14 recognize three different classes of standpipe systems. For a further discussion of standpipe classes and types, see the commentary to Section 905.

Class I system. A system providing $2^1/_2$-inch (64 mm) hose connections to supply water for use by fire departments and those trained in handling heavy fire streams.

❖ A Class I standpipe system is intended for use by trained fire service personnel as a readily available water source for manual fire-fighting operations. A Class I standpipe system is equipped with only $2^1/_2$-inch (64 mm) hose connections to allow the fire service to attach the appropriate hose and nozzles. A Class I standpipe system is not equipped with hose stations, which include a cabinet, hose and nozzle.

Class II system. A system providing $1^1/_2$-inch (38 mm) hose stations to supply water for use primarily by the building occupants or by the fire department during initial response.

❖ A Class II standpipe system is intended for use by building occupants or by the fire department for manual suppression. The hose stations defined in NFPA 14 as part of the Class II standpipe system include a hose rack, hose nozzle, hose and hose connection. The intent of providing the hose is for use by properly trained personnel. Occupant-use hose stations should only be provided where they can be used by people who have been properly trained in the use of the hose and nozzle.

Class III system. A system providing $1^1/_2$-inch (38 mm) hose stations to supply water for use by building occupants and $2^1/_2$-inch (64 mm) hose connections to supply a larger volume of water for use by fire departments and those trained in handling heavy fire streams.

❖ A Class III standpipe system is intended for use by building occupants as well as trained fire service personnel. The $1^1/_2$-inch (38 mm) hose station is for use by the building occupants or fire department for manual fire suppression and the $2^1/_2$-inch (64 mm) hose connection is intended for use primarily by fire service personnel or those who have received training in the use of the larger hoses. Class III systems allow the fire department to select the types of hose necessary based on the fire hazard present. If the fire is effectively controlled by an automatic sprinkler system, the smaller hose size may be all that is necessary for fire department mop-up operations.

[F] STANDPIPE, TYPES OF. Standpipe types are as follows:

❖ Section 905 recognizes five types of standpipe systems. The use of each type of system depends on specific occupancy conditions and the presence of an automatic sprinkler system. For a further discussion of standpipe classes and types, see the commentary to Section 905.

Automatic dry. A dry standpipe system, normally filled with pressurized air, that is arranged through the use of a device, such as dry pipe valve, to admit water into the system piping *automatically* upon the opening of a hose valve. The water supply for an *automatic* dry standpipe system shall be capable of supplying the system demand.

❖ A typical automatic dry standpipe system has an automatic water supply retained by a dry pipe valve. The dry pipe valve clapper is kept in place by air placed in the standpipe system under pressure. Once a standpipe hose valve is opened, the air is released from the system, allowing water to fill the system through the dry pipe valve. This system is traditionally used in areas where the temperature falls below 40°F (4°C), where a wet system could freeze and possibly burst the pipe or simply be unavailable when needed.

Automatic wet. A wet standpipe system that has a water supply that is capable of supplying the system demand *automatically.*

❖ An automatic wet standpipe system is used in locations where the entire system would remain above 40°F (4°C). Because the system is pressurized with water, an immediate release of water occurs when a hose connection valve is opened. This is the most generally preferred type of standpipe but it is not necessarily the required type unless so stipulated.

Manual dry. A dry standpipe system that does not have a permanent water supply attached to the system. Manual dry standpipe systems require water from a fire department pumper to be pumped into the system through the fire department connection in order to meet the system demand.

❖ A manual dry standpipe system is filled with water only when the fire service is present. Typically, the fire service connects the discharge from a water source, such as a pumper truck, to the fire department connection of a manual dry standpipe system. When the fire service has suppressed the fire and is preparing to leave, the system is drained of the remaining water. Manual dry standpipe systems are commonly installed in open parking structures.

Manual wet. A wet standpipe system connected to a water supply for the purpose of maintaining water within the system but does not have a water supply capable of delivering the system demand attached to the system. Manual-

INTERNATIONAL CODE COUNCIL®
Copyright © 2015 ICC. ALL RIGHTS RESERVED. Accessed by David Dammon on Jun 21, 2017 12:30:52 PM pursuant to License Agreement with ICC. No further reproduction or distribution authorized. ANY UNAUTHORIZED REPRODUCTION OR DISTRIBUTION IS A VIOLATION OF THE FEDERAL COPYRIGHT ACT AND THE LICENSE AGREEMENT, AND SUBJECT TO CIVIL AND CRIMINAL PENALTIES THEREUNDER.

wet standpipe systems require water from a fire department pumper (or the like) to be pumped into the system in order to meet the system demand.

❖ A manual wet standpipe system is connected to an automatic water supply, but the supply is not capable of providing the system demand. The manual wet system could be one that is connected with the sprinkler system such that it is capable of supplying the demand for the sprinkler system but not for the standpipe. The standpipe system demand is met when the fire service provides additional water through the fire department connection from the discharge of a water source, such as a pumper truck.

Semiautomatic dry. A dry standpipe system that is arranged through the use of a device, such as a deluge valve, to admit water into the system piping upon activation of a remote control device located at a hose connection. A remote control activation device shall be provided at each hose connection. The water supply for a semiautomatic dry standpipe system shall be capable of supplying the system demand.

❖ This type of dry standpipe is a special design that uses a solenoid-activated valve to retain the automatic water supply. Once the standpipe hose valve is opened, a signal is sent to the deluge valve retaining the automatic water supply to allow water to fill the system. This kind of system is used in areas where the temperature falls below 40°F (4°C), where a wet system would otherwise freeze. As such, there is no semiautomatic wet system type.

START OF CONSTRUCTION. The date of issuance for new construction and *substantial improvements* to *existing structures*, provided the actual start of construction, *repair*, reconstruction, rehabilitation, *addition*, placement or other improvement is within 180 days after the date of issuance. The actual start of construction means the first placement of permanent construction of a building (including a manufactured home) on a site, such as the pouring of a slab or footings, installation of pilings or construction of columns.

Permanent construction does not include land preparation (such as clearing, excavation, grading or filling), the installation of streets or walkways, excavation for a *basement*, footings, piers or foundations, the erection of temporary forms or the installation of accessory buildings such as garages or sheds not occupied as *dwelling units* or not part of the main building. For a *substantial improvement*, the actual "start of construction" means the first *alteration* of any wall, ceiling, floor or other structural part of a building, whether or not that *alteration* affects the external dimensions of the building.

❖ This term is used in the definition of "Existing structure," and is also applicable to substantial improvements of existing buildings and structures.

[BS] STEEL CONSTRUCTION, COLD-FORMED. That type of construction made up entirely or in part of *steel structural members* cold formed to shape from sheet or strip steel such as *roof deck*, floor and wall panels, studs, floor joists, roof joists and other structural elements.

❖ This definition is necessary to distinguish structural members of cold-formed steel from other types of steel elements. A distinguishing characteristic is that the forming operation takes place at room temperature without the addition of heat. Specific references to AISI standards and specifications applicable to cold-formed steel construction are provided in Sections 2210 and 2211.

[BS] STEEL ELEMENT, STRUCTURAL. Any *steel structural member* of a building or structure consisting of rolled shapes, pipe, hollow structural sections, plates, bars, sheets, rods or steel castings other than cold-formed steel or steel joist members.

❖ This definition facilitates application of steel requirements, primarily in Chapter 22, by enabling the code user to distinguish structural steel elements from other types of steel elements. See the references to the AISC standards and specifications for structural steel that are provided in Section 2205.

[BS] STEEL JOIST. Any *steel structural member* of a building or structure made of hot-rolled or cold-formed solid or open-web sections, or riveted or welded bars, strip or sheet steel members, or slotted and expanded, or otherwise deformed rolled sections.

❖ This definition is necessary to distinguish steel joists from other types of steel elements. References to SJI specifications are provided in Section 2207.

STEEP SLOPE. A roof slope greater than two units vertical in 12 units horizontal (17-percent slope).

❖ This is the general criterion for roof slope that is used throughout the code. Slope requirements for specific roof covering materials are specified in Chapter 15.

[BS] STONE MASONRY. *Masonry* composed of field, quarried or *cast stone* units bonded by *mortar*.

❖ Stone masonry is composed of natural marble, limestone, granite, sandstone and slate for building purposes. Ashlar stone is further distinguished as coursed or random. Rubble stone masonry is further distinguished as coursed, random or rough.

[F] STORAGE, HAZARDOUS MATERIALS. The keeping, retention or leaving of hazardous materials in closed containers, tanks, cylinders, or similar vessels; or vessels supplying operations through closed connections to the vessel.

❖ This term refers to all hazardous materials that are essentially being stored in a static condition. The material is considered in use once it is placed into action by either handling or transport or in a closed or open system.

[BS] STORAGE RACKS. Cold-formed or hot-rolled steel structural members which are formed into steel storage racks, including pallet storage racks, movable-shelf racks, rack-sup-

INTERNATIONAL CODE COUNCIL®
Copyright © 2015 ICC. ALL RIGHTS RESERVED. Accessed by David Dammon on Jun 21, 2017 12:30:52 PM pursuant to License Agreement with ICC. No further reproduction or distribution authorized. ANY UNAUTHORIZED REPRODUCTION OR DISTRIBUTION IS A VIOLATION OF THE FEDERAL COPYRIGHT ACT AND THE LICENSE AGREEMENT, AND SUBJECT TO CIVIL AND CRIMINAL PENALTIES THEREUNDER.

ported systems, automated storage and retrieval systems (stacker racks), push-back racks, pallet-flow racks, case-flow racks, pick modules and rack-supported platforms. Other types of racks, such as drive-in or drive-through racks, cantilever racks, portable racks or racks made of materials other than steel, are not considered storage racks for the purpose of this code.

❖ This definition of storage rack is drawn from RMI MH 16.1 in order to facilitate application of code requirements for steel storage racks in Chapters 17 and 22.

[BS] STORM SHELTER. A building, structure or portions thereof, constructed in accordance with ICC 500 and designated for use during a severe wind storm event, such as a hurricane or tornado.

Community storm shelter. A storm shelter not defined as a "Residential storm shelter."

Residential storm shelter. A storm shelter serving occupants of *dwelling units* and having an *occupant load* not exceeding 16 persons.

❖ The significance of the definitions is to distinguish between residential shelters and community shelters. Residential shelters are somewhat more basic than community shelters. A residential shelter allows for less floor area per person than that required for a community shelter because the occupants are presumed to be more familiar with each other. A shelter that serves a group of dwelling units but where the capacity needs to be more than 16 persons would be considered a community storm shelter.

STORY. That portion of a building included between the upper surface of a floor and the upper surface of the floor or roof next above (see "*Basement*," *"Building height," "Grade plane" and* "*Mezzanine*"). A story is measured as the vertical distance from top to top of two successive tiers of beams or finished floor surfaces and, for the topmost story, from the top of the floor finish to the top of the ceiling joists or, where there is not a ceiling, to the top of the roof rafters.

❖ All levels in a building that conform to this description are stories, including basements. A mezzanine is considered part of the story in which it is located. See Chapter 5 for code requirements regarding limitations on the number of stories in a building as a function of the type of construction.

STORY ABOVE GRADE PLANE. Any *story* having its finished floor surface entirely above *grade plane*, or in which the finished surface of the floor next above is:

1. More than 6 feet (1829 mm) above *grade plane*; or
2. More than 12 feet (3658 mm) above the finished ground level at any point.

❖ The determination of the allowed height of a building under Section 504 is based on the number of stories above grade plane (see definitions of "Grade plane," "Height, building" and "Basement"). The code establishes by this definition which stories of a building are those above grade plane. Clearly, it includes those stories that are fully above grade plane. It also includes stories that may be partially below finished ground level, but the finished floor level is more than 6 feet (1829 mm) above grade plane. It also includes those floor levels that, due to an irregular terrain, have a finished floor level more than 12 feet (3658 mm) above finished ground level at any point surrounding the building. Any building level not qualifying as a story above grade plane is, by definition, a basement. See the commentaries for the definitions of "Grade plane," "Height, building" and "Basement" and Commentary Figures 202(7) and 202(23) through (27).

[BS] STRENGTH (For Chapter 21).

❖ In masonry design under Chapter 21 of the code, the term "strength" is used in both general and specific senses. In the general sense, the strength of a member is its capacity to resist internal forces and moments. In the specific sense, strength is further categorized by type. The tensile strength of a member, for instance, refers to how much tensile force the member can support.

In the context of strength design, the force resulting from factored design actions is referred to as the "required strength." An approximation to the "minimum expected" strength of the member is referred to as the "nominal strength" (see the commentary to "Nominal strength"). This nominal strength is then multiplied by a strength reduction factor to account for material, design and construction variabilities to determine the design strength. The design strength must equal or exceed the required strength.

In the context of allowable stress design (ASD), the force resulting from unfactored design loads is referred to as the "applied (actual) force." The anticipated strength would then be reduced by appropriate safety factors to either an allowable stress or an allowable strength (for example, for anchor bolts). This allowable stress or strength is required to equal or exceed the applied (actual) stress or force.

"Design strength," "Nominal strength" and "Required strength" are defined in more detail immediately below. Allowable stresses and strengths are defined in the *Building Code for Masonry Structures* (TMS 402/ACI 530/ASCE 5).

Strength can also refer to the load at which a test specimen fails (for example, prism strength).

Design strength. Nominal strength multiplied by a strength reduction factor.

❖ The strength design procedures of Section 2108 use the term "design strength" to indicate a realistic capacity of a member considering material, design and construction variabilities. The design strength is obtained by multiplying the "nominal strength" by a strength reduction factor. The design strength must equal or exceed the "required strength."

INTERNATIONAL CODE COUNCIL®
Copyright © 2015 ICC. ALL RIGHTS RESERVED. Accessed by David Dammon on Jun 21, 2017 12:30:52 PM pursuant to License Agreement with ICC. No further reproduction or distribution authorized. ANY UNAUTHORIZED REPRODUCTION OR DISTRIBUTION IS A VIOLATION OF THE FEDERAL COPYRIGHT ACT AND THE LICENSE AGREEMENT, AND SUBJECT TO CIVIL AND CRIMINAL PENALTIES THEREUNDER.

Nominal strength. Strength of a member or cross section calculated in accordance with these provisions before application of any strength-reduction factors.

❖ The strength design procedures of Section 2108 use the term "nominal strength" to refer to the capacity of a masonry member, which is determined based on the assumptions contained in Section 2108. It is sometimes referred to as the "expected" strength of the member; however, this is a misnomer. The nominal strength would equal the expected strength if: the masonry member were constructed of materials complying exactly with the minimum material requirements; design equations were perfect; and construction tolerances were zero. Since material strengths commonly exceed minimum requirements, expected strength is often much higher than nominal strength. For instance, Grade 60 reinforcement often has a yield strength of around 66,000 pounds per square inch (psi) (455 MPa), even though the minimum specified yield strength requirement is 60,000 psi (414 MPa). Therefore, the nominal strength is not the expected strength of the member, although it can be grossly classified as the minimum expected strength. Expected strength design is not included in Chapter 21 and is currently beyond the scope of the code. To determine the design strength, the nominal strength is multiplied by a strength reduction factor to account for material, design and construction variability. The design strength is required to equal or exceed the required strength.

Required strength. Strength of a member or cross section required to resist *factored loads*.

❖ In the strength design of masonry (see Section 2108), the required strength is that which corresponds to the factored design loads on the structure. The design strength (nominal strength times the appropriate strength reduction factor) must equal or exceed the required strength.

[BS] STRENGTH (for Chapter 16).

Nominal strength. The capacity of a structure or member to resist the effects of *loads*, as determined by computations using *specified* material strengths and dimensions and equations derived from accepted principles of structural mechanics or by field tests or laboratory tests of scaled models, allowing for modeling effects and differences between laboratory and field conditions.

❖ This definition is needed to apply the structural analysis and structural material design requirements in Chapter 16 and the structural materials requirements in Chapters 19 through 23.

Required strength. Strength of a member, cross section or connection required to resist *factored loads* or related internal moments and forces in such combinations as stipulated by these provisions.

❖ This definition is needed to apply the structural analysis requirements in Chapter 16 and the structural material design requirements in Chapters 19 through 23.

Strength design. A method of proportioning structural members such that the computed forces produced in the members by *factored loads* do not exceed the member design strength [also called "*load and resistance factor design*" (LRFD)]. The term "strength design" is used in the design of concrete and *masonry* structural elements.

❖ This definition describes the strength design method, which is one of the design approaches recognized under the code in Section 1604.1. It is needed to apply the structural analysis requirements in Chapter 16 and the structural material design requirements in Chapters 19 through 23.

[BS] STRUCTURAL COMPOSITE LUMBER. Structural member manufactured using wood elements bonded together with exterior adhesives. Examples of structural composite lumber are:

Laminated strand lumber (LSL). A composite of wood strand elements with wood fibers primarily oriented along the length of the member, where the least dimension of the wood strand elements is 0.10 inch (2.54 mm) or less and their average lengths not less than 150 times the least dimension of the wood strand elements.

Laminated veneer lumber (LVL). A composite of wood *veneer* sheet elements with wood fibers primarily oriented along the length of the member, where the *veneer* element thicknesses are 0.25 inches (6.4 mm) or less.

Oriented strand lumber (OSL). A composite of wood strand elements with wood fibers primarily oriented along the length of the member, where the least dimension of the wood strand elements is 0.10 inches (2.54 mm) or less and their average lengths not less than 75 times and less than 150 times the least dimension of the strand elements.

Parallel strand lumber (PSL). A composite of wood strand elements with wood fibers primarily oriented along the length of the member where the least dimension of the wood strand elements is 0.25 inches (6.4 mm) or less and their average lengths not less than 300 times the least dimension of the wood strand elements.

❖ This definition identifies which engineered wood products are considered structural composite lumber. This facilitates the application of the requirements of Section 2303.1.10, which references ASTM D5456 for determination of structural capacities. The four types are: laminated strand lumber (LSL), laminated veneer lumber (LVL), oriented strand lumber (OSL) and parallel strand lumber (PSL). LSL, OSL and PSL are a composite of wood strand elements with wood fibers primarily oriented along the length of the member. What distinguishes between the three is the least dimension of the wood strand elements and their average lengths. Note that in OSL, the limit on the least dimension of the wood strands is the same as LSL. The average length limit on the wood strand is what distinguishes OSL from LSL. LVL is made of

INTERNATIONAL CODE COUNCIL®
Copyright © 2015 ICC. ALL RIGHTS RESERVED. Accessed by David Dammon on Jun 21, 2017 12:30:52 PM pursuant to License Agreement with ICC. No further reproduction or distribution authorized. ANY UNAUTHORIZED REPRODUCTION OR DISTRIBUTION IS A VIOLATION OF THE FEDERAL COPYRIGHT ACT AND THE LICENSE AGREEMENT, AND SUBJECT TO CIVIL AND CRIMINAL PENALTIES THEREUNDER.

composite wood veneer sheet elements with wood fibers primarily oriented along the length of the member where the thicknesses of the veneers are 0.25 inches (6.4 mm) or less.

[BS] STRUCTURAL GLUED-LAMINATED TIMBER. An engineered, stress-rated product of a timber laminating plant, comprised of assemblies of specially selected and prepared wood laminations in which the grain of all laminations is approximately parallel longitudinally and the laminations are bonded with adhesives.

❖ Structural wood members can be produced by laminating smaller pieces of lumber together in a specific way using glues to create high-performing structural members. Typically, these 2-inch-wide (51 mm) members are arranged in a specific order so that their strength characteristics are used most efficiently. For example, the outer laminations are for tension and compression while the inner laminations are for horizontal shear. Although these members are made of smaller pieces of lumber, they act together to create sizes that are included in the requirements for heavy timber framing members. Section 2303.1.3 references ANSI/APA A 190.1, which specifies the method of manufacturing these members, and the means of identifying their performance capabilities. ASTM D3737 covers procedures for establishing their structural properties.

[BS] STRUCTURAL OBSERVATION. The visual observation of the structural system by a *registered design professional* for general conformance to the *approved construction documents*.

❖ Where required based on wind or seismic hazards, the registered design professional must visit the site to visually determine general conformance to the approved construction documents. Structural observation is an additional tier of inspections and does not substitute for the inspections required by Sections 110 or 1705; or other sections of the code.

[A] STRUCTURE. That which is built or constructed.

❖ This definition is intentionally broad so as to include within its scope, and therefore the scope of the code (see Section 101.2), everything that is built as an improvement to real property. See also the definitions for "Building" and "Area, building" for the difference between a building and structure.

SUBSTANTIAL DAMAGE. Damage of any origin sustained by a structure whereby the cost of restoring the structure to its before-damaged condition would equal or exceed 50 percent of the market value of the structure before the damage occurred.

❖ This term is used in the definition of "Substantial improvement." The work necessary to repair a substantially damaged building qualifies as substantial improvement. A building is substantially damaged if the cost of restoring damage to pre-damage condition equals or exceeds 50 percent of the market value of the structure before the damage occurred. Buildings that are determined to be substantially damaged are required to be brought into compliance with the flood resistant design requirements for new buildings and structures. The market rate for owner labor, volunteer labor, and donated or discounted supplies, if any, must be estimated when determining the cost of repairing or restoring damage (see Section 104.2.1). A substantial damage determination must be made regardless of what causes damage. Buildings may sustain substantial damage due to flood, fire, wind, earthquake, deterioration and other causes. For more guidance, see FEMA P-758.

SUBSTANTIAL IMPROVEMENT. Any *repair*, reconstruction, rehabilitation, *alteration*, *addition* or other improvement of a building or structure, the cost of which equals or exceeds 50 percent of the market value of the structure before the improvement or repair is started. If the structure has sustained *substantial damage*, any *repairs* are considered substantial improvement regardless of the actual *repair* work performed. The term does not, however, include either:

1. Any project for improvement of a building required to correct existing health, sanitary or safety code violations identified by the *building official* and that are the minimum necessary to assure safe living conditions.
2. Any *alteration* of a historic structure provided that the *alteration* will not preclude the structure's continued designation as a historic structure.

❖ One of the long-range objectives of regulating flood hazard areas is to reduce the exposure of older buildings that were built in flood hazard areas before local jurisdictions adopted flood hazard area maps and regulations. Section 105.3 directs the applicant to state the valuation of the proposed work as part of the information submitted to obtain a permit. To make a determination (see Section 104.2.1) as to whether a proposed repair, reconstruction, rehabilitation, addition or improvement constitutes substantial improvement or repair of substantial damage, the building official compares the cost of the proposed work to the market value of the building or structure before the work is started. In order to determine market value, the building official may use the assessed valuation of the building (adjusted as specified by the appropriate appraisal authority) or may require the applicant to provide such information as allowed under Section 105.3. For additional guidance, refer to FEMA P-758 and FEMA P-784, Substantial Damage Estimator (user's manual, workbook and tool).

[BS] SUBSTANTIAL STRUCTURAL DAMAGE. A condition where one or both of the following apply:

1. The vertical elements of the lateral force-resisting system have suffered damage such that the lateral load-carrying capacity of any *story* in any horizontal direction has been reduced by more than 33 percent from its predamage condition.

INTERNATIONAL CODE COUNCIL®
Copyright © 2015 ICC. ALL RIGHTS RESERVED. Accessed by David Dammon on Jun 21, 2017 12:30:52 PM pursuant to License Agreement with ICC. No further reproduction or distribution authorized. ANY UNAUTHORIZED REPRODUCTION OR DISTRIBUTION IS A VIOLATION OF THE FEDERAL COPYRIGHT ACT AND THE LICENSE AGREEMENT, AND SUBJECT TO CIVIL AND CRIMINAL PENALTIES THEREUNDER.

2. The capacity of any vertical component carrying gravity load, or any group of such components, that supports more than 30 percent of the total area of the structure's floors and roofs has been reduced more than 20 percent from its predamage condition and the remaining capacity of such affected elements, with respect to all dead and *live loads*, is less than 75 percent of that required by this code for new buildings of similar structure, purpose and location.

❖ This definition gives the specific parameters that determine whether a building has sustained substantial structural damage. The IEBC provides direction on how such damage must be addressed.

[E] SUNROOM. A one-*story* structure attached to a building with a glazing area in excess of 40 percent of the gross area of the structure's *exterior walls* and roof.

❖ This terminology is provided in order to address separate requirements for sunrooms with regard to ventilation of adjoining spaces (see Section 1203.5.1.1). Defined in previous editions as "sunroom addition," sunrooms can be either an addition or part of the original construction. Provisions in Chapter 12 are applicable regardless of whether the sunroom is an addition to an existing structure or is part of the original design and construction. Sunrooms that are provided with "thermal isolation" are also addressed in the *International Energy Conservation Code*.

[F] SUPERVISING STATION. A facility that receives signals and at which personnel are in attendance at all times to respond to these signals.

❖ The supervising station is the location where all fire protection-system-related signals are sent and where trained personnel are present to respond to an emergency. The supervising station may be an approved central station, a remote supervising station, a proprietary supervising station or other constantly attended location approved by the fire code official. Each type of supervising station must comply with the applicable specific provisions described in NFPA 72.

[F] SUPERVISORY SERVICE. The service required to monitor performance of guard tours and the operative condition of fixed suppression systems or other systems for the protection of life and property.

❖ The supervisory service is responsible for maintaining the integrity of the fire protection system by notifying the supervising station of a change in protection system status.

Guard tours are recognized as a nonrequired (voluntary) system. If a guard tour is provided, the signals from that system can be transmitted through the supervisory service to the supervision station. Guard tours are not a required part of a fire alarm system.

[F] SUPERVISORY SIGNAL. A signal indicating the need of action in connection with the supervision of guard tours, the fire suppression systems or equipment or the maintenance features of related systems.

❖ Activation of a supervisory signal-initiating device transmits a signal indicating that a change in the status of the fire protection system has occurred and that action must be taken. These signals are the basis for the actions taken by the attendant at the supervising station. These signals do not indicate an emergency condition but indicate that a portion of the system is not functioning in the manner in which it should and that if the condition is not corrected it could impair the ability of the fire protection system to perform properly. A supervisory signal is also a part of the nonrequired guard tour system.

[F] SUPERVISORY SIGNAL-INITIATING DEVICE. An initiation device, such as a valve supervisory switch, water-level indicator or low-air pressure switch on a dry-pipe sprinkler system, whose change of state signals an off-normal condition and its restoration to normal of a fire protection or life safety system, or a need for action in connection with guard tours, fire suppression systems or equipment or maintenance features of related systems.

❖ The supervisory signal-initiating device detects a change in protection system status. Examples of a supervisory signal-initiating device include a flow switch to detect movement of water through the system and a tamper switch to detect when someone shuts off a water control valve.

[BS] SUSCEPTIBLE BAY. A roof or portion thereof with:

1. A slope less than $^1/_4$-inch per foot (0.0208 rad); or
2. On which water is impounded, in whole or in part, and the secondary drainage system is functional but the primary drainage system is blocked.

A roof surface with a slope of $^1/_4$-inch per foot (0.0208 rad) or greater towards points of free drainage is not a susceptible bay.

❖ This term is needed to identify portions of roofs that must be investigated for the possibility of progressive deflections due to ponding.

SWIMMING POOL. Any structure intended for swimming, recreational bathing or wading that contains water over 24 inches (610 mm) deep. This includes in-ground, above-ground and on-ground pools; hot tubs; spas and fixed-in-place wading pools.

❖ Section 3109 provides reference to the ISPSC, which provides requirements for these facilities.

INTERNATIONAL CODE COUNCIL®
Copyright © 2015 ICC. ALL RIGHTS RESERVED. Accessed by David Dammon on Jun 21, 2017 12:30:52 PM pursuant to License Agreement with ICC. No further reproduction or distribution authorized. ANY UNAUTHORIZED REPRODUCTION OR DISTRIBUTION IS A VIOLATION OF THE FEDERAL COPYRIGHT ACT AND THE LICENSE AGREEMENT, AND SUBJECT TO CIVIL AND CRIMINAL PENALTIES THEREUNDER.

T RATING. The time period that the *penetration firestop system*, including the penetrating item, limits the maximum temperature rise to 325°F (163°C) above its initial temperature through the penetration on the nonfire side when tested in accordance with ASTM E814 or UL 1479.

❖ See the definition of "Through-penetration firestop system." Some through penetrations having a high thermal conductivity (e.g., metal pipes, cables) will not be able to achieve a T rating without some method to prevent the heat from being transmitted from the fire side to the nonfire side. For metallic pipes, insulation must be applied to the through penetrant for some distance on one or, more often, both sides of the fire-resistance-rated assembly. Thus, when a T rating is desired, the seemingly unusual situation can arise of needing to insulate items that would normally not need insulation, such as drain pipes or conduit. Some plastic pipes are also unable to achieve a T rating without some insulation, particularly those used and, therefore, tested as "open" systems, where hot gases from the test furnace are able to flow within the plastic pipe once the pipe burns through. The type and thickness of insulation required, as well as the length over which it must be applied, are all indicated in the through-penetration firestop system listings.

Some highly intumescent firestop products can close (choke down) a plastic pipe early enough during a fire test to prevent hot gases from heating up the pipe from inside, thus allowing plastic pipe through-penetration firestop systems to be developed that have a T rating without the need for any insulation.

To avoid the need for a T rating altogether, through penetrations that pass through floors can be contained within a chase wall (see Section 714.4.1.2 exceptions). It is particularly important for the designer to plan ahead to have through penetrations concealed within a chase wall or located in a shaft in cases where adding insulation to the through penetrant is an undesirable or unacceptable option.

In the case of cable through penetrations, the need for heat dissipation would usually make the application of additional insulating material unacceptable. The few cable through-penetration firestop systems that do have a T rating achieve this by enclosing the cables within some protective enclosure for a distance from the rated assembly, thus allowing any heat transmitted through the cables during fire exposure to be dissipated, resulting in the exposed section of cabling to be cool enough for the duration of the fire test exposure to meet the T rating requirement [see Commentary Figure 202(37)].

Overall, due to the unavoidable difficulty in having a conductive or semiconductive through penetrant obtain a T rating, less than 5 percent of all tested and listed through-penetration firestop systems have a T rating. This is because the T rating indicates that the firestop system is not only capable of stopping the fire, flame and hot gases from passing through the assembly at the penetration as an F rating does, but it also must limit the temperature transfer to the unexposed side of the assembly.

TECHNICAL PRODUCTION AREA. Open elevated areas or spaces intended for entertainment technicians to walk on and occupy for servicing and operating entertainment technology systems and equipment. Galleries, including fly and lighting galleries, gridirons, catwalks, and similar areas are designed for these purposes.

❖ The definition replaces the dated terms and definitions of fly gallery and gridiron. A technical production area encompasses all areas, regardless of their traditional name, used to support entertainment technology from above the performance area. Such areas are sometimes called the backstage. Technical production areas may also be used in venues without stages or platforms, such as sports arenas. Technical production areas are regulated in Section 410.

TENSILE MEMBRANE STRUCTURE. A membrane structure having a shape that is determined by tension in the membrane and the geometry of the support structure. Typically, the structure consists of both flexible elements (e.g., membrane and cables), nonflexible elements (e.g., struts, masts, beams and arches) and the anchorage (e.g., supports and foundations). This includes frame-supported tensile membrane structures.

❖ This definition is associated the requirements in Section 3102.1 and 3102.1.1 for the construction of such structures. These types of structures have specific features and are regulated by ASCE 55. The definition serves as a clarification as to which structures must comply with ASCE 55. See commentary for Section 3102.1.1.

TENT. A structure, enclosure or shelter, with or without sidewalls or drops, constructed of fabric or pliable material supported in any manner except by air or the contents it protects.

❖ Tents can be temporary or permanent structures. When permanent, they are considered membrane-covered structures and are regulated by Section 3102. When erected as temporary enclosures, they are regulated by Section 3103.

[E] THERMAL ISOLATION. A separation of conditioned spaces, between a *sunroom* and a *dwelling unit*, consisting of existing or new walls, doors or windows.

❖ This terminology is needed for the same reason provided in the definition of "Sunroom." A sunroom with thermal isolation according to Section 1203.5 can be a source of natural ventilation.

THERMOPLASTIC MATERIAL. A plastic material that is capable of being repeatedly softened by increase of temperature and hardened by decrease of temperature.

❖ Thermoplastic materials become plastic and deform easily at higher temperatures. Indeed, many of these materials have limited construction value at high temperatures. Examples of thermoplastics are cellulose acetate, nylon, polycarbonates, polyethylene (three

INTERNATIONAL CODE COUNCIL®
Copyright © 2015 ICC. ALL RIGHTS RESERVED. Accessed by David Dammon on Jun 21, 2017 12:30:52 PM pursuant to License Agreement with ICC. No further reproduction or distribution authorized. ANY UNAUTHORIZED REPRODUCTION OR DISTRIBUTION IS A VIOLATION OF THE FEDERAL COPYRIGHT ACT AND THE LICENSE AGREEMENT, AND SUBJECT TO CIVIL AND CRIMINAL PENALTIES THEREUNDER.

different densities), methyl methacrylate (plexiglass), polypropylene, polybutylene, polystyrene, acrylonitrile-butadiene-styrene (ABS), polytetrafluro ethylene (Teflon®), polyvinyl chloride (PVC), chlorinated polyvinyl chloride (CPVC) and polyethylene terephthalate (polyester). Note there are both thermosetting and thermoplastic polyesters. These materials have high thermal expansion coefficients and, while they may burn slowly in a fire, they decompose rapidly to yield a heavy black smoke and acrid, sometimes very toxic, fumes depending on the specific material and burning conditions.

THERMOSETTING MATERIAL. A plastic material that is capable of being changed into a substantially nonreformable product when cured.

❖ This term is the opposite of a thermoplastic material. Common thermosetting plastic includes epoxy, melamine, urea, polyester and polyurethane.

THROUGH PENETRATION. A breach in both sides of a floor, floor-ceiling or wall assembly to accommodate an item passing through the breaches**.**

❖ This term is different from a single "membrane penetration." It defines the situation where an opening (a breach in both membranes of an assembly) is created to accommodate an object that passes completely through an assembly from one side to the other [see Commentary Figure 202(37) for an example of a through penetration]. It is important to realize that this term applies only to an item that passes all the way through the assembly; back-to-back membrane penetrations, such as outlet boxes on each side of a wall assembly, should not be considered a through penetration.

THROUGH-PENETRATION FIRESTOP SYSTEM. An assemblage consisting of a fire-resistance-rated floor, floor-ceiling, or wall assembly, one or more penetrating items pass-

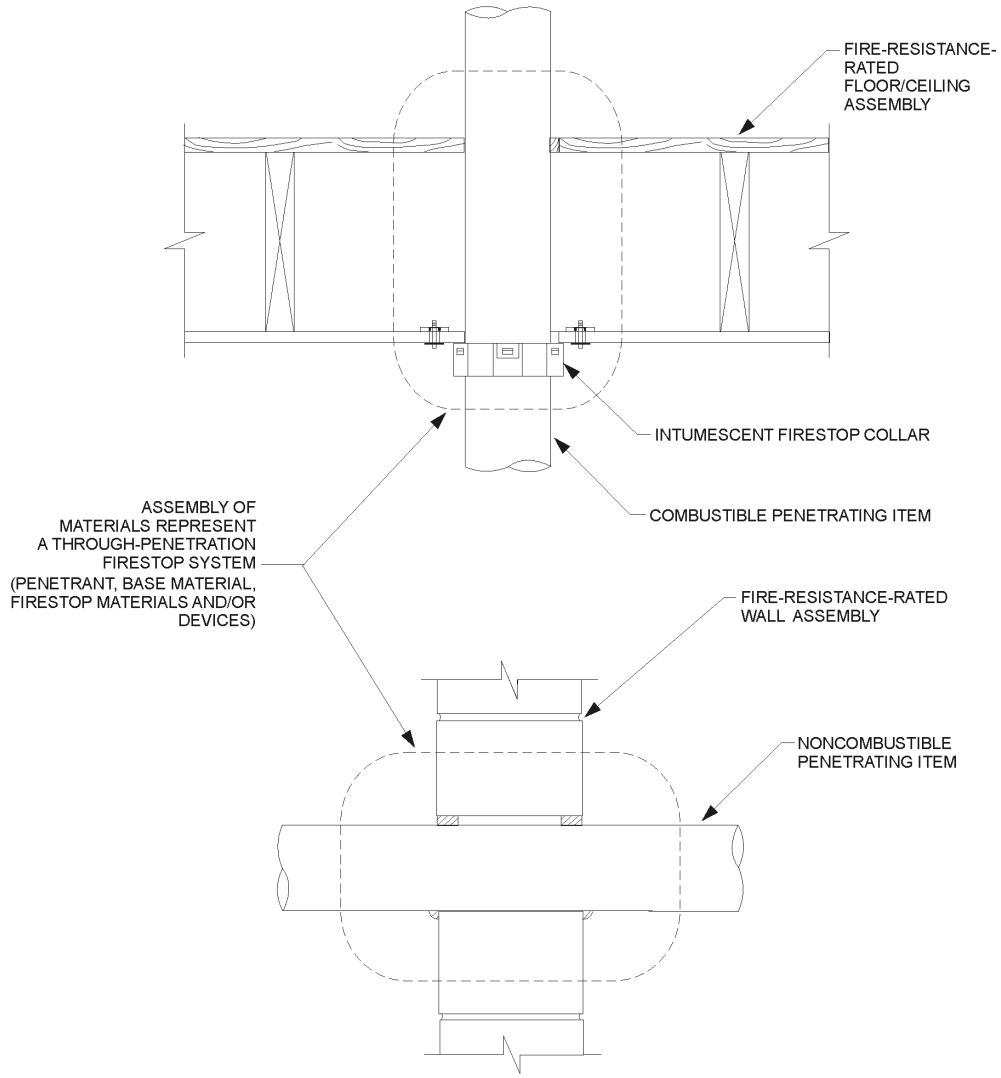

Figure 202(37)
EXAMPLES OF THROUGH-PENETRATION FIRESTOP SYSTEMS

INTERNATIONAL CODE COUNCIL®
Copyright © 2015 ICC. ALL RIGHTS RESERVED. Accessed by David Dammon on Jun 21, 2017 12:30:52 PM pursuant to License Agreement with ICC. No further reproduction or distribution authorized. ANY UNAUTHORIZED REPRODUCTION OR DISTRIBUTION IS A VIOLATION OF THE FEDERAL COPYRIGHT ACT AND THE LICENSE AGREEMENT, AND SUBJECT TO CIVIL AND CRIMINAL PENALTIES THEREUNDER.

ing through the breaches in both sides of the assembly and the materials or devices, or both, installed to resist the spread of fire through the assembly for a prescribed period of time.

❖ One method of protection for penetrations through fire walls, fire barriers, fire partitions and fire-resistance-rated floor/ceiling assemblies is to provide a through-penetration firestop system (see Sections 714.3.1.2 and 714.4.1.2). Through-penetration firestop systems maintain the required protection from the spread of fire, passage of hot gases and transfer of heat. The protection is often provided by an intumescent material. Upon exposure to high temperatures, this material expands as much as eight to 10 times its original volume, forming a high-strength char.

This is one of several types of through-penetration firestop systems available. This definition is based on information from three sources: ASTM E814; a compilation of definitions from ASTM International standards and the *Fire Resistance Directory* by Underwriters Laboratories Inc.

[BS] TIE-DOWN (HOLD-DOWN). A device used to resist uplift of the chords of *shear walls.*

❖ A shear wall resists lateral forces that are typically applied at the top of and parallel to the wall from the floor or roof diaphragm. This load will rack the wall and attempt to turn it over. If the strength of the sheathing and framing is adequate to resist the load and appropriately attached, the sheathing will resist the tendency to rack the wall. To prevent the wall from overturning, the tension chord must be adequately anchored to the foundation or structure below. Anchor bolts in the sill plate are not typically designed to resist these overturning loads. Hold-down devices are often necessary at the ends of the shear wall to resist overturning from high lateral loads due to wind loads or seismic ground motion.

[BS] TIE, WALL. Metal connector that connects *wythes* of *masonry* walls together.

❖ Ties are used to connect adjacent masonry wythes and are subject to requirements for strength, durability and installation. Ties are either adjustable or non-adjustable.

[BS] TILE, STRUCTURAL CLAY. A hollow *masonry unit* composed of burned clay, shale, fire clay or mixture thereof, and having parallel *cells*.

❖ These clay masonry units are produced as end tiles and side tiles, and differ from clay brick by having required cells with thinner webs between them.

[F] TIRES, BULK STORAGE OF. Storage of tires where the area available for storage exceeds 20,000 cubic feet (566 m^3).

❖ This definition describes a storage space that is larger than what would be found in most typical mercantile and storage occupancies. Because of its size and the volume of combustible material it would house, it poses an extraordinary hazard for fire protection.

The volume is based on the legacy code definition, which was based on 10,000 passenger vehicle tires weighing an average of 25 pounds (11 kg) each, rather than the volume of the stored tires. Assuming a 24-inch by 24-inch space (610 mm by 610 mm) for an average passenger vehicle tire and a 6-inch (152 mm) thickness, the result is 20,000 cubic feet (566 m^3):

$$10{,}000 \text{ tires} \times 2 \text{ ft} \times 2 \text{ ft} \times 0.5 \text{ ft} = 20{,}000 \text{ ft}^3$$

The 20,000 cubic feet (566 m^3) represents the actual volume of stored materials based on an equivalent height and area for passenger vehicle tires as shown in the calculation above and does not include circulation area or other portions of the building. Rather, it focuses on how much of the material is present. Although the definition uses the term "area" rather than "volume," it is the volume that becomes the threshold consideration. Still, the area where the tires are stored implies the footprint used for storage. It is not the intent to apply this to areas outside of those used for bulk tire storage.

Buildings used for the bulk storage of tires are classified as Group S-1 occupancies in accordance with Section 311.2. All Group S-1 occupancies, regardless of square footage, are required by Section 903.2.9.2 to be equipped with an NFPA 13 automatic sprinkler system if used for the bulk storage of tires. Chapter 34 of the IFC also requires that bulk tire storage buildings be further designed to comply with NFPA 13, and Chapter 32 of the IFC includes additional requirements for high-piled rubber tire storage as a high-hazard commodity (see commentary, Chapters 32 and 34 of the IFC).

[A] TOWNHOUSE. A single-family *dwelling unit* constructed in a group of three or more attached units in which each unit extends from the foundation to roof and with open space on at least two sides.

❖ This specific configuration of construction is called different things in different parts of the country, such as a rowhouse. A townhouse structure that meets the following four criteria is not regulated by the code, but is regulated by the IRC. Those criteria are:

1. Each unit extends from foundation to roof with no vertical overlap of any parts of adjoining units;
2. Each unit must have open space on at least two sides (either two opposite or two adjoining sides);
3. Each unit must have a separate means of egress; and
4. The building must not exceed three stories above grade plane.

❖ If all of these criteria are met, then according to the exception to Section 101.2, the structure is within

INTERNATIONAL CODE COUNCIL®
Copyright © 2015 ICC. ALL RIGHTS RESERVED. Accessed by David Dammon on Jun 21, 2017 12:30:52 PM pursuant to License Agreement with ICC. No further reproduction or distribution authorized. ANY UNAUTHORIZED REPRODUCTION OR DISTRIBUTION IS A VIOLATION OF THE FEDERAL COPYRIGHT ACT AND THE LICENSE AGREEMENT, AND SUBJECT TO CIVIL AND CRIMINAL PENALTIES THEREUNDER.

scope of the IRC. (It should also be noted that townhouses within the IRC must be separated by a wall or walls meeting specific criteria.) If a structure does not meet these four criteria, it will need to be regulated under the code and will either be classified as a Group R-2 or Group R-3 structure, depending on how the units are separated. A building containing three or more dwelling units is regulated as a Group R-2 occupancy. To be considered a Group R-3, the structure must have one or two dwelling units, or be subdivided by fire walls between every unit or every two units (see Section 310 and the definitions for "Area, building," "Dwelling" and "Dwelling unit"). Finally, the definition of "Townhouse" is not dependent on the presence of individual lots. A townhouse structure could be built with any number of attached units on the same lot, or it could be developed such that a property line lies at each common wall separating two units (see definition for "Lot").

[F] TOXIC. A chemical falling within any of the following categories:

1. A chemical that has a median lethal dose (LD_{50}) of more than 50 milligrams per kilogram, but not more than 500 milligrams per kilogram of body weight when administered orally to albino rats weighing between 200 and 300 grams each.
2. A chemical that has a median lethal dose (LD_{50}) of more than 200 milligrams per kilogram, but not more than 1,000 milligrams per kilogram of body weight when administered by continuous contact for 24 hours (or less if death occurs within 24 hours) with the bare skin of albino rabbits weighing between 2 and 3 kilograms each.
3. A chemical that has a median lethal concentration (LC_{50}) in air of more than 200 parts per million, but not more than 2,000 parts per million by volume of gas or vapor, or more than 2 milligrams per liter but not more than 20 milligrams per liter of mist, fume or dust, when administered by continuous inhalation for 1 hour (or less if death occurs within 1 hour) to albino rats weighing between 200 and 300 grams each.

❖ The definition is derived from DOL 29 CFR; Part 1910.1200. These materials are considered dangerous to humans when either inhaled, absorbed or injected through the skin or when orally ingested. Toxic materials differ from highly toxic materials with regard to the specified median lethal dose or concentration of a given chemical. Toxic materials present a health hazard and are subsequently listed as a Group H-4 material in Section 307.6.

TRANSIENT. Occupancy of a *dwelling unit* or *sleeping unit* for not more than 30 days.

❖ The intent of this definition is to establish a time parameter to differentiate between transient and nontransient as listed under Groups R-1 and R-2. Real estate law often dictates that a lease must be created after 30 days, and 30-day time periods are typically how extended-stay hotels and motels rent to people. Such a time period gives the occupant time to be familiar with the surroundings and, therefore, become more accustomed to any hazards of the built environment than an overnight guest or a guest who stays for just a few days. Since nontransient occupancies do not have the same level of protection in the code as transient occupancies, it is important to determine what makes an occupancy transient so as to provide consistency in enforcement.

Since the requirements for Type B units are tied to the facilities that are intended to be occupied as a residence under both the Group R-1 and Group R-2, this definition does not have a detrimental effect on matching the Fair Housing Act provisions.

TRANSIENT AIRCRAFT. Aircraft based at another location and that is at the transient location for not more than 90 days.

❖ Transient aircraft are those that are merely visiting an airport as compared to those that are based at that location. The definition is used in conjunction with Section 412.4.6 to establish the level of fire suppression needed in various aircraft hangars. Fixed-base operators, especially at larger airports, will have distinct hangars that are used for repair and maintenance of aircraft. The hangars used by transient aircraft are primarily a storage place for aircraft based at another location. This better identifies the intent of this type of aircraft hangar. Most frequently, the owner who wants to develop an aircraft hangar that fits the Group II category will do no "major maintenance" and will only store airplanes in the hangar (see commentary, Section 412.4.6).

[BS] TREATED WOOD. Wood products that are conditioned to enhance fire-retardant or preservative properties.

❖ There are two types of treated wood: fire-retardant-treated wood and preservative-treated wood. Wood is treated to reduce its ability to propagate flame or resist damage caused by fungus or insects.

Fire-retardant-treated wood. Wood products that, when impregnated with chemicals by a pressure process or other means during manufacture, exhibit reduced surface-burning characteristics and resist propagation of fire.

❖ The ability of the wood to extinguish itself once the source of ignition is consumed or removed is an important characteristic of this material. Section 2303.2 requires testing in accordance with ASTM E84 or UL 723. The section requires the test to be continued an additional 20 minutes beyond the 10 minutes required to establish the flame spread. According to Section 2303.2, there can be no significant progressive combustion during this period.

Preservative-treated wood. Wood products that, conditioned with chemicals by a pressure process or other means, exhibit reduced susceptibility to damage by fungi, insects or marine borers.

❖ Wood that is exposed to high levels of moisture or heat is susceptible to decay both from fungus and

INTERNATIONAL CODE COUNCIL®
Copyright © 2015 ICC. ALL RIGHTS RESERVED. Accessed by David Dammon on Jun 21, 2017 12:30:52 PM pursuant to License Agreement with ICC. No further reproduction or distribution authorized. ANY UNAUTHORIZED REPRODUCTION OR DISTRIBUTION IS A VIOLATION OF THE FEDERAL COPYRIGHT ACT AND THE LICENSE AGREEMENT, AND SUBJECT TO CIVIL AND CRIMINAL PENALTIES THEREUNDER.

other organisms as well as insect attack. The damage caused by decay or insects can reduce the performance of wood members below the minimum level required by the code. Section 2304.11 identifies the locations where the use of naturally durable or preservative-treated wood is required. It is important to note that preservative treatment requires a pressure-treatment process. Painting, coating or other surface treatment does not necessarily produce preservative-treated wood that will perform as required. The treatment process uses pressure to achieve the depth of penetration of preservative into the wood that is needed to verify that the wood will be resistant to decay and insects over time. Surface treatments may be washed away by rain or ground water, or may chip or peel. Preservative-treated wood will not reduce susceptibility to all insects, only those that actually eat the wood.

The American Wood Preservers' Association (AWPA) standards are prescribed in Section 2303.1.9. These include water-borne, as well as oil-borne, materials for treatment, testing and quality control of various wood and wood-based products. The American Lumber Standard Committee (ALSC) also accredits third-party inspection agencies, in a manner similar to their grading rules certification, for the quality control of preservative-treated wood products. Facsimiles of accredited agencies' quality marks for treatment are available from ALSC.

TRIM. Picture molds, chair rails, baseboards, *handrails*, door and window frames and similar decorative or protective materials used in fixed applications.

❖ As interior trim, this material is usually combustible and permanently affixed. Trim is primarily located around door and window openings (frames), around walls at floors (baseboard) and on walls (chair rail). Interior trim material should only constitute 10 percent of the wall or ceiling area (see Section 806.5).

[F] TROUBLE SIGNAL. A signal initiated by the *fire alarm system* or device indicative of a fault in a monitored circuit or component.

❖ This type of signal indicates that there has been an abnormal change in the normal status of the fire detection system or devices and that a response is required to determine the nature of the fault condition. The trouble signal is only associated with electronic portions of a fire protection system. Physical conditions such as a closed valve are monitored electronically and would report as a supervisory signal rather than a trouble signal. A valve supervisory switch, or "tamper switch," for example, would perform such a function.

[BS] TUBULAR DAYLIGHTING DEVICE (TDD). A non-operable *fenestration* unit primarily designed to transmit daylight from a roof surface to an interior ceiling via a tubular conduit. The basic unit consists of an exterior glazed weathering surface, a light-transmitting tube with a reflective interior surface, and an interior-sealing device such as a translucent ceiling panel. The unit can be factory assembled, or field-assembled from a manufactured kit.

❖ This definition helps to differentiate tubular daylighting devices (TDDs) from unit skylights, both of which are subject to similar requirements in Chapter 24. These devices are typically field assembled from a manufactured kit, unlike a unit skylight which is typically shipped as a factory-assembled unit.

24-HOUR BASIS. See "24-hour basis" located preceding "AAC masonry."

TYPE A UNIT. A *dwelling unit* or *sleeping unit* designed and constructed for accessibility in accordance with this code and the provisions for *Type A units* in ICC A117.1.

❖ There are three levels of accessibility described in the code pertaining to dwelling units. Accessible units (always spelled with a capital "A"), Type A units and Type B units. A Type A unit has some elements that are constructed for accessibility [e.g., 32-inch (813 mm) clear width doors with maneuvering clearances] and some elements that are constructed as adaptable (e.g., blocking for future installation of grab bars). A Type A dwelling unit is designed and constructed to provide accessibility for wheelchair users throughout the unit, and, as such, is considered more accessible than a Type B dwelling unit. Because some adaptable features are permitted in the standard, the Type A unit is considered less wheelchair-user friendly than an Accessible unit. Type A units are only scoped in large apartment buildings of Group R-2 occupancies. The technical requirements for the interior of Type A units are in Section 1003 of ICC A117.1 (see commentary, Section 1107.2).

TYPE B UNIT. A *dwelling unit* or *sleeping unit* designed and constructed for accessibility in accordance with this code and the provisions for *Type B units* in ICC A117.1, consistent with the design and construction requirements of the federal Fair Housing Act.

❖ There are three levels of accessibility described in the code pertaining to dwelling units. Accessible units (always spelled with a capital "A"), Type A units and Type B units. A Type B dwelling or sleeping unit is designed and constructed to provide a minimal level of accessibility, and, as such, is considered less accessible than either an Accessible unit or a Type A unit. The requirements for Type B units are intended to be consistent with the Fair Housing Amendments Act (FHA). Type B units are scoped in many types of housing. The technical requirements for the interior of Type B units are in Section 1004 of ICC A117.1 (see commentary, Section 1107.2 and the definition for "Intended to be occupied as a residence").

[BS] UNDERLAYMENT. One or more layers of felt, sheathing paper, nonbituminous saturated felt or other *approved* material over which a steep-slope *roof covering* is applied.

❖ According to Section 1507.2.3, underlayment is required to comply with ASTM D226 or ASTM D4869,

INTERNATIONAL CODE COUNCIL®
Copyright © 2015 ICC. ALL RIGHTS RESERVED. Accessed by David Dammon on Jun 21, 2017 12:30:52 PM pursuant to License Agreement with ICC. No further reproduction or distribution authorized. ANY UNAUTHORIZED REPRODUCTION OR DISTRIBUTION IS A VIOLATION OF THE FEDERAL COPYRIGHT ACT AND THE LICENSE AGREEMENT, AND SUBJECT TO CIVIL AND CRIMINAL PENALTIES THEREUNDER.

Type I, which is commonly referred to as No. 15 asphalt felt.

UNIT SKYLIGHT. See "Skylight, unit."

[F] UNSTABLE (REACTIVE) MATERIAL. A material, other than an explosive, which in the pure state or as commercially produced, will vigorously polymerize, decompose, condense or become self-reactive and undergo other violent chemical changes, including *explosion*, when exposed to heat, friction or shock, or in the absence of an inhibitor, or in the presence of contaminants, or in contact with *incompatible materials*. Unstable (reactive) materials are subdivided as follows:

Class 4. Materials that in themselves are readily capable of *detonation* or explosive decomposition or explosive reaction at *normal temperatures and pressures*. This class includes materials that are sensitive to mechanical or localized thermal shock at *normal temperatures and pressures.*

Class 3. Materials that in themselves are capable of *detonation* or of explosive decomposition or explosive reaction but which require a strong initiating source or which must be heated under confinement before initiation. This class includes materials that are sensitive to thermal or mechanical shock at elevated temperatures and pressures.

Class 2. Materials that in themselves are normally unstable and readily undergo violent chemical change but do not detonate. This class includes materials that can undergo chemical change with rapid release of energy at *normal temperatures and pressures*, and that can undergo violent chemical change at elevated temperatures and pressures.

Class 1. Materials that in themselves are normally stable but which can become unstable at elevated temperatures and pressure.

❖ The classification of unstable (reactive) materials is based on provisions in NFPA 704. The different classes of unstable (reactive) materials reflect the degree of susceptibility of the materials to release energy. Unstable (reactive) materials polymerize, decompose or become self-reactive when exposed to heat, air, moisture, pressure or shock. Separation from incompatible materials is essential to minimizing the hazards. Examples of unstable (reactive) materials include nitromethane, perchloric acid, sodium perchlorate, vinyl acetate and acetic acid.

[F] USE (MATERIAL). Placing a material into action, including *solids, liquids* and gases.

❖ This definition describes the active utilization mode of a material as opposed to the inactive nature of storage or the limited movement or transport involved in handling. This mode tends to be more hazardous in that the material is exposed to human or mechanical contact rather than being confined to a closed container, thus increasing the potential for spills or other releases of liquids, vapors, gases or solids.

VAPOR PERMEABLE MEMBRANE. The property of having a moisture vapor permeance rating of 5 perms (2.9 × 10-10 kg/Pa × s × m^2) or greater, when tested in accordance with the desiccant method using Procedure A of ASTM E96. A vapor permeable material permits the passage of moisture vapor.

❖ Greater demands on the building envelope due to energy considerations now dictate the need for an outer membrane that reduces wind infiltration. The membranes used in this application may need to allow vapor to pass through it, given that a vapor barrier would be needed on the inside of the wall and would be undesirable on the outside of the wall. In such cases, a vapor-permeable membrane would be used. Membranes with a permeance rating lower than 10 perms are considered vapor retarders.

VAPOR RETARDER CLASS. A measure of a material or assembly's ability to limit the amount of moisture that passes through that material or assembly. Vapor retarder class shall be defined using the desiccant method of ASTM E96 as follows:

Class I: 0.1 perm or less.

Class II: 0.1 < perm ≤ 1.0 perm.

Class III: 1.0 < perm ≤ 10 perm.

❖ Vapor retarders are used to limit moisture intrusion into a building. The definition establishes three classes of vapor retarders based on the amount of moisture that can pass through in a given time period.

Class I: 0.1 perm or less.

Class II: 0.1 < perm ≤ 1.0 perm.

Class III: 1.0 < perm ≤ 10 perm.

VEGETATIVE ROOF. An assembly of interacting components designed to waterproof and normally insulate a building's top surface that includes, by design, vegetation and related landscape elements.

❖ Vegetative roofs are a specific design element used in the IgCC to provide a cool roof or to limit heat island impacts of a building. For the IBC, their effects on the roofing requirements and structural design are addressed in Chapters 15 and 16, respectively.

VEHICLE BARRIER. A component or a system of components, near open sides of a garage floor or ramp or building walls that act as restraints for vehicles.

❖ This definition explains vehicle barriers in order to clarify the minimum design loads that must be applied to these components in accordance with Section 1607.8.3.

VEHICULAR GATE. A gate that is intended for use at a vehicular entrance or exit to a facility, building or portion thereof, and that is not intended for use by pedestrian traffic.

❖ This definition provides the scope for the particular type of gates addressed by Section 3110. They are, specifically, those gates associated with vehicles at a building or facility as a opposed to a parking lot or access road. In addition, it clarifies that these gates are not used by people.

INTERNATIONAL CODE COUNCIL®
Copyright © 2015 ICC. ALL RIGHTS RESERVED. Accessed by David Dammon on Jun 21, 2017 12:30:52 PM pursuant to License Agreement with ICC. No further reproduction or distribution authorized. ANY UNAUTHORIZED REPRODUCTION OR DISTRIBUTION IS A VIOLATION OF THE FEDERAL COPYRIGHT ACT AND THE LICENSE AGREEMENT, AND SUBJECT TO CIVIL AND CRIMINAL PENALTIES THEREUNDER.

VENEER. A facing attached to a wall for the purpose of providing ornamentation, protection or insulation, but not counted as adding strength to the wall.

❖ Veneers are wall facings or claddings of various materials that are used for environmental protection or ornamentation on the exterior of walls. Veneers are nonstructural in that they do not carry any load other than their own weight.

[M] VENTILATION. The natural or mechanical process of supplying conditioned or unconditioned air to, or removing such air from, any space.

❖ Ventilation is the process of moving air to or from building spaces. This definition of ventilation requirements is used in the code to establish minimum levels of air movement within a building for the purposes of providing a healthful interior environment. Ventilation would include both natural (openable exterior windows and doors for wind movement) and mechanical (forced air with mechanical equipment) methods.

VINYL SIDING. A shaped material, made principally from rigid polyvinyl chloride (PVC), that is used as an *exterior wall covering*.

❖ Vinyl siding is discussed in Sections 1404.9 and 1405.14. This material offers a siding product that does not require regular painting. It is offered in a variety of colors and textures. Some vinyl siding is manufactured with some relief on the face of the product to emulate wood grain. It is important when applying the material to use an attachment method that allows the product to move as it expands and contracts. Static connections will cause the material to crack and warp.

[F] VISIBLE ALARM NOTIFICATION APPLIANCE. A notification appliance that alerts by the sense of sight.

❖ Visible alarm notification appliances are located anywhere an occupant notification system is required, where occupants may be hearing impaired and in sleeping accommodations of Group I-1 and R-1 occupancies. These alarm notification devices must be located and oriented so that they will display alarm signals throughout the required space. Visible alarms, when provided, are typically installed in the public and common areas of buildings (see commentary, Section 907.5.2.3).

WALKWAY, PEDESTRIAN. A walkway used exclusively as a pedestrian trafficway.

❖ A pedestrian walkway is an enclosed passageway external to, and not considered part of, the buildings it connects. Intended only for pedestrian use, it can be at grade, below grade or elevated above grade.

[BS] WALL (for Chapter 21). A vertical element with a horizontal length-to-thickness ratio greater than three, used to enclose space.

❖ Masonry walls, as addressed in Chapter 21, typically enclose space and therefore are generally required to be designed and installed for weather resistance, durability and in addition to adequate strength. The given dimensional requirements differentiate masonry walls from masonry columns.

Cavity wall. A wall built of *masonry units* or of concrete, or a combination of these materials, arranged to provide an airspace within the wall, and in which the inner and outer parts of the wall are tied together with metal ties.

❖ Cavity walls are made up of solid or hollow masonry units separated by a continuous airspace or cavity. This continuous airspace adds insulating value and acts as a barrier to moisture when detailed with flashing and weep holes. In many cavity walls, thermal insulation is placed between the masonry wythes to further enhance thermal efficiency.

Dry-stacked, surface-bonded wall. A wall built of concrete *masonry units* where the units are stacked dry, without *mortar* on the bed or *head joints*, and where both sides of the wall are coated with a surface-bonding *mortar*.

❖ Although this type of masonry wall is dry stacked, a leveling course set in a full bed of mortar is often used. Dry-stacked walls are also required to be placed in a running bond pattern (see the commentary to the definition of "Mortar, surface-bonding").

Parapet wall. The part of any wall entirely above the roof line.

❖ These portions of masonry walls project above the roof. A parapet wall is exposed to weather on both sides and is laterally unsupported at the top. Parapets often have copings.

[BS] WALL, LOAD-BEARING. Any wall meeting either of the following classifications:

1. Any metal or wood stud wall that supports more than 100 pounds per linear foot (1459 N/m) of vertical load in addition to its own weight.
2. Any *masonry* or concrete wall that supports more than 200 pounds per linear foot (2919 N/m) of vertical load in addition to its own weight.

❖ This definition is necessary since the structural requirements and fire-resistance-rating requirements in the code vary for nonload-bearing walls and load-bearing walls. The term "load-bearing walls" is intended to refer to wall elements that support part of the structural framework of a building.

[BS] W**ALL, NONLOAD-BEARING.** Any wall that is not a *load-bearing wall*.

❖ This definition is necessary since the structural requirements and fire-resistance-rating requirements in the code vary for nonload-bearing walls and load-bearing walls. Nonload-bearing walls do not support any portion of the building or structure except the weight of the wall itself.

[F] WATER-REACTIVE MATERIAL. A material that explodes; violently reacts; produces *flammable*, *toxic* or other hazardous gases; or evolves enough heat to cause autoignition or ignition of combustibles upon exposure to water or moisture. Water-reactive materials are subdivided as follows:

INTERNATIONAL CODE COUNCIL®
Copyright © 2015 ICC. ALL RIGHTS RESERVED. Accessed by David Dammon on Jun 21, 2017 12:30:52 PM pursuant to License Agreement with ICC. No further reproduction or distribution authorized. ANY UNAUTHORIZED REPRODUCTION OR DISTRIBUTION IS A VIOLATION OF THE FEDERAL COPYRIGHT ACT AND THE LICENSE AGREEMENT, AND SUBJECT TO CIVIL AND CRIMINAL PENALTIES THEREUNDER.

Class 3. Materials that react explosively with water without requiring heat or confinement.

Class 2. Materials that react violently with water or have the ability to boil water. Materials that produce *flammable*, *toxic* or other hazardous gases or evolve enough heat to cause autoignition or ignition of combustibles upon exposure to water or moisture.

Class 1. Materials that react with water with some release of energy, but not violently.

❖ These materials liberate significant quantities of heat when reacting with water. Combustible water-reactive materials are capable of self-ignition. Even noncombustible water-reactive materials present a hazard because of the heat liberated during their reaction with water, which is sufficient to ignite surrounding combustible materials. While a definition for Class 1 water-reactive materials is provided for informational purposes, the maximum allowable quantities of these materials in accordance with Table 307.1(1) is not limited. The descriptions of each of the subdivisions is consistent with the approach used for the determination of water hazards in NFPA 704.

WATER-RESISTIVE BARRIER. A material behind an *exterior wall covering* that is intended to resist liquid water that has penetrated behind the exterior covering from further intruding into the *exterior wall* assembly.

❖ Protection of the building envelope from moisture intrusion is a primary concern. The ability of the water-resistive barrier to provide weather resistance and maintain the integrity of the building envelope is key to controlling water-based problems such as mold, decay and deterioration of a structure. Water-resistive barriers are discussed in Section 1404.2.

WEATHER-EXPOSED SURFACES. Surfaces of walls, ceilings, floors, roofs, soffits and similar surfaces exposed to the weather except the following:

1. Ceilings and roof soffits enclosed by walls, fascia, bulkheads or beams that extend not less than 12 inches (305 mm) below such ceiling or roof soffits.
2. Walls or portions of walls beneath an unenclosed roof area, where located a horizontal distance from an open exterior opening equal to not less than twice the height of the opening.
3. Ceiling and roof soffits located a minimum horizontal distance of 10 feet (3048 mm) from the outer edges of the ceiling or roof soffits.

❖ Outside surfaces of a building or structure are generally exposed to elements of the weather. Therefore, it is necessary to take special precautions to protect them from damage. The most common way to protect exterior surfaces from damage caused by rain, sleet, wind, ice and snow or water from other sources is by the use of building materials that are designed, manufactured and installed to resist or withstand the extremes produced by weather. There are many building materials other than those identified in Chapter 25 that provide excellent protection from weather damage, and are permitted by the I-Codes for use on weather-exposed surfaces. Requirements for other approved materials, such as, but not limited to, brick, concrete, precast concrete panels, concrete unit masonry, wood, vinyl, aluminum, glass and steel, are specified in other chapters of the code.

There are isolated surfaces located on the exterior of a building or structure that are not directly exposed to or in contact with the damaging effects of the weather. These areas are identified in Items 1, 2 and 3 above. Although these surfaces are located on the exterior of the building or structure, they are provided with a permissible amount of protection and are not directly exposed to the weather with regard to moisture. This must be taken into consideration when wall and ceiling covering materials are being selected. It is not required to use waterproof materials at these locations, but materials approved by the code and the product manufacturer for exterior applications must be used.

[F] WET-CHEMICAL EXTINGUISHING SYSTEM. A solution of water and potassium-carbonate-based chemical, potassium-acetate-based chemical or a combination thereof, forming an extinguishing agent.

❖ This extinguishing agent is a suitable alternative to the use of a dry chemical, especially when protecting commercial kitchen range hoods. There is less cleanup time after system discharge. Wet chemical solutions are considered to be relatively harmless and normally have no lasting effect on the skin or respiratory system. These solutions may produce temporary irritation, which is usually mild and disappears when contact is eliminated. These systems must be preengineered and labeled. NFPA 17A applies to the design, installation, operation, testing and maintenance of wet-chemical extinguishing systems.

WHEELCHAIR SPACE. A space for a single wheelchair and its occupant.

❖ A wheelchair space is a designated space for a person to be stationary in his or her wheelchair as part of a fixed assembly seating configuration. The wheelchair space must be sized in accordance with ICC A117.1 (see Section 1108.2.4 for wheelchair space dispersion requirements for multilevel assembly seating). ICC A117.1 provides additional dispersion criteria within a level (i.e., side-to-side, front-to-back and by type), depending on the number of seats provided in the assembly seating space.

[BS] WIND-BORNE DEBRIS REGION. Areas within hurricane-prone regions located:

1. Within 1 mile (1.61 km) of the coastal mean high water line where the ultimate design wind speed, V_{ult}, is 130 mph (58 m/s) or greater; or
2. In areas where the ultimate design wind speed is 140 mph (63.6 m/s) or greater; or Hawaii.

INTERNATIONAL CODE COUNCIL®
Copyright © 2015 ICC. ALL RIGHTS RESERVED. Accessed by David Dammon on Jun 21, 2017 12:30:52 PM pursuant to License Agreement with ICC. No further reproduction or distribution authorized. ANY UNAUTHORIZED REPRODUCTION OR DISTRIBUTION IS A VIOLATION OF THE FEDERAL COPYRIGHT ACT AND THE LICENSE AGREEMENT, AND SUBJECT TO CIVIL AND CRIMINAL PENALTIES THEREUNDER.

For *Risk Category* II buildings and structures and *Risk Category* III buildings and structures, except health care facilities, the wind-borne debris region shall be based on Figure 1609.3.(1). For *Risk Category* IV buildings and structures and *Risk Category* III health care facilities, the wind-borne debris region shall be based on Figure 1609.3(2).

❖ This definition identifies those areas that require consideration of the impact of wind-borne debris on the building envelope (see the commentary to Sections 1609.1 and 1609.1.2 for information on the effects of openings in the building envelope). Note that Section 1609.3 makes Figure 1609.3.1(2) applicable to both Risk Category III and IV structures for obtaining the ultimate design wind speed. However, this definition of wind-borne debris regions provides somewhat of an exception by allowing Figure 1609.3.1(1) to be used for establishing the wind-borne debris regions that are applicable to Risk Category III structures, other than health care facilities. This results in wind-borne debris regions applicable to Risk Category III (other than health care facilities) that are consistent with the areas that were defined in the prior editions of the code. At the same time, it should be noted that the wind-borne debris region established by Figure 1609.3.1(2) for Risk Category IV, as well as health care facilities that are Risk Category III, is an expansion of the wind-borne debris region defined in prior editions of the code.

WINDFORCE-RESISTING SYSTEM, MAIN. See "Main windforce-resisting system."

[BS] WIND SPEED, V_{ult}. Ultimate design wind speeds.

❖ This term is needed to identify the mapped wind speed in Section 1609, which is one of the primary criteria for determination of wind loading.

[BS] WIND SPEED, V_{asd}. Nominal design wind speeds.

❖ This term is used to identify wind speeds that are converted from the ultimate (mapped) wind speeds in accordance with Section 1609.3.1. Nominal wind speed is used as a wind criteria, rather than the ultimate wind speed, for requirements in Chapters 14, 15 and 23, for example.

WINDER. A tread with nonparallel edges.

❖ Winders are used as components of stairways that change direction, just as "fliers" (rectangular treads) are components in straight stairways. A winder performs the same function as a tread, but its shape allows the additional function of a gradual turning of the stairway direction. The tread depth of a winder at the walkline and the minimum tread depth at the narrow end control the turn made by each winder. Winders are not landings. Winder treads are limited to curved or spiral stairways with all groups but are all stairways within dwelling units (see Section 1011.5.3).

[BS] WIRE BACKING. Horizontal strands of tautened wire attached to surfaces of vertical supports which, when covered with the building paper, provide a *backing* for cement plaster

❖ Where metal lath attached to exterior wall studs is used as backing for a plaster base coat, additional reinforcing is necessary to stiffen the wall framing system and minimize unwanted movement to the wall itself. Plaster is a fairly rigid material and excessive movement will cause it to crack. Eighteen-gage metal wire attached horizontally to the face of the wall studs and covered with building paper will provide the additional stiffness required to minimize cracking in the finish surface (see Section 2510.5 for additional commentary on the requirements for wire backing).

[F] WIRELESS PROTECTION SYSTEM. A system or a part of a system that can transmit and receive signals without the aid of wire.

❖ These systems use radio frequency transmitting devices that comply with the special requirements for supervision of low-power wireless systems in NFPA 72. Wireless devices have the advantage of flexibility in positioning. Consequently, portable wireless notification devices are frequently used in existing facilities where visual devices are not present throughout.

[BS] WOOD/PLASTIC COMPOSITE. A composite material made primarily from wood or cellulose-based materials and plastic.

❖ Wood/Plastic composite is manufactured of wood and cellulosic materials to provide strength and stiffness. These components are typically used for exterior decking and railing systems. Chapter 26, which regulates plastic materials, contains requirements for plastic lumber used as exterior decking components, such as deck boards, stair treads, handrails and guardrails.

[BS] WOOD SHEAR PANEL. A wood floor, roof or wall component sheathed to act as a *shear wall* or *diaphragm.*

❖ Wood shear panels are horizontal (diaphragm) or vertical (wood shear wall) panels, which transmit forces in the plane of the sheathing caused by lateral loads transmitted from one component of the structure to another. Wood shear panels usually consist of wood framing (studs or joists), either singly or doubly sheathed. The code has design provisions for wood shear panels that are sheathed with 4-foot by 8-foot (1219 mm by 2438 mm) wood structural panels.

[BS] WOOD STRUCTURAL PANEL. A panel manufactured from *veneers*, wood strands or wafers or a combination of *veneer* and wood strands or wafers bonded together with waterproof synthetic resins or other suitable bonding systems. Examples of wood structural panels are:

❖ The code defines wood structural panels in terms of the materials commonly used in their manufacture.

INTERNATIONAL CODE COUNCIL®
Copyright © 2015 ICC. ALL RIGHTS RESERVED. Accessed by David Dammon on Jun 21, 2017 12:30:52 PM pursuant to License Agreement with ICC. No further reproduction or distribution authorized. ANY UNAUTHORIZED REPRODUCTION OR DISTRIBUTION IS A VIOLATION OF THE FEDERAL COPYRIGHT ACT AND THE LICENSE AGREEMENT, AND SUBJECT TO CIVIL AND CRIMINAL PENALTIES THEREUNDER.

Wood structural panels intended for structural use must comply with DOC PS 1, DOC PS 2 or ANSI/APA PRP 210 in accordance with Section 2303.1.5. These documents specify the required structural performance characteristics of wood structural panels and detail the requirements for the third-party label each panel is required to bear (see Section 2303.1.5 for a more detailed discussion).

Composite panels. A wood structural panel that is comprised of wood *veneer* and reconstituted wood-based material and bonded together with waterproof adhesive;

❖ Composite panels are structural panels that are made up of a combination of wood veneers and wood-based materials. The wood veneer usually forms the two outer layers and may also be used in the core of the panel. These layers of veneer and wood flakes or strands, called "furnish," may be cross laminated.

Oriented strand board (OSB). A mat-formed wood structural panel comprised of thin rectangular wood strands arranged in cross-aligned layers with surface layers normally arranged in the long panel direction and bonded with waterproof adhesive; or

❖ Oriented strand board (OSB) is one of three types of wood structural panel. OSB panels are fabricated out of multiple layers made up of wood flakes or strands called "furnish." Like plywood, these layers of furnish are oriented at 90 degrees (1.57 rad) to each other. This gives OSB panels properties very similar to those of plywood.

Plywood. A wood structural panel comprised of plies of wood *veneer* arranged in cross-aligned layers. The plies are bonded with waterproof adhesive that cures on application of heat and pressure.

❖ Plywood is one of three types of wood structural panel. It is manufactured by gluing together three or more cross-laminated layers of wood veneer. The code does not differentiate between OSB and plywood, since manufacturing is done according to either the DOC PS 1 standard for construction and industrial plywood or for OSB, DOC PS 2 performance standard for wood-based structural panels.

[F] WORKSTATION. A defined space or an independent principal piece of equipment using *HPM* within a *fabrication area* where a specific function, laboratory procedure or research activity occurs. *Approved* or *listed hazardous materials storage cabinets*, *flammable liquid* storage cabinets or *gas cabinets* serving a workstation are included as part of the workstation. A workstation is allowed to contain *ventilation* equipment, fire protection devices, detection devices, electrical devices and other processing and scientific equipment.

❖ Workstations further subdivide a fabrication area and provide relatively self-contained, specialized areas where HPM processes are conducted. Workstation controls limit the quantity of materials and impose limitations on the design of these processes to include, but not be limited to, protection by local exhaust; sprinklers; automatic and emergency shutoffs; construction materials and HPM compatibility. Excess materials are prohibited and must be contained in storage rooms designed to accommodate such hazards.

[BS] WYTHE. Each continuous, vertical section of a wall, one *masonry unit* in thickness.

❖ Sometimes referred to as a "leaf" or "tier," each wythe is one thickness of a masonry unit.

YARD. An open space, other than a *court*, unobstructed from the ground to the sky, except where specifically provided by this code, on the lot on which a building is situated.

❖ This definition is used, similar to the definition of "Court," to establish the applicability of code requirements when yards are utilized for natural light or natural ventilation purposes (see Section 1206.1). Whereas a court is bounded on three or more sides with the building or structure, a yard is bounded on two or fewer sides by the building or structure (see also the definition of "Egress court").

[F] ZONE. A defined area within the protected premises. A zone can define an area from which a signal can be received, an area to which a signal can be sent or an area in which a form of control can be executed.

❖ Zoning a system is important to emergency personnel in locating a fire. When an alarm is designated to a specific zone, it allows the fire service to immediately respond to the area where the fire is in progress instead of searching the entire building for the origin of an alarm.

[F] ZONE, NOTIFICATION. An area within a building or facility covered by notification appliances which are activated simultaneously.

❖ This definition is provided to clarify the code by making a clear distinction between fire alarm system initiation device zones required by Section 907.6.4 and the zones that may be designed into occupant notification device systems in a building. The term is used primarily in the exceptions for sprinkler systems found in the manual fire alarm system requirements in Section 907.2 and its subsections. Note that the code does not require audible and visible occupant notification device systems to be zoned. If such zones are provided, it is a matter of the system design engineer's judgment. The voice paging component in high-rise building emergency voice/alarm communication systems is, however, required to be zoned in accordance with Section 907.5.2.2.

Bibliography

The following resource materials were used in the preparation of the commentary for this chapter of the code.

24 CFR, *Fair Housing Accessibility Guidelines* (FHAG). Washington, DC: US Department of Housing and Urban Development, 1991.

INTERNATIONAL CODE COUNCIL®
Copyright © 2015 ICC. ALL RIGHTS RESERVED. Accessed by David Dammon on Jun 21, 2017 12:30:52 PM pursuant to License Agreement with ICC. No further reproduction or distribution authorized. ANY UNAUTHORIZED REPRODUCTION OR DISTRIBUTION IS A VIOLATION OF THE FEDERAL COPYRIGHT ACT AND THE LICENSE AGREEMENT, AND SUBJECT TO CIVIL AND CRIMINAL PENALTIES THEREUNDER.

ACI 318-14, *Building Code Requirements for Structural Concrete*. Farmington Hills, MI: American Concrete Institute, 2014.

ANSI/APA A 190.1-12, *Structural Glued-Laminated Timber*. Tacoma, WA: APA-Engineered Wood Association, 2012.

APA Research Report 154, *Wood Structural Panel Shear Wall*. Tacoma, WA: APAC Engineered Wood Association.

ASCE 7-10, *Minimum Design Loads for Buildings and Other Structures with Supplement No.1* (also ASCE 7-88, ASCE 7-93, ASCE 7-95). Reston, VA: American Society of Civil Engineers, 2010.

ASTM C11-13 *Standard Terminology Related to Gypsum and Related Building Materials and Systems*. West Conshohocken, PA: ASTM International, 2013.

ASTM D56-05 (2010), *Test Method for Flash Point by Tag Closed Tester*. West Conshohocken, PA: ASTM International, 2005 (2010).

ASTM D93-12, *Test Methods for Flash Point by Pensky-Martens Closed-Cup Tester*. West Conshohocken, PA: ASTM International, 2012.

ASTM D226/D226M-09, *Specification for Asphalt-Saturated Organic Felt Used in Roofing and Waterproofing*. West Conshohocken, PA: ASTM International, 2009.

ASTM D3278-96 (2011), *Test Methods for Flash Point of Liquids by Small-Scale Closed-Cup Apparatus*. West Conshohocken, PA: ASTM International, 2011.

ASTM D3737-12, *Practice for Establishing Allowable Properties for Structural Glued-Laminated Timber* (Glulam). West Conshohocken, PA: ASTM International, 2012.

ASTM E119-12A, *Standard Test Method for Fire Tests of Building Construction and Materials*. West Conshohocken, PA: ASTM International, 2012A.

ASTM E136-12, *Test Method for Behavior of Materials in a Vertical Tube Furnace at 750°C*. West Conshohocken, PA: ASTM International, 2012.

ASTM E1966-07A (2011), *Test Method for Fire-resistant Joint Systems.* West Conshohocken, PA: ASTM International, 2007A (2011).

ASTM E2072-10, *Standard Specification for Photoluminescent (Phosphorescent) Safety Markings*. West Conshohocken, PA: ASTM International, 2010.

AWCI 12-B-04, *Technical Manual 12-B Standard Practice for the Testing and Inspection of Field-Applied Thin-Film Intumescent Fire-Resistive Materials; an Annoted Guide, Second Edition*. Falls Church, VA: The Association of the Wall and Ceiling Industries International, 2004.

AWC SDPWS-15, *Special Design Provisions for Wind and Seismic*. Leesburg, VA: American Wood Council, 2015.

CPA (ANSI) A208.1-09, *Particleboard*. Leesburg, VA, Composite Panel Association, 2009.

DOC PS 1-09, *Structural Plywood*, Washington, DC, MD: US Department of Commerce, 2010.

DOC PS 2-10, *Performance Standard for Wood-Based Structural-Use Panels*. Gaithersburg, MD: US Department of Commerce, 2010.

DOL 29 CFR, Part 1910.1000-09, *Air Contaminants*. Washington, DC: US Department of Labor, 2009.

DOL 29 CFR, Part 1910.1200-07, *Principal Emergency Response and Preparedness, Requirements and Guidance—Hazard Communication*. Washington, DC: US Department of Labor, 2007.

FEMA 450-2-04, NEHRP *Recommended Provisions for Seismic Regulations for New Buildings and Other Structures, Part 2: Commentary*. Washington, DC: Federal Emergency Management Agency, 2004.

FEMA FIA-TB #2, *Flood Damage-resistant Materials Requirements for Buildings Located in Special Flood Hazard Areas*. Washington, DC: Federal Emergency Management Agency, 2008.

FEMA P-758-09, *Substantial Improvement/Substantial Damage Desk Reference*. Washington, DC: Federal Emergency Management Agency, 2009.

FEMA P-784-09, *Substantial Damage Estimator*. Washington, DC: Federal Emergency Management Agency, 2009.

ICC A117.1-09, *Accessible and Usable Buildings and Facilities.* Washington, DC: International Code Council, 2011.

ISO 8115-86, *Cotton Bales Dimensions and Density*. Switzerland International Organization for Standardization, 1986.

NFPA 11-10, *Standard for Low-Expansion Foam*. Quincy, MA: National Fire Protection Association, 2010.

NFPA 11A-99, *Standard For Medium- And High-Expansion Foam Systems*. Quincy, MA: National Fire Protection Association, 1999.

NFPA 12A-09, *Standard for Halon 1301 Fire-Extinguishing Systems.* Quincy, MA: National Fire Protection Association, 2009.

NFPA 13-13, *Installation of Sprinkler Systems*. Quincy, MA: National Fire Protection Association, 2013

NFPA 13D-13, *Standard for the Installation of Sprinkler Systems in One- and Two-Family Dwellings and Manufactured Homes*. Quincy, MA: National Fire Protection Association, 2013.

INTERNATIONAL CODE COUNCIL®

Copyright © 2015 ICC. ALL RIGHTS RESERVED. Accessed by David Dammon on Jun 21, 2017 12:30:52 PM pursuant to License Agreement with ICC. No further reproduction or distribution authorized. ANY UNAUTHORIZED REPRODUCTION OR DISTRIBUTION IS A VIOLATION OF THE FEDERAL COPYRIGHT ACT AND THE LICENSE AGREEMENT, AND SUBJECT TO CIVIL AND CRIMINAL PENALTIES THEREUNDER.

NFPA 13R-13, *Standard for the Installation of Sprinkler Systems in Low Rise Residential Occupancies.* Quincy, MA: National Fire Protection Association, 2013.

NFPA 14-13, *Standard for the Installation of Standpipe and Hose Systems*. Quincy, MA: National Fire Protection Association, 2013.

NFPA 17A-13, *Standard for Wet-Chemical Extinguishing Systems*. Quincy, MA: National Fire Protection Association, 2013.

NFPA 72-13, *National Fire Alarm Code and Signaling Code*. Quincy, MA: National Fire Protection Association, 2013.

NFPA 80-13, *Standard for Fire Doors and Other Opening Protectives*. Quincy, MA: National Fire Protection Association, 2013.

NFPA 252-12, *Standard Methods of Fire Tests of Door Assemblies*. Quincy, MA: National Fire Protection Association, 2012.

NFPA 257-12, *Standard On Fire Test For Window And Glass Block Assemblies*. Quincy, MA: National Fire Protection Association, 2012.

NFPA 701-10, *Standard Method of Fire Tests for Flame- Propagation of Textiles and Films*. Quincy, MA: National Fire Protection Association, 2010.

NFPA 704-12, *Standard System for the Identification of the Hazards of Materials for Emergency Response*. Quincy, MA: National Fire Protection Association, 2012.

NFPA 1124-06, *Code for the Manufacture, Transportation, Storage of Fireworks and Pyrotechnic Articles*. Quincy, MA: National Fire Protection Association, 2006.

TMS 402/ACI 530/ASCE 5-13, *Building Code Requirements for Masonry Structures*. Farmington Hills, MI: American Concrete Institute; Reston, VA: American Society of Civil Engineers; Longmont, CO: The Masonry Society, 2013.

TMS 602/ACI 530.1/ASCE 6-13, *Specifications for Masonry Structures*. Farmington Hills, MI: American Concrete Institute; Reston, VA: American Society of Civil Engineers; Longmont, CO: The Masonry Society, 2013.

UL 9-09, Fire Tests of Window Assemblies. Northbrook, IL: Underwriters Laboratories Inc., 2009.

UL 10C-09, *Positive Pressure Fire Tests of Door Assemblies.* Northbrook, IL: Underwriters Laboratories Inc., 2009.

UL 217-06, *Single- and Multiple-Station Smoke Alarms - with Revisions through April 2002*. Northbrook, IL: Underwriters Laboratories Inc., 2006.

UL 924-06, *Standard for Safety of Emergency Lighting and Power Equipment with Revisions through February 2011*. Northbrook, IL: Underwriters Laboratories Inc., 2005.

UL 1994-04, *Standard for Luminous Egress Path Marking Systems with Revisions through November 2010.* Northbrook, IL: Underwriters Laboratories Inc., 2005.

UL 2079-04, *Tests for Fire Resistance for Building Joint Systems with Revisions through December 2012*. Northbrook, IL: Underwriters Laboratories Inc., 2004.

INTERNATIONAL CODE COUNCIL®

Copyright © 2015 ICC. ALL RIGHTS RESERVED. Accessed by David Dammon on Jun 21, 2017 12:30:52 PM pursuant to License Agreement with ICC. No further reproduction or distribution authorized. ANY UNAUTHORIZED REPRODUCTION OR DISTRIBUTION IS A VIOLATION OF THE FEDERAL COPYRIGHT ACT AND THE LICENSE AGREEMENT, AND SUBJECT TO CIVIL AND CRIMINAL PENALTIES THEREUNDER.

INTERNATIONAL CODE COUNCIL®
Copyright © 2015 ICC. ALL RIGHTS RESERVED. Accessed by David Dammon on Jun 21, 2017 12:30:52 PM pursuant to License Agreement with ICC. No further reproduction or distribution authorized. ANY UNAUTHORIZED REPRODUCTION OR DISTRIBUTION IS A VIOLATION OF THE FEDERAL COPYRIGHT ACT AND THE LICENSE AGREEMENT, AND SUBJECT TO CIVIL AND CRIMINAL PENALTIES THEREUNDER.

Chapter 3:
Use and Occupancy Classification

General Comments

Chapter 3 provides for the classification of buildings, structures and parts thereof based on the purpose or purposes for which they are used.

Section 302 identifies the occupancy groups into which all buildings, structures and parts thereof must be classified.

Sections 303 through 312 identify the occupancy characteristics of each group classification. In some sections, specific group classifications having requirements in common are collectively organized such that one term applies to all. For example, Groups A-1, A-2, A-3, A-4 and A-5 are individual groups. The general term Group A, however, includes each of these individual groups. For this reason, each specific assembly group classification is included in Section 303.

Definitions play a key role in determining the occupancy classification. All definitions are located in Chapter 2. This chapter lists key definitions for classification of occupancies.

In the early years of building code development, the essence of regulatory safeguards from fire was to provide a reasonable level of protection to property. The idea was that if property was adequately protected from fire, then the building occupants would also be protected.

From this outlook on fire safety, the concept of equivalent risk has evolved in the code. This concept maintains that, in part, an acceptable level of risk against the damages of fire respective to a particular occupancy type (group) can be achieved by limiting the height and area of buildings containing such occupancies according to the building's construction type (i.e., its relative fire endurance).

The concept of equivalent risk involves three interdependent considerations: 1. The level of fire hazard associated with the specific occupancy of the facility; 2. The reduction of fire hazard by limiting the floor areas and the height of the building based on the fuel load (combustible contents and burnable building components); and 3. The level of overall fire resistance provided by the type of construction used for the building.

The interdependence of these fire safety considerations can be seen by first looking at Tables 601 and 602, which show the fire-resistance ratings of the principal structural elements comprising a building in relation to the five classifications for types of construction. Type I construction is the classification that generally requires the highest fire-resistance ratings for structural elements, whereas Type V construction, which is designated as a combustible type of construction, generally requires the least amount of fire-resistance-rated structural elements. If one then looks at Tables 504.3, 504.4 and 506.2, the relationship among group classification, allowable heights and areas and types of construction becomes apparent. Respective to each group classification, the greater the fire-resistance rating of structural elements, as represented by the type of construction, the greater the floor area and height allowances. The greater the potential fire hazards indicated as a function of the group, the lesser the height and area allowances for a particular construction type.

As a result of extensive research and advancements in fire technology, today's building codes are more comprehensive and complex regulatory instruments than they were in the earlier years of code development. While the principle of equivalent risk remains an important component in building codes, perspectives have changed and life safety is now the paramount fire issue. Even so, occupancy classification still plays a key part in organizing and prescribing the appropriate protection measures. As such, threshold requirements for fire protection and means of egress systems are based on occupancy classification (see Chapters 9 and 10).

Other sections of the code also contain requirements respective to the classification of building groups. For example, Section 705 addresses requirements for exterior wall fire-resistance ratings that are tied to the occupancy classification of a building and Section 803.9 contains interior finish requirements that are dependent upon the occupancy classification

Purpose

The purpose of this chapter is to classify a building, structure or part thereof into a group based on the specific purpose for which it is designed or occupied. Throughout the code, group classifications are considered a fundamental principle in organizing and prescribing the appropriate features of construction and occupant safety requirements for buildings, especially general building limitations, means of egress, fire protection systems and interior finishes.

INTERNATIONAL CODE COUNCIL®
Copyright © 2015 ICC. ALL RIGHTS RESERVED. Accessed by David Dammon on Jun 21, 2017 12:30:52 PM pursuant to License Agreement with ICC. No further reproduction or distribution authorized. ANY UNAUTHORIZED REPRODUCTION OR DISTRIBUTION IS A VIOLATION OF THE FEDERAL COPYRIGHT ACT AND THE LICENSE AGREEMENT, AND SUBJECT TO CIVIL AND CRIMINAL PENALTIES THEREUNDER.

SECTION 301
GENERAL

301.1 Scope. The provisions of this chapter shall control the classification of all buildings and structures as to use and occupancy.

❖ As used throughout the code, the classification of an occupancy into a group is established by the requirements of this chapter. The purpose of these provisions is to provide rational criteria for the classification of various occupancies into groups based on their relative fire hazard and life safety properties. This is necessary because the code utilizes group classification as a fundamental principle for differentiating requirements in other parts of the code related to fire and life safety protection.

SECTION 302
CLASSIFICATION

302.1 General. Structures or portions of structures shall be classified with respect to occupancy in one or more of the groups listed in this section. A room or space that is intended to be occupied at different times for different purposes shall comply with all of the requirements that are applicable to each of the purposes for which the room or space will be occupied. Structures with multiple occupancies or uses shall comply with Section 508. Where a structure is proposed for a purpose that is not specifically provided for in this code, such structure shall be classified in the group that the occupancy most nearly resembles, according to the fire safety and relative hazard involved.

1. Assembly (see Section 303): Groups A-1, A-2, A-3, A-4 and A-5.
2. Business (see Section 304): Group B.
3. Educational (see Section 305): Group E.
4. Factory and Industrial (see Section 306): Groups F-1 and F-2.
5. High Hazard (see Section 307): Groups H-1, H-2, H-3, H-4 and H-5.
6. Institutional (see Section 308): Groups I-1, I-2, I-3 and I-4.
7. Mercantile (see Section 309): Group M.
8. Residential (see Section 310): Groups R-1, R-2, R-3 and R-4.
9. Storage (see Section 311): Groups S-1 and S-2.
10. Utility and Miscellaneous (see Section 312): Group U.

❖ This section requires all structures to be classified in one or more of the groups listed according to the structure's purpose and function (i.e., its occupancy). By organizing occupancies with similar fire hazard and life safety properties into groups, the code has incorporated the means to differentiate occupancies such that various fire protection and life safety requirements can be rationally organized and applied. Each specific group has an individual classification. Each represents a different characteristic and level of fire hazard that requires special code provisions to lessen the associated risks. There are some group classifications that are very closely related to other specific groups and, therefore, are collectively referred to as a single group (e.g., Group F applies to Groups F-1 and F-2). In these cases, there are requirements within the code that are common to each specific group classification. These common requirements are applicable based on the reference to the collective classification. For example, the automatic sprinkler system requirement of Section 903.2.8 applies to each specific group classification (R-1, R-2, R-3 and R-4) listed under the term "Group R." Although many requirements applicable to a general occupancy classification are the same for all of the subclassifications within the occupancy group, there are enough differences to warrant the division of the general category into two or more specific classifications.

Example: Both a restaurant (Group A-2) and a church (Group A-3) are included in Group A, but they have different specific group classifications. Both Groups A-2 and A-3 are subject to the same travel distance limitations (see Table 1017.1) and corridor fire-resistance ratings (see Table 1020.1), but have different thresholds for when automatic sprinkler systems are required (see Section 903).

Buildings that contain more than one occupancy group are mixed occupancy buildings. Buildings with mixed occupancies must comply with one of the design options contained in Section 508. Options established in Section 508 include the regulation of the mixed-occupancy conditions as accessory occupancies, nonseparated occupancies or separated occupancies.

Occasionally, a building or space is intended to be occupied for completely different purposes at different times. For instance, a church hall might be used as a day care center during weekdays and as a reception hall for weddings and other similar events at other times. In these cases, the code provisions for each occupancy must be satisfied.

In cases where a structure has a purpose that is not specifically identified within any particular occupancy classification, that structure is to be classified in the group that it most closely resembles. Before an accurate classification can be made, however, a detailed description of the activities or processes taking place inside the building, the occupant load and the materials and equipment used and stored therein must be submitted to the building official. The building official must then compare this information to the various occupancy classifications, determine which one the building most closely resembles and classify the building as such.

Example: A designer presents the building official with a building needing an occupancy group classification. The building official is informed that the build-

INTERNATIONAL CODE COUNCIL®
Copyright © 2015 ICC. ALL RIGHTS RESERVED. Accessed by David Dammon on Jun 21, 2017 12:30:52 PM pursuant to License Agreement with ICC. No further reproduction or distribution authorized. ANY UNAUTHORIZED REPRODUCTION OR DISTRIBUTION IS A VIOLATION OF THE FEDERAL COPYRIGHT ACT AND THE LICENSE AGREEMENT, AND SUBJECT TO CIVIL AND CRIMINAL PENALTIES THEREUNDER.

ing is to be used as an indoor shooting gallery, open to the public but used mostly by police officers. After reviewing the code, the official cannot find a specific reference to a shooting gallery in Sections 303 through 312 or in the associated tables. The building official asks the designer for additional information about the activities to be conducted in the building and is told that there will be a small sign-in booth, patron waiting/viewing area and the actual shooting area. Based on this information, the building official can determine that the most logical classification of the building is Group A-3, assembly. This classification is based on the fact that the building is used for the congregation of people for recreation. A shooting gallery is similar in many respects to a bowling center, which is classified as Group A-3 (see Commentary Figure 302.1).

SECTION 303
ASSEMBLY GROUP A

303.1 Assembly Group A. Assembly Group A occupancy includes, among others, the use of a building or structure, or a portion thereof, for the gathering of persons for purposes such as civic, social or religious functions; recreation, food or drink consumption or awaiting transportation.

❖ Because of the arrangement and density of the occupant load associated with occupancies classified in the Group A assembly category, the potential for multiple fatalities and injuries from fire is comparatively high. For example, no other use listed in Section 302.1 contemplates occupant loads as dense as 5 square feet (0.46 m^2) per person (see Table 1004.1.1). Darkened spaces in theaters, nightclubs and similar spaces serve to increase hazards. In sudden emergencies, the congestion caused by large numbers of people rushing to exits can cause panic conditions. For these and many other reasons, there is a relatively high degree of hazard to life safety in assembly facilities. The relative hazards of assembly occupancies are reflected in the height and area limitations of Tables 504.3, 504.4 and 506.2, which are, in comparison, generally more restrictive than for buildings in other group classifications.

A room or space with an occupant load of 50 or more persons should not be automatically classified as Group A. However, if a room or space is used for assembly purposes (i.e., gathering of persons for purposes such as civic, social or religious functions; recreation, food or drink consumption; or awaiting transportation per Section 303.1) and the occupant load is 50 or more, Group A is likely to be the appropriate designation. Other uses can have an occupant load of more than 50 in a space or room—for example, a large office space, a grocery store or the main floor of a major retail business—but these are not assembly occupancies.

There are five specific assembly group classifications, Groups A-1 through A-5, described in this section. Where used in the code, the general term "Group A" is intended to include all five classifications.

The fundamental characteristics of all assembly occupancies are identified in this section. Structures that are designed or occupied for assembly purposes must be placed in one of the assembly group classifications. There are buildings and spaces which are used for assembly purposes, but are not classified as assembly occupancies. The "exceptions" to this rule include small assembly buildings, tenant spaces and assembly spaces in mixed-use buildings. These exceptions to the Group A classification are addressed in Sections 303.1.1 through 303.1.4.

303.1.1 Small buildings and tenant spaces. A building or tenant space used for assembly purposes with an *occupant load* of less than 50 persons shall be classified as a Group B occupancy.

❖ There are often small establishments that typically serve food and have a few seats that technically meet the definition of an assembly Group A occupancy but due to the low occupant load pose a lower risk than a typical assembly occupancy. These types of buildings

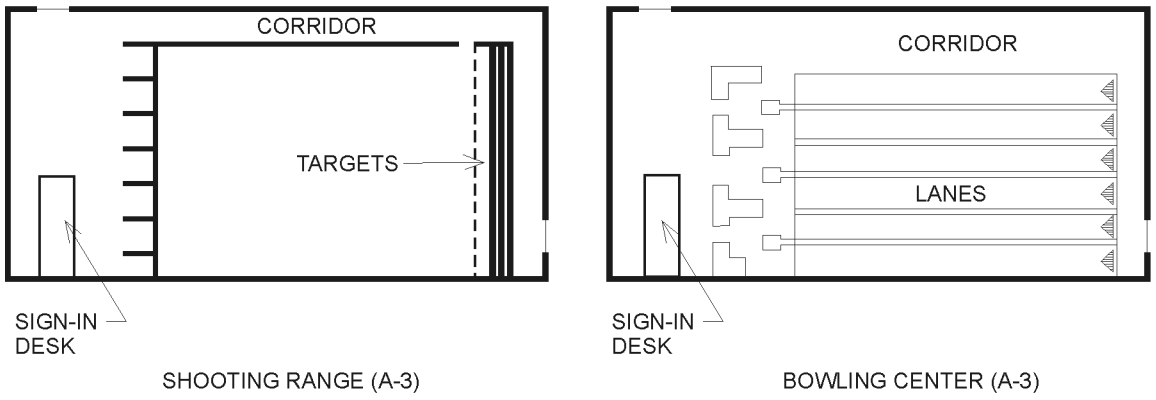

Figure 302.1
GROUP CLASSIFICATION

INTERNATIONAL CODE COUNCIL®
Copyright © 2015 ICC. ALL RIGHTS RESERVED. Accessed by David Dammon on Jun 21, 2017 12:30:52 PM pursuant to License Agreement with ICC. No further reproduction or distribution authorized. ANY UNAUTHORIZED REPRODUCTION OR DISTRIBUTION IS A VIOLATION OF THE FEDERAL COPYRIGHT ACT AND THE LICENSE AGREEMENT, AND SUBJECT TO CIVIL AND CRIMINAL PENALTIES THEREUNDER.

and tenant spaces are to be considered as Group B occupancies when the occupant load is determined to be less than 50 persons. Examples of this include small "fast food" establishments and small "mom-and-pop" cafes or coffee shops.

303.1.2 Small assembly spaces. The following rooms and spaces shall not be classified as Assembly occupancies:

1. A room or space used for assembly purposes with an *occupant load* of less than 50 persons and accessory to another occupancy shall be classified as a Group B occupancy or as part of that occupancy.
2. A room or space used for assembly purposes that is less than 750 square feet (70 m^2) in area and accessory to another occupancy shall be classified as a Group B occupancy or as part of that occupancy.

❖ Assembly rooms or spaces within larger buildings that house other uses may be classified as other than Group A depending on occupant load or the size of the space. Where the occupant load of the assembly space is less than 50, or where the floor area of the space used for assembly purposes is less than 750 square feet (65 m^2), a classification of other than Group A is permitted. In both cases, the purpose of the assembly space must be accessory to the principal occupancy of the structure (i.e., the activities in the assembly space are subordinate and secondary to the primary occupancy). If either the maximum occupant load or floor area limit requirement is satisfied and the purpose of the assembly space is accessory to the principal occupancy, the space is permitted to be classified as either a Group B occupancy or as part of the principal occupancy. In either case, Section 508.2 does not apply to this section; these assembly spaces (individually or in aggregation) are not required to be less than 10 percent of the area of the story on which they are located (IBC Interpretation No. 20-04).

The allowances given to assembly spaces in buildings containing multiple uses reflect a practical code consideration that permits a mixed-use condition to exist without requiring compliance with the provisions for mixed occupancies (see Section 508). Although the term "accessory" is used in describing the relationship of the uses, the intent of the term here is that the use of the space is related to, or part of, the main use of the space. These exceptions are not limited by the accessory use requirements found in Section 508.2.

Example 1: An office building, classified as a Group B occupancy, has a conference room used for staff meetings with an occupant load of 40 [see Commentary Figure 303.1.2(1)]. The occupancy classification of a conference room is generally considered a Group A-3. Since the occupant load of the conference room is less than 50 and its function is clearly accessory to the business area, the room is permitted to be classified the same as the main occupancy, Group B.

Example 2: A 749-square-foot (70 m^2) assembly area is located adjacent to a mercantile floor area of 5,000 square feet (465 m^2) [see Commentary Figure 303.1.2(2)]. Although the assembly use area occupies 15 percent of the 5,000-square foot (465 m^2) floor area, it does not exceed 750 square feet (70 m^2) and is not considered a Group A occupancy, but rather is classified as part of the Group M occupancy.

303.1.3 Associated with Group E occupancies. A room or space used for assembly purposes that is associated with a Group E occupancy is not considered a separate occupancy.

❖ A typical educational facility for students in the 12th grade and below invariably contains many types of assembly spaces other than classrooms, including auditoriums, cafeterias, gymnasiums and libraries. These assembly spaces in a Group E building are not intended to be regulated as separate Group A occupancies, regardless of their floor area, but rather an extension of the Group E classification. It is worth mentioning, for these assembly functions to be considered part of the primary Group E occupancy, the assembly functions must be ancillary and supportive to the educational operation of the building. Otherwise, they would be classified into the appropriate Group A occupancy based upon their specific function. These assembly spaces, where classified as a portion of the Group E occupancy, are still considered as assembly in nature and must comply with assembly space requirements specified for accessibility and means of egress. However, often these school facilities are used for other functions such as a meeting of a community service organization or a community crafts fair. These types of uses fall outside of the intent of this section, and therefore such assembly spaces would need to be classified as a Group A.

303.1.4 Accessory to places of religious worship. Accessory religious educational rooms and religious auditoriums with *occupant loads* of less than 100 per room or space are not considered separate occupancies.

❖ "Places of religious worship" are listed as Group A-3 occupancies. In addition to the worship hall, it is common for these facilities to contain smaller rooms used

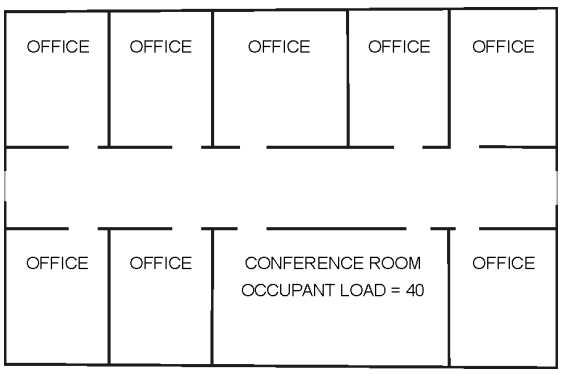

Figure 303.1.2(1)
ACCESSORY ASSEMBLY USE LIMITED BY OCCUPANT LOAD

INTERNATIONAL CODE COUNCIL®
Copyright © 2015 ICC. ALL RIGHTS RESERVED. Accessed by David Dammon on Jun 21, 2017 12:30:52 PM pursuant to License Agreement with ICC. No further reproduction or distribution authorized. ANY UNAUTHORIZED REPRODUCTION OR DISTRIBUTION IS A VIOLATION OF THE FEDERAL COPYRIGHT ACT AND THE LICENSE AGREEMENT, AND SUBJECT TO CIVIL AND CRIMINAL PENALTIES THEREUNDER.

for educational activities. This provision allows such spaces to be considered as part of the Group A-3 classification rather than create a mixed-occupancy condition. For example, classrooms are normally classified as Group E if occupied by persons of ages through the 12th grade, or as Group B if the education is provided to adults. These types of classrooms could be considered as a part of the Group A-3 occupancy under the provisions of this section. Where such rooms are used at certain times for other than a religious auditorium or for religious education, Section 302 requires that the requirements of each occupancy be applied.

303.2 Assembly Group A-1. Group A-1 occupancy includes assembly uses, usually with fixed seating, intended for the production and viewing of the performing arts or motion pictures including, but not limited to:

Motion picture theaters
Symphony and concert halls
Television and radio studios admitting an audience
Theaters

❖ Some of the characteristics of Group A-1 occupancies are large, concentrated occupant loads, low lighting levels, above-normal sound levels and a moderate fuel load.

Group A-1 is characterized by two basic types of activities. The first type is one in which the facility is occupied for the production and viewing of theatrical or operatic performances. Facilities of this type ordinarily have fixed seating; a permanent raised stage; a proscenium wall and curtain; fixed or portable scenery drops; lighting devices; dressing rooms; mechanical appliances; or other theatrical accessories and equipment [see Commentary Figure 303.2(1)].

The second type is one in which the structure is primarily occupied for the viewing of motion pictures. Facilities of this type ordinarily have fixed seating, no

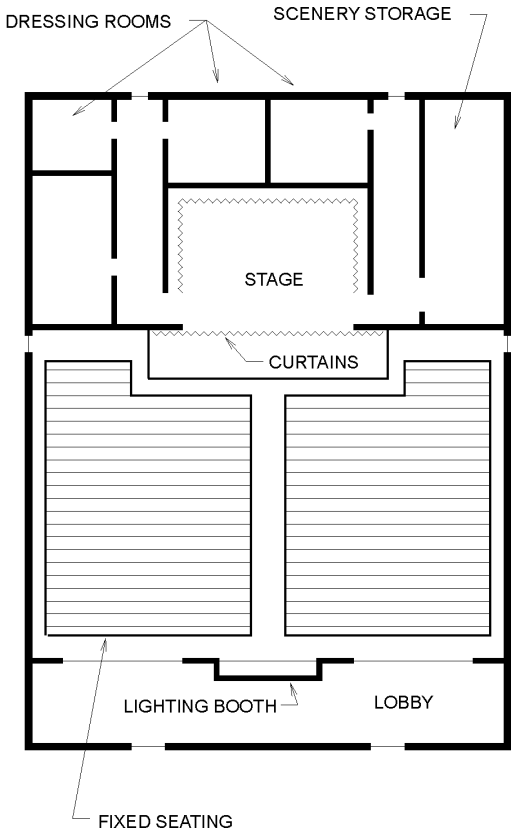

Figure 303.2(1)
GROUP A-1

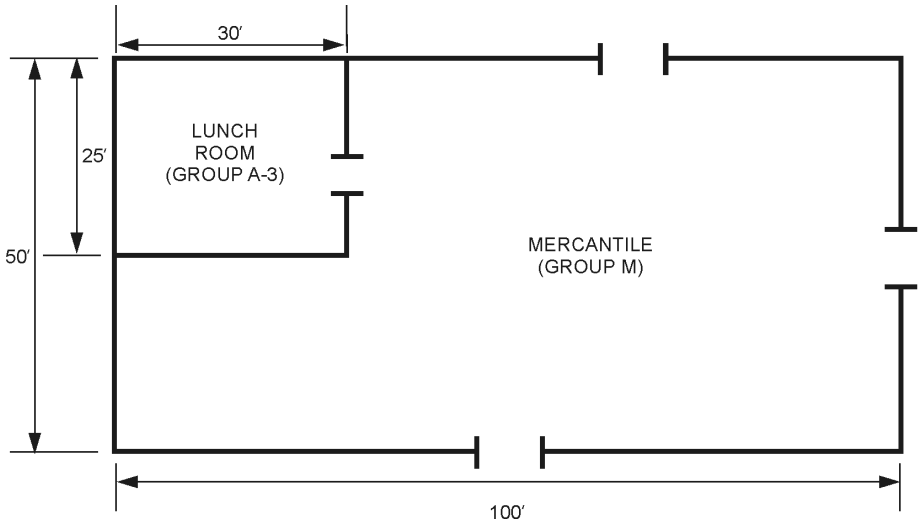

For SI:1 foot = 304.8 mm, 1 square foot = 0.0929 m^2.

Figure 303.1.2(2)
ACCESSORY ASSEMBLY USE GREATER THAN 10% OF FLOOR AREA BUT LESS THAN 750 SQ. FT.

INTERNATIONAL CODE COUNCIL®
Copyright © 2015 ICC. ALL RIGHTS RESERVED. Accessed by David Dammon on Jun 21, 2017 12:30:52 PM pursuant to License Agreement with ICC. No further reproduction or distribution authorized. ANY UNAUTHORIZED REPRODUCTION OR DISTRIBUTION IS A VIOLATION OF THE FEDERAL COPYRIGHT ACT AND THE LICENSE AGREEMENT, AND SUBJECT TO CIVIL AND CRIMINAL PENALTIES THEREUNDER.

stage, a viewing screen, motion picture projection booths and equipment [see Commentary Figure 303.2(2)].

Group A-1 presents a significant potential life safety hazard because of the large occupant loads and the concentration of people within confined spaces. The means of egress is an important factor in the design of such facilities. Theaters for the performing arts that require stages are considered particularly hazardous because of the amount of combustibles such as curtains, drops, scenery, construction materials and other accessories normally associated with stage operation. As such, special protection requirements applicable to stages and platforms are provided in Section 410.

303.3 Assembly Group A-2. Group A-2 occupancy includes assembly uses intended for food and/or drink consumption including, but not limited to:

Banquet halls
Casinos (gaming areas)
Nightclubs
Restaurants, cafeterias and similar dining facilities (including associated commercial kitchens)
Taverns and bars

❖ Group A-2 includes occupancies in which people congregate in high densities for social entertainment, including drinking and dancing (e.g., nightclubs, banquet halls, cabarets) and food and drink consumption (e.g., restaurants). The uniqueness of these occupancies is characterized by some or all of the following:

- Low lighting levels;
- Entertainment by a live band or recorded music generating above-normal sound levels;
- No theatrical stage accessories;
- Later-than-average operating hours;
- Tables and seating arranged or positioned so as to create ill-defined aisles;
- A specific area designated for dancing;
- Service facilities for alcoholic beverages and food; and
- High occupant load density.

The fire records are very clear in identifying that the characteristics listed above often cause a delayed awareness of a fire situation and confuse occupants regarding the appropriate response, resulting in an increased egress time and sometimes panic. Together, these factors may result in extensive life and property losses. These characteristics are only advisory in determining whether Group A-2 is the appropriate classification. Often there are additional characteristics that are unique to a project, which also must be taken into consideration when a classification is made.

Not all restaurants have all of these characteristics. Most fast food restaurants will only have two or three of these, yet they are appropriately classified as Group A-2.

Example: The Downtown Club, a popular local nightclub/dance hall, features a different band every weekend [see Commentary Figure 303.3]. It is equipped with a bar and basic kitchen facilities so that beverages and appetizers can be served. There is a platform for a band to perform, a dance floor in front of the platform and numerous cocktail tables and chairs. The tables and chairs are not fixed, resulting in an arrangement with no distinct aisles. When the band

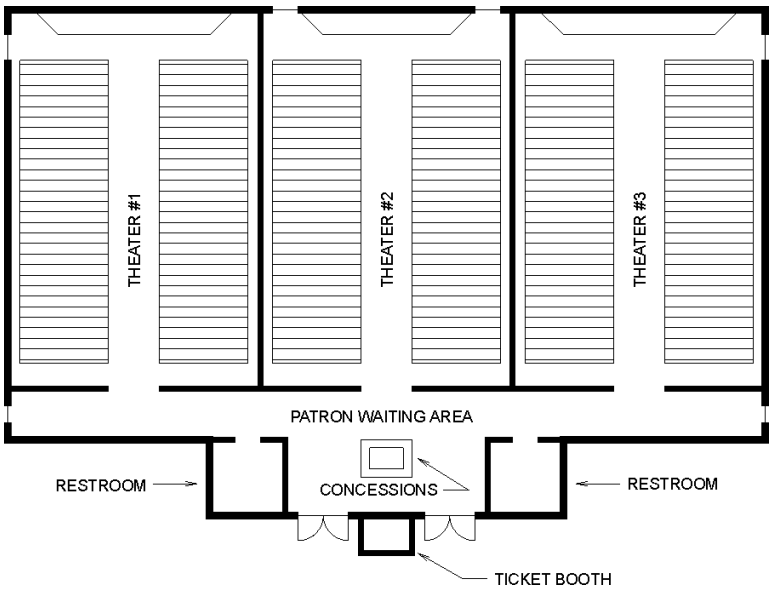

Figure 303.2(2)
GROUP A-1

INTERNATIONAL CODE COUNCIL®
Copyright © 2015 ICC. ALL RIGHTS RESERVED. Accessed by David Dammon on Jun 21, 2017 12:30:52 PM pursuant to License Agreement with ICC. No further reproduction or distribution authorized. ANY UNAUTHORIZED REPRODUCTION OR DISTRIBUTION IS A VIOLATION OF THE FEDERAL COPYRIGHT ACT AND THE LICENSE AGREEMENT, AND SUBJECT TO CIVIL AND CRIMINAL PENALTIES THEREUNDER.

performs, the house lights are dimmed and spotlights are keyed in on the performers. The club is equipped with a sound system that is used at loud levels. The club is open until 3:00 a.m.—the latest time the local jurisdiction will allow.

From this description of the Downtown Club, one can readily see that the appropriate classification is Group A-2. Sometimes, however, it is not this easy to determine the appropriate classification. In such cases, the building official must seek additional information regarding the functions of the building and each area within the building.

Two of the specific uses listed as Group A-2 occupancies are typically not considered as facilities primarily used for food and/or drink consumption, however their classification as such has been deemed appropriate for varying reasons. The placement of casino gaming areas in the Group A-2 classification is because they share many hazard characteristics with nightclubs and, to some extent, the other uses in the category. The presence of distracting lights, sounds and decorations, along with the potential for alcohol consumption, create an assembly environment that is best addressed under the Group A-2 provisions. The classification is specific to the gaming areas of a casino, therefore other related uses such as administrative, storage and lodging areas are to be individually classified based upon their specific use.

Commercial kitchens, when associated with a Group A-2 dining and drinking establishment, are also classified as Group A-2. Although commercial kitchens do not pose the same conditions and concerns as the other uses classified as Group A-2, their classification as such recognizes the relationship that exists between the dining and cooking areas. Providing a physical fire-resistive separation between the kitchen and the dining area that it serves is often found to be impractical. Assigning a single occupancy classification for both the commercial kitchen and its associated dining area eliminates any potential for an unnecessary mixed-occupancy condition. This single classification approach can also be applied where the occupant load of the dining area is below 50, allowing for a Group B classification. Under such circumstances, the kitchen would be considered an extension of the Group B dining facility. See also commercial kitchens in Group F-1.

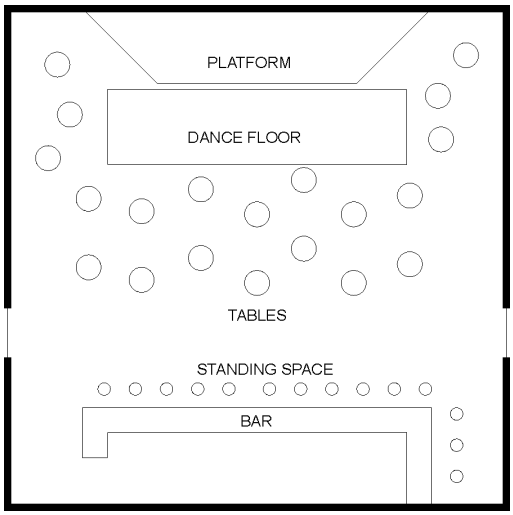

Figure 303.3
GROUP A-2

303.4 Assembly Group A-3. Group A-3 occupancy includes assembly uses intended for worship, recreation or amusement and other assembly uses not classified elsewhere in Group A including, but not limited to:

Amusement arcades
Art galleries
Bowling alleys
Community halls
Courtrooms
Dance halls (not including food or drink consumption)
Exhibition halls
Funeral parlors
Gymnasiums (without spectator seating)
Indoor *swimming pools* (without spectator seating)
Indoor tennis courts (without spectator seating)
Lecture halls
Libraries
Museums
Places of religious worship
Pool and billiard parlors
Waiting areas in transportation terminals

❖ Structures in which people assemble for the purpose of social activities (such as entertainment, recreation and amusement) that are not classified in Group A-1, A-2, A-4 or A-5 are to be classified in Group A-3. Some of the uses listed as examples in Group A-3 are more appropriately classified as Group A-4 or A-5 where there is spectator seating provided. An indoor tennis court where no spectator seating is provided is an A-3. Add spectator seating and it becomes an A-4 occupancy. Take away the roof and now it is a Group A-5 occupancy. Exhibition halls, libraries, dance halls (not including food and drink), places of religious worship, museums, gymnasiums, recreation centers, health clubs, fellowship halls, indoor shooting galleries, bowling centers and billiard halls are among the facilities often classified in Group A-3. Also, since they most nearly resemble this occupancy classification, public and private spaces used for assembly are often classified in Group A-3. These include large courtrooms, meeting rooms and conference centers.

To more fully understand the occupancy classification of places of religious worship, see the commentary for the defined term in Section 202 and Section 303.1.4.

Schools (Group E) and colleges (Group B) may have spaces that have an occupant load of more than

INTERNATIONAL CODE COUNCIL®
Copyright © 2015 ICC. ALL RIGHTS RESERVED. Accessed by David Dammon on Jun 21, 2017 12:30:52 PM pursuant to License Agreement with ICC. No further reproduction or distribution authorized. ANY UNAUTHORIZED REPRODUCTION OR DISTRIBUTION IS A VIOLATION OF THE FEDERAL COPYRIGHT ACT AND THE LICENSE AGREEMENT, AND SUBJECT TO CIVIL AND CRIMINAL PENALTIES THEREUNDER.

50 in a room, but are ancillary to the place of education and used only for programs directly associated with the school. See the commentaries for Groups E and B for additional information (Sections 304 and 305). For college buildings, similar to other office buildings, if there are spaces with occupant loads of greater than 50 (such as cafeterias or lecture halls), by the character of the space and the level of fire hazard they would be appropriately classified as Group A-2 or A-3, respectively (see Section 302.1).

The fire hazard in terms of combustible contents (fuel load) in structures classified in Group A-3 is most often expected to be moderate to low. Since structures classified in Group A-3 vary widely as to the purposes for which they are used, the range of fuel load varies widely. For example, the fuel load in a library or an exhibition hall usually is considerably greater than that normally found in a gymnasium. While the code specifically addresses kitchens associated with Group A-2 restaurants and similar dining facilities, it is silent regarding accessory kitchens one might find associated with community centers or a fellowship hall of a place of religious worship. These kitchens should be considered carefully by the building official. Each facility and its use will be unique. The intensity and frequency of the use of the space for serving of food as well as the type of cooking equipment installed are important factors. The occasional use of the fellowship hall for a fundraising dinner where food is brought in and warmed is one end of the spectrum and may warrant keeping a Group A-3 classification. But when the same hall becomes a daily charity "soup" kitchen, then Group A-2 classification is more appropriate.

303.5 Assembly Group A-4. Group A-4 occupancy includes assembly uses intended for viewing of indoor sporting events and activities with spectator seating including, but not limited to:

Arenas
Skating rinks
Swimming pools
Tennis courts

❖ Structures provided with spectator seating in which people assemble to watch an indoor sporting event are to be classified as Group A-4. Arenas, skating rinks, swimming pools and tennis courts are among the facilities often classified as Group A-4. The list of four uses offers examples of A-4 occupancies and is not an exhaustive list. The distinguishing factor between Group A-4 and A-5 structures is whether the event is indoors or outdoors. Group A-4 facilities are limited to indoor structures only. The distinguishing factor between Group A-4 and Group A-3 facilities is the presence of a defined seating area. While Group A-3 facilities are indoors (e.g., tennis courts, swimming pools), they typically do not have a defined seating area in which to view the event. Only facilities that are both indoors and have a defined seating area are to be classified as Group A-4.

303.6 Assembly Group A-5. Group A-5 occupancy includes assembly uses intended for participation in or viewing outdoor activities including, but not limited to:

Amusement park structures
Bleachers
Grandstands
Stadiums

❖ Structures classified in Group A-5 are outdoor facilities where people assemble to view or participate in social and recreational activities (e.g., stadiums, grandstands, bleachers, coliseums). In order to qualify as an outdoor facility, the structure must be one where the products of combustion are freely and rapidly vented to the atmosphere (i.e., a structure without enclosures that would prevent the free movement of smoke from the occupied area to the outside). Any recreation facility that has exterior walls that enclose the facility and a roof that fully covers the area would not be classified in Group A-5, but rather in Group A-3 or A-4 depending on whether a seating area has been provided. In the case of a structure with a retractable roof, the more stringent occupancy classification (i.e., Group A-4) would be required. The list of four uses offers examples of A-5 occupancies and is not an exhaustive list.

Since occupancies classified in Group A-5 are primarily viewing and sports participation areas, the fuel load associated with them is very low (i.e., the structure itself and seats). Since the fuel load present is relatively low and the expectation is that smoke will be quickly evacuated from the structure, the relative fire hazard of occupancies classified in Group A-5 is expected to be low. The life safety hazard from panic that might occur in an emergency, however, is a serious concern. Hence, the capability of large crowds to exit the structure quickly and orderly during emergencies is an important design consideration (see Section 1029).

Both Group A-4 and A-5 occupancies will include a variety of uses that support the viewing of sports and similar activities. There will likely be luxury seating suites, locker rooms, toilet facilities and press boxes, which are clearly part of the overall uses of the facility. There will also be offices, food concession stands and merchandise stands, which by their use are different occupancies, but are probably within the accessory occupancy limits established in Section 508.2. Because of the multitiered design of most Group A-4 and A-5 occupancies, the limit for accessory occupancies to account for less than 10 percent of the story will need to be creatively applied. There may be full-fledged restaurants that are in the same building and open to guests, not just limited to those attending an event. A Group A-2 occupancy designation is likely the most appropriate classification and the mixed-occupancy conditions would most typically be addressed under the accessory occupancy provisions of Section 508.2.

INTERNATIONAL CODE COUNCIL®
Copyright © 2015 ICC. ALL RIGHTS RESERVED. Accessed by David Dammon on Jun 21, 2017 12:30:52 PM pursuant to License Agreement with ICC. No further reproduction or distribution authorized. ANY UNAUTHORIZED REPRODUCTION OR DISTRIBUTION IS A VIOLATION OF THE FEDERAL COPYRIGHT ACT AND THE LICENSE AGREEMENT, AND SUBJECT TO CIVIL AND CRIMINAL PENALTIES THEREUNDER.

SECTION 304
BUSINESS GROUP B

304.1 Business Group B. Business Group B occupancy includes, among others, the use of a building or structure, or a portion thereof, for office, professional or service-type transactions, including storage of records and accounts. Business occupancies shall include, but not be limited to, the following:

Airport traffic control towers
Ambulatory care facilities
Animal hospitals, kennels and pounds
Banks
Barber and beauty shops
Car wash
Civic administration
Clinic, outpatient
Dry cleaning and laundries: pick-up and delivery stations and self-service
Educational occupancies for students above the 12th grade
Electronic data processing
Food processing establishments and commercial kitchens not associated with restaurants, cafeterias and similar dining facilities not more than 2,500 square feet (232 m^2) in area.
Laboratories: testing and research
Motor vehicle showrooms
Post offices
Print shops
Professional services (architects, attorneys, dentists, physicians, engineers, etc.)
Radio and television stations
Telephone exchanges
Training and skill development not in a school or academic program (this shall include, but not be limited to, tutoring centers, martial arts studios, gymnastics and similar uses regardless of the ages served, and where not classified as a Group A occupancy).

❖ The risks to life safety in the business occupancy classification are relatively low. Exposure to the potential effects of fire is limited because business-type facilities most often have low fuel loads, are normally occupied only during the daytime and, with some exceptions, are usually occupied for a set number of hours. The occupants, because of the nature of the use, are typically alert, ambulatory, conscious, aware of their surroundings and generally familiar with the building's features, particularly the means of egress. Historically, this occupancy has one of the better fire safety records for the protection of life and property.

This section identifies the general characteristics and lists examples of occupancies that are classified in Group B. Note that the description recognizes the need for limited storage spaces that are incidental to office occupancies. Accessory storage classified as a Group B occupancy is limited by Section 311.1.1 to be no more than 10 percent of a given story of a building.

Colleges (educational occupancies for students above the 12th grade) may have spaces that have an occupant load of more than 50 in a room, but are ancillary to the place of education and used only for programs directly associated with training and education (Section 303.4). For college buildings, similar to other office buildings, if there are spaces with occupant loads greater than 50, such as cafeterias or lecture halls, by the character of the space and the level of fire hazard they would be appropriately classified as Group A-2 or A-3, respectively (see Section 302.1). Where lecture facilities for large groups (i.e., occupant load of 50 or more) are located within the same building as classrooms with an occupant load less than 50, the building is a mixed occupancy (Groups A-3 and B) and is subject to the provisions of Section 508

While civic administration covers a broad range of state and local government buildings, many such buildings will have a variety of uses and need to be considered under mixed occupancy provisions. Frequently, police stations will include jails or holding cells. Fire stations will be a mix of offices, parking and maintenance facilities for the fire engines, and living spaces for the fire fighters. Often a meeting room that is open to the public is also included. This type of facility is a mix of Group A, B, R and S occupancies.

Ambulatory care facilities are those used to provide medical, or similar care, on less than a 24-hour basis to patients who are rendered incapable of self-preservation (see Section 202). Frequently called "day surgery centers" or "ambulatory surgical centers," ambulatory care facilities perform procedures that render care recipients (patients) temporarily incapable of self-preservation due to the use of nerve blocks, sedation or anesthesia. Because of the condition of the care recipients, the need for medical staff to stabilize the patients before evacuation and the use of medical gases such as oxygen and nitrous oxide, these types of facilities pose greater fire and life safety hazards than other business occupancies. Accordingly, additional fire protection and means of egress requirements specific to ambulatory care are provided in Section 422.

Facilities that provide medical services for inpatient care where the care recipients (patients) stay for more than 24 hours would be classified as Group I-2. Buildings used as sleep clinics would be classified as Group B since these spaces are not typical dwelling or sleeping units where people live, the occupants are assumed to be capable of self-preservation and the occupants are not living in a supervised environment. Although the patients in a sleep clinic may be sleeping, they can be easily awakened and alerted to an emergency as compared to the patients at an ambulatory care facility.

The code distinguishes, based on size, between food processing operations that are not directly associated with a restaurant. Those 2,500 square feet

INTERNATIONAL CODE COUNCIL®
Copyright © 2015 ICC. ALL RIGHTS RESERVED. Accessed by David Dammon on Jun 21, 2017 12:30:52 PM pursuant to License Agreement with ICC. No further reproduction or distribution authorized. ANY UNAUTHORIZED REPRODUCTION OR DISTRIBUTION IS A VIOLATION OF THE FEDERAL COPYRIGHT ACT AND THE LICENSE AGREEMENT, AND SUBJECT TO CIVIL AND CRIMINAL PENALTIES THEREUNDER.

(232 m^2) or smaller fall under the Group B classification. A small catering business would fall under this classification. Other food-related businesses which do not provide a space for their product to be eaten on site, such as a take-out pizza store or a neighborhood bakery, would also be classified as a Group B occupancy. A commercial kitchen or food processing facility larger than 2,500 square feet (232 m^2) would be classified as a Group F occupancy.

Training and skill development is classified as a Group B occupancy due to the similarity in use of spaces between education above the 12th grade and professional consultation. Often unions provide training facilities for their members so they can keep up with new materials and updates of regulations. Other facilities can provide one-on-one tutoring such as remedial reading or math skills for students. Those receiving the training or skill development can include those whose ages are typically associated with grades 12 or earlier. The determination of the appropriate classification requires the building official to consider whether the training is given as part of a traditional educational program. Examples provided by the code allow a range of size in the numbers receiving the training from one-on-one tutoring to a large class of children learning martial arts or ballet. The presence of children does not automatically mean a classification as a Group E. Where the occupant load of a training classroom or space exceeds 50, a Group A classification may be appropriate for the space, especially if the space is to be used for different activities at different times. If the training room is used for a martial arts competition with spectators on an evening or weekend, then a Group A designation should also be considered.

304.2 Definitions. The following terms are defined in Chapter 2:

AMBULATORY CARE FACILITY.

CLINIC, OUTPATIENT.

❖ This section lists terms that are specifically associated with the subject matter of this section. It is important to emphasize that these terms are not exclusively related to this section but may or may not also be applicable where the term is used elsewhere in the code.

Definitions of terms can help in the understanding and application of the code requirements. The purpose for including a list within this chapter is to provide more convenient access to terms which may have a specific or limited application within this chapter. For the complete definition and associated commentary, refer back to Chapter 2. Terms that are italicized provide a visual identification throughout the code that a definition exists for that term. The use and application of all defined terms are set forth in Section 201.

SECTION 305
EDUCATIONAL GROUP E

305.1 Educational Group E. Educational Group E occupancy includes, among others, the use of a building or structure, or a portion thereof, by six or more persons at any one time for educational purposes through the 12th grade.

❖ The risks to life safety in this occupancy vary with the composition of the facilities and also with the ages of the occupants. In general, children require more safeguards than do older, more mature persons.

This section identifies the criteria for classification of a building in Group E. The two fundamental characteristics of a Group E facility are as follows:

1. The facility is occupied by more than five persons (excluding the instructor); and
2. The purpose of the facility is for educating persons at the 12th-grade level and below, but not including more than five occupants $2^1/_2$ years of age or less.

It is common for a school to also have gymnasiums (Group A-3), auditoriums (Group A-1), libraries (Group A-3) and offices (Group B). Storage rooms might be either a Group S-1 occupancy or, if less than 10 percent of a story, they can be classified as Group E (see Section 311.1.1). When this occurs, the building is considered as a mixed occupancy condition and is subject to the provisions of Section 508. In accordance with Section 303.1.3, assembly spaces, such as the gymnasium, auditorium, library and cafeteria, do not have to be considered separate occupancies if used for school purposes (see commentary, Section 303.1.3). For such assembly functions to be considered part of the primary Group E occupancy, the assembly functions must be ancillary and supportive to the educational operation of the building.

Occupancies used for the education of persons above the 12th grade level are not included in Group E. These facilities are occupied by adults who are not expected to require special supervision, direction or instruction in a fire or other emergency.

305.1.1 Accessory to places of religious worship. Religious educational rooms and religious auditoriums, which are accessory to *places of religious worship* in accordance with Section 303.1.4 and have *occupant loads* of less than 100 per room or space, shall be classified as Group A-3 occupancies.

❖ In places of religious worship, worship halls, religious educational rooms and religious auditoriums are often all provided in the same building complex. Such religious educational rooms and auditoriums are not to be considered separate occupancies (i.e., Group E) (see commentary, Section 303.1.4). Where such rooms are used at certain times for other than a religious auditorium or for religious education, Section 302 requires that the requirements of each occupancy be applied.

INTERNATIONAL CODE COUNCIL®
Copyright © 2015 ICC. ALL RIGHTS RESERVED. Accessed by David Dammon on Jun 21, 2017 12:30:52 PM pursuant to License Agreement with ICC. No further reproduction or distribution authorized. ANY UNAUTHORIZED REPRODUCTION OR DISTRIBUTION IS A VIOLATION OF THE FEDERAL COPYRIGHT ACT AND THE LICENSE AGREEMENT, AND SUBJECT TO CIVIL AND CRIMINAL PENALTIES THEREUNDER.

305.2 Group E, day care facilities. This group includes buildings and structures or portions thereof occupied by more than five children older than $2^1/_2$ years of age who receive educational, supervision or *personal care services* for fewer than 24 hours per day.

❖ Group E day care occupancies include facilities intended to be used for the care and supervision of more than five children older than $2^1/_2$ years of age where individual care is for a period of less than 24 hours per day. Day care centers are a special concern since they are generally occupied by preschool children who are less capable of responding to an emergency. The hazards found in a day care center are far greater than in normal educational facilities, not so much because of the occupant or fuel load, but because of the inability of the occupants to respond.

Children $2^1/_2$ years of age or less usually are not able to recognize an emergency situation, may not respond appropriately or simply may not be able to egress without assistance. Thus, facilities that have more than five children $2^1/_2$ years of age or less are classified as child care facilities and considered to be Group I-4 (see Section 308.6) unless the provisions of Sections 308.6.1 through 308.6.4 allow for a different classification.

Locations where child care may be provided that would not be considered Group E or I-2 are addressed in Sections 305.2.1 through 305.2.3.

305.2.1 Within places of religious worship. Rooms and spaces within *places of religious worship* providing such day care during religious functions shall be classified as part of the primary occupancy.

❖ Cry rooms and other types of child care areas within places of worship that are used for this purpose during a religious function need not be classified as Group E day care facilities. Such rooms and spaces may take on the classification of the primary occupancy, which in most cases would be Group A-3. The limited occupant load makes the need for classification as a Group E occupancy unnecessary. If the child care areas are used when there is not a service or other religious function going on simultaneously, such as for child day care during the week, the religious facility would be a mixed use building (see commentary, Section 303.5.2 or 308.6).

305.2.2 Five or fewer children. A facility having five or fewer children receiving such day care shall be classified as part of the primary occupancy.

❖ Where a child care facility has no more than five children receiving care at any one time, the classification of the main occupancy may extend to the child care use. The limited number of occupants requiring care services does not warrant classification as a separate and distinct occupancy from that of the major use.

305.2.3 Five or fewer children in a dwelling unit. A facility such as the above within a *dwelling unit* and having five or fewer children receiving such day care shall be classified as a Group R-3 occupancy or shall comply with the *International Residential Code*.

❖ Where child care services are performed within a single-family dwelling or within a dwelling unit of a two-family dwelling, residential provisions are applicable provided the number of children receiving care does not exceed five. The facility may be classified under the code as a Group R-3 occupancy or may be regulated under the provisions of the *International Residential Code*® (IRC®). Where this use occurs within a dwelling unit of a Group R-2 multifamily building, it is expected that the child care facility be considered as an extension of the Group R-2 classification as addressed in Section 305.2.2.

SECTION 306
FACTORY GROUP F

306.1 Factory Industrial Group F. Factory Industrial Group F occupancy includes, among others, the use of a building or structure, or a portion thereof, for assembling, disassembling, fabricating, finishing, manufacturing, packaging, repair or processing operations that are not classified as a Group H hazardous or Group S storage occupancy.

❖ The purpose of this section is to identify the characteristics of occupancies that are classified in factory and industrial occupancies and to differentiate Groups F-1 and F-2.

Because of the vast number of diverse manufacturing and processing operations in the industrial community, it is more practical to classify such facilities by their level of hazard rather than their function. In industrial facilities, experience has shown that the loss of life or property is most directly related to fire hazards, particularly the fuel load contributed by the materials being fabricated, assembled or processed.

Statistics show that property losses are comparatively high in factory and industrial occupancies, but the record of fatalities and injuries from fire has been remarkably low. This excellent life safety record can, in part, be attributed to fire protection requirements of the code.

This section requires that all structures used for fabricating, finishing, manufacturing, packaging, assembling or processing products or materials are to be classified in either Group F-1 (moderate hazard) or F-2 (low hazard). These classifications are based on the relative level of hazard for the types of materials that are fabricated, assembled or processed. Where the products and materials in a factory present an extreme fire, explosion or health hazard, such facilities are classified in Group H (see Section 307). It should be noted that the term “Group F” is not a specific occupancy, but is a term that collectively applies to Groups F-1 and F-2.

306.2 Moderate-hazard factory industrial, Group F-1. Factory industrial uses that are not classified as Factory Industrial F-2 Low Hazard shall be classified as F-1 Moder-

INTERNATIONAL CODE COUNCIL®
Copyright © 2015 ICC. ALL RIGHTS RESERVED. Accessed by David Dammon on Jun 21, 2017 12:30:52 PM pursuant to License Agreement with ICC. No further reproduction or distribution authorized. ANY UNAUTHORIZED REPRODUCTION OR DISTRIBUTION IS A VIOLATION OF THE FEDERAL COPYRIGHT ACT AND THE LICENSE AGREEMENT, AND SUBJECT TO CIVIL AND CRIMINAL PENALTIES THEREUNDER.

ate Hazard and shall include, but not be limited to, the following:

Aircraft (manufacturing, not to include repair)
Appliances
Athletic equipment
Automobiles and other motor vehicles
Bakeries
Beverages: over 16-percent alcohol content
Bicycles
Boats
Brooms or brushes
Business machines
Cameras and photo equipment
Canvas or similar fabric
Carpets and rugs (includes cleaning)
Clothing
Construction and agricultural machinery
Disinfectants
Dry cleaning and dyeing
Electric generation plants
Electronics
Engines (including rebuilding)
Food processing establishments and commercial kitchens not associated with restaurants, cafeterias and similar dining facilities more than 2,500 square feet (232 m^2) in area.
Furniture
Hemp products
Jute products
Laundries
Leather products
Machinery
Metals
Millwork (sash and door)
Motion pictures and television filming (without spectators)
Musical instruments
Optical goods
Paper mills or products
Photographic film
Plastic products
Printing or publishing
Recreational vehicles
Refuse incineration
Shoes
Soaps and detergents
Textiles
Tobacco
Trailers
Upholstering
Wood; distillation
Woodworking (cabinet)

❖ Structures classified in Group F-1 (moderate hazard) are occupied for the purpose of fabrication, finishing, manufacturing, packaging, assembly or processing of materials that are combustible or that use combustible products in the production process. Food processing facilities and commercial kitchens that are 2,500 square feet (232 m^2) or smaller in area fall under the Group B occupancy category, see Section 304.1.

306.3 Low-hazard factory industrial, Group F-2. Factory industrial uses that involve the fabrication or manufacturing of noncombustible materials that during finishing, packing or processing do not involve a significant fire hazard shall be classified as F-2 occupancies and shall include, but not be limited to, the following:

Beverages: up to and including 16-percent alcohol content
Brick and masonry
Ceramic products
Foundries
Glass products
Gypsum
Ice
Metal products (fabrication and assembly)

❖ Structures classified in Group F-2 (low hazard) are occupied for the purpose of fabrication, manufacturing or processing of noncombustible materials. It is acceptable for noncombustible products to be packaged in a combustible material, provided that the fuel load contributed by the packaging is negligible when compared to the amount of noncombustible product.

The use of a significant amount of combustible material to package or finish a noncombustible product, however, will result in a Group F-1 (moderate-hazard factory and industrial) classification.

To distinguish when the presence of combustible packaging constitutes a significant fuel load, possibly requiring the reclassification of the building or structure as Group F-1, a reasonable guideline to follow is the "single thickness" rule, which is when a noncombustible product is put in one layer of packaging material.

Examples of acceptable conditions in Group F-2 include:

- Vehicle engines placed on wood pallets for transportation after assembly;
- Washing machines in corrugated cardboard boxes; and
- Soft-drink glass bottles packaged in pressed paper boxes.

Occupancies involving noncombustible items packaged in more than one layer of combustible packaging material are most appropriately classified in Group F-1.

Typical examples of packaging that would result in a Group F-1 classification include:

- Chinaware wrapped in corrugated paper and placed in cardboard boxes;
- Glassware set in expanded foam forms and placed in cardboard boxes; and
- Fuel filters individually packed in pressed paper boxes, placed by the gross in a cardboard box and stacked on a pallet for transportation.

INTERNATIONAL CODE COUNCIL®
Copyright © 2015 ICC. ALL RIGHTS RESERVED. Accessed by David Dammon on Jun 21, 2017 12:30:52 PM pursuant to License Agreement with ICC. No further reproduction or distribution authorized. ANY UNAUTHORIZED REPRODUCTION OR DISTRIBUTION IS A VIOLATION OF THE FEDERAL COPYRIGHT ACT AND THE LICENSE AGREEMENT, AND SUBJECT TO CIVIL AND CRIMINAL PENALTIES THEREUNDER.

Factories and industrial facilities often have offices and areas where large quantities of materials are kept in the same building as manufacturing operations, fabrication processes and assembly processes. The stock areas are classified as either Group S-1 or S-2, depending on the combustibility of the materials stored. Areas used for offices are classified in Group B. Where these and other combinations of occupancies occur, the building is subject to the mixed occupancy provisions in Section 508.

SECTION 307
HIGH-HAZARD GROUP H

[F] 307.1 High-hazard Group H. High-hazard Group H occupancy includes, among others, the use of a building or structure, or a portion thereof, that involves the manufacturing, processing, generation or storage of materials that constitute a physical or health hazard in quantities in excess of those allowed in *control areas* complying with Section 414, based on the maximum allowable quantity limits for *control areas* set forth in Tables 307.1(1) and 307.1(2). Hazardous occupancies are classified in Groups H-1, H-2, H-3, H-4 and H-5 and shall be in accordance with this section, the requirements of Section 415 and the *International Fire Code*. Hazardous materials stored, or used on top of roofs or canopies, shall be classified as outdoor storage or use and shall comply with the *International Fire Code*.

❖ This section identifies the various types of facilities contained in the high-hazard occupancy. This occupancy classification relates to those facilities where operations or the storage of materials are deemed to be extremely hazardous to life and property, especially when they involve the use of significant amounts of highly combustible, flammable or explosive materials, regardless of their composition (i.e., solids, liquids, gases or dust). Although they are not explosive or highly flammable, other hazardous materials, such as corrosive liquids, highly toxic materials and poisonous gases, still present an extreme hazard to life. Many materials possess multiple hazards, whether physical or health related.

There is a wide range of high-hazard operations in the industrial community; therefore, it is more practical to categorize such facilities in terms of the degree of hazard they present, rather than attempt to define a facility in terms of its function. This method is similar to that used to categorize factory (see Section 306) and storage (see Section 311) occupancies.

Group H is handled as a separate classification because it represents an unusually high degree of hazard that is not found in the other occupancies. It is important to isolate those industrial or storage operations that pose the greatest dangers to life and property and to reduce such hazards by providing systems or elements of protection through the regulatory provisions of building codes.

There are numerous provisions and exceptions throughout the code that cannot be used when one or more Group H occupancies are present.

Operations that, because of the materials utilized or stored, cause a building or portion of a building to be classified as a high-hazard occupancy are identified in this section. While buildings classified as Group H may not have a large occupant load, the unstable chemical properties of the materials contained on the premises constitute an above-average fuel load and serve as a potential danger to the surrounding area.

The dangers created by the high-hazard materials require special consideration for the abatement of the danger. The classification of a material as high hazard is based on information derived from National Fire Protection Association (NFPA) standards and the Code of Federal Regulations (DOL 29 CFR).

The wide range of materials utilized or stored in buildings creates an equally wide range of hazards to the occupants of the building, the building proper and the surrounding area. Since these hazards range from explosive to corrosive conditions, the high-hazard occupancy has been broken into four subclassifications: Groups H-1 through H-4. A fifth category, Group H-5, is used to represent structures that contain hazardous production material (HPM) facilities. Each of these subclassifications addresses materials that have similar characteristics, and the protection requirements attempt to address the hazard involved. These subclassifications are defined by the properties of the materials involved with only occasional reference to specific materials. This performance-based criterion may involve additional research to identify a hazard, but it is the only way to remain current in a rapidly changing field. Material Safety Data Sheets (MSDS) will be a major source for information.

Additional information on hazardous materials can be found in Section 415 as well as the commentary to the *International Fire Code*® (IFC®).

Section 307.1 acknowledges that a building is not classified as a high-hazard occupancy unless the maximum allowable quantities per control area as prescribed in Tables 307.1(1) and 307.1(2) are exceeded, subject to the applicable control area provisions of Section 414.2. The maximum quantity limitations per control area prescribed in Tables 307.1(1) and 307.1(2) have been determined to be relatively safe when maintained in accordance with the IFC. Therefore, a building containing less than the maximum allowable quantities specified in Tables 307.1(1) and 307.1(2) would not be classified as a Group H occupancy but rather as the occupancy group it most nearly resembles. The materials in these tables, which are listed in Section 307.2 are defined in detail in Section 202.

Section 414.2 establishes the control area concept for regulating hazardous materials. This concept would allow the maximum allowable quantities of hazardous materials per control area in Tables 307.1(1) and 307.1(2) to be exceeded within a given building without classifying the building as a high-hazard occupancy by utilizing a multiple control area

INTERNATIONAL CODE COUNCIL®
Copyright © 2015 ICC. ALL RIGHTS RESERVED. Accessed by David Dammon on Jun 21, 2017 12:30:52 PM pursuant to License Agreement with ICC. No further reproduction or distribution authorized. ANY UNAUTHORIZED REPRODUCTION OR DISTRIBUTION IS A VIOLATION OF THE FEDERAL COPYRIGHT ACT AND THE LICENSE AGREEMENT, AND SUBJECT TO CIVIL AND CRIMINAL PENALTIES THEREUNDER.

approach. The permitted number of control areas, maximum percentage of allowable quantities of hazardous materials per control area and degree of fire separation between control areas are regulated by Section 414.2 (see commentary, Section 414.2).

Section 307.1 also clarifies that hazardous materials outside of the building envelope should be classified as outdoor storage. As such, hazardous material quantities on roofs or canopies are not included in evaluating the occupancy classification of a building or structure. Canopies used to support gaseous hydrogen systems must comply with Section 406.7.2.1.

[F] 307.1.1 Uses other than Group H. An occupancy that stores, uses or handles hazardous materials as described in one or more of the following items shall not be classified as Group H, but shall be classified as the occupancy that it most nearly resembles.

1. Buildings and structures occupied for the application of flammable finishes, provided that such buildings or areas conform to the requirements of Section 416 and the *International Fire Code*.
2. Wholesale and retail sales and storage of flammable and combustible liquids in mercantile occupancies conforming to the *International Fire Code*.
3. Closed piping system containing flammable or combustible liquids or gases utilized for the operation of machinery or equipment.
4. Cleaning establishments that utilize combustible liquid solvents having a flash point of 140°F (60°C) or higher in closed systems employing equipment *listed* by an *approved* testing agency, provided that this occupancy is separated from all other areas of the building by 1-hour *fire barriers* constructed in accordance with Section 707 or 1-hour *horizontal assemblies* constructed in accordance with Section 711, or both.
5. Cleaning establishments that utilize a liquid solvent having a flash point at or above 200°F (93°C).
6. Liquor stores and distributors without bulk storage.
7. Refrigeration systems.
8. The storage or utilization of materials for agricultural purposes on the premises.
9. Stationary batteries utilized for facility emergency power, uninterruptable power supply or telecommunication facilities, provided that the batteries are provided with safety venting caps and *ventilation* is provided in accordance with the *International Mechanical Code.*
10. Corrosive personal or household products in their original packaging used in retail display.
11. Commonly used corrosive building materials.
12. Buildings and structures occupied for aerosol storage shall be classified as Group S-1, provided that such buildings conform to the requirements of the *International Fire Code*.
13. Display and storage of nonflammable solid and nonflammable or noncombustible liquid hazardous materials in quantities not exceeding the maximum allowable quantity per *control area* in Group M or S occupancies complying with Section 414.2.5.
14. The storage of black powder, smokeless propellant and small arms primers in Groups M and R-3 and special industrial explosive devices in Groups B, F, M and S, provided such storage conforms to the quantity limits and requirements prescribed in the *International Fire Code*.

❖ Section 307.1.1 provides 14 cases where facilities would not be classified as Group H because of the specific type of material, how it is expected to be used or stored, or both; the building's construction and use; the packaging of materials; the quantity of materials; or the precautions taken to prevent fire. Even if a high-hazard material meets one of these 14 cases, its storage and use must comply with the applicable provisions of Section 414 and the IFC.

Item 1 exempts spray painting and similar operations within buildings from being classified as a high-hazard occupancy. This item requires that all such operations, as well as the handling of flammable finishes, are in accordance with the provisions of Section 416 and the IFC. Therefore, an adequately protected typical paint spray booth in a factory (Group F-1) would not result in a high-hazard occupancy classification for either the building or the paint spray area.

Item 2 relies on the provisions of Section 5704.3.4.1 of the IFC to regulate the storage of flammable and combustible liquids for wholesale and retail sales and storage in mercantile occupancies. The overall permitted amount of flammable and combustible liquids is dependent on the class of liquid, storage arrangement, container size and level of sprinkler protection. For nonsprinklered buildings, the maximum allowable quantity per control area permitted by Table 5704.3.4.1 of the IFC is 1,600 gallons (6057 L) of Class IB, IC, II and IIIA liquids with a maximum of 60 gallons (227 L) of Class IA liquids. Depending on storage and ceiling heights, buildings equipped with a sprinkler system with a minimum design density for an Ordinary Hazard Group 2 occupancy may have an aggregate total of 7,500 gallons (28 391 L) of Class IB, IC, II, and IIIA liquids with a maximum of 60 gallons (227 L) of Class IA liquids. The quantities of Class IB, IC, II and IIA liquids could be further increased depending on the potential storage conditions and enhanced degree of sprinkler protection (see Section 5704.3.4.1 of the IFC for additional design information). Again, it should be noted that, despite the increased quantities far exceeding the base quantity limitations of Table 307.1(1), compliance with this item would result in the building not being classified as a Group H occupancy.

Item 3 exempts from Group H classification closed systems that are used exclusively for the operation of

INTERNATIONAL CODE COUNCIL®
Copyright © 2015 ICC. ALL RIGHTS RESERVED. Accessed by David Dammon on Jun 21, 2017 12:30:52 PM pursuant to License Agreement with ICC. No further reproduction or distribution authorized. ANY UNAUTHORIZED REPRODUCTION OR DISTRIBUTION IS A VIOLATION OF THE FEDERAL COPYRIGHT ACT AND THE LICENSE AGREEMENT, AND SUBJECT TO CIVIL AND CRIMINAL PENALTIES THEREUNDER.

machinery or equipment. The closed piping systems, which are essentially not open to the atmosphere, keep flammable or combustible liquids from direct exposure to external sources of ignition and prevent the users from coming in direct contact with liquids or harmful vapors. This item would include systems such as oil-burning equipment, piping for diesel fuel generators and LP-gas cylinders for use in forklift trucks.

Item 4 allows cleaning establishments that utilize a closed system for all combustible liquid solvents with a flash point at or above 140°F (60°C) to be classified as something other than Group H. The reference to using equipment listed by an approved testing laboratory does not mean that the entire system needs to be approved, but rather the individual pieces of equipment. As with any mechanical equipment or appliance, it should bear the label of an approved agency and be installed in accordance with the manufacturer's installation instructions [see the *International Mechanical Code*® (IMC®)].

Item 5 covers cleaning establishments that use solvents that have very high flash points [at least 200°F (93°C)] and that are exceedingly difficult to ignite. Such liquids can be used openly, but with due care.

Item 6 exempts all retail liquor stores and liquor distribution facilities from the high-hazard occupancy classification, even though most of the contents are considered combustible liquids. The item takes into account that alcoholic beverages are packaged in individual containers of limited size.

Item 7 refers to refrigeration systems that utilize refrigerants that may be flammable or toxic. Refrigeration systems do not alter the occupancy classification of the building, provided they are installed in accordance with the IMC. The IMC has specific limitations on the quantity and type of refrigerants that can be used, depending on the occupancy classification of the building.

Item 8 addresses materials that are used for agricultural purposes, such as fertilizers, pesticides, and fungicides, when used on the premises. Agricultural materials stored for direct or immediate use are not usually of a quantity large enough to constitute a large fuel load or an exceptionally hazardous condition. A group H classification is not appropriate for these situations.

Item 9 addresses battery storage rooms when used as part of an operating system, such as for providing standby power. The batteries used in installations of this type do not represent a significant health, safety or fire hazard. The electrolyte and battery casing contribute little fuel load to a fire. The release of hydrogen gas during the operation of battery systems is minimal. Ventilation in accordance with the IMC will disperse the small amounts of liberated hydrogen. This item also assumes that rooms containing stationary storage battery systems are in compliance with Section 608 of the IFC.

Without Item 10, certain products that technically are corrosive could cause grocery stores and other mercantile occupancies to be inappropriately classified as Group H-4. This item allows the maximum allowable quantity per control area in Table 307.1(2) for corrosives to be exceeded in the retail display area. This would include such things as bleaches, detergents and other household cleaning supplies in normal-size containers.

Item 11 exempts the storage or manufacture of commonly used building materials, such as Portland cement, from being inappropriately classified as Group H.

Item 12 exempts from a Group H classification those buildings and structures used for the storage of aerosol products, provided they are protected in accordance with the provisions of NFPA 30B and the IFC. The aerosol storage requirements in the IFC, referred to in this item, are based on the provisions of NFPA 30B. Compliance with the item exempts buildings from the Group H classification, provided the storage of aerosol products complies with applicable separation, storage limitations and sprinkler design requirements specified in the IFC and NFPA 30B.

Item 13 permits certain products found in mercantile and storage occupancies, which may be composed of hazardous materials, to exceed the maximum allowable quantity per control area of Tables 307.1(1) and 307.1(2). The products, however, must be composed of nonflammable solids or liquids that are nonflammable or noncombustible. Materials could include swimming pool chemicals, which are typically Class 2 or 3 oxidizers or industrial corrosive cleaning agents (see commentary, Section 414.2.5).

Item 14 permits the base maximum allowable quantity per control area of black powder, smokeless propellant and small arms primers in Group M and R-3 occupancies to be exceeded, provided the material is stored in accordance with Chapter 33 of the IFC. The requirements are based on the provisions in NFPA 495. Similarly, special industrial explosive devices are found in a number of occupancies other than Group H (Groups B, F, M and S). Storage of these devices in accordance with the IFC is not required to have a high-hazard occupancy classification. Power drivers are commonly used in the construction industry, and there are stocks of these materials maintained for sale and use by the trade. The automotive airbag industry has evolved with the use of these devices, and they are located in automotive dealerships and personal use vehicles throughout society. The IFC currently exempts up to 50 pounds (23 kg) of these materials from regulation under Chapter 56 (explosives).

TABLE 307.1(1). See page 3-18.

❖ The maximum allowable quantities (MAQ) of high-hazard materials allowed in each control area before

INTERNATIONAL CODE COUNCIL®
Copyright © 2015 ICC. ALL RIGHTS RESERVED. Accessed by David Dammon on Jun 21, 2017 12:30:52 PM pursuant to License Agreement with ICC. No further reproduction or distribution authorized. ANY UNAUTHORIZED REPRODUCTION OR DISTRIBUTION IS A VIOLATION OF THE FEDERAL COPYRIGHT ACT AND THE LICENSE AGREEMENT, AND SUBJECT TO CIVIL AND CRIMINAL PENALTIES THEREUNDER.

having to classify a part of the (or the entire) building as a high-hazard occupancy are given in the table. This table is referenced in Section 307.1. The materials listed in this table (see Chapter 2 for definitions of the materials) are classified according to their specific occupancy in Sections 307.3 through 307.5. This table only contains materials applicable to Groups H-1, H-2 and H-3. The maximum allowable quantities per control area for Group H-4 materials are listed in Table 307.1(2).

The presence of any one of the materials listed in Table 307.1(1) in an amount greater than allowed requires that the building or area in which the material is contained be classified as a Group H, high-hazard occupancy.

If a building or area contains only the materials listed in either Table 307.1(1) or 307.1(2) in the maximum allowable quantity per control area or less, then that building or area would not be classified as a Group H, high-hazard occupancy. The possible increase in overall danger that might exist should this occur because of the storage and use of incompatible materials is an issue that the code does not specifically address. In such situations, the building official can seek the advice of chemical engineers, fire protection engineers, fire service personnel or other experts in the use of hazardous materials. Based on their advice, the building official can deem the building a high-hazard occupancy.

Table 307.7(1) is subdivided based on whether the material is in storage or in use in a closed or open system. Definitions of both closed and open systems are found in Section 202. Within these subdivisions, the appropriate maximum allowable quantity per control area is listed in accordance with the physical state (solid, liquid or gas) of the material. A column for gas in open systems is not indicated because hazardous gaseous materials should not be allowed in a system that is continuously open to the atmosphere. While hazardous materials within a closed or open system are considered to be in use, Note b clearly indicates that the aggregate quantity of hazardous materials in use and storage within a given control area should not exceed the quantity listed in Table 307.7(1) for storage. Without Note c, many common alcoholic beverages and household products containing a negligible amount of a hazardous material could result in a Group M occupancy being classified as a high hazard. Note c recognizes the reduced hazard of the materials based on their water miscibility and limited container size.

Notes d and e of Table 307.1(1) are significant in that, for certain materials, the maximum allowable amount may be increased due to the use of approved hazardous material storage cabinets, or where the building is fully protected by an automatic sprinkler system, or both. The notes are intended to be cumulative in that up to four times the base maximum quantity may be allowed per control area, if both sprinklered and in cabinets, without classifying the building as Group H. While the use of cabinets is not always a feasible or practical method of storage, they do provide additional protection to warrant an increase if provided. Construction requirements for hazardous material storage cabinets are contained in the IFC. Note that the use of day boxes, gas cabinets, exhausted enclosures or listed safety cans would allow the same increase as for cabinets. Listed safety cans, which are primarily intended for flammable and combustible liquids, must be in compliance with UL 30 when used to increase the maximum allowable quantities permitted by Table 307.1(1).

While classified as a hazardous material, the code recognizes the relative hazard of Class IIIB liquids as compared to that of other flammable and combustible liquids by establishing a base maximum allowable quantity per control area of 13,200 gallons (49 962 L). As indicated in Note f, the quantity of Class I oxidizers and Class IIIB liquids would not be limited, provided the building is fully sprinklered in accordance with NFPA 13. Since any building that exceeds this maximum amount would be required to be classified as Group H and these buildings are required to be sprinklered, the maximum allowable amount would then be unlimited. As such, a Group H classification would not be warranted. The hazard presented by Class I oxidizers is that they slightly increase the burning rate of combustible materials that they may come into contact with during a fire. Class IIIB combustible liquids have flash points at or above 200°F (93°C). Motor oil is a typical example of a Class IIIB combustible liquid.

Note g recognizes that the hazard presented by certain materials is such that they may be stored or used only inside buildings that are fully sprinklered.

Note h clarifies for the user that while there is a combination maximum allowable quantity for flammable liquids, no individual class of liquid (Class IA, IB or IC) may exceed its own individual maximum allowable quantity.

Note i is a specific exception for inside storage tanks of combustible liquids that are connected to a fuel-oil piping system in accordance with Section 603.3.2 of the IFC. This exception applies to most oil-fired stationary equipment, whether in industrial, commercial or residential occupancies. NFPA 31 and NFPA 37 provide further guidance on the type of installations this exception is intended to permit. This exception would permit fuel-oil storage tanks containing a maximum of 660 gallons (2498 L) of combustible liquids within a building without being classified as a Group H-3 occupancy. This quantity limitation could be further increased to 3,000 gallons (11 356 L) for combustible liquids stored in protected above-ground tanks in rooms protected by an automatic sprinkler system complying with NFPA 13.

Note k permits a larger amount of Class 3 oxidizers in a building when used for maintenance and sanitation purposes. An example is the use of 51 percent hydrogen peroxide (H_2O_2) during industrial-scale food

INTERNATIONAL CODE COUNCIL®
Copyright © 2015 ICC. ALL RIGHTS RESERVED. Accessed by David Dammon on Jun 21, 2017 12:30:52 PM pursuant to License Agreement with ICC. No further reproduction or distribution authorized. ANY UNAUTHORIZED REPRODUCTION OR DISTRIBUTION IS A VIOLATION OF THE FEDERAL COPYRIGHT ACT AND THE LICENSE AGREEMENT, AND SUBJECT TO CIVIL AND CRIMINAL PENALTIES THEREUNDER.

production operations. In a diluted form, 51 percent hydrogen peroxide is used for disinfecting piping systems and machinery used for manufacturing and packaging dairy products, such as ice cream, cheese and milk, to effectively sterilize all surfaces that are in contact with these milk products. The method used to store the oxidizers is subject to the evaluation and approval of the building official. Note k also provides consistency with Note k of Table 5003.1.1(1) of the IFC.

Note l clarifies that the 125 pounds (57 kg) of storage permitted for consumer fireworks represents the net weight of the pyrotechnic composition of the fireworks in a nonsprinklered building. This amount represents approximately $12^1/_2$ shipping cases (less than $1^1/_2$ pallet loads) of fireworks in a nonsprinklered storage condition. In cases where the net weight of the pyrotechnic composition of the fireworks is unknown, 25 percent of the gross weight of the fireworks is to be used. The gross weight is to include the weight of the packaging.

Note n provides an exception when the amount of hazardous material in storage and display in Group M and S occupancies meet the requirements of Section 414.2.5.

Note o clarifies that densely packed baled cotton is not considered a hazardous material when meeting the size and weight requirements of ISO 8115 and, as such, is not subject to the maximum allowable quantity per control area specified for combustible fibers.

Note p clarifies that vehicles with closed fuel systems should be treated no differently than machinery or equipment when considering the allowable quantities of materials within a building. This note also clarifies that the fuels contained within the fuel tanks of vehicles or motorized equipment are not to be considered when calculating the aggregate quantity of hazardous materials within a control area of a building. For example, when evaluating a parking garage with several hundred cars parked inside, the fuel tanks of vehicles are not counted. When motorized equipment, such as a floor buffer or forklift, is used, those fuels are not included as long as other code requirements are satisfied. This note also exempts alcohol-based hand rubs when contained in dispensers complying with the IFC.

Note q directs code users to Section 414.1.3 in an effort to determine the appropriateness of a Group H-2 classification for facilities where combustible dust is manufactured, generated or used. The presence of combustible dust may or may not result in a high-hazard condition. In order to determine if a potential dust hazard exists that would warrant a Group H-2 occupancy classification, the conditions must be evaluated and a report submitted to the building official that sets forth a determination of the degree of hazard and recommended safeguards, including the appropriate occupancy classification.

TABLE 307.1(2). See page 3-20.

❖ Table 307.1(2), similar to Table 307.1(1), specifies the maximum quantities of hazardous materials, liquids or chemicals allowed per control area before having to classify building, or a portion of a building, as a high-hazard occupancy. Table 307.1(2), as referenced in Section 307.1, contains materials classified as Group H-4 in accordance with Section 307.6. While the materials listed in this table are considered health hazards, some materials may also possess physical hazard characteristics more indicative of materials classified as Group H-1, H-2 or H-3.

The maximum allowable quantities per control area listed in Table 307.1(2) are indicative of industry practice and assume the materials are properly stored and handled in accordance with the IFC. Group H-4 materials, while indeed hazardous, are primarily considered a handling problem and do not possess the same fire, explosion or reactivity hazard associated with other hazardous materials. The base maximum allowable quantity per control area of 810 cubic feet (23 m^3) for gases that are either corrosive or toxic is based on a standard-size chlorine cylinder. The use of 150 pounds (68 kg) as the baseline quantity for liquefied corrosive and toxic gases is intended to be consistent with the philosophical approach to the same maximum quantity permitted for liquefied oxidizing gases in Table 307.1(1). The 150-pound (68 kg) limitation allows a single cylinder of chlorine, which could be considered both a corrosive and oxidizing gas, to not result in either a Group H-3 or H-4 occupancy classification.

Note b clearly indicates that the aggregate quantity of hazardous materials in use and storage, within a given control area, cannot exceed the quantity listed in the table for storage.

Without Note c, many common household products, such as household bleach and window cleaners, containing a negligible amount of a hazardous material could result in a Group M occupancy being classified as a high hazard. Note c recognizes the reduced hazard of the materials based on their water miscibility and limited container size.

Notes d and e are identical to Notes d and e to Table 307.1(1) and allow up to four times the maximum allowed quantities. See the commentary for Notes d and e of Table 307.1(1).

Note f provides an exception when the amount of hazardous material in storage and display in Group M and S occupancies meets the requirements of Section 414.2.5.

Note g is significant in that, for certain materials, their hazard is so great that their maximum allowable quantity per control area may be stored in the building only when approved exhausted enclosures or gas cabinets are utilized.

INTERNATIONAL CODE COUNCIL®
Copyright © 2015 ICC. ALL RIGHTS RESERVED. Accessed by David Dammon on Jun 21, 2017 12:30:52 PM pursuant to License Agreement with ICC. No further reproduction or distribution authorized. ANY UNAUTHORIZED REPRODUCTION OR DISTRIBUTION IS A VIOLATION OF THE FEDERAL COPYRIGHT ACT AND THE LICENSE AGREEMENT, AND SUBJECT TO CIVIL AND CRIMINAL PENALTIES THEREUNDER.

TABLE 307.1(1)
MAXIMUM ALLOWABLE QUANTITY PER CONTROL AREA OF HAZARDOUS MATERIALS POSING A PHYSICAL HAZARD[a, j, m, n, p]

MATERIAL	CLASS	GROUP WHEN THE MAXIMUM ALLOWABLE QUANTITY IS EXCEEDED	STORAGE[b]			USE-CLOSED SYSTEMS[b]			USE-OPEN SYSTEMS[b]	
			Solid pounds (cubic feet)	Liquid gallons (pounds)	Gas cubic feet at NTP	Solid pounds (cubic feet)	Liquid gallons (pounds)	Gas cubic feet at NTP	Solid pounds (cubic feet)	Liquid gallons (pounds)
Combustible dust	NA	H-2	See Note q	NA	NA	See Note q	NA	NA	See Note q	NA
Combustible fiber[q]	Loose Baled[o]	H-3	(100) (1,000)	NA	NA	(100) (1,000)	NA	NA	(20) (200)	NA
Combustible liquid[c, i]	II IIIA IIIB	H-2 or H-3 H-2 or H-3 NA	NA	120[d, e] 330[d, e] 13,200[e, f]	NA	NA	120[d] 330[d] 13,200[f]	NA	NA	30[d] 80[d] 3,300[f]
Consumer fireworks	1.4G	H-3	125[e, l]	NA	NA	NA	NA	NA	NA	NA
Cryogenic flammable	NA	H-2	NA	45[d]	NA	NA	45[d]	NA	NA	10[d]
Cryogenic inert	NA	NA	NA	NA	NL	NA	NA	NL	NA	NA
Cryogenic oxidizing	NA	H-3	NA	45[d]	NA	NA	45[d]	NA	NA	10[d]
Explosives	Division 1.1 Division 1.2 Division 1.3 Division 1.4 Division 1.4G Division 1.5 Division 1.6	H-1 H-1 H-1 or H-2 H-3 H-3 H-1 H-1	1[e, g] 1[e, g] 5[e, g] 50[e, g] 125[d, e, l] 1[e, g] 1[e, g]	(1)[e, g] (1)[e, g] (5)[e, g] (50)[e, g] NA (1)[e, g] NA	NA	0.25[g] 0.25[g] 1[g] 50[g] NA 0.25[g] NA	(0.25)[g] (0.25)[g] (1)[g] (50)[g] NA (0.25)[g] NA	NA	0.25[g] 0.25[g] 1[g] NA NA 0.25[g] NA	(0.25)[g] (0.25)[g] (1)[g] NA NA (0.25)[g] NA
Flammable gas	Gaseous Liquefied	H-2	NA	NA (150)[d, e]	1,000[d, e] NA	NA	NA (150)[d, e]	1,000[d, e] NA	NA	NA
Flammable liquid[c]	IA IB and IC	H-2 or H-3	NA	30[d, e] 120[d, e]	NA	NA	30[d] 120[d]	NA	NA	10[d] 30[d]
Flammable liquid, combination (IA, IB, IC)	NA	H-2 or H-3	NA	120[d, e, h]	NA	NA	120[d, h]	NA	NA	30[d, h]

(continued)

INTERNATIONAL CODE COUNCIL®
Copyright © 2015 ICC. ALL RIGHTS RESERVED. Accessed by David Dammon on Jun 21, 2017 12:30:52 PM pursuant to License Agreement with ICC. No further reproduction or distribution authorized. ANY UNAUTHORIZED REPRODUCTION OR DISTRIBUTION IS A VIOLATION OF THE FEDERAL COPYRIGHT ACT AND THE LICENSE AGREEMENT, AND SUBJECT TO CIVIL AND CRIMINAL PENALTIES THEREUNDER.

TABLE 307.1(1)—continued
MAXIMUM ALLOWABLE QUANTITY PER CONTROL AREA OF HAZARDOUS MATERIALS POSING A PHYSICAL HAZARD[a, j, m, n, p]

MATERIAL	CLASS	GROUP WHEN THE MAXIMUM ALLOWABLE QUANTITY IS EXCEEDED	STORAGE[b]			USE-CLOSED SYSTEMS[b]			USE-OPEN SYSTEMS[b]	
			Solid pounds (cubic feet)	Liquid gallons (pounds)	Gas cubic feet at NTP	Solid pounds (cubic feet)	Liquid gallons (pounds)	Gas cubic feet at NTP	Solid pounds (cubic feet)	Liquid gallons (pounds)
Flammable solid	NA	H-3	125[d, e]	NA	NA	125[d]	NA	NA	25[d]	NA
Inert gas	Gaseous Liquefied	NA NA	NA NA	NA NA	NL NL	NA NA	NA NA	NL NL	NA NA	NA NA
Organic peroxide	UD I II III IV V	H-1 H-2 H-3 H-3 NA NA	1[e, g] 5[d, e] 50[d, e] 125[d, e] NL NL	(1)[e, g] (5)[d, e] (50)[d, e] (125)[d, e] NL NL	NA	0.25[g] 1[d] 50[d] 125[d] NL NL	(0.25)[g] (1)[d] (50)[d] (125)[d] NL NL	NA	0.25[g] 1[d] 10[d] 25[d] NL NL	(0.25)[g] (1)[d] (10)[d] (25)[d] NL NL
Oxidizer	4 3[k] 2 1	H-1 H-2 or H-3 H-3 NA	1[g] 10[d, e] 250[d, e] 4,000[e, f]	(1)[e, g] (10)[d, e] (250)[d, e] (4,000)[e, f]	NA	0.25[g] 2[d] 250[d] 4,000[f]	(0.25)[g] (2)[d] (250)[d] (4,000)[f]	NA	0.25[g] 2[d] 50[d] 1,000[f]	(0.25)[g] (2)[d] (50)[d] (1,000)[f]
Oxidizing gas	Gaseous Liquefied	H-3	NA	NA (150)[d, e]	1,500[d, e] NA	NA	NA (150)[d, e]	1,500[d, e] NA	NA	NA
Pyrophoric	NA	H-2	4[e, g]	(4)[e, g]	50[e, g]	1[g]	(1)[g]	10[e, g]	0	0
Unstable (reactive)	4 3 2 1	H-1 H-1 or H-2 H-3 NA	1[e, g] 5[d, e] 50[d, e] NL	(1)[e, g] (5)[d, e] (50)[d, e] NL	10[e, g] 50[d, e] 750[d, e] NL	0.25[g] 1[d] 50[d] NL	(0.25)[g] (1)[d] (50)[d] NL	2[e, g] 10[d, e] 750[d, e] NL	0.25[g] 1[d] 10[d] NL	(0.25)[g] (1)[d] (10)[d] NL
Water reactive	3 2 1	H-2 H-3 NA	5[d, e] 50[d, e] NL	(5)[d, e] (50)[d, e] NL	NA	5[d] 50[d] NL	(5)[d] (50)[d] NL	NA	1[d] 10[d] NL	(1)[d] (10)[d] NL

For SI: 1 cubic foot = 0.028 m^3, 1 pound = 0.454 kg, 1 gallon = 3.785 L.

NL = Not Limited; NA = Not Applicable; UD = Unclassified Detonable.

a. For use of control areas, see Section 414.2.

b. The aggregate quantity in use and storage shall not exceed the quantity listed for storage.

c. The quantities of alcoholic beverages in retail and wholesale sales occupancies shall not be limited provided the liquids are packaged in individual containers not exceeding 1.3 gallons. In retail and wholesale sales occupancies, the quantities of medicines, foodstuffs or consumer products, and cosmetics containing not more than 50 percent by volume of water-miscible liquids with the remainder of the solutions not being flammable, shall not be limited, provided that such materials are packaged in individual containers not exceeding 1.3 gallons.

d. Maximum allowable quantities shall be increased 100 percent in buildings equipped throughout with an *automatic sprinkler system* in accordance with Section 903.3.1.1. Where Note e also applies, the increase for both notes shall be applied accumulatively.

e. Maximum allowable quantities shall be increased 100 percent when stored in approved storage cabinets, day boxes, gas cabinets, gas rooms or exhausted enclosures or in *listed* safety cans in accordance with Section 5003.9.10 of the *International Fire Code*. Where Note d also applies, the increase for both notes shall be applied accumulatively.

f. Quantities shall not be limited in a building equipped throughout with an *automatic sprinkler system* in accordance with Section 903.3.1.1.

g. Allowed only in buildings equipped throughout with an *automatic sprinkler system* in accordance with Section 903.3.1.1.

h. Containing not more than the maximum allowable quantity per *control area* of Class IA, IB or IC flammable liquids.

i. The maximum allowable quantity shall not apply to fuel oil storage complying with Section 603.3.2 of the *International Fire Code*.

j. Quantities in parenthesis indicate quantity units in parenthesis at the head of each column.

k. A maximum quantity of 200 pounds of solid or 20 gallons of liquid Class 3 oxidizers is allowed when such materials are necessary for maintenance purposes, operation or sanitation of equipment when the storage containers and the manner of storage are approved.

l. Net weight of the pyrotechnic composition of the fireworks. Where the net weight of the pyrotechnic composition of the fireworks is not known, 25 percent of the gross weight of the fireworks, including packaging, shall be used.

m. For gallons of liquids, divide the amount in pounds by 10 in accordance with Section 5003.1.2 of the *International Fire Code*.

n. For storage and display quantities in Group M and storage quantities in Group S occupancies complying with Section 414.2.5, see Tables 414.2.5(1) and 414.2.5(2).

o. Densely packed baled cotton that complies with the packing requirements of ISO 8115 shall not be included in this material class.

p. The following shall not be included in determining the maximum allowable quantities:

1. Liquid or gaseous fuel in fuel tanks on vehicles.
2. Liquid or gaseous fuel in fuel tanks on motorized equipment operated in accordance with the *International Fire Code*.
3. Gaseous fuels in piping systems and fixed appliances regulated by the *International Fuel Gas Code*.
4. Liquid fuels in piping systems and fixed appliances regulated by the *International Mechanical Code*.
5. Alcohol-based hand rubs classified as Class I or II liquids in dispensers that are installed in accordance with Sections 5705.5 and 5705.5.1 of the *International Fire Code*. The location of the alcohol-based hand rub (ABHR) dispensers shall be provided in the construction documents.

q. Where manufactured, generated or used in such a manner that the concentration and conditions create a fire or explosion hazard based on information prepared in accordance with Section 414.1.3.

INTERNATIONAL CODE COUNCIL®
Copyright © 2015 ICC. ALL RIGHTS RESERVED. Accessed by David Dammon on Jun 21, 2017 12:30:52 PM pursuant to License Agreement with ICC. No further reproduction or distribution authorized. ANY UNAUTHORIZED REPRODUCTION OR DISTRIBUTION IS A VIOLATION OF THE FEDERAL COPYRIGHT ACT AND THE LICENSE AGREEMENT, AND SUBJECT TO CIVIL AND CRIMINAL PENALTIES THEREUNDER.

[F] TABLE 307.1(2)
MAXIMUM ALLOWABLE QUANTITY PER CONTROL AREA OF HAZARDOUS MATERIAL POSING A HEALTH HAZARD[a, c, f, h, i]

MATERIAL	STORAGE[b]			USE-CLOSED SYSTEMS[b]			USE-OPEN SYSTEMS[b]	
	Solid pounds[d, f]	Liquid gallons (pounds)[d, f]	Gas cubic feet at NTP (pounds)[d]	Solid pounds[d]	Liquid gallons (pounds)[e, d]	Gas cubic feet at NTP (pounds)[d]	Solid pounds[d]	Liquid gallons (pounds)[d]
Corrosives	5,000	500	Gaseous 810[e, f] Liquefied (150)	5,000	500	Gaseous 810[e] Liquefied (150)	1,000	100
Highly Toxic	10	(10)	Gaseous 20[g] Liquefied (4)[g]	10	(10)	Gaseous 20[g] Liquefied (4)[g]	3	(3)
Toxic	500	(500)	Gaseous 810[e] Liquefied (150)[e]	500	(500)	Gaseous 810[e] Liquefied (150)[e]	125	(125)

For SI: 1 cubic foot = 0.028 m^3, 1 pound = 0.454 kg, 1 gallon = 3.785 L.

a. For use of control areas, see Section 414.2.
b. The aggregate quantity in use and storage shall not exceed the quantity listed for storage.
c. In retail and wholesale sales occupancies, the quantities of medicines, foodstuffs or consumer products, and cosmetics containing not more than 50 percent by volume of water-miscible liquids and with the remainder of the solutions not being flammable, shall not be limited, provided that such materials are packaged in individual containers not exceeding 1.3 gallons.
d. Maximum allowable quantities shall be increased 100 percent in buildings equipped throughout with an *approved automatic sprinkler system* in accordance with Section 903.3.1.1. Where Note e also applies, the increase for both notes shall be applied accumulatively.
e. Maximum allowable quantities shall be increased 100 percent where stored in approved storage cabinets, gas cabinets or exhausted enclosures as specified in the *International Fire Code*. Where Note d also applies, the increase for both notes shall be applied accumulatively.
f. For storage and display quantities in Group M and storage quantities in Group S occupancies complying with Section 414.2.5, see Tables 414.2.5(1) and 414.2.5(2).
g. Allowed only where stored in approved exhausted gas cabinets or exhausted enclosures as specified in the *International Fire Code*.
h. Quantities in parenthesis indicate quantity units in parenthesis at the head of each column.
i. For gallons of liquids, divide the amount in pounds by 10 in accordance with Section 5003.1.2 of the *International Fire Code.*

[F] 307.1.2 Hazardous materials. Hazardous materials in any quantity shall conform to the requirements of this code, including Section 414, and the *International Fire Code*.

❖ The use of high-hazard materials must be regulated in accordance with Sections 414 and 415 as well as the applicable requirements of the IFC. While the building may be exempt from a high-hazard occupancy classification (i.e., Group H-1, H-2, H-3, H-4 or H-5), any potential hazard with regard to the use of storage of any hazardous material, regardless of quantity, must be abated.

[F] 307.2 Definitions. The following terms are defined in Chapter 2:

AEROSOL

Level 1 aerosol products.

Level 2 aerosol products.

Level 3 aerosol products.

AEROSOL CONTAINER.

BALED COTTON.

BALED COTTON, DENSELY PACKED.

BARRICADE.

Artificial barricade.

Natural barricade.

BOILING POINT.

CLOSED SYSTEM.

COMBUSTIBLE DUST.

COMBUSTIBLE FIBERS.

COMBUSTIBLE LIQUID.

Class II.

Class IIIA.

Class IIIB.

COMPRESSED GAS.

CONTROL AREA.

CORROSIVE.

CRYOGENIC FLUID.

DAY BOX.

DEFLAGRATION.

DETONATION.

DISPENSING.

EXPLOSION.

EXPLOSIVE.

High explosive.

Low explosive.

Mass-detonating explosives.

UN/DOTn Class 1 explosives.

Division 1.1.

Division 1.2.

Division 1.3.

Division 1.4.

Division 1.5.

Division 1.6.

INTERNATIONAL CODE COUNCIL®
Copyright © 2015 ICC. ALL RIGHTS RESERVED. Accessed by David Dammon on Jun 21, 2017 12:30:52 PM pursuant to License Agreement with ICC. No further reproduction or distribution authorized. ANY UNAUTHORIZED REPRODUCTION OR DISTRIBUTION IS A VIOLATION OF THE FEDERAL COPYRIGHT ACT AND THE LICENSE AGREEMENT, AND SUBJECT TO CIVIL AND CRIMINAL PENALTIES THEREUNDER.

FIREWORKS.

Fireworks, 1.3G.

Fireworks, 1.4G.

FLAMMABLE GAS.

FLAMMABLE LIQUEFIED GAS.

FLAMMABLE LIQUID.

Class IA.

Class IB.

Class IC.

FLAMMABLE MATERIAL.

FLAMMABLE SOLID.

FLASH POINT.

HANDLING.

HAZARDOUS MATERIALS.

HEALTH HAZARD.

HIGHLY TOXIC.

INCOMPATIBLE MATERIALS.

INERT GAS.

OPEN SYSTEM.

OPERATING BUILDING.

ORGANIC PEROXIDE.

Class I.

Class II.

Class III.

Class IV.

Class V.

Unclassified detonable.

OXIDIZER.

Class 4.

Class 3.

Class 2.

Class 1.

OXIDIZING GAS.

PHYSICAL HAZARD.

PYROPHORIC.

PYROTECHNIC COMPOSITION.

TOXIC.

UNSTABLE (REACTIVE) MATERIAL.

Class 4.

Class 3.

Class 2.

Class 1.

WATER-REACTIVE MATERIAL.

Class 3.

Class 2.

Class 1.

❖ This section lists terms that are specifically associated with the subject matter of this section. It is important to emphasize that these terms are not exclusively related to this section but may or may not also be applicable where the term is used elsewhere in the code.

Definitions of terms can help in the understanding and application of the code requirements. The purpose for including a list within this chapter is to provide more convenient access to terms which may have a specific or limited application within this chapter. For the complete definition and associated commentary, refer back to Chapter 2. Terms that are italicized provide a visual identification throughout the code that a definition exists for that term. The use and application of all defined terms are set forth in Section 201.

[F] 307.3 High-hazard Group H-1. Buildings and structures containing materials that pose a detonation hazard shall be classified as Group H-1. Such materials shall include, but not be limited to, the following:

Detonable pyrophoric materials

Explosives:

Division 1.1

Division 1.2

Division 1.3

Division 1.4

Division 1.5

Division 1.6

Organic peroxides, unclassified detonable

Oxidizers, Class 4

Unstable (reactive) materials, Class 3 detonable and Class 4

❖ The contents of occupancies in Group H-1 present a detonation hazard. Examples of materials that create this hazard are listed in the section. The definitions for Group H-1 materials are listed in Section 307.2 and defined in Chapter 2. Because of the explosion hazard potential associated with Group H-1 materials, occupancies in Group H-1, which exceed the maximum allowable quantity per control area indicated in Table 307.1(1), are required to be located in detached one-story buildings without basements (see commentary, Sections 415.6.2, 415.7 and 508.3). Group H-1 occupancies cannot be located in a mixed occupancy building.

[F] 307.3.1 Occupancies containing explosives not classified as H-1. The following occupancies containing explosive materials shall be classified as follows:

1. Division 1.3 explosive materials that are used and maintained in a form where either confinement or configuration will not elevate the hazard from a mass fire

INTERNATIONAL CODE COUNCIL®
Copyright © 2015 ICC. ALL RIGHTS RESERVED. Accessed by David Dammon on Jun 21, 2017 12:30:52 PM pursuant to License Agreement with ICC. No further reproduction or distribution authorized. ANY UNAUTHORIZED REPRODUCTION OR DISTRIBUTION IS A VIOLATION OF THE FEDERAL COPYRIGHT ACT AND THE LICENSE AGREEMENT, AND SUBJECT TO CIVIL AND CRIMINAL PENALTIES THEREUNDER.

to mass explosion hazard shall be allowed in H-2 occupancies.

2. Articles, including articles packaged for shipment, that are not regulated as a Division 1.4 explosive under Bureau of Alcohol, Tobacco, Firearms and Explosives regulations, or unpackaged articles used in process operations that do not propagate a detonation or deflagration between articles shall be allowed in H-3 occupancies.

❖ There are certain explosive materials that pose a hazard level less than that anticipated for a Group H-1 occupancy. A Group H-2 classification is permitted for Division 1.3 explosive materials used or maintained under conditions where the hazard level will not rise from that of a mass fire hazard to a mass explosion hazard. A Group H-3 occupancy classification is permitted for packaged and unpackaged articles not regulated as Division 1.4 explosives by the Bureau of Alcohol, Tobacco and Firearms, as well as unpackaged articles used in process operations, provided there is no concern regarding the propagation of a detonation or deflagration between the articles during process operations.

[F] 307.4 High-hazard Group H-2. Buildings and structures containing materials that pose a deflagration hazard or a hazard from accelerated burning shall be classified as Group H-2. Such materials shall include, but not be limited to, the following:

Class I, II or IIIA flammable or combustible liquids that are used or stored in normally open containers or systems, or in closed containers or systems pressurized at more than 15 pounds per square inch gauge (103.4 kPa).
Combustible dusts where manufactured, generated or used in such a manner that the concentration and conditions create a fire or explosion hazard based on information prepared in accordance with Section 414.1.3.
Cryogenic fluids, flammable.
Flammable gases.
Organic peroxides, Class I.
Oxidizers, Class 3, that are used or stored in normally open containers or systems, or in closed containers or systems pressurized at more than 15 pounds per square inch gauge (103 kPa).
Pyrophoric liquids, solids and gases, nondetonable.
Unstable (reactive) materials, Class 3, nondetonable.
Water-reactive materials, Class 3.

❖ The contents of occupancies in Group H-2 present a deflagration or accelerated burning hazard. Examples of materials that create this hazard are listed. The definitions for Group H-2 materials are contained in Section 202. Because of the severe fire or reactivity hazard associated with these types of materials, proper classification is essential in determining the applicable requirements with regard to the mitigation of these hazards.

[F] 307.5 High-hazard Group H-3. Buildings and structures containing materials that readily support combustion or that pose a physical hazard shall be classified as Group H-3. Such materials shall include, but not be limited to, the following:

Class I, II or IIIA flammable or combustible liquids that are used or stored in normally closed containers or systems pressurized at 15 pounds per square inch gauge (103.4 kPa) or less.
Combustible fibers, other than densely packed baled cotton, where manufactured, generated or used in such a manner that the concentration and conditions create a fire or explosion hazard based on information prepared in accordance with Section 414.1.3.
Consumer fireworks, 1.4G (Class C, Common)
Cryogenic fluids, oxidizing
Flammable solids
Organic peroxides, Class II and III
Oxidizers, Class 2
Oxidizers, Class 3, that are used or stored in normally closed containers or systems pressurized at 15 pounds per square inch gauge (103 kPa) or less
Oxidizing gases
Unstable (reactive) materials, Class 2
Water-reactive materials, Class 2

❖ The contents of occupancies in Group H-3 present a hazard inasmuch as they contain materials that readily support combustion or that present a physical hazard. Examples of materials that create this hazard are listed. The definitions for Group H-3 materials are contained in Section 202. While Group H-3 materials are generally less of a fire or reactivity hazard than Group H-2 materials, they still present a greater physical hazard than materials not currently regulated as high hazard.

[F] 307.6 High-hazard Group H-4. Buildings and structures containing materials that are health hazards shall be classified as Group H-4. Such materials shall include, but not be limited to, the following:

Corrosives
Highly toxic materials
Toxic materials

❖ The contents of occupancies in Group H-4 present a hazard inasmuch as they contain materials that are health hazards. Examples of these hazards are listed in this section. The definitions for Group H-4 materials are contained in Section 202. While reference is made to chemicals that cause these hazards, the data sheets for these chemicals, which are furnished by the applicant, will need considerable subjective evaluation. Some materials falling into the category of health hazard may also present a physical hazard and would, therefore, require the structure to be designed for multiple hazards in accordance with Section 307.8.

[F] 307.7 High-hazard Group H-5. Semiconductor fabrication facilities and comparable research and development areas in which hazardous production materials (HPM) are used and the aggregate quantity of materials is in excess of those listed in Tables 307.1(1) and 307.1(2) shall be classi-

INTERNATIONAL CODE COUNCIL®
Copyright © 2015 ICC. ALL RIGHTS RESERVED. Accessed by David Dammon on Jun 21, 2017 12:30:52 PM pursuant to License Agreement with ICC. No further reproduction or distribution authorized. ANY UNAUTHORIZED REPRODUCTION OR DISTRIBUTION IS A VIOLATION OF THE FEDERAL COPYRIGHT ACT AND THE LICENSE AGREEMENT, AND SUBJECT TO CIVIL AND CRIMINAL PENALTIES THEREUNDER.

fied as Group H-5. Such facilities and areas shall be designed and constructed in accordance with Section 415.10.

❖ HPM includes flammable liquids and gases, corrosives, oxidizers and, in many instances, highly toxic materials (see the definition for "Hazardous production material" in Section 202). In determining the applicable requirements of other sections of the code, HPM facilities are considered to be Group H-5 occupancies. It is intended that the quantities of materials permitted in Table 415.11.1.1.1 will take precedence over Tables 307.1(1) and 307.1(2).

[F] 307.8 Multiple hazards. Buildings and structures containing a material or materials representing hazards that are classified in one or more of Groups H-1, H-2, H-3 and H-4 shall conform to the code requirements for each of the occupancies so classified.

❖ If materials are present that possess characteristics of more than one Group H, high-hazard occupancy, then the structure must be designed to protect against the hazards of each relevant high-hazard occupancy classification. For example, a material could be classified as both a Class 2 oxidizer (Group H-3) and a corrosive (Group H-4). If the given quantity exceeded the maximum allowable quantity per control area individually for both a Class 2 oxidizer and a corrosive, the structure is required to conform to the applicable requirements of both Groups H-3 and H-4.

SECTION 308
INSTITUTIONAL GROUP I

308.1 Institutional Group I. Institutional Group I occupancy includes, among others, the use of a building or structure, or a portion thereof, in which care or supervision is provided to persons who are or are not capable of self-preservation without physical assistance or in which persons are detained for penal or correctional purposes or in which the liberty of the occupants is restricted. Institutional occupancies shall be classified as Group I-1, I-2, I-3 or I-4.

❖ Institutional occupancies are composed of two basic types. The first includes Groups I-1, I-2 and I-4 and relates to facilities where personal care, custodial care or medical care is provided for people who due to age, physical limitations, diseases, mental disabilities or other infirmities need a supervised environment (see the commentary for the definitions of "Personal care," "Custodial care" and "Medical care"). This includes persons who are ambulatory and are capable of self-preservation as well as those who are restricted in their mobility or are totally immobile to the extent that they are incapable of self-preservation and therefore may need assistance to evacuate during an emergency situation, such as a fire. The IFC also addresses the idea of a defend-in-place protection option for hospitals and nursing homes (see the commentary for the definition of "Incapable of self-preservation" and the IFC Chapter 4 Commentary). The second type, Group I-3, relates primarily to detention and correctional facilities. Since security is the major operational consideration in these kinds of facilities, the occupants (inmates) are under some form of supervision and restraint and may be rendered incapable of self-preservation without direct intervention from staff in emergency situations due to locked cells and exits.

The degree of hazards in each type of institutional facility identified in this section varies respective to each kind of occupancy. The code addresses each occupancy separately and the regulatory provisions throughout the code provide the proper means of protection so as to produce an acceptable level of safety to life and property.

Groups I-1, I-2 and I-3 are further divided into "conditions" relative to unique aspects of the respective occupancies. Groups I-1 and R-4 are closely related and are primarily distinguished by the number of persons residing in the facility (see Section 308.3).

Another of the distinguishing characteristics between the different Group I occupancies and other occupancies is when care is provided for a length of time exceeding 24 hours. The intent is that these criteria are not specific to the hours of operation of the facility, but the length of time that care is provided for the patients, residents or those in day care. For example, an outpatient clinic that is open 24 hours a day is a Group B occupancy provided care recipients are treated as outpatients and there are no inpatients who would stay at the facility 24 hours or longer. Another example would be a "day care" facility that is open 24 hours to serve workers who work any shift and need to have children in "day care" while they work. Provided that individual children receive care for less than 24 hours, the occupancy would be classified as a Group I-4 or possible a Group E.

Each individual facility will have unique characteristics or a combination of characteristics which should be considered when classifying it to one occupancy and condition or another. For example, some of the newer care facilities are offering a combination of care levels to allow for persons to age in place within the same complex. A facility could easily have a mix of occupancies such as one wing providing full-time nursing care (Group I-2, Condition 1); a second wing with assisted living care for residents with dementia who may need some direct physical contact from staff to react to an emergency (Group I-1, Condition 2); and yet a third wing with custodial care where residents are capable of responding to an emergency on their own (Group I-1, Condition 1). Health care and custodial care facilities are subject to many state and local regulations. Such regulations may factor in which IBC occupancy classification is appropriate. Commentary Figure 308.1 provides a summary of care facility classifications.

INTERNATIONAL CODE COUNCIL®
Copyright © 2015 ICC. ALL RIGHTS RESERVED. Accessed by David Dammon on Jun 21, 2017 12:30:52 PM pursuant to License Agreement with ICC. No further reproduction or distribution authorized. ANY UNAUTHORIZED REPRODUCTION OR DISTRIBUTION IS A VIOLATION OF THE FEDERAL COPYRIGHT ACT AND THE LICENSE AGREEMENT, AND SUBJECT TO CIVIL AND CRIMINAL PENALTIES THEREUNDER.

24-HOUR CARE					
Type of care	**Capability of patients receiving care**	**Types of facilities**	**1-5 Occupants**	**6-16 Occupants**	**More than 16 occupants**
Custodial	Capable of responding to emergency situation and complete building evacuation without assistance	Alcohol & drug center; assisted living; congregate care; group home; halfway house; residential board and care; social rehabilitation	R-3[a] Sec: 308.3.4	R-4, Condition 1 Sec. 308.3.3 & 310.6.1	I-1 Condition 1 Sec. 308.3.1
Custodial	Any residents who require limited verbal or physical assistance while responding to emergency situation	Alcohol & drug center; assisted living; congregate care; group home; halfway house; residential board and care; social rehabilitation	R-3[a] Sec: 308.3.4	R-4, Condition 2 Sec. 308.3.3 & 310.6.2	I-1 Condition 2 Sec. 308.3.2
Medical	Incapable of self-preservation	Nursing homes; foster care facilities; facilities providing nursing and medical care but without emergency, surgery or obstetric services or inpatient stabilization for psychiatric or detoxification.	R-3[a] Sec: 308.4.2	I-2 Condition 1 Sec. 308.4.1.1	I-2 Condition 1 Sec. 308.4.1.1
		Hospitals; facilities providing nursing and medical care including emergency, surgery or obstetric services or inpatient stabilization for psychiatric or detoxification.	R-3[a] Sec: 308.4.2	I-2 Condition 2 Sec. 308.4.1.2	I-2 Condition 2 Sec. 308.4.1.2
LESS THAN 24-HOUR CARE					
Type of Care or Service	**Age and Capability of occupants**	**Types of Facilities**	**1-5 In a dwelling unit**	**1-5 occupants**	**6 or more occupants**
Medical	Any age—Capable of self-preservation	Outpatient clinic; doctor's office	NA	B Sec, 304.1	B Sec. 304.1
Medical, surgical, psychiatric, nursing	Any age—Rendered incapable of self-preservation	Ambulatory care facility	NA	B Sec. 304.1	B Sec. 304.1
Educational, supervisory or personal care services	Older than $2^1/_2$ years and 12th grade or younger	Day care, Child care	R-3 Sec, 305.2.3	Same of primary occupancy of Building Sec. 305.2.1 & 305.2.2	E[b] Sec. 305.2
Custodial care	$2^1/_2$ years or less and older where incapable of self-preservation	Day care, Adult care	R-3 Sec. 308.6.4	Same of primary occupancy of Building Sec. 308.6.2 & 308.6.3	I-4[b,c] Sec, 308.6

a. This is the option of complying with the *International Residential Code* providing an NFPA 13D automatic sprinkler system installed in accordance with IBC Section 903.3.1.3.
b. Rooms or spaces within places of religious worship; classified as part of primary occupancy—usually A-3.
c. Floors in day care facilities where more than five but no more than 100 infants and toddlers (i.e., children $2^1/_2$ years or younger in age) can be classified as Group E provided rooms used as such are on the level of exit discharge and have exit door directly to exterior.

Figure 308.1
OCCUPANCY CLASSIFICATION OF CARE FACILITIES

Copyright © 2015 ICC. ALL RIGHTS RESERVED. Accessed by David Dammon on Jun 21, 2017 12:30:52 PM pursuant to License Agreement with ICC. No further reproduction or distribution authorized. ANY UNAUTHORIZED REPRODUCTION OR DISTRIBUTION IS A VIOLATION OF THE FEDERAL COPYRIGHT ACT AND THE LICENSE AGREEMENT, AND SUBJECT TO CIVIL AND CRIMINAL PENALTIES THEREUNDER.

308.2 Definitions. The following terms are defined in Chapter 2:

24-HOUR BASIS.

CUSTODIAL CARE.

DETOXIFICATION FACILITIES.

FOSTER CARE FACILITIES.

HOSPITALS AND PSYCHIATRIC HOSPITALS.

INCAPABLE OF SELF-PRESERVATION.

MEDICAL CARE.

NURSING HOMES.

❖ This section lists terms that are specifically associated with the subject matter of this section. It is important to emphasize that these terms are not exclusively related to this section but may or may not also be applicable where the term is used elsewhere in the code.

Definitions of terms can help in the understanding and application of the code requirements. The purpose for including a list within this chapter is to provide more convenient access to terms which may have a specific or limited application within this chapter. For the complete definition and associated commentary, refer back to Chapter 2. Terms that are italicized provide a visual identification throughout the code that a definition exists for that term. The use and application of all defined terms are set forth in Section 201.

308.3 Institutional Group I-1. Institutional Group I-1 occupancy shall include buildings, structures or portions thereof for more than 16 persons, excluding staff, who reside on a 24-hour basis in a supervised environment and receive custodial care. Buildings of Group I-1 shall be classified as one of the occupancy conditions specified in Section 308.3.1 or 308.3.2. This group shall include, but not be limited to, the following:

Alcohol and drug centers
Assisted living facilities
Congregate care facilities
Group homes
Halfway houses
Residential board and care facilities
Social rehabilitation facilities

❖ Groups I-4 and R-4 are similar facilities that differ only by the number of residents receiving care. Groups I-1 and R-4 occupancies are based on three characterizations described in the occupancy classification: custodial care is provided; there is 24-hour-a-day supervision; and they are either Condition 1 or Condition 2. The difference is the number of persons receiving car and residing in such facilities. Group I-1 has more than 16 residents while Group R-4 has six to 16 persons. Note that Group I-1 and R-4 occupancies are limited facilities where custodial care is provided and not where medical care is provided. See the commentary to Section 202 Definitions, "Custodial care" and "Medical care." Groups I-1 and R-4 occupancies list the same eight generic uses as examples which fall under the Group I-1/R-4 umbrella. Of these eight, only "Group home" is defined (see commentary in Chapter 2). Some of these terms may be used in state and local regulations of care facilities. Caution should be taken before assuming that a state-defined "assisted living" facility should be classified under the IBC as a Group I-1 or R-4.

Both Groups I-1 and R-4 include "conditions" to cover the variety of acuity and ability levels of custodial care recipients. Group I-1/R-4, Condition 1 match requirements for previous editions of the code for Group I-1 and R-4, before conditions were included. The intent of the conditions was to address concerns that some residents may need limited assistance or verbal direction to evacuate. The building protection offered for Group I-1/R-4 in previous editions of the code is maintained in Condition 1. Some additional requirements were added for Condition 2. Note that this is custodial care. Where nursing care is provided, the facility is a Group I-2, Condition 1. The Condition 1 care recipients may be slower during evacuation, but all are capable of emergency evacuation without any physical assistance from others. However, they require minor verbal cues from others during emergencies, as might be expected in the general population. Condition 2 custodial care recipients are also slower to evacuate and include any care recipients who may require limited assistance during evacuation. Group I-1/R4, Condition 2 integrates additional protection features, such as smoke barriers to subdivide the building as well as increased automatic sprinkler requirements.

In Group I-1/R-4, Condition 2 facilities, assistance with evacuation can occur because of care recipients' physical or mental limitations, or both. The Condition 2 assistance with evacuation includes help getting out of bed and into a wheelchair or to a walker, or help initiating ambulation. It includes continued physical assistance getting out of the building from a sleeping room, apartment, or other rooms during an emergency. Assistance with evacuation includes assisting persons who may have resistance or confusion in response to an alarm, or require help with instructions. It can also include help for persons with short periods of impaired consciousness intermittently due to medications or illness. Custodial care Group I-1/R-4, Condition 2 evacuation assistance does not include moving occupants in beds or stretchers during emergencies, as is allowed in Group I-2 medical care.

How individual state licensing agencies name, classify and regulate many of the uses listed in Groups I-1 and R-4 vary significantly from state to state and may not correlate with the IBC classifications. It is for this reason that the Groups I-1 and R-4 list of uses is included under the general occupancy classifications and not under each "condition." The building permit applicant should confirm how the spe-

INTERNATIONAL CODE COUNCIL®
Copyright © 2015 ICC. ALL RIGHTS RESERVED. Accessed by David Dammon on Jun 21, 2017 12:30:52 PM pursuant to License Agreement with ICC. No further reproduction or distribution authorized. ANY UNAUTHORIZED REPRODUCTION OR DISTRIBUTION IS A VIOLATION OF THE FEDERAL COPYRIGHT ACT AND THE LICENSE AGREEMENT, AND SUBJECT TO CIVIL AND CRIMINAL PENALTIES THEREUNDER.

cific state licensing regulations correlate to the code's care type, occupancy, condition, evacuation capability, and number of persons receiving care. The permit application drawings should identify the five criteria, while specifically noting that the state licensing regulations limit occupants to only include Condition 1 criteria, or allow Condition 2 criteria. Most assisted living facilities and many residential board and care facilities will be classified as Group I-1, Condition 1 or Group R-4, Condition 1. Generally, almost all specially designated Alzheimer's/memory care facilities providing custodial care will be classified as Group I-1, Condition 2 or Group R-4, Condition 2, due to the inability of some residents to recognize how to respond to an emergency situation. Note that nursing facilities with specialized dementia wings that provide medical care would be classified as Group I-2, Condition 1. Also, it is important to keep in mind that facilities that may be classified initially as Group I-1, Condition 1 (capable of self-preservation) or Group R-4, Condition 1 can very easily need to be reclassified as a Group I-1/R-4, Condition 2 or as a Group I-2, Condition 1 if the abilities of the persons receiving care change over time. Therefore, it is essential for the proponents of a new facility to provide to the building official information regarding the full range of patients and residents expected at a facility both initially and over time.

The occupant load for occupancy classification purposes refers to the number of care recipients only. The number of guests or staff is not included. Note however, that the number of guests and staff is included for means of egress purposes.

For clarification purposes, a dormitory or apartment complex that houses only elderly people and has a nonmedically trained live-in manager is not classified as an institutional occupancy but rather as a residential occupancy (see Section 310). A critical phrase in the code to consider when evaluating this type of facility is "live in a supervised residential environment." Such dormitories or apartment complexes may contain features such as special emergency call switches that are located in each dwelling unit and monitored by health center staff. These emergency call switches are a convenience and do not necessarily indicate infirmity of the care recipients.

308.3.1 Condition 1. This occupancy condition shall include buildings in which all persons receiving custodial care who, without any assistance, are capable of responding to an emergency situation to complete building evacuation.

❖ See the commentary to Section 308.3.

308.3.2 Condition 2. This occupancy condition shall include buildings in which there are any persons receiving custodial care who require limited verbal or physical assistance while responding to an emergency situation to complete building evacuation.

❖ See the commentary to Section 308.3.

308.3.3 Six to 16 persons receiving custodial care. A facility housing not fewer than six and not more than 16 persons receiving custodial care shall be classified as Group R-4.

❖ Any building that has the characteristics of a Group I-1 occupancy but has more than five and not more than 16 persons receiving custodial care is classified as Group R-4 (see Section 310.6). Ninety- eight percent of households in the U.S. have less than 16 occupants, thus the limit of 16 is considered appropriate for a residential occupancy. Similar to Group I-1, Group R-4 is also divided into Conditions 1 and 2.

308.3.4 Five or fewer persons receiving custodial care. A facility with five or fewer persons receiving custodial care shall be classified as Group R-3 or shall comply with the *International Residential Code* provided an *automatic sprinkler system* is installed in accordance with Section 903.3.1.3 or Section P2904 of the *International Residential Code*.

❖ Any building that has the characteristics of a Group I-1 occupancy (Condition 1 or 2, or both) but has five or fewer persons receiving custodial care is classified as Group R-3 (see Section 310.5) or may be constructed in accordance with the *International Residential Code*® (IRC®) (see Section 310.5.1). When the code allows compliance in accordance with the IRC, the only requirements that would apply would be those of the IRC, including the installation of automatic sprinkler protection. The intent is to allow persons to be cared for in a residential, or home, environment, often by family members. Please note similar provisions for Group E occupancies as well as Groups I-2 and I-4.

308.4 Institutional Group I-2. Institutional Group I-2 occupancy shall include buildings and structures used for *medical care* on a 24-hour basis for more than five persons who are *incapable of self-preservation*. This group shall include, but not be limited to, the following:

Foster care facilities
Detoxification facilities
Hospitals
Nursing homes
Psychiatric hospitals

❖ An occupancy classified in Group I-2 is characterized by three conditions: it is a health care facility where the level of care offered is medical care; there is 24-hour-a-day medical supervision for the individuals receiving care; and patients/residents require physical assistance by staff or others to reach safety in an emergency situation (see the definitions for "Custodial care," "Medical care," "24-hour basis" and the five facility examples listed). Where a facility offers medical care instead of custodial care, it is assumed that residents may not be capable of self-preservation. This assessment of the level of care provided needs to be taken with caution, and reliance on other state and federal guidelines and associated regulations may be necessary. Also, it is important to keep in mind that facilities that may be classified initially as

INTERNATIONAL CODE COUNCIL®
Copyright © 2015 ICC. ALL RIGHTS RESERVED. Accessed by David Dammon on Jun 21, 2017 12:30:52 PM pursuant to License Agreement with ICC. No further reproduction or distribution authorized. ANY UNAUTHORIZED REPRODUCTION OR DISTRIBUTION IS A VIOLATION OF THE FEDERAL COPYRIGHT ACT AND THE LICENSE AGREEMENT, AND SUBJECT TO CIVIL AND CRIMINAL PENALTIES THEREUNDER.

Group I-1, Condition 1 (capable of self-preservation) or Group R-4, Condition 1 can very easily need to be reclassified as a Group I-1/R-4, Condition 2 or as a Group I-2, Condition 1 if the abilities of the persons receiving care change over time. Therefore, it is essential for the proponents of a new facility to provide to the building official information regarding the full range of patients and residents expected at a facility both initially and over time.

Due to the diversification of how medical care is provided in the five characteristic occupancies currently specified in the IBC for Group I-2 occupancies, the Group I-2 occupancy has been split into two basic conditions: Condition 1, nursing homes and foster care; and Condition 2, short-term care (hospitals). Although both of these subsets are based on medical treatment and are occupancies within which the occupants are protected with a defend-in-place method of safety, changes in the delivery of care in the two different conditions has changed in the past 10 to 20 years. Some examples of these changes include:

- Within hospitals, there has been a general increase in the floor area per patient due to the increase in diagnostic equipment and the movement toward single-occupant patient rooms.
- Within nursing homes, there has been a trend to provide more residential-type accommodations, such as group/suite living, gathering areas and cooking facilities in residential areas.

The most common examples of facilities classified in Group I-2 are hospitals (Condition 2) and nursing homes (Condition 1) [see Commentary Figures 308.4(1) and 308.4(2)]. Other facilities included are detoxification facilities, foster care facilities and psychiatric hospitals. How state licensing agencies name, classify and regulate many of the uses listed in Group I-2 varies from state to state and may not correlate with the IBC classifications. It is for this reason that the Group I-2 list of uses is included under the general occupancy classification and not under each "condition."

The benefit to the "condition" concept is that a majority of code requirements will still apply to all Group I-2 occupancies as well as allow the provision of specific code requirements that apply to different levels of care and acuity that are found in different facility types, thus allowing the establishment of specific code requirements that are based on the operation of the facility. See Commentary Figure 308.1.

It is not uncommon to find dining rooms (Group A-2), staff offices (Group B), gift shops (Group M), laundries (Group F) and other nonmedically related areas in buildings otherwise classified as Group I-2. Where such other occupancies occur, the building is considered as a mixed occupancy and subject to the provisions of Section 508. In addition to the general requirements contained in this section, Section 407 contains specific requirements for Group I-2.

308.4.1 Occupancy conditions. Buildings of Group I-2 shall be classified as one of the occupancy conditions specified in Section 308.4.1.1 or 308.4.1.2.

❖ Sections 308.4.1.1 and 308.4.1.2 provide the distinction between the Condition 1 and Condition 2 for the Group I-2 occupancy. Section 407 provides many requirements which apply to both conditions under the Group I-2 occupancy.

308.4.1.1 Condition 1. This occupancy condition shall include facilities that provide nursing and medical care but do

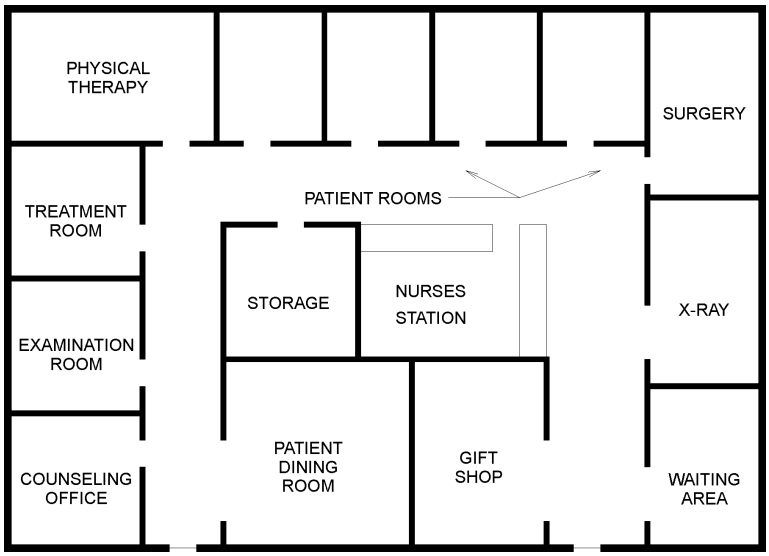

Figure 308.4(1)
GROUP I-2—HOSPITAL

INTERNATIONAL CODE COUNCIL®
Copyright © 2015 ICC. ALL RIGHTS RESERVED. Accessed by David Dammon on Jun 21, 2017 12:30:52 PM pursuant to License Agreement with ICC. No further reproduction or distribution authorized. ANY UNAUTHORIZED REPRODUCTION OR DISTRIBUTION IS A VIOLATION OF THE FEDERAL COPYRIGHT ACT AND THE LICENSE AGREEMENT, AND SUBJECT TO CIVIL AND CRIMINAL PENALTIES THEREUNDER.

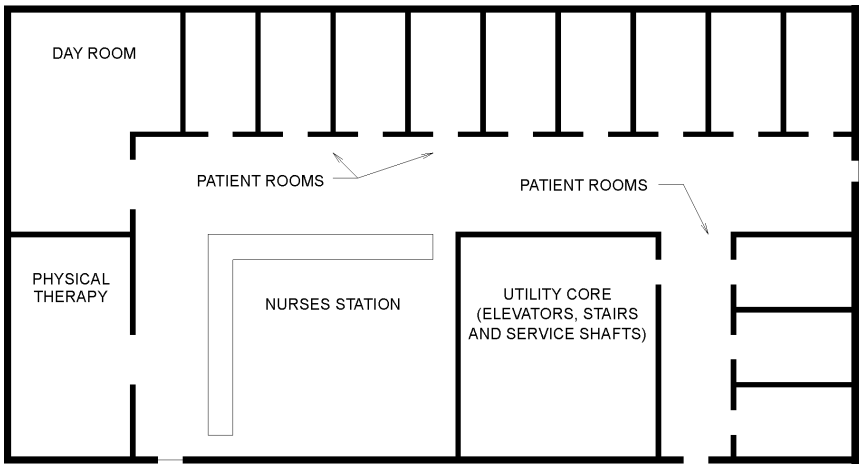

Figure 308.4(2)
GROUP I-2—NURSING HOME

not provide emergency care, surgery, obstetrics or in-patient stabilization units for psychiatric or detoxification, including but not limited to nursing homes and foster care facilities.

❖ The principal use in this category is nursing homes, which are typically facilities providing long-term medical care but not the types of care typically found in hospitals. Foster care facilities, by the Chapter 2 definition, are where children up to the age of $2^1/_2$ receive care. Foster care for more than five infants and toddlers would also be classified as Group I-2, Condition 2. Foster care facilities that provide care for five or more children older than age $2^1/_2$ would typically be Group I-1/R-4, Condition 1 based on supervised living and capability of the residents.

308.4.1.2 Condition 2. This occupancy condition shall include facilities that provide nursing and medical care and could provide emergency care, surgery, obstetrics or in-patient stabilization units for psychiatric or detoxification, including but not limited to hospitals.

❖ Hospitals and psychiatric hospitals are both included in the Condition 2 category of the Group I-2 occupancy. Treatment is usually for periods longer than 24 hours and provides medical care not typically available in long-term nursing care facilities.

308.4.2 Five or fewer persons receiving medical care. A facility with five or fewer persons receiving medical care shall be classified as Group R-3 or shall comply with the *International Residential Code* provided an *automatic sprinkler system* is installed in accordance with Section 903.3.1.3 or Section P2904 of the *International Residential Code*.

❖ Any facility that has the characteristics of a Group I-2 occupancy but does not have more than five persons receiving care at any one time is to be classified as a Group R-3 occupancy (see Section 310.5). As an option, the facility may be designed and constructed under the provisions of the IRC, provided the building has a sprinkler system (see Section 310.5.1). The intent is to allow persons to be cared for in a residential, or home, environment, often under the care of family members. The persons receiving the care do not need to be capable of self-preservation. The sprinkler system is to comply with the requirements for an NFPA 13D system or those of Section P2904 of the IRC. Please note similar provisions for Group E occupancies as well as Groups I-1 (see Section 308.3.4) and I-4 (See Section 308.6.4). See Commentary Figure 308.1.

308.5 Institutional Group I-3. Institutional Group I-3 occupancy shall include buildings and structures that are inhabited by more than five persons who are under restraint or security. A Group I-3 facility is occupied by persons who are generally *incapable of self-preservation* due to security measures not under the occupants' control. This group shall include, but not be limited to, the following:

Correctional centers
Detention centers
Jails
Prerelease centers
Prisons
Reformatories

Buildings of Group I-3 shall be classified as one of the occupancy conditions specified in Sections 308.5.1 through 308.5.5 (see Section 408.1).

❖ An occupancy classified in Group I-3 is characterized by three conditions: it is a location where persons are under restraint or where security is closely supervised; there are more than five such persons; and they are not capable of self-preservation because the conditions of confinement are not under their control (i.e., they require assistance by the facilities' staff to reach safety in an emergency situation). For occupancy classification purposes, the provision refers to the number of persons being secured or restrained

INTERNATIONAL CODE COUNCIL®
Copyright © 2015 ICC. ALL RIGHTS RESERVED. Accessed by David Dammon on Jun 21, 2017 12:30:52 PM pursuant to License Agreement with ICC. No further reproduction or distribution authorized. ANY UNAUTHORIZED REPRODUCTION OR DISTRIBUTION IS A VIOLATION OF THE FEDERAL COPYRIGHT ACT AND THE LICENSE AGREEMENT, AND SUBJECT TO CIVIL AND CRIMINAL PENALTIES THEREUNDER.

only. The number of guests or staff is not included. Please note, however, that the number of guests and staff is included for means of egress purposes.

Buildings that have these characteristics but that contain no more than five persons who are being secured or restrained are to be classified based upon the function to which they are associated. For example, the small holding cell in a Group B police station having only the one cell would simply be classified as a portion of the Group B occupancy. Regardless of the occupancy classification, the means of egress provisions for places of restraint are still applicable (see Chapter 10).

It is recognized that not all Group I-3 occupancies have the same level of restraint. Thus, to distinguish these different levels, the code defines five different conditions of occupancy based on the degree of access to the exit discharge.

The five occupancy conditions are summarized in Commentary Figure 308.5

308.5.1 Condition 1. This occupancy condition shall include buildings in which free movement is allowed from sleeping areas, and other spaces where access or occupancy is permitted, to the exterior via *means of egress* without restraint. A Condition 1 facility is permitted to be constructed as Group R.

❖ Condition 1 areas are those where the secured persons have unrestrained access to the exterior of the building. As such, a key or remote control release device is not needed for any occupant to reach the exterior of the building (exit discharge) at any time. These types of buildings are referred to as low-security facilities. A work-release center is a typical Condition 1 facility (see Commentary Figure 308.5.1).

Because of the lack of restraint associated with a Condition 1 building, it resembles a residential use more than a detention facility and, therefore, is permitted to be classified in Group R (see Section 310).

308.5.2 Condition 2. This occupancy condition shall include buildings in which free movement is allowed from sleeping areas and any other occupied *smoke compartment* to one or more other *smoke compartments*. Egress to the exterior is impeded by locked *exits*.

❖ Condition 2 areas are those in which the movement of the persons under restraint is not controlled within the exterior walls of the building (i.e., the occupants have unrestrained access within the building). As such, there is free movement by such persons between smoke compartments (as created by smoke barriers); however, the restrained persons must rely on someone else to allow them to exit the building to the area of discharge. This is illustrated in Commentary Figure 308.5.2.

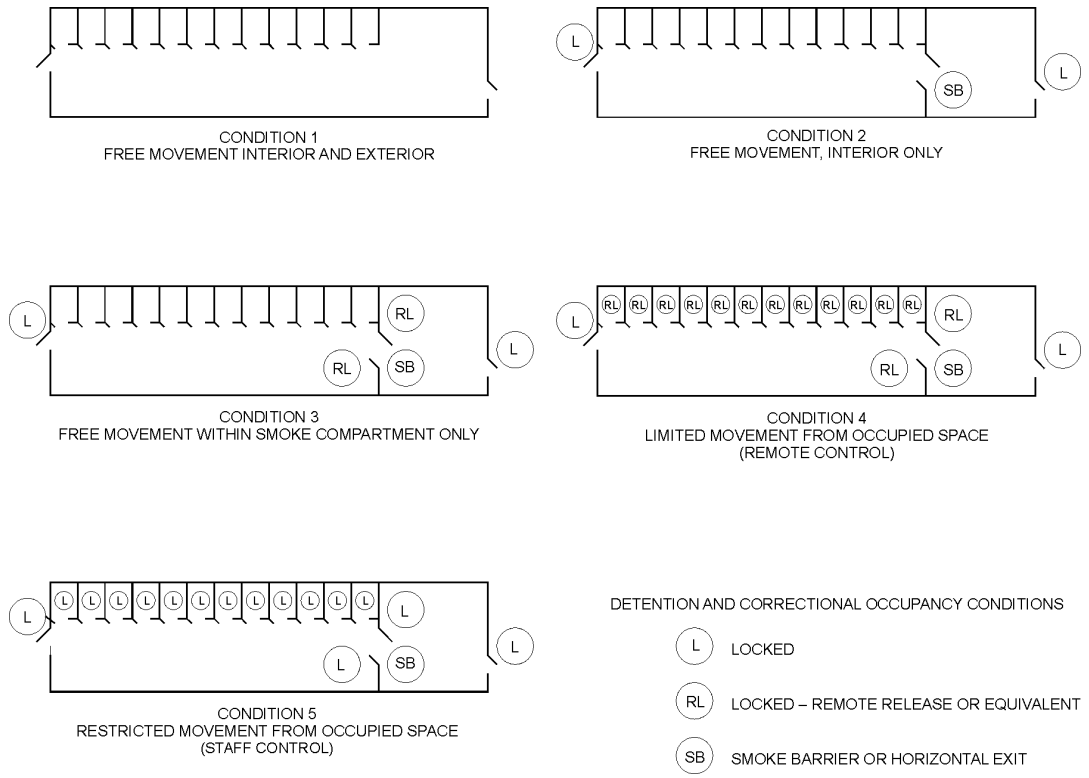

Figure 308.5
GROUP I-3—OCCUPANCY CONDITIONS

INTERNATIONAL CODE COUNCIL®
Copyright © 2015 ICC. ALL RIGHTS RESERVED. Accessed by David Dammon on Jun 21, 2017 12:30:52 PM pursuant to License Agreement with ICC. No further reproduction or distribution authorized. ANY UNAUTHORIZED REPRODUCTION OR DISTRIBUTION IS A VIOLATION OF THE FEDERAL COPYRIGHT ACT AND THE LICENSE AGREEMENT, AND SUBJECT TO CIVIL AND CRIMINAL PENALTIES THEREUNDER.

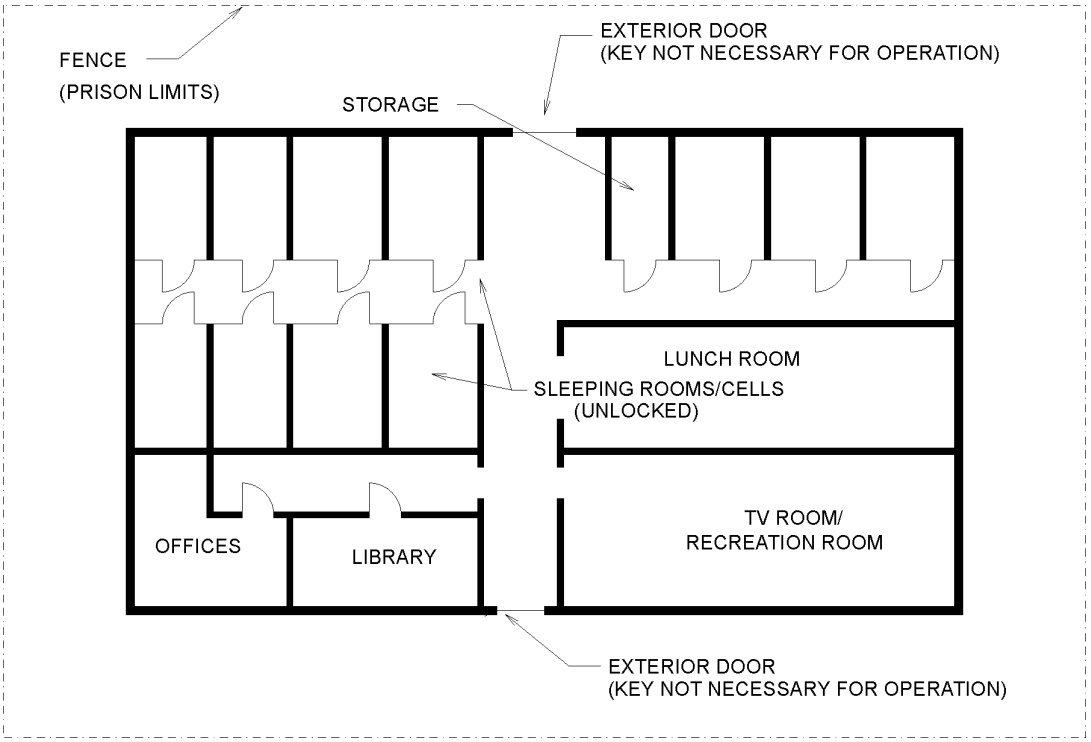

Figure 308.5.1
CONDITION 1

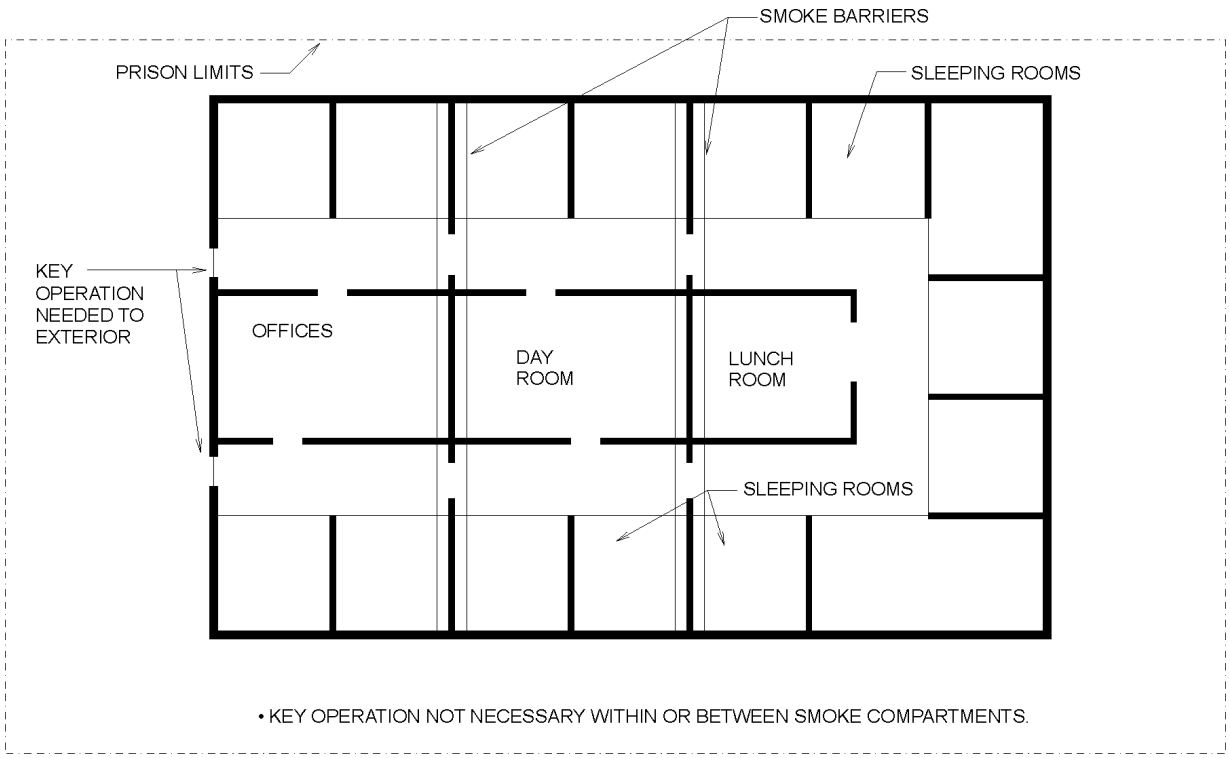

Figure 308.5.2
CONDITION 2

INTERNATIONAL CODE COUNCIL®
Copyright © 2015 ICC. ALL RIGHTS RESERVED. Accessed by David Dammon on Jun 21, 2017 12:30:52 PM pursuant to License Agreement with ICC. No further reproduction or distribution authorized. ANY UNAUTHORIZED REPRODUCTION OR DISTRIBUTION IS A VIOLATION OF THE FEDERAL COPYRIGHT ACT AND THE LICENSE AGREEMENT, AND SUBJECT TO CIVIL AND CRIMINAL PENALTIES THEREUNDER.

308.5.3 Condition 3. This occupancy condition shall include buildings in which free movement is allowed within individual *smoke compartments*, such as within a residential unit comprised of individual *sleeping units* and group activity spaces, where egress is impeded by remote-controlled release of *means of egress* from such a *smoke compartment* to another *smoke compartment*.

❖ Condition 3 areas are those in which free movement by the persons under restraint is permitted within an individual smoke compartment. However, movement of such persons from one smoke compartment (as created by smoke barriers) to another smoke compartment and from within the building to the exterior (exit discharge) is controlled by remote release locking devices. As such, the restrained persons in the facility are dependent on the staff for their release from each smoke compartment or to the exterior (exit discharge). This condition is illustrated in Commentary Figure 308.5.3.

308.5.4 Condition 4. This occupancy condition shall include buildings in which free movement is restricted from an occupied space. Remote-controlled release is provided to permit movement from *sleeping units*, activity spaces and other occupied areas within the *smoke compartment* to other *smoke compartments*.

❖ Condition 4 areas are those in which the movement of restrained persons from any room or space within a smoke compartment (as created by smoke barriers) to another smoke compartment or to the exterior (exit discharge) is controlled by remote-release locking devices. Any movement within the facility requires activation of a remote-control lock system to release the designated area (see Commentary Figure 308.5.4). The persons being restrained or secured within a Condition 4 area must rely on an activation system in the event of an emergency in order to evacuate the area.

Condition 4 facilities most often are penal facilities where the restrained persons are considered relatively safe to handle in large groups. As such, many persons can be released simultaneously from their individual sleeping areas when they need to travel to dining areas or move to another area.

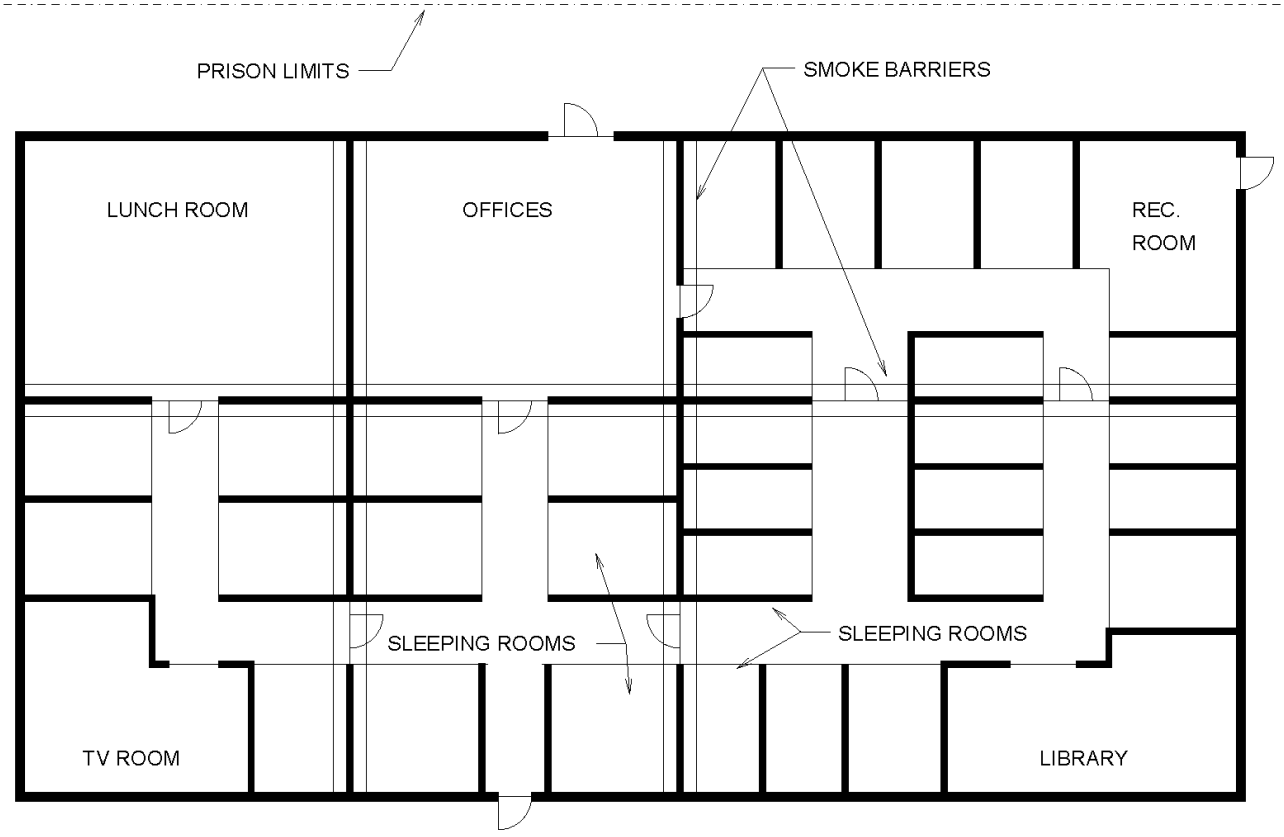

Figure 308.5.3
CONDITION 3

INTERNATIONAL CODE COUNCIL®
Copyright © 2015 ICC. ALL RIGHTS RESERVED. Accessed by David Dammon on Jun 21, 2017 12:30:52 PM pursuant to License Agreement with ICC. No further reproduction or distribution authorized. ANY UNAUTHORIZED REPRODUCTION OR DISTRIBUTION IS A VIOLATION OF THE FEDERAL COPYRIGHT ACT AND THE LICENSE AGREEMENT, AND SUBJECT TO CIVIL AND CRIMINAL PENALTIES THEREUNDER.

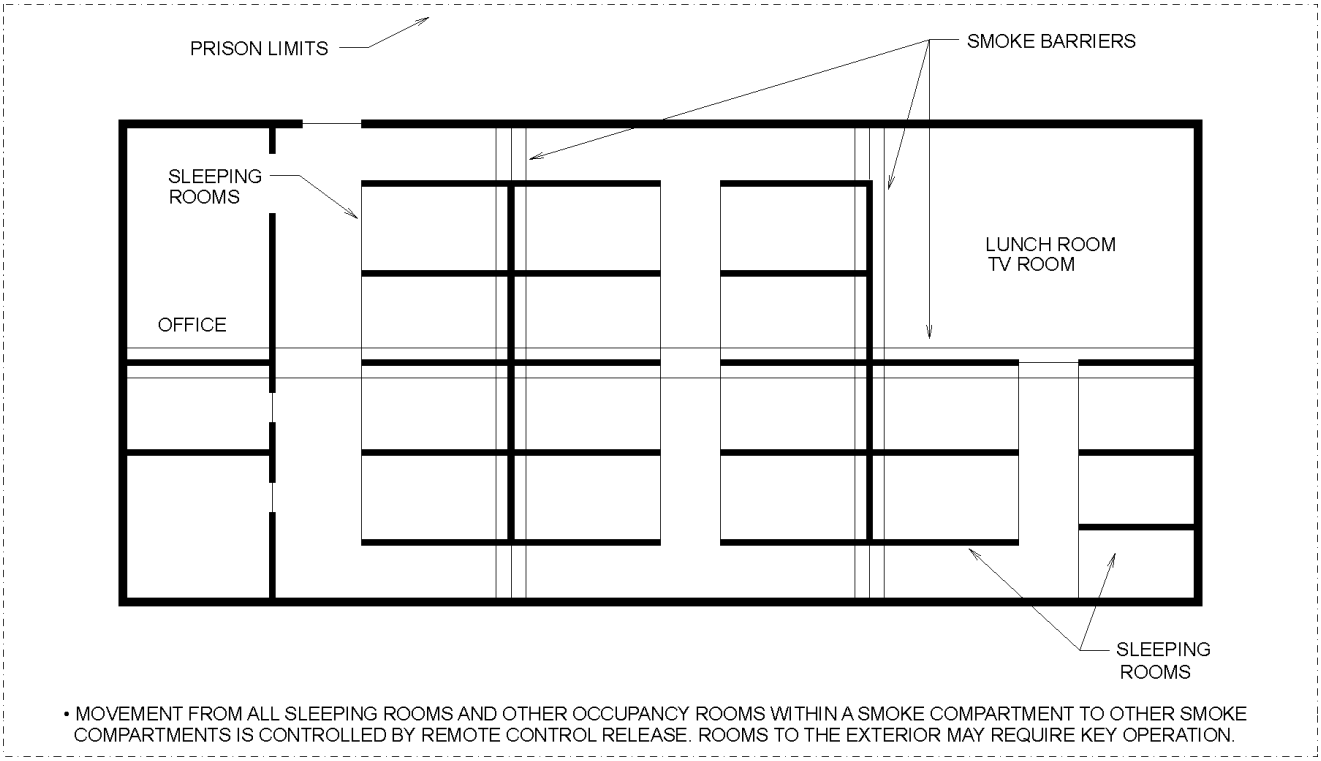

Figure 308.5.4
CONDITION 4

308.5.5 Condition 5. This occupancy condition shall include buildings in which free movement is restricted from an occupied space. Staff-controlled manual release is provided to permit movement from *sleeping units*, activity spaces and other occupied areas within the *smoke compartment* to other *smoke compartments*.

❖ Condition 5 areas are those in which the persons being secured or restrained are not allowed free movement from a room or space within a smoke compartment (as created by smoke barriers) to another smoke compartment or to the exterior (exit discharge) unless the locking device controlling their area of confinement is manually released by a staff member. Once an occupant is released from an individual space, a staff member is responsible for unlocking all doors from that location to the next smoke compartment. This is the most restrictive occupancy condition, as each secured person must be released on an individual basis and escorted to other areas.

Condition 5 facilities are most often used for maximum security or solitary confinement areas where the persons are considered to be dangerous to others, including staff members, and cannot safely be handled in large groups (see Commentary Figure 308.5.5).

308.6 Institutional Group I-4, day care facilities. Institutional Group I-4 occupancy shall include buildings and structures occupied by more than five persons of any age who receive *custodial care* for fewer than 24 hours per day by persons other than parents or guardians, relatives by blood, marriage or adoption, and in a place other than the home of the person cared for. This group shall include, but not be limited to, the following:

Adult day care
Child day care

❖ Facilities that contain provisions for the custodial care of more than five persons of any age are classified as Group I-4 (see definitions of "Personal care" and "Custodial care"). Group I-4 facilities are less restrictive in some requirements (e.g., height and area) than the other Group I occupancies. Group I-4 facilities are intended to be used to provide care for less than 24 hours. Day care facilities are not intended to be a full-time residence for the people receiving care (see Sections 308.3 and 308.4). Staff members are assumed not to be related to individuals in day care facilities. The premise of the provisions is that the numbers receiving care are exclusive of staff. The care recipients in a Group I-4 occupancy are not expected to respond to an emergency without physical assistance from others. Group I-4 occupancies include both adult day care and child day care.

Adult care facilities are assumed to be for people other than children who require some type of custodial (i.e., nonmedical) care. A facility where adults gather for social activities, such as a community cen-

INTERNATIONAL CODE COUNCIL®
Copyright © 2015 ICC. ALL RIGHTS RESERVED. Accessed by David Dammon on Jun 21, 2017 12:30:52 PM pursuant to License Agreement with ICC. No further reproduction or distribution authorized. ANY UNAUTHORIZED REPRODUCTION OR DISTRIBUTION IS A VIOLATION OF THE FEDERAL COPYRIGHT ACT AND THE LICENSE AGREEMENT, AND SUBJECT TO CIVIL AND CRIMINAL PENALTIES THEREUNDER.

ter or a YMCA, is not an adult care facility (Group I) and would be regulated under other provisions of the code (Group A-3 or B). The classification of Group I-4 for an adult day care facility does not apply to facilities that provide personal care services for adults who are capable of responding to an emergency unassisted. In that case, the facility is simply classified into the occupancy group it most resembles. A facility providing a similar degree of custodial care for infants and toddlers on less than a 24-hour-per-day basis would be considered as a Group I-4 day care facility (see Sections 308.5.1 and 305.2).

308.6.1 Classification as Group E. A child day care facility that provides care for more than five but not more than 100 children $2^1/_2$ years or less of age, where the rooms in which the children are cared for are located on a *level of exit discharge* serving such rooms and each of these child care rooms has an *exit* door directly to the exterior, shall be classified as Group E.

❖ Children $2^1/_2$ years of age or less (i.e., infants and toddlers) are not typically capable of independently responding to an emergency and must be led or carried to safety. Under such circumstances, the infants and toddlers are considered nonambulatory. Therefore, a Group I-4 classification is given to those facilities where six or more infants and toddlers receive custodial care for less than 24 hours per day. A similar condition is found in foster care facilities (Group I-2, Condition 1), where infants and toddlers stay for extended periods of time. The distinguishing factor between the two occupancies is the amount of time the facility provides care for each individual. Group I-2 facilities provide care on a 24-hour basis while in Group I-4 facilities, individual care must be less than 24 hours. It is also assumed that medical care is not present in Group I-4 facilities.

A child care facility in which the number of infants and toddlers is greater than five but not more than 100 is permitted to be classified as Group E, provided the infants and toddlers are all located in rooms on the level of exit discharge that serves such rooms and all of the rooms have exit doors directly to the exterior. This exception is only applicable to rooms and spaces used for child care and is not intended to apply to accessory spaces such as restrooms, offices and kitchens. Many day care facilities primarily catering to those under primary school age tend to divide the children into three general categories based on state laws and regulations. These include infant, toddler and preschool.

Some variations do occur in that larger day care facilities will have transition rooms for mobile infants or pre-K oriented rooms for those entering kindergarten. But basically there is a mixture of children $2^1/_2$ years or less and older children. The older children can automatically be in a facility classified as a Group E occupancy, but for the younger children the exception as discussed above would need to be applied to classify the entire occupancy as Group E. The total number of children can exceed 100 and the Group E

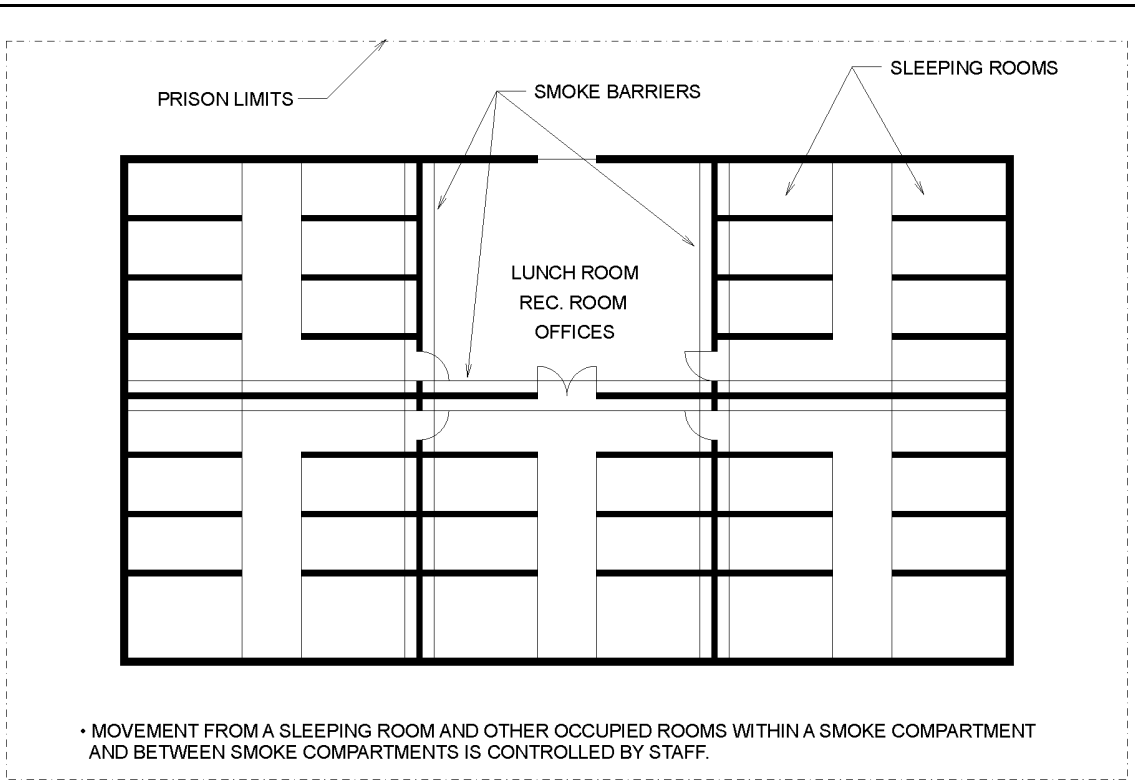

Figure 308.5.5
CONDITION 5

INTERNATIONAL CODE COUNCIL®
Copyright © 2015 ICC. ALL RIGHTS RESERVED. Accessed by David Dammon on Jun 21, 2017 12:30:52 PM pursuant to License Agreement with ICC. No further reproduction or distribution authorized. ANY UNAUTHORIZED REPRODUCTION OR DISTRIBUTION IS A VIOLATION OF THE FEDERAL COPYRIGHT ACT AND THE LICENSE AGREEMENT, AND SUBJECT TO CIVIL AND CRIMINAL PENALTIES THEREUNDER.

classification is retained, provided that the number of children $2^1/_2$ years or less is limited to 100 or fewer. The infant and toddler rooms would need to have exits directly to the outside on the level of exit discharge. If the exception is not applied, the entire facility would need to be classified as Group I-4 or a mixed occupancy classification would be necessary.

By permitting the facility to be classified as Group E, the building would not be required to be sprinklered unless the fire area was greater than 12,000 square feet (115 m^2). A Group I-4 facility would be required to be sprinklered regardless of the area. But as a Group E occupancy, panic hardware would be required in rooms and spaces exceeding 50 occupants.

See Commentary Figure 308.1.

308.6.2 Within a place of religious worship. Rooms and spaces within *places of religious worship* providing such care during religious functions shall be classified as part of the primary occupancy.

❖ Group I-4 provisions do not apply to places of religious worship simply providing care services during worship and related religious functions. If the space is used at other times as a day care facility, then it would be classified as Group I-4 or E as applicable.

308.6.3 Five or fewer persons receiving care. A facility having five or fewer persons receiving *custodial care* shall be classified as part of the primary occupancy.

❖ Where five or fewer persons receive custodial care in a facility other than a dwelling unit, the classification of the care area is to be consistent with that of the primary occupancy. The limited number of care recipients reduces the hazard level to the point that classification as a Group I-4 occupancy is not warranted.

308.6.4 Five or fewer persons receiving care in a dwelling unit. A facility such as the above within a *dwelling unit* and having five or fewer persons receiving *custodial care* shall be classified as a Group R-3 occupancy or shall comply with the *International Residential Code.*

❖ Buildings that have five or fewer persons receiving custodial care within a dwelling unit are to be classified as Group R-3, or shall be constructed in accordance with the IRC. The assumption is that this type of activity is possible in a residential environment where one or more family members require the high level of care regulated by Section 308.6. Please note similar provisions for Group E occupancies as well as Groups I-1 and I-2.

SECTION 309
MERCANTILE GROUP M

309.1 Mercantile Group M. Mercantile Group M occupancy includes, among others, the use of a building or structure or a portion thereof for the display and sale of merchandise, and involves stocks of goods, wares or merchandise incidental to such purposes and accessible to the public. Mercantile occupancies shall include, but not be limited to, the following:

Department stores
Drug stores
Markets
Motor fuel-dispensing facilities
Retail or wholesale stores
Sales rooms

❖ The characteristics of occupancies classified in Group M are contained in this section. Because mercantile occupancies normally involve the display and sale of large quantities of combustible merchandise, the fuel load in such facilities can be relatively high, potentially exposing the occupants (customers and sales personnel) to a high degree of fire hazard. Mercantile operations often attract large crowds (particularly in large department stores and covered and open malls and especially during weekends and holidays). There are two factors that alleviate the risks to life safety: the occupant load normally has a low to moderate density, and the occupants are alert, mobile and able to respond in an emergency situation. The degree of openness and the organization of the retail display found in most mercantile occupancies are generally orderly and do not present an unusual difficulty for occupant evacuation.

Listed here are general descriptions of the kinds of occupancies that are classified in Group M. Mercantile buildings most often have both a moderate occupant load and a high fuel load, which is in the form of furnishings and the goods being displayed, stored and sold [see Commentary Figure 309.1(1)].

The key characteristics that differentiate occupancies classified in Group M from those classified in Group B (see Section 304) are the larger quantity of goods or merchandise available for sale and the lack of familiarity of the occupants with the building, particularly its means of egress. To be classified in Group M, the goods that are on display must be accessible to the public. If a patron sees an item for sale, then that item is generally available for purchase at that time (i.e., there is a large stock of goods). If a store allows people to see the merchandise but it is not available on the premises, such as an automobile showroom, then the occupancy classification of business (Group B) should be considered. A mercantile building is open to the public, many of whom may not be regular visitors. A business building, however, is primarily occupied by regular employees who are familiar with the building arrangement and, most importantly, the exits. This awareness of the building and the exits can be an important factor in a fire emergency.

Where storage rooms are limited to a maximum of 100 square feet (9.3 m^2) in area, Section 311.1.1 allows such rooms to still be considered part of the primary occupancy, provided that the aggregate of

INTERNATIONAL CODE COUNCIL®
Copyright © 2015 ICC. ALL RIGHTS RESERVED. Accessed by David Dammon on Jun 21, 2017 12:30:52 PM pursuant to License Agreement with ICC. No further reproduction or distribution authorized. ANY UNAUTHORIZED REPRODUCTION OR DISTRIBUTION IS A VIOLATION OF THE FEDERAL COPYRIGHT ACT AND THE LICENSE AGREEMENT, AND SUBJECT TO CIVIL AND CRIMINAL PENALTIES THEREUNDER.

such rooms does not exceed 10 percent of the story. Therefore, many mercantile stores with stockroom areas will be considered a mixed use building for height and area, construction type and sprinkler requirements. Note that Table 508.4 does not require a fire-resistance rating on the separation between Groups M and S-1.

Automotive, fleet-vehicle, marine and self-service fuel-dispensing facilities, as defined in the IFC, are classified in the mercantile occupancy, as are the convenience stores often associated with such occupancies [see Commentary Figure 309.1(2)]. Quick-lube, tune-up, muffler and tire shops are not included in this classification. Those facilities that typically conduct automotive service and repair work are treated as a repair garage (Group S-1, also defined in the IFC).

Simply because a building containing a mercantile-

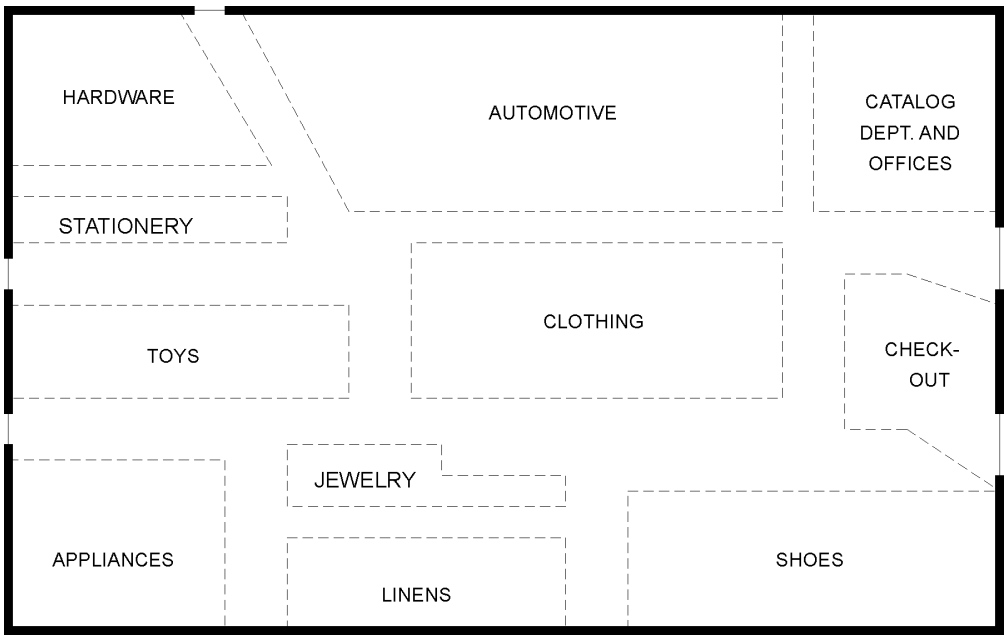

Figure 309.1(1)
GROUP M—DEPARTMENT STORE

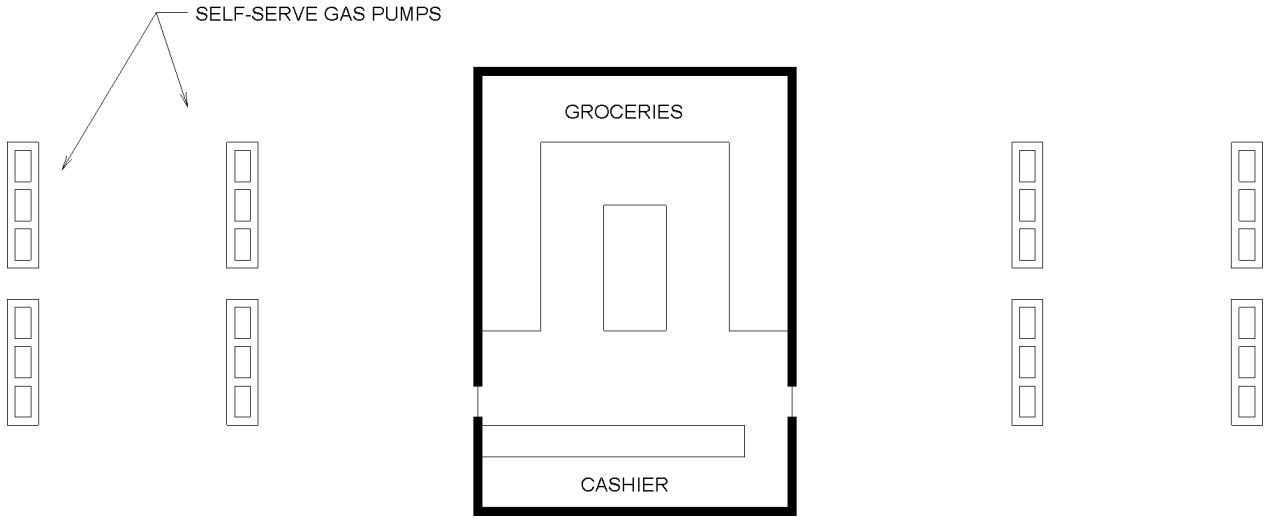

Figure 309.1(2)
GROUP M—SELF-SERVICE GAS STATION
(NO REPAIR IS DONE)

INTERNATIONAL CODE COUNCIL®
Copyright © 2015 ICC. ALL RIGHTS RESERVED. Accessed by David Dammon on Jun 21, 2017 12:30:52 PM pursuant to License Agreement with ICC. No further reproduction or distribution authorized. ANY UNAUTHORIZED REPRODUCTION OR DISTRIBUTION IS A VIOLATION OF THE FEDERAL COPYRIGHT ACT AND THE LICENSE AGREEMENT, AND SUBJECT TO CIVIL AND CRIMINAL PENALTIES THEREUNDER.

type occupancy has a dense occupant load does not necessitate the need to classify the building as an assembly occupancy, unless the activity includes an assembly-type area where purchasing of goods is a group activity versus individual shoppers independently considering and purchasing merchandise. For example, a building in which auction sales occur may have a highly concentrated occupant load where the sales occur, but Section 309.1 describes mercantile occupancies as "the use of a building or structure or portion thereof for the display and sale of merchandise and involves stocks of goods, wares or merchandise incidental to such purposes and accessible to the public." In an auction, however, the activity is dominated by an assembly use of the space as people gather to conduct and participate in the auction. As such, auction spaces need to be assigned a Group A-3 occupancy (IBC Interpretation No. 38-03). The presence of highly concentrated occupant loads does not in itself mandate an assembly use classification unless the activity is assembly in nature versus large numbers of people pursuing individual activities of acquisition.

309.2 Quantity of hazardous materials. The aggregate quantity of nonflammable solid and nonflammable or noncombustible liquid hazardous materials stored or displayed in a single *control area* of a Group M occupancy shall not exceed the quantities in Table 414.2.5(1).

❖ This section addresses an exception for control areas of mercantile occupancies containing certain nonflammable or noncombustible materials and health hazard gases that are stored in accordance with Table 414.2.5(1). This section allows Group H-4 materials, which pose a health hazard rather than a physical hazard, as well as limited Group H-2 and H-3 materials to be stored in both the retail display and stock areas of mercantile occupancies in excess of the maximum allowable quantity per control area of Tables 307.1(1) and 307.1(2) without classifying the building as Group H. To correctly classify a building where products that have hazardous properties are stored and sold, the code user must also be aware of the provisions contained in Section 307.1, Notes c and n of Table 307.1(1) and Notes b and c of Table 307.1(2). These provisions give the quantity limitations for specific high-hazard products in mercantile display areas, including medicines, foodstuffs, cosmetics and alcoholic beverages.

Without this option, many mercantile occupancies could technically be classified as Group H. The increased quantities of certain hazardous materials are based on the recognition that, while there is limited risk in mercantile occupancies, the packaging and storage arrangements can be controlled. For further information on the storage limitations required for these types of materials in mercantile occupancies, see Section 2703.11 of the IFC.

SECTION 310
RESIDENTIAL GROUP R

310.1 Residential Group R. Residential Group R includes, among others, the use of a building or structure, or a portion thereof, for sleeping purposes when not classified as an Institutional Group I or when not regulated by the *International Residential Code*.

❖ Residential occupancies represent some of the highest fire safety risks of any of the occupancies listed in Chapter 3. There are several reasons for this condition.

Structures in the residential occupancy house the widest range of occupant types, i.e., infants to the aged, for the longest periods of time. As such, residential occupancies are more susceptible to the careless acts of the occupants; therefore, the consequences of exposure to the effects of fire are the most serious.

Most residential occupants are asleep approximately one-third of every 24-hour period. When sleeping, they are not likely to become immediately aware of a developing fire. Also, if awakened from sleep by the presence of fire, the residents often may not immediately react in a rational manner and delay their evacuation.

The fuel load in residential occupancies is often quite high, both in quantity and variety. Also, in the construction of residential buildings, it is common to use extensive amounts of combustible materials.

Another portion of the fire problem in residential occupancies relates to the occupants' lack of vigilance in the prevention of fire hazards. In their own domicile or residence, people tend to relax and are often prone to allow fire hazards to go unabated; thus, in residential occupancies, fire hazards tend to accrue over an extended period of time and go unnoticed or are ignored.

Most of the nation's fire problems occur in Group R buildings and, in particular, one- and two-family dwellings, which account for more than 80 percent of all deaths from fire in residential occupancies and about two-thirds of all fire fatalities in all occupancies. One- and two-family dwellings also account for more than 80 percent of residential property losses from fire and more than one-half of all property losses from fire.

Because of the relatively high fire risk and potential for loss of life in buildings classified in Groups R-1 (hotels and motels) and R-2 (apartments and dormitories), the code has stringent provisions for the protection of life in these occupancies. Group R-3 occupancies, however, are not generally considered to be in the same domain and, thus, are not subject to the same level of regulatory control as is provided in other occupancies.

Because of the growing trend to care for people in a residential environment, residential care/assisted

INTERNATIONAL CODE COUNCIL®
Copyright © 2015 ICC. ALL RIGHTS RESERVED. Accessed by David Dammon on Jun 21, 2017 12:30:52 PM pursuant to License Agreement with ICC. No further reproduction or distribution authorized. ANY UNAUTHORIZED REPRODUCTION OR DISTRIBUTION IS A VIOLATION OF THE FEDERAL COPYRIGHT ACT AND THE LICENSE AGREEMENT, AND SUBJECT TO CIVIL AND CRIMINAL PENALTIES THEREUNDER.

living facilities are also classified as Group R. Specifically, these facilities are classified as Group R-4. Mainstreaming people who are recovering from alcohol or drug addiction and people who are developmentally disabled is reported to have therapeutic and social benefits. A residential environment often fosters this mainstreaming.

A building or part of a building is considered to be a residential occupancy if it is intended to be used for sleeping accommodations (including assisted living facilities) and is not an institutional occupancy. Institutional occupancies are similar to residential occupancies in many ways. However, they differ from each other in that institutional occupants are in a supervised environment, and, in the case of Groups I-2 and I-3 occupancies, are under some form of restraint or physical limitation that makes them incapable of complete self-preservation. The number of these occupants who are under supervision or are incapable of self-preservation is one distinguishing factor for being classified as an institutional or residential occupancy.

The term Group R refers collectively to the four individual residential occupancy classifications: Groups R-1, R-2, R-3 and R-4. These classifications are differentiated in the code based on the following criteria: 1. Whether the occupants are transient or nontransient in nature; 2. The type and number of dwelling units or sleeping units contained in a single building; and 3. The number of occupants in the facility.

310.2 Definitions. The following terms are defined in Chapter 2:

BOARDING HOUSE.

CONGREGATE LIVING FACILITIES.

DORMITORY.

GROUP HOME.

GUEST ROOM.

LODGING HOUSE.

PERSONAL CARE SERVICE.

TRANSIENT.

❖ This section lists terms that are specifically associated with the subject matter of this section. It is important to emphasize that these terms are not exclusively related to this section but may or may not also be applicable where the term is used elsewhere in the code.

Definitions of terms can help in the understanding and application of the code requirements. The purpose for including a list within this chapter is to provide more convenient access to terms which may have a specific or limited application within this chapter. For the complete definition and associated commentary, refer back to Chapter 2. Terms that are italicized provide a visual identification throughout the code that a definition exists for that term. The use and application of all defined terms are set forth in Section 201.

310.3 Residential Group R-1. Residential Group R-1 occupancies containing *sleeping units* where the occupants are primarily *transient* in nature, including:

Boarding houses (*transient*) with more than 10 occupants
Congregate living facilities (*transient)* with more than 10 occupants
Hotels (*transient*)
Motels (*transient*)

❖ The key characteristic of Group R-1 that differentiates it from other Group R occupancies is that the occupants are considered transient in nature (i.e., those whose length of stay is not more than 30 days). There is an expectation that the occupants are not as familiar with the building as those residents in nontransient facilities such as apartment buildings and single-family dwellings. If occupants are unfamiliar with their surroundings, they may not recognize potential hazards or be able to use the means of egress effectively.

The most common building types classified in Group R-1 are hotels, motels and boarding houses. Facilities classified as Group R-1 occupancies may include dwelling units, sleeping units, or a combination of both. Group R-1 occupancies do not typically have cooking facilities in the unit. When a unit is not equipped with cooking facilities, it does not meet the definition of a “dwelling unit” in Section 202. When this occurs, such units are treated as sleeping units for the application of code provisions (see Commentary Figure 310.3). A recent trend in development is the construction of “extended-stay hotels.” While these units may have all of the characteristics of a typical dwelling unit (i.e., cooking, living, sleeping, eating, sanitation), the length of stay is still typically not more than 30 days. As such, these buildings would still be classified as Group R-1. If the length of stay is more than 30 days, these buildings would be classified as Group R-2. If a hotel offers rooms for short-term housing (i.e., more than 30 days), the facility must comply with the provisions for both Groups R-1 and R-2 (see Section 302.1).

Other occupancies are often found in buildings classified in Group R-1. These occupancies include nightclubs (Group A-2), restaurants (Group A-2), gift shops (Group M), business offices (Group B), health clubs (Group A-3) and storage facilities (Group S-1). When this occurs, the building is a mixed occupancy and is subject to the provisions of Section 508.

Transient congregate living facilities and boarding houses with 10 or fewer occupants can be constructed to the standards of Group R-3 occupancies rather than the general category of Group R-1. The primary intent of this provision is to permit bed-and-breakfast-type facilities to be established in existing single-family (one-family) structures. In comparison to the provision under Group R-2 which permits congregate living facilities with fewer than 16 nontransient

INTERNATIONAL CODE COUNCIL®
Copyright © 2015 ICC. ALL RIGHTS RESERVED. Accessed by David Dammon on Jun 21, 2017 12:30:52 PM pursuant to License Agreement with ICC. No further reproduction or distribution authorized. ANY UNAUTHORIZED REPRODUCTION OR DISTRIBUTION IS A VIOLATION OF THE FEDERAL COPYRIGHT ACT AND THE LICENSE AGREEMENT, AND SUBJECT TO CIVIL AND CRIMINAL PENALTIES THEREUNDER.

occupants to be built as a Group R-3, the Group R-3 "transient" facility is limited to 10 or fewer occupants in reflection of the limited number of occupants.

See Section 310.5.2 for lodging houses with five or fewer rooms to rent. While these are transient in nature and potentially have more than 10 occupants, these types of bed-and-breakfast type facilities are specifically listed under Group R-3.

310.4 Residential Group R-2. Residential Group R-2 occupancies containing *sleeping units* or more than two *dwelling units* where the occupants are primarily permanent in nature, including:

Apartment houses
Boarding houses (nontransient) with more than 16 occupants
Congregate living facilities (nontransient) with more than 16 occupants
Convents
Dormitories
Fraternities and sororities
Hotels (nontransient)
Live/work units
Monasteries
Motels (nontransient)
Vacation timeshare properties

❖ The length of the occupants' stay plus the arrangement of the facilities provided are the basic factors that differentiate occupancies classified in Group R-2 from other occupancies in Group R. The occupants of facilities or areas classified in Group R-2 are primarily nontransient, capable of self-preservation and share their means of egress in whole or in part with other occupants outside of their sleeping area or dwelling unit. Building types ordinarily classified in Group R-2 include apartments, boarding houses (when the occupants are not transient) and nontransient congregate living facilities, such as dormitories, where there are more than 16 occupants [see Commentary Figures 310.4(1) and 310.4(2)].

Individual dwelling units in Group R-2 are either rented by tenants or owned by the occupants. The code does not make a distinction between either type of tenancy. Residential condominiums are treated in the code the same as Group R-2 apartments. Such condominiums are based on shared ownership of a building and related facilities. While an individual

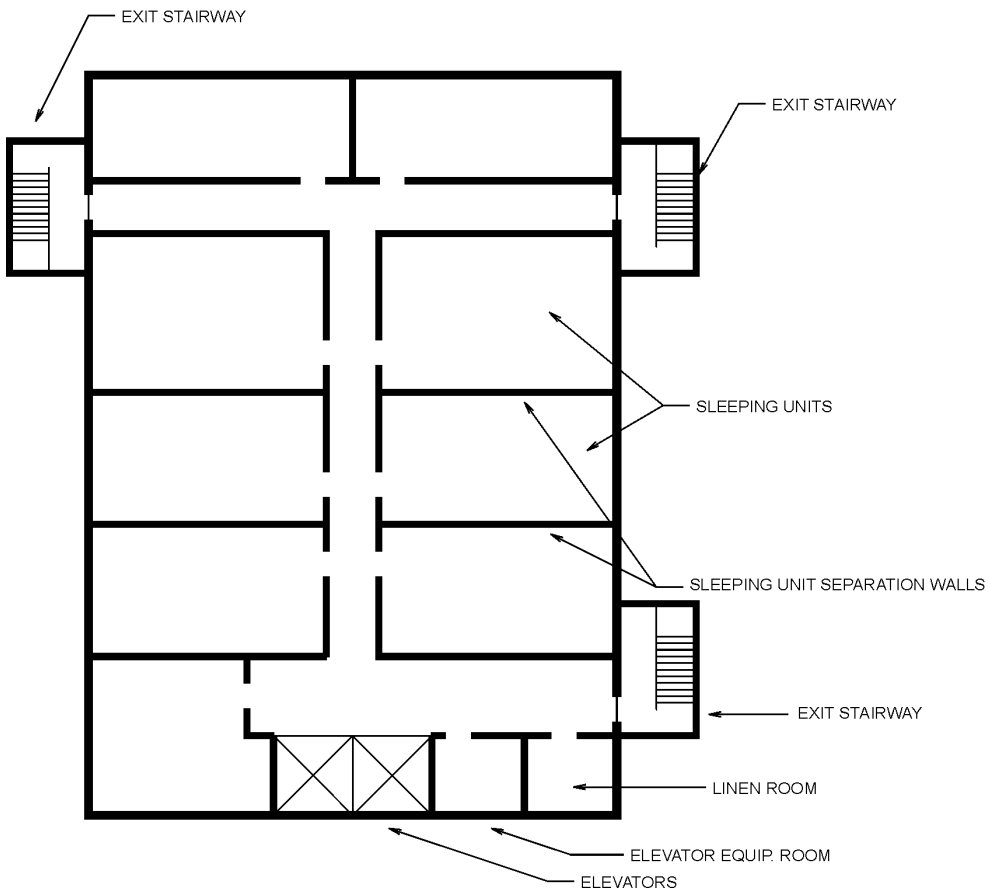

Figure 310.3
GROUP R-1—HOTEL
(OCCUPANTS PRIMARILY TRANSIENT)

INTERNATIONAL CODE COUNCIL®
Copyright © 2015 ICC. ALL RIGHTS RESERVED. Accessed by David Dammon on Jun 21, 2017 12:30:52 PM pursuant to License Agreement with ICC. No further reproduction or distribution authorized. ANY UNAUTHORIZED REPRODUCTION OR DISTRIBUTION IS A VIOLATION OF THE FEDERAL COPYRIGHT ACT AND THE LICENSE AGREEMENT, AND SUBJECT TO CIVIL AND CRIMINAL PENALTIES THEREUNDER.

owner will have exclusive rights to a certain unit, the building, the lot the building sits upon, parking, common recreational facilities and similar features are owned in common by all the owners of individual dwelling units. In most cases condominiums do not establish separate lots and the walls between units are not setting on lot lines. Another type of shared ownership is referred to as a "co-op," short for cooperative. Occasionally a condominium will establish actual lots and lot lines distinguishing individual ownership. When the dwelling unit is located on a separate parcel of land, lot lines defining the parcel exist and the requirements for fire separation must be met.

Dormitories are generally associated with university or college campuses for use as student housing, but dormitory uses continue to evolve. Many dormitories are now being built as housing for elderly people who wish to live with other people their own age and who do not need 24-hour-a-day medical supervision. The only difference between the dormitory that has just been described and the dormitory found on a college campus is the age of its occupants. If the elderly people must have 24-hour-a-day medical supervision (i.e., a nurse or doctor on the premises), the building is no longer considered a residential occupancy but an institutional occupancy and would have to comply with the applicable provisions of the code for the appropriate Group I occupancy.

Similar to Group R-1, individual rooms in dormitories are sleeping units. When college classes are not in session, the rooms in dormitories are sometimes rented out for periods of less than 30 days to convention attendees and other visitors. When dormitories undergo this type of transient use, they more closely resemble Group R-1. A style of dormitory design which is being used more frequently is one where there are groups of sleeping units around a common living space, including shared bathrooms and sometimes a kitchen or kitchenette. At this time, the code does not indicate if these groups of rooms should be addressed as separate sleeping units or as a dwelling unit, except for when counting units for determining the number of Accessible units required (see Section 1107.6.2.3.1).

Buildings containing dormitories often contain other occupancies, such as cafeterias or dining rooms (Group A-2), recreation rooms (Group A-3), offices (Group B) and study and meeting rooms (Group A-3). When this occurs, the building is considered a mixed occupancy and is subject to the provisions of Section 508 [see Commentary Figure 310.4(2)].

Included in the listing of Group R-2 are live/work units. A live/work unit is a dwelling unit or sleeping unit in which a significant portion of the space includes a nonresidential use operated by the tenant. Reflecting a growing trend in urban neighborhoods and the reuse of existing buildings, live/work units must comply with the provisions of Section 419.

The intent of the congregate living facility reference is to better define when a congregate living facility is operating as a single-family home. Blended families are now commonplace and not necessarily defined strictly by blood or marriage. Small boarding houses, convents, dormitories, fraternities, sororities, monasteries and nontransient hotels and motels may be small enough to operate as a single-family unit and would be permitted to be constructed as Group R-3 occupancies as intended by the code. The threshold of 16 persons is consistent with the results of the most recent census, which showed that 98 percent of households in the U.S. that identified themselves as a single family have less than 16 occupants. The 16-occupant limit is also consistent with the limits of an NFPA 13D sprinkler system.

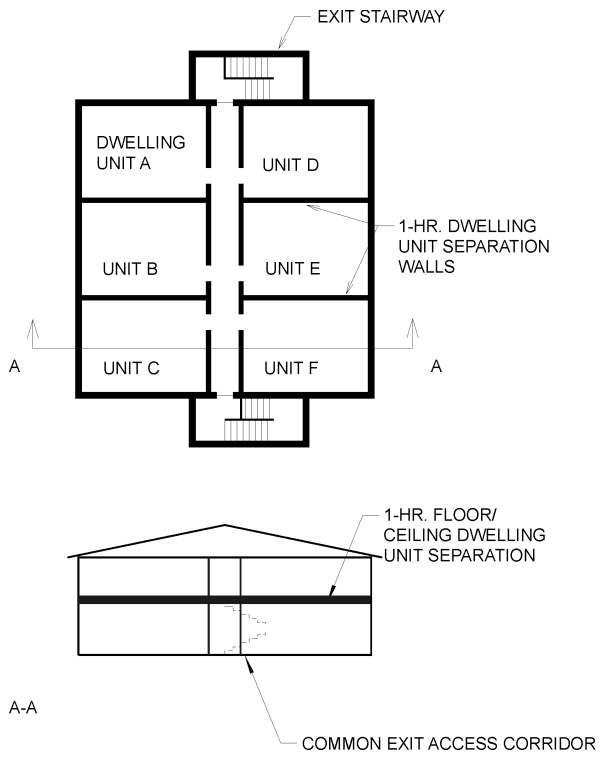

Figure 310.4(1)
GROUP R-2—APARTMENTS
(OCCUPANTS PRIMARILY NONTRANSIENT)

310.5 Residential Group R-3. Residential Group R-3 occupancies where the occupants are primarily permanent in nature and not classified as Group R-1, R-2, R-4 or I, including:

Buildings that do not contain more than two *dwelling units*

Boarding houses (nontransient) with 16 or fewer occupants

Boarding houses (*transient*) with 10 or fewer occupants

Care facilities that provide accommodations for five or fewer persons receiving care

Congregate living facilities (nontransient) with 16 or fewer occupants

INTERNATIONAL CODE COUNCIL®
Copyright © 2015 ICC. ALL RIGHTS RESERVED. Accessed by David Dammon on Jun 21, 2017 12:30:52 PM pursuant to License Agreement with ICC. No further reproduction or distribution authorized. ANY UNAUTHORIZED REPRODUCTION OR DISTRIBUTION IS A VIOLATION OF THE FEDERAL COPYRIGHT ACT AND THE LICENSE AGREEMENT, AND SUBJECT TO CIVIL AND CRIMINAL PENALTIES THEREUNDER.

Congregate living facilities (*transient*) with 10 or fewer occupants

Lodging houses with five or fewer *guest rooms*

❖ Group R-3 facilities include all detached one- and two-family dwellings and multiple (three or more) single-family dwellings (townhouses) more than three stories in height. Those buildings three or less stories in height are not classified as Group R-3 and are regulated by the IRC. Each pair of dwelling units in multiple single-family dwellings greater than three stories in height must be separated by fire walls (see Section 706) or by two exterior walls (see Table 602) in order to be classified as Group R-3. (Duplexes, buildings with two dwelling units, must be detached from other structures in order to be regulated by the IRC.) A duplex attached to another duplex would be required to comply with the code and be classified as Group R-2 or R-3, depending on the presence of fire walls.

Buildings that are classified as Group R-3, while limited in height, are not limited in the allowable area as indicated in Table 503.

Buildings that are one- and two-family dwellings and multiple single-family dwellings less than three stories in height and that contain another occupancy (e.g., Groups B, M, I-4) must be regulated as a mixed occupancy in accordance with this code and are not permitted to be regulated by the provisions of the IRC [see Commentary Figures 310.5(1) and 310.5(2)]. However, some mixed-use dwelling units may qualify as live/work units under Section 419 and be classified as a Group R-2 occupancy.

In addition, boarding houses and congregate living facilities with no more than 16 nontransient occupants or no more than 10 transient occupants are to be classified as Group R-3.

Group R-3 occupancies include small care facilities where care is provided to five or fewer persons. The intent is to allow persons to be cared for in a residential, or home, environment, often by family members, in a manner that is typical within a single-family-type home. Allowances for the Group R-3 classification of smaller care facilities are established in Sections 305.2.3 (Group E), 308.3.4 (Group I-1), 308.4.2 (Group I-2) and 308.6.4 (Group I-4). Because the intent is to accommodate persons who might otherwise be in other group occupancies including Group I-2, the Group R-3 care facility is not limited to just persons who are capable of self-preservation. The

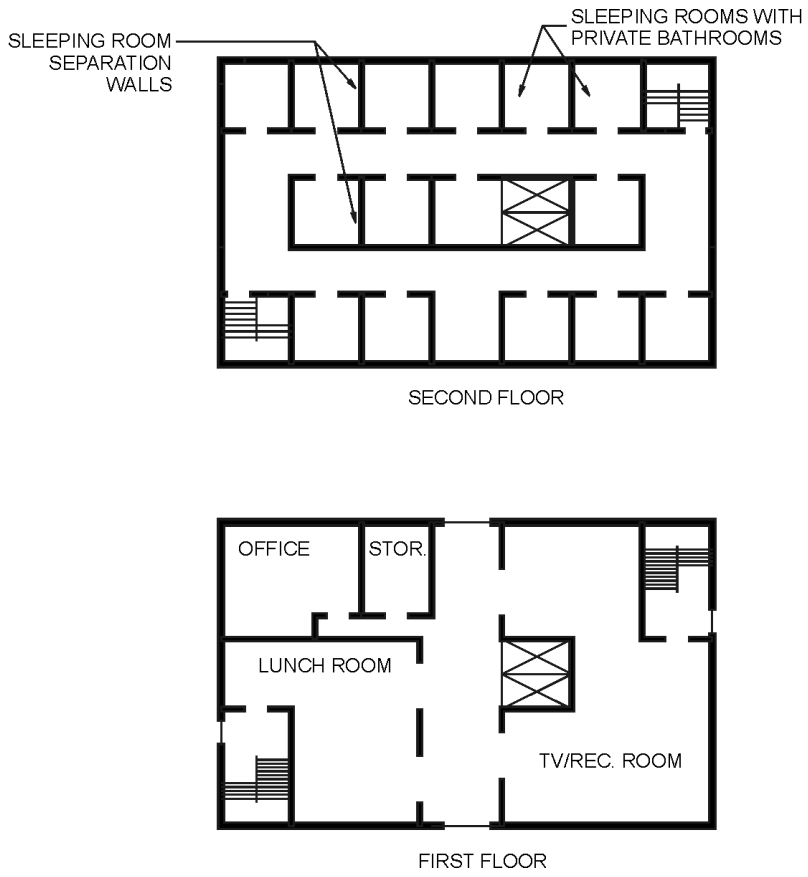

Figure 310.4(2)
GROUP R-2—DORMITORY
(OCCUPANTS PRIMARILY NONTRANSIENT)

INTERNATIONAL CODE COUNCIL®
Copyright © 2015 ICC. ALL RIGHTS RESERVED. Accessed by David Dammon on Jun 21, 2017 12:30:52 PM pursuant to License Agreement with ICC. No further reproduction or distribution authorized. ANY UNAUTHORIZED REPRODUCTION OR DISTRIBUTION IS A VIOLATION OF THE FEDERAL COPYRIGHT ACT AND THE LICENSE AGREEMENT, AND SUBJECT TO CIVIL AND CRIMINAL PENALTIES THEREUNDER.

only limit is the number receiving care, not the total number of occupants in the dwelling unit. If two people are receiving care, and the rest of the family is four people, the total of six occupants of the dwelling does not move this out of being a Group R-3 occupancy. See also Section 310.5.1.

A lodging house with five or fewer guest rooms can be classified as a Group R-3 occupancy or, under Section 310.5.2, can be constructed under the provisions of the IRC. The definition of lodging house allows the rental of guest rooms to transients, provided that there are one or more occupants who are permanent in nature. While Section 310.5.2 requires owner occupancy of the dwelling unit in order for it to be built in compliance with the IRC, there is no owner occupancy requirement for lodging houses that comply with Group R-3 requirements. The broad intent of the lodging house provisions is to allow bed and breakfast and similar facilities under the Group R-3 category even though transient housing generally falls under the Group R-1 classification. The limit is set to the number of guest rooms. There is no specified limit on the number of guests, the number of residents, or the combination of both.

310.5.1 Care facilities within a dwelling. Care facilities for five or fewer persons receiving care that are within a single-family dwelling are permitted to comply with the *International Residential Code* provided an *automatic sprinkler system* is installed in accordance with Section 903.3.1.3 or Section P2904 of the *International Residential Code*.

❖ Section 310.5 already states that care facilities that accommodate five or fewer persons receiving care can be classified as a Group R-3 occupancy. Sections 305.2.3 (Group E), 308.3.4 (Group I-1), 308.4.2 (Group I-2) and 308.6.4 (Group I-4) each state the option of providing the care of five or fewer persons within a structure regulated under the IRC. The intent is to allow persons to be cared for in a residential, or home, environment, often by family members, in a manner that is typical within a single-family-type home. As stated for those care facilities allowed within the R-3 occupancy, the persons receiving care in a building designed according to the IRC are not limited to those who are capable of self-preservation. Similar to Sections 308.3.4 and 308.4.2, this section specifies that any such IRC-regulated facility be provided with a sprinkler system.

310.5.2 Lodging houses. Owner-occupied *lodging houses* with five or fewer *guest rooms* shall be permitted to be constructed in accordance with the *International Residential Code*.

❖ This section allows bed-and-breakfast type hotels that are both owner occupied and have five or fewer rooms to rent to be constructed under the IRC. There are no occupant load limitations for this option as there are for boarding houses or congregate residences. See commentary for Section 310.5.

310.6 Residential Group R-4. Residential Group R-4 occupancy shall include buildings, structures or portions thereof for more than five but not more than 16 persons, excluding staff, who reside on a 24-hour basis in a supervised residential environment and receive *custodial care*. Buildings of Group R-4 shall be classified as one of the occupancy conditions specified in Section 310.6.1 or 310.6.2. The persons

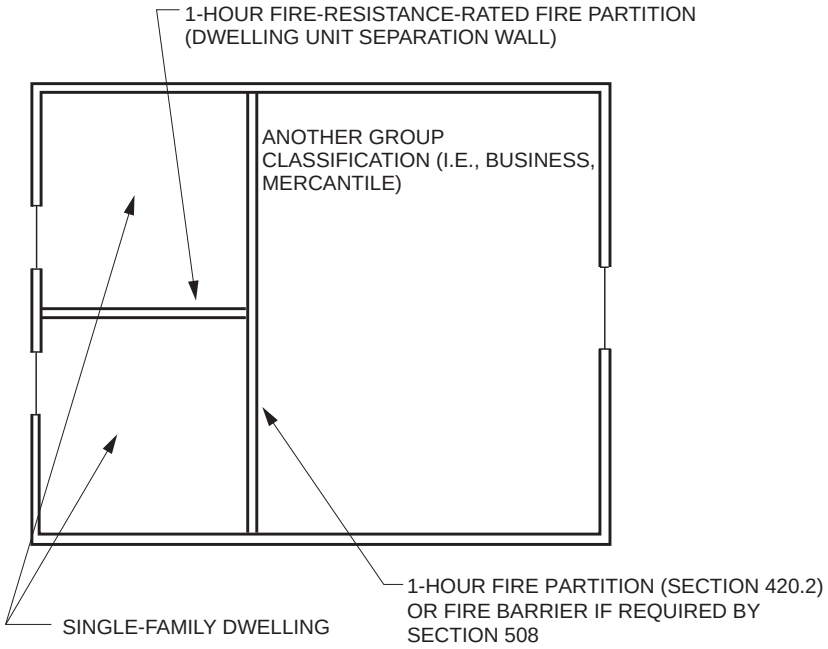

Figure 310.5(1)
GROUP R-3—MIXED OCCUPANCY BUILDING

INTERNATIONAL CODE COUNCIL®
Copyright © 2015 ICC. ALL RIGHTS RESERVED. Accessed by David Dammon on Jun 21, 2017 12:30:52 PM pursuant to License Agreement with ICC. No further reproduction or distribution authorized. ANY UNAUTHORIZED REPRODUCTION OR DISTRIBUTION IS A VIOLATION OF THE FEDERAL COPYRIGHT ACT AND THE LICENSE AGREEMENT, AND SUBJECT TO CIVIL AND CRIMINAL PENALTIES THEREUNDER.

receiving care are capable of self-preservation. This group shall include, but not be limited to, the following:

Alcohol and drug centers
Assisted living facilities
Congregate care facilities
Group homes
Halfway houses
Residential board and care facilities
Social rehabilitation facilities

Group R-4 occupancies shall meet the requirements for construction as defined for Group R-3, except as otherwise provided for in this code.

❖ Where five to 16 residents live in a supervised environment and receive custodial care, such a facility is classified as Group R-4. Ninety-eight percent of households in the U.S. that identified themselves as a single-family household have less than 16 occupants. The 16-occupant limit is also consistent with the limits of an NFPA 13D sprinkler system. Thus the limit of 16 residents was established as an appropriate limit considering that this facility will operate similarly to a single-family home. Under federal housing laws regarding nondiscrimination, families cannot be determined by blood or marriage. If a Group R-4 occupancy is expanded or allowed to have more than 16 care recipients, the facility needs to be reclassified as a Group I-1 occupancy. The number of persons used in the determination includes those who receive care but does not include staff.

Similar to Group I-1, a Group R-4 occupancy is also one of two "conditions." In a Condition 1 facility, care recipients may be slower during evacuation but are capable of self-preservation. In a Condition 2 facility, care recipients may require limited assistance with evacuation during emergency situations. See the commentary in Section 308.3 for Group I-1, for a further detailed explanation of both Group I-1 and R-4 custodial care occupancies. Also see Section 202, Definitions, Custodial care.

Group R-4 facilities must satisfy the construction requirements of Group R-3. Facilities with five or fewer persons receiving care will be either a Group R-3 occupancy (see Section 310.5), or can be built under the IRC (see Section 310.5.1).

See Commentary Figure 308.1.

310.6.1 Condition 1. This occupancy condition shall include buildings in which all persons receiving custodial care, without any assistance, are capable of responding to an emergency situation to complete building evacuation.

❖ See the commentary to Section 310.6.

310.6.2 Condition 2. This occupancy condition shall include buildings in which there are any persons receiving custodial care who require limited verbal or physical assistance while responding to an emergency situation to complete building evacuation.

❖ See the commentary to Section 310.6.

SECTION 311
STORAGE GROUP S

311.1 Storage Group S. Storage Group S occupancy includes, among others, the use of a building or structure, or a portion thereof, for storage that is not classified as a hazardous occupancy.

❖ This section requires that all structures (or parts thereof) designed or occupied for the storage of moderate- and low-hazard materials are to be classified in either Group S-1 (moderate hazard) or S-2 (low hazard).

Life safety problems in structures used for storage of moderate- and low-hazard materials are minimal

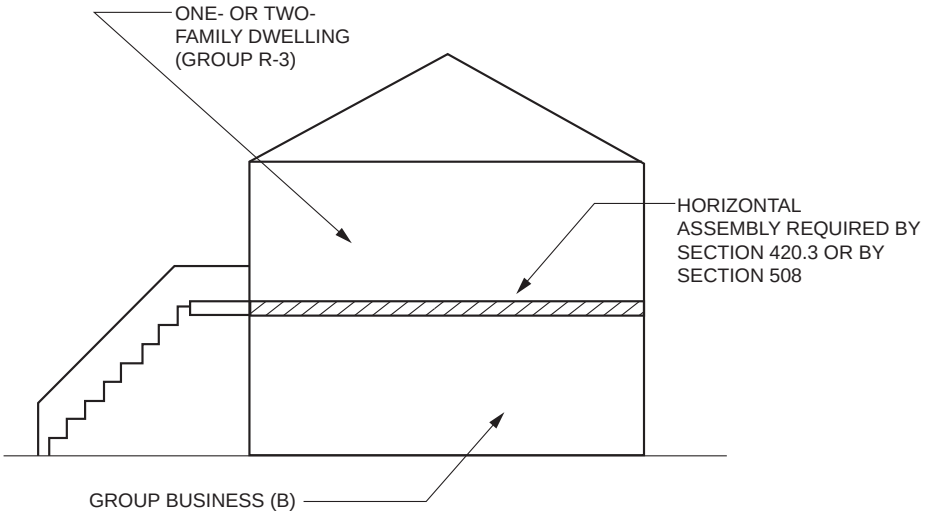

Figure 310.5(2)
GROUP R-3—MIXED OCCUPANCY BUILDING

INTERNATIONAL CODE COUNCIL®
Copyright © 2015 ICC. ALL RIGHTS RESERVED. Accessed by David Dammon on Jun 21, 2017 12:30:52 PM pursuant to License Agreement with ICC. No further reproduction or distribution authorized. ANY UNAUTHORIZED REPRODUCTION OR DISTRIBUTION IS A VIOLATION OF THE FEDERAL COPYRIGHT ACT AND THE LICENSE AGREEMENT, AND SUBJECT TO CIVIL AND CRIMINAL PENALTIES THEREUNDER.

because the number of people involved in a storage operation is usually small and normal work patterns require occupants to be dispersed throughout the facility.

Problems of fire safety, particularly as they relate to the protection of stored contents, are directly associated with the amount and combustibility of the materials (including packaging) that are housed on the premises.

Storage facilities typically contain significant amounts of combustible or noncombustible materials that are kept in a common area. Because of the combustion, flammability or explosive characteristics of certain materials (see Section 307), a structure or portion thereof that is used to store high-hazard materials exceeding the maximum allowable quantities (MAQ), or that does not meet one of the identified uses in Section 307.1.1, cannot be classified as Group S. Such a structure is to be classified as Group H, high-hazard use, and is to comply with Section 307.

Hazardous materials may be located in Group S occupancy buildings, provided the amount of materials in each control area does not exceed the MAQ specified in Tables 307.1(1) and 307.1(2). Control areas must comply with Section 414. Storage occupancies consist of two basic types: Groups S-1 and S-2, which are based on the properties of the materials being stored. The distinction between Groups S-1 and S-2 is similar to that between Groups F-1 and F-2, as outlined in Section 306.

311.1.1 Accessory storage spaces. A room or space used for storage purposes that is less than 100 square feet (9.3 m^2) in area and accessory to another occupancy shall be classified as part of that occupancy. The aggregate area of such rooms or spaces shall not exceed the allowable area limits of Section 508.2.

❖ This provision allows small storage rooms to be classified in the same occupancy group as the primary occupancy of a space. There are two limits: each space is limited to 100 square feet (9.3 m^2); and the aggregate of such spaces on any story is limited to 10 percent of the floor area. These small storage spaces could occur in any other occupancy, such as a Group B office building, a Group E classroom or a Group M retail store. Individual spaces in excess of 100 square feet (9.3 m^2) would be classified as a Group S occupancy and the provisions of mixed occupancies (Section 508) would apply. Section 508.2 limits accessory occupancies on any story to 10 percent of the area of that story. The area of storage spaces would need to be aggregated to determine if the spaces can be classified as part of the main occupancy or if they need to be classified as a Group S occupancy. As a separated mixed use building, Table 508.4 does not require a separation between Group S-1 and Group F-1, B or M. Table 509 for incidental uses would require storage rooms in Group I-2 and ambulatory care facilities with an area over 100 square feet (9.3 m^2) to be separated by fire barrier or horizontal assemblies with a fire-resistance rating of at least 1 hour.

311.2 Moderate-hazard storage, Group S-1. Storage Group S-1 occupancies are buildings occupied for storage uses that are not classified as Group S-2, including, but not limited to, storage of the following:

Aerosols, Levels 2 and 3
Aircraft hangar (storage and repair)
Bags: cloth, burlap and paper
Bamboos and rattan
Baskets
Belting: canvas and leather
Books and paper in rolls or packs
Boots and shoes
Buttons, including cloth covered, pearl or bone
Cardboard and cardboard boxes
Clothing, woolen wearing apparel
Cordage
Dry boat storage (indoor)
Furniture
Furs
Glues, mucilage, pastes and size
Grains
Horns and combs, other than celluloid
Leather
Linoleum
Lumber
Motor vehicle repair garages complying with the maximum allowable quantities of hazardous materials listed in Table 307.1(1) (see Section 406.8)
Photo engravings
Resilient flooring
Silks
Soaps
Sugar
Tires, bulk storage of
Tobacco, cigars, cigarettes and snuff
Upholstery and mattresses
Wax candles

❖ Buildings in which combustible materials are stored and that burn with ease are classified in Group S-1, moderate-hazard storage occupancies. Examples of the kinds of materials that, when stored, are representative of occupancies classified in Group S-1 are also listed in this section.

As defined by the IFC, a repair garage is any structure used for servicing or repairing motor vehicles. Therefore, regardless of the extent of work done (e.g., quick lube, tune-up, muffler and tire shops, painting, body work, engine overhaul), repair garages are classified as Group S-1 (see Commentary Figure 311.2) and must be in compliance with Section 406.8. In addition, to avoid a Group H classification, the amounts of hazardous materials in the garage must be less than the maximum allowable quantity per control area permitted in Tables 307.1(1) and 307.1(2).

Aircraft hangars for storage, repair or both would be classified as Group S-1. This classification corre-

INTERNATIONAL CODE COUNCIL®
Copyright © 2015 ICC. ALL RIGHTS RESERVED. Accessed by David Dammon on Jun 21, 2017 12:30:52 PM pursuant to License Agreement with ICC. No further reproduction or distribution authorized. ANY UNAUTHORIZED REPRODUCTION OR DISTRIBUTION IS A VIOLATION OF THE FEDERAL COPYRIGHT ACT AND THE LICENSE AGREEMENT, AND SUBJECT TO CIVIL AND CRIMINAL PENALTIES THEREUNDER.

lates with the actual use of such hangars, which very frequently would include some level of repair work, and also works with the requirements of NFPA 409. Aircraft hangers accessory to one- and two-family structures are classified as Group U occupancies.

311.3 Low-hazard storage, Group S-2. Storage Group S-2 occupancies include, among others, buildings used for the storage of noncombustible materials such as products on wood pallets or in paper cartons with or without single thickness divisions; or in paper wrappings. Such products are permitted to have a negligible amount of plastic *trim*, such as knobs, handles or film wrapping. Group S-2 storage uses shall include, but not be limited to, storage of the following:

Asbestos
Beverages up to and including 16-percent alcohol in metal, glass or ceramic containers
Cement in bags
Chalk and crayons
Dairy products in nonwaxed coated paper containers
Dry cell batteries
Electrical coils
Electrical motors
Empty cans
Food products
Foods in noncombustible containers
Fresh fruits and vegetables in nonplastic trays or containers
Frozen foods
Glass
Glass bottles, empty or filled with noncombustible liquids
Gypsum board
Inert pigments
Ivory
Meats
Metal cabinets
Metal desks with plastic tops and *trim*
Metal parts
Metals
Mirrors
Oil-filled and other types of distribution transformers
Parking garages, open or enclosed
Porcelain and pottery
Stoves
Talc and soapstones
Washers and dryers

❖ Buildings in which noncombustible materials are stored are classified as Group S-2, low-hazard storage occupancies (see Commentary Figure 311.3). It is acceptable for stored noncombustible products to be packaged in combustible materials as long as the quantity of packaging is kept to an insignificant level.

As seen in Group F-1 and F-2 classifications, it is important to be able to distinguish when the presence of combustible packaging constitutes a significant fuel load. As such, a fuel load might require the building to be classified in Group S-1, moderate-hazard storage. A simple guideline to follow is the "single thickness" rule, which is when a noncombustible product is put in one layer of packaging material.

Examples of materials qualified for storage in Group S-2 storage facilities are as follows:

- Vehicle engines placed on wood pallets for transportation after assembly;
- Washing machines in corrugated cardboard boxes; and
- Soft-drink glass bottles packaged in pressed paper boxes.

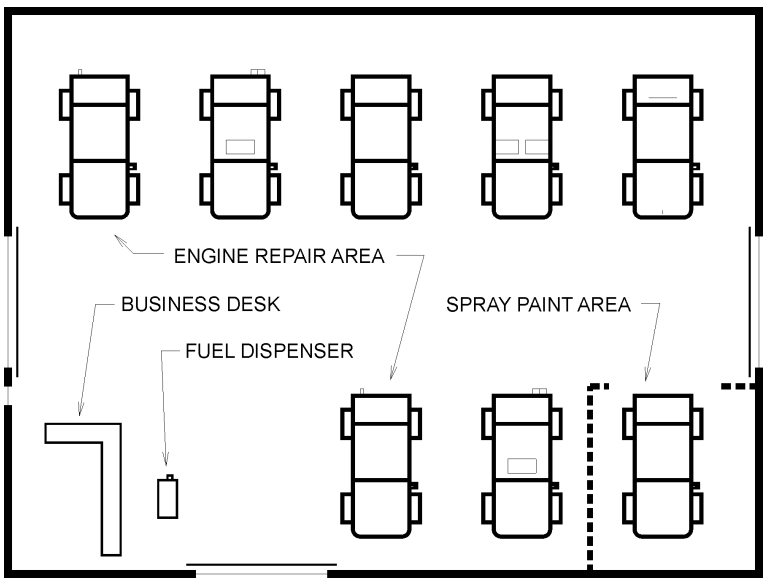

Figure 311.2
GROUP S-1—REPAIR GARAGES

INTERNATIONAL CODE COUNCIL®
Copyright © 2015 ICC. ALL RIGHTS RESERVED. Accessed by David Dammon on Jun 21, 2017 12:30:52 PM pursuant to License Agreement with ICC. No further reproduction or distribution authorized. ANY UNAUTHORIZED REPRODUCTION OR DISTRIBUTION IS A VIOLATION OF THE FEDERAL COPYRIGHT ACT AND THE LICENSE AGREEMENT, AND SUBJECT TO CIVIL AND CRIMINAL PENALTIES THEREUNDER.

Structures used to store noncombustible materials packaged in more than one layer of combustible packaging material are to be classified in Group S-1.

Examples of materials that, because of packaging, do not qualify for classification in Group S-2 are:

- Chinaware wrapped in corrugated paper and placed in cardboard boxes;
- Glassware set in expanded foam forms and placed in a cardboard box; and
- Fuel filters individually packed in pressed paper boxes, placed by the gross in a cardboard box and then stacked on a wood pallet for transportation.

An area of the IFC that is often related to Group S occupancies is Chapter 23, which regulates high-piled combustible storage [storage over 12 feet (3658 mm) in height or 6 feet (1829 mm) if the material is considered high hazard]. Chapter 23 of the IFC is focused not only on the type of materials being stored but also the height and configuration of such storage. It is important to note that not all Group S occupancies will contain high-piled storage and that high-piled storage is not limited to Group S occupancies. High-piled storage can be found in occupancies such as Groups H and F.

Open and enclosed parking garages are classified as Group S-2 occupancies as long as no repair activities as discussed in the commentary to Section 311.2 occur in such buildings. A garage in a fire station, for example, that undertakes maintenance and repairs limited to cleaning, hose change, water fill, fire equipment upgrades or wheel removal for repair off premises would not constitute the same hazard associated with repair garages and would be appropriately classified as a Group S-2 classification.

SECTION 312
UTILITY AND MISCELLANEOUS GROUP U

312.1 General. Buildings and structures of an accessory character and miscellaneous structures not classified in any specific occupancy shall be constructed, equipped and maintained to conform to the requirements of this code commensurate with the fire and life hazard incidental to their occupancy. Group U shall include, but not be limited to, the following:

Agricultural buildings
Aircraft hangars, accessory to a one- or two-family residence (see Section 412.5)
Barns
Carports
Fences more than 6 feet (1829 mm) in height
Grain silos, accessory to a residential occupancy
Greenhouses
Livestock shelters
Private garages
Retaining walls
Sheds
Stables
Tanks
Towers

❖ This section identifies the characteristics of occupancies classified in Group U. Structures that are classified in Group U are typically accessory to another building or structure and are not more appropriately classified in another occupancy. Miscellaneous storage buildings accessory to detached one- and two-family dwellings and multiple single-family dwellings (townhouses) not more than three stories in height, however, are intended to be designed and built in accordance with the !RC (see Section 101.2).

Structures classified as Group U, such as fences, equipment, foundations and retaining walls, are

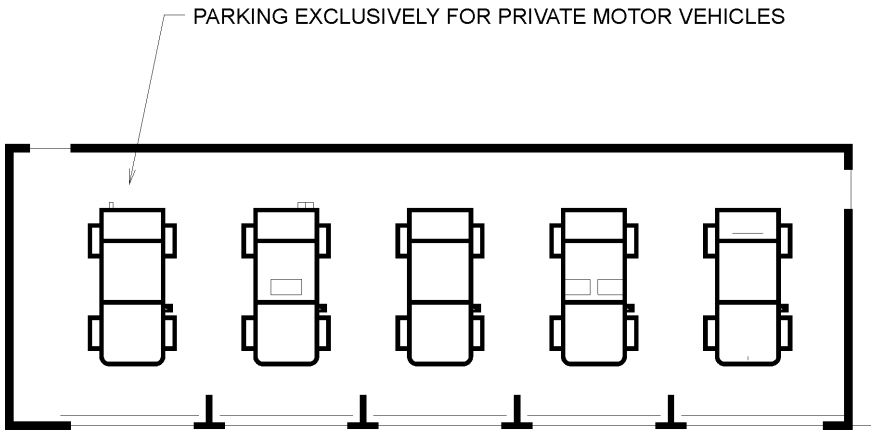

Figure 311.3
GROUP S-2—ENCLOSED PARKING GARAGE

INTERNATIONAL CODE COUNCIL®
Copyright © 2015 ICC. ALL RIGHTS RESERVED. Accessed by David Dammon on Jun 21, 2017 12:30:52 PM pursuant to License Agreement with ICC. No further reproduction or distribution authorized. ANY UNAUTHORIZED REPRODUCTION OR DISTRIBUTION IS A VIOLATION OF THE FEDERAL COPYRIGHT ACT AND THE LICENSE AGREEMENT, AND SUBJECT TO CIVIL AND CRIMINAL PENALTIES THEREUNDER.

somewhat outside the primary scope of the code (i.e., means of egress, fire resistance). They are not usually considered to be habitable or occupiable. Nevertheless, many code provisions do apply and need to be enforced (e.g., structural design and material performance).

Structures housing accessory equipment that is part of a utility or communications system are often classified as Group U occupancies when there is no intent that these structures be occupied except for servicing and maintaining the equipment within the structure. A pumphouse for a water or sewage system or an equipment building at the base of a telecommunications tower are examples of such buildings.

Group U occupancies are subject to the same structural loadings as other occupancies, such as snow loads. Section 312.1 establishes that occupancies classified as utility and miscellaneous structures shall be constructed, equipped and maintained to conform to the code requirements that are commensurate with the fire and life hazards incidental to their occupancy. The structural design requirements for roofs are the minimum deemed necessary to withstand such elements. Allowing construction of a building with an accessory occupancy that could reasonably be expected to collapse under the snow loads known to prevail in a certain area is not in the best interest of public safety.

Greenhouses are one of the listed uses in the Group U classification. Greenhouse is not a defined term in the code. Therefore, greenhouses can fall into categories other than Group U depending on their specific use. Greenhouse can be classified as business (Group B), education (Group E), and mercantile (Group M). The building code does not presently address these use conditions for greenhouses specifically, and the interpretation of how to apply these provisions can be inconsistent. However, there are specific considerations applicable in determining whether a greenhouse should be in another use group.

1. Is the greenhouse intended to have more than occasional access by the general public for business or education or retail purposes; and
2. Are those purposes more accurately reflected by Group B, E or M?

If the answer to one or more of these questions is yes, the greenhouse may be required to be constructed for a purpose in addition to the cultivation, protection and maintenance of plants. The greenhouse may be subject to the Group U provisions and the fire, egress, and accessibility requirements of another applicable use group, depending on the specific conditions for use.

The code provides Appendix C - Agricultural Buildings which, if adopted, provides alternative standards for Group U structures including egress, height and area limits, exits and mixed occupancy requirements. The building height and area limits in Chapter 5 which apply to Group U greenhouses are more restrictive than Groups S-1 and S-2, which have higher safety and hazard risks than the agricultural building specified in Appendix C. The height and area limits in Appendix C may more realistically reflect the relative hazards and occupancy level for Group U greenhouses. Even where Appendix C is not adopted, it may serve as a useful guide where larger greenhouse structures are proposed.

Bibliography

The following resource materials were used in the preparation of the commentary for this chapter of the code.

DOL 29 CFR; Part 1910-09, *Occupational Safety and Health Standards*. Washington, DC: United States Department of Labor, 2007.

ISO 8115-86, *Cotton Bales—Dimensions and Density*. Geneva 20, Switzerland: International Organization for Standardization, 1986.

NFPA 13-13, *Installation of Sprinkler Systems*. Quincy, MA: National Fire Protection Association, 2013.

NFPA 30B-15, *Manufacture and Storage of Aerosol Products*. Quincy, MA: National Fire Protection Association, 2015.

NFPA 31-11, *Installation of Oil-burning Equipment*. Quincy, MA: National Fire Protection Association, 2011.

NFPA 37-06, *Installation and Use of Stationary Combustion Engines and Gas Turbines*. Quincy, MA: National Fire Protection Association, 2006.

NFPA 495-13, *Explosive Materials Code*. Quincy, MA: National Fire Protection Association, 2013.

UL 30-95, *Metal Safety Cans—with Revisions through December 2004*. Northbrook, IL: Underwriters Laboratories, Inc., 1995.

INTERNATIONAL CODE COUNCIL®

Copyright © 2015 ICC. ALL RIGHTS RESERVED. Accessed by David Dammon on Jun 21, 2017 12:30:52 PM pursuant to License Agreement with ICC. No further reproduction or distribution authorized. ANY UNAUTHORIZED REPRODUCTION OR DISTRIBUTION IS A VIOLATION OF THE FEDERAL COPYRIGHT ACT AND THE LICENSE AGREEMENT, AND SUBJECT TO CIVIL AND CRIMINAL PENALTIES THEREUNDER.

Chapter 4: Special Detailed Requirements Based on Use and Occupancy

General Comments

The provisions of Chapter 4 are supplemental to the remainder of the code. Chapter 4 contains provisions that may alter requirements found elsewhere in the code; however, the general requirements of the code still apply unless modified within the chapter. For example, the height and area limitations established in Chapter 5 apply to all special occupancies unless Chapter 4 contains height and area limitations. In this case, the limitations in Chapter 4 supersede those in other sections. An example of this is the height and area limitations given in Section 406.5.4, which supersede the limitations given in Tables 504.3, 504.4 and 506.2 for open parking garages.

The *International Fire Code*® (IFC®) contains provisions applicable to the storage, handling and use of hazardous substances, materials or devices and, therefore, must also be complied with when addressing such occupancies as those involving flammable and combustible liquids. Similarly, the *International Mechanical Code*® (IMC®) and the *International Plumbing Code*® (IPC®) include provisions for specific applications, such as hazardous exhaust systems and hazardous material piping.

In some instances, it may not be necessary to apply the provisions of Chapter 4. For example, if a covered mall building complies with the provisions of the code for the occupancies within the building, then Section 402 does not apply. However, other sections that address a use, process or operation must be applied to that specific occupancy, such as Sections 410, 411 and 414.

Purpose

The purpose of Chapter 4 is to combine in one chapter the provisions of the code applicable to special uses and occupancies. Hazardous materials and operations may occur in more than one group; therefore, the applicable provisions for the specific hazardous occupancy or operation apply to multiple groups. Also, while the provisions for all structures are interrelated to form an overall protection system, by providing requirements for specific occupancies in Chapter 4 the package of protection features is more easily identified.

Chapter 4 contains the requirements for protecting special uses and occupancies. The provisions in this chapter reflect those occupancies and groups that require special consideration and are not addressed elsewhere in the code. The chapter includes requirements for buildings and conditions that apply to one or more groups, such as high-rise buildings or atriums. Special uses may also imply specific occupancies and operations, such as for Groups H-1, H-2, H-3, H-4 and H-5, application of flammable finishes and combustible storage; or for a specific occupancy within a much larger occupancy, such as covered mall buildings, motor-vehicle-related occupancies, special amusement buildings and aircraft-related occupancies. Finally, in order that the overall package of protection features can be easily understood, occupancies, such as Groups I-2 and I-3, live/work units and underground buildings, are addressed.

SECTION 401
SCOPE

401.1 Detailed use and occupancy requirements. In addition to the occupancy and construction requirements in this code, the provisions of this chapter apply to the special uses and occupancies described herein.

❖ This section provides guidance on how Chapter 4 is to be applied with respect to other sections of the code. Section 401.1 indicates that all other provisions of the code apply except as modified by Chapter 4.

The requirements contained in Chapter 4 are intended to apply to special uses and occupancies, as well as special construction features as defined in various sections in this chapter. These requirements are applicable in addition to other chapters of the code.

SECTION 402
COVERED MALL AND OPEN MALL BUILDINGS

402.1 Applicability. The provisions of this section shall apply to buildings or structures defined herein as *covered or open mall buildings* not exceeding three floor levels at any point nor more than three *stories above grade plane*. Except

INTERNATIONAL CODE COUNCIL®
Copyright © 2015 ICC. ALL RIGHTS RESERVED. Accessed by David Dammon on Jun 21, 2017 12:30:52 PM pursuant to License Agreement with ICC. No further reproduction or distribution authorized. ANY UNAUTHORIZED REPRODUCTION OR DISTRIBUTION IS A VIOLATION OF THE FEDERAL COPYRIGHT ACT AND THE LICENSE AGREEMENT, AND SUBJECT TO CIVIL AND CRIMINAL PENALTIES THEREUNDER.

as specifically required by this section, *covered and open mall buildings* shall meet applicable provisions of this code.

Exceptions:

1. Foyers and lobbies of Groups B, R-1 and R-2 are not required to comply with this section.
2. Buildings need not comply with the provisions of this section where they totally comply with other applicable provisions of this code.

❖ This section primarily addresses shopping centers with a maximum of three levels that consist of one or more sizeable anchor businesses, typically department stores, known as anchor buildings, and numerous smaller retail stores, all of which are interconnected by means of a mall or common pedestrian way. See Commentary Figure 402.1. The mall may be covered, providing a climate-controlled environment, or open to the sky. The complex may include movie theaters, bowling lanes, ice arenas, offices, and dining and drinking establishments. Historically, anchor buildings were large department stores, and malls remain attached to department stores, but under this section anchor buildings can contain any occupancy with the exception of a Group H. The complex may also include single- or multiple-level buildings, with a vast majority of shopping centers being one or two levels, and with an occasional mezzanine. Many malls contain large food courts with a variety of food vendors surrounding a common seating area.

This section addresses the special considerations associated with covered or open mall buildings, including construction, egress and fire protection systems. It does not, in general, apply to the anchor buildings around the perimeter of the covered or open mall building. To be considered an anchor building for purposes of applying the code, the building must have complete egress facilities, including the required number and capacity of exits, independent of the covered or open mall building.

Originally, the provisions of this section applied to the typical covered mall building: a one- to three-level structure consisting primarily of retail space and a covered pedestrian way. More recently, other types of covered mall buildings, such as airport passenger terminals and office centers, have also been constructed in accordance with this section.

Malls with an unroofed common pedestrian way, or open malls, are becoming common in the "sun belt" areas of the country and in similar climates around the world. The code includes open malls within the broader definition of covered mall building and allows the same benefits of the covered mall provisions, because an open-to-the-sky mall provides equivalent or better life safety and property protection. The key to the open mall concept is to have everything a covered mall building would have, except for the roof

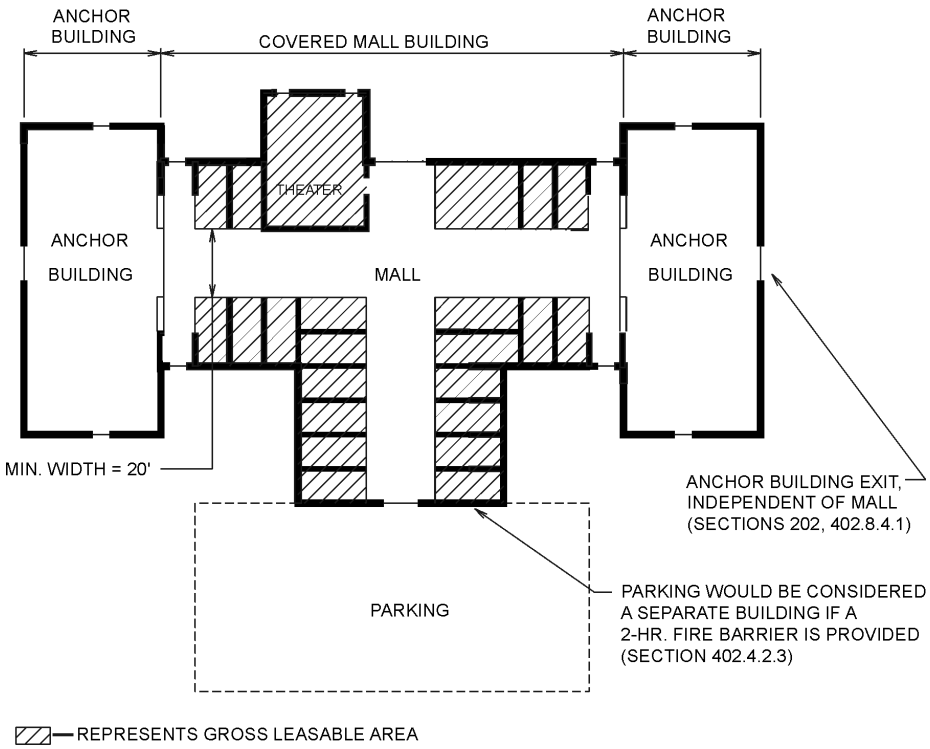

For SI: 1 foot = 304.8 mm.

Figure 402.1
COVERED MALL BUILDING

INTERNATIONAL CODE COUNCIL®
Copyright © 2015 ICC. ALL RIGHTS RESERVED. Accessed by David Dammon on Jun 21, 2017 12:30:52 PM pursuant to License Agreement with ICC. No further reproduction or distribution authorized. ANY UNAUTHORIZED REPRODUCTION OR DISTRIBUTION IS A VIOLATION OF THE FEDERAL COPYRIGHT ACT AND THE LICENSE AGREEMENT, AND SUBJECT TO CIVIL AND CRIMINAL PENALTIES THEREUNDER.

over the mall area. Without a roof over the mall area and with required openings from the grade level to the sky above, natural ventilation is provided and mechanical smoke control is no longer necessary in the mall area and adjoining tenant spaces.

This section is not intended to apply to the foyers and lobbies of business and residential occupancies that may contain retail spaces, small restaurants and offices unrelated to the use of upper stories. If these lobbies have multiple levels open to each other, the provisions of Section 404, Atriums, may apply. In all such cases, the provisions for mixed occupancies found in Section 508 would apply. This section is also not intended to apply to large-footprint retail buildings, which may include smaller retail spaces, such as banks, florists or coffee stands, around the perimeter of a central sales area. These buildings do not provide the intended concept of a central pedestrian mall that is distinct from the surrounding tenant spaces.

Covered or open mall buildings that comply with all other applicable provisions of the code need not comply with the provisions of this section; however, covered or open mall buildings that are designed and constructed to comply with the provisions of this section must also comply with the provisions of the code that are not otherwise modified in this section. For example, the egress provisions in Section 402.8 are applicable to covered or open mall buildings designed in accordance with this section. The provisions in Chapter 10 related to door swing and stairways are also applicable, however, since Section 402 contains no similar provisions.

402.1.1 Open space. A *covered mall building* and attached *anchor buildings* and parking garages shall be surrounded on all sides by a permanent open space or not less than 60 feet (18 288 mm). An *open mall building* and *anchor buildings* and parking garages adjoining the perimeter line shall be surrounded on all sides by a permanent open space of not less than 60 feet (18 288 mm).

Exception: The permanent open space of 60 feet (18 288 mm) shall be permitted to be reduced to not less than 40 feet (12 192 mm), provided the following requirements are met:

1. The reduced open space shall not be allowed for more than 75 percent of the perimeter of the *covered or open mall building* and *anchor buildings*;
2. The *exterior wall* facing the reduced open space shall have a *fire-resistance rating* of not less than 3 hours;
3. Openings in the *exterior wall* facing the reduced open space shall have opening protectives with a *fire protection rating* of not less than 3 hours; and
4. Group E, H, I or R occupancies are not located within the *covered or open mall building* or *anchor buildings*.

❖ One fundamental aspect of the covered mall building concept is that significant open space be provided around the perimeter of the entire building. The open space serves two key roles: separation of these buildings from other buildings and ample space on all sides for fire-fighting operations. The required minimum open space of 60 feet (18 288 mm) must also be provided at any anchor buildings and parking garages attached to the covered mall building. In all cases the open space can occur either within public ways surrounding the site, or by yards provided on the lot between the covered mall building and the lot lines, or a combination of yards and public ways. Where a yard is used to achieve the open space, it must be on the same lot as the building receiving the benefit. With respect to the 60-foot (18 288 mm) requirement, the entire width of the public way can be included. The open space must be provided in all directions around the perimeter of the building, not just measured at right angles to the building. A similar degree of open space is required to surround open mall buildings and any adjacent anchor buildings and parking garages.

The exception allows covered or open mall buildings to reduce the required open space around the building in the same manner as unlimited area buildings regulated in Section 507. Where permitted in Section 507, unlimited area buildings require an open space around the building of 60 feet (18 288 mm) to prevent exposure fire spread. Section 507.2.1 permits five of the nine categories of unlimited area buildings to have a reduced open space of only 40 feet (12 192 mm). This reduction is permitted in these locations when the exterior wall in the required space area is rated for 3 hours and does not include more than 75 percent of the building perimeter. A significant majority of the uses described in Section 507 are found in the definition of a covered or open mall building. Therefore, it can be assumed that the fire load within a mall is similar to the fire load permitted in a code-compliant unlimited area building. Since the intent of the open space requirement is to prevent fire spread from one building to another and the fire loads are similar, allowing covered or open mall buildings to be subject to the same separation requirements as other unlimited area buildings does not reduce the level of fire protection afforded. The fourth requirement of the exception aligns this section with the occupancies permitted to use the unlimited area provisions of Section 507.2.1. Group E, H, I and R occupancies are not prohibited from being within a covered or open mall building or an anchor store, but the exception would prohibit the use of reduced open space if one of these occupancies was a part of the covered or open mall building or anchor building.

402.1.2 Open mall building perimeter line. For the purpose of this code, a perimeter line shall be established. The perimeter line shall encircle all buildings and structures that comprise the *open mall building* and shall encompass any open-air interior walkways, open-air courtyards or similar open-air spaces. The perimeter line shall define the extent of the *open mall building*. *Anchor buildings* and parking structures shall

INTERNATIONAL CODE COUNCIL®
Copyright © 2015 ICC. ALL RIGHTS RESERVED. Accessed by David Dammon on Jun 21, 2017 12:30:52 PM pursuant to License Agreement with ICC. No further reproduction or distribution authorized. ANY UNAUTHORIZED REPRODUCTION OR DISTRIBUTION IS A VIOLATION OF THE FEDERAL COPYRIGHT ACT AND THE LICENSE AGREEMENT, AND SUBJECT TO CIVIL AND CRIMINAL PENALTIES THEREUNDER.

be outside of the perimeter line and are not considered as part of the *open mall building*.

❖ Where the intent is to apply the open mall building provisions of Section 402, it is necessary to establish a building perimeter line that can be used for the application of various special requirements, such as those regarding travel distance in Section 402.8.5. As shown in Commentary Figure 402.1.2, the perimeter line encloses all portions of the open mall building, including open-air walkways and spaces, but does not enclose any anchor buildings or parking garages adjacent to the open mall building. The designer has the discretion as to the relative location of the perimeter line, similar to the discretion they have to place an assumed imaginary line between two buildings located on the same lot. But even with that discretion, it is anticipated that the perimeter line will, in essence, enclose the same space as exterior walls would in a covered mall building.

402.2 Definitions. The following terms are defined in Chapter 2:

ANCHOR BUILDING.

COVERED MALL BUILDING.

Mall.

Open mall.

Open mall building.

FOOD COURT.

GROSS LEASABLE AREA.

❖ This section lists terms that are specifically associated with the subject matter of Section 402. It is important to emphasize that these terms are not exclusively related to this chapter but may or may not also be applicable where the term is used elsewhere in the code.

Definitions of terms can help in the understanding and application of the code requirements. The purpose for including a list within this chapter is to provide more convenient access to terms which may have a specific or limited application within this chapter. For the complete definition and associated commentary, refer back to Chapter 2. Terms that are italicized provide a visual identification throughout the code that a definition exists for that term. The use and application of all defined terms are set forth in Section 201.

402.3 Lease plan. Each *owner* of a *covered mall building* or of an *open mall building* shall provide both the building and fire departments with a lease plan showing the location of each occupancy and its *exits* after the certificate of occupancy has been issued. No modifications or changes in occupancy or use shall be made from that shown on the lease plan without prior approval of the *building official*.

❖ The required lease plan is permitted to be submitted after the certificate of occupancy has been issued because many times the developer does not have the information at the time of construction. The location of tenant separations may not be known until leases are negotiated with prospective tenants. This may occur after the mall has opened.

During initial construction, it is anticipated that the building department will require tenant improvements to be submitted through the building permit process. After tenant spaces are prepared for occupancy and the lease plan is developed, subsequent modifications and changes must be submitted for approval

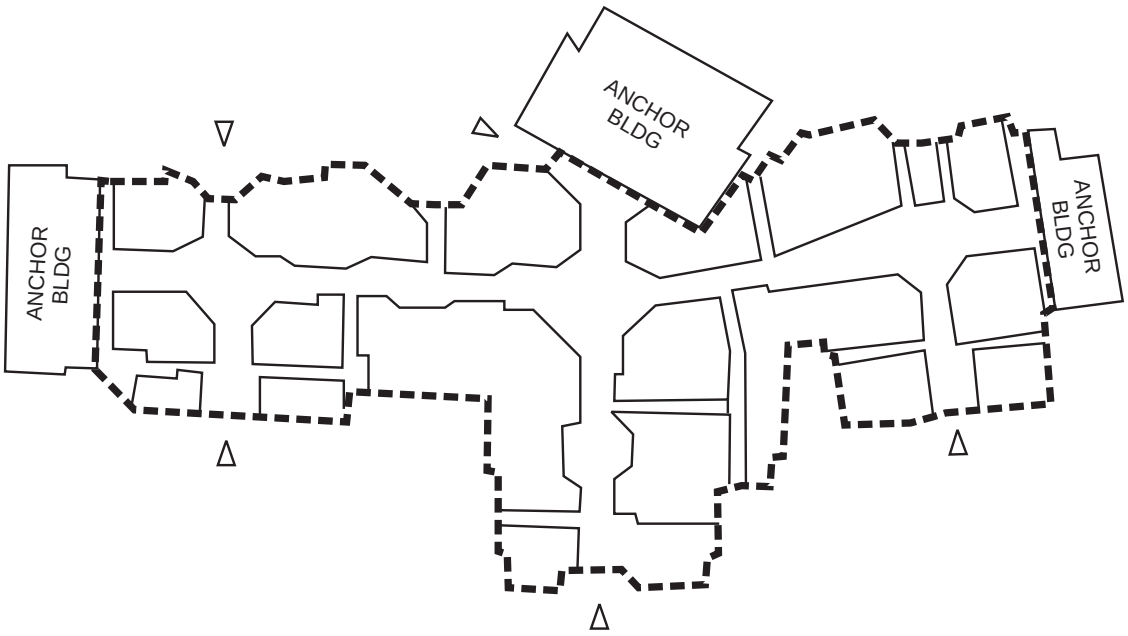

Figure 402.1.2
OPEN MALL PERIMETER

INTERNATIONAL CODE COUNCIL®
Copyright © 2015 ICC. ALL RIGHTS RESERVED. Accessed by David Dammon on Jun 21, 2017 12:30:52 PM pursuant to License Agreement with ICC. No further reproduction or distribution authorized. ANY UNAUTHORIZED REPRODUCTION OR DISTRIBUTION IS A VIOLATION OF THE FEDERAL COPYRIGHT ACT AND THE LICENSE AGREEMENT, AND SUBJECT TO CIVIL AND CRIMINAL PENALTIES THEREUNDER.

prior to commencing construction or changing the use. It is important that the fire department receives copies of current lease plans, since not only does this help the fire department while performing fire prevention inspections, but also the lease plans assist in fire department response to an emergency.

402.4 Construction. The construction of *covered and open mall buildings, anchor buildings* and parking garages associated with a *mall* building shall comply with Sections 402.4.1 through 402.4.3.

❖ A number of construction-related provisions are specific to covered and open mall buildings, anchor buildings and associated parking garages. Such buildings are regulated in this section for allowable floor area and height, type of construction, and fire-resistance-rated separations. The various requirements in these code sections are illustrated in Commentary Figure 402.4.

402.4.1 Area and types of construction. The *building area* and type of construction of *covered mall* or *open mall buildings, anchor buildings* and parking garages shall comply with this section.

❖ Specific construction requirements and area allowances are provided for mall buildings, anchor buildings and parking garages in Sections 402.4.1.1, 402.4.1.2 and 402.4.1.3, respectively.

402.4.1.1 Covered and open mall buildings. The *building area* of any *covered mall* or *open mall building* shall not be limited provided the *covered mall* or *open mall building* does not exceed three floor levels at any point nor three *stories above grade plane*, and is of Type I, II, III or IV construction.

❖ Covered or open mall buildings are considered to be special types of unlimited area buildings and are exempt from the allowable area limitations of Section 506 where they are limited to not more than three stories above grade plane. It should be noted that the height limitations in feet, specified in Table 504.3 based on the type of construction classification, are applicable to covered or open mall buildings. The allowance of an unlimited area is also based on the restriction of construction types to noncombustible (Types I and II), noncombustible/combustible (Type III) and heavy timber (Type IV). It assumes an effective automatic sprinkler system is provided in accordance with Section 402.5.

402.4.1.2 Anchor buildings. The *building area* and *building height* of any *anchor building* shall be based on the type of

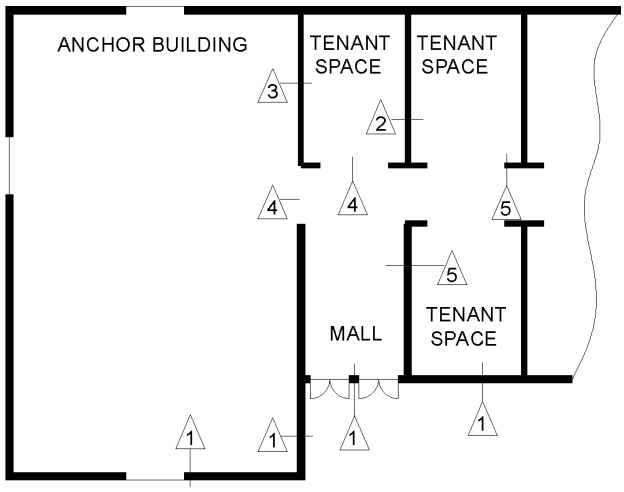

Figure 402.4
TENANT SPACE AND ANCHOR BUILDING SEPARATIONS

INTERNATIONAL CODE COUNCIL®
Copyright © 2015 ICC. ALL RIGHTS RESERVED. Accessed by David Dammon on Jun 21, 2017 12:30:52 PM pursuant to License Agreement with ICC. No further reproduction or distribution authorized. ANY UNAUTHORIZED REPRODUCTION OR DISTRIBUTION IS A VIOLATION OF THE FEDERAL COPYRIGHT ACT AND THE LICENSE AGREEMENT, AND SUBJECT TO CIVIL AND CRIMINAL PENALTIES THEREUNDER.

construction as required by Section 503 as modified by Sections 504 and 506.

Exception: The *building area* of any *anchor building* shall not be limited provided the *anchor building* is not more than three *stories above grade plane*, and is of Type I, II, III or IV construction.

❖ Anchor buildings, although attached to the mall building, can be treated as separate buildings with respect to building height, building area and construction type. For example, where a mall is limited to three stories, the attached anchor building built of Type I-A construction could be a high-rise building.

According to the exception, where the anchor building is limited to the same limits as the mall building, the anchor building can also be of unlimited area.

402.4.1.3 Parking garage. The *building area* and *building height* of any parking garage, open or enclosed, shall be based on the type of construction as required by Sections 406.5 and 406.6, respectively.

❖ This section provides a reminder that the construction of parking garages is regulated by the general provisions found in Sections 406.5 and 406.6 and that they are not regulated by the covered mall building's type of construction. It also clarifies that the garage is not included in the unlimited area allowance given to the mall building and anchor stores.

402.4.2 Fire-resistance-rated separation. Fire-resistance-rated separation is not required between tenant spaces and the *mall*. Fire-resistance-rated separation is not required between a *food court* and adjacent tenant spaces or the *mall*.

❖ From an operational point of view, separating the tenant space from the mall is not practical in that customer flow would be restricted and, therefore, detract from the merchandising purpose of covered or open malls. Historical experience and reliability data on automatic sprinkler performance indicate that a separation between the tenant space and the mall is not warranted.

402.4.2.1 Tenant separations. Each tenant space shall be separated from other tenant spaces by a *fire partition* complying with Section 708. A tenant separation wall is not required between any tenant space and the *mall*.

❖ Covered mall buildings are essentially large unlimited area mixed-occupancy buildings. Rather than complying with Section 508.3 or 508.4, the building has a series of protections including the tenant separations specified in this section. In order to limit the spread of smoke, tenant separation walls are required to be fire partitions (see Section 708) having a fire-resistance rating of at least 1 hour and extending from the floor to the underside of the ceiling (see Commentary Figure 402.4). Extending tenant separations to the floor slab or roof deck above is not always practical or possible because of operation of the heating, ventilating and air-conditioning (HVAC) system. The effectiveness of the automatic sprinkler system is also a reason for not requiring tenant separations to extend above the ceiling, including attic spaces (see Section 708.4, Exception 4).

The open mall "building" provides a unique question regarding separation of tenant spaces. The open mall building may likely be a collection of separate structures treated as one open mall "building." The extent of the open mall building will be established by the perimeter line. Where a separate structure within an open mall contains multiple tenant spaces, those spaces need to separated as required in this section.

Within the perimeter line, the walls between the tenant spaces and the mall will be "interior walls" to the whole open mall building complex, but they are also exterior walls as they separate interior from exterior environments. As part of a complex of buildings, the exterior walls of each individual tenant space facing the mall will not need to meet the wall and opening protection of Section 705, but do need to comply with other exterior wall provisions of Chapter 14. In most cases where there are separate "buildings" within the perimeter line, there will be a walkway—or pedestrian mall—between the buildings. Even where these are off the main mall, these are still considered tenant walls facing the mall. The walls on the exterior face of the open mall "building," those adjoining the perimeter line, would be subject to the provisions of Section 705.

402.4.2.2 Anchor building separation. An *anchor building* shall be separated from the *covered or open mall building* by *fire walls* complying with Section 706.

Exceptions:

1. *Anchor buildings* of not more than three *stories above grade plane* that have an occupancy classification the same as that permitted for tenants of the *mall building* shall be separated by 2-hour fire-resistance-rated *fire barriers* complying with Section 707.
2. The exterior walls of *anchor buildings* separated from an *open mall building* by an *open mall* shall comply with Table 602.

❖ In general, anchor buildings are typically viewed as being separate from the covered or open mall building (see commentary, Sections 402.1 and 402.4.1). As separate buildings, the code requires that a fire wall complying with Section 706 be constructed.

The first exception to this section may be used in situations where the occupancy and size limitations of the anchor building are the same as what would be permitted for any other tenant within the covered mall building. In those situations, the code permits the separation to be constructed as a fire barrier instead of as a fire wall. The exception would not be applicable if the anchor building was over three stories above grade plane or if it contained an occupancy that was not normally permitted within the mall. An example would be a high-rise office building or a

INTERNATIONAL CODE COUNCIL®
Copyright © 2015 ICC. ALL RIGHTS RESERVED. Accessed by David Dammon on Jun 21, 2017 12:30:52 PM pursuant to License Agreement with ICC. No further reproduction or distribution authorized. ANY UNAUTHORIZED REPRODUCTION OR DISTRIBUTION IS A VIOLATION OF THE FEDERAL COPYRIGHT ACT AND THE LICENSE AGREEMENT, AND SUBJECT TO CIVIL AND CRIMINAL PENALTIES THEREUNDER.

hotel that was connected with the covered mall building (see Commentary Figure 402.4 and commentary, Section 402.4.2.2.1).

For an open mall building where the anchor building is actually a separate building, the application of a fire wall may not be appropriate, but since it is considered a separate structure even under the covered mall scenario, it is appropriate to have the anchor building provide exterior wall protection set in Table 602. This allowance is set forth in Exception 2.

A growing trend in the development of mall buildings and anchor buildings is the desire of the operators of the businesses in an anchor building to own the structure of the anchor building as well as a distinct parcel of land on which the anchor building sits. The original intent of the mall provisions was to apply to one building, or a collection of buildings, located on one lot under the control of one owner. Various provisions assume a single "lot" for the covered mall and associated anchor buildings and parking structures. If the mall and associated buildings are managed as a single complex, strict interpretation would eliminate the application of these provisions to such a complex. Application of Section 402 provisions to a situation where the mall and anchor buildings are separate ownership lots would be problematic, requiring special legal and technical considerations and treatment by the authority having jurisdiction.

402.4.2.2.1 Openings between anchor building and mall. Except for the separation between Group R-1 *sleeping units* and the *mall*, openings between *anchor buildings* of Type IA, IB, IIA or IIB construction and the *mall* need not be protected.

❖ As with tenant separations, openings between the anchor building and the pedestrian area of the mall need not be protected. Such separations would defeat the merchandising purpose of covered malls by restricting customer flow and visual access. While the openings may be unprotected, the separations between the anchor building and all tenant spaces in the covered mall building are to be constructed as required in Section 402.4.2.2 for a fire wall (see commentary, Section 706) or fire barrier (see commentary, Section 707) since the anchor building is considered a separate building (see Commentary Figure 402.4).

402.4.2.3 Parking garages. An attached garage for the storage of passenger vehicles having a capacity of not more than nine persons and *open parking garages* shall be considered as a separate building where it is separated from the *covered or open mall building* or *anchor building* by not less than 2-hour *fire barriers* constructed in accordance with Section 707 or *horizontal assemblies* constructed in accordance with Section 711, or both.

Parking garages, open or enclosed, which are separated from *covered mall buildings*, *open mall buildings* or *anchor buildings*, shall comply with the provisions of Table 602.

Pedestrian walkways and tunnels that connect garages to *mall* buildings or *anchor buildings* shall be constructed in accordance with Section 3104.

❖ Buildings adjacent to mall buildings are typically considered separate buildings provided they are separated by exterior walls or fire walls. In recognition of the limited hazard presented by attached garages and open parking garages, this section permits such structures to be considered separate buildings, if fire barriers and horizontal assemblies having a fire-resistance rating of at least 2 hours are provided. See the commentary to Section 707 relative to the construction of fire barriers and Section 711 relative to the construction of horizontal assemblies.

The 2-hour fire-resistance rating is consistent with the requirements of Table 508.4 for Groups M and S-2. If the 2-hour fire barrier or horizontal assembly is not provided, the parking structure can be considered part of the covered mall building and be limited. Table 602, regulating exterior wall protection, is applicable for those parking garages that are not attached to the covered or open mall building or anchor buildings. See the commentary to Section 3104 for the requirements related to any pedestrian walkways or tunnels which connect the garages to mall buildings or anchor stores.

402.4.3 Open mall construction. Floor assemblies in, and *roof assemblies* over, the *open mall* of an *open mall building* shall be open to the atmosphere for not less than 20 feet (9096 mm), measured perpendicular from the face of the tenant spaces on the lowest level, from edge of balcony to edge of balcony on upper floors and from edge of roof line to edge of roof line. The openings within, or the unroofed area of, an *open mall* shall extend from the lowest/grade level of the open mall through the entire *roof assembly*. Balconies on upper levels of the *mall* shall not project into the required width of the opening.

❖ An open mall requires a minimum open area width of 20 feet (9096 mm) between opposing structures from the lowest grade level to the sky above. This dimension aligns with Section 402.8.1.1, minimum width for egress. The width of the opening is measured perpendicular from the face of the tenant spaces, essentially across the pedestrian mall. This is similar to the mall width for covered malls. The opening, or the unroofed area, must extend from the lowest grade level of the common open mall to the sky above. This will provide natural ventilation to all levels. Balconies on the upper levels are permitted but may not project into the required 20-foot (9096 mm) width. Pedestrian walkways and overhangs at the end locations of the open mall are permitted (see Commentary Figure 402.4.3).

402.4.3.1 Pedestrian walkways. *Pedestrian walkways* connecting balconies in an *open mall* shall be located not less than 20 feet (9096 mm) from any other *pedestrian walkway*.

❖ Where pedestrian walkways are provided, they must be spatially separated in order to maintain the

INTERNATIONAL CODE COUNCIL®
Copyright © 2015 ICC. ALL RIGHTS RESERVED. Accessed by David Dammon on Jun 21, 2017 12:30:52 PM pursuant to License Agreement with ICC. No further reproduction or distribution authorized. ANY UNAUTHORIZED REPRODUCTION OR DISTRIBUTION IS A VIOLATION OF THE FEDERAL COPYRIGHT ACT AND THE LICENSE AGREEMENT, AND SUBJECT TO CIVIL AND CRIMINAL PENALTIES THEREUNDER.

expected openness of the open mall area. The minimum required distance of 20 feet (9096 mm) is consistent with the minimum open space required between various buildings that make up an open mall building.

[F] 402.5 Automatic sprinkler system. *Covered* and *open mall buildings* and buildings connected shall be equipped throughout with an *automatic sprinkler system* in accordance with Section 903.3.1.1, which shall comply with all of the following:

1. The *automatic sprinkler system* shall be complete and operative throughout occupied space in the *mall building* prior to occupancy of any of the tenant spaces. Unoccupied tenant spaces shall be similarly protected unless provided with *approved* alternative protection.
2. Sprinkler protection for the *mall* of a *covered mall building* shall be independent from that provided for tenant spaces or *anchor buildings*.
3. Sprinkler protection for the tenant spaces of an *open mall building* shall be independent from that provided for *anchor buildings.*
4. Sprinkler protection shall be provided beneath exterior circulation balconies located adjacent to an *open mall*.
5. Where tenant spaces are supplied by the same system, they shall be independently controlled.

   Exception: An *automatic sprinkler system* shall not be required in spaces or areas of *open parking garages* separated from the *covered or open mall building* in accordance with Section 402.4.2.3 and constructed in accordance with Section 406.5.

❖ The covered or open mall building and connected buildings, such as anchor buildings, must be protected with an automatic sprinkler system to protect life and property effectively. As has been discussed throughout the section, numerous allowances (such

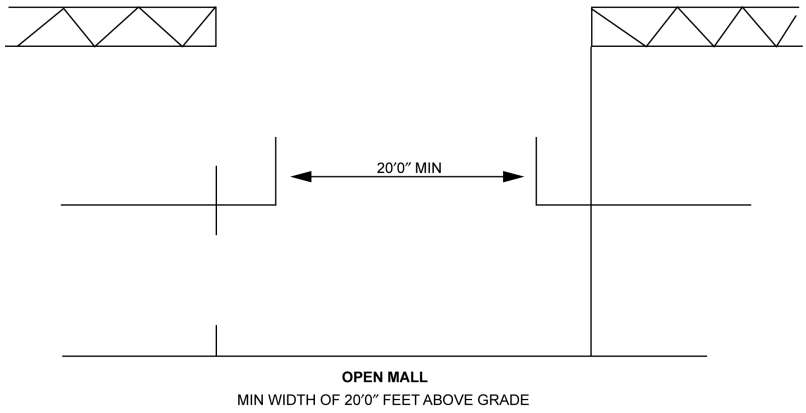

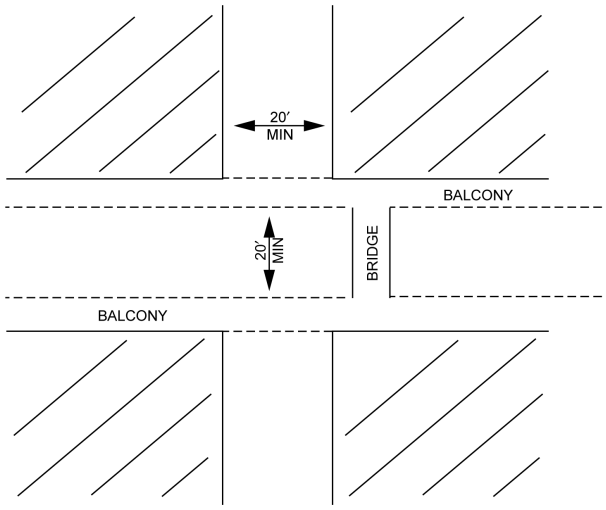

For SI: 1 foot = 304.8 mm, 1 inch = 25.4 mm.

Figure 402.4.3
MINIMUM WIDTH OF OPEN MALL

INTERNATIONAL CODE COUNCIL®
Copyright © 2015 ICC. ALL RIGHTS RESERVED. Accessed by David Dammon on Jun 21, 2017 12:30:52 PM pursuant to License Agreement with ICC. No further reproduction or distribution authorized. ANY UNAUTHORIZED REPRODUCTION OR DISTRIBUTION IS A VIOLATION OF THE FEDERAL COPYRIGHT ACT AND THE LICENSE AGREEMENT, AND SUBJECT TO CIVIL AND CRIMINAL PENALTIES THEREUNDER.

as reduced tenant separations and elimination of area limitations) are based on the effectiveness of the automatic sprinkler system.

The sprinkler system is to be designed, installed, tested and maintained in accordance with Chapter 9, the IFC and NFPA 13. Additionally, the system must be installed such that any portion serving tenant spaces in a covered mall building may be shut down independently without affecting the operation of the systems protecting the mall area. This special feature is in recognition of the frequent need to shut down the system so that changes can be made to it as a result of tenant improvements and modifications.

In an open mall building, the sprinkler systems for the tenant spaces are to be separate from those provided for the anchor buildings. It is necessary that sprinkler protection for open mall buildings be extended to the underneath side of pedestrian walkways and exterior balconies used for circulation and egress purposes. Although the open mall itself requires no sprinkler protection, it is important that those areas below overhead walkways be provided with sprinklers.

Section 909.12.3 requires operation of the sprinkler system to activate automatically the mechanical smoke control system (where an automatic control system is utilized). It is imperative that the zoning of the sprinkler system match the zoning of the smoke control system. This is necessary so that the area where water flow has occurred will also be the area from which smoke is removed. Smoke control is only required where an atrium that connects three stories is present (see Section 402.7.2).

The exception clarifies that sprinkler protection need not be extended to complying open parking garages that are adequately separated from the covered mall building, open mall building or anchor store. The allowance is consistent with the automatic sprinkler provisions of Section 903.2 where no sprinkler protection is required in open parking garages based on occupancy classification (Group S-2).

402.6 Interior finishes and features. Interior finishes within the *mall* and installations within the *mall* shall comply with Sections 402.6.1 through 402.6.4.

❖ This section addresses one general fire safety feature (interior finishes) and three specific features commonly found in covered mall buildings. Such features are also addressed where applicable within the perimeter line of an open mall building.

402.6.1 Interior finish. *Interior wall* and *ceiling finishes* within the *mall* of a *covered mall building* and within the *exits* of *covered or open mall buildings* shall have a minimum *flame spread index* and smoke-developed index of Class B in accordance with Chapter 8. *Interior floor finishes* shall meet the requirements of Section 804.

❖ Although Section 804 addresses the wall and ceiling finish requirements for mall building tenant spaces and anchor buildings based on the occupancies involved, Section 804 does not specifically state the requirements for interior finish within the mall of a covered mall building. In addition, it does not specify the interior wall and ceiling finish requirements for exits of open or covered mall buildings. Since a covered mall building is actually a mixed-use building, the most restrictive occupancy requirement should most likely apply. The use of the mall has gone beyond its original intent of providing a wide-open walking space for people. Mall spaces have become locations to assemble to watch a dance recital, attend a fashion show, or for the local radio station to run a promotion. It has become clear that malls are assembly spaces themselves, not taking into account the tenant assembly spaces that open into them. Therefore, the mall spaces and exits are regulated for interior finishes in a manner similar to Group A requirements. The wall and ceiling finishes must have a minimum flame spread index and smoke-developed index of Class B.

402.6.2 Kiosks. Kiosks and similar structures (temporary or permanent) located within the *mall* of a *covered mall building* or within the perimeter line of an *open mall building* shall meet the following requirements:

1. Combustible kiosks or other structures shall not be located within a *covered* or *open mall* unless constructed of any of the following materials:
   1.1. *Fire-retardant-treated* wood complying with Section 2303.2.
   1.2. Foam plastics having a maximum heat release rate not greater than 100 kW (105 Btu/h) when tested in accordance with the exhibit booth protocol in UL 1975 or when tested in accordance with NFPA 289 using the 20 kW ignition source.
   1.3. Aluminum composite material (ACM) meeting the requirements of Class A *interior finish* in accordance with Chapter 8 when tested as an assembly in the maximum thickness intended.
2. Kiosks or similar structures located within the *mall* shall be provided with *approved automatic sprinkler system* and detection devices.
3. The horizontal separation between kiosks or groupings thereof and other structures within the *mall* shall be not less than 20 feet (6096 mm).
4. Each kiosk or similar structure or groupings thereof shall have an area not greater than 300 square feet (28 m^2).

❖ Other potential sources of combustibles within the mall area are kiosks and similar structures. As with the restrictions of Section 402.6.4 on plastic signs, in order to maintain the mall as a viable means of egress, the amount of combustibles within the mall must be minimized. The restriction on kiosk construction and location is also intended to minimize the potential for fire spread through the mall area. These

INTERNATIONAL CODE COUNCIL®
Copyright © 2015 ICC. ALL RIGHTS RESERVED. Accessed by David Dammon on Jun 21, 2017 12:30:52 PM pursuant to License Agreement with ICC. No further reproduction or distribution authorized. ANY UNAUTHORIZED REPRODUCTION OR DISTRIBUTION IS A VIOLATION OF THE FEDERAL COPYRIGHT ACT AND THE LICENSE AGREEMENT, AND SUBJECT TO CIVIL AND CRIMINAL PENALTIES THEREUNDER.

restrictions apply to both permanent and temporary structures and are applicable to both covered and open mall buildings.

Kiosks and similar structures are permitted to be of noncombustible construction or may be of combustible construction where the provisions of Item 1 are followed. The code allows combustible kiosks to be made of fire-retardant-treated wood or certain foam plastics and aluminum composites that provide performance comparable to that of the fire-retardant-treated wood. As such, the amount of combustibles within the mall and the potential for fire spread through the mall are minimized.

If the kiosk or similar structure has a cover, the automatic sprinkler system within the covered mall building will not be able to control effectively a fire within the kiosk (or similar structure) in the early stages of development. Suppression and detection devices must, therefore, be installed within such structures when there is anything that shields the mall sprinkler system from areas within the kiosk.

In order to minimize a fire exposure hazard, kiosks and similar structures must be located at least 20 feet (6096 mm) from each other or be situated in groups that are appropriately separated from other kiosks. Although the structure itself is often noncombustible or of the limited types of acceptable combustible materials, it is recognized that combustibles may be displayed within the structure and, therefore, the separation minimizes the potential for fire spread from kiosk to kiosk. If a series of kiosks do not have 20 feet (6096 mm) separating them, they can be treated as a group and would be limited to 300 square feet (28 m^2), as a group. The open space between individual kiosks in the group can be excluded from the aggregate area for determining the area of the group (see IBC Interpretation No. 11-07). Within a group of kiosks treated as one, there can be multiple "tenants" or one, and there are no specifics about the relative size of individual kiosks within the group (see IBC Interpretation Nos. 13-07 and 14-07). As required by Section 402.8.1.1, the kiosk must also be located at least 10 feet (3048 mm) from any projection of a tenant space.

To further control the use of kiosks and similar structures within the mall, their size is restricted to 300 square feet (28 m^2) or less. This area restriction attempts to minimize the potential for a significant fire within the mall area. A kiosk larger than 300 square feet (28 m^2) must be considered as a tenant space.

402.6.3 Children's play structures. Children's play structures located within the *mall* of a *covered mall building* or within the perimeter line of an *open mall building* shall comply with Section 424. The horizontal separation between children's play structures, kiosks and similar structures within the *mall* shall be not less than 20 feet (6096 mm).

❖ A common attraction found within covered and open mall buildings is one or more dedicated play areas for children. These attractions include such things as jungle gyms, playhouses and activity areas. If these structures exceed 10 feet (3048 mm) in height and 150 square feet (14 m^2) in area, then the provisions of Section 424 must be followed. Children's play structures have to be separated from each other, as well as from kiosks and similar structures, by at least 20 feet (6096 mm) in order to limit the aggregate combustible fire loading created by such structures.

402.6.4 Plastic signs. Plastic signs affixed to the storefront of any tenant space facing a *mall* or *open mall* shall be limited as specified in Sections 402.6.4.1 through 402.6.4.5.

❖ In order that the mall can be used as an exit access, combustible materials in the mall must be restricted; therefore, the size, area, location and amount of exposed plastic signs are restricted. This section restricts only plastic signs that are along the wall separating the tenant space from the mall (see Commentary Figure 402.6.4). The limit applies to both covered and open mall buildings. While the potential hazards of a plastic sign are somewhat dissipated in an open air mall, the pedestrian malls within an open mall are still considered space within a mall and are used for egress from the complex, therefore appropriate protections are needed. If the sign housing and face panels are noncombustible or glass, there are no limitations. Light-transmitting plastic interior signs not located in the mall, such as those located within an individual tenant space, must comply with the requirements of Chapter 26.

402.6.4.1 Area. Plastic signs shall be not more than 20 percent of the wall area facing the *mall*.

❖ The signs located on the wall facing the mall must not exceed 20 percent of the wall area. The restrictions on size, coupled with the restrictions on location and height, are intended to prevent fire spread via the plastic signs.

402.6.4.2 Height and width. Plastic signs shall be not greater than 36 inches (914 mm) in height, except that where the sign is vertical, the height shall be not greater than 96 inches (2438 mm) and the width shall be not greater than 36 inches (914 mm).

❖ Signs that are wider than they are high (horizontal panels) must not be more than 36 inches (914 mm) in height. The width of signs is controlled by the maximum area (see Section 402.6.4.1) and the location restrictions with respect to adjacent tenant spaces (see Section 402.6.4.3). Vertical signs must not be more than 36 inches (914 mm) in width and 96 inches (2438 mm) in height and are also subject to the area and location restrictions of other sections. The restrictions are intended to minimize horizontal and vertical fire spread through the mall area via the signs.

402.6.4.3 Location. Plastic signs shall be located not less than 18 inches (457 mm) from adjacent tenants.

❖ To minimize the potential for fire spread, plastic signs must be located at least 18 inches (457 mm) from adjacent tenant spaces.

INTERNATIONAL CODE COUNCIL®
Copyright © 2015 ICC. ALL RIGHTS RESERVED. Accessed by David Dammon on Jun 21, 2017 12:30:52 PM pursuant to License Agreement with ICC. No further reproduction or distribution authorized. ANY UNAUTHORIZED REPRODUCTION OR DISTRIBUTION IS A VIOLATION OF THE FEDERAL COPYRIGHT ACT AND THE LICENSE AGREEMENT, AND SUBJECT TO CIVIL AND CRIMINAL PENALTIES THEREUNDER.

402.6.4.4 Plastics other than foam plastics. Plastics other than foam plastics used in signs shall be light- transmitting plastics complying with Section 2606.4 or shall have a self-ignition temperature of 650°F (343°C) or greater when tested in accordance with ASTM D1929, and a *flame spread index* not greater than 75 and smoke-developed index not greater than 450 when tested in the manner intended for use in accordance with ASTM E84 or UL 723 or meet the acceptance criteria of Section 803.1.2.1 when tested in accordance with NFPA 286.

❖ To minimize the potential fire hazard, light-transmitting plastic signs located in a mall must comply with the specific material requirements of Section 2606.4 (see commentary, Section 2606.4) or must meet one of the alternative test methods that are permitted. Additionally, the backs and edges of the sign must be encased to reduce the likelihood of ignition and fire spread.

402.6.4.4.1 Encasement. Edges and backs of plastic signs in the *mall* shall be fully encased in metal.

❖ In order that the amount of exposed plastic materials in the mall is minimized, as well as to reduce the potential for ignition of a plastic panel, the edges and backs of plastic signs must be encased in metal. To conceptually understand this requirement, consider how easily a piece of paper ignites when a flame is held to its edge versus being held in the middle of the paper.

402.6.4.5 Foam plastics. Foam plastics used in signs shall have flame-retardant characteristics such that the sign has a maximum heat-release rate of 150 kilowatts when tested in accordance with UL 1975 or when tested in accordance with NFPA 289 using the 20 kW ignition source, and the foam plastics shall have the physical characteristics specified in this section. Foam plastics used in signs installed in accordance with Section 402.6.4 shall not be required to comply with the *flame spread* and smoke-developed indices specified in Section 2603.3.

❖ Foam plastics that are used in signs located in a mall must comply with the provisions of Sections 402.6.4.5.1 and 402.6.4.5.2. The provisions of the code include specific material requirements for the foam plastics, such as the allowable heat-release rate, density and thickness permitted.

402.6.4.5.1 Density. The density of foam plastics used in signs shall be not less than 20 pounds per cubic foot (pcf) (320 kg/ m^3).

❖ Foam plastics used in signs are limited to a minimum density of no less than 20 pounds per cubic foot (pcf) (320 kg/m^3). This limitation lessens the likelihood that the sign will add a significant fuel load to the tenant space entrance.

402.6.4.5.2 Thickness. The thickness of foam plastic signs shall not be greater than $^1/_2$ inch (12.7 mm).

❖ The thickness of the foam plastic sign is also limited to lessen the likelihood that the sign will add a significant fuel load to the tenant space entrance.

[F] 402.7 Emergency systems. *Covered and open mall buildings*, *anchor buildings* and associated parking garages

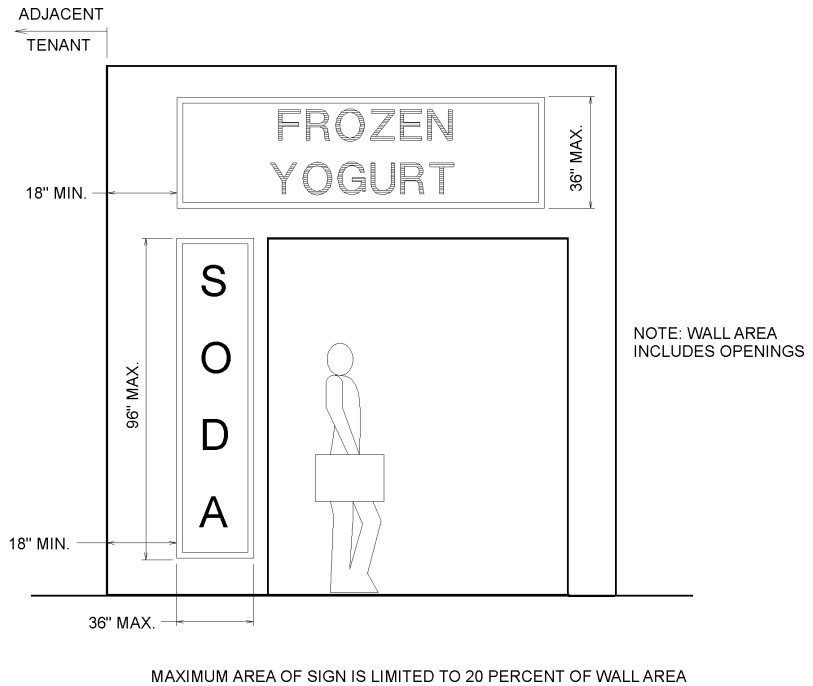

For SI: 1 inch = 25.4 mm.

Figure 402.6.4
STOREFRONT SIGNAGE WITH PLASTIC SIGNS

INTERNATIONAL CODE COUNCIL®
Copyright © 2015 ICC. ALL RIGHTS RESERVED. Accessed by David Dammon on Jun 21, 2017 12:30:52 PM pursuant to License Agreement with ICC. No further reproduction or distribution authorized. ANY UNAUTHORIZED REPRODUCTION OR DISTRIBUTION IS A VIOLATION OF THE FEDERAL COPYRIGHT ACT AND THE LICENSE AGREEMENT, AND SUBJECT TO CIVIL AND CRIMINAL PENALTIES THEREUNDER.

shall be provided with emergency systems complying with Sections 402.7.1 through 402.7.5.

❖ The special allowances for covered and open mall buildings are available in great part due to the presence of several emergency fire protection systems within the building. In addition to the automatic sprinkler system required by Section 402.5, this section identifies those systems and methods by addressing standpipe systems, smoke control, standby power, emergency voice/alarm communication and fire department access to equipment.

[F] 402.7.1 Standpipe system. *Covered and open mall buildings* shall be equipped throughout with a standpipe system as required by Section 905.3.3.

❖ This section provides a reminder to the code user and a direct reference to the section that regulates the need for standpipes or hose connections for covered or open mall buildings (see commentary, Section 905.3.3).

[F] 402.7.2 Smoke control. Where a *covered mall building* contains an *atrium*, a smoke control system shall be provided in accordance with Section 404.5.

Exception: A smoke control system is not required in *covered mall buildings* where an *atrium* connects only two stories.

❖ A smoke control system must be provided for all covered mall buildings that contain an atrium which connects more than two stories. An "atrium" is defined (Section 202) as an opening connecting two or more stories other than enclosed stairways, elevators, hoistways, escalators, plumbing, electrical, air-conditioning or other equipment, which is closed at the top. Malls inherently contain unenclosed floor openings that may allow for the migration of smoke and hot gases resulting from a fire. See Sections 404.5 and 909 for a discussion of the requirements of the smoke control system, noting the exceptions listed for floor openings. Open malls and adjoining tenant spaces are not required to have a smoke control system because they are open at the top and would not meet the definition of an "atrium." However, individual tenant spaces that contain an atrium and are part of an open mall "building" are not exempted from the smoke control requirement.

[F] 402.7.3 Emergency power. *Covered mall buildings* greater than 50,000 square feet (4645 m^2) in area and *open mall buildings* greater than 50,000 square feet (4645 m^2) within the established perimeter line shall be provided with emergency power that is capable of operating the *emergency voice/alarm communication system* in accordance with Section 2702.

❖ Covered and open mall buildings of a substantial size are required to be provided with emergency power only for the emergency voice/alarm communication system (see Section 2702.2.3). For means of egress illumination, see Section 1008.

[F] 402.7.4 Emergency voice/alarm communication system. Where the total floor area is greater than 50,000 square feet (4645 m^2) within either a *covered mall building* or within the perimeter line of an *open mall building*, an *emergency voice/alarm communication system* shall be provided.

Emergency voice/alarm communication systems serving a *mall*, required or otherwise, shall be accessible to the fire department. The systems shall be provided in accordance with Section 907.5.2.2.

❖ An emergency voice/alarm communication system is required to allow the fire department control and communication during an emergency situation. Such a system is required when the covered or open mall building exceeds a floor area of 50,000 square feet (4645 m^2) (see commentary, Section 907.5.2.2). For open mall buildings, the threshold of 50,000 square feet (4645 m^2) is based on the floor area within the building's perimeter line as described in Section 402.1.2.

[F] 402.7.5 Fire department access to equipment. Rooms or areas containing controls for air-conditioning systems, *automatic fire-extinguishing systems*, *automatic sprinkler systems* or other detection, suppression or control elements shall be identified for use by the fire department.

❖ Consideration should be given to fire department access during an emergency. Fire department personnel may need to either determine that the fire protection systems are functioning properly or override the automatic features to manually activate or shut down a particular system. For this reason, the fire department must have access to controls for the air-conditioning and fire protection systems. The controls are to be clearly identified so that fire department personnel can properly operate them.

402.8 Means of egress. *Covered mall buildings*, *open mall buildings* and each tenant space within a mall building shall be provided with *means of egress* as required by this section and this code. Where there is a conflict between the requirements of this code and the requirements of Sections 402.8.1 through 402.8.8, the requirements of Sections 402.8.1 through 402.8.8 shall apply.

❖ Covered mall buildings and open mall buildings, as well as each individual tenant space within the covered or open mall building, are required to have means of egress that comply with other provisions of the code—especially Chapter 10. Keep in mind that the requirements of Section 402.8 will supersede some of the provisions of Chapter 10. In order to comply, travel through the mall area is considered as exit access and must comply with Section 402.8.5. Travel distance within a tenant space need only be measured to the entrance of the mall from the space (see Commentary Figure 402.8). As such, two distinct criteria must be met with regard to exit access travel distance: travel within the mall and travel within the tenant space.

INTERNATIONAL CODE COUNCIL®
Copyright © 2015 ICC. ALL RIGHTS RESERVED. Accessed by David Dammon on Jun 21, 2017 12:30:52 PM pursuant to License Agreement with ICC. No further reproduction or distribution authorized. ANY UNAUTHORIZED REPRODUCTION OR DISTRIBUTION IS A VIOLATION OF THE FEDERAL COPYRIGHT ACT AND THE LICENSE AGREEMENT, AND SUBJECT TO CIVIL AND CRIMINAL PENALTIES THEREUNDER.

402.8.1 Mall width. For the purpose of providing required egress, *malls* are permitted to be considered as *corridors* but need not comply with the requirements of Section 1005.1 of this code where the width of the *mall* is as specified in this section.

❖ Pedestrian malls that serve as exit access routes for tenant space occupants are not required to comply with Section 1005.1. The design capacity of the mall width is already established by Section 402.8.1.1. No further egress width calculations are required by the code for mall corridors.

402.8.1.1 Minimum width. The aggregate clear egress width of the *mall* in either a *covered or open mall building* shall be not less than 20 feet (6096 mm). The *mall* width shall be sufficient to accommodate the *occupant load* served. No portion of the minimum required aggregate egress width shall be less than 10 feet (3048 mm) measured to a height of 8 feet (2438 mm) between any projection of a tenant space bordering the *mall* and the nearest kiosk, vending machine, bench, display opening, *food court* or other obstruction to *means of egress* travel.

❖ The minimum 20-foot (6096 mm) clear egress width of a mall is based on the need to provide adequate access to exits or, for open malls, the "building perimeter line," which is the point where people transition from being within the open mall "building" to outside of the "building." Together with the automatic sprinkler system, the physical separation further reduces the need for a separation between tenant spaces and the mall.

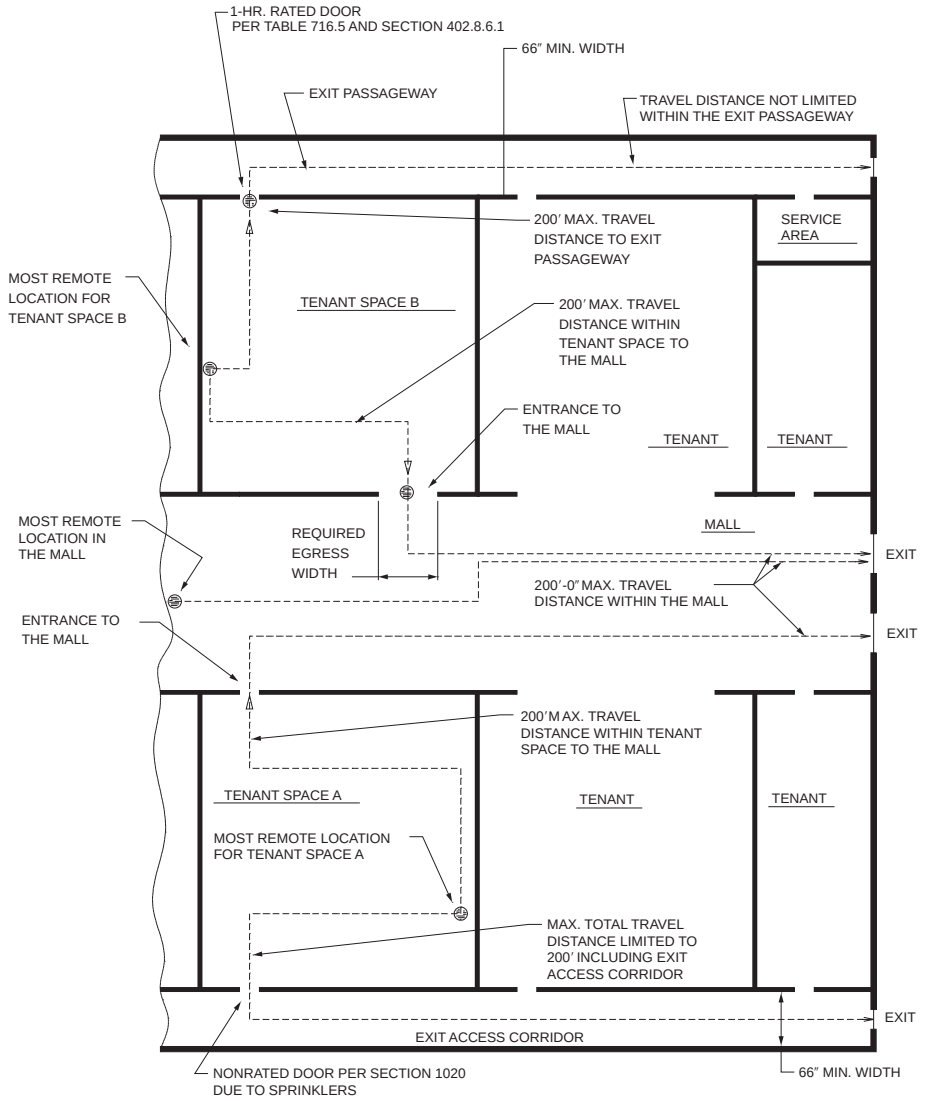

For SI: 1 inch = 25.4 mm, 1 foot = 304.8 mm.

Figure 402.8
MEANS OF EGRESS

INTERNATIONAL CODE COUNCIL®
Copyright © 2015 ICC. ALL RIGHTS RESERVED. Accessed by David Dammon on Jun 21, 2017 12:30:52 PM pursuant to License Agreement with ICC. No further reproduction or distribution authorized. ANY UNAUTHORIZED REPRODUCTION OR DISTRIBUTION IS A VIOLATION OF THE FEDERAL COPYRIGHT ACT AND THE LICENSE AGREEMENT, AND SUBJECT TO CIVIL AND CRIMINAL PENALTIES THEREUNDER.

In order that an aggregate clear width of 20 feet (6096 mm) is always provided in the mall, a minimum 10-foot (3048 mm) clear and unobstructed space is to be maintained to a height of 8 feet (2438 mm) in front of, adjacent to and parallel to the storefronts (tenant spaces). The requirement applies to kiosks, vending machines, benches, small stands, merchandise displays and any other potential obstruction to egress (see Commentary Figure 402.8.1.1).

402.8.2 Determination of occupant load. The *occupant load* permitted in any individual tenant space in a *covered or open mall building* shall be determined as required by this code. *Means of egress* requirements for individual tenant spaces shall be based on the *occupant load* thus determined.

❖ Since the tenant spaces of covered or open mall buildings can be used for varied occupancies, the design occupant loads will also vary. Although each tenant space contributes to the gross leasable area of Section 402.8.2.1, each must have its own occupant load calculated along with the applicable means of egress requirements. For example, a restaurant with its own dining area may occupy a tenant space. The design occupant load for this space is calculated in accordance with Table 1004.1.2 based on the assembly occupancy of the dining areas and on the commercial kitchen occupancy of the food preparation areas. Door swing direction and panic and fire exit hardware requirements would be based on this occupant load.

402.8.2.1 Occupant formula. In determining required *means of egress* of the *mall*, the number of occupants for whom *means of egress* are to be provided shall be based on *gross leasable area* of the *covered or open mall building* (excluding *anchor buildings*) and the *occupant load* factor as determined by Equation 4-1.

$$OLF = (0.00007)\ (GLA) + 25 \qquad \textbf{(Equation 4-1)}$$

where:

OLF = The *occupant load* factor (square feet per person).

GLA = The *gross leasable area* (square feet).

Exception: Tenant spaces attached to a *covered or open mall building* but with a *means of egress* system that is totally independent of the *open mall* of an *open mall building* or of a *covered mall building* shall not be considered as *gross leasable area* for determining the required *means of egress* for the *mall building*.

❖ The capacity of the exits serving the covered and open mall buildings must satisfy the calculated occupant load based on the gross leasable area. The occupant load factors (OLF) were determined empirically by surveying more than 270 covered mall shopping centers, studying mercantile occupancy parking requirements [5.0 cars per 1,000 square feet (93 m^2) of gross leasable area] and observing the number of occupants per vehicle during peak seasons (4.0 per car).

The formula used for determining occupant load results in a smooth transition between the occupant load and the gross leasable area with a range of 30 to 50.

For example, if the gross leasable area of the covered or open mall building is 400,000 square feet (37 160 m^2), the calculated OLF is determined as follows:

$OLF = (0.00007)\ (400{,}000) + 25$

OLF = 53 square feet (4.9 m^2) per person

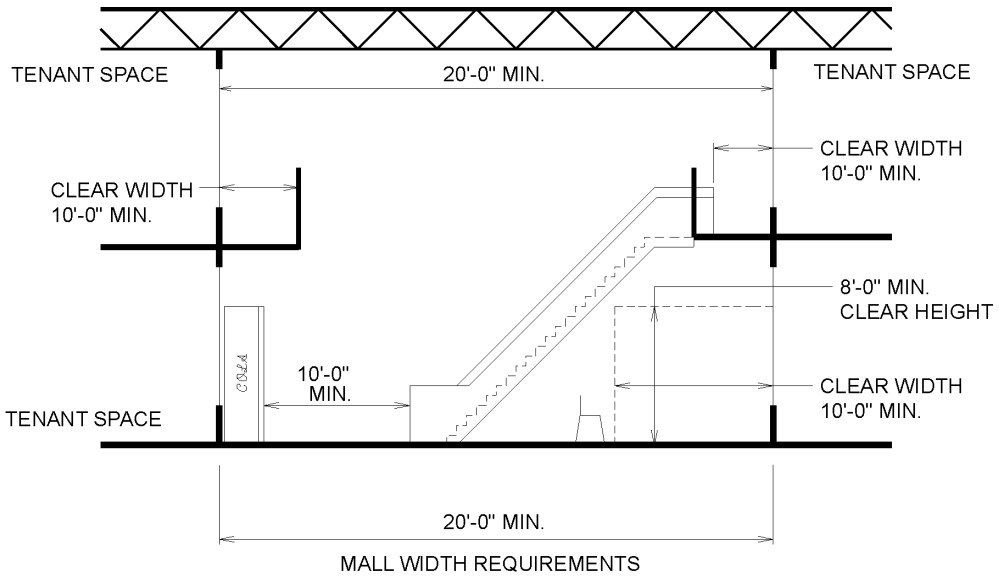

For SI: 1 foot = 304.8 mm, 1 inch = 25.4 mm.

Figure 402.8.1.1
COVERED MALL MINIMUM WIDTH

INTERNATIONAL CODE COUNCIL®
Copyright © 2015 ICC. ALL RIGHTS RESERVED. Accessed by David Dammon on Jun 21, 2017 12:30:52 PM pursuant to License Agreement with ICC. No further reproduction or distribution authorized. ANY UNAUTHORIZED REPRODUCTION OR DISTRIBUTION IS A VIOLATION OF THE FEDERAL COPYRIGHT ACT AND THE LICENSE AGREEMENT, AND SUBJECT TO CIVIL AND CRIMINAL PENALTIES THEREUNDER.

Since the design occupant load factor cannot exceed 50 in accordance with Section 402.8.2.2, the required OLF would be 50 square feet (4.6 m^2) per person.

If the gross leasable area of the mall building is 55,000 square feet (5109 m^2), the calculated OLF is determined as follows:

$OLF = (0.00007)\ (55{,}000) + 25$

OLF = 29 square feet (2.7 m^2) per person

Since the OLF need not be less than 30 in accordance with Section 402.8.2.2, the required occupant load factor would be 30 square feet (2.8 m^2) per person. The code would permit the use of an occupant load factor of 29, since it would result in a higher design occupant load and, consequently, increased width of exits.

402.8.2.2 OLF range. The *occupant load* factor (*OLF*) is not required to be less than 30 and shall not exceed 50.

❖ Although not mandatory, an OLF of less than 30 may be used at the designer's discretion (see Section 1004.2). In no case should an OLF greater than 50 be used, since it would result in too small a design occupant load. It should be noted that Table 1004.1.2 assigns an OLF of 60 to mercantile occupancies. The 60 OLF would apply to stores not located in a mall. The assumption behind a lower OLF in malls is that malls attract larger numbers of shoppers than standalone stores. A lower OLF means more people in a given space. This results in greater width for egress elements such as corridors or more egress elements such as exit doors.

402.8.2.3 Anchor buildings. The *occupant load* of *anchor buildings* opening into the *mall* shall not be included in computing the total number of occupants for the *mall*.

❖ Although anchor buildings are allowed access to the mall portions of the covered or open mall building, the occupant load of the mall does not have to be increased for this access. People may certainly discharge from the anchor building into the mall on their own accord; however, the anchor building is required to provide sufficient exits for its occupant load at locations other than the mall.

402.8.2.4 Food courts. The *occupant load* of a *food court* shall be determined in accordance with Section 1004. For the purposes of determining the *means of egress* requirements for the *mall*, the *food court occupant load* shall be added to the *occupant load* of the *covered or open mall building* as calculated above.

❖ The occupant load for food courts must be determined in accordance with Section 1004. Typically, tables and chairs are provided for the public's use in a food court. As such, the design occupant load for a food court is usually calculated at a rate of one person for every 15 square feet (1.4 m^2) of net floor space for an unconcentrated assembly occupancy. The occupant loads for all food courts are added to the mall occupant load calculated in accordance with Section 402.8.2.1 and Equation 4-1. Food courts are not considered part of the gross leasable area of the mall; therefore, the occupant loads of the food courts must be calculated separately and then added to the overall covered or open mall building occupant load.

402.8.3 Number of means of egress. Wherever the distance of travel to the *mall* from any location within a tenant space used by persons other than employees is greater than 75 feet (22 860 mm) or the tenant space has an *occupant load* of 50 or more, no fewer than two *means of egress* shall be provided.

❖ This section applies within each tenant space. It dictates the minimum number of paths of travel an occupant is to have available to avoid a fire incident in the occupied tenant space. While providing multiple egress doorways from every tenant space is unrealistic, a point does exist where alternative egress paths must be provided, based on the number of occupants at risk, the distance occupants must travel to reach the mall and the relative hazards associated with the occupancy of the space.

The 75-foot (22 860 mm) travel distance and the 49-person occupant load limitations represent an empirical judgment of the risks associated with a single means of egress from a tenant space based on the inherent risks associated with the occupancy (such as occupant mobility, occupant familiarity with the mall, occupant response and the fire growth rate). The requirement for two exits for 50 or more occupants applies to all occupants of the tenant space, including employees. The 75-foot (22 860 mm) travel distance does not apply to employees. Employee-only areas of the tenant space can require travel greater than 75 feet (22 860 mm) to reach the mall or other exit. A second means of egress is not required in spaces with an occupant load less than 50.

402.8.4 Arrangements of means of egress. Assembly occupancies with an *occupant load* of 500 or more located within a *covered mall building* shall be so located such that their entrance will be immediately adjacent to a principal entrance to the *mall* and shall have not less than one-half of their required *means of egress* opening directly to the exterior of the *covered mall building*. Assembly occupancies located within the perimeter line of an *open mall building* shall be permitted to have their main *exit* open to the *open mall*.

❖ Tenant spaces which are assembly occupancies with an occupant load of 500 or more must be carefully located to minimize the hazards of egress. Movie theaters, nightclubs and large restaurants must be located on an exterior wall of the covered mall building and adjacent to the mall's exits if their occupant loads exceed 499. A maximum of 50 percent of the means of egress from these assembly occupancies is permitted to discharge into the mall. Other means of egress from these tenant spaces must discharge directly to the exterior with a capacity of at least one-half the occupant load. For open mall buildings, any

INTERNATIONAL CODE COUNCIL®
Copyright © 2015 ICC. ALL RIGHTS RESERVED. Accessed by David Dammon on Jun 21, 2017 12:30:52 PM pursuant to License Agreement with ICC. No further reproduction or distribution authorized. ANY UNAUTHORIZED REPRODUCTION OR DISTRIBUTION IS A VIOLATION OF THE FEDERAL COPYRIGHT ACT AND THE LICENSE AGREEMENT, AND SUBJECT TO CIVIL AND CRIMINAL PENALTIES THEREUNDER.

assembly occupancy located with the building perimeter line is permitted to have its main exits open directly into the mall due to the decreased hazard level of an open, unroofed, mall compared to an enclosed and covered mall.

402.8.4.1 Anchor building means of egress. Required *means of egress* for *anchor buildings* shall be provided independently from the *mall means of egress* system. The *occupant load* of *anchor buildings* opening into the *mall* shall not be included in determining *means of egress* requirements for the *mall*. The path of egress travel of *malls* shall not exit through *anchor buildings*. *Malls* terminating at an *anchor building* where no other *means of egress* has been provided shall be considered as a dead-end *mall.*

❖ As indicated in the definition of anchor building (see Section 202), the required means of egress for an anchor building must be provided independently of the mall and the means of egress from the mall. Since independent means of egress are provided, the occupant load of anchor buildings is not included in determining the means of egress requirements for the mall. If independent means of egress are not provided, the space cannot be considered an anchor building and is to be treated as any other tenant space of the mall. As such it would need to be included in the gross leasable area under Section 402.8.2.1.

402.8.5 Distance to exits. Within each individual tenant space in a *covered or open mall building*, the distance of travel from any point to an *exit* or entrance to the *mall* shall be not greater than 200 feet (60 960 mm).

The distance of travel from any point within a *mall* of a *covered mall building* to an *exit* shall be not greater than 200 feet (60 960 mm). The maximum distance of travel from any point within an *open mall* to the perimeter line of the *open mall building* shall be not greater than 200 feet (60 960 mm).

❖ The maximum permissible travel distance from any point in the tenant space to the mall is 200 feet (60 960 mm). A similar 200-foot (60 960 mm) limitation is applied from any point within the mall in a covered mall building to an exit, as well as from any point within the mall of an open mall building to the perimeter line. As such, the mall is treated like an aisle in a large store, the large store being the mall building. Although the distance is less than that permitted in Group M occupancies with an automatic sprinkler system, it must be recognized that this travel distance is measured from a point within the mall and not from the most remote point within the covered or open mall building (i.e., within a tenant space). Because of the uncertainty with respect to tenant improvements, it is more reliable to regulate travel distance within the mall instead of throughout the covered or open mall building.

402.8.6 Access to exits. Where more than one *exit* is required, they shall be so arranged that it is possible to travel in either direction from any point in a *mall* of a *covered mall building* to separate *exits* or from any point in an *open mall* of an *open mall building* to two separate locations on the perimeter line, provided neither location is an exterior wall of an *anchor building* or parking garage. The width of an *exit passageway* or *corridor* from a *mall* shall be not less than 66 inches (1676 mm).

Exception: Access to exits is permitted by way of a dead-end *mall* that does not exceed a length equal to twice the width of the *mall* measured at the narrowest location within the dead-end portion of the *mall*.

❖ In order to accommodate the many occupants anticipated in a covered or open mall building, exits are to be distributed equally throughout the mall. If exits were congregated in certain areas, egress would be compounded by the convergence of a large number of people to one or more areas of the building. In an open mall building, the distribution of exits must occur at separate locations on the perimeter line that are open and provide continued egress to the public way. The corridors and exit access passageways from a mall must be at least 66 inches (1676 mm) wide.

The maximum dead end permitted in a mall is twice the width of the mall. For a mall with a minimum width of 20 feet (6096 mm), dead ends are permitted to be 40 feet (12 192 mm) or less in length. The allowance for dead ends is in recognition of the reduced hazard represented by a dead end in a mall and because the relatively large minimum width provides alternative paths of travel. Additionally, dead ends are not as critical in a mall, since the volume of the space and the automatic sprinkler system minimize the potential for the space to become untenable in a fire condition.

402.8.6.1 Exit passageways. Where *exit passageways* provide a secondary *means of egress* from a tenant space, doorways to the *exit passageway* shall be protected by 1-hour *fire door assemblies* that are self- or automatic-closing by smoke detection in accordance with Section 716.5.9.3.

❖ If exit passageways must be provided because of either travel distance limitations or the number of means of egress required from a tenant space, the passageways must be enclosed as required by the code. Additionally, the doors opening from the tenant spaces into the exit enclosures must be not less than 1-hour rated. These doors must be self-closing or automatic-closing by smoke detection to provide the necessary protection as the occupants of a tenant space flee a fire situation.

402.8.7 Service areas fronting on exit passageways. Mechanical rooms, electrical rooms, building service areas and service elevators are permitted to open directly into *exit passageways*, provided the *exit passageway* is separated from such rooms with not less than 1-hour *fire barriers* constructed in accordance with Section 707 or *horizontal assemblies* constructed in accordance with Section 711, or both. The *fire protection rating* of openings in the *fire barriers* shall be not less than 1 hour.

❖ In a covered mall building, it is necessary to provide for services to the tenant spaces that are maintained by the mall management (e.g., water, electricity, tele-

INTERNATIONAL CODE COUNCIL®
Copyright © 2015 ICC. ALL RIGHTS RESERVED. Accessed by David Dammon on Jun 21, 2017 12:30:52 PM pursuant to License Agreement with ICC. No further reproduction or distribution authorized. ANY UNAUTHORIZED REPRODUCTION OR DISTRIBUTION IS A VIOLATION OF THE FEDERAL COPYRIGHT ACT AND THE LICENSE AGREEMENT, AND SUBJECT TO CIVIL AND CRIMINAL PENALTIES THEREUNDER.

phone and fire protection). These services must be located in a common space controlled by the mall management and, therefore, cannot be located within the tenant spaces. Frequently, these services are logically located with direct access to exit passageways at the rear of the tenant spaces. For open mall buildings, the use of exit passageways will probably not occur as frequently, but where they do, they also need to comply with this section.

Exit passageways are generally treated similarly to exit stairways in that only openings from normally occupied spaces are permitted. This would prohibit doors or utility penetrations to such mechanical/electrical rooms. In the case of malls, the code allows an exception to that general rule, provided that the fire-resistance rating of the exit enclosure is maintained by appropriate opening protection, such as fire doors, fire dampers and through-penetration firestopping.

402.8.8 Security grilles and doors. Horizontal sliding or vertical security grilles or doors that are a part of a required *means of egress* shall conform to the following:

1. Doors and grilles shall remain in the full open position during the period of occupancy by the general public.
2. Doors or grilles shall not be brought to the closed position when there are 10 or more persons occupying spaces served by a single *exit* or 50 or more persons occupying spaces served by more than one *exit*.
3. The doors or grilles shall be openable from within without the use of any special knowledge or effort where the space is occupied.
4. Where two or more *exits* are required, not more than one-half of the *exits* shall be permitted to include either a horizontal sliding or vertical rolling grille or door.

❖ When improperly installed or when their use is not properly supervised, security grilles and doors can prohibit or delay egress beyond an acceptable time period. Such security devices are common in covered mall buildings. In every case, the grille must be openable to permit egress from the inside without the use of tools, keys or special knowledge or effort when the grille spans across a means of egress. For example, during business hours in a mercantile use, the grille must remain in its full, open position. The grille may be taken to a partially closed position when it provides the sole means of egress and no more than nine persons occupy the space. If a second means of egress is required, the grille may not be closed, as long as more than 49 persons occupy the space.

Because security grilles represent such a threat to prompt egress, the number of occupants exposed to the risk of a lack of supervision of the devices is limited. Except where a single means of egress is permitted, alternative means of egress must be available and not equipped with such devices. Security grilles must not be used on more than 50 percent of the exits.

SECTION 403
HIGH-RISE BUILDINGS

403.1 Applicability. *High-rise buildings* shall comply with Sections 403.2 through 403.6.

Exception: The provisions of Sections 403.2 through 403.6 shall not apply to the following buildings and structures:

1. Airport traffic control towers in accordance with Section 412.3.
2. *Open parking garages* in accordance with Section 406.5.
3. The portion of a building containing a Group A-5 occupancy in accordance with Section 303.6.
4. Special industrial occupancies in accordance with Section 503.1.1.
5. Buildings with:
   - 5.1. A Group H-1 occupancy;
   - 5.2. A Group H-2 occupancy in accordance with Section 415.8, 415.9.2, 415.9.3 or 426.1; or,
   - 5.3. A Group H-3 occupancy in accordance with Section 415.8.

❖ "High-rise buildings" are defined in Chapter 2 as buildings with occupied floors located more than 75 feet (22 860 mm) above the lowest level of fire department vehicle access [see Commentary Figure 403.1(1)]. Such buildings require special consideration relative to fire protection and occupant safety because of difficulties associated with smoke movement (stack effect), egress time, access by fire department personnel and perceived vulnerability to terrorist attack. This section contains provisions for high-rise buildings to address these special considerations.

While most of the provisions in Section 403 apply to all high-rise buildings, additional elevator requirements apply to high-rise buildings in excess of 120 feet (36 576 mm). Further standards apply to high-rise buildings greater than 420 feet (128 m). These "super high-rises" must comply with enclosure structural integrity requirements (see Section 403.2.3), increased bond strength for sprayed fire-resistant materials (see Section 403.2.4), additional sprinkler risers (see Section 403.3.1) and have an additional exit stairway (see Section 403.5.2). In addition, these taller high-rise buildings are not allowed to be designed with the reduced fire-resistance ratings permitted in Section 403.2.1.

The provisions of Section 403 apply to all high-rise buildings except those identified in the five exceptions.

Exception 1 addresses airport control towers and is based on the limited fuel load and the limited number of persons occupying the tower (see Section 412.3).

INTERNATIONAL CODE COUNCIL®
Copyright © 2015 ICC. ALL RIGHTS RESERVED. Accessed by David Dammon on Jun 21, 2017 12:30:52 PM pursuant to License Agreement with ICC. No further reproduction or distribution authorized. ANY UNAUTHORIZED REPRODUCTION OR DISTRIBUTION IS A VIOLATION OF THE FEDERAL COPYRIGHT ACT AND THE LICENSE AGREEMENT, AND SUBJECT TO CIVIL AND CRIMINAL PENALTIES THEREUNDER.

The intent of Exception 2 is exempt places of outdoor assembly (Group A-5) stadiums, but not other significant facilities which might be attached to the stadium. Stadiums which reach a 75 foot occupied floor level height are generally going to be large facilities at major universities or occupied by professional sports teams. Such stadiums will have accessory spaces such as concession stands. However, the trend for elaborate skyboxes and large, multilevel press boxes should be addressed by the high-rise building standards. Major attached facilities such as office towers and residential buildings are not exempted even though attached to a Group A-5 structure.

Stand-alone open parking garages are exempted by Exception 3 because of the free ventilation to the outside that exists in such structures.

Low-hazard special industrial occupancies, which meet the criteria of Section 503.1.1, are exempt from the high-rise provisions.

Finally, Exception 5 addresses buildings with Group H-1, H-2 or H-3 occupancies. H-1 occupancies must be in detached buildings and are limited to single-story buildings (see Section 415.7 and Table 504.4). Where Groups H-2 and H-3 are required to be in detached buildings in accordance with Section 415.8, high-rise building standards do not apply. Detached buildings, by definition, are limited to a single story. Finally, H-2 occupancy buildings that are liquefied petroleum gas facilities, dry cleaning plants, grain processing facilities or facilities where combustible dusts are generated or stored are not subject to Section 403. Other H-2 and H-3 occupancies could be in a high-rise building and are subject to Section 403 requirements.

High-rise buildings must comply with all provisions of the code. Section 403 provides additional requirements for high-rise development.

- Section 403.2 specifies additional construction requirements, as well as some requirement reductions, applicable to constructing a high-rise building.
- Section 403.3 states the basic requirement for all high-rise buildings that an automatic sprinkler system be provided throughout the building. Specific standards unique to high-rise development are also provided.
- Section 403.4 specifies the various emergency detection and response systems that are required in a high-rise building.
- Section 403.5 provides additional means of egress system requirements for the occupants of a high-rise building.
- Section 403.6 provides elevator-related requirements for these structures.

The provisions are applicable to all buildings when the highest occupied floor is more than 75 feet (22 860 mm) above the lowest level of fire department vehicle access [see Commentary Figure 403.1(1)]. The lowest level of fire department vehicle access refers to the lowest ground level at which the fire department vehicle could be staged at the exterior of the building for carrying out fire-fighting operations. The definition of a “High-rise building” comes from the International Symposium on Fire Safety in High-Rise Buildings sponsored by the General Services Administration (GSA). The definition developed at the symposium is as follows:

- “A high-rise building is one in which emergency evacuation is not practical and in which fire must

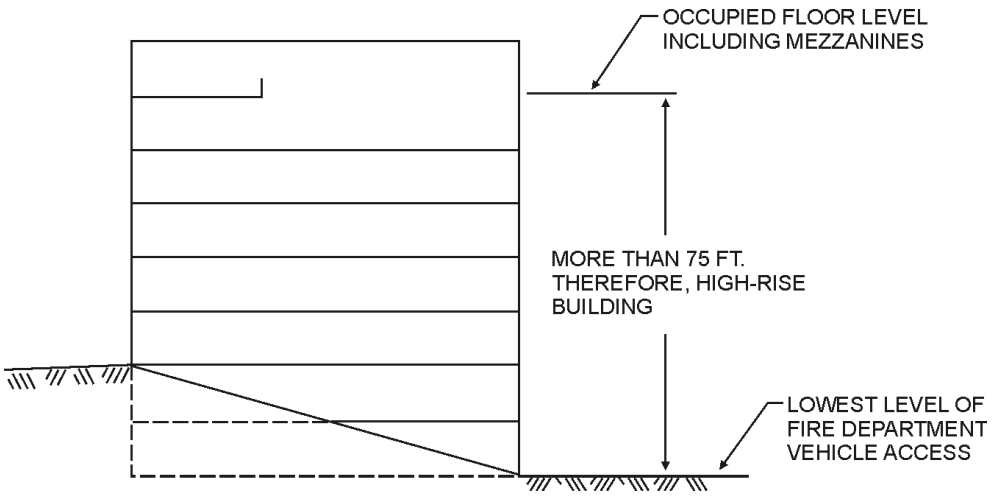

For SI: 1 foot = 304.8 mm.

Figure 403.1(1)
HIGH-RISE BUILDINGS

INTERNATIONAL CODE COUNCIL®
Copyright © 2015 ICC. ALL RIGHTS RESERVED. Accessed by David Dammon on Jun 21, 2017 12:30:52 PM pursuant to License Agreement with ICC. No further reproduction or distribution authorized. ANY UNAUTHORIZED REPRODUCTION OR DISTRIBUTION IS A VIOLATION OF THE FEDERAL COPYRIGHT ACT AND THE LICENSE AGREEMENT, AND SUBJECT TO CIVIL AND CRIMINAL PENALTIES THEREUNDER.

be fought internally because of height." The usual characteristics of such a building are:

- Beyond the reach of fire department equipment;
- Poses a potential for significant stack effect; and
- Requires unreasonable evacuation time.

The 75-foot (22 860 mm) height threshold was determined from the effective reach of a 100-foot (30 480 mm) aerial apparatus based on the assumptions that the building will be set back from the curb, that access might be restricted by such things as parked cars and that obstructions, such as utility lines, would be present. The applicability of this section, however, is not based on the availability of such apparatus within the community.

Stack effect is illustrated in Commentary Figure 403.1(2), while typical evacuation times for buildings are shown in Commentary Figure 403.1(3).

403.2 Construction. The construction of *high-rise buildings* shall comply with the provisions of Sections 403.2.1 through 403.2.4.

❖ Section 403.2 includes subsections allowing the reduction of fire-resistance rating in some high-rise buildings, requiring minimum structural integrity for exit and elevator enclosures and setting bond strength for sprayed fire-resistant materials.

403.2.1 Reduction in fire-resistance rating. The *fire-resistance-rating* reductions listed in Sections 403.2.1.1 and 403.2.1.2 shall be allowed in buildings that have sprinkler control valves equipped with supervisory initiating devices and water-flow initiating devices for each floor.

❖ Since the overall reliability of the sprinkler system is greatly improved by the required control valves and water-flow devices, certain code modifications are allowed.

Sprinkler control valves with supervisory initiating devices and water-flow initiating devices must be provided for each floor to realize the reduction in rating. Annunciation by floor is intended to allow rapid identification of the fire location by the fire department. Sprinkler control valves on each floor are intended to permit servicing activated systems without impairing the water supply to large portions of the building. It is, therefore, necessary to equip the valves with supervisory initiating devices. NFPA 13 does not require annunciation per floor, since some systems may take on configurations that would not lend themselves to this type of zoning. In accordance with Section 102.4, the criteria for this section takes precedence over the permissive language of NFPA 13; therefore, in order to use the reductions allowed by this section, the sprinkler system must comply with these features. Without these sprinkler system enhancements, no reductions are permissible.

403.2.1.1 Type of construction. The following reductions in the minimum *fire-resistance rating* of the building elements in Table 601 shall be permitted as follows:

1. For buildings not greater than 420 feet (128 000 mm) in *building height*, the *fire-resistance rating* of the building elements in Type IA construction shall be permitted to be reduced to the minimum *fire-resistance ratings* for the building elements in Type IB.

   Exception: The required *fire-resistance rating* of columns supporting floors shall not be reduced.

2. In other than Group F-1, M and S-1 occupancies, the *fire-resistance rating* of the building elements in Type IB construction shall be permitted to be reduced to the *fire-resistance ratings* in Type IIA.
3. The *building height* and *building area* limitations of a building containing building elements with reduced *fire-resistance ratings* shall be permitted to be the same as the building without such reductions.

❖ This section specifies the allowed reductions of fire-resistance rating of building elements specified in Table 601, without this being considered a reduction in the construction type.

Item 1 allows high-rise buildings that must be of Type IA construction for building height and building area purposes to have building elements which comply with the fire-resistance rating of the Type IIB construction type as shown in Table 601. This reduction is not applicable to buildings with a height in excess of 420 feet (128 m) and does not apply to columns which are supporting floors in any building classified as a high-rise building.

Item 2 allows high-rise buildings that must be of Type IB construction for building height and area purposes to have elements that comply with the fire-resistance rating of Type IIA construction as shown in Table 601. This reduction is not allowed if the building contains Group F-1, M or S-1 occupancies. This reduction is not allowed for these moderate-hazard buildings because of their customary higher fuel loads.

Item 3 states that even though the fire-resistance ratings have been reduced to the equivalent of the next lower construction type, the construction type of the building is not considered reduced. A Type IB building with 1-hour fire-resistant protection of the structural frame is still a Type IB building.

In determining the minimum allowable type of construction for a high-rise building, Tables 504.3, 504.4 and 506.2 are applied in the usual fashion (see Sections 504 and 506). Item 3 reminds the code user that even though reductions are taken, the allowable area for the building is that of the "original" type of construction and is not reduced because building elements have reduced fire protection. Section 403.2.1.1 is applied once the minimum type of construction has been determined.

INTERNATIONAL CODE COUNCIL®
Copyright © 2015 ICC. ALL RIGHTS RESERVED. Accessed by David Dammon on Jun 21, 2017 12:30:52 PM pursuant to License Agreement with ICC. No further reproduction or distribution authorized. ANY UNAUTHORIZED REPRODUCTION OR DISTRIBUTION IS A VIOLATION OF THE FEDERAL COPYRIGHT ACT AND THE LICENSE AGREEMENT, AND SUBJECT TO CIVIL AND CRIMINAL PENALTIES THEREUNDER.

For example, an eight-story high-rise office building is to be constructed and equipped with an automatic sprinkler system in accordance with Sections 403.2.1 and 403.3. The minimum allowable construction type is Type IB. In accordance with Section 403.2.1.1, however, the required fire-resistance ratings for the structural elements would be determined using the column for Type IIA construction in Tables 601 and 602. It should be noted that Tables 504.3, 504.4 and 506.2 do not permit the use of unprotected noncombustible construction in a high-rise building.

403.2.1.2 Shaft enclosures. For buildings not greater than 420 feet (128 000 mm) in *building height*, the required *fire-resistance rating* of the *fire barriers* enclosing vertical *shafts*, other than *interior exit stairway* and elevator hoistway enclosures, is permitted to be reduced to 1 hour where automatic sprinklers are installed within the *shafts* at the top and at alternate floor levels.

❖ As with previous sections, based on the effectiveness and reliability of a complete automatic sprinkler system in accordance with Sections 403.2.1 and 403.3, the fire-resistance rating of shaft enclosures may be reduced to 1 hour, provided the sprinklers are also installed within the shafts at the top and at alternate floor levels. This reduction is not applicable to shafts within buildings with a building height in excess of 420 feet (128 m).

The reduced fire-resistance rating also does not apply to shafts which are either interior exit stairway enclosures or elevator hoistways (see also Section 403.2.3 for requirements applicable to these shafts.) The reduction does not apply to exit stairway and elevator shafts since they may continue to be used for egress or for fire-fighter access during a fire; therefore, the integrity of the shaft must be maintained. If, for some reason, the fire penetrates the 1-hour shaft, it will affect conditions on other floors, hence, the need to maintain the protection for interior exit stairway and elevator shafts. By the time the fire penetrates a 1-hour fire-resistance-rated shaft, the affected floors should be evacuated.

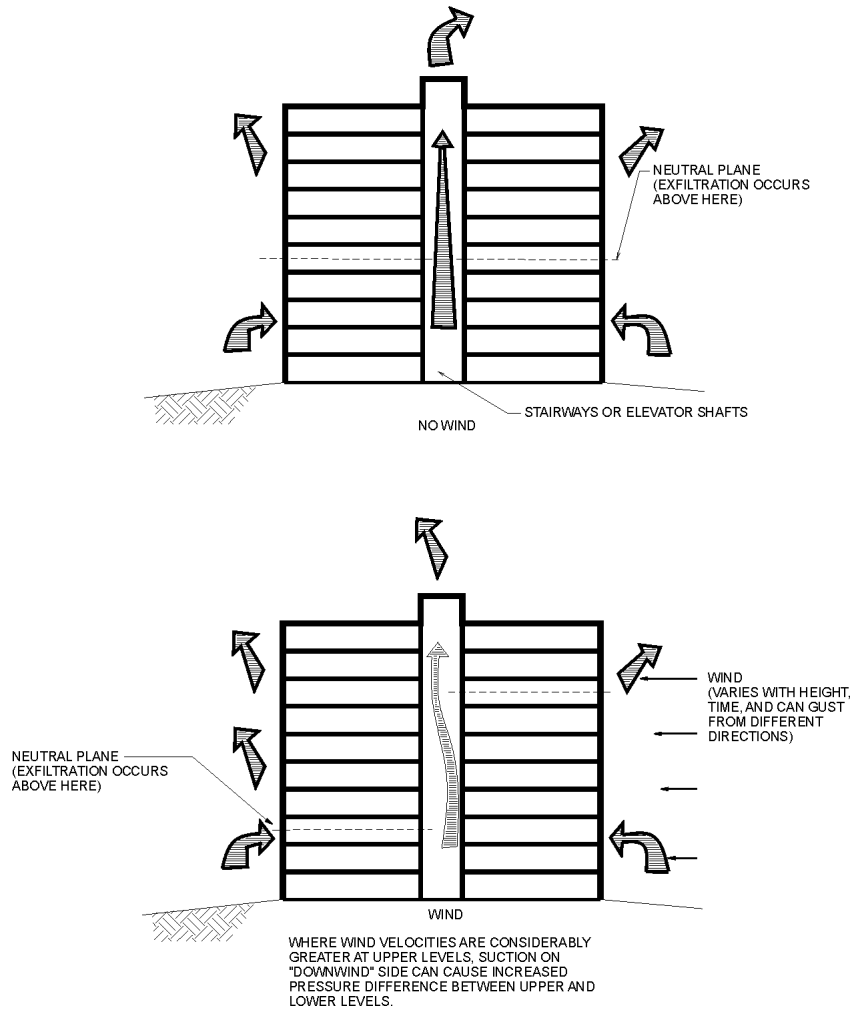

Figure 403.1(2)
HIGH-RISE BUILDINGS—STACK EFFECT

INTERNATIONAL CODE COUNCIL®
Copyright © 2015 ICC. ALL RIGHTS RESERVED. Accessed by David Dammon on Jun 21, 2017 12:30:52 PM pursuant to License Agreement with ICC. No further reproduction or distribution authorized. ANY UNAUTHORIZED REPRODUCTION OR DISTRIBUTION IS A VIOLATION OF THE FEDERAL COPYRIGHT ACT AND THE LICENSE AGREEMENT, AND SUBJECT TO CIVIL AND CRIMINAL PENALTIES THEREUNDER.

403.2.2 Seismic considerations. For seismic considerations, see Chapter 16.

❖ A reminder is provided in this section of the code that high-rise buildings are required to be designed for the effects of seismic activity. The reminder was primarily placed in Section 403.2.2, in addition to general design for seismic forces, to note that mechanical and electrical components are required to be designed for forces determined by Section 1613. This would also require that elevators be designed to resist the effects of the seismic forces. These elements are critical for the safety of high-rise buildings so that all of the required fire protection systems and the electrical components that secure them will be designed for the applicable seismic loads.

403.2.3 Structural integrity of interior exit stairways and elevator hoistway enclosures. For *high-rise buildings* of *Risk Category* III or IV in accordance with Section 1604.5, and for all buildings that are more than 420 feet (128 000 mm) in *building height*, enclosures for *interior exit stairways* and elevator hoistway enclosures shall comply with Sections 403.2.3.1 through 403.2.3.4.

❖ This section specifies a minimum standard for the integrity of the walls of interior exit stairways and elevator hoistway enclosures. The requirement applies to all high-rise buildings with a building height in excess of 420 feet (128 m). It also applies to any high-rise building, regardless of height, that is either a Risk Category Class III or IV as specified in Section 1604.5. Risk Category Class IV are those uses that are considered to be essential in that their continuous use is needed, particularly in response to disasters. Risk Category Class III buildings include those occupancies that have relatively large numbers of occupants, where there is an elevated life safety hazard, or where the occupants' ability to respond to an emergency is limited. Also see the commentary for Sections 3007 and 3008

403.2.3.1 Wall assembly. The wall assemblies making up the enclosures for *interior exit stairways* and elevator hoistway enclosures shall meet or exceed Soft Body Impact Classification Level 2 as measured by the test method described in ASTM C1629/C1629M.

❖ The requirement applies to all wall assemblies enclosing interior exit stairways, as well as elevator hoistway enclosures in the buildings specified in Section 403.2.3. The requirement applies regardless of the height or location of the particular enclosure. The standard applies to exit passageways that connect the enclosures of interior exit stairways to the exterior of the building, as well as those that connect an "offset" in an interior exit stairway. While this section of the code doesn't specifically include these exit passageways, Section 1024 requires that the level of protection in an exit be maintained until discharge.

The code relies on ASTM C1629 and C1629M for determining compliance with this requirement. The standard was developed specifically to test gypsum and fiber-reinforced cement panels; however, it can readily be used to test the impact resistance of other board and panel materials. For concrete and

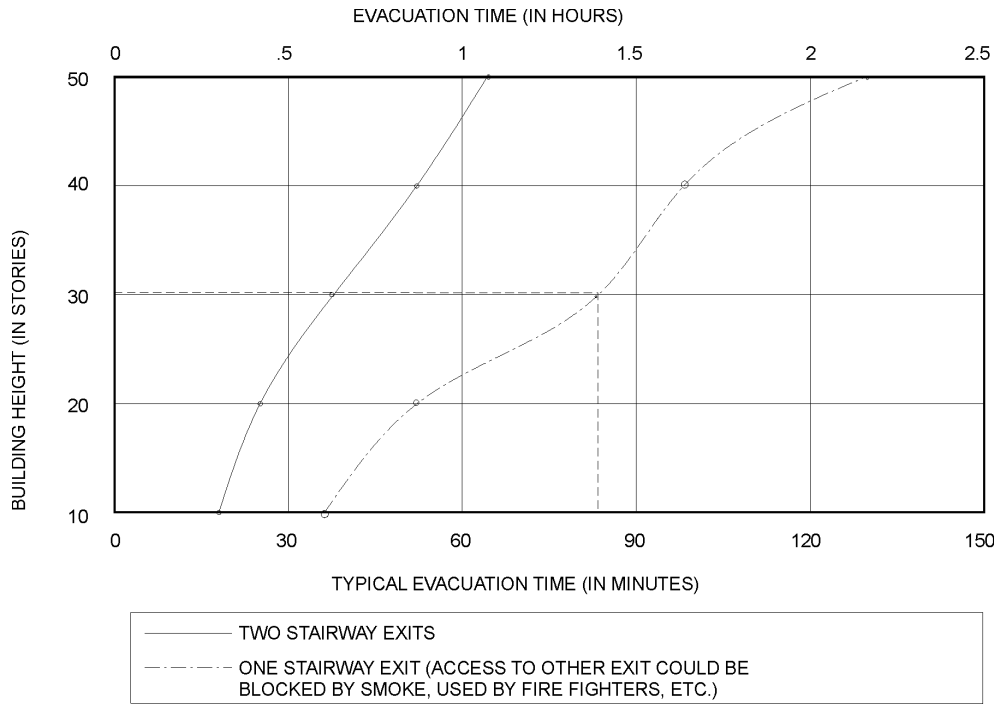

Figure 403.1(3)
HIGH-RISE BUILDINGS—EVACUATION TIMES

INTERNATIONAL CODE COUNCIL®
Copyright © 2015 ICC. ALL RIGHTS RESERVED. Accessed by David Dammon on Jun 21, 2017 12:30:52 PM pursuant to License Agreement with ICC. No further reproduction or distribution authorized. ANY UNAUTHORIZED REPRODUCTION OR DISTRIBUTION IS A VIOLATION OF THE FEDERAL COPYRIGHT ACT AND THE LICENSE AGREEMENT, AND SUBJECT TO CIVIL AND CRIMINAL PENALTIES THEREUNDER.

masonry walls, see Section 403.2.3.3. The code requires the entire wall assembly to withstand an impact of 195 pound force (867 N), as measured by the ASTM C1629, Soft Body Impact Test. The test method used in ASTM C1629 is conducted in accordance with the ASTM E695 test method, which covers the measurement of the relative resistance of wall, floor and roof construction to impact loading.

403.2.3.2 Wall assembly materials. The face of the wall assemblies making up the enclosures for *interior exit stairways* and elevator hoistway enclosures that are not exposed to the interior of the enclosures for *interior exit stairways* or elevator hoistway enclosure shall be constructed in accordance with one of the following methods:

1. The wall assembly shall incorporate no fewer than two layers of impact-resistant construction board each of which meets or exceeds Hard Body Impact Classification Level 2 as measured by the test method described in ASTM C1629/C1629M.
2. The wall assembly shall incorporate no fewer than one layer of impact-resistant construction material that meets or exceeds Hard Body Impact Classification Level 3 as measured by the test method described in ASTM C1629/C1629M.
3. The wall assembly incorporates multiple layers of any material, tested in tandem, that meets or exceeds Hard Body Impact Classification Level 3 as measured by the test method described in ASTM C1629/C1629M.

❖ Section 403.2.3.2 requires that the face of the wall assembly that is not exposed to the shaft enclosure containing the interior exit stairway or elevators (or exit passageway)—the outside face—be protected by a material or materials that comply with a level of impact resistance. To comply with the requirement, at least two layers of Level 2 material or one layer of Level 3 material must be incorporated into the system. Level 2 material must withstand a Hard Body impact of 100 lbf (445 N) to comply with the standard. Level 3 material must withstand a Hard Body impact of 150 lbf (667 N). The code also permits the use of a system composed of multiple layers of different materials, provided the composite system can comply with a Level 3 Hard Body test.

403.2.3.3 Concrete and masonry walls. Concrete or masonry walls shall be deemed to satisfy the requirements of Sections 403.2.3.1 and 403.2.3.2.

❖ Concrete and masonry walls used for such enclosures are deemed to be adequate to meet the intent of this requirement without any testing under ASTM C1629.

403.2.3.4 Other wall assemblies. Any other wall assembly that provides impact resistance equivalent to that required by Sections 403.2.3.1 and 403.2.3.2 for Hard Body Impact Classification Level 3, as measured by the test method described in ASTM C1629/C1629M, shall be permitted.

❖ This section allows other assemblies to be tested and approved for application in these walls. If a designer wished to include materials or a combination of materials not specified in Section 403.2.3.2 or 403.2.3.3, and wished to have the assembly tested, it would be acceptable as a wall for these enclosures if it complies with the Level 3 Hard Body test.

403.2.4 Sprayed fire-resistant materials (SFRM). The bond strength of the SFRM installed throughout the building shall be in accordance with Table 403.2.4.

❖ For buildings other than high-rise buildings, the minimum bond strength required for sprayed fire-resistant materials (SFRM) required by the code is 150 psf (667 N) when tested in accordance with ASTM E736. Recommendation 6 of the National Institute of Standards and Technology (NIST) investigation of the World Trade Center (WTC) Report called for improvement of the in-place performance of SFRM. For high-rise buildings with a building height in the 75- to 420-foot (22.9 to 128 m) range, SFRM must have a minimum bond strength of 430 psf (1913 N) wherever applied in the building. For high-rise buildings over 420 feet (128 m), the bond strength must be at least 1,000 psf (4448 N) wherever SFRM is applied in the building. While the NIST report was based on the specific events of the WTC fire and collapse, events far less dramatic can dislodge SFRM, such as elevator movement, building sway or maintenance activities. Using greater bond strengths will increase the probability that the protection will stay in place. These factors should provide for a longer time of safety.

TABLE 403.2.4
MINIMUM BOND STRENGTH

HEIGHT OF BUILDING[a]	SFRM MINIMUM BOND STRENGTH
Up to 420 feet	430 psf
Greater than 420 feet	1,000 psf

For SI: 1 foot = 304.8 mm, 1 pound per square foot (psf) = 0.0479 kW/m^2.
a. Above the lowest level of fire department vehicle access.

❖ See the commentary to Section 403.2.4.

[F] 403.3 Automatic sprinkler system. Buildings and structures shall be equipped throughout with an *automatic sprinkler system* in accordance with Section 903.3.1.1 and a secondary water supply where required by Section 403.3.3.

Exception: An *automatic sprinkler system* shall not be required in spaces or areas of:

1. *Open parking garages* in accordance with Section 406.5.
2. Telecommunications equipment buildings used exclusively for telecommunications equipment, associated electrical power distribution equipment,

INTERNATIONAL CODE COUNCIL®
Copyright © 2015 ICC. ALL RIGHTS RESERVED. Accessed by David Dammon on Jun 21, 2017 12:30:52 PM pursuant to License Agreement with ICC. No further reproduction or distribution authorized. ANY UNAUTHORIZED REPRODUCTION OR DISTRIBUTION IS A VIOLATION OF THE FEDERAL COPYRIGHT ACT AND THE LICENSE AGREEMENT, AND SUBJECT TO CIVIL AND CRIMINAL PENALTIES THEREUNDER.

batteries and standby engines, provided that those spaces or areas are equipped throughout with an automatic fire detection system in accordance with Section 907.2 and are separated from the remainder of the building by not less than 1-hour *fire barriers* constructed in accordance with Section 707 or not less than 2-hour *horizontal assemblies* constructed in accordance with Section 711, or both.

❖ Because of the difficulties associated with manual suppression of a fire in a high-rise building, all high-rise buildings regulated by this section are required to be protected throughout with an automatic sprinkler system. The sprinkler system is to be in accordance with Section 903.3.1.1, which requires compliance with NFPA 13.

In order to increase the reliability of the sprinkler system should an earthquake disable the primary water supply, a secondary water supply is required for buildings at sites with the specified seismic design category listed in Section 403.3.3. The secondary water supply must be equal to the hydraulically calculated sprinkler demand and must have a duration of no less than 30 minutes.

Exception 1 addresses where a high-rise building contains an open parking garage. The exception is limited where Section 903.2 dictates the extent of the sprinkler system coverage. Where the occupancy of the upper stories of a high-rise building is a Group B, then the open parking garage portion of the building need not be protected with an automatic sprinkler system. However, if the high-rise building contains Group R occupancies such as an R-1 hotel or an R-2 apartment/condominium occupancy, then Section 903.2.8 requires a sprinkler system throughout the building, including the parking garage. See the commentary to Section 406.3 for a discussion of the fire hazards associated with open parking garages.

Exception 2 addresses where a telecommunications equipment facility is part of a high-rise building. The automatic sprinkler protection can be eliminated from certain areas if an automatic sprinkler fire detection system is provided and the telecommunication equipment areas are separated from other building areas with fire-resistance-rated construction of the specified ratings. This same exception is provided in Section 903.2, but is restated here to emphasize its application to all buildings, including high-rise buildings. This exception is based on the need to maintain uninterrupted operation of telecommunications equipment, which frequently includes emergency telephone and similar communication services. The presence of an automatic sprinkler system or other automatic fire suppression system may be detrimental to public safety should disruption of emergency services occur.

[F] 403.3.1 Number of sprinkler risers and system design. Each sprinkler system zone in buildings that are more than 420 feet (128 000 mm) in *building height* shall be supplied by no fewer than two risers. Each riser shall supply sprinklers on alternate floors. If more than two risers are provided for a zone, sprinklers on adjacent floors shall not be supplied from the same riser.

❖ For all high-rise buildings with a building height in excess of 420 feet (128 m), this section requires the sprinkler system to be designed with additional risers for each sprinkler zone. This redundancy provides increased reliability of the automatic sprinkler system. At least two risers must be provided for each sprinkler zone. Recommendation 12 of the NIST WTC report called for the redundancy of active fire suppression systems to be increased to accommodate the greater risks associated with increasing building height and population. Providing two risers in each zone allows that if one riser is taken out of service, the other will be able to supply sprinklers on the floors above and below. This will impede any fire spread and allow the fire department time to respond and extinguish the fire.

[F] 403.3.1.1 Riser location. Sprinkler risers shall be placed in *interior exit stairways* and ramps that are remotely located in accordance with Section 1007.1.

❖ This section requires sprinkler risers to be located in the interior exit stairways of buildings. Such interior exit stairways must be separated in accordance with the requirements of Section 1007.1. This separation reduces the possibility that one incident could incapacitate both risers and additionally provides the protection of the rated enclosures. While the section references the separation requirements of Chapter 10, Section 403.5.1 can result in an even greater separation of the exit enclosures in these taller high-rise buildings. Also, Section 403.2.3 regarding the integrity of the interior exit stairways is intended to make sure that the walls of the enclosures protecting the risers meet a minimum impact standard.

[F] 403.3.2 Water supply to required fire pumps. In buildings that are more than 420 feet (128 000 mm) in *building height*, required fire pumps shall be supplied by connections to no fewer than two water mains located in different streets. Separate supply piping shall be provided between each connection to the water main and the pumps. Each connection and the supply piping between the connection and the pumps shall be sized to supply the flow and pressure required for the pumps to operate.

Exception: Two connections to the same main shall be permitted provided the main is valved such that an interruption can be isolated so that the water supply will continue without interruption through no fewer than one of the connections.

❖ Fire pumps are installed in sprinkler and standpipe systems to pressurize the water supply for the minimum required sprinkler and standpipe operation. Fire pumps are only "required" to meet the system needs. Therefore, whether a particular high-rise building includes fire pumps will depend on interaction of the height of the building, the local water system and the designs of the sprinkler and standpipe systems in the

INTERNATIONAL CODE COUNCIL®
Copyright © 2015 ICC. ALL RIGHTS RESERVED. Accessed by David Dammon on Jun 21, 2017 12:30:52 PM pursuant to License Agreement with ICC. No further reproduction or distribution authorized. ANY UNAUTHORIZED REPRODUCTION OR DISTRIBUTION IS A VIOLATION OF THE FEDERAL COPYRIGHT ACT AND THE LICENSE AGREEMENT, AND SUBJECT TO CIVIL AND CRIMINAL PENALTIES THEREUNDER.

building (see Section 913 of the IFC for more information on fire pumps).

Where the systems require a fire pump and the building is more than 420 feet (128 m) in height, this section requires the fire pumps to be supplied by two water mains located in separate streets. Having two connections will greatly reduce the possibility of the loss of water due to a main break, given the valving of a public water system. Each connection must be adequate to provide the flow and pressure needed for the fire pumps to operate. The exception is a performance-based provision that is not tied to any specific configuration.

[F]403.3.3 Secondary water supply. An automatic secondary on-site water supply having a capacity not less than the hydraulically calculated sprinkler demand, including the hose stream requirement, shall be provided for *high-rise buildings* assigned to Seismic Design Category C, D, E or F as determined by Section 1613. An additional fire pump shall not be required for the secondary water supply unless needed to provide the minimum design intake pressure at the suction side of the fire pump supplying the *automatic sprinkler system*. The secondary water supply shall have a duration of not less than 30 minutes.

❖ The intent of this section is that a secondary water supply be provided on the high-rise building site in order to provide a high level of functional reliability for the fire protection systems if a seismic event disables the primary water supply for high-rise buildings assigned these seismic design categories. The categories are described in Section 1613.

The text's specific wording that the secondary supply be on site rather than to the site would preclude the use, for example, of a secondary connection to the municipal supply to achieve compliance with this requirement.

The required amount of water is equal to the hydraulically calculated sprinkler demand plus hose stream demand for a minimum 30-minute period, depending on the appropriate occupancy hazard classification in NFPA 13.

Note that the beginning of Section 403.3.3 requires that the secondary water supply be automatic; in other words, switchover to the secondary water source cannot occur manually. This is consistent with the definitions of "Automatic sprinkler system" and "Classes of standpipe systems" in that both systems are required to be connected to a reliable water supply.

Generally, this section does not automatically require a second fire pump but, if necessary, an additional pump may be required. A second pump would be necessary if the secondary water supply does not provide the necessary water pressure for intake into the primary fire pump.

[F] 403.3.4 Fire pump room. Fire pumps shall be located in rooms protected in accordance with Section 913.2.1.

❖ Where fire pumps are provided, they must be properly isolated from other portions of the high-rise building with fire-resistance-rated construction in accordance with Section 913.2.1. The separation must consist of minimum 2-hour fire barriers or horizontal assemblies, or both. Such separation is not required where the fire pumps are physically separated from the building in accordance with NFPA 20.

[F] 403.4 Emergency systems. The detection, alarm and emergency systems of *high-rise buildings* shall comply with Sections 403.4.1 through 403.4.8.

❖ Section 403.4 lists the requirements for detection and emergency response systems applicable to high-rise buildings. These systems detect smoke and heat in these buildings, and provide systems to notify occupants of the hazards of, and proper response to, the fire or other event. Systems and facilities are provided for emergency responders to assist the occupants and fight a fire. Finally, the section provides requirements for standby and emergency power to keep vital systems operating in case of power loss, either during an event or power loss to the building.

[F] 403.4.1 Smoke detection. Smoke detection shall be provided in accordance with Section 907.2.13.1.

❖ Automatic smoke detectors are required in all high-rise buildings in locations so that a fire will be detected in its early stages of development. Smoke detectors must be installed in rooms that are not typically occupied, such as mechanical equipment rooms, elevator equipment rooms and similar spaces. Smoke detectors are also required in elevator lobbies. Finally, smoke detectors are required at various locations in the HVAC ducts. See Section 907.2.13 for the specific requirements for high-rise buildings.

[F] 403.4.2 Fire alarm system. A *fire alarm* system shall be provided in accordance with Section 907.2.13.

❖ Fire alarm systems must be provided in high-rise buildings in accordance with the provisions of Section 907.2.13. Although a fire alarm system is not specifically listed as a requirement in Section 907.2.13, this section does require an automatic smoke detection system. Section 907.2.13.1.1 requires that the smoke detectors be connected to an automatic fire alarm system. Therefore, regardless of the occupancy category or categories in the high-rise building, a fire alarm system must comply with the code and NFPA 72, as applicable.

[F] 403.4.3 Standpipe system. A *high-rise building* shall be equipped with a standpipe system as required by Section 905.3.

❖ Section 905.3 provides the applicable provisions for standpipes in buildings, including high-rise buildings. At a minimum, a Class I standpipe system is required based upon Exception 1 to Section 905.3.1.

[F] 403.4.4 Emergency voice/alarm communication system. An *emergency voice/alarm communication system* shall be provided in accordance with Section 907.5.2.2.

❖ By definition, one characteristic of high-rise buildings is longer evacuation times. As such, the traditional

INTERNATIONAL CODE COUNCIL®
Copyright © 2015 ICC. ALL RIGHTS RESERVED. Accessed by David Dammon on Jun 21, 2017 12:30:52 PM pursuant to License Agreement with ICC. No further reproduction or distribution authorized. ANY UNAUTHORIZED REPRODUCTION OR DISTRIBUTION IS A VIOLATION OF THE FEDERAL COPYRIGHT ACT AND THE LICENSE AGREEMENT, AND SUBJECT TO CIVIL AND CRIMINAL PENALTIES THEREUNDER.

fire alarm system, which usually results in simultaneous total building evacuation, is not practical. Therefore, the alarm communication system should be able to:

- Direct the occupants of the fire zone to an area of refuge or exit;
- Notify the fire department of the existence of the fire; and
- Sound no alarms outside the fire zone until deemed desirable.

The alarm signal to the fire zone may include continuous sounding devices (e.g., bells, horns, chimes), as well as voice direction, which may momentarily silence the continuous sounding devices so as to be heard clearly. In accordance with Section 907.5.2.3, visible alarm notification appliances are required in the common and public areas of the high-rise buildings. Visible alarm appliances are also required in certain dwelling units and sleeping units, such as hotel guest rooms. The message of the voice/alarm is to be predetermined but needs not be a recorded message. It would typically indicate that a fire has been reported at a specific location and that occupants should await further instructions or evacuate in accordance with the building's fire safety and evacuation plan. The voice/alarm signal will usually commence with a 3- to 10-second alert signal followed by the message. See the commentary to Section 907.5.2.2 for further requirements of the emergency voice/alarm communication system.

[F] 403.4.5 Emergency responder radio coverage. Emergency responder radio coverage shall be provided in accordance with Section 510 of the *International Fire Code*.

❖ High-rise buildings have posed a challenge to the traditional communication systems used by the fire service for fire-to-ground communications. Therefore, emergency responder radio coverage complying with Section 510 of the IFC must be provided. The coverage is needed to coordinate with the fire department radio system to allow fireground officers to remain in communication with fire fighters working in various areas of a building.

As facilities grow larger and more complex, they become more challenging for effective fire response. Therefore, more fire protection features must be provided within the building. While modeling and other techniques may provide a good prediction as to whether a building will interfere with radio communications, the reality is that it is unknown if a building will need to have an enhanced radio system installed until after the building is constructed. The presumption is that high-rise buildings will more likely than not need to be provided with an emergency responder system. Section 510.1 of the IFC offers three exceptions that may be considered by the building and fire code officials.

[F] 403.4.6 Fire command. A *fire command center* complying with Section 911 shall be provided in a location *approved* by the fire department.

❖ Fireground operations usually involve establishing an incident command post where the fire official can observe what is happening, control arriving personnel and equipment, and direct resources and fire-fighting operations effectively. Because of the difficulties in controlling a fire in a high-rise building, a separate room (enclosed in 1-hour-rated construction) within the building must be established as a fire command center. The room must be provided at a location that is acceptable to the fire department, usually along the front of the building or near the main entrance. The room must contain equipment necessary to monitor or control fire protection and other building service systems (see Section 911 for further information).

403.4.7 Smoke removal. To facilitate smoke removal in post-fire salvage and overhaul operations, buildings and structures shall be equipped with natural or mechanical *ventilation* for removal of products of combustion in accordance with one of the following:

1. Easily identifiable, manually operable windows or panels shall be distributed around the perimeter of each floor at not more than 50-foot (15 240 mm) intervals. The area of operable windows or panels shall be not less than 40 square feet (3.7 m^2) per 50 linear feet (15 240 mm) of perimeter.

   Exceptions:

   1. In Group R-1 occupancies, each *sleeping unit* or suite having an *exterior wall* shall be permitted to be provided with 2 square feet (0.19 m^2) of venting area in lieu of the area specified in Item 1.
   2. Windows shall be permitted to be fixed provided that glazing can be cleared by fire fighters.

2. Mechanical air-handling equipment providing one exhaust air change every 15 minutes for the area involved. Return and exhaust air shall be moved directly to the outside without recirculation to other portions of the building.
3. Any other *approved* design that will produce equivalent results.

❖ Section 403.4.7 requires new high-rise buildings to be provided with a smoke removal system to exhaust products of combustion following a fire incident. The intent of the requirement as clearly specified in the code is to facilitate the removal of smoke during the salvage and overhaul of a building after a fire has ended. “Overhaul and salvage operations” are generally understood to include searching the fire scene to detect and extinguish hidden fires or “hot spots.” They also include controlling additional losses, stabi-

INTERNATIONAL CODE COUNCIL®
Copyright © 2015 ICC. ALL RIGHTS RESERVED. Accessed by David Dammon on Jun 21, 2017 12:30:52 PM pursuant to License Agreement with ICC. No further reproduction or distribution authorized. ANY UNAUTHORIZED REPRODUCTION OR DISTRIBUTION IS A VIOLATION OF THE FEDERAL COPYRIGHT ACT AND THE LICENSE AGREEMENT, AND SUBJECT TO CIVIL AND CRIMINAL PENALTIES THEREUNDER.

lizing the incident scene by providing for fire-fighter safety and securing the structure. The smoke removal system is not a smoke control system similar to those required for atriums or underground buildings. The smoke removal system in a high-rise building is not intended for use during a fire event. It is not intended to serve any health and life safety function, and, therefore, is only required to operate after, and not during, a fire event. In comparison, a smoke control system for an atrium is a life safety function and is designed to operate during a fire event to control smoke that is generated by the fire and keep it from migrating to other portions of the structure. This is not a smoke control system required elsewhere in the code; therefore, Section 909 is not referenced and is not applicable.

A smoke removal system can be a whole building system or a floor-by-floor localized system. It can also be provided by either natural means or a mechanical system. When a mechanical ventilation system is utilized, the controls for the smoke removal system are allowed to be independent of the building's HVAC system, or it may be an integral part of that or other ventilation systems present in the building. The technical requirements for smoke removal design for high-rise buildings are included in Section 403.4.7. Two primary options for accomplishing post-fire smoke removal are provided.

The first option is a natural ventilation system. This design option relies on reasonably spaced and sized openings to allow air movement through a story. This is accomplished by providing operable windows or panels of a minimum size and spacing around the exterior of each story.

There are two exceptions to this design option. Exception 1 applies to Group R-1 occupancy hotels. It permits each guestroom or suite to have a single 2-square-foot (0.19 m^2) operable window or panel in lieu of the 40 square feet (3.7 m^2). Exception 2 allows fixed windows to be used in lieu of operable windows or panels, if the glazing can be cleared by fire fighters. Traditional tempered glass may be an appropriate type of glazing for this exception provided it is not coated, or has an applied film that modifies its natural breaking characteristics. Designers should work with the building official and the fire department to determine what type of glazing might meet the intent of this exception.

The second option is a mechanical ventilation system. This design option requires a mechanical air-handling system capable of exhausting the equivalent of one air change every 15 minutes. The code requires both the air being exhausted from the building and any return air that might be coming from the fire salvage areas to be exhausted outside of the building. When using the mechanical ventilation option, the design will most likely result in the use of dampers to zone floors and to introduce fresh air.

Since the smoke removal system is meant to be used after a fire for cleanup and recovery and not during a fire event, it is not necessary to connect this system to standby or emergency power.

In Item 3 of this section, a third design option is given. It simply states that any system that can provide results similar to the prescribed natural or mechanical systems in Item 1 or 2 can be used when such alternative has been approved by the building official. This provision restates the general code allowance for alternative methods permitted by Section 104.11.

[F] 403.4.8 Standby and emergency power. A standby power system complying with Section 2702 and Section 3003 shall be provided for the standby power loads specified in Section 403.4.8.2. An emergency power system complying with Section 2702 shall be provided for the emergency power loads specified in Section 403.4.8.3.

❖ Standby and emergency power are required to increase the probability that the fire protection systems and elevators will continue to function in the event of failure of normal building service. By referencing Chapter 27, these provisions pick up the requirements of not only the *National Electrical Code* (NEC), but also NFPA 110 and 111. Section 403.4.8.3 lists three systems that are considered standby power loads and must be supplied with standby power. Section 403.4.8.4 lists six systems that must be supplied with emergency power.

[F] 403.4.8.1 Equipment room. If the standby or emergency power system includes a generator set inside a building, the system shall be located in a separate room enclosed with 2-hour *fire barriers* constructed in accordance with Section 707 or *horizontal assemblies* constructed in accordance with Section 711, or both. System supervision with manual start and transfer features shall be provided at the *fire command center*.

Exception: In Group I-2, Condition 2, manual start and transfer features for the critical branch of the emergency power are not required to be provided at the *fire command center*.

❖ The section requires that, where generators are used to provide standby power and/or emergency power, such generators be protected in a room of not less than 2-hour construction. The walls of the room are to be constructed as fire barriers. Since Section 2702.1.4 requires these systems to be supplied with power for 2 hours, for high-rise buildings it was thought to be essential that the generator be protected for that length of time. The purpose of the enclosure is to decrease the probability that a fire can affect both the normal and standby power systems. It is important to note that this requirement is more restrictive than the provisions found in the NEC (NFPA 70). NFPA 70 would only require either the 2-hour fire protection or a sprinkler system, but not both. Because high-rise buildings are required to be sprinkler protected, these standby systems end up with both the sprinkler protection and the separation.

The controls of the systems are to be located in the building's fire command center. The exception allows

INTERNATIONAL CODE COUNCIL®
Copyright © 2015 ICC. ALL RIGHTS RESERVED. Accessed by David Dammon on Jun 21, 2017 12:30:52 PM pursuant to License Agreement with ICC. No further reproduction or distribution authorized. ANY UNAUTHORIZED REPRODUCTION OR DISTRIBUTION IS A VIOLATION OF THE FEDERAL COPYRIGHT ACT AND THE LICENSE AGREEMENT, AND SUBJECT TO CIVIL AND CRIMINAL PENALTIES THEREUNDER.

hospitals to place the controls for critical branch emergency power in a location more appropriate for the hospital's chief engineer or other authorized person to control.

[F] 403.4.8.2 Fuel line piping protection. Fuel lines supplying a generator set inside a building shall be separated from areas of the building other than the room the generator is located in by an approved method or assembly that has a fire-resistance rating of not less than 2 hours. Where the building is protected throughout with an automatic sprinkler system installed in accordance with Section 903.3.1.1 or 903.3.1.2, the required fire-resistance rating shall be reduced to 1 hour.

❖ This section adds to the protection of standby and emergency power systems. Section 403.4.8.1 requires that an on-site generator set be in an enclosure with not less than 2 hours of protection. If the generators are fuel dependent, the fuel lines delivering the fuel should also be protected.

[F] 403.4.8.3 Standby power loads. The following are classified as standby power loads:

1. Power and lighting for the *fire command center* required by Section 403.4.6.
2. *Ventilation* and automatic fire detection equipment for *smokeproof enclosures*.
3. Elevators.
4. Where elevators are provided in a *high-rise building* for *accessible means of egress*, fire service access or occupant self-evacuation, the standby power system shall also comply with Sections 1009.4, 3007 or 3008, as applicable.

❖ The standby power system must be adequate to provide power to the fire command center (Section 403.4.6), smokeproof enclosures (Section 403.5.4) and elevators.

Elevators in a high-rise building must be provided with standby power. Additional requirements are found in Section 1009.4 for elevators used as accessible means of egress; Section 3007 for fire service access elevators required by Section 403.6.1; and Section 3008 for occupant evacuation elevators provided under Section 403.6.2. These additional provisions may add to the standby power load.

Where standby power is required for elevators, Section 3003 describes how it is to be provided. Under Section 3003, an arrangement must be made such that any elevator may be connected to the standby power with one elevator designated as the primary recipient of power once the standby system is activated. The primary elevator must be capable of serving all floors of a building. In extremely tall buildings, it may be necessary to designate multiple elevators as being primary recipients in order to permit usage of both local and express elevators. Based on language in the NEC, the capacity of the standby system must be such that all equipment that has to be operational at the same time will be able to function. The system need not, however, be capable of supplying the load for all connected equipment simultaneously if automatic load shedding is provided. For example, if multiple elevators are connected to the system, the standby power system need only be capable of supplying one elevator such that the elevator provides access to all floors and that central controls restrict operation of other elevators at the same time. The intent of the provisions of Section 3003 is not only to keep one elevator in operation, but also to make sure that all elevators at least initially make it to the designated level and allow passengers to exit the elevators (see commentary, Section 3003).

Note that the requirements for elevators designated as fire service access elevators or elevators used for occupant evacuation have different and generally more restrictive requirements for standby power (see commentary, Sections 3007.8 and 3008.8).

[F] 403.4.8.4 Emergency power loads. The following are classified as emergency power loads:

1. Exit signs and *means of egress* illumination required by Chapter 10.
2. Elevator car lighting.
3. *Emergency voice/alarm communications systems*.
4. Automatic fire detection systems.
5. *Fire alarm* systems.
6. Electrically powered fire pumps.

❖ The section simply lists those systems that must be connected to the emergency power system. The illumination of exit signs and the means of egress are required by Sections 1008 and 1013. Other systems are required by the provisions of Section 403. These systems must be provided power within 10 seconds of loss of regular power.

403.5 Means of egress and evacuation. The *means of egress* in *high-rise buildings* shall comply with Sections 403.5.1 through 403.5.6.

❖ Section 403.5 lists the requirements for means of egress systems applicable to high-rise buildings. Because of the size and height of high-rise buildings, they will contain large occupant loads which, when a building is evacuated, have longer evacuation times than low-rise buildings. Therefore, additional standards for egress systems are imposed for high-rise buildings. These include greater separation of the exit stairways in all high-rise buildings, requiring most stairways to be smokeproof enclosures, and for the tall high-rise buildings over 420 feet (128 m), an extra stairway, in addition to those provided based on the occupant load, is required. Luminous egress path markings are required for both vertical and horizontal exit enclosures. Section 403.5.3 addresses the practice of locking doors of an interior exit stairway.

403.5.1 Remoteness of interior exit stairways. Required *interior exit stairways* shall be separated by a distance not less than 30 feet (9144 mm) or not less than one-fourth of the

INTERNATIONAL CODE COUNCIL®
Copyright © 2015 ICC. ALL RIGHTS RESERVED. Accessed by David Dammon on Jun 21, 2017 12:30:52 PM pursuant to License Agreement with ICC. No further reproduction or distribution authorized. ANY UNAUTHORIZED REPRODUCTION OR DISTRIBUTION IS A VIOLATION OF THE FEDERAL COPYRIGHT ACT AND THE LICENSE AGREEMENT, AND SUBJECT TO CIVIL AND CRIMINAL PENALTIES THEREUNDER.

length of the maximum overall diagonal dimension of the building or area to be served, whichever is less. The distance shall be measured in a straight line between the nearest points of the enclosure surrounding the *interior exit stairways.* In buildings with three or more *interior exit stairways,* no fewer than two of the *interior exit stairways* shall comply with this section. Interlocking or *scissor stairs* shall be counted as one *interior exit stairway.*

❖ This section requires that two of the interior exit stairways be separated from each other by a minimum distance. Requiring a minimum separation, even as little as 30 feet (9144 mm), reduces the probability that a fire or other event that damages one interior exit stairway enclosure will also cause the second interior exit stairway to be unusable. This separation requirement must be met, as well as the separation standards of Section 1007.1.1. The separation is to be measured between the enclosures surrounding the interior exit stairways. If the design of a building under Section 1007 results in two interior exit stairways being separated by 30 feet (9144 mm) or more, then Section 403.5.1 is also satisfied. While Section 1007 requires that two means of egress be separated by at least one-half or one-third of the diagonal measurement of the area served, the distance is measured between the doors into those interior exit stairways. Depending on the size and configuration of the building, two interior exit stairways could directly adjoin each other and still comply with Section 1007. For high-rise buildings, Section 403.5.1 requires that the interior exit stairway enclosures be completely separated at all points by the distance prescribed (see Commentary Figure 403.5.1).

Section 403.5.1 applies to all high-rise buildings subject to Section 403, regardless of the height of the building above 75 feet (22 860 mm). The requirement is either 30 feet (9144 mm), or one-fourth of the diagonal measurement of the area served, whichever is less. This is the same diagonal that is measured for compliance with Section 1007. For any building with a diagonal exceeding 120 feet (36 576 mm), the enclosures of interior exit stairways must be at least 30 feet (9144 mm) apart at their closest points. Only where the diagonal is less than 120 feet (36 576 mm) will the one-fourth of the diagonal come into play. For example, a building with a 100-foot (30 480 mm) maximum diagonal would only need 25 feet (7620 mm) between the two interior exit stairway enclosures. In larger buildings, with an occupant load per story in excess of 500, a third stairway is required. Also in buildings in excess of 420 feet (128 m), an additional stairway is required. The separation

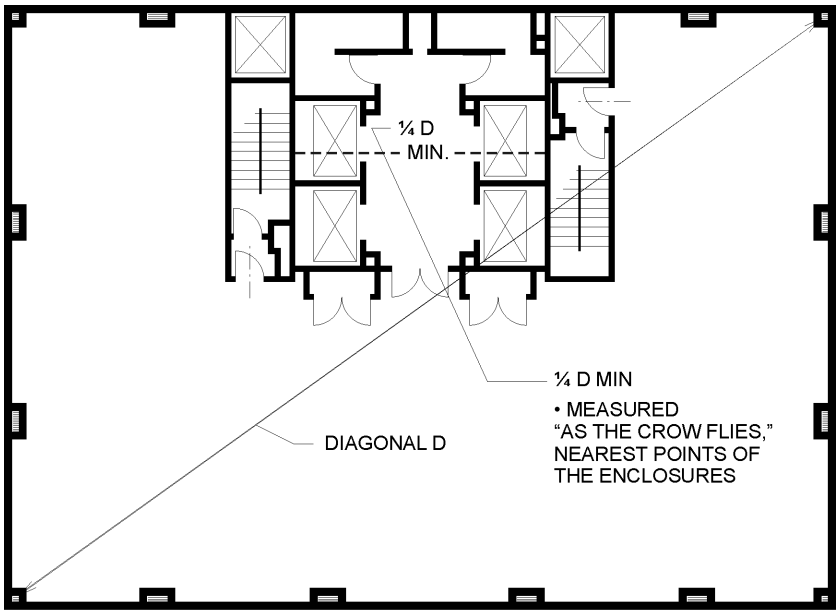

EXAMPLE:

DIAGONAL DIMENSION = 132′ -0″
¼ OF DIAGONAL = 132 ÷ 4 = 33′

SINCE ¼ DIAGONAL EXCEED 30 FEET -
ENCLOSURES MUST BE SEPARATED BY 30 FEET

For SI: 1 foot = 304.8 mm, 1 inch = 25.4 mm.

Figure 403.5.1
HIGH-RISE BUILDINGS: REMOTENESS OF INTERIOR EXIT STAIRWAY ENCLOSURES

INTERNATIONAL CODE COUNCIL®
Copyright © 2015 ICC. ALL RIGHTS RESERVED. Accessed by David Dammon on Jun 21, 2017 12:30:52 PM pursuant to License Agreement with ICC. No further reproduction or distribution authorized. ANY UNAUTHORIZED REPRODUCTION OR DISTRIBUTION IS A VIOLATION OF THE FEDERAL COPYRIGHT ACT AND THE LICENSE AGREEMENT, AND SUBJECT TO CIVIL AND CRIMINAL PENALTIES THEREUNDER.

required by Section 403.5.1 only applies to two of the interior exit stairways. Any required third or fourth stairway could be directly adjacent to one of the first two interior exit stairways.

Interlocking interior exit stairways (two interior exit stairways that "wrap" around each other as they descend through the building) or scissor stairways (two stairways in the same shaft enclosure) have to be considered as one interior exit stairway for the purposes of this section. Clearly a scissor stairway does not create two independent interior exit stairways, and therefore would not meet the needs of this requirement. Similarly, interlocking interior exit stairways often share a common enclosure wall with an interior exit stairway on each side. Obviously, two interior exit stairways sharing a common enclosure wall would not meet the minimum separation requirement.

403.5.2 Additional interior exit stairway. For buildings other than Group R-2 that are more than 420 feet (128 000 mm) in *building height*, one additional *interior exit stairway* meeting the requirements of Sections 1011 and 1023 shall be provided in addition to the minimum number of *exits* required by Section 1006.3. The total width of any combination of remaining *interior exit stairways* with one *interior exit stairway* removed shall be not less than the total width required by Section 1005.1. *Scissor stairways* shall not be considered the additional *interior exit stairway* required by this section.

Exception: An additional *interior exit stairway* shall not be required to be installed in buildings having elevators used for occupant self-evacuation in accordance with Section 3008.

❖ For buildings in excess of 420 feet (128 m) in height, this provision requires an extra stairway to be provided in addition to the number of stairways (means of egress) required based on occupant load of the building as well as travel distance (see Sections 1004 and 1017). This requirement does not apply to high-rise buildings that are occupied as Group R-2 apartments or condominiums, but would apply to R-1 hotels. If a building is a mixed-occupancy structure, the building official should consider which occupancies are located above the 420-foot (128 m) level.

The intent of this provision is to accommodate a simultaneous occurrence of evacuation of the occupants of a high-rise building and fire-fighting operations. The traditional approach to emergencies in a high-rise building is to allow people on a floor affected by a fire to move up or down in the building to another story that is relatively safe from the effects of the fire. Fire fighters will usually set up a staging point one or two stories below the fire and commandeer one of the two stairways to move up to the fire floor. If for some reason it becomes necessary to evacuate the building during active fire fighting, the capacity of the means of egress system can be cut in half. This section implements, in part, Recommendation 17 of the NIST report. The report states that buildings should be designed to accommodate timely full-building evacuation of occupants when required by building-specific or large-scale emergencies, such as widespread power outages, major earthquakes, tornadoes, hurricanes without sufficient advance warning, fires, explosions or terrorist attacks.

The code requires that the extra stairway be sized so that the loss of any one stairway will still result in the remaining stairways being of sufficient size to accommodate the occupant load served by the stairways. For example, in a high-rise office building that has a calculated occupant load of 250 on each story, two stairways each designed to accommodate 125 occupants will be the minimum requirement for interior exit stairways in accordance with Chapter 10. The minimum stairway width of 44 inches (1118 mm) is sufficient to accommodate 146 people, or slightly more than needed for this building. In this building a third interior exit stairway would therefore need to be provided that is also at least 44 inches (1118 m) in width. The result is that if the fire fighters need to commandeer stairway 1, stairways 2 and 3, which each have a capacity to serve 146 people, will still be large enough to meet the occupant load requirements for the means of egress system. In larger buildings with occupant loads in excess of 500, a third stairway is required by Section 1006.2.1.1. In such buildings, Section 403.5.2 would require a fourth exit stairway.

The "additional" stairway has to comply with all the same requirements of any stairway in a high-rise building, including a design complying with smoke-proof enclosures required by Section 403.5.4.

The additional stairway is not affected by the remoteness requirement of Section 403.5.1. That section applies to the first two exit stairway enclosures required in a building. Additional stairways, whether required for occupant load, travel distance or this section, do not also need to comply with the remoteness requirement of Section 403.5.1.

Finally, the exception to this section permits the installation of occupant evacuation elevators as an alternative to providing the additional exit stairway (see also the commentary to Sections 403.6.2 and 3008). The intent behind the exception is recognition that the reason behind the requirement for an additional stairway is the loss of egress capacity under the unusual circumstance of simultaneous total building evacuation and fire fighting. Recognizing that occupant evacuation elevators provide an alternative way to meet a portion of the evacuation needs in these circumstances, the code allows the elevators as a substitute for the additional capacity provided by a third or fourth stairway. Where occupant evacuation elevators are proposed, the requirements of Section 3008 apply to all passenger elevators for general public use in the building (see commentary, Section 3008).

INTERNATIONAL CODE COUNCIL®
Copyright © 2015 ICC. ALL RIGHTS RESERVED. Accessed by David Dammon on Jun 21, 2017 12:30:52 PM pursuant to License Agreement with ICC. No further reproduction or distribution authorized. ANY UNAUTHORIZED REPRODUCTION OR DISTRIBUTION IS A VIOLATION OF THE FEDERAL COPYRIGHT ACT AND THE LICENSE AGREEMENT, AND SUBJECT TO CIVIL AND CRIMINAL PENALTIES THEREUNDER.

403.5.3 Stairway door operation. *Stairway* doors other than the *exit discharge* doors shall be permitted to be locked from the *stairway* side. *Stairway* doors that are locked from the *stairway* side shall be capable of being unlocked simultaneously without unlatching upon a signal from the *fire command center*.

❖ Section 1010.1.9.11 requires that all egress doors for interior stairways be readily openable from both sides. It is often desirable to control movement of people within a building and to provide additional security from external threats. This section permits locking of stairway doors from the stair side when all doors are capable of being simultaneously unlocked. Since high-rise buildings are difficult to evacuate and people are often relocated to another floor level during an emergency, access from the stairway to a floor could be essential in a fire or other emergency. Therefore, all stairway doors that are to be locked from the stairway side must have the capability of being unlocked on a signal from the fire command center. The unlocking of the door must not negate the latching feature, which is essential to the operation of the door as a fire door. Section 403.4.8.2, Item 1, by its reference to Section 403.4.6, requires the locking feature to be connected to the standby power system. When the door is unlocked during an emergency, it should not automatically relock on closure. Electrically powered locks should be designed such that when power to the locking device is interrupted, the lock is released. This is intended to enable doors to be operable from the inside of the stairway, and not locked, if power to the lock is interrupted. The building official should review the emergency release operation of stairway doors to determine that they remain unlocked.

403.5.3.1 Stairway communication system. A telephone or other two-way communications system connected to an *approved constantly attended station* shall be provided at not less than every fifth floor in each *stairway* where the doors to the *stairway* are locked.

❖ If the stairway doors are locked to restrict reentry as permitted in Section 403.5.3, a two-way communication system must be provided at no less than every fifth floor and must be connected to the standby power system. This system is required to be connected to a constantly attended location, which could be within the building, or to a central station that monitors fire alarms and is manned 24 hours a day, 7 days a week. Use of the fire command center is not recommended, since it may not be constantly attended. The system will permit occupants in the stairway to notify the attended location that the stairway doors need to be unlocked to access another floor or because conditions in the stairway prevent its continued use.

403.5.4 Smokeproof enclosures. Every required *interior exit stairway* serving floors more than 75 feet (22 860 mm) above the lowest level of fire department vehicle access shall be a *smokeproof enclosure* in accordance with Sections 909.20 and 1023.11.

❖ This section serves as a reminder that the smokeproof enclosure provisions of Section 1023.11 are applicable to high-rise buildings. Section 909.20 provides the standards on the construction of a smokeproof enclosure. It is important to understand that this requirement is only applicable in the portions of the building where the stack effect is more of a factor and the resulting spread of smoke will be the greatest. For example, if the high-rise building consists of a tower portion with a larger area on the bottom that is only a couple of stories in height, these requirements would only be applicable to stairways in the tower portion that serve floors that are more than 75 feet (22 860 mm) above the level where fire department vehicles would be located. The requirement would not apply to stairways in a low-rise portion of a building not exceeding 75 feet (22 860 mm), nor to stairways within the tower that do not serve floors more than 75 feet (22 860 mm) above the lowest level of fire department access.

403.5.5 Luminous egress path markings. Luminous egress path markings shall be provided in accordance with Section 1025.

❖ This section requires the provision of luminous egress path markings in all high-rise buildings containing any Group A, B, E, I, M or R-1 occupancy. The specific requirements are found in Section 1025. The requirements apply only to exit enclosures, vertical or horizontal. The markings are not required in the exit access or exit discharge portions of the means of egress system, nor at a horizontal exit.

403.5.6 Emergency escape and rescue. Emergency escape and rescue openings specified in Section 1030 are not required.

❖ This section of the code reinforces other tradeoffs or allowances permitted in the code for buildings equipped with automatic sprinkler systems. Previous editions of Section 1030 required emergency escape and rescue windows for windows located four stories or less, but then exempted high-rise buildings. Section 1030 now only requires the windows in R-3 buildings and single-exit R-2 occupancy buildings, neither of which is likely to occur in a high-rise building. This section is a leftover reference from previous editions of the code.

403.6 Elevators. Elevator installation and operation in *high-rise buildings* shall comply with Chapter 30 and Sections 403.6.1 and 403.6.2.

❖ This section explicitly states that elevator installation and operation are to be in accordance with Chapter 30, which contains provisions for the design, construction, installation, operation and maintenance of elevators. While a vital purpose of the elevator requirements in high-rise buildings has always been for the use of the fire department, this role has been

INTERNATIONAL CODE COUNCIL®
Copyright © 2015 ICC. ALL RIGHTS RESERVED. Accessed by David Dammon on Jun 21, 2017 12:30:52 PM pursuant to License Agreement with ICC. No further reproduction or distribution authorized. ANY UNAUTHORIZED REPRODUCTION OR DISTRIBUTION IS A VIOLATION OF THE FEDERAL COPYRIGHT ACT AND THE LICENSE AGREEMENT, AND SUBJECT TO CIVIL AND CRIMINAL PENALTIES THEREUNDER.

enhanced (see Section 403.6.1). Elevators have been one method of providing an accessible means of egress under the requirements of Section 1009, but have never been considered part of the means of egress system for the nondisabled occupants of a building or for those with disabilities to self-evacuate. However, elevators are now allowed to augment the egress system for all occupants in buildings over 420 feet (128 m) in height. The allowance for self-evacuation is based on occupants using the elevators prior to the elevators being recalled. This is much different from the requirements of Section 1009, under which fire department personnel use the elevators to assist in the rescue of occupants while those elevators are on Phase II emergency operation.

Chapter 30 provides important standards for the size of elevators, allowing ambulance stretchers to easily fit into at least one elevator serving high-rise buildings. Protection of the hoistway and machine room is also addressed.

403.6.1 Fire service access elevator. In buildings with an occupied floor more than 120 feet (36 576 mm) above the lowest level of fire department vehicle access, no fewer than two fire service access elevators, or all elevators, whichever is less, shall be provided in accordance with Section 3007. Each fire service access elevator shall have a capacity of not less than 3,500 pounds (1588 kg) and shall comply with Section 3002.4.

❖ For buildings with occupied floors in excess of 120 feet (36 576 mm) above the lowest level of fire department vehicle access, at least two of the elevators must comply with the fire service access elevator requirements, which are detailed in Section 3007 (see Commentary Figure 403.6.1). The requirements in Section 3007 are another result of NIST research following the World Trade Center fire and collapse. The fire service access provisions work with previously enacted emergency operation requirements for elevators, allowing elevators that comply with Section 3007 to remain in service for trained fire fighters to reach the upper levels of a building within a reasonable amount of time and to stage their fire-fighting operations at a level below the actual fire. These elevators must be provided with a lobby of a minimum size which is protected by at least 1-hour fire-resistance-rated smoke barriers. The lobby must be directly connected to one of the interior exit stairways and that stairway must contain a standpipe as required by Section 905. These lobbies may also serve as the area of refuge required as part of an

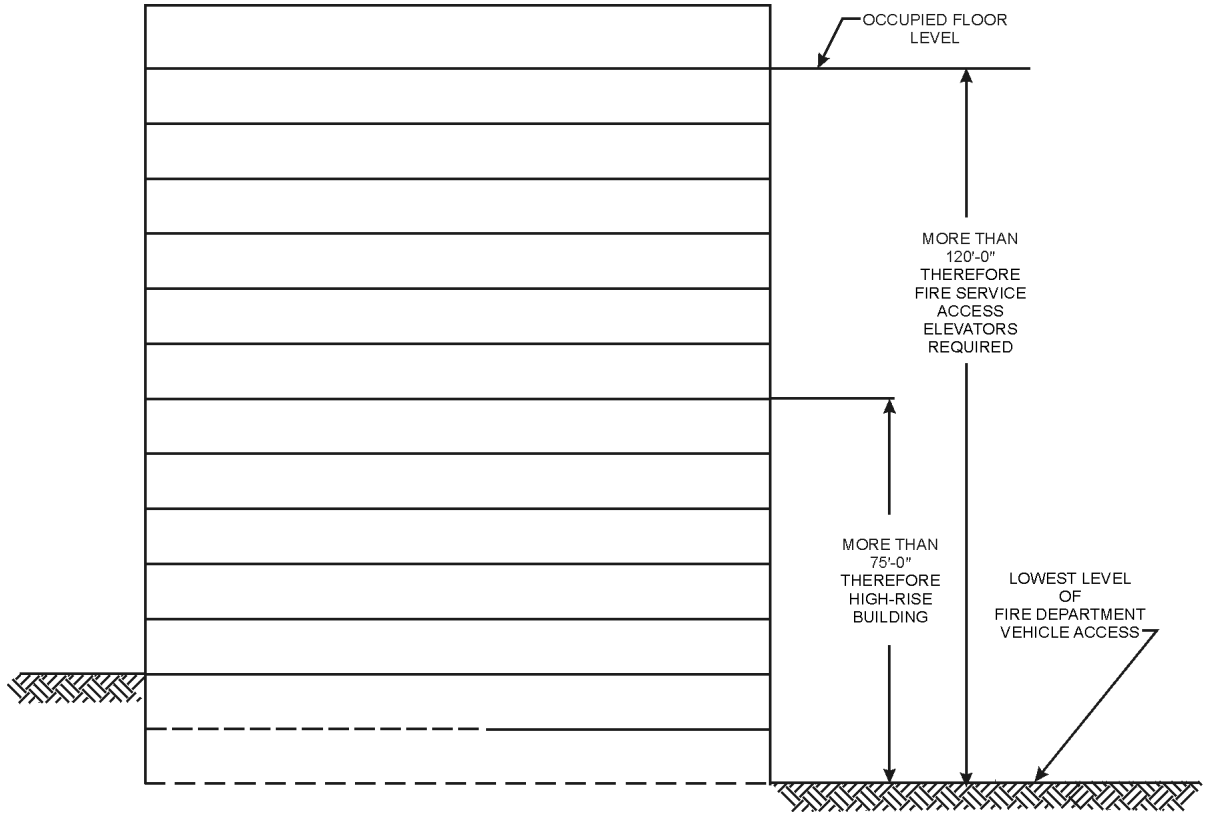

For SI: 1 foot = 304.8 mm; 1 inch = 25.4 mm.

Figure 403.6.1
HIGH-RISE BUILDINGS: FIRE SERVICE ACCESS ELEVATORS

INTERNATIONAL CODE COUNCIL®
Copyright © 2015 ICC. ALL RIGHTS RESERVED. Accessed by David Dammon on Jun 21, 2017 12:30:52 PM pursuant to License Agreement with ICC. No further reproduction or distribution authorized. ANY UNAUTHORIZED REPRODUCTION OR DISTRIBUTION IS A VIOLATION OF THE FEDERAL COPYRIGHT ACT AND THE LICENSE AGREEMENT, AND SUBJECT TO CIVIL AND CRIMINAL PENALTIES THEREUNDER.

accessible means of egress. People waiting for assistance in egress will need to be helped to a safe location before one lobby or another is used as the staging location for fire fighting.

The need for at least two elevators complying with Section 3007 is based on past experience showing that on many occasions elevators are not available because of various reasons, including problems in operation, routine maintenance, modernization programs and EMS operations in the building prior to fire fighter arrival. A minimum of two fire service elevators provided with all of the benefits afforded by such elevators better ensures that there will be a fire service access elevator available for the fire fighters' use in the performance of their duties.

The requirement for a minimum capacity of 3,500 pounds (1588 kg) for fire service access elevators allows for design flexibility in the selection of elevator cars while still providing the necessary capacity and size for emergency responder needs. Finally, Section 3002.4 is referenced to ensure that fire service access elevators will be large enough to accommodate an ambulance stretcher.

403.6.2 Occupant evacuation elevators. Where installed in accordance with Section 3008, passenger elevators for general public use shall be permitted to be used for occupant self-evacuation.

❖ Section 3008 provides the requirements for occupant evacuation elevators. When part of a fire safety and evacuation plan, occupant evacuation elevators are allowed in a building. A key element of applying Section 3008 is that all passenger elevators for general public use in the building must comply. Similar to fire service access elevators, occupant evacuation elevators must be provided with a lobby constructed of 1-hour fire-resistance-rated smoke barriers. Occupant evacuation elevators also require signs and other indicators, as well as a communication system connected to the fire command center to help occupants use the elevators. Where occupant evacuation elevators are provided, their requirements make for a substantially improved accessible means of egress over the requirements of Section 1009, which only allow for fire-fighter-assisted evacuation.

For any high-rise building, elevators may be designed for occupant self-evacuation. In fact, Section 3008 could be applied to any building as long as the design complies with all of the requirements.

Elevators are still prohibited by Section 1003.7 from serving as a means of egress for the general population of a building. However, in high-rise buildings in excess of 420 feet (128 m) in height, Section 403.5.2 requires there be an exit stairway provided in addition to those needed for egress capacity or travel distance purposes. This additional stairway is not required when the elevators in the building comply with Section 3008 and allow occupant self-evacuation.

SECTION 404
ATRIUMS

404.1 General. In other than Group H occupancies, and where permitted by Section 712.1.7, the provisions of Sections 404.1 through 404.10 shall apply to buildings or structures containing vertical openings defined as "Atriums."

❖ Unprotected vertical openings are often identified as the factors responsible for fire spread in incidents involving fire fatalities or extensive property damage. Section 404 addresses one method for protection of these specific building features in lieu of providing a complete floor separation. As noted in this section, the atrium provisions are primarily one of 18 options for addressing vertical openings as set forth in Section 712. Atriums are regulated by this section and are considered acceptable when in compliance with the criteria of this section. Additionally, the code permits other types of vertical openings that are not addressed by this section. For example, Section 712 permits openings within residential dwelling units to be unprotected. Other unprotected vertical openings that are permitted by the code include covered malls (see Section 402); communicating spaces in buildings of Group I-3 (see Section 408.5); mezzanines (see Section 505); escalator or supplemental stairway openings (see Section 712.1.3); open parking garages (see Section 406.5); enclosed parking garages (see Section 406.6); and as otherwise noted in Section 712.

An atrium is a space within a building that extends vertically and connects two or more stories. Atriums are not to be considered unprotected vertical openings; rather, the vertical openings are protected by means other than enclosure of the shaft or a complete floor assembly. This section does not apply to spaces that comply with Section 712 based on the itemized options, other than Section 712.1.7. In other words, if compliance with Section 712 is achieved by applying one of the options other than Section 712.1.7 that permits an atrium, then compliance with Section 404 is not required. Likewise, if the provisions of Section 404 have been complied with, then the other options listed in Section 712 do not need to be addressed. Spaces that are separated from the atrium by shaft enclosure assemblies complying with the provisions of Section 713 are not considered as part of the atrium. Section 404 applies only to the spaces that are contained within the atrium. Atriums are permitted in all buildings except Group H.

The options listed in Section 712 are all considered legitimate methods of appropriately addressing vertical openings within buildings, but were not developed with specific consideration of the application of multiple options in the same building/space. In most cases this will be appropriate but can become complicated where, for example, an atrium is open to a space that is applying Section 712.1.3 for escalator openings. More discussion of this particular scenario is found in the commentary to Section 404.6.

INTERNATIONAL CODE COUNCIL®
Copyright © 2015 ICC. ALL RIGHTS RESERVED. Accessed by David Dammon on Jun 21, 2017 12:30:52 PM pursuant to License Agreement with ICC. No further reproduction or distribution authorized. ANY UNAUTHORIZED REPRODUCTION OR DISTRIBUTION IS A VIOLATION OF THE FEDERAL COPYRIGHT ACT AND THE LICENSE AGREEMENT, AND SUBJECT TO CIVIL AND CRIMINAL PENALTIES THEREUNDER.

404.1.1 Definition. The following term is defined in Chapter 2:

ATRIUM.

❖ This section defines a term that is specifically associated with the subject matter of Section 404. It is important to emphasize that this term is not exclusively related to this chapter but may or may not also be applicable where the term is used elsewhere in the code.

Definitions of terms can help in the understanding and application of the code requirements. The purpose for including a definition in this chapter is to provide more convenient access to a term that may have a specific or limited application within this chapter. For the complete definition and associated commentary, refer back to Chapter 2. Terms that are italicized provide a visual identification throughout the code that a definition exists for that term. The use and application of all defined terms are set forth in Section 201.

404.2 Use. The floor of the *atrium* shall not be used for other than low fire hazard uses and only *approved* materials and decorations in accordance with the *International Fire Code* shall be used in the *atrium* space.

Exception: The *atrium* floor area is permitted to be used for any *approved* use where the individual space is provided with an *automatic sprinkler system* in accordance with Section 903.3.1.1.

❖ Because an automatic sprinkler system at the ceiling of an atrium may not be effective for a fire on the floor of the atrium due to the ceiling height or obstructions to the sprinkler discharge, the use and activities of the floor level and the types of materials in the atrium space must be controlled. This section applies to all atriums regardless of their height or area. Low fire-hazard uses would limit the atrium floor to such functions as pedestrian walk-through areas, security desks and reception areas. Storage areas, fabrication areas and office areas would not be low fire-hazard uses. Chapter 8 regulates the use of decorative materials and furnishings.

If the floor area is equipped with an automatic sprinkler system that can provide the required protection, then its use is not restricted. The exception stipulates that such areas must be equipped with an automatic sprinkler system as is required throughout the remainder of the atrium.

[F] 404.3 Automatic sprinkler protection. An *approved automatic sprinkler system* shall be installed throughout the entire building.

Exceptions:

1. That area of a building adjacent to or above the *atrium* need not be sprinklered provided that portion of the building is separated from the *atrium* portion by not less than 2-hour *fire barriers* constructed in accordance with Section 707 or *horizontal assemblies* constructed in accordance with Section 711, or both.
2. Where the ceiling of the *atrium* is more than 55 feet (16 764 mm) above the floor, sprinkler protection at the ceiling of the *atrium* is not required.

❖ One means of controlling the spread of fire and smoke through vertical openings is to control and extinguish the fire as early as possible. Therefore, all floor areas that are connected by the atrium are to be protected with an approved sprinkler system, including the atrium space itself. The system is to be designed, installed, tested and maintained in accordance with the provisions of Section 903.3 and the IFC. Since Chapter 9 requires that the sprinkler system be supervised, the reliability of the sprinkler system is improved. Exception 1 clarifies that since the atrium protection is one of the various options for protecting vertical openings, typically an alternative to a shaft enclosure, the sprinkler system is not required in areas that are separated from the atrium by 2-hour fire barrier walls or horizontal assemblies that would otherwise be required for a shaft enclosure. Such fire barrier walls must conform to Section 707, while the horizontal assemblies must comply with Section 711.

Exception 2 permits the required sprinkler system to be deleted from the ceiling areas of atriums where the vertical distance between the atrium floor and atrium ceiling is greater than 55 feet (16 764 mm). A ceiling height of more than 55 feet (16 764 mm) is the height at which the system is no longer effective and installing such systems provides little benefit. This exception does not alter the use limitations of the atrium as stated in Section 404.2, nor does it exempt any adjacent floor areas with lower ceiling heights that are included in the atrium boundary in accordance with Exception 1. It is important to note that if a smoke control system is required by Section 404.5, the smoke control design should not take sprinkler activation into account for design fires that are located in areas not protected with sprinklers or in areas where sprinklers are installed but, due to their location, may not be able to control a fire.

[F] 404.4 Fire alarm system. A *fire alarm* system shall be provided in accordance with Section 907.2.14.

❖ Section 907.2.14 of the code contains a requirement for a fire alarm system in atriums connecting more than two stories. In addition, when such atriums are located in Group A, E and M occupancies, an emergency voice communication system is required.

404.5 Smoke control. A smoke control system shall be installed in accordance with Section 909.

Exception: In other than Group I-2, and Group I-1, Condition 2, smoke control is not required for *atriums* that connect only two *stories*.

❖ In order to prevent the migration of smoke throughout interconnected levels of a building via the atrium, a mechanical smoke control system is to be installed in

INTERNATIONAL CODE COUNCIL®
Copyright © 2015 ICC. ALL RIGHTS RESERVED. Accessed by David Dammon on Jun 21, 2017 12:30:52 PM pursuant to License Agreement with ICC. No further reproduction or distribution authorized. ANY UNAUTHORIZED REPRODUCTION OR DISTRIBUTION IS A VIOLATION OF THE FEDERAL COPYRIGHT ACT AND THE LICENSE AGREEMENT, AND SUBJECT TO CIVIL AND CRIMINAL PENALTIES THEREUNDER.

all atriums connecting more than two stories and in Group I-2 and Group I-1, Condition 2 buildings where atriums connect two or more stories. The smoke control system is to be designed and installed in accordance with the provisions of Section 909. See Commentary Figure 404.6(1) for examples of when smoke control is and is not required. For spaces such as atriums, the primary method of smoke control, in accordance with Section 909, is the exhaust method. Pressure differences in such a large space will be difficult to achieve and the area of fire origin when undertaking the pressurization method is not required to be tenable in accordance with Section 909.6. The airflow method is impractical with such large spaces. The airflow method is sometimes used in combination with the exhaust methods to protect openings into the atrium (see commentary, Section 909). The smoke control system for the atrium is required to be connected to a standby source of power in accordance with Sections 404.7 and 909.11.

Section 402.7.2 for covered mall buildings also references Section 404.5 for smoke control provisions when a covered mall building contains an atrium. It should be noted that when a covered mall building contains an atrium, all areas adjacent to the atrium without separation would need to be addressed when designing the smoke control system as required by Section 404.6, Exception 3.

As discussed in the commentary to Section 404.1, the atrium provisions are basically one of many options provided in the vertical opening requirements in Section 712. Therefore, if another option in Section 712 is chosen, such openings would not be considered atriums and smoke control would not be required.

404.6 Enclosure of atriums. *Atrium* spaces shall be separated from adjacent spaces by a 1-hour *fire barrier* constructed in accordance with Section 707 or a *horizontal assembly* constructed in accordance with Section 711, or both.

Exceptions:

1. A *fire barrier* is not required where a glass wall forming a smoke partition is provided. The glass wall shall comply with all of the following:

   1.1. Automatic sprinklers are provided along both sides of the separation wall and doors, or on the room side only if there is not a walkway on the *atrium* side. The sprinklers shall be located between 4 inches and 12 inches (102 mm and 305 mm) away from the glass and at intervals along the glass not greater than 6 feet (1829 mm). The sprinkler system shall be designed so that the entire surface of the glass is wet upon activation of the sprinkler system without obstruction;

   1.2. The glass wall shall be installed in a gasketed frame in a manner that the framing system deflects without breaking (loading) the glass before the sprinkler system operates; and

   1.3. Where glass doors are provided in the glass wall, they shall be either *self-closing* or automatic-closing.

2. A *fire barrier* is not required where a glass-block wall assembly complying with Section 2110 and having a $^{3}/_{4}$-hour *fire protection rating* is provided.

3. A *fire barrier* is not required between the *atrium* and the adjoining spaces of any three floors of the *atrium* provided such spaces are accounted for in the design of the smoke control system.

❖ One of the basic premises of atrium requirements is that an engineered smoke control system combined with an automatic fire sprinkler system that is properly supervised provide an adequate alternative to the fire-resistance rating of a shaft enclosure. It is also recognized that some form of a boundary is required to assist the smoke control system in containing smoke to just the atrium area. The basic requirement, therefore, is that the atrium space be separated from adjacent areas by fire barriers and horizontal assemblies having a fire-resistance rating of at least 1 hour.

Also, openings in the wall are required to be protected, in accordance with Section 707.6. In accordance with Section 713.4, shafts are required to have a fire-resistance rating of at least 2 hours if connecting more than three stories, and 1 hour when connecting two or three stories. The basis for the 1-hour requirement in Section 404.6 is that an automatic sprinkler system can be substituted for the 1 hour of fire resistance of a shaft enclosure. The allowance is consistent with the 1-hour fire-resistance-rating reduction permitted in high-rise buildings (see Section 403.2.1.2).

In lieu of a 1-hour fire-resistance-rated fire barrier separation, Exception 1 allows adjacent spaces to be separated by glass walls where automatic sprinklers have been installed to protect the glass. The sprinklers are to be located so as to wet the entire surface of the glass wall. If there is a floor surface on each side of the wall, both sides of the glass must be protected. The glass must be in a gasketed frame such that the framing system can deflect without breaking the glass. Although this exception does not address obstructions or other window treatments, consideration must be given to locating such items to avoid interference with the required sprinkler heads. Without specific test evidence, curtain rods, traverse rods, curtains and draperies must be located at least 12 inches (305 mm) from the window surface [see Commentary Figure 404.6(1)]. The sprinkler system required for Exception 1 is not intended to be a deluge system. Instead, it is intended to protect the glazing material from breakage as a result of thermal shock. It is not necessary to activate all the sprinklers along the glazing material to provide such protection

INTERNATIONAL CODE COUNCIL®
Copyright © 2015 ICC. ALL RIGHTS RESERVED. Accessed by David Dammon on Jun 21, 2017 12:30:52 PM pursuant to License Agreement with ICC. No further reproduction or distribution authorized. ANY UNAUTHORIZED REPRODUCTION OR DISTRIBUTION IS A VIOLATION OF THE FEDERAL COPYRIGHT ACT AND THE LICENSE AGREEMENT, AND SUBJECT TO CIVIL AND CRIMINAL PENALTIES THEREUNDER.

as long as the entire surface of the glazed panel is designed such that it can be wetted by the sprinkler system.

Any doors through the required 1-hour fire barrier wall must be $^{3}/_{4}$-hour rated in accordance with Table 716.5. However, where glass doors occur within the complying glass wall system established in Exception 1, such doors need not be fire-protection rated but they must be either self-closing or automatic-closing.

Exception 2 allows a glass-block wall assembly conforming to Section 2110 in lieu of a 1-hour fire barrier. It is important to note that these glass-block assemblies do not require the sprinkler protection that is required by Exception 1.

Exception 3 recognizes the desire to have at least some floors open to the atrium, and permits a maximum of three. The three-floor restriction is consistent with the basic premise that the life safety hazard becomes significant when more than three floors are open and is also consistent with the allowances for covered mall buildings. It should be noted that the three floor levels may be at any height and need not be consecutive floor levels [see Commentary Figure 404.6(2)]. The exception also states that the smoke control design must account for these spaces. This particular reference to the smoke control design does not require that the 6-foot-high (1829 mm) layer required by Section 909.8.1 be maintained in these spaces. Instead it is saying that if a smoke control system is required by Section 404.5, such spaces must be accounted for in terms of the hazard they pose to the atrium and to smoke migrating to other adjacent spaces on other stories open to the atrium. Essentially these spaces have simply increased the possible design fires that may send smoke into the atrium, thus threatening to send smoke throughout the building and other adjoining spaces. If the atrium smoke control system is not designed to handle fires in these areas, the system may become overpowered. This exception can also permit a two-story atrium to have adjacent areas open to the atrium. In this case, since there is no required smoke control system, obviously there is no need to account for the added space (see IBC Interpretation No. 54-07).

As discussed in the commentary to Section 404.1, the atrium requirements are basically one of many options for protecting vertical openings through floors as established in the requirements of Section 712. More specifically, Section 712 has multiple options that are all legitimate approaches to addressing vertical openings. If there are portions of the building applying other options in Section 712 that are not separated from the atrium, they can be considered part of the atrium themselves and be subject to the smoke control layer height of 6 feet (1829 mm) or could be considered as adjacent spaces and need to be accounted for when designing the smoke control system, as discussed above. It should be noted that if the space is considered part of the atrium itself, the other options in Section 712 need not be considered as the atrium provisions are already being applied.

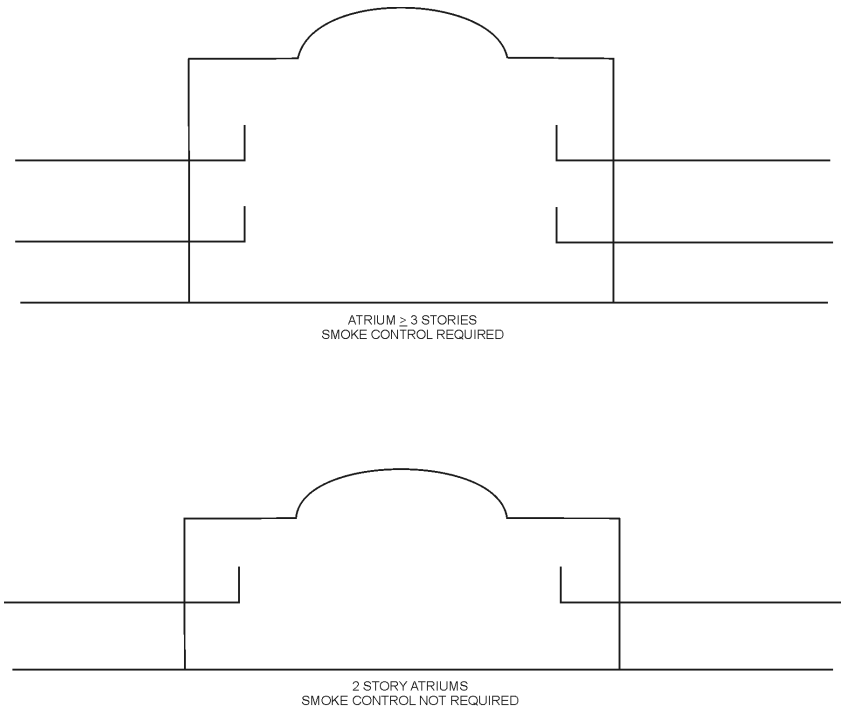

Figure 404.6(1)
ENCLOSURE OF ATRIUMS (EXCEPTION 1)

INTERNATIONAL CODE COUNCIL®
Copyright © 2015 ICC. ALL RIGHTS RESERVED. Accessed by David Dammon on Jun 21, 2017 12:30:52 PM pursuant to License Agreement with ICC. No further reproduction or distribution authorized. ANY UNAUTHORIZED REPRODUCTION OR DISTRIBUTION IS A VIOLATION OF THE FEDERAL COPYRIGHT ACT AND THE LICENSE AGREEMENT, AND SUBJECT TO CIVIL AND CRIMINAL PENALTIES THEREUNDER.

[F] 404.7 Standby power. Equipment required to provide smoke control shall be provided with standby power in accordance with Section 909.11.

❖ To enhance the reliability of the required smoke control system, this section of the code mandates that the mechanical smoke control system must be provided with standby power. The reference to Section 909.11 allows the atrium's equipment to receive its primary power from the building's power system. A secondary standby power source is required should the building's primary system fail.

404.8 Interior finish. The *interior finish* of walls and ceilings of the *atrium* shall be not less than Class B with no reduction in class for sprinkler protection.

❖ Although Chapter 8 contains provisions governing the use of interior finishes, trim and decorative materials, specific limitations are provided for an atrium. Similar to the use limitations contained in Section 404.2, a minimum interior finish classification is specified to limit the fuel load within the atrium spaces. At least a Class B finish is mandated for the walls and ceilings of the atrium. This finish classification limits the material's flame spread index to a range of 26 through 75 and a smoke-developed index rating of 450 or less. The sprinkler reductions shown in Table 803.11 are not applicable to the interior finishes of an atrium space.

404.9 Exit access travel distance. *Exit access* travel distance for areas open to an *atrium* shall comply with the requirements of this section.

❖ The means of egress from buildings containing atriums are required to conform to Chapter 10, the provisions of this section which address exit travel distance and Section 404.10.

404.9.1 Egress not through the atrium. Where required access to the *exits* is not through the *atrium*, *exit access* travel distance shall comply with Section 1017.

❖ Exit access travel which does not go through the atrium is determined in the usual method found in Chapter 10.

404.9.2 Exit access travel distance at the level of exit discharge. Where the path of egress travel is through an *atrium* space, *exit access* travel distance at the *level of exit discharge* shall be determined in accordance with Section 1017.

❖ This section indicates that if you have exit access travel across the floor of the atrium, essentially the lowest level, then this travel should also be determined in accordance with Chapter 10. However, where the egress travel is on upper levels, it is limited according to Section 404.9.3.

404.9.3 Exit access travel distance at other than the level of exit discharge. Where the path of egress travel is not at the *level of exit discharge* from the *atrium*, that portion of the total permitted *exit access* travel distance that occurs within the *atrium* shall be not greater than 200 feet (60 960 mm).

❖ On upper stories of an atrium, exit access travel through the atrium is limited to 200 feet (60 960 mm). An example is a hotel designed to have the doors to all guest rooms located on balconies in the atrium. The exit access travel from the room door to an exit enclosure (or to an area of the building not within the atrium) is limited to 200 feet (60 960 mm). That limit applies on each floor open to the atrium with the

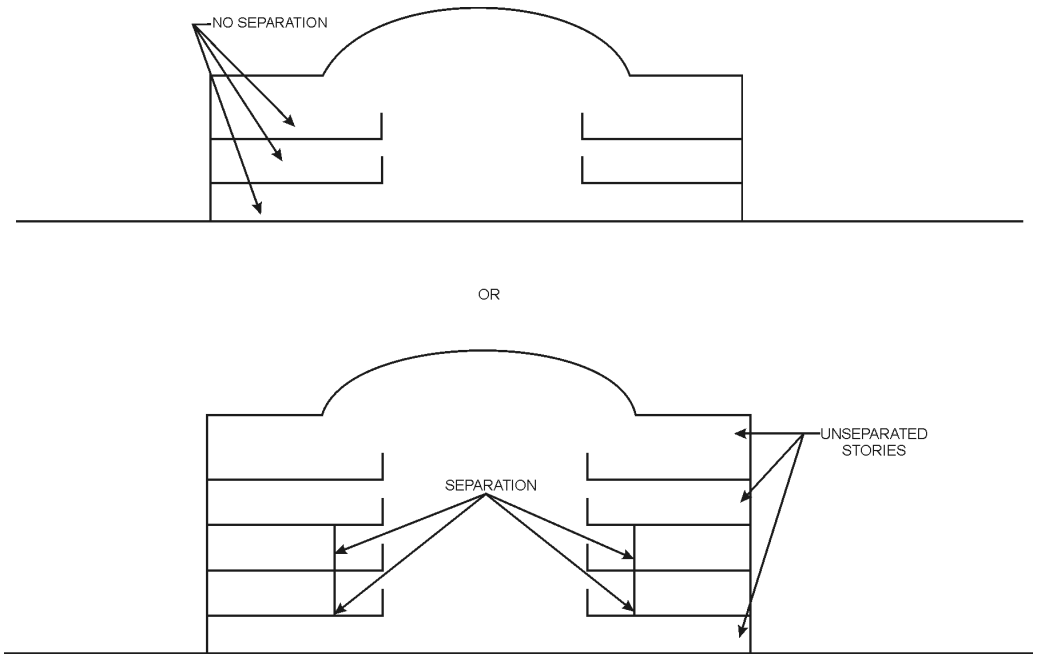

Figure 404.6(2)
ENCLOSURE OF ATRIUMS (EXCEPTION 3)

INTERNATIONAL CODE COUNCIL®
Copyright © 2015 ICC. ALL RIGHTS RESERVED. Accessed by David Dammon on Jun 21, 2017 12:30:52 PM pursuant to License Agreement with ICC. No further reproduction or distribution authorized. ANY UNAUTHORIZED REPRODUCTION OR DISTRIBUTION IS A VIOLATION OF THE FEDERAL COPYRIGHT ACT AND THE LICENSE AGREEMENT, AND SUBJECT TO CIVIL AND CRIMINAL PENALTIES THEREUNDER.

exception of the level of exit discharge, which is usually the floor of the atrium.

404.10 Interior exit stairways. A maximum of 50 percent of *interior exit stairways* are permitted to egress through an *atrium* on the *level of exit discharge* in accordance with Section 1028.

❖ Section 1028 of the code permits 50 percent of interior exit stairways to terminate on the level of exit discharge such that building occupants travel across the floor of that level before reaching an exterior exit door. The intent of this section is to clearly allow the same option for a building with an atrium. It allows the path of egress to be through the atrium.

SECTION 405
UNDERGROUND BUILDINGS

405.1 General. The provisions of Sections 405.2 through 405.9 apply to building spaces having a floor level used for human occupancy more than 30 feet (9144 mm) below the finished floor of the lowest *level of exit discharge*.

Exceptions: The provisions of Section 405 are not applicable to the following buildings or portions of buildings**:**

1. One- and two-family *dwellings*, sprinklered in accordance with Section 903.3.1.3.
2. Parking garages provided with *automatic sprinkler systems* in compliance with Section 405.3.
3. Fixed guideway transit systems.
4. *Grandstands*, *bleachers*, stadiums, arenas and similar facilities.
5. Where the lowest *story* is the only *story* that would qualify the building as an underground building and has an area not greater than 1,500 square feet (139 m^2) and has an *occupant load* less than 10.
6. Pumping stations and other similar mechanical spaces intended only for limited periodic use by service or maintenance personnel.

❖ An underground building presents a unique hazard to life safety. Because of its isolation and inaccessibility, occupants within the structure and fire fighters attempting to locate and suppress a fire are presented with a unique fire protection challenge.

Underground buildings that require the occupants of the lowest floor level to travel upward for more than 30 feet (9144 mm) to reach the finished floor of the lowest level of exit discharge present a significant hazard to the occupants. As such, Section 405 is applicable to buildings with a floor level more than 30 feet (9144 mm) below the finished floor surface of the lowest level of exit discharge (see Commentary Figure 405.1).

To egress the structure, occupants must travel in an upward direction. The direction of occupant travel is the same as the direction that the products of combustion travel. As such, the occupants are potentially exposed to the products of combustion along the entire means of egress.

Fire fighters are also confronted by constant exposure to the products of combustion. Beginning their descent above the actual location of the fire source, fire fighters encounter an increasing amount of smoke, heat and flame as they attempt to locate and extinguish the fire source. These extreme conditions could significantly hinder the effectiveness of the fire department if not offset by appropriate fire protection requirements. The requirements for underground buildings are, in some ways, similar to those for high-rise buildings. Both types of structures present an unusual hazard, since they are virtually inaccessible to exterior fire department suppression and rescue operations with the increased potential to trap occupants inside. To counteract these hazards, such structures are required by Section 405.2 to be built of noncombustible, fire-resistance-rated construction.

Additionally, they are required by Section 405.3 to be equipped with an automatic sprinkler system and a smoke control system in accordance with Section 405.5. Standby and emergency power systems are also required in these structures by Sections 405.8 and 405.9.

Structures regulated by Section 405 are also subject to all other applicable code provisions. Additionally, underground buildings to which this section does not apply are still subject to all other code provisions, including fire suppression (see Section 903); standpipe systems (see Section 905); and fire alarm and detection (see Section 907).

There are six exceptions to the applicability of Section 405. These exceptions are in consideration of specific types of structures to which the requirements of this section are impractical, unnecessary or to which alternative provisions apply.

405.2 Construction requirements. The underground portion of the building shall be of Type I construction.

❖ Two of the key goals with underground construction are to limit the fuel load and to increase the fire resistance of underground buildings. To reasonably ensure that the building elements will remain structurally sound during exposure to fire, all structural elements of the underground portions are required to be of noncombustible, protected construction. Therefore, any portion of the structure located below grade level is required to be of Type I construction (see Commentary Figure 405.1).

Portions of the structure above grade, however, are permitted to be of any type of construction.

Any portion of the structure above ground level must conform to the height and area limitations of Tables 504.3, 504.4 and 506.2. These tables do not regulate the maximum depth of an underground structure; therefore, the height, area and depth of most Type I structures are not limited.

[F] 405.3 Automatic sprinkler system. The highest *level of exit discharge* serving the underground portions of the building and all levels below shall be equipped with an *automatic*

INTERNATIONAL CODE COUNCIL®
Copyright © 2015 ICC. ALL RIGHTS RESERVED. Accessed by David Dammon on Jun 21, 2017 12:30:52 PM pursuant to License Agreement with ICC. No further reproduction or distribution authorized. ANY UNAUTHORIZED REPRODUCTION OR DISTRIBUTION IS A VIOLATION OF THE FEDERAL COPYRIGHT ACT AND THE LICENSE AGREEMENT, AND SUBJECT TO CIVIL AND CRIMINAL PENALTIES THEREUNDER.

sprinkler system installed in accordance with Section 903.3.1.1. Water-flow switches and control valves shall be supervised in accordance with Section 903.4.

❖ One of the most effective preventive measures to fire growth is the installation of an automatic sprinkler system. Because of the unique conditions for occupant egress and fire department access in the underground portion of a building, automatic sprinkler protection is required. The level of exit discharge and all floor levels below are required to be sprinklered throughout in accordance with Section 903.3.1.1. This section does permit a portion of a building to extend above the level of exit discharge and not be equipped with an automatic sprinkler system. If, however, another code section (see Section 403.3 or 903) requires an automatic sprinkler system in the above-ground portion, such a requirement would still be applicable. Note that a smoke control system is required in accordance with Section 405.5. Automatic sprinkler systems are essential elements of any smoke control system. Without suppression, the size of the fire or the resulting products of combustion will rapidly overwhelm most mechanical smoke control systems. The pressurization system requirements in Section 909 are based upon the use of sprinklers. Pressure differences needed to contain the smoke to the area of origin would need to be higher in an nonsprinklered building.

405.4 Compartmentation. Compartmentation shall be in accordance with Sections 405.4.1 through 405.4.3.

❖ Compartmentation is a key element in the egress and fire access plan for floor areas in an underground building. Subdivision into separate compartments through the use of smoke barriers (see Section 709) permits occupants to travel horizontally to escape the fire condition and provides a staging area for the fire service (see Commentary Figure 405.4).

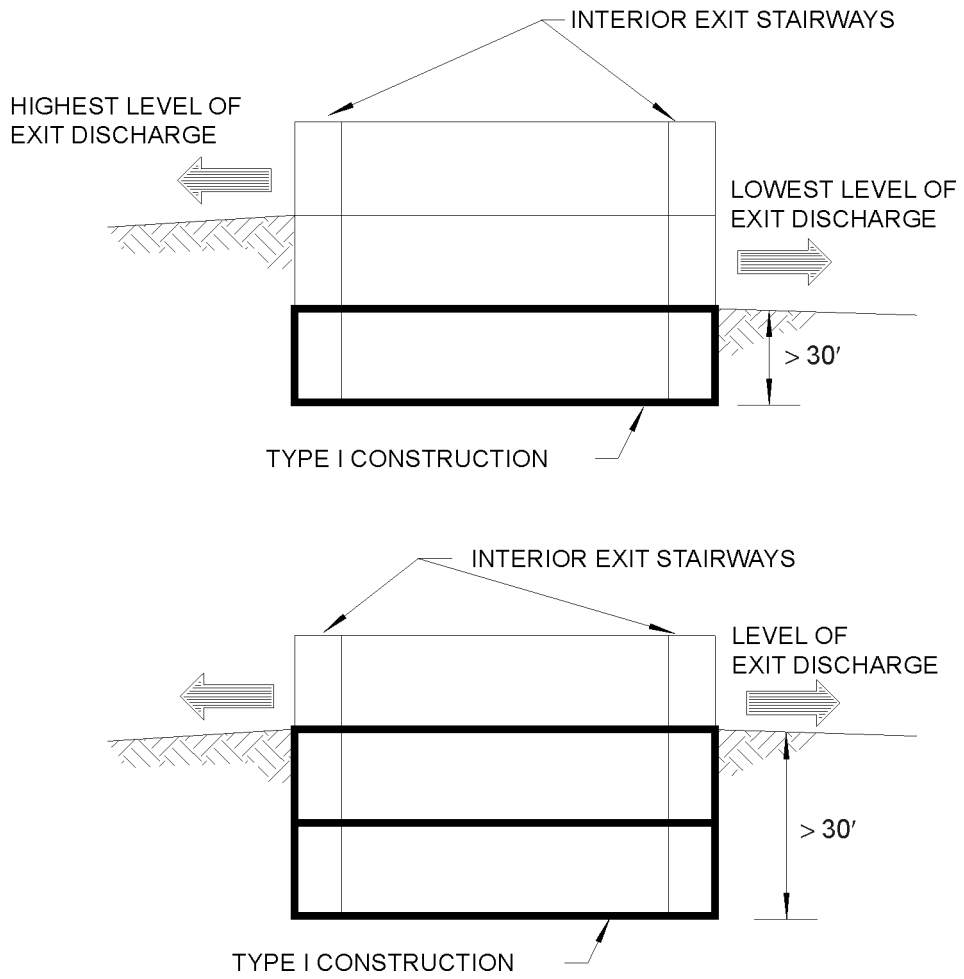

For SI: 1 foot = 304.8 mm.

Figure 405.1
EXAMPLES OF UNDERGROUND BUILDINGS

INTERNATIONAL CODE COUNCIL®
Copyright © 2015 ICC. ALL RIGHTS RESERVED. Accessed by David Dammon on Jun 21, 2017 12:30:52 PM pursuant to License Agreement with ICC. No further reproduction or distribution authorized. ANY UNAUTHORIZED REPRODUCTION OR DISTRIBUTION IS A VIOLATION OF THE FEDERAL COPYRIGHT ACT AND THE LICENSE AGREEMENT, AND SUBJECT TO CIVIL AND CRIMINAL PENALTIES THEREUNDER.

405.4.1 Number of compartments. A building having a floor level more than 60 feet (18 288 mm) below the finished floor of the lowest *level of exit discharge* shall be divided into no fewer than two compartments of approximately equal size. Such compartmentation shall extend through the highest *level of exit discharge* serving the underground portions of the building and all levels below.

Exception: The lowest *story* need not be compartmented where the area is not greater than 1,500 square feet (139 m^2) and has an *occupant load* of less than 10.

❖ The 60-foot (18 288 mm) threshold is based on establishing a reasonable limitation on the required vertical travel distance for the occupants and fire service before the added protection of compartmentation is beneficial.

It is important to realize that the code requires, at a minimum, two compartments of approximately equal size. The maximum size of each compartment is not limited and is, therefore, a design decision subject to the approval of the building official.

An exception is permitted at the lowest level of the underground building as long as that level is relatively small in area [less than or equal to 1,500 square feet (139 m^2)] and serves a low occupant load (less than 10), since an evacuation to the next higher level

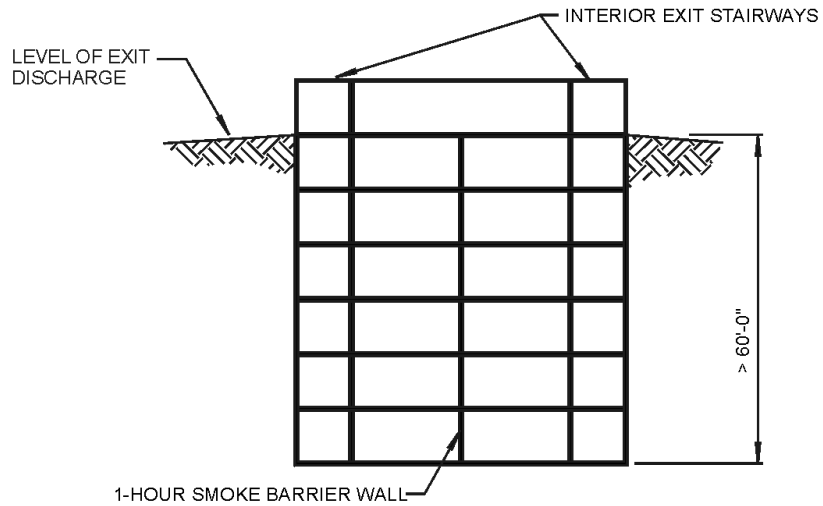

ELEVATION

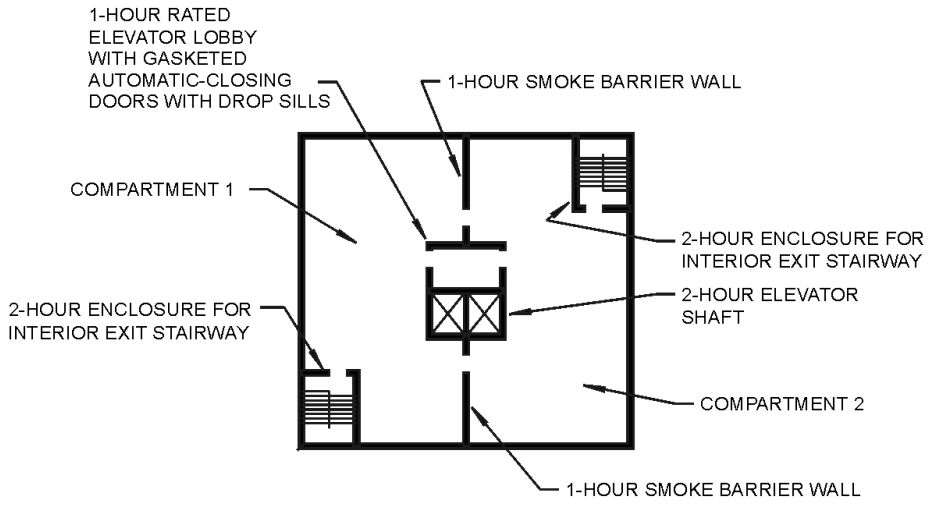

PLAN

For SI: 1 foot = 304.8 mm, 1 inch = 25.4 mm.

Figure 405.4
EXAMPLE OF COMPARTMENTATION, ELEVATOR PROTECTION AND EGRESS OF AN UNDERGROUND BUILDING

INTERNATIONAL CODE COUNCIL®
Copyright © 2015 ICC. ALL RIGHTS RESERVED. Accessed by David Dammon on Jun 21, 2017 12:30:52 PM pursuant to License Agreement with ICC. No further reproduction or distribution authorized. ANY UNAUTHORIZED REPRODUCTION OR DISTRIBUTION IS A VIOLATION OF THE FEDERAL COPYRIGHT ACT AND THE LICENSE AGREEMENT, AND SUBJECT TO CIVIL AND CRIMINAL PENALTIES THEREUNDER.

would not be expected to adversely affect that level. Note that this exception coordinates with Exception 5 to Section 405.1.

It should be noted that smoke control would be required for all underground buildings in accordance with Section 405.5 that fall under the scope of Section 405.1. Smoke control systems, which are required to be designed in accordance with Section 909, would generally require the use of smoke barriers to create compartments to achieve the design goals stated in Section 405.5.1. Therefore, even when compartmentation is not required for a building that has a floor level less than 60 feet (18 288 mm) below the finished floor of the level of exit discharge, compartmentation will probably still be utilized within a building to achieve the goals of Section 909. These compartments may be utilized in a different manner than as mandated in Section 405.4.1. In other words, such compartments may not span vertically from the finished floor of the level of exit discharge to the lowest level of the underground building. The compartments may be designated by story (see Commentary Figure 405.4.1).

The provisions for smoke control and compartmentation found in Section 405 were historically focused on smoke exhaust versus smoke control. More specifically, smoke control is for the safety of the occupants only, whereas smoke exhaust tends to focus on the needs of the fire department in managing smoke in underground conditions. The compartmentation requirements in Section 405.4 were meant to work with the smoke exhaust requirements and, at the very least, provide passive smoke management for the building for both the occupants and the fire department. As noted, the requirements of Section 909 as required by Section 405.5 have a different focus and will result in many compartments within the building.

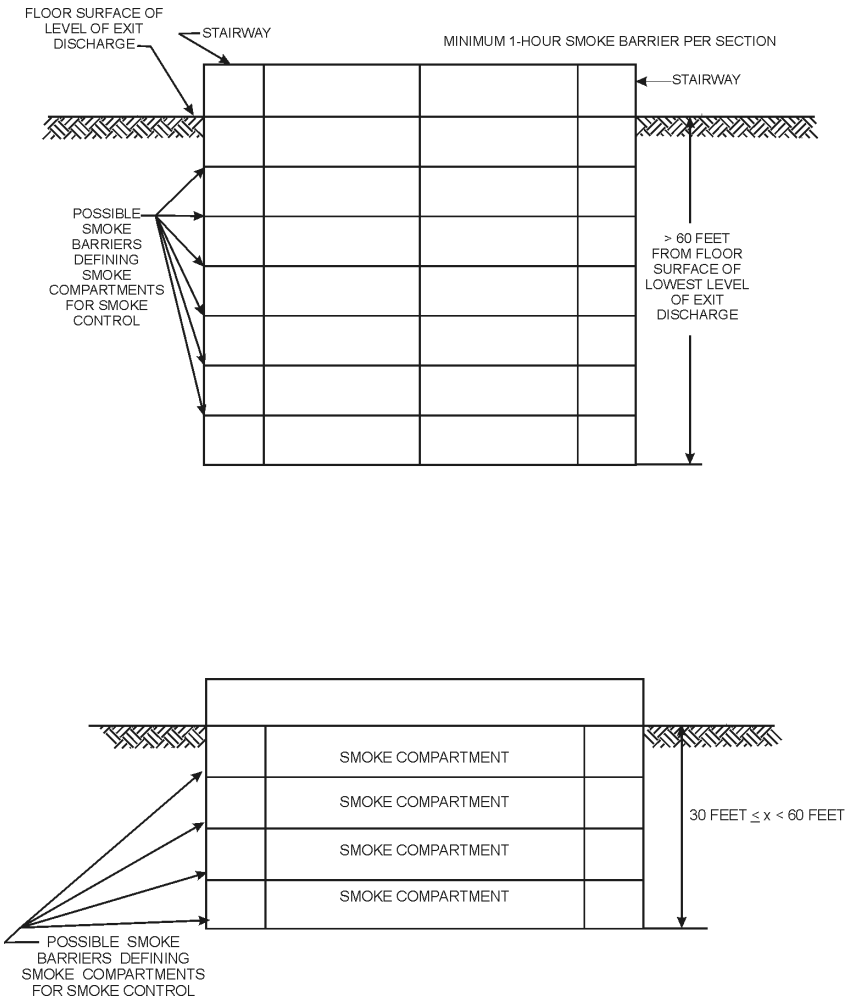

For SI: 1 foot = 304.8.

Figure 405.4.1
EXAMPLE OF HORIZONTAL COMPARTMENTATION

INTERNATIONAL CODE COUNCIL®
Copyright © 2015 ICC. ALL RIGHTS RESERVED. Accessed by David Dammon on Jun 21, 2017 12:30:52 PM pursuant to License Agreement with ICC. No further reproduction or distribution authorized. ANY UNAUTHORIZED REPRODUCTION OR DISTRIBUTION IS A VIOLATION OF THE FEDERAL COPYRIGHT ACT AND THE LICENSE AGREEMENT, AND SUBJECT TO CIVIL AND CRIMINAL PENALTIES THEREUNDER.

405.4.2 Smoke barrier penetration. The compartments shall be separated from each other by a *smoke barrier* in accordance with Section 709. Penetrations between the two compartments shall be limited to plumbing and electrical piping and conduit that are firestopped in accordance with Section 714. Doorways shall be protected by *fire door assemblies* that are automatic-closing by smoke detection in accordance with Section 716.5.9.3 and are installed in accordance with NFPA 105 and Section 716.5.3. Where provided, each compartment shall have an air supply and an exhaust system independent of the other compartments.

❖ The smoke barrier walls and floor/ceiling assemblies that create the compartments must be fire-resistance rated for 1-hour and must meet the requirements of Section 709. Penetrations through the smoke barrier wall are limited to plumbing, piping and penetrations that are vital to the fire protection systems (i.e., sprinkler piping and electrical raceways). Special fire-resistance-rated doors are required to maintain the intended compartmentation, including gasketing and drop sills. Separate air distribution systems are required for each compartment. Components of the air distribution system are not permitted to penetrate the smoke barrier walls. These requirements are intended to help provide for the independence of the compartments separated by the smoke barrier walls by minimizing the penetrations therein. Note also that Section 711.2 addresses horizontal assemblies that are used as smoke barriers.

The separate air distribution systems required by this section are focused on the smoke compartments specifically required by this section and would not necessarily require separate systems for each compartment as created by the requirements of Section 405.5.

405.4.3 Elevators. Where elevators are provided, each compartment shall have direct access to an elevator. Where an elevator serves more than one compartment, an elevator lobby shall be provided and shall be separated from each compartment by a s*moke barrier* in accordance with Section 709. Doors shall be gasketed, have a drop sill and be automatic-closing by smoke detection in accordance with Section 716.5.9.3.

❖ Elevators are permitted to serve more than one compartment when properly protected. When different compartments utilize a common elevator, a smoke barrier consisting of a 1-hour fire-resistance-rated elevator lobby is required. This lobby provides additional separation between adjacent compartments, thus helping to create their independence from the immediate effects of fire (see Commentary Figure 405.4). Essentially, the elevator lobby as prescribed in this section creates another smoke compartment within the building.

405.5 Smoke control system. A smoke control system shall be provided in accordance with Sections 405.5.1 and 405.5.2.

❖ A smoke control system is required for all underground buildings. The smoke control system is an integral part of the required fire protection systems for underground buildings and is focused upon the safety of occupants while exiting the building during a fire. In the case where the building contains both underground and above-ground portions, such specific details and requirements are listed in Sections 405.5.1 and 405.5.2.

405.5.1 Control system. A smoke control system is required to control the migration of products of combustion in accordance with Section 909 and the provisions of this section. Smoke control shall restrict movement of smoke to the general area of fire origin and maintain *means of egress* in a usable condition.

❖ The general design requirements, special inspection and test requirements, and applicable smoke control methods are contained within Section 909. The performance goal of the smoke control system is to contain the smoke and hot gases generated by a fire condition to the immediate area of origin. “Containing to the immediate area of origin” is usually taken to mean the compartment of origin. This allows the building occupants to access their required exits and evacuate the building before smoke movement traps them below grade. Generally the type of system will be a pressurization system where the smoke is managed by maintaining pressure differences across smoke barriers. It could be possible that a different type of system such as an exhaust system is required in larger more open spaces such as an atrium. It is important to note that the systems in Section 909 are intended for the protection of occupants and do not necessarily provide longer term capacity for the fire department. In addition, such systems are not intended as a method of smoke exhaust for salvage and overhaul after a fire. It is recognized that overhaul in underground buildings after a fire is far more complex because the structure is entirely underground, but as Section 909 is currently written such systems are not specifically designed with this role in mind.

As discussed in the commentary to Section 405.4.1, the smoke control system required by Section 405.5 will likely result in many smoke compartments in order to meet the design criteria of Section 909.

405.5.2 Compartment smoke control system. Where compartmentation is required, each compartment shall have an independent smoke control system. The system shall be automatically activated and capable of manual operation in accordance with Sections 907.2.18 and 907.2.19.

❖ The compartmentation referred to in this section is that discussed in Section 405.4.1, which requires that the building be separated from the story of level of exit discharge to the lowest level in the building. It is not the intent that each smoke compartment (smoke zone) as created through the application of Section 405.5.1 would be required to have independent smoke control systems (see commentary, Section 405.4.2).

INTERNATIONAL CODE COUNCIL®
Copyright © 2015 ICC. ALL RIGHTS RESERVED. Accessed by David Dammon on Jun 21, 2017 12:30:52 PM pursuant to License Agreement with ICC. No further reproduction or distribution authorized. ANY UNAUTHORIZED REPRODUCTION OR DISTRIBUTION IS A VIOLATION OF THE FEDERAL COPYRIGHT ACT AND THE LICENSE AGREEMENT, AND SUBJECT TO CIVIL AND CRIMINAL PENALTIES THEREUNDER.

[F] 405.6 Fire alarm systems. A *fire alarm* system shall be provided where required by Sections 907.2.18 and 907.2.19.

❖ The ability to communicate and offer warning of a fire scenario can increase the time available for egress from the building. Underground buildings with a floor level greater than 60 feet (18 288 mm) below the finished floor of the level of exit discharge are, therefore, required to be provided with a manual fire alarm system. An emergency voice/alarm communication system is required as part of this system.

405.7 Means of egress. *Means of egress* shall be in accordance with Sections 405.7.1 and 405.7.2.

❖ This section is simply the introduction for means of egress requirements in underground buildings. Egress from underground buildings can be more challenging than buildings above grade, thus additional requirements are necessary.

405.7.1 Number of exits. Each floor level shall be provided with no fewer than two *exits*. Where compartmentation is required by Section 405.4, each compartment shall have no fewer than one *exit* and shall also have no fewer than one *exit access* doorway into the adjoining compartment.

❖ The means of egress from underground buildings is an integral part of the safety precautions necessary to abate the hazards of people being located more than 30 feet (9144 mm) below the level of exit discharge. Sections 405.7.1 and 405.7.2 provide the minimum number of exits and requirements for smokeproof enclosures. These provisions create safe and usable elements that the building occupants can enter to flee the immediate effects of a fire located well below grade.

The arrangement of exits and exit access doors for an underground building is regulated by this section (see Commentary Figure 405.4).

Based on the requirements of this section and Section 405.4, an underground building having a floor level more than 30 feet (9144 mm) below the level of exit discharge requires a minimum of two exits, and cannot qualify as a single-exit building. Additional exits may be required in accordance with Section 1006.2. Underground buildings requiring compartmentation in accordance with Section 405.4.1 must have an exit in each and every compartment plus a doorway into the adjoining compartment.

405.7.2 Smokeproof enclosure. Every required *stairway* serving floor levels more than 30 feet (9144 mm) below the finished floor of its *level of exit discharge* shall comply with the requirements for a *smokeproof enclosure* as provided in Section 1023.11.

❖ In order for interior exit stairways to provide the necessary means of egress, all stairways of an underground building must be constructed as smokeproof enclosures. The requirements for smokeproof enclosures are contained in Section 1023.11, which in turn references Section 909.20, and include a 2-hour enclosure along with limited access via a vestibule where the mechanical ventilation alternative described in Section 909.20 is provided. Another alternative is a pressurized stairway. The requirements for pressurized stairways are also listed in Section 909.20. Pressurized interior exit stairways do not require a vestibule, but pressure differences as prescribed in Section 909.20.5 need to be provided and demonstrated through testing. These provisions for a smokeproof enclosure are intended to maintain a protected path of travel for building occupants to egress the underground building and also allow the fire department to enter for rescue and fire-fighting operations.

[F] 405.8 Standby and emergency power. A standby power system complying with Section 2702 shall be provided for the standby power loads specified in Section 405.8.1. An emergency power system complying with Section 2702 shall be provided for the emergency power loads specified in Section 405.8.2.

❖ All underground buildings regulated by this section are required to be provided with standby and emergency power systems to increase the probability that critical systems will be operational in the event of a loss of normal power supply. The purpose of the standby and emergency power systems is to provide an alternative means of supplying power to selected building systems should the normal electrical source fail. The systems which must be provided with standby power are specified in Section 405.8.1. The systems required to be provided with emergency power are specified in Section 405.8.2.

[F] 405.8.1 Standby power loads. The following loads are classified as standby power loads:

1. Smoke control system.
2. *Ventilation* and automatic fire detection equipment for *smokeproof enclosures.*
3. Fire pumps.
4. Elevators, as required in Section 3003.

❖ The standby power system is required to supply electrical power to equipment that is essential to emergency egress, fire-fighting and rescue operations. See the commentary in Sections 403.4.8.3 and 3003 regarding how elevators operate under standby power.

[F] 405.8.2 Emergency power loads. The following loads are classified as emergency power loads:

1. *Emergency voice/alarm communications systems*.
2. *Fire alarm* systems.
3. Automatic fire detection systems.
4. Elevator car lighting.
5. *Means of egress* and exit sign illumination as required by Chapter 10.

❖ The emergency power system is required to supply electrical power to equipment that is essential to detecting and warning others of a fire condition and to provide for illuminated evacuation of the underground

INTERNATIONAL CODE COUNCIL®
Copyright © 2015 ICC. ALL RIGHTS RESERVED. Accessed by David Dammon on Jun 21, 2017 12:30:52 PM pursuant to License Agreement with ICC. No further reproduction or distribution authorized. ANY UNAUTHORIZED REPRODUCTION OR DISTRIBUTION IS A VIOLATION OF THE FEDERAL COPYRIGHT ACT AND THE LICENSE AGREEMENT, AND SUBJECT TO CIVIL AND CRIMINAL PENALTIES THEREUNDER.

building. Because of the critical nature of the systems and the potential for panic in the areas covered, the loads must be picked up within 10 seconds after failure of the normal power supply. This maximum time is consistent with the requirements of NFPA 70.

[F] 405.9 Standpipe system. The underground building shall be equipped throughout with a standpipe system in accordance with Section 905.

❖ Just as high-rise buildings or other large buildings with special features are required to be provided with a standpipe system, so are underground buildings. A Class I automatic wet or manual wet standpipe system must be provided. Standpipe systems allow fire department or other trained personnel to fight fires at basement levels where it is impractical to run supply lines from fire department trucks or outside hydrants. A quick and convenient water source for fire department use is essential to containing an underground fire.

SECTION 406
MOTOR-VEHICLE-RELATED OCCUPANCIES

❖ Included in this section of the code are the special use and occupancy requirements for those buildings and structures that house motor vehicles. Corresponding requirements for aircraft-related occupancies can be found in Section 412. By definition, all structures that provide services or are used for the storage or parking of motor vehicles are regulated by these provisions. These requirements are applicable regardless of the type of fuel source used to power the vehicles' motors, the number of vehicles present, whether the vehicles are privately or commercially owned and whether they are used strictly for passengers or for freight. Typically, fire hazards for motor-vehicle occupancies are low because of the limited amounts of combustibles present along with the steel frame and metal clad bodies. Motor vehicle structures normally have sufficient space around each vehicle for parking purposes, which serves to further limit the fuel load. The design occupant loads are usually low and pose little if any life safety risks.

This section contains requirements for five different motor-vehicle occupancies along with general requirements for parking garages. Section 406.3 addresses private garages and carports, which are classified as a Group U occupancies. All other parking garages are considered to be public parking garages and divided into either open parking garages or enclosed parking garages. These Group S-2 structures represent a slightly higher hazard than private garages or carports. As such, the heights and areas of these structures along with their type of construction classification are controlled. Requirements are also provided for those buildings and structures that provide service, care and repair of the vehicles. Stations where motor fuels are sold and dispensed are classified as Group M occupancies. The requirements for such facilities are contained in Section 406.7. Garages that provide repair services for vehicles also represent a slightly higher hazard; therefore, Section 406.8 identifies those additional code requirements necessary to abate the hazards of repair garages and their Group S-1 occupancy classification.

Although not specifically referenced in the code, both Section 304 of the *International Mechanical Code*® (IMC®) and Section 305 of the *International Fuel Gas Code*® (IFGC®) address the location of mechanical equipment in both private and public garages.

406.1 General. Motor-vehicle-related occupancies shall comply with Sections 406.1 through 406.8.

❖ The special provisions for motor vehicle related occupancies address private garages and carports, public parking (both open and unenclosed) garages, motor fuel-dispensing facilities and repair garages.

406.2 Definitions. The following terms are defined in Chapter 2:

MECHANICAL-ACCESS OPEN PARKING GARAGES.

OPEN PARKING GARAGE.

PRIVATE GARAGE.

RAMP-ACCESS OPEN PARKING GARAGES.

❖ This section lists terms that are specifically associated with the subject matter of Section 406. It is important to emphasize that these terms are not exclusively related to this chapter but may or may not also be applicable where the term is used elsewhere in the code.

Definitions of terms can help in the understanding and application of the code requirements. The purpose for including a list within this chapter is to provide more convenient access to terms which may have a specific or limited application within this chapter. For the complete definition and associated commentary, refer back to Chapter 2. Terms that are italicized provide a visual identification throughout the code that a definition exists for that term. The use and application of all defined terms are set forth in Section 201.

406.3 Private garages and carports. Private garages and carports shall comply with Sections 406.3.1 through 406.3.6.

❖ This section regulates private garages and carports. Such garages are frequently attached to residential-type occupancies. However, it is not mandatory that a private garage be accessory to a Group R occupancy. The code defines private garages (See Section 202). The definition states that a private garage does not accommodate repairing or servicing vehicles for a profit. But a person using the garage to service their own vehicle is not prohibited.

406.3.1 Classification. Private garages and carports shall be classified as Group U occupancies. Each private garage shall

INTERNATIONAL CODE COUNCIL®
Copyright © 2015 ICC. ALL RIGHTS RESERVED. Accessed by David Dammon on Jun 21, 2017 12:30:52 PM pursuant to License Agreement with ICC. No further reproduction or distribution authorized. ANY UNAUTHORIZED REPRODUCTION OR DISTRIBUTION IS A VIOLATION OF THE FEDERAL COPYRIGHT ACT AND THE LICENSE AGREEMENT, AND SUBJECT TO CIVIL AND CRIMINAL PENALTIES THEREUNDER.

be not greater than 1,000 square feet (93 m^2) in area. Multiple private garages are permitted in a building where each private garage is separated from the other private garages by 1-hour *fire barriers* in accordance with Section 707, or 1-hour *horizontal assemblies* in accordance with Section 711, or both.

❖ Private garages and carports are usually considered accessory to the building they serve. Section 312 classifies these utility and miscellaneous uses as Group U. This section limits an individual private garage to 1,000 square feet (93 m^2) in area. However, the code recognizes the concept of having multiple private garages in the same structure. Where such occurs, there is a minimum 1-hour fire barrier between individual private garages (and a 1-hour horizontal assembly where private garages are on multiple levels). However, there is no upper limit on the number of private garages that could be in any one structure. Section 406.3.4 specifies how private garages are to be separated from other occupancies.

406.3.2 Clear height. In private garages and carports, the clear height in vehicle and pedestrian traffic areas shall be not less than 7 feet (2134 mm). Vehicle and pedestrian areas accommodating van-accessible parking shall comply with Section 1106.5.

❖ The clear height is only required for vehicle and pedestrian traffic areas. If a portion of the garage was used for storage, as one typically finds for a garage attached to a residence, the ceiling height could be lower in such areas. Van parking, where provided in accordance with Section 1106.5, is required to have a minimum ceiling height of 98 inches (8 feet 2 inches) as specified in the ICC A117.1 Accessibility standard.

406.3.3 Garage floor surfaces. Garage floor surfaces shall be of *approved* noncombustible material. The area of floor used for parking of automobiles or other vehicles shall be sloped to facilitate the movement of liquids to a drain or toward the main vehicle entry doorway.

❖ The use of a combustible floor finish that could absorb flammable and combustible liquids commonly used and stored within garages and carports presents a potential safety hazard to the occupants of an attached building. The floors of private garages must be sloped toward the main vehicle doors. Carports have an exception allowing use of asphalt paving, which is not allowed for private garages because they are enclosed resulting in the described potential safety hazards.

406.3.4 Separation. For other than private garages adjacent to dwelling units, the separation of private garages from other occupancies shall comply with Section 508. Separation of private garages from *dwelling units* shall comply with Sections 406.3.4.1 through 406.3.4.3.

❖ The section directs code users to places for separation requirements between private garages and other occupancies. The separations other than from dwelling units are treated no differently than other occupancy separations and therefore must comply with Section 508. Separation between private garages and dwelling units is specified in the three following sections. Please note that individual private garages in the same building are separated by 1-hour fire barriers as specified in Section 406.3.1.

406.3.4.1 Dwelling unit separation. The private garage shall be separated from the *dwelling unit* and its *attic* area by means of gypsum board, not less than $^1/_2$ inch (12.7 mm) in thickness, applied to the garage side. Garages beneath habitable rooms shall be separated from all habitable rooms above by not less than a $^5/_8$-inch (15.9 mm) Type X gypsum board or equivalent and $^1/_2$-inch (12.7 mm) gypsum board applied to structures supporting the separation from habitable rooms above the garage. Door openings between a private garage and the *dwelling unit* shall be equipped with either solid wood doors or solid or honeycomb core steel doors not less than $1^3/_8$ inches (34.9 mm) in thickness, or doors in compliance with Section 716.5.3 with a fire protection rating of not less than 20 minutes. Doors shall be *self-closing* and self-latching.

❖ When a private garage is attached to a dwelling unit, the adjacent areas (including attics) are to be separated to provide a minimum level of protection. This separation is to be constructed of not less than $^1/_2$-inch (12.7 mm) gypsum wallboard applied to the garage side. In a location where the garage is beneath any type of habitable space, the separation requirement is increased by requiring $^5/_8$-inch (15.9 mm) Type X gypsum board or some other material that would provide an equivalent level of protection. Bearing walls and other structural elements that support the horizontal separation shall be protected with minimum $^1/_2$-inch (12.7 mm) gypsum board. Doors opening within the adjacent wall are required to be protected with a minimum $1^3/_8$-inch-thick (34 mm) solid core wood or $1^3/_8$-inch-thick (34 mm) solid or honeycomb steel door. Although the $1^3/_8$-inch-thick (34 mm) solid core wood and honeycomb steel doors are not listed as fire doors, they still provide some protection. Alternatively, doors with a 20-minute fire protection rating in accordance with Section 716.5.3 may be used. All door openings from the garage, whether solid core wood, honeycomb steel or 20-minute rated, are prohibited from opening directly into a bedroom or any other room used for sleeping purposes. It is important to note that this separation requirement, including the protection and the limitation on the openings, is only applicable to garages and not to carports.

406.3.4.2 Openings prohibited. Openings from a private garage directly into a room used for sleeping purposes shall not be permitted.

❖ All openings, including doors, are strictly prohibited between a garage and any room used for sleeping purposes. Even the doors specified in Section 406.3.4.2. are prohibited. Openings are not prohibited for carports.

406.3.4.3 Ducts. Ducts in a private garage and ducts penetrating the walls or ceilings separating the *dwelling unit* from the garage, including its *attic* area, shall be constructed of sheet

INTERNATIONAL CODE COUNCIL®
Copyright © 2015 ICC. ALL RIGHTS RESERVED. Accessed by David Dammon on Jun 21, 2017 12:30:52 PM pursuant to License Agreement with ICC. No further reproduction or distribution authorized. ANY UNAUTHORIZED REPRODUCTION OR DISTRIBUTION IS A VIOLATION OF THE FEDERAL COPYRIGHT ACT AND THE LICENSE AGREEMENT, AND SUBJECT TO CIVIL AND CRIMINAL PENALTIES THEREUNDER.

steel of not less than 0.019 inch (0.48 mm) in thickness and shall have no openings into the garage.

❖ Ducts in the walls and ceilings that do not penetrate into the garage are already protected by the gypsum wallboard; therefore, additional separation is not necessary. If the ducts do penetrate through the separation, then the specified protection must be provided.

406.3.5 Carports. Carports shall be open on at least two sides. Carport floor surfaces shall be of an *approved* noncombustible material. Carports not open on at least two sides shall be considered a garage and shall comply with the requirements for private garages.

Exception: Asphalt surfaces shall be permitted at ground level in carports.

The area of floor used for parking of automobiles or other vehicles shall be sloped to facilitate the movement of liquids to a drain or toward the main vehicle entry doorway.

❖ Carports are covered structures, either free-standing or attached to the side of a building, for the purposes of providing shelter for motor vehicles. Carports must be open on at least two sides. This allows a fire condition to vent quickly to the outside. This further prevents a fire from going undetected and usually limits the amount of other incidental storage that may be included in a fully enclosed garage. Attached carports that are not open on at least two sides are considered a garage and must then be separated from the adjoining dwelling or other occupancy. Where a garage door is provided on a carport, that side should not be considered an open side.

The use of a combustible floor finish that could absorb flammable and combustible liquids commonly used and stored within carports presents a potential safety hazard to the occupants of an attached building. Recognizing that a carport is open on at least two sides and thus has a lower hazard than an enclosed private garage, the exception allows asphalt paving on a ground-level carport. Regardless of the surfacing material, the floor needs to be sloped to a drain or vehicle entry. This permits any spilled material to be moved out of the carport and not accumulate.

406.3.5.1 Carport separation. A separation is not required between a Group R-3 and U carport, provided the carport is entirely open on two or more sides and there are not enclosed areas above.

❖ A roofed structure such as a carport, open on two or more sides without any enclosed uses above, poses no special hazard to the occupants of the dwelling. If a fire were to start under the carport roof, the smoke, hot gases and flames would be able to escape out the open sides, providing the structure with an adequate amount of protection. See the commentary to Section 406.3.3 for additional related discussion.

406.3.6 Automatic garage door openers. Automatic garage door openers, where provided, shall be *listed* in accordance with UL 325.

❖ This section provides a requirement that automatic door openers comply with UL 325. This provision is also found in the *International Residential Code*® (IRC®).

406.4 Public parking garages. Parking garages, other than *private garages*, shall be classified as public parking garages and shall comply with the provisions of Sections 406.4.2 through 406.4.8 and shall be classified as either an *open parking garage* or an enclosed parking garage. *Open parking garages* shall also comply with Section 406.5. Enclosed parking garages shall also comply with Section 406.6. See Section 510 for special provisions for parking garages.

❖ There are fundamentally two types of parking garages regulated by the IBC: private garages and public garages. Private garages are addressed by Section 406.3 and are defined in Section 202. Those structures that fall outside of the scope of Section 406.3 and the Section 202 definition of "Private garage" are considered as public parking garages. The primary difference between private and public garages is the size of the facility, rather than the use. Strictly limited in permissible height and area, private parking garages are typically not commercial in nature. They serve only a specific tenant or building and are not open for public use. It is important to note that there is no implication that public parking garages must be open to the public, as they are only considered public in comparison to private garages.

Public parking garages are considered to be storage occupancies (Group S-2). In addition to the provisions of Sections 406.4, 406.5 and 406.6, public parking garages must also comply with the code provisions for Group S occupancies.

The overall building fire loading in public parking garages is typically low because of the considerable amount of metal in vehicles, which absorbs heat, and the average weight of combustibles per square foot being relatively low [approximately 2 pounds per square foot (9.8 kg/m^2 psf)]. Still, a vehicle fire may be quite extensive.

Public parking garages are divided into one of two categories. Those parking garages that contain sufficient clear openings in their exterior walls that meet the requirements of Section 406.5.2 can be classified as open parking garages. All other public parking garages must be considered as enclosed parking garages and must comply with Section 406.6. Special height and area provisions for parking garages located above or below other uses and occupancies are contained in Section 510.

406.4.1 Clear height. The clear height of each floor level in vehicle and pedestrian traffic areas shall be not less than 7

INTERNATIONAL CODE COUNCIL®
Copyright © 2015 ICC. ALL RIGHTS RESERVED. Accessed by David Dammon on Jun 21, 2017 12:30:52 PM pursuant to License Agreement with ICC. No further reproduction or distribution authorized. ANY UNAUTHORIZED REPRODUCTION OR DISTRIBUTION IS A VIOLATION OF THE FEDERAL COPYRIGHT ACT AND THE LICENSE AGREEMENT, AND SUBJECT TO CIVIL AND CRIMINAL PENALTIES THEREUNDER.

feet (2134 mm). Vehicle and pedestrian areas accommodating van-accessible parking shall comply with Section 1106.5.

❖ A clear height of 7 feet (2134 mm) is required for all parking garages. This is an exception to the 7-foot 6-inch (2286 mm) minimum height required in Chapter 10 for the means of egress system. This minimum height permits free and unobstructed egress around the vehicles and exit access areas. Van-accessible parking areas and the vehicular route to them must comply with Section 1106.5.

406.4.2 Guards. Guards shall be provided in accordance with Section 1015. Guards serving as *vehicle barriers* shall comply with Sections 406.4.3 and 1015.

❖ For the same reasons as identified in the commentary to Section 1015, guards are required around all vertical openings in the floors and roofs of parking garages where the vertical distance between adjacent levels exceeds 30 inches (762 mm). As a separate requirement, vehicle barriers are required at specified locations where the vertical distance between adjacent levels exceeds 12 inches (305 mm). Guards that serve a dual purpose of guard and vehicle barrier systems must comply with both Sections 1015 and 406.4.3.

406.4.3 Vehicle barriers. *Vehicle barriers* not less than 2 feet 9 inches (835 mm) in height shall be placed where the vertical distance from the floor of a drive lane or parking space to the ground or surface directly below is greater than 1 foot (305 mm). *Vehicle barriers* shall comply with the loading requirements of Section 1607.8.3.

Exception: *Vehicle barriers* are not required in vehicle storage compartments in a mechanical access parking garage.

❖ This section requires vehicle barriers at locations where a 1-foot (305 mm) dropoff exists adjacent to parking spaces or drive lanes. Vehicle barriers are to be designed in accordance with Section 1607.8.3. The vehicle barriers are required to resist a single load of 6,000 pounds (2722 kg). The minimum height of the barriers is 2 feet 9 inches (835 mm), in recognition of the extensive number of vehicles with higher profiles on the road today. Barriers are not required in areas where the employees of the garage park the vehicles, such as mechanical access garages.

406.4.4 Ramps. Vehicle ramps shall not be considered as required *exits* unless pedestrian facilities are provided. Vehicle ramps that are utilized for vertical circulation as well as for parking shall not exceed a slope of 1:15 (6.67 percent).

❖ Since the vehicular ramps of parking garages are open to all levels, they are directly exposed to the effects of smoke and hot gases. In addition, the vehicle ramps are often sloped at a rate greater than 1:12 (8-percent slope). These ramps, therefore, cannot be counted as part of the required exits from each level or tier. Certainly occupants can travel from their vehicles on sloped parking levels to access the required exit stairways. However, occupants cannot continuously travel down the vehicle ramps to reach the exit discharge unless the slope is 1:15 or less and sidewalks or other protected walking surfaces are provided.

406.4.5 Floor surface. Parking surfaces shall be of concrete or similar noncombustible and nonabsorbent materials.

The area of floor used for parking of automobiles or other vehicles shall be sloped to facilitate the movement of liquids to a drain or toward the main vehicle entry doorway.

Exceptions:

1. Asphalt parking surfaces shall be permitted at ground level.
2. Floors of Group S-2 parking garages shall not be required to have a sloped surface.

❖ To avoid acquiring a buildup of flammable liquids on the floor of parking garages, the floor finish is required to be noncombustible and nonabsorbent. Because of pollution concerns, however, garage floors are not automatically required to be drained into the building drainage system. This is consistent with requirements of the Environmental Protection Agency (EPA) for storm water drainage, as well as the philosophy of hazardous material handling (i.e., localize spills and treat them). If floor drains are provided, however, they must be installed in accordance with the IPC.

Exception 1 recognizes that many states have allowed the use of asphalt paving surfaces at grade levels of parking garages with no record of fire hazards. This exception does not allow asphalt paving to be used on stories above or below grade. Although not specified, the floor must be positively sloped at some rate, such as 1 in 48 (2-percent slope), to prevent the accumulation of any spilled flammable and combustible liquids and their vapors. This minimizes the risk of the vapors building up to a point where a fire condition could result.

Exception 2 was introduced into the code based on the recognition that many parking garages are constructed of prefabricated materials which prove difficult to achieve the required slope when assembled on site. The exception, however, waives the slope requirement for all Group S-2 parking facilities, not just those of prefabricated materials.

406.4.6 Mixed occupancy separation. Parking garages shall be separated from other occupancies in accordance with Section 508.1.

❖ If a building or structure consists not only of a Group S-2 parking garage but also other occupancies, then the building is treated as any other mixed occupancy. The building designer must choose one of the options available in Section 508 to address the mixed use and occupancy issues. Keep in mind that Sections 510.2, 510.3, 510.4, 510.7, 510.8 and 510.9 contain special provisions for mixed separations when the parking garages are located above or below other groups.

INTERNATIONAL CODE COUNCIL®
Copyright © 2015 ICC. ALL RIGHTS RESERVED. Accessed by David Dammon on Jun 21, 2017 12:30:52 PM pursuant to License Agreement with ICC. No further reproduction or distribution authorized. ANY UNAUTHORIZED REPRODUCTION OR DISTRIBUTION IS A VIOLATION OF THE FEDERAL COPYRIGHT ACT AND THE LICENSE AGREEMENT, AND SUBJECT TO CIVIL AND CRIMINAL PENALTIES THEREUNDER.

406.4.7 Special hazards. Connection of a parking garage with any room in which there is a fuel-fired appliance shall be by means of a vestibule providing a two-doorway separation.

Exception: A single door shall be allowed provided the sources of ignition in the appliance are not less than 18 inches (457 mm) above the floor.

❖ As part of the special use and occupancy requirements for parking garages, all possible ignition sources must be controlled and isolated. Specifically, all heating equipment must be located in rooms that are separated from the main areas where the vehicles are parked. Doors connecting the heating equipment rooms and the main parking area must be done with a vestibule or airlock arrangement such that one must pass through two doors prior to entering the other room. Again, this is done to minimize the possibility of any spilled flammable liquids and the resulting vapors from coming in contact with the ignition sources of the heating equipment.

An allowance is made if the heating equipment is located at least 18 inches (457 mm) above the floor of the separated room. In such a case, the vestibule/airlock arrangement with a double-door system is not required and access can be done with just a single door. If this exception is used, it must be understood by the building and fire officials that these special stipulations and conditions are part of the certificate of occupancy. Please note that there are more specific standards regarding the installation of mechanical equipment in public and private garages in Section 304 of the IMC and Section 305 of the IFGC.

406.4.8 Attached to rooms. Openings from a parking garage directly into a room used for sleeping purposes shall not be permitted.

❖ Just as a private garage cannot have openings into bedrooms (see Section 406.3.4.2), public parking garages are likewise limited. The risks of a fire and smoke quickly spreading into adjacent areas where occupants may be sleeping are too great.

406.5 Open parking garages. *Open parking garages* shall comply with Sections 406.5.1 through 406.5.11.

❖ The code establishes four types of garages: private, enclosed parking, repair garages and open parking. With the exception of private garages, all such structures are classified as Group S. Unlike other storage occupancies in which the fuel load is evenly distributed, garages represent a different fire hazard.

Because of generally fast-burning upholstery and gasoline or diesel fuel content, fires in individual vehicles can be quite extensive. Because of both the overall combustible loading within a parking garage, which yields a low combustible fuel load [approximately 2 pounds per square foot (psf) (9.8 kg/m^2)], and the considerable amount of metal in vehicles, which absorbs heat, the overall fire hazards are low. Section 406.5 provides requirements that are unique to open parking garages, while Section 406.3 addresses private garages and Section 406.6 addresses enclosed parking garages. Because of the permanently open exterior walls of open parking garages, which permit the dissipation of heated gases, special provisions are made for heights and areas of such structures.

Open parking garages are classified as Group S-2 and all of the provisions for this occupancy group are applicable except as modified herein.

406.5.1 Construction. *Open parking garages* shall be of Type I, II or IV construction. *Open parking garages* shall meet the design requirements of Chapter 16. For *vehicle barriers*, see Section 406.4.3.

❖ One of the basic premises of the provisions for open parking garages is that the overall fuel load is low and that the average fuel load per square foot is low. The construction of open parking garages, therefore, is restricted to Type I, II or IV, so that the combustible loading of cars is not exceeded by that of the structure.

406.5.2 Openings. For natural *ventilation* purposes, the exterior side of the structure shall have uniformly distributed openings on two or more sides. The area of such openings in *exterior walls* on a tier shall be not less than 20 percent of the total perimeter wall area of each tier. The aggregate length of the openings considered to be providing natural *ventilation* shall be not less than 40 percent of the perimeter of the tier. Interior walls shall be not less than 20 percent open with uniformly distributed openings.

Exception: Openings are not required to be distributed over 40 percent of the building perimeter where the required openings are uniformly distributed over two opposing sides of the building.

❖ Key attributes of an open parking garage, based on the fire records of such facilities, include the exterior wall openings and ventilation of the structure. This section requires that 40 percent of the building perimeter has openings that are uniformly distributed on no less than two sides of the structure. In addition to providing for adequate distribution, the section also requires that a minimum of 20 percent of the total perimeter wall area at each level must be open. The openings in the exterior wall must be free so that natural ventilation will occur without interior wall obstructions.

In instances where the open parking garage is provided with openings on two opposite sides of the structure, thereby providing cross ventilation, the 40-percent criterion does not apply. However, the openings must still meet the 20-percent criterion of the total perimeter wall area.

In every case, interior walls are to have distributed openings totaling 20 percent of the wall area to allow ventilation of all spaces (see Commentary Figure 406.5.2).

406.5.2.1 Openings below grade. Where openings below grade provide required natural *ventilation*, the outside hori-

INTERNATIONAL CODE COUNCIL®
Copyright © 2015 ICC. ALL RIGHTS RESERVED. Accessed by David Dammon on Jun 21, 2017 12:30:52 PM pursuant to License Agreement with ICC. No further reproduction or distribution authorized. ANY UNAUTHORIZED REPRODUCTION OR DISTRIBUTION IS A VIOLATION OF THE FEDERAL COPYRIGHT ACT AND THE LICENSE AGREEMENT, AND SUBJECT TO CIVIL AND CRIMINAL PENALTIES THEREUNDER.

zontal clear space shall be one and one-half times the depth of the opening. The width of the horizontal clear space shall be maintained from grade down to the bottom of the lowest required opening.

❖ Because permanently open exterior walls provide sufficient natural ventilation and permit the dissipation of heated gases, open parking garages are viewed as a relatively low hazard. However, there are situations where the required openings are located below the surrounding grade, which makes it more difficult to provide the necessary openness required for good performance. A clear horizontal space as described by this section must be provided adjacent to the garage's exterior openings to allow for adequate air movement through the opening. As the distance of the openings below the adjoining ground level increases, the minimum required exterior horizontal clear space also increases proportionally. The dimensional requirements are based on the provisions of Section 1203.5.1.2. The extent of the required clear space allows for adequate exterior open space to meet the intent and dynamics of natural ventilation requirements for open parking garages.

406.5.3 Uses. Mixed uses shall be allowed in the same building as an *open parking garage* subject to the provisions of Sections 402.4.2.3, 406.5.11, 508.1, 510.3, 510.4 and 510.7.

❖ Open parking garages can be constructed as part of a mixed-occupancy building. The building cannot be designed to take advantage of the height and area increases allowed by Sections 406.5.4.1 and 406.5.5. The code provides references to the placement of open parking garages as part of a covered or open mall building. It also provides specific references to three of the special building provisions in Section 510 where open parking garages may be located above or below other buildings. There is also a reference to the mixed-occupancy provisions of Section 508. There is also a reference to Section 406.5.11, where there are specific prohibitions for certain activities within an open parking garage.

406.5.4 Area and height. Area and height of *open parking garages* shall be limited as set forth in Chapter 5 for Group S-2 occupancies and as further provided for in Section 508.1.

❖ When an open parking garage is located within a building containing other occupancies, the code requires that the height and area limitations for the open parking garage be determined by using the normal provisions found in Chapter 5 for a Group S-2 occupancy. This essentially means that the garage would receive the same allowable areas of an enclosed parking garage or a storage building that was classified in the same occupancy.

406.5.4.1 Single use. Where the *open parking garage* is used exclusively for the parking or storage of private motor vehicles, with no other uses in the building, the area and height shall be permitted to comply with Table 406.5.4, along with increases allowed by Section 406.5.5.

Exception: The grade-level tier is permitted to contain an office, waiting and toilet rooms having a total combined area of not more than 1,000 square feet (93 m^2). Such area need not be separated from the *open parking garage*.

In *open parking garages* having a spiral or sloping floor, the horizontal projection of the structure at any cross section

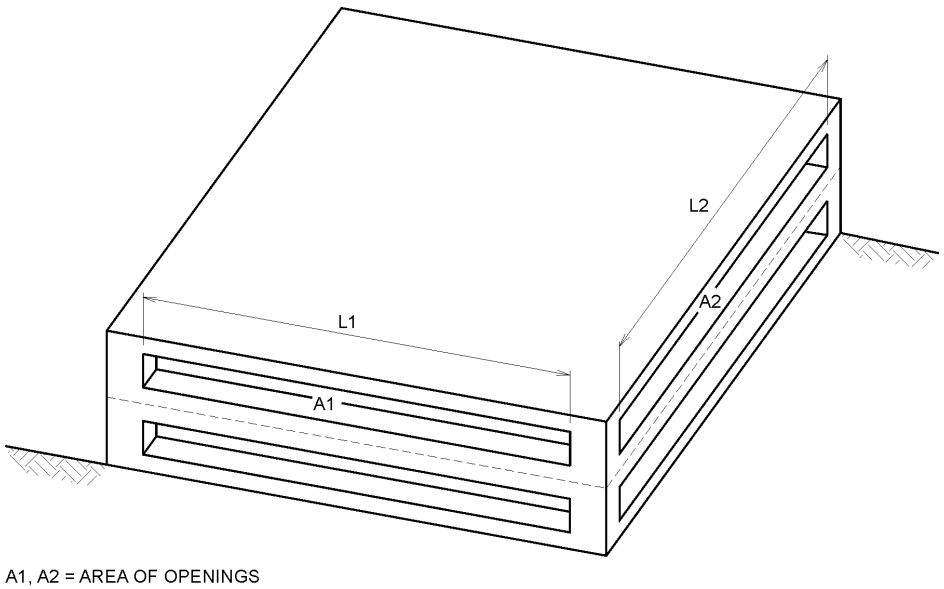

A1, A2 = AREA OF OPENINGS
L1, L2 = LENGTH OF OPENINGS
L1 + L2 > 40 PERCENT OF BUILDING PERIMETER
A1 + A2 > 20 PERCENT OF BUILDING PERIMETER WALL AREA

Figure 406.5.2
TWO-STORY OPEN PARKING GARAGE

INTERNATIONAL CODE COUNCIL®
Copyright © 2015 ICC. ALL RIGHTS RESERVED. Accessed by David Dammon on Jun 21, 2017 12:30:52 PM pursuant to License Agreement with ICC. No further reproduction or distribution authorized. ANY UNAUTHORIZED REPRODUCTION OR DISTRIBUTION IS A VIOLATION OF THE FEDERAL COPYRIGHT ACT AND THE LICENSE AGREEMENT, AND SUBJECT TO CIVIL AND CRIMINAL PENALTIES THEREUNDER.

shall not exceed the allowable area per parking tier. In the case of an *open parking garage* having a continuous spiral floor, each 9 feet 6 inches (2896 mm) of height, or portion thereof, shall be considered a tier.

The clear height of a parking tier shall be not less than 7 feet (2134 mm), except that a lower clear height is permitted in mechanical-access *open parking garages* where *approved* by the *building official*.

❖ When an open parking garage is located in a building that is only used as a parking garage, the type of hazard that is created by the occupancy is greatly reduced. Because of the openness requirements in Section 406.5.2 and the dissipation of heated gases, as well as the overall low fuel load, the height and area limitations for single-use open parking garages are not the same as for other buildings of Group S-2. The height requirements are based on actual fire experience and full-scale fire tests conducted in the United States, Great Britain, Japan and Switzerland. For these single-use buildings that comply with the other provisions of this section, Table 406.5.4 replaces Tables 504.3, 504.4 and 506.2 for the determination of heights and areas. Although these open parking garages are considered as being a single occupancy, the exception permits a limited amount of support-type spaces to be included in the structure.

TABLE 406.5.4. See below.

❖ Table 406.5.4 is used in the same manner as Tables 504.3, 504.4 and 506.2. For a given construction type, the height and area limitations can be determined from the table. For example, an open parking garage of Type IIB construction may be a maximum of eight tiers in height for a ramp access garage. The area would be limited to 50,000 square feet (4545 m^2) per tier.

The height restrictions in the table are measured as defined in Section 202. In this instance, parking may be permitted on the highest level of the structure, which also constitutes the roof of the structure. The areas provided are per tier.

406.5.5 Area and height increases. The allowable area and height of *open parking garages* shall be increased in accordance with the provisions of this section. Garages with sides open on three-fourths of the building's perimeter are permitted to be increased by 25 percent in area and one tier in height. Garages with sides open around the entire building's perimeter are permitted to be increased by 50 percent in area and one tier in height. For a side to be considered open under the above provisions, the total area of openings along the side shall not be less than 50 percent of the interior area of the side at each tier and such openings shall be equally distributed along the length of the tier. For purposes of calculating the interior area of the side, the height shall not exceed 7 feet (2134 mm).

Allowable tier areas in Table 406.5.4 shall be increased for *open parking garages* constructed to heights less than the table maximum. The gross tier area of the garage shall not exceed that permitted for the higher structure. No fewer than three sides of each such larger tier shall have continuous horizontal openings not less than 30 inches (762 mm) in clear height extending for not less than 80 percent of the length of the sides and no part of such larger tier shall be more than 200 feet (60 960 mm) horizontally from such an opening. In addition, each such opening shall face a street or *yard* accessible to a street with a width of not less than 30 feet (9144 mm) for the full length of the opening, and standpipes shall be provided in each such tier.

Open parking garages of Type II construction, with all sides open, shall be unlimited in allowable area where the *building height* does not exceed 75 feet (22 860 mm). For a side to be considered open, the total area of openings along the side shall be not less than 50 percent of the interior area of the side at each tier and such openings shall be equally distributed along the length of the tier. For purposes of calculating the interior area of the side, the height shall not exceed 7 feet (2134 mm). All portions of tiers shall be within 200 feet (60 960 mm) horizontally from such openings or other natural *ventilation* openings as defined in Section 406.5.2. These openings shall be permitted to be provided in *courts* with a minimum dimension of 20 feet (6096 mm) for the full width of the openings.

❖ The area modifications permitted by Section 406.5.5 for open building perimeters, which are similar to Section 506.3, are also applicable to the area restrictions in Table 406.5.4.

Open parking garages of Type IA construction are unlimited in area and height. This is consistent with Type I construction in Tables 504.3, 504.4 and 506.2.

Open parking garages of Type IB construction are

TABLE 406.5.4
OPEN PARKING GARAGES AREA AND HEIGHT

TYPE OF CONSTRUCTION	AREA PER TIER (square feet)	HEIGHT (in tiers)		
		Ramp access	Mechanical access	
			Automatic sprinkler system	
			No	Yes
IA	Unlimited	Unlimited	Unlimited	Unlimited
IB	Unlimited	12 tiers	12 tiers	18 tiers
IIA	50,000	10 tiers	10 tiers	15 tiers
IIB	50,000	8 tiers	8 tiers	12 tiers
IV	50,000	4 tiers	4 tiers	4 tiers

For SI: 1 square foot = 0.0929 m^2.

INTERNATIONAL CODE COUNCIL®
Copyright © 2015 ICC. ALL RIGHTS RESERVED. Accessed by David Dammon on Jun 21, 2017 12:30:52 PM pursuant to License Agreement with ICC. No further reproduction or distribution authorized. ANY UNAUTHORIZED REPRODUCTION OR DISTRIBUTION IS A VIOLATION OF THE FEDERAL COPYRIGHT ACT AND THE LICENSE AGREEMENT, AND SUBJECT TO CIVIL AND CRIMINAL PENALTIES THEREUNDER.

also unlimited in area, but are limited in height to 12 tiers (or 18 tiers for a mechanical-access garage which is sprinkler protected). If a Type IB garage meets either of the open perimeter criteria below, it can be one tier higher than allowed in the table.

Where the building is of Type II or IV construction and 75 percent of the perimeter is open, it is permitted to be increased 25 percent in area per tier [or from 50,000 square feet (4645 m^2) to 62,500 square feet (5806 m^2)] and one tier in height above the limits for the type of construction in Table 406.5.4.

Where the building is of Type II or IV construction and is open for the entire perimeter, a 50-percent increase in area is permitted, as well as one tier in height. This results in the same number of tiers as the 75-percent open perimeter, but in this case the area of each tier can be as large as 75,000 square feet (6968 m^2).

In addition to complying with the opening criteria found in Section 406.5.2, the openings for an increased area and/or height open parking garage must be at least equal to 50 percent of the interior area of each tier and must be at least 30 inches (762 mm) in vertical dimension. They must be found on 80 percent of the perimeter sides considered open and each such opening shall front on a yard or public way with a minimum dimension of 30 feet (9144 mm). Each part of enlarged tiers needs to be within 200 feet (60 960 mm) of such openings.

For Type II garages, there is another design option. If all sides are open, the area per tier is unlimited provided the building height does not exceed 75 feet (22 860 mm) above grade plane. As in the other options, the openings must be at least 50 percent of the interior of each tier, but in this case the openings must be evenly distributed around the perimeter. All portions of each tier must be within 200 feet (60 960 mm) of such openings, and, where necessary, some of the openings needed for this ventilation may be located in courts, provided the courts have a least dimension of 20 feet (6096 mm).

When calculating the interior area of the side of a tier, the maximum height to be used in the calculation is 7 feet (2134 mm) as shown in Commentary Figure 406.5.2. This method allows for consistent application of the provision regardless of the wall height.

406.5.6 Fire separation distance. *Exterior walls* and openings in *exterior walls* shall comply with Tables 601 and 602. The distance to an adjacent *lot line* shall be determined in accordance with Table 602 and Section 705.

❖ The required fire separation is intended to provide sufficient open space adjacent to the exterior wall openings to allow for free ventilation and to reduce the probability for fire spread to adjacent structures. The exterior wall openings in an open parking garage are not subject to the opening limitations with a fire separation distance greater than 10 feet (3048 mm) (see Table 705.8, Note g).

406.5.7 Means of egress. Where persons other than parking attendants are permitted, *open parking garages* shall meet the *means of egress* requirements of Chapter 10. Where no persons other than parking attendants are permitted, there shall be no fewer than two *exit stairways.* Each *exit stairway* shall be not less than 36 inches (914 mm) in width. Lifts shall be permitted to be installed for use of employees only, provided they are completely enclosed by noncombustible materials.

❖ Typical means of egress elements are required for open parking garages based on a design occupant load of one person per 200 square feet (19 m^2) of gross floor area (see Table 1004.1.2). For mechanical-access open parking garages or for attendant-only ramp-access parking garages, the code would permit two exit stairs, each 36 inches (914 mm) wide.

[F] 406.5.8 Standpipe system. An *open parking garage* shall be equipped with a standpipe system as required by Section 905.3.

❖ Depending on the height of an open parking garage, Section 905.3.1 may require a standpipe system. The standpipe system would aid the fire department in on-site fire-fighting operations, since Table 406.5.4 permits buildings that may not allow for conventional hoses and apparatus to be carried from ground operations to the fire floor.

406.5.9 Enclosure of vertical openings. Enclosure shall not be required for vertical openings except as specified in Section 406.5.7.

❖ Based on the use of open parking garages requiring convenient and frequent access between floor levels, enclosure of most vertical openings is not required or desired due to the opening requirements of Section 406.5.2. This would include the exit access stairways as permitted by Section 1019.3, Exception 6. Where a designer chooses to provide an enclosure—for example, around an elevator hoistway—since the enclosure does not need to be rated, there is no requirement that a lobby be provided for the elevator (see IBC Interpretation No. 36-07).

406.5.10 Ventilation. *Ventilation*, other than the percentage of openings specified in Section 406.5.2, shall not be required.

❖ Mechanical ventilation systems are not required in a structure that is inherently open to the exterior atmosphere.

406.5.11 Prohibitions. The following uses and alterations are not permitted:

1. Vehicle repair work.
2. Parking of buses, trucks and similar vehicles.
3. Partial or complete closing of required openings in exterior walls by tarpaulins or any other means.
4. Dispensing of fuel.

❖ This section reinforces the concepts and requirements of Section 406.5.2 and the definition of “Open

INTERNATIONAL CODE COUNCIL®
Copyright © 2015 ICC. ALL RIGHTS RESERVED. Accessed by David Dammon on Jun 21, 2017 12:30:52 PM pursuant to License Agreement with ICC. No further reproduction or distribution authorized. ANY UNAUTHORIZED REPRODUCTION OR DISTRIBUTION IS A VIOLATION OF THE FEDERAL COPYRIGHT ACT AND THE LICENSE AGREEMENT, AND SUBJECT TO CIVIL AND CRIMINAL PENALTIES THEREUNDER.

parking garage." Any other use or alteration of an open parking garage, which is designed to take advantage of the increased heights and areas, is specifically prohibited.

406.6 Enclosed parking garages. Enclosed parking garages shall comply with Sections 406.6.1 through 406.6.3.

❖ Enclosed parking garages are considered to be storage occupancies. In addition to the provisions of Sections 406.4 and 406.6, enclosed parking garages must also comply with the code provisions for Group S-2 low-hazard storage occupancies.

The overall building fire load in enclosed parking garages is typically low because the considerable amount of metal in vehicles absorbs heat and the average weight of combustibles per square foot is relatively low [approximately 2 psf (9.8 kg/m^2)]. Still, a vehicle fire may be quite extensive.

406.6.1 Heights and areas. Enclosed vehicle parking garages and portions thereof that do not meet the definition of *open parking garages* shall be limited to the allowable heights and areas specified in Sections 504 and 506 as modified by Section 507. Roof parking is permitted.

❖ Special height and area limitations allowed for open parking garages in Table 406.5.4 are not provided for enclosed parking garages. The typical allowable building heights and areas of Chapter 5 are to be used for these Group S-2 structures. It should be noted that Section 510 also contains special provisions for enclosed parking garages located beneath other groups and occupancies. See that section for further discussion of these special building arrangements.

406.6.2 Ventilation. A mechanical *ventilation* system shall be provided in accordance with the *International Mechanical Code*.

❖ Enclosed parking garages are required to be ventilated in accordance with the provisions of the IMC. If motor vehicles will be operated for a period of time exceeding 10 seconds, the ventilation return air for the enclosed parking garage ventilation system must be exhausted (see Section 404 of the IMC).

[F] 406.6.3 Automatic sprinkler system. An enclosed parking garage shall be equipped with an *automatic sprinkler system* in accordance with Section 903.2.10.

❖ A building containing a Group S-2 enclosed parking garage is required to be sprinklered throughout where the fire area of the garage exceeds 12,000 square feet (1115 m^2) or where the garage is located under occupancies other than Group R-3. A full discussion is provided in the commentary to Section 903.2.10.

406.7 Motor fuel-dispensing facilities. Motor fuel-dispensing facilities shall comply with the *International Fire Code* and Sections 406.7.1 and 406.7.2.

❖ Motor fuel-dispensing facilities are those areas where motor fuels are stored, sold or otherwise dispensed to vehicles. These buildings and structures are classified as Group M. Motor fuel-dispensing facilities must be constructed in accordance with the applicable requirements of Chapter 23 of the IFC. Specific details are provided for the special hazards relative to fuel-dispensing systems and areas.

406.7.1 Vehicle fueling pad. The vehicle shall be fueled on noncoated concrete or other *approved* paving material having a resistance not exceeding 1 megohm as determined by the methodology in EN 1081.

❖ The expansion of the use of hydrogen as a vehicle fuel necessitates that the code more clearly address the hazard of potential electrostatic discharge around fueling facilities. The preferred material for fueling pads is concrete, but the referenced standard provides alternative materials to achieve an antistatic performance of the pad.

406.7.2 Canopies. Canopies under which fuels are dispensed shall have a clear, unobstructed height of not less than 13 feet 6 inches (4115 mm) to the lowest projecting element in the vehicle drive-through area. Canopies and their supports over pumps shall be of noncombustible materials, *fire-retardant-treated wood* complying with Chapter 23, wood of Type IV sizes or of construction providing 1-hour *fire resistance*. Combustible materials used in or on a *canopy* shall comply with one of the following:

1. Shielded from the pumps by a noncombustible element of the *canopy*, or wood of Type IV sizes;
2. Plastics covered by aluminum facing having a thickness of not less than 0.010 inch (0.30 mm) or corrosion-resistant steel having a base metal thickness of not less than 0.016 inch (0.41 mm). The plastic shall have a *flame spread index* of 25 or less and a smoke-developed index of 450 or less when tested in the form intended for use in accordance with ASTM E84 or UL 723 and a self-ignition temperature of 650°F (343°C) or greater when tested in accordance with ASTM D1929; or
3. Panels constructed of light-transmitting plastic materials shall be permitted to be installed in *canopies* erected over motor vehicle fuel-dispensing station fuel dispensers, provided the panels are located not less than 10 feet (3048 mm) from any building on the same *lot* and face *yards* or streets not less than 40 feet (12 192 mm) in width on the other sides. The aggregate areas of plastics shall be not greater than 1,000 square feet (93 m^2). The maximum area of any individual panel shall be not greater than 100 square feet (9.3 m^2).

❖ Almost all motor fuel-dispensing facilities are provided with a flat canopy-style roof structure that is column supported. Obviously these structures must be designed to meet the applicable wind and snow loads of Chapter 16 for life safety purposes. For fire safety purposes, the canopies must pose little fire risk and be located above any immediate fire hazards from the fuel-dispensing areas. Limitations are provided for all combustible materials used in the canopy construction.

INTERNATIONAL CODE COUNCIL®
Copyright © 2015 ICC. ALL RIGHTS RESERVED. Accessed by David Dammon on Jun 21, 2017 12:30:52 PM pursuant to License Agreement with ICC. No further reproduction or distribution authorized. ANY UNAUTHORIZED REPRODUCTION OR DISTRIBUTION IS A VIOLATION OF THE FEDERAL COPYRIGHT ACT AND THE LICENSE AGREEMENT, AND SUBJECT TO CIVIL AND CRIMINAL PENALTIES THEREUNDER.

406.7.2.1 Canopies used to support gaseous hydrogen systems. *Canopies* that are used to shelter dispensing operations where flammable compressed gases are located on the roof of the *canopy* shall be in accordance with the following:

1. The *canopy* shall meet or exceed Type I construction requirements.
2. Operations located under *canopies* shall be limited to refueling only.
3. The *canopy* shall be constructed in a manner that prevents the accumulation of hydrogen gas.

❖ This provision is part of the overall package of code requirements related to the gaseous hydrogen concept of fuel. These additional requirements are necessary to abate the inherent hazards while permitting the use of weather shelters. Not only must the canopies be of noncombustible materials but they must also have the fire-resistance ratings specified in Table 601 for either Type IA or IB construction.

406.8 Repair garages. Repair garages shall be constructed in accordance with the *International Fire Code* and Sections 406.8.1 through 406.8.6. This occupancy shall not include motor fuel-dispensing facilities, as regulated in Section 406.7.

❖ Repair garages are those in which provisions are made for the care, repair and painting of vehicles. Repair garages have an inherently higher fire hazard represented by numerous vehicles in some state of repair, with possible spray painting. As such, these buildings or structures are classified as Group S-1. Repair garages must also meet the applicable requirements of Chapter 23 of the IFC and Section 416 if there are paint-spraying operations.

All motor vehicle work that involves repairs or reconstruction of damaged or nonfunctioning vehicles is considered a higher hazard. These types of facilities provide a variety of services, including tune-ups, oil changes, engine or transmission overhauls and body work, and are all considered as repair garages. Additional protection and detection systems are required to match the increased hazards.

406.8.1 Mixed uses. Mixed uses shall be allowed in the same building as a repair garage subject to the provisions of Section 508.1.

❖ Repair garages usually have integral office and administration areas or are part of an automobile dealership. To minimize the hazards and functions housed in the repair areas, the code reminds the user that these spaces are considered as different occupancies and must therefore comply with the general code requirements for mixed uses. The actual requirements will depend on the size of the spaces and how the designer chooses to deal with the different uses.

406.8.2 Ventilation. Repair garages shall be mechanically ventilated in accordance with the *International Mechanical Code*. The *ventilation* system shall be controlled at the entrance to the garage.

❖ Repair garages are required to be ventilated in accordance with the provisions of the IMC. If motor vehicles will be operated for a period of time exceeding 10 seconds, the ventilation return air for the repair garage ventilation system must be exhausted (see Sections 403 and 404 of the IMC).

406.8.3 Floor surface. Repair garage floors shall be of concrete or similar noncombustible and nonabsorbent materials.

Exception: Slip-resistant, nonabsorbent, *interior floor finishes* having a critical radiant flux not more than 0.45 W/cm^2, as determined by NFPA 253, shall be permitted.

❖ To avoid a buildup of flammable liquids on the floor of repair garages, the floor finish is in general required to be noncombustible and nonabsorbent. Because of pollution concerns, however, garage floors are not automatically required to be drained into the building drainage system. This is consistent with requirements of the EPA for storm water drainage, as well as the philosophy of hazardous material handling (i.e., localize spills and treat them). If floor drains are provided, however, they must be installed in accordance with the IPC.

406.8.4 Heating equipment. Heating equipment shall be installed in accordance with the *International Mechanical Code*.

❖ As part of the special use and occupancy requirements for repair garages, all possible ignition sources must be controlled and isolated. Specifically, all heating equipment must be installed in accordance with the IMC, which contains provisions that address items such as the elevation of the appliance above the floor and the use of overhead unit heaters.

[F] 406.8.5 Gas detection system. Repair garages used for the repair of vehicles fueled by nonodorized gases such as hydrogen and nonodorized LNG, shall be provided with a flammable gas detection system.

❖ Some gases contain additives, such as ethyl mercaptan, that produce pungent odors for easy sensory detection and recognition. If the repair garage repairs vehicles equipped with fuel systems that do not use these odorized gases, a gas detection system must be installed to replace the lost sensory detection capability.

[F] 406.8.5.1 System design. The flammable gas detection system shall be *listed* or *approved* and shall be calibrated to the types of fuels or gases used by vehicles to be repaired. The gas detection system shall be designed to activate when the level of flammable gas exceeds 25 percent of the lower flammable limit (LFL). Gas detection shall be provided in lubrication or chassis service pits of repair garages used for repairing nonodorized LNG-fueled vehicles.

❖ The flammable gas detection system is designed to produce an alarm or signal when exposed to different

INTERNATIONAL CODE COUNCIL®
Copyright © 2015 ICC. ALL RIGHTS RESERVED. Accessed by David Dammon on Jun 21, 2017 12:30:52 PM pursuant to License Agreement with ICC. No further reproduction or distribution authorized. ANY UNAUTHORIZED REPRODUCTION OR DISTRIBUTION IS A VIOLATION OF THE FEDERAL COPYRIGHT ACT AND THE LICENSE AGREEMENT, AND SUBJECT TO CIVIL AND CRIMINAL PENALTIES THEREUNDER.

concentrations of gases or vapor. The gas detector or gas sensor is a critical part of the system for the detection of the different gases. Section 2311.7.2.1 of the IFC requires gas detection equipment to be listed in accordance with UL 2075 and include an indication of the different gases it will detect. Under UL 2075, a set of flammable gases and concentrations (PPM) is developed for each detector or sensor and the manufacturer is required to provide information as to what gases and concentrations the device is designed to detect. Tests under the standard then verify the performance of each detector or sensor for each gas it is designed to detect. The gases that the equipment will detect may be shown in the manufacturer's instructions rather than on the product. This section will require quick-lube-type facilities that change oil and lubricate vehicles to install gas detection systems in the pit area if they service vehicles that are equipped with LNG fuel systems using nonodorized LNG.

[F] 406.8.5.1.1 Gas detection system components. Gas detection system control units shall be *listed* and *labeled* in accordance with UL 864 or UL 2017. Gas detectors shall be *listed* and *labeled* in accordance with UL 2075 for use with the gases and vapors being detected.

❖ This section mandates that gas detection system components are listed in accordance with nationally recognized safety standards. These standards include a comprehensive set of construction and performance requirements that are used to evaluate and list gas detection system control units and gas detectors.

[F] 406.8.5.2 Operation. Activation of the gas detection system shall result in all of the following:

1. Initiation of distinct audible and visual alarm signals in the repair garage.
2. Deactivation of all heating systems located in the repair garage.
3. Activation of the mechanical *ventilation* system, where the system is interlocked with gas detection.

❖ Once the required flammable gas detection system identifies a gas level exceeding 25 percent of the lower explosive limit (LEL), it must do three things: alert the occupants of the emergency, cut power to all possible ignition sources and dilute the concentration level with additional ventilation air.

[F] 406.8.5.3 Failure of the gas detection system. Failure of the gas detection system shall result in the deactivation of the heating system, activation of the mechanical *ventilation* system where the system is interlocked with the gas detection system and cause a trouble signal to sound in an *approved* location.

❖ The required flammable gas detection system must include a default mode of operation. If the system malfunctions or loses power, it must in effect do the same operational requirements referenced in Section 406.8.5.2. This redundancy will lessen the likelihood of an explosive fire risk for the specialized motor fuels.

[F] 406.8.6 Automatic sprinkler system. A repair garage shall be equipped with an *automatic sprinkler system* in accordance with Section 903.2.9.1.

❖ Section 903.2.9.1 requires buildings where repair garages are located to be provided with an automatic sprinkler system where any one of four listed conditions is present. The sprinkler threshold is reduced in those repair garages where work is performed on trucks or buses. See the commentary on Section 903.2.9.1 for further information.

SECTION 407
GROUP I-2

407.1 General. Occupancies in Group I-2 shall comply with the provisions of Sections 407.1 through 407.10 and other applicable provisions of this code.

❖ The provisions contained in Section 407 reflect requirements of previous model codes, full-scale fire tests and historical fire experience. Features unique to health care facilities, such as a low fuel load, the presence of staff, operating practices and procedures and the regulatory process, were also included in developing the provisions. One of the concerns addressed by this section is the need to provide an acceptable level of protection without interfering with the operation of the facility. To that end, various provisions of Section 407 are designed to soften the rigid barrier between rooms and corridors. For example, Section 407.2.5 allows a nursing home housing unit to be open to the corridor under certain conditions. Such designs allow nursing homes to be a little less institutional while still providing a safe environment for the residents and staff of the home.

Group I-2 has been divided into two conditions (see Section 308.4). Group I-2, Condition 1 occupancies are primarily nursing homes where both nursing and medical care is provided, but services such as surgery, obstetrics and emergency care are not provided. Care recipients in a Group I-2, Condition 1 facility are usually staying for long periods. Group I-2, Condition 2 occupancies are primarily hospitals which provide a wide range of medical treatment and services. Patients generally stay over a night or two, but stays are generally short term. See also the definitions in Chapter 2 of the terms "24-hour basis," "Medical care," "Custodial care" and "Personal care."

Underlying the protection requirements for Group I-2 is a "defend-in-place" philosophy based on the difficulties associated with evacuating such facilities.

The first level of protection established is the individual room (typically a patient sleeping room). Horizontal evacuation to an adjacent smoke compartment provides the second level of protection. If necessary, the third level of protection involves evacuation of the floor or entire building.

This section has been created not only because of

INTERNATIONAL CODE COUNCIL®
Copyright © 2015 ICC. ALL RIGHTS RESERVED. Accessed by David Dammon on Jun 21, 2017 12:30:52 PM pursuant to License Agreement with ICC. No further reproduction or distribution authorized. ANY UNAUTHORIZED REPRODUCTION OR DISTRIBUTION IS A VIOLATION OF THE FEDERAL COPYRIGHT ACT AND THE LICENSE AGREEMENT, AND SUBJECT TO CIVIL AND CRIMINAL PENALTIES THEREUNDER.

considerations unique to health care facilities, but also to facilitate the consideration of the entire package of protection features. The basic protection features include early detection, fire containment, horizontal evacuation and fire extinguishment. Additionally, Chapter 4 of the IFC contains criteria for emergency planning and preparedness.

As previously noted, the provisions of this section are based in part on a relatively low fuel load. Certain areas within Group I-2, however, will have a higher concentration of combustibles. These areas, as well as other areas that represent a specific hazard within Group I-2, are addressed in Section 509 as incidental uses. Because of the nature of the activity, the incidental use area is required to be protected with an automatic sprinkler system, separated with a fire barrier and horizontal assembly, or both (see Table 509).

The provisions of Section 407 apply to both Group I-2 conditions unless the section specifically refers to one or the other. The requirements of Section 407 are intended to be additional special use and occupancy provisions for facilities that provide medical care for more than five persons for longer than 24 hours. For medical care outside of a Group I occupancy, please also see Section 422 for ambulatory care facilities. Other requirements for Group I-2 occupancies are provided throughout the code.

407.2 Corridors continuity and separation. *Corridors* in occupancies in Group I-2 shall be continuous to the *exits* and shall be separated from other areas in accordance with Section 407.3 except spaces conforming to Sections 407.2.1 through 407.2.6.

❖ Since the occupants of areas classified as Group I-2 may be incapable of self-preservation, the means of egress serving such areas must facilitate the evacuation of such persons, as well as other people with mobility impairments. Accordingly, corridors serving Group I-2 occupancies are required to be continuous to the exits and, except as provided for in Sections 407.2.1 through 407.2.6, separated from other use areas. As such, corridors in Group I-2 occupancies are intended to provide a protected path of travel that, once entered, leads directly and continuously to the exits (see also commentary, Sections 407.4.1 and 1020.6). Note that a door through a horizontal exit constructed with a fire barrier or fire wall would constitute an exit (see Section 1026); however, moving through a smoke barrier into another smoke compartment is not a horizontal exit and therefore corridor continuity must be maintained on both sides of the smoke barrier.

To address the various operational requirements of occupancies classified as Group I-2, the code includes provisions that both permit various areas to be open to corridors and address care suite arrangements for the exit access portions of the facilities. Standards for areas open to corridors are covered primarily in this section. The design of care suites is regulated by provisions found in Section 407.4.4.

For the ease of operations of Group I-2 occupancies, it is often desirable to have certain areas open to exit access corridors. Recognizing these needs and that these occupancies are equipped throughout with an automatic sprinkler system, the code permits specific areas to be open to corridors, provided they are properly arranged and equipped with compensating protection features (e.g., automatic fire detection). Sections 407.2.1 through 407.2.6 identify those areas and the protection features required to maintain the safety of the corridor.

In addition to practical reasons, such as in the case of care providers' stations, it is also desirable to designate certain areas being open to the corridor for treatment purposes. In many instances, the care recipient is encouraged to leave the sleeping room for both physical as well as social benefit. So that care recipients can be encouraged to socialize and benefit from group activities and social interaction, the areas need to be open to the corridor.

Waiting areas and other areas open to the corridor also serve a useful purpose during a fire emergency. If evacuation becomes necessary, care recipients usually will be relocated to an adjacent smoke compartment in which the areas open to the corridor will serve as a refuge area. Section 407.5.1 contains provisions for the net area that must be available for the relocation of care recipients. Waiting areas provide a space in which care recipients can be relocated such that treatment can continue during a fire emergency.

407.2.1 Waiting and similar areas. Waiting areas and similar spaces constructed as required for *corridors* shall be permitted to be open to a *corridor*, only where all of the following criteria are met:

1. The spaces are not occupied as care recipient's sleeping rooms, treatment rooms, incidental uses in accordance with Section 509, or hazardous uses.
2. The open space is protected by an automatic fire detection system installed in accordance with Section 907.
3. The *corridors* onto which the spaces open, in the same *smoke compartment*, are protected by an automatic fire detection system installed in accordance with Section 907, or the *smoke compartment* in which the spaces are located is equipped throughout with quick-response sprinklers in accordance with Section 903.3.2.
4. The space is arranged so as not to obstruct access to the required *exits*.

❖ In the design of health care facilities, it is desirable to have small waiting areas and similar spaces open to the corridor. Such seating areas or gathering spaces provide care recipients and others a place to sit outside of the sleeping rooms or to wait near special care areas for their turn in a treatment room. In consideration of the additional protection features specified, small waiting areas and similar spaces are permitted to be open to corridors in Group I-2 occupancies within each smoke compartment, provided they are constructed to the corridor standards for

INTERNATIONAL CODE COUNCIL®
Copyright © 2015 ICC. ALL RIGHTS RESERVED. Accessed by David Dammon on Jun 21, 2017 12:30:52 PM pursuant to License Agreement with ICC. No further reproduction or distribution authorized. ANY UNAUTHORIZED REPRODUCTION OR DISTRIBUTION IS A VIOLATION OF THE FEDERAL COPYRIGHT ACT AND THE LICENSE AGREEMENT, AND SUBJECT TO CIVIL AND CRIMINAL PENALTIES THEREUNDER.

Group I-2 occupancies, as specified in Section 407.3.

Care recipient sleeping rooms, treatment rooms, and hazardous and incidental use areas cannot be open to the corridors under this section. Under Section 508, all Group H hazardous occupancies must be separated from other occupancies, therefore it follows that such can not be open to the corridors in Group I-2 facilities. This configuration is commonly found in a typical ward situation.

While Item 1 restricts treatment facilities in general from being open to the corridor, Section 407.2.3 specifically allows treatment areas for psychiatric wards to be open to the corridor. Further, the broad restriction that sleeping rooms not be open to the corridor is relaxed under Section 407.2.5, which relaxes the relationship between nursing home housing units and the corridors. Areas similar to waiting rooms could include common visiting areas, reception or information stations and patient check-in stations. General hospital office areas or support spaces beyond those associated with waiting or reception areas must be separated from the corridor (see Commentary Figure 407.2.1) unless permitted by other subsections.

To reduce the likelihood that a fire within such an open space could develop beyond the incipient stage, thereby jeopardizing the integrity of the corridor, the area is to be equipped with an automatic fire detection system (see Section 907). The detectors are to be located to provide the appropriate coverage to the space.

There is no size limit set by the code for these spaces. Due to the unlimited size of the space and, consequently, the potential for a significant number of people in the area, an automatic fire detection system is also required in all corridors open to the spaces within the smoke compartment, or the smoke compartment in which such spaces are located must be protected throughout with quick-response sprinklers.

Waiting areas and similar spaces open to corridors must be arranged so as to not obstruct access to exits. There must be a clear path of travel of the minimum required width for the corridor, which should be maintained at all times. As such, furniture layouts must be arranged in a manner that obstruction of the exits does not occur under normal use.

407.2.2 Care providers' stations. Spaces for care providers', supervisory staff, doctors' and nurses' charting, communications and related clerical areas shall be permitted to be open to the *corridor*, where such spaces are constructed as required for *corridors.*

❖ Stations for care providers need to be located to provide quick access to care recipients and to permit visual or audible monitoring of the sleeping rooms. For these and other practical reasons, care providers' stations are permitted to be open to the corridor, provided the walls surrounding the area are constructed as required for corridor walls (see Commentary Figure 407.2.2). Except as required in Section 407.8, the additional protection of automatic fire detection is not required because of the reduced risk to life safety and attendance by the staff (see Section 407.8). This sec-

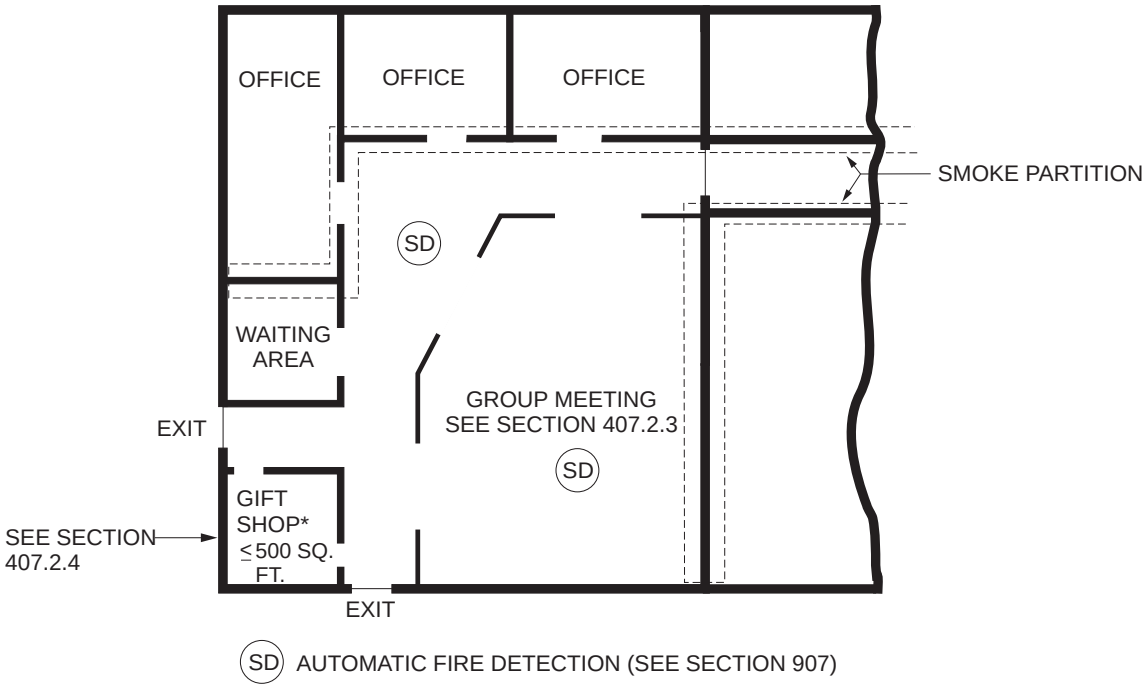

For SI: 1 square foot = 0.0929 m^2.

Figure 407.2.1
GROUP I-2: WAITING ROOMS AND SIMILAR AREAS

INTERNATIONAL CODE COUNCIL®
Copyright © 2015 ICC. ALL RIGHTS RESERVED. Accessed by David Dammon on Jun 21, 2017 12:30:52 PM pursuant to License Agreement with ICC. No further reproduction or distribution authorized. ANY UNAUTHORIZED REPRODUCTION OR DISTRIBUTION IS A VIOLATION OF THE FEDERAL COPYRIGHT ACT AND THE LICENSE AGREEMENT, AND SUBJECT TO CIVIL AND CRIMINAL PENALTIES THEREUNDER.

tion is not intended to apply to nurses' offices, administrative supply storage areas, drug distribution stations or similar areas with a higher fuel load and from which continual observation of the nursing unit is not essential.

407.2.3 Psychiatric treatment areas. Areas wherein psychiatric care recipients who are not capable of self-preservation are housed, or group meeting or multipurpose therapeutic spaces other than incidental uses in accordance with Section 509, under continuous supervision by facility staff, shall be permitted to be open to the *corridor*, where the following criteria are met:

1. Each area does not exceed 1,500 square feet (140 m^2).
2. The area is located to permit supervision by the facility staff.
3. The area is arranged so as not to obstruct any access to the required *exits*.
4. The area is equipped with an automatic fire detection system installed in accordance with Section 907.2.
5. Not more than one such space is permitted in any one *smoke compartment*.
6. The walls and ceilings of the space are constructed as required for *corridors*.

❖ This section applies to all areas that house psychiatric care recipients who are not physically capable of self-preservation because the area is secured (see Section 1010.1.9.6).

To encourage care recipients of psychiatric facilities to participate in group meetings and therapeutic activities, treatment areas may be open to the corridor, provided that the area does not exceed 1,500 square feet (140 m^2) and only one such area is provided within a smoke compartment. Other protection features that must be provided to permit the area to be open include: staff supervision, unobstructed access to exits and automatic fire detection in accordance with Section 907.2 within the area. The group meeting room, while not separated from the corridor, must be separated from other areas of the unit with construction as required for a corridor.

407.2.4 Gift shops. Gift shops and associated storage that are less than 500 square feet (455 m^2) in area shall be permitted to be open to the *corridor* where such spaces are constructed as required for *corridors*.

❖ Gift shops are not permitted to be open to a corridor in occupancies classified as Group I-2 unless they are less than 500 square feet (46 m^2) in area (see Commentary Figure 407.2.1). The section allows any associated storage to be included in the 500-square-foot (46.5 m^2) limitation since the associated fire hazard in both areas would be the same. If the gift shop and associated storage were greater than 500 square feet (46.5 m^2) combined, but the gift shop itself was less than 500 square feet (46.5m^2), an option would be to leave the gift shop open to the corridor and separate the storage from the gift shop and other areas with construction as required for corridors.

407.2.5 Nursing home housing units. In Group I-2, Condition 1, occupancies, in areas where nursing home residents are housed, shared living spaces, group meeting or multipurpose therapeutic spaces shall be permitted to be open to the *corridor*, where all of the following criteria are met:

1. The walls and ceilings of the space are constructed as required for *corridors*.

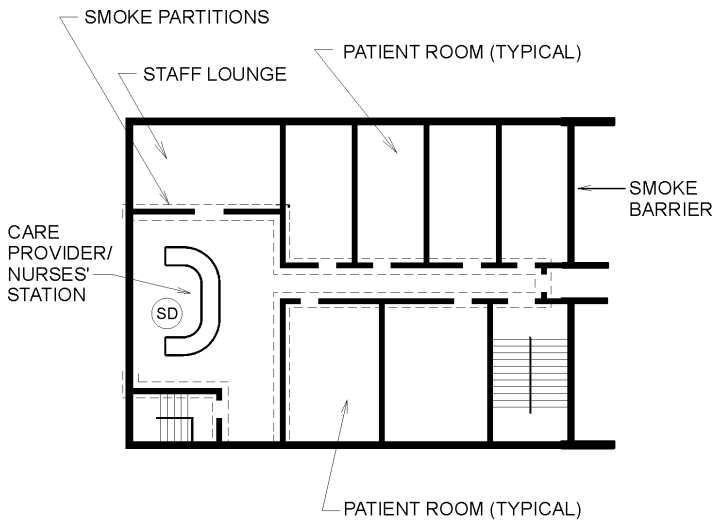

Figure 407.2.2
GROUP I-2: CARE PROVIDERS' STATION

INTERNATIONAL CODE COUNCIL®
Copyright © 2015 ICC. ALL RIGHTS RESERVED. Accessed by David Dammon on Jun 21, 2017 12:30:52 PM pursuant to License Agreement with ICC. No further reproduction or distribution authorized. ANY UNAUTHORIZED REPRODUCTION OR DISTRIBUTION IS A VIOLATION OF THE FEDERAL COPYRIGHT ACT AND THE LICENSE AGREEMENT, AND SUBJECT TO CIVIL AND CRIMINAL PENALTIES THEREUNDER.

2. The spaces are not occupied as resident sleeping rooms, treatment rooms, incidental uses in accordance with Section 509, or hazardous uses.
3. The open space is protected by an automatic fire detection system installed in accordance with Section 907.
4. The *corridors* onto which the spaces open, in the same *smoke compartment*, are protected by an automatic fire detection system installed in accordance with Section 907, or the *smoke compartment* in which the spaces are located is equipped throughout with quick-response sprinklers in accordance with Section 903.3.2.
5. The space is arranged so as not to obstruct access to the required *exits*.

❖ In nursing home occupancies, residents are encouraged to spend time outside of their rooms. Way finding and orientation problems are common in nursing home residents, and research has shown that direct visibility to a desired location is more effective for cuing than signage. Therefore, having a variety of shared living spaces open to the corridor encourages socialization, encourages interaction, and is important to resident well-being. Further, being able to preview activities that are occurring helps to encourage joining and allows reluctant participants to join at their own pace. Finally, a more open plan allows staff to see residents more easily throughout the course of the day. Commentary Figure 407.2.5 shows examples of typical areas open to a corridor that would be allowed by this provision. The protections used for other areas allowed open to the corridor in other parts of Section 407.2 are repeated here.

407.2.6 Nursing home cooking facilities. In Group I-2, Condition 1, occupancies, rooms or spaces that contain a cooking facility with domestic cooking appliances shall be permitted to be open to the corridor where all of the following criteria are met:

1. The number of care recipients housed in the smoke compartment is not greater than 30.
2. The number of care recipients served by the cooking facility is not greater than 30.
3. Only one cooking facility area is permitted in a smoke compartment.
4. The types of domestic cooking appliances permitted are limited to ovens, cooktops, ranges, warmers and microwaves.
5. The corridor is a clearly identified space delineated by construction or floor pattern, material or color.
6. The space containing the domestic cooking facility shall be arranged so as not to obstruct access to the required exit.
7. A domestic cooking hood installed and constructed in accordance with Section 505 of the *International Mechanical Code* is provided over the cooktop or range.
8. The domestic cooking hood provided over the cooktop or range shall be equipped with an automatic fire-extinguishing system of a type recognized for protection of domestic cooking equipment. Preengineered automatic extinguishing systems shall be tested in accordance with UL 300A and *listed* and *labeled* for the intended application. The system shall be installed in accordance with this code, its listing and the manufacturer's instructions.
9. A manual actuation device for the hood suppression system shall be installed in accordance with Sections 904.12.1 and 904.12.2.
10. An interlock device shall be provided such that upon activation of the hood suppression system, the power or fuel supply to the cooktop or range will be turned off.
11. A shut-off for the fuel and electrical power supply to the cooking equipment shall be provided in a location that is accessible only to staff.



Figure 407.2.5
NURSING HOME HOUSING UNIT

INTERNATIONAL CODE COUNCIL®
Copyright © 2015 ICC. ALL RIGHTS RESERVED. Accessed by David Dammon on Jun 21, 2017 12:30:52 PM pursuant to License Agreement with ICC. No further reproduction or distribution authorized. ANY UNAUTHORIZED REPRODUCTION OR DISTRIBUTION IS A VIOLATION OF THE FEDERAL COPYRIGHT ACT AND THE LICENSE AGREEMENT, AND SUBJECT TO CIVIL AND CRIMINAL PENALTIES THEREUNDER.

12. A timer shall be provided that automatically deactivates the cooking appliances within a period of not more than 120 minutes.
13. A portable fire extinguisher shall be installed in accordance with Section 906 of the *International Fire Code.*

❖ As nursing homes move away from institutional models, it is critical to have a functioning kitchen that can serve as the hearth of the home. Instead of a large, centralized, institutional kitchen where all meals are prepared and delivered to a central dining room or the resident's room, the new "household model" nursing home uses de-centralized kitchens and small dining areas to create the feeling and focus of home. For persons with dementia, it is particularly important to have spaces that look familiar, like the kitchen in their former home, to increase their understanding and ability to function at their highest level.

Allowing kitchens that serve a small, defined group of residents to be open to common spaces and, in some instances, corridors, is critically important to enhancing the feeling and memories of home for older adults. This allows residents to see and smell the food being prepared, which can enhance their appetites and evoke positive memories. Some residents, based on their abilities and cognition level, may even be able to participate in food preparation activities such as stirring, measuring ingredients, peeling vegetables, or folding towels. This becomes a social activity, where they can easily converse with the staff member cooking, as well as a way for the resident to maintain their functional abilities and to feel that they are still an important, contributing member of society. Commentary Figure 407.2.6(1) provides a picture of an open kitchen area. Commentary Figure 407.2.6(2) provides an example floor plan of a nursing home housing unit with an open kitchen.

It is recognized that unattended cooking is a leading cause of fires. Therefore, the provisions of this section are aimed at limiting the potential of such fires and, in the event of such a fire, to limit the area affected by the fire. Item 11 is key to limiting the use of these kitchens to when the staff is aware of the activity and authorizes it by turning on the fuel sources. In addition to the 13 safeguards provided in this section, all new nursing home are fully protected with an automatic sprinkler system.



Figure 407.2.6(1)
NURSING HOME WITH OPEN-PLAN KITCHEN

407.3 Corridor wall construction. *Corridor* walls shall be constructed as smoke partitions in accordance with Section 710.

❖ Corridor walls are required to form a barrier to limit smoke transfer in accordance with provisions for smoke partitions in Section 710, thus providing protection for exit access routes, from separate areas containing combustible materials that could produce smoke and to provide adequate separation of the care recipient sleeping rooms. In a building protected throughout with an automatic sprinkler system, the probability that a fire will develop that is life threatening to persons outside the room of origin is reduced; therefore, corridor walls need only be able to resist the passage of smoke.

The corridor wall is not required to have a fire-resistance rating (Section 710.3), but the wall is to terminate at the underside of the floor or roof deck above or to the underside of the ceiling membrane if it is capable of resisting the passage of smoke (Section 710.4). The walls must be of materials consistent with the building's type of construction classification.

Note that the provisions of Section 509 must be considered in determining the fire-resistance rating of any corridor walls that also enclose incidental uses where fire barriers are required (Section 509.4.1) or construction capable of resisting the passage of smoke (Section 509.4.2). Note that construction capable of resisting the passage of smoke does not have all the same requirements as smoke partitions as required in Section 710 (see Commentary Figure 407.3).

407.3.1 Corridor doors. *Corridor* doors, other than those in a wall required to be rated by Section 509.4 or for the enclosure of a vertical opening or an *exit*, shall not have a required *fire protection rating* and shall not be required to be equipped with *self-closing* or automatic-closing devices, but shall provide an effective barrier to limit the transfer of smoke and shall be equipped with positive latching. Roller latches are not permitted. Other doors shall conform to Section 716.5.

❖ As with corridor wall construction (see commentary, Section 407.3), the door assemblies need only be capable of resisting the passage of smoke. Corridor doors in occupancies classified as Group I-2 are not required to be self-closing or automatic-closing except where required by other sections, such as for doors serving incidental uses as required in Section 509, or doors in shaft walls that enclose a vertical opening or exit stairway or ramp. This provision is primarily intended to apply to care recipient sleeping room corridor doors. Doors in walls that separate incidental uses in accordance with Section 509 are

INTERNATIONAL CODE COUNCIL®
Copyright © 2015 ICC. ALL RIGHTS RESERVED. Accessed by David Dammon on Jun 21, 2017 12:30:52 PM pursuant to License Agreement with ICC. No further reproduction or distribution authorized. ANY UNAUTHORIZED REPRODUCTION OR DISTRIBUTION IS A VIOLATION OF THE FEDERAL COPYRIGHT ACT AND THE LICENSE AGREEMENT, AND SUBJECT TO CIVIL AND CRIMINAL PENALTIES THEREUNDER.

required to be self-closing to minimize the possibility that corridors will be affected by a fire originating in those adjacent areas. Self-closing or automatic-closing doors in the shaft walls of vertical openings and exit stairways and ramps are still required to avoid a breech in vertical opening protection that would enable rapid fire spread from story to story and for adequate protection of the exits. It is important to recognize that this section contains a specific set of requirements for the corridor doors in this occupancy and that the provisions of this section must be followed versus the provisions of Section 710.5.2 for doors in smoke partitions (see code and commentary, Section 102.1). Full-scale fire tests and historical experience indicate that the automatic sprinkler system will provide adequate protection to persons outside of the room of origin. It is also expected that staff will be adequately trained and will close the doors to care recipient sleeping rooms within the affected areas, or will evacuate patients to an adjacent smoke compartment. The presence of the automatic sprinkler system, particularly one equipped with quick-response heads, increases the probability that staff will be able to close the door to the room of origin and thereby limit the size of the fire. Roller latches are not permitted on these doors, as they are not regarded as providing positive latching that will allow the door to act as a reliable smoke protective.

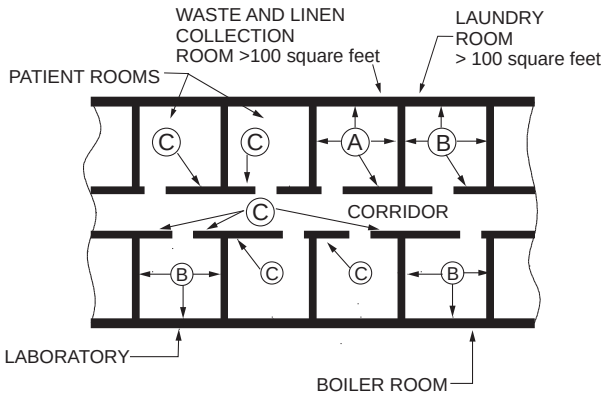

For SI: 1 square foot = 0.0929 m^2.

Figure 407.3
GROUP I-2: CORRIDOR WALLS



13 Resident Nursing Household
w/ open cooking facility

Figure 407.2.6(2)
NURSING HOME HOUSING UNIT FLOOR PLAN

INTERNATIONAL CODE COUNCIL®
Copyright © 2015 ICC. ALL RIGHTS RESERVED. Accessed by David Dammon on Jun 21, 2017 12:30:52 PM pursuant to License Agreement with ICC. No further reproduction or distribution authorized. ANY UNAUTHORIZED REPRODUCTION OR DISTRIBUTION IS A VIOLATION OF THE FEDERAL COPYRIGHT ACT AND THE LICENSE AGREEMENT, AND SUBJECT TO CIVIL AND CRIMINAL PENALTIES THEREUNDER.

407.4 Means of egress. Group I-2 occupancies shall be provided with means of egress complying with Chapter 10 and Sections 407.4.1 through 407.4.4. The fire safety and evacuation plans provided in accordance with Section 1001.4 shall identify the building components necessary to support a *defend-in-place* emergency response in accordance with Sections 404 and 408 of the *International Fire Code*.

❖ In addition to required compliance with Chapter 10, Group I-2 occupancies must also comply with special provisions regarding direct access to a corridor (Section 407.4.1), travel distance (Section 407.4.2), projections into corridors (Section 407.4.3) and care suites (Section 407.4.4).

Defend-in-place is a concept that has long been employed as the preferred method of fire response in nursing homes and hospitals due to the fragile nature of the occupants. Occupants in this setting are often dependent upon the building infrastructure, active and passive fire protection and staff training and response since immediate evacuation would place their lives at risk. The infrastructure system typically includes life-support systems such as medical gases, emergency power and environmental controls that rely on continued building operation. A combination of active and passive fire protection typically includes fire and smoke detection, fire sprinkler systems, fire and smoke barriers and dampers along with protective openings. Integral to the staff training and response is the fire safety and evacuation plan. Health care facilities typically have a facility-wide plan that describes the overall safety program and details the specific measures for a facility-wide response. In addition to this plan, facilities will also have department- or unit-specific safety plans. These unit-specific plans detail specific actions that will need to be taken to protect the various patients, staff and visitors within the area such as what actions are to be taken immediately, like who is responsible to close what doors, remove allowable equipment from the corridor, where and when to meet to discuss patient needs and to prepare for possible horizontal evacuation.

Previous versions of this code and legacy codes have created a tried and tested set of requirements to support the defend-in-place concept, such as smoke compartments and areas of refuge. However, previous codes have not specifically described the concept of occupants remaining within a building during an emergency, which has led to confusion and misapplication during design and enforcement. This section identifies Group I-2 as a location where this type of emergency response is permitted. The codes governing hospitals, nursing homes and other Group I-2 classes are designed to support the defend-in-place use. While the code has been silent on the underlying concept, the defend-in-place strategy has been the commonly accepted practice in these occupancies (see IFC Sections 403 and 404 for additional information on defend-in-place).

407.4.1 Direct access to a corridor. Habitable rooms in Group I-2 occupancies shall have an *exit access* door leading directly to a *corridor*.

Exceptions:

1. Rooms with *exit* doors opening directly to the outside at ground level.
2. Rooms arranged as *care suites* complying with Section 407.4.4.

❖ Direct access to the corridor system from a patient sleeping room or treatment room is a key component to staff access and patient movement. The term "habitable rooms" is not intended to include individual bathrooms, closets and similar spaces, or briefly occupied spaces such as control rooms in radiology and small storage/supply rooms. Habitable areas would include staff areas within the patient treatment and sleeping areas (e.g., nutrition rooms, clean/dirty linen rooms, staff lounge, staff work areas).

The exceptions would allow direct access to the outside rather than needing to go back into the corridor, or access through a portion of a care suite before accessing the corridor.

407.4.1.1 Locking devices. Locking devices that restrict access to a care recipient's room from the *corridor* and that are operable only by staff from the *corridor* side shall not restrict the *means of egress* from the care recipient's room.

Exceptions:

1. This section shall not apply to rooms in psychiatric treatment and similar care areas.
2. Locking arrangements in accordance with Section 1010.1.9.6.

❖ Locking devices are permitted on care recipient room doors, provided egress from the care recipient room is not restricted. Such locking devices enable care recipients in long-term care facilities to secure their rooms and staff to secure unoccupied rooms. In such cases, it is expected that the staff still has access, via key or other opening device.

The need to lock corridor doors to restrain care recipients in psychiatric facilities, however, is recognized. When such locking is necessary, provisions must be made for continuous supervision and prompt release. Additional guidance on locking arrangements, applying to occupancies in Group I-3, can be found in Sections 408.4 and 1010.1.9.10. A decision needs to be made to determine if the area being considered more closely represents an occupancy in Group I-2 or I-3 (e.g., a holding room in the emergency room of the hospital for patients who may be violent). In occupancies in Group I-3, it is generally assumed that the occupants are capable of self-preservation once the doors are unlocked. This may not be the case in some psychiatric facilities and, therefore, the provision applicable to occupancies in Group I-2 may be more appropriate.

Similar protection may also be necessary in certain portions of other occupancies in Group I-2 where the

INTERNATIONAL CODE COUNCIL®
Copyright © 2015 ICC. ALL RIGHTS RESERVED. Accessed by David Dammon on Jun 21, 2017 12:30:52 PM pursuant to License Agreement with ICC. No further reproduction or distribution authorized. ANY UNAUTHORIZED REPRODUCTION OR DISTRIBUTION IS A VIOLATION OF THE FEDERAL COPYRIGHT ACT AND THE LICENSE AGREEMENT, AND SUBJECT TO CIVIL AND CRIMINAL PENALTIES THEREUNDER.

movement of the care recipients must be controlled (e.g., care recipients with Alzheimer's disease). For special locking arrangements for suites or floors where elopement may be an issue, see Section 1010.1.9.6. It is not the intent of this section to prohibit other locking options that will allow free access in accordance with Sections 1010.1.9.7, 1010.1.9.8 and 1010.1.9.9.

407.4.2 Distance of travel. The distance of travel between any point in a Group I-2 occupancy sleeping room, not located in a *care suite*, and an *exit access* door in that room shall be not greater than 50 feet (15 240 mm).

❖ This section limits the overall travel distance within an individual patient sleeping room to the exit access door from that room. This is a separate concept from the travel distance within a care suite (see Section 407.4.4) and must be considered for each patient sleeping room individually.

407.4.3 Projections in nursing home corridors. In Group I-2, Condition 1, occupancies, where the corridor width is a minimum of 96 inches (2440 mm), projections shall be permitted for furniture where all of the following criteria are met:

1. The furniture is attached to the floor or to the wall.
2. The furniture does not reduce the clear width of the corridor to less than 72 inches (1830 mm) except where other encroachments are permitted in accordance with Section 1005.7.
3. The furniture is positioned on only one side of the *corridor*.
4. Each arrangement of furniture is 50 square feet (4.6 m^2) maximum in area.
5. Furniture arrangements are separated by 10 feet (3048 mm) minimum.
6. Placement of furniture is considered as part of the fire and safety plans in accordance with Section 1001.4.

❖ Many nursing homes have long corridors that residents must traverse. Residents who are physically unable to traverse the distance without being able to rest periodically have little recourse but use a wheelchair, an outcome counter to maintaining their ambulatory skills. The provisions of this section are aimed at maintaining the corridor's function by keeping furniture secure in place and only allowing limited installations. The spacing of the furniture also supports the therapeutic use of the furniture by residents moving from one location to another farther down the corridor.

407.4.4 Group I-2 care suites. *Care suites* in Group I-2 shall comply with Sections 407.4.4.1 through 407.4.4.4 and either Section 407.4.4.5 or 407.4.4.6.

❖ Care suites are typically either groups of patient sleeping rooms or groups of care rooms and associated support/staff spaces that operate as a unit. Care suites are recognized to be an effective tool to provide some flexibility, due to functional considerations, in providing appropriate patient care and allowing for the ability to reach an exit access. Use of suites is a particularly useful tool at intensive care units and emergency departments in patient treatment areas. The ability to have a full visual wall system or open plan not only allows for patient privacy and improved patient care but also functions as extremely beneficial during any type of emergency situation, including defending-in-place and evacuation.

Patient treatment and sleeping rooms are permitted to be arranged as suites (see Commentary Figure 407.4.4 for an example plan of a patient suite). The figure illustrates a patient suite of more than 1,000 square feet (93 m^2) where two remote egress doors are required. The criteria in this section recognize the low patient-to-staff ratio of these facilities where the staff is directly responsible for the safety of the patients in the event of a fire.

Care suites allow for the elimination of the smoke partition between the patient rooms and the staff areas. By considering the connected space an intervening room rather than a corridor, these provisions can be applied.

While not prohibited in nursing homes, suite configurations are more commonly found in hospitals.

The use of the term "care suite" is not intended to prohibit other groups of rooms that are not patient care areas, such as records departments or the business offices found in hospitals.

407.4.4.1 Exit access through care suites. *Exit* access from all other portions of a building not classified as a *care suite* shall not pass through a *care suite*. In a *care suite* required to have more than one *exit*, one *exit access* is permitted to pass through an adjacent *care suite* provided all of the other requirements of Sections 407.4 and 1016.2 are satisfied.

❖ Suites are intended to serve specific functions for patient treatment or sleeping. This section clarifies that the suite should not be used as part of the exit access of other areas within the building. It is intended to prevent corridors from discharging into a maze of intervening rooms prior to entering the exit. However, the second sentence would allow for a group of suites to work together as long as the overall exit access travel distance of 200 feet (60 960 mm) was met (see Table 1017.2); the next suite could meet the egress through intervening spaces as addressed in Section 1016.2; and both suites complied with the provisions in this section.

407.4.4.2 Separation. *Care suites* shall be separated from other portions of the building, including other care suites, by a smoke partition complying with Section 710.

❖ This section clarifies the type of partition that should be used to separate the suite from the corridor, adjacent suite or any other portion of the building. This section requires separation by a smoke partition, similar to the construction of a corridor wall in Group I-2 (see Section 407.3).

INTERNATIONAL CODE COUNCIL®
Copyright © 2015 ICC. ALL RIGHTS RESERVED. Accessed by David Dammon on Jun 21, 2017 12:30:52 PM pursuant to License Agreement with ICC. No further reproduction or distribution authorized. ANY UNAUTHORIZED REPRODUCTION OR DISTRIBUTION IS A VIOLATION OF THE FEDERAL COPYRIGHT ACT AND THE LICENSE AGREEMENT, AND SUBJECT TO CIVIL AND CRIMINAL PENALTIES THEREUNDER.

407.4.4.3 Access to corridor. Movement from habitable rooms shall not require passage through more than three doors and 100 feet (30 480 mm) distance of travel within the suite.

Exception: The distance of travel shall be permitted to be increased to 125 feet (38 100 mm) where an automatic smoke detection system is provided throughout the *care suite* and installed in accordance with NFPA 72.

❖ In previous editions of the code, travel distance was controlled within suites by limiting the number of intervening rooms. The approach was confusing and led to inconsistent application of the care suite provisions. Travel distance within the suite is limited to 100 feet (30 480 mm) and allows for the movement of a patient through a maximum of three doors. The three doors are within the care suite, thus the door from the care suite to the corridor would be in addition to the three allowed within the suite. The distance can be expanded to 125 feet (38 100 mm) within the care suite as provided by the exception. Table 1017.2 limits the total travel distance within Group I-2 occupancies to 200 feet (60 960 mm). Therefore, if you have 125 feet (38 100 mm) of travel within the suite, you only have 75 feet (22 860 mm) outside of the care suite before your travel must get you to an exit. The Section 407.4.2 limit of a maximum 50-foot (15 240 mm) travel distance within a patient sleeping room to an exit access door does not apply to patient rooms within care suites.

407.4.4.4 Doors within care suites. Doors in care suites serving habitable rooms shall be permitted to comply with one of the following:

1. Manually operated horizontal sliding doors permitted in accordance with Exception 9 to Section 1010.1.2.
2. Power-operated doors permitted in accordance with Exception 7 to Section 1010.1.2.
3. Means of egress doors complying with Section 1010.

❖ Within care suites, patient rooms and treatment rooms are generally not required by the code to have doors. However, for clinical needs (infection control, privacy, noise control, etc.), doors are commonly required to patient or treatment rooms within care suites. This section clarifies what types of doors are permitted within a suite. Considered in the allowances is that staff will be assisting in evacuation and will be familiar with door operation.

407.4.4.5 Care suites containing sleeping room areas. Sleeping rooms shall be permitted to be grouped into care suites where one of the following criteria is met:

1. The *care suite* is not used as an *exit access* for more than eight care recipient beds.

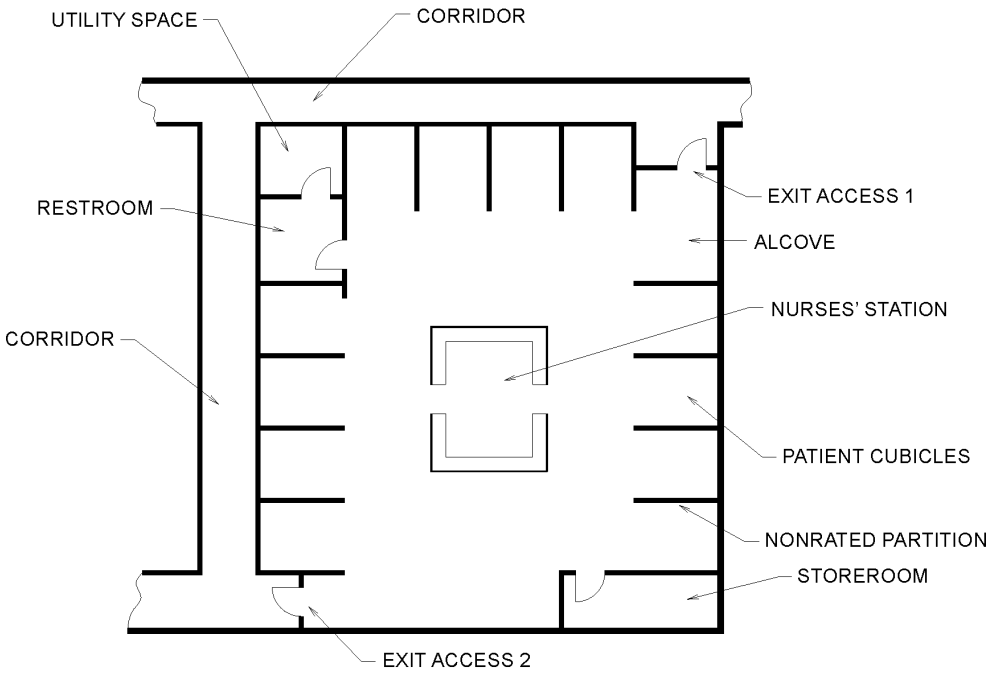

For SI: 1 square foot = 0.0929 m^2.

Figure 407.4.4
GROUP I-2 EXAMPLE OF SUITE

INTERNATIONAL CODE COUNCIL®
Copyright © 2015 ICC. ALL RIGHTS RESERVED. Accessed by David Dammon on Jun 21, 2017 12:30:52 PM pursuant to License Agreement with ICC. No further reproduction or distribution authorized. ANY UNAUTHORIZED REPRODUCTION OR DISTRIBUTION IS A VIOLATION OF THE FEDERAL COPYRIGHT ACT AND THE LICENSE AGREEMENT, AND SUBJECT TO CIVIL AND CRIMINAL PENALTIES THEREUNDER.

2. The arrangement of the *care suite* allows for direct and constant visual supervision into the sleeping rooms by care providers.
3. An automatic smoke detection system is provided in the sleeping rooms and installed in accordance with NFPA 72.

❖ In addition to complying with Sections 407.4.4 through 407.4.4.4, care suites containing patient sleeping rooms must comply with Sections 407.4.4.5, 407.4.4.5.1 and 407.4.4.5.2. The three items of this section are options. The suite can be limited to eight beds. It can have more than eight beds provided the suite is arranged such that each patient sleeping room is within direct and constant visual supervision or an automatic smoke detection system is provided. The smoke detection option is provided where direct supervision of patients by staff is not possible. Smoke detection in the patient room provides equivalent early detection of a fire. Section 407.4.4.5.1 will provide the overall size limit to the care suite.

407.4.4.5.1 Area. *Care suites* containing sleeping rooms shall be not greater than 7,500 square feet (696 m^2) in area.

Exception: *Care suites* containing sleeping rooms shall be permitted to be not greater than 10,000 square feet (929 m^2) in area where an automatic smoke detection system is provided throughout the *care suite* and installed in accordance with NFPA 72.

❖ The combined area of the patient sleeping rooms, the staff areas and any associated spaces (e.g., clean room, nutrition center, storage room) and any intervening rooms are permitted to have a total area of 7,500 square feet (696 m^2). The care suite perimeter is defined by its separations from other care suites, other portions of the occupancy and from corridors in accordance with earlier provisions of Section 407. Increasing the area to 10,000 square feet (929 m^2) allows inclusion of more staff and support spaces within the suite. Operationally, this is a key factor because the staff will not need to leave the suite as often in order to retrieve supplies or to access the staff toilet, which will improve the response time of the staff during a medical emergency, or a fire/safety situation.

407.4.4.5.2 Exit access. Any sleeping room, or any *care suite* that contains sleeping rooms, of more than 1,000 square feet (93 m^2) shall have no fewer than two *exit access* doors from the *care suite* located in accordance with Section 1007.

❖ A care suite that contains a patient sleeping room and an area of 1,000 square feet (93 m^2) or less can be provided with only one exit access door to a corridor, provided that the 100-foot (30 480 mm) maximum travel distance (see Section 407.4.4.3) is met. For suites that contain patient sleeping rooms and have an area of between 1,000 square feet (93 m^2) and 10,000 square feet (929 m^2), there must be at least two exit access doors to corridors, or one access door to a corridor and one to an adjoining care suite as allowed by Section 407.4.4.1.

Because this section allows a single exit access door from suites smaller than 1,000 square feet (93 m^2), and Section 407.4.4.3 allows a maximum travel within suite of either 100 feet (30 480 mm) or 125 feet (38 100 mm), there could be a configuration of a suite where the common path of travel within the suite exceeds the limits found in Table 1006.2.1. For rooms within suites, a greater common path of travel is allowed, provided the maximum travel distance established in Section 407.4.4.3 is met.

407.4.4.6 Care suites not containing sleeping rooms. Areas not containing sleeping rooms, but only treatment areas and the associated rooms, spaces or circulation space, shall be permitted to be grouped into *care suites* and shall conform to the limitations in Sections 407.4.4.6.1 and 407.4.4.6.2.

❖ According to the definition for "Care suite" in Chapter 2, suites covered by these provisions are limited to areas that include patient sleeping rooms or patient treatment rooms. This group of sections addresses suites for patient treatment rooms. Common examples include diagnostic or therapy areas where the function of treatment requires adjacency. This could also include inpatient or outpatient surgery suites, emergency treatment area suites or areas such as recovery rooms or dialysis treatment centers. Patients may be anesthetized, but staff/patient ratios are high and staff is trained in proper evacuation procedures. In addition to complying with Sections 407.4.4 through 407.4.4.4, care suites that do not contain patient sleeping rooms must comply with Sections 407.4.4.6, 407.4.4.6.1 and 407.4.4.6.2.

407.4.4.6.1 Area. *Care suites* of rooms, other than sleeping rooms, shall have an area not greater than 12,500 square feet (1161 m^2).

Exception: *Care suites* not containing sleeping rooms shall be permitted to be not greater than 15,000 square feet (1394 m^2) in area where an automatic smoke detection system is provided throughout the *care suite* in accordance with Section 907.

❖ A 10,000-square-foot (929 m^2) limitation for care suites not containing sleeping rooms was in the legacy codes before sprinkler protection was required in Group I-2 occupancies. Designs to address current diagnostic and treatment methods have proven difficult to achieve within the previous 10,000-square-foot (929 m^2) requirement. Sprinkler protection provides an additional level of life safety to building occupants, which justifies the area increase to 12,500 square feet (1161 m^2). Additionally, providing an automatic smoke detection system throughout a care suite provides an added level of life safety, which can be used to increase the area to 15,000 square feet (1394 m^2). Sprinkler protection and smoke detection are very effective measures of providing life safety to building occupants. Providing these additional levels of life safety will allow for more functional design to better meet increased space requirements for the area of a care suite not containing sleeping rooms.

INTERNATIONAL CODE COUNCIL®
Copyright © 2015 ICC. ALL RIGHTS RESERVED. Accessed by David Dammon on Jun 21, 2017 12:30:52 PM pursuant to License Agreement with ICC. No further reproduction or distribution authorized. ANY UNAUTHORIZED REPRODUCTION OR DISTRIBUTION IS A VIOLATION OF THE FEDERAL COPYRIGHT ACT AND THE LICENSE AGREEMENT, AND SUBJECT TO CIVIL AND CRIMINAL PENALTIES THEREUNDER.

407.4.4.6.2 Exit access. *Care suites*, other than sleeping rooms, with an area of more than 2,500 square feet (232 m^2) shall have no fewer than two *exit access* doors from the *care suite* located in accordance with Section 1007.1.

❖ A suite that contains a patient treatment room and an area of 2,500 square feet (232 m^2) or less can have only one exit access door to a corridor, provided that the maximum travel distance within the suite does not exceed the 100-foot (30 480 mm) exit access limit set by Section 407.4.4.3 is met. For suites that contain patient treatment rooms and have an area of between 2,500 square feet (232 m^2) and 15,000 square feet (1394 m^2), there must be at least two exit access doors to the corridor, or one access door to the corridor and one to an adjoining care suite as allowed by Section 407.4.4.1. These doors must meet the separation requirements in Section 1007. In a two-exit suite, at least one of the exits must be within the travel distance of every point in the suite as specified in Sections 407.4.4.3.

Because this section allows a single-exit access door from suites smaller than 2,500 square feet (232 m^2), and Section 407.4.4.3 allows a maximum travel within suite of either 100 feet (30 480 mm) or 125 feet (38 100 mm), there could be a configuration of a suite where the common path of travel within the suite exceeds the limits found in Table 1006.2.1. For rooms within suites, a greater common path of travel is allowed, provided the maximum travel distance established in Section 407.4.4.3 is met.

407.5 Smoke barriers. *Smoke barriers* shall be provided to subdivide every *story* used by persons receiving care, treatment or sleeping and to divide other *stories* with an *occupant load* of 50 or more persons, into no fewer than two *smoke compartments*. Such stories shall be divided into *smoke compartments* with an area of not more than 22,500 square feet (2092 m^2) in Group I-2, Condition 1, and not more than 40,000 square feet (3716 m^2) in Group I-2, Condition 2, and the distance of travel from any point in a *smoke compartment* to a *smoke barrier* door shall be not greater than 200 feet (60 960 mm). The *smoke barrier* shall be in accordance with Section 709.

❖ One of the basic premises of this section is that vertical evacuation of care recipients in Group I-2 occupancies is extremely difficult where patients are incapable of self-preservation or require ongoing care. It is essential, therefore, to provide a refuge area on every story used by care recipients for sleeping, care or treatment. The refuge area is intended to provide a protected area to which care recipients may be relocated if it becomes necessary to evacuate them from their original rooms. For this reason, each story used by care recipients for sleeping, care or treatment and all other stories with an occupant load of 50 or more must be divided into at least two smoke compartments. Each smoke compartment is limited to an area of no more than 22,500 square feet (2092 m^2) for nursing homes (Group I-2, Condition 1) and 40,000 square feet (3716 m^2) for hospitals (Group I-2, Condition 2) (see the definition of "Smoke compartment" in Section 202). The travel distance from any point in a smoke compartment to a smoke barrier door is limited to 200 feet (60 960 mm). This is distinct from the travel distance to exits. This distance is limiting the distance that care providers and care recipients must travel until reaching another smoke compartment and the refuge area it contains. Travel to an exit enclosure or exit door is not a substitute for travel to the smoke barrier and a separate compartment (see Commentary Figure 407.5). Every occupied space must be able to meet both exit access travel distance to an exit and to the entrance to an adjacent smoke compartment. The maximum travel distance to an exit is also 200 feet (60 960 mm).

Smoke barriers used to divide one smoke compartment from the next are to be constructed in accordance with Section 709 and with horizontal assemblies as specified in Section 407.5.3. The smoke barrier is different from the smoke partitions required for corridor walls in Section 407.3. Among other things, a smoke barrier is required to have a fire-resistance rating of 1 hour and, except as other-

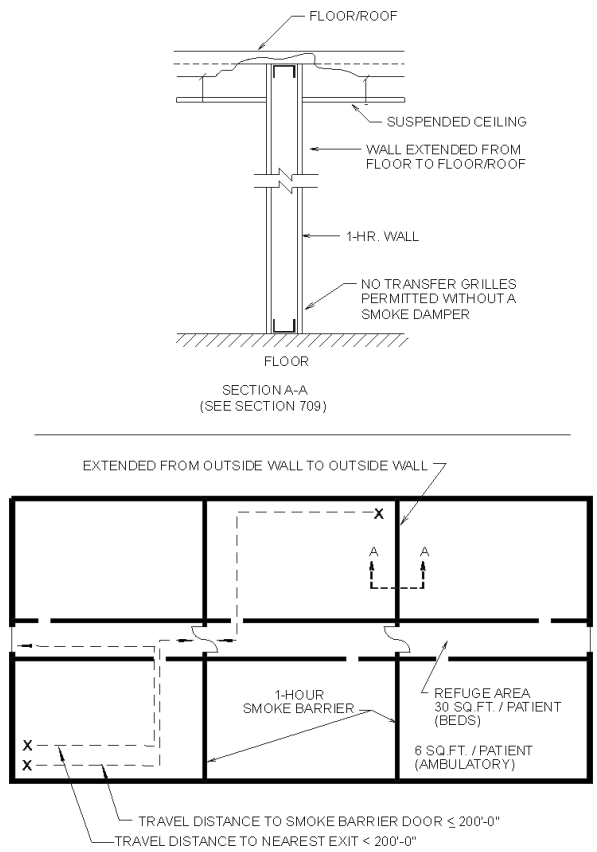

For SI: 1 foot = 304.8 mm, 1 inch = 25.4 mm, 1 square foot = 0.0929 m^2.

Figure 407.5
GROUP I-2: SMOKE BARRIER

INTERNATIONAL CODE COUNCIL®
Copyright © 2015 ICC. ALL RIGHTS RESERVED. Accessed by David Dammon on Jun 21, 2017 12:30:52 PM pursuant to License Agreement with ICC. No further reproduction or distribution authorized. ANY UNAUTHORIZED REPRODUCTION OR DISTRIBUTION IS A VIOLATION OF THE FEDERAL COPYRIGHT ACT AND THE LICENSE AGREEMENT, AND SUBJECT TO CIVIL AND CRIMINAL PENALTIES THEREUNDER.

wise provided for in the Exception 1 to Section 709.4, provide a continuous separation through all concealed spaces to resist the passage of fire and smoke (see Commentary Figure 407.5). The maximum area of the smoke compartment provides two protection features. First, the number of persons who are exposed to smoke and fumes will be limited. Typical designs indicate that the number of persons exposed will usually be less than 100 and, more likely, 50 or less. Second, the overall dimensions of the smoke compartment must result in a maximum travel distance to the smoke barrier door of 200 feet (60 960 mm) for all design configurations.

407.5.1 Refuge area. Refuge areas shall be provided within each *smoke compartment*. The size of the refuge area shall accommodate the occupants and care recipients from the adjoining *smoke compartment*. Where a *smoke compartment* is adjoined by two or more *smoke compartments*, the minimum area of the refuge area shall accommodate the largest *occupant load* of the adjoining compartments. The size of the refuge area shall provide the following:

1. Not less than 30 net square feet (2.8 m^2) for each care recipient confined to bed or stretcher.
2. Not less than 6 square feet (0.56 m^2) for each ambulatory care recipient not confined to bed or stretcher and for other occupants.

Areas or spaces permitted to be included in the calculation of refuge area are *corridors*, sleeping areas, treatment rooms, lounge or dining areas and other low-hazard areas.

❖ To provide adequate space for occupants who might be relocated to an adjacent smoke compartment, open space for refuge areas must be available. In the determination of the adequacy of the refuge areas, minimum net areas per occupant are required. In determining the area available, it should be noted that the facility may still need to function as a medical care facility even while the care recipients are relocated. On floors housing nonambulatory patients (i.e., care recipient sleeping floors), a minimum of 30 net square feet (2.8 m^2) per patient is required to be provided in low-hazard areas, such as waiting areas, corridors or patient rooms. This is to permit the relocation of the care recipient on a bed or stretcher to an area of safety on the same floor. The 30 net square feet (2.8 m^2) is intended only to apply to the number of care recipients and not the calculated occupant load as determined using Table 1004.1.2.

For floors classified as Group I-2 that are not used for care recipient sleeping rooms (i.e., treatment floors), the net area required is 6 square feet (0.56 m^2) per occupant. In this instance, the area required is based on the calculated occupant load as determined by Table 1004.1.2. The 6-square-foot (0.56 m^2) minimum is based on an assumption that some occupants will be using walkers, wheelchairs and possibly a few litters for care recipients who are being transported through the area at the time of the fire.

The refuge area must be able to accommodate all of the occupants and care recipients from the adjoining smoke compartment based on the factors described above. If a smoke compartment containing a refuge area is adjoined by multiple smoke compartments, the minimum required size of the refuge area is to be based upon the largest of the occupant loads of the adjoining compartments. It is assumed that the refuge area will only need to serve one adjacent smoke compartment.

When there are multiple smoke compartments on the same level, each smoke compartment must have open space for the largest number of evacuees. Space for people already in the smoke compartment should be considered in the design, but do not have to be considered for determining the refuge area square footage requirements. Remember, the idea is for smoke compartments to be part of the "defend-in-place" scenario commonly used in hospitals and nursing homes (see commentary, Section 407.1).

Refuge areas required by this section are distinct from areas of refuge and exterior areas of assisted rescue required by Section 1009 for accessible means of egress.

407.5.2 Independent egress. A *means of egress* shall be provided from each *smoke compartment* created by *smoke barriers* without having to return through the smoke compartment from which *means of egress* originated.

❖ To prevent creation of a dead-end smoke compartment, exits are to be arranged so as to permit access without returning through a smoke compartment from which egress originated. This section does not require an exit from within each smoke compartment. See Commentary Figures 407.5.2(1) and 407.5.2(2) for acceptable and unacceptable egress arrangements.

407.5.3 Horizontal assemblies. *Horizontal assemblies* supporting *smoke barriers* required by this section shall be designed to resist the movement of smoke. Elevator lobbies shall be in accordance with Section 3006.2.

❖ In order to maintain the integrity of a smoke compartment, the horizontal assemblies supporting the smoke barrier walls must also be designed to resist the passage of smoke. With the combination of these horizontal assemblies and the fire barriers, a complete smoke-protected compartment is achieved. Provisions of Section 711.2.4.4 address openings and penetrations of each horizontal assembly providing a barrier to smoke. Elevators and other large openings will have to be in a shaft enclosure. A lobby complying with Section 3006.2 will need to be provided for such elevators.

[F] 407.6 Automatic sprinkler system. *Smoke compartments* containing sleeping rooms shall be equipped throughout with an *automatic sprinkler* system in accordance with Sections 903.3.1.1 and 903.3.2.

❖ Recognizing the effectiveness of an automatic sprinkler system, the reference to Section 903.3.1.1 clari-

INTERNATIONAL CODE COUNCIL®
Copyright © 2015 ICC. ALL RIGHTS RESERVED. Accessed by David Dammon on Jun 21, 2017 12:30:52 PM pursuant to License Agreement with ICC. No further reproduction or distribution authorized. ANY UNAUTHORIZED REPRODUCTION OR DISTRIBUTION IS A VIOLATION OF THE FEDERAL COPYRIGHT ACT AND THE LICENSE AGREEMENT, AND SUBJECT TO CIVIL AND CRIMINAL PENALTIES THEREUNDER.

fies that the suppression system required by Section 903.2.6 must be a sprinkler system in accordance with the code and NFPA 13. Furthermore, in response to recent proven technology, smoke compartments containing patient rooms are required to be equipped throughout with quick-response or residential sprinklers as set forth in Item 1 in Section 903.3.2.

Most fire injuries in hospitals begin with the ignition of clothing on a person, a mattress, a pillow, bedding or linen. The Building and Fire Research Laboratory of NIST conducted fire tests in patient rooms using quick-response sprinklers and smoke detectors. The test results were published in a July 1993 report entitled, "Measurement of Room Conditions and Response of Sprinklers and Smoke Detectors During a Simulated Two-bed Hospital Patient Room Fire." The report concluded that quick-response sprinklers actuated before any life would be threatened by a fire in a care recipient's (patient's) room.

Prior to the development of quick-response sprinkler technology, smoke detection in care recipient rooms classified as Group I-2 occupancies was typically required, due to the slower response time of standard sprinklers. While properly operating standard sprinklers are effective, the extent of fire growth and smoke production that can occur before sprinkler activation creates the need for early warning to

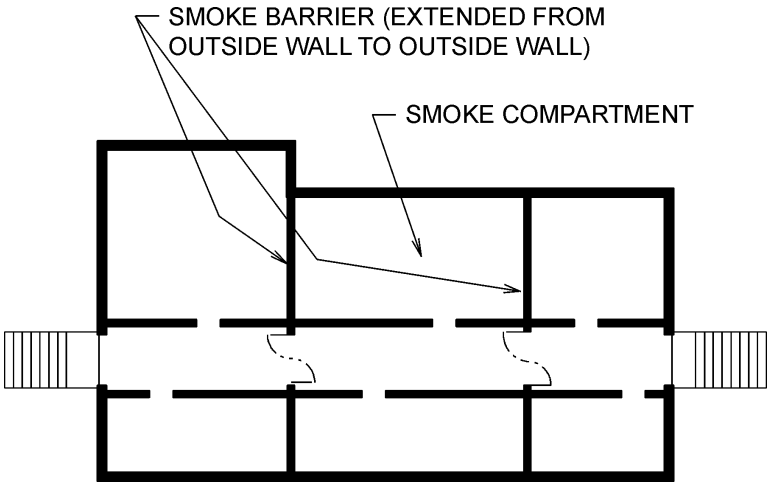

Figure 407.5.2(1)
ACCEPTABLE EGRESS ARRANGEMENT

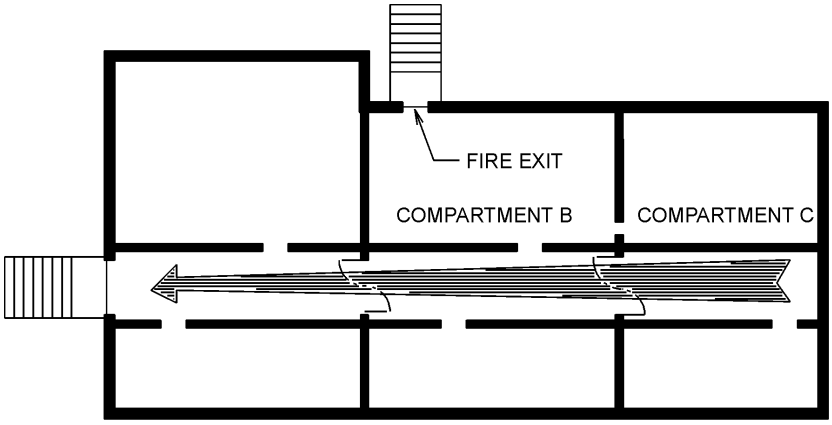

IF PATIENTS ARE MOVED FROM COMPARTMENT B TO C, THERE IS NO EXIT AVAILABLE WITHOUT RETURNING TO COMPARTMENT B; THEREFORE, COMPARTMENT C IS A "DEAD-END" SMOKE COMPARTMENT.

Figure 407.5.2(2)
UNACCEPTABLE EGRESS ARRANGEMENT

INTERNATIONAL CODE COUNCIL®
Copyright © 2015 ICC. ALL RIGHTS RESERVED. Accessed by David Dammon on Jun 21, 2017 12:30:52 PM pursuant to License Agreement with ICC. No further reproduction or distribution authorized. ANY UNAUTHORIZED REPRODUCTION OR DISTRIBUTION IS A VIOLATION OF THE FEDERAL COPYRIGHT ACT AND THE LICENSE AGREEMENT, AND SUBJECT TO CIVIL AND CRIMINAL PENALTIES THEREUNDER.

enable faster response by the care providers and initiation of egress that is critical in occupancies containing persons incapable of self-preservation. With quick-response or residential sprinklers installed throughout the smoke compartment, and additional protection provided as indicated for spaces open to corridors, incidental uses and certain specific health care facilities, smoke detectors in care recipient sleeping rooms are not required in Group I-2 occupancies.

[F] 407.7 Fire alarm system. A *fire alarm* system shall be provided in accordance with Section 907.2.6.

❖ Fire alarms are essential to this occupancy where many of those receiving care and treatment cannot leave a fire incident area without the assistance of staff. The alarm system is a key part of the safeguards to protect care recipients. Standards for this alarm system are found in Sections 907.2.6 and 907.2.6.2.

[F] 407.8 Automatic fire detection. *Corridors* in Group I-2, Condition 1, occupancies, long-term care facilities, *detoxification facilities* and spaces permitted to be open to the *corridors* by Section 407.2 shall be equipped with an automatic fire detection system.

Group I-2, Condition 2, occupancies shall be equipped with smoke detection as required in Section 407.2.

Exceptions:

1. *Corridor* smoke detection is not required where sleeping rooms are provided with *smoke detectors* that comply with UL 268. Such detectors shall provide a visual display on the *corridor* side of each sleeping room and an audible and visual alarm at the care provider's station attending each unit.
2. *Corridor* smoke detection is not required where sleeping room doors are equipped with automatic door-closing devices with integral *smoke detectors* on the unit sides installed in accordance with their listing, provided that the integral detectors perform the required alerting function.

❖ Automatic fire detection is required in corridors and areas open to corridors in nursing homes, Group I-2, Condition 1, occupancies and long-term care and detoxification facilities. In recognition of quick-response sprinkler technology and the fact that the sprinkler system is electronically supervised and doors to sleeping rooms are supervised by staff on a continual basis when in the open position, it is now believed that sleeping room smoke detectors are not required for adequate fire safety in sleeping rooms. In nursing homes, long-term care facilities and detoxification facilities, however, some redundancy is appropriate because such facilities typically have less control over furnishings and personal items and, thereby, result in a less predictable and usually higher fire hazard load than other Group I-2 occupancies. Also, there is generally less staff supervision in these facilities than in other health care facilities and, thus, less control over patient smoking and other fire causes. To provide additional protection against fires spreading from the room of origin, therefore, automatic fire detection is required in corridors of nursing homes, long-term care facilities and detoxification facilities. It should be noted that fire detection is not required in corridors of other Group I-2 occupancies except where otherwise specifically required in the code (see Sections 407.2.1 through 407.2.4, 907.2.6 and 907.2.6.2). Similarly, since areas open to the corridor very often are the room of fire origin and because such areas are not required by the code to be under visual supervision by staff, some redundancy to protection by the sprinkler system is requested. Accordingly, all areas open to corridors must be protected by an automatic fire detection system. This requirement provides an additional level of protection against sprinkler system failures or lapses in staff supervision. There are two exceptions to the requirement for an automatic fire detection system in corridors of nursing homes, long-term care facilities and detoxification facilities. In both exceptions, the alternative methods of protection specifically provide an equivalent level of safety to what is required in care recipient sleeping rooms.

Exception 1 requires smoke detectors to be located in the care recipient's sleeping room and to activate both a visual display on the corridor side of the patient room and a visual and audible alarm at the care providers' station serving or attending the room. Detectors complying with UL 268 are intended for open area protection and for connection to a normal power supply or as part of a fire alarm system.

This exception, however, is specifically designed so as not to require the detectors to activate the building's fire alarm system where approved sleeping room smoke detectors are installed and where visual and audible alarms are provided. This is in response to the concern over unwanted alarms. It should be noted that the required alarm signals will not necessarily indicate to staff that a fire emergency exists. The nursing/ care provider call system may typically be used to identify numerous conditions within the room.

Exception 2 addresses the situation where smoke detectors are incorporated within automatic door-closing devices. The units are acceptable as long as the required alarm functions are still provided. Such units are usually listed as combination door closer and hold-open devices.

407.9 Secured yards. Grounds are permitted to be fenced and gates therein are permitted to be equipped with locks, provided that safe dispersal areas having 30 net square feet (2.8 m^2) for bed and stretcher care recipients and 6 net square feet (0.56 m^2) for ambulatory care recipients and other occupants are located between the building and the fence. Such provided safe dispersal areas shall be located not less than 50 feet (15 240 mm) from the building they serve.

❖ Group I-2 occupancies, particularly those specializing in the treatment of mental disabilities such as

INTERNATIONAL CODE COUNCIL®
Copyright © 2015 ICC. ALL RIGHTS RESERVED. Accessed by David Dammon on Jun 21, 2017 12:30:52 PM pursuant to License Agreement with ICC. No further reproduction or distribution authorized. ANY UNAUTHORIZED REPRODUCTION OR DISTRIBUTION IS A VIOLATION OF THE FEDERAL COPYRIGHT ACT AND THE LICENSE AGREEMENT, AND SUBJECT TO CIVIL AND CRIMINAL PENALTIES THEREUNDER.

Alzheimer's, often provide a secured yard for care recipient use. During an emergency, it may be difficult to safeguard care recipients if they are allowed to have direct access to a public way. This section essentially creates a safe area where people may move from the building without having unrestricted access to the public way.

407.10 Electrical systems. In Group I-2 occupancies, the essential electrical system for electrical components, equipment and systems shall be designed and constructed in accordance with the provisions of Chapter 27 and NFPA 99.

❖ Currently, emergency power systems are required to comply with NFPA 99 by the Center for Medicare/ Medicaid Services (CMS) in order for a facility to receive federal reimbursement funds. This section's mandate for compliance with NFPA 99 will ensure the required power system is provided in Group I-2 occupancies. A reference to Chapter 27 will comprehensively address electrical systems, including references to NFPA 70, 110 and 111.

SECTION 408
GROUP I-3

408.1 General. Occupancies in Group I-3 shall comply with the provisions of Sections 408.1 through 408.11 and other applicable provisions of this code (see Section 308.5).

❖ The provisions of Section 408 address the unique features of detention and correctional occupancies in Group I-3. The provisions are based on full-scale fire tests, fire experience (in particular several multiple-death fires that occurred between 1974 and 1979) and the provisions for occupancies in Group I-2. With respect to evacuation, occupancies in Groups I-2 and I-3 are similar in that the occupants are typically not capable of self-preservation and, therefore, staff must assist in evacuation.

The general approach is a defend-in-place philosophy based on the difficulties associated with evacuation, especially in medium- and high-security facilities. The first level of protection is established as the room that is typically a sleeping room or cell. Horizontal evacuation to an adjacent smoke compartment provides the second level of protection, and vertical evacuation is the third level of protection. The evacuation difficulty associated with occupancies in Group I-3 is not occupant mobility; rather, it is the need to maintain security and, in some instances, to keep the residents segregated. There are also instances, such as protected witness facilities, in which the identity of the occupant must not be revealed to other occupants or the public.

It is recognized that the broad classification of Group I-3 includes a variety of locking arrangements based on the various levels of security required. As such, Section 308.5 contains definitions for five different occupancy conditions that are intended to represent the various locking arrangements and different levels of security (see commentary, Section 308.5). Regardless of the security level, fire protection and life safety features must be provided in order to achieve an acceptable level of protection without interfering with the operation of the facility and the need to maintain security.

This section has been developed out of considerations unique to detention and correctional facilities and to facilitate the consideration of the entire package of protection features. The basic protection features provided include early detection, fire containment, evacuation and fire extinguishment. Section 403.8.3 of the IFC contains provisions for emergency preparedness, including staff training, staffing requirements and the need to be able to obtain and identify emergency keys. Additional consideration should be given to restricting the fuel load within resident housing areas. It should also be noted that Section 509 contains provisions for incidental uses within Group I-3. The incidental uses represent different degrees of hazard than are associated with the hazards of the primary building area—in this case, the housing of occupants under physical restraint. The different hazard is typically related to the basic nature of the contents or the quantity of combustibles.

The provisions of Section 408 apply to all occupancies in Group I-3 and those portions of occupancies that are considered Group I-3, except Condition 1 facilities (see Commentary Figure 408.1). As defined in Section 308.5.1, Condition 1 facilities permit free egress even to the exterior and, therefore, such occupancies are subject to the same provisions applicable to Group R.

The elimination of Condition 1 from the provisions of Section 408 may result in some interesting applications of the code. For example, the corridor separation requirements in Section 1020.1 for occupancies in Group R are more restrictive than the corridor requirements for occupancies in Group I-3, Condition 2. This may result in a request to consider a facility as Condition 2 even though the building is really Condition 1. Such a request could be considered acceptable only if the additional requirements in the code and in the IFC for Condition 2 are met, including automatic fire suppression and staffing (see Section 403.8.3.2 of the IFC).

408.1.1 Definitions. The following terms are defined in Chapter 2:

CELL.

CELL TIER.

HOUSING UNIT.

SALLYPORT.

❖ This section lists terms that are specifically associated with the subject matter of Section 408. It is important to emphasize that these terms are not exclusively related to this chapter but may or may not also be applicable where the term is used elsewhere in the code.

INTERNATIONAL CODE COUNCIL®
Copyright © 2015 ICC. ALL RIGHTS RESERVED. Accessed by David Dammon on Jun 21, 2017 12:30:52 PM pursuant to License Agreement with ICC. No further reproduction or distribution authorized. ANY UNAUTHORIZED REPRODUCTION OR DISTRIBUTION IS A VIOLATION OF THE FEDERAL COPYRIGHT ACT AND THE LICENSE AGREEMENT, AND SUBJECT TO CIVIL AND CRIMINAL PENALTIES THEREUNDER.

Definitions of terms can help in the understanding and application of the code requirements. The purpose for including a list within this chapter is to provide more convenient access to terms which may have a specific or limited application within this chapter. For the complete definition and associated commentary, refer back to Chapter 2. Terms that are italicized provide a visual identification throughout the code that a definition exists for that term. The use and application of all defined terms are set forth in Section 201.

408.2 Other occupancies. Buildings or portions of buildings in Group I-3 occupancies where security operations necessitate the locking of required *means of egress* shall be permitted to be classified as a different occupancy. Occupancies classified as other than Group I-3 shall meet the applicable requirements of this code for that occupancy where provisions are made for the release of occupants at all times.

Means of egress from detention and correctional occupancies that traverse other use areas shall, as a minimum, conform to requirements for detention and correctional occupancies.

Exception: It is permissible to exit through a *horizontal exit* into other contiguous occupancies that do not conform to detention and correctional occupancy egress provisions but that do comply with requirements set forth in the appropriate occupancy, as long as the occupancy is not a Group H use.

❖ In accordance with the provisions of Section 508, portions of an occupancy in Group I-3 may be classified as a separate occupancy and meet the provisions of the code for that occupancy. Since the area may be used by the residents, however, a need may exist for the other occupancy to also contain security provisions, such as the locking of egress doors. This section specifically permits such a condition as long as arrangements have been made for release of the occupants within these areas at any time they are occupied. Acceptable methods include having either

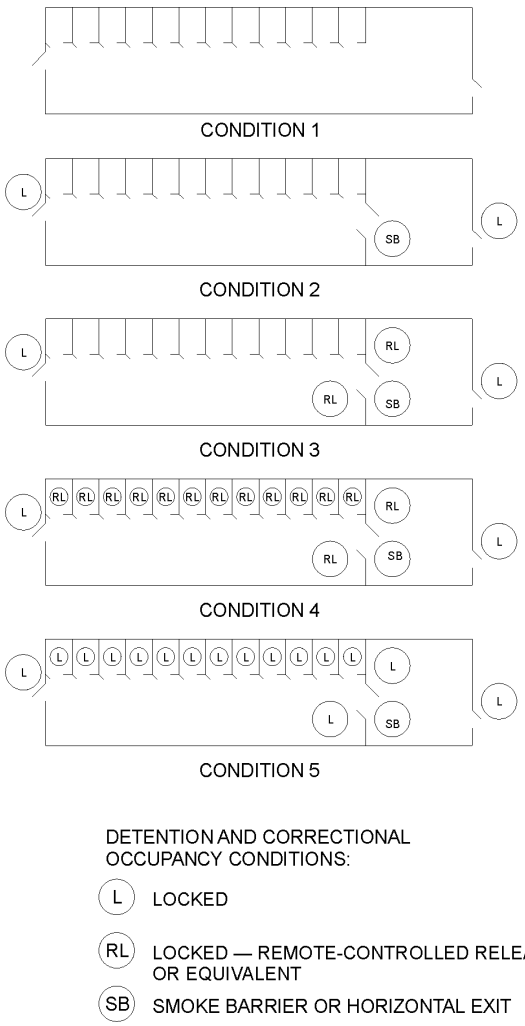

Figure 408.1
GROUP I-3: OCCUPANCY CONDITIONS

INTERNATIONAL CODE COUNCIL®
Copyright © 2015 ICC. ALL RIGHTS RESERVED. Accessed by David Dammon on Jun 21, 2017 12:30:52 PM pursuant to License Agreement with ICC. No further reproduction or distribution authorized. ANY UNAUTHORIZED REPRODUCTION OR DISTRIBUTION IS A VIOLATION OF THE FEDERAL COPYRIGHT ACT AND THE LICENSE AGREEMENT, AND SUBJECT TO CIVIL AND CRIMINAL PENALTIES THEREUNDER.

staff operate the locks or remote release of the locks, similar to that which is provided in the housing areas.

Although it is indicated that the section applies to portions of occupancies in Group I-3, consideration should be given to allow the necessary security to be provided in separate buildings that are part of a detention or correctional facility. Applications of this section should be restricted to the buildings that must be secure because they are occupied by residents, and arrangements for quick release of the locks must be provided at all times the building is occupied. If residents are to be permitted into an area or building without staff supervision, the residents should be able to initiate their own evacuation.

The means of egress provisions from this section and Chapter 10 that are applicable to Group I-3 are also applicable to the path through different occupancies. For example, if the means of egress from a cell block wing traverses through a Group A area, then the requirements of the code for the Group I-3 egress are also applicable to the path through the assembly occupancy.

The exception in the code permits egress through a different occupancy, other than Group H, that is separated from the Group I-3 areas by either a fire wall or fire barrier. A horizontal exit complying with Section 1026 must be provided in this wall or barrier. This separation voids the requirements that Group I-3 egress provisions are also applicable to the different occupancies. The reason for this, of course, is that Group I-3 occupants have fled the immediate effects of the fire condition in the original detention or correctional areas and are now harbored in a refuge area.

408.3 Means of egress. Except as modified or as provided for in this section, the *means of egress* provisions of Chapter 10 shall apply.

❖ Because of the need to provide security in occupancies in Group I-3, many of the means of egress requirements of Chapter 10 have been modified for Group I-3. Except as modified in Section 408, however, all other provisions of Chapter 10 are applicable.

408.3.1 Door width. Doors to resident *sleeping units* shall have a clear width of not less than 28 inches (711 mm).

❖ Except for sleeping units that are provided to meet accessible unit provisions of Section 1107.5.5, sleeping unit doors may be a minimum of 28 inches (711 mm) in width. This section is not intended to negate the need to provide a 32-inch (813 mm) door if the room is intended to serve as part of an accessible route. In an occupancy in Group I-3, most sleeping units and even sections of the prison need not be accessible (see Sections 1103.2.14 and 1107.5.5).

408.3.2 Sliding doors. Where doors in a *means of egress* are of the horizontal-sliding type, the force to slide the door to its fully open position shall be not greater than 50 pounds (220 N) with a perpendicular force against the door of 50 pounds (220 N).

❖ Swinging doors in occupancies in Group I-3 may not be acceptable for security reasons. If the door swings into a room, the door can easily be blocked and staff access can be prevented. If the door swings out, staff does not have control of the door and the residents can use the door as a means to overcome a staff member. Therefore, horizontal sliding doors are used quite extensively and are permitted in the means of egress. The doors must be capable of being opened with a force of 50 pounds (220 N) even if a 50-pound (220 N) force is being applied perpendicular to the door. The maximum force permitted to open the door exceeds the restrictions in Section 1010.1.3 in recognition of the physical capabilities of staff members.

408.3.3 Guard tower doors. A hatch or trap door not less than 16 square feet (610 m^2) in area through the floor and having dimensions of not less than 2 feet (610 mm) in any direction shall be permitted to be used as a portion of the *means of egress* from guard towers.

❖ This provision allows the use of trap doors in the floor of an observation point as both the access and the means of egress from the tower. In order to provide the 360-degree visibility necessary for guard observation stations, the size of the base of each such elevated station must be kept to a minimum. These towers are usually limited to prison/jail staff. The trap doors work in conjunction with the spiral stairway and ship's ladders provisions of the next two sections.

408.3.4 Spiral stairways. *Spiral stairways* that conform to the requirements of Section 1011.10 are permitted for access to and between staff locations.

❖ Recognizing the physical capabilities of the staff, spiral stairways are permitted for access to and between staff locations. In multiple story facilities, spiral stairways are often used between staff control areas on different levels. As such, staff can move between the areas without entering adjacent housing areas and without losing the space that would be required for a traditional stairway. Spiral stairways provide an option for vertical circulation in guard towers and similar observation areas where the floor area is limited and the desire is to have the least amount of obstruction of floor area possible.

408.3.5 Ship's ladders. Ship's ladders shall be permitted for egress from control rooms or elevated facility observation rooms in accordance with Section 1011.15.

❖ Ship's ladders are another alternative to spiral stairways for providing vertical paths of access and egress within a Group I-3 occupancy. These are intended for access to locations used by prison/jail staff. The design standard for ship's ladders is found in Section 1011.15. In that section, the code limits any space accessed by a ship's ladder to a maximum

INTERNATIONAL CODE COUNCIL®
Copyright © 2015 ICC. ALL RIGHTS RESERVED. Accessed by David Dammon on Jun 21, 2017 12:30:52 PM pursuant to License Agreement with ICC. No further reproduction or distribution authorized. ANY UNAUTHORIZED REPRODUCTION OR DISTRIBUTION IS A VIOLATION OF THE FEDERAL COPYRIGHT ACT AND THE LICENSE AGREEMENT, AND SUBJECT TO CIVIL AND CRIMINAL PENALTIES THEREUNDER.

of 250 square feet (23 m^2) and a maximum of three occupants (see commentary, Section 1011.15).

408.3.6 Exit discharge. *Exits* are permitted to discharge into a fenced or walled courtyard. Enclosed *yards* or *courts* shall be of a size to accommodate all occupants, be located not less than 50 feet (15 240 mm) from the building and have an area of not less than 15 square feet (1.4 m^2) per person.

❖ For security purposes, exits from areas in Group I-3 do not normally provide access to a public way. In some instances, the building is located in a complex that has perimeter walls preventing access to a public way but that permit occupants to move away from the building. In other instances or in complexes where the mixing of residents must be controlled, one or more yards or courts are provided for exit discharge. Such arrangements are acceptable, provided that the occupants have an area that is at least 15 square feet (1.4 m^2) per person and is located at least 50 feet (15 240 mm) from the building.

This 50-foot (15 240 mm) distance enables residents to move away from the building and should have adequate spatial separation—especially since the building is required to be protected with an automatic fire suppression system in accordance with Section 903.2.6. The 15-square-foot (1.4 m^2) measurement is provided so that the residents have adequate space in which to stand and to move around, since they may need to remain in the yard or court for some time.

408.3.7 Sallyports. A *sallyport* shall be permitted in a *means of egress* where there are provisions for continuous and unobstructed passage through the *sallyport* during an emergency egress condition.

❖ A sallyport is a compartment established for security purposes that restricts the movement of individuals. A sallyport consists of two or more security doors that do not normally operate simultaneously. One door will not normally open until the other doors are closed and locked. Sallyports are provided for security purposes to control movement and passage of residents from one area to another. The sallyport is to be arranged such that during an emergency, the doors may be opened simultaneously so as to permit free and unobstructed movement from the area. In many instances, the sallyport doors contain a manual release that can be operated by staff during an emergency to override the normal electric operation.

Although not addressed by this section, if the sallyport is in the path that the fire department or fire brigade will use to bring fire hoses, additional consideration may need to be given to permit the hose to go through the sallyport. An alternative would be to provide a standpipe connection on the housing-area side of the sallyport.

408.3.8 Interior exit stairway and ramp construction. One *interior exit stairway* or *ramp* in each building shall be permitted to have glazing installed in doors and interior walls at each landing level providing access to the *interior exit stairway or ramp*, provided that the following conditions are met:

1. The *interior exit stairway or ramp* shall not serve more than four floor levels.
2. *Exit* doors shall be not less than $^3/_4$-hour *fire door assemblies* complying with Section 716.5
3. The total area of glazing at each floor level shall not exceed 5,000 square inches (3.2 m^2) and individual panels of glazing shall not exceed 1,296 square inches (0.84 m^2).
4. The glazing shall be protected on both sides by an *automatic sprinkler system*. The sprinkler system shall be designed to wet completely the entire surface of any glazing affected by fire when actuated.
5. The glazing shall be in a gasketed frame and installed in such a manner that the framing system will deflect without breaking (loading) the glass before the sprinkler system operates.
6. Obstructions, such as curtain rods, drapery traverse rods, curtains, drapes or similar materials shall not be installed between the automatic sprinklers and the glazing.

❖ In addressing the security needs in Group I-3, the limitation on openings in the interior exit stairways given in Sections 1023.2, 1023.4 and 1023.5 is modified to facilitate visibility into the exit.

An interior exit stairway that is open to view in a correctional facility is useful and necessary for two reasons. First, the movement of the inmates is observable, thus reducing the potential for concealment, physical attacks on other inmates and other undesirable activities that could otherwise take place in enclosed spaces that are not observable.

Second, the movement of inmates who are under physical restraint is observable from the exterior, thus increasing the level of safety for correctional officers. The alternative of closed-circuit television within the interior exit stairway is not as desirable because the potential for malfunction of or intentional damage to the equipment makes this method a less reliable form of observation.

The conditions specified that permit glazing require full enclosure of the floor opening so that there is no direct communication between stories. These criteria provide a measure of fire integrity, if somewhat less than that otherwise required of an interior exit stairway.

408.4 Locks. Egress doors are permitted to be locked in accordance with the applicable use condition. Doors from a refuge area to the outside are permitted to be locked with a key in lieu of locking methods described in Section 408.4.1. The keys to unlock the exterior doors shall be available at all times and the locks shall be operable from both sides of the door.

❖ The locking arrangements for egress doors depend on the occupancy condition (1, 2, 3, 4 or 5) given in

INTERNATIONAL CODE COUNCIL®
Copyright © 2015 ICC. ALL RIGHTS RESERVED. Accessed by David Dammon on Jun 21, 2017 12:30:52 PM pursuant to License Agreement with ICC. No further reproduction or distribution authorized. ANY UNAUTHORIZED REPRODUCTION OR DISTRIBUTION IS A VIOLATION OF THE FEDERAL COPYRIGHT ACT AND THE LICENSE AGREEMENT, AND SUBJECT TO CIVIL AND CRIMINAL PENALTIES THEREUNDER.

Section 308.5. Except for Condition 1 buildings, the doors to the exterior from an occupancy in Group I-3 may be locked and need not be remotely controlled. The door locks are to be arranged so that they can be released from the exterior of the building, as well as the interior. This feature accomplishes two purposes. First, since the door can be unlocked from the outside, staff need not enter the housing area in which the fire may be located to release the locks. Second, many facilities do not permit staff members in the housing area to carry the keys for the exterior doors; therefore, there may be no benefit in requiring the door lock to be arranged to permit operation from the interior, although such an arrangement is not prohibited.

The provisions of Section 403.8.3.4 of the IFC concerning the marking of keys applies to both exterior and interior door locks. For this reason, it is usually desirable to minimize the number of keys required for an emergency; therefore, the exterior doors will most likely be keyed alike. Unfortunately, many facilities do not take this into consideration and the number of emergency keys becomes excessive to the extent that it is virtually impossible to identify each key by sight and touch.

408.4.1 Remote release. Remote release of locks on doors in a *means of egress* shall be provided with reliable means of operation, remote from the resident living areas, to release locks on all required doors. In Occupancy Condition 3 or 4, the arrangement, accessibility and security of the release mechanisms required for egress shall be such that with the minimum available staff at any time, the lock mechanisms are capable of being released within 2 minutes.

Exception: Provisions for remote locking and unlocking of occupied rooms in Occupancy Condition 4 are not required provided that not more than 10 locks are necessary to be unlocked in order to move occupants from one smoke compartment to a refuge area within 3 minutes. The opening of necessary locks shall be accomplished with not more than two separate keys.

❖ The provisions of this section do not mandate remote release locks; rather, the facility determines the level and manner in which security is to be provided. Door-locking arrangements fall into one of the conditions defined in Section 308.5. If remote release locks are provided, the means of operating them must be external to the resident housing area so the staff is not required to enter the housing area to release the locks. Clearly, in Conditions 3 and 4, excessive delay in releasing locks puts the occupants at additional risk. Locks in Conditions 3 and 4 must be able to be released promptly (within 2 minutes) with the minimum staff that will be available. A control center is typically provided for two or more housing areas from which the locks are controlled. In evaluating the use and arrangement of the remote release, consideration must be given to the intended staffing levels at different times of the day, as well as the locations of the remote release.

The condition definitions of Section 308.5 are intended to relate to the time necessary to evacuate the residents to a refuge area, such as a smoke compartment; therefore, in Condition 4, manual release locks may be used only when no more than 10 locks have to be unlocked in order to move all occupants from one smoke compartment to another and provided that this can be accomplished within 3 minutes. The time period of 3 minutes is presumed to be a reasonable staff response time to a fire emergency. So that the time to release the locks is kept to a minimum, it cannot take more than two separate keys to release the 10 locks. Again, the intended staff levels of the facility need to be considered (see Commentary Figure 408.4.1).

[F] 408.4.2 Power-operated doors and locks. Power-operated sliding doors or power-operated locks for swinging

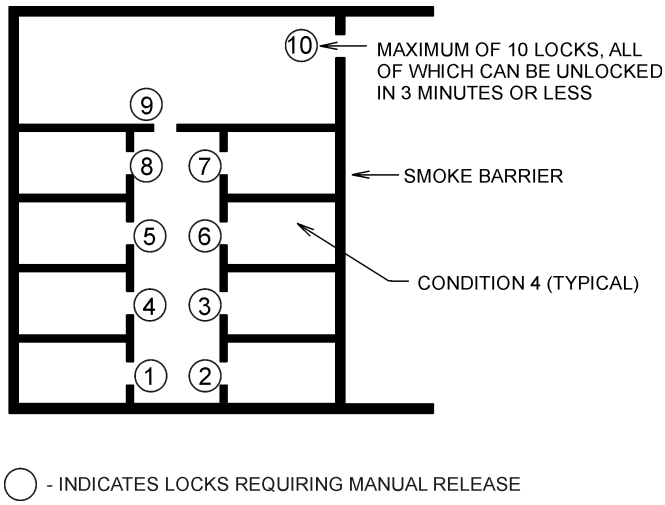

Figure 408.4.1
GROUP I-3: MANUAL RELEASE

INTERNATIONAL CODE COUNCIL®
Copyright © 2015 ICC. ALL RIGHTS RESERVED. Accessed by David Dammon on Jun 21, 2017 12:30:52 PM pursuant to License Agreement with ICC. No further reproduction or distribution authorized. ANY UNAUTHORIZED REPRODUCTION OR DISTRIBUTION IS A VIOLATION OF THE FEDERAL COPYRIGHT ACT AND THE LICENSE AGREEMENT, AND SUBJECT TO CIVIL AND CRIMINAL PENALTIES THEREUNDER.

doors shall be operable by a manual release mechanism at the door. Emergency power shall be provided for the doors and locks in accordance with Section 2702.

Exceptions:

1. Emergency power is not required in facilities with 10 or fewer locks complying with the exception to Section 408.4.1.
2. Emergency power is not required where remote mechanical operating releases are provided.

❖ To increase the likelihood that the doors in the means of egress can be operated even during a power failure, two alternative locking arrangements are required wherever the doors or locks are electrically operated. First, a manual release mechanism is to be provided at the door. Also, a remote backup (second) mechanical operating door release system must be provided or the electrical door control system must be provided with an emergency power source. If provided, the mechanical operating door release system must be capable of being operated from outside the residential housing area.

This section does not apply to manually operated doors and locks that meet the requirements of the exception to Section 408.4.1.

408.4.3 Redundant operation. Remote release, mechanically operated sliding doors or remote release, mechanically operated locks shall be provided with a mechanically operated release mechanism at each door, or shall be provided with a redundant remote release control.

❖ If a mechanically operated remote release mechanism is provided as the remote release system, either a second, redundant system is required or each remote release door or lock is to be provided with a mechanically operated device at the door. The redundant operation is essential to increase the likelihood that the doors will continue to operate in the event of failure of the primary locking system. If provided, the redundant mechanical operating door release system must also be operable from outside the residential housing area.

This provision does not apply to power-operated doors and locks that are required to have alternative systems in accordance with Section 408.4.2.

408.4.4 Relock capability. Doors remotely unlocked under emergency conditions shall not automatically relock when closed unless specific action is taken at the remote location to enable doors to relock.

❖ So as to maintain means of egress doors in an open position during an emergency condition, once a door in a means of egress is unlocked via an emergency unlocking system, the door must not automatically relock when closed unless a specific action is taken at the remote location. The normal operation of such doors and locks is typically arranged so that the door will automatically relock upon closure.

Many electronic-locking systems operate such that the door automatically relocks upon closure for security reasons. To comply with the provisions of this section, however, a specific switch is usually provided that serves as an emergency control and does not permit the door to relock without operating it. This section does not require that doors automatically release upon activation of the fire alarm system.

408.5 Protection of vertical openings. Any vertical opening shall be protected by a *shaft enclosure* in accordance with Section 713, or shall be in accordance with Section 408.5.1.

❖ This section requires that vertical openings be protected in the manner established in Section 713. The section allows compliance with Section 408.5.1 as an alternative within a housing unit. If the provisions of Section 408.5.1 for floor openings are used, then Section 408.5.2 regarding plumbing chases is also available for use in the design.

408.5.1 Floor openings. Openings in floors within a *housing unit* are permitted without a *shaft enclosure*, provided all of the following conditions are met:

1. The entire normally occupied areas so interconnected are open and unobstructed so as to enable observation of the areas by supervisory personnel;
2. *Means of egress* capacity is sufficient for all occupants from all interconnected *cell tiers* and areas;
3. The height difference between the floor levels of the highest and lowest *cell tiers* shall not exceed 23 feet (7010 mm); and
4. Egress from any portion of the *cell tier* to an *exit* or *exit access* door shall not require travel on more than one additional floor level within the *housing unit*.

❖ This section is essentially an exception to the protection of vertical openings required by Section 712. It allows openings between the various floor levels and cell tiers within a single housing unit. This provision applies regardless of whether the communicating floor levels are stories or mezzanines as long as they are within the same housing unit [see Commentary Figures 408.5(1) and (2)].

The following is a discussion of the conditions that must be met:

1. The areas must be sufficiently open and unobstructed so that a fire in one part will be immediately obvious to the occupants and supervisory personnel in the area. The intent of the provision is not to require open cell fronts; rather, it is to enable the staff to observe events occurring on all levels from one location. This arrangement is usually desirable from a security standpoint [see Commentary Figure 408.5(1)].
2. The exit capacity required is determined based on the occupant load of all floor levels exiting simultaneously. It is not unusual for most of the residents to be on the main level in the common space during periods when they are not required to be in the sleeping units (cells);

INTERNATIONAL CODE COUNCIL®
Copyright © 2015 ICC. ALL RIGHTS RESERVED. Accessed by David Dammon on Jun 21, 2017 12:30:52 PM pursuant to License Agreement with ICC. No further reproduction or distribution authorized. ANY UNAUTHORIZED REPRODUCTION OR DISTRIBUTION IS A VIOLATION OF THE FEDERAL COPYRIGHT ACT AND THE LICENSE AGREEMENT, AND SUBJECT TO CIVIL AND CRIMINAL PENALTIES THEREUNDER.

therefore, this level must be able to handle the potential occupant load of all cell tier levels.

3. The height differential between the floor levels of highest and lowest cell tiers must not exceed 23 feet (7010 mm). The limitation of 23 feet (7010 mm) expands the general code limitations on unprotected floor openings beyond two stories, because in Group I-3 it is not uncommon to have more than two interconnected levels in this open arrangement; however, the effective limitation in number of cell tiers is three. As with atriums (see Section 404), an automatic sprinkler system is required to control the spread of smoke and fire through vertical openings. Beyond the specified dimension of 23 feet (7010 mm), effective unobstructed sight becomes less attainable [see Commentary Figure 408.5(2)].
4. To minimize the potential that a fire in the day room would block access to all exits, the exits must be arranged such that it is possible to reach an exit on each level, or from the level next above or below. This would permit, for example, a three-tiered housing unit to have exits or exit access doors out of the housing unit, which are located on the lowest level and mid-level only; or on the lowest level and the top level only. In these two scenarios, the residents have access to an exit either from the level they are on or on the next level directly above or below.

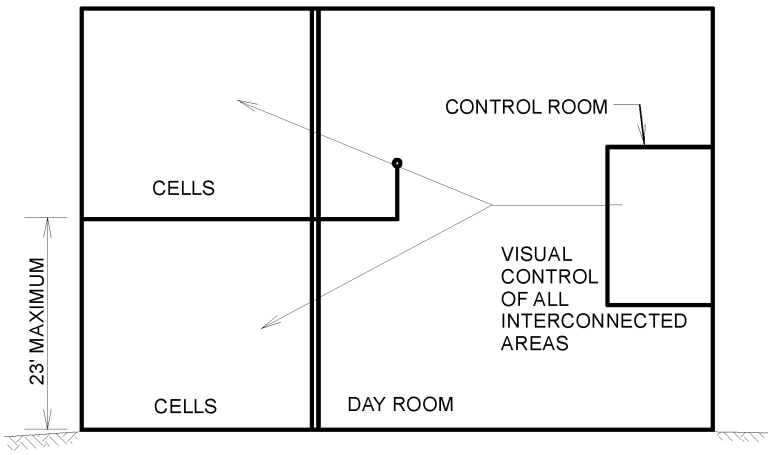

For SI: 1 foot = 304.8 mm.

Figure 408.5(1)
GROUP I-3: VERTICAL OPENINGS

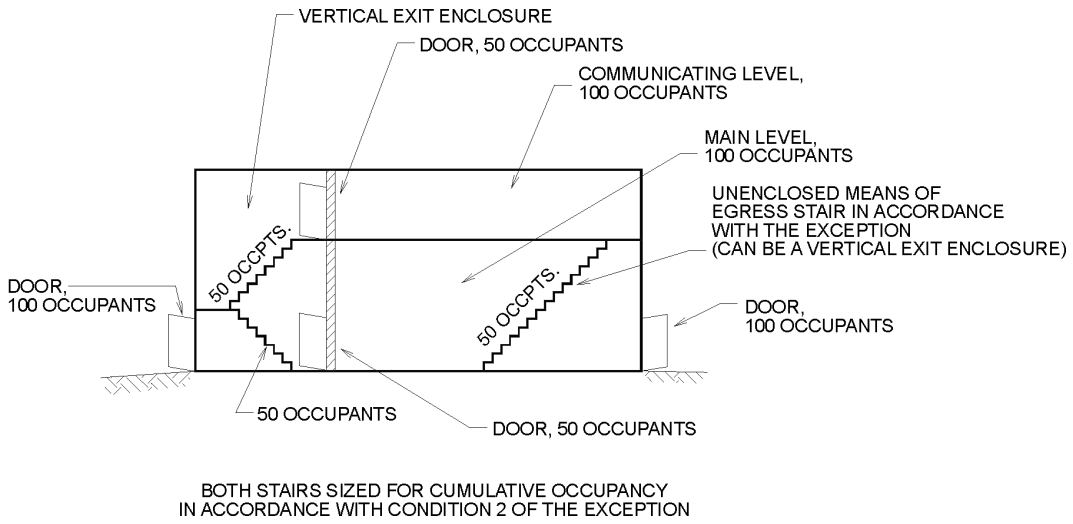

Figure 408.5(2)
GROUP I-3: VERTICAL OPENINGS

INTERNATIONAL CODE COUNCIL®
Copyright © 2015 ICC. ALL RIGHTS RESERVED. Accessed by David Dammon on Jun 21, 2017 12:30:52 PM pursuant to License Agreement with ICC. No further reproduction or distribution authorized. ANY UNAUTHORIZED REPRODUCTION OR DISTRIBUTION IS A VIOLATION OF THE FEDERAL COPYRIGHT ACT AND THE LICENSE AGREEMENT, AND SUBJECT TO CIVIL AND CRIMINAL PENALTIES THEREUNDER.

408.5.2 Shaft openings in communicating floor levels. Where a floor opening is permitted between communicating floor levels of a *housing unit* in accordance with Section 408.5.1, plumbing chases serving vertically staked individual *cells* contained with the *housing unit* shall be permitted without a *shaft enclosure*.

❖ Where a housing unit is designed in compliance with Section 408.5.1, this section allows plumbing chases within the same housing unit to also be unprotected where they penetrate through the floors separating cell tiers. If opening protection is provided within a housing unit under the provisions of Section 712, the provisions of this section cannot be used in a building design.

408.6 Smoke barrier. Occupancies in Group I-3 shall have *smoke barriers* complying with Sections 408.7 and 709 to divide every *story* occupied by residents for sleeping, or any other *story* having an *occupant load* of 50 or more persons, into no fewer than two *smoke compartments*.

Exception: Spaces having a direct *exit* to one of the following, provided that the locking arrangement of the doors involved complies with the requirements for doors at the *smoke barrier* for the use condition involved:

1. A *public way*.
2. A building separated from the resident housing area by a 2-hour fire-resistance-rated assembly or 50 feet (15 240 mm) of open space.
3. A secured y*ard* or *court* having a holding space 50 feet (15 240 mm) from the housing area that provides 6 square feet (0.56 m^2) or more of refuge area per occupant, including residents, staff and visitors.

❖ One of the basic premises of this section is that evacuation of a Group I-3 facility is impractical because of the need to maintain security. The security measures may also result in a delayed evacuation as compared to residential occupancies in which free egress is allowed. Therefore, it is essential to provide a refuge area to which residents can be relocated when it becomes necessary to evacuate them from the housing units. For this reason, each cell tier and each floor with an occupant load of 50 or more is required to be divided into at least two smoke compartments using smoke barriers that comply with Sections 408.8 and 709 (see commentary, Section 709). It should be noted that Section 709 provides several exceptions to smoke barriers used in Group I-3 occupancies (e.g., construction, doors and opening protectives). A further exception allowing increased glazing is permitted by the provisions of Section 408.7.

The exception provides three alternatives that are common-sense options to movement into a smoke compartment. If the particular occupancy condition affords free, unobstructed access with no delay to the exterior, to a separate building or through a horizontal exit, then defend-in-place provisions are not needed.

408.6.1 Smoke compartments. The number of residents in any *smoke compartment* shall be not more than 200. The distance of travel to a door in a *smoke barrier* from any room door required as exit access shall be not greater than 150 feet (45 720 mm). The distance of travel to a door in a *smoke barrier* from any point in a room shall be not greater than 200 feet (60 960 mm).

❖ This section defines the maximum allowable size of smoke compartments by limiting the number of residents in any single smoke compartment to 200, the maximum door-to-door distance within the compartment to 150 feet (45 720 mm) and the maximum total travel distance to 200 feet (60 960 mm). These limitations are intended to enable evacuation of a smoke compartment for all of the occupants (see Commentary Figure 408.6.1).

408.6.2 Refuge area. Not less than 6 net square feet (0.56 m^2) per occupant shall be provided on each side of each *smoke barrier* for the total number of occupants in adjoining *smoke compartments*. This space shall be readily available wherever the occupants are moved across the *smoke barrier* in a fire emergency.

❖ To provide adequate space for the residents evacuated to an adjacent smoke compartment, an additional 6 square feet (0.56 m^2) per person must be readily available for the total number of occupants in the adjoining smoke compartment (see Commentary Figure 408.6.2). The 6-square-foot (0.56 m^2) criterion enables the occupants to be evacuated to the adjacent smoke compartment without delay from crowding.

In a fire emergency, any action that must be taken to unlock the space will result in a delay in moving occupants into the refuge area. As such, the code requires the refuge area to be readily available in order to preclude consideration (as a refuge area) of a space that may be normally locked and, therefore, not immediately usable.

408.6.3 Independent egress. A *means of egress* shall be provided from each *smoke compartment* created by *smoke barriers* without having to return through the *smoke compartment* from which *means of egress* originates.

❖ To prevent creating a dead-end smoke compartment, exits are to be arranged so as to permit access without returning through a compartment from which egress originated. An exit is not required from within each smoke compartment [see Commentary Figures 407.5.2(1) and (2) for acceptable and unacceptable exit arrangements].

408.7 Security glazing. In occupancies in Group I-3, windows and doors in 1-hour *fire barriers* constructed in accordance with Section 707, *fire partitions* constructed in accordance with Section 708 and *smoke barriers* constructed in accordance with Section 709 shall be permitted to have security glazing installed provided that the following conditions are met.

1. Individual panels of glazing shall not exceed 1,296 square inches (0.84 m^2).

INTERNATIONAL CODE COUNCIL®
Copyright © 2015 ICC. ALL RIGHTS RESERVED. Accessed by David Dammon on Jun 21, 2017 12:30:52 PM pursuant to License Agreement with ICC. No further reproduction or distribution authorized. ANY UNAUTHORIZED REPRODUCTION OR DISTRIBUTION IS A VIOLATION OF THE FEDERAL COPYRIGHT ACT AND THE LICENSE AGREEMENT, AND SUBJECT TO CIVIL AND CRIMINAL PENALTIES THEREUNDER.

2. The glazing shall be protected on both sides by an *automatic sprinkler system*. The sprinkler system shall be designed to, when actuated, wet completely the entire surface of any glazing affected by fire.
3. The glazing shall be in a gasketed frame and installed in such a manner that the framing system will deflect without breaking (loading) the glass before the sprinkler system operates.
4. Obstructions, such as curtain rods, drapery traverse rods, curtains, drapes or similar materials shall not be installed between the automatic sprinklers and the glazing.

❖ This section allows sprinkler-protected glazing in walls in a Group I-3 facility provided the wall is rated for 1 hour or less. As with many provisions in Section 408, this enhances the security of a facility by provid-

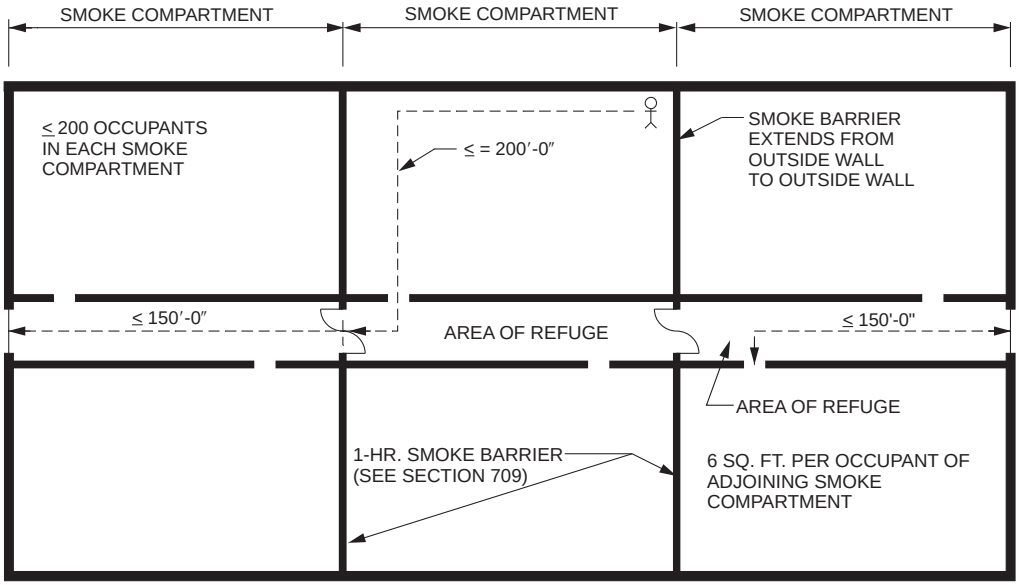

For SI: 1 foot = 304.8 mm, 1 inch = 25.4 mm, 1 square foot = 0.0929 m^2.

Figure 408.6.1
GROUP I-3: SMOKE COMPARTMENTS

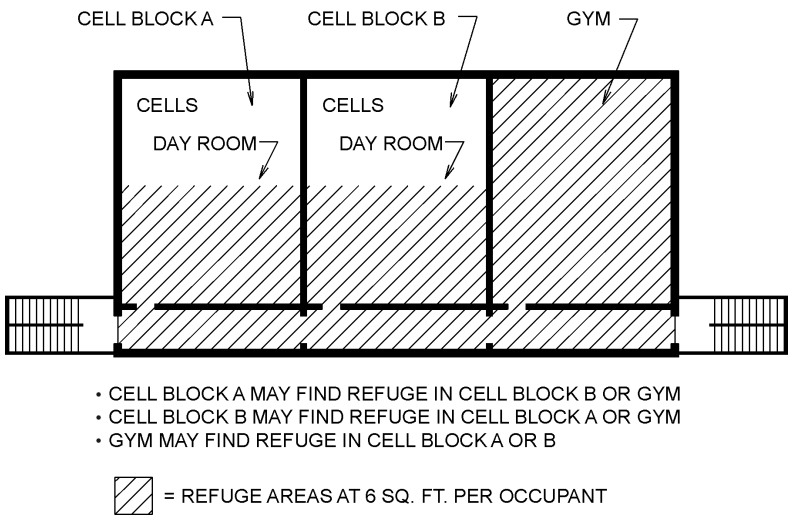

For SI: 1 square foot = 0.0929 m^2.

Figure 408.6.2
GROUP I-3: REFUGE AREA

INTERNATIONAL CODE COUNCIL®
Copyright © 2015 ICC. ALL RIGHTS RESERVED. Accessed by David Dammon on Jun 21, 2017 12:30:52 PM pursuant to License Agreement with ICC. No further reproduction or distribution authorized. ANY UNAUTHORIZED REPRODUCTION OR DISTRIBUTION IS A VIOLATION OF THE FEDERAL COPYRIGHT ACT AND THE LICENSE AGREEMENT, AND SUBJECT TO CIVIL AND CRIMINAL PENALTIES THEREUNDER.

ing more opportunities for staff to monitor the activities of residents

408.8 Subdivision of resident housing areas. Sleeping areas and any contiguous day room, group activity space or other common spaces where residents are housed shall be separated from other spaces in accordance with Sections 408.8.1 through 408.8.4.

❖ Resident housing areas usually consist of sleeping areas and other contiguous common area spaces, such as day rooms or activity areas onto which sleeping areas open. The separation required by this section is intended to separate housing areas, where the occupants in those areas may be asleep, from other activity areas since people asleep are more vulnerable to a fire emergency. The separation requirements are based on the relative evacuation difficulty as determined by the occupancy condition. Sections 408.8.1 through 408.8.4 give the separation requirements for the various occupancy conditions for which separation is necessary.

408.8.1 Occupancy Conditions 3 and 4. Each sleeping area in Occupancy Conditions 3 and 4 shall be separated from the adjacent common spaces by a smoke-tight partition where the distance of travel from the sleeping area through the common space to the *corridor* exceeds 50 feet (15 240 mm).

❖ A smoke-tight partition is required between the sleeping areas and common areas in Conditions 3 and 4 when the distance of travel from the sleeping area through the common area to an exit access corridor exceeds 50 feet (15 240 mm). This requirement recognizes the need to protect sleeping areas from nonsleeping areas due to the increased hazards associated with common areas, delayed recognition of fire hazards by sleeping persons and the restrictions on movement for these two occupancy conditions. Moreover, release from the sleeping area may be delayed and as such, evacuation with extended travel through a common space may not be safe. In such cases, the sleeping area will be a refuge area until the fire is controlled and the occupants in the sleeping area can be safely evacuated.

It should be noted that the provisions contained in Section 1016.2 are applicable to this circumstance, and as such, sleeping areas, including those in Group I-3 occupancies, are precluded from egressing through another sleeping area. Additionally, egress is not allowed from sleeping areas through toilet rooms.

408.8.2 Occupancy Condition 5. Each sleeping area in Occupancy Condition 5 shall be separated from adjacent sleeping areas, *corridors* and common spaces by a smoke-tight partition. Additionally, common spaces shall be separated from the *corridor* by a smoke-tight partition.

❖ Given that movement from an occupied space in Condition 5 is even more restricted than for the other conditions, smoke-tight partitions are required to be installed between areas, sleeping areas, common spaces and the exit access corridor. Protection is provided because the staff-controlled release from the sleeping area is not as immediate as in other conditions.

408.8.3 Openings in room face. The aggregate area of openings in a solid sleeping room face in Occupancy Conditions 2, 3, 4 and 5 shall not exceed 120 square inches (0.77 m^2). The aggregate area shall include all openings including door undercuts, food passes and grilles. Openings shall be not more than 36 inches (914 mm) above the floor. In Occupancy Condition 5, the openings shall be closeable from the room side.

❖ Food pass-throughs, door undercuts and grilles are a functional necessity; therefore, openings are limited in size and close to the floor. The openings are required to be close to the floor to minimize the potential for smoke to pass through the opening. By placing the opening close to the floor, smoke will not pass through a smoke-tight barrier initially; rather, there will be some time delay as the smoke layer descends to 36 inches (914 mm) above the floor before smoke is transmitted through such openings.

408.8.4 Smoke-tight doors. Doors in openings in partitions required to be smoke tight by Section 408.8 shall be substantial doors, of construction that will resist the passage of smoke. Latches and door closures are not required on *cell* doors.

❖ If the partition is required to be capable of resisting the passage of smoke, door openings within the enclosure are also to be protected with an assembly that is capable of resisting the passage of smoke. As with other sections of the code that deal with doors and walls capable of resisting the passage of smoke, application of the section requires judgment by the building official. The intent is a solid door surface without louvered openings. Door closers and latches are not required. It is anticipated that the security lock will secure the door in the closed position. A door closer can interfere with the removal of the occupants not only in an emergency but also during normal operations.

408.9 Windowless buildings. For the purposes of this section, a windowless building or portion of a building is one with nonopenable windows, windows not readily breakable or without windows. Windowless buildings shall be provided with an engineered smoke control system to provide a tenable environment for exiting from the *smoke compartment* in the area of fire origin in accordance with Section 909 for each windowless *smoke compartment.*

❖ An engineered smoke control system is required for smoke compartments in which there are no openings through which the products of combustion can be vented. The intent of the system is to provide a tenable environment during the period it takes the occupants to egress from a smoke compartment that is the area of fire origin. As it often takes longer to evacuate a Group I-3 facility due to the locking and restricted egress paths, the maintenance of a tenable environment is essential. As defined for this section only, a windowless building is a building or portion

INTERNATIONAL CODE COUNCIL®
Copyright © 2015 ICC. ALL RIGHTS RESERVED. Accessed by David Dammon on Jun 21, 2017 12:30:52 PM pursuant to License Agreement with ICC. No further reproduction or distribution authorized. ANY UNAUTHORIZED REPRODUCTION OR DISTRIBUTION IS A VIOLATION OF THE FEDERAL COPYRIGHT ACT AND THE LICENSE AGREEMENT, AND SUBJECT TO CIVIL AND CRIMINAL PENALTIES THEREUNDER.

thereof with only nonoperable windows, windows that are not readily breakable or without windows. The intent of this section is that staff must have some means to ventilate the products of combustion; therefore, if the window cannot be broken by items readily available to the staff, the area is considered windowless.

[F] 408.10 Fire alarm system. A *fire alarm* system shall be provided in accordance with Section 907.2.6.3.

❖ Fire alarm systems are required in Group I-3 facilities. See the commentary to Section 907.2.6.3 for detailed requirements for this system.

[F] 408.11 Automatic sprinkler system. Group I-3 occupancies shall be equipped throughout with an *automatic sprinkler system* in accordance with Section 903.2.6.

❖ Automatic sprinkler systems are required in all Group I-3 facilities. See the commentary to Section 903.2.6 for detailed requirements for this system.

SECTION 409
MOTION PICTURE PROJECTION ROOMS

409.1 General. The provisions of Sections 409.1 through 409.5 shall apply to rooms in which ribbon-type cellulose acetate or other safety film is utilized in conjunction with electric arc, xenon or other light-source projection equipment that develops hazardous gases, dust or radiation. Where cellulose nitrate film is utilized or stored, such rooms shall comply with NFPA 40.

❖ Cellulose acetate or other safety film used in the presence of potential ignition sources, including projectors or related equipment, creates a potential hazard. The provisions of this section are intended to minimize the potential for exposure of the audience and other occupants to the hazards associated with the presence of ignition sources in close proximity to the fuel load.

Provisions are established for projection rooms in recognition of the hazards attendant to the projection of ribbon-type cellulose acetate or other safety film in such spaces.

Safety film is typically made of cellulose acetate, polyester or triacetate film. In the early 1950s, safety film began to replace cellulose nitrate film. Although the use and manufacture of cellulose nitrate film has virtually ceased in the United States, large quantities of such film still exist, primarily for archival purposes. Cellulose nitrate film presents a serious hazard because degradation under external heat below ignition temperatures causes a chemical reaction. This chemical reaction releases heat of sufficient quantity to raise the substance to ignition temperatures, resulting in spontaneous combustion. After ignition, rapid burning and the production of toxic and flammable gases takes place. If such film is used, the provisions of NPFA 40 are applicable as are the provisions of Section 306 of the IFC.

The provisions of this section apply only where the previously mentioned hazards exist. The use of ribbon-type cellulose acetate or other safety film in conjunction with electric arc, xenon or other light-source projection equipment that develops hazardous gases, dust or radiation invokes these provisions. The provisions of this section do not apply where nonprofessional projection equipment is used, except that statements specific to cellulose nitrate film apply if such film is present regardless of the nature of the equipment. The safety film used by the motion picture industry since 1951 has fire hazard characteristics similar to ordinary paper of the same thickness and form.

If cellulose nitrate film is used, the provisions of NFPA 40 apply. NFPA 40 contains minimum requirements to provide a reasonable level of protection for the storage and handling of cellulose nitrate film. The standard does not contain provisions for the manufacture of cellulose nitrate film, since it has not been manufactured in the United States since 1951.

409.1.1 Projection room required. Every motion picture machine projecting film as mentioned within the scope of this section shall be enclosed in a projection room. Appurtenant electrical equipment, such as rheostats, transformers and generators, shall be within the projection room or in an adjacent room of equivalent construction.

❖ The projection room is to be enclosed in accordance with Section 409.2 to isolate the spaces housing the potential hazard. To minimize the potential for arcs or sparks to come in contact with the film, electrical equipment, such as rheostats, transformers and generators, should be located in a separate room. This section permits such equipment to be in the same room, but it should be arranged to minimize the potential for arcs or sparks to come in contact with the film, reducing the potential for ignition. Additional requirements for electrical equipment permitted in the projection room and requirements for nonprofessional equipment are given in NFPA 70.

409.2 Construction of projection rooms. Every projection room shall be of permanent construction consistent with the construction requirements for the type of building in which the projection room is located. Openings are not required to be protected.

The room shall have a floor area of not less than 80 square feet (7.44 m^2) for a single machine and not less than 40 square feet (3.7 m^2) for each additional machine. Each motion picture projector, floodlight, spotlight or similar piece of equipment shall have a clear working space of not less than 30 inches by 30 inches (762 mm by 762 mm) on each side and at the rear thereof, but only one such space shall be required between two adjacent projectors. The projection room and the rooms appurtenant thereto shall have a ceiling height of not less than 7 feet 6 inches (2286 mm). The aggregate of openings for projection equipment shall not exceed 25 percent of the area of the wall between the projection room and the auditorium. Openings shall be provided with glass or

INTERNATIONAL CODE COUNCIL®
Copyright © 2015 ICC. ALL RIGHTS RESERVED. Accessed by David Dammon on Jun 21, 2017 12:30:52 PM pursuant to License Agreement with ICC. No further reproduction or distribution authorized. ANY UNAUTHORIZED REPRODUCTION OR DISTRIBUTION IS A VIOLATION OF THE FEDERAL COPYRIGHT ACT AND THE LICENSE AGREEMENT, AND SUBJECT TO CIVIL AND CRIMINAL PENALTIES THEREUNDER.

other *approved* material, so as to close completely the opening.

❖ The projection room is to be constructed as required by the construction type of the building. Since the room dimensions are small, ventilation is provided to reduce heat buildup and accumulation of dust particles. A minimum fire-resistance rating is not required unless by other provisions of the code. Limited openings are permitted and are not required to be protected so as to facilitate the intended function of projecting the image onto the auditorium screen. Openings to the auditorium must not exceed 25 percent of the area of the wall between the projection room and the auditorium. Glass or other approved material must be provided that will completely close the opening and prevent a sharing of atmospheres with the audience or seating area.

In order to minimize the buildup of heat in any area, adequate floor space must be available. The space is required to be at least 80 square feet (7.44 m^2) in size for a single projector and an additional 40 square feet (3.7 m^2) for each additional projector. The room must be of adequate size so that not less than 30 inches by 30 inches (762 mm by 762 mm) of clear working space is available on each side and behind the projectors, floodlights, spotlights and similar equipment. For adjacent equipment, a clear space of 30 inches (762 mm) is adequate.

Because the projection room is considered an occupiable room, the ceiling height must not be less than 7 feet, 6 inches (2286 mm) (see commentary, Section 1208.2).

409.3 Projection room and equipment ventilation. *Ventilation* shall be provided in accordance with the *International Mechanical Code*.

❖ All projection rooms and the equipment located within the rooms must be properly ventilated to abate the hazards of any hot gases and smoke generated by the equipment. Further, any intense heat given off by the equipment must be directly exhausted to the exterior rather than be absorbed by the building's ventilation system. Sections 502.11.1 and 502.11.2 of the IMC contain requirements for projectors provided with an exhaust discharge and those without an exhaust connection.

409.3.1 Supply air. Each projection room shall be provided with adequate air supply inlets so arranged as to provide well-distributed air throughout the room. Air inlet ducts shall provide an amount of air equivalent to the amount of air being exhausted by projection equipment. Air is permitted to be taken from the outside; from adjacent spaces within the building, provided the volume and infiltration rate is sufficient; or from the building air-conditioning system, provided it is so arranged as to provide sufficient air when other systems are not in operation.

❖ Separate supply (see Section 409.3.1) and exhaust (see Section 409.3.2) requirements are provided for projection rooms. Exhaust rates are specified in Section 502.11.2 of the IMC for projectors without exhaust connection.

Sufficient air must be introduced into each projection room to allow the effects of hot gases, smoke and heat to be diluted and to provide a makeup air source for the exhausted air. Although the code does not prescriptively state where the air supply inlets are to be located, the intent is to create a well-ventilated room. Several air supply inlets should be provided so that the entire room has adequate air changes. The amount of air supplied to each projection room must be approximately equal to the volume of air that is exhausted according to the IMC. Makeup supply air can be obtained from any source as long as sufficient quantities are provided at all times that the exhaust system is operating.

409.3.2 Exhaust air. Projection rooms are permitted to be exhausted through the lamp exhaust system. The lamp exhaust system shall be positively interconnected with the lamp so that the lamp will not operate unless there is the required airflow. Exhaust air ducts shall terminate at the exterior of the building in such a location that the exhaust air cannot be readily recirculated into any air supply system. The projection room *ventilation* system is permitted to also serve appurtenant rooms, such as the generator and rewind rooms.

❖ Another method of providing exhaust is to exhaust the room itself. This method can only be used when the projectors do not have an integral lamp exhaust system. Exhaust rates for this type of system are specified in the IMC based on the type of projector. The exhaust ducts for the projection room must be terminated at the exterior of the building and cannot be combined with any other exhaust or return system present in the building. The intent of this requirement is so that the hot gases, smoke and heat will not be allowed to be disbursed elsewhere in the building.

409.3.3 Projection machines. Each projection machine shall be provided with an exhaust duct that will draw air from each lamp and exhaust it directly to the outside of the building. The lamp exhaust is permitted to serve to exhaust air from the projection room to provide room air circulation. Such ducts shall be of rigid materials, except for a flexible connector *approved* for the purpose. The projection lamp or projection room exhaust system, or both, is permitted to be combined but shall not be interconnected with any other exhaust or return system, or both, within the building.

❖ Projectors with an integral lamp exhaust system use air to cool the equipment during operation. The amount of air exhausted with these systems is part of the manufacturer’s installation instructions. These integral exhaust systems must be directly connected to the mechanical exhaust systems. Further, the lamp exhaust system must be interconnected to the projector's power supply such that when the projector is operating, its exhaust system will be automatically activated.

409.4 Lighting control. Provisions shall be made for control of the auditorium lighting and the *means of egress* lighting

INTERNATIONAL CODE COUNCIL®
Copyright © 2015 ICC. ALL RIGHTS RESERVED. Accessed by David Dammon on Jun 21, 2017 12:30:52 PM pursuant to License Agreement with ICC. No further reproduction or distribution authorized. ANY UNAUTHORIZED REPRODUCTION OR DISTRIBUTION IS A VIOLATION OF THE FEDERAL COPYRIGHT ACT AND THE LICENSE AGREEMENT, AND SUBJECT TO CIVIL AND CRIMINAL PENALTIES THEREUNDER.

systems of theaters from inside the projection room and from not less than one other convenient point in the building.

❖ The projection room is usually an attended location, but it is also a likely area for a fire to originate. Lighting controls that provide adequate normal and emergency auditorium lighting must be provided in the projection room. Upon detection of a fire anywhere in the building, the operator can immediately provide adequate illumination for the occupants egressing the auditorium. A second location for the lighting controls is also required somewhere else in the building, so that entry into the projection room is not required to provide the necessary illumination, as it could be the location of fire origin. This second control is required to be conveniently located for the staff yet inaccessible to unauthorized persons.

409.5 Miscellaneous equipment. Each projection room shall be provided with rewind and film storage facilities.

❖ In order to keep all operations related to projection activities in the protected enclosure, rewind and film storage facilities are to be located in the projection room or in an adjacent room in accordance with Section 409.1.1.

SECTION 410
STAGES, PLATFORMS AND TECHNICAL PRODUCTION AREAS

410.1 Applicability. The provisions of Sections 410.1 through 410.8 shall apply to all parts of buildings and structures that contain *stages* or *platforms* and similar appurtenances as herein defined.

❖ Historically, most significant theater fires originated on the stage. The 1903 Iroquois Theater fire in Chicago serves as a vivid example of a stage fire and its potentially tragic effects—602 people lost their lives. Hazards associated with stages include: combustible scenery and lighting suspended overhead; scenic elements, contents and acoustical treatment on the back and sides of the stage; technical production areas including workshops, scene docks and dressing rooms located around the stage perimeter; and storage areas and property rooms located underneath the stage.

The protection requirements set forth in this section are intended to limit the threat from stage fires to an audience and reduce the likelihood of a large fire in the stage area. These provisions include construction restrictions, automatic sprinkler systems, ventilation, separation of the stage from the audience and compartmentalization of appurtenant rooms to the stage. Special allowances are provided for galleries, gridirons, catwalks and other technical production areas.

Based on historical events and the expertise of a broad range of professionals with experience in theater design, operations and fire events, a set of principles guides the requirements for theaters. These principles are summarized as follows:

1. The fire hazards of stages are not necessarily a function of type (legitimate, regular or thrust) but rather area and height. Accordingly, a stage area in excess of 1,000 square feet (93 m^2) or a height in excess of 50 feet (15 240 mm) is the threshold that represents a significant potential for fuel load due to scenery and drops.
2. Stages that exceed 1,000 square feet (93 m^2) or the 50-foot (15 240 mm) height threshold require a means of emergency ventilation.
3. Stages that exceed 1,000 square feet (93 m^2) and the 50-foot (15 240 mm) height threshold require automatic sprinkler protection.
4. Stages and platforms are similar to floor construction; therefore, the type of construction should be consistent with that of the floor construction in the building.
5. Separation of the stage from the seating area, dressing rooms, property rooms and similar spaces is critical in order to provide a degree of fire containment.

Section 410.3 contains provisions for the construction of the stage and gallery. Stage openings, decorations, equipment and scenery are addressed in Sections 410.3.3 through 410.3.6. Stage ventilation is required in accordance with Section 410.3.7. Platforms must be constructed in accordance with Section 410.4. The construction of auxiliary stage spaces is addressed in Section 410.5. Special means of egress requirements for stages, platforms and technical production areas are established in Section 410.6. Sections 410.7 and 410.8 contain the requirements for automatic sprinkler systems and standpipes, respectively.

All parts of a building or structure that contain a stage, platform or similar appurtenance are required to comply with the provisions of this section.

410.2 Definitions. The following terms are defined in Chapter 2:

PLATFORM.

PROSCENIUM WALL.

STAGE.

TECHNICAL PRODUCTION AREA.

❖ This section lists terms that are specifically associated with the subject matter of Section 410. It is important to emphasize that these terms are not exclusively related to this chapter but may or may not also be applicable where the term is used elsewhere in the code.

Definitions of terms can help in the understanding and application of the code requirements. The pur-

INTERNATIONAL CODE COUNCIL®
Copyright © 2015 ICC. ALL RIGHTS RESERVED. Accessed by David Dammon on Jun 21, 2017 12:30:52 PM pursuant to License Agreement with ICC. No further reproduction or distribution authorized. ANY UNAUTHORIZED REPRODUCTION OR DISTRIBUTION IS A VIOLATION OF THE FEDERAL COPYRIGHT ACT AND THE LICENSE AGREEMENT, AND SUBJECT TO CIVIL AND CRIMINAL PENALTIES THEREUNDER.

pose for including a list within this chapter is to provide more convenient access to terms which may have a specific or limited application within this chapter. For the complete definition and associated commentary, refer back to Chapter 2. Terms that are italicized provide a visual identification throughout the code that a definition exists for that term. The use and application of all defined terms are set forth in Section 201.

410.3 Stages. *Stage* construction shall comply with Sections 410.3.1 through 410.3.7.

❖ This section indicates the scope of the code provisions that apply to stage construction.

410.3.1 Stage construction. *Stages* shall be constructed of materials as required for floors for the type of construction of the building in which such *stages* are located.

Exception: *Stages* need not be constructed of the same materials as required for the type of construction provided the construction complies with one of the following:

1. *Stages* of Type IIB or IV construction with a nominal 2-inch (51 mm) wood deck, provided that the *stage* is separated from other areas in accordance with Section 410.3.4.
2. In buildings of Type IIA, IIIA and VA construction, a fire-resistance-rated floor is not required, provided the space below the *stage* is equipped with an *automatic sprinkler system or fire-extinguishing system* in accordance with Section 903 or 904.
3. In all types of construction, the finished floor shall be constructed of wood or *approved* noncombustible materials. Openings through *stage* floors shall be equipped with tight-fitting, solid wood trap doors with *approved* safety locks.

❖ Stages, most simply, are floor construction, and as such, must conform to the requirements for all other floors in the building so that the building's designated construction classification will be consistent throughout.

Since wood is the material of choice for stage floors because it allows for nailing of sets and props and provides the best acoustics for dance and other performances, the code allows three exceptions to the requirement for stage construction.

Exception 1 permits stages in buildings of any construction classification to be constructed with a nominal 2-inch (51 mm) wood deck supported by either unprotected noncombustible construction (Type IIB) or heavy timber construction (Type IV) where the stage is separated from the audience by a proscenium wall built in accordance with Section 410.3.4.

Under Exception 2, stage floors are not required to be fire-resistance rated in buildings of Types IIA, IIIA and VA where the space below the stage is equipped with an automatic sprinkler system or fire-extinguishing system installed in accordance with Section 903 or 904. In this case, the requirement for fire-resistance-rated floors is offset by the protection supported by the automatic fire-extinguishing system.

Exception 3 recognizes that stages are predominantly constructed with a finished floor of wood and identifies wood as an acceptable finish material for all construction classifications. It also permits openings in stage floors to be protected with tight-fitting solid wood doors with safety locks to secure them. The normal operation of stage trap doors does not typically allow them to have a fire-resistance rating.

410.3.1.1 Stage height and area. *Stage* areas shall be measured to include the entire performance area and adjacent backstage and support areas not separated from the performance area by fire-resistance-rated construction. *Stage* height shall be measured from the lowest point on the *stage* floor to the highest point of the roof or floor deck above the *stage*.

❖ As previously stated, many of the code's requirements for stages and platforms are triggered based on the volume of the stage or platform space. All of the wing areas and backstage areas are included as the stage area, unless they are separated with fire-resistance-rated construction. Stage height is not the height of the opening in the proscenium wall, but the height from the stage floor to the highest horizontal assembly that encloses the stage space. It will typically include the fly gallery and fly loft above the stage.

410.3.2 Technical production areas: galleries, gridirons and catwalks. Beams designed only for the attachment of portable or fixed theater equipment, gridirons, galleries and catwalks shall be constructed of *approved* materials consistent with the requirements for the type of construction of the building; and a *fire-resistance rating* shall not be required. These areas shall not be considered to be floors, *stories*, *mezzanines* or levels in applying this code.

Exception: Floors of fly galleries and catwalks shall be constructed of any *approved* material.

❖ This section identifies the components of the technical production areas located above the stage that are used to conceal movable scenery from the audience and where the operation of such scenery and other stage effects is controlled.

The normal use and operation of a stage requires that equipment, normally rigging, be installed and rearranged as production requirements vary. This equipment is normally installed by clamping or welding to the structural framing over and around the stage, making protecting the framing by encasement or membranes infeasible; hence, a fire-resistance rating is not required for these elements. In order to control the fuel load in this area, however, the code requires that all of the elements must be of approved materials consistent with the requirements of the building's construction type. The exception to this requirement is that in all cases, the floors of fly galleries and catwalks may be constructed of any approved material regardless of the building's construction type. Such spaces are generally limited in area, access is restricted to authorized personnel and they

INTERNATIONAL CODE COUNCIL®
Copyright © 2015 ICC. ALL RIGHTS RESERVED. Accessed by David Dammon on Jun 21, 2017 12:30:52 PM pursuant to License Agreement with ICC. No further reproduction or distribution authorized. ANY UNAUTHORIZED REPRODUCTION OR DISTRIBUTION IS A VIOLATION OF THE FEDERAL COPYRIGHT ACT AND THE LICENSE AGREEMENT, AND SUBJECT TO CIVIL AND CRIMINAL PENALTIES THEREUNDER.

require floor materials that will deaden sound so as not to disrupt the performance below. These auxiliary areas do not have to meet the code's requirements as another story, mezzanine level or equipment platforms.

410.3.3 Exterior stage doors. Where protection of openings is required, exterior *exit* doors shall be protected with *fire door assemblies* that comply with Section 716. Exterior openings that are located on the *stage* for *means of egress* or loading and unloading purposes, and that are likely to be open during occupancy of the theater, shall be constructed with vestibules to prevent air drafts into the auditorium.

❖ If exterior opening protectives are required, exit discharge doors directly from the stage to the outside must be fire door assemblies in accordance with Section 716.

Since one of the major concerns is containing a stage fire to the stage area, any exterior opening from the stage that is likely to be opened during a performance is to be constructed with a vestibule to prevent air drafts into the auditorium. This vestibule requirement applies to all exterior openings that are likely to be open regardless of their intended use.

410.3.4 Proscenium wall. Where the *stage* height is greater than 50 feet (15 240 mm), all portions of the *stage* shall be completely separated from the seating area by a proscenium wall with not less than a 2-hour *fire-resistance rating* extending continuously from the foundation to the roof.

❖ The protection afforded by a 2-hour fire separation and opening protection (see Section 410.3.5) is required where the stage height is greater than 50 feet (15 240 mm). Stages with a height greater than 50 feet (15 240 mm) permit multiple settings and large amounts of scenery and scenic elements in dense configurations. The height may reduce the effectiveness of the suppression system and the multiple settings hung over the stage may further obstruct the suppression system and impede access to a fire originating high above the stage. Stages with a height less than 50 feet (15 240 mm) do not require separation from the audience since they represent a limited fuel load potential caused by scenery, drops and curtains.

410.3.5 Proscenium curtain. Where a proscenium wall is required to have a *fire-resistance rating*, the *stage* opening shall be provided with a fire curtain complying with NFPA 80, horizontal sliding doors complying with Section 716.5.2 having a fire protection rating of at least 1 hour, or an *approved* water curtain complying with Section 903.3.1.1 or, in facilities not utilizing the provisions of smoke-protected assembly seating in accordance with Section 1029.6.2, a smoke control system complying with Section 909 or natural *ventilation* designed to maintain the smoke level not less than 6 feet (1829 mm) above the floor of the *means of egress*.

❖ Fuel loads in a stage with a height greater than 50 feet (15 240 mm) most often are high and the resulting fire is severe. In such cases, to permit the audience to evacuate the seating area without being threatened directly or indirectly by a stage fire, this section requires the proscenium opening be protected. The code specifies three options: 1. A fire curtain (complying with NFPA 80); 2. Horizontal sliding doors which are fire door assemblies complying with Section 716.5.2; or 3. An approved water curtain. In lieu of directly protecting the opening, the theater design can provide either a smoke control system or natural ventilation designed to prevent the accumulation of smoke within the first 6 feet (1829 mm) above the floor. These smoke control or ventilation options are only permissible if a smoke-protected assembly seating design in accordance with Section 1029.6.2 is not utilized.

In accordance with NFPA 80, a fire curtain must be capable of preventing the passage of flame or smoke, thereby providing a certain level of protection for the audience when a stage fire occurs. It is notable that the fire curtain is not required to provide the same level of protection as is typically required for a fire door assembly. Also, since one of the goals is to protect against panic, flame and smoke must not be capable of passing through to the unexposed side of the fire curtain. The level of protection for the fire curtain is based upon evacuation time of the audience. Fire curtains are designed to provide 20 minutes of protection to allow the audience to evacuate.

NFPA 80 requirements for the fire curtain include, but are not limited to: testing of the fabric (NFPA 701, Test Method 2), a fire curtain sample assembly subjected to the standard fire test as specified in NFPA 251, activation (emergency and manual) and rate of closing speed. The speed of descent must be slowed for the last 8 feet (2438 mm) of travel in order to allow individuals on the stage to move away from the curtain and to avoid injury from being hit by the batten in the bottom pocket of the curtain. It should be noted that only stages with a height greater than 50 feet (15 240 mm) are required to have a proscenium wall and curtain.

Horizontal sliding fire door assemblies can also be used to protect the opening. These doors are tested in accordance with either NFPA 252 or UL 10B. For this installation, the door must have a fire protection rating of not less than one hour. This is a longer protection period than required by the fire curtain option.

Water curtains conforming with Section 903.3.1.1 are viewed as providing an equivalent degree of protection to that of a fire curtain. This, in part, recognizes that emergency ventilation is also required in accordance with Section 410.3.7, which will assist in controlling smoke movement. The duration of protection is, of course, continuous as long as the sprinkler system is in operation.

Lastly, today's assembly facilities, such as arenas and theaters in the round, make the use of a traditional fire curtain impractical. As such, a smoke control system or a natural ventilation system may be

INTERNATIONAL CODE COUNCIL®
Copyright © 2015 ICC. ALL RIGHTS RESERVED. Accessed by David Dammon on Jun 21, 2017 12:30:52 PM pursuant to License Agreement with ICC. No further reproduction or distribution authorized. ANY UNAUTHORIZED REPRODUCTION OR DISTRIBUTION IS A VIOLATION OF THE FEDERAL COPYRIGHT ACT AND THE LICENSE AGREEMENT, AND SUBJECT TO CIVIL AND CRIMINAL PENALTIES THEREUNDER.

utilized in lieu of methods directly protecting the stage opening, provided the special allowances for smoke-protected assembly seating are not being applied.

410.3.6 Scenery. Combustible materials used in sets and scenery shall meet the fire propagation performance criteria of Test Method 1 or Test Method 2, as appropriate, of NFPA 701, in accordance with Section 806 and the *International Fire Code*. Foam plastics and materials containing foam plastics shall comply with Section 2603 and the *International Fire Code*.

❖ This section recognizes that scenery and sets are decorative materials. As such, combustible materials used in sets and scenery must meet the fire propagation performance criteria in accordance with the provisions of NFPA 701, Section 806 and the IFC. Section 806 references Section 2604 for specific requirements for foam plastics used as trim. It should also be noted that Section 2603 addresses the uses of foam plastics in insulation. The materials when tested in accordance with NFPA 701 must comply with the performance criteria of one of the two identified test methods. The historic "small-scale test" is no longer accepted.

410.3.7 Stage ventilation. Emergency *ventilation* shall be provided for *stages* larger than 1,000 square feet (93 m^2) in floor area, or with a *stage* height greater than 50 feet (15 240 mm). Such *ventilation* shall comply with Section 410.3.7.1 or 410.3.7.2.

❖ In addition to an automatic sprinkler system, emergency ventilation is one of the key fire protection components for stages that contain large fuel loads. Stages with large areas or heights permit multiple settings and large amounts of scenery and scenic elements in dense configurations. Increased height also permits multiple settings to be hung over the stage, possibly reducing the effectiveness of the suppression system or impeding access to a fire originating high above the stage. Based on these factors and the potential hazard presented by them, stages larger than 1,000 square feet (93 m^2) in area or with a height greater than 50 feet (15 240 mm) are required to be equipped with emergency ventilation to control smoke movement and minimize the potential for fire and smoke to spread to the seating area.

410.3.7.1 Roof vents. Two or more vents constructed to open automatically by *approved* heat-activated devices and with an aggregate clear opening area of not less than 5 percent of the area of the *stage* shall be located near the center and above the highest part of the *stage* area. Supplemental means shall be provided for manual operation of the ventilator. Curbs shall be provided as required for skylights in Section 2610.2. Vents shall be *labeled*.

❖ Where vents are used to ventilate a stage, the code requires that there be a minimum of two vents provided for redundancy. Those vents are to be located near the center and above the highest part of the stage, since this is the point at which smoke and hot gases are likely to accumulate. The minimum aggregate clear opening area of the vents is required to be 5 percent of the floor area of the stage. The vents must open automatically by approved heat-activated devices, often fusible links, and must also be operable by a supplemental manual means. The manual means serves as a backup to the automatic detectors and permits the vent to be opened as a precaution prior to achieving the heat required to activate the heat device. The vents are to be provided with curbs as required for skylights in Section 2610.2. In addition, the vents must be labeled by an approved agency (see Section 1703.5 for further labeling requirements).

[F] 410.3.7.2 Smoke control. Smoke control in accordance with Section 909 shall be provided to maintain the smoke layer interface not less than 6 feet (1829 mm) above the highest level of the assembly seating or above the top of the proscenium opening where a proscenium wall is provided in compliance with Section 410.3.4.

❖ In addition to roof vents, another option for emergency ventilation (i.e., smoke control) of stages is provided in this section. This section, in concert with the provisions contained in Section 909, provides the criteria for smoke control for stages larger than 1,000 square feet (93 m^2) in floor area or with a stage height greater than 50 feet (15 240 mm). In such cases, the smoke layer interface must be maintained 6 feet (1829 mm) above the highest level of the assembly seating or above the top of the proscenium opening when one is provided. The smoke layer is maintained 6 feet (1829 mm) above the proscenium opening in order to prevent smoke from entering into the audience area.

410.4 Platform construction. Permanent *platforms* shall be constructed of materials as required for the type of construction of the building in which the permanent *platform* is located. Permanent *platforms* are permitted to be constructed of *fire-retardant-treated wood* for Types I, II and IV construction where the *platforms* are not more than 30 inches (762 mm) above the main floor, and not more than one-third of the room floor area and not more than 3,000 square feet (279 m^2) in area. Where the space beneath the permanent *platform* is used for storage or any purpose other than equipment, wiring or plumbing, the floor assembly shall be not less than 1-hour fire-resistance-rated construction. Where the space beneath the permanent *platform* is used only for equipment, wiring or plumbing, the underside of the permanent *platform* need not be protected.

❖ This section establishes the scope of the code requirements for platform construction. A permanent platform is basically raised floor construction. As such, the construction must be consistent with that of all the floors in the building.

Permanent platforms can be of fire-retardant-treated wood in limited applications. In buildings of Type I, II or IV construction, platforms can be of fire-retardant-treated wood if they are no more than 30 inches (762 mm) in height, are no more than one-third of the floor area of the room and are 3,000

INTERNATIONAL CODE COUNCIL®
Copyright © 2015 ICC. ALL RIGHTS RESERVED. Accessed by David Dammon on Jun 21, 2017 12:30:52 PM pursuant to License Agreement with ICC. No further reproduction or distribution authorized. ANY UNAUTHORIZED REPRODUCTION OR DISTRIBUTION IS A VIOLATION OF THE FEDERAL COPYRIGHT ACT AND THE LICENSE AGREEMENT, AND SUBJECT TO CIVIL AND CRIMINAL PENALTIES THEREUNDER.

square feet (279 m^2) or less in area. A platform that meets these three size limits poses a small fire risk relative to the normal fuel load in the room. As such, the platform deck and its supporting construction can be of fire-retardant-treated wood materials. If the platform exceeds any one of the three size limits, then it must be constructed of materials consistent with the building's type of construction classification. A basic premise of Section 410.4 is that the platform must not significantly increase the fire hazard of the space or building. As such, the space beneath platforms is regulated to appropriately abate the risk. Where the space beneath a permanent platform is utilized for any purpose other than electrical wiring or plumbing, the platform is to have a 1-hour fire-resistance rating. The purpose of the fire-resistance-rating requirement is to provide some structural integrity to the platform should a fire occur in the concealed space. In the case of permanent platforms where the space beneath the platform is only used for plumbing or electrical wiring, no further protection is required since the fire risk will be minimal.

410.4.1 Temporary platforms. *Platforms* installed for a period of not more than 30 days are permitted to be constructed of any materials permitted by this code. The space between the floor and the *platform* above shall only be used for plumbing and electrical wiring to *platform* equipment.

❖ Temporary platforms may be constructed of any material regardless of the building's construction classification due to their limited time of use and their normally limited size and fuel load. Because temporary platforms are permitted to be constructed of any approved material, the space beneath a temporary platform may never be used for any purpose other than electrical wiring or plumbing to the platform equipment. Such lines serving other areas may not be located beneath a temporary platform.

410.5 Dressing and appurtenant rooms. Dressing and appurtenant rooms shall comply with Sections 410.5.1 and 410.5.2.

❖ Because stages are open to the viewing audience and typically contain a substantial fuel load, it is essential to contain fires in rooms around the stage to the room of origin; therefore, this section contains provisions for the separation of such areas from the stage and from one another.

410.5.1 Separation from stage. The *stage* shall be separated from dressing rooms, scene docks, property rooms, workshops, storerooms and compartments appurtenant to the *stage* and other parts of the building by *fire barriers* constructed in accordance with Section 707 or *horizontal assemblies* constructed in accordance with Section 711, or both. The *fire-resistance rating* shall be not less than 2 hours for *stage* heights greater than 50 feet (15 240 mm) and not less than 1 hour for *stage* heights of 50 feet (15 240 mm) or less.

❖ Separation of the stage from appurtenant rooms provides a significant level of fire containment. Such containment is fundamental to limiting the spread of fire from adjacent spaces to the stage area, as well as the growth of fires in the stage area itself. The 2-hour fire-resistance rating for stages with a height greater than 50 feet (15 240 mm), such as large theatrical stages, acknowledges the significant potential for a large fuel load and is consistent with the 2-hour rating of Section 410.3.4. Although stages with a height of 50 feet (15 240 mm) or less represent a limited potential fuel load, a 1-hour fire-resistance rating will provide an additional level of compartmentation in the event a fire originates at the stage (which may not be sprinklered if the stage complies with Section 410.7, Exception 2). Such stages are likely to be found in educational occupancies or meeting halls.

410.5.2 Separation from each other. Dressing rooms, scene docks, property rooms, workshops, storerooms and compartments appurtenant to the *stage* shall be separated from each other by not less than 1-hour *fire barriers* constructed in accordance with Section 707 or *horizontal assemblies* constructed in accordance with Section 711, or both.

❖ As an additional level of protection, rooms and compartments appurtenant to the stage must be separated from one another by an approved 1-hour fire-resistance-rated fire barrier and horizontal assemblies. Rooms appurtenant to the stage (e.g., property rooms and activities with a history of fire incidents, such as scenery workshops) often have very high fuel loads. This additional level of fire containment is intended to minimize fire growth and limit fires in these areas to the room of origin.

410.6 Means of egress. Except as modified or as provided for in this section, the provisions of Chapter 10 shall apply.

❖ The general means of egress requirements in Chapter 10 are applicable to stages, platforms and technical production areas except where modified by this section. The modifications provided in this section provide adjustments to the Chapter 10 general egress provisions because of the uniqueness of stage areas.

410.6.1 Arrangement. Where two or more *exits* or *exit access doorways* from the *stage* are required in accordance with Section 1006.2, no fewer than one *exit* or *exit access doorway* shall be provided on each side of a *stage*.

❖ Because of the relative fire hazards associated with stages, this section requires that a minimum of one approved means of egress be provided from each side of the stage if at least two means of egress are required based on the provisions of Section 1006.2. This is intended to provide the occupants of a stage ready access to evacuate the stage area in the event of a fire. Where the occupant load of the stage is such that only one means of egress is required by Section 1006.2, then it is not necessary to provide an exit or exit access doorway on both sides of the stage.

INTERNATIONAL CODE COUNCIL®
Copyright © 2015 ICC. ALL RIGHTS RESERVED. Accessed by David Dammon on Jun 21, 2017 12:30:52 PM pursuant to License Agreement with ICC. No further reproduction or distribution authorized. ANY UNAUTHORIZED REPRODUCTION OR DISTRIBUTION IS A VIOLATION OF THE FEDERAL COPYRIGHT ACT AND THE LICENSE AGREEMENT, AND SUBJECT TO CIVIL AND CRIMINAL PENALTIES THEREUNDER.

410.6.2 Stairway and ramp enclosure. *Exit access stairways* and *ramps* serving a *stage* or *platform* are not required to be enclosed. *Exit access stairways* and ramps serving *technical production areas* are not required to be enclosed.

❖ Exit access stairways that serve a stage, platform or technical production areas do not require enclosure due to the nature of the activities involved. These stairways are required to meet the stairway provisions in Section 1011, including handrail and guard requirements where applicable.

410.6.3 Technical production areas. *Technical production areas* shall be provided with means of egress and means of escape in accordance with Sections 410.6.3.1 through 410.6.3.5.

❖ A variety of special means of egress provisions are provided for technical production areas that take into account the unique characteristics of such areas. Defined in Section 202, technical production areas include all technical support areas regardless of their traditional name (fly gallery, gridiron). The provisions of Section 410.6.3 reflect the special allowances for minimum number of means of egress, maximum travel distance, allowable exit access components and minimum travel path width. It should be noted that these provisions are also applicable to those "technical production areas" that are not necessarily associated with a stage or platform, such as those that are present at a sports arena or stadium.

410.6.3.1 Number of means of egress. No fewer than one *means of egress* shall be provided from *technical production areas*.

❖ Fly galleries, gridirons and other technical production areas are ordinarily occupied by a few persons at any one time who are likely to be very familiar with the stage operations. As such, these areas need only be provided with one approved means of egress.

410.6.3.2 Exit access travel distance. The *exit access* travel distance shall be not greater than 300 feet (91 440 mm) for buildings without a sprinkler system and 400 feet (121 900 mm) for buildings equipped throughout with an *automatic sprinkler system* in accordance with Section 903.3.1.1.

❖ The exit access travel distance limitations reflect the limited hazard presented by technical production areas, the limited number of persons affected, and the necessary extent of such areas that would cause such distances to be reasonable.

410.6.3.3 Two means of egress. Where two *means of egress* are required, the *common path of travel* shall be not greater than 100 feet (30 480 mm).

Exception: A means of escape to a roof in place of a second *means of egress* is permitted.

❖ In those cases where a second means of egress from a technical production area is required, typically where the travel distance limits of Section 410.6.3.2 cannot be met, it is necessary to limit the common path of travel to 100 feet (30 480 mm). This ensures that limited occupant travel will be necessary before the occupants have a choice of two paths that lead to the two required means of egress. The exception permits one of the means of egress to lead to the roof where at least two means of egress are provided.

410.6.3.4 Path of egress travel. The following *exit access* components are permitted where serving *technical production areas:*

1. *Stairways*.
2. *Ramps*.
3. *Spiral stairways*.
4. Catwalks.
5. *Alternating tread devices*.
6. Permanent ladders.

❖ Due to the reduced hazards previously described, a variety of exit access components may be utilized throughout the means of egress serving technical production areas. In addition to stairways and ramps, the egress path may include spiral stairways as addressed in Section 1011.10, alternating tread devices as described in Section 1011.14, and permanent ladders as addressed in Section 1011.16 and the IMC, Section 306.5.

410.6.3.5 Width. The path of egress travel within and from technical support areas shall be not less than 22 inches (559 mm).

❖ Since the means of egress from a technical production area will not be used by the public nor will it serve a significant occupant load, it is considered acceptable that a reduced egress width be provided. The required minimum width of 22 inches (559 mm) is applicable to all of the exit access components serving only the technical production areas, including stairways, ramps, spiral stairways, alternating tread devices and permanent ladders, where provided.

[F] 410.7 Automatic sprinkler system. *Stages* shall be equipped with an *automatic sprinkler system* in accordance with Section 903.3.1.1. Sprinklers shall be installed under the roof and gridiron and under all catwalks and galleries over the *stage*. Sprinklers shall be installed in dressing rooms, performer lounges, shops and storerooms accessory to such *stages.*

Exceptions:

1. Sprinklers are not required under *stage* areas less than 4 feet (1219 mm) in clear height that are utilized exclusively for storage of tables and chairs, provided the concealed space is separated from the adjacent spaces by Type X gypsum board not less than $^5/_8$-inch (15.9 mm) in thickness.
2. Sprinklers are not required for *stages* 1,000 square feet (93 m^2) or less in area and 50 feet (15 240 mm) or less in height where curtains, scenery or other combustible hangings are not retractable vertically. Combustible hangings shall be limited to a single main curtain, borders, legs and a single backdrop.

INTERNATIONAL CODE COUNCIL®
Copyright © 2015 ICC. ALL RIGHTS RESERVED. Accessed by David Dammon on Jun 21, 2017 12:30:52 PM pursuant to License Agreement with ICC. No further reproduction or distribution authorized. ANY UNAUTHORIZED REPRODUCTION OR DISTRIBUTION IS A VIOLATION OF THE FEDERAL COPYRIGHT ACT AND THE LICENSE AGREEMENT, AND SUBJECT TO CIVIL AND CRIMINAL PENALTIES THEREUNDER.

3. Sprinklers are not required within portable orchestra enclosures on *stages*.

❖ Stages contain significant quantities of combustible materials stored in, around and above the stage that are located in close proximity to large quantities of lighting equipment (i.e., scenery and lighting above the stage). There also is scenery on the sides and rear of the stage; shops located along the back and sides of the stage; and storage, props, trap doors and lifts under the stage floor. This combination of fuel load and ignition sources increases the potential for a fire. As such, stages and technical production areas, such as dressing rooms, workshops and storerooms, are required to be protected with an automatic sprinkler system.

The references to Chapter 9 indicate that the sprinkler system may be designed in accordance with NFPA 13 and Section 903.3.1.1 or, if not more than 20 sprinklers are required on any single connection, a limited area sprinkler system may be used (see Section 903.3.8).

Exception 1 applies to areas less than 4 feet (1219 mm) in clear height under stages that are used only for the storage of tables and chairs. Because of the limited fuel load present, such areas are not required to be protected with sprinklers, provided that the concealed space is separated from all adjacent spaces by no less than $^5/_8$-inch (15.9 mm) Type X gypsum board. This level of separation is intended to provide fire containment in the absence of sprinkler protection. This arrangement is often found in educational buildings where the room is used as a multipurpose room.

Exception 2 recognizes that stages 1,000 square feet (93 m^2) or less in area and 50 feet (15 240 mm) or less in height represent a limited potential for combustibles that does not warrant the requirements for an automatic sprinkler system. The code further limits the amounts of combustible materials by not allowing any vertical retractable curtains, hangings and similar scenery elements. It should be noted, however, that although sprinkler protection is not required, the requirements of Section 410.5 still apply.

Exception 3 acknowledges the limited hazards associated with portable orchestra enclosures. These elements are temporary in nature and are intended to improve the acoustics of the stage performances. These temporary enclosures do not lend themselves to temporary sprinkler heads; therefore, none are required.

[F] 410.8 Standpipes. Standpipe systems shall be provided in accordance with Section 905.

❖ Because of the potentially large fuel load and three-dimensional aspect of the fire hazard associated with stages greater than 1,000 square feet (93 m^2) in area, a Class III wet standpipe system is required on each side of such stages. The standpipes are required to be equipped with both a $1^1/_2$-inch (38 mm) and $2^1/_2$-inch (64 mm) hose connection. The required design criteria for the standpipe system, including hoses and cabinets, is specified in Section 905.3.4.

SECTION 411
SPECIAL AMUSEMENT BUILDINGS

411.1 General. *Special amusement buildings* having an *occupant load* of 50 or more shall comply with the requirements for the appropriate Group A occupancy and Sections 411.1 through 411.8. *Special amusement buildings* having an *occupant load* of less than 50 shall comply with the requirements for a Group B occupancy and Sections 411.1 through 411.8.

Exception: *Special amusement buildings* or portions thereof that are without walls or a roof and constructed to prevent the accumulation of smoke need not comply with this section.

For flammable *decorative materials*, see the *International Fire Code*.

❖ A special amusement building is one in which the egress is not readily apparent, is intentionally confounded or is not readily available (see Section 411.2). This section addresses the hazards associated with such use by requiring automatic fire detection (see Section 411.3), automatic sprinkler protection (see Section 411.4), alarm requirements (see Section 411.5), an emergency voice/alarm communication system (see Section 411.6) and specific means of egress lighting and marking (see Section 411.7). Additionally, only interior finish materials that meet the most stringent flame spread classification, Class A, are permitted in special amusement buildings (see Section 411.8).

In addition to the provisions of this section, other applicable requirements, such as means of egress (i.e., occupant load and travel distance) and building construction (i.e., type of construction, and fire-resistance ratings), apply in accordance with the appropriate assembly group classification (see Section 303.1).

Special amusement buildings are considered assembly uses based on the provisions of Section 303.1. Section 303.1 further specifies that a Group A classification is only applicable when the building's design occupant load is 50 or more. The provisions of Section 411 apply in addition to the other requirements for the appropriate assembly use, usually Group A-1 or A-3. Very small special amusement buildings are not required to be classified as Group A. If the design occupant load is less than 50, then the building is classified as Group B. This acknowledges the lesser hazards associated with smaller groups of people. Although smaller buildings are classified as Group B, they must still meet the requirements of this section as special amusement buildings.

Section 411 does not apply to a facility that is constructed to permit the free and immediate ventilation of the products of combustion to the outside. Such free and immediate ventilation addresses the hazard associated with many special amusement buildings relative to the rapid accumulation of smoke in a build-

INTERNATIONAL CODE COUNCIL®
Copyright © 2015 ICC. ALL RIGHTS RESERVED. Accessed by David Dammon on Jun 21, 2017 12:30:52 PM pursuant to License Agreement with ICC. No further reproduction or distribution authorized. ANY UNAUTHORIZED REPRODUCTION OR DISTRIBUTION IS A VIOLATION OF THE FEDERAL COPYRIGHT ACT AND THE LICENSE AGREEMENT, AND SUBJECT TO CIVIL AND CRIMINAL PENALTIES THEREUNDER.

ing in which the egress is not readily apparent, confusing or not readily available.

All flammable decorative materials used in special amusement buildings are required to follow the provisions of the IFC. The use of flammable and combustible materials in these types of buildings must be strictly regulated to limit the fire hazards to the building occupants (refer to Chapter 8 of the IFC for those restrictions).

411.2 Definition. The following term is defined in Chapter 2:

SPECIAL AMUSEMENT BUILDING.

❖ This section lists a term specifically associated with the subject matter of Section 411. It is important to emphasize that this term is not exclusively related to this chapter but may or may not also be applicable where the term is used elsewhere in the code.

Definitions of terms can help in the understanding and application of the code requirements. The purpose for including the above term within this chapter is to provide more convenient access to a term that may have a specific or limited application within this chapter. For the complete definition and associated commentary, refer back to Chapter 2. Terms that are italicized provide a visual identification throughout the code that a definition exists for that term. The use and application of all defined terms are set forth in Section 201.

[F] 411.3 Automatic fire detection. *Special amusement buildings* shall be equipped with an automatic fire detection system in accordance with Section 907.

❖ The automatic fire detection system is required to provide early warning of fire and must comply with Section 907. The detection system is required regardless of the presence of staff in the building.

[F] 411.4 Automatic sprinkler system. *Special amusement buildings* shall be equipped throughout with an *automatic sprinkler system* in accordance with Section 903.3.1.1. Where the *special amusement building* is temporary, the sprinkler water supply shall be of an *approved* temporary means.

Exception: Automatic sprinklers are not required where the total floor area of a temporary *special amusement building* is less than 1,000 square feet (93 m^2) and the exit access travel distance from any point to an exit is less than 50 feet (15 240 mm).

❖ One protection strategy to minimize the potential hazard to occupants is to control fire development. As such, special amusement buildings are required to be protected with an automatic sprinkler system. If the building is small [less than 1,000 square feet (93 m^2)] and the travel distance to exits is short [less than 50 feet (15 240 mm)] and only used on a temporary basis (such as at Halloween), automatic sprinklers are not required. In such buildings, it is anticipated that automatic fire detection and the resulting alarm (see Section 411.5) will provide additional egress time for the limited number of occupants.

Since many special amusement buildings are portable or temporary, it is not practical to require a permanent, automatic sprinkler water supply as required in Chapter 9. Instead, the building official may allow a reliable, temporary water supply. There are other unique design considerations for the sprinkler system, such as drainage and pipe and sprinkler support, which may be necessary because of the movement of the structures from one location to another.

[F] 411.5 Alarm. Actuation of a single *smoke detector*, the *automatic sprinkler system* or other automatic fire detection device shall immediately sound an alarm at the building at a *constantly attended location* from which emergency action can be initiated including the capability of manual initiation of requirements in Section 907.2.12.2.

❖ Upon activation of either the automatic fire detection or the automatic sprinkler systems, an alarm is required to be sounded at a constantly attended location. The staff at the location is expected to be capable of then providing the required egress illumination, stopping the conflicting or confusing sounds and distractions and activating the exit marking required by Section 411.7. It is also anticipated that the staff would be capable of preventing additional people from entering the building.

[F] 411.6 Emergency voice/alarm communications system. An *emergency voice/alarm communications system* shall be provided in accordance with Sections 907.2.12 and 907.5.2.2, which is also permitted to serve as a public address system and shall be audible throughout the entire *special amusement building*.

❖ An integral part of the fire protection systems required for special amusement buildings is an emergency voice/alarm communications system. This system can serve as a public address system to alert the building occupants of the fire emergency and provide them with the proper emergency instructions. The system must be installed in accordance with NFPA 72 and must be heard throughout the entire special amusement building. Upon activation, the system must sound an alert tone followed by the necessary voice instructions. These instructions can save valuable time in directing the building occupants to quickly and safely egress.

411.7 Exit marking. Exit signs shall be installed at the required *exit* or *exit access doorways* of amusement buildings in accordance with this section and Section 1013. *Approved* directional exit markings shall also be provided. Where mirrors, mazes or other designs are utilized that disguise the path of egress travel such that they are not apparent, *approved* and *listed* low-level exit signs that comply with Section 1013.5, and directional path markings *listed* in accordance with UL 1994, shall be provided and located not more than 8 inches (203 mm) above the walking surface and on or near the path of egress travel. Such markings shall become visible in an

INTERNATIONAL CODE COUNCIL®
Copyright © 2015 ICC. ALL RIGHTS RESERVED. Accessed by David Dammon on Jun 21, 2017 12:30:52 PM pursuant to License Agreement with ICC. No further reproduction or distribution authorized. ANY UNAUTHORIZED REPRODUCTION OR DISTRIBUTION IS A VIOLATION OF THE FEDERAL COPYRIGHT ACT AND THE LICENSE AGREEMENT, AND SUBJECT TO CIVIL AND CRIMINAL PENALTIES THEREUNDER.

emergency. The directional exit marking shall be activated by the automatic fire detection system and the *automatic sprinkler system* in accordance with Section 907.2.12.2.

❖ During normal operation of a special amusement building, the illumination and marking of the egress path may not be adequate to allow for prompt egress from the building. This section clearly reminds the reader that exit signs must be provided at the required exit or exit access doors, and that signs must comply with the requirements of Section 1013. As special amusement spaces quite often consist of low-level lighting and/or spaces and features that can confuse a person's orientation, exit signs are required regardless of the number of required means of egress. Where obstructions and confusion may still exist because of the nature of the facility, low-level exit signs and directional path markings (listed in accordance with UL 1994) must be provided and located not higher than 8 inches (203 mm) above the walking surface in order to direct the occupants toward the exits. In an emergency, activation of the automatic fire detection system or automatic sprinkler system must activate the directional exit markings to become visible.

411.7.1 Photoluminescent exit signs. Where *photoluminescent exit* signs are installed, activating light source and viewing distance shall be in accordance with the listing and markings of the signs.

❖ Photo luminescent exit signs operate due to exposure to specific sources of light as indicated in their listing and labeling. In some situations, not all types of photo luminescent exit signs can be used and, as such, the normal lighting levels in the area where such exit signs are to be installed must be assessed to verify compatibilty.

411.8 Interior finish. The *interior finish* shall be Class A in accordance with Section 803.1.

❖ All interior finish materials must be tested for surface-burning performance in accordance with ASTM E84 or UL 723. Due to the potential for fire to spread quickly in the relatively confined spaces in these structures, only Class A materials are permitted to be used as interior finish in a special amusement building. These special amusement buildings are not permitted the one classification reduction that would normally be allowed by Table 803.11 in a sprinklered building.

SECTION 412
AIRCRAFT-RELATED OCCUPANCIES

412.1 General. Aircraft-related occupancies shall comply with Sections 412.1 through 412.8 and the *International Fire Code*.

❖ Section 412 provides specific details for the construction of the full range of aircraft-related occupancies from residential aircraft hangars to those handling large commercial aircraft, as well as helistops and heliports. This section contains code requirements for some very specialized occupancies dealing with aircraft. Aircraft pose some of the same hazards associated with motor vehicles; therefore, some of the same requirements are applicable for life and fire safety issues. The unique issues surrounding aircraft traffic control towers are addressed in Section 412.3.

Sections 412.4 and 412.5 are composed of code provisions that regulate both commercial and residential aircraft hangars. The overall building fire load for hangars is typically low, because the considerable amounts of metal in aircraft absorb heat and provide limited combustibility to sustain a fire. An aircraft fire, however, can be quite severe because of the flammability of the fuel contained in its tanks. Provisions for regulating the exterior walls, basements and floor surfaces of commercial aircraft hangars are specified along with separation and fire suppression requirements.

Section 412.6 addresses specialized hangars that are used for the painting of aircraft with flammable materials. Just as Section 416 contains limitations and requirements for the application of flammable finishes, so does Section 412.6 for aircraft paint hangars. Use and occupancy requirements commensurate with the hazards are provided, including construction, fire protection systems and necessary ventilation.

Section 412.7 addresses the unique and very large facilities where aircraft are manufactured. The size of such buildings where both commercial and military aircraft are assembled have such large footprints that traditional exit access travel distances are unrealistic.

Lastly, Section 412.8 identifies those code requirements applicable to helicopter landing and service ports. Although the code relies heavily on the requirements of NFPA 418 for heliports and helistops located on the roofs of buildings and structures, there are provisions applicable for all locations. This section contains requirements for size limitations, design and means of egress.

There are additional requirements applicable to these occupancies in Chapter 11 of the IFC, Aviation Facilities, as well as other chapters of the IFC.

412.2 Definitions. The following terms are defined in Chapter 2:

FIXED BASE OPERATOR (FBO).

HELIPORT.

HELISTOP.

RESIDENTIAL AIRCRAFT HANGAR.

TRANSIENT AIRCRAFT.

❖ This section lists terms that are specifically associated with the subject matter of Section 412. It is important to emphasize that these terms are not exclusively related to this chapter but may or may not also be applicable where the term is used elsewhere in the code.

Definitions of terms can help in the understanding

INTERNATIONAL CODE COUNCIL®
Copyright © 2015 ICC. ALL RIGHTS RESERVED. Accessed by David Dammon on Jun 21, 2017 12:30:52 PM pursuant to License Agreement with ICC. No further reproduction or distribution authorized. ANY UNAUTHORIZED REPRODUCTION OR DISTRIBUTION IS A VIOLATION OF THE FEDERAL COPYRIGHT ACT AND THE LICENSE AGREEMENT, AND SUBJECT TO CIVIL AND CRIMINAL PENALTIES THEREUNDER.

and application of the code requirements. The purpose for including a list within this chapter is to provide more convenient access to terms that may have a specific or limited application within this chapter. For the complete definition and associated commentary, refer back to Chapter 2. Terms that are italicized provide a visual identification throughout the code that a definition exists for that term. The use and application of all defined terms are set forth in Section 201.

412.3 Airport traffic control towers. The provisions of Sections 412.3.1 through 412.3.8 shall apply to airport traffic control towers occupied only for the following uses:

1. Airport traffic control cab.
2. Electrical and mechanical equipment rooms.
3. Airport terminal radar and electronics rooms.
4. Office spaces incidental to the tower operation.
5. Lounges for employees, including sanitary facilities.

❖ Section 412.3 addresses airport traffic control towers. Although these structures do not house aircraft, they are included in this section for consistency. These structures pose unique hazards to occupants because of their height and the fact that they may have limited routes of escape. This section contains requirements governing the permitted types of construction and necessary egress along with the needed fire protection systems. This section applies only to airport traffic control towers that are limited to uses exclusively related to air traffic control purposes and the uses listed in this section. If the building contains uses not listed in this section, then the building must comply with the balance of the IBC and this section (412) cannot be applied.

Airport traffic control towers are structures designed for highly specific functions. These functions include the housing of vital electronic equipment, providing an elevated structure for electronic communication, such as radar, and providing an observation area that allows an unobstructed view of the ground and airspace for air traffic controllers. This functional configuration creates special hazards, including limited means of egress, limited fire-fighting access to upper floors and vulnerability to exposure fires. The intent of the code is to restrict the fuel load by limiting the structure construction to primarily noncombustible materials; minimizing combustible contents and potential ignition sources by limiting the use of the structure; providing automatic fire detection and sprinkler systems, and adequate and reliable egress. Some provisions of Section 412 only apply where the control tower is restricted to a single means of egress.

Regardless of the height of control towers, those towers regulated under Section 412 are not considered high-rise buildings, and therefore they are exempt from Section 403.

Standby or emergency power is not specified in Section 412 for aircraft control towers. However, many of the systems in the tower such as means of egress illumination, smokeproof enclosures, the elevator and the fire detection system will need standby or emergency power as specified in those provisions.

412.3.1 Type of construction. Airport traffic control towers shall be constructed to comply with the height limitations of Table 412.3.1.

❖ The height of aircraft control towers is limited as specified in Table 412.3.1. The height limitations of Section 504 do not apply to aircraft control towers.

Table 412.3.1. See below.

❖ Table 412.3.1 functions the same as Table 504.3. Height of control towers is based on feet only and not on stories, and the actual height is measured from grade plane to the finished floor of the cab or the highest occupied level. “Cab” is the term of art for control towers and applies to the room at the top of a control tower where the controllers do their work. The number of stories is not a criterion, since many of the towers do not have occupied stories for the entire height between the ground and the occupiable level at the top. If the type of construction is known, the allowable height is given by the corresponding figure in the second column. If the height is known, the permitted construction types are determined from the first column.

TABLE 412.3.1
HEIGHT LIMITATIONS FOR
AIRPORT TRAFFIC CONTROL TOWERS

TYPE OF CONSTRUCTION	HEIGHT[a] (feet)
IA	Unlimited
IB	240
IIA	100
IIB	85
IIIA	65

For SI: 1 foot = 304.8 mm, 1 square foot = 0.0929 m^2.

a. Height to be measured from grade plane to cab floor.

412.3.2 Stairways. Stairways in airport traffic control towers shall be in accordance with Section 1011. Stairways shall be smokeproof enclosures complying with one of the alternatives provided in Section 909.20.

Exception: Stairways in airport traffic control towers are not required to comply with Section 1011.12.

❖ In general, stairways are to comply with the stairway provisions of Chapter 10. Specifically, they are required to be within smokeproof enclosures. The only stairway provision that does not apply to control tower stairways is Section 1011.12, which would require a stairway to the roof. The whole point of control towers is to have a 360-degree view. Pushing a stairway to the roof through the cab of the control tower would defeat the purpose.

412.3.3 Exit access. From observation levels, airport traffic control towers shall be permitted to have a single means of exit access for a distance of travel not greater than 100 feet

INTERNATIONAL CODE COUNCIL®
Copyright © 2015 ICC. ALL RIGHTS RESERVED. Accessed by David Dammon on Jun 21, 2017 12:30:52 PM pursuant to License Agreement with ICC. No further reproduction or distribution authorized. ANY UNAUTHORIZED REPRODUCTION OR DISTRIBUTION IS A VIOLATION OF THE FEDERAL COPYRIGHT ACT AND THE LICENSE AGREEMENT, AND SUBJECT TO CIVIL AND CRIMINAL PENALTIES THEREUNDER.

(30 480 mm). Exit access stairways from the observation level need not be enclosed.

❖ Again, the intent of the control tower is visibility of the aircraft and the airfield. It is essential to not have construction, such as a stairway enclosure, interrupting vision. Therefore, from the cab of the tower (the observation level) to an exit enclosure, a single exit access travel distance of 100 feet is allowed and would include the travel down an unenclosed stairway. Where the tower has two exit stairways, providing only a single means of exit access should not be needed.

412.3.4 Number of exits. Not less than one *exit stairway* shall be permitted for airport traffic control towers of any height provided that the *occupant load* per floor is not greater than 15 and the area per floor does not exceed 1,500 square feet (140 m^2).

❖ Where a tower has two exit stairways, this section does not apply. The code recognizes that the benefit of a second exit in a tower-type structure is greatly reduced when the two exits would be in very close proximity, as would occur for towers with a small cab. Larger cabs that one would expect at larger airports such as O'Hare in Chicago and Los Angeles International would more easily be able to be provided with two exit stairways.

Therefore, for towers with a small cab (observation level) with limited area per floor and limited number of occupants, only one exit is required per floor provided that the occupant load of each floor is 15 or less. The occupant load restriction of 15 persons is based on the calculated occupant load for a business use (1:100), with a maximum tower floor area of 1,500 square feet (139 m^2) (see Table 1004.1.2).

412.3.4.1 Interior finish. Where an airport traffic control tower is provided with only one exit stairway, interior wall and ceiling finishes shall be either Class A or Class B.

❖ Typically, rooms and spaces in most occupancies can have Class C finishes. Where egress is limited to one stairway as permitted in Section 412.3.4, the finished surfaces of the control tower cab and other interior spaces must have safer finishes.

[F] 412.3.5 Automatic fire detection systems. Airport traffic control towers shall be provided with an automatic fire detection system installed in accordance with Section 907.2.

❖ To ensure early fire detection and to alert the occupants to egress the building during the incipient stage of a fire event, an automatic smoke detection system is required in accordance with Section 907.2.22. Section 907.2.22.1 applies specifically to towers where sprinklers are provided and there are at least two means of egress. Where there is only a single means of egress, Section 907.2.22.2 specifies the coverage of the fire detection systems. Section 907.2.22.2 also applies to towers that are not sprinkler protected. Only towers of a height of less than 35 feet (10 668 mm) would be without sprinklers (see Section 412.3.6).

412.3.6 Automatic sprinkler system. Where an occupied floor is located more than 35 feet (10 668 mm) above the lowest level of fire department vehicle access, airport traffic control towers shall be equipped with an *automatic sprinkler system* in accordance with Section 903.3.1.1.

❖ Sprinkler systems are required for all towers being constructed under Section 412 once there is an occupied floor above 35 feet (10 668 mm). This height was selected because shorter towers should be reachable by ladders typically found at rural fire stations and smaller airports. These are also the types of airports that would have the shorter towers.

412.3.7 Elevator protection. Wires or cables that provide normal or standby power, control signals, communication with the car, lighting, heating, air conditioning, *ventilation* and fire detecting systems to elevators shall be protected by construction having a *fire-resistance rating* of not less than 1 hour, or shall be circuit integrity cable having a fire-resistance rating of not less than 1 hour.

❖ This provision is intended to increase the probability of a functioning elevator to aid fire fighters in the event of a fire and to increase the probability that the facility can be rapidly returned to service after a minor fire incident.

412.3.7.1 Elevators for occupant evacuation. Where provided in addition to an exit stairway, occupant evacuation elevators shall be in accordance with Section 3008.

❖ This section provides a simple reference to the provisions governing occupant evacuation elevators. Such elevators are not required for these towers, but could be provided to improve egress options.

412.3.8 Accessibility. Airport traffic control towers need not be *accessible* as specified in the provisions of Chapter 11.

❖ Airport traffic control towers are not required to have an accessible route to the cab and the floor immediately below the cab (see Section 1104.4, Exception 3). Other areas of the control tower are typically employee work stations, which must be connected by an accessible route so that such stations can be approached, entered and exited (see Sections 1103.2.2 and 1104.3.1).

412.4 Aircraft hangars. Aircraft hangars shall be in accordance with Sections 412.4.1 through 412.4.6.

❖ The requirements of Section 412.4 address commercial (or nonresidential) aircraft hangars. It should be noted that most commercial aircraft hangars will not be limited in height in terms of feet (see Section 504.1) or in area (see Section 507) based on the presence of an automatic sprinkler system. All commercial aircraft hangars, however, must be regulated in regard to exterior wall fire-resistance ratings, basement limitations, floor surface construction requirements, heating equipment separation and finishing restrictions. All of these provisions serve to abate the hazards associated with large aircraft and their integral fuel tanks to acceptable fire safety levels.

INTERNATIONAL CODE COUNCIL®
Copyright © 2015 ICC. ALL RIGHTS RESERVED. Accessed by David Dammon on Jun 21, 2017 12:30:52 PM pursuant to License Agreement with ICC. No further reproduction or distribution authorized. ANY UNAUTHORIZED REPRODUCTION OR DISTRIBUTION IS A VIOLATION OF THE FEDERAL COPYRIGHT ACT AND THE LICENSE AGREEMENT, AND SUBJECT TO CIVIL AND CRIMINAL PENALTIES THEREUNDER.

412.4.1 Exterior walls. *Exterior walls* located less than 30 feet (9144 mm) from *lot lines* or a *public way* shall have a *fire-resistance rating* not less than 2 hours.

❖ To abate the hazards of a fire condition from spreading from a commercial aircraft hangar to adjacent buildings and structures, the code requires exterior walls that are located less than 30 feet (9144 mm) from lot lines or public ways to have fire-resistance-rated construction of not less than 2 hours. Fire-resistance-rated exterior walls permit the fire department additional time and protection as it attempts to take control of a fire situation in a hangar located less than 30 feet (9144 mm) from lot lines or public ways.

412.4.2 Basements. Where hangars have *basements,* floors over *basements* shall be of Type IA construction and shall be made tight against seepage of water, oil or vapors. There shall be no opening or communication between *basements* and the hangar. Access to *basements* shall be from outside only.

❖ As part of the hangar requirements, the use and separation of any basement levels are rigidly controlled. A fire in the main level of a hangar could pose a severe hazard not only to the occupants of basements but also to the fire department itself. The floor/ceiling assembly located between the hangar and the first basement level below must be of Type IA construction. With a floor of 2-hour fire-resistance-rated construction along with the supporting construction, a fire on the main level should be contained. Not only is the floor construction required to be rated, but it must be properly sealed or otherwise made waterproof. This requirement prevents the chances of a fire or other liquids and vapors from seeping into the floor construction and leaking into the basement level. Further, the code prohibits any openings or access between the main level of the hangar and the basement level. This would include fire-resistance-rated shafts. Any opening into the basement has to be made from the exterior of the structure via areaway construction.

412.4.3 Floor surface. Floors shall be graded and drained to prevent water or fuel from remaining on the floor. Floor drains shall discharge through an oil separator to the sewer or to an outside vented sump.

Exception: Aircraft hangars with individual lease spaces not exceeding 2,000 square feet (186 m^2) each in which servicing, repairing or washing is not conducted and fuel is not dispensed shall have floors that are graded toward the door, but shall not require a separator.

❖ These provisions go hand in hand with the waterproof requirements of Section 412.4.2. The floors of all hangars must be positively sloped to prevent standing liquids. This requirement is not only for personnel safety but also to minimize the effects of any spilled flammable liquids. Floor drains, if provided, must discharge their contents into an oil separator or an outside sump. This prevents the flammable liquids from entering the jurisdiction's sewer system and causing additional hazards.

An exception has been included for those commercial aircraft hangars that are divided into individual tenant or lease spaces. Hangars with tenant or lease spaces of 2,000 square feet (186 m^2) or less in area do not pose the same overall hazard. The likelihood of all the aircraft being used at the same time is remote; therefore, the hazard of ponding water or spilled fuel is remote. The floor surfaces of small aircraft hangar tenant or lease spaces only need to be sloped toward the main exterior wall openings. It is imperative that no other servicing, repair work or aircraft washing is done and that no fuel dispensing can occur in these small tenant lease spaces.

412.4.4 Heating equipment. Heating equipment shall be placed in another room separated by 2-hour *fire barriers* constructed in accordance with Section 707 or *horizontal assemblies* constructed in accordance with Section 711, or both. Entrance shall be from the outside or by means of a vestibule providing a two-doorway separation.

Exceptions:

1. Unit heaters and vented infrared radiant heating equipment suspended not less than 10 feet (3048 mm) above the upper surface of wings or engine enclosures of the highest aircraft that are permitted to be housed in the hangar need not be located in a separate room provided they are mounted not less than 8 feet (2438 mm) above the floor in shops, offices and other sections of the hangar communicating with storage or service areas.
2. Entrance to the separated room shall be permitted by a single interior door provided the sources of ignition in the appliances are not less than 18 inches (457 mm) above the floor.

❖ As part of the special use and occupancy requirements for commercial aircraft hangars, all possible ignition sources must be controlled and isolated. Specifically, all heating equipment must be located in rooms that are separated from the main areas where the aircraft are parked. This separation (both fire barrier walls and horizontal assemblies) must be 2-hour fire-resistance-rated construction. Although not explicitly stated, all openings through the rated walls must be protected. Doors connecting the heating equipment rooms and the main hangar area must be done with a vestibule or airlock arrangement such that one must pass through two doors prior to entering the other room. Again, this is done to minimize the possibility of any spilled flammable liquids and the resulting vapors from coming in contact with the ignition sources of the heating equipment.

Two exceptions to the separation requirements are provided. Unit heaters or vented infrared radiant heating equipment that are carefully located high above not only the floor surfaces but also the fuel tanks and engine compartments of the aircraft pose little risk. An allowance is also made if the heating equipment is located at least 18 inches (457 mm) above the floor of the separated room. In such a

INTERNATIONAL CODE COUNCIL®
Copyright © 2015 ICC. ALL RIGHTS RESERVED. Accessed by David Dammon on Jun 21, 2017 12:30:52 PM pursuant to License Agreement with ICC. No further reproduction or distribution authorized. ANY UNAUTHORIZED REPRODUCTION OR DISTRIBUTION IS A VIOLATION OF THE FEDERAL COPYRIGHT ACT AND THE LICENSE AGREEMENT, AND SUBJECT TO CIVIL AND CRIMINAL PENALTIES THEREUNDER.

case, the vestibule/airlock arrangement with a double door system is not required and can be done with just a single door. If either exception is used, care must be taken by the building and fire officials that these special stipulations and conditions are part of the certificate of occupancy.

412.4.5 Finishing. The process of "doping," involving use of a volatile flammable solvent, or of painting, shall be carried on in a separate *detached building* equipped with *automatic fire-extinguishing equipment* in accordance with Section 903.

❖ Any application of spraying or "doping" of flammable finishes or solvent treatments to aircraft is prohibited within the hangar. These types of operations must be done in a separate detached building that is provided with an automatic fire-extinguishing system. Although not specifically stated here, the intent of the code is to treat those types of buildings as aircraft paint hangars in accordance with Section 412.6.

Doping is a type of lacquer used to protect, waterproof and make taut cloth surfaces of airplane wings. It is used on lighter-than-air, ultra-light and some light aircraft. It is essentially painting on fabric. Doping is not used on metallic surfaces; however, the use of flammable paints is also addressed in this section. When flammable finishes are applied, the process must occur in a separate building not attached to the hangar. Because the code text refers to Section 903, the intent is for an automatic sprinkler system to be installed, unless otherwise approved.

[F] 412.4.6 Fire suppression. Aircraft hangars shall be provided with a fire suppression system designed in accordance with NFPA 409, based upon the classification for the hangar given in Table 412.4.6.

Exception: Where a *fixed base operator* has separate repair facilities on site, Group II hangars operated by a *fixed base operator* used for storage of *transient aircraft* only shall have a fire suppression system, but the system is exempt from foam requirements.

❖ To minimize the fire hazards associated with aircraft hangars, most hangars are required to be protected with a fire suppression system. Where required, the fire suppression system must be designed and installed in accordance with NFPA 409, which requires fire suppression based on the type and construction of, and the activities in, a given hangar. In the standard, the suppression requirements are broken down based on three categories: Group I, Group II and Group III. Table 412.4.6 designates which group designation applies to various sizes of fire areas within a hangar and the type of construction. For example, a hangar that is 28,000 square feet (2601 m^2) in Type IIB construction is a Group II hangar. Group I and II hangars are required to have fire suppression as specified in NFPA 409. In general, Group III hangars are exempt from providing fire suppression unless one or more of the hazardous operations listed in Section 412.4.6.1 occur within the hanger. In these situations, fire suppression based on the appropriate portion of the standard for either Group I or II is required.

The exception would not require a foam system for Group II hangers if the hangar is essentially a parking garage for transient aircraft. The exception would likely only be applicable at a larger airport facility that has multiple hangars and separate hangars for repair operations.

TABLE 412.4.6. See below.

❖ As discussed, Table 412.4.6 simply determines the hangar classification to which the fire suppression system must be designed in accordance with NFPA 409. This is based upon the construction type of each building and its floor area. Table 412.4.6, Note a indi-

[F] TABLE 412.4.6
HANGAR FIRE SUPPRESSION REQUIREMENTS[a,b,c]

MAXIMUM SINGLE FIRE AREA (square feet)	TYPE OF CONSTRUCTION								
	IA	IB	IIA	IIB	IIIA	IIIB	IV	VA	VB
≥ 40,001	Group I	Group I	Group I	Group I	Group I	Group I	Group I	Group I	Group I
40,000	Group II	Group II	Group II	Group II	Group II	Group II	Group II	Group II	Group II
30,000	Group III	Group II	Group II	Group II	Group II	Group II	Group II	Group II	Group II
20,000	Group III	Group III	Group II	Group II	Group II	Group II	Group II	Group II	Group II
15,000	Group III	Group III	Group III	Group II	Group III	Group II	Group III	Group II	Group II
12,000	Group III	Group III	Group III	Group III	Group III	Group III	Group III	Group II	Group II
8,000	Group III	Group III	Group III	Group III	Group III	Group III	Group III	Group III	Group II
5,000	Group III	Group III	Group III	Group III	Group III	Group III	Group III	Group III	Group III

For SI: 1 foot = 304.8 mm, 1 square foot = 0.0929 m^2.

a. Aircraft hangars with a door height greater than 28 feet shall be provided with fire suppression for a Group I hangar regardless of maximum fire area.

b. Groups shall be as classified in accordance with NFPA 409.

c. Membrane structures complying with Section 3102 shall be classified as a Group IV hangar.

INTERNATIONAL CODE COUNCIL®
Copyright © 2015 ICC. ALL RIGHTS RESERVED. Accessed by David Dammon on Jun 21, 2017 12:30:52 PM pursuant to License Agreement with ICC. No further reproduction or distribution authorized. ANY UNAUTHORIZED REPRODUCTION OR DISTRIBUTION IS A VIOLATION OF THE FEDERAL COPYRIGHT ACT AND THE LICENSE AGREEMENT, AND SUBJECT TO CIVIL AND CRIMINAL PENALTIES THEREUNDER.

cates that regardless of size or construction type, any hangar with a door opening greater than 28 feet high (8534 mm) requires that hangar to have fire suppression system required for a Group I. Note c provides a Group IV designation for any hangar located in a membrane structure.

[F] 412.4.6.1 Hazardous operations. Any Group III aircraft hangar according to Table 412.4.6 that contains hazardous operations including, but not limited to, the following shall be provided with a Group I or II fire suppression system in accordance with NFPA 409 as applicable:

1. Doping.
2. Hot work including, but not limited to, welding, torch cutting and torch soldering.
3. Fuel transfer.
4. Fuel tank repair or maintenance not including defueled tanks in accordance with NFPA 409, inerted tanks or tanks that have never been fueled.
5. Spray finishing operations.
6. Total fuel capacity of all aircraft within the unsprinklered single *fire area* in excess of 1,600 gallons (6057 L).
7. Total fuel capacity of all aircraft within the maximum single *fire area* in excess of 7,500 gallons (28 390 L) for a hangar with an *automatic sprinkler system* in accordance with Section 903.3.1.1.

❖ Any of the operations listed in Section 412.6.1 which are occurring in a Group III hangar will require, under NFPA 409, some level of fire suppression. Doping is clarified in Section 412.4.5.

[F] 412.4.6.2 Separation of maximum single fire areas. Maximum single *fire areas* established in accordance with hangar classification and construction type in Table 412.4.6 shall be separated by 2-hour *fire walls* constructed in accordance with Section 706. In determining the maximum single *fire area* as set forth in Table 412.4.6, ancillary uses that are separated from aircraft servicing areas by a *fire barrier* of not less than 1 hour, constructed in accordance with Section 707, shall not be included in the area.

❖ The classification of aircraft hangars for fire suppression purposes is based on the hangar's type of construction and fire area size. Fire area size is based on the aggregate floor area bounded by exterior walls and 2-hour fire walls where provided. For the purposes of hangar classification, ancillary uses located within the fire area are not required to be included in the fire area size provided they are separated from the aircraft servicing area by minimum 1-hour fire barriers.

Many times there are ancillary areas associated with an aircraft hangar, such as offices, maintenance shops and storage rooms. Since the fire suppression requirements of NFPA 409 are primarily for the protection of aircraft within the storage and servicing area, inclusion of the floor area of the ancillary spaces into the fire suppression criteria is considered unnecessary. The fire protection requirements in the ancillary areas are considered to be less extensive than those required for the aircraft servicing and storage areas. Therefore, their inclusion in the application of Table 412.4.6 for fire area size is not required where a limited degree of fire separation is provided.

In order to be exempted from the fire area calculation within the aircraft hangar, it is necessary that the ancillary areas be separated from the aircraft storage and servicing areas by minimum 1-hour fire barriers. The 1-hour requirement intends to provide an acceptable fire separation without the creation of additional fire areas that would require separation by 2-hour fire walls.

412.5 Residential aircraft hangars. *Residential aircraft hangars* shall comply with Sections 412.5.1 through 412.5.5.

❖ This section of the code contains provisions that account for small, limited-size aircraft hangars that are truly accessory and auxiliary to a dwelling unit. Housing developments located along or adjacent to small-scale airports are the most obvious application of these code requirements. As part of the scoping requirement of this section, the hangar must meet all of the criteria listed in its definition in Section 202. A hangar that exceeds the limitations must then meet the provisions of Section 412.4. Included in the code requirements are fire separation from the adjacent residence; adequate means of egress; smoke detection and alarms; independent mechanical and plumbing systems; and height and area limitations.

412.5.1 Fire separation. A hangar shall not be attached to a *dwelling* unless separated by a *fire barrier* having a *fire-resistance rating* of not less than 1 hour. Such separation shall be continuous from the foundation to the underside of the roof and unpierced except for doors leading to the *dwelling unit*. Doors into the *dwelling unit* shall be equipped with *self-closing* devices and conform to the requirements of Section 716 with a noncombustible raised sill not less than 4 inches (102 mm) in height. Openings from a hangar directly into a room used for sleeping purposes shall not be permitted.

❖ A residential aircraft hangar can either be a stand-alone detached structure or attached to the residential dwelling. If the hangar is in close proximity or attached to the dwelling, it must then be separated with 1-hour fire-resistance-rated fire barriers. This fire separation must be continuous from the floor slab up to the roof sheathing. The only openings permitted in the fire separation are normal access doors. Windows or other vent openings are prohibited, as are any openings between the hangar and the bedrooms of the dwelling. The doors must have a $^3/_4$-hour opening protective fire protection rating in accordance with Table 716.5. A 4-inch-high (102 mm) noncombustible step is required at the door along with a self-closing device. All of these fire separation requirements serve to isolate the fire hazards associated with the hangar from the occupants of the dwelling, similar to a private garage.

INTERNATIONAL CODE COUNCIL®
Copyright © 2015 ICC. ALL RIGHTS RESERVED. Accessed by David Dammon on Jun 21, 2017 12:30:52 PM pursuant to License Agreement with ICC. No further reproduction or distribution authorized. ANY UNAUTHORIZED REPRODUCTION OR DISTRIBUTION IS A VIOLATION OF THE FEDERAL COPYRIGHT ACT AND THE LICENSE AGREEMENT, AND SUBJECT TO CIVIL AND CRIMINAL PENALTIES THEREUNDER.

412.5.2 Egress. A hangar shall provide two *means of egress*. One of the doors into the dwelling shall be considered as meeting only one of the two *means of egress*.

❖ The hangar must be provided with two separate and remotely located means of egress. This redundancy provides persons with an alternative means of escaping a fire in the hangar. One of the means of egress can be the access door into the adjacent dwelling unit. The other means of egress could be the aircraft entrance door subject to the requirements of Sections 1010.1.1 and 1010.1.2 regarding door size and swing.

[**F] 412.5.3 Smoke alarms.** *Smoke alarms* shall be provided within the hangar in accordance with Section 907.2.21.

❖ A smoke alarm is required in the hangar space in accordance with Section 907.2.21. Similar to the smoke alarms required in each and every bedroom, in the immediate vicinity of the bedrooms and in each and every story of the dwelling, the hangar smoke alarm must be interconnected such that one alarm will activate all other alarms. An early detection and warning alert is essential to abate the hazards of an aircraft hangar located adjacent to a residence.

412.5.4 Independent systems. Electrical, mechanical and plumbing drain, waste and vent (DWV) systems installed within the hangar shall be independent of the systems installed within the dwelling. Building sewer lines shall be permitted to be connected outside the structures.

Exception: *Smoke detector* wiring and feed for electrical subpanels in the hangar.

❖ To maintain the fire separation requirements of Section 412.5.1, the only openings permitted are normal access doors. Likewise, the mechanical and plumbing systems for the hangar must be independent of the systems within the residential house. The plumbing drain or waste line could discharge into its own building sewer line that then connects to the house's building sewer line. This connection must be done outside of both the house and the hangar. Electrical wiring serving as the feed for the subpanels in the hangar is permitted to penetrate the fire separation along with the wiring for the smoke alarm required by Section 412.5.3 and the necessary interconnection with the other interior alarms.

412.5.5 Height and area limits. *Residential aircraft hangars* shall be not greater than 2,000 square feet (186 m^2) in area and 20 feet (6096 mm) in *building height*.

❖ As stated in the definition in Section 202, the residential aircraft hangar is limited to 2,000 square feet (186 m^2) in area and 20 feet (6096 mm) in building height. These limits control the fire hazard associated with such a use. The type and number of aircraft stored in the hangar are not limited. Since the hangar is considered part of the residential use, it can be constructed of any materials that are permitted for the house, including wood-frame construction.

[F] 412.6 Aircraft paint hangars. Aircraft painting operations where flammable liquids are used in excess of the maximum allowable quantities per *control area* listed in Table 307.1(1) shall be conducted in an aircraft paint hangar that complies with the provisions of Sections 412.6.1 through 412.6.6.

❖ This section provides requirements for aircraft-related structures that exceed normal hangar storage purposes. The painting or cleaning of all aircraft with flammable liquids must be carefully controlled in an aircraft paint hangar. To determine the applicability of these requirements, the building owner must provide a complete list of all flammable liquids intended to be used in the building along with their anticipated quantities. If the amounts exceed the maximum allowable quantities per control area, then the building must be classified as an aircraft paint hangar. See Table 307.1(1) and Section 414.2 for further discussion of the maximum allowable quantities per control area of hazardous materials.

[F] 412.6.1 Occupancy group. Aircraft paint hangars shall be classified as Group H-2. Aircraft paint hangars shall comply with the applicable requirements of this code and the *International Fire Code* for such occupancy.

❖ Similar to any other building containing hazardous materials in excess of the maximum allowable quantities per control area, the building or structure must be classified as Group H. Because of the flammable liquids present, the aircraft paint hangar is classified as Group H-2. Based on the equivalent risk theory, the requirements of Section 412.6 and other applicable portions of the code and the IFC must be followed for this Group H-2 occupancy.

412.6.2 Construction. The aircraft paint hangar shall be of Type I or II construction.

❖ All aircraft paint hangars must be constructed as a Type I or II building. Special allowable height modifications are provided in Section 504.1 for aircraft paint hangars along with special area limitations in Section 507.10. If these modifications are not applicable, then the height and area limitations of Tables 504.3, 504.4 and 506.2 for a Group H-2 structure must be used. The requirement for noncombustible construction limits the fuel load that is added to the occupancy contents by the structure.

[F] 412.6.3 Operations. Only those flammable liquids necessary for painting operations shall be permitted in quantities less than the maximum allowable quantities per *control area* in Table 307.1(1). Spray equipment cleaning operations shall be conducted in a liquid use, dispensing and mixing room.

❖ To lessen the likelihood of a fire in the actual painting or aircraft cleaning areas, only flammable liquids necessary for those operations are permitted. The cleaning and maintenance of spray equipment is further limited to a liquid use, dispensing and mixing room. This requirement for separation and segregation of

INTERNATIONAL CODE COUNCIL®
Copyright © 2015 ICC. ALL RIGHTS RESERVED. Accessed by David Dammon on Jun 21, 2017 12:30:52 PM pursuant to License Agreement with ICC. No further reproduction or distribution authorized. ANY UNAUTHORIZED REPRODUCTION OR DISTRIBUTION IS A VIOLATION OF THE FEDERAL COPYRIGHT ACT AND THE LICENSE AGREEMENT, AND SUBJECT TO CIVIL AND CRIMINAL PENALTIES THEREUNDER.

the different operations reduces the fire risks associated with the painting and cleaning services.

[F] 412.6.4 Storage. Storage of flammable liquids shall be in a liquid storage room.

❖ The storage of all flammable liquids must be limited to a liquid storage room, which is further defined in Section 202. The applicable requirements of Section 415 and the IFC must be followed for liquid storage rooms to reduce the fire risks to the rest of the hangar operation.

[F] 412.6.5 Fire suppression. Aircraft paint hangars shall be provided with fire suppression as required by NFPA 409.

❖ To minimize the fire hazards associated with aircraft paint hangars, all such buildings are required to be protected with a fire suppression system. This requirement is applicable regardless of the height or area of the hangar or the types and quantities of aircraft being cleaned or painted. The fire suppression system must be designed and installed in accordance with referenced standard NFPA 409. This standard contains specific requirements for the suppression systems needed to properly protect paint hangars.

[F] 412.6.6 Ventilation. Aircraft paint hangars shall be provided with *ventilation* as required in the *International Mechanical Code*.

❖ Integral to the requirements for aircraft paint hangars are the ventilation provisions. Hazardous exhaust systems for controlling the overspray of painting and aircraft cleaning operations are required. These systems along with the necessary ventilation of the occupiable spaces must be in accordance with the IMC.

412.7 Aircraft manufacturing facilities. In buildings used for the manufacturing of aircraft, exit access travel distances indicated in Section 1017.1 shall be increased in accordance with the following:

1. The building shall be of Type I or II construction.
2. Exit access travel distance shall not exceed the distances given in Table 412.7.

❖ Aircraft, both domestic and military, are assembled within huge facilities. What is being assembled is huge. For example, the tail height of a Boeing 747 is over 63 feet (19 202 mm) tall. The assembly facilities for such aircraft frequently contain multiple planes at various stages of assembly. The traditional exit access travel distances are simply not reasonable for these facilities. The only way to comply with Chapter 10 travel distances would be to create exit passageways below the assembly floor. This would require occupants to behave in a counterintuitive fashion, moving into an underground enclosure where they would not be able to judge where the incident is occurring rather than away from the incident to an open area. Modeling of designs complying with this provision demonstrate the safety of these provisions for this specific use.

TABLE 412.7. See below.

❖ See commentary for Section 412.7

412.7.1 Ancillary areas. Rooms, areas and spaces ancillary to the primary manufacturing area shall be permitted to egress through such area having a minimum height as indicated in Table 412.7. Exit access travel distance within the ancillary room, area or space shall not exceed that indicated in Table 1017.2 based on the occupancy classification of that ancillary area. Total exit access travel distance shall not exceed that indicated in Table 412.7.

❖ It is common to have various rooms surrounding the main assembly floor where support functions are provided, perhaps storage of some parts or assembly of smaller units that are then installed into the aircraft being assembled on the main floor. These spaces are part and parcel to the function of the aircraft manufacturing/assembly process. This section allows these spaces to essentially use the main assembly space as an intervening room in the exit access pathway. The travel distance within such rooms is going to comply with the distances in Table 1017.2. Total travel distance starting within the room until an exit is reached is limited to those found in Table 412.7.

[F] 412.8 Heliports and helistops. *Heliports* and *helistops* shall be permitted to be erected on buildings or other locations where they are constructed in accordance with Sections 412.8.1 through 412.8.5.

❖ This section contains special use and occupancy requirements for a very unique and specialized aircraft occupancy—those related to helicopters. Because of the limited space requirements necessary for the landing and taking off of helicopters, these areas are more likely to be incorporated into other buildings and structures, such as hospitals or large office buildings, than facilities for fixed-wing aircraft.

TABLE 412.7
AIRCRAFT MANUFACTURING EXIT ACCESS TRAVEL DISTANCE

HEIGHT (feet) [b]	MANUFACTURING AREA (sq. ft.) [a]					
	≥ 150,000	≥ 200,000	≥ 250,000	≥ 500,000	≥ 750,000	≥ 1,000,000
≥ 25	400	450	500	500	500	500
≥ 50	400	500	600	700	700	700
≥ 75	400	500	700	850	1,000	1,000
≥ 100	400	500	750	1,000	1,250	1,500

For SI: 1 foot = 304.8 mm.

a. Contiguous floor area of the aircraft manufacturing facility having the indicated height.

b. Minimum height from finished floor to bottom of ceiling or roof slab or deck.

INTERNATIONAL CODE COUNCIL®
Copyright © 2015 ICC. ALL RIGHTS RESERVED. Accessed by David Dammon on Jun 21, 2017 12:30:52 PM pursuant to License Agreement with ICC. No further reproduction or distribution authorized. ANY UNAUTHORIZED REPRODUCTION OR DISTRIBUTION IS A VIOLATION OF THE FEDERAL COPYRIGHT ACT AND THE LICENSE AGREEMENT, AND SUBJECT TO CIVIL AND CRIMINAL PENALTIES THEREUNDER.

Included in these requirements are provisions for minimum clearance sizes, structural use and design, means of egress and a referenced standard for rooftop locations. Heliports and helistops pose less fire hazard than the storage of these aircraft in hangars, but increased life safety risks.

Heliports and helistops are permitted to be located anywhere as long as they meet the requirements of Section 412.8. Certainly, federal, state and local governments may have restrictions on the locations of heliports and helistops for general aviation purposes. However, the code only addresses those fire and life safety hazards associated with heliport and helistop locations to other buildings and structures and the means of egress from the same.

[F] 412.8.1 Size. The landing area for helicopters less than 3,500 pounds (1588 kg) shall be not less than 20 feet (6096 mm) in length and width. The landing area shall be surrounded on all sides by a clear area having a minimum average width at roof level of 15 feet (4572 mm) but with no width less than 5 feet (1524 mm).

❖ The landing pad for small helicopters [less than 3,500 pounds (1588 kg) in weight] must be a minimum 20-foot-diameter (6096 mm) circle. In addition, a concentric circle must be provided around the landing pad, providing a clear area with an average width of 15 feet (4572 mm) but with the least dimension of not less than 5 feet (1524 mm). This additional clear space provides an increased landing area during windy conditions when pinpoint landing is not possible. Further, this clear area maintains the necessary separation between the rotating blades and all adjacent construction.

[F] 412.8.2 Design. Helicopter landing areas and the supports thereof on the roof of a building shall be noncombustible construction. Landing areas shall be designed to confine any flammable liquid spillage to the landing area itself and provisions shall be made to drain such spillage away from any *exit* or *stairway* serving the helicopter landing area or from a structure housing such *exit* or *stairway*. For structural design requirements, see Section 1607.6.

❖ Landing areas (helistops) located on the roofs of buildings must be of noncombustible materials, including the supporting construction. This requirement is necessary to provide a structurally sound support for the additional weight of the helicopter and its loads. This section refers to Section 1607.6 for further structural design requirements. Section 1607.6 requires that the building designer must account for the increased roof loads, including impact loads in the structural design.

Rooftop landing areas must be sloped or diked to prevent any spillage of flammable fuel from the helicopter from entering the building. This is most important since penthouse doors or exit stairways could allow spilled hazardous materials and vapors to enter the building, which would pose an unacceptable fire hazard.

[F] 412.8.3 Means of egress. The *means of egress* from *heliports* and *helistops* shall comply with the provisions of Chapter 10. Landing areas located on buildings or structures shall have two or more *means of egress*. For landing areas less than 60 feet (18 288 mm) in length or less than 2,000 square feet (186 m^2) in area, the second *means of egress* is permitted to be a fire escape, *alternating tread device* or ladder leading to the floor below.

❖ As with all means of egress, the required egress paths from heliports and helistops must be in accordance with Chapter 10. Rooftop landing areas must be provided with at least two remotely located means of egress so that the helicopter occupants have redundant means to leave the landing area and enter the building. For very small landing areas, the code would permit one exit into the building while the other could take the form of a fire escape, alternating tread device or ladder to the next lower floor level.

[F] 412.8.4 Rooftop heliports and helistops. Rooftop *heliports* and *helistops* shall comply with NFPA 418.

❖ In addition to the specific requirements of Section 412.8, rooftop heliports and helistops must comply with referenced standard NFPA 418. That standard provides further life safety and fire safety requirements associated with rooftop landing areas.

[F] 412.8.5 Standpipe system. In buildings equipped with a standpipe system, the standpipe shall extend to the roof level in accordance with Section 905.3.6.

❖ In order to assist with fire suppression activities, a standpipe system is required in those buildings with a rooftop helistop or heliport. Section 905.3.6 requires that that the standpipe system be extended to the roof level on which the helistop or heliport is located. Section 2007.5 of the IFC provides additional information in regard to the placement of standpipe connections.

SECTION 413
COMBUSTIBLE STORAGE

413.1 General. High-piled stock or rack storage in any occupancy group shall comply with the *International Fire Code*.

❖ This section alerts the code user to the specific high-piled combustible storage requirements contained in Chapter 32 of the IFC. High-piled storage presents a hazard above that of normal combustible storage. By increasing the height of the storage, the ability for a fire to grow and thrive is increased dramatically. Therefore, such storage requires special consideration with regard to arrangement and fire protection design features.

Chapter 32 of the IFC provides requirements for the high-piled storage of combustible materials regardless of the occupancy classification. High-piled storage can occur in many different occupancies, but is most typical in Group M, S and F occupancies.

INTERNATIONAL CODE COUNCIL®
Copyright © 2015 ICC. ALL RIGHTS RESERVED. Accessed by David Dammon on Jun 21, 2017 12:30:52 PM pursuant to License Agreement with ICC. No further reproduction or distribution authorized. ANY UNAUTHORIZED REPRODUCTION OR DISTRIBUTION IS A VIOLATION OF THE FEDERAL COPYRIGHT ACT AND THE LICENSE AGREEMENT, AND SUBJECT TO CIVIL AND CRIMINAL PENALTIES THEREUNDER.

High-piled storage of combustible materials includes solid-piled, palletized, shelf or rack storage where the top of storage is in excess of 12 feet (3658 mm) in height or 6 feet (1829 mm) for high-hazard commodities. Commodity classifications for all types of products, as well as fire protection requirements, are provided in Chapter 32 of the IFC and the high-piled storage provisions of NFPA 13.

413.2 Attic, under-floor and concealed spaces. *Attic*, under-floor and concealed spaces used for storage of combustible materials shall be protected on the storage side as required for 1-hour fire-resistance-rated construction. Openings shall be protected by assemblies that are *self-closing* and are of noncombustible construction or solid wood core not less than $1^3/_4$ inch (45 mm) in thickness.

Exception: Neither fire-resistance-rated construction nor open protectives are required in any of the following locations:

1. Areas protected by *approved automatic sprinkler systems*.
2. Group R-3 and U occupancies.

❖ The severity of a potential fire hazard increases when combustibles are located within concealed spaces and similar areas that provide limited access to manual fire fighting. The areas typically have low supervision and, therefore, there is increased potential for a fire to develop and spread undetected through the building. This section regulates the minimum level of separation required between storage areas and the main occupiable area in nonsprinklered buildings. Since the intent is to protect against a fire in the storage area endangering the other occupied areas of the building, the required 1-hour fire-resistance rating need only be achieved from the storage side. While any access openings in the 1-hour fire-resistant construction need not be rated, they must be self-closing and of either noncombustible construction or a minimum $1^3/_4$-inch (44 mm) thickness of solid wood core.

Item 1 of the exception exempts the storage area from being separated by 1-hour fire-resistance-rated construction, provided the area is protected by an approved automatic sprinkler system. This exception only requires the sprinkler system in the attic, underfloor or concealed space. Complete sprinkler protection throughout the building is not required in order to be in compliance with the exception.

Item 2 of the exception clarifies that storage in residential occupancies classified as Group R-3 and Group U utility structures are exempt from the separation requirement.

SECTION 414
HAZARDOUS MATERIALS

[F] 414.1 General. The provisions of Sections 414.1 through 414.6 shall apply to buildings and structures occupied for the manufacturing, processing, dispensing, use or storage of hazardous materials.

❖ This section, along with Sections 307 (High-hazard Group H) and 415 (Groups H-1, H-2, H-3, H-4 and H-5) and the IFC, are intended to be companion provisions for the treatment of occupancies that contain hazardous materials. Any building or structure utilizing hazardous materials, regardless of quantity, is to comply with all of the applicable provisions of both the code and the IFC. This section also contains design alternatives for the use and storage of hazardous materials without classifying the building as a high-hazard Group H occupancy through the use of control areas (Section 414.2) or the mercantile display option (Section 414.2.5). While Section 414 contains general construction-related requirements for high-hazard occupancies, they are not indicative of a specific Group H occupancy classification but are dictated by hazardous material requirements in the IFC. Construction-related provisions for specific Group H occupancies are contained in Section 415.

The provisions of Section 414 apply to the use and storage of hazardous materials whether or not the building is classified as Group H. Requirements for specific materials are contained in the IFC.

[F] 414.1.1 Other provisions. Buildings and structures with an occupancy in Group H shall comply with this section and the applicable provisions of Section 415 and the *International Fire Code*.

❖ Section 415 is referenced for specific provisions applicable to occupancies classified as Groups H-1, H-2, H-3, H-4 and H-5. Regardless of the actual quantity of hazardous materials present, the use and storage of all such materials are required to comply with the applicable provisions of the IFC.

[F] 414.1.2 Materials. The safe design of hazardous material occupancies is material dependent. Individual material requirements are also found in Sections 307 and 415, and in the *International Mechanical Code* and the *International Fire Code*.

❖ This section emphasizes that high-hazard occupancies are different than other occupancies in that they are material dependent. This section alerts the code user to companion provisions in both the IMC and the IFC. Section 307 contains specific parameters for when a high-hazard occupancy classification is warranted. Section 415 contains specific building requirements dependent on the actual Group H occupancy classification for the building or area.

[F] 414.1.2.1 Aerosols. Level 2 and 3 aerosol products shall be stored and displayed in accordance with the *International Fire Code*. See Section 311.2 and the *International Fire Code* for occupancy group requirements.

❖ Where Level 2 and 3 aerosol products are stored or displayed in accordance with Chapter 51 of the IFC,

INTERNATIONAL CODE COUNCIL®
Copyright © 2015 ICC. ALL RIGHTS RESERVED. Accessed by David Dammon on Jun 21, 2017 12:30:52 PM pursuant to License Agreement with ICC. No further reproduction or distribution authorized. ANY UNAUTHORIZED REPRODUCTION OR DISTRIBUTION IS A VIOLATION OF THE FEDERAL COPYRIGHT ACT AND THE LICENSE AGREEMENT, AND SUBJECT TO CIVIL AND CRIMINAL PENALTIES THEREUNDER.

they may be classified as a Group S-1 occupancy as stated in Section 311.2. Section 307.1.1, Item 12, specifically exempts aerosol storage from being classified as a Group H occupancy when in compliance with the IFC. The protection required by the IFC is important so that the hazards created by these aerosols are addressed. The reference to the IFC will also address those locations where limited quantities of aerosol products are allowed in other occupancies.

[F] 414.1.3 Information required. A report shall be submitted to the *building official* identifying the maximum expected quantities of hazardous materials to be stored, used in a *closed system* and used in an *open system*, and subdivided to separately address hazardous material classification categories based on Tables 307.1(1) and 307.1(2). The methods of protection from such hazards, including but not limited to *control areas*, fire protection systems and Group H occupancies shall be indicated in the report and on the *construction documents*. The opinion and report shall be prepared by a qualified person, firm or corporation *approved* by the *building official* and provided without charge to the enforcing agency.

For buildings and structures with an occupancy in Group H, separate floor plans shall be submitted identifying the locations of anticipated contents and processes so as to reflect the nature of each occupied portion of every building and structure.

❖ A detailed plan addressing storage of hazardous materials, as well as their use in both closed and open systems, must be prepared and submitted to the building official. Such a plan is essential for assisting fire department and other emergency response personnel in hazardous materials situations. A report, such as a *Hazardous Materials Management Plan* (HMMP), as indicated in the IFC, or other approved plan, should be submitted to aid fire department personnel in the building design preplanning phase.

[F] 414.2 Control areas. *Control areas* shall comply with Sections 414.2.1 through 414.2.5 and the *International Fire Code*.

❖ As defined in Section 202, control areas are spaces within a building where quantities of hazardous materials not exceeding the maximum allowable quantities per control area are stored, dispensed, used or handled.

This section, in conjunction with the maximum allowable quantity tables in Section 307, utilizes a limited density concept for hazardous materials through the use of control areas. The intent of the control area concept is to provide an alternative method for the handling of hazardous materials without classifying the occupancy as Group H. In order to not be considered Group H, the amount of hazardous materials within any single control area bounded by fire barriers, horizontal assemblies, fire walls and exterior walls cannot exceed the maximum allowable quantity for a specific material listed in Table 307.1(1) or 307.1(2) (see Commentary Figure 414.2). A control area may be an entire building or a portion thereof. Note that when an entire building is the control area, the entire maximum allowable quantity of material from Table 307.1(1) or 307.1(2) located on any story is subject to the limitations of Table 414.2.2 (see IFC Interpretation Numbers 51-07 and 52-07).

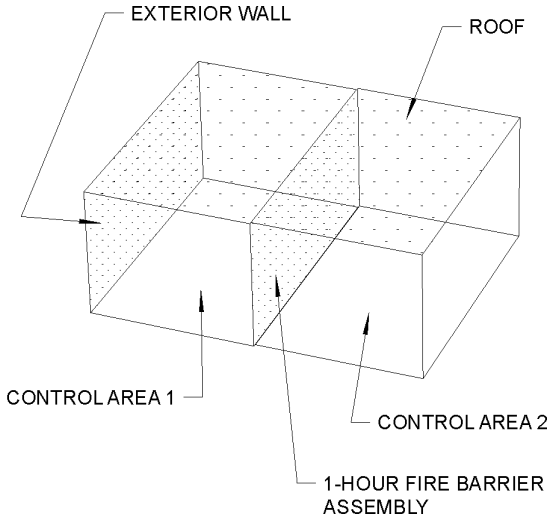

Figure 414.2
CONTROL AREAS

[F] 414.2.1 Construction requirements. *Control areas* shall be separated from each other by *fire barriers* constructed in accordance with Section 707 or *horizontal assemblies* constructed in accordance with Section 711, or both.

❖ Control areas are compartments of a building surrounded by fire barrier walls and fire-resistance-rated horizontal assemblies. If there are no fire barriers or fire-resistance-rated horizontal assemblies, the entire building is a single control area, for the purpose of applying these code provisions. Therefore, if more than the permitted maximum allowable quantities of Table 307.1(1) or 307.1(2) are anticipated in the building, additional control areas with minimum 1-hour fire barrier wall construction (2 hours where more than three stories) must be provided in order to not warrant a high-hazard occupancy classification. The provisions for required fire barriers also minimize the possibility of simultaneous involvement of multiple control areas due to a single fire condition. A fire in a single control area would involve only the amount of hazardous materials as limited by the maximum allowable quantities.

[F] 414.2.2 Percentage of maximum allowable quantities. The percentage of maximum allowable quantities of hazardous materials per *control area* permitted at each floor level within a building shall be in accordance with Table 414.2.2.

❖ Table 414.2.2 specifies the percentage of maximum allowable quantities of hazardous materials per control area dependent on the location of a given floor

INTERNATIONAL CODE COUNCIL®
Copyright © 2015 ICC. ALL RIGHTS RESERVED. Accessed by David Dammon on Jun 21, 2017 12:30:52 PM pursuant to License Agreement with ICC. No further reproduction or distribution authorized. ANY UNAUTHORIZED REPRODUCTION OR DISTRIBUTION IS A VIOLATION OF THE FEDERAL COPYRIGHT ACT AND THE LICENSE AGREEMENT, AND SUBJECT TO CIVIL AND CRIMINAL PENALTIES THEREUNDER.

level with respect to grade. The noted percentages are a percentage of the maximum allowable quantities of hazardous materials permitted per control area in accordance with Tables 307.1(1) and 307.1(2).

For example, Table 307.1(1) would allow 240 gallons (908 L) of Class IB flammable liquid (in a storage condition) per control area in a fully sprinklered building [see Table 307.1(1), Note d]. Table 414.2.2, in turn, would allow 75 percent of the maximum allowable quantity per control area for control areas located on the second floor level above grade. As such, 180 gallons (681 L) of Class IB flammable liquids per control area could be stored on the second floor of a fully sprinklered building without classifying the building as a Group H-3 high-hazard occupancy.

TABLE 414.2.2. See below.

❖ The purpose of Table 414.2.2 is to establish the maximum allowable quantity of hazardous materials permitted in a building without classifying the building as a high-hazard occupancy based on the use of control areas. The number of control areas and permitted quantities of hazardous materials per control area are reduced when stored or used above the first floor level. This table also sets forth the minimum vertical fire barrier assemblies between adjacent control areas on the same floor. For floor levels above the third floor, a minimum 2-hour fire barrier is required from adjacent areas to aid fire department response due to the additional time necessary for them to access the hazardous material storage areas on upper floors. The required fire-resistance rating of the horizontal assembly above the control area is dictated by the required fire-resistance rating of the enclosure walls of the control area in order to maintain continuity and integrity. Special attention needs to be given to the rating of the floor of the control area, especially for levels below the fourth level. Section 414.2.4 requires that the floor of the control area and its supporting construction have a minimum 2-hour fire-resistance rating. In general, this will not affect floors above the third level since the continuity provisions of Section 707.5 when combined with the 2-hour separation requirement from Table 414.2.2 will ensure the floor that supports the fire barrier has an equivalent rating. However, in situations where Table 414.2.2 only requires the walls separating control areas to be of 1-hour fire-resistance-rated construction, Section 414.2.4 still would require a 2-hour fire-resistance-rated floor. This could greatly affect the design of a two-story building that was originally intended to be of Type IIB construction (see commentary, Section 414.2.4).

The percentage of quantities of hazardous materials per control area per floor area is intended to be cumulative. A two-story building, therefore, could contain three control areas with each having 75 percent of the maximum allowable quantity on the second floor in addition to the four control areas containing 100 percent each of the maximum allowable quantity on the first floor. This condition would require that adequate fire-resistance-rated separation be provided.

Note a clarifies that the maximum allowable quantity of hazardous materials per control area is based on Tables 307.1(1) and 307.1(2). The maximum permitted amount includes the increases allowed by an automatic sprinkler system in accordance with NFPA 13, approved hazardous material storage cabinets or both where applicable.

Note b clarifies the fire barrier separation needed to establish the boundaries of the control area that include not only the vertical wall assemblies but also the floor/ceiling assemblies in order to be adequately separated from all adjacent interior spaces.

Example: Determine the maximum amount of Class IB flammable liquids that can be stored within a single-story, 10,000-square-foot (929 m^2) nonsprinklered Group F-1 occupancy (see Commentary Figure 414.2.2) of Type IIB construction without classifying the storage area as Group H-2. Based on a maximum allowable quantity of 120 gallons (454 L) for Class IB flammable liquids from Table 307.1(1), a maximum of 120 gallons (454 L) can be stored in

[F] TABLE 414.2.2
DESIGN AND NUMBER OF CONTROL AREAS

FLOOR LEVEL		PERCENTAGE OF THE MAXIMUM ALLOWABLE QUANTITY PER CONTROL AREA[a]	NUMBER OF CONTROL AREAS PER FLOOR	FIRE-RESISTANCE RATING FOR FIRE BARRIERS IN HOURS[b]
Above grade plane	Higher than 9	5	1	2
	7-9	5	2	2
	6	12.5	2	2
	5	12.5	2	2
	4	12.5	2	2
	3	50	2	1
	2	75	3	1
	1	100	4	1
Below grade plane	1	75	3	1
	2	50	2	1
	Lower than 2	Not Allowed	Not Allowed	Not Allowed

a. Percentages shall be of the maximum allowable quantity per control area shown in Tables 307.1(1) and 307.1(2), with all increases allowed in the notes to those tables.

b. Separation shall include fire barriers and horizontal assemblies as necessary to provide separation from other portions of the building.

INTERNATIONAL CODE COUNCIL®
Copyright © 2015 ICC. ALL RIGHTS RESERVED. Accessed by David Dammon on Jun 21, 2017 12:30:52 PM pursuant to License Agreement with ICC. No further reproduction or distribution authorized. ANY UNAUTHORIZED REPRODUCTION OR DISTRIBUTION IS A VIOLATION OF THE FEDERAL COPYRIGHT ACT AND THE LICENSE AGREEMENT, AND SUBJECT TO CIVIL AND CRIMINAL PENALTIES THEREUNDER.

each of the four control areas. Therefore, while the building may actually contain a total of 480 gallons (1817 L), a maximum of 120 gallons (454 L) is permitted in each control area that is separated from all adjacent control areas by minimum 1-hour fire barriers constructed in accordance with Section 707. The building, in this case, could still be classified as Group F-1. An automatic fire suppression system would not be required, since the 12,000-square-foot (1115 m^2) threshold for suppression of Group F-1 fire areas is not exceeded (Section 903.2.4) and there are no control areas containing hazardous materials that exceed the maximum allowable quantities. Notes d and e of Table 307.1(1) would allow the base quantity of Class IB flammable liquids to be increased 100 percent in buildings protected with an automatic sprinkler system or when the material is stored in approved hazardous material storage cabinets. In this example, this would result in increasing the maximum allowable quantity of Class IB flammable liquids by a factor of two. Therefore, the building could now contain a total of 960 gallons (3634 L) with a maximum of 240 gallons (908 L) in each of the four control areas, separated as required by the code, and still maintain a Group F-1 classification. If both an automatic sprinkler system and hazardous material storage cabinets are used to protect Class IB flammable liquids, then the base quantity of Table 307.1(1) could be increased by a factor of four. The building in this example, therefore, with both sprinkler protection and approved cabinets, could contain a total of 1,920 gallons (7267 L) with a maximum of 480 gallons (1817 L) in each of the four control areas, separated as required by the code, and still maintain a Group F-1 classification. The allowable increase in the maximum allowable quantities is offset by the additional level or levels of protection. The use of control areas provides a tradeoff based on building compartmentation. Fire protection (automatic sprinkler systems) and controlled storage through the use of approved hazardous material storage cabinets also adds a degree of protection, justifying the increased allowable quantities.

[F] 414.2.3 Number. The maximum number of *control areas* within a building shall be in accordance with Table 414.2.2.

❖ The maximum quantity of hazardous materials permitted in a building without classifying the building as a Group H, high-hazard occupancy is regulated per control area and not per building area. The quantity limitation for the entire building would be established based on the number of permitted control areas on each floor of the building in accordance with Table 414.2.2. Based on the table, the first floor could contain four control areas with up to 100 percent of the maximum allowable quantity of hazardous materials per control area. For example, a single control area in a nonsprinklered building could contain up to 30 gallons (113 L) of Class IA flammable liquids, 125 pounds (57 kg) of Class III organic peroxides, 250 pounds (113 kg) of Class 2 oxidizers and 500 gallons (1893 L) of corrosive liquids based on the maximum allowable quantities of Tables 307.1(1) and 307.1(2). Those quantities could be contained in each of four different control areas, provided that all control areas are separated from each other with minimum 1-hour fire barriers and horizontal assemblies. Please note that in order to have more control areas per floor than indicated in Table 414.2.2, a fire wall in accordance with Section 706 would be required in order to create separate buildings within the total structure.

[F] 414.2.4 Fire-resistance-rating requirements. The required *fire-resistance rating* for *fire barriers* shall be in accordance with Table 414.2.2. The floor assembly of the

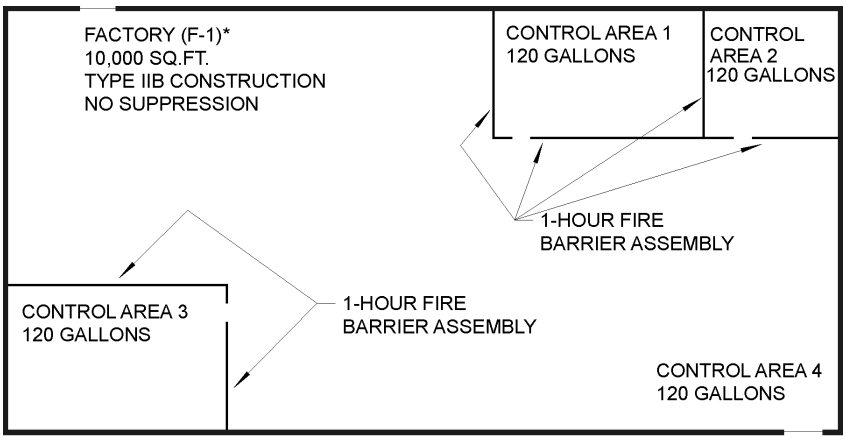

* ASSUME CLASS IB FLAMMABLE LIQUIDS

For SI: 1 square foot = 0.0929 m^2,
1 gallon = 3.785 L.

Figure 414.2.2
CONTROL AREAS

INTERNATIONAL CODE COUNCIL®
Copyright © 2015 ICC. ALL RIGHTS RESERVED. Accessed by David Dammon on Jun 21, 2017 12:30:52 PM pursuant to License Agreement with ICC. No further reproduction or distribution authorized. ANY UNAUTHORIZED REPRODUCTION OR DISTRIBUTION IS A VIOLATION OF THE FEDERAL COPYRIGHT ACT AND THE LICENSE AGREEMENT, AND SUBJECT TO CIVIL AND CRIMINAL PENALTIES THEREUNDER.

control area and the construction supporting the floor of the *control area* shall have a *fire-resistance rating* of not less than 2 hours.

Exception: The floor assembly of the *control area* and the construction supporting the floor of the *control area* are allowed to be 1-hour fire-resistance rated in buildings of Types IIA, IIIA and VA construction, provided that both of the following conditions exist:

1. The building is equipped throughout with an *automatic sprinkler system* in accordance with Section 903.3.1.1; and
2. The building is three or fewer *stories above grade plane*.

❖ The fire separation requirements for control areas, both horizontal and vertical, are dependent on their location in a building in accordance with Table 414.2.2. The amount of hazardous materials per control area, as well as the number of control areas per floor, are reduced if stored or used above the first floor.

Where the control area is located above the first floor, the floor assembly and all supporting construction for the control area would require a minimum 2-hour fire-resistance rating. The required 2-hour fire-resistance rating of the floor construction only refers to the floor of the control area. The increased fire-resistance rating and reduced quantities are intended to aid fire department personnel. The use of control areas on upper floors provides an alternative method for multistory research and laboratory-type facilities that may need to use a limited amount of hazardous materials throughout various portions of the building. Without control areas, the maximum allowable quantity for a hazardous material would be limited to a single building area regardless of the overall size or height of the building. For example, if control areas are not utilized, a 50,000-square-foot (4645 m^2) single-story building would be limited to the same quantity of hazardous materials as a two-story building with 5,000 square feet (464 m^2) per floor.

Buildings of Type IIA, IIIA and VA construction are required to have floor construction with a minimum fire-resistance rating of 1-hour as indicated in Table 601. The exception recognizes the combination of a 1-hour horizontal assembly in conjunction with sprinkler protection as a reasonable alternative for the noted construction types. The three-story limitation is consistent with the fire-resistant-rating requirements for fire barriers in Table 414.2.2.

[F] 414.2.5 Hazardous material in Group M display and storage areas and in Group S storage areas. The aggregate quantity of nonflammable solid and nonflammable or noncombustible liquid hazardous materials permitted within a single *control area* of a Group M display and storage area, a Group S storage area or an outdoor *control area* is permitted to exceed the maximum allowable quantities per *control area* specified in Tables 307.1(1) and 307.1(2) without classifying the building or use as a Group H occupancy, provided that the materials are displayed and stored in accordance with the *International Fire Code* and quantities do not exceed the maximum allowable specified in Table 414.2.5(1).

In Group M occupancy wholesale and retail sales uses, indoor storage of flammable and combustible liquids shall not exceed the maximum allowable quantities per *control area* as indicated in Table 414.2.5(2), provided that the materials are displayed and stored in accordance with the *International Fire Code.*

The maximum quantity of aerosol products in Group M occupancy retail display areas, storage areas adjacent to retail display areas and retail storage areas shall be in accordance with the *International Fire Code*.

❖ This section addresses an option for control areas containing certain nonflammable or noncombustible hazardous materials that are stored in mercantile and storage occupancies, including outdoor control areas. This option would allow Group H-4 materials, which present a health hazard rather than a physical hazard, as well as limited Group H-2 and H-3 materials, such as oxidizers, to be stored in both retail display and stock areas of regulated mercantile occupancies and in storage-related occupancies in excess of the maximum allowable quantities of Tables 307.1(1) and 307.1(2) without classifying the building as Group H. Without this option, many mercantile and storage occupancies could be classified technically as Group H. The increased quantities of certain hazardous materials are based on the recognition that while there is limited risk in these occupancies, the packaging and storage arrangements can be controlled. For further information on the storage limitations required for these types of materials, see Section 5003.11.3 of the IFC.

This section, in conjunction with Table 414.2.5(1), establishes the maximum quantity of the indicated hazardous materials permitted within a single control area of a mercantile occupancy. As indicated in Table 414.2.5(1), this section only applies to certain nonflammable solids and nonflammable or noncombustible liquids. Please note that this option is not applicable to mercantile and storage occupancies containing hazardous materials other than those indicated in Table 414.2.5(1).

This section also addresses Group M occupancies utilized for the wholesale and retail sale of flammable and combustible liquids. Group M occupancies must be able to display flammable and combustible liquids for sale to the public. The maximum allowable quantities of flammable and combustible liquids per control area can exceed the limitations of Table 307.1(1), provided they are in compliance with the amounts in Table 414.2.5(2) and displayed and stored in accordance with Section 5704.3.6 of the IFC. Section 307.1.1, Item 2 also addresses this design alternative to a Group H occupancy classification for flammable and combustible liquids in mercantile occupancies.

INTERNATIONAL CODE COUNCIL®
Copyright © 2015 ICC. ALL RIGHTS RESERVED. Accessed by David Dammon on Jun 21, 2017 12:30:52 PM pursuant to License Agreement with ICC. No further reproduction or distribution authorized. ANY UNAUTHORIZED REPRODUCTION OR DISTRIBUTION IS A VIOLATION OF THE FEDERAL COPYRIGHT ACT AND THE LICENSE AGREEMENT, AND SUBJECT TO CIVIL AND CRIMINAL PENALTIES THEREUNDER.

The retail sales of aerosol products requires compliance with Chapter 51 of the IFC and the applicable provisions of NFPA 30B.

TABLE 414.2.5(1). See below.

❖ Table 414.2.5(1) lists the hazardous materials eligible for the mercantile and storage occupancy option and the corresponding maximum permitted quantities per control area depending on the extent of protection provided. The permitted quantities of each listed material are independent of each other, as well as the various classes or physical state of a specific material. For example, a given control area could contain up to the permitted maximum quantity of Class 2 solid oxidizers, Class 3 solid oxidizers and Class 2 liquid oxidizers, in addition to the permitted quantities of corrosive materials.

Notes b and c would allow the listed maximum quantity in Table 414.2.5(1) to be increased because of the use of sprinklers, approved hazardous materials storage cabinets, or both. The notes are intended to be cumulative in that up to four times the listed amount may be allowed per control area, if the building is fully sprinkler protected and approved cabinets are utilized, without classifying the building as Group H.

Note d simply refers to Table 414.2.2 for the design and permitted number of control areas.

The 100-percent increase in maximum quantities for outdoor control areas permitted by Note f is based on the reduced exposure hazard to the building and its occupants. The increase encourages exterior storage applications without mandating sprinkler protection or approved hazardous material storage cabinets.

Notes g and h recognize that Class 2 and 3 solid

[F] TABLE 414.2.5(1)
MAXIMUM ALLOWABLE QUANTITY PER INDOOR AND OUTDOOR CONTROL AREA IN GROUP M AND S OCCUPANCIES
NONFLAMMABLE SOLIDS AND NONFLAMMABLE AND NONCOMBUSTIBLE LIQUIDS[d,e,f]

CONDITION		MAXIMUM ALLOWABLE QUANTITY PER CONTROL AREA	
Material[a]	Class	Solids pounds	Liquids gallons
A. Health-hazard materials—nonflammable and noncombustible solids and liquids			
1. Corrosives[b,c]	Not Applicable	9,750	975
2. Highly toxics	Not Applicable	20[b,c]	2[b,c]
3. Toxics[b,c]	Not Applicable	1,000	100
B. Physical-hazard materials—nonflammable and noncombustible solids and liquids			
1. Oxidizers[b,c]	4	Not Allowed	Not Allowed
	3	1,150[g]	115
	2	2,250[h]	225
	1	18,000 [i, j]	1,800 [i, j]
2. Unstable (reactives)[b,c]	4	Not Allowed	Not Allowed
	3	550	55
	2	1,150	115
	1	Not Limited	Not Limited
3. Water reactives	3[b,c]	550	55
	2[b,c]	1,150	115
	1	Not Limited	Not Limited

For SI: 1 pound = 0.454 kg, 1 gallon = 3.785 L.

a. Hazard categories are as specified in the *International Fire Code*.

b. Maximum allowable quantities shall be increased 100 percent in buildings that are sprinklered in accordance with Section 903.3.1.1. When Note c also applies, the increase for both notes shall be applied accumulatively.

c. Maximum allowable quantities shall be increased 100 percent when stored in approved storage cabinets, in accordance with the *International Fire Code*. When Note b also applies, the increase for both notes shall be applied accumulatively.

d. See Table 414.2.2 for design and number of control areas.

e. Allowable quantities for other hazardous material categories shall be in accordance with Section 307.

f. Maximum quantities shall be increased 100 percent in outdoor control areas.

g. Maximum amounts shall be increased to 2,250 pounds when individual packages are in the original sealed containers from the manufacturer or packager and do not exceed 10 pounds each.

h. Maximum amounts shall be increased to 4,500 pounds when individual packages are in the original sealed containers from the manufacturer or packager and do not exceed 10 pounds each.

i. The permitted quantities shall not be limited in a building equipped throughout with an automatic sprinkler system in accordance with Section 903.3.1.1.

j. Quantities are unlimited in an outdoor control area.

INTERNATIONAL CODE COUNCIL®
Copyright © 2015 ICC. ALL RIGHTS RESERVED. Accessed by David Dammon on Jun 21, 2017 12:30:52 PM pursuant to License Agreement with ICC. No further reproduction or distribution authorized. ANY UNAUTHORIZED REPRODUCTION OR DISTRIBUTION IS A VIOLATION OF THE FEDERAL COPYRIGHT ACT AND THE LICENSE AGREEMENT, AND SUBJECT TO CIVIL AND CRIMINAL PENALTIES THEREUNDER.

oxidizers include several disinfectants that are commonly used in recreational, potable and wastewater treatment. Without these exceptions, the tabular maximum allowable quantities allowed in Group M and S occupancies would not be sufficient to sustain trade demand during times of peak usage. Because small containers of these materials have not been involved in losses, the exceptions permit additional containers of 10 pounds (5 kg) or less. Note that Section 5003.11.3.6 of the IFC limits the tabular quantities to individual containers of 100 pounds (45 kg) or less, whereas these exceptions give the retailer/wholesaler the option of increasing quantities on the shelves when the packaging sizes are reduced and limited to 10 pounds (5 kg) or less.

Note i recognizes the inherently higher level of protection and safety afforded by a sprinkler system and that, by definition, the only hazard presented by Class 1 oxidizers is that they slightly increase the burning rate of combustible materials with which they may come into contact during a fire. Materials with such properties present nowhere near the level of hazard of many ordinary commodities that might be found in a Group M or S occupancy, such as foam plastics. To put this matter into perspective, Class 1 oxidizers are materials with a degree of hazard similar to that of toilet bowl cleaner crystals. Note i also correlates with Table 307.1(1), Note f.

Note j further recognizes the lesser hazard of Class 1 oxidizers and the inherent safety of storing hazardous materials outdoors by allowing quantities to be unlimited in outdoor control areas. Note j also correlates with Table 5003.1.1(3) of the IFC.

TABLE 414.2.5(2). See below.

❖ Table 414.2.5(2) provides the maximum allowable quantity of flammable and combustible liquids per control area in mercantile occupancies. The limitations are based on the type of flammable and combustible liquid in the control area, the type of storage (such as rack or palletized) and the level of sprinkler protection.

The easier the flammable or combustible liquid is to ignite, the more restrictive is the quantity of liquid allowed. As such, the table severely limits the quantity of Class IA liquids. Class IIIB liquids, on the other hand, given their flash points above 200°F (93°C), are unlimited in a building with an automatic sprinkler system.

The automatic sprinkler system must be designed in accordance with NFPA 13. Flammable and combustible liquids displayed on shelves of 6 feet (1829 mm) or less are treated as an Ordinary Hazard Group 2 occupancy in accordance with NFPA 13, which would require a minimum sprinkler density of 0.20 gallon per minute (0.72 L/min) per square foot over the most remote 1,500-square-foot (140 m^2) area.

Because the flammable and combustible liquid is more exposed in individual packaging, the sprinkler system can provide better fire control. If the flammable and combustible liquids are displayed or stored in cartons, pallets or racks, the minimum sprinkler density is 0.21 gallons per minute (0.79 L/min) per square foot over the most remote 1,500-square-foot (140 m^2) area. This type of display or storage is limited to a maximum height of 4 feet, 6 inches (1372 mm). This type of packaging is more difficult for the fire sprinkler system to handle, so a greater density is required.

To allow a larger quantity and increased storage height of flammable and combustible liquids, the mercantile occupancy would require an enhanced sprinkler system in accordance with the applicable provisions of the IFC and NFPA 30. These provisions would require the sprinkler system to have a greater design density and operating area to adequately protect most storage conditions. For additional guidance, see Section 5704.3.6 of the IFC.

[F] TABLE 414.2.5(2)
MAXIMUM ALLOWABLE QUANTITY OF FLAMMABLE AND COMBUSTIBLE LIQUIDS IN WHOLESALE AND RETAIL SALES OCCUPANCIES PER CONTROL AREA[a]

TYPE OF LIQUID	MAXIMUM ALLOWABLE QUANTITY PER CONTROL AREA (gallons)		
	Sprinklered in accordance with note b densities and arrangements	Sprinklered in accordance with Tables 5704.3.6.3(4) through 5704.3.6.3(8) and 5704.3.7.5.1 of the *International Fire Code*	Nonsprinklered
Class IA	60	60	30
Class IB, IC, II and IIIA	7,500[c]	15,000[c]	1,600
Class IIIB	Unlimited	Unlimited	13,200

For SI: 1 foot = 304.8 mm, 1 square foot = 0.0929 m^2, 1 gallon = 3.785 L, 1 gallon per minute per square foot = 40.75 L/min/m^2.

a. Control areas shall be separated from each other by not less than a 1-hour fire barrier wall.

b. To be considered as sprinklered, a building shall be equipped throughout with an approved automatic sprinkler system with a design providing minimum densities as follows:

1. For uncartoned commodities on shelves 6 feet or less in height where the ceiling height does not exceed 18 feet, quantities are those permitted with a minimum sprinkler design density of Ordinary Hazard Group 2.
2. For cartoned, palletized or racked commodities where storage is 4 feet 6 inches or less in height and where the ceiling height does not exceed 18 feet, quantities are those permitted with a minimum sprinkler design density of 0.21 gallon per minute per square foot over the most remote 1,500-square-foot area.

c. Where wholesale and retail sales or storage areas exceed 50,000 square feet in area, the maximum allowable quantities are allowed to be increased by 2 percent for each 1,000 square feet of area in excess of 50,000 square feet, up to a maximum of 100 percent of the table amounts. A control area separation is not required. The cumulative amounts, including amounts attained by having an additional control area, shall not exceed 30,000 gallons.

INTERNATIONAL CODE COUNCIL®
Copyright © 2015 ICC. ALL RIGHTS RESERVED. Accessed by David Dammon on Jun 21, 2017 12:30:52 PM pursuant to License Agreement with ICC. No further reproduction or distribution authorized. ANY UNAUTHORIZED REPRODUCTION OR DISTRIBUTION IS A VIOLATION OF THE FEDERAL COPYRIGHT ACT AND THE LICENSE AGREEMENT, AND SUBJECT TO CIVIL AND CRIMINAL PENALTIES THEREUNDER.

[F] 414.3 Ventilation. Rooms, areas or spaces in which explosive, corrosive, combustible, flammable or highly toxic dusts, mists, fumes, vapors or gases are or may be emitted due to the processing, use, handling or storage of materials shall be mechanically ventilated where required by this code, the *International Fire Code* or the *International Mechanical Code*.

Emissions generated at workstations shall be confined to the area in which they are generated as specified in the *International Fire Code* and the *International Mechanical Code*.

❖ This section requires mechanical ventilation for occupancies utilizing hazardous materials when required by the IFC. The specific ventilation requirements are required to be in accordance with the applicable provisions in the IMC.

With regard to ducts conveying hazardous exhaust, the intent of this section is to minimize the potential for spreading hazardous exhaust to other parts of the building as a result of duct leakage or failure. In the event of a duct fire or explosion, other areas of the building could be jeopardized. Section 414.3 requires the exhaust flow to be maintained at concentrations below the lower flammability limit (LFL) of the contaminant. In all cases, ducts conveying hazardous exhaust must not extend into or through other ducts or plenum spaces, unless the flammable vapor-air mixtures are less than 25 percent of the LFL of the vapor being generated. The reference to work stations addresses spaces within a Group H-5 occupancy that utilize hazardous production materials within a fabrication area. The required control of emissions at work stations is intended to prevent exposure of the work station operator to hazardous fumes or vapors and to prevent hazardous concentrations of the materials used in the manufacturing process.

The exhaust system required by this section must be provided with an emergency manual shutoff control (kill switch) that will permit the exhaust system to be shut down without requiring personnel to enter the storage room. In the event of an emergency, it would be desirable to shut off an exhaust fan that is a source of ignition or is exhausting significant quantities of hazardous substances as a result of leaking storage containers. Under some circumstances, continued operation of an exhaust system could increase the level of hazard or cause the spread of fire. To prevent tampering and unauthorized use of the shutoff control, such controls must be of the type that requires a seal to be broken before they can be actuated. The control must be clearly identified as to its purpose.

[F] 414.4 Hazardous material systems. Systems involving hazardous materials shall be suitable for the intended application. Controls shall be designed to prevent materials from entering or leaving process or reaction systems at other than the intended time, rate or path. Automatic controls, where provided, shall be designed to be fail safe.

❖ Process-type systems involving the use of hazardous materials generally involve many design variables. Many times, the building official may not be aware of the potentially dangerous chemical combination or use of incompatible materials that might be inherent in a given system. This section simply requires that all systems involving the use of hazardous materials should be designed to prevent an unwanted mixture of hazardous materials from occurring.

[F] 414.5 Inside storage, dispensing and use. The inside storage, dispensing and use of hazardous materials shall be in accordance with Sections 414.5.1 through 414.5.3 of this code and the *International Fire Code*.

❖ Sections 414.5.1 through 414.5.5 contain construction-related items for the inside storage and use of hazardous materials. The applicability of the provisions of Section 414.5 is dependent on the specific hazardous material requirements in the IFC. It is important to note that these provisions are not solely applicable to Group H occupancies.

[F] 414.5.1 Explosion control. Explosion control shall be provided in accordance with the *International Fire Code* as required by Table 414.5.1 where quantities of hazardous materials specified in that table exceed the maximum allowable quantities in Table 307.1(1) or where a structure, room or space is occupied for purposes involving explosion hazards as required by Section 415 or the *International Fire Code*.

❖ It is usually impractical to design a building to withstand the pressure created by an explosion; therefore, this section mandates an explosion relief system for all structures, rooms or spaces with uses involving explosion hazards. Explosions may result from the overpressurization of a containing structure, by physical/chemical means or by a chemical reaction. During an explosion, a sudden release of a high-pressure gas occurs and the energy is dissipated in the form of a shock wave.

All structures, rooms or spaces with those special uses listed in Table 414.5.1 involving explosion hazards must be equipped with some method of explosion control as required by Section 415 or the material-specific requirements in the IFC. Table 414.5.1 also specifies when explosion control is required based on certain materials where the quantities of hazardous materials involved exceed the maximum allowable quantities in Table 307.1(1). Similarly, Section 911 of the IFC recognizes explosion (deflagration) venting and explosion (deflagration) prevention systems as acceptable methods of explosion control, where appropriate. The use of barricades or other explosion protective devices, such as magazines, may be permitted as the means of explo-

INTERNATIONAL CODE COUNCIL®
Copyright © 2015 ICC. ALL RIGHTS RESERVED. Accessed by David Dammon on Jun 21, 2017 12:30:52 PM pursuant to License Agreement with ICC. No further reproduction or distribution authorized. ANY UNAUTHORIZED REPRODUCTION OR DISTRIBUTION IS A VIOLATION OF THE FEDERAL COPYRIGHT ACT AND THE LICENSE AGREEMENT, AND SUBJECT TO CIVIL AND CRIMINAL PENALTIES THEREUNDER.

sion control where indicated in the IFC as an acceptable alternative and approved by the building official.

TABLE 414.5.1. See below.

❖ This table designates when some methods of explosion control are required for specific material or special use conditions. The applicability of this table assumes either the quantities of hazardous materials involved exceed the maximum allowable quantities in Table 307.1(1), listed in the table under "Hazard Category," or special explosion hazards exist as listed under "Special Uses." Section 911 of the IFC provides design criteria for explosion (deflagration) venting. Explosion prevention (suppression) systems, where utilized, must comply with NFPA 69. Barricade construction must be designed and installed in accordance with NFPA 495. As indicated in Table 414.5.1, Note b, the IFC provides additional guidance as to the applicability and design criteria for explosion control methods.

[F] 414.5.2 Emergency or standby power. Where required by the *International Fire Code* or this code, mechanical ventilation, treatment systems, temperature control, alarm, detection or other electrically operated systems shall be provided with emergency or standby power in accordance with Section 2702. For storage and use areas for highly toxic or toxic

[F] TABLE 414.5.1
EXPLOSION CONTROL REQUIREMENTS[a, h]

MATERIAL	CLASS	EXPLOSION CONTROL METHODS	
		Barricade construction	Explosion (deflagration) venting or explosion (deflagration) prevention systems[b]
HAZARD CATEGORY			
Combustible dusts[c]	—	Not Required	Required
Cryogenic flammables	—	Not Required	Required
Explosives	Division 1.1 Division 1.2 Division 1.3 Division 1.4 Division 1.5 Division 1.6	Required Required Not Required Not Required Required Required	Not Required Not Required Required Required Not Required Not Required
Flammable gas	Gaseous Liquefied	Not Required Not Required	Required Required
Flammable liquid	IA[d] IB[e]	Not Required Not Required	Required Required
Organic peroxides	U I	Required Required	Not Permitted Not Permitted
Oxidizer liquids and solids	4	Required	Not Permitted
Pyrophoric gas	—	Not Required	Required
Unstable (reactive)	4 3 Detonable 3 Nondetonable	Required Required Not Required	Not Permitted Not Permitted Required
Water-reactive liquids and solids	3 2[g]	Not Required Not Required	Required Required
SPECIAL USES			
Acetylene generator rooms	—	Not Required	Required
Grain processing	—	Not Required	Required
Liquefied petroleum gas-distribution facilities	—	Not Required	Required
Where explosion hazards exist[f]	Detonation Deflagration	Required Not Required	Not Permitted Required

a. See Section 414.1.3.
b. See the *International Fire Code.*
c. As generated during manufacturing or processing.
d. Storage or use.
e. In open use or dispensing.
f. Rooms containing dispensing and use of hazardous materials when an explosive environment can occur because of the characteristics or nature of the hazardous materials or as a result of the dispensing or use process.
g. A method of explosion control shall be provided when Class 2 water-reactive materials can form potentially explosive mixtures.
h. Explosion venting is not required for Group H-5 fabrication areas complying with Section 415.11.1 and the *International Fire Code.*

INTERNATIONAL CODE COUNCIL®
Copyright © 2015 ICC. ALL RIGHTS RESERVED. Accessed by David Dammon on Jun 21, 2017 12:30:52 PM pursuant to License Agreement with ICC. No further reproduction or distribution authorized. ANY UNAUTHORIZED REPRODUCTION OR DISTRIBUTION IS A VIOLATION OF THE FEDERAL COPYRIGHT ACT AND THE LICENSE AGREEMENT, AND SUBJECT TO CIVIL AND CRIMINAL PENALTIES THEREUNDER.

materials, see Sections 6004.2.2.8 and 6004.3.4.2 of the *International Fire Code.*

❖ A backup emergency power source is considered essential for required systems monitoring hazardous materials. Therefore, when limit controls, detection systems or mechanical ventilation are required for a specific hazardous material, an emergency electrical system or standby power system is required.

[F] 414.5.2.1 Exempt applications. Emergency or standby power is not required for the mechanical ventilation systems provided for any of the following:

1. Storage of Class IB and IC flammable and combustible liquids in closed containers not exceeding 6.5 gallons (25 L) capacity.
2. Storage of Class 1 and 2 oxidizers.
3. Storage of Class II, III, IV and V organic peroxides.
4. Storage of asphyxiant, irritant and radioactive gases.

❖ Exemption 1 correlates with industry treatment of portable container storage. Notably, storage of small, closed containers does not pose a risk that warrants ventilation for these materials. FM Data Sheet 7-29, "Flammable and Combustible Liquid Storage in Portable Containers," does not require mechanical ventilation for flammable liquids in closed containers of not greater than 6.5 gallons (2290 L) individual capacity, with a flash point of not greater than 100°F (38°C) and a boiling point equal to or greater than 100°F (38°C). NFPA 30, *Flammable and Combustible Liquids Code*, also recognizes that closed container storage does not pose a risk that warrants ventilation (ventilation is required if there is open dispensing). These materials are in sealed containers in storage. Any loss of power would require an immediate cessation of operations, which would eliminate spill risk. By limiting the container size, the potential for accidental spills is significantly reduced.

Exemptions 2 and 3 address low-hazard oxidizers and organic peroxides that do not present a severe fire or reactivity hazard. Highly toxic and toxic materials (see Exception 5) must conform to applicable requirements of Chapter 60 of the IFC. For example, emergency power may be required for treatment systems utilized to process the accidental release of highly toxic or toxic compressed gases caused by a leak or rupture in storage cylinders or tanks. Without emergency power, all required monitoring systems, including the treatment system for neutralizing potential leaking gas, would be rendered inoperative if a power failure or other electrical system failure occurred.

Exemption 4 exempts storage areas for asphyxiant, irritant or radioactive gases because, unlike the requirements for hazard categories that use the Maximum Allowable Quantity (MAQ) per control area as a trigger threshold, the requirement for ventilation in storage areas containing asphyxiant, irritant and radioactive gases is not quantity based. The construction of compressed gas containers is robust compared to the containers used for other materials that may be of glass, plastic or paper. The integrity of the containers alone represents a major safeguard against likely failure. While leakage from containers is a consideration, the need for the reestablishment of power to the ventilation system within a 60-second period is not warranted given the fact that the requirement could be imposed for insignificant quantities of the gas, and given the fact that occupancy of a storage area during power outage is not the norm.

Exception 6 recognizes the use of an engineered system that is designed to always fail in the appropriate design mode without human intervention in lieu of the emergency power system. The intent of the exception is to permit alternative systems that are not subject to power interruptions. The exception, as noted, does not apply to detection and alarm systems, but addresses those systems essential to the removal of hazardous fumes and vapors from potentially occupied areas.

[F] 414.5.2.2 Fail-safe engineered systems. Standby power for mechanical ventilation, treatment systems and temperature control systems shall not be required where an approved fail-safe engineered system is installed.

❖ This section recognizes the use of an engineered system that is designed to always fail in the appropriate design mode without human intervention in lieu of the emergency power system. The intent of this section is to permit alternative systems that are not subject to power interruptions. This section does not apply to detection and alarm systems, but addresses those systems essential to the removal of hazardous fumes and vapors from potentially occupied areas.

[F] 414.5.3 Spill control, drainage and containment. Rooms, buildings or areas occupied for the storage of solid and liquid hazardous materials shall be provided with a means to control spillage and to contain or drain off spillage and fire protection water discharged in the storage area where required in the *International Fire Code*. The methods of spill control shall be in accordance with the *International Fire Code*.

❖ This section references the IFC for material-specific occupancies containing materials in excess of the maximum allowable quantities, which would require some method of spill control, drainage and containment. The specific provisions for providing adequate spill control, drainage and containment, when required, are located in Section 5004.2 of the IFC.

[F] 414.6 Outdoor storage, dispensing and use. The outdoor storage, dispensing and use of hazardous materials shall be in accordance with the *International Fire Code*.

❖ This section requires the outdoor storage, dispensing and use of hazardous materials to be in accordance with the provisions of the IFC, regardless of the quan-

INTERNATIONAL CODE COUNCIL®
Copyright © 2015 ICC. ALL RIGHTS RESERVED. Accessed by David Dammon on Jun 21, 2017 12:30:52 PM pursuant to License Agreement with ICC. No further reproduction or distribution authorized. ANY UNAUTHORIZED REPRODUCTION OR DISTRIBUTION IS A VIOLATION OF THE FEDERAL COPYRIGHT ACT AND THE LICENSE AGREEMENT, AND SUBJECT TO CIVIL AND CRIMINAL PENALTIES THEREUNDER.

tity. Certain provisions in the IFC, however, are only applicable when the maximum allowable quantities are exceeded. In general, the permitted quantity per outdoor control area exceeds that permitted for the inside storage or use of the same material. The outdoor storage or use of hazardous materials in excess of the maximum allowable quantities does not result in a high-hazard occupancy classification but simply dictates the need for additional requirements.

[F] 414.6.1 Weather protection. Where weather protection is provided for sheltering outdoor hazardous material storage or use areas, such areas shall be considered outdoor storage or use when the weather protection structure complies with Sections 414.6.1.1 through 414.6.1.3.

❖ This section provides the minimum construction requirements for outdoor storage areas of hazardous materials that require protection from the elements. The need for weather protection is dependent on the specific material requirements in the IFC. For ready access to materials, many such structures are commonly constructed as an attached canopy. Depending on the hazardous material involved, additional protection, such as fire suppression of the outside storage area, fire-resistance-rated exterior wall construction or a limitation on exterior wall openings, may be necessary.

Structures not in compliance with the provisions of this section would be regulated as inside storage, and as such, would be considered a Group H, high-hazard occupancy if the maximum allowable quantities of a specific hazardous material were exceeded.

[F] 414.6.1.1 Walls. Walls shall not obstruct more than one side of the structure.

Exception: Walls shall be permitted to obstruct portions of multiple sides of the structure, provided that the obstructed area is not greater than 25 percent of the structure's perimeter.

❖ The structure should be sufficiently open to allow for adequate cross ventilation. The intent of this section is to allow either one full side of a weather protection structure to be obstructed or, through the exception, to permit portions of multiple sides to be obstructed, provided the obstructed perimeter does not exceed 25 percent of the total perimeter.

[F] 414.6.1.2 Separation distance. The distance from the structure to buildings, *lot lines*, *public ways* or *means of egress* to a *public way* shall be not less than the distance required for an outside hazardous material storage or use area without weather protection.

❖ The structure is required to be located with respect to lot lines, public ways or the means of egress to the public way as required for the specific hazardous material provisions in the IFC.

[F] 414.6.1.3 Noncombustible construction. The overhead structure shall be of *approved* noncombustible construction with a maximum area of 1,500 square feet (140 m^2).

Exception: The maximum area is permitted to be increased as provided by Section 506.

❖ The overhead structure is required to be of noncombustible construction to eliminate the possibility of adding to the fuel load in a fire condition. The exception permits the area of the overhead structure to exceed the 1,500-square-foot (139 m^2) area limitation if either open building frontage or an automatic sprinkler system is provided.

SECTION 415
GROUPS H-1, H-2, H-3, H-4 AND H-5

[F] 415.1 Scope. The provisions of Sections 415.1 through 415.11 shall apply to the storage and use of hazardous materials in excess of the maximum allowable quantities per *control area* listed in Section 307.1. Buildings and structures with an occupancy in Group H shall also comply with the applicable provisions of Section 414 and the *International Fire Code*.

❖ This section establishes the application of Section 415 and references the IFC for additional specific hazardous material requirements. Section 415 is only applicable when the maximum allowable quantity of a hazardous material listed in either Table 307.1(1) or 307.1(2) is exceeded. The provisions of Section 414, however, are applicable wherever hazardous materials are stored or used, regardless of quantity.

[F] 415.2 Definitions. The following terms are defined in Chapter 2:

CONTINUOUS GAS DETECTION SYSTEM.

DETACHED BUILDING.

EMERGENCY CONTROL STATION.

EXHAUSTED ENCLOSURE.

FABRICATION AREA.

FLAMMABLE VAPORS OR FUMES.

GAS CABINET.

GASROOM.

HAZARDOUS PRODUCTION MATERIAL (HPM).

HPM FLAMMABLE LIQUID.

HPM ROOM.

IMMEDIATELY DANGEROUS TO LIFE AND HEALTH (IDLH).

LIQUID.

LIQUID STORAGE ROOM.

LIQUID USE, DISPENSING AND MIXING ROOM.

INTERNATIONAL CODE COUNCIL®
Copyright © 2015 ICC. ALL RIGHTS RESERVED. Accessed by David Dammon on Jun 21, 2017 12:30:52 PM pursuant to License Agreement with ICC. No further reproduction or distribution authorized. ANY UNAUTHORIZED REPRODUCTION OR DISTRIBUTION IS A VIOLATION OF THE FEDERAL COPYRIGHT ACT AND THE LICENSE AGREEMENT, AND SUBJECT TO CIVIL AND CRIMINAL PENALTIES THEREUNDER.

LOWER FLAMMABLE LIMIT (LFL).

NORMAL TEMPERATURE AND PRESSURE (NTP).

PHYSIOLOGICAL WARNING THRESHOLD LEVEL.

SERVICE CORRIDOR.

SOLID.

STORAGE, HAZARDOUS MATERIALS.

USE (MATERIAL).

WORKSTATION.

❖ This section lists terms that are specifically associated with the subject matter of Section 415. It is important to emphasize that these terms are not exclusively related to this chapter but may or may not also be applicable where the term is used elsewhere in the code.

Definitions of terms can help in the understanding and application of the code requirements. The purpose for including a list within this chapter is to provide more convenient access to terms which may have a specific or limited application within this chapter. For the complete definition and associated commentary, refer back to Chapter 2. Terms that are italicized provide a visual identification throughout the code that a definition exists for that term. The use and application of all defined terms are set forth in Section 201.

[F] 415.3 Automatic fire detection systems. Group H occupancies shall be provided with an automatic fire detection system in accordance with Section 907.2.

❖ This section references Section 907.2.5 regarding the installation of automatic fire detection systems in Group H occupancies. Specifically required are automatic smoke detection systems when highly toxic gases, organic peroxides and oxidizers are present. See also Chapters 60, 62 and 63 of the IFC commentary. Section 907.2.5 also requires a manual fire alarm system in Group H-5 occupancies. This system shall activate the occupant notification system as specified in Section 907.5.

[F] 415.4 Automatic sprinkler system. Group H occupancies shall be equipped throughout with an *automatic sprinkler system* in accordance with Section 903.2.5.

❖ An automatic sprinkler system is required throughout buildings or portions of buildings classified as Group H occupancies as established in Section 903.2.5. In other than Group H-5 occupancies, the sprinkler system required by this section is only required in those areas that have the Group H classification. For example, in an 8,000-square-foot (743.2 m^2) Group F-1 factory with a 600-square-foot (55.7 m^2) Group H-3 storage room, only the storage room would require an automatic sprinkler system.

[F] 415.5 Emergency alarms. Emergency alarms for the detection and notification of an emergency condition in Group H occupancies shall be provided as set forth herein.

❖ An emergency alarm is required in all areas utilized for the storage, dispensing, use and handling of hazardous materials in accordance with Sections 415.5.1 through 415.5.4. This section assumes the area in question utilizes hazardous materials in excess of the maximum allowable quantities indicated in Tables 307.1(1) and 307.1(2) and, therefore, the building is classified as a Group H occupancy.

[F] 415.5.1 Storage. An approved manual emergency alarm system shall be provided in buildings, rooms or areas used for storage of hazardous materials. Emergency alarm-initiating devices shall be installed outside of each interior exit or exit access door of storage buildings, rooms or areas. Activation of an emergency alarm-initiating device shall sound a local alarm to alert occupants of an emergency situation involving hazardous materials.

❖ A manual pull station or other emergency signal device approved by the building official must be provided outside of each egress door to hazardous material storage areas. Activation of the device is intended to warn the building occupants of a potential dangerous condition within the hazardous material storage area. The alarm signal required by this section is intended only to be a local alarm. A complete evacuation alarm system, excluding a local trouble alarm located within the immediate high-hazard area, is not required.

[F] 415.5.2 Dispensing, use and handling. Where hazardous materials having a hazard ranking of 3 or 4 in accordance with NFPA 704 are transported through corridors, interior exit stairways or ramps, or exit passageways, there shall be an emergency telephone system, a local manual alarm station or an approved alarm-initiating device at not more than 150-foot (45 720 mm) intervals and at each exit and exit access doorway throughout the transport route. The signal shall be relayed to an approved central, proprietary or remote station service or constantly attended on-site location and shall initiate a local audible alarm.

❖ This section requires access to an approved supervised signaling device along the transport route when hazardous materials must be transported through corridors, interior exit stairways or exit passageways. A spill or other incident involving hazardous materials within a corridor or exit may render it unusable for egress. A loud audible alarm, which relays a signal to a remote station, allows a quick response by emergency responders.

INTERNATIONAL CODE COUNCIL®

Copyright © 2015 ICC. ALL RIGHTS RESERVED. Accessed by David Dammon on Jun 21, 2017 12:30:52 PM pursuant to License Agreement with ICC. No further reproduction or distribution authorized. ANY UNAUTHORIZED REPRODUCTION OR DISTRIBUTION IS A VIOLATION OF THE FEDERAL COPYRIGHT ACT AND THE LICENSE AGREEMENT, AND SUBJECT TO CIVIL AND CRIMINAL PENALTIES THEREUNDER.

[F] 415.5.3 Supervision. Emergency alarm systems shall be supervised by an approved central, proprietary or remote station service or shall initiate an audible and visual signal at a constantly attended on-site location.

❖ This section requires an approved method of electrical supervision for the emergency alarm systems for the hazardous material storage and use areas required by Sections 415.5.1 and 415.3.2. The method of supervision should also be in compliance with the applicable provisions of NFPA 72.

[F] 415.5.4 Emergency alarm systems. *Emergency alarm systems* shall be provided with emergency power in accordance with Section 2702.

❖ This section requires an approved emergency power system for emergency alarm systems for the hazardous material storage and use areas required by Sections 415.5.1 and 415.5.2. The system is required to be in accordance with Section 2702. Technical requirements are found in the International Fire Code, NFPA 70, NFPA 110 and NFPA 111 as stated in Section 2702.1.2.

[F] 415.6 Fire separation distance. Group H occupancies shall be located on property in accordance with the other provisions of this chapter. In Groups H-2 and H-3, not less than 25 percent of the perimeter wall of the occupancy shall be an *exterior wall*.

Exceptions:

1. *Liquid use, dispensing and mixing rooms* having a floor area of not more than 500 square feet (46.5 m^2) need not be located on the outer perimeter of the building where they are in accordance with the *International Fire Code* and NFPA 30.
2. *Liquid storage rooms* having a floor area of not more than 1,000 square feet (93 m^2) need not be located on the outer perimeter where they are in accordance with the *International Fire Code* and NFPA 30.
3. Spray paint booths that comply with the *International Fire Code* need not be located on the outer perimeter.

❖ This section specifies the location of Group H storage areas within a building. In order to provide adequate access for fire-fighting operations and venting of the products of combustion, Group H-2 and H-3 storage areas within a building must be located along an exterior wall.

Exception 1 recognizes the use of inside storage rooms that are utilized for operations involving flammable and combustible liquids. These types of rooms, which have no perimeter access, are permitted by the IFC and NFPA 30. The size of the room as well as the quantity of liquids, however, are restricted due to the lack of perimeter access and ventilation options.

Exception 2 is similar to Exception 1 except that a larger room area is permitted since the flammable and combustible liquids are in a static storage condition.

Spray paint booths are typically power-ventilated structures within a building that have their own enclosure separate from the exterior wall construction. The location and fire separation requirements for the spray paint booth must be in accordance with Section 416 and NFPA 33.

[F] 415.6.1 Group H occupancy minimum fire separation distance. Regardless of any other provisions, buildings containing Group H occupancies shall be set back to the minimum *fire separation distance* as set forth in Sections 415.6.1.1 through 415.6.1.4. Distances shall be measured from the walls enclosing the occupancy to *lot lines*, including those on a public way. Distances to assumed *lot lines* established for the purpose of determining exterior wall and opening protection are not to be used to establish the minimum *fire separation distance* for buildings on sites where explosives are manufactured or used when separation is provided in accordance with the quantity distance tables specified for explosive materials in the *International Fire Code*.

❖ Due to the potentially volatile nature of hazardous materials, specific setback requirements are necessary for Group H occupancies. These provisions take precedence over provisions in the code that may specify a minimum fire separation distance based on building construction type and exposure (see Table 602). The listed conditions are dependent on the type of materials that are indicative of the specified Group H occupancies, the size of the hazardous material storage area and whether a detached building is required by Table 415.6.2.

When dealing with explosives, it is important to note that the base paragraph makes a distinction between the assumed lot lines (see Section 705.3) that are used for determining exterior wall and opening protection and those that are used for the separation of buildings, based on fire separation distance, where explosives are involved. Where explosives are involved, the separation distances are measured between structures and not to some imaginary lot line that is assumed to be between them. It is reasonable to make this distinction since the separation distances for explosives far exceed the normal exterior wall and opening separation requirements.

[F] 415.6.1.1 Group H-1. Group H-1 occupancies shall be set back not less than 75 feet (22 860 mm) and not less than required by the *International Fire Code*.

Exception: Fireworks manufacturing buildings separated in accordance with NFPA 1124.

❖ Unless a greater distance is required by the IFC, a minimum setback of 75 feet (22 860 mm) is required between the walls enclosing a Group H-1 occupancy and all lot lines. The exception recognizes that fireworks manufacturing buildings pose unique hazards due to the potential volume (net weight) of fireworks in any single building. NFPA 1124 specifies the mini-

INTERNATIONAL CODE COUNCIL®
Copyright © 2015 ICC. ALL RIGHTS RESERVED. Accessed by David Dammon on Jun 21, 2017 12:30:52 PM pursuant to License Agreement with ICC. No further reproduction or distribution authorized. ANY UNAUTHORIZED REPRODUCTION OR DISTRIBUTION IS A VIOLATION OF THE FEDERAL COPYRIGHT ACT AND THE LICENSE AGREEMENT, AND SUBJECT TO CIVIL AND CRIMINAL PENALTIES THEREUNDER.

mum separation distances between all process buildings, public highways and other inhabited buildings.

[F] 415.6.1.2 Group H-2. Group H-2 occupancies shall be set back not less than 30 feet (9144 mm) where the area of the occupancy is greater than 1,000 square feet (93 m^2) and it is not required to be located in a *detached building*.

❖ Unless required to be in a detached building as regulated by Section 415.6.2, all Group H-2 occupancies that exceed 1,000 square feet (93 m^2) in floor area are to have at least 30 feet (9144 mm) between the walls enclosing the Group H-2 occupancy and the lot lines surrounding the site.

[F] 415.6.1.3 Groups H-2 and H-3. Group H-2 and H-3 occupancies shall be set back not less than 50 feet (15 240 mm) where a *detached building* is required (see Table 415.6.2).

❖ Where Table 415.6.2 requires a detached building due to the quantity of hazardous materials involved, the Group H-2 and H-3 occupancies must be set back at least 50 feet (15 240 mm) from surrounding lot lines.

[F] 415.6.1.4 Explosive materials. Group H-2 and H-3 occupancies containing materials with explosive characteristics shall be separated as required by the *International Fire Code*. Where separations are not specified, the distances required shall be determined by a technical report issued in accordance with Section 414.1.3.

❖ The physical separation requirements for Group H-2 and H-3 occupancies that contain explosive materials are not regulated by the IBC, but rather by Chapter 56 in the IFC. In those situations where the IFC does not provide minimum separation requirements, it is necessary to do a specific analysis of the conditions and develop a technical report as described in Section 414.1.3.

[F] 415.6.2 Detached buildings for Group H-1, H-2 or H-3 occupancy. The storage or use of hazardous materials in excess of those amounts listed in Table 415.6.2 shall be in accordance with the applicable provisions of Sections 415.7 and 415.8.

❖ Table 415.6.2 requires detached buildings for some of the materials found in Groups H-2 and H-3 due to the large quantities involved. Even though these materials are less of a hazard when compared to those found in Group H-1, they do create a significant hazard in sufficiently large quantities

TABLE 415.6.2. See below.

❖ Table 415.6.2 establishes when hazardous materials must be stored in detached structures. The need for

[F] TABLE 415.6.2
DETACHED BUILDING REQUIRED

A DETACHED BUILDING IS REQUIRED WHEN THE QUANTITY OF MATERIAL EXCEEDS THAT LISTED HEREIN			
Material	**Class**	**Solids and Liquids (tons)[a, b]**	**Gases (cubic feet)[a, b]**
Explosives	Division 1.1 Division 1.2 Division 1.3 Division 1.4 Division 1.4[c] Division 1.5 Division 1.6	Maximum Allowable Quantity Maximum Allowable Quantity Maximum Allowable Quantity Maximum Allowable Quantity 1 Maximum Allowable Quantity Maximum Allowable Quantity	Not Applicable
Oxidizers	Class 4	Maximum Allowable Quantity	Maximum Allowable Quantity
Unstable (reactives) detonable	Class 3 or 4	Maximum Allowable Quantity	Maximum Allowable Quantity
Oxidizer, liquids and solids	Class 3 Class 2	1,200 2,000	Not Applicable Not Applicable
Organic peroxides	Detonable Class I Class II Class III	Maximum Allowable Quantity Maximum Allowable Quantity 25 50	Not Applicable Not Applicable Not Applicable Not Applicable
Unstable (reactives) nondetonable	Class 3 Class 2	1 25	2,000 10,000
Water reactives	Class 3 Class 2	1 25	Not Applicable Not Applicable
Pyrophoric gases	Not Applicable	Not Applicable	2,000

For SI: 1 ton = 906 kg, 1 cubic foot = 0.02832 m^3, 1 pound = 0.454 kg.

a. For materials that are detonable, the distance to other buildings or lot lines shall be in accordance with Chapter 56 of the *International Fire Code* based on trinitrotoluene (TNT) equivalence of the material. For materials classified as explosives, see Chapter 56 of the *International Fire Code*.

b. "Maximum Allowable Quantity" means the maximum allowable quantity per control area set forth in Table 307.1(1).

c. Limited to Division 1.4 materials and articles, including articles packaged for shipment, that are not regulated as an explosive under Bureau of Alcohol, Tobacco, Firearms and Explosives (BATF) regulations or unpackaged articles used in process operations that do not propagate a detonation or deflagration between articles, provided the net explosive weight of individual articles does not exceed 1 pound.

INTERNATIONAL CODE COUNCIL®
Copyright © 2015 ICC. ALL RIGHTS RESERVED. Accessed by David Dammon on Jun 21, 2017 12:30:52 PM pursuant to License Agreement with ICC. No further reproduction or distribution authorized. ANY UNAUTHORIZED REPRODUCTION OR DISTRIBUTION IS A VIOLATION OF THE FEDERAL COPYRIGHT ACT AND THE LICENSE AGREEMENT, AND SUBJECT TO CIVIL AND CRIMINAL PENALTIES THEREUNDER.

detached storage is a function of the type, physical state and quantity of material.

[F] 415.6.2.1 Wall and opening protection. Where a *detached building* is required by Table 415.6.2, there are no requirements for wall and opening protection based on *fire separation distance.*

❖ Detached buildings are required to be adequately separated from lot lines and other important buildings. As such, additional exposure protection for exterior walls is not needed.

[F] 415.7 Special provisions for Group H-1 occupancies. Group H-1 occupancies shall be in detached buildings used for no other purpose. Roofs shall be of lightweight construction with suitable thermal insulation to prevent sensitive material from reaching its decomposition temperature. Group H-1 occupancies containing materials that are in themselves both physical and health hazards in quantities exceeding the maximum allowable quantities per *control area* in Table 307.1(2) shall comply with requirements for both Group H-1 and H-4 occupancies.

❖ Due to the explosion hazard potential associated with Group H-1 materials, Group H-1 occupancies are required to be in separate detached structures. The limitation of one story is based on the need to exit a building with a detonation hazard as soon as possible. Exiting from a second story or basement, even within an interior exit stairway, may not offer sufficient protection where an explosion hazard exists. The one-story limitation is also intended to limit the volume of detonable materials that could be stored in any one structure.

Group H-1 occupancies that contain materials that present a health as well as a detonation hazard must also comply with the applicable requirements for a Group H-4 occupancy (see commentary, Section 307.8).

[F] 415.7.1 Floors in storage rooms. Floors in storage areas for organic peroxides, pyrophoric materials and unstable (reactive) materials shall be of liquid-tight, noncombustible construction.

❖ Noncombustible floors are required to prevent the structure from contributing to a fire scenario. The floors are also required to be liquid tight to prevent the spread of hazardous materials to areas outside the storage room.

[F] 415.8 Special provisions for Group H-2 and H-3 occupancies. Group H-2 and H-3 occupancies containing quantities of hazardous materials in excess of those set forth in Table 415.6.2 shall be in *detached buildings* used for manufacturing, processing, dispensing, use or storage of hazardous materials. Materials listed for Group H-1 occupancies in Section 307.3 are permitted to be located within Group H-2 or H-3 *detached buildings* provided the amount of materials per *control area* do not exceed the maximum allowed quantity specified in Table 307.1(1).

❖ This section, in conjunction with Table 415.6.2, specifies when a Group H-2 or H-3 occupancy must be in a detached structure. Detached structures used for the storage of hazardous materials are not intended to be mixed-use occupancies. In addition to the materials listed in Table 415.6.2, along with those addressed in Section 415.8.2, it is acceptable to locate materials listed in Section 307.3 in such detached structures provided they do not exceed the maximum allowable quantities per control area based on Table 307.1(1).

[F] 415.8.1 Multiple hazards. Group H-2 or H-3 occupancies containing materials that are in themselves both physical and health hazards in quantities exceeding the maximum allowable quantities per *control area* in Table 307.1(2) shall comply with requirements for Group H-2, H-3 or H-4 occupancies as applicable.

❖ Group H-2 and H-3 occupancies that contain materials that pose a health as well as a physical hazard must also comply with the applicable requirements for a Group H-4 occupancy (see commentary, Section 307.8).

[F] 415.8.2 Separation of incompatible materials. Hazardous materials other than those listed in Table 415.6.2 shall be allowed in manufacturing, processing, dispensing, use or storage areas when separated from incompatible materials in accordance with the provisions of the *International Fire Code.*

❖ In addition to those hazardous materials specifically listed in Table 415.6.2, it is acceptable to use or store other types of hazardous materials in a detached building, provided the incompatible materials are isolated from each other in accordance with the IFC.

[F] 415.8.3 Water reactives. Group H-2 and H-3 occupancies containing water-reactive materials shall be resistant to water penetration. Piping for conveying liquids shall not be over or through areas containing water reactives, unless isolated by *approved* liquid-tight construction.

Exception: Fire protection piping shall be permitted over or through areas containing water reactives without isolating it with liquid-tight construction.

❖ The design and construction of buildings used for storing water-reactive materials must be such that water will not be permitted to come in contact with the stored materials. The building materials should be designed to resist the passage of flowing water. Piping conveying liquids, other than sprinkler system piping, is prohibited in any area containing water-reactive materials.

[F] 415.8.4 Floors in storage rooms. Floors in storage areas for organic peroxides, oxidizers, pyrophoric materials, unstable (reactive) materials and water-reactive solids and liquids shall be of liquid-tight, noncombustible construction.

❖ Noncombustible floors are required to prevent the structure from contributing to a fire scenario. The floors are also required to be liquid tight to prevent the spread of hazardous materials to areas outside the storage room.

[F] 415.8.5 Waterproof room. Rooms or areas used for the storage of water-reactive solids and liquids shall be con-

INTERNATIONAL CODE COUNCIL®
Copyright © 2015 ICC. ALL RIGHTS RESERVED. Accessed by David Dammon on Jun 21, 2017 12:30:52 PM pursuant to License Agreement with ICC. No further reproduction or distribution authorized. ANY UNAUTHORIZED REPRODUCTION OR DISTRIBUTION IS A VIOLATION OF THE FEDERAL COPYRIGHT ACT AND THE LICENSE AGREEMENT, AND SUBJECT TO CIVIL AND CRIMINAL PENALTIES THEREUNDER.

structed in a manner that resists the penetration of water through the use of waterproof materials. Piping carrying water for other than *approved automatic sprinkler systems* shall not be within such rooms or areas.

❖ Similar to Section 415.8.5, storage rooms containing water-reactive materials must be waterproofed. Though water piping may not be run into or through such rooms, the code recognizes that automatic sprinkler systems are a more regulated type of water piping system and have a low leakage and failure rate when properly installed and maintained.

[F] 415.9 Group H-2. Occupancies in Group H-2 shall be constructed in accordance with Sections 415.9.1 through 415.9.3 and the *International Fire Code*.

❖ Sections 415.9.1 through 415.9.3 contain specific construction requirements for occupancies that contain Group H-2 materials in excess of the maximum allowable quantities. Such occupancies are also required to comply with all material-specific related provisions in the IFC. In addition, see the commentary on Section 426.

[F] 415.9.1 Flammable and combustible liquids. The storage, handling, processing and transporting of flammable and combustible liquids in Group H-2 and H-3 occupancies shall be in accordance with Sections 415.9.1.1 through 415.9.1.9, the *International Mechanical Code* and the *International Fire Code*.

❖ Although Section 415.9.1 and its subsections are part of Section 415.9, these sections apply to both Group H-2 and H-3 occupancies. The storage of flammable and combustible liquids constitutes a special hazard because of the potential fire severity and ease of ignition related to such liquids. The flash point is the most important criterion of the hazards associated with flammable and combustible liquids because it represents the lowest temperature at which sufficient vapor will be given off to form an ignitable or flammable mixture with air. Although it is the flammable vapors that burn or explode, flammable liquids (by definition) are normally stored above their flash point. Since flammable and combustible liquids are found in virtually every industrial plant and many other occupancies, minimum requirements for the storage of such liquids are set forth in the provisions of Chapter 57 of the IFC and NFPA 30.

Additionally, the provisions of Sections 415.9.1.1 through 415.9.1.9 permit the inside tank storage of flammable and combustible liquids. It is intended that all of these provisions, where applicable, be complied with in order to allow the installation of large tanks of flammable and combustible liquids within the building. These provisions were developed in part due to the cost of complying with environmental considerations regarding the installation of underground storage tanks. In downtown areas, above-ground inside storage tanks are commonly used in conjunction with emergency power generators. While not specifically defined, these provisions are intended for tanks proposed for fixed installation as opposed to containers and portable tanks, such as 55-gallon (208 L) drums.

[F] 415.9.1.1 Mixed occupancies. Where the storage tank area is located in a building of two or more occupancies and the quantity of liquid exceeds the maximum allowable quantity for one *control area*, the use shall be completely separated from adjacent occupancies in accordance with the requirements of Section 508.4.

❖ This section requires mandatory fire-resistance-rated separation of the Group H storage tank area from adjacent areas containing other groups. By referencing Section 508.4 for separated mixed occupancies, the storage tank area would require a minimum fire barrier construction, both horizontally and vertically, whenever a mixed-occupancy condition occurs.

[F] 415.9.1.1.1 Height exception. Where storage tanks are located within a building no more than one story above grade plane, the height limitation of Section 504 shall not apply for Group H.

❖ Group H storage tank areas may be located on an upper floor in a multiple-story building subject to the limitations of Section 504. As long as the storage tank area is located within a building no more than one story, the height limitations of Tables 504.3 and 504.4, with respect to both height in feet and number of stories, would not apply to the Group H fire area. The height limitation for the building would be dictated by the other occupancy groups in the building and the actual construction type. The height exception assumes the storage tank area complies with all of the applicable provisions of Section 415.9.1 and Chapter 57 of the IFC.

[F] 415.9.1.2 Tank protection. Storage tanks shall be noncombustible and protected from physical damage. *Fire barriers* or *horizontal assemblies* or both around the storage tanks shall be permitted as the method of protection from physical damage.

❖ Storage tanks shall be noncombustible and protected from physical damage. Fire barriers, horizontal assemblies or both around the storage tanks shall be permitted as the method of protection from physical damage.

The intent of this section is to reduce the potential for industrial accidents involving storage tanks by providing a physical barrier, such as a pipe bollard or barricade. This section would also allow the fire barrier or horizontal assembly that is enclosing the storage tank area to qualify as the means of protection from physical damage. Any method of physical protection, other than a fire barrier wall assembly, must be approved by the building official.

[F] 415.9.1.3 Tanks. Storage tanks shall be *approved* tanks conforming to the requirements of the *International Fire Code*.

❖ The design, construction and installation of all storage tanks for flammable and combustible liquids

INTERNATIONAL CODE COUNCIL®
Copyright © 2015 ICC. ALL RIGHTS RESERVED. Accessed by David Dammon on Jun 21, 2017 12:30:52 PM pursuant to License Agreement with ICC. No further reproduction or distribution authorized. ANY UNAUTHORIZED REPRODUCTION OR DISTRIBUTION IS A VIOLATION OF THE FEDERAL COPYRIGHT ACT AND THE LICENSE AGREEMENT, AND SUBJECT TO CIVIL AND CRIMINAL PENALTIES THEREUNDER.

must comply with the applicable provisions of Chapter 57 of the IFC.

[F] 415.9.1.4 Leakage containment. A liquid-tight containment area compatible with the stored liquid shall be provided. The method of spill control, drainage control and secondary containment shall be in accordance with the *International Fire Code*.

Exception: Rooms where only double-wall storage tanks conforming to Section 415.9.1.3 are used to store Class I, II and IIIA flammable and combustible liquids shall not be required to have a leakage containment area.

❖ In order to prevent the spread of flammable and combustible liquids to adjacent nonstorage areas in the event of a leak in a storage tank, an adequately sized containment area is required. The sizing of the containment area should be designed to contain a spill from the largest vessel plus the fire protection water for the required duration. It is also important that the drainage system be sufficient to drain not only the flammable or combustible liquid but also the drainage water from the sprinkler system as well as hose streams. Since the outer wall of a double-walled storage tank acts as the secondary means of containment, the exception would allow the omission of the leakage containment area for all flammable and combustible liquids.

[F] 415.9.1.5 Leakage alarm. An *approved* automatic alarm shall be provided to indicate a leak in a storage tank and room. The alarm shall sound an audible signal, 15 dBa above the ambient sound level, at every point of entry into the room in which the leaking storage tank is located. An *approved* sign shall be posted on every entry door to the tank storage room indicating the potential hazard of the interior room environment, or the sign shall state: WARNING, WHEN ALARM SOUNDS, THE ENVIRONMENT WITHIN THE ROOM MAY BE HAZARDOUS. The leakage alarm shall also be supervised in accordance with Chapter 9 to transmit a trouble signal.

❖ This section requires an alarm system to indicate a leak in the storage tank. The alarm must be supervised, as well as sound a local signal. Automatic electrical supervision of the leakage alarm is required in accordance with Section 901.6.2

[F] 415.9.1.6 Tank vent. Storage tank vents for Class I, II or IIIA liquids shall terminate to the outdoor air in accordance with the *International Fire Code*.

❖ Section 5704.2.7.3.3 of the IFC specifies the proper location of the tank vent to enable flammable vapors to be released to the outside air and dissipate without creating a hazard. It also requires the tank vent to terminate a minimum of 12 feet (3658 mm) above grade and 5 feet (1524 mm) from building openings and lot lines to reduce the possibility of ignitable concentrations of the vapors collecting near the discharge end of the vent pipe, entering building openings or exposing adjoining property.

[F] 415.9.1.7 Room ventilation. Storage tank areas storing Class I, II or IIIA liquids shall be provided with mechanical *ventilation*. The mechanical *ventilation* system shall be in accordance with the *International Mechanical Code* and the *International Fire Code*.

❖ This section requires mechanical ventilation for storage tank areas in order to maintain any vapor buildup at safe levels until the hazard of a spill or leak can be abated. The ventilation requirements for flammable or combustible liquid storage tanks must be in accordance with the applicable provisions of the IMC and the IFC.

[F] 415.9.1.8 Explosion venting. Where Class I liquids are being stored, explosion venting shall be provided in accordance with the *International Fire Code*.

❖ Class I flammable liquids, when stored in sufficient quantities, can readily produce vapors within the explosive limitations. Explosion venting must be in accordance with the provisions of Sections 414.5.1 and 911 and Chapter 57 of the IFC.

[F] 415.9.1.9 Tank openings other than vents. Tank openings other than vents from tanks inside buildings shall be designed to ensure that liquids or vapor concentrations are not released inside the building.

❖ Additional provisions are necessary to minimize the possibility of an accidental release of flammable or combustible liquids or their vapors via any connection to the tank other than a vent. This includes requirements for liquid-tight openings below the liquid level in the tank, overflow protection and vapor recovery connections as indicated in Section 5704.2.7.5 of the IFC.

[F] 415.9.2 Liquefied petroleum gas facilities. The construction and installation of liquefied petroleum gas facilities shall be in accordance with the requirements of this code, the *International Fire Code,* the *International Mechanical Code*, the *International Fuel Gas Code* and NFPA 58.

❖ The key to this section is the reference to NFPA 58 for design and construction of liquefied petroleum gas facilities. NFPA 58 provides a comprehensive set of construction requirements for LP-gas distribution facilities, as well as bulk plants, and industrial plants in which LP-gas systems, storage systems, vaporizers, mixing systems and similar activities are involved.

[F] 415.9.3 Dry cleaning plants. The construction and installation of dry cleaning plants shall be in accordance with the requirements of this code, the *International Mechanical Code*, the *International Plumbing Code* and NFPA 32. Dry cleaning solvents and systems shall be classified in accordance with the *International Fire Code*.

❖ Dry cleaning plants that do not qualify under Item 4 or 5 of Section 307.1.1 and in which the maximum allowable quantity per control area of dry cleaning solvents exceeds the values in Table 307.1(1) would

INTERNATIONAL CODE COUNCIL®
Copyright © 2015 ICC. ALL RIGHTS RESERVED. Accessed by David Dammon on Jun 21, 2017 12:30:52 PM pursuant to License Agreement with ICC. No further reproduction or distribution authorized. ANY UNAUTHORIZED REPRODUCTION OR DISTRIBUTION IS A VIOLATION OF THE FEDERAL COPYRIGHT ACT AND THE LICENSE AGREEMENT, AND SUBJECT TO CIVIL AND CRIMINAL PENALTIES THEREUNDER.

be classified in Group H and would be required to comply with the applicable provisions of the IPC, the IMC and NFPA 32. It should be noted that Chapter 21 of the IFC also contains provisions for dry cleaning plants and references NFPA 32 for their maintenance. NFPA 32 contains provisions for the prevention and control of fire and explosion hazards associated with dry cleaning operations and for the protection of employees and the public. This standard addresses such issues as location, construction, building services, processes and equipment, and fire control.

[F] 415.10 Groups H-3 and H-4. Groups H-3 and H-4 shall be constructed in accordance with the applicable provisions of this code and the *International Fire Code*.

❖ This section contains provisions that are applicable to all Group H-3 and H-4 occupancies in addition to material-specific requirements in the IFC. These requirements assume that the Group H-3 and H-4 occupancies contain more than the maximum allowable quantities of hazardous materials per control area permitted by Tables 307.1(1) and 307.1(2). Sections 307.5 and 307.6 contain a list of those materials that could be present in Group H-3 and H-4 occupancies.

[F] 415.10.1 Flammable and combustible liquids. The storage, handling, processing and transporting of flammable and combustible liquids in Group H-3 occupancies shall be in accordance with Section 415.9.1.

❖ This section refers back to Section 415.9.1, where the standards for the handling, storage and processing of these liquids are provided for both Group H-3 and H-2 occupancies.

[F] 415.10.2 Gas rooms. Where gas rooms are provided, such rooms shall be separated from other areas by not less than 1-hour *fire barriers* constructed in accordance with Section 707 or *horizontal assemblies* constructed in accordance with Section 711, or both.

❖ In order to restrict the potential fire involvement of a storage room of hazardous gases within a Group H-3 or H-4 occupancy, a 1-hour fire-resistance-rated fire barrier, horizontal assemblies or both, are required to separate gas rooms from other adjacent areas. The required fire-resistance-rated 1-hour barrier separation is not due to a mixed-occupancy condition but rather further compartmentation in a Group H-3 or H-4 occupancy.

[F] 415.10.3 Floors in storage rooms. Floors in storage areas for corrosive liquids and highly toxic or toxic materials shall be of liquid-tight, noncombustible construction.

❖ Storage rooms of corrosive liquids and highly toxic and toxic materials would be classified as a Group H-4 occupancy. Noncombustible floors are required to prevent the structure from contributing to a fire scenario. The floors are also required to be liquid tight to prevent the spread of liquids from a spill to areas outside the storage room.

[F] 415.10.4 Separation—highly toxic solids and liquids. Highly toxic solids and liquids not stored in *approved* hazardous materials storage cabinets shall be isolated from other hazardous materials storage by not less than 1-hour *fire barriers* constructed in accordance with Section 707 or *horizontal assemblies* constructed in accordance with Section 711, or both.

❖ The potential involvement of materials that may be incompatible in storage situations with highly toxic solids and liquids must be addressed. The required degree of separation, either by approved cabinets or 1-hour fire-resistance-rated fire barrier and horizontal assembly construction, is also intended to restrict the highly toxic materials from other combustibles.

[F] 415.11 Group H-5. In addition to the requirements set forth elsewhere in this code, Group H-5 shall comply with the provisions of Sections 415.11.1 through 415.11.11 and the *International Fire Code*.

❖ This section contains the requirements for Group H-5 facilities that utilize HPM. Section 415.11 is intended to be a design option for buildings that utilize hazardous materials in excess of the maximum allowable quantities permitted by Tables 307.1(1) and 307.1(2). HPM facilities are considered unique high-hazard occupancies. The HPM occupancy classification assumes that while the manufacturing process involves the use of hazardous materials, the end product by itself is not hazardous.

The provisions of Section 415.11 resulted from nonuniform regulation of semiconductor fabrication facilities and are based on code changes submitted by groups associated with the semiconductor industry. These industries include electronic high-tech industries, such as semiconductor microchip fabrication, as well as the floppy disk and telecommunication industries. Additionally, there are other comparable activities involving similar technology that also use high-hazard materials. HPM include flammable liquids and gases, corrosives, oxidizers and, in many instances, highly toxic materials. The HPM may be a solid, liquid or gas with a degree of hazard rating in health, flammability or reactivity of Class 3 or 4 in accordance with NFPA 704, which is used directly in research, laboratory or production processes.

Structures that contain HPM facilities are required to meet the provisions of Section 415.11 as well as any other code provisions for a Group H-5 occupancy classification unless specifically modified in Section 415.11. Additionally, Chapter 27 of the IFC provides complementary fire safety controls that reduce the risk of hazard to an acceptable level in existing HPM buildings and fabrication areas.

[F] 415.11.1 Fabrication areas. *Fabrication areas* shall comply with Sections 415.11.1.1 through 415.11.1.8.

❖ The fabrication area of an HPM facility is where the hazardous materials are actively handled and processed. The fabrication area includes accessory

INTERNATIONAL CODE COUNCIL®
Copyright © 2015 ICC. ALL RIGHTS RESERVED. Accessed by David Dammon on Jun 21, 2017 12:30:52 PM pursuant to License Agreement with ICC. No further reproduction or distribution authorized. ANY UNAUTHORIZED REPRODUCTION OR DISTRIBUTION IS A VIOLATION OF THE FEDERAL COPYRIGHT ACT AND THE LICENSE AGREEMENT, AND SUBJECT TO CIVIL AND CRIMINAL PENALTIES THEREUNDER.

rooms and spaces such as workstations and employee dressing rooms.

[F] 415.11.1.1 Hazardous materials. Hazardous materials and hazardous production materials (HPM) shall comply with Sections 415.11.1.1.1 and 415.11.1.1.2.

❖ Sections 415.11.1.1.1 and 415.11.1.1.2 regulate the quantities and densities of HPM for each fabrication area of a Group H-5 facility.

[F] 415.11.1.1.1 Aggregate quantities. The aggregate quantities of hazardous materials stored and used in a single *fabrication area* shall not exceed the quantities set forth in Table 415.11.1.1.1.

Exception: The quantity limitations for any hazard category in Table 415.11.1.1.1 shall not apply where the *fabrication area* contains quantities of hazardous materials not exceeding the maximum allowable quantities per *control area* established by Tables 307.1(1) and 307.1(2).

❖ This section regulates the total amount of hazardous materials, whether in use or storage, within a single fabrication area based on the density/quantity of material specified in Table 415.11.1.1.1. The exception permits a fabrication area to have a total quantity of HPM of either the quantity specified in Table 415.11.1.1.1 or the maximum allowable quantities per control area specified in Table 307.1(1) or 307.1(2), whichever is greater. For example, a small fabrication area may have a quantity in accordance with Tables 307.1(1) and 307.1(2) even though it may exceed the quantities specified in Table 415.11.1.1.1. Conversely, a large fabrication area may have an aggregate quantity that exceeds those specified in Tables 307.1(1) and 307.1(2) if it does not exceed the quantities specified in Table 415.11.1.1.1.

It should be reiterated that this section refers to an aggregate quantity of hazardous materials that are in use and storage within a single fabrication area. Section 415.11.1.1.1 further limits the amount of HPM that is being stored within a fabrication area.

TABLE 415.11.1.1.1. See page 4-116.

❖ Table 415.11.1.1.1 controls the permitted densities/quantities of hazardous materials in a single fabrication area. In accordance with Section 415.11.1.1.1, the quantities permitted in Tables 307.1(1) and 307.1(2) may be exceeded, provided the quantities in Table 415.11.1.1.1 are maintained subject to the storage limitations of Section 415.11.1.1.2. Conversely, the maximum quantities of Table 415.11.1.1.1 may be exceeded, provided the maximum allowable quantities of Tables 307.1(1) and 307.1(2) are not exceeded.

In accordance with Note a, hazardous materials in piping need not be included in evaluating the permitted quantity. Note b establishes that a specific quantity limitation, rather than a calculated density, is required for certain hazardous materials.

[F] 415.11.1.1.2 Hazardous production materials. The maximum quantities of hazardous production materials (HPM) stored in a single *fabrication area* shall not exceed the maximum allowable quantities per *control area* established by Tables 307.1(1) and 307.1(2).

❖ This section provides the overall limit of HPM that can be stored within a single fabrication area based on Tables 307.1(1) and 307.1(2). Any storage in excess of the permitted maximum allowable quantities would be required to be stored in an HPM storage room, liquid storage room or gas room. The aggregate quantities of hazardous materials in both a storage and use condition within a single fabrication area are regulated by Section 415.11.1.1.1.

INTERNATIONAL CODE COUNCIL®
Copyright © 2015 ICC. ALL RIGHTS RESERVED. Accessed by David Dammon on Jun 21, 2017 12:30:52 PM pursuant to License Agreement with ICC. No further reproduction or distribution authorized. ANY UNAUTHORIZED REPRODUCTION OR DISTRIBUTION IS A VIOLATION OF THE FEDERAL COPYRIGHT ACT AND THE LICENSE AGREEMENT, AND SUBJECT TO CIVIL AND CRIMINAL PENALTIES THEREUNDER.

[F] TABLE 415.11.1.1.1
QUANTITY LIMITS FOR HAZARDOUS MATERIALS IN A SINGLE FABRICATION AREA IN GROUP H-5[a]

HAZARD CATEGORY		SOLIDS (pounds per square foot)	LIQUIDS (gallons per square foot)	GAS (cubic feet @ NTP/square foot)
PHYSICAL-HAZARD MATERIALS				
Combustible dust		Note b	Not Applicable	Not Applicable
Combustible fiber	Loose Baled	Note b Notes b, c	Not Applicable	Not Applicable
Combustible liquid Combination Class	II IIIA IIIB I, II and IIIA	Not Applicable	0.01 0.02 Not Limited 0.04	Not Applicable
Cryogenic gas	Flammable Oxidizing	Not Applicable	Not Applicable	Note d 1.25
Explosives		Note b	Note b	Note b
Flammable gas	Gaseous Liquefied	Not Applicable	Not Applicable	Note d Note d
Flammable liquid Combination Class Combination Class	IA IB IC IA, IB and IC I, II and IIIA	Not Applicable	0.0025 0.025 0.025 0.025 0.04	Not Applicable
Flammable solid		0.001	Not Applicable	Not Applicable
Organic peroxide	Unclassified detonable Class I Class II Class III Class IV Class V	Note b Note b 0.025 0.1 Not Limited Not Limited	Not Applicable	Not Applicable
Oxidizing gas Combination of gaseous and liquefied	Gaseous Liquefied	Not Applicable	Not Applicable	1.25 1.25 1.25
Oxidizer Combination Class	Class 4 Class 3 Class 2 Class 1 1, 2, 3	Note b 0.003 0.003 0.003 0.003	Note b 0.03 0.03 0.03 0.03	Not Applicable
Pyrophoric materials		0.01	0.00125	Notes d and e
Unstable (reactive)	Class 4 Class 3 Class 2 Class 1	Note b 0.025 0.1 Not Limited	Note b 0.0025 0.01 Not Limited	Note b Note b Note b Not Limited
Water reactive	Class 3 Class 2 Class 1	Note b 0.25 Not Limited	0.00125 0.025 Not Limited	Not Applicable
HEALTH-HAZARD MATERIALS				
Corrosives		Not Limited	Not Limited	Not Limited
Highly toxic		Not Limited	Not Limited	Note d
Toxics		Not Limited	Not Limited	Note d

For SI: 1 pound per square foot = 4.882 kg/m^2, 1 gallon per square foot = 40.7 L/m^2, 1 cubic foot @ NTP/square foot = 0.305 m^3 @ NTP/m^2, 1 cubic foot = 0.02832 m^3.

a. Hazardous materials within piping shall not be included in the calculated quantities.

b. Quantity of hazardous materials in a single fabrication shall not exceed the maximum allowable quantities per control area in Tables 307.1(1) and 307.1(2).

c. Densely packed baled cotton that complies with the packing requirements of ISO 8115 shall not be included in this material class.

d. The aggregate quantity of flammable, pyrophoric, toxic and highly toxic gases shall not exceed 9,000 cubic feet at NTP.

e. The aggregate quantity of pyrophoric gases in the building shall not exceed the amounts set forth in Table 415.6.2.

INTERNATIONAL CODE COUNCIL®
Copyright © 2015 ICC. ALL RIGHTS RESERVED. Accessed by David Dammon on Jun 21, 2017 12:30:52 PM pursuant to License Agreement with ICC. No further reproduction or distribution authorized. ANY UNAUTHORIZED REPRODUCTION OR DISTRIBUTION IS A VIOLATION OF THE FEDERAL COPYRIGHT ACT AND THE LICENSE AGREEMENT, AND SUBJECT TO CIVIL AND CRIMINAL PENALTIES THEREUNDER.

[F] 415.11.1.2 Separation. *Fabrication areas*, whose sizes are limited by the quantity of hazardous materials allowed by Table 415.11.1.1.1, shall be separated from each other, from *corridors* and from other parts of the building by not less than 1-hour *fire barriers* constructed in accordance with Section 707 or *horizontal assemblies* constructed in accordance with Section 711, or both.

Exceptions:

1. Doors within such *fire barrier* walls, including doors to *corridors*, shall be only *self-closing fire door assemblies* having a *fire protection rating* of not less than $^3/_4$ hour.
2. Windows between *fabrication areas* and *corridors* are permitted to be fixed glazing *listed* and labeled for a *fire protection rating* of not less than $^3/_4$ hour in accordance with Section 716.

❖ Fabrication areas must be separated from other parts of the building, egress corridors and other fabrication areas by fire barriers, horizontal assemblies, or both, having a fire-resistance rating of at least 1 hour. While the potential fire exposure could warrant a higher fire-resistance rating, the additional protection features indicative of a Group H-5 facility result in a 1-hour fire-resistance rating being acceptable. The fire barriers must be constructed in accordance with Section 707. The horizontal assemblies must be constructed in accordance with Section 711. One reason for separating one fabrication area from another is the limitation of HPM quantities in a single fabrication area. If the need exists for quantities in excess of those permitted by Section 415.11.1.1.1, the area can be divided into two fabrication areas with 1-hour fire barriers and horizontal assemblies.

Exception 1 clarifies that all doors within the fire barrier walls that comprise the fabrication area must be self-closing and have a fire protection rating of $^3/_4$ hour; therefore, if a corridor wall was also part of the fabrication area, a $^3/_4$-hour opening protective would be required for the door opening. Openings in rated corridors that are not part of a fabrication area typically are required to only have a 20-minute fire protection rating. The doors are required to be self-closing since fabrication areas are "clean rooms" under positive pressure.

The $^3/_4$-hour requirement of Exception 2 will permit the use of fire protection-rated glazing or wired glass windows in accordance with Section 716.6. The use of windows is often desirable to facilitate the security of activities in the fabrication area as well as emergency response in the event of an accident.

[F] 415.11.1.3 Location of occupied levels. Occupied levels of *fabrication areas* shall be located at or above the first *story above grade plane*.

❖ Due to the potential extensive use of hazardous materials, the occupiable levels of fabrication areas are not permitted in basements or other areas below grade. Maintaining fabrication areas at or above grade aids in the egress of the occupants and access for fire department operations.

[F] 415.11.1.4 Floors. Except for surfacing, floors within *fabrication areas* shall be of noncombustible construction.

Openings through floors of *fabrication areas* are permitted to be unprotected where the interconnected levels are used solely for mechanical equipment directly related to such *fabrication areas (*see also Section 415.11.1.5).

Floors forming a part of an occupancy separation shall be liquid tight.

❖ Fabrication area floors are required to be noncombustible. The intent of the requirement for noncombustible floors is to prevent the structure from being involved in the fire from a liquid that may seep into the floor system. The requirement is not intended to apply to floor-covering material.

This section permits the interconnection of the operation floor and a mechanical floor, provided that the mechanical floor is essentially unoccupied. The intent is to prevent leakage past a required separation and to allow multiple-level fabrication areas where the space above or below the operation level is used for mechanical equipment, ducts and similar service equipment. Where a rated separation is required, the floors must be liquid tight. Whereas the hazards often involve liquids, floors are required to be liquid tight to prevent the spread of liquids from a spill to areas outside the fabrication area. "Liquid tight" requires that floors be sealed where they intersect with walls. This can be accomplished by a cove base of the same material as the floor.

[F] 415.11.1.5 Shafts and openings through floors. Elevator hoistways, vent *shafts* and other openings through floors shall be enclosed where required by Sections 712 and 713. Mechanical, duct and piping penetrations within a *fabrication area* shall not extend through more than two floors. The *annular space* around penetrations for cables, cable trays, tubing, piping, conduit or ducts shall be sealed at the floor level to restrict the movement of air. The *fabrication area*, including the areas through which the ductwork and piping extend, shall be considered a single conditioned environment.

❖ Section 712 specifies the conditions when a shaft enclosure or some other application of addressing vertical openings in multistory buildings is required. This section provides the requirements for specific opening penetrations through a floor within a fabrication area. The maximum number of stories that are allowed to be interconnected is three, since penetrations are limited to two floors. The penetrations for duct and piping are to have the annular space protected. Where such penetrations exist, the fire separation required by Section 415.11.1.2 is to separate the entire interconnected volume.

[F] 415.11.1.6 Ventilation. Mechanical exhaust *ventilation* at the rate of not less than 1 cubic foot per minute per square foot [0.0051 $m^3/(s \cdot m^2)$] of floor area shall be provided throughout the portions of the *fabrication area* where HPM

INTERNATIONAL CODE COUNCIL®
Copyright © 2015 ICC. ALL RIGHTS RESERVED. Accessed by David Dammon on Jun 21, 2017 12:30:52 PM pursuant to License Agreement with ICC. No further reproduction or distribution authorized. ANY UNAUTHORIZED REPRODUCTION OR DISTRIBUTION IS A VIOLATION OF THE FEDERAL COPYRIGHT ACT AND THE LICENSE AGREEMENT, AND SUBJECT TO CIVIL AND CRIMINAL PENALTIES THEREUNDER.

are used or stored. The exhaust air duct system of one *fabrication area* shall not connect to another duct system outside that *fabrication area* within the building.

A *ventilation* system shall be provided to capture and exhaust gases, fumes and vapors at workstations.

Two or more operations at a workstation shall not be connected to the same exhaust system where either one or the combination of the substances removed could constitute a fire, explosion or hazardous chemical reaction within the exhaust duct system.

Exhaust ducts penetrating *fire barriers* constructed in accordance with Section 707 or *horizontal assemblies* constructed in accordance with Section 711 shall be contained in a *shaft* of equivalent fire-resistance- rated construction. Exhaust ducts shall not penetrate *fire walls*.

Fire dampers shall not be installed in exhaust ducts.

❖ A major design factor is the required minimum ventilation. The minimum rate is 1 cubic foot per minute (cfm) per square foot (0.0051 $m^3/s \times m^2$), or about eight air changes per hour for an 8-foot-high (2438 mm) fabrication area. Typically, at least 24 air changes per hour are provided for operational needs and where unclassified electrical systems are to be used. In order to prevent the spread of gases or fumes, the exhaust air duct system of any fabrication area must not be connected to any other ventilation system. With regard to workstations, the required ventilation system is intended to prevent exposure of the work station operator to hazardous fumes or vapors and prevent hazardous concentrations of materials used in the manufacturing process. Additionally, ventilation systems must be designed to reduce the possibility of a chemical reaction occurring between two or more HPM or a material's and exhaust system's components. Where two or more chemicals may react dangerously if exhausted through a common duct, they must be removed separately. NFPA 491, which is included in the NFPA Fire Protection Guide on Hazardous Materials, is a good first reference when trying to determine if any two agents are reactive.

Ventilation should not be interrupted by a fire damper when a fire or other emergency occurs involving a workstation. This helps reduce the likelihood that hazardous combustion byproducts or hazardous concentrations of HPM are not forced back into the workstation or clean room. Continuous ventilation through a duct enclosed in a fire-resistance-rated shaft is required. Fire walls define separations between buildings. Ducts must never penetrate a barrier common to another building or occupancy. This reduces the likelihood of tampering with or interrupting the duct integrity.

[F] 415.11.1.7 Transporting hazardous production materials to fabrication areas. HPM shall be transported to *fabrication areas* through enclosed piping or tubing systems that comply with Section 415.11.6, through *service corridors* complying with Section 415.11.3, or in *corridors* as permitted in the exception to Section 415.11.2. The handling or transporting of HPM within *service corridors* shall comply with the *International Fire Code*.

❖ Except as permitted in the exception to Section 415.11.2 for existing facilities, all HPM must be transported to the fabrication area by service corridors or piping (see Sections 415.11.4 and 415.11.6). This reduces the chance that an egress route will be affected by an accidental leak or spill. Chapter 27 of the IFC contains additional requirements for the transport of HPM through all egress components as well as service corridors.

[F] 415.11.1.8 Electrical. Electrical equipment and devices within the *fabrication area* shall comply with NFPA 70. The requirements for hazardous locations need not be applied where the average air change is at least four times that set forth in Section 415.11.1.6 and where the number of air changes at any location is not less than three times that required by Section 415.11.1.6. The use of recirculated air shall be permitted.

❖ Consistent with Chapter 27, electrical installations are required to comply with NFPA 70. This section specifically permits the dilution of concentrations of hazardous areas such that the hazardous location provisions of NFPA 70 need not apply. This is because some of the equipment used in HPM facilities cannot comply with the hazardous location provisions of NFPA 70. The nature of the fabrication process also dictates the use of the dilution concept. Typically, such facilities have a ventilation system designed to provide at least 24 air changes per hour.

At least 3 cfm per square foot (0.132 $L/s/m^2$) or 24 air changes in an 8-foot-high (2438 mm) fabrication area are required at all locations in order not to apply the hazardous location provisions of NFPA 70. Also, an average rate of 4 cfm per square foot (0.176 $L/s/m^2$) or 32 air changes in an 8-foot-high (2438 mm) fabrication area are required if the hazardous location provisions of NFPA 70 are not applied.

[F] 415.11.1.8.1 Workstations. Workstations shall not be energized without adequate exhaust *ventilation*. See Section 415.11.1.6 for workstation exhaust *ventilation* requirements.

❖ Accidental exposure to flammable fumes or vapors can occur at workstations where hazardous materials are used. Either a mechanical or electrical interlock must be provided to engage the required exhaust ventilation system before HPM enters the workstation. This reduces the likelihood of gas or vapor exposure.

[F] 415.11.2 Corridors. *Corridors* shall comply with Chapter 10 and shall be separated from *fabrication area*s as specified in Section 415.11.1.2. *Corridors* shall not contain HPM

INTERNATIONAL CODE COUNCIL®
Copyright © 2015 ICC. ALL RIGHTS RESERVED. Accessed by David Dammon on Jun 21, 2017 12:30:52 PM pursuant to License Agreement with ICC. No further reproduction or distribution authorized. ANY UNAUTHORIZED REPRODUCTION OR DISTRIBUTION IS A VIOLATION OF THE FEDERAL COPYRIGHT ACT AND THE LICENSE AGREEMENT, AND SUBJECT TO CIVIL AND CRIMINAL PENALTIES THEREUNDER.

and shall not be used for transporting such materials except through closed piping systems as provided in Section 415.11.6.4

Exception: Where existing *fabrication areas* are altered or modified, HPM is allowed to be transported in existing *corridors*, subject to the following conditions:

1. Nonproduction HPM is allowed to be transported in *corridors* if utilized for maintenance, lab work and testing.
2. Where existing *fabrication areas* are altered or modified, HPM is allowed to be transported in existing *corridors*, subject to the following conditions:
   - 2.1. Corridors. *Corridors* adjacent to the *fabrication area* where the alteration work is to be done shall comply with Section 1020 for a length determined as follows:
     - 2.1.1. The length of the common wall of the *corridor* and the *fabrication area*; and
     - 2.1.2. For the distance along the *corridor* to the point of entry of HPM into the *corridor* serving that *fabrication area*.
   - 2.2. *Emergency alarm system.* There shall be an emergency telephone system, a local manual alarm station or other *approved* alarm-initiating device within *corridors* at not more than 150-foot (45 720 mm) intervals and at each *exit* and doorway. The signal shall be relayed to an *approved* central, proprietary or remote station service or the emergency control station and shall also initiate a local audible alarm.
   - 2.3. Pass-throughs. *Self-closing* doors having a *fire protection rating* of not less than 1 hour shall separate pass-throughs from existing *corridors.* Pass-throughs shall be constructed as required for the *corridors* and protected by an *approved automatic sprinkler system.*

❖ Corridors are required to comply with the requirements of Section 1020 and must be separated from fabrication areas in accordance with Section 415.11.1.2. Additionally, typical egress corridors in new buildings are not to be used for transporting HPM to the fabrication area. In accordance with Section 415.11.1.7, HPM must be transported by service corridors or piping (see Sections 415.11.3 and 415.11.6, and Commentary Figure 415.11.2).

Figure 415.11.2. See page 4-120.

❖ Exception 1 allows corridors to be used for the movement of HPM that is only used for maintenance purposes, laboratory work and testing activities. The second exception addresses HPM facilities that existed before the adoption and enforcement of this section. It permits the transport of HPM in egress corridors in existing buildings under the conditions specified in Items 2.1, 2.2 and 2.3. When alterations are made to a fabrication area, such corridors must be upgraded. Chapter 27 of the IFC provides additional requirements for the storage, handling and transporting of HPM in existing HPM facilities. Item 2.1 of the exception requires that corridors be upgraded to a 1-hour fire-resistance rating for the entire length of the wall common to the fabrication area. Additionally, the entire length of the corridor that is used for transporting HPM to the fabrication area being renovated must also be upgraded to have a 1-hour fire-resistance rating. Item 2.2 requires a means to notify trained personnel of an emergency condition in an egress corridor. A local alarm is required to alert the occupants of a potential hazardous condition. The intent of Item 2.3 is to permit a "pass-through" for providing HPM to a fabrication area. A pass-through, such as a storage cabinet, is used to store and receive HPM for the fabrication area. The pass-through must be separated from the egress corridor by 1-hour fire-resistance-rated construction, including a 1-hour-rated self-closing fire door, and be protected by an automatic sprinkler system.

[F] 415.11.3 Service corridors. *Service corridors* within a Group H-5 occupancy shall comply with Sections 415.11.3.1 through 415.11.3.4.

❖ This section regulates the corridor that may be used for the transport of HPM in a Group H-5 facility of new construction. For the transport of HPM via piping systems, see Section 415.11.6.

It is also clarified that a potential separation due to the mixed occupancy provisions of Section 508.4 does not apply, since service corridors are considered part of the Group H-5 occupancy.

[F] 415.11.3.1 Use conditions. *Service corridors* shall be separated from *corridors* as required by Section 415.11.1.2. *Service corridors* shall not be used as a required *corridor*.

❖ Service corridors are used for transporting HPM in lieu of piping. The separation between a service corridor and an egress corridor must be in accordance with Section 415.11.1.2. As such, a minimum 1-hour fire separation is required. Service corridors are also not intended to be used as a portion of the required means of egress.

[F] 415.11.3.2 Mechanical ventilation. Service corridors shall be mechanically ventilated as required by Section 415.11.1.6 or at not less than six air changes per hour.

❖ Since the same HPM that may be present in the fabrication area may be transported in the service corridors, an adequate means of ventilation is required. This section requires a ventilation rate of either 1 cfm per square foot (0.044 L/s/m^2) of floor area in accordance with Section 415.11.1.6 or six air changes per hour, whichever is greater depending on the size and volume of the service corridor.

INTERNATIONAL CODE COUNCIL®
Copyright © 2015 ICC. ALL RIGHTS RESERVED. Accessed by David Dammon on Jun 21, 2017 12:30:52 PM pursuant to License Agreement with ICC. No further reproduction or distribution authorized. ANY UNAUTHORIZED REPRODUCTION OR DISTRIBUTION IS A VIOLATION OF THE FEDERAL COPYRIGHT ACT AND THE LICENSE AGREEMENT, AND SUBJECT TO CIVIL AND CRIMINAL PENALTIES THEREUNDER.

[F] 415.11.3.3 Means of egress. The distance of travel from any point in a *service corridor* to an *exit, exit access corridor* or door into a *fabrication area* shall be not greater than 75 feet (22 860 mm). Dead ends shall be not greater than 4 feet (1219 mm) in length. There shall be not less than two *exits*, and not more than one-half of the required *means of egress* shall require travel into a *fabrication area*. Doors from *service corridors* shall swing in the direction of egress travel and shall be *self-closing*.

❖ The exit access travel distance is limited to 75 feet (22 860 mm), except that the travel distance may be measured from a door to a fabrication area. In order to minimize the potential for an occupant to be trapped in a service corridor, dead ends must not exceed 4 feet (1219 mm). As such, the occupant would most likely be intimate with the source of the problem or located in an adjacent fabrication area from which egress is provided via exit access, not service, corridors.

An occupant at any location in a service corridor is required to have access to at least two means of egress. No more than 50 percent of the means of egress may be through a fabrication area that, in most cases, will be one of the means of egress. This assumes that, should an incident or problem occur, it will be in either the service corridor or the fabrication

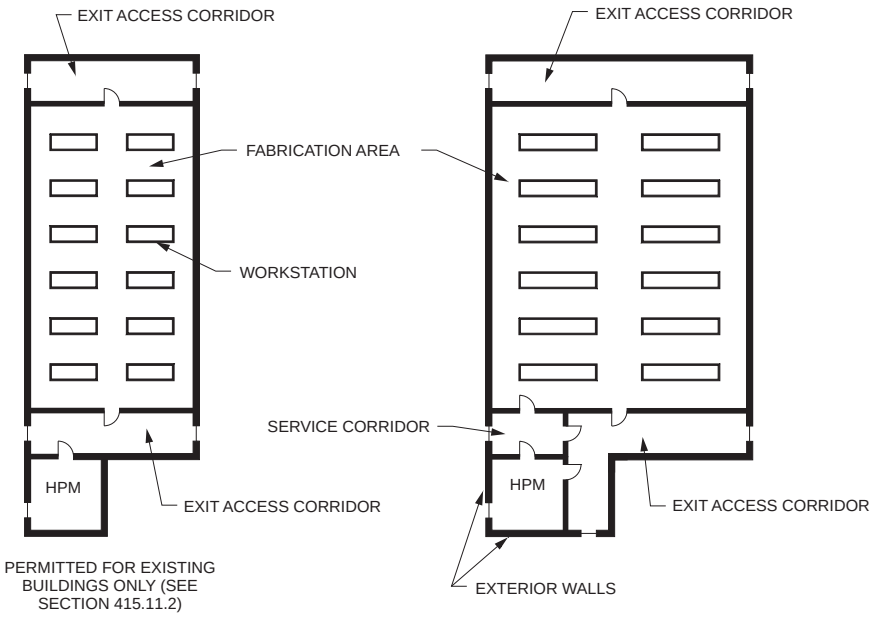

Figure 415.11.2
ALLOWABLE HPM CORRIDOR ARRANGEMENTS

INTERNATIONAL CODE COUNCIL®
Copyright © 2015 ICC. ALL RIGHTS RESERVED. Accessed by David Dammon on Jun 21, 2017 12:30:52 PM pursuant to License Agreement with ICC. No further reproduction or distribution authorized. ANY UNAUTHORIZED REPRODUCTION OR DISTRIBUTION IS A VIOLATION OF THE FEDERAL COPYRIGHT ACT AND THE LICENSE AGREEMENT, AND SUBJECT TO CIVIL AND CRIMINAL PENALTIES THEREUNDER.

area—not both. Because of the potential for a hazardous condition, all doors to service corridors must be self-closing and swing in the direction of egress travel. Smoke-detector-actuated hold-open devices are not acceptable because smoke detectors may not respond to hazardous conditions that do not involve products of combustion.

[F] 415.11.3.4 Minimum width. The clear width of a *service corridor* shall be not less than 5 feet (1524 mm), or 33 inches (838 mm) wider than the widest cart or truck used in the *service corridor*, whichever is greater.

❖ The minimum width requirement for the service corridor is to provide adequate clearance to get around the device used to transport the HPM in the event it is involved in an emergency incident in the service corridor. The size of the transport carts and trucks depends on the type and quantity of materials utilized in the facility.

[F] 415.11.3.5 Emergency alarm system. *Emergency alarm systems* shall be provided in accordance with this section and Sections 415.5.1 and 415.5.2. The maximum allowable quantity per *control area* provisions shall not apply to *emergency alarm systems* required for HPM.

❖ This section requires an emergency alarm system in all areas where HPM is transported or stored. The applicability of either Section 415.5.1 or 415.5.2 depends on whether the HPM material is in a storage or use condition. This section also clarifies that the requirement for an emergency alarm system in a Group H-5 facility in the locations identified in Sections 415.11.3.5.1 through 415.11.3.5.3 is not dependent on whether the maximum allowable quantities per control area of Tables 307.1(1) or 307.1(2) are exceeded.

[F] 415.11.3.5.1 Service corridors. An *emergency alarm system* shall be provided in *service corridors,* with no fewer than one alarm device in each *service corridor*.

❖ An emergency telephone system or manual alarm pull station is required in service corridors. Such devices must initiate an alarm at the emergency control station as well as activate a local audible device.

[F] 415.11.3.5.2 Corridors and interior exit stairways and ramps. Emergency alarms for *corridors*, *interior exit stairways* and *ramps* and *exit passageways* shall comply with Section 415.5.2.

❖ Since HPM would not be in exit access corridors or interior exit stairways unless they were being transported to another approved area, the emergency alarm requirements of Section 415.5.2 for dispensing, use and handling must be complied with.

[F] 415.11.3.5.3 Liquid storage rooms, HPM rooms and gas rooms. Emergency alarms for liquid storage rooms, HPM rooms and gas rooms shall comply with Section 415.5.1.

❖ This section requires compliance with the emergency alarm requirements of Section 415.5.1 for hazardous materials in a storage condition. This section addresses storage areas, which by their designation contain HPM in quantities greater than those listed in Table 307.1(1) or 307.1(2).

[F] 415.11.3.5.4 Alarm-initiating devices. An *approved* emergency telephone system, local alarm manual pull stations, or other *approved* alarm-initiating devices are allowed to be used as emergency alarm-initiating devices.

❖ This section classifies what constitutes an approved alarm-initiating device (see commentary, Section 415.5).

[F] 415.11.3.5.5 Alarm signals. Activation of the *emergency alarm system* shall sound a local alarm and transmit a signal to the emergency control station.

❖ The alarm signal is required to be transmitted to the emergency control station in order to notify trained personnel of an emergency condition. A local alarm is required to alert the occupants of a potentially hazardous condition.

[F] 415.11.4 Storage of hazardous production materials. Storage of hazardous production materials (HPM) in *fabrication areas* shall be within *approved* or *listed* storage cabinets or gas cabinets or within a workstation. The storage of HPM in quantities greater than those listed in Section 5004.2 of the *International Fire Code* shall be in liquid storage rooms, HPM rooms or gas rooms as appropriate for the materials stored. The storage of other hazardous materials shall be in accordance with other applicable provisions of this code and the *International Fire Code*.

❖ Section 415.11.4 addresses general storage provisions for HPM in a Group H-5 facility.

Even though the amount of HPM in a fabrication area is controlled, it still must be within approved cabinets or a workstation. This requirement is intended to limit the exposure to occupants of the fabrication area to only the material in use within that area.

The larger amounts of HPM typically stored in separate areas present a hazard comparable to other Group H facilities; therefore, such storage rooms need to meet similar code requirements. Storage rooms containing HPM in quantities greater than permitted by Section 2704.2 of the IFC are required to comply with the applicable provisions of Sections 415.11.5.1 through 415.11.5.9, depending on the state of the material.

It should be noted that the HPM quantity limitations per fabrication area are essentially identical to the limitations of Section 415.11.1.1.2.

[F] 415.11.5 HPM rooms, gas rooms, liquid storage room construction. HPM rooms, gas rooms and liquid shall be constructed in accordance with Sections 415.11.5.1 through 415.11.5.9.

❖ Sections 415.11.5.1 through 415.11.5.9 selectively address construction requirements for two types of storage rooms: those classified as HPM rooms or gas rooms, and those utilized as liquid storage rooms. The size and separation of such rooms is dependent on the type of materials stored.

INTERNATIONAL CODE COUNCIL®
Copyright © 2015 ICC. ALL RIGHTS RESERVED. Accessed by David Dammon on Jun 21, 2017 12:30:52 PM pursuant to License Agreement with ICC. No further reproduction or distribution authorized. ANY UNAUTHORIZED REPRODUCTION OR DISTRIBUTION IS A VIOLATION OF THE FEDERAL COPYRIGHT ACT AND THE LICENSE AGREEMENT, AND SUBJECT TO CIVIL AND CRIMINAL PENALTIES THEREUNDER.

[F] 415.11.5.1 HPM rooms and gas rooms. HPM rooms and gas rooms shall be separated from other areas by *fire barriers* constructed in accordance with Section 707 or *horizontal assemblies* constructed in accordance with Section 711, or both. The *fire-resistance rating* shall be not less than 2 hours where the area is 300 square feet (27.9 m^2) or more and not less than 1 hour where the area is less than 300 square feet (27.9 m^2).

❖ The amount of hazardous material in an HPM room or gas room is only limited by room size; therefore, since storage rooms in excess of 300 square feet (27.9 m^2) are not limited by size or quantity of hazardous material, construction of fire barriers and horizontal assemblies of not less than 2-hour fire-resistance rating is required. It should be noted that this section assumes the storage areas have at least one exterior wall with a minimum 30-foot (9144 mm) fire separation distance (see Section 415.11.5.4). If the room has an area of less than 300 square feet (27.9 m^2), the construction can be rated for 1 hour.

[F] 415.11.5.2 Liquid storage rooms. Liquid storage rooms shall be constructed in accordance with the following requirements:

1. Rooms greater than 500 square feet (46.5 m^2) in area, shall have no fewer than one exterior door *approved* for fire department access.
2. Rooms shall be separated from other areas by *fire barriers* constructed in accordance with Section 707 or *horizontal assemblies* constructed in accordance with Section 711, or both. The *fire-resistance rating* shall be not less than 1 hour for rooms up to 150 square feet (13.9 m^2) in area and not less than 2 hours where the room is more than 150 square feet (13.9 m^2) in area.
3. Shelving, racks and wainscotting in such areas shall be of noncombustible construction or wood of not less than 1-inch (25 mm) nominal thickness or fire-retardant-treated wood complying with Section 2303.2.
4. Rooms used for the storage of Class I flammable liquids shall not be located in a *basement*.

❖ This section assumes storage rooms are utilized for the storage of flammable and combustible liquids in closed containers. The size of the rooms is severely restricted when only 1-hour fire barriers and 1-hour horizontal assemblies are provided to limit the size of a potential fire. For rooms greater than 150 square feet (14 m^2) in area, a minimum 2-hour-rated construction is required because the size of the room or quantity of hazardous materials is not limited. Due to the need for readily available access in a fire scenario, all liquid storage rooms in excess of 500 square feet (46.5 m^2) must have at least one exterior door that provides access to the room. In accordance with Section 415.11.5.4, all liquid storage rooms, regardless of size, must have at least one exterior wall.

The construction limitations on the shelving racks and wainscotting are intended to limit their potential involvement in a fire scenario. Due to the volatile nature of Class I flammable liquids and the need for quick fire department access, they must be located in liquid storage rooms at or above grade.

[F] 415.11.5.3 Floors. Except for surfacing, floors of HPM rooms and liquid storage rooms shall be of noncombustible liquid-tight construction. Raised grating over floors shall be of noncombustible materials.

❖ Similar to the floor construction of fabrication areas, the floors of HPM rooms and liquid storage rooms are required to be noncombustible and liquid tight (see commentary, Section 415.11.1.4).

[F] 415.11.5.4 Location. Where HPM rooms, liquid storage rooms and gas rooms are provided, they shall have no fewer than one *exterior wall* and such wall shall be not less than 30 feet (9144 mm) from *lot lines*, including *lot lines* adjacent to *public ways*.

❖ Access from the exterior for fire-fighting operations is essential for storage rooms of hazardous materials. These rooms by their designation contain more than the maximum allowable quantities per control area listed in Tables 307.1(1) and 307.1(2). The 30-foot (9144 mm) limitation is based in part on the fact that the exterior wall need not have a fire-resistance rating depending on the construction type of the building (see Table 602). Such walls may also be used for explosion venting when such venting is required.

[F] 415.11.5.5 Explosion control. Explosion control shall be provided where required by Section 414.5.1.

❖ This section requires a method of explosion control only when an explosion hazard exists. Not all storage rooms are required to have explosion control. Section 414.5.1 requires a method of explosion control, such as explosion venting or barricade construction, depending on the specific hazardous material involved in accordance with the IFC. Table 414.5.1 provides guidance as to when explosion control is required for various hazardous materials.

[F] 415.11.5.6 Exits. Where two *exits* are required from HPM rooms, liquid storage rooms and gas rooms, one shall be directly to the outside of the building.

❖ Depending on the common path of egress travel available in accordance with Section 1006.2.1, two exits may be required from all HPM rooms, liquid storage rooms and gas rooms. For example, a liquid storage room containing Class IB flammable liquids in normally closed containers would be considered a Group H-3 occupancy. As such, a maximum common path of travel of 25 feet (7620 mm) would be permitted before a second exit, one of which was directly to the exterior, is required. Storage rooms are required to be located along an exterior wall. In addition to the requirements of this section, all liquid storage rooms in excess of 500 square feet (46 m^2) are required to have at least one exterior door regardless of travel distance.

INTERNATIONAL CODE COUNCIL®
Copyright © 2015 ICC. ALL RIGHTS RESERVED. Accessed by David Dammon on Jun 21, 2017 12:30:52 PM pursuant to License Agreement with ICC. No further reproduction or distribution authorized. ANY UNAUTHORIZED REPRODUCTION OR DISTRIBUTION IS A VIOLATION OF THE FEDERAL COPYRIGHT ACT AND THE LICENSE AGREEMENT, AND SUBJECT TO CIVIL AND CRIMINAL PENALTIES THEREUNDER.

[F] 415.11.5.7 Doors. Doors in a *fire barrier* wall, including doors to *corridors*, shall be *self-closing fire door assemblies* having a *fire protection rating* of not less than $^3/_4$ hour.

❖ Doors that are in an interior wall that comprises part of the storage room enclosure are required to have a minimum $^3/_4$-hour fire protection rating. The actual rating is dependent on the fire-resistance rating of the fire barrier separation required. While a 1-hour fire barrier would permit a door with a $^3/_4$-hour fire protection rating, a 2-hour fire barrier would require a door to have a $1^1/_2$-hour fire protection rating in accordance with Table 716.5.

[F] 415.11.5.8 Ventilation. Mechanical exhaust ventilation shall be provided in liquid storage rooms, HPM rooms and gas rooms at the rate of not less than 1 cubic foot per minute per square foot (0.044 L/s/m^2) of floor area or six air changes per hour.

Exhaust ventilation for gas rooms shall be designed to operate at a negative pressure in relation to the surrounding areas and direct the exhaust ventilation to an exhaust system.

❖ Similar to fabrication areas and service corridors, mechanical exhaust ventilation is required in liquid storage rooms, HPM rooms and gas rooms (see commentary, Sections 415.11.1.6 and 415.11.3.2).

[F] 415.11.5.9 Emergency alarm system. An *approved emergency alarm system* shall be provided for HPM rooms, liquid storage rooms and gas rooms.

Emergency alarm-initiating devices shall be installed outside of each interior *exit* door of such rooms.

Activation of an emergency alarm-initiating device shall sound a local alarm and transmit a signal to the emergency control station.

An *approved* emergency telephone system, local alarm manual pull stations or other *approved* alarm-initiating devices are allowed to be used as emergency alarm-initiating devices.

❖ An emergency alarm system is required for all storage rooms containing hazardous materials in excess of the quantities permitted in Tables 307.1(1) and 307.1(2). See the commentary to Section 415.11.3.5 for similar emergency alarm requirements.

[F] 415.11.6 Piping and tubing. Hazardous production materials piping and tubing shall comply with this section and ASME B31.3.

❖ This section addresses the design requirements for all piping and tubing utilized to transport HPM throughout a Group H-5 facility, including where it can be located within the building.

The nature of the HPM involved requires strict control of both the materials used in piping and the joint methods used to avoid leakage. ASME B31.3 provides criteria for piping installation applicable to HPM facilities.

[F] 415.11.6.1 HPM having a health-hazard ranking of 3 or 4. Systems supplying HPM liquids or gases having a health-hazard ranking of 3 or 4 shall be welded throughout, except for connections, to the systems that are within a ventilated enclosure if the material is a gas, or an *approved* method of drainage or containment is provided for the connections if the material is a liquid.

❖ The primary purpose of this section is to minimize the potential for a leak of HPM. The use of mechanical compression-type fittings or other nonwelded joints in areas of health hazard 3 or 4 must be limited to areas where any leaks will be vented and the materials exhausted. If the material is a liquid, then a method of drainage or containment is required to minimize the hazard.

[F] 415.11.6.2 Location in service corridors. Hazardous production materials supply piping or tubing in *service corridors* shall be exposed to view.

❖ Concealment of piping in service corridors must be avoided to provide a means of monitoring for leaks.

[F] 415.11.6.3 Excess flow control. Where HPM gases or liquids are carried in pressurized piping above 15 pounds per square inch gauge (psig) (103.4 kPa), excess flow control shall be provided. Where the piping originates from within a liquid storage room, HPM room or gas room, the excess flow control shall be located within the liquid storage room, HPM room or gas room. Where the piping originates from a bulk source, the excess flow control shall be located as close to the bulk source as practical.

❖ Excess flow control valves regulate the flow of hazardous materials within the piping system. The valves are designed to shut off in the event the predetermined flow is exceeded.

[F] 415.11.6.4 Installations in corridors and above other occupancies. The installation of HPM piping and tubing within the space defined by the walls of *corridors* and the floor or roof above, or in concealed spaces above other occupancies, shall be in accordance with Sections 415.11.6.1 through 415.11.6.3 and the following conditions:

1. Automatic sprinklers shall be installed within the space unless the space is less than 6 inches (152 mm) in the least dimension.
2. *Ventilation* not less than six air changes per hour shall be provided. The space shall not be used to convey air from any other area.
3. Where the piping or tubing is used to transport HPM liquids, a receptor shall be installed below such piping or tubing. The receptor shall be designed to collect any discharge or leakage and drain it to an *approved* location. The 1-hour enclosure shall not be used as part of the receptor.
4. HPM supply piping and tubing and nonmetallic waste lines shall be separated from the corridor and from occupancies other than Group H-5 by fire barriers or by an approved method or assembly that has a fire-resistance rating of not less than 1 hour. Access openings into the enclosure shall be protected by approved fire-protection-rated assemblies.

INTERNATIONAL CODE COUNCIL®
Copyright © 2015 ICC. ALL RIGHTS RESERVED. Accessed by David Dammon on Jun 21, 2017 12:30:52 PM pursuant to License Agreement with ICC. No further reproduction or distribution authorized. ANY UNAUTHORIZED REPRODUCTION OR DISTRIBUTION IS A VIOLATION OF THE FEDERAL COPYRIGHT ACT AND THE LICENSE AGREEMENT, AND SUBJECT TO CIVIL AND CRIMINAL PENALTIES THEREUNDER.

5. Readily accessible manual or automatic remotely activated fail-safe emergency shutoff valves shall be installed on piping and tubing other than waste lines at the following locations:

   5.1. At branch connections into the *fabrication area*.

   5.2. At entries into *corridors*.

Exception: Transverse crossings of the *corridors* by supply piping that is enclosed within a ferrous pipe or tube for the width of the *corridor* need not comply with Items 1 through 5.

❖ The installation of HPM piping in the space above an egress corridor or another occupancy, as well as the cavity of the egress corridor wall, present a potential source of hazard to the building's occupants. The five requirements provided for such installations serve to mitigate the hazard by suppression, ventilation, containment and ignition control. In order to address the potential hazards, the containment must be a fire barrier with at least a 1-hour fire-resistance rating, drainage receptors, excess flow control and shutoff valves.

When the piping traverses a corridor, the use of a coaxial enclosed pipe around the HPM piping is considered acceptable for providing the required separation and containment of a potential leak. The assumption is that the open ends of that pipe are in an HPM facility and, therefore, a leak into the outer casing can be monitored. If the adjacent areas that contain the open ends are not in an HPM facility, then the outer-jacket method cannot be used.

[F] 415.11.6.5 Identification. Piping, tubing and HPM waste lines shall be identified in accordance with ANSI A13.1 to indicate the material being transported.

❖ To facilitate monitoring, detecting and controlling any possible leaks, all piping, tubing and HPM waste lines must be identified in accordance with ANSI A13.1. This standard contains criteria for properly identifying the piping system, including labeling and frequency or distribution of the signs or labels.

[F] 415.11.7 Continuous gas detection systems. A *continuous gas detection system* shall be provided for HPM gases where the physiological warning threshold level of the gas is at a higher level than the accepted permissible exposure limit (PEL) for the gas and for flammable gases in accordance with Sections 415.11.7.1 and 415.11.7.2.

❖ A gas detection system in the room or area utilized for the storage or use of HPM gases provides early notification of a leak that is occurring before the escaping gas reaches hazardous concentration levels.

[F] 415.11.7.1 Where required. A *continuous gas detection system* shall be provided in the areas identified in Sections 415.11.7.1.1 through 415.11.7.1.4.

❖ Sections 415.11.7.1.1 through 415.11.7.1.4 prescribe the locations in a Group H-5 facility when a gas detection system is required.

[F] 415.11.7.1.1 Fabrication areas. A *continuous gas detection system* shall be provided in *fabrication areas* where gas is used in the *fabrication area*.

❖ All fabrication areas that utilize HPM gases must have a gas detection system. It should be noted that gas detection is often installed within workstations as a means of early detection of leaks. Such detection is generally not acceptable as an alternative to gas detection for the fabrication area, since a leak may occur remote from the workstation.

[F] 415.11.7.1.2 HPM rooms. A *continuous gas detection system* shall be provided in HPM rooms where gas is used in the room.

❖ HPM rooms, which by definition contain more than the quantities of hazardous materials per control area permitted by Tables 307.1(1) and 307.1(2), are required to have a gas detection system.

[F] 415.11.7.1.3 Gas cabinets, exhausted enclosures and gas rooms. A *continuous gas detection system* shall be provided in gas cabinets and exhausted enclosures. A *continuous gas detection system* shall be provided in gas rooms where gases are not located in gas cabinets or exhausted enclosures.

❖ In the potential event of a leaking cylinder of a hazardous gas, gas cabinets, exhausted enclosures and gas rooms must have a gas detection system.

[F] 415.11.7.1.4 Corridors. Where gases are transported in piping placed within the space defined by the walls of a *corridor* and the floor or roof above the *corridor*, a *continuous gas detection system* shall be provided where piping is located and in the *corridor*.

Exception: A *continuous gas detection system* is not required for occasional transverse crossings of the *corridors* by supply piping that is enclosed in a ferrous pipe or tube for the width of the *corridor*.

❖ In addition to the requirements of Section 415.11.6.4 for HPM piping and tubing in an egress corridor, a gas detection system is required for early notification of a potential leak of an HPM gas.

The exception is similar to the exception in Section 415.11.6.4. In essence, the gas detection system required by this section as well as the additional provisions in Section 415.11.6.4 are not required if the exception is met (see commentary, Section 415.11.6.4).

[F] 415.11.7.2 Gas detection system operation. The *continuous gas detection system* shall be capable of monitoring the room, area or equipment in which the gas is located at or below all the following gas concentrations:

1. Immediately dangerous to life and health (IDLH) values where the monitoring point is within an exhausted enclosure, ventilated enclosure or gas cabinet.
2. Permissible exposure limit (PEL) levels where the monitoring point is in an area outside an exhausted enclosure, ventilated enclosure or gas cabinet.

INTERNATIONAL CODE COUNCIL®
Copyright © 2015 ICC. ALL RIGHTS RESERVED. Accessed by David Dammon on Jun 21, 2017 12:30:52 PM pursuant to License Agreement with ICC. No further reproduction or distribution authorized. ANY UNAUTHORIZED REPRODUCTION OR DISTRIBUTION IS A VIOLATION OF THE FEDERAL COPYRIGHT ACT AND THE LICENSE AGREEMENT, AND SUBJECT TO CIVIL AND CRIMINAL PENALTIES THEREUNDER.

3. For flammable gases, the monitoring detection threshold level shall be vapor concentrations in excess of 25 percent of the lower flammable limit (LFL) where the monitoring is within or outside an exhausted enclosure, ventilated enclosure or gas cabinet.
4. Except as noted in this section, monitoring for highly toxic and toxic gases shall also comply with Chapter 60 of the *International Fire Code*.

❖ This section requires gas detection systems to be capable of sensing a leak at or below the permissible exposure limit (PEL). This exposure limit regulated by OSHA to prevent adverse health effects is the breathing zone exposure limit for employees over an 8-hour time weighted average. In most cases, gas detection in the semiconductor industry is conducted in an exhausted enclosure, ventilated enclosure or gas cabinet and not in the breathing zone of the employee; is designed to detect and alert employees of leaks inside exhausted enclosures, ventilated enclosures or gas cabinets; and is not intended to estimate potential employee breathing zone exposures. The semiconductor industry addressed this by codifying Section 10.9 of NFPA 318 to differentiate gas detection set points in exhausted enclosures (set at the IDLH) with gas detection when the monitoring point is in an area outside an exhausted enclosure, ventilated enclosure or gas cabinet. This section is consistent with the provisions of Section 10.9 of NFPA 318 guidelines that are much more relevant to the type of monitoring performed in semiconductor manufacturing (inside exhausted enclosures, ventilated enclosures or gas cabinets). Monitoring in the semiconductor industry is designed to detect and alert employees of leaks inside exhausted enclosures, ventilated enclosures and gas cabinets, and is not intended to estimate potential employee breathing zone exposures. Therefore, set points are not required or recommended to be set at occupational exposure limits (e.g., TLVs or PELs). Additionally, the 25 percent LFL is consistent with both Section 510.2 of the IMC and Section 10.9 of NFPA 318. Section Chapter 60 of the IFC contains additional requirements for the monitoring of highly toxic and toxic compressed gases.

[F] 415.11.7.2.1 Alarms. The gas detection system shall initiate a local alarm and transmit a signal to the emergency control station when a short-term hazard condition is detected. The alarm shall be both visual and audible and shall provide warning both inside and outside the area where the gas is detected. The audible alarm shall be distinct from all other alarms.

❖ The required local alarm is intended to alert occupants to a hazardous condition in the vicinity of where the HPM gases are being stored or used. The alarm is not intended to be an evacuation alarm; however, it is required to be monitored to hasten emergency personnel response.

[F] 415.11.7.2.2 Shutoff of gas supply. The gas detection system shall automatically close the shutoff valve at the source on gas supply piping and tubing related to the system being monitored for which gas is detected when a short-term hazard condition is detected. Automatic closure of shutoff valves shall comply with the following:

1. Where the gas detection sampling point initiating the gas detection system alarm is within a gas cabinet or exhausted enclosure, the shutoff valve in the gas cabinet or exhausted enclosure for the specific gas detected shall automatically close.
2. Where the gas detection sampling point initiating the gas detection system alarm is within a room and compressed gas containers are not in gas cabinets or an exhausted enclosure, the shutoff valves on all gas lines for the specific gas detected shall automatically close.
3. Where the gas detection sampling point initiating the gas detection system alarm is within a piping distribution manifold enclosure, the shutoff valve supplying the manifold for the compressed gas container of the specific gas detected shall automatically close.

Exception: Where the gas detection sampling point initiating the gas detection system alarm is at the use location or within a gas valve enclosure of a branch line downstream of a piping distribution manifold, the shutoff valve for the branch line located in the piping distribution manifold enclosure shall automatically close.

❖ Where gas detection systems are required, automatic emergency shutoff valves are required to stop the flow of hazardous material from possibly deteriorating further in an emergency.

[F] 415.11.8 Manual fire alarm system. An *approved* manual *fire alarm* system shall be provided throughout buildings containing Group H-5. Activation of the alarm system shall initiate a local alarm and transmit a signal to the emergency control station. The *fire alarm* system shall be designed and installed in accordance with Section 907.

❖ Due to the type and potential quantities of hazardous materials that could be present in a Group H-5 facility, a manual means of activating an evacuation alarm is essential for the safety of the occupants in an emergency situation. The alarm signal must be transmitted to the emergency control station. The fire alarm must also be in accordance with the applicable provisions of Section 907 and NFPA 72.

[F] 415.11.9 Emergency control station. An emergency control station shall be provided in accordance with Sections 415.11.9.1 through 415.11.9.3.

❖ Due to the extent of hazardous materials permitted in an HPM facility, an approved on-site location is needed where the alarm signals from emergency equipment can be received.

INTERNATIONAL CODE COUNCIL®
Copyright © 2015 ICC. ALL RIGHTS RESERVED. Accessed by David Dammon on Jun 21, 2017 12:30:52 PM pursuant to License Agreement with ICC. No further reproduction or distribution authorized. ANY UNAUTHORIZED REPRODUCTION OR DISTRIBUTION IS A VIOLATION OF THE FEDERAL COPYRIGHT ACT AND THE LICENSE AGREEMENT, AND SUBJECT TO CIVIL AND CRIMINAL PENALTIES THEREUNDER.

[F] 415.11.9.1 Location. The emergency control station shall be located on the premises at an *approved* location outside the *fabrication area*.

❖ The emergency control station must be located on-site at a location approved by the building official. The emergency control station must not be located in an area where hazardous materials are stored, used or transported, such as a fabrication area.

[F] 415.11.9.2 Staffing. Trained personnel shall continuously staff the emergency control station.

❖ Appropriate response by trained personnel is essential to any emergency event involving HPM materials.

[F] 415.11.9.3 Signals. The emergency control station shall receive signals from emergency equipment and alarm and detection systems. Such emergency equipment and alarm and detection systems shall include, but not be limited to, the following where such equipment or systems are required to be provided either in this chapter or elsewhere in this code:

1. *Automatic sprinkler system* alarm and monitoring systems.
2. Manual *fire alarm* systems.
3. *Emergency alarm systems.*
4. *Continuous gas detection systems.*
5. Smoke detection systems.
6. Emergency power system.
7. Automatic detection and alarm systems for pyrophoric liquids and Class 3 water-reactive liquids required in Section 2705.2.3.4 of the *International Fire Code*.
8. Exhaust *ventilation* flow alarm devices for pyrophoric liquids and Class 3 water-reactive liquids cabinet exhaust *ventilation* systems required in Section 2705.2.3.4 of the *International Fire Code*.

❖ This section specifies the types of systems that are to be monitored by the emergency control station.

[F] 415.11.10 Emergency power system. An emergency power system shall be provided in Group H-5 occupancies in accordance with Section 2702. The emergency power system shall supply power automatically to the electrical systems specified in Section 415.11.10.1 when the normal electrical supply system is interrupted.

❖ A backup emergency power source is considered essential for systems that are monitoring and protecting hazardous materials in a Group H-5 occupancy. Without an emergency power system, all required electrical controls or equipment monitoring hazardous materials would be rendered inoperative if a power failure or other electrical system failure were to occur.

[F] 415.11.10.1 Required electrical systems. Emergency power shall be provided for electrically operated equipment and connected control circuits for the following systems:

1. HPM exhaust *ventilation* systems.
2. HPM gas cabinet *ventilation* systems.
3. HPM exhausted enclosure *ventilation* systems.
4. HPM gas room *ventilation* systems.
5. HPM gas detection systems.
6. *Emergency alarm systems.*
7. Manual and automatic *fire alarm* systems.
8. *Automatic sprinkler system* monitoring and alarm systems.
9. Automatic alarm and detection systems for pyrophoric liquids and Class 3 water-reactive liquids required in Section 2705.2.3.4 of the *International Fire Code*.
10. Flow alarm switches for pyrophoric liquids and Class 3 water-reactive liquids cabinet exhaust *ventilation* systems required in Section 2705.2.3.4 of the *International Fire Code*.
11. Electrically operated systems required elsewhere in this code or in the *International Fire Code* applicable to the use, storage or handling of HPM.

❖ This section specifies the types of systems within a Group H-5 occupancy that are required to be connected to an approved emergency power system. As indicated in Section 2702, all emergency power systems must be installed in accordance with the applicable requirements of NFPA 70, 110 and 111.

[F] 415.11.10.2 Exhaust ventilation systems. Exhaust *ventilation* systems are allowed to be designed to operate at not less than one-half the normal fan speed on the emergency power system where it is demonstrated that the level of exhaust will maintain a safe atmosphere.

❖ Emergency power for exhaust ventilation is required to prevent hazardous concentrations of HPM fumes or vapors in areas such as workstations or fabrication areas. Fans for exhaust ventilation draw a considerable amount of current when operating. Running exhaust fans at a reduced speed may be desirable when it will not endanger the operator or result in a hazardous condition. However, an exhaust fan must not be run at a speed less than 50 percent of its rating, even if a slower speed will not produce a serious hazard.

[F] 415.11.11 Automatic sprinkler system protection in exhaust ducts for HPM. An *approved automatic sprinkler system* shall be provided in exhaust ducts conveying gases, vapors, fumes, mists or dusts generated from HPM in accordance with Sections 415.11.11.1 through 415.10.11.3 and the *International Mechanical Code*.

❖ This section prescribes the sprinkler system requirements for exhaust ducts for HPM. The requirements depend on the construction materials of the exhaust duct.

An exhaust duct for HPM materials could convey flammable and combustible gases, fumes, vapors or ducts. To provide protection against the spread of fire within the exhaust system and to prevent a duct fire from involving the building, sprinkler protection is

INTERNATIONAL CODE COUNCIL®
Copyright © 2015 ICC. ALL RIGHTS RESERVED. Accessed by David Dammon on Jun 21, 2017 12:30:52 PM pursuant to License Agreement with ICC. No further reproduction or distribution authorized. ANY UNAUTHORIZED REPRODUCTION OR DISTRIBUTION IS A VIOLATION OF THE FEDERAL COPYRIGHT ACT AND THE LICENSE AGREEMENT, AND SUBJECT TO CIVIL AND CRIMINAL PENALTIES THEREUNDER.

required in the exhaust duct. The use of an extinguishing agent other than water, based on agent compatibility, would be subject to local approval. Section 510 of the IMC contains additional requirements for protecting hazardous exhaust systems.

[F] 415.11.11.1 Metallic and noncombustible nonmetallic exhaust ducts. An *approved automatic sprinkler system* shall be provided in metallic and noncombustible nonmetallic exhaust ducts where all of the following conditions apply:

1. Where the largest cross-sectional diameter is equal to or greater than 10 inches (254 mm).
2. The ducts are within the building.
3. The ducts are conveying flammable gases, vapors or fumes.

❖ Sprinklers are required within each individual duct when all three of the following conditions exist:

1. Cross-sectional diameter at the widest point is equal to or exceeds 10 inches (254 mm).
2. Ducts are located within the building.
3. Ducts convey gases or vapors within the flammable range.

Commentary Figure 415.11.11.1 illustrates how to measure the cross-sectional diameter of various duct shapes. Provisions of this section require the square and rounded ducts to be protected by automatic sprinklers. The round or elliptical ducts depicted on the right side of the diagram are not required to be protected.

[F] 415.11.11.2 Combustible nonmetallic exhaust ducts. *Automatic sprinkler system* protection shall be provided in combustible nonmetallic exhaust ducts where the largest cross-sectional diameter of the duct is equal to or greater than 10 inches (254 mm).

Exception: Ducts need not be provided with automatic sprinkler protection as follows:

1. Ducts *listed* or *approved* for applications without *automatic sprinkler system* protection.
2. Ducts not more than 12 feet (3658 mm) in length installed below ceiling level.

❖ Galvanized steel is not an appropriate duct material for all substances handled in the broad category of hazardous exhaust systems. A duct material compatible with the exhaust must be selected, and factors such as corrosiveness, abrasion resistance, chemical resistance and operating temperatures must be taken into account. Section 510.8 of the IMC contains additional provisions for duct construction that is part of a hazardous exhaust system. As such, automatic sprinkler protection is also required for all combustible nonmetallic ducts with a cross-sectional diameter equal to or greater than 10 inches (254 mm).

Exception 1 states that automatic sprinklers are not required where the risk to people or property is limited, such as when nonmetallic ducts approved for installation without sprinklers are used. Exception 2 states that when ducts do not exceed 12 feet (3658 mm) in length and are installed exposed below ceiling level, sprinklers may be omitted. The limited duct length and exposure reduces the potential of a concealed fire hazard.

[F] 415.11.11.3 Automatic sprinkler locations. Sprinkler systems shall be installed at 12-foot (3658 mm) intervals in

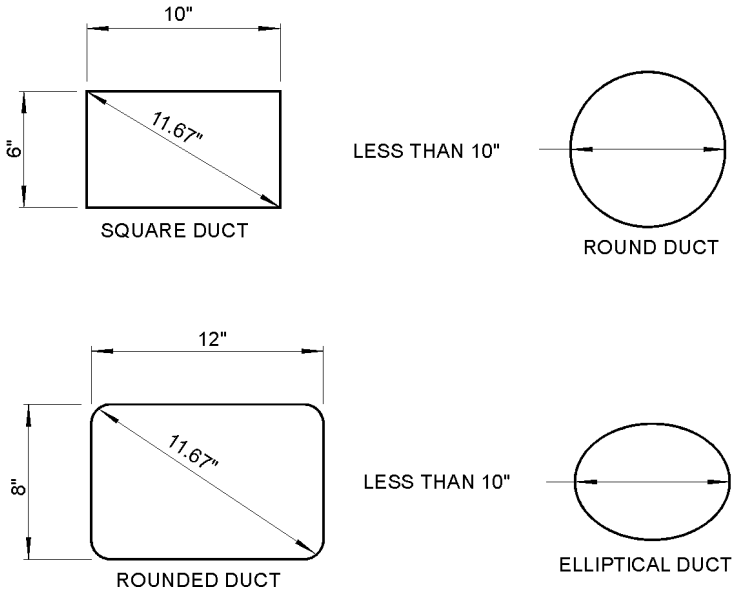

For SI: 1 inch = 25.4 mm.

Figure 415.11.11.1
CROSS-SECTIONAL DIAMETERS OF VARIOUS-SHAPED DUCTS

INTERNATIONAL CODE COUNCIL®
Copyright © 2015 ICC. ALL RIGHTS RESERVED. Accessed by David Dammon on Jun 21, 2017 12:30:52 PM pursuant to License Agreement with ICC. No further reproduction or distribution authorized. ANY UNAUTHORIZED REPRODUCTION OR DISTRIBUTION IS A VIOLATION OF THE FEDERAL COPYRIGHT ACT AND THE LICENSE AGREEMENT, AND SUBJECT TO CIVIL AND CRIMINAL PENALTIES THEREUNDER.

horizontal ducts and at changes in direction. In vertical ducts, sprinklers shall be installed at the top and at alternate floor levels.

❖ Adequate sprinkler coverage needs to be maintained to prevent the spread of fire within the exhaust system. All sprinkler system components must also be in compliance with the applicable provisions of NFPA 13.

SECTION 416
APPLICATION OF FLAMMABLE FINISHES

[F] 416.1 General. The provisions of this section shall apply to the construction, installation and use of buildings and structures, or parts thereof, for the application of flammable finishes. Such construction and equipment shall comply with the *International Fire Code*.

❖ The principal hazards associated with paint spraying and spray booths originate from the presence of flammable liquids or powders and their vapors or mists. The purpose of this section is to provide requirements that address the hazards associated with spray applications and dipping or coating applications involving flammable paints, varnishes and lacquers. The requirements listed include such areas as ventilation, automatic sprinklers, control of ignition sources and proper operation of the equipment. In addition to the provisions of this section, the provisions of the IMC and Chapter 24 of the IFC also apply.

The provisions of this section apply to the indoor use of spray applications and dipping or coating applications involving flammable paints, varnishes and lacquers. Outdoor applications involving flammable paints, varnishes and lacquers are not covered, since overspray deposits are not likely to create hazardous conditions, and flammable vapor-air mixtures are minimized because of atmospheric dilution. Safeguards, such as ventilation, ignition control, material storage and waste disposal (see Chapter 24 of the IFC), should still apply. This reference to the IFC and its provisions regarding flammable finishes covers the application of flammable or combustible materials when applied as a spray by compressed air; via "airless" or "hydraulic atomization" steam; electrostatically; or by any other means in continuous or intermittent processes. They also cover the application of combustible powders when applied by powder spray guns, electrostatic powder spray guns, fluidized beds or electrostatic fluidized beds. The IFC and its referenced standards contain provisions relating to the location of spray areas, ignition sources, ventilation, liquid storage and handling, protection, operation, maintenance and training. The provisions found in Chapter 24 of the IFC also apply to: processes in which articles or materials are passed through the contents of tanks, vats or containers of flammable or combustible liquids, including dipping; roll; flow and curtain coating; finishing; treating; cleaning; and similar processes. Requirements for the location of dipping and coating processes, ventilation, equipment construction, liquid storage and handling, protection, operation, maintenance and training are also provided.

[F] 416.2 Spray rooms. Spray rooms shall be enclosed with not less than 1-hour *fire barriers* constructed in accordance with Section 707 or *horizontal assemblies* constructed in accordance with Section 711, or both. Floors shall be waterproofed and drained in an *approved* manner.

❖ A spray room is a power-ventilated, fully enclosed room used exclusively for open spraying of flammable and combustible materials. The entire spray room is considered the spray area. The primary difference between a spray room and a spray booth is that spray booths are partially open. A spray room is to be enclosed with fire barriers and horizontal assemblies having a fire-resistance rating of at least 1 hour. Waterproof floors are to be arranged to drain to the outside of the building, to internal drains or to other suitable places. Properly designed and guarded drains or scuppers of sufficient number and size to dispose of all surplus water likely to be discharged by automatic sprinklers must be provided.

[F] 416.2.1 Surfaces. The interior surfaces of spray rooms shall be smooth and shall be so constructed to permit the free passage of exhaust air from all parts of the interior and to facilitate washing and cleaning, and shall be so designed to confine residues within the room. Aluminum shall not be used.

❖ Rough, corrugated or uneven surfaces are difficult to clean. Periodic cleaning of interior surfaces reduces the fire hazard posed by the accumulation of flammable or combustible coatings. Due to the physical properties of aluminum, it is unsuitable for cleaning and scraping of overspray residue.

[F] 416.2.2 Ventilation. Mechanical *ventilation* and interlocks with the spraying operation shall be in accordance with the *International Mechanical Code*.

❖ The provisions addressing ventilation in spray rooms where flammable finishes are applied are found in Section 502.7 of the IMC. For effective ventilation, the system must run continuously during the spraying operation phase and the drying phase of the process when vapors are generated. The required interlock between the ventilation and spraying equipment is intended to reduce the likelihood that the operator will fail to activate the ventilation system prior to use of the spray equipment.

[F] 416.3 Spraying spaces. Spraying spaces shall be ventilated with an exhaust system to prevent the accumulation of flammable mist or vapors in accordance with the *International Mechanical Code*. Where such spaces are not separately enclosed, noncombustible spray curtains shall be provided to restrict the spread of flammable vapors.

❖ The objective of ventilation is to remove flammable vapors and mists so as to minimize the potential for a flash fire or explosion. The spray area is required to

INTERNATIONAL CODE COUNCIL®
Copyright © 2015 ICC. ALL RIGHTS RESERVED. Accessed by David Dammon on Jun 21, 2017 12:30:52 PM pursuant to License Agreement with ICC. No further reproduction or distribution authorized. ANY UNAUTHORIZED REPRODUCTION OR DISTRIBUTION IS A VIOLATION OF THE FEDERAL COPYRIGHT ACT AND THE LICENSE AGREEMENT, AND SUBJECT TO CIVIL AND CRIMINAL PENALTIES THEREUNDER.

be ventilated in accordance with the provisions of the IMC. When the spray process is not separated from the other operations or areas, a noncombustible spray curtain must be provided to restrict the spread of flammable vapors. The IFC requires ventilation systems and enclosures to be interlocked with the spraying equipment to ensure that fans operate and doors remain closed when in use.

[F] 416.3.1 Surfaces. The interior surfaces of spraying spaces shall be smooth and continuous without edges; shall be so constructed to permit the free passage of exhaust air from all parts of the interior and to facilitate washing and cleaning; and shall be so designed to confine residues within the spraying space. Aluminum shall not be used.

❖ See commentary, Section 416.2.1.

[F] 416.4 Spray booths. Spray booths shall be designed, constructed and operated in accordance with the *International Fire Code*.

❖ Detailed requirements for the design and construction of spray booths are given in Section 2404.3.2 of the IFC. The IFC also addresses requirements for ventilation of adjacent areas, fire protection, fire extinguishers, control of ignition sources, housekeeping during operations, lighting and operation control through interlocks.

[F] 416.5 Fire protection. An *automatic sprinkler system* or *fire-extinguishing system* shall be provided in all spray, dip and immersing spaces and storage rooms and shall be installed in accordance with Chapter 9.

❖ Spray application operations are to be protected with an automatic sprinkler system or fire-extinguishing system. While an automatic sprinkler system is the most desirable type of suppression system, this section would allow the use of other effective extinguishing agents, such as dry chemical or foam. Because of the ease of ignition of flammable liquids, specifically spray paint applications of a flammable liquid, an automatic fire sprinkler system or fire-extinguishing system is required in rooms in which spray painting is conducted, as well as rooms in which flammable materials are used for painting, brushing, dipping or mixing on a regular basis. Dry sprinklers should not be used for the protection of spray operations, except possibly at the exhaust duct penetrations to the outside. Wet-pipe, preaction or deluge systems should be used so that water is placed on the fire in the shortest possible time. If the entire building is not protected with an automatic sprinkler system, then the system protecting the spray booth or room may be a limited area sprinkler system in accordance with Section 903.3.8. Locating sprinklers in paint spray booths presents an unusual problem, since the sprinkler may become clogged with paint. The most satisfactory solution is to locate the sprinklers in areas in a way that the paint spray will most likely not reach the sprinkler. Even in the most ideal locations, the sprinkler will need to be cleaned very frequently. A coating of grease with a low melting point, such as petroleum jelly, motor oil or a soft neutral soap, will facilitate cleaning of the sprinkler. Other alternatives that are commonly used include polyethylene or cellophane bags with a thickness of 0.003 inches (0.076 mm) or less or thin paper bags to protect the sprinklers.

Additional guidance on fire protection requirements for the application of flammable finishes can be found in Chapter 24 of the IFC.

SECTION 417
DRYING ROOMS

[F] 417.1 General. A drying room or dry kiln installed within a building shall be constructed entirely of *approved* noncombustible materials or assemblies of such materials regulated by the *approved* rules or as required in the general and specific sections of this chapter for special occupancies and where applicable to the general requirements of the *International Mechanical Code*.

❖ This section establishes specific safety requirements for drying rooms and dry kilns used in conjunction with the drying (accelerated seasoning) of lumber, and dryers or dehydrators used to reduce the moisture content of agricultural products. Included are drying operations for other combustible materials, such as certain building materials, textiles and fabrics. Drying operations associated with the application of flammable finishes are regulated by Section 416. The hazards associated with drying rooms and dry kilns relate to the volume of readily combustible materials being processed at temperatures conducive to their ignition in the event of a system malfunction.

The materials or assemblies used in the construction of drying rooms or dry kilns located within buildings must be noncombustible, regardless of the type of construction of the building itself (see commentary, Section 703.5 for a discussion of noncombustibility criteria) when required by Chapter 4 or the International Mechanical Code. The use of noncombustible materials of construction for drying rooms and dry kilns provides for a measure of confinement of a fire occurring within and prevents the room or kiln from contributing to the fuel load exposed to an unwanted fire.

[F] 417.2 Piping clearance. Overhead heating pipes shall have a clearance of not less than 2 inches (51 mm) from combustible contents in the dryer.

❖ Piped steam and hot-water indirect heating systems used in drying rooms or dry kilns can operate at temperatures of up to several hundred degrees Fahrenheit and are considered a safe and appropriate method of providing heat to the drying processes. A minimum clearance of 2 inches (51 mm) between hydronic piping and adjacent combustible contents in the drying room or dry kiln is required to reduce the likelihood of contact ignition of the combustible contents. Though hydronic piping is frequently installed overhead, the clearance is required regardless of the pipes' location within the drying room or kiln.

INTERNATIONAL CODE COUNCIL®
Copyright © 2015 ICC. ALL RIGHTS RESERVED. Accessed by David Dammon on Jun 21, 2017 12:30:52 PM pursuant to License Agreement with ICC. No further reproduction or distribution authorized. ANY UNAUTHORIZED REPRODUCTION OR DISTRIBUTION IS A VIOLATION OF THE FEDERAL COPYRIGHT ACT AND THE LICENSE AGREEMENT, AND SUBJECT TO CIVIL AND CRIMINAL PENALTIES THEREUNDER.

[F] 417.3 Insulation. Where the operating temperature of the dryer is 175°F (79°C) or more, metal enclosures shall be insulated from adjacent combustible materials by not less than 12 inches (305 mm) of airspace, or the metal walls shall be lined with $^1/_4$-inch (6.4 mm) insulating mill board or other *approved* equivalent insulation.

❖ The insulation of metal drying room and kiln enclosures from adjacent combustible materials is required when the drying apparatus operates at or above 175°F (79°C). Insulation can be accomplished by the use of airspace or by lining the metal dryer walls with insulating material. The insulation will reduce the possibility that combustible materials in proximity to the drying room or dry kiln will be ignited by heat transfer from it. The temperature of 175°F (79°C) has been determined to be the highest allowable temperature without any clearance to combustibles.

[F] 417.4 Fire protection. Drying rooms designed for high-hazard materials and processes, including special occupancies as provided for in Chapter 4, shall be protected by an *approved automatic fire-extinguishing system* complying with the provisions of Chapter 9.

❖ The possibility of ignition increases in a drying room utilized in conjunction with hazardous materials, such as combustible fibers and other finely divided materials. The installation of an approved fire-extinguishing system in accordance with Chapter 9 will contain a fire within the drying room until the fire department (or industrial fire brigade) arrives. In sprinklered buildings, fire suppression can be easily and economically provided by installing sprinklers within the drying room or area. Wet-pipe, preaction or deluge systems should be used so that water is placed on the fire in the shortest possible time. Note that dryers used in conjunction with plywood, veneer and composite board mill operations are required by the IFC to be protected by an approved deluge water-spray system. See the commentary for Chapter 28 of the IFC for further information on lumber and woodworking facilities. In nonsprinklered or partially sprinklered buildings, the system protecting the drying room may be an approved, limited area sprinkler system in accordance with Section 903.3.8. An alternative fire-extinguishing system consisting of dry chemical, carbon dioxide, clean agent or other approved nonwater-based fire-extinguishing system in accordance with Section 904 can provide an equivalent level of protection, depending on the nature of the drying room contents. See the commentary to Section 904 for a discussion of the various alternative fire-extinguishing systems available.

SECTION 418
ORGANIC COATINGS

❖ The manufacture of organic coatings encompasses operations that produce decorative and protective coatings for architectural uses, industrial products and other specialized purposes. Requirements of this chapter address the hazards associated with the manufacture of solvent-based organic coatings. Water-based materials are exempt from these requirements. These provisions are consistent with Chapter 29 of the IFC, which contains more detailed requirements for the manufacture of organic coatings. NFPA 35 also provides additional guidance on the maintenance of facilities utilized for the manufacture of organic coatings.

[F] 418.1 Building features. Manufacturing of organic coatings shall be done only in buildings that do not have pits or *basements.*

❖ Basements, pits and depressed first-floor construction are prohibited because of the tendency for hazardous material vapors to accumulate in low areas and the difficulty in fighting fires in basements and pits in such occupancies.

[F] 418.2 Location. Organic coating manufacturing operations and operations incidental to or connected therewith shall not be located in buildings having other occupancies.

❖ Operations and activities closely related to the primary occupancy are necessary for the efficient, continuous and safe performance of the manufacture of organic coatings. Administration, storage, shipping and receiving, as well as other related but not indispensable operations, should be located in separate buildings.

[F] 418.3 Process mills. Mills operating with close clearances and that process flammable and heat-sensitive materials, such as nitrocellulose, shall be located in a *detached building* or noncombustible structure.

❖ Milling of heat-sensitive materials, such as nitrocellulose, is an extraordinary hazard. Such operations must be located in separate, single-purpose buildings away from other uses and high-hazard operations. Pebble mills pose a special vapor ignition hazard caused by static electricity. Both the grinding material and inner lining of these mills are made of materials with good insulating characteristics. Because static electricity is produced during milling, it has nowhere to go. Generally, the inside of this type of mill is either partially or totally inerted using nitrogen or carbon dioxide gas to prevent ignition.

[F] 418.4 Tank storage. Storage areas for flammable and combustible liquid tanks inside of structures shall be located at or above grade and shall be separated from the processing area by not less than 2-hour *fire barriers* constructed in accordance with Section 707 or *horizontal assemblies* constructed in accordance with Section 711, or both.

❖ Tank storage located below grade is prohibited. Basements located under grade-level storage areas should be discouraged. Below-grade flammable liquid fires are extremely difficult to fight. Similarly, above-grade spills will flow to lower floors, possibly resulting in spill fires on more than one building level. Tank storage of raw materials must be confined to

INTERNATIONAL CODE COUNCIL®
Copyright © 2015 ICC. ALL RIGHTS RESERVED. Accessed by David Dammon on Jun 21, 2017 12:30:52 PM pursuant to License Agreement with ICC. No further reproduction or distribution authorized. ANY UNAUTHORIZED REPRODUCTION OR DISTRIBUTION IS A VIOLATION OF THE FEDERAL COPYRIGHT ACT AND THE LICENSE AGREEMENT, AND SUBJECT TO CIVIL AND CRIMINAL PENALTIES THEREUNDER.

locations at or above grade level. Tank storage rooms must be separated from process and other storage areas by fire barriers and horizontal assemblies that are a minimum of 2-hour fire-resistance rated. If possible, these rooms should be able to be accessed on at least one side from the outside. Cut-off rooms with access from two or even three sides are considered ideal.

[F] 418.5 Nitrocellulose storage. Nitrocellulose storage shall be located on a detached pad or in a separate structure or a room enclosed with not less than 2-hour *fire barriers* constructed in accordance with Section 707 or *horizontal assemblies* constructed in accordance with Section 711, or both.

❖ Once ignited, nitrocellulose will continue to burn even in the absence of oxygen. Extra precautions must be used to prevent ignition and fire spread. Therefore, nitrocellulose storage should be in either a separate detached structure, on a detached exterior pad or fully enclosed by a construction of minimum 2-hour fire-resistance rating complying with fire barrier and horizontal assembly requirements.

[F] 418.6 Finished products. Storage rooms for finished products that are flammable or combustible liquids shall be separated from the processing area by not less than 2-hour *fire barriers* constructed in accordance with Section 707 or *horizontal assemblies* constructed in accordance with Section 711, or both.

❖ Finished products, which are also classified as flammable or combustible liquids, must also comply with the applicable provisions of Chapter 57 of the IFC and NFPA 30. As a minimum, a 2-hour fire-resistance-rated construction consisting of horizontal assemblies and fire barriers with approved opening protectives is required between the processing area and the storage area to eliminate mutual involvement in a single fire scenario. A higher degree of fire separation may be required depending on the building's occupancy classification.

SECTION 419
LIVE/WORK UNITS

419.1 General. A *live/work unit* shall comply with Sections 419.1 through 419.9.

Exception: Dwelling or sleeping units that include an office that is less than 10 percent of the area of the *dwelling unit* are permitted to be classified as *dwelling units* with accessory occupancies in accordance with Section 508.2.

❖ These provisions allow a live/work unit that includes both living and working environments to be considered a single Group R-2 dwelling unit for application of the code. Several limitations and specific requirements are applied to both the living and work portions of the unit. Prior to the adoption of these provisions, the code and the IRC did not allow residential live/work units in a form that is typically desirable for community development. This concept has become increasingly popular, allowing design and construction of a public business with employees working within a residence, allowing the public to enter the work area of the unit to acquire service. Examples of live/work commercial functions are artists' studios, beauty parlors, nail salons and chiropractors' offices. It is important to note that live/work is specifically not to apply to an in-home office. The exception to Section 419.1 is intended to address these small home offices which involve less than 10 percent of the dwelling's floor area.

These concepts reflect an era of planning which created a community where residents could walk to all needed services such as the typical corner commercial store. Examples of this form of planning can be found in many older cities, as well as many "planned communities." Live/work units began to re-emerge in the 1990s through a development style known as "Traditional Neighborhood Design" (TND). More recently, adaptive reuse in many older urban structures in city centers incorporated the same live/work tools to provide a variety of business offerings combined with residential unit types.

Historically, building codes did not have to deal with many live/work issues because zoning codes generally precluded a mixing of uses within a neighborhood, much less within a building. However, recent planning trends have been adopted in many jurisdictions, encouraging mixing of commercial and residential uses, not just in neighborhoods, but also in buildings, and even within unit types, such as the live/work unit commonly found in TND projects.

The provisions for live/work units apply to the code criteria based on the Group R-2 provisions for construction. The occupant loads will be determined by the "function" of each space in accordance with Table 1004.1.2.

Section 419 allows mixed use within the dwelling unit or sleeping unit without classification as a mixed-occupancy condition as long as the unit meets the limits within this section. It is then to be classified as a Group R-2 occupancy. Special features that are common within a dwelling unit and are likely within the live/work unit are addressed in order to clearly delineate the means for designing a live/work unit.

419.1.1 Limitations. The following shall apply to all live/work areas:

1. The *live/work unit* is permitted to be not greater than 3,000 square feet (279 m^2) in area;
2. The nonresidential area is permitted to be not more than 50 percent of the area of each *live/work unit*;
3. The nonresidential area function shall be limited to the first or main floor only of the *live/work unit*; and
4. Not more than five nonresidential workers or employees are allowed to occupy the nonresidential area at any one time.

❖ These provisions were meant to apply strictly to small businesses associated with dwelling and sleeping

INTERNATIONAL CODE COUNCIL®
Copyright © 2015 ICC. ALL RIGHTS RESERVED. Accessed by David Dammon on Jun 21, 2017 12:30:52 PM pursuant to License Agreement with ICC. No further reproduction or distribution authorized. ANY UNAUTHORIZED REPRODUCTION OR DISTRIBUTION IS A VIOLATION OF THE FEDERAL COPYRIGHT ACT AND THE LICENSE AGREEMENT, AND SUBJECT TO CIVIL AND CRIMINAL PENALTIES THEREUNDER.

units. In fact, the intent is that the main occupancy of the building is residential, with some business activity within the building. The code limits the nonresidential aspect to a maximum of 50 percent of the area of each unit. In addition, the total area of the live/work unit is limited to 3,000 square feet (279 m^2). Therefore, the total area of the work unit would be a maximum of 1,500 square feet (139 m^2). Since a nonresidential use is being located in a dwelling unit or sleeping unit, the nonresidential area is limited to the first or main floor. Therefore, those coming to the place of business do not need to enter the residential portion of the building. Finally, in keeping with the intent that these are small occupancies and that such occupancies could not create unnecessary life safety concerns, the number of nonresidential workers (employees) is limited to five. This limit of five is not the limit on the number of occupants that can be located within the work area, but simply the number of workers from outside the household that can be there on a regular basis. The 1,500 square-foot (139 m^2) limit on area would limit the number of occupants based upon the occupant load factors.

419.2 Occupancies. *Live/work units* shall be classified as a Group R-2 occupancy. Separation requirements found in Sections 420 and 508 shall not apply within the *live/work unit* where the *live/work unit* is in compliance with Section 419. Nonresidential uses that would otherwise be classified as either a Group H or S occupancy shall not be permitted in a *live/work unit.*

Exception: Storage shall be permitted in the *live/work unit* provided the aggregate area of storage in the nonresidential portion of the *live/work unit* shall be limited to 10 percent of the space dedicated to nonresidential activities.

❖ The entire live/work unit is to be classified as Group R-2 regardless of the types of business being conducted. This exempts such units from the requirements for separation in Sections 420 and 508 within the unit, but would still require the separation between each live/work unit.

The provisions that prohibit uses that would otherwise be classified as either Group H or S occupancies intend to avoid the accumulation of excessive and dangerous fire loads in residential related occupancies. This section would not prohibit the occupancy from containing the maximum allowable quantities of hazardous materials per control area within a building. Control areas are regulated in Section 414 (see the commentary for that section).

Storage is a potential fire load in any business. To ensure that it does not become a large fire hazard, it is limited to 10 percent of the nonresidential portion of the live/work unit. That would be a maximum of 150 square feet (14 m^2); about the size of a large closet.

419.3 Means of egress. Except as modified by this section, the *means of egress* components for a *live/work unit* shall be designed in accordance with Chapter 10 for the function served.

❖ This section requires compliance with Chapter 10 for means of egress unless the general requirements are modified by the following two subsections. The means of egress for the nonresidential portion of the live/work unit is regulated based upon the specific function of the space rather than the egress requirements for a Group R-2 occupancy. In many instances, this will require an occupancy classification determination for the nonresidential portion for means of egress purposes without assigning such a classification to the function itself. For example, if the nonresidential portion of the live/work unit is a retail sales use, that portion of the unit would be regulated as a Group M occupancy for the means of egress provisions in Chapter 10.

419.3.1 Egress capacity. The egress capacity for each element of the *live/work unit* shall be based on the occupant load for the function served in accordance with Table 1004.1.2.

❖ The egress capacity must be based upon the actual use of the space. Therefore if you had a mercantile type use in the live/work unit, the egress capacity must be based on 60 square feet (5.6 m^2) per person of the gross area of the mercantile space. If a 3,000-square-foot (279 m^2) unit is equally divided for mercantile and residential use, in such a case the calculated occupant load would be determined by dividing the area by the square feet per person: 1,500 square feet (139 m^2)/60 square feet (5.6 m^2) per person = 25 occupants. In addition, the capacity for residential use is 200 square feet (18.6 m^2) per person (gross area), which would be 1,500 square feet (139 m^2)/200 square feet (18.6 m^2) per person = 8 occupants.

419.3.2 Spiral stairways. *Spiral stairways* that conform to the requirements of Section 1011.10 shall be permitted.

❖ Spiral staircases are allowed in dwelling units and this section simply emphasizes this allowance with a specific reference to the design criteria in Section 1011.10. There is no limit on the use of spiral stairways regardless of the floor area of the nonresidential uses in the live/work unit.

419.4 Vertical openings. Floor openings between floor levels of a *live/work unit* are permitted without enclosure.

❖ Within a multistory unit, openings through one or more floors created by stairways and other vertical elements need not be enclosed. This is consistent with the allowance for unconcealed vertical openings within individual residential dwelling units and sleeping units (see Sections 712.1.2 and 1009.3, Exception 2).

INTERNATIONAL CODE COUNCIL®
Copyright © 2015 ICC. ALL RIGHTS RESERVED. Accessed by David Dammon on Jun 21, 2017 12:30:52 PM pursuant to License Agreement with ICC. No further reproduction or distribution authorized. ANY UNAUTHORIZED REPRODUCTION OR DISTRIBUTION IS A VIOLATION OF THE FEDERAL COPYRIGHT ACT AND THE LICENSE AGREEMENT, AND SUBJECT TO CIVIL AND CRIMINAL PENALTIES THEREUNDER.

[F] 419.5 Fire protection. The *live/work unit* shall be provided with a monitored *fire alarm* system where required by Section 907.2.9 and an *automatic sprinkler system* in accordance with Section 903.2.8.

❖ Since the unit is considered as Group R-2, the entire building would be required to be sprinklered in accordance with Section 903.3.1.1 (NFPA 13) or 903.3.1.2 (NFPA 13R).

This section requires the installation of a fire alarm system as required for a Group R-2 occupancy. Section 907.2.9 would only require a fire alarm system in certain cases. The requirements for a manual fire alarm are based on the location of the Group R-2 dwelling unit (three or more stories above the lowest level of exit discharge or one story below the highest level of exit discharge) and the number of units (more than 16). If a building has a sprinkler system and would require a manual system, the manual aspect is no longer required. Instead, the sprinkler system is required to be tied to the notification appliances and activate the system upon water flow.

419.6 Structural. Floors within a *live/work unit* shall be designed for the live loads in Table 1607.1, based on the function within the space.

❖ Since live/work units may have structural loads not normally anticipated by Group R-2 occupancies, the code specifically requires structural design of floor live loads to be addressed in accordance with Table 1607.1, based on what is actually occurring in the space. For instance, if the nonresidential activity is a business, there may be equipment such as computers, files or a large copy machine that requires loading based on office loads of 100 psf (4788 Pa).

419.7 Accessibility. Accessibility shall be designed in accordance with Chapter 11 for the function served.

❖ Accessibility to and within the live/work unit must be designed and constructed in compliance with Chapter 11. The business/work area on the first floor must be fully accessible. In accordance with Section 1107.6.2.1, the dwelling unit portion must be evaluated separately. If the structure has four or more units, or the site has more than 20 units, Type A unit or Type B unit requirements may be applicable. The exceptions under Section 1107.7 are applicable. The most common application will typically be the multistory dwelling unit (see Section 1107.7.2).

Section 1107.3 requires that rooms and spaces available to the public be accessible. Accessible spaces that may be utilized by the public in accordance with Section 1107.3 include other spaces such as kitchens, living and dining areas and any exterior spaces including patios, terraces and balconies that may be on the same level as the entrance to the unit. These may not be "available to the public" unless they are part of the function of the nonresidential activity. Such spaces that are strictly part of the residential function of the live/work unit are only required to be accessible to the degree that such units are required to be made accessible.

419.8 Ventilation. The applicable *ventilation* requirements of the *International Mechanical Code* shall apply to each area within the *live/work unit* for the function within that space.

❖ Similar to egress and structural requirements, the use of the space must be looked at individually to ensure ventilation being provided fits the use. For instance, Table 403.3.1.1 of the IMC would require a florist shop to have 15 cubic feet (0.42 m^3) per minute of outdoor air per person. With a possible floor area of 1,500 square feet (139 m^2) for the work area and a minimum of eight persons per 1,000 square feet (92.9 m^2) as required by Table 403.3.1.1, the cfm required would be as follows:

(8 occupants/1,000 square feet) x 1,500 square feet = 12 occupants

12 occupants x 15 cfm = 180 cfm of outside air ventilation

A two-bedroom dwelling unit would typically require 105 cfm (15 cfm per occupant x 7 occupants — 200 square feet per occupant in accordance with Table 1004.1.2). However, it is more typical that designs of residential dwelling units include the provision of fresh air by the natural ventilation option.

419.9 Plumbing facilities. The nonresidential area of the *live/work unit* shall be provided with minimum plumbing facilities as specified by Chapter 29, based on the function of the nonresidential area. Where the nonresidential area of the *live/work unit* is required to be *accessible* by Section 1103.2.13, the plumbing fixtures specified by Chapter 29 shall be *accessible*.

❖ In a manner consistent with the application of means of egress provisions to live/work units, plumbing facilities as specified by Chapter 29 are to be provided for the nonresidential use based on the function of the nonresidential area. Based on the example of a retail sales use as set forth in the commentary to Section 419.3, plumbing fixture requirements for the nonresidential retail sales area would be based on a Group M classification. However, the Group M classification would not be specifically assigned to the live/work unit. As previously stated in Section 419.7, the accessibility requirements for the nonresidential area would be based on the function of that area

SECTION 420
GROUPS I-1, R-1, R-2, R-3 AND R-4

420.1 General. Occupancies in Groups I-1, R-1, R-2, R-3 and R-4 shall comply with the provisions of Sections 420.1 through 420.6 and other applicable provisions of this code.

❖ The nature of occupancies in Groups I-1, R-1, R-2, R-3 and R-4 is such that some level of protection against fire is needed for occupants in dwelling units and sleeping units. There remains a high frequency

INTERNATIONAL CODE COUNCIL®
Copyright © 2015 ICC. ALL RIGHTS RESERVED. Accessed by David Dammon on Jun 21, 2017 12:30:52 PM pursuant to License Agreement with ICC. No further reproduction or distribution authorized. ANY UNAUTHORIZED REPRODUCTION OR DISTRIBUTION IS A VIOLATION OF THE FEDERAL COPYRIGHT ACT AND THE LICENSE AGREEMENT, AND SUBJECT TO CIVIL AND CRIMINAL PENALTIES THEREUNDER.

of fires where people live. These occupancies need to be provided automatic sprinkler system protection. Requiring a minimum fire resistance to the construction separating both units and residential areas from nonresidential areas provides an extra level of protection in people's homes from occurrences in their neighbors' homes. These separations are required between live/work units as provided in Section 419, but separations within each live/work unit between residential and nonresidential uses are not required.

420.2 Separation walls. Walls separating *dwelling units* in the same building, walls separating *sleeping units* in the same building and walls separating *dwelling* or *sleeping units* from other occupancies contiguous to them in the same building shall be constructed as *fire partitions* in accordance with Section 708.

❖ The sleeping units or dwelling units that are in a single building are required to be separated by fire partitions complying with Section 708, or horizontal fire-resistance-rated assemblies complying with Section 711. Fire partitions are the least robust of all fire-resistance-rated walls called out in the code. These occupancies all require smoke alarms in the sleeping areas of the units, and occupancies in Groups I-1 and R-1 also require general fire alarms. In addition, these occupancies are all required to be sprinklered. The reason for the nominal fire-resistant separation is to account for the fact that individuals asleep in these units could respond more slowly to a fire; therefore, some amount of fire resistance is deemed necessary to protect these occupants.

Section 708.3 requires fire partitions to be not less than 1-hour fire-resistance rated. If the building's sprinkler protection is provided by a system complying with NFPA 13, the rating can be reduced to 30 minutes. Section 708.4 requires 1-hour-rated fire partitions to be supported by construction that has the same rating or better; however, this requirement is waived for these separation walls in buildings of Type II B, IIIB and VB construction.

This requirement also applies to walls that separate these Group R and I occupancies from other occupancies in the building. Even if those other areas are regulated under the accessory occupancies or nonseparated occupancies option of mixed occupancies contained in Sections 508.2 or 508.3 respectively, these partitions and horizontal assemblies are still required.

420.3 Horizontal separation. Floor assemblies separating *dwelling units* in the same buildings, floor assemblies separating *sleeping units* in the same building and floor assemblies separating *dwelling* or *sleeping units* from other occupancies contiguous to them in the same building shall be constructed as *horizontal assemblies* in accordance with Section 711.

❖ See the commentary to Section 420.2. Section 711.2 requires floor assemblies providing this separation to be not less than 1-hour fire-resistance rated. If the building's sprinkler protection is provided by a system complying with NFPA 13, the rating can be reduced to 30 minutes. Section 708.4 requires 1-hour-rated fire partitions to be supported by construction that has the same rating or better; however, this requirement is waived for these floor assemblies in buildings of Type IIB, IIIB and VB construction.

420.4 Smoke barriers in Group I-1, Condition 2. Smoke barriers shall be provided in Group I-1, Condition 2, to subdivide every story used by persons receiving care, treatment or sleeping and to provide other stories with an occupant load of 50 or more persons, into no fewer than two smoke compartments. Such stories shall be divided into smoke compartments with an area of not more than 22,500 square feet (2092 m^2) and the distance of travel from any point in a smoke compartment to a smoke barrier door shall not exceed 200 feet (60 960 mm). The smoke barrier shall be in accordance with Section 709.

❖ Group I-1, Condition 2 allows occupants that may need assistance with evacuation (see Section 308.3.2). Smoke barriers and the associated compartmentalization is a key protective feature utilized for this occupant type. Requirements mostly match Group I-2 smoke barrier criteria provided in Section 407 with the following noted differences: The refuge area is 15 feet (4572 mm) for each care recipient in a Group I-1, Condition 2 versus the 30 square feet (2.8 m^2) required in Group I-2. There are no bed or stretcher occupants in Group I-1, Condition 2, meaning occupants can be moved during emergencies without having to be moved in a bed. The Group I-1, Condition 2 areas permitted to be included in the calculation do not include sleeping areas (sleeping room) as permitted in Group I-2. Sleeping areas are included in Group I-2 because of defend-in-place strategies during emergencies. Group I-1, Condition 2 occupants utilize smoke compartments for a staged evacuation in accordance with the IFC but are not supposed to stay in their rooms during emergencies.

420.4.1 Refuge area. Refuge areas shall be provided within each smoke compartment. The size of the refuge area shall accommodate the occupants and care recipients from the adjoining smoke compartment. Where a smoke compartment is adjoined by two or more smoke compartments, the minimum area of the refuge area shall accommodate the largest occupant load of the adjoining compartments. The size of the refuge area shall provide the following:

1. Not less than 15 net square feet (1.4 m^2) for each care recipient.
2. Not less than 6 net square feet (0.56 m^2) for other occupants.

Areas or spaces permitted to be included in the calculation of the refuge area are corridors, lounge or dining areas and other low-hazard areas.

❖ Under this provision, refuge areas are only required for Group I-1, Condition 2 occupancies. They are not required for other Group I-1 occupancies or the Group R occupancies. Similar refuge areas are required for Group I-2 occupancies (Section 407) and

INTERNATIONAL CODE COUNCIL®
Copyright © 2015 ICC. ALL RIGHTS RESERVED. Accessed by David Dammon on Jun 21, 2017 12:30:52 PM pursuant to License Agreement with ICC. No further reproduction or distribution authorized. ANY UNAUTHORIZED REPRODUCTION OR DISTRIBUTION IS A VIOLATION OF THE FEDERAL COPYRIGHT ACT AND THE LICENSE AGREEMENT, AND SUBJECT TO CIVIL AND CRIMINAL PENALTIES THEREUNDER.

Group I-3 occupancies (Section 408.) See also the commentary for Section 420.4.

[F] 420.5 Automatic sprinkler system. Group R occupancies shall be equipped throughout with an *automatic sprinkler system* in accordance with Section 903.2.8. Group I-1 occupancies shall be equipped throughout with an *automatic sprinkler system* in accordance with Section 903.2.6. Quick-response or residential automatic sprinklers shall be installed in accordance with Section 903.3.2.

❖ The provisions requiring automatic sprinkler protection for all buildings containing Group I or R occupancies are referenced here. In addition, reference is made to Section 903.3.2 regarding the required use of quick-response or residential automatic sprinklers.

[F] 420.6 Fire alarm systems and smoke alarms. Fire alarm systems and smoke alarms shall be provided in Group I-1, R-1, R-2 and R-4 occupancies in accordance with Sections 907.2.6, 907.2.8, 907.2.9 and 907.2.10, respectively. Single- or multiple- station smoke alarms shall be provided in Groups I-1, R-2, R-3 and R-4 in accordance with Section 907.2.11.

❖ References to Sections 907.2.6, 907.2.8, 907.2.9 and 907.2.10 are a reminder of the requirements for fire alarm systems and smoke alarms in Group I-1, R-1 and R-2 occupancies. It is also noted that Section 907.2.11 sets forth the requirements for single-station and multiple-station smoke alarms.

SECTION 421
HYDROGEN FUEL GAS ROOMS

[F] 421.1 General. Where required by the *International Fire Code*, hydrogen fuel gas rooms shall be designed and constructed in accordance with Sections 421.1 through 421.7.

❖ This section is simply stating that all hydrogen cutoff rooms are to be constructed in accordance with the provisions contained in Section 421. Hydrogen cutoff rooms were created to address the increasing and emerging concepts of fuel cells that use hydrogen and actually generate hydrogen onsite to run the fuel cells. IFC Section 2309.3.2.3 requires that generation, compression, storage and dispensing equipment related to hydrogen be located in one of three places inside buildings. The first is a hydrogen cutoff room in accordance with this section. The second is outside a cutoff room where the gaseous hydrogen system is listed and labeled for indoor installation and installed in accordance with the manufacturer's instructions. The third is in a dedicated hydrogen fuel dispensing area having an aggregate hydrogen delivery capacity no greater than 12 standard cubic feet (0.34 m^3) per minute. The provisions of Section 421 address construction-related issues for hydrogen cutoff rooms such as location, fire-resistant separation and ventilation, and safety features such as gas detection and explosion control.

[F] 421.2 Definitions. The following terms are defined in Chapter 2:

GASEOUS HYDROGEN SYSTEM.

HYDROGEN FUEL GAS ROOM.

❖ This section lists terms that are specifically associated with the subject matter of Section 421. It is important to emphasize that these terms are not exclusively related to this chapter but may or may not also be applicable where the term is used elsewhere in the code.

Definitions of terms can help in the understanding and application of the code requirements. The purpose for including a list within this chapter is to provide more convenient access to terms that may have a specific or limited application within this chapter. For the complete definition and associated commentary, refer back to Chapter 2. Terms that are italicized provide a visual identification throughout the code that a definition exists for that term. The use and application of all defined terms are set forth in Section 201.

[F] 421.3 Location. Hydrogen fuel gas rooms shall not be located below grade.

❖ Restrictions against installation of hydrogen fuel gas rooms below grade are similar to those restricting the location of flammable and combustible liquids in basements. Explosion hazards are the primary concern, and placement of materials that have an ability to cause an explosion in below-grade spaces is not appropriate. Such spaces are more difficult to evacuate, create a fire explosion hazard to the structure above and are very difficult for the fire department to address.

[F] 421.4 Design and construction. Hydrogen fuel gas rooms not classified as Group H shall be separated from other areas of the building in accordance with Section 509.1.

❖ Hydrogen fuel gas rooms are required to be separated by not less than 1-hour fire-resistance-rated fire barriers and horizontal assemblies, which is consistent with the requirements in Table 509 for incidental uses. In addition, the classification of the space will affect the separation requirements. Hydrogen fuel gas rooms can contain any amount of hydrogen, but if the maximum allowable quantities are exceeded, the room can no longer be considered an incidental use and instead must be classified as a Group H-2 occupancy. A Group H-2 must then be addressed as a separated occupancy. In all cases, separation in accordance with Table 508.4 would apply in addition to the applicable occupancy-specific requirements.

INTERNATIONAL CODE COUNCIL®
Copyright © 2015 ICC. ALL RIGHTS RESERVED. Accessed by David Dammon on Jun 21, 2017 12:30:52 PM pursuant to License Agreement with ICC. No further reproduction or distribution authorized. ANY UNAUTHORIZED REPRODUCTION OR DISTRIBUTION IS A VIOLATION OF THE FEDERAL COPYRIGHT ACT AND THE LICENSE AGREEMENT, AND SUBJECT TO CIVIL AND CRIMINAL PENALTIES THEREUNDER.

[F] 421.4.1 Pressure control. Hydrogen fuel gas rooms shall be provided with a ventilation system designed to maintain the room at a negative pressure in relation to surrounding rooms and spaces.

❖ This section requires hydrogen fuel gas rooms to be maintained at a negative pressure with regard to surrounding spaces to provide some level of protection against a flammable mixture being attained in other parts of the building.

[F] 421.4.2 Windows. Operable windows in interior walls shall not be permitted. Fixed windows shall be permitted where in accordance with Section 716.

❖ Operable windows are prohibited to further reduce the likelihood of allowing hydrogen from escaping into the room and entering other portions of the building that may not be properly ventilated. An operable window could inadvertently be left in the open or partially open position and go unnoticed. Fixed window openings must meet the requirements of Section 716 to ensure that the requirements for opening protectives are met. More specifically, the proper fire protection ratings for openings in fire barriers are required.

[F] 421.5 Exhaust ventilation. Hydrogen fuel gas rooms shall be provided with mechanical exhaust ventilation in accordance with the applicable provisions of Section 502.16.1 of the *International Mechanical Code*.

❖ The purpose of this section is to prevent a dangerous accumulation of flammable gas in the room through the use of an exhaust ventilation system. The *Sourcebook for Hydrogen Applications* recommends ventilation at the rate of 1 cfm per square foot [0.00508 $m^3/(s \times m^2)$] of floor area, which is consistent with the requirements in Chapter 5 of the IMC.

[F] 421.6 Gas detection system. Hydrogen fuel gas rooms shall be provided with an approved flammable gas detection system in accordance with Sections 421.6.1 through 421.6.4.

❖ Some gases contain additives that produce pungent odors for easy recognition. Systems using nonodorized gases, such as hydrogen and liquid natural gas, must utilize gas detection systems to detect leaks. This section specifically requires such detection due to the hazards associated with a buildup of hydrogen at hazardous levels within a building.

[F] 421.6.1 System design. The flammable gas detection system shall be listed for use with hydrogen and any other flammable gases used in the hydrogen fuel gas room. The gas detection system shall be designed to activate when the level of flammable gas exceeds 25 percent of the lower flammability limit (LFL) for the gas or mixtures present at their anticipated temperature and pressure.

❖ The detection system must initiate the operations specified in Section 421.6.2 at any time that the flammable gas concentration exceeds one-fourth of the concentration necessary to support combustion. Early detection of the presence of a flammable gas will allow adequate mitigation procedures to be taken. Hydrogen fires are not normally extinguished until the supply of hydrogen has been shut off because of the danger of reignition or explosion. A gas detection system in the room or space housing a gaseous hydrogen system results in early notification of a leak that is occurring before the escaping gas reaches a hazardous concentration.

[F] 421.6.2 Gas detection system components. Gas detection system control units shall be listed and labeled in accordance with UL 864 or UL 2017. Gas detectors shall be listed and labeled in accordance with UL 2075 for use with the gases and vapors being detected.

❖ This section provides that control units and gas detectors used in these systems be listed and labeled equipment. The section provides the specific standard under which the equipment needs to be listed and labeled.

[F] 421.6.3 Operation. Activation of the gas detection system shall result in all of the following:

1. Initiation of distinct audible and visual alarm signals both inside and outside of the hydrogen fuel gas room.
2. Activation of the mechanical exhaust ventilation system.

❖ The detection system must activate the mechanical ventilation system that is required by Section 421.5, in addition to causing alarms to activate. Note that the mechanical ventilation alternative in Section 421.4.1.1 is continuously in operation.

The required local alarm is intended to alert the occupants to an emerging hazardous condition in the vicinity. The monitor control equipment must also initiate operation of the mechanical ventilation system in the event of a leak or rupture in the gaseous hydrogen system to prevent an accumulation of flammable gas.

[F] 421.6.4 Failure of the gas detection system. Failure of the gas detection system shall result in activation of the mechanical exhaust ventilation system, cessation of hydrogen generation and the sounding of a trouble signal in an approved location.

❖ Systems must be designed to be self-monitoring and fail-safe in that all safety systems are activated to alert any occupants that a problem exists and to prevent more hydrogen from being generated by any appliances in the room when hazardous conditions cannot be monitored.

[F] 421.7 Explosion control. Explosion control shall be provided where required by Section 414.5.1.

❖ The requirements of this section are intended to address the circumstance resulting from a catastrophic failure of the cutoff room. These requirements are the final safeguard in case safety features such as interlocked doors, ventilation and gas detection systems should fail. An ignited hydrogen mixture produces large quantities of heat, causing a rapid expansion of the surrounding air. This can cause a pressure increase in a confined space and a catastrophic failure. Explosion control methods are identi-

INTERNATIONAL CODE COUNCIL®
Copyright © 2015 ICC. ALL RIGHTS RESERVED. Accessed by David Dammon on Jun 21, 2017 12:30:52 PM pursuant to License Agreement with ICC. No further reproduction or distribution authorized. ANY UNAUTHORIZED REPRODUCTION OR DISTRIBUTION IS A VIOLATION OF THE FEDERAL COPYRIGHT ACT AND THE LICENSE AGREEMENT, AND SUBJECT TO CIVIL AND CRIMINAL PENALTIES THEREUNDER.

fied in Section 911 of the IFC to prevent such a catastrophic failure. The explosion control requirements for hydrogen are consistent with the requirements in NFPA 50A and the Sourcebook for Hydrogen Applications.

[F] 421.8 Standby power. Mechanical *ventilation* and gas detection systems shall be provided with a standby power system in accordance with Section 2702.

❖ The ventilation system and gas detection system are life safety systems and, therefore, must be dependable. Both safety systems must remain active in the event of a power failure of the primary power supply. Hydrogen is a colorless, odorless gas; a release might go undetected if detection systems are not functioning. The accumulation of hydrogen in an unventilated area can lead to mixtures in the flammable range if safety systems and mechanical ventilation systems are not in operation. Chapter 50 of the IFC addresses emergency and standby power requirements for emergency systems. It also allows an exception to the requirement for systems that are fail-safe (see IFC Section 5004.7, Exception 4). This exception may be used in cutoff rooms where hydrogen is generated, but not stored. Any storage of hydrogen within the cutoff room would not qualify for the exception because, in the event of a power failure, there will be no way to detect or ventilate a release from a storage vessel.

SECTION 422
AMBULATORY CARE FACIILITIES

422.1 General. Occupancies classified as *ambulatory care facilities* shall comply with the provisions of Sections 422.1 through 422.5 and other applicable provisions of this code.

❖ Complex outpatient surgeries outside of the hospital are now commonplace. They are performed in facilities often called “day surgery centers” or “ambulatory surgical centers” because patients are able to walk in and walk out the same day. Procedures render patients temporarily incapable of self-preservation by application of nerve blocks, sedation or anesthesia. Patients in these facilities typically recover quickly. A definition of “Ambulatory care facility” is provided in Section 202.

The code identifies medical care Group I occupancies as having 24-hour stay. Without a 24-hour stay, these surgery centers are classified as Group B. Strictly regulating such occupancies as a typical Group B occupancy is considered inappropriate, as this would allow the rendering of an unlimited number of people incapable of self-preservation with no more protection than a business office. These types of facilities contain distinctly different hazards to life and safety than other business occupancies, such as:

1. Patients incapable of self-preservation require rescue by other occupants or fire personnel.
2. Medical staff must stabilize the patient prior to evacuation; therefore, staff may require evacuation as well.
3. Use of oxidizing medical gases, such as oxygen and nitrous oxide.
4. Prevalence of surgical fires.

In the past, there was a movement to classify ambulatory care facilities as Group I-2 occupancies. This was determined to be a poor fit, because these are not hospitals. Federal and state jurisdictions have recognized that there is a middle ground between Groups B and I-2. These requirements provide a scaled approach to protection. The occupancy classification is a Group B, but with some enhanced safety features focused on the concern with occupants being incapable of self-preservation on a temporary basis. The enhanced requirements are based on the concepts in the regulation of the Group I-2 occupancy requirements found in Section 407.

422.2 Separation. *Ambulatory care facilities* where the potential for four or more care recipients are to be *incapable of self-preservation* at any time, whether rendered incapable by staff or staff accepted responsibility for a care recipient already incapable, shall be separated from adjacent spaces, *corridors* or tenants with a *fire partition* installed in accordance with Section 708.

❖ In a multitenant or mixed-occupancy building where there are other uses present in addition to an ambulatory care facility, a degree of fire separation between the ambulatory care facility and those nonrelated spaces is required where the ambulatory care facility is intended to have at least four care recipients incapable of self-preservation at any one time. The minimum separation, a fire partition complying with Section 708, is viewed as an important tool in isolating the ambulatory care portion of building from fire hazards that may occur in other portions of the building. Where a building is considered wholly as an ambulatory care facility, or if the ambulatory care facility occupies the entire story of a multistory building, there is no requirement for a fire partition to be constructed.

422.3 Smoke compartments. Where the aggregate area of one or more *ambulatory care facilities* is greater than 10,000 square feet (929 m^2) on one *story*, the *story* shall be provided with a *smoke barrier* to subdivide the *story* into no fewer than two *smoke compartments*. The area of any one such *smoke compartment* shall be not greater than 22,500 square feet (2092 m^2). The distance of travel from any point in a *smoke compartment* to a *smoke barrier* door shall be not greater than 200 feet (60 960 mm). The *smoke barrier* shall be installed in accordance with Section 709 with the exception that *smoke barriers* shall be continuous from outside wall to an outside wall, a floor to a floor, or from a *smoke barrier* to a *smoke barrier* or a combination thereof.

❖ In larger facilities, the creation of smoke compartments is required to allow a protect-in-place environ-

INTERNATIONAL CODE COUNCIL®
Copyright © 2015 ICC. ALL RIGHTS RESERVED. Accessed by David Dammon on Jun 21, 2017 12:30:52 PM pursuant to License Agreement with ICC. No further reproduction or distribution authorized. ANY UNAUTHORIZED REPRODUCTION OR DISTRIBUTION IS A VIOLATION OF THE FEDERAL COPYRIGHT ACT AND THE LICENSE AGREEMENT, AND SUBJECT TO CIVIL AND CRIMINAL PENALTIES THEREUNDER.

ment. These compartments allow staff a safer environment to stabilize the patients before evacuation, and protection for fire personnel who may have to evacuate both patients and staff. The maximum size of a smoke compartment is limited to 22,500 square feet (2090 m^2), consistent with the maximum size allowed for Group I-2, Condition 1 occupancies. It is important to note that each floor must be divided into at least two smoke compartments if the total floor area exceeds 10,000 square feet (929 m^2) on each story. Conversely, smoke compartments are not required for ambulatory care facilities with a floor area that does not exceed 10,000 square feet (929 m^2) on each story. The 10,000-square-foot (929 m^2) threshold is based on a story-by-story basis and is based on the aggregate floor areas where multiple ambulatory care facilities are present. The travel distance of 200 feet (60 960 mm) to a door providing egress from the smoke compartment is the same requirement as for Group I-2 occupancies.

422.3.1 Means of egress. Where ambulatory care facilities require smoke compartmentation in accordance with Section 422.3, the fire safety evacuation plans provided in accordance with Section 1001.4 shall identify the building components necessary to support a *defend-in-place* emergency response in accordance with Sections 404 and 408 of the *International Fire Code*.

❖ Defend-in-place, or protect in place, is a concept that has long been employed as the preferred method of fire response in hospitals due to the fragile nature of the occupants. Occupants in this setting, and similarly in ambulatory care facilities, are often dependent on the building infrastructure given that immediate evacuation would place their lives at risk. This infrastructure typically includes life support systems such as medical gases, emergency power and environmental controls that rely on continued building operation. Previous versions of this code have created a tried and tested set of requirements to support this concept, such as smoke compartmentation and areas of refuge. However, previous codes have not specifically described the concept of occupants remaining within a building during a fire emergency, leading to confusion and misapplication during design and enforcement. The concept is predicated on the use of smoke compartmentation.

422.3.2 Refuge area. Not less than 30 net square feet (2.8 m^2) for each nonambulatory care recipient shall be provided within the aggregate area of *corridors,* care recipient rooms, treatment rooms, lounge or dining areas and other low-hazard areas within each *smoke compartment.* Each occupant of an *ambulatory care facility* shall be provided with access to a refuge area without passing through or utilizing adjacent tenant spaces.

❖ This requirement is very similar to that found in Section 407.5.1 for Group I-2 occupancies. The purpose is to provide adequate space for patients, on beds, who might be relocated to an adjacent smoke compartment. Since the facility may still be in operation during the fire, space must be provided in corridors, patient rooms, treatment rooms, lounge or dining areas and other low-hazard areas for both the patients being relocated and the patients being treated in that smoke compartment. Section 407.5.1 acknowledges that there may be floors that do not house patients who are confined to beds or litter. It is also important that access to a refuge area be provided without requiring the occupant to travel through any other tenant space.

422.3.3 Independent egress. A *means of egress* shall be provided from each *smoke compartment* created by smoke barriers without having to return through the *smoke compartment* from which *means of egress* originated.

❖ This section is identical to Section 407.5.2 and requires that occupants should be able to exit the building without having to re-enter a smoke compartment from where they started. Although the strategy is to protect in place, occupants should not have to travel back through a smoke compartment to ultimately exit the building. This prevents the creation of a dead-end smoke compartment [see Commentary Figures 407.5, 407.5.2(1) and 407.5.2(2)].

[F] 422.4 Automatic sprinkler systems. *Automatic sprinkler systems* shall be provided for *ambulatory care facilities* in accordance with Section 903.2.2.

❖ Section 422.6 is part of the package of enhanced Group B requirements to accommodate the risk to occupants that is higher than the typical business occupancy but does not warrant classification as a Group I-2 occupancy. The actual sprinkler requirements are located in Section 903.2.2. The specific requirements apply when there are four or more care recipients incapable of self-preservation or if one or more care recipients are located on a story other than the level of exit discharge. The entire fire area meeting either one of the criteria must be sprinklered.

[F] 422.5 Fire alarm systems. A *fire alarm* system shall be provided for *ambulatory care facilities* in accordance with Section 907.2.2.

❖ As with the sprinkler requirements, the alarm requirements are actually located in Chapter 9. More specifically, Section 907.2.2.1 requires a manual fire alarm system in any fire area containing a Group B ambulatory care facility. Furthermore, an automatic smoke detection system is required within ambulatory care facility and public use spaces, such as lobbies and corridors, except where all areas of the building are protected by an automatic sprinkler system. In addition, the sprinkler system is required to activate the occupant notification appliances upon sprinkler water flow (see commentary, Section 907.2.2.1). The scope of the smoke detection was purposely narrowed to limit the amount of retrofit measures that a building owner would be required to undertake if a new ambulatory care tenant was established in an existing building.

INTERNATIONAL CODE COUNCIL®
Copyright © 2015 ICC. ALL RIGHTS RESERVED. Accessed by David Dammon on Jun 21, 2017 12:30:52 PM pursuant to License Agreement with ICC. No further reproduction or distribution authorized. ANY UNAUTHORIZED REPRODUCTION OR DISTRIBUTION IS A VIOLATION OF THE FEDERAL COPYRIGHT ACT AND THE LICENSE AGREEMENT, AND SUBJECT TO CIVIL AND CRIMINAL PENALTIES THEREUNDER.

SECTION 423
STORM SHELTERS

423.1 General. In addition to other applicable requirements in this code, storm shelters shall be constructed in accordance with ICC 500.

❖ Standard ICC 500 provides requirements for the design and construction of shelters to protect people from the violent winds of hurricanes and tornadoes. The standard includes special requirements for structural design, including wind loads that are considerably higher than the wind loads required by Chapter 16 for all structures.

Residential storm shelters are defined as shelters for dwelling units and with an occupant load of 16 or fewer. Commercial storm shelters are for anything else, including shelter for larger groups of homes and apartment buildings, as well as other occupancies.

Wind loads for storm shelters will be based upon wind speed contour maps developed specially for this standard. The wind load design requirements are relatively severe when compared to the wind speed maps in Chapter 16. Contour maps for wind speeds in hurricane prone regions were determined based upon a 10,000-year mean return period. The map shows 200 mph (89 m/s) wind speeds on the coast of Florida and the Carolinas, and wind speeds higher than 200 mph (89 m/s) in some locations. These are wind speeds associated with a Category 5 hurricane. Shelter design wind speeds in the central part of the United States (a region called “tornado alley”) are as high as 250 mph (112 m/s).

Such high wind speeds, of course, produce flying debris, turning construction materials into deadly missiles. The standard contains specific test methods and pass-fail criteria for window and doors protection from flying debris.

ICC 500 addresses nonstructural issues, as well. Storm shelters for hurricanes will be required to house people for 24 hours. Tornado shelters will be required to house people for 2 hours. The standard addresses minimum requirements for ventilation air, sanitation facilities, potable water supply, lighting and other minimal power needs.

It should be noted that the entrances and exits to commercial storm shelters will be required to be accessible. In addition, the occupant load requirements are such that some wheelchair space will be required.

423.1.1 Scope. This section applies to the construction of storm shelters constructed as separate detached buildings or constructed as safe rooms within buildings for the purpose of providing safe refuge from storms that produce high winds, such as tornados and hurricanes. Such structures shall be designated to be hurricane shelters, tornado shelters, or combined hurricane and tornado shelters.

❖ Most storm shelters are safe rooms within a bigger facility. Shelters can be used for other purposes during normal building operation. Examples are gymnasiums and classrooms in a school, and locker rooms and bathrooms in a fire station. The purpose of the storm shelter is to provide refuge for people during a storm. The standard does not address the use of the shelter as a post-storm recovery facility, although it may well be used for that purpose. Sections 423.3 and 423.4 specify two instances where storm shelters are required in buildings constructed in compliance with the code.

423.2 Definitions. The following terms are defined in Chapter 2:

STORM SHELTER.

Community storm shelter.

Residential storm shelter.

❖ This section lists terms that are specifically associated with the subject matter of Section 423. It is important to emphasize that these terms are not exclusively related to this chapter but may or may not also be applicable where the term is used elsewhere in the code.

Definitions of terms can help in the understanding and application of the code requirements. The purpose for including a list within this chapter is to provide more convenient access to terms that may have a specific or limited application within this chapter. For the complete definition and associated commentary, refer back to Chapter 2. Terms that are italicized provide a visual identification throughout the code that a definition exists for that term. The use and application of all defined terms are set forth in Section 201.

423.3 Critical emergency operations. In areas where the shelter design wind speed for tornados in accordance with Figure 304.2(1) of ICC 500 is 250 MPH, 911 call stations, emergency operation centers and fire, rescue, ambulance and police stations shall have a storm shelter constructed in accordance with ICC 500.

Exception: Buildings meeting the requirements for shelter design in ICC 500.

❖ Figure 304.2(1) of ICC 500 is replicated as Commentary Figure 423.3 for this commentary. The figure outlines all or part of 23 states where the design speed for tornadoes is 250 mph (112 m/s), thus requiring that these emergency service facilities be provided with a storm shelter. The types of facilities that are required to have shelters are locations that house emergency responders or systems that a community would want operational after a tornado event.

The code offers the option of providing a shelter within the building, or constructing the whole building as a shelter. The advantage of constructing the whole building as a shelter is that, should a tornado hit the building, the building has a better chance of surviving the storm and therefore being ready to provide emergency services to the community immediately after the storm passes.

The code does not specify the capacity of the shelter if it is not the whole building. While the first

INTERNATIONAL CODE COUNCIL®
Copyright © 2015 ICC. ALL RIGHTS RESERVED. Accessed by David Dammon on Jun 21, 2017 12:30:52 PM pursuant to License Agreement with ICC. No further reproduction or distribution authorized. ANY UNAUTHORIZED REPRODUCTION OR DISTRIBUTION IS A VIOLATION OF THE FEDERAL COPYRIGHT ACT AND THE LICENSE AGREEMENT, AND SUBJECT TO CIVIL AND CRIMINAL PENALTIES THEREUNDER.

thought of capacity should be protecting the occupants of the building containing the shelter, thought should be given to people in adjacent and nearby buildings that may not have their own shelter. Once the number of occupants to be accommodated is decided, ICC 500 provides details for the design and construction of the shelter.

423.4 Group E occupancies. In areas where the shelter design wind speed for tornados is 250 MPH in accordance with Figure 304.2(1) of ICC 500, all Group E occupancies with an aggregate occupant load of 50 or more shall have a storm shelter constructed in accordance with ICC 500. The shelter shall be capable of housing the total occupant load of the Group E occupancy.

Exceptions:

1. Group E day care facilities.
2. Group E occupancies accessory to places of religious worship.
3. Buildings meeting the requirements for shelter design in ICC 500.

❖ See the commentary for Section 423.3. For Group E occupancies such as grade, middle and high schools, the code requires the provision of a storm shelter large enough to accommodate the total occupant load of the Group E occupancy. The option exists to build the whole school as a shelter (Exception 3). Schools that include an auditorium or gymnasium where large numbers will gather for sporting events or other school activities must have shelters capable of accommodating those occupants. It is not the intent to require the shelter to be designed for the total occupant load of the building that is used for means of egress. Where there is a situation where the classrooms would be empty if the gymnasium was full, such as an all-school assembly, or after-hours sporting event, the storm shelter can be designed to accommodate that occupant load. The best option may be to construct the auditorium or gymnasium as the shelter. While the text says "a" storm shelter, there is nothing to prevent creating multiple shelters in diverse locations within the facility to accommodate all occupants. Some schools use the bathrooms throughout the school as shelters to lessen the time and travel for students to access those shelters. Three E occupancies are exempt from the requirement: 1. Those with an occupant load of less than 50; 2. Day care facilities (see Sections 308.6.1 and 305.2); and 3. Group E occupancies accessory to a place of religious worship (see Sections 303.1.4 and 305.2.1).

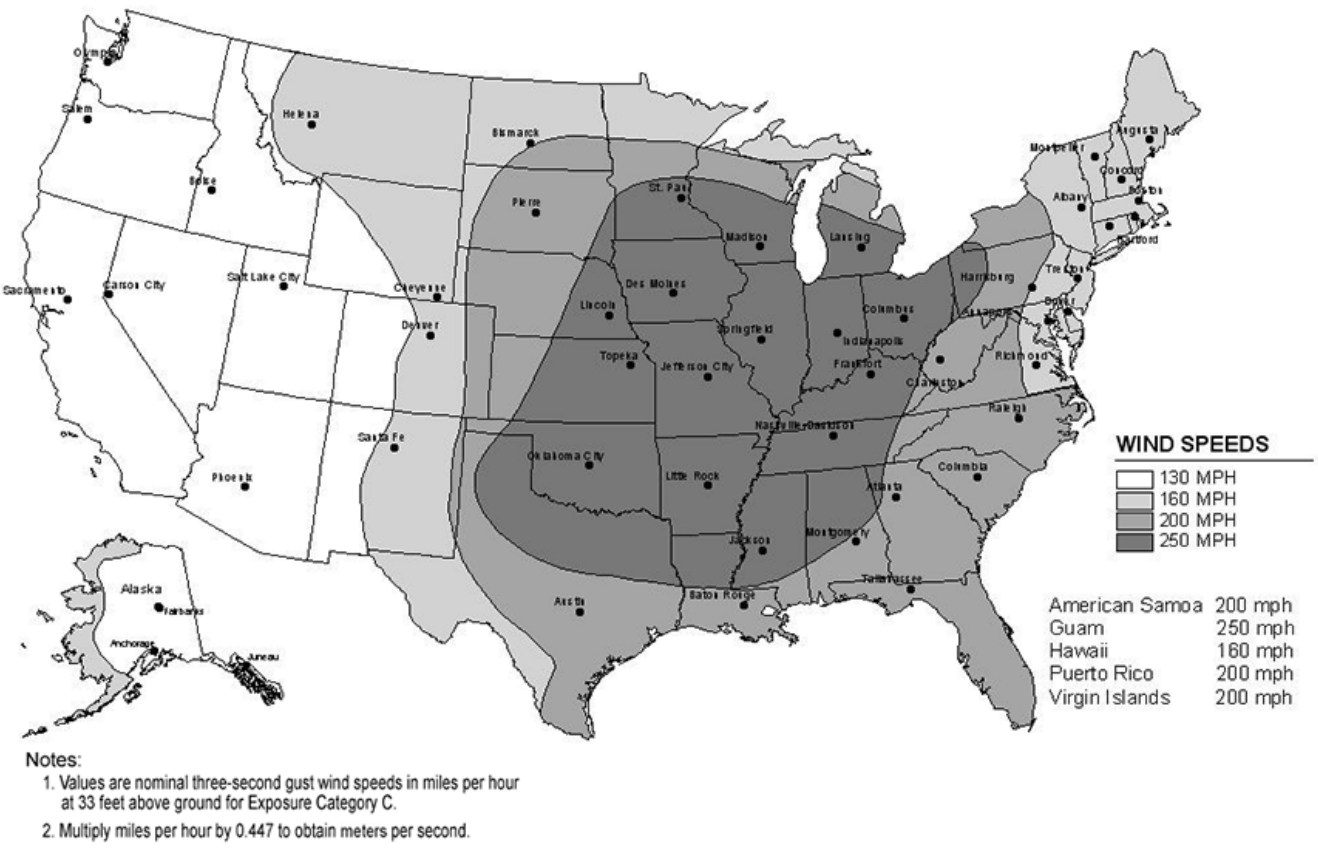

Figure 423.3
SHELTER DESIGN WIND SPEEDS FOR TORNADOES

INTERNATIONAL CODE COUNCIL®
Copyright © 2015 ICC. ALL RIGHTS RESERVED. Accessed by David Dammon on Jun 21, 2017 12:30:52 PM pursuant to License Agreement with ICC. No further reproduction or distribution authorized. ANY UNAUTHORIZED REPRODUCTION OR DISTRIBUTION IS A VIOLATION OF THE FEDERAL COPYRIGHT ACT AND THE LICENSE AGREEMENT, AND SUBJECT TO CIVIL AND CRIMINAL PENALTIES THEREUNDER.

SECTION 424
CHILDREN'S PLAY STRUCTURES

424.1 Children's play structures. Children's play structures installed inside all occupancies covered by this code that exceed 10 feet (3048 mm) in height and 150 square feet (14 m^2) in area shall comply with Sections 424.2 through 424.5.

❖ Play structures for children's activities have been regulated for some time by the code where such structures are located within covered mall buildings. The primary concern, consistent with other structures located within a covered mall building, is the combustibility of such play structures. Due to the potential fire hazards, the regulations are now applicable where such structures are located within any building regulated by this code, regardless of occupancy classification. The current provisions are essentially identical to those that historically regulated children's play structures located within covered mall buildings. If these structures exceed 10 feet (3048 mm) in height and 150 square feet (14 m^2) in area, then the provisions of Sections 424.2 through 424.5 must be followed.

424.2 Materials. Children's play structures shall be constructed of noncombustible materials or of combustible materials that comply with the following:

1. *Fire-retardant-treated* wood complying with Section 2303.2.
2. Light-transmitting plastics complying with Section 2606.
3. Foam plastics (including the pipe foam used in soft-contained play equipment structures) having a maximum heat-release rate not greater than 100 kilowatts when tested in accordance with UL 1975 or when tested in accordance with NFPA 289, using the 20 kW ignition source.
4. Aluminum composite material (ACM) meeting the requirements of Class A *interior finish* in accordance with Chapter 8 when tested as an assembly in the maximum thickness intended for use.
5. Textiles and films complying with the fire propagation performance criteria contained in Test Method 1 or Test Method 2, as appropriate, of NFPA 701.
6. Plastic materials used to construct rigid components of soft-contained play equipment structures (such as tubes, windows, panels, junction boxes, pipes, slides and decks) exhibiting a peak rate of heat release not exceeding 400 kW/ m^2 when tested in accordance with ASTM E1354 at an incident heat flux of 50 kW/m^2 in the horizontal orientation at a thickness of 6 mm.
7. Ball pool balls, used in soft-contained play equipment structures, having a maximum heat-release rate not greater than 100 kilowatts when tested in accordance with UL 1975 or when tested in accordance with NFPA 289, using the 20 kW ignition source. The minimum specimen test size shall be 36 inches by 36 inches (914 mm by 914 mm) by an average of 21 inches (533 mm) deep, and the balls shall be held in a box constructed of galvanized steel poultry netting wire mesh.
8. Foam plastics shall be covered by a fabric, coating or film meeting the fire propagation performance criteria contained in Test Method 1 or Test Method 2, as appropriate, of NFPA 701.
9. The floor covering placed under the children's play structure shall exhibit a Class I interior floor finish classification, as described in Section 804, when tested in accordance with NFPA 253.

❖ The amount of combustible materials associated with children's play structures is rigidly limited. The provisions of Section 424.2 provide nine items of combustible materials that can be used to construct play equipment. These limitations are consistent with those previously applicable only to children's play structures located in covered mall buildings. The materials when tested in accordance with NFPA 701 must comply with the performance criteria of one of the two identified test methods. The historic "small-scale test" is no longer accepted.

[F] 424.3 Fire protection. Children's play structures shall be provided with the same level of *approved* fire suppression and detection devices required for other structures in the same occupancy.

❖ Children's play structures within a building must be provided with fire suppression and detection devices that provide an equal or better degree of fire protection than that required for the occupancy in which the play structures are located.

424.4 Separation. Children's play structures shall have a horizontal separation from building walls, partitions and from elements of the *means of egress* of not less than 5 feet (1524 mm). Children's playground structures shall have a horizontal separation from other children's play structures of not less than 20 feet (6090 mm).

❖ Multiple children's play structures must be isolated from each other by a minimum distance of 20 feet (6090 mm). This separation reduces the concentration of combustible materials within a single area. A minimum separation of 5 feet (1524 mm) is also required between any play structure and portions of the building's construction, including means of egress elements, to allow for emergency personnel access and to reduce fire spread potential.

424.5 Area limits. Children's play structures shall be not greater than 300 square feet (28 m^2) in area, unless a special investigation, acceptable to the building official, has demonstrated adequate fire safety.

❖ Play structures are limited to a 300-square-foot (28 m^2) area limitation unless adequate fire safety is proven to the building official by way of a special investigation.

INTERNATIONAL CODE COUNCIL®
Copyright © 2015 ICC. ALL RIGHTS RESERVED. Accessed by David Dammon on Jun 21, 2017 12:30:52 PM pursuant to License Agreement with ICC. No further reproduction or distribution authorized. ANY UNAUTHORIZED REPRODUCTION OR DISTRIBUTION IS A VIOLATION OF THE FEDERAL COPYRIGHT ACT AND THE LICENSE AGREEMENT, AND SUBJECT TO CIVIL AND CRIMINAL PENALTIES THEREUNDER.

SECTION 425
HYPERBARIC FACILITIES

425.1 Hyperbaric facilities. Hyperbaric facilities shall meet the requirements contained in Chapter 20 of NFPA 99.

❖ For these unique treatment facilities, Chapter 20 of NFPA 99 provides appropriate design criteria. While hyperbaric facilities are often located in a hospital facility (Group I-2, Condition 2), they can also be found at independent medical facilities.

SECTION [F] 426
COMBUSTIBLE DUSTS, GRAIN PROCESSING AND STORAGE

426.1 Combustible dusts, grain processing and storage. The provisions of Sections 426.1.1 through 426.1.7 shall apply to buildings in which materials that produce combustible dusts are stored or handled. Buildings that store or handle combustible dusts shall comply with the applicable provisions of NFPA 61, NFPA 85, NFPA 120, NFPA 484, NFPA 654, NFPA 655 and NFPA 664 and the *International Fire Code*.

❖ Combustible dusts can generate high-pressure gas by combustion in air. The pressure created can destroy process equipment and structures. While there is a minimum concentration of dust required, there is no reliable upper concentration limitation beyond which combustion will not occur. The ignition source is often the process equipment itself. The provisions of this section primarily address the construction of a building that contains this hazard. The construction requirements are primarily intended to reduce the exposure hazard should a fire or explosion occur. To minimize the impact of the explosion on the structure, explosion control in accordance with Section 414.5.1 and the IFC is required. The provisions of this section apply to all buildings in which combustible dusts and particles are of sufficient quantity to be readily ignited and subject to explosion. The concentration that would be required to constitute such a hazard is dependent on the particle size. Additional guidance on the relative fire risk associated with various combustible dusts can be found in the referenced standards. In addition to the provisions of this section, compliance with the provisions of the IFC and the referenced standards is essential to minimize potential ignition and fire and explosion hazards. Chapter 22 of the IFC contains specific safety precautions for combustible dust-producing operations and references additional standards for explosion protection based on the type of process involved. Essentially, each of the referenced standards prescribes reasonable requirements for safety to life and property from fire and explosion. The standards also minimize the resulting damage should a fire or explosion occur. More specifically, they contain provisions for construction, ventilation, explosion venting, equipment, heating devices, dust control and fire protection; supplemental requirements related to electrical wiring and equipment; provisions concerning protection from sparks; and regulations addressing cutting and welding, smoking and signage.

[F] 426.1.1 Type of construction and height exceptions. Buildings shall be constructed in compliance with the height, number of stories and area limitations specified in Sections 504 and 506; except that where erected of Type I or II construction, the heights and areas of grain elevators and similar structures shall be unlimited, and where of Type IV construction, the maximum building height shall be 65 feet (19 812 mm) and except further that, in isolated areas, the maximum building height of Type IV structures shall be increased to 85 feet (25 908 mm).

❖ The construction of buildings in which combustible dusts can be readily ignitable and subject to an explosion hazard is restricted to the height and area limits in Tables 504.3, 504.4 and 506.2 for Group H-2. The limitation on construction is intended to reduce the available fuel source that could ignite and serve as the source of a dust explosion. Grain elevators and similar structures that require a height in excess of that permitted in Table 504.3 may be of unlimited height if the structures are of Type I or II construction; or such structures may be 65 feet (19 812 mm) if they are of Type IV construction. If the structure is of Type IV construction and located so as not to constitute an explosion hazard, the allowable height may be increased to 85 feet (25 908 mm). Although the buildings are required to have an automatic sprinkler system in accordance with Section 903.2.5, the speed at which the combustion process or explosion could occur may reduce the effectiveness of the sprinkler system. Additional guidance on methods to prevent explosions can be found in Section 911 of the IFC and applicable referenced standards, such as NFPA 69, for explosion prevention systems.

[F] 426.1.2 Grinding rooms. Every room or space occupied for grinding or other operations that produce combustible dusts in such a manner that the room or space is classified as a Group H-2 occupancy shall be enclosed with fire barriers constructed in accordance with Section 707 or horizontal assemblies constructed in accordance with Section 711, or both. The fire-resistance rating of the enclosure shall be not less than 2 hours where the area is not more than 3,000 square feet (279 m^2), and not less than 4 hours where the area is greater than 3,000 square feet (279 m^2).

❖ Grinding rooms are to be separated from remaining parts of the building by construction having a fire-resistance rating of at least 2 hours. If the area of the room is greater than 3,000 square feet (279 m^2), the fire-resistance rating of the enclosure must be at least 4 hours. Not only is it the intent to protect the room from an explosion fire but also, assuming the explosion venting results in minimal structural damage, for the enclosure to contain the resulting fire, if any, to the room of origin. Without venting, it is doubtful that the enclosure could withstand the forces exerted on the wall by an explosion.

INTERNATIONAL CODE COUNCIL®
Copyright © 2015 ICC. ALL RIGHTS RESERVED. Accessed by David Dammon on Jun 21, 2017 12:30:52 PM pursuant to License Agreement with ICC. No further reproduction or distribution authorized. ANY UNAUTHORIZED REPRODUCTION OR DISTRIBUTION IS A VIOLATION OF THE FEDERAL COPYRIGHT ACT AND THE LICENSE AGREEMENT, AND SUBJECT TO CIVIL AND CRIMINAL PENALTIES THEREUNDER.

[F] 426.1.3 Conveyors. Conveyors, chutes, piping and similar equipment passing through the enclosures of rooms or spaces shall be constructed dirt tight and vapor tight, and be of *approved* noncombustible materials complying with Chapter 30.

❖ The intent of this section is to restrict conveyors that pass through walls so that they do not serve as an ignition source or avenue of fire spread to adjacent areas. These conveyors and similar equipment must be constructed of noncombustible materials and be dirt and vapor tight.

[F] 426.1.4 Explosion control. Explosion control shall be provided as specified in the *International Fire Code*, or spaces shall be equipped with the equivalent mechanical *ventilation* complying with the *International Mechanical Code*.

❖ The pressure exerted by a combustible dust explosion typically ranges from 13 to 89 psi (89 to 614 kPa). It is impractical to construct a building that will withstand such pressures; therefore, either a means of explosion control must be provided in accordance with Section 911 of the IFC, or an equivalent mechanical ventilation system must be provided. The mechanical ventilation system must be in accordance with the IMC and must be designed to control the dust concentration below hazardous levels. The mechanical ventilation is dependent on the concentration at which a dust explosion could occur. Additional guidance on the relative fire risk associated with various combustible dusts can be found in the referenced standards.

[F] 426.1.5 Grain elevators. Grain elevators, malt houses and buildings for similar occupancies shall not be located within 30 feet (9144 mm) of interior *lot lines* or structures on the same *lot*, except where erected along a railroad right-of-way.

❖ The 30-foot (9144 mm) separation between grain elevators (or similar structures with regard to lot lines) and other structures is intended to reduce the exposure hazard. It is intended not only to reduce the damage to the adjacent structure but also to minimize the potential that a fire in the adjacent structure would affect the grain elevator. Grain elevators are singled out because of the additional height permitted in Section 415.8.1.1 and the typical openness of the structure. The 30-foot (9144 mm) separation is not required if the grain elevator is located along a railroad right-of-way. The railroad right-of-way will offer some separation, except when a car is being loaded from the grain elevator, in which case the 30-foot (9144 mm) criterion may not be practical.

[F] 426.1.6 Coal pockets. Coal pockets located less than 30 feet (9144 mm) from interior *lot lines* or from structures on the same *lot shall* be constructed of not less than Type IB construction. Where more than 30 feet (9144 mm) from interior *lot lines*, or where erected along a railroad right-of-way, the minimum type of construction of such structures not more than 65 feet (19 812 mm) in *building height* shall be Type IV.

❖ Like grain elevators, coal pockets are typically open structures and there is a need to provide separation between the coal pocket and adjacent structures to reduce exposure fire risk. Type IB construction is the required minimum if a coal pocket is within 30 feet (9144 mm) of another structure or lot line. Like grain elevators, if the separation is in excess of 30 feet (9144 mm), Type IV construction is permitted to a maximum building height of 65 feet (19 812 mm).

[F] 426.1.7 Tire rebuilding. Buffing operations shall be located in a room separated from the remainder of the building housing the tire rebuilding or tire recapping operation by a 1-hour *fire barrier*.

Exception: Buffing operations are not required to be separated where all of the following conditions are met:

1. Buffing operations are equipped with an *approved* continuous automatic water-spray system directed at the point of cutting action;
2. Buffing machines are connected to particle-collecting systems providing a minimum air movement of 1,500 cubic feet per minute (cfm) (0.71 m^3/s) in volume and 4,500 feet per minute (fpm) (23 m/s) in-line velocity; and
3. The collecting system shall discharge the rubber particles to an *approved* outdoor noncombustible or fire-resistant container, which is emptied at frequent intervals to prevent overflow.

❖ Tire rebuilding plants are classified in Group F-1 occupancies in accordance with Section 306.2. Depending on an evaluation of the actual hazards presented by a given operation, which could include grinding, buffing or gluing of tires or tire components, the plant or portions of it might be classified as Group H. This section specifies that the buffing operations must be separated from other operations by a 1-hour fire barrier. The intent is to keep the higher hazard operations separate, thereby reducing the potential for a rapidly spreading fire.

The exception recognizes that meeting the three outlined conditions will afford protection equivalent to the 1-hour fire barrier required by this section.

Bibliography

The following resource materials were used in the preparation of the commentary for this chapter of the code.

ANSI A13.1-07, *Scheme for the Identification of Piping Systems*. New York: American National Standards Institute, 2007.

ASME B31.3-12, *Process Piping*. New York: American National Standards Institute, 2012.

INTERNATIONAL CODE COUNCIL®
Copyright © 2015 ICC. ALL RIGHTS RESERVED. Accessed by David Dammon on Jun 21, 2017 12:30:52 PM pursuant to License Agreement with ICC. No further reproduction or distribution authorized. ANY UNAUTHORIZED REPRODUCTION OR DISTRIBUTION IS A VIOLATION OF THE FEDERAL COPYRIGHT ACT AND THE LICENSE AGREEMENT, AND SUBJECT TO CIVIL AND CRIMINAL PENALTIES THEREUNDER.

ASTM C1628-06, *Specification for Joints for Concrete Gravity Flow Sewer Pipe, Using Rubber Gaskets*. West Conshohocken, PA: ASTM International, 2006.

ASTM C1629/C1629M-06, (2011) *Standard Classification for Abuse-resistant Nondecorated Interior Gypsum Panel Products and Fiber-reinforced Cement Panels*. West Conshohocken, PA: ASTM International, 2011.

ASTM E84-2013A, *Test Methods for Surface-burning Characteristics of Building Materials*. West Conshohocken, PA: ASTM International, 2013.

ASTM E119-2012A, *Test Methods for Fire Tests of Building Construction and Materials*. West Conshohocken, PA: ASTM International, 2012.

ASTM E695-09, *Method for Measuring Relative Resistance of Wall, Floor, and Roof Construction to Impact Loading*. West Conshohocken, PA: ASTM International, 2009.

ASTM E736-00 (2011), *Test Method for Cohesion/ Adhesion of Sprayed Fire-resistive Materials Applied to Structural Members*. West Conshohocken, PA: ASTM International, 2011.

Bain, A., J. Barclay, T. Bose, F. Edeskuty, M. Farlie, J. Hansel, R. Hay and M. Swain (et al). *Sourcebook for Hydrogen Application*. Golden, CO: Hydrogen Research Institute and National Renewable Energy Laboratory, 1998.

Boring, Delbert F. and others. *Fire Protection Through Modern Building Codes*, 5th ed. Washington, DC: American Iron and Steel Institute, 1981.

Final Report of the National Construction Safety Team on the Collapses of the World Trade Center Towers. Washington, DC: National Institute of Standards and Technology, 2005.

Fire Protection Handbook, 20th ed. Quincy, MA: National Fire Protection Association, 2008.

Fothergill, John W. and John H. Klote. *Design of Smoke Control Systems for Buildings*. Atlanta: American Society for Heating, Refrigerating and Air-Conditioning Engineers, Inc., 1983.

ICC/ANSI A117.1-09, *Accessible and Usable Buildings and Facilities*. Washington, DC: International Code Council, 2010.

ICC 500-14, *ICC/NSSA Standard on the Design and Construction of Storm Shelters*. Washington, DC: International Code Council, 2014.

NFPA 13-13, *Installation of Sprinkler Systems*. Quincy, MA: National Fire Protection Association, 2013.

NFPA 13-D-13, *Installation of Sprinkler Systems in One- and Two-family Dwellings and Manufactured Homes*. Quincy, MA: National Fire Protection Association, 2013.

NFPA 13R-13, *Installation of Sprinkler Systems in Residential Occupancies up to and Including Four Stories in Height*. Quincy, MA: National Fire Protection Association, 2013.

NFPA 30-12, *Flammable and Combustible Liquids Code*. Quincy, MA: National Fire Protection Association, 2011.

NFPA 30A-15, *Code for Motor Fuel-dispensing Facilities and Repair Garages*. Quincy, MA: National Fire Protection Association, 2015.

NFPA 30B-15, *Manufacture and Storage of Aerosol Products*. Quincy, MA: National Fire Protection Association, 2015.

NFPA 32-11, *Dry Cleaning Plants*. Quincy, MA: National Fire Protection Association, 2011.

NFPA 33-15, *Spray Application Using Flammable and Combustible Materials*. Quincy, MA: National Fire Protection Association, 2015.

NFPA 34-15, *Dipping and Coating Processes Using Flammable or Combustible Liquids*. Quincy, MA: National Fire Protection Association, 2015.

NFPA 35-11, *Manufacture of Organic Coatings*. Quincy, MA: National Fire Protection Association, 2011.

NFPA 40-11, *Storage and Handling of Cellulose Nitrate Film*. Quincy, MA: National Fire Protection Association, 2011.

NFPA 50A-99, *Gaseous Hydrogen Systems at Consumer Sites*. Quincy, MA: National Fire Protection Association, 1999.

NFPA 58-14, *Liquefied Petroleum Gas Code*. Quincy, MA: National Fire Protection Association, 2014.

NFPA 61-13, *Prevention of Fires and Dust Explosions in Agricultural Food Products Facilities*. Quincy, MA: National Fire Protection Association, 2013.

NFPA 68-07, *Explosion Protection by Deflagration Venting*. Quincy, MA: National Fire Protection Association, 2007.

NFPA 69-14, *Explosion Prevention Systems*. Quincy, MA: National Fire Protection Association, 2014.

NFPA 70-14, *National Electrical Code*. Quincy, MA: National Fire Protection Association, 2014.

NFPA 72-13, *National Fire Alarm Code*. Quincy, MA: National Fire Protection Association, 2013.

NFPA 80-13, *Fire Doors and Other Opening Protectives*. Quincy, MA: National Fire Protection Association, 2013.

NFPA 99-15, *Standard for Health Care Facilities*. Quincy, MA: National Fire Protection Association, 2015.

INTERNATIONAL CODE COUNCIL®

Copyright © 2015 ICC. ALL RIGHTS RESERVED. Accessed by David Dammon on Jun 21, 2017 12:30:52 PM pursuant to License Agreement with ICC. No further reproduction or distribution authorized. ANY UNAUTHORIZED REPRODUCTION OR DISTRIBUTION IS A VIOLATION OF THE FEDERAL COPYRIGHT ACT AND THE LICENSE AGREEMENT, AND SUBJECT TO CIVIL AND CRIMINAL PENALTIES THEREUNDER.

NFPA 110-13, *Emergency and Standby Power Systems*. Quincy, MA: National Fire Protection Association, 2013.

NFPA 111-13, *Stored Electrical Energy Emergency and Standby Power Systems*. Quincy, MA: National Fire Protection Association, 2013.

NFPA 120-15, *Coal Preparation Plants*. Quincy, MA: National Fire Protection Association, 2015.

NFPA 251-06, *Standard Methods of Tests of Building Endurance of Building Construction and Materials*. Quincy, MA: National Fire Protection Association, 2006.

NFPA 318-15, *Standard for the Protection of Semiconductor Fabrication Facilities*. Quincy, MA: National Fire Protection Association, 2015.

NFPA 409-11, *Aircraft Hangars*. Quincy, MA: National Fire Protection Association, 2011.

NFPA 418-11, *Standard for Heliports*. Quincy, MA: National Fire Protection Association, 2011.

NFPA 484-15, C*ombustible Metals.* Quincy, MA: National Fire Protection Association, 2015.

NFPA 495-13, *Explosive Materials Code*. Quincy, MA: National Fire Protection Association, 2013.

NFPA 654-13, *Prevention of Fire and Dust Explosions from the Manufacturing, Processing and Handling of Combustible Particulate Solids*. Quincy, MA: National Fire Protection Association, 2013.

NFPA 655-12, *Prevention of Sulfur Fires and Explosions*. Quincy, MA: National Fire Protection Association, 2011.

NFPA 664-12, *Prevention of Fires and Explosions in Wood Processing and Woodworking Facilities*. Quincy, MA: National Fire Protection Association, 2011.

NFPA 701-10, *Standard Methods of Fire Tests for Flame-propagation of Textiles and Films*. Quincy, MA: National Fire Protection Association, 2010.

NFPA 704-12, *Flammable and Combustible Liquids Code*. Quincy, MA: National Fire Protection Association, 2011.

NFPA 1124-06, *Manufacture, Transportation and Storage of Fireworks and Pyrotechnic Articles*. Quincy, MA: National Fire Protection Association, 2006.

NFPA, *Fire Protection Guide on Hazardous Materials*. Quincy, MA: National Fire Protection Association, 2002.

NIST IR 5240-93, *Measurement of Room Conditions and Response of Sprinklers and Smoke Detectors During a Simulated Two-bed Hospital Patient Room Fire*. Gaithersburg, MD: National Institute of Standards and Technology, July 1993.

UL 217-06, *Single- and Multiple-station Smoke Detectors with Revisions through August 2005*. Northbrook, IL: Underwriters Laboratories Inc., 2006.

UL 268-09, *Smoke Detectors for Fire Protection Signaling*. Northbrook, IL: Underwriters Laboratories Inc., 2009.

UL 325-02, *Door, Drapery, Gate, Louver and Window Operations and Systems—with Revisions through February 2006*. Northbrook, IL: Underwriters Laboratories Inc., 2002.

UL 1994-04, *Standard for Luminous Egress Path Marking Systems, with Revisions through February of 2005*. Northbrook, IL: Underwriters Laboratories Inc., 2005.

UL 2075-2013, *Standard for Gas and Vapor Detectors and Sensors*. Northbrook, IL: Underwriters Laboratories Inc., 2013.

INTERNATIONAL CODE COUNCIL®

Copyright © 2015 ICC. ALL RIGHTS RESERVED. Accessed by David Dammon on Jun 21, 2017 12:30:52 PM pursuant to License Agreement with ICC. No further reproduction or distribution authorized. ANY UNAUTHORIZED REPRODUCTION OR DISTRIBUTION IS A VIOLATION OF THE FEDERAL COPYRIGHT ACT AND THE LICENSE AGREEMENT, AND SUBJECT TO CIVIL AND CRIMINAL PENALTIES THEREUNDER.

INTERNATIONAL CODE COUNCIL®
Copyright © 2015 ICC. ALL RIGHTS RESERVED. Accessed by David Dammon on Jun 21, 2017 12:30:52 PM pursuant to License Agreement with ICC. No further reproduction or distribution authorized. ANY UNAUTHORIZED REPRODUCTION OR DISTRIBUTION IS A VIOLATION OF THE FEDERAL COPYRIGHT ACT AND THE LICENSE AGREEMENT, AND SUBJECT TO CIVIL AND CRIMINAL PENALTIES THEREUNDER.

Chapter 5:
General Building Heights and Areas

General Comments

Chapter 5 contains the provisions that regulate the minimum type of construction of a building, including allowable heights and areas; mezzanines; unlimited area structures; mixed occupancies; and special provisions. The occupancy (or occupancies) and type of construction of a building are of key importance to the application of these provisions.

Section 501.1 gives the scope of Chapter 5. It specifies that the provisions of Chapter 5 apply not only to new construction, but also to existing building additions.

Section 502 lists terms that are related to the use and application of Chapter 5 and other provisions of the code related to height and area. The definitions are found in Section 202.

Section 503 addresses the general allowable height and area limitations of buildings. New to the 2015 Codes, this section points to separate sections for limitations on building height and building area. The single Table 503 is replaced by three tables—Table 504.3 for building height in feet, Table 504.4 for building height in stories, and Table 506.2 for building area.

Section 504 addresses the height limits of buildings in both height in feet and number of stories. Table 504.3 provides the height limits, in feet, based upon type of construction, and Table 504.4 provides the maximum allowable number of stories above grade based upon type of construction. Both tables give allowable heights or number of stories with and without sprinkler systems.

Section 505 provides the criteria and regulations for mezzanines and industrial equipment platforms.

Section 506 addresses area limits for a building. Table 506.2 provides tabular areas for buildings based upon the type of construction and occupancy classification for buildings with and without sprinkler systems. The allowable area is then calculated by adding a street frontage increase to these values.

Section 507 includes requirements for buildings with no area limitation. These provisions are commonly used for very large retail sales buildings, industrial warehouses and factories.

Section 508 provides requirements for buildings with multiple occupancies.

Section 509 addresses incidental uses such as waste and linen collection rooms, laundry rooms and incinerator rooms.

Section 510 contains special options for buildings that modify the general limitations of a building's allowable height and/or area.

Chapter 5 is an important chapter in the code because many other code requirements depend on the establishment of the minimum required type of construction for a building. A building has one minimum required construction type and must meet or exceed those requirements, with certain exceptions for buildings conforming to the special provisions of Section 510. Without the correct determination of the minimum type of construction, misapplication of the code is probable.

Sections 504 and 506 provide the foundation for setting thresholds for building size based on the building's use and the materials with which it is constructed. The aim is to reduce risk of injury to an acceptable level for building occupants by limiting fire load and fire hazards relating to height, area and occupancy. In accordance with Tables 504.3, 504.4 and 506.2, buildings of higher construction types [noncombustible materials and a higher degree of fire-resistance rating of elements (see Chapter 6)] can be larger and taller than buildings of lower construction types (combustible and unprotected with fire-resistance ratings).

Purpose

Following occupancy classification of uses based on Chapter 3, the code review for the design of any building continues with Chapter 5, with the determination of the minimum required type of construction based on the use and size of the building. Misapplication of Chapter 5 can result in a multitude of related errors in subsequent code application, since many code requirements depend on the type of construction that is required for the building.

The main purpose of Chapter 5 is to regulate the size of structures based on the specific hazards associated with their occupancy and the materials of which they are constructed. Chapter 5 also provides for adjustments to the allowable area and height based on the presence of fire protection systems, which offer protection for both building occupants and responding fire service personnel in the event of a fire.

INTERNATIONAL CODE COUNCIL®
Copyright © 2015 ICC. ALL RIGHTS RESERVED. Accessed by David Dammon on Jun 21, 2017 12:30:52 PM pursuant to License Agreement with ICC. No further reproduction or distribution authorized. ANY UNAUTHORIZED REPRODUCTION OR DISTRIBUTION IS A VIOLATION OF THE FEDERAL COPYRIGHT ACT AND THE LICENSE AGREEMENT, AND SUBJECT TO CIVIL AND CRIMINAL PENALTIES THEREUNDER.

SECTION 501
GENERAL

501.1 Scope. The provisions of this chapter control the height and area of structures hereafter erected and *additions* to existing structures.

❖ Chapter 5 is applicable to all new buildings as well as any existing structures that are to be enlarged. Allowable building height and building area are evaluated on the basis of occupancy classification, type of construction, location on the property relative to lot lines and other structures on the same lot, and the presence of an automatic sprinkler system throughout the building.

In the case of additions to existing buildings that are not separated by fire walls, for purposes of determining allowable building area and height, the designer and plan reviewer must evaluate the entire building, including the addition, as if it were a new structure. For instance, if an existing Type IIB building is to have an addition, the aggregate area of the modified building (existing plus the addition) must be within the limits established by Table 506.2 for the allowable area, Table 504.3 for the allowable height in feet, and Table 504.4 for the allowable number of stories above grade of a Type IIB building. The tables take into account area and height limitations for nonsprinklered or sprinklered buildings.

[F] 501.2 Address identification. New and existing buildings shall be provided with *approved* address identification. The address identification shall be legible and placed in a position that is visible from the street or road fronting the property. Address identification characters shall contrast with their background. Address numbers shall be Arabic numbers or alphabetical letters. Numbers shall not be spelled out. Each character shall be a minimum of 4 inches (102 mm) high with a minimum stroke width of $^1/_2$ inch (12.7 mm). Where required by the fire *code official*, address identification shall be provided in additional approved locations to facilitate emergency response. Where access is by means of a private road and the building address cannot be viewed from the public way, a monument, pole or other approved sign or means shall be used to identify the structure. Address identification shall be maintained.

❖ Identifying buildings, both new and existing, during an emergency (i.e., fire department, ambulances, medical, police) is greatly aided by the proper placement of address identification. The size and color criteria are intended to aid visibility from the street. When several structures are remotely located on a site or set back into a property, or at locations where multiple addresses are provided (e.g., strip malls) where the address is not readily visible from the public way, an approved method of identification will also be required, which will have characters posted in a location that will help in an emergency. The fire code official has the authority to require that address numbers be located in all locations deemed necessary to properly identify the building by street address. The primary concern is for emergency personnel to locate the building without going through a lengthy search procedure. In the case of a strip mall, identification would be provided for the backs of buildings that face alleys or roads since the emergency response unit may often be directed to the back entrance. The address numbers must be maintained in a readily visible condition to provide for continuous identification. This would include the repainting of faded numbers or the trimming of trees or other vegetation that may be obscuring visibility of the address.

SECTION 502
DEFINITIONS

502.1 Definitions. The following terms are defined in Chapter 2:

AREA, BUILDING.

BASEMENT.

EQUIPMENT PLATFORM.

GRADE PLANE.

HEIGHT, BUILDING.

MEZZANINE.

❖ This section lists terms that are specifically associated with the subject matter of this chapter. It is important to emphasize that these terms are not exclusively related to this chapter but may or may not also be applicable where the term is used elsewhere in the code. For example, the defined term "basement" in most portions of the code applies to stories that do not meet the definition of a story above grade. However, for the application of flood plain regulations in Section 1612, a different definition of basement applies.

Definitions of terms can help in the understanding and application of the code requirements. The purpose for including a list within this chapter is to provide more convenient access to terms which may have a specific or limited application within this chapter. For the complete definition and associated commentary, refer back to Section 202. Terms that are italicized provide a visual identification throughout the code that a definition exists for that term. The use and application of all defined terms are set forth in Section 201.

SECTION 503
GENERAL BUILDING HEIGHT AND AREA LIMITATIONS

503.1 General. Unless otherwise specifically modified in Chapter 4 and this chapter, *building height*, number of stories and *building area* shall not exceed the limits specified in Sections 504 and 506 based on the type of construction as determined by Section 602 and the occupancies as determined by Section 302 except as modified hereafter. *Building height*, number of stories and *building* area provisions shall be applied independently. Each portion of a building separated

INTERNATIONAL CODE COUNCIL®
Copyright © 2015 ICC. ALL RIGHTS RESERVED. Accessed by David Dammon on Jun 21, 2017 12:30:52 PM pursuant to License Agreement with ICC. No further reproduction or distribution authorized. ANY UNAUTHORIZED REPRODUCTION OR DISTRIBUTION IS A VIOLATION OF THE FEDERAL COPYRIGHT ACT AND THE LICENSE AGREEMENT, AND SUBJECT TO CIVIL AND CRIMINAL PENALTIES THEREUNDER.

by one or more *fire walls* complying with Section 706 shall be considered to be a separate building.

❖ The provisions for governing the height and area of buildings on the basis of occupancy classification and type of construction are established in this section. This section sends the user to Sections 504 and 506 to establish allowable heights, in feet and in stories, and allowable building area, based upon the type of construction. All buildings are subject to these limitations unless more specific code requirements for a building type provide for different height or area limitations. For instance:

- Section 507 allows certain buildings to be unlimited in area due to lack of exposure, low hazard level, construction type, the presence of fire safety systems such as a sprinkler system, or a combination of these characteristics.
- Section 510 allows certain buildings with additional safeguards to adjust the heights and areas allowed by Sections 504 and 506. These are the only provisions that allow a mixture of construction types. In many cases, these provisions involve a distinct portion of the structure being used for parking.
- Where more than one occupancy is present within one building, the provisions of Section 508 must be used in conjunction with Sections 504 and 506 to determine the appropriate construction type for the occupancies involved.

Table 601 is used in conjunction with this chapter to determine acceptable risk and fire safety levels for a building. Classification by occupancy, in accordance with the descriptions in Chapter 3, can be considered as establishing the level of "risk" associated with the use of a building. The various construction types, described in Chapter 6 and Table 601, can be thought of as various levels of safety in regard to fire resistance. Tables 504.3, 504.4 and 506.2 become a set of risk/safety matrices that sets a minimum level of safety (construction type) in accordance with the risk (the occupancy classification).

Fire walls are useful when a single building exceeds the allowable area limitation of Tables 504.3, 504.4 and 506.2. When fire walls (see Section 706) are used in a structure, multiple buildings are created. Each building created by the fire walls would be permitted to have its own occupancy classification and type of construction. Since multiple buildings would be created, each building would be evaluated separately in accordance with the height and area limitations of this Chapter (see commentary, Section 706 and the definition for "Area, building").

503.1.1 Special industrial occupancies. Buildings and structures designed to house special industrial processes that require large areas and unusual *building heights* to accommodate craneways or special machinery and equipment, including, among others, rolling mills; structural metal fabrication shops and foundries; or the production and distribution of electric, gas or steam power, shall be exempt from the *building height*, number of stories and *building area* limitations specified in Sections 504 and 506.

❖ This section provides an exemption from the limits of Sections 504 and 506. The occupancies that may use this exemption are quite limited. The exemption is only applicable when large areas or unusual heights beyond that permitted by Tables 504.3, 504.4 and 506.2 are necessary to accommodate the specific low-hazard or moderate-hazard manufacturing process.

It is the responsibility of the building official to determine when the application of this section is appropriate. The mere cost impact of the application of Tables 504.3, 504.4 and 506.2 does not dictate an exemption. The building official, in assessing the proposed construction, may wish to compare what protection features are being proposed to those features of facilities similar to those described in this section.

503.1.2 Buildings on same lot. Two or more buildings on the same lot shall be regulated as separate buildings or shall be considered as portions of one building where the *building height*, number of stories of each building and the aggregate *building area* of the buildings are within the limitations specified in Sections 504 and 506. The provisions of this code applicable to the aggregate building shall be applicable to each building.

❖ Ordinarily, two buildings on the same lot are considered independently for compliance with the requirements of the code. Section 705.3 requires that when two buildings are on the same lot, an "imaginary" line is assumed between the buildings. This is used to determine the appropriate exterior wall fire-resistance ratings in Table 602, exterior wall requirements of Section 705, projection requirements of Section 705.2 and opening protective ratings and requirements set forth in Table 705.8 and Section 716 (also see the commentary for the definition of "Fire separation distance"). The primary purpose of Section 503.1.2 is to eliminate the application of the provisions of Section 705.3 when two separate buildings can be regulated as one larger building on the lot. In other words, if the two buildings under consideration were actually connected (making one building) and could meet the area and height limitations for one building based on construction type, the connecting interior wall would not be required to have been rated. Therefore, it is inconsistent to require the protection of the facing exterior walls simply because there is not a physical connection between two portions of the same building.

For example, in Commentary Figure 503.1.2(1), Buildings A and B are being constructed on the same lot at the same time. If they are considered to be separate buildings, then the code requirements for exterior wall and opening protection, as well as

INTERNATIONAL CODE COUNCIL®
Copyright © 2015 ICC. ALL RIGHTS RESERVED. Accessed by David Dammon on Jun 21, 2017 12:30:52 PM pursuant to License Agreement with ICC. No further reproduction or distribution authorized. ANY UNAUTHORIZED REPRODUCTION OR DISTRIBUTION IS A VIOLATION OF THE FEDERAL COPYRIGHT ACT AND THE LICENSE AGREEMENT, AND SUBJECT TO CIVIL AND CRIMINAL PENALTIES THEREUNDER.

projections and roof coverings, would apply to each building on the basis of the placement of an imaginary lot line between the two buildings.

Under this section, however, if they are considered to be one building (for minimum type of construction purposes), then there is no need for protection of the facing exterior walls and the code requirements for exterior wall and openings do not apply to the walls between the two buildings. These walls would have to meet exterior wall requirements for the type of construction specified in Table 601 for exterior bearing walls only. If they were nonbearing walls, then the required fire-resistance rating would be zero.

Although facing exterior walls between two buildings on the same lot are not subject to fire-resistance rating and opening size limitations by using this provision (except as previously indicated for bearing walls), the remainder of the exterior walls in both buildings must comply with any applicable exterior wall and opening provisions, including Tables 601, 602, 705.8, 716.5 and 716.6. Three of the walls in Building A and three of the walls in Building B, therefore, would still be required to meet the applicable requirements, and the exemption would only apply to the two walls (one from each building) that face each other.

A special circumstance occurs when a large structure is divided by fire walls into two or more buildings. In such a case, the exception provided by Section 503.1.2 would not be applicable because it is likely that a fire wall has been established because the overall structure exceeds the allowable area for a single building. If the configuration of the buildings results in a court, an imaginary line should be established between the two buildings in order to determine exterior wall and opening protection requirements [see Commentary Figure 503.1.2(2)].

503.1.3 Type I construction. Buildings of Type I construction permitted to be of unlimited tabular *building heights and areas* are not subject to the special requirements that allow unlimited area buildings in Section 507 or unlimited *building height* in Sections 503.1.1 and 504.3 or increased *building heights and areas* for other types of construction.

❖ Buildings of Type I construction permitted by Sections 504 and 506 to be of unlimited height and area do not need to comply with the provisions of Section 503.1.1 or the exception in Section 504.3, which allow height and area increases. While most buildings of Type I construction are permitted to be unlimited in area (see Section 506.2), they are not required to comply with any of the provisions in Section 507 for unlimited area buildings. The requirements in Section 507 address special circumstances that permit a building to be unlimited in area that would not otherwise be allowed to be unlimited in area. As there are no limitations to the size of these structures, the application of these sections would be superfluous. These buildings may be of unlimited size based on their type of construction alone.

Conversely, high-rise buildings are required to be protected by an automatic sprinkler system in accordance with Section 403.3, and this section should not be construed to be a release from that requirement if a building fits the definition of “High-rise building.”

Also note that a special industrial occupancy building, in accordance with Section 503.1.1, is permitted to be unlimited in height. However, this does not

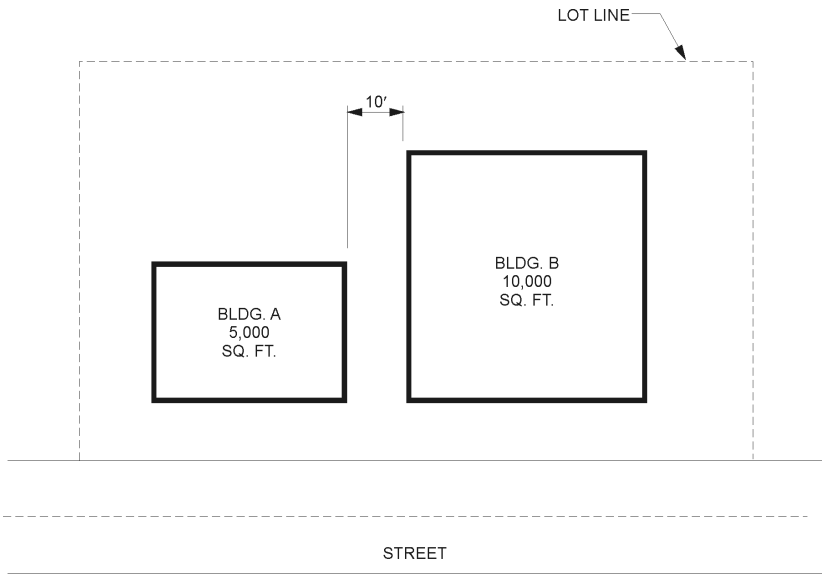

For SI: 1 foot = 304.8 mm,
1 square foot = 0.0929 m^2.

Figure 503.1.2(1)
BUILDINGS ON SAME LOT

INTERNATIONAL CODE COUNCIL®
Copyright © 2015 ICC. ALL RIGHTS RESERVED. Accessed by David Dammon on Jun 21, 2017 12:30:52 PM pursuant to License Agreement with ICC. No further reproduction or distribution authorized. ANY UNAUTHORIZED REPRODUCTION OR DISTRIBUTION IS A VIOLATION OF THE FEDERAL COPYRIGHT ACT AND THE LICENSE AGREEMENT, AND SUBJECT TO CIVIL AND CRIMINAL PENALTIES THEREUNDER.

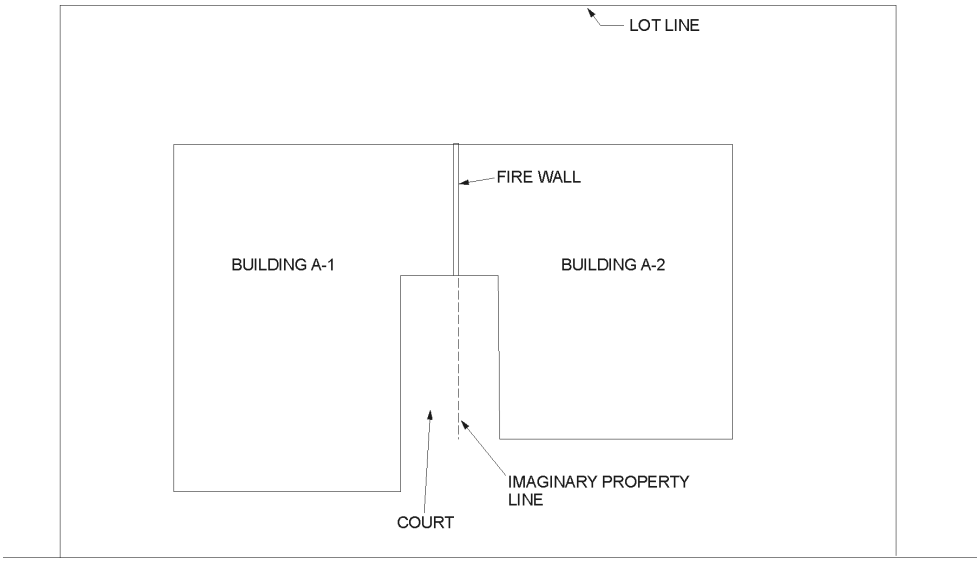

Figure 503.1.2(2)
TWO BUILDINGS ON SAME LOT CREATED BY FIRE WALL

require the type of construction for the building to be Type I. Any type of construction is permitted for special industrial occupancy buildings. Similarly, noncombustible roof structures are permitted to be unlimited in height on all buildings, including those of Type I construction. See also Sections 504.1.1 and 506.1.1 for additional options for unlimited area buildings.

SECTION 504
BUILDING HEIGHT AND NUMBER OF STORIES

504.1 General. The height, in feet, and the number of stories of a building shall be determined based on the type of construction, occupancy classification and whether there is an *automatic sprinkler system* installed throughout the building.

Exception: The *building height* of one-*story* aircraft hangars, aircraft paint hangars and buildings used for the manufacturing of aircraft shall not be limited where the building is provided with an *automatic sprinkler system* or *automatic fire-extinguishing system* in accordance with Chapter 9 and is entirely surrounded by *public ways* or *yards* not less in width than one and one-half times the *building height*.

❖ This section is a fairly straightforward statement regarding those attributes of a building that impact the allowable height of a building. These attributes are: the type of construction, as described in Chapter 6; the occupancy classification of the building, as described in Chapter 3; and the presence, or lack thereof, of an automatic sprinkler system for the entire building. This section is simply a charging statement for what is to come. The actual limitations on numbers of stories and feet come later, in Sections 504.3 and 504.4.

The exception permits fully suppressed aircraft hangars to exceed the height limits of Table 503 as long as they have the specified open area surrounding the building. The exception is necessary to accommodate the size of large aircraft within the building, and the hazard is mitigated by the requirement for suppression and the very large open space provided by the yards and public ways. While the code refers to fire-extinguishing requirements in Chapter 9, the detailed suppression requirements for aircraft hangars are specified in Section 412.4.6. Aircraft paint hangars that are Group H-2 may be unlimited in area as well, under certain conditions (see commentary, Section 507.10).

504.1.1 Unlimited area buildings. The height of unlimited area buildings shall be designed in accordance with Section 507.

❖ Section 507 allows certain buildings to be unlimited in area due to lack of exposure, low hazard level, construction type, the presence of fire safety systems or a combination of these characteristics. This section is a pointer to Section 507 for determination of the allowable height of buildings when the building is being built, using the specific provisions of the unlimited area buildings option. See also Sections 503.1.3 and 506.1.1 for additional options for unlimited area buildings.

504.1.2 Special provisions. The special provisions of Section 510 permit the use of special conditions that are exempt from, or modify, the specific requirements of this chapter regarding the allowable heights of buildings based on the occupancy classification and type of construction, provided the special

INTERNATIONAL CODE COUNCIL®
Copyright © 2015 ICC. ALL RIGHTS RESERVED. Accessed by David Dammon on Jun 21, 2017 12:30:52 PM pursuant to License Agreement with ICC. No further reproduction or distribution authorized. ANY UNAUTHORIZED REPRODUCTION OR DISTRIBUTION IS A VIOLATION OF THE FEDERAL COPYRIGHT ACT AND THE LICENSE AGREEMENT, AND SUBJECT TO CIVIL AND CRIMINAL PENALTIES THEREUNDER.

condition complies with the provisions specified in Section 510.

❖ Section 510 allows certain buildings with additional safeguards to adjust the height in feet and stories allowed by Sections 504.3 and 504.4. Many of the provisions allow a mixture of construction types, and most involve a distinct portion of the structure being used for parking (see also Section 506.1.2).

504.2 Mixed occupancy. In a building containing mixed occupancies in accordance with Section 508, no individual occupancy shall exceed the height and number of story limits specified in this section for the applicable occupancies.

❖ This section is a pointer to Section 508 regarding how to apply the height limitations of Sections 504.3 and 504.4 when a building contains two or more occupancies. The actual allowable height of the building depends on the specific provisions of the applicable portion of Section 508. That is, are the occupancies separated or nonseparated? Or, is one of the occupancies accessory to a main occupancy?

For example: A two-story, nonsprinklered building of 5B construction is proposed to have a restaurant on the first floor and a business on the second floor. Per Table 504.4, the number of stories for Group A-2 is limited to one story and for Group B, to two stories. The building could not be built without a separation between the floors because the nonseparated option must comply with the most restrictive height limitation. Options that could be investigated include equipping the building with sprinklers, separating the first and second floors or choosing a higher construction type.

504.3 Height in feet. The maximum height, in feet, of a building shall not exceed the limits specified in Table 504.3.

Exception: Towers, spires, steeples and other roof structures shall be constructed of materials consistent with the required type of construction of the building except where other construction is permitted by Section 1510.2.5. Such structures shall not be used for habitation or storage. The structures shall be unlimited in height where of noncombustible materials and shall not extend more than 20 feet (6096 mm) above the allowable building height where of combustible materials (see Chapter 15 for additional requirements).

❖ Table 504.3 provides limitations on the height, in feet, of a building based on the occupancy classification, the type of construction and whether the building is equipped throughout with a sprinkler system. The height in feet is the distance from grade plane to the average height of the highest roof surface. See the commentary in Section 202 on "Height, building."

Example: An architect is planning an office building to be constructed of Type VB construction without a sprinkler system. What is the maximum height, in feet, above grade plane to which this building can be constructed?

Answer: The building can be constructed to a maximum height above grade plane of 40 feet (12 192 mm). The building is Occupancy Classification B. Therefore, to find this number, one would go to the row with Occupancy Classifications A, B, E, F, M, S, and U and find the row aligned with "NS." Following to the right on that row, the number 40 can be found under the column TYPE V and B. If a taller building is desired, the options to increase the allowable building height would be to either sprinkler the building, or choose a higher type of construction.

The exception relates to certain roof structures that may exceed the height limitations of Table 504.3 in accordance with this section and Chapter 15. Structures that are used for habitation or storage must be considered to be an additional story and must be included when considering the height limitations in stories in Table 504.4 as well as the height limits in feet in Table 504.3. Please note that Section 1510, Rooftop Structures, contains additional restrictions for structures of a certain size or use. Roof structures must be consistent with the type of construction for the supporting building and, in some cases, must have ratings equivalent to those required for exterior walls. Section 1510.2.5 contains exceptions for penthouse-type structures, mechanical equipment enclosures and screens when not in proximity to a property line. The height for noncombustible roof structures is unlimited. Combustible roof structures are permitted to extend up to 20 feet (6096 mm) above the allowable height set in Table 504.3.

TABLE 504.3. See page 5-7.

❖ The use of Table 504.3 is explained in the example in Section 504.3.

Regarding the Notes:

In this table, "UL" indicates where the height in feet is unlimited; however, it is important to also look at the limits for height in stories and area in Tables 504.4 and 506.2, respectively. The notes also contain some very important information for compliance with the code. In particular, "S" indicates an automatic sprinkler system installed in accordance with Section 903.3.1.1, which is a sprinkler system installed in accordance with NFPA 13 (as opposed to NFPA 13R or 13D), with some exempt locations as specified. "S13R" refers to buildings equipped with a sprinkler system installed in accordance with Section 903.3.1.2, which is a sprinkler system installed in accordance with NFPA 13R, with some exempt locations as specified. NFPA 13R is a standard for installation of sprinkler systems in low-rise residential and Group I-1 occupancies. NFPA 13 contains some provisions that are more rigorous than NFPA 13R.

Therefore, a residential building with a sprinkler system installed in accordance with Section 903.3.1.1 (NFPA 13) has a higher limitation for height than a

INTERNATIONAL CODE COUNCIL®
Copyright © 2015 ICC. ALL RIGHTS RESERVED. Accessed by David Dammon on Jun 21, 2017 12:30:52 PM pursuant to License Agreement with ICC. No further reproduction or distribution authorized. ANY UNAUTHORIZED REPRODUCTION OR DISTRIBUTION IS A VIOLATION OF THE FEDERAL COPYRIGHT ACT AND THE LICENSE AGREEMENT, AND SUBJECT TO CIVIL AND CRIMINAL PENALTIES THEREUNDER.

residential building with sprinklers installed in accordance with Section 903.3.1.2 (NFPA 13R). Since there are no specific height limitations for buildings permitted to use an NFPA 13D sprinkler system, the height limitations for a nonsprinklered building should be used for this option.

Note a: Chapters 4 and 5 contain provisions for special detailed requirements based on use and occupancy, some of which include exceptions to these height limitations. An example is open parking garages, Section 406.5. Open parking garages have their own area and height limitations stated in Table 406.5.4. Similarly, this chapter contains some provisions that are exceptions to the height limitations contained in this section. An example is Section 507, which contains different height limits for unlimited area buildings.

Note b: Section 903.2 specifies thresholds for occupancies that require sprinklers, regardless of height and area or type of construction. For instance, a fire area containing a Group A-2 occupancy greater than 5,000 square feet (465 m^2), or an occupant load greater than 100, or one that is located above the level of exit discharge must be equipped with a sprinkler system, as well as all of the intervening floors from the level of exit discharge to the floor containing the A-2 fire area. If there were floors above this occupancy that were not sprinklered, then the building would be designed based on "NS," Nonsprinklered, because the building is not equipped throughout with a sprinkler system.

Note c: This is a specific mention of an item in Section 903.2 as already mentioned in Note b. All new construction in Group H occupancies is required to be equipped with a sprinkler system. Therefore the "NS" row will never apply.

Note d: There are some applications where "NS" values are given, but do not apply to new

TABLE 504.3[a]
ALLOWABLE BUILDING HEIGHT IN FEET ABOVE GRADE PLANE

OCCUPANCY CLASSIFICATION	TYPE OF CONSTRUCTION									
	SEE FOOTNOTES	TYPE I		TYPE II		TYPE III		TYPE IV	TYPE V	
		A	B	A	B	A	B	HT	A	B
A, B, E, F, M, S, U	NS[b]	UL	160	65	55	65	55	65	50	40
	S	UL	180	85	75	85	75	85	70	60
H-1, H-2, H-3, H-5	NS[c, d]	UL	160	65	55	65	55	65	50	40
	S									
H-4	NS[c, d]	UL	160	65	55	65	55	65	50	40
	S	UL	180	85	75	85	75	85	70	60
I-1 Condition 1, I-3	NS[d, e]	UL	160	65	55	65	55	65	50	40
	S	UL	180	85	75	85	75	85	70	60
I-1 Condition 2, I-2	NS[d, f, e]	UL	160	65	55	65	55	65	50	40
	S	UL	180	85						
I-4	NS[d, g]	UL	160	65	55	65	55	65	50	40
	S	UL	180	85	75	85	75	85	70	60
R	NS[d, h]	UL	160	65	55	65	55	65	50	40
	S13R	60	60	60	60	60	60	60	60	60
	S	UL	180	85	75	85	75	85	70	60

For SI: 1 foot = 304.8 mm.

Note: UL = Unlimited; NS = Buildings not equipped throughout with an automatic sprinkler system; S = Buildings equipped throughout with an automatic sprinkler system installed in accordance with Section 903.3.1.1; S13R = Buildings equipped throughout with an automatic sprinkler system installed in accordance with Section 903.3.1.2.

a. See Chapters 4 and 5 for specific exceptions to the allowable height in this chapter.
b. See Section 903.2 for the minimum thresholds for protection by an automatic sprinkler system for specific occupancies.
c. New Group H occupancies are required to be protected by an automatic sprinkler system in accordance with Section 903.2.5.
d. The NS value is only for use in evaluation of existing building height in accordance with the *International Existing Building Code*.
e. New Group I-1 and I-3 occupancies are required to be protected by an automatic sprinkler system in accordance with Section 903.2.6. For new Group I-1 occupancies, Condition 1, see Exception 1 of Section 903.2.6.
f. New and existing Group I-2 occupancies are required to be protected by an automatic sprinkler system in accordance with Section 903.2.6 and Section 1103.5 of the *International Fire Code*.
g. For new Group I-4 occupancies, see Exceptions 2 and 3 of Section 903.2.6.
h. New Group R occupancies are required to be protected by an automatic sprinkler system in accordance with Section 903.2.8.

INTERNATIONAL CODE COUNCIL®
Copyright © 2015 ICC. ALL RIGHTS RESERVED. Accessed by David Dammon on Jun 21, 2017 12:30:52 PM pursuant to License Agreement with ICC. No further reproduction or distribution authorized. ANY UNAUTHORIZED REPRODUCTION OR DISTRIBUTION IS A VIOLATION OF THE FEDERAL COPYRIGHT ACT AND THE LICENSE AGREEMENT, AND SUBJECT TO CIVIL AND CRIMINAL PENALTIES THEREUNDER.

construction. They might, however, apply to existing construction, applying the evaluation provisions of the *International Existing Building Code*® (IEBC®).

Notes e, f, g, and h: Similar to the discussion on Note c, there are occupancies that are required to have sprinkler systems installed, and therefore the only time the values in the "NS" row might apply are for existing buildings, where the IEBC applies. Also, in the case of Note g, there are areas where the code does not require sprinklers in Group I-4. In those cases, the "NS" row would be the appropriate row to use in determining height limitations.

504.4 Number of stories. The maximum number of stories of a building shall not exceed the limits specified in Table 504.4.

❖ Table 504.4 provides height limitations, in stories, of a building based upon the occupancy classification, the type of construction, and whether the building is equipped throughout with an automatic sprinkler system. The height is in number of stories above grade plane. See the commentary in Section 202 for the definition of "Story above grade plane."

Example: An architect is planning an office building to be constructed of Type VB construction without a sprinkler system. What is the maximum height, in stories, above grade plane to which this building can be constructed?

Answer: The building can be constructed to a maximum height of two stories above grade plane. The building is Occupancy Classification B. To find this number, one would go to the row with Occupancy Classification "B" and find the row aligned, with "NS." Following to the right on that row, the number 2 can be found under the column TYPE V and B. If a taller building is desired, the options to increase the allowable building height would be to either sprinkler the building or choose a higher type of construction.

TABLE 504.4. See page 5-9.

❖ The use of Table 504.4 is explained in the example in Section 504.4. See the commentary provided for Table 504.3.

SECTION 505
MEZZANINES AND EQUIPMENT PLATFORMS

505.1 General. *Mezzanines* shall comply with Section 505.2. *Equipment platforms* shall comply with Section 505.3.

❖ Special provisions are established for two types of elevated floor areas: mezzanines and equipment platforms. Each of the elements has its own unique characteristics, requirements and allowances. Section 505.2 addresses mezzanines. Special provisions for equipment platforms are located in Section 505.3.

505.2 Mezzanines. A *mezzanine* or *mezzanines* in compliance with Section 505.2 shall be considered a portion of the *story* below. Such *mezzanines* shall not contribute to either the *building area* or number of *stories* as regulated by Section 503.1. The area of the *mezzanine* shall be included in determining the *fire area*. The clear height above and below the *mezzanine* floor construction shall be not less than 7 feet (2134 mm).

❖ Although mezzanines provide an additional or intermediate useable floor level in a building, they are not considered an additional story as long as they comply with the requirements of Section 505.2. Building height and area limitations are intended to offset the inherent fire hazard associated with specific occupancies and with materials and features of a specific construction type. Because of a mezzanine's restricted size and its required openness to the room or space in which it is located, a mezzanine is not considered to contribute significantly to a building's inherent fire hazard. Therefore, the area of a mezzanine is not considered when applying the provisions of Section 506.2 for building area limitations, and mezzanines are not considered in determining the height in stories of a building as regulated by Table 504.4. The occupant and fuel loads of the mezzanine should be taken into consideration, however, when determining the necessity for fire protection systems. As such, the area of the mezzanine is to be included in the calculation of the size of the fire area for sprinkler thresholds (see the commentary for the definition of "Fire area" in Section 202).

This section does not include any special requirements for the construction of a mezzanine or for fire-resistance ratings; therefore, the mezzanine is to be constructed of materials consistent with the construction type of the building. Required fire-resistance ratings are determined on the basis of Table 601 for the appropriate construction type.

Mezzanines are required to have a ceiling height of not less than 7 feet (2134 mm), and the ceiling height below the mezzanine must also be not less than 7 feet (2134 mm). Even habitable rooms located in mezzanines may have a ceiling height of 7 feet (2134 mm), in accordance with Exception 3 to Section 1208.2.

INTERNATIONAL CODE COUNCIL®
Copyright © 2015 ICC. ALL RIGHTS RESERVED. Accessed by David Dammon on Jun 21, 2017 12:30:52 PM pursuant to License Agreement with ICC. No further reproduction or distribution authorized. ANY UNAUTHORIZED REPRODUCTION OR DISTRIBUTION IS A VIOLATION OF THE FEDERAL COPYRIGHT ACT AND THE LICENSE AGREEMENT, AND SUBJECT TO CIVIL AND CRIMINAL PENALTIES THEREUNDER.

TABLE 504.4[a, b]
ALLOWABLE NUMBER OF STORIES ABOVE GRADE PLANE

OCCUPANCY CLASSIFICATION	TYPE OF CONSTRUCTION									
	SEE FOOTNOTES	TYPE I		TYPE II		TYPE III		TYPE IV	TYPE V	
		A	B	A	B	A	B	HT	A	B
A-1	NS	UL	5	3	2	3	2	3	2	1
	S	UL	6	4	3	4	3	4	3	2
A-2	NS	UL	11	3	2	3	2	3	2	1
	S	UL	12	4	3	4	3	4	3	2
A-3	NS	UL	11	3	2	3	2	3	2	1
	S	UL	12	4	3	4	3	4	3	2
A-4	NS	UL	11	3	2	3	2	3	2	1
	S	UL	12	4	3	4	3	4	3	2
A-5	NS	UL	UL	UL	UL	UL	UL	UL	UL	UL
	S	UL	UL	UL	UL	UL	UL	UL	UL	UL
B	NS	UL	11	5	3	5	3	5	3	2
	S	UL	12	6	4	6	4	6	4	3
E	NS	UL	5	3	2	3	2	3	1	1
	S	UL	6	4	3	4	3	4	2	2
F-1	NS	UL	11	4	2	3	2	4	2	1
	S	UL	12	5	3	4	3	5	3	2
F-2	NS	UL	11	5	3	4	3	5	3	2
	S	UL	12	6	4	5	4	6	4	3
H-1	NS[c, d]	1	1	1	1	1	1	1	1	NP
	S									
H-2	NS[c, d]	UL	3	2	1	2	1	2	1	1
	S									
H-3	NS[c, d]	UL	6	4	2	4	2	4	2	1
	S									
H-4	NS[c, d]	UL	7	5	3	5	3	5	3	2
	S	UL	8	6	4	6	4	6	4	3
H-5	NS[c, d]	4	4	3	3	3	3	3	3	2
	S									
I-1 Condition 1	NS[d, e]	UL	9	4	3	4	3	4	3	2
	S	UL	10	5	4	5	4	5	4	3
I-1 Condition 2	NS[d, e]	UL	9	4	3	4	3	4	3	2
	S	UL	10	5						
I-2	NS[d, f]	UL	4	2	1	1	NP	1	1	NP
	S	UL	5	3						
I-3	NS[d, e]	UL	4	2	1	2	1	2	2	1
	S	UL	5	3	2	3	2	3	3	2
I-4	NS[d, g]	UL	5	3	2	3	2	3	1	1
	S	UL	6	4	3	4	3	4	2	2
M	NS	UL	11	4	2	4	2	4	3	1
	S	UL	12	5	3	5	3	5	4	2

(continued)

INTERNATIONAL CODE COUNCIL®
Copyright © 2015 ICC. ALL RIGHTS RESERVED. Accessed by David Dammon on Jun 21, 2017 12:30:52 PM pursuant to License Agreement with ICC. No further reproduction or distribution authorized. ANY UNAUTHORIZED REPRODUCTION OR DISTRIBUTION IS A VIOLATION OF THE FEDERAL COPYRIGHT ACT AND THE LICENSE AGREEMENT, AND SUBJECT TO CIVIL AND CRIMINAL PENALTIES THEREUNDER.

TABLE 504.4[a, b]—continued
ALLOWABLE NUMBER OF STORIES ABOVE GRADE PLANE

OCCUPANCY CLASSIFICATION	TYPE OF CONSTRUCTION									
	SEE FOOTNOTES	TYPE I		TYPE II		TYPE III		TYPE IV	TYPE V	
		A	B	A	B	A	B	HT	A	B
R-1	NS[d, h]	UL	11	4	4	4	4	4	3	2
	S13R	4	4						4	3
	S	UL	12	5	5	5	5	5	4	3
R-2	NS[d, h]	UL	11	4	4	4	4	4	3	2
	S13R	4	4	4					4	3
	S	UL	12	5	5	5	5	5	4	3
R-3	NS[d, h]	UL	11	4	4	4	4	4	3	3
	S13R	4	4						4	4
	S	UL	12	5	5	5	5	5	4	4
R-4	NS[d, h]	UL	11	4	4	4	4	4	3	2
	S13R	4	4						4	3
	S	UL	12	5	5	5	5	5	4	3
S-1	NS	UL	11	4	2	3	2	4	3	1
	S	UL	12	5	3	4	3	5	4	2
S-2	NS	UL	11	5	3	4	3	4	4	2
	S	UL	12	6	4	5	4	5	5	3
U	NS	UL	5	4	2	3	2	4	2	1
	S	UL	6	5	3	4	3	5	3	2

Note: UL = Unlimited; NP = Not Permitted; NS = Buildings not equipped throughout with an automatic sprinkler system; S = Buildings equipped throughout with an automatic sprinkler system installed in accordance with Section 903.3.1.1; S13R = Buildings equipped throughout with an automatic sprinkler system installed in accordance with Section 903.3.1.2.

a. See Chapters 4 and 5 for specific exceptions to the allowable height in this chapter.
b. See Section 903.2 for the minimum thresholds for protection by an automatic sprinkler system for specific occupancies.
c. New Group H occupancies are required to be protected by an automatic sprinkler system in accordance with Section 903.2.5.
d. The NS value is only for use in evaluation of existing building height in accordance with the *International Existing Building Code*.
e. New Group I-1 and I-3 occupancies are required to be protected by an automatic sprinkler system in accordance with Section 903.2.6. For new Group I-1 occupancies, Condition 1, see Exception 1 of Section 903.2.6.
f. New and existing Group I-2 occupancies are required to be protected by an automatic sprinkler system in accordance with Section 903.2.6 and Section 1103.5 of the *International Fire Code*.
g. For new Group I-4 occupancies, see Exceptions 2 and 3 of Section 903.2.6.
h. New Group R occupancies are required to be protected by an automatic sprinkler system in accordance with Section 903.2.8.

505.2.1 Area limitation. The aggregate area of a *mezzanine* or *mezzanines* within a room shall be not greater than one-third of the floor area of that room or space in which they are located. The enclosed portion of a room shall not be included in a determination of the floor area of the room in which the *mezzanine* is located. In determining the allowable *mezzanine* area, the area of the *mezzanine* shall not be included in the floor area of the room.

Where a room contains both a *mezzanine* and an *equipment platform*, the aggregate area of the two raised floor levels shall be not greater than two-thirds of the floor area of that room or space in which they are located.

Exceptions:

1. The aggregate area of *mezzanines* in buildings and structures of Type I or II construction for special industrial occupancies in accordance with Section 503.1.1 shall be not greater than two-thirds of the floor area of the room.
2. The aggregate area of *mezzanines* in buildings and structures of Type I or II construction shall be not greater than one-half of the floor area of the room in buildings and structures equipped throughout with an *approved automatic sprinkler system* in accordance with Section 903.3.1.1 and an *approved emergency voice/alarm communication system* in accordance with Section 907.5.2.2.

❖ So as not to contribute significantly to a building's inherent fire hazard, a mezzanine is restricted to a maximum of one-third of the area of the room with which it shares a common atmosphere. The area may consist of multiple mezzanines open to the same room at the same or different levels, provided that the

INTERNATIONAL CODE COUNCIL®
Copyright © 2015 ICC. ALL RIGHTS RESERVED. Accessed by David Dammon on Jun 21, 2017 12:30:52 PM pursuant to License Agreement with ICC. No further reproduction or distribution authorized. ANY UNAUTHORIZED REPRODUCTION OR DISTRIBUTION IS A VIOLATION OF THE FEDERAL COPYRIGHT ACT AND THE LICENSE AGREEMENT, AND SUBJECT TO CIVIL AND CRIMINAL PENALTIES THEREUNDER.

aggregate area does not exceed the one-third limitation. (This determination is based on the gross floor area of the mezzanines.) If the area limitation is exceeded, the provisions of this section do not apply and the mezzanine level is considered an additional story.

In determining the allowable area of the mezzanine, any enclosed spaces in the room in which the mezzanine is contained are not to be included in calculating the room size. Although the mezzanine area is included in the calculation of fire area size, it is not included in the area of the room when computing the allowable mezzanine area. For example, a room contains 5,000 square feet (465 m^2), 500 square feet (46 m^2) of which are enclosed and not part of the common atmosphere with the mezzanine. A mezzanine may be provided in the room such that the area of the mezzanine is not more than 1,500 square feet (139 m^2) [5,000 square feet — 500 square feet = 4,500 square feet x $^1/_3$ = 1,500 square feet (139 m^2)]. The mezzanine level must be open, except that enclosed spaces are permitted for mezzanines in accordance with the exceptions to Section 505.2.3. Even if the mezzanine is enclosed, the allowable area of the mezzanine is always determined assuming the space is open to the room in which it is located.

By definition, in special industrial occupancies (see commentary, Section 503.1.1) the inherent fire hazard is very low. Therefore, mezzanines in such occupancies located in buildings of Type I or II construction are permitted to constitute up to two-thirds of the area of the room in which they are located, in accordance with Exception 1. The limitation on construction types further reduces the fire hazard associated with such occupancies.

Exception 2 provides additional allowable area for mezzanines in Type I or II construction in any occupancy, when sprinklers and an approved emergency voice/alarm communication system are installed. The tradeoff for additional area for installation of a sprinkler system recognizes the additional time that sprinklers provide for occupant evacuation. The emergency voice/alarm communication system is also seen as a necessary feature of this tradeoff as it enables occupants of a building to become aware of a fire that could start in a remote part of the mezzanine, prompting evacuation before smoke spread could cause a problem for occupants. Experience has shown that occupants react more readily when given voice instructions than when given a general alarm.

Equipment platforms, as defined in Section 202, are not considered mezzanines (see Section 505.3 for provisions addressing equipment platforms). Where one or more mezzanines and one or more equipment platforms are located within the same room, the aggregate area of such elevated spaces cannot exceed more than two-thirds of the floor area of the room in which they are located. In addition, the maximum floor area for any portion determined to be a mezzanine is limited based upon the provisions of this section.

505.2.2 Means of egress. The *means of egress* for *mezzanines* shall comply with the applicable provisions of Chapter 10.

❖ A mezzanine can be likened to a room or space when considering means of egress (see Section 1006.2). As with rooms, if the occupant load of the mezzanine exceeds the limitation of Table 1006.2.1 for the specific use of the space, at least two independent means of egress must be provided for the mezzanine. For example, if a mezzanine containing office areas (Group B) has an occupant load exceeding 49, a second means of egress from the mezzanine is required. Additionally, if a mezzanine has one means of egress and it is by means of an exit access stairway to the floor below, the common path of travel distance from the most remote point on the mezzanine to the bottom of the stairway may not exceed 75 feet (22 860 mm) in accordance with Section 1006.2.1 [where the occupant load is 30 or less, a common path of egress travel is allowed to increase to 100 feet (30 480 mm)]. If the travel distance to the bottom of the exit access stairway exceeds the limits of Table 1006.2.1, then a second means of egress must be provided from the mezzanine. This assumes that at the bottom of the stairway there are at least two separate travel paths available that lead to at least two exits. If the room below has only one exit, the travel distance from the most remote point on the mezzanine is measured to the exit access door of the room.

Because mezzanines that comply with Section 505.2 are considered a portion of the story in which they are located, the exit access stairway leading from it is not required to be enclosed. Per Section 1019.2, stairways that are contained within a single story are not required to be enclosed.

When two exit access stairways are required, they are to be located remote from each other in accordance with Section 1007.1.1. The measurement for separation is to the top of the closest riser of the two open exit access stairways (see Section 1007.1.1.1, Item 2), and the separation must be maintained for the entire length of the open exit access stairways as they move down to the room below (see Section 1007.1.3).

The occupant load of the mezzanine is added to the room or space below, and the required means of egress width for that room is determined accordingly (see Section 1004.1.1.2). For example, if a room (Group B) has an occupant load of 45 and a mezzanine (also Group B) has an occupant load of 15, the total occupant load for the space served is 60. Therefore, the room must have two exit access doors or exits in accordance with Table 1006.2.1. The mezzanine itself, however, needs only one means of egress provided the common path of travel provisions of Table 1006.2.1 are met.

Alternatively, if exit access travel distance cannot

INTERNATIONAL CODE COUNCIL®
Copyright © 2015 ICC. ALL RIGHTS RESERVED. Accessed by David Dammon on Jun 21, 2017 12:30:52 PM pursuant to License Agreement with ICC. No further reproduction or distribution authorized. ANY UNAUTHORIZED REPRODUCTION OR DISTRIBUTION IS A VIOLATION OF THE FEDERAL COPYRIGHT ACT AND THE LICENSE AGREEMENT, AND SUBJECT TO CIVIL AND CRIMINAL PENALTIES THEREUNDER.

be met, an exit providing direct access to the outside, an exterior exit stairway or an enclosed interior exit stairway can be utilized to provide the required means of egress from the mezzanine.

The requirements for accessible means of egress are not in any way intended to be affected by these provisions. If two means of egress are required from the mezzanine and an accessible route is required to the mezzanine, then two accessible means of egress must be provided from the mezzanine (see Section 1009.1). If an accessible route is not required to the mezzanine (see Sections 1104.3 and 1104.4) or the mezzanine is not required to be accessible (see Section 1103.2), then accessible means of egress are not required.

505.2.3 Openness. A *mezzanine* shall be open and unobstructed to the room in which such *mezzanine* is located except for walls not more than 42 inches (1067 mm) in height, columns and posts.

Exceptions:

1. *Mezzanines* or portions thereof are not required to be open to the room in which the *mezzanines* are located, provided that the *occupant load* of the aggregate area of the enclosed space is not greater than 10.
2. A *mezzanine* having two or more exits or access to exits is not required to be open to the room in which the *mezzanine* is located.
3. *Mezzanines* or portions thereof are not required to be open to the room in which the *mezzanines* are located, provided that the aggregate floor area of the enclosed space is not greater than 10 percent of the *mezzanine* area.
4. In industrial facilities, *mezzanines* used for control equipment are permitted to be glazed on all sides.
5. In occupancies other than Groups H and I, that are no more than two *stories* above *grade plane* and equipped throughout with an *automatic sprinkler system* in accordance with Section 903.3.1.1, a *mezzanine* having two or more *means of egress* shall not be required to be open to the room in which the *mezzanine* is located.

❖ A mezzanine presents a unique fire threat to the occupant. If a mezzanine is closed off from the larger room, an undetected fire could develop such that it would jeopardize or eliminate the opportunity for occupant escape. The initial requirement is for the mezzanine to be open to the room below so that there will be the same atmosphere as the room below. This should make fire recognition quicker. The 42-inch (1067 mm) height for the perimeter walls is to allow walls that meet the height requirements for guards (see Section 1015.3). The columns and posts should be limited to those that support the roof or floor above the mezzanine.

The exceptions address situations where the hazard is reduced. Exception 1 would allow for a small mezzanine, or a small portion of a larger mezzanine, to be enclosed where the occupant load for that enclosed area is 10 or less. Occupant load is calculated in accordance with Section 1004.1 for the use or function of the mezzanine space. Similarly, Exception 3 permits the enclosure of a limited portion of a mezzanine.

Exception 2 permits enclosure of the mezzanine based on at least two means of egress being provided. Since mezzanines are elevated, means of egress is typically by either open exit access stairways or enclosed interior exit stairways. Exception 4 addresses industrial facilities, where enclosure may be necessary for noise reduction or atmospheric control.

Exception 5 permits enclosure of a mezzanine in a building that is fully protected by a sprinkler system and limited to two stories. While Exception 5 has more restrictions than Exception 2, the allowances for enclosure of the mezzanine are essentially the same where there are two means of egress provided.

505.3 Equipment platforms. *Equipment platforms* in buildings shall not be considered as a portion of the floor below. Such *equipment platforms* shall not contribute to either the *building area* or the number of *stories* as regulated by Section 503.1. The area of the *equipment platform* shall not be included in determining the *fire area* in accordance with Section 903. *Equipment platforms* shall not be a part of any *mezzanine* and such platforms and the walkways, *stairs*, *alternating tread devices* and ladders providing access to an *equipment platform* shall not serve as a part of the *means of egress* from the building.

❖ "Equipment platform" is defined in Section 202 as an unoccupied, elevated platform used exclusively for supporting mechanical systems or industrial process equipment and providing access to that equipment. If an elevated platform does not meet all the conditions of this definition, then it must be considered either a mezzanine or another story.

Equipment platforms are treated as part of the equipment they support (within the limitations of the subsections to this section), and do not contribute in any way to the area of the building, the number of stories, the area of any mezzanine or any fire area. If equipment platforms are located in the same room as a mezzanine, however, the aggregate area of the platforms and mezzanines is limited by Sections 505.2.1 and 505.3.1.

The definition of "Equipment platform" includes the associated elevated walkways, stairs, alternating tread devices and ladders necessary to access the platform. Any egress elements that serve an equipment platform are not permitted to serve as a means of egress for occupants from other areas of the building. Because they are not used for general means of egress, the elements used to access these platforms could be something other than a stairway or ramp. For example, a permanent ladder could be used to access an equipment platform.

INTERNATIONAL CODE COUNCIL®
Copyright © 2015 ICC. ALL RIGHTS RESERVED. Accessed by David Dammon on Jun 21, 2017 12:30:52 PM pursuant to License Agreement with ICC. No further reproduction or distribution authorized. ANY UNAUTHORIZED REPRODUCTION OR DISTRIBUTION IS A VIOLATION OF THE FEDERAL COPYRIGHT ACT AND THE LICENSE AGREEMENT, AND SUBJECT TO CIVIL AND CRIMINAL PENALTIES THEREUNDER.

505.3.1 Area limitation. The aggregate area of all *equipment platforms* within a room shall be not greater than two-thirds of the area of the room in which they are located. Where an *equipment platform* is located in the same room as a *mezzanine*, the area of the *mezzanine* shall be determined by Section 505.2.1 and the combined aggregate area of the *equipment platforms* and *mezzanines* shall be not greater than two-thirds of the room in which they are located.

❖ In determining the allowable area of an equipment platform, neither the enclosed spaces of the room in which the equipment platform is located nor the area of the equipment platform itself is to be included in calculating the room size. Whereas mezzanines are limited to one-third of the area of the room in which they are located, equipment platforms are permitted to be two-thirds of the area of the room. Whereas the area of mezzanines is included in the calculation of the fire area (see Section 505.1), the area of equipment platforms is not included as part of the fire area. The area of mezzanines and equipment platforms, however, is summed when they are in the same room, and the aggregate area is limited to two-thirds of the area of the room.

505.3.2 Automatic sprinkler system. Where located in a building that is required to be protected by an *automatic sprinkler system*, *equipment platforms* shall be fully protected by sprinklers above and below the platform, where required by the standards referenced in Section 903.3.

❖ In buildings or spaces that are required to be protected with an automatic fire sprinkler system, sprinkler protection above and below the equipment platform is needed so the equipment platform will not obstruct sprinkler coverage or delay sprinkler activation if a fire develops below the platform. This section should not be construed to require sprinkler protection for equipment platforms where such a system is not otherwise required.

505.3.3 Guards. *Equipment platforms* shall have *guards* where required by Section 1015.2.

❖ Guards are required for equipment platforms in the same manner that they are required at open walking surfaces in other parts of the building, and are subject to the same requirements for height, design load and configuration. Exception 3 to Section 1015.4 allows, in areas where electrical, mechanical and plumbing systems or equipment are accessed and used, guard balusters to be spaced to prevent the passage of a 21-inch (533 mm) sphere.

SECTION 506
BUILDING AREA

506.1 General. The floor area of a building shall be determined based on the type of construction, occupancy classification, whether there is an automatic sprinkler system installed throughout the building and the amount of building frontage on public way or open space.

❖ This section is a fairly straightforward statement regarding which attributes of a building impact the allowable area of a building. These attributes are the type of construction, as described in Chapter 6; the occupancy classification of the building, as described in Chapter 3; the presence, or lack thereof, of an automatic sprinkler system for the entire building; and the amount of the building that has frontage on an open space or public way. This section is simply a charging statement for what is to come. The limitations on numbers of stories and feet are found in Sections 504.3 and 504.4.

506.1.1 Unlimited area buildings. Unlimited area buildings shall be designed in accordance with Section 507.

❖ Section 507 allows certain buildings to be unlimited in area due to lack of exposure, low hazard level, construction type, the presence of fire safety systems or a combination of these characteristics. Under these specific provisions, Section 506.2 does not apply unless referenced. See also Section 503.1.3 for additional options for unlimited area buildings.

506.1.2 Special provisions. The special provisions of Section 510 permit the use of special conditions that are exempt from, or modify, the specific requirements of this chapter regarding the allowable areas of buildings based on the occupancy classification and type of construction, provided the special condition complies with the provisions specified in Section 510.

❖ Section 510 allows certain buildings with additional safeguards to adjust the heights and areas allowed by Section 506.2. Many of the provisions allow a mixture of construction types, and most involve a distinct portion of the structure being used for parking.

506.1.3 Basements. Basements need not be included in the total allowable floor area of a building provided the total area of such basements does not exceed the area permitted for a one-story above grade plane building.

❖ Assuming the basement is the same footprint as the building, the area of a single basement is not required to be counted as part of the total building area when evaluating total allowable area in accordance with Section 506.2. Determining the maximum area for the basement can include the frontage increase in Section 506.3. Where there are multiple basements, the area of the basements is combined in order to determine if the basements will be considered to count toward the limits for the total permitted building area. Therefore, if the allowable area of a single-story building is 50,000 square feet (4645 m^2) in accordance with Sections 506.2 and 506.3, the total aggregate area of all stories below grade plane must not exceed 50,000 square feet (4645 m^2). If the aggregate area exceeds that allowed for a single-story building, the basement levels must be counted as contributing to the total allowable area for the building.

INTERNATIONAL CODE COUNCIL®
Copyright © 2015 ICC. ALL RIGHTS RESERVED. Accessed by David Dammon on Jun 21, 2017 12:30:52 PM pursuant to License Agreement with ICC. No further reproduction or distribution authorized. ANY UNAUTHORIZED REPRODUCTION OR DISTRIBUTION IS A VIOLATION OF THE FEDERAL COPYRIGHT ACT AND THE LICENSE AGREEMENT, AND SUBJECT TO CIVIL AND CRIMINAL PENALTIES THEREUNDER.

506.2 Allowable area determination. The allowable area of a building shall be determined in accordance with the applicable provisions of Sections 506.2.1 through 506.2.4 and Section 506.3.

❖ The process for determining the allowable area of a building is provided in Sections 506.2.1 through 506.2.4 and Section 506.3. At the core of the requirements is Table 506.2, which provides tabular area values that are plugged into the applicable equations in Sections 506.2.1 through 506.2.4. The tabular values are established based upon the type of construction, the occupancy classification and whether the building is equipped throughout with an automatic sprinkler system. The allowable area values are then determined based upon these tabular values, the number of stories and the amount of frontage the building has on open space or a public way.

TABLE 506.2. See page 5-15.

❖ The use of Table 506.2 is explained in the example in Section 506.2. Regarding the notes, see the commentary provided on the notes for Table 504.3.

506.2.1 Single-occupancy, one-story buildings. The allowable area of a single-occupancy building with no more than one story above grade plane shall be determined in accordance with Equation 5-1:

$$A_a = A_t + (NS \times I_f) \qquad \textbf{(Equation 5-1)}$$

where:

A_a = Allowable area (square feet).

A_t = Tabular allowable area factor (NS, S1, or S13R value, as applicable) in accordance with Table 506.2.

NS = Tabular allowable area factor in accordance with Table 506.2 for nonsprinklered building (regardless of whether the building is sprinklered).

I_f = Area factor increase due to frontage (percent) as calculated in accordance with Section 506.3.

❖ This section gives the basic formula for determining the allowable area for a one-story, single-occupancy building.

Example 1: A one-story motel, planned to be Type IIIB construction. As required by the code, the building will be equipped throughout with an NFPA 13R sprinkler system. The building has only 25 percent of its perimeter facing a public way or open space. What is the allowable area?

Answer: The allowable area for this building is 16,000 square feet (1486 m^2).

Explanation: The occupancy classification for a motel is R-1. Under the column Type III, Column B, in the row for R-1, S13R, the value for A_t is 16,000, and NS = 16,000.

In Equation 5-1, I_f = 0. (See commentary on Section 506.3 for a detailed explanation of I_f)

Therefore, in Equation 5-1: A_a = 16,000 + (16,000 x 0) = 16,000.

Observe that, for residential occupancies, there is no advantage to having a sprinkler system installed in accordance with NFPA 13R versus having no sprinkler system at all. However, for this same building, the allowable area would be 64,000 square feet (5946 m^2) if an NFPA 13 sprinkler system were installed.

Example 2: A one-story retail store building is proposed to be built 21,000 square feet (1951 m^2) in area. Like Example 1, the building has only 25 percent of its perimeter facing a public way or open space. What is the minimum type of construction allowed for this building? If an NFPA 13 sprinkler system was to be installed, what would be the minimum type of construction allowed?

Answer: The minimum type of construction for this building without a sprinkler system would be Type IIA. With an NFPA 13 sprinkler system, the minimum type of construction would be Type VB.

The area factor increase due to frontage, I_f = 0. (For discussion on this factor, see Section 506.3.) Therefore, Equation 5-1 becomes $A_a = A_t$. That is, the allowable area equals the tabular area when there is no increase for frontage. The occupancy classification for a retail store is M. Therefore, entering Table 506.2 for occupancy classification M, in the row labeled "NS" for nonsprinklered buildings, note that the tabular area for Type IIA construction is 21,500 square feet (1997 m^2), which is greater than the area of 21,000 square feet (1951 m^2) proposed. Therefore, Type IIA construction would be required.

If the building was provided with an NFPA 13 sprinkler system, the construction type could be VB. Again, entering the table at occupancy classification M, but in the row "SI" for one-story sprinklered buildings, note that the tabular area for Type VB construction is 36,000 square feet (3344 m^2), which is greater than the proposed 21,000 square feet (1951 m^2).

INTERNATIONAL CODE COUNCIL®
Copyright © 2015 ICC. ALL RIGHTS RESERVED. Accessed by David Dammon on Jun 21, 2017 12:30:52 PM pursuant to License Agreement with ICC. No further reproduction or distribution authorized. ANY UNAUTHORIZED REPRODUCTION OR DISTRIBUTION IS A VIOLATION OF THE FEDERAL COPYRIGHT ACT AND THE LICENSE AGREEMENT, AND SUBJECT TO CIVIL AND CRIMINAL PENALTIES THEREUNDER.

TABLE 506.2[a, b]
ALLOWABLE AREA FACTOR (A_t = NS, S1, S13R, or SM, as applicable) IN SQUARE FEET

OCCUPANCY CLASSIFICATION	SEE FOOTNOTES	TYPE OF CONSTRUCTION								
		TYPE I		TYPE II		TYPE III		TYPE IV	TYPE V	
		A	B	A	B	A	B	HT	A	B
A-1	NS	UL	UL	15,500	8,500	14,000	8,500	15,000	11,500	5,500
	S1	UL	UL	62,000	34,000	56,000	34,000	60,000	46,000	22,000
	SM	UL	UL	46,500	25,500	42,000	25,500	45,000	34,500	16,500
A-2	NS	UL	UL	15,500	9,500	14,000	9,500	15,000	11,500	6,000
	S1	UL	UL	62,000	38,000	56,000	38,000	60,000	46,000	24,000
	SM	UL	UL	46,500	28,500	42,000	28,500	45,000	34,500	18,000
A-3	NS	UL	UL	15,500	9,500	14,000	9,500	15,000	11,500	6,000
	S1	UL	UL	62,000	38,000	56,000	38,000	60,000	46,000	24,000
	SM	UL	UL	46,500	28,500	42,000	28,500	45,000	34,500	18,000
A-4	NS	UL	UL	15,500	9,500	14,000	9,500	15,000	11,500	6,000
	S1	UL	UL	62,000	38,000	56,000	38,000	60,000	46,000	24,000
	SM	UL	UL	46,500	28,500	42,000	28,500	45,000	34,500	18,000
A-5	NS	UL	UL	UL	UL	UL	UL	UL	UL	UL
	S1									
	SM									
B	NS	UL	UL	37,500	23,000	28,500	19,000	36,000	18,000	9,000
	S1	UL	UL	150,000	92,000	114,000	76,000	144,000	72,000	36,000
	SM	UL	UL	112,500	69,000	85,500	57,000	108,000	54,000	27,000
E	NS	UL	UL	26,500	14,500	23,500	14,500	25,500	18,500	9,500
	S1	UL	UL	106,000	58,000	94,000	58,000	102,000	74,000	38,000
	SM	UL	UL	79,500	43,500	70,500	43,500	76,500	55,500	28,500
F-1	NS	UL	UL	25,000	15,500	19,000	12,000	33,500	14,000	8,500
	S1	UL	UL	100,000	62,000	76,000	48,000	134,000	56,000	34,000
	SM	UL	UL	75,000	46,500	57,000	36,000	100,500	42,000	25,500
F-2	NS	UL	UL	37,500	23,000	28,500	18,000	50,500	21,000	13,000
	S1	UL	UL	150,000	92,000	114,000	72,000	202,000	84,000	52,000
	SM	UL	UL	112,500	69,000	85,500	54,000	151,500	63,000	39,000
H-1	NS[c]	21,000	16,500	11,000	7,000	9.500	7,000	10,500	7,500	NP
	S1									
H-2	NS[c]	21,000	16,500	11,000	7,000	9.500	7,000	10,500	7,500	3,000
	S1									
	SM									
H-3	NS[c]	UL	60,000	26,500	14,000	17,500	13,000	25,500	10,000	5,000
	S1									
	SM									
H-4	NS[c, d]	UL	UL	37,500	17,500	28,500	17,500	36,000	18,000	6,500
	S1	UL	UL	150,000	70,000	114,000	70,000	144,000	72,000	26,000
	SM	UL	UL	112,500	52,500	85,500	52,500	108,000	54,000	19,500
H-5	NS[c, d]	UL	UL	37,500	23,000	28,500	19,000	36,000	18,000	9,000
	S1	UL	UL	150,000	92,000	114,000	76,000	144,000	72,000	36,000
	SM	UL	UL	112,500	69,000	85,500	57,000	108000	54,000	27,000

(continued)

INTERNATIONAL CODE COUNCIL®
Copyright © 2015 ICC. ALL RIGHTS RESERVED. Accessed by David Dammon on Jun 21, 2017 12:30:52 PM pursuant to License Agreement with ICC. No further reproduction or distribution authorized. ANY UNAUTHORIZED REPRODUCTION OR DISTRIBUTION IS A VIOLATION OF THE FEDERAL COPYRIGHT ACT AND THE LICENSE AGREEMENT, AND SUBJECT TO CIVIL AND CRIMINAL PENALTIES THEREUNDER.

TABLE 506.2[a, b]—continued
ALLOWABLE AREA FACTOR (A_t = NS, S1, S13R, or SM, as applicable) IN SQUARE FEET

OCCUPANCY CLASSIFICATION	SEE FOOTNOTES	TYPE OF CONSTRUCTION								
		TYPE I		TYPE II		TYPE III		TYPE IV	TYPE V	
		A	B	A	B	A	B	HT	A	B
I-1	NS[d, e]	UL	55,000	19,000	10,000	16,500	10,000	18,000	10,500	4,500
	S1	UL	220,000	76,000	40,000	66,000	40,000	72,000	42,000	18,000
	SM	UL	165,000	57,000	30,000	49,500	30,000	54,000	31,500	13,500
I-2	NS[d, f]	UL	UL	15,000	11,000	12,000	NP	12,000	9,500	NP
	S1	UL	UL	60,000	44,000	48,000	NP	48,000	38,000	NP
	SM	UL	UL	45,000	33,000	36,000	NP	36,000	28,500	NP
I-3	NS[d, e]	UL	UL	15,000	10,000	10,500	7,500	12,000	7,500	5,000
	S1	UL	UL	45,000	40,000	42,000	30,000	48,000	30,000	20,000
	SM	UL	UL	45,000	30,000	31,500	22,500	36,000	22,500	15,000
I-4	NS[d, g]	UL	60.500	26,500	13,000	23,500	13,000	25,500	18,500	9,000
	S1	UL	121,000	106,000	52,000	94,000	52,000	102,000	74,000	36,000
	SM	UL	181,500	79,500	39,000	70,500	39,000	76,500	55,500	27,000
M	NS	UL	UL	21,500	12,500	18,500	12,500	20,500	14,000	9,000
	S1	UL	UL	86,000	50,000	74,000	50,000	82,000	56,000	36,000
	SM	UL	UL	64,500	37,500	55,500	37,500	61,500	42,000	27,000
R-1	NS[d, h]	UL	UL	24,000	16,000	24,000	16,000	20,500	12,000	7,000
	S13R									
	S1	UL	UL	96,000	64,000	96,000	64,000	82,000	48,000	28,000
	SM	UL	UL	72,000	48,000	72,000	48,000	61,500	36,000	21,000
R-2	NS[d, h]	UL	UL	24,000	16,000	24,000	16,000	20,500	12,000	7,000
	S13R									
	S1	UL	UL	96,000	64,000	96,000	64,000	82,000	48,000	28,000
	SM	UL	UL	72,000	48,000	72,000	48,000	61,500	36,000	21,000
R-3	NS[d, h]	UL	UL	UL	UL	UL	UL	UL	UL	UL
	S13R									
	S1									
	SM									
R-4	NS[d, h]	UL	UL	24,000	16,000	24,000	16,000	20,500	12,000	7,000
	S13R									
	S1	UL	UL	96,000	64,000	96,000	64,000	82,000	48,000	28,000
	SM	UL	UL	72,000	48,000	72,000	48,000	61,500	36,000	21,000
S-1	NS	UL	48,000	26,000	17,500	26,000	17,500	25,500	14,000	9,000
	S1	UL	192,000	104,000	70,000	104,000	70,000	102,000	56,000	36,000
	SM	UL	144,000	78,000	52,500	78,000	52,500	76,500	42,000	27,000
S-2	NS	UL	79,000	39,000	26,000	39,000	26,000	38,500	21,000	13,500
	S1	UL	316,000	156,000	104,000	156,000	104,000	154,000	84,000	54,000
	SM	UL	237,000	117,000	78,000	117,000	78,000	115,500	63,000	40,500
U	NS	UL	35,500	19,000	8,500	14,000	8,500	18,000	9,000	5,500
	S1	UL	142,000	76,000	34,000	56,000	34,000	72,000	36,000	22,000
	SM	UL	106,500	57,000	25,500	42,000	25,500	54,000	27,000	16,500

(continued)

INTERNATIONAL CODE COUNCIL®
Copyright © 2015 ICC. ALL RIGHTS RESERVED. Accessed by David Dammon on Jun 21, 2017 12:30:52 PM pursuant to License Agreement with ICC. No further reproduction or distribution authorized. ANY UNAUTHORIZED REPRODUCTION OR DISTRIBUTION IS A VIOLATION OF THE FEDERAL COPYRIGHT ACT AND THE LICENSE AGREEMENT, AND SUBJECT TO CIVIL AND CRIMINAL PENALTIES THEREUNDER.

TABLE 506.2[a,b]—continued
ALLOWABLE AREA FACTOR (A_t = NS, S1, S13R, or SM, as applicable) IN SQUARE FEET

Note: UL = Unlimited; NP = Not permitted;

For SI: 1 square foot = 0.0929 m^2.

NS = Buildings not equipped throughout with an automatic sprinkler system; S1 = Buildings a maximum of one story above grade plane equipped throughout with an automatic sprinkler system installed in accordance with Section 903.3.1.1; SM = Buildings two or more stories above grade plane equipped throughout with an automatic sprinkler system installed in accordance with Section 903.3.1.1; S13R = Buildings equipped throughout with an automatic sprinkler system installed in accordance with Section 903.3.1.2.

a. See Chapters 4 and 5 for specific exceptions to the allowable height in this chapter.
b. See Section 903.2 for the minimum thresholds for protection by an automatic sprinkler system for specific occupancies.
c. New Group H occupancies are required to be protected by an automatic sprinkler system in accordance with Section 903.2.5.
d. The NS value is only for use in evaluation of existing building area in accordance with the *International Existing Building Code*.
e. New Group I-1 and I-3 occupancies are required to be protected by an automatic sprinkler system in accordance with Section 903.2.6. For new Group I-1 occupancies, Condition 1, see Exception 1 of Section 903.2.6.
f. New and existing Group I-2 occupancies are required to be protected by an automatic sprinkler system in accordance with Section 903.2.6 and Section 1103.5 of the *International Fire Code*.
g. New Group I-4 occupancies see Exceptions 2 and 3 of Section 903.2.6.
h. New Group R occupancies are required to be protected by an automatic sprinkler system in accordance with Section 903.2.8.

506.2.2 Mixed-occupancy, one-story buildings. The allowable area of a mixed-occupancy building with no more than one story above grade plane shall be determined in accordance with the applicable provisions of Section 508.1 based on Equation 5-1 for each applicable occupancy.

❖ The allowable area of a building with more than one occupancy is dependent upon the option used in Section 508 for the multiple occupancies. The commentary for Section 508 will delve into this in some detail. The code provides three basic options for mixed occupancies: accessory occupancies, nonseparated occupancies and separated occupancies. The availability of the options depends upon the area of each story desired for each different occupancy and the relationship of one occupancy to the other.

Example: A single-story business office of 23,000 square feet (2137 m^2) contains a lunch room that is 2,000 square feet (186 m^2) in area. The main occupancy is Group B and the accessory occupancy is Group A-2. Since the Group A-2 occupancy has a floor area of less than 10 percent of the overall floor area of the single story, this can be viewed as an accessory occupancy and there is no fire separation requirement between the Group A-2 and B occupancies. For purposes of evaluating the area limitation, the building is evaluated solely as Group B.

In contrast to the accessory occupancy provisions illustrated above, the fundamental concept for nonseparated occupancies is that the allowable building areas are based upon the most restrictive requirements of each of the occupancies in the mixed occupancy building.

Example: A single-story Type IIB building contains both Group B and M occupancies and is being evaluated under the "nonseparated occupancies" provisions of Section 508.3. The Group B portion is 1,000 square feet (93 m^2) in area while the Group M portion is 10,000 square feet (929 m^2) in area. The building does not have a sprinkler system and does not qualify for any frontage increase. With the exception of Type I construction, the area limitation of Section 503.1 is more restrictive for Group M than for Group B.

Group M: A_a = 12,500 + 0 = 12,500 square feet

Therefore, for purposes of evaluating the area limitation of Table 503, the building is evaluated solely as Group M.

Since the total area is 11,000 square feet (1022 m^2), the building can be constructed as a Type IIB building, or another evaluation:

Actual area (Group M)/Allowable area (Group M) <1.0

11,000/12,500 = 0.88 which is < 1.0; therefore OK

The separated occupancies concept requires the different occupancies to be separated in accordance with Table 508.4. The sum of the ratios of the actual floor area of each separated occupancy contained therein, as compared to the area allowed per story by Section 506.2, must not exceed one (see Section 508.4.2).

Example: A single-story Type IIB building contains separated Group B and M occupancies. The Group B portion is 1,000 square feet (93 m^2) in area while the Group M portion is 10,000 square feet (929 m^2) in area. The building does not have a sprinkler system and does not qualify for any frontage increase.

$$\frac{\text{Actual area (B)}}{\text{Allowable area (B)}} + \frac{\text{Actual area of (M)}}{\text{Allowable area of (M)}} \le 1.0$$

$$\frac{1,000}{23,000} + \frac{10,000}{12,500}$$

0.04 + 0.8 = 0.84 < 1.0; therefore OK

INTERNATIONAL CODE COUNCIL®
Copyright © 2015 ICC. ALL RIGHTS RESERVED. Accessed by David Dammon on Jun 21, 2017 12:30:52 PM pursuant to License Agreement with ICC. No further reproduction or distribution authorized. ANY UNAUTHORIZED REPRODUCTION OR DISTRIBUTION IS A VIOLATION OF THE FEDERAL COPYRIGHT ACT AND THE LICENSE AGREEMENT, AND SUBJECT TO CIVIL AND CRIMINAL PENALTIES THEREUNDER.

506.2.2.1 Group H-2 or H-3 mixed occupancies. For a building containing Group H-2 or H-3 occupancies, the allowable area shall be determined in accordance with Section 508.4.2, with the sprinkler system increase applicable only to the portions of the building not classified as Group H-2 or H-3.

❖ Section 506.2.2.1 allows Group H-2 and H-3 occupancies to be placed in a building where the increase for a sprinkler system given in Table 506.2 would be applied, but with the limitation that the increase for automatic sprinklers would not apply to the Group H-2 or H-3 areas. These Group H-2 or H-3 areas would be required to be separated from the other uses, given that Sections 508.2.4, 508.3.3 and 508.4.4 specifically require separation of these occupancies from other occupancies. The required separation would be as given for separated occupancies in Section 508.4.4, and the allowable area would be based upon the sum of the ratios of the actual area of each occupancy to the allowable area per story (see commentary, Section 508.4.2). In the case of the Group H-2 or H-3 areas, the allowable area per story would be based upon the tabular area given in Table 506.2 for H-2 or H-3 as applicable. This would have the effect of limiting the allowable areas of the entire building when a Group H-2 or H-3 area is being included.

Example: It is desired to construct a single-story Group F-1 factory using Type IIIB construction, with a 3,500-square-foot (325 m^2) Group H-2 area. An automatic sprinkler system will be used throughout the building. The building does not qualify for any frontage increase.

Applying Equation 5-1 to each occupancy:

Allowable area of Group F-1 = 48,000 square feet

Allowable area of Group H-2 = 7,000 square feet

Allowable area of the Group F-1 area with an NFPA 13 automatic sprinkler system = 48,000 square feet (4459 m^2). So, without a Group H-2 area, the building could be 48,000 square feet (4459 m^2) in area.

However, with the Group H-2 area present:

$$\frac{\text{Actual area of F-1}}{\text{Allowable area F-1}} + \frac{\text{Actual area of H-2}}{\text{Allowable area of H-2}}$$

$$= \text{Actual Area F-1/48000} + 3{,}500/7{,}000 \leq 1$$

Solving this equation for the actual area of Group F-1, it is determined that the maximum area of Group F-1 that could be allowed would now be 24,000 square feet (1672 m^2). Thus, while the high hazard is allowed, it does restrict the size of the host occupancy.

506.2.3 Single-occupancy, multistory buildings. The allowable area of a single-occupancy building with more than one story above grade plane shall be determined in accordance with Equation 5-2:

$$A_a = [A_t + (NS \times I_f)] \times S_a \qquad \textbf{(Equation 5-2)}$$

where:

A_a = Allowable area (square feet).

A_t = Tabular allowable area factor (NS, S13R or SM value, as applicable) in accordance with Table 506.2.

NS = Tabular allowable area factor in accordance with Table 506.2 for a nonsprinklered building (regardless of whether the building is sprinklered).

I_f = Area factor increase due to frontage (percent) as calculated in accordance with Section 506.3.

S_a = Actual number of building stories above grade plane, not to exceed three. For buildings equipped throughout with an automatic sprinkler system installed in accordance with Section 903.3.1.2, use the actual number of building stories above grade plane, not to exceed four.

No individual story shall exceed the allowable area (A_a) as determined by Equation 5-2 using the value of $S_a = 1$.

❖ Just as in Section 506.2.1, this section provides limitations on the area of a building based on occupancy classification, type of construction and whether the building is equipped throughout with a sprinkler system. However, in this case, the building is more than one story, so the equation for allowable area is a little more complicated. Basically, the code requirements are as follows: The total allowable area of a multistory building is based upon the tabular area of Table 506.2 multiplied by the perimeter frontage increase and multiplied by the total number of stories, but no more than three. Finally, no one story can be greater than the allowable area of a one-story building. This does not mean that buildings are limited to three stories in height. This means that the total allowable area of a building three or more stories in height is the same, regardless of the number of stories above three. Some examples will illustrate.

Example 1: What is the allowable area of a two-story office building, Type IIB construction, equipped throughout with an NFPA 13 sprinkler system, with no increase for frontage?

Answer: Total allowable area is 138,000 square feet (12 820 m^2). Maximum area of each story is 69,000 square feet (6410 m^2). For Equation 5-2: $A_t = 69{,}000$, $NS = 23{,}000$, $I_f = 0$, and $S_a = 2$. Therefore:

$A_a = [A_t + (NS \times I_f)] \times S_a = [69{,}000 + (23{,}000 \times 0)] \times 2 = 69{,}000 \times 2 = 138{,}000$. Again maximum area of each story is 69,000 square feet (6410 m^2).

Example 2: What is the allowable area of a three-story office building, constructed like the building in Example 1?

INTERNATIONAL CODE COUNCIL®
Copyright © 2015 ICC. ALL RIGHTS RESERVED. Accessed by David Dammon on Jun 21, 2017 12:30:52 PM pursuant to License Agreement with ICC. No further reproduction or distribution authorized. ANY UNAUTHORIZED REPRODUCTION OR DISTRIBUTION IS A VIOLATION OF THE FEDERAL COPYRIGHT ACT AND THE LICENSE AGREEMENT, AND SUBJECT TO CIVIL AND CRIMINAL PENALTIES THEREUNDER.

Answer: Total allowable area is 207,000 square feet (19 230 m^2). Maximum area of each story is 69,000 square feet (6410 m^2). For Equation 5-2, all is the same as in Example 1, except S_a = 3. Therefore, A_a = 69,000 x 3 = 207,000 square feet (19 230 m^2) total.

Example 3: What is the allowable area of a five-story office building, constructed like the building in Examples 1 and 2?

Answer: Total allowable area is 207,000 square feet (19 230 m^2). Maximum area of each story is 69,000 square feet (6410 m^2). For Equation 5-2 all is the same as in Example 2. The maximum that S_a can be is 3. The maximum area of each story is 69,000 square feet (6410 m^2); however, the average area of all five stories must be 41,400 square feet (3846 m^2) to be within the allowable area of the code. The area of each story can vary, as long as the total area does not exceed 207,000 square feet (19 230 m^2). For example: the first story could be 69,000 square feet (6410 m^2), the second story 50,000 square feet (4645 m^2), and the top three stories could be 29,333 square feet (2725 m^2) for a total of 206,999 square feet (19 230 m^2).

Example 4: What is the allowable area of a four-story apartment building, Type IIIB construction, equipped throughout with NFPA 13R sprinklers, with no allowable frontage increase?

Answer: Total allowable area is 64,000 square feet (5946 m^2). Maximum area of each story is 16,000 square feet (1486 m^2). Entering the Equation 5-2: A_t = 16,000, I_f = 0, NS = 16,000, S_a = 4. Therefore:

A_a = [16,000 + (16,000 x 0)] x 4 = 64,000 square feet (5946 m^2). The code increases the maximum number of stories as the base for the building equipped with an NFPA 13R system to four rather than three because NFPA 13R is specifically written to be capable of dealing effectively with buildings up to a maximum of four stories. Note that this is a limitation, and that an NFPA13 system would be required for a building over four stories in height.

506.2.4 Mixed-occupancy, multistory buildings. Each story of a mixed-occupancy building with more than one story above grade plane shall individually comply with the applicable requirements of Section 508.1. For buildings with more than three stories above grade plane, the total building area shall be such that the aggregate sum of the ratios of the actual area of each story divided by the allowable area of such stories, determined in accordance with Equation 5-3 based on the applicable provisions of Section 508.1, shall not exceed three.

$$A_a = [A_t + (NS \times I_f)] \qquad \textbf{(Equation 5-3)}$$

where:

A_a = Allowable area (square feet).

A_t = Tabular allowable area factor (NS, S13R or SM value, as applicable) in accordance with Table 506.2.

NS = Tabular allowable area factor in accordance with Table 506.2 for a nonsprinklered building (regardless of whether the building is sprinklered).

I_f = Area factor increase due to frontage (percent) as calculated in accordance with Section 506.3.

Exception: For buildings designed as separated occupancies under Section 508.4 and equipped throughout with an *automatic sprinkler system* installed in accordance with Section 903.3.1.2, the total building area shall be such that the aggregate sum of the ratios of the actual area of each story divided by the allowable area of such stories determined in accordance with Equation 5-3 based on the applicable provisions of Section 508.1, shall not exceed four.

❖ This section addresses allowable area for multiple story buildings that have mixed occupancy. This can seem to be a little counterintuitive. The allowable area of a single story of a building depends upon the method of mixed occupancy being employed.

When buildings containing mixed occupancies are two or more stories above grade plane, the same concept applied to Section 506.2.2 is applied to each story of the building. Once a mixed-occupancy building exceeds three stories in height, the maximum allowed area for the total building is set at three times the sum of the ratios. The following examples illustrate the application of the total area limitations for each building as well as showing the variety of ways in which the provisions of Section 508, Mixed Use and Occupancy, can be used in the design of the building.

Example 1: Nonsprinklered, two-story Type IIA building.

First story:	Group B occupancy— 3,000 square feet (278 m^2) Group S-2 occupancy— 23,000 square feet (2137 m^2)
Second story:	Group A-3 occupancy— 2,000 square feet (186 m^2) Group B occupancy— 24,000 square feet (2230 m^2)

The first story qualifies for the nonseparated occupancy design method since the total square footage [26,000 square feet (2415 m^2)] is less than that permitted for the most restrictive occupancy [Group B-37,500 square feet (3484 m^2)].

The second story is larger than that permitted for a Group A-3 occupancy; however, since the Group A-3 occupancy is less than 10 percent of the area of the second story, it qualifies as an accessory occupancy if subsidiary to the Group B occupancy.

In this instance, each story individually qualifies based on the applicable mixed-occupancy provision.

INTERNATIONAL CODE COUNCIL®
Copyright © 2015 ICC. ALL RIGHTS RESERVED. Accessed by David Dammon on Jun 21, 2017 12:30:52 PM pursuant to License Agreement with ICC. No further reproduction or distribution authorized. ANY UNAUTHORIZED REPRODUCTION OR DISTRIBUTION IS A VIOLATION OF THE FEDERAL COPYRIGHT ACT AND THE LICENSE AGREEMENT, AND SUBJECT TO CIVIL AND CRIMINAL PENALTIES THEREUNDER.

Example 2: Sprinklered, four-story Type IIB building, no frontage increase.

First story:	Group B occupancy— 20,000 square feet (1858 m^2) Group M occupancy— 25,000 square feet (3159 m^2)
Second story:	Group A-3 occupancy— 4,000 square feet (372 m^2) Group B occupancy— 41,000 square feet (3809 m^2)
Third story:	Group B occupancy— 15,000 square feet (1394 m^2) Group S-1 occupancy— 15,000 square feet (1394 m^2) Group F-1 occupancy— 15,000 square feet (1394 m^2)
Fourth story:	Group B occupancy— 10,000 square feet (929 m^2) Group S-2 occupancy— 35,000 square feet (3252 m^2)

The first story does not qualify as an accessory or nonseparated occupancy. As separated occupancies, the ratio on the story is 0.96 [(20,000/69,000) + (25,000/37,500)].

The second story is larger than that permitted for a Group A-3 occupancy; however, since the Group A-3 occupancy is less than 10 percent of the area of the second story, it qualifies as an accessory occupancy if subsidiary to the Group B occupancy. The ratio on the story is 0.65 (45,000/69,000).

The third story qualifies as a nonseparated occupancy, since the allowable area per story for the most restrictive occupancy [Group F-1; 46,500 square feet (4320 m^2)] is larger than the actual area on any individual story. The ratio of the floor is 0.97 (45,000/46,500).

The fourth floor qualifies as a nonseparated occupancy, since the allowable area per floor for the most restrictive occupancy [Group B; 69,000 square feet (6410 m^2)] is larger than the actual area on any individual story. The ratio of the story is 0.65 (45,000/69,000).

The aggregate sum of the ratios is 3.23 (0.96 + 0.65 + 0.97 + 0.65). Since the aggregate sum of the ratios exceeds three, Type IIB construction would not be permitted without further modification. Options would be to increase the construction type or increase the open frontage.

506.2.4.1 Group H-2 or H-3 mixed occupancies. For a building containing Group H-2 or H-3 occupancies, the allowable area shall be determined in accordance with Section 508.4.2, with the sprinkler system increase applicable only to the portions of the building not classified as Group H-2 or H-3.

❖ This section is a reminder that Group H-2 or H-3 occupancies are allowed in mixed occupancy buildings, but that there is no advantage for sprinklers. Therefore, Table 506.2 has the same area factors for nonsprinklered and sprinklered buildings for H-2 or H-3 construction. See the commentary to Section 506.2.2.1.

506.3 Frontage increase. Every building shall adjoin or have access to a public way to receive an area factor increase based on frontage. Area factor increase shall be determined in accordance with Sections 506.3.1 through 506.3.3.

❖ The allowable area of a building is allowed to be increased when it has a certain amount of frontage on streets (public ways) or open spaces, since this provides access to the structure by fire service personnel, a temporary refuge area for occupants as they leave the building in a fire emergency and a reduced exposure to and from adjacent structures. Sections 506.3.1 through 506.3.3 describe how this increase for frontage is determined.

506.3.1 Minimum percentage of perimeter. To qualify for an area factor increase based on frontage, a building shall have not less than 25 percent of its perimeter on a public way or open space. Such open space shall be either on the same lot or dedicated for public use and shall be accessed from a street or approved fire lane.

❖ There is no requirement in the code that buildings have at least 25 percent of their perimeter on a public way or open space. However, in order to qualify for an area increase, a building must have more than 25 percent of its perimeter on a public way or open space having a minimum width of at least 20 feet (6096 mm) (see Section 506.3.2). When the calculations are done, the maximum percent increase for a fully open perimeter (full frontage—the entire perimeter fronts on a public way or open space) is 75 percent. Width is measured at right angles to the perimeter walls as set forth in Section 506.3.2, but open frontage is not the same as fire separation distance. Fire separation distance, as defined in Section 202, is measured to the centerline of public ways or to an imaginary line between buildings on the same lot. Open space can include the total width of the public way as well as the total open space between buildings on the same lot. “Public way” is a defined term.

If a structure is divided into two or more buildings by fire walls complying with Section 706, the area modifications allowed by Section 506 must be determined based on each separate building within the structure. This especially comes into play in determining increases allowable based on frontage. The fire wall is essentially the perimeter wall for that side of the building and must be included in determining the *P* in Equation 5-5. Since there is another building on the other side of the fire wall, this portion of the perimeter is not considered fronting on a public way or yard and, therefore, is not included in *F* [see Commentary Figure 506.3.1(1)].

This section requires that an open space that is not a public way be on the same lot or dedicated for pub-

INTERNATIONAL CODE COUNCIL®
Copyright © 2015 ICC. ALL RIGHTS RESERVED. Accessed by David Dammon on Jun 21, 2017 12:30:52 PM pursuant to License Agreement with ICC. No further reproduction or distribution authorized. ANY UNAUTHORIZED REPRODUCTION OR DISTRIBUTION IS A VIOLATION OF THE FEDERAL COPYRIGHT ACT AND THE LICENSE AGREEMENT, AND SUBJECT TO CIVIL AND CRIMINAL PENALTIES THEREUNDER.

lic use, and it must have access from a street or an approved fire lane in order to contribute to the frontage increase.

The requirement that the open space be on the same lot is so that the owner or the jurisdiction can control the space that is assumed to be open for purposes of the area increase. One cannot encumber a neighbor's property with a requirement that the space will always remain unoccupied.

Any part of the perimeter that is not accessible to the fire department by means of a street or fire lane cannot be considered open for the purposes of this section. For instance, if the back side of a building on a narrow lot cannot be reached by means of a fire lane on one side of the building (and there is no alley or street at the back), that portion of the perimeter is not considered open for purposes of frontage increase, even if there is actual open space exceeding 20 feet (6096 mm) in width. See Commentary Figure 506.3.1(2) as an illustration of this limitation.

This section does not require that a fire lane or street extend immediately adjacent to every portion of the perimeter that is considered open for purposes of the increase. Rather, access by a fire lane must be provided up to the open side such that fire department personnel can approach the side and pull hoses across the open area to fight a fire, and no corner of the building will impede the use of hoses and equipment on that side of the building. The following examples demonstrate this point.

Example 1: In Commentary Figure 506.3.1(2), the south and east side of the building facing the street can be considered open perimeter (frontage). The north side of the building cannot be considered open perimeter for purposes of the increase, since it is not accessible from the street or a fire lane. Even though the 20-foot-wide yard can be included in open frontage because it does not provide a fire lane to the rear of the building, the 100-foot yard cannot be included.

Example 2: In Commentary Figure 506.3.1(3), all sides of the building are considered open perimeter (frontage) for purposes of the increase. Access up to each side of the building is provided by means of a fire lane or street.

Section 503 of the *International Fire Code*® (IFC®) specifies that access roads extend to within 150 feet (45 720 mm) of all portions of the exterior walls of a building. However, there are exceptions that would permit the omission of such roads under certain circumstances. One such exception is for buildings equipped throughout with an automatic sprinkler system where the fire code official is permitted to extend the 150-foot (45 720 mm) limit.

The IFC also stipulates that the access roads must be at least 20 feet (6096 mm) in unobstructed width, although it also gives the building official authority to require greater widths if necessary for effective firefighting operations. The type of surface necessary for the approved fire lane is determined by the local building official with input from the fire department, but the road must be capable of supporting the imposed loads of fire apparatus and be surfaced so as to provide all-weather driving capabilities.

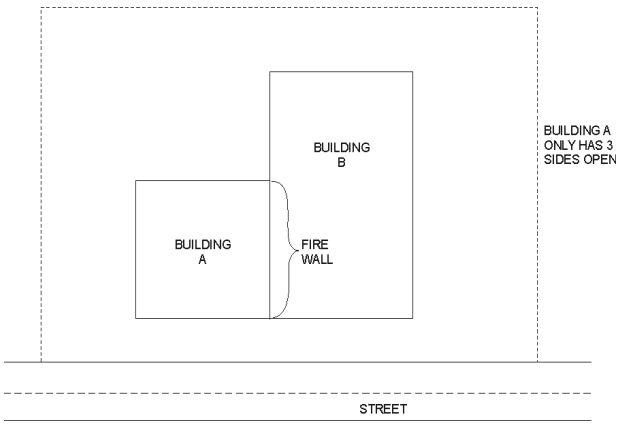

For SI: 1 inch = 25.4 mm, 1 foot = 304.8 mm.

Figure 506.3.1(1)
FRONTAGE INCREASE—FIRE WALL

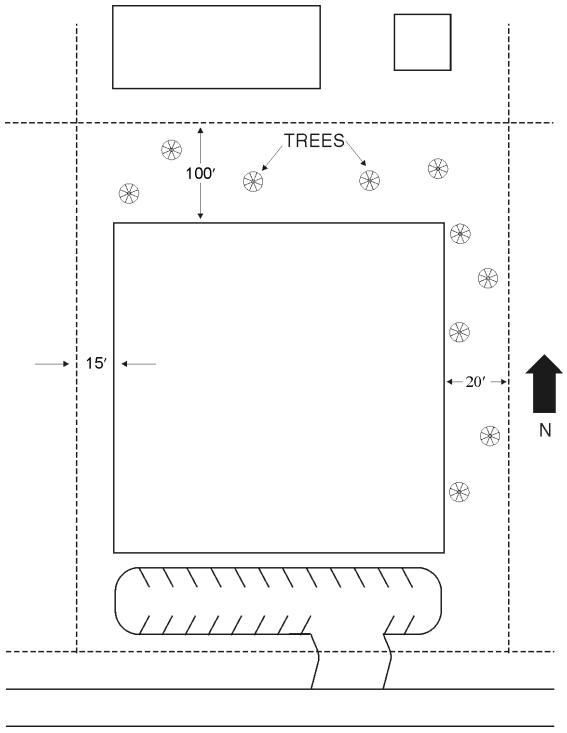

For SI: 1 foot = 304.8 mm.

Figure 506.3.1(2)
ACCESS TO OPEN SPACE

INTERNATIONAL CODE COUNCIL®
Copyright © 2015 ICC. ALL RIGHTS RESERVED. Accessed by David Dammon on Jun 21, 2017 12:30:52 PM pursuant to License Agreement with ICC. No further reproduction or distribution authorized. ANY UNAUTHORIZED REPRODUCTION OR DISTRIBUTION IS A VIOLATION OF THE FEDERAL COPYRIGHT ACT AND THE LICENSE AGREEMENT, AND SUBJECT TO CIVIL AND CRIMINAL PENALTIES THEREUNDER.

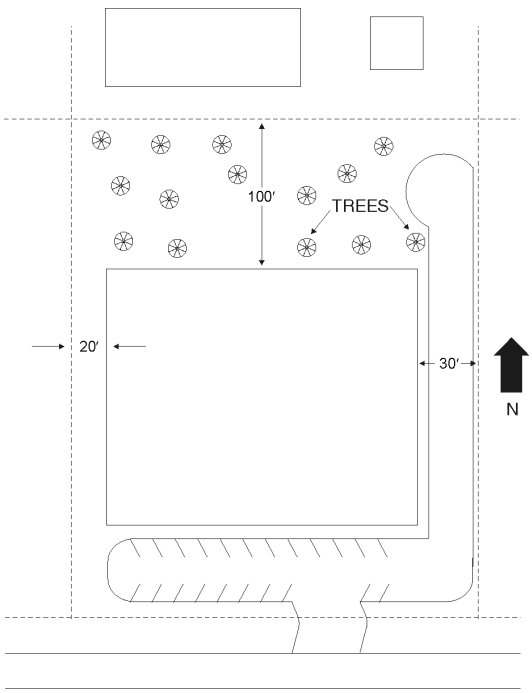

For SI: 1 foot = 304.8 mm.

Figure 506.3.1(3)
ACCESS TO OPEN SPACE

506.3.2 Minimum frontage distance. To qualify for an area factor increase based on frontage, the public way or open space adjacent to the building perimeter shall have a minimum distance (*W*) of 20 feet (6096 mm) measured at right angles from the building face to any of the following:

1. The closest interior lot line.
2. The entire width of a street, alley or public way.
3. The exterior face of an adjacent building on the same property.

Where the value of *W* is greater than 30 feet (9144 mm), a value of 30 feet (9144 mm) shall be used in calculating the building area increase based on frontage, regardless of the actual width of the public way or open space. Where the value of *W* varies along the perimeter of the building, the calculation performed in accordance with Equation 5-5 shall be based on the weighted average calculated in accordance with Equation 5-4.

$$W = (L_1 \times w_1 + L_2 \times w_2 + L_3 \times w_3 \ldots)/F \qquad \textbf{(Equation 5-4)}$$

where:

W (Width: weighted average) = Calculated width of public way or open space (feet).

L_n = Length of a portion of the exterior perimeter wall.

w_n = Width (≥ 20 feet) of a public way or open space associated with that portion of the exterior perimeter wall.

F = Building perimeter that fronts on a public way or open space having a width of 20 feet (6096 mm) or more.

Exception: Where a building meets the requirements of Section 507, as applicable, except for compliance with the minimum 60-foot (18 288 mm) *public way* or *yard* requirement, and the value of *W* is greater than 30 feet (9144 mm), the value of *W* shall not exceed 60 feet (18 288 mm).

❖ The amount of area increase (that is, the value of I_f in Section 506.3.3) will vary depending on the minimum width of the open space used in the frontage increase calculation. The general requirement is that the value of *W* must equal at least 20 feet (6096 mm) and cannot exceed 30 feet (9144 mm). The value of *W* is the weighted average of the portions of the wall and each open space when the width of the open space is between 20 and 30 feet (6096 and 9144 mm). Except as provided in the exception, the width of open space used in this calculation cannot exceed 30 feet (9144 mm) even when part of the open space is wider than 30 feet (9144 mm). See the following two examples illustrating this requirement. Example 1 also illustrates the use of Equation 5-4 in the determination of the weighted average *W*.

Example 1: In Commentary Figure 506.3.2(1), the value *W* = [(200 feet x 25 feet) + (100 feet x 20 feet) + (200 feet x 30 feet)]/500 feet = 26 feet (7925 mm).

Example 2: In Commentary Figure 506.3.2(2), the value of *W* would be 30 feet (9144 mm), since the minimum width of the open space that qualifies as open frontage is greater than 30 feet (9144 mm) on all

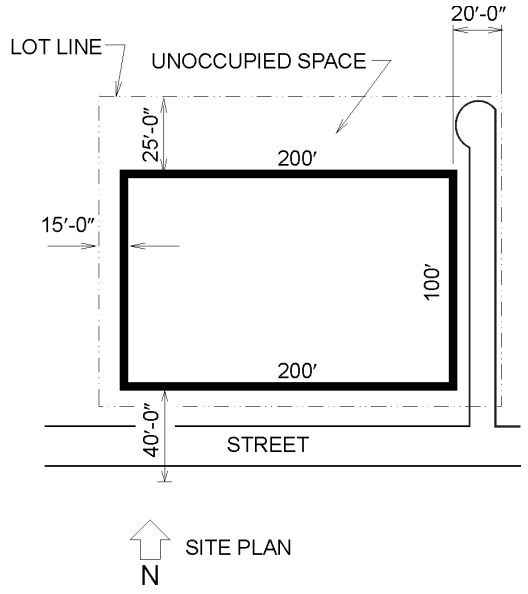

For SI: 1 inch = 25.4 mm, 1 foot = 304.8 mm.

Figure 506.3.2(1)
FRONTAGE INCREASE—THREE SIDES

INTERNATIONAL CODE COUNCIL®
Copyright © 2015 ICC. ALL RIGHTS RESERVED. Accessed by David Dammon on Jun 21, 2017 12:30:52 PM pursuant to License Agreement with ICC. No further reproduction or distribution authorized. ANY UNAUTHORIZED REPRODUCTION OR DISTRIBUTION IS A VIOLATION OF THE FEDERAL COPYRIGHT ACT AND THE LICENSE AGREEMENT, AND SUBJECT TO CIVIL AND CRIMINAL PENALTIES THEREUNDER.

sides of this building. The reason the value of *W* must be taken at 30 feet (9144 mm) and not 50 feet (15 240 mm) is that this section sets an upper limit on the value of the *W*/30 term in Equation 5-5.

Typically, when multiple buildings are located on the same lot, an imaginary lot line must be established somewhere between the buildings in order to determine the fire separation distance. However, the value of *W* is defined as the width of the public way or open space, and is not dependent upon the fire separation distance. Therefore, for purposes of determining the value of *W* between buildings on the same lot, the entire distance between the buildings is permitted to be used, not solely the fire separation distance. Similarly, the entire width of a public way is used and not just the distance to the centerline of the public way. Such measurements are to be taken at right angles from the building.

The exception states that for certain buildings, the value of *W* divided by 30 is permitted to have a maximum value of 2.0. This exception applies to buildings that would be allowed to be unlimited in area in accordance with Section 507, save for the fact that the open area of 60 feet (18 288 mm) required by Section 507 is not met. Therefore, the weighted average of *W* would be calculated between 20 feet (6096 mm) and 60 feet (18 288 mm).

506.3.3 Amount of increase. The area factor increase based on frontage shall be determined in accordance with Equation 5-5:

$$I_f = [F/P - 0.25]W/30 \qquad \textbf{(Equation 5-5)}$$

where:

I_f = Area factor increase due to frontage.

F = Building perimeter that fronts on a *public way* or open space having minimum distance of 20 feet (6096 mm).

P = Perimeter of entire building (feet).

W = Width of *public way* or open space (feet) in accordance with Section 506.3.2.

❖ The terms that are used in Equation 5-5 have been discussed in the commentary to Sections 506.3.1 and 506.3.2. One additional example to demonstrate the application:

Example 1: Refer to Commentary Figure 506.3.3. In Equation 5-5, the term would have the following values:

F = 500 feet (15 240 mm), since all sides of the building front on a public way or open space having 20 feet (6096 mm) minimum open width.

P = 500 feet (15 240 mm), the length of the entire perimeter.

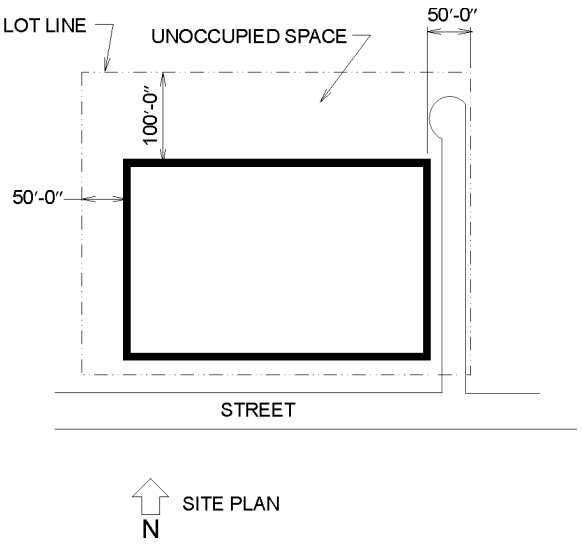

For SI: 1 inch = 25.4 mm, 1 foot = 304.8 mm.

Figure 506.3.2(2)
FRONTAGE INCREASE—FOUR SIDES

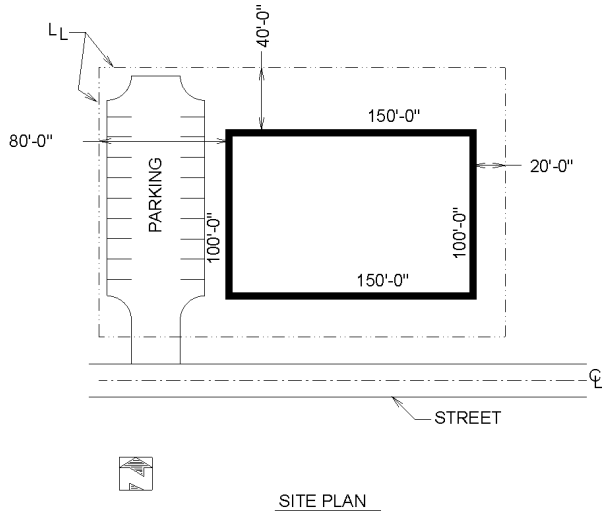

For SI: 1 inch = 25.4 mm, 1 foot = 304.8 mm.

Figure 506.3.3
FRONTAGE INCREASE

INTERNATIONAL CODE COUNCIL®
Copyright © 2015 ICC. ALL RIGHTS RESERVED. Accessed by David Dammon on Jun 21, 2017 12:30:52 PM pursuant to License Agreement with ICC. No further reproduction or distribution authorized. ANY UNAUTHORIZED REPRODUCTION OR DISTRIBUTION IS A VIOLATION OF THE FEDERAL COPYRIGHT ACT AND THE LICENSE AGREEMENT, AND SUBJECT TO CIVIL AND CRIMINAL PENALTIES THEREUNDER.

W = The weighted average of the widths of the public way or open space = [(20 ft.)(100 ft.) + (30 ft.)(150 ft.) + (30 ft.)(100 ft.) + (30 ft.)(150 ft.)]/500 ft. = 28 feet (8534 mm).

Note in the above computation for *W* that, where the actual width exceeds 30 feet (9144 mm), a value of 30 feet (9144 mm) is used as required by Section 506.3.2.

Equation 5-5, $I_f = [(F/P) - 0.25](W/30)$, becomes:

$I_f = [(500/500) - 0.25](28/30) = (.75)(.93) = 0.70$

Therefore, the term "I_f" equals 0.70 when using Equation 5-1 or 5-2 for determining the allowable area per story (A_a).

Example 2: The building shown on Commentary Figure 506.3.3 for Example 1 is proposed to be a Mercantile Occupancy, Type VB construction, one story, equipped throughout with an NFPA 13 sprinkler system. The allowable area, using Equation 5-1:

$A_a = A_t + (NS \times I_f) = 36{,}000 + (9{,}000 \times 0.7) = 42{,}300$ square feet (3930 m^2).

SECTION 507
UNLIMITED AREA BUILDINGS

507.1 General. The area of buildings of the occupancies and configurations specified in Sections 507.1 through 507.12 shall not be limited. Basements not more than one story below grade plane shall be permitted.

❖ This section addresses circumstances under which a building would be allowed to be constructed unlimited in building area. Depending upon the height (in stories) of the structure and the occupancy classification, the code presents different circumstances that would allow an unlimited area building. There is a common thread among the requirements for these facilities:

1. Except for the option in Section 507.3, the building is equipped throughout with an automatic sprinkler system.
2. The building is surrounded by increased open space, usually 60 feet (18 288 mm) in width (see also Section 507.2.1).
3. The buildings are limited to one or two stories above grade plane, with a single-story basement.
4. The building only houses low-hazard or moderate-hazard occupancies.

Historically, structures constructed under the provisions for unlimited area buildings have performed quite well in regard to fire and life safety. In general, only those occupancies and configurations that are specifically identified in Section 507 are subject to the unlimited area allowance.

507.1.1 Accessory occupancies. Accessory occupancies shall be permitted in unlimited area buildings in accordance with the provisions of Section 508.2, otherwise the requirements of Sections 507.3 through 507.13 shall be applied, where applicable.

❖ This section clarifies that the accessory use provisions of Section 508.2 can also be applied to unlimited area buildings. This allows uses not specifically addressed in Sections 507.3 through 507.13 to be located in any of these buildings, provided they meet the requirements of accessory occupancies according to Section 508.2. The provision is distinct from Section 507.4.1, which addresses Group A-1 and A-2 occupancies in unlimited area buildings under Section 507.4. The provisions of Section 507.4.1 are for additional primary uses in these unlimited area buildings. A large office building could have an employee cafeteria, which is a Group A-2 occupancy, as an accessory, provided it was less than 10 percent of the floor area and didn't exceed the allowable area of Sections 503 and 506. Such accessory space would not need to be separated as required for the larger spaces allowed under Section 507.4.1.

507.2 Measurement of open spaces. Where Sections 507.3 through 507.13 require buildings to be surrounded and adjoined by *public ways* and *yards*, those open spaces shall be determined as follows:

1. Yards shall be measured from the building perimeter in all directions to the closest interior *lot lines* or to the exterior face of an opposing building located on the same *lot*, as applicable.
2. Where the building fronts on a *public way*, the entire width of the *public way* shall be used.

❖ In all cases, the open space can occur within public ways surrounding the site, by yards provided on the lot between the building and the lot lines, or a combination of yards and public ways. Where a yard is used to achieve the open space, it must be on the same lot as the building receiving the benefit. With respect to the 60 feet (18 288 mm), the code specifies that the entire width of the public way can be included. (Fire separation distance, which is a different requirement, requires measurement to the centerline of the public way.) Unlike the street frontage increase in Section 506.3.2, the open space must be provided in all directions around the perimeter of the building, not just measured at right angles to the building (see Commentary Figure 507.2). Two unlimited area buildings on the same lot must be separated by 60 feet (18 288 mm) [or 40 feet (12 192 mm) if Section 507.2.1 is used] unless they are treated as a single building under the provisions of Section 503.1.2.

The open space located on the private property does not need to be dedicated to the public or publicly owned, but can be the location of parking, landscaping, roadways and other minor accessory features (tanks, generators, trash dumpster enclo-

INTERNATIONAL CODE COUNCIL®
Copyright © 2015 ICC. ALL RIGHTS RESERVED. Accessed by David Dammon on Jun 21, 2017 12:30:52 PM pursuant to License Agreement with ICC. No further reproduction or distribution authorized. ANY UNAUTHORIZED REPRODUCTION OR DISTRIBUTION IS A VIOLATION OF THE FEDERAL COPYRIGHT ACT AND THE LICENSE AGREEMENT, AND SUBJECT TO CIVIL AND CRIMINAL PENALTIES THEREUNDER.

sures) (see IBC Interpretation No. 20-03). However, the yard cannot be occupied by any exterior use that is essentially a continuation of use of the building. For example, many big box retailers will have an adjoining lawn and garden merchandise area; or a lumber supply area that is only partially enclosed by walls, fencing and roof covering. This type of use would need to be considered part of the unlimited area building, and the 60 feet (18 288 mm) of open space provided beyond this area (see IBC Interpretation No. 03-05).

The open areas serve two key roles: separation of these buildings from other buildings and ample space on all sides for fire-fighting operations.

Please note that Section 507.2.1 permits a reduction in the open space in exchange for increased wall and opening protection for those unlimited area buildings allowed by Sections 507.3, 507.4, 507.5, 507.6 and 507.12.

507.2.1 Reduced open space. The *public ways* or *yards* of 60 feet (18 288 mm) in width required in Sections 507.3, 507.4, 507.5, 507.6 and 507.12 shall be permitted to be reduced to not less than 40 feet (12 192 mm) in width provided all of the following requirements are met:

1. The reduced width shall not be allowed for more than 75 percent of the perimeter of the building.
2. The *exterior walls* facing the reduced width shall have a *fire-resistance rating* of not less than 3 hours.
3. Openings in the *exterior walls* facing the reduced width shall have opening protectives with a *fire protection rating* of not less than 3 hours.

❖ The minimum width of the open space surrounding those unlimited area buildings specified in Sections 507.3, 507.4, 507.5, 507.6 and 507.12 may be reduced if the exterior walls are protected with minimum 3-hour fire-resistance-rated construction and the openings are protected with 3-hour rated assemblies. All three conditions of this section must be met in order to reduce the open space to a minimum of 40 feet (12 192 mm). The criteria and standards for wall assemblies and opening protection are contained in Chapter 7. The rated walls and protected openings are required only for those portions of the walls that do not face at least 60 feet (18 288 mm) of unoccupied space or public way.

507.3 Nonsprinklered, one-story buildings. The area of a Group F-2 or S-2 building no more than one story in height shall not be limited where the building is surrounded and adjoined by *public ways* or *yards* not less than 60 feet (18 288 mm) in width.

❖ By definition, occupancies of Groups F-2 and S-2 are not permitted to contain significant amounts of combustible materials (see Sections 306.3 and 311.3); therefore, because the fire load of the contents is lower, the hazard is lower. The type of construction is not restricted, and sprinklers are not required for unlimited area buildings containing Group F-2 and S-2 occupancies, provided the building is no more than one story above grade plane. See the commentary in Section 507.2 regarding the required open space. Section 507.2.1 can be applied to buildings built under this section.

507.4 Sprinklered, one-story buildings. The area of a Group A-4 building no more than one *story above grade plane* of other than Type V construction, or the area of a Group B, F, M or S building no more than one story above grade plane of any construction type, shall not be limited

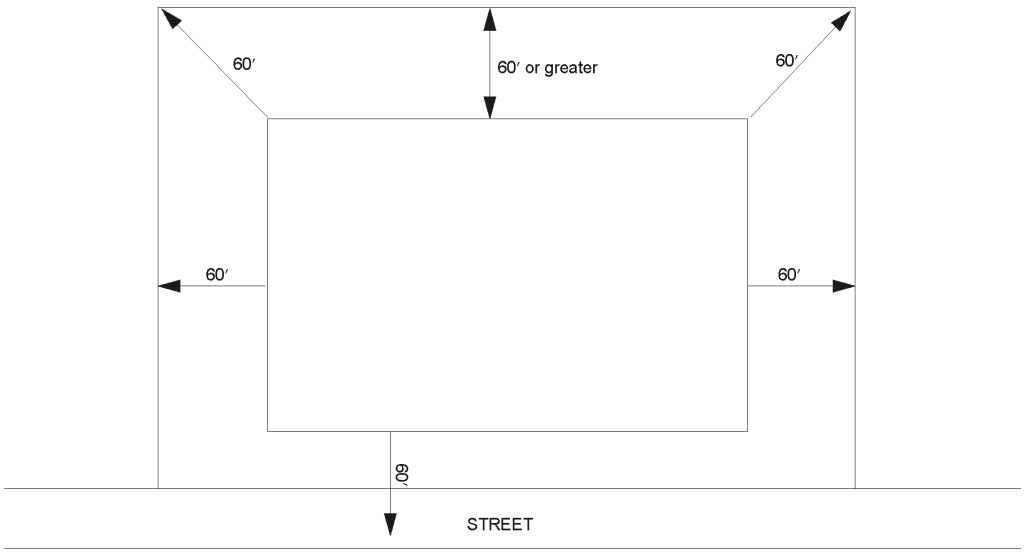

For SI: 1 foot = 304.8 mm.

Figure 507.2
REQUIRED SEPARATION FOR UNLIMITED AREA BUILDINGS

INTERNATIONAL CODE COUNCIL®
Copyright © 2015 ICC. ALL RIGHTS RESERVED. Accessed by David Dammon on Jun 21, 2017 12:30:52 PM pursuant to License Agreement with ICC. No further reproduction or distribution authorized. ANY UNAUTHORIZED REPRODUCTION OR DISTRIBUTION IS A VIOLATION OF THE FEDERAL COPYRIGHT ACT AND THE LICENSE AGREEMENT, AND SUBJECT TO CIVIL AND CRIMINAL PENALTIES THEREUNDER.

where the building is provided with an *automatic sprinkler system* throughout in accordance with Section 903.3.1.1 and is surrounded and adjoined by *public ways* or *yards* not less than 60 feet (18 288 mm) in width.

Exceptions:

1. Buildings and structures of Type I or II construction for rack storage facilities that do not have access by the public shall not be limited in height, provided that such buildings conform to the requirements of Sections 507.4 and 903.3.1.1 and Chapter 32 of the *International Fire Code*.
2. The *automatic sprinkler system* shall not be required in areas occupied for indoor participant sports, such as tennis, skating, swimming and equestrian activities in occupancies in Group A-4, provided that both of the following criteria are met:
   2.1. *Exit* doors directly to the outside are provided for occupants of the participant sports areas.
   2.2. The building is equipped with a *fire alarm system* with *manual fire alarm boxes* installed in accordance with Section 907.

❖ Because of their excellent record in controlling and preventing fires, the installation of a sprinkler system throughout single-story buildings of the listed groups, individually or in combination, permits them to be unlimited in area (IBC Interpretation No. 44-06). This also applies to two-story above-grade-plane buildings of these groups, with the exception of Group A-4 (see Section 507.5). See the commentary in Section 507.2 regarding the required open space. Section 507.2.1 can be applied to buildings built under Section 507.4.

The life-safety hazards in buildings of these occupancies, because of the typical activities of the occupants and their level of awareness, are considered low enough that larger building areas and increased fire loads can be tolerated. For Groups B, F, M and S, this section may be applied to buildings of all construction types and is not limited to noncombustible construction. For indoor arenas and other Group A-4 buildings, the unlimited area provision can be applied to buildings of Type I, II, Ill and IV construction only. This reflects the size of the occupant load in these types of facilities. The sprinkler system is required to be designed and installed in accordance with NFPA 13 (see Section 903.3.1.1). The height in feet of the unlimited area building cannot exceed the limits established in Section 504.3 for the occupancy and type of construction. See Section 507.8 for similar buildings that include Group H-5 facilities.

Exception 1 specifically permits Type I and II buildings with rack storage to be a single-story building, but unlimited in the height in feet, if they are surrounded by 60 feet (18 288 mm) of open space, do not permit access by the public, have an NFPA 13 sprinkler system and comply with the *International Fire Code*® (IFC®) Chapter 32. These standards contain provisions for storage configuration, in-rack sprinkler coverage and system requirements that offset the hazard introduced by increased height.

Exception 2 eliminates providing a sprinkler system in certain areas of unlimited area Group A-4 occupancies where a lack of fuel loading and excessive ceiling heights would reduce the need for, and effectiveness of, the system. Group A-4 occupancies frequently have indoor participant sports areas such as tennis courts, skating rinks, swimming pools, baseball fields, basketball courts and equestrian arenas, with spectator seating usually situated around the perimeter of the sports field or area. These types of indoor recreation areas often require very large, open areas with such high ceilings that the installation of an automatic sprinkler system in the immediate participant sport area would be ineffective. The potential for significant fire involvement in such an area is generally quite low because of the low fuel load; therefore, sprinkler coverage is unnecessary for the playing field in most of these buildings. These areas are, therefore, exempt from the suppression requirement of this section, provided the conditions regarding exiting and the required fire alarm system are met. The use of the sports area for other uses, such as a weekend crafts fair or other activity not specifically listed, would be in violation of the exception and should not be permitted. When an indoor arena or sports facility is built without suppression in the participant sport area, occupants of the playing field or participant sport area must be able to exit the building directly from the playing area, without having to pass through other parts of the building. This eliminates the hazard of having to pass through higher fuel load areas such as locker rooms or concession areas. The building must also be equipped with a manual alarm system that complies with Section 907. This manual alarm system provides an additional and acceptable level of life safety in spite of the omission of sprinklers over the playing field area. This exception only applies to Group A-4 occupancies that are contained within an unlimited area building.

Omission of sprinkler coverage is permitted in the unlimited area building for the participant sport area only. All other areas are required to be equipped with an automatic sprinkler system. This includes all other rooms and spaces in the building, such as the spectator seating areas, locker rooms, restaurants, lounges, shops, arcades, skyboxes and storage areas.

507.4.1 Mixed occupancy buildings with Groups A-1 and A-2. Group A-1 and A-2 occupancies of other than Type V construction shall be permitted within mixed occupancy buildings of unlimited area complying with Section 507.4, provided all of the following criteria are met:

1. Group A-1 and A-2 occupancies are separated from other occupancies as required for separated occupancies in Section 508.4.4 with no reduction allowed in the *fire-resistance rating* of the separation based upon the installation of an *automatic sprinkler system*.

INTERNATIONAL CODE COUNCIL®
Copyright © 2015 ICC. ALL RIGHTS RESERVED. Accessed by David Dammon on Jun 21, 2017 12:30:52 PM pursuant to License Agreement with ICC. No further reproduction or distribution authorized. ANY UNAUTHORIZED REPRODUCTION OR DISTRIBUTION IS A VIOLATION OF THE FEDERAL COPYRIGHT ACT AND THE LICENSE AGREEMENT, AND SUBJECT TO CIVIL AND CRIMINAL PENALTIES THEREUNDER.

2. Each area of the portions of the building used for Group A-1 or A-2 occupancies shall not exceed the maximum allowable area permitted for such occupancies in Section 503.1.
3. *Exit* doors from Group A-1 and A-2 occupancies shall discharge directly to the exterior of the building.

❖ This section allows Group A-1 and A-2 occupancies in mixed occupancy, single-story unlimited area buildings under limited conditions. These are considered as additional primary use occupancies allowed in buildings regulated by Section 507.4. For accessory uses, see the commentary for Section 507.1.1. A typical example of a practical application of this would be the construction of a strip mall that is mainly for retail stores, but might contain a restaurant or a movie theater, or both. Group A-1 or A-2 buildings would not be permitted as stand-alone unlimited area buildings. Similar to the requirement in Section 507.4 for Group A-4 buildings, unlimited area buildings that contain a Group A-1 or A-2 occupancy are not permitted to be built of Type V construction.

507.5 Two-story buildings. The area of a Group B, F, M or S building no more than two *stories above grade plane* shall not be limited where the building is equipped throughout with an *automatic sprinkler system* in accordance with Section 903.3.1.1 and is surrounded and adjoined by *public ways* or *yards* not less than 60 feet (18 288 mm) in width.

❖ The rationale for allowing unlimited area two-story buildings in these four occupancy groups is the same as for one-story structures of these uses. The type of construction is not restricted. The number of stories are those above grade plane. Group A is not included in the occupancies that can be located within a two-story, unlimited area building because of the hazards associated with higher occupant loads. Even though limited Group A occupancies can be located in one-story unlimited area buildings, such occupancies cannot be located on either story of a two-story, unlimited area building unless they are accessory occupancies (see Section 507.1.1). The provisions of Section 507.4.1 do not apply to two-story buildings. See the commentary to Section 507.2 regarding the required open space. Section 507.2.1 can be applied to buildings built under Section 507.5.

507.6 Group A-3 buildings of Type II construction. The area of a Group A-3 building no more than one *story above grade plane*, used as a *place of religious worship*, community hall, dance hall, exhibition hall, gymnasium, lecture hall, indoor *swimming pool* or tennis court of Type II construction, shall not be limited provided all of the following criteria are met:

1. The building shall not have a *stage* other than a *platform.*
2. The building shall be equipped throughout with an *automatic sprinkler system* in accordance with Section 903.3.1.1.
3. The building shall be surrounded and adjoined by *public ways* or *yards* not less than 60 feet (18 288 mm) in width.

❖ Assembly buildings pose a greater risk in general, primarily because of their relatively large occupant loads and the density of such loads; therefore, the unlimited area provisions are more restrictive for assembly occupancies. Limited types of Group A-3 buildings are allowed as unlimited area buildings, provided each is limited to one story above grade plane. In the case of the Group A-3 occupancies listed, the construction classifications allowed to be unlimited area include Type II, which are noncombustible structures, and Type III and IV (see Section 507.7), which are combustible structures. The types of Group A-3 occupancies listed—churches, dance halls, community halls, exhibition halls, gymnasiums, lecture halls, indoor swimming pools and tennis courts—are typically well-lit, open spaces, containing a low fuel load. Libraries and museums are excluded, as they generally have a higher fuel load, as are bowling alleys and pool halls that are often poorly lit and have higher levels of activity. The dance halls included in Group A-3 are not to be confused with nightclubs, which are Group A-2 occupancies.

The Group A-3 buildings listed in this section must have 60 feet (18 288 mm) of open space surrounding the structure. Similar to the occupancies referenced in Sections 507.3 and 507.4, a sprinkler system must be provided and is required to be designed and installed in accordance with NFPA 13. Group A-3 buildings are further restricted, however, in that the building must not have a stage (other than a platform). These requirements aid in the exiting of the building in an emergency. See the commentary to Section 507.2 regarding the required open space. Section 507.2.1 can be applied to buildings built under Section 507.6.

507.7 Group A-3 buildings of Type III and IV construction. The area of a Group A-3 building of Type III or IV construction, with no more than one *story above grade plane* and used as a *place of religious worship*, community hall, dance hall, exhibition hall, gymnasium, lecture hall, indoor *swimming pool* or tennis court, shall not be limited provided all of the following criteria are met:

1. The building shall not have a *stage* other than a *platform*.
2. The building shall be equipped throughout with an *automatic sprinkler system* in accordance with Section 903.3.1.1.
3. The assembly floor shall be located at or within 21 inches (533 mm) of street or grade level and all *exits* are provided with ramps complying with Section 1012 to the street or grade level.

INTERNATIONAL CODE COUNCIL®
Copyright © 2015 ICC. ALL RIGHTS RESERVED. Accessed by David Dammon on Jun 21, 2017 12:30:52 PM pursuant to License Agreement with ICC. No further reproduction or distribution authorized. ANY UNAUTHORIZED REPRODUCTION OR DISTRIBUTION IS A VIOLATION OF THE FEDERAL COPYRIGHT ACT AND THE LICENSE AGREEMENT, AND SUBJECT TO CIVIL AND CRIMINAL PENALTIES THEREUNDER.

4. The building shall be surrounded and adjoined by *public ways* or *yards* not less than 60 feet (18 288 mm) in width.

❖ The requirements for Group A-3 buildings of Type III or IV construction are similar to the provisions for buildings of Type II construction. Due to the permitted use of combustible materials in Group A-3 buildings of Type III and IV construction, these buildings are further restricted in that the assembly floor level of the building must not be higher than 21 inches (533 mm) above street or grade level. These requirements aid in the exiting of the building occupants in an emergency. In order to further assist in the evacuation of the building in an emergency, assembly floors which are not at grade level must be provided with ramps (i.e., no stairs) which lead to grade level. Note that the 21-inch (533 mm) height limitation for the assembly floor would prohibit the installation of a mezzanine, balcony or most raised-floor surfaces in the building. See the commentary to Section 507.2 regarding the required open space. Please note that Section 507.2.1 can not be applied to buildings built under Section 507.7.

507.8 Group H-2, H-3 and H-4 occupancies. Group H-2, H-3 and H-4 occupancies shall be permitted in unlimited area buildings containing Group F or S occupancies in accordance with Sections 507.4 and 507.5 and the provisions of Sections 507.8.1 through 507.8.4.

❖ Group F and S buildings, single story, with an NFPA 13 sprinkler and a 60-foot open perimeter can include some high-hazard areas. This section sets forth limits for Group H-2, H-3 and H-4 occupancies in these unlimited area buildings. Group F facilities often inherently contain a certain amount of Group H-2, H-3 and H-4 occupancies when hazardous materials are needed for the industrial processes. Similarly, it is reasonable to provide for limited quantities of hazardous material storage in a storage (Group S) occupancy. See the commentary to Section 507.2 regarding the required open space. Please note that Section 507.2.1 can not be applied to buildings built under Section 507.8.

507.8.1 Allowable area. The aggregate floor area of Group H occupancies located in an unlimited area building shall not exceed 10 percent of the area of the building or the area limitations for the Group H occupancies as specified in Section 506 based on the perimeter of each Group H floor area that fronts on a *public way* or open space.

❖ Multiple high-hazard (Group H-2, H-3 and H-4) occupancies are permitted within a manufacturing or storage building constructed under the unlimited area building provisions; however, the aggregate floor area of all such occupancies cannot be more than 10 percent of the floor area of the entire building. It is important that the higher hazards be limited in amount in order to maintain the high degree of fire and life safety anticipated in an unlimited area building. In addition, the aggregate floor area of Group H occupancies cannot exceed area limitations established by Section 506 with any permitted frontage increases as calculated by Section 506.3.

507.8.1.1 Located within the building. The aggregate floor area of Group H occupancies not located at the perimeter of the building shall not exceed 25 percent of the area limitations for the Group H occupancies as specified in Section 506.

❖ For those Group H occupancies that are not located at the perimeter of the building, an additional limitation is placed on their allowable area. If the high-hazard occupancy is surrounded on all sides by an unlimited area building, it is difficult for fire department personnel to locate and access that area. Therefore, Group H-2, H-3 and H-4 occupancies that are not located at the perimeter of the building are limited to 25 percent of the area limitation specified in Section 506 for the building type of construction and occupancy classification, as shown in Commentary Figure 507.8.1.1. With this option, a frontage increase per Section 506.3 is not permitted.

507.8.1.1.1 Liquid use, dispensing and mixing rooms. Liquid use, dispensing and mixing rooms having a floor area of not more than 500 square feet (46.5 m^2) need not be located on the outer perimeter of the building where they are in accordance with the *International Fire Code* and NFPA 30.

❖ Identical language is found in Exception 1 to Section 415.6, allowing small liquid use, dispensing and mixing rooms to be located within the building's interior rather than at its perimeter.

507.8.1.1.2 Liquid storage rooms. Liquid storage rooms having a floor area of not more than 1,000 square feet (93 m^2) need not be located on the outer perimeter where they are in accordance with the *International Fire Code* and NFPA 30.

❖ Liquid storage rooms no more than 1,000 square feet (93 m^2) are permitted to be located within the building. This allowance is also reflected in Section 415.6, Exception 2.

507.8.1.1.3 Spray paint booths. Spray paint booths that comply with the *International Fire Code* need not be located on the outer perimeter.

❖ Spray paint booths are regulated independently by the IFC and NFPA 33. There is no requirement that they be located on a building's perimeter. This language is also provided in Exception 3 of Section 415.6. It should be noted that an approved spray booth is not typically classified as a Group H occupancy, but rather simply regulated as an appliance (see definition of "Spray booth" in Section 202) located within the general building occupancy. Therefore, the allowable floor area for one or more spray booths in an unlimited area building would be regulated by the provisions of IFC Section 2404, not by this section. In addition, the floor area of the spray booths would not be included in the aggregate floor

INTERNATIONAL CODE COUNCIL®
Copyright © 2015 ICC. ALL RIGHTS RESERVED. Accessed by David Dammon on Jun 21, 2017 12:30:52 PM pursuant to License Agreement with ICC. No further reproduction or distribution authorized. ANY UNAUTHORIZED REPRODUCTION OR DISTRIBUTION IS A VIOLATION OF THE FEDERAL COPYRIGHT ACT AND THE LICENSE AGREEMENT, AND SUBJECT TO CIVIL AND CRIMINAL PENALTIES THEREUNDER.

area of the Group H occupancies in the unlimited area building for the purposes of applying the allowable area limitations of Sections 507.8.1 and 507.8.1.1.

507.8.2 Located on building perimeter. Except as provided for in Section 507.8.1.1, Group H occupancies shall be located on the perimeter of the building. In Group H-2 and H-3 occupancies, not less than 25 percent of the perimeter of such occupancies shall be an *exterior wall*.

❖ Unless in compliance with Section 507.8.1.1, Group H occupancies are to be located on the building's perimeter. More ready access to the high-hazard occupancy from the exterior of the building provides the fire department with an opportunity to respond more effectively to an incident. As set forth in Section 507.8.1, Group H-2, H-3 and H-4 occupancies that are located on the perimeter of an unlimited area building are permitted to be a maximum of 10 percent of the total building area, or the maximum area permitted by Section 506 for the Group H occupancy, whichever is less.

The increase permitted in Section 506.3 is to be based on the open frontage of Group H-2, H-3 and H-4 floor areas. In Commentary Figure 507.8.2(1), the Group H-2 floor area is located in the corner of the Group F-1 building, so that two walls of the perimeter of the Group H-2 floor area front an unoccupied open space. In accordance with Section 506.2.1, the area increase due to frontage (I_f) is calculated to be 25 percent, in accordance with the figure. Applying this factor in Equation 5-1, the allowable area for the Group H-2 occupancy is [7,000 square feet + (7000 square feet x 0.25)] = 8,750 square feet (813 m^2). This is less than 10 percent of the total area per story [i.e., 15,000 square feet (1394 m^2)], so 8,750 square feet (813 m^2) is the maximum allowable area for the Group H-2 occupancy.

Locating the Group H-2 floor area further away from the perimeter of the Group F-1 building, as occurs in Commentary Figure 507.8.2(2), qualifies the Group H-2 floor area for an even greater allowable area increase [see Commentary Figure 507.8.2(2)].

The mandate that Group H-2 and H-3 occupancies have a minimum of 25 percent of their perimeter as an exterior wall is based on the provisions of Section 415.6. Additionally, the three exceptions to Section 415.6 are the basis for those of Sections 507.8.1.1.1, 507.8.1.1.2 and 507.8.1.1.3. Please refer to the commentary to Section 415.6 for further information.

507.8.3 Occupancy separations. Group H occupancies shall be separated from the remainder of the unlimited area building and from each other in accordance with Table 508.4.

❖ In order to maintain the necessary fire resistance between the high-hazard areas and the remainder of the unlimited area building, the required occupancy separations established in Table 508.4 for separated occupancies must be provided.

507.8.4 Height limitations. For two-*story*, unlimited area buildings, Group H occupancies shall not be located more than one *story above grade plane* unless permitted based on the allowable height and number of *stories* and feet as specified in Section 504 based on the type of construction of the unlimited area building.

❖ This section notes that the Group H occupancy must be on the first story above grade unless Table 504.4 allows for such occupancies on the second story above grade. This will depend on the type of construction. All the other size limitations still apply.

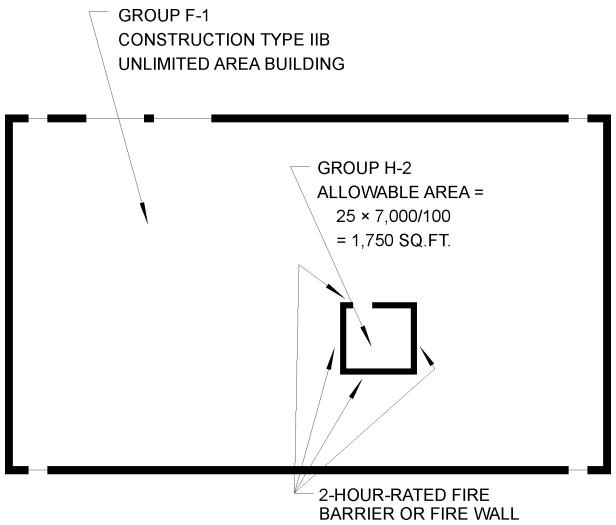

For SI: 1 square foot = 0.0929 m^2.

Figure 507.8.1.1
USE GROUP H-2 NOT LOCATED AT THE PERIMETER OF AN UNLIMITED AREA BUILDING

INTERNATIONAL CODE COUNCIL®
Copyright © 2015 ICC. ALL RIGHTS RESERVED. Accessed by David Dammon on Jun 21, 2017 12:30:52 PM pursuant to License Agreement with ICC. No further reproduction or distribution authorized. ANY UNAUTHORIZED REPRODUCTION OR DISTRIBUTION IS A VIOLATION OF THE FEDERAL COPYRIGHT ACT AND THE LICENSE AGREEMENT, AND SUBJECT TO CIVIL AND CRIMINAL PENALTIES THEREUNDER.

507.9 Unlimited mixed occupancy buildings with Group H-5. The area of a Group B, F, H-5, M or S building no more than two *stories above grade plane* shall not be limited where the building is equipped throughout with an *automatic sprinkler system* in accordance with Section 903.3.1.1, and is surrounded and adjoined by *public ways* or *yards* not less than 60 feet (18 288 mm) in width, provided all of the following criteria are met:

1. Buildings containing Group H-5 occupancy shall be of Type I or II construction.

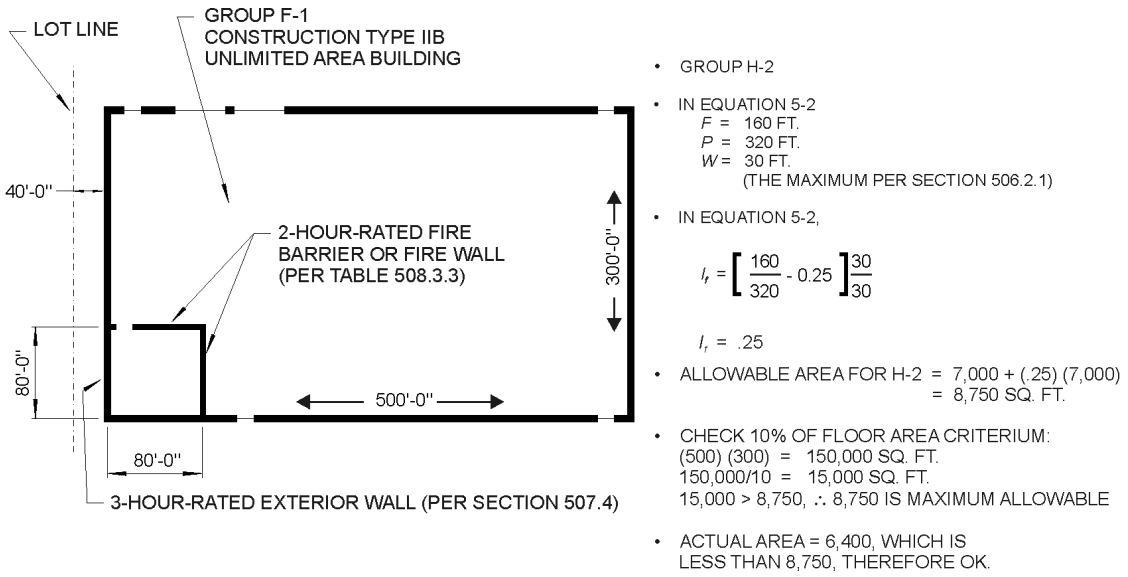

For SI: 1 inch = 25.4 mm, 1 foot = 304.8 mm,
1 square foot = 0.0929 m^2.

Figure 507.8.2(1)
GROUP H-2 AT THE CORNER OF AN UNLIMITED AREA BUILDING

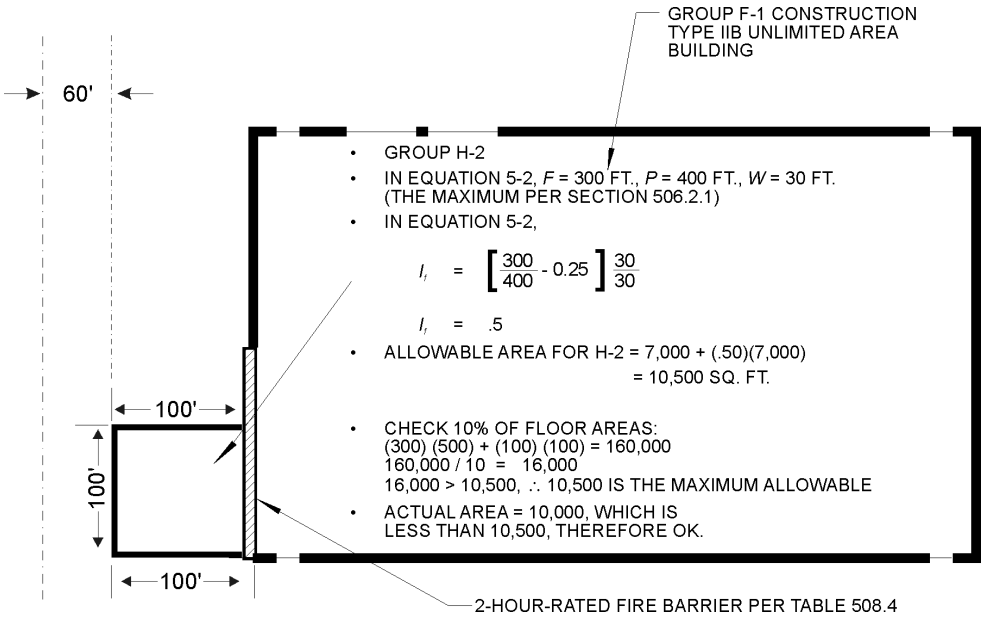

For SI: 1 foot = 304.8 mm, 1 square foot = 0.0929 m^2.

Figure 507.8.2(2)
GROUP H-2 AT THE CORNER OF AN UNLIMITED AREA BUILDING

INTERNATIONAL CODE COUNCIL®
Copyright © 2015 ICC. ALL RIGHTS RESERVED. Accessed by David Dammon on Jun 21, 2017 12:30:52 PM pursuant to License Agreement with ICC. No further reproduction or distribution authorized. ANY UNAUTHORIZED REPRODUCTION OR DISTRIBUTION IS A VIOLATION OF THE FEDERAL COPYRIGHT ACT AND THE LICENSE AGREEMENT, AND SUBJECT TO CIVIL AND CRIMINAL PENALTIES THEREUNDER.

2. Each area used for Group H-5 occupancy shall be separated from other occupancies as required in Sections 415.11 and 508.4.

3. Each area used for Group H-5 occupancy shall not exceed the maximum allowable area permitted for such occupancies in Section 503.1 including modifications of Section 506.

   Exception: Where the Group H-5 occupancy exceeds the maximum allowable area, the Group H-5 shall be subdivided into areas that are separated by 2-hour fire barriers.

❖ H-5 occupancy has a relative hazard based on allowable area per Table 506.2 that is equal to or better than B, F, M, and S occupancies. Adding H-5 occupancy to the occupancies that are allowed to have unlimited area in accordance with Section 507.5 would be consistent with the permitted level of hazard and mitigation established by this section. The code-required mitigating features of H-5 occupancy have been demonstrated to be effective since the introduction of the semiconductor fabrication facility occupancy in the model codes. The exception permits larger H-5 facilities than under previous codes, where 2-hour fire barriers are provided, separating areas of the building.

507.10 Aircraft paint hangar. The area of a Group H-2 aircraft paint hangar no more than one *story above grade plane* shall not be limited where such aircraft paint hangar complies with the provisions of Section 412.6 and is surrounded and adjoined by *public ways* or *yards* not less in width than one and one-half times the *building height*.

❖ Because of their specialized nature and the required size of these facilities, one-story Group H-2 aircraft paint hangars are not limited in area if they meet all of the requirements of Section 412.6. This section requires that the building be of Type I or II construction and have a fire suppression system in accordance with NFPA 409. This standard requires a foam-water suppression system in the paint areas and water sprinklers in all accessory areas. The criteria for the foam-water system depends on the size (and classification in accordance with NFPA 409) of the hangar. Other requirements of Section 412.6 include compartmentalized storage and use of flammable liquids, compliance with the IFC for spray application of flammable liquids and compliance with the *International Mechanical Code*® (IMC®) for ventilation of flammable-finish application areas (see commentary, Section 412.6.6).

In addition to compliance with Section 412.6, the hangar must be surrounded by open space. However, instead of the 60-foot (18 288 mm) width required for other buildings, the open space surrounding the hangar must be at least one and one-half times the height of the building. Therefore, if the hangar was 30 feet (9144 mm) high, there would need to be at least 45 feet (13 716 mm) [30 feet (9144 mm) x 1.5] of open space surrounding the building.

Note that one-story paint hangars would also be permitted to exceed the height limit (in feet) of Table 504.3 if the exception to Section 504.1 is satisfied. Note, further, that Section 507.2.1 cannot be applied to buildings built under Section 507.10.

507.11 Group E buildings. The area of a Group E building no more than one *story above grade plane*, of Type II, IIIA or IV construction, shall not be limited provided all of the following criteria are met:

1. Each classroom shall have not less than two *means of egress*, with one of the *means of egress* being a direct *exit* to the outside of the building complying with Section 1022.
2. The building is equipped throughout with an *automatic sprinkler system* in accordance with Section 903.3.1.1.
3. The building is surrounded and adjoined by *public ways* or *yards* not less than 60 feet (18 288 mm) in width.

❖ This section permits Group E structures to be built as unlimited area buildings. A direct exit to the outside from each classroom must be provided in addition to another means of egress. It is clear in the wording that to fulfill this requirement, students must be able to egress the classroom directly to the outside without intervening corridors, exit passageways or exit enclosures. The unlimited area school building must also be fully sprinklered in accordance with NFPA 13, have open space on all sides of at least 60 feet (18 288 mm) and be no more than one story above grade plane. See the commentary to Section 507.2 regarding the required open space. Please note that Section 507.2.1 cannot be applied to buildings built under Section 507.11.

Where associated assembly spaces are included as part of the Group E occupancy classification in accordance with Section 303.1.3, they would also be allowed to be unlimited in area under this section. The type of construction is limited to Type II, IIIA or IV.

507.12 Motion picture theaters. In buildings of Type II construction, the area of a motion picture theater located on the first *story above grade plane* shall not be limited where the building is provided with an *automatic sprinkler system* throughout in accordance with Section 903.3.1.1 and is surrounded and adjoined by *public ways* or *yards* not less than 60 feet (18 288 mm) in width.

❖ Motion picture theaters located in buildings of Type II construction that are no more than one story above grade plane may be unlimited in area by virtue of being of noncombustible construction, and having low fire loading and sprinkler protection in accordance with NFPA 13. The building must also be surrounded by at least 60 feet (18 288 mm) of open space. See the commentary to Section 507.2 regarding the required open space. Section 507.2.1 can be applied to buildings built under Section 507.12.

INTERNATIONAL CODE COUNCIL®
Copyright © 2015 ICC. ALL RIGHTS RESERVED. Accessed by David Dammon on Jun 21, 2017 12:30:52 PM pursuant to License Agreement with ICC. No further reproduction or distribution authorized. ANY UNAUTHORIZED REPRODUCTION OR DISTRIBUTION IS A VIOLATION OF THE FEDERAL COPYRIGHT ACT AND THE LICENSE AGREEMENT, AND SUBJECT TO CIVIL AND CRIMINAL PENALTIES THEREUNDER.

507.13 Covered and open mall buildings and anchor buildings. The area of *covered and open mall buildings* and *anchor buildings* not exceeding three *stories* in height that comply with Section 402 shall not be limited.

❖ This section is simply included as a reference to Section 402 for covered malls. The definition of "Covered mall" includes open malls as well. An open mall is very similar to a covered mall but the central pedestrian mall area is open to the sky. If an open mall complies with the provisions for covered malls under Section 402, it is allowed to be of unlimited area. See the commentary to Section 507.2 regarding the required open space. While Section 507.2.1 does not include Section 507.13, Section 402.1.1 permits a similar reduction in open space.

SECTION 508
MIXED USE AND OCCUPANCY

508.1 General. Each portion of a building shall be individually classified in accordance with Section 302.1. Where a building contains more than one occupancy group, the building or portion thereof shall comply with the applicable provisions of Section 508.2, 508.3 or 508.4, or a combination of these sections.

Exceptions:

1. Occupancies separated in accordance with Section 510.
2. Where required by Table 415.6.2, areas of Group H-1, H-2 and H-3 occupancies shall be located in a *detached building* or structure.
3. Uses within *live/work units*, complying with Section 419, are not considered separate occupancies.

❖ Very frequently, buildings are designed for multiple uses, and typically that will result in the building having more than one occupancy classification. This section describes the provisions governing the condition when a building contains more than one of the occupancies identified in Sections 303 through 312. For example, a facility that appears to be used solely for storage often has a small office area for bookkeeping and other purposes. Because the office would be classified as a business occupancy, the building would be identified as a mixed occupancy, storage (Group S-1) and business (Group B).

The section contains three major parts:

1. Accessory occupancies (see Section 508.2). This portion of the section addresses situations where a building contains a main occupancy with minor areas of a building classified as one or more different occupancies that can be treated for allowable area purposes as part of the main occupancy.
2. Mixed occupancies that are not separated from each other (see Section 508.3) since the building is regulated for several of the worst-case conditions of each occupancy involved. This section addresses circumstances where the building contains more than one different occupancy classification in which certain requirements for each occupancy are addressed on a building-wide basis.
3. Mixed occupancies where occupancies of different hazard levels are separated (see Section 508.4). This section addresses circumstances where the building contains more than one occupancy classification but in which occupancies with different hazard levels are separated from each other by fire-resistance-rated construction.

The final sentence of this section reemphasizes the choice for the designer to use just the provisions of one of the three parts, or options, and not to use the other options. But the code also allows a mixture of the options in different portions of a building. For example, a building could be designed to comply with only Section 508.3 for nonseparated mixed occupancies and not comply with any of the provisions of either Section 508.2 or 508.4. A different example could be to use the provisions of Section 508.3 on the first story of a building which perhaps had three or four different occupancies, but then separate the upper stories of the building from the first story and treat the upper stories under Section 508.4 for separated occupancies. A final example would be a building that was predominately one use but had small accessory areas on various stories. For this building the best option might be Section 508.2 regarding accessory occupancies.

These options depend on the limitations of their use, as stated in the respective sections of the code. Basically, the availability of the options depends on the size of the areas desired for each different occupancy, and the relationship of one occupancy to the other.

Exception 1 provides a fourth set of options for mixed occupancies by referring to Section 510, which describes various special circumstances, including where parking garages are located above or below other uses.

Exception 2 reminds the user that including Group H-1, H-2 or H-3 in the same building with other occupancies when quantities exceed certain amounts is prohibited by Section 415.5.2 because of the nature of the hazard for high quantities of flammable, combustible and explosive materials.

Exception 3 exempts uses within a live/work unit from needing to comply with Section 508 provided the uses are within the limitations of Section 419. Live/work units provide the option for as much as 50 percent of nonresidential uses within what is classified as a Group R-2 dwelling unit.

Note that Section 509 regulates incidental uses that, when they occur as part of an occupancy,

INTERNATIONAL CODE COUNCIL®
Copyright © 2015 ICC. ALL RIGHTS RESERVED. Accessed by David Dammon on Jun 21, 2017 12:30:52 PM pursuant to License Agreement with ICC. No further reproduction or distribution authorized. ANY UNAUTHORIZED REPRODUCTION OR DISTRIBUTION IS A VIOLATION OF THE FEDERAL COPYRIGHT ACT AND THE LICENSE AGREEMENT, AND SUBJECT TO CIVIL AND CRIMINAL PENALTIES THEREUNDER.

require additional protection or separation from the balance of the building. Incidental uses are part of the occupancy and the presence of an incidental use in a building does not establish a mixed occupancy condition and as such is not required to comply with Section 508.

508.2 Accessory occupancies. Accessory occupancies are those occupancies that are ancillary to the main occupancy of the building or portion thereof. Accessory occupancies shall comply with the provisions of Sections 508.2.1 through 508.2.4.

❖ Buildings often have rooms or spaces with an occupancy classification that is different from, but accessory to, the principal occupancy classification of the building. When such accessory areas are limited in size, they will not ordinarily represent a significantly different life safety hazard. This principle does not apply where otherwise indicated in Section 508.2.4 for areas classified as Group H, I-1 or R.

The accessory occupancy must be ancillary to the principal purpose for which the structure is occupied. This means that the purpose and function of the area is subordinate and secondary to the structure's primary function. As such, the activities that occur in accessory use areas are necessary for the principal occupancy to properly function and would not otherwise reasonably exist apart from the principal occupancy. See also Section 311, Small Storage Spaces.

508.2.1 Occupancy classification. Accessory occupancies shall be individually classified in accordance with Section 302.1. The requirements of this code shall apply to each portion of the building based on the occupancy classification of that space.

❖ Under Section 508.2.1, each accessory use is to be classified in accordance with Section 302 in the appropriate occupancy classification. Code requirements such as means of egress, the provision of sprinkler protection and structural load are to be determined for this occupancy as if it were a main occupancy of the building. For example, an accessory lunchroom located in a business office regulated as an accessory occupancy would need to be protected with an automatic sprinkler system if the lunchroom's occupant load exceeds 100. In addition, any means of egress doors serving the lunchroom, from the lunchroom to the exterior exit doors, would need to be provided with panic hardware. The lunchroom would need to comply with all other code requirements applicable to a Group A-2 use.

Please note that Sections 508.2.2 and 508.2.3 state that height and area of the building are based on the main occupancy. Therefore, for determining the construction type for the total building, the building's floor area and height should be compared to the limits of Tables 504.3, 504.4 and 506.2 to determine the appropriate construction type. See Section 508.2.3 regarding the area of the accessory occupancy itself and see Section 508.2.2 regarding the height of the accessory occupancy itself.

When applying Chapter 9, many of the requirements for automatic sprinkler systems are based on the size of the fire area in which the occupancy is located. For instance, a Group A-2 occupancy requires a sprinkler system when the fire area is greater than 5,000 square feet (465 m^2) or when the fire area has an occupant load of 100 or more. By understanding the definition of a "Fire area," if there is no rated separation of the accessory occupancy from the main occupancy, the fire area will be everything between fire barriers, fire walls or exterior walls, and therefore could, and most likely will, contain both the accessory occupancy area as well as the main occupancy.

Continuing with this example, suppose that a single-story business office of 23,000 square feet (2137 m^2) contains a lunchroom that is 2,000 square feet (186 m^2) and an occupant load of 134. The main occupancy is a Group B, and the accessory occupancy is a Group A-2. Because the Group A-2 occupancy has a floor area of less than 10 percent of the overall floor area of the single story, it could be regulated as an accessory occupancy, and there is no fire separation requirement between the Group A-2 and Group B. A Group A-2 occupancy is required to be provided with an automatic sprinkler system when it is either in excess of 5,000 square feet (465 m^2) or 100 occupants. Since this fire area is 23,000 square feet (2137 m^2), contains a Group A-2 occupancy with an occupant load of over 100 and is located within a fire area of greater than 5,000 square feet (465 m^2), this fire area would need to be provided with an automatic sprinkler system throughout based on either of the two thresholds.

508.2.2 Allowable building height. The allowable height and number of stories of the building containing accessory occupancies shall be in accordance with Section 504 for the main occupancy of the building.

❖ See the commentary to Section 508.2.1 for accessory occupancies.

508.2.3 Allowable building area. The allowable area of the building shall be based on the applicable provisions of Section 506 for the main occupancy of the building. Aggregate accessory occupancies shall not occupy more than 10 percent of the floor area of the story in which they are located and shall not exceed the tabular values for nonsprinklered buildings in Table 506.2 for each such accessory occupancy.

❖ For accessory occupancies, the area of the building containing the accessory occupancy is based on the area of the main occupancy because accessory occupancies must be limited in size and pose a limited increased degree of hazard. The aggregate area within a story devoted to the occupancies that are designated as accessory occupancies must not be greater than 10 percent of the area of that story [see Commentary Figure 508.2.3(1)].

The area of the portion of the building devoted to an accessory occupancy must also be less than the tabular building area for nonsprinklered buildings

INTERNATIONAL CODE COUNCIL®
Copyright © 2015 ICC. ALL RIGHTS RESERVED. Accessed by David Dammon on Jun 21, 2017 12:30:52 PM pursuant to License Agreement with ICC. No further reproduction or distribution authorized. ANY UNAUTHORIZED REPRODUCTION OR DISTRIBUTION IS A VIOLATION OF THE FEDERAL COPYRIGHT ACT AND THE LICENSE AGREEMENT, AND SUBJECT TO CIVIL AND CRIMINAL PENALTIES THEREUNDER.

given in Table 506.2, based on the group classification that most nearly resembles the accessory occupancy under consideration. Area increases for street frontage based on the provisions of Section 506 are not allowed [see Commentary Figure 508.2.3(2)].

See also the commentary to Section 508.2.1.

508.2.4 Separation of occupancies. No separation is required between accessory occupancies and the main occupancy.

Exceptions:

1. Group H-2, H-3, H-4 and H-5 occupancies shall be separated from all other occupancies in accordance with Section 508.4.
2. Group I-1, R-1, R-2 and R-3 *dwelling units* and *sleeping units* shall be separated from other *dwelling* or *sleeping units* and from accessory occupancies contiguous to them in accordance with the requirements of Section 420.

❖ When a designer is using Section 508.2, most accessory occupancies need not be separated from the main occupancy. Please note that even where an accessory occupancy is not separated from the main occupancy under the provisions of Section 508.2.4, there may be other provisions of the code that might require a fire-resistance-rated separation. For instance, if it was desired not to provide a sprinkler system in the fire area discussed in the commentary example in Section 508.2.1, then a fire barrier would need to be installed to make the fire area containing the Group A-2 occupancy smaller than the threshold amount of 5,000 square feet (465 m^2) and below the 100-occupant threshold. Or, in some cases there could be a wall between two different occupancies that is required by another section of the code to be fire-resistance rated (e.g., a separation wall is provided that also serves as a corridor wall that is required to be fire-resistance rated).

Exception 1 addresses the need to separate Group H-2, H-3, H-4 and H-5 occupancies because of the higher risk posed by these high-hazard occupancies. Please notice that Group H-1 occupancies are not mentioned because these occupancies are always required to be located in a separate building (see Section 415.7).

Exception 2 states that the separation between dwelling units and sleeping units and any accessory occupancies must still comply with Section 420. For example, a common lounge or manager's office that otherwise might qualify as an accessory occupancy within an apartment building must still be separated from adjoining dwelling units.

Those rooms and spaces listed in Table 509 are incidental uses and are not to be considered as accessory occupancies, but rather must be separated or protected as specified in the table.

508.3 Nonseparated occupancies. Buildings or portions of buildings that comply with the provisions of this section shall be considered as nonseparated occupancies.

❖ This section describes the second option a designer may choose to apply to a building that contains more than one occupancy classification. Except with respect to occupancies classified in Group H, this

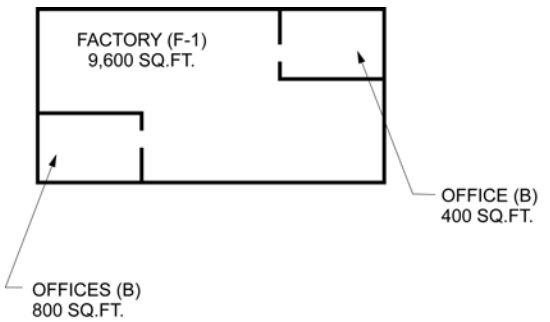

- TOTAL AREA OF FLOOR = 10,800 SQ.FT.
- ACCESSORY USE AREAS (AGGREGATE) = 1,200 SQ.FT.
- MAXIMUM ALLOWABLE AREA OF ACCESSORY USES (AGGREGATE) = (.10) (10,800) = 1,080 SQ.FT.
- ACCESSORY USE AREAS EXCEED THE AREA PERMITTED (I.E., 1,200 > 1,080)
- BUILDING MUST BE REEVALUATED AS A MIXED OCCUPANCY OF OFFICES (B) AND FACTORY (F-1).

For SI: 1 square foot = 0.0929 m^2.

Figure 508.2.3(1)
ACCESSORY USES LIMITED BY FLOOR AREA

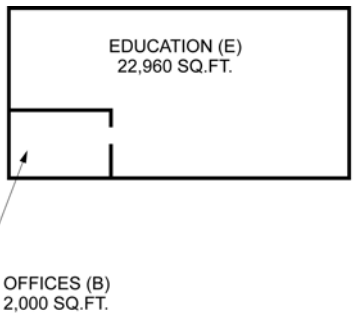

- ONE-STORY, 24,960-SQ.-FT. BUILDING OF TYPE IIA CONSTRUCTION, SPRINKLERED WITH NO OPEN FRONTAGE.
- TOTAL BUILDING AREA = 24,960 SQ.FT.
- ACCESSORY USE AREA = 2,000 SQ.FT.
- AREA PERMITTED BY TABLE 503 = 37,500 SQ. FT.
- AREA OF ACCESSORY USE IS LESS THAN THE AREA PERMITTED; THEREFORE, THE OFFICES ARE PERMITTED TO BE INCLUDED AS PART OF THE MAIN OCCUPANCY (GROUP E) OF THE BUILDING.

For SI: 1 square foot = 0.0929 m^2.

Figure 508.2.3(2)
ACCESSORY USES LIMITED BY TABULAR AREA

INTERNATIONAL CODE COUNCIL®
Copyright © 2015 ICC. ALL RIGHTS RESERVED. Accessed by David Dammon on Jun 21, 2017 12:30:52 PM pursuant to License Agreement with ICC. No further reproduction or distribution authorized. ANY UNAUTHORIZED REPRODUCTION OR DISTRIBUTION IS A VIOLATION OF THE FEDERAL COPYRIGHT ACT AND THE LICENSE AGREEMENT, AND SUBJECT TO CIVIL AND CRIMINAL PENALTIES THEREUNDER.

option is similar to the accessory occupancy option (see Section 508.2) in that there is no requirement for various occupancies to be physically separated by any type of fire-resistance-rated assembly (see Commentary Figure 508.3).

The principle behind nonseparated occupancies is that the different occupancies within the same building do not have to be separated by fire-resistance-rated assemblies if the building complies throughout with the more restrictive code requirements for minimum construction type and fire protection systems (Chapter 9) applicable to the occupancies in the building. If the building is also a high-rise building, the most restrictive provisions of Section 403 applicable to the specific occupancies in the building will also apply. Although each occupancy is separately classified as to its group, a fire-resistance-rated assembly is not required by the nonseparated occupancies option. A designer may choose to physically separate the occupancies; however, a fire-resistance rating of these separations would not be required by this section.

There are four basic steps to follow when applying the nonseparated occupancies concept:

Step 1: Determine which occupancy group classifications are present in the building.

Step 2: Determine the minimum type of construction based on the height and area of the building for each occupancy in accordance with Section 503 as if each occupancy occurred throughout the building. Compare the requirements for each occupancy and then apply the requirement for the highest type of construction to the entire building (see Section 508.3.2).

Step 3: Apply the most restrictive provisions found in Chapter 9 throughout the building containing nonseparated occupancies. For example, if the two occupancies in a 6,000-square-foot (557 m^2) building are Group B and Group A-2, even though Section 903 does not require an automatic sprinkler system in nonhigh-rise Group B buildings, it does require sprinklers in a Group A-2 building of this size. For this example, the building with these nonseparated occupancies would need to be fully sprinklered.

For a high-rise building, also apply the most restrictive provisions contained in Section 403 related to the occupancies present (see Section 508.3.1).

Step 4: Apply all other requirements of the code, except for Section 403 and Chapter 9, to each occupancy individually based on the specific occupancy of each space (e.g., means of egress).

508.3.1 Occupancy classification. Nonseparated occupancies shall be individually classified in accordance with Section 302.1. The requirements of this code shall apply to each portion of the building based on the occupancy classification of that space. In addition, the most restrictive provisions of Chapter 9 that apply to the nonseparated occupancies shall apply to the total nonseparated occupancy area. Where nonseparated occupancies occur in a *high-rise building*, the most restrictive requirements of Section 403 that apply to the nonseparated occupancies shall apply throughout the *high-rise building*.

❖ The nonseparated occupancies option requires that each occupancy area be considered a different occupancy for purposes of application of code requirements and therefore requires that all code issues related to that occupancy be considered separately

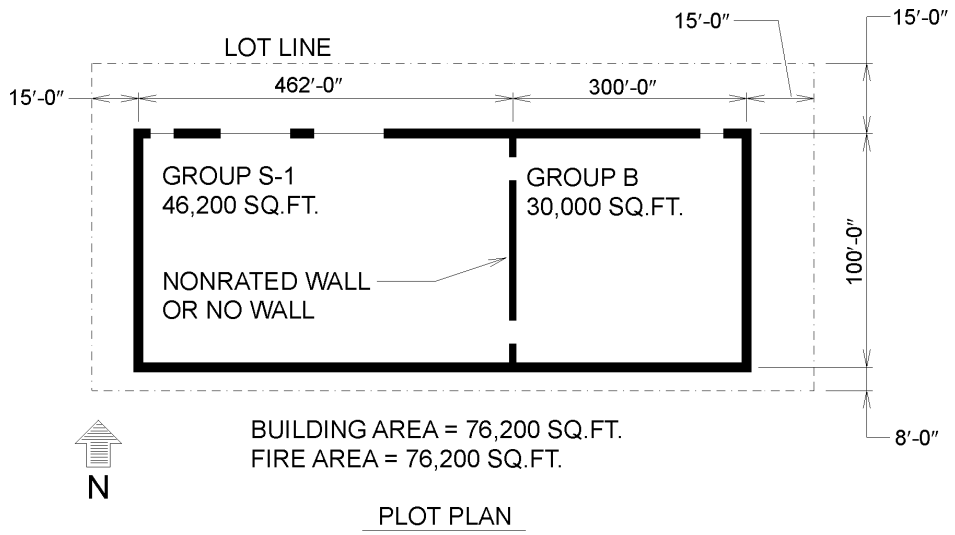

For SI: 1 inch = 25.4 mm, 1 foot = 304.8 mm, 1 square foot = 0.0929 m^2.

Figure 508.3
NONSEPARATED USES

INTERNATIONAL CODE COUNCIL®
Copyright © 2015 ICC. ALL RIGHTS RESERVED. Accessed by David Dammon on Jun 21, 2017 12:30:52 PM pursuant to License Agreement with ICC. No further reproduction or distribution authorized. ANY UNAUTHORIZED REPRODUCTION OR DISTRIBUTION IS A VIOLATION OF THE FEDERAL COPYRIGHT ACT AND THE LICENSE AGREEMENT, AND SUBJECT TO CIVIL AND CRIMINAL PENALTIES THEREUNDER.

for the areas of the building where the occupancy is located. The exception to this is for the provisions of Chapter 9 and Section 403, which must be applied to the whole building containing the nonseparated occupancies.

The principle behind the nonseparated occupancies concept is that the different occupancies within the same building do not have to be separated by fire-resistance-rated assemblies if the building complies throughout with the more restrictive code requirements for construction, fire protection systems and, where applicable, requirements for high-rise buildings. Although each occupancy group is separately classified as to its group, a fire-resistance-rated assembly is not required under the nonseparated occupancies option. A designer may choose to physically separate the occupancies; however, a fire-resistance rating of these separations would not be required by this section, as stated in Section 508.3.3.

For example, if a building contains both Groups B and M, each portion of the building must comply with the code requirements for its respective group classification. The occupant load for the area classified as Group B is based on the code requirements applicable to the business occupancy. Similarly, the occupant load for the Group M area is based on requirements applicable to the mercantile occupancy. Live loads for the Group B area are applied to the area of business occupancy. Group M live loads are applied to the area of mercantile occupancy. Exterior wall ratings based on fire separation distance (see Table 602) apply to exterior walls of the business occupancy for Group B buildings; the same is true for walls in Group M occupancies.

It is important to note the threshold requirements for fire protection systems are contained in Chapter 9. In some cases they are simply based on the occupancy, and in other cases they are based on height or area criteria. Also, the requirements to be met in some cases only apply to the fire area in which a given occupancy is contained, while in others they apply to the entire building.

For example, if the business occupancy as described in Commentary Figure 508.3 required a fire alarm system with manual fire alarm boxes, then one would be required for the entire building—even though Chapter 9 does not require a fire alarm system for a storage occupancy. Note that when determining if a fire alarm system is required and the threshold for the requirement is based on occupant load, it is based on the occupant load of the individual occupancy and not for all the occupancies in the nonseparated building (see commentary, Section 907.2).

508.3.2 Allowable building area and height. The allowable *building area and height* of the building or portion thereof shall be based on the most restrictive allowances for the occupancy groups under consideration for the type of construction of the building in accordance with Section 503.1.

❖ The fundamental concept underlying the nonseparated occupancies option is that the allowable building heights and allowable building areas are based on the most restrictive requirements of Tables 504.3, 504.4 and 506.2 applicable to each of the occupancy groups in the mixed occupancy building.

For example, the tabular area for Group S-1 in Table 506.2 is less than the corresponding tabular area for Group B. Therefore, Group S-1 results in a requirement for a higher type of construction for buildings of equal size and will determine the minimum construction type of the building. If the building were, say, Type IIB construction with a sprinkler system, then the allowable area for the building would be 70,000 square feet (6503 m^2), based on the allowable area of Group S-1 occupancies for Type IIB construction in Section 506. Area increases for frontage could be applied. The same methodology of applying the most restrictive criteria of Table 506.2 is used to evaluate the maximum permitted height in stories and feet above grade plane based upon Section 504.

508.3.3 Separation. No separation is required between nonseparated occupancies.

Exceptions:

1. Group H-2, H-3, H-4 and H-5 occupancies shall be separated from all other occupancies in accordance with Section 508.4.
2. Group I-1, R-1, R-2 and R-3 *dwelling units* and *sleeping units* shall be separated from other *dwelling* or *sleeping units* and from other occupancies contiguous to them in accordance with the requirements of Section 420.

❖ As is indicated by the name of this mixed occupancy option, "nonseparated occupancies," the occupancy groups within the building need not be separated from each other by fire-resistance-rated construction. It must be noted that other portions of the code might require fire separation assemblies, and where the separations are required by other provisions, they must be provided even in a building designed under the nonseparated mixed occupancy option. For instance, if it was desired not to provide a sprinkler system in the fire area discussed in the commentary example in Section 508.2.1, then a fire barrier would need to be installed to make the fire area containing the Group A-2 occupancy smaller than the threshold amount of 5,000 square feet (465 m^2) and the occupant load less than 100. Or, in some cases there could be a wall between two different occupancies that is required by another section of the code to be fire-resistance rated (e.g., a separation wall is provided that also serves as a corridor wall that is required to be fire-resistance rated).

When one or more of the occupancies is a Group H-2, H-3, H-4 or H-5 high-hazard occupancy, the nonseparated occupancies option could not be applied for the Group H portions of the building (Exception 1). Any Group H occupancies would need to be separated as required by Section 508.4 for separated occupancies.

INTERNATIONAL CODE COUNCIL®
Copyright © 2015 ICC. ALL RIGHTS RESERVED. Accessed by David Dammon on Jun 21, 2017 12:30:52 PM pursuant to License Agreement with ICC. No further reproduction or distribution authorized. ANY UNAUTHORIZED REPRODUCTION OR DISTRIBUTION IS A VIOLATION OF THE FEDERAL COPYRIGHT ACT AND THE LICENSE AGREEMENT, AND SUBJECT TO CIVIL AND CRIMINAL PENALTIES THEREUNDER.

Exception 2 states that the horizontal assemblies and walls required to separate dwelling units and sleeping units from each other and from other occupancies need to comply with Section 420 even if the nonseparated occupancies provisions are applied.

Example: A building contains a 46,200-square-foot (4292 m^2) general warehouse and an accompanying 30,000-square-foot (2787 m^2) regional dispatch office for a total area of 76,200 square feet (7079 m^2). The building is a one-story, metal building. Assume that there is no allowable area increase for frontage. In applying the four-step procedure for nonseparated uses, the following holds true:

Step 1: The warehouse is classified in Group S-1 and the offices are classified in Group B.

Step 2: The minimum type of construction is based on the lesser allowable area of the building for each occupancy classification. First, determine if any increases can be obtained (no frontage increase). Note, in Step 3, the building is required to be sprinklered. For the purpose of analysis, assume the building is of Type IIB construction. The Group B requirements would allow the building to be 92,000 square feet (8547 m^2) (A_t = 92,000 square feet from Table 506.2, with no frontage increases). The Group S-1 requirements, however, only allow a building of Type IIB construction to be 70,000 square feet (6503 m^2). The most restrictive is the Group S-1 requirement; therefore, it governs. Hence, Type IIB construction would not allow adequate area for the S-1 occupancy. Since the most restrictive allowable area is required to be considered, a higher construction type would be required. The minimum type of construction needs to be Type IIA.

Step 3: The fire area containing the occupancy classified in Group S-1 is more than 12,000 square feet (1115 m^2); thus, in accordance with Section 903.2.9, this building must be sprinklered. The area classified as Group B ordinarily is not required to be equipped with sprinklers by Section 903. However, since the Group S-1 provision does require sprinkler protection, it is more restrictive than the requirement for Group B under Chapter 9. Therefore, the entire building must be sprinklered.

Step 4: The occupant load of each area should be calculated separately (based on the occupancy of that area) using Section 1004.1 and Table 1004.1.1.

Business: = 30,000 square feet (2787 m^2) divided by 100 square feet (9 m^2) per person = 300 people.

Storage: = 46,200 square feet (4292 m^2) divided by 500 (warehouses) square feet (46 m^2) per person = 93 people.

Total occupant load: 393 people

The evaluation of means of egress in accordance with Chapter 10 is then based on these occupant loads.

The load-bearing members in the north, east and west exterior walls of the building must provide a minimum 1-hour fire-resistance rating as required for Type IIA construction in Table 601. The nonload-bearing walls are also required to have a 1-hour fire-resistance rating because of the 15-foot (4572 mm) fire separation distance (see Table 602).

The fire separation distance on the south side of the mixed occupancy building is 8 feet (2438 mm). Table 602 requires the Group S-1 and B portions of this wall to have a 1-hour fire-resistance rating. The ratings required by this table apply to both load-bearing and nonload-bearing exterior walls. The substitution of an automatic sprinkler system in lieu of 1-hour fire-resistance-rated construction (as indicated in Note d of Table 602) does not apply to exterior walls; therefore, all exterior walls (whether load-bearing or nonload-bearing) in this building are required to have a 1-hour fire-resistance rating.

This analysis must be continued for other aspects of code compliance for each respective occupancy.

508.4 Separated occupancies. Buildings or portions of buildings that comply with the provisions of this section shall be considered as separated occupancies.

❖ This section describes the third option, separated occupancies, that a designer may choose to apply when constructing a building that contains more than one occupancy classification. This third option differs from the first two alternatives (i.e., accessory occupancies and nonseparated occupancies) (see Sections 508.2 and 508.3) in four ways:

1. Occupancies that are to be evaluated as separated occupancies must be separated in accordance with Table 508.4. When the table requires a separation, the occupancies must be separated completely, both horizontally and vertically, by the provision of fire-resistance-rated fire barriers and horizontal assemblies (see Sections 707 and 711). It should be noted that Table 508.4 indicates "N" at the intersection of some occupancies. The "N" indicates that no rated separation is required. This is allowed where the adjacent occupancies pose similar levels of risk. Separations, where provided, do not necessarily create separate fire areas. Table 508.4 is not intended to be used for determining the required fire-

INTERNATIONAL CODE COUNCIL®
Copyright © 2015 ICC. ALL RIGHTS RESERVED. Accessed by David Dammon on Jun 21, 2017 12:30:52 PM pursuant to License Agreement with ICC. No further reproduction or distribution authorized. ANY UNAUTHORIZED REPRODUCTION OR DISTRIBUTION IS A VIOLATION OF THE FEDERAL COPYRIGHT ACT AND THE LICENSE AGREEMENT, AND SUBJECT TO CIVIL AND CRIMINAL PENALTIES THEREUNDER.

resistance rating for creating multiple fire areas. The minimum separations for fire area purposes are established in Table 707.3.9.

2. The determination of the minimum type of construction is based on both the height of each occupancy relative to the grade plane and the areas of each occupancy relative to the total area per story.
3. Allowable building area is determined based on the occupancies on each story through a comparison of the allowed area for each occupancy category and the actual floor area proposed for each occupancy.
4. In comparison to the nonseparated occupancies provisions in Section 508.3 where the most restrictive of the requirements of Chapter 9 apply throughout the building, under separated occupancies, requirements for such systems as sprinkler systems, alarms and standpipes are determined based on the areas containing each occupancy. It must be noted that the determination of sprinkler requirements in Section 903 is based on the occupancies present. The threshold for providing a sprinkler system is often based on the size of a fire area. In the cases where Table 508.4 does not require a separation, the result is that certain fire areas will contain more than one occupancy. Therefore, when determining where sprinklers are required, the total size of the fire area needs to be considered, not just the portion containing each occupancy. For example, a proposed building is 16,000 square feet (1486 m^2), there is 8,000 square feet (743 m^2) of Group M occupancy and 8,000 square feet (743 m^2) of Group B. According to Table 508.4, there does not need to be a separation between these two occupancies. Individually, neither is large enough to require a sprinkler system. However, if no separation is provided, the fire area is 16,000 square feet (1486 m^2), and in accordance with Section 903.2.7 a fire area containing a Group M occupancy and exceeding 12,000 square feet (1115 m^2) must be sprinkler protected. [Fire areas (defined in Section 202) are used in Section 903.2 to determine if sprinklers are required. Fire areas are a distinct requirement from separation of occupancies and the separation of occupancies by a fire-resistance-rated wall may not always create a separate fire area. Fire areas can be delineated by fire walls and fire barriers per Chapter 7.]

There are four basic steps to follow when using the separated occupancies option:

Step 1: Determine which occupancies are present in the building (see Section 508.4.1).

Step 2: Separate the occupancies in accordance with Table 508.4 with fire barrier walls and horizotal assemblies in accordance with Sections 707 and 711 (see Section 508.4.4).

Step 3: Apply all code requirements for each separated space individually based on the occupancy or occupancies present (i.e., design occupant load, means of egress elements, exterior wall requirements and fire protection). For the application of code provisions, each separated space is taken into consideration individually. Again, it must be remembered that Table 508.4 may not require a separation and, therefore, code requirements based on fire area must be addressed for the total fire area even though it contains more than one occupancy.

Step 4: Determine the minimum type of construction of a building based on the building height limitations of Sections 503 and 504 and the building area limitations of Sections 503 and 506 (see Sections 508.4.3 and 508.4.2, respectively).

Part A: Determine the minimum type of construction required based on the height of each occupancy relative to the grade plane (see Section 508.4.3). This needs to be evaluated for both height in feet and stories above grade plane.

Part B: Determine the minimum type of construction based on a weighted average of areas occupied by the various occupancies (see Section. 508.4.2).

TABLE 508.4. See page 5-39.

❖ The purpose of Table 508.4 is to set forth the fire-resistance rating required for fire barrier walls and horizontal assemblies used to separate occupancies. The fire-resistance rating of the separation between different occupancies is based on the relative anticipated fire severity of the occupancies.

"N" in this table is present where a separation is not required between the uses because the hazards of the two uses are the same. "NP" in this table is used where an occupancy is required to be sprinklered, so the nonsprinklered option is not permitted. "S" is for occupancies that are equipped throughout with an NFPA 13 sprinkler system. "NS" is for occupancies that are either not sprinklered or are sprinklered with and NFPA 13R or NFPA 13D system.

Note a: A reference is made to Section 420 for provisions requiring the separation of dwelling units and sleeping units in Group I-1, R-1, R-2, R-3 and R-4 occupancies (see commentary, Section 420).

Note b: The fire-resistance rating of spaces used solely for private or pleasure vehicles may be reduced by 1 hour but never less than 1 hour.

Note c: See the commentary for Section 406.3.4 for separation for private garages and carports.

INTERNATIONAL CODE COUNCIL®
Copyright © 2015 ICC. ALL RIGHTS RESERVED. Accessed by David Dammon on Jun 21, 2017 12:30:52 PM pursuant to License Agreement with ICC. No further reproduction or distribution authorized. ANY UNAUTHORIZED REPRODUCTION OR DISTRIBUTION IS A VIOLATION OF THE FEDERAL COPYRIGHT ACT AND THE LICENSE AGREEMENT, AND SUBJECT TO CIVIL AND CRIMINAL PENALTIES THEREUNDER.

Note d: Occupancies in the same classification do not need to be separated. A Group H-3 occupancy does not need to be separated from a different Group H-3 use.

Note e: See Section 422.2 for specific requirements for ambulatory care facilities that are required to be separated.

508.4.1 Occupancy classification. Separated occupancies shall be individually classified in accordance with Section 302.1. Each separated space shall comply with this code based on the occupancy classification of that portion of the building.

❖ In the separated occupancies option, occupancies that are to be evaluated as separated occupancies must be separated in accordance with Table 508.4. When a separation is required, occupancies must be separated completely, both horizontally and vertically, with fire barriers and horizontal assemblies (see Sections 707 and 711).

Except for certain occupancies, it is the designer's prerogative to use the accessory occupancies option, nonseparated occupancies option or the separated occupancies option when establishing a mixed occupancy building. It is also possible to apply both or all three options within different portions or different stories of a building. Where a mixture of options is used, the design documentation needs to clearly show how the requirements of each option are applied in each portion of the building.

508.4.2 Allowable building area. In each *story*, the *building area* shall be such that the sum of the ratios of the actual *building area* of each separated occupancy divided by the allowable *building* area of each separated occupancy shall not exceed 1.

❖ For each story, it must be determined that the sum of the ratios of the actual floor area of each separated occupancy, respective to the most restrictive occupancy contained therein as compared to the areas per story allowed by Section 506 for each respective occupancy, does not exceed one. In the evaluation of allowable area, intervening fire barriers between different fire areas containing the same occupancy are not a consideration. In determining the floor area per occupancy, all areas of the same occupancy are added together irrespective of the presence of multiple fire areas.

In determining the allowable areas for each occupancy, the frontage increase can be applied; thus, the allowable areas are intended to include the increases permitted for open perimeter. For determination of the allowable perimeter increase, use the entire building perimeter—not the occupancy perimeters.

508.4.3 Allowable height. Each separated occupancy shall comply with the *building height* limitations based on the type of construction of the building in accordance with Section 503.1.

Exception: Special provisions of Section 510 shall permit occupancies at *building heights* other than provided in Section 503.1.

❖ The allowable height is occupancy dependent. As long as individual occupancies meet the height limitations based upon a measurement from grade plane,

TABLE 508.4
REQUIRED SEPARATION OF OCCUPANCIES (HOURS)

OCCUPANCY	A, E		I-1[a], I-3, I-4		I-2		R[a]		F-2, S-2[b], U		B[e], F-1, M, S-1		H-1		H-2		H-3, H-4		H-5	
	S	NS	S	NS	S	NS	S	NS	S	NS	S	NS	S	NS	S	NS	S	NS	S	NS
A, E	N	N	1	2	2	NP	1	2	N	1	1	2	NP	NP	3	4	2	3	2	NP
I-1[a], I-3, I-4	—	—	N	N	2	NP	1	NP	1	2	1	2	NP	NP	3	NP	2	NP	2	NP
I-2	—	—	—	—	N	N	2	NP	2	NP	2	NP	NP	NP	3	NP	2	NP	2	NP
R[a]	—	—	—	—	—	—	N	N	1[c]	2[c]	1	2	NP	NP	3	NP	2	NP	2	NP
F-2, S-2[b], U	—	—	—	—	—	—	—	—	N	N	1	2	NP	NP	3	4	2	3	2	NP
B[e], F-1, M, S-1	—	—	—	—	—	—	—	—	—	—	N	N	NP	NP	2	3	1	2	1	NP
H-1	—	—	—	—	—	—	—	—	—	—	—	—	N	NP	NP	NP	NP	NP	NP	NP
H-2	—	—	—	—	—	—	—	—	—	—	—	—	—	—	N	NP	1	NP	1	NP
H-3, H-4	—	—	—	—	—	—	—	—	—	—	—	—	—	—	—	—	1[d]	NP	1	NP
H-5	—	—	—	—	—	—	—	—	—	—	—	—	—	—	—	—	—	—	N	NP

S = Buildings equipped throughout with an automatic sprinkler system installed in accordance with Section 903.3.1.1.
NS = Buildings not equipped throughout with an automatic sprinkler system installed in accordance with Section 903.3.1.1.
N = No separation requirement.
NP = Not permitted.
a. See Section 420.
b. The required separation from areas used only for private or pleasure vehicles shall be reduced by 1 hour but not to less than 1 hour.
c. See Section 406.3.4.
d. Separation is not required between occupancies of the same classification.
e. See Section 422.2 for ambulatory care facilities.

INTERNATIONAL CODE COUNCIL®
Copyright © 2015 ICC. ALL RIGHTS RESERVED. Accessed by David Dammon on Jun 21, 2017 12:30:52 PM pursuant to License Agreement with ICC. No further reproduction or distribution authorized. ANY UNAUTHORIZED REPRODUCTION OR DISTRIBUTION IS A VIOLATION OF THE FEDERAL COPYRIGHT ACT AND THE LICENSE AGREEMENT, AND SUBJECT TO CIVIL AND CRIMINAL PENALTIES THEREUNDER.

then the building complies. For example, a building of Type IIB construction with no increases for sprinklers containing a Group B occupancy and a Group F-1 occupancy could be three stories. The only limitation in this case, in terms of building height, would be that the Group F-1 occupancy could not be located any higher than the second story.

508.4.4 Separation. Individual occupancies shall be separated from adjacent occupancies in accordance with Table 508.4.

❖ Table 508.4 provides the required separation between areas containing the separated occupancies. Separations must be of fire-resistance-rated construction for 1, 2 or 3 hours as specified in the cells of the table. Generally, the required rating will be higher if a building is not fully protected by an automatic sprinkler system. The table states "NP" in certain cells. These occur where occupancies are not permitted to be in a mixed occupancy building, or where one or both occupancies cannot be in a nonsprinklered building. Other cells contain the letter "N." For the adjoining occupancies represented by each such cell, no separation is required. Although certain adjacent occupancies are not required to be physically separated, they are still evaluated under the separated option, but note that, where code requirements are based on established fire areas, occupancies not separated must be considered as sharing the same fire area.

For example, a completely sprinklered building of Type VB construction contains areas devoted to business and assembly occupancies. The designer has chosen the separated occupancies option and has completely separated the areas containing the two different occupancies by fire barriers (complying with Section 707) and horizontal assemblies (complying with Section 711) having a minimum 1-hour fire-resistance rating in accordance with Table 508.4. This is found by consulting the box that intersects with "A, E" in the first column with "B, F-1, M, S-1" in the first row and, because the entire building is sprinklered, the fire-resistance rating of the fire barrier walls and horizontal assemblies is required to be 1 hour, as indicated in the column designated "S." Had the building not been sprinklered, the required rating would have been 2 hours, as indicated in the column designated "NS."

Please note that Table 508.4 contains groupings of some of the occupancies, including:

- A, E
- I-1, I-3, I-4
- R
- F-2, S-2, U
- B, F-1, M, S-1
- H-3, H-4

These are occupancies that share the same level of hazard with respect to fire safety. It is possible, therefore, to have two occupancies that comply with these separated use provisions that require no separation between them. For instance, a mixed occupancy of Groups B and M would not be required to have a separation between them, but the provisions for calculation of the sum of the ratios of actual areas to allowable areas would still be applied to this circumstance.

508.4.4.1 Construction. Required separations shall be *fire barriers* constructed in accordance with Section 707 or *horizontal assemblies* constructed in accordance with Section 711, or both, so as to completely separate adjacent occupancies.

❖ This section is merely a reference to the appropriate provisions in Chapter 7 for fire-resistance-rated assemblies that are required to meet the provisions for adequate separation of occupancies.

The following three examples illustrate the application of the separated occupancies option.

Example 1: A four-story building contains a retail store on the first story, a lecture hall with fixed seats on the second story and offices on the top two stories. Each story is 10,500 square feet (975 m^2). A sprinkler system is not provided throughout the building. Assume that there is no open perimeter increase [see Commentary Figure 508.4.4.1(1)]. In applying the four-step procedure for separated uses, the following holds true:

Step 1: First story is Group M for the entire story. Second story is Group A-3 for the entire story. Third and fourth stories are Group B for both stories.

Step 2: The separation requirements in accordance with Table 508.4 require a 2-hour fire-resistance rating for the horizontal assembly between the Group M occupancy and the Group A-3 occupancy. Likewise, a 2-hour fire-resistance-rated horizontal assembly is required between the Group A-3 occupancy and the Group B occupancy. Each occupancy is separated horizontally with an approved fire-resistance-rated assembly. There is no rating required for the horizontal assembly between the third and fourth stories because they are in the same occupancy.

Step 3: The occupancy-specific requirements need to be addressed. The building is essentially broken into the following three areas based on the separations provided to achieve the separated occupancy requirements:

Group M area = 10,500 square feet (975 m^2).

Group A-3 area = 10,500 square feet (975 m^2).

Group B area = 21,000 square feet (1951 m^2) [combined area for two stories, each 10,500 square feet (975 m^2)].

INTERNATIONAL CODE COUNCIL®
Copyright © 2015 ICC. ALL RIGHTS RESERVED. Accessed by David Dammon on Jun 21, 2017 12:30:52 PM pursuant to License Agreement with ICC. No further reproduction or distribution authorized. ANY UNAUTHORIZED REPRODUCTION OR DISTRIBUTION IS A VIOLATION OF THE FEDERAL COPYRIGHT ACT AND THE LICENSE AGREEMENT, AND SUBJECT TO CIVIL AND CRIMINAL PENALTIES THEREUNDER.

Because of the construction required in this example for each separation, these occupancy areas may also be separate fire areas as determined by Table 707.3.10.

Since the story containing the Group M occupancy is also a fire area that is less than 12,000 square feet (1115 m^2) and is located below the fourth story, sprinklers are not required for the Group M occupancy.

The story containing the Group A-3 occupancy is also a fire area that is less than 12,000 square feet (1115 m^2), but it is located on the second story and above the level of exit discharge. According to Section 903.2.1.3, a Group A-3 occupancy fire area in this location must be provided with a sprinkler system. In addition, this would mean that the Group M occupancy would be required to be sprinklered in accordance with Section 903.2.1, which requires that all stories between the Group A-3 occupancy and the level of exit discharge be sprinklered.

The third and fourth stories containing the Group B occupancy do not require sprinklers because neither the size nor height of these stories triggers any threshold in Section 903.

Additionally, provisions in other parts of the code for each occupancy area (e.g., means of egress, exterior wall requirements, interior finishes) should be used based on the occupancy located on each story. For example, the design occupant load of the area containing the Group M occupancy is based on the mercantile occupant load factor found in Table 1004.1.1 while the area containing the Group A-3 occupancy is based upon the number of fixed seats in the lecture hall in accordance with Section 1004.4.

Step 4:

Part A: Review for the minimum types of construction based on the height limitations for each of the three occupancies as follows [see Commentary Figure 508.4.4.1(2)]:

1. Group M, one story in height; the minimum type of construction is Type VA [two stories and 40 feet (12 192 mm) in accordance with Section 504].
2. Group A-3, two stories in height; the minimum type of construction is Type VA [two stories and 50 feet (15 240 mm) in accordance with Section 504].
3. Group B, four stories in height; the minimum type of construction is Type IIIA [five stories and 65 feet (19 812 mm) in accordance with Section 504].

The highest type of construction for any one of the occupancies governs for the entire building; thus, the minimum allowable type of construction permitted for the building based on height is Type IIIA. The designer is permitted to choose any one of the construction types other than Types IIB, IIIB, VA and VB for the design of the building. The separated occupancy option presumes that each occupancy is restricted to the story (or stories) for which it is designated. For this example, the first story is separated and designated for the Group M occupancy, and the Group M occupancy can only occur on that story. In comparison, the nonseparated

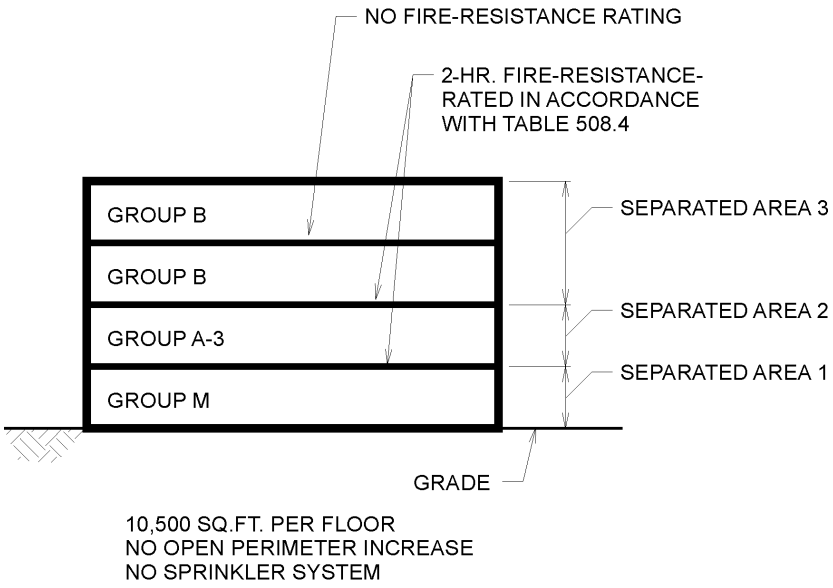

For SI: 1 square foot = 0.0929 m^2.

Figure 508.4.4.1(1)
SEPARATED OCCUPANCIES—EXAMPLE 1

INTERNATIONAL CODE COUNCIL®
Copyright © 2015 ICC. ALL RIGHTS RESERVED. Accessed by David Dammon on Jun 21, 2017 12:30:52 PM pursuant to License Agreement with ICC. No further reproduction or distribution authorized. ANY UNAUTHORIZED REPRODUCTION OR DISTRIBUTION IS A VIOLATION OF THE FEDERAL COPYRIGHT ACT AND THE LICENSE AGREEMENT, AND SUBJECT TO CIVIL AND CRIMINAL PENALTIES THEREUNDER.

option would assume that the Group M occupancy could occur on any of the four stories.

If the building were completely sprinklered, the allowable heights of all occupancies would be higher in accordance with Section 504. Accordingly, under Section 504, the minimum type of construction allowed for the building would be Type VA. In addition, the minimum fire-resistance rating of each floor/ceiling assembly would need to be only 1 hour, in accordance with Table 508.4.

Part B: Since each story has only one occupancy, the maximum allowable area for a story of the building can be taken directly from Table 506.2. Based on the allowable construction type determined, Type IIIB construction is acceptable for Groups B and M, but it is not acceptable for Group A-3. Based on the given area of 10,500 square feet (975 m^2) and without any area increases, the allowable types of construction permitted for Group A-3 based on area are Types IA, IB, IIA, IIIA, IV and VA. Although the Group A-3 story and the story below will be required to be sprinkler protected, because the whole building is not protected, area increases for sprinklers are not allowed in this example.

From Part A it was determined that Type VA construction is not permitted for the height of the building due to Group B; therefore, the allowable types of construction for the building based on height and area are Types IA, IB, IIA, IIIA and IV.

Example 2: Consider a 76,200-square-foot (7079 m^2) building with a fire barrier wall separating a 46,200-square-foot (4292 m^2) warehouse from a 30,000-square-foot (2787 m^2) office space [see Commentary Figure 508.4.4.1(3)].

Step 1: The warehouse occupancy (which is also a fire area) is classified in Group S-2. The office occupancy (which is also a fire area) is classified in Group B.

Step 2: A 2-hour fire barrier is required in accordance with Table 508.4 for nonsprinklered buildings (1 hour for sprinklered buildings) between the two occupancies and extends continuously through all concealed spaces to the underside of the roof deck in accordance with Section 707.

Step 3: The separation required by Table 508.4 also creates two fire areas since it requires the same level of fire separation as Table 707.3.10 which is used to determine the minimum required fire area separation. The Group B area is one story and 30,000 square feet (2787 m^2). A sprinkler system is not required by the code for a one-story Group B fire area (unless it is an ambulatory care center). The Group S-2 fire area is 46,200 square feet (4292 m^2), which is also not required to have a sprinkler system. However, the designer wants to be able to utilize Type IIB construction. The tabular area for nonsprinklered buildings from Table 506.2 for Group S-2 occupancies within a Type IIB building is only 26,000 feet (2416 m^2); therefore, a sprinkler system will need to be provided to allow an increase in allowable area. For a single-story building, the allowable area for a Group S-2 building in Type IIB would then be 104,000 square feet (9662 m^2). To allow this increase, the entire building including both occupancies would need to be protected throughout with an NFPA 13 sprinkler system.

Further, evaluate each occupancy area in the same manner for compliance with all provisions of the code.

Step 4:

Part A: The proposed building is only one story in height. Based on height, any type of construction is acceptable for the occupancies under consideration.

Part B: Make a trial evaluation of the building assuming it to be Type IIB construction:

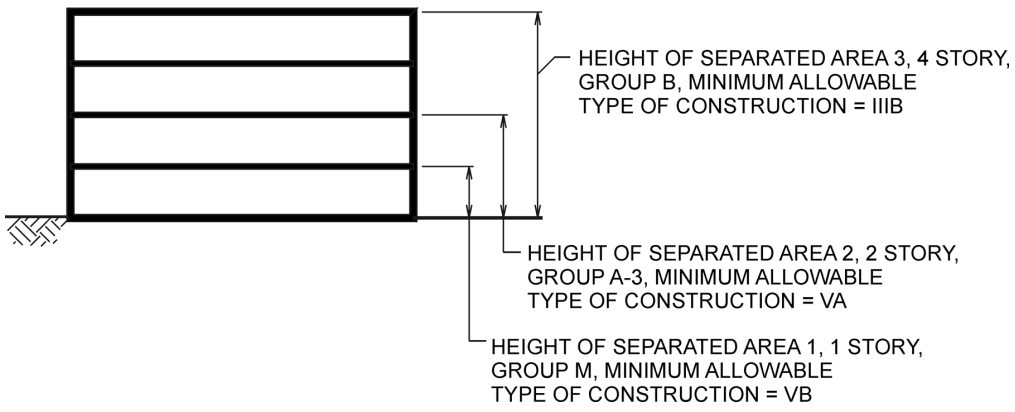

Figure 508.4.4.1(2)
SEPARATED OCCUPANCIES—EXAMPLE 1: LOCATION ON STORIES

INTERNATIONAL CODE COUNCIL®
Copyright © 2015 ICC. ALL RIGHTS RESERVED. Accessed by David Dammon on Jun 21, 2017 12:30:52 PM pursuant to License Agreement with ICC. No further reproduction or distribution authorized. ANY UNAUTHORIZED REPRODUCTION OR DISTRIBUTION IS A VIOLATION OF THE FEDERAL COPYRIGHT ACT AND THE LICENSE AGREEMENT, AND SUBJECT TO CIVIL AND CRIMINAL PENALTIES THEREUNDER.

Actual area of Group S-2 = 46,200 square feet (4292 m^2) and actual area of Group B = 30,000 square feet (2787 m^2).

Group S-2 maximum allowable area, = 104,000 square feet (9662 m^2).

The maximum allowable area for Group B = 92,000 square feet (8547 m^2).

Using the sum of the ratios approach, 46,200/104,000 + 30,000/92,000 = 0.77 which does not exceed 1.0.

Therefore, Type IIB construction is an acceptable minimum type of construction. When the factor arrived at is substantially below 1.0, it indicates that the building might qualify as a lower type of construction or as nonseparated occupancies.

The building is deemed to comply with the code after each of the code requirements is satisfied, as determined by Steps 1 through 4.

In the case of multistory buildings, an evaluation of the allowable area must be performed for every story of the building that contains separated uses.

Example 3: Consider a 76,200-square-foot (7079 m^2) building identical to that used in Example 2, except that the warehouse is classified in Group S-1. The Group S-1 warehouse is 46,000 square feet (4292 m^2) and the Group B office space is 30,000-square-foot (2787 m^2) [see Commentary Figure 508.4.4.1(4)].

Step 1: The warehouse is classified as Group S-1. The office is classified as Group B.

Step 2: Table 508.4 indicates that there is no separation requirement between Groups B and S-1, since they are in the same grouping of occupancies in the table.

Step 3: As there is no separation between the occupancies, there is only one fire area including both occupancies. The fire area for the occupancy of Groups B and S-1 is the entire area of the one-story building, or 76,200 square feet (7079 m^2). In accordance with Section 903.2.9, since the fire area containing Group S-1 is greater than 12,000 square feet (1115 m^2) the entire building is required to be sprinklered. Note that even if the uses were separated, Section 903.2.9 requires sprinklers throughout all buildings containing a Group S-1 fire area greater than 12,000 square feet (1115 m^2).

Step 4:

Part A: Based on the one-story height, any type of construction is acceptable for the occupancies under consideration.

Part B: Make a trial evaluation of the building assuming it to be Type IIB construction.

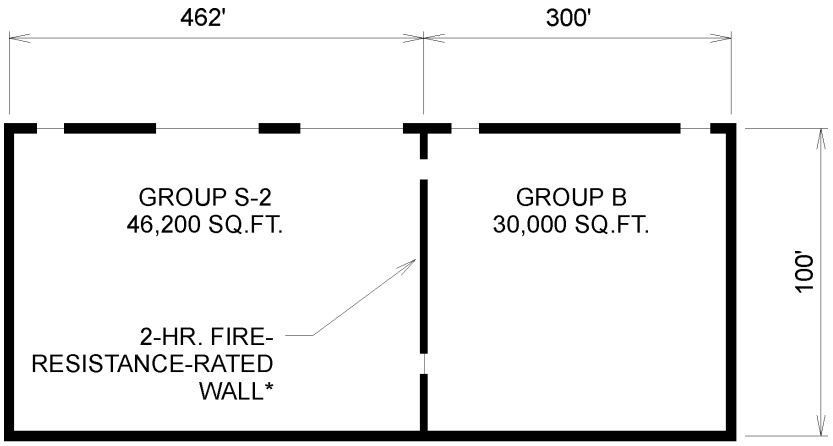

For SI: 1 foot = 304.8 mm, 1 square foot = 0.0929 m^2.

Figure 508.4.4.1(3)
SEPARATED OCCUPANCIES—EXAMPLE 2

INTERNATIONAL CODE COUNCIL®
Copyright © 2015 ICC. ALL RIGHTS RESERVED. Accessed by David Dammon on Jun 21, 2017 12:30:52 PM pursuant to License Agreement with ICC. No further reproduction or distribution authorized. ANY UNAUTHORIZED REPRODUCTION OR DISTRIBUTION IS A VIOLATION OF THE FEDERAL COPYRIGHT ACT AND THE LICENSE AGREEMENT, AND SUBJECT TO CIVIL AND CRIMINAL PENALTIES THEREUNDER.

Actual area of Group S-1 = 46,200 square feet (4292 m^2) and actual area of Group B = 30,000 square feet (2787 m^2).

Group S-1 maximum allowable area, = 70,000 square feet (6503 m^2).

The maximum allowable area for Group B including allowable increases = 92,000 square feet (8547 m^2). Using the sum of the ratios approach, 46,200/70,000 + 30,000/92,000 = 0.99 which does not exceed 1.0.

Note that, in this case, the separated use option requires no separation between these particular uses, and the Type IIB classification is acceptable. Comparing this to the example for nonseparated uses, with the same dimensions of each occupancy, the Type IIB construction classification is not acceptable, and a Type IIA construction classification is required.

Since Section 508.3 (nonseparated occupancies) makes a reference to applying the most restrictive requirements of Section 403 and Chapter 9, there may be the assumption that under the separated occupancies option, requirements can be applied separately to each occupancy in all cases. This is not completely true. There are sections of Chapter 9, such as Section 903.2.6, 903.2.8 or 903.2.9, that require sprinklers throughout the entire building when a particular occupancy is present. Some sections in Chapter 9, however, do permit separate application of requirements, even though the term "fire area" is not used. For example, a warehouse building with an office would be categorized as Groups B (office) and S-1 (warehouse). If the separated occupancies option is selected and the office has an occupant load of at least 500 people, then a fire alarm system is only required in the Group B area and not the Group S-1 area (see Section 907.2). It should be noted that alarm requirements must address the path of egress for occupants and may require notification appliances along those paths.

With respect to the high-rise provisions of Section 403, the requirements generally apply throughout the building and are not specific to fire areas. There are limited provisions in Section 403 that are specific to one occupancy or another. Regardless of the option selection in a mixed occupancy building, requirements in Section 403 that are based on occupancy will need to be applied throughout the building.

Another approach available to the designer of structures that contain more than one occupancy requires that the occupancies are completely separated by fire walls (see Section 706), thus creating separate buildings for each use. This is the simplest option to apply and analyze. When a fire wall is utilized, for code application purposes, two or more separate and independent buildings (see the definition of "Area, building" in Section 202) are created, and each building is reviewed individually.

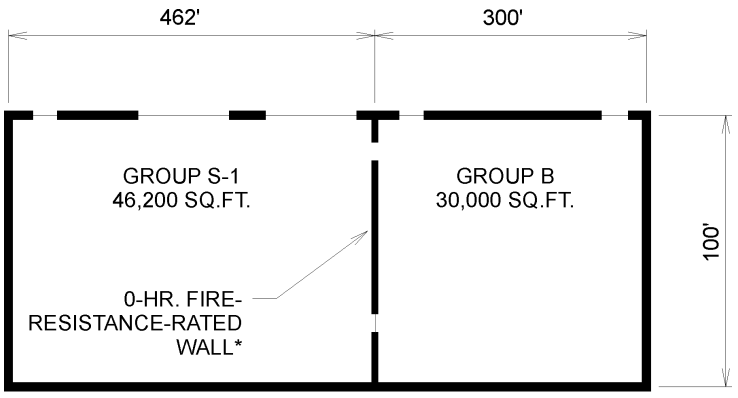

* WALL RATED IN ACCORDANCE WITH TABLE 508.4(4).

BUILDING AREA = 76,200 SQ.FT.
S-1 FIRE AREA = 46,200 SQ.FT.
B FIRE AREA = 30,000 SQ.FT.

For SI: 1 foot = 304.8 mm, 1 square foot = 0.0929 m^2.

Figure 508.4.4.1(4)
SEPARATED OCCUPANCIES—EXAMPLE 3

INTERNATIONAL CODE COUNCIL®
Copyright © 2015 ICC. ALL RIGHTS RESERVED. Accessed by David Dammon on Jun 21, 2017 12:30:52 PM pursuant to License Agreement with ICC. No further reproduction or distribution authorized. ANY UNAUTHORIZED REPRODUCTION OR DISTRIBUTION IS A VIOLATION OF THE FEDERAL COPYRIGHT ACT AND THE LICENSE AGREEMENT, AND SUBJECT TO CIVIL AND CRIMINAL PENALTIES THEREUNDER.

SECTION 509
INCIDENTAL USES

509.1 General Incidental uses located within single occupancy or mixed occupancy buildings shall comply with the provisions of this section. Incidental uses are ancillary functions associated with a given occupancy that generally pose a greater level of risk to that occupancy and are limited to those uses listed in Table 509.

Exception: Incidental uses within and serving a *dwelling unit* are not required to comply with this section.

❖ Incidental uses are rooms or areas that constitute special hazards or risks to life safety. Such spaces often pose risks that are not typically addressed by the provisions for the general occupancy groups under consideration. However, such rooms or areas may functionally be an extension of the primary use. Only those rooms or areas found in Table 509 are to be regulated as incidental uses. Incidental uses can be located within both single-occupancy and mixed-occupancy buildings. The concern is that those areas designated as incidental uses pose a risk to the remainder of the building, and as such, some degree of protection is required. The protection requirements, however, are not applicable to incidental uses that are located within and serve a dwelling unit. Incidental uses are not required to also comply with the accessory use provisions of Section 508.2.

TABLE 509. See page 5-46.

❖ Table 509 identifies incidental uses and the required separation or other protection to be provided. Where a fire-resistance-rated separation is required, the incidental use must be separated from other portions of the building with fire barriers that comply with Section 707 and/or horizontal assemblies complying with Section 711. Where Table 509 permits protection by an automatic sprinkler system without fire barriers, the walls enclosing the incidental use must comply with Section 509.4.2.

509.2 Occupancy classification. Incidental uses shall not be individually classified in accordance with Section 302.1. Incidental uses shall be included in the building occupancies within which they are located.

❖ This provision expressly states that incidental uses are not considered as separate and distinct occupancy classifications, but rather are classified the same as the building occupancies in which they are located. As an example, a 200-square-foot (18.5 m^2) laundry room in an apartment building would simply be classified as a part of the Group R-2 occupancy. Similarly, a waste and linen collection room in a nursing home would be classified as a portion of the Group I-2 occupancy.

509.3 Area limitations. Incidental uses shall not occupy more than 10 percent of the *building area* of the *story* in which they are located.

❖ The floor area limitation of 10 percent for incidental uses emphasizes the ancillary nature of such rooms and areas. Each incidental use is limited to a maximum of 10 percent of the floor area of the story in which it is located. Where there are two or more tenants located on the same story, the 10 percent limitation is presumably based upon the floor area of each individual tenant space rather than that of the entire story. The application of the limit on a tenant-by-tenant basis is consistent with the concept of incidental uses typically being ancillary only to a portion of the building, the specific tenant occupancy.

509.4 Separation and protection. The incidental uses listed in Table 509 shall be separated from the remainder of the building or equipped with an *automatic sprinkler system*, or both, in accordance with the provisions of that table.

❖ In addition to identifying those rooms or areas that warrant regulation as incidental uses, Table 509 also indicates the required degree of protection or separation. The requirements identified in Table 509 vary depending on the incidental use. In some cases, a specific type of separation and/or protection is required, while in others there is an option. As indicated by Section 509.4.2.1, the requirement for an automatic sprinkler system for the majority of those listed applies only to the incidental use room or area, not the entire building. If a building is required to be provided with a sprinkler system for other reasons, then any sprinkler requirement for an incidental use is also met.

509.4.1 Separation. Where Table 509 specifies a fire-resistance-rated separation, the incidental uses shall be separated from the remainder of the *building* by a *fire barrier* constructed in accordance with Section 707 or a *horizontal assembly* constructed in accordance with Section 711, or both. Construction supporting 1-hour *fire barriers* or *horizontal assemblies* used for incidental use separations in buildings of Type IIB, IIIB and VB construction is not required to be fire-resistance rated unless required by other sections of this code.

❖ Where a fire-resistance rated separation is required, the incidental use must be separated from other portions of the building with fire barriers that comply with Section 707, horizontal assemblies complying with Section 711, or both. Where Table 509 permits protection by an automatic sprinkler system without fire barriers, the construction enclosing the incidental use must resist the passage of smoke in accordance with Section 509.4.2. Where the construction surrounding an incidental use is only required to be 1 hour, and the building is of nonrated construction (Type IIB, IIIB or VB), the rated construction does not need to be supported by 1-hour fire-resistance-rated construction. In all other instances, the construction supporting incidental occupancy separations must be supported by construction with at least the same rating as the separations.

509.4.2 Protection. Where Table 509 permits an *automatic sprinkler system* without a *fire barrier*, the incidental uses shall be separated from the remainder of the building by construction capable of resisting the passage of smoke. The walls

INTERNATIONAL CODE COUNCIL®
Copyright © 2015 ICC. ALL RIGHTS RESERVED. Accessed by David Dammon on Jun 21, 2017 12:30:52 PM pursuant to License Agreement with ICC. No further reproduction or distribution authorized. ANY UNAUTHORIZED REPRODUCTION OR DISTRIBUTION IS A VIOLATION OF THE FEDERAL COPYRIGHT ACT AND THE LICENSE AGREEMENT, AND SUBJECT TO CIVIL AND CRIMINAL PENALTIES THEREUNDER.

shall extend from the top of the foundation or floor assembly below to the underside of the ceiling that is a component of a fire-resistance-rated floor assembly or roof assembly above or to the underside of the floor or roof sheathing, deck or slab above. Doors shall be self- or automatic-closing upon detection of smoke in accordance with Section 716.5.9.3. Doors shall not have air transfer openings and shall not be undercut in excess of the clearance permitted in accordance with NFPA 80. Walls surrounding the incidental use shall not have air transfer openings unless provided with smoke dampers in accordance with Section 710.8.

❖ Where Table 509 permits protection by an automatic sprinkler system without fire barriers, the construction enclosing the incidental use must resist the passage of smoke. While this section can be viewed as a performance standard, construction details for resisting the passage of smoke are provided in this section. Although the section specifically states that air transfer openings must be provided with smoke dampers, it is silent with respect to ducts. If ducts are penetrating this separation, the arrangement of the duct system should be analyzed to determine if it will allow smoke to pass through the wall and not restrict it to the incidental use.

The wall construction described here is not required to be a smoke barrier conforming to Section 709 or a smoke partition conforming to Section 710.

509.4.2.1 Protection limitation. Where an *automatic sprinkler system* is provided in accordance with Table 509, only the space occupied by the incidental use need be equipped with such a system.

❖ The point of this section is that the sprinkler system stipulated in Table 509 is required for the incidental use only. In general, the nature of these incidental uses is such that they are small areas, not often frequented by building occupants, in which a fire could get underway and go unnoticed for a longer time than in a part of the building that is constantly occupied.

SECTION 510
SPECIAL PROVISIONS

510.1 General. The provisions in Sections 510.2 through 510.9 shall permit the use of special conditions that are exempt from, or modify, the specific requirements of this

TABLE 509
INCIDENTAL USES

ROOM OR AREA	SEPARATION AND/OR PROTECTION
Furnace room where any piece of equipment is over 400,000 Btu per hour input	1 hour or provide automatic sprinkler system
Rooms with boilers where the largest piece of equipment is over 15 psi and 10 horsepower	1 hour or provide automatic sprinkler system
Refrigerant machinery room	1 hour or provide automatic sprinkler system
Hydrogen fuel gas rooms, not classified as Group H	1 hour in Group B, F, M, S and U occupancies; 2 hours in Group A, E, I and R occupancies.
Incinerator rooms	2 hours and provide automatic sprinkler system
Paint shops, not classified as Group H, located in occupancies other than Group F	2 hours; or 1 hour and provide automatic sprinkler system
In Group E occupancies, laboratories and vocational shops not classified as Group H	1 hour or provide automatic sprinkler system
In Group I-2 occupancies, laboratories not classified as Group H	1 hour and provide automatic sprinkler system
In ambulatory care facilities, laboratories not classified as Group H	1 hour or provide automatic sprinkler system
Laundry rooms over 100 square feet	1 hour or provide automatic sprinkler system
In Group I-2, laundry rooms over 100 square feet	1 hour
Group I-3 cells and Group I-2 patient rooms equipped with padded surfaces	1 hour
In Group I-2, physical plant maintenance shops	1 hour
In ambulatory care facilities or Group I-2 occupancies, waste and linen collection rooms with containers that have an aggregate volume of 10 cubic feet or greater	1 hour
In other than ambulatory care facilities and Group I-2 occupancies, waste and linen collection rooms over 100 square feet	1 hour or provide automatic sprinkler system
In ambulatory care facilities or Group I-2 occupancies, storage rooms greater than 100 square feet	1 hour
Stationary storage battery systems having a liquid electrolyte capacity of more than 50 gallons for flooded lead-acid, nickel cadmium or VRLA, or more than 1,000 pounds for lithium-ion and lithium metal polymer used for facility standby power, emergency power or uninterruptable power supplies	1 hour in Group B, F, M, S and U occupancies; 2 hours in Group A, E, I and R occupancies.

For SI: 1 square foot = 0.0929 m^2, 1 pound per square inch (psi) = 6.9 kPa, 1 British thermal unit (Btu) per hour = 0.293 watts, 1 horsepower = 746 watts, 1 gallon = 3.785 L, 1 cubic foot = 0.0283 m^3.

INTERNATIONAL CODE COUNCIL®
Copyright © 2015 ICC. ALL RIGHTS RESERVED. Accessed by David Dammon on Jun 21, 2017 12:30:52 PM pursuant to License Agreement with ICC. No further reproduction or distribution authorized. ANY UNAUTHORIZED REPRODUCTION OR DISTRIBUTION IS A VIOLATION OF THE FEDERAL COPYRIGHT ACT AND THE LICENSE AGREEMENT, AND SUBJECT TO CIVIL AND CRIMINAL PENALTIES THEREUNDER.

chapter regarding the allowable *building heights and areas* of buildings based on the occupancy classification and type of construction, provided the special condition complies with the provisions specified in this section for such condition and other applicable requirements of this code. The provisions of Sections 510.2 through 510.8 are to be considered independent and separate from each other.

❖ The subsections of Section 510 are exceptions to the general height and area limitations of Chapter 5. Most of the subsections address attached parking structures and contain conditions by which these can be attached to buildings without creating hardship in regard to allowable area and height for the building. These allowances are not always related to buildings containing parking below but can involve other uses and occupancies. Also many of these scenarios will be applied such that there may be multiple buildings above the parking garage.

510.2 Horizontal building separation allowance. A building shall be considered as separate and distinct buildings for the purpose of determining area limitations, continuity of *fire walls*, limitation of number of *stories* and type of construction where all of the following conditions are met:

1. The buildings are separated with a *horizontal assembly* having a *fire-resistance rating* of not less than 3 hours.
2. The building below the *horizontal assembly* is of Type IA construction.
3. *Shaft*, *stairway*, *ramp* and escalator enclosures through the *horizontal assembly* shall have not less than a 2-hour *fire-resistance rating* with opening protectives in accordance with Section 716.5.

   Exception: Where the enclosure walls below the *horizontal assembly* have not less than a 3-hour *fire-resistance rating* with opening protectives in accordance with Section 716.5, the enclosure walls extending above the *horizontal assembly* shall be permitted to have a 1-hour *fire-resistance rating*, provided:

   1. The building above the *horizontal assembly* is not required to be of Type I construction;
   2. The enclosure connects fewer than four *stories*; and
   3. The enclosure opening protectives above the *horizontal assembly* have a *fire protection rating* of not less than 1 hour.
4. The building or buildings above the *horizontal assembly* shall be permitted to have multiple Group A occupancy uses, each with an *occupant load* of less 300, or Group B, M, R or S occupancies.
5. The building below the *horizontal assembly* shall be protected throughout by an *approved automatic sprinkler system* in accordance with Section 903.3.1.1, and shall be permitted to be any occupancy allowed by this code except Group H.
6. The maximum *building height* in feet (mm) shall not exceed the limits set forth in Section 504.3 for the building having the smaller allowable height as measured from the *grade plane*.

❖ Section 510.2 essentially allows a 3-hour fire-resistance-rated horizontal assembly to create separate buildings similar to the concept used for fire walls (see Commentary Figure 510.2). However, consideration as separated buildings by this method is only applicable to a limited number of specified conditions. This allowance provides an extensive benefit for height and area in these structures. Buildings constructed under this section are frequently referred to as “pedestal,” “podium” or “platform” buildings. It should be noted that multiple buildings may be located above the horizontal assembly. Structures built under this section are considered to be distinct buildings above and below the 3-hour fire-resistance-rated horizontal assembly. As distinct buildings, they are individually evaluated with respect to allowable building area, the number of stories and the type of construction. In addition, if a fire wall is needed to address building area issues in the upper building or buildings, the fire wall construction can stop at the 3-hour fire-resistance-rated horizontal assembly and does not need to extend to the foundation. However, other building systems and requirements must be evaluated using the total structure. For example, if the upper building is apartments and the lower building an open parking garage, both buildings will need to be protected by an automatic sprinkler system because of the requirement for buildings occupied by Group R occupancies (see Section 903.2.8).

There are six conditions that set the limits of this design:

1. Separation of upper and lower buildings by a 3-hour fire-resistance-rated horizontal assembly.
2. The building below the horizontal assembly is of Type IA construction. As such it is allowed to be of unlimited area in accordance with Section 506.
3. All openings through the 3-hour fire-resistance-rated horizontal assembly are to be protected by a 2-hour shaft (the shaft openings having $1^1/_2$-hour protectives, see Table 716.5).
4. The uses in the upper building or buildings are limited to Group A occupancy uses where each Group A area has an occupant load of less than 300, or Group B, M, R or S occupancies. The limit of 300 occupants in Group A occupancies is also reflective of the history of these provisions from the legacy codes, and the intent of restricting the assembly spaces to smaller businesses so that the assembly use does not dominate the upper building. This same limit for assembly is not applied to the lower building.
5. The building below is allowed to be any occupancy or any combination of occupancies except Group H, provided that the lower

INTERNATIONAL CODE COUNCIL®
Copyright © 2015 ICC. ALL RIGHTS RESERVED. Accessed by David Dammon on Jun 21, 2017 12:30:52 PM pursuant to License Agreement with ICC. No further reproduction or distribution authorized. ANY UNAUTHORIZED REPRODUCTION OR DISTRIBUTION IS A VIOLATION OF THE FEDERAL COPYRIGHT ACT AND THE LICENSE AGREEMENT, AND SUBJECT TO CIVIL AND CRIMINAL PENALTIES THEREUNDER.

building is equipped throughout with an NFPA 13 sprinkler system. While historic versions of Section 510.2 limited the use of the lower building to parking, the provision has evolved to reflect a mixed occupancy setting of urban neighborhoods.

6. The height of the combined buildings above and below the horizontal assembly is limited to the number of feet above grade plane allowed by Section 504.3 for the type of construction of the upper building. However, the charging language of Section 510.2 does not restrict the number of stories to the entire structure but only to that which is above the horizontal assembly. Thus, a Type VA building, protected by a NFPA 13R sprinkler system and containing a Group R-2 occupancy, can have four stories above the horizontal assembly, provided the overall height of both buildings does not exceed 60 feet (18 288 mm) above grade plane.

This is one of the rare circumstances where there could be two different construction types in a single structure without being separated by a fire wall. It is possible that following the conventional provisions for mixed occupancies in Sections 508.3 and 508.4 would be less restrictive than the conditions of this section. Compliance with the general provisions of Section 508.3 or 508.4 is permissible, and this section should be viewed as an alternative means of compliance with Section 508.3 or 508.4.

There is one exception within the six items: the exception to Item 3 indicates the conditions by which the shaft construction protecting openings in the horizontal separation may be 1-hour rated above the horizontal separation. This allowance is only for openings connecting a maximum of four stories. This would include the connection to the area below the horizontal assembly (see Commentary Figure 510.2).

A common example of a building constructed under the provisions of Section 510.2 is a Type IA building that contains parking at and below grade level, with up to four stories of Group R-2 apartments in a Type VA, wood-frame constructed building above the separation (see Commentary Figure 510.2). In many city neighborhoods where zoning laws encourage a mixture of uses, the first story is often occupied with retail shops, service businesses and small restaurants. The height of this structure measured in feet is limited by the Type VA upper structure to a maximum of 70 feet (21 336 mm) above grade plane. But the number of stories of the Type VA portion of the building is determined by starting at the horizontal separation between the construction types. See also Section 510.9 for where there are multiple buildings above the horizontal separation.

510.3 Group S-2 enclosed parking garage with Group S-2 open parking garage above. A Group S-2 enclosed parking garage with not more than one *story* above *grade plane* and located below a Group S-2 *open parking garage* shall be classified as a separate and distinct building for the purpose of determining the type of construction where all of the following conditions are met:

1. The allowable area of the building shall be such that the sum of the ratios of the actual area divided by the allowable area for each separate occupancy shall not exceed 1.
2. The Group S-2 enclosed parking garage is of Type I or II construction and is at least equal to the *fire-resistance* requirements of the Group S-2 *open parking garage*.

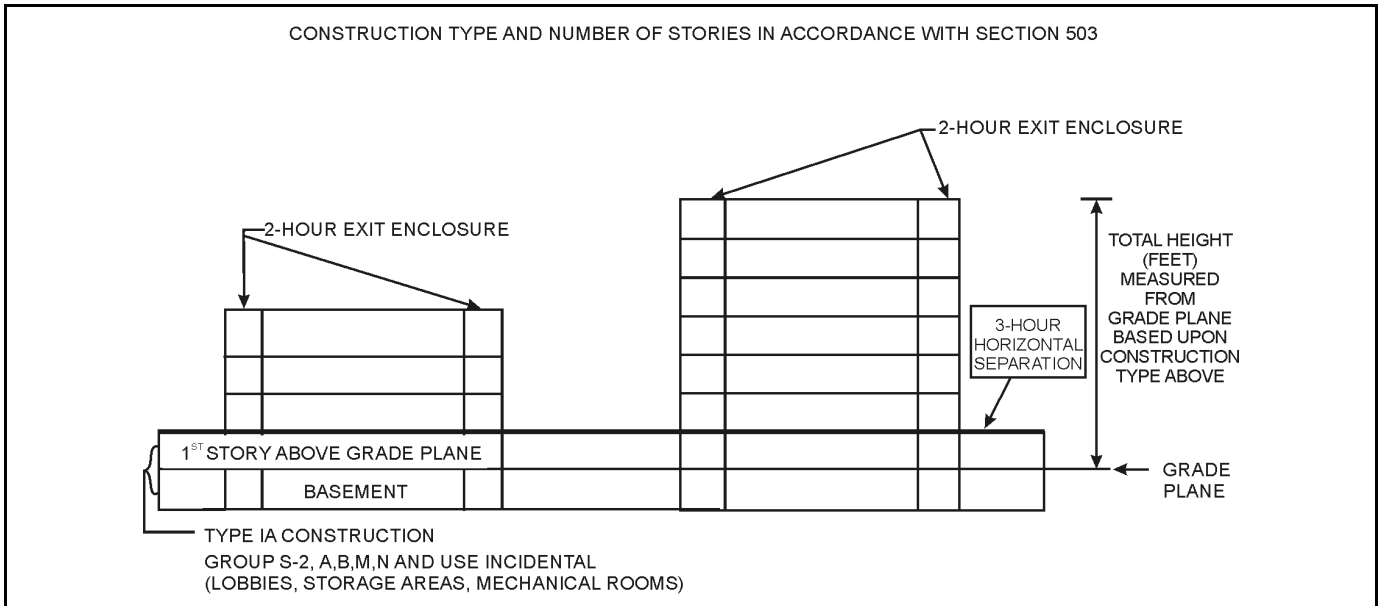

Figure 510.2
HORIZONTAL BUILDING SEPARATION

INTERNATIONAL CODE COUNCIL®
Copyright © 2015 ICC. ALL RIGHTS RESERVED. Accessed by David Dammon on Jun 21, 2017 12:30:52 PM pursuant to License Agreement with ICC. No further reproduction or distribution authorized. ANY UNAUTHORIZED REPRODUCTION OR DISTRIBUTION IS A VIOLATION OF THE FEDERAL COPYRIGHT ACT AND THE LICENSE AGREEMENT, AND SUBJECT TO CIVIL AND CRIMINAL PENALTIES THEREUNDER.

3. The height and the number of tiers of the Group S-2 *open parking garage* shall be limited as specified in Table 406.5.4.
4. The floor assembly separating the Group S-2 enclosed parking garage and Group S-2 *open parking garage* shall be protected as required for the floor assembly of the Group S-2 enclosed parking garage. Openings between the Group S-2 enclosed parking garage and Group S-2 *open parking garage*, except *exit* openings, shall not be required to be protected.
5. The Group S-2 enclosed parking garage is used exclusively for the parking or storage of private motor vehicles, but shall be permitted to contain an office, waiting room and toilet room having a total area of not more than 1,000 square feet (93 m^2) and mechanical equipment rooms incidental to the operation of the building.

❖ Parking garages of both types, enclosed and open, are addressed in Section 406. Special height and area allowances are given in Section 406.5.4 for open parking structures. However, these special height and area provisions are not applicable if any level of the parking garage does not meet the definition of "Open parking garage" by not having the requisite clear open area to the exterior. This would normally preclude having parking levels below grade in an open parking garage.

Section 510.3 contains provisions that would allow an open parking structure to take advantage of the special height and area limits for open parking structures in Section 406.5.4 while incorporating, in the same building, enclosed parking levels below grade. This is an alternative to treating the whole building as an enclosed parking garage.

There are five conditions listed that must be met in order to use this alternative:

1. Appropriate increases in accordance with Section 506 are to be considered for each portion, and for purposes of frontage increase the same measurement of open perimeter may apply to both the upper and lower garages.
2. The enclosed parking structure below must meet or exceed the fire resistance of the open parking structure above. At a minimum, the enclosed parking structure must be of Type IIB construction (all noncombustible materials, without fire-resistance-rated protection). However, if the open parking structure above is Type VA, IIIA, IIA or IA, the enclosed parking structure would also have to meet or exceed the required ratings of the building elements from Table 601 for the construction type of the open parking structure.
3. Both the entire height of the building and the number of tiers are limited by Table 406.5.4. Therefore, even if the first story above grade is part of the enclosed parking garage portion of the building, the height of the structure above grade plane could not exceed what would be permitted by Table 406.5.4 if the entire structure above grade plane were part of the open parking garage portion.
4. Protection of the floor assembly of the Group S-2 building depends on the construction type and Table 601 for the S-2 enclosed parking garage.
5. Certain accessory uses are permitted to be present when taking advantage of these alternative provisions, such as a small office and waiting area.

See also Section 510.9 for where there are multiple buildings above the horizontal separation.

510.4 Parking beneath Group R. Where a maximum one *story above grade plane* Group S-2 parking garage, enclosed or open, or combination thereof, of Type I construction or open of Type IV construction, with grade entrance, is provided under a building of Group R, the number of *stories* to be used in determining the minimum type of construction shall be measured from the floor above such a parking area. The floor assembly between the parking garage and the Group R above shall comply with the type of construction required for the parking garage and shall also provide a *fire-resistance rating* not less than the mixed occupancy separation required in Section 508.4.

❖ This section permits an extra story (above the limits of Table 504.4), based on construction type, for Group R buildings with parking on the first story (see Commentary Figure 510.4). There are several conditions that must be met: the parking must be limited to one story above grade; must be Type IV (if open) or I (open or enclosed) construction; the entrance to the garage must be at grade; and a 1-hour horizontal assembly must be provided between the parking and the Group R occupancy in accordance with Table 508.4. The limitation of Table 504.3 for height above grade plane (in feet) is not changed under this circumstance. It should be noted that all buildings containing Group R occupancies are required to be sprinklered in the code. Therefore, the separation required would only be 1 hour, but the parking area must also be sprinklered.

For instance, a fully sprinklered Group R-2 building of Type VB construction would normally be permitted to be three stories above grade (Table 504.4 for R-2, "S"). If it meets the conditions of this section for parking on the first story above grade, then it could actually be four stories above grade. However, the building height in feet cannot exceed 60 feet (18 288 mm) above grade plane in accordance with Table 504.3 for Type VB construction. Commentary Figure 510.4 provides an example of a Group R-1 building over enclosed parking.

510.5 Group R-1 and R-2 buildings of Type IIIA construction. The height limitation for buildings of Type IIIA construction in Groups R-1 and R-2 shall be increased to six *stories* and 75 feet (22 860 mm) where the first floor assembly above the *basement* has a *fire-resistance rating* of not less than 3 hours and the floor area is subdivided by 2-hour fire-

INTERNATIONAL CODE COUNCIL®
Copyright © 2015 ICC. ALL RIGHTS RESERVED. Accessed by David Dammon on Jun 21, 2017 12:30:52 PM pursuant to License Agreement with ICC. No further reproduction or distribution authorized. ANY UNAUTHORIZED REPRODUCTION OR DISTRIBUTION IS A VIOLATION OF THE FEDERAL COPYRIGHT ACT AND THE LICENSE AGREEMENT, AND SUBJECT TO CIVIL AND CRIMINAL PENALTIES THEREUNDER.

resistance-rated *fire walls* into areas of not more than 3,000 square feet (279 m^2).

❖ This section contains special provisions for increasing the height of Type IIIA Group R-1 and R-2 buildings based upon increases in fire resistance and compartmentation. More specifically, the higher rating would apply to the floor structure of the first story above grade (3 hours), and the fire walls (2 hours) subdividing the building into floor areas of not more than 3,000 square feet (279 m^2). The fire walls must extend from foundation to roof. In addition, the fire walls must comply with the requirements in Section 706.

It should be noted that this section is independent of the fire area requirements of Section 901.7, but such separations could certainly be considered as creating fire areas or separate buildings. In either case, all buildings containing a Group R-1 or R-2 fire area would require sprinklers in accordance with Section 903.2.8.

This section constitutes a trade-off of building area for extra height, and depends on the materials and rating requirements for Type IIIA construction, as well as the extra fire resistance of the first story.

See Commentary Figure 510.5 for an example of a Type IIIA building height increase for a Group R-2 occupancy.

510.6 Group R-1 and R-2 buildings of Type IIA construction. The height limitation for buildings of Type IIA construction in Groups R-1 and R-2 shall be increased to nine *stories* and 100 feet (30 480 mm) where the building is separated by not less than 50 feet (15 240 mm) from any other building on the *lot* and from *lot lines*, the *exits* are segregated in an area enclosed by a 2-hour fire-resistance-rated *fire wall* and the first floor assembly has a *fire-resistance rating* of not less than $1^1/_2$ hours.

❖ This section contains special provisions for increasing the height of Type IIA, Group R-1 and R-2 buildings. The higher $1^1/_2$-hour rating would apply to the floor assembly of the first story above grade, and the exits are required to be enclosed with fire walls extending from foundation to roof, otherwise meeting all the requirements of Section 706. Such fire walls would create separate fire areas or buildings for the purposes of the application of the rest of the code.

A separation distance of at least 50 feet (15 240 mm) from other buildings on the same lot or property lines is also required to use this alternative. This section constitutes a tradeoff of extra protection for exits for extra building height, and depends also on the materials and rating requirements for Type IIA construction, as well as the extra fire-resistance rating protecting the first story from the basement. The entire building must be sprinklered in accordance with Section 903.2.8 with an NFPA 13 sprinkler system. See Commentary Figure 510.6 for an example of a Type IIA building height increase for a Group R-2 occupancy.

Note that such buildings will likely be considered high-rise buildings and, as such, also must comply with Section 403.

510.7 Open parking garage beneath Groups A, I, B, M and R. *Open parking garages* constructed under Groups A, I, B, M and R shall not exceed the height and area limitations

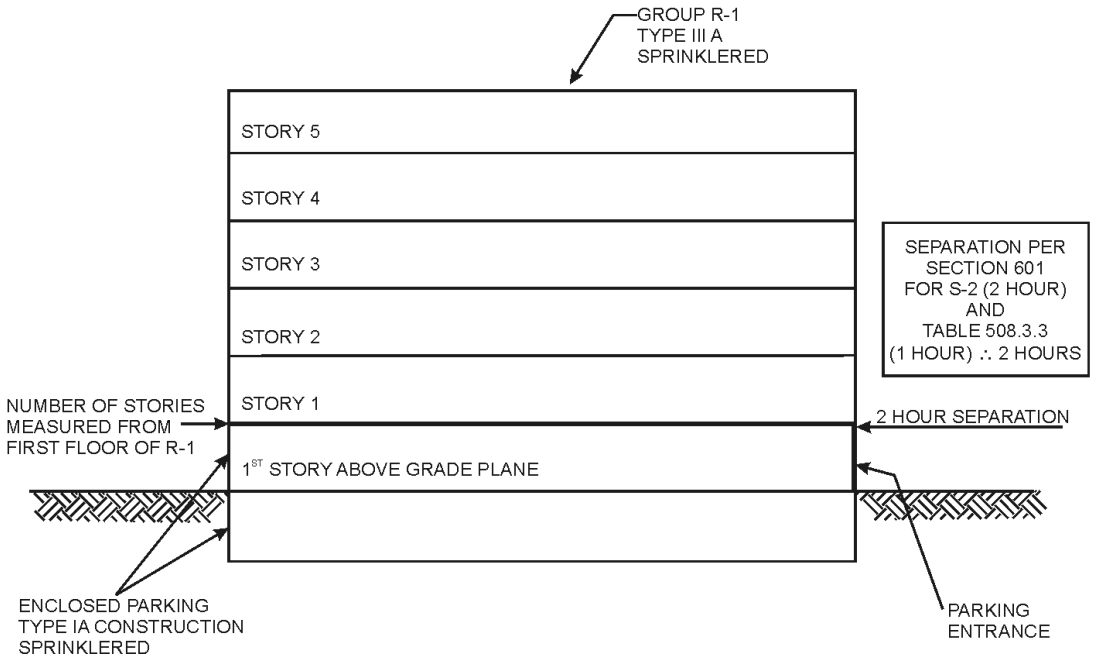

Figure 510.4
EXAMPLE R-1 OVER ENCLOSED PARKING

INTERNATIONAL CODE COUNCIL®
Copyright © 2015 ICC. ALL RIGHTS RESERVED. Accessed by David Dammon on Jun 21, 2017 12:30:52 PM pursuant to License Agreement with ICC. No further reproduction or distribution authorized. ANY UNAUTHORIZED REPRODUCTION OR DISTRIBUTION IS A VIOLATION OF THE FEDERAL COPYRIGHT ACT AND THE LICENSE AGREEMENT, AND SUBJECT TO CIVIL AND CRIMINAL PENALTIES THEREUNDER.

permitted under Section 406.5. The height and area of the portion of the building above the *open parking garage* shall not exceed the limitations in Section 503 for the upper occupancy. The height, in both feet and *stories*, of the portion of the building above the *open parking garage* shall be measured from *grade plane* and shall include both the *open parking garage* and the portion of the building above the parking garage.

❖ This section addresses a special mixed-use condition, and is another circumstance wherein a building can be designated with two different types of construction for determining height and area. This provision is only to be applied when an open parking structure (Group S-2) is to be constructed below a Group A, I, B, M or R occupancy (see Commentary Figure 510.7). If an open parking structure is located below any other occupancy group, Section 508 must be applied, as for any other mixed-use condition. In accordance with Section 510.1, this section is an alternative to the general mixed-occupancy provisions in Section 508 that can be applied where advantageous to the design of buildings with open parking on the lower levels.

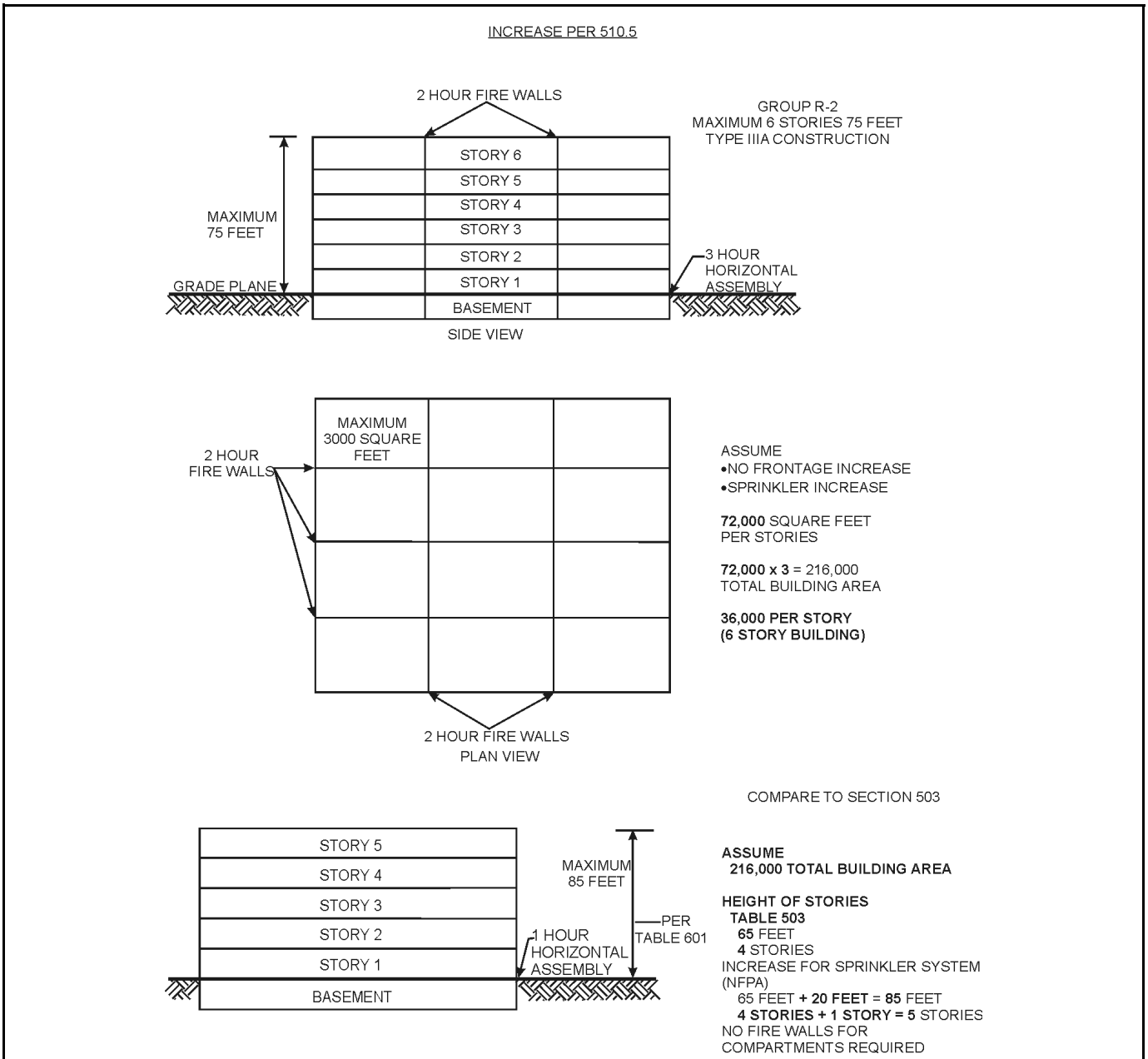

For SI: 1 foot = 304.8 mm, 1 square foot = 0.0929 mm^2.

Figure 510.5
EXAMPLE TYPE IIIA, GROUP R-2 HEIGHT INCREASE

INTERNATIONAL CODE COUNCIL®
Copyright © 2015 ICC. ALL RIGHTS RESERVED. Accessed by David Dammon on Jun 21, 2017 12:30:52 PM pursuant to License Agreement with ICC. No further reproduction or distribution authorized. ANY UNAUTHORIZED REPRODUCTION OR DISTRIBUTION IS A VIOLATION OF THE FEDERAL COPYRIGHT ACT AND THE LICENSE AGREEMENT, AND SUBJECT TO CIVIL AND CRIMINAL PENALTIES THEREUNDER.

In the application of Section 510.7, there are two criteria that must be met for code compliance (see Commentary Figure 510.7):

1. The height (measured both in feet and stories) and area of the open parking structure comprising a part of a mixed-use group building must not exceed the limitations for open parking structures permitted in Section 406.5.4 and Table 406.5.4.
2. The allowable height of the occupancy located above the open parking structure is to be determined in accordance with Section 504. The height is the vertical distance (measured both in feet and stories) from the grade plane to the top of the average height of the highest roof surface, in accordance with the definition of "Height, building" in Section 202.

510.7.1 Fire separation. *Fire barriers* constructed in accordance with Section 707 or *horizontal assemblies* constructed in accordance with Section 711 between the parking occupancy and the upper occupancy shall correspond to the required *fire-resistance rating* prescribed in Table 508.4 for the uses involved. The type of construction shall apply to each occupancy individually, except that structural members, including main bracing within the open parking structure, which is necessary to support the upper occupancy, shall be protected with the more restrictive fire-resistance-rated assemblies of the groups involved as shown in Table 601. *Means of egress* for the upper occupancy shall conform to Chapter 10 and shall be separated from the parking occupancy by *fire barriers* having not less than a 2-hour *fire-resistance rating* as required by Section 707 with *self-closing* doors complying with Section 716 or *horizontal assemblies* having not less than a 2-hour *fire-resistance rating* as required by Section 711, with *self-closing* doors complying

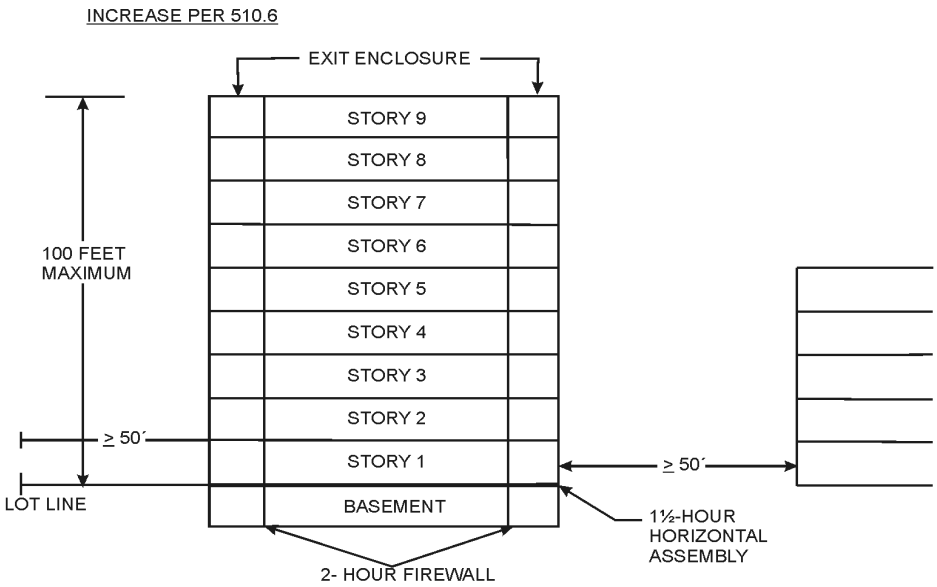

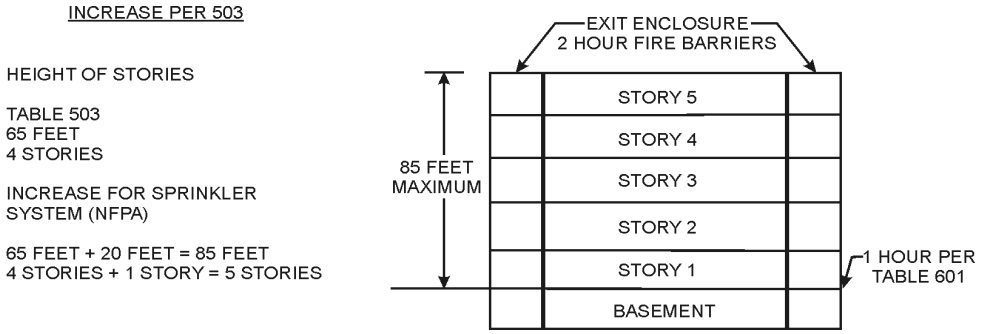

For SI: 1 foot = 304.8 mm.

Figure 510.6
EXAMPLE TYPE IIA, GROUP R-2 HEIGHT INCREASE

INTERNATIONAL CODE COUNCIL®
Copyright © 2015 ICC. ALL RIGHTS RESERVED. Accessed by David Dammon on Jun 21, 2017 12:30:52 PM pursuant to License Agreement with ICC. No further reproduction or distribution authorized. ANY UNAUTHORIZED REPRODUCTION OR DISTRIBUTION IS A VIOLATION OF THE FEDERAL COPYRIGHT ACT AND THE LICENSE AGREEMENT, AND SUBJECT TO CIVIL AND CRIMINAL PENALTIES THEREUNDER.

with Section 716. *Means of egress* from the *open parking garage* shall comply with Section 406.5.

❖ This section contains additional conditions for the use of Section 510.7 as an alternative to the general mixed-use provisions in Section 508. It contains an additional five criteria:

1. The open parking structure and occupancy located above must be separated, both horizontally and vertically if necessary, by fire separation assemblies having a fire-resistance rating corresponding to that specified in Table 508.4.

   Example: An open parking structure, Group S-2, is located below an office (Group B); therefore, based on Table 508.4, all vertical and horizontal assemblies separating the two groups are required to have a minimum fire-resistance rating of 2 hours in a nonsprinklered building and 1 hour in a sprinklered building.

2. The upper and lower portions of the building may be of different types of construction (except as discussed in Item 5 below). The minimum type of construction for an open parking structure is Type IIB or IV, depending on the thresholds established in Table 406.5.4.

   Example: The open parking structure may be of Type IIB construction and the offices located above the open parking structure may be of Type IB construction.

3. Regardless of the construction types being used, all structural members, including main bracing in the open parking structure for the stability of the upper occupancy, must be rated in accordance with the most restrictive fire-resistance-rating requirement in accordance with Table 601, which would be that for Type IB construction.

   Example: Consider a building where the upper occupancy is of Type IB protected construction, and the open parking structure is of Type IIB unprotected construction. In accordance with Table 601, all load-bearing walls and structural frames, including columns and girders necessary to support the upper occupancy, must have at least a 2-hour fire-resistance rating, in accordance with the requirements of Type IB construction. This typically applies to the columns and bracing in the entire structure, beams supporting the floor separating the upper occupancy from the open parking structure and any transfer beams located in the open parking structure. The story of the open parking structure and any members supporting these stories, however, are permitted to have a zero fire-resistance rating in accordance with the requirements for Type IIB construction.

4. Means of egress facilities within and from the upper occupancy are to conform to Chapter 10. In addition, the egress facilities from the upper occupancy must be separated from the parking area by fire-resistance-rated wall assemblies of at least 2 hours, by fire barriers meeting the requirements of Section 707 or horizontal assemblies meeting Section 711. These egress

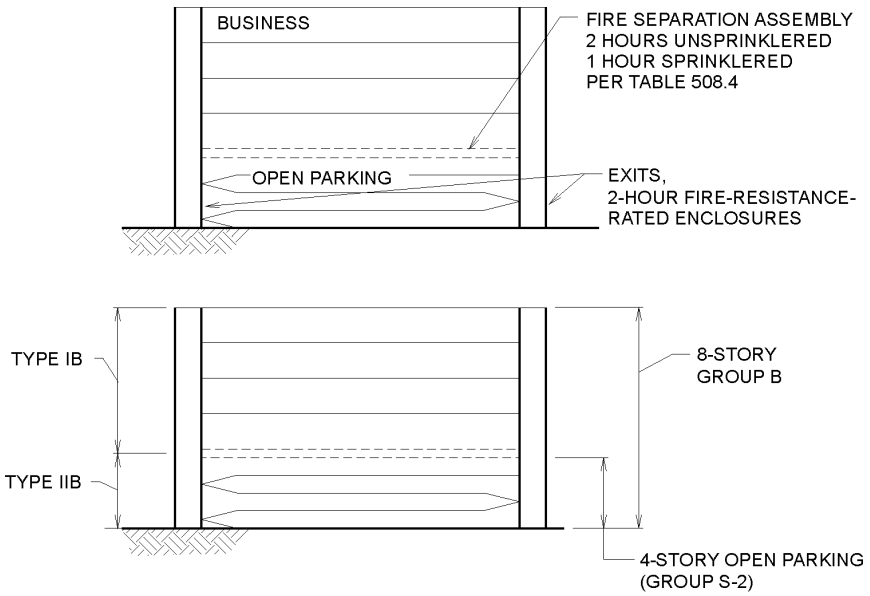

Figure 510.7
OPEN PARKING BELOW OTHER GROUPS

INTERNATIONAL CODE COUNCIL®
Copyright © 2015 ICC. ALL RIGHTS RESERVED. Accessed by David Dammon on Jun 21, 2017 12:30:52 PM pursuant to License Agreement with ICC. No further reproduction or distribution authorized. ANY UNAUTHORIZED REPRODUCTION OR DISTRIBUTION IS A VIOLATION OF THE FEDERAL COPYRIGHT ACT AND THE LICENSE AGREEMENT, AND SUBJECT TO CIVIL AND CRIMINAL PENALTIES THEREUNDER.

facilities are required to maintain the 2-hour protection for their full height and must be continuous to the level of exit discharge. The fire-resistance rating reduction of interior exit stairways for structures less than four stories in height (see Section 1023.2) is not applicable to an exit passing through the open parking structure in accordance with this section. Door openings to the interior exit stairway must have self-closing doors that comply with Section 716, with a fire protection rating of $1^1/_2$ hours in accordance with Table 716.5.

5. Means of egress facilities within and from the open parking structure are to conform to Section 406.5.7, which also references Chapter 10.

510.8 Group B or M buildings with Group S-2 open parking garage above. Group B or M occupancies located below a Group S-2 open parking garage of a lesser type of construction shall be considered as a separate and distinct building from the Group S-2 open parking garage for the purpose of determining the type of construction where all of the following conditions are met:

1. The buildings are separated with a *horizontal assembly* having a *fire-resistance rating* of not less than 2 hours.
2. The occupancies in the building below the *horizontal assembly* are limited to Groups B and M.
3. The occupancy above the *horizontal assembly* is limited to a Group S-2 *open parking garage*.
4. The building below the horizontal assembly is of Type IA construction.

   Exception: The building below the *horizontal assembly* shall be permitted to be of Type IB or II construction, but not less than the type of construction required for the Group S-2 *open parking garage* above, where the building below is not greater than one story in height above grade plane.
5. The height and area of the building below the *horizontal assembly* does not exceed the limits set forth in Section 503.
6. The height and area of the Group S-2 *open parking garage* does not exceed the limits set forth in Section 406.5. The height, in both feet and *stories*, of the Group S-2 *open parking garage* shall be measured from *grade plane* and shall include the building below the *horizontal assembly*.
7. *Exits* serving the Group S-2 *open parking garage* discharge directly to a street or *public way* and are separated from the building below the *horizontal assembly* by 2-hour *fire barriers* constructed in accordance with Section 707 or 2-hour *horizontal assemblies* constructed in accordance with Section 711, or both.

❖ This section addresses the inverse of the other circumstances in Section 510: the parking, which must be an open parking garage, is located above the other groups, in this case, Group B or M. This is a common type of construction in metropolitan areas. The parking garage is an open parking structure, with developers using the street level part of the building as an opportunity to provide retail space or other commercial space in a downtown application. The conditions under which this configuration of parking garage and Group B or M uses is similar to conditions for other circumstances is found in Section 510.

More specifically, there are seven criteria that must be met.

1. Similar to Item 1 of Section 510.2, a horizontal separation is required to essentially divide the buildings into separate buildings. Again it is like having a horizontal fire wall. The separation is only required to be 2 hours, which is less than the 3 hours required by Item 1 of Section 510.2.
2. The occupancies below the separation are limited to Groups B and M.
3. The occupancy above the horizontal assembly is limited to a Group S-2 open parking garage.
4. The building below is required to be of Type IA construction. The exception allows for Type IB or II construction if the building below is only one story; provided the construction type must always be at least that of the Group S-2 above.
5. The Group B and M occupancies must comply with the height (measured in feet and stories) and area requirements of Section 503. As written this would allow increases in area and height as appropriate.
6. The height (measured in tiers) and area of the Group S-2 occupancy shall not exceed that of Section 406.5. In addition, the overall height (measured feet and stories) is further restricted by the fact that the occupancies below the horizontal assembly must be included.
7. Lastly, similar to Section 510.7.1, the exits from the Group S-2 must be protected within 2-hour fire barriers or horizontal assemblies and extend directly to a street or public way.

See Commentary Figure 510.8 for an application of this section. See also Section 510.9 for where there are multiple buildings above the horizontal separation.

510.9 Multiple buildings above a horizontal assembly. Where two or more buildings are provided above the *horizontal assembly* separating a Group S-2 parking garage or building below from the buildings above in accordance with the special provisions in Section 510.2, 510.3 or 510.8, the buildings above the *horizontal assembly* shall be regarded as separate and distinct buildings from each other and shall comply with all other provisions of this code as applicable to each separate and distinct building.

❖ A very common practice when applying alternatives such as those found in Sections 510.2 and 510.3 is to have multiple buildings above the horizontal assem-

INTERNATIONAL CODE COUNCIL®
Copyright © 2015 ICC. ALL RIGHTS RESERVED. Accessed by David Dammon on Jun 21, 2017 12:30:52 PM pursuant to License Agreement with ICC. No further reproduction or distribution authorized. ANY UNAUTHORIZED REPRODUCTION OR DISTRIBUTION IS A VIOLATION OF THE FEDERAL COPYRIGHT ACT AND THE LICENSE AGREEMENT, AND SUBJECT TO CIVIL AND CRIMINAL PENALTIES THEREUNDER.

blies. Specifically, the concept in Section 510.2 is often called a "pedestal" building. In other words, the building below and including the horizontal assembly creates a "pedestal" on top of which many buildings, which are considered separate from one another, can be located. This section is simply clarifying that the multiple buildings located on top of the pedestal are considered separate from one another. This can be realized by there being multiple and distinct structures separated by yards or courts between different structures, or can be the result of the use of fire walls dividing a single structure into multiple buildings.

Similar to distinct buildings sitting on the ground, multiple buildings above the horizontal assemblies can be of different construction types from the pedestal building and of different construction types from each other (see Commentary Figure 510.9). This allowance is also applicable where Section 510.8 is utilized.

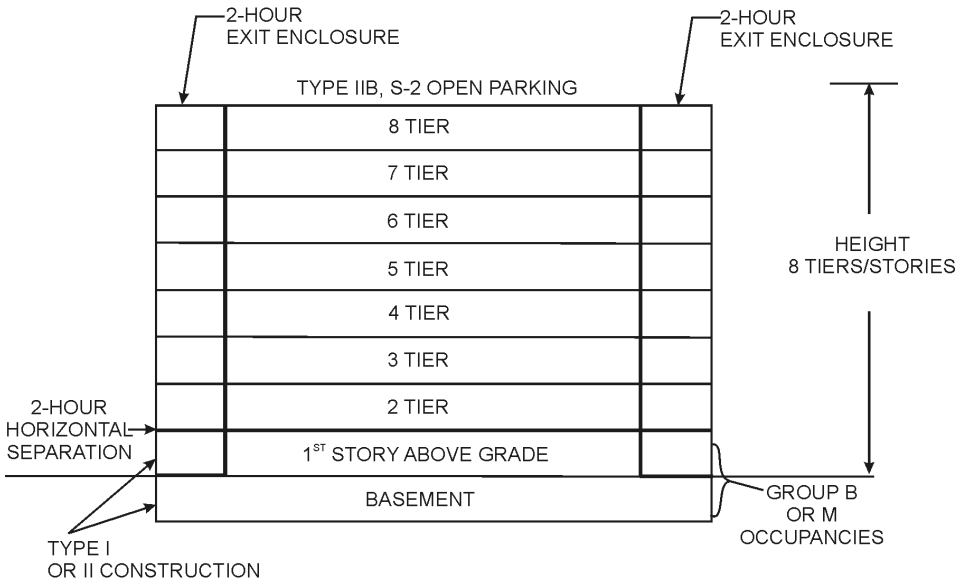

Figure 510.8
EXAMPLE OF S-2 PARKING OVER GROUP B AND M OCCUPANCIES

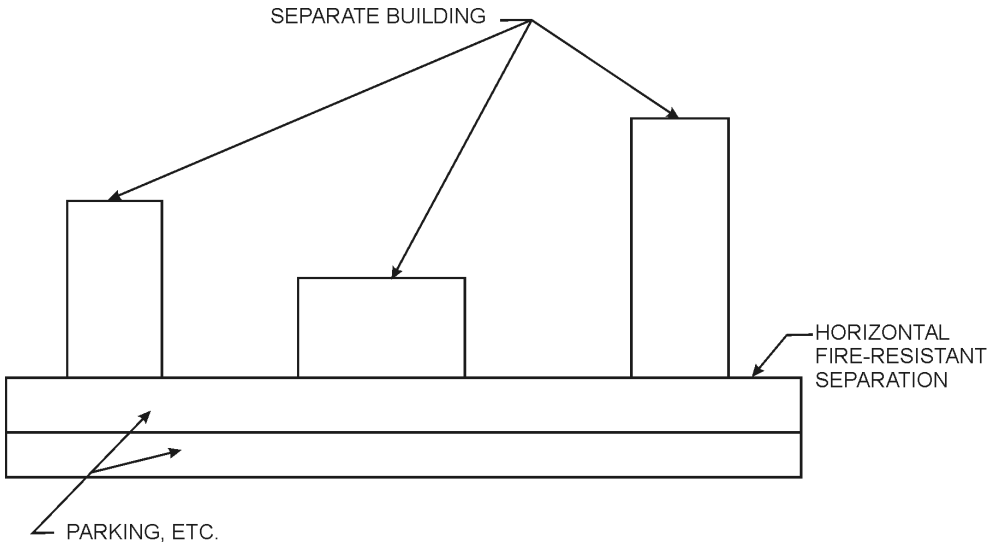

Figure 510.9
MULTIPLE SEPARATE BUILDINGS

INTERNATIONAL CODE COUNCIL®
Copyright © 2015 ICC. ALL RIGHTS RESERVED. Accessed by David Dammon on Jun 21, 2017 12:30:52 PM pursuant to License Agreement with ICC. No further reproduction or distribution authorized. ANY UNAUTHORIZED REPRODUCTION OR DISTRIBUTION IS A VIOLATION OF THE FEDERAL COPYRIGHT ACT AND THE LICENSE AGREEMENT, AND SUBJECT TO CIVIL AND CRIMINAL PENALTIES THEREUNDER.

INTERNATIONAL CODE COUNCIL®
Copyright © 2015 ICC. ALL RIGHTS RESERVED. Accessed by David Dammon on Jun 21, 2017 12:30:52 PM pursuant to License Agreement with ICC. No further reproduction or distribution authorized. ANY UNAUTHORIZED REPRODUCTION OR DISTRIBUTION IS A VIOLATION OF THE FEDERAL COPYRIGHT ACT AND THE LICENSE AGREEMENT, AND SUBJECT TO CIVIL AND CRIMINAL PENALTIES THEREUNDER.

Chapter 6:
Types of Construction

General Comments

Chapter 6 contains the requirements to classify buildings into one of five types of construction. Tables 601 and 602 provide the minimum hourly fire-resistance ratings for the structural elements based on the type of construction of the building and fire separation distance. Section 602 describes each construction type in detail. Section 603 describes the permitted use of combustible materials in buildings of noncombustible construction.

Correct classification of a building by its type of construction is essential. Many code requirements applicable to a building, such as allowable height and area (see Chapter 5), are dependent on its type of construction. If a building is placed in an incorrect construction classification (for example, one that is overly restrictive), its owner may be penalized by increased construction costs. On the other hand, when a building is incorrectly classified in an overly lenient type of construction, it will not be constructed in a manner that takes into account the relative risks associated with its size or function. The provisions of this chapter, coupled with Chapters 3 and 5 and Tables 601 and 602, establish the basis for the "equivalent risk theory" on which the entire code is based.

Purpose

The purpose of classifying buildings or structures by their type of construction is to account for the response or participation that a building's structure will have in a fire condition originating within the building as a result of its occupancy or fuel load.

The code requires every building to be classified as one of five possible types of construction: Type I, II, III, IV or V. Each type of construction denotes the kinds of materials that are permitted to be used [i.e., noncombustible steel, concrete, masonry, combustible (wood, plastic) or heavy timber (HT)], and the minimum fire-resistance ratings that are associated with the structural elements in a building having that classification (i.e., 0, 1, $1^1/_2$, 2 or 3 hours). Type I and II construction consists of building elements that are noncombustible. Buildings of Type III construction have noncombustible exterior walls and combustible or noncombustible interior elements. Type IV construction identifies those structures with noncombustible exterior walls and heavy-timber interior elements. Type V buildings are permitted to have building elements that are either combustible or noncombustible, or a combination of both. Types I, II, III and V construction are further subdivided into two categories (IA and IB, IIA and IIB, IIIA and IIIB, VA and VB) that identify differences in the degree of fire resistance required.

SECTION 601
GENERAL

601.1 Scope. The provisions of this chapter shall control the classification of buildings as to type of construction.

❖ This section requires that all buildings be assigned a type of construction classification as indicated in the "General Comments" above.

TABLE 601. See page 6-2.

❖ Table 601 has three components: the top rows list the five general types of construction and their subclassifications; the left column lists the various building elements that are regulated by the table; and each cell in the table contains the minimum required fire-resistance rating, in hours, for the various elements based on the required type of construction of the building. "Building element" is defined in Section 202 as a fundamental component of building construction which needs to be constructed of the materials and have the fire-resistance rating specified in this chapter in order for a building to be classified in a type of construction. Notes a through f apply as specifically referenced in the table.

Types I, II, III and V construction are further subdivided into two categories (A and B). Type A and B construction are not defined in the code. The designations simply refer to the hourly fire-resistance rating required for the structural elements. A Type A designation will have a higher fire-resistance rating for the structural element than a Type B designation. In other than Type I construction, Types A and B are often referred to as protected and unprotected construction, respectively. Please note this terminology does not refer to whether the building is protected by an installed automatic sprinkler system.

The following describes the items in the left column of the table, titled "Building Element."

Row 1: *Primary structural frame.* This category includes the structural (load-bearing) components of the building frame. Definitions of "Primary structural frame" and "Secondary members" are

INTERNATIONAL CODE COUNCIL®
Copyright © 2015 ICC. ALL RIGHTS RESERVED. Accessed by David Dammon on Jun 21, 2017 12:30:52 PM pursuant to License Agreement with ICC. No further reproduction or distribution authorized. ANY UNAUTHORIZED REPRODUCTION OR DISTRIBUTION IS A VIOLATION OF THE FEDERAL COPYRIGHT ACT AND THE LICENSE AGREEMENT, AND SUBJECT TO CIVIL AND CRIMINAL PENALTIES THEREUNDER.

found in Section 202. Any structural item that provides direct connections to columns and bracing members that are designed to carry a gravity load is considered part of the structural frame. To delay vertical (i.e., gravity) load-carrying collapse of a building due to fire exposure for a theoretical amount of time, the components that make up the primary structural frame are required to maintain a minimum degree of fire resistance. The components defined as part of the primary structural frame, with the exception of Type IV construction, must also comply with Section 704 [see the commentary to Section 602.4 for more information about Type IV (Heavy timber) construction]. Secondary members (e.g., floor or roof panels without a connection to the column) are not considered part of the structural frame (see Rows 5 and 6 of the table).

Row 2: *Bearing walls—exterior and interior.* Exterior bearing walls are the outermost walls that enclose the structure and support any structural load other than their own weight. Their required fire-resistance rating is established by the higher of two fire-resistance ratings. The first component of determining the fire-resistance rating is based on the type of construction of the building (Table 601). The second component of determining the fire-resistance rating is based on the exterior walls' fire separation distance (Table 602). Whichever of the two tables requires the higher fire-resistance rating will dictate the minimum required fire-resistance rating of the exterior wall.

In addition to Tables 601 and 602, exterior walls must comply with Section 705 and Chapter 14. In addition, Section 706.5.1 has fire-resistance-rating requirements for exterior walls on each side of the intersection of fire wall.

There are also several requirements related to exterior walls mentioned in Chapter 10. Section 1009.7 has fire-resistance-rating requirements for exterior walls adjacent to exterior areas for assisted rescue. Section 1023.7 has specific fire-resistance-rating requirements for exterior walls adjacent to an interior exit stairway. Section 1027.6 has fire-resistance-rating requirements for exterior walls adjacent to exterior exit stairways. Section 1028.4.2 has fire-resistance-rating requirements for exterior walls adjacent to an egress court.

Additionally, this category includes the structural (load-bearing) interior walls of a building. To delay vertical load-carrying collapse of a building due to fire exposure for a predetermined amount of time, the structural partitions are required to maintain a minimum degree of fire resistance. Primary structural frame elements supporting such walls must comply with Table 601, as well as have at least the same degree of fire resistance as the supported wall. See the commentary to Section 602.1 regarding opening and penetration protection of bearing walls.

Row 3: *Nonbearing walls and partitions—exterior.* This category includes all exterior walls that only support their own weight. The minimum required fire-resistance rating, unlike for load-bearing walls, is based solely on the exterior wall's fire separation distance (Table 602). Where nonbearing exterior walls occur in buildings of

TABLE 601
FIRE-RESISTANCE RATING REQUIREMENTS FOR BUILDING ELEMENTS (HOURS)

BUILDING ELEMENT	TYPE I		TYPE II		TYPE III		TYPE IV	TYPE V	
	A	B	A	B	A	B	HT	A	B
Primary structural frame[f] (see Section 202)	3[a]	2[a]	1	0	1	0	HT	1	0
Bearing walls Exterior[e, f] Interior	 3 3[a]	 2 2[a]	 1 1	 0 0	 2 1	 2 0	 2 1/HT	 1 1	 0 0
Nonbearing walls and partitions Exterior	See Table 602								
Nonbearing walls and partitions Interior[d]	0	0	0	0	0	0	See Section 602.4.6	0	0
Floor construction and associated secondary members (see Section 202)	2	2	1	0	1	0	HT	1	0
Roof construction and associated secondary members (see Section 202)	$1^{1}/_{2}$[b]	1[b,c]	1[b,c]	0[c]	1[b,c]	0	HT	1[b,c]	0

For SI: 1 foot = 304.8 mm.

a. Roof supports: Fire-resistance ratings of primary structural frame and bearing walls are permitted to be reduced by 1 hour where supporting a roof only.

b. Except in Group F-1, H, M and S-1 occupancies, fire protection of structural members shall not be required, including protection of roof framing and decking where every part of the roof construction is 20 feet or more above any floor immediately below. Fire-retardant-treated wood members shall be allowed to be used for such unprotected members.

c. In all occupancies, heavy timber shall be allowed where a 1-hour or less fire-resistance rating is required.

d. Not less than the fire-resistance rating required by other sections of this code.

e. Not less than the fire-resistance rating based on fire separation distance (see Table 602).

f. Not less than the fire-resistance rating as referenced in Section 704.10.

INTERNATIONAL CODE COUNCIL®
Copyright © 2015 ICC. ALL RIGHTS RESERVED. Accessed by David Dammon on Jun 21, 2017 12:30:52 PM pursuant to License Agreement with ICC. No further reproduction or distribution authorized. ANY UNAUTHORIZED REPRODUCTION OR DISTRIBUTION IS A VIOLATION OF THE FEDERAL COPYRIGHT ACT AND THE LICENSE AGREEMENT, AND SUBJECT TO CIVIL AND CRIMINAL PENALTIES THEREUNDER.

Type I or II construction, the walls can be constructed of fire-retardant-treated wood (FRTW) if no rating is required (see Section 603.1).

Row 4: *Nonbearing walls and partitions—interior.* This category includes all interior nonload-bearing walls and partitions (for example, the common wall separating two offices in the same suite). These walls need only comply with all of the material requirements associated with their type of construction classification and are not required to have a fire-resistance rating. Where they occur in buildings of Type I or II construction and are to be constructed of wood, the wood must be fire-retardant treated as indicated in Section 603.1. Nonload-bearing interior walls may be required to be fire-resistance rated when they also serve another purpose. Examples include interior walls also serving to separate mixed occupancies, dwelling units, sleeping units and incidental uses, as well as corridor walls required to have a fire-resistance rating.

Row 5: *Floor construction and associated secondary members.* Floor construction provides a natural fire compartment in a building by means of a horizontal barrier that retards the vertical passage of fire from floor to floor. In order to accomplish this, floor assemblies, including the beams and secondary structural members supporting the floor, must comply with Table 601 and Section 711. Ceilings are included if they are part of the tested assembly. A definition of "Secondary member" is provided in Section 202. Secondary members are not considered part of the primary structural frame.

Row 6: *Roof construction and associated secondary members.* Proper roof construction is necessary to prevent collapse from fire as well as potential impingement on adjacent buildings. Roof construction must comply with Table 601 and Section 711 (see the definition of "Secondary member" in Section 202). Additionally, when a portion of the roof construction is less than 20 feet (6096 mm) above the floor immediately below, the entire structural member must be protected to meet the minimum fire-resistance-rating requirements. In Commentary Figure 601(2), the roof construction is assumed to be one structural member. While a majority of the roof construction is greater than 20 feet (6096 mm) above the floor below, a portion of the roof construction is only 15 feet (4572 mm) above the mezzanine. As such, the entire length of the structural member, or in this case, the entire roof, must be rated for not less than 1 hour. The fire-resistance rating is not permitted to terminate at the portion where the roof is 20 feet (6096 mm) above the floor below unless the structural member ends at that point. The fire-resistance rating of a column must also be continuous for the full height of the column and not reduced or eliminated at a height of 20 feet (6096 mm) and above (see Note b). It should be noted that those members of the roof construction that are considered as primary structural frame members are not regulated by Row 5, but rather by Row 1.

Note a permits the fire-resistance ratings of primary structural frame and interior load-bearing walls in buildings of Type IA and IB construction to be reduced by 1 hour if the members are supporting only the roof.

Note b applies to the construction of the roof and related secondary members in all types of construction. It allows these elements to be of unprotected construction when all parts of the roof construction are more than 20 feet (6096 mm)

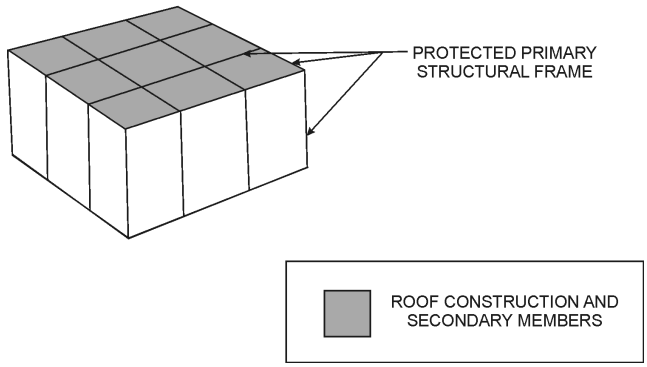

Figure 601(1)
PROTECTION OF SECONDARY MEMBERS

INTERNATIONAL CODE COUNCIL®
Copyright © 2015 ICC. ALL RIGHTS RESERVED. Accessed by David Dammon on Jun 21, 2017 12:30:52 PM pursuant to License Agreement with ICC. No further reproduction or distribution authorized. ANY UNAUTHORIZED REPRODUCTION OR DISTRIBUTION IS A VIOLATION OF THE FEDERAL COPYRIGHT ACT AND THE LICENSE AGREEMENT, AND SUBJECT TO CIVIL AND CRIMINAL PENALTIES THEREUNDER.

above any floor below. This allowance only applies to the secondary members of the roof structure and not to primary structural frame located within the roof or at the roof level [see Commentary Figure 601(1)]. This alternative is applicable for all occupancy classifications except Groups F-1, H, M and S-1. Commentary Figure 601(2) shows an example where a mezzanine reduces the clearance to the roof to less than 20 feet (6096 mm) for a portion of the total roof. Designs similar to Commentary Figure 601(2) do not comply with Note b, and elimination of fire resistance is not allowed for any portion of the roof.

In buildings of Type I and II construction, fire-retardant-treated wood (FRTW) may be utilized for unprotected roof members. Please note that FRTW is not required in the roof of buildings of Type IIIA or VA construction since combustible materials are already permitted by Sections 602.3 and 602.5, respectively.

Note c permits heavy timber (HT) construction to be utilized in the roof construction as an alternative to having a fire-resistance rating of 1 hour or less. Note that HT cannot be used in Type IA construction since the roof is required to have a rating greater than 1 hour. The intent of the note is to allow the substitution of HT for 1-hour construction in roof construction; it is not intended to say that HT is 1-hour-rated construction.

Note d is applicable only to interior nonload-bearing walls. While nonbearing interior walls are not required to have a rating in accordance with Table 601, other sections of the code may require a rating (e.g., corridor walls, dwelling unit separation, sleeping unit separation). If other sections of the code require a rating, this would override the requirements of Table 601 stating no rating is required. In addition, interior nonbearing walls in buildings of Type IV (Heavy Timber, HT) construction shall be of solid wood construction formed by not less than two layers of 1-inch (25 mm) matched boards or laminated construction 4 inches (102 mm) thick, or of 1-hour-rated construction (see Section 602.4.6).

Note e is a reminder that exterior load-bearing walls must also comply with the fire-resistance rating listed in Table 602 based on the fire separation distance. Exterior load-bearing walls must satisfy the higher of the fire-resistance ratings required by these two tables.

Note f is a reminder of the provisions of Section 704.10 that load-bearing structural members located within the exterior walls or “outside” of the structure need to comply with the highest of three fire-resistance ratings: the requirement for the primary structural frame; the requirement for exterior bearing walls; or the requirement from Table 602 based on the fire separation distance of the exterior wall. In Type III and IV construction, the rating for an exterior load-bearing wall is higher than that required for a primary structural frame alone.

TABLE 602. See page 6-5.

❖ Table 602 establishes the minimum fire-resistance ratings for both load-bearing and nonload-bearing exterior walls based on fire separation distance as defined in Section 202. The required ratings are based on the fuel load, probable fire intensity of the various occupancy classifications and the physical separation between the exterior wall and the line used to determine fire separation distance as established in Section 202 [see Commentary Figure 602(1)]. In using the table, the occupancy classifica-

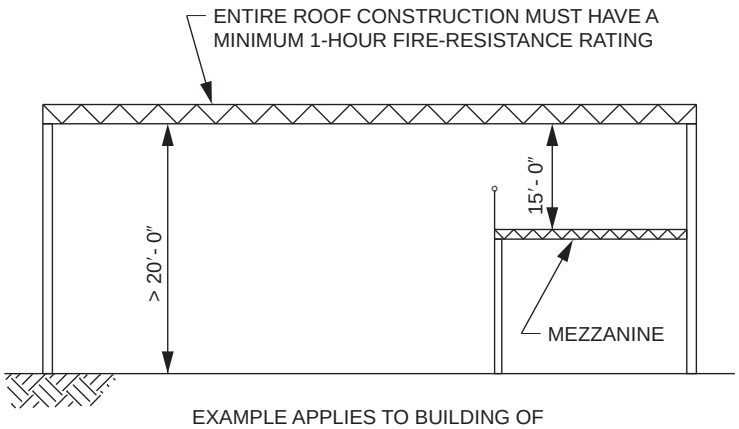

For SI: 1 inch = 25.4 mm, 1 foot = 304.8 mm.

Figure 601(2)
PROTECTION OF ROOF CONSTRUCTION

INTERNATIONAL CODE COUNCIL®
Copyright © 2015 ICC. ALL RIGHTS RESERVED. Accessed by David Dammon on Jun 21, 2017 12:30:52 PM pursuant to License Agreement with ICC. No further reproduction or distribution authorized. ANY UNAUTHORIZED REPRODUCTION OR DISTRIBUTION IS A VIOLATION OF THE FEDERAL COPYRIGHT ACT AND THE LICENSE AGREEMENT, AND SUBJECT TO CIVIL AND CRIMINAL PENALTIES THEREUNDER.

tion of the building and the fire separation distance of the walls must be determined. Once determined, the required fire-resistance rating is obtained by referring to the appropriate row and column corresponding to these parameters.

Please note that where there is more than one building on a lot, an imaginary lot line must be assumed between the buildings in accordance with Section 705.3. Commentary Figure 602(1) shows an assumed line halfway between the two buildings. The imaginary lot line can be at any location between the structures. Wherever the line is established, fire separation distance for each wall must be measured from the line, and wall and opening protection based on the distance to the assumed location.

Note a indicates that the fire-resistance-rating

TABLE 602
FIRE-RESISTANCE RATING REQUIREMENTS FOR EXTERIOR WALLS BASED ON FIRE SEPARATION DISTANCE[a, d, g]

FIRE SEPARATION DISTANCE = X (feet)	TYPE OF CONSTRUCTION	OCCUPANCY GROUP H[e]	OCCUPANCY GROUP F-1, M, S-1[f]	OCCUPANCY GROUP A, B, E, F-2, I, R, S-2, U[h]
X < 5[b]	All	3	2	1
5 ≤ X < 10	IA Others	3 2	2 1	1 1
10 ≤ X < 30	IA, IB IIB, VB Others	2 1 1	1 0 1	1[c] 0 1[c]
X ≥ 30	All	0	0	0

For SI: 1 foot = 304.8 mm.

a. Load-bearing exterior walls shall also comply with the fire-resistance rating requirements of Table 601.
b. See Section 706.1.1 for party walls.
c. Open parking garages complying with Section 406 shall not be required to have a fire-resistance rating.
d. The fire-resistance rating of an exterior wall is determined based upon the fire separation distance of the exterior wall and the story in which the wall is located.
e. For special requirements for Group H occupancies, see Section 415.6.
f. For special requirements for Group S aircraft hangars, see Section 412.4.1.
g. Where Table 705.8 permits nonbearing exterior walls with unlimited area of unprotected openings, the required fire-resistance rating for the exterior walls is 0 hours.
h. For a building containing only a Group U occupancy private garage or carport, the exterior wall shall not be required to have a fire-resistance rating where the fire separation distance is 5 feet or more.

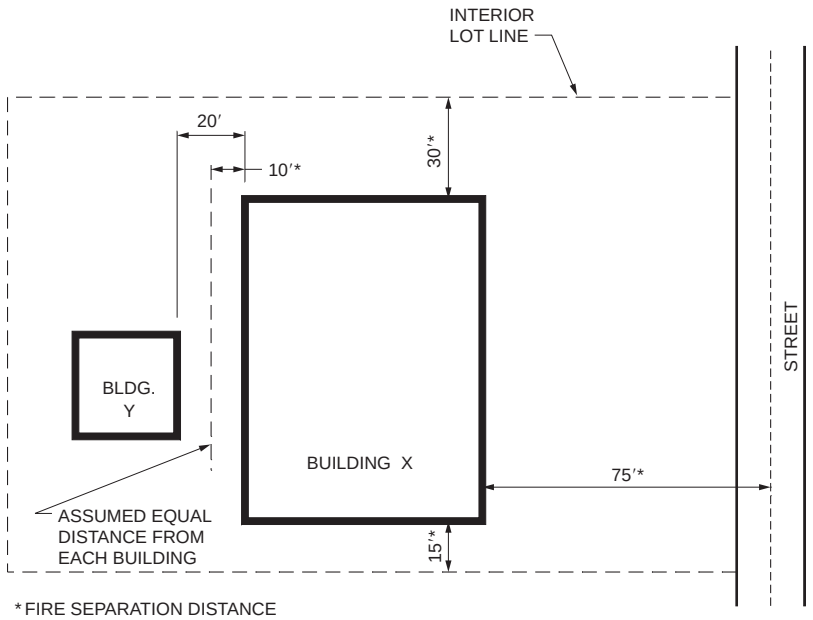

For SI: 1 foot = 304.8 mm.

Figure 602(1)
DETERMINING FIRE SEPARATION DISTANCE

INTERNATIONAL CODE COUNCIL®
Copyright © 2015 ICC. ALL RIGHTS RESERVED. Accessed by David Dammon on Jun 21, 2017 12:30:52 PM pursuant to License Agreement with ICC. No further reproduction or distribution authorized. ANY UNAUTHORIZED REPRODUCTION OR DISTRIBUTION IS A VIOLATION OF THE FEDERAL COPYRIGHT ACT AND THE LICENSE AGREEMENT, AND SUBJECT TO CIVIL AND CRIMINAL PENALTIES THEREUNDER.

requirements of Table 601, which are based on construction type, also apply. Exterior load-bearing walls must conform to the higher of the fire-resistance ratings specified in Tables 601 and 602. Exterior nonload-bearing walls need only comply with Table 602.

Note b requires walls that are located on lot lines between adjacent buildings (i.e., zero fire separation distance) to be constructed as fire walls and be rated in accordance with Table 706.4.

Note c permits the exterior walls of an open parking garage to have no fire-resistance rating where the fire separation distance is at least 10 feet (3048 mm). Table 705.8 allows the openings to be unlimited for open parking garages at 10 feet (3048 mm) of fire separation distance. If the amount of openings is no longer limited, then the entire wall could be removed.

Note d clarifies that the required minimum fire-resistance rating of each exterior wall in each story of a building must be determined separately. Should a multistory building be configured such that the fire separation distance of each story is different, the required fire-resistance ratings associated with each of the exterior walls in each of those stories is established separately [see Commentary Figure 602(2)].

Note e provides a reference for Group H occupancies to Section 415.6 where there are specific standards for fire separation distances and wall and opening protection that supersede those of Table 602.

Note f provides a reference to Section 412.4.1 regulating aircraft hangars where there are specific standards for fire separation distances that supersede Table 602.

Note g allows for an elimination of the required wall protection for those exterior walls permitted to have unlimited openings in accordance with Table 705.8. For buildings protected by an automatic sprinkler system, Table 705.8 allows unlimited openings in walls with a fire separation distance of 20 feet (6096 mm) or more. This note is limited to the fire-resistance rating requirements of Table 602, and does not eliminate requirements established in Table 601 for load-bearing walls. Wall and opening protection for Group H-1, H-2 and H-3 occupancies is established by Section 415.6.

Note h addresses Group U occupancy garages and carports. Such structures are usually small and are either stand-alone or are attached to smaller apartment buildings or commercial buildings. This note would not apply to a Group U structure not used for the parking and storage of motor vehicles. Other Group U occupancies would have a minimum 1-hour fire-resistance rating for a fire separation distance of less than 10 feet (3048 mm).

SECTION 602
CONSTRUCTION CLASSIFICATION

602.1 General. Buildings and structures erected or to be erected, altered or extended in height or area shall be classified in one of the five construction types defined in Sections 602.2 through 602.5. The building elements shall have a *fire-resistance rating* not less than that specified in Table 601 and exterior walls shall have a *fire-resistance rating* not less than that specified in Table 602. Where required to have a *fire-resistance rating* by Table 601, building elements shall comply with the applicable provisions of Section 703.2. The protection of openings, ducts and air transfer openings in building elements shall not be required unless required by other provisions of this code.

❖ This section requires that each building or structure be put into one of five possible construction classifications: Type I, II, III, IV or V. Structural members are required to have a fire-resistance rating in accordance with Table 601. Additionally, the exterior walls of the structure must satisfy the requirements in Table 602, which bases the fire-resistance rating on the fire separation distance.

The use of multiple construction classifications in a single building is very limited and can only be done when specifically called out in the code. An example

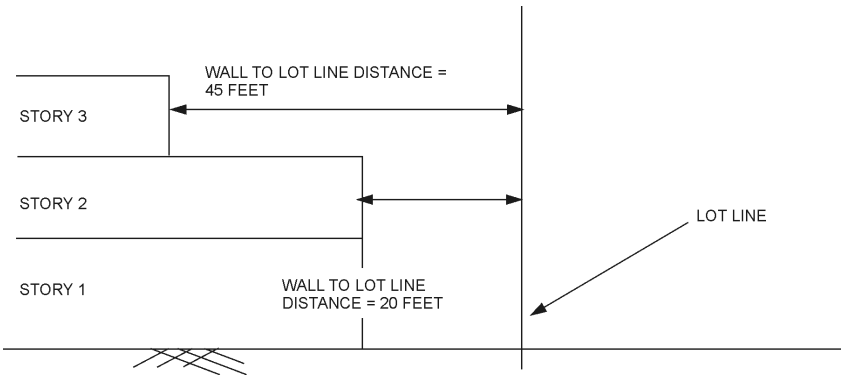

For SI: 1 foot = 304.8 mm.

Figure 602(2)
DETERMINING FIRE SEPARATION DISTANCE FOR MULTISTORY BUILDINGS

INTERNATIONAL CODE COUNCIL®
Copyright © 2015 ICC. ALL RIGHTS RESERVED. Accessed by David Dammon on Jun 21, 2017 12:30:52 PM pursuant to License Agreement with ICC. No further reproduction or distribution authorized. ANY UNAUTHORIZED REPRODUCTION OR DISTRIBUTION IS A VIOLATION OF THE FEDERAL COPYRIGHT ACT AND THE LICENSE AGREEMENT, AND SUBJECT TO CIVIL AND CRIMINAL PENALTIES THEREUNDER.

of combining types of construction is an office building of Type IIA construction located above an open parking structure of Type IIB construction, as described in Sections 510.7 and 510.7.1. Several other special provisions found in Section 510 also permit a building of multiple construction classifications.

A more common example is where a single structure is divided into two parts by using a fire wall, resulting in two separate buildings or structures—each of which may be of a different type of construction. Where a structure contains more than one building (for example, separation by a fire wall), each building is to be individually assigned a type of construction.

Also, a building may have elements that comply with the requirements of more than one type of construction, in which case the building as a whole must be assigned the less restrictive type of construction. The designer may have intended, however, to comply with a higher type of construction, in which case those elements not in compliance with the intended type of construction are to be brought into compliance. The selection of a construction type is the prerogative of the permit applicant. The applicant should have the designer indicate on the submitted construction documents which construction type has been selected. This will expedite the compliance review by the plans examiner.

Section 602.1 applies to both new construction and additions. The provisions in Section 503 on general height and area limitations, Chapter 7 on fire and smoke protection features and construction, and other applicable portions of the code depend on the requirements of this section. Where Table 601 requires a building element to meet a fire-resistance rating, that rating is determined based on the criteria in Section 703. Building elements required to have a fire-resistance rating by Table 601 do not necessarily need opening protectives or dampers for penetrations through these elements. Opening protectives or dampers are only required for building elements listed in Table 601 that are also a specific type of wall or horizontal assembly that is required by other criteria in the code to have protected openings.

Where Table 601 requires a building element to meet a fire-resistance rating, that rating is determined based on the criteria in Section 703. Although a building element is required to have fire resistance by Table 601 this does not mean that the required openings in these building elements or duct penetrations through these elements have to be protected. However, a building element listed in Table 601 may also be a specific type of wall or horizontal assembly that is required by other criteria in the code to have protected openings. For example, an interior bearing wall inside a Type IIA building is required to have a fire-resistance rating of not less than 1 hour. However, the openings in that wall need not be protected unless that bearing wall is also serving another purpose. This wall could also be part of the walls establishing a control area on the second story. In accordance with Section 414.2.2, such a wall would also have to be a 1-hour-rated fire barrier, and in accordance with Table 716.5, openings in this 1-hour-rated fire barrier would need to have 45-minute-rated opening protection. It is essential to check the provisions of Chapter 7 to determine where building elements are required, or not required, to have protected openings, transfer openings, ducts, joints and other penetrations.

602.1.1 Minimum requirements. A building or portion thereof shall not be required to conform to the details of a type of construction higher than that type which meets the minimum requirements based on occupancy even though certain features of such a building actually conform to a higher type of construction.

❖ These requirements permit design flexibility by allowing various building materials and components to be used. A building must, as a minimum, meet all of the requirements of a given type of construction to be classified as such, even though portions of that building meet the criteria of a higher construction type (e.g., greater fire-resistance ratings). This is consistent with the concept that the code is a minimum requirement. For example, a building classified as Type III construction is not prohibited from having construction that is superior, but it could not be reclassified into a higher type of construction unless it met all of the requirements for that construction type. In a normal situation, the design professional has identified the construction classification on the drawings. When this assignment has not been made, the building official is placed in a position of verifying the designer's intent and selecting the least-restrictive type that will meet all of the code requirements.

602.2 Types I and II. Types I and II construction are those types of construction in which the building elements listed in Table 601 are of noncombustible materials, except as permitted in Section 603 and elsewhere in this code.

❖ Buildings of Types I and II construction are required to be constructed of noncombustible materials (see Section 703.5) and, therefore, are frequently referred to as "noncombustible construction." All Type I and II structural members have a fire-resistance rating as required by Table 601 and 602. A typical example of a building of Type IA, IB or IIA construction would be a high-rise structure or a very large low-rise structure. These buildings are permitted to be relatively large in height and area due to the fire resistance afforded the structure's components. The structural members of a building of Type IIB construction do not have the same fire resistance as structural members in a building of Type IA, IB or IIA construction. As such, the height and area requirements are not as large for Type IIB construction (see Commentary Figure 602.2 for an example of Type I or II construction).

Types I and II construction are divided into four subclassifications: Types IA, IB, IIA and IIB. The only

INTERNATIONAL CODE COUNCIL®
Copyright © 2015 ICC. ALL RIGHTS RESERVED. Accessed by David Dammon on Jun 21, 2017 12:30:52 PM pursuant to License Agreement with ICC. No further reproduction or distribution authorized. ANY UNAUTHORIZED REPRODUCTION OR DISTRIBUTION IS A VIOLATION OF THE FEDERAL COPYRIGHT ACT AND THE LICENSE AGREEMENT, AND SUBJECT TO CIVIL AND CRIMINAL PENALTIES THEREUNDER.

difference among the four subclassifications is the degree of fire-resistance rating required for similar elements and assemblies. For example, the required rating for structural frame members in Type IA construction is 3 hours, for Type IB it is 2 hours, for Type IIA it is 1 hour, and for Type IIB no rating is required (0 hours). Often, the fire-resistance ratings required by Tables 601 and 602 for structural elements are achieved by "fireproofing" structural members. Fireproofing is typically the process of creating a fire-resistance-rated assembly that incorporates the structural member by encapsulating it, either by boxing it in or by spraying on a coating to achieve the required fire-resistance rating. It should be noted that when a protective covering is used to provide the fire-resistance rating, it must be of noncombustible material, except as indicated in Section 603.1, Item 21.

Fire-retardant-treated wood (FRTW), although combustible, is permitted in limited uses in buildings of Type I and II construction (see Section 603 and Table 601, Note b). While FRTW is permitted in certain applications in buildings of Type I and II construction, it is not assumed to be fire-resistance rated, and generally does not afford any higher fire-resistance rating than untreated wood material.

Other combustible items (as specified in Section 603.1) are also permitted in buildings of Type I or II construction.

602.3 Type III. Type III construction is that type of construction in which the exterior walls are of noncombustible materials and the interior building elements are of any material permitted by this code. *Fire-retardant-treated wood* framing complying with Section 2303.2 shall be permitted within *exterior wall* assemblies of a 2-hour rating or less.

❖ Buildings of Type III construction are typically constructed with both combustible and noncombustible materials. The exterior walls are required to be noncombustible with load-bearing exterior walls required to have a minimum 2-hour fire-resistance rating. Exterior nonloadbearing walls are not required by Table 601 to have a fire-resistance rating, but must comply with the provisions of Table 602. The elements within the perimeter established by the exterior walls (i.e., floors, roofs and walls) are permitted to be of combustible materials. An example of a typical building of Type III construction is a structure having its exterior walls constructed of concrete, masonry or other approved noncombustible materials, but with a wood frame floor, interior wall and roof construction (see Commentary Figure 602.3). The structural members of a building of Type IIIB construction are not

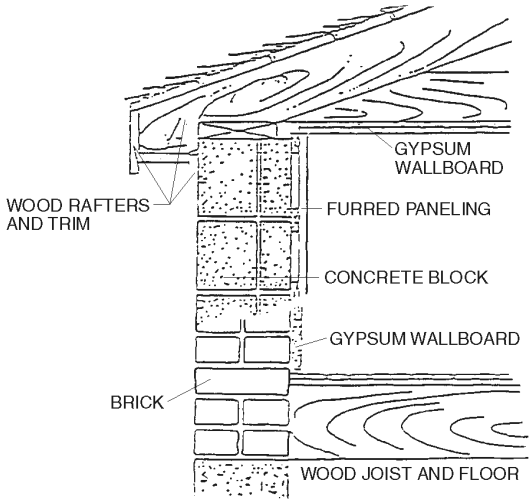

Figure 602.3
EXAMPLE OF TYPE III CONSTRUCTION

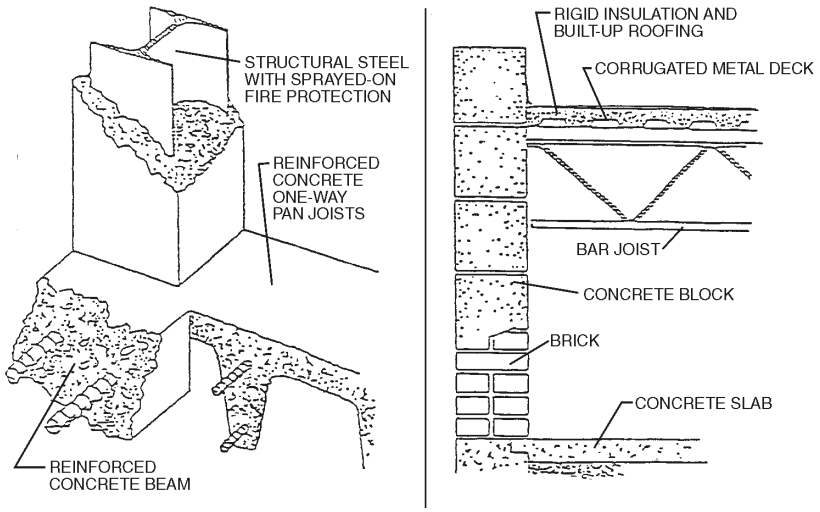

Figure 602.2
EXAMPLES OF TYPE I AND II CONSTRUCTION

INTERNATIONAL CODE COUNCIL®
Copyright © 2015 ICC. ALL RIGHTS RESERVED. Accessed by David Dammon on Jun 21, 2017 12:30:52 PM pursuant to License Agreement with ICC. No further reproduction or distribution authorized. ANY UNAUTHORIZED REPRODUCTION OR DISTRIBUTION IS A VIOLATION OF THE FEDERAL COPYRIGHT ACT AND THE LICENSE AGREEMENT, AND SUBJECT TO CIVIL AND CRIMINAL PENALTIES THEREUNDER.

required to have a fire-resistance rating, with the exception of the exterior load-bearing walls.

Although fire-retardant-treated wood (FRTW) does not meet the specifications of the code as a noncombustible material, it is permitted as a substitute for noncombustible materials for framing within exterior wall assemblies of Type III construction. The exterior surfaces of the walls must be of noncombustible materials. While the exterior walls are permitted to be either nonload-bearing or load-bearing, to apply the allowance for FRTW the required fire-resistance rating of the exterior wall must be no greater than 2 hours. FRTW is required to comply with the provisions in Section 2303.2.

602.4 Type IV. Type IV construction (Heavy Timber, HT) is that type of construction in which the exterior walls are of noncombustible materials and the interior building elements are of solid or laminated wood without concealed spaces. The details of Type IV construction shall comply with the provisions of this section and Section 2304.11. Exterior walls complying with Section 602.4.1 or 602.4.2 shall be permitted. Minimum solid sawn nominal dimensions are required for structures built using Type IV construction (HT). For glued-laminated members and structural composite lumber (SCL) members, the equivalent net finished width and depths corresponding to the minimum nominal width and depths of solid sawn lumber are required as specified in Table 602.4. *Cross-laminated timber* (CLT) dimensions used in this section are actual dimensions.

❖ This section provides the general regulations for Type IV (Heavy Timber, HT) construction. HT construction requires the exterior walls to be constructed of noncombustible materials. The interior elements are required to be constructed of solid or laminated wood without any concealed spaces. All of the combustible structural elements are permitted to be unprotected because of the massive element sizes and the requirement that there not be any concealed spaces, such as soffits, plenums or suspended ceilings. Because HT elements are unprotected, they do not have a fire-resistance rating. Therefore, compliance with Sections 703 and 704 is irrelevant and not required.

Sections 602.4.1 through 602.4.9 provide specific requirements for the connection of structural members and minimum dimensions. An examination of Tables 504.3. 504.4 and 506.2 indicates that the allowable height and area for Type IV construction is greater than that permitted for buildings of Type IIB construction. This distinction is based on testing that demonstrated that HT structural members perform better structurally under fire conditions than comparable unprotected steel structural members because of charring, which insulates the wood mass.

Historically, heavy timber was simply large pieces of sawn lumber from the large trees of North American forests. Over time, as such trees became less common, the industry has created three types of engineered wood products that can be used as "heavy timber": glued-laminated; structural composite lumber (SCL); and cross-laminated timber (CLT).

TABLE 602.4. See below.

❖ Solid sawn wood members, glued-laminated timbers, structural composite lumber and cross-laminated timber are manufactured using different methods and procedures and, therefore, do not have the same dimensions. However, they all have the same inherent fire-resistance capability. The dimensions noted in Sections 602.4.1 through 602.4.9 refer to the nominal dimensions of solid sawn lumber. These dimensions do not directly correlate to the dimensions of glued-laminated timbers, structural composite lumber or cross-laminated timber. Table 602.4 provides a simple procedure to determine the dimensions that are required for glued-laminated timbers and structural composite lumber when designing to meet the requirements of Type IV construction. Cross-laminated timber is not included in the table because the actual dimensions of CLT are to be used. The table provides minimum dimensions for glued-laminated wood members and for structural composite lumber for each set of dimensions specified in the specific provisions of Section 602.4. To use the table, compare the required minimum dimensions for sawn timber found in the two left-hand columns with the dimensions found in the two middle columns for glued-laminated wood members or the two right-hand columns for structural composite lumber. For example, where the code requires a minimum sawn timber of 8 inches by 8 inches (203 mm by 203 mm): for a glued-laminated wood member to be used, it would need to be a minimum of $6^3/_4$ inches wide by $8^1/_4$

TABLE 602.4
WOOD MEMBER SIZE EQUIVALENCIES

MINIMUM NOMINAL SOLID SAWN SIZE		MINIMUM GLUED-LAMINATED NET SIZE		MINIMUM STRUCTURAL COMPOSITE LUMBER NET SIZE	
Width, inch	Depth, inch	Width, inch	Depth, inch	Width, inch	Depth, inch
8	8	$6^3/_4$	$8^1/_4$	7	$7^1/_2$
6	10	5	$10^1/_2$	$5^1/_4$	$9^1/_2$
6	8	5	$8^1/_4$	$5^1/_4$	$7^1/_2$
6	6	5	6	$5^1/_4$	$5^1/_2$
4	6	3	$6^7/_8$	$3^1/_2$	$5^1/_2$

For SI: 1 inch = 25.4 mm.

INTERNATIONAL CODE COUNCIL®
Copyright © 2015 ICC. ALL RIGHTS RESERVED. Accessed by David Dammon on Jun 21, 2017 12:30:52 PM pursuant to License Agreement with ICC. No further reproduction or distribution authorized. ANY UNAUTHORIZED REPRODUCTION OR DISTRIBUTION IS A VIOLATION OF THE FEDERAL COPYRIGHT ACT AND THE LICENSE AGREEMENT, AND SUBJECT TO CIVIL AND CRIMINAL PENALTIES THEREUNDER.

inches deep (171 mm by 210 mm); and for structural composite lumber to be used, it would need to be a minimum of 7 inches wide by $7^1/_2$ inches deep (178 mm by 190 mm).

602.4.1 Fire-retardant-treated wood in exterior walls. *Fire-retardant-treated wood* framing complying with Section 2303.2 shall be permitted within exterior wall assemblies with a 2-hour rating or less.

❖ As with Type III construction, fire-retardant-treated wood (FRTW) is permitted as a substitute for noncombustible materials within exterior wall assemblies of Type IV construction. Except as noted in Section 602.4.9, exterior structural members used externally must be noncombustible. While the exterior walls are permitted to be either nonload-bearing or load-bearing, to apply the allowance for FRTW the required fire-resistance rating of the exterior wall must be no greater than 2 hours. FRTW is required to comply with the provisions of Section 2303.2.

602.4.2 Cross-laminated timber in exterior walls. *Cross-laminated timber* complying with Section 2303.1.4 shall be permitted within exterior wall assemblies with a 2-hour rating or less, provided the exterior surface of the cross-laminated timber is protected by one the following:

1. *Fire-retardant-treated wood* sheathing complying with Section 2303.2 and not less than $^{15}/_{32}$ inch (12 mm) thick;
2. *Gypsum board* not less than $^1/_2$ inch (12.7 mm) thick; or
3. A noncombustible material.

❖ Similar to FRTW, cross-laminated timber can be used within the exterior walls of a Type IV building provided the CLT is protected by one of the three methods listed. In other words, the CLT can be part of the exterior wall provided it is not exposed but is covered.

602.4.3 Columns. Wood columns shall be sawn or glued laminated and shall be not less than 8 inches (203 mm), nominal, in any dimension where supporting floor loads and not less than 6 inches (152 mm) nominal in width and not less than 8 inches (203 mm) nominal in depth where supporting roof and ceiling loads only. Columns shall be continuous or superimposed and connected in an *approved* manner.

❖ Minimum construction requirements and dimensions for timber columns are provided in this section. Columns are required to be a minimum of 8 inches (203 mm) nominal in any dimension if they support floor loads, or a minimum of 6 by 8 inches (152 by 203 mm) nominal if they support no more than a roof and ceiling. Timber columns are required to be continuous or superimposed, positioned on or over each other, through floors for the entire height of the building. The design engineer or architect must provide details of all column connections. As with all structural members, each column must also be adequately

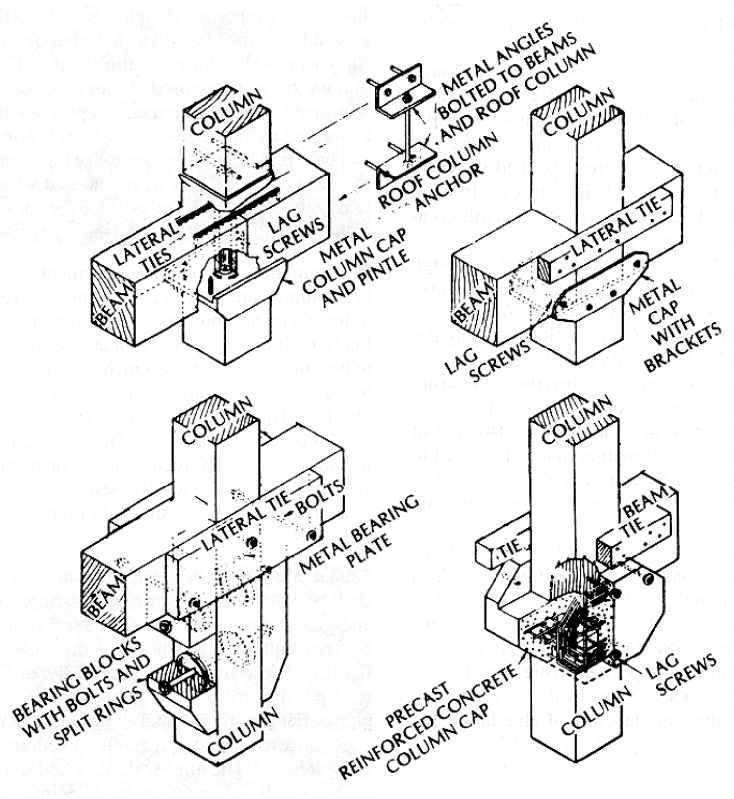

Figure 602.4.1(1)
HEAVY TIMBER—FLOOR BEAM AND COLUMN FRAMING

INTERNATIONAL CODE COUNCIL®
Copyright © 2015 ICC. ALL RIGHTS RESERVED. Accessed by David Dammon on Jun 21, 2017 12:30:52 PM pursuant to License Agreement with ICC. No further reproduction or distribution authorized. ANY UNAUTHORIZED REPRODUCTION OR DISTRIBUTION IS A VIOLATION OF THE FEDERAL COPYRIGHT ACT AND THE LICENSE AGREEMENT, AND SUBJECT TO CIVIL AND CRIMINAL PENALTIES THEREUNDER.

fastened to other structural members in order to withstand the loads that will be placed upon the column. Some typical examples include reinforced concrete or metal caps, steel or iron column caps and timber splice plates [see Commentary Figures 602.4.1(1) and 602.4.1(2)]. CLT is not included in this section because CLT is not used as a column or framing material.

602.4.4 Floor framing. Wood beams and girders shall be of sawn or glued-laminated timber and shall be not less than 6 inches (152 mm) nominal in width and not less than 10 inches (254 mm) nominal in depth. Framed sawn or glued-laminated timber arches, which spring from the floor line and support floor loads, shall be not less than 8 inches (203 mm) nominal in any dimension. Framed timber trusses supporting floor loads shall have members of not less than 8 inches (203 mm) nominal in any dimension.

❖ Minimum construction requirements and dimensions for floor framing are provided in this section. Girders are the principal horizontal structural members that support columns or beams. Beams are the structural members that support a floor or roof. Both girders and beams are required to be a minimum 6 inches (152 mm) wide and 10 inches (254 mm) deep. Both framed timber trusses supporting floor loads and framed sawn or glued-laminated timber arches that spring from the floor line and support floor loads are required to be at least 8 inches (203 mm) in any dimension. CLT is not included in this section because CLT is not used as a framing material.

602.4.5 Roof framing. Wood-frame or glued-laminated arches for roof construction, which spring from the floor line or from grade and do not support floor loads, shall have members not less than 6 inches (152 mm) nominal in width and have not less than 8 inches (203 mm) nominal in depth for the lower half of the height and not less than 6 inches (152 mm) nominal in depth for the upper half. Framed or glued-laminated arches for roof construction that spring from the top of walls or wall abutments, framed timber trusses and other roof framing, which do not support floor loads, shall have members not less than 4 inches (102 mm) nominal in width and not less than 6 inches (152 mm) nominal in depth. Spaced members shall be permitted to be composed of two or more pieces not less than 3 inches (76 mm) nominal in thickness where blocked solidly throughout their intervening spaces or where spaces are tightly closed by a continuous wood cover plate of not less than 2 inches (51 mm) nominal in thickness secured to the underside of the members. Splice plates shall be not less than 3 inches (76 mm) nominal in thickness. Where protected by *approved* automatic sprinklers under the roof deck, framing members shall be not less than 3 inches (76 mm) nominal in width.

❖ Minimum construction requirements and dimensions for arches and other types of roof framing are pro-

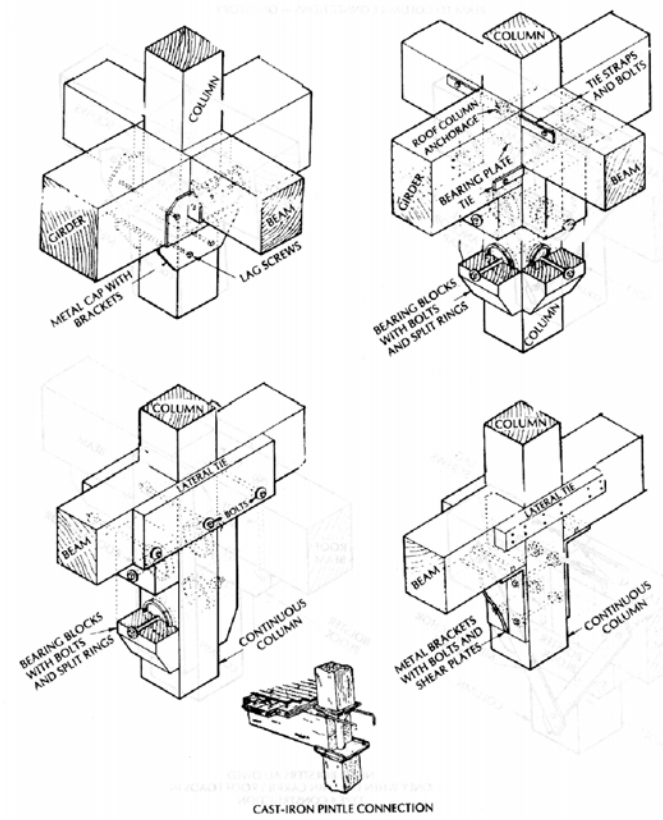

Figure 602.4.1(2)
COLUMN/FLOOR BEAM CONNECTIONS
American Institute for Timber Construction

INTERNATIONAL CODE COUNCIL®
Copyright © 2015 ICC. ALL RIGHTS RESERVED. Accessed by David Dammon on Jun 21, 2017 12:30:52 PM pursuant to License Agreement with ICC. No further reproduction or distribution authorized. ANY UNAUTHORIZED REPRODUCTION OR DISTRIBUTION IS A VIOLATION OF THE FEDERAL COPYRIGHT ACT AND THE LICENSE AGREEMENT, AND SUBJECT TO CIVIL AND CRIMINAL PENALTIES THEREUNDER.

vided in this section. Other types of roof framing included in this section are heavy timber trusses with spaced members. When the members of a heavy timber truss are split and placed on either side of a main member, such as a web connecting a chord, each component of the web must be 3 inches (76 mm) or more in nominal thickness. The space between the two web members must be protected with a 2-inch-thick (51 mm) cover plate [see Commentary Figure 602.4.3(1)], or solidly filled with blocking [see Commentary Figure 602.4.3(2)]. The size of the roof framing members is dependent on the configuration used and is regulated by this section. CLT is not included in this section because CLT is not used as a framing material.

If a building of Type IV construction is equipped with approved automatic sprinklers under the roof deck, the minimum required size of the roof framing members is reduced to 3 inches (76 mm). Roof framing members of a smaller size will have a lower resistance to fire than the 6-inch by 8-inch (152 mm by 203 mm) or 4-inch by 6-inch (102 mm by 152 mm) members required by this section where a sprinkler system is not present. However, the trade-off allowing smaller roof framing members when the building is equipped with an automatic sprinkler system is consistent with the concept of maintaining "equivalent risk" for the building.

602.4.6 Floors. Floors shall be without concealed spaces. Wood floors shall be constructed in accordance with Section 602.4.6.1 or 602.4.6.2.

602.4.6.1 Sawn or glued-laminated plank floors. Sawn or glued-laminated plank floors shall be one of the following:

1. Sawn or glued-laminated planks, splined or tongue-and-groove, of not less than 3 inches (76 mm) nominal in thickness covered with 1-inch (25 mm) nominal dimension tongue-and-groove flooring, laid crosswise

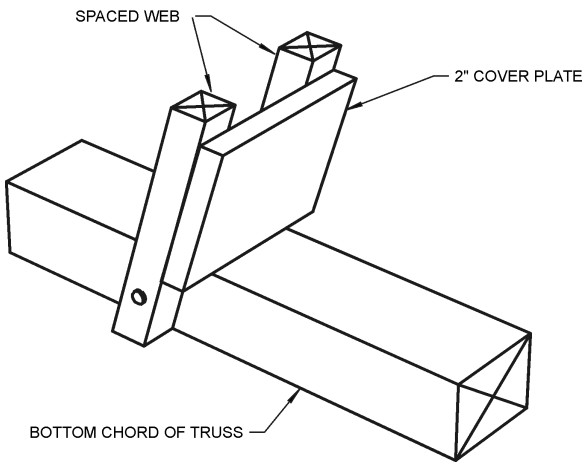

For SI: 1 inch = 25.4 mm

Figure 602.4.3(1)
SPACED MEMBERS WITH COVER PLATE

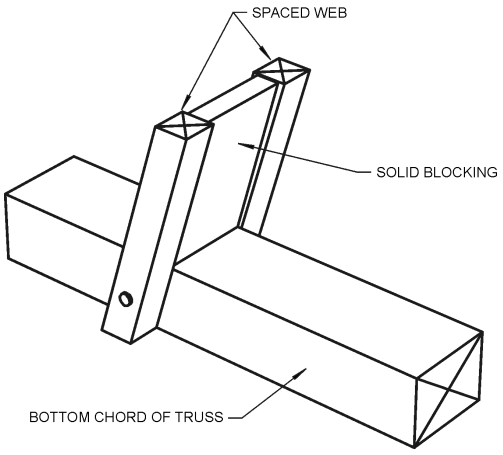

Figure 602.4.3(2)
SOLID BLOCKING OF SPACED MEMBERS

INTERNATIONAL CODE COUNCIL®
Copyright © 2015 ICC. ALL RIGHTS RESERVED. Accessed by David Dammon on Jun 21, 2017 12:30:52 PM pursuant to License Agreement with ICC. No further reproduction or distribution authorized. ANY UNAUTHORIZED REPRODUCTION OR DISTRIBUTION IS A VIOLATION OF THE FEDERAL COPYRIGHT ACT AND THE LICENSE AGREEMENT, AND SUBJECT TO CIVIL AND CRIMINAL PENALTIES THEREUNDER.

or diagonally, $^{15}/_{32}$-inch (12 mm) wood structural panel or $^{1}/_{2}$-inch (12.7 mm) particleboard.

2. Planks not less than 4 inches (102 mm) nominal in width set on edge close together and well spiked and covered with 1-inch (25 mm) nominal dimension flooring or $^{15}/_{32}$-inch (12 mm) wood structural panel or $^{1}/_{2}$-inch (12.7 mm) particleboard.

The lumber shall be laid so that no continuous line of joints will occur except at points of support. Floors shall not extend closer than $^{1}/_{2}$ inch (12.7 mm) to walls. Such $^{1}/_{2}$-inch (12.7 mm) space shall be covered by a molding fastened to the wall and so arranged that it will not obstruct the swelling or shrinkage movements of the floor. Corbelling of masonry walls under the floor shall be permitted to be used in place of molding.

❖ Heavy timber (HT) flooring is required to consist of minimum 3-inch-thick (76 mm) sawn or glued-laminated planks, splined floors or tongue-and-groove floors with an overlayment of 1-inch (25 mm) tongue-and-groove flooring, laid crosswise or diagonally. HT flooring may also consist of $^{1}/_{2}$-inch (12.7 mm) particleboard or planks at least 4 inches (102 mm) in width set on edge and secured together, with an appropriate overlayment, such as 1-inch (25 mm) hardwood flooring or a $^{15}/_{32}$-inch (12.7 mm) wood structural panel. Flooring in Type IV construction is not permitted to have concealed spaces because an undetected fire can spread quickly in combustible concealed floor spaces [see Commentary Figure 602.4.4(1)]. Because of the support afforded by adjacent members, continuous joints must only occur over supports.

Wood flooring must be fastened to supports that are perpendicular to the planking. Fastening must not be made to beams or girders that are parallel to the

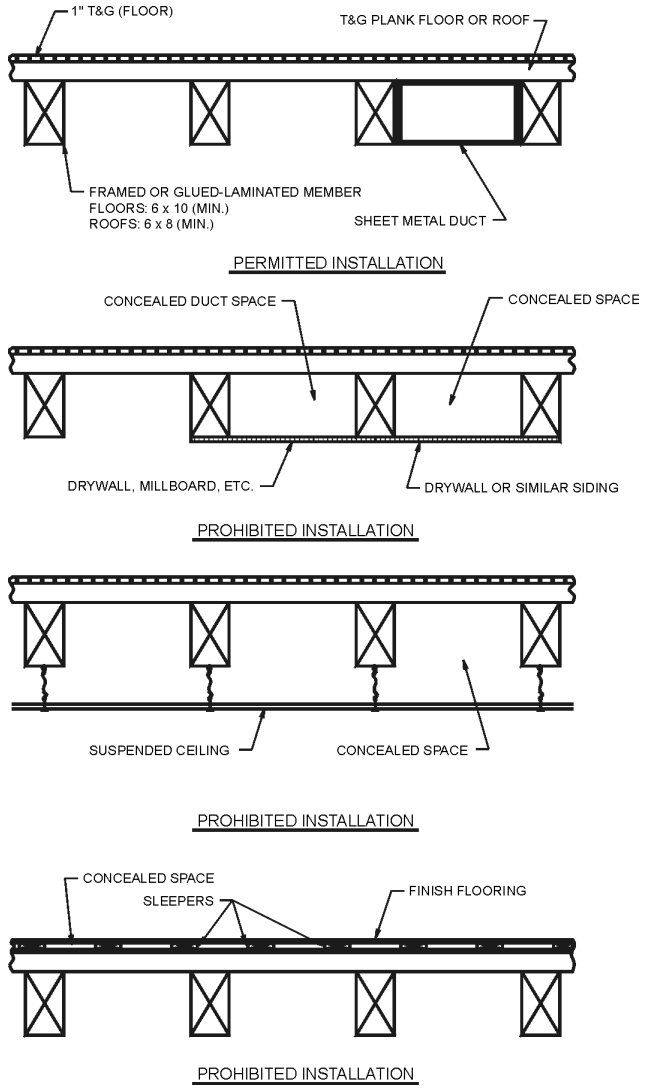

For SI: 1 inch = 25.4 mm.

Figure 602.4.4(1)
CONCEALED SPACES

INTERNATIONAL CODE COUNCIL®
Copyright © 2015 ICC. ALL RIGHTS RESERVED. Accessed by David Dammon on Jun 21, 2017 12:30:52 PM pursuant to License Agreement with ICC. No further reproduction or distribution authorized. ANY UNAUTHORIZED REPRODUCTION OR DISTRIBUTION IS A VIOLATION OF THE FEDERAL COPYRIGHT ACT AND THE LICENSE AGREEMENT, AND SUBJECT TO CIVIL AND CRIMINAL PENALTIES THEREUNDER.

planks [see Commentary Figure 602.4.4(2)]. This precaution is intended to prevent separation of the planks because of differential movement of the beam relative to the girders and possible expansion/contraction due to differing moisture or humidity levels. This section requires a minimum $^1/_2$-inch (12.7 mm) clearance between the wood flooring and exterior walls. This will prevent damage to the walls if the flooring expands or moves due to factors such as use and natural forces. It should be emphasized that the integrity of the floor assembly must be maintained to provide the equivalent of a 1-hour fire-resistance rating. In addition, the $^1/_2$-inch (12.7 mm) gap must be protected by a molding connected to the wall so that any possible contracting or expanding of the floor is not impeded. If masonry walls are utilized, corbeling of the masonry may be used as an alternate to the molding requirements.

602.4.6.2 Cross-laminated timber floors. *Cross-laminated timber* shall be not less than 4 inches (102 mm) in thickness. *Cross-laminated timber* shall be continuous from support to support and mechanically fastened to one another. *Cross-laminated timber* shall be permitted to be connected to walls without a shrinkage gap providing swelling or shrinking is considered in the design. Corbelling of masonry walls under the floor shall be permitted to be used.

❖ Cross-laminated timber is a large, thick panel composed of crosswise layers of dimension lumber bound with a structural adhesive. When used in floors, CLT is unlike traditional plank decking because the CLT panel doesn't have joints to protect. Therefore, there is no requirement for sheathing. Sheathing can be used on CLT, but is not necessary for compliance with this section.

602.4.7 Roofs. Roofs shall be without concealed spaces and wood roof decks shall be sawn or glued laminated, splined or tongue-and-groove plank, not less than 2 inches (51 mm) nominal in thickness; $1^1/_8$-inch-thick (32 mm) wood structural panel (exterior glue); planks not less than 3 inches (76 mm) nominal in width, set on edge close together and laid as required for floors; or of cross-laminated timber. Other types of decking shall be permitted to be used if providing equivalent fire resistance and structural properties.

Cross-laminated timber roofs shall be not less than 3 inches (76 mm) nominal in thickness and shall be continuous from support to support and mechanically fastened to one another.

❖ Minimum construction requirements and dimensions for roof decks are provided in this section. As required for floors, roofs are not permitted to have concealed spaces [see Commentary Figure 602.4.4(1)]. If the materials used in roof construction are different from those described in this section, the roof must have a minimum 1-hour fire-resistance rating and be of the same structural properties.

602.4.8 Partitions and walls. Partitions and walls shall comply with Section 602.4.8.1 or 602.4.8.2.

602.4.8.1 Interior walls and partitions. Interior walls and partitions shall be of solid wood construction formed by not less than two layers of 1-inch (25 mm) matched boards or laminated construction 4 inches (102 mm) thick, or of 1-hour fire-resistance-rated construction.

❖ Minimum construction requirements and dimensions for partitions in Type IV construction are provided in this section. Partitions must either be formed by not less than two layers of 1-inch (25 mm) matched boards or laminated construction 4 inches (102 mm)

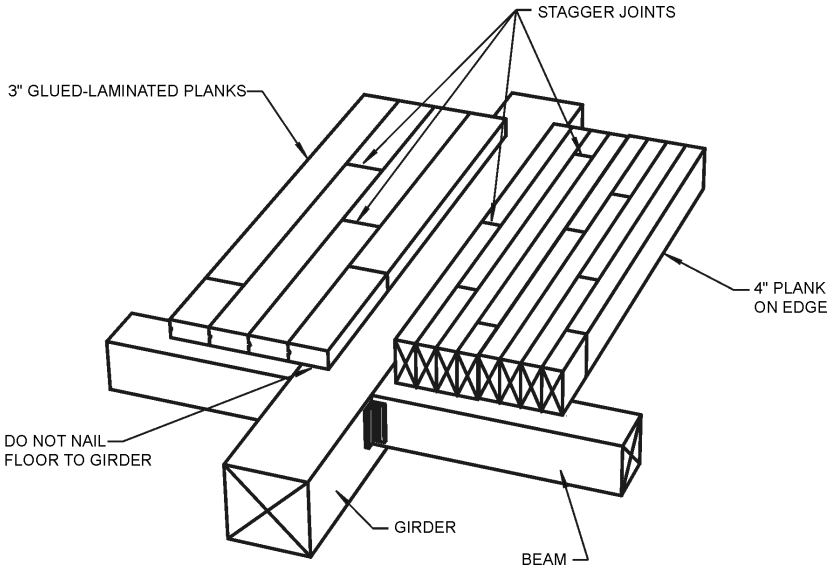

For SI: 1 inch = 25.4 mm.

Figure 602.4.4(2)
HEAVY TIMBER FLOORING

INTERNATIONAL CODE COUNCIL®
Copyright © 2015 ICC. ALL RIGHTS RESERVED. Accessed by David Dammon on Jun 21, 2017 12:30:52 PM pursuant to License Agreement with ICC. No further reproduction or distribution authorized. ANY UNAUTHORIZED REPRODUCTION OR DISTRIBUTION IS A VIOLATION OF THE FEDERAL COPYRIGHT ACT AND THE LICENSE AGREEMENT, AND SUBJECT TO CIVIL AND CRIMINAL PENALTIES THEREUNDER.

thick if they are constructed of solid wood. Partitions are permitted to be constructed of materials other than solid wood if they have at least a 1-hour fire-resistance rating. An example of the use of alternative materials is when a fire-resistance rating for a corridor wall is required. It is common practice to utilize a 1-hour fire-resistance-rated stud and gypsum wallboard assembly between the exposed columns to form the walls of the corridor.

602.4.8.2 Exterior walls. Exterior walls shall be of one of the following:

1. Noncombustible materials.
2. Not less than 6 inches (152 mm) in thickness and constructed of one of the following:
   2.1. *Fire-retardant-treated wood* in accordance with Section 2303.2 and complying with Section 602.4.1.
   2.2. *Cross-laminated timber* complying with Section 602.4.2.

❖ Exterior walls of Type IV buildings must be of noncombustible materials, or can include either fire-retardant-treated wood in accordance with Section 602.4.1 or cross-laminated timber complying with Section 602.4.2. In addition, wood columns and arches that are of heavy timber sizes can be exposed in the exterior wall in accordance with Section 602.4.9.

602.4.9 Exterior structural members. Where a horizontal separation of 20 feet (6096 mm) or more is provided, wood columns and arches conforming to heavy timber sizes shall be permitted to be used externally.

❖ Heavy timber columns and arches that conform to minimum dimensional requirements may be used on the exterior if a fire separation distance of at least 20 feet (6096 mm) is maintained, although the exterior wall itself must be of noncombustible construction. If a fire separation distance of at least 20 feet (6096 mm) is maintained, the risk of exposure of the wood members to fire from an adjacent building is reduced, and the HT columns and arches are permitted to be exposed to the exterior.

If a building of Type IV construction has a fire separation distance of less than 20 feet (6096 mm), the wood columns and arches are to be located on the interior side of the exterior wall. The noncombustible construction of the exterior wall will provide some degree of protection to the interior timber members. Therefore, placing the wood structural members inside an exterior wall is preferable to placing them within 20 feet (6096 mm) of a lot line or adjacent building with no exposure protection.

602.5 Type V. Type V construction is that type of construction in which the structural elements, *exterior walls* and interior walls are of any materials permitted by this code.

❖ Type V construction allows the use of all types of materials, both noncombustible and combustible, but Type V buildings are most commonly constructed of dimensional lumber (see Commentary Figure 602.5 for an example of Type V construction). It is divided into two subclassifications: Types VA and VB. An example of a typical building of Type VA construction is a wood frame building in which the interior and exterior load-bearing walls, floors, roofs and all structural members are protected to provide a minimum 1-hour fire-resistance rating. Type V construction is required to comply with Table 601 and Chapter 23.

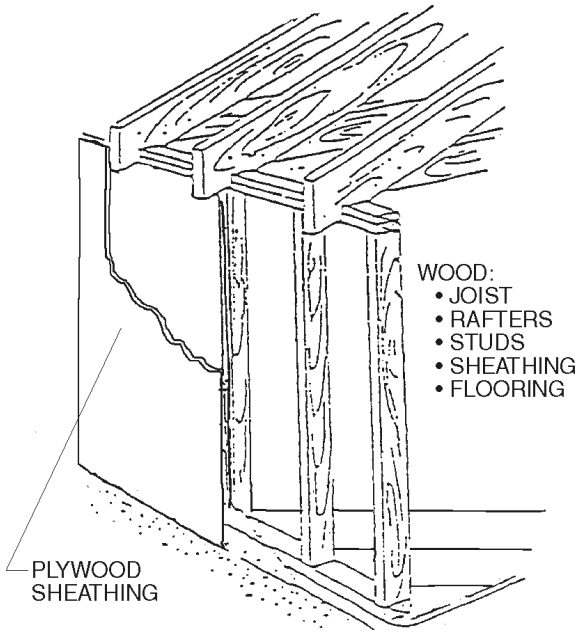

Figure 602.5
EXAMPLE OF TYPE V CONSTRUCTION

SECTION 603
COMBUSTIBLE MATERIAL IN TYPES I AND II CONSTRUCTION

603.1 Allowable materials. Combustible materials shall be permitted in buildings of Type I or II construction in the following applications and in accordance with Sections 603.1.1 through 603.1.3:

1. *Fire-retardant-treated wood* shall be permitted in:
   1.1. Nonbearing partitions where the required *fire-resistance rating* is 2 hours or less.
   1.2. Nonbearing *exterior walls* where fire-resistance-rated construction is not required.
   1.3. Roof construction, including girders, trusses, framing and decking.

   Exception: In buildings of Type IA construction exceeding two *stories above grade plane*, *fire-retardant-treated wood* is not permitted in roof construction where the vertical distance from the upper floor to the roof is less than 20 feet (6096 mm).

INTERNATIONAL CODE COUNCIL®
Copyright © 2015 ICC. ALL RIGHTS RESERVED. Accessed by David Dammon on Jun 21, 2017 12:30:52 PM pursuant to License Agreement with ICC. No further reproduction or distribution authorized. ANY UNAUTHORIZED REPRODUCTION OR DISTRIBUTION IS A VIOLATION OF THE FEDERAL COPYRIGHT ACT AND THE LICENSE AGREEMENT, AND SUBJECT TO CIVIL AND CRIMINAL PENALTIES THEREUNDER.

2. Thermal and acoustical insulation, other than foam plastics, having a *flame spread index* of not more than 25.

   Exceptions:

   1. Insulation placed between two layers of noncombustible materials without an intervening airspace shall be allowed to have a *flame spread index* of not more than 100.
   2. Insulation installed between a finished floor and solid decking without intervening airspace shall be allowed to have a *flame spread index* of not more than 200.

3. Foam plastics in accordance with Chapter 26.
4. Roof coverings that have an A, B or C classification.
5. *Interior floor finish* and floor covering materials installed in accordance with Section 804.
6. Millwork such as doors, door frames, window sashes and frames.
7. *Interior wall and ceiling finishes* installed in accordance with Sections 801 and 803.
8. *Trim* installed in accordance with Section 806.
9. Where not installed greater than 15 feet (4572 mm) above grade, show windows, nailing or furring strips and wooden bulkheads below show windows, including their frames, aprons and show cases.
10. Finish flooring installed in accordance with Section 805.
11. Partitions dividing portions of stores, offices or similar places occupied by one tenant only and that do not establish a *corridor* serving an *occupant load* of 30 or more shall be permitted to be constructed of *fire-retardant-treated wood*, 1-hour fire-resistance-rated construction or of wood panels or similar light construction up to 6 feet (1829 mm) in height.
12. Stages and platforms constructed in accordance with Sections 410.3 and 410.4, respectively.
13. Combustible *exterior wall coverings*, balconies and similar projections and bay or oriel windows in accordance with Chapter 14.
14. Blocking such as for handrails, millwork, cabinets and window and door frames.
15. Light-transmitting plastics as permitted by Chapter 26.
16. Mastics and caulking materials applied to provide flexible seals between components of *exterior wall* construction.
17. Exterior plastic veneer installed in accordance with Section 2605.2.
18. Nailing or furring strips as permitted by Section 803.11.
19. Heavy timber as permitted by Note c to Table 601 and Sections 602.4.7 and 1406.3.
20. Aggregates, component materials and admixtures as permitted by Section 703.2.2.
21. Sprayed fire-resistant materials and intumescent and mastic fire-resistant coatings, determined on the basis of *fire resistance* tests in accordance with Section 703.2 and installed in accordance with Sections 1705.14 and 1705.15, respectively.
22. Materials used to protect penetrations in fire-resistance-rated assemblies in accordance with Section 714.
23. Materials used to protect joints in fire-resistance-rated assemblies in accordance with Section 715.
24. Materials allowed in the concealed spaces of buildings of Types I and II construction in accordance with Section 718.5.
25. Materials exposed within plenums complying with Section 602 of the *International Mechanical Code*.
26. Wall construction of freezers and coolers of less than 1,000 square feet (92.9 m^2), in size, lined on both sides with noncombustible materials and the building is protected throughout with an *automatic sprinkler system* in accordance with Section 903.3.1.1.

❖ Section 603.1 provides a listing of circumstances where combustible materials can be used in buildings of Type I and II construction, which are otherwise required to be constructed of noncombustible materials. The list of 26 items frequently references the code user to other sections of the code where specific allowances are found. Most of these listed items, while of combustible materials, are either of minor quantities in the overall building or are of materials with fire-resistive properties.

Treated wood: Fire-retardant-treated wood (FRTW) does not meet the criteria in the code for a noncombustible material. It is, however, permitted as an alternative to noncombustible materials in specific locations in Type I and II construction (see Items 1, 11 and 13). For example, the use of FRTW in walls of Type I and II construction has been limited to nonload-bearing partitions with a fire-resistance rating of no greater than 2 hours and nonload-bearing exterior walls without a fire-resistance rating. Additionally, roofs in buildings of Type I and II construction are permitted to be constructed of FRTW. The exception to Item 1.3 does not permit FRTW in the roofs of buildings of Type IA construction over two stories in height if the distance from the uppermost floor to the roof is less than 20 feet (6096 mm). If the distance is 20 feet (6096 mm) or greater, then FRTW is acceptable in the roof. FRTW is permitted in the roof of any Type IA building two stories or less in height regardless of the distance from the floor to the roof. Similarly, FRTW is permitted in the roof of any Type IB or Type II building (no height restrictions) regardless of the distance from the floor to the roof.

INTERNATIONAL CODE COUNCIL®
Copyright © 2015 ICC. ALL RIGHTS RESERVED. Accessed by David Dammon on Jun 21, 2017 12:30:52 PM pursuant to License Agreement with ICC. No further reproduction or distribution authorized. ANY UNAUTHORIZED REPRODUCTION OR DISTRIBUTION IS A VIOLATION OF THE FEDERAL COPYRIGHT ACT AND THE LICENSE AGREEMENT, AND SUBJECT TO CIVIL AND CRIMINAL PENALTIES THEREUNDER.

Untreated wood: Numerous items in the list of Section 603.1 permit the use of untreated wood in Type I and II construction. Blocking or nailers used to support fixtures, railings, cabinets or interior and exterior finishes are permitted within walls and partitions required to be of noncombustible construction in accordance with Item 14. Item 18 permits combustible nailers and blocking as stipulated in accordance with Section 803.11. Section 803.11.1 indicates that "furring strips not exceeding 1.75 inches (44 mm)" are permitted to be used in concrete or masonry construction for securing trim and finishes. Although locating these combustible elements within noncombustible frame partitions is not specifically identified in this section, the presence of combustible nailers within noncombustible construction types, other than concrete and masonry, represents an equivalent circumstance. Therefore, it is the intent of the code to permit the use of combustible nailers and blocking within Type I and II construction.

According to Item 11, partitions within a small store or office can include untreated wood in their construction (or FTRW), provided the partitions do not exceed 6 feet (1829 mm) in height. The limitations to 30 occupants and to not forming a corridor restrict this exception from introducing extensive amounts of combustible materials. Item 9 permits the use of untreated wood for show windows and related construction up to a height 15 feet (4572 mm) above grade. This permits a broader range of materials for storefronts without jeopardizing the overall integrity of these buildings.

Item 19 references three different code sections where heavy timber construction can occur within and on the outside of noncombustible buildings.

Item 26 would allow wood construction in freezers and coolers provided the walls are lined with noncombustible materials. This would allow untreated wood as framing elements as well as trim and frames of these installations.

Plastics: Items 2, 3, 15 and 17 specifically address allowed plastics within or on the surfaces of Type I and II buildings. These items include allowances for thermal and acoustical insulation having a flame spread index of no greater than 25 when tested in accordance with ASTM E84 or UL 723; foam and light-transmitting plastics complying with Chapter 26; and exterior plastic veneers complying with Section 2605.2. Plastic materials are often included in installations allowed for interior finishes and within the construction of the building, in accordance with Item 7. Item 26 allows freezers and coolers which will often have foam plastic insulation within the walls.

Roof construction and roof coverings: While combustible roofs must be of FRTW if used in a Type I or II building, roof coverings, blocking, nailers and furring strips are also permitted to be combustible without the use of FRTW (see Items 4, 14 and 18).

"Roof covering" is defined as the membrane covering the roof that provides weather resistance, fire resistance and appearance. As long as a noncombustible roof deck (or FRTW) is provided as the structural element, foam plastic insulation, wood structural panels, nailing/furring strips and roof coverings may be applied.

Exterior wall coverings and projections: Item 13 provides a reference to Chapter 14 where provisions address combustible wall coverings and use of combustible materials in projections such as balconies and eaves. Combustible wall coverings need to be applied on top of a noncombustible wall meeting the required rating of Table 601. The coverings cannot be a substitute for the exterior face of a tested assembly. Plastic veneers (Item 17) are allowed in accordance with Section 2605.2.

Concealed spaces and construction: Many combustible materials are used, and allowed to be used within the elements of a building. Often these are used to help protect a fire-resistance-rated assembly where it is penetrated by pipes, ducts or conduit. Many of these materials are tested for the specific purposes and installations such as protection of joints or are used to actually resist, or react to, fire (see Items 16, 20, 21, 22, 23, 24 and 25).

Finish and interior materials: Finish materials for floors, walls and ceilings need to comply with various provisions of Chapter 8. Allowed materials do include combustible materials, but typically they are limited in flame spread index and smoke generation. Items 5, 7 and 8 address interior finishes. Stages and platforms can be combustible when in compliance with Section 410 (see Item 12). And, finally, doors and windows are not among the elements required to be noncombustible in accordance with Item 6.

603.1.1 Ducts. The use of nonmetallic ducts shall be permitted where installed in accordance with the limitations of the *International Mechanical Code*.

❖ Ducts are not addressed by construction-type requirements and their use is not controlled by construction-type provisions. The *International Mechanical Code*® (IMC®) provides requirements for nonmetallic ducts and addresses issues including flammability and flame spread. This section clarifies that this chapter is not intended to override those requirements.

603.1.2 Piping. The use of combustible piping materials shall be permitted where installed in accordance with the limitations of the *International Mechanical Code* and the *International Plumbing Code*.

❖ Piping is not addressed by construction-type requirements and the use of piping is not controlled by construction-type provisions. The *International Plumbing Code*® (IPC®) provides requirements for combustible piping materials, such as plastic, that address the

INTERNATIONAL CODE COUNCIL®
Copyright © 2015 ICC. ALL RIGHTS RESERVED. Accessed by David Dammon on Jun 21, 2017 12:30:52 PM pursuant to License Agreement with ICC. No further reproduction or distribution authorized. ANY UNAUTHORIZED REPRODUCTION OR DISTRIBUTION IS A VIOLATION OF THE FEDERAL COPYRIGHT ACT AND THE LICENSE AGREEMENT, AND SUBJECT TO CIVIL AND CRIMINAL PENALTIES THEREUNDER.

issues of flammability and flame spread. This section clarifies that this chapter is not intended to override those requirements.

603.1.3 Electrical. The use of electrical wiring methods with combustible insulation, tubing, raceways and related components shall be permitted where installed in accordance with the limitations of this code.

❖ Electrical wiring and equipment are not addressed by construction-type requirements and their use is not controlled by construction-type provisions. NFPA 70, *National Electrical Code*, provides requirements for combustible wiring materials that address the issue of flammability and flame spread. This section clarifies that this chapter is not intended to override those requirements.

Bibliography

The following resource materials were used in the preparation of the commentary for this chapter of the code.

ASTM E84-13, *Test Methods for Surface Burning Characteristics of Building Materials*. West Conshohocken, PA: ASTM International, 2013.

DOC PS 20-05, *American Softwood Lumber Standard*. Washington, DC: United States Department of Commerce, 2005.

Fire Protection through Modern Building Codes. Washington, DC: American Iron and Steel Institute, 1981.

NFPA 13-13, *Standard for the Installation of Sprinkler Systems*. Quincy, MA: National Fire Protection Association, 2013.

NFPA 70-14, *National Electrical Code*. Quincy, MA: National Fire Protection Association, 2014.

Technical Report No. 1, *Comparative Fire Test on Wood and Steel Joists.* Washington, DC: National Forest Products Association, 1961.

Timber Construction Manual, 2nd edition. American Institute of Timber Construction. New York: John Wiley and Sons Inc., 1974.

Wood Construction Data No. 5, *Heavy Timber Construction*. Washington, DC: American Forest and Paper Association, 2004.

INTERNATIONAL CODE COUNCIL®

Copyright © 2015 ICC. ALL RIGHTS RESERVED. Accessed by David Dammon on Jun 21, 2017 12:30:52 PM pursuant to License Agreement with ICC. No further reproduction or distribution authorized. ANY UNAUTHORIZED REPRODUCTION OR DISTRIBUTION IS A VIOLATION OF THE FEDERAL COPYRIGHT ACT AND THE LICENSE AGREEMENT, AND SUBJECT TO CIVIL AND CRIMINAL PENALTIES THEREUNDER.

Chapter 7:
Fire and Smoke Protection Features

General Comments

Chapter 7 provides detailed requirements for fire-resistance-rated construction, including structural members, walls, partitions and horizontal assemblies. Other portions of the code tell us when certain fire-resistance-rated elements are required. This chapter specifies how these elements are constructed, how openings in walls and partitions are protected, and how penetrations of such elements are protected.

Fire-resistance-rated construction is one form of fire protection in building design. It is often referred to as "passive protection." Fire-resistance-rated building elements provide resistance to the advance of fire, as opposed to active fire protection systems, such as automatic sprinkler systems, which actively attempt to suppress a fire.

At the core of fire-resistance-rated construction is test standard ASTM E119. This test standard specifies how to test different building elements for fire resistance, and defines what the level of fire-resistance performance is, based upon this test.

Restriction of fire growth, or passive protection, has been a key part of building codes since their inception. Other sections of the code require elements to have a fire-resistance rating or a degree of resistance to flame spread because of the relative hazard associated with the type of construction, the occupancy of the building or the function of the element.

The construction features dealt with in this chapter that are required to have some degree of fire resistance include structural members (see Section 704), exterior walls (Section 705), fire walls (Section 706), fire barriers (Section 707), fire partitions (Section 708), smoke barriers (Section 709), smoke partitions (Section 710), horizontal assemblies (Section 711), vertical openings (Section 712) and shaft enclosures (Section 713). Additionally, methods of protecting penetrations, joints, doors, windows, ducts and air transfer openings in fire-resistant elements are covered in Sections 714, 715, 716 and 717. This chapter also covers draftstopping and fireblocking of concealed spaces, in Section 718. The flame spread and smoke development of insulation are regulated by Section 720. As an alternative to tested assemblies, some prescriptive and calculated methods of determining fire-resistant assemblies are given in Sections 721 and 722.

SECTION 701
GENERAL

701.1 Scope. The provisions of this chapter shall govern the materials, systems and assemblies used for structural *fire resistance* and fire-resistance-rated construction separation of adjacent spaces to safeguard against the spread of fire and smoke within a building and the spread of fire to or from buildings.

❖ The provisions of Chapter 7 apply to the materials, assemblies and systems used to protect against the passage of fire and smoke. Each of the walls and partitions outlined herein provides various degrees of protection. The required fire-resistance rating varies with the potential fire hazard associated with the type of construction, occupancy, height and area of the building and degree of protection for different elements of the means of egress. The potential fire hazard associated with various occupancies is reflected in Tables 508.4, 509, 706.4, 707.3.10 and 1020.1. Chapter 7 provides the details and the extent of the protection (horizontal and vertical continuity); however, the actual fire-resistance-rated construction is mandated by provisions in Chapters 4, 5, 6, 7 and 10.

Whenever the code mandates the use of materials or assemblies that are noncombustible or have a degree of fire or smoke resistance, the performance of the material or assembly is required to be evaluated in accordance with the provisions of this chapter and the referenced standards.

The important criteria for the terms "combustible" and "noncombustible" used in this chapter and elsewhere throughout the code are contained in Section 703.5.

701.2 Multiple use fire assemblies. Fire assemblies that serve multiple purposes in a building shall comply with all of the requirements that are applicable for each of the individual fire assemblies.

❖ Some building elements are required by two or more code provisions to be fire-resistance rated. The same wall can serve as a load-bearing wall in Type IIA construction, an incidental use separation wall and a corridor wall. The structural load-bearing wall must meet Section 704.1, the incidental use separation wall is a fire barrier and must meet Section 707, while the corridor wall is a fire partition and must meet Section 708. Another example would be an elevator lobby

INTERNATIONAL CODE COUNCIL®
Copyright © 2015 ICC. ALL RIGHTS RESERVED. Accessed by David Dammon on Jun 21, 2017 12:30:52 PM pursuant to License Agreement with ICC. No further reproduction or distribution authorized. ANY UNAUTHORIZED REPRODUCTION OR DISTRIBUTION IS A VIOLATION OF THE FEDERAL COPYRIGHT ACT AND THE LICENSE AGREEMENT, AND SUBJECT TO CIVIL AND CRIMINAL PENALTIES THEREUNDER.

with an adjacent enclosed exit stair open to a corridor system that is required to be fire-resistance rated. In this example the elevator shaft enclosure door opening and the exit stairway door opening would need to not only comply with the requirements for openings in a fire barrier, but additionally must meet the smoke and draft control requirements for an opening in a fire-resistance-rated corridor.

SECTION 702
DEFINITIONS

702.1 Definitions. The following terms are defined in Chapter 2:

❖ This is a list of terms applicable to Chapter 7. Those definitions and the commentary for them are in Chapter 2.

ANNULAR SPACE.

BUILDING ELEMENT.

CEILING RADIATION DAMPER.

COMBINATION FIRE/SMOKE DAMPER.

CORRIDOR DAMPER.

DAMPER.

DRAFTSTOP

F RATING.

FIRE BARRIER.

FIRE DAMPER.

FIRE DOOR.

FIRE DOOR ASSEMBLY.

FIRE PARTITION.

FIRE PROTECTION RATING.

FIRE-RATED GLAZING.

FIRE RESISTANCE.

FIRE-RESISTANCE RATING.

FIRE-RESISTANT JOINT SYSTEM.

FIRE SEPARATION DISTANCE.

FIRE WALL.

FIRE WINDOW ASSEMBLY.

FIREBLOCKING.

FLOOR FIRE DOOR ASSEMBLY.

HORIZONTAL ASSEMBLY.

JOINT.

L RATING.

MEMBRANE PENETRATION.

MEMBRANE-PENETRATION FIRESTOP.

MEMBRANE-PENETRATION FIRESTOP SYSTEM.

MINERAL FIBER.

MINERAL WOOL.

PENETRATION FIRESTOP.

SELF-CLOSING.

SHAFT.

SHAFT ENCLOSURE.

SMOKE BARRIER.

SMOKE COMPARTMENT.

SMOKE DAMPER.

SPLICE.

T RATING.

THROUGH PENETRATION.

THROUGH-PENETRATION FIRESTOP SYSTEM.

SECTION 703
FIRE-RESISTANCE RATINGS AND FIRE TESTS

703.1 Scope. Materials prescribed herein for *fire resistance* shall conform to the requirements of this chapter.

❖ Standard fire test methods for determining fire-resistance ratings and combustibility of materials are covered in this section. Section 703.2 addresses the acceptable testing method to be used in determining the fire-resistance ratings of building assemblies and structural elements, while Section 703.3 provides alternative methods. Section 703.4 clarifies that sprinklers cannot be utilized when testing passive fire-resistance ratings. Section 703.5 defines methods to determine if a material is combustible or noncombustible. Section 703.6 references the testing and labeling requirements for fire-resistance-rated glazing. The signage requirements for various fire-resistance-rated walls and partitions are in Section 703.7.

Fire-resistance ratings of structural members are among the factors taken into consideration when determining the allowable height and area of buildings. By using materials and construction methods that result in the required fire-resistance ratings (see commentary, Table 503), the inherent fire hazards associated with different uses are, in part, addressed. Other sections of the code also contain provisions for required fire-resistance ratings in specific applications based on the need to separate uses, processes, fire areas or building areas.

703.2 Fire-resistance ratings. The *fire-resistance rating* of building elements, components or assemblies shall be determined in accordance with the test procedures set forth in ASTM E119 or UL 263 or in accordance with Section 703.3. The *fire-resistance rating* of penetrations and fire-resistant joint systems shall be determined in accordance Sections 714 and 715, respectively.

❖ The fire-resistance properties of materials and assemblies must be measured and specified in accordance with a common test standard. For this reason, the fire-resistance ratings of building assemblies and structural elements are required to be deter-

INTERNATIONAL CODE COUNCIL®
Copyright © 2015 ICC. ALL RIGHTS RESERVED. Accessed by David Dammon on Jun 21, 2017 12:30:52 PM pursuant to License Agreement with ICC. No further reproduction or distribution authorized. ANY UNAUTHORIZED REPRODUCTION OR DISTRIBUTION IS A VIOLATION OF THE FEDERAL COPYRIGHT ACT AND THE LICENSE AGREEMENT, AND SUBJECT TO CIVIL AND CRIMINAL PENALTIES THEREUNDER.

mined in accordance with ASTM E119 or UL 263. The ASTM E119 and UL 263 test methods evaluate the ability of an assembly to contain a fire, to retain its structural integrity or both in terms of endurance time during the test conditions. The test standard also contains conditions for measuring heat transfer through membrane elements protecting framing or surfaces. The fire exposure is based on the standard time-temperature curve (see Commentary Figure 703.2). In addition, the data to indicate compliance with the requirements of Sections 714 and 715 for penetrations and joints must be submitted to verify that the required fire-resistance ratings are maintained. These sections give prescriptive and performance compliance criteria for penetrations and openings within or through fire-resistance-rated assemblies. The details of the penetrations and openings within the tested assembly must meet these minimum requirements.

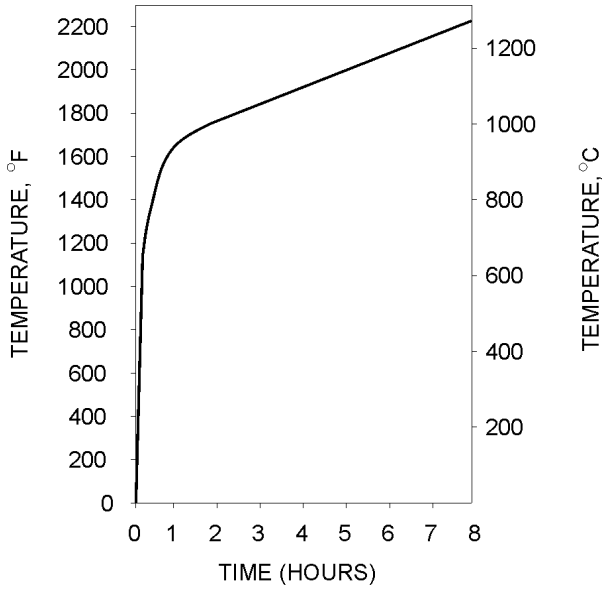

For SI: °C = [(°F)-32]/1.8.

Figure 703.2
STANDARD TIME-TEMPERATURE CURVE

703.2.1 Nonsymmetrical wall construction. Interior walls and partitions of nonsymmetrical construction shall be tested with both faces exposed to the furnace, and the assigned *fire-resistance rating* shall be the shortest duration obtained from the two tests conducted in compliance with ASTM E119 or UL 263. Where evidence is furnished to show that the wall was tested with the least fire-resistant side exposed to the furnace, subject to acceptance of the *building official*, the wall need not be subjected to tests from the opposite side (see Section 705.5 for *exterior walls*).

❖ In applying Sections 703.2 and 703.2.1, it is the intent of the code that the required fire-resistance rating of interior walls be based on a fire exposure from either side. For example, it is appropriate to expect the required fire performance of an exit access corridor wall from the corridor side, as well as from the room side. If the corridor becomes involved in a fire, the corridor wall must restrict the spread of fire into adjacent spaces. However, Section 704.5 does allow exterior walls with a fire separation distance of more than 5 feet (1524 mm) to be fire-resistance rated from the interior only.

Section 703.2.1 permits testing from only one side of nonsymmetrical assemblies, provided it can be demonstrated that the tested side results in the lower value (i.e., the nontested side, if tested, would result in a higher value). For example, a 2-inch by 4-inch (51 mm by 102 mm) wood stud wall with two layers of $^{5}/_{8}$-inch (15.9 mm) Type X gypsum board on one side and only one layer on the opposite side is an illustration of a "nonsymmetrical" assembly. This assembly would be permitted to be tested only from the side with the single layer of gypsum board. This is because testing from the side with the two layers would result in a higher rating.

703.2.2 Combustible components. Combustible aggregates are permitted in gypsum and Portland cement concrete mixtures for fire-resistance-rated construction. Any component material or admixture is permitted in assemblies if the resulting tested assembly meets the fire-resistance test requirements of this code.

❖ The combustibility of materials is regulated by the code when it has been determined that the material or assembly could significantly contribute to a fire hazard. However, the limited use of combustible materials, such as combustible aggregates, is permitted as long as the desired fire-resistance rating can still be obtained. The use of a combustible aggregate in the material or assembly will not significantly contribute to fire growth or severity.

703.2.3 Restrained classification. Fire-resistance-rated assemblies tested under ASTM E119 or UL 263 shall not be considered to be restrained unless evidence satisfactory to the *building official* is furnished by the *registered design professional* showing that the construction qualifies for a restrained classification in accordance with ASTM E119 or UL 263. Restrained construction shall be identified on the *construction documents*.

❖ The effect on the fire-resistance rating of a structural element that is part of an assembly is addressed, to an extent, through the distinction in ASTM E119 or UL 263 between "restrained" and "unrestrained" conditions. The standard defines this distinction as follows: "A restrained condition in fire tests, as used in this test method, is one in which expansion of the supports of a load-carrying element resulting from the effects of the fire is resisted by forces external to the element. An unrestrained condition is one in which the load-carrying element is free to expand and rotate at its supports." In evaluating fire-resistance ratings of structural elements, the conditions of support must be

INTERNATIONAL CODE COUNCIL®
Copyright © 2015 ICC. ALL RIGHTS RESERVED. Accessed by David Dammon on Jun 21, 2017 12:30:52 PM pursuant to License Agreement with ICC. No further reproduction or distribution authorized. ANY UNAUTHORIZED REPRODUCTION OR DISTRIBUTION IS A VIOLATION OF THE FEDERAL COPYRIGHT ACT AND THE LICENSE AGREEMENT, AND SUBJECT TO CIVIL AND CRIMINAL PENALTIES THEREUNDER.

consistent with the tested condition as described in the test report.

A restrained classification yields higher fire-resistance ratings than unrestrained; therefore, the code takes the conservative approach, and thus the lesser rating, by assuming the in-place conditions to be unrestrained unless structural documentation is provided that supports a restrained condition.

703.2.4 Supplemental features. Where materials, systems or devices that have not been tested as part of a fire-resistance-rated assembly are incorporated into the building element, component or assembly, sufficient data shall be made available to the *building official* to show that the required *fire-resistance rating* is not reduced.

❖ The extent to which the test specimen is representative of in-place conditions is determined by the test standard and what is actually tested. For example, the test standard does not provide for the effect on fire endurance of conventional openings in the assembly, such as electrical outlets, plumbing pipes, etc., unless specifically included in the construction assembly tested. The test reports will, however, typically indicate an allowance for openings for steel electrical outlet boxes that do not exceed 16 square inches (0.0103 m^2) in area, provided that the area of such openings does not exceed 100 square inches (0.0645 m^2) for any 100 square feet (9.3 m^2) of wall area. Since, in actuality, assemblies are often penetrated by cables, conduits, ducts, pipes, vents and similar materials, such penetrations that are not part of the tested assembly must be adequately protected and sealed for the assembly to perform as required in resisting the spread of fire. This section, therefore, also mandates that adequate documentation be submitted in order for the building official to verify that the fire-resistance rating of the assembly is not compromised by the penetration. The documentation submitted as evidence that the required fire-resistance ratings are not reduced can be in the form of specific product, assembly or system listings (see the definition of "Listed" in Section 202), engineering judgments provided by accredited testing laboratories, product manufacturers that are based on similar tested conditions or, less frequently, data reports for specific fire tests conducted to evaluate a specific penetration method. However, care must be taken to determine that the materials and methods of the proposed penetration or joint protection correspond to the details of the actual penetration or joint protection assembly that was tested. In the case of engineering judgments submitted for through-penetration firestops or fire-resistive joint systems, the publication *Recommended IFC Guidelines for Evaluating Firestop Engineering Judgments (EJ's)* can be used as a tool in evaluating the submitted documentation. It is available as a free download from the International Firestop Council (www.firestop.org).

ASTM E119 and UL 263 state that they are not intended to determine the following:

- Contribution of the tested assembly to the fire hazard;
- Measurement of the degree of control or limitation of the passage of smoke or products of combustion;
- Simulation of the fire behavior at joints between building elements, such as floor-to-wall or wall-to-wall connections; or
- Measurement of the flame spread over the surface of the tested element.

Documentation that a component or assembly has been tested to ASTM E119 or UL 263 is typically in the form of a test report issued by an approved, qualified testing agency. The test report contains certain information, including the time periods of fire resistance (e.g., 1 hour, $1^1/_2$ hours, 2 hours, etc.) and other significant details of the material or assembly. In lieu of an actual copy of a test report, the building official may accept the use of a design number found in a compendium of ASTM E119 or UL 263 test reports such as, but not limited to, the *Fire Resistance Design Manual* published by the Gypsum Association, the *Fire Resistance Directory* published by UL LLC, or certification listings published by Warnock Hersey. Each publication includes a detailed description of the assembly, its hourly fire-resistance rating and other pertinent details, such as specifications of materials and alternative assembly details.

These publications detail the design of columns, beams, walls, partitions and floor/ceiling and roof/ceiling assemblies that have been tested or analyzed in accordance with ASTM E119 or UL 263. The designs are classified in accordance with their use and fire-resistance rating. Often, wall, partition, floor/ceiling and roof/ceiling assemblies are further classified with sound transmission class (STC) ratings. Many floor/ceiling assemblies also include impact insulation class (IIC) ratings. The designs indicate whether an assembly was tested under load-bearing or nonload-bearing conditions, and what structural height limitations there are for nonload-bearing assemblies. Many of the publications have introductory material that provides details on the uses and limitations of the tested assemblies, such as the amount of penetrations permitted in an assembly for electrical outlet boxes.

703.2.5 Exterior bearing walls. In determining the *fire-resistance rating* of exterior bearing walls, compliance with the ASTM E119 or UL 263 criteria for unexposed surface temperature rise and ignition of cotton waste due to passage of flame or gases is required only for a period of time corresponding to the required *fire-resistance rating* of an exterior nonbearing wall with the same *fire separation distance*, and in a building of the same group. Where the *fire-resistance*

INTERNATIONAL CODE COUNCIL®
Copyright © 2015 ICC. ALL RIGHTS RESERVED. Accessed by David Dammon on Jun 21, 2017 12:30:52 PM pursuant to License Agreement with ICC. No further reproduction or distribution authorized. ANY UNAUTHORIZED REPRODUCTION OR DISTRIBUTION IS A VIOLATION OF THE FEDERAL COPYRIGHT ACT AND THE LICENSE AGREEMENT, AND SUBJECT TO CIVIL AND CRIMINAL PENALTIES THEREUNDER.

rating determined in accordance with this exception exceeds the *fire-resistance rating* determined in accordance with ASTM E119 or UL 263, the fire exposure time period, water pressure and application duration criteria for the hose stream test of ASTM E119 or UL 263 shall be based on the *fire-resistance rating* determined in accordance with this section.

❖ This section applies to exterior load-bearing walls that are required to have a fire-resistance rating for structural integrity and not as a fire barrier (e.g., due to fire separation distance in accordance with Table 705.8). The exception is necessary because ASTM E119 and UL 263 do not distinguish between structural and fire-containment features of a wall. For example, assume that a concrete double-tee wall assembly was tested in accordance with ASTM E119 or UL 263. The flanges of the double-tees were $1^1/_2$ inches thick (38 mm) and the load applied to the wall was 9,600 pounds per lineal foot (14 150 kg/m). Because the temperature of the unexposed surface rose an average of 250°F (121°C) in 21 minutes, the fire-resistance rating assigned to the assembly was 21 minutes. The fire exposure was continued after the unexposed surface temperature criterion was exceeded and the wall assembly continued to support the applied load for 2 hours, at which time the test was terminated. Thus, the wall should be acceptable where structural performance for 2 hours is required and prevention of fire spread from building to building is not under consideration because of the fire separation distance. The exception, therefore, allows exterior load-bearing walls to be tested after the first failure criterion of ASTM E119 or UL 263 is reached, if the failure is other than a failure to sustain the applied load, and allows a structural fire-resistance rating to be determined. It should be noted that the hose stream test procedure is to be based on the fire exposure time period related to the structural fire-resistance rating.

703.3 Methods for determining fire resistance. The application of any of the methods listed in this section shall be based on the fire exposure and acceptance criteria specified in ASTM E119 or UL 263. The required *fire resistance* of a building element, component or assembly shall be permitted to be established by any of the following methods or procedures:

1. Fire-resistance designs documented in approved sources.
2. Prescriptive designs of fire-resistance-rated building elements, components or assemblies as prescribed in Section 721.
3. Calculations in accordance with Section 722.
4. Engineering analysis based on a comparison of building element, component or assemblies designs having *fire-resistance ratings* as determined by the test procedures set forth in ASTM E119 or UL 263.
5. Alternative protection methods as allowed by Section 104.11.
6. Fire-resistance designs certified by an approved agency.

❖ When based on the fire exposure and acceptance criteria of ASTM E119 or UL 263, an analytical method can be used in lieu of an actual ASTM E119 or UL 263 fire test to establish the fire-resistance rating of a single component or assembly.

1. The commentary to Section 703.2 also identifies additional resource materials relative to test reports.

2 & 3. Sections 721 and 722 provide further methods of determining fire-resistance ratings (see the commentary to these sections).

For example, methods for determining fire-resistance ratings of concrete or masonry assemblies have been standardized in ACI 216.1/TMS 0216.1 (see commentary, Section 722.1), as well as in the following:

- PCI MNL 124, Precast/Prestressed Concrete Institute.
- *Reinforced Concrete Fire Resistance*, Concrete Reinforcing Steel Institute.
- CMIFC SR267.01B, Concrete and Masonry Industry Fire Safety Committee.
- *A Compilation of Fire Tests on Concrete Masonry Assemblies*, National Concrete Masonry Association.
- NCMA TEK 6A, National Concrete Masonry Association.
- NCMA 35D, National Concrete Masonry Association.

4. An approved engineering analysis allows the fire protection properties of a component or assembly to be determined using information generated from previous fire tests through empirical calculations. There are several analytical methods available to designers for many types of construction materials. An engineering analysis is available for calculating fire-resistance ratings of heavy timber construction. This analysis uses an empirical mathematical method that generates a design for the minimum dimensions of a wood beam or column. These dimensions account for the changes that occur in the member due to charring of the wood after any given period of fire exposure. American Iron and Steel Institute (AISI) *Designing Fire Protection for Steel Columns* presents the factors that influence the fire-resistance ratings of steel columns in frequently used sizes and shapes. The publication also contains a discussion of the fire protection materials most often used with steel columns and provides accepted methods for calculating the fire-resistance rating of steel

INTERNATIONAL CODE COUNCIL®
Copyright © 2015 ICC. ALL RIGHTS RESERVED. Accessed by David Dammon on Jun 21, 2017 12:30:52 PM pursuant to License Agreement with ICC. No further reproduction or distribution authorized. ANY UNAUTHORIZED REPRODUCTION OR DISTRIBUTION IS A VIOLATION OF THE FEDERAL COPYRIGHT ACT AND THE LICENSE AGREEMENT, AND SUBJECT TO CIVIL AND CRIMINAL PENALTIES THEREUNDER.

columns predicated on the ASTM E119 or UL 263 fire exposure standard. Similarly, AISI's *Designing Fire Protection for Steel Beams* presents the factors that influence the fire-resistance ratings of steel beams in frequently used sizes. As typical test reports specify minimum beam sizes only, three different ways of evaluating beam substitutions are provided. Since the ASTM E119 or UL 263 test furnace is incapable of testing assemblies that incorporate large structural members, AISI's *Designing Fire Protection for Steel Trusses* proposes concepts for determining fire protection designs by applying existing test data. The application of these methods, as well as information on the fire resistance of archaic construction, is summarized in the International Code Council® (ICC®) publication, *2001 Guidelines for Determining Fire Resistance of Building Elements*. It is important to emphasize that all analytical methods of calculating fire-resistance ratings must be substantiated as being based on the fire exposure and acceptance criteria of ASTM E119 or UL 263. Upon submission of such documentation to the building official, the analytical methods mentioned herein, or any other such analytical methods, can be approved as the basis for showing compliance with the fire-resistance ratings required by the code.

5. As indicated in Section 104.11, alternative protection may be provided if approved by the building official. An example of an alternative protection method is the water-filled steel column system. The system consists of hollow, liquid-filled columns that are interconnected with pipe loops to allow the water to circulate freely. Engineering studies confirmed by tests have shown that critical temperatures are not reached in the steel columns as long as they remain filled with liquid.
6. This item allows the determination of fire-resistance design by qualified agencies. The term "certified by an approved agency" provides confidence that the design conforms to the test standard based on scientific data.

703.4 Automatic sprinklers. Under the prescriptive fire-resistance requirements of this code, the *fire-resistance rating* of a building element, component or assembly shall be established without the use of *automatic sprinklers* or any other fire suppression system being incorporated as part of the assembly tested in accordance with the fire exposure, procedures and acceptance criteria specified in ASTM E119 or UL 263. However, this section shall not prohibit or limit the duties and powers of the *building official* allowed by Sections 104.10 and 104.11.

❖ The fire-resistive requirements for structural members and walls and partitions separating areas in a building are passive fire-resistive measures and, when required, are required in addition to any other sprinkler requirements in the code. Required fire-resistance ratings must be established by tests not utilizing sprinklers. This section does not prohibit the building official from accepted alternatives in accordance with Sections 104.10 and 104.11.

703.5 Noncombustibility tests. The tests indicated in Sections 703.5.1 and 703.5.2 shall serve as criteria for acceptance of building materials as set forth in Sections 602.2, 602.3 and 602.4 in Type I, II, III and IV construction. The term "noncombustible" does not apply to the flame spread characteristics of *interior finish* or *trim* materials. A material shall not be classified as a noncombustible building construction material if it is subject to an increase in combustibility or flame spread beyond the limitations herein established through the effects of age, moisture or other atmospheric conditions.

❖ Restrictions on the use of combustible materials are primarily found in Chapter 6. However, certain sections of Chapter 7 (such as use of combustibles in Section 703.2.2 and fire walls in Section 706.3) contain restrictions on the use of combustible materials and separate provisions, depending on whether the material is combustible or noncombustible. Sections 703.5.1 and 703.5.2 contain the appropriate test criteria by which a material is to be evaluated to ascertain whether it is combustible or noncombustible.

Materials that are considered noncombustible must be capable of maintaining the required performance characteristics (noncombustibility and flame spread ratings) regardless of age, moisture or other atmospheric conditions. If exposure to atmospheric conditions results in an increase in combustibility or flame spread rating beyond the limitations specified, the material is considered combustible.

The criteria established by this section are primarily based on the National Board of Fire Underwriters' (NBFU) *National Building Code*, 1955 edition, which permitted a noncombustible material to contain a limited amount of combustible material, provided that it did not contribute to fire propagation. The requirement for noncombustibility is considered to apply to certain materials used for walls, roofs and other structural elements, but not to surface finish materials. The determination of whether a material is noncombustible from the standpoint of minimum required clearances to heating appliances, flues or other sources of high temperature is based on the ASTM E136 definition of "Noncombustibility," not the prescriptive definition in Section 703.5.2. Note that the *International*

INTERNATIONAL CODE COUNCIL®
Copyright © 2015 ICC. ALL RIGHTS RESERVED. Accessed by David Dammon on Jun 21, 2017 12:30:52 PM pursuant to License Agreement with ICC. No further reproduction or distribution authorized. ANY UNAUTHORIZED REPRODUCTION OR DISTRIBUTION IS A VIOLATION OF THE FEDERAL COPYRIGHT ACT AND THE LICENSE AGREEMENT, AND SUBJECT TO CIVIL AND CRIMINAL PENALTIES THEREUNDER.

Mechanical Code® (IMC®) contains a definition of "Noncombustible materials," which does not contain provisions for the use of composite materials (defined in Section 703.5.2) as acceptable noncombustible materials.

703.5.1 Elementary materials. Materials required to be noncombustible shall be tested in accordance with ASTM E136.

❖ Materials intended to be classified as noncombustible are to be tested in accordance with ASTM E136. In accordance with Section 8 of ASTM E136, such materials are acceptable as noncombustible when at least three of four specimens tested conform to all of the following criteria:

1. The recorded temperature of the surface and interior thermocouples shall not at any time during the test rise more than 54°F (30°C) above the furnace temperature at the beginning of the test.
2. There shall not be flaming from the specimen after the first 30 seconds.
3. If the weight loss of the specimen during testing exceeds 50 percent, the recorded temperature of the surface and interior thermocouples shall not at any time during the test rise above the furnace air temperature at the beginning of the test, and there shall not be flaming of the specimen.

The use of the test standard is limited to elementary materials and excludes laminated and coated materials because of the uncertainties associated with more complex materials and with products that cannot be tested in a realistic configuration. The test standard is also limited to solid materials and does not measure the self-heating tendencies of large masses of materials, such as resin-impregnated mineral fiber insulation.

The defined furnace temperature in the standard, 1,382°F (750°C), is representative of temperatures that are known to exist during building fires, although temperatures between 1,800°F (982°C) and 2,200°F (1204°C) are frequently achieved during intense fires. For most building materials, however, complete burning of the combustible fraction will occur as readily at 1,382°F (750°C) as at higher temperatures. The criterion requiring four specimens to be tested recognizes the variable nature of the measurements and the fact that there are difficulties in observing the presence and duration of flaming.

The need to measure and limit the duration of flaming and the rise in temperature recognizes that a brief period of flaming and a small amount of heating are not considered serious limitations on the use of building materials. Test results have shown that such criteria limit the combustible portion of noncombustible materials to a maximum of 3 percent. The 50-percent weight-loss limitation precludes the possibility that combustion of low-density materials will occur so rapidly that the recorded temperature rise and the measured flaming duration will be less than the prescribed limitations. The 50-percent limitation is considered appropriate for materials that contain appreciable quantities of combined water or gaseous components.

703.5.2 Composite materials. Materials having a structural base of noncombustible material as determined in accordance with Section 703.5.1 with a surfacing not more than 0.125 inch (3.18 mm) thick that has a *flame spread index* not greater than 50 when tested in accordance with ASTM E84 or UL 723 shall be acceptable as noncombustible materials.

❖ In recognition that an essentially noncombustible material with a thin combustible coating will not contribute appreciably to an ambient fire, this section provides criteria by which a composite material may be determined acceptable as a noncombustible material. The structural base of the composite material must meet the criteria for elementary materials (see Section 703.5.1). The material may have a surface not more than $^1/_8$ inch (3.2 mm) thick applied to the noncombustible base. This surface is required to have a flame spread rating no greater than 50 when tested in accordance with ASTM E84 or UL 723. For a discussion of both the ASTM E84 and UL 723 test methods, refer to the commentary to Section 803.1.

In accordance with this section, material such as gypsum board—which consists of a noncombustible base and a combustible (paper) surface—is considered to be a composite material. As noted in the commentary to Section 703.5, a composite material is considered a noncombustible material in the context of the code. The IMC, however, intentionally includes only limited applications of the criteria of this section in the definition of a noncombustible material. Therefore, composite materials are not considered acceptable noncombustible materials from the standpoint of clearances to heating appliances, flues or other sources of high temperature because of their potentially poor response to radiant heat exposure.

703.6 Fire-resistance-rated glazing. Fire-resistance-rated glazing, when tested in accordance with ASTM E119 or UL 263 and complying with the requirements of Section 707, shall be permitted. Fire-resistance-rated glazing shall bear a *label* marked in accordance with Table 716.3 issued by an agency and shall be permanently identified on the glazing.

❖ Fire-resistance-rated glazing is one of two designated types of fire-rated glazing—fire-protection-rated glazing being the other. Fire-rated glazing is allowed in three separate locations, depending on which tests the glazing has passed. The label is required to provide the location and the fire-resistance rating in minutes. There are door labels, window labels and wall labels. Section 703.6 concerns only the fire-resistance-rated glazing. Table 716.3 indicates that glazing meeting ASTM E119 or UL 263 shall bear a "W" label and is considered a wall; therefore, it is not subject to the limitations on doors and windows. This section indicates that fire-resistance-rated glazing with the "W" designation on the label is good for fire

INTERNATIONAL CODE COUNCIL®
Copyright © 2015 ICC. ALL RIGHTS RESERVED. Accessed by David Dammon on Jun 21, 2017 12:30:52 PM pursuant to License Agreement with ICC. No further reproduction or distribution authorized. ANY UNAUTHORIZED REPRODUCTION OR DISTRIBUTION IS A VIOLATION OF THE FEDERAL COPYRIGHT ACT AND THE LICENSE AGREEMENT, AND SUBJECT TO CIVIL AND CRIMINAL PENALTIES THEREUNDER.

walls and fire barriers. It follows that it would be good for shaft walls and stair enclosures as well. It could also be used as a fire partition, smoke partition or smoke barrier.

Fire-resistance-rated glazing is also mentioned in Table 716.5 for doors and windows.

703.7 Marking and identification. Where there is an accessible concealed floor, floor-ceiling or *attic* space, *fire walls*, *fire barriers*, *fire partitions*, *smoke barriers* and smoke partitions or any other wall required to have protected openings or penetrations shall be effectively and permanently identified with signs or stenciling in the concealed space. Such identification shall:

1. Be located within 15 feet (4572 mm) of the end of each wall and at intervals not exceeding 30 feet (9144 mm) measured horizontally along the wall or partition.
2. Include lettering not less than 3 inches (76 mm) in height with a minimum $^{3}/_{8}$-inch (9.5 mm) stroke in a contrasting color incorporating the suggested wording, "FIRE AND/OR SMOKE BARRIER—PROTECT ALL OPENINGS," or other wording.

❖ This code requirement addresses the need for installed fire-resistance-rated assemblies to maintain their fire resistance over the life of the building. This identification will allow tradespeople, craftsmen, installers, maintenance workers or inspectors to know that the wall is a fire-resistance-rated wall and openings or penetrations of it must be protected. This identification is only required where there is an accessible concealed space associated with the wall construction.

SECTION 704
FIRE-RESISTANCE RATING OF STRUCTURAL MEMBERS

704.1 Requirements. The *fire-resistance ratings* of structural members and assemblies shall comply with this section and the requirements for the type of construction as specified in Table 601. The *fire-resistance ratings* shall be not less than the ratings required for the fire-resistance-rated assemblies supported by the structural members.

Exception: *Fire barriers*, *fire partitions*, *smoke barriers* and *horizontal assemblies* as provided in Sections 707.5, 708.4, 709.4 and 711.2, respectively.

❖ This section contains provisions that apply to structural members that are required to have a fire-resistance rating. The required rating of structural members is usually based on the type of construction and Table 601. Other sections of the code, such as the continuity provisions of Sections 707.5, 709.4, 710.4 and 711.2.2, may require structural members to have a fire-resistance rating because they support fire-resistance-rated construction. The minimum required fire-resistance rating for the structural member is, therefore, the more restrictive of the above two criteria.

There are instances in which the code does not require the supporting structural members to have a fire-resistance rating. An example includes the supporting construction for tenant and sleeping unit separations, exit access corridors and smoke partitions in Type IIB, IIIB, and VB construction (see Sections 708.4 and 709.4).

Protection of structural members differs for various members. Required column fire-resistance protection must be afforded in accordance with Section 704.2. Certain primary structural frames (see definition in Section 202) must be protected by individual encasement in accordance with Section 704.3. Secondary structural members (see definition in Section 202) may utilize membrane protection in accordance with Section 704.4. Special requirements apply to fire-resistance protection of trusses (see Section 704.5).

Section 704 addresses issues such as protection of attachments to structural members (see Section 704.6), embedment of service facilities (see Section 704.8), impact protection (see Section 704.9), exterior structural members (see Section 704.10), bottom flange protection (see Section 704.11), seismic isolation systems (see Section 704.12) and sprayed fire-resistant materials (SFRM) (see Section 704.13).

704.2 Column protection. Where columns are required to have protection to achieve a *fire-resistance rating*, the entire column shall be provided individual encasement protection by protecting it on all sides for the full column height, including connections to other structural members, with materials having the required *fire-resistance rating*. Where the column extends through a ceiling, the encasement protection shall be continuous from the top of the foundation or floor/ceiling assembly below through the ceiling space to the top of the column.

❖ Columns required to be fire-resistance rated must be encased on all sides. This is true even if the column is located on the exterior of the structure. The ceiling membrane or ceiling protection of a floor/ceiling or roof/ceiling fire-resistance-rated assembly is prohibited from being considered as the protection for columns required to have a fire-resistance rating. Therefore, the materials that encase or provide individual protection must continue through the concealed space above a ceiling, even if the ceiling membrane is part of a fire-resistance-rated assembly (see Commentary Figure 704.2). Connections of structural members to columns must also be individually protected (see Section 704.6). Columns that provide inherent fire resistance, without encasement, such as heavy timber, are considered as not requiring protection and do not need to comply with this section.

704.3 Protection of the primary structural frame other than columns. Members of the primary structural frame other than columns that are required to have protection to achieve a *fire-resistance rating* and support more than two floors or one floor and roof, or support a load-bearing wall or a nonload-bearing wall more than two stories high, shall be provided individual encasement protection by protecting

INTERNATIONAL CODE COUNCIL®
Copyright © 2015 ICC. ALL RIGHTS RESERVED. Accessed by David Dammon on Jun 21, 2017 12:30:52 PM pursuant to License Agreement with ICC. No further reproduction or distribution authorized. ANY UNAUTHORIZED REPRODUCTION OR DISTRIBUTION IS A VIOLATION OF THE FEDERAL COPYRIGHT ACT AND THE LICENSE AGREEMENT, AND SUBJECT TO CIVIL AND CRIMINAL PENALTIES THEREUNDER.

them on all sides for the full length, including connections to other structural members, with materials having the required *fire-resistance rating*.

Exception: Individual encasement protection on all sides shall be permitted on all exposed sides provided the extent of protection is in accordance with the required *fire-resistance rating*, as determined in Section 703.

❖ Not all primary structural frames need to comply with this section. Only those primary structural frame members that are required to have a fire-resistance rating and support more than two floors, more than one floor and a roof, a bearing wall of any height or a nonload-bearing wall more than two stories high, are required to be protected by individual encasement. Individual encasement, though not defined, is attained by using tested design assemblies that provide gypsum board applied directly to the member or to studs that are directly attached to all sides of the member, mastic and intumescent coatings, and sprayed fire-resistant materials.

Individual encasement is required for primary structural frame members receiving tributary loads from multiple levels in order to reduce the risk associated with catastrophic failure. The risk represented by structural collapse during a fire is significantly increased in multistory buildings, since the occupants require additional time of egress and a single structural element that supports multiple elements requires more conservative protection methods.

Though the text states that the encasement must be on all sides of the structural member, the exception will allow tested assemblies that have the encasement on only the exposed sides of a member. Commentary Figure 704.3 is an example of individual encasement protection.

Note that some structural members such as heavy wood beams may not require any protection (encasement or membrane) to attain a fire rating (see calculated fire resistance, Section 722.1).

704.4 Protection of secondary members. Secondary members that are required to have protection to achieve a *fire-resistance rating* shall be protected by individual encasement protection.

❖ Where secondary structural members are required to be fire-resistance-rated, the rating, in most cases, is required to be achieved by construction that encloses the individual member. See Commentary Figures 704.2 and 704.3 for examples of individual encasement. Situations where the fire rating can be achieved by a membrane are contained in Sections 704.4.1 and 704.4.2.

Remember that the fire-resistance requirements are established based upon a fire test in accordance with ASTM E119 or UL 263. Although the fire temperature in the furnace is the same, the test protocols in both standards have different temperature rise limits for the elements and different temperature couple

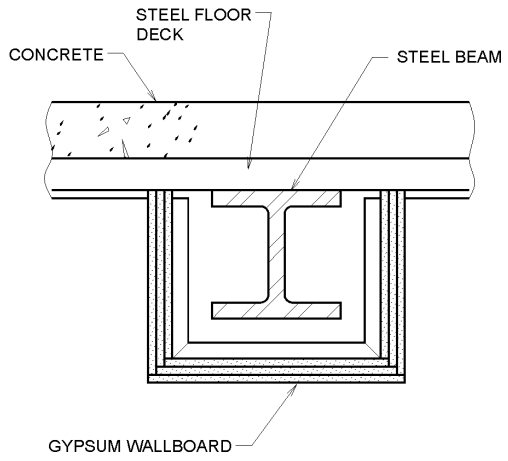

Figure 704.3
INDIVIDUAL FIRE PROTECTION METHOD

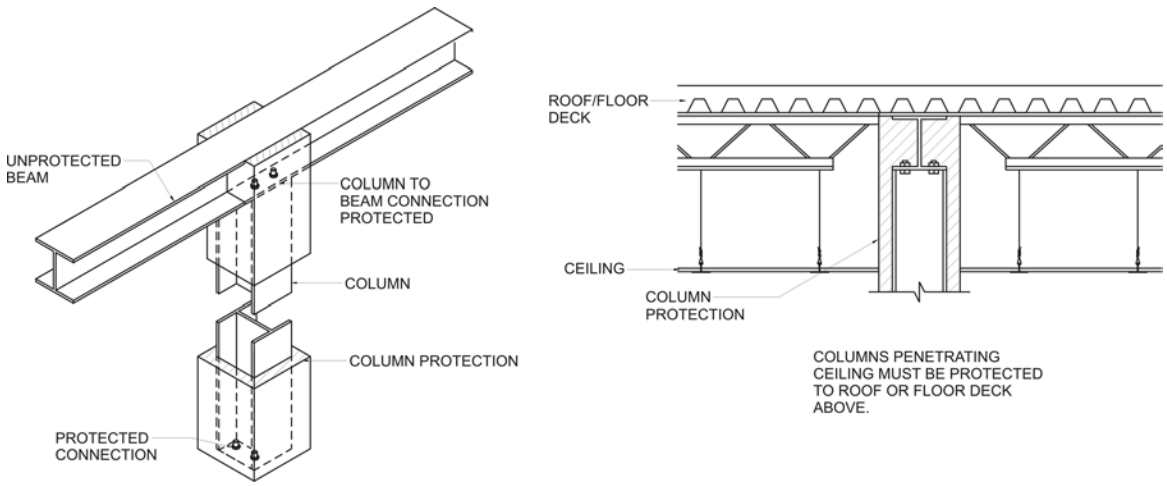

Figure 704.2
COLUMN PROTECTION

INTERNATIONAL CODE COUNCIL®
Copyright © 2015 ICC. ALL RIGHTS RESERVED. Accessed by David Dammon on Jun 21, 2017 12:30:52 PM pursuant to License Agreement with ICC. No further reproduction or distribution authorized. ANY UNAUTHORIZED REPRODUCTION OR DISTRIBUTION IS A VIOLATION OF THE FEDERAL COPYRIGHT ACT AND THE LICENSE AGREEMENT, AND SUBJECT TO CIVIL AND CRIMINAL PENALTIES THEREUNDER.

locations between a structural member test and a wall or horizontal assembly test. Therefore, although a wall may obtain a 1-hour fire-resistance rating, it does not mean that a column placed within that wall would also obtain a 1-hour fire-resistance rating. Also, a floor/ceiling assembly rated for 2 hours cannot be assumed to protect a beam that was not in the tested assembly. If the beam was in the tested assembly, the fire-resistance rating of the floor/ceiling may be different than the beam. It is important that the structural members located within the assemblies were also in the tested floor/ceiling and roof/ceiling assemblies.

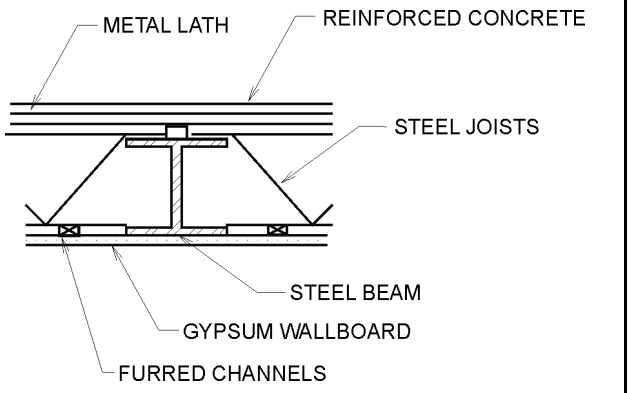

Figure 704.4.2
MEMBRANE FIRE PROTECTION METHOD

704.4.1 Light-frame construction. Studs and boundary elements that are integral elements in *load-bearing walls* of light-frame construction shall be permitted to have required *fire-resistance ratings* provided by the membrane protection provided for the *load-bearing wall*.

❖ Studs in light-frame construction are considered as standard parts of the wall assembly rather than as individual members acting as a typical column. Note that other vertical members that act as columns and are secondary members require individual encasement.

704.4.2 Horizontal assemblies. *Horizontal assemblies* are permitted to be protected with a membrane or ceiling where the membrane or ceiling provides the required *fire-resistance rating* and is installed in accordance with Section 711.

❖ The fire-resistance rating of secondary members within a horizontal assembly can be achieved by either a ceiling membrane or by individual encasement. Typically, protection by a ceiling membrane is the most economical, though it depends on the details of the specific condition. Commentary Figure 704.4.2 is an example of membrane protection.

704.5 Truss protection. The required thickness and construction of fire-resistance-rated assemblies enclosing trusses shall be based on the results of full-scale tests or combinations of tests on truss components or on *approved* calculations based on such tests that satisfactorily demonstrate that the assembly has the required *fire resistance*.

❖ Trusses can be of an almost infinite number of configurations and sizes. By nature, they are typically designed and constructed of different structural components. This leads to the impracticality of such trusses being tested. The code acknowledges this by allowing full-scale tests, tests on the individual components or some form of calculations that demonstrate that the structural elements that form the truss are provided with the requisite protection to attain the fire-resistance rating.

704.6 Attachments to structural members. The edges of lugs, brackets, rivets and bolt heads attached to structural members shall be permitted to extend to within 1 inch (25 mm) of the surface of the fire protection.

❖ This section is intended to limit the transfer of heat to the structural element from the connection elements by requiring the connection element to be protected with at least 1 inch (25 mm) of some form of fire-resistance protection. No attaching elements are allowed to the structural element that would allow heat to transfer through the protection and to the structural element. At least 1 inch (25 mm) of cover is required on all the attaching elements.

704.7 Reinforcing. Thickness of protection for concrete or masonry reinforcement shall be measured to the outside of the reinforcement except that stirrups and spiral reinforcement ties are permitted to project not more than 0.5-inch (12.7 mm) into the protection.

❖ Since load-bearing assemblies must sustain the superimposed load while being subjected to standard time-temperature fire conditions, concrete, masonry and reinforcing steel must be able to provide the required strength at elevated temperatures. This involves providing adequate cover over the steel reinforcement so that the stress induced in the reinforcement is less than its yield stress, which is commonly referred to as “yield strength.” Tests of steel reinforcing bars show that at a temperature of approximately 1,100°F (593°C), the yield strength of steel is reduced to approximately 50 percent of that at ambient temperature conditions. Similar tests of prestressing tendons show that at approximately 800°F (427°C) the tensile strength is approximately 50 percent of that at ambient conditions. Cover requirements, therefore, are typically based on limiting the reinforcing and prestressing steel temperatures to 1,100 and 800°F (593 and 427°C), respectively. This section allows for stirrups and spiral column ties to project into the required cover by a minimal distance, acknowledging the practicality of construction tolerances while providing adequate cover to the main reinforcing steel, which is located inside of the stirrups and ties. This also acknowledges that the stirrups are not continuous for the length of the member and are spaced at intermittent intervals. Therefore, they only reduce the actual cover to the main reinforcing steel at a percentage of

INTERNATIONAL CODE COUNCIL®
Copyright © 2015 ICC. ALL RIGHTS RESERVED. Accessed by David Dammon on Jun 21, 2017 12:30:52 PM pursuant to License Agreement with ICC. No further reproduction or distribution authorized. ANY UNAUTHORIZED REPRODUCTION OR DISTRIBUTION IS A VIOLATION OF THE FEDERAL COPYRIGHT ACT AND THE LICENSE AGREEMENT, AND SUBJECT TO CIVIL AND CRIMINAL PENALTIES THEREUNDER.

its length. The $^1/_2$-inch (12.7 mm) dimension reflects a No. 4 reinforcing bar.

704.8 Embedments and enclosures. Pipes, wires, conduits, ducts or other service facilities shall not be embedded in the required fire protective covering of a structural member that is required to be individually encased.

❖ Piping, wires, conduits, ducts and other service facilities are not to be embedded in the fire protective covering of a structural member that is required to be individually encased in accordance with Section 704.3. The fire protection performance of encasement materials is critical to achieve the required fire-resistance rating, and would be impaired if the continuity of the encasement is interrupted. This does not, however, prevent the installation if these items are installed in hollow spaces that may be created by the encasement method. When items are installed in such hollow spaces, penetrations of the protective assembly must be properly protected so that the fire-resistance rating is maintained.

704.9 Impact protection. Where the fire protective covering of a structural member is subject to impact damage from moving vehicles, the handling of merchandise or other activity, the fire protective covering shall be protected by corner guards or by a substantial jacket of metal or other noncombustible material to a height adequate to provide full protection, but not less than 5 feet (1524 mm) from the finished floor.

Exception: Corner protection is not required on concrete columns in open or enclosed parking garages.

❖ To aid in the reliability of the fire protective covering, impact protection must be provided if the covering is subject to impact from moving vehicles, handling of merchandise or other activities. The impact protection is to be provided to at least 5 feet (1524 mm) above the finished floor or as needed to prevent impact damage.

The type of protection required is not specified within the code, but it should be determined based on the type of fire protection used and also the expected impact that the protection may be expected to encounter. For example, if the fire-resistance protection of a column is provided by either spray-on fireproofing or gypsum board, that would be more likely to be damaged than a concrete-encased column. Additionally, if the column was in a grocery store and the only expected item to impact the column was a shopping cart, then it may be determined acceptable to simply cover the gypsum board with a piece of thin sheet metal. On the other hand, if the column is located in a warehouse or parking garage where a vehicle such as a forklift or automobile could strike it, then the protection may require the installation of steel plates or bollards.

704.10 Exterior structural members. Load-bearing structural members located within the *exterior walls* or on the outside of a building or structure shall be provided with the highest *fire-resistance rating* as determined in accordance with the following:

1. As required by Table 601 for the type of building element based on the type of construction of the building;
2. As required by Table 601 for exterior bearing walls based on the type of construction; and
3. As required by Table 602 for *exterior walls* based on the *fire separation distance*.

❖ Exterior load-bearing structural members, such as columns or girders, must have the same fire-resistance rating required for exterior load-bearing walls. As such, the required fire-resistance rating is the higher rating of that found in Table 601 for type of construction for structural elements or bearing walls or as required in Table 602 based on the fire separation distance.

704.11 Bottom flange protection. Fire protection is not required at the bottom flange of lintels, shelf angles and plates, spanning not more than 6 feet 4 inches (1931 mm) whether part of the primary structural frame or not, and from the bottom flange of lintels, shelf angles and plates not part of the structural frame, regardless of span.

❖ Structural frame elements located over an opening in a wall required to be fire-resistance rated, particularly a masonry wall with an exposed steel lintel or angle over the wall opening, are covered by this section. The bottom flanges of such lintels or angles if less than 6 feet 4 inches (1930 mm) in length are not required to be protected even if part of the primary structural frame. Regardless of the span, the bottom flange of such lintels or angles is not required to be protected if the member is not part of the primary structural frame.

704.12 Seismic isolation systems. *Fire-resistance ratings* for the isolation system shall meet the *fire-resistance rating* required for the columns, walls or other structural elements in which the isolation system is installed in accordance with Table 601. Isolation systems required to have a *fire-resistance rating* shall be protected with *approved* materials or construction assemblies designed to provide the same degree of *fire resistance* as the structural element in which the system is installed when tested in accordance with ASTM E119 or UL 263 (see Section 703.2).

Such isolation system protection applied to isolator units shall be capable of retarding the transfer of heat to the isolator unit in such a manner that the required gravity load-carrying capacity of the isolator unit will not be impaired after exposure to the standard time-temperature curve fire test prescribed in ASTM E119 or UL 263 for a duration not less than that required for the *fire-resistance rating* of the structure element in which the system is installed.

Such isolation system protection applied to isolator units shall be suitably designed and securely installed so as not to dislodge, loosen, sustain damage or otherwise impair its ability to accommodate the seismic movements for which the iso-

INTERNATIONAL CODE COUNCIL®
Copyright © 2015 ICC. ALL RIGHTS RESERVED. Accessed by David Dammon on Jun 21, 2017 12:30:52 PM pursuant to License Agreement with ICC. No further reproduction or distribution authorized. ANY UNAUTHORIZED REPRODUCTION OR DISTRIBUTION IS A VIOLATION OF THE FEDERAL COPYRIGHT ACT AND THE LICENSE AGREEMENT, AND SUBJECT TO CIVIL AND CRIMINAL PENALTIES THEREUNDER.

lator unit is designed and to maintain its integrity for the purpose of providing the required fire-resistance protection.

❖ This section states that the fire-resistance requirements for seismic isolation systems are the same as those for other structural elements, as required in Table 601. Additionally, the fire-resistance method used must be able to withstand the anticipated movement of the system without the fire-resistance application methods and systems affecting its functionality during a seismic event. Elements of the system can either be individually protected or contained within a tested assembly. Another key element of this section is that, when tested under exposure to the standard time-temperature curve test, the structural elements are still able to carry the gravity load as designed.

704.13 Sprayed fire-resistant materials (SFRM). Sprayed fire-resistant materials (SFRM) shall comply with Sections 704.13.1 through 704.13.5.

❖ The intent of this code section is to increase the in-place durability of spray-applied fire-resistant materials (SFRM). The National Institute of Standards and Technology's (NIST) investigation on the World Trade Center tragedy documented that the proximate cause of the actual collapse was the action of a building contents fire on light steel members in the absence of spray-applied fire-resistive material, which had been dislodged. Events far less dramatic than an airplane attack have been known to dislodge SFRM. Events as simple as an elevator movement, building sway or maintenance activities can dislodge SFRM if it is not adhered properly. These code requirements as well as the special testing requirements in Section 1705.13 are necessary to increase the in-place capability of SFRM assemblies. Section 403.2.4 in the high-rise buildings section gives the bond strength requirements for SFRM.

704.13.1 Fire-resistance rating. The application of SFRM shall be consistent with the *fire-resistance rating* and the listing, including, but not limited to, minimum thickness and dry density of the applied SFRM, method of application, substrate surface conditions and the use of bonding adhesives, sealants, reinforcing or other materials.

❖ In order for the fire-resistance rating that is actually realized by sprayed fire-resistant materials to equal or exceed the required fire-resistance rating, it is necessary to install the materials in accordance with their listing. In this section, minimum thicknesses, proper conditions of the substrate, method of application, and correct bonding materials are all items that are necessary to ensure the proper performance of these materials.

704.13.2 Manufacturer's installation instructions. The application of SFRM shall be in accordance with the manufacturer's installation instructions. The instructions shall include, but are not limited to, substrate temperatures and surface conditions and SFRM handling, storage, mixing, conveyance, method of application, curing and ventilation.

❖ Sections 704.13.1 and 704.13.2 require that the application of SFRM be in accordance with all terms and conditions of the listing and the manufacturer's instruction.

704.13.3 Substrate condition. The SFRM shall be applied to a substrate in compliance with Sections 704.13.3.1 through 704.13.3.2.

❖ The in-place adhesion of SFRM can be reduced by a factor of 10 when applied over certain primers compared to the adhesion obtained by the rated material applied on bare, clean steel. This section gives the requirements for the surface condition of the substrate receiving the SFRM.

704.13.3.1 Surface conditions. Substrates to receive SFRM shall be free of dirt, oil, grease, release agents, loose scale and any other condition that prevents adhesion. The substrates shall be free of primers, paints and encapsulants other than those fire tested and *listed* by a nationally recognized testing agency. Primed, painted or encapsulated steel shall be allowed, provided that testing has demonstrated that required adhesion is maintained.

❖ This section gives the minimum temperature for the air and the material itself, which must be maintained during application and for 24 hours after, unless the manufacturer's instructions allow otherwise.

704.13.3.2 Primers, paints and encapsulants. Where the SFRM is to be applied over primers, paints or encapsulants other than those specified in the listing, the material shall be field tested in accordance with ASTM E736. Where testing of the SFRM with primers, paints or encapsulants demonstrates that required adhesion is maintained, SFRM shall be permitted to be applied to primed, painted or encapsulated wide flange steel shapes in accordance with the following conditions:

1. The beam flange width does not exceed 12 inches (305 mm); or
2. The column flange width does not exceed 16 inches (400 mm); or
3. The beam or column web depth does not exceed 16 inches (400 mm).
4. The average and minimum bond strength values shall be determined based on a minimum of five bond tests conducted in accordance with ASTM E736. Bond tests conducted in accordance with ASTM E736 shall indicate an average bond strength of not less than 80 percent and an individual bond strength of not less than 50 percent, when compared to the bond strength of the SFRM as applied to clean uncoated $^1/_8$-inch-thick (3.2 mm) steel plate.

❖ When there is some sort of material, such as paint or primer, on the steel structural members where it is desired to install SFRM, it is still possible to apply the SFRM to the steel without removing the material. However, this section specifies that a field test in accordance with ASTM E736 be done on the SFRM so applied. This ensures that a bond strength is achieved and that the material will remain in place. Note that there are limitations on the sizes of struc-

INTERNATIONAL CODE COUNCIL®
Copyright © 2015 ICC. ALL RIGHTS RESERVED. Accessed by David Dammon on Jun 21, 2017 12:30:52 PM pursuant to License Agreement with ICC. No further reproduction or distribution authorized. ANY UNAUTHORIZED REPRODUCTION OR DISTRIBUTION IS A VIOLATION OF THE FEDERAL COPYRIGHT ACT AND THE LICENSE AGREEMENT, AND SUBJECT TO CIVIL AND CRIMINAL PENALTIES THEREUNDER.

tural members that can utilize this field test (Conditions 1-3).

704.13.4 Temperature. A minimum ambient and substrate temperature of 40°F (4.44°C) shall be maintained during and for not fewer than 24 hours after the application of the SFRM, unless the manufacturer's instructions allow otherwise.

❖ This section gives the minimum temperature for the air and the material itself, which must be maintained during application and for 24 hours after, unless the manufacturer's instructions allow otherwise.

704.13.5 Finished condition. The finished condition of SFRM applied to structural members or assemblies shall not, upon complete drying or curing, exhibit cracks, voids, spalls, delamination or any exposure of the substrate. Surface irregularities of SFRM shall be deemed acceptable.

❖ This section and the special inspections required by Section 1704.12 establish the acceptance criteria for the finished condition of the SFRM.

SECTION 705
EXTERIOR WALLS

705.1 General. *Exterior walls* shall comply with this section.

❖ In order to accomplish these functions, this section regulates the fire protection capability of the exterior wall, including limitations on openings in the walls. The requirements contained herein and in Table 602 are based on the fire separation distance, the occupancy that represents a relative fuel loading and the percentage of openings in the wall. Section 705.8.5 also regulates the location of openings in order to prevent ignition of materials in adjacent stories.

All other applicable provisions of the code concerning exterior walls still apply. The provisions of this section refer to the fire-resistance requirements contained in Tables 601 and 602 (see Section 705.5). Table 601 establishes minimum fire-resistance ratings for load-bearing exterior walls based on the type of construction that addresses the structural integrity of the building under fire conditions. Table 602 establishes ratings based on fire separation distance in an effort to address conflagration concerns.

705.2 Projections. Cornices, eave overhangs, exterior balconies and similar projections extending beyond the exterior wall shall conform to the requirements of this section and Section 1406. Exterior egress balconies and exterior exit stairways and ramps shall comply with Sections 1021 and 1027, respectively. Projections shall not extend any closer to the line used to determine the fire separation distance than shown in Table 705.2.

❖ Horizontal projections, similar to walls and openings, are a potential source of the spread of fire from building to building. Some projections from the building exterior wall may even shelter combustible materials. As such, limits on the allowable projections are necessary. Examples of horizontal projections are roof overhangs, exterior balconies, canopies and covered porches. Balcony projections must also meet the requirements of Section 1406, while exterior egress balconies must meet Section 1021.

The first column in Table 705.2 is Fire Separation Distance (FSD) and is measured from the lot line or assumed lot line to the exterior wall—not to the edge of the overhang. The second column is distance from the line used to determine the FSD to the vertical edge of the overhang. For examples of the application of Table 705.2, see Commentary Figure 705.2.

The exception addresses buildings on the same lot that together qualify as one aggregate building under the limitations of Chapter 5. Projections on the exterior walls of these buildings that face each other are not limited in length.

TABLE 705.2
MINIMUM DISTANCE OF PROJECTION

FIRE SEPARATION DISTANCE (FSD)	MINIMUM DISTANCE FROM LINE USED TO DETERMINE FSD
0 feet to 2 feet	Projections not permitted
Greater than 2 feet to 3 feet	24 inches
Greater than 3 feet to less than 30 feet	24 inches plus 8 inches for every foot of FSD beyond 3 feet or fraction thereof
30 feet or greater	20 feet

For SI: 1 foot = 304.8 mm; 1 inch = 25.4 mm.

Exception: Buildings on the same lot and considered as portions of one building in accordance with Section 705.3 are not required to comply with this section for projections between the buildings.

705.2.1 Type I and II construction. Projections from walls of Type I or II construction shall be of noncombustible materials or combustible materials as allowed by Sections 1406.3 and 1406.4.

❖ The code requires projections from walls of Type I and II materials to be noncombustible. An exception for combustible materials is for balconies (Section 1406.3) and bay windows (Section 1406.4). Buildings of Type I through IV construction require the exterior walls to be noncombustible. However, the code places a higher restriction on projections on the two highest types of construction, while Section 705.2.2 allows combustible projections on buildings of Type III and IV construction. This approach mirrors the general requirements that all elements of Type I and II buildings be noncombustible, while those of Type III and IV are permitted to be constructed of combustible interior materials.

705.2.2 Type III, IV or V construction. Projections from walls of Type III, IV or V construction shall be of any *approved* material.

❖ See also Section 1406. When combustible materials are used, the provisions of Section 705.2.3 must be followed.

705.2.3 Combustible projections. Combustible projections extending to within 5 feet (1524 mm) of the line used to determine the *fire separation distance* shall be of not less

INTERNATIONAL CODE COUNCIL®
Copyright © 2015 ICC. ALL RIGHTS RESERVED. Accessed by David Dammon on Jun 21, 2017 12:30:52 PM pursuant to License Agreement with ICC. No further reproduction or distribution authorized. ANY UNAUTHORIZED REPRODUCTION OR DISTRIBUTION IS A VIOLATION OF THE FEDERAL COPYRIGHT ACT AND THE LICENSE AGREEMENT, AND SUBJECT TO CIVIL AND CRIMINAL PENALTIES THEREUNDER.

than 1-hour *fire-resistance-rated* construction, Type IV construction, *fire-retardant-treated wood* or as required by Section 1406.3.

Exception: Type VB construction shall be allowed for combustible projections in Group R-3 and U occupancies with a fire separation distance greater than or equal to 5 feet (1524 mm).

❖ This section states the requirements for protecting combustible projections and does not state when combustible projections are allowed. That is covered in Sections 705.2.1, 705.2.2 and 1406.3. The location where protection is required is simply where the combustible projection extends to within 5 feet (1524 mm) of the line (either the property line or the assumed line) used to determine the fire separation distance (FSD) (see Section 202). Every projection, if allowed by Section 705.2.2 or 1406.3 to be of combustible construction, will have to be protected according to this section if the projection is within 5 feet (1524 mm) of the line used to determine the FSD.

A frequently asked question is: should the entire projection be protected or just the portion of the projection within the 5 feet (1524 mm)? From a practical standpoint the entire projection must be protected.

The four types of protection for the combustible projections enumerated in this section are:

- The projection must be 1-hour fire-resistance-rated construction;
- The projection must be of heavy timber size combustible members;
- The projection must be constructed of fire-retardant-treated wood; or
- The projection must be as required by Section 1406.3.

The first three are self-explanatory. Section 1406.3 has construction requirements for balconies and similar projections regardless of their location on the property. The only other protection method mentioned in Section 1406.3 is sprinklers. Balconies and similar projections in Type III, IV and V construction may be combustible if sprinklers are extended into the balcony area.

There is an exception to combustible projection

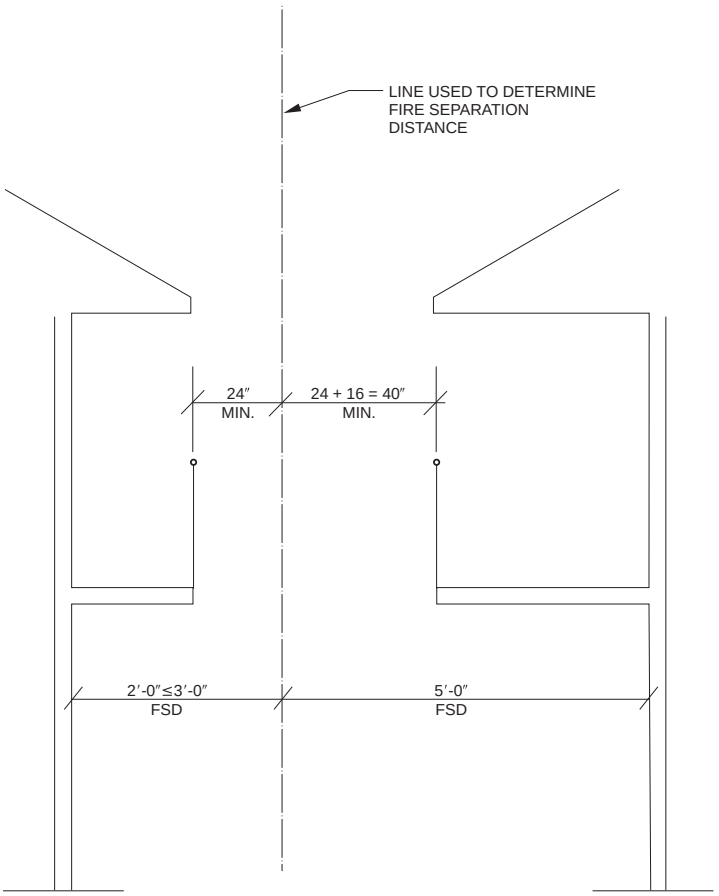

For SI: 1 inch = 25.4 mm, 1 foot = 304.8 mm.

Figure 705.2
PROJECTIONS FROM EXTERIOR WALLS

INTERNATIONAL CODE COUNCIL®
Copyright © 2015 ICC. ALL RIGHTS RESERVED. Accessed by David Dammon on Jun 21, 2017 12:30:52 PM pursuant to License Agreement with ICC. No further reproduction or distribution authorized. ANY UNAUTHORIZED REPRODUCTION OR DISTRIBUTION IS A VIOLATION OF THE FEDERAL COPYRIGHT ACT AND THE LICENSE AGREEMENT, AND SUBJECT TO CIVIL AND CRIMINAL PENALTIES THEREUNDER.

protection for Type VB construction in Group R-3 and Group U occupancies with an FSD equal or greater than 5 feet (1524 mm).

705.3 Buildings on the same lot. For the purposes of determining the required wall and opening protection, projections and roof-covering requirements, buildings on the same lot shall be assumed to have an imaginary line between them.

Where a new building is to be erected on the same lot as an existing building, the location of the assumed imaginary line with relation to the existing building shall be such that the *exterior wall* and opening protection of the existing building meet the criteria as set forth in Sections 705.5 and 705.8.

Exceptions:

1. Two or more buildings on the same lot shall be either regulated as separate buildings or shall be considered as portions of one building if the aggregate area of such buildings is within the limits specified in Chapter 5 for a single building. Where the buildings contain different occupancy groups or are of different types of construction, the area shall be that allowed for the most restrictive occupancy or construction.
2. Where an S-2 parking garage of Construction Type I or IIA is erected on the same lot as a Group R-2 building, and there is no *fire separation distance* between these buildings, then the adjoining *exterior walls* between the buildings are permitted to have occupant use openings in accordance with Section 706.8. However, opening protectives in such openings shall only be required in the exterior wall of the S-2 parking garage, not in the exterior wall openings in the R-2 building, and these opening protectives in the exterior wall of the S-2 parking garage shall be not less than $1^1/_2$-hour *fire protection rating*.

❖ This section addresses buildings on the same lot and requires that an imaginary lot line be established between buildings in order to determine exterior wall fire ratings and opening protectives (see the definition of "Fire separation distance"). This section takes the approach of limiting the conflagration hazard between buildings on the same property.

Exception #1 permits two buildings on the same lot to be exempt from Sections 705.5 and 705.8 when considered as one building in accordance with Section 503.1.2. The provisions of Section 705.8.5 would still apply, since a need exists to restrict fire spread between stories within a building. Although not specifically identified in the exception, Section 705.11 would not apply, since it is dependent on the exterior wall being required to have a fire-resistance rating in accordance with Section 705.5, which relates to measurement of FSD. The last sentence of the exception reminds the user that normal code requirements would still be applicable once the two buildings are considered as one. Therefore, if two types of construction are involved, then the lowest type of construction would be assumed for the entire building because there is no fire wall between them. In applying this last sentence it is probably easiest to determine what the requirement is if the user imagines what the code requirement would be if the buildings were pushed together. In such a case, it would be easier to see that a fire wall would be needed between portions of a building that are of two different construction types or the entire building would have to be viewed as the lowest possible type of construction. Regarding occupancies and associated allowable areas, they would be separated per Section 508.4 or considered as nonseparated occupancies per Section 508.3 and, therefore, use the most restrictive allowable area.

In order to help make sense of the last sentence of the exception, the idea of imagining the two buildings being pushed together, as mentioned above, is helpful. Then realize that simply pulling the building apart should not increase or lessen the code requirements for that "single" building.

Exception #2 takes into account a practical design issue.

The great majority of multifamily projects are being built with parking garages beside apartment buildings. Access from the parking garage into the apartment unit's floor is provided at each garage floor onto the apartment's floor for convenience as well as for safety for the apartment dwellers. Many designs have one or more of the exterior walls of the parking garage and the apartment building at a 0-foot fire separation distance. The requirements within Table 705.8 would prohibit any openings in these exterior walls between the parking garage and the apartment building. Based on the protection afforded by the sprinkler system in the R-2 use and the inherent fire safety of the parking garage, this exception would allow these openings. See Commentary Figure 705.3 for an illustration of this condition.

705.4 Materials. *Exterior walls* shall be of materials permitted by the building type of construction.

❖ The material (combustible or noncombustible) requirements for exterior walls are found in Sections 602.1 through 602.5. Only Type V construction allows exterior walls to be combustible construction. Other types of construction require exterior walls, or at least the framing members, to be noncombustible. Type I and II construction allows limited use of fire-retardant wood for exterior nonload-bearing walls. All types of construction allow insulation, exterior wall coverings and interior finish to be combustible within limits. See Sections 603, 720 and 1405.5 for materials allowed within and on framed exterior walls.

705.5 Fire-resistance ratings. *Exterior walls* shall be fire-resistance rated in accordance with Tables 601 and 602 and this section. The required *fire-resistance rating* of *exterior walls* with a *fire separation distance* of greater than 10 feet (3048 mm) shall be rated for exposure to fire from the inside. The required *fire-resistance rating* of *exterior walls* with a

INTERNATIONAL CODE COUNCIL®
Copyright © 2015 ICC. ALL RIGHTS RESERVED. Accessed by David Dammon on Jun 21, 2017 12:30:52 PM pursuant to License Agreement with ICC. No further reproduction or distribution authorized. ANY UNAUTHORIZED REPRODUCTION OR DISTRIBUTION IS A VIOLATION OF THE FEDERAL COPYRIGHT ACT AND THE LICENSE AGREEMENT, AND SUBJECT TO CIVIL AND CRIMINAL PENALTIES THEREUNDER.

fire separation distance of less than or equal to 10 feet (3048 mm) shall be rated for exposure to fire from both sides.

❖ Table 601 states the requirements for the fire-resistance ratings for load-bearing exterior walls. All load-bearing exterior walls except those in Type IIB and VB construction require some degree of fire-resistance rating. Table 602 states the requirements for the fire-resistance ratings for both load-bearing and nonload-bearing exterior walls. Whereas Table 602 is based on the fire separation distance, the type of construction and the occupancy group, Table 601 requirements are only a function of the type of construction. The table resulting in the highest fire-resistance rating shall be used.

Fire exposure from the outside of the building is thought to be from other buildings either on the same property or another property. Therefore, with increased FSD, the spread of fire from building to building is lessened. For years the code required the fire-resistance rating to be from both sides of the exterior wall when the FSD was 5 feet (1524 mm) or less. During the development of the IBC, it was decided that exterior walls that had no required fire-resistance rating according to Tables 601 and 602 could have unlimited unprotected openings (see Section 705.8.1, Exception 2). This would allow an exterior wall in a Type IIB or VB building of nearly any occupancy group to have unlimited openings and a nonfire-resistance-rated wall at an FSD of 10 feet (3048 mm). You could have another building 15-plus feet (4572 mm) from the first building with an exterior wall without fire-resistance rating from the exterior exposure because that building would have an FSD of 5 feet (1524 mm). The consensus now is that an FSD of 10 feet (3048 mm) is more practical for allowing the fire-resistance ratings of the exterior wall to be based on interior surface exposure only. Now the fire-resistance rating of the exterior wall is from both sides when the FSD is 10 feet (3048 mm) or less.

705.6 Structural stability. *Exterior walls* shall extend to the height required by Section 705.11. Interior structural elements that brace the exterior wall but that are not located within the plane of the exterior wall shall have the minimum *fire-resistance rating* required in Table 601 for that structural element. Structural elements that brace the exterior wall but are located outside of the exterior wall or within the plane of the exterior wall shall have the minimum *fire-resistance rating* required in Tables 601 and 602 for the exterior wall.

❖ Structural stability of fire-resistance-rated construction is an important concern. Section 705.6 requires elements providing bracing support to be fire-resistance rated for the same duration of time as the exterior wall. In light-frame platform construction, this will require that the band joist or beam supporting the floor and the wall above to also be of fire-resistant construction. Although the floor construction itself may not be required to be of fire-resistance-rated construction in Type IIB and VB construction, some effort must be made to ensure that the floor joists, at least at the exterior wall, are of fire-resistant-rated construction. Although the floor framing acts as a lateral support for the exterior wall, this section does not require that the entire floor system be of fire-resistance-rated construction. To state otherwise would prohibit Type IIB and VB buildings with an FSD of less than 10 feet (3048 mm). Only the structural element within the floor system that supports the vertical load of the wall must be of fire-resistance-rated construction.

For exterior walls, this section requires fire-resis-

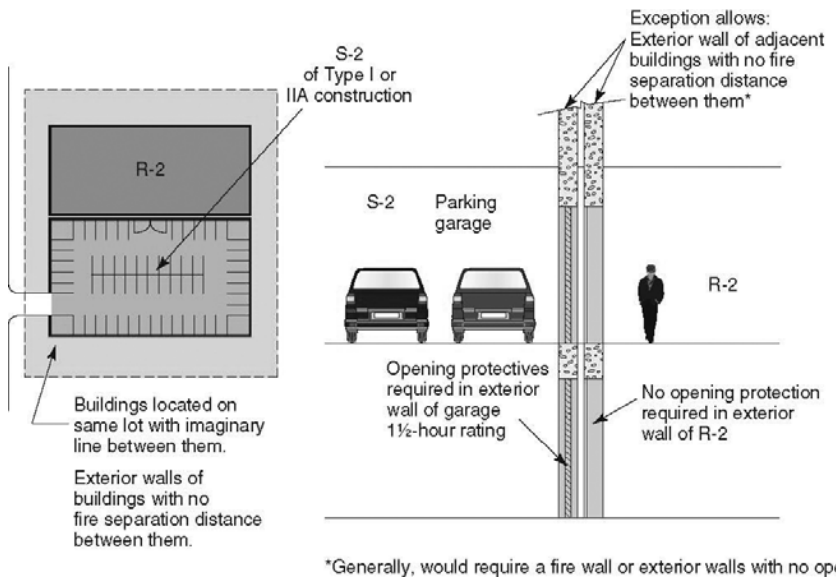

Figure 705.3
R-2 WITH S-2 PARKING GARAGE

INTERNATIONAL CODE COUNCIL®
Copyright © 2015 ICC. ALL RIGHTS RESERVED. Accessed by David Dammon on Jun 21, 2017 12:30:52 PM pursuant to License Agreement with ICC. No further reproduction or distribution authorized. ANY UNAUTHORIZED REPRODUCTION OR DISTRIBUTION IS A VIOLATION OF THE FEDERAL COPYRIGHT ACT AND THE LICENSE AGREEMENT, AND SUBJECT TO CIVIL AND CRIMINAL PENALTIES THEREUNDER.

tance-rated construction to extend to the roof construction or to the top of the parapet if a parapet is required (see Section 705.11). This begs the question—in conventional light-frame platform construction, is the floor system supported by the lower exterior wall and supporting the exterior wall above part of the exterior wall? And, if so, how and to what limits do you go to provide a fire-resistance rating? This is a valid concern in Type IIB and VB construction with an FSD of less than 10 feet (3048 mm) because the exterior wall is required to have a fire-resistance rating while the floor system is not. Both the continuity and the structural integrity issue are illustrated in Commentary Figure 705.6.

When parapet walls are not required, the exterior wall for fire-resistant rating purposes stops at the roof/ceiling construction.

Interior structural elements which brace an exterior wall do not require a fire-resistance rating equal to the wall it braces. However, the structural element must have a fire-resistance rating as required by Table 601 for that structural element.

This section does not require that the wall remain in place when the structure collapses. That language is only used for fire wall structural integrity.

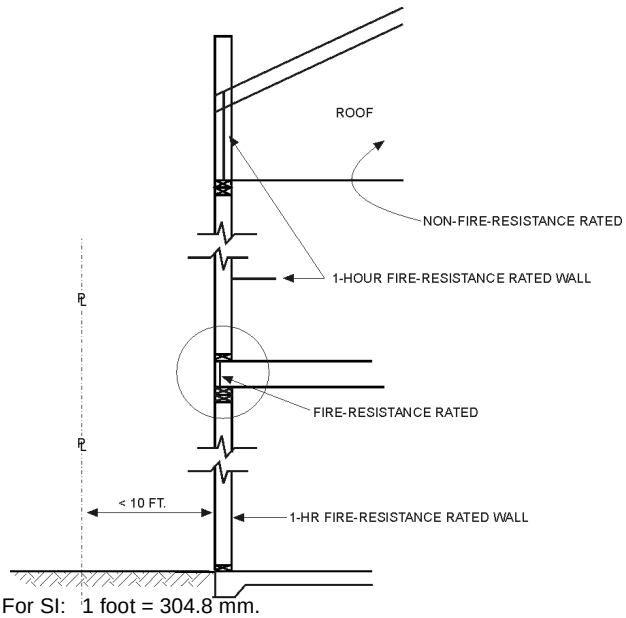

For SI: 1 foot = 304.8 mm.

Figure 705.6
TYPE IIB AND VB EXTERIOR FIRE-RESISTANCE-RATED WALL CONTINUITY AND STRUCTURAL STABILITY

705.7 Unexposed surface temperature. Where protected openings are not limited by Section 705.8, the limitation on the rise of temperature on the unexposed surface of *exterior walls* as required by ASTM E119 or UL 263 shall not apply. Where protected openings are limited by Section 705.8, the limitation on the rise of temperature on the unexposed surface of *exterior walls* as required by ASTM E119 or UL 263 shall not apply provided that a correction is made for radiation from the unexposed *exterior wall* surface in accordance with the following formula:

$$A_e = A + (A_f \times F_{eo}) \qquad \textbf{(Equation 7-1)}$$

where:

A_e = Equivalent area of protected openings.

A = Actual area of protected openings.

A_f = Area of *exterior wall* surface in the *story* under consideration exclusive of openings, on which the temperature limitations of ASTM E119 or UL 263 for walls are exceeded.

F_{eo} = An "equivalent opening factor" derived from Figure 705.7 based on the average temperature of the unexposed wall surface and the *fire-resistance rating* of the wall.

❖ The purpose of this provision is to allow the use of an exterior fire-resistance-rated wall assembly that does not meet all of the conditions of acceptance of ASTM E119 or UL 263. The only condition that may not apply is the limitation on the rise of temperature on the unexposed surface of the wall. To pass the standard, the rise of temperature cannot exceed 250°F (121°C) above the initial temperature. All listed fire-resistance-rated exterior walls and partitions meet all of the conditions of acceptance. If a particular required fire-resistance-rated exterior wall was not listed by an approved testing agency for the required duration of time, then this section could be applicable.

For exterior walls with FSDs of 20 feet (6096 mm) or greater, the limitation on the rise of temperature on the unexposed surface of the exterior wall does not apply. This is practical because at 20 feet (6096 mm) an unlimited area of protected openings can be installed; protected openings are treated as windows or doors and the standard fire test for windows and doors does not have a limit on the temperature rise. To accept a nonlisted exterior wall assembly, the failed test data would have to be provided showing that the assembly did indeed pass all of the conditions of acceptance except rise of temperature on the unexposed surface.

For required exterior walls with FSDs of less than 20 feet (6096 mm), the limitation on the rise of temperature on the unexposed surface of the exterior wall may not apply. To accept a nonlisted exterior wall assembly, the failed test data would have to be provided showing that the assembly did indeed pass all of the conditions of acceptance except rise of temperature on the unexposed surface. The test data must also state the average temperature of the unexposed surface at the time duration for which the exterior wall is required to be rated. We must make a correction for the radiation from the unexposed exterior wall surface. We convert the wall surface which has too much temperature rise to an equivalent

INTERNATIONAL CODE COUNCIL®
Copyright © 2015 ICC. ALL RIGHTS RESERVED. Accessed by David Dammon on Jun 21, 2017 12:30:52 PM pursuant to License Agreement with ICC. No further reproduction or distribution authorized. ANY UNAUTHORIZED REPRODUCTION OR DISTRIBUTION IS A VIOLATION OF THE FEDERAL COPYRIGHT ACT AND THE LICENSE AGREEMENT, AND SUBJECT TO CIVIL AND CRIMINAL PENALTIES THEREUNDER.

amount of protected openings. Then we check for compliance with the opening provisions of Section 705.8.1 as always. See Example 705.7:

As shown in Commentary Figure 705.7, Example 705.7:

The exterior bearing wall of a Type VA nonsprinklered building with a Group B occupancy is 16 feet (4877 mm) from an interior lot line. The designer chose to use an exterior wall assembly which failed the ASTM E119 fire test because of the rise of temperature of the unexposed surface. The designer supplies the failed test data which clearly shows that the wall met all conditions of acceptance for a 1-hour fire-resistance rating except the rise of temperature on the unexposed side which was an average of 1200°F (649°C) at 1-hour fire duration. Since the temperature rise exceeds the allowed, we must treat the wall surface as though it had an equivalent area of protected openings.

Solution:

- From Table 602: the exterior wall must be fire-resistance rated for 1 hour.
- From Table 705.8: the wall may have 75-percent protected wall openings or 25-percent unprotected wall openings or a combination of the two in accordance with Section 705.8.4.
- From drawing of exterior wall elevation: total area of wall = 700 sq. ft. (65 m^2).

  total area of protected openings = 0
  total area of unprotected openings = 120 sq. ft. (11 m^2).
  total area of exterior wall surface minus the openings = 580 sq. ft. (54 m^2).
- First we compute the equivalent area of protected openings using Equation 7-1:
- We can calculate from the drawings the actual area of protected openings which is *A*. *A* = 0
- We can calculate *Af* from the drawings. It is the total area of the wall surface minus the openings. 700-120 = 540 sq. ft.
- We can obtain F_{eo} from Figure 705.7. Using the given average temperature rise on the unexposed side which was 1200°F and the curve on the figure for 1 hour and reading to the left legend we find that F_{eo} for this assembly is 0.34.
- Equation 7-1 yields: A_e = 0 + (540 x 0.34) or A_e = 197 sq. ft.

Having solved for the equivalent area of protected openings we can now proceed as normal by checking compliance with Section 705.8.4 since we have a mix

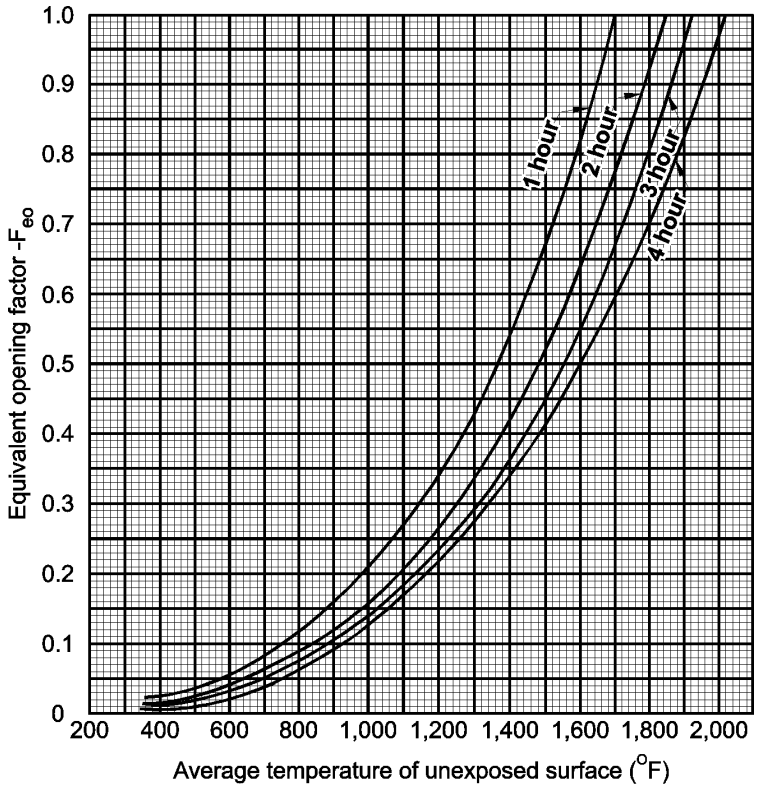

For SI: °C = [(°F) - 32] / 1.8.

FIGURE 705.7
EQUIVALENT OPENING FACTOR

INTERNATIONAL CODE COUNCIL®
Copyright © 2015 ICC. ALL RIGHTS RESERVED. Accessed by David Dammon on Jun 21, 2017 12:30:52 PM pursuant to License Agreement with ICC. No further reproduction or distribution authorized. ANY UNAUTHORIZED REPRODUCTION OR DISTRIBUTION IS A VIOLATION OF THE FEDERAL COPYRIGHT ACT AND THE LICENSE AGREEMENT, AND SUBJECT TO CIVIL AND CRIMINAL PENALTIES THEREUNDER.

of protected and unprotected openings in the fire-resistance-rated exterior wall.

- From Table 705.8: seventy-five percent of the total wall area may be protected openings or 0.75 x 700 = 525 sq. ft.
- From Table 705.8: twenty-five percent of the total wall area may be unprotected openings or 0.25 x 700 = 175 sq. ft.
- From Equation 7-2: $(A_p / a_p) + (A_u / a_u) \le 1$ or we have too many openings in the wall.
- From Equation 7-2 and using A_e computed above for A_p we have (197/525) + (120/175) ≤ 1 or 0.375 + 0.685 = 1.06 which is not less than or equal to 1. The wall does not meet the code. Too many openings.

705.8 Openings. Openings in *exterior walls* shall comply with Sections 705.8.1 through 705.8.6.

❖ The requirements of this section limit the allowable area of openings in exterior walls and are applicable to buildings with or without walls with FSDs less than 30 feet (9144 mm). The limitations on openings in exterior walls is a function of FSD (see definition this chapter) and the degree of protection provided for the opening. The degree of protection of the openings is either unprotected in a nonsprinklered building (UP, NS), unprotected in a sprinklered building (UP, S) or protected openings (P). Protected openings are openings with fire doors, fire shutters or fire window assemblies that comply with Sections 716.5 and 716.6. Sprinklered buildings are buildings with an NFPA 13 sprinkler system. Buildings with only an NFPA 13 R system shall be considered nonsprinklered for the purpose of opening limitations in exterior walls. The percentage of openings allowed is in Table 705.8, subject to the exceptions in Section 705.8.1.

TABLE 705.8. See page 7-20.

❖ Table 705.8, on page 7-20, provides allowable areas for exterior wall openings for structures based on the FSD of the exterior wall and the degree of protection afforded to the opening, such as fire shutters and automatic sprinkler systems. The more protection provided, the larger the area of openings can get.

705.8.1 Allowable area of openings. The maximum area of unprotected and protected openings permitted in an *exterior wall* in any *story* of a building shall not exceed the percentages specified in Table 705.8.

Exceptions:

1. In other than Group H occupancies, unlimited unprotected openings are permitted in the first *story* above grade plane either:
   1.1. Where the wall faces a street and has a *fire separation distance* of more than 15 feet (4572 mm); or
   1.2. Where the wall faces an unoccupied space. The unoccupied space shall be on the same lot or dedicated for public use, shall be not less than 30 feet (9144 mm) in width and shall have access from a street by a posted fire lane in accordance with the *International Fire Code*.
2. Buildings whose exterior bearing walls, exterior nonbearing walls and exterior primary structural frame are not required to be fire-resistance rated shall be permitted to have unlimited unprotected openings.

❖ The allowable area is given as a percentage of the total wall area at any story. Each story must comply independently.

Exception 1.1 only applies to the exterior walls on the first story above grade. For all occupancies except Group H, the first-story exterior wall that faces a street and that is at least 15 feet (4572 mm) from the wall to the centerline of the street shall be allowed unlimited unprotected openings.

Exception 1.2 also applies to the exterior walls on only the first story above grade. For all occupancies except Group H, the first-story exterior wall that faces a minimum 30-foot-wide (9144 mm) unoccupied space either on the same lot or dedicated for public use with access from a street by a fire lane, shall be allowed unlimited unprotected openings.

Since the first story above grade is generally read-

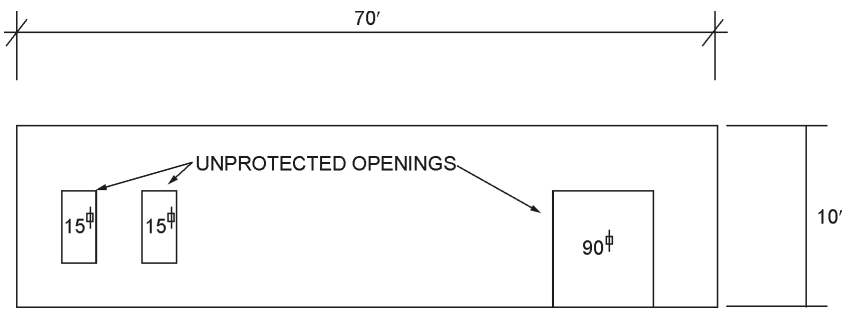

For SI: 1 foot = 304.8 mm.

Figure 705.7, Example 705.7
ELEVATION OF EXTERIOR WALL

INTERNATIONAL CODE COUNCIL®
Copyright © 2015 ICC. ALL RIGHTS RESERVED. Accessed by David Dammon on Jun 21, 2017 12:30:52 PM pursuant to License Agreement with ICC. No further reproduction or distribution authorized. ANY UNAUTHORIZED REPRODUCTION OR DISTRIBUTION IS A VIOLATION OF THE FEDERAL COPYRIGHT ACT AND THE LICENSE AGREEMENT, AND SUBJECT TO CIVIL AND CRIMINAL PENALTIES THEREUNDER.

ily available for fire department access, unprotected openings are not limited in the above exception. See Commentary Figure 705.8.1 for examples of first-story openings.

Exception 2 is for openings in all exterior walls in all stories where Tables 601 and 602 do not require any exterior wall (bearing or nonbearing) or primary structural member to be fire-resistance rated. Therefore, this exception is only applicable to Type IIB and VB construction with an FSD of 10 feet (3048 mm) or greater. This allows unlimited unprotected openings in Type IIB and VB construction for all exterior walls facing an FSD of 10 feet (3048 mm) or more.

705.8.2 Protected openings. Where openings are required to be protected, *fire doors* and fire shutters shall comply with Section 716.5 and *fire window assemblies* shall comply with Section 716.6.

Exception: Opening protectives are not required where the building is equipped throughout with an *automatic*

TABLE 705.8
MAXIMUM AREA OF EXTERIOR WALL OPENINGS BASED ON FIRE SEPARATION DISTANCE AND DEGREE OF OPENING PROTECTION

FIRE SEPARATION DISTANCE (feet)	DEGREE OF OPENING PROTECTION	ALLOWABLE AREA[a]
0 to less than 3[b, c, k]	Unprotected, Nonsprinklered (UP, NS)	Not Permitted[k]
	Unprotected, Sprinklered (UP, S)[i]	Not Permitted[k]
	Protected (P)	Not Permitted[k]
3 to less than 5[d, e]	Unprotected, Nonsprinklered (UP, NS)	Not Permitted
	Unprotected, Sprinklered (UP, S)[i]	15%
	Protected (P)	15%
5 to less than 10[e, f, j]	Unprotected, Nonsprinklered (UP, NS)	10%[h]
	Unprotected, Sprinklered (UP, S)[i]	25%
	Protected (P)	25%
10 to less than 15[e, f, g, j]	Unprotected, Nonsprinklered (UP, NS)	15%[h]
	Unprotected, Sprinklered (UP, S)[i]	45%
	Protected (P)	45%
15 to less than 20[f, g, j]	Unprotected, Nonsprinklered (UP, NS)	25%
	Unprotected, Sprinklered (UP, S)[i]	75%
	Protected (P)	75%
20 to less than 25[f, g, j]	Unprotected, Nonsprinklered (UP, NS)	45%
	Unprotected, Sprinklered (UP, S)[i]	No Limit
	Protected (P)	No Limit
25 to less than 30[f, g, j]	Unprotected, Nonsprinklered (UP, NS)	70%
	Unprotected, Sprinklered (UP, S)[i]	No Limit
	Protected (P)	No Limit
30 or greater	Unprotected, Nonsprinklered (UP, NS)	No Limit
	Unprotected, Sprinklered (UP, S)[i]	No Limit
	Protected (P)	No Limit

For SI: 1 foot = 304.8 mm.

UP, NS = Unprotected openings in buildings not equipped throughout with an automatic sprinkler system in accordance with Section 903.3.1.1.

UP, S = Unprotected openings in buildings equipped throughout with an automatic sprinkler system in accordance with Section 903.3.1.1.

P = Openings protected with an opening protective assembly in accordance with Section 705.8.2.

a. Values indicated are the percentage of the area of the exterior wall, per story.

b. For the requirements for fire walls of buildings with differing heights, see Section 706.6.1.

c. For openings in a fire wall for buildings on the same lot, see Section 706.8.

d. The maximum percentage of unprotected and protected openings shall be 25 percent for Group R-3 occupancies.

e. Unprotected openings shall not be permitted for openings with a fire separation distance of less than 15 feet for Group H-2 and H-3 occupancies.

f. The area of unprotected and protected openings shall not be limited for Group R-3 occupancies, with a fire separation distance of 5 feet or greater.

g. The area of openings in an open parking structure with a fire separation distance of 10 feet or greater shall not be limited.

h. Includes buildings accessory to Group R-3.

i. Not applicable to Group H-1, H-2 and H-3 occupancies.

j. The area of openings in a building containing only a Group U occupancy private garage or carport with a fire separation distance of 5 feet or greater shall not be limited.

k. For openings between S-2 parking garage and Group R-2 building, see Section 705.3, Exception 2.

INTERNATIONAL CODE COUNCIL®
Copyright © 2015 ICC. ALL RIGHTS RESERVED. Accessed by David Dammon on Jun 21, 2017 12:30:52 PM pursuant to License Agreement with ICC. No further reproduction or distribution authorized. ANY UNAUTHORIZED REPRODUCTION OR DISTRIBUTION IS A VIOLATION OF THE FEDERAL COPYRIGHT ACT AND THE LICENSE AGREEMENT, AND SUBJECT TO CIVIL AND CRIMINAL PENALTIES THEREUNDER.

sprinkler system in accordance with Section 903.3.1.1 and the exterior openings are protected by a water curtain using automatic sprinklers *approved* for that use.

❖ To be considered protected, the opening must have a listed and labeled fire door, fire shutter or fire window meeting the requirements of Sections 716.5 and 716.6. The required fire protection rating of doors in protected openings of exterior walls shall be in accordance with Table 716.5. Protected window assemblies shall have the fire protection rating as indicated in Table 716.6.

The exception to Section 705.8.2 is irrelevant for most occupancies. Table 705.8 allows the same percentage of opening area for protected openings and unprotected openings in sprinklered buildings and Table 705.8 does not have the water curtain requirement as the exception does. In a building sprinklered throughout with a full NFPA 13 system, the same percentage of openings is allowed, whether they are protected or unprotected.

The exception to Section 705.8.2 would be relevant for Group H occupancies since Note i to Table 705.8 makes the unprotected sprinklered category not applicable to Group H-1, H-2, and H-3 occupancies.

705.8.3 Unprotected openings. Where unprotected openings are permitted, windows and doors shall be constructed of any *approved* materials. Glazing shall conform to the requirements of Chapters 24 and 26.

❖ Unprotected openings can be windows and doors of any approved material. Glazing must meet the structural requirements and the safety requirements as applicable in Chapters 24 and 26. All openings in wind-borne debris regions must be protected by impact-resistant material in accordance with Section 1609.1.2. For purposes of exterior wall fire-resistance requirements and opening limitations, an unprotected opening can have nothing at all in it as a partial enclosed building. Sheds without exterior walls must also meet Section 705.8 and Table 705.8.

705.8.4 Mixed openings. Where both unprotected and protected openings are located in the *exterior wall* in any *story* of a building, the total area of openings shall be determined in accordance with the following:

$$(A_p/a_p) + (A_u/a_u) \le 1 \qquad \textbf{(Equation 7-2)}$$

where:

A_p = Actual area of protected openings, or the equivalent area of protected openings, A_e (see Section 705.7).

a_p = Allowable area of protected openings.

A_u = Actual area of unprotected openings.

a_u = Allowable area of unprotected openings.

❖ The opening limitations in Table 705.8 vary according to the degrees of opening protection. The table establishes the acceptable percentage for openings if all openings were of one degree of protection. For instance, at 12 feet (3658 mm) if all openings are unprotected in a nonsprinklered building you can have only 15 percent of the wall area in unprotected openings. In that same exterior wall if all openings were protected, you could have 45 percent of the wall area in protected openings. If any exterior wall area in any story has both protected and unprotected openings, then the actual areas of both types of openings must meet Equation 7-2.

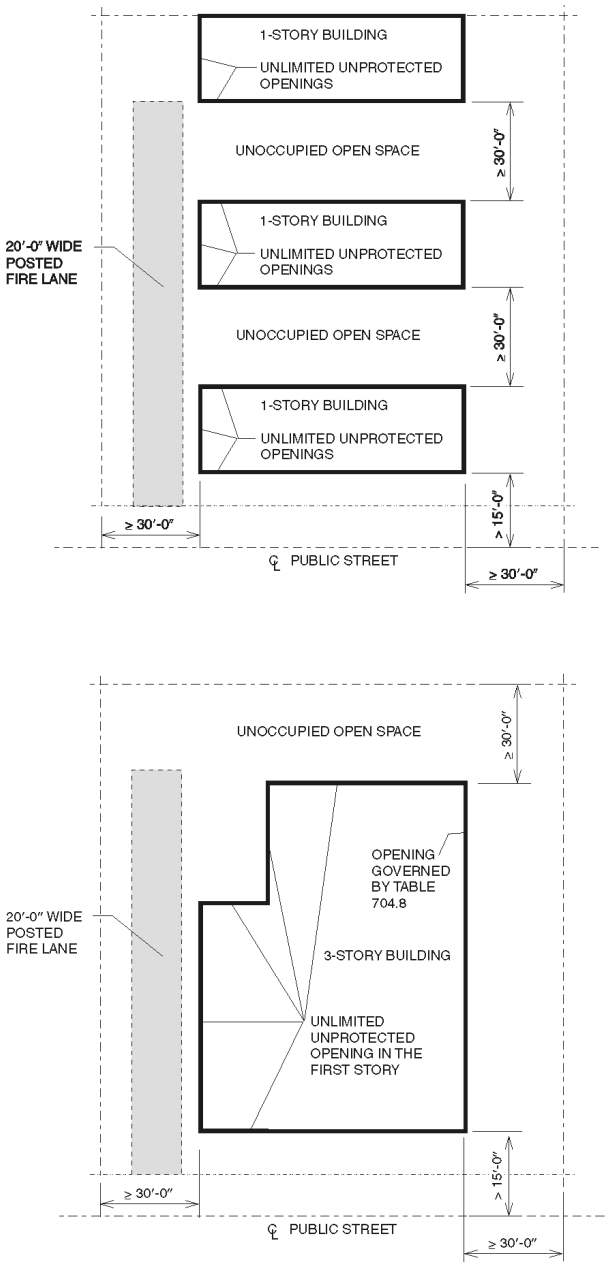

For SI: 1 inch = 25.4 mm, 1 foot = 304.8 mm.

Figure 705.8.1
EXAMPLES OF PERMITTED UNLIMITED OPENING AREA IN THE FIRST STORY

INTERNATIONAL CODE COUNCIL®
Copyright © 2015 ICC. ALL RIGHTS RESERVED. Accessed by David Dammon on Jun 21, 2017 12:30:52 PM pursuant to License Agreement with ICC. No further reproduction or distribution authorized. ANY UNAUTHORIZED REPRODUCTION OR DISTRIBUTION IS A VIOLATION OF THE FEDERAL COPYRIGHT ACT AND THE LICENSE AGREEMENT, AND SUBJECT TO CIVIL AND CRIMINAL PENALTIES THEREUNDER.

Example 705.8.4:

In a Type IIA building, the exterior wall is required to be of 1-hour fire-resistance-rated construction by Table 602. The wall has an FSD of 12 feet (3658 mm). The building is nonsprinklered. The wall in the first story has a total area of 1000 sq. ft. (93 m^2). The designer has 150 sq. ft. (14 m^2) of protected openings in the wall and 100 sq. ft. (9.3 m^2) of unprotected openings. Does this comply with the code, particularly Section 705.8.4?

Solution:

- Use Equation 7-2
- From the building in the example the protected openings are 150 sq. ft. (14 m^2). This value is A_p.
- From Table 705.8 the allowable area (if only protected openings are used) is 45 percent. Forty-five percent of 1000 sq. ft. (93 m^2) is 450 sq. ft. (42 m^2) (1000 x 0.45 = 450). This value is a_p in the equation.
- From the building in the example the unprotected openings are 100 sq. ft. (9.3 m^2) This value is A_u in the equation.
- From Table 705.8 the allowable area (if only unprotected openings are used) is 15 percent. Fifteen percent of 1000 sq. ft. (93 m^2) is 150 sq. ft. (14 m^2) (1000 x 0.15 = 150). This value is a_u in the equation.
- Equation 7-2 $(A_p/a_p) + (A_u/a_u) \le 1$ or (150/450) + (100/150) ≤ 1 or 0.333 + 0.666 = 1

This amount of openings exactly complies with the code. Had the sum of the ratios exceeded 1 the opening mixture would not be allowed.

705.8.5 Vertical separation of openings. Openings in *exterior walls* in adjacent *stories* shall be separated vertically to protect against fire spread on the exterior of the buildings where the openings are within 5 feet (1524 mm) of each other horizontally and the opening in the lower *story* is not a protected opening with a *fire protection rating* of not less than $^3/_4$ hour. Such openings shall be separated vertically not less than 3 feet (914 mm) by spandrel girders, *exterior walls* or other similar assemblies that have a *fire-resistance rating* of not less than 1 hour, rated for exposure to fire from both sides, or by flame barriers that extend horizontally not less than 30 inches (762 mm) beyond the *exterior wall*. Flame barriers shall have a *fire-resistance rating* of not less than 1 hour. The unexposed surface temperature limitations specified in ASTM E119 or UL 263 shall not apply to the flame barriers or vertical separation unless otherwise required by the provisions of this code.

Exceptions:

1. This section shall not apply to buildings that are three *stories* or less above *grade plane*.
2. This section shall not apply to buildings equipped throughout with an *automatic sprinkler system* in accordance with Section 903.3.1.1 or 903.3.1.2.
3. Open parking garages.

❖ Where unprotected openings occur in adjacent stories, a fire that breaks out of an opening in a lower story can spread vertically to upper stories of the building. A fire at the Hilton Hotel in Las Vegas provides a good illustration of this problem. In that incident a fire broke out in an elevator lobby at a lower level and then quickly spread upward to a number of other stories simply due to the flame plume from the lower level impinging on the windows above and causing the combustible materials in those upper levels to ignite. A vertical panel or horizontal flame barrier is necessary to minimize the possibility of vertical flame spread. The vertical panel is to be at least 3 feet (914 mm) in height and have a fire-resistance rating of at least 1 hour [see Commentary Figure 705.8.5(1)]. Note that the fire rating is required from both sides of the assembly regardless of fire separation distance. Full-scale fire tests have shown that the vertical panel should extend at least 30 inches (762 mm) above the finished floor level. This is to prevent the transfer of radiant heat to furnishings and other combustibles located in the lower portion of the room in the story above the assumed fire exposure. Horizontal flame barriers are required to extend at least 30 inches (762 mm) beyond the face of the exterior wall and have a fire-resistance rating of at least 1 hour [see Commentary Figure 705.8.5(2)].

This section requires such protection when the opening on the lower level is not fire-protection rated for $^3/_4$ hour or more. The use of glazing is one example of why this section is so specific. Wired glass, for

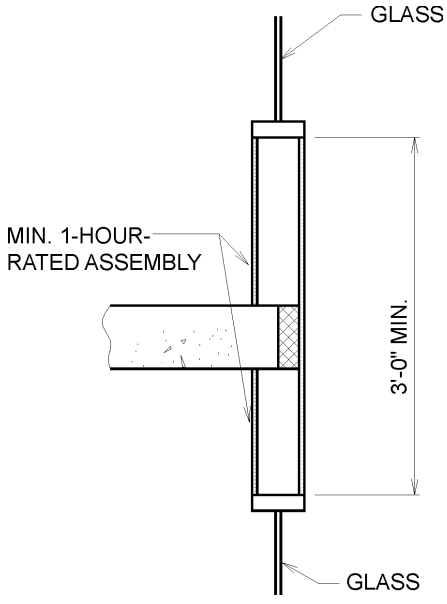

For SI: 1 inch = 25.4 mm, 1 foot = 304.8 mm.

Figure 705.8.5(1)
EXTERIOR WALL VERTICAL FLAME BARRIER

INTERNATIONAL CODE COUNCIL®
Copyright © 2015 ICC. ALL RIGHTS RESERVED. Accessed by David Dammon on Jun 21, 2017 12:30:52 PM pursuant to License Agreement with ICC. No further reproduction or distribution authorized. ANY UNAUTHORIZED REPRODUCTION OR DISTRIBUTION IS A VIOLATION OF THE FEDERAL COPYRIGHT ACT AND THE LICENSE AGREEMENT, AND SUBJECT TO CIVIL AND CRIMINAL PENALTIES THEREUNDER.

example, has been shown to retain its integrity with limited fire exposure when exposed to a fire condition for a certain period of time. For this reason, wired glass has historically been recognized as a suitable exterior opening protective within size and mounting methods defined by its listing.

Wired glass permits a significant percentage, typically recognized as high as 50 percent, of radiant heat energy to pass through. Since the initial concern is heat radiated from the flame plume, wired glass does little to prevent ignition of combustibles in the room on the upper floor. This section permits the elimination of the unexposed surface temperature limitations prescribed by ASTM E119 for flame barriers and vertical shields. Fire spread between floors is primarily the result of radiant heat, not conductive heat transfer. Full-scale tests have shown that only a small degree of fire resistance is required for adequate protection since radiant energy is the primary concern and glazing in the unprotected openings above the story of fire origin may break within 1 minute.

Protection is not required for buildings three stories or less in height. This exception is consistent with Table 503, which permits buildings of three stories in height to be of Type IIB, IIIB and VB construction when these buildings do not require a fire-resistance rating for the floor construction.

The exception for buildings protected with an automatic sprinkler system is consistent with the code's approach to limiting fire size and, thus, limiting spread of fire beyond the area or room of origin. The exception is based on the effectiveness and reliability of automatic sprinkler systems in decreasing fire size. The reference to Section 903.3.1.1 or 903.3.1.2 reinforces that the system must be a code-compliant automatic sprinkler system per NFPA 13 as modified by Section 903.3.1.1 or in accordance with NFPA 13R as modified by Section 903.3.1.2. Exception 3 acknowledges the practicality of constructing open parking structures and the need to have a significant amount of openings for natural ventilation.

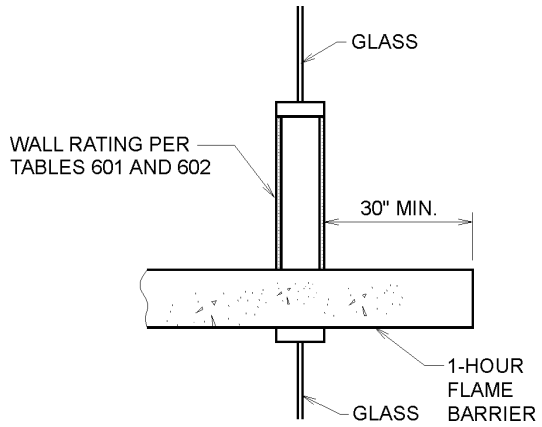

For SI: 1 inch = 25.4 mm.

Figure 705.8.5(2)
EXTERIOR WALL HORIZONTAL FLAME BARRIER

705.8.6 Vertical exposure. For buildings on the same lot, opening protectives having a *fire protection rating* of not less than $^3/_4$ hour shall be provided in every opening that is less than 15 feet (4572 mm) vertically above the roof of an adjacent building or structure based on assuming an imaginary line between them. The opening protectives are required where the *fire separation distance* between the imaginary line and the adjacent building or structure is less than 15 feet (4572 mm).

Exceptions:

1. Opening protectives are not required where the roof assembly of the adjacent building or structure has a *fire-resistance rating* of not less than 1 hour for a minimum distance of 10 feet (3048 mm) from the *exterior wall* facing the imaginary line and the entire length and span of the supporting elements for the fire-resistance-rated roof assembly has a *fire-resistance rating* of not less than 1 hour.
2. Buildings on the same lot and considered as portions of one building in accordance with Section 705.3 are not required to comply with Section 705.8.6.

❖ A fire in a building that is adjacent to a taller building can be the source of fire exposure to openings in the taller building. Although the height of a fire plume is dependent on several factors, this section requires $^3/_4$-hour or greater opening protectives in the wall where the openings are within 15 feet vertically (4572 mm) above the roof of a building that is within a horizontal FSD of 15 feet (4572 mm) (see Commentary Figure 705.8.6). Full-scale tests have indicated that exterior flame plumes may extend higher than 16 feet (4877 mm) above a window using a fuel load of 8 pounds per square foot (psf) (39 kg/m^2). Since this provision is based on a fire exposure from the roof of the lower building, it does not apply where the roof construction is 1-hour fire-resistance rated, which reduces the potential for fire exposure.

705.9 Joints. Joints made in or between *exterior walls* required by this section to have a *fire-resistance rating* shall comply with Section 715.

Exception: Joints in *exterior walls* that are permitted to have unprotected openings.

❖ Joints, such as expansion or seismic, are another form of opening in exterior walls, and therefore, must be considered with regard to maintaining the fire-resistance ratings of the exterior walls. This section requires that all joints located in exterior walls required to be fire-resistance rated are to be protected by a joint system that has a fire-resistance rating and complies with the requirements of Section 715 (see commentary for Section 715). The exception to joint protection here and in Section 715 is for

INTERNATIONAL CODE COUNCIL®
Copyright © 2015 ICC. ALL RIGHTS RESERVED. Accessed by David Dammon on Jun 21, 2017 12:30:52 PM pursuant to License Agreement with ICC. No further reproduction or distribution authorized. ANY UNAUTHORIZED REPRODUCTION OR DISTRIBUTION IS A VIOLATION OF THE FEDERAL COPYRIGHT ACT AND THE LICENSE AGREEMENT, AND SUBJECT TO CIVIL AND CRIMINAL PENALTIES THEREUNDER.

exterior walls that are permitted by Table 705.8 to have unprotected openings. Therefore, this section requires fire-resistant joint systems to protect joints in exterior walls of nonsprinklered buildings with an FSD of 5 feet (1524 mm) or less; in sprinklered buildings with an FSD of 3 feet (914 mm) or less; and in Group H-2 or H-3 buildings with an FSD of 15 feet (4572 mm) or less (see note e to Table 705.8). This implies that the building may have joints in fire-resistance-rated walls with an FSD of less than 3 feet (914 mm). In this context, joints are not treated like openings, which are not permitted in walls with an FSD of less than 3 feet (914 mm).

705.9.1 Voids. The void created at the intersection of a floor/ceiling assembly and an exterior curtain wall assembly shall be protected in accordance with Section 715.4.

❖ See the commentary to Section 715.4.

705.10 Ducts and air transfer openings. Penetrations by air ducts and air transfer openings in fire-resistance-rated *exterior walls* required to have protected openings shall comply with Section 717.

Exception: Foundation vents installed in accordance with this code are permitted.

❖ This section requires air outlets in exterior walls, including air intake and air exhaust outlets, to be protected by fire dampers where Table 705.8 requires protected openings. That is a wall with an FSD from 3 feet to 5 feet (914 mm to 1524 mm) for nonsprinklered buildings. For sprinklered buildings, protected openings are never required, so air outlets can be located in an exterior wall with an FSD of 3 feet (914 mm) or more. There can be no openings in a wall with an FSD of less than 3 feet (914 mm). Fire damper assembly standards are in accordance with Section 717. Exhaust outlets that cannot have fire dampers (such as commercial kitchen hood exhausts) cannot be located in exterior walls in locations where openings are required to be protected in accordance with Table 705.8. This is also stated in Section 506.3.12.2 of the IMC.

705.11 Parapets. Parapets shall be provided on *exterior walls* of buildings.

Exceptions: A parapet need not be provided on an *exterior wall* where any of the following conditions exist:

1. The wall is not required to be fire-resistance rated in accordance with Table 602 because of *fire separation distance.*
2. The building has an area of not more than 1,000 square feet (93 m^2) on any floor.
3. Walls that terminate at roofs of not less than 2-hour fire-resistance-rated construction or where the roof, including the deck or slab and supporting construc-

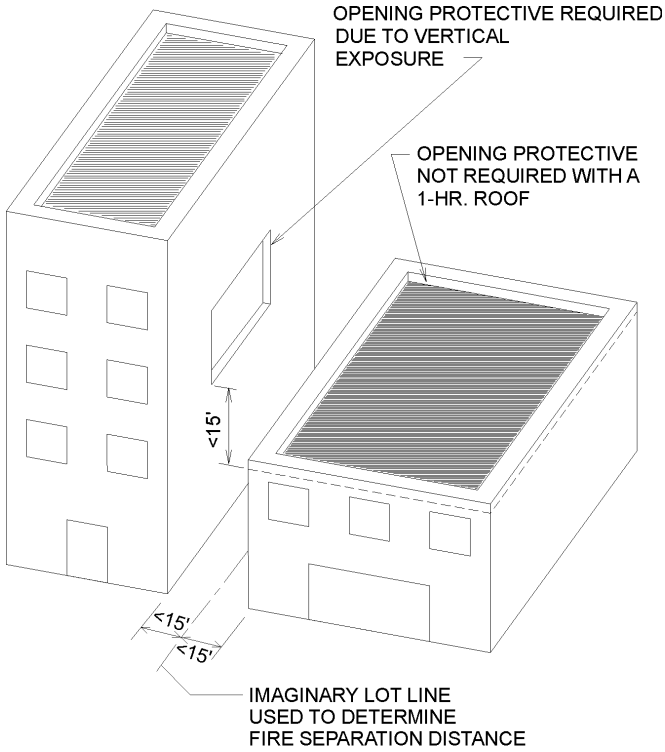

For SI: 1 foot = 304.8 mm.

Figure 705.8.6
VERTICAL FIRE EXPOSURE OF ADJACENT BUILDING

INTERNATIONAL CODE COUNCIL®
Copyright © 2015 ICC. ALL RIGHTS RESERVED. Accessed by David Dammon on Jun 21, 2017 12:30:52 PM pursuant to License Agreement with ICC. No further reproduction or distribution authorized. ANY UNAUTHORIZED REPRODUCTION OR DISTRIBUTION IS A VIOLATION OF THE FEDERAL COPYRIGHT ACT AND THE LICENSE AGREEMENT, AND SUBJECT TO CIVIL AND CRIMINAL PENALTIES THEREUNDER.

tion, is constructed entirely of noncombustible materials.

4. One-hour fire-resistance-rated *exterior walls* that terminate at the underside of the roof sheathing, deck or slab, provided:
    4.1. Where the roof/ceiling framing elements are parallel to the walls, such framing and elements supporting such framing shall not be of less than 1-hour fire-resistance-rated construction for a width of 4 feet (1220 mm) for Groups R and U and 10 feet (3048 mm) for other occupancies, measured from the interior side of the wall.
    4.2. Where roof/ceiling framing elements are not parallel to the wall, the entire span of such framing and elements supporting such framing shall not be of less than 1-hour fire-resistance-rated construction.
    4.3. Openings in the roof shall not be located within 5 feet (1524 mm) of the 1-hour fire-resistance-rated *exterior wall* for Groups R and U and 10 feet (3048 mm) for other occupancies, measured from the interior side of the wall.
    4.4. The entire building shall be provided with not less than a Class B roof covering.
5. In Groups R-2 and R-3 where the entire building is provided with a Class C roof covering, the *exterior wall* shall be permitted to terminate at the underside of the roof sheathing or deck in Type III, IV and V construction, provided one or both of the following criteria is met:
    5.1. The roof sheathing or deck is constructed of *approved* noncombustible materials or of *fire-retardant-treated wood* for a distance of 4 feet (1220 mm).
    5.2. The roof is protected with 0.625-inch (16 mm) Type X gypsum board directly beneath the underside of the roof sheathing or deck, supported by not less than nominal 2-inch (51 mm) ledgers attached to the sides of the roof framing members for a minimum distance of 4 feet (1220 mm).
6. Where the wall is permitted to have not less than 25 percent of the *exterior wall* areas containing unprotected openings based on *fire separation distance* as determined in accordance with Section 705.8.

❖ Parapets are required to restrict spread of fire from building to building and are therefore a function of the FSD. Parapets are not required to extend above the roofs on all buildings. There are six exceptions. Exceptions 1 and 6 apply to all buildings.

- Exception 1 exempts exterior walls with a 30-foot (9144 mm) or greater FSD for all types of construction except Types IIB and VB. Exterior walls of Types IIB and VB (except for H occupancy) with greater than 10 feet (3048 mm) of FSD are exempt from parapets.
- Exception 6 exempts all sprinklered buildings from parapet walls where the exterior walls have an FSD of 5 feet (1524 mm) or greater. Exception 6 exempts all nonsprinklered buildings from parapets with an FSD of 15 feet (4572 mm) or greater. Exception 6 is the greater exemption for all but Type IIB and VB nonsprinklered buildings, when Exception 1 is better. These two exceptions yield the following:
- Parapet walls are not required on sprinklered buildings with an FSD of 5 feet (1524 mm) or greater.
- Parapet walls are not required for nonsprinklered Type IIB and VB construction with an FSD of 10 feet (3048 mm) or more.
- Parapet walls are not required for nonsprinklered buildings of all types of construction other than Types IIB and VB with an FSD of 15 feet (4572 mm) or more.
- Exception 2 exempts buildings with 1000 sq. ft. (93 m^2) or less on any floor.
- Exceptions 3, 4 and 5. While Exceptions 1, 2 and 6 completely exempt the exterior walls from parapets, Exceptions 3, 4 and 5 deal with special credit for the roof construction.

Exceptions 3, 4 and 5 require the exterior walls to extend to the roof deck or underside of roof sheathing and require special attention to the roof construction to eliminate the need for the parapet extension, thus they are not subject to any FSD requirements and can have an FSD of zero. Exceptions 1, 2 and 6 simply exempt the walls from extending above the roof without any special roof construction and do not require that the walls must extend to the roof deck.

Exception 1 applies to bearing and nonload-bearing walls and would also exempt bearing walls from parapets if the bearing wall was not required to have a fire-resistance rating by Table 602, even if said bearing wall was required to have a fire-resistance rating by Table 601.

705.11.1 Parapet construction. Parapets shall have the same *fire-resistance rating* as that required for the supporting wall, and on any side adjacent to a roof surface, shall have noncombustible faces for the uppermost 18 inches (457 mm), including counterflashing and coping materials. The height of the parapet shall be not less than 30 inches (762 mm) above the point where the roof surface and the wall intersect. Where the roof slopes toward a parapet at a slope greater than two units vertical in 12 units horizontal (16.7-percent slope), the parapet shall extend to the same height as any portion of the roof within a *fire separation distance* where protection of wall openings is

INTERNATIONAL CODE COUNCIL®
Copyright © 2015 ICC. ALL RIGHTS RESERVED. Accessed by David Dammon on Jun 21, 2017 12:30:52 PM pursuant to License Agreement with ICC. No further reproduction or distribution authorized. ANY UNAUTHORIZED REPRODUCTION OR DISTRIBUTION IS A VIOLATION OF THE FEDERAL COPYRIGHT ACT AND THE LICENSE AGREEMENT, AND SUBJECT TO CIVIL AND CRIMINAL PENALTIES THEREUNDER.

required, but in no case shall the height be less than 30 inches (762 mm).

❖ Parapet wall construction shall be of combustible or noncombustible material depending on the exterior wall requirements of the type of construction and shall be of fire-resistance-rated construction as required for the exterior wall. The interior wall covering facing the roof, including the flashing, shall be noncombustible to a height of 18 inches (457 mm) above the roof. The required height of the parapet shall be 30 inches (762 mm) above the roof surface unless the roof slopes upward away from the wall on a pitch of 2 in 12 or greater. In some cases, the last part of this section requires a higher parapet, depending on the FSD. When the slope of the roof is over 2 in 12, the parapet shall extend to a height equal to the height of the roof at the point determined as follows:

- In a nonsprinklered building, Table 705.8 requires protected openings for any FSD between 3 and 5 feet (914 mm and 1524 mm). Therefore, the height of the roof at the 5-foot (1524 mm) FSD is the height to which the parapet wall extension must extend, but must always extend at least 30 inches (762 mm) above the roof at the exterior wall. For a nonsprinklered building, the height of the roof at the plane where protected openings are required according to Table 705.8 is the height at 5 feet (1524 mm) from the common lot line or assumed property line. See Commentary Figure 705.11.1(1).
- For a sprinklered building, Table 705.8 never requires protected openings. Therefore, for a sprinklered building the parapet need only extend 30 inches (762 mm) above the roof, regardless of the slope of the roof or the FSD. See Commentary Figure 705.11.1(2).

SECTION 706
FIRE WALLS

706.1 General. Each portion of a building separated by one or more *fire walls* that comply with the provisions of this section shall be considered a separate building. The extent and location of such *fire walls* shall provide a complete separation. Where a *fire wall* separates occupancies that are required to be separated by a *fire barrier* wall, the most restrictive requirements of each separation shall apply.

❖ Fire walls serve to create separate buildings for purposes of allowable area and type of construction requirements (see the definition of "Area, building" in

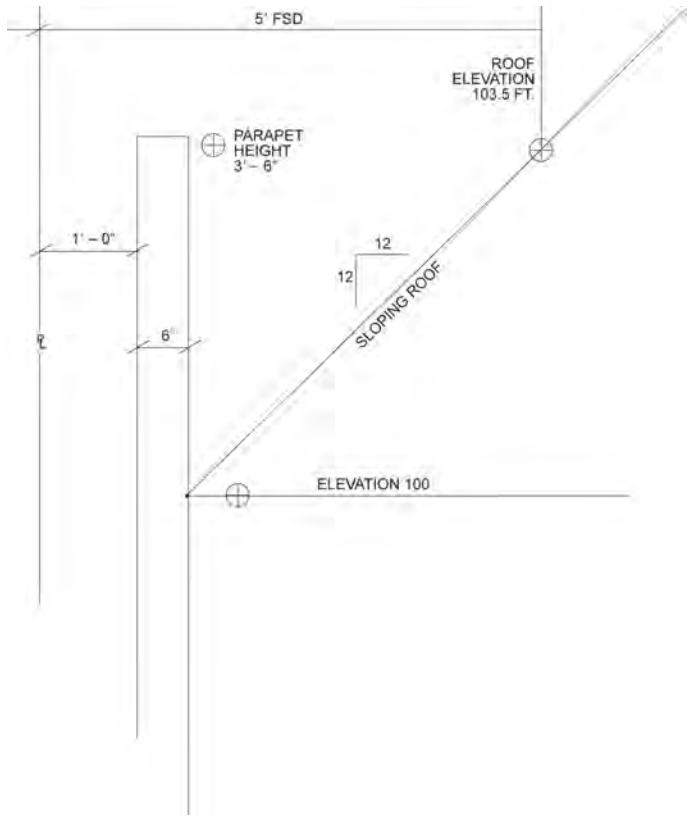

For SI: 1 inch = 25.4 mm, 1 foot = 304.8 mm.

Figure 705.11.1(1)
PARAPET WALL EXTENSION WITH SLOPING 100% ROOF AND NONSPRINKLERED BUILDING

INTERNATIONAL CODE COUNCIL®
Copyright © 2015 ICC. ALL RIGHTS RESERVED. Accessed by David Dammon on Jun 21, 2017 12:30:52 PM pursuant to License Agreement with ICC. No further reproduction or distribution authorized. ANY UNAUTHORIZED REPRODUCTION OR DISTRIBUTION IS A VIOLATION OF THE FEDERAL COPYRIGHT ACT AND THE LICENSE AGREEMENT, AND SUBJECT TO CIVIL AND CRIMINAL PENALTIES THEREUNDER.

Section 202). All code provisions that apply to buildings would be applied individually to the "building" on each side of the fire wall. Because of the special allowances for allowable areas, a fire wall must provide a higher level of fire safety, continuity and structural integrity than other types of fire-resistance-rated walls. When the designer utilizes a fire wall, he or she must design the fire wall to meet this section.

It is not intended that fire walls can be provided in the horizontal plane to create separate buildings. Fire walls cannot be utilized to increase the allowable building height. However, offsetting two vertical sections of fire wall is permissible as long as the required fire-resistance rating and structural stability are maintained.

706.1.1 Party walls. Any wall located on a *lot line* between adjacent buildings, which is used or adapted for joint service between the two buildings, shall be constructed as a *fire wall* in accordance with Section 706. Party walls shall be constructed without openings and shall create separate buildings.

Exception: Openings in a party wall separating an *anchor building* and a mall shall be in accordance with Section 402.4.2.2.1.

❖ A party wall is a fire wall on an interior lot line, adapted for joint use by both buildings. It is distinguished from other fire walls in that it is on the property line and serves to separate buildings usually owned by two separate parties. When two separate structures are built up to the property line, the designer has the option of using two separate exterior walls with zero FSD or a party wall. Since there is a real property line involved, the prohibition for openings between the two buildings is important and even utilities cannot penetrate the party wall. Unlike fire walls in other buildings, which can have openings in them, party walls cannot have any openings in them (see Section 706.8 for opening limits on other fire walls).

The exception to allow openings is important since many anchor stores are actually owned by the major department store while the mall is owned by a separate entity. The fact that there is a real property line at the separation walls between an anchor and a mall means that technically there is a party wall, but openings are normally present and a necessary function of the mall and anchor.

706.2 Structural stability. *Fire walls* shall be designed and constructed to allow collapse of the structure on either side without collapse of the wall under fire conditions. *Fire walls* designed and constructed in accordance with NFPA 221 shall be deemed to comply with this section.

❖ Since the collapse of one building from fire conditions should not cause the collapse of an adjacent building, a fire wall is required to be capable of withstanding the collapse of the construction on either side of the wall under fire conditions. An exception to the provision is found in Exception 5 to Section 706.6. In this situation, the issue of structural stability would still apply if the fire was in the buildings located above the horizontal separation required in Section 509.2, Item

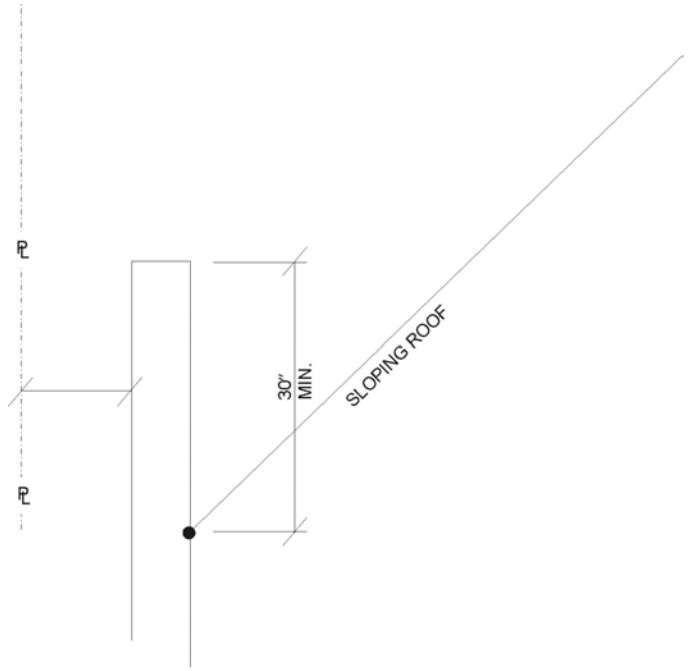

For SI: 1 inch = 25.4 mm.

Figure 705.11.1(2)
PARAPET WALL EXTENSION WITH SLOPING ROOF SPRINKLERED BUILDING

INTERNATIONAL CODE COUNCIL®
Copyright © 2015 ICC. ALL RIGHTS RESERVED. Accessed by David Dammon on Jun 21, 2017 12:30:52 PM pursuant to License Agreement with ICC. No further reproduction or distribution authorized. ANY UNAUTHORIZED REPRODUCTION OR DISTRIBUTION IS A VIOLATION OF THE FEDERAL COPYRIGHT ACT AND THE LICENSE AGREEMENT, AND SUBJECT TO CIVIL AND CRIMINAL PENALTIES THEREUNDER.

1. However, it would clearly be impossible for the buildings above the separation or, for that matter, the fire wall to be able to withstand the collapse of the building beneath it. Since the building below is of Type IA construction and the separation has a 3-hour fire-resistance rating, this should not be a problem. See 706.6, Exception 5, regarding fire walls in this situation.

There are various methods of designing and constructing fire walls for structural stability during a fire. Among the systems used are cantilevered or free-standing walls, laterally supported and tied walls, and double wall construction. For masonry walls, the NCMA TEK Bulletin 5-8B contains helpful information. For an example with a masonry fire wall, see Commentary Figure 706.2(1). The Gypsum Association's *Fire Resistance Design Manual* contains construction details for area separation walls (party wall/fire walls) which have been accepted as fire walls. For an example of a gypsum board fire wall, see Commentary Figure 706.2(2).

The collapse of structural members at some distance from the wall can generally be ignored, but the structural members that are supported by the wall or

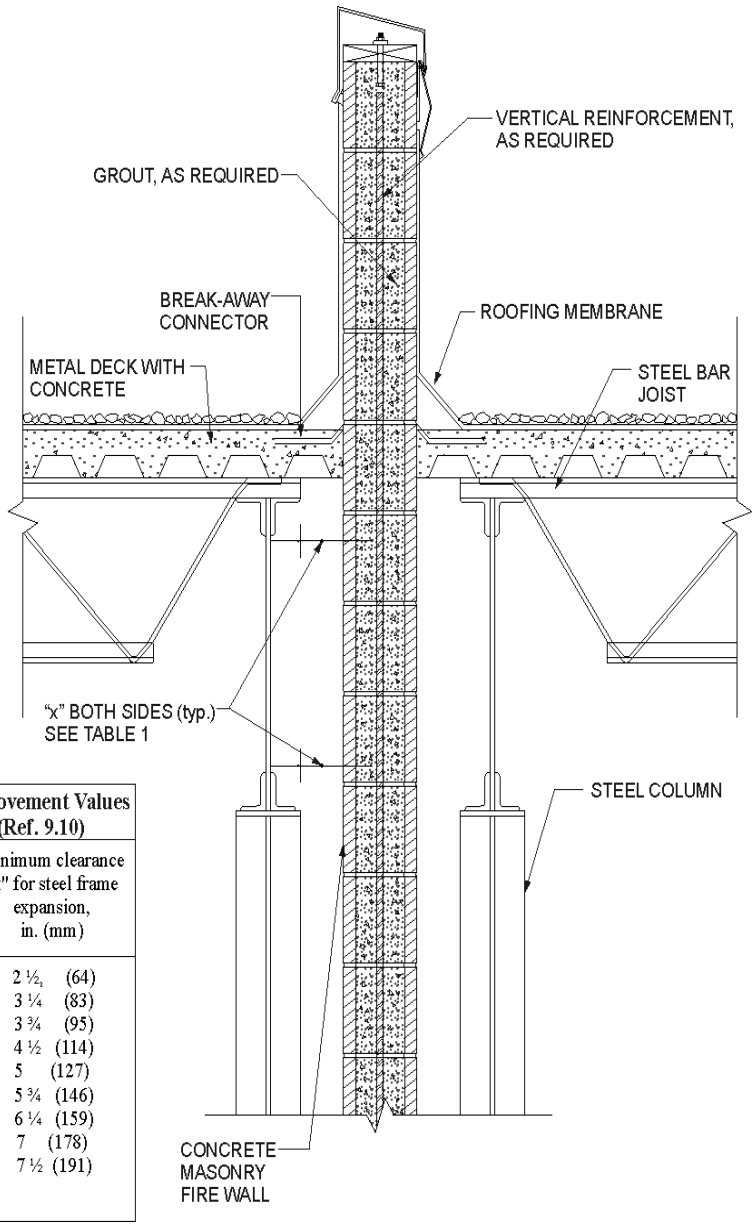

Table 1 — Thermal Movement Values for Steel Frames (Ref. 9.10)

Length of bay perpendicular to fire wall ft (m)	Minimum clearance "x" for steel frame expansion, in. (mm)
20 (6.10)	2 ½ (64)
25 (7.62)	3 ¼ (83)
30 (9.14)	3 ¾ (95)
35 (10.67)	4 ½ (114)
40 (12.19)	5 (127)
45 (13.72)	5 ¾ (146)
50 (15.24)	6 ¼ (159)
55 (16.76)	7 (178)
	7 ½ (191)

Figure 706.2(1)
DETAILS OF MASONRY FIRE WALL FOR STABILITY
(Compliments of NCMA)

INTERNATIONAL CODE COUNCIL®
Copyright © 2015 ICC. ALL RIGHTS RESERVED. Accessed by David Dammon on Jun 21, 2017 12:30:52 PM pursuant to License Agreement with ICC. No further reproduction or distribution authorized. ANY UNAUTHORIZED REPRODUCTION OR DISTRIBUTION IS A VIOLATION OF THE FEDERAL COPYRIGHT ACT AND THE LICENSE AGREEMENT, AND SUBJECT TO CIVIL AND CRIMINAL PENALTIES THEREUNDER.

that are attached directly to the wall for lateral support do require special attention.

Double fire walls shall be assumed to have the required structural stability if they are constructed in accordance with NFPA 221. NFPA 221 covers more than double fire walls, but the IBC only references it for double fire walls.

706.3 Materials. *Fire walls* shall be of any *approved* noncombustible materials.

Exception: Buildings of Type V construction.

❖ This section requires that fire walls be constructed of noncombustible materials unless both buildings are of Type V (combustible) construction. This is consistent with the provisions of Section 602, which require exterior walls of buildings of Type I, II, III and IV to be built of noncombustible construction, while buildings of Type V construction are permitted to be built of combustible exterior walls.

706.4 Fire-resistance rating. *Fire walls* shall have a *fire-resistance rating* of not less than that required by Table 706.4.

❖ The required fire-resistance rating must comply with the more restrictive occupancy of Table 706.4. For example, if two buildings of Type II construction with occupancies in Groups S-1 and B are built of any construction type and separated by a fire wall, the fire wall is required to have a fire-resistance rating of 3 hours (in accordance with Table 706.4 based on Group S-1). The provisions of Section 706.1 should also be reviewed when determining the required fire-resistance rating. If the occupancies involved require a separation, or are not permitted in a mixed occu-

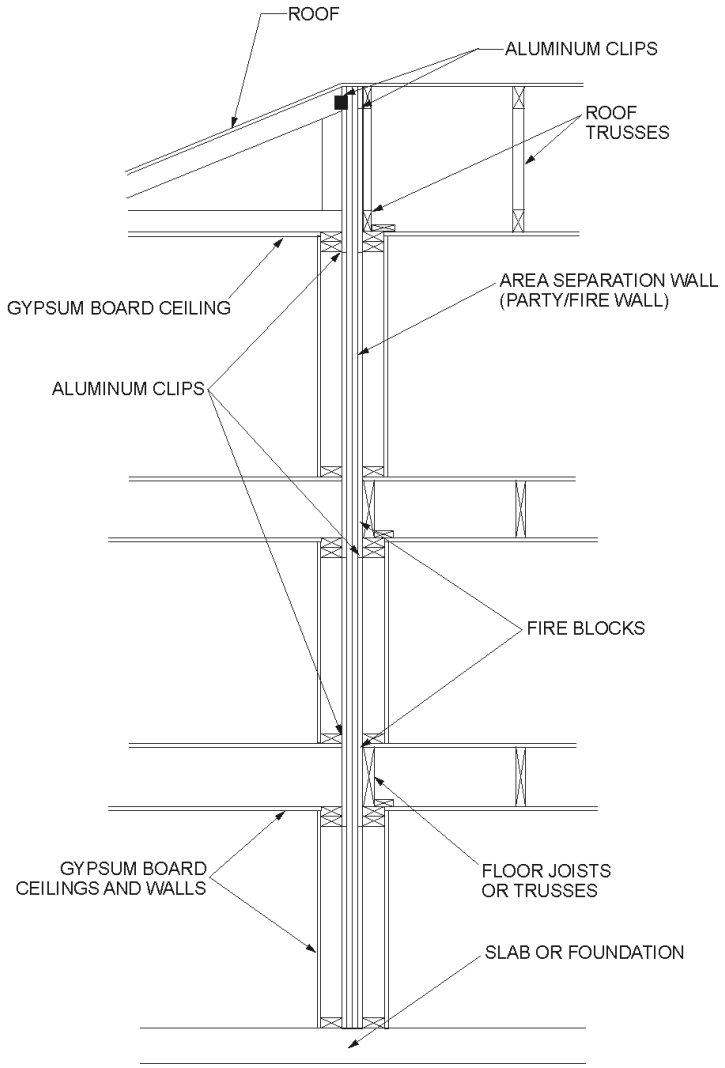

Figure 706.2(2)
DETAILS OF GYPSUM BOARD AREA SEPARATION WALLS (FIREWALL)
(Compliments of Gypsum Association)

INTERNATIONAL CODE COUNCIL®
Copyright © 2015 ICC. ALL RIGHTS RESERVED. Accessed by David Dammon on Jun 21, 2017 12:30:52 PM pursuant to License Agreement with ICC. No further reproduction or distribution authorized. ANY UNAUTHORIZED REPRODUCTION OR DISTRIBUTION IS A VIOLATION OF THE FEDERAL COPYRIGHT ACT AND THE LICENSE AGREEMENT, AND SUBJECT TO CIVIL AND CRIMINAL PENALTIES THEREUNDER.

pancy building, then the most restrictive requirement between that and the fire wall provisions will apply.

TABLE 706.4
FIRE WALL FIRE-RESISTANCE RATINGS

GROUP	FIRE-RESISTANCE RATING (hours)
A, B, E, H-4, I, R-1, R-2, U	3[a]
F-1, H-3[b], H-5, M, S-1	3
H-1, H-2	4[b]
F-2, S-2, R-3, R-4	2

a. In Type II or V construction, walls shall be permitted to have a 2-hour *fire-resistance rating.*

b. For Group H-1, H-2 or H-3 buildings, also see Sections 415.7 and 415.8.

❖ The fire-resistance ratings represent a relationship between the fuel load and an exposure to fire severity that is equivalent to the standard time-temperature curve. The relationship is based on a number of full-scale fire tests by the U.S. Department of Commerce's National Bureau of Standards (NBS) conducted in the 1920s to determine how actual building fires compared with the temperatures represented by the standard time-temperature curve (see commentary, Section 703.2).

An analysis of tests documented by S.H. Ingberg indicates that the weight per square foot (psf) of ordinary combustibles, such as wood and paper, with a heat of combustion of 7,000 to 8,000 British thermal units (Btu) per pound (16 282 to 18 608 kJ/kg), is related to hourly fire severity as described in Commentary Figure 706.4(1). By comparing Table 706.4 to Commentary Figure 706.4(2), it shows that the table is not based solely on the average fuel load of the occupancy. Not only are other factors, such as occupant density and evacuation capability, incorporated into the required fire-resistance rating, but it must also be recognized that fuel loads in a building are not evenly distributed. For example, the average fuel load for an occupancy in Group B may be 5 to 10 psf (24 to 49 kg/m^2). The fuel load in file and storage rooms, however, may be 10 to 20 psf (49 to 98 kg/m^2). While other sections of the code may address these areas by mandating an automatic fire suppression system with a partition capable of resisting the passage of smoke or a fire-resistance-rated enclosure of the incidental use area, the potential for higher fuel loads is also factored into determining the required fire-resistance rating.

The minimum fire-resistance ratings required in Table 706.4 generally correlate with the fire-resistance ratings required by Table 508.3.3. However, Table 706.4 contains provisions that acknowledge the need for more conservative ratings for fire walls due to their unique role in creating separate buildings.

Note a allows a reduction in the fire-resistance rating of the fire walls in buildings of Type II or V construction. For instance, the fire-resistance rating of a fire wall separating a Type II building from a Type V building can be only 2 hours. If the buildings on both sides of the fire wall are Type II construction, the same reduction is allowed. If the buildings on both sides of the fire wall are Type V construction, the same reduction is allowed. If the building on either side of the fire wall is of another type of construction than Type II or V, the greater fire-resistance rating is required.

Due to the unique nature of the hazards presented by occupancies of Groups H-1, H-2 and H-3, Table 706.4 includes Note b, which references Sections 415.7 and 415.8 for specific requirements relative to the construction of such buildings (see commentary, Sections 415.7 and 415.8).

Average fuel load psf	kg/m^2	Equivalent fire endurance (hours)
5	24.4	1/2
7 1/2	36.6	3/4
10	48.8	1
15	73.2	1 1/2
20	97.6	2
30	146.5	3
40	195.3	4 1/2
50	244.1	6
60	292.9	7 1/2

For SI: 1 pound per square foot = 4.882 kg/m^2.

Figure 706.4(1)
RELATIONSHIP BETWEEN
FUEL LOAD AND FIRE ENDURANCE

Occupancy	Combustibles in occupancy (psf)	Fire severity (hours)
Assembly	5 to 10	1/2 to 1
Business	5 to 10	1/2 to 1
Educational	5 to 10	1/2 to 1
Factory—Industrial		
Low hazard	0 to 10	0 to 1
Moderate hazard	10 to 25	1 to 3
Hazardous	Variable	Variable
Institutional	5 to 10	1/2 to 1
Mercantile	10 to 20	1 to 2
Residential	5 to 10	1/2 to 1
Storage		
Low hazard	0 to 10	0 to 1
Moderate hazard	10 to 30	1 to 1

For SI: 1 pound per square foot = 4.882 kg/m^2.

Figure 706.4(2)
OCCUPANCIES—FUEL LOAD-FIRE SEVERITY

INTERNATIONAL CODE COUNCIL®
Copyright © 2015 ICC. ALL RIGHTS RESERVED. Accessed by David Dammon on Jun 21, 2017 12:30:52 PM pursuant to License Agreement with ICC. No further reproduction or distribution authorized. ANY UNAUTHORIZED REPRODUCTION OR DISTRIBUTION IS A VIOLATION OF THE FEDERAL COPYRIGHT ACT AND THE LICENSE AGREEMENT, AND SUBJECT TO CIVIL AND CRIMINAL PENALTIES THEREUNDER.

706.5 Horizontal continuity. *Fire walls* shall be continuous from *exterior wall* to *exterior wall* and shall extend not less than 18 inches (457 mm) beyond the exterior surface of *exterior walls.*

Exceptions:

1. *Fire walls* shall be permitted to terminate at the interior surface of combustible exterior sheathing or siding provided the *exterior wall* has a *fire-resistance rating* of not less than 1 hour for a horizontal distance of not less than 4 feet (1220 mm) on both sides of the *fire wall*. Openings within such *exterior walls* shall be protected by opening protectives having a *fire protection rating* of not less than $^3/_4$ hour.
2. *Fire walls* shall be permitted to terminate at the interior surface of noncombustible exterior sheathing, exterior siding or other noncombustible exterior finishes provided the sheathing, siding or other exterior noncombustible finish extends a horizontal distance of not less than 4 feet (1220 mm) on both sides of the *fire wall*.
3. *Fire walls* shall be permitted to terminate at the interior surface of noncombustible exterior sheathing where the building on each side of the *fire wall* is protected by an *automatic sprinkler system* installed in accordance with Section 903.3.1.1 or 903.3.1.2.

❖ Historically, the codes have addressed the hazards of fire exposure at the fire wall from only a vertical perspective; namely, at the roof (see Section 706.6). Section 706.5 addresses a similar fire hazard concern from the horizontal perspective; namely, at the intersection of the fire wall and the exterior wall.

The 18-inch (457 mm) extension is intended to abate the potential for fire to travel from one building to the other around the fire wall. The 18-inch (457 mm) extension is required to extend the full height of the fire wall. The three exceptions acknowledge the effect certain types of construction will have on fire breaching the exterior wall and exposing the adjacent building. Specifically, fire-resistance-rated construction (see Exception 1), noncombustible finish materials (see Exception 2) and noncombustible sheathing materials coupled with sprinkler protection (see Exception 3) provide the necessary barrier to limit fire spread across the exterior surface. The difference between Exceptions 2 and 3 is that Exception 2 would not permit a combustible exterior finish to be placed over the noncombustible exterior wall construction, while Exception 3 would allow a combustible exterior finish, provided the building is sprinklered with either an NFPA 13 or 13R system.

706.5.1 Exterior walls. Where the *fire wall* intersects *exterior walls*, the *fire-resistance rating* and opening protection of the *exterior walls* shall comply with one of the following:

1. The *exterior walls* on both sides of the *fire wall* shall have a 1-hour *fire-resistance rating* with $^3/_4$-hour protection where opening protection is required by Section 705.8. The *fire-resistance rating* of the *exterior wall* shall extend not less than 4 feet (1220 mm) on each side of the intersection of the *fire wall* to *exterior wall. Exterior wall* intersections at *fire walls* that form an angle equal to or greater than 180 degrees (3.14 rad) do not need *exterior wall* protection.
2. Buildings or spaces on both sides of the intersecting *fire wall* shall assume to have an imaginary *lot line* at the *fire wall* and extending beyond the exterior of the *fire wall*. The location of the assumed line in relation to the *exterior walls* and the *fire wall* shall be such that the *exterior wall* and opening protection meet the requirements set forth in Sections 705.5 and 705.8. Such protection is not required for *exterior walls* terminating at *fire walls* that form an angle equal to or greater than 180 degrees (3.14 rad).

❖ This section deals only with fire walls that terminate at an exterior wall that does not continue in the same horizontal plane but the exterior walls on each side of the fire wall form an angle of less than 180 degrees (3.14 rad). For example, the required fire wall may end at an inside corner of an L-shaped building. Should this occur, not only does Section 706.5 apply, but this section has extra requirements to mitigate the exterior wall fire exposure from one building to another. This section states two methods of complying. See Commentary Figures 706.5.1(1), 706.5.1(2) and 706.5.1(3).

706.5.2 Horizontal projecting elements. *Fire walls* shall extend to the outer edge of horizontal projecting elements such as balconies, roof overhangs, canopies, marquees and similar projections that are within 4 feet (1220 mm) of the *fire wall*.

Exceptions:

1. Horizontal projecting elements without concealed spaces, provided the *exterior wall* behind and below the projecting element has not less than 1-hour fire-resistance-rated construction for a distance not less than the depth of the projecting element on both sides of the *fire wall*. Openings within such *exterior walls* shall be protected by opening protectives having a *fire protection rating* of not less than $^3/_4$ hour.
2. Noncombustible horizontal projecting elements with concealed spaces, provided a minimum 1-hour fire-resistance-rated wall extends through the concealed space. The projecting element shall be separated from the building by not less than 1-hour fire-resistance-rated construction for a distance on each side of the *fire wall* equal to the depth of the projecting element. The wall is not required to extend under the projecting element where the building *exterior wall* is not less than 1-hour fire-resistance rated for a distance on each side of the *fire wall* equal to the depth of the projecting element. Openings within such *exterior walls* shall be protected by opening protectives having a *fire protection rating* of not less than $^3/_4$ hour.

INTERNATIONAL CODE COUNCIL®
Copyright © 2015 ICC. ALL RIGHTS RESERVED. Accessed by David Dammon on Jun 21, 2017 12:30:52 PM pursuant to License Agreement with ICC. No further reproduction or distribution authorized. ANY UNAUTHORIZED REPRODUCTION OR DISTRIBUTION IS A VIOLATION OF THE FEDERAL COPYRIGHT ACT AND THE LICENSE AGREEMENT, AND SUBJECT TO CIVIL AND CRIMINAL PENALTIES THEREUNDER.

3. For combustible horizontal projecting elements with concealed spaces, the *fire wall* need only extend through the concealed space to the outer edges of the projecting elements. The *exterior wall* behind and below the projecting element shall be of not less than 1-hour fire-resistance-rated construction for a distance not less than the depth of the projecting elements on both sides of the *fire wall*. Openings within such *exterior walls* shall be protected by opening protectives having a fire-protection rating of not less than $^{3}/_{4}$ hour.

❖ Fire walls are typically used to reduce the building area for the purpose of code compliance. However, many structures divided by fire walls are still detailed as a contiguous structure with projecting elements located on the exterior wall that extend across the fire wall. These projecting elements represent a potential conduit for fire to be transferred from one side of the building to the other side of the building. Even if the projecting elements are terminated at a distance in close proximity to the fire wall, the potential for fire spread to the adjacent projecting element still exists. In this section, 4 feet (1219 mm) (measured from the fire wall) is considered the appropriate threshold.

This section requires the fire wall to extend to the outer edge of the projecting element when such an element is located within 4 feet (1219 mm) of the fire wall. For example, in a contiguous residential structure with interior lot lines and fire walls or party walls between each dwelling unit, and where balconies are located within 4 feet (1219 mm) of the party or fire wall, then the fire/party wall must be extended to the outer edge of the balcony or to a point in line with the outer edge of the balcony.

Exception 1 acknowledges the reduction in hazard due to the lack of a concealed space crossing the fire

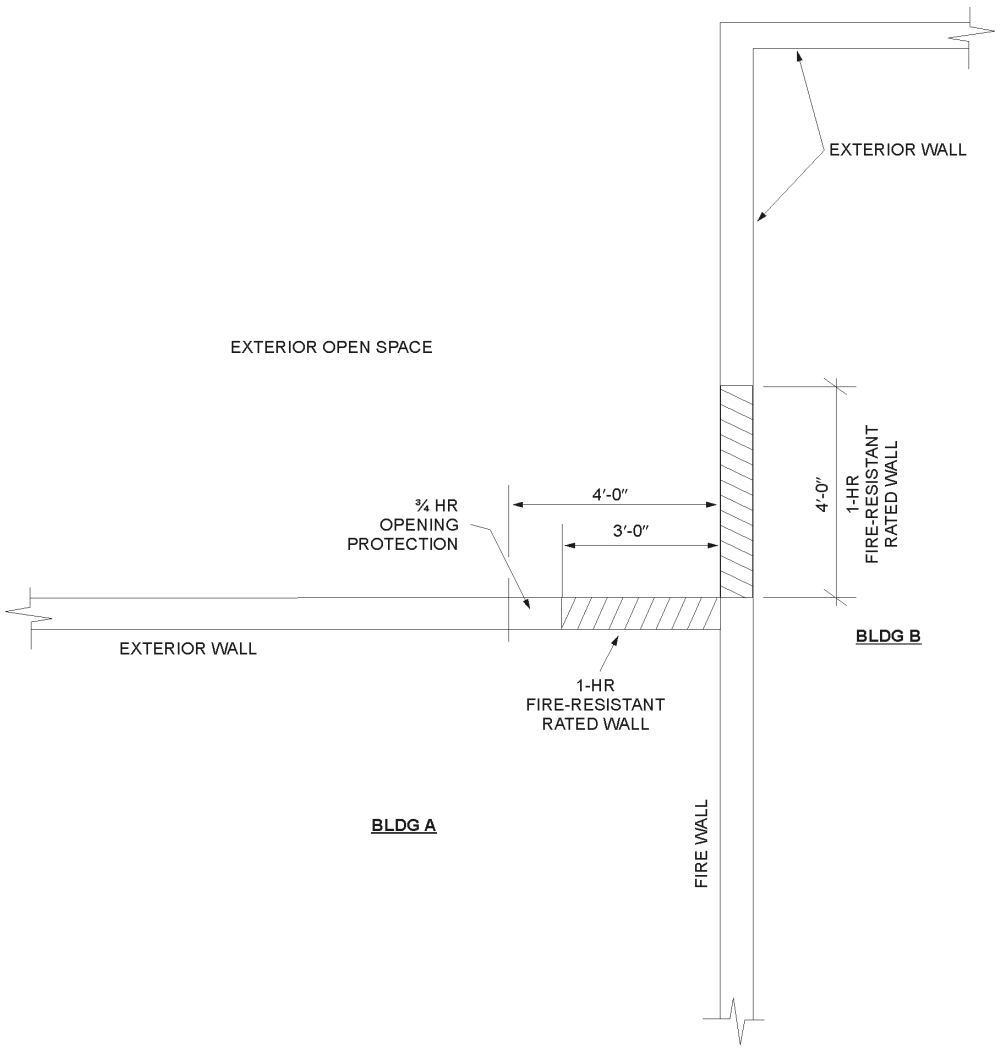

For SI: 1 inch = 25.4 mm, 1 foot = 304.8 mm.

Figure 706.5.1(1)
EXAMPLE OF METHOD 1

INTERNATIONAL CODE COUNCIL®
Copyright © 2015 ICC. ALL RIGHTS RESERVED. Accessed by David Dammon on Jun 21, 2017 12:30:52 PM pursuant to License Agreement with ICC. No further reproduction or distribution authorized. ANY UNAUTHORIZED REPRODUCTION OR DISTRIBUTION IS A VIOLATION OF THE FEDERAL COPYRIGHT ACT AND THE LICENSE AGREEMENT, AND SUBJECT TO CIVIL AND CRIMINAL PENALTIES THEREUNDER.

wall. However, since the projecting element provides a connection between the buildings, there is still a potential for fire to transfer across the wall, thus the need for a rated exterior wall separation between the inside of the building and the projection. Exceptions 2 and 3 address projecting elements with concealed spaces of noncombustible and combustible construction, respectively.

706.6 Vertical continuity. *Fire walls* shall extend from the foundation to a termination point not less than 30 inches (762 mm) above both adjacent roofs.

Exceptions:

1. Stepped buildings in accordance with Section 706.6.1.
2. Two-hour fire-resistance-rated walls shall be permitted to terminate at the underside of the roof sheathing, deck or slab, provided:
   2.1. The lower roof assembly within 4 feet (1220 mm) of the wall has not less than a 1-hour *fire-resistance rating* and the entire length and span of supporting elements for the rated roof assembly has a *fire-resistance rating* of not less than 1 hour.
   2.2. Openings in the roof shall not be located within 4 feet (1220 mm) of the *fire wall*.
   2.3. Each building shall be provided with not less than a Class B roof covering.

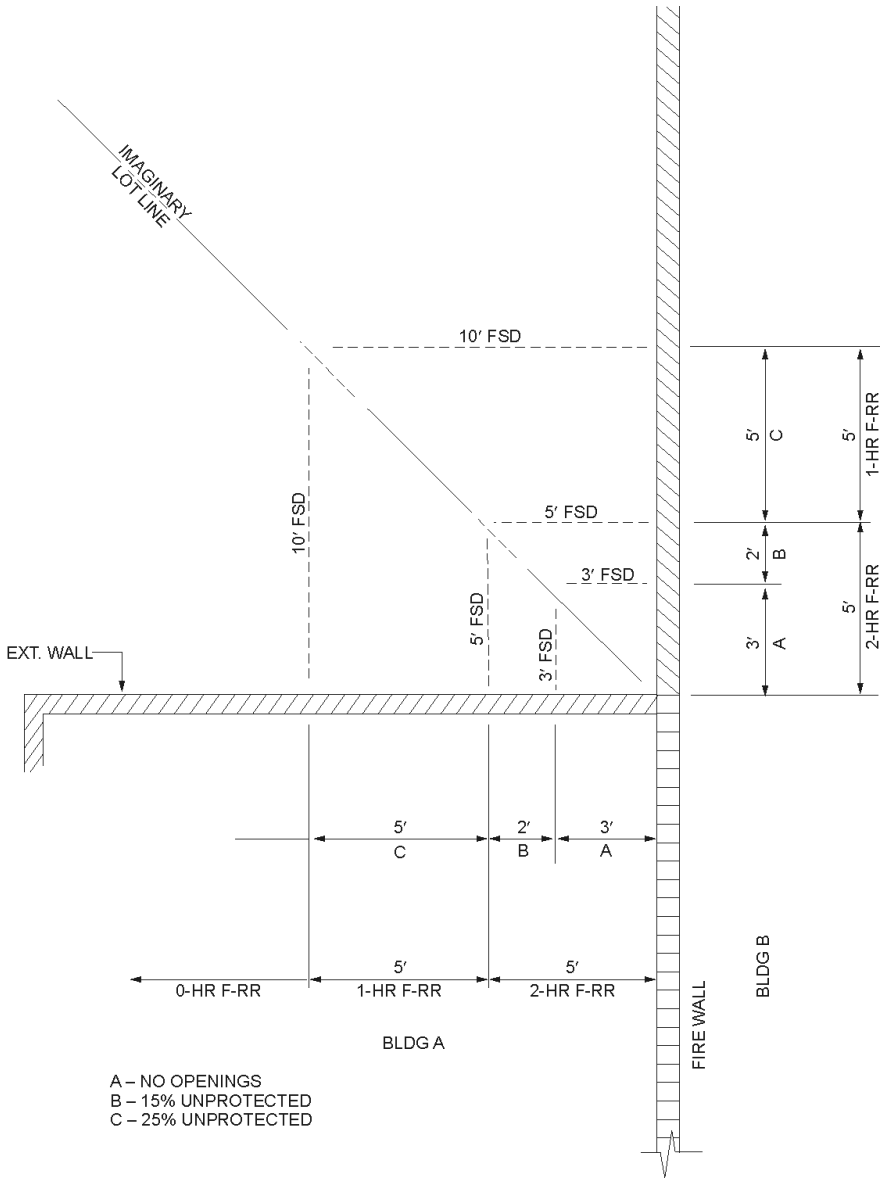

Figure 706.5.1(2)
EXAMPLE OF METHOD 2

INTERNATIONAL CODE COUNCIL®
Copyright © 2015 ICC. ALL RIGHTS RESERVED. Accessed by David Dammon on Jun 21, 2017 12:30:52 PM pursuant to License Agreement with ICC. No further reproduction or distribution authorized. ANY UNAUTHORIZED REPRODUCTION OR DISTRIBUTION IS A VIOLATION OF THE FEDERAL COPYRIGHT ACT AND THE LICENSE AGREEMENT, AND SUBJECT TO CIVIL AND CRIMINAL PENALTIES THEREUNDER.

3. Walls shall be permitted to terminate at the underside of noncombustible roof sheathing, deck or slabs where both buildings are provided with not less than a Class B roof covering. Openings in the roof shall not be located within 4 feet (1220 mm) of the *fire wall*.
4. In buildings of Type III, IV and V construction, walls shall be permitted to terminate at the underside of combustible roof sheathing or decks, provided:
   4.1. There are no openings in the roof within 4 feet (1220 mm) of the *fire wall*,
   4.2. The roof is covered with a minimum Class B roof covering, and
   4.3. The roof sheathing or deck is constructed of *fire-retardant-treated wood* for a distance of 4 feet (1220 mm) on both sides of the wall or the roof is protected with $^{5}/_{8}$-inch (15.9

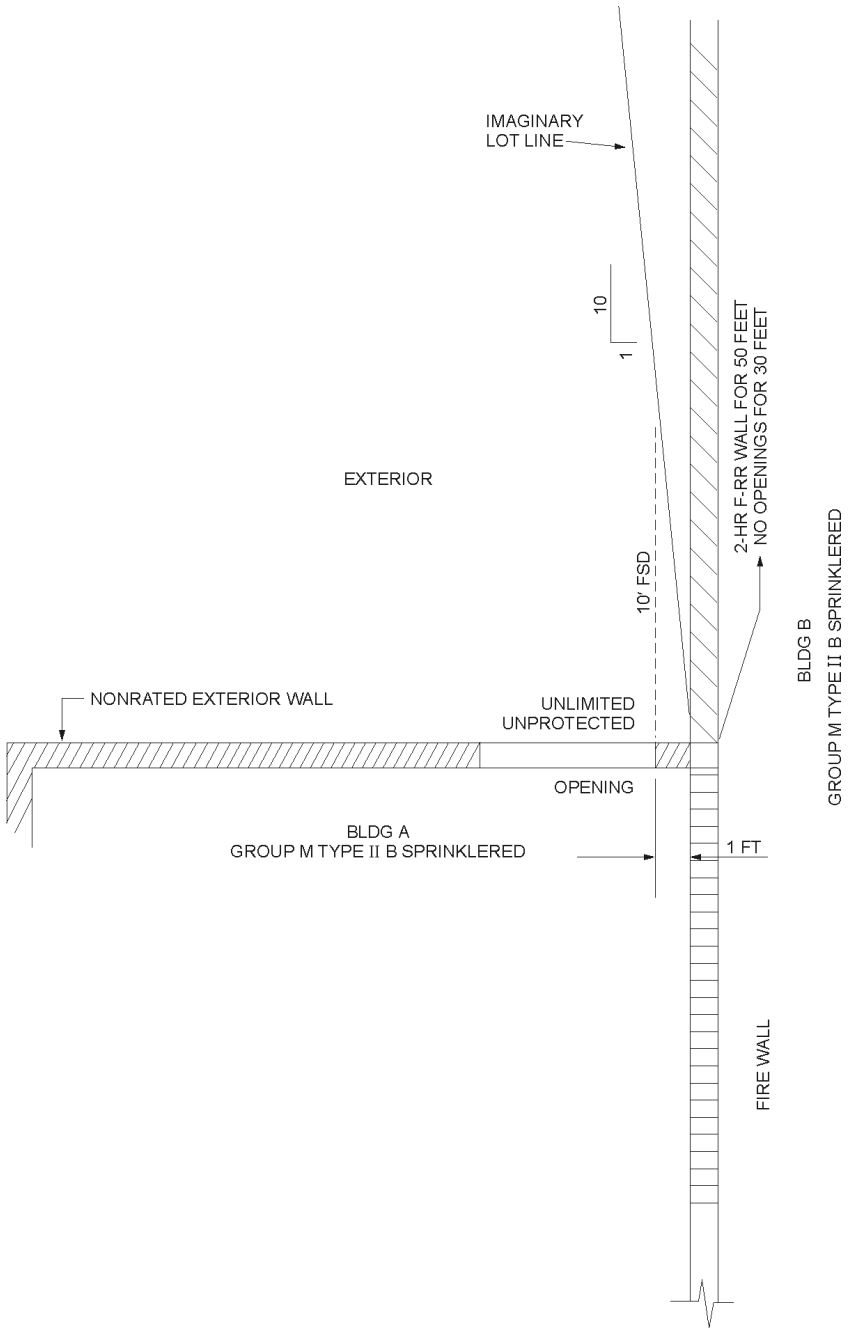

Figure 706.5.1(3)
EXAMPLE OF METHOD 2

INTERNATIONAL CODE COUNCIL®
Copyright © 2015 ICC. ALL RIGHTS RESERVED. Accessed by David Dammon on Jun 21, 2017 12:30:52 PM pursuant to License Agreement with ICC. No further reproduction or distribution authorized. ANY UNAUTHORIZED REPRODUCTION OR DISTRIBUTION IS A VIOLATION OF THE FEDERAL COPYRIGHT ACT AND THE LICENSE AGREEMENT, AND SUBJECT TO CIVIL AND CRIMINAL PENALTIES THEREUNDER.

mm) Type X gypsum board directly beneath the underside of the roof sheathing or deck, supported by not less than 2-inch (51 mm) nominal ledgers attached to the sides of the roof framing members for a distance of not less than 4 feet (1220 mm) on both sides of the *fire wall*.

5. In buildings designed in accordance with Section 510.2, *fire walls* located above the 3-hour *horizontal assembly* required by Section 510.2, Item 1 shall be permitted to extend from the top of this *horizontal assembly*.
6. Buildings with sloped roofs in accordance with Section 706.6.2.

❖ One of the primary purposes of a fire wall is to provide protection from an exposure fire. A fire wall must be continuous from the foundation to or through the roof. The fire wall is required to extend to 30 inches (762 mm) above the roof surface (see Commentary Figure 706.6 for a diagram of a typical fire wall). Where other provisions are met that will restrict the spread of fire, this 30-inch (762 mm) extension is not required (see Exceptions 1 through 5). Exception 1 stipulates that fire walls separating two buildings that have different roof levels must comply with the provisions of Section 706.6.1.

Exception 2 to this section's requirement for a parapet applies to buildings where: a. The maximum required fire-resistance rating of the fire wall is 2 hours; b. The roof assembly located within 4 feet (1219 mm) of the fire wall has a minimum fire-resistance rating of 1 hour (including all supporting elements and structural members); c. No roof openings are located within 4 feet (1219 mm) of the fire wall; and d. The buildings on either side of the fire wall have a minimum Class B roof covering. The provisions of Exception 2 are not applicable to buildings with combustible roof construction where a fire wall is required to have a fire-resistance rating of 3 hours or greater. Buildings where the fire wall is required to have a 3-hour or greater fire-resistance rating must comply with the general provisions of Section 706.6, or with Exception 3 or 4 in order to qualify for the parapet extension exception.

Exception 3 states that, since the intent of the parapet is to prevent fire spread over the roof, it is not required if the entire roof is of noncombustible construction; the fire wall is continuous to the underside of the roof deck, roof slab or roof sheathing; the roof-covering material has a minimum Class B classification in accordance with the provisions of Section 1505.3 (see commentary, Section 1505.3); and there are no roof openings located within 4 feet (1219 mm) on either side of the fire wall.

The intent of the requirement for a Class B roof covering is due to the fact that roof coverings are not considered part of the roof, and therefore, are not subject to the noncombustibility requirements of this section. This section requires that the roof covering

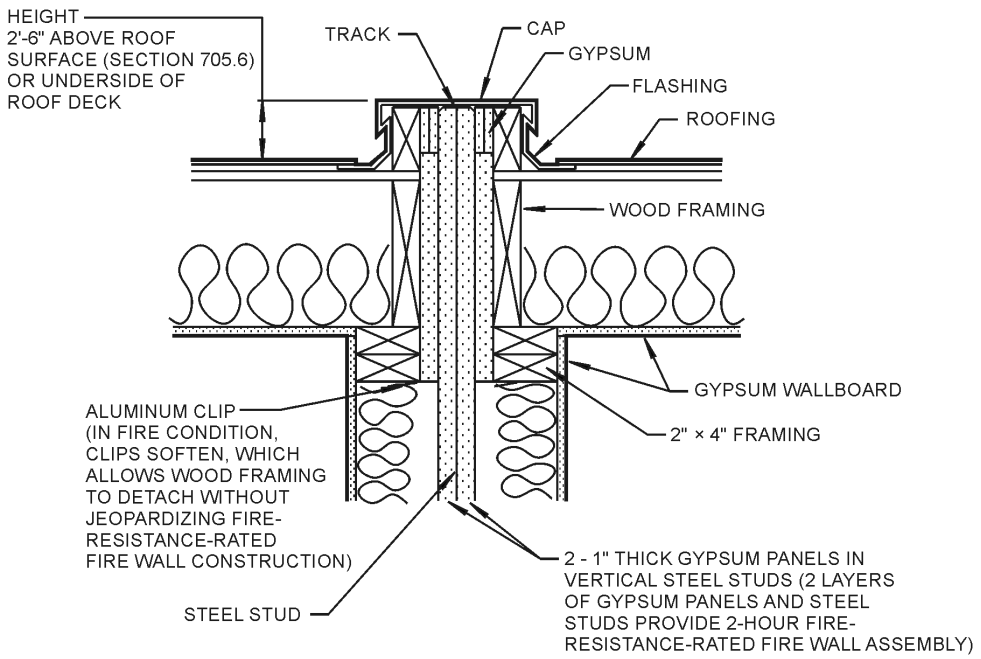

For SI: 1 inch = 25.4 mm, 1 foot = 304.8 mm.

Figure 706.6
GENERIC FIRE WALL EXAMPLE
(Source: National Gypsum Company)

INTERNATIONAL CODE COUNCIL®
Copyright © 2015 ICC. ALL RIGHTS RESERVED. Accessed by David Dammon on Jun 21, 2017 12:30:52 PM pursuant to License Agreement with ICC. No further reproduction or distribution authorized. ANY UNAUTHORIZED REPRODUCTION OR DISTRIBUTION IS A VIOLATION OF THE FEDERAL COPYRIGHT ACT AND THE LICENSE AGREEMENT, AND SUBJECT TO CIVIL AND CRIMINAL PENALTIES THEREUNDER.

be effective against moderate fire test exposure to reduce the potential for fire spread across the roof. The restriction on the location of roof openings is intended to minimize the potential of the spread of fire from one building to an adjacent building via roof openings, such as skylights, penetrations or roof windows. This fire spread could occur from something such as a fan that breaches the roof opening in the involved building and exposes roof openings in the adjacent building to direct fire or to burning brands, which could land on the roof, burn through the roof opening and ignite combustibles in the interior of the adjacent building. The 4-foot (1219 mm) threshold provides a reasonable approximation of a fire plume, beyond which the exposure to fire of the adjacent building is reduced. Exception 4 to the requirement in Section 706.6 for a parapet is the condition in buildings of Type III, IV and V construction where the sheathing or deck is constructed of noncombustible materials or approved fire-retardant-treated wood for a distance of 4 feet (1219 mm) on both sides of the wall (see the commentary to Section 2303.2 for additional information on fire-retardant-treated wood) or where the prescribed application of $^5/_8$-inch (15.9 mm) Type X gypsum board is applied to the underside of the deck for a distance of 4 feet (1219 mm) on both sides of the wall. The roof coverings on both buildings must have a minimum Class B rating and no roof openings are to be located within 4 feet (1219 mm) of the fire wall (see commentary, Section 508.2). The intent is the same: to resist the passage of flame beyond the fire wall.

706.6.1 Stepped buildings. Where a *fire wall* serves as an *exterior wall* for a building and separates buildings having different roof levels, such wall shall terminate at a point not less than 30 inches (762 mm) above the lower roof level, provided the *exterior wall* for a height of 15 feet (4572 mm) above the lower roof is not less than 1-hour fire-resistance-rated construction from both sides with openings protected by fire assemblies having a *fire protection rating* of not less than $^3/_4$ hour.

Exception: Where the *fire wall* terminates at the underside of the roof sheathing, deck or slab of the lower roof, provided:

1. The lower roof assembly within 10 feet (3048 mm) of the wall has not less than a 1-hour *fire-resistance rating* and the entire length and span of supporting elements for the rated roof assembly has a *fire-resistance rating* of not less than 1 hour.
2. Openings in the lower roof shall not be located within 10 feet (3048 mm) of the *fire wall*.

❖ The basic provisions of Section 706.6 require that a parapet extend a minimum of 30 inches (762 mm) above the roof surfaces on both sides of the fire wall, which would then require fire walls separating buildings with different roof heights to extend 30 inches (762 mm) above the highest roof surface. The provisions of Section 706.6.1 address situations where a fire wall separates adjacent buildings with a difference in roof height. These provisions acknowledge that fire exposure to the exterior wall of an adjacent building from the roof of a lower building represents, to a certain extent, a reduced hazard.

This section retains the fire wall extension above the lower roof surface and places a 15-foot (4572 mm) limit on rated wall construction and opening protectives, while the exception allows the fire wall extension to be eliminated as long as a fire barrier, in the form of 1-hour-rated roof construction, is provided that extends a minimum of 10 feet (3048 mm) from the fire wall. The option provided by this section permits openings in an exterior wall that extend above the fire wall, where the fire wall extends 30 inches (762 mm) above the lower roof surface, and the exterior wall extending above the fire wall is constructed as a 1-hour fire-resistance-rated wall rated for exposure from both sides for a distance of 15 feet (4572 mm) above the lower roof surface. Where the fire wall and exterior wall comply with these requirements, openings are permitted in the exterior wall extension, provided that all openings located within 15 feet (4572 mm) of the lower roof surface are protected with $^3/_4$-hour-rated opening protectives. Openings located more than 15 feet (4572 mm) above the lower roof surface are not required to have opening protectives [see Commentary Figure 706.6.1(1)]. The provisions of this section are similar to those contained in Section 704.10 for vertical exposure of exterior openings. They require that when the difference in height between the roof surfaces of the adjacent buildings is less than 15 feet (4572 mm), the exterior wall extension is required to extend to the underside of the upper roof deck [see Commentary Figure 706.6.1(2)].The exception permits openings in the roof that extend above the fire wall, where: a. The fire wall terminates at the bottom of the roof deck of the lower roof; b. The lower roof assembly has a minimum 1-hour fire-resistance rating for a minimum distance of 10 feet (3048 mm) from the fire wall; and c. There are no openings located in the lower roof within 10 feet (3048 mm) of the fire wall. Openings located in the exterior wall above the lower roof surface are not required to have opening protectives [see Commentary Figure 706.6.1(3)]. It must be noted that all structural elements, including beams, columns and bearing walls that provide support for the fire-resistance-rated roof assembly, must also have a 1-hour fire-resistance rating for their entire length or span in order to maintain the effectiveness of the rated roof assembly. The provisions of this section are similar to those contained in Section 1023.7 for the protection of the exterior walls of exit stairways. The provisions for stepped buildings only apply where a fire wall is required in between the buildings and do not apply to party walls on real property lines.

INTERNATIONAL CODE COUNCIL®
Copyright © 2015 ICC. ALL RIGHTS RESERVED. Accessed by David Dammon on Jun 21, 2017 12:30:52 PM pursuant to License Agreement with ICC. No further reproduction or distribution authorized. ANY UNAUTHORIZED REPRODUCTION OR DISTRIBUTION IS A VIOLATION OF THE FEDERAL COPYRIGHT ACT AND THE LICENSE AGREEMENT, AND SUBJECT TO CIVIL AND CRIMINAL PENALTIES THEREUNDER.

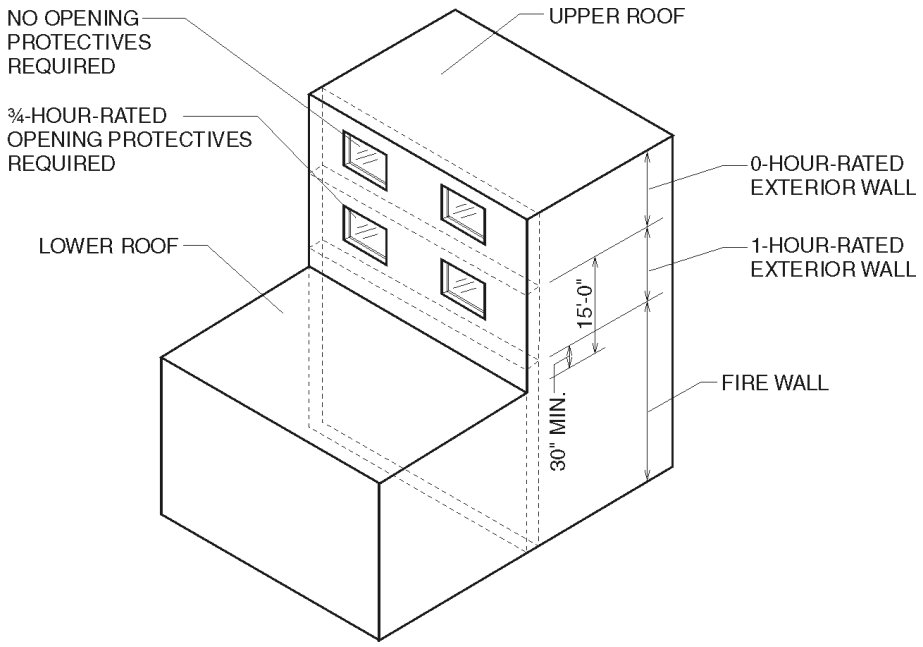

For SI: 1 inch = 25.4 mm, 1 foot = 304.8 mm.

Figure 706.6.1(1)
FIRE WALLS—STEPPED BUILDINGS

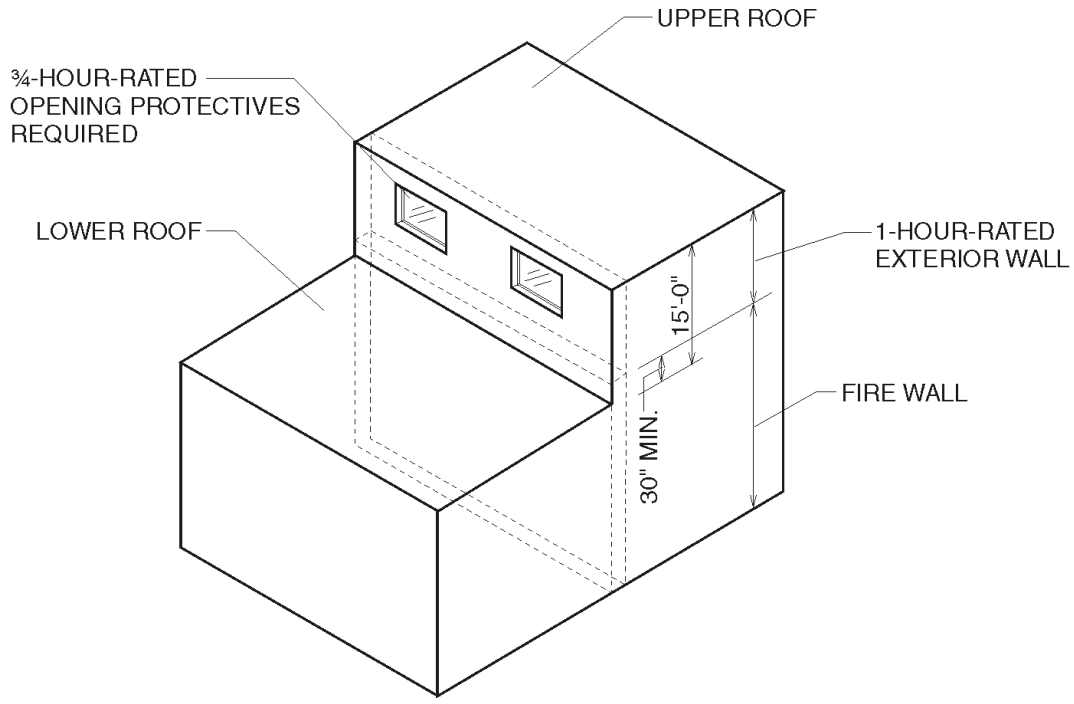

For SI: 1 inch = 25.4 mm, 1 foot = 304.8 mm.

Figure 706.6.1(2)
FIRE WALLS—STEPPED BUILDINGS

INTERNATIONAL CODE COUNCIL®
Copyright © 2015 ICC. ALL RIGHTS RESERVED. Accessed by David Dammon on Jun 21, 2017 12:30:52 PM pursuant to License Agreement with ICC. No further reproduction or distribution authorized. ANY UNAUTHORIZED REPRODUCTION OR DISTRIBUTION IS A VIOLATION OF THE FEDERAL COPYRIGHT ACT AND THE LICENSE AGREEMENT, AND SUBJECT TO CIVIL AND CRIMINAL PENALTIES THEREUNDER.

706.6.2 Buildings with sloped roofs. Where a *fire wall* serves as an interior wall for a building, and the roof on one side or both sides of the fire wall slopes toward the fire wall at a slope greater than two units vertical in 12 units horizontal (2:12), the *fire wall* shall extend to a height equal to the height of the roof located 4 feet (1219 mm) from the *fire wall* plus 30 inches (762 mm). In no case shall the extension of the fire wall be less than 30 inches (762 mm).

❖ This requirement is similar to that of stepped buildings. This section only applies if the roof slopes upward away from the fire wall at a slope greater than two units vertical in 12 units horizontal (2:12). The sloping roof presents a greater hazard to the building from fire exposure on either side than a roof at the same elevation on each side. The hazard would increase as the slope of the roof increases. Commentary Figure 706.6.2 illustrates this requirement. This section requires the extension above the roof regardless of the material of the roof construction on either side. For roofs sloping two units vertical in 12 units horizontal (2:12), fire wall extensions need only comply with Section 706.6. Section 706.6 may require a 30- inch (762 mm) height extension or may allow the fire wall to terminate at the roof deck under the conditions of one of the exceptions in Section 706.6.

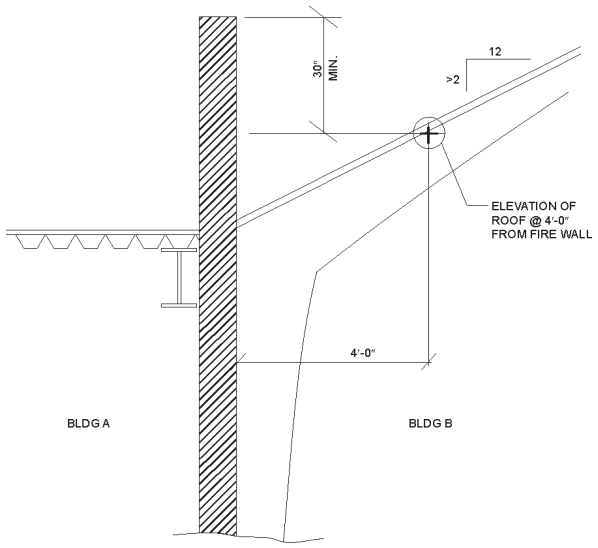

For SI: 1 inch = 25.4 mm, 1 foot = 304.8 mm.

Figure 706.6.2
FIRE WALL EXTENSION AT SLOPING ROOF > 2:12

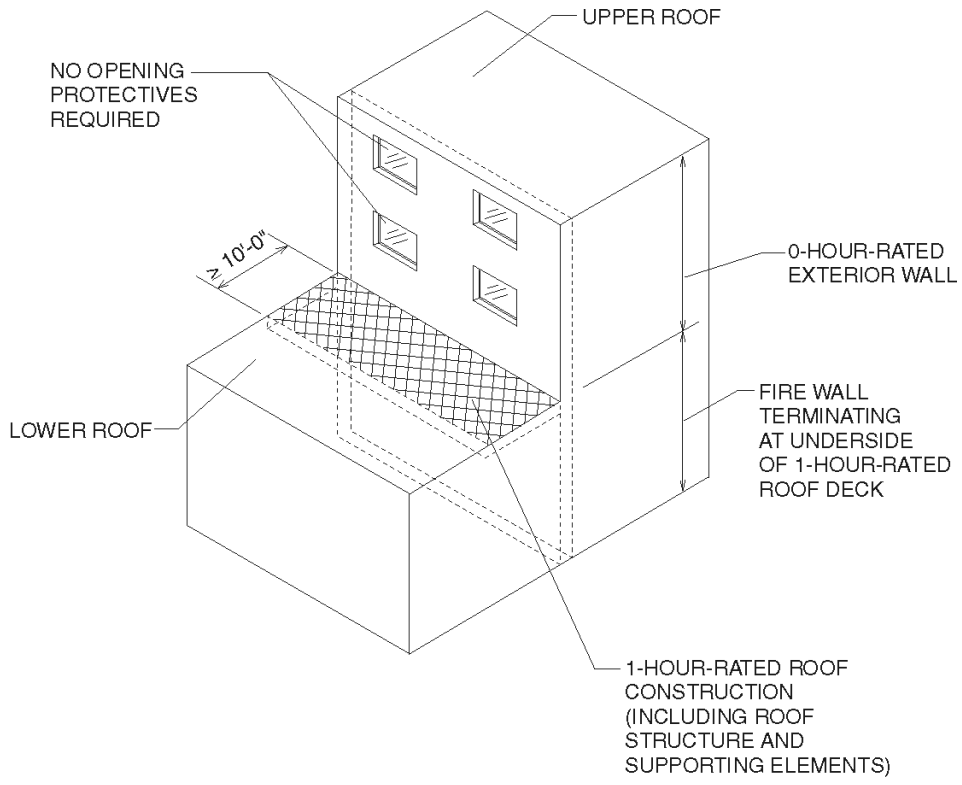

For SI: 1 inch = 25.4 mm, 1 foot = 304.8 mm.

Figure 706.6.1(3)
FIRE WALLS—EXTENSION EXCEPTION

INTERNATIONAL CODE COUNCIL®
Copyright © 2015 ICC. ALL RIGHTS RESERVED. Accessed by David Dammon on Jun 21, 2017 12:30:52 PM pursuant to License Agreement with ICC. No further reproduction or distribution authorized. ANY UNAUTHORIZED REPRODUCTION OR DISTRIBUTION IS A VIOLATION OF THE FEDERAL COPYRIGHT ACT AND THE LICENSE AGREEMENT, AND SUBJECT TO CIVIL AND CRIMINAL PENALTIES THEREUNDER.

706.7 Combustible framing in fire walls. Adjacent combustible members entering into a concrete or masonry *fire wall* from opposite sides shall not have less than a 4-inch (102 mm) distance between embedded ends. Where combustible members frame into hollow walls or walls of hollow units, hollow spaces shall be solidly filled for the full thickness of the wall and for a distance not less than 4 inches (102 mm) above, below and between the structural members, with noncombustible materials *approved* for fireblocking.

❖ In order to retain the fire-resistance capability of the wall where combustible members will frame into it, hollow walls or walls of hollow units must be solidly filled for the thickness of the wall and for a distance of not less than 4 inches (102 mm) above, below and between the structural members. Consistent with the construction of the walls, the fireblocking materials are to be noncombustible and approved for fireblocking in accordance with Section 717.2. If combustible members enter both sides of a fire wall, there must be at least 4 inches (102 mm) of masonry between the embedded ends.

In order to maintain structural integrity where wood beams or joists are supported in and on masonry fire walls, the joists and beams should be shaped so that they can rotate out of the pocket without exerting undue force on the wall.

706.8 Openings. Each opening through a *fire wall* shall be protected in accordance with Section 716.5 and shall not exceed 156 square feet (15 m^2). The aggregate width of openings at any floor level shall not exceed 25 percent of the length of the wall.

Exceptions:

1. Openings are not permitted in party walls constructed in accordance with Section 706.1.1.
2. Openings shall not be limited to 156 square feet (15 m^2) where both buildings are equipped throughout with an *automatic sprinkler system* installed in accordance with Section 903.3.1.1.

❖ In order to maintain the integrity of the fire wall, the maximum area and percent of openings in the wall are restricted. When provided, the openings must be properly protected so that the fire-resistance rating of the wall is maintained. This section prescribes the maximum area and the percent of openings that may be permitted in a fire wall at any one floor level. The provisions must be used in concert with Section 706.1.1, which limits openings for party walls.

Fire wall openings have restrictive limitations in their size and total area because of the critical function that a fire wall serves. To maintain the required fire performance of the fire wall, each opening through a fire wall is restricted in area to 156 square feet (11 m^2) and the aggregate width of all openings at any one floor level may not constitute more than 25 percent of the length of the wall. The 156-square-foot (11 m^2) limitation provides a reasonable size through which industrial machinery may pass and corresponds with the maximum area limitations of many tested fire doors.

Recognizing the effectiveness of automatic sprinklers, the 156-square-foot (11 m^2) opening limitation does not apply where the buildings on both sides of the fire wall are fully sprinklered (see Exception 2); however, the aggregate width of all openings in a fire wall at any one floor level is still limited to 25 percent of the length of the wall.

706.9 Penetrations. Penetrations of *fire walls* shall comply with Section 714.

❖ In order to maintain the integrity of the required fire-resistance rating, penetrations through the fire wall must be properly protected. Acceptable protection methods for various penetrations of fire walls are identified in Sections 714.2 and 714.3.

706.10 Joints. Joints made in or between *fire walls* shall comply with Section 715.

❖ Joints, such as expansion or seismic, are another form of openings in fire walls and, therefore, must be considered with regard to maintaining the fire-resistance ratings of fire walls. This section requires all joints that are located in fire walls to be protected by a joint system with a fire-resistance rating and to comply with the requirements of Section 715.

706.11 Ducts and air transfer openings. Ducts and air transfer openings shall not penetrate *fire walls*.

Exception: Penetrations by ducts and air transfer openings of *fire walls* that are not on a *lot line* shall be allowed provided the penetrations comply with Section 717. The size and aggregate width of all openings shall not exceed the limitations of Section 706.8.

❖ The general provisions of this section mirror those of Section 706.1.1 for party walls. The exception permits duct and transfer openings for fire walls not located on a lot line, provided the maximum aggregate area provisions of Section 706.8 are met and that the openings are protected in accordance with Section 717.

SECTION 707
FIRE BARRIERS

707.1 General. *Fire barriers* installed as required elsewhere in this code or the *International Fire Code* shall comply with this section.

❖ The provisions of this section apply to assemblies that are required to have a fire-resistance rating and are required to be constructed as "fire barriers." As addressed in Section 707.3, fire barriers are used for separating exits, incidental use areas, shafts, hazardous materials control areas and fire areas. Fire barriers provide a higher degree of protection than fire partitions (see Section 708), but lack the inherent

INTERNATIONAL CODE COUNCIL®
Copyright © 2015 ICC. ALL RIGHTS RESERVED. Accessed by David Dammon on Jun 21, 2017 12:30:52 PM pursuant to License Agreement with ICC. No further reproduction or distribution authorized. ANY UNAUTHORIZED REPRODUCTION OR DISTRIBUTION IS A VIOLATION OF THE FEDERAL COPYRIGHT ACT AND THE LICENSE AGREEMENT, AND SUBJECT TO CIVIL AND CRIMINAL PENALTIES THEREUNDER.

structural integrity of fire walls. Fire barriers limit the number of openings. Fire barrier wall assemblies must be continuous from the top of a fire-resistance-rated floor/ceiling assembly to the bottom of the floor or roof slab/deck above. Unlike fire partitions, addressed in Section 708, there are no circumstances under which a fire barrier wall is permitted to terminate at a ceiling.

Fire barriers are used for a variety of purposes, such as mixed occupancies, shafts, exit access stairways and exit and floor opening enclosures. Fire barriers also include interior walls that serve to subdivide a space by separating one fire area from an adjacent fire area and for separating incidental use areas (see Section 509.4.1). Fire-resistance-rated assemblies used to separate exit access corridors in many applications as well as tenant, dwelling unit and guestroom separations are fire partitions (see Section 708). This section provides minimum requirements for the fire-resistance rating, continuity, combustibility and protection of openings and penetrations in order to help maintain the reliability of the fire separation assembly. As with any fire-resistance-rated assembly, consideration must be given to the openings and penetrations that are provided within the assembly. The intent is to maintain the fire-resistance rating of the assembly. These sections recognize that fire spread beyond a fire-resistance-rated compartment is often attributed to the protection given to any opening or penetration in the fire barrier, or the lack thereof.

Since the fire barrier is intended to provide a reliable subdivision of areas, the construction that structurally supports the assembly is required to provide at least the same hourly fire-resistance rating as the fire barrier. This is applicable regardless of the type of construction of the building. Structural stability is regulated by Section 707.5.

707.2 Materials. *Fire barriers* shall be of materials permitted by the building type of construction.

❖ The types of materials used in fire barriers are to be consistent with Sections 602 through 602.5 for the type of construction classification of the building. The fire-resistance ratings of fire barriers used to separate mixed occupancies are determined in accordance with Section 508.4 (see commentary, Section 508.4). Fire barriers are permitted to be of combustible materials in Type III, IV and V construction and are required to be of noncombustible materials in Type I and II construction.

707.3 Fire-resistance rating. The *fire-resistance rating* of *fire barriers* shall comply with this section.

❖ The elements that are identified in this section must be constructed as required for fire barriers and must be fire-resistance rated as required by the code sections referenced in this section.

707.3.1 Shaft enclosures. The *fire-resistance rating* of the *fire barrier* separating building areas from a shaft shall comply with Section 713.4.

❖ See Section 713.4 for the fire-resistance rating for shaft enclosures.

707.3.2 Interior exit stairway and ramp construction. The *fire-resistance rating* of the *fire barrier* separating building areas from an *interior exit stairway* or *ramp* shall comply with Section 1023.1.

❖ See Section 1023.1 for the fire-resistance rating of the fire barrier separating building areas from interior exit stairways and ramps (vertical exit enclosures).

707.3.3 Enclosures for exit access stairways. The *fire-resistance rating* of the *fire barrier* separating building areas from an *exit access stairway* or *ramp* shall comply with Section 713.4.

❖ See Sections 1023 for the enclosure requirements for exit access stairways and ramps. Unlike exit stairway enclosures, there are numerous exceptions to the enclosure requirements in Section 1023.

707.3.4 Exit passageway. The *fire-resistance rating* of the *fire barrier* separating building areas from an *exit* passageway shall comply with Section 1024.3.

❖ See Section 1024.3 for the fire-resistance rating for fire barriers forming exit passageways. Exit passageway enclosures may be fire barriers complying with this section or horizontal assemblies complying with Section 711.

707.3.5 Horizontal exit. The *fire-resistance rating* of the separation between building areas connected by a horizontal *exit* shall comply with Section 1026.1.

❖ See Section 1026.1 for the fire-resistance rating of the fire barriers forming horizontal exits. Horizontal exits may be formed by fire walls meeting Section 706, fire barriers complying with this section or horizontal assemblies complying with Sections 1026.2 and 711.

707.3.6 Atriums. The *fire-resistance rating* of the *fire barrier* separating atriums shall comply with Section 404.6.

❖ See Section 404.6 for the fire-resistance rating of the fire barrier walls separating the atrium area from other building use areas. Horizontal assemblies meeting Section 711 can also separate the atrium area.

707.3.7 Incidental uses. The *fire barrier* separating incidental uses from other spaces in the building shall have a *fire-resistance rating* of not less than that indicated in Table 509.

❖ Table 509 states the fire-resistance requirements for fire barrier walls separating incidental use areas. For some incidental uses there is a sprinkler option in lieu of the fire-resistance-rated fire barrier wall. With the sprinkler option, the wall is not required to be fire-resistance rated but must be capable of resisting the

INTERNATIONAL CODE COUNCIL®
Copyright © 2015 ICC. ALL RIGHTS RESERVED. Accessed by David Dammon on Jun 21, 2017 12:30:52 PM pursuant to License Agreement with ICC. No further reproduction or distribution authorized. ANY UNAUTHORIZED REPRODUCTION OR DISTRIBUTION IS A VIOLATION OF THE FEDERAL COPYRIGHT ACT AND THE LICENSE AGREEMENT, AND SUBJECT TO CIVIL AND CRIMINAL PENALTIES THEREUNDER.

passage of smoke. Those nonrated wall assemblies are not required to be constructed as fire barriers.

707.3.8 Control areas. *Fire barriers* separating *control areas* shall have a *fire-resistance rating* of not less than that required in Section 414.2.4.

❖ Control areas refer to areas within a building where limited quantities of hazardous materials are stored or used. Section 414.2.4 references Table 414.2.4 for the design and number of control areas. The required fire-resistance rating for the fire barriers separating the control areas from the rest of the area is also found within the table.

707.3.9 Separated occupancies. Where the provisions of Section 508.4 are applicable, the *fire barrier* separating mixed occupancies shall have a *fire-resistance rating* of not less than that indicated in Table 508.4 based on the occupancies being separated.

❖ Where separation of mixed occupancies is the chosen option for mixed uses in a building, the required fire separation is either a fire barrier meeting the requirements of this section or a horizontal fire separation assembly meeting the requirements of Section 711 (see Section 508.4). The required fire-resistance rating for the fire barrier or horizontal assembly is found in Table 508.4, but in no case shall the fire-resistance rating be less than the highest value in Table 707.3.10 for the occupancies being separated.

707.3.10 Fire areas. The *fire barriers* or *horizontal assemblies*, or both, separating a single occupancy into different *fire areas* shall have a *fire-resistance rating* of not less than that indicated in Table 707.3.10. The *fire barriers* or *horizontal assemblies*, or both, separating *fire areas* of mixed occupancies shall have a *fire-resistance rating* of not less than the highest value indicated in Table 707.3.10 for the occupancies under consideration.

❖ One of the alternatives available in addressing fire protection systems in many buildings is to divide the building into separate fire areas (see the definition of "Fire areas" in Chapter 2). Since many of the fire suppression system thresholds (see Section 903.2) are based upon the fire area, separation of a single occupancy into small fire areas can be an acceptable method for avoiding the use of sprinklers. This is a classic type of design decision: sprinklers versus compartmentation. If the separation is provided in accordance with Table 707.3.10, each fire area may be evaluated separately for purposes of determining the applicable provisions of the code.

Areas separated with fire barriers are not considered separate buildings; they are considered separate fire areas. Two areas must be separated by a fire wall or exterior walls to be considered separate buildings. Two areas separated with fire barriers are still considered as part of a single building. This distinction is critical in determining compliance with allowable height and area and other code provisions.

TABLE 707.3.10
FIRE-RESISTANCE RATING REQUIREMENTS FOR FIRE BARRIER ASSEMBLIES OR HORIZONTAL ASSEMBLIES BETWEEN FIRE AREAS

OCCUPANCY GROUP	FIRE-RESISTANCE RATING (hours)
H-1, H-2	4
F-1, H-3, S-1	3
A, B, E, F-2, H-4, H-5, I, M, R, S-2	2
U	1

❖ Table 707.3.10 provides the minimum required fire-resistance ratings of the fire barrier wall or horizontal assembly separating two fire areas of the same occupancy group.

707.4 Exterior walls. Where exterior walls serve as a part of a required fire-resistance-rated shaft or stairway or ramp enclosure, or separation, such walls shall comply with the requirements of Section 705 for exterior walls and the fire-resistance-rated enclosure or separation requirements shall not apply.

Exception: Exterior walls required to be fire-resistance rated in accordance with Section 1021 for exterior egress balconies, Section 1023.7 for interior exit stairways and ramps and Section 1027.6 for exterior exit stairways and ramp.

❖ If an area is required to be enclosed by fire barriers and an exterior wall constitutes part of the enclosure, the exterior wall is only required to comply with the fire-resistance-rating requirements in Section 705, unless the exterior wall is protecting part of an exterior egress balcony, an exit enclosure or an exterior stairway or ramp (see commentary, Sections 1021, 1023.7 and 1027.6). The intent of the fire barrier requirements is to subdivide or enclose areas to protect them from a fire in the building. In general, the exterior wall only needs a fire-resistance rating if required for structural stability (see Table 601) or because of exterior exposure potential (see Table 602 and Section 705.5). The exception, however, points to three sections of the code where the exterior wall must be rated for reasons other than the FSD.

707.5 Continuity. *Fire barriers* shall extend from the top of the foundation or floor/ceiling assembly below to the underside of the floor or roof sheathing, slab or deck above and shall be securely attached thereto. Such *fire barriers* shall be continuous through concealed space, such as the space above a suspended ceiling. Joints and voids at intersections shall comply with Sections 707.8 and 707.9

Exceptions:

1. Shaft enclosures shall be permitted to terminate at a top enclosure complying with Section 713.12.
2. *Interior exit stairway* and *ramp* enclosures required by Section 1023 and *exit access stairway* and *ramp* enclosures required by Section 1019 shall be permit-

INTERNATIONAL CODE COUNCIL®
Copyright © 2015 ICC. ALL RIGHTS RESERVED. Accessed by David Dammon on Jun 21, 2017 12:30:52 PM pursuant to License Agreement with ICC. No further reproduction or distribution authorized. ANY UNAUTHORIZED REPRODUCTION OR DISTRIBUTION IS A VIOLATION OF THE FEDERAL COPYRIGHT ACT AND THE LICENSE AGREEMENT, AND SUBJECT TO CIVIL AND CRIMINAL PENALTIES THEREUNDER.

ted to terminate at a top enclosure complying with Section 713.12.

❖ To minimize the potential for fire spread from one area to another over a fire barrier wall, such fire barrier assemblies must be continuous from the fire-resistance-rated floor/ceiling assembly below to the underside of the floor slab or roof deck above (see Commentary Figure 707.5). To maintain the efficiency of the fire barrier, it must be continuous through all concealed spaces (such as a space above a suspended ceiling), be constructed tight and securely attached to the underside of the floor slab or roof deck. The joint at the intersection of fire barrier walls and other fire barriers, the underside of fire-resistance-rated floors or roof decks, slabs, decks and exterior walls must be an approved fire-resistance joint system meeting ASTM E119 or UL 263.

Exception 1 is an exception to the continuity requirement for shaft enclosure walls. Exception 2 allows exit stair enclosures and exit access stairway enclosures to terminate at a top enclosure complying with Section 713.12.

707.5.1 Supporting construction. The supporting construction for a *fire barrier* shall be protected to afford the required *fire-resistance rating* of the *fire barrier* supported. Hollow vertical spaces within a *fire barrier* shall be fireblocked in accordance with Section 718.2 at every floor level.

Exceptions:

1. The maximum required *fire-resistance rating* for assemblies supporting *fire barriers* separating tank storage as provided for in Section 415.9.1.2 shall be 2 hours, but not less than required by Table 601 for the building construction type.
2. Supporting construction for 1-hour *fire barriers* required by Table 509 in buildings of Type IIB, IIIB and VB construction is not required to be *fire-resistance rated* unless required by other sections of this code.

❖ In general, fire barriers must be supported by construction having an equivalent fire-resistance rating. If the supporting structure is a primary structural frame (see the definition in Chapter 2) and supports a fire barrier wall more than two stories in height, the fire-resistance rating for the supporting structure must be protected by the individual encasement method in Section 704.3. If the supporting members are a secondary structural member, then the supporting structure can be protected by a membrane as in Section 711 for horizontal assemblies. The intent of this requirement is to prevent the effectiveness of the assembly from being circumvented by a fire that threatens the supporting elements. The requirement for the supporting construction to be fire-resistance rated applies to buildings of all types of construction, even to buildings of Type IIB, IIIB and VB construction for all fire barrier walls except those separating incidental use areas.

Exception 1 is not an exception at all but a requirement that supporting structures for fire barriers separating flammable or combustible tank storage be 2-hour fire-resistance rated.

Exception 2 allows only incidental use area separation walls in Type IIB, IIIB and VB construction to be supported on nonfire-resistance-rated construction if no other code section requires the supporting elements to be fire-resistance rated.

Fire barrier walls will usually be built on top of a floor and will terminate at the floor above. Should a fire barrier wall, as in the case of some shaft walls, be constructed through a floor, any hollow space within that wall could provide a passage for fire or smoke and, therefore, must be fireblocked as specified in the last sentence of Section 707.5.1. Any hollow vertical

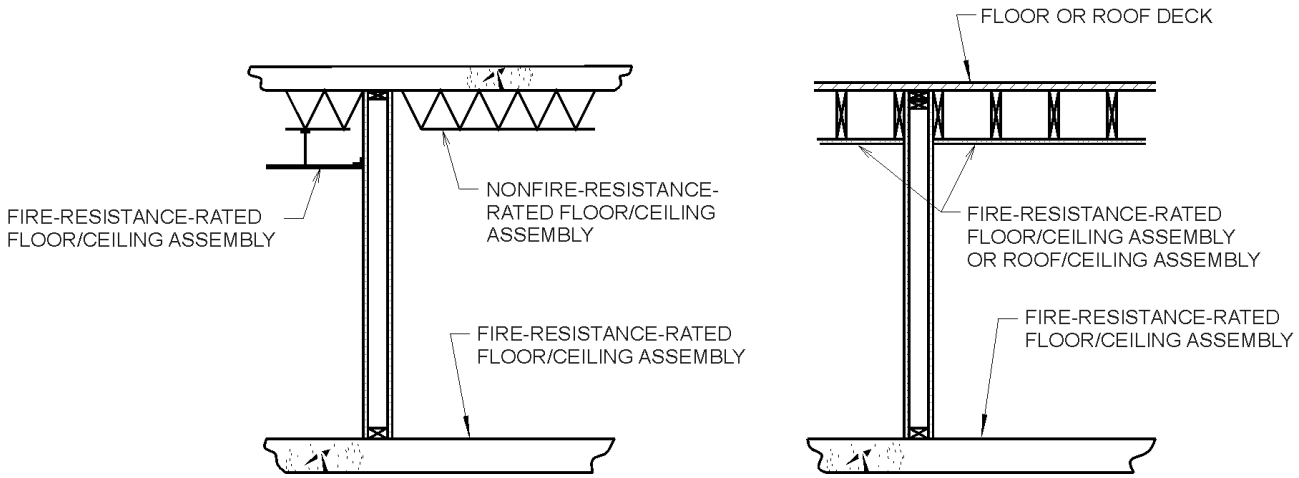

Figure 707.5
CONTINUITY OF FIRE BARRIERS

INTERNATIONAL CODE COUNCIL®
Copyright © 2015 ICC. ALL RIGHTS RESERVED. Accessed by David Dammon on Jun 21, 2017 12:30:52 PM pursuant to License Agreement with ICC. No further reproduction or distribution authorized. ANY UNAUTHORIZED REPRODUCTION OR DISTRIBUTION IS A VIOLATION OF THE FEDERAL COPYRIGHT ACT AND THE LICENSE AGREEMENT, AND SUBJECT TO CIVIL AND CRIMINAL PENALTIES THEREUNDER.

spaces within fire barrier walls must be fireblocked in accordance with Section 718.2

707.6 Openings. Openings in a *fire barrier* shall be protected in accordance with Section 716. Openings shall be limited to a maximum aggregate width of 25 percent of the length of the wall, and the maximum area of any single opening shall not exceed 156 square feet (15 m2). Openings in enclosures for *exit access stairways* and *ramps*, *interior exit stairways* and *ramps* and *exit passageways* shall also comply with Sections 1019, 1023.4 and 1024.5, respectively.

Exceptions:

1. Openings shall not be limited to 156 square feet (15 m^2) where adjoining floor areas are equipped throughout with an automatic sprinkler system in accordance with Section 903.3.1.1.
2. Openings shall not be limited to 156 square feet (15 m^2) or an aggregate width of 25 percent of the length of the wall where the opening protective is a fire door serving enclosures for exit access stairways and ramps, and interior exit stairways and ramps.
3. Openings shall not be limited to 156 square feet (15 m^2) or an aggregate width of 25 percent of the length of the wall where the opening protective has been tested in accordance with ASTM E119 or UL 263 and has a minimum *fire-resistance rating* not less than the *fire-resistance rating* of the wall.
4. Fire window assemblies permitted in atrium separation walls shall not be limited to a maximum aggregate width of 25 percent of the length of the wall.
5. Openings shall not be limited to 156 square feet (15 m^2) or an aggregate width of 25 percent of the length of the wall where the opening protective is a fire door assembly in a *fire barrier* separating an enclosure for *exit access* stairways and ramps, and interior exit stairways and ramps from an exit passageway in accordance with Section 1023.3.1.

❖ To function as intended, buildings must provide access into different building areas. This access requires openings within fire barriers. Section 707.6 defines what openings are permitted and how they have to be protected to maintain the integrity of the fire barrier. To maintain the viability of the fire barrier, the aggregate width of openings is restricted to a maximum of 25 percent of the length of the wall. This limitation is based on the fact that the criteria for opening protectives do not include limitations on unexposed surface temperature or radiant heat transfer. Consistent with typical listing limitations, a single opening protective is limited to a maximum of 156 square feet (15 m^2). It should be noted, however, that certain opening protectives, such as fire windows, are often limited to much smaller areas per opening.

Traditionally, the limiting size on openings in fire-resistance-rated walls has been based on the maximum sizes identified in the fire door listings. The previous size limitation was 120 square feet (11 m^2) due to the limitations of such listings. In 2006, the code increased the maximum permitted size of an opening protective to 156 square feet (15 m^2) in a fire barrier, based upon the current listing limitations of steel fire doors. The maximum length of any single opening is limited to 13 feet, 6 inches (4114 mm) for the same reason when used during the testing process.

The reference to Sections 1019, 1023.4 and 1024.5 specifies that in exit enclosures and exit passageways, only openings for the purpose of exiting from normally occupied spaces are permitted. Spaces that are not normally occupied, such as janitor closets or mechanical and electrical rooms, are not permitted to open directly into these protected exit systems since fire in those areas may produce large volumes of heat and smoke that could readily enter the exit enclosure and delay or prevent egress. In order to maintain the required fire-resistance rating of the assembly, opening protectives must have a fire protection rating in accordance with Section 716. The reference to Section 716 is intended to identify the required fire protection rating for the opening protective, as indicated in Table 716.5, installation requirements and the applicable test standards.

Openings in fire barriers are not limited to 156 square feet (15 m^2) when all fire areas separated by the assembly are equipped throughout with automatic sprinkler protection (see Exception 1). This exception is similar to the one made for fire walls (see Section 706.8), based on the historical fire record of automatic sprinkler systems. Although the openings in the fire barrier are not limited in size under this exception, they are still required to be protected by opening protectives that meet the requirements of Section 716.

Exception 2 acknowledges the practicality of the 25-percent limitation for walls enclosing interior exit stairways and ramps, and exit access stairways and ramps. Most exit enclosures are of such limited size that the placement of the fire door in the wall of the enclosure often exceeds 25 percent of the wall.

Exception 3 addresses new opening protective products that have been tested to the more rigorous provisions of ASTM E119 or UL 263 rather than, or in addition to, the opening protective standard NFPA 252 or UL 10C. Since the opening protective has been tested to the same standard as the wall itself, it is then logical to allow such an opening protective without restrictions (see commentary, Section 703.6).

Exception 4 acknowledges the inclusive requirements for openings into atriums addressed in Section 404 that include glazing material allowances not found elsewhere in Chapter 7.

Exception 5 is similar to Exception 2 in that the wall area between the exit enclosure and the exit passageway is usually so very small that the door opening will nearly always exceed the 25-percent limitation.

707.7 Penetrations. Penetrations of *fire barriers* shall comply with Section 714.

❖ In order to maintain the integrity of the fire barrier, penetrations into and through the fire-resistance-

INTERNATIONAL CODE COUNCIL®
Copyright © 2015 ICC. ALL RIGHTS RESERVED. Accessed by David Dammon on Jun 21, 2017 12:30:52 PM pursuant to License Agreement with ICC. No further reproduction or distribution authorized. ANY UNAUTHORIZED REPRODUCTION OR DISTRIBUTION IS A VIOLATION OF THE FEDERAL COPYRIGHT ACT AND THE LICENSE AGREEMENT, AND SUBJECT TO CIVIL AND CRIMINAL PENALTIES THEREUNDER.

rated wall must be properly protected. Acceptable methods for various penetrations of fire barriers are identified in Section 714.3. The provisions of Section 707.7.1 must be used when the penetration is into an exit enclosure or exit passageway.

707.7.1 Prohibited penetrations. Penetrations into enclosures for *exit access stairways* and *ramps*, *interior exit stairways* and *ramps*, and *exit passageways* shall be allowed only where permitted by Sections 1019, 1023.5 and 1024.6, respectively.

❖ This section reminds the code user that although the penetration firestop systems do provide protection for the penetration, the code prohibits most penetrations through exit enclosures. Only penetrations of items such as sprinkler piping, necessary ductwork for stair pressurization, and electrical conduit that serve the exit enclosure are allowed. There can never be a penetration through a fire barrier that separates an adjacent exit enclosure.

707.8 Joints. Joints made in or between *fire barriers*, and joints made at the intersection of *fire barriers* with underside of a fire-resistance-rated floor or roof sheathing, slab or deck above, and the exterior vertical wall intersection shall comply with Section 715.

❖ This section contains requirements for joints or linear openings created between building assemblies, which are sometimes referred to as construction, expansion or seismic joints. These joints are most often created where the structural design of a building necessitates a separation between building components in order to accommodate anticipated structural displacements caused by thermal expansion and contraction, seismic activity, wind or other loads. Commentary Figure 715.1 illustrates some of the most common locations of these joints.

These linear openings create a "weak link" in fire-resistance-rated assemblies, which can compromise the integrity of the tested assembly by allowing an avenue for the passage of fire and the products of combustion through the assembly. In order to maintain the efficacy of the fire-resistance-rated assembly, these openings must be protected by a joint system with a fire-resistance rating equal to the adjacent assembly. It is not the intent of this section to regulate joints installed in assemblies that are provided to control shrinkage cracking, such as a saw-cut control joint in concrete (see Section 715).

707.9 Voids at intersections. The voids created at the intersection of a *fire barrier* and a nonfire-resistance-rated roof assembly or a nonfire-resistance-rated exterior wall assembly shall be filled. An approved material or system shall be used to fill the void, and shall be securely installed in or on the intersection for its entire length so as not to dislodge, loosen or otherwise impair its ability to accommodate expected building movements and to retard the passage of fire and hot gases.

❖ This new section is meant to give some prescriptive requirements for the joint formed by the intersection of a fire barrier wall and a nonfire-resistance-rated roof or wall assembly. Fire barrier walls are required to extend vertically to the roof deck. Fire barriers may also need to extend horizontally to an exterior wall. The method of sealing the resulting joint is prescribed in this section. Unlike a joint formed by a fire barrier wall and a fire-resistance-rated roof, which requires a joint meeting the test criteria of ASTM E1966 or UL 2079, this joint or void must only be filled with a material approved by the building official. It is not the intent of this section to require any performance-based tested assembly.

707.10 Ducts and air transfer openings. Penetrations in a *fire barrier* by ducts and air transfer openings shall comply with Section 717.

❖ Section 717 details the protection of ducts and air transfer openings at the point where they penetrate a fire-resistance-rated assembly. Section 717.5 indicates which situations will require the installation of a damper. As stated in Section 717.1.2, if a duct does not require a damper, the penetration of that duct through a fire-resistance-rated assembly must be protected as a through penetration in accordance with Section 714.

SECTION 708
FIRE PARTITIONS

708.1 General. The following wall assemblies shall comply with this section.

1. Separation walls as required by Section 420.2 for Groups I-1, R-1, R-2 and R-3.
2. Walls separating tenant spaces in *covered and open mall buildings* as required by Section 402.4.2.1.
3. Corridor walls as required by Section 1020.1.
4. Elevator lobby separation as required by Section 3006.2.
5. Egress balconies as required by Section 1019.2

❖ "Fire partitions," as defined in Section 202, are wall assemblies that enclose an exit access corridor, separate dwelling units, separate sleeping units, separate tenants in covered and open mall buildings and separate elevator lobbies. There are some exceptions to the requirement that corridor walls and elevator lobby walls be fire partitions. Those exceptions are found in Sections 3006.2 and 1020.1.

Corridor walls not required to be fire-resistance rated by Table 1020.1 are not required to meet this section. Elevator lobby walls not required to be fire-resistance rated by the exceptions to Section 3006.2 are not required to meet this section.

This section contains fire-resistance rating requirements, continuity requirements, opening requirements, penetration requirements, joint requirements and duct and air transfer opening requirements for fire partitions.

INTERNATIONAL CODE COUNCIL®
Copyright © 2015 ICC. ALL RIGHTS RESERVED. Accessed by David Dammon on Jun 21, 2017 12:30:52 PM pursuant to License Agreement with ICC. No further reproduction or distribution authorized. ANY UNAUTHORIZED REPRODUCTION OR DISTRIBUTION IS A VIOLATION OF THE FEDERAL COPYRIGHT ACT AND THE LICENSE AGREEMENT, AND SUBJECT TO CIVIL AND CRIMINAL PENALTIES THEREUNDER.

For horizontal assemblies separating dwelling and sleeping units, see Section 711.

708.2 Materials. The walls shall be of materials permitted by the building type of construction.

❖ The types of materials used in fire partitions are to be consistent with Sections 602.2 through 602.5 for the type of construction classification of the building. Fire partitions are permitted to be of combustible construction in Type III, IV and V construction and are required to be of noncombustible materials in Type I and II construction, except as allowed by Exception 1 to Section 603.1.

708.3 Fire-resistance rating. Fire partitions shall have a *fire-resistance rating* of not less than 1 hour.

Exceptions:

1. Corridor walls permitted to have a $^1/_2$-hour *fire-resistance rating* by Table 1020.1.
2. *Dwelling unit* and *sleeping unit* separations in buildings of Type IIB, IIIB and VB construction shall have *fire-resistance ratings* of not less than $^1/_2$ hour in buildings equipped throughout with an *automatic sprinkler system* in accordance with Section 903.3.1.1.

❖ This requirement is for fire partitions to be 1-hour fire-resistance rated. There are two exceptions.

Exception 1 states that corridor walls not required by Table 1020.1 to be fire-resistance rated need not comply with this section at all, since according to Section 1020.1 they are not fire partitions. Table 1020.1 also contains a reduction of the 1-hour fire-resistance rating down to 30 minutes for sprinklered Group R occupancies.

A reduction in the fire-resistance rating for dwelling and sleeping unit separation is allowed for Type IIB, IIIB and VB construction which is sprinklered with an NFPA 13 sprinkler system. This is not allowed with an NFPA 13R system according to Exception 2, which reduces the rating from 1 hour to only 30 minutes. There is a similar reduction for the horizontal assemblies separating dwelling and sleeping units in Section 711.2.4.3.

708.4 Continuity. Fire partitions shall extend from the top of the foundation or floor/ceiling assembly below to the underside of the floor or roof sheathing, slab or deck above or to the fire-resistance-rated floor/ceiling or roof/ceiling assembly above, and shall be securely attached thereto. In combustible construction where the *fire partitions* are not required to be continuous to the sheathing, deck or slab, the space between the ceiling and the sheathing, deck or slab above shall be fireblocked or draftstopped in accordance with Sections 718.2 and 718.3 at the partition line. The supporting construction shall be protected to afford the required *fire-resistance rating* of the wall supported, except for walls separating tenant spaces in *covered and open mall buildings*, walls separating *dwelling units*, walls separating *sleeping units* and *corridor* walls, in buildings of Type IIB, IIIB and VB construction.

Exceptions:

1. The wall need not be extended into the crawl space below where the floor above the crawl space has a minimum 1-hour *fire-resistance rating*.
2. Where the room-side fire-resistance-rated membrane of the *corridor* is carried through to the underside of the floor or roof sheathing, deck or slab of a fire-resistance-rated floor or roof above, the ceiling of the *corridor* shall be permitted to be protected by the use of ceiling materials as required for a 1-hour fire-resistance-rated floor or roof system.
3. Where the *corridor* ceiling is constructed as required for the *corridor* walls, the walls shall be permitted to terminate at the upper membrane of such ceiling assembly.
4. The fire partitions separating tenant spaces in a *covered or open mall building*, complying with Section 402.4.2.1, are not required to extend beyond the underside of a ceiling that is not part of a fire-resistance-rated assembly. A wall is not required in *attic* or ceiling spaces above tenant separation walls.
5. Attic fireblocking or draftstopping is not required at the partition line in Group R-2 buildings that do not exceed four *stories above grade plane*, provided the *attic* space is subdivided by draftstopping into areas not exceeding 3,000 square feet (279 m^2) or above every two *dwelling units*, whichever is smaller.
6. Fireblocking or draftstopping is not required at the partition line in buildings equipped with an *automatic sprinkler system* installed throughout in accordance with Section 903.3.1.1 or 903.3.1.2, provided that automatic sprinklers are installed in combustible floor/ceiling and roof/ceiling spaces.

❖ To minimize the potential for fire spread from the exposed side of the fire partition to the unexposed side, such partitions must be continuous from the floor assembly to the underside of a fire-resistance-rated floor/ceiling or roof/ceiling assembly. In the absence of a rated floor/ceiling or roof/ceiling assembly, the fire partition is to be continuous to the floor slab or roof deck above [see Commentary Figures 708.4(1) and 708.4(2)(A)]. All hollow vertical spaces in a combustible fire partition must be fireblocked at the ceiling and floor or roof levels in accordance with Section 718.2. If the fire-resistance-rated floor/ceiling or roof/ceiling assembly are of combustible construction, then draftstopping is required in the space above and in line with the partition. The draftstopping must meet Section 718.3. Fire partitions are not always required to be continuous through concealed spaces, whereas fire barriers are to be continuous (see Section 707.5). This is the primary difference between fire barriers and fire partitions.

INTERNATIONAL CODE COUNCIL®
Copyright © 2015 ICC. ALL RIGHTS RESERVED. Accessed by David Dammon on Jun 21, 2017 12:30:52 PM pursuant to License Agreement with ICC. No further reproduction or distribution authorized. ANY UNAUTHORIZED REPRODUCTION OR DISTRIBUTION IS A VIOLATION OF THE FEDERAL COPYRIGHT ACT AND THE LICENSE AGREEMENT, AND SUBJECT TO CIVIL AND CRIMINAL PENALTIES THEREUNDER.

Fire partitions serving as exit access corridor walls and tenant and guestroom separation walls in buildings of Type IIB, IIIB and VB construction are not required to be supported by structural elements having the same fire-resistance rating. The primary purpose of rated corridor walls is to prevent fire or smoke spread from a room to the corridor in order to maintain the protection of the means of egress. Secondly, the rated corridor wall also prevents fire or smoke spread from a corridor to adjacent rooms should the fire

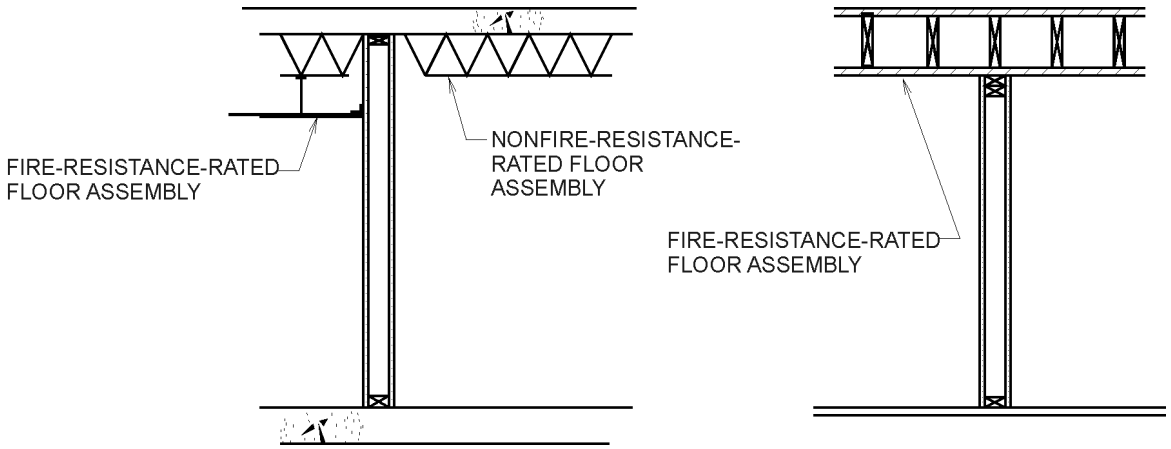

Figure 708.4(1)
CONTINUITY OF FIRE PARTITIONS

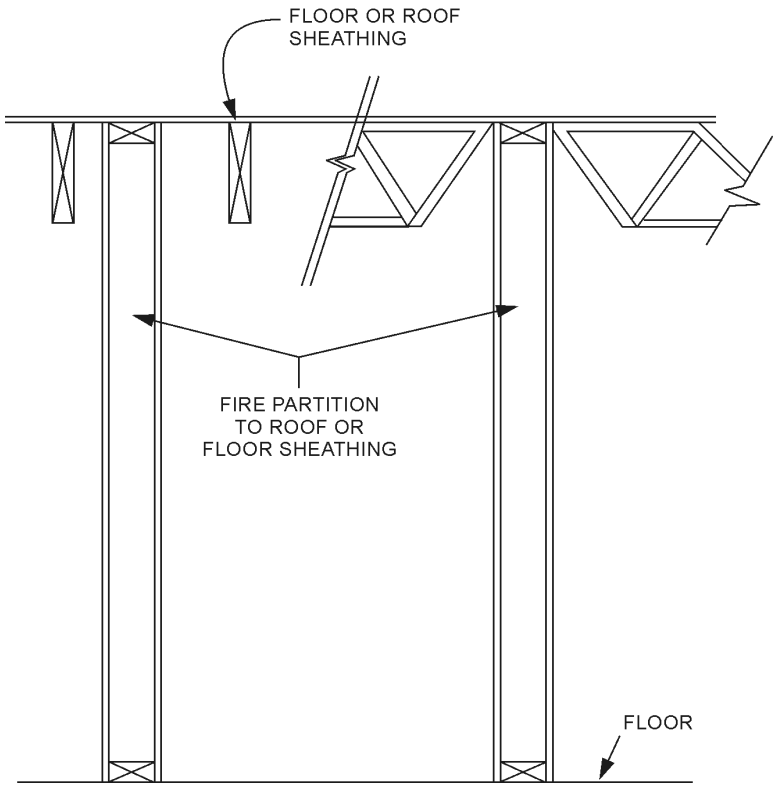

Figure 708.4(2)(A)
FIRE PARTITION CONTINUITY

INTERNATIONAL CODE COUNCIL®
Copyright © 2015 ICC. ALL RIGHTS RESERVED. Accessed by David Dammon on Jun 21, 2017 12:30:52 PM pursuant to License Agreement with ICC. No further reproduction or distribution authorized. ANY UNAUTHORIZED REPRODUCTION OR DISTRIBUTION IS A VIOLATION OF THE FEDERAL COPYRIGHT ACT AND THE LICENSE AGREEMENT, AND SUBJECT TO CIVIL AND CRIMINAL PENALTIES THEREUNDER.

involve the corridor. Therefore, the fire-resistance rating of the floor construction supporting the wall is not critical to the performance of the corridor wall.

The construction supporting tenant and guestroom separation walls is exempted from the requirements for a fire-resistance rating since the compartmentalization provided by these walls is similar to that provided by corridor walls. Additionally, if the supporting construction were required to be fire-resistance rated, this section would effectively result in all buildings containing guestrooms (occupancies in Groups R-1, R-2 and I-1) being built of protected construction only. The remaining construction types are not included, since the supporting structural elements (floors and columns) are required to have at least a 1-hour rating (per Table 601), which is the maximum fire-resistance rating required for corridor walls. Similarly, tenant separations in covered mall buildings of Type IIB construction are not required to be supported by construction having an equivalent fire-resistance rating.

While supporting members in Types IIB, IIIB and VB construction are not required to be protected by the same fire resistance as the separation walls between a dwelling and sleeping unit, the horizontal floor assembly between dwelling and sleeping units is required to be fire-resistance-rated construction by Section 711.2.4.3.

Exception 1 modifies the continuity requirement for the various tenant, dwelling unit or sleeping unit separations where a crawl space is found below. As discussed above, because corridors and elevator lobby separations are intended for protection from hazards on that floor level, they would not require a fire partition within the crawl space.

Although this exception provides a blanket exclusion for extending the partition into the crawl space, it may be prudent to consider each building on an individual basis. If the crawl space is arranged or provided so that each dwelling unit has access to it or it may be intended for storage or equipment, then it may be wise to consider the crawl space as a part of the dwelling unit; therefore, it may be reasonable to apply the exception to circumstances where the crawl space is not considered to be a part of the dwelling unit.

Although the exception requires that the floor above the crawl space have a 1-hour fire-resistance rating, it would still be permissible to use the provisions of Section 711.2.6 and eliminate the ceiling membrane if the crawl space is considered an unusable space.

Exception 2 allows for only one side (the room side) of a fire-resistance-rated wall assembly to be continuous to the rated assembly above. The membrane on the corridor side of the wall is carried up to the underside of the corridor ceilings, provided the corridor ceiling is constructed of materials that have been tested as part of a 1-hour assembly [see Commentary Figure 708.4(2)(B)].

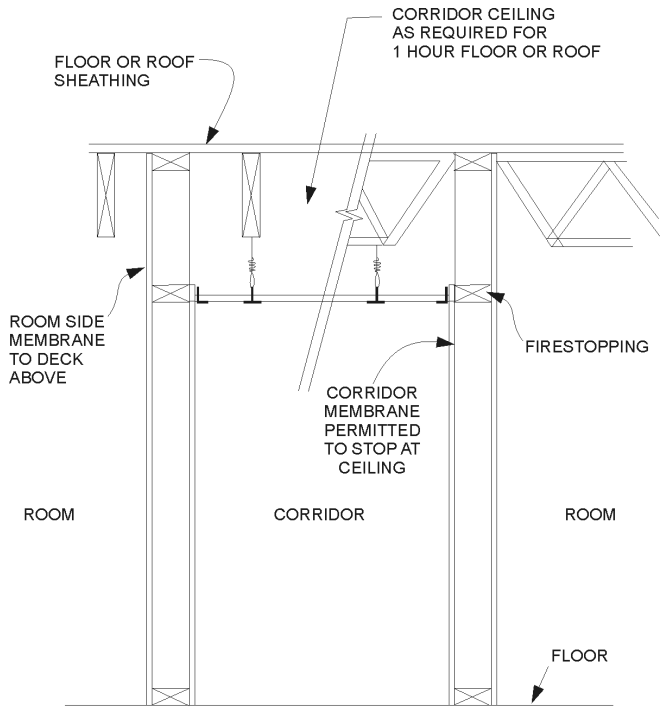

Figure 708.4(2)(B)
FIRE PARTITION CONTINUITY

INTERNATIONAL CODE COUNCIL®
Copyright © 2015 ICC. ALL RIGHTS RESERVED. Accessed by David Dammon on Jun 21, 2017 12:30:52 PM pursuant to License Agreement with ICC. No further reproduction or distribution authorized. ANY UNAUTHORIZED REPRODUCTION OR DISTRIBUTION IS A VIOLATION OF THE FEDERAL COPYRIGHT ACT AND THE LICENSE AGREEMENT, AND SUBJECT TO CIVIL AND CRIMINAL PENALTIES THEREUNDER.

Exception 3 allows for a corridor to be constructed in a "tunnel" fashion—with rated walls and a rated top. In these cases, the walls are not required to extend to the underside of a rated assembly. This is a unique provision in the code and the fact that it permits a wall assembly to be turned into a horizontal position should not be applied to other sections of the code or other rated assemblies. In this one situation, the code will permit an assembly that has been tested as a wall to be turned and used horizontally. Because of the differences in the fire test and the fact that a horizontal test is generally a more severe condition, most assemblies will not obtain the same fire-resistance rating when installed in a horizontal position. In this case, because one of the primary purposes of a corridor is to stop the spread of smoke versus necessarily stopping a fire, this level of protection and construction has been accepted [see Commentary Figure 708.4(2)(C)].

In order to limit the spread of smoke, tenant separation walls in a mall are required to be fire partitions (see Sections 702.4.2.1 and 708.1) having a fire-resistance rating of a least 1 hour and extending from the floor to the underside of the ceiling. Exception 4 acknowledges that extending tenant separations to the floor slab or roof deck above is not always practical for mall buildings because of the design and operation of the heating, ventilating and air-conditioning (HVAC) system. The effectiveness of the automatic sprinkler system as well as the location of the fuel loading are also reasons for not requiring tenant separations to extend above the ceiling, including attic spaces.

Within combustible construction in the situations where the fire partition is stopped at the ceiling line instead of being continuous up to the roof deck, Exception 5 permits draftstopping or fireblocking above every other dwelling unit or at a maximum spacing of 3,000 square feet (279 m^2). This design requirement allows for proper ventilation of the attic space above dwelling units. In typical multiple-family construction, with dwelling units along the front and back of the building, trusses run front to rear with soffit vents at each end. If draftstopping or fireblocking were required at each dwelling unit, it would block cross ventilation, eliminating the use of ridge vents. Soffit and ridge venting allows natural air circulation that, in turn, lowers the roof sheathing temperature in the winter, relieving many of the problems associated with ice dams. This exception is the same as permitted for draftstopping in Section 718.4.2, Exception 3.

Exception 6 recognizes the added protection afforded a building that is equipped throughout with an

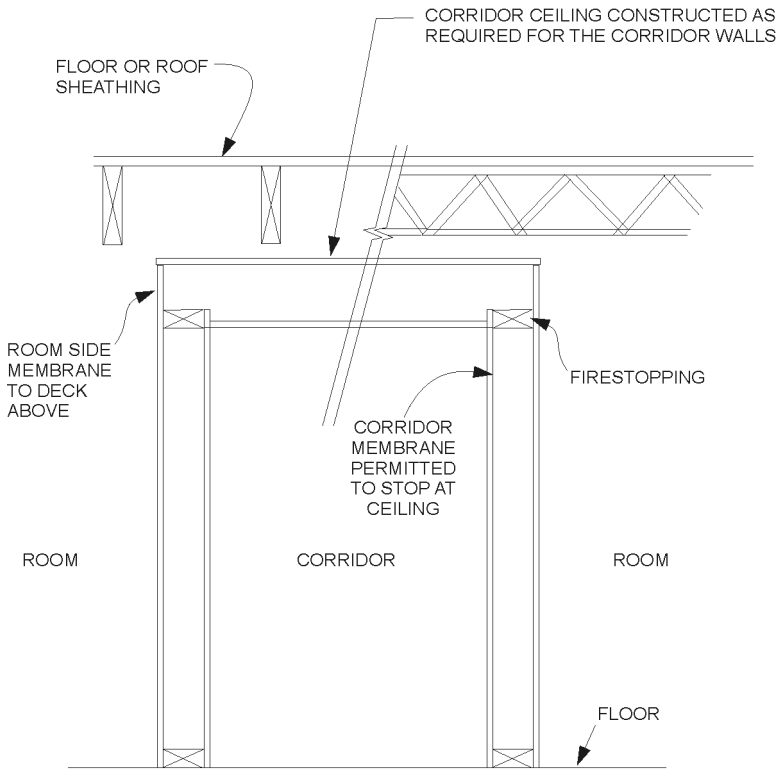

Figure 708.4(2)(C)
FIRE PARTITION CONTINUITY

INTERNATIONAL CODE COUNCIL®
Copyright © 2015 ICC. ALL RIGHTS RESERVED. Accessed by David Dammon on Jun 21, 2017 12:30:52 PM pursuant to License Agreement with ICC. No further reproduction or distribution authorized. ANY UNAUTHORIZED REPRODUCTION OR DISTRIBUTION IS A VIOLATION OF THE FEDERAL COPYRIGHT ACT AND THE LICENSE AGREEMENT, AND SUBJECT TO CIVIL AND CRIMINAL PENALTIES THEREUNDER.

automatic sprinkler system in accordance with Section 903.3.1.1 or 903.3.1.2 and NFPA 13 and 13R, respectively, and permits those fire partitions used for dwelling unit and guestroom separations to terminate at the underside of the ceiling membrane without the need for fireblocking or draftstopping above the partition. For buildings equipped with a sprinkler system that conforms to the NFPA 13 standard, the attic and other concealed areas are required to be sprinklered, thus providing protection that offsets the fact that the dwelling unit separations, fireblocking or draftstopping do not extend to the deck above. In buildings equipped throughout with an NFPA 13R system, the attic and other concealed areas may not be sprinklered. NFPA 13R allows the omission of sprinkler protection in combustible attics and concealed spaces, provided the space is not used for living purposes or storage. When using this exception, sprinkler protection, however, is necessary and required since the protection is considered available to control fires in the incipient stage and keep unoccupied concealed spaces and attic areas from becoming involved. For these buildings, the exception requires sprinkler protection and the fire partitions do not need to extend to the deck above.

Although Exception 6 provides a blanket exclusion for fireblocking or draftstopping within floor/ceiling and roof/ceiling spaces, this may need to be reviewed on a case-by-case basis. The intent of this section is to address concealed spaces that are not used for any purpose. When an attic space is provided, it would be necessary to decide if the attic is simply a concealed space or if it is an occupied portion of the dwelling unit. For example, if each dwelling unit had access to the attic above its unit by means of a pull-down ladder and an area of the attic was provided with flooring so that storage could be placed there, it would be prudent to consider that attic as being a part of the dwelling unit and, therefore, requiring a fire partition, instead of draftstopping, to be provided between the adjacent attics.

708.5 Exterior walls. Where *exterior walls* serve as a part of a required fire-resistance-rated separation, such walls shall comply with the requirements of Section 705 for *exterior walls*, and the fire-resistance-rated separation requirements shall not apply.

Exception: Exterior walls required to be fire-resistance rated in accordance with Section 1021.2 for exterior egress balconies, Section 1023.7 for interior exit stairways and ramps and Section 1027.6 for exterior exit stairways and ramps.

❖ This section pertains to exterior walls that are a part of an enclosure, such as corridors on the exterior face of a building or elevator lobbies that have exterior walls. Such exterior walls do not need to be fire-resistance-rated construction unless required by Table 601 or 602. The exception noted in this section is identical to the exceptions for Sections 707.4 and 713.6 for fire barriers and shaft enclosures. See the commentary for both of those sections.

708.6 Openings. Openings in a *fire partition* shall be protected in accordance with Section 716.

❖ Section 716.4 includes the requirements for fire doors in fire partitions. Generally, $^1/_3$-hour doors are required for corridors and $^3/_4$-hour doors for tenant dwelling and sleeping unit separations in accordance with Table 716.4. Where $^1/_2$-hour fire-resistance-rated assemblies are permitted for partitions, the doors are required to be $^1/_3$-hour doors. It is important to note that Section 716.4.3 requires smoke and draft control doors for corridors. Section 716.5 includes the requirements for windows located in a corridor.

708.7 Penetrations. Penetrations of *fire partitions* shall comply with Section 714.

❖ This section simply states that penetrations through fire partitions must conform to the requirements of Sections 714.2 and 714.3. This is the same as the penetration requirements for fire barriers.

708.8 Joints. Joints made in or between *fire partitions* shall comply with Section 715.

❖ Joints, such as expansion or seismic, are another form of openings in fire partitions and, therefore, must be considered with regard to maintaining the fire-resistance ratings of these walls. This section requires all joints that are located in fire partitions to be protected by a joint system that has a fire-resistance rating and complies with the requirements of Section 715 (see commentary, Section 715).

708.9 Ducts and air transfer openings. Penetrations in a *fire partition* by ducts and air transfer openings shall comply with Section 717.

❖ Section 717 details the protection of ducts and air transfer openings at the point where they penetrate a fire-resistance-rated assembly. Sections 717.5 and 717.5.4 indicate which situations will require the installation of a damper. As stated in Section 717.1.2, if a duct does not require a damper, the penetration of that duct through a fire-resistance-rated assembly must be protected as a through penetration in accordance with Section 714.

SECTION 709
SMOKE BARRIERS

709.1 General. Vertical and horizontal *smoke barriers* shall comply with this section.

❖ Smoke barriers divide areas of a building into separate smoke compartments both vertically and horizontally. A smoke barrier is designed to resist fire and smoke spread so that occupants can be evacuated or relocated to adjacent smoke compartments. This concept has proven effective in Group I-2 and I-3 occupancies. Sections 407.5 and 408.6 identify where smoke barriers are required. Also, while not cross-referenced in this section, smoke barriers may be utilized in other applications, including as part of

INTERNATIONAL CODE COUNCIL®
Copyright © 2015 ICC. ALL RIGHTS RESERVED. Accessed by David Dammon on Jun 21, 2017 12:30:52 PM pursuant to License Agreement with ICC. No further reproduction or distribution authorized. ANY UNAUTHORIZED REPRODUCTION OR DISTRIBUTION IS A VIOLATION OF THE FEDERAL COPYRIGHT ACT AND THE LICENSE AGREEMENT, AND SUBJECT TO CIVIL AND CRIMINAL PENALTIES THEREUNDER.

smoke control systems (see Section 909.5), accessible means of egress (see Section 1009.6.4), accessible areas of refuge (see Section 1007.6), compartmentation of underground buildings (see Section 405.4.2) and elevator lobbies in underground buildings (see Section 405.4.3).

All of the elements in the smoke barrier that can potentially allow smoke travel through the smoke barrier are required to have a quantified resistance to leakage. This includes doors, joints, through penetrations and dampers. The maximum leakage limits are as established in the individual code sections referenced for each element.

709.2 Materials. *Smoke barriers* shall be of materials permitted by the building type of construction.

❖ The types of materials used in smoke barriers are to be consistent with Sections 602.2 through 602.5 for the type of construction classification of the building. Smoke barriers are permitted to be of combustible construction in Type III, IV and V construction and are required to be of noncombustible materials in Type I and II construction, except as permitted in the exceptions to Section 603.1.

709.3 Fire-resistance rating. A 1-hour *fire-resistance rating* is required for *smoke barriers*.

Exception: *Smoke barriers* constructed of minimum 0.10-inch-thick (2.5 mm) steel in Group I-3 buildings.

❖ Smoke barriers are intended to create an area of refuge; therefore, they are to be capable of resisting the passage of smoke (see Section 709.4). Smoke barriers are also required to have a fire-resistance rating of at least 1 hour. The smoke barrier is not intended or expected to be exposed to fire for extended periods and is, therefore, not required to have a fire-resistance rating exceeding 1 hour. The occupancies in which smoke barriers are required are also generally required to be sprinklered (see Section 903.2). The exception of this section allows smoke barriers in occupancies in Group I-3 to be constructed of nominal 0.10-inch (2.5 mm) steel plate. This exception to the 1-hour fire-resistance-rated assembly recognizes the security needs of such facilities and at the same time provides the requisite smoke barrier performance.

709.4 Continuity. *Smoke barriers* shall form an effective membrane continuous from the top of the foundation or floor/ceiling assembly below to the underside of the floor or roof sheathing, deck or slab above, including continuity through concealed spaces, such as those found above suspended ceilings, and interstitial structural and mechanical spaces. The supporting construction shall be protected to afford the required *fire-resistance rating* of the wall or floor supported in buildings of other than Type IIB, IIIB or VB construction. *Smoke barrier* walls used to separate smoke compartments shall comply with Section 709.4.1. *Smoke-barrier* walls used to enclose areas of refuge in accordance with Section 1009.6.4 or to enclose elevator lobbies in accordance with Section 405.4.3, 3007.6.2, or 3008.6.2 shall comply with Section 709.4.2.

Exception: *Smoke-barrier* walls are not required in interstitial spaces where such spaces are designed and constructed with ceilings or *exterior walls* that provide resistance to the passage of fire and smoke equivalent to that provided by the *smoke-barrier* walls.

❖ Smoke barriers are to be continuous from the top of the foundation or floor/ceiling assembly below to the underside of the floor or roof sheathing, deck or slab. Horizontal continuity requirements vary depending on what the smoke barrier is separating or enclosing (see sections 709.4.1 and 709.4.2). The provisions require the barrier to be continuous through all concealed and interstitial spaces, including suspended ceilings and the space between the ceiling and the floor or roof sheathing, deck or slab above; and the space between an interior wall finish and the exterior wall sheathing, such as in a wood or metal frame wall. Smoke barriers are not required to extend through interstitial spaces if the space is designed and constructed such that fire and smoke will not spread from one smoke compartment to another. Therefore, the construction assembly forming the bottom of the interstitial space must provide the required fire-resistance rating and be capable of resisting the passage of smoke from the spaces below.

As mentioned in the commentary for the general provisions of Section 709.1, the air-leakage performance of the smoke barrier itself is not typically regulated. This is because of the general assumption that a barrier which provides a fire-resistance rating will be capable of limiting the spread of smoke through it. When a smoke barrier is being used with a smoke control system, the barrier does have limitations on the air leakage (see Section 909.5). Therefore, under those circumstances and when using Exception 1 in Section 709.4, it may be necessary to provide a “hard ceiling” instead of a lay-in suspended ceiling in order to prevent the spread of smoke.

Since the primary performance of smoke barriers is to achieve protection on the fire floor, the supporting construction is not required to provide the same degree of fire resistance for buildings of Type IIB, IIIB and VB construction.

As with fire partitions serving as exit access corridor walls (see Section 709.4), these three construction types are identified because the floor construction is not otherwise required to have a fire-resistance rating, and it is not considered essential to only require fire-resistance-rated floor construction because the floor is supporting a smoke barrier.

When designing for occupancies in Groups I-2 and I-3, it is often desirable to incorporate a horizontal exit and a smoke barrier. The code does not prevent such a combination, but in such cases, the wall construction must meet the provisions of this section as well as Section 707 for fire barrier assemblies and Section

INTERNATIONAL CODE COUNCIL®
Copyright © 2015 ICC. ALL RIGHTS RESERVED. Accessed by David Dammon on Jun 21, 2017 12:30:52 PM pursuant to License Agreement with ICC. No further reproduction or distribution authorized. ANY UNAUTHORIZED REPRODUCTION OR DISTRIBUTION IS A VIOLATION OF THE FEDERAL COPYRIGHT ACT AND THE LICENSE AGREEMENT, AND SUBJECT TO CIVIL AND CRIMINAL PENALTIES THEREUNDER.

1026 for horizontal exits. The most restrictive provisions of each section would apply. For example, the building would be required to have a fire barrier with a fire-resistance rating of at least 2 hours (see Section 1026.2) and duct penetrations would need to be protected with a combination fire and smoke damper (see Sections 717.5.2 and 717.5.2.1) or with separate fire and smoke dampers. For requirements specific to smoke barriers used to separate smoke compartments and to enclose areas of refuge and elevator lobbies, see Sections 709.4.1 and 709.4.2, respectively.

Furthermore, the supporting construction would then be required to provide at least the same fire-resistance rating as the wall in all types of construction (see Section 707.5.1).

The exception recognizes that a ceiling membrane or exterior wall membrane may afford the same or greater resistance to the passage of fire and smoke that is provided by the smoke barrier. In these cases, continuity through the interstitial space is not required.

709.4.1 Smoke-barrier walls separating smoke compartments. *Smoke-barrier* walls used to separate smoke compartments shall form an effective membrane continuous from outside wall to outside wall.

❖ To completely separate smoke compartments within a building, the horizontal continuity of the smoke barrier walls must extend from exterior wall to exterior wall.

709.4.2 Smoke-barrier walls enclosing areas of refuge or elevator lobbies. *Smoke-barrier* walls used to enclose areas of refuge in accordance with Section 1009.6.4, or to enclose elevator lobbies in accordance with Section 405.4.3, 3007.6.2, or 3008.6.2, shall form an effective membrane enclosure that terminates at a *fire barrier* wall having a level of *fire protection rating* not less than 1 hour, another *smoke barrier* wall or an outside wall. A smoke and draft control door assembly as specified in Section 716.5.3.1 shall not be required at each elevator hoistway door opening or at each exit doorway between an area of refuge and the exit enclosure.

❖ Recognizing the differences between smoke compartments, areas of refuge and elevator lobby enclosures, this section provides alternative horizontal continuity compliance options. Since these areas can be located anywhere in a building, the enclosure can terminate at assemblies other than the exterior wall, such as a fire barrier or another smoke barrier.

709.5 Openings. Openings in a *smoke barrier* shall be protected in accordance with Section 716.

Exceptions:

1. In Group I-1 Condition 2, Group I-2 and *ambulatory care facilities*, where a pair of opposite-swinging doors are installed across a corridor in accordance with Section 709.5.1, the doors shall not be required to be protected in accordance with Section 716. The doors shall be close fitting within operational tolerances, and shall not have a center mullion or undercuts in excess of $^3/_4$ inch (19.1 mm), louvers or grilles. The doors shall have head and jamb stops, and astragals or rabbets at meeting edges. Where permitted by the door manufacturer's listing, positive-latching devices are not required.
2. In Group I-1 Condition 2, Group I-2 and *ambulatory care facilities*, horizontal sliding doors installed in accordance with Section 1010.1.4.3 and protected in accordance with Section 716.

❖ Section 709.5 requires openings in a smoke barrier to be protected in accordance with Section 716, Opening Protectives. Opening protectives include doors/door assemblies, glazed assemblies, fire shutters, chute intake and discharge doors, and other devices or assemblies. Within 716, Section 716.5.3 requires doors in corridors and smoke barriers to have a fire protection rating of 20 minutes. The requirements in 716.5.3 should be considered along with other requirements in Section 716 for doors required to have a fire protection rating. Such doors must also comply with UL 1784 in accordance with Section 716.5,3.1, which requires these doors to have a maximum leakage rating of 3 cfm per square foot [0.02 $m^3/(s \cdot m^2)$] or less as tested at a pressure of 0.10 inch of water (0.02 kPa).

The first exception to 709.5, along with the requirements of Section 709.5.1, specifically applies to Group I-1 Condition 2, Group I-2 and ambulatory care facilities. In order to maintain the integrity of the smoke barrier, opposite-swinging doors such as double-egress cross-corridor doors are required to be constructed and installed with some of the attributes of opening protectives, but would not be required to be listed. Since the primary purpose of a smoke barrier is to resist smoke spread, the doors are to be close fitting within operational tolerances, are not to have undercuts, louvers or grilles, and are to have stops at the head and jambs. The only openings permitted in the door assembly are those clearances that are necessary for the proper operation of the door. The clearance that occurs at the meeting edges of the door is to be protected with rabbets or astragals (see Commentary Figure 709.5).

The second exception to 709.5 applies in Group I-1 Condition 2, Group I-2 and ambulatory care facilities where special-purpose horizontal sliding, accordion, or folding doors are installed in accordance with Section 1010.1.4.3 and protected in accordance with Section 716. The requirements in Section 1010.1.4.3 include specific requirements for these special-purpose doors.

709.5.1 Group I-2 and ambulatory care facilities. In Group I-2 and *ambulatory care facilities*, where doors are installed across a corridor, the doors shall be automatic-closing by smoke detection in accordance with Section 716.5.9.3 and shall have a vision panel with fire-protection-rated glazing

INTERNATIONAL CODE COUNCIL®
Copyright © 2015 ICC. ALL RIGHTS RESERVED. Accessed by David Dammon on Jun 21, 2017 12:30:52 PM pursuant to License Agreement with ICC. No further reproduction or distribution authorized. ANY UNAUTHORIZED REPRODUCTION OR DISTRIBUTION IS A VIOLATION OF THE FEDERAL COPYRIGHT ACT AND THE LICENSE AGREEMENT, AND SUBJECT TO CIVIL AND CRIMINAL PENALTIES THEREUNDER.

materials in fire-protection-rated frames, the area of which shall not exceed that tested.

❖ Section 709.5.1 requires all doors installed across a corridor in Group I-2 and ambulatory care facilities to be automatic closing upon smoke detection per the requirements in Section 716.5.9.3. In this manner, the doors will close completely, thus preventing the spread of smoke. Cross-corridor doors in Group I-2 and ambulatory care facilities are also required to have a vision panel consisting of fire-protection-rated glazing in a fire-protection-rated frame. The requirements for fire-protection-rated glazing are in Section 716.6. The size of the vision panel is limited to the maximum size tested in accordance with Section 716.6. Note: vision panels in doors (i.e., glazing in doors) are also required to meet the safety requirements for glazing in hazardous locations, per the requirements of Section 2406. The intent of requiring vision panels is to reduce the likelihood of an injury caused by opening the door into a person standing at or approaching the door from the opposite side. Vision panels also enable an individual to be alerted to a fire or smoke condition on the other side before opening the door.

709.6 Penetrations. Penetrations of *smoke barriers* shall comply with Section 714.

❖ The provisions for penetrations of smoke barriers are found in Sections 714.2, 714.3 and 714.5. To prevent through penetrations from becoming a source of significant smoke spread across the smoke barrier, the firestop system provided for each through penetration must have not only the appropriate F rating, but must also have a leakage rating (L rating) of 5 cfm per square foot [2.78 $m^3/(s \cdot m^2)$] or less as tested at a pressure of 0.30 inch of water (0.07 kPa) (see commentary, Section 713.5).

709.7 Joints. Joints made in or between *smoke barriers* shall comply with Section 715.

❖ Joints, such as expansion or seismic, are additional forms of openings in smoke barriers and, therefore, must be considered with regard to maintaining the fire-resistance ratings of these walls. This section requires all joints that are located in smoke barriers to be protected by a joint system that has a fire-resistance rating and complies with the requirements of Section 715 (see commentary, Section 715). To prevent joints from becoming a source of significant smoke spread across the smoke barrier, fire-resistant joint systems used in a smoke barrier must have a leakage rating (L rating) of 5 cfm per linear foot (0.00775 $m^3/s \cdot m$) or less (see commentary, Section 715.6).

709.8 Ducts and air transfer openings. Penetrations in a *smoke barrier* by ducts and air transfer openings shall comply with Section 717.

❖ To prevent ducts and air transfer openings from becoming a source of significant smoke spread across the smoke barrier, a listed smoke damper must be provided for duct or air transfer openings penetrating the smoke barrier (see Section 717.5.5). The smoke damper leakage rating, as tested per UL 555S; shall not be less than Class II (see Section 717.3.2.1).

Section 717.5.5 indicates which situations will require the installation of a damper. For smoke barriers, there is one exception to that requirement. If all the duct outlets are limited to one of the smoke compartments and the ducts are constructed of steel, then no smoke damper is required. As stated in Section 717.1.2, if a duct does not require a damper, the penetration of that duct through a fire-resistance-rated assembly must be protected as a through penetration in accordance with Section 714.

SECTION 710
SMOKE PARTITIONS

710.1 General. Smoke partitions installed as required elsewhere in the code shall comply with this section.

❖ Unlike a 1-hour fire-resistance-rated smoke barrier, smoke partitions are nonrated walls that serve to resist the spread of fire and the unmitigated move-

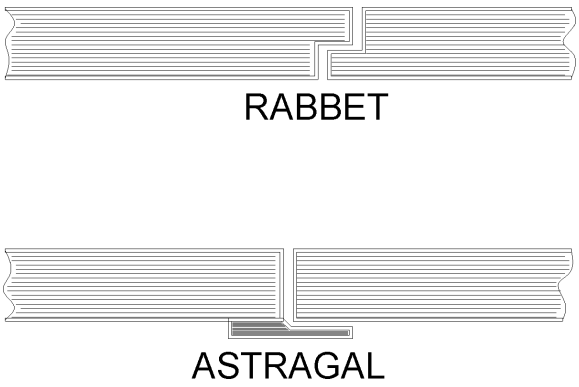

Figure 709.5
ACCEPTABLE MEETING EDGES OF DOUBLE MEANS OF EGRESS DOORS

INTERNATIONAL CODE COUNCIL®
Copyright © 2015 ICC. ALL RIGHTS RESERVED. Accessed by David Dammon on Jun 21, 2017 12:30:52 PM pursuant to License Agreement with ICC. No further reproduction or distribution authorized. ANY UNAUTHORIZED REPRODUCTION OR DISTRIBUTION IS A VIOLATION OF THE FEDERAL COPYRIGHT ACT AND THE LICENSE AGREEMENT, AND SUBJECT TO CIVIL AND CRIMINAL PENALTIES THEREUNDER.

ment of smoke for an unspecified period of time. A smoke partition is intended to provide less protection than a smoke barrier and is not required to be continuous through the concealed spaces and through the ceiling. The construction of a smoke partition is described in this section; however, the level of performance or a method of testing them is not provided. Some elements of this section (see Sections 710.5 and 710.8) will provide a performance level and test method to verify the protection provided by doors or dampers. In addition, some specific features of a smoke partition may be triggered by other sections of the code.

At this point, the application of smoke partitions is still fairly limited. The smoke partition requirements apply to Section 407.3, which permits corridor walls in Group I-2 to have no fire-resistance rating, but it does require that they be constructed as smoke partitions. A smoke partition can also be used under the provisions of Section 3006.2 to form the elevator lobby in a sprinklered building.

It is important to realize that, like all other elements found in Chapter 7, a smoke partition is not required unless the specific text of the code states that it is required. For example, the two sections listed in the previous paragraph do require the use of a smoke partition. On the other hand, Section 509.4.2, when dealing with incidental uses, will permit the elimination of a fire barrier and only require the wall constructed around the incidental use area to be "capable of resisting the passage of smoke." In this circumstance, the wall is not required to comply with the smoke partition requirements of Section 710 and is only required to comply with the details listed in Section 509.4.2.

710.2 Materials. The walls shall be of materials permitted by the building type of construction.

❖ As with most wall or partition assemblies, except for fire walls, there are no additional requirements or restrictions on the materials used, except that they meet the requirements for the type of construction.

710.3 Fire-resistance rating. Unless required elsewhere in the code, smoke partitions are not required to have a *fire-resistance rating*.

❖ The primary purpose of smoke partitions is to prevent the ready and quick passage of smoke into corridors in Group I-2 or for elevator lobby protection in a sprinklered building. The automatic sprinkler system installed in these instances eliminates the need for a fire-resistance-rated assembly; however, the issue of smoke propagation must be addressed with the use of a smoke partition. Because a performance level or a method of testing the partition is not established, any rated or nonrated assembly would be permitted, provided it is approved by the building official.

710.4 Continuity. Smoke partitions shall extend from the top of the foundation or floor below to the underside of the floor or roof sheathing, deck or slab above or to the underside of the ceiling above where the ceiling membrane is constructed to limit the transfer of smoke.

❖ The continuity provisions for smoke partitions are similar to those for fire partitions (see Section 708.4), except that the issue is the spread of smoke, not fire. Therefore, the allowance for termination at the underside of the ceiling membrane (as opposed to the underside of the floor or roof deck above) relates to the ability of the ceiling membrane to limit the spread of smoke. Typical "lay in" ceiling tiles, for instance, would probably not serve this function; however, a drywall ceiling that is taped and finished would be an example of construction that could resist the passage of smoke.

710.5 Openings. Openings in smoke partitions shall comply with Sections 710.5.1 and 710.5.2.

❖ Limiting smoke movement in buildings with smoke partitions includes opening protectives that resist the passage of smoke.

710.5.1 Windows. Windows in smoke partitions shall be sealed to resist the free passage of smoke or be automatic-closing upon detection of smoke.

❖ Windows in smoke partitions do not require a fire-resistance rating. There are no limits on the amount of glazing. They must be fixed glazing or automatic closing upon the activation of smoke detectors.

710.5.2 Doors. Doors in smoke partitions shall comply with Sections 710.5.2.1 through 710.5.2.3.

❖ Doors in smoke partitions do not require a fire-resistance rating and may not need self-closing devices.

710.5.2.1 Louvers. Doors in smoke partitions shall not include louvers.

❖ Louvers in doors allow smoke to move from one area to the remainder of the building. This would defeat the sole purpose of a smoke partition.

710.5.2.2 Smoke and draft control doors. Where required elsewhere in the code, doors in smoke partitions shall meet the requirements for a smoke and draft control door assembly tested in accordance with UL 1784. The air leakage rate of the door assembly shall not exceed 3.0 cubic feet per minute per square foot [0.015424 $m^3/(s \cdot m^2)$] of door opening at 0.10 inch (24.9 Pa) of water for both the ambient temperature test and the elevated temperature exposure test. Installation of smoke doors shall be in accordance with NFPA 105.

❖ Only doors in smoke partitions that are required elsewhere in the code to be smoke and draft control doors must meet this section.

710.5.2.2.1 Smoke and draft control door labeling. Smoke and draft control doors complying only with UL 1784 shall be permitted to show the letter "S" on the manufacturer's labeling.

❖ This section clarifies that the use of the "S" letter mark is intended only to indicate compliance with UL 1784, and allows use of the marking on smoke partition doors that comply with that test standard.

INTERNATIONAL CODE COUNCIL®
Copyright © 2015 ICC. ALL RIGHTS RESERVED. Accessed by David Dammon on Jun 21, 2017 12:30:52 PM pursuant to License Agreement with ICC. No further reproduction or distribution authorized. ANY UNAUTHORIZED REPRODUCTION OR DISTRIBUTION IS A VIOLATION OF THE FEDERAL COPYRIGHT ACT AND THE LICENSE AGREEMENT, AND SUBJECT TO CIVIL AND CRIMINAL PENALTIES THEREUNDER.

710.5.2.3 Self- or automatic-closing doors. Where required elsewhere in the code, doors in smoke partitions shall be self- or automatic-closing by smoke detection in accordance with Section 716.5.9.3.

❖ The requirement for doors to be self-closing or automatic-closing does not automatically apply to all walls that must be built as smoke partitions. That requirement must be mandated elsewhere in the code for this provision to apply. In the case of corridor walls for Group I-2 occupancies, there is no requirement for self-closing or automatic-closing doors so as to accommodate the normal operational requirements of that occupancy. In that situation, it is anticipated that doors would be manually closed by personnel in the event of a fire emergency based upon a defend-in-place strategy. Having doors arranged for automatic closing or self-closing, however, is not prohibited as it would potentially increase the reliability of smoke partitions. There are exceptions to Section 3006.2 that allow elevator lobby smoke partition enclosures in lieu of fire partitions. In this case, closers on the doors to the lobby would be required as a part of the conditions for the exception.

710.6 Penetrations. The space around penetrating items shall be filled with an *approved* material to limit the free passage of smoke.

❖ There is no prescriptive requirement for a material used to seal penetrations in smoke partitions. The intent is to limit the transfer of smoke through the partition. See the commentary to Section 710.7 for more information.

710.7 Joints. Joints shall be filled with an *approved* material to limit the free passage of smoke.

❖ There is no requirement for a material used to seal penetrations or joints to be applied to both sides of the wall, as would usually be the case when the penetrations and joints are in a fire-resistance-rated wall. The intent of this section will have been met as long as the space around penetrating items and in joints is filled in a way that would prevent a continuous channel from one side of the wall to the other. In selecting a material to seal these gaps, consideration should be given to the fact that smoke may have a temperature that is above the normal ambient temperature. The code does not mandate any specific temperature resistance. However, as one possible reference point, UL uses a gas temperature of 325°F (180°C) above ambient to represent "warm smoke." With a common ambient temperature of 75°F (24°C), the "warm smoke" temperature would therefore be 400°F (204°C). Sealing materials that would not maintain their integrity to at least this temperature would be inferior choices for the purpose of limiting the free passage of smoke. Porous materials (e.g., fibrous insulation) that would not provide any significant resistance to the passage of smoke through them would also be inferior choices for sealing of joints and through penetrations for this purpose. Again, because the level of performance is not clearly established, the word "approved" and the building official's decision will determine what materials are required or accepted.

710.8 Ducts and air transfer openings. The space around a duct penetrating a smoke partition shall be filled with an *approved* material to limit the free passage of smoke. Air transfer openings in smoke partitions shall be provided with a *smoke damper* complying with Section 717.3.2.2.

Exception: Where the installation of a *smoke damper* will interfere with the operation of a required smoke control system in accordance with Section 909, *approved* alternative protection shall be utilized.

❖ Smoke dampers are required to be provided to maintain the integrity of the smoke partition as a means to prevent the spread of smoke when an "air transfer opening" exists. If a ducted system is used, then the code specifies that the annular space around the duct must be protected. Because the code does not define what an "air transfer opening" is, the provision may not be consistently enforced. The general intent is that a ducted system does not require a damper, but an opening such as an air transfer grille or louvered opening would be dampered. A ducted system must be protected in accordance with Section 710.6. The exception relating to the required operation of a smoke control system is consistent with the exceptions given elsewhere regarding air transfer openings and ducts with fire dampers or smoke dampers (see Section 717). An effective smoke control system will protect the building against the spread of smoke and it is important to ensure such installation of a smoke damper will not lessen the effectiveness of a smoke control system.

SECTION 711
HORIZONTAL ASSEMBLIES

711.1 General. *Horizontal assemblies* shall comply with Section 711.2. Nonfire-resistance-rated floor and roof assemblies shall comply with Section 711.3.

❖ Horizontal assemblies by definition are fire-resistance-rated assemblies. A horizontal assembly may be either a floor or roof assembly and may rely on the ceiling membrane to achieve its fire-resistance-rating. The ceiling assembly is often an integral part of a fire-resistance-rated floor/ceiling or roof/ceiling assembly; therefore, the integrity of the ceiling assembly must be maintained in order to reduce the potential for premature failure of the floor or roof of a building. Section 711.2 contains requirements for horizontal assemblies.

Nonfire-resistance-rated floor/ceiling and roof/ceiling assemblies are not considered horizontal assemblies. These assemblies have requirements less stringent than horizontal assemblies. Section 711.3 contains requirements for nonfire-resistance-rated floor/ceiling and roof/ceiling assemblies.

INTERNATIONAL CODE COUNCIL®
Copyright © 2015 ICC. ALL RIGHTS RESERVED. Accessed by David Dammon on Jun 21, 2017 12:30:52 PM pursuant to License Agreement with ICC. No further reproduction or distribution authorized. ANY UNAUTHORIZED REPRODUCTION OR DISTRIBUTION IS A VIOLATION OF THE FEDERAL COPYRIGHT ACT AND THE LICENSE AGREEMENT, AND SUBJECT TO CIVIL AND CRIMINAL PENALTIES THEREUNDER.

711.2 Horizontal assemblies. *Horizontal assemblies* shall comply with Sections 711.2.1 through 711.2.6.

❖ This section is simply charging language for the subsections. See the commentary to Sections 711.2.1 through 711.2.6

711.2.1 Materials. Assemblies shall be of materials permitted by the building type of construction.

❖ The types of materials used in the construction of horizontal assemblies are to be consistent with Sections 602.2 through 602.5 for the type of construction classification of the building. Horizontal assemblies are permitted to be of combustible construction in Type III, IV and V construction and are required to be of noncombustible materials in Type I and II construction, except as permitted in the exceptions to Section 603.1 or in Notes c and d from Table 601.

711.2.2 Continuity. Assemblies shall be continuous without vertical openings, except as permitted by this section and Section 712.

❖ All floors, roofs and ceilings of horizontal assemblies are to be continuous without openings or penetrations, except as permitted by this section. The continuity of the assembly is critical to its ability to limit fire and smoke spread. Penetrations or openings of the assembly are permitted in accordance with Section 712 provided that the fire-resistance rating, is maintained. The fire-resistance rating required by Table 601 for roof construction is intended to minimize the threat of premature structural failure of the roof construction under fire conditions. The provisions for rated roof construction in Table 601 do not apply to openings in the roof. Code users should also review the fireblocking and draftstopping requirements that are found in Section 718. Fireblocking and draftstopping requirements apply to combustible concealed locations, are separate issues from fire-resistance ratings, and may impose additional requirements for the assembly.

711.2.3 Supporting construction. The supporting construction shall be protected to afford the required *fire-resistance rating* of the *horizontal assembly* supported.

Exception: In buildings of Type IIB, IIIB or VB construction, the construction supporting the *horizontal assembly* is not required to be *fire-resistance rated* at the following:

1. *Horizontal assemblies* at the separations of incidental uses as specified by Table 509 provided the required *fire-resistance rating* does not exceed 1 hour.
2. *Horizontal assemblies* at the separations of *dwelling units* and *sleeping units* as required by Section 420.3.
3. *Horizontal assemblies* at *smoke barriers* constructed in accordance with Section 709.

❖ The base requirement is that construction supporting horizontal assemblies be fire-resistance rated at least equal to the rating of the horizontal assembly. The exception deals with three specific applications of horizontal assemblies where it is unnecessary to provide a fire-resistance rating of the supporting construction of horizontal assemblies in buildings of Type IIB, IIIB or VB construction since Table 601 does not require the horizontal assembly or the supporting structural members to have a fire-resistance rating in these types of construction. This exception exempts the supporting construction of horizontal assemblies in the same manner that the code currently exempts the supporting construction of fire barriers, fire partitions and smoke barriers, but only in those circumstances where the horizontal assembly is a component of the same fire containment assembly as the fire barrier, fire partition or smoke barrier.

711.2.4 Fire-resistance rating. The *fire-resistance rating* of *horizontal assemblies* shall comply with Sections 711.2.4.1 through 711.2.4.6 but shall be not less than that required by the building type of construction.

❖ Floor and roof assemblies could have a fire-resistance rating for several reasons:

- Required for the type of construction in Table 601.
- Required for separation of mixed uses in Section 508.4.
- Separate fire areas of like or different occupancies in order to reduce the size of fire areas to below threshold values for sprinkler requirements in Section 903.
- Separation of dwelling units in the same building.
- Separation of sleeping units in Group R-1 hotels, R-2 and I-1.

711.2.4.1 Separating mixed occupancies. Where the *horizontal assembly* separates mixed occupancies, the assembly shall have a *fire-resistance rating* of not less than that required by Section 508.4 based on the occupancies being separated.

❖ Horizontal assemblies may be required to separate mixed occupancies. As an example, consider a nonsprinklered two-story building of Type IIA construction and a Group B occupancy, with the basement having a storage occupancy in Group S-2. Assume the designer has chosen the separated occupancies option for compliance with the mixed occupancy condition. In this case, even though Table 601 requires a 1-hour fire-resistance-rated floor throughout the building, the assembly separating the basement from the first floor of the building is also regulated by Section 508.4 for mixed occupancies. Ultimately, Section 508.4.4 references Table 508.4, which requires that the floor/ceiling construction separating Group S-2 from Group B provides a 2-hour fire-resistance-rated separation.

INTERNATIONAL CODE COUNCIL®
Copyright © 2015 ICC. ALL RIGHTS RESERVED. Accessed by David Dammon on Jun 21, 2017 12:30:52 PM pursuant to License Agreement with ICC. No further reproduction or distribution authorized. ANY UNAUTHORIZED REPRODUCTION OR DISTRIBUTION IS A VIOLATION OF THE FEDERAL COPYRIGHT ACT AND THE LICENSE AGREEMENT, AND SUBJECT TO CIVIL AND CRIMINAL PENALTIES THEREUNDER.

711.2.4.2 Separating fire areas. Where the *horizontal assembly* separates a single occupancy into different fire areas, the assembly shall have a *fire-resistance rating* of not less than that required by Section 707.3.10.

❖ A designer may choose to separate areas of the building into fire areas for reasons such as to incorporate horizontal exits or to create areas within the thresholds for nonsprinklered applications. Fire areas can separate the same or different groups. For these applications, the fire-resistance rating is required to comply with Section 707.3.10.

711.2.4.3 Dwelling units and sleeping units. *Horizontal assemblies* serving as dwelling or sleeping unit separations in accordance with Section 420.3 shall be not less than 1-hour *fire-resistance-rated* construction.

Exception: *Horizontal assemblies* separating *dwelling units* and *sleeping units* shall be not less than 1/2-hour fire-resistance-rated construction in a building of Type IIB, IIIB and VB construction, where the building is equipped throughout with an *automatic sprinkler system* in accordance with Section 903.3.1.1.

❖ The requirement for 1-hour floor assemblies separating dwelling and sleeping units mirrors that found in Section 708 for fire partitions. There are other sections of the code that require a fire-resistance rating for the floor or roof assembly, or where other provisions are dependent on the fire-resistance rating or construction of the assembly (examples of such sections include Sections 704.1, 705.6, 707.5.1, 708.4 and 709.4).

The exception for dwelling and sleeping unit separations in unprotected types of construction is based on the protection provided by a sprinkler system installed in accordance with Section 903.3.1.1 (NFPA 13). This presumably will reduce the potential fire exposure of the unit separation to that which makes a minimum $^1/_2$-hour fire-resistance rating adequate. The reason that only unprotected types of construction are permitted to take advantage of this trade-off is because Table 601 would not otherwise require the floor construction of such structures to be fire-resistance rated, whereas all other types of construction require the floor construction to provide at least a 1-hour fire-resistance rating.

711.2.4.4 Separating smoke compartments. Where the *horizontal assembly* is required to be a *smoke barrier*, the assembly shall comply with Section 709.

❖ Smoke compartments are required in Group I-2 and I-3 to create areas where the occupants can be relocated during an emergency without leaving the building. Horizontal assemblies that separate smoke compartments are required to comply with Section 709.

711.2.4.5 Separating incidental uses. Where the *horizontal assembly* separates incidental uses from the remainder of the building, the assembly shall have a *fire-resistance rating* of not less than that required by Section 509.

❖ Incidental uses are specific rooms or areas that require separation or separation and sprinkler fire protection. Horizontal assemblies that separate smoke compartments are required to comply with Section 509.

711.2.4.6 Other separations. Where a *horizontal assembly* is required by other sections of this code, the assembly shall have a *fire-resistance rating* of not less than that required by that section.

❖ Horizontal assemblies may be required elsewhere in the code, such as Chapter 6 as it relates to the building's type of construction. For these other separation requirements, the fire-resistance rating is as required by that section.

Chapter 6 also contains provisions governing materials that may be used in the construction of such assemblies based on the type of construction of the building and whether combustible or noncombustible materials are used.

711.2.5 Ceiling panels. Where the weight of lay-in ceiling panels, used as part of fire-resistance-rated floor/ceiling or roof/ceiling assemblies, is not adequate to resist an upward force of 1 pound per square foot (48 Pa), wire or other *approved* devices shall be installed above the panels to prevent vertical displacement under such upward force.

❖ Where a ceiling membrane constitutes part of a fire-resistance-rated floor/ceiling or roof/ceiling assembly, the ability of the ceiling membrane to not be displaced by the upward pressure of a fire condition is necessary to maintain the viability of the fire-resistance rating. Commentary Figure 711.2.5 shows a floor/ceiling assembly that uses hold-down clips to keep the ceiling panels in place. When the weight of the ceiling panel is less than 1 pound per square foot (psf) (48 Pa), wire or other approved means must be provided to prevent uplift of the ceiling panels. Manufacturers' literature can be used to determine the weight of the panel.

711.2.6 Unusable space. In 1-hour fire-resistance-rated floor/ceiling assemblies, the ceiling membrane is not required to be installed over unusable crawl spaces. In 1-hour fire-resistance-rated roof assemblies, the floor membrane is not required to be installed where unusable *attic* space occurs above.

❖ The section is a special exception for specific assemblies to allow the deletion of floor or roof decking or the ceiling membrane from a required fire-resistance-rated floor/ceiling or roof/ceiling assembly used in certain applications. In an attic application, the floor sheathing may be deleted from a fire-resistance-rated assembly as long as the joist and ceiling remain identical to the tested assembly and the attic space is not usable space where potential combustible materials

INTERNATIONAL CODE COUNCIL®
Copyright © 2015 ICC. ALL RIGHTS RESERVED. Accessed by David Dammon on Jun 21, 2017 12:30:52 PM pursuant to License Agreement with ICC. No further reproduction or distribution authorized. ANY UNAUTHORIZED REPRODUCTION OR DISTRIBUTION IS A VIOLATION OF THE FEDERAL COPYRIGHT ACT AND THE LICENSE AGREEMENT, AND SUBJECT TO CIVIL AND CRIMINAL PENALTIES THEREUNDER.

or ignition sources may be located [see Commentary Figure 711.2.6(1)]. Over a crawl space, the ceiling membrane may be deleted subject to the same conditions [see Commentary Figure 711.2.6(2)]. In determining whether a space is "unusable," the building official must verify that combustible materials other than construction elements will not be located therein and ignition sources will be minimal. As such, pipes, conduit and ducts may be permitted in an unusable space.

711.3 Nonfire-resistance-rated floor and roof assemblies. Nonfire-resistance-rated floor, floor/ceiling, roof and roof/ceiling assemblies shall comply with Sections 711.3.1 and 711.3.2.

❖ Nonfire-resistance rated floor and roof assemblies, although not fire rated, do have minimum construction and continuity requirements as described in this section.

711.3.1 Materials. Assemblies shall be of materials permitted by the building type of construction.

❖ At a minimum, the materials used to construct these floor and roof assemblies need to be consistent with the materials required for the type of construction required based on the criteria in Chapters 5 and 6. For example, if a noncombustible type of construction is required, then the elements of the floor and roof assembly also need to be noncombustible unless otherwise allowed by the code, such as the allowances of Section 603.

711.3.2 Continuity. Assemblies shall be continuous without vertical openings, except as permitted by Section 712.

❖ Although these assemblies are not required to be fire rated, there is still a benefit to their being continuous. This benefit is a resistance to smoke migration. Openings are not prohibited and can be found in Section 712.

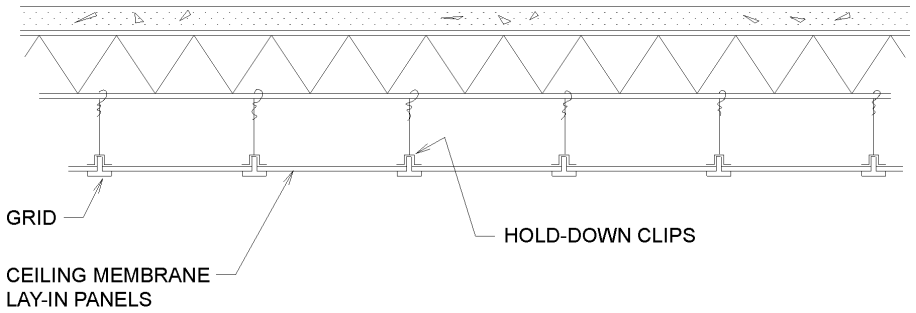

For SI: 1 pound per square foot = 4.882 kg/m^2.

Figure 711.2.5
CEILING PANELS USED IN FIRE-RESISTANCE-RATED ASSEMBLIES

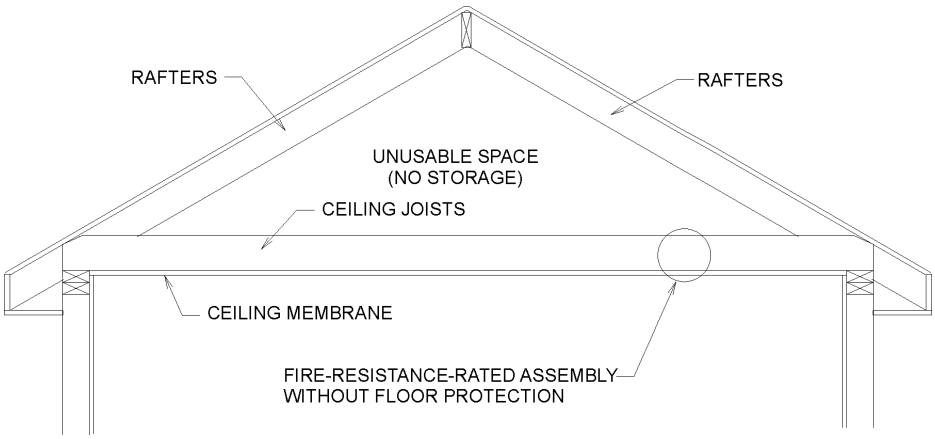

Figure 711.2.6(1)
UNUSABLE SPACE ABOVE A FIRE-RESISTANCE-RATED ASSEMBLY

INTERNATIONAL CODE COUNCIL®
Copyright © 2015 ICC. ALL RIGHTS RESERVED. Accessed by David Dammon on Jun 21, 2017 12:30:52 PM pursuant to License Agreement with ICC. No further reproduction or distribution authorized. ANY UNAUTHORIZED REPRODUCTION OR DISTRIBUTION IS A VIOLATION OF THE FEDERAL COPYRIGHT ACT AND THE LICENSE AGREEMENT, AND SUBJECT TO CIVIL AND CRIMINAL PENALTIES THEREUNDER.

SECTION 712
VERTICAL OPENINGS

712.1 General. Each vertical opening shall comply in accordance with one of the protection methods in Sections 712.1.1 through 712.1.16.

❖ Section 712 lists the applications when the code allows vertical openings between stories or levels within a building. The conditions that are necessary to allow the vertical openings are enumerated in this section or the appropriate sections are referenced. Please note that these are prescriptive options and are intended to be applied individually.

712.1.1 Shaft enclosures. Vertical openings contained entirely within a shaft enclosure complying with Section 713 shall be permitted.

❖ The first condition through which vertical openings between stories is allowed is fully enclosing the opening in shaft wall construction complying with Section 713. These types of openings contain ducts, vents, piping, chutes or elevator hoistways. Stairways are also vertical openings between floors and Section 713 references Sections 1009 and 1022 for stairway enclosures and the exceptions to their enclosures.

712.1.2 Individual dwelling unit. Unconcealed vertical openings totally within an individual residential dwelling unit and connecting four stories or less shall be permitted.

❖ The keyword in this section is "unconcealed." Vertical openings in view of the occupants, such as open exit access stairs, are allowed. The unconcealed floor opening connecting no more than four stories within a dwelling unit is permitted without a shaft enclosure. This is generally consistent with the permitted omission of stairway enclosures in such uses in accordance with Item 2 to Section 1019.3.

712.1.3 Escalator openings. Where a building is equipped throughout with an *automatic sprinkler system* in accordance with Section 903.3.1.1, vertical openings for escalators shall be permitted where protected in accordance with Section 712.1.3.1 or 712.1.3.2.

❖ Vertical openings containing escalators in buildings that are fully sprinklered in accordance with NFPA 13 are allowed under either of the two protection methods stated in Sections 712.1.3.1 and 712.1.3.2.

712.1.3.1 Opening size. Protection by a draft curtain and closely spaced sprinklers in accordance with NFPA 13 shall be permitted where the area of the vertical opening between stories does not exceed twice the horizontal projected area of the escalator. In other than Groups B and M, this application is limited to openings that do not connect more than four stories.

❖ Under this method a draft curtain is required to protect the vertical opening. The details of the draft curtain and sprinkler spacing are in NFPA 13. The size of the vertical opening cannot exceed twice the horizontal projection of the escalator (see Commentary Figure 712.1.3.1). This method allows such floor openings to occur for the full height of the building, regardless of the number of stories for Groups B and M. For all other occupancies, there is a four-story limitation (three floors permitted to contain openings). This is similar to Item 4 for exit access stairways in Section 1019.3.

712.1.3.2 Automatic shutters. Protection of the vertical opening by approved shutters at every penetrated floor shall be permitted in accordance with this section. The shutters shall be of noncombustible construction and have a *fire-resistance rating* of not less than 1.5 hours. The shutter shall be so constructed as to close immediately upon the actuation of a smoke detector installed in accordance with Section 907.3.1

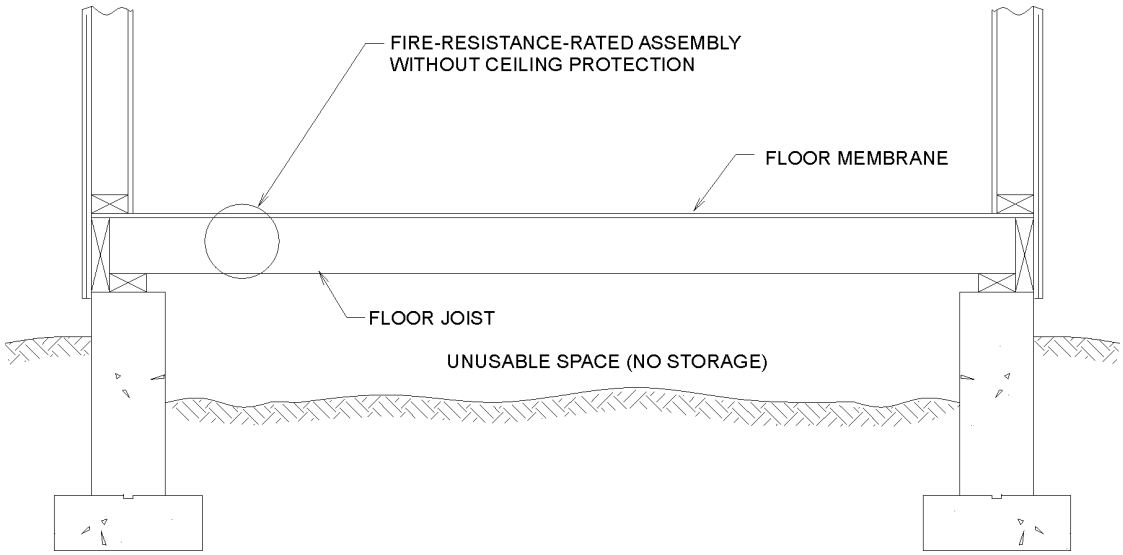

Figure 711.2.6(2)
UNUSABLE SPACE BELOW A FIRE-RESISTANCE-RATED ASSEMBLY

INTERNATIONAL CODE COUNCIL®
Copyright © 2015 ICC. ALL RIGHTS RESERVED. Accessed by David Dammon on Jun 21, 2017 12:30:52 PM pursuant to License Agreement with ICC. No further reproduction or distribution authorized. ANY UNAUTHORIZED REPRODUCTION OR DISTRIBUTION IS A VIOLATION OF THE FEDERAL COPYRIGHT ACT AND THE LICENSE AGREEMENT, AND SUBJECT TO CIVIL AND CRIMINAL PENALTIES THEREUNDER.

and shall completely shut off the well opening. Escalators shall cease operation when the shutter begins to close. The shutter shall operate at a speed of not more than 30 feet per minute (152.4 mm/s) and shall be equipped with a sensitive leading edge to arrest its progress where in contact with any obstacle, and to continue its progress on release there from.

❖ This method of protecting vertical openings containing escalators requires automatic shutters at each floor opening and is not limited as to height or occupancy [see Commentary Figure 712.1.3.2].

712.1.4 Penetrations. Penetrations, concealed and unconcealed, shall be permitted where protected in accordance with Section 714.

❖ Vertical openings are formed at the penetrations of horizontal assemblies by pipe, tube, conduit, wire, cable and other utilities. The annular spaces around the penetrating item must be protected in accordance with Section 714.4 or the penetrating items must be in shafts meeting Section 712.1.1.

712.1.5 Joints. Joints shall be permitted where complying with Section 712.1.5.1 or 712.1.5.2, as applicable.

❖ Joints are allowed in floor and roof assemblies where protected in accordance with this Section.

712.1.5.1 Joints in or between horizontal assemblies. Joints made in or between *horizontal assemblies* shall comply with Section 715. The void created at the intersection of a floor/ceiling assembly and an exterior curtain wall assembly shall be permitted where protected in accordance with Section 715.4.

❖ Joints, such as expansion or seismic, are additional forms of openings in horizontal assemblies and, therefore, must be considered with regard to maintaining the fire-resistance ratings of these floors or roofs. This section requires all joints that are located in rated horizontal assemblies to be protected by a joint system that has a fire-resistance rating and complies with the requirements of Section 715 (see commentary, Section 715). The provisions of this section

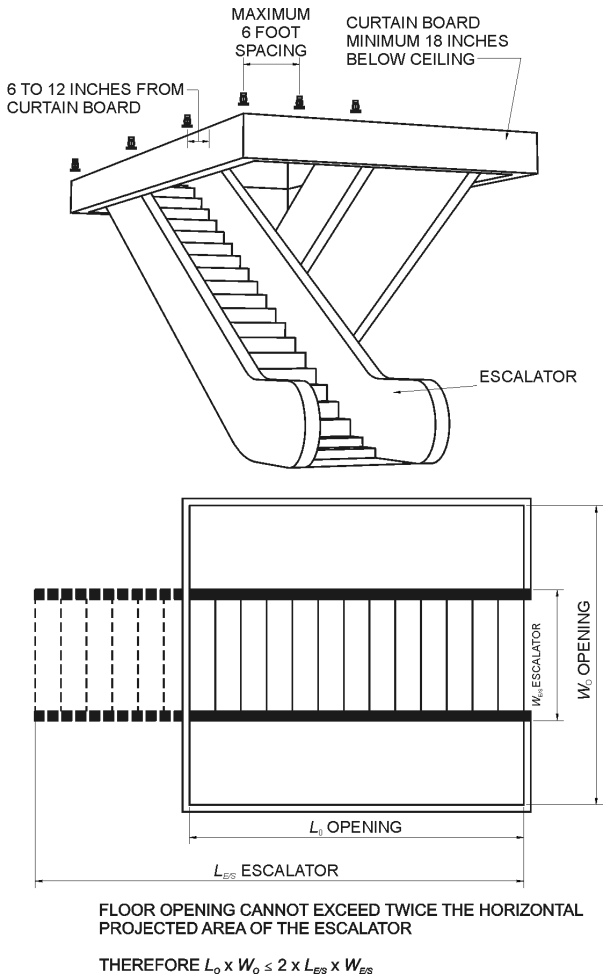

For SI: 1 inch = 25.4 mm, 1 foot = 304.8 mm.

Figure 712.1.3.1
SHAFT ENCLOSURE—DRAFT CURTAIN EXCEPTION

INTERNATIONAL CODE COUNCIL®
Copyright © 2015 ICC. ALL RIGHTS RESERVED. Accessed by David Dammon on Jun 21, 2017 12:30:52 PM pursuant to License Agreement with ICC. No further reproduction or distribution authorized. ANY UNAUTHORIZED REPRODUCTION OR DISTRIBUTION IS A VIOLATION OF THE FEDERAL COPYRIGHT ACT AND THE LICENSE AGREEMENT, AND SUBJECT TO CIVIL AND CRIMINAL PENALTIES THEREUNDER.

also include the protection of joints/voids that may occur at the intersection of the horizontal assembly and an exterior wall.

712.1.5.2 Joints in or between nonfire-resistance-rated floor assemblies. Joints in or between floor assemblies without a required *fire-resistance rating* shall be permitted where they comply with one of the following:

1. The joint shall be concealed within the cavity of a wall.
2. The joint shall be located above a ceiling.
3. The joint shall be sealed, treated or covered with an *approved* material or system to resist the free passage of flame and the products of combustion.

Exception: Joints meeting one of the exceptions listed in Section 715.1.

❖ This section addresses joints in nonrated floor assemblies. The spread of fire from story to story is a concern for all buildings whether or not the floors are required to be fire-resistance rated or not. This is why shaft enclosures are required for buildings even with no requirement for fire-resistance-rated floors. Although applicable to fire-resistant joint systems, the exceptions in Section 715.1 are also applicable to joints in nonfire-resistance-rated floor assemblies.

712.1.6 Ducts and air transfer openings. Penetrations by ducts and air transfer openings shall be protected in accordance with Section 717. Grease ducts shall be protected in accordance with the *International Mechanical Code*.

❖ Ducts and air transfer openings for HVAC supply, return and exhaust through horizontal assemblies can be a source for the spread of smoke and fire from story to story. This section references Section 717.6, which states that the first option is to enclose the vertical ducts in shaft walls, but gives several other options as well (see commentary, Section 717.6).

712.1.7 Atriums. In other than Group H occupancies, atriums complying with Section 404 shall be permitted.

❖ "Atriums" are defined as an opening connecting two or more stories. Vertical openings connecting two or more stories may be allowed under the provisions and conditions in Section 404. All vertical openings connecting two or more stories are not required to meet Section 404. For openings connecting only two stories, the provisions of Section 712.1.9 may also be used to allow vertical openings. Vertical openings consisting of unenclosed exit access stairs may also be allowed when meeting specific portions of Section 1019.

712.1.8 Masonry chimney. Approved vertical openings for masonry chimneys shall be permitted where the annular space is fireblocked at each floor level in accordance with Section 718.2.5.

❖ A masonry chimney must meet Section 2113 in order to be approved. According to Section 718.2.5, the annular space surrounding the masonry chimney must be fireblocked with a material specifically tested in the form and manner intended for use to demonstrate its ability to remain in place and resist the free passage of flame and products of combustion. Furthermore, Section 2113.20 requires the annular space to be fireblocked with a noncombustible material at the ceiling and floor. This section does not

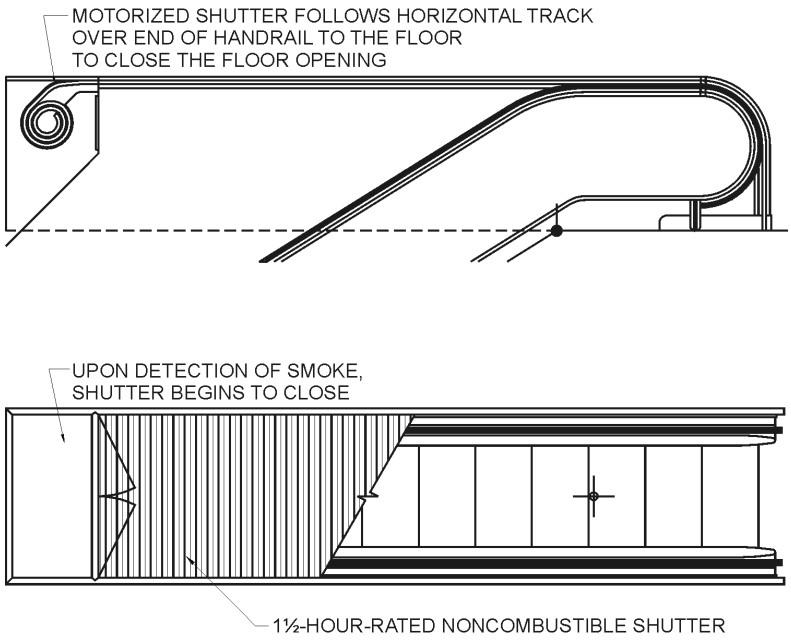

Figure 712.1.3.2
SHAFT ENCLOSURE—SHUTTERS EXCEPTION

INTERNATIONAL CODE COUNCIL®
Copyright © 2015 ICC. ALL RIGHTS RESERVED. Accessed by David Dammon on Jun 21, 2017 12:30:52 PM pursuant to License Agreement with ICC. No further reproduction or distribution authorized. ANY UNAUTHORIZED REPRODUCTION OR DISTRIBUTION IS A VIOLATION OF THE FEDERAL COPYRIGHT ACT AND THE LICENSE AGREEMENT, AND SUBJECT TO CIVIL AND CRIMINAL PENALTIES THEREUNDER.

apply to factory-built fireplaces and chimneys. Factory-built chimneys require shaft enclosures when penetrating floors.

712.1.9 Two-story openings. In other than Groups I-2 and I-3, a vertical opening that is not used as one of the applications listed in this section shall be permitted if the opening complies with all of the items below:

1. Does not connect more than two stories.
2. Does not penetrate a horizontal assembly that separates fire areas or smoke barriers that separate smoke compartments.
3. Is not concealed within the construction of a wall or a floor/ceiling assembly.
4. Is not open to a corridor in Group I and R occupancies.
5. Is not open to a corridor on nonsprinklered floors.
6. Is separated from floor openings and air transfer openings serving other floors by construction conforming to required shaft enclosures.

❖ The floor-opening allowance described in this section is not applicable to Groups I-2 and I-3. A floor opening connecting two stories that is not covered by one of the other provisions for vertical openings in Section 712 may use this provision. This provision addresses the issue of floor openings that are not a part of the required means of egress, such as unconcealed openings providing the same purpose as an atrium between two stories. Unlike the atrium provisions in Section 404, this section does not require sprinklers or smoke control. Such vertical openings cannot connect to exit access corridors in Group I or R because occupants can be sleeping and the integrity of the corridor system is especially important under such conditions. For a sprinklered Group B occupancy, Commentary Figure 712.1.9 illustrates the vertical opening connecting to an exit access corridor.

Under this provision, such two-story vertical openings cannot be connected to any other floor opening that connects to an additional floor level. Such vertical openings must be separated from vertical openings serving other stories by construction that complies with this section for shaft enclosures. This requirement limits the use of this provision so that an opening between two stories does not openly communicate with another opening to an additional story and, therefore, interconnect three or more different levels.

712.1.10 Parking garages. Vertical openings in parking garages for automobile ramps, elevators and duct systems shall comply with Section 712.1.10.1, 712.1.10.2 or 712.1.10.3, as applicable.

❖ Vertical openings between stories or tiers of parking in parking garages are permitted. It is impractical to consider not allowing those vertical openings created by the automobile ramps. While this section only applies to the vehicle ramps, Sections 712.1.15 and 712.1.10.3 apply to vertical openings for duct systems and elevator hoistways serving only the parking garage. Exit access stairways in enclosed parking garages may need enclosures if they do not meet one of the specific provisions in Section 1019.

712.1.10.1 Automobile ramps. Vertical openings for automobile ramps in open and enclosed parking garages shall be permitted where constructed in accordance with Sections 406.5 and 406.6, respectively.

❖ The special code requirements in Sections 406.5 and 406.6 recognize the unique features of parking garages. Adherence to those sections will mitigate the concerns about vertical openings.

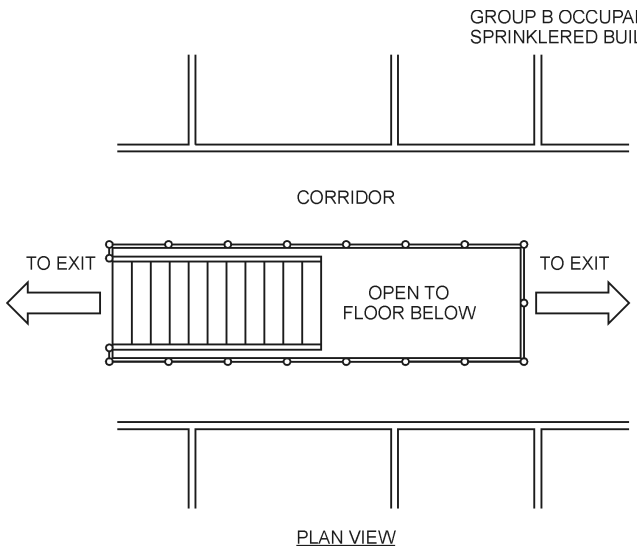

Figure 712.1.9
TWO-STORY SHAFT ENCLOSURE EXCEPTION

INTERNATIONAL CODE COUNCIL®
Copyright © 2015 ICC. ALL RIGHTS RESERVED. Accessed by David Dammon on Jun 21, 2017 12:30:52 PM pursuant to License Agreement with ICC. No further reproduction or distribution authorized. ANY UNAUTHORIZED REPRODUCTION OR DISTRIBUTION IS A VIOLATION OF THE FEDERAL COPYRIGHT ACT AND THE LICENSE AGREEMENT, AND SUBJECT TO CIVIL AND CRIMINAL PENALTIES THEREUNDER.

712.1.10.2 Elevators. Vertical openings for elevator hoistways in open or enclosed parking garages that serve only the parking garage, and complying with Sections 406.5 and 406.6, respectively, shall be permitted.

❖ Vertical openings that contain elevator hoistways that only serve a parking garage (open or enclosed) need not be enclosed in fire-resistance-rated shaft construction. The tiered levels of parking are already open; therefore, to provide fire-resistance-rated construction for the hoistway enclosures serves no useful purpose. Please note that if the elevator hoistway serves floors that are not part of the parking garage, then the fire-resistance-rated shafts would be required throughout the entire length of the elevator hoistway.

712.1.10.3 Duct systems. Vertical openings for mechanical exhaust or supply duct systems in open or enclosed parking garages complying with Sections 406.5 and 406.6, respectively, shall be permitted to be unenclosed where such duct system is contained within and serves only the parking garage.

❖ This section is similar to Section 712.1.10.2. Fire-resistance-rated shafts are not required for vertical duct work that is contained within and serves only the parking structure.

712.1.11 Mezzanine. Vertical openings between a mezzanine complying with Section 505 and the floor below shall be permitted.

❖ Section 712.1.11 recognizes that vertical openings between a mezzanine and the floor below are actually an advantage. The limited-size mezzanine is considered a part of the story below in accordance with Section 505.1. The openness between the mezzanine level and the floor below allows smoke or other hazards to be readily observable to occupants of both levels.

712.1.12 Exit access stairways and ramps. Vertical openings containing *exit access stairways* or *ramps* in accordance with Section 1019 shall be permitted.

❖ There are 10 separate conditions in Section 1019 that permit unenclosed exit access stairs or ramps. The vertical openings created by the unenclosed stairs that meet Section 1019 are allowed.

712.1.13 Openings. Vertical openings for floor fire doors and access doors shall be permitted where protected by Section 712.1.13.1 or 712.1.13.2.

❖ Vertical openings can be provided with fire doors in the plane of the floor. The door can be automatic closing. The floor fire door requirement is detailed in Section 712.1.13.1. These floor fire doors can be used to close a floor opening because they have a fire-resistance rating equal to that of the floor and, therefore, meet requirements that are similar to those of the floor itself. It should be noted that floor fire door assemblies must be installed in fire-resistance-rated floors and nonfire-resistance-rated floors.

712.1.13.1 Horizontal fire door assemblies. Horizontal *fire door* assemblies used to protect openings in fire-resistance-rated *horizontal assemblies* shall be tested in accordance with NFPA 288, and shall achieve a *fire-resistance rating* not less than the assembly being penetrated. Horizontal *fire door* assemblies shall be labeled by an *approved agency*. The *label* shall be permanently affixed and shall specify the manufacturer, the test standard and the *fire-resistance rating*.

❖ Horizontal fire doors are specifically addressed as an opening protective in horizontal floor assemblies. The code requires that these doors have a fire-resistance rating instead of just a fire protection rating. By requiring a fire-resistance rating, it will restore the opening in the horizontal assembly to the same level of protection that was originally established during the fire test by limiting the temperature transmission to the unexposed side of the assembly.

712.1.13.2 Access doors. Access doors shall be permitted in ceilings of fire-resistance-rated floor/ceiling and roof/ceiling assemblies, provided such doors are tested in accordance with ASTM E119 or UL 263 as horizontal assemblies and labeled by an approved agency for such purpose.

❖ Access doors are often necessary in order to service mechanical and plumbing systems above the ceiling. This section states that if such doors are used where the ceiling provides part of the protection, they must be tested in accordance with ASTM E119 or UL 263 as a horizontal assembly. This makes it clear that the standard fire test for doors (NFPA 80 or 257) is not acceptable. This ensures that the thermal transmission through the access door and its effect on the assembly is considered. The provisions of this section are not applicable if the ceiling membrane does not provide any portion of the fire-resistive protection. Therefore, in a nonrated ceiling, this access door requirement would not apply.

712.1.14 Group I-3. In Group I-3 occupancies, vertical openings shall be permitted in accordance with Section 408.5.

❖ Vertical openings within a Group I-3 housing unit are allowed under the conditions of Section 408.5.1. This is to allow tiered cells with observation by supervisory personnel.

712.1.15 Skylights. Skylights and other penetrations through a *fire-resistance-rated* roof deck or slab are permitted to be unprotected, provided that the structural integrity of the *fire-resistance-rated* roof assembly is maintained. Unprotected skylights shall not be permitted in roof assemblies required to be *fire-resistance rated* in accordance with Section 705.8.6. The supporting construction shall be protected to afford the required *fire-resistance rating* of the *horizontal assembly* supported.

❖ Fire-resistance-rated roof construction is not intended to create a barrier in order to contain the fire within the building, except for Exception 1 of Section 705.8.6 and the exception to Section 706.6.1. Non-fire-resistance-rated penetrations and skylight and roof window assemblies are, therefore, permitted to be installed in fire-resistance-rated roof assemblies,

INTERNATIONAL CODE COUNCIL®
Copyright © 2015 ICC. ALL RIGHTS RESERVED. Accessed by David Dammon on Jun 21, 2017 12:30:52 PM pursuant to License Agreement with ICC. No further reproduction or distribution authorized. ANY UNAUTHORIZED REPRODUCTION OR DISTRIBUTION IS A VIOLATION OF THE FEDERAL COPYRIGHT ACT AND THE LICENSE AGREEMENT, AND SUBJECT TO CIVIL AND CRIMINAL PENALTIES THEREUNDER.

provided that the structural integrity of the roof assembly is not reduced and the provisions of Section 705.8.6 for protection of vertical exposure do not apply (see commentary, Section 705.8.6). The issue of structural integrity refers to the effect the collapse of a skylight assembly, under fire conditions, would have on the roof structure. Section 713.12, regarding the extension of a shaft to the roof level, would also permit the same unprotected openings to the exterior.

712.1.16 Openings otherwise permitted. Vertical openings shall be permitted where allowed by other sections of this code.

❖ With the 2012 code, an effort was made to include or reference all the conditions that would allow vertical openings in one section. Previous editions did not try to include vertical openings in one section; therefore, any other requirement is covered with this reference.

SECTION 713
SHAFT ENCLOSURES

713.1 General. The provisions of this section shall apply to shafts required to protect openings and penetrations through floor/ceiling and roof/ceiling assemblies. *Interior exit stairways* and *ramps* shall be enclosed in accordance with Section 1023.

❖ This section applies to vertical shafts enclosing vertical openings, such as vertical exhaust ducts; gas flues; metal chimneys; vertical supply ducts; return and outdoor air ducts; elevator hoistways, linen chutes and trash chutes. All openings or penetrations in floor/ceiling or roof/ceiling assemblies are required to be protected with a vertical shaft enclosure, except for the permitted uses in Section 712.

The purpose of shafts is to confine a fire to the floor of origin and to prevent the fire or the products of the fire (smoke, heat and hot gases) from spreading to other levels. For interior exit stairways and interior exit ramps, the requirements in Section 1023 are applicable.

713.2 Construction. Shaft enclosures shall be constructed as *fire barriers* in accordance with Section 707 or horizontal assemblies in accordance with Section 711, or both.

❖ Shafts are required to be enclosed in fire-resistance-rated fire barriers (Section 707) or a combination of fire barriers and horizontal assemblies (Section 712) where shafts are offset between stories.

713.3 Materials. The shaft enclosure shall be of materials permitted by the building type of construction.

❖ Material used for the construction of shaft walls must comply with the material requirements for partitions based on the building construction type in Section 602.

713.4 Fire-resistance rating. Shaft enclosures shall have a *fire-resistance rating* of not less than 2 hours where connecting four *stories* or more, and not less than 1 hour where connecting less than four *stories*. The number of *stories* connected by the shaft enclosure shall include any basements but not any *mezzanines*. Shaft enclosures shall have a *fire-resistance rating* not less than the floor assembly penetrated, but need not exceed 2 hours. Shaft enclosures shall meet the requirements of Section 703.2.1.

❖ The required fire-resistance rating for a shaft enclosure is related to the number of stories being connected. Please note that the shaft enclosure is required to be fire-resistance rated even though the floor may not be required to be fire-resistance rated, such as in a Type IIB, IIIB or VB construction. The fire-resistance rating of shaft enclosures must be 2 hours in buildings four or more stories in height. The fire-resistance rating of shaft enclosures that connect less than four stories is required to be only 1 hour. However, in the case of Type IA or IB construction, the shaft enclosure for a building height of three stories or less would have to be 2 hours. That is because the floors are 2-hour fire-resistance rated in those types of construction. The fire-resistance integrity of the floor construction must be maintained. The shaft wall construction shall never be allowed to be less than the fire-resistance rating of the floors being penetrated, but need not exceed 2 hours (see Commentary Figure 713.4). Another case where a two- or three-story building will require a 2-hour shaft enclosure is a mixed occupancy building using the separated option with a floor separating the occupancies rated for 2 hours.

There is one exception to the 2-hour fire-resistance rating for shaft enclosures in buildings meeting the high-rise provisions of Section 403. Section 403.2.1.2 allows a reduction to 1 hour in high-rise buildings less than 420 feet (128 m) in height for shaft enclosures other than exits and elevator hoistways where special sprinklers are installed in the shaft.

The reference to Section 703.2.1 is a 2009 revision to this section. The intent is that fire-resistance-rated shaft enclosure walls must be rated from fire exposure from both sides. That is, they must be symmetrical assemblies or assume the rating of the least-rated side. Chase walls are not to be confused with shaft walls.

713.5 Continuity. Shaft enclosures shall be constructed as *fire barriers* in accordance with Section 707 or *horizontal assemblies* constructed in accordance with Section 711, or both, and shall have continuity in accordance with Section 707.5 for *fire barriers* or Section 711.2.2 for *horizontal assemblies*, as applicable.

❖ This section references the fire barrier and horizontal assembly provisions for details on the continuity requirements. For fire barriers, the continuity section is Section 707.5, which also contains the supporting structure provisions. For horizontal assemblies, Section 711.2.2 describes the continuity provisions. See the commentary for both of those sections. Nothing in this section prohibits offsets in shaft enclosures, provided that the enclosures are continuous to the roof.

INTERNATIONAL CODE COUNCIL®
Copyright © 2015 ICC. ALL RIGHTS RESERVED. Accessed by David Dammon on Jun 21, 2017 12:30:52 PM pursuant to License Agreement with ICC. No further reproduction or distribution authorized. ANY UNAUTHORIZED REPRODUCTION OR DISTRIBUTION IS A VIOLATION OF THE FEDERAL COPYRIGHT ACT AND THE LICENSE AGREEMENT, AND SUBJECT TO CIVIL AND CRIMINAL PENALTIES THEREUNDER.

713.6 Exterior walls. Where *exterior walls* serve as a part of a required shaft enclosure, such walls shall comply with the requirements of Section 705 for *exterior walls* and the fire-resistance-rated enclosure requirements shall not apply.

Exception: Exterior walls required to be fire-resistance rated in accordance with Section 1021.2 for exterior egress balconies, Section 1023.7 for interior *exit* stairways and ramps and Section 1027.6 for exterior *exit* stairways and ramps.

❖ If an exterior wall constitutes part of a shaft enclosure, the exterior wall is only required to comply with the fire-resistance-rating requirements in Section 705 for exterior walls. The intent of the fire barrier requirements is to subdivide or enclose areas to protect them from a fire within the building. The exterior wall need only have a fire-resistance rating if required for structural stability (see Table 601) or because of an exterior exposure potential based on FSD. The exception to Section 713.6 recognizes that an exterior wall of a shaft can also be an egress balcony wall or a wall separating an exterior exit stair. Exterior balcony, exit enclosure and ramp and stair requirements are referenced by the exception as areas required to be fire-resistance rated for reasons other than structural or FSD. Section 701.2 also requires a wall serving multiple purposes to meet all the code requirements for each purpose.

713.7 Openings. Openings in a shaft enclosure shall be protected in accordance with Section 716 as required for *fire barriers*. Doors shall be self- or automatic-closing by smoke detection in accordance with Section 716.5.9.3.

❖ The integrity of the shaft enclosures must be maintained with approved opening protectives (see Section 716). An example of a protected opening is illustrated in Commentary Figure 713.7. Doors provided into shafts shall be self-closing or, if automatic closing, must be smoke activated in accordance with Section 716.5.9.3. Table 716.5 provides the fire pro-

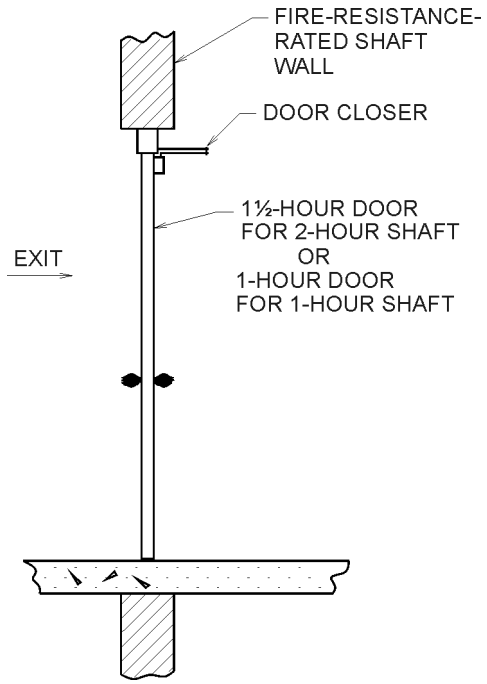

Figure 713.7
PROTECTED OPENING IN SHAFT ENCLOSURE

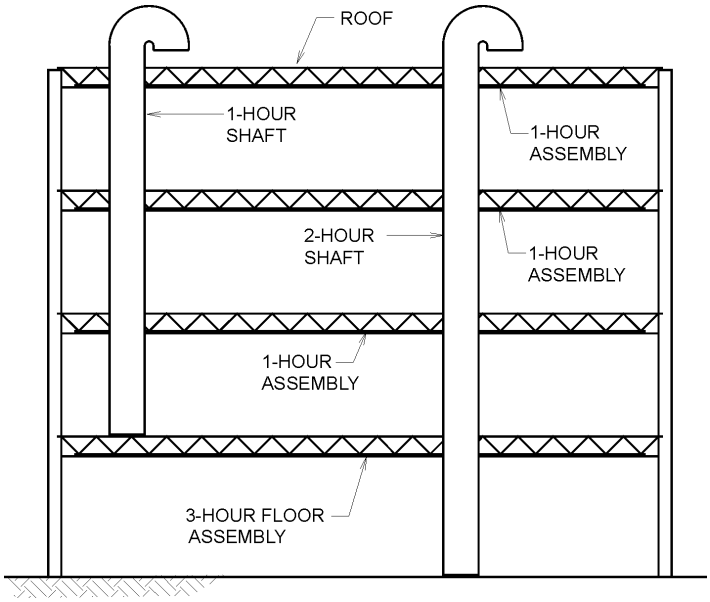

Figure 713.4
VERTICAL SHAFTS—FIRE-RESISTANCE RATING

INTERNATIONAL CODE COUNCIL®
Copyright © 2015 ICC. ALL RIGHTS RESERVED. Accessed by David Dammon on Jun 21, 2017 12:30:52 PM pursuant to License Agreement with ICC. No further reproduction or distribution authorized. ANY UNAUTHORIZED REPRODUCTION OR DISTRIBUTION IS A VIOLATION OF THE FEDERAL COPYRIGHT ACT AND THE LICENSE AGREEMENT, AND SUBJECT TO CIVIL AND CRIMINAL PENALTIES THEREUNDER.

tection rating required. There is no requirement for the doors to meet the smoke and draft control assembly testing, unless the shaft door also serves as an opening into a corridor or through a smoke barrier.

713.7.1 Prohibited openings. Openings other than those necessary for the purpose of the shaft shall not be permitted in shaft enclosures.

❖ In fire barrier walls forming shaft enclosures, openings are limited to only those necessary for the shaft to serve its intended purpose.

713.8 Penetrations. Penetrations in a shaft enclosure shall be protected in accordance with Section 714 as required for *fire barriers*. Structural elements, such as beams or joists, where protected in accordance with Section 714 shall be permitted to penetrate a shaft enclosure.

❖ Penetrations for items such as cables, cable trays, conduits, ducts and piping are required to be tested in accordance with ASTM E814 or UL 1479 with some minor exceptions (see Section 714.3.1). The change in the 2012 code permits structural members to penetrate shaft walls if the structural members have been tested in the assembly and meet ASTM E814 and UL 1479. This change is only for shafts in Section 713 and does not address stair shafts in Sections 1009 and 1022. Neither does this change affect penetrations of fire barriers in general.

713.8.1 Prohibited penetrations. Penetrations other than those necessary for the purpose of the shaft shall not be permitted in shaft enclosures.

❖ The provisions of Section 713.8.1 mirror those of Section 713.7.1 for openings. Because a shaft provides a potential method for a fire or the products of combustion to spread throughout a building, especially when driven due to the stack effect, the code restricts penetrations so that the effectiveness of the shaft is maintained. For instance, horizontal plumbing piping cannot penetrate the walls of a shaft serving vertical air ducts.

713.9 Joints. Joints in a shaft enclosure shall comply with Section 715.

❖ See the commentary to Section 715.

713.10 Duct and air transfer openings. Penetrations of a shaft enclosure by ducts and air transfer openings shall comply with Section 717.

❖ These provisions reference the applicable protection features of Section 717 for duct openings. Since a duct is also a penetration, the limitations of Section 713.8.1 are applicable. For exit enclosures, it is important to note that duct openings are limited to those allowed in Section 1023.4. As stated in Section 717.1.2, if a duct is exempted from the need for a damper, the penetration of that duct through a fire-resistance-rated assembly must be protected as a through penetration in accordance with Section 714. Section 717.5.3 requires shaft enclosure penetrations by ducts and air transfer openings to be protected by both fire dampers and smoke dampers. For the exceptions, see the commentary to Section 717.5.3

713.11 Enclosure at the bottom. Shafts that do not extend to the bottom of the building or structure shall comply with one of the following:

1. They shall be enclosed at the lowest level with construction of the same *fire-resistance rating* as the lowest floor through which the shaft passes, but not less than the rating required for the shaft enclosure.
2. They shall terminate in a room having a use related to the purpose of the shaft. The room shall be separated from the remainder of the building by *fire barriers* constructed in accordance with Section 707 or *horizontal assemblies* constructed in accordance with Section 711, or both. The *fire-resistance rating* and opening protectives shall be not less than the protection required for the shaft enclosure.
3. They shall be protected by *approved fire dampers* installed in accordance with their listing at the lowest floor level within the shaft enclosure.

Exceptions:

1. The fire-resistance-rated room separation is not required, provided there are no openings in or penetrations of the shaft enclosure to the interior of the building except at the bottom. The bottom of the shaft shall be closed off around the penetrating items with materials permitted by Section 718.3.1 for draftstopping, or the room shall be provided with an *approved automatic sprinkler system*.
2. A shaft enclosure containing a waste or linen chute shall not be used for any other purpose and shall discharge in a room protected in accordance with Section 713.13.4.
3. The fire-resistance-rated room separation and the protection at the bottom of the shaft are not required provided there are no combustibles in the shaft and there are no openings or other penetrations through the shaft enclosure to the interior of the building.

❖ In order to limit the spread of fire from story to story through vertical shafts, an enclosure is required throughout the length of the shaft, including the bottom, if the shaft does not extend to the bottom floor of the building. This section gives three separate methods of providing protection for the bottom of shafts that are not at the bottom of the building.

Method 1 is shown in Commentary Figure 713.11(1). Please note that the bottom of the shaft is supported by a horizontal assembly meeting Section 711. However, if the horizontal structural members are primary structural frames and not secondary structural members, and the structural floor member supports shaft walls three stories or more in height, then individual encasement is required (see Section 704.3).

Method 2 is illustrated in Commentary Figure 713.11(2). This figure shows a 1-hour fire-resistance-rated shaft, but this method is applicable to 2-hour

INTERNATIONAL CODE COUNCIL®
Copyright © 2015 ICC. ALL RIGHTS RESERVED. Accessed by David Dammon on Jun 21, 2017 12:30:52 PM pursuant to License Agreement with ICC. No further reproduction or distribution authorized. ANY UNAUTHORIZED REPRODUCTION OR DISTRIBUTION IS A VIOLATION OF THE FEDERAL COPYRIGHT ACT AND THE LICENSE AGREEMENT, AND SUBJECT TO CIVIL AND CRIMINAL PENALTIES THEREUNDER.

fire-resistance-rated shafts as well, although the room separation would be 2 hours. This method recognizes that the purpose of some shafts cannot be accomplished if the bottom must be enclosed as in Method 1. Therefore, a room is permitted at the bottom of the shaft, but the function of the room must be related to the purpose of the shaft. Two common examples of this situation are either mechanical rooms that have vents from the room to the roof or refuse chutes that terminate at a room at the bottom for collection. Exceptions 1 and 2 to this section relate to this method.

Method 3 is similar to Method 1, but allows a fire damper to be provided at the bottom of the enclosure. Please note that this method predates the requirement for both smoke and fire dampers in ducts penetrating shaft walls (Section 717.5.3). The code user must comply with both code sections. Therefore, the code user must provide both fire and smoke dampers with this method unless the smoke damper is exempted by Section 717.5.3.

Exception 1 is illustrated by both Commentary Figures 713.11(3) and 713.11(4). This is an exception to Method 2 and eliminates the need for the room to be

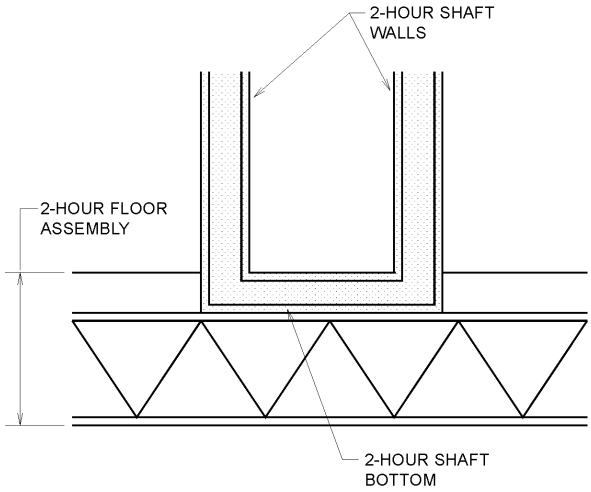

Figure 713.11(1)
VERTICAL SHAFTS—BOTTOM ENCLOSURES METHOD 1

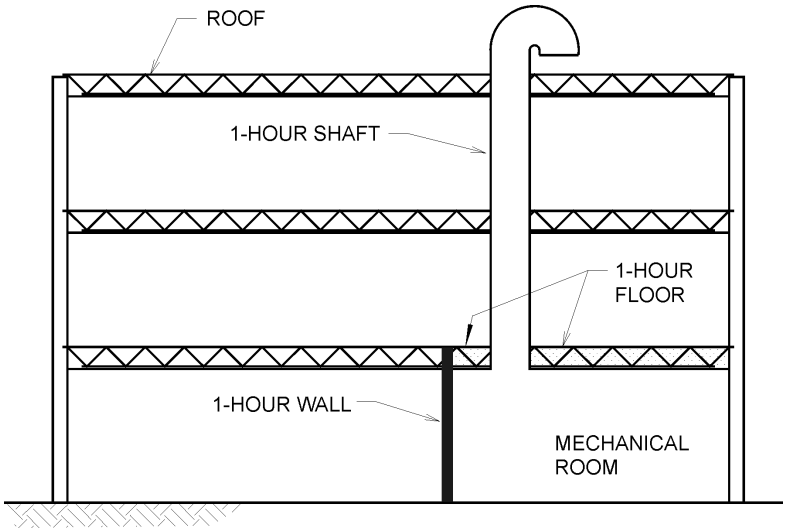

Figure 713.11(2)
VERTICAL SHAFTS—BOTTOM ENCLOSURE ROOM METHOD 2

INTERNATIONAL CODE COUNCIL®
Copyright © 2015 ICC. ALL RIGHTS RESERVED. Accessed by David Dammon on Jun 21, 2017 12:30:52 PM pursuant to License Agreement with ICC. No further reproduction or distribution authorized. ANY UNAUTHORIZED REPRODUCTION OR DISTRIBUTION IS A VIOLATION OF THE FEDERAL COPYRIGHT ACT AND THE LICENSE AGREEMENT, AND SUBJECT TO CIVIL AND CRIMINAL PENALTIES THEREUNDER.

separated. With this exception there cannot be any openings or penetrations into the shaft enclosures anywhere except at the bottom and the top. A gas-fired appliance flue and a commercial kitchen exhaust duct are good examples.

Exception 2 is specific to waste or linen chute termination rooms and requires compliance with Section 713.13.4.

Exception 3 is illustrated by Commentary Figure 713.11(5). This is an exception to the entire section and to all three methods. While the figure shows a very small light well shaft in a three-story building, this exception is not limited to three stories and the size of the shaft is not limited. The area and volume of the shaft can be considered as part of the story in which the bottom of the shaft terminates. The conditions of the exception are based on the fact that the shaft contents will not contribute to the fuel load and that the shaft serves and connects to only one story—the one in which it terminates. This is similar to an atrium with no openings except in the first story. Unlike an atrium, which is exempted from shaft enclosures, this actually is a shaft with shaft wall construction on all stories except the first.

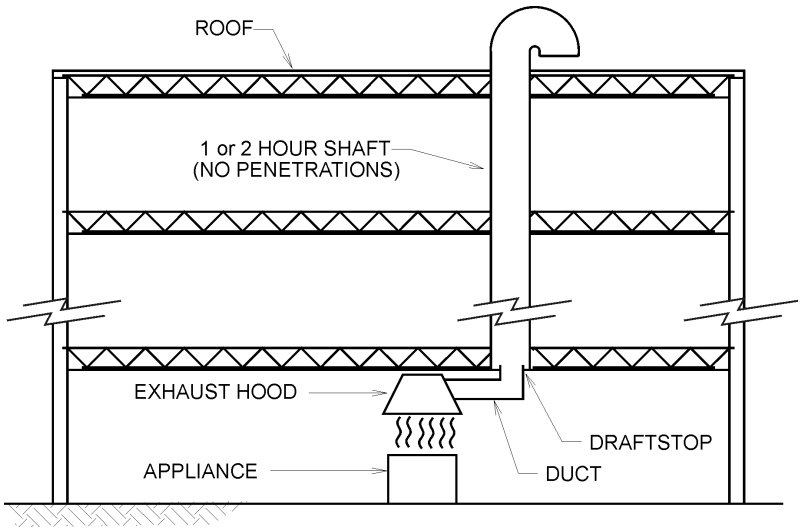

Figure 713.11(3)
VERTICAL SHAFTS—BOTTOM ENCLOSURE ROOM METHOD 2—EXCEPTION 1

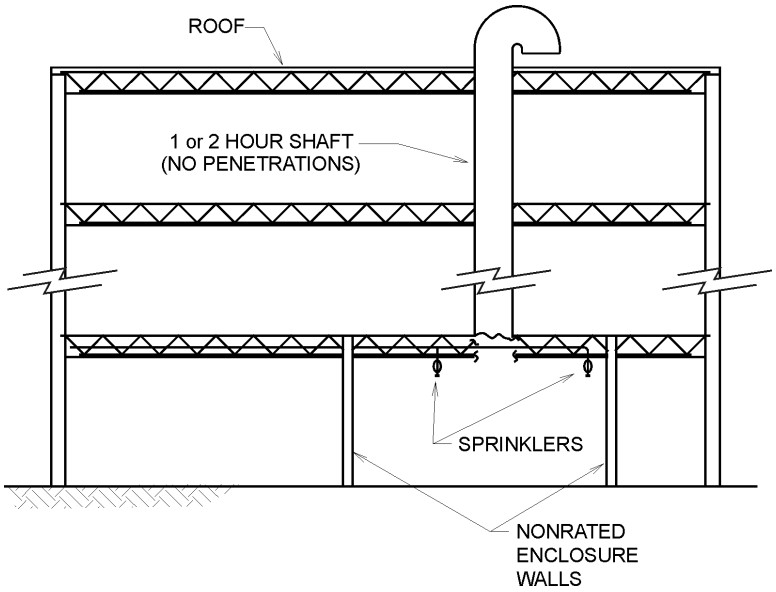

Figure 713.11(4)
VERTICAL SHAFTS—BOTTOM ENCLOSURE WITH SPRINKLERS—METHOD 2—EXCEPTION 1

INTERNATIONAL CODE COUNCIL®
Copyright © 2015 ICC. ALL RIGHTS RESERVED. Accessed by David Dammon on Jun 21, 2017 12:30:52 PM pursuant to License Agreement with ICC. No further reproduction or distribution authorized. ANY UNAUTHORIZED REPRODUCTION OR DISTRIBUTION IS A VIOLATION OF THE FEDERAL COPYRIGHT ACT AND THE LICENSE AGREEMENT, AND SUBJECT TO CIVIL AND CRIMINAL PENALTIES THEREUNDER.

713.12 Enclosure at top. A shaft enclosure that does not extend to the underside of the roof sheathing, deck or slab of the building shall be enclosed at the top with construction of the same *fire-resistance rating* as the topmost floor penetrated by the shaft, but not less than the *fire-resistance rating* required for the shaft enclosure.

❖ Proper shaft enclosures must include all sides and the top unless the top of the shaft is also the roof of the building. Because the purpose of the shaft is to limit the spread of fire within the building, if the top of the shaft does not extend to or through the underside of the roof sheathing, deck or slab, then the code requires a fire-resistance-rated horizontal assembly at the top. The fire-resistance rating for the top of the shaft must not be less than the required fire resistance of the shaft enclosure or the fire-resistance rating of the highest floor penetrated (see Commentary Figure 713.12). The required rating for the top of the shaft that extends to the sheathing or roof deck must be consistent with the requirements of Table 601 and Section 711 for roof construction. The top of the shaft

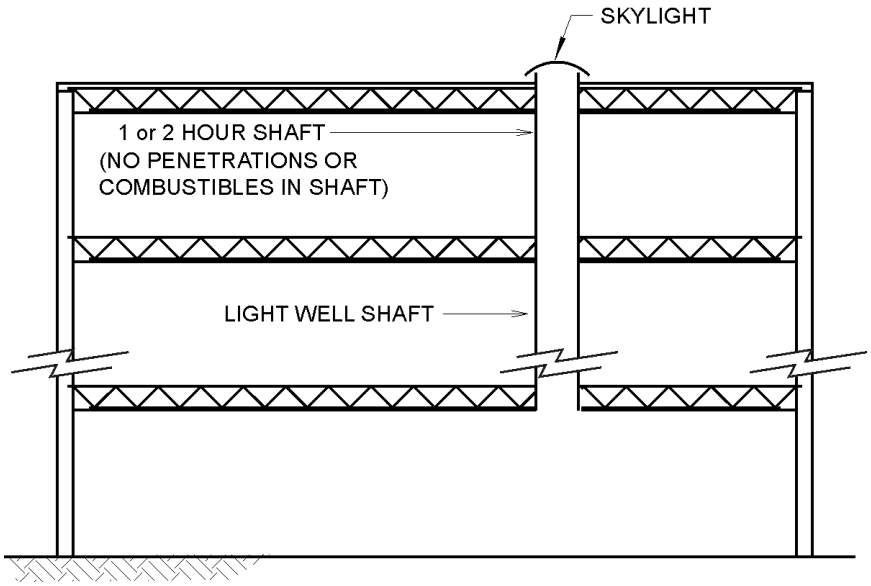

Figure 713.11(5)
VERTICAL SHAFTS—BOTTOM ENCLOSURE EXCEPTION 3

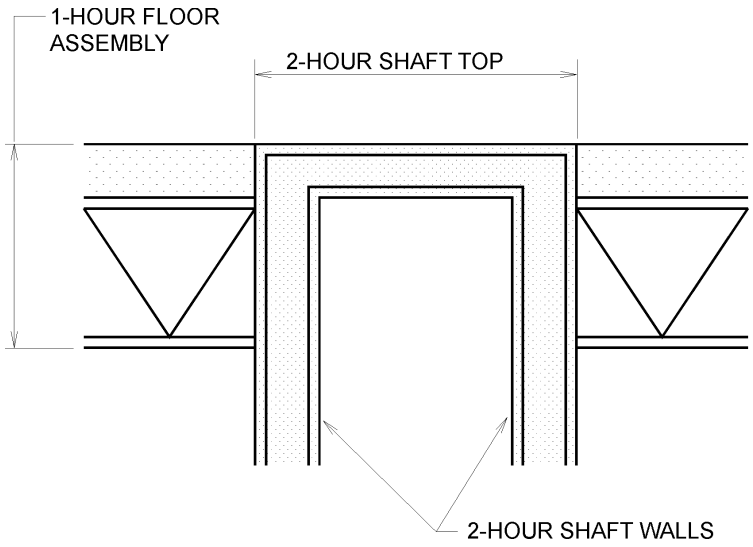

Figure 713.12
VERTICAL SHAFTS—TOP ENCLOSURE AT FLOOR

INTERNATIONAL CODE COUNCIL®
Copyright © 2015 ICC. ALL RIGHTS RESERVED. Accessed by David Dammon on Jun 21, 2017 12:30:52 PM pursuant to License Agreement with ICC. No further reproduction or distribution authorized. ANY UNAUTHORIZED REPRODUCTION OR DISTRIBUTION IS A VIOLATION OF THE FEDERAL COPYRIGHT ACT AND THE LICENSE AGREEMENT, AND SUBJECT TO CIVIL AND CRIMINAL PENALTIES THEREUNDER.

must be constructed using a horizontal assembly (see Section 711) with the proper fire-resistance rating. It is not permissible to simply take a fire barrier, such as the assembly used for the shaft wall, and turn it horizontally.

The code is silent on whether a fire damper is appropriate for use to enclose the top of a shaft. Fire dampers are expressly permitted to be used at the bottom of a fire-resistance-rated shaft in Section 713.11. The damper listing should be reviewed before any damper is installed at this location.

713.13 Waste and linen chutes and incinerator rooms. Waste and linen chutes shall comply with the provisions of NFPA 82, Chapter 5 and shall meet the requirements of Sections 713.13.1 through 713.13.6. Incinerator rooms shall meet the provisions of Sections 713.13.4 through 713.13.5.

Exception: Chutes serving and contained within a single dwelling unit.

❖ Waste- and linen-handling systems represent locations that provide rapid fire spread potential. The emphasis on the vertical chute systems in this section is because such systems interconnect multiple stories and can contain combustible material. Additionally, these systems all too often receive an ignition source, such as discarded chemicals and materials capable of producing spontaneous combustion, smoking materials that have not been extinguished and hot ashes, embers and charcoal. Such systems are also subject to acts of vandalism. The construction, fire suppression and termination requirements of waste- and linen-handling systems are interrelated in other code sections. The exception recognizes the small size, limited use and occupant control of refuse and laundry chutes commonly installed within dwelling units.

713.13.1 Waste and linen. A shaft enclosure containing a recycling, or waste or linen chute shall not be used for any other purpose and shall be enclosed in accordance with Section 713.4. Openings into the shaft, from access rooms and discharge rooms, shall be protected in accordance with this section and Section 716. Openings into chutes shall not be located in *corridors*. Doors into chutes shall be self-closing. Discharge doors shall be self- or automatic-closing upon the actuation of a smoke detector in accordance with Section 716.5.9.3, except that heat-activated closing devices shall be permitted between the shaft and the discharge room.

❖ This section requires that vertical systems or chutes be enclosed in a fire-resistance-rated shaft in accordance with Section 713.4. As with all shafts, the fire-resistance integrity of the shaft must be protected at all penetrations of the shaft enclosure. All access openings and disharge points must be treated as shaft enclosure penetrations requiring opening protectives. Waste and linen access openings are prohibited from being located in corridors or exits. While a corridor is a very convenient location for access to these chutes, in order to access the chute from a corridor, an intervening room (see Section 713.13.3) with an additional fire-rated opening protective provides redundancy that is justified by fire experience.

713.13.2 Materials. A shaft enclosure containing a waste, recycling, or linen chute shall be constructed of materials as permitted by the building type of construction.

❖ The types of materials used in shaft enclosures are to be consistent with Sections 602 through 602.5 for the type of construction of the building. Fire barriers or horizontal assemblies that form shaft walls are permitted to be of combustible construction in Type III, IV and V construction and are required to be of noncombustible materials in Type I and II construction.

713.13.3 Chute access rooms. Access openings for waste or linen chutes shall be located in rooms or compartments enclosed by not less than 1-hour *fire barriers* constructed in accordance with Section 707 or *horizontal assemblies* constructed in accordance with Section 711, or both. Openings into the access rooms shall be protected by opening protectives having a *fire protection rating* of not less than $^3/_4$ hour. Doors shall be self- or automatic-closing upon the detection of smoke in accordance with Section 716.5.9.3.

❖ The chutes themselves must have a rated fire door with closers in accordance with Section 713.13.1; therefore, the fire door in the shaft wall must be rated for 60 minutes or 90 minutes depending on the height of the shaft enclosure. In addition to this protection, such openings into the chute shaft must be located in a room or compartment. This room or compartment must be enclosed by fire barrier walls (Section 707) and horizontal assemblies (Section 711) with fire-resistance ratings of 1 hour. The door openings into the access room shall be fire-resistance rated for 45 minutes (see Commentary Figure 713.13.3). This requirement is necessary to provide an added measure of protection should the access door to the shaft fail to close due to waste being stuck in the door and because these rooms are a catch-all for combustible material.

713.13.4 Chute discharge room. Waste or linen chutes shall discharge into an enclosed room separated by *fire barriers* with a *fire-resistance rating* not less than the required fire rating of the shaft enclosure and constructed in accordance with Section 707 or *horizontal assemblies* constructed in accordance with Section 711, or both. Openings into the discharge room from the remainder of the building shall be protected by opening protectives having a *fire protection rating* equal to the protection required for the shaft enclosure. Doors shall be self- or automatic-closing upon the detection of smoke in accordance with Section 716.5.9.3. Waste chutes shall not terminate in an incinerator room. Waste and linen rooms that are not provided with chutes need only comply with Table 509.

❖ The chute discharge rooms, like the access rooms, are a repository of combustible material, and thus must be separated from all other parts of the building by fire barriers (Section 707) and horizontal assemblies (Section 711). The fire-resistance ratings are the same as for access rooms. See also Exception 2

INTERNATIONAL CODE COUNCIL®
Copyright © 2015 ICC. ALL RIGHTS RESERVED. Accessed by David Dammon on Jun 21, 2017 12:30:52 PM pursuant to License Agreement with ICC. No further reproduction or distribution authorized. ANY UNAUTHORIZED REPRODUCTION OR DISTRIBUTION IS A VIOLATION OF THE FEDERAL COPYRIGHT ACT AND THE LICENSE AGREEMENT, AND SUBJECT TO CIVIL AND CRIMINAL PENALTIES THEREUNDER.

of Section 713.11, which allows the shaft to discharge into such a room. The incidental use separation requirements for waste and linen separation rooms in Table 509 are only applicable to collection rooms not connected to chutes. The discharge room must never be connected to an incinerator room.

713.13.5 Incinerator room. Incinerator rooms shall comply with Table 509.

❖ This section refers to the incidental use separation table. Table 509 requires a 2-hour fire-resistance enclosure for such rooms and sprinkler protection.

713.13.6 Automatic sprinkler system. An *approved automatic sprinkler system* shall be installed in accordance with Section 903.2.11.2.

❖ In addition to meeting the requirements for shaft enclosures, laundry and refuse chutes must be provided with automatic sprinkler coverage. Most buildings with chutes will need to be fully sprinklered by other sections of the code. The chutes must have additional heads at the top, in the termination room and in the chute at every other floor level. The need for the sprinkler protection addresses the potential that a fire can occur in the chute or in the container below the chute.

713.14 Elevator, dumbwaiter and other hoistways. Elevator, dumbwaiter and other hoistway enclosures shall be constructed in accordance with Section 713 and Chapter 30.

❖ The hoistway enclosure is the fixed structure consisting of vertical walls or partitions that isolates the enclosure from all other building areas or from an adjacent enclosure in which the hoistway doors and door assemblies are installed. With the exception of observation elevators (usually in atriums), the hoistway is normally enclosed with fire barriers (see Section 707.3.1). Elevator hoistways in all parking structures that serve only the parking structure are exempt from enclosures by Section 712.1.15. In addition, shaft enclosures are not required for elevators located in an atrium since the hoistways are not concealed and there is no penetration of floor assemblies. Elevator hoistways are enclosed to ensure that flame, smoke and hot gases from a fire do not have an avenue of travel from one floor to another through a concealed space (see the discussion of stack effect in the commentary to Section 708.14.1). Enclosures are also provided to restrict contact with moving equipment and to prevent people from falling.

SECTION 714
PENETRATIONS

714.1 Scope. The provisions of this section shall govern the materials and methods of construction used to protect *through penetrations* and *membrane penetrations* of *horizontal assemblies* and fire-resistance-rated wall assemblies.

❖ This section addresses the specific requirements for maintaining the integrity of fire-resistance-rated assemblies at penetrations. The provisions of this section apply to penetrations of fire-resistance-rated walls (see Section 714.3), fire-resistance-rated horizontal assemblies (see Section 714.4.1) and nonfire-resistance-rated assemblies (see Section 714.5). Penetrations of fire-resistance-rated assemblies range from combustible pipe and tubing to noncombustible wiring with combustible covering to noncombustible items such as pipe, tube, conduit and ductwork.

Each type of penetration requires a specific method of protection, which is based on the type of fire-resistance-rated assembly that is penetrated and the type of penetrating item. To determine the type of

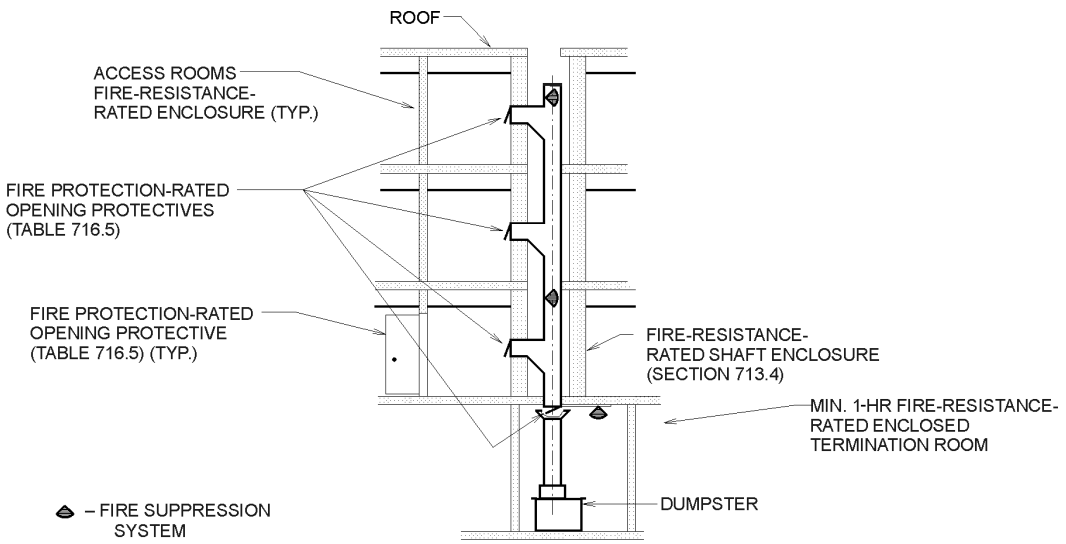

Figure 713.13.3
REFUSE CHUTE (FIRE BARRIER OPTION)

INTERNATIONAL CODE COUNCIL®
Copyright © 2015 ICC. ALL RIGHTS RESERVED. Accessed by David Dammon on Jun 21, 2017 12:30:52 PM pursuant to License Agreement with ICC. No further reproduction or distribution authorized. ANY UNAUTHORIZED REPRODUCTION OR DISTRIBUTION IS A VIOLATION OF THE FEDERAL COPYRIGHT ACT AND THE LICENSE AGREEMENT, AND SUBJECT TO CIVIL AND CRIMINAL PENALTIES THEREUNDER.

penetration protection required, the first step is to identify whether the penetrated assembly is a fire-resistance-rated wall, a fire-resistance-rated horizontal assembly or a nonfire-resistance-rated horizontal assembly. Next, identify the type of penetrating item in the applicable section and determine the applicable method of penetration protection necessary.

714.1.1 Ducts and air transfer openings. Penetrations of fire-resistance-rated walls by ducts that are not protected with *dampers* shall comply with Sections 714.2 through 714.3.3. Penetrations of *horizontal assemblies* not protected with a shaft as permitted by Section 717.6, and not required to be protected with fire *dampers* by other sections of this code, shall comply with Sections 714.4 through 714.5.2. Ducts and air transfer openings that are protected with *dampers* shall comply with Section 717.

❖ Duct penetrations are typically protected with fire and smoke dampers in accordance with Section 717.5. However, if the code does not require them and the designer does not provide such dampers, as it may interfere with the system design, Section 714.1.1 allows for such removal, provided the penetration is protected as part of a tested assembly (see Section 714.3.1.1) or is protected with some type of through-penetration firestop system (see Section 714.3.1.2).

This section coordinates with Section 717.1.2, which states the appropriate section to go to in order to determine the proper protection for ducts when they penetrate a fire-resistance-rated wall assembly. Where ducts or air transfer openings penetrate a fire-resistance-rated wall assembly, fire dampers can be installed to maintain the rating of the assembly as required by Section 717. However, in addition to maintaining the fire-resistant integrity of the floor, wall or roof/ceiling assembly, the damper also serves an additional function as an active component of the fire management design. Unlike through-penetration firestop systems, fire dampers can restrict the spread of fire through the air duct system within a building to areas remote from the fire or into a building from the outside. In addition, the air duct system can be used for the purpose of emergency smoke control, either manually or automatically. Although fire dampers and through-penetration firestop systems both are intended to maintain the rating of the assembly at the point where an opening occurs for the ventilation system, they are not optional or equivalent alternatives for one another.

The placement (or the elimination) of fire dampers within the ventilation system is based on additional factors other than the point at which the duct penetrates a fire-resistance-rated assembly.

Other sections of the code may permit fire dampers to be eliminated due to the installation of an automatic sprinkler system or the design may not include a fire damper to interface with the ventilation system and fire management design at specific locations. This section addresses the protection of the fire rating of the assembly when such conditions occur and provides that the duct penetration is protected as part of a tested assembly (see Section 714.3.1.1) or is protected with some type of through-penetration firestop system (see Section 714.3.1.1), tested and listed for use on ducts without fire dampers.

714.2 Installation details. Where sleeves are used, they shall be securely fastened to the assembly penetrated. The space between the item contained in the sleeve and the sleeve itself and any space between the sleeve and the assembly penetrated shall be protected in accordance with this section. Insulation and coverings on or in the penetrating item shall not penetrate the assembly unless the specific material used has been tested as part of the assembly in accordance with this section.

❖ Sleeves are typically installed when the opening penetrates an assembly with interior voids, such as a steel stud-framed wall. The sleeve must be securely fastened to the penetrated assembly to prevent the sleeve from becoming dislodged and adversely affecting the performance of the annular space protection. The space between the sleeve and the penetrating item, as well as between the sleeve and the rated assembly, must be protected in accordance with Section 714.3.1. Without attention to these conditions, a sleeved penetration may not perform as required by the code. A sleeve may also exist when a segment of plastic or metal pipe or tube is cast into a concrete floor, thus creating the needed opening for an anticipated penetration. In this case, the need for secure fastening to the underlying assembly is essentially guaranteed, and there would be no space needing to be sealed between the sleeve and the assembly being penetrated.

Section 714.3.1 requires that combustible penetrations be protected with assemblies that have been tested in accordance with ASTM E119 or UL 263 (see Section 714.3.1.1), or ASTM E814 or UL 1479 (see Section 714.3.1.2). If a sleeve is used in conjunction with the penetrating items, then the annular space within and around the sleeve must also be protected with materials that meet the conditions of the test standards. The purpose of this section is to provide the building official with the necessary text to enforce the conditions of the penetration protection standards.

If combustible insulation material or coverings on the penetrating item could provide a path for the line of fire to travel through the assembly, the method of protection must have also been fire tested using that specific type and thickness of insulation. This section clarifies that either the insulation or covering must be part of the tested assembly, whether the assembly was tested under ASTM E119 or UL 263 or is a through-penetration firestop system tested in accordance with ASTM E814 or UL 1479, or else the insulation or covering is not allowed to pass through the penetration. In the latter case, the insulation or covering should be removed from the penetrated item at the point of penetration through the fire-resistance-rated assembly, assuming that the removal would not cause other problems and that the removal would be

INTERNATIONAL CODE COUNCIL®
Copyright © 2015 ICC. ALL RIGHTS RESERVED. Accessed by David Dammon on Jun 21, 2017 12:30:52 PM pursuant to License Agreement with ICC. No further reproduction or distribution authorized. ANY UNAUTHORIZED REPRODUCTION OR DISTRIBUTION IS A VIOLATION OF THE FEDERAL COPYRIGHT ACT AND THE LICENSE AGREEMENT, AND SUBJECT TO CIVIL AND CRIMINAL PENALTIES THEREUNDER.

compliant with other applicable codes [e.g., IMC or *International Plumbing Code*® (IPC®)].

714.3 Fire-resistance-rated walls. Penetrations into or through *fire walls*, *fire barriers*, *smoke barrier* walls and *fire partitions* shall comply with Sections 714.3.1 through 714.3.3. Penetrations in *smoke barrier* walls shall also comply with Section 714.4.4.

❖ In order to maintain the integrity of the fire-resistance-rated wall assembly (fire walls, fire barriers, smoke barriers and fire partitions), penetrations into and through the rated assembly must be properly protected. Acceptable protection methods for various penetrations of wall assemblies are identified in Sections 714.3.1 through 714.3.3. Additionally, penetrations of smoke barriers are required to meet the test requirements for air leakage given in Section 714.4.4.

714.3.1 Through penetrations. Through penetrations of fire-resistance-rated walls shall comply with Section 714.3.1.1 or 714.3.1.2.

Exception: Where the penetrating items are steel, ferrous or copper pipes, tubes or conduits, the *annular space* between the penetrating item and the fire-resistance-rated wall is permitted to be protected by either of the following measures:

1. In concrete or masonry walls where the penetrating item is a maximum 6-inch (152 mm) nominal diameter and the area of the opening through the wall does not exceed 144 square inches (0.0929 m^2), concrete, grout or mortar is permitted where installed the full thickness of the wall or the thickness required to maintain the *fire-resistance rating*.
2. The material used to fill the *annular space* shall prevent the passage of flame and hot gases sufficient to ignite cotton waste when subjected to ASTM E119 or UL 263 time-temperature fire conditions under a minimum positive pressure differential of 0.01 inch (2.49 Pa) of water at the location of the penetration for the time period equivalent to the *fire-resistance rating* of the construction penetrated.

❖ Combustible cables, wires, pipes, tubes and conduits that penetrate fire-resistance-rated walls are required to be properly protected [see Commentary Figures 714.3.1(1) and 714.3.1(2)]. These penetrations are required to be tested in accordance with ASTM E119 or UL 263 (see Section 714.3.1.1) or ASTM E814 or UL 1479 (see Section 714.3.1.2).

Because combustible materials have a greater propensity to spread fire through a penetration, the requirements for combustible penetrating items are considerably more restrictive than for noncombustible penetrating items, to which the exception can apply. Penetration of fire-resistance-rated walls by cables, wires, pipes, tubes, conduits and vents represents a weak link in the continuity of the required fire-resistance rating. These penetrations are to be protected with materials that will maintain the integrity of the wall for the duration of the required fire-resistance rating. In lieu of a system tested in accordance with ASTM E119 or UL 263 (see Section 714.3.1.1), or ASTM E814 or UL 1479 (see Section 713.3.1.2), penetrations with steel, ferrous or copper pipes, tubes or conduits may be protected by filling the annular space. Annular space protection is permitted for the protection of penetrations of wall assemblies by only the mentioned noncombustible items. "Annular space" is defined in Section 202 as the perimeter space between the penetrating item and the rated assembly. If sleeves are used, the annular space includes the space between the penetrating item and the sleeve, as well as the space between the sleeve and the rated assembly [see Commentary Figure 714.3.1(3)]. Item 1 of the exception permits the use of

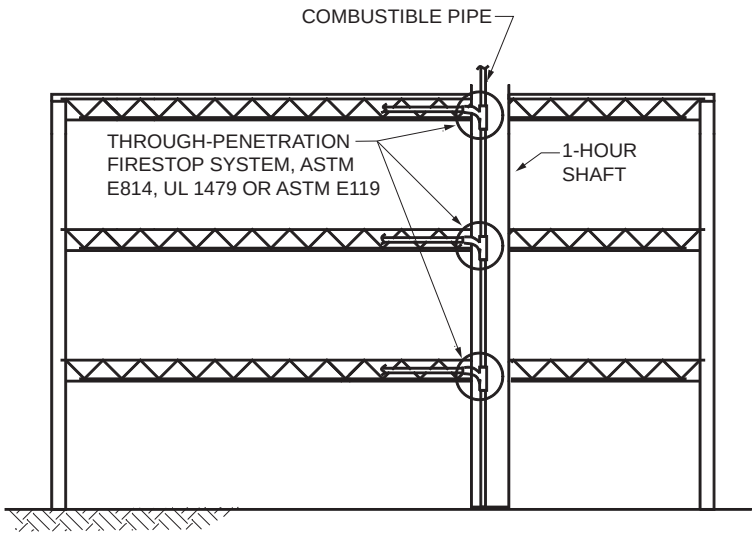

Figure 714.3.1(1)
VERTICAL SHAFTS—COMBUSTIBLE PENETRATIONS

INTERNATIONAL CODE COUNCIL®
Copyright © 2015 ICC. ALL RIGHTS RESERVED. Accessed by David Dammon on Jun 21, 2017 12:30:52 PM pursuant to License Agreement with ICC. No further reproduction or distribution authorized. ANY UNAUTHORIZED REPRODUCTION OR DISTRIBUTION IS A VIOLATION OF THE FEDERAL COPYRIGHT ACT AND THE LICENSE AGREEMENT, AND SUBJECT TO CIVIL AND CRIMINAL PENALTIES THEREUNDER.

concrete, grout or mortar to provide annular space protection for certain penetrations of concrete and masonry wall assemblies. The concrete, grout or mortar must be provided for the full thickness of the wall, unless evidence can be provided that demonstrates that the required fire-resistance rating can be achieved with a lesser depth.

Concrete, grout and mortar have traditionally been

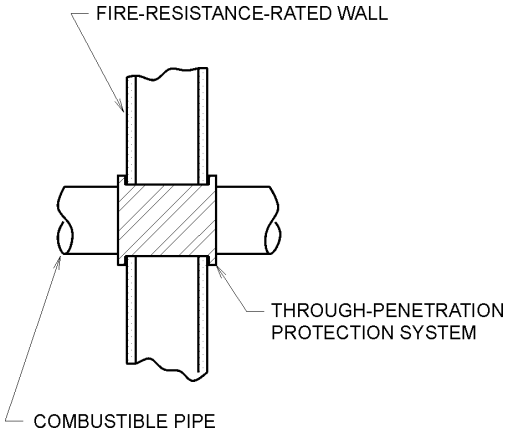

Figure 714.3.1(2)
COMBUSTIBLE PIPE PENETRATION OF FIRE-RESISTANCE-RATED WALL

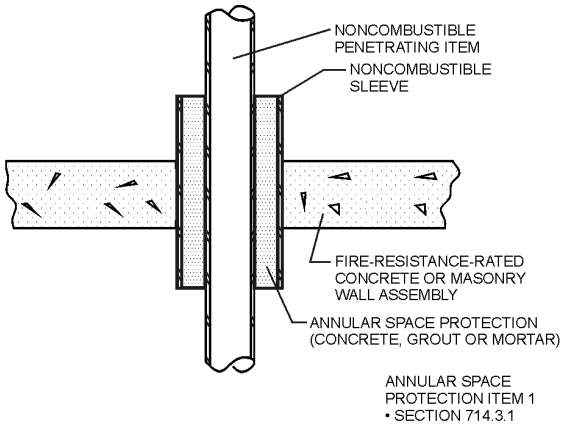

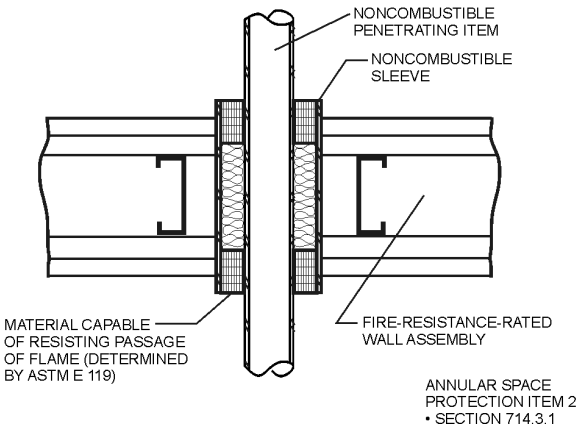

Figure 714.3.1(3)
EXAMPLES OF ANNULAR SPACE PROTECTION

INTERNATIONAL CODE COUNCIL®
Copyright © 2015 ICC. ALL RIGHTS RESERVED. Accessed by David Dammon on Jun 21, 2017 12:30:52 PM pursuant to License Agreement with ICC. No further reproduction or distribution authorized. ANY UNAUTHORIZED REPRODUCTION OR DISTRIBUTION IS A VIOLATION OF THE FEDERAL COPYRIGHT ACT AND THE LICENSE AGREEMENT, AND SUBJECT TO CIVIL AND CRIMINAL PENALTIES THEREUNDER.

used as protection for the annular space in penetrations of concrete and masonry walls. Experience has shown this form of protection to be viable.

Under Item 2 of the exception, because the penetrating items are limited and the annular space protection is not based on specific performance testing of each penetration arrangement and detail, the performance of the protection is dependent on the annular space protection material alone. As such, for walls other than concrete or masonry, Item 2 requires that the material be prequalified as to its ability to prevent the passage of flame and hot gases sufficient to ignite cotton waste when subjected to the time-temperature criteria of ASTM E119 or UL 263. This is consistent with the criteria required for through-penetration protection systems (ASTM E814 or UL 1479) in which the T rating is not required. Since it is very likely that the penetration in an actual fire will be exposed to a positive pressure, this section specifies that the test fire exposure include a positive pressure of 0.01 inch (0.25 mm) of water column as a further means to verify the performance of this protection method as required by the code.

714.3.1.1 Fire-resistance-rated assemblies. Penetrations shall be installed as tested in an *approved* fire-resistance-rated assembly.

❖ This section requires, as an option, that the tested assembly in accordance with ASTM E119 or UL 263 include the penetrations along with the proposed type of protection. In other words, the entire assembly is tested. As an option, this section is not used frequently due to the limitations placed on the tested assembly relative to its application. Penetration protection is most often provided in accordance with the exception to Section 714.3.1 and the provisions of Section 714.3.1.2.

714.3.1.2 Through-penetration firestop system. *Through penetrations* shall be protected by an *approved* penetration firestop system installed as tested in accordance with ASTM E814 or UL 1479, with a minimum positive pressure differential of 0.01 inch (2.49 Pa) of water and shall have an F rating of not less than the required *fire-resistance rating* of the wall penetrated.

❖ In order to maintain effective compartmentation of a building to restrict the spread of fire, all penetrations through fire-resistance-rated assemblies must be protected. In recent history, there have been several examples of buildings where extensive fire damage and loss of life was attributed, at least in part, to lack of or improper installation of penetration protection. In the absence of a through-penetration firestop system to protect penetrations of fire-resistance-rated assemblies, the potential exists for fire to spread beyond the initial area of fire origin. One report on the source of origin of fires in buildings indicated that 23 percent of all building fires originate from electrical systems. This fact, coupled with the number of penetrations through walls and floors created by electrical distribution piping, helps to underscore the necessity for the protection of all penetrations through rated assemblies. It must be noted that penetrations are not limited to electrical systems only, but that openings to accommodate plumbing and mechanical systems also contribute to the number of penetrations through any given assembly.

A through-penetration firestop system consists of specific materials or an assembly of materials that are designed to restrict the passage of fire and hot gases for a prescribed period of time through openings made in fire-resistance-rated walls or horizontal assemblies. In certain instances, the through-penetration firestop system is also required to limit the transfer of heat from the fire side to the unexposed side. In order to determine the effectiveness of a through-penetration firestop system in restricting the passage of fire and the transfer of heat, firestop systems are required to be subjected to fire testing. ASTM E814 and UL 1479 are the test methods developed specifically for the evaluation of a firestop system's ability to resist the passage of flame and hot gases, withstand thermal stresses and restrict transfer of heat through the penetrated assembly.

The basic provisions of ASTM E814 and UL 1479 require that a test assembly consisting of a specific wall or floor construction, containing through penetrations of various types and sizes, be constructed. The through-penetration firestop system to be tested is installed in accordance with the manufacturer's instructions around the penetrations. The test assembly is then exposed to a test fire that corresponds to the time-temperature curve established by ASTM E119 or UL 263 (see the commentary to Section 703.2 for more discussion on ASTM E119 or UL 263). After the fire test exposure, the through-penetration firestop system is subjected to a hose stream, which evaluates the ability of the through-penetration firestop system to resist the effects of erosion and thermal shock. After completion of the ASTM E814 or UL 1479 procedure, two ratings for the test subject are established, which indicate how the test specimen withstands exposure to the test fire for a specified period of time.

Ratings for the through-penetration firestop system are generated based on the results of the testing, and are reported as an F (flame) rating and a T (temperature) rating. The F rating indicates the period of time, in hours, the tested through-penetration firestop system remained in place without allowing the passage of fire during exposure or water during the hose stream. The T rating indicates the time, in hours, it took for the temperature, as recorded by thermocouples placed at specified locations on the unexposed side of the test assembly, to reach 325°F (162°C) above ambient. It must be noted that in order to obtain a T rating, the system must first obtain an F rating. F ratings are required for all through-penetration firestop systems and must be equal to the fire-resistance rating of the assembly penetrated. A T rating is not required for wall penetrations, but a mini-

INTERNATIONAL CODE COUNCIL®
Copyright © 2015 ICC. ALL RIGHTS RESERVED. Accessed by David Dammon on Jun 21, 2017 12:30:52 PM pursuant to License Agreement with ICC. No further reproduction or distribution authorized. ANY UNAUTHORIZED REPRODUCTION OR DISTRIBUTION IS A VIOLATION OF THE FEDERAL COPYRIGHT ACT AND THE LICENSE AGREEMENT, AND SUBJECT TO CIVIL AND CRIMINAL PENALTIES THEREUNDER.

mum of 1 hour is required where the through-penetration firestop system is installed in a floor assembly where the penetrating item is a pipe, tube or conduit that is in direct contact with a combustible material. This requirement is intended to minimize the potential for ignition of the combustible material on the unexposed side of the assembly due to elevated temperatures transmitted via the pipe, tube or conduit.

An ASTM International (ASTM) standard practice is available that can be used in cases where a standardized methodology is desired for the inspection of installed through-penetration firestop systems. Such a standardized procedure can be particularly useful in cases where a third-party inspection firm is used. ASTM E2174, *Standard Practice for On-site Inspection of Installed Firestops*, includes items such as preconstruction meetings to review submittals, details, variances, building mock-ups for destructive testing and scheduling witnessed inspection of a specified percentage of installations or conducting destructive testing on a specified percentage of installations. This standard practice also identifies what actions should be taken based on the percentage of noncompliant installations identified, as well as providing a standardized reporting form.

Two of the most common types of materials used in through-penetration firestop systems are intumescent and endothermic materials. Intumescent materials expand to approximately eight to 10 times their original volume when exposed to temperatures exceeding 250°F (121°C). The expansion of the material fills the voids or openings within the penetration to resist the passage of flame, while the outer layer of the expanded intumescent material forms an insulating charred layer that assists in limiting the transfer of heat. The expansion properties of intumescent materials allow them to seal openings left by combustible penetrating items that burn away during a fire, but do not retard heat as well as endothermic materials. Intumescent materials are typically used with combustible penetrating items or where a higher T rating is not required.

Endothermic materials provide protection through chemically bound water released in the form of steam when exposed to temperatures exceeding 600°F (316°C). This released water provides a cooling of the penetration and retards heat transfer through the penetration. Endothermic materials tend to be superlatively resistant to heat transfer and have higher T ratings, but do not expand to fill voids left by combustible penetrating items that burn away during a fire. Endothermic materials are, therefore, typically used with noncombustible penetrating items and where a higher T rating is required.

714.3.2 Membrane penetrations. Membrane penetrations shall comply with Section 714.3.1. Where walls or partitions are required to have a *fire-resistance rating*, recessed fixtures shall be installed such that the required fire resistance will not be reduced.

Exceptions:

1. Membrane penetrations of maximum 2-hour fire-resistance-rated walls and partitions by steel electrical boxes that do not exceed 16 square inches (0.0 103 m^2) in area, provided the aggregate area of the openings through the membrane does not exceed 100 square inches (0.0645 m^2) in any 100 square feet (9.29 m^2) of wall area. The *annular space* between the wall membrane and the box shall not exceed $^1/_8$ inch (3.2 mm). Such boxes on opposite sides of the wall or partition shall be separated by one of the following:
   1.1. By a horizontal distance of not less than 24 inches (610 mm) where the wall or partition is constructed with individual noncommunicating stud cavities;
   1.2. By a horizontal distance of not less than the depth of the wall cavity where the wall cavity is filled with cellulose loose-fill, rockwool or slag mineral wool insulation;
   1.3. By solid fireblocking in accordance with Section 718.2.1;
   1.4. By protecting both outlet boxes with *listed* putty pads; or
   1.5. By other *listed* materials and methods.
2. Membrane penetrations by *listed* electrical boxes of any material, provided such boxes have been tested for use in fire-resistance-rated assemblies and are installed in accordance with the instructions included in the listing. The *annular space* between the wall membrane and the box shall not exceed $^1/_8$ inch (3.2 mm) unless *listed* otherwise. Such boxes on opposite sides of the wall or partition shall be separated by one of the following:
   2.1. By the horizontal distance specified in the listing of the electrical boxes;
   2.2. By solid fireblocking in accordance with Section 718.2.1;
   2.3. By protecting both boxes with *listed* putty pads; or
   2.4. By other *listed* materials and methods.
3. Membrane penetrations by electrical boxes of any size or type, that have been *listed* as part of a wall opening protective material system for use in fire-resistance-rated assemblies and are installed in accordance with the instructions included in the listing.
4. Membrane penetrations by boxes other than electrical boxes, provided such penetrating items and the *annular space* between the wall membrane and the box, are protected by an *approved mem-*

INTERNATIONAL CODE COUNCIL®
Copyright © 2015 ICC. ALL RIGHTS RESERVED. Accessed by David Dammon on Jun 21, 2017 12:30:52 PM pursuant to License Agreement with ICC. No further reproduction or distribution authorized. ANY UNAUTHORIZED REPRODUCTION OR DISTRIBUTION IS A VIOLATION OF THE FEDERAL COPYRIGHT ACT AND THE LICENSE AGREEMENT, AND SUBJECT TO CIVIL AND CRIMINAL PENALTIES THEREUNDER.

brane penetration firestop system installed as tested in accordance with ASTM E814 or UL 1479, with a minimum positive pressure differential of 0.01 inch (2.49 Pa) of water, and shall have an F and T rating of not less than the required *fire-resistance rating* of the wall penetrated and be installed in accordance with their listing.

5. The *annular space* created by the penetration of an automatic sprinkler, provided it is covered by a metal escutcheon plate.
6. Membrane penetrations of maximum 2-hour *fire resistance-rated* walls and partitions by steel electrical boxes that exceed 16 square inches (0.0 103 m^2) in area, or steel electrical boxes of any size having an aggregate area through the membrane exceeding 100 square inches (0.0645 m^2) in any 100 square feet (9.29 m^2) of wall area, provided such penetrating items are protected by listed putty pads or other listed materials and methods, and installed in accordance with the listing.

❖ "Membrane penetrations" are defined in Section 202 as "a breach in one side of a floor/ceiling, roof/ceiling or wall assembly to accommodate an item installed into or passing through the breach." Therefore they are different from a through penetration in that they do not pass through the entire assembly. Membrane penetrations are treated similarly to through penetrations. Specifically, noncombustible conduits, pipes and tubes that penetrate only one membrane of a fire-resistance-rated wall assembly are required to have the annular space protected in accordance with Section 714.3.1 or comply with the exception of that section. Combustible penetrations through only one membrane of a wall assembly would require either a tested assembly (see Section 714.3.1.1) or a through-penetration firestop system that complies with Section 714.3.1.2 for the penetrated membrane.

Penetrations, such as electrical outlet boxes, can affect the fire-resistance rating of an assembly. The criteria in Exception 1 [see Commentary Figure 714.3.2(1)] limits the size of steel electrical outlet boxes [16 square inches (.0103 m^2)] and the amount allowed in a 100-square-foot (9.3 m^2) area [100 square inches (0.0645 m^2)]. Although not directly stated in the code, based on the supporting text in one of the legacy codes, when membrane penetrations of electrical outlet boxes were first regulated in 1979, it would appear that the original intent was to permit 100 square inches (0.0645 m^2) of openings on each side of a 100-square-foot (9.3 m^2) wall section. These criteria are consistent with the criteria determined from fire tests that have generally shown that, within these limitations, these penetrations will not adversely affect the fire-resistance rating of the wall. The design information section of the *UL Fire Resistance Directory* states that the opening in a wallboard facing is to be cut such that the clearance between the box and the wallboard does not exceed $^1/_8$ inch (3.2 mm).

Electrical outlet boxes of steel or materials other

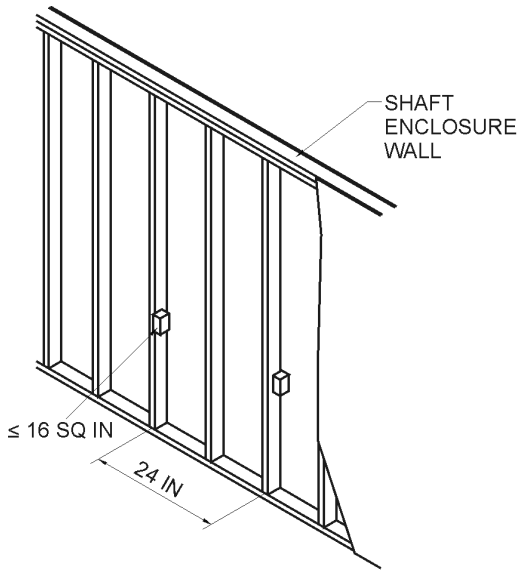

AGGREGATE AREA OF OUTLET BOXES MUST NOT EXCEED 100 SQ IN PER 100 SQ FT OF WALL AREA OR SHAFT ENCLOSURE WALL AREA.

For SI: 1 inch = 25.4 mm, 1 square inch = 645 mm^2.

Figure 714.3.2(1)
OUTLET BOXES IN RATED ASSEMBLIES

INTERNATIONAL CODE COUNCIL®
Copyright © 2015 ICC. ALL RIGHTS RESERVED. Accessed by David Dammon on Jun 21, 2017 12:30:52 PM pursuant to License Agreement with ICC. No further reproduction or distribution authorized. ANY UNAUTHORIZED REPRODUCTION OR DISTRIBUTION IS A VIOLATION OF THE FEDERAL COPYRIGHT ACT AND THE LICENSE AGREEMENT, AND SUBJECT TO CIVIL AND CRIMINAL PENALTIES THEREUNDER.

than steel (see Exception 2) can be utilized in the fire-resistance-rated wall if they have been specifically tested as part of a fire-resistance-rated assembly. Steel outlet boxes that exceed the size limitations of Exception 1 would also require the same prequalification by testing. Exceptions 1 and 2 also allow electrical boxes on opposite sides of the wall if they meet one of several criteria, such as separation by a horizontal distance of 24 inches (610 mm).

Exception 3 relates to electrical boxes listed as part of an assembly by a testing agency. Certification and listing agencies have published listings covering proprietary compositions that are used to maintain the hourly ratings of fire-resistant walls and partitions incorporating flush-mounted devices, such as outlet boxes, electrical cabinets and mechanical cabinets penetrating membranes of fire-resistance-rated assemblies. The individual systems indicate the specific applications and the method of installation for which the materials have been evaluated. The basic standards used to investigate these products are UL 263 and ASTM E119. For example, UL classifies these materials and systems as "wall opening protective materials." This category includes classifications for both generic steel electrical boxes as well as specific types and models of outlet and switch boxes composed of other materials, all listed for specific usage in fire-resistance-rated wall assemblies. The UL listings for wall opening protective materials indicate that, depending upon the testing conducted for the individual listing, their use can allow for any combination of: 1. Reducing the spacing between boxes contained on opposite sides of the wall; 2. Increasing the size of the boxes; 3. Increasing the density of the boxes; and 4. Allowing the use of boxes on each side of staggered stud walls. Because these systems are tested for the specific end-use applications, the individual and aggregate restrictions on maximum sizes and quantities [i.e., 16 square inches (10 322 mm^2) for an individual box, and the aggregate maximum of 100 square inches (64 516 mm^2) per 100 square feet (9.3 m^2)] are not required for these systems to maintain the fire-resistance ratings of the assemblies penetrated.

Exception 4 creates a direct parallel between the requirements for electrical outlet boxes and other membrane penetration boxes, such as dryer exhaust boxes, washing machine hose connection boxes, fire or police alarm boxes, manual fire alarm boxes, switch boxes, valve boxes, special purpose boxes, electrical panels and hose cabinets. The protection systems are to be tested for use in fire-resistance-rated assemblies and installed in accordance with the instructions included in the listings. Because these utility boxes can exceed 100 square inches (64 516 mm^2) aggregate area, however, both an F and T rating are required in order to be directly equivalent to the fire-resistance rating of the assemblies penetrated. Given that these are membrane penetrations, there is a greater likelihood that someone could unknowingly place or store combustible materials, potentially even furniture and bedding, directly in contact with the unpenetrated membrane on the opposite side of the wall. This could significantly increase threat of a fire spread. The information provided for each classification would include the model numbers for the products, a description of the rated assemblies, the spacing limitations for the boxes and the installation details.

Exception 5 provides an alternative to the annular space protection provisions of Section 714.3.1 for fire sprinklers that penetrate a single membrane, provided that the annular space around the fire sprinkler head or fitting is completely covered by an escutcheon plate of noncombustible material [see Commentary Figure 714.3.2(2)]. The nature of the hazard posed by single membrane penetrations of sprinkler piping is limited due to the size of the opening, the potential amount of openings and the presence of a sprinkler system. The installation of a noncombustible escutcheon provides protection against free passage of fire through the annular space as well as allowing for the movement of sprinkler piping without breaking during a seismic event. These provisions correlate with the requirements of the National Earthquake Hazard Reduction Program (NEHRP) provisions recommended by the Building Seismic Safety Council (BSSC) for installation of sprinkler systems to resist seismic forces. Wall-mounted sprinkler heads installed back to back in fire-resistance-rated walls would be treated as through penetrations and not membrane penetrations.

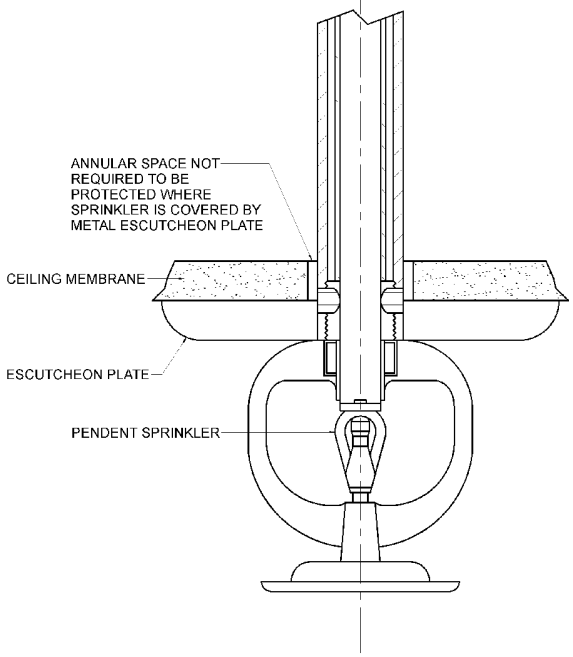

Figure 714.3.2(2)
EXCEPTION TO ANNULAR SPACE PROTECTION

INTERNATIONAL CODE COUNCIL®
Copyright © 2015 ICC. ALL RIGHTS RESERVED. Accessed by David Dammon on Jun 21, 2017 12:30:52 PM pursuant to License Agreement with ICC. No further reproduction or distribution authorized. ANY UNAUTHORIZED REPRODUCTION OR DISTRIBUTION IS A VIOLATION OF THE FEDERAL COPYRIGHT ACT AND THE LICENSE AGREEMENT, AND SUBJECT TO CIVIL AND CRIMINAL PENALTIES THEREUNDER.

Exception 6 reflects a common practice. This exception permits an additional allowance for steel electrical boxes exceeding 16 square inches (0.0 103 m^2) in size, and exceeding an aggregate area through the membrane of 100 square inches (0.0645 m^2) in any 100 square feet (9.29 m^2) of wall area based on testing and listing of the protection methods. The protection methods include putty pads or other such listed materials installed consistent with the listing.

714.3.3 Dissimilar materials. Noncombustible penetrating items shall not connect to combustible items beyond the point of firestopping unless it can be demonstrated that the fire-resistance integrity of the wall is maintained.

❖ This section limits the common practice of using a short metal nipple to penetrate a rated assembly, firestopping for the metal penetration (which is substantially less expensive than firestopping for plastic) and then connecting to plastic pipe or conduit on the room side of the wall. Arguably, there is a distance at which such connection is safe. However, this distance is variable and cannot be specified in the body of the code, hence the requirement for demonstration of fire-resistance integrity. An identical provision is found in Section 714.4.3 regarding penetrations of horizontal assemblies.

714.4 Horizontal assemblies. Penetrations of a *fire-resistance-rated* floor, floor/ceiling assembly or the ceiling membrane of a roof/ceiling assembly not required to be enclosed in a shaft by Section 712.1 shall be protected in accordance with Sections 714.4.1 through 714.4.4.

❖ Penetrations of horizontal assemblies are required to be protected by a shaft enclosure unless otherwise exempted by Section 712.1. The acceptable methods by which a floor or roof assembly can be interrupted by a penetration are identified in Sections 714.4.1 through 714.4.4.

As noted in the commentary to Section 711, roof construction that is required to have a fire-resistance rating is intended to minimize the threat of premature structural failure of the roof construction under fire conditions and not to create a barrier to contain fire within the building. Section 7112.1.15 permits unprotected penetrations in fire-resistance-rated roof assemblies, provided that the structural integrity of the roof assembly is not reduced.

714.4.1 Through penetrations. Through penetrations of *horizontal assemblies* shall comply with Section 714.4.1.1 or 714.4.1.2.

Exceptions:

1. Penetrations by steel, ferrous or copper conduits, pipes, tubes or vents or concrete or masonry items through a single fire-resistance-rated floor assembly where the *annular space* is protected with materials that prevent the passage of flame and hot gases sufficient to ignite cotton waste when subjected to ASTM E119 or UL 263 time-temperature fire conditions under a minimum positive pressure differential of 0.01 inch (2.49 Pa) of water at the location of the penetration for the time period equivalent to the *fire-resistance rating* of the construction penetrated. Penetrating items with a maximum 6-inch (152 mm) nominal diameter shall not be limited to the penetration of a single fire-resistance-rated floor assembly, provided the aggregate area of the openings through the assembly does not exceed 144 square inches (92 900 mm^2) in any 100 square feet (9.3 m^2) of floor area.
2. Penetrations in a single concrete floor by steel, ferrous or copper conduits, pipes, tubes or vents with a maximum 6-inch (152 mm) nominal diameter, provided the concrete, grout or mortar is installed the full thickness of the floor or the thickness required to maintain the *fire-resistance rating*. The penetrating items shall not be limited to the penetration of a single concrete floor, provided the area of the opening through each floor does not exceed 144 square inches (92 900 mm^2).
3. Penetrations by *listed* electrical boxes of any material, provided such boxes have been tested for use in fire-resistance-rated assemblies and installed in accordance with the instructions included in the listing.

❖ The code addresses the penetration of fire-resistance-rated horizontal separations in much the same way as penetrations through vertical assemblies. Specifically, the penetrations are required to either be part of a total assembly or be protected with a through-penetration firestop system (see commentary, Section 714.3.1).

Exception 1 is similar to Item 2 of the exception to Section 714.3.1. This exception allows the noncombustible penetrating item to connect two stories (penetrate one floor), regardless of the size of the penetrating item [see Commentary Figure 714.4.1(1)]. Where the size of the individual penetration [6-inch diameter (152 mm)] and the aggregate area [144 square inches (0.095 m^2)] is limited in any 100 square feet (9.3 m^2), the code allows such penetrations of noncombustible construction to be through an unlimited number of floors.

Exception 2 allows a 6-inch-diameter (152 mm) penetration through a concrete floor similar to Item 1 in the exception to Section 714.3.1. Where the area of the penetration is limited to 144 square inches (0.095 mm^2), such a penetration is permitted to be through an unlimited number of floors [see Commentary Figure 714.4.1(2) for methods of annular space protection for Exceptions 1 and 2].

Exception 3 mirrors Exception 2 to Section 714.3.2 for membrane penetrations, but is applicable to through penetrations of a horizontal assembly, provided the outlet box has been tested.

INTERNATIONAL CODE COUNCIL®
Copyright © 2015 ICC. ALL RIGHTS RESERVED. Accessed by David Dammon on Jun 21, 2017 12:30:52 PM pursuant to License Agreement with ICC. No further reproduction or distribution authorized. ANY UNAUTHORIZED REPRODUCTION OR DISTRIBUTION IS A VIOLATION OF THE FEDERAL COPYRIGHT ACT AND THE LICENSE AGREEMENT, AND SUBJECT TO CIVIL AND CRIMINAL PENALTIES THEREUNDER.

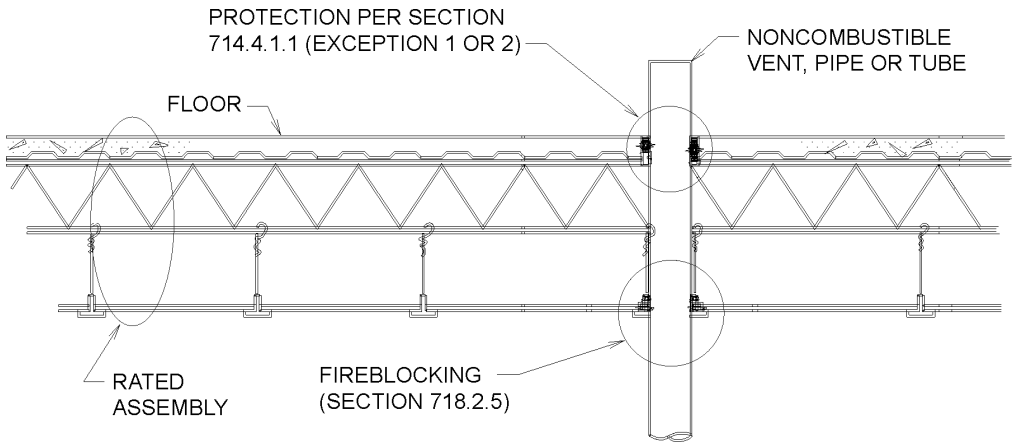

Figure 714.4.1(1)
NONCOMBUSTIBLE PENETRATION OF A HORIZONTAL ASSEMBLY

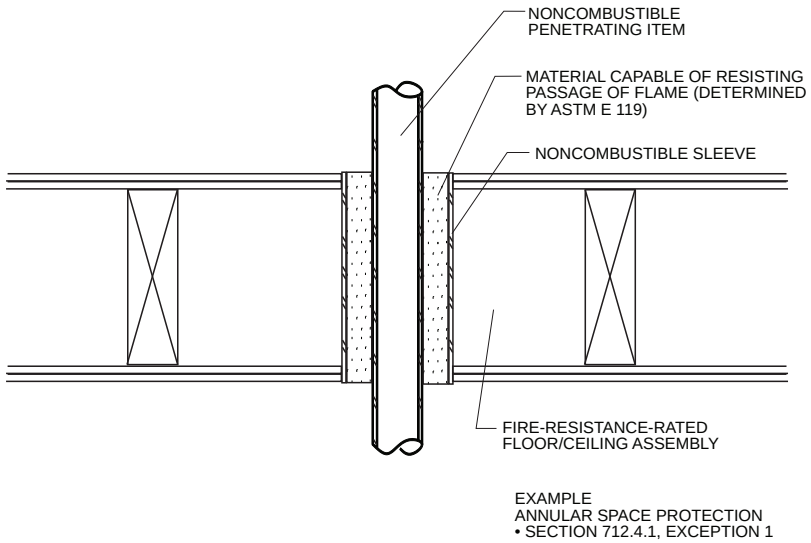

Figure 714.4.1(2)
EXAMPLES OF ANNULAR SPACE PROTECTION WITH SLEEVES

INTERNATIONAL CODE COUNCIL®
Copyright © 2015 ICC. ALL RIGHTS RESERVED. Accessed by David Dammon on Jun 21, 2017 12:30:52 PM pursuant to License Agreement with ICC. No further reproduction or distribution authorized. ANY UNAUTHORIZED REPRODUCTION OR DISTRIBUTION IS A VIOLATION OF THE FEDERAL COPYRIGHT ACT AND THE LICENSE AGREEMENT, AND SUBJECT TO CIVIL AND CRIMINAL PENALTIES THEREUNDER.

714.4.1.1 Installation. *Through penetrations* shall be installed as tested in the *approved* fire-resistance-rated assembly.

❖ This section addresses membrane penetrations that were tested as a part of the normal fire test of the assembly (see commentary, Section 714.3.1.1).

714.4.1.2 Through-penetration firestop system. *Through penetrations* shall be protected by an *approved through-penetration firestop system* installed and tested in accordance with ASTM E814 or UL 1479, with a minimum positive pressure differential of 0.01 inch of water (2.49 Pa). The system shall have an F rating/T rating of not less than 1 hour but not less than the required rating of the floor penetrated.

Exceptions:

1. Floor penetrations contained and located within the cavity of a wall above the floor or below the floor do not require a T rating.
2. Floor penetrations by floor drains, tub drains or shower drains contained and located within the concealed space of a horizontal assembly do not require a T rating.
3. Floor penetrations of maximum 4-inch (102 mm) nominal diameter penetrating directly into metal-enclosed electrical power switchgear do not require a T rating.

❖ This section differs slightly from Section 714.3.1.2 for wall penetrations in that a T rating is required for penetrations of horizontal assemblies, but is not required for penetrations of wall assemblies (see commentary, Section 714.3.1.2).

When permitted as an alternative to a shaft enclosure, cables, cable trays, conduits, tubes and pipes may penetrate a floor assembly when an approved through-penetration firestop system is used. An approved through-penetration firestop system is one that has been tested in accordance with ASTM E814 or UL 1479. The test method determines the performance of the protection system with respect to exposure to a standard time-temperature fire and hose stream test. The performance of the protection system is dependent on the specific assembly of materials tested, including the number, type and size of penetrations and the types of floors or walls in which it is installed. It should also be noted that tests have been conducted at various pressure differentials; however, the current criterion used is 0.01 inch (2.49 Pa) of water gauge, and only tests with such minimum pressure throughout the test period are to be accepted. In evaluating test reports, the building official must determine that the tested assembly is truly representative of the manner in which the system is to be installed. It should be noted that the ASTM E814 and UL 1479 test establishes two ratings: the F rating, which identifies the ability of the material to resist the passage of flame, and the T rating, which identifies the thermal transmission characteristics of the material or assembly. Exception 1 is intended to set aside the T-rating requirement where the penetrating item is located in a cavity of a wall and is separated from contact with adjacent materials in the occupiable floor area.

Exception 2 allows floor penetrations for plumbing drains located within a concealed horizontal assembly without a T rating. Meeting the T-rating requirement can be very challenging for penetrants that are metallic and therefore conduct heat. A through-penetration firestop system for such penetrants would not typically meet the T-rating requirement simply by sealing the penetrant within the floor. Additional insulation or covering of the through penetrant is typically required above and below the floor to prevent heat transmission via the penetrant. Listings for through-penetration firestop systems will indicate the T rating obtained for any specific system. Commentary Figure 714.4.1.2 shows an example of typical firestop details that would be needed for a cable bundle to meet the T rating requirement of Section 714.4.1.2. For other types of metallic penetrants, listed systems with suitable T ratings would typically have insulation wrapped around the penetrant for some distance above and below the floor.

Exception 3 permits an additional exception for metallic EMT or conduit penetrating a horizontal assembly that directly enters a metal-enclosed power switchgear assembly. The *National Electrical Code* (NEC) defines a metal-enclosed power switchgear as a switchgear assembly completely enclosed on all sides and top with sheet metal (except for ventilating openings and inspection windows), and containing primary power circuit switching, interrupting devices or both, with buses and connections. The assembly may include control and auxiliary devices. Access to the interior of the enclosure is provided by doors, removable covers or both. These devices consist of a substantial metal structure and a sheet metal enclosure. The NEC further requires that, where installed over a combustible floor, suitable protection to the floor and clearances for cable conductors entering these enclosures must be provided. The unobstructed space opposite terminals or raceways or cables entering a switchgear or control assembly must be adequate for the type of conductor and method of termination. Because the penetrating item (EMT) goes through the floor and enters directly into these robust enclosures, it is reasonable to provide an exemption to the T-rating requirements of the code in these conditions.

714.4.2 Membrane penetrations. Penetrations of membranes that are part of a *horizontal assembly* shall comply with Section 714.4.1.1 or 714.4.1.2. Where floor/ceiling assemblies are required to have a *fire-resistance rating*, recessed fixtures shall be installed such that the required *fire resistance* will not be reduced.

Exceptions:

1. *Membrane penetrations* by steel, ferrous or copper conduits, pipes, tubes or vents, or concrete or masonry items where the *annular space* is protected

INTERNATIONAL CODE COUNCIL®
Copyright © 2015 ICC. ALL RIGHTS RESERVED. Accessed by David Dammon on Jun 21, 2017 12:30:52 PM pursuant to License Agreement with ICC. No further reproduction or distribution authorized. ANY UNAUTHORIZED REPRODUCTION OR DISTRIBUTION IS A VIOLATION OF THE FEDERAL COPYRIGHT ACT AND THE LICENSE AGREEMENT, AND SUBJECT TO CIVIL AND CRIMINAL PENALTIES THEREUNDER.

either in accordance with Section 714.4.1 or to prevent the free passage of flame and the products of combustion. The aggregate area of the openings through the membrane shall not exceed 100 square inches (64 500 mm^2) in any 100 square feet (9.3 m^2) of ceiling area in assemblies tested without penetrations.

2. Ceiling *membrane penetrations* of maximum 2-hour *horizontal assemblies* by steel electrical boxes that do not exceed 16 square inches (10 323 mm^2) in area, provided the aggregate area of such penetrations does not exceed 100 square inches (44 500 mm^2) in any 100 square feet (9.29 m^2) of ceiling area, and the *annular space* between the ceiling membrane and the box does not exceed $^1/_8$ inch (3.2 mm).
3. *Membrane penetrations* by electrical boxes of any size or type, that have been *listed* as part of an opening protective material system for use in *horizontal assemblies* and are installed in accordance with the instructions included in the listing.
4. *Membrane penetrations* by *listed* electrical boxes of any material, provided such boxes have been tested for use in fire-resistance-rated assemblies and are installed in accordance with the instructions included in the listing. The *annular space* between the ceiling membrane and the box shall not exceed $^1/_8$ inch (3.2 mm) unless *listed* otherwise.
5. The *annular space* created by the penetration of a fire sprinkler, provided it is covered by a metal escutcheon plate.

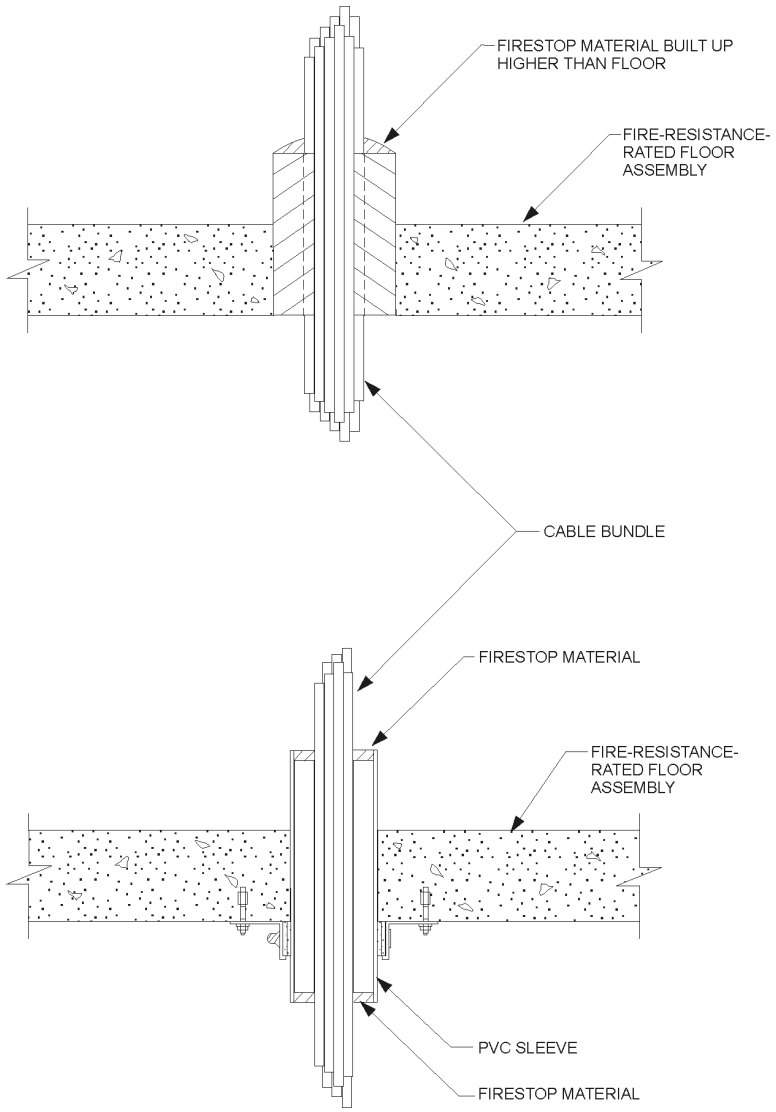

Figure 714.4.1.2
EXAMPLE OF CABLING THROUGH-PENETRATION FIRESTOP SYSTEM

INTERNATIONAL CODE COUNCIL®
Copyright © 2015 ICC. ALL RIGHTS RESERVED. Accessed by David Dammon on Jun 21, 2017 12:30:52 PM pursuant to License Agreement with ICC. No further reproduction or distribution authorized. ANY UNAUTHORIZED REPRODUCTION OR DISTRIBUTION IS A VIOLATION OF THE FEDERAL COPYRIGHT ACT AND THE LICENSE AGREEMENT, AND SUBJECT TO CIVIL AND CRIMINAL PENALTIES THEREUNDER.

6. Noncombustible items that are cast into concrete building elements and that do not penetrate both top and bottom surfaces of the element.
7. The ceiling membrane of 1- and 2-hour *fire-resistance-rated horizontal assemblies* is permitted to be interrupted with the double wood top plate of a wall assembly that is sheathed with Type X gypsum wallboard, provided that all penetrating items through the double top plates are protected in accordance with Section 714.4.1.1 or 714.4.1.2 and the ceiling membrane is tight to the top plates.

❖ Penetrations of fire-resistance-rated floor/ceiling and roof/ceiling assemblies that have a ceiling membrane as a component of the tested assembly, such as steel or wood joist assemblies using acoustical tiles or gypsum wallboard, are limited to those penetrations that are listed in the tested assembly (see Section 714.4.1.1) or those protected in accordance with ASTM E814 or UL 1479 [see Section 714.4.1.2 and Commentary Figure 714.4.2(1)]. Penetrations of a ceiling membrane by items that are not part of a tested assembly create a point for possible fire penetration into the space above the ceiling membrane, which in turn could jeopardize the fire-resistance rating of the assembly. The exceptions contain protection requirements for specific types of penetrations that are not required to be part of the tested assembly.

Exception 1 allows for a maximum aggregate amount of noncombustible pipe, tube, vents and conduit penetrations of a floor or ceiling that is part of a fire-resistance-rated assembly to be 100 square inches (0.0645 m^2) per 100 square feet (9.3 m^2) of ceiling area. The annular space of the penetration can be protected by either annular space protection (see Exception 1 of Section 714.4.1) or a through-penetration firestop system tested to ASTM E814 or UL 1479 [see Section 714.4.1.2 and Commentary Figure 714.4.2(2)].

Annular space protection is not an option for combustible items because it does not have the ability to protect the resulting void created when the combustible penetrating item burns away.

Exception 2 allows penetrations of electrical outlet boxes that can affect the fire-resistance rating of an assembly. The criteria of this section limit the size of noncombustible electrical outlet boxes that penetrate a ceiling membrane to 16 square inches and an aggregate area that shall not exceed 100 square inches (0.0645 m^2) in 100 square feet (9.3 m^2) of ceiling area. All of the openings at the penetrations of the outlets are required to be protected as mentioned above. The area limitations are consistent with the criteria determined from fire tests, which have shown that within these limitations, these penetrations will not adversely affect the fire-resistance rating of the floor/ceiling assembly.

The exception permits electrical outlet boxes and fittings, which have been evaluated and found suitable for this purpose, to be located in the floor or ceiling of the fire-resistance-rated assembly. Reference sources for fire-resistance-rated assemblies, such as the *UL Fire Resistance Directory*, state that certain tested floor assemblies will permit the installation of electrical and communication connection inserts that appear in the UL listing category "Outlet Boxes and Fittings Classified for Fire Resistance" without reducing the fire-resistance rating of the assembly. However, classified outlet boxes and fittings installed in floor/ceiling assemblies that do not specify their use will jeopardize the rating unless compensating protection is provided.

Exception 3 is related to membrane penetrations of fire-resistance-rated assemblies by electrical boxes of any size or type that have been listed for their particular use in a horizontal assembly.

Certification and listing agencies have published listings covering proprietary compositions that are used to maintain the hourly ratings of fire-resistant

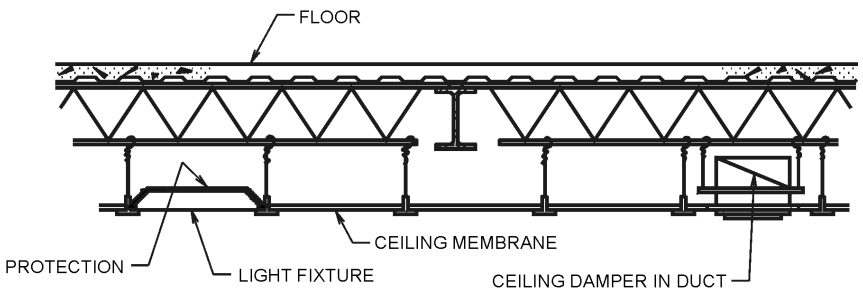

NOTE: 100 SQUARE INCHES OF OPENING PERMITTED IN EACH 100 SQUARE FEET OF CEILING AREA

For SI: 1 square inch = 645 mm^2, 1 square foot = 0.0929 m^2.

Figure 714.4.2(1)
PROTECTION OF PENETRATIONS THROUGH CEILING MEMBRANE OF A HORIZONTAL ASSEMBLY

INTERNATIONAL CODE COUNCIL®
Copyright © 2015 ICC. ALL RIGHTS RESERVED. Accessed by David Dammon on Jun 21, 2017 12:30:52 PM pursuant to License Agreement with ICC. No further reproduction or distribution authorized. ANY UNAUTHORIZED REPRODUCTION OR DISTRIBUTION IS A VIOLATION OF THE FEDERAL COPYRIGHT ACT AND THE LICENSE AGREEMENT, AND SUBJECT TO CIVIL AND CRIMINAL PENALTIES THEREUNDER.

assemblies incorporating flush-mounted devices, such as outlet boxes, electrical cabinets and mechanical cabinets penetrating membranes of fire-resistance-rated assemblies. The individual systems indicate the specific applications and method of installation for which the materials have been evaluated. The basic standards used to investigate these products are ANSI/UL 263 and ASTM E119.

For example, UL classifies nonmetallic outlet boxes for installation in floors and ceilings in accordance with the provisions of NFPA 70, *National Electrical Code*® (NEC®). These systems are required to provide a degree of fire resistance when installed in specific floor assemblies. Listing information includes the model numbers for the products, a description of the rated assemblies in which they can be used, the spacing limitations for the boxes and the installation details.

Exception 4 is similar to Exception 3 and probably could be combined. This exception addresses the annular space between the box and the ceiling membrane and limits it to $^1/_8$ inch (3.2 mm) unless listed otherwise.

Exception 5 covers fire sprinkler heads in fire-resistant ceiling membranes and allows them without any testing where they are installed with metal escutcheon plates. This is identical to the membrane wall penetration for sprinkler heads in Exception 5 to Section 714.3.2 [see Commentary Figure 714.3.2(2)].

Exception 6 allows any noncombustible penetration that is cast into a concrete floor slab, provided that it penetrates only one surface (top or bottom). It may penetrate the top surface or the bottom surface but not both.

Exception 7 is a very important addition to the code, because it allows a common construction practice. For instance, a 1- or 2-hour fire-resistance-rated floor/ceiling or roof/ceiling assembly is tested and rated with a continuous $^5/_8$-inch (15.8 mm) gypsum wallboard ceiling. In conventional light platform framing, the bearing walls and nonbearing walls are framed with floor joists typically resting directly on studs. The ceiling membrane is then attached, which creates a membrane penetration where the top wall plates intersect the floor joists. This was previously a matter not provided for in the codes, requiring special analysis to be submitted to the building official for specific approval. This exception allows this typical framing detail, but gives special requirements. The wall must have double top plates (two-2Xs) and the wall must be sheathed with Type X gypsum wallboard.

714.4.3 Dissimilar materials. Noncombustible penetrating items shall not connect to combustible materials beyond the point of firestopping unless it can be demonstrated that the fire-resistance integrity of the *horizontal assembly* is maintained.

❖ This section mirrors that of Section 714.3.3 for direct penetrations through walls (see commentary, Section 714.3.3).

714.4.4 Penetrations in smoke barriers. Penetrations in *smoke barriers* shall be protected by an approved *through-penetration firestop system* installed and tested in accordance with the requirements of UL 1479 for air leakage. The *L rating* of the system measured at 0.30 inch (7.47 Pa) of water in both the ambient temperature and elevated temperature tests shall not exceed:

1. 5.0 cfm per square foot (0.025 $m^3/s \cdot m^2$) of penetration opening for each *through-penetration firestop system*; or
2. A total cumulative leakage of 50 cfm (0.024 m^3/s) for any 100 square feet (9.3 m^2) of wall area, or floor area.

❖ Smoke barriers are intended to create compartments within a building where, under fire conditions, they provide protection from both fire and smoke. As such compartments are critical in providing the necessary

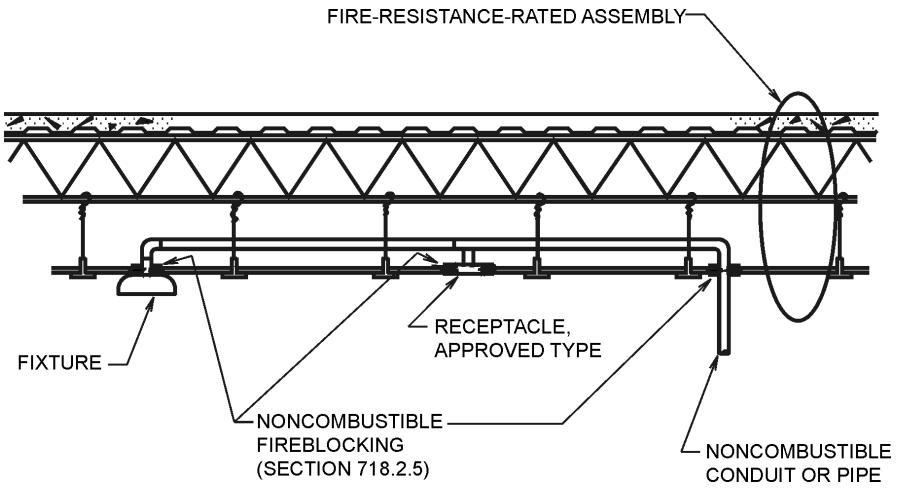

Figure 714.4.2(2)
NONCOMBUSTIBLE PIPE PENETRATIONS THROUGH CEILING MEMBRANE OF A HORIZONTAL ASSEMBLY

INTERNATIONAL CODE COUNCIL®
Copyright © 2015 ICC. ALL RIGHTS RESERVED. Accessed by David Dammon on Jun 21, 2017 12:30:52 PM pursuant to License Agreement with ICC. No further reproduction or distribution authorized. ANY UNAUTHORIZED REPRODUCTION OR DISTRIBUTION IS A VIOLATION OF THE FEDERAL COPYRIGHT ACT AND THE LICENSE AGREEMENT, AND SUBJECT TO CIVIL AND CRIMINAL PENALTIES THEREUNDER.

level of fire and smoke protection, enforceable language is deemed necessary to help ensure that the intention of the code is met. Previous language in the code included terms such as "limit," "restrict" and "resist" to indicate the degree of smoke protection required, creating inconsistent application of the provisions.

The L rating provides a quantitative indication of the through-penetration system's ability to resist the passage of smoke. Although the test is performed using air, the flow properties of air and of smoke are sufficiently close for engineering purposes as to provide a reasonable quantification of smoke leakage. The L-rating test is an optional test within the UL 1479 test standard; therefore, not all through-penetration firestop systems that are tested and listed will have this information. In the 2005 UL *Fire Resistance Directory (Vol. 2)*, there are approximately 550 through-penetration firestop systems that are listed that also have an L rating of 5 or less. This should provide a sufficient selection to allow for code compliance in all situations.

Smoke barriers, in general, have limited areas where smoke will leak through, such as at doors, dampers, penetrations and joints. Fire door assemblies and smoke dampers have previously had allowable leakage rates established by the code and referenced standards. Since the 2006 edition of the code added this text for penetrations and joint systems (see Section 715.6), all of the typical areas where leakage in smoke barriers can occur have been addressed.

714.5 Nonfire-resistance-rated assemblies. Penetrations of nonfire-resistance-rated floor or floor/ceiling assemblies or the ceiling membrane of a nonfire-resistance-rated roof/ceiling assembly shall meet the requirements of Section 713 or shall comply with Section 714.5.1 or 714.5.2.

❖ This section limits the penetrations of nonfire-resistance-rated floor assemblies to prevent the migration of smoke through a building, despite being of an unprotected type of construction. Penetrating items such as pipes are required to be in shafts or one of the permitted protection methods outlined in Sections 714.5.1 and 714.5.2.

Where penetrations of the ceiling membrane of a nonfire-resistance-rated roof/ceiling assembly occur, the penetrations are required to be protected by fireblocking in accordance with the requirements of Section 718.2.5 to restrict the spread of fire through the concealed roof space above the ceiling membrane (see commentary, Section 718.2.5).

714.5.1 Noncombustible penetrating items. Noncombustible penetrating items that connect not more than five *stories* are permitted, provided that the *annular space* is filled to resist the free passage of flame and the products of combustion with an *approved* noncombustible material or with a fill, void or cavity material that is tested and classified for use in *through-penetration firestop systems*.

❖ Noncombustible penetrations connecting five stories or less (penetrating four floors or less) are permitted when the annular space of the penetrating item is filled with an approved noncombustible material. As required in Section 718.2.5, this material shall be tested in the form and manner intended for use to demonstrate that it will stay in place and resist the passage of flame and products of combustion. It can also be filled with a material that is tested as a through-penetration firestop system (see Commentary Figure 714.5.1).

714.5.2 Penetrating items. Penetrating items that connect not more than two *stories* are permitted, provided that the *annular space* is filled with an *approved* material to resist the free passage of flame and the products of combustion.

❖ This section is not limited as to the combustibility of the penetrating item. This section allows both combustible and noncombustible penetrations of a single nonfire-resistance-rated floor (thus connecting two stories), provided the annular space is fireblocked in accordance with Section 718.2.5. This section does not require a noncombustible firestop to protect the annular space, while Section 714.5.1 does require a noncombustible firestop material.

SECTION 715
FIRE-RESISTANT JOINT SYSTEMS

715.1 General. Joints installed in or between fire-resistance-rated walls, floor or floor/ceiling assemblies and roofs or roof/ceiling assemblies shall be protected by an approved *fire-resistant joint system* designed to resist the passage of fire for a time period not less than the required *fire-resistance rating* of the wall, floor or roof in or between which the system is installed. *Fire-resistant joint systems* shall be tested in accordance with Section 715.3.

Exception: *Fire-resistant joint systems* shall not be required for joints in all of the following locations:

1. Floors within a single *dwelling unit*.
2. Floors where the joint is protected by a shaft enclosure in accordance with Section 713.
3. Floors within atriums where the space adjacent to the atrium is included in the volume of the atrium for smoke control purposes.
4. Floors within malls.
5. Floors and ramps within open and enclosed parking garages or structures constructed in accordance with Sections 406.5 and 406.6, respectively.
6. Mezzanine floors.
7. Walls that are permitted to have unprotected openings.

INTERNATIONAL CODE COUNCIL®
Copyright © 2015 ICC. ALL RIGHTS RESERVED. Accessed by David Dammon on Jun 21, 2017 12:30:52 PM pursuant to License Agreement with ICC. No further reproduction or distribution authorized. ANY UNAUTHORIZED REPRODUCTION OR DISTRIBUTION IS A VIOLATION OF THE FEDERAL COPYRIGHT ACT AND THE LICENSE AGREEMENT, AND SUBJECT TO CIVIL AND CRIMINAL PENALTIES THEREUNDER.

8. Roofs where openings are permitted.
9. Control joints not exceeding a maximum width of 0.625 inch (15.9 mm) and tested in accordance with ASTM E119 or UL 263.

❖ This section regulates joints or linear openings created between building assemblies, which are sometimes referred to as head-of-wall, expansion or seismic joints. These joints are most often created where the structural design of a building necessitates a separation between building components in order to accommodate anticipated structural displacements caused by thermal expansion and contraction, seismic activity, wind or other loads. Commentary Figure 715.1 illustrates some of the most common locations of these joints.

Seismic joints in multistory buildings are intended to allow differential lateral displacement of separate portions of a building during a seismic event. Expansion joints permit separate portions of the structural frame to contract and expand due to temperature change or wind sway without adversely affecting the building functions or structural integrity.

Joints can also occur in fire barriers at the intersection of the top of a wall and the underside of the floor or roof above (head of wall); within a wall or floor at any specific point to accommodate the structural design; or at the edge of the floor at the intersection of the floor and exterior wall. All of these linear openings create a "weak link" in fire-resistance-rated assemblies that can compromise the integrity of the tested assembly by allowing an avenue for the passage of fire and the products of combustion through the assembly. In order to maintain the efficacy of the fire-resistance-rated assembly, these openings must be protected by a fire-resistance-rated joint system with a rating equal to the assembly in the same plane. Where two assemblies intersect, the fire rating of the joint must be the same as the fire rating of the assembly (or assemblies) of the same plane as the assembly where the joint occurs. It is not the intent of this section to regulate joints installed in assemblies that are provided to control shrinkage cracking, such as a saw-cut control joint in concrete. This section con-

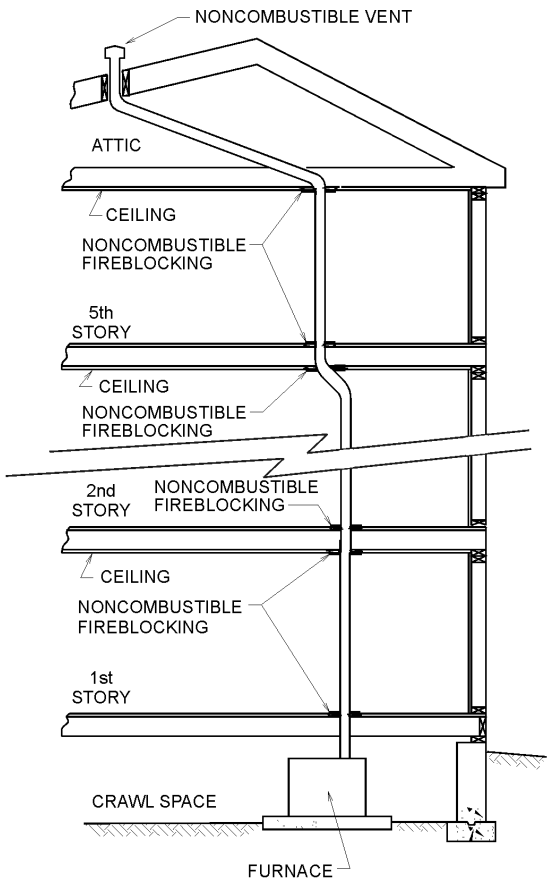

NOTE: NONCOMBUSTIBLE VENTS, CHIMNEYS, CONDUITS, PIPES AND TUBES CAN CONNECT UP TO FIVE STORIES WHEN ANNULAR SPACE IS FILLED WITH AN APPROVED NONCOMBUSTIBLE MATERIAL

Figure 714.5.1
NONCOMBUSTIBLE PIPE PENETRATIONS OF NONFIRE-RESISTANCE-RATED ASSEMBLIES

INTERNATIONAL CODE COUNCIL®
Copyright © 2015 ICC. ALL RIGHTS RESERVED. Accessed by David Dammon on Jun 21, 2017 12:30:52 PM pursuant to License Agreement with ICC. No further reproduction or distribution authorized. ANY UNAUTHORIZED REPRODUCTION OR DISTRIBUTION IS A VIOLATION OF THE FEDERAL COPYRIGHT ACT AND THE LICENSE AGREEMENT, AND SUBJECT TO CIVIL AND CRIMINAL PENALTIES THEREUNDER.

tains nine locations where a fire-resistant joint system is not required to be installed to protect the joint. These generally are locations where a separation or protected opening is not required or where the joint occurs within an area that is bounded by other means of protection.

Exception 1 states that a fire-resistant joint is not required for joints contained within a single dwelling unit. This exception is similar to Section 712.1.2. Unlike Section 712.1.2, the joints can be in concealed spaces.

Exception 2 exempts fire-resistant joints completely enclosed in a shaft that complies with Section 713.

Exception 3 exempts the requirement for fire-resistant joints that are located in floors in an atrium that complies with Section 404. This exception is similar to Section 712.1.7.

Exception 4 exempts joints located in malls that comply with Section 402. Although this appears to be a general exception that would affect all floors within a covered or open mall building, it only applies to the mall. The mall is the common pedestrian area.

Exception 5 exempts joints located in open parking structures that comply with Section 406.5, and is similar to Section 712.1.9.

Exception 6 exempts joints in mezzanines that comply with Section 505, and is similar to Section 712.1.11. As a type of opening/penetration, a joint represents a similar hazard to exterior wall fire exposures as other openings.

Exception 7 acknowledges that if an exterior wall is permitted to have unprotected openings (see Table 705.8), then the joint does not require protection as well. A joint is a much smaller opening than an unprotected opening.

Exception 8 exempts joints located in roof decks that are not required to have protected openings, and is similar to that contained in Section 712.1.15, which allows skylights and other penetrations in rated roof decks, provided the structural integrity is not affected.

Exception 9 exempts control joints that have been tested as part of the overall assembly in accordance with ASTM E119 and UL 263. This allowance is in recognition of fire test data that has existed since the 1960s regarding control joints and perimeter relief joints in fire-rated systems, the performance of these devices and systems in the field and a rational approach regarding minor movement [defined here as a maximum of $^{5}/_{8}$ inch (15.9 mm)] where no appreciable damage or fatigue is incurred by the joint system that would have a profound impact on the joint's fire performance. Since all buildings move slightly, it is not prudent to have to cycle and test joint systems that only move a few millimeters. Although their movement is limited, control joint systems must still pass the rigors of ASTM E119 or UL 263 in accordance with this exception.

715.1.1 Curtain wall assembly. The void created at the intersection of a floor/ceiling assembly and an exterior curtain wall assembly shall be protected in accordance with Section 715.4.

❖ The void at the intersection of floor/ceiling assemblies and exterior curtain walls is a joint. To provide continuity for the horizontal assembly and block the verti-

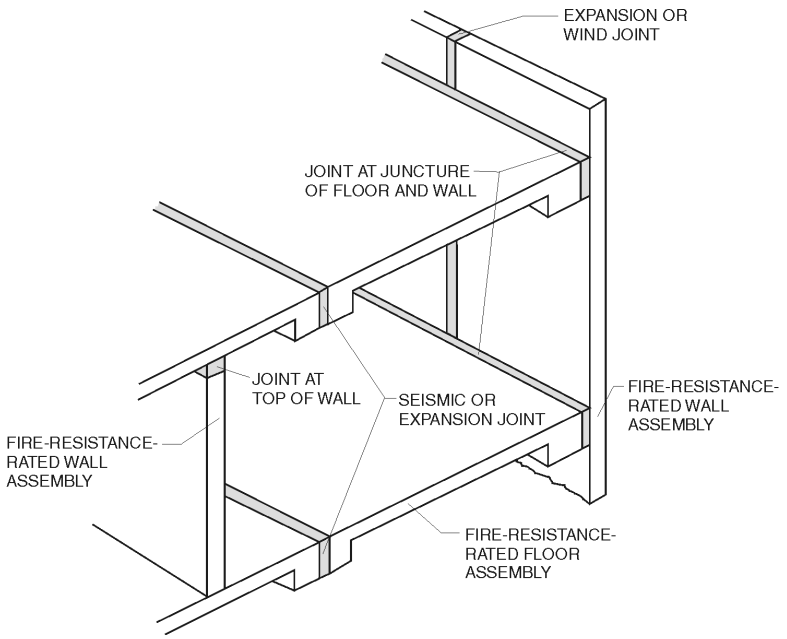

Figure 715.1
EXAMPLES OF JOINT LOCATIONS

INTERNATIONAL CODE COUNCIL®
Copyright © 2015 ICC. ALL RIGHTS RESERVED. Accessed by David Dammon on Jun 21, 2017 12:30:52 PM pursuant to License Agreement with ICC. No further reproduction or distribution authorized. ANY UNAUTHORIZED REPRODUCTION OR DISTRIBUTION IS A VIOLATION OF THE FEDERAL COPYRIGHT ACT AND THE LICENSE AGREEMENT, AND SUBJECT TO CIVIL AND CRIMINAL PENALTIES THEREUNDER.

cal opening, fire-resistance joint material is required. This section references Section 715.4 for the performance standard that must be met.

715.2 Installation. A *fire-resistant joint system* shall be securely installed in accordance with the listing criteria in or on the joint for its entire length so as not to dislodge, loosen or otherwise impair its ability to accommodate expected building movements and to resist the passage of fire and hot gases.

❖ This section requires that joint systems be installed for their full length or height, due to the fact that the openings to be protected by these types of joints are most often continuous. The required listing will have installation criteria.

715.3 Fire test criteria. *Fire-resistant joint systems* shall be tested in accordance with the requirements of either ASTM E1966 or UL 2079. Nonsymmetrical wall joint systems shall be tested with both faces exposed to the furnace, and the assigned *fire-resistance rating* shall be the shortest duration obtained from the two tests. Where evidence is furnished to show that the wall was tested with the least fire-resistant side exposed to the furnace, subject to acceptance of the *building official*, the wall need not be subjected to tests from the opposite side.

Exception: For *exterior walls* with a horizontal *fire separation distance* greater than 5 feet (1524 mm), the joint system shall be required to be tested for interior fire exposure only.

❖ In order to determine the anticipated protection provided by a given assembly, the hourly fire-resistance rating must be determined by testing the joint system in accordance with UL 2079 or ASTM E1966. This standard includes specific criteria for test specimen preparation, placement, configuration, size and testing conditions of joint systems. Also included in the test protocol is the minimum positive pressure differential to be used for the test, which is intended to assist in evaluating whether the joint will remain in place during a fire condition. A joint splice must be tested, since the presence and orientation of a splice in a joint system can affect the fire performance of the joint. These splices may occur where the length of the joint to be protected exceeds the length of a prefabricated joint or where a cold joint occurs in a field-installed system. The maximum joint width must be tested when in a fully expanded or extended condition in order to evaluate the fire-resistance rating. Joints that are designed to transfer structural building loads are required to have a superimposed load during the test, which is consistent with the requirements for the testing of load-bearing fire-resistance-rated assemblies. Finally, the test addresses requirements for joints that are intended to accommodate building movement, such as expansion, seismic and wind sway joints, including preconditioning cycling, which is intended to allow for evaluation of the joint's ability to withstand cyclical movement over its anticipated life.

Test data have indicated that the orientation of nonsymmetrical joints can have an effect on the performance of the joint. As a result, in accordance with this section, all joint systems must be tested for fire exposure from both sides so that the required protection will be provided regardless of which side of the joint is exposed to fire. The exception for joints in exterior walls correlates with Section 705.5 for the fire exposure rating of exterior walls.

Though not required by the code, an ASTM standard practice is available that can be used in cases where a standardized methodology is desired for the inspection of installed fire- resistant joint systems and perimeter fire barrier systems. Such a standardized procedure can be particularly useful in cases where a third-party inspection firm is used. ASTM E2393, *Standard Practice for On-Site Inspection of Installed Fire Resistive Joint Systems and Perimeter Fire Barriers*, includes items such as preconstruction meetings to review submittals, building mock-ups for destructive testing and scheduling on-site inspections of installed joint systems. This standard practice also identifies what actions should be taken based on the percentage of noncompliant installations identified, as well as providing a standardized reporting form.

715.4 Exterior curtain wall/floor intersection. Where fire resistance-rated floor or floor/ceiling assemblies are required, voids created at the intersection of the exterior curtain wall assemblies and such floor assemblies shall be sealed with an *approved* system to prevent the interior spread of fire. Such systems shall be securely installed and tested in accordance with ASTM E2307 to provide an *F rating* for a time period not less than the *fire-resistance rating* of the floor assembly. Height and fire-resistance requirements for curtain wall spandrels shall comply with Section 705.8.5.

Exception: Voids created at the intersection of the exterior curtain wall assemblies and such floor assemblies where the vision glass extends to the finished floor level shall be permitted to be sealed with an approved material to prevent the interior spread of fire. Such material shall be securely installed and capable of preventing the passage of flame and hot gases sufficient to ignite cotton waste where subjected to ASTM E119 time-temperature fire conditions under a minimum positive pressure differential of 0.01 inch (0.254 mm) of water column (2.5 Pa) for the time period not less than the *fire-resistance rating* of the floor assembly.

❖ The void created between a floor and a curtain wall requires sealing to prevent the spread of flames and products of combustion between adjacent stories. Most fire-rated horizontal assemblies are required to extend from outside wall to outside wall, that is from the inside faces of the exterior walls. The void in question is the one between the intersection of the edge of the fire-resistance-rated horizontal assembly and the interior face of the exterior wall or curtain wall. The void does not include the exterior wall cavity.

A fire test standard was specifically developed to

INTERNATIONAL CODE COUNCIL®
Copyright © 2015 ICC. ALL RIGHTS RESERVED. Accessed by David Dammon on Jun 21, 2017 12:30:52 PM pursuant to License Agreement with ICC. No further reproduction or distribution authorized. ANY UNAUTHORIZED REPRODUCTION OR DISTRIBUTION IS A VIOLATION OF THE FEDERAL COPYRIGHT ACT AND THE LICENSE AGREEMENT, AND SUBJECT TO CIVIL AND CRIMINAL PENALTIES THEREUNDER.

evaluate the interface between a fire-resistance-rated horizontal assembly and an exterior curtain wall. This particular standard is ASTM E2307, *Standard Test Method for Determining Fire Resistance of Perimeter Fire Barrier Systems Using Intermediate-Scale, Multi-story Test Apparatus*. The "perimeter fire barrier system" is the assembly of materials that prevents the passage of flame and hot gases at the void space between the interior surface of the wall assembly and the adjacent edge of the floor. For the purposes of the ASTM E2307 test standard, the interior face is at the interior surface of the wall's framework. The width of the joint, which has maximum allowable dimensions specified in the perimeter fire barrier system listings, is therefore the distance between the edge of the framing nearest the floor and the adjacent floor edge. The void space or cavity between framing members is not considered joint space. Commentary Figure 715.4 shows the typical components that are specified in listings of tested perimeter fire barrier systems.

Tested and listed perimeter fire barrier systems do not include the interior finished wall (e.g., "knee wall") details. This makes the systems applicable to any and all finished wall configurations. The existence of the interior wall surface, even if made of fire-resistant materials such as fire-resistance-rated gypsum board, does not eliminate the need to have an appropriately tested material or system to protect the curtain wall from interior fire spread at the perimeter gap, unless that interior wall detail has been specifically tested and shown to meet the requirements of this section of the code.

Although not required by the code, an ASTM standard practice is available that can be used in cases where a standardized methodology is desired for the inspection of installed perimeter fire barrier systems. Such a standardized procedure can be particularly useful in cases where a third-party inspection firm is used. ASTM E2393, *Standard Practice for On-Site Inspection of Installed Fire Resistive Joint Systems*

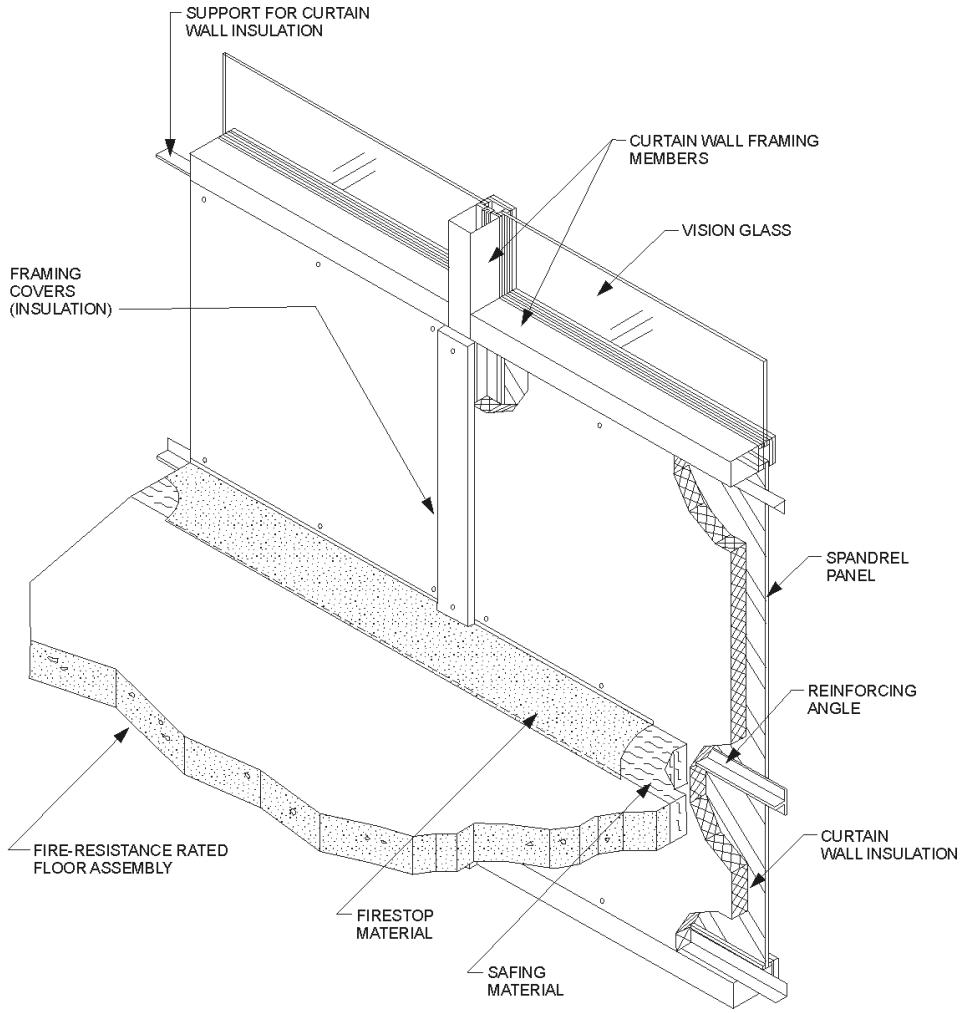

Figure 715.4
EXTERIOR CURTAIN WALL/FLOOR INTERSECTION

INTERNATIONAL CODE COUNCIL®
Copyright © 2015 ICC. ALL RIGHTS RESERVED. Accessed by David Dammon on Jun 21, 2017 12:30:52 PM pursuant to License Agreement with ICC. No further reproduction or distribution authorized. ANY UNAUTHORIZED REPRODUCTION OR DISTRIBUTION IS A VIOLATION OF THE FEDERAL COPYRIGHT ACT AND THE LICENSE AGREEMENT, AND SUBJECT TO CIVIL AND CRIMINAL PENALTIES THEREUNDER.

and Perimeter Fire Barriers, includes items such as preconstruction meetings to review submittals, details, variances, building mock-ups for destructive testing and scheduling a witnessed inspection of a specified percentage of installations or conducting destructive testing on a specified percentage of installations. This standard practice also identifies what actions should be taken based on the percentage of noncompliant installations identified, as well as providing a standardized reporting form.

The exception, which allows the option of using materials or systems that have been tested by subjecting them to an ASTM E119 or UL 263 time-temperature fire exposure under positive pressure, is the protection of the perimeter gap that existed in previous editions of the code before the 2009 edition. These systems and materials tested in the years before the formal issuance of ASTM E2307 can continue to be used to comply with Section 715.4. Those assemblies that were tested using the ASTM E119 or UL 263 time-temperature fire exposure in a multistory apparatus would be expected to be in substantial compliance with ASTM E2307 and are expected to provide an equivalent level of protection.

The option of using materials or systems that have been tested by subjecting them to an ASTM E119 or UL 263 time-temperature fire exposure under positive pressure is the requirement for protection of the perimeter gap that existed in previous editions of the code. These systems and materials tested in the years before the formal issuance of ASTM E2307 can continue to be used to comply with Section 714.4. Those assemblies that were tested using the ASTM E119 or UL 263 time-temperature fire exposure in a multistory apparatus would be expected to be in substantial compliance with ASTM E2307, and are expected to provide an equivalent level of protection.

The exterior wall construction must comply with Section 705.8.5. Section 705.8.5 requires a 3-foot-high (914 mm) 1-hour fire-resistance-rated spandrel wall in unsprinklered buildings four stories or greater in height.

715.4.1 Exterior curtain wall/nonfire-resistance-rated floor assembly intersections. Voids created at the intersection of exterior curtain wall assemblies and nonfire-resistance-rated floor or floor/ceiling assemblies shall be sealed with an *approved* material or system to retard the interior spread of fire and hot gases between *stories*.

❖ Where the joint between walls involves a nonfire-resistance-rated floor and an exterior curtain wall, there is no reason to try to maintain a fire-resistance rating with a rated joint system. However, spread of smoke is a concern and, therefore, the code calls for a tight joint to protect rapid spread of smoke from a floor of fire origin to other floors of the building. The exterior wall construction must also comply with Section 705.8.5 even though the floors are not fire-resistance rated.

715.4.2 Exterior curtain wall/vertical fire barrier intersections. Voids created at the intersection of nonfire-resistance-rated exterior curtain wall assemblies and *fire barriers* shall be filled. An approved material or system shall be used to fill the void and shall be securely installed in or on the intersection for its entire length so as not to dislodge, loosen or otherwise impair its ability to accommodate expected building movements and to retard the passage of fire and hot gases.

❖ This section specifically addresses the intersection of nonfire-resistance-rated exterior curtain wall and rated fire barriers. The proposed language provides clear performance requirements that can be applied and enforced in these conditions.

715.5 Spandrel wall. Height and fire-resistance requirements for curtain wall spandrels shall comply with Section 705.8.5. Where Section 705.8.5 does not require a fire-resistance-rated spandrel wall, the requirements of Section 715.4 shall still apply to the intersection between the spandrel wall and the floor.

❖ This provision serves as a cross reference to the vertical separation of openings in exterior wall requirements found in Section 705.8.5. This section still requires that where a floor intersects with a nonrated spandrel wall, the void space must be protected by an approved joint system.

715.6 Fire-resistant joint systems in smoke barriers. *Fire-resistant joint systems* in *smoke barriers*, and joints at the intersection of a horizontal *smoke barrier* and an exterior curtain wall, shall be tested in accordance with the requirements of UL 2079 for air leakage. The *L rating* of the joint system shall not exceed 5 cfm per linear foot (0.00775 m^3/s m) of joint at 0.30 inch (7.47 Pa) of water for both the ambient temperature and elevated temperature tests.

❖ The leakage, or L rating, provides a quantitative indication of a fire-resistant joint system's ability to resist the passage of smoke. Although the test is performed using air, the flow properties of air and smoke are sufficiently close for engineering purposes as to provide a reasonable quantification of smoke leakage. The L-rating test is an optional test within the UL 2079 test standard; therefore, not all fire-resistant joint systems that are tested and listed will have this information. In the 2005 UL *Fire Resistance Directory (Vol. 2)*, there are 335 fire-resistant joint systems that are listed that also have an L rating of 5 or less. This should provide a sufficient selection to allow for code compliance in all situations.

SECTION 716
OPENING PROTECTIVES

716.1 General. Opening protectives required by other sections of this code shall comply with the provisions of this section.

❖ This section regulates two types of opening protectives: fire doors (Section 716.5) and fire protection-

INTERNATIONAL CODE COUNCIL®
Copyright © 2015 ICC. ALL RIGHTS RESERVED. Accessed by David Dammon on Jun 21, 2017 12:30:52 PM pursuant to License Agreement with ICC. No further reproduction or distribution authorized. ANY UNAUTHORIZED REPRODUCTION OR DISTRIBUTION IS A VIOLATION OF THE FEDERAL COPYRIGHT ACT AND THE LICENSE AGREEMENT, AND SUBJECT TO CIVIL AND CRIMINAL PENALTIES THEREUNDER.

rated glazing (Section 716.6). As covered in Section 716.2, fire-resistance-rated glazing is not addressed by the balance of the requirements in Section 716. Fire doors are a type of opening protective and are installed in openings in fire-resistance-rated assemblies, including fire walls, fire barriers, fire partitions and exterior walls where the openings are required to be protected. Where a load-bearing exterior wall requires a fire-resistance rating in accordance with Table 601, it is for structural integrity purposes. The openings are not required to be protected unless an opening protective is required by another section of the code, including Section 705.8.

In addition to fire doors, another form of an opening protective is fire protection-rated glazing (commonly referred to as "fire windows"). Fire windows refer to the entire assembly, which may consist of a frame and the glazing material and mounting components. A glass-block assembly is also considered a window assembly.

The fire protection ratings in this section are based on the acceptance criteria of NFPA 252, 257 and UL 10A, 14B or 14C. The fire protection rating acceptance criteria are not the same as that required for a fire-resistance rating for building structural elements. Fire-resistance ratings of building construction are determined by ASTM E119 or UL 263. The fire protection rating required for an opening protective is generally less than the required fire resistance of the wall (see Tables 716.5 and 716.6). This is based upon the ability of a wall to have material or a fuel package directly against the assembly while fire doors and windows are assumed to have the fuel package remote from the surface of the assembly. Sections 716.5 and 716.6 (and subsections) reference the appropriate test standards and require that all opening protectives be labeled (see Section 716.5.7.1 for doors, Section 716.5.8.3 for glazing in doors and Section 716.6.8 for glazing in windows), with the exception being oversized doors that require a certificate of inspection by an approved agency (see Section 716.5.7.2).

716.2 Fire-resistance-rated glazing. *Fire-resistance-rated* glazing tested as part of a f*ire-resistance-rated* wall or floor/ceiling assembly in accordance with ASTM E119 or UL 263 and labeled in accordance with Section 703.6 shall not otherwise be required to comply with this section where used as part of a wall or floor/ceiling assembly. *Fire-resistance-rated* glazing shall be permitted in fire door and *fire window assemblies* where tested and installed in accordance with their listings and where in compliance with the requirements of this section.

❖ There are glazing materials used as and tested as a wall assembly under ASTM E119 or UL 263 that are not covered by Section 716. Because these materials can meet the same fire-resistance requirements of the wall, they are not required to be regulated as an opening that would require the lower level of protection that fire protection-rated glazing provides (see commentary, Section 703.6). The second sentence indicates that when fire-resistance-rated glazing is used as part of a fire door or fire window assembly, there are provisions in Section 716 that apply to its use.

716.3 Marking fire-rated glazing assemblies. *Fire-rated glazing* assemblies shall be marked in accordance with Tables 716.3, 716.5 and 716.6.

❖ With two types of fire-rated glazing, it is very important to understand the labeling system and the meaning of each mark. The type of wall, the type of opening and the size of the opening determine the minimum required type of fire-rated glazing. Table 716.3 defines the markings, while Tables 716.5 and 716.6 give the requirements for fire-rated glazing by type of wall and location in the wall. There are three different requirements depending on whether the glass is in a door, in a sidelite or transom door frame, or in a fire window. Commentary Figures 716.3(1) and 716.3(2) show the required fire-rated glazing markings by type of wall and location.

716.3.1 Fire-rated glazing identification. For *fire-rated glazing*, the *label* shall bear the identification required in Tables 716.3 and 716.5. "D" indicates that the glazing is permitted to be used in *fire door* assemblies and that the glazing meets the fire protection requirements of NFPA 252. "H" shall indicate that the glazing meets the hose stream requirements of NFPA 252. "T" shall indicate that the glazing meets the temperature requirements of Section 716.5.5.1. The placeholder "XXX" represents the fire-rating period, in minutes.

❖ The provisions of this section apply to fire-rated glazing used in fire door assemblies. By following the provisions of this section, the glazing utilized in fire door assemblies can be easily identified for verification of

TABLE 716.3
MARKING FIRE-RATED GLAZING ASSEMBLIES

FIRE TEST STANDARD	MARKING	DEFINITION OF MARKING
ASTM E119 or UL 263	W	Meets wall assembly criteria.
NFPA 257 or UL 9	OH	Meets fire window assembly criteria including the hose stream test.
NFPA 252 or UL 10B or UL 10C	D H T	Meets fire door assembly criteria. Meets fire door assembly hose stream test. Meets 450ºF temperature rise criteria for 30 minutes
	XXX	The time in minutes of the fire resistance or fire protection rating of the glazing assembly.

For SI: ºC = [(ºF) - 32]/1.8.

INTERNATIONAL CODE COUNCIL®
Copyright © 2015 ICC. ALL RIGHTS RESERVED. Accessed by David Dammon on Jun 21, 2017 12:30:52 PM pursuant to License Agreement with ICC. No further reproduction or distribution authorized. ANY UNAUTHORIZED REPRODUCTION OR DISTRIBUTION IS A VIOLATION OF THE FEDERAL COPYRIGHT ACT AND THE LICENSE AGREEMENT, AND SUBJECT TO CIVIL AND CRIMINAL PENALTIES THEREUNDER.

its appropriate application. The "D" designation indicates the glazing can be used in a fire-door assembly, with the remaining identifiers providing specific information as to the glazing's capability to meet the hose stream test and temperature limits. See Section 716.5.8 for further discussion on the use of this glazing material.

716.3.2 Fire-protection-rated glazing identification. For *fire-protection-rated* glazing, the *label* shall bear the following identification required in Tables 716.3 and 716.6: "OH – XXX." "OH" indicates that the glazing meets both the fire protection and the hose-stream requirements of NFPA 257 or UL 9 and is permitted to be used in fire window openings. The placeholder "XXX" represents the fire-rating period, in minutes.

❖ The provisions of this section apply to fire-protection-rated glazing assemblies. Section 716.3.2 indicates that Tables 716.3 and 716.6 are the appropriate tables to be used for fire-protection-rated glazing and to provide details of the required label and standards for performance. The "OH" designation indicates the glazing meets both the fire protection and hose stream requirements for use in fire windows. See Section 716.5.8 for further discussion on the use of this glazing material.

716.3.3 Fire-rated glazing that exceeds the code requirements. *Fire-rated glazing* assemblies marked as complying with hose stream requirements (H) shall be permitted in applications that do not require compliance with hose stream requirements. *Fire-rated glazing* assemblies marked as complying with temperature rise requirements (T) shall be permitted in applications that do not require compliance with temperature rise requirements. *Fire-rated glazing* assemblies marked with ratings (XXX) that exceed the ratings required by this code shall be permitted.

❖ Fire-protection-rated glazing with an "H" marking has been tested and has passed the hose stream requirements of NFPA 252. Fire protection-rated glazing with a "T" marking has been tested and has passed the hose stream requirements of NFPA 252. For example, a door view panel less than 100 square inches (64 516 mm^2) in area in a 2-hour exit enclosure requires only a glazing mark of [D-H-90], but a glazing panel marked with [D-H-T-90] could also be used since it exceeds the requirements for the particular location. If Table 716.5 requires glazing with a marking [D-H-T-60], then a panel with a marking of [D-H-T-90] could be used.

716.4 Alternative methods for determining fire protection ratings. The application of any of the alternative methods *listed* in this section shall be based on the fire exposure and acceptance criteria specified in NFPA 252, NFPA 257 or UL 9. The required *fire resistance* of an opening protective shall be permitted to be established by any of the following methods or procedures:

1. Designs documented in *approved* sources.
2. Calculations performed in an *approved* manner.
3. Engineering analysis based on a comparison of opening protective designs having *fire protection ratings* as determined by the test procedures set forth in NFPA 252, NFPA 257 or UL 9.
4. Alternative protection methods as allowed by Section 104.11.

❖ Section 716.4 contains language similar to Section 703.3 regarding fire-resistance ratings. The intent of this section is to recognize approved calculations, an engineering analysis or alternative protection methods as permitted in Section 104.11 as an acceptable alternative means to determine a fire protection rating.

716.5 Fire door and shutter assemblies. Approved *fire door* and fire shutter assemblies shall be constructed of any material or assembly of component materials that conforms to the test requirements of Section 716.5.1, 716.5.2 or 716.5.3 and the *fire protection rating* indicated in Table 716.5. *Fire door*

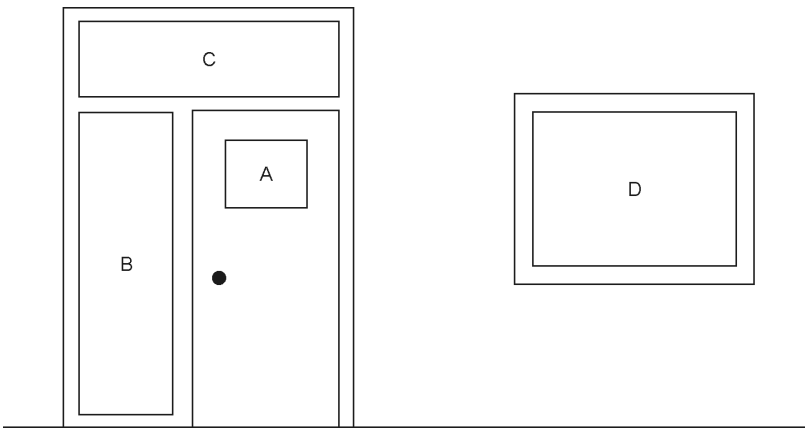

Figure 716.3(1)
FIRE-RATED GLAZING LOCATIONS
[FOR USE WITH TABLE 716.3(1)]

INTERNATIONAL CODE COUNCIL®
Copyright © 2015 ICC. ALL RIGHTS RESERVED. Accessed by David Dammon on Jun 21, 2017 12:30:52 PM pursuant to License Agreement with ICC. No further reproduction or distribution authorized. ANY UNAUTHORIZED REPRODUCTION OR DISTRIBUTION IS A VIOLATION OF THE FEDERAL COPYRIGHT ACT AND THE LICENSE AGREEMENT, AND SUBJECT TO CIVIL AND CRIMINAL PENALTIES THEREUNDER.

frames with transom lights, sidelights or both shall be permitted in accordance with Section 716.5.6. *Fire door* assemblies and shutters shall be installed in accordance with the provisions of this section and NFPA 80.

Exceptions:

1. Labeled protective assemblies that conform to the requirements of this section or UL 10A, UL 14B and UL 14C for tin-clad *fire door* assemblies.
2. Floor *fire door* assemblies in accordance with Section 712.1.13.1.

❖ When the code refers to a fire door assembly, the intent is that the term "fire door" (see the definition in Section 202) applies to the door itself, while the term "fire door assembly" includes the fire door, the frame, related hardware and accessories, unless otherwise noted (see the definition of "Fire door assembly" in Section 202). Therefore, it is important to realize that a fire door by itself is not generally accepted. An assembly that includes the door is needed. A door by itself cannot provide the protection. It needs to be supported by the hinges, held into a specific frame and generally have latching and closing hardware. By requiring an assembly tested to the specific standards, all of the components needed for protection will be provided. For example, although there is not a direct mention in the section relative to mandating latching hardware, the referenced installation standard, NFPA 80, addresses the requirements relative to positive latch devices.

Note that reference to Section 716.5.6 is made for fire door assemblies that include transoms and a sidelite. Fire door assemblies with sidelites or tran-

TYPE OF ASSEMBLY	REQUIRED WALL ASSEMBLY RATING (HRS)	DOOR VIEW PANEL A 100 IN^2 OR LESS	DOOR VIEW PANEL A > 100 IN^2	SIDELITE OR TRANSOM PANELS B & C	WINDOW ASSEMBLY D
Fire wall and fire barrier wall	4-hr	Not Permitted	Not Permitted	W-240[b]	W-240[b]
	3-hr	Not Permitted	Not Permitted	W-180[b]	W-180[b]
	2-hr	[D-H-90]	[D-H-W-90][c]	W-120[b]	W-120[b]
	$1^1/_2$-hr	[D-H-90]	[D-H-W-90][c]	W-90[b]	W-90[b]
Shaft, exit enclosures and exit passageway walls	2-hr	[D-H-90]	[D-H-W-90][c] or [D-H-T-W-90][c]	W-120[b, e]	W-120[b, e]
Fire barriers for enclosures of shafts, exit access stairways, exit access ramps, interior exit stairways and exit passageway walls	1-hr	[D-H-60]	[D-H-T-60] or [D-H-T-W-60][c]	W-60[b, e]	W-60[b, e]
Other fire barriers	1-hr	[D-H-NT-45]	[D-H-NT-45]	[D-H-NT-45]	W-60[b]
Fire barriers – incidental use areas, mixed occupancy separations	1-hr	[D-H-NT-45]	[D-H-NT-45]	[D-H-NT-45]	[OH-45] or W-60[b]
Fire partitions: Corridor walls	1-hr	[D-20]	[D-20]	[D-H-OH-45]	[OH-45] or W-60[b]
	0.5-hr	[D-20]	[D-20]	[D-H-OH-20]	[OH-20] or W-30[b]
Other fire partitions	1-hr	[D-H-45]	[D-H-45]	[D-H-45]	[OH-45] or W-60[b]
	0.5-hr	[D-H-20]	[D-H-20]	[D-H-20]	[OH-20] or W-30[b]
Smoke barriers	1-hr	[D-20]	[D-20]	[D-H-OH-45]	[OH-45] or W-60[b]
Exterior walls[d]	3-hr	[D-H-90]	[D-H-W-90][c]	W-180[b]	[OH-90] or W-180[b]
	2-hr	[D-H-90]	[D-H-W-90][c]	W-120[b]	[OH-90] or W-120[b]
	1-hr	[D-H-45]	[D-H-45]	[D-H-45]	[OH-45] or W-60[b]

For SI: 1 square inch = 645.2 mm^2.

a. Markings in brackets [ ] are fire-protection-rated glazing. Fire-protection-rated glazing in doors, sidelights and transoms meets NFPA 252. Fire protection-rated glazing in windows meets NFPA 257 or UL 9.

b. Fire-resistance-rated glazing meeting ASTM E119 or UL 263.

c. Glazing meeting both the standard for fire-protection-rated glazing in fire doors (NFPA 252) and the standard fire-resistance-rated glazing (ASTM E119 or UL 263).

d. Glazing requirements where protected openings are required by Table 705.8.

e. Only openings necessary for egress are allowed in exit access stairways and interior exit stairs.

Figure 716.3(2)
MARKINGS OF FIRE-RATED GLAZING[a]

INTERNATIONAL CODE COUNCIL®
Copyright © 2015 ICC. ALL RIGHTS RESERVED. Accessed by David Dammon on Jun 21, 2017 12:30:52 PM pursuant to License Agreement with ICC. No further reproduction or distribution authorized. ANY UNAUTHORIZED REPRODUCTION OR DISTRIBUTION IS A VIOLATION OF THE FEDERAL COPYRIGHT ACT AND THE LICENSE AGREEMENT, AND SUBJECT TO CIVIL AND CRIMINAL PENALTIES THEREUNDER.

soms must be fire-protection-rated glazing if the opening protective is $^3/_4$ hour or less and fire-resistive rated if the open protective is 1 hour or more.

Labels that indicate compliance with UL 10A, 14B or 14C are acceptable (see Exception 1). Exception 2 exempts floor fire door assemblies from the requirements of this section, since Section 712.1.13.1 requires floor fire doors to comply with a different test standard (NFPA 288) and their rating must not be less than the rating of the horizontal assembly being penetrated (see the commentary to Section 712.1.13.1 for a discussion of floor fire doors).

TABLE 716.5. See below.

❖ This table lists the minimum fire protection ratings for fire doors relative to the nature and fire-resistance rating of the wall. Once the purpose and fire-resistance rating of the wall are identified, the minimum

TABLE 716.5
OPENING FIRE PROTECTION ASSEMBLIES, RATINGS AND MARKINGS

TYPE OF ASSEMBLY	REQUIRED WALL ASSEMBLY RATING (hours)	MINIMUM FIRE DOOR AND FIRE SHUTTER ASSEMBLY RATING (hours)	DOOR VISION PANEL SIZE[b]	FIRE-RATED GLAZING MARKING DOOR VISION PANEL[d]	MINIMUM SIDELIGHT/ TRANSOM ASSEMBLY RATING (hours)		FIRE-RATED GLAZING MARKING SIDELIGHT/TRANSOM PANEL	
					Fire protection	Fire resistance	Fire protection	Fire resistance
Fire walls and fire barriers having a required fire-resistance rating greater than 1 hour	4	3	See Note b	D-H-W-240	Not Permitted	4	Not Permitted	W-240
	3	3[a]	See Note b	D-H-W-180	Not Permitted	3	Not Permitted	W-180
	2	$1^1/_2$	100 sq. in.	≤100 sq. in. = D-H-90 >100 sq. in.= D-H-W-90	Not Permitted	2	Not Permitted	W-120
	$1^1/_2$	$1^1/_2$	100 sq. in.	≤100 sq. in. = D-H-90 >100 sq. in.= D-H-W-90	Not Permitted	$1^1/_2$	Not Permitted	W-90
Enclosures for shafts, interior exit stairways and interior exit ramps.	2	$1^1/_2$	100 sq. in.	≤100 sq. in. = D-H-90 > 100 sq. in.= D-H-T-W-90	Not Permitted	2	Not Permitted	W-120
Horizontal exits in fire walls[e]	4	3	100 sq. in.	≤100 sq. in. = D-H-180 > 100 sq. in.= D-H-W-240	Not Permitted	4	Not Permitted	W-240
	3	3[a]	100 sq. in.	≤100 sq. in. = D-H-180 > 100 sq. in.= D-H-W-180	Not Permitted	3	Not Permitted	W-180
Fire barriers having a required fire-resistance rating of 1 hour: Enclosures for shafts, exit access stairways, exit access ramps, interior exit stairways and interior exit ramps; and exit passageway walls	1	1	100 sq. in.[c]	≤100 sq. in. = D-H-60 >100 sq. in.= D-H-T-W-60	Not Permitted	1	Not Permitted	W-60
					Fire protection			
Other fire barriers	1	$^3/_4$	Maximum size tested	D-H	$^3/_4$		D-H	
Fire partitions: Corridor walls	1	$^1/_3$[b]	Maximum size tested	D-20	$^3/_4$[b]		D-H-OH-45	
	0.5	$^1/_3$[b]	Maximum size tested	D-20	$^1/_3$		D-H-OH-20	
Other fire partitions	1	$^3/_4$	Maximum size tested	D-H-45	$^3/_4$		D-H-45	
	0.5	$^1/_3$	Maximum size tested	D-H-20	$^1/_3$		D-H-20	

(continued)

INTERNATIONAL CODE COUNCIL®
Copyright © 2015 ICC. ALL RIGHTS RESERVED. Accessed by David Dammon on Jun 21, 2017 12:30:52 PM pursuant to License Agreement with ICC. No further reproduction or distribution authorized. ANY UNAUTHORIZED REPRODUCTION OR DISTRIBUTION IS A VIOLATION OF THE FEDERAL COPYRIGHT ACT AND THE LICENSE AGREEMENT, AND SUBJECT TO CIVIL AND CRIMINAL PENALTIES THEREUNDER.

TABLE 716.5—continued
OPENING FIRE PROTECTION ASSEMBLIES, RATINGS AND MARKINGS

TYPE OF ASSEMBLY	REQUIRED WALL ASSEMBLY RATING (hours)	MINIMUM FIRE DOOR AND FIRE SHUTTER ASSEMBLY RATING (hours)	DOOR VISION PANEL SIZE[b]	FIRE-RATED GLAZING MARKING DOOR VISION PANEL[d]	MINIMUM SIDELIGHT/ TRANSOM ASSEMBLY RATING (hours)		FIRE-RATED GLAZING MARKING SIDELIGHT/TRANSOM PANEL	
					Fire protection	Fire resistance	Fire protection	Fire resistance
Exterior walls	3	1 1/2	100 sq. in.[b]	≤100 sq. in. = D-H-90 >100 sq. in = D-H-W-90	Not Permitted	3	Not Permitted	W-180
	2	1 1/2	100 sq. in.[b]	≤100 sq. in. = D-H-90 >100 sq. in.= D-H-W-90	Not Permitted	2	Not Permitted	W-120
					Fire protection			
	1	3/4	Maximum size tested	D-H-45	3/4		D-H-45	
Smoke barriers					Fire protection			
	1	1/3	Maximum size tested	D-20	3/4		D-H-OH-45	

For SI: 1 square inch = 645.2 mm^2.

a. Two doors, each with a fire protection rating of 1 1/2 hours, installed on opposite sides of the same opening in a fire wall, shall be deemed equivalent in fire protection rating to one 3-hour fire door.

b. Fire-resistance-rated glazing tested to ASTM E119 in accordance with Section 716.2 shall be permitted, in the maximum size tested.

c. Except where the building is equipped throughout with an automatic sprinkler and the fire-rated glazing meets the criteria established in Section 716.5.5.

d. Under the column heading "Fire-rated glazing marking door vision panel," W refers to the *fire-resistance rating* of the glazing, not the frame.

e. See Section 716.5.8.1.2.1.

required fire protection rating of the door can be determined using the table. Typically, the minimum permitted fire door fire protection rating is less than the required fire-resistance rating of the wall.

The allowable size and required marking of glazed door vision panels are shown in the fourth and fifth columns. The last column indicates the minimum glazing marking for the sidelite and transom. The glazing markings are explained in Section 716.5.8.3.1 and Table 716.3.

In addition to the fire protection ratings in Table 716.5, other sections of the code prescribe additional performance criteria for fire door assemblies. For example, Section 716.5.5 requires doors in exit enclosures to have a maximum temperature increase on the unexposed surface of 450°F (232°C) after 30 minutes. Although temperature rise is not a condition of acceptance, test standards require that unexposed surface temperatures be measured and documented in the test report. Another requirement not in the table is related to corridor doors. Required fire-rated corridor doors must also meet the requirements for smoke and draft control in Section 716.5.3.1.

The exterior wall opening protectives in Table 716.5 are not required where Section 705.8 does not require protected openings.

716.5.1 Side-hinged or pivoted swinging doors. *Fire door* assemblies with side-hinged and pivoted swinging doors shall be tested in accordance with NFPA 252 or UL 10C. After 5 minutes into the NFPA 252 test, the neutral pressure level in the furnace shall be established at 40 inches (1016 mm) or less above the sill.

❖ Fire door assemblies that contain side-hinged or pivoted swinging doors are to be tested in accordance with the referenced test standards.

When first introduced in one of the early editions of the code, the requirement for the door to be tested with a pressure differential (positive pressure at the top and a negative pressure at the bottom) and a specific neutral pressure point was a major revision in the way that doors were tested. The intent of this provision is to better approximate the conditions found in an actual building fire where smoke, heat and hot gasses rise to the top of the room and increase the pressure in the upper portion of the room. Test method UL 10C contains the requirements for positive pressure testing.

716.5.2 Other types of assemblies. *Fire door* assemblies with other types of doors, including swinging elevator doors, horizontal sliding fire door assemblies, and fire shutter assemblies, bottom and side-hinged chute intake doors, and top-hinged chute discharge doors, shall be tested in accordance with NFPA 252 or UL 10B. The pressure in the furnace shall be maintained as nearly equal to the atmospheric pressure as possible. Once established, the pressure shall be maintained during the entire test period.

❖ This section also references NFPA 252 or UL10B for fire door assemblies containing other than the typical side-hinged-type doors. NFPA 252 is a general test

INTERNATIONAL CODE COUNCIL®
Copyright © 2015 ICC. ALL RIGHTS RESERVED. Accessed by David Dammon on Jun 21, 2017 12:30:52 PM pursuant to License Agreement with ICC. No further reproduction or distribution authorized. ANY UNAUTHORIZED REPRODUCTION OR DISTRIBUTION IS A VIOLATION OF THE FEDERAL COPYRIGHT ACT AND THE LICENSE AGREEMENT, AND SUBJECT TO CIVIL AND CRIMINAL PENALTIES THEREUNDER.

standard that is not specific to any type of door. UL 10B was developed for negative pressure testing of fire door and fire shutter assemblies and is viewed as a viable test method, provided that the pressure is maintained at or nearly at atmospheric pressure. It is important to distinguish that the pressure testing that is required for side-hinged or pivoted swinging doors by Section 716.5.1 is not applicable to this section and other door types.

716.5.3 Door assemblies in corridors and smoke barriers. *Fire door* assemblies required to have a minimum *fire protection rating* of 20 minutes where located in *corridor* walls or *smoke barrier* walls having a *fire-resistance rating* in accordance with Table 716.5 shall be tested in accordance with NFPA 252 or UL 10C without the hose stream test.

Exceptions:

1. Viewports that require a hole not larger than 1 inch (25 mm) in diameter through the door, have not less than a 0.25-inch-thick (6.4 mm) glass disc and the holder is of metal that will not melt out where subject to temperatures of 1,700°F (927°C).
2. *Corridor* door assemblies in occupancies of Group I-2 shall be in accordance with Section 407.3.1.
3. Unprotected openings shall be permitted for *corridors* in multitheater complexes where each motion picture auditorium has not fewer than one-half of its required *exit* or *exit access doorways* opening directly to the exterior or into an *exit* passageway.
4. Horizontal sliding doors in *smoke barriers* that comply with Sections 408.6 and 408.8.4 in occupancies in Group I-3.

❖ This section covers doors in fire partitions specifically for corridors and doors in smoke barriers. NFPA 252 and UL 10C standards require a hose stream test on all fire door assemblies. The hose stream test is intended to provide a measurement of structural integrity by evaluating the ability of the assembly to withstand impact. It has come to be accepted that a hose stream is not justified for 20-minute doors.

Exception 1 accepts certain viewports that are not required to be tested as a part of a door assembly. The use of viewports is fairly common in corridors of a Group R-1 occupancy or other similar locations. Because of the limited size and materials, the overall performance of the door will not be greatly affected by including the viewport.

Exception 2 serves as a cross reference to the requirements for a Group I-2 occupancy, which does not require the door to have a fire protection rating.

Exception 3 has little application now due to the requirements of Sections 1020.1 and 903.2.1.1, Item 4. This exception was originally intended to allow the removal of latching hardware on the corridor door and, therefore, reduce the level of noise that was made when it was opened during a movie. Since the code now requires all multitheater complexes to be sprinklered and corridors in sprinklered Group A occupancies do not require a fire-resistive rating, the other provisions of the code would eliminate the need for the door to have a fire-protection rating and the latch that was considered as the problem is then generally not required.

Exception 4 serves as a cross reference to Section 408 for Group I-3 occupancies that contain requirements specific to smoke-tight door assemblies for specific locations within resident housing areas.

716.5.3.1 Smoke and draft control. *Fire door* assemblies shall meet the requirements for a smoke and draft control door assembly tested in accordance with UL 1784. The air leakage rate of the door assembly shall not exceed 3.0 cubic feet per minute per square foot ($0.01524\ m^3/s \cdot m^2$) of door opening at 0.10 inch (24.9 Pa) of water for both the ambient temperature and elevated temperature tests. Louvers shall be prohibited. Installation of smoke doors shall be in accordance with NFPA 105.

❖ This section is only applicable to fire doors in corridors or smoke barrier walls. When a corridor wall is required to be fire protection rated, a degree of smoke control is needed to provide a tenable space for egress. Fire doors in corridors and smoke barriers are also required to meet the criteria of UL 1784. This standard measures the movement of smoke through a door assembly. The installation of the doors is to be done according to NFPA 105 requirements. This standard, entitled *Standard for the Installation of Smoke Door Assemblies*, is a companion to the previously referenced NFPA 80. The criteria for air leakage are also provided in this section.

716.5.3.2 Glazing in door assemblies. In a 20-minute *fire door assembly*, the glazing material in the door itself shall have a minimum fire-protection-rated glazing of 20 minutes and shall be exempt from the hose stream test. Glazing material in any other part of the door assembly, including transom lights and sidelights, shall be tested in accordance with NFPA 257 or UL 9, including the hose stream test, in accordance with Section 716.6.

❖ Glazing in 20-minute-rated doors must also have a 20-minute fire protection rating and is not required to pass the hose stream test. Sidelites and transoms, which are not part of the fire door but instead are part of the fire-door assembly (see definitions in Section 202), are required to pass the hose stream test as detailed in NFPA 257 or UL 9.

716.5.4 Door assemblies in other fire partitions. *Fire door* assemblies required to have a minimum fire protection rating of 20 minutes where located in other *fire partitions* having a fire-resistance rating of 0.5 hour in accordance with Table 716.5 shall be tested in accordance with NFPA 252, UL 10B or UL 10C with the hose stream test.

❖ Section 708.1 lists the locations requiring fire partitions. Fire partitions, other than corridor walls, would be dwelling unit separation walls, sleeping unit separation walls, tenant space walls in malls and elevator lobby separation walls. Unlike the corridor doors in Section 716.5.3, these doors must be tested with the hose stream.

INTERNATIONAL CODE COUNCIL®
Copyright © 2015 ICC. ALL RIGHTS RESERVED. Accessed by David Dammon on Jun 21, 2017 12:30:52 PM pursuant to License Agreement with ICC. No further reproduction or distribution authorized. ANY UNAUTHORIZED REPRODUCTION OR DISTRIBUTION IS A VIOLATION OF THE FEDERAL COPYRIGHT ACT AND THE LICENSE AGREEMENT, AND SUBJECT TO CIVIL AND CRIMINAL PENALTIES THEREUNDER.

716.5.5 Doors in interior exit stairways and ramps and exit passageways. *Fire door* assemblies in interior exit stairways and ramps and exit passageways shall have a maximum transmitted temperature rise of not more than 450°F (250°C) above ambient at the end of 30 minutes of standard fire test exposure.

Exception: The maximum transmitted temperature rise is not required in buildings equipped throughout with an *automatic sprinkler system* installed in accordance with Section 903.3.1.1 or 903.3.1.2.

❖ This section requires that door assemblies utilized in interior exit stairways, ramp enclosures and exit passageways comply with the requirements of Section 715 and be tested in accordance with either NFPA 252 or UL 10C. This section adds a requirement that door construction is limited to a temperature rise of 450°F (250°C) on the unexposed side during the first 30 minutes of the standard fire test (NFPA 252). The labels for these doors are required to indicate that the temperature on the unexposed side is 450°F (250°C) or less above ambient temperature. The temperature rise rating is not required on doors in sprinklered buildings.

It should be noted that the temperature rise criterion is not otherwise a limitation with respect to a door receiving a fire protection rating. Therefore, simply specifying a $1^1/_2$-hour fire protection rating on the door does not ensure the additional requirements of Section 715.4.4 are met. The basis for limiting the temperature rise of the unexposed surface of exit doors to 450°F (250°C) is that a higher allowable temperature would provide enough radiant heat to discourage or even prevent building occupants from closely approaching or passing by the door assembly during a fire emergency. The intent is to protect the occupants in the vertical exit enclosure and exit passageway from excessive radiant heat. The exception provides relief from providing doors meeting temperature rise ratings when buildings are equipped throughout with either an NFPA 13 or 13R automatic sprinkler system.

716.5.5.1 Glazing in doors. Fire-protection-rated glazing in excess of 100 square inches (0.065 m^2) is not permitted. Fire-resistance-rated glazing in excess of 100 square inches (0.065 m^2) shall be permitted in door *fire doors.* Listed *fire-resistance-rated* glazing in a *fire door* shall have a maximum transmitted temperature rise in accordance with Section 716.5.5 when the *fire door* is tested in accordance with NFPA 252, UL 10B or UL 10C.

❖ This section only addresses glazing in doors in stairway enclosures and exit passage enclosures. Glazing 100 square inches (0.065 m^2) or less may be fire-protection-rated glazing. Glazing over 100 square inches (0.065 m^2) must be fire-resistance-rated glazing. The larger glazing panels in fire doors shall have a temperature rise rating of 450°F (250°C). This increased glazing is to be tested as a component of the door. The test methods to be utilized are listed in Section 716.5 and include NFPA 252, UL 10B and UL10C. The 100-square-inch (0.065 m^2) threshold is consistent with the glazing size limitations contained in Section 716.5.8.1.2.1. In general, the glazing is required to be tested first, and, if it meets the ASTM E119 acceptance criteria, it is listed as a fire-resistance-rated glazing. That "listed fire-resistance-rated glazing" is then installed in a fire door and tested in accordance with NFPA 252, including tests for the maximum transmitted temperature rise requirements of Section 716.5.5.

716.5.6 Fire door frames with transom lights and sidelights. Door frames with transom lights, sidelights or both, shall be permitted where a $^3/_4$-hour *fire protection rating* or less is required in accordance with Table 716.5. *Fire door* frames with transom lights, sidelights, or both, installed with fire-resistance-rated glazing tested as an assembly in accordance with ASTM E119 or UL 263 shall be permitted where a fire protection rating exceeding $^3/_4$ hour is required in accordance with Table 716.5.

❖ The purpose of this section is to address the use of fire-resistance-rated glazing in fire door frames with transoms or sidelights where the fire protection rating exceeds $^3/_4$ hour. For instances where the required rating is $^3/_4$ hour or less, fire protection-rated glazing meeting the test requirements of NFPA 252 shall apply. Fire-resistance-rated glazing is required where the required rating exceeds $^3/_4$ hour. The assembly must be tested in accordance with ASTM E119 or UL 263. Testing the assemblies to these criteria exposes the glazing to the appropriate temperature rise to substantiate the higher fire protection rating.

716.5.7 Labeled protective assemblies. *Fire door* assemblies shall be labeled by an *approved agency*. The *labels* shall comply with NFPA 80, and shall be permanently affixed to the door or frame.

❖ The requirement that fire doors be labeled leads to the provisions of Section 1703.5 being applied. A label indicates that the door assembly has not only passed the required fire test but that a follow-up inspection was also performed during production (see Section 1703.5.2). The building official should, therefore, verify that fire door assemblies are properly labeled, and not rely solely on a test report. To provide specific guidance, compliance with NFPA 80 is required.

716.5.7.1 Fire door labeling requirements. *Fire doors* shall be labeled showing the name of the manufacturer or other identification readily traceable back to the manufacturer, the name or trademark of the third-party inspection agency, the *fire protection rating* and, where required for *fire doors* in interior exit stairways and ramps and exit passageways by Section 716.5.5, the maximum transmitted temperature end point. Smoke and draft control doors complying with UL 1784 shall be labeled as such and shall comply with Section 716.5.7.3. Labels shall be approved and permanently affixed.

INTERNATIONAL CODE COUNCIL®
Copyright © 2015 ICC. ALL RIGHTS RESERVED. Accessed by David Dammon on Jun 21, 2017 12:30:52 PM pursuant to License Agreement with ICC. No further reproduction or distribution authorized. ANY UNAUTHORIZED REPRODUCTION OR DISTRIBUTION IS A VIOLATION OF THE FEDERAL COPYRIGHT ACT AND THE LICENSE AGREEMENT, AND SUBJECT TO CIVIL AND CRIMINAL PENALTIES THEREUNDER.

The label shall be applied at the factory or location where fabrication and assembly are performed.

❖ Labels on fire doors apply to the door only. The building official should verify that the remaining portions of the assembly (door frame, hardware and accessories) are also labeled for use with a labeled fire door. In addition to the appropriate fire protection rating, the labels for interior exit stairways and ramps and exit passageway doors are required to indicate the temperature rise on the unexposed surface after 30 minutes (see commentary, Section 716.5.5). A label is also to serve as evidence of both a required fire protection rating and third-party inspection—not solely as a manufacturer's identification (see commentary, Section 1703.5). To ensure appropriate labeling, it is required to occur at the actual location where fabrication and assembly occur.

716.5.7.1.1 Light kits, louvers and components. Listed light kits and louvers and their required preparations shall be considered as part of the labeled door where such installations are done under the listing program of the third-party agency. *Fire doors* and door assemblies shall be permitted to consist of components, including glazing, vision light kits and hardware that are listed or classified and labeled for such use by different third-party agencies.

❖ The code allows the use of listed light kits, listed louvers and their required preparation material to be considered as part of a labeled door where such light kits and louvers are installed under the conditions of their listing. Where such components are listed for use in such doors, they may be listed, or classified, and labeled by different third-party agencies. Louvers would be required to be listed with shutters and could not be used where prohibited elsewhere in the code.

716.5.7.2 Oversized doors. Oversized *fire doors* shall bear an oversized *fire door label* by an *approved agency* or shall be provided with a certificate of inspection furnished by an *approved* testing agency. Where a certificate of inspection is furnished by an *approved* testing agency, the certificate shall state that the door conforms to the requirements of design, materials and construction, but has not been subjected to the fire test.

❖ Recognizing that doors may exceed the required tested size, the code indicates that oversized doors that have a certificate of inspection from an approved testing agency are acceptable. For example, rolling steel-type fire doors are normally listed for 120 square feet (11 m^2) with no dimension in excess of 12 feet (3658 mm). Rolling steel-type doors that exceed these dimensions are permitted as long as they have certification indicating that they are constructed of materials of the same grade, thickness, shape, etc., as labeled doors. This is normally indicated with a certificate that reads "Oversized Fire Door Certificate."

The code does not specify what is considered as an "oversized door." This information would be dependent on the test standard and the dimensions listed within it. Note that the provisions of Sections 706.8 and 707.6 allow openings up to 156 square feet (14 m^2) in area.

716.5.7.3 Smoke and draft control door labeling requirements. Smoke and draft control doors complying with UL 1784 shall be labeled in accordance with Section 716.5.7.1 and shall show the letter "S" on the fire-rating *label* of the door. This marking shall indicate that the door and frame assembly are in compliance where *listed* or labeled gasketing is installed.

❖ When doors are required to be approved for smoke and draft control, they require a special label containing the letter "S." Without this label it is very difficult to assess in the field that the door meets UL 1784 and that listed or labeled gasketing is also required to be installed with the door and frame.

716.5.7.4 Fire door frame labeling requirements. *Fire door* frames shall be labeled showing the names of the manufacturer and the third-party inspection agency.

❖ It is required that the fire door frame be labeled with names of the manufacturer and the third-party testing agency to assist in the assessment of the door in the field. The actual rating is not required to be included.

716.5.7.5 Fire door operator labeling requirements. *Fire door* operators for horizontal sliding doors shall be labeled and listed for use with the assembly.

❖ Section 716.5 requires fire door assemblies to be installed in accordance with NFPA 80. NFPA 80 requires fire door operators to be listed for use with the door. Therefore, the requirements of this section related to operators of horizontal sliding fire doors are consistent with the requirements in NFPA 80 that, by reference, are required.

716.5.8 Glazing material. *Fire-rated glazing* and *fire-resistance-rated* glazing conforming to the opening protection requirements in Section 716.5 shall be permitted in *fire door* assemblies.

❖ This section of the code addresses fire-resistance-rated glazing and fire protection-rated glazing material in door assemblies installed in fire walls and fire barriers. It applies to glazing in doors, sidelights and transoms, but not to glazing in fire windows, which is covered in Section 716.6. Wired glass is no longer specifically mentioned and, if used, must meet the same test standards as other glazing material (see Table C716.3).

716.5.8.1 Size limitations. *Fire-resistance-rated* glazing shall comply with the size limitations in Section 716.5.8.1.1. Fire-protection-rated glazing shall comply with the size limitations of NFPA 80, and as provided in Section 716.5.8.1.2.

❖ Fire-resistance-rated glazing is allowed in more applications than fire-protection-rated glazing. Therefore the more stringent fire testing methods of Section 716.5.8.1.1 are required. NFPA 80 permits fire-protection-rated glazing in fire doors with a fire protection rating up to 3 hours. For $^1/_3$-, $^1/_2$-, $^3/_4$-, 1- and $1^1/_2$-hour

INTERNATIONAL CODE COUNCIL®
Copyright © 2015 ICC. ALL RIGHTS RESERVED. Accessed by David Dammon on Jun 21, 2017 12:30:52 PM pursuant to License Agreement with ICC. No further reproduction or distribution authorized. ANY UNAUTHORIZED REPRODUCTION OR DISTRIBUTION IS A VIOLATION OF THE FEDERAL COPYRIGHT ACT AND THE LICENSE AGREEMENT, AND SUBJECT TO CIVIL AND CRIMINAL PENALTIES THEREUNDER.

doors, the allowable area is a function of the glazed area tested. One-hour and $1^1/_2$- hour doors requiring a temperature rise rating are limited to 100 square inches (0.065 m^2) or less. While NFPA 80 allows a view panel 10 square inches (0.065 m^2) or less in 3-hour fire doors, Table 716.5 does not. The design must meet both NFPA 90 and Table 716.5.

716.5.8.1.1 Fire-resistance-rated glazing in door assemblies in fire walls and fire barriers rated greater than 1 hour. Fire-resistance-rated glazing tested to ASTM E119 or UL 263 and NFPA 252, UL 10B or UL 10C shall be permitted in *fire door assemblies* located in *fire walls* and in *fire barriers* in accordance with Table 716.5 to the maximum size tested and in accordance with their listings.

❖ Fire-resistance-rated glazing, not fire protection glazing, shall be permitted in fire walls and fire barrier walls to the maximum size tested and as allowed in Table 716.5. The glazing, if used in a fire door view panel, must be tested to two standards—both ASTM E119 or UL 263 and NFPA 252 or UL 10.

716.5.8.1.2 Fire-protection-rated glazing in door assemblies in fire walls and fire barriers rated greater than 1 hour. Fire-protection-rated glazing shall be prohibited in *fire walls* and *fire barriers* except as provided in Sections 716.5.8.1.2.1 and 716.5.8.1.2.2.

❖ Fire-protection-rated glazing, not fire-resistance-rated glazing, shall not be allowed in fire walls or fire barriers greater than 1 hour except for 100-square-inch (0.065 m^2) or less view panels in fire doors in horizontal exits and fire barrier walls. This view panel allowance recognizes the benefit of visual observance in an emergency situation.

716.5.8.1.2.1 Horizontal exits. Fire-protection-rated glazing shall be permitted as vision panels in *self-closing* swinging *fire door* assemblies serving as horizontal exits in *fire walls* where limited to 100 square inches (0.065 m^2) with no dimension exceeding 10 inches (0.3 mm).

❖ Only self-closing swinging fire doors and not all doors in horizontal exits are allowed the limited size view panel.

716.5.8.1.2.2 Fire barriers. Fire-protection-rated glazing shall be permitted in *fire doors* having a $1^1/_2$-hour *fire protection rating* intended for installation in *fire barriers*, where limited to 100 square inches (0.065 m^2).

❖ Only fire barrier doors required to be $1^1/_2$-hour fire rated are allowed to have the limited area view panel. Some fire barriers are required to be 3- and 4-hour rated, so doors with the 3-hour fire rating would not be allowed the view panels.

716.5.8.2 Elevator, stairway and ramp protectives. Approved fire-protection-rated glazing used in *fire door* assemblies in elevator, stairway and ramp enclosures shall be so located as to furnish clear vision of the passageway or approach to the elevator, stairway or ramp.

❖ The purpose of vision panels in exit doors and elevator doors is to permit observation by occupants who may be on the opposite side of the door before opening it. The limitations on the size of panels in Section 716.5.8.1 still apply.

716.5.8.3 Labeling. *Fire-rated glazing* shall bear a *label* or other identification showing the name of the manufacturer, the test standard and information required in Table 716.3 that shall be issued by an *approved agency* and shall be permanently identified on the glazing.

❖ This provision of the code maintains proper labeling for each piece of fire protection-rated glazing. The label must specify the name or fully identifying logo of the manufacturer, the test standard that was used to evaluate the glass and the rating established by the test.

716.5.8.4 Safety glazing. *Fire-protection-rated* glazing and *fire-resistance-rated* glazing installed in *fire door* assemblies shall comply with the safety glazing requirements of Chapter 24 where applicable.

❖ This section provides a cross reference to the safety glazing requirements of Chapter 24, specifically Section 2406. Not only do glass or glazed panels need to be fire-resistance rated, but the glass also must pass the test requirements of CPSC 16 CFR, Part 1201 if it is installed in locations subject to human impact loads. Locations where glazing presents a hazard to occupants upon impact are identified in Section 2406.4. This requirement reduces the hazards of someone falling into a fire-resistance-rated glass panel.

716.5.9 Door closing. *Fire doors* shall be latching and self- or automatic-closing in accordance with this section.

Exceptions:

1. *Fire doors* located in common walls separating *sleeping units* in Group R-1 shall be permitted without automatic- or *self-closing* devices.
2. The elevator car doors and the associated hoistway enclosure doors at the floor level designated for recall in accordance with Section 3003.2 shall be permitted to remain open during Phase I emergency recall operation.

❖ In order for fire doors to be effective, they must be in the closed position. Therefore, the preferred arrangement is to install self-closing doors. Recognizing that operational practices often require doors to be open for an extended period of time, automatic-closing doors are permitted as long as this opening will not pose a threat to occupant safety and the doors will self-latch. Automatic-closing devices enable the opening to be protected during a fire condition. The basic requirement for closing devices and specific requirements for automatic-closing and self-closing devices are given in NFPA 80 (see Section 716.5). The requirements for latching provides added confidence that the door will remain closed by being latched.

Exception 1 discusses doors in the separation walls of side-by-side sleeping units in Group R-1 occupancies. This allows two or more sleeping units

INTERNATIONAL CODE COUNCIL®
Copyright © 2015 ICC. ALL RIGHTS RESERVED. Accessed by David Dammon on Jun 21, 2017 12:30:52 PM pursuant to License Agreement with ICC. No further reproduction or distribution authorized. ANY UNAUTHORIZED REPRODUCTION OR DISTRIBUTION IS A VIOLATION OF THE FEDERAL COPYRIGHT ACT AND THE LICENSE AGREEMENT, AND SUBJECT TO CIVIL AND CRIMINAL PENALTIES THEREUNDER.

to be opened to each other so that a suite can be established if desired. If the adjacent rooms are rented by separate people, the doors will generally be closed. If the rooms are rented together, this permits a larger room to be created simply by opening the door. Because most rooms only open to one adjacent room, most configurations would still result in a solid fire partition without any door openings between this suite of rooms and any other sleeping units.

Exception 2 coordinates with the requirements related to elevator recall that are found in Chapter 30. Since the hoistway doors generally provide the shaft opening protection, this exception is needed for this situation.

716.5.9.1 Latch required. Unless otherwise specifically permitted, single *fire doors* and both leaves of pairs of side-hinged swinging *fire doors* shall be provided with an active latch bolt that will secure the door when it is closed.

❖ This section merely reinforces the acceptance criteria of fire test standards for fire doors. A door that does not latch would generally be an ineffective barrier against the spread of a fire and would be unable to withstand the pressures of a fire in the adjacent space. Such hardware must be listed for use on fire doors.

716.5.9.1.1 Chute intake door latching. Chute intake doors shall be positive latching, remaining latched and closed in the event of latch spring failure during a fire emergency.

❖ Latching devices for chute intake doors must provide a positive latch and, in the event of a latch spring failure, shall remain closed. The proponent of this code change stated that simple technology exists that can accomplish this fail-safe provision.

716.5.9.2 Automatic-closing fire door assemblies. Automatic-closing *fire door* assemblies shall be *self-closing* in accordance with NFPA 80.

❖ NFPA 80 requires doors to be automatic closing with a closing device and a separate hold-release device or hold-open mechanism that closes upon activation of an automatic fire detector acceptable to the building official. This provision simply ensures that when the door is released it will move to the closed position.

716.5.9.3 Smoke-activated doors. Automatic-closing doors installed in the following locations shall be automatic-closing by the actuation of smoke detectors installed in accordance with Section 907.3 or by loss of power to the smoke detector or hold-open device. Doors that are automatic-closing by smoke detection shall not have more than a 10-second delay before the door starts to close after the smoke detector is actuated:

1. Doors installed across a *corridor*.
2. Doors installed in the enclosures of *exit access stairways* and *ramps* in accordance with Sections 1019 and 1023, respectively.
3. Doors that protect openings in *exits* or *corridors* required to be of fire-resistance-rated construction.
4. Doors that protect openings in walls that are capable of resisting the passage of smoke in accordance with Section 509.4.
5. Doors installed in *smoke barriers* in accordance with Section 709.5.
6. Doors installed in *fire partitions* in accordance with Section 708.6.
7. Doors installed in a *fire wall* in accordance with Section 706.8.
8. Doors installed in shaft enclosures in accordance with Section 713.7.
9. Doors installed in waste and linen chutes, discharge openings and access and discharge rooms in accordance with Section 713.13. Loading doors installed in waste and linen chutes shall meet the requirements of Sections 716.5.9 and 716.5.9.1.1.
10. Doors installed in the walls for compartmentation of underground buildings in accordance with Section 405.4.2.
11. Doors installed in the elevator lobby walls of underground buildings in accordance with Section 405.4.3.
12. Doors installed in smoke partitions in accordance with Section 710.5.2.3.

❖ Since the integrity of the means of egress or general occupant safety can be compromised by smoke, doors at certain locations are required to be automatic closing upon the detection of smoke. The automatic closer is also to activate upon loss of power to the smoke detector and to the hold-open device. NFPA 72, as referenced in Chapter 9, contains criteria relative to the number and location of detectors necessary for door release service. NFPA 80 also provides criteria for closing devices required for a fire door.

716.5.9.4 Doors in pedestrian ways. Vertical sliding or vertical rolling steel *fire doors* in openings through which pedestrians travel shall be heat activated or activated by smoke detectors with alarm verification.

❖ Where vertical sliding or rolling doors are provided as an opening protective through which pedestrian travel is intended, automatic-closing actuation is not permitted via a smoke detector unless alarm verification is provided. Sudden closing of these doors and the potential of false actuation of smoke detectors create a hazard to occupants moving through the opening. Although pedestrian travel is intended in openings regulated by this section, a common oversight is that the vertical rolling or sliding door is not permitted to be considered an egress component, as stated in Section 1008.1.2.

INTERNATIONAL CODE COUNCIL®
Copyright © 2015 ICC. ALL RIGHTS RESERVED. Accessed by David Dammon on Jun 21, 2017 12:30:52 PM pursuant to License Agreement with ICC. No further reproduction or distribution authorized. ANY UNAUTHORIZED REPRODUCTION OR DISTRIBUTION IS A VIOLATION OF THE FEDERAL COPYRIGHT ACT AND THE LICENSE AGREEMENT, AND SUBJECT TO CIVIL AND CRIMINAL PENALTIES THEREUNDER.

716.5.10 Swinging fire shutters. Where fire shutters of the swinging type are installed in exterior openings, not less than one row in every three vertical rows shall be arranged to be readily opened from the outside, and shall be identified by distinguishing marks or letters not less than 6 inches (152 mm) high.

❖ The fire department needs access to openings for ventilation purposes and entry. Therefore, if an extensive amount of swinging shutters is used, at least one in every three vertical rows must be readily openable from the outside. The operable shutter must also be easily recognized for use by the fire department. The identification is on the exterior.

716.5.11 Rolling fire shutters. Where fire shutters of the rolling type are installed, such shutters shall include *approved* automatic-closing devices.

❖ Rolling fire shutters require a detecting device to initiate the closing sequence. The actuation shall be by smoke detectors in locations required by Section 716.5.9.3.

716.6 Fire-protection-rated glazing. Glazing in *fire window assemblies* shall be fire protection rated in accordance with this section and Table 716.6. Glazing in *fire door* assemblies shall comply with Section 716.5.8. Fire-protection-rated glazing in fire window assemblies shall be tested in accordance with and shall meet the acceptance criteria of NFPA 257 or UL 9. Fire-protection-rated glazing shall comply with NFPA 80. Openings in nonfire-resistance-rated *exterior wall* assemblies that require protection in accordance with Section 705.3, 705.8, 705.8.5 or 705.8.6 shall have a fire protection rating of not less than $^3/_4$ hour. Fire-protection-rated glazing in 0.5-hour fire-resistance-rated partitions is permitted to have an 0.33-hour fire protection rating.

❖ This section covers glazing in fire windows, not fire doors. The appropriate test standards referenced for fire windows (fire-protection-rated glazing) are NFPA 257 or UL 9, which are pass/fail tests with a specified time of exposure. It is important to realize that this section only applies to materials that are tested in accordance with the two identified standards and that are intended as an opening protective in a wall that requires openings with a fire protection rating. The distinction between fire-protection-rated glazing and a fire-resistance-rated glazing must be understood. Glazing that has a fire-resistance rating is not required to comply with Section 716 if it is tested and installed in accordance with its listing (see Section 716.2). It is required in many openings where fire-protection-rated glazing is not allowed to be installed. Fire windows with fire-protection-rated glazing are only allowed in incidental use and occupancy separation fire barrier walls rated at 1 hour or less, fire partitions, smoke barriers and fire-resistance-rated exterior walls. In addition, Sections 1023.4 and 1024.5 would not allow fire windows in exit enclosures and exit passageway enclosures. The basic premise of the referenced standard is that it evaluates the effectiveness of windows when used as opening protectives to remain in place during the specified time of exposure. In addition to being subjected to a predetermined fire condition, the assembly is also subjected to a hose stream impact test. The test procedure does not measure or evaluate heat transmission or radiation through the assembly. Table 716.6 gives the fire ratings and the marking requirements for fire windows.

TABLE 716.6. See below.

❖ Table 716.6 prescribes the minimum fire protection ratings for fire windows, relative to the type and fire-resistance rating of the wall. Once the purpose and fire-resistance rating of the wall are identified, the

TABLE 716.6
FIRE WINDOW ASSEMBLY FIRE PROTECTION RATINGS

TYPE OF WALL ASSEMBLY	REQUIRED WALL ASSEMBLY RATING (hours)	MINIMUM FIRE WINDOW ASSEMBLY RATING (hours)	FIRE-RATED GLAZING MARKING
Interior walls			
Fire walls	All	NP[a]	W-XXX[b]
Fire barriers	>1	NP[a]	W-XXX[b]
	1	NP[a]	W-XXX[b]
Incidental use areas (Section 707.3.7), Mixed occupancy separations (Section 707.3.9)	1	$^3/_4$	OH-45 or W-60
Fire partitions	1	$^3/_4$	OH-45 or W-60
	0.5	$^1/_3$	OH-20 or W-30
Smoke barriers	1	$^3/_4$	OH-45 or W-60
Exterior walls	>1	$1^1/_2$	OH-90 or W-XXX[b]
	1	$^3/_4$	OH-45 or W-60
	0.5	$^1/_3$	OH-20 or W-30
Party wall	All	NP	Not Applicable

NP = Not Permitted.

a. Not permitted except fire-resistance-rated glazing assemblies tested to ASTM E119 or UL 263, as specified in Section 716.2.

b. XXX = The fire rating duration period in minutes, which shall be equal to the *fire-resistance rating* required for the wall assembly.

INTERNATIONAL CODE COUNCIL®
Copyright © 2015 ICC. ALL RIGHTS RESERVED. Accessed by David Dammon on Jun 21, 2017 12:30:52 PM pursuant to License Agreement with ICC. No further reproduction or distribution authorized. ANY UNAUTHORIZED REPRODUCTION OR DISTRIBUTION IS A VIOLATION OF THE FEDERAL COPYRIGHT ACT AND THE LICENSE AGREEMENT, AND SUBJECT TO CIVIL AND CRIMINAL PENALTIES THEREUNDER.

minimum required fire protection rating of windows and the required marking are determined by using the table. The requirements in this table are not to be confused with the ratings for fire doors provided in Table 716.5 since the requirements do differ. For a comparison of the provisions of the two tables see Table C716.3.

716.6.1 Testing under positive pressure. NFPA 257 or UL 9 shall evaluate fire-protection-rated glazing under positive pressure. Within the first 10 minutes of a test, the pressure in the furnace shall be adjusted so not less than two-thirds of the test specimen is above the neutral pressure plane, and the neutral pressure plane shall be maintained at that height for the balance of the test.

❖ Under fire conditions there is likely to be positive pressure acting on the window. Therefore, this section requires that tested window assemblies be subjected to positive pressure conditions during the test. This requirement is consistent with standards used for testing window assemblies in the United States and other countries.

716.6.2 Nonsymmetrical glazing systems. Nonsymmetrical fire-protection-rated glazing systems in *fire partitions*, *fire barriers* or in *exterior walls* with a *fire separation distance* of 5 feet (1524 mm) or less pursuant to Section 705 shall be tested with both faces exposed to the furnace, and the assigned *fire protection rating* shall be the shortest duration obtained from the two tests conducted in compliance with NFPA 257 or UL 9.

❖ This section requires that glazing systems that by design are not the same on either side be tested on both sides. The rating resulting from these tests will be determined from the lower performing side. These requirements are for fire-type barriers (versus smoke) within buildings and when used on an exterior wall with a small separation distance [less than 5 feet (1524 mm)]. The concern here is the same as for nonsymmetrical wall assemblies in Section 703.2.1.

716.6.3 Safety glazing. *Fire-protection-rated* glazing and *fire-resistance-rated* glazing installed in *fire window assemblies* shall comply with the safety glazing requirements of Chapter 24 where applicable.

❖ This section provides a cross reference to the safety glazing requirements of Chapter 24, specifically Section 2406. Not only do glass or glazed panels need to be fire-resistance rated, but the glass also must pass the test requirements of CPSC 16 CFR, Part 1201 if it is installed in locations subject to human impact loads. Locations where glazing presents a hazard to occupants upon impact are identified in Section 2406.4. This requirement reduces the hazards of someone being injured by falling into a fire-resistance-rated glass panel.

716.6.4 Glass and glazing. Glazing in *fire window assemblies* shall be fire-protection-rated glazing installed in accordance with and complying with the size limitations set forth in NFPA 80.

❖ Nothing in this section prohibits fire-resistance-rated glazing from use in fire window assemblies installed in accordance with their listing. Fire protection-rated glazing shall be installed in accordance with NFPA 80.

716.6.5 Installation. Fire-protection-rated glazing shall be in the fixed position or be automatic-closing and shall be installed in *approved* frames.

❖ In order to adequately protect the opening, protection must be in place during a fire event. This is achieved by either having the glazing in a permanently fixed position or having the glazing protective actuated by a detection device.

716.6.6 Window mullions. Metal mullions that exceed a nominal height of 12 feet (3658 mm) shall be protected with materials to afford the same *fire-resistance rating* as required for the wall construction in which the protective is located.

❖ Fire windows are normally tested in panels not exceeding 1,296 square inches (0.85 m^2) and 54 inches (1372 mm) in width or length, respectively. The code does, however, permit panels to be installed adjacent to one another. This section requires that mullions higher than 12 feet (3658 mm) meet the criteria for fire-resistance-rated glazing (ASTM E119 or UL 263), not fire-protection-rated glazing (NFPA 257).

716.6.7 Interior fire window assemblies. Fire-protection-rated glazing used in *fire window assemblies* located in *fire partitions* and *fire barriers* shall be limited to use in assemblies with a maximum *fire-resistance rating* of 1 hour in accordance with this section.

❖ Since fire-protection-rated glazing has a maximum $^3/_4$-hour fire-resistance rating, fire windows using fire-protection-rated glazing may only be used in fire-partitions (1-hour rated in accordance with Section 708.3) and fire barriers having a fire-resistance rating of 1 hour. These limitations are indicated in Table 716.6.

716.6.7.1 Where $^3/_4$-hour fire protection window assemblies permitted. Fire-protection-rated glazing requiring 45-minute opening protection in accordance with Table 716.6 shall be limited to *fire partitions* designed in accordance with Section 708 and *fire barriers* utilized in the applications set forth in Sections 707.3.6 and 707.3.8 where the *fire-resistance rating* does not exceed 1 hour. Fire-resistance-rated glazing assemblies tested in accordance with ASTM E119 or UL 263 shall not be subject to the limitations of this section.

❖ Not all 1-hour fire-resistance-rated walls are allowed to have fire windows with fire-protection-rated glazing. All fire partitions and certain fire barrier walls may have fire protection-rated glazing. Only 1-hour fire-resistance-rated fire barriers in incidental use separations (Section 707.3.7) and mixed occupancy separa-

INTERNATIONAL CODE COUNCIL®
Copyright © 2015 ICC. ALL RIGHTS RESERVED. Accessed by David Dammon on Jun 21, 2017 12:30:52 PM pursuant to License Agreement with ICC. No further reproduction or distribution authorized. ANY UNAUTHORIZED REPRODUCTION OR DISTRIBUTION IS A VIOLATION OF THE FEDERAL COPYRIGHT ACT AND THE LICENSE AGREEMENT, AND SUBJECT TO CIVIL AND CRIMINAL PENALTIES THEREUNDER.

tions (Section 707.3.9) may have fire protection-rated glazing in fire windows. Shaft walls, exit access stairway enclosures, interior exit stairways, exit passageway enclosures and control area separation walls are considered fire barrier walls, though when rated for 1 hour, are not allowed to have fire windows with fire-protection-rated glazing. Of course, nothing in this section prohibits fire-resistance-rated glazing in fire windows in some of those applications.

716.6.7.2 Area limitations. The total area of the glazing in fire-protection-rated window assemblies shall not exceed 25 percent of the area of a common wall with any room.

❖ The area limitations for interior fire windows vary from those found in Section 707.6 for fire barriers. Openings of all types in fire barriers are limited to 25 percent of the length of the wall while this section bases the limitation on fire windows to the area of the wall. Therefore, when dealing with a fire barrier, both the 25-percent length and area would be applicable. When dealing with a fire partition, only the area limitation would apply.

The phrase "common wall" will limit the size to the actual visible wall that is shared and can be seen in the two rooms. The area of the wall that continues through the interstitial space above a ceiling would not be included when determining the wall size. In addition, if the ceiling height differs on the two sides of the wall, the lowest ceiling height would be used to determine what is considered the "common wall."

716.6.7.3 Where $^1/_3$-hour fire-protection window assemblies permitted. Fire-protection-rated glazing shall be permitted in window assemblies tested to NFPA 257 or UL 9 in *smoke barriers* and *fire partitions* requiring $^1/_3$-hour opening protection in accordance with Table 716.6.

❖ The previous sections dealt with fire partitions and fire barriers, whereas this section addresses smoke barriers and fire partitions requiring only 20-minute opening protectives. Fire windows with fire-protection-rated glazing are permitted in such partitions with the ratings and markings shown in Table 716.6.

716.6.8 Labeling requirements. Fire-protection-rated glazing shall bear a label or other identification showing the name of the manufacturer, the test standard and information required in Section 716.3.2 and Table 716.6 that shall be issued by an approved agency and permanently identified on the glazing.

❖ This section requires fire-protection-rated glazing (see Section 716.6) to be labeled by an approved testing agency. This requirement enables the code user to verify that a fire window has been tested to the correct standard and that the test was properly performed by experienced people with the correct equipment. Table 716.6 details the necessary information required on the fire window label. Each glazed panel is to be permanently identified. These descriptive requirements are used to verify that fire window assemblies have been correctly tested. The label on each and every fire window assembly must contain the manufacturer's name, the test standard used and the fire protection rating. The label must be applied at the manufacturer's plant by the third-party inspection agency. As a reminder, fire-resistance-rated glazing is not regulated by this section (see Section 716.2). Labeling requirements for fire-resistance-rated glazing can be found in Section 703.6.

SECTION 717
DUCTS AND AIR TRANSFER OPENINGS

717.1 General. The provisions of this section shall govern the protection of duct penetrations and air transfer openings in assemblies required to be protected and duct penetrations in nonfire-resistance-rated floor assemblies.

❖ Fire dampers, smoke dampers and combination fire/smoke dampers protect openings created by duct penetrations and transfer openings in assemblies required to be fire-resistance rated. Ceiling radiation dampers protect duct penetrations, which only penetrate the ceiling membrane of a fire-resistance-rated assembly. Penetrations with ducts through nonfire-resistance-rated floors are also regulated by this section. This section includes installation, testing, rating, and actuation requirements in Sections 717.2, 717.3.1, 717.3.2 and 717.3.3, respectively. Section 717.3.1 4 indicates that dampers are to bear the label of an approved agency. When dampers are provided, they must be properly maintained and, therefore, must be accessible (see Section 717.4). Section 717.5 indicates the conditions in which dampers are required at penetrations through vertical assemblies. Duct penetrations and transfer openings through horizontal assemblies, including requirements for ceiling dampers, are regulated in Section 717.6. The provisions of Section 717 are duplicated in Section 607 of the IMC. All the requirements for protection of duct penetrations and transfer openings are found in this section. This section is directly referenced by sections that address vertical and horizontal fire-resistance-rated assemblies, as follows:

Exterior walls	Section 705.10
Fire walls	Section 706.11
Fire barriers	Section 707.10
Fire partitions	Section 708.9
Smoke barriers	Section 709.8
Smoke partitions	Section 710.8
Vertical openings	Section 712.1.6
Shafts	Section 713.10
Penetrations	Section 714.1.1

717.1.1 Ducts and air transfer openings. Ducts transitioning horizontally between shafts shall not require a shaft

INTERNATIONAL CODE COUNCIL®
Copyright © 2015 ICC. ALL RIGHTS RESERVED. Accessed by David Dammon on Jun 21, 2017 12:30:52 PM pursuant to License Agreement with ICC. No further reproduction or distribution authorized. ANY UNAUTHORIZED REPRODUCTION OR DISTRIBUTION IS A VIOLATION OF THE FEDERAL COPYRIGHT ACT AND THE LICENSE AGREEMENT, AND SUBJECT TO CIVIL AND CRIMINAL PENALTIES THEREUNDER.

enclosure provided that the duct penetration into each associated shaft is protected with *dampers* complying with this section.

❖ This section addresses a typical condition where the design requires HVAC ductwork to jog horizontally then continue vertically within the building. This is allowed without a continuous (horizontal) shaft enclosure as long as the penetrations through the vertical shafts are protected with the appropriate dampers. See Commentary Figure 717.1.1.

717.1.2 Ducts that penetrate fire-resistance-rated assemblies without dampers. Ducts that penetrate fire-resistance-rated assemblies and are not required by this section to have *dampers* shall comply with the requirements of Sections 714.2 through 714.3.3. Ducts that penetrate *horizontal assemblies* not required to be contained within a shaft and not required by this section to have *dampers* shall comply with the requirements of Sections 714.4 through 714.5.2.

❖ This section identifies how duct penetrations are to be properly protected, either in accordance with Section 717 using fire or fire/smoke dampers where required or, if dampers are not required, in accordance with Section 714 with materials that have been tested to either ASTM E814 or ASTM E119 or UL 263 to maintain the fire-resistance rating of the fire assembly. This section is coordinated with Section 714.3 (fire-resistance-rated walls) and Section 714.4 (horizontal assemblies). If a duct does not require a damper, the penetration of that duct through a fire-resistance-rated assembly must be protected as a through penetration in accordance with Section 714. If a duct does require a fire damper, smoke damper or combination fire/smoke damper, the through-penetration protection requirements of Section 714 will not apply. The reason is that these dampers are fire tested as a complete assembly installed within a fire-resistance-rated wall assembly or horizontal assembly. The test and resulting listing will include not only the damper but also all required mounting hardware for the duct at the point where it penetrates the wall or floor. As long as the complete installation details in the listing are complied with, there is no need for any additional protection (e.g., per Section 714) to ensure that the fire-resistance rating of the wall assembly or horizontal assembly is maintained. However, it is possible to pass the fire test and obtain a listing for a fire damper or smoke damper without completely preventing smoke migration outside the duct, such as through the gap between the outside surface of the duct and the inside surface of the hole made to accommodate the duct. This can be quite apparent in some cases, as daylight might be visible from one side of the wall or floor assembly to the other side. This is because the tested dampers generally require a minimum gap to be provided between the damper and the wall or floor it is installed in. Although not required by the code, this gap is sometimes closed with a sealant in order to provide more complete smoke resistance for the wall or floor assembly. It is imperative that an intumescent firestop sealant not be used on the outside of the duct to seal this gap. The expansion pressure of the intumescent sealant can buckle the duct, thus hindering or preventing the

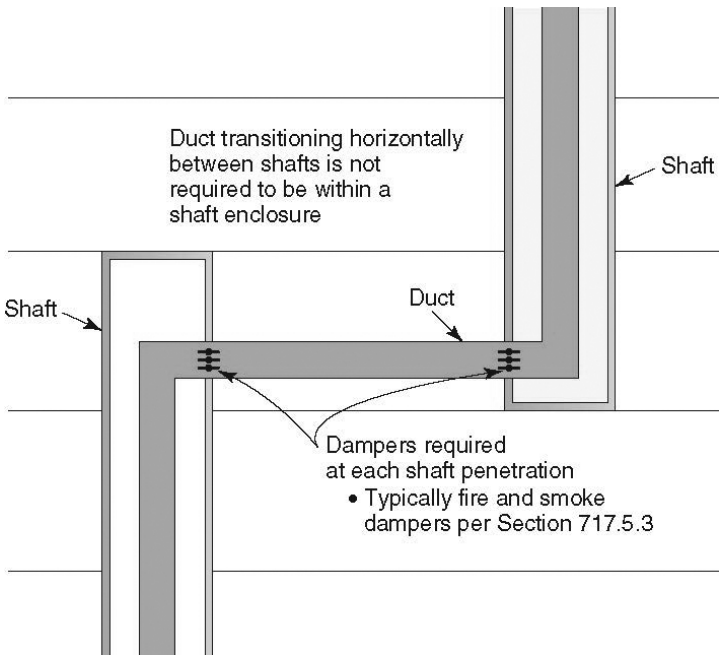

Figure 717.1.1
HORIZONTAL DUCT BETWEEN TWO SHAFTS

INTERNATIONAL CODE COUNCIL®
Copyright © 2015 ICC. ALL RIGHTS RESERVED. Accessed by David Dammon on Jun 21, 2017 12:30:52 PM pursuant to License Agreement with ICC. No further reproduction or distribution authorized. ANY UNAUTHORIZED REPRODUCTION OR DISTRIBUTION IS A VIOLATION OF THE FEDERAL COPYRIGHT ACT AND THE LICENSE AGREEMENT, AND SUBJECT TO CIVIL AND CRIMINAL PENALTIES THEREUNDER.

proper operation of the damper under fire conditions.

The purpose of this section is to point the user to the annular space protection requirements for ducts that penetrate nonfire-resistance-rated assemblies, when applicable. The referenced section, Section 717.6.3, provides options for protecting these types of penetrations, two of which contain requirements for annular space protection.

717.1.2.1 Ducts that penetrate nonfire-resistance-rated assemblies. The space around a duct penetrating a nonfire-resistance-rated floor assembly shall comply with Section 717.6.3.

❖ The purpose of this section is to point the user to the annular space protection requirements for ducts that penetrate nonfire-resistance-rated assemblies, when applicable. The referenced section, Section 717.6.3, provides options for protecting these types of penetrations, two of which contain requirements for annular space protection.

717.2 Installation. *Fire dampers, smoke dampers, combination fire/smoke dampers* and *ceiling radiation dampers* located within air distribution and smoke control systems shall be installed in accordance with the requirements of this section, the manufacturer's instructions and the *dampers'* listing.

❖ This section performs two regulating functions. First, it requires that dampers be installed in accordance with the manufacturer's installation instructions and listing. Such instructions will result in an installation that not only protects the penetration when the damper is actuated, but also create a protected opening should the duct collapse. Second, this section introduces Sections 717.2.1 and 717.2.2, which address the relationship of dampers with smoke control systems and hazardous exhaust ducts.

717.2.1 Smoke control system. Where the installation of a *fire damper* will interfere with the operation of a required smoke control system in accordance with Section 909, *approved* alternative protection shall be utilized. Where mechanical systems including ducts and *dampers* utilized for normal building ventilation serve as part of the smoke control system, the expected performance of these systems in smoke control mode shall be addressed in the rational analysis required by Section 909.4.

❖ Fire dampers are not permitted where they will obstruct or inhibit the proper operation of a required smoke control system. In a smoke control system, fire dampers are replaced with an alternative means of protection subject to the approval of the building official. Alternative protection may be in the form of a fire-resistance-rated shaft enclosure, steel subducts extending at least 22 inches (559 mm) vertically in an exhaust shaft having continuous upward airflow or a fire-resistance-rated horizontal duct enclosure. If a smoke control system is installed that is not required by the code, it is still subject to the same fire damper requirements as a required smoke control system; however, such nonmandated systems would be permitted to employ fire dampers instead of the mandatory alternative protection prescribed in this section for required smoke control systems. A required smoke control system is an important life-safety system and the code-mandated provisions here combine with Section 909 design requirements to ensure operability. This section does more than simply allow fire dampers to be omitted in required smoke control systems; it mandates the omission of fire dampers where such system operation could be jeopardized. Lastly, this section allows the normal building ventilation system (HVAC) to be employed to serve as the smoke control system, as long as the performance is substantiated.

717.2.2 Hazardous exhaust ducts. *Fire dampers* for hazardous exhaust duct systems shall comply with the *International Mechanical Code*.

❖ This section refers the user to the IMC. In particular, Section 510 of the IMC deals with hazardous exhaust systems. Hazardous exhaust can be emissions including flammable vapors, gases, fumes, mists or dusts, and airborne materials posing a health hazard. These types of duct systems are not allowed by Section 510.6.1 of the IMC to have fire or smoke dampers, but Section 510.6.3 of the IMC requires fire-resistance-rated duct enclosure construction from the point of penetrations of a fire-resistance-rated wall to the exterior. Section 510.4 of the IMC requires independent systems.

717.3 Damper testing, ratings and actuation. *Damper* testing, ratings and actuation shall be in accordance with Sections 717.3.1 through 717.3.3.

❖ The purpose of this section is to introduce the requirements for the testing, rating and actuation of fire dampers, smoke dampers, combination fire/smoke dampers and ceiling radiation dampers.

717.3.1 Damper testing. Dampers shall be listed and labeled in accordance with the standards in this section.

1. *Fire dampers* shall comply with the requirements of UL 555. Only *fire dampers* and *ceiling radiation dampers* labeled for use in dynamic systems shall be installed in heating, ventilation and air-conditioning systems designed to operate with fans on during a fire.
2. Smoke dampers shall comply with the requirements of UL 555S.
3. Combination fire/smoke dampers shall comply with the requirements of both UL 555 and UL 555S.
4. Ceiling radiation dampers shall comply with the requirements of UL 555C or shall be tested as part of a fire-resistance-rated floor/ceiling or roof/ceiling assembly in accordance with ASTM E119 or UL 263.
5. *Corridor dampers* shall comply with requirements of both UL 555 and UL 555S. *Corridor dampers* shall demonstrate acceptable closure performance when subjected to 150 feet per minute (0.76 mps) velocity across

INTERNATIONAL CODE COUNCIL®
Copyright © 2015 ICC. ALL RIGHTS RESERVED. Accessed by David Dammon on Jun 21, 2017 12:30:52 PM pursuant to License Agreement with ICC. No further reproduction or distribution authorized. ANY UNAUTHORIZED REPRODUCTION OR DISTRIBUTION IS A VIOLATION OF THE FEDERAL COPYRIGHT ACT AND THE LICENSE AGREEMENT, AND SUBJECT TO CIVIL AND CRIMINAL PENALTIES THEREUNDER.

the face of the damper during the UL 555 fire exposure test.

❖ The purpose of this section is to provide the physical testing requirements for fire dampers, smoke dampers, combination fire/smoke dampers and ceiling radiation dampers. A fire damper is a device designed to close automatically upon detection of heat, to interrupt migratory airflow and to restrict the passage of flame through duct penetrations of rated assemblies. Fire dampers are required to be tested in accordance with UL 555. The criteria for acceptance of fire dampers require that they close and latch automatically, limit movement (warping) to prescribed limitations and remain in the opening for the fire exposure period for which they are rated. In addition to being tested, fire dampers must be labeled and, in accordance with Section 1703.5, require a follow-up service.

Fire dampers and ceiling radiation dampers are classified by UL 555 for use in static and dynamic airflow conditions. Fire dampers and ceiling radiation dampers installed in air-distribution systems that remain in operation after smoke or heat from a fire is detected (a dynamic airflow condition) must be labeled for such use. Static fire dampers may not operate properly under dynamic conditions. Therefore, fire dampers used in systems designed with dynamic airflow must be tested and labeled for closure under the anticipated airflow and pressure conditions.

The manufacturer's installation instructions must be followed. Fire dampers are to be installed in the assembly such that an opening created by a duct collapse is properly protected. Dampers are to be installed in accordance with their tested application, either vertically or horizontally. Although the test criteria of UL 555 are not functions of a horizontal versus vertical application, there are specific tests required for spring-operated dampers that are not required for gravity operated types. Therefore, the type of damper used requires the building official to determine if it is acceptable for the given application.

Fire dampers are required to have the minimum fire protection rating established in Table 717.3.2.1. A smoke damper is a device installed in a duct, typically in smoke control systems or to protect smoke barrier penetrations, which operates to seal the duct against smoke leakage. Fire dampers tested to UL 555 are not rated for smoke leakage. Fire dampers are activated at a predetermined temperature using a fusible link or other heat-responsive device. Smoke dampers, on the other hand, are tested for leakage in accordance with the requirements of UL 555S and are activated by a smoke detector in the duct or area to be served.

Ceiling radiation dampers, formerly known as ceiling dampers, are designed to limit the radiative heat transfer through an air inlet/outlet opening in the ceiling membrane of a fire-resistance-rated floor/ceiling or roof/ceiling assembly. Ceiling radiation dampers are evaluated either in accordance with UL 555C or as part of the floor/ceiling or roof/ceiling assembly tested to ASTM E119 or UL 263. Ceiling radiation dampers evaluated in accordance with UL 555C are investigated for use in lieu of hinged-door-type dampers commonly specified in the listing of fire-resistance-rated floor/ceiling or roof/ceiling assemblies. UL 555C also provides criteria for the construction of ceiling dampers. Ceiling radiation dampers investigated as part of the fire-resistance-rated floor/ceiling or roof/ceiling assembly are specified in the listing of such assemblies. The description of the tested assembly will include a description of the ceiling damper and its installation. A fire damper is a device designed to close automatically upon detection of heat, to interrupt migratory airflow and to restrict the passage of flame through duct penetrations of rated assemblies. Since ceiling and fire dampers have different design criteria, a fire damper must not be used in place of a ceiling damper.

Corridor dampers are addressed in Item 5. This item describes the testing standards that corridor dampers must meet. Corridor dampers are also required to demonstrate acceptable closure performance when subjected to 150 fpm velocity across the face of the damper during fire exposure testing.

717.3.2 Damper rating. *Damper* ratings shall be in accordance with Sections 717.3.2.1 through 717.3.2.4.

❖ The purpose of this section is to provide direction to the requirements for the ratings of fire dampers (Section 717.3.2.1), smoke dampers (Section 717.3.2.2) and combination fire/smoke dampers (Section 717.3.2.3).

717.3.2.1 Fire damper ratings. *Fire dampers* shall have the minimum *fire protection rating* specified in Table 717.3.2.1 for the type of penetration.

❖ This section primarily serves the purpose of requiring fire damper ratings to be determined in accordance with Table 717.3.2.1. Table 717.3.2.1 sets the minimum damper ratings based upon the type of assemblies being penetrated.

TABLE 717.3.2.1
FIRE DAMPER RATING

TYPE OF PENETRATION	MINIMUM DAMPER RATING (hours)
Less than 3-hour fire-resistance-rated assemblies	1.5
3-hour or greater fire-resistance-rated assemblies	3

❖ The table summarizes the required hourly ratings for fire dampers based on the fire-resistance-rated assembly that is being penetrated by the air distribution system. The left-hand column lists the associated hourly ratings of either wall or horizontal assemblies. The code user enters the line item in the left-hand column based on the applicable fire-resistance rating of the element penetrated and reads across to the right column for the appropriate fire damper rating. These fire damper ratings are established based on tests conducted in accordance with UL 555 and rep-

INTERNATIONAL CODE COUNCIL®
Copyright © 2015 ICC. ALL RIGHTS RESERVED. Accessed by David Dammon on Jun 21, 2017 12:30:52 PM pursuant to License Agreement with ICC. No further reproduction or distribution authorized. ANY UNAUTHORIZED REPRODUCTION OR DISTRIBUTION IS A VIOLATION OF THE FEDERAL COPYRIGHT ACT AND THE LICENSE AGREEMENT, AND SUBJECT TO CIVIL AND CRIMINAL PENALTIES THEREUNDER.

resent the ratings necessary to maintain the integrity of the rated wall or horizontal assembly.

717.3.2.2 Smoke damper ratings. *Smoke damper* leakage ratings shall be Class I or II. Elevated temperature ratings shall be not less than 250°F (121°C).

❖ In accordance with UL 555S, smoke dampers are marked with a temperature rating starting at 250°F (121°C) and rising in increments of 100°F (56°C). Leakage ratings range from Classes I to III in accordance with the standard and are further identified for tested pressure ranging from 4 inches (102 mm) to 12 inches (305 mm) of water. Class I and II leakage ratings meet the code requirement for the damper to be not less than Class II.

717.3.2.3 Combination fire/smoke damper ratings. *Combination fire/smoke dampers* shall have the minimum *fire protection rating* specified for *fire dampers* in Table 717.3.2.1 for the type of penetration and shall have a minimum *smoke damper* rating as specified in Section 717.3.2.2.

❖ This section primarily serves the purpose of requiring the ratings of combination fire/smoke dampers to comply with the requirements for both fire and smoke dampers, including the fire protection rating specified in Table 717.3.2.1 and the leakage rating specified in Section 717.3.2.2.

717.3.2.4 Corridor damper ratings. *Corridor dampers* shall have the following minimum ratings:

1. One hour *fire-resistance rating*.
2. Class I or II leakage rating as specified in Section 717.3.2.2.

❖ This section describes the ratings that corridor dampers must meet. Corridor dampers are listed for both a fire-resistance rating of 1 hour, and a Class I or II leakage rating as defined by the Standard UL 555S. Leakage ratings of corridor dampers are determined at an elevated temperature of 250°F (121°C) or 350°F (177°C). Corridor dampers are only intended to be used to protect duct and air transfer openings in corridor ceilings, where the ceilings are constructed as required for the corridor walls (as permitted in Section 708.4, Exception 3).

717.3.3 Damper actuation. *Damper* actuation shall be in accordance with Sections 717.3.3.1 through 717.3.3.5 as applicable.

❖ The purpose of this section is to provide direction to the requirements for the actuation of fire dampers (Section 717.3.3.1), smoke dampers (Section 717.3.3.2), combination fire/smoke dampers (Section 717.3.3.3) and ceiling radiation dampers (Section 717.3.3.4).

717.3.3.1 Fire damper actuation device. The *fire damper* actuation device shall meet one of the following requirements:

1. The operating temperature shall be approximately 50°F (10°C) above the normal temperature within the duct system, but not less than 160°F (71°C).
2. The operating temperature shall be not more than 350°F (177°C) where located in a smoke control system complying with Section 909.

❖ The purpose of this section is to prescribe the actuation (operating temperature) requirements for fire dampers. The thresholds for actuation are based on UL 555. For static systems, UL 555 identifies 160°F (71°C) as the minimum and 215°F (102°C) as the maximum temperature (see Item 1). For dynamic systems, the standard includes a minimum value of 160°F (71°C) and a maximum value of 350°F (177°C) (see Item 2).

717.3.3.2 Smoke damper actuation. The *smoke damper* shall close upon actuation of a *listed* smoke detector or detectors installed in accordance with Section 907.3 and one of the following methods, as applicable:

1. Where a *smoke damper* is installed within a duct, a smoke detector shall be installed inside the duct or outside the duct with sampling tubes protruding into the duct. The detector or tubes within the duct shall be within 5 feet (1524 mm) of the *damper*. Air outlets and inlets shall not be located between the detector or tubes and the *damper*. The detector shall be *listed* for the air velocity, temperature and humidity anticipated at the point where it is installed. Other than in mechanical smoke control systems, *dampers* shall be closed upon fan shutdown where local smoke detectors require a minimum velocity to operate.
2. Where a *smoke damper* is installed above *smoke barrier* doors in a *smoke barrier*, a spot-type detector shall be installed on either side of the *smoke barrier* door opening. The detector shall be listed for releasing service if used for direct interface with the damper.
3. Where a *smoke damper* is installed within an air transfer opening in a wall, a spot-type detector shall be installed within 5 feet (1524 mm) horizontally of the *damper*. The detector shall be listed for releasing service if used for direct interface with the damper.
4. Where a *smoke damper* is installed in a *corridor* wall or ceiling, the *damper* shall be permitted to be controlled by a smoke detection system installed in the *corridor*.
5. Where a smoke detection system is installed in all areas served by the duct in which the damper will be located, the *smoke dampers* shall be permitted to be controlled by the smoke detection system.

❖ This section provides specific requirements to ensure that an installed detector will detect smoke (see Item 1). Additionally, for passive systems (not part of a smoke control system), the location of detectors is critical to their performance. Smoke dampers are installed in not only duct penetrations, but also transfer openings. A method for properly controlling dampers in such arrangements is provided in Item 3. A smoke detector provided throughout a corridor or an entire area detects smoke more effectively than a duct-type detector. Such detection is necessary for controlling dampers (Items 4 and 5). Smoke dampers

INTERNATIONAL CODE COUNCIL®
Copyright © 2015 ICC. ALL RIGHTS RESERVED. Accessed by David Dammon on Jun 21, 2017 12:30:52 PM pursuant to License Agreement with ICC. No further reproduction or distribution authorized. ANY UNAUTHORIZED REPRODUCTION OR DISTRIBUTION IS A VIOLATION OF THE FEDERAL COPYRIGHT ACT AND THE LICENSE AGREEMENT, AND SUBJECT TO CIVIL AND CRIMINAL PENALTIES THEREUNDER.

may also be operated remotely, especially when used as part of a smoke control system. Combination fire/smoke dampers can be activated by either heat or smoke sensors. Once the primary heat-sensing device has been activated, a remote control system can be used to open the damper to permit its use as a smoke damper in the smoke removal system. Then, if the temperature rises to the damper's maximum degradation test temperature, the secondary heat sensor closes the damper again.

717.3.3.3 Combination fire/smoke damper actuation. *Combination fire/smoke damper* actuation shall be in accordance with Sections 717.3.3.1 and 717.3.3.2. *Combination fire/smoke dampers* installed in smoke control system shaft penetrations shall not be activated by local area smoke detection unless it is secondary to the smoke management system controls.

❖ This section primarily serves the purpose of requiring the actuation of combination fire/smoke dampers to comply with the requirements for both fire and smoke dampers, including the requirements in Sections 717.3.3.1 and 717.3.3.2. Further, when these dampers are used as part of a smoke control system, this section prohibits activation of these dampers by local area smoke detectors because this could render the smoke control system inoperable.

717.3.3.4 Ceiling radiation damper actuation. The operating temperature of a *ceiling radiation damper* actuation device shall be 50°F (27.8°C) above the normal temperature within the duct system, but not less than 160°F (71°C).

❖ The purpose of this section is to prescribe the actuation (operating temperature) requirements for ceiling radiation dampers. The thresholds for actuation are similar to those required for fire dampers used in static systems

717.3.3.5 Corridor damper actuation. *Corridor damper* actuation shall be in accordance with Sections 717.3.3.1 and 717.3.3.2.

❖ This section addresses the actuation criteria for corridor dampers using existing criteria for both fire dampers and smoke dampers.

717.4 Access and identification. Fire and smoke *dampers* shall be provided with an *approved* means of access that is large enough to *permit* inspection and maintenance of the *damper* and its operating parts. The access shall not affect the integrity of fire-resistance-rated assemblies. The access openings shall not reduce the *fire-resistance rating* of the assembly. Access points shall be permanently identified on the exterior by a *label* having letters not less than $^1/_2$ inch (12.7 mm) in height reading: FIRE/SMOKE DAMPER, SMOKE DAMPER or FIRE DAMPER. Access doors in ducts shall be tight fitting and suitable for the required duct construction.

❖ Fire and smoke dampers and combination dampers must be properly maintained so that they will operate as intended. The need to maintain dampers, as well as reset them and replace fusible links after operation, requires that they be accessible as a part of the initial design in the code. The access doors may need to be fire doors in accordance with Section 716, depending on the location of the door, in order to maintain a fire-resistance rating. Access doors in the duct itself do not need a fire protection rating.

717.5 Where required. *Fire, dampers, smoke dampers, combination fire/smoke dampers, ceiling radiation dampers* and *corridor dampers* shall be provided at the locations prescribed in Sections 717.5.1 through 717.5.7 and 717.6. Where an assembly is required to have both *fire dampers* and *smoke dampers, combination fire/smoke dampers* or a *fire damper* and a *smoke damper* shall be provided.

❖ In order to maintain the fire-resistance rating of fire and smoke vertical walls, barriers and partitions, code-required dampers must be provided for all duct penetrations. Fire dampers are to be installed in the assembly such that an opening created by a duct collapse is properly protected. The manufacturer's installation instructions, which should indicate how the damper is to be installed, must be followed so that the operation and functioning of the installed assembly will be consistent with that required by the code.

Commentary Figure 717.5 shows the difference between where a fire damper is required and where one is not. In this example, the designer has chosen to separate mixed occupancies in accordance with the option of Section 508.4.4 The occupancy separation wall (fire barrier) that is required to be fire-resistance rated is also required to have the duct penetration protected by a fire damper, while the nonrated wall requires no such protection. Occasionally, the visible gap between the outside of the dampered duct and the inside surface of the hole in a wall or floor that accommodates the duct is closed with a sealant. Although not required by the code, this is occasionally done to provide more complete smoke resistance for the wall or floor assembly. The installation of the damper assembly in accordance with the listing and manufacturer's instructions will provide the required fire resistance, even without sealing any apparent gaps between the duct and the hole. It is imperative that an intumescent firestop sealant not be used on the outside of the duct to seal this gap. The expansion pressure of the intumescent sealant can buckle the duct, thus hindering or preventing the proper operation of the damper under fire conditions.

The code requires that a fire damper not be used as a smoke damper unless the location of the installation is appropriate for the dual purpose. The most likely location for this to occur would be where the air distribution system also serves as a smoke control system and a duct penetrates a fire-resistance-rated assembly. Section 717.2.1 requires alternative protection to be provided where fire dampers will interfere with the operation of a smoke control system. A combination fire/smoke damper, such as that described above, may be approved for use as alternative protection.

INTERNATIONAL CODE COUNCIL®
Copyright © 2015 ICC. ALL RIGHTS RESERVED. Accessed by David Dammon on Jun 21, 2017 12:30:52 PM pursuant to License Agreement with ICC. No further reproduction or distribution authorized. ANY UNAUTHORIZED REPRODUCTION OR DISTRIBUTION IS A VIOLATION OF THE FEDERAL COPYRIGHT ACT AND THE LICENSE AGREEMENT, AND SUBJECT TO CIVIL AND CRIMINAL PENALTIES THEREUNDER.

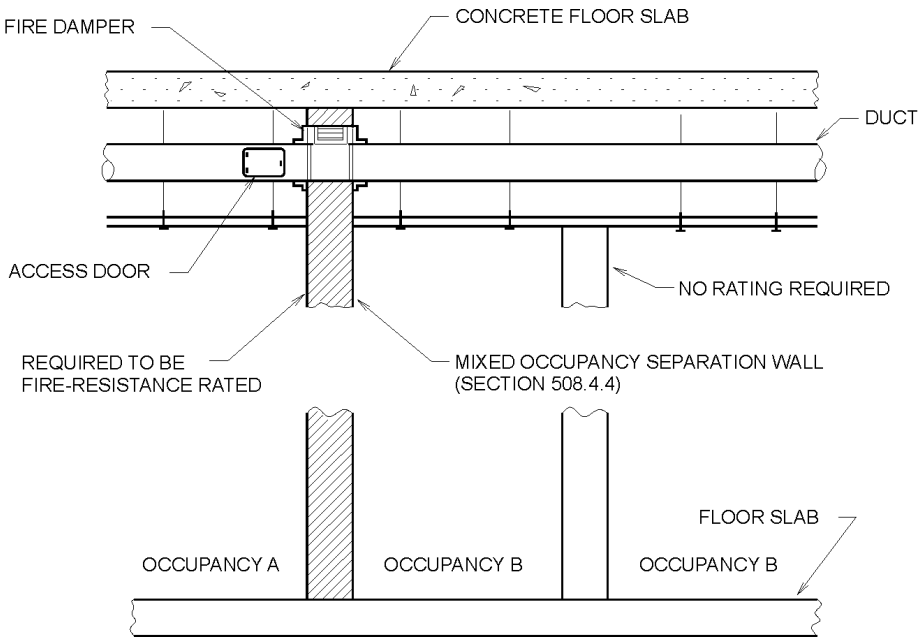

Figure 717.5
FIRE DAMPERS IN RATED WALL

717.5.1 Fire walls. Ducts and air transfer openings permitted in *fire walls* in accordance with Section 706.11 shall be protected with *listed fire dampers* installed in accordance with their listing.

❖ Fire walls can create separate buildings within a structure. These multiple buildings may be on a single lot or, in the case of zero lot line construction, the fire wall may be located on the lot line. In the case where the fire wall separates different buildings on different lots, the code does not permit openings (see Sections 706.1.1 and 706.11). In such instances, a duct penetration is not permitted. Where the fire wall is not located on a lot line, the wall is permitted to be penetrated by a duct or transfer opening, provided the opening is protected with a listed fire damper. The fire damper in 3-hour and greater fire-resistance-rated walls must be rated for 3 hours.

717.5.1.1 Horizontal exits. A *listed smoke damper* designed to resist the passage of smoke shall be provided at each point a duct or air transfer opening penetrates a *fire wall* that serves as a horizontal *exit*.

❖ Recognizing that fire walls can jointly serve as horizontal exits, this section requires ducts and air transfer opening penetrations of such walls to be provided with smoke dampers. The purpose of this section is to recognize that horizontal exits are required to resist the passage of smoke as well as fire.

717.5.2 Fire barriers. Ducts and air transfer openings of *fire barriers* shall be protected with *approved fire dampers* installed in accordance with their listing. Ducts and air transfer openings shall not penetrate enclosures for *interior exit stairways* and *ramps* and *exit passageways*, except as permitted by Sections 1023.5 and 1024.6, respectively.

Exception: *Fire dampers* are not required at penetrations of *fire barriers* where any of the following apply:

1. Penetrations are tested in accordance with ASTM E119 or UL 263 as part of the fire-resistance-rated assembly.
2. Ducts are used as part of an *approved* smoke control system in accordance with Section 909 and where the use of a *fire damper* would interfere with the operation of a smoke control system.
3. Such walls are penetrated by ducted HVAC systems, have a required *fire-resistance rating* of 1 hour or less, are in areas of other than Group H and are in buildings equipped throughout with an *automatic sprinkler system* in accordance with Section 903.3.1.1 or 903.3.1.2. For the purposes of this exception, a ducted HVAC system shall be a duct system for conveying supply, return or exhaust air as part of the structure's HVAC system. Such a duct system shall be constructed of sheet steel not less than No. 26 gage thickness and shall be continuous from the air-handling appliance or equipment to the air outlet and inlet terminals.

❖ Fire barriers require fire dampers at duct and transfer openings. However, ducts and transfer openings are not allowed to penetrate stairway and exit passageway enclosures even with fire dampers. Of course, independent stair pressurization ductwork may penetrate the stairway enclosure in accordance with Sec-

INTERNATIONAL CODE COUNCIL®
Copyright © 2015 ICC. ALL RIGHTS RESERVED. Accessed by David Dammon on Jun 21, 2017 12:30:52 PM pursuant to License Agreement with ICC. No further reproduction or distribution authorized. ANY UNAUTHORIZED REPRODUCTION OR DISTRIBUTION IS A VIOLATION OF THE FEDERAL COPYRIGHT ACT AND THE LICENSE AGREEMENT, AND SUBJECT TO CIVIL AND CRIMINAL PENALTIES THEREUNDER.

tions 1024.5 and 1025.6. Penetration of an exit has the potential to allow smoke or flame to be introduced into the enclosure from other parts of the building, effectively blocking the exit path.

Exception 1 states that fire dampers are not required for duct penetrations of fire barriers when the assembly has been tested in accordance with ASTM E119 or UL 263 without fire dampers and the required fire-resistance rating is obtained. In this case, the penetration assembly has been demonstrated as preserving the fire-resistance rating of the wall assembly.

Exception 2 reinforces the provisions of Section 717.2.1 (see commentary). A fire damper may interfere with the operation of the smoke control system; however, some form of alternative protection must be provided due to the duct penetrating the fire barrier.

Exception 3 states that, in fully sprinklered buildings containing occupancies other than Group H, fire dampers may be omitted in duct penetrations of walls having a fire-resistance rating of 1 hour or less. Such duct systems must be 26-gage steel continuous from the air handler to the air outlet with no flex duct connectors.

717.5.2.1 Horizontal exits. A *listed smoke damper* designed to resist the passage of smoke shall be provided at each point a duct or air transfer opening penetrates a *fire barrier* that serves as a horizontal *exit*.

❖ Walls separating buildings into areas of refuge in accordance with Section 1025 are specific types of fire barrier walls. The purpose of this section is to recognize that horizontal exits are required to resist the passage of smoke as well as fire. This section, therefore, requires that smoke dampers be installed at ducts or transfer openings that penetrate a fire barrier wall used as a horizontal exit.

717.5.3 Shaft enclosures. Shaft enclosures that are permitted to be penetrated by ducts and air transfer openings shall be protected with *approved* fire and smoke *dampers* installed in accordance with their listing.

Exceptions:

1. *Fire dampers* are not required at penetrations of shafts where any of the following criteria are met:
   - 1.1. Steel exhaust subducts are extended not less than 22 inches (559 mm) vertically in exhaust shafts, provided there is a continuous airflow upward to the outside.
   - 1.2. Penetrations are tested in accordance with ASTM E119 or UL 263 as part of the fire-resistance-rated assembly.
   - 1.3. Ducts are used as part of an *approved* smoke control system designed and installed in accordance with Section 909 and where the *fire damper* will interfere with the operation of the smoke control system.
   - 1.4. The penetrations are in parking garage exhaust or supply shafts that are separated from other building shafts by not less than 2-hour fire-resistance-rated construction.
2. In Group B and R occupancies equipped throughout with an *automatic sprinkler system* in accordance with Section 903.3.1.1, *smoke dampers* are not required at penetrations of shafts where all of the following criteria are met:
   - 2.1. Kitchen, clothes dryer, bathroom and toilet room exhaust openings are installed with steel exhaust subducts, having a minimum wall thickness of 0.0187-inch (0.4712 mm) (No. 26 gage).
   - 2.2. The subducts extend not less than 22 inches (559 mm) vertically.
   - 2.3. An exhaust fan is installed at the upper terminus of the shaft that is powered continuously in accordance with the provisions of Section 909.11, so as to maintain a continuous upward airflow to the outside.
3. *Smoke dampers* are not required at penetration of exhaust or supply shafts in parking garages that are separated from other building shafts by not less than 2-hour fire-resistance-rated construction.
4. *Smoke dampers* are not required at penetrations of shafts where ducts are used as part of an *approved* mechanical smoke control system designed in accordance with Section 909 and where the *smoke damper* will interfere with the operation of the smoke control system.
5. *Fire dampers* and *combination fire/smoke dampers* are not required in kitchen and clothes dryer exhaust systems where installed in accordance with the *International Mechanical Code.*

❖ This section requires both fire and smoke dampers at duct and air transfer openings in the shaft wall. The fire damper is required due to the penetration of a fire-resistance-rated wall. The smoke damper is required in order to limit the migration of smoke to other parts of the building via the shaft and the chimney effect (see commentary, Section 713.1). The exceptions allow the omission of fire dampers and smoke dampers under certain conditions. Exception 1 addresses fire dampers. Exceptions 2, 3 and 4 address smoke dampers. Exception 4 addresses the interface with smoke control systems as designed in Section 909, and coordinates with Section 717.2.1. Exception 5 addresses both fire and fire/smoke dampers, but not smoke dampers. When applying the exceptions, remember both fire and smoke dampers are required for shaft wall penetrations by ducts. Some exceptions only address one and not the other. Exceptions can be combined.

Exceptions 1.1 thru 1.4 only exempt fire dampers.

Exception 1.1 recognizes that the presence of a vertical subduct in a shaft will also offer some degree of fire resistance should the duct outside of the shaft collapse. Steel exhaust ducts that consist of a 22-inch

INTERNATIONAL CODE COUNCIL®
Copyright © 2015 ICC. ALL RIGHTS RESERVED. Accessed by David Dammon on Jun 21, 2017 12:30:52 PM pursuant to License Agreement with ICC. No further reproduction or distribution authorized. ANY UNAUTHORIZED REPRODUCTION OR DISTRIBUTION IS A VIOLATION OF THE FEDERAL COPYRIGHT ACT AND THE LICENSE AGREEMENT, AND SUBJECT TO CIVIL AND CRIMINAL PENALTIES THEREUNDER.

(559 mm) vertical upturn in the shaft need not be protected with a fire damper if there is a continuous upward airflow to the outside. The continuous airflow will create a negative pressure in the shaft as compared to adjacent spaces, thereby minimizing the spread of hot gases from the shaft [see Commentary Figure 717.5.3.1(1)].

Exceptions 1.2 and 1.3 are identical to Exceptions 1 and 2 to Section 717.5.2 (see commentary, Section 717.5.2).

Exception 1.4 states that fire dampers may also be omitted in exhaust and supply shafts that serve a garage and are separated from all other shafts in the building by a 2-hour fire separation assembly [see Commentary Figure 717.5.3.1(2)]. Requiring fire dampers in garage exhaust and supply shafts would not significantly prevent the spread of smoke and fire within the garage, since the vehicle ramp from floor to floor is a much greater conduit of smoke and fire in a garage.

Exception 2 is specific to Group B and R occupancies and exempts smoke dampers. Exception 2 has many more conditions than Exception 1.1, but together they can be used to exempt both fire and smoke dampers.

Exception 3 addresses parking garage shafts for exhaust and supply ducts and exempts smoke dampers, whereas Exception 1.4 exempts fire dampers.

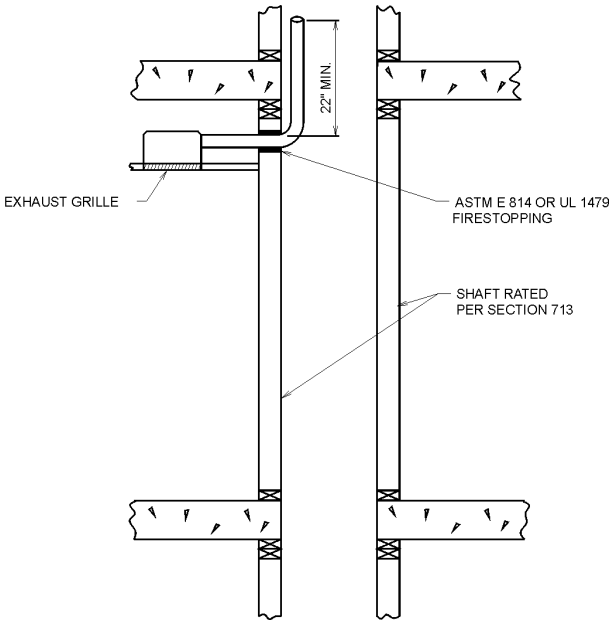

For SI: 1 inch = 25.4 mm.

Figure 717.5.3.1(1)
FIRE DAMPERS—EXCEPTION 1

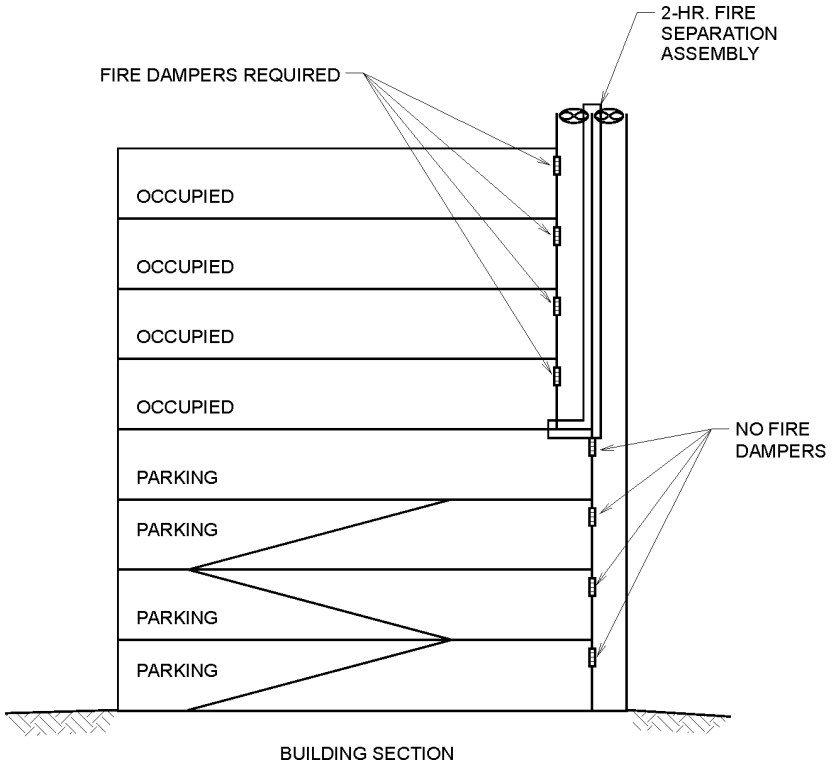

Figure 717.5.3.1(2)
FIRE DAMPERS—EXCEPTION 1.4

INTERNATIONAL CODE COUNCIL®
Copyright © 2015 ICC. ALL RIGHTS RESERVED. Accessed by David Dammon on Jun 21, 2017 12:30:52 PM pursuant to License Agreement with ICC. No further reproduction or distribution authorized. ANY UNAUTHORIZED REPRODUCTION OR DISTRIBUTION IS A VIOLATION OF THE FEDERAL COPYRIGHT ACT AND THE LICENSE AGREEMENT, AND SUBJECT TO CIVIL AND CRIMINAL PENALTIES THEREUNDER.

The conditions for the exception are the same.

Exception 4 is the counterpart to Exception 1.3. One exempts the fire damper and one exempts the smoke damper.

Exception 5 exempts fire dampers and combination fire/smoke dampers from kitchen and clothes dryer exhaust systems that are installed in accordance with the IMC. This is to recognize the hazards associated with obstructing the airflow for these installations. The IMC requires a shaft for multifloor kitchen and clothes dryer exhaust systems and requires 22-inch (559 mm) sub-ducts and special construction in accordance with Section 504.8 of the IMC. The fact that fire dampers and combination fire/smoke dampers are not required does not exempt the requirement for smoke dampers. However, Exception 2 of this section can be used.

717.5.4 Fire partitions. Ducts and air transfer openings that penetrate *fire partitions* shall be protected with *listed fire dampers* installed in accordance with their listing.

Exceptions: In occupancies other than Group H, *fire dampers* are not required where any of the following apply:

1. Corridor walls in buildings equipped throughout with an *automatic sprinkler system* in accordance with Section 903.3.1.1 or 903.3.1.2 and the duct is protected as a *through penetration* in accordance with Section 714.
2. Tenant partitions in *covered and open mall buildings* where the walls are not required by provisions elsewhere in the code to extend to the underside of the floor or roof sheathing, slab or deck above.
3. The duct system is constructed of *approved* materials in accordance with the *International Mechanical Code* and the duct penetrating the wall complies with all of the following requirements:
   - 3.1. The duct shall not exceed 100 square inches (0.06 m^2).
   - 3.2. The duct shall be constructed of steel not less than 0.0217 inch (0.55 mm) in thickness.
   - 3.3. The duct shall not have openings that communicate the *corridor* with adjacent spaces or rooms.
   - 3.4. The duct shall be installed above a ceiling.
   - 3.5. The duct shall not terminate at a wall register in the fire-resistance-rated wall.
   - 3.6. A minimum 12-inch-long (305 mm) by 0.060-inch-thick (1.52 mm) steel sleeve shall be centered in each duct opening. The sleeve shall be secured to both sides of the wall and all four sides of the sleeve with minimum $1^1/_2$-inch by $1^1/_2$-inch by 0.060-inch (38 mm by 38 mm by 1.52 mm) steel retaining angles. The retaining angles shall be secured to the sleeve and the wall with No. 10 (M5) screws. The *annular space* between the steel sleeve and the wall opening shall be filled with *mineral wool* batting on all sides.
4. Such walls are penetrated by ducted HVAC systems, have a required *fire-resistance rating* of 1 hour or less, and are in buildings equipped throughout with an automatic sprinkler system in accordance with Section 903.3.1.1 or 903.3.1.2. For the purposes of this exception, a ducted HVAC system shall be a duct system for conveying supply, return or exhaust air as part of the structure's HVAC system. Such a duct system shall be constructed of sheet steel not less than No. 26 gage thickness and shall be continuous from the air-handling appliance or equipment to the air outlet and inlet terminals.

❖ Fire dampers are required when a duct or air transfer opening penetrates a fire partition, and must be listed for the fire rating of the partition and installed in accordance with the listing. Please note that corridor walls, where required to be separated by Section 1020.1, must have duct penetrations or transfer openings protected with smoke dampers unless exempted by Section 717.5.4.1. This section includes four exceptions to the fire damper requirement.

Exception 1 addresses fire-resistance-rated corridor walls. In fully sprinklered buildings, corridor wall penetrations by ducts or air transfer openings need not have fire dampers but they still are required to have smoke dampers by Section 717.5.4.1 unless further exempted there. Remember that duct penetrations that are exempted from fire dampers are required by Section 717.1.2 to have through-penetration firestops [see Commentary Figure 717.5.4(1)].

Exception 2 coordinates with Exception 4 to Section 708.4 and addresses standard construction designs for mall buildings as they relate to open ceiling spaces. The exception removes an implied requirement for dampers where logic would dictate none is required. This provision recognizes that walls separating tenants in a covered mall are required to be rated but are allowed to stop at unrated ceilings and storefronts, providing no true separation. Therefore, it does not make sense to require a damper through the wall. If the tenant separation wall is required to be continuous to a roof deck or rated floor assembly for another purpose, the fire dampers would obviously be required.

Exception 3 states that fire dampers are not required where a steel duct penetrates a wall but does not have openings serving adjacent rooms or spaces [see Commentary Figure 717.5.4(2)] This exception has several criteria, one of which is to utilize a steel sleeve with mineral wool batting on all sides. Steel ducts have been shown to have the ability to remain in place during severe fire exposures. With no openings into the corridor to allow for smoke and heat transfer in the protected corridor enclosure, a fire damper is not necessary to attain the required fire performance of the penetration.

INTERNATIONAL CODE COUNCIL®
Copyright © 2015 ICC. ALL RIGHTS RESERVED. Accessed by David Dammon on Jun 21, 2017 12:30:52 PM pursuant to License Agreement with ICC. No further reproduction or distribution authorized. ANY UNAUTHORIZED REPRODUCTION OR DISTRIBUTION IS A VIOLATION OF THE FEDERAL COPYRIGHT ACT AND THE LICENSE AGREEMENT, AND SUBJECT TO CIVIL AND CRIMINAL PENALTIES THEREUNDER.

Exception 4 is similar to Exception 1. Exception 4 exempts all ducted penetrations of all fire partitions and not just corridor wall penetrations. Exception 4, in addition to the sprinkler provision, requires all steel ducts and does not allow flexible duct connectors. For corridors, Exception 1 is easier. Both exceptions would require through-penetration protection in accordance with Section 717.1.2. Exception 4 is identical to Exception 3 for fire barrier duct penetrations in Section 717.5.2.

717.5.4.1 Corridors. Duct and air transfer openings that penetrate *corridors* shall be protected with dampers as follows:

1. A *corridor damper* shall be provided where corridor ceilings, constructed as required for the corridor walls as permitted in Section 708.4, Exception 3, are penetrated.
2. A *ceiling radiation damper* shall be provided where the ceiling membrane of a *fire-resistance-rated* floor-ceil-

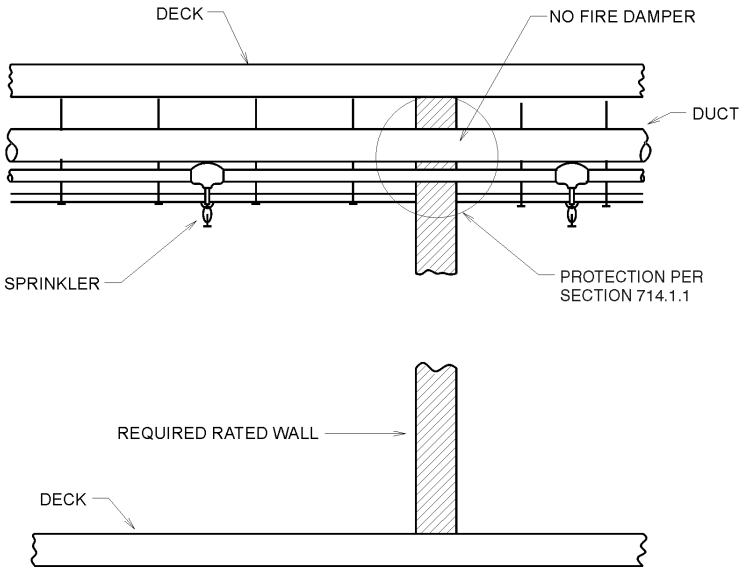

Figure 717.5.4(1)
FIRE DAMPERS—EXCEPTION 1

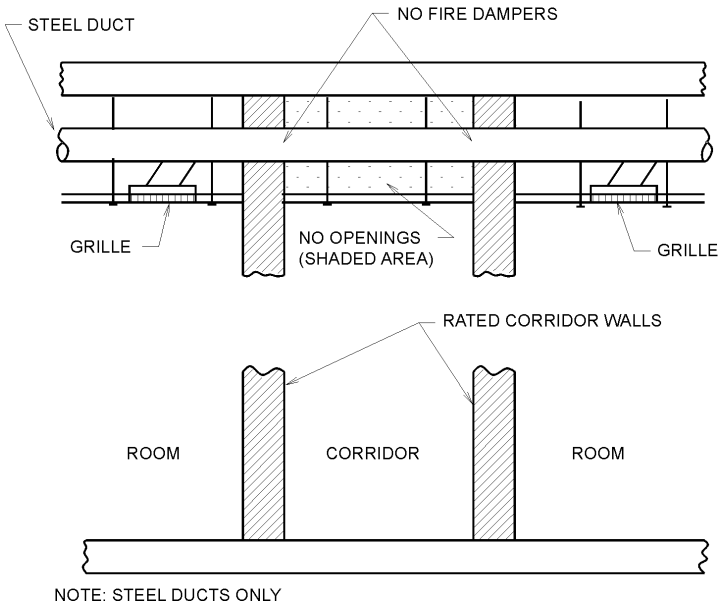

Figure 717.5.4(2)
FIRE DAMPERS—EXCEPTION 3

INTERNATIONAL CODE COUNCIL®
Copyright © 2015 ICC. ALL RIGHTS RESERVED. Accessed by David Dammon on Jun 21, 2017 12:30:52 PM pursuant to License Agreement with ICC. No further reproduction or distribution authorized. ANY UNAUTHORIZED REPRODUCTION OR DISTRIBUTION IS A VIOLATION OF THE FEDERAL COPYRIGHT ACT AND THE LICENSE AGREEMENT, AND SUBJECT TO CIVIL AND CRIMINAL PENALTIES THEREUNDER.

ing or roof-ceiling assembly, constructed as permitted in Section 708.4, Exception 2, is penetrated.

3. A listed smoke damper designed to resist the passage of smoke shall be provided at each point a duct or air transfer opening penetrates a corridor enclosure required to have smoke and draft control doors in accordance with Section 716.5.3.

Exceptions:

1. *Smoke dampers* are not required where the building is equipped throughout with an *approved* smoke control system in accordance with Section 909, and *smoke dampers* are not necessary for the operation and control of the system.
2. *Smoke dampers* are not required in *corridor* penetrations where the duct is constructed of steel not less than 0.019 inch (0.48 mm) in thickness and there are no openings serving the *corridor*.

❖ Protecting the corridors from smoke during a fire incident is important for egress from the buildings. Consistent with the door opening protection requirements of Section 716.5.3, penetration of ducts and air transfer openings require minimum protection. Therefore, all fire-rated corridor walls penetrated by ducts or air transfer openings must have listed dampers that are suited to three different conditions as follows:

1. Where the corridor ceiling is constructed to provide a fire rating equivalent to that of the corridor walls, then corridor dampers are required.
2. Where the corridor ceiling is protected by a ceiling membrane in accordance with Item 2 of Section 708.4, then ceiling radiation dampers are required.
3. For conditions other than 1 and 2 above, smoke dampers are required.

Exception 1 cites the concern of the damper interfering with the smoke control system (see commentary, Section 717.2.1).

Exception 2 exempts the duct penetration from smoke dampers when a steel duct penetrates the corridor walls and there are no duct outlets or openings serving the corridor.

717.5.5 Smoke barriers. A *listed smoke damper* designed to resist the passage of smoke shall be provided at each point a duct or air transfer opening penetrates a *smoke barrier*. *Smoke dampers* and *smoke damper* actuation methods shall comply with Section 717.3.3.2.

Exceptions:

1. *Smoke dampers* are not required where the openings in ducts are limited to a single *smoke compartment* and the ducts are constructed of steel.
2. *Smoke dampers* are not required in *smoke barriers* required by Section 407.5 for Group I-2, Condition 2—where the HVAC system is fully ducted in accordance with Section 603 of the *International Mechanical Code* and where buildings are equipped throughout with an *automatic sprinkler system* in accordance with Section 903.3.1.1 and equipped with quick-response sprinklers in accordance with Section 903.3.2.

❖ Smoke barriers are required for both Group I-2 (see Section 407.5) and I-3 (see Section 408.6) occupancies. See the commentary to Section 709.1 for other applications of smoke barriers. The concept of requiring smoke barriers is to limit the migration of smoke. In fact, Section 709.4 requires that smoke barriers form an effective continuous membrane from outside wall to outside wall and from the floor slab to the floor or roof deck above. This would include continuity through concealed spaces, such as those found above suspended ceilings and interstitial structural and mechanical spaces.

To prevent smoke migration across the smoke barrier where duct penetrations occur, an approved damper designed to resist the passage of smoke is to be provided at each point where a duct penetrates a smoke barrier. The damper closes upon detection of smoke by an approved smoke detector within the duct. If the duct penetration is above a smoke barrier door assembly, smoke detectors for adjacent doors may also be used to operate the damper and the duct detector may be eliminated. A reference to Section 717.3.3.2 is provided for activation mechanisms.

The designer must evaluate the specific conditions of the installation to determine which class of damper should be installed. If a fire damper is required (i.e., the smoke barrier is also a mixed occupancy separation or corridor wall), a combination fire/smoke damper or separate fire and smoke dampers may be installed.

Exception 1 eliminates the need for smoke dampers, provided the duct openings are limited to one smoke compartment and the ducts are of a construction that inherently resists the passage of smoke for a duration of time (steel).

Exception 2 eliminates the need for smoke dampers in care facilities and Group I-2 hospital occupancies under specific conditions. These facilities are fully protected with electronically supervised and tested and maintained quick-response automatic sprinkler systems. The meaningful time of the fire protection of the building occurs in the first 30 minutes of the fire incident, when decisions are made by fire professionals and the safety staff of the hospital in terms of status of the patients. Quick-response sprinklers are more often noted as the most important feature of the overall building fire protection system, and are demonstrated to be more effective in containing the spread of fire than dampering of the duct system.

INTERNATIONAL CODE COUNCIL®
Copyright © 2015 ICC. ALL RIGHTS RESERVED. Accessed by David Dammon on Jun 21, 2017 12:30:52 PM pursuant to License Agreement with ICC. No further reproduction or distribution authorized. ANY UNAUTHORIZED REPRODUCTION OR DISTRIBUTION IS A VIOLATION OF THE FEDERAL COPYRIGHT ACT AND THE LICENSE AGREEMENT, AND SUBJECT TO CIVIL AND CRIMINAL PENALTIES THEREUNDER.

717.5.6 Exterior walls. Ducts and air transfer openings in fire-resistance-rated *exterior walls* required to have protected openings in accordance with Section 705.10 shall be protected with *listed fire dampers* installed in accordance with their listing.

❖ The purpose of this section is to recognize that under certain conditions exterior walls are required to be fire-resistance rated. Depending on the fire separation distance, not all fire-resistance-rated exterior walls require protected openings. If protected openings are required by Section 705.10, then fire dampers are required.

717.5.7 Smoke partitions. A *listed smoke damper* designed to resist the passage of smoke shall be provided at each point that an air transfer opening penetrates a smoke partition. *Smoke dampers* and *smoke damper* actuation methods shall comply with Section 717.3.3.2.

Exception: Where the installation of a *smoke damper* will interfere with the operation of a required smoke control system in accordance with Section 909, *approved* alternative protection shall be utilized.

❖ The purpose of this section is to recognize that penetrations of smoke partitions by air transfer openings need to resist the transfer of smoke and, therefore, are required to be provided with a smoke damper. This is also consistent with the requirements in Section 710.8. This section also requires the actuation of the damper to comply with Section 717.3.3.2. The exception cites the concern of the damper interfering with the smoke control system (see commentary, Section 717.2.1).

717.6 Horizontal assemblies. Penetrations by ducts and air transfer openings of a floor, floor/ceiling assembly or the ceiling membrane of a roof/ceiling assembly shall be protected by a shaft enclosure that complies with Section 713 or shall comply with Sections 717.6.1 through 717.6.3.

❖ In general, all floor openings that connect two or more stories are to be enclosed in shafts that are constructed in accordance with Section 713. Section 712.1.6 references Section 717.6 for duct openings (penetration). Sections 717.6.1 through 717.6.3 identify conditions where a shaft is not required and either a fire damper (see Section 717.6.1) or ceiling radiation damper (see Section 717.6.2.1) is required. There is an exception within Section 717.6.1 that allows the elimination of the fire damper; however, ceiling radiation dampers would still be required in some cases (see Section 717.6.2.1).

717.6.1 Through penetrations. In occupancies other than Groups I-2 and I-3, a duct constructed of *approved* materials in accordance with the *International Mechanical Code* that penetrates a fire-resistance-rated floor/ceiling assembly that connects not more than two *stories* is permitted without shaft enclosure protection, provided a *listed fire damper* is installed at the floor line or the duct is protected in accordance with Section 714.4. For air transfer openings, see Section 712.1.9.

Exception: A duct is permitted to penetrate three floors or less without a *fire damper* at each floor, provided such duct meets all of the following requirements:

1. The duct shall be contained and located within the cavity of a wall and shall be constructed of steel having a minimum wall thickness of 0.0187 inches (0.4712 mm) (No. 26 gage).
2. The duct shall open into only one *dwelling or sleeping unit* and the duct system shall be continuous from the unit to the exterior of the building.
3. The duct shall not exceed 4-inch (102 mm) nominal diameter and the total area of such ducts shall not exceed 100 square inches (0.065 m^2) in any 100 square feet (9.3 m^2) of floor area.
4. The *annular space* around the duct is protected with materials that prevent the passage of flame and hot gases sufficient to ignite cotton waste where subjected to ASTM E119 or UL 263 time-temperature conditions under a minimum positive pressure differential of 0.01 inch (2.49 Pa) of water at the location of the penetration for the time period equivalent to the *fire-resistance rating* of the construction penetrated.
5. Grille openings located in a ceiling of a fire-resistance-rated floor/ceiling or roof/ceiling assembly shall be protected with a *listed ceiling radiation damper* installed in accordance with Section 717.6.2.1.

❖ Penetrations of a fire-resistance-rated horizontal assembly by air ducts are permitted where no more than two stories are connected (i.e., the duct penetrates a single floor) and a fire damper is provided at the floor line. The fire damper must be tested in accordance with UL 555 [see Commentary Figure 717.6.1(1)]. A roof assembly penetrated by a duct that is open to the atmosphere is not required to have a fire damper installed at the penetrations because it is considered acceptable for the fire to vent to the outside atmosphere and heat or fire extension will do no harm [see Commentary Figure 717.6.1(2)]. However, a ceiling radiation damper would still be needed to protect a roof/ceiling assembly per Section 717.6.2, Item 2. As noted, there is an exception to this section that allows the elimination of fire dampers at each floor when the ducts extend through a maximum of three floors. There are several criteria that must be followed to allow this, including:

- Minimum duct thickness (increases time for heat to penetrate and provides more durability) and enclosure within wall cavity.
- Limited to a single sleeping unit or dwelling unit (to reduce the likelihood that one dwelling unit or sleeping unit will be able to endanger another).

INTERNATIONAL CODE COUNCIL®
Copyright © 2015 ICC. ALL RIGHTS RESERVED. Accessed by David Dammon on Jun 21, 2017 12:30:52 PM pursuant to License Agreement with ICC. No further reproduction or distribution authorized. ANY UNAUTHORIZED REPRODUCTION OR DISTRIBUTION IS A VIOLATION OF THE FEDERAL COPYRIGHT ACT AND THE LICENSE AGREEMENT, AND SUBJECT TO CIVIL AND CRIMINAL PENALTIES THEREUNDER.

- Size of the duct opening (smaller opening means smaller amounts of fire effluents).
- Annular protection (reduces the chance of duct leakage from penetrated walls/barriers).
- Ceiling radiation dampers at grilles in fire-resistant ceilings (maintains ceiling fire resistance).
- All criteria center on limiting the impact of hot gases being present and spreading from one area to another. As noted, Section 712.1.8 addresses air transfer openings.

717.6.2 Membrane penetrations. Ducts and air transfer openings constructed of *approved* materials in accordance with the *International Mechanical Code* that penetrate the ceiling membrane of a fire-resistance-rated floor/ceiling or roof/ceiling assembly shall be protected with one of the following:

1. A shaft enclosure in accordance with Section 713.
2. A *listed ceiling radiation damper* installed at the ceiling line where a duct penetrates the ceiling of a fire-resistance-rated floor/ceiling or roof/ceiling assembly.
3. A *listed ceiling radiation damper* installed at the ceiling line where a diffuser with no duct attached penetrates the ceiling of a fire-resistance-rated floor/ceiling or roof/ceiling assembly.

❖ Unless the duct system is proteced with a shaft enclosure in accordance with Sections 713 and 714.4, a ceiling radiation damper, as described in Section 717.6.2.1, is to be installed at the line where

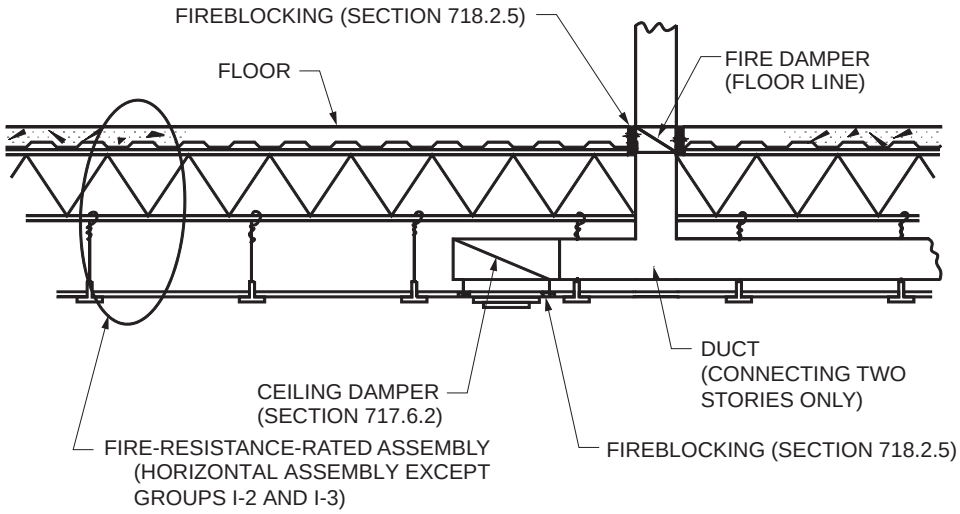

Figure 717.6.1(1)
AIR DUCT PENETRATION OF A HORIZONTAL ASSEMBLY

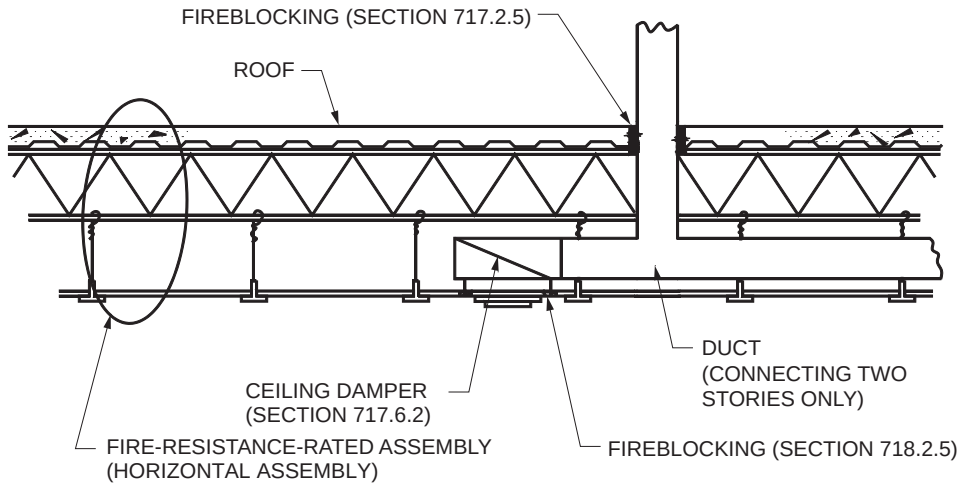

Figure 717.6.1(2)
AIR DUCT PENETRATION OF A HORIZONTAL ASSEMBLY

INTERNATIONAL CODE COUNCIL®
Copyright © 2015 ICC. ALL RIGHTS RESERVED. Accessed by David Dammon on Jun 21, 2017 12:30:52 PM pursuant to License Agreement with ICC. No further reproduction or distribution authorized. ANY UNAUTHORIZED REPRODUCTION OR DISTRIBUTION IS A VIOLATION OF THE FEDERAL COPYRIGHT ACT AND THE LICENSE AGREEMENT, AND SUBJECT TO CIVIL AND CRIMINAL PENALTIES THEREUNDER.

the ceiling is both penetrated by a noncombustible air duct and is an integral component of the fire-resistance rating.

The requirement for a ceiling radiation damper applies to ductwork that either penetrates a ceiling membrane from above and continues downward, or where a diffuser with no ductwork attached below penetrates a ceiling membrane. Ceiling diffusers without ducts attached above or below are also covered by this section. Section 717.6.1 contains the requirements for fire dampers where the duct penetrates through the entire assembly [see Commentary Figures 717.6.1(1) and 717.6.1(2) for ceiling radiation damper and fire damper locations].

Ceiling radiation dampers are designed to limit the radiative heat transfer through an air inlet or outlet opening in the ceiling membrane of a fire-resistance-rated floor/ceiling or roof/ceiling assembly.

717.6.2.1 Ceiling radiation dampers. *Ceiling radiation dampers* shall be tested in accordance with Section 717.3.1. *Ceiling radiation dampers* shall be installed in accordance with the details *listed* in the fire-resistance-rated assembly and the manufacturer's instructions and the listing. *Ceiling radiation dampers* are not required where one of the following applies:

1. Tests in accordance with ASTM E119 or UL 263 have shown that *ceiling radiation dampers* are not necessary in order to maintain the *fire-resistance rating* of the assembly.
2. Where exhaust duct penetrations are protected in accordance with Section 714.4.2, are located within the cavity of a wall and do not pass through another *dwelling unit* or tenant space.
3. Where duct and air transfer openings are protected with a duct outlet protection system tested as part of a *fire-resistance-rated* assembly in accordance with ASTM E119 or UL 263.

❖ Ceiling radiation dampers, formerly known as ceiling dampers, are evaluated either in accordance with UL 555C or as part of the floor/ceiling or roof/ceiling assembly tested to ASTM E119 or UL 263. Ceiling radiation dampers evaluated in accordance with UL 555C are investigated for use in lieu of hinged-door-type dampers commonly specified in the listing of fire-resistance-rated floor/ceiling or roof/ceiling assemblies. UL 555C also provides criteria for the construction of ceiling radiation dampers. If the fire-resistance-rated floor/ceiling or roof/ceiling assembly does not incorporate a hinged-door-type damper, a ceiling radiation damper may not be utilized in the assembly. Ceiling radiation dampers investigated as part of the fire-resistance-rated floor/ceiling or roof/ceiling assembly are specified in the listing of such assemblies. The description of the tested assembly will include a description of the ceiling radiation damper and its installation. Both types of ceiling radiation dampers shall be installed in accordance with the details listed in the fire-resistance-rated assembly and the manufacturer's installation instructions and listing.

The design information section of the *UL Fire Resistance Directory* also includes two duct outlet protection systems. "Duct Outlet Protection System A" may be used where specified in the fire-resistance-rated floor/ceiling or roof/ceiling assembly. "Duct Outlet Protection System B" may be used in lieu of hinged-door-type dampers commonly specified in the listing of fire-resistance-rated floor/ceiling or roof/ceiling assemblies. These methods meet ASTM E119 or UL 363.

One exception to the ceiling radiation dampers is for ceiling membrane penetrations by ducts or ceiling diffusers that have been tested in accordance with ASTM E119 or UL 263 as part of the overall fire-resistance-rated assembly.

Another exception is for exhaust ducts that penetrate a ceiling and: 1. Are protected in accordance with Section 714.4.2; 2. Are located within the cavity of a wall above; and 3. Do not pass through another dwelling unit or tenant space.

The last exception permits the use of duct protection methods other than ceiling radiation dampers for protecting ducts and air transfer openings through the ceiling membrane of a fire-resistance-rated floor/ceiling or roof/ceiling assembly. The acceptance of the alternative duct protection system is based on testing conducted in accordance with ASTM E119 or UL 263.

717.6.3 Nonfire-resistance-rated floor assemblies. Duct systems constructed of *approved* materials in accordance with the *International Mechanical Code* that penetrate nonfire-resistance-rated floor assemblies shall be protected by any of the following methods:

1. A shaft enclosure in accordance with Section 713.
2. The duct connects not more than two *stories*, and the *annular space* around the penetrating duct is protected with an *approved* noncombustible material that resists the free passage of flame and the products of combustion.
3. In floor assemblies composed of noncombustible materials, a shaft shall not be required where the duct connects not more than three stories, the annular space around the penetrating duct is protected with an approved noncombustible material that resists the free passage of flame and the products of combustion and a *fire damper* is installed at each floor line.

   Exception: *Fire dampers* are not required in ducts within individual residential *dwelling units*.

❖ Floor assemblies that are not rated still require isolation in some form based on the requirements of Section 717.6.3 when duct systems penetrate the assemblies. Three conditions or requirements are listed.

First, the ducts can be part of a shaft enclosure in accordance with Section 713. The shaft construction required in Section 713.4 would be at least 1 hour.

INTERNATIONAL CODE COUNCIL®
Copyright © 2015 ICC. ALL RIGHTS RESERVED. Accessed by David Dammon on Jun 21, 2017 12:30:52 PM pursuant to License Agreement with ICC. No further reproduction or distribution authorized. ANY UNAUTHORIZED REPRODUCTION OR DISTRIBUTION IS A VIOLATION OF THE FEDERAL COPYRIGHT ACT AND THE LICENSE AGREEMENT, AND SUBJECT TO CIVIL AND CRIMINAL PENALTIES THEREUNDER.

Second, duct systems that connect not more than two stories (penetrate one floor) are permitted, provided the annular space around the duct is sealed with a noncombustible material that will not allow free passage of flame or smoke. The two-story arrangement does not require a rated damper [see Commentary Figure 717.6.3(1)].

Third, when air ducts connect three levels or less and thus penetrate two floors or less, fire dampers must be provided at each floor line. A $1^1/_2$-hour-rated fire damper (see Table 717.3.2.1) is required even though the floor is not required to have a fire-resistance rating [see Commentary Figure 717.6.3(2)]. Fire dampers, unlike door opening protectives with multiple ratings, are only rated for $1^1/_2$ or 3 hours. Note that this method is limited to floor assemblies of noncombustible construction.

717.7 Flexible ducts and air connectors. Flexible ducts and air connectors shall not pass through any fire-resistance-rated assembly. Flexible air connectors shall not pass through any wall, floor or ceiling.

❖ Flexible air ducts are prohibited from penetrating fire-resistance-rated assemblies. Flexible air connectors are not permitted to pass through any wall, floor or ceiling (fire-resistance rated or not). An inadequate seal at the assembly penetration could allow smoke or flame to penetrate the assembly. Flexible air ducts and connectors can be constructed of both combustible and noncombustible components; therefore, the duct's resistance to the passage of fire could be less than the resistance of the penetrated assembly. All construction assemblies, whether fire-resistance rated or not, provide some inherent resistance to the spread of fire.

SECTION 718
CONCEALED SPACES

718.1 General. *Fireblocking* and draftstopping shall be installed in combustible concealed locations in accordance with this section. *Fireblocking* shall comply with Section 718.2. Draftstopping in floor/ceiling spaces and *attic* spaces shall comply with Sections 718.3 and 718.4, respectively. The permitted use of combustible materials in concealed spaces of buildings of Type I or II construction shall be limited to the applications indicated in Section 718.5.

❖ The key words in this section are "combustible concealed spaces." This section does not apply to noncombustible construction. During a fire, flame, smoke and gases will spread via the paths of least resistance. Certain assemblies create void spaces, which will not only affect the spread of fire but, since the voids are concealed, will also make access for suppression more difficult.

The code has established two means by which fire spread within void spaces can be controlled: fireblocking and draftstopping. Fireblocking involves the use of building materials to prevent the movement of flame and gases to other areas through concealed spaces. Draftstopping involves the use of building

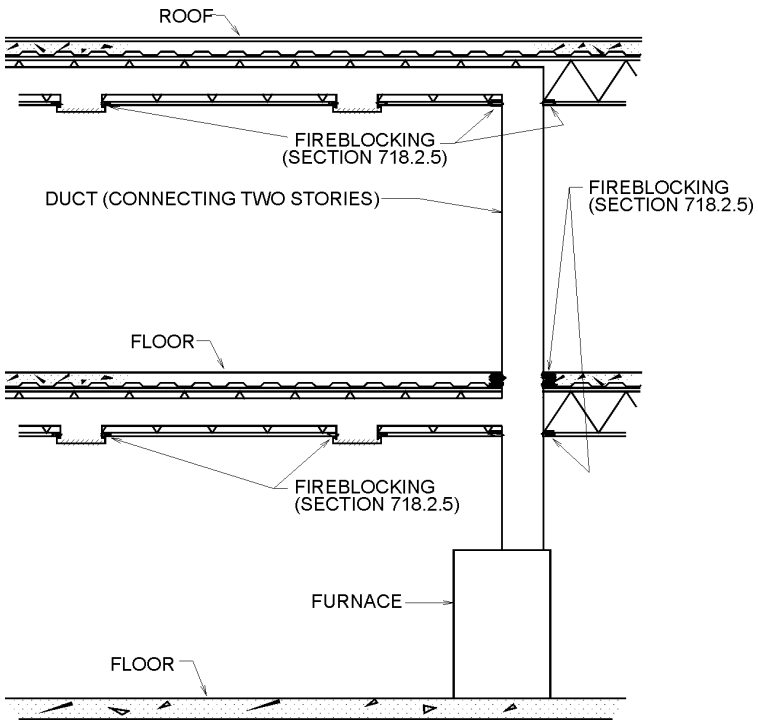

Figure 717.6.3(1)
DUCT PENETRATIONS OF NONFIRE-RESISTANCE-RATED ASSEMBLIES

INTERNATIONAL CODE COUNCIL®
Copyright © 2015 ICC. ALL RIGHTS RESERVED. Accessed by David Dammon on Jun 21, 2017 12:30:52 PM pursuant to License Agreement with ICC. No further reproduction or distribution authorized. ANY UNAUTHORIZED REPRODUCTION OR DISTRIBUTION IS A VIOLATION OF THE FEDERAL COPYRIGHT ACT AND THE LICENSE AGREEMENT, AND SUBJECT TO CIVIL AND CRIMINAL PENALTIES THEREUNDER.

materials to prevent the movement of air, smoke, gases and flames to other areas through large concealed spaces. For example, the protection in an attic space is draftstopping, while the protection in the cavity of a wall assembly is fireblocking.

Section 718.2.1 identifies the materials that are acceptable for use as fireblocks and Section 718.3.1 specifies the acceptable materials for draftstops. Sections 718.2, 718.3 and 718.4 address where fireblocking and draftstopping are required.

Fireblocks and draftstops are to be installed in combustible concealed spaces to prevent the spread of flame, smoke and gases. If a fire condition exists in a concealed space, the fireblocks and draftstops will help contain the fire until it can be suppressed. This section also includes provisions for permitted combustibles in concealed spaces in buildings of Type I and II construction (see Section 718.5 and Section 603.1, Exceptions 1 through 25).

718.2 Fireblocking. In combustible construction, *fireblocking* shall be installed to cut off concealed draft openings (both vertical and horizontal) and shall form an effective barrier between floors, between a top *story* and a roof or *attic* space. *Fireblocking* shall be installed in the locations specified in Sections 718.2.2 through 718.2.7.

❖ This section merely states the goals associated with fireblocking. The intent of fireblocking is to reduce the ability of fire, smoke and gases from moving to different parts of the building through combustible concealed spaces. Since there are no test standards for fireblocking as with firestopping materials, the requirements are prescriptive.

718.2.1 Fireblocking materials. *Fireblocking* shall consist of the following materials:

1. Two-inch (51 mm) nominal lumber.
2. Two thicknesses of 1-inch (25 mm) nominal lumber with broken lap joints.
3. One thickness of 0.719-inch (18.3 mm) wood structural panels with joints backed by 0.719-inch (18.3 mm) wood structural panels.
4. One thickness of 0.75-inch (19.1 mm) particleboard with joints backed by 0.75-inch (19 mm) particleboard.
5. One-half-inch (12.7 mm) gypsum board.
6. One-fourth-inch (6.4 mm) cement-based millboard.

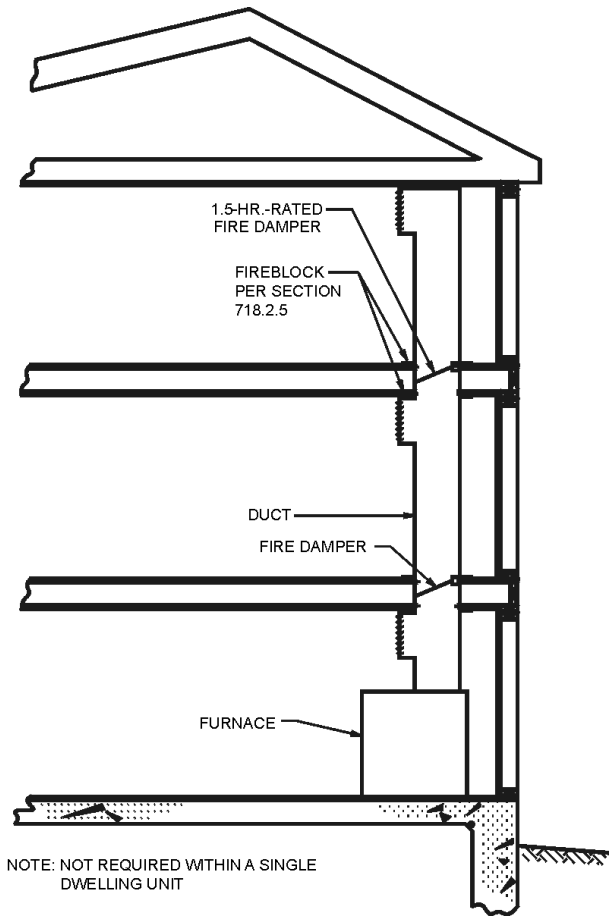

Figure 717.6.3(2)
FIRE DAMPERS IN DUCTS PENETRATING NONFIRE-RESISTANCE-RATED ASSEMBLIES

INTERNATIONAL CODE COUNCIL®
Copyright © 2015 ICC. ALL RIGHTS RESERVED. Accessed by David Dammon on Jun 21, 2017 12:30:52 PM pursuant to License Agreement with ICC. No further reproduction or distribution authorized. ANY UNAUTHORIZED REPRODUCTION OR DISTRIBUTION IS A VIOLATION OF THE FEDERAL COPYRIGHT ACT AND THE LICENSE AGREEMENT, AND SUBJECT TO CIVIL AND CRIMINAL PENALTIES THEREUNDER.

7. Batts or blankets of *mineral wool*, *mineral fiber* or other *approved* materials installed in such a manner as to be securely retained in place.
8. Cellulose insulation installed as tested for the specific application.

❖ The items on this approved list of fireblocking materials have not been tested for fire resistance, but are simply deemed as acceptable materials for slowing the spread of flame and products of combustion. Their effectiveness depends on their correct installation, something which must be inspected at the time of construction.

Various insulation materials have been evaluated for use as fireblocking and have been shown to perform well if installed in accordance with their specifications. For insulating material to function well as fireblocking, it must completely fill the area where fireblocking is required so that no unblocked passages exist.

Certain insulating materials have been evaluated for use as fireblocks. The evaluation reports that specify the configuration and attachment for the insulating materials in the construction assemblies are based on tests performed on the assemblies. Although the code does not specify a test standard for fireblocking, these materials have been tested using the ASTM E119 or UL 263 standard and their performance during the test is compared to the performance of other conventional fireblocking material. Nonrigid materials such as mineral wool, mineral fiber and fiber glass batts or blankets have somewhat limited applications. See Sections 718.2.1.1 and 718.2.1.2 for the limits on these materials. A new material has joined the list as possible fireblocking material—cellulose insulation. The code requires cellulose insulation to be tested for the specific application as fireblocking. Just because a space is filled with cellulose insulation does not guarantee that fireblocking will be accomplished.

718.2.1.1 Batts or blankets of mineral wool or mineral fiber. Batts or blankets of *mineral wool* or *mineral fiber* or other *approved* nonrigid materials shall be permitted for compliance with the 10-foot (3048 mm) horizontal *fireblocking* in walls constructed using parallel rows of studs or staggered studs.

❖ The use of mineral wool or mineral fiber or other approved nonrigid material is allowed to fulfill the requirement for fireblocking in the horizontal cavities formed by parallel rows of studs or staggered studs. Some type of fireblocking is required at 10-foot (3048 mm) intervals measured horizontally by Section 718.2.2. The code allows these types of batts or blankets, but the installation details must be approved and inspected in the field to verify that all concealed spaces are effectively fireblocked at the required locations. Simply because a space is filled with insulation does not guarantee that fireblocking will be accomplished.

718.2.1.2 Unfaced fiberglass. Unfaced fiberglass batt insulation used as *fireblocking* shall fill the entire cross section of the wall cavity to a minimum height of 16 inches (406 mm) measured vertically. Where piping, conduit or similar obstructions are encountered, the insulation shall be packed tightly around the obstruction.

❖ Unfaced fiberglass is a batt insulation that can be used as fireblocking when installed as described in this section. For fiberglass batt insulation to be effective it must fill the wall cavity at the location being fireblocked, not necessarily the full height of the wall. It must be a minimum of 16 inches (406 mm) vertically since it is assumed that this application is to prevent vertical spread of fire.

718.2.1.3 Loose-fill insulation material. Loose-fill insulation material, insulating foam sealants and caulk materials shall not be used as a fireblock unless specifically tested in the form and manner intended for use to demonstrate its ability to remain in place and to retard the spread of fire and hot gases.

❖ Loose-fill insulation materials are generally not suitable for use as fireblocking because, by their very nature, they are not intended to span an open gap and serve the purpose intended for fireblocking. However, the code does allow for the possibility that some types of materials with some cohesiveness might work; therefore, the code would require testing. This should be full-scale testing using a fire generated in accordance with ASTM E119 or UL 263.

718.2.1.4 Fireblocking integrity. The integrity of fireblocks shall be maintained.

❖ The continued integrity of the fireblocking over time is necessary to ensure that it is in place at the time a fire occurs. Some of these materials over time, with repair work or remodeling work being done, will be removed, have holes put in the material or be subject to other activity that will make the material ineffective as a fireblock.

718.2.1.5 Double stud walls. Batts or blankets of mineral or glass fiber or other *approved* nonrigid materials shall be allowed as *fireblocking* in walls constructed using parallel rows of studs or staggered studs.

❖ The fireblocking at horizontal intervals of 10 feet (3048 mm) or less in the cavities of double stud or staggered stud walls may be fiberglass, mineral fiber or other approved nonrigid materials (see commentary, Section 718.2.1.1).

718.2.2 Concealed wall spaces. *Fireblocking* shall be provided in concealed spaces of stud walls and partitions, including furred spaces, and parallel rows of studs or staggered studs, as follows:

1. Vertically at the ceiling and floor levels.
2. Horizontally at intervals not exceeding 10 feet (3048 mm).

❖ The intent of this section is to prevent the spread of fires within walls. Losses in this area have been seen

INTERNATIONAL CODE COUNCIL®
Copyright © 2015 ICC. ALL RIGHTS RESERVED. Accessed by David Dammon on Jun 21, 2017 12:30:52 PM pursuant to License Agreement with ICC. No further reproduction or distribution authorized. ANY UNAUTHORIZED REPRODUCTION OR DISTRIBUTION IS A VIOLATION OF THE FEDERAL COPYRIGHT ACT AND THE LICENSE AGREEMENT, AND SUBJECT TO CIVIL AND CRIMINAL PENALTIES THEREUNDER.

in existing structures of balloon construction, but the requirements apply to platform framing as well. This section requires both vertical and horizontal blocking. Vertical blocking simply requires fireblocking in vertical wall cavities at floors and ceilings. Therefore, a tall warehouse-type building may not need any vertical fireblocking. Horizontal blocking, however, would be required every 10 feet (3048 mm). Section 718.2.1 provides the various methods for fireblocking. One method addressed is the use of mineral or glass fiber insulation, which is only allowed for horizontal fireblocking (see commentary, Section 717.2.1.1).

718.2.3 Connections between horizontal and vertical spaces. *Fireblocking* shall be provided at interconnections between concealed vertical stud wall or partition spaces and concealed horizontal spaces created by an assembly of floor joists or trusses, and between concealed vertical and horizontal spaces such as occur at soffits, drop ceilings, cove ceilings and similar locations.

❖ To prevent fire and smoke from spreading between vertical and horizontal spaces, fireblocks are required [see Commentary Figures 718.2.3(1 through 3)]. If not provided, a concealed fire could spread throughout the floor level because of the interconnection of concealed combustible wall and ceiling spaces.

In platform framing, where gypsum wallboard is continued to the top plate of the wall, typically either the gypsum board or the top plate will serve to cut off the connection between the vertical and horizontal construction. Therefore, with many typical details, no additional fireblocking is needed at this location.

718.2.4 Stairways. *Fireblocking* shall be provided in concealed spaces between *stair* stringers at the top and bottom of the run. Enclosed spaces under *stairways* shall comply with Section 1011.7.3.

❖ Fireblocks are required at the top and bottom of concealed spaces between stair stringers (see Commentary Figure 718.2.4). Similar to fireblocks between horizontal and vertical spaces, fireblocks at the top and bottom of a run will provide a barrier between the floor below the stair and the floor that the stairway serves. Additionally, a reference is made to Section 1011.7.3, which requires the interior of the space under stairways to contain 1-hour fire-resistant-rated construction or the stairway to be fire resistant (whichever is greater).

718.2.5 Ceiling and floor openings. Where required by Section 712.1.8, Exception 1 of Section 714.4.1.2 or Section 714.5, *fireblocking* of the *annular space* around vents, pipes, ducts, chimneys and fireplaces at ceilings and floor levels shall be installed with a material specifically tested in the form and manner intended for use to demonstrate its ability to remain in place and resist the free passage of flame and the products of combustion.

❖ Sections 712.1.8 and 714.4 allow penetrations of ceilings and floors to be fireblocked [see Figures 714.4.1(1), 714.4.2(2) and 714.5.1]. It should be noted that depending on the type of penetration and the number of floors penetrated (or stories connected), a shaft may be required (see Sections 712 and 713).

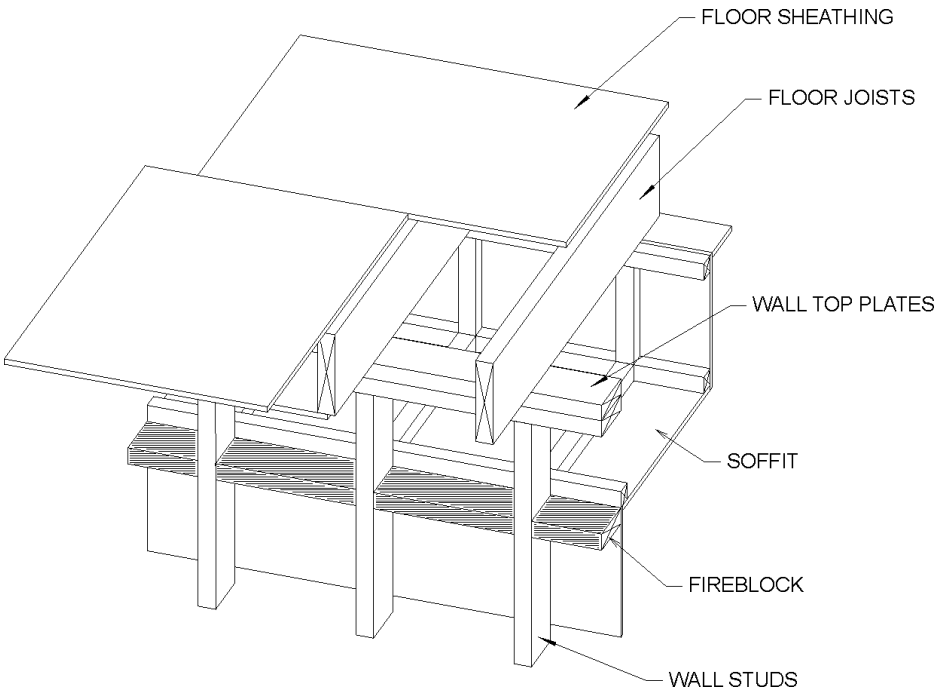

Figure 718.2.3(1)
FIREBLOCKING—SOFFIT

INTERNATIONAL CODE COUNCIL®
Copyright © 2015 ICC. ALL RIGHTS RESERVED. Accessed by David Dammon on Jun 21, 2017 12:30:52 PM pursuant to License Agreement with ICC. No further reproduction or distribution authorized. ANY UNAUTHORIZED REPRODUCTION OR DISTRIBUTION IS A VIOLATION OF THE FEDERAL COPYRIGHT ACT AND THE LICENSE AGREEMENT, AND SUBJECT TO CIVIL AND CRIMINAL PENALTIES THEREUNDER.

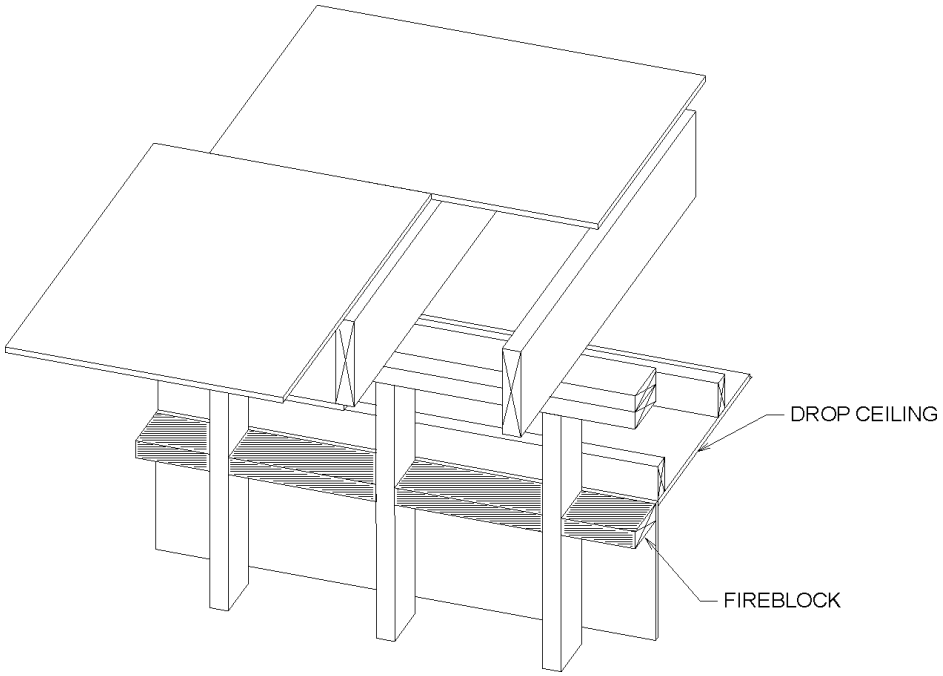

Figure 718.2.3(2)
FIREBLOCKING—DROP CEILING

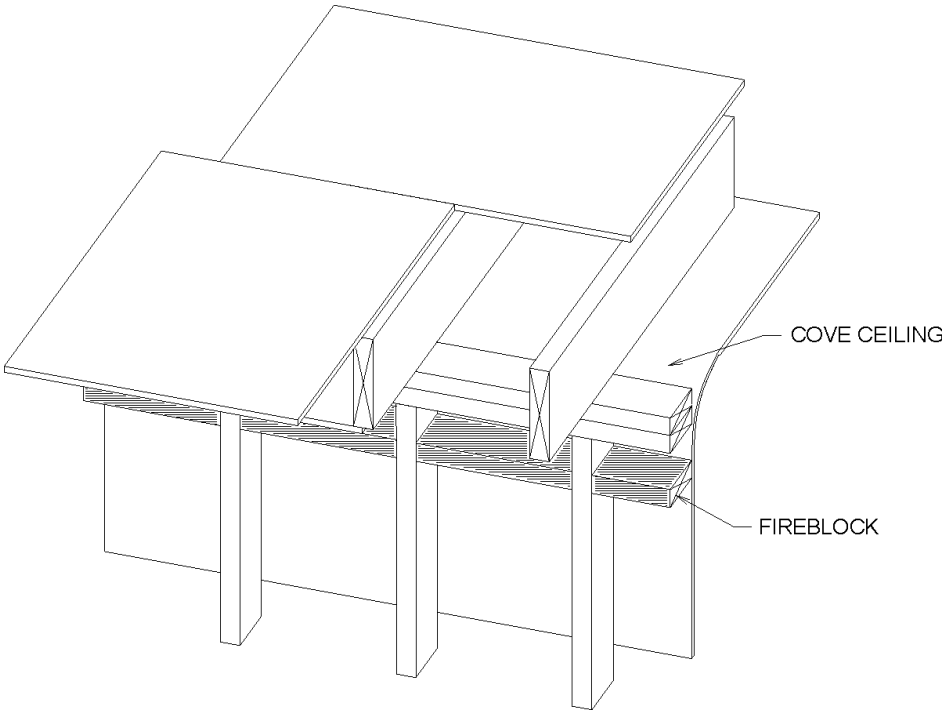

Figure 718.2.3(3)
FIREBLOCKING—COVE CEILING

INTERNATIONAL CODE COUNCIL®
Copyright © 2015 ICC. ALL RIGHTS RESERVED. Accessed by David Dammon on Jun 21, 2017 12:30:52 PM pursuant to License Agreement with ICC. No further reproduction or distribution authorized. ANY UNAUTHORIZED REPRODUCTION OR DISTRIBUTION IS A VIOLATION OF THE FEDERAL COPYRIGHT ACT AND THE LICENSE AGREEMENT, AND SUBJECT TO CIVIL AND CRIMINAL PENALTIES THEREUNDER.

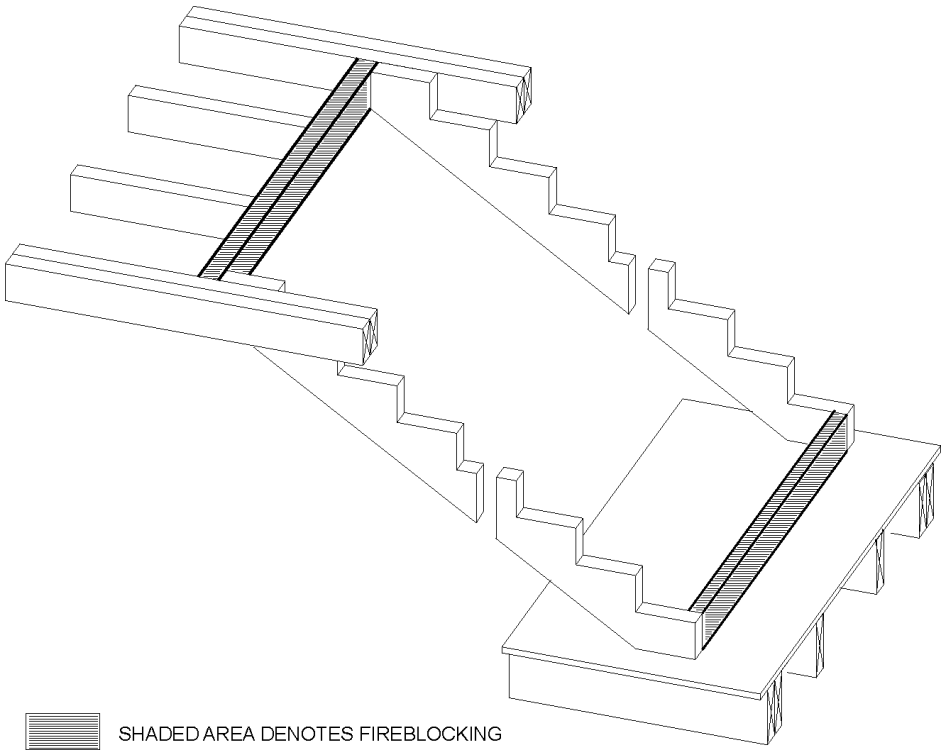

Figure 718.2.4
FIREBLOCKING—STAIRS

718.2.5.1 Factory-built chimneys and fireplaces. Factory-built chimneys and fireplaces shall be fireblocked in accordance with UL 103 and UL 127.

❖ UL 103 and 127 specify that only metal fireblocks and insulation shields are to be used with factory-built chimneys and fireplaces. The IMC contains a reference similar to that made in the UL standards. When fire-resistance-rated floor/ceiling assemblies are penetrated, the higher degree of protection afforded by tested through-penetration protection systems is required.

718.2.6 Exterior wall coverings. *Fireblocking* shall be installed within concealed spaces of exterior wall coverings and other exterior architectural elements where permitted to be of combustible construction as specified in Section 1406 or where erected with combustible frames. *Fireblocking* shall be installed at maximum intervals of 20 feet (6096 mm) in either dimension so that there will be no concealed space exceeding 100 square feet (9.3 m^2) between fireblocking. Where wood furring strips are used, they shall be of approved wood of natural decay resistance or preservative-treated wood. If noncontinuous, such elements shall have closed ends, with not less than 4 inches (102 mm) of separation between sections.

Exceptions:

1. *Fireblocking* of cornices is not required in single-family *dwellings*. *Fireblocking* of cornices of a two-family *dwelling* is required only at the line of *dwelling unit* separation.
2. *Fireblocking* shall not be required where the exterior wall covering is installed on noncombustible framing and the face of the exterior wall covering exposed to the concealed space is covered by one of the following materials:
   2.1. Aluminum having a minimum thickness of 0.019 inch (0.5 mm).
   2.2. Corrosion-resistant steel having a base metal thickness not less than 0.016 inch (0.4 mm) at any point.
   2.3. Other *approved* noncombustible materials.
3. *Fireblocking* shall not be required where the exterior wall covering has been tested in accordance with, and complies with the acceptance criteria of, NFPA 285. The exterior wall covering shall be installed as tested in accordance with NFPA 285.

❖ Combustible exterior wall finish and exterior architectural elements are required to be fireblocked at a maximum of 20-foot (6096 mm) intervals and a 100-square-foot (9.3 m^2) maximum area to prevent the spread of fire or smoke through concealed spaces. Adjacent sections of exterior trim need not be considered as contributing to the 20-foot (6096 mm) limitation if there is a minimum 4-inch (102 mm) separation

INTERNATIONAL CODE COUNCIL®
Copyright © 2015 ICC. ALL RIGHTS RESERVED. Accessed by David Dammon on Jun 21, 2017 12:30:52 PM pursuant to License Agreement with ICC. No further reproduction or distribution authorized. ANY UNAUTHORIZED REPRODUCTION OR DISTRIBUTION IS A VIOLATION OF THE FEDERAL COPYRIGHT ACT AND THE LICENSE AGREEMENT, AND SUBJECT TO CIVIL AND CRIMINAL PENALTIES THEREUNDER.

between sections of exterior trim and the ends are closed. Trim on the building exterior presents the same concern as interior combustible concealed wall spaces and, therefore, requires fireblocking. To increase the long-term durability of wood used on the exterior, a certain level of decay resistance is required.

Exception 1 exempts single-family dwellings from the fireblocking requirement in the eaves or cornices.

Exception 2 exempts aluminum or steel siding installed over noncombustible wall framing.

Exception 3 exempts exterior wall coverings that have been tested and comply with NFPA 285, provided the coverings are installed in accordance with the listing. This exception is compatible to the metal composite material (MCM) wall coverings in Section 1407. Section 1407.10.4 also requires the NFPA 285 test.

718.2.7 Concealed sleeper spaces. Where wood sleepers are used for laying wood flooring on masonry or concrete fire-resistance-rated floors, the space between the floor slab and the underside of the wood flooring shall be filled with an *approved* material to resist the free passage of flame and products of combustion or fireblocked in such a manner that there will be no open spaces under the flooring that will exceed 100 square feet (9.3 m^2) in area and such space shall be filled solidly under permanent partitions so that there is no communication under the flooring between adjoining rooms.

Exceptions:

1. *Fireblocking* is not required for slab-on-grade floors in gymnasiums.
2. *Fireblocking* is required only at the juncture of each alternate lane and at the ends of each lane in a bowling facility.

❖ Concealed spaces created by floor sleepers must be fireblocked into areas no greater than 100 square feet (9.3 m^2) or such spaces must be filled with materials capable of resisting flame, smoke or gases (see Commentary Figure 718.2.7).

Since floor sleepers may cover large areas, this fireblock or material will restrict a fire from spreading within the concealed space to other areas of the floor. This section is commonly applied when a raised, wood-finished floor surface is installed in Type I or II construction.

718.3 Draftstopping in floors. In combustible construction, draftstopping shall be installed to subdivide floor/ceiling assemblies in the locations prescribed in Sections 718.3.2 through 718.3.3.

❖ Draftstopping subdivides combustible concealed horizontal spaces, unlike firestopping which subdivides vertical spaces. Draftstopping is required in combustible concealed floor construction in the locations required by Sections 718.3.2 and 718.3.3.

718.3.1 Draftstopping materials. Draftstopping materials shall be not less than $^1/_2$-inch (12.7 mm) gypsum board, $^3/_8$-inch (9.5 mm) wood structural panel, $^3/_8$-inch (9.5 mm) particleboard, 1-inch (25-mm) nominal lumber, cement fiberboard, batts or blankets of *mineral wool* or glass fiber, or other *approved* materials adequately supported. The integrity of *draftstops* shall be maintained.

❖ Similar to fireblocks in small concealed spaces, draftstops also act as a barrier to smoke and gases. Because of the large areas that require this barrier, the code permits certain types of sheathing material such as $^1/_2$-inch (12.7 mm) gypsum board, $^3/_8$-inch (9.5 mm) plywood and particleboard, 1-inch nominal lumber, cement fiberboard, mineral wool and glass fiber batts or blankets, or other approved materials. The draftstop material must be properly supported and capable of remaining in place when subjected to initial fire exposure. It is reasonable to assume that materials that are acceptable for fireblocking purposes (see Section 718.2.1) would perform as well for draftstopping situations, so many items are duplicated here. Although the code provides an extensive laundry list of accepted materials, it is important to note that the code allows the use of any other

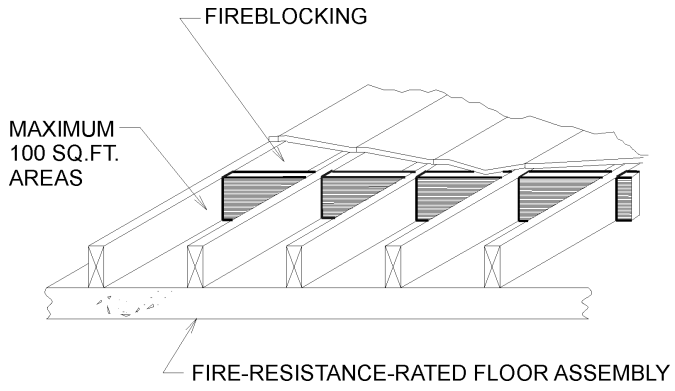

For SI: 1 square foot = 0.0929 mm^2.

Figure 718.2.7
FIREBLOCKING—CONCEALED FLOOR SPACES

INTERNATIONAL CODE COUNCIL®
Copyright © 2015 ICC. ALL RIGHTS RESERVED. Accessed by David Dammon on Jun 21, 2017 12:30:52 PM pursuant to License Agreement with ICC. No further reproduction or distribution authorized. ANY UNAUTHORIZED REPRODUCTION OR DISTRIBUTION IS A VIOLATION OF THE FEDERAL COPYRIGHT ACT AND THE LICENSE AGREEMENT, AND SUBJECT TO CIVIL AND CRIMINAL PENALTIES THEREUNDER.

approved material when it is adequately supported. Glass and mineral fiber batts are mentioned as an approved draftstopping material. Since the nonrigid glass or mineral fiber batts are not for insulation, they should be compressed to ensure that the void is completely filled. Batts used for insulation cannot be compressed.

718.3.2 Groups R-1, R-2, R-3 and R-4. Draftstopping shall be provided in floor/ceiling spaces in Group R-1 buildings, in Group R-2 buildings with three or more *dwelling units*, in Group R-3 buildings with two *dwelling units* and in Group R-4 buildings. Draftstopping shall be located above and in line with the *dwelling unit* and *sleeping unit* separations.

Exceptions:

1. Draftstopping is not required in buildings equipped throughout with an *automatic sprinkler system* in accordance with Section 903.3.1.1.
2. Draftstopping is not required in buildings equipped throughout with an *automatic sprinkler system* in accordance with Section 903.3.1.2, provided that automatic sprinklers are installed in the combustible concealed spaces where the draftstopping is being omitted.

❖ To maintain the integrity of dwelling or sleeping unit separation walls in buildings of Groups R-1, R-2, R-3 and R-4, draftstopping is to be provided when the dwelling, or sleeping-unit separation wall is not continuous to the floor sheathing above. The draftstopping must be installed directly above the dwelling or sleeping unit separation wall (see Commentary Figure 718.3.2). The dwelling unit or sleeping unit separation wall (see Section 708.4), plus the draftstopping above, are considered a barrier to the spread of fire and smoke. As such, the draftstop offers some level of protection to the occupants of one dwelling or sleeping unit from a fire occurring in another dwelling or sleeping unit.

The exception indicates that the draftstopping need not be provided if sprinklers are installed above and below the ceiling, since sprinkler activation will control the spread of fire. The sprinkler system must be installed in accordance with Section 903.3.1.1 or 903.3.1.2 and NFPA 13 or 13R. The NFPA 13 sprinkler system (see Section 903.3.1.1) will generally require the sprinklers to be installed within combustible floor spaces unless the space meets the exceptions found within the standard. The NFPA 13R sprinkler system (see Section 903.3.1.2) would generally not require the sprinkler system within the concealed floor space. However, when using the provisions of Exception 2, the NFPA 13R system must be extended into the floor space despite the normal exclusion within the standard. See Section 102.4, which requires this specific code requirement to apply beyond the requirements of the referenced standards.

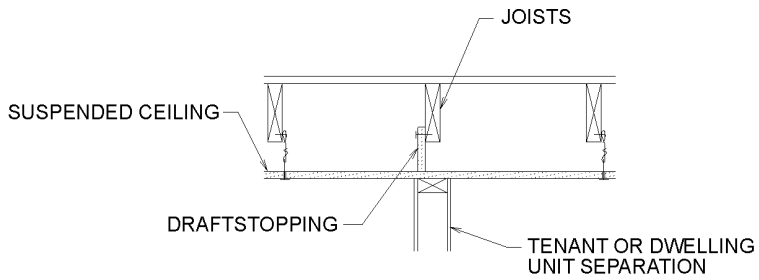

SECTION A-A

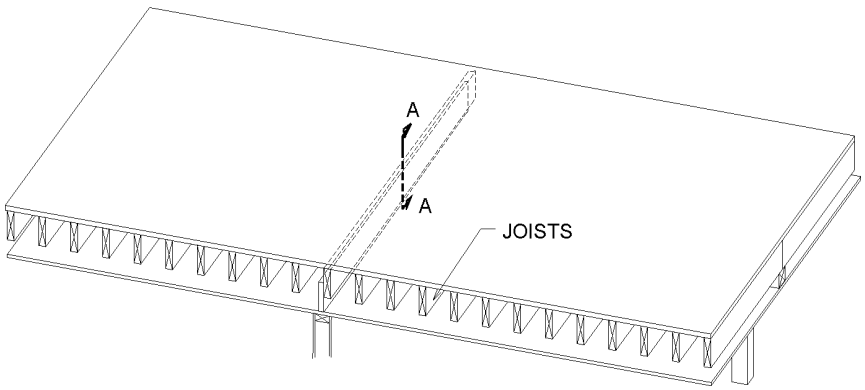

Figure 718.3.2
DRAFTSTOPPING—GROUPS R-1, R-2, R-3 AND R-4 AT TENANT AND DWELLING UNIT SEPARATION

INTERNATIONAL CODE COUNCIL®
Copyright © 2015 ICC. ALL RIGHTS RESERVED. Accessed by David Dammon on Jun 21, 2017 12:30:52 PM pursuant to License Agreement with ICC. No further reproduction or distribution authorized. ANY UNAUTHORIZED REPRODUCTION OR DISTRIBUTION IS A VIOLATION OF THE FEDERAL COPYRIGHT ACT AND THE LICENSE AGREEMENT, AND SUBJECT TO CIVIL AND CRIMINAL PENALTIES THEREUNDER.

718.3.3 Other groups. In other groups, draftstopping shall be installed so that horizontal floor areas do not exceed 1,000 square feet (93 m^2).

Exception: Draftstopping is not required in buildings equipped throughout with an *automatic sprinkler system* in accordance with Section 903.3.1.1.

❖ Unless the buildings are sprinklered throughout with an NFPA 13 system, draftstopping is to be provided in all groups except Groups R-1, R-2, R-3 and R-4 such that the concealed combustible floor/ceiling space is subdivided into horizontal spaces not exceeding 1,000 square feet (93 m^2) (see Commentary Figure 718.3.3).

718.4 Draftstopping in attics. In combustible construction, draftstopping shall be installed to subdivide *attic* spaces and concealed roof spaces in the locations prescribed in Sections 718.4.2 and 718.4.3. Ventilation of concealed roof spaces shall be maintained in accordance with Section 1203.2.

❖ Fires that spread to attics that are not properly draftstopped often cause considerable damage. For this reason, draftstopping is required in attic and concealed roof spaces in accordance with Sections 718.4.2 and 718.4.3. The text also reminds the code user that, although the space must be compartmented, it still must be ventilated in accordance with the provisions of Chapter 12 in order to eliminate moisture or condensation or to cool the attic.

718.4.1 Draftstopping materials. Materials utilized for draftstopping of *attic* spaces shall comply with Section 718.3.1.

❖ See the commentary to Section 718.3.1

718.4.1.1 Openings. Openings in the partitions shall be protected by *self-closing* doors with automatic latches constructed as required for the partitions.

❖ Section 1209.2 requires attic access. The placement of draftstopping in the attic may interfere with the ability of the fire department to gain access to all attic spaces. This section requires that if draftstopping is provided with access openings to adjacent draftstopped portions of the attic, the openings must be constructed of draftstopping materials and be equipped with self-closing mechanisms in order to ensure that the draftstop will perform its intended function.

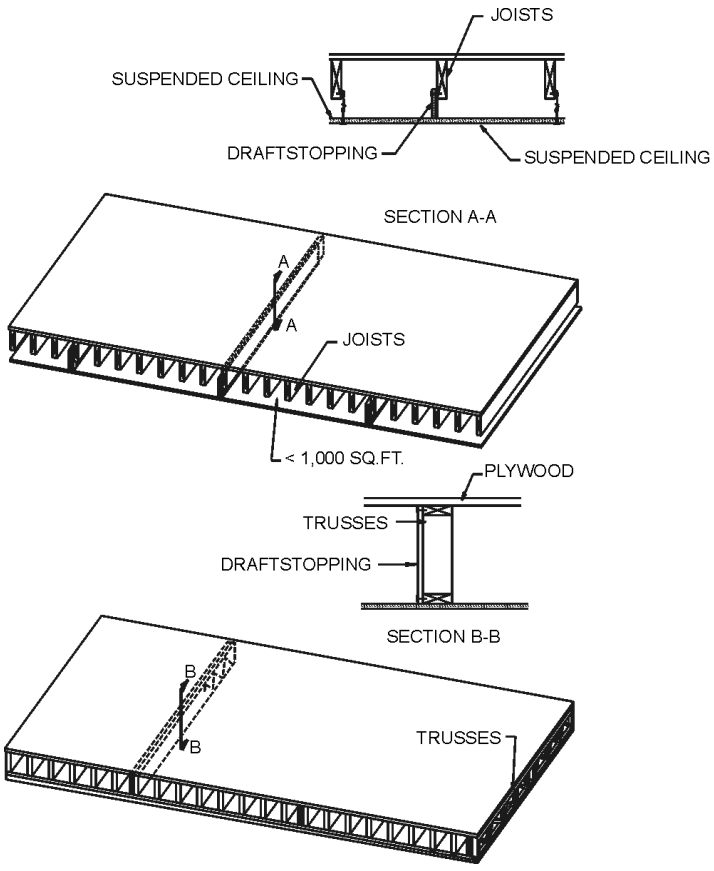

For SI: 1 square foot = 0.0929 mm^2.

Figure 718.3.3
DRAFTSTOPPING—CONCEALED FLOOR SPACES, OTHER GROUP

INTERNATIONAL CODE COUNCIL®
Copyright © 2015 ICC. ALL RIGHTS RESERVED. Accessed by David Dammon on Jun 21, 2017 12:30:52 PM pursuant to License Agreement with ICC. No further reproduction or distribution authorized. ANY UNAUTHORIZED REPRODUCTION OR DISTRIBUTION IS A VIOLATION OF THE FEDERAL COPYRIGHT ACT AND THE LICENSE AGREEMENT, AND SUBJECT TO CIVIL AND CRIMINAL PENALTIES THEREUNDER.

718.4.2 Groups R-1 and R-2. Draftstopping shall be provided in *attics*, mansards, overhangs or other concealed roof spaces of Group R-2 buildings with three or more *dwelling units* and in all Group R-1 buildings. Draftstopping shall be installed above, and in line with, *sleeping unit* and *dwelling unit* separation walls that do not extend to the underside of the roof sheathing above.

Exceptions:

1. Where *corridor* walls provide a *sleeping unit* or *dwelling unit* separation, draftstopping shall only be required above one of the *corridor* walls.
2. Draftstopping is not required in buildings equipped throughout with an *automatic sprinkler system* in accordance with Section 903.3.1.1.
3. In occupancies in Group R-2 that do not exceed four *stories above grade plane*, the *attic* space shall be subdivided by *draftstops* into areas not exceeding 3,000 square feet (279 m^2) or above every two *dwelling units*, whichever is smaller.
4. Draftstopping is not required in buildings equipped throughout with an *automatic sprinkler system* in accordance with Section 903.3.1.2, provided that automatic sprinklers are installed in the combustible concealed space where the draftstopping is being omitted.

❖ To maintain the integrity of dwelling- and sleeping-unit separation walls (see commentary, Section 718.3.2), draftstopping is to be provided above dwelling- or sleeping-unit separation walls that do not extend to the roof sheathing [see Commentary Figures 718.4.2(1) and 718.4.2(2)]. This provision is limited to Group R-1 and R-2 occupancies. Groups R-3 and R-4 are regulated by Section 718.4.3.

Exception 1 clarifies that for corridor walls that serve as dwelling- or sleeping-unit separations, draftstopping is only required above one of the two corridor walls. It should be noted that this option only applies to roof/attic spaces and not to floors (see Sections 718.3.2 and 708.4).

Exceptions 2 and 4 omit the requirement for draftstopping attics that are sprinklered in accordance with Section 903.3.1.1 (see Exception 2) or 903.3.1.2 (see Exception 4). This exception would require the attic to be sprinklered even though it may not be required by the standard. NFPA 13R typically would not require an attic to be sprinklered. This is consistent with the exceptions to Section 718.3.2 for draftstopping of floor spaces (see commentary, Section 718.3.2).

The draftstopping requirements can be reduced in Group R-2 occupancies of four stories or less by Exception 3. This exception allows the area between draftstopping to be increased to 3,000 square feet (279 m^2) or above every two dwelling units, whichever is smaller. This provides the opportunity for a simpler draftstopping installation when the draftstops are not required to be in line with the dwelling or sleeping unit

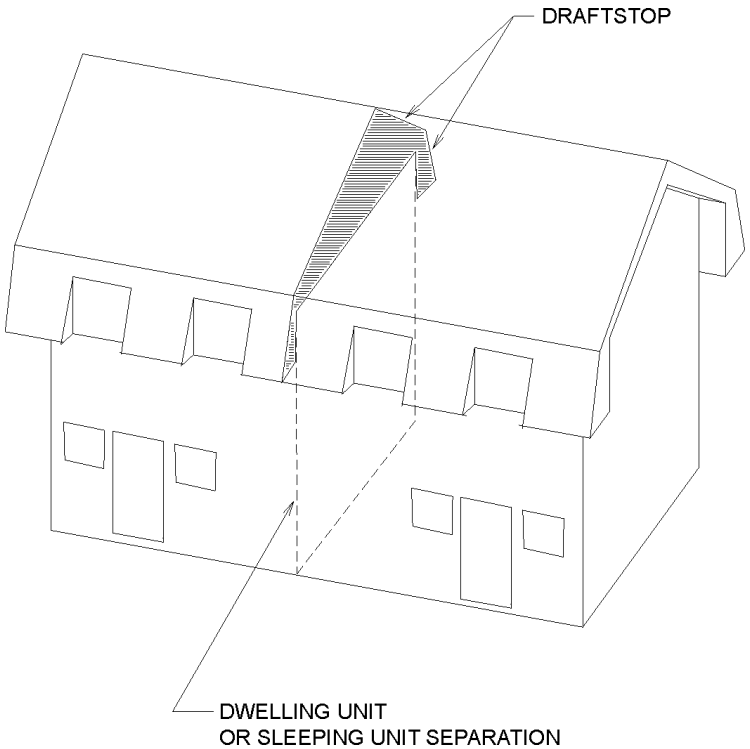

Figure 718.4.2(1)
DRAFTSTOPPING AT TENANT AND DWELLING UNIT SEPARATION

INTERNATIONAL CODE COUNCIL®
Copyright © 2015 ICC. ALL RIGHTS RESERVED. Accessed by David Dammon on Jun 21, 2017 12:30:52 PM pursuant to License Agreement with ICC. No further reproduction or distribution authorized. ANY UNAUTHORIZED REPRODUCTION OR DISTRIBUTION IS A VIOLATION OF THE FEDERAL COPYRIGHT ACT AND THE LICENSE AGREEMENT, AND SUBJECT TO CIVIL AND CRIMINAL PENALTIES THEREUNDER.

separation walls. Group R-2 buildings are required by Section 903.2.8 to be sprinklered; sprinklers reduce the need for attic draftstopping. The four-story restriction will match with the limitations of Section 903.3.1.2 for NFPA 13R sprinkler systems. Therefore, by providing this level of draftstopping, buildings that use the NFPA 13R systems will not need to comply with Exception 4, which is discussed above. If Section 903.3.1.1 (an NFPA 13 sprinkler system) is used, then sprinklers will generally be required within the attic space and Exception 2 (discussed above) would be applicable.

718.4.3 Other groups. Draftstopping shall be installed in *attics* and concealed roof spaces, such that any horizontal area does not exceed 3,000 square feet (279 m^2).

Exception: Draftstopping is not required in buildings equipped throughout with an *automatic sprinkler system* in accordance with Section 903.3.1.1.

❖ Since Group R-3, R-4 and nonresidential buildings are not always subdivided into small tenant spaces, concealed roof spaces and attics are to be subdivided into areas not exceeding 3,000 square feet (279 m^2). The exception indicates that draftstopping is not required when the spaces above and below the ceiling are provided coverage by an automatic sprinkler system, in accordance with NFPA 13.

718.5 Combustible materials in concealed spaces in Type I or II construction. Combustible materials shall not be permitted in concealed spaces of buildings of Type I or II construction.

Exceptions:

1. Combustible materials in accordance with Section 603.
2. Combustible materials exposed within plenums complying with Section 602 of the *International Mechanical Code.*
3. Class A *interior finish* materials classified in accordance with Section 803.
4. Combustible piping within partitions or shaft enclosures installed in accordance with the provisions of this code.
5. Combustible piping within concealed ceiling spaces installed in accordance with the *International Mechanical Code* and the *International Plumbing Code*.
6. Combustible insulation and covering on pipe and tubing, installed in concealed spaces other than plenums, complying with Section 720.7.

❖ This section is necessary because Section 718 would generally exclude Type I and II buildings from the concealed space draftstopping and fireblocking provisions. The use of combustibles in nonstructural applications is limited to the listed exceptions to prevent fire spread within building elements. The severity of a

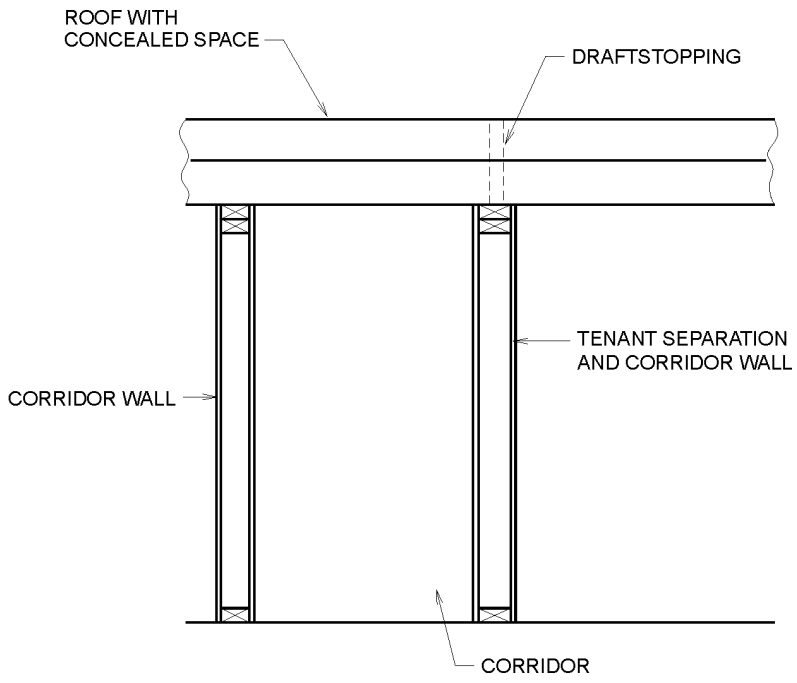

Figure 718.4.2(2)
DRAFTSTOPPING IN LINE WITH TENANT AND DWELLING UNIT SEPARATION WALL

INTERNATIONAL CODE COUNCIL®
Copyright © 2015 ICC. ALL RIGHTS RESERVED. Accessed by David Dammon on Jun 21, 2017 12:30:52 PM pursuant to License Agreement with ICC. No further reproduction or distribution authorized. ANY UNAUTHORIZED REPRODUCTION OR DISTRIBUTION IS A VIOLATION OF THE FEDERAL COPYRIGHT ACT AND THE LICENSE AGREEMENT, AND SUBJECT TO CIVIL AND CRIMINAL PENALTIES THEREUNDER.

potential problem increases when combustibles are located within concealed spaces that are inaccessible to manual fire fighting. This section regulates the use of combustibles within concealed spaces of noncombustible buildings. This section is referenced from Exception 24 of Section 603.1.

SECTION 719
FIRE-RESISTANCE REQUIREMENTS FOR PLASTER

719.1 Thickness of plaster. The minimum thickness of gypsum plaster or Portland cement plaster used in a fire-resistance-rated system shall be determined by the prescribed fire tests. The plaster thickness shall be measured from the face of the lath where applied to gypsum lath or metal lath.

❖ The fire resistance of plaster is dependent on material variations, such as the aggregate mixture (sand content) as well as bonding to the plaster base. The use of wire or wire fabric reinforces the plaster mixes applied to plaster bases and, therefore, ensures increased fire resistance. As such, the makeup of the plastered element is required when evaluating the fire-resistance rating of plaster. Because the type of plaster used affects the fire-resistance rating, it is essential that the tests conducted utilize a plaster mix similar to that which is to be used in actual construction. Depending on the type of plaster, additional tests may not be required. If the plaster is a type that is judged to be equivalent to a tested type (see Section 719.2), additional testing is not required.

Similar to the requirements of Section 714.2.5, it is the thickness of the protective covering that is important. Therefore, the plaster is to be measured from the face of the lath, which reinforces the plaster.

Code users should also be aware that Sections 721 and 722 contain a number of items related to the use of plaster in fire-resistance ratings. Section 720 contains a number of prescriptive assemblies that can be used to obtain a fire-resistance rating. Section 721 contains methods of calculating fire-resistant assemblies and the contribution of plaster to other assemblies. For more information, see Sections 722.2.1.4, 722.3.2 and 722.4.1. Although many people are not familiar with these provisions, they are permitted under Section 703.3 and provide another option for establishing rated assemblies.

719.2 Plaster equivalents. For fire-resistance purposes, $^1/_2$ inch (12.7 mm) of unsanded gypsum plaster shall be deemed equivalent to $^3/_4$ inch (19.1 mm) of one-to-three gypsum sand plaster or 1 inch (25 mm) of Portland cement sand plaster.

❖ This section indicates that prescribed thicknesses of unsanded gypsum plaster, one-to-three sanded gypsum plaster and Portland cement sand plaster are considered equivalent in terms of their fire-resistance rating characteristics. Once tests are conducted to determine the fire resistance of an assembly using one of these types, equivalency to the other prescribed types can be determined without subsequent tests.

719.3 Noncombustible furring. In buildings of Type I and II construction, plaster shall be applied directly on concrete or masonry or on *approved* noncombustible plastering base and furring.

❖ Buildings of Type I and II construction are required to be predominantly of noncombustible construction. This section requires the plastering base and furring to be noncombustible. The intent of this provision is to not permit a combustible cavity behind the finished plaster, which may be an area for a concealed fire buildup.

719.4 Double reinforcement. Plaster protection more than 1 inch (25 mm) in thickness shall be reinforced with an additional layer of *approved* lath embedded not less than $^3/_4$ inch (19.1 mm) from the outer surface and fixed securely in place.

Exception: Solid plaster partitions or where otherwise determined by fire tests.

❖ The additional reinforcement is intended to decrease the likelihood of the plaster loosening when subjected to high temperatures. The plaster relies on the lath to provide a finish that is structurally sound. As the thickness of the plaster increases, additional reinforcement is required to hold the plaster in place.

719.5 Plaster alternatives for concrete. In reinforced concrete construction, gypsum plaster or Portland cement plaster is permitted to be substituted for $^1/_2$ inch (12.7 mm) of the required poured concrete protection, except that a minimum thickness of $^3/_8$ inch (9.5 mm) of poured concrete shall be provided in reinforced concrete floors and 1 inch (25 mm) in reinforced concrete columns in addition to the plaster finish. The concrete base shall be prepared in accordance with Section 2510.7.

❖ Concrete elements, such as reinforced slabs and columns, rely in part on the thickness of the element to provide a fire-resistance rating. In order to reduce the concrete thickness, this section permits up to $^1/_2$ inch (12.7 mm) of plaster to be substituted for $^1/_2$ inch (12.7 mm) of concrete without affecting the fire-resistance rating of the element. While plaster can be substituted for concrete for fire-resistance purposes, a minimum amount of concrete is still required to be provided for structural integrity.

SECTION 720
THERMAL- AND SOUND-INSULATING MATERIALS

720.1 General. Insulating materials, including facings such as vapor retarders and *vapor-permeable membranes*, similar coverings and all layers of single and multilayer reflective foil insulations, shall comply with the requirements of this section. Where a flame spread index or a smoke-developed index is specified in this section, such index shall be determined in accordance with ASTM E84 or UL 723. Any material that is subject to an increase in flame spread index or smoke-developed index beyond the limits herein established

INTERNATIONAL CODE COUNCIL®
Copyright © 2015 ICC. ALL RIGHTS RESERVED. Accessed by David Dammon on Jun 21, 2017 12:30:52 PM pursuant to License Agreement with ICC. No further reproduction or distribution authorized. ANY UNAUTHORIZED REPRODUCTION OR DISTRIBUTION IS A VIOLATION OF THE FEDERAL COPYRIGHT ACT AND THE LICENSE AGREEMENT, AND SUBJECT TO CIVIL AND CRIMINAL PENALTIES THEREUNDER.

through the effects of age, moisture or other atmospheric conditions shall not be permitted.

Exceptions:

1. Fiberboard insulation shall comply with Chapter 23.
2. Foam plastic insulation shall comply with Chapter 26.
3. Duct and pipe insulation and duct and pipe coverings and linings in plenums shall comply with the *International Mechanical Code*.
4. All layers of single and multilayer reflective plastic core insulation shall comply with Section 2613.

❖ This section addresses the potential fire or flame spread hazards of insulating materials installed in building spaces. Other provisions of the code or companion codes regulate insulating materials used for duct and plenum insulation [see the IMC for energy conservation purposes and the *International Energy Conservation Code*® (IECC®)] and foam plastic insulation (see Section 2603). Insulating materials can affect fire development and fire spread and are, therefore, regulated accordingly.

This section addresses the various insulating materials that may be installed in building spaces, including insulating batts, blankets, fills (including vapor barriers and vapor-permeable membranes) or other coverings. Fiberboard insulation is regulated by Chapter 23. Cellulose loose-fill insulation is regulated by Section 720.6. Foam plastic insulation is regulated by Chapter 26. The applicable test method is ASTM E84 or UL 723 (see commentary, Section 803.1).

The requirements of Section 703.2 regarding the potential that adding items into a fire-resistant assembly may reduce the rating of the tested assembly must be considered. The addition of insulation has the potential to either add to or reduce the fire-resistance rating of an assembly. The reduction of ratings is more of a problem when insulation is added into a horizontal assembly.

720.2 Concealed installation. Insulating materials, where concealed as installed in buildings of any type of construction, shall have a flame spread index of not more than 25 and a smoke-developed index of not more than 450.

Exception: Cellulosic fiber loose-fill insulation complying with the requirements of Section 720.6 shall not be required to meet a flame spread index requirement but shall be required to meet a smoke-developed index of not more than 450 when tested in accordance with CAN/ULC S102.2.

❖ Concealed insulation no longer acts as an interior finish unless the covering material is removed or the fire is in the concealed building space. To limit the contribution of the insulation to a fire condition, the material must have a flame spread index of no more than 25 and a smoke-developed index of no more than 450. This is illustrated in Commentary Figure 720.2. Cellulosic fiber loose-fill insulation is regulated by the U.S. Consumer Product Safety Commission (CPSC) in accordance with Section 720.6. These materials are exempt from the flame spread index requirements but still need to be tested for smoke-development in accordance with CAN/ULC S102.2. Spray-applied cellulose is regulated by Section 720.3.1 (see commentary, Section 720.4).

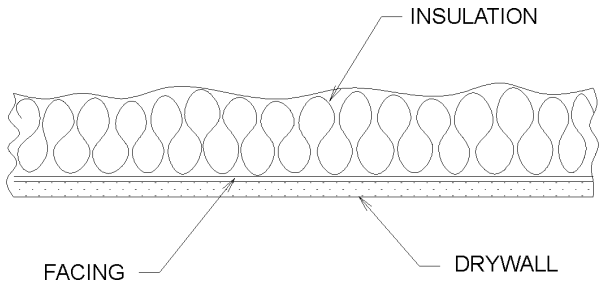

Figure 720.2
CONCEALED INSULATION

720.2.1 Facings. Where such materials are installed in concealed spaces in buildings of Type III, IV or V construction, the flame spread and smoke-developed limitations do not apply to facings, coverings, and layers of reflective foil insulation that are installed behind and in substantial contact with the unexposed surface of the ceiling, wall or floor finish.

Exception: All layers of single and multilayer reflective plastic core insulation shall comply with Section 2613.

❖ In buildings of Type III, IV and V construction, the flame spread indices do not apply to facing material, provided it is installed behind (and in substantial contact with) the unexposed surface of the ceiling, floor or wall finish. For example, when paper-backed insulation is placed directly on top of a ceiling, the paper facing is not required to meet the flame spread index; however, if the same material is applied to the underside of a roof deck and the paper facing is exposed to the attic space, the paper facing must meet the flame spread criteria. The potential for flame spread is greatly diminished when the facings are installed in direct contact with the finish material because of the lack of airspace to support a fire if it were to be exposed to a source of ignition.

The purpose of the vapor retarder being placed on the warm-in-winter side of the building element is to prevent moisture vapor in the warm interior from reaching the dew-point temperature on a cold surface in the roof, wall or floor system. The generally accepted rating of a vapor retarder is 1 perm [57 mg/(s • m^2 • Pa)]. It is assumed that the permeance of an adequate vapor barrier will not exceed 1 perm [57 mg/(s • m^2 • Pa)] (see commentary, Section 1203.2).

720.3 Exposed installation. Insulating materials, where exposed as installed in buildings of any type of construction,

INTERNATIONAL CODE COUNCIL®
Copyright © 2015 ICC. ALL RIGHTS RESERVED. Accessed by David Dammon on Jun 21, 2017 12:30:52 PM pursuant to License Agreement with ICC. No further reproduction or distribution authorized. ANY UNAUTHORIZED REPRODUCTION OR DISTRIBUTION IS A VIOLATION OF THE FEDERAL COPYRIGHT ACT AND THE LICENSE AGREEMENT, AND SUBJECT TO CIVIL AND CRIMINAL PENALTIES THEREUNDER.

shall have a flame spread index of not more than 25 and a smoke-developed index of not more than 450.

Exception: Cellulosic fiber loose-fill insulation complying with the requirements of Section 720.6 shall not be required to meet a flame spread index requirement but shall be required to meet a smoke-developed index of not more than 450 when tested in accordance with CAN/ULC S102.2.

❖ Exposed insulating materials represent the same fire exposure hazard as any other exposed material, such as interior finish. The flame spread index for all applications of insulation materials is limited to 25, compared to 200 for interior finishes installed in rooms or spaces of certain occupancies (see commentary, Chapter 8). As with all interior finishes, the smoke-developed index is limited to 450. Cellulosic fiber loose-fill insulation is regulated by the CPSC in accordance with Section 720.6. These materials are exempt from the flame spread index requirements but still need to be tested for smoke development in accordance with CAN/ULC S102.2.Spray-applied cellulosic fiber is regulated by Section 720.3.1 (see commentary, Section 720.4).

It is important to remember that insulation materials that are open and exposed within an attic or crawl space are still considered as being "exposed" and, therefore, regulated by this section. The general requirements of this section do not differ from the provisions of Section 720.1. The main difference is that the facing materials within concealed installations may be exempt from the flame spread and smoke-developed rating (see Section 720.2.1) while the exposed facings would be limited as stated in this section.

720.3.1 Attic floors. Exposed insulation materials installed on *attic* floors shall have a critical radiant flux of not less than 0.12 watt per square centimeter when tested in accordance with ASTM E970.

❖ ASTM E970 is a test method that was developed by the insulation industry to evaluate the fire hazard of exposed attic insulation and is referenced in the material standards for insulation. Cellulosic fiber loose-fill insulation is required to comply with CPSC 16 CFR, Part 1209 (see Section 720.6), which requires testing by this method. Spray-applied cellulose insulation that is not subject to the CPSC standard is also subject to the ASTM E970 testing by virtue of this section.

720.4 Loose-fill insulation. Loose-fill insulation materials that cannot be mounted in the ASTM E84 or UL 723 apparatus without a screen or artificial supports shall comply with the flame spread and smoke-developed limits of Sections 720.2 and 720.3 when tested in accordance with CAN/ULC S102.2.

Exception: Cellulosic fiber loose-fill insulation shall not be required to meet a flame spread index requirement when tested in accordance with CAN/ULC S102.2, provided such insulation has a smoke-developed index of not more than 450 and complies with the requirements of Section 720.6.

❖ The exception serves to make a distinction between cellulose insulation, which is spray applied using a water-mist applicator, and cellulose or other loose-fill insulation, which is poured or blown in place. Spray-applied cellulose insulation can be exposed on vertical and horizontal ceiling-type surfaces so it is treated as any other insulating material in regard to testing. Cellulosic fiber loose-fill insulation, which is poured or blown in, is regulated by CPSC requirements (see Section 720.6) and is exempt from the test procedure described in this section. These materials are exempt from the flame spread index requirements but still need to be tested for smoke development in accordance with CAN/ULC S102.2.

720.5 Roof insulation. The use of combustible roof insulation not complying with Sections 720.2 and 720.3 shall be permitted in any type of construction provided that insulation is covered with *approved* roof coverings directly applied thereto.

❖ Foam plastic roof insulation is required to comply with Chapter 26. This section allows combustible insulation other than foam plastic insulation to be incorporated in the roof assembly without declassifying the type of construction. This provision coordinates with Section 603.1, Item 4.

720.6 Cellulosic fiber loose-fill insulation and self-supported spray-applied cellulosic insulation. Cellulosic fiber loose-fill insulation and self-supported spray-applied cellulosic insulation shall comply with CPSC 16 CFR Parts 1209 and 1404. Each package of such insulating material shall be clearly labeled in accordance with CPSC 16 CFR Parts 1209 and 1404.

❖ Cellulosic fiber loose-fill insulation is federally regulated by the CPSC. CPSC 16 CFR, Parts 1209 and 1404, contain various requirements that regulate the product to avoid excessive flammability or significant fire hazards. The smoke-developed index for cellulosic fiber loose-fill insulation must be determined by the ASTM E84 test and must be 450 or less. The intent of this section is that the procedure for the smoke-developed index should be done by an ASTM E84 test and not by the test procedures specified in Section 720.4.

720.7 Insulation and covering on pipe and tubing. Insulation and covering on pipe and tubing shall have a flame spread index of not more than 25 and a smoke-developed index of not more than 450.

Exception: Insulation and covering on pipe and tubing installed in plenums shall comply with the *International Mechanical Code.*

❖ This section maintains the general provision for insulation by requiring a maximum flame spread of 25 and a smoke-developed index of 450, as stated in

INTERNATIONAL CODE COUNCIL®
Copyright © 2015 ICC. ALL RIGHTS RESERVED. Accessed by David Dammon on Jun 21, 2017 12:30:52 PM pursuant to License Agreement with ICC. No further reproduction or distribution authorized. ANY UNAUTHORIZED REPRODUCTION OR DISTRIBUTION IS A VIOLATION OF THE FEDERAL COPYRIGHT ACT AND THE LICENSE AGREEMENT, AND SUBJECT TO CIVIL AND CRIMINAL PENALTIES THEREUNDER.

Sections 720.2 and 720.3; however, if exposed in a plenum, the IMC limits the smoke-developed index to 50.

SECTION 721
PRESCRIPTIVE FIRE RESISTANCE

721.1 General. The provisions of this section contain prescriptive details of fire-resistance-rated building elements, components or assemblies. The materials of construction listed in Tables 721.1(1), 721.1(2), and 721.1(3) shall be assumed to have the *fire-resistance ratings* prescribed therein. Where materials that change the capacity for heat dissipation are incorporated into a fire-resistance-rated assembly, fire test results or other substantiating data shall be made available to the *building official* to show that the required fire-resistance-rating time period is not reduced.

❖ Section 703.3 permits the fire-resistance ratings to be determined in a number of ways, including those found in Section 721 (see Section 703.3, Item 2). In this section, there are many prescriptive details for fire-resistance-rated construction, particularly those materials and assemblies listed in Table 721.1(1) for structural parts, Table 721.1(2) for walls and partitions and Table 721.1(3) for floor and roof systems. For the most part, the listed items have been tested in accordance with the fire-resistance ratings indicated. In addition, a similar footnote to all of the tables allows the acceptance of generic assemblies that are listed in GA 600, *Fire-Resistance Design Manual*. It is important to review all of the applicable footnotes when using a material or assembly from one of the tables.

As stated above, the fire-resistance ratings for the walls and partitions outlined in Table 721.1(2) are based on actual tests. For reinforced concrete walls, it is important to note the type of aggregate used. The difference in aggregates is quite significant for a 4-hour fire-resistance-rated wall, as it amounts to a difference in thickness of almost 2 inches (51 mm). For hollow-unit masonry walls, the thickness required for a particular fire-endurance rating is the equivalent thickness as defined in Section 722.3.1 for concrete masonry and Section 722.4.1.1 for clay masonry.

Table 721.1(3) provides fire-resistance ratings for floor/ceiling and roof/ceiling assemblies. Note n, which exempts unusable space from the flooring and ceiling requirements, is especially important. This exemption is consistent with Section 711.2.6.

Often, materials such as insulation are added to fire-resistance-rated assemblies. The code requires substantiating fire test data to show that when the materials are added, they do not reduce the required fire-endurance time period. As an example, adding insulation to a floor/ceiling assembly may change its capacity to dissipate heat and, particularly for noncombustible assemblies, the fire-resistance rating may be changed.

Although the primary intent of the provision is to cover those cases where thermal insulation is added, the language is intentionally broad so that it applies to any material that might be added to the assembly.

721.1.1 Thickness of protective coverings. The thickness of fire-resistant materials required for protection of structural members shall be not less than set forth in Table 721.1(1), except as modified in this section. The figures shown shall be the net thickness of the protecting materials and shall not include any hollow space in back of the protection.

❖ In accordance with this section, the required thickness of insulating material used to provide fire resistance to a structural member cannot be less than the dimension established by Table 721.1(1), except for permitted modifications. An example of the minimum thickness of concrete required for a structural steel column is shown in Commentary Figure 721.1.1(1). Commentary Figure 721.1.1(2) illustrates the minimum concrete thickness requirements for protecting reinforcing steel in concrete columns, beams, girders and trusses. Refer to Section 704 for additional provisions regarding structural members.

721.1.2 Unit masonry protection. Where required, metal ties shall be embedded in bed joints of unit masonry for pro-

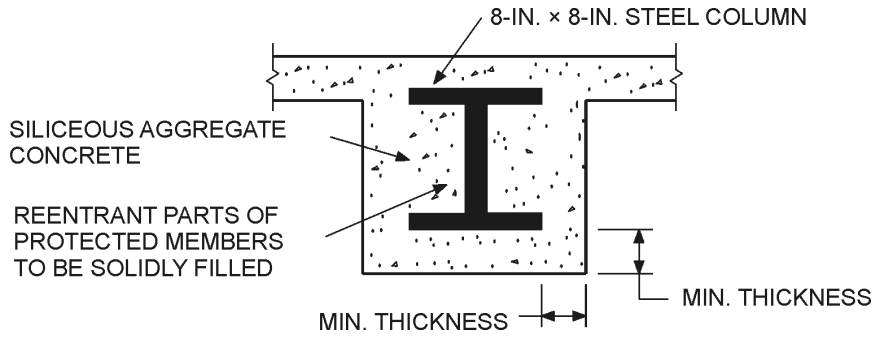

For SI: 1 inch = 25.4 mm.

Figure 721.1.1(1)
STEEL COLUMN ENCASED IN CONCRETE

INTERNATIONAL CODE COUNCIL®
Copyright © 2015 ICC. ALL RIGHTS RESERVED. Accessed by David Dammon on Jun 21, 2017 12:30:52 PM pursuant to License Agreement with ICC. No further reproduction or distribution authorized. ANY UNAUTHORIZED REPRODUCTION OR DISTRIBUTION IS A VIOLATION OF THE FEDERAL COPYRIGHT ACT AND THE LICENSE AGREEMENT, AND SUBJECT TO CIVIL AND CRIMINAL PENALTIES THEREUNDER.

tection of steel columns. Such ties shall be as set forth in Table 721.1(1) or be equivalent thereto.

❖ Items 1-3.1 through 1-3.4 of Table 721.1(1) require horizontal joint reinforcement. This section stipulates that if ties are required to connect the masonry to the steel column, such ties are to be located in the bed joints, which is where the horizontal reinforcement is to be located.

721.1.3 Reinforcement for cast-in-place concrete column protection. Cast-in-place concrete protection for steel columns shall be reinforced at the edges of such members with wire ties of not less than 0.18 inch (4.6 mm) in diameter wound spirally around the columns on a pitch of not more than 8 inches (203 mm) or by equivalent reinforcement.

❖ In order for a concrete-encased steel column to maintain a fire-resistance rating, it is imperative that the concrete remain in place. Similar to a reinforced concrete column with spiral reinforcement (see Section 721.2.4.3), the ties required by this section are necessary for the concrete to remain in place around the column.

721.1.4 Plaster application. The finish coat is not required for plaster protective coatings where those coatings comply with the design mix and thickness requirements of Tables 721.1(1), 721.1(2) and 721.1(3).

❖ The thickness of plaster for prescriptive assemblies, such as Item 1-4.1 in Table 721.1(1), Item 12-1.1 in Table 721.1(2) and Item 11-1.1 in Table 721.1(3), does not include the finish coat. Only the scratch coat and brown coat are needed to achieve the indicated fire-resistance ratings in the tables.

721.1.5 Bonded prestressed concrete tendons. For members having a single tendon or more than one tendon installed with equal concrete cover measured from the nearest surface, the cover shall be not less than that set forth in Table 721.1(1). For members having multiple tendons installed with variable concrete cover, the average tendon cover shall be not less than that set forth in Table 721.1(1), provided:

1. The clearance from each tendon to the nearest exposed surface is used to determine the average cover.
2. In no case can the clear cover for individual tendons be less than one-half of that set forth in Table 721.1(1). A minimum cover of $^3/_4$ inch (19.1 mm) for slabs and 1 inch (25 mm) for beams is required for any aggregate concrete.
3. For the purpose of establishing a *fire-resistance rating*, tendons having a clear covering less than that set forth in Table 721.1(1) shall not contribute more than 50 percent of the required ultimate moment capacity for members less than 350 square inches (0.226 m^2) in cross-sectional area and 65 percent for larger members. For structural design purposes, however, tendons having a reduced cover are assumed to be fully effective.

❖ As the ultimate-moment capacity of the member is critical to its behavior under fire conditions, the code requires the reduction for those tendons having cover to be less than that specified by the code. Behavior at service loads, however, is less affected by the heat of a fire; therefore, the code permits those tendons with reduced cover to be fully effective.

TABLE 721.1(1). See page 7-135.

❖ An example of the minimum thickness of concrete required for a structural steel column is shown in Commentary Figure 721.1.1(1). As shown, this figure depicts Item 1-1.5 of Table 721.1(1). Commentary Figure 721.1.1(2) depicts a reinforced concrete column based on Item 5-1.1 (see commentary, Section 721.1).

TABLE 721.1(2). See page 7-139.

❖ An example of the minimum thickness of concrete required for a wall is shown in Commentary Figure 721.1(2)(a). As shown, this figure depicts Item 4-1.1 of Table 721.1(2). Commentary Figure 721.1(2)(b) depicts a noncombustible stud exterior wall based on Item 15-1.4 (see commentary, Section 721.1).

TABLE 721.1(3). See page 7-147.

❖ An example of a 1-hour-rated wood floor or roof truss is shown in Commentary Figure 721.1(3). As shown, this figure depicts Item 21-1.1 (see commentary, Section 721.1).

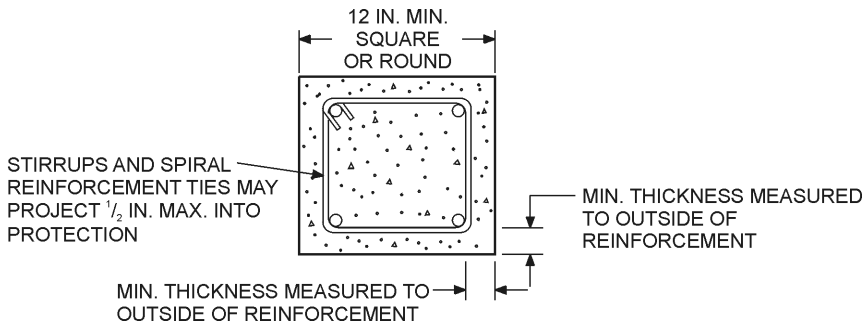

For SI: 1 inch = 25.4 mm.

Figure 721.1.1(2)
REINFORCING STEEL IN CONCRETE COLUMNS, BEAMS, GIRDERS AND TRUSSES

INTERNATIONAL CODE COUNCIL®
Copyright © 2015 ICC. ALL RIGHTS RESERVED. Accessed by David Dammon on Jun 21, 2017 12:30:52 PM pursuant to License Agreement with ICC. No further reproduction or distribution authorized. ANY UNAUTHORIZED REPRODUCTION OR DISTRIBUTION IS A VIOLATION OF THE FEDERAL COPYRIGHT ACT AND THE LICENSE AGREEMENT, AND SUBJECT TO CIVIL AND CRIMINAL PENALTIES THEREUNDER.

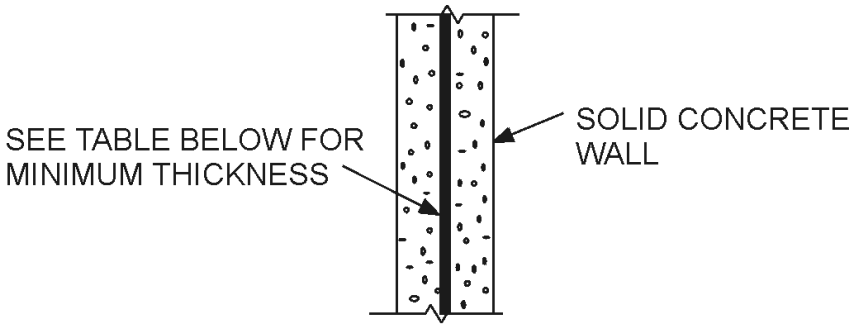

SOLID CONCRETE WALL

MATERIAL	ITEM NUMBER	CONSTRUCTION	MINIMUM FINISHED THICKNESS FACE-TO-FACE (inches)			
			4 hour	3 hour	2 hour	1 hour
Solid concrete	4-1.1	Siliceous aggregate concrete	7.0	6.2	5.0	3.5
		Carbondate aggregate concrete	6.6	5.7	4.6	3.2
		Sand-lightweight concrete	5.4	4.6	3.8	2.7
		Lightweight concrete	5.1	4.4	3.6	2.5

For SI: 1 inch = 25.4 mm.

Figure 721.1(2)(a)
CONCRETE WALL

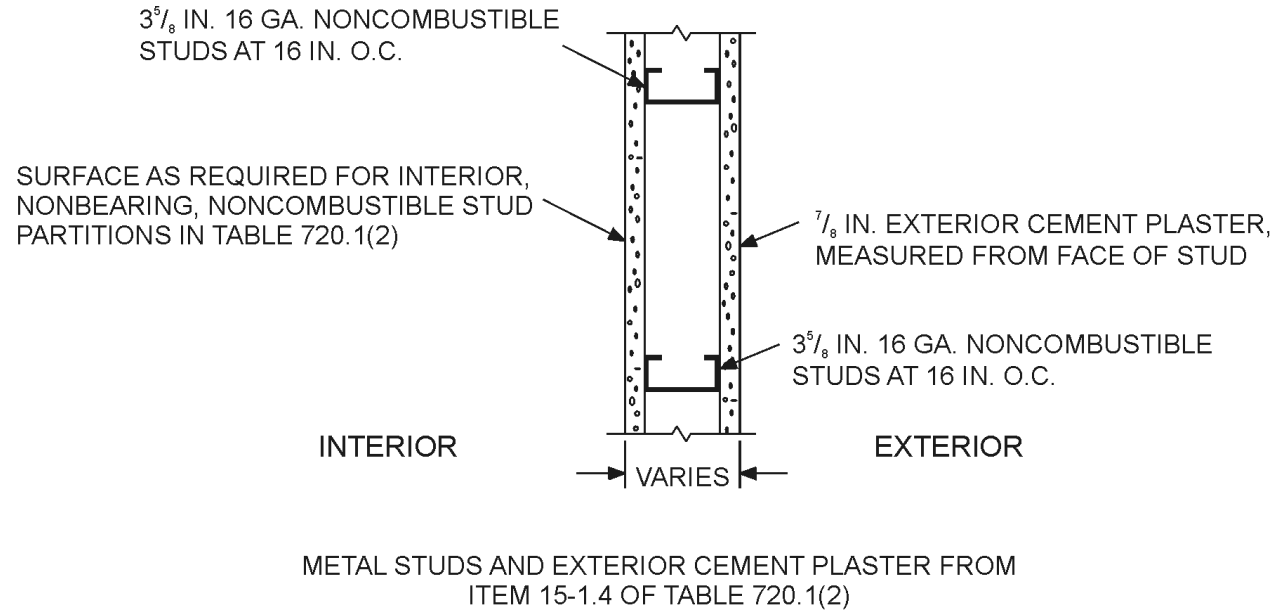

METAL STUDS AND EXTERIOR CEMENT PLASTER FROM
ITEM 15-1.4 OF TABLE 720.1(2)

For SI: 1 inch = 25.4 mm.

Figure 721.1(2)(b)
METAL STUD WALL WITH PLASTER

INTERNATIONAL CODE COUNCIL®
Copyright © 2015 ICC. ALL RIGHTS RESERVED. Accessed by David Dammon on Jun 21, 2017 12:30:52 PM pursuant to License Agreement with ICC. No further reproduction or distribution authorized. ANY UNAUTHORIZED REPRODUCTION OR DISTRIBUTION IS A VIOLATION OF THE FEDERAL COPYRIGHT ACT AND THE LICENSE AGREEMENT, AND SUBJECT TO CIVIL AND CRIMINAL PENALTIES THEREUNDER.

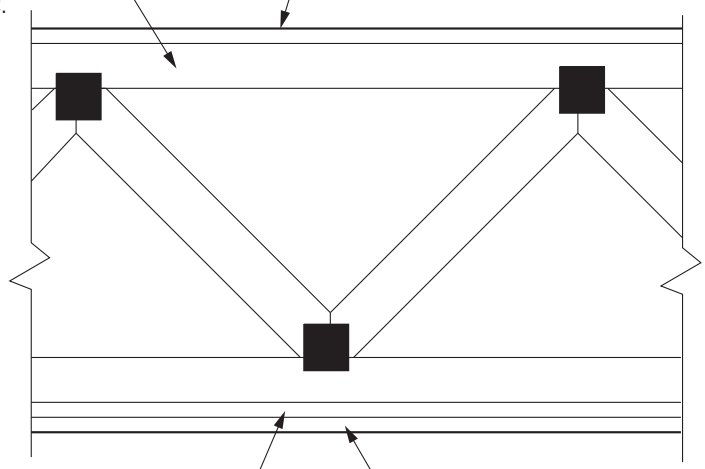

For SI: 1 inch = 25.4 mm.

Figure 721.1(3)
WOOD FLOOR TRUSS

INTERNATIONAL CODE COUNCIL®
Copyright © 2015 ICC. ALL RIGHTS RESERVED. Accessed by David Dammon on Jun 21, 2017 12:30:52 PM pursuant to License Agreement with ICC. No further reproduction or distribution authorized. ANY UNAUTHORIZED REPRODUCTION OR DISTRIBUTION IS A VIOLATION OF THE FEDERAL COPYRIGHT ACT AND THE LICENSE AGREEMENT, AND SUBJECT TO CIVIL AND CRIMINAL PENALTIES THEREUNDER.

TABLE 721.1(1)
MINIMUM PROTECTION OF STRUCTURAL PARTS BASED ON TIME PERIODS FOR VARIOUS NONCOMBUSTIBLE INSULATING MATERIALS[m]

STRUCTURAL PARTS TO BE PROTECTED	ITEM NUMBER	INSULATING MATERIAL USED	MINIMUM THICKNESS OF INSULATING MATERIAL FOR THE FOLLOWING FIRE-RESISTANCE PERIODS (inches)			
			4 hours	3 hours	2 hours	1 hour
1. Steel columns and all of primary trusses (continued)	1-1.1	Carbonate, lightweight and sand-lightweight aggregate concrete, members 6″ × 6″ or greater (not including sandstone, granite and siliceous gravel).[a]	2 1/2	2	1 1/2	1
	1-1.2	Carbonate, lightweight and sand-lightweight aggregate concrete, members 8″ × 8″ or greater (not including sandstone, granite and siliceous gravel).[a]	2	1 1/2	1	1
	1-1.3	Carbonate, lightweight and sand-lightweight aggregate concrete, members 12″ × 12″ or greater (not including sandstone, granite and siliceous gravel).[a]	1 1/2	1	1	1
	1-1.4	Siliceous aggregate concrete and concrete excluded in Item 1-1.1, members 6″ × 6″ or greater.[a]	3	2	1 1/2	1
	1-1.5	Siliceous aggregate concrete and concrete excluded in Item 1-1.1, members 8″ × 8″ or greater.[a]	2 1/2	2	1	1
	1-1.6	Siliceous aggregate concrete and concrete excluded in Item 1-1.1, members 12″ × 12″ or greater.[a]	2	1	1	1
	1-2.1	Clay or shale brick with brick and mortar fill.[a]	3 3/4	—	—	2 1/4
	1-3.1	4″ hollow clay tile in two 2″ layers; 1/2″ mortar between tile and column; 3/8″ metal mesh 0.046″ wire diameter in horizontal joints; tile fill.[a]	4	—	—	—
	1-3.2	2″ hollow clay tile; 3/4″ mortar between tile and column; 3/8″ metal mesh 0.046″ wire diameter in horizontal joints; limestone concrete fill[a]; plastered with 3/4″ gypsum plaster.	3	—	—	—
	1-3.3	2″ hollow clay tile with outside wire ties 0.08″ diameter at each course of tile or 3/8″ metal mesh 0.046″ diameter wire in horizontal joints; limestone or trap-rock concrete fill[a] extending 1″ outside column on all sides.	—	—	3	—
	1-3.4	2″ hollow clay tile with outside wire ties 0.08″ diameter at each course of tile with or without concrete fill; 3/4″ mortar between tile and column.	—	—	—	2
	1-4.1	Cement plaster over metal lath wire tied to 3/4″ cold-rolled vertical channels with 0.049″ (No. 18 B.W. gage) wire ties spaced 3″ to 6″ on center. Plaster mixed 1:2 1/2 by volume, cement to sand.	—	—	2 1/2[b]	7/8
	1-5.1	Vermiculite concrete, 1:4 mix by volume over paperbacked wire fabric lath wrapped directly around column with additional 2″ × 2″ 0.065″ /0.065″ (No. 16/16 B.W. gage) wire fabric placed 3/4″ from outer concrete surface. Wire fabric tied with 0.049″ (No. 18 B.W. gage) wire spaced 6″ on center for inner layer and 2″ on center for outer layer.	2	—	—	—
	1-6.1	Perlite or vermiculite gypsum plaster over metal lath wrapped around column and furred 1 1/4″ from column flanges. Sheets lapped at ends and tied at 6″ intervals with 0.049″ (No. 18 B.W. gage) tie wire. Plaster pushed through to flanges.	1 1/2	1	—	—
	1-6.2	Perlite or vermiculite gypsum plaster over self-furring metal lath wrapped directly around column, lapped 1" and tied at 6″ intervals with 0.049″ (No. 18 B.W. gage) wire.	1 3/4	1 3/8	1	—
	1-6.3	Perlite or vermiculite gypsum plaster on metal lath applied to 3/4″ cold-rolled channels spaced 24″ apart vertically and wrapped flatwise around column.	1 1/2	—	—	—
	1-6.4	Perlite or vermiculite gypsum plaster over two layers of 1/2″ plain full-length gypsum lath applied tight to column flanges. Lath wrapped with 1″ hexagonal mesh of No. 20 gage wire and tied with doubled 0.035" diameter (No. 18 B.W. gage) wire ties spaced 23″ on center. For three-coat work, the plaster mix for the second coat shall not exceed 100 pounds of gypsum to 2 1/2 cubic feet of aggregate for the 3-hour system.	2 1/2	2	—	—

(continued)

INTERNATIONAL CODE COUNCIL®
Copyright © 2015 ICC. ALL RIGHTS RESERVED. Accessed by David Dammon on Jun 21, 2017 12:30:52 PM pursuant to License Agreement with ICC. No further reproduction or distribution authorized. ANY UNAUTHORIZED REPRODUCTION OR DISTRIBUTION IS A VIOLATION OF THE FEDERAL COPYRIGHT ACT AND THE LICENSE AGREEMENT, AND SUBJECT TO CIVIL AND CRIMINAL PENALTIES THEREUNDER.

TABLE 721.1(1)—continued
MINIMUM PROTECTION OF STRUCTURAL PARTS BASED ON TIME PERIODS FOR VARIOUS NONCOMBUSTIBLE INSULATING MATERIALS[m]

STRUCTURAL PARTS TO BE PROTECTED	ITEM NUMBER	INSULATING MATERIAL USED	MINIMUM THICKNESS OF INSULATING MATERIAL FOR THE FOLLOWING FIRE-RESISTANCE PERIODS (inches)			
			4 hours	3 hours	2 hours	1 hour
1. Steel columns and all of primary trusses	1-6.5	Perlite or vermiculite gypsum plaster over one layer of $^1/_2$″ plain full-length gypsum lath applied tight to column flanges. Lath tied with doubled 0.049″ (No. 18 B.W. gage) wire ties spaced 23″ on center and scratch coat wrapped with 1″ hexagonal mesh 0.035″ (No. 20 B.W. gage) wire fabric. For three-coat work, the plaster mix for the second coat shall not exceed 100 pounds of gypsum to $2^1/_2$ cubic feet of aggregate.	—	2	—	—
	1-7.1	Multiple layers of $^1/_2$″ gypsum wallboard[c] adhesively[d] secured to column flanges and successive layers. Wallboard applied without horizontal joints. Corner edges of each layer staggered. Wallboard layer below outer layer secured to column with doubled 0.049″ (No. 18 B.W. gage) steel wire ties spaced 15″ on center. Exposed corners taped and treated.	—	—	2	1
	1-7.2	Three layers of $^5/_8$″ Type X gypsum wallboard.[c] First and second layer held in place by $^1/_8$″ diameter by $1^3/_8$″ long ring shank nails with $^5/_{16}$″ diameter heads spaced 24″ on center at corners. Middle layer also secured with metal straps at mid-height and 18″ from each end, and by metal corner bead at each corner held by the metal straps. Third layer attached to corner bead with 1″ long gypsum wallboard screws spaced 12″ on center.	—	—	$1^7/_8$	—
	1-7.3	Three layers of $^5/_8$″ Type X gypsum wallboard,[c] each layer screw attached to $1^5/_8$″ steel studs 0.018" thick (No. 25 carbon sheet steel gage) at each corner of column. Middle layer also secured with 0.049″ (No. 18 B.W. gage) double-strand steel wire ties, 24″ on center. Screws are No. 6 by 1″ spaced 24″ on center for inner layer, No. 6 by $1^5/_8$″ spaced 12″ on center for middle layer and No. 8 by $2^1/_4$″ spaced 12″ on center for outer layer.	—	$1^7/_8$	—	—
	1-8.1	Wood-fibered gypsum plaster mixed 1:1 by weight gypsum-to-sand aggregate applied over metal lath. Lath lapped 1″ and tied 6″ on center at all end, edges and spacers with 0.049″ (No. 18 B.W. gage) steel tie wires. Lath applied over $^1/_2$″ spacers made of $^3/_4$″ furring channel with 2″ legs bent around each corner. Spacers located 1″ from top and bottom of member and a maximum of 40″ on center and wire tied with a single strand of 0.049″ (No. 18 B.W. gage) steel tie wires. Corner bead tied to the lath at 6″ on center along each corner to provide plaster thickness.	—	—	$1^5/_8$	—
	1-9.1	Minimum W8x35 wide flange steel column ($w/d \geq 0.75$) with each web cavity filled even with the flange tip with normal weight carbonate or siliceous aggregate concrete (3,000 psi minimum compressive strength with 145 pcf ± 3 pcf unit weight). Reinforce the concrete in each web cavity with a minimum No. 4 deformed reinforcing bar installed vertically and centered in the cavity, and secured to the column web with a minimum No. 2 horizontal deformed reinforcing bar welded to the web every 18″ on center vertically. As an alternative to the No. 4 rebar, $^3/_4$″ diameter by 3″ long headed studs, spaced at 12″ on center vertically, shall be welded on each side of the web midway between the column flanges.	—	—	—	See Note n
2. Webs or flanges of steel beams and girders (continued)	2-1.1	Carbonate, lightweight and sand-lightweight aggregate concrete (not including sandstone, granite and siliceous gravel) with 3″ or finer metal mesh placed 1″ from the finished surface anchored to the top flange and providing not less than 0.025 square inch of steel area per foot in each direction.	2	$1^1/_2$	1	1
	2-1.2	Siliceous aggregate concrete and concrete excluded in Item 2-1.1 with 3″ or finer metal mesh placed 1″ from the finished surface anchored to the top flange and providing not less than 0.025 square inch of steel area per foot in each direction.	$2^1/_2$	2	$1^1/_2$	1
	2-2.1	Cement plaster on metal lath attached to $^3/_4$″ cold-rolled channels with 0.04″ (No. 18 B.W. gage) wire ties spaced 3″ to 6″ on center. Plaster mixed 1:2 $^1/_2$ by volume, cement to sand.	—	—	$2^1/_2$[b]	$^7/_8$

(continued)

INTERNATIONAL CODE COUNCIL®
Copyright © 2015 ICC. ALL RIGHTS RESERVED. Accessed by David Dammon on Jun 21, 2017 12:30:52 PM pursuant to License Agreement with ICC. No further reproduction or distribution authorized. ANY UNAUTHORIZED REPRODUCTION OR DISTRIBUTION IS A VIOLATION OF THE FEDERAL COPYRIGHT ACT AND THE LICENSE AGREEMENT, AND SUBJECT TO CIVIL AND CRIMINAL PENALTIES THEREUNDER.

TABLE 721.1(1)—continued
MINIMUM PROTECTION OF STRUCTURAL PARTS BASED ON TIME PERIODS FOR VARIOUS NONCOMBUSTIBLE INSULATING MATERIALS[m]

STRUCTURAL PARTS TO BE PROTECTED	ITEM NUMBER	INSULATING MATERIAL USED	MINIMUM THICKNESS OF INSULATING MATERIAL FOR THE FOLLOWING FIRE-RESISTANCE PERIODS (inches)			
			4 hours	3 hours	2 hours	1 hour
2. Webs or flanges of steel beams and girders	2-3.1	Vermiculite gypsum plaster on a metal lath cage, wire tied to 0.165″ diameter (No. 8 B.W. gage) steel wire hangers wrapped around beam and spaced 16″ on center. Metal lath ties spaced approximately 5″ on center at cage sides and bottom.	—	$^{7}/_{8}$	—	—
	2-4.1	Two layers of $^{5}/_{8}$″ Type X gypsum wallboard[c] are attached to U-shaped brackets spaced 24″ on center. 0.018″ thick (No. 25 carbon sheet steel gage) $1^{5}/_{8}$″ deep by 1″ galvanized steel runner channels are first installed parallel to and on each side of the top beam flange to provide a $^{1}/_{2}$″ clearance to the flange. The channel runners are attached to steel deck or concrete floor construction with approved fasteners spaced 12″ on center. U-shaped brackets are formed from members identical to the channel runners. At the bent portion of the U-shaped bracket, the flanges of the channel are cut out so that $1^{5}/_{8}$″ deep corner channels can be inserted without attachment parallel to each side of the lower flange. As an alternative, 0.021″ thick (No. 24 carbon sheet steel gage) 1″ × 2″ runner and corner angles shall be used in lieu of channels, and the web cutouts in the U-shaped brackets shall not be required. Each angle is attached to the bracket with $^{1}/_{2}$″-long No. 8 self-drilling screws. The vertical legs of the U-shaped bracket are attached to the runners with one $^{1}/_{2}$″ long No. 8 self-drilling screw. The completed steel framing provides a $2^{1}/_{8}$″ and $1^{1}/_{2}$″ space between the inner layer of wallboard and the sides and bottom of the steel beam, respectively. The inner layer of wallboard is attached to the top runners and bottom corner channels or corner angles with $1^{1}/_{4}$″-long No. 6 self-drilling screws spaced 16″ on center. The outer layer of wallboard is applied with $1^{3}/_{4}$″-long No. 6 self-drilling screws spaced 8″ on center. The bottom corners are reinforced with metal corner beads.	—	—	$1^{1}/_{4}$	—
	2-4.2	Three layers of $^{5}/_{8}$″ Type X gypsum wallboard[c] attached to a steel suspension system as described immediately above utilizing the 0.018″ thick (No. 25 carbon sheet steel gage) 1″ × 2″ lower corner angles. The framing is located so that a $2^{1}/_{8}$″ and 2″ space is provided between the inner layer of wallboard and the sides and bottom of the beam, respectively. The first two layers of wallboard are attached as described immediately above. A layer of 0.035″ thick (No. 20 B.W. gage) 1″ hexagonal galvanized wire mesh is applied under the soffit of the middle layer and up the sides approximately 2″. The mesh is held in position with the No. 6 $1^{5}/_{8}$″-long screws installed in the vertical leg of the bottom corner angles. The outer layer of wallboard is attached with No. 6 $2^{1}/_{4}$″-long screws spaced 8″ on center. One screw is also installed at the mid-depth of the bracket in each layer. Bottom corners are finished as described above.	—	$1^{7}/_{8}$	—	—
3. Bonded pretensioned reinforcement in prestressed concrete[e]	3-1.1	Carbonate, lightweight, sand-lightweight and siliceous[f] aggregate concrete Beams or girders	4[g]	3[g]	$2^{1}/_{2}$	$1^{1}/_{2}$
		Solid [h]		2	$1^{1}/_{2}$	1

(continued)

INTERNATIONAL CODE COUNCIL®
Copyright © 2015 ICC. ALL RIGHTS RESERVED. Accessed by David Dammon on Jun 21, 2017 12:30:52 PM pursuant to License Agreement with ICC. No further reproduction or distribution authorized. ANY UNAUTHORIZED REPRODUCTION OR DISTRIBUTION IS A VIOLATION OF THE FEDERAL COPYRIGHT ACT AND THE LICENSE AGREEMENT, AND SUBJECT TO CIVIL AND CRIMINAL PENALTIES THEREUNDER.

TABLE 721.1(1) —continued
MINIMUM PROTECTION OF STRUCTURAL PARTS BASED ON TIME PERIODS FOR VARIOUS NONCOMBUSTIBLE INSULATING MATERIALS[m]

STRUCTURAL PARTS TO BE PROTECTED	ITEM NUMBER	INSULATING MATERIAL USED	MINIMUM THICKNESS OF INSULATING MATERIAL FOR THE FOLLOWING FIRE-RESISTANCE PERIODS (inches)			
			4 hours	3 hours	2 hours	1 hour
4. Bonded or unbonded post-tensioned tendons in pre-stressed concrete[e, i]	4-1.1	Carbonate, lightweight, sand-lightweight and siliceous[f] aggregate concrete Unrestrained members: Solid slabs[h] Beams and girders[j] 8″ wide greater than 12″ wide	 — 3	 2 4 1/2 2 1/2	 1 1/2 2 1/2 2	 — 1 3/4 1 1/2
	4-1.2	Carbonate, lightweight, sand-lightweight and siliceous aggregate Restrained members:[k] Solid slabs[h] Beams and girders[j] 8″ wide greater than 12″ wide	 1 1/4 2 1/2 2	 1 2 1 3/4	 3/4 1 3/4 1 1/2	 — — —
5. Reinforcing steel in reinforced concrete columns, beams girders and trusses	5-1.1	Carbonate, lightweight and sand-lightweight aggregate concrete, members 12″ or larger, square or round. (Size limit does not apply to beams and girders monolithic with floors.) Siliceous aggregate concrete, members 12″ or larger, square or round. (Size limit does not apply to beams and girders monolithic with floors.)	1 1/2 2	1 1/2 1 1/2	1 1/2 1 1/2	1 1/2 1 1/2
6. Reinforcing steel in reinforced concrete joists[l]	6-1.1 6-1.2	Carbonate, lightweight and sand-lightweight aggregate concrete Siliceous aggregate concrete	1 1/4 1 3/4	1 1/4 1 1/2	1 1	3/4 3/4
7. Reinforcing and tie rods in floor and roof slabs[l]	7-1.1 7-1.2	Carbonate, lightweight and sand-lightweight aggregate concrete Siliceous aggregate concrete	1 1 1/4	1 1	3/4 1	3/4 3/4

For SI: 1 inch = 25.4 mm, 1 square inch = 645.2 mm^2, 1 cubic foot = 0.0283 m^3, 1 pound per cubic foot = 16.02 kg/m^3.

a. Reentrant parts of protected members to be filled solidly.

b. Two layers of equal thickness with a 3/4-inch airspace between.

c. For all of the construction with gypsum wallboard described in Table 721.1(1), gypsum base for veneer plaster of the same size, thickness and core type shall be permitted to be substituted for gypsum wallboard, provided attachment is identical to that specified for the wallboard and the joints on the face layer are reinforced, and the entire surface is covered with not less than 1/16-inch gypsum veneer plaster.

d. An approved adhesive qualified under ASTM E119 or UL 263.

e. Where lightweight or sand-lightweight concrete having an oven-dry weight of 110 pounds per cubic foot or less is used, the tabulated minimum cover shall be permitted to be reduced 25 percent, except that in no case shall the cover be less than 3/4 inch in slabs or 1 1/2 inches in beams or girders.

f. For solid slabs of siliceous aggregate concrete, increase tendon cover 20 percent.

g. Adequate provisions against spalling shall be provided by U-shaped or hooped stirrups spaced not to exceed the depth of the member with a clear cover of 1 inch.

h. Prestressed slabs shall have a thickness not less than that required in Table 721.1(3) for the respective fire-resistance time period.

i. Fire coverage and end anchorages shall be as follows: Cover to the prestressing steel at the anchor shall be 1/2 inch greater than that required away from the anchor. Minimum cover to steel-bearing plate shall be 1 inch in beams and 3/4 inch in slabs.

j. For beam widths between 8 inches and 12 inches, cover thickness shall be permitted to be determined by interpolation.

k. Interior spans of continuous slabs, beams and girders shall be permitted to be considered restrained.

l. For use with concrete slabs having a comparable fire endurance where members are framed into the structure in such a manner as to provide equivalent performance to that of monolithic concrete construction.

m. Generic *fire-resistance ratings* (those not designated as PROPRIETARY* in the listing) in GA 600 shall be accepted as if herein listed.

n. No additional insulating material is required on the exposed outside face of the column flange to achieve a 1-hour *fire-resistance rating*.

INTERNATIONAL CODE COUNCIL®
Copyright © 2015 ICC. ALL RIGHTS RESERVED. Accessed by David Dammon on Jun 21, 2017 12:30:52 PM pursuant to License Agreement with ICC. No further reproduction or distribution authorized. ANY UNAUTHORIZED REPRODUCTION OR DISTRIBUTION IS A VIOLATION OF THE FEDERAL COPYRIGHT ACT AND THE LICENSE AGREEMENT, AND SUBJECT TO CIVIL AND CRIMINAL PENALTIES THEREUNDER.

TABLE 721.1(2)
RATED FIRE-RESISTANCE PERIODS FOR VARIOUS WALLS AND PARTITIONS [a, o, p]

MATERIAL	ITEM NUMBER	CONSTRUCTION	MINIMUM FINISHED THICKNESS FACE-TO-FACE[b] (inches)			
			4 hours	3 hours	2 hours	1 hour
1. Brick of clay or shale	1-1.1	Solid brick of clay or shale[c].	6	4.9	3.8	2.7
	1-1.2	Hollow brick, not filled.	5.0	4.3	3.4	2.3
	1-1.3	Hollow brick unit wall, grout or filled with perlite vermiculite or expanded shale aggregate.	6.6	5.5	4.4	3.0
	1-2.1	4″ nominal thick units not less than 75 percent solid backed with a hat-shaped metal furring channel $^3/_4$″ thick formed from 0.021″ sheet metal attached to the brick wall on 24″ centers with approved fasteners, and $^1/_2$″ Type X gypsum wallboard attached to the metal furring strips with 1″-long Type S screws spaced 8″ on center.	—	—	5[d]	—
2. Combination of clay brick and load-bearing hollow clay tile	2-1.1	4″ solid brick and 4″ tile (not less than 40 percent solid).	—	8	—	—
	2-1.2	4″ solid brick and 8″ tile (not less than 40 percent solid).	12	—	—	—
3. Concrete masonry units	3-1.1[f, g]	Expanded slag or pumice.	4.7	4.0	3.2	2.1
	3-1.2[f, g]	Expanded clay, shale or slate.	5.1	4.4	3.6	2.6
	3-1.3[f]	Limestone, cinders or air-cooled slag.	5.9	5.0	4.0	2.7
	3-1.4[f, g]	Calcareous or siliceous gravel.	6.2	5.3	4.2	2.8
4. Solid concrete[h, i]	4-1.1	Siliceous aggregate concrete.	7.0	6.2	5.0	3.5
		Carbonate aggregate concrete.	6.6	5.7	4.6	3.2
		Sand-lightweight concrete.	5.4	4.6	3.8	2.7
		Lightweight concrete.	5.1	4.4	3.6	2.5
5. Glazed or unglazed facing tile, nonload-bearing	5-1.1	One 2″ unit cored 15 percent maximum and one 4″ unit cored 25 percent maximum with $^3/_4$″ mortar-filled collar joint. Unit positions reversed in alternate courses.	—	$6^3/_8$	—	—
	5-1.2	One 2″ unit cored 15 percent maximum and one 4″ unit cored 40 percent maximum with $^3/_4$″ mortar-filled collar joint. Unit positions side with $^3/_4$″ gypsum plaster. Two wythes tied together every fourth course with No. 22 gage corrugated metal ties.	—	$6^3/_4$	—	—
	5-1.3	One unit with three cells in wall thickness, cored 29 percent maximum.	—	—	6	—
	5-1.4	One 2″ unit cored 22 percent maximum and one 4″ unit cored 41 percent maximum with $^1/_4$″ mortar-filled collar joint. Two wythes tied together every third course with 0.030″ (No. 22 galvanized sheet steel gage) corrugated metal ties.	—	—	6	—
	5-1.5	One 4″ unit cored 25 percent maximum with $^3/_4$″ gypsum plaster on one side.	—	—	$4^3/_4$	—
	5-1.6	One 4″ unit with two cells in wall thickness, cored 22 percent maximum.	—	—	—	4
	5-1.7	One 4″ unit cored 30 percent maximum with $^3/_4$″ vermiculite gypsum plaster on one side.	—	—	$4^1/_2$	—
	5-1.8	One 4″ unit cored 39 percent maximum with $^3/_4$″ gypsum plaster on one side.	—	—	—	$4^1/_2$

(continued)

INTERNATIONAL CODE COUNCIL®
Copyright © 2015 ICC. ALL RIGHTS RESERVED. Accessed by David Dammon on Jun 21, 2017 12:30:52 PM pursuant to License Agreement with ICC. No further reproduction or distribution authorized. ANY UNAUTHORIZED REPRODUCTION OR DISTRIBUTION IS A VIOLATION OF THE FEDERAL COPYRIGHT ACT AND THE LICENSE AGREEMENT, AND SUBJECT TO CIVIL AND CRIMINAL PENALTIES THEREUNDER.

TABLE 721.1(2)—continued
RATED FIRE-RESISTANCE PERIODS FOR VARIOUS WALLS AND PARTITIONS [a, o, p]

MATERIAL	ITEM NUMBER	CONSTRUCTION	MINIMUM FINISHED THICKNESS FACE-TO-FACE[b] (inches)			
			4 hours	3 hours	2 hours	1 hour
6. Solid gypsum plaster	6-1.1	$^3/_4$″ by 0.055″ (No. 16 carbon sheet steel gage) vertical cold-rolled channels, 16″ on center with 2.6-pound flat metal lath applied to one face and tied with 0.049″ (No. 18 B.W. gage) wire at 6″ spacing. Gypsum plaster each side mixed 1:2 by weight, gypsum to sand aggregate.	—	—	—	2[d]
	6-1.2	$^3/_4$″ by 0.05″ (No. 16 carbon sheet steel gage) cold-rolled channels 16″ on center with metal lath applied to one face and tied with 0.049″ (No. 18 B.W. gage) wire at 6″ spacing. Perlite or vermiculite gypsum plaster each side. For three-coat work, the plaster mix for the second coat shall not exceed 100 pounds of gypsum to $2^1/_2$ cubic feet of aggregate for the 1-hour system.	—	—	$2^1/_2$[d]	2[d]
	6-1.3	$^3/_4$″ by 0.055″ (No. 16 carbon sheet steel gage) vertical cold-rolled channels, 16″ on center with $^3/_8$″ gypsum lath applied to one face and attached with sheet metal clips. Gypsum plaster each side mixed 1:2 by weight, gypsum to sand aggregate.	—	—	—	2[d]
	6-2.1	Studless with $^1/_2$″ full-length plain gypsum lath and gypsum plaster each side. Plaster mixed 1:1 for scratch coat and 1:2 for brown coat, by weight, gypsum to sand aggregate.	—	—	—	2[d]
	6-2.2	Studless with $^1/_2$″ full-length plain gypsum lath and perlite or vermiculite gypsum plaster each side.	—	—	$2^1/_2$[d]	2[d]
	6-2.3	Studless partition with $^3/_8$″ rib metal lath installed vertically adjacent edges tied 6″ on center with No. 18 gage wire ties, gypsum plaster each side mixed 1:2 by weight, gypsum to sand aggregate.	—	—	—	2[d]
7. Solid perlite and Portland cement	7-1.1	Perlite mixed in the ratio of 3 cubic feet to 100 pounds of Portland cement and machine applied to stud side of $1^1/_2$″ mesh by 0.058-inch (No. 17 B.W. gage) paper-backed woven wire fabric lath wire-tied to 4″-deep steel trussed wire[j] studs 16″ on center. Wire ties of 0.049″ (No. 18 B.W. gage) galvanized steel wire 6″ on center vertically.	—	—	$3^1/_8$[d]	—
8. Solid neat wood fibered gypsum plaster	8-1.1	$^3/_4$″ by 0.055-inch (No. 16 carbon sheet steel gage) cold-rolled channels, 12″ on center with 2.5-pound flat metal lath applied to one face and tied with 0.049″ (No. 18 B.W. gage) wire at 6″ spacing. Neat gypsum plaster applied each side.	—	—	2[d]	—
9. Solid wallboard partition	9-1.1	One full-length layer $^1/_2$″ Type X gypsum wallboard[e] laminated to each side of 1″ full-length V-edge gypsum coreboard with approved laminating compound. Vertical joints of face layer and coreboard staggered not less than 3″.	—	—	2[d]	—
10. Hollow (studless) gypsum wallboard partition	10-1.1	One full-length layer of $^5/_8$″ Type X gypsum wallboard[e] attached to both sides of wood or metal top and bottom runners laminated to each side of 1″× 6″ full-length gypsum coreboard ribs spaced 2″ on center with approved laminating compound. Ribs centered at vertical joints of face plies and joints staggered 24″ in opposing faces. Ribs may be recessed 6″ from the top and bottom.	—	—	—	$2^1/_4$[d]
	10-1.2	1″ regular gypsum V-edge full-length backing board attached to both sides of wood or metal top and bottom runners with nails or $1^5/_8$″ drywall screws at 24″ on center. Minimum width of rumors $1^5/_8$″. Face layer of $^1/_2$″ regular full-length gypsum wallboard laminated to outer faces of backing board with approved laminating compound.	—	—	$4^5/_8$[d]	—

(continued)

INTERNATIONAL CODE COUNCIL®
Copyright © 2015 ICC. ALL RIGHTS RESERVED. Accessed by David Dammon on Jun 21, 2017 12:30:52 PM pursuant to License Agreement with ICC. No further reproduction or distribution authorized. ANY UNAUTHORIZED REPRODUCTION OR DISTRIBUTION IS A VIOLATION OF THE FEDERAL COPYRIGHT ACT AND THE LICENSE AGREEMENT, AND SUBJECT TO CIVIL AND CRIMINAL PENALTIES THEREUNDER.

TABLE 721.1(2) —continued
RATED FIRE-RESISTANCE PERIODS FOR VARIOUS WALLS AND PARTITIONS [a, o, p]

MATERIAL	ITEM NUMBER	CONSTRUCTION	MINIMUM FINISHED THICKNESS FACE-TO-FACE[b] (inches)			
			4 hours	3 hours	2 hours	1 hour
11. Noncombustible studs-interior partition with plaster each side	11-1.1	$3^1/_4$″ × 0.044″ (No. 18 carbon sheet steel gage) steel studs spaced 24″ on center. $^5/_8$″ gypsum plaster on metal lath each side mixed 1:2 by weight, gypsum to sand aggregate.	—	—	—	$4^3/_4$[d]
	11-1.2	$3^3/_8$″ × 0.055″ (No. 16 carbon sheet steel gage) approved nailable[k] studs spaced 24″ on center. $^5/_8$″ neat gypsum wood-fibered plaster each side over $^3/_8$″ rib metal lath nailed to studs with 6d common nails, 8″ on center. Nails driven $1^1/_4$″ and bent over.	—	—	$5^5/_8$	—
	11-1.3	4″ × 0.044″ (No. 18 carbon sheet steel gage) channel-shaped steel studs at 16″ on center. On each side approved resilient clips pressed onto stud flange at 16″ vertical spacing, $^1/_4$″ pencil rods snapped into or wire tied onto outer loop of clips, metal lath wire-tied to pencil rods at 6″ intervals, 1″ perlite gypsum plaster, each side.	—	$7^5/_8$[d]	—	—
	11-1.4	$2^1/_2$″ × 0.044″ (No. 18 carbon sheet steel gage) steel studs spaced 16″ on center. Wood fibered gypsum plaster mixed 1:1 by weight gypsum to sand aggregate applied on $^3/_4$-pound metal lath wire tied to studs, each side. $^3/_4$″ plaster applied over each face, including finish coat.	—	—	$4^1/_4$[d]	—
12. Wood studs-interior partition with plaster each side	12-1.1[l, m]	2″ × 4″ wood studs 16″ on center with $^5/_8$″ gypsum plaster on metal lath. Lath attached by 4d common nails bent over or No. 14 gage by $1^1/_4$″ by $^3/_4$″ crown width staples spaced 6″ on center. Plaster mixed 1:$1^1/_2$ for scratch coat and 1:3 for brown coat, by weight, gypsum to sand aggregate.	—	—	—	$5^1/_8$
	12-1.2[l]	2″ × 4″ wood studs 16″ on center with metal lath and $^7/_8$″ neat wood-fibered gypsum plaster each side. Lath attached by 6d common nails, 7″ on center. Nails driven $1^1/_4$″ and bent over.	—	—	$5^1/_2$[d]	—
	12-1.3[l]	2″ × 4″ wood studs 16″ on center with $^3/_8$″ perforated or plain gypsum lath and $^1/_2$″ gypsum plaster each side. Lath nailed with $1^1/_8$″ by No. 13 gage by $^{19}/_{64}$″ head plasterboard blued nails, 4″ on center. Plaster mixed 1:2 by weight, gypsum to sand aggregate.	—	—	—	$5^1/_4$
	12-1.4[l]	2″ × 4″ wood studs 16″ on center with $^3/_8$″ Type X gypsum lath and $^1/_2$″ gypsum plaster each side. Lath nailed with $1^1/_8$″ by No. 13 gage by $^{19}/_{64}$″ head plasterboard blued nails, 5″ on center. Plaster mixed 1:2 by weight, gypsum to sand aggregate.	—	—	—	$5^1/_4$
13. Noncombustible studs-interior partition with gypsum wallboard each side	13-1.1	0.018″ (No. 25 carbon sheet steel gage) channel-shaped studs 24″ on center with one full-length layer of $^5/_8$″ Type X gypsum wallboard[e] applied vertically attached with 1″-long No. 6 drywall screws to each stud. Screws are 8″ on center around the perimeter and 12″ on center on the intermediate stud. Where applied horizontally, the Type X gypsum wallboard shall be attached to $3^5/_8$″ studs and the horizontal joints shall be staggered with those on the opposite side. Screws for the horizontal application shall be 8″ on center at vertical edges and 12″ on center at intermediate studs.	—	—	—	$2^7/_8$[d]
	13-1.2	0.018″ (No. 25 carbon sheet steel gage) channel-shaped studs 25″ on center with two full-length layers of $^1/_2$″ Type X gypsum wallboard[e] applied vertically each side. First layer attached with 1″-long, No. 6 drywall screws, 8″ on center around the perimeter and 12″ on center on the intermediate stud. Second layer applied with vertical joints offset one stud space from first layer using $1^5/_8$″ long, No. 6 drywall screws spaced 9″ on center along vertical joints, 12″ on center at intermediate studs and 24″ on center along top and bottom runners.	—	—	$3^5/_8$[d]	—
	13-1.3	0.055″ (No. 16 carbon sheet steel gage) approved nailable metal studs[e] 24″ on center with full-length $^5/_8$″ Type X gypsum wallboard[e] applied vertically and nailed 7″ on center with 6d cement-coated common nails. Approved metal fastener grips used with nails at vertical butt joints along studs.	—	—	—	$4^7/_8$

(continued)

INTERNATIONAL CODE COUNCIL®
Copyright © 2015 ICC. ALL RIGHTS RESERVED. Accessed by David Dammon on Jun 21, 2017 12:30:52 PM pursuant to License Agreement with ICC. No further reproduction or distribution authorized. ANY UNAUTHORIZED REPRODUCTION OR DISTRIBUTION IS A VIOLATION OF THE FEDERAL COPYRIGHT ACT AND THE LICENSE AGREEMENT, AND SUBJECT TO CIVIL AND CRIMINAL PENALTIES THEREUNDER.

TABLE 721.1(2)—continued
RATED FIRE-RESISTANCE PERIODS FOR VARIOUS WALLS AND PARTITIONS [a, o, p]

MATERIAL	ITEM NUMBER	CONSTRUCTION	MINIMUM FINISHED THICKNESS FACE-TO-FACE[b] (inches)			
			4 hours	3 hours	2 hours	1 hour
14. Wood studs-interior partition with gypsum wallboard each side	14-1.1[h, m]	2″ × 4″ wood studs 16″ on center with two layers of 3/8″ regular gypsum wallboard[e] each side, 4d cooler[n] or wallboard[n] nails at 8″ on center first layer, 5d cooler[n] or wallboard[n] nails at 8″ on center second layer with laminating compound between layers, joints staggered. First layer applied full length vertically, second layer applied horizontally or vertically.	—	—	—	5
	14-1.2[l, m]	2″ × 4″ wood studs 16″ on center with two layers 1/2″ regular gypsum wallboard[e] applied vertically or horizontally each side[k], joints staggered. Nail base layer with 5d cooler[n] or wallboard[n] nails at 8″ on center face layer with 8d cooler[n] or wallboard[n] nails at 8″ on center.	—	—	—	5 1/2
	14-1.3[l, m]	2″ × 4″ wood studs 24″ on center with 5/8″ Type X gypsum wallboard[e] applied vertically or horizontally nailed with 6d cooler[n] or wallboard[n] nails at 7″ on center with end joints on nailing members. Stagger joints each side.	—	—	—	4 3/4
	14-1.4[l]	2″ × 4″ fire-retardant-treated wood studs spaced 24″ on center with one layer of 5/8″ Type X gypsum wallboard[e] applied with face paper grain (long dimension) parallel to studs. Wallboard attached with 6d cooler[n] or wallboard[n] nails at 7″ on center.	—	—	—	4 3/4 [d]
	14-1.5[l, m]	2″ × 4″ wood studs 16″ on center with two layers 5/8″ Type X gypsum wallboard[e] each side. Base layers applied vertically and nailed with 6d cooler[n] or wallboard[n] nails at 9″ on center. Face layer applied vertically or horizontally and nailed with 8d cooler[n] or wallboard[n] nails at 7″ on center. For nail-adhesive application, base layers are nailed 6″ on center. Face layers applied with coating of approved wallboard adhesive and nailed 12″ on center.	—	—	6	—
	14-1.6[l]	2″ × 3″ fire-retardant-treated wood studs spaced 24″ on center with one layer of 5/8″ Type X gypsum wallboard[e] applied with face paper grain (long dimension) at right angles to studs. Wallboard attached with 6d cement-coated box nails spaced 7″ on center.	—	—	—	3 5/8 [d]
15. Exterior or interior walls (continued)	15-1.1[l, m]	Exterior surface with 3/4″ drop siding over 1/2″ gypsum sheathing on 2″ × 4″ wood studs at 16″ on center, interior surface treatment as required for 1-hour-rated exterior or interior 2″ × 4″ wood stud partitions. Gypsum sheathing nailed with 1 3/4″ by No. 11 gage by 7/16″ head galvanized nails at 8″ on center. Siding nailed with 7d galvanized smooth box nails.	—	—	—	Varies
	15-1.2[l, m]	2″ × 4″ wood studs 16″ on center with metal lath and 3/4″ cement plaster on each side. Lath attached with 6d common nails 7″ on center driven to 1″ minimum penetration and bent over. Plaster mix 1:4 for scratch coat and 1:5 for brown coat, by volume, cement to sand.	—	—	—	5 3/8
	15-1.3[l, m]	2″ × 4″ wood studs 16″ on center with 7/8″ cement plaster (measured from the face of studs) on the exterior surface with interior surface treatment as required for interior wood stud partitions in this table. Plaster mix 1:4 for scratch coat and 1:5 for brown coat, by volume, cement to sand.	—	—	—	Varies
	15-1.4	3 5/8″ No. 16 gage noncombustible studs 16″ on center with 7/8″ cement plaster (measured from the face of the studs) on the exterior surface with interior surface treatment as required for interior, nonbearing, noncombustible stud partitions in this table. Plaster mix 1:4 for scratch coat and 1:5 for brown coat, by volume, cement to sand.	—	—	—	Varies[d]

(continued)

INTERNATIONAL CODE COUNCIL®
Copyright © 2015 ICC. ALL RIGHTS RESERVED. Accessed by David Dammon on Jun 21, 2017 12:30:52 PM pursuant to License Agreement with ICC. No further reproduction or distribution authorized. ANY UNAUTHORIZED REPRODUCTION OR DISTRIBUTION IS A VIOLATION OF THE FEDERAL COPYRIGHT ACT AND THE LICENSE AGREEMENT, AND SUBJECT TO CIVIL AND CRIMINAL PENALTIES THEREUNDER.

TABLE 721.1(2)—continued
RATED FIRE-RESISTANCE PERIODS FOR VARIOUS WALLS AND PARTITIONS [a, o, p]

MATERIAL	ITEM NUMBER	CONSTRUCTION	MINIMUM FINISHED THICKNESS FACE-TO-FACE[b] (inches)			
			4 hours	3 hours	2 hours	1 hour
15. Exterior or interior walls (continued)	15-1.5[m]	$2^1/_4$″ × $3^3/_4$″ clay face brick with cored holes over $^1/_2$″ gypsum sheathing on exterior surface of 2″ × 4″ wood studs at 16″ on center and two layers $^5/_8$″ Type X gypsum wallboard[e] on interior surface. Sheathing placed horizontally or vertically with vertical joints over studs nailed 6″ on center with $1^3/_4$″ × No. 11 gage by $^7/_{16}$″ head galvanized nails. Inner layer of wallboard placed horizontally or vertically and nailed 8″ on center with 6d cooler[n] or wallboard[n] nails. Outer layer of wallboard placed horizontally or vertically and nailed 8″ on center with 8d cooler[n] or wallboard[n] nails. Joints staggered with vertical joints over studs. Outer layer joints taped and finished with compound. Nail heads covered with joint compound. 0.035 inch (No. 20 galvanized sheet gage) corrugated galvanized steel wall ties $^3/_4$″ by $6^5/_8$″ attached to each stud with two 8d cooler[n] or wallboard[n] nails every sixth course of bricks.	—	—	10	—
	15-1.6[l, m]	2″ × 6″ fire-retardant-treated wood studs 16″ on center. Interior face has two layers of $^5/_8$″ Type X gypsum with the base layer placed vertically and attached with 6d box nails 12″ on center. The face layer is placed horizontally and attached with 8d box nails 8″ on center at joints and 12″ on center elsewhere. The exterior face has a base layer of $^5/_8$″ Type X gypsum sheathing placed vertically with 6d box nails 8″ on center at joints and 12″ on center elsewhere. An approved building paper is next applied, followed by self-furred exterior lath attached with $2^1/_2$″, No. 12 gage galvanized roofing nails with a $^3/_8$″ diameter head and spaced 6″ on center along each stud. Cement plaster consisting of a $^1/_2$″ brown coat is then applied. The scratch coat is mixed in the proportion of 1:3 by weight, cement to sand with 10 pounds of hydrated lime and 3 pounds of approved additives or admixtures per sack of cement. The brown coat is mixed in the proportion of 1:4 by weight, cement to sand with the same amounts of hydrated lime and approved additives or admixtures used in the scratch coat.	—	—	$8^1/_4$	—
	15-1.7[l, m]	2″ × 6″ wood studs 16″ on center. The exterior face has a layer of $^5/_8$″ Type X gypsum sheathing placed vertically with 6d box nails 8″ on center at joints and 12″ on center elsewhere. An approved building paper is next applied, followed by 1″ by No. 18 gage self-furred exterior lath attached with 8d by $2^1/_2$″ long galvanized roofing nails spaced 6″ on center along each stud. Cement plaster consisting of a $^1/_2$″ scratch coat, a bonding agent and a $^1/_2$″ brown coat and a finish coat is then applied. The scratch coat is mixed in the proportion of 1:3 by weight, cement to sand with 10 pounds of hydrated lime and 3 pounds of approved additives or admixtures per sack of cement. The brown coat is mixed in the proportion of 1:4 by weight, cement to sand with the same amounts of hydrated lime and approved additives or admixtures used in the scratch coat. The interior is covered with $^3/_8$″ gypsum lath with 1″ hexagonal mesh of 0.035 inch (No. 20 B.W. gage) woven wire lath furred out $^5/_{16}$″ and 1″ perlite or vermiculite gypsum plaster. Lath nailed with $1^1/_8$″ by No. 13 gage by $^{19}/_{64}$″ head plasterboard glued nails spaced 5″ on center. Mesh attached by $1^3/_4$″ by No. 12 gage by $^3/_8$″ head nails with $^3/_8$″ furrings, spaced 8″ on center. The plaster mix shall not exceed 100 pounds of gypsum to $2^1/_2$ cubic feet of aggregate.	—	—	$8^3/_8$	—

(continued)

INTERNATIONAL CODE COUNCIL®
Copyright © 2015 ICC. ALL RIGHTS RESERVED. Accessed by David Dammon on Jun 21, 2017 12:30:52 PM pursuant to License Agreement with ICC. No further reproduction or distribution authorized. ANY UNAUTHORIZED REPRODUCTION OR DISTRIBUTION IS A VIOLATION OF THE FEDERAL COPYRIGHT ACT AND THE LICENSE AGREEMENT, AND SUBJECT TO CIVIL AND CRIMINAL PENALTIES THEREUNDER.

TABLE 721.1(2)—continued
RATED FIRE-RESISTANCE PERIODS FOR VARIOUS WALLS AND PARTITIONS [a, o, p]

MATERIAL	ITEM NUMBER	CONSTRUCTION	MINIMUM FINISHED THICKNESS FACE-TO-FACE[b] (inches)			
			4 hours	3 hours	2 hours	1 hour
15. Exterior or interior walls (continued)	15-1.8[l, m]	2″ × 6″ wood studs 16″ on center. The exterior face has a layer of $^5/_8$″ Type X gypsum sheathing placed vertically with 6d box nails 8″ on center at joints and 12″ on center elsewhere. An approved building paper is next applied, followed by $1^1/_2$″ by No. 17 gage self-furred exterior lath attached with 8d by $2^1/_2$″ long galvanized roofing nails spaced 6″ on center along each stud. Cement plaster consisting of a $^1/_2$″ scratch coat, and a $^1/_2$″ brown coat is then applied. The plaster may be placed by machine. The scratch coat is mixed in the proportion of 1:4 by weight, plastic cement to sand. The brown coat is mixed in the proportion of 1:5 by weight, plastic cement to sand. The interior is covered with $^3/_8$″ gypsum lath with 1″ hexagonal mesh of No. 20 gage woven wire lath furred out $^5/_{16}$″ and 1″ perlite or vermiculite gypsum plaster. Lath nailed with $1^1/_8$″ by No. 13 gage by $^{19}/_{64}$″ head plasterboard glued nails spaced 5″ on center. Mesh attached by $1^3/_4$″ by No. 12 gage by $^3/_8$″ head nails with $^3/_8$″ furrings, spaced 8″ on center. The plaster mix shall not exceed 100 pounds of gypsum to $2^1/_2$ cubic feet of aggregate.	—	—	$8^3/_8$	—
	15-1.9	4″ No. 18 gage, nonload-bearing metal studs, 16″ on center, with 1″ Portland cement lime plaster (measured from the back side of the $^3/_4$-pound expanded metal lath) on the exterior surface. Interior surface to be covered with 1″ of gypsum plaster on $^3/_4$-pound expanded metal lath proportioned by weight-1:2 for scratch coat, 1:3 for brown, gypsum to sand. Lath on one side of the partition fastened to $^1/_4$″ diameter pencil rods supported by No. 20 gage metal clips, located 16″ on center vertically, on each stud. 3″ thick mineral fiber insulating batts friction fitted between the studs.	—	—	$6^1/_2$[d]	—
	15-1.10	Steel studs 0.060″ thick, 4″ deep or 6″ at 16″ or 24″ centers, with $^1/_2$″ Glass Fiber Reinforced Concrete (GFRC) on the exterior surface. GFRC is attached with flex anchors at 24″ on center, with 5″ leg welded to studs with two $^1/_2$″-long flare-bevel welds, and 4″ foot attached to the GFRC skin with $^5/_8$″ thick GFRC bonding pads that extend $2^1/_2$″ beyond the flex anchor foot on both sides. Interior surface to have two layers of $^1/_2$″ Type X gypsum wallboard.[e] The first layer of wallboard to be attached with 1″-long Type S buglehead screws spaced 24″ on center and the second layer is attached with $1^5/_8$″-long Type S screws spaced at 12″ on center. Cavity is to be filled with 5″ of 4 pcf (nominal) mineral fiber batts. GFRC has $1^1/_2$″ returns packed with mineral fiber and caulked on the exterior.	—	—	$6^1/_2$	—
	15-1.11	Steel studs 0.060″ thick, 4″ deep or 6″ at 16″ or 24″ centers, respectively, with $^1/_2$″ Glass Fiber Reinforced Concrete (GFRC) on the exterior surface. GFRC is attached with flex anchors at 24″ on center, with 5″ leg welded to studs with two $^1/_2$″-long flare-bevel welds, and 4″ foot attached to the GFRC skin with $^5/_8$″ -thick GFRC bonding pads that extend $2^1/_2$″ beyond the flex anchor foot on both sides. Interior surface to have one layer of $^5/_8$″ Type X gypsum wallboard[e], attached with $1^1/_4$″-long Type S buglehead screws spaced 12″ on center. Cavity is to be filled with 5″ of 4 pcf (nominal) mineral fiber batts. GFRC has $1^1/_2$″ returns packed with mineral fiber and caulked on the exterior.	—	—	—	$6^1/_8$
	15-1.12[q]	2″ × 6″ wood studs at 16″ with double top plates, single bottom plate; interior and exterior sides covered with $^5/_8$″ Type X gypsum wallboard, 4′ wide, applied horizontally or vertically with vertical joints over studs, and fastened with $2^1/_4$″ Type S drywall screws, spaced 12″ on center. Cavity to be filled with $5^1/_2$″ mineral wool insulation.	—	—	—	$6^3/_4$

(continued)

INTERNATIONAL CODE COUNCIL®
Copyright © 2015 ICC. ALL RIGHTS RESERVED. Accessed by David Dammon on Jun 21, 2017 12:30:52 PM pursuant to License Agreement with ICC. No further reproduction or distribution authorized. ANY UNAUTHORIZED REPRODUCTION OR DISTRIBUTION IS A VIOLATION OF THE FEDERAL COPYRIGHT ACT AND THE LICENSE AGREEMENT, AND SUBJECT TO CIVIL AND CRIMINAL PENALTIES THEREUNDER.

TABLE 721.1(2)—continued
RATED FIRE-RESISTANCE PERIODS FOR VARIOUS WALLS AND PARTITIONS [a, o, p]

MATERIAL	ITEM NUMBER	CONSTRUCTION	MINIMUM FINISHED THICKNESS FACE-TO-FACE[b] (inches)			
			4 hours	3 hours	2 hours	1 hour
15. Exterior or interior walls (continued)	15-1.13[q]	2″ × 6″ wood studs at 16″ with double top plates, single bottom plate; interior and exterior sides covered with $^5/_8$″ Type X gypsum wallboard, 4′ wide, applied vertically with all joints over framing or blocking and fastened with $2^1/_4$″ Type S drywall screws, spaced 12″ on center. R-19 mineral fiber insulation installed in stud cavity.	—	—	—	$6^3/_4$
	15-1.14[q]	2″ × 6″ wood studs at 16″ with double top plates, single bottom plate; interior and exterior sides covered with $^5/_8$″ Type X gypsum wallboard, 4′ wide, applied horizontally or vertically with vertical joints over studs, and fastened with $2^1/_4$″ Type S drywall screws, spaced 7″ on center.	—	—	—	$6^3/_4$
	15-1.15[q]	2″ × 4″ wood studs at 16″ with double top plates, single bottom plate; interior and exterior sides covered with $^5/_8$″ Type X gypsum wallboard and sheathing, respectively, 4′ wide, applied horizontally or vertically with vertical joints over studs, and fastened with $2^1/_4$″ Type S drywall screws, spaced 12″ on center. Cavity to be filled with $3^1/_2$″ mineral wool insulation.	—	—	—	$4^3/_4$
	15-1.16[q]	2″ x 6″ wood studs at 24″ centers with double top plates, single bottom plate; interior and exterior side covered with two layers of $^5/_8$″ Type X gypsum wallboard, 4′ wide, applied horizontally with vertical joints over studs. Base layer fastened with $2^1/_4$″ Type S drywall screws, spaced 24″ on center and face layer fastened with Type S drywall screws, spaced 8″ on center, wallboard joints covered with paper tape and joint compound, fastener heads covered with joint compound. Cavity to be filled with $5^1/_2$″ mineral wool insulation.	—	—	8	—
	15-2.1[d]	$3^5/_8$″ No. 16 gage steel studs at 24″ on center or 2″ × 4″ wood studs at 24″ on center. Metal lath attached to the exterior side of studs with minimum 1″ long No. 6 drywall screws at 6″ on center and covered with minimum $^3/_4$″ thick Portland cement plaster. Thin veneer brick units of clay or shale complying with ASTM C1088, Grade TBS or better, installed in running bond in accordance with Section 1405.10. Combined total thickness of the Portland cement plaster, mortar and thin veneer brick units shall be not less than $1^3/_4$″. Interior side covered with one layer of $^5/_8$″ thick Type X gypsum wallboard attached to studs with 1″ long No. 6 drywall screws at 12″ on center.	—	—	—	6
	15-2.2[d]	$3^5/_8$″ No. 16 gage steel studs at 24″ on center or 2″ × 4″ wood studs at 24″ on center. Metal lath attached to the exterior side of studs with minimum 1″ long No. 6 drywall screws at 6″ on center and covered with minimum $^3/_4$″ thick Portland cement plaster. Thin veneer brick units of clay or shale complying with ASTM C1088, Grade TBS or better, installed in running bond in accordance with Section 1405.10. Combined total thickness of the Portland cement plaster, mortar and thin veneer brick units shall be not less than 2″. Interior side covered with two layers of $^5/_8$″ thick Type X gypsum wallboard. Bottom layer attached to studs with 1″ long No. 6 drywall screws at 24″ on center. Top layer attached to studs with $1^5/_8$″ long No. 6 drywall screws at 12″ on center.	—	—	$6^7/_8$	—
	15-2.3[d]	$3^5/_8$″ No. 16 gage steel studs at 16″ on center or 2″× 4″ wood studs at 16″ on center. Where metal lath is used, attach to the exterior side of studs with minimum 1″ long No. 6 drywall screws at 6″ on center. Brick units of clay or shale not less than $2^5/_8$″ thick complying with ASTM C216 installed in accordance with Section 1405.6 with a minimum 1″ airspace. Interior side covered with one layer of $^5/_8$″ thick Type X gypsum wallboard attached to studs with 1″ long No. 6 drywall screws at 12″ on center.	—	—	—	$7^7/_8$

(continued)

INTERNATIONAL CODE COUNCIL®
Copyright © 2015 ICC. ALL RIGHTS RESERVED. Accessed by David Dammon on Jun 21, 2017 12:30:52 PM pursuant to License Agreement with ICC. No further reproduction or distribution authorized. ANY UNAUTHORIZED REPRODUCTION OR DISTRIBUTION IS A VIOLATION OF THE FEDERAL COPYRIGHT ACT AND THE LICENSE AGREEMENT, AND SUBJECT TO CIVIL AND CRIMINAL PENALTIES THEREUNDER.

TABLE 721.1(2)—continued
RATED FIRE-RESISTANCE PERIODS FOR VARIOUS WALLS AND PARTITIONS [a, o, p]

MATERIAL	ITEM NUMBER	CONSTRUCTION	MINIMUM FINISHED THICKNESS FACE-TO-FACE[b] (inches)			
			4 hours	3 hours	2 hours	1 hour
15. Exterior or interior walls	15-2.4[d]	$3^5/_8$″ No. 16 gage steel studs at 16″ on center or 2″ × 4″ wood studs at 16″ on center. Where metal lath is used, attach to the exterior side of studs with minimum 1″ long No. 6 drywall screws at 6″ on center. Brick units of clay or shale not less than $2^5/_8$″ thick complying with ASTM C216 installed in accordance with Section 1405.6 with a minimum 1″ airspace. Interior side covered with two layers of $^5/_8$″ thick Type X gypsum wallboard. Bottom layer attached to studs with 1″ long No. 6 drywall screws at 24″ on center. Top layer attached to studs with $1^5/_8$″ long No. 6 drywall screws at 12″ on center.	—	—	$8^1/_2$	—
16. Exterior walls rated for fire resistance from the inside only in accordance with Section 705.5.	16-1.1[q]	2″ × 4″ wood studs at 16″ centers with double top plates, single bottom plate; interior side covered with $^5/_8$″ Type X gypsum wallboard, 4″ wide, applied horizontally unblocked, and fastened with $2^1/_4$″ Type S drywall screws, spaced 12″ on center, wallboard joints covered with paper tape and joint compound, fastener heads covered with joint compound. Exterior covered with $^3/_8$″ wood structural panels, applied vertically, horizontal joints blocked and fastened with 6d common nails (bright) — 12″ on center in the field, and 6″ on center panel edges. Cavity to be filled with $3^1/_2$″ mineral wool insulation. Rating established for exposure from interior side only.	—	—	—	$4^1/_2$
	16-1.2[q]	2″ × 6″ wood studs at 16″ centers with double top plates, single bottom plate; interior side covered with $^5/_8$″ Type X gypsum wallboard, 4″ wide, applied horizontally or vertically with vertical joints over studs and fastened with $2^1/_4$″ Type S drywall screws, spaced 12″ on center, wallboard joints covered with paper tape and joint compound, fastener heads covered with joint compound, exterior side covered with $^7/_{16}$″ wood structural panels fastened with 6d common nails (bright) spaced 12″ on center in the field and 6″ on center along the panel edges. Cavity to be filled with $5^1/_2$″ mineral wool insulation. Rating established from the gypsum-covered side only.	—	—	—	$6^9/_{16}$
	16-1.3[q]	2″ × 6″ wood studs at 16″ centers with double top plates, single bottom plates; interior side covered with $^5/_8$″ Type X gypsum wallboard, 4″ wide, applied vertically with all joints over framing or blocking and fastened with $2^1/_4$″ Type S drywall screws spaced 7″ on center. Joints to be covered with tape and joint compound. Exterior covered with $^3/_8$″ wood structural panels, applied vertically with edges over framing or blocking and fastened with 6d common nails (bright) at 12″ on center in the field and 6″ on center on panel edges. R-19 mineral fiber insulation installed in stud cavity. Rating established from the gypsum-covered side only.	—	—	—	$6^1/_2$

For SI: 1 inch = 25.4 mm, 1 square inch = 645.2 mm^2, 1 cubic foot = 0.0283 m^3.

a. Staples with equivalent holding power and penetration shall be permitted to be used as alternate fasteners to nails for attachment to wood framing.

b. Thickness shown for brick and clay tile is nominal thicknesses unless plastered, in which case thicknesses are net. Thickness shown for concrete masonry and clay masonry is equivalent thickness defined in Section 722.3.1 for concrete masonry and Section 722.4.1.1 for clay masonry. Where all cells are solid grouted or filled with silicone-treated perlite loose-fill insulation; vermiculite loose-fill insulation; or expanded clay, shale or slate lightweight aggregate, the equivalent thickness shall be the thickness of the block or brick using specified dimensions as defined in Chapter 21. Equivalent thickness shall include the thickness of applied plaster and lath or gypsum wallboard, where specified.

c. For units in which the net cross-sectional area of cored brick in any plane parallel to the surface containing the cores is not less than 75 percent of the gross cross-sectional area measured in the same plane.

d. Shall be used for nonbearing purposes only.

e. For all of the construction with gypsum wallboard described in this table, gypsum base for veneer plaster of the same size, thickness and core type shall be permitted to be substituted for gypsum wallboard, provided attachment is identical to that specified for the wallboard, and the joints on the face layer are reinforced and the entire surface is covered with not less than $^1/_{16}$-inch gypsum veneer plaster.

f. The fire-resistance time period for concrete masonry units meeting the equivalent thicknesses required for a 2-hour *fire-resistance rating* in Item 3, and having a thickness of not less than $7^5/_8$ inches is 4 hours where cores that are not grouted are filled with silicone-treated perlite loose-fill insulation; vermiculite loose-fill insulation; or expanded clay, shale or slate lightweight aggregate, sand or slag having a maximum particle size of $^3/_8$ inch.

g. The *fire-resistance rating* of concrete masonry units composed of a combination of aggregate types or where plaster is applied directly to the concrete masonry shall be determined in accordance with ACI 216.1/TMS 0216. Lightweight aggregates shall have a maximum combined density of 65 pounds per cubic foot.

(continued)

INTERNATIONAL CODE COUNCIL®
Copyright © 2015 ICC. ALL RIGHTS RESERVED. Accessed by David Dammon on Jun 21, 2017 12:30:52 PM pursuant to License Agreement with ICC. No further reproduction or distribution authorized. ANY UNAUTHORIZED REPRODUCTION OR DISTRIBUTION IS A VIOLATION OF THE FEDERAL COPYRIGHT ACT AND THE LICENSE AGREEMENT, AND SUBJECT TO CIVIL AND CRIMINAL PENALTIES THEREUNDER.

TABLE 721.1(2)—continued
RATED FIRE-RESISTANCE PERIODS FOR VARIOUS WALLS AND PARTITIONS [a, o,]

h. See Note b. The equivalent thickness shall be permitted to include the thickness of cement plaster or 1.5 times the thickness of gypsum plaster applied in accordance with the requirements of Chapter 25.
i. Concrete walls shall be reinforced with horizontal and vertical temperature reinforcement as required by Chapter 19.
j. Studs are welded truss wire studs with 0.18 inch (No. 7 B.W. gage) flange wire and 0.18 inch (No. 7 B.W. gage) truss wires.
k. Nailable metal studs consist of two channel studs spot welded back to back with a crimped web forming a nailing groove.
l. Wood structural panels shall be permitted to be installed between the fire protection and the wood studs on either the interior or exterior side of the wood frame assemblies in this table, provided the length of the fasteners used to attach the fire protection is increased by an amount not less than the thickness of the wood structural panel.
m. For studs with a slenderness ratio, l_e/d, greater than 33, the design stress shall be reduced to 78 percent of allowable F'_c. For studs with a slenderness ratio, l_e/d, not exceeding 33, the design stress shall be reduced to 78 percent of the adjusted stress F'_c calculated for studs having a slenderness ratio l_e/d of 33.
n. For properties of cooler or wallboard nails, see ASTM C514, ASTM C547 or ASTM F1667.
o. Generic *fire-resistance ratings* (those not designated as PROPRIETARY* in the listing) in the GA 600 shall be accepted as if herein listed.
p. NCMA TEK 5-8A shall be permitted for the design of fire walls.
q. The design stress of studs shall be equal to a maximum of 100 percent of the allowable F'_c calculated in accordance with Section 2306.

TABLE 721.1(3)
MINIMUM PROTECTION FOR FLOOR AND ROOF SYSTEMS[a, q]

FLOOR OR ROOF CONSTRUCTION	ITEM NUMBER	CEILING CONSTRUCTION	THICKNESS OF FLOOR OR ROOF SLAB (inches)				MINIMUM THICKNESS OF CEILING (inches)			
			4 hours	3 hours	2 hours	1 hour	4 hours	3 hours	2 hours	1 hour
1. Siliceous aggregate concrete	1-1.1	Slab (no ceiling required). Minimum cover over nonprestressed reinforcement shall be not less than $^3/_4$″ [b].	7.0	6.2	5.0	3.5	—	—	—	—
2. Carbonate aggregate concrete	2-1.1		6.6	5.7	4.6	3.2	—	—	—	—
3. Sand-lightweight concrete	3-1.1		5.4	4.6	3.8	2.7	—	—	—	—
4. Lightweight concrete	4-1.1		5.1	4.4	3.6	2.5	—	—	—	—
5. Reinforced concrete	5-1.1	Slab with suspended ceiling of vermiculite gypsum plaster over metal lath attached to $^3/_4$″ cold-rolled channels spaced 12″ on center. Ceiling located 6″ minimum below joists.	3	2	—	—	1	$^3/_4$	—	—
	5-2.1	$^3/_8$″ Type X gypsum wallboard[c] attached to 0.018 inch (No. 25 carbon sheet steel gage) by $^7/_8$″ deep by $2^5/_8$″ hat-shaped galvanized steel channels with 1″-long No. 6 screws. The channels are spaced 24″ on center, span 35″ and are supported along their length at 35″ intervals by 0.033″ (No. 21 galvanized sheet gage) galvanized steel flat strap hangers having formed edges that engage the lips of the channel. The strap hangers are attached to the side of the concrete joists with $^5/_{32}$″ by $1^1/_4$″ long power-driven fasteners. The wallboard is installed with the long dimension perpendicular to the channels. End joints occur on channels and supplementary channels are installed parallel to the main channels, 12″ each side, at end joint occurrences. The finished ceiling is located approximately 12″ below the soffit of the floor slab.	—	—	$2^1/_2$	—	—	—	$^5/_8$	—

(continued)

INTERNATIONAL CODE COUNCIL®
Copyright © 2015 ICC. ALL RIGHTS RESERVED. Accessed by David Dammon on Jun 21, 2017 12:30:52 PM pursuant to License Agreement with ICC. No further reproduction or distribution authorized. ANY UNAUTHORIZED REPRODUCTION OR DISTRIBUTION IS A VIOLATION OF THE FEDERAL COPYRIGHT ACT AND THE LICENSE AGREEMENT, AND SUBJECT TO CIVIL AND CRIMINAL PENALTIES THEREUNDER.

TABLE 721.1(3)—continued
MINIMUM PROTECTION FOR FLOOR AND ROOF SYSTEMS[a, q]

FLOOR OR ROOF CONSTRUCTION	ITEM NUMBER	CEILING CONSTRUCTION	THICKNESS OF FLOOR OR ROOF SLAB (inches)				MINIMUM THICKNESS OF CEILING (inches)			
			4 hours	3 hours	2 hours	1 hour	4 hours	3 hours	2 hours	1 hour
6. Steel joists constructed with a poured reinforced concrete slab on metal lath forms or steel form units[d, e]	6-1.1	Gypsum plaster on metal lath attached to the bottom cord with single No. 16 gage or doubled No. 18 gage wire ties spaced 6″ on center. Plaster mixed 1:2 for scratch coat, 1:3 for brown coat, by weight, gypsum-to-sand aggregate for 2-hour system. For 3-hour system plaster is neat.	—	—	$2^1/_2$	$2^1/_4$	—	—	$^3/_4$	$^5/_8$
	6-2.1	Vermiculite gypsum plaster on metal lath attached to the bottom chord with single No.16 gage or doubled 0.049-inch (No. 18 B.W. gage) wire ties 6″ on center.	—	2	—	—	—	$^5/_8$	—	—
	6-3.1	Cement plaster over metal lath attached to the bottom chord of joists with single No. 16 gage or doubled 0.049″ (No. 18 B.W. gage) wire ties spaced 6″ on center. Plaster mixed 1:2 for scratch coat, 1:3 for brown coat for 1-hour system and 1:1 for scratch coat, 1:1 $^1/_2$ for brown coat for 2-hour system, by weight, cement to sand.	—	—	—	2	—	—	—	$^5/_8$[f]
	6-4.1	Ceiling of $^5/_8$″ Type X wallboard[c] attached to $^7/_8$″ deep by $2^5/_8$″ by 0.021 inch (No. 25 carbon sheet steel gage) hat-shaped furring channels 12″ on center with 1″ long No. 6 wallboard screws at 8″ on center. Channels wire tied to bottom chord of joists with doubled 0.049 inch (No. 18 B.W. gage) wire or suspended below joists on wire hangers.[g]	—	—	$2^1/_2$	—	—	—	$^5/_8$	—
	6-5.1	Wood-fibered gypsum plaster mixed 1:1 by weight gypsum to sand aggregate applied over metal lath. Lath tied 6″ on center to $^3/_4$″ channels spaced $13^1/_2$″ on center. Channels secured to joists at each intersection with two strands of 0.049 inch (No. 18 B.W. gage) galvanized wire.	—	—	$2^1/_2$	—	—	—	$^3/_4$	—
7. Reinforced concrete slabs and joists with hollow clay tile fillers laid end to end in rows $2^1/_2$″ or more apart; reinforcement placed between rows and concrete cast around and over tile.	7-1.1	$^5/_8$″ gypsum plaster on bottom of floor or roof construction.	—	—	8[h]	—	—	—	$^5/_8$	—
	7-1.2	None	—	—	—	$5^1/_2$[i]	—	—	—	—
8. Steel joists constructed with a reinforced concrete slab on top poured on a $^1/_2$″ deep steel deck.[e]	8-1.1	Vermiculite gypsum plaster on metal lath attached to $^3/_4$″ cold-rolled channels with 0.049″ (No. 18 B.W. gage) wire ties spaced 6″ on center.	$2^1/_2$[j]	—	—	—	$^3/_4$	—	—	—

(continued)

INTERNATIONAL CODE COUNCIL®
Copyright © 2015 ICC. ALL RIGHTS RESERVED. Accessed by David Dammon on Jun 21, 2017 12:30:52 PM pursuant to License Agreement with ICC. No further reproduction or distribution authorized. ANY UNAUTHORIZED REPRODUCTION OR DISTRIBUTION IS A VIOLATION OF THE FEDERAL COPYRIGHT ACT AND THE LICENSE AGREEMENT, AND SUBJECT TO CIVIL AND CRIMINAL PENALTIES THEREUNDER.

TABLE 721.1(3)—continued
MINIMUM PROTECTION FOR FLOOR AND ROOF SYSTEMS[a, q]

FLOOR OR ROOF CONSTRUCTION	ITEM NUMBER	CEILING CONSTRUCTION	THICKNESS OF FLOOR OR ROOF SLAB (inches)				MINIMUM THICKNESS OF CEILING (inches)			
			4 hours	3 hours	2 hours	1 hour	4 hours	3 hours	2 hours	1 hour
9. 3″ deep cellular steel deck with concrete slab on top. Slab thickness measured to top.	9-1.1	Suspended ceiling of vermiculite gypsum plaster base coat and vermiculite acoustical plaster on metal lath attached at 6″ intervals to $^3/_4$″ cold-rolled channels spaced 12″ on center and secured to $1^1/_2$″ cold-rolled channels spaced 36″ on center with 0.065″ (No. 16 B.W. gage) wire. $1^1/_2$″ channels supported by No. 8 gage wire hangers at 36″ on center. Beams within envelope and with a $2^1/_2$″ airspace between beam soffit and lath have a 4-hour rating.	$2^1/_2$	—	—	—	$1^1/_8$[k]	—	—	—
10. $1^1/_2$″-deep steel roof deck on steel framing. Insulation board, 30 pcf density, composed of wood fibers with cement binders of thickness shown bonded to deck with unified asphalt adhesive. Covered with a Class A or B roof covering.	10-1.1	Ceiling of gypsum plaster on metal lath. Lath attached to $^3/_4$″ furring channels with 0.049″ (No. 18 B.W. gage) wire ties spaced 6″ on center. $^3/_4$″ channel saddle tied to 2″ channels with doubled 0.065″ (No. 16 B.W. gage) wire ties. 2″ channels spaced 36″ on center suspended 2″ below steel framing and saddle-tied with 0.165″ (No. 8 B.W. gage) wire. Plaster mixed 1:2 by weight, gypsum-to-sand aggregate.	—	—	$1^7/_8$	1	—	—	$^3/_4$[l]	$^3/_4$[l]
11. $1^1/_2$″-deep steel roof deck on steel-framing wood fiber insulation board, 17.5 pcf density on top applied over a 15-lb asphalt-saturated felt. Class A or B roof covering.	11-1.1	Ceiling of gypsum plaster on metal lath. Lath attached to $^3/_4$″ furring channels with 0.049″ (No. 18 B.W. gage) wire ties spaced 6″ on center. $^3/_4$″ channels saddle tied to 2″ channels with doubled 0.065″ (No. 16 B.W. gage) wire ties. 2″ channels spaced 36″ on center suspended 2″ below steel framing and saddle tied with 0.165″ (No. 8 B.W. gage) wire. Plaster mixed 1:2 for scratch coat and 1:3 for brown coat, by weight, gypsum-to-sand aggregate for 1-hour system. For 2-hour system, plaster mix is 1:2 by weight, gypsum-to-sand aggregate.	—	—	$1^1/_2$	1	—	—	$^7/_8$[g]	$^3/_4$[l]

(continued)

INTERNATIONAL CODE COUNCIL®
Copyright © 2015 ICC. ALL RIGHTS RESERVED. Accessed by David Dammon on Jun 21, 2017 12:30:52 PM pursuant to License Agreement with ICC. No further reproduction or distribution authorized. ANY UNAUTHORIZED REPRODUCTION OR DISTRIBUTION IS A VIOLATION OF THE FEDERAL COPYRIGHT ACT AND THE LICENSE AGREEMENT, AND SUBJECT TO CIVIL AND CRIMINAL PENALTIES THEREUNDER.

TABLE 721.1(3) —continued
MINIMUM PROTECTION FOR FLOOR AND ROOF SYSTEMS[a, q]

FLOOR OR ROOF CONSTRUCTION	ITEM NUMBER	CEILING CONSTRUCTION	THICKNESS OF FLOOR OR ROOF SLAB (inches)				MINIMUM THICKNESS OF CEILING (inches)			
			4 hours	3 hours	2 hours	1 hour	4 hours	3 hours	2 hours	1 hour
12. $1^1/_2$″ deep steel roof deck on steel-framing insulation of rigid board consisting of expanded perlite and fibers impregnated with integral asphalt waterproofing; density 9 to 12 pcf secured to metal roof deck by $^1/_2$″ wide ribbons of waterproof, cold-process liquid adhesive spaced 6″ apart. Steel joist or light steel construction with metal roof deck, insulation, and Class A or B built-up roof covering.[e]	12-1.1	Gypsum-vermiculite plaster on metal lath wire tied at 6″ intervals to $^3/_4$″ furring channels spaced 12″ on center and wire tied to 2″ runner channels spaced 32″ on center. Runners wire tied to bottom chord of steel joists.	—	—	1	—	—	—	$^7/_8$	—
13. Double wood floor over wood joists spaced 16″ on center.[m,n]	13-1.1	Gypsum plaster over $^3/_8$″ Type X gypsum lath. Lath initially applied with not less than four $1^1/_8$″ by No. 13 gage by $^{19}/_{64}$″ head plasterboard blued nails per bearing. Continuous stripping over lath along all joist lines. Stripping consists of 3″ wide strips of metal lath attached by $1^1/_2$″ by No. 11 gage by $^1/_2$″ head roofing nails spaced 6″ on center. Alternate stripping consists of 3″ wide 0.049″ diameter wire stripping weighing 1 pound per square yard and attached by No.16 gage by $1^1/_2$″ by $^3/_4$″ crown width staples, spaced 4″ on center. Where alternate stripping is used, the lath nailing shall consist of two nails at each end and one nail at each intermediate bearing. Plaster mixed 1:2 by weight, gypsum-to-sand aggregate.	—	—	—	—	—	—	—	$^7/_8$
	13-1.2	Cement or gypsum plaster on metal lath. Lath fastened with $1^1/_2$″ by No. 11 gage by $^7/_{16}$″ head barbed shank roofing nails spaced 5″ on center. Plaster mixed 1:2 for scratch coat and 1:3 for brown coat, by weight, cement to sand aggregate.	—	—	—	—	—	—	—	$^5/_8$
	13-1.3	Perlite or vermiculite gypsum plaster on metal lath secured to joists with $1^1/_2$″ by No. 11 gage by $^7/_{16}$″ head barbed shank roofing nails spaced 5″ on center.	—	—	—	—	—	—	—	$^5/_8$
	13-1.4	$^1/_2$″ Type X gypsum wallboard[c] nailed to joists with 5d cooler[o] or wallboard[o] nails at 6″ on center. End joints of wallboard centered on joists.	—	—	—	—	—	—	—	$^1/_2$

(continued)

INTERNATIONAL CODE COUNCIL®
Copyright © 2015 ICC. ALL RIGHTS RESERVED. Accessed by David Dammon on Jun 21, 2017 12:30:52 PM pursuant to License Agreement with ICC. No further reproduction or distribution authorized. ANY UNAUTHORIZED REPRODUCTION OR DISTRIBUTION IS A VIOLATION OF THE FEDERAL COPYRIGHT ACT AND THE LICENSE AGREEMENT, AND SUBJECT TO CIVIL AND CRIMINAL PENALTIES THEREUNDER.

TABLE 721.1(3) —continued
MINIMUM PROTECTION FOR FLOOR AND ROOF SYSTEMS[a, q]

FLOOR OR ROOF CONSTRUCTION	ITEM NUMBER	CEILING CONSTRUCTION	THICKNESS OF FLOOR OR ROOF SLAB (inches)				MINIMUM THICKNESS OF CEILING (inches)			
			4 hours	3 hours	2 hours	1 hour	4 hours	3 hours	2 hours	1 hour
14. Plywood stressed skin panels consisting of $^5/_8$″ -thick interior C-D (exterior glue) top stressed skin on 2″ × 6″ nominal (minimum) stringers. Adjacent panel edges joined with 8d common wire nails spaced 6″ on center. Stringers spaced 12″ maximum on center.	14-1.1	$^1/_2$″ -thick wood fiberboard weighing 15 to 18 pounds per cubic foot installed with long dimension parallel to stringers or $^3/_8$″ C-D (exterior glue) plywood glued and/or nailed to stringers. Nailing to be with 5d cooler[o] or wallboard[o] nails at 12″ on center. Second layer of $^1/_2$″ Type X gypsum wallboard[c] applied with long dimension perpendicular to joists and attached with 8d cooler[o] or wallboard[o] nails at 6″ on center at end joints and 8″ on center elsewhere. Wallboard joints staggered with respect to fiberboard joints.	—	—	—	—	—	—	—	1
15. Vermiculite concrete slab proportioned 1:4 (Portland cement to vermiculite aggregate) on a $1^1/_2$″ -deep steel deck supported on individually protected steel framing. Maximum span of deck 6′-10″ where deck is less than 0.019 inch (No. 26 carbon steel sheet gage) or greater. Slab reinforced with 4″ × 8″ 0.109/0.083″ (No. $^{12}/_{14}$ B.W. gage) welded wire mesh.	15-1.1	None	—	—	—	3[j]	—	—	—	—
16. Perlite concrete slab proportioned 1:6 (Portland cement to perlite aggregate) on a $1^1/_4$″ -deep steel deck supported on individually protected steel framing. Slab reinforced with 4″ × 8″ 0.109/0.083″ (No. $^{12}/_{14}$ B.W. gage) welded wire mesh.	16-1.1	None	—	—	—	$3^1/_2$[j]	—	—	—	—

(continued)

INTERNATIONAL CODE COUNCIL®
Copyright © 2015 ICC. ALL RIGHTS RESERVED. Accessed by David Dammon on Jun 21, 2017 12:30:52 PM pursuant to License Agreement with ICC. No further reproduction or distribution authorized. ANY UNAUTHORIZED REPRODUCTION OR DISTRIBUTION IS A VIOLATION OF THE FEDERAL COPYRIGHT ACT AND THE LICENSE AGREEMENT, AND SUBJECT TO CIVIL AND CRIMINAL PENALTIES THEREUNDER.

TABLE 721.1(3)—continued
MINIMUM PROTECTION FOR FLOOR AND ROOF SYSTEMS[a, q]

FLOOR OR ROOF CONSTRUCTION	ITEM NUMBER	CEILING CONSTRUCTION	THICKNESS OF FLOOR OR ROOF SLAB (inches)				MINIMUM THICKNESS OF CEILING (inches)			
			4 hours	3 hours	2 hours	1 hour	4 hours	3 hours	2 hours	1 hour
17. Perlite concrete slab proportioned 1:6 (Portland cement to perlite aggregate) on a $^{9}/_{16}$″-deep steel deck supported by steel joists 4′ on center. Class A or B roof covering on top.	17-1.1	Perlite gypsum plaster on metal lath wire tied to $^{3}/_{4}$″ furring channels attached with 0.065″ (No. 16 B.W. gage) wire ties to lower chord of joists.	—	2[p]	2[p]	—	—	$^{7}/_{8}$	$^{3}/_{4}$	—
18. Perlite concrete slab proportioned 1:6 (Portland cement to perlite aggregate) on $1^{1}/_{4}$″ -deep steel deck supported on individually protected steel framing. Maximum span of deck 6′-10″ where deck is less than 0.019″ (No. 26 carbon sheet steel gage) and 8′-0″ where deck is 0.019″ (No. 26 carbon sheet steel gage) or greater. Slab reinforced with 0.042″ (No. 19 B.W. gage) hexagonal wire mesh. Class A or B roof covering on top.	18-1.1	None	—	$2^{1}/_{4}$[p]	$2^{1}/_{4}$[p]	—	—	—	—	—
19. Floor and beam construction consisting of 3″ -deep cellular steel floor unit mounted on steel members with 1:4 (proportion of Portland cement to perlite aggregate) perlite-concrete floor slab on top.	19-1.1	Suspended envelope ceiling of perlite gypsum plaster on metal lath attached to $^{3}/_{4}$″ cold-rolled channels, secured to $1^{1}/_{2}$″ cold-rolled channels spaced 42″ on center supported by 0.203 inch (No. 6 B.W. gage) wire 36″ on center. Beams in envelope with 3″ minimum airspace between beam soffit and lath have a 4-hour rating.	2[p]	—	—	—	1[1]	—	—	—

(continued)

INTERNATIONAL CODE COUNCIL®
Copyright © 2015 ICC. ALL RIGHTS RESERVED. Accessed by David Dammon on Jun 21, 2017 12:30:52 PM pursuant to License Agreement with ICC. No further reproduction or distribution authorized. ANY UNAUTHORIZED REPRODUCTION OR DISTRIBUTION IS A VIOLATION OF THE FEDERAL COPYRIGHT ACT AND THE LICENSE AGREEMENT, AND SUBJECT TO CIVIL AND CRIMINAL PENALTIES THEREUNDER.

TABLE 721.1(3)—continued
MINIMUM PROTECTION FOR FLOOR AND ROOF SYSTEMS[a, q]

FLOOR OR ROOF CONSTRUCTION	ITEM NUMBER	CEILING CONSTRUCTION	THICKNESS OF FLOOR OR ROOF SLAB (inches)				MINIMUM THICKNESS OF CEILING (inches)			
			4 hours	3 hours	2 hours	1 hour	4 hours	3 hours	2 hours	1 hour
20. Perlite concrete proportioned 1:6 (Portland cement to perlite aggregate) poured to $^{1}/_{8}$″ thickness above top of corrugations of $1^{5}/_{16}$″ -deep galvanized steel deck maximum span 8′-0″ for 0.024″ (No. 24 galvanized sheet gage) or 6′ 0″ for 0.019″ (No. 26 galvanized sheet gage) with deck supported by individually protected steel framing. Approved polystyrene foam plastic insulation board having a flame spread not exceeding 75 (1″ to 4″ thickness) with vent holes that approximate 3 percent of the board surface area placed on top of perlite slurry. A 2′ by 4′ insulation board contains six $2^{3}/_{4}$″ diameter holes. Board covered with $2^{1}/_{4}$″ minimum perlite concrete slab. Slab reinforced with mesh consisting of 0.042″ (No. 19 B.W. gage) galvanized steel wire twisted together to form 2″ hexagons with straight 0.065″ (No. 16 B.W. gage) galvanized steel wire woven into mesh and spaced 3″. Alternate slab reinforcement shall be permitted to consist of 4″ × 8″, 0.109/0.238″ (No. 12/4 B.W. gage), or 2″ × 2″, 0.083/0.083″ (No. 14/14 B.W. gage) welded wire fabric. Class A or B roof covering on top.	20-1.1	None	—	—	Varies	—	—	—	—	—
21. Wood joists, wood I-joists, floor trusses and flat or pitched roof trusses spaced a maximum 24″ o.c. with $^{1}/_{2}$″ wood structural panels with exterior glue applied at right angles to top of joist or top chord of trusses with 8d nails. The wood structural panel thickness shall be not less than nominal $^{1}/_{2}$″ nor less than required by Chapter 23.	21-1.1	Base layer $^{5}/_{8}$″ Type X gypsum wallboard applied at right angles to joist or truss 24" o.c. with $1^{1}/_{4}$″ Type S or Type W drywall screws 24″ o.c. Face layer $^{5}/_{8}$″ Type X gypsum wallboard or veneer base applied at right angles to joist or truss through base layer with $1^{7}/_{8}$″ Type S or Type W drywall screws 12″ o.c. at joints and intermediate joist or truss. Face layer Type G drywall screws placed 2″ back on either side of face layer end joints, 12″ o.c.	—	—	—	Varies	—	—	—	$1^{1}/_{4}$

(continued)

INTERNATIONAL CODE COUNCIL®
Copyright © 2015 ICC. ALL RIGHTS RESERVED. Accessed by David Dammon on Jun 21, 2017 12:30:52 PM pursuant to License Agreement with ICC. No further reproduction or distribution authorized. ANY UNAUTHORIZED REPRODUCTION OR DISTRIBUTION IS A VIOLATION OF THE FEDERAL COPYRIGHT ACT AND THE LICENSE AGREEMENT, AND SUBJECT TO CIVIL AND CRIMINAL PENALTIES THEREUNDER.

TABLE 721.1(3)—continued
MINIMUM PROTECTION FOR FLOOR AND ROOF SYSTEMS[a, q]

FLOOR OR ROOF CONSTRUCTION	ITEM NUMBER	CEILING CONSTRUCTION	THICKNESS OF FLOOR OR ROOF SLAB (inches)				MINIMUM THICKNESS OF CEILING (inches)			
			4 hours	3 hours	2 hours	1 hour	4 hours	3 hours	2 hours	1 hour
22. Steel joists, floor trusses and flat or pitched roof trusses spaced a maximum 24″ o.c. with $^1/_2$″ wood structural panels with exterior glue applied at right angles to top of joist or top chord of trusses with No. 8 screws. The wood structural panel thickness shall be not less than nominal $^1/_2$″ nor less than required by Chapter 23.	22-1.1	Base layer $^5/_8$″ Type X gypsum board applied at right angles to steel framing 24″ on center with 1″ Type S drywall screws spaced 24″ on center. Face layer $^5/_8$″ Type X gypsum board applied at right angles to steel framing attached through base layer with $1^5/_8$″ Type S drywall screws 12″ on center at end joints and intermediate joints and $1^1/_2$″ Type G drywall screws 12 inches on center placed 2″ back on either side of face layer end joints. Joints of the face layer are offset 24″ from the joints of the base layer.	—	—	—	Varies	—	—	—	$1^1/_4$
23. Wood I-joist (minimum joist depth $9^1/_4$″ with a minimum flange depth of $1^5/_{16}$″ and a minimum flange cross-sectional area of 2.25 square inches) at 24″ o.c. spacing with a minimum 1 × 4 ($^3/_4$″ × 3.5″ actual) ledger strip applied parallel to and covering the bottom of the bottom flange of each member, tacked in place. 2″ mineral wool insulation, 3.5 pcf (nominal) installed adjacent to the bottom flange of the I-joist and supported by the 1 × 4 ledger strip.	23-1.1	$^1/_2$″ deep single leg resilient channel 16″ on center (channels doubled at wallboard end joints), placed perpendicular to the furring strip and joist and attached to each joist by $1^7/_8$″ Type S drywall screws. $^5/_8$″ Type C gypsum wallboard applied perpendicular to the channel with end joints staggered not less than 4′ and fastened with $1^1/_8$″ Type S drywall screws spaced 7″ on center. Wallboard joints to be taped and covered with joint compound.	—	—	—	Varies	—	—	—	$^5/_8$
24. Wood I-joist (minimum I-joist depth $9^1/_4$″ with a minimum flange depth of $1^1/_2$″ and a minimum flange cross-sectional area of 5.25 square inches; minimum web thickness of $^3/_8$″) @ 24″ o.c., $1^1/_2$″ mineral wool insulation (2.5 pcf-nominal) resting on hat-shaped furring channels.	24-1.1	Minimum 0.026″ thick hat-shaped channel 16″ o.c. (channels doubled at wallboard end joints), placed perpendicular to the joist and attached to each joist by $1^1/_4$″ Type S drywall screws. $^5/_8$″ Type C gypsum wallboard applied perpendicular to the channel with end joints staggered and fastened with $1^1/_8$″ Type S drywall screws spaced 12″ o.c. in the field and 8″ o.c. at the wallboard ends. Wallboard joints to be taped and covered with joint compound.	—	—	—	Varies	—	—	—	$^5/_8$
25. Wood I-joist (minimum I-joist depth $9^1/_4$″ with a minimum flange depth of $1^1/_2$″ and a minimum flange cross-sectional area of 5.25 square inches; minimum web thickness of $^7/_{16}$″) @ 24″ o.c., $1^1/_2$″ mineral wool insulation (2.5 pcf-nominal) resting on resilient channels.	25-1.1	Minimum 0.019″ thick resilient channel 16″ o.c. (channels doubled at wallboard end joints), placed perpendicular to the joist and attached to each joist by $1^5/_8$″ Type S drywall screws. $^5/_8$″ Type C gypsum wallboard applied perpendicular to the channel with end joints staggered and fastened with 1″ Type S drywall screws spaced 12″ o.c. in the field and 8″ o.c. at the wallboard ends. Wallboard joints to be taped and covered with joint compound.	—	—	—	Varies	—	—	—	$^5/_8$

(continued)

INTERNATIONAL CODE COUNCIL®
Copyright © 2015 ICC. ALL RIGHTS RESERVED. Accessed by David Dammon on Jun 21, 2017 12:30:52 PM pursuant to License Agreement with ICC. No further reproduction or distribution authorized. ANY UNAUTHORIZED REPRODUCTION OR DISTRIBUTION IS A VIOLATION OF THE FEDERAL COPYRIGHT ACT AND THE LICENSE AGREEMENT, AND SUBJECT TO CIVIL AND CRIMINAL PENALTIES THEREUNDER.

TABLE 721.1(3)—continued
MINIMUM PROTECTION FOR FLOOR AND ROOF SYSTEMS[a, q]

FLOOR OR ROOF CONSTRUCTION	ITEM NUMBER	CEILING CONSTRUCTION	THICKNESS OF FLOOR OR ROOF SLAB (inches)				MINIMUM THICKNESS OF CEILING (inches)			
			4 hours	3 hours	2 hours	1 hour	4 hours	3 hours	2 hours	1 hour
26. Wood I-joist (minimum I-joist depth $9^1/_4$″ with a minimum flange thickness of $1^1/_2$″ and a minimum flange cross-sectional area of 2.25 square inches; minimum web thickness of $^3/_8$″) @ 24″ o.c.	26-1.1	Two layers of $^1/_2$″ Type X gypsum wallboard applied with the long dimension perpendicular to the I-joists with end joints staggered. The base layer is fastened with $1^5/_8$″ Type S drywall screws spaced 12″ o.c. and the face layer is fastened with 2″ Type S drywall screws spaced 12″ o.c. in the field and 8″ o.c. on the edges. Face layer end joints shall not occur on the same I-joist as base layer end joints and edge joints shall be offset 24″ from base layer joints. Face layer to also be attached to base layer with $1^1/_2$″ Type G drywall screws spaced 8″ o.c. placed 6″ from face layer end joints. Face layer wallboard joints to be taped and covered with joint compound.	—	—	—	Varies	—	—	—	1
27. Wood I-joist (minimum I-joist depth $9^1/_2$″ with a minimum flange depth of $1^5/_{16}$″ and a minimum flange cross-sectional area of 1.95 square inches; minimum web thickness of $^3/_8$″) @ 24″ o.c.	27-1.1	Minimum 0.019″ thick resilient channel 16″ o.c. (channels doubled at wallboard end joints), placed perpendicular to the joist and attached to each joist by $1^1/_4$″ Type S drywall screws. Two layers of $^1/_2$″ Type X gypsum wallboard applied with the long dimension perpendicular to the I-joists with end joints staggered. The base layer is fastened with $1^1/_4$″ Type S drywall screws spaced 12″ o.c. and the face layer is fastened with $1^5/_8$″ Type S drywall screws spaced 12″ o.c. Face layer end joints shall not occur on the same I-joist as base layer end joints and edge joints shall be offset 24″ from base layer joints. Face layer to also be attached to base layer with $1^1/_2$″ Type G drywall screws spaced 8″ o.c. placed 6″ from face layer end joints. Face layer wallboard joints to be taped and covered with joint compound.	—	—	—	Varies	—	—	—	1

(continued)

INTERNATIONAL CODE COUNCIL®
Copyright © 2015 ICC. ALL RIGHTS RESERVED. Accessed by David Dammon on Jun 21, 2017 12:30:52 PM pursuant to License Agreement with ICC. No further reproduction or distribution authorized. ANY UNAUTHORIZED REPRODUCTION OR DISTRIBUTION IS A VIOLATION OF THE FEDERAL COPYRIGHT ACT AND THE LICENSE AGREEMENT, AND SUBJECT TO CIVIL AND CRIMINAL PENALTIES THEREUNDER.

TABLE 721.1(3)—continued
MINIMUM PROTECTION FOR FLOOR AND ROOF SYSTEMS[a, q]

FLOOR OR ROOF CONSTRUCTION	ITEM NUMBER	CEILING CONSTRUCTION	THICKNESS OF FLOOR OR ROOF SLAB (inches)				MINIMUM THICKNESS OF CEILING (inches)			
			4 hours	3 hours	2 hours	1 hour	4 hours	3 hours	2 hours	1 hour
28. Wood I-joist (minimum I-joist depth $9^1/_4$″ with a minimum flange depth of $1^1/_2$″ and a minimum flange cross-sectional area of 2.25 square inches; minimum web thickness of $^3/_8$″) @ 24″ o.c. Unfaced fiberglass insulation or mineral wool insulation is installed between the I-joists supported on the upper surface of the flange by stay wires spaced 12″ o.c.	28-1.1	Base layer of $^5/_8$″ Type C gypsum wallboard attached directly to I-joists with $1^5/_8$″ Type S drywall screws spaced 12″ o.c. with ends staggered. Minimum 0.0179″ thick hat-shaped $^7/_8$-inch furring channel 16″ o.c. (channels doubled at wallboard end joints), placed perpendicular to the joist and attached to each joist by $1^5/_8$″ Type S drywall screws after the base layer of gypsum wallboard has been applied. The middle and face layers of $^5/_8$″ Type C gypsum wallboard applied perpendicular to the channel with end joints staggered. The middle layer is fastened with 1″ Type S drywall screws spaced 12″ o.c. The face layer is applied parallel to the middle layer but with the edge joints offset 24″ from those of the middle layer and fastened with $1^5/_8$″ Type S drywall screws 8″ o.c. The joints shall be taped and covered with joint compound.	—	—	—	Varies	—	—	$2^3/_4$	—
29. Channel-shaped 18 gage steel joists (minimum depth 8″) spaced a maximum 24″ o.c. supporting tongue-and-groove wood structural panels (nominal minimum $^3/_4$″ thick) applied perpendicular to framing members. Structural panels attached with $1^5/_8$″ Type S-12 screws spaced 12″ o.c.	29-1.1	Base layer $^5/_8$″ Type X gypsum board applied perpendicular to bottom of framing members with $1^1/_8$″ Type S-12 screws spaced 12″ o.c. Second layer $^5/_8$″ Type X gypsum board attached perpendicular to framing members with $1^5/_8$″ Type S-12 screws spaced 12″ o.c. Second layer joints offset 24″ from base layer. Third layer $^5/_8$″ Type X gypsum board attached perpendicular to framing members with $2^3/_8$″ Type S-12 screws spaced 12″ o.c. Third layer joints offset 12″ from second layer joints. Hat-shaped $^7/_8$-inch rigid furring channels applied at right angles to framing members over third layer with two $2^3/_8$″ Type S-12 screws at each framing member. Face layer $^5/_8$″ Type X gypsum board applied at right angles to furring channels with $1^1/_8$″ Type S screws spaced 12″ o.c.	—	—	Varies	—	—	—	$3^3/_8$	—

(continued)

INTERNATIONAL CODE COUNCIL®
Copyright © 2015 ICC. ALL RIGHTS RESERVED. Accessed by David Dammon on Jun 21, 2017 12:30:52 PM pursuant to License Agreement with ICC. No further reproduction or distribution authorized. ANY UNAUTHORIZED REPRODUCTION OR DISTRIBUTION IS A VIOLATION OF THE FEDERAL COPYRIGHT ACT AND THE LICENSE AGREEMENT, AND SUBJECT TO CIVIL AND CRIMINAL PENALTIES THEREUNDER.

TABLE 721.1(3)—continued
MINIMUM PROTECTION FOR FLOOR AND ROOF SYSTEMS[a, q]

FLOOR OR ROOF CONSTRUCTION	ITEM NUMBER	CEILING CONSTRUCTION	THICKNESS OF FLOOR OR ROOF SLAB (inches)				MINIMUM THICKNESS OF CEILING (inches)			
			4 hours	3 hours	2 hours	1 hour	4 hours	3 hours	2 hours	1 hour
30. Wood I-joist (minimum I-joist depth $9^1/_2$″ with a minimum flange depth of $1^1/_2$″ and a minimum flange cross-sectional area of 2.25 square inches; minimum web thickness of $^3/_8$″) @ 24″ o.c. Fiberglass insulation placed between I-joists supported by the resilient channels.	30-1.1	Minimum 0.019″ thick resilient channel 16″ o.c. (channels doubled at wallboard end joints), placed perpendicular to the joists and attached to each joist by $1^1/_4$″ Type S drywall screws. Two layers of $^1/_2$″ Type X gypsum wallboard applied with the long dimension perpendicular to the I-joists with end joints staggered. The base layer is fastened with $1^1/_4$″ Type S drywall screws spaced 12" o.c. and the face layer is fastened with $1^5/_8$″ Type S drywall screws spaced 12″ o.c. Face layer end joints shall not occur on the same I-joist as base layer end joints and edge joints shall be offset 24″ from base layer joints. Face layer to be attached to base layer with $1^1/_2$″ Type G drywall screws spaced 8″ o.c. placed 6″ from face layer end joints. Face layer wallboard joints to be taped and covered with joint compound.	—	—	—	Varies	—	—	—	1

For SI: 1 inch = 25.4 mm, 1 foot = 304.8 mm, 1 pound = 0.454 kg, 1 cubic foot = 0.0283 m^3,
1 pound per square inch = 6.895 kPa, 1 pound per linear foot = 1.4882 kg/m.

a. Staples with equivalent holding power and penetration shall be permitted to be used as alternate fasteners to nails for attachment to wood framing.

b. Where the slab is in an unrestrained condition, minimum reinforcement cover shall be not less than $1^5/_8$ inches for 4 hours (siliceous aggregate only); $1^1/_4$ inches for 4 and 3 hours; 1 inch for 2 hours (siliceous aggregate only); and $^3/_4$ inch for all other restrained and unrestrained conditions.

c. For all of the construction with gypsum wallboard described in this table, gypsum base for veneer plaster of the same size, thickness and core type shall be permitted to be substituted for gypsum wallboard, provided attachment is identical to that specified for the wallboard, and the joints on the face layer are reinforced and the entire surface is covered with not less than $^1/_{16}$-inch gypsum veneer plaster.

d. Slab thickness over steel joists measured at the joists for metal lath form and at the top of the form for steel form units.

e. (a) The maximum allowable stress level for H-Series joists shall not exceed 22,000 psi.
(b) The allowable stress for K-Series joists shall not exceed 26,000 psi, the nominal depth of such joist shall be not less than 10 inches and the nominal joist weight shall be not less than 5 pounds per linear foot.

f. Cement plaster with 15 pounds of hydrated lime and 3 pounds of approved additives or admixtures per bag of cement.

g. Gypsum wallboard ceilings attached to steel framing shall be permitted to be suspended with $1^1/_2$-inch cold-formed carrying channels spaced 48 inches on center, that are suspended with No. 8 SWG galvanized wire hangers spaced 48 inches on center. Cross-furring channels are tied to the carrying channels with No. 18 SWG galvanized wire hangers spaced 48 inches on center. Cross-furring channels are tied to the carrying channels with No. 18 SWG galvanized wire (double strand) and spaced as required for direct attachment to the framing. This alternative is applicable to those steel framing assemblies recognized under Note q.

h. Six-inch hollow clay tile with 2-inch concrete slab above.

i. Four-inch hollow clay tile with $1^1/_2$-inch concrete slab above.

j. Thickness measured to bottom of steel form units.

k. Five-eighths inch of vermiculite gypsum plaster plus $^1/_2$ inch of approved vermiculite acoustical plastic.

l. Furring channels spaced 12 inches on center.

m. Double wood floor shall be permitted to be either of the following:
(a) Subfloor of 1-inch nominal boarding, a layer of asbestos paper weighing not less than 14 pounds per 100 square feet and a layer of 1-inch nominal tongue-and-groove finished flooring; or
(b) Subfloor of 1-inch nominal tongue-and-groove boarding or $^{15}/_{32}$-inch wood structural panels with exterior glue and a layer of 1-inch nominal tongue-and-groove finished flooring or $^{19}/_{32}$-inch wood structural panel finish flooring or a layer of Type I Grade M-1 particleboard not less than $^5/_8$-inch thick.

n. The ceiling shall be permitted to be omitted over unusable space, and flooring shall be permitted to be omitted where unusable space occurs above.

o. For properties of cooler or wallboard nails, see ASTM C514, ASTM C547 or ASTM F1667.

p. Thickness measured on top of steel deck unit.

q. Generic *fire-resistance ratings* (those not designated as PROPRIETARY* in the listing) in the GA 600 shall be accepted as if herein listed.

INTERNATIONAL CODE COUNCIL®
Copyright © 2015 ICC. ALL RIGHTS RESERVED. Accessed by David Dammon on Jun 21, 2017 12:30:52 PM pursuant to License Agreement with ICC. No further reproduction or distribution authorized. ANY UNAUTHORIZED REPRODUCTION OR DISTRIBUTION IS A VIOLATION OF THE FEDERAL COPYRIGHT ACT AND THE LICENSE AGREEMENT, AND SUBJECT TO CIVIL AND CRIMINAL PENALTIES THEREUNDER.

SECTION 722
CALCULATED FIRE RESISTANCE

❖ Due to the prescriptive nature of Section 722, this section contains explanatory material, examples and reference materials related to calculating fire-resistance ratings of materials and assemblies. As such, commentary is provided where necessary as the basis for a provision or to illustrate the application of the requirement.

This section provides a number of useful alternatives for establishing compliance with the code. The provisions in this section can be used to calculate the fire-resistance rating for an assembly (concrete, concrete masonry, clay masonry, steel and wood). It also contains provisions that would permit modifications or changes to a tested assembly. For example, the steel assemblies (see Section 722.5) will allow the selection of different sized or shaped members depending on the weight-to-heated-perimeter ratio (see Sections 722.5.2.1.2 and 722.5.2.2). In addition, the amount of spray-applied fire-resistant materials can be modified from a tested assembly to either increase or decrease the coverage dependent on the member and the spray-applied material.

The section also addresses items that are much less exotic and may be helpful in a number of situations. Section 722.6 provides methods for calculating the fire resistance of wood assemblies, including light-framed walls and floors or exposed heavy-timber members. Section 722.4.1 can be used for masonry walls (including existing conditions) where additional protection such as filled cores or an additional wythe such as a brick veneer is added.

While this section is not often used by many people, those who have used it will find that it is often helpful in solving difficult situations related to the protection of certain assemblies. Therefore, taking the time to become familiar with this section can be very beneficial. The provisions of this section include methods for calculating fire resistance as follows:

Concrete Assemblies:
- Walls—722.2.1
- Floor and roof slabs—722.2.2
- Beams—722.2.3
- Columns—722.2.3

Concrete Masonry:
- Walls—722.3.2
- Lintels—722.3.4
- Columns—722.3.5

Clay Brick and Tile Masonry:
- Walls—722.4.1
- Lintels—722.4.3
- Columns—722.4.4

Steel Assemblies:
- Columns using:
  - Gypsum wallboard—722.5.1.2
  - Spray-applied materials—722.5.1.3
  - Concrete or masonry—722.5.1.4
- Beams using:
  - Spray-applied materials—722.5.2.2
- Trusses using:
  - Spray-applied materials—722.5.2.3

Wood Assemblies:
- Walls, floors and roofs—722.6.2

722.1 General. The provisions of this section contain procedures by which the *fire resistance* of specific materials or combinations of materials is established by calculations. These procedures apply only to the information contained in this section and shall not be otherwise used. The calculated *fire resistance* of concrete, concrete masonry and clay masonry assemblies shall be permitted in accordance with ACI 216.1/TMS 0216. The calculated *fire resistance* of steel assemblies shall be permitted in accordance with Chapter 5 of ASCE 29. The calculated *fire resistance* of exposed wood members and wood decking shall be permitted in accordance with Chapter 16 of ANSI/AF&PA *National Design Specification for Wood Construction (NDS)*.

❖ Section 703.3 permits fire-resistance ratings to be determined in a number of ways, including those found in Section 722 (see Section 703.3, Item 3). The provisions of this section contain procedures by which the fire resistance of specific materials or combinations of materials is established by calculations. These procedures apply only to the information contained in this section and are not to be otherwise used. The calculated fire resistance of concrete, concrete masonry and clay masonry assemblies is also permitted in accordance with ACI 216.1/TMS 0216.1 while steel assemblies can use ASCE 29 (see commentary, Section 703.3).

722.1.1 Definitions. The following terms are defined in Chapter 2:

❖ This section lists terms that are specifically associated with the subject matter of this chapter. It is important to emphasize that these terms are not exclusively related to this chapter but may or may not also be applicable where the term is used elsewhere in the code.

Definitions of terms can help in the understanding and application of the code requirements. The purpose for including a list within this chapter is to provide more convenient access to terms which may have a specific or limited application within this chapter. For the complete definition and associated commentary, refer back to Chapter 2. Terms that are italized provide a visual identification throughout the code that a definition exists for that term. The use and application of all defined terms are set forth in Section 201.

CERAMIC FIBER BLANKET.

CONCRETE, CARBONATE AGGREGATE.

CONCRETE, CELLULAR.

CONCRETE, LIGHTWEIGHT AGGREGATE.

CONCRETE, PERLITE.

INTERNATIONAL CODE COUNCIL®
Copyright © 2015 ICC. ALL RIGHTS RESERVED. Accessed by David Dammon on Jun 21, 2017 12:30:52 PM pursuant to License Agreement with ICC. No further reproduction or distribution authorized. ANY UNAUTHORIZED REPRODUCTION OR DISTRIBUTION IS A VIOLATION OF THE FEDERAL COPYRIGHT ACT AND THE LICENSE AGREEMENT, AND SUBJECT TO CIVIL AND CRIMINAL PENALTIES THEREUNDER.

CONCRETE, SAND-LIGHTWEIGHT.

CONCRETE, SILICEOUS AGGREGATE.

CONCRETE, VERMICULITE.

GLASS FIBERBOARD.

MINERAL BOARD.

722.2 Concrete assemblies. The provisions of this section contain procedures by which the *fire-resistance ratings* of concrete assemblies are established by calculations.

❖ See the commentary to Section 722.

722.2.1 Concrete walls. Cast-in-place and precast concrete walls shall comply with Section 722.2.1.1. Multiwythe concrete walls shall comply with Section 722.2.1.2. Joints between precast panels shall comply with Section 722.2.1.3. Concrete walls with gypsum wallboard or plaster finish shall comply with Section 722.2.1.4.

❖ See the commentary to Sections 702.2.1.1, 702.2.1.2, 702.2.1.3 and 702.2.1.4.

722.2.1.1 Cast-in-place or precast walls. The minimum equivalent thicknesses of cast-in-place or precast concrete walls for *fire-resistance ratings* of 1 hour to 4 hours are shown in Table 722.2.1.1. For solid walls with flat vertical surfaces, the equivalent thickness is the same as the actual thickness. The values in Table 722.2.1.1 apply to plain, reinforced or prestressed concrete walls.

❖ Although there have been few fire tests of concrete walls (other than concrete masonry), there have been many fire tests of concrete slabs tested as floors or roofs. Fire tests of floors or roofs are considered to be more severe than those of walls because of the loading conditions (tension cracks associated with bending moment). In addition, most ASTM E119 or UL 263 fire tests of floor assemblies have been conducted while the assembly was supported within restraining frames. As concrete assemblies are heated and expand, the expansion is resisted by the restraining frame. These restraining forces are usually much greater than the superimposed loads supported by load-bearing walls. Thus, floor or roof assemblies are subjected to both vertical superimposed loads and horizontal restraining loads during fire tests. By contrast, load-bearing walls are subjected only to superimposed loads.

The fire endurance of masonry or concrete walls is nearly always governed by the ASTM E119 or UL 263 criteria for temperature rise of the unexposed surface (i.e., the "heat transmission" end point). For flat concrete slabs or panels, the heat transmission fire endurance depends primarily on the aggregate type and thickness and is essentially the same for floors as it is for walls.

722.2.1.1.1 Hollow-core precast wall panels. For hollow-core precast concrete wall panels in which the cores are of constant cross section throughout the length, calculation of the equivalent thickness by dividing the net cross-sectional area (the gross cross section minus the area of the cores) of the panel by its width shall be permitted

❖ The method for determining equivalent thickness of masonry units was developed because the cores in masonry units taper. The method is, of course, also applicable to hollow-core precast concrete panels. However, because the cores in hollow-core panels do not taper, the equivalent thickness can be calculated by dividing the net cross-sectional area of the panel by its width.

TABLE 722.2.1.1
MINIMUM EQUIVALENT THICKNESS OF CAST-IN-PLACE OR PRECAST CONCRETE WALLS, LOAD-BEARING OR NONLOAD-BEARING

CONCRETE TYPE	MINIMUM SLAB THICKNESS (inches) FOR FIRE-RESISTANCE RATING OF				
	1 hour	$1^1/_2$ hours	2 hours	3 hours	4 hours
Siliceous	3.5	4.3	5.0	6.2	7.0
Carbonate	3.2	4.0	4.6	5.7	6.6
Sand-lightweight	2.7	3.3	3.8	4.6	5.4
Lightweight	2.5	3.1	3.6	4.4	5.1

For SI: 1 inch = 25.4 mm.

❖ The data in Table 722.2.1.1 were derived from Portland Cement Association (PCA) Bulletin 223, "Fire Endurances of Concrete Slabs as Influenced by Thickness, Aggregate Type, and Moisture," and PCA Publication T-140, *Fire Resistance of Reinforced Concrete Floors*.

722.2.1.1.2 Core spaces filled. Where all of the core spaces of hollow-core wall panels are filled with loose-fill material, such as expanded shale, clay or slag, or vermiculite or perlite, the *fire-resistance rating* of the wall is the same as that of a solid wall of the same concrete type and of the same overall thickness.

❖ The PCA report "Tests of Fire Resistance and Strength of Walls of Concrete Masonry Units" shows that filling cores of concrete masonry units with loose lightweight aggregates increases the fire endurance to a duration significantly longer than that of solid masonry units of the same total thickness. It is reasonable to assume that the same relationship exists for walls made of hollow-core panels.

722.2.1.1.3 Tapered cross sections. The thickness of panels with tapered cross sections shall be that determined at a distance $2t$ or 6 inches (152 mm), whichever is less, from the point of minimum thickness, where t is the minimum thickness.

❖ Some precast concrete wall panel sections (e.g., certain single-tee units) have tapered surfaces so the thickness varies, as shown in Code Figure 722.2.2.1.2. In fire tests, it has been customary to monitor the unexposed surface temperature at the location shown in the figure.

INTERNATIONAL CODE COUNCIL®
Copyright © 2015 ICC. ALL RIGHTS RESERVED. Accessed by David Dammon on Jun 21, 2017 12:30:52 PM pursuant to License Agreement with ICC. No further reproduction or distribution authorized. ANY UNAUTHORIZED REPRODUCTION OR DISTRIBUTION IS A VIOLATION OF THE FEDERAL COPYRIGHT ACT AND THE LICENSE AGREEMENT, AND SUBJECT TO CIVIL AND CRIMINAL PENALTIES THEREUNDER.

722.2.1.1.4 Ribbed or undulating surfaces. The equivalent thickness of panels with ribbed or undulating surfaces shall be determined by one of the following expressions:

For $s \geq 4t$, the thickness to be used shall be t

For $s \leq 2t$, the thickness to be used shall be t_e

For $4t > s > 2t$, the thickness to be used shall be

$$t + \left(\frac{4t}{s} - 1\right)(t_e - t) \qquad \textbf{(Equation 7-3)}$$

where:

s = Spacing of ribs or undulations.

t = Minimum thickness.

t_e = Equivalent thickness of the panel calculated as the net cross-sectional area of the panel divided by the width, in which the maximum thickness used in the calculation shall not exceed $2t$.

❖ The portion of a ribbed panel that can be used in calculating equivalent thickness, t_e, is shown in Code Figure 722.2.2.1.3. Note that the procedure outlined gives no credit for stems of double tees or of similar ribbed panels and clearly indicates that the minimum thickness must be used for such sections.

722.2.1.2 Multiwythe walls. For walls that consist of two wythes of different types of concrete, the *fire-resistance ratings* shall be permitted to be determined from Figure 722.2.1.2.

❖ The graphs in the Code Figure 722.2.1.2 were derived from a report entitled "Fire Endurance of Two-Course Floors and Roofs" in the *ACI Journal.*

722.2.1.2.1 Two or more wythes. The *fire-resistance rating* for wall panels consisting of two or more wythes shall be permitted to be determined by the formula:

$$R = (R_1^{0.59} + R_2^{0.59} + \ldots + R_n^{0.59})^{1.7} \qquad \textbf{(Equation 7-4)}$$

where:

R = The fire endurance of the assembly, minutes.

R_1, R_2, and R_n = The fire endurances of the individual wythes, minutes. Values of $R_n^{0.59}$ for use in Equation 7-4 are given in Table 722.2.1.2(1). Calculated *fire-resistance ratings* are shown in Table 722.2.1.2(2).

❖ Equation 7-4 was developed by the U.S. National Bureau of Standards (NBS) in the early 1940s and first appeared in Appendix B of BMS 92. Verification of the accuracy of the equation is given in "Fire Endurance of Two-Course Floors and Roofs" in the *ACI Journal.*

This section and the associated tables allow both the determination of the fire endurance of a particular assembly [see Table 722.2.1.2(1)] and what thickness is required to achieve a certain fire endurance [see Table 722.2.1.2(2)].

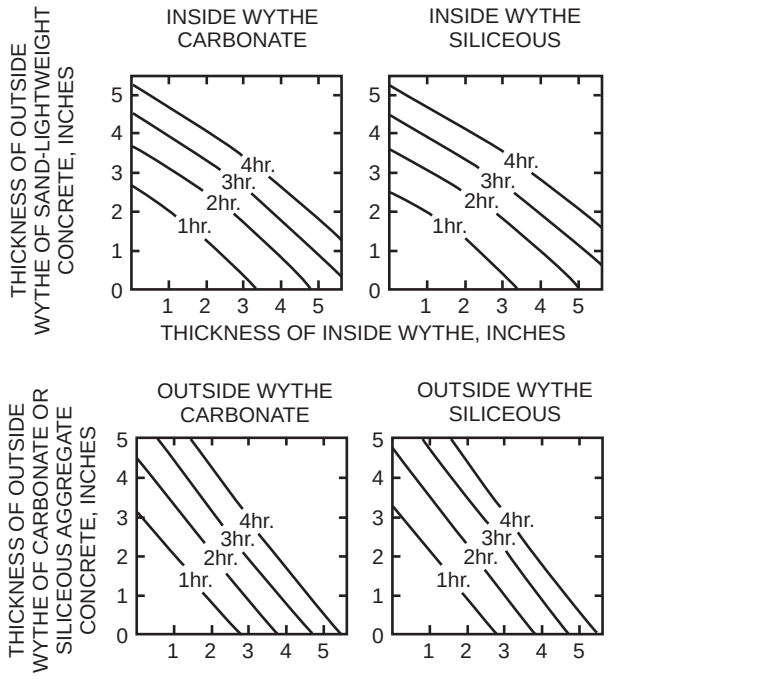

For SI: 1 inch = 25.4 mm.

FIGURE 722.2.1.2
FIRE-RESISTANCE RATINGS OF TWO-WYTHE CONCRETE WALLS

INTERNATIONAL CODE COUNCIL®
Copyright © 2015 ICC. ALL RIGHTS RESERVED. Accessed by David Dammon on Jun 21, 2017 12:30:52 PM pursuant to License Agreement with ICC. No further reproduction or distribution authorized. ANY UNAUTHORIZED REPRODUCTION OR DISTRIBUTION IS A VIOLATION OF THE FEDERAL COPYRIGHT ACT AND THE LICENSE AGREEMENT, AND SUBJECT TO CIVIL AND CRIMINAL PENALTIES THEREUNDER.

722.2.1.2.2 Foam plastic insulation. The *fire-resistance ratings* of precast concrete wall panels consisting of a layer of foam plastic insulation sandwiched between two wythes of concrete shall be permitted to be determined by use of Equation 7-4. Foam plastic insulation with a total thickness of less than 1 inch (25 mm) shall be disregarded. The R_n value for thickness of foam plastic insulation of 1 inch (25 mm) or greater, for use in the calculation, is 5 minutes; therefore $R_n^{0.59} = 2.5$.

❖ This value was for foam plastic insulation 1 inch (25 mm) thick and greater, determined from a fire test conducted on a panel that consisted of a 2-inch (51 mm) base slab of carbonate aggregate concrete, a 1-inch (25 mm) layer of cellular polystyrene insulation and a 2-inch (51 mm) face slab of carbonate aggregate concrete. The resulting fire endurance was 2 hours. From Equation 7-4, the contribution of the 1-inch (25 mm) layer of foam polystyrene was calculated to be 5 minutes.

Presumably, a comparable *R*-value for a 1-inch (25 mm) layer of foam polyurethane would be somewhat greater than for a 1-inch (25 mm) layer of foam polystyrene, but test values are not available. The above value for polystyrene is conservative for foam polyurethane.

Equation 7-4 can be rewritten as:

$$R^{0.59} = (R^{10.59} + R^{20.59} + \ldots R_n^{0.59})$$

This form of the equation is useful in making a quick determination of whether an assembly qualifies for a particular classification when used in conjunction with Tables 722.2.1.2(1) and 722.2.1.2(2).

EXAMPLE:

GIVEN: A sandwich wall panel consists of two $2^1/_2$-inch (63 mm) wythes of normal-weight concrete with a 2-inch (51 mm) layer of foam polystyrene between them.

FIND: Does the panel qualify for a 3-hour fire-resistance rating?

SOLUTION: From Table 722.2.1.2(1) in the code, the value of $R_n^{0.59}$ for a carbonate aggregate concrete is higher than for siliceous aggregate concrete, but because the type of concrete was not given, the value for siliceous should be used. From Section 722.2.1.2.2, the value of $R_n^{0.59}$ for the 2-inch (51 mm) layer of foam polystyrene is 2.5.

$R^{0.59} = 8.1 + 2.5 + 8.1 = 18.7$

From Table 722.2.1.2(2), a 3-hour rating is required to have an $R^{0.59}$ value of 21.41.

18.7 < 21.41, thus the wall does not qualify for a 3-hour rating.

722.2.1.3 Joints between precast wall panels. Joints between precast concrete wall panels that are not insulated as required by this section shall be considered as openings in walls. Uninsulated joints shall be included in determining the percentage of openings permitted by Table 705.8. Where openings are not permitted or are required by this code to be protected, the provisions of this section shall be used to determine the amount of joint insulation required. Insulated joints shall not be considered openings for purposes of determining

TABLE 722.2.1.2(1)
VALUES OF $R_n^{0.59}$ FOR USE IN EQUATION 7-4

TYPE OF MATERIAL	THICKNESS OF MATERIAL (inches)											
	$1^1/_2$	2	$2^1/_2$	3	$3^1/_2$	4	$4^1/_2$	5	$5^1/_2$	6	$6^1/_2$	7
Siliceous aggregate concrete	5.3	6.5	8.1	9.5	11.3	13.0	14.9	16.9	18.8	20.7	22.8	25.1
Carbonate aggregate concrete	5.5	7.1	8.9	10.4	12.0	14.0	16.2	18.1	20.3	21.9	24.7	27.2[c]
Sand-lightweight concrete	6.5	8.2	10.5	12.8	15.5	18.1	20.7	23.3	26.0[c]	Note c	Note c	Note c
Lightweight concrete	6.6	8.8	11.2	13.7	16.5	19.1	21.9	24.7	27.8[c]	Note c	Note c	Note c
Insulating concrete[a]	9.3	13.3	16.6	18.3	23.1	26.5[c]	Note c	Note c	Note c	Note c	Note c	Note c
Airspace[b]	—	—	—	—	—	—	—	—	—	—	—	—

For SI: 1 inch = 25.4 mm, 1 pound per cubic foot = 16.02 kg/m^3.

a. Dry unit weight of 35 pcf or less and consisting of cellular, perlite or vermiculite concrete.

b. The $R_n^{0.59}$ value for one $^1/_2$" to $3^1/_2$" airspace is 3.3. The $R_n^{0.59}$ value for two $^1/_2$" to $3^1/_2$" airspaces is 6.7.

c. The *fire-resistance rating* for this thickness exceeds 4 hours.

TABLE 722.2.1.2(2)
FIRE-RESISTANCE RATINGS BASED ON $R^{0.59}$

R^a, MINUTES	$R^{0.59}$
60	11.20
120	16.85
180	21.41
240	25.37

INTERNATIONAL CODE COUNCIL®
Copyright © 2015 ICC. ALL RIGHTS RESERVED. Accessed by David Dammon on Jun 21, 2017 12:30:52 PM pursuant to License Agreement with ICC. No further reproduction or distribution authorized. ANY UNAUTHORIZED REPRODUCTION OR DISTRIBUTION IS A VIOLATION OF THE FEDERAL COPYRIGHT ACT AND THE LICENSE AGREEMENT, AND SUBJECT TO CIVIL AND CRIMINAL PENALTIES THEREUNDER.

compliance with the allowable percentage of openings in Table 705.8.

❖ See the commentary to Section 705.8.

722.2.1.3.1 Ceramic fiber joint protection. Figure 722.2.1.3.1 shows thicknesses of *ceramic fiber blankets* to be used to insulate joints between precast concrete wall panels for various panel thicknesses and for joint widths of $^3/_8$ inch (9.5 mm) and 1 inch (25 mm) for *fire-resistance ratings* of 1 hour to 4 hours. For joint widths between $^3/_8$ inch (9.5 mm) and 1 inch (25 mm), the thickness of *ceramic fiber blanket* is allowed to be determined by direct interpolation. Other tested and labeled materials are acceptable in place of *ceramic fiber blankets*.

❖ Code Figure 722.2.1.3.1 was derived from data in the report entitled "Fire Tests of Joints Between Precast Concrete Wall Units: Effect of Various Joint Treatments" in the *PCI Journal*.

EXAMPLE:

FIND: Determine the thickness of a ceramic fiber blanket needed for a 2-hour fire-resistance rating for joints between 5-inch-thick (127 mm) precast concrete wall panels made of siliceous aggregate concrete if the maximum joint width is $^7/_8$-inch (22.2 mm).

SOLUTION: Code Figure 722.2.1.3.1 indicates a minimum 0.7-inch (18 mm) thickness of ceramic fiber blanket for 5-inch (127 mm) panels for a 2-hour rating of a $^3/_4$-inch (19.5 mm) wide joint and 2.1 inches (53 mm) for a 1-inch (25 mm) wide joint. By interpolation, the thickness is computed as follows:

$t = 2.1 - (2.1 - 0.7)\ (1 - {}^7/_8) = 1.93$ inches

Therefore, the required thickness for a 2-hour rating is 1.93 inches (49 mm).

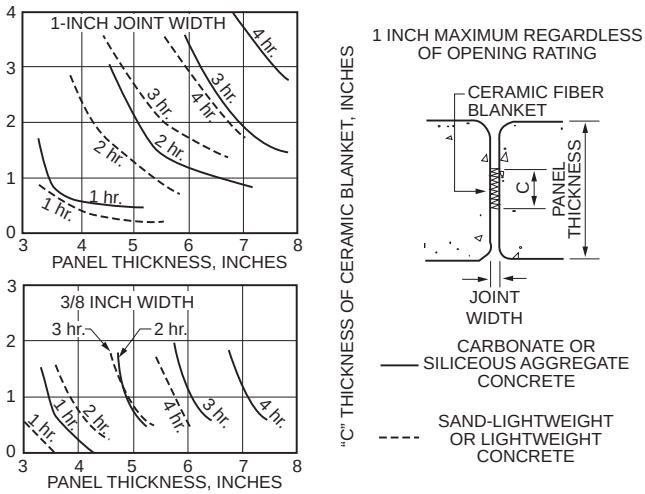

For SI: 1 inch = 25.4 mm.

FIGURE 722.2.1.3.1
CERAMIC FIBER JOINT PROTECTION

722.2.1.4 Walls with gypsum wallboard or plaster finishes. The *fire-resistance rating* of cast-in-place or precast concrete walls with finishes of gypsum wallboard or plaster applied to one or both sides shall be permitted to be calculated in accordance with the provisions of this section.

❖ The information contained in this section is based on fire endurance tests on unit masonry walls with gypsum wallboard and *The Supplement to the National Building Code of Canada 1980* (NRCC 17724) by the National Research Council of Canada.

For instance, a wall with a rating of 1 hour that has a 1-inch (25.4 mm) layer of portland cement-sand plaster applied on metal lath would add 30 minutes to the rating. Therefore, the fire-resistance rating would now be $1^1/_2$ hours.

722.2.1.4.1 Nonfire-exposed side. Where the finish of gypsum wallboard or plaster is applied to the side of the wall not exposed to fire, the contribution of the finish to the total *fire-resistance rating* shall be determined as follows: The thickness of the finish shall first be corrected by multiplying the actual thickness of the finish by the applicable factor determined from Table 722.2.1.4(1) based on the type of aggregate in the concrete. The corrected thickness of finish shall then be added to the actual or equivalent thickness of concrete and *fire-resistance rating* of the concrete and finish determined from Tables 722.2.1.1 and 722.2.1.2(1) and Figure 722.2.1.2.

❖ The fire resistance of concrete walls is generally determined by temperature rise on the unexposed surface (i.e., the heat transmission end point) (see commentary, Section 722.2.1.1). The time required to reach the heat transmission end point (fire-resistance rating) is primarily dependent upon the thickness of the concrete and the type of aggregate used to make the concrete. When additional finishes are applied to the unexposed side of the wall, the time required to reach the heat transmission end point is delayed and the fire-resistance rating of the wall is thus increased. The increase in the rating contributed by the finish can be determined by considering the finish as adding to the thickness of concrete. However, since the finish material and concrete may have different insulating properties, the actual thickness of the finish may need to be corrected to be compatible with the type of aggregate used in the concrete. The correction is made by multiplying the actual finish thickness by the factor determined from Table 722.2.1.4(1), and then adding the corrected thickness to the thickness of the concrete. This equivalent thickness is used to determine the fire-resistance rating from Table 722.2.1.1, Table 722.2.1.2(1) or Code Figure 722.21.2.

TABLE 722.2.1.4(1). See page 7-163.

❖ See the commentary to Section 722.2.1.4.1.

722.2.1.4.2 Fire-exposed side. Where gypsum wallboard or plaster is applied to the fire-exposed side of the wall, the contribution of the finish to the total *fire-resistance rating* shall be determined as follows: The time assigned to the finish as established by Table 722.2.1.4(2) shall be added to the *fire-*

INTERNATIONAL CODE COUNCIL®
Copyright © 2015 ICC. ALL RIGHTS RESERVED. Accessed by David Dammon on Jun 21, 2017 12:30:52 PM pursuant to License Agreement with ICC. No further reproduction or distribution authorized. ANY UNAUTHORIZED REPRODUCTION OR DISTRIBUTION IS A VIOLATION OF THE FEDERAL COPYRIGHT ACT AND THE LICENSE AGREEMENT, AND SUBJECT TO CIVIL AND CRIMINAL PENALTIES THEREUNDER.

resistance rating determined from Tables 722.2.1.1 and 722.2.1.2(1) and Figure 722.2.1.2 for the concrete alone, or to the rating determined in Section 722.2.1.4.1 for the concrete and finish on the nonfire-exposed side.

❖ Where finishes are added to the fire-exposed side of a concrete wall, their contribution to the total fire-resistance rating is based primarily upon the ability of the finish to remain in place, thus affording protection to the concrete wall. Table 722.2.1.4(2) lists the times that have been assigned to finishes on the fire-exposed side of the wall. These time-assigned values are based upon actual fire tests. The time-assigned values are added to the fire-resistance rating of the wall alone or to the rating determined for the wall and any finish on the unexposed side.

TABLE 722.2.1.4(2). See below.

❖ See the commentary to Section 722.2.1.4.2.

722.2.1.4.3 Nonsymmetrical assemblies. For a wall having no finish on one side or different types or thicknesses of finish on each side, the calculation procedures of Sections 722.2.1.4.1 and 722.2.1.4.2 shall be performed twice, assum-

TABLE 722.2.1.4(1)
MULTIPLYING FACTOR FOR FINISHES ON NONFIRE-EXPOSED SIDE OF WALL

TYPE OF FINISH APPLIED TO CONCRETE OR CONCRETE MASONRY WALL	TYPE OF AGGREGATE USED IN CONCRETE OR CONCRETE MASONRY			
	Concrete: siliceous or carbonate Concrete Masonry: siliceous or carbonate; solid clay brick	Concrete: sand-lightweight Concrete Masonry: clay tile; hollow clay brick; concrete masonry units of expanded shale and < 20% sand	Concrete: lightweight Concrete Masonry: concrete masonry units of expanded shale, expanded clay, expanded slag, or pumice < 20% sand	Concrete Masonry: concrete masonry units of expanded slag, expanded clay, or pumice
Portland cement-sand plaster	1.00	0.75[a]	0.75[a]	0.50[a]
Gypsum-sand plaster	1.25	1.00	1.00	1.00
Gypsum-vermiculite or perlite plaster	1.75	1.50	1.25	1.25
Gypsum wallboard	3.00	2.25	2.25	2.25

For SI: 1 inch = 25.4 mm.

a. For Portland cement-sand plaster $^5/_8$ inch or less in thickness and applied directly to the concrete or concrete masonry on the nonfire-exposed side of the wall, the multiplying factor shall be 1.00.

TABLE 722.2.1.4(2)
TIME ASSIGNED TO FINISH MATERIALS ON FIRE-EXPOSED SIDE OF WALL

FINISH DESCRIPTION	TIME (minutes)
Gypsum wallboard	
$^3/_8$ inch	10
$^1/_2$ inch	15
$^5/_8$ inch	20
2 layers of $^3/_8$ inch	25
1 layer of $^3/_8$ inch, 1 layer of $^1/_2$ inch	35
2 layers of $^1/_2$ inch	40
Type X gypsum wallboard	
$^1/_2$ inch	25
$^5/_8$ inch	40
Portland cement-sand plaster applied directly to concrete masonry	See Note a
Portland cement-sand plaster on metal lath	
$^3/_4$ inch	20
$^7/_8$ inch	25
1 inch	30
Gypsum sand plaster on $^3/_8$-inch gypsum lath	
$^1/_2$ inch	35
$^5/_8$ inch	40
$^3/_4$ inch	50
Gypsum sand plaster on metal lath	
$^3/_4$ inch	50
$^7/_8$ inch	60
1 inch	80

For SI: 1 inch = 25.4 mm.

a. The actual thickness of Portland cement-sand plaster, provided it is $^5/_8$ inch or less in thickness, shall be permitted to be included in determining the equivalent thickness of the masonry for use in Table 722.3.2.

INTERNATIONAL CODE COUNCIL®
Copyright © 2015 ICC. ALL RIGHTS RESERVED. Accessed by David Dammon on Jun 21, 2017 12:30:52 PM pursuant to License Agreement with ICC. No further reproduction or distribution authorized. ANY UNAUTHORIZED REPRODUCTION OR DISTRIBUTION IS A VIOLATION OF THE FEDERAL COPYRIGHT ACT AND THE LICENSE AGREEMENT, AND SUBJECT TO CIVIL AND CRIMINAL PENALTIES THEREUNDER.

ing either side of the wall to be the fire-exposed side. The *fire-resistance rating* of the wall shall not exceed the lower of the two values.

Exception: For an *exterior wall* with a *fire separation distance* greater than 5 feet (1524 mm) the fire shall be assumed to occur on the interior side only.

❖ Except for exterior walls having more than 5 feet (1524 mm) of horizontal separation, Section 705.5 requires that walls be rated for exposure to fire from both sides. Therefore, two calculations must be performed, on the assumption that each side of the wall is the fire-exposed side. Two calculations are not necessary for exterior walls with more than 5 feet (1524 mm) of horizontal separation or for other walls that are symmetrical (i.e., walls having the same type and thickness of finish on each side). The calculated fire-resistance rating of the wall is the lower of the two ratings determined, assuming that each side is the fire-exposed side.

722.2.1.4.4 Minimum concrete fire-resistance rating. Where finishes applied to one or both sides of a concrete wall contribute to the *fire-resistance rating*, the concrete alone shall provide not less than one-half of the total required *fire-resistance rating*. Additionally, the contribution to the *fire resistance* of the finish on the nonfire-exposed side of a *load-bearing wall* shall not exceed one-half the contribution of the concrete alone.

❖ Where gypsum wallboard or plaster finishes are applied to a concrete wall, the calculated fire-resistance rating for the concrete alone should not be less than one-half the required fire-resistance rating. This limitation is necessary to ensure that the concrete wall is of sufficient thickness to withstand fire exposure.

EXAMPLE:

GIVEN: An exterior bearing wall of a building of Type IB construction with 4 feet (1216 mm) of horizontal separation is required to have a 2-hour fire-resistance rating. The wall will be cast in place with siliceous aggregate concrete. The interior will be finished with a $^1/_2$-inch (12.7 mm) thickness of gypsum wallboard applied to steel furring members.

FIND: What is the minimum thickness of concrete required?

SOLUTION:

First calculation: Assume the interior to be the fire-exposed side.

1. From Table 722.2.1.4(2), the $^1/_2$-inch (12.7 mm) gypsum wallboard has a time-a.ssigned value of 15 minutes; therefore, the fire-resistance rating that must be developed by the concrete must not be less than $1^3/_4$ hours (2 hours - 15 minutes).
2. Since Table 722.2.1.1 does not include a minimum thickness requirement corresponding to $1^3/_4$ hours, direct interpolation between the values for $1^1/_2$ and 2 hours is acceptable. The interpolation results in a required thickness of 4.65 inches (118 mm) of concrete.

Second calculation: Assume the exterior to be the fire-exposed side.

1. From Table 722.2.1.4(1), the multiplying factor for gypsum wallboard and siliceous aggregate concrete is 1.25; therefore, the corrected thickness for $^1/_2$ inch (12.7 mm) of gypsum wallboard is 0.63 inch (16.02 mm) [1.25 inches (32 mm) × $^1/_2$ inch (12.7 mm)].
2. Table 722.2.1.1 requires 5 inches (127 mm) of siliceous aggregate concrete for a 2-hour fire-resistance rating. Therefore, the actual thickness of concrete required is 4.37 inches (111 mm) [5 inches (127 mm)–0.63 inches (16 mm)].
3. Since the thickness of concrete required when assuming the interior side to be the fire-exposed side is greater, the minimum concrete thickness required to achieve a 2-hour fire-resistance rating is 4.65 inches (118 mm).
4. Section 722.2.1.4.4 requires that the concrete alone provides no less than one-half the total required rating; thus, the concrete must provide at least a 1-hour rating. From Table 722.2.1.1, it can be seen that only 3.5 inches (89 mm) of siliceous aggregate concrete is required for 1 hour, whereas 4.65 inches (118 mm) will be provided.

❖ For a similar example problem, see the commentary to Section 722.3.2.4.

722.2.1.4.5 Concrete finishes. Finishes on concrete walls that are assumed to contribute to the total *fire-resistance rating* of the wall shall comply with the installation requirements of Section 722.3.2.5.

❖ See the commentary to Section 722.3.2.5.

722.2.2 Concrete floor and roof slabs. Reinforced and prestressed floors and roofs shall comply with Section 722.2.2.1. Multicourse floors and roofs shall comply with Sections 722.2.2.2 and 722.2.2.3, respectively.

❖ The fire test criteria for temperature rise of the unexposed surface and the ability to resist superimposed loads (heat transmission and structural criteria, respectively) must both be considered in determining the fire resistance of floors and roofs. Section 722.2.2 deals with heat transmission and Section 722.2.3 deals with structural criteria.

INTERNATIONAL CODE COUNCIL®
Copyright © 2015 ICC. ALL RIGHTS RESERVED. Accessed by David Dammon on Jun 21, 2017 12:30:52 PM pursuant to License Agreement with ICC. No further reproduction or distribution authorized. ANY UNAUTHORIZED REPRODUCTION OR DISTRIBUTION IS A VIOLATION OF THE FEDERAL COPYRIGHT ACT AND THE LICENSE AGREEMENT, AND SUBJECT TO CIVIL AND CRIMINAL PENALTIES THEREUNDER.

722.2.2.1 Reinforced and prestressed floors and roofs. The minimum thicknesses of reinforced and prestressed concrete floor or roof slabs for *fire-resistance ratings* of 1 hour to 4 hours are shown in Table 722.2.2.1.

Exception: Minimum thickness shall not be required for floors and ramps within open and enclosed parking garages constructed in accordance with Sections 406.5 and 406.6, respectively.

❖ The criterion limiting the average temperature rise to 250°F (121°C) and the maximum rise at one point to 325°F (163°C) is often referred to as the "heat transmission end point." For solid concrete slabs, the heat transmission end point is primarily a function of slab thickness and aggregate type. Other factors that affect heat transmission to a lesser degree are moisture content of the concrete, aggregate size, mortar content and air content. Factors that have very little effect on heat transmission are cement content and strength; type; amount and location of reinforcement, provided these items are within the normal range of usage. The values in Table 722.2.2.1 apply to concrete slabs reinforced with bars or welded wire fabric, as well as to prestressed slabs.

The exception recognizes that Section 712.1.10.1 permits floor openings for automobile ramps in open and enclosed parking garages without shaft enclosures. Further, Exception 5 of Section 715.1 does not require fire-resistant joint systems for floors and ramps within open and enclosed parking garages or structures. Referenced standard ACI 216.1-07, *Standard Method for Determining Fire Resistance of Concrete and Masonry Construction Assemblies,* states that the purpose of the minimum thickness requirements (Section 722.2.2.1) is for "barrier fire resistance." It can be concluded from Sections 712.1.10.1 and 715.1 that there is no intent of creating a fire barrier between floors and ramps in open and enclosed parking garages. Therefore, there is no logic in requiring a minimum thickness for floors and ramps of open and enclosed parking garages.

TABLE 722.2.2.1
MINIMUM SLAB THICKNESS (inches)

CONCRETE TYPE	FIRE-RESISTANCE RATING (hours)				
	1	1 1/2	2	3	4
Siliceous	3.5	4.3	5	6.2	7
Carbonate	3.2	4	4.6	5.7	6.6
Sand-lightweight	2.7	3.3	3.8	4.6	5.4
Lightweight	2.5	3.1	3.6	4.4	5.1

For SI: 1 inch = 25.4 mm.

❖ See the commentary to Section 722.2.2.1.

722.2.2.1.1 Hollow-core prestressed slabs. For hollow-core prestressed concrete slabs in which the cores are of constant cross section throughout the length, the equivalent thickness shall be permitted to be obtained by dividing the net cross-sectional area of the slab including grout in the joints, by its width.

❖ The method for determining equivalent thickness of masonry units was developed because the cores in masonry units taper. The method is, of course, also applicable to hollow-core precast concrete panels. However, because the cores in hollow-core panels do not taper, the equivalent thickness can be calculated by dividing the net cross-sectional area of the panel by its width.

722.2.2.1.2 Slabs with sloping soffits. The thickness of slabs with sloping soffits (see Figure 722.2.2.1.2) shall be determined at a distance $2t$ or 6 inches (152 mm), whichever is less, from the point of minimum thickness, where t is the minimum thickness.

❖ Some precast concrete wall panel sections (e.g., certain single-tee units) have tapered surfaces, so the thickness varies, as shown in Code Figure 722.2.2.1.2. In fire tests, it is customary to monitor the unexposed surface temperature at the location shown in the figure.

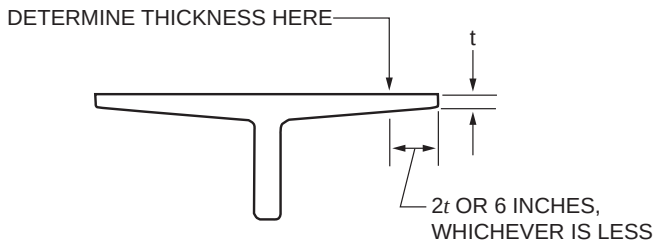

For SI: 1 inch = 25.4 mm.

FIGURE 722.2.2.1.2
DETERMINATION OF SLAB THICKNESS FOR SLOPING SOFFITS

722.2.2.1.3 Slabs with ribbed soffits. The thickness of slabs with ribbed or undulating soffits (see Figure 722.2.2.1.3) shall be determined by one of the following expressions, whichever is applicable:

For $s > 4t$, the thickness to be used shall be t

For $s \le 2t$, the thickness to be used shall be t_e

For $4t > s > 2t$, the thickness to be used shall be

$$t + \left(\frac{4t}{s} - 1\right)(t_e - t) \qquad \textbf{(Equation 7-5)}$$

where:

s = Spacing of ribs or undulations.

t = Minimum thickness.

t_e = Equivalent thickness of the slab calculated as the net area of the slab divided by the width, in which the

INTERNATIONAL CODE COUNCIL®
Copyright © 2015 ICC. ALL RIGHTS RESERVED. Accessed by David Dammon on Jun 21, 2017 12:30:52 PM pursuant to License Agreement with ICC. No further reproduction or distribution authorized. ANY UNAUTHORIZED REPRODUCTION OR DISTRIBUTION IS A VIOLATION OF THE FEDERAL COPYRIGHT ACT AND THE LICENSE AGREEMENT, AND SUBJECT TO CIVIL AND CRIMINAL PENALTIES THEREUNDER.

maximum thickness used in the calculation shall not exceed 2*t*.

❖ The portion of a ribbed slab that can be used in calculating equivalent thickness, t_e, is shown in code Figure 722.2.2.1.3. Note that the procedure does not give credit for joists in one- or two-way joisted floors or in double tees. For such sections, the minimum thickness of the deck slab must be used.

EXAMPLE:

FIND: Determine the fire-resistance rating of the floor section shown in Code Figure 722.2.2.1.3 if the units were made of siliceous aggregate concrete.

SOLUTION:

s = 12 inches.

t = 4 inches.

Therefore:

$4t > s > 2t$ (16 inches > 12 inches > 8 inches)

$$t_e = \frac{(4'')(12'') + (5'')(1.6'') + \left(\frac{1}{2}''\right)(1'')(1.6'')}{12''}$$

t_e = 4.8 inches < 2*t*.

Therefore the thickness to be used, t_s:

$$t_s = 4'' + \left(\frac{(4)(4'')}{12} - 1\right)(4.8'' - 4'')$$

t_s = 4.27 inches.

❖ From Table 722.2.2.1, using interpolation, the fire-resistance rating of the floor section shown is 1.48 hours or 1 hour, 29 minutes.

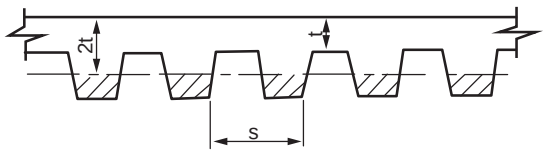

NEGLECT SHADED AREA IN CALCULATION OF EQUIVALENT THICKNESS

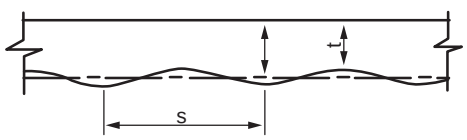

For SI: 1 inch = 25.4 mm.

FIGURE 722.2.2.1.3
SLABS WITH RIBBED OR UNDULATING SOFFITS

722.2.2.2 Multicourse floors. The *fire-resistance ratings* of floors that consist of a base slab of concrete with a topping (overlay) of a different type of concrete shall comply with Figure 722.2.2.2.

❖ The information in this section is based on the report entitled "Fire Endurance of Two-course Floors and Roofs" in the *ACI Journal*.

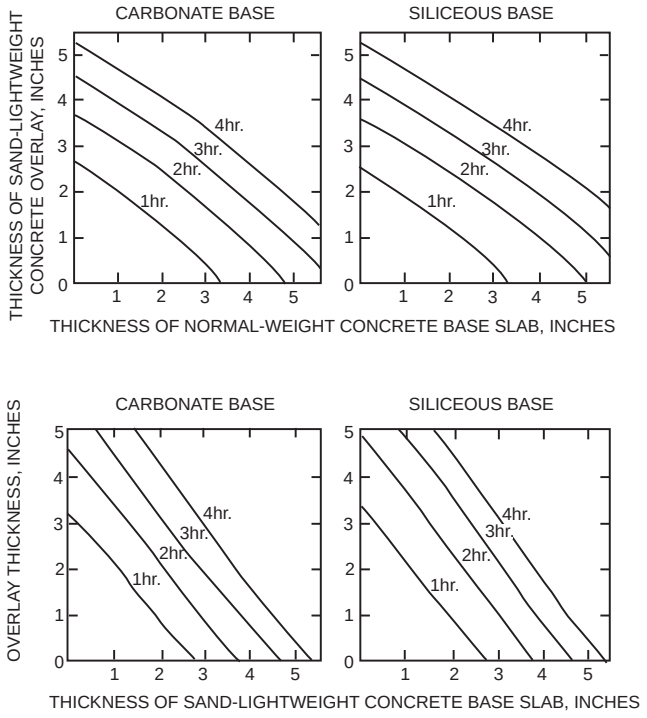

For SI: 1 inch = 25.4 mm.

FIGURE 722.2.2.2
FIRE-RESISTANCE RATINGS FOR TWO-COURSE CONCRETE FLOORS

722.2.2.3 Multicourse roofs. The *fire-resistance ratings* of roofs that consist of a base slab of concrete with a topping (overlay) of an insulating concrete or with an insulating board and built-up roofing shall comply with Figures 722.2.2.3(1) and 722.2.2.3(2).

❖ The information in this section is based on the report entitled "Fire Endurance of Two-course Floors and Roofs" in the *ACI Journal*.

722.2.2.3.1 Heat transfer. For the transfer of heat, three-ply built-up roofing contributes 10 minutes to the *fire-resistance rating*. The *fire-resistance rating* for concrete assemblies such as those shown in Figure 722.2.2.3(1) shall be increased by 10 minutes. This increase is not applicable to those shown in Figure 722.2.2.3(2).

❖ See the commentary to Section 722.2.2.3.

722.2.2.4 Joints in precast slabs. Joints between adjacent precast concrete slabs need not be considered in calculating the slab thickness provided that a concrete topping not less than 1 inch (25 mm) thick is used. Where no concrete topping

INTERNATIONAL CODE COUNCIL®
Copyright © 2015 ICC. ALL RIGHTS RESERVED. Accessed by David Dammon on Jun 21, 2017 12:30:52 PM pursuant to License Agreement with ICC. No further reproduction or distribution authorized. ANY UNAUTHORIZED REPRODUCTION OR DISTRIBUTION IS A VIOLATION OF THE FEDERAL COPYRIGHT ACT AND THE LICENSE AGREEMENT, AND SUBJECT TO CIVIL AND CRIMINAL PENALTIES THEREUNDER.

is used, joints must be grouted to a depth of not less than one-third the slab thickness at the joint, but not less than 1 inch (25 mm), or the joints must be made fire resistant by other *approved* methods.

❖ Based on data developed by UL, where a concrete topping is not used over precast concrete floors, joints must be grouted. If a concrete topping at least 1 inch thick (25 mm) is used, the joints need not be grouted.

722.2.3 Concrete cover over reinforcement. The minimum thickness of concrete cover over reinforcement in concrete slabs, reinforced beams and prestressed beams shall comply with this section.

❖ See the commentary to Sections 722.2.3.1, 722.2.3.2 and 722.2.3.3.

722.2.3.1 Slab cover. The minimum thickness of concrete cover to the positive moment reinforcement shall comply with Table 722.2.3(1) for reinforced concrete and Table 722.2.3(2) for prestressed concrete. These tables are applicable for solid or hollow-core one-way or two-way slabs with flat undersurfaces. These tables are applicable to slabs that are either cast in place or precast. For precast prestressed concrete not covered elsewhere, the procedures contained in PCI MNL 124 shall be acceptable.

❖ The temperature of the tensile reinforcement depends on the thickness of cover and aggregate type. For unrestrained slabs, the values shown in Tables 722.2.3(1) and 722.2.3(2) are the cover thickness needed to keep the tensile reinforcement below 1,100°F (593°C) and 800°F (427°C), respectively. For restrained slabs, the temperature of the tensile reinforcement is not as critical, and thus, a minimum cover of $^3/_4$ inch (19.5 mm) is specified in PCA Bulletin 223, "Fire Endurance of Concrete Slabs as Influenced by Thickness, Aggregate Type and Moisture."

TABLE 722.2.3(1). See page 7-168.

❖ See the commentary to Section 722.2.3.1.

TABLE 722.2.3(2). See page 7-168.

❖ See the commentary to Section 722.2.3.1.

TABLE 722.2.3(3). See page 7-168.

❖ See the commentary to Section 722.2.3.2.

TABLE 722.2.3(4). See page 7-168.

❖ See the commentary to Section 722.2.3.2.

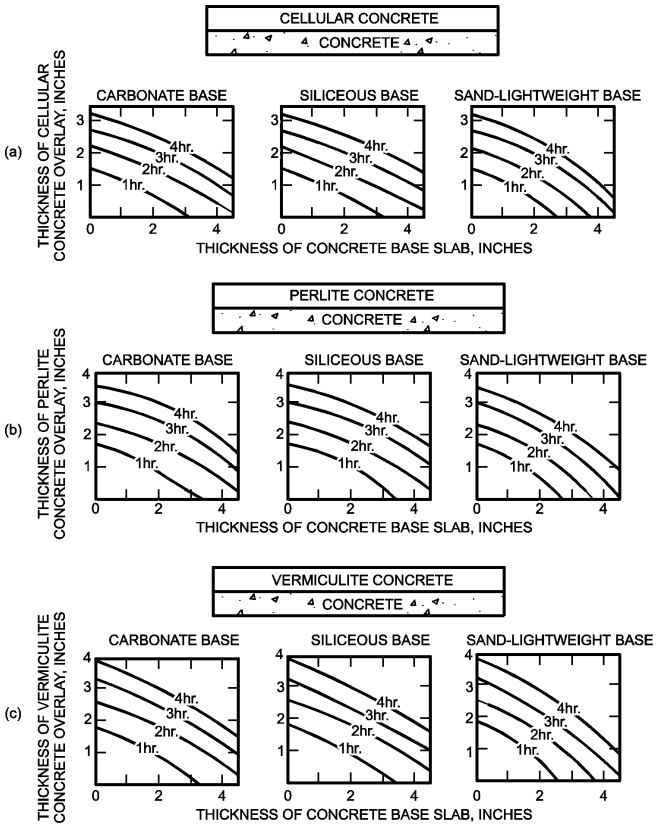

For SI: 1 inch = 25.4 mm.

FIGURE 722.2.2.3(1)
FIRE-RESISTANCE RATINGS FOR CONCRETE ROOF ASSEMBLIES

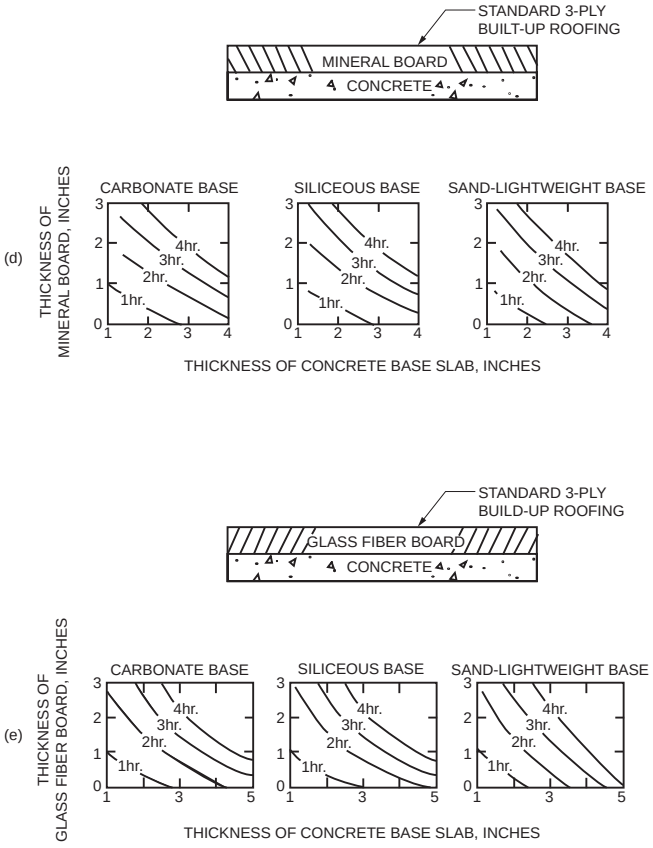

For SI: 1 inch = 25.4 mm.

FIGURE 722.2.2.3(2)
FIRE-RESISTANCE RATINGS FOR CONCRETE ROOF ASSEMBLIES

INTERNATIONAL CODE COUNCIL®
Copyright © 2015 ICC. ALL RIGHTS RESERVED. Accessed by David Dammon on Jun 21, 2017 12:30:52 PM pursuant to License Agreement with ICC. No further reproduction or distribution authorized. ANY UNAUTHORIZED REPRODUCTION OR DISTRIBUTION IS A VIOLATION OF THE FEDERAL COPYRIGHT ACT AND THE LICENSE AGREEMENT, AND SUBJECT TO CIVIL AND CRIMINAL PENALTIES THEREUNDER.

TABLE 722.2.3(1)
COVER THICKNESS FOR REINFORCED CONCRETE FLOOR OR ROOF SLABS (inches)

CONCRETE AGGREGATE TYPE	FIRE-RESISTANCE RATING (hours)									
	Restrained					Unrestrained				
	1	1 1/2	2	3	4	1	1 1/2	2	3	4
Siliceous	3/4	3/4	3/4	3/4	3/4	3/4	3/4	1	1 1/4	1 5/8
Carbonate	3/4	3/4	3/4	3/4	3/4	3/4	3/4	3/4	1 1/4	1 1/4
Sand-lightweight or lightweight	3/4	3/4	3/4	3/4	3/4	3/4	3/4	3/4	1 1/4	1 1/4

For SI: 1 inch = 25.4 mm.

TABLE 722.2.3(2)
COVER THICKNESS FOR PRESTRESSED CONCRETE FLOOR OR ROOF SLABS (inches)

CONCRETE AGGREGATE TYPE	FIRE-RESISTANCE RATING (hours)									
	Restrained					Unrestrained				
	1	1 1/2	2	3	4	1	1 1/2	2	3	4
Siliceous	3/4	3/4	3/4	3/4	3/4	1 1/8	1 1/2	1 3/4	2 3/8	2 3/4
Carbonate	3/4	3/4	3/4	3/4	3/4	1	1 3/8	1 5/8	2 1/8	2 1/4
Sand-lightweight or lightweight	3/4	3/4	3/4	3/4	3/4	1	1 3/8	1 1/2	2	2 1/4

For SI: 1 inch = 25.4 mm.

TABLE 722.2.3(3)
MINIMUM COVER FOR MAIN REINFORCING BARS OF REINFORCED CONCRETE BEAMS[c]
(APPLICABLE TO ALL TYPES OF STRUCTURAL CONCRETE)

RESTRAINED OR UNRESTRAINED[a]	BEAM WIDTH[b](inches)	FIRE-RESISTANCE RATING (hours)				
		1	1 1/2	2	3	4
Restrained	5	3/4	3/4	3/4	1[a]	1 1/4[a]
	7	3/4	3/4	3/4	3/4	3/4
	≥ 10	3/4	3/4	3/4	3/4	3/4
Unrestrained	5	3/4	1	1 1/4	—	—
	7	3/4	3/4	3/4	1 3/4	3
	≥ 10	3/4	3/4	3/4	1	1 3/4

For SI: 1 inch = 25.4 mm, 1 foot = 304.8 mm.

a. Tabulated values for restrained assemblies apply to beams spaced more than 4 feet on center. For restrained beams spaced 4 feet or less on center, minimum cover of 3/4 inch is adequate for ratings of 4 hours or less.

b. For beam widths between the tabulated values, the minimum cover thickness can be determined by direct interpolation.

c. The cover for an individual reinforcing bar is the minimum thickness of concrete between the surface of the bar and the fire-exposed surface of the beam. For beams in which several bars are used, the cover for corner bars used in the calculation shall be reduced to one-half of the actual value. The cover for an individual bar must be not less than one-half of the value given in Table 722.2.3(3) nor less than 3/4 inch.

TABLE 722.2.3(4)
MINIMUM COVER FOR PRESTRESSED CONCRETE BEAMS 8 INCHES OR GREATER IN WIDTH[b]

RESTRAINED OR UNRESTRAINED[a]	CONCRETE AGGREGATE TYPE	BEAM WIDTH (inches)	FIRE-RESISTANCE RATING (hours)				
			1	1 1/2	2	3	4
Restrained	Carbonate or siliceous	8	1 1/2	1 1/2	1 1/2	1 3/4[a]	2 1/2[a]
	Carbonate or siliceous	≥ 12	1 1/2	1 1/2	1 1/2	1 1/2	1 7/8[a]
	Sand lightweight	8	1 1/2	1 1/2	1 1/2	1 1/2	2[a]
	Sand lightweight	≥ 12	1 1/2	1 1/2	1 1/2	1 1/2	1 5/8[a]
Unrestrained	Carbonate or siliceous	8	1 1/2	1 3/4	2 1/2	5[c]	—
	Carbonate or siliceous	≥ 12	1 1/2	1 1/2	1 7/8[a]	2 1/2	3
	Sand lightweight	8	1 1/2	1 1/2	2	3 1/4	—
	Sand lightweight	≥ 12	1 1/2	1 1/2	1 5/8	2	2 1/2

For SI: 1 inch = 25.4 mm, 1 foot = 304.8 mm.

a. Tabulated values for restrained assemblies apply to beams spaced more than 4 feet on center. For restrained beams spaced 4 feet or less on center, minimum cover of 3/4 inch is adequate for 4-hour ratings or less.

b. For beam widths between 8 inches and 12 inches, minimum cover thickness can be determined by direct interpolation.

c. Not practical for 8-inch-wide beam but shown for purposes of interpolation.

INTERNATIONAL CODE COUNCIL®
Copyright © 2015 ICC. ALL RIGHTS RESERVED. Accessed by David Dammon on Jun 21, 2017 12:30:52 PM pursuant to License Agreement with ICC. No further reproduction or distribution authorized. ANY UNAUTHORIZED REPRODUCTION OR DISTRIBUTION IS A VIOLATION OF THE FEDERAL COPYRIGHT ACT AND THE LICENSE AGREEMENT, AND SUBJECT TO CIVIL AND CRIMINAL PENALTIES THEREUNDER.

TABLE 722.2.3(5). See below.

❖ See the commentary to Section 722.2.3.2.

722.2.3.2 Reinforced beam cover. The minimum thickness of concrete cover to the positive moment reinforcement (bottom steel) for reinforced concrete beams is shown in Table 722.2.3(3) for *fire-resistance ratings* of 1 hour to 4 hours.

❖ For reinforced concrete beams, the critical steel temperature is 1,100°F (593°C), so the effect of aggregate type is minimal. For prestressed concrete, the comparable temperature is 800°F (427°C), so aggregate type must be considered. The data in Tables 722.2.3(3) and 722.2.3(4) were derived from the fire tests of a series of beam specimens that ranged in width between 2 and 24 inches (51 and 607 mm). Other variables in the series included aggregate type and amount of reinforcement. Tests were conducted at the PCA. The results of the fire tests of beams conducted at UL were also analyzed. Charts showing the resulting data are shown in Figure A4 of PCI Manual 124, *Design for Fire Resistance of Precast Prestressed Concrete*.

722.2.3.3 Prestressed beam cover. The minimum thickness of concrete cover to the positive moment prestressing tendons (bottom steel) for restrained and unrestrained prestressed concrete beams and stemmed units shall comply with the values shown in Tables 722.2.3(4) and 722.2.3(5) for *fire-resistance ratings* of 1 hour to 4 hours. Values in Table 722.2.3(4) apply to beams 8 inches (203 mm) or greater in width. Values in Table 722.2.3(5) apply to beams or stems of any width, provided the cross-section area is not less than 40 square inches (25 806 mm^2). In case of differences between the values determined from Table 722.2.3(4) or 722.2.3(5), it is permitted to use the smaller value. The concrete cover shall be calculated in accordance with Section 722.2.3.3.1. The minimum concrete cover for nonprestressed reinforcement in prestressed concrete beams shall comply with Section 722.2.3.2.

❖ See the commentary to Section 721.2.3.2.

722.2.3.3.1 Calculating concrete cover. The concrete cover for an individual tendon is the minimum thickness of concrete between the surface of the tendon and the fire-exposed surface of the beam, except that for ungrouted ducts, the assumed cover thickness is the minimum thickness of concrete between the surface of the duct and the fire-exposed surface of the beam. For beams in which two or more tendons are used, the cover is assumed to be the average of the minimum cover of the individual tendons. For corner tendons (tendons equal distance from the bottom and side), the minimum cover used in the calculation shall be one-half the actual value. For stemmed members with two or more prestressing tendons located along the vertical centerline of the stem, the average cover shall be the distance from the bottom of the member to the centroid of the tendons. The actual cover for any individual tendon shall be not less than one-half the smaller value shown in Tables 722.2.3(4) and 722.2.3(5), or 1 inch (25 mm), whichever is greater.

722.2.4 Concrete columns. Concrete columns shall comply with this section.

❖ Most building code provisions for reinforced concrete columns are based on two reports: "Fire Tests of Building Columns" by the Associated Factory Mutual Insurance Companies and "Fire Resistance of Concrete Columns" by the NBS. Sizes of the tested columns were 12 inches (305 mm), 16 inches (406 mm) and 18 inches (457 mm). Nearly all of the columns withstood 4-hour fire tests that were essentially conducted in accordance with ASTM E119 or UL 263. Most of the tests were stopped after 4 hours, but some were continued to 8 hours. The shortest duration was 3 hours. At the time of the tests few, if any, concrete columns were smaller than 12 inches (305 mm), but smaller columns have been in use for many years since then.

Fire tests conducted in Europe on smaller columns indicate that fire endurance is greater for larger columns.

TABLE 722.2.3(5)
MINIMUM COVER FOR PRESTRESSED CONCRETE BEAMS OF ALL WIDTHS

RESTRAINED OR UNRESTRAINED[a]	CONCRETE AGGREGATE TYPE	BEAM AREA[b] A (square inches)	FIRE-RESISTANCE RATING (hours)				
			1	1 1/2	2	3	4
Restrained	All	40 ≤ A ≤ 150	1 1/2	1 1/2	2	2 1/2	—
	Carbonate or siliceous	150 < A ≤ 300	1 1/2	1 1/2	1 1/2	1 3/4	2 1/2
		300 < A	1 1/2	1 1/2	1 1/2	1 1/2	2
	Sand lightweight	150 < A	1 1/2	1 1/2	1 1/2	1 1/2	2
Unrestrained	All	40 ≤ A ≤ 150	2	2 1/2	—	—	—
	Carbonate or siliceous	150 < A ≤ 300	1 1/2	1 3/4	2 1/2	—	—
		300 < A	1 1/2	1 1/2	2	3[c]	4[c]
	Sand lightweight	150 < A	1 1/2	1 1/2	2	3[c]	4[c]

For SI: 1 inch = 25.4 mm, 1 foot = 304.8 mm.

a. Tabulated values for restrained assemblies apply to beams spaced more than 4 feet on center. For restrained beams spaced 4 feet or less on center, minimum cover of 3/4 inch is adequate for 4-hour ratings or less.

b. The cross-sectional area of a stem is permitted to include a portion of the area in the flange, provided the width of the flange used in the calculation does not exceed three times the average width of the stem.

c. U-shaped or hooped stirrups spaced not to exceed the depth of the member and having a minimum cover of 1 inch shall be provided.

INTERNATIONAL CODE COUNCIL®
Copyright © 2015 ICC. ALL RIGHTS RESERVED. Accessed by David Dammon on Jun 21, 2017 12:30:52 PM pursuant to License Agreement with ICC. No further reproduction or distribution authorized. ANY UNAUTHORIZED REPRODUCTION OR DISTRIBUTION IS A VIOLATION OF THE FEDERAL COPYRIGHT ACT AND THE LICENSE AGREEMENT, AND SUBJECT TO CIVIL AND CRIMINAL PENALTIES THEREUNDER.

722.2.4.1 Minimum size. The minimum overall dimensions of reinforced concrete columns for *fire-resistance ratings* of 1 hour to 4 hours for exposure to fire on all sides shall comply with this section.

❖ Column requirements are based on provisions in ACI 216.1-07/TMS 0216.1-07, *Code Requirements for Determining Fire Resistance of Concrete and Masonry Construction Assemblies*, the successor to ACI 216.1-97/TMS 0216.1-97.

722.2.4.1.1 Concrete strength less than or equal to 12,000 psi. For columns made with concrete having a specified compressive strength, f'_c, of less than or equal to 12,000 psi (82.7 MPa), the minimum dimension shall comply with Table 722.2.4.

❖ For concrete with compressive strength less than 12,000 psi (82.7 MPa), the minimum dimensions necessary to achieve certain fire-resistance ratings are given by Table 722.2.4. Concrete compressive strengths used in building construction are normally in the range of 4,000 to 6,000 psi (27.6 to 41.4 MPa) so this section and Table 722.2.4 are operative most of the time in determining fire-resistance ratings for concrete.

TABLE 722.2.4
MINIMUM DIMENSION OF CONCRETE COLUMNS (inches)

TYPES OF CONCRETE	FIRE-RESISTANCE RATING (hours)				
	1	1 1/2	2[a]	3[a]	4[b]
Siliceous	8	9	10	12	14
Carbonate	8	9	10	11	12
Sand-lightweight	8	8 1/2	9	10 1/2	12

For SI: 1 inch = 25 mm.

a. The minimum dimension is permitted to be reduced to 8 inches for rectangular columns with two parallel sides not less than 36 inches in length.

b. The minimum dimension is permitted to be reduced to 10 inches for rectangular columns with two parallel sides not less than 36 inches in length.

❖ Table 722.2.4 reflects the information cited in the reports listed in the commentary to Section 722.2.4 and in the report "Investigations on Building Fires, Part VI: Fire Resistance of Reinforced Concrete Columns" in the National Building Studies Research Paper No. 18. This table is for columns that may be exposed to fire on all sides. Notes a and b to Table 722.2.4 permit a smaller minimum dimension for columns than required in the table, provided the longer dimension of the column is at least 36 inches (914 mm).

722.2.4.1.2 Concrete strength greater than 12,000 psi. For columns made with concrete having a specified compressive strength, f'_c, greater than 12,000 psi (82.7 MPa), for *fire-resistance ratings* of 1 hour to 4 hours the minimum dimension shall be 24 inches (610 mm).

❖ Concrete with a compressive strength greater than 12,000 psi (82.7 MPa) is very rarely used in building construction. The concrete is very stiff, with a very low water-to-cement ratio, and therefore is very difficult to work with. Because it contains very small air pockets and voids, the material conducts heat relatively quickly when compared to more common concrete with compressive strengths in the 4,000 to 6,000 psi (27.6 to 41.4 MPa) range. Therefore, the minimum thickness necessary to achieve a fire-resistance rating of 1 to 4 hours is considerably higher.

722.2.4.2 Minimum cover for R/C columns. The minimum thickness of concrete cover to the main longitudinal reinforcement in columns, regardless of the type of aggregate used in the concrete and the specified compressive strength of concrete, f'_c, shall be not less than 1 inch (25 mm) times the number of hours of required *fire resistance* or 2 inches (51 mm), whichever is less.

❖ The minimum concrete cover refers to the main longitudinal reinforcement, not ties or spirals.

722.2.4.3 Tie and spiral reinforcement. For concrete columns made with concrete having a specified compressive strength, f'_c, greater than 12,000 psi (82.7 MPa), tie and spiral reinforcement shall comply with the following:

1. The free ends of rectangular ties shall terminate with a 135-degree (2.4 rad) standard tie hook.
2. The free ends of circular ties shall terminate with a 90-degree (1.6 rad) standard tie hook.
3. The free ends of spirals, including at lap splices, shall terminate with a 90-degree (1.6 rad) standard tie hook.

The hook extension at the free end of ties and spirals shall be the larger of six bar diameters and the extension required by Section 7.1.3 of ACI 318. Hooks shall project into the core of the column.

❖ The intent of the provisions in this section is to prevent ties or spirals from disengaging from the longitudinal reinforcement should the concrete cover over the ties or spirals be lost during a fire. The section expands on the provisions found in ACI 216.1/TMS 0216.1 by addressing spiral reinforcement, which is typically used for lateral reinforcement in round columns.

722.2.4.4 Columns built into walls. The minimum dimensions of Table 722.2.4 do not apply to a reinforced concrete column that is built into a concrete or masonry wall provided all of the following are met:

1. The *fire-resistance rating* for the wall is equal to or greater than the required rating of the column;
2. The main longitudinal reinforcing in the column has cover not less than that required by Section 722.2.4.2; and
3. Openings in the wall are protected in accordance with Table 716.5.

Where openings in the wall are not protected as required by Section 716.5, the minimum dimension of columns required to have a *fire-resistance rating* of 3 hours or less shall be 8 inches (203 mm), and 10 inches (254 mm) for col-

INTERNATIONAL CODE COUNCIL®
Copyright © 2015 ICC. ALL RIGHTS RESERVED. Accessed by David Dammon on Jun 21, 2017 12:30:52 PM pursuant to License Agreement with ICC. No further reproduction or distribution authorized. ANY UNAUTHORIZED REPRODUCTION OR DISTRIBUTION IS A VIOLATION OF THE FEDERAL COPYRIGHT ACT AND THE LICENSE AGREEMENT, AND SUBJECT TO CIVIL AND CRIMINAL PENALTIES THEREUNDER.

umns required to have a *fire-resistance rating* of 4 hours, regardless of the type of aggregate used in the concrete.

❖ Table 722.2.4 does not apply to columns built into concrete or masonry walls that meet all three of the conditions in this section.

722.2.4.5 Precast cover units for steel columns. See Section 722.5.1.4.

❖ See the commentary to Section 722.5.1.4.

722.3 Concrete masonry. The provisions of this section contain procedures by which the *fire-resistance ratings* of concrete masonry are established by calculations.

❖ See the commentary to Section 722.

722.3.1 Equivalent thickness. The equivalent thickness of concrete masonry construction shall be determined in accordance with the provisions of this section.

❖ See the commentary to Section 722.

722.3.1.1 Concrete masonry unit plus finishes. The equivalent thickness of concrete masonry assemblies, T_{ea}, shall be computed as the sum of the equivalent thickness of the concrete masonry unit, T_e, as determined by Section 722.3.1.2, 722.3.1.3 or 722.3.1.4, plus the equivalent thickness of finishes, T_{ef}, determined in accordance with Section 722.3.2:

$$T_{ea} = T_e + T_{ef} \qquad \textbf{(Equation 7-6)}$$

❖ See the commentary to Section 722.

722.3.1.2 Ungrouted or partially grouted construction. T_e shall be the value obtained for the concrete masonry unit determined in accordance with ASTM C140.

❖ See the commentary to Section 722.

722.3.1.3 Solid grouted construction. The equivalent thickness, T_e, of solid grouted concrete masonry units is the actual thickness of the unit.

❖ See the commentary to Section 722.

722.3.1.4 Airspaces and cells filled with loose-fill material. The equivalent thickness of completely filled hollow concrete masonry is the actual thickness of the unit where loose-fill materials are: sand, pea gravel, crushed stone, or slag that meet ASTM C33 requirements; pumice, scoria, expanded shale, expanded clay, expanded slate, expanded slag, expanded fly ash, or cinders that comply with ASTM C331; or perlite or vermiculite meeting the requirements of ASTM C549 and ASTM C516, respectively.

❖ See the commentary to Section 722.

722.3.2 Concrete masonry walls. The *fire-resistance rating* of walls and partitions constructed of concrete masonry units shall be determined from Table 722.3.2. The rating shall be based on the equivalent thickness of the masonry and type of aggregate used.

❖ It has been accepted practice to determine the fire-resistance rating of concrete masonry walls based on the type of aggregate used to manufacture them and the equivalent thickness of solid material in the wall. Equivalent thicknesses shown in Table 722.3.2 have been developed and refined through actual fire testing.

To determine the minimum equivalent thickness, Section 722.3.1.2 references ASTM C140.

EXAMPLE:

FIND: Determine the equivalent thickness of a standard 8-inch by 8-inch by 16-inch (203 mm by 203 mm by 406 mm) concrete masonry unit. The unit is normal weight with sand and gravel aggregate.

SOLUTION: The equivalent thickness is actually the average thickness of the solid material in the unit. The equivalent thickness is determined by the following:

$$T_e = 1728\,A/(L \times H)$$

where:

T_e = Equivalent thickness, in.

A = Net volume of unit, ft^3.

L = Length of unit, in.

H = Height of unit, in.

Net volume, A, is determined by the following equation:

$$A = C/D$$

where:

C = Dry weight of unit, pounds.

D = Density of unit, pounds per cubic foot.

From data furnished by the manufacturer, the dry unit weight is 44 pounds (20 kg) and the density is 135 pounds per cubic foot (pcf) (2115 kg/m^2).

$$T_e = \frac{(1,728\ \text{in.}^3/\text{ft.}^3)(0.326\ \text{ft.}^3)}{(15.625\ \text{in.})(7.625\ \text{in.})}$$

T_e = 4.73 inches (120 mm).

The fire-resistance rating for this type of unit with siliceous gravel aggregate can now be determined from Table 722.3.2. In this case, the fire-resistance rating will fall between 2.25 and 2.5 hours.

TABLE 722.3.2. See page 7-172.

❖ See the commentary to Section 722.3.2.

722.3.2.1 Finish on nonfire-exposed side. Where plaster or gypsum wallboard is applied to the side of the wall not exposed to fire, the contribution of the finish to the total *fire-resistance rating* shall be determined as follows: The thickness of gypsum wallboard or plaster shall be corrected by multiplying the actual thickness of the finish by applicable factor determined from Table 722.2.1.4(1). This corrected thickness of finish shall be added to the equivalent thickness of masonry and the *fire-resistance rating* of the masonry and finish determined from Table 722.3.2.

❖ The information contained in this section is based on *Fire Endurance Tests on Unit Masonry Walls with Gypsum Wallboard* and *The Supplement to the*

INTERNATIONAL CODE COUNCIL®
Copyright © 2015 ICC. ALL RIGHTS RESERVED. Accessed by David Dammon on Jun 21, 2017 12:30:52 PM pursuant to License Agreement with ICC. No further reproduction or distribution authorized. ANY UNAUTHORIZED REPRODUCTION OR DISTRIBUTION IS A VIOLATION OF THE FEDERAL COPYRIGHT ACT AND THE LICENSE AGREEMENT, AND SUBJECT TO CIVIL AND CRIMINAL PENALTIES THEREUNDER.

TABLE 722.3.2
MINIMUM EQUIVALENT THICKNESS (inches) OF BEARING OR NONBEARING CONCRETE MASONRY WALLS[a,b,c,d]

TYPE OF AGGREGATE	FIRE-RESISTANCE RATING (hours)														
	1/2	3/4	1	1 1/4	1 1/2	1 3/4	2	2 1/4	2 1/2	2 3/4	3	3 1/4	3 1/2	3 3/4	4
Pumice or expanded slag	1.5	1.9	2.1	2.5	2.7	3.0	3.2	3.4	3.6	3.8	4.0	4.2	4.4	4.5	4.7
Expanded shale, clay or slate	1.8	2.2	2.6	2.9	3.3	3.4	3.6	3.8	4.0	4.2	4.4	4.6	4.8	4.9	5.1
Limestone, cinders or unexpanded slag	1.9	2.3	2.7	3.1	3.4	3.7	4.0	4.3	4.5	4.8	5.0	5.2	5.5	5.7	5.9
Calcareous or siliceous gravel	2.0	2.4	2.8	3.2	3.6	3.9	4.2	4.5	4.8	5.0	5.3	5.5	5.8	6.0	6.2

For SI: 1 inch = 25.4 mm.

a. Values between those shown in the table can be determined by direct interpolation.

b. Where combustible members are framed into the wall, the thickness of solid material between the end of each member and the opposite face of the wall, or between members set in from opposite sides, shall be not less than 93 percent of the thickness shown in the table.

c. Requirements of ASTM C55, ASTM C73, ASTM C90 or ASTM C744 shall apply.

d. Minimum required equivalent thickness corresponding to the hourly *fire-resistance rating* for units with a combination of aggregate shall be determined by linear interpolation based on the percent by volume of each aggregate used in manufacture.

National Building Code of Canada 1980 by the National Research Council of Canada.

The fire resistance of concrete masonry walls is generally determined by temperature rise on the unexposed surface (i.e., the "heat transmission" end point). The time required to reach the heat transmission end point (fire-resistance rating) is primarily dependent upon the equivalent thickness of the masonry and the type of aggregate used to make the concrete. When additional finishes are applied to the unexposed side of the wall, the time required to reach the heat transmission end point is delayed; thus, the fire-resistance rating of the wall is increased. The increase in the rating contributed by the finish can be determined by considering the finish as an addition to the equivalent thickness of masonry. However, since the finish material and masonry may have different insulating properties, the actual thickness of the finish must be multiplied by a correction factor to be compatible with the type of aggregate used in the concrete. The correction is made by multiplying the actual finish thickness by the factor determined from Table 722.2.1.4(1), then adding the modified thickness to the equivalent thickness of masonry. This combined equivalent thickness is used to determine the fire-resistance rating from Table 722.3.2.

722.3.2.2 Finish on fire-exposed side. Where plaster or gypsum wallboard is applied to the fire-exposed side of the wall, the contribution of the finish to the total *fire-resistance rating* shall be determined as follows: The time assigned to the finish as established by Table 722.2.1.4(2) shall be added to the *fire-resistance rating* determined in Section 722.3.2 for the masonry alone, or in Section 722.3.2.1 for the masonry and finish on the nonfire-exposed side.

❖ Where finishes are added to the fire-exposed side of a concrete masonry wall, their contribution to the total fire-resistance rating is based primarily upon their ability to remain in place, thus affording protection to the masonry wall. Table 722.2.1.4(2) lists the times that have been assigned to finishes on the fire-exposed side of the wall. These time-assigned values are based upon actual fire tests. The time-assigned values are added to the fire-resistance rating of the wall alone or to the rating determined for the wall and any finish on the unexposed side.

722.3.2.3 Nonsymmetrical assemblies. For a wall having no finish on one side or having different types or thicknesses of finish on each side, the calculation procedures of this section shall be performed twice, assuming either side of the wall to be the fire-exposed side. The *fire-resistance rating* of the wall shall not exceed the lower of the two values calculated.

Exception: For *exterior walls* with a *fire separation distance* greater than 5 feet (1524 mm), the fire shall be assumed to occur on the interior side only.

❖ Except for exterior walls having more than 5 feet (1524 mm) of FSD, Section 704.5 requires that walls be rated for exposure to fire from both sides. Therefore, two calculations must be performed, on the assumption that each side is the fire-exposed side. Two calculations are not necessary for exterior walls with an FSD of more than 5 feet (1524 mm) or for other walls that are symmetrical (i.e., walls having the same type and thickness of finish on each side). The calculated fire-resistance rating must not exceed the lower of the two ratings determined, assuming that each side is the fire-exposed side.

722.3.2.4 Minimum concrete masonry fire-resistance rating. Where the finish applied to a concrete masonry wall contributes to its *fire-resistance rating*, the masonry alone shall provide not less than one-half the total required *fire-resistance rating*.

❖ Where gypsum wallboard or plaster finishes are applied to a concrete masonry wall, the calculated fire-resistance rating for the concrete alone should be not less than one-half the required fire-resistance rating. This limitation is necessary to ensure that the masonry wall is of sufficient thickness to withstand fire exposure.

EXAMPLE:

GIVEN: A wall required to have a 4-hour fire-resistance rating will be constructed with concrete

INTERNATIONAL CODE COUNCIL®
Copyright © 2015 ICC. ALL RIGHTS RESERVED. Accessed by David Dammon on Jun 21, 2017 12:30:52 PM pursuant to License Agreement with ICC. No further reproduction or distribution authorized. ANY UNAUTHORIZED REPRODUCTION OR DISTRIBUTION IS A VIOLATION OF THE FEDERAL COPYRIGHT ACT AND THE LICENSE AGREEMENT, AND SUBJECT TO CIVIL AND CRIMINAL PENALTIES THEREUNDER.

masonry units of expanded shale aggregate. The wall will be finished on each side with a layer of $^1/_2$-inch (12.7 mm) gypsum wallboard.

FIND: What is the minimum equivalent thickness of concrete masonry required?

SOLUTION: Since the wall has the same type and thickness of finish on each side, only one calculation is required.

1. The $^1/_2$-inch (12.7 mm) gypsum wallboard on the fire-exposed side has a time-assigned value of 15 minutes in accordance with Table 722.2.1.4(2).
2. Therefore, the fire resistance required to be provided by the masonry and gypsum wallboard on the unexposed side is 3 hours and 45 minutes (4 hours - 15 minutes).
3. From Table 722.2.1.4(1), the corrected thickness of gypsum wallboard on the unexposed side is $^1/_2$ inch (12.7 mm) (1.00 × $^1/_2$ inch).
4. From Table 722.3.2, the minimum equivalent thickness of masonry, including the corrected thickness of gypsum wallboard, required for a rating of 3 hours and 45 minutes is 4.9 inches (124 mm).
5. Therefore, the equivalent thickness of masonry required is 4.4 inches (112 mm) [4.9 inches (124 mm) - $^1/_2$ inch (12.7 mm)].
6. From Table 722.3.2, it can be determined that 4.4 inches (112 mm) of expanded shale aggregate concrete masonry will provide a fire resistance of 3 hours. Therefore, the requirement that the masonry alone provide at least one-half of the total required rating is satisfied.

For a similar example problem, see the commentary to Section 722.2.1.4.4.

722.3.2.5 Attachment of finishes. Installation of finishes shall be as follows:

1. Gypsum wallboard and gypsum lath applied to concrete masonry or concrete walls shall be secured to wood or steel furring members spaced not more than 16 inches (406 mm) on center (o.c.).
2. Gypsum wallboard shall be installed with the long dimension parallel to the furring members and shall have all joints finished.
3. Other aspects of the installation of finishes shall comply with the applicable provisions of Chapters 7 and 25.

❖ This section provides prescriptive installation requirements for gypsum wallboard when installed on concrete masonry or concrete walls. Specification for gypsum wallboard materials and accessories are contained in Chapter 25.

722.3.3 Multiwythe masonry walls. The *fire-resistance rating* of wall assemblies constructed of multiple wythes of masonry materials shall be permitted to be based on the *fire-resistance rating* period of each wythe and the continuous airspace between each wythe in accordance with the following formula:

$$R_A = (R_1^{0.59} + R_2^{0.59} + ... + R_n^{0.59} + A_1 + A_2 + ... + A_n)^{1.7} \quad \textbf{(Equation 7-7)}$$

where:

R_A = *Fire-resistance rating* of the assembly (hours).

$R_1, R_2, ..., R_n$ = *Fire-resistance rating* of wythes for 1, 2, *n* (hours), respectively.

$A_1, A_2, ..., A_n$ = 0.30, factor for each continuous airspace for 1, 2, ...*n*, respectively, having a depth of $^1/_2$ inch (12.7 mm) or more between wythes.

❖ This calculation method was first published in Report BMS 92 of the NBS.

722.3.4 Concrete masonry lintels. *Fire-resistance ratings* for concrete masonry lintels shall be determined based upon the nominal thickness of the lintel and the minimum thickness of concrete masonry or concrete, or any combination thereof, covering the main reinforcing bars, as determined in accordance with Table 722.3.4, or by *approved* alternate methods.

❖ See the commentary to Section 722.

TABLE 722.3.4
MINIMUM COVER OF LONGITUDINAL REINFORCEMENT IN FIRE-RESISTANCE-RATED REINFORCED CONCRETE MASONRY LINTELS (inches)

NOMINAL WIDTH OF LINTEL (inches)	FIRE-RESISTANCE RATING (hours)			
	1	2	3	4
6	$1^1/_2$	2	—	—
8	$1^1/_2$	$1^1/_2$	$1^3/_4$	3
10 or greater	$1^1/_2$	$1^1/_2$	$1^1/_2$	$1^3/_4$

For SI: 1 inch = 25.4 mm.

❖ See the commentary to Section 722.

722.3.5 Concrete masonry columns. The *fire-resistance rating* of concrete masonry columns shall be determined based upon the least plan dimension of the column in accordance with Table 722.3.5 or by *approved* alternate methods.

❖ See the commentary to Section 722.

TABLE 722.3.5
MINIMUM DIMENSION OF CONCRETE MASONRY COLUMNS (inches)

FIRE-RESISTANCE RATING (hours)			
1	2	3	4
8 inches	10 inches	12 inches	14 inches

For SI: 1 inch = 25.4 mm.

❖ See the commentary to Section 722.

INTERNATIONAL CODE COUNCIL®
Copyright © 2015 ICC. ALL RIGHTS RESERVED. Accessed by David Dammon on Jun 21, 2017 12:30:52 PM pursuant to License Agreement with ICC. No further reproduction or distribution authorized. ANY UNAUTHORIZED REPRODUCTION OR DISTRIBUTION IS A VIOLATION OF THE FEDERAL COPYRIGHT ACT AND THE LICENSE AGREEMENT, AND SUBJECT TO CIVIL AND CRIMINAL PENALTIES THEREUNDER.

722.4 Clay brick and tile masonry. The provisions of this section contain procedures by which the *fire-resistance ratings* of clay brick and tile masonry are established by calculations.

❖ See the commentary to Section 722.

722.4.1 Masonry walls. The *fire-resistance rating* of masonry walls shall be based upon the equivalent thickness as calculated in accordance with this section. The calculation shall take into account finishes applied to the wall and airspaces between wythes in multiwythe construction.

❖ See the commentary to Section 722.

722.4.1.1 Equivalent thickness. The *fire-resistance ratings* of walls or partitions constructed of solid or hollow clay masonry units shall be determined from Table 722.4.1(1) or 722.4.1(2). The equivalent thickness of the clay masonry unit shall be determined by Equation 7-8 where using Table 722.4.1(1). The *fire-resistance rating* determined from Table 722.4.1(1) shall be permitted to be used in the calculated *fire-resistance rating* procedure in Section 722.4.2.

$$T_e = V_n/LH \qquad \textbf{(Equation 7-8)}$$

where:

T_e = The equivalent thickness of the clay masonry unit (inches).

V_n = The net volume of the clay masonry unit (inch^3).

L = The specified length of the clay masonry unit (inches).

H = The specified height of the clay masonry unit (inches).

❖ It has been accepted practice to determine the fire-resistance ratings of clay masonry walls by the ASTM E119 or UL 263 test method. In fact, Table 722.4.1(1) is based on tests performed by various laboratories in conformance with ASTM E119 or UL 263. Most notable are the NBS, Ohio State University Experiment Station and the University of California at Berkeley. New methods, however, have been developed to evaluate the fire resistance of clay masonry by the equivalent thickness method, similar to concrete masonry. This approach was used in conjunction with extensive testing previously performed on clay masonry to develop Table 722.4.1(1).

TABLE 722.4.1(1). See below.

❖ See the commentary to Section 722.4.1.1.

TABLE 722.4.1(2). See page 7-175.

❖ See the commentary to Section 722.4.1.1.

722.4.1.1.1 Hollow clay units. The equivalent thickness, T_e, shall be the value obtained for hollow clay units as determined in accordance with Equation 7-8. The net volume, V_n, of the units shall be determined using the gross volume and percentage of void area determined in accordance with ASTM C67.

❖ See the commentary to Section 722.4.1.1.

722.4.1.1.2 Solid grouted clay units. The equivalent thickness of solid grouted clay masonry units shall be taken as the actual thickness of the units.

❖ See the commentary to Section 722.4.1.1.

722.4.1.1.3 Units with filled cores. The equivalent thickness of the hollow clay masonry units is the actual thickness of the unit where completely filled with loose-fill materials of: sand, pea gravel, crushed stone, or slag that meet ASTM C33 requirements; pumice, scoria, expanded shale, expanded clay, expanded slate, expanded slag, expanded fly ash, or cinders in compliance with ASTM C331; or perlite or vermiculite meeting the requirements of ASTM C549 and ASTM C516, respectively.

❖ See the commentary to Section 722.4.1.1.

722.4.1.2 Plaster finishes. Where plaster is applied to the wall, the total *fire-resistance rating* shall be determined by the formula:

$$R = (R_n^{0.59} + pl)^{1.7} \qquad \textbf{(Equation 7-9)}$$

where:

R = The *fire-resistance rating* of the assembly (hours).

R_n = The *fire-resistance rating* of the individual wall (hours).

pl = Coefficient for thickness of plaster.

TABLE 722.4.1(1)
FIRE-RESISTANCE PERIODS OF CLAY MASONRY WALLS

MATERIAL TYPE	MINIMUM REQUIRED EQUIVALENT THICKNESS FOR FIRE RESISTANCE[a, b, c] (inches)			
	1 hour	2 hours	3 hours	4 hours
Solid brick of clay or shale[d]	2.7	3.8	4.9	6.0
Hollow brick or tile of clay or shale, unfilled	2.3	3.4	4.3	5.0
Hollow brick or tile of clay or shale, grouted or filled with materials specified in Section 722.4.1.1.3	3.0	4.4	5.5	6.6

For SI: 1 inch = 25.4 mm.

a. Equivalent thickness as determined from Section 722.4.1.1.

b. Calculated fire resistance between the hourly increments listed shall be determined by linear interpolation.

c. Where combustible members are framed in the wall, the thickness of solid material between the end of each member and the opposite face of the wall, or between members set in from opposite sides, shall be not less than 93 percent of the thickness shown.

d. For units in which the net cross-sectional area of cored brick in any plane parallel to the surface containing the cores is not less than 75 percent of the gross cross-sectional area measured in the same plane.

INTERNATIONAL CODE COUNCIL®
Copyright © 2015 ICC. ALL RIGHTS RESERVED. Accessed by David Dammon on Jun 21, 2017 12:30:52 PM pursuant to License Agreement with ICC. No further reproduction or distribution authorized. ANY UNAUTHORIZED REPRODUCTION OR DISTRIBUTION IS A VIOLATION OF THE FEDERAL COPYRIGHT ACT AND THE LICENSE AGREEMENT, AND SUBJECT TO CIVIL AND CRIMINAL PENALTIES THEREUNDER.

Values for $R_n^{0.59}$ for use in Equation 7-9 are given in Table 722.4.1(3). Coefficients for thickness of plaster shall be selected from Table 722.4.1(4) based on the actual thickness of plaster applied to the wall or partition and whether one or two sides of the wall are plastered.

❖ The variables for use in Equation 7-9 for determining the fire-resistance rating of plastered clay masonry walls are based on BMS 92, *Fire Resistance Classifications of Building Construction,* of the NBS. These values were derived from fire test results. The average thickness of plaster applied in the series of tests ranged from $^1/_2$ inch (12.7 mm) to $^3/_4$ inch (19.1 mm). The thickness for which the coefficients of plaster in Table 722.4.1(4) are given are those most likely to be applied to a clay masonry wall. Ratings for other thicknesses provided can be obtained by substituting the appropriate coefficients in the formula.

A test of four hollow concrete unit walls shows the effect of one coat of plaster on the fire-exposed side to be about the same as for one coat of plaster on the unexposed side. Tests have not been made with plaster on the unexposed side of only clay hollow walls. However, the ratings resulting from Equation 7-9 for clay or tile masonry walls for plaster on one side are believed to have a sufficient margin of safety to be applicable to either the exposed or unexposed side of the wall.

EXAMPLE:

GIVEN: A 4-inch (102 mm) solid brick wall is required to have a 3-hour fire-resistance rating with clay masonry units.

FIND: The thickness of one side of plaster required to attain a 3-hour rating.

SOLUTION:

1. From Table 722.4.1(1), a 2-hour solid brick wall is 3.8 inches (99 mm) of equivalent thickness and a 3-hour wall is 4.9 inches (124 mm). Through interpolation (Note a), a 4-inch (102 mm) wall is approximately a 131-minute (2.18 hours) fire rating.
2. From Table 722.4.1(4), plaster has a coefficient of 0.3 for $^1/_2$-inch thick (12.7 mm) plaster, 0.37 for $^5/_8$-inch thick (15.9 mm) plaster or 0.45 for $^3/_4$-inch (19.1 mm) thick plaster.
3. From Equation 7-9:

   $R = (R_n.59 + pl)1.7$

   where:

   $R = 3$

   $R_n = 2.18$

   $3 = [(2.18)^{0.59} + pl]^{1.7}$

   $\sqrt[1.7]{3} = \sqrt[1.7]{[(1.58 + pl)^{1.7}]}$

   $1.91 = 1.584 + pl$

   $pl = .326.$
4. Therefore, one coat of $^5/_8$-inch-thick (15.9 mm) sanded gypsum plaster on a 4-inch (102 mm) solid brick masonry wall would result in a 3-hour fire-resistance rating.

TABLE 722.4.1(3)
VALUES OF $R_n^{0.59}$

R_n 0.59	R (hours)
1	1.0
2	1.50
3	1.91
4	2.27

❖ See the commentary to Section 722.4.1.2.

TABLE 722.4.1(2)
FIRE-RESISTANCE RATINGS FOR BEARING STEEL FRAME BRICK VENEER WALLS OR PARTITIONS

WALL OR PARTITION ASSEMBLY	PLASTER SIDE EXPOSED (hours)	BRICK FACED SIDE EXPOSED (hours)
Outside facing of steel studs: $^1/_2$″ wood fiberboard sheathing next to studs, $^3/_4$″ airspace formed with $^3/_4$″ × 1$^5/_8$″ wood strips placed over the fiberboard and secured to the studs; metal or wire lath nailed to such strips, 3$^3/_4$″ brick veneer held in place by filling $^3/_4$″ airspace between the brick and lath with mortar. Inside facing of studs: $^3/_4$″ unsanded gypsum plaster on metal or wire lath attached to $^5/_{16}$″ wood strips secured to edges of the studs.	1.5	4
Outside facing of steel studs: 1″ insulation board sheathing attached to studs, 1″ airspace, and 3$^3/_4$″ brick veneer attached to steel frame with metal ties every 5th course. Inside facing of studs: $^7/_8$″ sanded gypsum plaster (1:2 mix) applied on metal or wire lath attached directly to the studs.	1.5	4
Same as above except use $^7/_8$″ vermiculite-gypsum plaster or 1″ sanded gypsum plaster (1:2 mix) applied to metal or wire.	2	4
Outside facing of steel studs: $^1/_2$″ gypsum sheathing board, attached to studs, and 3$^3/_4$″ brick veneer attached to steel frame with metal ties every 5th course. Inside facing of studs: $^1/_2$″ sanded gypsum plaster (1:2 mix) applied to $^1/_2$″ perforated gypsum lath securely attached to studs and having strips of metal lath 3 inches wide applied to all horizontal joints of gypsum lath.	2	4

For SI: 1 inch = 25.4 mm.

INTERNATIONAL CODE COUNCIL®
Copyright © 2015 ICC. ALL RIGHTS RESERVED. Accessed by David Dammon on Jun 21, 2017 12:30:52 PM pursuant to License Agreement with ICC. No further reproduction or distribution authorized. ANY UNAUTHORIZED REPRODUCTION OR DISTRIBUTION IS A VIOLATION OF THE FEDERAL COPYRIGHT ACT AND THE LICENSE AGREEMENT, AND SUBJECT TO CIVIL AND CRIMINAL PENALTIES THEREUNDER.

TABLE 722.4.1(4)
COEFFICIENTS FOR PLASTER, *pl* [a]

THICKNESS OF PLASTER (inch)	ONE SIDE	TWO SIDES
$^1/_2$	0.3	0.6
$^5/_8$	0.37	0.75
$^3/_4$	0.45	0.90

For SI: 1 inch = 25.4 mm.
a. Values listed in the table are for 1:3 sanded gypsum plaster.

❖ See the commentary to Section 722.4.1.2.

TABLE 722.4.1(5)
REINFORCED MASONRY LINTELS

NOMINAL LINTEL WIDTH (inches)	MINIMUM LONGITUDINAL REINFORCEMENT COVER FOR FIRE RESISTANCE (inches)			
	1 hour	2 hours	3 hours	4 hours
6	$1^1/_2$	2	NP	NP
8	$1^1/_2$	$1^1/_2$	$1^3/_4$	3
10 or more	$1^1/_2$	$1^1/_2$	$1^1/_2$	$1^3/_4$

For SI: 1 inch = 25.4 mm.
NP = Not permitted.

❖ See the commentary to Section 722.4.1.2.

TABLE 722.4.1(6)
REINFORCED CLAY MASONRY COLUMNS

COLUMN SIZE	FIRE-RESISTANCE RATING (hours)			
	1	2	3	4
Minimum column dimension (inches)	8	10	12	14

For SI:1 inch = 25.4 mm.

❖ See the commentary to Section 722.4.1.2.

722.4.1.3 Multiwythe walls with airspace. Where a continuous airspace separates multiple wythes of the wall or partition, the total *fire-resistance rating* shall be determined by the formula:

$$R = (R_1^{0.59} + R_2^{0.59} + ... + R_n^{0.59} + as)^{1.7} \quad \textbf{(Equation 7-10)}$$

where:

R = The *fire-resistance rating* of the assembly (hours).

R_1, R_2 and R_n = The *fire-resistance rating* of the individual wythes (hours).

as = Coefficient for continuous airspace.

Values for $R_n^{0.59}$ for use in Equation 7-10 are given in Table 722.4.1(3). The coefficient for each continuous airspace of $^1/_2$ inch to $3^1/_2$ inches (12.7 to 89 mm) separating two individual wythes shall be 0.3.

❖ Tests have shown that a continuous airspace separating two wythes of masonry can also increase the fire-resistance rating of a clay masonry wall. According to BMS 92 of the NBS, the coefficient for continuous airspace (*as*) between $^1/_2$ inch (12.7 mm) and $3^1/_2$ inches (89 mm) is 0.3. Equation 7-10 provides the formula for calculating the fire-resistance ratings involving an airspace if the fire-resistance rating of the wythes separated by the airspace is known. The fire-resistance ratings for various wythes can be obtained from Tables 722.4.1(1) and 722.4.1(2). The procedure for using Equation 7-10 is the same as Equation 7-9, except that a coefficient for airspace (*as*) is substituted for the coefficient of plaster (*pl*).

722.4.1.4 Nonsymmetrical assemblies. For a wall having no finish on one side or having different types or thicknesses of finish on each side, the calculation procedures of this section shall be performed twice, assuming either side to be the fire-exposed side of the wall. The *fire resistance* of the wall shall not exceed the lower of the two values determined.

Exception: For *exterior walls* with a *fire separation distance* greater than 5 feet (1524 mm), the fire shall be assumed to occur on the interior side only.

❖ Except for exterior walls having an FSD of more than 5 feet (1524 mm), Section 704.5 requires that walls be rated for exposure to fire from both sides. Therefore, two calculation procedures must be performed, on the assumption that each side is the fire-exposed side. Two calculations are not necessary for exterior walls with an FSD of more than 5 feet (1524 mm) or for other walls that are symmetrical (i.e., having the same type and thickness of finish on each side). The calculated fire-resistance rating must not exceed the lower of the two values determined, assuming that each side is the fire-exposed side.

722.4.2 Multiwythe walls. The *fire-resistance rating* for walls or partitions consisting of two or more dissimilar wythes shall be permitted to be determined by the formula:

$$R = (R_1^{0.59} + R_2^{0.59} + ... + R_n^{0.59})^{1.7} \quad \textbf{(Equation 7-11)}$$

where:

R = The *fire-resistance rating* of the assembly (hours).

R_1, R_2 and R_n = The *fire-resistance rating* of the individual wythes (hours).

Values for $R_n^{0.59}$ for use in Equation 7-11 are given in Table 722.4.1(3).

❖ Typically, the fire-resistance-rating period for clay masonry walls is determined by the temperature rise on the unexposed side of the wall. This criterion is what Equation 7-11 is based on. According to the general theory of heat transmission, if walls of the same material are exposed to a heat source that maintains a constant surface temperature on the exposed side and the unexposed side is protected against heat loss, the time in which a given temperature will be attained on the unexposed side will vary as the square of the wall thickness does.

In the standard ASTM E119 or UL 263 test, which involves specified conditions of temperature measurement and a fire that increases the temperature at the exposed surface of the wall as the test proceeds, the time required to attain a given temperature rise on the unexposed side will differ when the temperature on the exposed side remains constant at the initial

INTERNATIONAL CODE COUNCIL®
Copyright © 2015 ICC. ALL RIGHTS RESERVED. Accessed by David Dammon on Jun 21, 2017 12:30:52 PM pursuant to License Agreement with ICC. No further reproduction or distribution authorized. ANY UNAUTHORIZED REPRODUCTION OR DISTRIBUTION IS A VIOLATION OF THE FEDERAL COPYRIGHT ACT AND THE LICENSE AGREEMENT, AND SUBJECT TO CIVIL AND CRIMINAL PENALTIES THEREUNDER.

exposure temperature for any period. A degree of correlation between test results and calculations can be obtained by assuming that the variation is a lower power of *n* than the second power. The fire resistance of the wall can then be expressed by the formula:

$R = (CV)^n$

where:

R = Fire-resistance period;

C = Coefficient depending on the material, design of the wall and the units of measurement of R and V;

V = Volume of solid material per unit area of wall surface; and

n = Exponent depending on the rate of increase of temperature at the exposed face of the wall.

For walls of a given material and design, it was found that an increase of 50 percent in volume of solid material per unit area of wall surface resulted in a 100-percent increase in the fire-resistance period. This correlates to a value of 1.7 for *n*. A value of *n* less than 2 is expected, since an increasing temperature on the exposed surface would tend to shorten the fire-resistance rating of walls that would qualify for a higher rating.

The fire-resistance rating of a wall may be expressed in terms of the fire-resistance rating of the conjoined wythes or laminae of the wall as follows:

$R_1 = (C_1V_1)^n$

$R_2 = (C_2V_2)^n$

$R_n = (C_nV_n)^n$

where R_1, R_2 and R_n are the fire resistances of each conjoined wythe.

The fire-resistance period of the composite wall will be:

$$R = \left(\sum_{i=1}^{n} C_i V_i \right)^{n_0}$$

$$R = (C_1V_1 + C_2V_2 + \ldots C_nV_n)^{n_0}$$

Substituting for C_1V_1, C_2V_2 and C_nV_n from the above relations yields:

$$R = (R_1^{1/n_0} + R_2^{1/n_0} + R_n^{1/n_0})^{n_0}$$

Substituting 1.7 for n_0 and 0.59 for $1/n_0$, the general formula becomes:

$R = (R_1^{0.59} + R_2^{0.59} + \ldots R_n^{0.59})^{1.7}$

Equation 7-11 was developed by the NBS in the early 1940s and first appeared in Appendix B of BMS 92. It is noted that the fire-resistance rating has been expressed in terms of the fire-resistance rating of the component laminae of the wall, which need not be of the same material and design.

722.4.2.1 Multiwythe walls of different material. For walls that consist of two or more wythes of different materials (concrete or concrete masonry units) in combination with clay masonry units, the *fire-resistance rating* of the different materials shall be permitted to be determined from Table 722.2.1.1 for concrete; Table 722.3.2 for concrete masonry units or Table 722.4.1(1) or 722.4.1(2) for clay and tile masonry units.

❖ A multiwythe wall (i.e., a wall consisting of two or more dissimilar materials) has a greater fire-resistance rating than a simple summation of the fire-endurance rating of the various layers. Equation 7-11 permits a calculated fire-resistance rating if the fire-resistance endurance rating is known for each dissimilar material. This section lists the applicable tables from Section 722 that can be used in conjunction with clay masonry walls to determine the total fire-resistance rating of a multiwythe wall composed of a combination of concrete, concrete masonry or clay masonry units.

722.4.3 Reinforced clay masonry lintels. *Fire-resistance ratings* for clay masonry lintels shall be determined based on the nominal width of the lintel and the minimum covering for the longitudinal reinforcement in accordance with Table 722.4.1(5).

❖ See the commentary to Section 722.

722.4.4 Reinforced clay masonry columns. The *fire-resistance ratings* shall be determined based on the last plan dimension of the column in accordance with Table 722.4.1(6). The minimum cover for longitudinal reinforcement shall be 2 inches (51 mm).

❖ See the commentary to Section 722.

722.5 Steel assemblies. The provisions of this section contain procedures by which the *fire-resistance ratings* of steel assemblies are established by calculations.

❖ See the commentary to Section 722.

722.5.1 Structural steel columns. The *fire-resistance ratings* of structural steel columns shall be based on the size of the element and the type of protection provided in accordance with this section.

❖ See the commentary to Section 722.

722.5.1.1 General. These procedures establish a basis for determining the *fire resistance* of column assemblies as a function of the thickness of fire-resistant material and, the weight, *W*, and heated perimeter, *D*, of structural steel columns. As used in these sections, *W* is the average weight of a structural steel column in pounds per linear foot. The heated perimeter, *D*, is the inside perimeter of the fire-resistant material in inches as illustrated in Figure 722.5.1(1).

❖ See the commentary to Section 722.

INTERNATIONAL CODE COUNCIL®
Copyright © 2015 ICC. ALL RIGHTS RESERVED. Accessed by David Dammon on Jun 21, 2017 12:30:52 PM pursuant to License Agreement with ICC. No further reproduction or distribution authorized. ANY UNAUTHORIZED REPRODUCTION OR DISTRIBUTION IS A VIOLATION OF THE FEDERAL COPYRIGHT ACT AND THE LICENSE AGREEMENT, AND SUBJECT TO CIVIL AND CRIMINAL PENALTIES THEREUNDER.

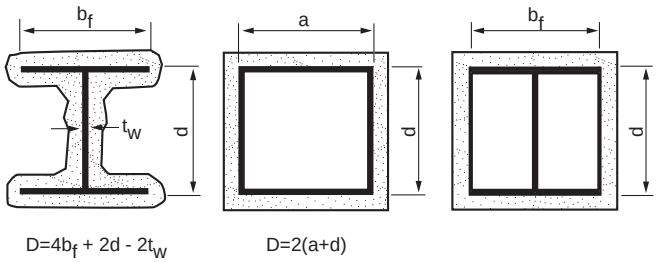

FIGURE 722.5.1(1)
DETERMINATION OF THE HEATED PERIMETER OF STRUCTURAL STEEL COLUMNS

722.5.1.1.1 Nonload-bearing protection. The application of these procedures shall be limited to column assemblies in which the fire-resistant material is not designed to carry any of the load acting on the column.

❖ See the commentary to Section 722.

722.5.1.1.2 Embedments. In the absence of substantiating fire-endurance test results, ducts, conduit, piping, and similar mechanical, electrical, and plumbing installations shall not be embedded in any required fire-resistant materials.

❖ See the commentary to Section 722.

722.5.1.1.3 Weight-to-perimeter ratio. Table 722.5.1(1) contains weight-to-heated-perimeter ratios (*W/D*) for both contour and box fire-resistant profiles, for the wide flange shapes most often used as columns. For different fire-resistant protection profiles or column cross sections, the weight-to-heated-perimeter ratios (*W/D*) shall be determined in accordance with the definitions given in this section.

❖ See the commentary to Section 722.

722.5.1.2 Gypsum wallboard protection. The *fire resistance* of structural steel columns with weight-to-heated-perimeter ratios (*W/D*) less than or equal to 3.65 and that are protected with Type X gypsum wallboard shall be permitted to be determined from the following expression:

$$R = 130\left[\frac{h(W'/D)^{0.75}}{2}\right] \quad \textbf{(Equation 7-12)}$$

where:

R = Fire resistance (minutes).

h = Total thickness of gypsum wallboard (inches).

D = Heated perimeter of the structural steel column (inches).

W' = Total weight of the structural steel column and gypsum wallboard protection (pounds per linear foot).

$W' = W + 50hD/144$.

722.5.1.2.1 Attachment. The gypsum board or gypsum panel products shall be supported as illustrated in either Figure 722.5.1(2) for *fire-resistance ratings* of 4 hours or less, or Figure 722.5.1(3) for *fire-resistance ratings* of 3 hours or less.

❖ **EXAMPLE**:

GIVEN: A *W*12 × 136 column protected by $^1/_2$-inch (12.7 mm) Type X gypsum wallboard as shown in Commentary Figure 722.5.1.2.1.

FIND: The fire-resistance rating of the column.

SOLUTION:

1. The heated perimeter D = 2(12.4 inches + 13.4 inches) = 51.6 inches (1311 mm).
2. W' = 136 + (50)(0.5)(51.6)/144 = 144.96.
3. W' = 144.96 / 51.62 = 2.81.
4. $R = 130[(0.5)(2.81)/2]^{0.75}$ = 99.7 minutes (1.66 hours).

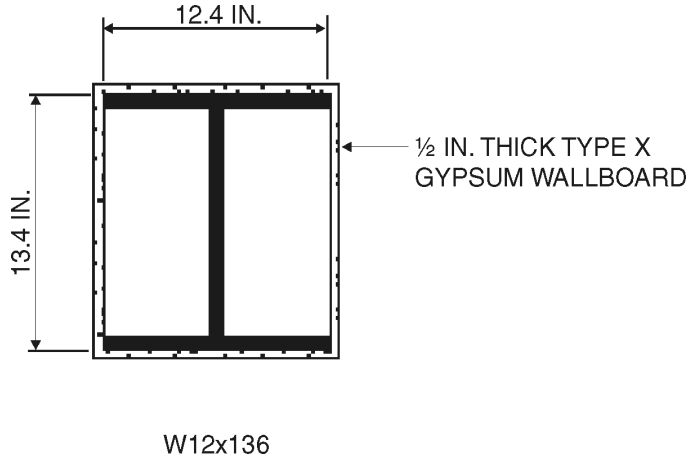

For SI: 1 inch = 25.4 mm.

Figure 722.5.1.2.1
EXAMPLE—STEEL COLUMN PROTECTED WITH WALLBOARD

INTERNATIONAL CODE COUNCIL®
Copyright © 2015 ICC. ALL RIGHTS RESERVED. Accessed by David Dammon on Jun 21, 2017 12:30:52 PM pursuant to License Agreement with ICC. No further reproduction or distribution authorized. ANY UNAUTHORIZED REPRODUCTION OR DISTRIBUTION IS A VIOLATION OF THE FEDERAL COPYRIGHT ACT AND THE LICENSE AGREEMENT, AND SUBJECT TO CIVIL AND CRIMINAL PENALTIES THEREUNDER.

5. Alternatively, from Table 722.5.1(1), the *W/D* ratio for a *W*12 × 136 is tabulated as 2.63. From Code Figure 722.5.1(4) using a *W/D* ratio of 2.63 and $^1/_2$-inch (12.7 mm) gypsum wallboard, an *R*-value of approximately 1.6 hours is obtained.

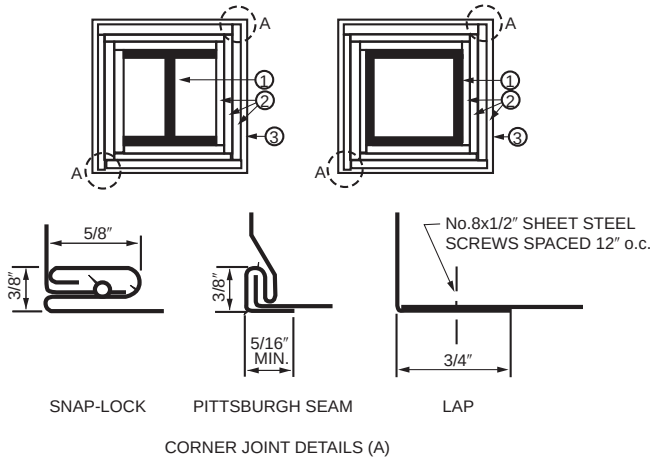

FIGURE 722.5.1(2)
GYPSUM-PROTECTED STRUCTURAL STEEL COLUMNS WITH SHEET STEEL COLUMN COVERS

For SI: 1 inch = 25.4 mm, 1 foot = 305 mm.

1. Structural steel column, either wide flange or tubular shapes.
2. Type X gypsum board or gypsum panel products in accordance with ASTM C1177, C1178, C1278, C1396 or C1658. The total thickness of gypsum board or gypsum panel products calculated as h in Section 722.5.1.2 shall be applied vertically to an individual column using one of the following methods:
   1. As a single layer with no horizontal joints.
   2. As multiple layers with no horizontal joints permitted in any layer.
   3. As multiple layers with horizontal joints staggered not less than 12 inches vertically between layers and not less than 8 feet vertically in any single layer. The total required thickness of gypsum board or gypsum panel products shall be determined on the basis of the specified fire-resistance rating and the weight-to-heated-perimeter ratio (W/D) of the column. For fire-resistance ratings of 2 hours or less, one of the required layers of gypsum board or gypsum panel product may be applied to the exterior of the sheet steel column covers with 1-inch long Type S screws spaced 1 inch from the wallboard edge and 8 inches on center. For such installations, 0.0149-inch minimum thickness galvanized steel corner beads with $1^1/_2$-inch legs shall be attached to the wallboard with Type S screws spaced 12 inches on center.
3. For *fire-resistance ratings* of 3 hours or less, the column covers shall be fabricated from 0.0239-inch minimum thickness galvanized or stainless steel. For 4-hour *fire-resistance ratings*, the column covers shall be fabricated from 0.0239-inch minimum thickness stainless steel. The column covers shall be erected with the Snap Lock or Pittsburgh joint details.

   For *fire-resistance ratings* of 2 hours or less, column covers fabricated from 0.0269-inch minimum thickness galvanized or stainless steel shall be permitted to be erected with lap joints. The lap joints shall be permitted to be located anywhere around the perimeter of the column cover. The lap joints shall be secured with $^1/_2$-inch-long No. 8 sheet metal screws spaced 12 inches on center.

   The column covers shall be provided with a minimum expansion clearance of $^1/_8$ inch per linear foot between the ends of the cover and any restraining construction.

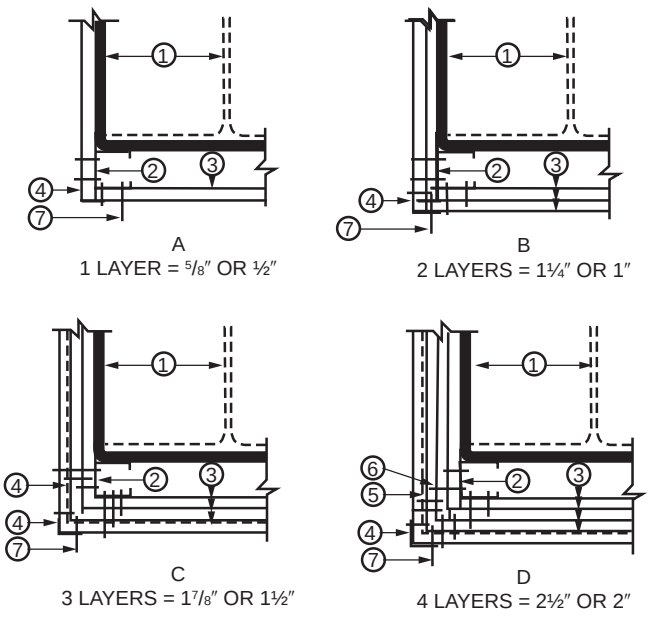

FIGURE 722.5.1(3)
GYPSUM-PROTECTED STRUCTURAL STEEL COLUMNS WITH STEEL STUD/SCREW ATTACHMENT SYSTEM

For SI: 1 inch = 25.4 mm, 1 foot = -305 mm.

1. Structural steel column, either wide flange or tubular shapes.
2. $1^5/_8$-inch deep studs fabricated from 0.0179-inch minimum thickness galvanized steel with $1^5/_{16}$ or $1^7/_{16}$-inch legs. The length of the steel studs shall be $^1/_2$ inch less than the height of the assembly.
3. Type X gypsum board or gypsum panel products in accordance with ASTM C177, C1178, C1278, C1396 or C1658. The total thickness of gypsum board or gypsum panel products calculated as *h* in Section 722.5.1.2 shall be applied vertically to an individual column using one of the following methods:
   1. As a single layer with no horizontal joints.
   2. As multiple layers with no horizontal joints permitted in any layer.
   3. As multiple layers with horizontal joints staggered not less than 12 inches vertically between layers and not less than 8 feet vertically in any single layer. The total required thickness of gypsum board or gypsum panel products shall be determined on the basis of the specified *fire-resistance rating* and the weight-to-heated-perimeter ratio (W/D) of the column.
4. Galvanized 0.0149-inch minimum thickness steel corner beads with $1^1/_2$-inch legs attached to the gypsum board or gypsum panel products with 1-inch-long Type S screws spaced 12 inches on center.
5. No. 18 SWG steel tie wires spaced 24 inches on center.
6. Sheet metal angles with 2-inch legs fabricated from 0.0221-inch minimum thickness galvanized steel.
7. Type S screws, 1 inch long, shall be used for attaching the first layer of gypsum board or gypsum panel product to the steel studs and the third layer to the sheet metal angles at 24 inches on center. Type S screws $1^3/_4$-inch long shall be used for attaching the second layer of gypsum board or gypsum panel product to the steel studs and the fourth layer to the sheet metal angles at 12 inches on center. Type S screws $2^1/_4$ inches long shall be used for attaching the third layer of gypsum board or gypsum panel product to the steel studs at 12 inches on center.

INTERNATIONAL CODE COUNCIL®
Copyright © 2015 ICC. ALL RIGHTS RESERVED. Accessed by David Dammon on Jun 21, 2017 12:30:52 PM pursuant to License Agreement with ICC. No further reproduction or distribution authorized. ANY UNAUTHORIZED REPRODUCTION OR DISTRIBUTION IS A VIOLATION OF THE FEDERAL COPYRIGHT ACT AND THE LICENSE AGREEMENT, AND SUBJECT TO CIVIL AND CRIMINAL PENALTIES THEREUNDER.

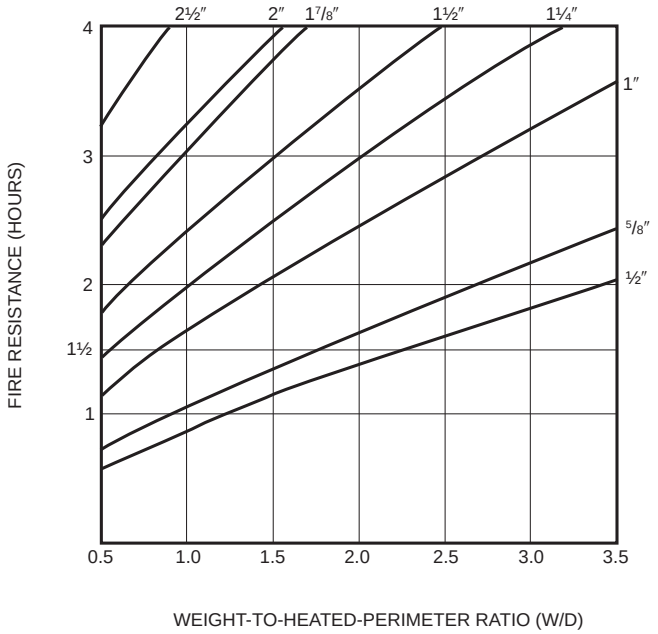

For SI: 1 inch = 25.4 mm, 1 pound per linear foot/inch = 0.059 kg/m/mm.

FIGURE 722.5.1(4)
FIRE RESISTANCE OF STRUCTURAL STEEL COLUMNS PROTECTED WITH VARIOUS THICKNESSES OF TYPE X GYPSUM WALLBOARD

a. The W/D ratios for typical wide flange columns are listed in Table 722.5.1(1). For other column shapes, the W/D ratios shall be determined in accordance with Section 722.5.1.1.

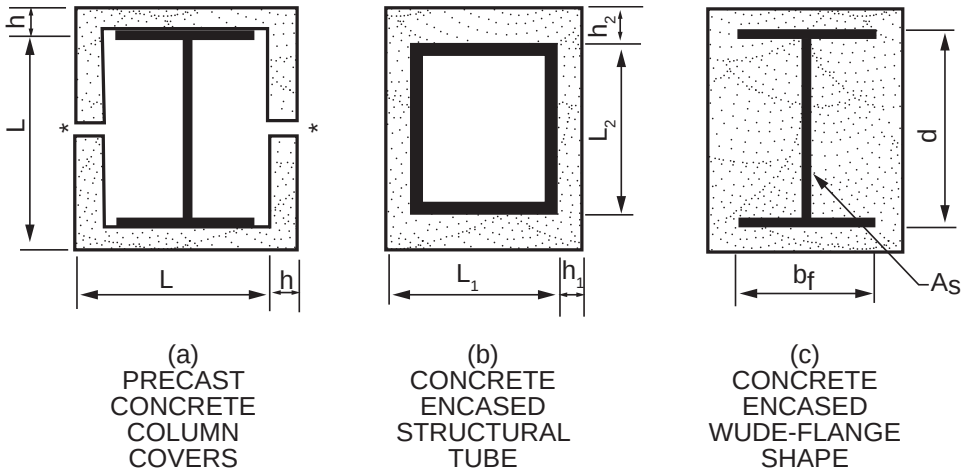

FIGURE 722.5.1(6)
CONCRETE PROTECTED STRUCTURAL STEEL COLUMNS[a,b]

a. When the inside perimeter of the concrete protection is not square, L shall be taken as the average of L_1 and L_2. When the thickness of concrete cover is not constant, h shall be taken as the average of h_1 and h_2.
b. Joints shall be protected with a minimum 1 inch thickness of ceramic fiber blanket but in no case less than one-half the thickness of the column cover (see Section 722.2.1.3).

FIGURE 722.5.1(5)
WIDE FLANGE STRUCTURAL STEEL COLUMNS WITH SPRAYED FIRE-RESISTANT MATERIALS

INTERNATIONAL CODE COUNCIL®
Copyright © 2015 ICC. ALL RIGHTS RESERVED. Accessed by David Dammon on Jun 21, 2017 12:30:52 PM pursuant to License Agreement with ICC. No further reproduction or distribution authorized. ANY UNAUTHORIZED REPRODUCTION OR DISTRIBUTION IS A VIOLATION OF THE FEDERAL COPYRIGHT ACT AND THE LICENSE AGREEMENT, AND SUBJECT TO CIVIL AND CRIMINAL PENALTIES THEREUNDER.

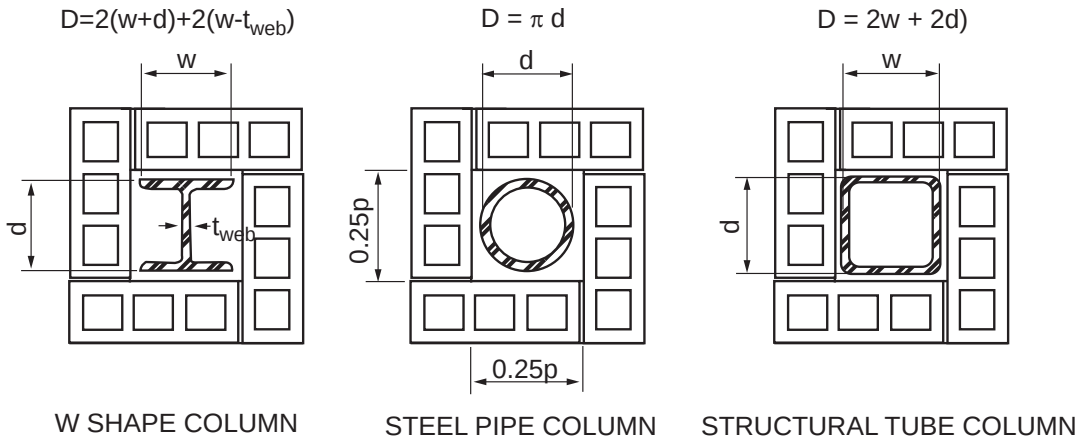

FIGURE 722.5.1(7)
CONCRETE OR CLAY MASONRY PROTECTED STRUCTURAL STEEL COLUMNS

For SI: 1 inch = 25.4 mm.
d = Depth of a wide flange column, outside diameter of pipe column, or outside dimension of structural tubing column (inches).
t_{web} = Thickness of web of wide flange column (inches).
w = Width of flange of wide flange column (inches).

INTERNATIONAL CODE COUNCIL®
Copyright © 2015 ICC. ALL RIGHTS RESERVED. Accessed by David Dammon on Jun 21, 2017 12:30:52 PM pursuant to License Agreement with ICC. No further reproduction or distribution authorized. ANY UNAUTHORIZED REPRODUCTION OR DISTRIBUTION IS A VIOLATION OF THE FEDERAL COPYRIGHT ACT AND THE LICENSE AGREEMENT, AND SUBJECT TO CIVIL AND CRIMINAL PENALTIES THEREUNDER.

TABLE 722.5.1(1)
W/D RATIOS FOR STEEL COLUMNS

STRUCTURAL SHAPE	CONTOUR PROFILE	BOX PROFILE	STRUCTURAL SHAPE	CONTOUR PROFILE	BOX PROFILE
W14 × 233	2.55	3.65	W10 × 112	1.81	2.57
× 211	2.32	3.35	× 100	1.64	2.33
× 193	2.14	3.09	× 88	1.45	2.08
× 176	1.96	2.85	× 77	1.28	1.85
× 159	1.78	2.60	× 68	1.15	1.66
× 145	1.64	2.39	× 60	1.01	1.48
× 132	1.56	2.25	× 54	0.922	1.34
× 120	1.42	2.06	× 49	0.84	1.23
× 109	1.29	1.88	× 45	0.888	1.24
× 99	1.18	1.72	× 39	0.78	1.09
× 90	1.08	1.58	× 33	0.661	0.93
× 82	1.23	1.68			
× 74	1.12	1.53	W8 × 67	1.37	1.94
× 68	1.04	1.41	× 58	1.20	1.71
× 61	0.928	1.28	× 48	1.00	1.44
× 53	0.915	1.21	× 40	0.849	1.23
× 48	0.835	1.10	× 35	0.749	1.08
× 43	0.752	0.99	× 31	0.665	0.97
			× 28	0.688	0.96
W12 × 190	2.50	3.51	× 24	0.591	0.83
× 170	2.26	3.20	× 21	0.577	0.77
× 152	2.04	2.90	× 18	0.499	0.67
× 136	1.86	2.63			
× 120	1.65	2.36	W6 ×25	0.696	1.00
× 106	1.47	2.11	× 20	0.563	0.82
× 96	1.34	1.93	× 16	0.584	0.78
× 87	1.22	1.76	× 15	0.431	0.63
× 79	1.11	1.61	× 12	0.448	0.60
× 72	1.02	1.48	× 9	0.338	0.46
× 65	0.925	1.35			
× 58	0.925	1.31	W5 ×19	0.644	0.93
× 53	0.855	1.20	× 16	0.55	0.80
× 50	0.909	1.23			
× 45	0.829	1.12	W4 ×13	0.556	0.79
× 40	0.734	1.00			

For SI: 1 pound per linear foot per inch = 0.059 kg/m/mm.

TABLE 722.5.1(2)
PROPERTIES OF CONCRETE

PROPERTY	NORMAL-WEIGHT CONCRETE	STRUCTURAL LIGHTWEIGHT CONCRETE
Thermal conductivity (k_c)	0.95 Btu/hr · ft · °F	0.35 Btu/hr · ft · °F
Specific heat (c_c)	0.20 Btu/lb °F	0.20 Btu/lb °F
Density (P_c)	145 lb/ft^3	110 lb/ft^3
Equilibrium (free) moisture content (m) by volume	4%	5%

For SI: 1 inch = 25.4 mm, 1 foot = 304.8 mm, 1 lb/ft^3 = 16.0185 kg/m^3, Btu/hr • ft • °F = 1.731 W/(m • K).

INTERNATIONAL CODE COUNCIL®
Copyright © 2015 ICC. ALL RIGHTS RESERVED. Accessed by David Dammon on Jun 21, 2017 12:30:52 PM pursuant to License Agreement with ICC. No further reproduction or distribution authorized. ANY UNAUTHORIZED REPRODUCTION OR DISTRIBUTION IS A VIOLATION OF THE FEDERAL COPYRIGHT ACT AND THE LICENSE AGREEMENT, AND SUBJECT TO CIVIL AND CRIMINAL PENALTIES THEREUNDER.

TABLE 722.5.1(3)
THERMAL CONDUCTIVITY OF CONCRETE OR CLAY MASONRY UNITS

DENSITY (d_m) OF UNITS (lb/ft^3)	THERMAL CONDUCTIVITY (K) OF UNITS (Btu/hr · ft · °F)
Concrete Masonry Units	
80	0.207
85	0.228
90	0.252
95	0.278
100	0.308
105	0.340
110	0.376
115	0.416
120	0.459
125	0.508
130	0.561
135	0.620
140	0.685
145	0.758
150	0.837
Clay Masonry Units	
120	1.25
130	2.25

For SI: 1 pound per cubic foot = 16.0185 kg/m^3, Btu/hr · ft · °F = 1.731 W/(m · K).

TABLE 722.5.1(4)
WEIGHT-TO-HEATED-PERIMETER RATIOS (W/D) FOR TYPICAL WIDE FLANGE BEAM AND GIRDER SHAPES

STRUCTURAL SHAPE	CONTOUR PROFILE	BOX PROFILE	STRUCTURAL SHAPE	CONTOUR PROFILE	BOX PROFILE
W36 x 300	2.50	3.33	W24 x 68	0.942	1.21
x 280	2.35	3.12	x 62	0.934	1.14
x 260	2.18	2.92	x 55	0.828	1.02
x 245	2.08	2.76			
x 230	1.95	2.61	W21 x 147	1.87	2.60
x 210	1.96	2.45	x 132	1.68	2.35
x 194	1.81	2.28	x 122	1.57	2.19
x 182	1.72	2.15	x 111	1.43	2.01
x 170	1.60	2.01	x 101	1.30	1.84
x 160	1.51	1.90	x 93	1.40	1.80
x 150	1.43	1.79	x 83	1.26	1.62
x 135	1.29	1.63	x 73	1.11	1.44
			x 68	1.04	1.35

(continued)

INTERNATIONAL CODE COUNCIL®
Copyright © 2015 ICC. ALL RIGHTS RESERVED. Accessed by David Dammon on Jun 21, 2017 12:30:52 PM pursuant to License Agreement with ICC. No further reproduction or distribution authorized. ANY UNAUTHORIZED REPRODUCTION OR DISTRIBUTION IS A VIOLATION OF THE FEDERAL COPYRIGHT ACT AND THE LICENSE AGREEMENT, AND SUBJECT TO CIVIL AND CRIMINAL PENALTIES THEREUNDER.

TABLE 722.5.1(4)—continued
WEIGHT-TO-HEATED-PERIMETER RATIOS (*W/D*) FOR TYPICAL WIDE FLANGE BEAM AND GIRDER SHAPES

STRUCTURAL SHAPE	CONTOUR PROFILE	BOX PROFILE	STRUCTURAL SHAPE	CONTOUR PROFILE	BOX PROFILE
W33 x 241	2.13	2.86	W21 x 62	0.952	1.23
x 221	1.97	2.64	x 57	0.952	1.17
x 201	1.79	2.42	x 50	0.838	1.04
x 152	1.53	1.94	x 44	0.746	0.92
x 141	1.43	1.80			
x 130	1.32	1.67	W18 x 119	1.72	2.42
x 118	1.21	1.53	x 106	1.55	2.18
			x 97	1.42	2.01
W30 x 211	2.01	2.74	x 86	1.27	1.80
x 191	1.85	2.50	x 76	1.13	1.60
x 173	1.66	2.28	x 71	1.22	1.59
x 132	1.47	1.85	x 65	1.13	1.47
x 124	1.39	1.75	x 60	1.04	1.36
x 116	1.30	1.65	x 55	0.963	1.26
x 108	1.21	1.54	x 50	0.88	1.15
x 99	1.12	1.42	x 46	0.878	1.09
			x 40	0.768	0.96
W27 x 178	1.87	2.55	x 35	0.672	0.85
x 161	1.70	2.33			
x 146	1.55	2.12	W16 x 100	1.59	2.25
x 114	1.39	1.76	x 89	1.43	2.03
x 102	1.24	1.59	x 77	1.25	1.78
x 94	1.15	1.47	x 67	1.09	1.56
x 84	1.03	1.33	x 57	1.09	1.43
			x 50	0.962	1.26
			x 45	0.870	1.15
W24 x 162	1.88	2.57	x 40	0.780	1.03
x 146	1.70	2.34	x 36	0.702	0.93
x 131	1.54	2.12	x 31	0.661	0.83
x 117	1.38	1.91	x 26	0.558	0.70
x 104	1.24	1.71			
x 94	1.28	1.63	W14 x 132	1.89	3.00
x 84	1.15	1.47	x 120	1.71	2.75
x 76	1.05	1.34	x 109	1.57	2.52
W14 x 99	1.43	2.31	W10 x 30	0.806	1.12
x 90	1.31	2.11	x 26	0.708	0.98
x 82	1.45	2.12	x 22	0.606	0.84
x 74	1.32	1.93	x 19	0.607	0.78
x 68	1.22	1.78	x 17	0.543	0.70
x 61	1.10	1.61	x 15	0.484	0.63
x 53	1.06	1.48	x 12	0.392	0.51
x 48	0.970	1.35			

(continued)

INTERNATIONAL CODE COUNCIL®
Copyright © 2015 ICC. ALL RIGHTS RESERVED. Accessed by David Dammon on Jun 21, 2017 12:30:52 PM pursuant to License Agreement with ICC. No further reproduction or distribution authorized. ANY UNAUTHORIZED REPRODUCTION OR DISTRIBUTION IS A VIOLATION OF THE FEDERAL COPYRIGHT ACT AND THE LICENSE AGREEMENT, AND SUBJECT TO CIVIL AND CRIMINAL PENALTIES THEREUNDER.

TABLE 722.5.1(4)—continued
WEIGHT-TO-HEATED-PERIMETER RATIOS (*W/D*) FOR TYPICAL WIDE FLANGE BEAM AND GIRDER SHAPES

STRUCTURAL SHAPE	CONTOUR PROFILE	BOX PROFILE	STRUCTURAL SHAPE	CONTOUR PROFILE	BOX PROFILE
W14 x 43	0.874	1.22	W8 x 67	1.65	2.55
x 38	0.809	1.09	x 58	1.44	2.26
x 34	0.725	0.98	x 48	1.21	1.91
x 30	0.644	0.87	x 40	1.03	1.63
x 26	0.628	0.79	x 35	0.907	1.44
x 22	0.534	0.68	x 31	0.803	1.29
			x 28	0.819	1.24
W12 x 87	1.47	2.34	x 24	0.704	1.07
x 79	1.34	2.14	x 21	0.675	0.96
x 72	1.23	1.97	x 18	0.583	0.84
x 65	1.11	1.79	x 15	0.551	0.74
x 58	1.10	1.69	x 13	0.483	0.65
x 53	1.02	1.55	x 10	0.375	0.51
x 50	1.06	1.54			
x 45	0.974	1.40	W6 x 25	0.839	1.33
x 40	0.860	1.25	x 20	0.678	1.09
x 35	0.810	1.11	x 16	0.684	0.96
x 30	0.699	0.96	x 15	0.521	0.83
x 26	0.612	0.84	x 12	0.526	0.75
x 22	0.623	0.77	x 9	0.398	0.57
x 19	0.540	0.67			
x 16	0.457	0.57	W5 x 19	0.776	1.24
x 14	0.405	0.50	x 16	0.664	1.07
W10 x 112	2.17	3.38	W4 x 13	0.670	1.05
x 100	1.97	3.07			
x 88	1.74	2.75			
x 77	1.54	2.45			
x 68	1.38	2.20			
x 60	1.22	1.97			
x 54	1.11	1.79			
x 49	1.01	1.64			
x 45	1.06	1.59			
x 39	0.94	1.40			
x 33	0.77	1.20			

For SI: 1 pound per linear foot per inch = 0.059 kg/m/mm.

INTERNATIONAL CODE COUNCIL®
Copyright © 2015 ICC. ALL RIGHTS RESERVED. Accessed by David Dammon on Jun 21, 2017 12:30:52 PM pursuant to License Agreement with ICC. No further reproduction or distribution authorized. ANY UNAUTHORIZED REPRODUCTION OR DISTRIBUTION IS A VIOLATION OF THE FEDERAL COPYRIGHT ACT AND THE LICENSE AGREEMENT, AND SUBJECT TO CIVIL AND CRIMINAL PENALTIES THEREUNDER.

TABLE 722.5.1(5)
FIRE RESISTANCE OF CONCRETE MASONRY PROTECTED STEEL COLUMNS

COLUMN SIZE	CONCRETE MASONRY DENSITY POUNDS PER CUBIC FOOT	MINIMUM REQUIRED EQUIVALENT THICKNESS FOR FIRE-RESISTANCE RATING OF CONCRETE MASONRY PROTECTION ASSEMBLY, T_e (inches)				COLUMN SIZE	CONCRETE MASONRY DENSITY POUNDS PER CUBIC FOOT	MINIMUM REQUIRED EQUIVALENT THICKNESS FOR FIRE-RESISTANCE RATING OF CONCRETE MASONRY PROTECTION ASSEMBLY, T_e (inches)			
		1 hour	2 hours	3 hours	4 hours			1 hour	2 hours	3 hours	4 hours
W14 × 82	80	0.74	1.61	2.36	3.04	W10 × 68	80	0.72	1.58	2.33	3.01
	100	0.89	1.85	2.67	3.40		100	0.87	1.83	2.65	3.38
	110	0.96	1.97	2.81	3.57		110	0.94	1.95	2.79	3.55
	120	1.03	2.08	2.95	3.73		120	1.01	2.06	2.94	3.72
W14 × 68	80	0.83	1.70	2.45	3.13	W10 × 54	80	0.88	1.76	2.53	3.21
	100	0.99	1.95	2.76	3.49		100	1.04	2.01	2.83	3.57
	110	1.06	2.06	2.91	3.66		110	1.11	2.12	2.98	3.73
	120	1.14	2.18	3.05	3.82		120	1.19	2.24	3.12	3.90
W14 × 53	80	0.91	1.81	2.58	3.27	W10 × 45	80	0.92	1.83	2.60	3.30
	100	1.07	2.05	2.88	3.62		100	1.08	2.07	2.90	3.64
	110	1.15	2.17	3.02	3.78		110	1.16	2.18	3.04	3.80
	120	1.22	2.28	3.16	3.94		120	1.23	2.29	3.18	3.96
W14 × 43	80	1.01	1.93	2.71	3.41	W10 × 33	80	1.06	2.00	2.79	3.49
	100	1.17	2.17	3.00	3.74		100	1.22	2.23	3.07	3.81
	110	1.25	2.28	3.14	3.90		110	1.30	2.34	3.20	3.96
	120	1.32	2.38	3.27	4.05		120	1.37	2.44	3.33	4.12
W12 × 72	80	0.81	1.66	2.41	3.09	W8 × 40	80	0.94	1.85	2.63	3.33
	100	0.91	1.88	2.70	3.43		100	1.10	2.10	2.93	3.67
	110	0.99	1.99	2.84	3.60		110	1.18	2.21	3.07	3.83
	120	1.06	2.10	2.98	3.76		120	1.25	2.32	3.20	3.99
W12 × 58	80	0.88	1.76	2.52	3.21	W8 × 31	80	1.06	2.00	2.78	3.49
	100	1.04	2.01	2.83	3.56		100	1.22	2.23	3.07	3.81
	110	1.11	2.12	2.97	3.73		110	1.29	2.33	3.20	3.97
	120	1.19	2.23	3.11	3.89		120	1.36	2.44	3.33	4.12
W12 × 50	80	0.91	1.81	2.58	3.27	W8 × 24	80	1.14	2.09	2.89	3.59
	100	1.07	2.05	2.88	3.62		100	1.29	2.31	3.16	3.90
	110	1.15	2.17	3.02	3.78		110	1.36	2.42	3.28	4.05
	120	1.22	2.28	3.16	3.94		120	1.43	2.52	3.41	4.20
W12 × 40	80	1.01	1.94	2.72	3.41	W8 × 18	80	1.22	2.20	3.01	3.72
	100	1.17	2.17	3.01	3.75		100	1.36	2.40	3.25	4.01
	110	1.25	2.28	3.14	3.90		110	1.42	2.50	3.37	4.14
	120	1.32	2.39	3.27	4.06		120	1.48	2.59	3.49	4.28
4 × 4 × $^1/_2$ wall thickness	80	0.93	1.90	2.71	3.43	4 double extra strong 0.674 wall thickness	80	0.80	1.75	2.56	3.28
	100	1.08	2.13	2.99	3.76		100	0.95	1.99	2.85	3.62
	110	1.16	2.24	3.13	3.91		110	1.02	2.10	2.99	3.78
	120	1.22	2.34	3.26	4.06		120	1.09	2.20	3.12	3.93
4 × 4 × $^3/_8$ wall thickness	80	1.05	2.03	2.84	3.57	4 extra strong 0.337 wall thickness	80	1.12	2.11	2.93	3.65
	100	1.20	2.25	3.11	3.88		100	1.26	2.32	3.19	3.95
	110	1.27	2.35	3.24	4.02		110	1.33	2.42	3.31	4.09
	120	1.34	2.45	3.37	4.17		120	1.40	2.52	3.43	4.23

(continued)

INTERNATIONAL CODE COUNCIL®
Copyright © 2015 ICC. ALL RIGHTS RESERVED. Accessed by David Dammon on Jun 21, 2017 12:30:52 PM pursuant to License Agreement with ICC. No further reproduction or distribution authorized. ANY UNAUTHORIZED REPRODUCTION OR DISTRIBUTION IS A VIOLATION OF THE FEDERAL COPYRIGHT ACT AND THE LICENSE AGREEMENT, AND SUBJECT TO CIVIL AND CRIMINAL PENALTIES THEREUNDER.

TABLE 722.5.1(5)—continued
FIRE RESISTANCE OF CONCRETE MASONRY PROTECTED STEEL COLUMNS

COLUMN SIZE	CONCRETE MASONRY DENSITY POUNDS PER CUBIC FOOT	MINIMUM REQUIRED EQUIVALENT THICKNESS FOR FIRE-RESISTANCE RATING OF CONCRETE MASONRY PROTECTION ASSEMBLY, T_e (inches)				COLUMN SIZE	CONCRETE MASONRY DENSITY POUNDS PER CUBIC FOOT	MINIMUM REQUIRED EQUIVALENT THICKNESS FOR FIRE-RESISTANCE RATING OF CONCRETE MASONRY PROTECTION ASSEMBLY, T_e (inches)			
		1 hour	2 hours	3 hours	4 hours			1 hour	2 hours	3 hours	4 hours
$4 \times 4 \times {}^{1}/_{4}$ wall thickness	80	1.21	2.20	3.01	3.73	4 standard 0.237 wall thickness	80	1.26	2.25	3.07	3.79
	100	1.35	2.40	3.26	4.02		100	1.40	2.45	3.31	4.07
	110	1.41	2.50	3.38	4.16		110	1.46	2.55	3.43	4.21
	120	1.48	2.59	3.50	4.30		120	1.53	2.64	3.54	4.34
$6 \times 6 \times {}^{1}/_{2}$ wall thickness	80	0.82	1.75	2.54	3.25	5 double extra strong 0.750 wall thickness	80	0.70	1.61	2.40	3.12
	100	0.98	1.99	2.84	3.59		100	0.85	1.86	2.71	3.47
	110	1.05	2.10	2.98	3.75		110	0.91	1.97	2.85	3.63
	120	1.12	2.21	3.11	3.91		120	0.98	2.02	2.99	3.79
$6 \times 6 \times {}^{3}/_{8}$ wall thickness	80	0.96	1.91	2.71	3.42	5 extra strong 0.375 wall thickness	80	1.04	2.01	2.83	3.54
	100	1.12	2.14	3.00	3.75		100	1.19	2.23	3.09	3.85
	110	1.19	2.25	3.13	3.90		110	1.26	2.34	3.22	4.00
	120	1.26	2.35	3.26	4.05		120	1.32	2.44	3.34	4.14
$6 \times 6 \times {}^{1}/_{4}$ wall thickness	80	1.14	2.11	2.92	3.63	5 standard 0.258 wall thickness	80	1.20	2.19	3.00	3.72
	100	1.29	2.32	3.18	3.93		100	1.34	2.39	3.25	4.00
	110	1.36	2.43	3.30	4.08		110	1.41	2.49	3.37	4.14
	120	1.42	2.52	3.43	4.22		120	1.47	2.58	3.49	4.28
$8 \times 8 \times {}^{1}/_{2}$ wall thickness	80	0.77	1.66	2.44	3.13	6 double extra strong 0.864 wall thickness	80	0.59	1.46	2.23	2.92
	100	0.92	1.91	2.75	3.49		100	0.73	1.71	2.54	3.29
	110	1.00	2.02	2.89	3.66		110	0.80	1.82	2.69	3.47
	120	1.07	2.14	3.03	3.82		120	0.86	1.93	2.83	3.63
$8 \times 8 \times {}^{3}/_{8}$ wall thickness	80	0.91	1.84	2.63	3.33	6 extra strong 0.432 wall thickness	80	0.94	1.90	2.70	3.42
	100	1.07	2.08	2.92	3.67		100	1.10	2.13	2.98	3.74
	110	1.14	2.19	3.06	3.83		110	1.17	2.23	3.11	3.89
	120	1.21	2.29	3.19	3.98		120	1.24	2.34	3.24	4.04
$8 \times 8 \times {}^{1}/_{4}$ wall thickness	80	1.10	2.06	2.86	3.57	6 standard 0.280 wall thickness	80	1.14	2.12	2.93	3.64
	100	1.25	2.28	3.13	3.87		100	1.29	2.33	3.19	3.94
	110	1.32	2.38	3.25	4.02		110	1.36	2.43	3.31	4.08
	120	1.39	2.48	3.38	4.17		120	1.42	2.53	3.43	4.22

For SI: 1 inch = 25.4 mm, 1 pound per cubic feet = 16.02 kg/m^3.
Note: Tabulated values assume 1-inch air gap between masonry and steel section.

INTERNATIONAL CODE COUNCIL®
Copyright © 2015 ICC. ALL RIGHTS RESERVED. Accessed by David Dammon on Jun 21, 2017 12:30:52 PM pursuant to License Agreement with ICC. No further reproduction or distribution authorized. ANY UNAUTHORIZED REPRODUCTION OR DISTRIBUTION IS A VIOLATION OF THE FEDERAL COPYRIGHT ACT AND THE LICENSE AGREEMENT, AND SUBJECT TO CIVIL AND CRIMINAL PENALTIES THEREUNDER.

TABLE 722.5.1(6)
FIRE RESISTANCE OF CLAY MASONRY PROTECTED STEEL COLUMNS

COLUMN SIZE	CLAY MASONRY DENSITY, POUNDS PER CUBIC FOOT	MINIMUM REQUIRED EQUIVALENT THICKNESS FOR FIRE-RESISTANCE RATING OF CLAY MASONRY PROTECTION ASSEMBLY, T_e (inches)				COLUMN SIZE	CLAY MASONRY DENSITY, POUNDS PER CUBIC FOOT	MINIMUM REQUIRED EQUIVALENT THICKNESS FOR FIRE-RESISTANCE RATING OF CLAY MASONRY PROTECTION ASSEMBLY, T_e (inches)			
		1 hour	2 hours	3 hours	4 hours			1 hour	2 hours	3 hours	4 hours
W14 × 82	120	1.23	2.42	3.41	4.29	W10 × 68	120	1.27	2.46	3.26	4.35
	130	1.40	2.70	3.78	4.74		130	1.44	2.75	3.83	4.80
W14 × 68	120	1.34	2.54	3.54	4.43	W10 × 54	120	1.40	2.61	3.62	4.51
	130	1.51	2.82	3.91	4.87		130	1.58	2.89	3.98	4.95
W14 × 53	120	1.43	2.65	3.65	4.54	W10 × 45	120	1.44	2.66	3.67	4.57
	130	1.61	2.93	4.02	4.98		130	1.62	2.95	4.04	5.01
W14 × 43	120	1.54	2.76	3.77	4.66	W10 × 33	120	1.59	2.82	3.84	4.73
	130	1.72	3.04	4.13	5.09		130	1.77	3.10	4.20	5.13
W12 × 72	120	1.32	2.52	3.51	4.40	W8 × 40	120	1.47	2.70	3.71	4.61
	130	1.50	2.80	3.88	4.84		130	1.65	2.98	4.08	5.04
W12 × 58	120	1.40	2.61	3.61	4.50	W8 × 31	120	1.59	2.82	3.84	4.73
	130	1.57	2.89	3.98	4.94		130	1.77	3.10	4.20	5.17
W12 × 50	120	1.43	2.65	3.66	4.55	W8 × 24	120	1.66	2.90	3.92	4.82
	130	1.61	2.93	4.02	4.99		130	1.84	3.18	4.28	5.25
W12 × 40	120	1.54	2.77	3.78	4.67	W8 × 18	120	1.75	3.00	4.01	4.91
	130	1.72	3.05	4.14	5.10		130	1.93	3.27	4.37	5.34
STEEL TUBING						**STEEL PIPE**					
NOMINAL TUBE SIZE (inches)	CLAY MASONRY DENSITY, POUNDS PER CUBIC FOOT	MINIMUM REQUIRED EQUIVALENT THICKNESS FOR FIRE-RESISTANCE RATING OF CLAY MASONRY PROTECTION ASSEMBLY, T_e (inches)				NOMINAL PIPE SIZE (inches)	CLAY MASONRY DENSITY, POUNDS PER CUBIC FOOT	MINIMUM REQUIRED EQUIVALENT THICKNESS FOR FIRE-RESISTANCE RATING OF CLAY MASONRY PROTECTION ASSEMBLY, T_e (inches)			
		1 hour	2 hours	3 hours	4 hours			1 hour	2 hours	3 hours	4 hours
4 × 4 × 1/2 wall thickness	120	1.44	2.72	3.76	4.68	4 double extra strong 0.674 wall thickness	120	1.26	2.55	3.60	4.52
	130	1.62	3.00	4.12	5.11		130	1.42	2.82	3.96	4.95
4 × 4 × 3/8 wall thickness	120	1.56	2.84	3.88	4.78	4 extra strong 0.337 wall thickness	120	1.60	2.89	3.92	4.83
	130	1.74	3.12	4.23	5.21		130	1.77	3.16	4.28	5.25
4 × 4 × 1/4 wall thickness	120	1.72	2.99	4.02	4.92	4 standard 0.237 wall thickness	120	1.74	3.02	4.05	4.95
	130	1.89	3.26	4.37	5.34		130	1.92	3.29	4.40	5.37
6 × 6 × 1/2 wall thickness	120	1.33	2.58	3.62	4.52	5 double extra strong 0.750 wall thickness	120	1.17	2.44	3.48	4.40
	130	1.50	2.86	3.98	4.96		130	1.33	2.72	3.84	4.83
6 × 6 × 3/8 wall thickness	120	1.48	2.74	3.76	4.67	5 extra strong 0.375 wall thickness	120	1.55	2.82	3.85	4.76
	130	1.65	3.01	4.13	5.10		130	1.72	3.09	4.21	5.18
6 × 6 × 1/4 wall thickness	120	1.66	2.91	3.94	4.84	5 standard 0.258 wall thickness	120	1.71	2.97	4.00	4.90
	130	1.83	3.19	4.30	5.27		130	1.88	3.24	4.35	5.32
8 × 8 × 1/2 wall thickness	120	1.27	2.50	3.52	4.42	6 double extra strong 0.864 wall thickness	120	1.04	2.28	3.32	4.23
	130	1.44	2.78	3.89	4.86		130	1.19	2.60	3.68	4.67
8 × 8 × 3/8 wall thickness	120	1.43	2.67	3.69	4.59	6 extra strong 0.432 wall thickness	120	1.45	2.71	3.75	4.65
	130	1.60	2.95	4.05	5.02		130	1.62	2.99	4.10	5.08
8 × 8 × 1/4 wall thickness	120	1.62	2.87	3.89	4.78	6 standard 0.280 wall thickness	120	1.65	2.91	3.94	4.84
	130	1.79	3.14	4.24	5.21		130	1.82	3.19	4.30	5.27

For SI: 1 inch = 25.4 mm, 1 pound per cubic foot = 16.02 kg/m^3.

INTERNATIONAL CODE COUNCIL®
Copyright © 2015 ICC. ALL RIGHTS RESERVED. Accessed by David Dammon on Jun 21, 2017 12:30:52 PM pursuant to License Agreement with ICC. No further reproduction or distribution authorized. ANY UNAUTHORIZED REPRODUCTION OR DISTRIBUTION IS A VIOLATION OF THE FEDERAL COPYRIGHT ACT AND THE LICENSE AGREEMENT, AND SUBJECT TO CIVIL AND CRIMINAL PENALTIES THEREUNDER.

TABLE 722.5.1(7)
MINIMUM COVER (inch) FOR STEEL COLUMNS ENCASED IN NORMAL-WEIGHT CONCRETE[a] [FIGURE 722.5.1(6)(c)]

STRUCTURAL SHAPE	FIRE-RESISTANCE RATING (hours)				
	1	1 1/2	2	3	4
W14 × 233	1	1	1	1 1/2	2
× 176					2 1/2
× 132				2	
× 90			1 1/2		
× 61					3
× 48		1 1/2		2 1/2	
× 43					
W12 × 152	1	1	1	2	2 1/2
× 96					
× 65		1 1/2	1 1/2		3
× 50				2 1/2	
× 40					
W10 × 88	1	1 1/2	1 1/2	2	3
× 49	1			2 1/2	
× 45					
× 39					3 1/2
× 33			2		
W8 × 67	1	1	1 1/2	2 1/2	3
× 58					
× 48		1 1/2	2	3	3 1/2
× 31					
× 21					
× 18					4
W6 × 25	1	1 1/2	2	3	3 1/2
× 20		2	2 1/2		4
× 16				3 1/2	
× 15	1 1/2				
× 9					

For SI: 1 inch = 25.4 mm.

a. The tabulated thicknesses are based upon the assumed properties of normal-weight concrete given in Table 722.5.1(2).

TABLE 722.5.1(8)
MINIMUM COVER (inch) FOR STEEL COLUMNS ENCASED IN STRUCTURAL LIGHTWEIGHT CONCRETE[a] [FIGURE 722.5.1(6)(c)]

STRUCTURAL SHAPE	FIRE-RESISTANCE RATING (HOURS)				
	1	1 1/2	2	3	4
W14 × 233	1	1	1	1	1 1/2
× 193				1 1/2	
× 74					2
× 61					2 1/2
× 43			1 1/2	2	
W12 × 65	1	1	1	1 1/2	2
× 53				2	2 1/2
× 40			1 1/2		
W10 × 112	1	1	1	1 1/2	2
× 88					
× 60				2	2 1/2
× 33			1 1/2		
W8 × 35	1	1	1 1/2	2	2 1/2
× 28					3
× 24				2 1/2	
× 18		1 1/2			

For SI: 1 inch = 25.4 mm.

a. The tabulated thicknesses are based upon the assumed properties of structural lightweight concrete given in Table 722.5.1(2).

INTERNATIONAL CODE COUNCIL®
Copyright © 2015 ICC. ALL RIGHTS RESERVED. Accessed by David Dammon on Jun 21, 2017 12:30:52 PM pursuant to License Agreement with ICC. No further reproduction or distribution authorized. ANY UNAUTHORIZED REPRODUCTION OR DISTRIBUTION IS A VIOLATION OF THE FEDERAL COPYRIGHT ACT AND THE LICENSE AGREEMENT, AND SUBJECT TO CIVIL AND CRIMINAL PENALTIES THEREUNDER.

TABLE 722.5.1(9)
MINIMUM COVER (inch) FOR STEEL COLUMNS IN NORMAL-WEIGHT PRECAST COVERS[a] [FIGURE 722.5.1(6)(a)]

STRUCTURAL SHAPE	FIRE-RESISTANCE RATING (hours)				
	1	1 1/2	2	3	4
W14 × 233	1 1/2	1 1/2	1 1/2	2 1/2	3
× 211					3 1/2
× 176			2		
× 145				3	
× 109		2	2 1/2		
× 99					4
× 61				3 1/2	
× 43					4 1/2
W12 × 190	1 1/2	1 1/2	1 1/2	2 1/2	3 1/2
× 152			2		
× 120				3	4
× 96		2	2 1/2	3 1/2	
× 87					4 1/2
× 58					
× 40					
W10 × 112	1 1/2	1 1/2	2	3	3 1/2
× 88					4
× 77		2	2 1/2		
× 54				3 1/2	
× 33					4 1/2
W8 × 67	1 1/2	1 1/2	2	3	4
× 58		2	2 1/2	3 1/2	
× 48					
× 28					4 1/2
× 21		2 1/2	3		
× 18				4	
W6 × 25	1 1/2	2	2 1/2	3 1/2	4 1/2
× 20		2 1/2	3		
× 16				4	
× 12	2				
× 9					5

For SI: 1 inch = 25.4 mm.

a. The tabulated thicknesses are based upon the assumed properties of normal-weight concrete given in Table 722.5.1(2).

TABLE 722.5.1(10)
MINIMUM COVER (inch) FOR STEEL COLUMNS IN STRUCTURAL LIGHTWEIGHT PRECAST COVERS[a] [FIGURE 722.5.1(6)(a)]

STRUCTURAL SHAPE	FIRE-RESISTANCE RATING (hours)				
	1	1 1/2	2	3	4
W14 × 233	1 1/2	1 1/2	1 1/2	2	2 1/2
× 176					3
× 145				2 1/2	
× 132					
× 109			2		
× 99					3 1/2
× 68				3	
× 43					
W12 × 190	1 1/2	1 1/2	1 1/2	2	2 1/2
× 152					3
× 136				2 1/2	
× 106					3 1/2
× 96					
× 87			2		
× 65				3	
× 40					
W10 × 112	1 1/2	1 1/2	1 1/2	2	3
× 100				2 1/2	
× 88					
× 77			2		3 1/2
× 60				3	
× 39					
× 33		2			
W8 × 67	1 1/2	1 1/2	1 1/2	2 1/2	3
× 48			2	3	3 1/2
× 35					
× 28		2			
× 18			2 1/2		4
W6 × 25	1 1/2	2	2	3	3 1/2
× 15			2 1/2		4
× 9				3 1/2	

For SI: 1 inch = 25.4 mm.

a. The tabulated thicknesses are based upon the assumed properties of structural lightweight concrete given in Table 722.5.1(2).

INTERNATIONAL CODE COUNCIL®
Copyright © 2015 ICC. ALL RIGHTS RESERVED. Accessed by David Dammon on Jun 21, 2017 12:30:52 PM pursuant to License Agreement with ICC. No further reproduction or distribution authorized. ANY UNAUTHORIZED REPRODUCTION OR DISTRIBUTION IS A VIOLATION OF THE FEDERAL COPYRIGHT ACT AND THE LICENSE AGREEMENT, AND SUBJECT TO CIVIL AND CRIMINAL PENALTIES THEREUNDER.

722.5.1.2.2 Gypsum wallboard equivalent to concrete. The determination of the *fire resistance* of structural steel columns from Figure 722.5.1(4) is permitted for various thicknesses of gypsum wallboard as a function of the weight-to-heated-perimeter ratio (*W/D*) of the column. For structural steel columns with weight-to-heated-perimeter ratios (*W/D*) greater than 3.65, the thickness of gypsum wallboard required for specified *fire-resistance ratings* shall be the same as the thickness determined for a *W*14 × 233 wide flange shape.

❖ See the commentary to Section 722.

722.5.1.3 Sprayed fire-resistant materials. The *fire resistance* of wide-flange structural steel columns protected with sprayed fire-resistant materials, as illustrated in Figure 722.5.1(5), shall be permitted to be determined from the following expression:

$$R = [C_1(W/D) + C_2]h \qquad \textbf{(Equation 7-13)}$$

where:

R = Fire resistance (minutes).

h = Thickness of sprayed fire-resistant material (inches).

D = Heated perimeter of the structural steel column (inches).

C_1 and C_2 = Material-dependent constants.

W = Weight of structural steel columns (pounds per linear foot).

The *fire resistance* of structural steel columns protected with intumescent or mastic fire-resistant coatings shall be determined on the basis of fire-resistance tests in accordance with Section 703.2.

❖ This section sets forth procedures for determining the fire resistance of structural steel columns protected with spray-applied cementitious or mineral fiber fire protection materials. These procedures do not apply to intumescent or mastic fire-resistant coatings, which must be tested in accordance with the requirements found in Section 703.2. These procedures are based upon an empirical equation, which includes two material-dependent constants. As a result, in order to apply this equation, the values of these two constants must be determined for specific fire protection materials. The purpose of this section is to provide guidance for the determination of these constants so that the resulting equation will be reasonably accurate, and yet slightly conservative, over the range of column shapes for the test data that is available.

Two different techniques are available for determining the two constants. The first requires a knowledge of thermal conductivity and specific heat of the fire protection material at elevated temperatures. Data of this nature is both difficult and expensive to obtain with any reasonable degree of accuracy. As a result, this technique will probably not be widely used, and accordingly, it will not be described in this section.

The second technique involves the use of Equation 7-13 as a means for interpolating between ASTM E119 or UL 263 fire endurance test results on different structural steel columns. Since this technique will undoubtedly be the most widely used, it is described in detail in this section. It is, however, important to recognize that a wide variety of both large- and small-scale tests can be used to accurately determine the required constants. Inherent in Equation 7-13 is the fact that the ratio of fire endurance time to the thickness of fire protection material (*R/h*) varies linearly as a function of the increasing *W/D* ratio of the protected steel column. These concepts are graphically illustrated in the example that follows. It has been found that this assumption is reasonably accurate for lightweight [density less than 50 pcf (801 kg/m^3)] spray-applied materials.

If ASTM E119 or UL 263 fire endurance test results are available for a specific fire protection material on two different structural steel column shapes, the constants C_1 and C_2 can be determined directly. The resulting equation can then be used to determine the thickness of fire protection material required for any specified fire endurance rating when applied to structural steel columns with *W/D* ratios between the largest and smallest column for the actual test results that are available.

To determine the constants, at least four ASTM E119 or UL 263 fire endurance tests or a combination of two ASTM E119 or UL 263 fire endurance tests and six small-scale tests [3-foot-long (914 mm) specimens] are conducted. If the results of the small-scale tests are used, at least two of the test assemblies are necessary to duplicate the ASTM E119 or UL 263 test assemblies for the purpose of establishing correlation. Regardless of the combination of small- and large-scale tests selected, at least two tests are conducted on the largest and two on the smallest columns to establish the limits of applicability to the resulting equation. The constants C_1 and C_2 are to be determined on the basis of the lowest ratios of fire endurance time to fire protection thickness (*R/h*) for these columns.

In addition, the test data need to be evaluated with respect to the assumption that the ratio of fire endurance to fire protection thickness (*R/h*) is reasonably constant for a given column shape [(*W/D*) ratio]. The tests conducted on columns of the same shape are designed so that the resulting fire endurance times are approximately $1^1/_2$ and $3^1/_2$ hours. In evaluating the *R/h* ratios resulting from tests on the same column shape, differences in the range of 10 percent are typical. Differences greater than 20 percent may, however, suggest that Equation 7-13 is not applicable to the specific fire protection material under consideration, and further examination of the test data is warranted.

INTERNATIONAL CODE COUNCIL®
Copyright © 2015 ICC. ALL RIGHTS RESERVED. Accessed by David Dammon on Jun 21, 2017 12:30:52 PM pursuant to License Agreement with ICC. No further reproduction or distribution authorized. ANY UNAUTHORIZED REPRODUCTION OR DISTRIBUTION IS A VIOLATION OF THE FEDERAL COPYRIGHT ACT AND THE LICENSE AGREEMENT, AND SUBJECT TO CIVIL AND CRIMINAL PENALTIES THEREUNDER.

EXAMPLE:

GIVEN: The fire endurance test data given in Commentary Figure 722.5.1.3.

FIND: The thickness of a spray-applied cementitious material required for a 3-hour rating on a W12 × 136.

SOLUTION:

1. Determine C_1 and C_2. From the end points of the graph:

   R/h = 75 for a W/D ratio of 0.6 and

   R/h = 200 for a W/D ratio of 2.5.

   From this, two equations with two unknowns are created:

   $75 = C_1 (0.6) + C_2$.

   $200 = C_1 (2.5) + C_2$.

   Solving these results in: $C_1 = 65.79$; $C_2 = 35.53$ and Equation 7-13, with h in the denominator, becomes:

   $R/h = 65.79 (W/D) + 35.53$.

2. From Table 722.5.1(1), a *W*12 × 136 has a W/D ratio of 1.82.

3. The required fire resistance is 180 minutes. Calculating for h yields:

   $180 = [(65.79)(1.82) + 35.53]h$

   $h = 1.16$ inches (29 mm).

Therefore, the required thickness of the spray-applied material is 1.16 inches (29 mm).

722.5.1.3.1 Material-dependent constants. The material-dependent constants, C_1 and C_2, shall be determined for specific fire-resistant materials on the basis of standard fire endurance tests in accordance with Section 703.2. Unless evidence is submitted to the *building official* substantiating a broader application, this expression shall be limited to determining the *fire resistance* of structural steel columns with weight-to-heated-perimeter ratios (W/D) between the largest and smallest columns for which standard fire-resistance test results are available.

❖ See the commentary to Section 722.

722.5.1.3.2 Identification. Sprayed fire-resistant materials shall be identified by density and thickness required for a given *fire-resistance rating*.

❖ See the commentary to Section 722.

722.5.1.4 Concrete-protected columns. The *fire resistance* of structural steel columns protected with concrete, as illustrated in Figure 722.5.1(6)(a) and (b), shall be permitted to be determined from the following expression:

$$R = R_o(1 + 0.03_m) \qquad \textbf{(Equation 7-14)}$$

where:

$$R_o = 10\,(W/D)^{0.7} + 17\,(h^{1.6}/k_c^{0.2}) \times [1 + 26\,\{H/p_c c_c h\,(L + h)\}^{0.8}]$$

As used in these expressions:

R = Fire endurance at equilibrium moisture conditions (minutes).

R_o = Fire endurance at zero moisture content (minutes).

m = Equilibrium moisture content of the concrete by volume (percent).

W = Average weight of the structural steel column (pounds per linear foot).

D = Heated perimeter of the structural steel column (inches).

h = Thickness of the concrete cover (inches).

k_c = Ambient temperature thermal conductivity of the concrete (Btu/hr ft °F).

H = Ambient temperature thermal capacity of the steel column = 0.11W (Btu/ ft °F).

p_c = Concrete density (pounds per cubic foot).

c_c = Ambient temperature specific heat of concrete (Btu/lb °F).

L = Interior dimension of one side of a square concrete box protection (inches).

❖ **EXAMPLE:**

GIVEN: A *W*8 × 28 steel column encased in lightweight concrete [density = 110 pcf (1762 kg/m^3)] shown in Code Figure 722.5.1(4), with all reentrant spaces filled with concrete cover 1.25 inches (32 mm)

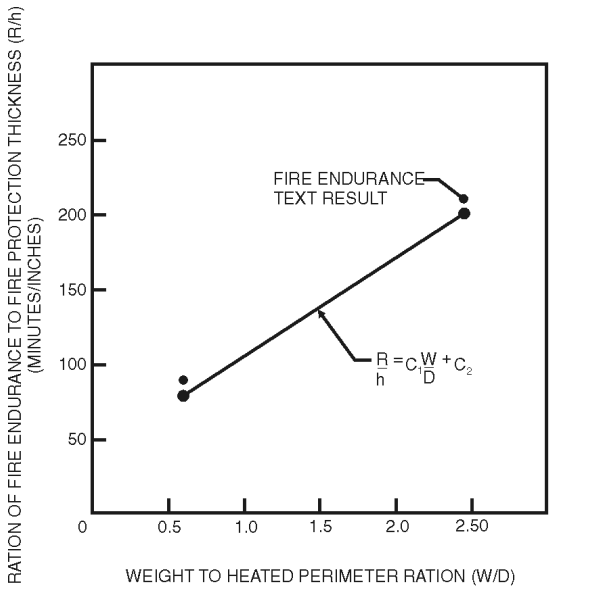

ILLUSTRATION OF THE PROCEDURE FOR DETERMINING THE MATERIAL DEPENDENT CONSTANTS FOR SPRAY-APPLIED CEMENTITIOUS AND MATERIAL FIBER FIRE PROTECTION MATERIAL

Figure 722.5.1.3
EXAMPLE—SPRAY-APPLIED MATERIALS, FIRE ENDURANCE TEST DATA

INTERNATIONAL CODE COUNCIL®
Copyright © 2015 ICC. ALL RIGHTS RESERVED. Accessed by David Dammon on Jun 21, 2017 12:30:52 PM pursuant to License Agreement with ICC. No further reproduction or distribution authorized. ANY UNAUTHORIZED REPRODUCTION OR DISTRIBUTION IS A VIOLATION OF THE FEDERAL COPYRIGHT ACT AND THE LICENSE AGREEMENT, AND SUBJECT TO CIVIL AND CRIMINAL PENALTIES THEREUNDER.

and a moisture content of 5 percent. The web thickness is 0.285[2].

FIND: The fire-resistance rating.

SOLUTION:

D = 4(6.535) + 2(8.06) - 2(0.285) = 41.69 inches (1059 mm).

W/D = 28 lb/ft/41.69² = 0.67 lb/ft-in.

h = 1.25 inches (32 mm).

k_c = 0.35 Btu/hr × °F.

c_c = 0.20 Btu/lb × °F.

r_c = 110 pcf (1762 kg/m^3).

L = (6.535 + 8.06)/2 = 7.30 inches (185 mm).

A_s = 8.25 square inches (.005 m^2).

H = 11(28) + [(110)(0.20)/144][(6.535)(8.06) - 8.25] = 9.87

$$R_0 = 10(0.67)^{0.7} + 17\left(\frac{(1.25)^{1.6}}{(0.35)^{0.2}}\right)$$

$$\left(1 + 26\left[\frac{9.87}{(110)(0.2)(1.25)(7.3 + 1.25)}\right]^{0.8}\right)$$

R_o = 99 minutes.

Therefore,

R = 99[1 + 0.33(5)] = 114 minutes.

For comparison purposes, the minimum cover requirement for a *W*8 × 28 steel column from Table 722.5.1(8) is 1 inch (25 mm) for a $1^1/_2$-hour rating. The column does not quite meet the required fire rating for a 2-hour column since 1.5 inches (38 mm) is required. Therefore, the fire resistance of the column is $1^1/_2$ hours.

722.5.1.4.1 Reentrant space filled. For wide-flange structural steel columns completely encased in concrete with all reentrant spaces filled [Figure 722.5.1(6)(c)], the thermal capacity of the concrete within the reentrant spaces shall be permitted to be added to the thermal capacity of the steel column, as follows:

$$H = 0.11\ W + (p_c c_c/144)\ (b_f d - A_s)$$

(Equation 7-15)

where:

b_f = Flange width of the structural steel column (inches).

d = Depth of the structural steel column (inches).

A_s = Cross-sectional area of the steel column (square inches).

❖ See the commentary to Section 722.

722.5.1.4.2 Concrete properties unknown. If specific data on the properties of concrete are not available, the values given in Table 722.5.1(2) are permitted.

❖ See the commentary to Section 722.

722.5.1.4.3 Minimum concrete cover. For structural steel column encased in concrete with all reentrant spaces filled, Figure 722.5.1(6)(c) and Tables 722.5.1(7) and 722.5.1(8) indicate the thickness of concrete cover required for various *fire-resistance ratings* for typical wide-flange sections. The thicknesses of concrete indicated in these tables apply to structural steel columns larger than those listed.

❖ See the commentary to Section 722.

722.5.1.4.4 Minimum precast concrete cover. For structural steel columns protected with precast concrete column covers as shown in Figure 722.5.1(6)(a), Tables 722.5.1(9) and 722.5.1(10) indicate the thickness of the column covers required for various *fire-resistance ratings* for typical wide-flange shapes. The thicknesses of concrete given in these tables apply to structural steel columns larger than those listed.

❖ See the commentary to Section 722.

722.5.1.4.5 Masonry protection. The *fire resistance* of structural steel columns protected with concrete masonry units or clay masonry units as illustrated in Figure 722.5.1(7) shall be permitted to be determined from the following expression:

$$R = 0.17\ (W/D)^{0.7} + [0.285\ (T_e^{1.6}/K^{0.2})]\ [1.0 + 42.7\ \{(A_s/d_m\ T_e)/(0.25p + T_e)\}^{0.8}]$$

(Equation 7-16)

where:

R = *Fire-resistance rating* of column assembly (hours).

W = Average weight of structural steel column (pounds per foot).

D = Heated perimeter of structural steel column (inches) [see Figure 722.5.1(7)].

T_e = Equivalent thickness of concrete or clay masonry unit (inches) (see Table 722.3.2 Note a or Section 722.4.1).

K = Thermal conductivity of concrete or clay masonry unit (Btu/hr · ft · °F) [see Table 722.5.1(3)].

A_s = Cross-sectional area of structural steel column (square inches).

d_m = Density of the concrete or clay masonry unit (pounds per cubic foot).

p = Inner perimeter of concrete or clay masonry protection (inches) [see Figure 722.5.1(7)].

❖ See the commentary to Section 722.

722.5.1.4.6 Equivalent concrete masonry thickness. For structural steel columns protected with concrete masonry, Table 722.5.1(5) gives the equivalent thickness of concrete masonry required for various *fire-resistance ratings* for typical column shapes. For structural steel columns protected with clay masonry, Table 722.5.1(6) gives the equivalent

INTERNATIONAL CODE COUNCIL®
Copyright © 2015 ICC. ALL RIGHTS RESERVED. Accessed by David Dammon on Jun 21, 2017 12:30:52 PM pursuant to License Agreement with ICC. No further reproduction or distribution authorized. ANY UNAUTHORIZED REPRODUCTION OR DISTRIBUTION IS A VIOLATION OF THE FEDERAL COPYRIGHT ACT AND THE LICENSE AGREEMENT, AND SUBJECT TO CIVIL AND CRIMINAL PENALTIES THEREUNDER.

thickness of concrete masonry required for various *fire-resistance ratings* for typical column shapes.

❖ See the commentary to Section 722.

722.5.2 Structural steel beams and girders. The *fire-resistance ratings* of structural steel beams and girders shall be based upon the size of the element and the type of protection provided in accordance with this section.

❖ See the commentary to Section 722.

722.5.2.1 Determination of *fire resistance*. These procedures establish a basis for determining resistance of structural steel beams and girders that differ in size from that specified in *approved* fire-resistance-rated assemblies as a function of the thickness of fire-resistant material and the weight (*W*) and heated perimeter (*D*) of the beam or girder. As used in these sections, *W* is the average weight of a *structural steel element* in pounds per linear foot (plf). The heated perimeter, *D*, is the inside perimeter of the fire-resistant material in inches as illustrated in Figure 722.5.2.

❖ See the commentary to Section 722.

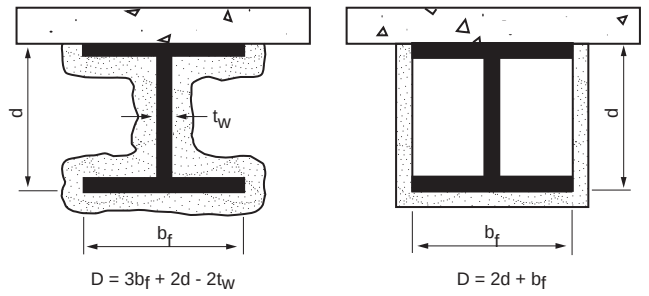

FIGURE 722.5.2
DETERMINATION OF THE HEATED PERIMETER OF STRUCTURAL STEEL BEAMS AND GIRDERS

722.5.2.1.1 Weight-to-heated perimeter. The weight-to-heated-perimeter ratios (*W/D*), for both contour and box fire-resistant protection profiles, for the wide flange shapes most often used as beams or girders are given in Table 722.5.1(4). For different shapes, the weight-to-heated-perimeter ratios (*W/D*) shall be determined in accordance with the definitions given in this section.

❖ See the commentary to Section 722.

722.5.2.1.2 Beam and girder substitutions. Except as provided for in Section 722.5.2.2, structural steel beams in *approved* fire-resistance-rated assemblies shall be considered the minimum permissible size. Other beam or girder shapes shall be permitted to be substituted provided that the weight-to-heated-perimeter ratio (*W/D*) of the substitute beam is equal to or greater than that of the beam specified in the *approved* assembly.

❖ This section defines a general rule for the substitution of different steel beam and girder shapes in all fire-resistant assemblies. In the past, the substitution of larger beams has been permitted based upon the thickness of web and flange elements. Extensive research at UL has proven that the heat transfer to a protected steel beam or girder is a direct function of the *W/D* ratio. As a result, beam substitutions should be based upon *W/D* ratios, as defined in this section. The significance of the thickness of web and flange elements is inherently included in the determination of *W/D* ratios. Code Figure 722.5.2 illustrates the procedure for determining heated perimeters (*D*), and Table 722.5.1(4) provides *W/D* ratios for the most commonly used wide flange beam and girder shapes.

722.5.2.2 Sprayed fire-resistant materials. The provisions in this section apply to structural steel beams and girders protected with sprayed fire-resistant materials. Larger or smaller beam and girder shapes shall be permitted to be substituted for beams specified in *approved* unrestrained or restrained fire-resistance-rated assemblies, provided that the thickness of the fire-resistant material is adjusted in accordance with the following expression:

$$h_2 = h_1 [(W_1 / D_1) + 0.60] / [(W_2 / D_2) + 0.60] \quad \textbf{(Equation 7-17)}$$

where:

h = Thickness of sprayed fire-resistant material in inches.

W = Weight of the structural steel beam or girder in pounds per linear foot.

D = Heated perimeter of the structural steel beam in inches.

Subscript 1 refers to the beam and fire-resistant material thickness in the *approved* assembly.

Subscript 2 refers to the substitute beam or girder and the required thickness of fire-resistant material.

The *fire resistance* of structural steel beams and girders protected with intumescent or mastic fire-resistant coatings shall be determined on the basis of fire-resistance tests in accordance with Section 703.2.

❖ This section defines an equation for adjusting the thickness of spray-applied cementitious and mineral fiber materials as a function of *W/D* ratios. This equation was developed by UL, and appropriate limitations have been included. The minimum *W/D* ratio of 0.37 in Section 722.5.2.2.1 will prevent the use of this equation for determining the fire resistance of very small shapes that have not been tested. The $^3/_8$-inch (9.5 mm) minimum thickness of protection is a practical limit based upon the most commonly used spray-applied fire protection materials.

EXAMPLE:

GIVEN: Determine the thickness of spray-applied fire protection required to provide a 2-hour fire-resistance rating for a W12 × 16 beam to be substituted for a W8 × 15 beam requiring 1.44 inches (37 mm) of protection for the same rating.

SOLUTION:

From Table 722.5.1(4):

W_1/D_1 = 0.54 for W8 × 15

INTERNATIONAL CODE COUNCIL®
Copyright © 2015 ICC. ALL RIGHTS RESERVED. Accessed by David Dammon on Jun 21, 2017 12:30:52 PM pursuant to License Agreement with ICC. No further reproduction or distribution authorized. ANY UNAUTHORIZED REPRODUCTION OR DISTRIBUTION IS A VIOLATION OF THE FEDERAL COPYRIGHT ACT AND THE LICENSE AGREEMENT, AND SUBJECT TO CIVIL AND CRIMINAL PENALTIES THEREUNDER.

W_2/D_2 = 0.45 for W12 × 16

h_1 = 1.44 inches.

$$h_2 = \left[\frac{0.54 + 0.60}{0.45 + 0.60}\right] + 1.44$$

= 1.56 inches (39 mm).

It is noted within this section that intumescent or mastic fire-resistant coatings are required to be tested in accordance with the requirements of Section 703.2.

722.5.2.2.1 Minimum thickness. The use of Equation 7-17 is subject to the following conditions:

1. The weight-to-heated-perimeter ratio for the substitute beam or girder (W_2/D_2) shall be not less than 0.37.
2. The thickness of fire protection materials calculated for the substitute beam or girder (T_1) shall be not less than $^3/_8$ inch (9.5 mm).
3. The unrestrained or restrained beam rating shall be not less than 1 hour.
4. Where used to adjust the material thickness for a restrained beam, the use of this procedure is limited to structural steel sections classified as compact in accordance with AISC 360.

❖ See the commentary to Section 722.5.2.2.

722.5.2.3 Structural steel trusses. The *fire resistance* of structural steel trusses protected with fire-resistant materials sprayed to each of the individual truss elements shall be permitted to be determined in accordance with this section. The thickness of the fire-resistant material shall be determined in accordance with Section 722.5.1.3. The weight-to-heated-perimeter ratio (*W/D*) of truss elements that can be simultaneously exposed to fire on all sides shall be determined on the same basis as columns, as specified in Section 722.5.1.1. The weight-to-heated-perimeter ratio (*W/D*) of truss elements that directly support floor or roof assembly shall be determined on the same basis as beams and girders, as specified in Section 722.5.2.1.

The *fire resistance* of structural steel trusses protected with intumescent or mastic fire-resistant coatings shall be determined on the basis of fire-resistance tests in accordance with Section 703.2.

❖ This section describes the application of spray-applied fire protection to structural steel trusses when each truss element is individually protected with spray-applied materials. The thickness of protection is determined using the column equation specified in Section 722.5.1.3. For trusses, the column equation is more technically correct than the beam equation, since it requires greater thicknesses of protection than the beam equation. Most truss elements can be exposed to fire on all four sides simultaneously. As a result, the heated perimeter of truss elements should be determined in the same manner as for columns. However, an exception is included for top chord elements that directly support floor or roof construction. The heated perimeter of such elements should be determined in the same manner as for beams and girders.

This section notes that intumescent and mastic fire-resistant materials must be tested in accordance with the requirements in Section 703.2.

722.6 Wood assemblies. The provisions of this section contain procedures by which the *fire-resistance ratings* of wood assemblies are established by calculations.

❖ The information contained in this section is based on Technical Paper No. 222 of the Division of Building Research Council of Canada entitled “Fire Endurance of Light Framed and Miscellaneous Assemblies” and NBS Report BMS 92. The fire-resistance rating is equal to the sum of the time assigned to the membranes [see Table 722.6.2(1)], the time assigned to the framing members [see Table 722.6.2(2)] and the time assigned for additional contribution by other protective measures, such as insulation [see Table 722.6.2(5)]. The membrane on the unexposed side is not included in the calculations. It is assumed that once the structural members fail, the entire assembly fails. The time assigned to an individual membrane is the individual contribution to the overall fire-resistance rating of the complete assembly. The assigned time is not to be confused with the fire-resistance rating of the membranes. Fire-resistance rating takes into account the rise in temperature on the unexposed side of the membrane. Times that have been assigned to membranes on the fire-exposed side of the assembly are based on their ability to remain in place during fire tests.

The fire-resistance rating of wood-frame assemblies is equal to the sum of the time assigned to the various components (membranes) on the fire-exposed side and the structural members. Interior walls and partitions, exterior walls within 5 feet (1524 mm) of a lot line or assumed lot line and some shaft walls must be designed for fire resistance by assuming that either side of the wall is exposed to fire.

Mineral fiber insulation provides additional protection to wood studs by shielding the studs from exposure to the furnace, thus delaying the time of collapse. The use of reinforcement in the membrane exposed to fire also adds to the fire resistance by extending the time to failure. Special care must be taken to ensure that all insulation materials used in conjunction with this method satisfy the weight criteria of Table 722.6.2(5).

The following are examples of how to use this section:

EXAMPLE 1:

GIVEN: The exterior wall assembly shown in Commentary Figure 722.6 having a layer of $^{15}/_{32}$-inch (12 mm) wood structural panel bonded with exterior glue covered with a layer of $^5/_8$-inch (15.8 mm)

INTERNATIONAL CODE COUNCIL®
Copyright © 2015 ICC. ALL RIGHTS RESERVED. Accessed by David Dammon on Jun 21, 2017 12:30:52 PM pursuant to License Agreement with ICC. No further reproduction or distribution authorized. ANY UNAUTHORIZED REPRODUCTION OR DISTRIBUTION IS A VIOLATION OF THE FEDERAL COPYRIGHT ACT AND THE LICENSE AGREEMENT, AND SUBJECT TO CIVIL AND CRIMINAL PENALTIES THEREUNDER.

gypsum wallboard and attached to studs spaced at 16 inches (406 mm) on center (o.c.).

FIND: Does the wall assembly qualify as a 1-hour fire-resistant wall assembly?

SOLUTION: From Tables 722.6.2(1) and 722.6.2(2):

Wood structural panel	= 10 minutes.
Gypsum wallboard	= 30 minutes.
Wood studs	= 20 minutes.
Total	= 60 minutes.

Therefore, the wall does qualify as a 1-hour wall. If the wall is an interior wall, both sides would be required to be fire protected with at least 40 minutes of membrane coverings (60 minutes - 20 minutes for wood frame).

It should be noted that Section 722.6.2.3 requires the exterior side to be protected in accordance with Table 722.6.2(3) or any membrane that is assigned a time of at least 15 minutes as listed in Table 722.6.2(1).

It should also be noted that if the wall cavities between the studs are filled with mineral fiber batts weighing no less than that specified in Table 722.6.2(5), the $^{15}/_{32}$-inch (12 mm) plywood membrane layer could be eliminated because the insulation adds 15 minutes of fire resistance, as indicated in Section 722.6.2.5 and Table 722.6.2(5). Thus, adding the contribution times for the $^{5}/_{8}$-inch (15.9 mm) gypsum board, the wood framing and the insulation (30 minutes + 20 minutes + 15 minutes), the resultant rating for the wall would be 65 minutes and meet a 1-hour fire-resistance rating.

EXAMPLE 2:

GIVEN: A floor/ceiling assembly using wood joists spaced at 16 inches (406 mm) o.c., protected on the bottom side (ceiling side) with two layers of $^{1}/_{2}$-inch (12.7 mm) Type X gypsum wallboard and protected on the upper side (floor side) with a $^{15}/_{32}$-inch (12 mm) plywood subfloor, a $^{3}/_{8}$-inch (15.9 mm) panel-type underlayment and carpet.

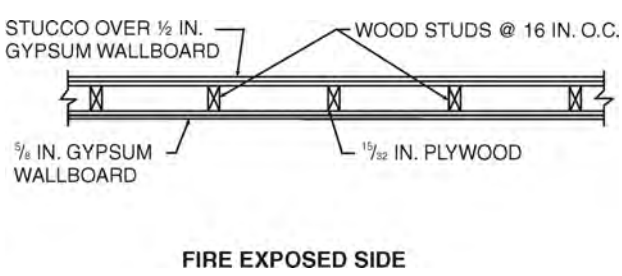

For SI: 1 inch = 25.4 mm.

Figure 722.6
EXAMPLE—WOOD STUD WALL WITH WALLBOARD

FIND: Does the floor/ceiling assembly meet the requirements of a 1-hour fire-resistance-rated assembly?

SOLUTION: Referring to Sections 722.6.2.1 and 722.6.2.4, Table 722.6.2(1) indicates that the time contribution for each layer of $^{1}/_{2}$-inch (12.7 mm) Type X gypsum wallboard is 25 minutes. The time of contribution for wood joists 16 inches (406 mm) o.c. is listed in Table 722.6.2(2) as 10 minutes. By adding the two layers of gypsum board (2 × 25 minutes) to the wood frame (10 minutes), a fire-resistance rating of 60 minutes, or 1 hour, can be obtained. It should be noted that Section 722.6.2.4 requires the upper membrane to be specified as in Table 722.6.2(4) or any membrane that has a time of contribution of at least 15 minutes as listed in Table 722.6.2(1).

If the above example had been a roof/ceiling assembly, the upper membrane would have been treated the same. If the proposed assembly is a ceiling with an attic above, Section 722.6.2.4 notes the exception to Section 711.2.6, which allows the elimination of the upper membrane.

TABLE 722.6.2(1)
TIME ASSIGNED TO WALLBOARD MEMBRANES[a, b, c, d]

DESCRIPTION OF FINISH	TIME[e] (minutes)
$^{3}/_{8}$-inch wood structural panel bonded with exterior glue	5
$^{15}/_{32}$-inch wood structural panel bonded with exterior glue	10
$^{19}/_{32}$-inch wood structural panel bonded with exterior glue	15
$^{3}/_{8}$-inch gypsum wallboard	10
$^{1}/_{2}$-inch gypsum wallboard	15
$^{5}/_{8}$-inch gypsum wallboard	30
$^{1}/_{2}$-inch Type X gypsum wallboard	25
$^{5}/_{8}$-inch Type X gypsum wallboard	40
Double $^{3}/_{8}$-inch gypsum wallboard	25
$^{1}/_{2}$-inch + $^{3}/_{8}$-inch gypsum wallboard	35
Double $^{1}/_{2}$-inch gypsum wallboard	40

For SI: 1 inch = 25.4 mm.

a. These values apply only where membranes are installed on framing members that are spaced 16 inches o.c. or less.

b. Gypsum wallboard installed over framing or furring shall be installed so that all edges are supported, except $^{5}/_{8}$-inch Type X gypsum wallboard shall be permitted to be installed horizontally with the horizontal joints staggered 24 inches each side and unsupported but finished.

c. On wood frame floor/ceiling or roof/ceiling assemblies, gypsum board shall be installed with the long dimension perpendicular to framing members and shall have all joints finished.

d. The membrane on the unexposed side shall not be included in determining the fire resistance of the assembly. Where dissimilar membranes are used on a wall assembly, the calculation shall be made from the least fire-resistant (weaker) side.

e. The time assigned is not a finished rating.

INTERNATIONAL CODE COUNCIL®
Copyright © 2015 ICC. ALL RIGHTS RESERVED. Accessed by David Dammon on Jun 21, 2017 12:30:52 PM pursuant to License Agreement with ICC. No further reproduction or distribution authorized. ANY UNAUTHORIZED REPRODUCTION OR DISTRIBUTION IS A VIOLATION OF THE FEDERAL COPYRIGHT ACT AND THE LICENSE AGREEMENT, AND SUBJECT TO CIVIL AND CRIMINAL PENALTIES THEREUNDER.

The fastening requirements for assemblies developed by Section 722.6 should be in accordance with Chapter 23 as stated in Section 722.6.2.6.

722.6.1 General. This section contains procedures for calculating the *fire-resistance ratings* of walls, floor/ceiling and roof/ceiling assemblies based in part on the standard method of testing referenced in Section 703.2.

❖ See the commentary to Section 722.6.

722.6.1.1 Maximum fire-resistance rating. *Fire-resistance ratings* calculated for assemblies using the methods in Section 722.6 shall be limited to a maximum of 1 hour.

❖ See the commentary to Section 722.6.

722.6.1.2 Dissimilar membranes. Where dissimilar membranes are used on a wall assembly that requires consideration of fire exposure from both sides, the calculation shall be made from the least fire-resistant (weaker) side.

❖ All wood wall assemblies that require fire resistance from both sides, by which the fire-resistance rating is calculated, must have a membrane on each side. However, where dissimilar membranes are utilized, the calculation shall be made from the least fire-resistant side.

722.6.2 Walls, floors and roofs. These procedures apply to both load-bearing and nonload-bearing assemblies.

❖ See the commentary to Section 722.6.

TABLE 722.6.2(2)
TIME ASSIGNED FOR CONTRIBUTION OF WOOD FRAME [a, b, c]

DESCRIPTION	TIME ASSIGNED TO FRAME (minutes)
Wood studs 16 inches o.c.	20
Wood floor and roof joists 16 inches o.c.	10

For SI: 1 inch = 25.4 mm.

a. This table does not apply to studs or joists spaced more than 16 inches o.c.

b. All studs shall be nominal 2 × 4 and all joists shall have a nominal thickness of not less than 2 inches.

c. Allowable spans for joists shall be determined in accordance with Sections 2308.4.2.1, 2308.7.1 and 2308.7.2.

TABLE 722.6.2(3)
MEMBRANE[a] ON EXTERIOR FACE OF WOOD STUD WALLS

SHEATHING	PAPER	EXTERIOR FINISH
$^5/_8$-inch T & G lumber $^5/_{16}$-inch exterior glue wood structural panel $^1/_2$-inch gypsum wallboard $^5/_8$-inch gypsum wallboard $^1/_2$-inch fiberboard	Sheathing paper	Lumber siding Wood shingles and shakes $^1/_4$-inch fiber-cement lap, panel or shingle siding $^1/_4$-inch wood structural panels-exterior type $^1/_4$-inch hardboard Metal siding Stucco on metal lath Masonry veneer Vinyl siding
None	—	$^3/_8$-inch exterior-grade wood structural panels

For SI: 1 inch = 25.4 mm.

a. Any combination of sheathing, paper and exterior finish is permitted.

TABLE 722.6.2(4)
FLOORING OR ROOFING OVER WOOD FRAMING[a]

ASSEMBLY	STRUCTURAL MEMBERS	SUBFLOOR OR ROOF DECK	FINISHED FLOORING OR ROOFING
Floor	Wood	$^{15}/_{32}$-inch wood structural panels or $^{11}/_{16}$-inch T & G softwood	Hardwood or softwood flooring on building paper resilient flooring, parquet floor felted-synthetic fiber floor coverings, carpeting, or ceramic tile on $^1/_4$-inch-thick fiber-cement underlayment or $^3/_8$-inch-thick panel-type underlay Ceramic tile on $1^1/_4$-inch mortar bed
Roof	Wood	$^{15}/_{32}$-inch wood structural panels or $^{11}/_{16}$-inch T & G softwood	Finished roofing material with or without insulation

For SI: 1 inch = 25.4 mm.

a. This table applies only to wood joist construction. It is not applicable to wood truss construction.

INTERNATIONAL CODE COUNCIL®
Copyright © 2015 ICC. ALL RIGHTS RESERVED. Accessed by David Dammon on Jun 21, 2017 12:30:52 PM pursuant to License Agreement with ICC. No further reproduction or distribution authorized. ANY UNAUTHORIZED REPRODUCTION OR DISTRIBUTION IS A VIOLATION OF THE FEDERAL COPYRIGHT ACT AND THE LICENSE AGREEMENT, AND SUBJECT TO CIVIL AND CRIMINAL PENALTIES THEREUNDER.

722.6.2.1 Fire-resistance rating of wood frame assemblies. The *fire-resistance rating* of a wood frame assembly is equal to the sum of the time assigned to the membrane on the fire-exposed side, the time assigned to the framing members and the time assigned for additional contribution by other protective measures such as insulation. The membrane on the unexposed side shall not be included in determining the *fire resistance* of the assembly.

❖ See the commentary to Section 722.6.

722.6.2.2 Time assigned to membranes. Table 722.6.2(1) indicates the time assigned to membranes on the fire-exposed side.

❖ See the commentary to Section 722.6.

722.6.2.3 Exterior walls. For an exterior wall with a *fire separation distance* greater than 10 feet (3048 mm), the wall is assigned a rating dependent on the interior membrane and the framing as described in Tables 722.6.2(1) and 722.6.2(2). The membrane on the outside of the nonfire-exposed side of exterior walls with a *fire separation distance* greater than 10 feet (3048 mm) shall consist of sheathing, sheathing paper and siding as described in Table 722.6.2(3).

❖ See the commentary to Section 722.6.

722.6.2.4 Floors and roofs. In the case of a floor or roof, the standard test provides only for testing for fire exposure from below. Except as noted in Section 703.3, Item 5, floor or roof assemblies of wood framing shall have an upper membrane consisting of a subfloor and finished floor conforming to Table 722.6.2(4) or any other membrane that has a contribution to *fire resistance* of not less than 15 minutes in Table 722.6.2(1).

❖ See the commentary to Section 722.6.

722.6.2.5 Additional protection. Table 722.6.2(5) indicates the time increments to be added to the *fire resistance* where glass fiber, rockwool, slag mineral wool or cellulose insulation is incorporated in the assembly.

❖ See the commentary to Section 722.6.

722.6.2.6 Fastening. Fastening of wood frame assemblies and the fastening of membranes to the wood framing members shall be done in accordance with Chapter 23.

❖ See the commentary to Section 722.6.

Bibliography

The following resource materials were used in the preparation of the commentary for this chapter of the code.

Allen L.W., M. Galbreath and W.W. Stanzak. *Fire Endurance Tests on Unit Masonry Walls with Gypsum Wallboard (NRCC 13901)*. Division of Building Research, National Research Council of Canada, 1980.

Analytical Methods of Determining Fire Endurance of Concrete and Masonry Members — Model Code Approved Procedures (SR267.01B). Skokie, IL: Concrete and Masonry Industry Fire Safety Committee, 1987.

ASTM E119-2012A, *Test Methods for Fire Tests of Building Construction and Materials*. West Conshohocken, PA: ASTM International, 2012.

ASTM E136-12, *Test Method for Behavior of Materials in a Vertical Tube Furnace at 750°C*. West Conshohocken, PA: ASTM International, 2012.

ASTM E814-13, *Test Method for Fire Tests of Through-Penetration Fire Stops*. West Conshohocken, PA: ASTM International, 2013.

TABLE 722.6.2(4)
FLOORING OR ROOFING OVER WOOD FRAMING[a]

ASSEMBLY	STRUCTURAL MEMBERS	SUBFLOOR OR ROOF DECK	FINISHED FLOORING OR ROOFING
Floor	Wood	$^{15}/_{32}$-inch wood structural panels or $^{11}/_{16}$-inch T & G softwood	Hardwood or softwood flooring on building paper resilient flooring, parquet floor felted-synthetic fiber floor coverings, carpeting, or ceramic tile on $^{1}/_{4}$-inch-thick fiber-cement underlayment or $^{3}/_{8}$-inch-thick panel-type underlay Ceramic tile on $1^{1}/_{4}$-inch mortar bed
Roof	Wood	$^{15}/_{32}$-inch wood structural panels or $^{11}/_{16}$-inch T & G softwood	Finished roofing material with or without insulation

For SI: 1 inch = 25.4 mm.

a. This table applies only to wood joist construction. It is not applicable to wood truss construction.

TABLE 722.6.2(5)
TIME ASSIGNED FOR ADDITIONAL PROTECTION

DESCRIPTION OF ADDITIONAL PROTECTION	FIRE RESISTANCE (minutes)
Add to the *fire-resistance rating* of wood stud walls if the spaces between the studs are completely filled with glass fiber mineral wool batts weighing not less than 2 pounds per cubic foot (0.6 pound per square foot of wall surface) or rockwool or slag material wool batts weighing not less than 3.3 pounds per cubic foot (1 pound per square foot of wall surface), or cellulose insulation having a nominal density not less than 2.6 pounds per cubic foot.	15

For SI: 1 pound/cubic foot = 16.0185 kg/m^3.

INTERNATIONAL CODE COUNCIL®
Copyright © 2015 ICC. ALL RIGHTS RESERVED. Accessed by David Dammon on Jun 21, 2017 12:30:52 PM pursuant to License Agreement with ICC. No further reproduction or distribution authorized. ANY UNAUTHORIZED REPRODUCTION OR DISTRIBUTION IS A VIOLATION OF THE FEDERAL COPYRIGHT ACT AND THE LICENSE AGREEMENT, AND SUBJECT TO CIVIL AND CRIMINAL PENALTIES THEREUNDER.

BMS 92, *Fire Resistance Classifications, Building Materials and Structures*. National Bureau of Standards, 1942.

CPSC 16 CFR, Part 1209-(2002), *Interim Safety Standard for Cellulose Insulation*. Washington, DC: Consumer Product Safety Commission, 2002.

CPSC 16 CFR, Part 1404-(2002), *Cellulose Insulation*. Washington, DC: Consumer Product Safety Commission, 2002.

Designing Fire Protection for Steel Beams. Washington, DC: American Iron and Steel Institute, 1984.

Designing Fire Protection for Steel Columns. Washington, DC: American Iron and Steel Institute, 1980.

Designing Fire Protection for Steel Trusses. Washington, DC: American Iron and Steel Institute, 1981.

"Fire Endurance of Concrete Slabs as Influenced by Thickness, Aggregate Type and Moisture." *PCA Bulletin 223*. Skokie, IL: Portland Cement Association.

Fire Resistance Classifications of Building Construction. National Bureau of Standards, 1942.

Fire Resistance Directory. Northbrook, IL: Underwriters Laboratories Inc., 1996.

Fire Tests of Building Columns. Associated Factory Mutual Insurance Companies, 1921.

"Fire Tests of Joints Between Precast Concrete Wall Units: Effect of Various Joint Treatments." *PCI Journal*. September-October, 1975.

GA 600-12, *Fire Resistance Design Manual*. Washington, DC: Gypsum Association, 2012.

Galbreath, Murdock. "Fire Resistance of Light Framed and Miscellaneous Assemblies." Technical Paper No. 222 of the Division of Building Research, National Research Council of Canada.

Hull and Inburg. "Fire Resistance of Concrete Columns." Technological Papers of the Bureau of Standards, No. 271, February 24, 1925.

"Investigations on Building Fires, Part VI: Fire Resistance of Reinforced Concrete Columns," *National Building Studies Research Paper No. 18*. London, England: Her Majesty's Stationary Office, 1953.

NCMA TEK 6A-91, *Fire Resistance Rating of Concrete Masonry Assembly*. Herndon, VA: National Concrete Masonry Association, 1991.

NFPA 72-13, *National Fire Alarm Code*. Quincy, MA: National Fire Protection Association, 2013.

NFPA 80-13, *Fire Doors and Windows*. Quincy, MA: National Fire Protection Association, 2013.

NFPA 252-12, *Methods of Fire Tests of Door Assemblies*. Quincy, MA: National Fire Protection Association, 2012.

NRCC 17724, *Supplement to the National Building Code of Canada 1980*. Associate Committee on the National Building Code. National Research Council of Canada, 1980.

PCA Publication T-140, *Fire Resistance of Referenced Concrete Floors*. Skokie, IL: Portland Cement Association.

PCI MNL 124-11, *Design for Fire Resistance of Precast Prestressed Concrete*. Chicago: Precast/Prestressed Concrete Institute, 2011.

Reinforced Concrete Fire Resistance. Schaumburg, IL: Concrete Reinforcing Steel Institute, 1980.

UL 103-2010, *Chimneys, Factory Built, Residential Type and Building Heating Appliance—with Revisions through February 1996*. Northbrook, IL: Underwriters Laboratories Inc., 2010.

UL 127-2011, *Factory-Built Fireplaces*. Northbrook, IL: Underwriters Laboratories Inc., 2011.

UL 263-11, *Standard for Fire Tests of Building Construction and Materials*. Northbrook, IL: Underwriters Laboratories Inc., 2011.

UL 555-2006, *Fire Dampers*. Northbrook, IL: Underwriters Laboratories Inc., 2006.

UL 555C-2006, *Ceiling Dampers*. Northbrook, IL: Underwriters Laboratories Inc., 2006.

UL 555S-99, *Leakage Rated Dampers for Use in Smoke Control Systems*. Northbrook, IL: Underwriters Laboratories Inc., 1999.

INTERNATIONAL CODE COUNCIL®
Copyright © 2015 ICC. ALL RIGHTS RESERVED. Accessed by David Dammon on Jun 21, 2017 12:30:52 PM pursuant to License Agreement with ICC. No further reproduction or distribution authorized. ANY UNAUTHORIZED REPRODUCTION OR DISTRIBUTION IS A VIOLATION OF THE FEDERAL COPYRIGHT ACT AND THE LICENSE AGREEMENT, AND SUBJECT TO CIVIL AND CRIMINAL PENALTIES THEREUNDER.

INTERNATIONAL CODE COUNCIL®
Copyright © 2015 ICC. ALL RIGHTS RESERVED. Accessed by David Dammon on Jun 21, 2017 12:30:52 PM pursuant to License Agreement with ICC. No further reproduction or distribution authorized. ANY UNAUTHORIZED REPRODUCTION OR DISTRIBUTION IS A VIOLATION OF THE FEDERAL COPYRIGHT ACT AND THE LICENSE AGREEMENT, AND SUBJECT TO CIVIL AND CRIMINAL PENALTIES THEREUNDER.

Chapter 8: Interior Finishes

General Comments

Past fire experience has shown that interior finish and decorative materials are key elements in the development and spread of fire. In some cases, as with Boston's devastating Cocoanut Grove fire in 1942, interior decorations were the first materials ignited. In many other cases, the interior finish materials became involved in the early stages of fire and contributed to its early growth and spread.

The provisions of Chapter 8 require materials used as interior finishes and decorations to have a flame spread index or meet certain flame propagation criteria based on the relative fire hazard associated with the occupancy.

The performance of the material is evaluated based on test standards.The design professional or permit applicant is responsible for determining and providing documentation on the flame spread potential and ability to propagate flames of a material in order to support the permit application.The building official then evaluates the information supplied to ascertain that compliance with the applicable code provisions has been achieved. It is also critical that a field inspection verifies that the material is installed in accordance with the approved documents and the code.

Purpose

This chapter contains the performance requirements for controlling fire growth within buildings by restricting interior finish materials and decorative materials.

SECTION 801 GENERAL

801.1 Scope. The provisions of this chapter shall govern the use of materials used as *interior finishes*, *trim* and *decorative materials*.

❖ This chapter contains requirements for materials used as interior finish, trim or decorative materials. These materials must conform to the flame spread index limitations, heat release and flashover limitations or flame propagation limitations established by this chapter. This chapter is similar to Chapter 8 of the *International Fire Code*® (IFC®) in intent, but is focused only on new construction and only on interior finish, trim and a limited amount of decorative materials. The IFC addresses both new and existing buildings and also some key building contents.

801.2 Interior wall and ceiling finish. The provisions of Section 803 shall limit the allowable fire performance and smoke development of *interior wall and ceiling finish* materials based on occupancy classification.

❖ The provisions of this chapter require materials used as interior finishes to have limited flame spread and smoke-developed indexes (or a limited heat and smoke release), based on the relative fire hazard and occupant vulnerability associated with the occupancy classification. Section 803 provides the necessary performance of wall and ceiling finishes required in test standards based upon the occupancy classification. The primary test standard is ASTM E84 or UL 723).

801.3 Interior floor finish. The provisions of Section 804 shall limit the allowable fire performance of *interior floor finish* materials based on occupancy classification.

❖ Just as for wall and ceiling finish materials, Chapter 8 provides limitations on flame propagation for materials used as floor finish. Section 804 provides the test requirements and criteria for floor finish materials.

[F] 801.4 Decorative materials and trim. *Decorative materials* and *trim* shall be restricted by combustibility, fire performance or flame propagation performance criteria in accordance with Section 806.

❖ This section is specific to decorative materials and trim, and their specific hazards versus the interior finish within a space. Section 806 addresses the tests for these materials, such as NFPA 701, which provides an indication of the potential for flame propagation of materials such as draperies. Additionally, materials, such as foam plastic used as interior trim, are limited in their combustibility through size, density and coverage limits (see commentary, Section 806).

801.5 Applicability. For buildings in flood hazard areas as established in Section 1612.3, *interior finishes*, *trim* and *decorative materials* below the elevation required by Section 1612 shall be flood-damage-resistant materials.

❖ All building materials located below the elevation required by Section 1612 (which refers to ASCE 24 for specific elevation requirements), including interior finishes, trim and decorative materials, must be resistant to flood damage. Many elevated buildings

INTERNATIONAL CODE COUNCIL®
Copyright © 2015 ICC. ALL RIGHTS RESERVED. Accessed by David Dammon on Jun 21, 2017 12:30:52 PM pursuant to License Agreement with ICC. No further reproduction or distribution authorized. ANY UNAUTHORIZED REPRODUCTION OR DISTRIBUTION IS A VIOLATION OF THE FEDERAL COPYRIGHT ACT AND THE LICENSE AGREEMENT, AND SUBJECT TO CIVIL AND CRIMINAL PENALTIES THEREUNDER.

located in flood hazard areas have enclosed lower areas below the elevated floor. "Flood-damage-resistant materials" are defined as "any construction material capable of withstanding direct and prolonged contact with floodwaters without sustaining any damage that requires more than cosmetic repair." In ASCE 24, the term "prolonged contact" means at least 72 hours, and the term "cosmetic repair" means cleaning the affected surfaces with commercially available cleaners and repainting as necessary. For further guidance, refer to FEMA TB #2, *Flood Damage-Resistant Material Requirements for Buildings Located in Special Flood Hazard Areas.*

801.6 Application. Combustible materials shall be permitted to be used as finish for walls, ceilings, floors and other interior surfaces of buildings.

❖ This section simply points out that this chapter allows combustible materials as interior finish. This would include the finish of walls that are required to be "noncombustible" due to the building's type of construction or other code requirements.This is supported by the provisions of Section 603.1, which allows limited combustible materials in Type I and II construction. Item 5 of Section 603.1 lists interior floor finish and interior finish, trim and millwork, such as doors, door frames, window sashes and frames, as allowable combustible materials. The majority of materials that are used as finish materials are combustible in nature. However, all materials in regulated environments are required to exhibit maximum flame spread and smoke-developed indexes or an equivalent performance on heat and smoke release in an appropriate room-corner fire test. Section 803 clarifies the limits on such materials by limiting the flame spread index and smoke-developed index of such materials in certain portions of the building based upon the occupancy.

801.7 Windows. Show windows in the exterior walls of the first *story* above grade plane shall be permitted to be of wood or of unprotected metal framing.

❖ First-story windows used as display spaces are exempt from finish requirements. These areas are subject to frequent redecoration; however, the enforcement of finish requirements would be impractical. The exemption is limited to the first story above grade plane, which is considered to provide ready access for the fire department from the exterior for effective manual fire suppression efforts.

801.8 Foam plastics. Foam plastics shall not be used as *interior finish* except as provided in Section 803.4. Foam plastics shall not be used as interior *trim* except as provided in Section 806.5 or 2604.2. This section shall apply both to exposed foam plastics and to foam plastics used in conjunction with a textile or vinyl facing or cover.

❖ This section establishes that foam plastic materials are not permitted to be used as interior finish materials unless the foam plastic complies with Section 2603.4, 2603.10 or 2604. Sections 2603.4 and 2603.4.1 generally require that foam plastic materials be covered by an approved thermal barrier, such as 0.5-inch (12.7 mm) gypsum wallboard. When covered in this manner, the foam plastic is no longer the interior finish material. Section 2603.10 provides a means by which foam plastics can be installed without a thermal barrier. A thermal barrier is not required when foam plastic insulation has met the following two criteria: 1. It has been tested in accordance with FM 4880, UL 1040 or UL 1715 or with NFPA 286 (with the pass/fail criteria of Section 803.1.2.1); and 2. The foam plastic meets the flame spread requirements of Section 803 (see commentary, Section 2603.10).

The reference to Section 2604 is for the use of foam plastic as trim.

Sections 806.5 and 2604.2 do allow the use of a limited amount of foam plastic as interior trim when certain criteria are met. The IFC contains the same allowance for interior trim (see commentary, Section 806.5).

It should be noted that the IFC further regulates some building contents with regard to foam plastic. More specifically, Section 807.4.2.1 of the IFC places maximum heat release rate criteria on foam plastic used for decorative purposes, stage scenery or exhibit booths when tested in accordance with UL 1975. This code typically does not regulate building contents.

SECTION 802
DEFINITIONS

802.1 Definitions. The following terms are defined in Chapter 2:

❖ Definitions facilitate the understanding of code provisions and minimize potential confusion. To that end, this section lists definitions of terms associated with interior finishes. Note that these definitions are found in Chapter 2. The use and application of defined terms, as well as undefined terms, are set forth in Section 201.

EXPANDED VINYL WALL COVERING.

FLAME SPREAD.

FLAME SPREAD INDEX.

INTERIOR FINISH.

INTERIOR FLOOR FINISH.

INTERIOR FLOOR-WALL BASE.

INTERIOR WALL AND CEILING FINISH.

SITE-FABRICATED STRETCH SYSTEM.

SMOKE-DEVELOPED INDEX.

TRIM.

INTERNATIONAL CODE COUNCIL®
Copyright © 2015 ICC. ALL RIGHTS RESERVED. Accessed by David Dammon on Jun 21, 2017 12:30:52 PM pursuant to License Agreement with ICC. No further reproduction or distribution authorized. ANY UNAUTHORIZED REPRODUCTION OR DISTRIBUTION IS A VIOLATION OF THE FEDERAL COPYRIGHT ACT AND THE LICENSE AGREEMENT, AND SUBJECT TO CIVIL AND CRIMINAL PENALTIES THEREUNDER.

SECTION 803
WALL AND CEILING FINISHES

803.1 General. *Interior wall and ceiling finish* materials shall be classified for fire performance and smoke development in accordance with Section 803.1.1 or 803.1.2, except as shown in Sections 803.2 through 803.13. Materials tested in accordance with Section 803.1.2 shall not be required to be tested in accordance with Section 803.1.1.

❖ Wall and ceiling interior finish and trim materials are required to have limits on flame spread and smoke-developed indexes as prescribed in Section 803.11 based upon occupancy. ASTM E84 or UL 723 is one of the tests available to demonstrate compliance with the requirements of Section 803. This test method has been around since 1944 [see Commentary Figure 803.1(1)]. This is the primary method used, but NFPA 286 is an alternate optional test that is discussed in the commentary for Section 803.1.2. ASTME 84 is intended to determine the relative burning behavior of materials on exposed surfaces, such as walls and ceilings, by visually observing the flame spread along the test specimen [see Commentary Figure 803.1(2)]. Flame spread and smoke-developed indexes are then reported. The test method is not appropriate for materials that are not capable of supporting themselves or of being supported in the test tunnel. There may also be concerns with materials that drip, melt or delaminate and with very thin materials. A distinction is made, therefore, for textiles, expanded vinyl wall or ceiling coverings and foam plastic insulation materials (see Sections 803.6, 803.7 and 806.5).

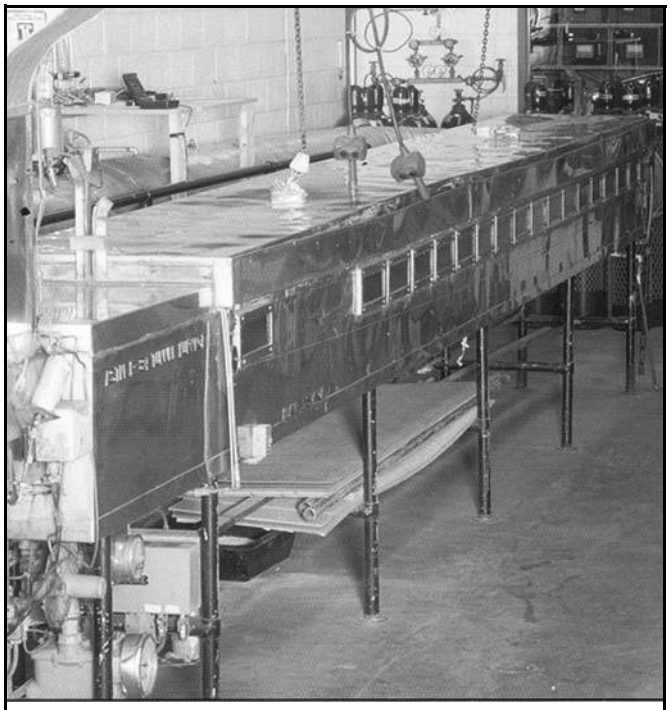

Figure 803.1(1)
ASTM E84 TUNNEL TEST

ASTM E84 establishes a flame spread index based on the area under a curve when the actual flame spread distance is plotted as a function of time. The code has divided the acceptable range of flame spread indexes (0-200) into three classes: Class A (0-25), Class B (26-75) and Class C (76-200). For all three classes the code has established a common acceptable range of smoke-developed index: 0-450. An indication of relative fire performance is as follows: an inorganic reinforced-cement board has a flame spread index of zero, while select grade red oak wood flooring has a flame spread index of 100. Not to preclude more detailed information resulting from an ASTME 84 test report, Table 803.1(3) identifies the typical flame spread properties of certain building materials.

803.1.1 Interior wall and ceiling finish materials. Interior wall and ceiling finish materials shall be classified in accordance with ASTM E84 or UL 723. Such *interior finish* materials shall be grouped in the following classes in accordance with their flame spread and *smoke-developed indexes*.

Class A: = Flame spread index 0-25; smoke-developed index 0-450.

Class B: = Flame spread index 26-75; smoke-developed index 0-450.

Class C: = Flame spread index 76-200; smoke-developed index 0-450.

Exception: Materials tested in accordance with Section 803.1.2.

❖ Wall and ceiling interior finish and trim materials are required to have limits on flame spread and smoke-developed indexes as prescribed in Section 803.11, based upon occupancy. ASTM E84 (or UL 723) is one of the tests available to demonstrate compliance with the requirements of Section 803. This test method has been around since 1944 [see Commentary Figure 803.1(1)]. This is the primary method used, but, as noted earlier, NFPA 286 is an alternative test, which is discussed in the commentary for Section 803.1.2. ASTME 84 is intended to determine the relative burning behavior of materials on exposed



Figure 803.1(2)
FLAME IN TUNNEL TEST

INTERNATIONAL CODE COUNCIL®
Copyright © 2015 ICC. ALL RIGHTS RESERVED. Accessed by David Dammon on Jun 21, 2017 12:30:52 PM pursuant to License Agreement with ICC. No further reproduction or distribution authorized. ANY UNAUTHORIZED REPRODUCTION OR DISTRIBUTION IS A VIOLATION OF THE FEDERAL COPYRIGHT ACT AND THE LICENSE AGREEMENT, AND SUBJECT TO CIVIL AND CRIMINAL PENALTIES THEREUNDER.

surfaces, such as ceilings and walls, by visually observing the flame spread along the test specimen [see Commentary Figure 803.1(2)]. Flame spread and smoke-developed indexes are then reported. The test method is not appropriate for materials that are not capable of supporting themselves or of being supported in the test tunnel. There may also be concerns with materials that drip, melt or delaminate and that are very thin. A distinction is made, therefore, for textile wall or ceiling coverings, expanded vinyl wall or ceiling coverings and foam plastic insulation materials (see Sections 803.5, 803.6, 803.7 and 803.8).

ASTME 84 establishes a flame spread index based on the area under a curve when the actual flame spread distance is plotted as a function of time. The code has divided the acceptable range of flame spread indexes (0-200) into three classes: Class A (0-25), Class B (26-75) and Class C (76-200). For all three classes the code has established a common acceptable range of smoke-developed index of 0-450. An indication of relative fire performance is as follows: an inorganic reinforced-cement board has a flame spread and smoke-developed index of zero, while select grade red oak wood flooring has a flame spread and smoke-developed index of 100. Not to preclude more detailed information resulting from an ASTME 84 test report, Figure 803.1(3) identifies the typical flame spread properties of certain building materials.

803.1.2 Room corner test for interior wall or ceiling finish materials. *Interior wall or ceiling finish* materials shall be permitted to be tested in accordance with NFPA 286. Interior wall or ceiling finish materials tested in accordance with NFPA 286 shall comply with Section 803.1.2.1.

❖ The alternative test method for determining compliance for interior wall and ceiling finish and trim, other than textiles, is found in test standard NFPA 286. This test is known as a "room-corner" fire test and is similar to that referenced for textile wall coverings in Section 803.1.3.1 (NFPA 265) [see Commentary Figures 803.1.2(1) and 803.1.2(2)]. In this test, materials are mounted covering three walls of the compartment (excluding the wall containing the door) and the ceiling. In the case where testing is only for ceiling finish properties, the sample only needs to be mounted on the ceiling. Then a fire source consisting of a gas burner is placed in one corner, flush against both walls (furthest from the doorway) of the compartment with the following exposure conditions:

- 40 kilowatts (kW) for 5 minutes, then
- 160 kW for 10 minutes.

The test then measures heat release and smoke release through the collection of the fire effluents and measurement of oxygen concentrations in the exhaust duct. Heat release is calculated by the oxygen consumption principle, which has shown that heat release is a function of the decrease in oxygen concentration in the fire effluents. Thus, exhaust duct measurements include temperatures, pressures and smoke values for use in the calculations. Temperatures and heat fluxes are also measured in the room. This generally provides a more realistic understanding of the fire hazard associated with the materials.

The NFPA 286 test method does not contain pass/fail criteria. However, the code provides such criteria in Section 803.1.2.1.

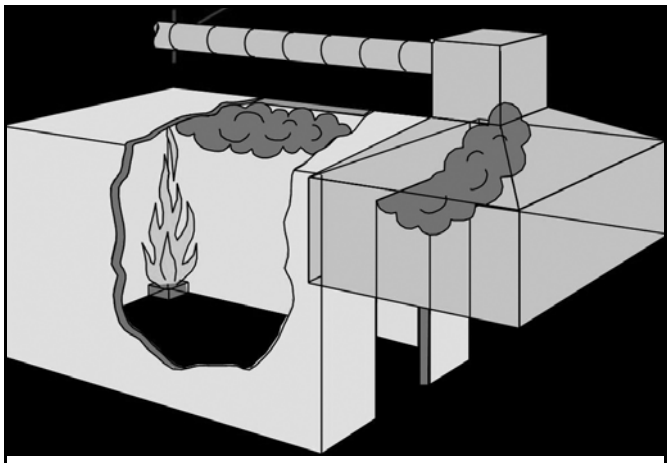

Figure 803.1.2(1)
ROOM CORNER TEST



Figure 803.1.2(2)
FLAME IN ROOM CORNER TEST

INTERNATIONAL CODE COUNCIL®
Copyright © 2015 ICC. ALL RIGHTS RESERVED. Accessed by David Dammon on Jun 21, 2017 12:30:52 PM pursuant to License Agreement with ICC. No further reproduction or distribution authorized. ANY UNAUTHORIZED REPRODUCTION OR DISTRIBUTION IS A VIOLATION OF THE FEDERAL COPYRIGHT ACT AND THE LICENSE AGREEMENT, AND SUBJECT TO CIVIL AND CRIMINAL PENALTIES THEREUNDER.

803.1.2.1 Acceptance criteria for NFPA 286. The interior finish shall comply with the following:

1. During the 40 kW exposure, flames shall not spread to the ceiling.
2. The flame shall not spread to the outer extremity of the sample on any wall or ceiling.
3. Flashover, as defined in NFPA 286, shall not occur.
4. The peak heat release rate throughout the test shall not exceed 800 kW.
5. The total smoke released throughout the test shall not exceed 1,000 m^2.

❖ The alternative test method for determining compliance for interior wall and ceiling finish and trim, other than textiles, is found in test standard NFPA 286. This test is known as a "room corner" fire test and is similar to that referenced for textile wall coverings in Section 803.1.3.1 (NFPA 265) [see Commentary Figures 803.1.2(1) and 803.1.2(2)]. In this test, materials are mounted covering three walls of the compartment (excluding the wall containing the door) and the ceiling. In the case where testing is only for ceiling finish properties, the sample only needs to be mounted on the ceiling. Then a fire source consisting of a gas burner is placed in one corner, flush against both walls (furthest from the doorway) of the compartment with the following exposure conditions:

- 40 kilowatts (kW) for 5 minutes; then
- 160 kW for 10 minutes.

The test then measures heat release and smoke release through the collection of the fire effluents and measurement of oxygen concentrations in the exhaust duct. Heat release is calculated by the oxygen consumption principle, which has shown that heat release is a function of the decrease in oxygen concentration in the fire effluents. Thus, exhaust duct measurements include temperatures, pressures and smoke values for use in the calculations. Temperatures and heat fluxes are also measured in the room. This generally provides a more realistic understanding of the fire hazard associated with the materials.

The NFPA 286 test method does not contain pass/fail criteria. However, the code provides such criteria in Section 803.1.2.1.

803.1.3 Room corner test for textile wall coverings and expanded vinyl wall coverings. Textile wall coverings and expanded vinyl wall coverings shall meet the criteria of Section 803.1.3.1 when tested in the manner intended for use in accordance with the Method B protocol of NFPA 265 using the product-mounting system, including adhesive.

❖ This particular section allows textile materials and expanded vinyl wall coverings when tested in accordance with Method B protocol of NFPA 265. NFPA 265 is known as a full-scale "room corner" fire test. Past research conducted with this kind of configuration has shown that flame spread indexes produced by ASTM E84 may not reliably predict the fire behavior of textile wall coverings. A more reliable test procedure was developed at the University of California and involved the use of a room corner fire test with a gas diffusion burner(s).The research findings are described in a report from the University of California Fire Research Laboratory titled, "Room Fire Experiments of Textile Wall Coverings." The NFPA 265 test method is only slightly different from NFPA 286. NFPA 286 is more severe in three ways:

1. The gas diffusion burner is used to expose the material on the wall in the room. The fire test starts with a heat release rate exposure of 40 kW for the first 5 minutes in both tests, but is then followed by 150 kW for 10 minutes in NFPA 265 and by 160 kW for 10 minutes in NFPA 286.
2. The gas burner is placed 2 inches (51 mm) away from each of the walls in NFPA 265, whereas, it is placed flush against both walls in NFPA 286.
3. The test sample is mounted on the walls only in accordance with NFPA 265, while it is mounted both on the walls and ceiling in accordance with NFPA 286.

A key result of the difference in intensity and location of the gas burner is that the burner flame does not reach the ceiling during the 150 kW exposure (while it does reach the ceiling during the 160 kW exposure in NFPA 286). Therefore, NFPA 265 is not considered to be suitable for testing ceiling coverings.

Based on the use of test Method B from NFPA 265, the sample must meet the criteria of Section 803.1.3.1. This test helps to determine the contribution of textile wall coverings to overall fire growth and spread in a compartment fire. This test also exposes the textile to an ignition source while mounted on the wall. It should be noted that the IFC allows the use of test Method A or B in NFPA 265. The testing requirements in the IFC apply specifically to existing buildings. In the Method A test protocol, 2-foot-wide (610 mm) strips of the material are mounted on the two walls closest to the corner with the burner, whereas, in the Method B test protocol, the sample is mounted completely covering three walls (except for the wall containing the door). Therefore, Method B test protocol is more severe. As noted, these textiles are exposed to a prescribed heat release rate of 40 kW for 5 minutes, which is then followed by a heat release rate of 150 kW for 10 minutes.

803.1.3.1 Acceptance criteria for NFPA 265. The interior finish shall comply with the following:

1. During the 40 kW exposure, flames shall not spread to the ceiling.
2. The flame shall not spread to the outer extremities of the samples on the 8-foot by 12-foot (203 by 305 mm) walls.
3. Flashover, as defined in NFPA 265, shall not occur.

INTERNATIONAL CODE COUNCIL®
Copyright © 2015 ICC. ALL RIGHTS RESERVED. Accessed by David Dammon on Jun 21, 2017 12:30:52 PM pursuant to License Agreement with ICC. No further reproduction or distribution authorized. ANY UNAUTHORIZED REPRODUCTION OR DISTRIBUTION IS A VIOLATION OF THE FEDERAL COPYRIGHT ACT AND THE LICENSE AGREEMENT, AND SUBJECT TO CIVIL AND CRIMINAL PENALTIES THEREUNDER.

4. The total smoke released throughout the test shall not exceed 1,000 m^2.

❖ To pass the Method B test protocol of NFPA 265, there are several criteria, including avoiding flashover, as defined in the standard. See the commentary to Section 803.1.3, which discusses limitations on the flame spread of the sample in both the 40 kW and 160 kW exposure and limits the total smoke released to 1000 m^2, just as in NFPA 286.

803.1.4 Acceptance criteria for textile and expanded vinyl wall or ceiling coverings tested to ASTM E84 or UL 723. Textile wall and ceiling coverings and expanded vinyl wall and ceiling coverings shall have a Class A flame spread index in accordance with ASTM E84 or UL 723 and be protected by an *automatic sprinkler system* installed in accordance with Section 903.3.1.1 or 903.3.1.2. Test specimen preparation and mounting shall be in accordance with ASTM E2404.

❖ Textile wall coverings and expanded vinyl wall coverings dramatically increase the fuel load in a room. As such, additional protection is required as a safety factor for rooms finished with these types of material. ASTM E84 alone is not considered a sufficient test of the flame spread properties of textile wall coverings because they are too thin when tested, and thus sprinklers would be required in addition to a Class A flame spread rating as a safety factor.

803.2 Thickness exemption. Materials having a thickness less than 0.036 inch (0.9 mm) applied directly to the surface of walls or ceilings shall not be required to be tested.

❖ Thin materials used as interior finish, such as wallpaper, are exempt from the testing requirements of this section. These materials represent a very low fuel load and minimal risk of significant flame spread.

803.3 Heavy timber exemption. Exposed portions of building elements complying with the requirements for buildings of Type IV construction in Section 602.4 shall not be subject to *interior finish* requirements.

❖ This section is simply intended to clarify the code regarding heavy timber, which is commonly exposed to the interior without any interior finish. The concerns over the contribution of heavy timber building elements to flame spread in a structure are dealt with in the general requirements of Chapter 6 and other provisions of the code that allow heavy timber.

803.4 Foam plastics. Foam plastics shall not be used as *interior finish* except as provided in Section 2603.9. This section shall apply both to exposed foam plastics and to foam plastics used in conjunction with a textile or vinyl facing or cover.

❖ This section is simply intended to serve as a reminder that the provisions of Chapter 26 apply when the material is foam plastic. The special approval provisions of Section 2603.10 would be required in order to allow a foam plastic to be used in an exposed interior application. The special approval involves testing in accordance with NFPA 286, which is also used for acceptance of other materials in this section.

803.5 Textile wall coverings. Where used as interior wall finish materials, textile wall coverings, including materials having woven or nonwoven, napped, tufted, looped or similar surface and carpet and similar textile materials, shall be tested in the manner intended for use, using the product mounting system, including adhesive, and shall comply with the requirements of Section 803.1.2, 803.1.3 or 803.1.4.

❖ This section recognizes that the methods for attaching interior finishes could contribute to the flame spread characteristics of the interior finish material. For textiles and expanded vinyl wall coverings, the variety of adhesives and mounting methods are such that the entire system needs to be tested in the Steiner tunnel tests or the room corner test specified in Section 803.1.3 or 803.1.4.

803.6 Textile ceiling coverings. Where used as interior ceiling finish materials, textile ceiling coverings, including materials having woven or nonwoven, napped, tufted, looped or similar surface and carpet and similar textile materials, shall be tested in the manner intended for use, using the product mounting system, including adhesive, and shall comply with the requirements of Section 803.1.2 or 803.1.4.

❖ This section recognizes that the methods for attaching interior finishes could contribute to the flame spread characteristics of the interior finish material. For textile ceiling coverings, the variety of adhesives and mounting methods are such that the entire system needs to be tested in the Steiner tunnel tests or the room corner test specified in Section 803.1.3 or 803.1.4.

803.7 Expanded vinyl wall coverings. Where used as interior wall finish materials, expanded vinyl wall coverings shall be tested in the manner intended for use, using the product mounting system, including adhesive, and shall comply with the requirements of Section 803.1.2, 803.1.3 or 803.1.4.

❖ This section recognizes that the methods for attaching interior finishes could contribute to the flame spread characteristics of the interior finish material. For expanded vinyl wall coverings, the variety of adhesives and mounting methods are such that the entire system needs to be tested in the Steiner tunnel tests or the room corner test specified in Section 803.1.3 or 803.1.4.

803.8 Expanded vinyl ceiling coverings. Where used as interior ceiling finish materials, expanded vinyl ceiling coverings shall be tested in the manner intended for use, using the product mounting system, including adhesive, and shall comply with the requirements of Section 803.1.2 or 803.1.4.

❖ This section recognizes that the methods for attaching interior finishes could contribute to the flame spread characteristics of the interior finish material. For expanded vinyl ceiling coverings, the variety of adhesives and mounting methods are such that the entire system needs to be tested in the Steiner tunnel tests or the room corner test specified in Section 803.1.3 or 803.1.4.

INTERNATIONAL CODE COUNCIL®
Copyright © 2015 ICC. ALL RIGHTS RESERVED. Accessed by David Dammon on Jun 21, 2017 12:30:52 PM pursuant to License Agreement with ICC. No further reproduction or distribution authorized. ANY UNAUTHORIZED REPRODUCTION OR DISTRIBUTION IS A VIOLATION OF THE FEDERAL COPYRIGHT ACT AND THE LICENSE AGREEMENT, AND SUBJECT TO CIVIL AND CRIMINAL PENALTIES THEREUNDER.

803.9 High-density polyethylene (HDPE) and polypropylene (PP). Where high-density polyethylene or polypropylene is used as an interior finish it shall comply with Section 803.1.2.

❖ High-density polyethylene (HDPE) and polypropylene (PP) are thermoplastic materials that, when burned, give off considerable energy and produce flammable liquid fires. Recent full-scale room corner tests using NFPA 286 have demonstrated a significant hazard with some of these (HDPE) materials. Extensive flammable liquid fires occurred during the tests. The Steiner tunnel test, however, is not a suitable measure of the performance of this material because the calculation of flame spread index does not take into account the unique hazards known for this material. Therefore, these materials are required to be tested in a full-scale room corner test in accordance with Section 803.1.2.

803.10 Site-fabricated stretch systems. Where used as interior wall or interior ceiling finish materials, site-fabricated stretch systems containing all three components described in the definition in Chapter 2 shall be tested in the manner intended for use, and shall comply with the requirements of Section 803.1.1 or 803.1.2. If the materials are tested in accordance with ASTM E84 or UL 723, specimen preparation and mounting shall be in accordance with ASTM E2573.

❖ The ASTM E05 committee on fire standards has issued a standard practice, ASTM E2573, for specimen preparation and mounting of site-fabricated stretch systems. Until now, there was no correct mandatory way to test these systems. These systems are now being used extensively because they can stretch to cover decorative walls and ceilings with unusual looks and shapes. The systems consist of three parts: a fabric (or vinyl), a frame and an infill core material. The testing has often been done on each component separately, which is inappropriate and unsafe, instead of testing the composite system.

803.11 Interior finish requirements based on group. *Interior wall and ceiling finish* shall have a flame spread index not greater than that specified in Table 803.11 for the group and location designated. *Interior wall and ceiling finish* materials tested in accordance with NFPA 286 and meeting the acceptance criteria of Section 803.1.2.1, shall be permitted to be used where a Class A classification in accordance with ASTM E84 or UL 723 is required.

❖ The requirements for flame spread indexes for interior finish materials applied to walls and ceilings are contained in Table 803.11 (see Sections 804 and 805 for floor finish requirements). The referenced test for determining flame spread indexes is ASTM E84 or UL 723, which establishes a relative measurement of flame spread across the surface of the material. The classifications used in Table 803.11 are defined in Section 803.1. See the commentary to Section 803.1 for additional information on the uses and limitations of the test procedure. This section also allows the use of NFPA 286 as noted in the exception to Section 803.1 and Section 803.2 (without the exception). Section 803.5, in particular, states that materials that pass NFPA 286 in accordance with the pass/fail criteria in Section 803.2.1 can be used as an alternative to ASTM E84. Passing NFPA 286 means that the material would be considered equivalent to Class A. In other words, it can be used as a replacement for all categories, as Class A is the most restrictive (see commentary, Section 803.1.2 for more detail on the test).

When evaluating test reports, the method of application and substrate material are considered. For example, adhesives that soften at moderate temperatures will allow wall or ceiling finishes to drop or peel. This not only increases the susceptibility of the material to ignition but also exposes the substrate material. The substrate material can also affect the interior finish rating of the surface material. It is not uncommon for a thin, combustible finish applied to a noncombustible material to obtain a low flame spread index, while the same material applied to a combustible substrate or applied without a substrate could exhibit a significantly high tendency to spread flame.

TABLE 803.11. See page 8-8.

❖ This table prescribes the minimum requirements for interior finishes applied to walls and ceilings. Class A material has the most restrictive flame spread index and Class C has the least restrictive flame spread index. Therefore, the use of a Class A material in an area that requires a minimum Class B material is always allowed. Likewise, when the table requires Class C materials, Classes A and B can also be used.

The requirements are based on the use of the space. To determine the applicable criteria, first determine whether the space is an exit stairway, ramp or passageway; a corridor, exit access stairway or ramp; or a room or enclosed space. For definitions of these various spaces, see Chapter 2. For the minimum requirements for these spaces, see Chapter 10.

Interior finishes in spaces that are not separated from a corridor (for example, waiting areas in business or health care facilities) must comply with the requirements for a corridor space. As shown in the table, the code places more emphasis on the allowable flame spread index for exits than for enclosed rooms because of the critical nature and relative importance that is placed on maintaining the integrity of exits to evacuate the building.

Numerous notes amend the basic requirements of Table 803.11. Notes a through l apply only where they are specifically referenced in the table.

INTERNATIONAL CODE COUNCIL®
Copyright © 2015 ICC. ALL RIGHTS RESERVED. Accessed by David Dammon on Jun 21, 2017 12:30:52 PM pursuant to License Agreement with ICC. No further reproduction or distribution authorized. ANY UNAUTHORIZED REPRODUCTION OR DISTRIBUTION IS A VIOLATION OF THE FEDERAL COPYRIGHT ACT AND THE LICENSE AGREEMENT, AND SUBJECT TO CIVIL AND CRIMINAL PENALTIES THEREUNDER.

TABLE 803.11
INTERIOR WALL AND CEILING FINISH REQUIREMENTS BY OCCUPANCY[k]

GROUP	SPRINKLERED[l]			NONSPRINKLERED		
	Interior exit stairways and ramps and exit passageways[a, b]	Corridors and enclosure for exit access stairways and ramps	Rooms and enclosed spaces[c]	Interior exit stairways and ramps and exit passageways[a, b]	Corridors and enclosure for exit access stairways and ramps	Rooms and enclosed spaces[c]
A-1 & A-2	B	B	C	A	A[d]	B[e]
A-3[f], A-4, A-5	B	B	C	A	A[d]	C
B, E, M, R-1	B	C	C	A	B	C
R-4	B	C	C	A	B	B
F	C	C	C	B	C	C
H	B	B	C[g]	A	A	B
I-1	B	C	C	A	B	B
I-2	B	B	B[h, i]	A	A	B
I-3	A	A[j]	C	A	A	B
I-4	B	B	B[h, i]	A	A	B
R-2	C	C	C	B	B	C
R-3	C	C	C	C	C	C
S	C	C	C	B	B	C
U	No restrictions			No restrictions		

For SI: 1 inch = 25.4 mm, 1 square foot = 0.0929m^2.

a. Class C interior finish materials shall be permitted for wainscotting or paneling of not more than 1,000 square feet of applied surface area in the grade lobby where applied directly to a noncombustible base or over furring strips applied to a noncombustible base and fireblocked as required by Section 803.13.1.

b. In other than Group I-3 occupancies in buildings less than three stories above grade plane, Class B interior finish for nonsprinklered buildings and Class C interior finish for sprinklered buildings shall be permitted in interior exit stairways and ramps.

c. Requirements for rooms and enclosed spaces shall be based upon spaces enclosed by partitions. Where a fire-resistance rating is required for structural elements, the enclosing partitions shall extend from the floor to the ceiling. Partitions that do not comply with this shall be considered enclosing spaces and the rooms or spaces on both sides shall be considered one. In determining the applicable requirements for rooms and enclosed spaces, the specific occupancy thereof shall be the governing factor regardless of the group classification of the building or structure.

d. Lobby areas in Group A-1, A-2 and A-3 occupancies shall not be less than Class B materials.

e. Class C interior finish materials shall be permitted in places of assembly with an occupant load of 300 persons or less.

f. For places of religious worship, wood used for ornamental purposes, trusses, paneling or chancel furnishing shall be permitted.

g. Class B material is required where the building exceeds two stories.

h. Class C interior finish materials shall be permitted in administrative spaces.

i. Class C interior finish materials shall be permitted in rooms with a capacity of four persons or less.

j. Class B materials shall be permitted as wainscotting extending not more than 48 inches above the finished floor in corridors and exit access stairways and ramps.

k. Finish materials as provided for in other sections of this code.

l. Applies when protected by an automatic sprinkler system installed in accordance with Section 903.3.1.1 or 903.3.1.2.

803.12 Stability. *Interior finish* materials regulated by this chapter shall be applied or otherwise fastened in such a manner that such materials will not readily become detached where subjected to room temperatures of 200°F (93°C) for not less than 30 minutes.

❖ Interior finishes are not to become detached under exposure to elevated temperatures [200°F (93°C)] for 30 minutes.There is not a standard test method yet developed to evaluate this requirement. Other sections of the code, however, offer some additional guidance. For example, the performance of the method of attachment of finish materials during a fire-resistance test will usually be an adequate indication of performance. Section 2506 contains requirements for gypsum wallboard that is not part of a fire-resistance-rated assembly. Interior finishes that become detached may add to the spread of fire, as well as create a hazard for fire fighters.

803.13 Application of interior finish materials to fire-resistance-rated or noncombustible building elements. Where *interior finish* materials are applied on walls, ceilings or structural elements required to have a *fire-resistance rating* or to be of noncombustible construction, these finish materials shall comply with the provisions of this section.

❖ Where an assembly is required to have a fire-resistance rating or be of noncombustible materials, interior finish materials are required to be applied in accordance with Sections 803.4.1 through 803.4.4. These methods are to prevent other types of fire

INTERNATIONAL CODE COUNCIL®
Copyright © 2015 ICC. ALL RIGHTS RESERVED. Accessed by David Dammon on Jun 21, 2017 12:30:52 PM pursuant to License Agreement with ICC. No further reproduction or distribution authorized. ANY UNAUTHORIZED REPRODUCTION OR DISTRIBUTION IS A VIOLATION OF THE FEDERAL COPYRIGHT ACT AND THE LICENSE AGREEMENT, AND SUBJECT TO CIVIL AND CRIMINAL PENALTIES THEREUNDER.

spread onto the exposed surface through the use of fireblocking and similar methods.

803.13.1 Direct attachment and furred construction. Where walls and ceilings are required by any provision in this code to be of fire-resistance-rated or noncombustible construction, the *interior finish* material shall be applied directly against such construction or to furring strips not exceeding $1^3/_4$ inches (44 mm), applied directly against such surfaces.

❖ Interior finish materials are required to be applied directly to the exposed surface of structural elements or to the furring attached to such surfaces. By applying the finish directly to the surface, the potential for the back side to contribute to a fire is diminished and, as a result, the effects on the fire-resistance rating and the creation of combustible cavities in noncombustible walls are minimized.

803.13.1.1 Furred construction. If the interior finish material is applied to furring strips, the intervening spaces between such furring strips shall comply with one of the following:

1. Be filled with material that is inorganic or noncombustible;
2. Be filled with material that meets the requirements of a Class A material in accordance with Section 803.1.1 or 803.1.2; or
3. Be fireblocked at a maximum of 8 feet (2438 mm) in every direction in accordance with Section 718.

❖ Interior finishes are allowed to be applied to furring strips under specific limitations. All concealed spaces created by furring are to be fireblocked at a maximum of 8-foot (2438 mm) intervals in any direction. Likewise, fireblocks in furred construction also diminish the likelihood of fire involvement between the finish and the interior wall surface. The use of wood nailing strips is intended to be limited to that which is necessary for the installation of finish and trim materials. As such, the amount of combustible material is restricted so that the performance of the element to which it is attached will not be adversely affected. It should be noted that the type of construction classification of the building is not intended to regulate the combustibility of the interior finish materials. The fire performance characteristics of the interior finish materials are regulated by Section 803.1.

803.13.2 Set-out construction. Where walls and ceilings are required to be of fire-resistance-rated or noncombustible construction and walls are set out or ceilings are dropped distances greater than specified in Section 803.13.1, Class A finish materials, in accordance with Section 803.1.1 or 803.1.2, shall be used.

Exceptions:

1. Where *interior finish* materials are protected on both sides by an *automatic sprinkler system* in accordance with Section 903.3.1.1 or 903.3.1.2.
2. Where *interior finish* materials are attached to noncombustible backing or furring strips installed as specified in Section 803.13.1.1.

❖ Where walls and ceilings are required to be of fire-resistance-rated or noncombustible construction and walls are set out or ceilings are dropped distances greater than specified in Section 803.13.1, finish materials with the most restrictive flame spread index (Class A) shall be used. Exceptions 1 and 2 describe alternatives to providing the Class A finish material. The first is to provide the protection afforded by an automatic sprinkler system. Note that this protection is required on each side of the finish material. The second is to secure the finish to noncombustible backing or furring strips in accordance with Section 803.13.1.1 (see Commentary Figure 803.13.2).

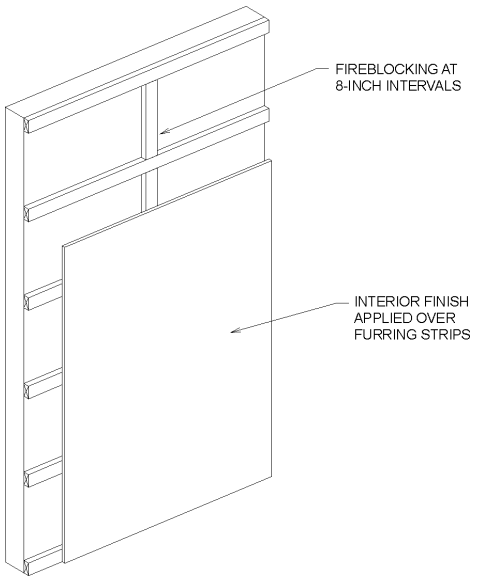

For SI: 1 inch = 25.4 mm.

Figure 803.13.2
SET-OUT CONSTRUCTION

803.13.2.1 Hangers and assembly members. The hangers and assembly members of such dropped ceilings that are below the horizontal fire-resistance-rated floor or roof assemblies shall be of noncombustible materials. The construction of each set-out wall and horizontal fire-resistance-rated floor or roof assembly shall be of fire-resistance-rated construction as required elsewhere in this code.

Exception: In Type III and V construction, *fire-retardant-treated wood* shall be permitted for use as hangers and assembly members of dropped ceilings.

❖ The hangers and assembly members of dropped ceilings that are below the main ceiling line are required

INTERNATIONAL CODE COUNCIL®
Copyright © 2015 ICC. ALL RIGHTS RESERVED. Accessed by David Dammon on Jun 21, 2017 12:30:52 PM pursuant to License Agreement with ICC. No further reproduction or distribution authorized. ANY UNAUTHORIZED REPRODUCTION OR DISTRIBUTION IS A VIOLATION OF THE FEDERAL COPYRIGHT ACT AND THE LICENSE AGREEMENT, AND SUBJECT TO CIVIL AND CRIMINAL PENALTIES THEREUNDER.

to be noncombustible materials to ensure that the ceiling will remain in place for some time if a fire occurs. The exception allows fire-retardant-treated wood (FRTW) in Type Ill and V construction. This is consistent with other provisions in the code dealing with options to noncombustible materials used in Type III and V construction.

803.13.3 Heavy timber construction. Wall and ceiling finishes of all classes as permitted in this chapter that are installed directly against the wood decking or planking of Type IV construction or to wood furring strips applied directly to the wood decking or planking shall be fireblocked as specified in Section 803.13.1.1.

❖ Attachment directly to heavy timber decking or planking eliminates concealed spaces (see Section 803.3). Furring strips of any depth are allowed when concealed spaces are treated according to Section 803.13.1.1. Again, the intent is to reduce the likelihood of fire spread between these spaces.

803.13.4 Materials. An interior wall or ceiling finish material that is not more than $^1/_4$ inch (6.4 mm) thick shall be applied directly onto the wall, ceiling or structural element without the use of furring strips and shall not be suspended away from the building element to which that finish material it is applied.

Exceptions:

1. Noncombustible interior finish materials.
2. Materials that meet the requirements of Class A materials in accordance with Section 803.1.1 or 803.1.2 where the qualifying tests were made with the material furred out from the noncombustible backing shall be permitted to be used with furring strips.
3. Materials that meet the requirements of Class A materials in accordance with Section 803.1.1 or 803.1.2 where the qualifying tests were made with the material suspended away from the noncombustible backing shall be permitted to be used suspended away from the building element.

❖ Combustible materials that have a maximum thickness of $^1/_4$ inch (6.4 mm) are required to be applied directly against a noncombustible backing and not to an added substrate or furred away from the backing, which may significantly increase the spread of fire (see Commentary Figure 803.13.4). Exception 1 allows noncombustible interior finish materials to be furred away from the noncombustible backing. Exceptions 2 and 3 allow materials that, in tests, perform similarly to directly attached materials when furred or suspended from a noncombustible backing, respectively.

SECTION 804
INTERIOR FLOOR FINISH

804.1 General. *Interior floor finish* and floor covering materials shall comply with Sections 804.2 through 804.4.2.

Exception: Floor finishes and coverings of a traditional type, such as wood, vinyl, linoleum or terrazzo, and resilient floor covering materials that are not comprised of fibers.

❖ This section regulates the design and installation of floor finish and floor covering materials. Traditional floor coverings such as wood, vinyl, terrazzo and other resilient floor covering material must be exempt from this section. Smooth-surface floor coverings generally contribute minimally to a fire. The focus is more upon textile floor coverings, such as carpets.

804.2 Classification. *Interior floor finish* and floor covering materials required by Section 804.4.2 to be of Class I or II materials shall be classified in accordance with NFPA 253. The classification referred to herein corresponds to the classi-

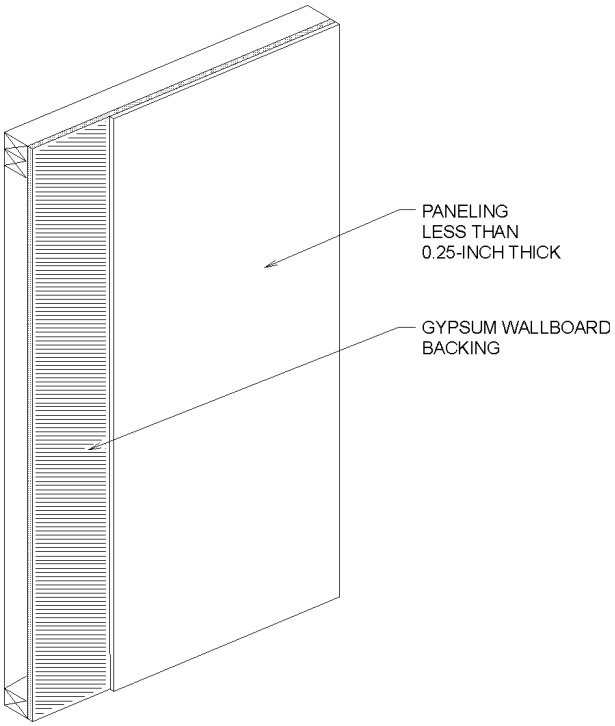

For SI: 1 inch = 25.4 mm.

Figure 803.13.4
THIN INTERIOR FINISH

INTERNATIONAL CODE COUNCIL®
Copyright © 2015 ICC. ALL RIGHTS RESERVED. Accessed by David Dammon on Jun 21, 2017 12:30:52 PM pursuant to License Agreement with ICC. No further reproduction or distribution authorized. ANY UNAUTHORIZED REPRODUCTION OR DISTRIBUTION IS A VIOLATION OF THE FEDERAL COPYRIGHT ACT AND THE LICENSE AGREEMENT, AND SUBJECT TO CIVIL AND CRIMINAL PENALTIES THEREUNDER.

fications determined by NFPA 253 as follows: Class I, 0.45 watts/cm^2 or greater; Class II, 0.22 watts/cm^2 or greater.

❖ The use of a classification system eliminates the need to state the actual critical radiant flux value for a product to meet the identification requirements of Section 804. Over the years, a classification system has been found to be much easier for the industry to follow and still provides the building official with the information required to verify compliance. The test required to measure the combustibility of floor coverings is NFPA 253. This standard is a radiant floor panel test, which basically simulates materials subjected to heat from a fire above.The primary concern with flooring is related to the spread of a fire that has already been ignited within a space or room to a different room. Commentary Figure 804.2 shows the test apparatus. The critical heat flux indicates the threshold value above which flame spread occurs in the testing environment.

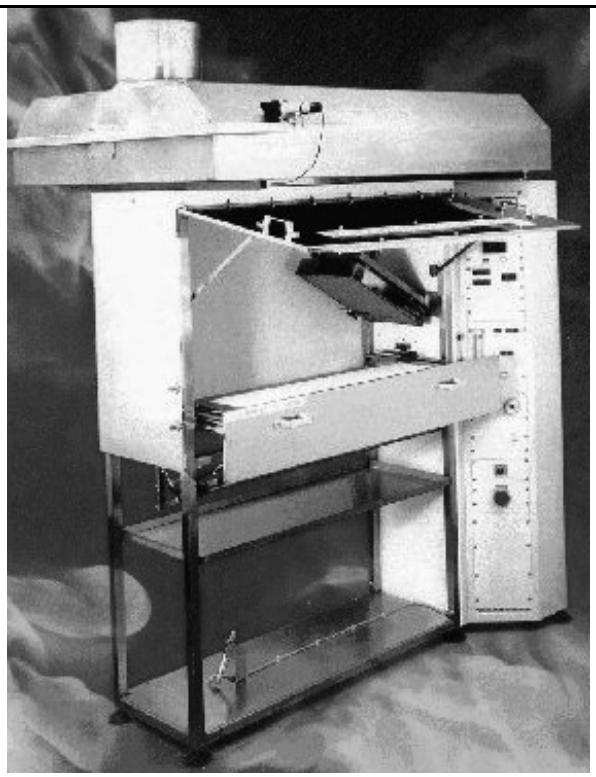

Figure 804.2
RADIANT FLOOR PANEL TEST (NFPA 253)

804.3 Testing and identification. *Interior floor finish* and floor covering materials shall be tested by an agency in accordance with NFPA 253 and identified by a hang tag or other suitable method so as to identify the manufacturer or supplier and style, and shall indicate the *interior floor finish* or floor covering classification in accordance with Section 804.2. Carpet-type floor coverings shall be tested as proposed for use, including underlayment. Test reports confirming the information provided in the manufacturer's product identification shall be furnished to the building official upon request.

❖ The only method to ascertain that a floor meets the criteria of this section is to request a copy of the test report for the specific material being installed. Therefore, it is critical that the carpeting be properly identified in order to verify that acceptable materials are being provided in the appropriate locations. The identification is to be provided on the material itself since a manufacturer's designation is required.

804.4 Interior floor finish requirements. Interior floor covering materials shall comply with Sections 804.4.1 and 804.4.2 and interior floor finish materials shall comply with Section 804.4.2.

❖ Regardless of occupancy, all interior floor covering materials need to comply with one of two test requirements as indicated in Section 804.4.1, both of which deal with ignition performance of the floor covering. The finish flooring requirements for means of egress components, such as enclosed exit stairways and ramps, exit passageways, corridors and spaces open to the corridor, are regarded as more critical than other building floor surfaces. As such, these finishes and coverings are also required to comply with the minimum critical radiant flux provisions in Section 804.4.2.

804.4.1 Test requirement. In all occupancies, interior floor covering materials shall comply with the requirements of the DOC FF-1 "pill test" (CPSC 16 CFR Part 1630) or with ASTM D2859.

❖ This section contains two test methods for interior floor covering materials: DOC FF-1 and ASTM D2859. All carpeting greater than 24 square feet (2.2 m^2) in area sold in the United States is required by federal law to pass DOC FF-1 as a minimum. DOC FF-1, also referred to as the "Methenamine Pill Test," was developed as a means of preventing the distribution of highly flammable soft-floor coverings within the United States. ASTM D2859 has been determined to be equivalent to DOC FF-1 and can be used as an alternative test method. Both test methods essentially evaluate the performance of the floor covering when subject to a cigarette-type ignition by using a small methenamine tablet.

804.4.2 Minimum critical radiant flux. In all occupancies, interior floor finish and floor covering materials in enclosures for stairways and ramps, exit passageways, corridors and rooms or spaces not separated from corridors by partitions extending from the floor to the underside of the ceiling shall withstand a minimum critical radiant flux. The minimum critical radiant flux shall be not less than Class I in Groups I-1, I-2 and I-3 and not less than Class II in Groups A, B, E, H, I-4, M, R-1, R-2 and S.

Exception: Where a building is equipped throughout with an automatic sprinkler system in accordance with Section 903.3.1.1 or 903.3.1.2, Class II materials are permitted in

INTERNATIONAL CODE COUNCIL®
Copyright © 2015 ICC. ALL RIGHTS RESERVED. Accessed by David Dammon on Jun 21, 2017 12:30:52 PM pursuant to License Agreement with ICC. No further reproduction or distribution authorized. ANY UNAUTHORIZED REPRODUCTION OR DISTRIBUTION IS A VIOLATION OF THE FEDERAL COPYRIGHT ACT AND THE LICENSE AGREEMENT, AND SUBJECT TO CIVIL AND CRIMINAL PENALTIES THEREUNDER.

any area where Class I materials are required, and materials complying with DOC FF-1 "pill test" (CPSC 16 CFR Part 1630) or with ASTM D2859 are permitted in any area where Class II materials are required.

❖ This section prescribes the minimum requirements for interior floor finish materials used in enclosed exit stairways and ramps, passageways, corridors and rooms or spaces open to the corridor. The criteria are based on the occupancy classification and the relationship of the space to the egress system. Similar to Table 803.11, the occupancy classification designation is meant to apply to the actual occupancy of the space and not necessarily the overall building classification.

Classifications I and II, as used in this section, are defined in Section 804.2 and are based on the results of the NFPA 253 test procedure.

Recognizing the ability of automatic sprinkler systems to control a fire and the minimal contribution of interior floor finishes to the early stages of fire growth, the exception allows the required interior floor finish ratings to be reduced when an automatic sprinkler system is provided throughout the building. The reference to Section 903.3.1.1 or 903.3.1.2 clarifies that the system is to be installed in accordance with NFPA 13 or 13R. In cases where Class II materials are required and an automatic sprinkler system is provided, the minimum requirement is that the material meet either the DOC FF-1 or the ASTM D2859 test criteria. For a discussion of these two methods, see the commentary to Section 804.4.1.

SECTION 805
COMBUSTIBLE MATERIALS IN TYPES I AND II CONSTRUCTION

805.1 Application. Combustible materials installed on or embedded in floors of buildings of Type I or II construction shall comply with Sections 805.1.1 through 805.1.3.

Exception: Stages and platforms constructed in accordance with Sections 410.3 and 410.4, respectively.

❖ This section provides several methods of allowing combustible materials in the floors of Type I or II construction. Generally, the focus is on fire spread in concealed spaces. If not properly addressed, combustible floor surfaces may eventually contribute to a fire within a concealed space. Sections 410.3 and 410.4 permit wood flooring in stages.

805.1.1 Subfloor construction. Floor sleepers, bucks and nailing blocks shall not be constructed of combustible materials, unless the space between the fire-resistance-rated floor assembly and the flooring is either solidly filled with noncombustible materials or fireblocked in accordance with Section 718, and provided that such open spaces shall not extend under or through permanent partitions or walls.

❖ Sleepers, bucks and nailing blocks are permitted to be of combustible materials only where the void space is filled with a noncombustible material or is fireblocked in accordance with Section 718. Section 718 permits a maximum concealed space area of 100 square feet (9.3 m^2). In either case, the open spaces cannot extend under or through permanent partitions or walls. The purpose of the fill or fireblocking is to reduce the impact of a fire in a concealed combustible space in the floor. Likewise, fire spread around partitions or walls through the concealed space in the floor is also intended to be prevented.

805.1.2 Wood finish flooring. Wood finish flooring is permitted to be attached directly to the embedded or fireblocked wood sleepers and shall be permitted where cemented directly to the top surface of fire-resistance-rated floor assemblies or directly to a wood subfloor attached to sleepers as provided for in Section 805.1.1.

❖ Wood floor finish materials may be applied directly to the wood sleepers, provided that the space is protected in accordance with Section 805.1.1. Wood floor finish materials may also be applied directly to the top surface of a fire-resistance-rated assembly or directly to a wood subfloor that is attached to sleepers that are either fireblocked or provide noncombustible fill between the sleepers in accordance with Section 805.1.1.

805.1.3 Insulating boards. Combustible insulating boards not more than $^1/_2$ inch (12.7 mm) thick and covered with finish flooring are permitted where attached directly to a noncombustible floor assembly or to wood subflooring attached to sleepers as provided for in Section 805.1.1.

❖ The addition of combustible insulating boards with a maximum thickness of $^1/_2$ inch (12.7 mm) will not significantly increase the fuel load when applied as prescribed by this section or attached to sleepers as provided for in Section 805.1.1.

In all occupancies, interior floor finish in exit enclosures, exit passageways, exit access corridors and rooms or spaces not separated from exit access corridors by full-height partitions extending from the floor to the underside of the ceiling must withstand a minimum critical radiant flux as specified in Section 804.4.2. The focus surrounding the critical radiant flux is combustibility and potential for flame spread of the exposed materials. Section 805 focuses upon fire spread through concealed spaces created by floors.

SECTION 806
DECORATIVE MATERIALS AND TRIM

[F] 806.1 General. Combustible decorative materials, other than decorative vegetation, shall comply with Sections 806.2 through 806.8.

❖ The requirements in this section apply to decorative materials other than decorative vegetation. The bulk of the requirements in this section are applicable to all groups. Section 806.3 is applicable to all groups except Group I-3. Section 806.6 is applicable to

INTERNATIONAL CODE COUNCIL®
Copyright © 2015 ICC. ALL RIGHTS RESERVED. Accessed by David Dammon on Jun 21, 2017 12:30:52 PM pursuant to License Agreement with ICC. No further reproduction or distribution authorized. ANY UNAUTHORIZED REPRODUCTION OR DISTRIBUTION IS A VIOLATION OF THE FEDERAL COPYRIGHT ACT AND THE LICENSE AGREEMENT, AND SUBJECT TO CIVIL AND CRIMINAL PENALTIES THEREUNDER.

Group A occupancies. Decorative materials must be noncombustible or meet the flame propagation performance criteria of Section 806.4 and NFPA 701.

[F] 806.2 Noncombustible materials. The permissible amount of noncombustible materials shall not be limited.

❖ Where decorative materials are classified as noncombustible, it is presumed that they will contribute little, if at all, to the growth and spread of fire. Therefore, the quantity of noncombustible decorative materials is not limited.

[F] 806.3 Combustible decorative materials. In other than Group I-3, curtains, draperies, fabric hangings and similar combustible decorative materials suspended from walls or ceilings shall comply with Section 806.4 and shall not exceed 10 percent of the specific wall or ceiling area to which such materials are attached.

Fixed or movable walls and partitions, paneling, wall pads and crash pads applied structurally or for decoration, acoustical correction, surface insulation or other purposes shall be considered *interior finish* shall comply with Section 803 and shall not be considered *decorative materials* or furnishings.

Exceptions:

1. In auditoriums in Group A, the permissible amount of curtains, draperies, fabric hangings and similar combustible decorative materials suspended from walls or ceilings shall not exceed 75 percent of the aggregate wall area where the building is equipped throughout with an *approved automatic sprinkler system* in accordance with Section 903.3.1.1, and where the material is installed in accordance with Section 803.13 of this code.
2. In Group R-2 dormitories, within sleeping units and dwelling units, the permissible amount of curtains, draperies, fabric hangings and similar decorative materials suspended from walls or ceiling shall not exceed 50 percent of the aggregate wall areas where the building is equipped throughout with an *approved automatic sprinkler system* installed in accordance with Section 903.3.1.
3. In Group B and M occupancies, the amount of combustible fabric partitions suspended from the ceiling and not supported by the floor shall comply with Section 806.4 and shall not be limited.

❖ In any occupancy classification where a movable wall, partition, paneling, wall pads or crash pads cover larger areas, they need to be dealt with as interior finishes instead of as decorative materials. Such areas would not be considered decorative materials where the area covered is greater than 10 percent of the wall or ceiling area. This is clarified in the paragraph addressing Exception 3. Meeting the flame propagation performance criteria of NFPA 701 does not mean that materials will not burn, only that they are going to spread flame relatively slowly. These materials are, therefore, limited to a maximum of 10 percent of the total wall and ceiling area of the space under consideration. Unlike incidental trim, decorative materials are not necessarily distributed evenly throughout the room. Additionally, consideration of the long-term maintenance of the materials, including possible periodic retreatment, should be taken into account.

There are two exceptions to the 10-percent limitation in Section 806.3. Exception 1 is for Group A auditoriums and would allow 75-percent coverage of the walls and ceilings (instead of the limit of 10 percent) if the space is sprinklered in accordance with NFPA 13 and the material is applied in accordance with Section 803.4. Exception 2 correlates with the general requirements in Section 806.1 and further emphasizes that an unlimited amount of fabric ceiling partitions are allowed as long as they meet the flame propagation performance of NFPA 701.

Exception 3 of this section also clarifies that, in Group B and M occupancies, fabric partitions suspended from the ceiling but not physically contacting the floor should be treated as decorative materials similar to curtains or draperies and comply with the flame propagation performance heat release criteria of Section 806.4.

[F] 806.4 Acceptance criteria and reports. Where required to exhibit improved fire performance, curtains, draperies, fabric hangings and similar combustible decorative materials suspended from walls or ceilings shall be tested by an *approved agency* and meet the flame propagation performance criteria of Test 1 or 2, as appropriate, of NFPA 701, or exhibit a maximum heat release rate of 100 kW when tested in accordance with NFPA 289, using the 20 kW ignition source. Reports of test results shall be prepared in accordance with the test method used and furnished to the *building official* upon request.

❖ One of the standard test methods to be used to evaluate the ability of a material to propagate flame is NFPA 701, which contains two test methods. Test 1 is a less severe test than Test 2 and uses smaller test specimens. Test 1 is intended for lighter-weight materials and single-layer fabrics: the limit is a linear density of 700 g/m^2 (21 oz/yd^2). Test 2 is more severe than Test 1 and uses larger test specimens. It is intended for higher-density materials and multilayered fabrics. It also applies to vinyl-coated fabric blackout linings and lined draperies using any density, because they have been shown to give misleading results using Test 1. NFPA 701 sets out the types of materials, including fabrics, that should be tested using each method.

Essentially, NFPA 701 provides a mechanism to distinguish between materials that allow flames to spread quickly and those that do not when using a small fire exposure.

Materials tested only to NFPA 701 are not permitted for use as interior finish materials, but instead are generally used as shades, swags, curtains and other similar materials. These tests are used to determine whether materials propagate flame beyond the area exposed to the ignition source. They are not intended

INTERNATIONAL CODE COUNCIL®
Copyright © 2015 ICC. ALL RIGHTS RESERVED. Accessed by David Dammon on Jun 21, 2017 12:30:52 PM pursuant to License Agreement with ICC. No further reproduction or distribution authorized. ANY UNAUTHORIZED REPRODUCTION OR DISTRIBUTION IS A VIOLATION OF THE FEDERAL COPYRIGHT ACT AND THE LICENSE AGREEMENT, AND SUBJECT TO CIVIL AND CRIMINAL PENALTIES THEREUNDER.

to indicate whether the material tested will resist the propagation of flame under fire exposures more extreme than the test conditions.

The other standard test method that can be used is NFPA 289. This test method quantifies the contribution of materials to heat and smoke release when subjected to different ignition sources. This test method also determines the potential for growth of a fire and the fire spread of a given material when exposed to an ignition source in a controlled environment.

[F] 806.5 Foam plastic. Foam plastic used as *trim* in any occupancy shall comply with Section 2604.2.

❖ This section establishes that some dense foam plastic materials may be used as interior trim if the thickness, width and area of coverage are specifically limited as required in Section 2604.2.

Section 2604.2 provides the following maximum values: $^1/_2$-inch (12.7 mm) thickness, 8-inch (203 mm) width and 10 percent of the aggregate wall and ceiling area. Section 2604.2 also establishes a minimum density for foam permitted for use as trim: 20 pounds per cubic foot (320 kg/m^3). Minimum instead of maximum density is specified because the denser the foam plastic material, the less likely it is that it will generate misleading ASTM E84 test results due to having insufficient material for fire testing of the foam [see Commentary Figures 806.7(1) and 806.7(2)].

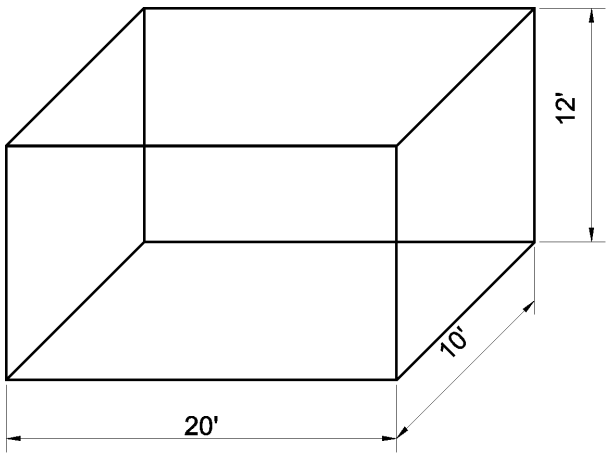

Wall area: 2 walls (20 × 12) + 2 walls (10 × 12) =
720 sq. ft. 10% of walls = 720 × 0.10 = 72 sq. ft.
Decorative trim coverage = 72 sq. ft.
Ceiling 20 × 10 = 200 sq. ft. 10% of ceiling =
200 × 0.10 = 20
Decorative trim coverage = 20 sq. ft.

For SI: 1 foot = 304.8 mm,
1 square foot = 0.0929 m^2.

Figure 806.7(1)
TRIM COVERAGE AREA

This section specifically calls out a numerical flame spread index limitation of 75 for foam plastic used as trim, which is a Class B flame spread index. No thermal barrier is required for the use of foam plastic as trim and the smoke-developed index is not limited. It should be noted that Section 803.7.3 of the IFC, which regulates the use of foam plastic trim for existing construction, has essentially identical requirements to those found in this section. Neither this section nor Section 2603.4.1.11 requires a thermal barrier for interior trim.

[F] 806.6 Pyroxylin plastic. Imitation leather or other material consisting of or coated with a pyroxylin or similarly hazardous base shall not be used in Group A occupancies.

❖ Use of pyroxylin plastics, also known as cellulose nitrate plastics, as imitation leather (or coated to imitation leather) is strictly prohibited in Group A occupancies because of the normally high occupant loads of such occupancies. This type of material is very hazardous because it has the potential to develop explosive atmospheres with high heat emission and it will begin decomposition at temperatures starting at 300°F (149°C). In actual fact, cellulose nitrate use has generally declined considerably because it tends to become somewhat unstable and is easily ignitable. Specifically, use of cellulose nitrate for motion picture film was discontinued in 1951.

[F] 806.7 Interior trim. Material, other than foam plastic used as interior *trim*, shall have a minimum Class C flame spread and smoke-developed index when tested in accor-

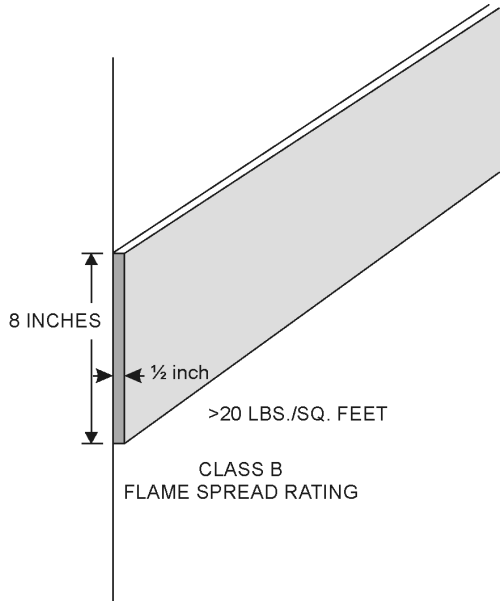

For SI: 1 inch = 25.4 mm,
1 pound per square foot = 47.88 Pa.

Figure 806.7(2)
MAXIMUM DIMENSION—FOAM PLASTIC TRIM

INTERNATIONAL CODE COUNCIL®
Copyright © 2015 ICC. ALL RIGHTS RESERVED. Accessed by David Dammon on Jun 21, 2017 12:30:52 PM pursuant to License Agreement with ICC. No further reproduction or distribution authorized. ANY UNAUTHORIZED REPRODUCTION OR DISTRIBUTION IS A VIOLATION OF THE FEDERAL COPYRIGHT ACT AND THE LICENSE AGREEMENT, AND SUBJECT TO CIVIL AND CRIMINAL PENALTIES THEREUNDER.

dance with ASTM E84 or UL 723, as described in Section 803.1.1. Combustible *trim*, excluding handrails and guardrails, shall not exceed 10 percent of the specific wall or ceiling area in which it is attached.

❖ In occupancies of any group, unless otherwise noted in the code, the minimum classification of all trim must be Class C. Additionally, combustible trim may not exceed 10 percent of the area of the aggregate wall or ceiling area. The 10-percent calculation does not need to include handrails and guardrails. Although a Class C rating may be lower than the rating required for a particular building or facility, this quantity of combustible material will not significantly increase the fuel load and flame spread hazards [see Commentary Figures 806.7(1) and 806.7(2)].

[F] 806.8 Interior floor-wall base. *Interior floor-wall base* that is 6 inches (152 mm) or less in height shall be tested in accordance with Section 804.2 and shall be not less than Class II. Where a Class I floor finish is required, the floor-wall base shall be Class I.

Exception: Interior *trim* materials that comply with Section 806.7.

❖ Section 806.8 addresses the issue of testing and regulation of interior floor-wall base trim materials. In many cases, the floor covering material is just seamlessly turned up or used at the intersection of the floor and the wall and thus it becomes the floor-wall base trim.

In the 2006 code, these materials could have been considered interior trim in accordance with Sections 804.1 and 806.7 and would have been required to be tested in accordance with ASTM E84 or UL 723, even though the floor covering may have been required to be tested in accordance with NFPA 253. The testing apparatus and specimen mounting requirements of ASTM E84 make it difficult to obtain reliable test results for these smaller floor-wall base profiles. Because of their location, at the floor line, floor-wall base materials are not likely to be involved in a fire until the floor covering is also involved, usually at room flashover. Thus, it is reasonable that floor-wall base materials meet the same criteria as floor coverings. The section specifies that floor-wall base materials 6 inches (152 mm) or less in height be tested in accordance with NFPA 253, and the proposal provides requirements for this application.

SECTION 807
INSULATION

807.1 Insulation. Thermal and acoustical insulation shall comply with Section 720.

❖ This section simply references Section 720 for the requirements for insulation materials and clarifies that these materials can be used when they meet the requirements of that section.

SECTION 808
ACOUSTICAL CEILING SYSTEMS

808.1 Acoustical ceiling systems. The quality, design, fabrication and erection of metal suspension systems for acoustical tile and lay-in panel ceilings in buildings or structures shall conform to generally accepted engineering practice, the provisions of this chapter and other applicable requirements of this code.

❖ This section regulates the design and installation of metal suspension systems for acoustical tile and acoustical lay-in panel ceilings. Suspended ceiling systems basically consist of a grid of metal channels or T-bars suspended by steel hangers (wires, rods or flats) from the structure above. Light fixtures, air diffusers and acoustical panels may be placed between the metal framing members.

808.1.1 Materials and installation. Acoustical materials complying with the *interior finish* requirements of Section 803 shall be installed in accordance with the manufacturer's recommendations and applicable provisions for applying *interior finish*.

❖ Acoustical materials used in metal suspension systems are regulated for the purpose of limiting flame spread and smoke development in the occupancies shown in Table 803.11.

Metal suspension system components for acoustical ceilings that might be subjected to the severe environmental conditions of high humidity (fog) or salt spray may have coatings ranked according to their ability to protect the components from deterioration. The installation of metal suspension systems in any exterior application must be considered as an installation in a severe environment (see ASTM C635).

808.1.1.1 Suspended acoustical ceilings. Suspended acoustical ceiling systems shall be installed in accordance with the provisions of ASTM C635 and ASTM C636.

❖ ASTM C635 covers metal ceiling suspension systems used primarily to support acoustical tile or acoustical lay-in panels. Suspension systems have three structural classifications, as described below:

- Light-duty systems—Used primarily for residential and light commercial structures where ceiling loads other than acoustical tile or lay-in panels are not anticipated.
- Intermediate-duty systems—Used primarily for ordinary commercial structures where some ceiling loads, due to light fixtures and air diffusers, are anticipated.
- Heavy-duty systems—Used primarily for commercial structures in which the quantities and weights of ceiling fixtures (lights, air diffusers, etc.) are greater than those for an ordinary commercial structure.

ASTM C636 covers the installation of suspension systems for acoustical tile and lay-in panels.

INTERNATIONAL CODE COUNCIL®
Copyright © 2015 ICC. ALL RIGHTS RESERVED. Accessed by David Dammon on Jun 21, 2017 12:30:52 PM pursuant to License Agreement with ICC. No further reproduction or distribution authorized. ANY UNAUTHORIZED REPRODUCTION OR DISTRIBUTION IS A VIOLATION OF THE FEDERAL COPYRIGHT ACT AND THE LICENSE AGREEMENT, AND SUBJECT TO CIVIL AND CRIMINAL PENALTIES THEREUNDER.

While the practices described in this standard have equal application to fire-resistance-rated suspension systems, additional requirements may be imposed to obtain the fire endurance classification of particular floor/ceiling or roof/ceiling assemblies (see Section 808.1.1.2).

808.1.1.2 Fire-resistance-rated construction. Acoustical ceiling systems that are part of fire-resistance-rated construction shall be installed in the same manner used in the assembly tested and shall comply with the provisions of Chapter 7.

❖ A suspended acoustical ceiling system by itself does not possess a fire-resistance rating. Acoustical ceiling systems are part of an assembly that has a specified fire-resistance rating. Acoustical lay-in panels must remain in place for the tested assembly to be effective.

Bibliography

The following resource materials were used in the preparation of the commentary for this chapter of the code.

ASTM C635-13, *Specification for the Manufacture, Performance, and Testing of Metal Suspension Systems for Acoustical Tile and Lay-In Panel Ceilings*. West Conshohocken, PA: ASTM International, 2013.

ASTM D2859-06(2011), *Standard Test Method for Ignition Characteristics of Finished Textile Floor Covering Materials*. West Conshohocken, PA: ASTM International, 2011.

ASTM E84-13A, *Test Method for Surface-burning Characteristics of Building Materials*. West Conshohocken, PA: ASTM International, 2013.

DOC FF-1 (CPSC 16 CFR, Part 1630-07), *Standard for the Surface Flammability of Carpets and Rugs*. Bethesda, MD: Consumer Product Safety Commission, 2007.

Fisher, F.L., B. McCracken and R.B. Williamson. "Room Fire Experiments of Textile Wall Coverings, Final Report of All Materials Tested Between March 1985 and January 1986." *Service to Industry Report*. ES-7853, Report 86-2, p.142. Berkley, CA: California University, March 1986.

NFPA 253-11, *Test for Critical Radiant Flux of Floor Covering Systems Using a Radiant Heat Energy Source*. Quincy, MA: National Fire Protection Association, 2011.

NFPA 265-11, *Standard Fire Tests for Evaluating Room Fire Growth Contribution of Textile Wall Coverings*. Quincy, MA: National Fire Protection Association, 2011.

NFPA 286-11, *Standard Methods of Fire Tests for Evaluating Contribution of Wall and Ceiling Interior Finish to Room Fire Growth*. Quincy, MA: National Fire Protection Association, 2011.

NFPA 701-2010, *Standard Methods of Fire Tests for Flame Propagation of Textiles and Films*. Quincy, MA: National Fire Protection Association, 2010.

UL 723-2008, *Standard for Test for Surface Burning Characteristics of Building Materials—with Revisions through May 2005*. Northbrook, IL: Underwriters Laboratories Inc., 2008.

INTERNATIONAL CODE COUNCIL®

Copyright © 2015 ICC. ALL RIGHTS RESERVED. Accessed by David Dammon on Jun 21, 2017 12:30:52 PM pursuant to License Agreement with ICC. No further reproduction or distribution authorized. ANY UNAUTHORIZED REPRODUCTION OR DISTRIBUTION IS A VIOLATION OF THE FEDERAL COPYRIGHT ACT AND THE LICENSE AGREEMENT, AND SUBJECT TO CIVIL AND CRIMINAL PENALTIES THEREUNDER.

Chapter 9:
Fire Protection Systems

General Comments

The provisions required by Chapter 9 are just one aspect of the overall fire protection system of a building or structure. All fire protection requirements contained in the code must be considered as a package or overall system. Noncompliance with any part of the overall system may cause other parts of the system to fail. Failure to install the systems in accordance with code provisions may result in an increased loss of life and property due to a reduction in the level of protection provided.

It is important that every effort be made to verify the proper design and installation of a given fire protection system, especially those that result in construction alternatives and other code tradeoffs.

The requirements found in Chapter 9 can be considered active fire safety provisions. They are provisions directed at containing and abating the fire once it has erupted. This chapter is almost a direct copy of Chapter 9 in the *International Fire Code*® (IFC®). The IFC, however, contains specific provisions that are only applicable to existing buildings. The IFC also contains periodic testing criteria that are not duplicated in this chapter. Proper testing, inspection and maintenance of the various systems, however, are critical to establish the reliability of the system. Additionally, Chapter 9 references and adopts numerous National Fire Protection Association (NFPA) standards, including the acceptance testing criteria within the standard. The referenced standards will also contain more specific design and installation criteria than are found in this chapter. As noted in Section 102.4, where differences occur between code provisions and the referenced standards, the code provisions apply.

Purpose

Fire protection systems may serve one or more purposes in providing adequate protection from fire and hazardous material exposure. The purpose of Chapter 9 is to prescribe the minimum requirements for an active system or systems of fire protection to perform the following functions: to detect a fire; to alert the occupants or fire department of a fire emergency; to control smoke and to control or extinguish the fire. Generally, the requirements are based on the occupancy and height and area of the building, as these are the factors that most affect fire-fighting capabilities and the relative hazard of a specific space or area.

SECTION 901
GENERAL

901.1 Scope. The provisions of this chapter shall specify where *fire protection systems* are required and shall apply to the design, installation and operation of *fire protection systems*.

❖ Chapter 9 contains requirements for fire protection systems that may be provided in a building. These include automatic suppression systems; standpipe systems; fire alarm and detection systems; smoke control systems; smoke and heat vents and portable fire extinguishers and emergency alarm systems. Besides indicating the conditions under which respective systems are required, this chapter contains the design, installation, maintenance and operational criteria for fire protection systems. While the chapter requires proper maintenance for the reliability of the systems, the actual maintenance provisions (periodic testing, inspections and maintenance) are found in the IFC.

This chapter also addresses the requirements for fire command centers, fire department connections, fire pumps and emergency radio systems. These features all directly relate to the proper function of fire protection systems.

901.2 Fire protection systems. *Fire protection systems* shall be installed, repaired, operated and maintained in accordance with this code and the *International Fire Code*.

Any *fire protection system* for which an exception or reduction to the provisions of this code has been granted shall be considered to be a required system.

Exception: Any *fire protection system* or portion thereof not required by this code shall be permitted to be installed for partial or complete protection provided that such system meets the requirements of this code.

❖ The fire protection system is an integral component of the protection features of the building and is required to be properly installed, repaired, operated and maintained in accordance with the code and the IFC. Improperly installed or maintained systems can negate any anticipated protection and, in fact, create a hazard in itself.

INTERNATIONAL CODE COUNCIL®
Copyright © 2015 ICC. ALL RIGHTS RESERVED. Accessed by David Dammon on Jun 21, 2017 12:30:52 PM pursuant to License Agreement with ICC. No further reproduction or distribution authorized. ANY UNAUTHORIZED REPRODUCTION OR DISTRIBUTION IS A VIOLATION OF THE FEDERAL COPYRIGHT ACT AND THE LICENSE AGREEMENT, AND SUBJECT TO CIVIL AND CRIMINAL PENALTIES THEREUNDER.

While the code may not require a protection system for a specific building or portion thereof, due to its occupancy, the fire protection system would still be considered a required system if some other code tradeoff, exception or reduction was taken based on the installation of the fire protection system. See Commentary Figure 904.2.1. For example, a typical small office building may not require an automatic sprinkler system solely because of its Group B occupancy classification; however, if an exit access corridor fire-resistance-rating reduction is taken in accordance with Table 1020.1 for buildings equipped throughout with an NFPA 13 sprinkler system, that sprinkler system would be considered a required system.

The exception acknowledges that a building owner or designer may elect to install a fire protection system that is not required by the code. Even though such a system is not required, it must comply with the applicable provisions of this chapter and the IFC. This requirement is predicated on the concept that any fire protection system not installed in accordance with the code is intrinsically lacking because it could give a false impression of properly installed protection.

For example, if a building owner chooses to provide sprinkler protection in a certain area and such protection is not required by the code, the system must be installed in accordance with the applicable NFPA sprinkler standard (13, 13R or 13D) and other applicable requirements of the code, such as water supply and supervision. The extent of the protection thus provided would not be regulated.

901.3 Modifications. Persons shall not remove or modify any *fire protection system* installed or maintained under the provisions of this code or the *International Fire Code* without approval by the *building official*.

❖ This section emphasizes the principle that systems installed and maintained in compliance with the codes and standards in effect at the time they were placed in service must remain in an operative condition at all times. Protection must not be diminished in any existing building except for the purpose of conducting tests, maintenance or repairs. The length of service interruptions should be kept to a minimum. The building official must be notified of any service interruptions and should carefully evaluate the continued operation or occupancy of buildings and structures where protection is interrupted.

901.4 Threads. Threads provided for fire department connections to sprinkler systems, standpipes, yard hydrants or any other fire hose connection shall be compatible with the connections used by the local fire department.

❖ Incompatible fire service threads have been a major problem throughout the history of modern fire suppression. Efforts to standardize fire service threads in the United States began as early as 1898. Following the Great Baltimore Fire of 1904, NFPA adopted a national standard for fire hose thread with diameters $2^1/_2$ inches (64 mm) and larger; however, to this day many jurisdictions continue to use their own (historic) thread standards. A number of jurisdictions have pioneered the use of non-threaded, quarter-turn or "Storz" fire hose couplings in place of the national and local traditional thread standards.

901.5 Acceptance tests. *Fire protection systems* shall be tested in accordance with the requirements of this code and the *International Fire Code*. When required, the tests shall be conducted in the presence of the *building official*. Tests required by this code, the *International Fire Code* and the standards listed in this code shall be conducted at the expense of the owner or the owner's authorized agent. It shall be unlawful to occupy portions of a structure until the required *fire protection systems* within that portion of the structure have been tested and *approved*.

❖ All fire protection systems are to be subjected to an acceptance test to determine that the system will operate in the manner required by the code. Acceptance tests are usually part of the final inspection procedures required by Section 110.3.10. Specific acceptance test procedures are provided in other sections as well as the referenced standards. In most instances, the acceptance test procedures require 100-percent operation of the testable system components to determine that they are functioning as required. Often, the design professional may require additional testing to verify that the system operates as designed, which may be beyond the code requirements.

The inclusion of the requirement for acceptance tests in the code is not intended to assign responsibility for witnessing the tests. The responsibility to witness the acceptance test is an administrative issue that each municipality must address. Because the acceptance test is critical during design and construction and is a requirement of occupancy, the requirement is located in the code. The section also clarifies that it is the owner or owner's authorized agent's responsibility to conduct the test and the role of the building official to witness—not conduct—the test. Typically, the owner will assign the responsibility to the installing contractor.

Access to all flow test connections, valves and points of fluid discharge required by other sections is to be provided at locations acceptable to the building official. Consideration should be given to the location of sprinkler system inspector test connections and the main drain valves, as well as to the valves necessary to test standpipe and fire pump installations.

Consideration should also be given to the discharge of water from the various test connections for aqueous systems that should be arranged to discharge to the outside or to a drain with sufficient capacity to handle the anticipated water flow. If the test connection is piped to the outside, then protection should be furnished to prevent unnecessary damage to the property by providing splash blocks or similar protection. When the building drainage system is used, the indirect waste provisions of Chapter 7 of the *International Plumbing Code*® (IPC®) are to apply.

INTERNATIONAL CODE COUNCIL®
Copyright © 2015 ICC. ALL RIGHTS RESERVED. Accessed by David Dammon on Jun 21, 2017 12:30:52 PM pursuant to License Agreement with ICC. No further reproduction or distribution authorized. ANY UNAUTHORIZED REPRODUCTION OR DISTRIBUTION IS A VIOLATION OF THE FEDERAL COPYRIGHT ACT AND THE LICENSE AGREEMENT, AND SUBJECT TO CIVIL AND CRIMINAL PENALTIES THEREUNDER.

Partial occupancy of any structure should not be permitted unless all fire protection systems for the occupied areas have been tested and approved. Even so, the code assumes that full protection for all areas will be provided as expeditiously as possible. The installation of many fire protection systems and the associated code tradeoffs permitted for a given occupancy assume complete building protection, not just in the occupied areas. Final approval of all partial occupancy conditions is subject to the building official.

901.6 Supervisory service. Where required, *fire protection systems* shall be monitored by an approved supervising station in accordance with NFPA 72.

❖ All required fire protection systems are to be supervised as a means of determining at any time that the system is operational. Acceptable methods of supervision are provided in NFPA 72.

901.6.1 Automatic sprinkler systems. *Automatic sprinkler systems* shall be monitored by an *approved* supervising station.

Exceptions:

1. A supervising station is not required for *automatic sprinkler systems* protecting one- and two-family dwellings.
2. Limited area systems serving fewer than 20 sprinklers.

❖ This section highlights that automatic sprinkler systems must be monitored by an approved supervising station. All water supply control valves and waterflow switches are required to be electrically supervised as indicated in Section 903.4. A central station, remote supervising station or proprietary supervising station is an approved service recognized in NFPA 72 (see commentary, Section 903.4.1).

Automatic sprinkler systems in one- and two-family dwellings are typically designed in accordance with NFPA 13D, which does not require electrical supervision (see Exception 1). Limited area sprinkler systems are generally supervised by their connection to the domestic water service (see Exception 2). As such, limited area sprinkler systems with fewer than 20 sprinkler heads are not required to have local alarms or a fire department connection.

901.6.2 Fire alarm systems. Fire alarm systems required by the provisions of Section 907.2 of this code and Sections 907.2 and 907.9 of the *International Fire Code* shall be monitored by an *approved* supervising station in accordance with Section 907.6.6.

Exceptions:

1. Single- and multiple-station smoke alarms required by Section 907.2.11.
2. Smoke detectors in Group I-3 occupancies.
3. Supervisory service is not required for *automatic sprinkler systems* in one- and two-family dwellings.

❖ Fire alarm systems are required to automatically transmit an alarm and any trouble signals to the fire department through one of the approved methods in NFPA 72. This includes systems in new buildings where required by Section 907.2 of both the code and the IFC and in existing buildings where required by Section 907.3 of the IFC.

Exception 1 exempts single- and multiple-station smoke alarms from being supervised due to the potential for unwanted false alarms. Similarly, due to the concern over unwanted alarms, smoke detectors in Group I-3 occupancies need only sound an approved alarm signal, which automatically notifies staff (see Section 907.2.6.3.1). Smoke detectors in Group I-3 occupancies are typically subject to misuse and abuse. Frequent unwanted alarms would negate the effectiveness of the system (see Exception 2).

Exception 3 clarifies that sprinkler systems in one- and two-family dwellings are not part of a dedicated fire alarm system and are typically designed in accordance with NFPA 13D, which does not require electrical supervision.

901.6.3 Group H. Supervision and monitoring of emergency alarm, detection and automatic fire-extinguishing systems in Group H occupancies shall be in accordance with the *International Fire Code*.

❖ Given the varied nature and quantity of hazardous materials that could be present, all emergency alarm, detection and automatic fire-extinguishing systems in Group H occupancies are required to be both supervised and monitored by an approved supervising station. Section 5004.10 of the IFC correlates with this section and further allows the building official to approve an on-site monitoring system. Many companies that routinely deal with hazardous materials employ their own fire brigades and have emergency response procedures in place.

901.7 Fire areas. Where buildings, or portions thereof, are divided into *fire areas* so as not to exceed the limits established for requiring a *fire protection system* in accordance with this chapter, such *fire areas* shall be separated by *fire barriers* constructed in accordance with Section 707 or *horizontal assemblies* constructed in accordance with Section 711, or both, having a *fire-resistance rating* of not less than that determined in accordance with Section 707.3.10.

❖ This section provides specific guidance on how a building needs to be divided into fire areas in order to avoid requiring a fire protection system to be installed. A single occupancy group would require fire barriers or horizontal assemblies in order to create multiple fire areas (see Table 707.3.10), each having an area below the threshold for fire protection system installation.

[F] 901.8 Pump and riser room size. Where provided, fire pump rooms and *automatic sprinkler system* riser rooms shall be designed with adequate space for all equipment necessary for the installation, as defined by the manufacturer, with sufficient working room around the stationary equipment. Clear-

INTERNATIONAL CODE COUNCIL®
Copyright © 2015 ICC. ALL RIGHTS RESERVED. Accessed by David Dammon on Jun 21, 2017 12:30:52 PM pursuant to License Agreement with ICC. No further reproduction or distribution authorized. ANY UNAUTHORIZED REPRODUCTION OR DISTRIBUTION IS A VIOLATION OF THE FEDERAL COPYRIGHT ACT AND THE LICENSE AGREEMENT, AND SUBJECT TO CIVIL AND CRIMINAL PENALTIES THEREUNDER.

ances around equipment to elements of permanent construction, including other installed equipment and appliances, shall be sufficient to allow inspection, service, repair or replacement without removing such elements of permanent construction or disabling the function of a required fire-resistance-rated assembly. Fire pump and *automatic sprinkler system* riser rooms shall be provided with a door(s) and unobstructed passageway large enough to allow removal of the largest piece of equipment.

❖ Section 901.8 establishes that, where a pump or rise room is necessary, the rooms housing fire protection system risers or fire pumps and their components have adequate space to facilitate their maintenance. This section does not require the construction of a room to house fire protection systems; however, if a room is provided, this section requires that it be adequately sized to allow for maintenance.

Instead of prescribing arbitrary dimensions, this provision bases the room area on clearances specified by the equipment manufacturers to ensure adequate space is available for its installation or removal. The design must provide enough area so that walls, finish materials and doors are not required to be removed during maintenance activities. The provision also prescribes that the size of the door serving a riser or pump room is of a size to accommodate the removal of the largest piece of equipment.

Given that the design of fire protection systems generally commences during the period that building construction drawings and specifications are being reviewed by the jurisdiction, it will be especially important for the building's designer to establish dialogue with the fire protection system contractor early in the design process to ensure that the room and at least one door can accommodate the largest equipment and provide the space needed for maintenance.

SECTION 902
DEFINITIONS

902.1 Definitions. The following terms are defined in Chapter 2:

❖ Definitions of terms can help in the understanding and application of the code requirements. This section directs the code user to Chapter 2 for the proper application of the indicated terms used in this chapter. Terms may be defined in Chapter 2 of another International Code as indicated in Section 201.3 or the dictionary meaning may be all that is needed (see commentary, Sections 201 through 201.4).

[F] ALARM NOTIFICATION APPLIANCE.

[F] ALARM SIGNAL.

[F] ALARM VERIFICATION FEATURE.

[F] ANNUNCIATOR.

[F] AUDIBLE ALARM NOTIFICATION APPLIANCE.

[F] AUTOMATIC.

[F] AUTOMATIC FIRE-EXTINGUISHING SYSTEM.

[F] AUTOMATIC SMOKE DETECTION SYSTEM.

[F] AUTOMATIC SPRINKLER SYSTEM.

[F] AUTOMATIC WATER MIST SYSTEM.

[F] AVERAGE AMBIENT SOUND LEVEL.

[F] CARBON DIOXIDE EXTINGUISHING SYSTEMS.

[F] CEILING LIMIT.

[F] CLEAN AGENT.

[F] COMMERCIAL MOTOR VEHICLE.

[F] CONSTANTLY ATTENDED LOCATION.

[F] DELUGE SYSTEM.

[F] DETECTOR, HEAT.

[F] DRY-CHEMICAL EXTINGUISHING AGENT.

[F] ELECTRICAL CIRCUIT PROTECTIVE SYSTEM.

[F] ELEVATOR GROUP.

[F] EMERGENCY ALARM SYSTEM.

[F] EMERGENCY VOICE/ALARM COMMUNICATIONS.

[F] FIRE ALARM BOX, MANUAL.

[F] FIRE ALARM CONTROL UNIT.

[F] FIRE ALARM SIGNAL.

[F] FIRE ALARM SYSTEM.

FIRE AREA.

[F] FIRE COMMAND CENTER.

[F] FIRE DETECTOR, AUTOMATIC.

[F] FIRE PROTECTION SYSTEM.

[F] FIRE SAFETY FUNCTIONS.

[F] FOAM-EXTINGUISHING SYSTEM.

[F] HALOGENATED EXTINGUISHING SYSTEM.

[F] INITIATING DEVICE.

[F] MANUAL FIRE ALARM BOX.

[F] MULTIPLE-STATION ALARM DEVICE.

[F] MULTIPLE-STATION SMOKE ALARM.

[F] NOTIFICATION ZONE.

[F] NUISANCE ALARM.

PRIVATE GARAGE.

[F] RECORD DRAWINGS.

[F] SINGLE-STATION SMOKE ALARM.

[F] SMOKE ALARM.

[F] SMOKE DETECTOR.

[F] SMOKEPROOF ENCLOSURE.

[F] STANDPIPE SYSTEM, CLASSES OF.

Class I system.

Class II system.

Class III system.

INTERNATIONAL CODE COUNCIL®

Copyright © 2015 ICC. ALL RIGHTS RESERVED. Accessed by David Dammon on Jun 21, 2017 12:30:52 PM pursuant to License Agreement with ICC. No further reproduction or distribution authorized. ANY UNAUTHORIZED REPRODUCTION OR DISTRIBUTION IS A VIOLATION OF THE FEDERAL COPYRIGHT ACT AND THE LICENSE AGREEMENT, AND SUBJECT TO CIVIL AND CRIMINAL PENALTIES THEREUNDER.

[F] STANDPIPE, TYPES OF.

Automatic dry.

Automatic wet.

Manual dry.

Manual wet.

Semiautomatic dry.

[F] SUPERVISING STATION.

[F] SUPERVISORY SERVICE.

[F] SUPERVISORY SIGNAL.

[F] SUPERVISORY SIGNAL-INITIATING DEVICE.

[F] TIRES, BULK STORAGE OF.

[F] TROUBLE SIGNAL.

[F] VISIBLE ALARM NOTIFICATION APPLIANCE.

[F] WET CHEMICAL EXTINGUISHING SYSTEM.

[F] WIRELESS PROTECTION SYSTEM.

[F] ZONE.

[F] ZONE, NOTIFICATION.

❖ Certain requirements in the code are based on code provisions in the IFC, *International Mechanical Code*® (IMC®) and IPC. A review of definitions included in those codes will aid in the understanding of many of the requirements contained in the code.

SECTION 903
AUTOMATIC SPRINKLER SYSTEMS

[F] 903.1 General. *Automatic sprinkler systems* shall comply with this section.

❖ This section identifies the conditions requiring an automatic sprinkler system for all occupancies. The need for an automatic sprinkler system may depend on not only the occupancy but also the occupant load, fuel load, height and area of the building as well as fire-fighting capabilities. Section 903.2 addresses all occupancy conditions requiring an automatic sprinkler system. Section 903.3 contains the installation requirements for all sprinkler systems in addition to the requirements of NFPA 13, NFPA 13R and NFPA 13D. The supervision and alarm requirements for sprinkler systems are contained in Section 903.4, whereas Section 903.5 refers to the IFC, which references testing and maintenance requirements for sprinkler systems found in Section 901 and NFPA 25.

Unless specifically allowed by the code, residential sprinkler systems installed in accordance with NFPA 13R or NFPA 13D are not recognized for reductions or exceptions permitted by other sections of the code. NFPA 13 systems provide the level of protection associated with adequate fire suppression for all occupancies. NFPA 13R and NFPA 13D systems are intended more to provide adequate time for egress but not necessarily for complete suppression of the fire. Commentary Figure 903.2 lists examples of where the various sprinkler thresholds differ in application.

The area values contained in this section are intended to apply to fire areas, which are comprised of all floor areas bounded by fire barriers, fire walls or exterior walls. The minimum required fire-resistance rating of fire barrier assemblies that define a fire area is specified in Table 707.3.10. Because the areas are defined as fire areas, fire barriers, horizontal assemblies, fire walls or exterior walls are the only acceptable means of subdividing a building into smaller areas instead of installing an automatic sprinkler system. Where fire barriers and exterior walls define multiple fire areas within a single building, a fire wall defines separate buildings within one structure. Also note that some of the threshold limitations result in a requirement to install an automatic sprinkler system throughout the building while others may require only specific fire areas to be sprinklered.

Another important point is that one fire area may include floor areas in more than one story of a building (see the commentary to the definition of "Fire area" in Section 202).

The application of mixed occupancies and fire areas must be carefully researched. Often the required separation between occupancies for the purposes of applying the separated mixed-use option in Section 508.4 will result in a separation that is less than what is required to define the boundaries of a fire area. It is possible to have two different occupancies within a given fire area, treated as separated uses but with code requirements applicable to both, since they are not separated by the rating required for fire areas.

[F] 903.1.1 Alternative protection. Alternative *automatic fire-extinguishing systems* complying with Section 904 shall be permitted instead of automatic sprinkler protection where recognized by the applicable standard and *approved* by the fire code official.

❖ This section permits the use of an alternative automatic fire-extinguishing system when approved by the fire code official as a means of compliance with the occupancy requirements of Section 903. Although the use of an alternative extinguishing system allowed by Section 904, such as a carbon dioxide system or clean-agent system, would satisfy the requirements of Section 903.2, it would not be considered an acceptable alternative for the purposes of exceptions, reductions or other code alternatives that would be applicable if an automatic sprinkler system were installed.

[F] 903.2 Where required. Approved *automatic sprinkler systems* in new buildings and structures shall be provided in the locations described in Sections 903.2.1 through 903.2.12.

Exception: Spaces or areas in telecommunications buildings used exclusively for telecommunications equipment, associated electrical power distribution equipment, batteries and standby engines, provided those spaces or areas are equipped throughout with an *automatic smoke detection*

INTERNATIONAL CODE COUNCIL®
Copyright © 2015 ICC. ALL RIGHTS RESERVED. Accessed by David Dammon on Jun 21, 2017 12:30:52 PM pursuant to License Agreement with ICC. No further reproduction or distribution authorized. ANY UNAUTHORIZED REPRODUCTION OR DISTRIBUTION IS A VIOLATION OF THE FEDERAL COPYRIGHT ACT AND THE LICENSE AGREEMENT, AND SUBJECT TO CIVIL AND CRIMINAL PENALTIES THEREUNDER.

system in accordance with Section 907.2 and are separated from the remainder of the building by not less than 1-hour *fire barriers* constructed in accordance with Section 707 or not less than 2-hour *horizontal assemblies* constructed in accordance with Section 711, or both.

❖ Sections 903.2.1 through 903.2.12 identify the conditions requiring an automatic sprinkler system (see Commentary Figure 903.2). The type of sprinkler system must be one that is permitted for the specific occupancy condition. An NFPA 13R sprinkler system, for example, may not be installed to satisfy the sprinkler threshold requirements for a mercantile occupancy (see Section 903.2.7). As indicated in Section 903.3.1.2, the use of an NFPA 13R sprinkler system is limited to Group R occupancies not exceeding four stories in height.

There is one exception for those spaces or areas used exclusively for telecommunications equipment. The telecommunications industry has continually stressed the need for the continuity of telephone service, and the ability to maintain this service is of prime importance. This service is a vital link between the community and the various life safety services, including fire, police and emergency medical services. The integrity of this communications service can be jeopardized not only by fire, but also by water, from whatever the source.

It must be emphasized that the exception applies only to those spaces or areas that are used exclusively for telecommunications equipment. Historically, those spaces have a low incidence of fire events. Fires in telecommunications equipment are difficult to start and, if started, grow slowly, thus permitting early detection. Such fires are typically of the smoldering type, do not spread beyond the immediate area and generally self-extinguish.

Note, however, that the exception requires a fire-resistance-rated separation from other portions of the building and, most importantly, that the building cannot qualify for any code tradeoffs for fully sprinklered buildings.

[F] 903.2.1 Group A. An *automatic sprinkler system* shall be provided throughout buildings and portions thereof used as Group A occupancies as provided in this section. For Group A-1, A-2, A-3 and A-4 occupancies, the *automatic sprinkler system* shall be provided throughout the story where the *fire area* containing the Group A-1, A-2, A-3 or A-4 occupancy is located, and throughout all stories from the Group A occupancy to, and including, the *levels of exit discharge* serving the Group A occupancy. For Group A-5 occupancies, the *automatic sprinkler system* shall be provided in the spaces indicated in Section 903.2.1.5.

❖ Group A occupancies are characterized by a significant number of people who are not familiar with their surroundings. The requirement for a suppression system reflects the additional time needed for egress. The protection is also intended to extend to the occupants of the assembly group from unobserved fires in other building areas located between the story containing the assembly occupancy and the levels of exit discharge serving such occupancies. The only exception to the coverage is for Group A-5 occupancies that are open to the atmosphere. Such occupancies require only certain aspects to be sprinklered, such as certain concession stands and other enclosed use areas (see commentary, Section 903.2.1.5).

The requirement for sprinklers is based on the location and function of the space. It is not dependent on whether or not the area is provided with exterior walls. IFC Committee Interpretation No. 25-05 to this section discusses this issue and states, in part, that “where no surrounding exterior walls are provided along the perimeter of the building, the building area is used to identify and determine applicable fire area.” Outdoor areas such as pavilions and patios may have no walls but will have an occupant load and other factors that identify the assembly occupancy as such. If any of the thresholds are reached requiring sprinkler protection, then sprinkler protection must be provided whether there are exterior walls or not.

INTERNATIONAL CODE COUNCIL®
Copyright © 2015 ICC. ALL RIGHTS RESERVED. Accessed by David Dammon on Jun 21, 2017 12:30:52 PM pursuant to License Agreement with ICC. No further reproduction or distribution authorized. ANY UNAUTHORIZED REPRODUCTION OR DISTRIBUTION IS A VIOLATION OF THE FEDERAL COPYRIGHT ACT AND THE LICENSE AGREEMENT, AND SUBJECT TO CIVIL AND CRIMINAL PENALTIES THEREUNDER.

Occupancy	Threshold	Exception
All occupancies	Buildings with floor level ≥ 55 feet above fire department vehicle access and occupant load ≥ 30.	Open parking structures. F-2
Assembly (A-1, A-3, A-4)	Fire area > 12,000 sq. ft. or fire area occupant load > 300 or fire area above/below level of exit discharge. Multitheater complex (A-1 only)	None
Assembly (A-2)	Fire area > 5,000 sq. ft. or fire area occupant load > 100 or fire area above/below level of exit discharge.	None
Assembly (A-5)	Accessory areas > 1,000 sq. ft.	None
Ambulatory care facility (B)	≥ 4 care recipients incapable of self-preservation or any care recipients incapable of self-preservation above or below level of exit discharge.	None
Educational (E)	Fire area > 12,000 sq. ft. or below level of exit discharge.	Each classroom has exterior door at grade.
Factory (F-1) Mercantile (M) Storage (S-1)	Fire area > 12,000 sq. ft. or building > three stories or combined fire area > 24,000 sq. ft. Woodworking > 2,500 sq. ft. (F-1 only). Manufacture > 2,500 sq. ft. (F-1), display and sale > 5,000 sq. ft. (M), storage > 2,500 sq. ft. (S-1) of upholstered furniture or mattresses. Bulk storage of tires > 20,000 cu. ft. (S-1 only).	None
High hazard (H-1, H-2, H-3, H-4, H-5)	Sprinklers required.	None
Institutional (I-1, I-2, I-3, I-4)	Sprinklers required.	Day Care at level of exit discharge and each classroom has exterior exit door.
Residential (R)	Sprinklers required.	None
Repair garage (S-1)	Fire area > 12,000 sq. ft. or ≥ two stories (including basement) with fire area > 10,000 sq. ft. or repair garage servicing vehicles in basement or servicing commercial motor vehicles in fire area > 5,000 sq. ft.	None
Parking garage (S-1)	Commercial motor vehicles parking area > 5,000 sq. ft.	None
Parking garage (S-2)	Fire area > 12,000 sq. ft. or fire area > 5,000 sq. ft. for storage of commercial motor vehicles; or beneath other groups. (enclosed parking)	Not if beneath Group R-3
Covered and open malls (402.5)	Sprinklers required.	Attached open parking structures.
High-rises (403.3)	Sprinklers required.	Open garages; certain telecommunications buildings
Unlimited area buildings (507)	A-3, A-4, B, F, M, S: one story. B, F, M, S: two story.	One story F-2 or S-2.

Note: Thresholds located in Section 903.2 unless noted. See also Table 903.2.11.6 for additional required suppression systems.
For SI: 1 foot = 304.8 mm, 1 square foot = 0.0929 m^2.

Figure 903.2
SUMMARY OF OCCUPANCY-RELATED AUTOMATIC SPRINKLER THRESHOLDS

INTERNATIONAL CODE COUNCIL®
Copyright © 2015 ICC. ALL RIGHTS RESERVED. Accessed by David Dammon on Jun 21, 2017 12:30:52 PM pursuant to License Agreement with ICC. No further reproduction or distribution authorized. ANY UNAUTHORIZED REPRODUCTION OR DISTRIBUTION IS A VIOLATION OF THE FEDERAL COPYRIGHT ACT AND THE LICENSE AGREEMENT, AND SUBJECT TO CIVIL AND CRIMINAL PENALTIES THEREUNDER.

[F] 903.2.1.1 Group A-1. An *automatic sprinkler system* shall be provided for *fire areas* containing Group A-1 occupancies and intervening floors of the building where one of the following conditions exists:

1. The *fire area* exceeds 12,000 square feet (1115 m^2).
2. The *fire area* has an *occupant load* of 300 or more.
3. The *fire area* is located on a floor other than a *level of exit discharge* serving such occupancies.
4. The *fire area* contains a multitheater complex.

❖ Group A-1 occupancies are identified as assembly occupancies with fixed seating, such as theaters. In addition to the high occupant load associated with these types of facilities, egress is further complicated by the possibility of low lighting levels customary during performances. The fuel load in these buildings is usually of a type and quantity that would support fairly rapid fire development and sustained duration.

Theaters with stages pose a greater hazard. Sections 410.7 and 410.8 require stages to be equipped with an automatic sprinkler system and standpipe system, respectively. The proscenium opening must also be protected. These features compensate for the additional hazards associated with stages in Group A-1 occupancies.

This section lists four conditions that require installing a suppression system in a Group A-1 occupancy including the entire story where the A-1 occupancy is located and all intervening floors. Condition 1 requires that, if any one fire area of Group A-1 exceeds 12,000 square feet (1115 m^2), the automatic sprinkler system is to be installed throughout the entire story where a Group A-1 occupancy is located, regardless of whether the building is divided into more than one fire area. However, if all fire areas are less than 12,000 square feet (1115 m^2) (and less than the other thresholds), then sprinklers would not be required. Compartmentalization into multiple fire areas in compliance with Chapter 7 is deemed an adequate alternative to sprinkler protection.

Condition 2 establishes the minimum number of occupants for which an automatic sprinkler system is considered necessary. The determination of the actual occupant load must be based on Section 1004.

Condition 3 accounts for occupant egress delay when traversing a stairway requiring a sprinkler system, regardless of the size of occupant load. In such cases alternative emergency escape elements such as windows may not be available, making the suppression needs all the greater. It is not necessary for the occupant load to exceed 300 on a level other than the level of exit discharge serving such occupancy. Any number of Group A-1 occupants on the alternative level would be cause to apply the requirement for sprinklers. The text does not make reference to "story" but uses the term "floor," which could include mezzanines and basements.

Condition 4 states that a sprinkler system is required for multiplex theater complexes to account for the delay associated with the notification of adjacent compartmentalized spaces where the occupants may not be immediately aware of an emergency.

[F] 903.2.1.2 Group A-2. An *automatic sprinkler system* shall be provided for *fire areas* containing Group A-2 occupancies and intervening floors of the building where one of the following conditions exists:

1. The *fire area* exceeds 5,000 square feet (464.5 m^2).
2. The *fire area* has an *occupant load* of 100 or more.
3. The *fire area* is located on a floor other than a *level of exit discharge* serving such occupancies.

❖ Group A-2 assembly occupancies are intended for food or drink consumption, such as banquet halls, nightclubs and restaurants. Occupancies in Group A-2 involve life safety factors such as a high occupant density, flexible fuel loading, movable furnishings and limited lighting; therefore, they must be protected with an automatic sprinkler system under any of the listed conditions.

In the case of an assembly use, the purpose of the automatic sprinkler system is to provide life safety from fire as well as preserving property. By requiring fire suppression in areas through which the occupants may egress, including the level of exit discharge serving such occupancies, the possibility of unobserved fire development affecting occupant egress is minimized.

The 5,000-square-foot (464 m^2) threshold for the automatic sprinkler system reflects the higher degree of life safety hazard associated with Group A-2 occupancies. As alluded to earlier, Group A-2 occupancies could have low lighting levels, loud music, late hours of operation, dense seating with ill-defined aisles and alcoholic beverage service. These factors in combination could delay fire recognition, confuse occupant response and increase egress time.

Although the calculated occupant load for a 5,000 square-foot (465 m^2) space at 15 square feet (1.4 m^2) per occupant would be over 100, the occupant load threshold in Condition 2 is meant to reflect the concern for safety in these higher density occupancies. Although the major reason for establishing the occupant threshold at 100 was because of several recent nightclub incidents, the requirement is not limited to nightclubs or banquet facilities but to all Group A-2 occupancies. Any restaurant with an occupant load greater than 100 would require sprinkler protection as well. This includes fast food facilities with no low lighting or alcohol sales. The similar intent of Condition 3 is addressed in the commentary to Section 903.2.1.1.

Note that as with Group A-1 occupancies, when sprinklers are required they are required on the story where the Group A-2 occupancy is located and on all intervening floors leading to the levels of exit discharge.

[F] 903.2.1.3 Group A-3. An *automatic sprinkler system* shall be provided for *fire areas* containing Group A-3 occu-

INTERNATIONAL CODE COUNCIL®
Copyright © 2015 ICC. ALL RIGHTS RESERVED. Accessed by David Dammon on Jun 21, 2017 12:30:52 PM pursuant to License Agreement with ICC. No further reproduction or distribution authorized. ANY UNAUTHORIZED REPRODUCTION OR DISTRIBUTION IS A VIOLATION OF THE FEDERAL COPYRIGHT ACT AND THE LICENSE AGREEMENT, AND SUBJECT TO CIVIL AND CRIMINAL PENALTIES THEREUNDER.

pancies and intervening floors of the building where one of the following conditions exists:

1. The *fire area* exceeds 12,000 square feet (1115 m^2).
2. The *fire area* has an *occupant load* of 300 or more.
3. The *fire area* is located on a floor other than a *level of exit discharge* serving such occupancies.

❖ Group A-3 occupancies are assembly occupancies intended for worship, recreation or amusement and other assembly uses not classified elsewhere in Group A, such as churches, museums and libraries. While Group A-3 occupancies could potentially have a high occupant load, they normally do not have the same potential combination of life safety hazards associated with Group A-2 occupancies. As with most assembly occupancies, however, most of the occupants are typically not completely familiar with their surroundings. When any of the three listed conditions are applicable, an automatic sprinkler system is required throughout the fire area containing the Group A-3 occupancy, including the entire story where the Group A-3 occupancy is located and throughout all floors between the Group A occupancy and exit discharge that serves that occupancy (see commentary, Sections 903.2.1 and 903.2.1.1).

[F] 903.2.1.4 Group A-4. An *automatic sprinkler system* shall be provided for *fire areas* containing Group A-4 occupancies and intervening floors of the building where one of the following conditions exists:

1. The *fire area* exceeds 12,000 square feet (1115 m^2).
2. The *fire area* has an *occupant load* of 300 or more.
3. The *fire area* is located on a floor other than a *level of exit discharge* serving such occupancies.

❖ Group A-4 occupancies are assembly uses intended for viewing of indoor sporting events and activities such as arenas, skating rinks and swimming pools. The occupant load density may be high depending on the extent and style of seating, such as bleachers or fixed seats, and the potential for standing-room viewing.

When any of the three listed conditions are applicable, an automatic sprinkler system is required throughout the fire area containing the Group A-4 occupancy, including the entire story where the Group A-4 occupancy is located, and in all floors between the Group A occupancy and exit discharge (see commentary, Sections 903.2.1 and 903.2.1.1).

[F] 903.2.1.5 Group A-5. An *automatic sprinkler system* shall be provided for Group A-5 occupancies in the following areas: concession stands, retail areas, press boxes and other accessory use areas in excess of 1,000 square feet (93 m^2).

❖ Group A-5 occupancies are assembly uses intended for viewing of outdoor activities. This occupancy classification could include amusement park structures, grandstands and open stadiums. A sprinkler system is not required in the open area of Group A-5 occupancies because the buildings would not accumulate smoke and hot gases. A fire in open areas would also be obvious to all spectators.

Enclosed areas such as retail areas, press boxes and concession stands require sprinklers if they are in excess of 1,000 square feet (93 m^2). The 1,000-square-foot (93 m^2) accessory use area is not intended to be an aggregate condition but rather per space. Thus, a press box that is 2,500 square feet (232 m^2) in area would need to be subdivided into areas less than 1,000 square feet (93 m^2) each in order to be below the threshold for sprinklers. There is no specific requirement for the separation of these spaces. It is assumed, however, that the separation would be a solid barrier of some type but without a required fire-resistance rating.

The provision is meant to mirror that in Section 1029.6.2.3, which exempts press boxes and storage facilities less than 1,000 square feet (93 m^2) in area from sprinkler requirements in smoke-protected assembly seating areas.

[F] 903.2.1.6 Assembly occupancies on roofs. Where an occupied roof has an assembly occupancy with an *occupant load* exceeding 100 for Group A-2 and 300 for other Group A occupancies, all floors between the occupied roof and the *level of exit discharge* shall be equipped with an *automatic sprinkler system* in accordance with Section 903.3.1.1 or 903.3.1.2.

Exception: Open parking garages of Type I or Type II construction.

❖ Frequently, roof tops are being used and occupied as assembly occupancies. Building owners will provide an open air roof-top bar or lounge, or other use similar to a Group A-2 occupancy on the roof of a building. A roof does not meet the definition of a fire area. As such, protection of the occupants can be less than what would otherwise be required were the occupancy located on a floor rather than on the roof. In addition, even if a fire occurs within the building itself, it puts these occupants at risk. The provisions requiring sprinklers are based on the type of assembly occupancy located on the roof. The roof itself is not required to be sprinklered. The reference to Section 903.3.1.2 is added, since this use can occur on the roof of multi-family housing facilities.

The exception for open parking garages is consistent with the existing code requirement exception for open parking garages under Section 903.2.11.3 for "Buildings 55 feet or more in height." It is becoming more common in the urban renewal areas throughout the U.S. that jurisdictions are asking developers to provide additional recreational and green spaces for their citizens to enjoy within their own communities. Because of the limited space available, it is not uncommon for such recreational and green spaces to be provided on the roofs of open parking garages. Based on the existing wording of this section, these recreational and green spaces greater than 700 square feet (based on 7 square feet net per occupant) or 1,500 square feet (based on 15 square feet

INTERNATIONAL CODE COUNCIL®
Copyright © 2015 ICC. ALL RIGHTS RESERVED. Accessed by David Dammon on Jun 21, 2017 12:30:52 PM pursuant to License Agreement with ICC. No further reproduction or distribution authorized. ANY UNAUTHORIZED REPRODUCTION OR DISTRIBUTION IS A VIOLATION OF THE FEDERAL COPYRIGHT ACT AND THE LICENSE AGREEMENT, AND SUBJECT TO CIVIL AND CRIMINAL PENALTIES THEREUNDER.

net per occupant) would now require the open parking garage to be sprinklered. In other words, an open recreational or green space on the roof of an open parking structure that is more than approximately 26 to 39 feet square would require the garage to be sprinklered with a dry pipe sprinkler system that is initially a major cost to the project as well as a major monthly and yearly maintenance expense. Such an expense would most likely have an adverse affect on developers doing major city urban renewal projects from agreeing to provide such amenities for the local jurisdiction.

Additionally, there are considerable data supporting the exception's elimination of automatic sprinkler systems in open parking garages. Two sample reports that evaluated fire behavior in parking garages are:

1. 2006 NFPA Fire Data Report, "Structure and Vehicle Fires in General Vehicle Parking Garages."
2. 2008 Parking Consultants Council Fire Safety Committee Report, "Parking Structure Fire Facts."

These reports provided the following conclusions:

- There was an average of only 660 fires per year in all types of parking garages in the U.S. This represented a mere 0.006 percent of all fires annually.
- There were no fire fatalities in open parking garages of Type I or II construction. On average, there were only 2 injuries per year.
- There was no structural damage in 98.7 percent of the fires in parking garages.
- Vehicle fires in parking garages typically do not spread from vehicle to vehicle. Fire spread from vehicle to vehicle occurred in only 7 percent of the incidents.

Automatic sprinkler systems are required in occupancies other than open parking garages to protect the assembly occupancy above the fire and to protect the means of egress. Based on the inherent fire safety provided by open parking garages of Type I or II construction, an automatic sprinkler system is not required when an assembly use is located on the roof.

903.2.1.7 Multiple fire areas. An *automatic sprinkler system* shall be provided where multiple fire areas of Group A-1, A-2, A-3 or A-4 occupancies share exit or exit access components and the combined *occupant load* of theses fire areas is 300 or more.

❖ There are two conditions required to trigger the requirements of this section. The first is that exit or exit access components of Group A-1, A-2, A-3 or A-4 fire areas are shared. The second is that the combined occupant load of the fire areas that share these components exceeds 300 persons.

This section addresses the issue of multiple small assembly occupancies placed in a single-story building and not triggering a sprinkler system requirement because of the installation of a rated corridor and separation walls. The code now requires that sprinkler systems be added when the convergence of more than 300 persons share an exit. This is consistent with the intent of automatic sprinkler systems being required for life safety and to maintain tenable exiting in a fire event. A fire event that is near an exit is the same whether there are 300 occupants in one room or three rooms with 100 occupants each sharing an exit. This is also consistent with the requirement in the "multi-theater complex" for Group A-1, which is a requirement for anytime two or more theaters are in the same tenancy and does not consider occupant load as a trigger.

This will still allow those single-story buildings with multiple tenancies that have separate exits and utilize the fire area separation concept, such as buildings with multiple restaurants with separate entrances and strip-style mall buildings.

[F] 903.2.2 Ambulatory care facilities. An *automatic sprinkler system* shall be installed throughout the entire floor containing an *ambulatory care facility* where either of the following conditions exist at any time:

1. Four or more care recipients are incapable of self-preservation, whether rendered incapable by staff or staff has accepted responsibility for care recipients already incapable.
2. One or more care recipients that are incapable of self-preservation are located at other than the level of exit discharge serving such a facility.

In buildings where ambulatory care is provided on levels other than the *level of exit discharge*, an *automatic sprinkler system* shall be installed throughout the entire floor where such care is provided as well as all floors below, and all floors between the level of ambulatory care and the nearest *level of exit discharge*, including the *level of exit discharge.*

❖ Ambulatory care facilities are Group B occupancies, which have an enhanced set of requirements that account for the fact that patients may be incapable of self-preservation and require rescue by other occupants or fire personnel. There are several aspects to the enhanced features, including smoke compartments, sprinklers and fire alarms. More specifically, the requirements for sprinklers are based on the presence of four or more care recipients at any given time that are incapable of self-preservation or any number of care recipients that are incapable of self-preservation located on a floor other than the level of exit discharge that serves the ambulatory care facility. The sprinkler requirement is limited to the floor area that contains the Group B ambulatory care facility and any floors between the ambulatory care facility and level of exit discharge (see commentary, Section 422).

INTERNATIONAL CODE COUNCIL®
Copyright © 2015 ICC. ALL RIGHTS RESERVED. Accessed by David Dammon on Jun 21, 2017 12:30:52 PM pursuant to License Agreement with ICC. No further reproduction or distribution authorized. ANY UNAUTHORIZED REPRODUCTION OR DISTRIBUTION IS A VIOLATION OF THE FEDERAL COPYRIGHT ACT AND THE LICENSE AGREEMENT, AND SUBJECT TO CIVIL AND CRIMINAL PENALTIES THEREUNDER.

[F] 903.2.3 Group E. An *automatic sprinkler system* shall be provided for Group E occupancies as follows:

1. Throughout all Group E *fire areas* greater than 12,000 square feet (1115 m^2) in area.
2. Throughout every portion of educational buildings below the lowest *level of exit discharge* serving that portion of the building.

   Exception: An *automatic sprinkler system* is not required in any area below the lowest *level of exit discharge* serving that area where every classroom throughout the building has not fewer than one exterior *exit* door at ground level.

❖ Group E occupancies are limited to educational purposes through the 12th grade and day care centers serving children older than $2^1/_2$ years of age. The 12,000-square-foot (1115 m^2) fire area threshold for the sprinkler system was established to allow smaller schools and day care centers to be nonsprinklered to minimize the economic impact on these facilities. The 12,000-square-foot (1115 m^2) threshold is similar to that used for several other occupancies, such as Group M occupancies.

Sprinklers would also be required in portions of the building located below the level of exit discharge serving that occupancy. However, there is an exception that would allow the omission of the automatic sprinkler system for the Group E fire area if there is a direct exit to the exterior from each classroom at ground level. The occupants must be able to go from the classroom directly to the outside without passing through intervening corridors, passageways or interior exit stairways.

[F] 903.2.4 Group F-1. An *automatic sprinkler system* shall be provided throughout all buildings containing a Group F-1 occupancy where one of the following conditions exists:

1. A Group F-1 *fire area* exceeds 12,000 square feet (1115 m^2).
2. A Group F-1 *fire area* is located more than three stories above *grade plane*.
3. The combined area of all Group F-1 *fire areas* on all floors, including any mezzanines, exceeds 24,000 square feet (2230 m^2).
4. A Group F-1 occupancy used for the manufacture of upholstered furniture or mattresses exceeds 2,500 square feet (232 m^2).

❖ Group F-1 occupancies must meet several different conditions as to when the fire area or occupancy must be sprinklered. The first three conditions are related to the difficulty of manually suppressing a fire involving a large area. Therefore, occupancies of Group F-1 must be protected throughout with an automatic sprinkler system if the fire area is in excess of 12,000 square feet (1115 m^2); if the total of all fire areas is in excess of 24,000 square feet (2230 m^2); or if the fire area is located more than three stories above grade plane. This is one of the few locations in the code where the total floor area of the building is aggregated for application of a code requirement. The stipulated conditions for when an automatic sprinkler system is required also apply to Group M (see Section 903.2.7) and S-1 (see Section 903.2.9) occupancies. Condition 4 for sprinklering a Group F-1 occupancy relates to the requirement for Group F-1 occupancies in excess of 2,500 square feet (232 m^2) that are used for the manufacture of upholstered furniture or mattresses. Note that this requirement is based simply on the square footage of the Group F-1 occupancy and is not related to fire areas. Upholstered furniture has the potential for rapid-growing and high-heat-release fires. This hazard is increased substantially when there are numerous upholstered furniture or mattresses being manufactured. Such fires put the occupants and emergency responders at risk. This requirement exists regardless of whether the upholstered furniture has passed any fire-retardant tests. See the commentary for Section 903.2.7 for more discussion on the subject of upholstered furniture. See the commentary to Section 903.2.9 for discussion of the formal interpretation and applicability to the code and the IFC.

The following examples illustrate how the criteria of this section are intended to be applied:

- If a building contains a single fire area of Group F-1 and the fire area is 13,000 square feet (1208 m^2), an automatic sprinkler system is required throughout the entire building; however, if this fire area is separated into two fire areas and neither is in excess of 12,000 square feet (1115 m^2), an automatic fire sprinkler system is not required. To be considered separate fire areas, the areas must be separated by fire barriers or horizontal assemblies having a fire-resistance rating as required in Table 707.3.10.
- If a 30,000-square-foot (2787 m^2) Group F-1 building was equally divided into separate fire areas of 10,000 square feet (929 m^2) each, an automatic sprinkler system would still be required throughout the entire building. Because the aggregate area of all fire areas exceeds 24,000 square feet (2230 m^2), additional compartmentation will not eliminate the need for an automatic sprinkler system. However, the use of a fire wall to separate the structure into two buildings would reduce the aggregate area of each building to less than 24,000 square feet (2230 m^2) and each fire area to less than 12,000 square feet (1115 m^2), which would offset the need for an automatic sprinkler system.

[F] 903.2.4.1 Woodworking operations. An *automatic sprinkler system* shall be provided throughout all Group F-1 occupancy *fire areas* that contain woodworking operations in excess of 2,500 square feet (232 m^2) in area that generate finely divided combustible waste or use finely divided combustible materials.

❖ Because of the potential amount of combustible dust that could be generated during woodworking opera-

INTERNATIONAL CODE COUNCIL®
Copyright © 2015 ICC. ALL RIGHTS RESERVED. Accessed by David Dammon on Jun 21, 2017 12:30:52 PM pursuant to License Agreement with ICC. No further reproduction or distribution authorized. ANY UNAUTHORIZED REPRODUCTION OR DISTRIBUTION IS A VIOLATION OF THE FEDERAL COPYRIGHT ACT AND THE LICENSE AGREEMENT, AND SUBJECT TO CIVIL AND CRIMINAL PENALTIES THEREUNDER.

tions, an automatic sprinkler system is required throughout a fire area when it contains a woodworking operation that exceeds 2,500 square feet (232 m^2) in area. Facilities where woodworking operations take place, such as cabinet making, are considered Group F-1 occupancies. The intent of the phrase "finely divided combustible waste" is to describe particle concentrations that are in the explosive range (see Chapter 22 of the IFC for discussion of dust-producing operations).

The extent of sprinkler coverage is only intended to be for the Group F-1 occupancy involved in the woodworking activity. If the fire area is larger than 2,500 square feet (232 m^2) but the woodworking area is 2,500 square feet (232 m^2) or less, sprinklers are not required. It is not the intent to require the installation of sprinklers throughout the building but rather in the fire area where the hazard may be present.

[F] 903.2.5 Group H. *Automatic sprinkler systems* shall be provided in high-hazard occupancies as required in Sections 903.2.5.1 through 903.2.5.3.

❖ Group H occupancies are those intended for the manufacturing, processing or storage of hazardous materials that constitute a physical or health hazard. To be considered a Group H occupancy, the amount of hazardous materials is assumed to be in excess of the maximum allowable quantities permitted by Tables 307.1(1) and 307.1(2).

[F] 903.2.5.1 General. An *automatic sprinkler system* shall be installed in Group H occupancies.

❖ This section requires an automatic sprinkler system in all Group H occupancies. Even though in some instances the hazard associated with the occupancy may be one that is not a fire hazard, an automatic sprinkler system is still required to minimize the potential for fire spreading to the high-hazard use; that is, the sprinklers protect the high-hazard area from fire outside the area. This section does not prohibit the use of an alternative automatic fire-extinguishing system in accordance with Section 904. When a water-based system is not compatible with the hazardous materials involved and thus creates a dangerous condition, an alternative fire-extinguishing system should be used. For example, combustible metals, such as magnesium and titanium, have a serious record of involvement with fire and are typically not compatible with water (see commentary, Chapter 59 of the IFC).

Where control areas are used to regulate the quantity of hazardous material within a building, the building is not considered a Group H occupancy. Unless a building would be required by some other code provision to be protected with sprinklers, control areas can be used to control the allowable quantities of hazardous materials in a building so as to not warrant a Group H classification and its mandatory sprinkler requirements.

[F] 903.2.5.2 Group H-5 occupancies. An *automatic sprinkler system* shall be installed throughout buildings containing Group H-5 occupancies. The design of the sprinkler system shall be not less than that required by this code for the occupancy hazard classifications in accordance with Table 903.2.5.2.

Where the design area of the sprinkler system consists of a *corridor* protected by one row of sprinklers, the maximum number of sprinklers required to be calculated is 13.

❖ Group H-5 occupancies are structures that are typically used as semiconductor fabrication facilities and comparable research laboratory facilities that use hazardous production materials (HPM). Many of the materials used in semiconductor fabrication present unique hazards. Many of the materials are toxic, while some are corrosive, water reactive or pyrophoric. Fire protection for these facilities is aimed at preventing incidents from escalating and producing secondary threats beyond a fire, such as the release of corrosive or toxic materials. Because of the nature of Group H-5 facilities, the overall amount of hazardous materials can far exceed the maximum allowable quantities given in Tables 307.1(1) and 307.1(2). Although the amount of HPM material is restricted in fabrication areas, the quantities of HPM in storage rooms normally will be in excess of those allowed by the tables. Additional requirements for Group H-5 facilities are located in Chapter 27 of the IFC and Section 415.11 of the code.

This section also specifies the sprinkler design criteria, based on NFPA 13, for various areas in a Group H-5 occupancy (see commentary, Table 903.2.5.2). When the corridor design area sprinkler option is used, a maximum of 13 sprinklers must be calculated. This exceeds the requirements of NFPA 13 for typical egress corridors, which require a maximum of either five or seven calculated sprinklers, depending on the extent of protected openings in the corridor. The increased number of calculated corridor sprinklers is based on the additional hazard associated with the movement of hazardous materials in corridors of Group H-5 facilities.

[F] TABLE 903.2.5.2
GROUP H-5 SPRINKLER DESIGN CRITERIA

LOCATION	OCCUPANCY HAZARD CLASSIFICATION
Fabrication areas	Ordinary Hazard Group 2
Service corridors	Ordinary Hazard Group 2
Storage rooms without dispensing	Ordinary Hazard Group 2
Storage rooms with dispensing	Extra Hazard Group 2
Corridors	Ordinary Hazard Group 2

❖ Table 903.2.5.2 designates the appropriate occupancy hazard classification for the various areas within a Group H-5 facility. The listed occupancy hazard classifications correspond to specific sprinkler system design criteria in NFPA 13. Ordinary Hazard Group 2 occupancies, for example, require a minimum design density of 0.20 gpm/ft^2 (8.1 L/min/m^2) with a minimum design area of 1,500 square feet

INTERNATIONAL CODE COUNCIL®
Copyright © 2015 ICC. ALL RIGHTS RESERVED. Accessed by David Dammon on Jun 21, 2017 12:30:52 PM pursuant to License Agreement with ICC. No further reproduction or distribution authorized. ANY UNAUTHORIZED REPRODUCTION OR DISTRIBUTION IS A VIOLATION OF THE FEDERAL COPYRIGHT ACT AND THE LICENSE AGREEMENT, AND SUBJECT TO CIVIL AND CRIMINAL PENALTIES THEREUNDER.

(139 m^2). An Extra Hazard Group 2 occupancy, in turn, requires a minimum design density of 0.40 gpm/ft^2 (16.3 L/min/m^2) with a minimum operating area of 2,500 square feet (232 m^2). The increased overall sprinkler demand for Extra Hazard Group 2 occupancies is based on the potential use and handling of substantial amounts of hazardous materials, such as flammable or combustible liquids.

[F] 903.2.5.3 Pyroxylin plastics. An *automatic sprinkler system* shall be provided in buildings, or portions thereof, where cellulose nitrate film or pyroxylin plastics are manufactured, stored or handled in quantities exceeding 100 pounds (45 kg).

❖ Cellulose nitrate (pyroxylin) plastics pose unusual and substantial fire risks. Pyroxylin plastics are the most dangerous and unstable of all plastic compounds. The chemically bound oxygen in their structure permits them to burn vigorously in the absence of atmospheric oxygen. Although these compounds produce approximately the same amount of energy as paper when they burn, pyroxylin plastics burn at a rate as much as 15 times greater than comparable common combustibles. When burning, these materials release highly flammable and toxic combustion byproducts. Consequently, cellulose nitrate fires are very difficult to control. Although this section specifies a sprinkler threshold quantity of 100 pounds, the need for additional fire protection should be considered for pyroxylin plastics in any amount.

Although the code includes cellulose nitrate "film" in its requirements, cellulose nitrate motion picture film has not been used in the United States since the 1950s. All motion picture film produced since that time is what is typically called "safety film." Consequently, the only application for this section relative to motion picture film is where it may be used in laboratories or storage vaults that are dedicated to film restoration and archives. The protection of these facilities is addressed in Sections 306.2 and 6504.2, both in the IFC.

[F] 903.2.6 Group I. An *automatic sprinkler system* shall be provided throughout buildings with a Group I *fire area*.

Exceptions:

1. An *automatic sprinkler system* installed in accordance with Section 903.3.1.2 shall be permitted in Group I-1 Condition 1 facilities.
2. An *automatic sprinkler system* is not required where Group I-4 day care facilities are at the *level of exit discharge* and where every room where care is provided has not fewer than one exterior exit door.
3. In buildings where Group I-4 day care is provided on levels other than the *level of exit discharge*, an *automatic sprinkler system* in accordance with Section 903.3.1.1 shall be installed on the entire floor where care is provided, all floors between the level of care and the level of *exit discharge*, and all floors below the *level of exit discharge* other than areas classified as an open parking garage.

❖ The Group I occupancy is divided into four individual occupancy classifications based on the degree of detention, supervision and physical mobility of the occupants. The evacuation difficulties associated with the building occupants creates the need to incorporate a defend-in-place philosophy of fire protection in occupancies of Group I. For this reason, all such occupancies are to be protected with an automatic sprinkler system. Note that this section is applicable to the entire building that contains a Group I occupancy.

Of particular note, this section encompasses all Group I-3 occupancies where more than five persons are detained (see Section 308.5). There has been considerable controversy concerning the use of automatic sprinklers in detention and correctional occupancies. Special design considerations can be taken into account to alleviate the perceived problems with sprinklers in sleeping units. Sprinklers that reduce the likelihood of vandalism as well as the potential to hang oneself are commercially available. Knowledgeable designers can incorporate certain design features to increase reliability and decrease the likelihood of damage to the system.

Group I-4 occupancies would include either adult-only care facilities or occupancies that provide personal care for more than five children $2^1/_2$ years of age or less on a less-than-24-hour basis. Because the degree of assistance and the time needed for egress cannot be gauged, an automatic sprinkler system is required.

There are three exceptions to this section. Exception 1 permits Group I-1 Condition 1 occupancies to be protected throughout with an NFPA 13R system instead of an NFPA 13 system. This is the lower risk condition for Group I-1 occupancies. Group I-1 Condition 2 occupancies would be required to use an NFPA 13 system.

Exception 2 exempts sprinkler systems completely if the day care center is at the level of exit discharge and every room has at least one exterior exit door. Note that day cares to which this section applies are considered by Section 308.6.1 to be Group E occupancies. An automatic sprinkler system would not be required unless dictated by the requirements in Section 903.2.2 (see the commentary for Section 308.6.1).

Exception 3 is also related to day cares that are still classified as Group I-4 by nature of the location in the building. In that case, an NFPA 13 system would be required on the floor where the center is located and all floors between and including the level of exit discharge. This is less stringent than the main requirement in Section 903.2.6 that requires the entire building to be sprinklered. As defined in Section 202,

INTERNATIONAL CODE COUNCIL®
Copyright © 2015 ICC. ALL RIGHTS RESERVED. Accessed by David Dammon on Jun 21, 2017 12:30:52 PM pursuant to License Agreement with ICC. No further reproduction or distribution authorized. ANY UNAUTHORIZED REPRODUCTION OR DISTRIBUTION IS A VIOLATION OF THE FEDERAL COPYRIGHT ACT AND THE LICENSE AGREEMENT, AND SUBJECT TO CIVIL AND CRIMINAL PENALTIES THEREUNDER.

a Group I-4 child care facility located at the level of exit discharge and accommodating no more than 100 children, with each child care room having an exit directly to the exterior, would be classified as a Group E occupancy.

[F] 903.2.7 Group M. An *automatic sprinkler system* shall be provided throughout buildings containing a Group M occupancy where one of the following conditions exists:

1. A Group M *fire area* exceeds 12,000 square feet (1115 m^2).
2. A Group M *fire area* is located more than three stories above *grade plane*.
3. The combined area of all Group M *fire areas* on all floors, including any mezzanines, exceeds 24,000 square feet (2230 m^2).
4. A Group M occupancy used for the display and sale of upholstered furniture or mattresses exceeds 5,000 square feet (464 m^2).

❖ The sprinkler threshold requirements for Group M occupancies are identical to those of Group F-1 and S-1 occupancies (see commentary, Section 903.2.4). The one exception is that Group M occupancies are provided with an increased area for display of upholstered furniture and mattresses of 5,000 square feet (464 m^2) versus 2,500 square feet (232 m^2) required for Group F-1 and S-1 occupancies. As noted in the commentary for Group F-1 occupancies, upholstered furniture and mattresses have the potential for rapidly growing and high-heat-release fires. This hazard is increased substantially when there are numerous upholstered furniture items or mattresses on display. Such fires put the occupants and emergency responders at risk. This requirement exists regardless of whether the upholstered furniture has passed any fire-retardant tests.

The code does not specifically address what constitutes upholstered furniture, but by simple dictionary definition, upholstered furniture has seats covered with padding, springs, webbing and fabric or leather covers. The code does not make any distinction between levels of padding and upholstery provided on furniture, which was intentional. The proponent's reason statement for code change F135-07/08 stated, in part, "the American Home Furnishings Alliance (AHFA) and the National Home Furnishings Association (NHFA) have examined proposals for exempting vendors of certain constructions of furniture and concluded that such exemptions would be impractical for local code officials to enforce. This is the case because the internal construction of furniture cannot be established reliably without deconstructing it."

Note that, as with Group F-1 occupancies, the criteria is written such that any Group M occupancy, not the fire area, over 5,000 square feet (464 m^2) used for the display and sale of upholstered furniture and mattresses shall be sprinklered throughout. This is regardless of the quantity of upholstered furniture and mattresses actually available for purchase. The reason these requirements were placed into the code and the IFC was based on a large fire in Charleston, South Carolina that killed nine fire fighters. The facility was a combination furniture showroom and associated storage area. The building did not provide an automatic sprinkler system. See the commentary to Section 903.2.9 for discussion of a formal interpretation dealing with Group S-1 occupancies and applicability to the code and the IFC.

Automatic sprinkler systems for mercantile occupancies are typically designed for an Ordinary Hazard Group 2 classification in accordance with NFPA 13. If high-piled storage (see Section 903.2.7.1) is anticipated, additional levels of fire protection may be required. Also, some merchandise in mercantile occupancies, such as aerosols, rubber tires, paints and certain plastic commodities, even at limited storage heights, are considered beyond the standard Class I through IV commodity classification assumed for mercantile occupancies in NFPA 13 and may warrant additional fire protection.

[F] 903.2.7.1 High-piled storage. An *automatic sprinkler system* shall be provided in accordance with the *International Fire Code* in all buildings of Group M where storage of merchandise is in high-piled or rack storage arrays.

❖ Regardless of the size of the Group M fire area, an automatic sprinkler system may be required in a high-piled storage area. High-piled storage includes piled, palletized, bin box, shelf or rack storage of Class I through IV commodities to a height greater than 12 feet (3658 mm) and certain high-hazard commodities greater than 6 feet (1829 mm). Chapter 23 of the IFC provides a package of requirements that may include sprinkler protection depending on the size of the high-piled storage area. The design standard for the sprinkler protection of high-piled storage is NFPA 13, which addresses the many different types and configurations of high-piled storage.

[F] 903.2.8 Group R. An *automatic sprinkler system* installed in accordance with Section 903.3 shall be provided throughout all buildings with a Group R *fire area*.

❖ This section requires sprinklers in any building that contains a Group R fire area. This includes uses such as hotels, apartment buildings, group homes and dormitories. There are no minimum criteria and no exceptions.

It should be noted that buildings constructed under the *International Residential Code*® (IRC®) are not included in Group R and would not, therefore, be subject to these particular requirements. The 2009 IRC required sprinklers in all new townhouses and, beginning January 1, 2011, in all new one- and two-family dwellings. The IRC is a stand-alone code for the construction of detached one- and two-family dwellings and multiple single-family dwellings (townhouses) no more than three stories in height with a separate means of egress and addresses the requirements for sprinklers in a different way. That is, all of the provi-

INTERNATIONAL CODE COUNCIL®
Copyright © 2015 ICC. ALL RIGHTS RESERVED. Accessed by David Dammon on Jun 21, 2017 12:30:52 PM pursuant to License Agreement with ICC. No further reproduction or distribution authorized. ANY UNAUTHORIZED REPRODUCTION OR DISTRIBUTION IS A VIOLATION OF THE FEDERAL COPYRIGHT ACT AND THE LICENSE AGREEMENT, AND SUBJECT TO CIVIL AND CRIMINAL PENALTIES THEREUNDER.

sions for new construction that affect those buildings are to be covered exclusively by the IRC and are not to be covered by another *International Code*. Buildings that do not fall within the scope of the IRC would be classified in Group R and be subject to these provisions. This is stated clearly in IFC Committee Interpretation No. 29-03.

With respect to life safety, the need for a sprinkler system is dependent on the occupants' proximity to the fire and the ability to respond to a fire emergency. Group R occupancies could contain occupants who may require assistance to evacuate, such as infants, those with a disability or who may simply be asleep. While the presence of a sprinkler system cannot always protect occupants in residential buildings who are aware of the ignition and either do not respond or respond inappropriately, it can prevent fatalities outside of the area of fire origin regardless of the occupants' response. Section 903.3.2 requires quick-response or residential sprinklers in all Group R occupancies. Full-scale fire tests have demonstrated the ability of quick-response and residential sprinklers to maintain tenability from flaming fires in the room of fire origin.

Where a different occupancy is located in a building with a residential occupancy, the provisions of this section still apply and the entire building is required to be provided with an automatic sprinkler system regardless of the type of mixed-use condition considered. This is consistent with the mixed-use provisions in Chapter 5. The type of sprinkler system permitted in the different types of Group R occupancies is further clarified in Sections 903.2.8.1 through 903.2.8.4.

[F] 903.2.8.1 Group R-3. An *automatic sprinkler system* installed in accordance with Section 903.3.1.3 shall be permitted in Group R-3 occupancies.

❖ Group R-3 occupancies are essentially one- and two-family dwellings that fall outside the scope of the IRC; thus an NFPA 13D system is appropriate. It should be noted there is no restriction on the use of NFPA 13 or NFPA 13R systems.

[F] 903.2.8.2 Group R-4 Condition 1. An *automatic sprinkler system* installed in accordance with Section 903.3.1.3 shall be permitted in Group R-4 Condition 1 occupancies.

❖ Group R-4 Condition 1 is the lesser of the risk categories for Group R-4 occupancies. The occupants are more capable of evacuating without assistance. Therefore they are treated no differently than a Group R-3 occupancy.

[F] 903.2.8.3 Group R-4 Condition 2. An *automatic sprinkler system* installed in accordance with Section 903.3.1.2 shall be permitted in Group R-4 Condition 2 occupancies. Attics shall be protected in accordance with Section 903.2.8.3.1 or 903.2.8.3.2.

❖ In Group R-4 Condition 2 occupancies, the occupants need more assistance evacuating a building; therefore, a more robust sprinkler system is required. An NFPA 13R system is required. It should be noted that there are some concerns with NFPA 13R systems not adequately addressing attic spaces as typically NFPA 13R systems focus primarily on the main habitable portion of the building. Specific compliance conditions are provided in Sections 903.2.8.3.1 and 908.2.8.3.2.

[F] 903.2.8.3.1 Attics used for living purposes, storage or fuel-fired equipment. Attics used for living purposes, storage or fuel-fired equipment shall be protected throughout with an *automatic sprinkler system* installed in accordance with Section 903.3.1.2.

❖ This section clarifies that if the attic is used for living purposes or if fuel-fired equipment or storage is in these areas, full coverage in accordance with NFPA 13R is required.

[F] 903.2.8.3.2 Attics not used for living purposes, storage or fuel-fired equipment. Attics not used for living purposes, storage or fuel-fired equipment shall be protected in accordance with one of the following:

1. Attics protected throughout by a heat detector system arranged to activate the building fire alarm system in accordance with Section 907.2.10.
2. Attics constructed of noncombustible materials.
3. Attics constructed of fire-retardant-treated wood framing complying with Section 2303.2.
4. The *automatic sprinkler system* shall be extended to provide protection throughout the attic space.

❖ In attics where people are not expected and where storage or fuel-fired equipment is not located, some protection is required on top of what NFPA 13R would require. Four different options of protection are provided. The first is simply to provide more warning time to the occupants if a fire should occur in the attic via a heat detector that activates the fire alarm system. The second is simply to reduce the risk of fire by requiring noncombustible construction materials. The third, similar to the second, is reducing the fire hazard by using fire-retardant-treated wood. This will slow the growth of a fire should one occur or prevent the start of a fire. The final option is simply to provide sprinkler protection to the attic. However if a sprinkler system is provided in the attic, issues such as freezing temperatures need to be addressed.

[F] 903.2.8.4 Care facilities. An a*utomatic sprinkler system* installed in accordance with Section 903.3.1.3 shall be permitted in care facilities with five or fewer individuals in a single-family dwelling.

❖ This section is similar to Sections 903.2.8.1 and 903.2.8.2 and allows the use of an NFPA 13D system in place of an NFPA 13 or 13R system. In this case, it is specific to smaller care facilities with five or fewer residents. Again, while not technically a single-family dwelling, they are very similar in nature based on the type and actual use of the building.

INTERNATIONAL CODE COUNCIL®
Copyright © 2015 ICC. ALL RIGHTS RESERVED. Accessed by David Dammon on Jun 21, 2017 12:30:52 PM pursuant to License Agreement with ICC. No further reproduction or distribution authorized. ANY UNAUTHORIZED REPRODUCTION OR DISTRIBUTION IS A VIOLATION OF THE FEDERAL COPYRIGHT ACT AND THE LICENSE AGREEMENT, AND SUBJECT TO CIVIL AND CRIMINAL PENALTIES THEREUNDER.

[F] 903.2.9 Group S-1. An *automatic sprinkler system* shall be provided throughout all buildings containing a Group S-1 occupancy where one of the following conditions exists:

1. A Group S-1 *fire area* exceeds 12,000 square feet (1115 m^2).
2. A Group S-1 *fire area* is located more than three stories above *grade plane*.
3. The combined area of all Group S-1 *fire areas* on all floors, including any mezzanines, exceeds 24,000 square feet (2230 m^2).
4. A Group S-1 *fire area* used for the storage of commercial motor vehicles where the *fire area* exceeds 5,000 square feet (464 m^2).
5. A Group S-1 occupancy used for the storage of upholstered furniture or mattresses exceeds 2,500 square feet (232 m^2).

❖ An automatic sprinkler system must be provided throughout all buildings containing a Group S-1 occupancy fire area where the fire area exceeds 12,000 square feet (1115 m^2); is more than three stories above grade plane; combined, on all floors including mezzanines, exceeds 24,000 square feet (2230 m^2); or is used for the storage of commercial motor vehicles and exceeds 5,000 square feet (464 m^2). See the commentary to the definition of "Commercial motor vehicle" in Chapter 2.

The first three sprinkler threshold requirements for Group S-1 occupancies are identical to those of Groups F-1 and M (see commentary, Sections 903.2.4 and 903.2.7). Group S-1 occupancies, such as warehouses and self-storage buildings, are assumed to be used for the storage of combustible materials. While high-piled storage does not change the Group S-1 occupancy classification, sprinkler protection, if required, may have to comply with the additional requirements of Chapter 32 of the IFC. High-piled stock or rack storage in any occupancy must comply with the code and the IFC. The fifth sprinkler threshold is the same as for Group F-1 except that, in this case, upholstered furniture and mattresses are being stored and not manufactured. Group M has a similar threshold, but is required for larger occupancies containing such items with an area of 5,000 square feet (464 m^2) versus what is required for Groups S-1 and F-1 occupancies of 2,500 square feet (232 m^2). See the commentary for Group M and Group F-1 definitions for more discussion on this issue. Again, it is important to note that the threshold is based upon the square footage of the occupancy and not upon the size of the fire area. A formal interpretation (IFC Interpretation 20-14) has been issued on this section. The formal interpretation addresses self storage warehouses specifically and whether such a facility between 2500 and 12000 square feet would require an automatic sprinkler system. This is based upon the fact that upholstered furniture may be stored in such units. The response provided noted that a sprinkler system would be required based on the fact the requirements are focused on the square footage of the occupancy and are not based on fire area or the amount of upholstered furniture or mattresses present.

[F] 903.2.9.1 Repair garages. An *automatic sprinkler system* shall be provided throughout all buildings used as repair garages in accordance with Section 406, as shown:

1. Buildings having two or more *stories above grade plane*, including basements, with a *fire area* containing a repair garage exceeding 10,000 square feet (929 m^2).
2. Buildings not more than one *story above grade plane*, with a *fire area* containing a repair garage exceeding 12,000 square feet (1115 m^2).
3. Buildings with repair garages servicing vehicles parked in basements.
4. A Group S-1 *fire area* used for the repair of commercial motor vehicles where the *fire area* exceeds 5,000 square feet (464 m^2).

❖ Automatic sprinklers may be required in repair garages, depending on the quantity of combustibles present, their location and floor area. In addition, any Group S-1 fire area intended for the repair of commercial motor vehicles that exceeds 5,000 square feet (464 m^2) would require sprinklers. This is the same criteria as Group S-1 occupancies and Group S-2 enclosed parking garages storing commercial motor vehicles. Repair garages may contain significant quantities of flammable liquids and other combustible materials. These occupancies are typically considered Ordinary Hazard Group 2 occupancies as defined in NFPA 13. Portions of repair garages used for parts cleaning using flammable or combustible liquids may require automatic sprinkler protection. If quantities of hazardous materials exceed the limitations in Section 307 for maximum allowable quantities per control area, the repair garage would be reclassified as a Group H occupancy. Note that the term "commercial motor vehicles" is specially defined in Chapter 2.

[F] 903.2.9.2 Bulk storage of tires. Buildings and structures where the area for the storage of tires exceeds 20,000 cubic feet (566 m^3) shall be equipped throughout with an *automatic sprinkler system* in accordance with Section 903.3.1.1.

❖ This section specifies when an automatic sprinkler system is required for the bulk storage of tires based on the volume of the storage area as opposed to a specific number of tires. Even in fully sprinklered buildings, tire fires pose significant problems to fire departments. Tire fires produce thick smoke and are difficult to extinguish by sprinklers alone. NFPA 13 contains specific fire protection requirements for the storage of rubber tires.

Whether the volume of tires is divided into different fire areas or not is irrelevant to the application of this section. If the total for all areas where tires are stored is great enough that the resultant storage volume exceeds 20,000 cubic feet (566 m^3), the building must

INTERNATIONAL CODE COUNCIL®
Copyright © 2015 ICC. ALL RIGHTS RESERVED. Accessed by David Dammon on Jun 21, 2017 12:30:52 PM pursuant to License Agreement with ICC. No further reproduction or distribution authorized. ANY UNAUTHORIZED REPRODUCTION OR DISTRIBUTION IS A VIOLATION OF THE FEDERAL COPYRIGHT ACT AND THE LICENSE AGREEMENT, AND SUBJECT TO CIVIL AND CRIMINAL PENALTIES THEREUNDER.

be sprinklered throughout. See the commentary to the Section 202 definition of "Tires, bulk storage of" for further information.

[F] 903.2.10 Group S-2 enclosed parking garages. An *automatic sprinkler system* shall be provided throughout buildings classified as enclosed parking garages in accordance with Section 406.6 where either of the following conditions exists:

1. Where the *fire area* of the enclosed parking garage exceeds 12,000 square feet (1115 m^2).
2. Where the enclosed parking garage is located beneath other groups.

   Exception: Enclosed parking garages located beneath Group R-3 occupancies.

❖ Fire records have shown that fires in parking structures typically fully involve only a single automobile with minor damage to adjacent vehicles. An enclosed parking garage, however, does not allow the dissipation of smoke and hot gases as readily as an open parking structure, which is also considered a Group S-2 occupancy. If the enclosed parking garage has a fire area greater than 12,000 square feet (1115 m^2) or is located beneath another occupancy group, the enclosed parking garage must be protected with an automatic sprinkler system. This requirement that the enclosed parking garage located beneath other occupancy groups is required to be sprinklered is based on the potential for a fire to develop undetected, which would endanger the occupants of the other occupancy. The 12,000-square-foot (1115 m^2) threshold is similar to other occupancies such as Groups M and S-1.

It should be noted that while open parking garages are considered a Group S-2 occupancy, they are not required by the provisions of this section to be equipped with an automatic sprinkler system.

The exception exempts enclosed garages in buildings where the garages are located below a Group R-3 occupancy. The exception is essentially moot since the code requires all buildings with a Group R occupancy to be sprinklered throughout. Because the entire building with the residential occupancy is required to be sprinklered according to Section 903.2.8, the garage would be sprinklered as well. It should be noted that if the Group R-3 occupancy was protected with an NFPA 13D system, the enclosed parking garage would not require sprinklers.

[F] 903.2.10.1 Commercial parking garages. An *automatic sprinkler system* shall be provided throughout buildings used for storage of commercial motor vehicles where the *fire area* exceeds 5,000 square feet (464 m^2).

❖ Because of the larger-sized vehicles involved in commercial parking structures, such as those housing commercial motor vehicles as defined in Section 202, a more stringent sprinkler threshold is required. Bus garages may also be located adjacent to passenger terminals (Group A-3) that have a substantial occupant load. Commercial parking requires only a single vehicle in order to be classified as commercial parking.

The criterion for sprinkler protection is based on the size of the fire area and not the size of the commercial parking. If the commercial parking involves only 1,000 square feet (93 m^2) but the fire area exceeds 5,000 square feet (464 m^2), sprinkler protection is required.

[F] 903.2.11 Specific building areas and hazards. In all occupancies other than Group U, an *automatic sprinkler system* shall be installed for building design or hazards in the locations set forth in Sections 903.2.11.1 through 903.2.11.6.

❖ Sections 903.2.11.1 through 903.2.11.2 specify certain conditions under which an automatic sprinkler system is required, even in otherwise nonsprinklered buildings. As indicated, the listed conditions in the noted sections are applicable to all occupancies except Group U. Most structures that qualify as Group U do not typically have the type of conditions stipulated in Sections 903.2.11.1 through 903.2.11.1.3.

[F] 903.2.11.1 Stories without openings. An *automatic sprinkler system* shall be installed throughout all *stories*, including basements, of all buildings where the floor area exceeds 1,500 square feet (139.4 m^2) and where there is not provided not fewer than one of the following types of *exterior wall* openings:

1. Openings below grade that lead directly to ground level by an exterior *stairway* complying with Section 1009 or an outside ramp complying with Section 1010. Openings shall be located in each 50 linear feet (15 240 mm), or fraction thereof, of *exterior wall* in the *story* on at least one side. The required openings shall be distributed such that the lineal distance between adjacent openings does not exceed 50 feet (15 240 mm).
2. Openings entirely above the adjoining ground level totaling not less than 20 square feet (1.86 m^2) in each 50 linear feet (15 240 mm), or fraction thereof, of *exterior wall* in the story on at least one side. The required openings shall be distributed such that the lineal distance between adjacent openings does not exceed 50 feet (15 240 mm). The height of the bottom of the clear opening shall not exceed 44 inches (1118 mm) measured from the floor.

❖ Because of both the lack of openings in exterior walls for access by the fire department for fire fighting and rescue and the problems associated with venting the products of combustion during fire suppression operations, all stories, including any basements of buildings that do not have adequate openings as defined in this section, must be equipped with an automatic sprinkler system. This section applies to stories without sufficient exterior openings where the floor area exceeds 1,500 square feet (139 m^2) and where the building is not otherwise required to be fully sprinklered. The requirement for an automatic sprinkler system in this section applies only to the affected area and does not mandate sprinkler protection throughout the entire building.

INTERNATIONAL CODE COUNCIL®
Copyright © 2015 ICC. ALL RIGHTS RESERVED. Accessed by David Dammon on Jun 21, 2017 12:30:52 PM pursuant to License Agreement with ICC. No further reproduction or distribution authorized. ANY UNAUTHORIZED REPRODUCTION OR DISTRIBUTION IS A VIOLATION OF THE FEDERAL COPYRIGHT ACT AND THE LICENSE AGREEMENT, AND SUBJECT TO CIVIL AND CRIMINAL PENALTIES THEREUNDER.

Stories without openings, as defined in this section, are stories that do not have at least 20 square feet (1.9 m^2) of opening leading directly to ground level in each 50 lineal feet (15 240 mm) or fraction thereof on at least one side. Since exterior doors will provide openings of 20 square feet (1.9 m^2), or slightly less in some occupancies, exterior stairways and ramps in each 50 lineal feet (15 240 mm) are considered acceptable.

This section specifically states that the required openings be distributed such that the lineal distance between adjacent openings does not exceed 50 feet (15 240 mm). If the openings in the exterior wall are located without regard to the location of the adjacent openings, it is possible that segments of the exterior wall will not have the required access to the interior of the building for fire-fighting purposes. Any arrangement of required stairways, ramps or openings that results in a portion of the wall 50 feet (15 240 mm) or more in length with no openings to the exterior does not meet the intent of the code that access be provided in each 50 lineal feet (15 240 mm) (see Commentary Figure 903.2.11.1).

There is a further restriction on openings that are entirely above grade. More specifically, to support fire-fighting operations the openings need to be accessible and usable. Therefore, Item 2 specifies that the maximum sill height be 44 inches (1118 mm) above the floor. This height is consistent with the height provided for emergency escape and rescue windows in Section 1030.3.

One application of this section has been addressed in the 2009 edition of the *International Code Interpretations* book and deals with automotive service shops that have below-grade service areas where employees perform oil changes and other minor maintenance services. The below-grade areas are typically open to the grade-level service bays via openings providing access to the underside of the vehicles without requiring the vehicle to be lifted into the air. Inasmuch as the below-grade space has no openings directly to the exterior, the question was asked if it would be regulated as a windowless story and thus be required to be equipped with an automatic fire suppression system in accordance with Section 903.2.11.1.

The answer to that question is no. Because of the openness between the adjacent service levels, the below-grade area would be more appropriately regulated similar to a mezzanine rather than a story. A mezzanine is not regulated as a separate story but rather as part of the same story that it serves. Therefore, if the below-grade service level is in compliance with the applicable provisions of Section 505, the windowless story provisions of Section 903.2.11.1 would be evaluated based on the exterior wall openings of the main level and not the service mezzanine below. The direct interconnections between the two adjacent floor levels by multiple service openings provide access to the lower service area for fire-fighting and rescue operations. As such, it would not be regulated as a windowless story.

The requirement to sprinkler the basement is independent of mixed-use conditions. Whether the basement is separated or nonseparated is irrelevant to the need for sprinkler protection, nor does the requirement to provide sprinklers in the basement imply that sprinklers must be provided elsewhere. This requirement is applicable to the basement or any story without openings irrespective of other code provisions.

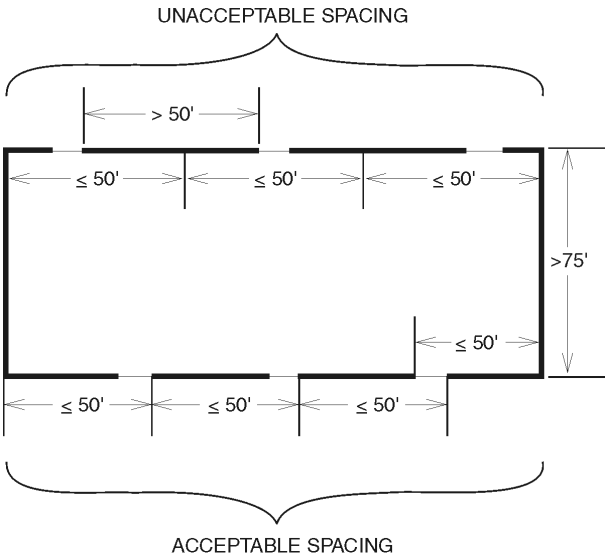

For SI: 1 foot = 304.8 mm.

Figure 903.2.11.1
SPACING OF OPENINGS IN STORIES OR BASEMENTS

INTERNATIONAL CODE COUNCIL®
Copyright © 2015 ICC. ALL RIGHTS RESERVED. Accessed by David Dammon on Jun 21, 2017 12:30:52 PM pursuant to License Agreement with ICC. No further reproduction or distribution authorized. ANY UNAUTHORIZED REPRODUCTION OR DISTRIBUTION IS A VIOLATION OF THE FEDERAL COPYRIGHT ACT AND THE LICENSE AGREEMENT, AND SUBJECT TO CIVIL AND CRIMINAL PENALTIES THEREUNDER.

Also, these provisions are not based on the size of a fire area but rather on the size of the basement. Thus, subdividing the basement into multiple fire areas would have no effect on the requirement. However, one benefit of the multiple fire areas could be that each fire area could have a separate limited area sprinkler system with less than 20 sprinklers.

[F] 903.2.11.1.1 Opening dimensions and access. Openings shall have a minimum dimension of not less than 30 inches (762 mm). Such openings shall be accessible to the fire department from the exterior and shall not be obstructed in a manner such that fire fighting or rescue cannot be accomplished from the exterior.

❖ To qualify, an opening must not be less than 30 inches (762 mm) in least dimension and must be accessible to the fire department from the exterior. The minimum opening dimension gives fire department personnel access to the interior of the story or basement for fire-fighting and rescue operations and provides openings that are large enough to vent the products of combustion.

[F] 903.2.11.1.2 Openings on one side only. Where openings in a *story* are provided on only one side and the opposite wall of such *story* is more than 75 feet (22 860 mm) from such openings, the *story* shall be equipped throughout with an *approved automatic sprinkler system*, or openings as specified above shall be provided on not fewer than two sides of the *story*.

❖ If openings are provided on only one side, an automatic sprinkler system would still be required if the opposite wall of the story is more than 75 feet (22 860 mm) from existing openings. An alternative to providing the automatic sprinkler system would be to design openings on at least two sides of the exterior of the building. As long as the story being considered is not a basement, the openings on two sides can be greater than 75 feet (22 860 mm) from any portion of the floor. In basements, if any portion is more than 75 feet (22 860 mm) from the openings, the entire basement must be equipped with an automatic sprinkler system, as indicated in Section 903.2.11.1.3. Providing openings on more than one wall allows cross ventilation to vent the products of combustion [see Commentary Figures 903.2.11.1.2(1–4)].

[F] 903.2.11.1.3 Basements. Where any portion of a *basement* is located more than 75 feet (22 860 mm) from openings required by Section 903.2.11.1, or where walls, partitions or other obstructions are installed that restrict the application of water from hose streams, the *basement* shall be equipped throughout with an *approved automatic sprinkler system*.

❖ The 75-foot (22 860 mm) distance is intended to be measured in the line of travel—not in a straight line perpendicular to the wall. Where obstructions, such as walls or other partitions, are present in a basement, the walls and partitions enclosing any room or space must have openings that provide an equivalent degree of fire department access to that provided by the openings prescribed in Section 903.2.11.1 for exterior walls. When obstructions such as walls or partitions are installed in the basement, the ability to apply hose streams through these openings and

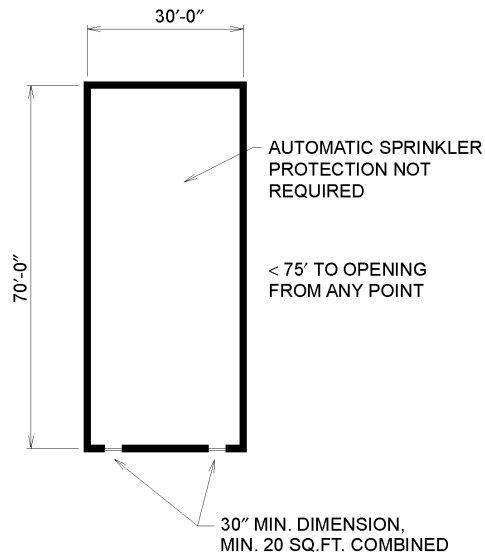

For SI: 1 inch = 25.4 mm, 1 foot = 304.8 mm, 1 square foot = 0.0929 m^2.

Figure 903.2.11.1.2(1)
OPENINGS IN STORIES OR BASEMENTS—LESS THAN 75 FEET FROM ANY POINT TO AN OPENING

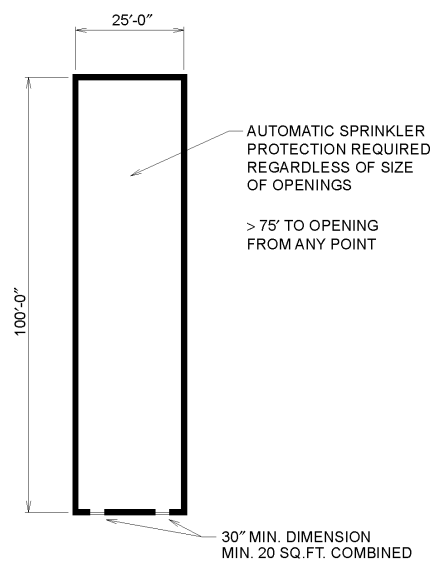

For SI: 1 inch = 25.4 mm, 1 foot = 304.8 mm, 1 square foot = 0.0929 m^2.

Figure 903.2.11.1.2(2)
OPENINGS IN STORIES OR BASEMENTS—MORE THAN 75 FEET FROM ANY POINT TO AN OPENING

INTERNATIONAL CODE COUNCIL®
Copyright © 2015 ICC. ALL RIGHTS RESERVED. Accessed by David Dammon on Jun 21, 2017 12:30:52 PM pursuant to License Agreement with ICC. No further reproduction or distribution authorized. ANY UNAUTHORIZED REPRODUCTION OR DISTRIBUTION IS A VIOLATION OF THE FEDERAL COPYRIGHT ACT AND THE LICENSE AGREEMENT, AND SUBJECT TO CIVIL AND CRIMINAL PENALTIES THEREUNDER.

reach the basement area is reduced or eliminated. The configuration and clear-opening requirements become useless when an interior wall or other obstruction is placed inside the basement. In that case, it is reasonable to require automatic fire sprinklers to provide adequate protection in the basement. If an equivalent degree of fire department access to all portions of the floor area is not provided, the basement would require an automatic sprinkler system.

[F] 903.2.11.2 Rubbish and linen chutes. An *automatic sprinkler system* shall be installed at the top of rubbish and linen chutes and in their terminal rooms. Chutes shall have additional sprinkler heads installed at alternate floors and at the lowest intake. Where a rubbish chute extends through a building more than one floor below the lowest intake, the extension shall have sprinklers installed that are recessed from the drop area of the chute and protected from freezing in accordance with Section 903.3.1.1. Such sprinklers shall be installed at alternate floors, beginning with the second level below the last intake and ending with the floor above the discharge. Chute sprinklers shall be accessible for servicing.

❖ Gravity rubbish (waste) and linen chutes can pose a significant hazard to building occupants if they are not properly installed and protected. Generally, these systems are installed in high-occupancy buildings where the occupants will be sleeping or are incapable of self-rescue, such as in Group I, R-1 and R-2 occupancies. For occupant convenience, openings to the chutes are commonly provided in areas accessible to the public and, in older buildings, the chute opening may be located in an exit access corridor. In comparison to other building shafts, gravity rubbish and linen chutes always contain fuel. As bags of waste debris or linen fall through the chute, they can deposit fluids such as waste cooking oil, which adheres to the shaft surface. This waste material and other debris provide fuel that can support and accelerate vertical fire spread. The greatest accumulation of fuel will be in the termination room; however, a significant amount of fuel that covers the interior surface area of the chute will be found in the sections of chutes closest to the collection or termination room. Therefore, it is important that the automatic sprinklers be properly placed and protected so they are available in the event of a fire in the termination room and to protect waste compaction equipment where such equipment is installed.

Installation of gravity chutes for rubbish or linen requires compliance with the code, the IFC and Chapter 6 of NFPA 82. Under the code, permanent rubbish and linen chutes are constructed inside of a fire-resistance-rated shaft assembly with a minimum 1-hour fire-resistance rating in buildings less than four stories in height; in buildings four or more stories in height, the fire-resistance rating is increased to 2

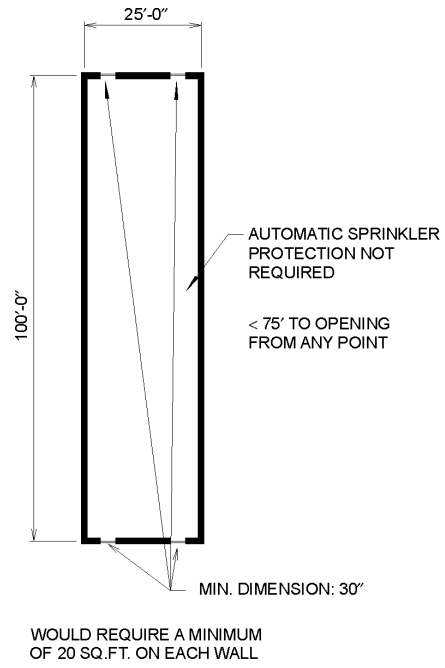

For SI: 1 inch = 25.4 mm, 1 foot = 304.8 mm, 1 square foot = 0.0929 m^2.

Figure 903.2.11.1.2(3)
OPENINGS IN STORIES OR BASEMENTS—LESS THAN 75 FEET FROM ANY POINT TO AN OPENING

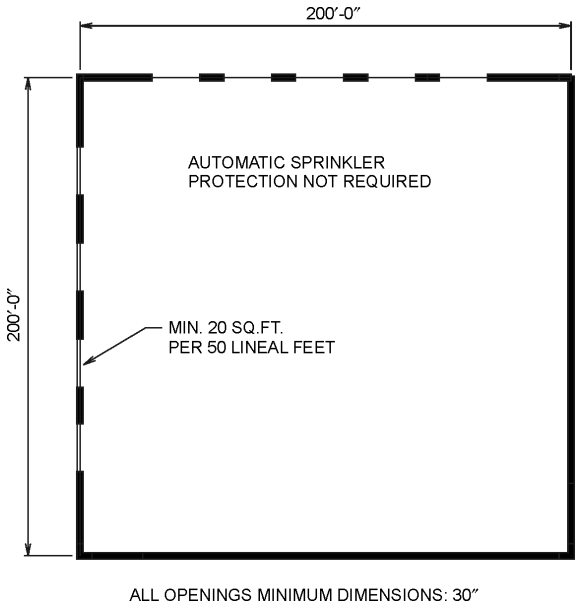

For SI: 1 inch = 25.4 mm, 1 foot = 304.8 mm, 1 square foot = 0.0929 m^2.

Figure 903.2.11.1.2(4)
OPENINGS IN STORIES OR BASEMENTS

INTERNATIONAL CODE COUNCIL®
Copyright © 2015 ICC. ALL RIGHTS RESERVED. Accessed by David Dammon on Jun 21, 2017 12:30:52 PM pursuant to License Agreement with ICC. No further reproduction or distribution authorized. ANY UNAUTHORIZED REPRODUCTION OR DISTRIBUTION IS A VIOLATION OF THE FEDERAL COPYRIGHT ACT AND THE LICENSE AGREEMENT, AND SUBJECT TO CIVIL AND CRIMINAL PENALTIES THEREUNDER.

hours by Section 713.4. The design of the shaft system and its openings must also comply with the requirements in Sections 713.11 and 713.13, which require the termination room receiving the discharged material to be separated from the building by a fire-resistance rating equivalent to that of the shaft that it serves.

Section 713.13.6 requires the installation of an automatic sprinkler system in rubbish and linen chutes to comply with the requirements of Section 903.2.11.2. Section 903.2.11.2 correlates with the requirements in Chapter 22 of NFPA 13. Chapter 22 of NFPA 13 contains the special occupancy requirements for all buildings, including gravity waste and linen chutes. The provisions align the code and IFC requirements with those in NFPA 82 and NFPA 13.

A critical term in this section is "extension." The word was selected to address chutes installed in buildings of pedestal construction or other designs in which the fire-resistant construction shaft and chute pass through a less hazardous occupancy, such as a Group S-2 parking garage, or other floors that do not have access to the shaft. In these areas, chute openings are generally not provided. As a result, this section now contains a specific provision that may impose a requirement for sprinklers in the portion of the chute that serves as an extension beyond the last intake and the termination room or discharge area.

Because objects will be falling through the chute, the code requires the chute sprinklers to be recessed and protected from impact. Sprinklers are not required at every story housing a chute. The code requires automatic sprinklers at the top of the chute and at its termination. In addition, sprinkler heads are required at alternate floors within the chute, with a head being installed at the floor level with the lowest intake point into the chute. Previously, these additional sprinkler heads were only required where the shaft extended through three or more floors. These revisions, plus the previously discussed requirements for extensions, may result in additional sprinkler heads within some shafts as compared to the previous requirements.

Sprinklers in chutes that are in locations subject to freezing require freeze protection in accordance with the requirements of Section 903.3.1.1 and, therefore, the NFPA 13 standard. This can be accomplished using a dry-pendant sprinkler or constructing a dry-pipe sprinkler system.

[F] 903.2.11.3 Buildings 55 feet or more in height. An *automatic sprinkler system* shall be installed throughout buildings that have one or more stories with an *occupant load* of 30 or more located 55 feet (16 764 mm) or more above the lowest level of fire department vehicle access, measured to the finished floor.

Exceptions:

1. Open parking structures.
2. Occupancies in Group F-2.

❖ Because of the difficulties associated with manual suppression of a fire in mid-rise buildings in excess of 55 feet (16 764 mm) above the lowest level of fire department vehicle access, an automatic sprinkler system is required throughout the building regardless of occupancy. Buildings that qualify for a sprinkler system under this section are not necessarily high-rise buildings as defined in Section 202 and are focused also on those with occupants located on the upper floors. These provisions apply only to buildings with occupied floors having an occupant load of 30 or more located on stories 55 feet or greater from fire department vehicle access. The 55 feet is measured to the finished floor (see Commentary Figure 903.2.11.3).

The listed exceptions are occupancies that, based on height only, do not require an automatic sprinkler system. Open parking structures are also exempt from the high-rise provisions of Section 403. Although an automatic sprinkler system is not required in open parking structures, a sprinkler system may still be needed, depending on the building construction type and the area and number of parking tiers (see Table 406.3.5).

[F] 903.2.11.4 Ducts conveying hazardous exhausts. Where required by the *International Mechanical Code*, automatic sprinklers shall be provided in ducts conveying hazardous exhaust or flammable or combustible materials.

Exception: Ducts where the largest cross-sectional diameter of the duct is less than 10 inches (254 mm).

❖ Section 510 of the IMC addresses the requirements for hazardous exhaust systems. To protect against the spread of fire within a hazardous exhaust system and to prevent a duct fire from involving the building, an automatic sprinkler system must be installed to protect the exhaust duct system. Where materials conveyed in the ducts are not compatible with water, alternative extinguishing agents should be used. The fire suppression requirement is intended to apply to exhaust systems having an actual fire hazard. An automatic sprinkler system in the duct would be of little value for an exhaust system that conveys only nonflammable or noncombustible materials, fumes, vapors or gases.

The exception recognizes the reduced hazard associated with smaller ducts and the impracticality of installing sprinkler protection. Another exception in the IMC indicates that laboratory hoods that meet specific provisions of the IMC are not required to be suppressed. Because the IMC is more specific in this regard, it should be consulted for the proper application of the exception.

[F] 903.2.11.5 Commercial cooking operations. An *automatic sprinkler system* shall be installed in commercial

INTERNATIONAL CODE COUNCIL®
Copyright © 2015 ICC. ALL RIGHTS RESERVED. Accessed by David Dammon on Jun 21, 2017 12:30:52 PM pursuant to License Agreement with ICC. No further reproduction or distribution authorized. ANY UNAUTHORIZED REPRODUCTION OR DISTRIBUTION IS A VIOLATION OF THE FEDERAL COPYRIGHT ACT AND THE LICENSE AGREEMENT, AND SUBJECT TO CIVIL AND CRIMINAL PENALTIES THEREUNDER.

kitchen exhaust hood and duct systems where an *automatic sprinkler system* is used to comply with Section 904.

❖ An automatic suppression system is required for commercial kitchen exhaust hood and duct systems where required by Section 609 of the IFC or by the IMC to have a Type I hood. Type I hoods are required for commercial cooking equipment that produces grease-laden vapors or smoke. Section 904.12 recognizes that alternative extinguishing systems other than an automatic sprinkler system may be used. Where an automatic sprinkler system is used for commercial cooking operations, it must comply with the requirements identified in Section 904.11.4.

[F] 903.2.11.6 Other required suppression systems. In addition to the requirements of Section 903.2, the provisions indicated in Table 903.2.11.6 require the installation of a fire suppression system for certain buildings and areas.

❖ In addition to Section 903.2, requirements for automatic fire suppression systems are also found elsewhere in the code as indicated in Table 903.2.11.6.

TABLE 903.2.11.6. See next column.

❖ Table 903.2.11.6 identifies other sections of the code that require an automatic fire suppression system based on the specific occupancy or use because of the unique hazards of such use or occupancy. The table does not identify the various sections of the code that contain design alternatives based on the use of an automatic fire suppression system, typically an automatic sprinkler system.

[F] TABLE 903.2.11.6
ADDITIONAL REQUIRED SUPPRESSION SYSTEMS

SECTION	SUBJECT
402.5, 402.6.2	Covered and open mall buildings
403.3	High-rise buildings
404.3	Atriums
405.3	Underground structures
407.6	Group I-2
410.7	Stages
411.4	Special amusement buildings
412.3.6	Airport traffic control towers
412.4.6, 412.4.6.1, 412.6.5	Aircraft hangars
415.11.11	Group H-5 HPM exhaust ducts
416.5	Flammable finishes
417.4	Drying rooms
419.5	*Live/work units*
424.3	Children's play structures
507	Unlimited area buildings
509.4	Incidental uses
1029.6.2.3	Smoke-protected assembly seating
IFC	Sprinkler system requirements as set forth in Section 903.2.11.6 of the *International Fire Code*

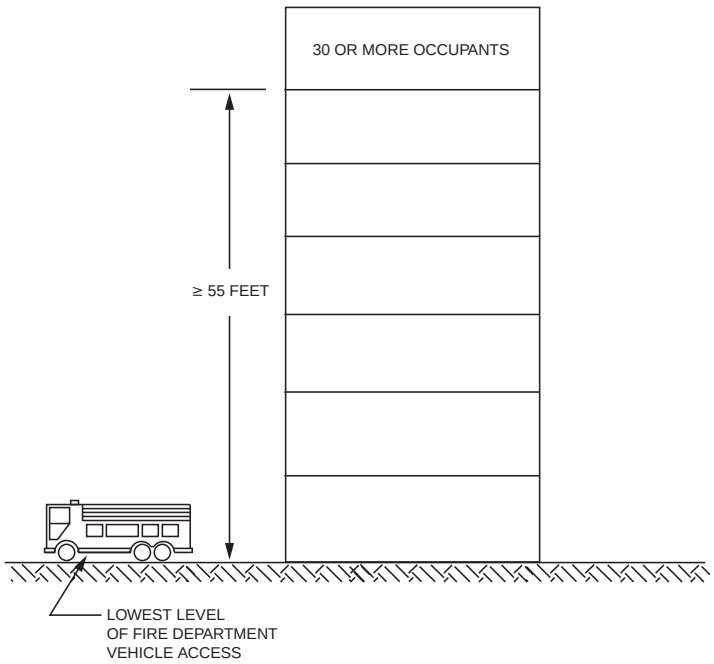

For SI: 1 foot = 304.8 mm.

Figure 903.2.11.3
SPRINKLER REQUIREMENTS: OCCUPANTS 55 FEET OR GREATER FROM FIRE DEPARTMENT VEHICLE ACCESS

INTERNATIONAL CODE COUNCIL®
Copyright © 2015 ICC. ALL RIGHTS RESERVED. Accessed by David Dammon on Jun 21, 2017 12:30:52 PM pursuant to License Agreement with ICC. No further reproduction or distribution authorized. ANY UNAUTHORIZED REPRODUCTION OR DISTRIBUTION IS A VIOLATION OF THE FEDERAL COPYRIGHT ACT AND THE LICENSE AGREEMENT, AND SUBJECT TO CIVIL AND CRIMINAL PENALTIES THEREUNDER.

[F] 903.2.12 During construction. *Automatic sprinkler systems* required during construction, *alteration* and demolition operations shall be provided in accordance with Chapter 33 of the *International Fire Code*.

❖ Chapter 33 of the code and Chapter 14 of the IFC address fire safety requirements during construction, alteration or demolition work. Working sprinkler systems should remain operative at all times unless it is absolutely necessary to shut down the system because of the proposed work. All sprinkler system impairments should be rectified as quickly as possible unless specific prior approval has been obtained from the fire code official. Buildings with a required sprinkler system should not be occupied unless the sprinkler system has been installed and tested consistent with Section 901.5. If the system must be placed out of service, the requirements of Section 901.7 of the IFC are necessary to address the temporary impairment to the fire protection system.

[F] 903.3 Installation requirements. *Automatic sprinkler systems* shall be designed and installed in accordance with Sections 903.3.1 through 903.3.8.

❖ Specific design, installation and testing criteria are given for automatic sprinkler systems in the sections and subsections that follow, as well as an indication of the applicability of a nationally recognized standard in the area. The information required to complete a thorough review of an automatic sprinkler system is listed in Commentary Figure 903.3.

[F] 903.3.1 Standards. Sprinkler systems shall be designed and installed in accordance with Section 903.3.1.1 unless otherwise permitted by Sections 903.3.1.2 and 903.3.1.3 and other chapters of this code, as applicable.

❖ Automatic sprinkler systems are to be installed to comply with the code and NFPA 13, 13R or 13D. As provided for in Section 102.4, where differences occur between the code and NFPA 13, 13R or 13D, the code applies. The fire code official also has the authority to approve the type of sprinkler system to be installed. See Commentary Figure 903.3.1 for typical design parameters for each type of sprinkler system.

This section also provides a pointer to other sections of the code that might provide more specific or detailed sprinkler requirements such as those found in Chapter 4 of the code.

[F] 903.3.1.1 NFPA 13 sprinkler systems. Where the provisions of this code require that a building or portion thereof be equipped throughout with an *automatic sprinkler system* in accordance with this section, sprinklers shall be installed throughout in accordance with NFPA 13 except as provided in Sections 903.3.1.1.1 and 903.3.1.1.2.

❖ NFPA 13 contains the minimum requirements for the design and installation of automatic water sprinkler systems and exposure protection sprinkler systems. The requirements contained in the standard include the character and adequacy of the water supply and the selection of sprinklers, piping, valves and all of the materials and accessories. The standard does not include requirements for installation of private fire service mains and their appurtenances; installation of fire pumps or construction and installation of gravity and pressure tanks and towers.

NFPA 13 defines seven classifications or types of water sprinkler systems: wet pipe [see Commentary Figure 903.3.1.1], dry pipe; preaction or deluge; combined dry pipe and preaction; antifreeze systems; sprinkler systems that are designed for a special purpose and outside sprinklers for exposure protection. While numerous variables must be considered in selecting the proper type of sprinkler system, the wet-pipe sprinkler system is recognized as the most effective and efficient. The wet-pipe system is also the most reliable type of sprinkler system, because water under pressure is available at the sprinkler. Therefore, wet-pipe sprinkler systems are recommended wherever possible.

The extent of coverage and distribution of sprinklers is based on the NFPA 13 standard. Numerous conditions exist in the standard where sprinklers are specifically required and also where they may or may not be located. Once it is determined that the sprinkler system is to be in accordance with NFPA 13, that standard must be reviewed for installation details. For example, exterior spaces such as combustible canopies are required to be equipped with sprinklers according to Section 8.15.7 of NFPA 13 where the canopy extends for a distance of 4 feet (1219 mm) or more. A 3-foot (914 mm) combustible canopy would not require sprinklers nor would a 6-foot (1829 mm) canopy constructed of noncombustible materials, provided there is no combustible storage under the canopy.

Because installation is required to be in accordance with NFPA 13, if the standard allows for the omission of sprinklers in any location, then the building is still considered as sprinklered throughout. For example, Section 8.15.8.1.1 of NFPA 13 allows sprinklers to be omitted from bathrooms in dwelling units in motels and hotels. If sprinklers are not provided in the bathrooms because of the conditions stipulated in NFPA 13, the building would still be considered as sprinklered throughout in accordance with the code, NFPA 13 and the IFC.

Exceptions for the use of NFPA 13R and 13D systems are addressed throughout the code when exceptions based on the use of sprinklers are provided. More specifically, if the use of these other standards is appropriate it will be noted within the exception. For a building to be considered "equipped throughout" with an NFPA 13 sprinkler system, complete protection must be provided in accordance with the referenced standard, subject to the exempt locations indicated in Section 903.3.1.1.1. See Commentary Figure 904.2.1 for examples of requirements modified through the use of sprinkler systems.

INTERNATIONAL CODE COUNCIL®
Copyright © 2015 ICC. ALL RIGHTS RESERVED. Accessed by David Dammon on Jun 21, 2017 12:30:52 PM pursuant to License Agreement with ICC. No further reproduction or distribution authorized. ANY UNAUTHORIZED REPRODUCTION OR DISTRIBUTION IS A VIOLATION OF THE FEDERAL COPYRIGHT ACT AND THE LICENSE AGREEMENT, AND SUBJECT TO CIVIL AND CRIMINAL PENALTIES THEREUNDER.

1. Information required on shop drawings includes:

— Name of owner and occupant
— Location, including street address
— Point of compass
— Graphic indication of scale
— Ceiling construction
— Full-height cross section
— Location of fire walls
— Location of partitions
— Occupancy of each area or room
— Location and size of blind spaces and closets
— Any questionable small enclosures in which no sprinklers are to be installed
— Size of city main in street, pressure and whether dead end or circulation and, if dead end, direction and distance to nearest circulating main, city main test results
— Other source of water supply, with pressure or elevation
— Make, type and orifice size of sprinkler
— Temperature rating and location of high-temperature sprinklers
— Limitations on extended coverage sprinklers or other special sprinkler types
— Number of sprinklers on each riser and on each system by floors and total area by each system on each floor
— Make, type, model and size of alarm or dry pipe valve
— Make, type, model and size of preaction or deluge valve
— Type and location of alarm bells
— Backflow prevention method and details
— Total number of sprinklers on each dry pipe system or preaction deluge system
— Approximate capacity in gallons or each dry pipe system
— Setting for pressure-reducing valves
— Pipe size, type, and schedule of wall thickness
— Cutting lengths of pipe (or center-to-center dimensions)
— Type of fittings, riser nipples and size, and all welds and bends
— Type and location of hangers, inserts and sleeves
— Calculations of loads and details for sway bracing
— All control valves, checks, drain pipes, flushing, and test pipes
— Size and location of standpipe risers and hose outlets
— Small hand-hose equipment
— Underground pipe size, length, location, weight, material, point of connection to city main; the type of valves, meters and valve pits; and the depth that top of the pipe is laid below grade
— Size and location of hydrants along with hose-houses
— Size and location of fire department connections
— When the equipment is to be installed as an addition to an old group of sprinklers without additional feed from the yard system, enough of the old system shall be indicated on the plans to show the total number of sprinklers to be supplied and to make all connections clear
— Information to be provided on the hydraulic nameplate
— Name, address and phone number of contractor and sprinkler designer
— Hydraulic reference points shall be shown by a number and/or letter designation and shall correspond with comparable reference points shown on the hydraulic calculation sheets
— System design criteria showing the minimum rate of water application (density), the design area of water application and the water required for hose streams both inside and outside
— Actual calculated requirements showing the total quantity of water and the pressure required at a common reference point for each system
— Elevation data showing elevations of sprinklers, junction points and supply or reference points
— Protected wall openings if room design method is used

2. Information required on calculations includes:

— Location
— Name of owner and occupant
— Building identification
— Description of hazard
— Name and address of contractor and designer
— Name of approving agency

3. System design requirements include:

— Design area of water application
— Minimum rate of water application (density)
— Area of sprinkler coverage
— Hazard or commodity classification
— Building height
— Storage height
— Storage method
— Total water requirements, as calculated, including allowance for hose demand water supply information and allowance for in-rack sprinklers
— Location and elevation static and residual test gauge with relation to the riser reference point
— Size and location of hydrants used for flow test data
— Flow location
— Static pressure, psi
— Residual pressure, psi
— Flow, gpm
— Date
— Time
— Test conducted by whom
— Sketch to accompany gridded system calculations to indicate flow quantities and directions for lines with sprinklers operated in the remote area

4. Additional information necessary for complete review includes:

— Sprinkler description and discharge constant (K-value)
— Hydraulic reference points
— Flow, gpm
— Pipe diameter (actual internal diameter)
— Pipe length
— Equivalent pipe length for fittings and components
— Friction loss in psi per foot of pipe
— Total friction loss between reference points
— Elevation difference between reference points
— Required pressure in psi at each reference point
— Velocity pressures and normal pressure if included in calculations
— Notes to indicate starting points, reference to other sheets or clarification of data
— Information on antifreeze solution (type and quantity)
— Water treatment system information including reason for treatment and program details

5. Included with the submittal must be a graph sheet showing water supply curves and system requirements including:

— Hose demand plotted on semilogarithmic graph paper so as to present a graphic summary of the complete hydraulic calculations
— Sprinkler system demand including in-rack sprinklers (if applicable)

Figure 903.3
SAMPLE SPRINKLER SYSTEM DRAWING AND DATA SUBMITTALS

INTERNATIONAL CODE COUNCIL®
Copyright © 2015 ICC. ALL RIGHTS RESERVED. Accessed by David Dammon on Jun 21, 2017 12:30:52 PM pursuant to License Agreement with ICC. No further reproduction or distribution authorized. ANY UNAUTHORIZED REPRODUCTION OR DISTRIBUTION IS A VIOLATION OF THE FEDERAL COPYRIGHT ACT AND THE LICENSE AGREEMENT, AND SUBJECT TO CIVIL AND CRIMINAL PENALTIES THEREUNDER.

[F] 903.3.1.1.1 Exempt locations. Automatic sprinklers shall not be required in the following rooms or areas where such rooms or areas are protected with an *approved* automatic fire detection system in accordance with Section 907.2 that will respond to visible or invisible particles of combustion. Sprinklers shall not be omitted from a room merely because it is damp, of fire-resistance-rated construction or contains electrical equipment.

1. A room where the application of water, or flame and water, constitutes a serious life or fire hazard.
2. A room or space where sprinklers are considered undesirable because of the nature of the contents, where *approved* by the fire code official.
3. Generator and transformer rooms separated from the remainder of the building by walls and floor/ceiling or roof/ceiling assemblies having a *fire-resistance rating* of not less than 2 hours.
4. Rooms or areas that are of noncombustible construction with wholly noncombustible contents.
5. Fire service access elevator machine rooms and machinery spaces.
6. Machine rooms, machinery spaces, control rooms and control spaces associated with occupant evacuation elevators designed in accordance with Section 3008.

❖ This section allows the omission of sprinkler protection in certain locations if an approved automatic fire detec-

	NFPA 13	NFPA 13R	NFPA 13D
Extent of protection	Equip throughout (Section 903.3.1.1)	Occupied spaces (Section 903.3.1.2)	Occupied spaces (Section 903.3.1.3)
Scope	All occupancies	Low-rise residential	One- and two-family dwellings
Sprinkler design	Density/area concept	4-head design	2-head design
Sprinklers	All types	Residential only	Residential only
Duration	30 minutes (minimum)	30 minutes	10 minutes
Advantages	Property and life protection	Life safety/tenability	Life safety/tenability

Figure 903.3.1
NFPA 13, NFPA 13R AND NFPA 13D SYSTEMS

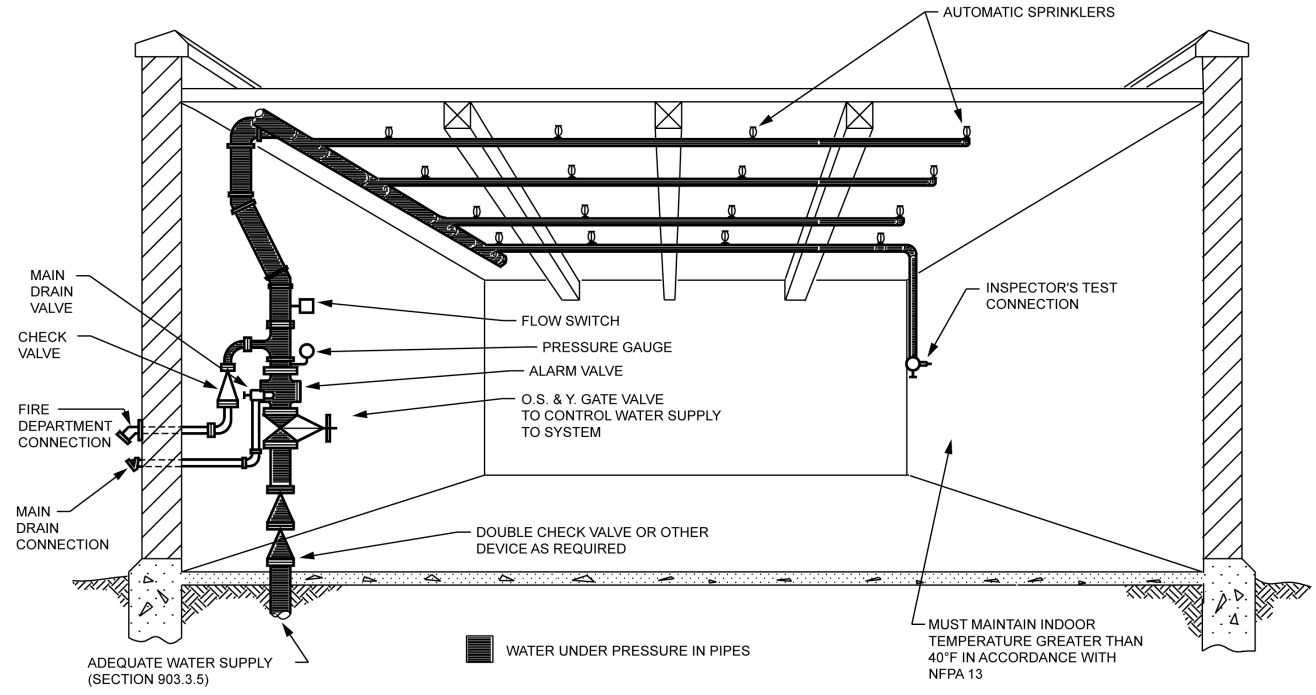

For SI: °C = [(°F) - 32]/1.8.

Figure 903.3.1.1
TYPICAL WET PIPE SYSTEM

INTERNATIONAL CODE COUNCIL®
Copyright © 2015 ICC. ALL RIGHTS RESERVED. Accessed by David Dammon on Jun 21, 2017 12:30:52 PM pursuant to License Agreement with ICC. No further reproduction or distribution authorized. ANY UNAUTHORIZED REPRODUCTION OR DISTRIBUTION IS A VIOLATION OF THE FEDERAL COPYRIGHT ACT AND THE LICENSE AGREEMENT, AND SUBJECT TO CIVIL AND CRIMINAL PENALTIES THEREUNDER.

tion system is installed. Buildings in compliance with one of the six listed conditions would still be considered fully sprinklered throughout in compliance with the code and NFPA 13 and thus are eligible for all applicable code alternatives, exceptions or reductions. Elimination of the sprinkler system in a sensitive area is subject to the approval of the fire code official.

Condition 1 addresses restrictions where the application of water could create a hazardous condition. For example, sprinkler protection is to be avoided where it is not compatible with certain stored materials (i.e., some water-reactive hazardous materials such as calcium carbide). Combustible metals, such as magnesium and aluminum, may burn so intensely that the use of water to attempt fire control will only intensify the reaction.

It is not the intent of Condition 2 to omit sprinklers solely because of a potential for water damage. A desire to not sprinkler a certain area (such as a computer room or operating room) does not fall within the limitations of the exception unless there is something unique about the space that would result in water being incompatible. A computer room can be adequately protected using an automatic sprinkler system or an alternative gaseous suppression agent system or a combination of these systems. The intent of Condition 2 is to consider whether or not the contents would react adversely to the application of water. It is important to note that the fire code official must approve the use of this item. Note also that with respect to computer rooms, NFPA 75 (*Protection of Information Technology Equipment*) (not a referenced standard) recognizes automatic sprinklers as the primary fire protection system for computer rooms.

Condition 3 recognizes the low fuel load and low occupancy hazards associated with generator and transformer rooms and, therefore, allows the omission of sprinkler protection if the rooms are separated from adjacent areas by 2-hour fire-resistance-rated construction. This condition assumes the room is not used for any combustible storage. This condition is similar to Section 8.15.11.3 of NFPA 13, which exempts electrical equipment rooms from sprinkler protection, provided the room is dedicated to the use of dry-type electrical equipment, is constructed as a 2-hour fire-resistance-rated enclosure, and is not used for combustible storage.

Condition 4 requires the construction of the room or area, as well as the contents, to be noncombustible. An example would be an area in an unprotected steel-frame building (Type IIB construction) used for steel or concrete block storage. Neither involves any significant combustible packaging or sources of ignition, and few combustibles are present (see Commentary Figure 903.3.1).

Condition 5 addresses the concern for elevator machine rooms and machinery spaces associated with fire service access elevators as required for buildings with occupied floors greater than 120 feet (36.58 m) from the lowest level of fire department access by Sections 403.6.1 and 3007. These elevators need to work during fire situations and their operation cannot be threatened by the activation of a sprinkler in a machine room or space that may affect the operation of the elevator. Fire service access elevators are required to be continuously monitored at the fire command center in accordance with Section 3007.7.

Condition 6, similar to Condition 5, exempts sprinklers from the machine rooms, machinery spaces, control rooms and control spaces for occupant evacuation elevators. Like fire service access elevators, these elevators need to work during fire situations and their operation cannot be threatened by the activation of a sprinkler in machine rooms, machinery spaces, control rooms and control spaces. Such elevators are required to be monitored at the fire command center in accordance with Section 3008.7.

[F] 903.3.1.1.2 Bathrooms. In Group R occupancies, other than Group R-4 occupancies, sprinklers shall not be required in bathrooms that do not exceed 55 square feet (5 m^2) in area and are located within individual *dwelling units* or *sleeping units*, provided that walls and ceilings, including the walls and ceilings behind a shower enclosure or tub, are of noncombustible or limited-combustible materials with a 15-minute thermal barrier rating.

❖ This provision was added to the code to reinstate an exception of NFPA 13 that had been in existence since 1976 but was deleted for all but dwelling units in motels and hotels (NFPA 8.15.8.1.1) from the 2013 edition of NFPA 13. Although reinstating the small bathroom exception will have a limited impact on new construction because many modern bathrooms exceed the 55-square-foot area limit to accommodate wheelchair access, the more important consequence will be removing an unnecessary cost increase for building owners who choose to retrofit existing properties with small bathrooms that were built before it was common to provide wheelchair access. Codes and standards should not erect any unnecessary barriers to retrofitting sprinklers into existing properties, such as existing high-rise buildings.

In the 1976 edition of the Life Safety Code (NFPA 101), to encourage cost-effective fire protection systems for apartment buildings, Section 11-3.8.3.4.1 provided an exception to permit bathrooms that did not exceed 55 square feet within individual dwelling units to omit sprinklers when the apartment building was sprinklered in accordance with NFPA 13. The basis of the 55-square-foot area is that this area accommodates a “typical” small bathroom that contains a standard tub, a toilet and a sink and nothing more. This exception was later duplicated from NFPA 101 into the 1991 edition of NFPA 13 with the understanding that the next edition of NFPA 101 (1994) could delete the exception since NFPA 13 would have it covered. NFPA 101-1994 then, as planned, deleted the exception.

The history of apartment unit bathroom fires is statistically minimal. According to the NFPA Home

INTERNATIONAL CODE COUNCIL®
Copyright © 2015 ICC. ALL RIGHTS RESERVED. Accessed by David Dammon on Jun 21, 2017 12:30:52 PM pursuant to License Agreement with ICC. No further reproduction or distribution authorized. ANY UNAUTHORIZED REPRODUCTION OR DISTRIBUTION IS A VIOLATION OF THE FEDERAL COPYRIGHT ACT AND THE LICENSE AGREEMENT, AND SUBJECT TO CIVIL AND CRIMINAL PENALTIES THEREUNDER.

Structure Fire Report, January 2009, Table 9B, "Reported Apartment Structure Fires by Area of Origin 2003-2006 Annual Averages," out of 113,000 fires/year, only 1,600 (1 percent) are in bathrooms. Given that there is more than 35 years of experience with the bathroom sprinkler exception being in place (since it was put into NFPA 101 in 1976), it would certainly be reasonable to expect anecdotal or statistical experience to indicate the existence of a problem if there were one.

[F] 903.3.1.2 NFPA 13R sprinkler systems. *Automatic sprinkler systems* in Group R occupancies up to and including four stories in height in buildings not exceeding 60 feet (18 288 mm) in height above grade plane shall be permitted to be installed throughout in accordance with NFPA 13R.

The number of stories of Group R occupancies constructed in accordance with Sections 510.2 and 510.4 shall be measured from the horizontal assembly creating separate buildings.

❖ NFPA 13R contains design and installation requirements for a sprinkler system to aid in the detection and control of fires in low-rise (four stories or less) residential occupancies.

Sprinkler systems designed in accordance with NFPA 13R are intended to prevent flashover (total involvement) in the room of fire origin and to improve the chance for occupants to escape or be evacuated. The design criteria in NFPA 13R are similar to those in NFPA 13 except that sprinklers may be omitted from areas in which fatal fires in residential occupancies do not typically originate (bathrooms, closets, attics, porches, garages and concealed spaces).

A common question is whether a mixed occupancy building which contains a Group R occupancy could still use NFPA 13R for the design. If one of the mixed-use occupancies would require a sprinkler system throughout the building in accordance with NFPA 13, then a 13R system would not be allowed. If, however, the only reason a sprinkler system is being installed is because there is a Group R fire area within the building, then an NFPA 13R system would be an appropriate design choice. The areas that are not classified as Group R would require protection in accordance with NFPA 13.

It must be noted that although the building would be considered sprinklered throughout in accordance with NFPA 13R, not all of the code sprinkler alternatives could be applied. Any alternative that requires the installation of an NFPA 13 system would not be applicable if a portion of the building utilizes an NFPA 13R system.

The code provisions that allow for an increase in building height according to Section 504.3 do not compound this section. NFPA 13R is applicable to buildings that are up to four stories and 60 feet (18 288 mm) in height above grade plane. If the design of a residential building intends to take advantage of the sprinkler height increase so that the building is five stories or more, the sprinkler system must be an NFPA 13 system. Because this section limits the height to four stories, that is the maximum height for a building that can utilize an NFPA 13R system. This is consistent with the scoping provisions in the NFPA 13R standard.

The limitation of four stories in height is to be measured with respect to the established grade plane, which is consistent with IFC Interpretation No. 43-03. As such, a basement would not be considered a story above grade for purposes of determining the applicability of this section.

The second paragraph recognizes the application of the requirements of Sections 510.2 and 510.4, which are essentially exceptions to the height and area requirements. This exception is based on providing a horizontal fire separation similar to the concept of a fire wall to create separate buildings. This establishes that the height in stories can be measured from the horizontal assembly instead of from grade plane. The height, in feet, would still be limited to being measured from grade plane. Such buildings are often referred to as "pedestal buildings."

[F] 903.3.1.2.1 Balconies and decks. Sprinkler protection shall be provided for exterior balconies, decks and ground floor patios of *dwelling units* and *sleeping units* where the building is of Type V construction, provided there is a roof or deck above. Sidewall sprinklers that are used to protect such areas shall be permitted to be located such that their deflectors are within 1 inch (25 mm) to 6 inches (152 mm) below the structural members and a maximum distance of 14 inches (356 mm) below the deck of the exterior balconies and decks that are constructed of open wood joist construction.

❖ Balconies, decks and patios in buildings of Type V construction and used for Group R occupancies are required to have sprinkler protection when there is a roof or deck above. This is in addition to the requirements of NFPA 13R, which primarily addresses the life safety of occupants and not property protection. The intent is to address hazards such as grilling and similar activities. Since NFPA 13R does not require such coverage, there is potential that a fire on a balcony could grow much too large for the system within the building to handle. The concern is that a potential exterior balcony fire could spread to unprotected floor/ceiling assemblies and attic spaces and result in major property damage. Section 308.1.4 of the IFC specifically addresses restrictions on open flame cooking devices used on combustible balconies. Note that sprinklers are not intended to be provided in closets found on such balconies.

Regardless of whether the exterior walking surface is attached to the building and called a balcony or is a freestanding structure such as a deck or patio the concern for fire ignition in the area adjacent to the exterior wall is the same. Sidewall sprinklers should be selected based on the area of coverage and climate. If the potential for freezing exists, a dry sidewall sprinkler should be used. Where the overhanging

INTERNATIONAL CODE COUNCIL®
Copyright © 2015 ICC. ALL RIGHTS RESERVED. Accessed by David Dammon on Jun 21, 2017 12:30:52 PM pursuant to License Agreement with ICC. No further reproduction or distribution authorized. ANY UNAUTHORIZED REPRODUCTION OR DISTRIBUTION IS A VIOLATION OF THE FEDERAL COPYRIGHT ACT AND THE LICENSE AGREEMENT, AND SUBJECT TO CIVIL AND CRIMINAL PENALTIES THEREUNDER.

deck or balcony is extensive, an extended coverage sprinkler should be selected.

[F] 903.3.1.2.2 Open-ended corridors. Sprinkler protection shall be provided in *open-ended corridors* and associated *exterior stairways* and *ramps* as specified in Section 1027.6, Exception 3.

❖ This section is simply emphasizing the fact that, since there is no separation from the exterior exit stairways, sprinklers would be required when using an NFPA 13R system. Section 1027.6 Exception 3 allows the separation between the open-ended corridor and exterior exit stairway to be omitted but only where several conditions are met. The primary condition is that the corridor be sprinklered. A definition of "open-ended corridor" is provided in Chapter 2. See Commentary Figure 903.3.1.2.2 for an example of an open-ended corridor.



Figure 903.3.1.2.2
OPEN-ENDED CORRIDOR

[F] 903.3.1.3 NFPA 13D sprinkler systems. *Automatic sprinkler systems* installed in one- and two-family *dwellings*; Group R-3, Group R-4 Condition 1 and *townhouses* shall be permitted to be installed throughout in accordance with NFPA 13D.

❖ NFPA 13D contains design and installation requirements for a sprinkler system to aid in the detection and control of fires in one- and two-family dwellings, mobile homes and townhouses. This section also specifically allows the use of an NFPA 13D system for occupancies classified as Group R-3 and Group R-4 Condition 1. Group R-3 occupancies are one- and two-family dwellings that fall outside the scope of the IRC and also those buildings housing small congregate living facilities and boarding houses. These facilities operate very similarly to a single-family home, and the level of the ability of the occupants is such that little assistance is needed for self-evacuation. This is consistent with the NFPA 13D requirements and is also consistent with FHA court cases based on nondiscrimination for group homes.

Similar to NFPA 13R, sprinkler systems designed in accordance with NFPA 13D are intended to prevent flashover (total involvement) in the room of fire origin and to improve the chance for occupants to escape or be evacuated. Although the allowable omission of sprinklers in certain areas of the dwelling unit in NFPA 13D is similar to that in NFPA 13R, the water supply requirements are less restrictive. NFPA 13D uses a two-head sprinkler design with a 10-minute duration requirement, while NFPA 13R uses a four-head sprinkler design with a 30-minute duration requirement. The decreased water supply requirement emphasizes the main intent of NFPA 13D to control the fire and maintain tenability during evacuation of the residence.

Since the fire code official has the authority to approve the type of sprinkler system, this Section may be used to prevent the use of a specific type of sprinkler system that may be inappropriate for a particular type of occupancy.

[F] 903.3.2 Quick-response and residential sprinklers. Where *automatic sprinkler systems* are required by this code, quick-response or residential automatic sprinklers shall be installed in all of the following areas in accordance with Section 903.3.1 and their listings:

1. Throughout all spaces within a smoke compartment containing care recipient *sleeping units* in Group I-2 in accordance with this code.
2. Throughout all spaces within a smoke compartment containing treatment rooms in ambulatory care facilities.
3. *Dwelling units* and *sleeping units* in Group I-1 and R occupancies.
4. Light-hazard occupancies as defined in NFPA 13.

❖ This section requires the use of either listed quick-response or residential automatic sprinklers, depending on the type of sprinkler system required to achieve faster and more effective suppression in certain areas. Residential sprinklers are required in all types of residential buildings that would permit the use of an NFPA 13R or 13D sprinkler system.

Quick-response and residential sprinklers are similar in nature. They use a lighter material for the operating mechanism, thus reducing the heat lag in the element. The faster the heat can be absorbed, the

INTERNATIONAL CODE COUNCIL®
Copyright © 2015 ICC. ALL RIGHTS RESERVED. Accessed by David Dammon on Jun 21, 2017 12:30:52 PM pursuant to License Agreement with ICC. No further reproduction or distribution authorized. ANY UNAUTHORIZED REPRODUCTION OR DISTRIBUTION IS A VIOLATION OF THE FEDERAL COPYRIGHT ACT AND THE LICENSE AGREEMENT, AND SUBJECT TO CIVIL AND CRIMINAL PENALTIES THEREUNDER.

sooner the sprinkler will begin to discharge water. Quick-response sprinklers have shown that they operate up to 25 percent faster than traditional sprinklers and create conditions in the room of origin that significantly increase the tenability of the environment. In tests performed by Factory Mutual (FM) for the Federal Emergency Management Agency (FEMA), the gas temperature in the room of origin was 550°F (288°C) with quick-response sprinklers, while it was 1,470°F (799°C) for conventional sprinklers at the time of sprinkler activation. More importantly, while the carbon monoxide (CO) level was 1,860 ppm for conventional sprinklers, the CO level when tested with quick-response sprinklers was only around 350 ppm. Comparatively, the National Institute of Occupational Safety and Health (NIOSH) considers the IDLH (immediately dangerous to life and health) level of CO to be 1,200 ppm. Thus, quick-response sprinklers have been shown to add significantly to the life safety effects of standard sprinkler systems.

Condition 1 requires the use of approved quick-response or residential sprinklers in smoke compartments containing care recipient sleeping units in Group I-2 occupancies. Even though properly operating standard sprinklers are effective, the extent of fire growth and smoke production that can occur before sprinkler activation creates the need for early warning to enable faster response by care providers and initiation of egress that is critical in occupancies containing persons incapable of self-preservation. The faster response time associated with quick-response or residential sprinklers increases the probability that the sprinklers will actuate before the care recipient's life would be threatened by a fire in his or her room.

Condition 2 requires the use of approved quick-response or residential sprinklers in smoke compartments containing treatment rooms in ambulatory care facilities. The justification is the same as that for Condition 1. When there is a potential for care recipients to be incapable of self-preservation, the use of residential sprinklers or quick-response sprinklers is critical.

Because of the kind of occupants sleeping in Group R and I-1 occupancies, as indicated in Condition 3, a faster responding type of sprinkler is desirable. Similar to the first condition, because occupants will be sleeping, the use of quick-response sprinklers creates additional safety by reducing sprinkler response time, thereby increasing the time available for egress and allowing for the time necessary for occupants to wake up and recognize the emergency event.

Condition 4 recognizes light-hazard occupancies in accordance with NFPA 13. These could include restaurants, schools, office buildings, places of religious worship and similar occupancies where the fire load and potential heat release of combustible contents are low.

[F] 903.3.3 Obstructed locations. Automatic sprinklers shall be installed with due regard to obstructions that will delay activation or obstruct the water distribution pattern. Automatic sprinklers shall be installed in or under covered kiosks, displays, booths, concession stands, or equipment that exceeds 4 feet (1219 mm) in width. Not less than a 3-foot (914 mm) clearance shall be maintained between automatic sprinklers and the top of piles of combustible fibers.

Exception: Kitchen equipment under exhaust hoods protected with a fire-extinguishing system in accordance with Section 904.

❖ To provide adequate sprinkler coverage, sprinkler protection must be extended under any obstruction that exceeds 4 feet (1219 mm) in width. Large air ducts are another common obstruction where sprinklers are routinely extended beneath the duct. The 3-foot (914 mm) storage clearance requirement for combustible fibers is caused by their potential high heat release. Most storage conditions require only a minimum 18-inch (457 mm) storage clearance to combustibles, depending on the type of sprinklers used and their actual storage conditions.

The exception recognizes that an alternative extinguishing system is permitted for commercial cooking systems in place of sprinkler protection for exhaust hoods that may be more than 4 feet (1219 mm) wide.

The application of this section is more critical to the ongoing use of the space. The obstruction conditions, therefore, should have already been addressed during plan review and installation inspection. This section gives the fire official and building owner adequate information to avoid the most typical obstruction-related issues in terms of proper sprinkler coverage.

[F] 903.3.4 Actuation. *Automatic sprinkler systems* shall be automatically actuated unless specifically provided for in this code.

❖ The intent of this section is to eliminate the need for occupant intervention during a fire. As such, it is assumed that it will not be necessary for a person to manually open a valve or perform some other physical activity in order to allow the sprinkler system to activate.

Wet-pipe and dry-pipe sprinkler systems, for example, are essentially fail-safe systems in the sense that, if the system is in proper operating condition, it will operate once a sprinkler fuses. Dry systems have an inherent time lag for water to reach the sprinkler; therefore, the response is not as fast as for a wet-pipe system. Other types of sprinkler systems, such as preaction and deluge, rely on the actuation of a detection system to operate the sprinkler valve.

[F] 903.3.5 Water supplies. Water supplies for *automatic sprinkler systems* shall comply with this section and the standards referenced in Section 903.3.1. The potable water supply shall be protected against backflow in accordance with the requirements of this section and the *International Plumbing Code*. For connections to public waterworks systems, the

INTERNATIONAL CODE COUNCIL®
Copyright © 2015 ICC. ALL RIGHTS RESERVED. Accessed by David Dammon on Jun 21, 2017 12:30:52 PM pursuant to License Agreement with ICC. No further reproduction or distribution authorized. ANY UNAUTHORIZED REPRODUCTION OR DISTRIBUTION IS A VIOLATION OF THE FEDERAL COPYRIGHT ACT AND THE LICENSE AGREEMENT, AND SUBJECT TO CIVIL AND CRIMINAL PENALTIES THEREUNDER.

water supply test used for design of fire protection systems shall be adjusted to account for seasonal and daily pressure fluctuations based on information from the water supply authority and as approved by the fire code official.

❖ To be effective, all sprinkler systems must have an adequate supply of water. The criteria for an acceptable water supply are contained in the standards referenced in Section 903.3.1. For example, NFPA 13 contains criteria for different types of water supplies as well as the methods to determine the pressure, flow capabilities and capacity necessary to get the intended performance from a sprinkler system. An acceptable water supply could consist of a reliable municipal supply, a gravity tank or a fire pump with a pressure tank or a combination of these.

This section also establishes the requirements for protecting the potable water system against a nonpotable source, such as stagnant water retained within the sprinkler piping. As stated in Section 608.16.4 of the IPC, an approved double check valve device or reduced pressure principle backflow preventer is required.

The other issue addressed by this section is fluctuations in water pressure. Information on pressure fluctuation is necessary to not only ensure that the minimum required pressure will be available for the automatic sprinkler system, but also to ensure that high pressures do not exceed the pressure limitations of the sprinkler system. If the water pressure on a sprinkler system exceeds 100 psi, changes in the hanging methods are required. Also, if a fire pump is provided, it might be possible to exceed 175 psi, which is typically considered the maximum working pressure for a sprinkler system. These are just additional reasons why it is critical to account for pressure fluctuations in the water supply. Obviously, fire flows can be affected by this, as well as other water-based fire protection systems, such as standpipes, which require a minimum 100 psi at the roof of high-rise buildings and such may not be available due to pressure fluctuations. With regards to gathering of data, this requirement is simply intended to make sure that pressure fluctuations are addressed in accordance with the water supply authority to the extent that such information is available. Further authority is provided to the fire code official to accept other documentation.

[F] 903.3.5.1 Domestic services. Where the domestic service provides the water supply for the *automatic sprinkler system*, the supply shall be in accordance with this section.

❖ This section establishes the scope of domestic services for residential combination services. Essentially, compliance with Section 903.3.5 is required.

[F] 903.3.5.2 Residential combination services. A single combination water supply shall be allowed provided that the domestic demand is added to the sprinkler demand as required by NFPA 13R.

❖ NFPA 13R permits a common supply main to a building to serve both the sprinkler system and domestic services if the domestic demand is added to the sprinkler demand. NFPA 13R systems do not provide the same level of property protection as NFPA 13 systems.

[F] 903.3.6 Hose threads. Fire hose threads and fittings used in connection with *automatic sprinkler systems* shall be as prescribed by the fire code official.

❖ The threads on connections and fittings that the fire department will use to connect a hose must be compatible with the fire department threads.

Design documents must specify the type of thread to be used in order to be compatible with the local fire department equipment after consultation and coordination with the fire code official. The criteria typically apply to fire department connections for sprinkler and standpipe systems, standpipe hose connections, yard hydrants and wall hydrants.

The majority of fire departments in the United States use the American National Fire Hose Connection Screw Thread also commonly known as NST and NS. NFPA 1963 gives the screw thread dimensions and the thread size of threaded connections, with nominal sizes ranging from $^{3}/_{4}$ inch (19 mm) to 6 inches (152 mm) for the NS thread. Although efforts to standardize fire hose threads began after the Boston conflagration in 1872, there are still many different screw threads, some of which give the appearance of compatibility with the NH thread. While NFPA 1963 may be used as a guide, the code does not require that any particular standard be used. Rather, it is important that the fire code official be consulted for the appropriate thread selection. The intent is that the threads match those of the local department identically so that adapters are not required within the fire department's own district.

[F] 903.3.7 Fire department connections. Fire department connections for *automatic sprinkler systems* shall be installed in accordance with Section 912.

❖ Section 912, to which this section points, provides a comprehensive set of requirements for FDCs reducing the opportunity for any of its requirements to be overlooked. See the commentary for Section 912.

[F] 903.3.8 Limited area sprinkler systems. Limited area sprinkler systems shall be in accordance with the standards listed in Section 903.3.1 except as provided in Sections 903.3.8.1 through 903.3.8.5.

❖ The use of limited area sprinkler systems is restricted to cases in which the code requires a limited number of sprinklers to protect a specific hazard or area and not a complete automatic sprinkler system. For example, limited area sprinkler systems may be used to protect areas including, but not limited to, stages; storage and workshop areas; painting rooms; trash rooms and chutes; furnace rooms; kitchens and hazardous exhaust systems and incidental uses as regulated in Section 509.

INTERNATIONAL CODE COUNCIL®
Copyright © 2015 ICC. ALL RIGHTS RESERVED. Accessed by David Dammon on Jun 21, 2017 12:30:52 PM pursuant to License Agreement with ICC. No further reproduction or distribution authorized. ANY UNAUTHORIZED REPRODUCTION OR DISTRIBUTION IS A VIOLATION OF THE FEDERAL COPYRIGHT ACT AND THE LICENSE AGREEMENT, AND SUBJECT TO CIVIL AND CRIMINAL PENALTIES THEREUNDER.

903.3.8.1 Number of sprinklers. Limited area sprinkler systems shall not exceed six sprinklers in any single *fire area*.

❖ In the 2015 edition of the code, the number of sprinklers allowed on a limited area sprinkler system in a fire area has been reduced to only six. In previous editions, up to 19 sprinklers were allowed. This reduced number will limit the type of applications for such systems. In the past, 19 sprinklers may have been able to address an entire building, depending on the system design, more easily allowing the use of the domestic water supply.

903.3.8.2 Occupancy hazard classification. Only areas classified by NFPA 13 as Light Hazard or Ordinary Hazard Group 1 shall be permitted to be protected by limited area sprinkler systems.

❖ The use of limited area systems is restricted to only the two lowest hazard occupancy classifications in accordance with NFPA 13. Such systems are fairly limited and can only contain six sprinklers per fire area. Because of this, the types of hazards protected should be limited.

903.3.8.3 Piping arrangement. Where a limited area sprinkler system is installed in a building with an automatic wet standpipe system, sprinklers shall be supplied by the standpipe system. Where a limited area sprinkler system is installed in a building without an automatic wet standpipe system, water shall be permitted to be supplied by the plumbing system provided that the plumbing system is capable of simultaneously supplying domestic and sprinkler demands.

❖ Two options are provided for how water to the limited area sprinkler system is to be supplied. If the building contains automatic wet standpipes, then the system must be supplied by the standpipe system. If there is no standpipe system available, connection to the domestic water supply is permitted. The water supply must be analyzed to determine if it is sufficient to supply simultaneously both domestic usage and the sprinkler system demand. This will be mean looking at peak water use throughout the day. See Section 903.3.5 and the *International Plumbing Code*.

903.3.8.4 Supervision. Control valves shall not be installed between the water supply and sprinklers unless the valves are of an *approved* indicating type that are supervised or secured in the open position.

❖ No shutoff valves are permitted in the sprinkler system piping unless the valves are specifically approved and are either supervised or secured in the open position. These restrictions increase the likelihood that the sprinkler system will be operational should a fire occur. Valve supervision or securing a valve in the open position are considered equally reliable by this section.

903.3.8.5 Calculations. Hydraulic calculations in accordance with NFPA 13 shall be provided to demonstrate that the available water flow and pressure are adequate to supply all sprinklers installed in any single *fire area* with discharge densities corresponding to the hazard classification.

❖ Hydraulic calculations are required to be in accordance with NFPA 13 to demonstrate that the water system is adequate to supply the sprinkler demand in any particular fire area.

[F] 903.4 Sprinkler system supervision and alarms. Valves controlling the water supply for *automatic sprinkler systems*, pumps, tanks, water levels and temperatures, critical air pressures and waterflow switches on all sprinkler systems shall be electrically supervised by a *listed* fire alarm control unit.

Exceptions:

1. *Automatic sprinkler systems* protecting one- and two-family *dwellings*.
2. Limited area sprinkler systems in accordance with Section 903.3.8.
3. *Automatic sprinkler systems* installed in accordance with NFPA 13R where a common supply main is used to supply both domestic water and the *automatic sprinkler system*, and a separate shutoff valve for the *automatic sprinkler system* is not provided.
4. Jockey pump control valves that are sealed or locked in the open position.
5. Control valves to commercial kitchen hoods, paint spray booths or dip tanks that are sealed or locked in the open position.
6. Valves controlling the fuel supply to fire pump engines that are sealed or locked in the open position.
7. Trim valves to pressure switches in dry, preaction and deluge sprinkler systems that are sealed or locked in the open position.

❖ The reliability data on automatic sprinkler systems clearly indicate that a closed valve is the leading cause of sprinkler system failure. There are also a number of other critical elements that contribute to successful sprinkler system operation, including, but not limited to, pumps, water tanks and air pressure maintenance devices; therefore, this section requires that the various critical elements that contribute to an available water supply and to the function of the sprinkler system be electrically supervised.

Automatic sprinkler systems in one- and two-family dwellings are typically designed to comply with NFPA 13D, which does not require electrical supervision (see Exception 1).

Limited area sprinkler systems are generally supervised by their connection to the domestic water service although the use of a supervised indicating valve is permitted. Compliance with Section 903.3.8 means that the alarm provisions of this section are not applicable to limited area systems. Consequently, limited area sprinkler systems do not require local alarms or supervision. Again, electrical supervision is required

INTERNATIONAL CODE COUNCIL®
Copyright © 2015 ICC. ALL RIGHTS RESERVED. Accessed by David Dammon on Jun 21, 2017 12:30:52 PM pursuant to License Agreement with ICC. No further reproduction or distribution authorized. ANY UNAUTHORIZED REPRODUCTION OR DISTRIBUTION IS A VIOLATION OF THE FEDERAL COPYRIGHT ACT AND THE LICENSE AGREEMENT, AND SUBJECT TO CIVIL AND CRIMINAL PENALTIES THEREUNDER.

only if a control valve is installed between the riser control valve and the sprinkler system piping.

Similar to limited area sprinkler systems, electrical supervision is not required for NFPA 13R residential combination services when a shutoff valve is not installed (see Exception 3). NFPA 13R sprinkler systems are supervised in that the only way to shut off the sprinkler system is to also shut off the domestic water supply.

The valves discussed in Exceptions 4 through 7 can be sealed or locked in the open position because they do not control the sprinkler system water supply.

[F] 903.4.1 Monitoring. Alarm, supervisory and trouble signals shall be distinctly different and shall be automatically transmitted to an *approved* supervising station or, where *approved* by the fire code official, shall sound an audible signal at a *constantly attended location*.

Exceptions:

1. Underground key or hub valves in roadway boxes provided by the municipality or public utility are not required to be monitored.
2. Backflow prevention device test valves located in limited area sprinkler system supply piping shall be locked in the open position. In occupancies required to be equipped with a fire alarm system, the backflow preventer valves shall be electrically supervised by a tamper switch installed in accordance with NFPA 72 and separately annunciated.

❖ Automatic sprinkler systems must be supervised as a means of determining that the system is operational. A valve supervisory switch operating as a normally open or normally closed switch is usually used. NFPA 72 does not permit valve supervisory switches to be connected to the same zone circuit as the waterflow switch unless it is specifically arranged to actuate a signal that is distinctive from the circuit trouble condition signal.

Required sprinkler systems are to be monitored by an approved supervising service to comply with NFPA 72. Types of supervising stations recognized in NFPA 72 include central stations, remote supervising stations or proprietary supervising stations.

A central station is an independent off-site facility operated and maintained by personnel whose primary business is to furnish, maintain, record and supervise a signaling system. A proprietary system is similar to a central station system; however, a proprietary system is typically an on-site facility monitoring a number of buildings on the same site for the same owner. A remote station system has an alarm signal that is transmitted to a remote location acceptable to the authority having jurisdiction and that is attended 24 hours a day. The receiving equipment is usually located at a fire station, police station, regional emergency communications center or telephone answering service. An alternative use to the three previous supervising methods is an audible signal that can be transmitted to a constantly attended location approved by the fire code official.

Exception 1 recognizes that underground key or hub valves in roadway boxes are not normally supervised or required to be supervised by this section or NFPA 13.

Exception 2 acknowledges that local water utilities and environmental authorities in many instances require, by local ordinances, that backflow prevention devices be installed in limited-area sprinkler system piping. To make the testing and maintenance of backflow prevention devices easier, test valves are installed on each side of the device. These valves are typically indicating-type valves and can function as shutoff valves for the sprinkler system, and therefore require some level of supervision.

Because these infrequently used valves may be the only feature of protection requiring supervision in occupancies not otherwise required to be equipped with a fire alarm system, Exception 2 permits these valves to be locked in the open position; however, if the occupancy is protected by a fire alarm system, these valves must be equipped with approved valve supervisory devices connected to the fire alarm control panel on a separate (supervisory) zone so that the supervisory signal is transmitted to the designated receiving station. Installation and testing of backflow preventers in sprinkler systems are regulated in Sections 312.10 (testing) and 608.16.4 (devices) of the IPC.

[F] 903.4.2 Alarms. An approved audible device, located on the exterior of the building in an approved location, shall be connected to each *automatic sprinkler system*. Such sprinkler waterflow alarm devices shall be activated by water flow equivalent to the flow of a single sprinkler of the smallest orifice size installed in the system. Where a fire alarm system is installed, actuation of the *automatic sprinkler system* shall actuate the building fire alarm system.

❖ The audible alarm, sometimes referred to as the "outside ringer" or "water-motor gong," sounds when the sprinkler system has activated. The alarm device may be electrically operated or it may be a true water-motor gong operated by a paddle-wheel-type attachment to the sprinkler system riser that responds to the flow of water in the piping. Though no longer the alarm device of choice, water-motor gongs do have the advantage of not being subject to power failures within or outside the protected building (see Sections 6.9 and 8.17 of NFPA 13 for further information on these devices). The alarm must be installed on the exterior of the building in a location approved by the fire code official. This location is often in close proximity to the fire department connection (FDC), serving a collateral function of helping the responding fire apparatus engineer more promptly locate the FDC.

The alarm is not intended to be an evacuation alarm. The requirement is also not intended to be an indirect requirement for a fire alarm system. Unless a fire alarm system is required by some other code provision, only the exterior alarm device is required. However, when a fire alarm system is installed, the

INTERNATIONAL CODE COUNCIL®
Copyright © 2015 ICC. ALL RIGHTS RESERVED. Accessed by David Dammon on Jun 21, 2017 12:30:52 PM pursuant to License Agreement with ICC. No further reproduction or distribution authorized. ANY UNAUTHORIZED REPRODUCTION OR DISTRIBUTION IS A VIOLATION OF THE FEDERAL COPYRIGHT ACT AND THE LICENSE AGREEMENT, AND SUBJECT TO CIVIL AND CRIMINAL PENALTIES THEREUNDER.

sprinkler system must also be interconnected with the fire alarm system so that when the sprinkler system actuates, it sounds the evacuation alarms required for the fire alarm system.

The primary purpose of the exterior alarm is to notify people outside the building that the sprinkler system is in operation. Originally, it was to act as a supplemental alert so that passersby could notify the fire department of the condition. However, because the code now requires electronic supervision of sprinkler systems, that function is mostly moot. The exterior notification now primarily serves the function of alerting the arriving fire department of which building or sprinkler system is in operation before staging firefighting activities for the building.

[F] 903.4.3 Floor control valves. *Approved* supervised indicating control valves shall be provided at the point of connection to the riser on each floor in high-rise buildings.

❖ In high-rise buildings, sprinkler control valves with supervisory initiating devices must be installed at the point of connection to the riser on each floor. Sprinkler control valves on each floor are intended to permit servicing activated systems without impairing the water supply to large portions of the building.

[F] 903.5 Testing and maintenance. Sprinkler systems shall be tested and maintained in accordance with the *International Fire Code*.

❖ Section 901 contains requirements for the testing and maintenance of sprinkler systems. Acceptance tests are necessary to verify that the system performs as intended by design and by the code. Periodic testing and maintenance are essential to verify that the level of protection designed into the building will be operational whenever a fire occurs. Water-based extinguishing systems must be tested and maintained as required by NFPA 25.

SECTION 904
ALTERNATIVE AUTOMATIC FIRE-EXTINGUISHING SYSTEMS

[F] 904.1 General. Automatic fire-extinguishing systems, other than *automatic sprinkler systems*, shall be designed, installed, inspected, tested and maintained in accordance with the provisions of this section and the applicable referenced standards.

❖ Section 904 covers alternative fire-extinguishing systems that use extinguishing agents other than water. Alternative automatic fire-extinguishing systems include wet-chemical, dry-chemical, foam, carbon dioxide, halon and clean-agent suppression systems. In addition to the provisions of Section 904, the indicated referenced standards include specific installation, maintenance and testing requirements for all systems.

[F] 904.2 Where permitted. Automatic fire-extinguishing systems installed as an alternative to the required *automatic sprinkler systems* of Section 903 shall be *approved* by the fire code official.

❖ One of the main considerations in selecting an extinguishing agent should be the compatibility of the agent with the hazard. The fire code official is responsible for approving an alternative extinguishing agent. The approval should be based on the compatibility of the agent with the hazard and the potential effectiveness of the agent to suppress a fire involving the hazards present.

[F] 904.2.1 Restriction on using automatic sprinkler system exceptions or reductions. Automatic fire-extinguishing systems shall not be considered alternatives for the purposes of exceptions or reductions allowed for *automatic sprinkler systems* or by other requirements of this code.

❖ Although Section 904.2 allows the use of alternative fire-extinguishing systems with specific approval, this section prohibits the use of such systems to allow reductions or exceptions allowed for automatic sprinkler systems throughout the code. Therefore the building will not be considered as equipped throughout with an automatic sprinkler system when using systems such as automatic water mist or other alternative systems. See Commentary Figure 904.2.1.

[F] 904.2.2 Commercial hood and duct systems. Each required commercial kitchen exhaust hood and duct system required by Section 609 of the *International Fire Code* or Chapter 5 of the *International Mechanical Code* to have a Type I hood shall be protected with an approved automatic fire-extinguishing system installed in accordance with this code.

❖ This section requires an effective suppression system to combat fire on the cooking surfaces of grease-producing appliances and within the hood and exhaust system of a commercial kitchen installation. Type I hoods, including the duct system, must be protected with an approved automatic fire-extinguishing system because they are used for handling grease-laden vapors or smoke, whereas Type II hoods handle fumes, steam, heat and odors. Type I hoods are typically required for commercial food heat-processing equipment, such as deep fryers, griddles, charbroilers, broilers and open burner stoves and ranges. For additional guidance on the requirements for Type I and II hoods, see the commentary to Section 507 of the IMC.

[F] 904.3 Installation. Automatic fire-extinguishing systems shall be installed in accordance with this section.

❖ The installation of automatic fire-extinguishing systems must comply with the requirements of Sections 904.3.1 through 904.3.5 in addition to the installation criteria contained in the referenced standard for the proposed type of alternative extinguishing system.

INTERNATIONAL CODE COUNCIL®
Copyright © 2015 ICC. ALL RIGHTS RESERVED. Accessed by David Dammon on Jun 21, 2017 12:30:52 PM pursuant to License Agreement with ICC. No further reproduction or distribution authorized. ANY UNAUTHORIZED REPRODUCTION OR DISTRIBUTION IS A VIOLATION OF THE FEDERAL COPYRIGHT ACT AND THE LICENSE AGREEMENT, AND SUBJECT TO CIVIL AND CRIMINAL PENALTIES THEREUNDER.

CODE SECTION[a]	MODIFICATION	NFPA 13	NPFA 13R	NFPA 13D
Increases				
504.3 and Table 504.3	Height increase in feet	yes	yes	no
504.4 and Table 504.4	Height increase in number of stories	yes	yes	no
506.2 and Table 506.2	Area increase	yes	yes	no
1005.3.1, 1005.3.2[b]	Egress width	yes	yes	no
Table 1017.2[b]	Travel distance	yes	yes	no
Rating Reductions				
Table 508.4	Separated occupancies	yes	no	no
708.3	Fire partitions (dwelling units, sleeping units)	yes	no	no
Table1020.1[b]	Corridor walls	yes	yes	no
Miscellaneous				
Tables 307.1(1), 307.1(2)	Hazardous material increase	yes	no	no
404.2	Atriums	yes	no	no
507.4, 507.5	Unlimited area buildings	yes	no	no
Table 705.8	Allowable area of openings	yes	no	no
705.8.5	Vertical separation of openings	yes	yes	no
718.3.2	Residential floor/ceiling draftstopping	yes	yes[c]	no
718.3.3	Nonresidential draftstopping	yes	no	no
718.4.2	Groups R-1, R-2 attic draftstopping	yes	yes[c]	no
718.4.3	Other group draftstopping	yes	no	no
Table 803.9	Interior finish	yes	yes	no
804.4.2	Floor finish	yes	yes	no
907.2.1 – 907.2.10[b]	Manual fire alarm system	yes (A, B, E, F, M)	yes (R-1, R-2)	no
1009.2.1[b]	Accessible egress	yes	yes	no
1028.1[b]	Exit discharge	yes	yes	no
1406.3	Balconies	yes	yes[c, d]	yes[c]

a. Section numbers refer to sections in the code.
b. Section numbers in Chapters 9 and 10 apply to both the IFC and the code.
c. Sprinkler protection must be extended to the affected areas.
d. For additional balcony requirements, see Section 903.3.1.2.1.

Figure 904.2.1
SELECTED EXAMPLES OF REQUIREMENTS MODIFIED THROUGH USE OF AUTOMATIC SPRINKLER SYSTEMS

INTERNATIONAL CODE COUNCIL®
Copyright © 2015 ICC. ALL RIGHTS RESERVED. Accessed by David Dammon on Jun 21, 2017 12:30:52 PM pursuant to License Agreement with ICC. No further reproduction or distribution authorized. ANY UNAUTHORIZED REPRODUCTION OR DISTRIBUTION IS A VIOLATION OF THE FEDERAL COPYRIGHT ACT AND THE LICENSE AGREEMENT, AND SUBJECT TO CIVIL AND CRIMINAL PENALTIES THEREUNDER.

[F] 904.3.1 Electrical wiring. Electrical wiring shall be in accordance with NFPA 70.

❖ NFPA 70 regulates the design and installation of electrical systems and equipment. All electrical work must also be in compliance with any specific electrical classifications and conditions contained in the referenced standards for each type of system.

Chapter 27 of the code and Section 605 of the IFC contain provisions that also reference NFPA 70. Those sections also contain additional information that must be applied when addressing electrical issues.

[F] 904.3.2 Actuation. Automatic fire-extinguishing systems shall be automatically actuated and provided with a manual means of actuation in accordance with Section 904.12.1. Where more than one hazard could be simultaneously involved in fire due to their proximity, all hazards shall be protected by a single system designed to protect all hazards that could become involved.

Exception: Multiple systems shall be permitted to be installed if they are designed to operate simultaneously.

❖ Section 904.3.2 requires alternative fire-extinguishing systems to be designed for automatic activation. Activation commonly occurs when a heat, fire or smoke detection system operates. In Type I commercial kitchen hoods, Section 904.12 requires a manual and automatic means of activating the fire-extinguishing system. Designing a fire-extinguishing system to only operate upon manual actuation is prohibited by the code and many of the NFPA fire protection system standards.

The requirements for fire-extinguishing system actuation correlate with the requirements of NFPA 17 and NFPA 17A. The requirement prescribes that when a hazard is protected by two or more fire-extinguishing systems, all of the systems must be designed to operate simultaneously. The reason for the revision is that a typical alternative automatic fire-extinguishing system has a limited amount of fire-extinguishing agent. The amount of agent that is available is based on the area or volume of the hazard and the fire behavior of the fuel. Because the amount of agent is limited, the simultaneous operation of all the fire-extinguishing systems ensures that enough agent is applied to extinguish the fire and prevent its spread from the area of origin.

It is fairly common for a single hazard to be protected by two or more alternative automatic fire-extinguishing systems. For example, protection of a spray booth used for the application of flammable finishes using dry chemical commonly requires two or three alternative automatic fire-extinguishing systems. The reason is that many dry-chemical and all wet-chemical systems are preengineered systems. Utilizing listed nozzles, preengineered systems are designed and constructed based on the manufacturer's installation requirements. Because these systems are assembled using listed nozzles and extinguishing agents, one system may not be able to protect the spraying space and exhaust plenum. As a result, two or more systems may be required as a provision of an extinguishing system's listing to protect certain hazards.

Another example is commercial kitchen cooking operations. Consider a flat grill broiler and a deep fat fryer located beneath the same Type I hood. It is quite common for each of these commercial cooking appliances to be protected by separate automatic fire-extinguishing systems. Based on the revision to Section 904.3.2, both extinguishing systems must simultaneously operate in the event a fire involves either of the example appliances (see commentary, Section 904.12.1).

[F] 904.3.3 System interlocking. Automatic equipment interlocks with fuel shutoffs, ventilation controls, door closers, window shutters, conveyor openings, smoke and heat vents and other features necessary for proper operation of the fire-extinguishing system shall be provided as required by the design and installation standard utilized for the hazard.

❖ Shutting off fuel supplies will eliminate potential ignition sources in the protected area. Automatic door and window closers and dampers for forced-air ventilation systems are intended to maintain the desired concentration level of the extinguishing agent in the protected area. See the commentary for Section 904.12.2 for information on system interconnections in commercial cooking fire-extinguishing systems.

[F] 904.3.4 Alarms and warning signs. Where alarms are required to indicate the operation of automatic fire-extinguishing systems, distinctive audible and visible alarms and warning signs shall be provided to warn of pending agent discharge. Where exposure to automatic-extinguishing agents poses a hazard to persons and a delay is required to ensure the evacuation of occupants before agent discharge, a separate warning signal shall be provided to alert occupants once agent discharge has begun. Audible signals shall be in accordance with Section 907.5.2.

❖ Safeguards are necessary to prevent injury or death to personnel in areas where the atmosphere will be made hazardous by oxygen depletion due to agent discharge in a confined space. The "where alarms are required" phrase is referring to requirements that will be found in the referenced installation standards indicated in Sections 904.5 through 904.12, as applicable. Predischarge alarms that will operate on fire detection system activation must be installed within and at entrances to the affected areas.

Where required by the appropriate installation standard, an extinguishing agent discharge delay feature shall also be provided to allow evacuation of personnel prior to agent discharge. Warning and instructional signs are also to be posted, preferably at the entrances to and within the protected area. See Section 4.5.6.1 of NFPA 12 for additional information on carbon dioxide system alarms, Section 4.3.5 of NFPA 12A for additional information on Halon system alarms and Section 4.3.5 of NFPA 2001 for additional information on clean agent system alarms.

INTERNATIONAL CODE COUNCIL®
Copyright © 2015 ICC. ALL RIGHTS RESERVED. Accessed by David Dammon on Jun 21, 2017 12:30:52 PM pursuant to License Agreement with ICC. No further reproduction or distribution authorized. ANY UNAUTHORIZED REPRODUCTION OR DISTRIBUTION IS A VIOLATION OF THE FEDERAL COPYRIGHT ACT AND THE LICENSE AGREEMENT, AND SUBJECT TO CIVIL AND CRIMINAL PENALTIES THEREUNDER.

[F] 904.3.5 Monitoring. Where a building fire alarm system is installed, automatic fire-extinguishing systems shall be monitored by the building fire alarm system in accordance with NFPA 72.

❖ Automatic fire-extinguishing systems need not be electrically supervised unless the building is equipped with a fire alarm system. This section recognizes the fact that a fire alarm system is not required in all buildings. However, because most alternative fire-extinguishing systems require the space to be evacuated before the system is discharged, they are equipped with evacuation alarms. Interconnection of the fire-extinguishing system evacuation alarm with the building evacuation alarm results in an increased level of hazard notification for the occupants in addition to the electrical supervision of the fire-extinguishing system.

[F] 904.4 Inspection and testing. Automatic fire-extinguishing systems shall be inspected and tested in accordance with the provisions of this section prior to acceptance.

❖ The completed installation must be tested and inspected to determine that the system has been installed in compliance with the code and will function as required. Full-scale acceptance tests must be conducted as required by the applicable referenced standard.

[F] 904.4.1 Inspection. Prior to conducting final acceptance tests, all of the following items shall be inspected:

1. Hazard specification for consistency with design hazard.
2. Type, location and spacing of automatic- and manual-initiating devices.
3. Size, placement and position of nozzles or discharge orifices.
4. Location and identification of audible and visible alarm devices.
5. Identification of devices with proper designations.
6. Operating instructions.

❖ This section identifies those items that need to be verified or visually inspected prior to the final acceptance tests. All equipment should be listed, approved and installed in accordance with the manufacturer's recommendations.

[F] 904.4.2 Alarm testing. Notification appliances, connections to fire alarm systems and connections to *approved* supervising stations shall be tested in accordance with this section and Section 907 to verify proper operation.

❖ Components of fire-extinguishing systems related to alarm devices and their supervision must be tested before the system is approved. Alarm devices must be tested to satisfy the requirements of NFPA 72.

[F] 904.4.2.1 Audible and visible signals. The audibility and visibility of notification appliances signaling agent discharge or system operation, where required, shall be verified.

❖ This section requires verification upon completion of the system installation of the audibility and visibility of notification appliances in the area affected by the extinguishing agent discharge of the alternative automatic fire-extinguishing system.

[F] 904.4.3 Monitor testing. Connections to protected premises and supervising station fire alarm systems shall be tested to verify proper identification and retransmission of alarms from automatic fire-extinguishing systems.

❖ Where monitoring of fire-extinguishing systems is required, such as by Section 904.3.5, all connections related to the supervision of the system must be tested to verify they are in proper working order.

[F] 904.5 Wet-chemical systems. Wet-chemical extinguishing systems shall be installed, maintained, periodically inspected and tested in accordance with NFPA 17A and their listing. Records of inspections and testing shall be maintained.

❖ NFPA 17A contains minimum requirements for the design, installation, operation, testing and maintenance of wet-chemical preengineered extinguishing systems. Equipment that is typically protected with wet-chemical extinguishing systems includes restaurant, commercial and institutional hoods; plenums; ducts and associated cooking equipment. Strict compliance with the manufacturer's installation instructions is vital for a viable installation.

Wet-chemical solutions used in extinguishing systems are relatively harmless and there is usually no lasting significant effect on a person's skin, respiratory system or clothing. These solutions may produce a mild, temporary irritation but the symptoms will usually disappear when contact is eliminated.

This section also specifically requires that records be maintained of inspections and testing to increase the effectiveness of such systems. Without records of such inspections and testing it is more difficult to determine if the systems will be effective when activated and when future inspection and testing is necessary.

[F] 904.6 Dry-chemical systems. Dry-chemical extinguishing systems shall be installed, maintained, periodically inspected and tested in accordance with NFPA 17 and their listing. Records of inspections and testing shall be maintained.

❖ NFPA 17 contains the minimum requirements for the design, installation, testing, inspection, approval, operation and maintenance of dry-chemical extinguishing systems.

The fire code official has the authority to approve

INTERNATIONAL CODE COUNCIL®
Copyright © 2015 ICC. ALL RIGHTS RESERVED. Accessed by David Dammon on Jun 21, 2017 12:30:52 PM pursuant to License Agreement with ICC. No further reproduction or distribution authorized. ANY UNAUTHORIZED REPRODUCTION OR DISTRIBUTION IS A VIOLATION OF THE FEDERAL COPYRIGHT ACT AND THE LICENSE AGREEMENT, AND SUBJECT TO CIVIL AND CRIMINAL PENALTIES THEREUNDER.

the type of dry-chemical extinguishing system to be used. NFPA 17 identifies three types of dry-chemical extinguishing systems: total flooding, local application and hand hose-line systems. Only total flooding and local application systems are considered automatic extinguishing systems.

The types of hazards and equipment that can be protected with dry-chemical extinguishing systems include: flammable and combustible liquids and combustible gases; combustible solids, which melt when involved in a fire; electrical hazards, such as transformers or oil circuit breakers; textile operations subject to flash surface fires; ordinary combustibles such as wood, paper or cloth and restaurant and commercial hoods, ducts and associated cooking appliance hazards, such as deep fat fryers and some plastics, depending on the type of material and configuration.

Total flooding dry-chemical extinguishing systems are used only where there is a permanent enclosure surrounding the hazard that is adequate to enable the required concentration to be built up. The total area of unclosable openings must not exceed 15 percent of the total area of the sides, top and bottom of the enclosure. Consideration must be given to eliminating the probable sources of re-ignition within the enclosure because the extinguishing action of dry-chemical systems is transient.

Local application of dry-chemical extinguishing systems is to be used for extinguishing fires where the hazard is not enclosed or where the enclosure does not conform to the requirements for total flooding systems. Local application systems have successfully protected hazards involving flammable or combustible liquids, gases and shallow solids, such as paint deposits.

NFPA 17 also discusses pre-engineered dry-chemical systems consisting of components designed to be installed in accordance with pretested limitations as tested and labeled by a testing agency. Pre-engineered systems must be installed within the limitations that have been established by the testing agency and may include total flooding, local application or a combination of both types of systems.

The type of dry chemical used in the extinguishing system is a function of the hazard to be protected. The type of dry chemical used in a system should not be changed unless it has been proven changeable by a testing laboratory, is recommended by the manufacturer of the equipment and is acceptable to the fire code official for the hazard being protected. Additional guidance on the use of various dry-chemical agents can be found in NFPA 17.

This section also specifically requires that records be maintained of inspections and testing to increase the effectiveness of such systems. Without records of such inspections and testing it is more difficult to determine if the systems will be effective when activated and when future inspection and testing is necessary.

[F] 904.7 Foam systems. Foam-extinguishing systems shall be installed, maintained, periodically inspected and tested in accordance with NFPA 11 and NFPA 16 and their listing. Records of inspections and testing shall be maintained.

❖ NFPA 11 covers the characteristics of foam-producing materials used for fire protection and the requirements for design, installation, operation, testing and maintenance of equipment and systems, including those used in combination with other fire-extinguishing agents. The minimum requirements are covered for flammable and combustible liquid hazards in local areas within buildings, storage tanks and indoor and outdoor processing areas.

Low-expansion foam is defined as an aggregation of air-filled bubbles resulting from the mechanical expansion of a foam solution by air with a foam-to-solution volume ratio of less than 20:1. It is most often used to protect flammable and combustible liquid hazards. Also, low-expansion foam may be used for heat radiation protection. Combined-agent systems involve the application of low-expansion foam to a hazard simultaneously or sequentially with dry-chemical powder.

NFPA 11 gives minimum requirements for the installation, design, operation, testing and maintenance of medium- and high-expansion foam systems. Medium-expansion foam is defined as an aggregation of air-filled bubbles resulting from the mechanical expansion of a foam solution by air or other gases with a foam-to-solution volume ratio of 20:1 to 200:1. High-expansion foam has a foam-to-solution volume ratio of 200:1 to approximately 1,000:1.

Medium-expansion foam may be used on solid fuel and liquid fuel fires where some degree of in-depth coverage is necessary (for example, for the total flooding of small, enclosed or partially enclosed volumes, such as engine test cells, transformer rooms, etc.). High-expansion foam is most suitable for filling volumes in which fires exit at various levels. For example, high-expansion foam can be used effectively against high-rack storage fires in enclosures such as in underground passages, where it may be dangerous to send personnel to control fires involving liquefied natural gas (LNG) and liquefied petroleum gas (LP-gas), and to provide vapor dispersion control for LNG and ammonia spills. High-expansion foam is particularly suited for indoor fires in confined spaces, since it is highly susceptible to wind and lack-of-confinement effects.

NFPA 16 contains the minimum requirements for open-head deluge-type foam-water sprinkler systems and foam-water spray systems. The systems are especially applicable to the protection of most flammable liquid hazards and have been used successfully to protect aircraft hangars and truck loading racks.

This section also specifically requires that records be maintained of inspections and testing to increase

INTERNATIONAL CODE COUNCIL®
Copyright © 2015 ICC. ALL RIGHTS RESERVED. Accessed by David Dammon on Jun 21, 2017 12:30:52 PM pursuant to License Agreement with ICC. No further reproduction or distribution authorized. ANY UNAUTHORIZED REPRODUCTION OR DISTRIBUTION IS A VIOLATION OF THE FEDERAL COPYRIGHT ACT AND THE LICENSE AGREEMENT, AND SUBJECT TO CIVIL AND CRIMINAL PENALTIES THEREUNDER.

the effectiveness of such systems. Without records of such inspections and testing it is more difficult to determine if the systems will be effective when activated and when future inspection and testing is necessary.

[F] 904.8 Carbon dioxide systems. Carbon dioxide extinguishing systems shall be installed, maintained, periodically inspected and tested in accordance with NFPA 12 and their listing. Records of inspections and testing shall be maintained.

❖ NFPA 12 provides minimum requirements for the design, installation, testing, inspection, approval, operation and maintenance of carbon dioxide extinguishing systems.

Carbon dioxide extinguishing systems are useful in extinguishing fires in specific hazards or equipment in occupancies where an inert electrically nonconductive medium is essential or desirable and where cleanup of other extinguishing agents, such as dry-chemical residue, presents a problem. Carbon dioxide systems have satisfactorily protected the following: flammable liquids; electrical hazards, such as transformers, oil switches, rotating equipment and electronic equipment; engines using gasoline and other flammable liquid fuels; ordinary combustibles, such as paper, wood and textiles and hazardous solids.

The fire code official has the authority to approve the type of carbon dioxide system to be installed. NFPA 12 defines four types of carbon dioxide systems: total flooding, local application, hand hose lines and standpipe and mobile supply systems. Only total flooding and local application systems are automatic suppression systems.

Total-flooding systems may be used where there is a permanent enclosure around the hazard that is adequate to allow the required concentration to be built up and maintained for the required period of time, which varies for different hazards. Examples of hazards that have been successfully protected by total flooding systems include rooms, vaults, enclosed machines, ducts, ovens and containers and their contents.

Local application systems may be used for extinguishing surface fires in flammable liquids, gases and shallow solids where the hazard is not enclosed or the enclosure does not conform to the requirements for a total-flooding system. Examples of hazards that have been successfully protected by local application systems include dip tanks, quench tanks, spray booths, oil-filled electric transformers and vapor vents.

This section also specifically requires that records be maintained of inspections and testing to increase the effectiveness of such systems. Without records of such inspections and testing it is more difficult to determine if the systems will be effective when activated and when future inspection and testing is necessary.

[F] 904.9 Halon systems. Halogenated extinguishing systems shall be installed, maintained, periodically inspected and tested in accordance with NFPA 12A and their listing. Records of inspections and testing shall be maintained.

❖ NFPA 12A contains minimum requirements for the design, installation, testing, inspection, approval, operation and maintenance of Halon 1301 extinguishing systems. Halon 1301 fire-extinguishing systems are useful in specific hazards, equipment or occupancies where an electrically nonconductive medium is essential or desirable and where cleanup of other extinguishing agents presents a problem.

Halon 1301 systems have satisfactorily protected gaseous and liquid flammable materials; electrical hazards, such as transformers, oil switches and rotating equipment; engines using gasoline and other flammable fuels; ordinary combustibles, such as paper, wood and textiles and hazardous solids. Halon 1301 systems have also satisfactorily protected electronic computers, data processing equipment and control rooms.

The fire code official has the authority to approve the type of halogenated extinguishing system to be installed. NFPA 12A defines two types of halogenated extinguishing systems: total flooding and local application. Total-flooding systems may be used where there is a fixed enclosure around the hazard that is adequate to enable the required halon concentration to be built up and maintained for the required period of time to enable the effective extinguishing of the fire. Total-flooding systems may provide fire protection for rooms, vaults, enclosed machines, ovens, containers, storage tanks and bins.

Local application systems are used where there is not a fixed enclosure around the hazard or where the fixed enclosure around the hazard is not adequate to enable an extinguishing concentration to be built up and maintained in the space. Hazards that may be successfully protected by local application systems include dip tanks, quench tanks, spray booths, oil-filled electric transformers and vapor vents.

Two other considerations in selecting the proper extinguishing system are ambient temperature and the personnel hazards associated with the agent. The ambient temperature of the enclosure for a total-flooding system must be above 70°F (21°C) for halon 1301 systems. Special consideration must also be given to the use of halon systems when the temperatures are in excess of 900°F (482°C) because halon will readily decompose at such temperatures and the products of decomposition can be extremely irritating if inhaled, even in small amounts.

Halon 1301 total-flooding systems must not be used in concentrations greater than 10 percent in normally occupied areas. Where personnel cannot vacate the area within 1 minute, Halon 1301 total-flooding systems must not be used in normally occupied areas with concentrations greater than 7 percent. Halon 1301 total-flooding systems may be used

INTERNATIONAL CODE COUNCIL®
Copyright © 2015 ICC. ALL RIGHTS RESERVED. Accessed by David Dammon on Jun 21, 2017 12:30:52 PM pursuant to License Agreement with ICC. No further reproduction or distribution authorized. ANY UNAUTHORIZED REPRODUCTION OR DISTRIBUTION IS A VIOLATION OF THE FEDERAL COPYRIGHT ACT AND THE LICENSE AGREEMENT, AND SUBJECT TO CIVIL AND CRIMINAL PENALTIES THEREUNDER.

with concentrations of up to 15 percent if the area is not normally occupied and the area can be evacuated within 30 seconds.

The use of halogenated extinguishing systems has become a concern with respect to the potential environmental effects of halon. Halongenated fire-extinguishing agents have been identified as a source of emissions, resulting in the depletion of the stratospheric ozone layer and, in accordance with the Montreal Protocol, the ceasing of its production in January 1994. Therefore, the supply of halon is limited and new supplies of halogenated extinguishing agents will not be available in the future. Existing supplies of halon can, however, continue to be used in existing, undischarged systems or to recharge discharged systems. This newfound need for halon supplies has given rise to new industries geared to the ranking, recycling and reclamation of existing halon supplies. Alternative "clean agent" extinguishing agents have been developed to replace halogenated agents (see Section 904.10).

This section also specifically requires that records be maintained of inspections and testing to increase the effectiveness of such systems. Without records of such inspections and testing it is more difficult to determine if the systems will be effective when activated and when future inspection and testing is necessary.

[F] 904.10 Clean-agent systems. Clean-agent fire-extinguishing systems shall be installed, maintained, periodically inspected and tested in accordance with NFPA 2001 and their listing. Records of inspections and testing shall be maintained.

❖ NFPA 2001 contains minimum requirements for the design, installation, testing, inspection and operation of clean-agent fire-extinguishing systems. A clean agent is an electrically nonconducting suppression agent that is volatile or gaseous at discharge and does not leave a residue on evaporation. Clean-agent fire-extinguishing systems are installed in locations that are enclosed and have openings in the protected area that can be sealed on activation of the alarm to provide effective clean-agent concentrations. A clean-agent fire-extinguishing system should not be installed in locations that cannot be sealed unless testing has shown that adequate concentrations can be developed and maintained.

The two categories of clean agents are halocarbon compounds and inert gas agents. Halocarbon compounds include bromine, carbon, chlorine, fluorine, hydrogen and iodine. Halocarbon compounds suppress fire by a combination of breaking the chemical chain reaction of the fire, reducing the oxygen supporting the fire and reducing the ambient temperature of the fire origin to reduce the propagation of the fire. Inert gas agents contain primary components consisting of helium, neon, argon or a combination of these. Inert gases work by reducing the oxygen concentration around the fire origin to a level that does not support combustion.

Clean-agent fire-extinguishing systems were developed in response to the demise of halon as an acceptable fire-extinguishing agent because of its harmful effect on the environment. Although the original hope for a halon substitute was that these new clean agents could be directly and proportionally substituted for halon agents in existing systems (drop in replacements), research has shown that clean agents are less efficient in extinguishing fires than are the halons they were intended to replace and require approximately 60 percent more agent by weight and volume in storage to do the same job. Additionally, the physical and chemical characteristics of clean agents differ sufficiently from halon to require different nozzles in addition to the need for larger storage vessels. Existing piping systems should be salvaged for use with clean agents only if they are carefully evaluated and determined to be hydraulically compatible with the flow characteristics of the new agent.

This section also relies on strict adherence to the system manufacturer's design and installation instructions for code compliance. As with many of the alternative fire suppression systems covered in this chapter, clean-agent systems are, for the most part, subjected by their manufacturers to a testing and listing program conducted by an approved testing agency. In such testing and listing programs, the clean agent is listed for use with specific equipment and equipment is listed for use with specific clean agents. The resultant listings include reference to the manufacturer's installation manuals, thereby giving the fire code official another valuable resource for reviewing and approving clean-agent systems.

Although clean agents have found a limited market for local application uses, such as a replacement for Halon 1211 in portable fire extinguishers, their primary application is in total-flooding systems and they are available in both engineered and preengineered configurations.

Engineered clean-agent systems are specifically designed for protection of a particular hazard, whereas preengineered systems are designed to operate within predetermined limitations up to the noted maximums, thus allowing broader applicability to a variety of hazard applications.

Total flooding systems are used where there is a fixed enclosure around the hazard that is adequate to enable the required clean-agent concentration to build up and be maintained within the space long enough to extinguish the fire. Such applications can include vaults, ovens, containers, tanks, computer rooms, paint lockers or enclosed machinery. In selecting the clean agent to be used in a given application, careful consideration must be given to whether the protected area is a normally occupied space, because different agents have different levels of concentration at which they may be a health hazard to occupants of the area.

The fire code official has the authority to approve the type of clean-agent system to be installed and

INTERNATIONAL CODE COUNCIL®
Copyright © 2015 ICC. ALL RIGHTS RESERVED. Accessed by David Dammon on Jun 21, 2017 12:30:52 PM pursuant to License Agreement with ICC. No further reproduction or distribution authorized. ANY UNAUTHORIZED REPRODUCTION OR DISTRIBUTION IS A VIOLATION OF THE FEDERAL COPYRIGHT ACT AND THE LICENSE AGREEMENT, AND SUBJECT TO CIVIL AND CRIMINAL PENALTIES THEREUNDER.

should become familiar with the unique characteristics and hazards of clean-agent extinguishing systems using all available resources on the subject.

This section also specifically requires that records be maintained of inspections and testing to increase the effectiveness of such systems. Without records of such inspections and testing it is more difficult to determine if the systems will be effective when activated and when future inspection and testing is necessary.

[F] 904.11 Automatic water mist systems. *Automatic water mist systems* shall be permitted in applications that are consistent with the applicable listing or approvals and shall comply with Sections 904.11.1 through 904.11.3.

❖ This section provides the ability to use automatic water mist systems in specific applications. These installations are required to be consistent with the listings or approvals to which such systems have been tested. See Commentary Figure 904.11 for a picture showing the discharge of a water mist nozzle.



Figure 904.11
WATER MIST NOZZLE DISCHARGE

[F] 904.11.1 Design and installation requirements. *Automatic water mist systems* shall be designed and installed in accordance with Sections 904.11.1.1 through 904.11.1.4.

❖ The subsections to follow provide the various installation and design requirements related to water mist systems. This relates to the systems themselves and providing a reliable water supply.

[F] 904.11.1.1 General. *Automatic water mist systems* shall be designed and installed in accordance with NFPA 750 and the manufacturer's instructions.

❖ This section simply provides reference to the subsections with the detailed requirements related to the design and installation of water mist systems.

[F] 904.11.1.2 Actuation. *Automatic water mist systems* shall be automatically actuated.

❖ If a water mist system is used, it is required to be automatically activated.

[F] 904.11.1.3 Water supply protection. Connections to a potable water supply shall be protected against backflow in accordance with the *International Plumbing Code*.

❖ The water supply quality is more critical with automatic water mist systems than automatic sprinkler systems. Backflow prevention is required as it would be for water supply for automatic sprinkler systems.

[F] 904.11.1.4 Secondary water supply. Where a secondary water supply is required for an *automatic sprinkler system*, an *automatic water mist system* shall be provided with an *approved* secondary water supply.

❖ Since these systems work to protect buildings and spaces in a fashion similar to a sprinkler system and possibly as an alternative to automatic sprinkler systems, the water supply must be appropriate. If an automatic sprinkler system is required to have a secondary water supply in accordance with Section 403.3.3, then the water mist system must also provide an approved secondary water supply.

[F] 904.11.2 Water mist system supervision and alarms. Supervision and alarms shall be provided as required for *automatic sprinkler systems* in accordance with Section 903.4.

❖ This section plays a similar role to an automatic sprinkler system with regard to supervision and alarms. It is critical to make sure valves are open. In addition, an alarm to notify of an activation must be provided as it is for a sprinkler system. Note that this is not intended to be an occupant notification system. See the commentary to Section 903.4.

[F] 904.11.2.1 Monitoring. Monitoring shall be provided as required for *automatic sprinkler systems* in accordance with Section 903.4.1.

❖ See the commentary to Sections 904.11.2 and 903.4.1.

[F] 904.11.2.2 Alarms. Alarms shall be provided as required for *automatic sprinkler systems* in accordance with Section 903.4.2.

❖ Again this is not intended to be occupant notification but to simply alert someone that the system has activated. See the commentary to Sections 904.11.2 and 903.4.2.

[F] 904.11.2.3 Floor control valves. Floor control valves shall be provided as required for *automatic sprinkler systems* in accordance with Section 903.4.3.

❖ See the commentary to Section 903.4.3.

[F] 904.11.3 Testing and maintenance. *Automatic water mist systems* shall be tested and maintained in accordance with the *International Fire Code*.

❖ Testing and maintenance is critical to the long-term viability of automatic water mist systems. This section references the IFC for such provisions since that

INTERNATIONAL CODE COUNCIL®
Copyright © 2015 ICC. ALL RIGHTS RESERVED. Accessed by David Dammon on Jun 21, 2017 12:30:52 PM pursuant to License Agreement with ICC. No further reproduction or distribution authorized. ANY UNAUTHORIZED REPRODUCTION OR DISTRIBUTION IS A VIOLATION OF THE FEDERAL COPYRIGHT ACT AND THE LICENSE AGREEMENT, AND SUBJECT TO CIVIL AND CRIMINAL PENALTIES THEREUNDER.

code focuses not simply on initial installation but on maintenance.

[F] 904.12 Commercial cooking systems. The automatic fire-extinguishing system for commercial cooking systems shall be of a type recognized for protection of commercial cooking equipment and exhaust systems of the type and arrangement protected. Preengineered automatic dry- and wet-chemical extinguishing systems shall be tested in accordance with UL 300 and *listed* and *labeled* for the intended application. Other types of automatic fire-extinguishing systems shall be *listed* and *labeled* for specific use as protection for commercial cooking operations. The system shall be installed in accordance with this code, its listing and the manufacturer's installation instructions. Automatic fire-extinguishing systems of the following types shall be installed in accordance with the referenced standard indicated, as follows:

1. Carbon dioxide extinguishing systems, NFPA 12.
2. *Automatic sprinkler systems*, NFPA 13.
3. Foam-water sprinkler system or foam-water spray systems, NFPA 16.
4. Dry-chemical extinguishing systems, NFPA 17.
5. Wet-chemical extinguishing systems, NFPA 17A.

Exception: Factory-built commercial cooking recirculating systems that are tested in accordance with UL 710B and *listed*, *labeled* and installed in accordance with Section 304.1 of the *International Mechanical Code*.

❖ The history of commercial kitchen exhaust systems shows that the mixture of flammable grease and effluents carried by such systems and the potential for the cooking equipment to act as an ignition source contribute to a higher level of hazard for kitchen exhaust systems than is normally found in many other exhaust systems. Furthermore, fire in a grease exhaust duct can produce temperatures of 2,000°F (1093°C) or more and heat radiating from the duct can ignite nearby combustibles. As a result, the code requires exhaust systems serving grease-producing equipment to include fire suppression to protect the cooking surfaces, hood, filters and exhaust duct to confine a fire to the hood and duct system, thus reducing the likelihood of it spreading to the structure.

In addition to the general requirements of this section, five industry standards are referenced for the installation of fire-extinguishing systems protecting commercial food heat-processing equipment and kitchen exhaust systems. Design professionals should specify and design fire-extinguishing systems to comply with these referenced standards. Only the installation of fire-extinguishing systems is regulated by these references. Where preengineered automatic dry- and wet-chemical extinguishing systems are installed, they must be listed and labeled for the specific cooking operation and tested in accordance with UL 300. Design and construction requirements for the specific types of fire-extinguishing systems are found in the respective sections of the referenced standards.

Regulatory requirements for the approval and installation of fire-extinguishing systems are the same as the approval required for all mechanical equipment and appliances. This section, therefore, requires extinguishing systems to be listed and labeled by an approved agency and installed in accordance with their listing and the manufacturer's installation instructions.

The exception allows factory-built commercial cooking recirculating systems to be installed if they have been tested and listed in accordance with UL 710B. It is important that they be installed in accordance with the manufacturer's installation instructions so that the listing requirements are met. An improper installation could result in hazardous vapors being discharged back into the kitchen.

Commercial cooking recirculating systems consist of an electric cooking appliance and an integral or matched packaged hood assembly. The hood assembly consists of a fan, collection hood, grease filter, fire damper, fire-extinguishing system and air filter, such as an electrostatic precipitator. These systems are tested for fire safety and emissions. The grease vapor (condensible particulate matter) in the effluent at the system discharge is not allowed to exceed a concentration of 5.0 mg/m^3. Recirculating systems are not used with fuel-fired appliances because the filtering systems do not remove combustion products. Kitchens require ventilation in accordance with Chapter 4 of the IMC.

Although the provisions in Section 904.12 address many of the specifics for commercial kitchens, additional information regarding commercial cooking suppression systems is located in Sections 904.2 and 904.3. This information is supplemental to that and should be considered together in developing the design for commercial cooking suppression systems.

[F] 904.12.1 Manual system operation. A manual actuation device shall be located at or near a *means of egress* from the cooking area not less than 10 feet (3048 mm) and not more than 20 feet (6096 mm) from the kitchen exhaust system. The manual actuation device shall be installed not more than 48 inches (1200 mm) or less than 42 inches (1067 mm) above the floor and shall clearly identify the hazard protected. The manual actuation shall require a maximum force of 40 pounds (178 N) and a maximum movement of 14 inches (356 mm) to actuate the fire suppression system.

Exception: *Automatic sprinkler systems* shall not be required to be equipped with manual actuation means.

❖ The manual device, usually a pull station, mechanically activates the suppression system. The typical system uses a mechanical circuit of cables under tension to hold the system in the armed (cocked) mode. Melting of a fusible link or actuation of a manual pull station causes the cable to lose tension, which, in turn, starts the discharge of the suppression agent. The manual actuation device must be readily and easily usable by the building occupants; therefore, the device must not require excessive force or range

INTERNATIONAL CODE COUNCIL®
Copyright © 2015 ICC. ALL RIGHTS RESERVED. Accessed by David Dammon on Jun 21, 2017 12:30:52 PM pursuant to License Agreement with ICC. No further reproduction or distribution authorized. ANY UNAUTHORIZED REPRODUCTION OR DISTRIBUTION IS A VIOLATION OF THE FEDERAL COPYRIGHT ACT AND THE LICENSE AGREEMENT, AND SUBJECT TO CIVIL AND CRIMINAL PENALTIES THEREUNDER.

of movement to cause actuation.

In order to allow the actuation device to be used most effectively, the specified mounting height is intended to be consistent with the NFPA 17A standards and be handicapped accessible. This includes the requirement to identify the actuation device with the hazard protected. Where multiple kitchen appliances are provided, properly identifying which device relates to which appliance is very important. Required signage should be readily visible in the hazard area and capable of conveying information quickly and concisely.

Manual actuation is not required for automatic sprinkler systems because the typical system design will employ closed heads and wet system piping. A manual actuation valve would serve no purpose because sprinkler heads are already supplied with pressurized water and will discharge water only when the individual fusible elements open the heads.

[F] 904.12.2 System interconnection. The actuation of the fire suppression system shall automatically shut down the fuel or electrical power supply to the cooking equipment. The fuel and electrical supply reset shall be manual.

❖ The actuation of any fire suppression system must automatically shut off all sources of fuel or power to all cooking equipment located beneath the exhaust hood protected by the suppression system. This requirement is intended to shut off all heat sources that could reignite or intensify a fire. Shutting off a fuel and power supply to cooking appliances will eliminate an ignition source and allow the cooking surfaces to cool down. This shutdown is accomplished with mechanical or electrical interconnections between the suppression system and a shutoff valve or switch located on the fuel or electrical supply.

Common fuel shutoff valves include mechanical-type gas valves and electrical solenoid-type gas valves. Contactor-type switches or shunt-trip circuit breakers can be used for electrically heated appliances. The fuel or electric source must not be automatically restored after the suppression system has been actuated.

Chemical-type fire-extinguishing systems discharge for only a limited time and can discharge only once before recharge and reset; therefore, precautions must be taken to prevent a fire from reigniting. After a fire is detected and the initial suppressant discharge begins, the fuel and power supply will be locked out, thereby preventing the operation of the appliances until all systems are again ready for operation. Fuel and power supply shutoff must be manually restored by resetting a mechanical linkage or holding (latching)-type circuit.

[F] 904.12.3 Carbon dioxide systems. Where carbon dioxide systems are used, there shall be a nozzle at the top of the ventilating duct. Additional nozzles that are symmetrically arranged to give uniform distribution shall be installed within vertical ducts exceeding 20 feet (6096 mm) and horizontal ducts exceeding 50 feet (15 240 mm). *Dampers* shall be installed at either the top or the bottom of the duct and shall be arranged to operate automatically upon activation of the fire-extinguishing system. Where the *damper* is installed at the top of the duct, the top nozzle shall be immediately below the *damper*. Automatic carbon dioxide fire-extinguishing systems shall be sufficiently sized to protect against all hazards venting through a common duct simultaneously.

❖ This section states specific design requirements for nozzle locations, dampers and ducts for carbon dioxide extinguishing systems that may be used to protect commercial cooking systems. These requirements are intended to supersede similar, more general provisions in NFPA 12. Because carbon dioxide (CO_2) is a gaseous suppressant, dampers are required in the ductwork to define the atmosphere where the fire event would be. A specific concentration of CO_2 is necessary and dampers are required to define and contain the suppressant. The discharge cools exposed surfaces in addition to depriving the fire of oxygen. Although not mentioned specifically in this section, the applicable provisions of NFPA 12 should also be applied because the system is a CO_2 system as referenced in Section 904.8.

[F] 904.12.3.1 Ventilation system. Commercial-type cooking equipment protected by an automatic carbon dioxide-extinguishing system shall be arranged to shut off the ventilation system upon activation.

❖ Shutting down the ventilation system upon activation of the CO_2 extinguishing system maintains the desired concentration of carbon dioxide to suppress the fire. Leakage of gas from the protected area should be kept to a minimum. Where leakage is anticipated, additional quantities of carbon dioxide must be provided to compensate for any losses.

[F] 904.12.4 Special provisions for automatic sprinkler systems. *Automatic sprinkler systems* protecting commercial-type cooking equipment shall be supplied from a separate, readily accessible, indicating-type control valve that is identified.

❖ This section requires a separate control valve in the water line to the sprinklers protecting the cooking and ventilating system. The additional valve allows the flexibility to shut off the system for repairs or for cleanups after sprinkler discharge without taking the entire system out of service.

[F] 904.12.4.1 Listed sprinklers. Sprinklers used for the protection of fryers shall be tested in accordance with UL 199E, *listed* for that application and installed in accordance with their listing.

❖ Sprinklers specifically listed for such use must be used when protecting deep-fat fryers. These specially listed sprinklers use finer water droplets than standard spray sprinklers. The water spray lowers the temperature below a point where the fire can sustain itself and reduces the possibility of expanding the fire. UL 199E addresses these special sprinklers and includes performance tests for deep-fat fryer extin-

INTERNATIONAL CODE COUNCIL®
Copyright © 2015 ICC. ALL RIGHTS RESERVED. Accessed by David Dammon on Jun 21, 2017 12:30:52 PM pursuant to License Agreement with ICC. No further reproduction or distribution authorized. ANY UNAUTHORIZED REPRODUCTION OR DISTRIBUTION IS A VIOLATION OF THE FEDERAL COPYRIGHT ACT AND THE LICENSE AGREEMENT, AND SUBJECT TO CIVIL AND CRIMINAL PENALTIES THEREUNDER.

guishment and also deep-fat fryer cooking temperature splash. The selection of inappropriate sprinklers for deep-fat fryer protection can increase the hazards during water application rather than suppressing the fire.

[F] 904.13 Domestic cooking systems in Group I-2 Condition 1. In Group I-2 Condition 1, occupancies where cooking facilities are installed in accordance with Section 407.2.6 of this code, the domestic cooking hood provided over the cooktop or range shall be equipped with an automatic fire-extinguishing system of a type recognized for protection of domestic cooking equipment. Preengineered automatic extinguishing systems shall be tested in accordance with UL 300A and listed and labeled for the intended application. The system shall be installed in accordance with this code, its listing and the manufacturer's instructions.

❖ As nursing homes move away from institutional models, it is critical to have a functioning kitchen that can serve as the "hearth of the home." Instead of a large, centralized, institutional kitchen where all meals are prepared and delivered to a central dining room or the resident's room, the new "household model" nursing home uses de-centralized kitchens and small dining areas to create the feeling and focus of home. For persons with dementia, it is particularly important to have spaces that look familiar, like the kitchen in their former home, to increase their understanding and ability to function at their highest level. This section addresses the fire protection system needs for these kitchens. Note that these occupancies already contain quick-response sprinklers. This section provides the requirements for the hood fire-extinguishing system needed for the cooking hood located over the cook top or range. That system is required to be in compliance with UL 300A.

[F] 904.13.1 Manual system operation and interconnection. Manual actuation and system interconnection for the hood suppression system shall be installed in accordance with Sections 904.12.1 and 904.12.2, respectively.

❖ To activate such systems manually, the requirements of Sections 904.12.1 and 904.12.2 would apply. This provides for the location of the manual shutdown and also directs what equipment and power needs to automatically shut down. See the commentary to Sections 904.12.1 and 904.12.2.

[F] 904.13.2 Portable fire extinguishers for domestic cooking equipment in Group I-2 Condition 1. A portable fire extinguisher complying with Section 906 shall be installed within a 30-foot (9144 mm) distance of travel from domestic cooking appliances.

❖ This requirement for a portable fire extinguisher relates to the added safety of allowing a residential-type kitchen in nursing homes. This provides another line of defense and the location is focused on the distance from the cooking appliances.

SECTION 905
STANDPIPE SYSTEMS

[F] 905.1 General. Standpipe systems shall be provided in new buildings and structures in accordance with Sections 905.2 through 905.10. In buildings used for high-piled combustible storage, fire protection shall be in accordance with the *International Fire Code*.

❖ Standpipe systems are required in buildings to provide a quick, convenient water source for fire department use where hose lines would otherwise be impractical, such as in high-rise buildings. Standpipe systems can also be used prior to deployment of hose lines from fire department apparatus. The requirements for stand- pipes are based on practical requirements of typical fire-fighting operations and the nationally recognized standard NFPA 14.

The threads on connections to which the fire department may connect a hose must be compatible with the fire department hose threads (see commentary, Section 903.3.6). Chapter 23 of the IFC requires a Class I standpipe system in exit passageways of buildings used for high-piled storage. Note that if a building containing high-piled storage does not contain an exit passageway, then standpipes would not be required. High-piled storage involves the solid-piled, bin box, palletized or rack storage of Class I through IV commodities over 12 feet (3658 mm) high. High-hazard commodities stored higher than 6 feet (1829 mm) are also considered high piled.

[F] 905.2 Installation standard. Standpipe systems shall be installed in accordance with this section and NFPA 14. Fire department connections for standpipe systems shall be in accordance with Section 912.

❖ This section requires the installation of standpipe systems to comply with the applicable provisions of NFPA 14 in addition to Section 905. NFPA 14 contains the minimum requirements for the installation of standpipe and hose systems for buildings and structures. The standard addresses additional requirements not addressed in the code, such as pressure limitations, minimum flow rates, piping specifications, hose connection details, valves, fittings, hangers and the testing and inspection of standpipes. The periodic inspection, testing and maintenance of standpipe systems must comply with NFPA 25.

Section 905 and NFPA 14 recognize three classes of standpipe systems: Class I, II or III. The type of system required depends on building height, building area, type of occupancy and the extent of automatic sprinkler protection. Section 905 also recognizes five types of standpipe systems: automatic dry, automatic wet, manual dry, manual wet and semiautomatic dry. The use of each type of system is limited to the building conditions and locations identified in Section 905.3. The classes and types of standpipe systems are defined in Section 202.

INTERNATIONAL CODE COUNCIL®
Copyright © 2015 ICC. ALL RIGHTS RESERVED. Accessed by David Dammon on Jun 21, 2017 12:30:52 PM pursuant to License Agreement with ICC. No further reproduction or distribution authorized. ANY UNAUTHORIZED REPRODUCTION OR DISTRIBUTION IS A VIOLATION OF THE FEDERAL COPYRIGHT ACT AND THE LICENSE AGREEMENT, AND SUBJECT TO CIVIL AND CRIMINAL PENALTIES THEREUNDER.

Section 912, to which this section refers, provides a comprehensive set of requirements for FDCs, reducing the opportunity for any of its requirements to be overlooked. See the commentary to Section 912.

[F] 905.3 Required installations. Standpipe systems shall be installed where required by Sections 905.3.1 through 905.3.8. Standpipe systems are allowed to be combined with *automatic sprinkler systems*.

Exception: Standpipe systems are not required in Group R-3 occupancies.

❖ Standpipe systems are installed in buildings based on the occupancy, fire department accessibility and special conditions that may require manual fire suppression exceeding the capacity of a fire extinguisher. Standpipe systems are most commonly required for buildings that exceed the height threshold requirement in Section 905.3.1 or due to features of a specific occupancy or the building such as covered and open mall buildings, stages and underground buildings.

This section also states that a standpipe system does not have to be separate from an installed sprinkler system. It is common practice in multistory buildings for the standpipe system risers to also serve as risers for the automatic sprinkler systems.

In these instances, precautions need to be taken so that the operation of one system will not interfere with the operation of the other system. Therefore, control valves for the sprinkler system must be installed where the sprinklers are connected to the standpipe riser at each floor level. This allows the standpipe system to remain operational, even if the sprinkler system is shut off at the floor control valve.

The exception recognizes that standpipe systems in Group R-3 occupancies would be of minimal value to the fire department and would send the wrong message to the occupants of a dwelling unit. In the case of multiple single-family dwellings, each dwelling unit has a separate entrance and is separated from the other units by 1-hour fire partitions. These conditions permit ready access to fires and also provide for a degree of fire containment through compartmentation, which is not always present in other occupancies.

[F] 905.3.1 Height. Class III standpipe systems shall be installed throughout buildings where the floor level of the highest *story* is located more than 30 feet (9144 mm) above the lowest level of fire department vehicle access, or where the floor level of the lowest *story* is located more than 30 feet (9144 mm) below the highest level of fire department vehicle access.

Exceptions:

1. Class I standpipes are allowed in buildings equipped throughout with an *automatic sprinkler system* in accordance with Section 903.3.1.1 or 903.3.1.2.
2. Class I manual standpipes are allowed in *open parking garages* where the highest floor is located not more than 150 feet (45 720 mm) above the lowest level of fire department vehicle access.
3. Class I manual dry standpipes are allowed in *open parking garages* that are subject to freezing temperatures, provided that the hose connections are located as required for Class II standpipes in accordance with Section 905.5.
4. Class I standpipes are allowed in basements equipped throughout with an *automatic sprinkler system*.
5. In determining the lowest level of fire department vehicle access, it shall not be required to consider either of the following:
    5.1. Recessed loading docks for four vehicles or less.
    5.2. Conditions where topography makes access from the fire department vehicle to the building impractical or impossible.

❖ Given the available manpower on the fire department vehicle, standard fire-fighting operations and standard hose sizes, a 30-foot (9144 mm) vertical distance is generally considered the maximum height to which a typical fire department engine company can practically and readily extend its hose lines. Thus, the maximum vertical travel (height) threshold is based on the time it would take a typical fire department engine (pumper) company to manually suppress a fire. The standpipe connection reduces the time needed for the fire department to extend hose lines up or down stairways to advance and apply water to the fire. For this use, a minimum Class III standpipe system is required.

With respect to the height of the building, the threshold is measured from the level at which the fire department can gain access to the building directly from its vehicle and begin vertical movement. Floor levels above grade are measured from the lowest level of fire department vehicle access to the highest floor level above [see Commentary Figure 905.3.1(1)]. If a building contains floor levels below the level of fire department vehicle access, the measurement is made from the highest level of fire department vehicle access to the lowest floor level. In cases where a building has more than one level of fire department vehicle access, the most restrictive measurement is used because it is not known at which level the fire department will access the building. In other words, the vertical distance is to be measured from the more restrictive level of fire department vehicle access to the level of the highest (or lowest, if below) floor [see Commentary Figure 905.3.1(2)].

The threshold based on the height of the building is independent of the occupancy of the building, the area of the building or the presence of an automatic sprinkler system. This is based on the universal need to be able to provide a water supply for fire suppres-

INTERNATIONAL CODE COUNCIL®
Copyright © 2015 ICC. ALL RIGHTS RESERVED. Accessed by David Dammon on Jun 21, 2017 12:30:52 PM pursuant to License Agreement with ICC. No further reproduction or distribution authorized. ANY UNAUTHORIZED REPRODUCTION OR DISTRIBUTION IS A VIOLATION OF THE FEDERAL COPYRIGHT ACT AND THE LICENSE AGREEMENT, AND SUBJECT TO CIVIL AND CRIMINAL PENALTIES THEREUNDER.

sion in any building and on the limitations of the physical effort necessary to extend hose lines vertically.

Before discussing the exceptions it is important to understand the differences between the different classes and operational characteristics of standpipes. More detailed information is included in Section 202 for the definitions of the different classes and types of standpipes.

Standpipes can be dry or wet, manual, automatic or semiautomatic. Automatic systems can be either

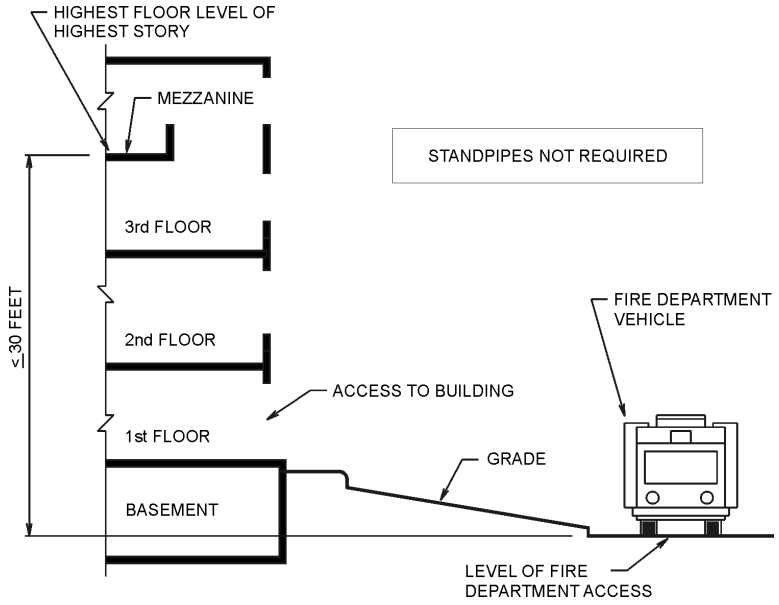

For SI: 1 foot = 304.8 mm.

Figure 905.3.1(1)
HEIGHT THRESHOLD FOR STANDPIPES

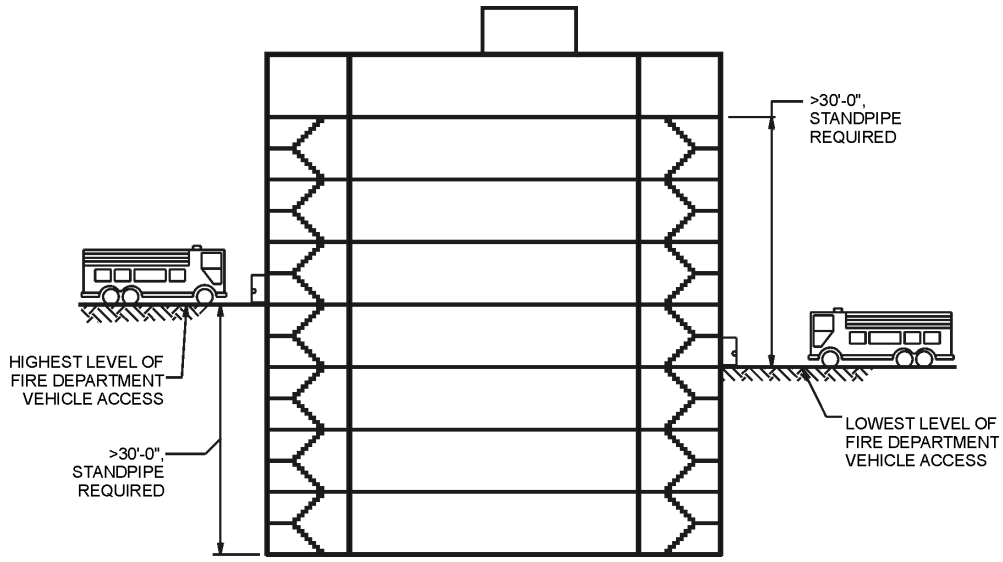

For SI: 1 inch = 25.4 mm, 1 foot = 304.8 mm.

Figure 905.3.1(2)
HEIGHT REQUIREMENTS FOR STANDPIPES WITH MULTIPLE LEVELS OF FIRE DEPARTMENT VEHICLE ACCESS

INTERNATIONAL CODE COUNCIL®
Copyright © 2015 ICC. ALL RIGHTS RESERVED. Accessed by David Dammon on Jun 21, 2017 12:30:52 PM pursuant to License Agreement with ICC. No further reproduction or distribution authorized. ANY UNAUTHORIZED REPRODUCTION OR DISTRIBUTION IS A VIOLATION OF THE FEDERAL COPYRIGHT ACT AND THE LICENSE AGREEMENT, AND SUBJECT TO CIVIL AND CRIMINAL PENALTIES THEREUNDER.

wet or dry. Manual systems can be either wet or dry. A semiautomatic system is always in association with a dry system.

The code is written such that it could be assumed the default is an automatic wet system. This is, however, not the case. The requirement is left to the design standard, NFPA 14. Section 5.4.1.1 of NFPA 14 indicates that Class I standpipes can be manual if the building is not a high rise. Section 5.4.1.4 of the standard indicates that a Class I standpipe must be wet except where the pipe is subject to freezing. Thus, where a Class I standpipe is installed, possibly as a part of Exception 1, the system can be manual wet if the building is not a high rise. This is consistent with IFC Committee Interpretation No. 33-03. As long as the building is not a high rise, it can be provided with a Class I standpipe system that is manual wet.

Class II and III standpipes are required to be automatic-wet or semiautomatic wet except where the piping is subject to freezing according to Section 5.4.2 of NFPA 14. They cannot be manual. Only Class I standpipes can be manual and only be used under the conditions noted in this code. Note that other sections of the code may specify whether the system must be automatic or not. If the requirement is not noted elsewhere in the code, then the decision to use an automatic or manual system is left to the designer.

Exception 1 recognizes that with a fully operational automatic sprinkler system, the time that the fire department has to extend hoses within the building is substantially increased and that the amount of effort required is greatly reduced. Consequently a single Class I connection can be provided. The second, $1^1/_2$-inch (38 mm) connection is allowed to be omitted. NFPA 14 also has a similar provision but is more restrictive as it only eliminates the hose station and additionally requires a $2^1/_2$ inch by $1^1/_2$ inch (65 mm by 40 mm) reducer and a cap attached with a chain (see NFPA 14, Section 7.3.4.1). In accordance with Section 102.4, the code would take precedence and the reducer and cap would not be required.

Exception 2 identifies one of the issues relative to open parking garages. This exception allows for the garage, when not more than 150 feet (45 720 mm) in height above the lowest level of fire department access, to have a wet standpipe but without additional operating pressure until the fire department connects and begins pumping into the system. This makes sense since normal operations typically do not begin until after the fire department is on the scene and has made its initial assessments. This is generally considered to be the maximum safe height for pumpers to overcome the hydrostatic head presented by 150 feet (45 720 mm) of water. Careful considerations should be made since not all fire departments have equipment capable of this type of pumping capacity.

Exception 3 is similar to the prior exception but with the added provision that the standpipe can be dry if subject to freezing, regardless of height. Because the standpipe will be without water and be dependent on the fire department to provide both water and pressure, standpipe outlets must be spaced more frequently, as noted in Section 905.5 for Class II standpipes, so that fire fighters can connect and begin operations quicker. The exception does not require Class II outlets; only that the spacing be consistent with the requirement for Class II.

Exception 4 is similar to Exception 1 but only addresses sprinklers in the basement. Thus it is possible to use this exception if only the basement is protected by automatic sprinklers. However, Class I connections can only be provided in the basements—not on the upper floors. The exception cannot be used for stories above grade unless the entire building is sprinklered and, therefore, compliant with Exception 1.

Exception 5 provides additional information about what must be considered when determining building height with respect to the level of fire department vehicle access. The first item is a practical one that excludes loading docks of a limited size. The second item notes that although it may be possible to have a fire department vehicle arrive adjacent to the building at a low level, it may not be possible for the fire department to access the building from that level. An example of this condition would be where a road surface is located below a building built on a bluff. Although the fire department vehicles can approach from the lower road, fire department personnel cannot access the building from that lower level. Thus, the standpipe requirement would not be based on the road below the bluff.

[F] 905.3.2 Group A. Class I automatic wet standpipes shall be provided in nonsprinklered Group A buildings having an *occupant load* exceeding 1,000 persons.

Exceptions:

1. Open-air-seating spaces without enclosed spaces.
2. Class I automatic dry and semiautomatic dry standpipes or manual wet standpipes are allowed in buildings that are not high-rise buildings.

❖ The main concern in assembly occupancies with a high occupant load is evacuation. Many occupants may not be familiar with either their surroundings or the egress arrangement in the building. This section also assumes the building is not sprinklered; therefore, control and suppression of the fire is left to the fire department.

Exception 1 exempts open-air seating without enclosed spaces, such as grandstands and bleachers. In such occupancies, a buildup of smoke and hot gases is not possible because these structures are open to the atmosphere.

Exception 2 states that in lieu of a Class I automatic wet standpipe, automatic dry and semiautomatic dry Class I standpipes are permitted in buildings that are not considered to be a high rise.

INTERNATIONAL CODE COUNCIL®
Copyright © 2015 ICC. ALL RIGHTS RESERVED. Accessed by David Dammon on Jun 21, 2017 12:30:52 PM pursuant to License Agreement with ICC. No further reproduction or distribution authorized. ANY UNAUTHORIZED REPRODUCTION OR DISTRIBUTION IS A VIOLATION OF THE FEDERAL COPYRIGHT ACT AND THE LICENSE AGREEMENT, AND SUBJECT TO CIVIL AND CRIMINAL PENALTIES THEREUNDER.

[F] 905.3.3 Covered and open mall buildings. Covered mall and open mall buildings shall be equipped throughout with a standpipe system where required by Section 905.3.1. Mall buildings not required to be equipped with a standpipe system by Section 905.3.1 shall be equipped with Class I hose connections connected to the *automatic sprinkler system* sized to deliver water at 250 gallons per minute (946.4 L/min) at the most hydraulically remote hose connection while concurrently supplying the automatic sprinkler system demand. The standpipe system shall be designed to not exceed a 50 pounds per square inch (psi) (345 kPa) residual pressure loss with a flow of 250 gallons per minute (946.4 L/min) from the fire department connection to the hydraulically most remote hose connection. Hose connections shall be provided at each of the following locations:

1. Within the mall at the entrance to each *exit* passageway or *corridor*.
2. At each floor-level landing within *interior exit stairways* opening directly on the mall.
3. At exterior public entrances to the mall of a covered mall building.
4. At public entrances at the perimeter line of an open mall building.
5. At other locations as necessary so that the distance to reach all portions of a tenant space does not exceed 200 feet (60 960 mm) from a hose connection.

❖ Covered and open mall buildings are only required to have a standpipe system if Section 905.3.1 requires such features. If standpipes are not required because of building height, Class I hose connections that are connected to the automatic sprinkler system are still required. Also to ensure that both the sprinkler system and hose connections will function at an acceptable level, the system must be sized for both the sprinkler demand and the hose connection demand. This section specifies a minimum flow rate and a maximum pressure loss to the most remote hose connection so that the fire department can gain full use of the hose connection during a fire. Hose connections are required when a standpipe system is not at key locations, such as entrances to exit passageways and at entrances to the covered or open mall. Note that these locations are essentially the same locations required for Class I hose connections in Section 905.4, except that this section also requires that the distance of all portions of tenant spaces does not exceed 200 feet (60 960 mm) from a hose connection.

[F] 905.3.4 Stages. Stages greater than 1,000 square feet in area (93 m^2) shall be equipped with a Class III wet standpipe system with $1^1/_2$-inch and $2^1/_2$-inch (38 mm and 64 mm) hose connections on each side of the stage.

Exception: Where the building or area is equipped throughout with an *automatic sprinkler system*, a $1^1/_2$-inch (38 mm) hose connection shall be installed in accordance with NFPA 13 or in accordance with NFPA 14 for Class II or III standpipes.

❖ Because of the potentially large fuel load and three-dimensional aspect of the fire hazard associated with stages greater than 1,000 square feet (93 m^2) in area, Class III standpipes are required on each side of these large stages. The standpipes must be equipped with a $1^1/_2$-inch (38 mm) hose connection and a $2^1/_2$-inch (64 mm) hose connection. The $1^1/_2$-inch (38 m^2) connection is for the hose requirement in Section 905.3.4.1. The $2^1/_2$-inch (64 mm) connection is to provide greater flexibility for the fire department in its fire-fighting operations.

Stages, as used in this section, are those stages defined in Section 410.2, which include overhead hanging curtains, drops, scenery or stage effects other than lighting and sound. These were traditionally referred to as "legitimate stages." It is not an appropriate application of this section to require standpipes for elevated areas in banquet rooms, or theatrical platforms where the higher fuel loads associated with a legitimate stage do not exist.

The exception recognizes the benefit of the building or area being sprinklered. If so, then only a single $1^1/_2$-inch (38 mm) connection is required. This hose connection is intended to be used by the fire department and apply less water from the hose because of the suppression activity of the sprinkler system. Hose threads must be compatible with those of the fire department as required in Section 903.3.6.

In a fully sprinklered building it is acceptable to supply the hose connections through the same standpipe as the sprinklers. This is reflected in the reference to both NFPA 13, which acknowledges this concept, and NFPA 14, which contains similar provisions. If the provisions of NFPA 14 are used, although the standpipe must be wet and Class II in its installation, the design of the water supply and interconnection of systems can be in accordance with the requirements for Class II as well as for Class III standpipes.

[F] 905.3.4.1 Hose and cabinet. The $1^1/_2$-inch (38 mm) hose connections shall be equipped with sufficient lengths of $1^1/_2$-inch (38 mm) hose to provide fire protection for the stage area. Hose connections shall be equipped with an *approved* adjustable fog nozzle and be mounted in a cabinet or on a rack.

❖ The $1^1/_2$-inch (38 mm) standpipe hose installed for stages greater than 1,000 square feet (93 m^2) in area is intended for use by stage personnel who have been trained to use it. The length of hose provided is a function of the size and configuration of the stage. This includes by definition the entire performance area and adjacent backstage and support areas not fire separated from the performance area. The effective reach of the fire stream from the fog nozzle is a function of the available water supply, and in particu-

INTERNATIONAL CODE COUNCIL®
Copyright © 2015 ICC. ALL RIGHTS RESERVED. Accessed by David Dammon on Jun 21, 2017 12:30:52 PM pursuant to License Agreement with ICC. No further reproduction or distribution authorized. ANY UNAUTHORIZED REPRODUCTION OR DISTRIBUTION IS A VIOLATION OF THE FEDERAL COPYRIGHT ACT AND THE LICENSE AGREEMENT, AND SUBJECT TO CIVIL AND CRIMINAL PENALTIES THEREUNDER.

lar, the pressure. Fog nozzles typically require 100 pounds per square inch (psi) (690 kPa) for optimum performance.

[F] 905.3.5 Underground buildings. Underground buildings shall be equipped throughout with a Class I automatic wet or manual wet standpipe system.

❖ Underground buildings pose unique hazards to life safety because of their isolation and inaccessibility. Additional fire protection and fire-fighting measures for the fire department are required to compensate for the lack of exterior access for fire suppression and rescue operations (see Section 405).

[F] 905.3.6 Helistops and heliports. Buildings with a rooftop *helistop* or *heliport* shall be equipped with a Class I or III standpipe system extended to the roof level on which the *helistop* or *heliport* is located in accordance with Section 2007.5 of the *International Fire Code*.

❖ Buildings containing rooftop helistops or heliports are required to be equipped with a Class I or III standpipe. A heliport is a distinct hazard that will involve flammable fuels. In the event of an emergency, rapid deployment of hand hose lines will be necessary to attack a resulting fire, effectuate rescue and to protect exposures and the remainder of the building.

The requirement results in a standpipe system throughout the building, not just a connection at the roof level. This is critical in fire-fighting operations because many times the connection below the rooftop level may be needed just to gain access onto the roof. If the only connection is on the roof, it is of no use if the fire fighters cannot get to it.

Additionally, a heliport includes fueling operations. It is entirely possible for a spill to not only affect the rooftop, but also floors below as the liquid fuel spreads. The standpipe system will again be utilized in these situations.

Section 2007.5 of the IFC requires a $2^1/_2$-inch (64 mm) standpipe outlet to be within 150 feet (45 675 mm) of all portions of the heliport or helistop area and be either Class I or III.

[F] 905.3.7 Marinas and boatyards. Standpipes in marinas and boatyards shall comply with Chapter 36 of the *International Fire Code*.

❖ Section 3604.2 of the IFC contains the specifics as to when standpipes are required at marinas. Marinas and boatyards have unique challenges for fire fighting. Although there is water readily available, it is not easily or effectively capable of being applied to a fire at such a facility. A fire in such facilities can spread from structure to structure and from vessel to vessel with no effective way to attack and control it. Section 3604.2 of the IFC references NFPA 303 for the standpipe requirements and additionally requires that no point on the marina pier or float system exceed 150 feet (45 720 mm) from a standpipe hose connection (see commentary, Section 3604.2 of the IFC).

[F] 905.3.8 Rooftop gardens and landscaped roofs. Buildings or structures that have rooftop gardens or landscaped roofs and that are equipped with a standpipe system shall have the standpipe system extended to the roof level on which the rooftop garden or landscaped roof is located.

❖ This section requires that if the building is equipped with a standpipe system, whether or not such systems are required, it must be extended to a roof containing a garden or that which is landscaped. These requirements relate to the requirements in Section 317 of the IFC that address the increased fuel load being added to roofs.

[F] 905.4 Location of Class I standpipe hose connections. Class I standpipe hose connections shall be provided in all of the following locations:

1. In every required *interior exit stairway*, a hose connection shall be provided for each story above and below grade. Hose connections shall be located at an intermediate landing between stories, unless otherwise *approved* by the fire code official.
2. On each side of the wall adjacent to the *exit* opening of a *horizontal exit*.

   Exception: Where floor areas adjacent to a *horizontal exit* are reachable from an *interior exit stairway* hose connection by a 30-foot (9144 mm) hose stream from a nozzle attached to 100 feet (30 480 mm) of hose, a hose connection shall not be required at the *horizontal exit*.
3. In every *exit* passageway, at the entrance from the *exit* passageway to other areas of a building.

   Exception: Where floor areas adjacent to an *exit* passageway are reachable from an *interior exit stairway* hose connection by a 30-foot (9144 mm) hose stream from a nozzle attached to 100 feet (30 480 mm) of hose, a hose connection shall not be required at the entrance from the *exit* passageway to other areas of the building.
4. In covered mall buildings, adjacent to each exterior public entrance to the mall and adjacent to each entrance from an exit passageway or exit corridor to the mall. In open mall buildings, adjacent to each public entrance to the mall at the perimeter line and adjacent to each entrance from an exit passageway or exit corridor to the mall.
5. Where the roof has a slope less than four units vertical in 12 units horizontal (33.3-percent slope), a hose connection shall be located to serve the roof or at the highest landing of an *interior exit stairway* with access to the roof provided in accordance with Section 1011.12.
6. Where the most remote portion of a nonsprinklered floor or *story* is more than 150 feet (45 720 mm) from a hose connection or the most remote portion of a sprinklered floor or *story* is more than 200 feet (60 960 mm) from a hose connection, the fire code official is authorized to require that additional hose connections be provided in *approved* locations.

❖ Hose connections are required for the fire department to make use of the standpipe system. Since the fire

INTERNATIONAL CODE COUNCIL®
Copyright © 2015 ICC. ALL RIGHTS RESERVED. Accessed by David Dammon on Jun 21, 2017 12:30:52 PM pursuant to License Agreement with ICC. No further reproduction or distribution authorized. ANY UNAUTHORIZED REPRODUCTION OR DISTRIBUTION IS A VIOLATION OF THE FEDERAL COPYRIGHT ACT AND THE LICENSE AGREEMENT, AND SUBJECT TO CIVIL AND CRIMINAL PENALTIES THEREUNDER.

department will typically access the building using the stairways, and most fire departments do not permit entry to the fire floor without an operating hose line, a hose connection must be installed for each floor level of each required enclosed stairway.

Item 1 also specifies that the hose connections are to be located at intermediate landings between stories. This reduces congestion at the stairway door and may reduce the hose lay distance. The hose connections, however, are still permitted at each story instead of at the intermediate landing if this arrangement is approved by the fire code official.

Because horizontal exits are also primary entrances to the fire floor, Item 2 states that hose connections must also be provided at each horizontal exit. The construction of the fire separation assembly used as the horizontal exit will protect the fire fighters while they are connecting to the standpipe system. The hose connections are to be located on each side of the hori-zontal exit to enable fire fighters to be in a protected area, regardless of the location of the fire. The exception acknowledges that there may already be a hose connection in close proximity to the horizontal exit if there is a stairway adjacent to the horizontal exit. The intent is to allow fewer standpipe outlets if the area can be adequately covered by the standpipes in stairways since those are the standpipes typically used by the fire department.

Item 3 states that an exit passageway in a building required to have a standpipe system is typically used as an extension of a required exit stairway. This allows use of the exit passageway for fire-fighting staging operations in the same way as an exit stair. The exception acknowledges that there may already be a hose connection in close proximity to the exit passageway. If there is a stairway containing a hose connection in close proximity to the exit passageway that can meet the 30-foot (9144 mm) hose stream from a nozzle attached to 100 feet (30 480 mm) of hose, then an additional standpipe is not required. The intent is to allow fewer standpipe outlets if the area can be adequately covered by the standpipes in stairways since those are the standpipes typically used by the fire department.

In covered and open mall buildings, Item 4 requires hose connections at each entrance to an exit passageway or exit corridor. In addition, covered mall buildings would be required to have connections at each exterior public entrance. Open malls would require connections at the public entrance perimeter line. These locations allow fire personnel to have a support line as soon as they enter the building.

Item 5 is consistent with NFPA 14 regarding the installation of Class I standpipe hose connections on the roofs of buildings. This requirement requires only one standpipe to extend to the roof level or highest landing of the stairway serving the roof. This coordinates with Section 1011.12, which only requires one stairway to extend to the roof.

Hose connections in each interior exit stairway result in hose connections being located based on the travel distances permitted in Table 1017.2, which recognizes that most fire departments carry standpipe hose packs with 150 feet (45 720 mm) of hose or possibly with 100 feet (30 480 mm) of hose and an additional 50-foot (15 240 mm) section that could be easily connected.

With the typical travel distance permitted in nonsprinklered buildings of 200 feet (60 960 mm), reasonable coverage is provided when the effective reach of a fire stream is considered. Depending on the arrangement of the floor, however, all areas may not be effectively protected. Although this situation could easily be corrected by locating additional hose connections on the floor, such connections may rarely be used because of the difficulty in identifying their location during a fire and the fact that most fire departments require an operational hose line before they enter the fire floor. Because longer travel distances are allowed in sprinklered buildings, the problem is increased, but the need for prompt manual suppression is reduced by the presence of the sprinkler system. Item 6 gives the fire code official the authority to require additional hose connections if needed.

[F] 905.4.1 Protection. Risers and laterals of Class I standpipe systems not located within an *interior exit stairway* shall be protected by a degree of *fire resistance* equal to that required for vertical enclosures in the building in which they are located.

Exception: In buildings equipped throughout with an *approved automatic sprinkler system*, laterals that are not located within an *interior exit stairway* are not required to be enclosed within fire-resistance-rated construction.

❖ To minimize the potential for damage to the standpipe systems from a fire, the risers and laterals (i.e., the horizontal segments of standpipe system piping) must be located in an enclosure having the same fire-resistance rating as required for a vertical or shaft enclosure within the building. The required fire-resistance rating for the enclosure can be determined as detailed in Section 713.4.

The exception states that the enclosure for laterals is not required if the building is equipped throughout with an approved automatic sprinkler system. The potential for damage to the standpipe system is minimized by the protection provided by the sprinkler system. The automatic sprinkler system may be either an NFPA 13 or 13R system, depending on what was permitted for the building occupancy.

If the interior exit stairway is not required to have a rated enclosure, such as in an open parking garage, the laterals are similarly not required to be in an enclosure. The protection afforded the vertical riser in the stairway must be the same as that afforded the laterals. If the stairway is not required by other sections of the code to be located in a rated enclosure then the laterals are not required to be in rated protection either.

INTERNATIONAL CODE COUNCIL®
Copyright © 2015 ICC. ALL RIGHTS RESERVED. Accessed by David Dammon on Jun 21, 2017 12:30:52 PM pursuant to License Agreement with ICC. No further reproduction or distribution authorized. ANY UNAUTHORIZED REPRODUCTION OR DISTRIBUTION IS A VIOLATION OF THE FEDERAL COPYRIGHT ACT AND THE LICENSE AGREEMENT, AND SUBJECT TO CIVIL AND CRIMINAL PENALTIES THEREUNDER.

[F] 905.4.2 Interconnection. In buildings where more than one standpipe is provided, the standpipes shall be interconnected in accordance with NFPA 14.

❖ In cases where there are multiple Class I standpipe risers, the risers must be supplied from and interconnected to a common supply line. The required fire department connection must serve all of the sprinklers or standpipes in the building.

[F] 905.5 Location of Class II standpipe hose connections. Class II standpipe hose connections shall be accessible and located so that all portions of the building are within 30 feet (9144 mm) of a nozzle attached to 100 feet (30 480 mm) of hose.

❖ Sections 905.5.1 through 905.5.3 specify the requirements for Class II standpipe hose connections. Class II standpipe systems are primarily intended for use by the building occupants.

This section for Class II standpipes does not specifically require the hose station and uses the term "hose connection" with a location based upon 100 feet (30 480 mm) of hose. However, the definition of Class II and III standpipes and Section 7.3.3.1 of NFPA 14 specifically require hose stations. Section 905.2 specifically references NFPA 14.

Although NFPA 14 requires a hose station, the decision as to whether a hose station is required may be one that is affected by the policies and procedures of the local fire department. It should be remembered that Class II hose connections and hose stations are intended for occupant use and not necessarily for fire department use. The fire department typically uses the Class I connection that is compatible with $2^1/_2$ inch (64 mm) hose.

[F] 905.5.1 Groups A-1 and A-2. In Group A-1 and A-2 occupancies having *occupant loads* exceeding 1,000 persons, hose connections shall be located on each side of any stage, on each side of the rear of the auditorium, on each side of the balcony and on each tier of dressing rooms.

❖ Because of the high occupant load density in Group A-1 and A-2 occupancies, providing additional means for controlling fires in their initial stage is important to enable prompt evacuation of the building. This section is independent of the Class I standpipe requirement for stages based on square footage as indicated in Section 905.3.4.

[F] 905.5.2 Protection. Fire-resistance-rated protection of risers and laterals of Class II standpipe systems is not required.

❖ Class II standpipe systems are normally not located in exit stairways; standpipe hose connections are located near the protected area to allow quick access. Therefore, it is likely that neither the risers nor the laterals would be located in any enclosure.

[F] 905.5.3 Class II system 1-inch hose. A minimum 1-inch (25 mm) hose shall be allowed to be used for hose stations in light-hazard occupancies where investigated and *listed* for this service and where *approved* by the fire code official.

❖ This section permits the use of 1-inch (25 mm) listed noncollapsible hose as an alternative to $1^1/_2$-inch (38 mm) hose, subject to the approval of the fire code official. This alternative is limited to light-hazard occupancies, such as office buildings and certain assembly occupancies that tend to have lower fuel loads, since a smaller hose can discharge less water.

[F] 905.6 Location of Class III standpipe hose connections. Class III standpipe systems shall have hose connections located as required for Class I standpipes in Section 905.4 and shall have Class II hose connections as required in Section 905.5.

❖ Class III standpipe systems that have both a $2^1/_2$-inch (64 mm) hose connection and a $1^1/_2$-inch (38 mm) hose connection must comply with the applicable requirements of Sections 905.4, 905.5 and 905.6. Thus, it is necessary to review and comply with all applicable provisions.

[F] 905.6.1 Protection. Risers and laterals of Class III standpipe systems shall be protected as required for Class I systems in accordance with Section 905.4.1.

❖ Because Class III standpipe systems are intended for use by fire-suppression personnel, they must be located in construction that has a fire-resistance rating equivalent to that of the vertical or shaft enclosure requirements of the building (see commentary, Section 905.4.1).

[F] 905.6.2 Interconnection. In buildings where more than one Class III standpipe is provided, the standpipes shall be interconnected in accordance with NFPA 14.

❖ As indicated in Section 905.4.2 for Class I standpipe systems, multiple standpipe risers must be interconnected with a common supply line. An indicating valve is typically installed at the base of each riser so that individual risers can be taken out of service without affecting the water supply or the operation of other standpipe risers.

[F] 905.7 Cabinets. Cabinets containing fire-fighting equipment such as standpipes, fire hoses, fire extinguishers or fire department valves shall not be blocked from use or obscured from view.

❖ This section does not require that cabinets be provided to contain fire protection equipment. However, if they are provided, cabinets must be readily visible and accessible at all times. Sections 905.7.1 and 905.7.2 contain additional criteria for the construction and identification of the cabinets. Where cabinets are located in fire-resistance-rated assemblies, the integrity of the assembly must be maintained. Cabinet design for hose connections, control valves or other devices that require manual operation should be such that there is sufficient clearance between the cabinet body and the device to allow grasping of the device

INTERNATIONAL CODE COUNCIL®
Copyright © 2015 ICC. ALL RIGHTS RESERVED. Accessed by David Dammon on Jun 21, 2017 12:30:52 PM pursuant to License Agreement with ICC. No further reproduction or distribution authorized. ANY UNAUTHORIZED REPRODUCTION OR DISTRIBUTION IS A VIOLATION OF THE FEDERAL COPYRIGHT ACT AND THE LICENSE AGREEMENT, AND SUBJECT TO CIVIL AND CRIMINAL PENALTIES THEREUNDER.

(quite likely with a gloved hand) and prompt operation of it.

[F] 905.7.1 Cabinet equipment identification. Cabinets shall be identified in an *approved* manner by a permanently attached sign with letters not less than 2 inches (51 mm) high in a color that contrasts with the background color, indicating the equipment contained therein.

Exceptions:

1. Doors not large enough to accommodate a written sign shall be marked with a permanently attached pictogram of the equipment contained therein.
2. Doors that have either an *approved* visual identification clear glass panel or a complete glass door panel are not required to be marked.

❖ This section specifies the minimum criteria to make the signs readily visible. Different color combinations may be approved by the fire code official if the color contrast between the letters and the background is vivid enough to make the sign visible at an approved distance. The exceptions address alternatives to letter signage if the cabinet is still conspicuously identified or the contents are readily visible.

[F] 905.7.2 Locking cabinet doors. Cabinets shall be unlocked.

Exceptions:

1. Visual identification panels of glass or other *approved* transparent frangible material that is easily broken and allows access.
2. *Approved* locking arrangements.
3. Group I-3.

❖ Ready access to all fire-fighting equipment in the cabinet is essential. The exceptions, however, recognize the need to lock cabinets for security reasons and to prevent theft or vandalism (see commentary, Section 906.8).

[F] 905.8 Dry standpipes. Dry standpipes shall not be installed.

Exception: Where subject to freezing and in accordance with NFPA 14.

❖ Wet standpipe systems are preferred because they tend to be the most reliable type of standpipe system; therefore, dry standpipes are prohibited unless subject to freezing. For example, Class I manual standpipe systems, which do not have a permanent water supply, are permitted in open parking structures. This recognizes that open parking structures are not heated and that most fires are limited to the vehicle of origin. The use of any dry standpipe system instead of a wet standpipe should take into consideration the added response time and its effect on the occupancy characteristics of the building.

[F] 905.9 Valve supervision. Valves controlling water supplies shall be supervised in the open position so that a change in the normal position of the valve will generate a supervisory signal at the supervising station required by Section 903.4. Where a fire alarm system is provided, a signal shall be transmitted to the control unit.

Exceptions:

1. Valves to underground key or hub valves in roadway boxes provided by the municipality or public utility do not require supervision.
2. Valves locked in the normal position and inspected as provided in this code in buildings not equipped with a fire alarm system.

❖ As with sprinkler systems, water control valves for standpipe systems must be electrically supervised as a means of determining that the system is operational (see commentary, Section 903.4).

Exception 1 recognizes that underground key or hub valves in roadway boxes are not normally supervised or need to be supervised whether the building contains a standpipe system or an automatic sprinkler system.

Exception 2 does not require the control valves for the standpipes to be electrically monitored if they are locked in the normal position and a fire alarm system is not installed in the building. When a fire alarm system is installed, the control valves for the standpipes must be electrically monitored and tied into the supervision required for the fire alarm system.

[F] 905.10 During construction. Standpipe systems required during construction and demolition operations shall be provided in accordance with Section 3311.

❖ As stated in Section 3311, at least one standpipe is required during construction of buildings four stories or more in height or during demolition of standpipe-equipped buildings. Standpipe systems must be accessible and operable during construction and demolition operations to assist in any potential fire (see commentary, Sections 3311.1 and 3311.2 of the code, and Sections 3313.1 and 3313.2 of the IFC).

SECTION 906
PORTABLE FIRE EXTINGUISHERS

[F] 906.1 Where required. Portable fire extinguishers shall be installed in all of the following locations:

1. In Group A, B, E, F, H, I, M, R-1, R-2, R-4 and S occupancies.

   Exception: In Group R-2 occupancies, portable fire extinguishers shall be required only in locations specified in Items 2 through 6 where each *dwelling unit* is provided with a portable fire extinguisher having a minimum rating of 1-A:10-B:C.
2. Within 30 feet (9144 mm) of commercial cooking equipment.
3. In areas where flammable or combustible liquids are stored, used or dispensed.
4. On each floor of structures under construction, except Group R-3 occupancies, in accordance with Section 3315.1 of the *International Fire Code*.

INTERNATIONAL CODE COUNCIL®
Copyright © 2015 ICC. ALL RIGHTS RESERVED. Accessed by David Dammon on Jun 21, 2017 12:30:52 PM pursuant to License Agreement with ICC. No further reproduction or distribution authorized. ANY UNAUTHORIZED REPRODUCTION OR DISTRIBUTION IS A VIOLATION OF THE FEDERAL COPYRIGHT ACT AND THE LICENSE AGREEMENT, AND SUBJECT TO CIVIL AND CRIMINAL PENALTIES THEREUNDER.

5. Where required by the *International Fire Code* sections indicated in Table 906.1.
6. Special-hazard areas, including but not limited to laboratories, computer rooms and generator rooms, where required by the fire code official.

❖ Portable fire extinguishers are required in certain instances to give the occupants the means to suppress a fire in its incipient stage. The capability for manual fire suppression can contribute to the protection of the occupants, especially if there are evacuation difficulties associated with the occupancy or the specific hazard in the area. To be effective, personnel must be properly trained in the use of portable fire extinguishers.

Because of the high-hazard nature of building contents, portable fire extinguishers are required in occupancies in Group H.

Portable fire extinguishers are required in occupancies in Groups A, B, E, F, I, M, R-1, R-2, R-4 and S because of the need to control the fire in its early stages and because evacuation can be slowed by the density of the occupant load, the capability of the occupants to evacuate or the overall fuel load in the building. Because the code typically focuses upon new buildings, this section is applicable to new buildings.

Portable fire extinguishers are required in areas containing special hazards, such as commercial cooking equipment, and specific hazardous operations, as indicated in Table 906.1. Because of the potentially extreme fire hazard associated with such areas or occupancy conditions, prompt extinguishment of the fire is critical.

Portable fire extinguishers are required in all buildings under construction, except in occupancies in Group R-3. The extinguishers are intended for use by construction personnel to suppress a fire in its incipient stages.

Portable fire extinguishers are also required in laboratories, computer rooms and other work spaces in which fire hazards may exist based on the use of the space. Many of these will be addressed by the required occupancy group criteria or by the specific hazard provisions of Table 906.1. Laboratories, for example, may not be considered Group H, but still use limited amounts of hazardous materials that would make manual means of fire extinguishment desirable.

The exception to Item 1 permits smaller PFEs in dwelling units of Group R-2 occupancies instead of larger PFEs in the common areas. Under the exception, the installation of 1-A:10-B:C PFEs within individual dwelling units allows apartment owners to eliminate their installation in common areas such as corridors, laundry rooms and swimming pool areas. PFEs in these areas are susceptible to vandalism or theft. Another issue is that larger PFEs are more difficult for the infirm and elderly to safely deploy and operate.

For the period of 2003 through 2007, NFPA reported that approximately 38,000 fires occurred annually in apartment buildings. Sixty percent of these fires occurred inside of dwelling units versus 14 percent that occurred in common areas covered by Items 3 and 6 of Section 906.1. It is more logical to place PFEs inside of dwelling units versus common areas because it locates the extinguisher in an area where statistically most fires occur. If the occupant cannot control the fire using the PFE, he or she can escape and allow the automatic sprinkler system to operate and control the fire. This exception improves the safety of Group R-2 residents because it does not require them to leave a dwelling involved in a fire, find a PFE and then return to the fire-involved dwelling unit to attempt incipient fire attack.

Including this requirement in the code alerts designers and building officials that the extinguishers are required. This will allow designers to plan for thicker walls where recessed cabinets may be used or to design locations where the extinguishers will not project into or obstruct the egress or circulation path.

TABLE 906.1. See page 9-53.

❖ Table 906.1 lists those sections of the IFC that represent specific occupancy conditions requiring portable fire extinguishers for incipient fire control. Wherever the code requires a fire extinguisher because of one of the listed occupancy conditions, it may identify the required rating of the extinguisher that is compatible with the hazard involved in addition to referencing Section 906.

[F] 906.2 General requirements. Portable fire extinguishers shall be selected and installed in accordance with this section and NFPA 10.

Exceptions:

1. The distance of travel to reach an extinguisher shall not apply to the spectator seating portions of Group A-5 occupancies.
2. In Group I-3, portable fire extinguishers shall be permitted to be located at staff locations.

❖ NFPA 10 contains minimum requirements for the selection, installation and maintenance of portable fire extinguishers. Portable fire extinguishers are investigated and rated in conformance to NFPA 10 and listed under a variety of standards. Portable fire extinguishers must be labeled and rated for use on fires of the type, severity and hazard class protected.

This section references NFPA 10 for the selection and installation of portable fire extinguishers and states that the code is focused on the initial construction versus long-term maintenance of a building. The maintenance of portable fire extinguishers is dealt with in the IFC.

Exception 1 recognizes the openness to the atmo-

INTERNATIONAL CODE COUNCIL®
Copyright © 2015 ICC. ALL RIGHTS RESERVED. Accessed by David Dammon on Jun 21, 2017 12:30:52 PM pursuant to License Agreement with ICC. No further reproduction or distribution authorized. ANY UNAUTHORIZED REPRODUCTION OR DISTRIBUTION IS A VIOLATION OF THE FEDERAL COPYRIGHT ACT AND THE LICENSE AGREEMENT, AND SUBJECT TO CIVIL AND CRIMINAL PENALTIES THEREUNDER.

sphere associated with Group A-5 occupancies. A fire in open areas is more obvious to all spectators. Group A-5 occupancies also do not accumulate smoke and hot gases because they are not enclosed spaces. These reasons, in addition to the large and expansive layout within seating areas, make it reasonable and practical not to apply the distance of travel to a PFE criteria in Group A-5. Revised distance of travel allowances would need to be approved by the code official. Group A-5 occupancies also tend to be more subject to the corrosive conditions of an outdoor environment, and may include freeze/thaw cycles that can be detrimental to fire extinguishers.

Exception 2 recognizes that portable fire extinguishers located throughout the facility are at times tampered with, removed or used for weapons by inmates in a detention or correctional setting. This exception would protect the extinguishers from damage or removal by inmates while still making them available to staff and employees for use in an emergency situation.

[F] 906.3 Size and distribution. The size and distribution of portable fire extinguishers shall be in accordance with Sections 906.3.1 through 906.3.4.

❖ Proper selection and distribution of portable fire extinguishers are essential to having adequate protection for the building structure and the occupancy conditions within. This section introduces the sections that provide those requirements. Determination of the desired type of portable fire extinguisher depends on the character of the fire anticipated, building occupancy, specific hazards and ambient temperature conditions [see commentary, Tables 906.3(1) and 906.3(2)].

[F] 906.3.1 Class A fire hazards. The minimum sizes and distribution of portable fire extinguishers for occupancies that involve primarily Class A fire hazards shall comply with Table 906.3(1).

❖ Class A fires generally involve materials considered to be “ordinary combustibles,” such as wood, cloth, paper, rubber and most plastics [see commentary, Table 906.3(1)].

[F]TABLE 906.3(1). See page 9-54.

❖ Table 906.3(1), which parallels Table 6.2.1.1 of NFPA 10, establishes the minimum number and rating of fire extinguishers for Class A fires in any particular occupancy. The occupancy classifications are further defined in NFPA 10. The maximum area that a single fire extinguisher can protect is determined based on the rating of the fire extinguisher. The distance of travel limitation of 75 feet (22 860 mm) is intended to be the actual walking distance along a normal path of travel to the extinguisher. For this reason, it is necessary to select fire extinguishers that comply with both the distribution criteria and distance of travel limitation for a specific occupancy classification.

[F] TABLE 906.1
ADDITIONAL REQUIRED PORTABLE FIRE EXTINGUISHERS IN THE INTERNATIONAL FIRE CODE

IFC SECTION	SUBJECT
303.5	Asphalt kettles
307.5	Open burning
308.1.3	Open flames—torches
309.4	Powered industrial trucks
2005.2	Aircraft towing vehicles
2005.3	Aircraft welding apparatus
2005.4	Aircraft fuel-servicing tank vehicles
2005.5	Aircraft hydrant fuel-servicing vehicles
2005.6	Aircraft fuel-dispensing stations
2007.7	Heliports and helistops
2108.4	Dry cleaning plants
2305.5	Motor fuel-dispensing facilities
2310.6.4	Marine motor fuel-dispensing facilities
2311.6	Repair garages
2404.4.1	Spray-finishing operations
2405.4.2	Dip-tank operations
2406.4.2	Powder-coating areas
2804.3	Lumberyards/woodworking facilities
2808.8	Recycling facilities
2809.5	Exterior lumber storage
2903.5	Organic-coating areas
3006.3	Industrial ovens
3104.12	Tents and membrane structures
3206.10	High-piled storage
3315.1	Buildings under construction or demolition
3317.3	Roofing operations
3408.2	Tire rebuilding/storage
3504.2.6	Welding and other hot work
3604.4	Marinas
3703.6	Combustible fibers
5703.2.1	Flammable and combustible liquids, general
5704.3.3.1	Indoor storage of flammable and combustible liquids
5704.3.7.5.2	Liquid storage rooms for flammable and combustible liquids
5705.4.9	Solvent distillation units
5706.2.7	Farms and construction sites—flammable and combustible liquids storage
5706.4.10.1	Bulk plants and terminals for flammable and combustible liquids
5706.5.4.5	Commercial, industrial, governmental or manufacturing establishments—fuel dispensing
5706.6.4	Tank vehicles for flammable and combustible liquids
5906.5.7	Flammable solids
6108.2	LP-gas

INTERNATIONAL CODE COUNCIL®
Copyright © 2015 ICC. ALL RIGHTS RESERVED. Accessed by David Dammon on Jun 21, 2017 12:30:52 PM pursuant to License Agreement with ICC. No further reproduction or distribution authorized. ANY UNAUTHORIZED REPRODUCTION OR DISTRIBUTION IS A VIOLATION OF THE FEDERAL COPYRIGHT ACT AND THE LICENSE AGREEMENT, AND SUBJECT TO CIVIL AND CRIMINAL PENALTIES THEREUNDER.

[F] 906.3.2 Class B fire hazards. Portable fire extinguishers for occupancies involving flammable or combustible liquids with depths less than or equal to 0.25-inch (6.4 mm) shall be selected and placed in accordance with Table 906.3(2).

Portable fire extinguishers for occupancies involving flammable or combustible liquids with a depth of greater than 0.25-inch (6.4 mm) shall be selected and placed in accordance with NFPA 10.

❖ Class B fires involve flammable and combustible liquids, oil-based paints, alcohols, solvents, flammable gases and similar materials. Selection of these extinguishers is made based on the depth of the liquid that could become involved in a fire. If the depth is $^1/_4$-inch (6.35 mm) or less, selection is made using Table 906.3(2). Class B extinguishers for greater liquid depth, characterized in NFPA 10 as "appreciable depth," must be selected and installed in accordance with Section 6.3.2 of NFPA 10 [see commentary, Table 906.3(2)].

TABLE 906.3(2). See next column.

❖ Fires involving flammable or combustible liquids present a severe hazard challenge regardless of occupancy. Table 906.3(2), which parallels Table 6.3.1.1 of NFPA 10, prescribes the minimum portable fire extinguisher requirements where flammable or combustible liquids are limited in depth [0.25 inch (6 mm) or less]. As can be seen in the table, the size of the extinguisher is directly related to the distance of travel to the extinguisher for each given occupancy classification. These fire extinguisher provisions are independent of whether other fixed automatic fire-extinguishing systems are installed. For occupancy conditions involving flammable or combustible liquids in potential depths greater than 0.25 inch (6 mm), the selection and spacing criteria of NFPA 10 must be used in addition to any applicable requirements in Chapter 57 of the IFC and NFPA 30.

[F] 906.3.3 Class C fire hazards. Portable fire extinguishers for Class C fire hazards shall be selected and placed on the basis of the anticipated Class A or B hazard.

❖ Class C fires involve energized electrical equipment where the electrical nonconductivity of the extinguishing agent is critical. The need for this class of extinguisher is simply based on the presence of the hazard in an occupancy and no numerical rating is required.

[F] 906.3.4 Class D fire hazards. Portable fire extinguishers for occupancies involving combustible metals shall be selected and placed in accordance with NFPA 10.

❖ Class D fires involve flammable solids, the bulk of which are combustible metals including, but not limited to, magnesium, potassium, sodium and titanium. Most Class D extinguishers will have a special low-velocity nozzle or discharge wand to gently apply the agent in large volumes to avoid disrupting any finely divided burning materials. Extinguishing agents are also available in bulk and can be applied with a scoop or shovel. While Class D extinguishers are often referred to as "dry chemical" fire extinguishers, they are more properly called "dry powder" fire extinguishers because their mechanism of extinguishment is by a smothering action rather than by chemical reaction with the combustion process.

There are several Class D fire-extinguisher agents available—some will handle multiple types of metal fires, others will not. Sodium carbonate-based extinguishers are used to control sodium, potassium, and sodium-potassium alloy fires but have limited use on other metals. This material smothers and forms a crust. Sodium chloride-based extinguishers contain sodium chloride salt and a thermoplastic additive. The plastic melts to form an oxygen-excluding crust over the metal, and the salt dissipates heat. This powder is useful on most alkali metals, including magnesium, titanium, aluminum, sodium, potassium and zirconium. Graphite-based extinguishers contain dry graphite powder that smothers burning metals.

[F] TABLE 906.3(1)
FIRE EXTINGUISHERS FOR CLASS A FIRE HAZARDS

	LIGHT (Low) HAZARD OCCUPANCY	ORDINARY (Moderate) HAZARD OCCUPANCY	EXTRA (High) HAZARD OCCUPANCY
Minimum rated single extinguisher	2-A[c]	2-A	4-A[a]
Maximum floor area per unit of A	3,000 square feet	1,500 square feet	1,000 square feet
Maximum floor area for extinguisher[b]	11,250 square feet	11,250 square feet	11,250 square feet
Maximum distance of travel to extinguisher	75 feet	75 feet	75 feet

For SI: 1 foot = 304.8 mm, 1 square foot = 0.0929m^2, 1 gallon = 3.785 L.

a. Two $2^1/_2$-gallon water-type extinguishers shall be deemed the equivalent of one 4-A rated extinguisher.

b. Annex E.3.3 of NFPA 10 provides more details concerning application of the maximum floor area criteria.

c. Two water-type extinguishers each with a 1-A rating shall be deemed the equivalent of one 2-A rated extinguisher for Light (Low) Hazard Occupancies.

[F] TABLE 906.3(2)
FIRE EXTINGUISHERS FOR FLAMMABLE OR COMBUSTIBLE LIQUIDS WITH DEPTHS LESS THAN OR EQUAL TO 0.25 INCH

TYPE OF HAZARD	BASIC MINIMUM EXTINGUISHER RATING	MAXIMUM DISTANCE OF TRAVEL TO EXTINGUISHERS (feet)
Light (Low)	5-B 10-B	30 50
Ordinary (Moderate)	10-B 20-B	30 50
Extra (High)	40-B 80-B	30 50

For SI: 1 inch = 25.4 mm, 1 foot = 304.8 mm.

Note: For requirements on water-soluble flammable liquids and alternative sizing criteria, see Section 5.5 of NFPA 10.

INTERNATIONAL CODE COUNCIL®
Copyright © 2015 ICC. ALL RIGHTS RESERVED. Accessed by David Dammon on Jun 21, 2017 12:30:52 PM pursuant to License Agreement with ICC. No further reproduction or distribution authorized. ANY UNAUTHORIZED REPRODUCTION OR DISTRIBUTION IS A VIOLATION OF THE FEDERAL COPYRIGHT ACT AND THE LICENSE AGREEMENT, AND SUBJECT TO CIVIL AND CRIMINAL PENALTIES THEREUNDER.

Unlike sodium chloride powder extinguishers, the graphite powder fire extinguishers can be used on very hot burning metal fires such as lithium, but the powder will not stick to and extinguish flowing or vertical lithium fires. The graphite powder acts as a heat sink as well as smothering the metal fire. See the commentary to Section 5906.5.7 of the IFC for a discussion of extinguishing flammable solid fires.

[F] 906.4 Cooking grease fires. Fire extinguishers provided for the protection of cooking grease fires shall be of an *approved* type compatible with the automatic fire-extinguishing system agent and in accordance with Section 904.12.5 of the *International Fire Code*.

❖ The combination of high-efficiency cooking appliances and hotter burning cooking media creates a potentially severe fire hazard. Although commercial cooking systems must have an approved exhaust hood and be protected by an approved automatic fire-extinguishing system, a manual means of extinguishment is desirable to attack a fire in its incipient stage.

As indicated in Section 904.12.5, a Class K-rated portable fire extinguisher must be located within 30 feet (9144 mm) of travel distance of commercial-type cooking equipment. Class K-rated extinguishers have been specifically tested on commercial cooking appliances using vegetable or animal oils or fats. These portable fire extinguishers are usually of sodium bicarbonate or potassium bicarbonate dry-chemical type.

[F] 906.5 Conspicuous location. Portable fire extinguishers shall be located in conspicuous locations where they will be readily accessible and immediately available for use. These locations shall be along normal paths of travel, unless the fire code official determines that the hazard posed indicates the need for placement away from normal paths of travel.

❖ Fire extinguishers must be located in readily accessible locations along normal egress paths. This increases the occupants, familiarity with the location of the fire extinguishers. When considering location, the most frequent occupants should be considered. These are the occupants who would become most familiar with the fire-extinguisher placement. For most buildings, it is the employees who are most familiar with their surroundings; therefore, a good understanding of employee operations is important for proper extinguisher placement.

[F] 906.6 Unobstructed and unobscured. Portable fire extinguishers shall not be obstructed or obscured from view. In rooms or areas in which visual obstruction cannot be completely avoided, means shall be provided to indicate the locations of extinguishers.

❖ Portable fire extinguishers must be located where they are readily visible at all times. If visual obstruction cannot be avoided, the location of the extinguishers must be marked by an approved means of identification. This could include additional signage, lights, arrows or other means approved by the fire code official. Unobstructed does not necessarily mean visible from all angles within the space. Often, columns or furnishings may obscure the extinguisher from one direction or another. These are not by themselves obstructions. The intent is that the extinguisher is not hidden but rather can be readily found. If the extinguisher is placed in the wall behind a door, it is clearly obstructed since it cannot be easily viewed. An extinguisher on a wall that is visible from most of the space would be considered unobstructed.

[F] 906.7 Hangers and brackets. Hand-held portable fire extinguishers, not housed in cabinets, shall be installed on the hangers or brackets supplied. Hangers or brackets shall be securely anchored to the mounting surface in accordance with the manufacturer's installation instructions.

❖ Portable fire extinguishers not housed in cabinets are usually mounted on walls or columns using securely fastened hangers. Brackets must be used where the fire extinguishers need to be protected from impact or other potential physical damage.

[F] 906.8 Cabinets. Cabinets used to house portable fire extinguishers shall not be locked.

Exceptions:

1. Where portable fire extinguishers subject to malicious use or damage are provided with a means of ready access.
2. In Group I-3 occupancies and in mental health areas in Group I-2 occupancies, access to portable fire extinguishers shall be permitted to be locked or to be located in staff locations provided the staff has keys.

❖ Cabinets housing fire extinguishers must not be locked in order to provide quick access in an emergency. Exception 1, however, allows the cabinets to be locked in occupancies where vandalism, theft or other malicious behavior is possible. Exception 2 also permits cabinets housing fire extinguishers to be locked or to be located in staff locations in Group I-3 occupancies and mental health areas in Group I-2 occupancies. Occupants in Group I-3 areas of jails, prisons or similar restrained occupancies should not have access to fire extinguishers because they could possibly be used as a weapon or be subject to vandalism. Staff adequately trained in the use of fire extinguishers are assumed to have ready access to the keys for the cabinets at all times.

[F] 906.9 Extinguisher installation. The installation of portable fire extinguishers shall be in accordance with Sections 906.9.1 through 906.9.3.

❖ This section introduces the installation criteria for portable fire extinguishers based on the weight of the unit.

[F] 906.9.1 Extinguishers weighing 40 pounds or less. Portable fire extinguishers having a gross weight not exceeding 40 pounds (18 kg) shall be installed so that their tops are not more than 5 feet (1524 mm) above the floor.

❖ Because of the varying height and physical strength levels of persons who might be called on to operate a

INTERNATIONAL CODE COUNCIL®
Copyright © 2015 ICC. ALL RIGHTS RESERVED. Accessed by David Dammon on Jun 21, 2017 12:30:52 PM pursuant to License Agreement with ICC. No further reproduction or distribution authorized. ANY UNAUTHORIZED REPRODUCTION OR DISTRIBUTION IS A VIOLATION OF THE FEDERAL COPYRIGHT ACT AND THE LICENSE AGREEMENT, AND SUBJECT TO CIVIL AND CRIMINAL PENALTIES THEREUNDER.

portable fire extinguisher, the mounting height of the extinguisher must be commensurate with its weight so that it may be easily retrieved by anyone from its mounting location and placed into use.

[F] 906.9.2 Extinguishers weighing more than 40 pounds. Hand-held portable fire extinguishers having a gross weight exceeding 40 pounds (18 kg) shall be installed so that their tops are not more than 3.5 feet (1067 mm) above the floor.

❖ See the commentary to Section 906.9.1.

[F] 906.9.3 Floor clearance. The clearance between the floor and the bottom of installed hand-held portable fire extinguishers shall be not less than 4 inches (102 mm).

❖ The clearance between the floor and the bottom of installed hand-held extinguishers must not be less than 4 inches (102 mm) to facilitate cleaning beneath the unit and reduce the likelihood of the extinguisher becoming dislodged during cleaning operations (floor mopping, sweeping, etc.).

[F] 906.10 Wheeled units. Wheeled fire extinguishers shall be conspicuously located in a designated location.

❖ Wheeled fire extinguishers consist of a large-capacity (up to several hundred pounds of agent) fire extinguisher assembly (either stored-pressure or pressure-transfer type) equipped with a carriage and wheels and discharge hose. They are constructed so that one able-bodied person could move the unit to the fire area and begin extinguishment unassisted. Wheeled fire extinguishers are capable of delivering greater flow rates and stream range for various extinguishing agents than hand-held portable fire extinguishers. Wheeled fire extinguishers are generally more effective in high-hazard areas and, as with any extinguisher, must be readily available and stored in an approved location. The wheeled fire extinguisher should be located a safe distance from the hazard area so that it will not become involved in the fire or access to it compromised by a fire. These units are typically found at airport fueling ramps, refineries, bulk plants and similar locations where high-challenge fires may be encountered. The extinguishing agents available in wheeled units include carbon dioxide, dry chemical, dry powder and foam.

SECTION 907
FIRE ALARM AND DETECTION SYSTEMS

[F] 907.1 General. This section covers the application, installation, performance and maintenance of fire alarm systems and their components.

❖ Fire alarm systems in new buildings, which typically include manual fire alarm systems and automatic smoke detection systems, must be installed in accordance with Section 907 and NFPA 72. Fire alarm systems in existing buildings are regulated by Chapter 11 of the IFC.

Manual fire alarm systems are installed in buildings to limit fire casualties and property losses. Fire alarm systems do this by promptly notifying the occupants of the building of an emergency, which increases the time available for evacuation. Similarly, when fire alarm systems are supervised, the fire department will be promptly notified and its response time relative to the onset of the fire will be reduced.

Automatic smoke detection systems are required under certain conditions to increase the likelihood that a fire is detected and occupants are given an early warning. The detection system is a system of devices and associated hardware that activates the alarm system. The automatic detecting devices are to be smoke detectors, unless a condition exists that calls for the use of a different type of detector.

[F] 907.1.1 Construction documents. *Construction documents* for fire alarm systems shall be of sufficient clarity to indicate the location, nature and extent of the work proposed and show in detail that it will conform to the provisions of this code, the *International Fire Code* and relevant laws, ordinances, rules and regulations, as determined by the fire code official.

❖ Construction documents for fire alarm systems must be submitted for review to determine compliance with the code, the IFC and NFPA 72. All of the information required by this section may not be available during the design stage and initial permit process. Later submission of more detailed shop drawings may be required in accordance with Section 907.1.2. These provisions are intended to reflect the minimum scope of information needed to determine code compliance. When the work can be briefly described on the application form, the fire code official may utilize judgment in determining the need for more detailed documents.

[F] 907.1.2 Fire alarm shop drawings. Shop drawings for fire alarm systems shall be submitted for review and approval prior to system installation, and shall include, but not be limited to, all of the following where applicable to the system being installed:

1. A floor plan that indicates the use of all rooms.
2. Locations of alarm-initiating devices.
3. Locations of alarm notification appliances, including candela ratings for visible alarm notification appliances.
4. Design minimum audibility level for occupant notification.
5. Location of fire alarm control unit, transponders and notification power supplies.
6. Annunciators.
7. Power connection.
8. Battery calculations.
9. Conductor type and sizes.
10. Voltage drop calculations.
11. Manufacturers' data sheets indicating model numbers and listing information for equipment, devices and materials.

INTERNATIONAL CODE COUNCIL®
Copyright © 2015 ICC. ALL RIGHTS RESERVED. Accessed by David Dammon on Jun 21, 2017 12:30:52 PM pursuant to License Agreement with ICC. No further reproduction or distribution authorized. ANY UNAUTHORIZED REPRODUCTION OR DISTRIBUTION IS A VIOLATION OF THE FEDERAL COPYRIGHT ACT AND THE LICENSE AGREEMENT, AND SUBJECT TO CIVIL AND CRIMINAL PENALTIES THEREUNDER.

12. Details of ceiling height and construction.
13. The interface of fire safety control functions.
14. Classification of the supervising station.

❖ Since the fire protection contractor(s) may not have been selected at the time a permit is issued for construction of a building, detailed shop drawings for fire alarm systems may not be available. Because they provide the information necessary to determine code compliance, as specified in this section, they must be submitted and approved by the fire code official before the contractor can begin installing the system.

[F] 907.1.3 Equipment. Systems and components shall be *listed* and *approved* for the purpose for which they are installed.

❖ The components of the fire alarm system must be approved for use in the planned system. NFPA 72 requires all devices, combinations of devices, appliances and equipment to be labeled for their proposed use. The testing agency will test the components for use in various types of systems and stipulate the use of the component on the label. Evidence of listing and labeling of the system components must be submitted with the shop drawings. In some instances, the entire system may be labeled.

At least one major testing agency, Underwriters Laboratories, Inc. (UL), has a program in which alarm installation and service companies are issued a certificate and become listed by the agency as being qualified to design, install and maintain local, auxiliary, remote station or proprietary fire alarm systems. The listed companies may then issue a certificate showing that the system is in compliance with Section 907. Terms of the company certification by UL include the company being responsible for keeping accurate system documentation, including as-built record drawings, acceptance test records and complete maintenance records on a given system. The company is also responsible for the required periodic inspection and testing of the system under contract with the owner. A similar program has been available for many years for central station alarm service, whereas the UL program is relatively new to the industry. Even though this company and system listing program is not required by the code or NFPA 72, it can be a valuable tool for the fire code official in determining compliance with the referenced standard.

Another issue that must be considered is the compatibility of the system components as required by NFPA 72. The labeling of system components discussed above should include any compatibility restrictions for components. Compatibility is primarily an issue of the ability of smoke detectors and fire alarm control panels (FACPs) to function properly when interconnected and affects the two-wire type of smoke detectors, which obtain their operating power over the same pair of wires used to transmit signals to the FACP (the control unit initiating device circuits). Laboratories will test for component compatibility either by actual testing or by reviewing the circuit parameters of both the detector and the FACP. Generally, if both the two-wire detector and the FACP are of the same brand, there should not be a compatibility problem. Nevertheless, the fire code official must be satisfied that the components are listed as being compatible. Failure to comply with the compatibility requirements of NFPA 72 can lead to system malfunction or failure at a critical time.

[F] 907.2 Where required—new buildings and structures. An *approved* fire alarm system installed in accordance with the provisions of this code and NFPA 72 shall be provided in new buildings and structures in accordance with Sections 907.2.1 through 907.2.23 and provide occupant notification in accordance with Section 907.5, unless other requirements are provided by another section of this code.

Not fewer than one manual fire alarm box shall be provided in an *approved* location to initiate a fire alarm signal for fire alarm systems employing automatic fire detectors or waterflow detection devices. Where other sections of this code allow elimination of fire alarm boxes due to sprinklers, a single fire alarm box shall be installed.

Exceptions:

1. The manual fire alarm box is not required for fire alarm systems dedicated to elevator recall control and supervisory service.
2. The manual fire alarm box is not required for Group R-2 occupancies unless required by the fire code official to provide a means for fire watch personnel to initiate an alarm during a sprinkler system impairment event. Where provided, the manual fire alarm box shall not be located in an area that is accessible to the public.

❖ This section specifies the occupancies or conditions in new buildings or structures that require some form of fire alarm system which is either a manual fire alarm system (manual fire alarm boxes) or an automatic smoke detection system. These systems must, upon activation, provide occupant notification throughout the area protected by the system unless other alternative provisions are allowed by this section.

Manual fire alarm systems must be installed in certain occupancies depending on the number of occupants, capabilities of the occupants and height of the building. An automatic smoke detection system must be installed in those occupancies and conditions where the need to detect the fire is essential to evacuation or protection of the occupants. The requirements for automatic smoke detection are generally based on the evacuation needs of the occupants and whether the occupancy includes sleeping accommodations.

Fire alarm systems must be installed in accordance with the code and NFPA 72. NFPA 72 identifies the minimum performance, location, mounting, testing and maintenance requirements for fire alarm sys-

INTERNATIONAL CODE COUNCIL®
Copyright © 2015 ICC. ALL RIGHTS RESERVED. Accessed by David Dammon on Jun 21, 2017 12:30:52 PM pursuant to License Agreement with ICC. No further reproduction or distribution authorized. ANY UNAUTHORIZED REPRODUCTION OR DISTRIBUTION IS A VIOLATION OF THE FEDERAL COPYRIGHT ACT AND THE LICENSE AGREEMENT, AND SUBJECT TO CIVIL AND CRIMINAL PENALTIES THEREUNDER.

tems. Smoke detectors must be used, except when ambient conditions would prohibit their use. In that case other detection methods may be used. The manufacturer's literature will identify the limitations on the use of smoke detectors, including environmental conditions such as humidity, temperature and airflow.

Only certain occupancies are required to have either a manual fire alarm or automatic fire detection system installed (see Commentary Figure 907.2). The need for either system is generally determined by the number of occupants, the height of the building or the ability of the occupants for self-preservation.

Note that generally the fire alarm requirements are based on occupancy and not on fire area. Commentary Figure 907.2 contains the conditions that require when either system must be installed in a building. The extent that an alarm system must be installed in a building once it has been determined that such a system is required is based on a several factors. One, if it is the only occupancy in the building, then it would be required throughout the building. Two, if the building is a mixed occupancy, it can either be separated or nonseparated. If the occupancy is separated in accordance with Section 508.4, then the alarm system is only required within that separated portion of the building. If the building is considered a nonseparated, mixed occupancy building, then Section 508.3.1 states that the code apply to each portion of the building based on the occupancy classification of that space and that the most restrictive provisions of Chapter 9 shall apply to the building or portion thereof in which the nonseparated occupancies are located. Therefore, if you had a Group A occupancy in a nonseparated mixed occupancy (containing other occupancies such as Groups B and M) where the Group A occupancy exceeds an occupant load of 300, then the entire nonseparated mixed occupancy would require the alarm system. Note that Section 508.3.1 focuses on each space to determine occupancy and requirements. Once the occupant load is determined, then any requirements, such as fire alarms, would be required throughout.

The code does not address whether or not a nonseparated mixed occupancy has a completely independent means of egress such as in a strip mall. Additionally, in a building containing primarily Group A occupancies, the code does not clearly address whether such occupancies within a building should be looked at as an aggregate or individual space. This issue has been clarified in the 2012 edition of the code through the use of the fire area concept for Group A occupancies, but only for the basic manual fire alarm requirements in Section 907.2.1. The emergency voice/alarm communication requirements in Section 907.2.1.1 still simply provide a criteria of 1,000 or more occupants in a Group A occupancy. A building with multiple Group A occupancies without using the concept of separation of egress paths would need to be reviewed in aggregate. Fire area separation could not be used to provide separation of occupancies in this case.

Commentary Figure 907.2 contains the threshold requirements for when a manual fire alarm system or an automatic fire detection system is required based on the occupancy group. It is important to remember that although the requirement for manual pull stations may not apply (e.g., sprinklered buildings), alarm and occupant notification may still be required. Sections 907.2.11 through 907.2.23 contain additional requirements for fire alarm systems depending on special occupancy conditions such as atriums, high-rise buildings or covered mall buildings.

The single manual fire alarm box required by this section is needed to provide a means of manually activating a fire alarm system that only contains automatic devices such as sprinkler waterflow switches or smoke detectors. Its primary use is for alarm system maintenance technicians to be able to manually activate the fire alarm system in the event of a fire during the time the system or portions of the system is down for maintenance. Note that this requirement is not subject to any of the exceptions in Sections 907.2.1 through 907.2.23 that might waive the need for manual fire alarm boxes in certain buildings.

Exception 1 recognizes the specialized nature of fire alarm systems installed only for emergency elevator control and supervision.

Exception 2 waives the single manual fire alarm box but gives the fire code official authority to require it in sprinklered buildings for use by fire watch personnel or sprinkler maintenance personnel to be able to manually activate the fire alarm system in the event of a fire during the time the sprinkler system is down for maintenance.

[F] 907.2.1 Group A. A manual fire alarm system that activates the occupant notification system in accordance with Section 907.5 shall be installed in Group A occupancies where the occupant load due to the assembly occupancy is 300 or more. Group A occupancies not separated from one another in accordance with Section 707.3.10 shall be considered as a single occupancy for the purposes of applying this section. Portions of Group E occupancies occupied for assembly purposes shall be provided with a fire alarm system as required for the Group E occupancy.

> **Exception:** Manual fire alarm boxes are not required where the building is equipped throughout with an *automatic sprinkler system* installed in accordance with Section 903.3.1.1 and the occupant notification appliances will activate throughout the notification zones upon sprinkler water flow.

❖ Group A occupancies are typically occupied by a significant number of people who are not completely familiar with their surroundings. The provisions of this section address three separate situations regarding the application of the alarm requirements for Group A occupancies. The three situations addressed by the provisions are: (1) where an assembly occupancy

INTERNATIONAL CODE COUNCIL®
Copyright © 2015 ICC. ALL RIGHTS RESERVED. Accessed by David Dammon on Jun 21, 2017 12:30:52 PM pursuant to License Agreement with ICC. No further reproduction or distribution authorized. ANY UNAUTHORIZED REPRODUCTION OR DISTRIBUTION IS A VIOLATION OF THE FEDERAL COPYRIGHT ACT AND THE LICENSE AGREEMENT, AND SUBJECT TO CIVIL AND CRIMINAL PENALTIES THEREUNDER.

and another occupancy are involved; (2) where multiple assembly areas exist in a building; and (3) where the assembly use occurs in and is a part of a Group E occupancy.

In situations where an assembly area and another occupancy are involved, the code specifies that it is the occupant load "due to the assembly occupancy" that would need to be 300 or more before the manual alarm system is required. For example, if the building is constructed with an assembly occupancy, such as a restaurant, with an occupant load of 250 and an adjacent office area with an occupant load of 100, the assembly space would not require an alarm system because the occupant load "due to the assembly occupancy" is less than 300. This is really simply a clarification of the way the provisions were intended to be applied. This would be the intended way to apply the provision whether the building was constructed using the accessory-, separated- or nonseparated-occupancy requirements of Chapter 5.

MANUAL FIRE ALARM SYSTEM	
Occupancy Group(s)	**Threshold**
Assembly (A-1, A-2, A-3, A-4, A-5)	All with an occupant load of > 300 (907.2.1)
Business (B)	Total Group B occupant load of > 500; or, > 100 above/below level of exit discharge; or, in Group B fire areas containing an ambulatory care facility. (907.2.2)
Educational (E)	> 50 occupants (several exceptions for manual fire alarm box placement) (907.2.3)
Factory (F-1, F-2)	> 2 stories with occupant load of > 500 above/below lowest level of exit discharge (exception for sprinklers) (907.2.4)
High hazard (H)	Group H-5 and in occupancies for manufacture of organic coatings. (907.2.5)
Institutional (I-1, I-2, I-3, I-4)	All (exceptions for I-1 and I-2 manual fire alarm box placement and private mode signaling) (907.2.6)
Mercantile (M)	Total Group M occupant load of > 500; or, occupant load of >100 above/below level of exit discharge (907.2.7)
Hotels (R-1)	All (exceptions for < 2 stories with sleeping units having exit directly to exterior; sprinklers) (907.2.8.1)
Multifamily (R-2)	If units > 3 stories above lowest level of exit discharge; or, > 1 story below highest level of exit discharge; or, > 16 units (exceptions for < 2 stories with sleeping units having exit directly to exterior; sprinklers); open-ended corridors/no corridor (907.2.9.1)
Residential care/assisted living (R-4)	All (exceptions for sprinklers, manual fire alarm boxes at staff locations, direct exit to exterior < 2 stories) (907.2.10.1)
AUTOMATIC SMOKE DETECTION SYSTEM	
Business (B) Ambulatory care facilities	Facility, plus public use areas outside of it including public corridors and elevator lobbies (exception for sprinklers) (907.2.2.1)
High hazard (H)	Highly toxic gases, organic peroxides, oxidizers (907.2.5)
Institutional (I-1, I-2, I-3)	All, in specific areas by occupancy (907.2.6.1, 907.2.6.2, 907.2.6.3.3)
Hotels (R-1)	All, in interior corridors (exception for buildings without interior corridors and with sleeping units having exit directly to exterior) (907.2.8.2)
Residential care/assisted living (R-4)	All, in corridors, waiting areas open to corridors, nonsleeping area habitable spaces and kitchens (exceptions for sprinklers and sleeping units having exit directly to exterior) (907.2.10.2)
College and university buildings (R-2 dormitories)	Common spaces; laundry, mechanical and storage rooms; interior corridors (exception for no interior corridors and each room has direct exit access or exit).

Figure 907.2
SUMMARY OF MANUAL FIRE ALARM AND AUTOMATIC SMOKE DETECTION SYSTEM THRESHOLDS

INTERNATIONAL CODE COUNCIL®
Copyright © 2015 ICC. ALL RIGHTS RESERVED. Accessed by David Dammon on Jun 21, 2017 12:30:52 PM pursuant to License Agreement with ICC. No further reproduction or distribution authorized. ANY UNAUTHORIZED REPRODUCTION OR DISTRIBUTION IS A VIOLATION OF THE FEDERAL COPYRIGHT ACT AND THE LICENSE AGREEMENT, AND SUBJECT TO CIVIL AND CRIMINAL PENALTIES THEREUNDER.

In buildings that contain multiple assembly areas, the second portion of the code text requires that the aggregate occupant load of the assembly areas is used unless the spaces are separated as required for fire areas in Section 707.3.10. Consider two examples to address this portion of the requirements. In a multi-theater complex, the auditoriums are generally not separated from each other by the 2-hour fire-resistance rating that Table 707.3.10 would require; therefore, the aggregate occupant load of all of the assembly spaces would be combined to determine if the occupant load was 300 or more. If it was, then the manual alarm would be required in all of the assembly spaces. As another example, consider a strip mall shopping center with a restaurant at one end of the building with an occupant load of 200 and a different restaurant with an occupant load of 150 at the other end of the building. Even though these are two completely separate establishments and have an amount of retail occupancy between them, the occupant load of the assembly areas does exceed 300. Therefore, unless a 2-hour fire-resistance rated separation complying with Section 707.3.10 is provided somewhere between the two restaurants to separate them into different fire areas, a manual fire alarm would be required in the Group A occupancies. If a complying separation is provided at some point in the building, then each assembly space can be reviewed independently and would not require the installation of the alarm system. Be aware that the separation of assembly spaces or the need to aggregate the occupant loads from them could occur not only on the same floor within a building, but also to assembly uses located on different stories.

The exception allows the omission of manual fire alarm boxes in buildings equipped throughout with an automatic sprinkler system if activation of the sprinkler system will activate the building evacuation alarms associated with the manual fire alarm system.

This section also permits assembly type areas in Group E occupancies to comply with Section 907.2.3 instead of the requirements of this section. A typical high school, for example, contains many areas used for assembly purposes such as a gymnasium, cafeteria, auditorium or library; however, they all exist to serve as an educational facility as their main function. The exception does not eliminate the fire alarm system and occupant notification system, but rather permits them to be initiated automatically by the sprinkler waterflow switch(es) instead of by the manual fire alarm boxes. It also reduces the possibility of mischievous or malicious false alarms being turned on by manual fire alarm boxes in venues where large numbers of people congregate.

[F] 907.2.1.1 System initiation in Group A occupancies with an occupant load of 1,000 or more. Activation of the fire alarm in Group A occupancies with an *occupant load* of 1,000 or more shall initiate a signal using an emergency voice/alarm communications system in accordance with Section 907.5.2.2.

Exception: Where *approved*, the prerecorded announcement is allowed to be manually deactivated for a period of time, not to exceed 3 minutes, for the sole purpose of allowing a live voice announcement from an *approved, constantly attended location*.

❖ In order to afford authorized personnel the ability to selectively evacuate or manage occupant relocation in large assembly venues, this section requires the fire alarm system to operate through an emergency voice/alarm communications system. The exception allows the automatic alarm signals to be overridden for live voice instructions if the live voice instructions do not exceed 3 minutes. The location from which the live voice announcement originates must be constantly attended and approved by the fire code official (see also commentary, Section 907.5.2.2). In terms of the applicability of this section, it is not as specific as Section 907.2.1. More specifically, the concept of fire areas does not apply. Credit is not given to reduce the occupant load through the use of the fire area concept (see commentary, Section 907.2).

[F] 907.2.1.2 Emergency voice/alarm communication captions. Stadiums, arenas and grandstands required to caption audible public announcements shall be in accordance with Section 907.5.2.2.4.

❖ A 2008 U.S. Federal Court case prompted a change to the code and the IFC. The court ruled that persons with hearing impairments who attend events at stadiums, grandstands and arenas require a means of equivalent communications in lieu of the public address system. Providing occupant notification in these structures is challenging because of the building area and the number and diversity of occupants. Provisions were added in the code to require captioned messages in these buildings and grandstands when public address (PA) systems are prescribed by the accessibility requirements.

Section 1108.2.7.3 sets forth requirements for audible PA systems in stadiums, arenas and grandstands. It requires that equivalent text information be provided to the audience and that the delivery time for these messages be the same as those broadcast from the PA system. The requirements apply to prerecorded and real-time messages. Section 1108.2.7.3 also requires captioning of messages in stadiums, arenas and grandstands that have more than 15,000 fixed seats.

Because messages being broadcast can include instructions to building or site occupants explaining the actions they need to take in the event of an emergency, the requirements of NFPA 72 are applicable for captioning systems. Such a system falls within the scope of Chapter 24 of NFPA 72 entitled “Emergency Communication Systems.” NFPA 72 defines an emergency communications system (ECS) as a sys-

INTERNATIONAL CODE COUNCIL®
Copyright © 2015 ICC. ALL RIGHTS RESERVED. Accessed by David Dammon on Jun 21, 2017 12:30:52 PM pursuant to License Agreement with ICC. No further reproduction or distribution authorized. ANY UNAUTHORIZED REPRODUCTION OR DISTRIBUTION IS A VIOLATION OF THE FEDERAL COPYRIGHT ACT AND THE LICENSE AGREEMENT, AND SUBJECT TO CIVIL AND CRIMINAL PENALTIES THEREUNDER.

tem designed for life safety that indicates the existence of an emergency and communicates the appropriate response and action. The ECS is required to be classified as either a one- or two-way path system. It can be within a building or over a wide area or can be targeted to a particular group of recipients. The messages that will be broadcast are based on an emergency response plan developed during a risk analysis by the project stakeholders and is approved by the fire code official.

The NFPA 72 ECS requirements are based on in-building or wide-area occupant notification. Wide-area systems could include the entire area of a jurisdiction. For a stadium, arena or grandstand captioning, NFPA 72 defines these as mass notification systems (MNS). In the context of the NFPA 72 requirements, this particular code change requires a one-way MNS where instructions are broadcasted by personnel authorized to distribute messages. This could include fire fighters during a fire event; also the system could be used by law enforcement officers during a domestic terrorism incident or a weather event like a tornado warning.

The design of the compliant MNS Chapter 24 of NFPA 72 is not prescriptive—an MNS is a performance-based design. Accordingly, fire code officials should require their design to be sealed by a registered professional engineer. Section 24.7 of the standard requires the preparation of a risk analysis based on the nature and anticipated risks of the facility. The risk analysis is part of the design brief, which will serve as the basis of the system design and is a required design document. NFPA 72 requires the following elements included in the risk analysis:

- The number of persons within the building, area, space, campus or region;
- The character of the occupancy, such as unique hazards and the rate at which the hazard can develop;
- The anticipated threats, including natural, technological and intentional events;
- The reliability and performance of the MNS;
- Security of the MNS and its components;
- How the building or staff implement the risk analysis, including the use of the MNS and
- How emergency services, such as the fire service and law enforcement agencies can employ the MNS.

In a stadium or arena, the captioning system is required to be a component of the emergency voice/communications alarm system (EV/ACS). Such a system is required by Section 907.2.1.1 in Group A occupancies with an occupant load of 1,000 or more.

The requirement in Section 907.5.2.2.4 specifies the captioning system would be connected to the EV/ACS. The fire alarm control unit will require a listed interface unit capable of displaying text messages. Textual visible appliances are allowed by NFPA 72 when used in conjunction with audible, visual or both types of notification appliances. In the public mode, textual visible appliances are located to ensure readability by the building occupants. Such a system can display messages using televisions or light emitting diode (LED) marquee signs.

The design concept of MNS is relatively new in the design community. Captioning systems might utilize components that are not listed for fire alarm service so the design will be required to comply with Chapter 24 of NFPA 72 for textual visible notification appliances. Emergency textual messages take precedence over any nonemergency text messages. Under NFPA 72 these devices require a primary and secondary power supply. If the devices are not monitored for integrity or loss of communications by an autonomous control or a fire alarm control unit, the appliance must clearly display its status. The size of characters displayed must comply with the requirements in NFPA 72. The NFPA 72 size, character and font requirements are based on the location of the display in relation to the height and distance from the persons viewing it.

[F] 907.2.2 Group B. A manual fire alarm system shall be installed in Group B occupancies where one of the following conditions exists:

1. The combined Group B *occupant load* of all floors is 500 or more.
2. The Group B *occupant load* is more than 100 persons above or below the lowest *level of exit discharge*.
3. The *fire area* contains an ambulatory care facility.

Exception: Manual fire alarm boxes are not required where the building is equipped throughout with an *automatic sprinkler system* installed in accordance with Section 903.3.1.1 and the occupant notification appliances will activate throughout the notification zones upon sprinkler water flow.

❖ Group B occupancies generally involve individuals or groups of people in separate office areas. As a result, the occupants are not necessarily aware of what is going on in other parts of the building. Group B buildings with large occupant loads, even in single-story buildings, or where a substantial number of occupants are above or below the level of exit discharge, increase the difficulty of alerting the occupants of a fire. This is especially true in nonsprinklered buildings with given occupant load thresholds. Group B occupancies include a specific use called ambulatory care facilities which present a higher level of life hazard than the typical Group B occupancy. The fact that the care recipients of such facilities may be rendered incapable of self-preservation for limited periods of time makes the need for a fire alarm system critical. Section 907.2.2 requires a manual alarm system any time a fire area contains a ambulatory care facility. See the commentary to Section 202, definition of "Ambulatory care facility" and Section 907.2.2.1.

The exception does not eliminate the fire alarm

INTERNATIONAL CODE COUNCIL®
Copyright © 2015 ICC. ALL RIGHTS RESERVED. Accessed by David Dammon on Jun 21, 2017 12:30:52 PM pursuant to License Agreement with ICC. No further reproduction or distribution authorized. ANY UNAUTHORIZED REPRODUCTION OR DISTRIBUTION IS A VIOLATION OF THE FEDERAL COPYRIGHT ACT AND THE LICENSE AGREEMENT, AND SUBJECT TO CIVIL AND CRIMINAL PENALTIES THEREUNDER.

system, but rather permits it to be initiated automatically by the sprinkler waterflow switch(es) instead of by the manual fire alarm boxes.

[F] 907.2.2.1 Ambulatory care facilities. *Fire areas* containing ambulatory care facilities shall be provided with an electronically supervised automatic smoke detection system installed within the ambulatory care facility and in public use areas outside of tenant spaces, including public *corridors* and elevator lobbies.

Exception: Buildings equipped throughout with an *automatic sprinkler system* in accordance with Section 903.3.1.1, provided the occupant notification appliances will activate throughout the notification zones upon sprinkler waterflow.

❖ Years ago, few surgical procedures were performed outside of a hospital. Today, complex outpatient surgeries conducted outside of a hospital are commonplace. They are performed in facilities often called "day surgery centers" or "ambulatory surgical centers" because patients are able to walk in and walk out the same day. Procedures render care recipients temporarily incapable of self-preservation by application of nerve blocks, sedation or anesthesia; however, they do typically recover quickly.

The code identifies health care Group I occupancies as including a 24-hour stay. Without a 24-hour stay, these surgery centers were classified as Group B which allowed the care providers to render an unlimited number of people incapable of self-preservation with no more protection than a business office. Since these types of facilities contain distinctly different hazards to life safety than other Group B occupancies, they are now required to have a higher level of life safety and fire protection as evidenced by the requirements of this section as well as Section 903.2.2 and the construction provisions of the code.

This section more specifically states that any time a fire area contains an ambulatory care facility, the fire area should be provided with a supervised smoke detection system in the ambulatory care facility and in public use areas outside of tenant spaces. Therefore, in a medical office building, for example, the ambulatory care facility contained within would have a full coverage system. The other offices in the building would not require smoke detection in the individual tenant spaces, but instead in the public areas, such as lobby or lounge areas.

The exception does not eliminate the fire alarm system, but rather permits it to be initiated automatically by the sprinkler waterflow switch(es) instead of by the smoke detection system.

[F] 907.2.3 Group E. A manual fire alarm system that initiates the occupant notification signal utilizing an emergency voice/alarm communication system meeting the requirements of Section 907.5.2.2 and installed in accordance with Section 907.6 shall be installed in Group E occupancies. When *automatic sprinkler systems* or smoke detectors are installed, such systems or detectors shall be connected to the building fire alarm system.

Exceptions:

1. A manual fire alarm system is not required in Group E occupancies with an *occupant load* of 50 or less.
2. Emergency voice/alarm communication systems meeting the requirements of Section 907.5.2.2 and installed in accordance with Section 907.6 shall not be required in Group E occupancies with occupant loads of 100 or less, provided that activation of the manual fire alarm system initiates an *approved* occupant notification signal in accordance with Section 907.5.
3. Manual fire alarm boxes are not required in Group E occupancies where all of the following apply:
   - 3.1. Interior *corridors* are protected by smoke detectors.
   - 3.2. Auditoriums, cafeterias, gymnasiums and similar areas are protected by *heat detectors* or other *approved* detection devices.
   - 3.3. Shops and laboratories involving dusts or vapors are protected by *heat detectors* or other *approved* detection devices.
4. Manual fire alarm boxes shall not be required in Group E occupancies where all of the following apply:
   - 4.1. The building is equipped throughout with an *approved automatic sprinkler system* installed in accordance with Section 903.3.1.1.
   - 4.2. The emergency voice/alarm communication system will activate on sprinkler waterflow.
   - 4.3. Manual activation is provided from a normally occupied location.

❖ Section 404.2.3 of the IFC addresses the development and implementation of lockdown plans. These requirements were developed to ensure that the level of life safety inside of the building is not reduced or compromised during a lockdown. In order for a building to safely function in a lockdown condition, the code requires a means of communication between the established central location and each secured area. Section 404.3.3.1 of the IFC does not prescribe the means of communication, which could include the use of text messages to cell phones/mobile devices, e-mail messages or the use of preestablished audio or visual signals. The provisions in Section 404.2.3 of the IFC are not specific to Group E occupancies—they are applicable to all occupancies that develop and implement lockdown plans.

Because of concerns of school campus safety serving kindergarten through 12th grade students, specific requirements were put into the 2012 edition

INTERNATIONAL CODE COUNCIL®
Copyright © 2015 ICC. ALL RIGHTS RESERVED. Accessed by David Dammon on Jun 21, 2017 12:30:52 PM pursuant to License Agreement with ICC. No further reproduction or distribution authorized. ANY UNAUTHORIZED REPRODUCTION OR DISTRIBUTION IS A VIOLATION OF THE FEDERAL COPYRIGHT ACT AND THE LICENSE AGREEMENT, AND SUBJECT TO CIVIL AND CRIMINAL PENALTIES THEREUNDER.

of the code and the IFC for enhanced communication between the school administrators, teachers and students when a lockdown plan is activated in Group E occupancies. As a result, emergency voice/alarm communication systems (EV/ACS) are prescribed in Group E occupancies. Previously, the code would have permitted the manual fire alarm system to use audible and visible alarm notification appliances and did not require the added capabilities that an EV/ACS provides.

Section 907.2.3 sets forth the requirements for automatic fire alarm and detection system requirements in Group E occupancies and prescribes the installation of an EV/ACS as opposed to a traditional horn/strobe occupant notification system.

Exception 1 exempts Group E occupancies from requiring a fire alarm system when the occupant load is less than 50. This would exempt small day care centers that serve children older than $2^1/_2$ years of age or a small Sunday school classroom at a place of religious worship.

Exception 2 provides relief for smaller schools. If the occupant load is 100 or less, notification is not required to be via an emergency voice/alarm communication system. A school with 100 occupants only has a couple classrooms of children. Communication is simplified and an emergency voice/alarm communication system is considered to be excessive.

Exception 3 exempts manual fire alarm boxes in interior corridors, laboratories, auditoriums, cafeterias, gymnasiums and similar spaces based on the installation of heat/smoke detectors. This is not an exception from the EV/ACS but simply an exemption of locations requiring manual fire alarm boxes. The applicability of Exception 2 is independent of whether an automatic sprinkler system is installed. If an automatic smoke detection system is installed, it must be connected to the building fire alarm system.

Exception 4 allows the omission of the manual fire alarm boxes in Group E occupancies equipped throughout with an automatic sprinkler system if the actuation of the sprinkler system will activate the EV/ACS . See Section 903.2.3 for sprinkler requirements in Group E buildings.

[F] 907.2.4 Group F. A manual fire alarm system that activates the occupant notification system in accordance with Section 907.5 shall be installed in Group F occupancies where both of the following conditions exist:

1. The Group F occupancy is two or more *stories* in height.
2. The Group F occupancy has a combined *occupant load* of 500 or more above or below the lowest *level of exit discharge.*

Exception: Manual fire alarm boxes are not required where the building is equipped throughout with an *automatic sprinkler system* installed in accordance with Section 903.3.1.1 and the occupant notification appliances will activate throughout the notification zones upon sprinkler water flow.

❖ This section is intended to apply to large multistory manufacturing facilities. For this reason, a manual fire alarm system would be required only if the building were at least two stories in height and had 500 or more occupants above or below the level of exit discharge. An unlimited area, two-story Group F occupancy complying with Section 507.5 of the code would be indicative of an occupancy requiring a manual fire alarm system.

Buildings in compliance with Section 507.5 of the code, and large manufacturing facilities in general, however, must be fully sprinklered and would thus be eligible for the exception. The exception does not eliminate the fire alarm system but rather permits it to be initiated automatically by the sprinkler system waterflow switch(es) instead of by the manual fire alarm boxes.

[F] 907.2.5 Group H. A manual fire alarm system that activates the occupant notification system in accordance with Section 907.5 shall be installed in Group H-5 occupancies and in occupancies used for the manufacture of organic coatings. An automatic smoke detection system shall be installed for highly toxic gases, organic peroxides and oxidizers in accordance with Chapters 60, 62 and 63, respectively, of the *International Fire Code*.

❖ Because of the nature and potential quantity of hazardous materials in Group H-5 occupancies, a manual means of activating an occupant notification system is essential for the safety of the occupants. In accordance with Section 415.10.8, the activation of the alarm system must initiate a local alarm and transmit a signal to the emergency control station. The manual fire alarm system requirement for the building is in addition to the emergency alarm requirements in Section 415.11.3.5 (see also Section 908.2).

Occupancies involved in the manufacture of organic coatings present special hazardous conditions because of the unstable character of the materials, such as nitrocellulose. Good housekeeping and control of ignition sources is critical. Section 418 of the code and Chapter 29 of the IFC contain additional requirements for organic coating manufacturing processes.

This section also requires an automatic smoke detection system in certain occupancy conditions involving either highly toxic gases or organic peroxides and oxidizers. The need for the automatic smoke detection system may depend on the class of materials and additional levels of fire protection provided. This requirement also assumes the quantity of materials is in excess of the maximum allowable quantities shown in Tables 307.1(1) and 307.1(2).

[F] 907.2.6 Group I. A manual fire alarm system that activates the occupant notification system in accordance with Section 907.5 shall be installed in Group I occupancies. An

INTERNATIONAL CODE COUNCIL®
Copyright © 2015 ICC. ALL RIGHTS RESERVED. Accessed by David Dammon on Jun 21, 2017 12:30:52 PM pursuant to License Agreement with ICC. No further reproduction or distribution authorized. ANY UNAUTHORIZED REPRODUCTION OR DISTRIBUTION IS A VIOLATION OF THE FEDERAL COPYRIGHT ACT AND THE LICENSE AGREEMENT, AND SUBJECT TO CIVIL AND CRIMINAL PENALTIES THEREUNDER.

automatic smoke detection system that activates the occupant notification system in accordance with Section 907.5 shall be provided in accordance with Sections 907.2.6.1, 907.2.6.2 and 907.2.6.3.3.

Exceptions:

1. Manual fire alarm boxes in sleeping units of Group I-1 and I-2 occupancies shall not be required at *exits* if located at all care providers' control stations or other constantly attended staff locations, provided such stations are visible and continuously accessible and that the distances of travel required in Section 907.4.2.1 are not exceeded.
2. Occupant notification systems are not required to be activated where private mode signaling installed in accordance with NFPA 72 is *approved* by the fire code official and staff evacuation responsibilities are included in the fire safety and evacuation plan required by Section 404 of the *International Fire Code*.

❖ Because the protection and possible evacuation of the occupants in Group I occupancies are most often dependent on the response by care providers, occupancies in Group I must be protected with a manual fire alarm system and in certain instances, as described in Sections 907.2.6.1, 907.2.6.2 and 907.2.6.3, an automatic smoke detection system. In Group I-1, smoke alarms are also required in accordance with Section 907.2.6.1.1.

It is not the intent of this section to require a smoke detection system throughout all Group I occupancies. Smoke detectors are only generally required in the corridors and in waiting rooms that are open to corridors, unless noted otherwise. IFC Committee Interpretation No. 36-03 makes it clear that the Group I provisions only require a manual fire alarm system with smoke detectors in selected areas. To reduce the potential for unwanted alarms, manual fire alarm boxes may be located at the care providers' control stations or another constantly attended location.

Exception 1 reduces the likelihood of accidental or malicious false alarm system activations by manual means by allowing the pull stations to be located in a more controlled area. It assumes the approved location is always accessible by care providers and within a distance of travel of 200 feet (60 960 mm).

Exception 2 allows the common practice in Group I occupancies of only notifying the care providers instead of all building occupants in the event of a fire, subject to the approval of the fire code official. In order to have confidence that the actions taken will be appropriate, the code also requires that the responsibilities of the staff be documented in the fire safety and evacuation plan for the facility. These requirements are found in Section 404 of the IFC. This will increase the likelihood for any staff training to be linked to the allowance of private mode signaling.

[F] 907.2.6.1 Group I-1. In Group I-1 occupancies, an automatic smoke detection system shall be installed in *corridors*, waiting areas open to *corridors* and *habitable spaces* other than *sleeping units* and kitchens. The system shall be activated in accordance with Section 907.5.

Exceptions:

1. For Group I-1 Condition 1 occupancies, smoke detection in *habitable spaces* is not required where the facility is equipped throughout with an *automatic sprinkler system* installed in accordance with Section 903.3.1.1.
2. Smoke detection is not required for exterior balconies.

❖ Occupancies in Group I-1 tend to be compartmentalized into small rooms so that a fire in one area of the building would not easily be noticed by occupants in another part of the building. Therefore, smoke detection is required in areas other than sleeping units and kitchens. Sleeping units are required by Section 907.2.6.1.1 to be equipped with single- and multiple-station smoke alarms in accordance with Section 907.2.11.

Since Group I-1 occupancies may not be supervised by care providers and to reduce the likelihood that a fire within a waiting area open to the corridor or the corridor itself could develop beyond the incipient stage, thereby jeopardizing the building egress, these areas must be equipped with automatic smoke detection.

Exception 1 allows smoke detectors to be eliminated from habitable spaces of Group I-1 Condition 1 occupancies if the building is equipped throughout with an NFPA 13 automatic sprinkler system. The sprinkler system should control any fire and perform occupant notification through actuation of the waterflow switch and subsequent activation of the building alarm notification appliances. A sprinkler system is required for all Group I occupancies in accordance with Section 903.2.6. It should be noted that Group I-1 Condition 1 is the lower risk Group I-1 occupancy where residents are able to evacuate without assistance. See the commentary to Section 308.3.

Exception 2 allows for omitting smoke detectors from exterior balconies for environmental reasons and does not require the installation of an alternative type of detector. The exterior balconies are assumed to be sufficiently open to the atmosphere to readily allow the dissipation of smoke and hot gases.

[F] 907.2.6.1.1 Smoke alarms. Single- and multiple-station smoke alarms shall be installed in accordance with Section 907.2.11.

❖ As with dwelling units or sleeping units in any occupancy, this section requires that single- and multiple-station smoke alarms be installed in accordance with Section 907.2.11. Section 907.2.11.2 deals specifically with the requirements for Group I-1.

INTERNATIONAL CODE COUNCIL®
Copyright © 2015 ICC. ALL RIGHTS RESERVED. Accessed by David Dammon on Jun 21, 2017 12:30:52 PM pursuant to License Agreement with ICC. No further reproduction or distribution authorized. ANY UNAUTHORIZED REPRODUCTION OR DISTRIBUTION IS A VIOLATION OF THE FEDERAL COPYRIGHT ACT AND THE LICENSE AGREEMENT, AND SUBJECT TO CIVIL AND CRIMINAL PENALTIES THEREUNDER.

[F] 907.2.6.2 Group I-2. An automatic smoke detection system shall be installed in *corridors* in Group I-2 Condition 1 facilities and spaces permitted to be open to the *corridors* by Section 407.2. The system shall be activated in accordance with Section 907.4. Group I-2 Condition 2 occupancies shall be equipped with an automatic smoke detection system as required in Section 407.

Exceptions:

1. Corridor smoke detection is not required in smoke compartments that contain sleeping units where such units are provided with smoke detectors that comply with UL 268. Such detectors shall provide a visual display on the corridor side of each sleeping unit and shall provide an audible and visual alarm at the care providers' station attending each unit.
2. Corridor smoke detection is not required in smoke compartments that contain sleeping units where sleeping unit doors are equipped with automatic door-closing devices with integral smoke detectors on the unit sides installed in accordance with their listing, provided that the integral detectors perform the required alerting function.

❖ Automatic smoke detection is required in areas permitted to be open to corridors in occupancies classified as Group I-2 Condition 2 and corridors in Group I-2 Condition 1 occupancies (e.g., nursing homes, long-term care facilities and detoxification facilities). In recognition of quick-response sprinkler technology and the fact that the sprinkler system is electronically supervised, and because the doors to care recipient's sleeping units are continuously supervised by care providers when in the open position, smoke detectors are not required for adequate fire safety in care recipient sleeping units.

In Group I-2 Condition 1 occupancies (nursing homes, long-term care facilities and detoxification facilities), some redundancy is appropriate because such facilities typically have less control over furnishings and personal items, thereby resulting in a less predictable and usually higher fire hazard load than Group I-2 Condition 2 occupancies (hospitals). Also, there is generally less care provider's supervision in these facilities than in other health care facilities and thus less control over care recipient smoking and other fire causes. Therefore, to provide additional protection against fires spreading from the room of origin, smoke detection is required in corridors of nursing homes, long-term care facilities and detoxification facilities.

Smoke detection is not required in corridors of Group I-2 Condition 2 occupancies except where otherwise specifically required in the code. Similarly, because areas open to the corridor very often are the room of fire origin, and such areas are no longer required by the code to be under visual supervision by care providers, some redundancy to protection by the sprinkler system is requested. Accordingly, all areas open to corridors must be protected by an automatic smoke detection system. This requirement provides an additional level of protection against sprinkler system failures or lapses in care provider supervision.

These requirements are not applicable to Group I-2 Condition 2 (hospitals). The scope of this section clearly indicates that its provisions are only applicable to detoxification facilities and nursing homes (Group I-2 Condition 1). Hospitals are noted as being subject to the provisions in Section 407.2. IFC Committee Interpretation No. 37-03 addresses this issue. Section 407.2 notes that smoke detection is only required for spaces open to corridors, such as waiting areas and mental health treatment areas where patients are not capable of self-preservation (see commentary, Section 407.2).

There are two exceptions to the requirement for an automatic fire detection system in corridors of nursing homes, long-term care facilities and detoxification facilities. Both exceptions provide an alternative method for redundant protection in care recipient sleeping units. For this reason, they provide either a backup to the notification of a fire or containment of fire in the room of origin.

Exception 1 requires smoke detectors in sleeping units that activate both a visual display on the corridor side of the care recipient sleeping unit and a visual and audible alarm at the care provider's station serving the room. Detectors complying with UL 268 are intended for open area protection and for connection to a normal power supply or as part of a fire alarm system. This exception, however, is specifically designed not to require the detectors to activate the building fire alarm system where approved care recipient sleeping unit smoke detectors are installed and where visual and audible alarms are provided. This is in response to the concern over unwanted alarms. The required alarm signals will not necessarily indicate to care providers that a fire emergency exists because the care provider call system may typically be used to identify numerous conditions within the room.

Exception 2 addresses the situation where smoke detectors are incorporated within automatic door-closing devices. The units are acceptable as long as the required alarm functions are still provided. Such units are usually listed as combination door closer and hold-open devices.

[F] 907.2.6.3 Group I-3 occupancies. Group I-3 occupancies shall be equipped with a manual fire alarm system and automatic smoke detection system installed for alerting staff.

❖ Because of the evacuation difficulties associated with Group I-3 occupancies and the dependence on adequate staff response, a manual fire alarm system and an automatic smoke detection system are required subject to the special occupancy conditions in Sections 907.2.6.3.1 through 907.2.6.3.3. This section recognizes that the evacuation of Group I-3 occupancies depends on an effective staff response. The requirements in Chapter 4 and specifically Section

INTERNATIONAL CODE COUNCIL®
Copyright © 2015 ICC. ALL RIGHTS RESERVED. Accessed by David Dammon on Jun 21, 2017 12:30:52 PM pursuant to License Agreement with ICC. No further reproduction or distribution authorized. ANY UNAUTHORIZED REPRODUCTION OR DISTRIBUTION IS A VIOLATION OF THE FEDERAL COPYRIGHT ACT AND THE LICENSE AGREEMENT, AND SUBJECT TO CIVIL AND CRIMINAL PENALTIES THEREUNDER.

403.8.3 of the IFC contains the requirements for an emergency plan, including employee training, staff availability, the need for occupants to notify staff and the need for the proper keys for unlocking doors for staff in Group I-3 occupancies.

[F] 907.2.6.3.1 System initiation. Actuation of an automatic fire-extinguishing system, *automatic sprinkler system*, a manual fire alarm box or a fire detector shall initiate an approved fire alarm signal that automatically notifies staff.

❖ This section specifies the systems that, upon activation, must initiate the required alarm signal immediately and automatically to the staff so that staff will respond in a timely manner.

[F] 907.2.6.3.2 Manual fire alarm boxes. Manual fire alarm boxes are not required to be located in accordance with Section 907.4.2 where the fire alarm boxes are provided at staff-attended locations having direct supervision over areas where manual fire alarm boxes have been omitted.

❖ Because of the potential for intentional false alarms and the resulting disruption to the facility, manual fire alarm boxes in Group I-3 occupancies may be either locked or made inaccessible to the occupants.

[F] 907.2.6.3.2.1 Manual fire alarm boxes in detainee areas. Manual fire alarm boxes are allowed to be locked in areas occupied by detainees, provided that staff members are present within the subject area and have keys readily available to operate the manual fire alarm boxes.

❖ The locking of manual fire alarm boxes is permitted only in areas where staff members are present and keys are readily available to them to unlock the boxes, or where the alarm boxes are located in a manned staff location that has direct supervision of the Group I-3 area.

[F] 907.2.6.3.3 Automatic smoke detection system. An automatic smoke detection system shall be installed throughout resident housing areas, including *sleeping units* and contiguous day rooms, group activity spaces and other common spaces normally accessible to residents.

Exceptions:

1. Other *approved* smoke detection arrangements providing equivalent protection, including, but not limited to, placing detectors in exhaust ducts from cells or behind protective guards *listed* for the purpose, are allowed when necessary to prevent damage or tampering.
2. *Sleeping units* in Use Conditions 2 and 3 as described in Section 308.
3. Smoke detectors are not required in *sleeping units* with four or fewer occupants in smoke compartments that are equipped throughout with an *automatic sprinkler system* installed in accordance with Section 903.3.1.1.

❖ Evacuation of Group I-3 facilities is impractical because of the need to maintain security. An automatic smoke detection system is therefore required to provide early warning of a fire.

As indicated in Exception 1, the installation of automatic smoke detectors must take into account the need to protect the detector from vandalism by residents. As a result, detectors may have to be located in return air ducts or be protected by a substantial physical barrier.

Since occupants in Use Condition 2 or 3 are not locked in their sleeping units, Exception 2 reduces the need for smoke detection.

Exception 3 allows smoke detectors to be omitted in sleeping units housing no more than four occupants on the basis that in a building that is protected throughout with an approved automatic sprinkler system, the system will provide both detection and suppression functions. Group I facilities are assumed to be fully sprinklered throughout in accordance with NFPA 13 as required by Section 903.2.6. The limitation of four occupants reduces the potential fuel load (mattresses, clothes, etc.) and the likelihood of involvement over an extended area.

[F] 907.2.7 Group M. A manual fire alarm system that activates the occupant notification system in accordance with Section 907.5 shall be installed in Group M occupancies where one of the following conditions exists:

1. The combined Group M *occupant load* of all floors is 500 or more persons.
2. The Group M *occupant load* is more than 100 persons above or below the lowest *level of exit discharge*.

Exceptions:

1. A manual fire alarm system is not required in *covered or open mall buildings* complying with Section 402.
2. Manual fire alarm boxes are not required where the building is equipped throughout with an *automatic sprinkler system* installed in accordance with Section 903.3.1.1 and the occupant notification appliances will automatically activate throughout the notification zones upon sprinkler water flow.

❖ Group M occupancies have the potential for large numbers of occupants who may not be familiar with their surroundings. The installation of a fire alarm system increases the ability to alert the occupants of a fire. Note that the occupant thresholds must be considered independently. If the total occupant load is 500 or more persons, a manual fire alarm system is required. If more than 100 persons are above or below the level of exit discharge, a manual fire alarm system is required.

This section also specifies that the manual fire alarm boxes must, upon activation, provide occupant notification throughout the Group M occupancy.

The extent of fire alarm application is based on the area in which the Group M occupancy is located. If the building is considered as a separated mixed occupancy, then the fire alarm system is only required in the individual occupancy in which the occupant load exceeds the threshold quantity. The rest of the building would not require a fire alarm sys-

INTERNATIONAL CODE COUNCIL®
Copyright © 2015 ICC. ALL RIGHTS RESERVED. Accessed by David Dammon on Jun 21, 2017 12:30:52 PM pursuant to License Agreement with ICC. No further reproduction or distribution authorized. ANY UNAUTHORIZED REPRODUCTION OR DISTRIBUTION IS A VIOLATION OF THE FEDERAL COPYRIGHT ACT AND THE LICENSE AGREEMENT, AND SUBJECT TO CIVIL AND CRIMINAL PENALTIES THEREUNDER.

tem. This approach is noted in Section 508.4.1, which states that each separated space must comply with the code based upon the occupancy classification of that portion of the building. If the Group M occupancy was part of a non separated mixed use building then the alarm system would be required in the entire building in accordance with Section 508.3.1. The determination as to when such a system is required would be based solely upon the Group M occupant load.

Exception 1 recognizes the increased level of fixed automatic protection inherently required in covered mall buildings including an automatic sprinkler system, and, possibly, a smoke control system. Covered mall buildings are also required to contain an emergency voice communication system (see Section 907.2.20).

Exception 2 does not eliminate the fire alarm system, but rather allows it to be initiated automatically by sprinkler system waterflow switch(es) instead of by manual fire alarm boxes. Buildings with a fire area containing a Group M occupancy in excess of 12,000 square feet (1115 m^2) must be equipped with an automatic sprinkler system complying with Section 903.2.7.

[F] 907.2.7.1 Occupant notification. During times that the building is occupied, the initiation of a signal from a manual fire alarm box or from a waterflow switch shall not be required to activate the alarm notification appliances when an alarm signal is activated at a *constantly attended location* from which evacuation instructions shall be initiated over an emergency voice/alarm communication system installed in accordance with Section 907.5.2.2.

❖ Occupants in a mercantile occupancy may assume the alarm is a false alarm or act inappropriately and thus delay evacuation of the building. To prevent such a dangerous situation, the manual fire alarm system may be part of an EV/ACS. The signal is to be sent to a constantly attended location on site from which evacuation instructions can be given.

It should be noted that, although the alarm notification alternative allows for the manual use of an EV/ACS, the alternative does not remove the requirement for audible and visual notification devices.

[F] 907.2.8 Group R-1. Fire alarm systems and smoke alarms shall be installed in Group R-1 occupancies as required in Sections 907.2.8.1 through 907.2.8.3.

❖ Because residents of Group R-1 occupancies may be asleep and are usually transients who are unfamiliar with the building, and because such buildings contain numerous small rooms so that the occupants may not notice a fire in another part of the building, occupancies in Group R-1 must have a manual fire alarm system and an automatic smoke detection system installed throughout. Requirements for single- or multiple-station smoke alarms in sleeping units are contained in Section 907.2.11.1.

[F] 907.2.8.1 Manual fire alarm system. A manual fire alarm system that activates the occupant notification system in accordance with Section 907.5 shall be installed in Group R- 1 occupancies.

Exceptions:

1. A manual fire alarm system is not required in buildings not more than two *stories* in height where all individual *sleeping units* and contiguous *attic* and crawl spaces to those units are separated from each other and public or common areas by not less than 1-hour *fire partitions* and each individual *sleeping unit* has an *exit* directly to a *public way*, *egress court* or *yard*.
2. Manual fire alarm boxes are not required throughout the building where all of the following conditions are met:
   2.1. The building is equipped throughout with an *automatic sprinkler system* installed in accordance with Section 903.3.1.1 or 903.3.1.2.
   2.2. The notification appliances will activate upon sprinkler water flow.
   2.3. Not fewer than one manual fire alarm box is installed at an *approved* location.

❖ This section is specific to manual fire alarm systems and requires such systems in all Group R-1 occupancies, with two exceptions.

Exception 1 eliminates the requirement for a manual fire alarm system if the sleeping units have an exit discharging directly to a public way, exit court or yard. Even though the building may be two stories in height, the sleeping units on each floor must have access directly to an approved exit at grade level. The use of an exterior exit access balcony with exterior stairs serving the second floor does not constitute an exit directly at grade. The minimum 1-hour fire-resistance rating required for adequate separation of the sleeping units must be maintained.

Exception 2 does not omit the fire alarm system but rather permits it to be initiated automatically by sprinkler system waterflow switch(es) in lieu of manual fire alarm boxes. The sprinkler system must activate the occupant notification system and at least one manual fire alarm box shall be installed at an approved location. See the commentary to Section 907.2 for a discussion of the single manual fire alarm box.

The exceptions do not affect the independent provision in Section 907.2.11 for single- or multiple-station smoke alarms.

[F] 907.2.8.2 Automatic smoke detection system. An automatic smoke detection system that activates the occupant notification system in accordance with Section 907.5 shall be installed throughout all interior *corridors* serving *sleeping units*.

Exception: An automatic smoke detection system is not required in buildings that do not have interior *corridors*

INTERNATIONAL CODE COUNCIL®
Copyright © 2015 ICC. ALL RIGHTS RESERVED. Accessed by David Dammon on Jun 21, 2017 12:30:52 PM pursuant to License Agreement with ICC. No further reproduction or distribution authorized. ANY UNAUTHORIZED REPRODUCTION OR DISTRIBUTION IS A VIOLATION OF THE FEDERAL COPYRIGHT ACT AND THE LICENSE AGREEMENT, AND SUBJECT TO CIVIL AND CRIMINAL PENALTIES THEREUNDER.

serving *sleeping units* and where each *sleeping unit* has a *means of egress* door opening directly to an *exit* or to an exterior *exit access* that leads directly to an *exit*.

❖ This section requires an automatic smoke detection system within interior corridors. Such systems make use of smoke detectors for alarm initiation in accordance with Section 907.2, with one exception.

The exception provides that automatic fire detectors are not required in motels and hotels that do not have interior corridors and in which sleeping units have a door opening directly to an exterior exit access that leads directly to the exits. The intent of the exception is that the exit access from the sleeping unit door be exterior and not require reentering the building prior to entering the exit. Since the exit access is outside, the need for detectors other than the smoke alarms required by Section 907.2.8.3 in sleeping units is greatly reduced.

[F] 907.2.8.3 Smoke alarms. Single- and multiple-station smoke alarms shall be installed in accordance with Section 907.2.11.

❖ The actual requirements for single- and multiple-station smoke alarms are located in Section 907.2.11. That section requires that the single- and multiple-station smoke alarms within sleeping units be connected to the emergency electrical system. Automatic activation of the fire alarm system is avoided to reduce unnecessary alarms within such buildings.

[F] 907.2.9 Group R-2. Fire alarm systems and smoke alarms shall be installed in Group R-2 occupancies as required in Sections 907.2.9.1 through 907.2.9.3.

❖ This section introduces the fire alarm system and smoke alarm requirements for Group R-2 occupancies. This includes Group R-2 occupancies in general and also Group R-2 college and university buildings.

[F] 907.2.9.1 Manual fire alarm system. A manual fire alarm system that activates the occupant notification system in accordance with Section 907.5 shall be installed in Group R-2 occupancies where any of the following conditions apply:

1. Any *dwelling unit* or *sleeping unit* is located three or more *stories* above the lowest *level of exit discharge*.
2. Any *dwelling unit* or *sleeping unit* is located more than one *story* below the highest *level of exit discharge* of *exits* serving the *dwelling unit* or *sleeping unit*.
3. The building contains more than 16 *dwelling units* or *sleeping units*.

Exceptions:

1. A fire alarm system is not required in buildings not more than two *stories* in height where all *dwelling units* or *sleeping units* and contiguous *attic* and crawl spaces are separated from each other and public or common areas by not less than 1-hour *fire partitions* and each *dwelling unit* or *sleeping unit* has an *exit* directly to a *public way*, *egress court* or *yard*.
2. Manual fire alarm boxes are not required where the building is equipped throughout with an *automatic sprinkler system* installed in accordance with Section 903.3.1.1 or 903.3.1.2 and the occupant notification appliances will automatically activate throughout the notification zones upon a sprinkler water flow.
3. A fire alarm system is not required in buildings that do not have interior *corridors* serving *dwelling units* and are protected by an *approved automatic sprinkler system* installed in accordance with Section 903.3.1.1 or 903.3.1.2, provided that *dwelling units* either have a *means of egress* door opening directly to an exterior *exit access* that leads directly to the *exits* or are served by open-ended *corridors* designed in accordance with Section 1027.6, Exception 3.

❖ The occupants of Group R-2 occupancies are not considered to be as transient as those of Group R-1, which increases the probability that residents can more readily notify each other of a fire. Therefore, Group R-1 occupancies must have a manual fire alarm system with audible and visual notification appliances subject to the exceptions in Section 907.2.8.1, whereas Group R-2 occupancies are required to have only a manual fire alarm system as stipulated in one of the three listed conditions. The threshold conditions are meant to be applied independently of each other.

Exception 1 eliminates the requirement for a manual fire alarm system if the sleeping units have an exit discharging directly to a public way, exit court or yard. Even though the building may be two stories in height, the sleeping units on each floor must have access directly to an approved exit at grade level. The use of an exterior exit access balcony with exterior stairs serving the second floor does not constitute an exit directly at grade. The minimum 1-hour fire-resistance rating required for adequate separation of the sleeping units must be maintained.

Exception 2 does not omit the fire alarm system but rather permits it to be initiated automatically by sprinkler system waterflow switch(es) in lieu of manual fire alarm boxes. The sprinkler system must activate the occupant notification system. This exception does not affect the independent provisions of Section 907.2.11.

Exception 3 allows the omission of a fire alarm system in fully sprinklered buildings (NFPA 13 or 13R) with no interior corridors and that exit directly to an exterior exit access or have open-ended corridors. The important thing to note is that the sprinkler system is not required to activate alarm notification appliances since a fire alarm system would not be required. Only the sprinkler alarms required by Section 903.4 would be required.

INTERNATIONAL CODE COUNCIL®
Copyright © 2015 ICC. ALL RIGHTS RESERVED. Accessed by David Dammon on Jun 21, 2017 12:30:52 PM pursuant to License Agreement with ICC. No further reproduction or distribution authorized. ANY UNAUTHORIZED REPRODUCTION OR DISTRIBUTION IS A VIOLATION OF THE FEDERAL COPYRIGHT ACT AND THE LICENSE AGREEMENT, AND SUBJECT TO CIVIL AND CRIMINAL PENALTIES THEREUNDER.

[F] 907.2.9.2 Smoke alarms. Single- and multiple-station smoke alarms shall be installed in accordance with Section 907.2.11.

❖ The actual requirements for single- and multiple-station smoke alarms are located in Section 907.2.11. That section requires that the single- and multiple-station smoke alarms within sleeping units be connected to the emergency electrical system. Automatic activation of the fire alarm system is avoided to reduce unnecessary alarms within such buildings.

[F] 907.2.9.3 Group R-2 college and university buildings. An automatic smoke detection system that activates the occupant notification system in accordance with Section 907.5 shall be installed in Group R-2 occupancies operated by a college or university for student or staff housing in all of the following locations:

1. Common spaces outside of *dwelling units* and *sleeping units*.
2. Laundry rooms, mechanical equipment rooms and storage rooms.
3. All interior corridors serving *sleeping units* or *dwelling units*.

Exception: An automatic smoke detection system is not required in buildings that do not have interior *corridors* serving *sleeping units* or *dwelling units* and where each *sleeping unit* or *dwelling unit* either has a *means of egress* door opening directly to an exterior *exit access* that leads directly to an *exit* or a *means of egress* door opening directly to an *exit*.

Required smoke alarms in *dwelling units* and *sleeping units* in Group R-2 occupancies operated by a college or university for student or staff housing shall be interconnected with the fire alarm system in accordance with NFPA 72.

❖ This section requires an automatic smoke detection system in Group R-2 occupancies that are operated by a college or university to provide student or staff housing. It also requires the smoke alarms in individual units to be interconnected with the fire alarm system. This interconnection is only for the purpose of making occupants within each unit aware of the fire alarm activation in the building. The intent was not to activate the building fire alarm system by smoke alarms in each unit. This is more restrictive than a Group R-2 occupancy in general as typically the requirements are limited to a manual fire alarm system and smoke alarms in the individual sleeping or dwelling units.

The smoke detection system is focused on common areas, such as interior corridors, lounge areas, laundry, and areas such as mechanical rooms, which could be the source of a fire, especially in these specific types of Group R-2 occupancies.

In a study completed by the New York State Governor's Task Force on Campus Fire Safety it was cited that 43 percent of fires in college dormitories are located in dorm rooms or kitchens, leaving the other 57 percent to be located in areas that would not require smoke detection under the current code. The study also showed that there were approximately 300 fires on college campus over a three-year period while only 160 were reported to the fire department. The Center for Campus Fire Safety states that 99 deaths have been "reported" in fires in student housing since 2000.

An NFPA study on student housing showed 3,300 structural fires in dormitories, fraternities, sororities and barracks between 2002 and 2005. Since 1980, there has been an increase of 3 percent in reported fires in dormitory-type occupancies, while there has been a 52-percent decrease in overall reported structural fires.

The requirements in this section are very similar to the recommendations of the study done in New York State. It is important to note that the recommendations for that study were specifically aimed at the properties of the colleges and universities so it was not the study's intent to cover off-campus housing in this particular regard. There were recommendations for off-campus housing, such as sororities and fraternities to have annual inspections. This particular distinction was not addressed in detail during the code development process initially; however, since this is somewhat of a continuation of requirements that were added into Chapter 4 of the 2006 edition of the IFC for emergency preparedness and planning, and those requirements were intended to deal with buildings that were college or university property, it seemed reasonable to interpret that this requirement is also limited to the buildings that are college or university property and does not apply to Group R-2 occupancies that are not college or university property. This has since been clarified through the code development process and the section now specifically notes that the Group R-2 occupancies are specifically operated by a college or university.

The exception allows for the elimination of the smoke detection system in the specific situation where there are no interior corridors and the occupants essentially exit directly to the outside. The lack of interior corridors and exterior exits reduces the amount of smoke one unit will expose to another. Note that smoke alarms within the units are still required by Section 907.2.11.2. Note also that it is entirely possible that some areas that are required to have smoke detection may have ambient conditions that warrant a different type of alarm-initiating device. Section 907.4.3 addresses this concern.

[F] 907.2.10 Group R-4. Fire alarm systems and smoke alarms shall be installed in Group R-4 occupancies as required in Sections 907.2.10.1 through 907.2.10.3.

❖ This section, based on the Group R-2 requirements for manual fire alarm systems and Group I-1 requirements for automatic smoke detection systems, contains manual fire alarm and automatic smoke detection system requirements for new Group R-4 occupancies. Reviewing the occupancy categories in

INTERNATIONAL CODE COUNCIL®
Copyright © 2015 ICC. ALL RIGHTS RESERVED. Accessed by David Dammon on Jun 21, 2017 12:30:52 PM pursuant to License Agreement with ICC. No further reproduction or distribution authorized. ANY UNAUTHORIZED REPRODUCTION OR DISTRIBUTION IS A VIOLATION OF THE FEDERAL COPYRIGHT ACT AND THE LICENSE AGREEMENT, AND SUBJECT TO CIVIL AND CRIMINAL PENALTIES THEREUNDER.

Chapter 3 of the code, a Group R-4 could be considered either a small Group I-1 or a Group R-2 with occupants that have special needs or limitations. A further review found that both Group I-1 and R-2 occupancies had fire alarm requirements for new buildings, but Group R-4 did not, even though the IFC required a fire alarm system retroactively in existing Group R-4 occupancies (see Section 1103.7.7 of the IFC).

[F] 907.2.10.1 Manual fire alarm system. A manual fire alarm system that activates the occupant notification system in accordance with Section 907.5 shall be installed in Group R-4 occupancies.

Exceptions:

1. A manual fire alarm system is not required in buildings not more than two *stories* in height where all individual *sleeping units* and contiguous *attic* and crawl spaces to those units are separated from each other and public or common areas by not less than 1-hour *fire partitions* and each individual *sleeping unit* has an *exit* directly to a *public way*, *egress court* or *yard*.
2. Manual fire alarm boxes are not required throughout the building where all of the following conditions are met:
   2.1. The building is equipped throughout with an *automatic sprinkler system* installed in accordance with Section 903.3.1.1 or 903.3.1.2.
   2.2. The notification appliances will activate upon sprinkler water flow.
   2.3. Not fewer than one manual fire alarm box is installed at an *approved* location.
3. Manual fire alarm boxes in resident or patient sleeping areas shall not be required at *exits* where located at all nurses' control stations or other constantly attended staff locations, provided such stations are visible and continuously accessible and that the distances of travel required in Section 907.4.2.1 are not exceeded.

❖ This section is specific to manual fire alarm systems and requires such systems in all Group R-4 occupancies, with three exceptions.

Exception 1 eliminates the requirement for a manual fire alarm system if the sleeping units have an exit discharging directly to a public way, exit court or yard. Even though the building may be two stories in height, the sleeping units on each floor must have access directly to an approved exit at grade level. The use of an exterior exit access balcony with exterior stairs serving the second floor does not constitute an exit directly at grade. The minimum 1-hour fire-resistance rating required for adequate separation of the sleeping units must be maintained.

Exception 2 does not omit the fire alarm system but rather permits it to be initiated automatically by sprinkler system waterflow switch(es) in lieu of manual fire alarm boxes. The sprinkler system must activate the occupant notification system and at least one manual fire alarm box shall be installed at an approved location. See the commentary to Section 907.2 for a discussion of the single manual fire alarm box.

Exception 3 reduces the likelihood of accidental or malicious false alarm system activations by manual means by allowing the pull stations to be located in a more controlled area. It assumes the approved location is always accessible by staff and within a distance of travel of 200 feet (60 960 mm).

[F] 907.2.10.2 Automatic smoke detection system. An automatic smoke detection system that activates the occupant notification system in accordance with Section 907.5 shall be installed in *corridors*, waiting areas open to *corridors* and *habitable spaces* other than *sleeping units* and kitchens.

Exceptions:

1. Smoke detection in *habitable spaces* is not required where the facility is equipped throughout with an *automatic sprinkler system* installed in accordance with Section 903.3.1.1.
2. An automatic smoke detection system is not required in buildings that do not have interior *corridors* serving *sleeping units* and where each *sleeping unit* has a *means of egress* door opening directly to an *exit* or to an exterior *exit access* that leads directly to an *exit*.

❖ Occupancies in Group R-4 can be compartmentalized into small rooms so that a fire in one area of the building would not easily be noticed by occupants in another part of the building. Therefore, smoke detection is required in areas other than sleeping units and kitchens. Sleeping units are required by Section 907.2.10.3 to be equipped with single- and multiple-station smoke alarms in accordance with Section 907.2.11.

Since Group R-4 occupancies may not be supervised by staff and to reduce the likelihood that a fire within a waiting area open to the corridor or the corridor itself could develop beyond the incipient stage, thereby jeopardizing the building egress, these areas must be equipped with automatic smoke detection.

Exception 1 allows smoke detectors to be eliminated from habitable spaces if the building is equipped throughout with an NFPA 13 automatic sprinkler system. The sprinkler system should control any fire and perform occupant notification through actuation of the waterflow switch and subsequent activation of the building alarm notification appliances. A sprinkler system is required for all Group R occupancies in accordance with Section 903.2.8.

The exception provides that automatic fire detectors are not required in buildings that do not have interior corridors and in which sleeping units have a door opening to an exterior exit access that leads directly to the exits. The intent of the exception is that the exit access from the sleeping unit door be exterior and not require reentering the building prior to enter-

INTERNATIONAL CODE COUNCIL®
Copyright © 2015 ICC. ALL RIGHTS RESERVED. Accessed by David Dammon on Jun 21, 2017 12:30:52 PM pursuant to License Agreement with ICC. No further reproduction or distribution authorized. ANY UNAUTHORIZED REPRODUCTION OR DISTRIBUTION IS A VIOLATION OF THE FEDERAL COPYRIGHT ACT AND THE LICENSE AGREEMENT, AND SUBJECT TO CIVIL AND CRIMINAL PENALTIES THEREUNDER.

ing the exit. Since the exit access is outside, the need for detectors other than the smoke alarms required by Section 907.2.10.3 in sleeping units is greatly reduced.

[F] 907.2.10.3 Smoke alarms. Single- and multiple-station smoke alarms shall be installed in accordance with Section 907.2.11.

❖ The actual requirements for single- and multiple-station smoke alarms are located in Section 907.2.11. That section requires that the single- and multiple-station smoke alarms within sleeping units be connected to the emergency electrical system. Automatic activation of the fire alarm system is avoided to reduce unnecessary alarms within such buildings.

[F] 907.2.11 Single- and multiple-station smoke alarms. *Listed* single- and multiple-station smoke alarms complying with UL 217 shall be installed in accordance with Sections 907.2.11.1 through 907.2.11.6 and NFPA 72.

❖ Single- and multiple-station smoke alarms have evolved as one of the most important fire safety features in residential and similar occupancies having sleeping occupants. The value of early fire warning in these occupancies has been repeatedly demonstrated in fires involving both successful and unsuccessful smoke alarm performance.

For successful smoke alarm operation and performance, single- and multiple-station smoke alarms must be listed in accordance with UL 217 and installed to comply with the code and Chapter 11 of NFPA 72, which contains the minimum requirements for the selection, installation, operation and maintenance of fire warning equipment for use in family living units. These devices are called "smoke alarms" rather than "smoke detectors" because they are independent of a fire alarm system and include an integral alarm notification device.

[F] 907.2.11.1 Group R-1. Single- or multiple-station smoke alarms shall be installed in all of the following locations in Group R-1:

1. In sleeping areas.
2. In every room in the path of the *means of egress* from the sleeping area to the door leading from the *sleeping unit.*
3. In each *story* within the *sleeping unit,* including basements. For *sleeping units* with split levels and without an intervening door between the adjacent levels, a smoke alarm installed on the upper level shall suffice for the adjacent lower level provided that the lower level is less than one full *story* below the upper level.

❖ Because the occupants of a sleeping unit or suite may be asleep and unaware of a fire developing in the room or in the egress path, single- or multiple-station smoke alarms must be provided in the sleeping unit and in any intervening room between the sleeping unit and the exit access door from the room. If the sleeping unit or suite involves more than one level, a smoke alarm must also be installed on every level. See the commentary to Section 202, definition of "Sleeping unit."

Smoke alarms are required in split-level arrangements, except those that meet the conditions described in Item 3. In accordance with Section 907.2.11.5, all smoke alarms within a sleeping unit or suite must be interconnected so that actuation of one alarm will actuate all smoke alarms within the sleeping unit or suite.

[F] 907.2.11.2 Groups R-2, R-3, R-4 and I-1. Single- or multiple-station smoke alarms shall be installed and maintained in Groups R-2, R-3, R-4 and I-1 regardless of *occupant load* at all of the following locations:

1. On the ceiling or wall outside of each separate sleeping area in the immediate vicinity of bedrooms.
2. In each room used for sleeping purposes.
3. In each *story* within a *dwelling unit,* including basements but not including crawl spaces and uninhabitable *attics*. In *dwellings* or *dwelling units* with split levels and without an intervening door between the adjacent levels, a smoke alarm installed on the upper level shall suffice for the adjacent lower level provided that the lower level is less than one full *story* below the upper level.

❖ Because the occupants of a dwelling unit may be asleep and unaware of a fire developing in the room or in an area within the dwelling unit that will affect their ability to escape, single- or multiple-station smoke alarms must be installed in every bedroom, in the vicinity of all bedrooms (e.g., hallways leading to the bedrooms) and on each story of the dwelling unit (see Commentary Figure 907.2.11.2 and the commentary to Section 202 definition of "Dwelling unit").

If a sprinkler system was installed throughout the building in accordance with NFPA 13, 13R or 13D, if applicable, smoke alarms would still be required in the bedrooms even if residential sprinklers were used.

Smoke alarms are required in split-level arrangements. As required by Section 907.2.11.5, all smoke alarms within a dwelling unit must be interconnected so that actuation of one alarm will actuate the alarms in all detectors within the dwelling unit.

These provisions do not apply to one- and two-family dwellings and multiple single-family dwellings (townhouses) not more than three stories in height with a separate means of egress that are regulated by the IRC. The IRC is intended to be a stand-alone document but if the residential units do not fall within the scope of the IRC or for other reasons are intended to be subject to this code, then the requirements of this section would apply. IFC Committee Interpretation No. 42-03 addresses this condition and contains additional explanatory information about the IRC and its relationship to the other *International Codes*.

INTERNATIONAL CODE COUNCIL®
Copyright © 2015 ICC. ALL RIGHTS RESERVED. Accessed by David Dammon on Jun 21, 2017 12:30:52 PM pursuant to License Agreement with ICC. No further reproduction or distribution authorized. ANY UNAUTHORIZED REPRODUCTION OR DISTRIBUTION IS A VIOLATION OF THE FEDERAL COPYRIGHT ACT AND THE LICENSE AGREEMENT, AND SUBJECT TO CIVIL AND CRIMINAL PENALTIES THEREUNDER.

Although the occupants of a sleeping unit in a Group I-1 occupancy may be asleep, they are still considered capable of self-preservation. Regardless, smoke alarms are required in sleeping units. The exception allows single- or multiple-station smoke alarms to be eliminated in the room if an automatic fire detection system that includes in-room system smoke detectors is installed as required by Section 907.2.6.

[F] 907.2.11.3 Installation near cooking appliances. Smoke alarms shall not be installed in the following locations unless this would prevent placement of a smoke alarm in a location required by Section 907.2.11.1 or 907.2.11.2:

1. Ionization smoke alarms shall not be installed less than 20 feet (6096 mm) horizontally from a permanently installed cooking appliance.
2. Ionization smoke alarms with an alarm-silencing switch shall not be installed less than 10 feet (3048 mm) horizontally from a permanently installed cooking appliance.
3. Photoelectric smoke alarms shall not be installed less than 6 feet (1829 mm) horizontally from a permanently installed cooking appliance.

❖ This requirement is intended to reduce nuisance alarms attributed to locating smoke alarms in close proximity to cooking appliances and bathrooms in which steam is produced. These provisions are based on the findings in the Task Group Report - Minimum Performance Requirements for Smoke Alarm Detection Technology - February 22, 2008, and are consistent with similar requirements included in Section 29.8.3.4 of NFPA 72.

[F] 907.2.11.4 Installation near bathrooms. Smoke alarms shall be installed not less than 3 feet (914 mm) horizontally from the door or opening of a bathroom that contains a bathtub or shower unless this would prevent placement of a smoke alarm required by Section 907.2.11.1 or 907.2.11.2.

❖ See the commentary to Section 907.2.11.3. Sections 907.2.11.3 and 907.2.11.4 are provided to reduce nuisance alarms.

[F] 907.2.11.5 Interconnection. Where more than one smoke alarm is required to be installed within an individual *dwelling unit* or *sleeping unit* in Group R or I-1 occupancies, the smoke alarms shall be interconnected in such a manner that the activation of one alarm will activate all of the alarms in the individual unit. Physical interconnection of smoke alarms shall not be required where listed wireless alarms are installed and all alarms sound upon activation of one alarm. The alarm shall be clearly audible in all bedrooms over background noise levels with all intervening doors closed.

❖ The installation of smoke alarms in areas remote from the sleeping area will be of minimal value if the alarm is not heard by the occupants. Interconnection of multiple smoke alarms within an individual dwelling unit or sleeping unit is required in order to alert a sleeping occupant of a remote fire within the unit before the combustion products reach the smoke alarm in the sleeping area and thus provide additional time for evacuation.

The term "interconnection" refers to either hard-wired systems or listed wireless systems. UL has listed smoke detectors that use this technology. It is presumed that on safely evacuating the unit or room of fire origin, an occupant will notify other occupants by actuating the manual fire alarm system or using other available means. Section 907.7.1 addresses the testing of the smoke alarms to demonstrate that interconnection of such smoke alarms is properly functioning.

Similar requirements can now be found in the IRC, IFC and *International Existing Building Code*®

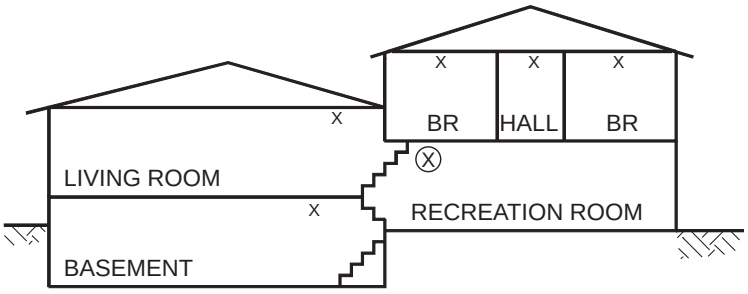

Figure 907.2.11.2
LOCATION OF SMOKE ALARMS IN A DWELLING UNIT

INTERNATIONAL CODE COUNCIL®
Copyright © 2015 ICC. ALL RIGHTS RESERVED. Accessed by David Dammon on Jun 21, 2017 12:30:52 PM pursuant to License Agreement with ICC. No further reproduction or distribution authorized. ANY UNAUTHORIZED REPRODUCTION OR DISTRIBUTION IS A VIOLATION OF THE FEDERAL COPYRIGHT ACT AND THE LICENSE AGREEMENT, AND SUBJECT TO CIVIL AND CRIMINAL PENALTIES THEREUNDER.

(IEBC®) for both new and existing buildings to allow interconnection with wireless technology of smoke alarms. All wirelessly interconnected smoke alarms are listed to UL 217 and are classified by NFPA 72 as low-power systems.

[F] 907.2.11.6 Power source. In new construction, required smoke alarms shall receive their primary power from the building wiring where such wiring is served from a commercial source and shall be equipped with a battery backup. Smoke alarms with integral strobes that are not equipped with battery backup shall be connected to an emergency electrical system in accordance with Section 2702. Smoke alarms shall emit a signal when the batteries are low. Wiring shall be permanent and without a disconnecting switch other than as required for overcurrent protection.

Exception: Smoke alarms are not required to be equipped with battery backup where they are connected to an emergency electrical system that complies with Section 2702.

❖ Smoke alarms are required to use AC as a primary power source and battery power as a secondary source to improve their reliability. For example, during a power outage, the probability of fire is increased because of the use of candles or lanterns for temporary light. Required backup battery power is intended to provide continued functioning of the smoke alarms. Smoke alarms are commonly designed to emit a recurring signal when batteries are low and need to be replaced.

Certain occupancies may already have an emergency electrical system in the building to monitor other building system conditions. The emergency electrical system provides a level of reliability equivalent to battery backup.

[F] 907.2.11.7 Smoke detection system. Smoke detectors listed in accordance with UL 268 and provided as part of the building *fire alarm system* shall be an acceptable alternative to single- and multiple-station *smoke alarms* and shall comply with the following:

1. The *fire alarm system* shall comply with all applicable requirements in Section 907.
2. Activation of a smoke detector in a *dwelling unit* or *sleeping unit* shall initiate alarm notification in the *dwelling unit* or *sleeping unit* in accordance with Section 907.5.2.
3. Activation of a smoke detector in a *dwelling unit* or *sleeping unit* shall not activate alarm notification appliances outside of the *dwelling unit* or *sleeping unit*, provided that a supervisory signal is generated and monitored in accordance with Section 907.6.6.

❖ This section specifically allows the use of an automatic smoke detection system as an alternative to smoke alarms. In the past, when this concept was proposed, it was only allowed through an alternative method and materials approach (see Section 104.11 of this code), even though, in concept, it provided the same level of protection. Such systems provide the same safety features necessary for occupants but are simply part of a fire alarm system. Note that if a detector activates within a sleeping or dwelling unit, the occupant notification system is not intended to activate. This is consistent with the operation of smoke alarms. Item 3 specifically requires the notification to be only to occupants of the sleeping unit or dwelling unit.

[F] 907.2.12 Special amusement buildings. An automatic smoke detection system shall be provided in *special amusement buildings* in accordance with Sections 907.2.12.1 through 907.2.12.3.

❖ Special amusement buildings are buildings in which the means of egress is not readily apparent, is intentionally confounded or is not readily available. Special amusement buildings must also comply with the provisions of Section 411.

The approved automatic smoke detection system is required to provide early warning of a fire. The detection system is required regardless of the presence of staff in the building. The exception recognizes that the ambient conditions in some special amusement buildings may preclude the use of automatic smoke detectors. In those instances, an alternative detection device must be used for early detection of a fire.

[F] 907.2.12.1 Alarm. Activation of any single smoke detector, the *automatic sprinkler system* or any other automatic fire detection device shall immediately activate an audible and visible alarm at the building at a constantly attended location from which emergency action can be initiated, including the capability of manual initiation of requirements in Section 907.2.12.2.

❖ On activation of either a smoke detector or other automatic fire detection device or the automatic sprinkler system, an alarm must activate both an audible and visible alarm at a constantly attended location. The staff at the location is expected to be capable of then providing the required egress illumination, stopping the conflicting or confusing sounds and distractions and activating the exit marking required by Section 907.2.12.2. The staff is also expected to be capable of preventing additional people from entering the building.

[F] 907.2.12.2 System response. The activation of two or more smoke detectors, a single smoke detector equipped with an alarm verification feature, the *automatic sprinkler system* or other *approved* fire detection device shall automatically do all of the following:

1. Cause illumination of the *means of egress* with light of not less than 1 footcandle (11 lux) at the walking surface level.
2. Stop any conflicting or confusing sounds and visual distractions.
3. Activate an *approved* directional *exit* marking that will become apparent in an emergency.
4. Activate a prerecorded message, audible throughout the *special amusement building*, instructing patrons to pro-

INTERNATIONAL CODE COUNCIL®
Copyright © 2015 ICC. ALL RIGHTS RESERVED. Accessed by David Dammon on Jun 21, 2017 12:30:52 PM pursuant to License Agreement with ICC. No further reproduction or distribution authorized. ANY UNAUTHORIZED REPRODUCTION OR DISTRIBUTION IS A VIOLATION OF THE FEDERAL COPYRIGHT ACT AND THE LICENSE AGREEMENT, AND SUBJECT TO CIVIL AND CRIMINAL PENALTIES THEREUNDER.

ceed to the nearest *exit*. Alarm signals used in conjunction with the prerecorded message shall produce a sound that is distinctive from other sounds used during normal operation.

❖ Once a fire has been detected, measures must be taken to stop the confusion or distractions. Additionally, the egress path must be illuminated and marked. These measures must occur automatically on detection of the fire or sprinkler waterflow. A prerecorded message that can be heard throughout the building instructing the occupants to proceed to the nearest exit must be automatically activated. The message and alarm signals should be designed to prevent panic. The prerecorded message capability is in addition to the EV/ACS requirement of Section 907.2.12.3. The wiring of all devices must comply with NFPA 72.

[F] 907.2.12.3 Emergency voice/alarm communication system. An emergency voice/alarm communication system, which is also allowed to serve as a public address system, shall be installed in accordance with Section 907.5.2.2 and be audible throughout the entire *special amusement building*.

❖ Because of the problem associated with evacuating special amusement buildings, an emergency voice/alarm communication system is required (see also Section 907.5.2.2). This section allows the system to also serve as a public address (PA) system to have the capability to alert the occupants of a fire and give them evacuation instructions. The system must be designed so that once the voice alarm is activated, the typical public address function is superseded by the voice alarm. Because a manual override must be provided, it is possible that the same microphone used for the public address can be used for the override. However, a separate action would be necessary so that the override function can be used once the voice alarm is active.

[F] 907.2.13 High-rise buildings. High-rise buildings shall be provided with an automatic smoke detection system in accordance with Section 907.2.13.1, a fire department communication system in accordance with Section 907.2.13.2 and an emergency voice/alarm communication system in accordance with Section 907.5.2.2.

Exceptions:

1. Airport traffic control towers in accordance with Sections 412 and 907.2.22.
2. *Open parking garages* in accordance with Section 406.5.
3. Buildings with an occupancy in Group A-5 in accordance with Section 303.1.
4. Low-hazard special occupancies in accordance with Section 503.1.1.
5. Buildings with an occupancy in Group H-1, H-2 or H-3 in accordance with Section 415.
6. In Group I-1 and I-2 occupancies, the alarm shall sound at a *constantly attended location* and occupant notification shall be broadcast by the emergency voice/alarm communication system.

❖ High-rise buildings require additional fire protection systems because of the difficulties with smoke movement, egress time and fire department access. As a result, this section requires both an automatic fire alarm system and an emergency voice/alarm communication system (see commentary, Section 907.5.2.2). Exceptions 1 through 5 are the same as those in Section 403.1 regarding the applicability of the high-rise provisions.

Exception 1 addresses airport traffic control towers and is based on the limited fuel load and the limited number of persons occupying the tower.

Open parking garages and places of outdoor assembly (Group A-5) are exempted by Exceptions 2 and 3, respectively, because of the free ventilation to the outside that exists in such structures.

In Exception 4, low-hazard special industrial occupancies may be exempted when approved by the fire code official. Such buildings should be evaluated based on the occupant load and the hazards of the occupancy and its contents to determine whether the protection features required by Section 403 of the code are necessary.

Buildings with occupancies in Groups H-1, H-2 and H-3 are excluded from the requirements of this section by Exception 5 because the fire hazard characteristics of these occupancies have not yet been considered in high-rise buildings.

Exception 6 recognizes the supervised environment typical of institutional uses and the reliance placed on staff to act appropriately in an emergency. As is the case for most voice alarms, the key is in being able to deliver specific information to the people who can affect a safe egress—whether it be the public, employees, or both.

[F] 907.2.13.1 Automatic smoke detection. Automatic smoke detection in high-rise buildings shall be in accordance with Sections 907.2.13.1.1 and 907.2.13.1.2.

❖ This section simply introduces the fire alarm and detection system requirements for high-rise buildings.

[F] 907.2.13.1.1 Area smoke detection. Area smoke detectors shall be provided in accordance with this section. Smoke detectors shall be connected to an automatic fire alarm system. The activation of any detector required by this section shall activate the emergency voice/alarm communication system in accordance with Section 907.5.2.2. In addition to smoke detectors required by Sections 907.2.1 through 907.2.10, smoke detectors shall be located as follows:

1. In each mechanical equipment, electrical, transformer, telephone equipment or similar room that is not provided with sprinkler protection.
2. In each elevator machine room, machinery space, control room and control space and in elevator lobbies.

❖ Automatic smoke detectors are required in all high-rise buildings in certain locations so that a fire will be

INTERNATIONAL CODE COUNCIL®
Copyright © 2015 ICC. ALL RIGHTS RESERVED. Accessed by David Dammon on Jun 21, 2017 12:30:52 PM pursuant to License Agreement with ICC. No further reproduction or distribution authorized. ANY UNAUTHORIZED REPRODUCTION OR DISTRIBUTION IS A VIOLATION OF THE FEDERAL COPYRIGHT ACT AND THE LICENSE AGREEMENT, AND SUBJECT TO CIVIL AND CRIMINAL PENALTIES THEREUNDER.

detected in its early stages of development. The detectors must be connected to the automatic fire alarm system and be capable of initiating operation of the EV/ACS.

This section divides the automatic smoke detection requirement into two categories. Smoke detectors must be installed in rooms that are not typically occupied. This includes rooms used for: mechanical equipment, electrical equipment, transformer equipment and telephone equipment where such rooms do not have automatic sprinkler protection. In most cases, these rooms will have sprinkler protection by virtue of being in a high-rise building and will therefore not require smoke detectors. However, in elevator machine rooms, machinery spaces, control rooms, control spaces and elevator lobbies, smoke detectors are required regardless of sprinkler protection.

Note that smoke detection and smoke alarms may be required based on occupancy-related requirements elsewhere in Section 907.2.

[M] 907.2.13.1.2 Duct smoke detection. Duct smoke detectors complying with Section 907.3.1 shall be located as follows:

1. In the main return air and exhaust air plenum of each air-conditioning system having a capacity greater than 2,000 cubic feet per minute (cfm) (0.94 m^3/s). Such detectors shall be located in a serviceable area downstream of the last duct inlet.
2. At each connection to a vertical duct or riser serving two or more stories from a return air duct or plenum of an air-conditioning system. In Group R-1 and R-2 occupancies, a smoke detector is allowed to be used in each return air riser carrying not more than 5,000 cfm (2.4 m^3/s) and serving not more than 10 air-inlet openings.

❖ Smoke detectors must be installed in the main return air and exhaust air plenum of each air-conditioning system having a design capacity exceeding 2,000 cubic feet per minute (cfm) (0.94 m^3/s). Systems with design capacities equal to or less than 2,000 cfm (0.94 m^3/s) are exempt from this requirement because their small size limits their capacity for spreading smoke to parts of the building not already involved with fire.

The area that could be served by a 2,000-cfm (0.94 m^3) system (approximately 5 tons of cooling capacity) is comparatively small; therefore, the distribution of smoke in a system of that size would be minimal. Smoke detectors must be located so that they monitor the total airflow within the system. If a single detector is unable to sample the total airflow at all times, then multiple detectors are required. The smoke detectors must be made accessible for maintenance and inspection. Many failures and false alarms are caused by a lack of maintenance and cleaning of the smoke detectors.

Consistent with Section 606.2.3 of the IMC, return air risers serving two or more stories must have smoke detectors installed at each story. Item 2 allows the use of a single listed smoke detector in each return air riser in a Group R-1 or R-2 occupancy if the capacity of each riser does not exceed 5,000 cfm (2.4 m^3/s) and does not serve more than 10 air-inlet openings. This alternative recognizes that it is not as necessary in buildings dedicated to residential occupancies only to monitor the return air from each story prior to intermixing the return air in the common riser.

[F] 907.2.13.2 Fire department communication system. Where a wired communication system is *approved* in lieu of an emergency responder radio coverage system in accordance with Section 510 of the *International Fire Code*, the wired fire department communication system shall be designed and installed in accordance with NFPA 72 and shall operate between a fire command center complying with Section 911, elevators, elevator lobbies, emergency and standby power rooms, fire pump rooms, *areas of refuge* and inside *interior exit stairways*. The fire department communication device shall be provided at each floor level within the *interior exit stairway*.

❖ High-rise buildings have posed a challenge to the traditional communication systems used by the fire service for fire-to-ground communications to assist fire ground officers in communicating with the fire fighters working in various areas of the building. Where testing of the emergency responder radio coverage system required by Section 403.4.5 of the code shows that the signal strengths are not satisfactory, Section 510.1, Exception 1, of the IFC allows for the alternative of installation of a wired communication system designed in accordance with this section. The system must be capable of operating between the fire command center and every elevator, elevator lobby, emergency/standby power room, fire pump room, area of refuge and interior exit stairway. Note that this section does not offer specific criteria as to what constitutes an acceptable wired communication system or its components. It could be a component of an emergency voice/alarm communication system that complies with Section 907.5.2.2 or a building's telephone system. In any event, when applying Section 510.1, Exception 1, of the IFC and this section, the concurrent approval of the fire and building code officials is required.

[F] 907.2.14 Atriums connecting more than two stories. A fire alarm system shall be installed in occupancies with an atrium that connects more than two *stories*, with smoke detection installed in locations required by a rational analysis in Section 909.4 and in accordance with the system operation requirements in Section 909.17. The system shall be activated in accordance with Section 907.5. Such occupancies in Group A, E or M shall be provided with an emergency voice/alarm communication system complying with the requirements of Section 907.5.2.2.

❖ Buildings containing an atrium that connects more than two stories are to be equipped with a fire alarm system that can be used to notify building occupants

INTERNATIONAL CODE COUNCIL®
Copyright © 2015 ICC. ALL RIGHTS RESERVED. Accessed by David Dammon on Jun 21, 2017 12:30:52 PM pursuant to License Agreement with ICC. No further reproduction or distribution authorized. ANY UNAUTHORIZED REPRODUCTION OR DISTRIBUTION IS A VIOLATION OF THE FEDERAL COPYRIGHT ACT AND THE LICENSE AGREEMENT, AND SUBJECT TO CIVIL AND CRIMINAL PENALTIES THEREUNDER.

to begin evacuating in case of a fire. The other critical part of such fire alarm systems is to activate the smoke control system. The system is to be activated by smoke detection designed and installed in accordance with the rational analysis as required in Section 909.4. More specifically smoke control systems are engineered systems that are activated by carefully placed and zoned smoke detection. If improperly designed and installed, the system may not be effective. For instance, wrongly placed or inappropriate smoke detection technology may not activate fast enough and the smoke control system would be overwhelmed. This section goes on to state that the alarm system must be initiated in accordance with Section 907.5, which requires that in buildings containing an atrium, the alarm system is to be initiated by the sprinkler system and any automatic or manual fire alarm-initiating devices found in the atrium as well as elsewhere in the building. It does not intend to require certain features to be installed within the atrium but rather is simply requiring that any such features present initiate the occupant notification system. It would not necessarily be appropriate to also initiate the smoke control system on activation of the alarm system within a building containing an atrium (see Section 909.12.3). The alarm system needs to be carefully zoned in such buildings to avoid an inappropriate activation of the smoke control system from a space not associated with the atrium.

Groups A, E and M must have an emergency voice/alarm communication system that complies with Section 907.5.2.2 because of the number of persons to be evacuated and the lack of familiarity with the location of exits that is typical of occupants in Groups A and M.

[F] 907.2.15 High-piled combustible storage areas. An automatic smoke detection system shall be installed throughout high-piled combustible storage areas where required by Section 3206.5 of the *International Fire Code*.

❖ Section 3206.5 of the IFC requires an automatic fire detection system in high-piled combustible storage areas depending on the commodity class, the size of the high-piled storage area and the presence of an automatic sprinkler system. High-piled storage is the storage of Class I through IV commodities in piles, bin boxes, on pallets or in racks more than 12 feet (3658 mm) high or for high-hazard commodities stored higher than 6 feet (1829 mm). Chapter 32 of the IFC and NFPA 13 contain additional requirements for all high-piled storage conditions.

[F] 907.2.16 Aerosol storage uses. Aerosol storage rooms and general-purpose warehouses containing aerosols shall be provided with an *approved* manual fire alarm system where required by the *International Fire Code.*

❖ Chapter 32 of the IFC and NFPA 30B contain additional guidance on the storage of and fire protection requirements for aerosol products. The requirements for storing the various levels of aerosol products are dependent on the level of sprinkler protection, the type of storage and the quantity of aerosol products. Although aerosol product fires generally involve property loss as opposed to loss of life, installation of a manual fire alarm system could aid in the prompt evacuation of the occupants. Fires involving aerosol products can spread rapidly through a building that is not properly protected and controlled.

[F] 907.2.17 Lumber, wood structural panel and veneer mills. Lumber, wood structural panel and veneer mills shall be provided with a manual fire alarm system.

❖ Any facility using mechanical methods to process wood into finished products produces debris and the potential for combustible dust. Such facilities include mills that produce solid wood lumber and wood veneers as well as those that manufacture structural wood panels such as waferboard, oriented strandboard, composite wood panels or plywood. Good housekeeping and control of ignition sources are therefore essential. To aid in the quick evacuation of occupants in an emergency, Section 2804.2.1 of the IFC requires a manual fire alarm system in lumber, wood structural panel and veneer mills that contain product dryers because of their potential as a source of ignition. A manual fire alarm system is not required, however, if the dryers and all other potential sources of ignition are protected by a supervised automatic sprinkler system.

[F] 907.2.18 Underground buildings with smoke control systems. Where a smoke control system is installed in an underground building in accordance with this code, automatic smoke detectors shall be provided in accordance with Section 907.2.18.1.

❖ As indicated in Section 405.5.2, each compartment of an underground building must have a smoke control/exhaust system that can be activated both automatically and manually. Floor levels more than 60 feet (18 288 mm) below the lowest level of exit discharge must be compartmented. Compartmentation is a key element in the egress and fire access plan for floor areas in an underground building. The smoke control system must not only facilitate egress during a fire, but also improve fire department access to the fire source by maintaining visibility that is otherwise impossible given the inability of the fire service to manually ventilate the underground portion of the building (see commentary, Section 405.4.1).

[F] 907.2.18.1 Smoke detectors. Not fewer than one smoke detector *listed* for the intended purpose shall be installed in all of the following areas:

1. Mechanical equipment, electrical, transformer, telephone equipment, elevator machine or similar rooms.
2. Elevator lobbies.
3. The main return and exhaust air plenum of each air-conditioning system serving more than one *story* and located in a serviceable area downstream of the last duct inlet.

INTERNATIONAL CODE COUNCIL®
Copyright © 2015 ICC. ALL RIGHTS RESERVED. Accessed by David Dammon on Jun 21, 2017 12:30:52 PM pursuant to License Agreement with ICC. No further reproduction or distribution authorized. ANY UNAUTHORIZED REPRODUCTION OR DISTRIBUTION IS A VIOLATION OF THE FEDERAL COPYRIGHT ACT AND THE LICENSE AGREEMENT, AND SUBJECT TO CIVIL AND CRIMINAL PENALTIES THEREUNDER.

4. Each connection to a vertical duct or riser serving two or more floors from return air ducts or plenums of heating, ventilating and air-conditioning systems, except that in Group R occupancies, a *listed* smoke detector is allowed to be used in each return air riser carrying not more than 5,000 cfm (2.4 m^3/s) and serving not more than 10 air-inlet openings.

❖ Automatic smoke detectors are required in certain locations in all underground buildings so that a fire will be detected in its early stages of development. Underground buildings are similar to high-rise buildings in that they present an unusual hazard by being virtually inaccessible to exterior fire department suppression and rescue operations with the increased potential to trap occupants inside the structure. For this reason, the smoke detector location requirements for underground buildings are similar to those in Section 907.2.13.1 for high-rise buildings (see commentary, Section 907.2.13.1).

The requirement for a smoke detector in the main return and exhaust air plenum of an air-conditioning system in an underground building, however, differs from that of a high-rise building in that it is not a function of capacity [2,000 cfm (0.94 m^3/s)] but rather a function of whether the system serves more than one floor level. There is more concern over the threat of smoke movement from floor to floor because the products of combustion cannot be vented directly to the atmosphere.

[F] 907.2.18.2 Alarm required. Activation of the smoke control system shall activate an audible alarm at a *constantly attended location.*

❖ The audible alarm is required to notify qualified personnel immediately that the smoke control system has been activated and to put emergency procedures into action quickly.

[F] 907.2.19 Deep underground buildings. Where the lowest level of a structure is more than 60 feet (18 288 mm) below the finished floor of the lowest *level of exit discharge*, the structure shall be equipped throughout with a manual fire alarm system, including an emergency voice/alarm communication system installed in accordance with Section 907.5.2.2.

❖ The ability to communicate and offer warning of a fire can increase the time available for egress from the building. Underground structures located more than 60 feet (18 288 mm) below the level of exit discharge must therefore have a manual fire alarm system. An emergency voice/alarm communication system is also required as part of this system (see commentary, Section 907.5.2.2).

[F] 907.2.20 Covered and open mall buildings. Where the total floor area exceeds 50,000 square feet (4645 m^2) within either a covered mall building or within the perimeter line of an open mall building, an emergency voice/alarm communication system shall be provided. Emergency voice/alarm communication systems serving a mall, required or otherwise, shall be accessible to the fire department. The system shall be provided in accordance with Section 907.5.2.2.

❖ Because of the potentially large number of occupants and their unfamiliarity with their surroundings, an EV/ACS, accessible by the fire department, is required to aid in evacuation of covered mall buildings exceeding 50,000 square feet (4645 m^2) in total floor area or an open mall exceeding 50,000 square feet (4645 m^2) measured within the perimeter lines of the open mall. Anchor stores are not included as part of the covered or open mall building (see commentary, Section 202) definition of "Covered mall building".

[F] 907.2.21 Residential aircraft hangars. Not fewer than one single-station smoke alarm shall be installed within a residential aircraft hangar as defined in Chapter 2 and shall be interconnected into the residential smoke alarm or other sounding device to provide an alarm that will be audible in all sleeping areas of the *dwelling*.

❖ Residential aircraft hangars are assumed to be on the same property as a one- or two-family dwelling. Section 412.5 contains additional requirements for the construction of residential aircraft hangars. The hangar could be located immediately adjacent to the dwelling unit if it is separated by 1-hour fire-resistance-rated construction. Because of the potentially close proximity of the aircraft and its flammability and fuel source, at least one smoke alarm is required in the hangar that is interconnected to the residential smoke alarms. It should be noted, however, that the requirement for a smoke alarm is also applicable to residential aircraft hangars that are detached from the dwelling unit. Because a minimum separation distance is not specified, a fire in the hangar could still present a serious fire hazard to the dwelling unit.

[F] 907.2.22 Airport traffic control towers. An automatic smoke detection system that activates the occupant notification system in accordance with Section 907.5 shall be provided in airport control towers in accordance with Sections 907.2.22.1 and 907.2.22.2.

Exception: Audible appliances shall not be installed within the control tower cab.

❖ Airport traffic control towers must be designed to comply with Section 412.3. These structures are unique in that they can be built to excessive heights and are often permitted to have one exit stairway. Section 412.3 requires that airport traffic control towers with an occupied floor more than 35 feet above fire department vehicle access be equipped throughout with an automatic sprinkler system. The requirements for detection systems and associated occupant notification are addressed based on whether the airport traffic control tower is equipped throughout with an automatic sprinkler system and whether multiple exits are provided.

The exception recognizes the sensitive nature of the operations that take place in the cab located at

INTERNATIONAL CODE COUNCIL®
Copyright © 2015 ICC. ALL RIGHTS RESERVED. Accessed by David Dammon on Jun 21, 2017 12:30:52 PM pursuant to License Agreement with ICC. No further reproduction or distribution authorized. ANY UNAUTHORIZED REPRODUCTION OR DISTRIBUTION IS A VIOLATION OF THE FEDERAL COPYRIGHT ACT AND THE LICENSE AGREEMENT, AND SUBJECT TO CIVIL AND CRIMINAL PENALTIES THEREUNDER.

the top of the tower and prohibits the installation of audible alarm notification devices there. Notification of occupants within the cab is to be by visual notification appliances only.

[F] 907.2.22.1 Airport traffic control towers with multiple exits and automatic sprinklers. Airport traffic control towers with multiple *exits* and equipped throughout with an *automatic sprinkler system* in accordance with Section 903.3.1.1 shall be provided with smoke detectors in all of the following locations:

1. Airport traffic control cab.
2. Electrical and mechanical equipment rooms.
3. Airport terminal radar and electronics rooms.
4. Outside each opening into *interior exit stairways*.
5. Along the single *means of egress* permitted from observation levels.
6. Outside each opening into the single *means of egress* permitted from observation levels.

❖ This section addresses airport traffic control towers that are both equipped throughout with an automatic sprinkler system and provide multiple exits. The requirements are less restrictive than Section 907.2.22.2 because two important safety aspects are provided.

The first three items address occupiable or equipment-related rooms where the fires are more likely to start. The last two items address the paths of egress. Item 4 requires one detector outside each entrance to the interior stairway. Item 5 is specific to providing detection along the entire means of egress path from the observation levels.

[F] 907.2.22.2 Other airport traffic control towers. Airport traffic control towers with a single *exit* or where sprinklers are not installed throughout shall be provided with smoke detectors in all of the following locations:

1. Airport traffic control cab.
2. Electrical and mechanical equipment rooms.
3. Airport terminal radar and electronics rooms.
4. Office spaces incidental to the tower operation.
5. Lounges for employees, including sanitary facilities.
6. *Means of egress*.
7. Accessible utility shafts.

❖ This section addresses airport traffic control towers that have only a single exit or where an automatic sprinkler system is not provided. Essentially all of the items addressed are the areas permitted in an airport traffic control tower in accordance with Section 412.3. Items 1 through 3 are the same as Section 907.2.22.1. These are the critical occupiable spaces and equipment spaces where fires have the greatest effect on the operation of airport traffic control towers. Since this is a single exit tower and possibly not equipped throughout with an automatic sprinkler system, other occupiable areas such as offices and lounges for employees must also provide smoke detection. Since there are limited exits or no systems able to control the fire, early warning of a fire becomes more critical. Item 6 requires smoke detection along the means of egress path. The intent is to address the exit access path leading to the interior exit stairway. Finally, Item 7 addresses the potential for fires in any utility shaft that may be accessible to building occupants.

[F] 907.2.23 Battery rooms. An automatic smoke detection system shall be installed in areas containing stationary storage battery systems with a liquid capacity of more than 50 gallons (189 L).

❖ Stationary lead-acid battery systems are commonly used for standby power, emergency power or uninterrupted power supplies. The release of hydrogen gas during battery system operation is usually minimal. Adequate ventilation will disperse the small amounts of liberated hydrogen. Because standby power and emergency power systems control many important building emergency systems and functions, a supervised automatic smoke detection system is required for early warning notification of a hazardous condition. Section 608 of the IFC contains additional requirements, including the need for safety venting; room enclosure requirements; spill control and neutralization provisions; ventilation criteria; signage and seismic protection. Section 509 also requires that such rooms in certain occupancies be separated by 1-hour construction.

[F] 907.3 Fire safety functions. Automatic fire detectors utilized for the purpose of performing fire safety functions shall be connected to the building's fire alarm control unit where a fire alarm system is required by Section 907.2. Detectors shall, upon actuation, perform the intended function and activate the alarm notification appliances or activate a visible and audible supervisory signal at a *constantly attended location*. In buildings not equipped with a fire alarm system, the automatic fire detector shall be powered by normal electrical service and, upon actuation, perform the intended function. The detectors shall be located in accordance with NFPA 72.

❖ When the code requires installation of automatic fire detectors to perform a specific function, such as elevator recall or smokeproof enclosure ventilation, or when detectors are installed to comply with a permitted alternative, such as door-closing devices, these detectors must be connected to the building's automatic fire alarm system if the building is required by the code to have such a system.

In addition to performing its intended function (for example, closing a door), if a detector is activated, it must also activate either the building alarm devices (if one is present) or a supervisory signal at a constantly attended location. This requirement recognizes that these detectors and the devices they control are part of the building fire protection system and are expected to perform as designed. If they are connected to a fire alarm system, they will have the supervision necessary for operational reliability. If

INTERNATIONAL CODE COUNCIL®
Copyright © 2015 ICC. ALL RIGHTS RESERVED. Accessed by David Dammon on Jun 21, 2017 12:30:52 PM pursuant to License Agreement with ICC. No further reproduction or distribution authorized. ANY UNAUTHORIZED REPRODUCTION OR DISTRIBUTION IS A VIOLATION OF THE FEDERAL COPYRIGHT ACT AND THE LICENSE AGREEMENT, AND SUBJECT TO CIVIL AND CRIMINAL PENALTIES THEREUNDER.

they are not connected to and supervised by a fire alarm system, they still must be supervised through the constantly attended location.

An exception is provided for fire safety function detectors in buildings not required to have a fire alarm system. The fire safety function detectors must be powered by the building electrical system and be located as required by NFPA 72. Without this exception, these detectors could not be expected to perform as intended because there would be no power supply.

Note that in the IFC, this section is entitled "Where required in existing buildings and structures." but since the IBC does not apply retroactively, such requirements do not appear here. That is why all sections of Section 907 following Section 907.2.23 do not exactly correlate with the content of Section 907 of the IFC.

[F] 907.3.1 Duct smoke detectors. Smoke detectors installed in ducts shall be *listed* for the air velocity, temperature and humidity present in the duct. Duct smoke detectors shall be connected to the building's fire alarm control unit when a fire alarm system is required by Section 907.2. Activation of a duct smoke detector shall initiate a visible and audible supervisory signal at a *constantly attended location* and shall perform the intended fire safety function in accordance with this code and the *International Mechanical Code*. In facilities that are required to be monitored by a supervising station, duct smoke detectors shall report only as a supervisory signal and not as a fire alarm. They shall not be used as a substitute for required open area detection.

Exceptions:

1. The supervisory signal at a *constantly attended location* is not required where duct smoke detectors activate the building's alarm notification appliances.
2. In occupancies not required to be equipped with a fire alarm system, actuation of a smoke detector shall activate a visible and an audible signal in an *approved* location. Smoke detector trouble conditions shall activate a visible or audible signal in an *approved* location and shall be identified as air duct detector trouble.

❖ It is not the intent of this section to send a signal to the fire department or to activate the alarm notification devices within a building. Instead, this section requires that a supervisory signal be sent to a constantly attended location. Smoke detectors must be connected to a fire alarm system where such systems are installed. Connection to the fire alarm system will activate a visible and audible supervisory signal at a constantly attended location, which will alert building supervisory personnel that a smoke alarm has activated and will also provide electronic supervision of the duct detectors, thereby indicating any problems that may develop in the detector system circuitry or power supply.

Exception 1 allows activation of the building alarm notification appliances in place of a supervisory signal. Causing the occupant notification system to sound would alert the occupants of the building that an alarm condition exists within the air distribution system, thereby performing the same function as a supervisory signal sent to a constantly attended location.

Exception 2 recognizes that not all buildings are required to have a fire alarm system. A visible and audible signal must be activated at an approved location that will alert building supervisory personnel to take action. Additionally, the duct smoke detectors must be electronically supervised to indicate trouble (system fault) in the detector system circuitry or power supply. A trouble condition must activate a distinct visible or audible signal at a location that will alert the responsible personnel.

[F] 907.3.2 Delayed egress locks. Where delayed egress locks are installed on *means of egress* doors in accordance with Section 1010.1.9.7, an automatic smoke or heat detection system shall be installed as required by that section.

❖ This section alerts the code user to additional requirements in Section 1010.1.9.7 that tie the operation of egress doors into the activation of an automatic fire detection system. A smoke or heat detection system is required to unlock delayed egress locks upon activation. The heat detection system can be the sprinkler system. For example, a similar requirement is found in Section 1010.1.4.3 that requires horizontal sliding doors used as a component of the means of egress, where required to be rated, to be self-closing or automatic-closing upon smoke detection. Also, electrically locked egress doors in occupancies as required by Section 1010.1.9.8 must be capable of being automatically unlocked by activation of an automatic fire detection system, if one is installed.

[F] 907.3.3 Elevator emergency operation. Automatic fire detectors installed for elevator emergency operation shall be installed in accordance with the provisions of ASME A17.1 and NFPA 72.

❖ This section provides correlation with Section 607.1 of the IFC by making it clear that automatic fire detection devices used to initiate Phase I emergency recall of elevators are to be installed in accordance with both ASME A17.1 and NFPA 72.

[F] 907.3.4 Wiring. The wiring to the auxiliary devices and equipment used to accomplish the fire safety functions shall be monitored for integrity in accordance with NFPA 72.

❖ In order to provide a reasonable level of integrity and reliability to the installation of automatic fire detection devices and related equipment installed to perform various fire safety functions in accordance with Section 907.3, this section requires that all wiring interconnecting such devices and equipment be monitored for integrity in accordance with NFPA 72.

[F] 907.4 Initiating devices. Where manual or automatic alarm initiation is required as part of a fire alarm system, the

INTERNATIONAL CODE COUNCIL®
Copyright © 2015 ICC. ALL RIGHTS RESERVED. Accessed by David Dammon on Jun 21, 2017 12:30:52 PM pursuant to License Agreement with ICC. No further reproduction or distribution authorized. ANY UNAUTHORIZED REPRODUCTION OR DISTRIBUTION IS A VIOLATION OF THE FEDERAL COPYRIGHT ACT AND THE LICENSE AGREEMENT, AND SUBJECT TO CIVIL AND CRIMINAL PENALTIES THEREUNDER.

initiating devices shall be installed in accordance with Sections 907.4.1 through 907.4.3.1.

❖ This section introduces Sections 907.4.1 through 907.4.3, which contain requirements for the various types of manual or automatic fire alarm-initiating devices.

[F] 907.4.1 Protection of fire alarm control unit. In areas that are not continuously occupied, a single smoke detector shall be provided at the location of each fire alarm control unit, notification appliance circuit power extenders, and supervising station transmitting equipment.

Exception: Where ambient conditions prohibit installation of a smoke detector, a *heat detector* shall be permitted.

❖ This section requires a smoke detector at the fire alarm control unit. This is consistent with Section 10.4.4 of NFPA 72. This smoke detector will activate the fire alarm control unit and allow it to either notify occupants or transmit a signal to a remote monitoring location before the fire impairs the fire alarm control unit. The exception parallels Section 907.4.3 by allowing a heat detector to be installed in lieu of a smoke detector in areas where the ambient environment is hostile to smoke detectors and could lead to unwanted alarm activations. This exception is also allowed by NFPA 72.

[F] 907.4.2 Manual fire alarm boxes. Where a manual fire alarm system is required by another section of this code, it shall be activated by fire alarm boxes installed in accordance with Sections 907.4.2.1 through 907.4.2.6.

❖ This section specifies the requirements for manual fire alarm boxes that are part of a required manual fire alarm system.

[F] 907.4.2.1 Location. Manual fire alarm boxes shall be located not more than 5 feet (1524 mm) from the entrance to each *exit*. In buildings not protected by an *automatic sprinkler system* in accordance with Section 903.3.1.1 or 903.3.1.2, additional manual fire alarm boxes shall be located so that the *exit access* travel distance to the nearest box does not exceed 200 feet (60 960 mm).

❖ Manual fire alarm boxes must be located in the path of egress and be readily accessible to the occupants. They must be located within 5 feet (1524 mm) of the entrance to each exit on every story of the building. This would include the need to locate manual fire alarm boxes near each horizontal exit, as well as entrances to stairs and exit doors to the exterior.

Manual fire alarm boxes are located near exits so that an adequate number of devices are available in the path of egress to transmit an alarm in a timely manner. These locations also encourage the actuation of a manual fire alarm box on the fire floor prior to entering the stair, resulting in the alarm being received from the actual fire floor and not another floor along the path of egress.

The location also presumes that individuals will be evacuating the area where the fire originated. When evacuation of the fire area is unlikely, consideration could be given to putting manual fire alarm boxes in more convenient places. Examples of such instances would be officer stations in Group I-3 occupancies and care provider's stations in Group I-2 occupancies.

The 200-foot (60 960 mm) exit access travel distance limitation is consistent with the exit access travel distance permitted for most nonsprinklered occupancies. If the 200-foot (60 960 mm) travel distance to a manual fire alarm box is exceeded in a nonsprinklered building, additional manual fire alarm boxes would be required.

[F] 907.4.2.2 Height. The height of the manual fire alarm boxes shall be not less than 42 inches (1067 mm) and not more than 48 inches (1372 mm) measured vertically, from the floor level to the activating handle or lever of the box.

❖ Manual fire alarm boxes must be reachable by the occupants of the building. They must also be mounted high enough to reduce the likelihood of damage or false alarms from something accidentally striking the device. Therefore, manual fire alarm boxes must be mounted a minimum of 42 inches (1067 mm) and a maximum of 48 inches (1372 mm) above the floor level. The 48-inch (1372 mm) measurement corresponds to the maximum unobstructed side-reach height by a person in a wheelchair.

[F] 907.4.2.3 Color. Manual fire alarm boxes shall be red in color.

❖ Manual fire alarm boxes are to be painted or manufactured in a distinctive and traditional red color to provide a visual cue to help building occupants identify the device.

[F] 907.4.2.4 Signs. Where fire alarm systems are not monitored by a supervising station, an *approved* permanent sign shall be installed adjacent to each manual fire alarm box that reads: WHEN ALARM SOUNDS CALL FIRE DEPARTMENT.

Exception: Where the manufacturer has permanently provided this information on the manual fire alarm box.

❖ This section has limited application because, as indicated in Section 907.6.6, fire alarm systems generally must be monitored by an approved supervising station. When a system is not monitored, such as possibly a fire alarm system that is not required by code, adequate signage must be displayed to tell occupants what response actions must be taken. Most building occupants assume that when an alarm device is activated, the fire department will automatically be notified as well. The sign must be conspicuously located next to the manual fire alarm box unless it is mounted on the manual fire alarm box itself by the manufacturer.

[F] 907.4.2.5 Protective covers. The fire code official is authorized to require the installation of *listed* manual fire alarm box protective covers to prevent malicious false alarms or to provide the manual fire alarm box with protection from

INTERNATIONAL CODE COUNCIL®
Copyright © 2015 ICC. ALL RIGHTS RESERVED. Accessed by David Dammon on Jun 21, 2017 12:30:52 PM pursuant to License Agreement with ICC. No further reproduction or distribution authorized. ANY UNAUTHORIZED REPRODUCTION OR DISTRIBUTION IS A VIOLATION OF THE FEDERAL COPYRIGHT ACT AND THE LICENSE AGREEMENT, AND SUBJECT TO CIVIL AND CRIMINAL PENALTIES THEREUNDER.

physical damage. The protective cover shall be transparent or red in color with a transparent face to permit visibility of the manual fire alarm box. Each cover shall include proper operating instructions. A protective cover that emits a local alarm signal shall not be installed unless *approved*. Protective covers shall not project more than that permitted by Section 1003.3.3.

❖ Although manual fire alarm boxes must be readily available to all occupants in buildings required to have a manual fire alarm system, this section allows the use of protective covers if they are approved by the fire code official. Protective covers are commonly used to reduce either the potential for intentional false alarms or vandalism. They also provide protection in locations where the manual fire alarm boxes may be exposed to physical damage, such as in gymnasiums, indoor tennis courts and the like.

[F] 907.4.2.6 Unobstructed and unobscured. Manual fire alarm boxes shall be accessible, unobstructed, unobscured and visible at all times.

❖ This section addresses the concern that manual fire alarm boxes be kept clear and unobstructed. It is recommended that a minimum of 3 feet (914 mm) be kept clear but more may be needed. NFPA 72 addresses the need for manual fire alarm boxes to be unobstructed in Section 17.14.8.2 and states that manual fire alarm boxes be conspicuous, unobstructed and accessible. This requirement will assist during the design, construction, inspection and future maintenance of manual fire alarm boxes when they are located where they will be provided with enough space to access and will not be obstructed.

[F] 907.4.3 Automatic smoke detection. Where an automatic smoke detection system is required it shall utilize smoke detectors unless ambient conditions prohibit such an installation. In spaces where smoke detectors cannot be utilized due to ambient conditions, *approved* automatic *heat detectors* shall be permitted.

❖ Smoke detectors must be used, except when ambient conditions would prohibit their use. This section would allow a heat detector to be installed in lieu of a smoke detector in areas where the ambient environment is hostile to smoke detectors and could lead to unwanted alarm activations. The smoke detector manufacturer's literature will identify the limitations on the use of smoke detectors, including environmental conditions such as humidity, temperature and airflow.

[F] 907.4.3.1 Automatic sprinkler system. For conditions other than specific fire safety functions noted in Section 907.3, in areas where ambient conditions prohibit the installation of smoke detectors, an *automatic sprinkler system* installed in such areas in accordance with Section 903.3.1.1 or 903.3.1.2 and that is connected to the fire alarm system shall be *approved* as automatic heat detection.

❖ This section states that automatic heat detection is not required when buildings are fully sprinklered in accordance with NFPA 13 or 13R. The presence of a sprinkler system exempts areas where a heat detector can be installed in place of a smoke detector, such as in storage or furnace rooms. The sprinkler head in this case essentially acts as a heat detection device. Note that this provision does not apply to the fire safety functions indicated in Section 907.3.

[F] 907.5 Occupant notification systems. A fire alarm system shall annunciate at the fire alarm control unit and shall initiate occupant notification upon activation, in accordance with Sections 907.5.1 through 907.5.2.3.3. Where a fire alarm system is required by another section of this code, it shall be activated by:

1. Automatic fire detectors.
2. *Automatic sprinkler system* waterflow devices.
3. Manual fire alarm boxes.
4. Automatic fire-extinguishing systems.

Exception: Where notification systems are allowed elsewhere in Section 907 to annunciate at a *constantly attended location*.

❖ This section makes it clear that fire alarm system activation begins first by activating the fire alarm control unit, then by notifying the occupants of an alarm condition and then goes on to introduce all of the components of an occupant notification system contained in Sections 907.5.1 through 907.5.2.3.3.

It also lists the system components that are to act as alarm initiation devices. The exception is a recognition that there are places in the code where an alternative to occupant notification is an alarm notification at a constantly attended location. The exception is intended to clarify the code so that there is no question as to whether this general provision for alarm activation is superseded by the other sections addressing the alarm notification at a constantly attended location.

[F] 907.5.1 Presignal feature. A presignal feature shall not be installed unless *approved* by the fire code official and the fire department. Where a presignal feature is provided, a signal shall be annunciated at a *constantly attended location approved* by the fire department so that occupant notification can be activated in the event of fire or other emergency.

❖ A presignal feature on a fire alarm system allows the occupant notification devices to activate in selected, constantly attended locations only and from which human intervention is required to activate a general occupant notification signal. Alternatively, this feature can be programmed to delay the general alarm notification for more than 1 minute before it will automatically be activated by the control panel. In either presignal scenario, remote transmission of the alarm signal to the fire department is immediate. See NFPA 72 for additional information on the presignal feature.

Improper use of the presignal feature has been a contributing factor in several multiple-death fire incidents. In most instances, the staff failed to activate the general alarm quickly and the occupants of the building were unaware of the fire. Therefore, the use of a presignal feature is discouraged by the code. A

INTERNATIONAL CODE COUNCIL®
Copyright © 2015 ICC. ALL RIGHTS RESERVED. Accessed by David Dammon on Jun 21, 2017 12:30:52 PM pursuant to License Agreement with ICC. No further reproduction or distribution authorized. ANY UNAUTHORIZED REPRODUCTION OR DISTRIBUTION IS A VIOLATION OF THE FEDERAL COPYRIGHT ACT AND THE LICENSE AGREEMENT, AND SUBJECT TO CIVIL AND CRIMINAL PENALTIES THEREUNDER.

presignal feature may be used only if it is approved by the fire code official and the fire department.

[F] 907.5.2 Alarm notification appliances. Alarm notification appliances shall be provided and shall be *listed* for their purpose.

❖ The code requires that fire alarm systems be equipped with approved alarm notification appliances so that in an emergency, the fire alarm system will notify the occupants of the need for evacuation or implementation of the fire emergency plan. Alarm notification devices required by the code are of two general types: visible and audible. Except for voice/alarm signaling systems, once the system has been activated, all visible and audible alarms are required to activate. Voice/alarm signaling systems are special signaling systems that are activated selectively in response to specific emergency conditions.

[F] 907.5.2.1 Audible alarms. Audible alarm notification appliances shall be provided and emit a distinctive sound that is not to be used for any purpose other than that of a fire alarm.

Exceptions:

1. Audible alarm notification appliances are not required in critical care areas of Group I-2 Condition 2 occupancies that are in compliance with Section 907.2.6, Exception 2.
2. A visible alarm notification appliance installed in a nurses' control station or other continuously attended staff location in a Group I-2 Condition 2 suite shall be an acceptable alternative to the installation of audible alarm notification appliances throughout the suite in Group I-2 Condition 2 occupancies that are in compliance with Section 907.2.6, Exception 2.
3. Where provided, audible notification appliances located in each occupant evacuation elevator lobby in accordance with Section 3008.9.1 shall be connected to a separate notification zone for manual paging only.

❖ To attract the attention of building occupants, audible alarms must be distinctive, using a sound that is unique to the fire alarm system and used for no other purpose than alerting occupants to a fire emergency. Other emergencies, such as tornados, etc., must be signaled by another sound different from the fire signal.

Exception 1 recognizes that the occupants in critical care areas of Group I-2 occupancies are usually incapacitated. The audible alarms may have the effect of unnecessarily disrupting the care recipients who are most likely not capable of self-preservation. Likewise, audible alarms in operating theaters of hospitals could be hazardous because an alarm activation could startle a surgeon during a delicate procedure. Critical care areas are also assumed to be adequately staffed at all times. Section 907.2.6 Exception 2 allows the use of private mode signaling in accordance with NFPA 72 and also requires that staff evacuation responsibilities be included in the fire safety and evacuation plan. See the commentary to Section 907.2.6. In private mode, as permitted by Section 907.2.6, there is still a requirement for an audible alarm notification from appliances, though at a much lower decibel level meant to alert staff of the alarm activation. Allowing the audible alarm to be eliminated from critical care areas (operating rooms) in exchange for a visual notification device is also not appropriate since the visual signal device also creates a distraction in critical care areas that may not be able to immediately stop a patient procedure. The emergency action plan would include provisions for alerting of critical area staff and the actions to be taken.

Exception 2 allows hospital care suites to eliminate audible alarms where visible alarm notification appliances are located at a continuously attended staff location or nurses control station. In a suite arrangement the "control area" is the centrally manned location for staff monitoring patients in the separate rooms. An alarm indicator at this location will alert staff for response in a more effective and efficient manner. Similar to exception 1 audible alarms can unnecessarily disrupt the care recipients. In addition simply providing visible alarm notification throughout the suite is not appropriate. The patient's evacuation depends on staff since they are not capable of self-preservation. As with Exception 1, compliance with Exception 2 to Section 907.2.6 would be required in order to take advantage of this exception.

Exception 3 is intended to address the concern that automatic emergency voice/alarm messages do not interfere with operation of the two-way communication associated with the occupant evacuation elevators. Live voice messages would be appropriate in the lobbies.

[F] 907.5.2.1.1 Average sound pressure. The audible alarm notification appliances shall provide a sound pressure level of 15 decibels (dBA) above the average ambient sound level or 5 dBA above the maximum sound level having a duration of not less than 60 seconds, whichever is greater, in every occupiable space within the building.

❖ To attract the attention of building occupants, this section requires that the distinctive audible alarms must be capable of being heard above the ambient noise level in a space. The indicated levels are considered the minimum pressure differential that will be perceivable by most people. It prescribes that the sound pressure level (SPL) for notification appliances shall be a minimum of 15 decibels measured in the A-scale (dBA) above the ambient SPL or 5 dBA above the maximum SPL in every space that can be occupied in a building. These SPLs are based on a minimum 1-minute measurement period. SPLs for Group R and I-1 occupancies, mechanical rooms and other occupancies are no longer stipulated as they had been in previous editions of the code.

INTERNATIONAL CODE COUNCIL®
Copyright © 2015 ICC. ALL RIGHTS RESERVED. Accessed by David Dammon on Jun 21, 2017 12:30:52 PM pursuant to License Agreement with ICC. No further reproduction or distribution authorized. ANY UNAUTHORIZED REPRODUCTION OR DISTRIBUTION IS A VIOLATION OF THE FEDERAL COPYRIGHT ACT AND THE LICENSE AGREEMENT, AND SUBJECT TO CIVIL AND CRIMINAL PENALTIES THEREUNDER.

The values mandated in Section 907.5.2.1.1 in previous editions of the code were not consistent with the notification appliance SPL requirements in NFPA 72. NFPA 72 requirements for the audible notification appliances are based on if the devices emit alert or evacuation tones, voice messages or audible notifications for exit markings. The provisions in Section 907.5.2.1.1 would apply to all notification appliances designed to operate in either public- or private-mode. In sleeping areas, the minimum SPL is no longer specified in Section 907.5.2.1.1; however, for smoke alarms, Section 907.2.11 and NFPA 72 require a minimum 75 dBA SPL at the pillow.

Also note that the 2010 American with Disabilities Act *Standard for Accessible Design* has an exception for medical care facilities following industry practice that will allow a dependence upon staff. The activation of either audible or visible alarms could be detrimental to the care recipients in locations like operating rooms and intensive or critical care units.

[F] 907.5.2.1.2 Maximum sound pressure. The maximum sound pressure level for audible alarm notification appliances shall be 110 dBA at the minimum hearing distance from the audible appliance. Where the average ambient noise is greater than 95 dBA, visible alarm notification appliances shall be provided in accordance with NFPA 72 and audible alarm notification appliances shall not be required.

❖ In no case may the sound pressure level exceed 110 dBA at the minimum hearing distance from the audible appliance. This is consistent with Americans with Disabilities Act (ADA) requirements. Sound pressures above that level can cause pain or even permanent hearing loss. In such cases, audible alarms are not required to be installed but visual alarms would be necessary to compensate for the lack of audibility.

It should also be noted that in certain work areas, Occupational Safety and Health Administration (OSHA) requires employees to wear hearing protection, possibly preventing them from hearing an audible alarm. Additionally, the noise factor in these areas is high enough that an audible alarm may not be discernible. In these areas, as well as in others, the primary method of indicating a fire can be by a visible signal. Employees must be capable of identifying such a signal as indicating a fire.

[F] 907.5.2.2 Emergency voice/alarm communication systems. Emergency voice/alarm communication systems required by this code shall be designed and installed in accordance with NFPA 72. The operation of any automatic fire detector, sprinkler waterflow device or manual fire alarm box shall automatically sound an alert tone followed by voice instructions giving *approved* information and directions for a general or staged evacuation in accordance with the building's fire safety and evacuation plans required by Section 404 of the *International Fire Code*. In high-rise buildings, the system shall operate on at least the alarming floor, the floor above and the floor below. Speakers shall be provided throughout the building by paging zones. At a minimum, paging zones shall be provided as follows:

1. Elevator groups.
2. *Interior exit stairways*.
3. Each floor.
4. *Areas of refuge* as defined in Chapter 2.

Exception: In Group I-1 and I-2 occupancies, the alarm shall sound in a constantly attended area and a general occupant notification shall be broadcast over the overhead page.

❖ The primary purpose of an emergency voice/alarm communication system is to provide dedicated manual and automatic facilities for the origination, control and transmission of information and instructions pertaining to a fire alarm emergency to the occupants of a building. This section identifies that notification speakers are required throughout the building with a minimum of one speaker in each paging zone when an emergency voice/alarm communication system is required. The system may sound a general alarm or be a selective system in which only certain areas of the building receive the alarm indication for staged evacuation. See Chapter 4 of the IFC for evacuation plan requirements. The intent is to provide the capability to send out selective messages to individual areas; however, it does not prohibit the same message to be sent to all areas. In high-rise buildings, a minimum area of notification must include the alarming floor and one floor above and one floor below it.

This section also identifies the minimum paging zone arrangement. This does not preclude further zone divisions for logical staged evacuation in accordance with an approved evacuation plan.

This section also indicates that the emergency voice/alarm system is to be initiated as all other fire alarm systems are initiated. The functional operation of the system begins with an alert tone (usually 3 to 10 seconds in duration) followed by the evacuation signal (message). It is important to remember that the voice alarm system is not an "audible alarm." It has its own specific criteria for installation and approval according to NFPA 72. Consequently the sound pressure requirements for audible alarms do not apply to voice alarm systems. For voice alarm systems, the intent is communication and an understanding of what is being said, not volume.

The exception is similar to the one to Section 907.5.2.1 and recognizes the supervised environment typical of institutional uses and the reliance placed on staff to act appropriately in an emergency. As is the case for most voice alarms, the key is in being able to deliver specific information to the people who can affect a safe egress—whether this is the public, employees, or both.

INTERNATIONAL CODE COUNCIL®
Copyright © 2015 ICC. ALL RIGHTS RESERVED. Accessed by David Dammon on Jun 21, 2017 12:30:52 PM pursuant to License Agreement with ICC. No further reproduction or distribution authorized. ANY UNAUTHORIZED REPRODUCTION OR DISTRIBUTION IS A VIOLATION OF THE FEDERAL COPYRIGHT ACT AND THE LICENSE AGREEMENT, AND SUBJECT TO CIVIL AND CRIMINAL PENALTIES THEREUNDER.

[F] 907.5.2.2.1 Manual override. A manual override for emergency voice communication shall be provided on a selective and all-call basis for all paging zones.

❖ The intent of this section is to provide the ability to transmit live voice instructions over any previously initiated signals or prerecorded messages for all zones. This would include the ability to override the voice message at once throughout the building or to be able to select individual paging zones for the message override.

[F] 907.5.2.2.2 Live voice messages. The emergency voice/alarm communication system shall have the capability to broadcast live voice messages by paging zones on a selective and all-call basis.

❖ This would include the ability to provide the live voice message at once throughout the building or to be able to select individual paging zones to receive the message. Speakers used for background music must not be used unless specifically listed for fire alarm system use. NFPA 72 has additional requirements for the placement, location and audibility of speakers used as part of an emergency voice/alarm communication system.

[F] 907.5.2.2.3 Alternate uses. The emergency voice/alarm communication system shall be allowed to be used for other announcements, provided the manual fire alarm use takes precedence over any other use.

❖ In certain circumstances which should be approved by the fire code officials, the emergency voice/alarm communication system could be used to convey information other than fire alarm-related items. This could include severe weather warnings that might require evacuation or relocation, lockdown instructions (see commentary, Section 404.2.3 of the IFC) and similar approved messages. In the event of such usage, the system must respond immediately to manual fire alarm box activations.

[F] 907.5.2.2.4 Emergency voice/alarm communication captions. Where stadiums, arenas and grandstands are required to caption audible public announcements in accordance with Section 1108.2.7.3, the emergency/voice alarm communication system shall be captioned. Prerecorded or live emergency captions shall be from an *approved* location constantly attended by personnel trained to respond to an emergency.

❖ This provision links the EV/ACS with the requirements for captioning in Section 1108.2.7.3. Section 1108.2.7.3 requires that stadiums, arenas and grandstands have 15,000 fixed seats to provide captioning for audible announcements (see commentary, Section 907.2.1.2).

[F] 907.5.2.2.5 Emergency power. Emergency voice/alarm communications systems shall be provided with emergency power in accordance with Section 2702. The system shall be capable of powering the required load for a duration of not less than 24 hours, as required in NFPA 72.

❖ Because the emergency voice/alarm communication system is a critical aid in evacuating the building, the system must be connected to an approved emergency power source complying with Section 2702. The section also clarifies that the duration of the load for EV/ACS is a minimum of 24 hours.

[F] 907.5.2.3 Visible alarms. Visible alarm notification appliances shall be provided in accordance with Sections 907.5.2.3.1 through 907.5.2.3.3.

Exceptions:

1. Visible alarm notification appliances are not required in *alterations*, except where an existing fire alarm system is upgraded or replaced, or a new fire alarm system is installed.
2. Visible alarm notification appliances shall not be required in *exits* as defined in Chapter 2.
3. Visible alarm notification appliances shall not be required in elevator cars.
4. Visual alarm notification appliances are not required in critical care areas of Group I-2 Condition 2 occupancies that are in compliance with Section 907.2.6, Exception 2.

❖ This section contains alarm system requirements for occupants who are hearing impaired. Visible alarm notification appliances are to be installed in conjunction with the audible devices and located and oriented so that they will display alarm signals throughout a space. It is not the intent of the code to offer visible alarm signals as an option to audible alarm signals. Both are required. However, the code acknowledges conditions when audible alarms may be of little or no value, such as when the ambient sound level exceeds 105 dBA. In such cases, Section 907.5.2.1, similar to NFPA 72, allows for visible alarm notification appliances in the area.

Exception 1 states that visible alarm devices are not required in previously approved existing fire alarm systems or as part of minor alterations to existing fire alarm systems. Extensive modifications to an existing fire alarm system such as an upgrade or replacement would require the installation of visible alarm devices even if the previous existing system neither had them nor required them. The main reason is a combination of simple economics and practical application. Many existing systems that do not have visible signal devices do not have the wiring capability to include such devices. To make the necessary changes to the existing system, a total replacement of the existing system may need to take place. In many cases this is cost prohibitive. Thus, if the alteration is small, the system can be left as is, without the visual devices. The second consideration is scope. If the alteration

INTERNATIONAL CODE COUNCIL®
Copyright © 2015 ICC. ALL RIGHTS RESERVED. Accessed by David Dammon on Jun 21, 2017 12:30:52 PM pursuant to License Agreement with ICC. No further reproduction or distribution authorized. ANY UNAUTHORIZED REPRODUCTION OR DISTRIBUTION IS A VIOLATION OF THE FEDERAL COPYRIGHT ACT AND THE LICENSE AGREEMENT, AND SUBJECT TO CIVIL AND CRIMINAL PENALTIES THEREUNDER.

involves only a limited area, it could be confusing to have part of the area equipped with visual devices and part without. This is not good practice, as the alarm could be confusing. If an entire floor is being altered, then it becomes subject to consideration for an upgrade to an alarm system with visual devices. If only an office is being remodeled, then the implication is that the upgrade to visual devices may not be warranted. This determination will be subjective in many cases and should be applied based on the life safety benefit and financial expenses involved and whether adequate audible devices are present for full coverage.

In Exception 2, visible alarm devices are not required in exit elements because of the potential distraction during evacuation. Exits, as defined in Chapter 2, could include interior exit stairways or exit passageways but not exit access corridors. In tall buildings, exiting may be phased based on alarm zone. If the alarm floor and adjacent floors are notified of the emergency but the remainder of the building is not, then a visual device in the stairway would be confusing to those people who may not be coming from the alarm floor.

Previously, some jurisdictions were requiring visible alarm notification appliances to be installed in elevator cars since there was no exception in the code or NFPA 72 to allow omission of this type of notification appliance in elevator cars. Exception 3 eliminates any confusion regarding the need to install visible notification appliances in elevator cars. The rationale for not installing visible notification appliances in elevator cars is the same as for interior exit stairways; high light intensity from these notification appliances may cause confusion and disorientation. Also, elevator passengers are "captive" in that they cannot respond to such devices until the elevator arrives at its destination or is recalled by the Phase I emergency recall feature, which could lead to passenger panic.

Exception 4 was added to eliminate visual alarm notification appliances in critical care areas of Group I-2 Condition 2 occupancies (hospitals) because of the hazards they may pose to the occupants. Such occupancies already have staff procedures in place during fires that more than compensate for visual alarm notification appliances. In addition in these areas of the hospital the patients are not typically ambulatory. This allowance includes specific requirements for detailing of the staff evacuation responsibilities based on the requirements in Section 907.2.6. See also the commentary to Exception 1 of Section 907.5.2.1.

[F] 907.5.2.3.1 Public use areas and common use areas. Visible alarm notification appliances shall be provided in *public use areas* and *common use areas*.

Exception: Where employee work areas have audible alarm coverage, the notification appliance circuits serving the employee work areas shall be initially designed with not less than 20-percent spare capacity to account for the potential of adding visible notification appliances in the future to accommodate hearing-impaired employee(s).

❖ Visible alarm notification appliances must provide coverage in all areas open to the public (use areas) as well as all shared or common use areas (e.g., corridors, public restrooms, shared offices, classrooms, medical exam rooms, etc.). Areas where visible alarm notification appliances are not required include private offices, mechanical rooms or similar spaces. The intent with this section is to replicate the provisions included in the Americans with Disabilities Act *Accessibility Guidelines for Buildings and Facilities* (ADAAG).

The exception allows employee work areas to provide only for spare capacity on notification circuits to allow for those with hearing impairments to be accommodated as necessary. This spare capacity is intended to eliminate the potential for overloading notification circuits when a hearing-impaired person is hired and needs to be accommodated, but reduces the initial construction cost as such alarm notification appliances may not be necessary in every situation.

[F] 907.5.2.3.2 Groups I-1 and R-1. Group I-1 and R-1 *dwelling units* or *sleeping units* in accordance with Table 907.5.2.3.2 shall be provided with a visible alarm notification appliance, activated by both the in-room smoke alarm and the building fire alarm system.

❖ Fire alarm systems in Group I-1 and R-1 sleeping accommodations must be equipped with visible alarms to the extent stated in Table 907.5.2.3.2. The visible alarm notification devices in these rooms are to be activated by both the required in-room smoke alarm and the building fire alarm system. All visible alarm notification appliances in a building, however, need not be activated by individual room smoke alarms. It is not a requirement that the accessible sleeping units be provided with visible alarm notification appliances even though some elderly patients or residents may be both mobility and hearing impaired.

[F] TABLE 907.5.2.3.2
VISIBLE ALARMS

NUMBER OF SLEEP UNITS	SLEEPING ACCOMMODATIONS WITH VISIBLE ALARMS
6 to 25	2
26 to 50	4
51 to 75	7
76 to 100	9
101 to 150	12
151 to 200	14
201 to 300	17
301 to 400	20
401 to 500	22
501 to 1,000	5% of total
1,001 and over	50 plus 3 for each 100 over 1,000

❖ This table specifies the minimum number of sleeping units that are to be equipped with visible and audible

INTERNATIONAL CODE COUNCIL®
Copyright © 2015 ICC. ALL RIGHTS RESERVED. Accessed by David Dammon on Jun 21, 2017 12:30:52 PM pursuant to License Agreement with ICC. No further reproduction or distribution authorized. ANY UNAUTHORIZED REPRODUCTION OR DISTRIBUTION IS A VIOLATION OF THE FEDERAL COPYRIGHT ACT AND THE LICENSE AGREEMENT, AND SUBJECT TO CIVIL AND CRIMINAL PENALTIES THEREUNDER.

alarms. The numbers are based on the total number of sleeping accommodations in the facility. The requirements in this table are intended to be consistent with the ADAAG.

[F] 907.5.2.3.3 Group R-2. In Group R-2 occupancies required by Section 907 to have a fire alarm system, all *dwelling units* and *sleeping units* shall be provided with the capability to support visible alarm notification appliances in accordance with Chapter 10 of ICC A117.1. Such capability shall be permitted to include the potential for future interconnection of the building fire alarm system with the unit smoke alarms, replacement of audible appliances with combination audible/visible appliances, or future extension of the existing wiring from the unit smoke alarm locations to required locations for visible appliances.

❖ Group R-2 occupancies with a fire alarm system are required to have the capability to support visual alarm notification appliances in accordance with Chapter 10 of ICC A117.1. This requirement has been in the IBC and the language added in the 2012 edition is intended to provide more specific guidance as to what is meant by "capability." Note that this requirement includes all dwelling and sleeping units, not just those classified as either Type A or B. Sections 1006.2 through 1006.4.4 of ICC A117.1 address smoke and fire alarm requirements as they pertain to accessible communication features. More specifically, Section 1006.2 states that when unit smoke detection is provided, it shall provide audible notification in compliance with NFPA 72. Section 1006.3 is focused on buildings where fire alarm systems are provided. If a fire alarm system is provided in the building, ICC A117.1 requires that the wiring be extended to a point within the unit in the vicinity of the smoke detection system. Based on the type of unit and the strategy used by the designer, this location may vary. Section 1006.4 addresses the visible alarm requirements specifically and has various issues it addresses, as follows:

1. Complies with Section 702 of ICC A117.1, which focuses on the requirements of NFPA 72, and that such notification devices be hardwired.
2. Addresses the fact that all visible notification devices be activated within the unit either when the smoke alarms in the unit activate or when that portion of the building fire alarm system in that portion of the building activate.
3. Allows the same visible notification for the smoke alarms in the unit and the building fire alarm system.
4. Prohibits the use of the visible notification for anything other than the operation of the smoke alarms in the unit or the building fire alarm system.

In terms of the specific capability requirements, this section has been clarified to provide direction as to what may be meant by bringing the wiring to the unit. There has been confusion in the past and it has been interpreted that all units are required to be prewired for visible appliances, which was not the intent of ICC A117.1. More specifically, now the requirements provide essentially three options for future capability, as follows:

- Potential for future interconnection of the building fire alarm system with the unit smoke alarms.
- Replacement of audible appliance with combination audible/visible appliances.
- Extension of wiring from the unit smoke alarm locations to required locations of visible appliances.

It is important to remember that the location of visible notification devices, if installed, are driven by the requirements of NFPA 72 and may vary the approach taken, based upon the configuration of the space.

[F] 907.6 Installation and monitoring. A fire alarm system shall be installed and monitored in accordance with Sections 907.6.1 through 907.6.6.2 and NFPA 72.

❖ This section specifies the requirements for fire alarm system installation and monitoring and also references the installation requirements of NFPA 72.

[F] 907.6.1 Wiring. Wiring shall comply with the requirements of NFPA 70 and NFPA 72. Wireless protection systems utilizing radio-frequency transmitting devices shall comply with the special requirements for supervision of low-power wireless systems in NFPA 72.

❖ Wiring for fire alarm systems must be installed so that it is secure and will function reliably in an emergency. The code requires that the wiring for fire alarm systems meet the requirements of NFPA 70 and NFPA 72. This requirement is in addition to the general requirements for electrical installations set forth in Chapter 27 of the IBC. For reliability, systems that use radio-frequency transmitting devices for signal transmission are required to have supervised transmitting and receiving equipment that conforms to the special requirements contained in NFPA 72. This requirement is in addition to the general requirements for supervision in Section 907.6.6.

[F] 907.6.2 Power supply. The primary and secondary power supply for the fire alarm system shall be provided in accordance with NFPA 72.

Exception: Back-up power for single-station and multiple-station smoke alarms as required in Section 907.2.11.6.

❖ The operation of fire alarm systems is essential to life safety in buildings and must be reliable in the event the normal power supply fails. For proper operation of fire alarm systems, this section requires that the primary and secondary power supplies comply with NFPA 72. This is in addition to the general requirements for electrical installations in Chapter 27. NFPA 72 offers three alternatives for secondary supply: a

INTERNATIONAL CODE COUNCIL®
Copyright © 2015 ICC. ALL RIGHTS RESERVED. Accessed by David Dammon on Jun 21, 2017 12:30:52 PM pursuant to License Agreement with ICC. No further reproduction or distribution authorized. ANY UNAUTHORIZED REPRODUCTION OR DISTRIBUTION IS A VIOLATION OF THE FEDERAL COPYRIGHT ACT AND THE LICENSE AGREEMENT, AND SUBJECT TO CIVIL AND CRIMINAL PENALTIES THEREUNDER.

24-hour storage battery; storage batteries with a 4-hour capacity; and a generator or multiple generators.

NFPA 72 requires that the primary and secondary power supplies for remotely located control equipment essential to the system operation must conform to the requirements for primary and secondary power supplies for the main system. Also, NFPA 72 contains requirements for monitoring the integrity of primary power supplies and requires a backup power supply.

[F] 907.6.3 Initiating device identification. The fire alarm system shall identify the specific initiating device address, location, device type, floor level where applicable and status including indication of normal, alarm, trouble and supervisory status, as appropriate.

Exceptions:

1. Fire alarm systems in single-story buildings less than 22,500 square feet (2090 m2) in area.
2. Fire alarm systems that only include manual fire alarm boxes, waterflow initiating devices and not more than 10 additional alarm-initiating devices.
3. Special initiating devices that do not support individual device identification.
4. Fire alarm systems or devices that are replacing existing equipment.

❖ Current technology makes identification of alarm-initiating devices much easier. This section takes advantage of this technology to improve the ability of emergency responders to rapidly identify the location and status of initiating devices at the time of an emergency. It will also help identify problematic alarm-initiating devices and thus reduce nuisance alarms. It also eliminates the requirements for providing zone indication of system status. This is considered particularly important in high-rise buildings, where the number of initiating devices and the geometry of the building warrant a need for point monitoring of individual devices, which is not currently accommodated by single floor zones.

This section allows the building official the flexibility to not require individual detection device identification in smaller buildings where the source of alarm and trouble signals can be more easily determined.

The 22,500-square-foot limitation noted in Exception 1 relates to the size of a typical fire alarm zone (see Section 907.6.4) and represents a small building. Exception 2 addresses manual fire alarm systems in which the location of initiation may not be an indicator of where the fire actually is or an automatic sprinkler waterflow alarm-initiating device which could be annunciating an entire building, along with a very limited number of other alarm initiating devices Exception 3 recognizes that some devices will not work with this requirement. Finally, Exception 4 provides flexibility to existing system replacement. Replacement should be encouraged and requiring identification of alarm-initiating device locations is considered onerous.

[F] 907.6.3.1 Annunciation. The initiating device status shall be annunciated at an *approved* on-site location.

❖ This section specifically notes that the alarm-initiating device status of trouble versus alarm needs to be provided in an approved location to enable rapid identification of problematic devices or alarm conditions by first responders.

[F] 907.6.4 Zones. Each floor shall be zoned separately and a zone shall not exceed 22,500 square feet (2090 m^2). The length of any zone shall not exceed 300 feet (91 440 mm) in any direction.

Exception: *Automatic sprinkler system* zones shall not exceed the area permitted by NFPA 13.

❖ Since the fire alarm system also aids emergency personnel in locating the fire, the system must be zoned to shorten response time to the fire location. Zoning is also critical if the fire alarm system initiates certain other fire protection systems or control features, such as smoke control systems.

At a minimum, each floor of a building must constitute one zone of the system. If the floor area exceeds 22,500 square feet (2090 m^2), additional zones per floor are required. The maximum length of a zone is 300 feet (91 440 mm).

The exception states that NFPA 13 defines the maximum areas to be protected by one sprinkler system and that the sprinkler system need not be designed to meet the 22,500-square-foot (2090 m^2) area limitations for a fire alarm system zone. For example, NFPA 13 permits a sprinkler system riser in a light-hazard occupancy to protect an area of 52,000 square feet (4831 m^2) per floor. In accordance with the exception, a single waterflow switch, and consequently a single fire alarm system zone, would be acceptable. If other alarm-initiating devices are present on the floor, they would need to be zoned separately to meet the 22,500-square-foot (2098 m^2) limitation.

It is not intended that this section apply to sprinkler systems. This section only applies where a fire alarm system is required in accordance with Section 907. Unless the building is categorized as a high rise and must comply with Section 907.6.4.2, the code does not mandate the zoning of sprinkler systems per floor. With today's fully addressable fire alarm systems, each detector effectively becomes its own zone. The intent with zoning is to identify and limit the search area for fire alarm systems. Addressable devices will indicate the precise location of the alarm condition, thereby eliminating the need for the zoning contemplated by this section when approved by the fire code official in accordance with Section 104.11.

[F] 907.6.4.1 Zoning indicator panel. A zoning indicator panel and the associated controls shall be provided in an *approved* location. The visual zone indication shall lock in

INTERNATIONAL CODE COUNCIL®
Copyright © 2015 ICC. ALL RIGHTS RESERVED. Accessed by David Dammon on Jun 21, 2017 12:30:52 PM pursuant to License Agreement with ICC. No further reproduction or distribution authorized. ANY UNAUTHORIZED REPRODUCTION OR DISTRIBUTION IS A VIOLATION OF THE FEDERAL COPYRIGHT ACT AND THE LICENSE AGREEMENT, AND SUBJECT TO CIVIL AND CRIMINAL PENALTIES THEREUNDER.

until the system is reset and shall not be canceled by the operation of an audible-alarm silencing switch.

❖ The zoning indicator panel, which can be the fire alarm control unit or a separate fire alarm annunciator panel (FAAP), must be installed in a location approved by the fire code official. One of the key considerations in determining panel placement is whether or not the panel is located to permit ready access by emergency responders. Once an alarm-initiating device within a zone has been activated, the annunciation of the zone must lock in until the system is reset.

[F] 907.6.4.2 High-rise buildings. In high-rise buildings, a separate zone by floor shall be provided for each of the following types of alarm-initiating devices where provided:

1. Smoke detectors.
2. Sprinkler waterflow devices.
3. Manual fire alarm boxes.
4. Other *approved* types of automatic fire detection devices or suppression systems.

❖ High-rise buildings must have a separate zone by floor for each indicated type of alarm-initiating device. Although this feature may be desirable in all buildings, the incremental cost difference is substantially higher in low-rise buildings in which basic fire alarm systems are installed. State-of-the-art fire alarm systems installed in high-rise buildings are addressable and by their nature automatically provide this minimum zoning.

[F] 907.6.5 Access. Access shall be provided to each fire alarm device and notification appliance for periodic inspection, maintenance and testing.

❖ Automatic fire detectors, especially smoke detectors, require periodic cleaning to reduce the likelihood of malfunction. Section 907.8 and NFPA 72 require inspection and testing at regular intervals. Access to perform the required inspections, necessary maintenance and testing is a particularly important consideration for those detectors that are installed within a concealed space, such as an air duct.

[F] 907.6.6 Monitoring. Fire alarm systems required by this chapter or by the *International Fire Code* shall be monitored by an *approved* supervising station in accordance with NFPA 72.

Exception: Monitoring by a supervising station is not required for:

1. Single- and multiple-station smoke alarms required by Section 907.2.11.
2. Smoke detectors in Group I-3 occupancies.
3. *Automatic sprinkler systems* in one- and two-family dwellings.

❖ Fire alarm systems required by Section 907 are required to be electrically supervised by one of the methods prescribed in NFPA 72.

Exception 1 exempts single- and multiple-station smoke alarms from being supervised because of the potential for unwanted false alarms.

Exception 2 recognizes a similar problem in Group I-3 occupancies. Accordingly, because of the concern over unwanted alarms, smoke detectors in Group I-3 occupancies need only sound an approved alarm signal that automatically notifies staff (see Section 907.2.6.3.1). Smoke detectors in such occupancies are typically subject to misuse and abuse, and frequent unwanted alarms would negate the effectiveness of the system.

Exception 3 clarifies that sprinkler systems in one- and two-family dwellings are not part of a dedicated fire alarm system and are typically designed in accordance with NFPA 13D, which does not require electrical supervision.

[F] 907.6.6.1 Automatic telephone-dialing devices. Automatic telephone-dialing devices used to transmit an emergency alarm shall not be connected to any fire department telephone number unless *approved* by the fire chief.

❖ On initiation of an alarm, supervisory or trouble signal, an automatic telephone-dialing device takes control of the telephone line for the reliability of transmission of all signals. The device, however, must not be connected to the fire department telephone number unless specifically approved by the fire department because that could disrupt any potential emergency (911) calls. NFPA 72 contains additional guidance on such devices, including digital alarm-communicator systems.

[F] 907.6.6.2 Termination of monitoring service. Termination of fire alarm monitoring services shall be in accordance with Section 901.9 of the *International Fire Code*.

❖ This is simply a cross link to a requirement in the IFC related to the termination of monitoring service. Section 901.9 of the IFC requires the monitoring service itself to notify the fire code official of the service being terminated. Although the ultimate responsibility rests with the building owner, he or she is not cited in this section since if they discontinued the service, they would likely not understand the implications, and if they did, would have no incentive to contact the fire code official.

[F] 907.7 Acceptance tests and completion. Upon completion of the installation, the fire alarm system and all fire alarm components shall be tested in accordance with NFPA 72.

❖ A complete performance test of the fire alarm system must be conducted to determine that the system is operating as required by the code. The acceptance test must include a test of each circuit, alarm-initiating device, alarm notification appliance and any supplementary functions, such as activation of closers and dampers. The operation of the primary and secondary (emergency) power supplies must also be tested, as well as the supervisory function of the control panel. Section 901.5 assigns responsibility for conducting the acceptance tests to the owner or the owner's representative.

INTERNATIONAL CODE COUNCIL®
Copyright © 2015 ICC. ALL RIGHTS RESERVED. Accessed by David Dammon on Jun 21, 2017 12:30:52 PM pursuant to License Agreement with ICC. No further reproduction or distribution authorized. ANY UNAUTHORIZED REPRODUCTION OR DISTRIBUTION IS A VIOLATION OF THE FEDERAL COPYRIGHT ACT AND THE LICENSE AGREEMENT, AND SUBJECT TO CIVIL AND CRIMINAL PENALTIES THEREUNDER.

NFPA 72 contains specific acceptance test procedures. Additional guidance on periodic testing and inspection can also be obtained from Section 907.8 and NFPA 72.

[F] 907.7.1 Single- and multiple-station alarm devices. When the installation of the alarm devices is complete, each device and interconnecting wiring for multiple-station alarm devices shall be tested in accordance with the smoke alarm provisions of NFPA 72.

❖ To determine that smoke alarms have been properly installed and are ready to function as intended, they must be actuated during an acceptance test. The test also confirms that interconnected detectors will operate simultaneously as required. The responsibility for conducting the acceptance tests rests with the owner or the owner representative as stated in Section 901.5.

[F] 907.7.2 Record of completion. A record of completion in accordance with NFPA 72 verifying that the system has been installed and tested in accordance with the *approved* plans and specifications shall be provided.

❖ In accordance with NFPA 72, this section requires a written statement from the installing contractor that the fire alarm system has been tested and installed in compliance with the approved plans and the manufacturer's specifications. Any deviations from the approved plans or the applicable provisions of NFPA 72 are to be noted in the record of completion.

[F] 907.7.3 Instructions. Operating, testing and maintenance instructions and record drawings ("as-builts") and equipment specifications shall be provided at an *approved* location.

❖ To permit adequate testing, maintenance and troubleshooting of the installed fire alarm system, an owner's manual with complete installation instructions must be kept on site or in another approved location. The instructions include a description of the system, operating procedures and testing and maintenance requirements.

[F] 907.8 Inspection, testing and maintenance. The maintenance and testing schedules and procedures for fire alarm and fire detection systems shall be in accordance with Section 907.8 of the *International Fire Code*.

❖ Fire alarms and smoke detection systems are to be inspected, tested and maintained in accordance with Sections 907.8.1 through 907.8.5 of the IFC and the applicable requirements of NFPA 72. It is the building owner's responsibility to keep these systems operable at all times.

SECTION 908
EMERGENCY ALARM SYSTEMS

[F] 908.1 Group H occupancies. Emergency alarms for the detection and notification of an emergency condition in Group H occupancies shall be provided in accordance with Section 415.5.

❖ Emergency alarm systems provide indication and warning of emergency situations involving hazardous materials. An emergency alarm system is required in all Group H occupancies, as indicated in Section 415.5 as well as Group H-5 HPM facilities as indicated in Sections 415.11.3.5 and 908.2. The Group H occupancy classification assumes the storage or use of hazardous materials exceeds the maximum allowable quantities specified in Tables 307.1(1) and 307.1(2).

An emergency alarm system should include an emergency alarm-initiating device outside each interior door of hazardous material storage areas, a local alarm device and adequate supervision.

Even though ozone gas-generator rooms (see Section 908.4), repair garages (see Section 908.5) and refrigeration systems (see Section 908.6) are not typically classified as Group H occupancies, the potential hazards associated with these occupancy conditions are great enough to require additional means of early warning detection.

[F] 908.2 Group H-5 occupancy. Emergency alarms for notification of an emergency condition in an HPM facility shall be provided as required in Section 415.11.3.5. A continuous gas detection system shall be provided for HPM gases in accordance with Section 415.11.7.

❖ In addition to hazardous material storage areas as regulated by Section 415.5.1 of the IFC, Section 415.11.3.5 also requires emergency alarms for service corridors, exit access corridors and interior exit stairways because of the potential transport of hazardous materials through these areas. Section 415.11.7 requires a continuous gas detection system for early detection of leaks in areas where HPM gas is used. Gas detection systems are required to initiate a local alarm and transmit a signal to the emergency control station on detection (see commentary, Sections 415.11.3.5 and 415.11.7.

[F] 908.3 Highly toxic and toxic materials. A gas detection system shall be provided to detect the presence of *highly toxic* or *toxic* gas at or below the permissible exposure limit (PEL) or ceiling limit of the gas for which detection is provided. The system shall be capable of monitoring the discharge from the treatment system at or below one-half the immediately dangerous to life and health (IDLH) limit.

Exception: A gas detection system is not required for *toxic* gases when the physiological warning threshold level for the gas is at a level below the accepted PEL for the gas.

❖ A gas detection system in the room or area utilized for indoor storage or the use of highly toxic or toxic gases provides early notification of a leak that is occurring before the escaping gas reaches hazardous exposure concentration levels. The exception

INTERNATIONAL CODE COUNCIL®
Copyright © 2015 ICC. ALL RIGHTS RESERVED. Accessed by David Dammon on Jun 21, 2017 12:30:52 PM pursuant to License Agreement with ICC. No further reproduction or distribution authorized. ANY UNAUTHORIZED REPRODUCTION OR DISTRIBUTION IS A VIOLATION OF THE FEDERAL COPYRIGHT ACT AND THE LICENSE AGREEMENT, AND SUBJECT TO CIVIL AND CRIMINAL PENALTIES THEREUNDER.

recognizes that certain toxic compressed gases do not pose a severe exposure hazard. Those toxic gases whose properties under standard conditions are still below the 8-hour weighted average concentration for the permitted exposure limit (PEL) are exempt from the requirement for a gas detection system.

This section also specifies the discharge requirements for treatment system performance to establish a maximum allowable concentration of highly toxic or toxic gases at the point of discharge to the atmosphere. The concentration level of one-half the immediately dangerous to life and health (IDLH) limit represents a minimum acceptable level of dilution at the point of discharge where the location of discharge is away from the general public. Where the treatment system processes more than one type of compressed gas, the maximum allowable concentration must be based on the release rate, quantity and IDLH for the gas that poses the worst-case release scenario.

[F] 908.3.1 Alarms. The gas detection system shall initiate a local alarm and transmit a signal to a constantly attended control station when a short-term hazard condition is detected. The alarm shall be both visible and audible and shall provide warning both inside and outside the area where gas is detected. The audible alarm shall be distinct from all other alarms.

Exception: Signal transmission to a constantly attended control station is not required when not more than one cylinder of *highly toxic* or *toxic* gas is stored.

❖ The required local alarm is intended to alert occupants to a hazardous condition in the vicinity of the inside storage room or area. The alarm is not intended to be an evacuation alarm; however, it is required to be monitored to hasten emergency personnel response. The exception allows the omission of supervision for the gas detection system where a single cylinder of highly toxic or toxic gas is stored. It should be noted that this section is only intended to apply when the maximum allowable quantity of a specific gas per control area is exceeded. A single cylinder would not require a gas detection system if it contained less than the maximum allowable quantities indicated in Tables 307.1(1) and 307.1(2).

[F] 908.3.2 Shutoff of gas supply. The gas detection system shall automatically close the shutoff valve at the source on gas supply piping and tubing related to the system being monitored for whichever gas is detected.

Exception: Automatic shutdown is not required for reactors utilized for the production of *highly toxic* or *toxic* compressed gases where such reactors are:

1. Operated at pressures less than 15 pounds per square inch gauge (psig) (103.4 kPa).
2. Constantly attended.
3. Provided with readily accessible emergency shutoff valves.

❖ Actuation of the gas detection system is required to close automatically all valves controlling highly toxic or toxic gases. This degree of protection is deemed necessary to provide a life safety measure in areas where highly toxic and toxic gases are being utilized for filling, dispensing or other operations.

In most situations, dispensing and use operations are assumed to be constantly attended because of the potential hazard and need to monitor operations involving highly toxic and toxic compressed gases.

The exception recognizes the decreased level of hazard for constantly attended operations involving reactors in manufacturing processes with low operating pressures. With low operating pressures, the rate at which the volume of the affected space would be filled by the released gas is minimized. Readily accessible manual shutoff valves would thus be permitted in lieu of an automatic-closing shutoff valve.

[F] 908.3.3 Valve closure. The automatic closure of shutoff valves shall be in accordance with the following:

1. When the gas-detection sampling point initiating the gas detection system alarm is within a gas cabinet or exhausted enclosure, the shutoff valve in the gas cabinet or exhausted enclosure for the specific gas detected shall automatically close.
2. Where the gas-detection sampling point initiating the gas detection system alarm is within a gas room and compressed gas containers are not in gas cabinets or exhausted enclosures, the shutoff valves on all gas lines for the specific gas detected shall automatically close.
3. Where the gas-detection sampling point initiating the gas detection system alarm is within a piping distribution manifold enclosure, the shutoff valve for the compressed container of specific gas detected supplying the manifold shall automatically close.

Exception: When the gas-detection sampling point initiating the gas detection system alarm is at a use location or within a gas valve enclosure of a branch line downstream of a piping distribution manifold, the shutoff valve in the gas valve enclosure for the branch line located in the piping distribution manifold enclosure shall automatically close.

❖ This section specifies the conditions where the shutoff valve for the gas supply is required to automatically close. The requirement depends on the location of the gas detection sampling point, which would initiate the actuation of the gas detection system, and the use of gas cabinets, exhaust enclosures or a piping distribution manifold enclosure.

[F] 908.4 Ozone gas-generator rooms. Ozone gas-generator rooms shall be equipped with a continuous gas detection sys-

INTERNATIONAL CODE COUNCIL®
Copyright © 2015 ICC. ALL RIGHTS RESERVED. Accessed by David Dammon on Jun 21, 2017 12:30:52 PM pursuant to License Agreement with ICC. No further reproduction or distribution authorized. ANY UNAUTHORIZED REPRODUCTION OR DISTRIBUTION IS A VIOLATION OF THE FEDERAL COPYRIGHT ACT AND THE LICENSE AGREEMENT, AND SUBJECT TO CIVIL AND CRIMINAL PENALTIES THEREUNDER.

tem that will shut off the generator and sound a local alarm when concentrations above the PEL occur.

❖ To monitor the potential buildup of dangerous levels of ozone, a gas detection system is required to, on actuation, shut off the generator and sound a local alarm. Ozone gas generators are commonly used in water treatment applications. The ozone gas-generator room should not be a normally occupied area or be used for the storage of combustibles or other hazardous materials. Section 6005 of the IFC contains additional requirements for ozone gas generators.

[F] 908.5 Repair garages. A flammable-gas detection system shall be provided in repair garages for vehicles fueled by nonodorized gases in accordance with Section 406.8.5.

❖ As indicated in Section 406.8.5, an approved flammable-gas detection system is required for garages used for repair of vehicles fueled by nonodorized gases, such as hydrogen and nonodorized LNG. To prevent a hazardous potential buildup of flammable gas caused by normal leakage and use conditions, the flammable-gas detection system is required to activate when the level of flammable gas exceeds 25 percent of the lower explosive limit (LEL) (see commentary, Section 406.8.5).

[F] 908.6 Refrigerant detector. Machinery rooms shall contain a refrigerant detector with an audible and visual alarm. The detector, or a sampling tube that draws air to the detector, shall be located in an area where refrigerant from a leak will concentrate. The alarm shall be actuated at a value not greater than the corresponding TLV-TWA values for the refrigerant classification shown in the *International Mechanical Code* for the refrigerant classification. Detectors and alarms shall be placed in *approved* locations. The detector shall transmit a signal to an *approved* location.

❖ A refrigerant-specific detector is required for the purpose of leak detection, early warning and actuation of emergency exhaust systems. Depending on the density of the refrigerants, leakage may collect near the floor, near the ceiling or disperse equally throughout. Refrigerant detector locations must be carefully considered. Most refrigerants are heavier than air; thus, floor depressions and pits are natural areas for accumulation. The code is silent on the location of sensors due to the endless variety of equipment room designs. The key to properly locating a detector in the machinery room is to remember that occupant safety is the primary objective, and the danger is in breathing refrigerant. Placing the sensor below the common breathing height of 5 feet (1525 mm) provides an additional safety margin because all commonly used halocarbon refrigerants are three to five times heavier than air. When undistributed by airflow, such escaping refrigerant will fall to the floor, seeking the lowest levels, and fill the room from the bottom up. Since pits, stairwells or trenches are likely to fill with refrigerant first, detectors should be also be placed in any of these areas that may be occupied. The alarm actuation threshold is dictated by the TLV-TWA values for the refrigerant classification in accordance with Table 1103.1 of the IMC.

Manufacturer's instructions for detectors provide installation guidance for the location and required number of detectors for any given room size.

The exception recognizes that ammonia refrigerant is "self-alarming" because of its strong odor and that ammonia machinery rooms are required to be continuously ventilated in accordance with the IMC.

Most general machinery rooms are unoccupied for long periods of time. Because of this, a refrigeration leak may go undetected, allowing a buildup of refrigerant that can pose a threat to the building occupants and the maintenance personnel who will be required to enter the machinery room. Also, the refrigerants may or may not be detectable by the sense of smell, depending upon the chemical nature and concentration in air of the refrigerant. This can be especially critical when a toxic refrigerant is used in the refrigeration system.

There are three levels of refrigerant exposure that are defined by the American Conference of Government Industrial Hygienists (ACGIH). Level 1 is the allowable exposure limit (AEL), which is the level at which a person can be exposed for 8 hours per day for 40 hours per week without having an adverse effect on health. At this level, a person exposed to the refrigerant should not suffer any adverse health effects. Level 2 is the short-term exposure limit (STEL), which is defined as three times the AEL. At this level, a person should not be exposed for more than 30 minutes at a time. Persons working in a machinery room having this concentration of refrigerant should be equipped with respiratory protection. Level 3 is the emergency exposure limit (EEL). At this level, persons should not be in the room without a self-contained breathing apparatus.

Early detection of leaking refrigerant is dependent upon the location of the refrigerant detectors. If improperly located, a refrigerant leak could go undetected for an undesirable period of time, thus allowing a significant amount of refrigerant to escape. It is therefore advantageous to locate the detectors in positions that will provide early detection and minimize the amount of refrigerant leakage.

Factors to be considered when choosing locations for detectors are the airflow patterns of the room, the particular refrigerant density and the fact that the primary hazard to the occupants is through inhalation. Specifically, halocarbon refrigerants are oxygen displacers; that is, they are heavier than air and will occupy the lowest areas of the room first. This suggests that the location of detectors should be below the breathing zone height. Additionally, detectors should be located so as to prevent the normal ventilation system from interfering with detection. Placing detectors between the refrigeration system and exhaust fan inlets should help to ensure that the presence of refrigerant will be detected. Depending on the size of the machinery room and the number and type

INTERNATIONAL CODE COUNCIL®
Copyright © 2015 ICC. ALL RIGHTS RESERVED. Accessed by David Dammon on Jun 21, 2017 12:30:52 PM pursuant to License Agreement with ICC. No further reproduction or distribution authorized. ANY UNAUTHORIZED REPRODUCTION OR DISTRIBUTION IS A VIOLATION OF THE FEDERAL COPYRIGHT ACT AND THE LICENSE AGREEMENT, AND SUBJECT TO CIVIL AND CRIMINAL PENALTIES THEREUNDER.

of refrigeration systems, more than one detector may be necessary. Manufacturer's installation instructions for the refrigeration detection system should be followed when choosing the location and number of sensors for a particular machinery room application.

[F] 908.7 Carbon dioxide (CO_2) systems. Emergency alarm systems in accordance with Section 5307.5.2 of the *International Fire Code* shall be provided where required for compliance with Section 5307.5 of the *International Fire Code*.

❖ This is simply a cross reference to requirements in the IFC related to the danger of CO_2 asphyxiation. The requirement is intended to address fatal CO_2 poisoning incidents in restaurants where CO_2 leaked from large storage tanks for beverage mixing and displaced oxygen in these areas. Section 5307.5 of the IFC addresses CO_2 systems with capacities of 100 pounds or greater. The hazard is required to be addressed for indoor areas or areas where CO_2 can collect. The options include ventilation in accordance with IFC Section 5307.5.1 or an emergency alarm system in accordance with IFC Section 5307.5.2.

SECTION 909
SMOKE CONTROL SYSTEMS

[F] 909.1 Scope and purpose. This section applies to mechanical or passive smoke control systems where they are required by other provisions of this code. The purpose of this section is to establish minimum requirements for the design, installation and acceptance testing of smoke control systems that are intended to provide a tenable environment for the evacuation or relocation of occupants. These provisions are not intended for the preservation of contents, the timely restoration of operations or for assistance in fire suppression or overhaul activities. Smoke control systems regulated by this section serve a different purpose than the smoke- and heat-venting provisions found in Section 910. Mechanical smoke control systems shall not be considered exhaust systems under Chapter 5 of the *International Mechanical Code*.

❖ This section is clarifying the intent of smoke control provisions, which is to provide a tenable environment to occupants during evacuation and relocation and not to protect the contents, enable timely restoration of operations or facilitate fire suppression and overhaul activities. There are provisions for high-rise buildings in Section 403.4.7 that are focused upon the removal of smoke for post fire and overhaul operations, which is very different than the smoke control provisions in Section 909. Another element addressed in this section is that smoke control systems serve a different purpose than smoke and heat vents (see Section 910). This eliminates any confusion that smoke and heat vents can be used as a substitution for smoke control. Additionally, a clarification is provided to note that smoke control systems are not considered an exhaust system in accordance with Chapter 5 of the IMC. This is because such systems are unique in their operation and are not necessarily designed to exhaust smoke but are focused on tenability for occupants during egress. It should be noted that the smoke control provisions are duplicated in Chapter 5 of the IMC.

It is important to note that these provisions only apply when smoke control is required by other sections of the code. The code requires smoke management within atrium spaces (see Section 404.5) and underground buildings (see Section 405.5). High-rise facilities require smokeproof exit enclosures in accordance with Sections 909.20 and 1019.1.8 (see Section 403.5.4). Also, covered mall buildings that contain atriums that connect more than two stories require smoke control (see Section 402.7.2).

Section 909 focuses primarily on mechanical smoke control systems, but there are many instances within the code where smoke is required to be managed in a passive way through the use of concepts such as smoke compartments. Smoke compartments are formed through the use of smoke barriers in accordance with Section 709. Smoke barriers can be used simply as a passive smoke management system or can be a design component of a mechanical smoke control system in accordance with Section 909. Some examples of occupancies requiring passive systems include hospitals, nursing homes and similar facilities (Group I-2 occupancies) and detention facilities (Group I-3 occupancies) (see Sections 407.5 and 408.6).

In some cases, mechanical smoke control in accordance with Section 909 is allowed as an option for compliance. More specifically if a Group I-3 contains windowless areas of the facility, natural or mechanical smoke management is required (see Section 408.9).

In the last several years, smoke control provisions have become more complex. The reason is related to the fact that smoke is a complex problem, while a generic solution of six air changes has repeatedly and scientifically been shown to be inadequate. Six air changes per hour does not take into account factors such as buoyancy; expansion of gases; wind; the geometry of the space and of communicating spaces; the dynamics of the fire, including heat release rate; the production and distribution of smoke and the interaction of the building systems.

Smoke control systems can be either passive or active. Active systems are sometimes referred to as mechanical. Passive smoke control systems take advantage of smoke barriers surrounding the zone in which the fire event occurs or high bay areas that act as reservoirs to control the movement of smoke to other areas of the building. Active systems utilize pressure differences to contain smoke within the event zone or exhaust flow rates sufficient to slow the descent of the upper-level smoke accumulation to some predetermined position above necessary exit paths through the event zone. On rare occasions, there is also a possibility of controlling the movement of smoke horizontally by opposed airflow, but this method requires a specific architectural geometry to

INTERNATIONAL CODE COUNCIL®
Copyright © 2015 ICC. ALL RIGHTS RESERVED. Accessed by David Dammon on Jun 21, 2017 12:30:52 PM pursuant to License Agreement with ICC. No further reproduction or distribution authorized. ANY UNAUTHORIZED REPRODUCTION OR DISTRIBUTION IS A VIOLATION OF THE FEDERAL COPYRIGHT ACT AND THE LICENSE AGREEMENT, AND SUBJECT TO CIVIL AND CRIMINAL PENALTIES THEREUNDER.

function properly that does not create an even greater hazard.

Essentially, there are three methods of mechanical or active smoke control that can be used separately or in combination within a design: pressurization, exhaust and, in rare and very special circumstances, opposed airflow.

Of course, all of these active approaches can be used in combination with the passive method.

Typically, the mechanical pressurization method is used in high-rise buildings when pressurizing stairways and for zoned smoke control. Pressurization is not practical in large open spaces such as atriums or malls, since it is difficult to develop the required pressure differences due to the large volume of the space.

The exhaust method is typically used in large open spaces such as atriums and malls. As noted, the pressurization method would not be practical within large spaces. The opposed airflow method, which basically uses a velocity of air horizontally to slow the movement of smoke, is typically applied in combination with either a pressurization method or exhaust method within hallways or openings into atriums and malls.

The application of each of these methods will be dependent on the specifics of the building design. Smoke control within a building is fundamentally an architecturally driven problem. Different architectural geometries first dictate the need or lack thereof for smoke control, and then define the bounds of available solutions to the problem.

[F] 909.2 General design requirements. Buildings, structures or parts thereof required by this code to have a smoke control system or systems shall have such systems designed in accordance with the applicable requirements of Section 909 and the generally accepted and well-established principles of engineering relevant to the design. The *construction documents* shall include sufficient information and detail to adequately describe the elements of the design necessary for the proper implementation of the smoke control systems. These documents shall be accompanied by sufficient information and analysis to demonstrate compliance with these provisions.

❖ This section simply states that when smoke control systems are required by the code, the design is required to be in accordance with the provisions of this section. As noted in the commentary to Section 909.1, there are instances within the code that have smoke management systems that are purely passive in nature and do not reference Section 909.

This section stresses that designs in accordance with this section need to follow "generally accepted and well-established principles of engineering relevant to the design," essentially requiring a certain level of qualifications in the applicable areas of engineering to prepare such designs. The primary engineering disciplines tend to be fire engineering and mechanical engineering. It should be noted that each state in the U.S. typically requires minimum qualifications to undertake engineering design. Two important resources when designing smoke control systems are the International Code Council's (ICC) *A Guide to Smoke Control in the 2006 IBC®* and American Society of Heating, Refrigerating and Air-Conditioning Engineers' (ASHRAE) *Design of Smoke Management Systems*. Additionally, Section 909.8 requires the use of NFPA 92 for the design of smoke control systems using the exhaust method. This standard has many relevant aspects beyond the design that are beneficial. In particular, Annex B provides resources in terms of determination of fire size for design. ICC's *A Guide to Smoke Control in the 2006 IBC®* also provides guidance on design fires.

A key element covered in this section is the need for detailed and clear construction documents so that the system is installed correctly. In most complex designs, the key to success is appropriate communication to the contractors as to what needs to be installed. The more complex a design becomes, the more likely there is to be construction errors. Most smoke control systems are complex, which is why special inspections in accordance with Section 909.3 and Chapter 17 are critical for smoke control systems. Additionally, in order for the design to be accepted, analyses and justifications need to be provided in enough detail to evaluate for compliance. Adequate documentation is critical to the commissioning, inspection, testing and maintenance of smoke control systems and significantly contributes to the overall reliability and effectiveness of such systems.

[F] 909.3 Special inspection and test requirements. In addition to the ordinary inspection and test requirements that buildings, structures and parts thereof are required to undergo, smoke control systems subject to the provisions of Section 909 shall undergo *special inspections* and tests sufficient to verify the proper commissioning of the smoke control design in its final installed condition. The design submission accompanying the *construction documents* shall clearly detail procedures and methods to be used and the items subject to such inspections and tests. Such commissioning shall be in accordance with generally accepted engineering practice and, where possible, based on published standards for the particular testing involved. The special inspections and tests required by this section shall be conducted under the same terms in Section 1704.

❖ Because of the complexity and uniqueness of each design, special inspection and testing must be conducted. The designer needs to provide specific recommendations for special inspection and testing within his or her documentation. In fact, the code specifies in Chapter 17 that special inspection agencies for smoke control have expertise in fire protection engineering, mechanical engineering and certification as air balancers. Since the designs are unique to each building, there probably will not be a generic approach available to inspect and test such systems. The designer can and should, however, use any available published standards or guides when

INTERNATIONAL CODE COUNCIL®
Copyright © 2015 ICC. ALL RIGHTS RESERVED. Accessed by David Dammon on Jun 21, 2017 12:30:52 PM pursuant to License Agreement with ICC. No further reproduction or distribution authorized. ANY UNAUTHORIZED REPRODUCTION OR DISTRIBUTION IS A VIOLATION OF THE FEDERAL COPYRIGHT ACT AND THE LICENSE AGREEMENT, AND SUBJECT TO CIVIL AND CRIMINAL PENALTIES THEREUNDER.

developing the special inspection and testing requirements for that particular design. ICC's *A Guide to Smoke Control in the 2006 IBC*® provides some background on such inspections, Also, ASHRAE Guideline 5 is a good starting place, but only as a general outline. In addition, NFPA 92A and NFPA 92B also have extensive testing, documentation and maintenance requirements that may be a good resource. NFPA 92B is referenced in Section 909.8 for the design of smoke control systems using the exhaust method. Each system will require a unique commissioning plan that can be developed only after careful and thoughtful examination of the final design and all of its components and interrelationships. Generally, these provisions may be included in design standards or engineering guides.

[F] 909.4 Analysis. A rational analysis supporting the types of smoke control systems to be employed, their methods of operation, the systems supporting them and the methods of construction to be utilized shall accompany the submitted *construction documents* and shall include, but not be limited to, the items indicated in Sections 909.4.1 through 909.4.7.

❖ This section indicates that simply determining airflow, exhaust rates and pressures to maintain tenable conditions is not adequate. There are many factors that could alter the effectiveness of a smoke control system, including stack effect, temperature effect of fire, wind effect, heating, ventilating and air-conditioning (HVAC) system interaction and climate, as well as the placement, quantity of inlets/outlets and velocity of supply and exhaust air. These factors are addressed in the sections that follow. Additionally, the duration of operation of any smoke control system is mandated at a minimum of 20 minutes or 1.5 times the egress time, whichever is less. The code cannot reasonably anticipate every conceivable building arrangement and condition the building may be subject to over its life and must depend on such factors being addressed through a rational analysis.

[F] 909.4.1 Stack effect. The system shall be designed such that the maximum probable normal or reverse stack effect will not adversely interfere with the system's capabilities. In determining the maximum probable stack effect, altitude, elevation, weather history and interior temperatures shall be used.

❖ Stack effect is the tendency for air to rise within a heated building when the temperature is colder on the exterior of the building. Reverse stack effect is the tendency for air to flow downward within a building when the interior is cooler than the exterior of the building. This air movement can affect the intended operation of a smoke control system. If stack effect is great enough, it may overcome the pressures determined during the design analyses and allow smoke to enter areas outside the zone of origin (see Commentary Figure 909.4.1).

[F] 909.4.2 Temperature effect of fire. Buoyancy and expansion caused by the design fire in accordance with Section 909.9 shall be analyzed. The system shall be designed such that these effects do not adversely interfere with the system's capabilities.

❖ This section requires that the design account for the effect temperature may have on the success of the system. When air or any gases are heated they will expand. This expansion makes the gases lighter and therefore more buoyant. The buoyancy of hot gases is important when the design is to exhaust such gases from a location in or close to the ceiling; therefore, if sprinklers are part of the design, as required by Section 909, the gases may be significantly cooler than an unsprinklered fire, making it more difficult to remove the smoke and alter the plume dynamics. The fact that air expands when heated needs to be accounted for in the design.

When using the pressurization method, the expansion of hot gases needs to be accounted for, since it will take a larger volume of air to create the neces-

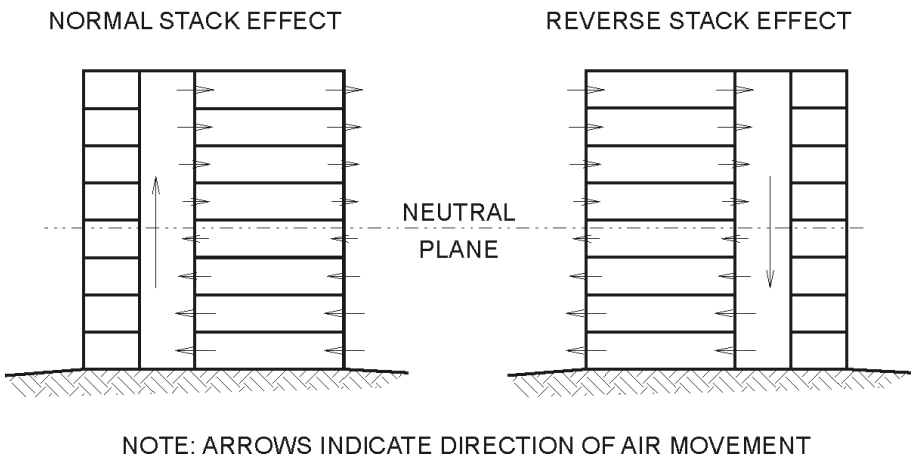

Figure 909.4.1
STACK EFFECT

INTERNATIONAL CODE COUNCIL®
Copyright © 2015 ICC. ALL RIGHTS RESERVED. Accessed by David Dammon on Jun 21, 2017 12:30:52 PM pursuant to License Agreement with ICC. No further reproduction or distribution authorized. ANY UNAUTHORIZED REPRODUCTION OR DISTRIBUTION IS A VIOLATION OF THE FEDERAL COPYRIGHT ACT AND THE LICENSE AGREEMENT, AND SUBJECT TO CIVIL AND CRIMINAL PENALTIES THEREUNDER.

sary pressure differences to maintain the area of fire origin in negative pressure. The expansion of the gases has the effect of pushing the hot gases out of the area of fire origin. Since sprinklers will tend to cool the gases, the effect of expansion is lower. The pressure differences required in Section 909.6.1 are specifically based on a sprinklered building. If the building is nonsprinklered, higher pressure differences may be required. The minimum pressure difference for certain unsprinklered ceiling height buildings is as follows:

Ceiling height (feet)	Minimum pressure difference (inch water gage)
9	.10
15	.14
21	.18

This is a very complex issue that needs to be part of the design analysis. It needs to address the type and reaction of the fire protection systems, ceiling heights and the size of the design fire.

[F] 909.4.3 Wind effect. The design shall consider the adverse effects of wind. Such consideration shall be consistent with the wind-loading provisions of Chapter 16.

❖ The effect of wind on a smoke control system within a building is very complex. It is generally known that wind exerts a load upon a building. The loads are looked at as windward (positive pressure) and leeward (negative pressure). The velocity of winds will vary based on the terrain and the height above grade; therefore, the height of the building and surrounding obstructions will have an effect on these velocities. These pressures alter the operation of fans, especially propeller fans, thus altering the pressure differences and airflow direction in the building. There is not an easy solution to dealing with these effects. In fact, little research has been done in this area.

It should be noted that in larger buildings a wind study is normally undertaken for the structural design. The data from those studies can be used in the analysis of the effects on the pressures and airflow within the building with regard to the performance of the smoke control system.

[F] 909.4.4 HVAC systems. The design shall consider the effects of the heating, ventilating and air-conditioning (HVAC) systems on both smoke and fire transport. The analysis shall include all permutations of systems status. The design shall consider the effects of the fire on the HVAC systems.

❖ If not properly configured to shut down or be included as part of the design, the HVAC system can alter the smoke control design. More specifically, if dampers are not provided between smoke zones within the HVAC system ducts, smoke could be transported from one zone to another. Additionally, if the HVAC system places more supply air than assumed for the smoke control system design, the velocity of the air may adversely affect the fire plume or a positive pressure may be created. Generally, an analysis of the smoke control design and the HVAC system in all potential modes should occur and be noted within the design documentation as well as incorporated into inspection, testing and maintenance procedures. This is critical as these systems need to be maintained and tested to help ensure that they operate and shut down systems as required.

[F] 909.4.5 Climate. The design shall consider the effects of low temperatures on systems, property and occupants. Air inlets and exhausts shall be located so as to prevent snow or ice blockage.

❖ This section is focused on properly protecting equipment from weather conditions that may affect the reliability of the design. For instance, extremely cold or hot air may damage critical equipment within the system when pulled directly from the outside. Some listings of duct smoke detectors are for specific temperature ranges; therefore, placing such detectors within areas exposed to extreme temperatures may void the listing. Also, the equipment and air inlets and outlets should be designed and located so as to not collect snow and ice that could block air from entering or exiting the building.

[F] 909.4.6 Duration of operation. All portions of active or engineered smoke control systems shall be capable of continued operation after detection of the fire event for a period of not less than either 20 minutes or 1.5 times the calculated egress time, whichever is greater.

❖ The intent of the smoke control provisions is to provide a tenable environment for occupants to either evacuate or relocate to a safe place. Evacuation and relocation activities include notifying occupants, possible investigation time for occupants, decision time and the actual travel time. In order to achieve this goal, the code has established 20 minutes or 1.5 times the calculated egress time, whichever is greater, as a minimum time for evacuation or relocation. Basically this allows a designer to undertake an analysis to more closely determine the necessary time required. The code provides a safety factor of 1.5 times the egress time to account for uncertainty related to human behavior. It is stressed that the 20-minute duration as well as the calculated egress time, whichever approach is chosen, begins after the detection of the fire event and notification to the building occupants to evacuate has occurred, since occupants need to be alerted before evacuation can occur. The calculation of evacuation time needs to include delays with notification and the start of evacuation (i.e., pre-movement time, etc.). It is stressed that the code states 20 minutes or 1.5 times the egress time, whichever is greater (i.e., 20 minutes is a minimum). Egress of occupants can be addressed through hand calculations or through the use of computerized egress models. Some of the more advanced models can address a variety of factors,

INTERNATIONAL CODE COUNCIL®
Copyright © 2015 ICC. ALL RIGHTS RESERVED. Accessed by David Dammon on Jun 21, 2017 12:30:52 PM pursuant to License Agreement with ICC. No further reproduction or distribution authorized. ANY UNAUTHORIZED REPRODUCTION OR DISTRIBUTION IS A VIOLATION OF THE FEDERAL COPYRIGHT ACT AND THE LICENSE AGREEMENT, AND SUBJECT TO CIVIL AND CRIMINAL PENALTIES THEREUNDER.

including the building layout, different sizes of people, different movement speeds and different egress paths available. With these types of programs, the actual time can be even more precisely calculated. Of course it is cautioned that in many cases these models provide the optimal time for egress. The safety factor of 1.5 within the code is intended to address many of these uncertainties.

Note that this section applies to all types of smoke control designed in accordance with Section 909. Also, most smoke control systems will typically have the ability to run for much longer than 20 minutes as they are on standby power and may be able to continue to achieve the tenability goals.

System response as required in Section 909.17 needs to be accounted for when determining the ability of the smoke control system to keep the smoke layer interface at the appropriate level (see commentary, Section 909.17).

909.4.7 Smoke control system interaction. The design shall consider the interaction effects of the operation of multiple smoke control systems for all design scenarios.

❖ The focus of this section is related to the interaction of multiple mechanical smoke control systems by asking for a specific analysis of the interaction of such systems similar to that required for the interaction of HVAC systems. Where hoistway pressurization is chosen as an option for compliance with the hoistway opening protection requirements, the potential exists for a pressurized stair system to also be present. These two systems need to be able to operate at the same time without a negative impact on either system. It is also possible that an atrium with a smoke control system is located in a building containing a stair pressurization system.

[F] 909.5 Smoke barrier construction. *Smoke barriers* required for passive smoke control and a smoke control system using the pressurization method shall comply with Section 709, and shall be constructed and sealed to limit leakage areas exclusive of protected openings. The maximum allowable leakage area shall be the aggregate area calculated using the following leakage area ratios:

1. Walls $A/A_w = 0.00100$
2. Interior *exit stairways* and *ramps* and *exit passageways*: $A/A_w = 0.00035$
3. Enclosed *exit access stairways* and *ramps* and all other shafts: $A/A_w = 0.00150$
4. Floors and roofs: $A/A_F = 0.00050$

where:

A = Total leakage area, square feet (m^2).

A_F = Unit floor or roof area of barrier, square feet (m^2).

A_w = Unit wall area of barrier, square feet (m^2).

The leakage area ratios shown do not include openings due to gaps around doors and operable windows. The total leakage area of the *smoke barrier* shall be determined in accordance with Section 909.5.1 and tested in accordance with Section 909.5.2.

❖ Part of the strategy of smoke control systems, particularly smoke control systems using the pressurization method (often termed zoned smoke control) is the use of smoke barriers to divide a building into separate smoke zones (or compartments). This strategy is used in both passive and mechanical systems. It should be noted that not all walls, ceilings or floors would be considered smoke barriers. Only walls that designate separate smoke zones within a building need to be constructed as smoke barriers. This section is simply providing requirements for walls, floors and ceilings that are used as smoke barriers. It should be noted that it is possible that a smoke control system utilizing the exhaust method may not need to utilize a smoke barrier to divide the building into separate smoke zones; therefore, the evaluation of barrier construction and leakage area may not be necessary and, as noted, is primarily focused on designs using a passive approach or the pressurization method.

In order for smoke to not travel from one smoke zone to another, specific construction requirements are necessary in accordance with the code. It should be noted that openings such as doors and windows are dealt with separately within Section 909.5.3 from openings such as cracks or penetrations.

[F] 909.5.1 Total leakage area. Total leakage area of the barrier is the product of the *smoke barrier* gross area multiplied by the allowable leakage area ratio, plus the area of other openings such as gaps around doors and operable windows.

❖ It is impossible for walls and floors to be constructed that are completely free from openings that may allow the migration of smoke; therefore, leakage needs to be compensated for within the design by calculating the leakage area of walls, ceilings and floors. The factors provided in Section 909.5, which originate from ASHRAE's provisions on leaky buildings, are used to calculate the total leakage area. The total leakage area is then used in the design process to determine the proper amount of air to create the required pressure differences across these surfaces that form smoke zones.

Additionally, Section 909.5 provides ratios to determine the maximum allowable leakage in walls, interior exit stairways, shafts, floors and roofs. These leakage areas are critical in determining whether the proper pressure differences are provided when utilizing the pressurization method of smoke control. Pressure differences will decrease as the openings get larger.

[F] 909.5.2 Testing of leakage area. Compliance with the maximum total leakage area shall be determined by achieving the minimum air pressure difference across the barrier with the system in the smoke control mode for mechanical smoke control systems utilizing the pressurization method. Compli-

INTERNATIONAL CODE COUNCIL®
Copyright © 2015 ICC. ALL RIGHTS RESERVED. Accessed by David Dammon on Jun 21, 2017 12:30:52 PM pursuant to License Agreement with ICC. No further reproduction or distribution authorized. ANY UNAUTHORIZED REPRODUCTION OR DISTRIBUTION IS A VIOLATION OF THE FEDERAL COPYRIGHT ACT AND THE LICENSE AGREEMENT, AND SUBJECT TO CIVIL AND CRIMINAL PENALTIES THEREUNDER.

ance with the maximum total leakage area of passive smoke control systems shall be verified through methods such as door fan testing or other methods, as *approved* by the fire code official.

❖ These leakage criteria need to be evaluated through testing. For the case of a pressurization system, pressure differences need to be verified when the system is in smoke control mode. In the case of passive smoke control systems, pressure testing through tests such as the door fan method is necessary.

[F] 909.5.3 Opening protection. Openings in *smoke barriers* shall be protected by automatic-closing devices actuated by the required controls for the mechanical smoke control system. Door openings shall be protected by *fire door assemblies* complying with Section 716.5.3.

Exceptions:

1. Passive smoke control systems with automatic-closing devices actuated by spot-type smoke detectors *listed* for releasing service installed in accordance with Section 907.3.
2. Fixed openings between smoke zones that are protected utilizing the airflow method.
3. In Group I-1 Condition 2, Group I-2 and ambulatory care facilities, where a pair of opposite-swinging doors are installed across a corridor in accordance with Section 909.5.3.1, the doors shall not be required to be protected in accordance with Section 716. The doors shall be close-fitting within operational tolerances and shall not have a center mullion or undercuts in excess of $^{3}/_{4}$ inch (19.1 mm), louvers or grilles. The doors shall have head and jamb stops and astragals or rabbets at meeting edges and, where permitted by the door manufacturer's listing, positive-latching devices are not required.
4. In Group I-2 and ambulatory care facilities, where such doors are special-purpose horizontal sliding, accordion or folding door assemblies installed in accordance with Section 1010.1.4.3 and are automatic closing by smoke detection in accordance with Section 716.5.9.3.
5. Group I-3.
6. Openings between smoke zones with clear ceiling heights of 14 feet (4267 mm) or greater and bank-down capacity of greater than 20 minutes as determined by the design fire size.

❖ Similar to concerns of smoke leakage between smoke zones, openings may compromise the necessary pressure differences between smoke zones. Openings in smoke barriers, such as doors and windows, must be either constantly or automatically closed when the smoke control system is operating. This section requires that doors be automatically closed through the activation of an automatic-closing device linked to the smoke control system. Essentially, when the smoke control system is activated, all openings are automatically closed. This most likely would mean that the mechanism that activates the smoke control system would also automatically close all openings. The smoke control system will be activated by a specifically zoned smoke detection or sprinkler system as required by Sections 909.12.3 and 909.12.4.

In terms of actual opening protection, Section 909.5.2 is simply referring the user to Section 716.5.3 for specific construction requirements for doors located in smoke barriers. Note that smoke barriers are different from fire barriers, since the intended measure of performance is different. One is focused on fire spread from the perspective of heat, the other from the perspective of smoke passage. Smoke barriers do require a 1-hour fire-resistance rating.

There are several exceptions to this particular section. Exception 1 is specifically for passive systems. Passive systems, as noted, are systems in which there is no use of mechanical systems. Instead, the system operates primarily upon the configuration of barriers and layout of the building to provide smoke control. Passive systems can use spot-type detectors to close doors that constitute portions of a smoke barrier. Essentially, this means a full fire alarm system would not be required. Instead, single station detectors would be allowed to close the doors. Such doors would need to fail in the closed position if power is lost. The specifics as to approved devices would be found in NFPA 72.

Exception 2 is based on the fact that some systems take advantage of the opposed airflow method such that smoke is prevented from migrating past the doors. Therefore, since the design already accounts for potential smoke migration at these openings through the use of air movement, it is unnecessary to require the barrier to be closed.

Exception 3 is specifically related to the unique requirements for Group I-1 Condition 2, I-2 occupancies and ambulatory care occupancies. Essentially, a very specific alternative, which meets the functional needs of these occupancy types, is provided. Opposite-swinging doors are allowed without meeting the specific requirements of Section 716. Note that Group I-2 and ambulatory care facilities utilize the concept of smoke compartments, which is a form of a passive smoke control system. The requirements of this section are focused on openings in smoke barriers that need to close upon activation of a pressurization system.

Exception 4 provides a specific allowance for horizontal sliding doors in Group I-2 Condition 2 occupancies and ambulatory care occupancies. These doors are commonly used in such occupancies and have very specific installation requirements in Section 1010.1.4.3. These doors are an alternative to pivoted or side-hinged, swinging-type doors. This exception requires compliance with Section 716.5.9.3 for automatic closing upon detection of smoke.

Exception 5 allows an exemption from the automatic-closing requirements for all Group I-3 occupancies. This is because facilities that have occupants

INTERNATIONAL CODE COUNCIL®
Copyright © 2015 ICC. ALL RIGHTS RESERVED. Accessed by David Dammon on Jun 21, 2017 12:30:52 PM pursuant to License Agreement with ICC. No further reproduction or distribution authorized. ANY UNAUTHORIZED REPRODUCTION OR DISTRIBUTION IS A VIOLATION OF THE FEDERAL COPYRIGHT ACT AND THE LICENSE AGREEMENT, AND SUBJECT TO CIVIL AND CRIMINAL PENALTIES THEREUNDER.

under restraint or with specific security restrictions have unique requirements in accordance with Section 408 of the code. These requirements accomplish the intent of providing reliable barriers between each smoke zone since, for the most part, such facilities will have a majority of doors closed and in a locked position because of the nature of the facility. The staff very closely controls these types of facilities.

Exception 6 relates to the behavior of smoke. The assumption is that smoke rises because of the buoyancy of hot gases, and if the ceiling is sufficiently high, the smoke layer will be contained for a longer period of time before it begins to move into the next smoke zone. Therefore, it is not as critical that the doors automatically close. This allowance is dependent on the specific design fire for a building. See Section 909.9 for more information on design fire determination. Different size design fires create different amounts of smoke that, depending on the layout of the building, may migrate in different ways throughout the building. This section mandates that smoke cannot begin to migrate into the next smoke zone for at least 20 minutes. This is consistent with the 20-minute minimum duration of operation of smoke control systems required in Section 909.4.6. It should be noted that a minimum of 14-foot (4267 mm) ceilings are required to take advantage of this exception. This exception would require an engineering analysis.

909.5.3.1 Group I-1 Condition 2; Group I-2 and ambulatory care facilities. In Group I-1 Condition 2, Group I-2 and *ambulatory care facilities*, where doors are installed across a *corridor*, the doors shall be automatic closing by smoke detection in accordance with Section 716.5.9.3 and shall have a vision panel with fire protection-rated glazing materials in fire protection-rated frames, the area of which shall not exceed that tested.

❖ Part of the alternative allowed for horizontal sliding doors in Exception 3 of Section 909.5.3 for Group I-2 Condition 2, Group I-1 Condition 2 and ambulatory care facilities is the requirement that vision panels be provided. These vision panels need to be approved fire-protection-rated glazing and be within frames of a size that does not exceed the frame size that was used for testing of the glazing.

[F] 909.5.3.2 Ducts and air transfer openings. Ducts and air transfer openings are required to be protected with a minimum Class II, 250°F (121°C) *smoke damper* complying with Section 717.

❖ Another factor that adds to the reliability of smoke barriers is the protection of ducts and air transfer openings within smoke barriers. Left open, these openings may allow the transfer of smoke between smoke zones. These ducts and air transfer openings most often are part of the HVAC system. Damper operation and the reaction with the smoke control system will be evaluated during acceptance testing. It should be noted that there are duct systems used within a smoke control design that are controlled by the smoke control system and should not automatically close upon detection of smoke via a smoke damper.

It should be noted that a smoke damper works differently than a fire damper. Fire dampers react to heat via a fusible link, while smoke dampers activate upon the detection of smoke. The smoke dampers used should be rated as Class II, 250°F (121°C). The class of the smoke damper refers to its level of performance relative to leakage. The temperature rating is related to its ability to withstand the heat of smoke resulting from a fire. It should be noted that although smoke barriers are only required to utilize smoke dampers, there may be many instances where a fire damper is also required. For instance, the smoke barrier may also be used as a fire barrier. Also, Section 717.5.3 would require penetration of shafts to contain both a smoke and fire damper. Therefore, in some cases both a smoke damper and fire damper would be required. There are listings specific to combination smoke and fire dampers. Note that the exceptions to Section 717.5.3 recognize that smoke and fire dampers may interfere with a smoke control design.

More specific requirements about dampers can be found in Chapter 7 of this code and Chapter 6 of the IMC.

[F] 909.6 Pressurization method. The primary mechanical means of controlling smoke shall be by pressure differences across smoke barriers. Maintenance of a tenable environment is not required in the smoke control zone of fire origin.

❖ There are several methods or strategies that may be used to control smoke movement. One of these methods is pressurization, wherein the system primarily utilizes pressure differences across smoke barriers to control the movement of smoke. Basically, if the area of fire origin maintains a negative pressure, then the smoke will be contained to that smoke zone. A typical approach used to obtain a negative pressure is to exhaust the fire floor. This is a fairly common practice in high-rise buildings. Interior exit stairways also utilize the concept of pressurization by keeping the interior exit stairways under positive pressure. The pressurization method in large open spaces, such as malls and atria, is impractical since it would take a large quantity of supply air to create the necessary pressure differences. It should be noted that pressurization is mandated as the primary method for mechanical smoke control design, but this is related to the primary methods historically used for smoke control in high-rise buildings. Currently high-rise buildings do not require smoke control. Airflow and exhaust methods are only allowed when appropriate. The exhaust method is the most commonly applied method based on the use of the atrium provisions in Section 404.5.

The pressurization method does not require that tenable conditions be maintained in the smoke zone where the fire originates. Maintaining this area tenable would be impossible, because pressures from the surrounding smoke zones would be placing a nega-

INTERNATIONAL CODE COUNCIL®
Copyright © 2015 ICC. ALL RIGHTS RESERVED. Accessed by David Dammon on Jun 21, 2017 12:30:52 PM pursuant to License Agreement with ICC. No further reproduction or distribution authorized. ANY UNAUTHORIZED REPRODUCTION OR DISTRIBUTION IS A VIOLATION OF THE FEDERAL COPYRIGHT ACT AND THE LICENSE AGREEMENT, AND SUBJECT TO CIVIL AND CRIMINAL PENALTIES THEREUNDER.

tive pressure within the zone of origin to keep the smoke from migrating.

Pressurization is used often with interior exit stairways. This method provides a positive pressure within the interior exit stairways to resist the passage of smoke. Stair pressurization is one method of compliance for stairways in high-rise or underground buildings where the floor surface is located more than 75 feet (22 860 mm) above the lowest level of fire department vehicle access or more than 30 feet (9144 mm) below the floor surface of the lowest level of exit discharge. It should be noted that there are two methods found in the code that address smoke movement—smokeproof enclosures or pressurized stairs. A smokeproof enclosure requires a certain fire-resistance rating along with access through a ventilated vestibule or an exterior balcony. The vestibule can be ventilated in two ways: using natural ventilation or mechanical ventilation as outlined in Sections 909.20.3 and 909.20.4. The pressurization method requires a sprinklered building and a minimum pressure difference of 0.15 inch (37 Pa) of water and a maximum of 0.35 inch (87 Pa) of water. These pressure differences are to be available with all doors closed under maximum stack pressures (see Sections 909.20 and 1023.11 for more details).

As noted, the pressurization method utilizes pressure differences across smoke barriers to achieve control of smoke. Sections 909.6.1 and 909.6.2 provide the criteria for smoke control design in terms of minimum and maximum pressure differences.

In summary, the pressurization method is used in two ways. The first is through the use of smoke zones where the zone of origin is exhausted, creating a negative pressure. The second is stair pressurization that creates a positive pressure within the stair to avoid the penetration of smoke. Note that the code allows the use of a smokeproof enclosure instead of pressurization.

[F] 909.6.1 Minimum pressure difference. The minimum pressure difference across a *smoke barrier* shall be 0.05-inch water gage (0.0124 kPa) in fully sprinklered buildings.

In buildings permitted to be other than fully sprinklered, the smoke control system shall be designed to achieve pressure differences not less than two times the maximum calculated pressure difference produced by the design fire.

❖ The minimum pressure difference is established as 0.05-inch water gage (12 Pa) in fully sprinklered buildings. This particular criterion is related to the pressures needed to overcome buoyancy and the pressures generated by the fire, which include expansion. This particular criterion is based on a sprinklered building. The pressure difference would need to be higher in a building that is not sprinklered. Additionally, the pressure difference needs to be provided based on the possible stack and wind effects present.

[F] 909.6.2 Maximum pressure difference. The maximum air pressure difference across a *smoke barrier* shall be determined by required door-opening or closing forces. The actual force required to open *exit* doors when the system is in the smoke control mode shall be in accordance with Section 1010.1.3. Opening and closing forces for other doors shall be determined by standard engineering methods for the resolution of forces and reactions. The calculated force to set a side-hinged, swinging door in motion shall be determined by:

$$F = F_{dc} + K(WA\Delta P)/2(W\text{-}d) \qquad \textbf{(Equation 9-1)}$$

where:

A = Door area, square feet (m^2).

d = Distance from door handle to latch edge of door, feet (m).

F = Total door opening force, pounds (N).

F_{dc} = Force required to overcome closing device, pounds (N).

K = Coefficient 5.2 (1.0).

W = Door width, feet (m).

ΔP = Design pressure difference, inches of water (Pa).

❖ The maximum pressure difference is based primarily on the force needed to open and close doors. The code establishes maximum opening forces for doors. This maximum opening force cannot be exceeded, taking into account the pressure differences across a doorway in a pressurized environment. Essentially, based on the opening force requirements of Section 1010.1.3, the maximum pressure difference can be calculated in accordance with Equation 9-1. In accordance with Chapter 10, the maximum opening force of a door has three components, including:

Door latch release:
Maximum of 15 pounds (67 N)

Set door in motion:
Maximum of 30 pounds (134 N)

Swing to full open position:
Maximum of 15 pounds (67 N)

Equation 9-1 is used to calculate the total force to set the door into motion when in the smoke control mode; therefore, the limiting criteria would be 30 pounds (134 N). It should be noted that although the accessibility requirements related to door opening force are more restrictive in Section 404.2.8 of ICC A117.1, fire doors do not require compliance with these requirements.

[F] 909.6.3 Pressurized stairways and elevator hoistways. Where stairways or elevator hoistways are pressurized, such pressurization systems shall comply with Section 909 as smoke control systems, in addition to the requirements of Sections 909.20 of this code and 909.21 of the *International Fire Code*.

❖ The purpose of this section is to clarify that pressurized stairways and pressurized hoistways are smoke control systems and must be addressed in the same way that a pressurization system in accordance with

INTERNATIONAL CODE COUNCIL®
Copyright © 2015 ICC. ALL RIGHTS RESERVED. Accessed by David Dammon on Jun 21, 2017 12:30:52 PM pursuant to License Agreement with ICC. No further reproduction or distribution authorized. ANY UNAUTHORIZED REPRODUCTION OR DISTRIBUTION IS A VIOLATION OF THE FEDERAL COPYRIGHT ACT AND THE LICENSE AGREEMENT, AND SUBJECT TO CIVIL AND CRIMINAL PENALTIES THEREUNDER.

Section 909.6 addresses such systems. This would require compliance with various sections but in particular the requirements for a rational analysis in accordance with Section 909.4.

[F] 909.7 Airflow design method. Where *approved* by the fire code official, smoke migration through openings fixed in a permanently open position, which are located between smoke control zones by the use of the airflow method, shall be permitted. The design airflow shall be in accordance with this section. Airflow shall be directed to limit smoke migration from the fire zone. The geometry of openings shall be considered to prevent flow reversal from turbulent effects. Smoke control systems using the airflow method shall be designed in accordance with NFPA 92.

❖ This method is only allowed when approved by the building official. As the title states, this method utilizes airflow to avoid the migration of smoke across smoke barriers. This has been referred to as opposed airflow. Specifically, this method is suited for the protection of smoke migration through doors and related openings fixed in a permanently open position. This method consists of providing a particular velocity of air based on the temperature of the smoke and the height of the opening. The temperature of the smoke will depend on the design fire that is established for the particular building. The higher the temperature of the smoke and the larger the opening, the higher the velocity necessary to maintain the smoke from migrating into the smoke zone. It should be noted that the airflow method seldom works for large openings, since the velocity to oppose the smoke becomes too high. This method tends to work better for smaller openings, such as pass-through windows. Reference is made to NFPA 92 to determine the minimum velocity required to limit smoke spread.

[F] 909.7.1 Prohibited conditions. This method shall not be employed where either the quantity of air or the velocity of the airflow will adversely affect other portions of the smoke control system, unduly intensify the fire, disrupt plume dynamics or interfere with exiting. In no case shall airflow toward the fire exceed 200 feet per minute (1.02 m/s). Where the calculated airflow exceeds this limit, the airflow method shall not be used.

❖ The airflow method has a limitation on maximum velocity. This limitation is because air may distort the flame and cause additional entrainment and turbulence; therefore, having a high velocity of air entering the zone of fire origin has the potential of increasing the amount of smoke produced. The velocity may also interact with other portions of the smoke control design. For instance, the pressure differences in other areas of the building may be altered, which may exceed the limitations of Sections 909.6.1 and 909.6.2. This section requires that when a velocity of over 200 feet per minute (1.02 m/sec) is calculated, the airflow method is not allowed. The solution may result in requiring a barrier such as a wall or door.

If the airflow design method is chosen to protect areas communicating with an atrium, the air added to the smoke layer needs to be accounted for in the exhaust rate.

[F] 909.8 Exhaust method. Where *approved* by the fire code official, mechanical smoke control for large enclosed volumes, such as in atriums or malls, shall be permitted to utilize the exhaust method. Smoke control systems using the exhaust method shall be designed in accordance with NFPA 92.

❖ This method is only allowed when approved by the building official. The primary application of the exhaust method is in large spaces, such as atriums and malls and is the most widely used method in the IBC. The strategy of this method is to keep the smoke layer at a certain level within the space. This is primarily accomplished through exhausting smoke. The amount of exhaust depends on the design fire [see Commentary Figure 909.8(1)]. Essentially, fires produce different amounts and properties of smoke based on the material being burned, and size and placement of the fire; therefore, NFPA 92 is referenced for the design of such systems. NFPA 92 presents several ways to address the control of smoke, which includes the use of the following tools:

- Scale Modeling (Small-scale testing)—Utilizes the concept of scaling to allow small-scale tests to be conducted to understand smoke movement within a space.
  - Benefits—More realistic understanding of smoke movement in spaces with unusual configurations or projections than algebraic calculations.
  - Disadvantages—Expensive and the application of results is limited to the uniqueness of the space being analyzed.
- Algebraic (Calculations—Empirically derived (based on testing) modeling in its simplest form.
  - Benefits—Simple, cost-effective analysis.
  - Disadvantages—Limited applicability because of the range of values they were derived from. Only appropriate with certain types of design fires, typically over conservative outputs that increase equipment needs, equipment costs and can impact aesthetics and architectural design.
- Computer Modeling [Computational Fluid Dynamics (CFD) or zone models]—Combination of theory and empirical values to determine the smoke movement and fire-induced conditions within a space and effectiveness of the smoke control system.
  - Benefits—More realistic understanding of smoke movement in spaces with unusual configurations or projections and less expensive than scale modeling. Helps significantly in designing smoke control sys-

INTERNATIONAL CODE COUNCIL®
Copyright © 2015 ICC. ALL RIGHTS RESERVED. Accessed by David Dammon on Jun 21, 2017 12:30:52 PM pursuant to License Agreement with ICC. No further reproduction or distribution authorized. ANY UNAUTHORIZED REPRODUCTION OR DISTRIBUTION IS A VIOLATION OF THE FEDERAL COPYRIGHT ACT AND THE LICENSE AGREEMENT, AND SUBJECT TO CIVIL AND CRIMINAL PENALTIES THEREUNDER.

tems tailored to spaces and achieving cost-effective designs, and can help limit the impact to architectural design.

- Disadvantages—Computing time and cost can be longer than algebraic calculations but benefits typically outweigh this disadvantage. Early planning is important and can limit these adverse impacts.

In terms of computer modeling, as noted, there are essentially two methods that include zone models and CFD models. Zone models are based on the unifying assumption that in any room or space where the effects of the fire are present, there are distinct layers (hot upper layer, cool lower layer). In real life such distinct layers do not exist. Some examples of zone models used in such applications include Consolidated Model of Fire Growth and Smoke Transport (C-FAST) and Available Safe Egress Time (ASET). See Section 3-7 of the *SFPE Handbook of Fire Protection Engineering* for further information. CFD models take this much further and actually divide the space into thousands or millions of interconnected "cells" or "fields." The model then evaluates the fire dynamics and heat and mass in each individual cell and how it interacts with those adjacent to it. The use of such models becomes more accurate with more numerous and smaller cells but the computing power and expertise required is much higher than for zone models. As noted the use of either types of models can be advantageous but such use must be undertaken by someone qualified. Proper review and verification of the input and output is critical. The most popular model in the area of CFD with regard to fire is the Fire Dynamics Simulator (FDS) developed by NIST. Other models such as Fluent are sometimes used (Fluent Inc.).

Depending on the space being evaluated, some design strategies may provide a better approach than others. Past editions of the code smoke control provisions for the exhaust method mandated the use of the algebraic methods with a steady fire. This also mandated that a mechanical system be used, whereas NFPA 92 allows an overall review of smoke layer movement and whether the design goals, which in this case are mandated by the code, can be met. Therefore, if it can be shown that the smoke layer interface can be held at 6 feet (1829 mm) as mandated in Section 909.8.1 for the design operation time required by Section 909.4.6 without mechanical ventilation, then the space would comply with Section 909. NFPA 92 presents several design approaches. This allows more flexibility in design than that found in previous editions of the code.

NFPA 92 as a standard does not set the minimum smoke layer interface height or duration for system operation. Such criteria are found within Sections 909.8.1 and 909.4.6, respectively. See the commentary for those sections.

If the algebraic approach is used, consideration of three types of fire plumes may be required to determine which one is the most demanding in terms of smoke removal needs based on the space being assessed. They include:

Axisymmetric plumes—Smoke rises unimpeded by walls, balconies or similar projections [see Commentary Figure 909.8(2)].

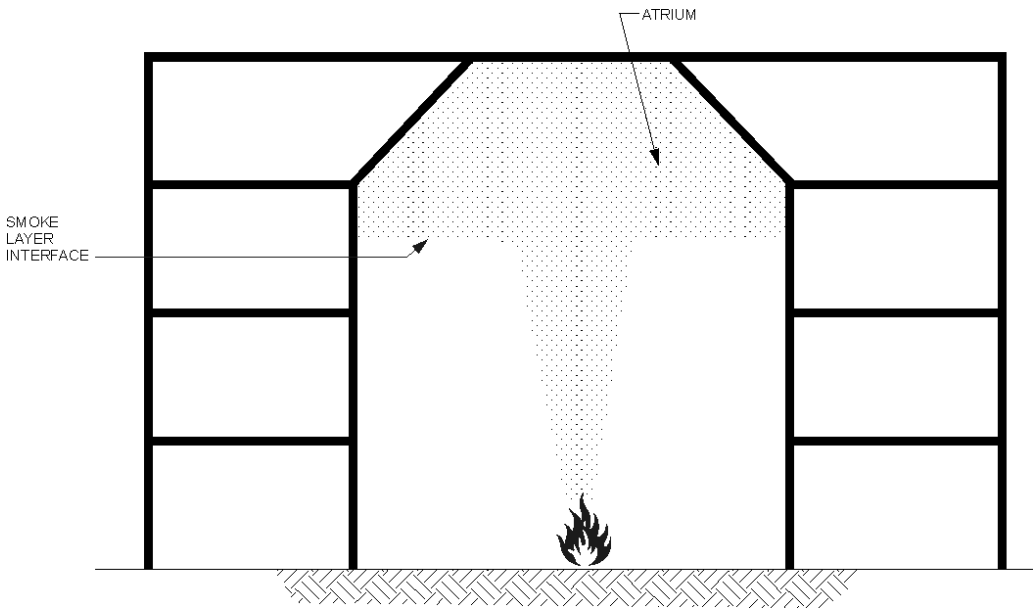

Figure 909.8(1)
SMOKE LAYER INTERFACE IN AN ATRIUM

INTERNATIONAL CODE COUNCIL®
Copyright © 2015 ICC. ALL RIGHTS RESERVED. Accessed by David Dammon on Jun 21, 2017 12:30:52 PM pursuant to License Agreement with ICC. No further reproduction or distribution authorized. ANY UNAUTHORIZED REPRODUCTION OR DISTRIBUTION IS A VIOLATION OF THE FEDERAL COPYRIGHT ACT AND THE LICENSE AGREEMENT, AND SUBJECT TO CIVIL AND CRIMINAL PENALTIES THEREUNDER.

Balcony spill plumes—Smoke flows under and around edges of a horizontal projection [see Commentary Figure 909.8(3)].

Window plumes—Smoke flows through an opening into a large-volume space [see Commentary Figure 909.8(4)].

It should be noted that prior to the reference to NFPA 92 in the code, the balcony spill and window plume calculations had been eliminated from the smoke control requirements of the code because of concerns with the applicability of those calculations. The major difference is that NFPA 92 does not mandate the use of such equations as did previous editions of the IBC. The use of such equations will depend on the design fires agreed upon for the particular design and whether an algebraic approach is chosen. These equations are used to determine a mass flow rate of smoke to ultimately determine the required exhaust volume for that space. If the potential for a balcony or window spill plumes is known to exist within the space, then appropriate measures need to be taken to address these, as they typically result in more onerous exhaust and supply requirements. Part of the reason for the initial deletion of these equations was the fact that such scenarios are not as likely or their impact is significantly reduced in sprinklered buildings. There is also some concern with the applicability of the balcony spill plume equation in a variety of applications. These potential fire scenarios and resulting plumes may further the need to undertake a CFD analysis to address such hazards more appropriately and effectively.

Another key aspect that NFPA 92 included within

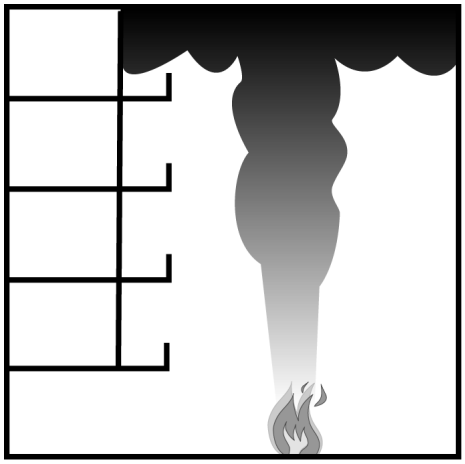

Figure 909.8(2)
AXISYMMETRICAL PLUME

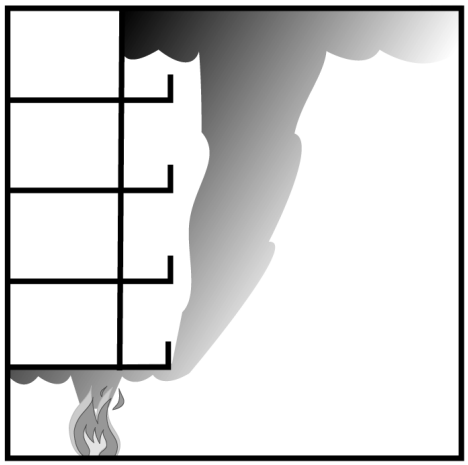

Figure 909.8(3)
BALCONY SPILL PLUME

INTERNATIONAL CODE COUNCIL®
Copyright © 2015 ICC. ALL RIGHTS RESERVED. Accessed by David Dammon on Jun 21, 2017 12:30:52 PM pursuant to License Agreement with ICC. No further reproduction or distribution authorized. ANY UNAUTHORIZED REPRODUCTION OR DISTRIBUTION IS A VIOLATION OF THE FEDERAL COPYRIGHT ACT AND THE LICENSE AGREEMENT, AND SUBJECT TO CIVIL AND CRIMINAL PENALTIES THEREUNDER.

the algebraic methods is equations to determine that a minimum number of exhaust inlets are available to prevent plugholing. Plugholing occurs when air from below the smoke layer is pulled through the smoke layer into the smoke exhaust inlets. As such, if plugholing occurs, some of the fan capacity is used to exhaust air rather than smoke and thus can affect the ability to maintain the smoke layer at or above the design height. Scale modeling and computer fire modeling would demonstrate these potential problems during the testing and analysis, respectively [see Commentary Figure 909.8(5)].

It should be noted that this section specifically references NFPA 92 for the design of smoke control using the exhaust method. Therefore the requirements in NFPA 92 related to testing, documentation and maintenance would not be applicable though they may be a good resource. Equipment and controls would be part of the design; therefore, related provisions of NFPA 92 would apply. Generally, the code addresses equipment and controls in a similar fashion.

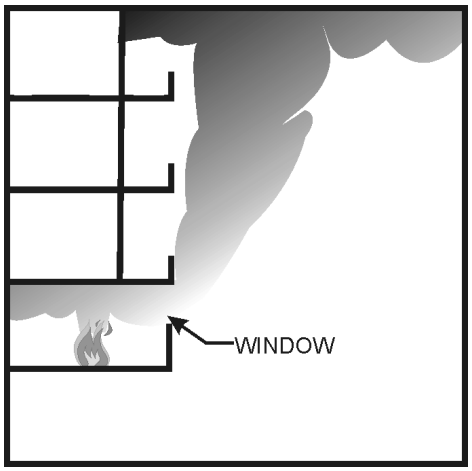

Figure 909.8(4)
WINDOW PLUME

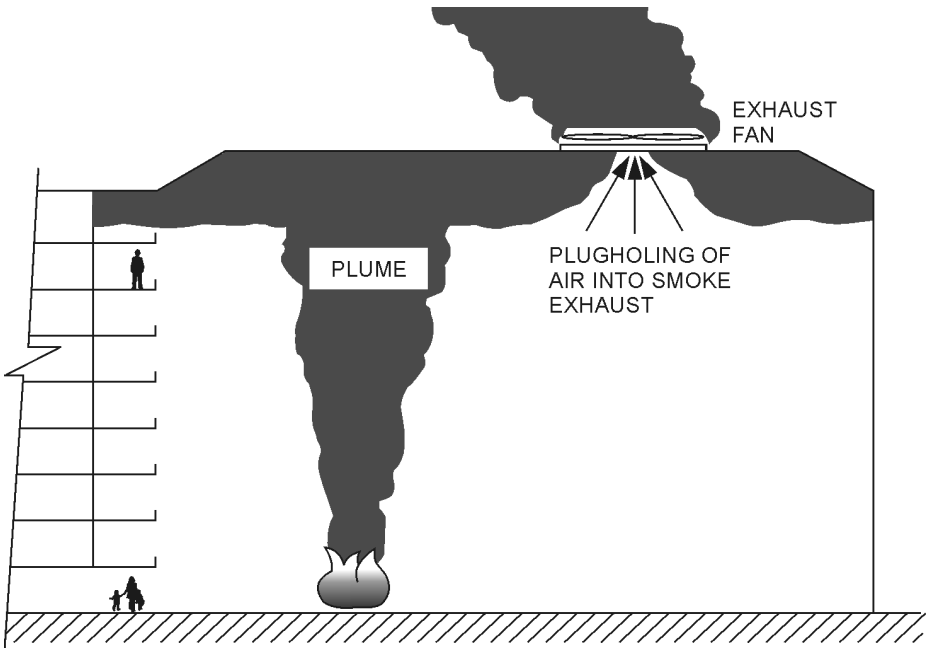

Figure 909.8(5)
PLUGHOLING

INTERNATIONAL CODE COUNCIL®
Copyright © 2015 ICC. ALL RIGHTS RESERVED. Accessed by David Dammon on Jun 21, 2017 12:30:52 PM pursuant to License Agreement with ICC. No further reproduction or distribution authorized. ANY UNAUTHORIZED REPRODUCTION OR DISTRIBUTION IS A VIOLATION OF THE FEDERAL COPYRIGHT ACT AND THE LICENSE AGREEMENT, AND SUBJECT TO CIVIL AND CRIMINAL PENALTIES THEREUNDER.

[F] 909.8.1 Smoke layer. The height of the lowest horizontal surface of the smoke layer interface shall be maintained not less than 6 feet (1829 mm) above a walking surface that forms a portion of a required egress system within the smoke zone.

❖ The design criteria to be used when applying NFPA 92 is to maintain the smoke layer interface at least 6 feet (1829 mm) above any walking surface that is considered part of the required egress within the particular smoke zone, such as an atrium, for 20 minutes or 1.5 times the calculated egress time (see Section 909.4.6). Chapter 10 considers the majority of occupiable space as part of the means of egress system. Also keep in mind that the criteria of 6 feet (1829 mm) does not apply just to the main floor surface of the mall or atrium but to any level where occupants may be exposed (for example, balconies) [see Commentary Figure 909.8.1(1)].

The code uses the terminology "lowest horizontal surface of the accumulating smoke layer interface." NFPA 92 has several definitions related to smoke layer, which include the following:

Smoke layer. The accumulated thickness of smoke below a physical barrier.

Smoke layer interface. The theoretical boundary between a smoke layer and the smoke-free air. (Note: This boundary is at the beginning of the transition zone.)

First indication of smoke. The boundary between the transition zone and the smoke-free air.

Transition zone. The layer between the smoke layer interface and the first indication of smoke in which the smoke layer temperature decreases to ambient. The transition zone may be several feet thick (large open space) or may barely exist (small area with intense fire).

See also Commentary Figure 909.8.1(2).

NFPA 92 provides algebraic equations to determine the first indication of smoke but is limited to very specific conditions such as a uniform cross section, specific aspect ratios, steady or unsteady fires and no smoke exhaust operating. When using algebraic equations for smoke layer interface looking at different types of plumes, the smoke layer interface terminology is used and the user enters the desired smoke layer interface height. Zone models use simplifying assumptions so the layers are distinct from one another. In contrast, when CFD or scale modeling is used, the data must be analyzed to verify that the smoke layer interface is located at or above 6 feet (1829 mm) during the event. This is not a simple analysis, as CFD and scale modeling provide more detail on actual smoke behavior; therefore, the location of the smoke layer interface may not be initially clear without some level of analysis. Again it depends on the depth of the transition layer. This may require reviewing tenability within the transition zone. Tenability limits need to be agreed upon by the stakeholders involved. Using CFD or scale modeling would likely need to occur through the alternative methods and materials section (see Section 104.11) because of the need to review tenability limits. It

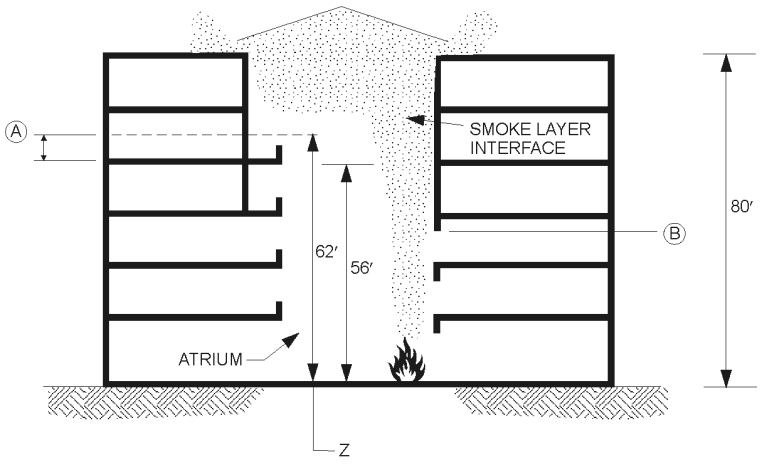

Z IS THE HEIGHT FROM ATRIUM FLOOR TO THE HIGHEST OF EITHER (A) OR (B) :

(A) 6′ - 0″ ABOVE THE HIGHEST LEVEL OF EXIT ACCESS OPEN TO ATRIUM

(B) THE HIGHEST UNPROTECTED OPENING TO ATRIUM

For SI: 1 foot = 304.8 mm.

Figure 909.8.1(1)
CRITICAL LEVEL OF SMOKE (EXAMPLE)

INTERNATIONAL CODE COUNCIL®
Copyright © 2015 ICC. ALL RIGHTS RESERVED. Accessed by David Dammon on Jun 21, 2017 12:30:52 PM pursuant to License Agreement with ICC. No further reproduction or distribution authorized. ANY UNAUTHORIZED REPRODUCTION OR DISTRIBUTION IS A VIOLATION OF THE FEDERAL COPYRIGHT ACT AND THE LICENSE AGREEMENT, AND SUBJECT TO CIVIL AND CRIMINAL PENALTIES THEREUNDER.

should be noted that NFPA 92 Annex A suggests that there are methods to determine where the smoke layer interface and first indication of smoke are located when undertaking CFD and scale modeling using a limited number of point measurements.

Also, Section 909.8.1 specifies a minimum distance for the smoke layer interface from any walking surface whereas Section 4.5.4.2 of NFPA 92 has provisions that simply allow the analysis to demonstrate tenability regardless of where the layer height is located above the floor. Defining tenability can be more difficult as there is not a standard definition. Any design using that approach would need to be addressed through Section 104.11.

Note that the response time of the system components (detection, activation, ramp up time, shutting down HVAC, opening/closing doors and dampers, etc.) needs to be accounted for when analyzing the location of the smoke layer interface in relation to the duration of operations stated in Section 909.4.6 (see commentary, Section 909.17).

[F] 909.9 Design fire. The design fire shall be based on a rational analysis performed by the *registered design professional* and *approved* by the fire code official. The design fire shall be based on the analysis in accordance with Section 909.4 and this section.

❖ The design fire is the most critical element in the smoke control system design. The fire is what produces the smoke to be controlled by the system; thus, the size of the fire directly impacts the quantity of smoke being produced. This section ensures that the design fire be determined through a rational analysis by a registered design professional with knowledge in this area. Such professionals should have experience in the area of fire dynamics, fire engineering and general building design, including mechanical systems. When determining the design fire, the designer should work with various stakeholders to determine the types of hazards and combustible materials (fire scenarios) on a permanent as well as temporary basis (i.e., Christmas/holiday decorative materials or scenery, temporary art exhibits) that may be present throughout the use of the building once occupied. Those hazards then need to be translated to potential design fires to be used when determining the smoke layer interface height for the duration as determined by Section 909.4.6. See the commentary for Section 909.9.3 for potential sources when determining design fires.

This section also does not mandate the type of fire (i.e., steady versus unsteady). A steady fire assumes a constant heat release rate over a period of time, where unsteady fires do not. An unsteady fire includes the growth and decay phases of the fire, as well as the peak heat release rate. An unsteady fire will hit a peak heat release rate when burning in the open, like an axisymmetric fire. An unsteady fire is a more realistic view of how fires actually burn. It should be noted that fires can be a combination of unsteady and steady fires when sufficient fuel is available. In other words, the fire initially grows (unsteady) then reaches a steady state and burns for sometime at a particular heat release rate before decay occurs.

Design fire information should therefore typically include growth rate, peak heat release rate, duration and decay as well as information related to fire locations and products of combustion yield (CO, smoke, etc.) that are produced by the various design fires that are deemed credible for the space.

To provide an order of magnitude of fire sizes obtained from various combustibles, the following data from fire tests are provided. The following heat release rates, found in Section 3, Chapter 3-1 of the

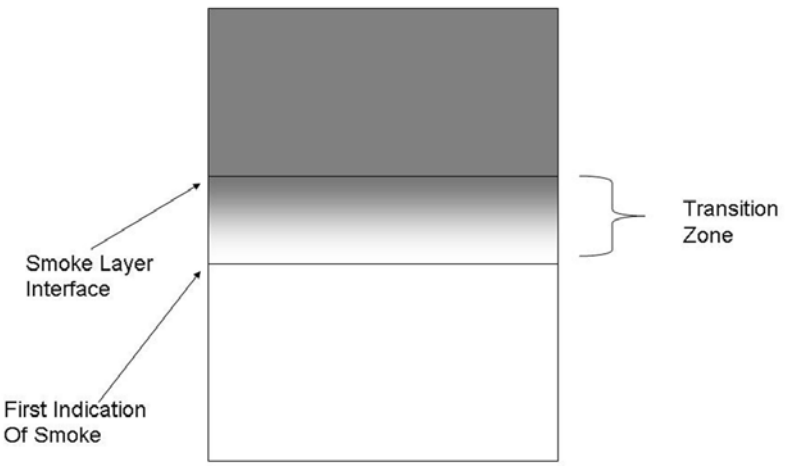

Figure 909.8.1(2)
SMOKE LAYER INTERFACE

INTERNATIONAL CODE COUNCIL®
Copyright © 2015 ICC. ALL RIGHTS RESERVED. Accessed by David Dammon on Jun 21, 2017 12:30:52 PM pursuant to License Agreement with ICC. No further reproduction or distribution authorized. ANY UNAUTHORIZED REPRODUCTION OR DISTRIBUTION IS A VIOLATION OF THE FEDERAL COPYRIGHT ACT AND THE LICENSE AGREEMENT, AND SUBJECT TO CIVIL AND CRIMINAL PENALTIES THEREUNDER.

4th edition of the *SFPE Handbook of Fire Protection Engineering*, are peak heat release rates:

- Plastic trash bags/paper trash:
  Approximately 120-350 kw
- Latex foam pillow:
  Approximately 120 kw
- Dry Douglas fir Christmas tree:
  Approximately 3000 kw at 20% moisture
- Polyurethane foam (PVC Ticking material)
  Mattress:
  Approximately 2630 kw
- Plywood wardrobe:
  Approximately 2900-6400 kw

[F] 909.9.1 Factors considered. The engineering analysis shall include the characteristics of the fuel, fuel load, effects included by the fire and whether the fire is likely to be steady or unsteady.

❖ This section simply provides more detail on the factors that should be taken under consideration when determining the design fire size. To determine the appropriate fire size, an engineering analysis is necessary that takes into account the following elements: fuel (potential burning rates), fuel load (how much), effects included by the fire (smoke particulate size and density), steady or unsteady (burn steadily or simply peak and dissipate) and likelihood of sprinkler activation (based on height and distance from the fire).

[F] 909.9.2 Design fire fuel. Determination of the design fire shall include consideration of the type of fuel, fuel spacing and configuration.

❖ The design fire size may also be affected by surrounding combustibles, which may have the effect of increasing the fire size. More specifically, there is concern that if sufficient separation is not maintained between combustibles, then a larger design fire is likely. The code does not provide extensive detail on this as such determination is left to the rational analysis undertaken by the design professional. NFPA 92 provides one method in which you determine the critical separation distance, *R*. This is based on fire size and the critical radiant heat flux for nonpiloted ignition. Nonpiloted ignition means the radiated heat from the fire without direct flame contact will ignite adjacent combustibles.

[F] 909.9.3 Heat-release assumptions. The analysis shall make use of best available data from *approved* sources and shall not be based on excessively stringent limitations of combustible material.

❖ This section stresses that data obtained for use in a rational analysis need to come from relevant and appropriate sources. Data can be obtained from groups such as NIST or from Annex B of NFPA 92. Data from fire tests are available and are a good resource for such analysis. As noted earlier, such data are not prevalent (see also Chapter 8, Analysis of Design Fires, from *A Guide to Smoke Control in the 2006 IBC®* and Section 3, Chapter 3-1, of the *SFPE Handbook of Fire Protection Engineering*).

[F] 909.9.4 Sprinkler effectiveness assumptions. A documented engineering analysis shall be provided for conditions that assume fire growth is halted at the time of sprinkler activation.

❖ This section raises a few questions regarding activation of sprinklers and their impact on the fire both in terms of their ability to "control" as well as "extinguish" a fire. The first is concerning an assumption that sprinklers will immediately control the fire as soon as they are activated (i.e., control results in limiting further growth and maintaining the heat release rate at approximately the same fire size as when the sprinklers activated). This assumption may be true in some cases, but for high ceilings, the sprinkler may not activate or may be ineffective. Sprinklers may be ineffective in high spaces, since by the time they are activated the fire is too large to control. Essentially, the fire plume may push away and evaporate the water before it actually reaches the seat of the fire. In addition, the fire may be shielded from sprinkler spray so that insufficient quantities of water reach the fuel. These are common problems with high-piled storage as well as other fires, including retail, and has been shown in actual tests. Also, if the fire becomes too large before the sprinklers are activated, the available water supply and pressure for the system may be compromised. Additionally, based on the layout of the room and the movement of the fire effluents, the wrong sprinklers could be activated, which leads to a larger fire size and depletion of the available water supply and pressure.

Another issue is whether the sprinklers "control" or "extinguish" the fire. Typical sprinklers are assumed only to control fires as opposed to extinguishing them. Sprinklers may be able to extinguish the fire but it should not automatically be assumed. A fire that is controlled will achieve steady state and maintain a certain fire size, which is very different from a fire that is actually extinguished.

Based on these concerns, each scenario needs to be looked at individually to determine whether sprinklers would be effective in halting the growth or extinguishing the fire. More specifically, the evaluation should include droplet size, density and area of coverage and should also be based on actual test results.

[F] 909.10 Equipment. Equipment including, but not limited to, fans, ducts, automatic *dampers* and balance *dampers*, shall be suitable for its intended use, suitable for the probable exposure temperatures that the rational analysis indicates and as *approved* by the fire code official.

❖ Section 909.10 and subsequent sections are primarily related to the reliability of the system components to provide a smoke control system that works according to the design. One of the largest concerns when

INTERNATIONAL CODE COUNCIL®
Copyright © 2015 ICC. ALL RIGHTS RESERVED. Accessed by David Dammon on Jun 21, 2017 12:30:52 PM pursuant to License Agreement with ICC. No further reproduction or distribution authorized. ANY UNAUTHORIZED REPRODUCTION OR DISTRIBUTION IS A VIOLATION OF THE FEDERAL COPYRIGHT ACT AND THE LICENSE AGREEMENT, AND SUBJECT TO CIVIL AND CRIMINAL PENALTIES THEREUNDER.

using smoke control provisions is the overall reliability of the system. Such systems have many different components, such as smoke and fire dampers; fans; ducts and controls associated with such components. The more components a system has, the less reliable it becomes. In fact, one approach in providing a higher level of reliability is utilizing the normal building systems such as the HVAC to provide the smoke control system. Basically, systems used every day are more likely to be working appropriately, since they are essentially being tested daily; however, there are many components that are specific to the smoke control system, such as exhaust fans in an atrium or the smoke control panel.

Also, there is not a generic prescriptive set of requirements as to how all smoke control system elements should operate, since each design may be fairly unique. The specifics on operation of such a system need to be included within the design and construction documents. Most components used in smoke control systems are elements used in many other applications such as HVAC systems; therefore, the basic mechanisms of a fan used in a smoke control system may not be different, although they may be applied differently.

[F] 909.10.1 Exhaust fans. Components of exhaust fans shall be rated and certified by the manufacturer for the probable temperature rise to which the components will be exposed. This temperature rise shall be computed by:

$$T_s = (Q_c/mc) + (T_a) \qquad \textbf{(Equation 9-2)}$$

where:

c = Specific heat of smoke at smoke layer temperature, Btu/lb°F (kJ/kg · K).

m = Exhaust rate, pounds per second (kg/s).

Q_c = Convective heat output of fire, Btu/s (kW).

T_a = Ambient temperature, °F (K).

T_s = Smoke temperature, °F (K).

Exception: Reduced T_s as calculated based on the assurance of adequate dilution air.

❖ Fans used for smoke control systems must be able to tolerate the possible elevated temperatures to which they will be exposed. Again, like many other factors this depends on the specifics of the design fire. Essentially, Equation 9-2 requires the calculation of the potential temperature rise. The exhaust fans must be specifically rated and certified by the manufacturer to be able to handle these rises in temperature. There is an exception that allows reduction of the temperature if it can be shown that adequate temperature reduction will occur. In many cases if the exhaust fans are near the ceiling, the smoke will be much cooler than the value resulting from Equation 9-2 since the smoke may cool considerably by the time it reaches the ceiling. Also, sprinkler activation will assist in cooling the smoke further.

[F] 909.10.2 Ducts. Duct materials and joints shall be capable of withstanding the probable temperatures and pressures to which they are exposed as determined in accordance with Section 909.10.1. Ducts shall be constructed and supported in accordance with the *International Mechanical Code*. Ducts shall be leak tested to 1.5 times the maximum design pressure in accordance with nationally accepted practices. Measured leakage shall not exceed 5 percent of design flow. Results of such testing shall be a part of the documentation procedure. Ducts shall be supported directly from fire-resistance-rated structural elements of the building by substantial, noncombustible supports.

Exception: Flexible connections, for the purpose of vibration isolation, complying with the *International Mechanical Code* and that are constructed of *approved* fire-resistance-rated materials.

❖ The next essential component of a smoke control system is the integrity of the ducts to transport supply and exhaust air. The integrity of ducts is also important for an HVAC system, but is more critical in this case since it is not simply a comfort issue but one of life safety. The key concern with ducts in smoke control systems is that they can withstand elevated temperatures and that there will be minimal leakage. The concern with leakage is the potential of leaking smoke into another smoke zone or not providing the proper amount of supply air to support the system.

More specifically, all ducts need to be leak tested to 1.5 times the maximum static design pressure. The leakage resulting should be no more than 5 percent of the design flow. For example, a duct that has a design flow of 300 cubic feet per minute (cfm) (0.141 m^3/s) would be allowed 15 cfm (0.007 m^3/s) of leakage when exposed to a pressure equal to 1.5 times the design pressure for that duct. The tests should be in accordance with nationally accepted practices. This criterion will often limit ductwork for smoke control systems to lined systems, since the amount of leakage in such systems is much less.

As part of the concern for possible exposure to fire and fire products, the ducts are required to be supported by way of substantial noncombustible supports connected to the fire-resistance-rated structural elements of the building. As noted, the system needs to able to run for 20 minutes starting from the detection of the fire. The exception to this section is really more of an acknowledgement that flexible connections for vibration isolation are acceptable when constructed of approved fire-resistance-rated materials. More specifically, it is often necessary to use such connections for connecting the duct to the fan. These connections cannot necessarily meet the requirements of the main section, but are a minimal part of the ductwork and as long as they perform adequately with regard to fire resistance they are permitted. Note that the term “approved” is used to determine the required fire resistance, therefore, flexibility is provided. The code does not specifically address this

INTERNATIONAL CODE COUNCIL®
Copyright © 2015 ICC. ALL RIGHTS RESERVED. Accessed by David Dammon on Jun 21, 2017 12:30:52 PM pursuant to License Agreement with ICC. No further reproduction or distribution authorized. ANY UNAUTHORIZED REPRODUCTION OR DISTRIBUTION IS A VIOLATION OF THE FEDERAL COPYRIGHT ACT AND THE LICENSE AGREEMENT, AND SUBJECT TO CIVIL AND CRIMINAL PENALTIES THEREUNDER.

determination but perhaps a relationship to the duration or operation and these flexible connections could be made to determine the necessary performance.

[F] 909.10.3 Equipment, inlets and outlets. Equipment shall be located so as to not expose uninvolved portions of the building to an additional fire hazard. Outside air inlets shall be located so as to minimize the potential for introducing smoke or flame into the building. Exhaust outlets shall be so located as to minimize reintroduction of smoke into the building and to limit exposure of the building or adjacent buildings to an additional fire hazard.

❖ The intent of this section is to minimize the likelihood of smoke being reintroduced into the building due to poorly placed outdoor air inlets and exhaust air outlets; therefore, placing one right next to another on the exterior of the building would be inappropriate. In addition, wind and other adverse conditions should be considered when choosing locations for these inlets and outlets. Particular attention should be paid to introducing exhausted smoke into another smoke zone. Also, smoke should be exhausted in a direction that will not introduce it into surrounding buildings or facilities. Within the building itself, the supply air and exhaust outlets should also be strategically located. The exhaust inlets and supply air should be evenly distributed to reduce the likelihood of a high velocity of air that may disrupt the fire plume and also push smoke back into occupied areas. See the commentary to Section 909.8 for discussion on avoiding plugholing.

[F] 909.10.4 Automatic dampers. Automatic *dampers*, regardless of the purpose for which they are installed within the smoke control system, shall be *listed* and conform to the requirements of *approved*, recognized standards.

❖ This section addresses the reliability of any dampers used within a smoke control system. This particular provision requires that the dampers be listed and conform to the appropriate recognized standards. More specifically, Section 717 contains more detailed information on the specific requirements for smoke and fire dampers. Smoke and fire dampers should be listed in accordance with UL 555S and 555, respectively. Also, remember that each smoke control design is unique and the sequence and methods used to activate the dampers may vary from design to design. This information needs to be addressed in the construction documents.

Another factor to take into account, with regard to timing of the system, is the fact that some dampers react more quickly than others, simply due to the particular smoke damper characteristics. Additionally, during the commissioning of the system, the damper is going to be exposed to many repetitions. These repetitions need to be accounted for in the overall reliability of the system.

[F] 909.10.5 Fans. In addition to other requirements, belt-driven fans shall have 1.5 times the number of belts required for the design duty, with the minimum number of belts being two. Fans shall be selected for stable performance based on normal temperature and, where applicable, elevated temperature. Calculations and manufacturer's fan curves shall be part of the documentation procedures. Fans shall be supported and restrained by noncombustible devices in accordance with the requirements of Chapter 16.

Motors driving fans shall not be operated beyond their nameplate horsepower (kilowatts), as determined from measurement of actual current draw, and shall have a minimum service factor of 1.15.

❖ Part of the overall reliability requires that fans used to provide supply air and exhaust capacity will be functioning when necessary; therefore, a safety factor of 1.5 is placed on the required belts for fans. All fans used as part of a smoke control system must provide 1.5 times the number of required belts with a minimum of two belts for all fans.

This section also points out that the fan chosen should fit the specific application. It should be able to withstand the temperature rise as calculated in Section 909.10.1 and generally be able to handle typical exposure conditions, such as location and wind. For instance, propeller fans are highly sensitive to the effects of wind. When located on the windward side of a building, wall-mounted, nonhooded propeller fans are not able to compensate for wind effects. Additionally, even hooded propeller fans located on the leeward side of the building may not adequately compensate for the decrease in pressure caused by wind effects. In general, when designing a system, it should be remembered that field conditions might vary from the calculations; therefore, flexibility should be built into the design that would account for things such as variations in wind conditions.

Finally, this section stresses that fan motors not be operated beyond their rated horsepower.

[F] 909.11 Standby power. Smoke control systems shall be provided with standby power in accordance with Section 2702.

❖ This section references Chapter 27 for the specifics as to what is required for standby power. As with any life safety system, a level of redundancy with regard to power supply is required to enable the functioning of the system during a fire. The primary source is the building's normal power system. The secondary power system is by means of standby power. One of the key elements is that standby power systems are intended to operate within 60 seconds of loss of primary power. It should be noted that the primary difference between standby power and emergency power is that emergency power must operate within 10 seconds of loss of primary power versus 60 seconds.

909.11.1 Equipment room. The standby power source and its transfer switches shall be in a room separate from the normal power transformers and switch gears and ventilated directly to and from the exterior. The room shall be enclosed

INTERNATIONAL CODE COUNCIL®
Copyright © 2015 ICC. ALL RIGHTS RESERVED. Accessed by David Dammon on Jun 21, 2017 12:30:52 PM pursuant to License Agreement with ICC. No further reproduction or distribution authorized. ANY UNAUTHORIZED REPRODUCTION OR DISTRIBUTION IS A VIOLATION OF THE FEDERAL COPYRIGHT ACT AND THE LICENSE AGREEMENT, AND SUBJECT TO CIVIL AND CRIMINAL PENALTIES THEREUNDER.

with not less than 1-hour *fire barriers* constructed in accordance with Section 707 or *horizontal assemblies* constructed in accordance with Section 711, or both.

❖ This section requires isolation from normal building power systems via a 1-hour fire barrier, 1-hour horizontal assembly, or both, depending on the location within the building. This increases the reliability and reduces the likelihood that a single event could remove both power supplies. The intent of the ventilation is focused on the proper function of the standby power source in terms of engine-driven generators having appropriate cooling air and combustion air. The requirement that it be from the outside is related to the protection of such ventilation from the effects of fire.

[F] 909.11.2 Power sources and power surges. Elements of the smoke control system relying on volatile memories or the like shall be supplied with uninterruptable power sources of sufficient duration to span 15-minute primary power interruption. Elements of the smoke control system susceptible to power surges shall be suitably protected by conditioners, suppressors or other *approved* means.

❖ Smoke control systems have many components, sometimes highly sensitive electronics, that are adversely affected by any interruption in or sudden surges of power. Therefore, Section 909.11.1 requires that any components of a smoke control system, such as volatile memories, be supplied with an uninterruptible power system for the first 15 minutes of loss of primary power. Volatile memory components will lose memory upon any loss of power, no matter how short the time period. Once the 15 minutes elapses, these elements can be transitioned to the already operating standby power supply.

With regard to components sensitive to power surges, they need to be provided with surge protection in the form of conditioners, suppressors or other approved means.

[F] 909.12 Detection and control systems. Fire detection systems providing control input or output signals to mechanical smoke control systems or elements thereof shall comply with the requirements of Section 907. Such systems shall be equipped with a control unit complying with UL 864 and *listed* as smoke control equipment.

❖ This section is focused on proper monitoring of the fire detection systems that activate the smoke control system through compliance with Section 907 and UL 864. This requires a specific listing of the fire alarm control unit as smoke control equipment. UL 864 has a subcategory (UUKL) specific to fire alarm control panels for smoke control system applications.

909.12.1 Verification. Control systems for mechanical smoke control systems shall include provisions for verification. Verification shall include positive confirmation of actuation, testing, manual override and the presence of power downstream of all disconnects. A preprogrammed weekly test sequence shall report abnormal conditions audibly, visually and by printed report. The preprogrammed weekly test shall operate all devices, equipment and components used for smoke control.

Exception: Where verification of individual components tested through the preprogrammed weekly testing sequence will interfere with, and produce unwanted effects to, normal building operation, such individual components are permitted to be bypassed from the preprogrammed weekly testing, where *approved* by the building official and in accordance with both of the following:

1. Where the operation of components is bypassed from the preprogrammed weekly test, presence of power downstream of all disconnects shall be verified weekly by a listed control unit.
2. Testing of all components bypassed from the preprogrammed weekly test shall be in accordance with Section 909.20.6 of the *International Fire Code*.

❖ This section addresses the function of the mechanical elements of the smoke control system once the system is activated. In particular, there is a focus on verification of activities. Verification would include the following two aspects:

1. The system is able to verify actuations, testing, manual overrides and the presence of power downstream. This would require information reported back to the smoke control panel, which can be accomplished via the weekly test sequence or through full electronic monitoring of the system.
2. Conduct a preprogrammed weekly test that simulates an actual (smoke) event to test the components of the system. These components would include elements such as smoke dampers, fans and doors. Abnormal conditions need to be reported in three ways:
   a. Audibly;
   b. Visually; and
   c. Printed report.

It should be noted that electrical monitoring of the control components is not required (supervision). Such supervision verifies integrity of the conductors from a fire alarm control unit to the control system input. The weekly test is considered sufficient verification of system performance and is often termed end-to-end verification. In other words, the control system input provides the expected results. Verification can be accomplished through any sensor that is calibrated to distinguish between the difference between proper operation and a fault condition. For fans, proper operation means that the fan is moving air within the intent of its design. Fault conditions include power failure, broken fan belts, adverse wind effects, a locked rotor condition and/or filters or large ducts that are blocked causing significantly reduced airflow. In addition to differential pressure transmitters

INTERNATIONAL CODE COUNCIL®
Copyright © 2015 ICC. ALL RIGHTS RESERVED. Accessed by David Dammon on Jun 21, 2017 12:30:52 PM pursuant to License Agreement with ICC. No further reproduction or distribution authorized. ANY UNAUTHORIZED REPRODUCTION OR DISTRIBUTION IS A VIOLATION OF THE FEDERAL COPYRIGHT ACT AND THE LICENSE AGREEMENT, AND SUBJECT TO CIVIL AND CRIMINAL PENALTIES THEREUNDER.

and sail switches, this can be accomplished by state-of-the-art current sensors. More discussion on verification for elements such as ducts and fire doors is discussed in Chapter 9 of *A Guide to Smoke Control in the 2006 IBC*®.

Also, the fact that a smoke control system is nondedicated (integrated with an HVAC system) does not mean that it is automatically being tested on a daily basis. It is cautioned that simply depending on occupant discomfort, for example, is sometimes an insufficient indicator of a fully functioning smoke control system. There may be various modes in which the HVAC system could operate that may not exercise the smoke control features and the sequence in which the system should operate. An example is an air-conditioning system operating only in full recirculating mode versus exhaust mode. This failure will likely not affect occupants and will not exercise the exhaust function. Plus, doors, which may be part of the smoke barrier, may not need to be closed in normal building operations but would need to be closed during smoke control system operation. This is why this section does not necessarily differentiate between dedicated and nondedicated smoke control systems and requires the system components to be tested.

It is important to note that this weekly test sequence is not an actual smoke event and is only intended to activate the system to ensure that the components are working correctly.

The exception addresses the impracticality of requiring a weekly test for many buildings. For many systems, the weekly test requires the introduction of untreated air into the smoke zone. This can be impractical in areas with cold or hot climates and for buildings that require close control of temperature and humidity, such as art museums and similar facilities. The introduction of the untreated air can also result in wasting energy to reheat, re-cool, humidify, or dehumidify the smoke control zone.

The intent of the exception is to provide means to verify that the required systems will be available when needed. The code requires control units to comply with UL 864, thus all components of the control system will be supervised. The exception includes requirements for verification of the power downstream of all disconnects, such as power breakers, power disconnects, automatic transfer switches, motor starters, and motor controls. This will provide reasonable assurance that power will be available for all smoke control components, such as fans, dampers, doors, and windows. The exception also adds the semi-annual requirement for a complete system test by reference to the IFC Section 909.20.6. This allows the building owner to schedule complete system testing on days that will reduce the impact to the building and energy needs. The combination of additional supervision and additional testing provides a reasonable alternative to weekly testing.

[F] 909.12.2 Wiring. In addition to meeting requirements of NFPA 70, all wiring, regardless of voltage, shall be fully enclosed within continuous raceways.

❖ Wiring is required to be placed within continuous raceways, which provides an additional level of reliability for the system. The definition of the term "raceway" in NFPA 70 lists several acceptable types of complying raceway that can be used; however, manufactured cable assemblies such as metal-clad cable (Type MC) or armored cable (Type AC) are not included.

[F] 909.12.3 Activation. Smoke control systems shall be activated in accordance with this section.

❖ The activation of a smoke control system is dependent on when such a system is required. Mechanical smoke control systems, which could include pressurization, airflow or exhaust methods, require an automatic activation mechanism. When using a passive system which depends on compartmentation, spot-type detectors are acceptable for the release of door closers and similar openings. With more complex mechanical systems, such activation needs to go beyond single-station detectors and be part of an automatic coordinated system.

[F] 909.12.3.1 Pressurization, airflow or exhaust method. Mechanical smoke control systems using the pressurization, airflow or exhaust method shall have completely automatic control.

❖ Automatic activation of such systems is especially critical as tenability is much more difficult to achieve if a delay occurred waiting for manual activation of the system. See Sections 909.6 for the pressurization method, 909.7 for the airflow design method and 909.8 for the exhaust method.

[F] 909.12.3.2 Passive method. Passive smoke control systems actuated by *approved* spot-type detectors *listed* for releasing service shall be permitted.

❖ This section recognizes that a passive system does not address smoke containment through mechanical means; therefore, it does not need to be "automatically activated" except in cases where smoke barriers have openings. These openings would be required to have smoke detectors to close openings where required by the design. Although spot-type detectors are technically automatic, they are not part of a more coordinated system of activation as needed for mechanical smoke control systems. Such detectors are simply standalone devices that fail in the fail-safe position. In other words, if the power were lost, a door on a magnetic hold would simply close.

INTERNATIONAL CODE COUNCIL®
Copyright © 2015 ICC. ALL RIGHTS RESERVED. Accessed by David Dammon on Jun 21, 2017 12:30:52 PM pursuant to License Agreement with ICC. No further reproduction or distribution authorized. ANY UNAUTHORIZED REPRODUCTION OR DISTRIBUTION IS A VIOLATION OF THE FEDERAL COPYRIGHT ACT AND THE LICENSE AGREEMENT, AND SUBJECT TO CIVIL AND CRIMINAL PENALTIES THEREUNDER.

[F] 909.12.4 Automatic control. Where completely automatic control is required or used, the automatic-control sequences shall be initiated from an appropriately zoned *automatic sprinkler system* complying with Section 903.3.1.1, manual controls that are readily accessible to the fire department and any smoke detectors required by engineering analysis.

❖ When automatic activation is required, it must be accomplished by a properly zoned automatic sprinkler system and, if the engineering analysis requires them, smoke detectors. Manual control for the fire department needs to be provided. An important point with this particular requirement is that smoke control systems are engineered systems and a prescribed smoke detection system may not fit the needs of the specific design. Other types of detectors, such as beam detectors (within an atrium), may be used and could be more useful and more practical from a maintenance standpoint. Also, it may not be practical or appropriate for the building's fire alarm system to activate such systems, as it may alter the effectiveness of the system by pulling smoke through the building versus removing or containing the smoke. For example, a building with an atrium may have several floors below the space. If a fire occurs in one of the floors not associated with the atrium, the atrium smoke control system could possibly pull smoke throughout the building if the detection is zoned incorrectly.

[F] 909.13 Control air tubing. Control air tubing shall be of sufficient size to meet the required response times. Tubing shall be flushed clean and dry prior to final connections and shall be adequately supported and protected from damage. Tubing passing through concrete or masonry shall be sleeved and protected from abrasion and electrolytic action.

❖ Control tubing is a method that uses pneumatics to operate components such as the opening and closing of dampers. Because of the sophistication of electronic systems today, control tubing is becoming less common.

These particular requirements provide the criteria for properly designing and installing control tubing. Essentially, it is up to the design professional to determine the size requirements and to properly design appropriate supports. This information needs to be detailed within the construction documents. Additionally, because of the effect of moisture and other contaminants on control tubing, it must be flushed clean then dried before installation.

[F] 909.13.1 Materials. Control-air tubing shall be hard-drawn copper, Type L, ACR in accordance with ASTM B42, ASTM B43, ASTM B68, ASTM B88, ASTM B251 and ASTM B280. Fittings shall be wrought copper or brass, solder type in accordance with ASME B16.18 or ASME B16.22. Changes in direction shall be made with appropriate tool bends. Brass compression-type fittings shall be used at final connection to devices; other joints shall be brazed using a BCuP-5 brazing alloy with solidus above 1,100°F (593°C) and liquids below 1,500°F (816°C). Brazing flux shall be used on copper-to-brass joints only.

Exception: Nonmetallic tubing used within control panels and at the final connection to devices provided all of the following conditions are met:

1. Tubing shall comply with the requirements of Section 602.2.1.3 of the *International Mechanical Code*.
2. Tubing and connected devices shall be completely enclosed within a galvanized or paint-grade steel enclosure having a minimum thickness of 0.0296 inch (0.7534 mm) (No. 22 gage). Entry to the enclosure shall be by copper tubing with a protective grommet of neoprene or Teflon or by suitable brass compression to male barbed adapter.
3. Tubing shall be identified by appropriately documented coding.
4. Tubing shall be neatly tied and supported within the enclosure.Tubing bridging cabinets and doors or moveable devices shall be of sufficient length to avoid tension and excessive stress. Tubing shall be protected against abrasion. Tubing serving devices on doors shall be fastened along hinges.

❖ This section addresses the materials allowed for control air tubing along with approved methods of connection. All of this information needs to be documented, as it will be subject to review by the special inspector.

[F] 909.13.2 Isolation from other functions. Control tubing serving other than smoke control functions shall be isolated by automatic isolation valves or shall be an independent system.

❖ This section requires separation of control tubing used for other functions through the use of isolation valves or a completely separate system. This is caused by the difference in requirements for control tubing used in a smoke control system versus other building systems. The isolation of the control air tubing for a smoke control system needs to be specifically noted on the construction documents.

[F] 909.13.3 Testing. Control air tubing shall be tested at three times the operating pressure for not less than 30 minutes without any noticeable loss in gauge pressure prior to final connection to devices.

❖ As part of the acceptance testing of the smoke control system, the control air tubing will be pressure tested three times the operating pressure for 30 minutes or more. The performance criterion as to whether the control tubing is considered a failure is when there is any noticeable loss in gauge pressure prior to final connection of devices during the 30-minute duration test.

INTERNATIONAL CODE COUNCIL®
Copyright © 2015 ICC. ALL RIGHTS RESERVED. Accessed by David Dammon on Jun 21, 2017 12:30:52 PM pursuant to License Agreement with ICC. No further reproduction or distribution authorized. ANY UNAUTHORIZED REPRODUCTION OR DISTRIBUTION IS A VIOLATION OF THE FEDERAL COPYRIGHT ACT AND THE LICENSE AGREEMENT, AND SUBJECT TO CIVIL AND CRIMINAL PENALTIES THEREUNDER.

[F] 909.14 Marking and identification. The detection and control systems shall be clearly marked at all junctions, accesses and terminations.

❖ This section requires that all portions of the fire detection system that activate the smoke control system be marked and identified appropriately. This includes all applicable fire alarm-initiating devices, the respective junction boxes, all data-gathering panels and fire alarm control panels. Additionally, all components of the smoke control system, which are not considered a fire detection system, are required to be properly identified and marked. This would include all applicable junction boxes, control tubing, temperature control modules, relays, damper sensors, automatic door sensors and air movement sensors.

[F] 909.15 Control diagrams. Identical control diagrams showing all devices in the system and identifying their location and function shall be maintained current and kept on file with the fire code official, the fire department and in the fire command center in a format and manner *approved* by the fire chief.

❖ The purpose of control diagrams is to provide consistent information on the system in several key locations, including the building department, the fire department and the fire command center. If a fire command center is not required or provided, the diagrams need to be located such that they can be readily accessed during an emergency. Some possible locations may be the security office, the building manager's office or, if possible, within the smoke control panel. This information is intended to assist in the use and operation of the smoke control system. The format of the control diagram is as approved by the fire chief. This is necessary since the fire department is the agency that will be using such a system during a fire and when the system is tested in the future. The more clearly the information is communicated, the more effective the smoke control system will be.

It should be noted that the fire department may want all smoke control systems within a jurisdiction to follow a particular protocol for control diagrams. Generally, the control diagrams should indicate the required reaction of the system in all scenarios. The status or position of every fan and damper in every scenario must be clearly identified.

[F] 909.16 Fire fighter's smoke control panel. A fire fighter's smoke control panel for fire department emergency response purposes only shall be provided and shall include manual control or override of automatic control for mechanical smoke control systems. The panel shall be located in a fire command center complying with Section 911 in high-rise buildings or buildings with smoke-protected assembly seating. In all other buildings, the fire fighter's smoke control panel shall be installed in an *approved* location adjacent to the fire alarm control panel. The fire fighter's smoke control panel shall comply with Sections 909.16.1 through 909.16.3.

❖ One of the elements that makes a smoke control system effective is that its activity is successfully communicated to the fire department and the fire department is able to manually operate the system. The following sections provide requirements for a control panel specifically for smoke control systems. This panel is required to be located within a fire command center when it is located in a high-rise building or there is smoke-protected seating. Section 403.4.6 would require a fire command center for high-rise buildings. Smoke-protected seating does not require a fire command center in Chapter 10 but this provision would ensure that one exists and contains the smoke control panel. Facilities with smoke-protected seating tend to be larger facilities that, at the very least, would already have a central security center if not a fire command center as required by the jurisdiction. All other locations would only need to provide the panel in an approved location as long as it is located with the fire alarm panel. The specific location will depend on the needs of the fire department in that jurisdiction. The reason not all fire-fighter smoke control panels need to be located in a fire command center is that many smoke control systems are located in a building containing an atrium that may only be three stories in height. A 200-square-foot (19 m^2) fire command center would be excessive for such buildings. There are two components that include the requirements for the display and for the controls. This control panel will provide an ability to override any other controls whether manual or automatic within the building as they relate to the smoke control system.

Note that the publication *A Guide to Smoke Control in the 2006 IBC®* goes into more detail about the fire fighter smoke control panel requirements.

[F] 909.16.1 Smoke control systems. Fans within the building shall be shown on the fire fighter's control panel. A clear indication of the direction of airflow and the relationship of components shall be displayed. Status indicators shall be provided for all smoke control equipment, annunciated by fan and zone, and by pilot-lamp-type indicators as follows:

1. Fans, *dampers* and other operating equipment in their normal status—WHITE.
2. Fans, *dampers* and other operating equipment in their off or closed status—RED.
3. Fans, *dampers* and other operating equipment in their on or open status—GREEN.
4. Fans, *dampers* and other operating equipment in a fault status—YELLOW/AMBER.

❖ This section denotes what should be displayed on the control panel. The display is required to include all fans, an indication of the direction of airflow and the relationship of the components. Also, status lights are required, and this section sets out specific standardized colors to indicate normal status, closed status, open status and fault status. A standardized approach increases the likelihood that the fire department will be able to quickly become familiar with a system. Since the fire department has the ability to

INTERNATIONAL CODE COUNCIL®
Copyright © 2015 ICC. ALL RIGHTS RESERVED. Accessed by David Dammon on Jun 21, 2017 12:30:52 PM pursuant to License Agreement with ICC. No further reproduction or distribution authorized. ANY UNAUTHORIZED REPRODUCTION OR DISTRIBUTION IS A VIOLATION OF THE FEDERAL COPYRIGHT ACT AND THE LICENSE AGREEMENT, AND SUBJECT TO CIVIL AND CRIMINAL PENALTIES THEREUNDER.

override the automatic functions of the system, this information is critical.

[F] 909.16.2 Smoke control panel. The fire fighter's control panel shall provide control capability over the complete smoke control system equipment within the building as follows:

1. ON-AUTO-OFF control over each individual piece of operating smoke control equipment that can also be controlled from other sources within the building. This includes *stairway* pressurization fans; smoke exhaust fans; supply, return and exhaust fans; elevator shaft fans and other operating equipment used or intended for smoke control purposes.
2. OPEN-AUTO-CLOSE control over individual *dampers* relating to smoke control and that are also controlled from other sources within the building.
3. ON-OFF or OPEN-CLOSE control over smoke control and other critical equipment associated with a fire or smoke emergency and that can only be controlled from the fire fighter's control panel.

Exceptions:

1. Complex systems, where *approved*, where the controls and indicators are combined to control and indicate all elements of a single smoke zone as a unit.
2. Complex systems, where *approved*, where the control is accomplished by computer interface using *approved*, plain English commands.

❖ This section sets the requirements as to which controls need to be provided for the fire department on the control panel.

There are two aspects to the controls. The controls will include on-auto-off and open-auto-close settings or will be strictly on-off or open-close. If the system or component can be set on automatic (auto), it can be controlled from other locations beyond the fire command center. This would include an automatic smoke detection system or by manual activation. If a control only contains on-off or open-close settings, the only way the system component can be controlled is in the fire command center.

It should be noted that components such as fans are usually associated with on-off-type controls, whereas components such as dampers are associated with open-close-type controls.

[F] 909.16.3 Control action and priorities. The fire-fighter's control panel actions shall be as follows:

1. ON-OFF and OPEN-CLOSE control actions shall have the highest priority of any control point within the building. Once issued from the fire fighter's control panel, automatic or manual control from any other control point within the building shall not contradict the control action. Where automatic means are provided to interrupt normal, nonemergency equipment operation or produce a specific result to safeguard the building or equipment including, but not limited to, duct freezestats, duct smoke detectors, high-temperature cutouts, temperature-actuated linkage and similar devices, such means shall be capable of being overridden by the fire fighter's control panel. The last control action as indicated by each fire fighter's control panel switch position shall prevail. Control actions shall not require the smoke control system to assume more than one configuration at any one time.

   Exception: Power disconnects required by NFPA 70.
2. Only the AUTO position of each three-position fire-fighter's control panel switch shall allow automatic or manual control action from other control points within the building. The AUTO position shall be the NORMAL, nonemergency, building control position. Where a fire fighter's control panel is in the AUTO position, the actual status of the device (on, off, open, closed) shall continue to be indicated by the status indicator described in Section 909.16.1. Where directed by an automatic signal to assume an emergency condition, the NORMAL position shall become the emergency condition for that device or group of devices within the zone. Control actions shall not require the smoke control system to assume more than one configuration at any one time.

❖ This section clarifies that when a component of the system is placed in an on-off or open-close configuration, no other control point in the building, whether automatic or manual, can override the action established in the fire command center. If a system component is configured in auto mode, it can be controlled from locations within the building beyond the fire command center. Some controls are specifically designed to only allow an action from the fire command center.

[F] 909.17 System response time. Smoke-control system activation shall be initiated immediately after receipt of an appropriate automatic or manual activation command. Smoke control systems shall activate individual components (such as *dampers* and fans) in the sequence necessary to prevent physical damage to the fans, *dampers*, ducts and other equipment. For purposes of smoke control, the fire fighter's control panel response time shall be the same for automatic or manual smoke control action initiated from any other building control point. The total response time, including that necessary for detection, shutdown of operating equipment and smoke control system startup, shall allow for full operational mode to be achieved before the conditions in the space exceed the design smoke condition. The system response time for each component and their sequential relationships shall be detailed in the required rational analysis and verification of their installed condition reported in the required final report.

❖ This particular section provides the criteria as to when the smoke control system is required to begin operation. Whether or not the activation is manual or automatic, these criteria clarify that the system be ini-

INTERNATIONAL CODE COUNCIL®
Copyright © 2015 ICC. ALL RIGHTS RESERVED. Accessed by David Dammon on Jun 21, 2017 12:30:52 PM pursuant to License Agreement with ICC. No further reproduction or distribution authorized. ANY UNAUTHORIZED REPRODUCTION OR DISTRIBUTION IS A VIOLATION OF THE FEDERAL COPYRIGHT ACT AND THE LICENSE AGREEMENT, AND SUBJECT TO CIVIL AND CRIMINAL PENALTIES THEREUNDER.

tiated immediately. Also, it requires that components activate in a sequence that will not potentially damage the fans, dampers, ducts and other equipment. Unrealistic timing of the system has the potential of creating an unsuccessful system. Delays in the system can be seen in slow dampers, fans that ramp up or down, systems that poll slowly and intentional built-in delays. These factors can add significantly to the reaction time of the system and may hamper achieving the design goals.

The key element is that the system be fully operational before the smoke conditions exceed the design parameters. The design should include these possible delays when analyzing the smoke layer interface location. The sequence of events needs to be justified within the design analysis and described clearly in the construction documents.

[F] 909.18 Acceptance testing. Devices, equipment, components and sequences shall be individually tested. These tests, in addition to those required by other provisions of this code, shall consist of determination of function, sequence and, where applicable, capacity of their installed condition.

❖ In order to achieve a certain level of performance, the smoke control system needs to be thoroughly tested. Section 909.18 requires that all devices, equipment components and sequences be individually tested.

[F] 909.18.1 Detection devices. Smoke or fire detectors that are a part of a smoke control system shall be tested in accordance with Chapter 9 in their installed condition. Where applicable, this testing shall include verification of airflow in both minimum and maximum conditions.

❖ Detection devices are required to be tested in accordance with the fire protection requirements found in Chapter 9. Also, since such detectors may be subject to higher air velocities than typical detectors, their operation needs to be verified in the minimum and maximum anticipated airflow conditions.

[F] 909.18.2 Ducts. Ducts that are part of a smoke control system shall be traversed using generally accepted practices to determine actual air quantities.

❖ This section requires ducts that are part of the smoke control system to be tested to show that the proper amount of air is flowing. It should be noted that Section 909.10.2 requires that the ducts be leak tested to 1.5 times the maximum design pressure. Such leakage is not allowed to exceed 5 percent of the design flow.

[F] 909.18.3 Dampers. *Dampers* shall be tested for function in their installed condition.

❖ This section notes that all dampers need to be inspected to meet the function for which they are installed. For instance, a damper that is to be open when the system is in smoke control mode should be verified to be open when testing the system. Also, a damper may have a specific timing associated with its operation that would need to be verified through testing.

[F] 909.18.4 Inlets and outlets. Inlets and outlets shall be read using generally accepted practices to determine air quantities.

❖ Similar to ducts, the appropriate amount of air that is entering or exiting the inlets and outlets, respectively, must be checked.

[F] 909.18.5 Fans. Fans shall be examined for correct rotation. Measurements of voltage, amperage, revolutions per minute (rpm) and belt tension shall be made.

❖ This section requires the testing of fans for the following: correct rotation, voltage, amperage, revolutions per minute and belt tension. These features are key to having the system run as designed.

A common problem with fans is that they are often installed in the reverse direction. Also, to verify the reliability of the fans, elements such as the appropriate voltage and belt tension need to be tested.

[F] 909.18.6 Smoke barriers. Measurements using inclined manometers or other *approved* calibrated measuring devices shall be made of the pressure differences across *smoke barriers*. Such measurements shall be conducted for each possible smoke control condition.

❖ As discussed in Section 909.5.2, the testing of pressure differences across smoke barriers needs to be measured in the smoke control mode. As noted in Section 909.18.6, such testing is to be performed for every possible smoke control condition, and the measurements will be taken using an inclined manometer or other approved methods. Electronic devices are also available. Qualified individuals must calibrate these types of devices. Additionally, before using an alternative method of testing, the building official needs to approve such a method.

[F] 909.18.7 Controls. Each smoke zone equipped with an automatic-initiation device shall be put into operation by the actuation of one such device. Each additional device within the zone shall be verified to cause the same sequence without requiring the operation of fan motors in order to prevent damage. Control sequences shall be verified throughout the system, including verification of override from the fire-fighter's control panel and simulation of standby power conditions.

❖ This section requires the overall testing of the system. More specifically, each zone needs to individually initiate the smoke control system by the activation of an automatic initiation device. Once that has occurred, all other devices within each zone need to be verified that they will activate the system, but to avoid damage, the fans do not need to be activated.

In addition to determining that all of the appropriate devices initiate the system, it must also be verified that all of the controls on the fire-fighter control panel initiate the appropriate aspects of the smoke control system, including the override capability.

INTERNATIONAL CODE COUNCIL®
Copyright © 2015 ICC. ALL RIGHTS RESERVED. Accessed by David Dammon on Jun 21, 2017 12:30:52 PM pursuant to License Agreement with ICC. No further reproduction or distribution authorized. ANY UNAUTHORIZED REPRODUCTION OR DISTRIBUTION IS A VIOLATION OF THE FEDERAL COPYRIGHT ACT AND THE LICENSE AGREEMENT, AND SUBJECT TO CIVIL AND CRIMINAL PENALTIES THEREUNDER.

Finally, the initiation and availability of the standby power system need to be verified.

[F] 909.18.8 Testing for smoke control. Smoke control systems shall be tested by a special inspector in accordance with Section 1705.18.

❖ Smoke control systems require testing by a special inspector since they are unique and complex life safety systems. Section 1705.18 provides the same requirements for testing as presented in Sections 909.18.8.1 and 909.18.8.2.

[F] 909.18.8.1 Scope of testing. Testing shall be conducted in accordance with the following:

1. During erection of ductwork and prior to concealment for the purposes of leakage testing and recording of device location.
2. Prior to occupancy and after sufficient completion for the purposes of pressure-difference testing, flow measurements, and detection and control verification.

❖ Special inspections need to occur at two different stages during construction to facilitate the necessary inspections. The first round of testing occurs before concealment of the ductwork or fire protection elements. The special inspector needs to verify the leakage in accordance with Section 909.10.2. Additionally, the location of all fire protection devices needs to be verified and documented at this time.

The second round of testing occurs just prior to occupancy. The testing includes the verification of pressure differences across smoke barriers, as required in Sections 909.5.2 and 909.18.6, the verification of appropriate volumes of airflow as noted in the design, and finally the verification of the appropriate operation of the detection and control mechanisms as required in Sections 909.18.1 and 909.18.7. These tests need to occur just prior to occupancy, since the test results will more clearly represent actual conditions. This also makes a strong design and quality assurance during construction critical, as it is very costly and difficult in most cases to make changes at this stage. Note that the test does not actually place smoke into the space demonstrate or the smoke layer interface location. Instead, the testing is focused on all of the elements of the design such as airflow and duct closure as prescribed by the specific design.

[F] 909.18.8.2 Qualifications. *Approved* agencies for smoke control testing shall have expertise in fire protection engineering, mechanical engineering and certification as air balancers.

❖ As noted in Section 909.3, special inspections are required for smoke control systems. This means a certain level of qualification that would include the need for expertise in fire protection engineering, mechanical engineering and certification as air balancers.

[F] 909.18.8.3 Reports. A complete report of testing shall be prepared by the *approved* agency. The report shall include identification of all devices by manufacturer, nameplate data, design values, measured values and identification tag or *mark*. The report shall be reviewed by the responsible *registered design professional* and, when satisfied that the design intent has been achieved, the responsible *registered design professional* shall sign, seal and date the report.

❖ Once the testing by the special inspector is complete, documentation of the activity is required. This documentation is to be prepared in the form of a report that identifies all devices by manufacturer, nameplate data, design values, measured values and identification or mark.

[F] 909.18.8.3.1 Report filing. A copy of the final report shall be filed with the fire code official and an identical copy shall be maintained in an *approved* location at the building.

❖ The report needs to be reviewed, approved and then signed, sealed and dated. This report is to be provided to the building official and a copy is also to remain in the building in an approved location. When a fire command center is required, this is the best location for such documents. Otherwise, a location such as the security office or building manager's office might be appropriate.

[F] 909.18.9 Identification and documentation. Charts, drawings and other documents identifying and locating each component of the smoke control system, and describing its proper function and maintenance requirements, shall be maintained on file at the building as an attachment to the report required by Section 909.18.8.3. Devices shall have an *approved* identifying tag or *mark* on them consistent with the other required documentation and shall be dated indicating the last time they were successfully tested and by whom.

❖ Additional documentation that needs to be maintained includes charts, drawings and other related documentation that assists in the identification of each aspect of the smoke control system. This documentation is where information, such as the last time a device or component was successfully tested and by whom, is recorded. This will serve as the main documentation for the system. Again, the fire command center, if required, is the most appropriate location for such information (see commentary, Section 909.18.8.3.1).

[F] 909.19 System acceptance. Buildings, or portions thereof, required by this code to comply with this section shall not be issued a certificate of occupancy until such time that the fire code official determines that the provisions of this section have been fully complied with and that the fire department has received satisfactory instruction on the operation, both automatic and manual, of the system and a written maintenance program complying with the requirements of Section 909.20.1 of the *International Fire Code* has been submitted and approved by the fire code official.

Exception: In buildings of phased construction, a temporary certificate of occupancy, as *approved* by the fire code official, shall be allowed provided that those portions of the building to be occupied meet the requirements of this section and that the remainder does not pose a significant

INTERNATIONAL CODE COUNCIL®
Copyright © 2015 ICC. ALL RIGHTS RESERVED. Accessed by David Dammon on Jun 21, 2017 12:30:52 PM pursuant to License Agreement with ICC. No further reproduction or distribution authorized. ANY UNAUTHORIZED REPRODUCTION OR DISTRIBUTION IS A VIOLATION OF THE FEDERAL COPYRIGHT ACT AND THE LICENSE AGREEMENT, AND SUBJECT TO CIVIL AND CRIMINAL PENALTIES THEREUNDER.

hazard to the safety of the proposed occupants or adjacent buildings.

❖ This section stipulates that the certificate of occupancy cannot be issued unless the smoke control system has been accepted. It is essential that the system be inspected and approved since it is a life safety system. There is an exception for buildings that are constructed in phases where a temporary certificate of occupancy is allowed. For example, a building where the portion requiring smoke control is not yet occupied so egress concerns through that space are not relevant. This space needs to be separated by smoke barriers (different smoke zone). The IFC also requires a maintenance program for smoke control systems since the long-term success of such systems depends heavily on proper maintenance in addition to rigorous acceptance testing. The IBC simply provides a reference to that section of the IFC.

909.20 Smokeproof enclosures. Where required by Section 1023.11, a smokeproof enclosure shall be constructed in accordance with this section. A smokeproof enclosure shall consist of an *interior exit stairway* or *ramp* that is enclosed in accordance with the applicable provisions of Section 1023 and an open exterior balcony or ventilated vestibule meeting the requirements of this section. Where access to the roof is required by the *International Fire Code*, such access shall be from the smokeproof enclosure where a smokeproof enclosure is required.

❖ In a building that serves stories where the floor surface is located more than 75 feet (22 860 mm) above the level of fire department access or more than 30 feet (9144 mm) below the level of exit discharge stairways, either a smokeproof enclosure or a pressurized stairway is required.

A smokeproof enclosure essentially takes advantage of fire-resistance-rated construction surrounding the interior exit stairway shaft and a buffer zone created by an outside balcony or ventilated vestibule to avoid the accumulation of smoke within the interior exit stairway. The premise is that if access to the smokeproof enclosure provides a sufficient buffer to the effects of smoke via ventilation or simply being located outside, the smoke will not migrate into the interior exit stairway.

The vestibule as noted is required to be ventilated. There are two alternatives provided in Section 909.20. They include natural ventilation, covered in Section 909.20.3, and mechanical ventilation, covered in Section 909.20.4. It should be noted that a smokeproof enclosure is not considered a pressurized stairway. The method of pressurizing stairways is recognized as an alternative to smokeproof enclosures in Section 909.20.5, but it is not required.

909.20.1 Access. Access to the *stairway* or *ramp* shall be by way of a vestibule or an open exterior balcony. The minimum dimension of the vestibule shall be not less than the required width of the *corridor* leading to the vestibule but shall not have a width of less than 44 inches (1118 mm) and shall not have a length of less than 72 inches (1829 mm) in the direction of egress travel.

❖ As noted, access to the stairway in a smokeproof enclosure is via an exterior balcony or a ventilated vestibule. This section provides the minimum dimensions for access to the smokeproof enclosure through a vestibule and then travel space to the entrance into the stairway. If a vestibule is chosen, the minimum width is established as the larger of 44 inches (1118 mm) or the width of the corridor. Additionally, when entering a vestibule there needs to be at least 72 inches (1829 mm) in the direction of travel (see Commentary Figure 909.20.1). It should be noted that the

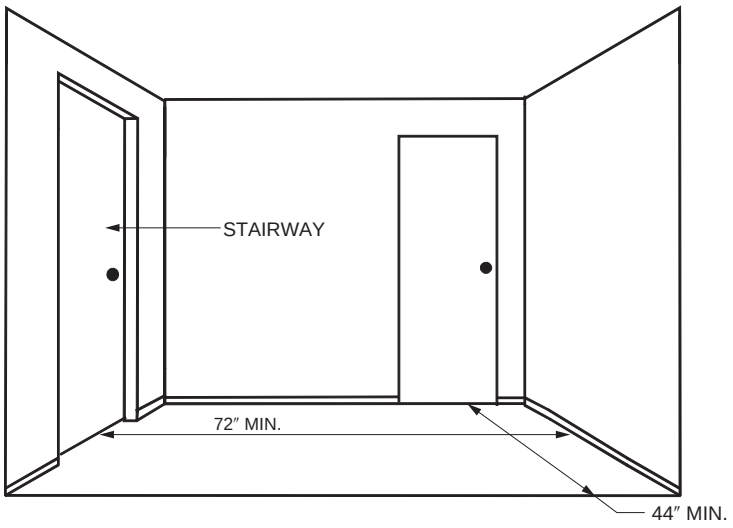

For SI: 1 inch = 25.4 mm.

Figure 909.20.1
DIMENSIONAL REQUIREMENTS FOR SMOKEPROOF ENCLOSURE VESTIBULE

INTERNATIONAL CODE COUNCIL®
Copyright © 2015 ICC. ALL RIGHTS RESERVED. Accessed by David Dammon on Jun 21, 2017 12:30:52 PM pursuant to License Agreement with ICC. No further reproduction or distribution authorized. ANY UNAUTHORIZED REPRODUCTION OR DISTRIBUTION IS A VIOLATION OF THE FEDERAL COPYRIGHT ACT AND THE LICENSE AGREEMENT, AND SUBJECT TO CIVIL AND CRIMINAL PENALTIES THEREUNDER.

pressurized stairway alternative would not require a vestibule.

909.20.2 Construction. The smokeproof enclosure shall be separated from the remainder of the building by not less than 2-hour *fire barriers* constructed in accordance with Section 707 or *horizontal assemblies* constructed in accordance with Section 711, or both. Openings are not permitted other than the required *means of egress* doors. The vestibule shall be separated from the *stairway* or *ramp* by not less than 2-hour *fire barriers* constructed in accordance with Section 707 or *horizontal assemblies* constructed in accordance with Section 711, or both. The open exterior balcony shall be constructed in accordance with the *fire-resistance rating* requirements for floor assemblies.

❖ This section sets the basic construction requirements for the stairway and the associated vestibule or exterior balcony. Essentially, a 2-hour fire-resistance-rated fire barrier or horizontal assembly is required between the enclosure and the rest of the building.

Additionally, vestibules need to be separated from the stairway by a 2-hour fire barrier or horizontal assembly. The exterior balcony, if used, would only be required to comply with the fire-rating requirements for floor construction. The opening protection for doors into the stairway from the vestibule are only required to be fire protection rated for 20 minutes (see Sections 909.20.3.2 and 909.20.4.1).

909.20.2.1 Door closers. Doors in a smokeproof enclosure shall be self- or automatic closing by actuation of a smoke detector in accordance with Section 716.5.9.3 and shall be installed at the floor-side entrance to the smokeproof enclosure. The actuation of the smoke detector on any door shall activate the closing devices on all doors in the smokeproof enclosure at all levels. Smoke detectors shall be installed in accordance with Section 907.3.

❖ In order to maintain the separation between the smokeproof enclosure and the rest of the building, the doors need to be self-closing or automatic closing through the actuation of a smoke detector. Also, when a smoke detector is activated on any floor, doors at all levels are required to close for that particular smokeproof enclosure.

909.20.3 Natural ventilation alternative. The provisions of Sections 909.20.3.1 through 909.20.3.3 shall apply to ventilation of smokeproof enclosures by natural means.

❖ Smoke and hot gases generated by fire may enter smokeproof enclosures through the doorways. This section provides for the diffusion of smoke and gases to the outside of the building by means of unenclosed openings to the outside.

909.20.3.1 Balcony doors. Where access to the *stairway* or *ramp* is by way of an open exterior balcony, the door assembly into the enclosure shall be a *fire door assembly* in accordance with Section 716.5.

❖ Where an open exterior balcony is used for entry into the stairway, the doorways to the stairway are required to have a $1^1/_2$-hour fire protection rating as required for 2-hour fire-resistance-rated wall assemblies in accordance with the requirements of Section 716.5. If a vestibule is used, the rating of the door from the vestibule into the stairway would only be required to be fire protection rated for 20 minutes. The door into the vestibule would require a fire protection rating of $1^1/_2$ hours.

909.20.3.2 Vestibule doors. Where access to the *stairway* or *ramp* is by way of a vestibule, the door assembly into the vestibule shall be a *fire door assembly* complying with Section 716.5. The door assembly from the vestibule to the *stairway* shall have not less than a 20-minute *fire protection rating* complying with Section 716.5.

❖ When a smokeproof enclosure is of the type that employs a vestibule as the means of access to an enclosed exit stairway, the entry into the vestibule from the exit access must consist of a fire door assembly having a $1^1/_2$-hour fire protection rating. This requirement is commensurate with the 2-hour fire-resistance- rated smokeproof enclosure construction requirement and the associated fire protection ratings specified in Table 716.5. Essentially, the fire door assemblies and the enclosure walls serve as the primary exit enclosure protection from fires occurring in adjacent spaces.

The entry from a vestibule into the stairway requires a 20-minute fire-protection-rated door assembly. These doorways are not normally subject to direct fire exposure and, therefore, only a nominal fire protection rating is required as a standard of construction that would minimize air leakage and thus reduce the possibilities of smoke and hot gases penetrating the stairway in amounts that could become a threat to life safety.

Door assemblies must comply with the requirements of Section 715.4 (see Commentary Figure 909.20.3.2).

909.20.3.3 Vestibule ventilation. Each vestibule shall have a minimum net area of 16 square feet (1.5 m^2) of opening in a wall facing an outer *court*, *yard* or *public way* that is not less than 20 feet (6096 mm) in width.

❖ Natural ventilation is allowed for vestibules that have a minimum net opening of 16 square feet (1.49 m^2) and open into an outer court, yard or public way that is at least 20 feet (6096 mm) in width. Basically, this option is intended to take advantage of the fact that smoke may disperse into an open area before entering the stair enclosure.

909.20.4 Mechanical ventilation alternative. The provisions of Sections 909.20.4.1 through 909.20.4.4 shall apply to ventilation of smokeproof enclosures by mechanical means.

❖ When an exterior balcony is not possible or when the clear open area cannot be achieved, then the mechanical ventilation alternative is necessary.

909.20.4.1 Vestibule doors. The door assembly from the building into the vestibule shall be a *fire door assembly* complying with Section 716.5.3. The door assembly from the vestibule to the *stairway* or *ramp* shall not have less than a 20-

INTERNATIONAL CODE COUNCIL®
Copyright © 2015 ICC. ALL RIGHTS RESERVED. Accessed by David Dammon on Jun 21, 2017 12:30:52 PM pursuant to License Agreement with ICC. No further reproduction or distribution authorized. ANY UNAUTHORIZED REPRODUCTION OR DISTRIBUTION IS A VIOLATION OF THE FEDERAL COPYRIGHT ACT AND THE LICENSE AGREEMENT, AND SUBJECT TO CIVIL AND CRIMINAL PENALTIES THEREUNDER.

minute *fire protection rating* and shall meet the requirements for a smoke door assembly in accordance with Section 716.5.3. The door shall be installed in accordance with NFPA 105.

❖ The entry into the vestibule from the exit access must consist of a fire door assembly having a $1^1/_2$-hour fire protection rating. This requirement is commensurate with the 2-hour fire-resistance-rated smokeproof enclosure construction requirement and the associated fire protection ratings specified in Table 716.5. Essentially, the fire door assemblies and the enclosure walls serve as the primary interior exit stairway protection from fires occurring in adjacent spaces.

The entry from a vestibule into the stairway requires a 20-minute fire-protection-rated door assembly that also meets the requirements for a smoke door assembly. Vestibule doors into stairways for the natural ventilation option (see Section 909.20.3.2) would not require the smoke door assembly rating in accordance with Section 716.5.3. The natural ventilation option requires an opening to the outside that is intended to compensate for this difference (see Commentary Figure 909.20.4.1).

909.20.4.2 Vestibule ventilation. The vestibule shall be supplied with not less than one air change per minute and the exhaust shall be not less than 150 percent of supply. Supply air shall enter and exhaust air shall discharge from the vestibule through separate, tightly constructed ducts used only for that purpose. Supply air shall enter the vestibule within 6 inches (152 mm) of the floor level. The top of the exhaust register shall be located at the top of the smoke trap but not more than 6 inches (152 mm) down from the top of the trap, and shall be entirely within the smoke trap area. Doors in the open position shall not obstruct duct openings. Duct openings with controlling *dampers* are permitted where necessary to meet the design requirements, but *dampers* are not otherwise required.

❖ This section provides the basic criteria for the mechanical ventilation of the vestibule during a fire situation. Such ventilation is required to be activated via a smoke detector in accordance with Section 909.20.6. The basic requirements are for one air change per minute within the vestibule. Also the exhaust is required to be 150 percent of the supply. The exhaust is required to exceed the supply so that air will not be pushed into the stairway due to a positive pressure being created within the vestibule. It should be noted that there is not a minimum pressure difference requirement. Instead, the code simply prescribes a particular air change rate (exhaust).

This section also prescribes criteria as to where supply air and exhaust air are to enter and exit, respectively, and requires that those paths are clear (see Commentary Figure 909.20.4.2).

It should be noted that this section does not specify when and how such systems should activate. Activation is addressed by Section 909.20.6.

909.20.4.2.1 Engineered ventilation system. Where a specially engineered system is used, the system shall exhaust a quantity of air equal to not less than 90 air changes per hour from any vestibule in the emergency operation mode and shall be sized to handle three vestibules simultaneously. Smoke detectors shall be located at the floor-side entrance to each vestibule and shall activate the system for the affected vestibule. Smoke detectors shall be installed in accordance with Section 907.3.

❖ If the method prescribed in Section 909.20.4.2 for mechanical ventilation of vestibules is not chosen,

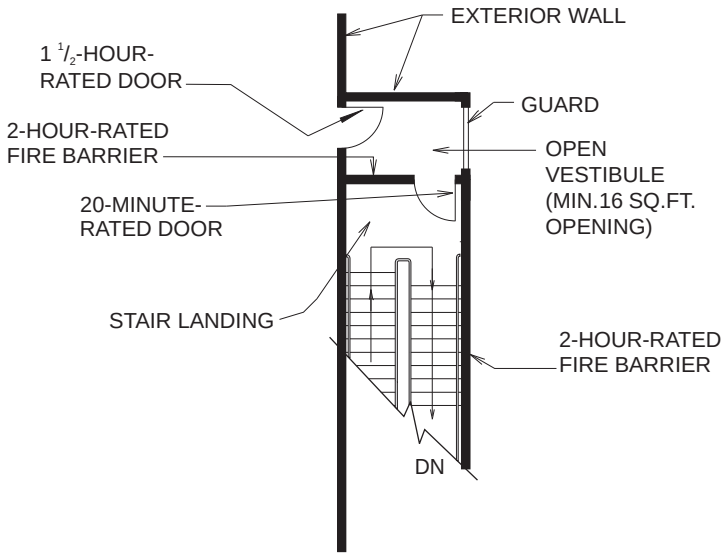

For SI: 1 square foot = 0.0929 m^2.

Figure 909.20.3.2
SMOKEPROOF ENCLOSURE WITH OPEN VESTIBULE ARRANGEMENT

INTERNATIONAL CODE COUNCIL®
Copyright © 2015 ICC. ALL RIGHTS RESERVED. Accessed by David Dammon on Jun 21, 2017 12:30:52 PM pursuant to License Agreement with ICC. No further reproduction or distribution authorized. ANY UNAUTHORIZED REPRODUCTION OR DISTRIBUTION IS A VIOLATION OF THE FEDERAL COPYRIGHT ACT AND THE LICENSE AGREEMENT, AND SUBJECT TO CIVIL AND CRIMINAL PENALTIES THEREUNDER.

then minimum criteria are provided for engineered systems. Essentially, the designer can create a design that meets the flexibility needs of the building and at the same time meets basic criteria. Once designed and installed, the vestibules must be ventilated at 90 air changes per hour, which is 30 more air changes per hour than the prescriptive solution would require. The exhaust rate is not mandated. It is simply left to the designer to achieve the 90 air changes per hour within the space (vestibule). Additionally, this

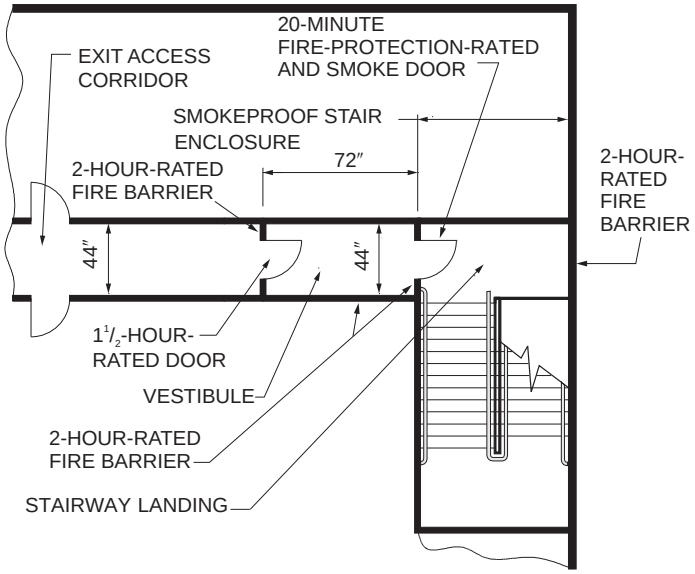

For SI: 1 inch = 25.4 mm.

Figure 909.20.4.1
SMOKEPROOF ENCLOSURE WITH CORRIDOR ARRANGEMENT

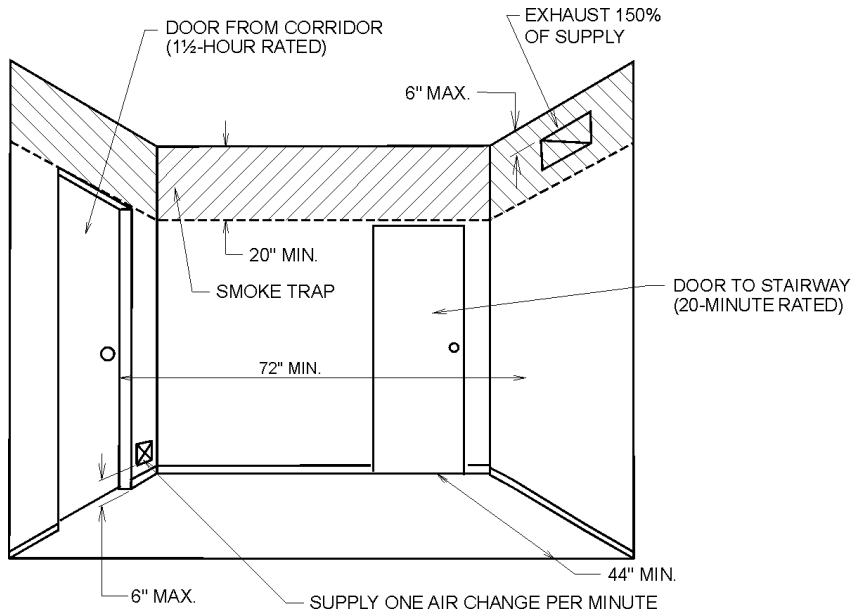

For SI: 1 inch = 25.4 mm.

Figure 909.20.4.2
MECHANICALLY VENTILATED VESTIBULE

INTERNATIONAL CODE COUNCIL®
Copyright © 2015 ICC. ALL RIGHTS RESERVED. Accessed by David Dammon on Jun 21, 2017 12:30:52 PM pursuant to License Agreement with ICC. No further reproduction or distribution authorized. ANY UNAUTHORIZED REPRODUCTION OR DISTRIBUTION IS A VIOLATION OF THE FEDERAL COPYRIGHT ACT AND THE LICENSE AGREEMENT, AND SUBJECT TO CIVIL AND CRIMINAL PENALTIES THEREUNDER.

system needs to be sized to handle at least three vestibules simultaneously. Finally, the engineered systems are required to operate in accordance with the initiation of a smoke detector located on the floor-side entrance of the affected vestibule; therefore, a smoke detector would be required on each floor at the entrance to each vestibule. The system would only need to be activated on the floors where smoke is detected.

909.20.4.3 Smoke trap. The vestibule ceiling shall be not less than 20 inches (508 mm) higher than the door opening into the vestibule to serve as a smoke and heat trap and to provide an upward-moving air column. The height shall not be decreased unless *approved* and justified by design and test.

❖ This section requires a 20-inch (508 mm) difference in height between the door openings into the vestibule and the ceiling. This is intended to allow an additional safeguard to assist in the containment of smoke inside the vestibule and outside the stair shaft. Essentially, as the title states, it provides a smoke trap. This arrangement also has the effect of keeping the air movement upward.

909.20.4.4 Stairway or ramp shaft air movement system. The *stairway* or *ramp* shaft shall be provided with a dampered relief opening and supplied with sufficient air to maintain a minimum positive pressure of 0.10 inch of water (25 Pa) in the shaft relative to the vestibule with all doors closed.

❖ In order to prevent smoke from migrating into the stairway from the vestibule, a positive pressure of 0.10 inch (25 Pa) of water in the stair shaft relative to the vestibule is required. This pressure difference is to be available when all doors are closed. This pressure difference is lower than that required by the stairway pressurization alternative. This would not be considered a pressurized stairway. This pressure difference would need to be tested to obtain approval once constructed.

909.20.5 Stairway and ramp pressurization alternative. Where the building is equipped throughout with an *automatic sprinkler system* in accordance with Section 903.3.1.1, the vestibule is not required, provided each interior *exit stairway* or *ramp* is pressurized to not less than 0.10 inch of water (25 Pa) and not more than 0.35 inches of water (87 Pa) in the shaft relative to the building measured with all *interior exit stairway* and *ramp* doors closed under maximum anticipated conditions of stack effect and wind effect.

❖ This method is allowed only when the building is equipped throughout with an automatic sprinkler system. This is partially related to the fact that these pressure differences were developed based on a sprinklered fire. It should be noted that smokeproof enclosures are not required to be in buildings equipped throughout with an automatic sprinkler system, but the areas where smokeproof enclosures are required are often sprinklered buildings (i.e., high-rise buildings). This alternative would not require vestibules or an exterior exit balcony. The criteria for smoke control design are provided in terms of minimum and maximum pressure differences of 0.10 inch (37 Pa) of water and 0.35 inch (87 Pa) of water, respectively, between the shaft and the building. This pressure difference is to be achieved when all doors are closed and maximum conditions of wind and stack effect have been taken into account. It should be noted that additional limitations may be placed on the maximum pressure differences for pressurized stairways due to the lower opening forces required in order to comply with Section 1010.1.3. If the maximum pressure difference of 35 would exceed the requirements of Section 1010.1.3, the maximum pressure difference would need to be lowered. Also note that Section 404.2.8 of ICC A117.1 would not require opening forces to be lowered for accessibility purposes if the door is a fire door. Finally, as with all other smoke control systems addressed in Section 909, such systems need to be designed through a rational analysis, tested and documented as such. See also commentary for Section 909.6.3.

909.20.6 Ventilating equipment. The activation of ventilating equipment required by the alternatives in Sections 909.20.4 and 909.20.5 shall be by smoke detectors installed at each floor level at an *approved* location at the entrance to the smokeproof enclosure. When the closing device for the *stairway* and *ramp* shaft and vestibule doors is activated by smoke detection or power failure, the mechanical equipment shall activate and operate at the required performance levels. Smoke detectors shall be installed in accordance with Section 907.3.

❖ This section clarifies that the activation mechanism for both mechanical means of smoke management for interior exit stairways in Sections 909.20.4 and 909.20.5 should be via a smoke detector located at each level outside the door leading into the vestibule and stairway, respectively. For systems that use automatic-closing devices on the doors, whether for vestibules in smokeproof enclosures or for pressurized stairways, if the door closes, the system must activate. This includes normal activation of the smoke detector or in the event of a power failure. Essentially, if there is a power failure it will operate in a fail-safe manner even if there is not a fire.

909.20.6.1 Ventilation systems. Smokeproof enclosure ventilation systems shall be independent of other building ventilation systems. The equipment, control wiring, power wiring and ductwork shall comply with one of the following:

1. Equipment, control wiring, power wiring and ductwork shall be located exterior to the building and directly connected to the smokeproof enclosure or connected to the smokeproof enclosure by ductwork enclosed by not less than 2-hour *fire barriers* constructed in accordance with Section 707 or *horizontal assemblies* constructed in accordance with Section 711, or both.
2. Equipment, control wiring, power wiring and ductwork shall be located within the smokeproof enclosure with intake or exhaust directly from and to the outside or through ductwork enclosed by not less than 2-hour *fire*

INTERNATIONAL CODE COUNCIL®
Copyright © 2015 ICC. ALL RIGHTS RESERVED. Accessed by David Dammon on Jun 21, 2017 12:30:52 PM pursuant to License Agreement with ICC. No further reproduction or distribution authorized. ANY UNAUTHORIZED REPRODUCTION OR DISTRIBUTION IS A VIOLATION OF THE FEDERAL COPYRIGHT ACT AND THE LICENSE AGREEMENT, AND SUBJECT TO CIVIL AND CRIMINAL PENALTIES THEREUNDER.

barriers constructed in accordance with Section 707 or *horizontal assemblies* constructed in accordance with Section 711, or both.

3. Equipment, control wiring, power wiring and ductwork shall be located within the building if separated from the remainder of the building, including other mechanical equipment, by not less than 2-hour *fire barriers* constructed in accordance with Section 707 or *horizontal assemblies* constructed in accordance with Section 711, or both.

Exceptions:

1. Control wiring and power wiring utilizing a 2-hour rated cable or cable system.
2. Where encased with not less than 2 inches (51 mm) of concrete.
3. Control wiring and power wiring protected by a listed electrical circuit protective system with a fire-resistance rating of not less than 2 hours.

❖ Smokeproof enclosures and pressurized stair shaft ventilation systems must be independent of other building ventilating systems. This section provides three options for the location of the ductwork associated with smokeproof enclosures and stair pressurization mechanical equipment. The three options include the following:

- Located on the exterior of the building and directly connected to the smokeproof enclosure;
- Within the smokeproof enclosure; or
- Within the building but separated from the remainder of the building by 2-hour fire-barriers or horizontal barriers, or both.

A question that often arises with the inclusion of the terms "control wiring" and "power wiring" is whether this addresses the smoke detection and fire alarm equipment associated with these ventilation systems. The original intent of the addition of these terms was focused primarily on the fans and related duct work and not necessarily on the fire alarm system components related to the activation of such systems. This is not specifically discussed within the code itself however. Code change FS172-07/08 placed this language in the code.

There are three exceptions to this section. The first is allowing the use of 2-hour-rated cable. This provides the protection required in terms of rating but provides more flexibility in the placement of such wiring.

Exception 2 allows a simple exception that provides a sufficient but not necessarily listed fire-resistance-rated approach by using concrete to encase the equipment or wiring.

Exception 3 is intended to add the option of using conventional cables with a protective material applied to them. These materials are called "electrical circuit protective systems" and are recognized by NFPA 70 *National Electrical Code* for protection of fire pump control wiring, emergency system circuit wiring, and critical operations power system circuit wiring.

909.20.6.2 Standby power. Mechanical vestibule and *stairway* and *ramp* shaft ventilation systems and automatic fire detection systems shall be provided with standby power in accordance with Section 2702.

❖ This section requires standby power for mechanical systems for pressurized stair shafts, mechanically ventilated vestibules, stair shafts for smokeproof enclosures and any automatic fire detection systems related to the activation of such systems.

909.20.6.3 Acceptance and testing. Before the mechanical equipment is *approved*, the system shall be tested in the presence of the *building official* to confirm that the system is operating in compliance with these requirements.

❖ This section requires verification of successful testing of the system to the building official. The requirements of Sections 909.18 and 909.19 should be addressed when testing smokeproof enclosures or pressurized stairs. It should be noted that the IFC does not contain the provisions for smokeproof enclosures and pressurized stairways, but it may be in the best interest to also notify the fire department of such testing and acceptance.

909.21 Elevator hoistway pressurization alternative. Where elevator hoistway pressurization is provided in lieu of required enclosed elevator lobbies, the pressurization system shall comply with Sections 909.21.1 through 909.21.11.

❖ This section sets out the requirements for hoistway pressurization when used as a method to protect hoistway openings as required by Section 3006. The minimum and maximum pressures are similar to those for pressurized stairs in Section 909.20.5. The provisions are located in Section 909 to group all of the smoke control techniques and requirements into the same section. This will promote more consistency in code application when addressing smoke control.

909.21.1 Pressurization requirements. Elevator hoistways shall be pressurized to maintain a minimum positive pressure of 0.10 inch of water (25 Pa) and a maximum positive pressure of 0.25 inch of water (67 Pa) with respect to adjacent occupied space on all floors. This pressure shall be measured at the midpoint of each hoistway door, with all elevator cars at the floor of recall and all hoistway doors on the floor of recall open and all other hoistway doors closed. The pressure differentials shall be measured between the hoistway and the adjacent elevator landing. The opening and closing of hoistway doors at each level must be demonstrated during this test. The supply air intake shall be from an outside, uncontaminated source located a minimum distance of 20 feet (6096 mm) from any air exhaust system or outlet.

Exceptions:

1. On floors containing only Group R occupancies, the pressure differential is permitted to be measured between the hoistway and a *dwelling unit* or *sleeping unit*.

INTERNATIONAL CODE COUNCIL®
Copyright © 2015 ICC. ALL RIGHTS RESERVED. Accessed by David Dammon on Jun 21, 2017 12:30:52 PM pursuant to License Agreement with ICC. No further reproduction or distribution authorized. ANY UNAUTHORIZED REPRODUCTION OR DISTRIBUTION IS A VIOLATION OF THE FEDERAL COPYRIGHT ACT AND THE LICENSE AGREEMENT, AND SUBJECT TO CIVIL AND CRIMINAL PENALTIES THEREUNDER.

2. Where an elevator opens into a lobby enclosed in accordance with Section 3007.6 or 3008.6, the pressure differential is permitted to be measured between the hoistway and the space immediately outside the door(s) from the floor to the enclosed lobby.
3. The pressure differential is permitted to be measured relative to the outdoor atmosphere on floors other than the following:
    3.1. The fire floor.
    3.2. The two floors immediately below the fire floor.
    3.3. The floor immediately above the fire floor.
4. The minimum positive pressure of 0.10 inch of water (25 Pa) and a maximum positive pressure of 0.25 inch of water (67 Pa) with respect to occupied floors are not required at the floor of recall with the doors open.

❖ This section states the minimum and the maximum positive pressure that must be achieved by the smoke control mechanical pressurization system. The minimum positive pressure is 0.10 inch of water column (0.02 kPa), the same as required for stairway pressurization in Section 909.20.5. The maximum pressure is 0.25 inch of water column (0.06 kPa) which is a little less than the maximum allowed for stairway pressurization. The minimum pressure is to ensure that the stack effect is overcome and the maximum pressure is an upper limit to ensure that the doors will operate properly. This section requires a test when the system is complete. The pressures are measured at the midpoint of each hoistway door with all elevator cars at the recall floor and all the hoistway doors open on that level. This simulates the Phase I recall requirements in Section 3003.2. Hoistway doors are then tested on each level to ensure proper operation.

The supply air intake for the pressurization system must be located at least 20 feet (6096 mm) away from any source of contamination to ensure that the hoistway remains tenable through the fire event or well into it before the elevators can no longer be used. Also, if smoke is drawn into the supply air, the system will only spread smoke and not prevent its spread.

There are four exceptions to the requirements of Section 909.21.1. The first two provide exceptions as to where the pressure differential can be measured. Exception 3 allows the pressure differences only to be measured at the fire floor and several designated floors. Finally, Exception 4 allows the pressure differential measurement to be omitted for the floor of recall.

The first three exceptions originated from the City of Seattle, Washington, which has had a long history of requiring pressurized hoistways in high-rise buildings to prevent smoke migration. In 2005, the City of Seattle Department of Planning & Development (DPD) convened a committee which included representatives from industry, the Seattle Fire Department, and DPD, to decide whether to recommend changes to the high-rise smoke migration control requirements in place at that time. The committee also consulted with Dr. John Klote, who suggested the approach that Seattle eventually adopted with some small modifications. These requirements are an adaptation of the Seattle approach.

During the 2009/2010 code change cycle, a proposal was made to delete the hoistway pressurization requirements in the IBC without substitution (FS51-09/10), based on a study conducted by Drs. Miller and Beasley. This study showed that requiring the pressure differential of 0.10 inch of water column to be maintained at the recall floor with the elevator doors in the open position resulted in over pressurization of all the other floors—meaning the current standards in the code cannot be met. Based on further modeling by Dr. Miller, the proponent for FS51-09/10 submitted a public comment introducing Seattle's requirements into the IBC. The reason statement for the public comment stated Dr. Miller "concluded that the 'Seattle approach' does indeed meet all the prescriptive requirements of the IBC 2009." The proposal and its public comment were ultimately withdrawn by the proponent in anticipation of further review of the overall elevator lobby provisions.

The intent of the code is to keep smoke out of the hoistway, so the pressure should be measured between the elevator hoistway and the elevator landing/lobby. However, Exception 1 allows the pressure to be measured between the hoistway and sleeping or dwelling units in residential buildings, since they are highly compartmented. In addition, the fire source is most likely to be in the dwelling or sleeping unit, and providing positive pressure in the corridor/hallway outside the units (via leakage through the elevator hoistway doors) will help reduce the smoke migrating from the affected unit. Exception 2, which is specific to elevator lobbies associated with fire service access elevators (FSAE) and occupant evacuation elevators, allows the pressure to be measured between the hoistway and the space on the outside of the smoke barrier that forms the lobby. It should be noted that hoistway pressurization is not a design alternative to enclosed lobbies for FSAEs and occupant evacuation elevators. Enclosed elevator lobbies are always required for these types of elevators. This exception would only apply if such a system was provided.

Exception 3 allows the 0.10-inch-water-column pressure differential between the hoistway and the floor be met only on the four most critical floors—the floor of fire origin, the two floors immediately below, and one floor immediately above. For all other stories, the pressure differential is allowed to be measured between the hoistway and the outside of the building. The purpose of this requirement is to maintain a slightly positive pressure in the building relative

INTERNATIONAL CODE COUNCIL®
Copyright © 2015 ICC. ALL RIGHTS RESERVED. Accessed by David Dammon on Jun 21, 2017 12:30:52 PM pursuant to License Agreement with ICC. No further reproduction or distribution authorized. ANY UNAUTHORIZED REPRODUCTION OR DISTRIBUTION IS A VIOLATION OF THE FEDERAL COPYRIGHT ACT AND THE LICENSE AGREEMENT, AND SUBJECT TO CIVIL AND CRIMINAL PENALTIES THEREUNDER.

to atmospheric, so as to lower the neutral pressure plane in the building, which then reduces the driving force of stack effect. This exception is intended to be permitted to be used in conjunction with Exceptions 1 and 2. The engineers who design this system begin by modeling one floor as the "notionalized" fire floor, and designing the system (fans, dampers, etc.) accordingly. Each floor is subsequently modeled as the notionalized fire floor, and the system is checked to make sure the maximum and minimum pressure differentials are met. (Note that actual models may not have to be run for each floor, if it is clear the worst case has been covered.) Ultimately, the system will need to be designed so it will correctly configure itself for a fire originating on any floor in the building.

The fourth exception omits the need to measure the pressure differential at the floor of elevator recall where the door is typically open. Section 909.21.1 requires the pressure difference, required for the pressurization alternative, to be measured at the midpoint of each hoistway door, with all elevator cars at the floor of recall and all hoistway doors on the floor of recall open and all other hoistway doors closed.

Elevator hositway pressurization is intended to minimize smoke movement into an elevator shaft when a lobby is not provided. Meeting the required pressure difference on the recall floor with the hoistway doors open is not necessary, because the recall floor is protected by smoke detectors that will not allow the hoistway doors to open if smoke is present.

The pressurization method is based on using pressure differences produced by fans to minimize the spread of smoke across a barrier. A barrier will not exist on the recall floor when the hoistway doors are open and smoke detectors used for elevator recall prevent the doors from opening when smoke is present.

909.21.1.1 Use of ventilation systems. Ventilation systems, other than hoistway supply air systems, are permitted to be used to exhaust air from adjacent spaces on the fire floor, two floors immediately below and one floor immediately above the fire floor to the building's exterior where necessary to maintain positive pressure relationships as required in Section 909.21.1 during operation of the elevator shaft pressurization system.

❖ This section allows the use of the general building HVAC system to exhaust air to create/maintain the required pressure differential. It is to be noted that the requirements of the rest of Section 909.21, in particular, Section 909.21.10 regarding protection of equipment, would still apply to these components.

909.21.2 Rational analysis. A rational analysis complying with Section 909.4 shall be submitted with the *construction documents*.

❖ Section 909.4 recognizes that there are many factors involved in a smoke control system, including stack effect due to height, temperature effect of fire, wind effect, interaction of the HVAC system, the weather and the egress time, all of which must be evaluated. The report must be submitted with the permit documents. Most importantly, the duration of operation of the smoke control system is a function of 1.5 times the egress time or 20 minutes, whichever is less. More discussion on the duration of operation is found in the commentary for Section 909.4.6.

909.21.3 Ducts for system. Any duct system that is part of the pressurization system shall be protected with the same *fire-resistance rating* as required for the elevator shaft enclosure.

❖ All ductwork necessary for hoistway pressurization must be protected from the effects of fire by enclosure in fire-resistance-rated construction equivalent to that required for the elevator hoistway shaft enclosure.

909.21.4 Fan system. The fan system provided for the pressurization system shall be as required by Sections 909.21.4.1 through 909.21.4.4.

❖ This section details the requirements for the mechanical system used for pressurization of the hoistway enclosure.

909.21.4.1 Fire resistance. Where located within the building, the fan system that provides the pressurization shall be protected with the same *fire-resistance rating* required for the elevator shaft enclosure.

❖ The only way to ensure that the mechanical pressurization system can operate during a fire is to locate it in a safe place. If located within the building it must be in an enclosed room protected with the same fire-resistance-rated construction required for the hoistway enclosure.

909.21.4.2 Smoke detection. The fan system shall be equipped with a smoke detector that will automatically shut down the fan system when smoke is detected within the system.

❖ The airflow must be free of smoke or it will only increase the likelihood of smoke spreading throughout the building. The smoke detector required by this section should be located on the intake side of the blower fan.

909.21.4.3 Separate systems. A separate fan system shall be used for each elevator hoistway.

❖ This section requires that each hoistway enclosure have its own mechanical system. This provides a more redundant system and helps to increase the likelihood that fans will be operational during a fire.

909.21.4.4 Fan capacity. The supply fan shall be either adjustable with a capacity of not less than 1,000 cfm (0.4719 m^3/s) per door, or that specified by a *registered design professional* to meet the requirements of a designed pressurization system.

❖ The fan capacity should be as specified by the registered design professional to meet the operational ranges of pressure at each door or be adjustable with

INTERNATIONAL CODE COUNCIL®
Copyright © 2015 ICC. ALL RIGHTS RESERVED. Accessed by David Dammon on Jun 21, 2017 12:30:52 PM pursuant to License Agreement with ICC. No further reproduction or distribution authorized. ANY UNAUTHORIZED REPRODUCTION OR DISTRIBUTION IS A VIOLATION OF THE FEDERAL COPYRIGHT ACT AND THE LICENSE AGREEMENT, AND SUBJECT TO CIVIL AND CRIMINAL PENALTIES THEREUNDER.

a capacity of at least 1,000 cfm (0.4719 m^3/s) per hoistway door. In either case, it is subject to field testing and adjustments to meet the pressure ranges.

909.21.5 Standby power. The pressurization system shall be provided with standby power in accordance with Section 2702.

❖ The elevator hoistway pressurization system is an emergency system and must have provisions for standby power like other emergency systems. Section 2702 states the requirements that standby power systems must meet. It is consistent with other smoke control systems required by Section 909 in that such systems have standby power as they are life-safety systems.

909.21.6 Activation of pressurization system. The elevator pressurization system shall be activated upon activation of either the building fire alarm system or the elevator lobby smoke detectors. Where both a building fire alarm system and elevator lobby smoke detectors are present, each shall be independently capable of activating the pressurization system.

❖ This section requires that the pressurization system will be activated when the general building fire alarm system or an elevator lobby smoke detector is activated. All buildings using this pressurization option will more than likely be required to have both. High-rise buildings require elevator lobby smoke detectors, but other buildings may not. Section 909.12 requires smoke detectors to activate the pressurization system if the design requires it to operate to remove the smoke.

909.21.7 Testing. Testing for performance shall be required in accordance with Section 909.18.8. System acceptance shall be in accordance with Section 909.19.

❖ Testing will be required to evaluate the performance of the completed system (see commentary, Sections 909.18 and 909.19).

909.21.8 Marking and identification. Detection and control systems shall be marked in accordance with Section 909.14.

❖ See the commentary to Section 909.14.

909.21.9 Control diagrams. Control diagrams shall be provided in accordance with Section 909.15.

❖ See the commentary to Section 909.15.

909.21.10 Control panel. A control panel complying with Section 909.16 shall be provided.

❖ See the commentary to Section 909.16.

909.21.11 System response time. Hoistway pressurization systems shall comply with the requirements for smoke control system response time in Section 909.17.

❖ See the commentary to Section 909.17.

SECTION 910
SMOKE AND HEAT REMOVAL

[F] 910.1 General. Where required by this code, smoke and heat vents or mechanical smoke removal systems shall conform to the requirements of this section.

❖ This section essentially requires either smoke and heat vents or a mechanical smoke removal system where required by Section 910.2. It should be noted that where high-piled combustible storage is involved, Chapter 32 of the IFC also applies.

The purpose of smoke and heat vents or smoke removal systems has historically been related to the needs of fire fighters. More specifically, smoke and heat vents or smoke removal systems, when activated, have the potential effect of lifting the height of the smoke layer and providing more tenable conditions to undertake fire-fighting activities. Other potential benefits include a reduction in property damage and the creation of more tenable conditions for occupants.

These provisions are based on research on the interaction of sprinklers, roof vents and draft curtains funded by the National Fire Protection Research Foundation (NFPRF) and conducted at Underwriters Laboratories (UL) in 1997/1998. This research is summarized in a document referred to as National Institute of Science and Technology Interagency Report (NISTIR) 6196-1 dated September 1998. The current provisions were also based on the following:

- Provisions for the use of roof vents in sprinklered buildings included in the 2010 and 2013 edition of NFPA 13, including the substantiation statement for the NFPA 13 roof vent provisions.
- The capability of standard spray sprinklers to both control and extinguish a fire within 30 minutes of sprinkler operation without supplemental fire department activity has been documented.
- Recommendations contained in National Institute for Occupational Safety and Health (NIOSH) 2005-132, *Preventing Injuries and Deaths of Fire Fighters Due to Truss Systems*, and NIOSH 2010-153, *Preventing Deaths and Injuries of Fire Fighters using Risk Management Principles at Structure Fires*.
- Recommendations contained in the Initial Report of the Federal Emergency Management Agency (FEMA)/National Fallen Firefighter Foundation (NFFF®) Firefighter Life Safety Summit held on April 14, 2004, in Tampa, Florida.

The primary purpose of smoke and heat removal from the perspective of the building code requirement is to assist fire-fighting operations after control of the fire has been achieved by the automatic sprinkler sys-

INTERNATIONAL CODE COUNCIL®
Copyright © 2015 ICC. ALL RIGHTS RESERVED. Accessed by David Dammon on Jun 21, 2017 12:30:52 PM pursuant to License Agreement with ICC. No further reproduction or distribution authorized. ANY UNAUTHORIZED REPRODUCTION OR DISTRIBUTION IS A VIOLATION OF THE FEDERAL COPYRIGHT ACT AND THE LICENSE AGREEMENT, AND SUBJECT TO CIVIL AND CRIMINAL PENALTIES THEREUNDER.

tem. Automatic smoke and heat vents and automatic sprinkler systems were developed independently of one another and their interaction has been a concern for many years. Even today, there is no accepted method of analyzing their interaction and, therefore, the installation standards for each (NFPA 204 and NFPA 13, respectively) give cautions to the designers of buildings having both systems. Note that NFPA 204 is not referenced in Section 910.

Manually activated mechanical smoke removal systems can perform the same function as roof vents. Mechanical smoke removal systems as required in Section 910 provide fire-rated, grade-level enclosures for the control of the mechanical smoke removal system. This provides greater control of the system for the fire incident commander and reduces the need to place fire fighters on roofs or in other hazardous situations to operate smoke and heat venting systems. This methodology is consistent with the latest recommendations from NIOSH and NFFF for fire fighter safety, risk management and recommended fire-fighting tactics.

[F] 910.2 Where required. Smoke and heat vents or a mechanical smoke removal system shall be installed as required by Sections 910.2.1 and 910.2.2.

Exceptions:

1. Frozen food warehouses used solely for storage of Class I and II commodities where protected by an *approved automatic sprinkler system*.
2. Smoke and heat removal shall not be required in areas of buildings equipped with early suppression fast-response (ESFR) sprinklers.
3. Smoke and heat removal shall not be required in areas of buildings equipped with control mode special application sprinklers with a response time index of 50 $(m \cdot s)^{1/2}$ or less that are listed to control a fire in stored commodities with 12 or fewer sprinklers.

❖ Sections 910.2.1 and 910.2.2 provide the locations where such smoke removal or smoke and heat vents would be required. There are three overall exceptions to the application of Section 910.

Exception 1 recognizes the "building-within-a-building" nature of typical frozen food warehouses. As such, smoke from a fire within a freezer would be contained within the freezer, thus negating the usefulness of smoke and heat vents at the roof level.

Exception 2 recognizes the negative effect that smoke and heat vents can have on the operation of early suppression fast-response (ESFR) sprinklers. Those negative effects include diverting heat away from the sprinklers, which could delay their activation or result in the activation of more sprinklers in areas away from the source of the fire, which may overwhelm the system.

Exception 3 recognizes a new category of automatic sprinkler that shares the key characteristics of ESFR sprinklers, i.e., thermal elements that have a response time index (RTI) of 50 or less and are listed to protect a design area that involves 12 or fewer sprinklers. These control mode special application (CMSA) sprinklers, while not called ESFR, still require similar precautions to ESFR sprinklers with respect to not introducing unknowns, such as smoke and heat removal, that were not present in the full-scale fire tests that determined their listing parameters. Such unknowns can lead to sprinkler "skipping" and exceeding the 12 sprinkler design area, which was the exact concern that led to the ESFR-related provisions that are currently in this chapter and Chapter 32. Note that CMSA sprinklers must have both an RTI of 50 or less and be listed to control or suppress a fire with 12 or fewer sprinklers to qualify for this exception. Any sprinkler listed as "quick response" will satisfy the "50 RTI or less" criterion based on the definition of "quick response" in NFPA 13 Section 3.6.4.7. The number of operating sprinklers will be indicated in the listing criterion for each sprinkler.

910.2.1 Group F-1 or S-1. Smoke and heat vents installed in accordance with Section 910.3 or a mechanical smoke removal system installed in accordance with Section 910.4 shall be installed in buildings and portions thereof used as a Group F-1 or S-1 occupancy having more than 50,000 square feet (4645 m^2) of undivided area. In occupied portions of a building equipped throughout with an *automatic sprinkler system* in accordance with Section 903.3.1.1 where the upper surface of the story is not a roof assembly, a mechanical smoke removal system in accordance with Section 910.4 shall be installed.

Exception: Group S-1 aircraft repair hangars.

❖ Large-area buildings with moderate to heavy fire loads present special challenges to the fire department in disposing of the smoke generated in a fire. In order to provide the fire department with the ability to rapidly and efficiently dispose of smoke in large-area Group F-1 and S-1 buildings exceeding 50,000 square feet (4645 m^2) in undivided area without the exposure of personnel to the dangers associated with cutting ventilation holes in the roof, smoke and heat vents or a smoke removal system must be provided.

The code is not clear on what is meant by the term "undivided area." However the intent is to provide the ability to manage the smoke in large spaces. Draft curtains or potentially any physical separation (regardless of rating) would provide such division. Draft curtains are typically constructed of sheet metal, lath and plaster, gypsum board or other materials that resist the passage of smoke. Typically draft curtains are at least 6 feet deep (1829 mm) from the ceiling. To keep with the concern for managing smoke, the joints and connections should be smoke tight.

INTERNATIONAL CODE COUNCIL®
Copyright © 2015 ICC. ALL RIGHTS RESERVED. Accessed by David Dammon on Jun 21, 2017 12:30:52 PM pursuant to License Agreement with ICC. No further reproduction or distribution authorized. ANY UNAUTHORIZED REPRODUCTION OR DISTRIBUTION IS A VIOLATION OF THE FEDERAL COPYRIGHT ACT AND THE LICENSE AGREEMENT, AND SUBJECT TO CIVIL AND CRIMINAL PENALTIES THEREUNDER.

Based on the intent of "undivided area," a fire barrier, smoke barrier, fire partition or smoke partition would be more than what is required and would therefore be an acceptable method of dividing the area.

This requirement is independent of the requirements related to high-piled storage in Section 910.2.2. High-piled combustible storage is not occupancy specific.

This section also addresses multistory buildings where the Group F-1 or S-1 occupancy is not the uppermost story and therefore would not have a roof in which to place smoke and heat vents. This section would require that a smoke removal system be installed. This issue was not clearly addressed in previous editions of the IBC.

[F] 910.2.2 High-piled combustible storage. Smoke and heat removal required by Table 3206.2 of the *International Fire Code* for buildings and portions thereof containing high-piled combustible storage shall be installed in accordance with Section 910.3 in unsprinklered buildings. In buildings and portions thereof containing high-piled combustible storage equipped throughout with an *automatic sprinkler system* in accordance with Section 903.3.1.1, a smoke and heat removal system shall be installed in accordance with Section 910.3 or 910.4. In occupied portions of a building equipped throughout with an *automatic sprinkler system* in accordance with Section 903.3.1.1, where the upper surface of the story is not a roof assembly, a mechanical smoke removal system in accordance with Section 910.4 shall be installed.

❖ This section requires smoke and heat removal as it is required in Chapter 32 of the IFC for high-piled combustible storage. Specifically Table 3206.2 sets out when smoke and heat removal is required. If Table 3206.2 does not require such protection, compliance with Section 910 is not necessary. The requirement in IFC Table 3206.2 is based primarily on the size of the high-piled combustible storage area and whether or not the area is equipped with an automatic sprinkler system.

There are several requirements provided within this section. The first addresses nonsprinklered high-piled storage areas. Such areas are required to use smoke and heat vents as mechanical smoke removal systems are designed for use in sprinklered buildings. The rationale for this provision is that a mechanical smoke removal system capable of handling temperatures between 1,000°F and 2,000°F cannot be practically provided at a reasonable cost.

Where high-piled storage areas are equipped with an automatic sprinkler system, smoke and heat vents or a smoke removal system are required to comply with this section. However, if the high-piled storage area is located in a multistory building where the storage area is not located on the uppermost story, this section requires that a smoke removal system be used. This was not clearly addressed in past editions of the IBC.

[F] 910.3 Smoke and heat vents. The design and installation of smoke and heat vents shall be in accordance with Sections 910.3.1 through 910.3.3.

❖ This section simply sets out the subsections that must be addressed to comply with the requirements for the installation of smoke and heat vents.

[F] 910.3.1 Listing and labeling. Smoke and heat vents shall be *listed* and labeled to indicate compliance with UL 793 or FM 4430.

❖ This section specifically requires that all smoke and heat vents be both listed and labeled in accordance with UL 793 or FM 4430. This provides consistency and a level of quality when smoke and heat vents are required. The standard addresses smoke and heat vents that automatically operate during fires via nonelectrical means. Automatic vents listed and labeled to this standard can be operated both automatically and manually. There are two main mechanisms for activation that include a heat-responsive device or on the action of a plastic cover shrinking and falling out of place because of fire exposure.

[F] 910.3.2 Smoke and heat vent locations. Smoke and heat vents shall be located 20 feet (6096 mm) or more from adjacent *lot lines* and *fire walls* and 10 feet (3048 mm) or more from *fire barriers*. Vents shall be uniformly located within the roof in the areas of the building where the vents are required to be installed by Section 910.2 with consideration given to roof pitch, sprinkler location and structural members.

❖ This section has two functions, the first being to focus on hazards to adjacent buildings and the second being proper function of smoke and heat vents through proper placement.

In terms of adjacent properties, this section requires a minimum distance to lot lines and fire walls and then a minimum distance to fire barriers. The first set of distances focuses on separate buildings and exposures, whereas the distance to fire barriers is less restrictive since it focuses on different uses and occupancies within the same building (see Commentary Figure 910.3.2).

To enhance vent performance within the area containing the smoke and heat vents, such vents need to be uniformly spaced. Consideration of issues such as sprinkler location and roof pitch are also essential to proper vent location.

910.3.3 Smoke and heat vents area. The required aggregate area of smoke and heat vents shall be calculated as follows:

For buildings equipped throughout with an *automatic sprinkler system* in accordance with Section 903.3.1.1:

$$A_{VR} = V/9000 \qquad \textbf{(Equation 9-3)}$$

where:

A_{VR} = The required aggregate vent area (ft^2).

V = Volume (ft^3) of the area that requires smoke removal.

INTERNATIONAL CODE COUNCIL®
Copyright © 2015 ICC. ALL RIGHTS RESERVED. Accessed by David Dammon on Jun 21, 2017 12:30:52 PM pursuant to License Agreement with ICC. No further reproduction or distribution authorized. ANY UNAUTHORIZED REPRODUCTION OR DISTRIBUTION IS A VIOLATION OF THE FEDERAL COPYRIGHT ACT AND THE LICENSE AGREEMENT, AND SUBJECT TO CIVIL AND CRIMINAL PENALTIES THEREUNDER.

For unsprinklered buildings:

$A_{VR} = A_{FA}/50$ **(Equation 9-4)**

where:

A_{VR} = The required aggregate vent area (ft^2).

A_{FA} = The area of the floor in the area that requires smoke removal.

❖ This section provides the design criteria to determine the area of smoke and heat vents required. The requirements are based on whether the area requiring smoke and heat vents is equipped with an automatic sprinkler system.

The design of roof vents in buildings protected by an automatic sprinkler system require that the area of roof vents provide equivalent venting to that required for the mechanical smoke removal system (two air changes per hour) based on an assumption that each square foot of vent area will provide 300 cubic feet per minute (cfm) of ventilation. The reason for this requirement is that the roof vents should at least provide venting equivalent to the minimum venting provided by the mechanical smoke removal system. A factor of 300 cfm of venting per square foot of vent area was included in the 2012 edition of the code, although the use of this conversion factor is questionable at best. The actual ventilation provided by each square foot of vent area will depend on the temperature differential between ambient conditions and the smoke layer under the roof deck or the pressure achieved if positive pressure ventilation is utilized. If the prescribed value is not practical for a given building design, designers have the option of demonstrating other values that provide the same performance under Section 104.11 of the code, which allows alternative methods and designs.

The design of roof vents in buildings not protected by a sprinkler system requires that the ratio of the area of the vents to the floor area be a minimum of 1:50. The rationale is that the case where roof vents will be provided without sprinkler protection will be rare (e.g., buildings that contain high-piled storage with an area between 2,500 and 12,000 square feet). Given that this situation will be rare, a complex analysis to determine the required area of roof vents was believed to be unnecessary. The ratio of vent area to floor area of 1:50 is conservative based on the requirements that were included in the 2012 code and the IFC.

[F] 910.4 Mechanical smoke removal systems. Mechanical smoke removal systems shall be designed and installed in accordance with Sections 910.4.1 through 910.4.7.

❖ Mechanical smoke removal systems are considered to be equivalent to smoke and heat vents in terms of code compliance. In multistory buildings, those areas requiring smoke and heat removal will require the use of a mechanical smoke removal system because of its location on stories other than the uppermost story. This section provides the various design requirements for such systems.

910.4.1 Automatic sprinklers required. The building shall be equipped throughout with an *approved automatic sprinkler system* in accordance with Section 903.3.1.1.

❖ The rationale for this provision is that a mechanical smoke removal system capable of handling temperatures between 1,000°F and 2,000°F cannot be practi-

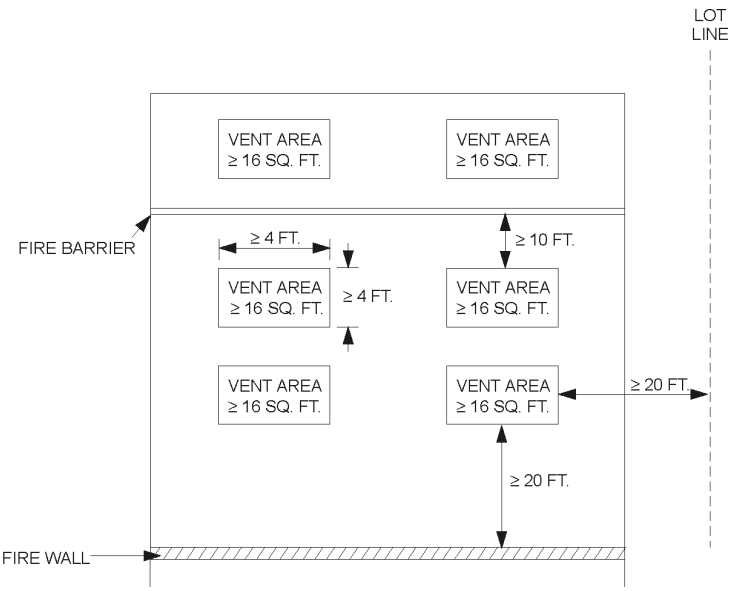

For SI: 1 foot = 304.8 mm, 1 square foot= 0.0929 m^2.

Figure 910.3.2
SMOKE AND HEAT VENT SPACING

INTERNATIONAL CODE COUNCIL®
Copyright © 2015 ICC. ALL RIGHTS RESERVED. Accessed by David Dammon on Jun 21, 2017 12:30:52 PM pursuant to License Agreement with ICC. No further reproduction or distribution authorized. ANY UNAUTHORIZED REPRODUCTION OR DISTRIBUTION IS A VIOLATION OF THE FEDERAL COPYRIGHT ACT AND THE LICENSE AGREEMENT, AND SUBJECT TO CIVIL AND CRIMINAL PENALTIES THEREUNDER.

cally provided at a reasonable cost. Therefore, in order to allow the use of a mechanical smoke removal system, the building is required to be equipped throughout with an automatic sprinkler system.

910.4.2 Exhaust fan construction. Exhaust fans that are part of a mechanical smoke removal system shall be rated for operation at 221°F (105°C). Exhaust fan motors shall be located outside of the exhaust fan air stream.

❖ This section requires exhaust fan motors to be located out of the exhaust stream to protect the mechanical equipment from excessive heat. Provisions for the mechanical smoke removal system permit the system to be designed to handle air at ambient temperature provided that the fan motors are located outside the air stream. The basis for this provision is the thermocouple temperature data for the large-scale fire tests conducted at UL in 1997/1998, specifically Tests P-1 and P-4. (In Tests P-1 and P-4, no vents opened so the ceiling temperatures recorded would be unaffected by the activation of vents. See Pages 40 and 52 of the NISTIR 6196-1 report dated September 1998 for the thermocouple temperature data recorded as a function of time.)

The exposing temperatures and time periods were reviewed and not considered to pose a threat to the building structure, fans or power wiring.

The sprinkler activation times and ceiling temperature data for the five large-scale fire tests summarized in NISTIR 6196-1 indicate that the exposure of mechanical exhaust fans and ducts located at the ceiling to high temperatures will be relatively short. Since it is anticipated that the exhaust system will only be activated after the arrival of fire fighters at the scene (estimated to be 7 minutes or longer after ignition), ceiling temperatures should be reduced sufficiently to allow fans rated for only ambient temperatures to be used for the exhaust system.

910.4.3 System design criteria. The mechanical smoke removal system shall be sized to exhaust the building at a minimum rate of two air changes per hour based upon the volume of the building or portion thereof without contents. The capacity of each exhaust fan shall not exceed 30,000 cubic feet per minute (14.2 m^3/sec).

❖ Sections 910.4.3 and 910.4.3.1 specify the design requirement for the minimum number of air changes, maximum fan capacity, and requirements for the provision of makeup air.

These provisions require that the mechanical smoke removal system be sized to provide a minimum exhaust rate of two air changes per hour based on the enclosed volume of the building space to be exhausted, without any deductions for the space occupied by storage or equipment. An exhaust rate of two air changes per hour is based on an analysis assuming a conservative approach using a Factory Mutual Research Corporation (FMRC) Standard Plastic Commodity (polystyrene cups in compartmented cartons). This commodity is recognized to represent a severe fire hazard of high-density plastics.

In a calculation based on this commodity, a maximum of 68,960 cfm of smoke was generated by the design fire. Based on an empty building volume of 2.659 million cubic feet, the exhaust rate required to achieve two air changes per hour is 88,633 cfm. Because no single fan can exceed 30,000 cfm, this building required five fans, each exhausting 25,570 cfm for a total of 127,850 cfm. This exceeds the minimum two air changes per hour by more than 40 percent. Even at the minimum required rate of two air changes per hour, the calculation results show that the mechanical smoke removal system will be capable of removing the smoke from the building faster than it will be generated, ultimately removing smoke from the building.

910.4.3.1 Makeup air. Makeup air openings shall be provided within 6 feet (1829 mm) of the floor level. Operation of makeup air openings shall be manual or automatic. The minimum gross area of makeup air inlets shall be 8 square feet per 1,000 cubic feet per minute (0.74 m^2 per 0.4719 m^3/s) of smoke exhaust.

❖ In order for a mechanical smoke removal system to work properly, makeup air at the proper location and volume needs to be provided. Generally, makeup air inlets need to be located much lower than where the smoke is exhausted to get the proper movement of air. In this case the required location is within 6 feet of the floor.

The derivation of the gross vent area is based on NFPA 92-2012. Specifically, Annex Section A-4.4.4.1.4 states that the maximum air velocity through the makeup air inlet is 1 m/sec or 200 ft/min. This is the same limitation found in Section 909.7.1, which is for the airflow method of smoke control. The area requirement is then derived as follows:

- Effective Vent Area = (1,000 ft^3/min)/(200 ft/min) = 5 ft^2 per 1,000 cfm
- Assume an orifice coefficient of 0.6
- Gross Vent Area = 5 ft^2/(0.6) = 8.33 ft^2 per 1,000 cfm, which is rounded down because of the conservative nature of the requirement

The reason for this limitation is to prevent significant deflection of the plume, which will cause more air entrainment into the plume and more smoke production. This is the same limitation found in Section 909.7.1, which is for the airflow method of smoke control. This criterion is conservative as the requirement above assumes an active fire and the design philosophy for this requirement is to provide post-fire smoke exhaust.

910.4.4 Activation. The mechanical smoke removal system shall be activated by manual controls only.

❖ This section requires that mechanical systems are to be activated manually so that the fire department is in control of the system. In some situations, automatic operation could cause a fire to grow or spread, open-

INTERNATIONAL CODE COUNCIL®
Copyright © 2015 ICC. ALL RIGHTS RESERVED. Accessed by David Dammon on Jun 21, 2017 12:30:52 PM pursuant to License Agreement with ICC. No further reproduction or distribution authorized. ANY UNAUTHORIZED REPRODUCTION OR DISTRIBUTION IS A VIOLATION OF THE FEDERAL COPYRIGHT ACT AND THE LICENSE AGREEMENT, AND SUBJECT TO CIVIL AND CRIMINAL PENALTIES THEREUNDER.

ing an excessive number of sprinklers. Automatic operation of the mechanical smoke removal system could also be detrimental to the operation of the sprinkler system in a manner similar to draft curtains. The effect of the automatic mechanical smoke removal system on sprinkler operation would depend on when the system was activated. The sooner the system is automatically activated, the greater the detrimental effect. The fire department will retain the option to shut down the exhaust system.

910.4.5 Manual control location. Manual controls shall be located so as to be accessible to the fire service from an exterior door of the building and protected against interior fire exposure by not less than 1-hour *fire barriers* constructed in accordance with Section 707 or *horizontal assemblies* constructed in accordance with Section 711, or both.

❖ This section establishes the required placement, access and protection of the manual controls to ensure that fire fighters will have quick and protected access to them.

[F] 910.4.6 Control wiring. Wiring for operation and control of mechanical smoke removal systems shall be connected ahead of the main disconnect in accordance with Section 701.12E of NFPA 70 and be protected against interior fire exposure to temperatures in excess of 1,000°F (538°C) for a period of not less than 15 minutes.

❖ Unless the mechanical smoke removal system also functions as a component of a smoke control system, standby power is not specifically required (see commentary, Sections 909.11 and 2702). In order to provide an enhanced level of operational reliability, this section requires that the power supply to smoke exhaust fans must be provided from a circuit connected on the supply side (i.e., ahead) of the building's main electrical service disconnecting means. Note that this is one of the sources of standby power recognized by NFPA 70, Section 701.12(E). Such a circuit connected "ahead of the main" must still have its own approved over current protection.

The provisions for the design of a mechanical smoke removal system indicate that wiring providing power to exhaust fans located in the interior of the building is to be protected by materials that will provide a 15-minute finish rating protection. The ceiling temperature data collected in the five large-scale fire tests summarized in NISTIR 6196-1 (cited above) show that temperatures at the ceiling will be far less than the exposure temperatures defined by the ASTM E119 time-temperature curve and that the ceiling temperatures will rapidly decrease once sprinklers activate. The ceiling temperature data included in NISTIR 6196-1 indicate that providing a 15-minute finish rating protection for the interior electrical power supply is more than adequate to prevent damage to the power supply wiring for the exhaust system.

[F] 910.4.7 Controls. Where building air-handling and mechanical smoke removal systems are combined or where independent building air-handling systems are provided, fans shall automatically shut down in accordance with the *International Mechanical Code*. The manual controls provided for the smoke removal system shall have the capability to override the automatic shutdown of fans that are part of the smoke removal system.

❖ This section requires that if a mechanical smoke removal system is integrated with a standard HVAC system, then the system must shut down upon detection of smoke as required by the IMC. This relates to the requirement in Section 910.4.4 that mechanical smoke removal systems shall be manually operated only.

The concern is that HVAC systems should not work against the intended operation of the smoke exhaust system. In some cases the system may be a combination system where shutdown is not necessary or appropriate. It really depends on how the smoke exhaust system has been designed.

910.5 Maintenance. Smoke and heat vents and mechanical smoke removal systems shall be maintained in accordance with the *International Fire Code*.

❖ As with any system or equipment, the long-term operation is critical. This section is simply referring to the IFC for the maintenance provisions. Section 910.5 of that code goes into more extensive detail as to what needs to be tested, frequency of testing and necessary records that are required to be kept of such testing.

SECTION 911
FIRE COMMAND CENTER

[F] 911.1 General. Where required by other sections of this code and in buildings classified as high-rise buildings by this code, a fire command center for fire department operations shall be provided and shall comply with Sections 911.1.1 through 911.1.6.

❖ Fireground operations usually involve establishing an incident command post where the incident command officer can observe what is happening; control arriving personnel and equipment and direct the resources and fire-fighting operations effectively. Because of the difficulties in controlling a fire in a high-rise building, a protected, readily accessible, separate room for this purpose within the building must be established to assist the incident command officer (see commentary, Section 202 for the definition of "Fire command center").

A fire command center is also required in buildings containing smoke-protected assembly seating to house the fire-fighter's smoke control panel. Facilities with smoke-protected seating tend to be larger facilities that, at the very least, would already have a central security center which could also function as a fire command center where approved by the jurisdiction (see commentary, Section 909.16).

INTERNATIONAL CODE COUNCIL®
Copyright © 2015 ICC. ALL RIGHTS RESERVED. Accessed by David Dammon on Jun 21, 2017 12:30:52 PM pursuant to License Agreement with ICC. No further reproduction or distribution authorized. ANY UNAUTHORIZED REPRODUCTION OR DISTRIBUTION IS A VIOLATION OF THE FEDERAL COPYRIGHT ACT AND THE LICENSE AGREEMENT, AND SUBJECT TO CIVIL AND CRIMINAL PENALTIES THEREUNDER.

[F] 911.1.1 Location and access. The location and accessibility of the fire command center shall be *approved* by the fire chief.

❖ Because of its importance to fire suppression and rescue operations, the fire command center must be provided at a location that is acceptable to the fire department, usually near the front of the building near the main entrance, so that the first arriving command officer can access it quickly and undertake operations. Since fireground operations are based on local operational procedures, it is only reasonable that the fire chief of the jurisdiction have approval authority over the location of and access to the fire command center.

[F] 911.1.2 Separation. The fire command center shall be separated from the remainder of the building by not less than a 1-hour *fire barrier* constructed in accordance with Section 707 or *horizontal assembly* constructed in accordance with Section 711, or both.

❖ Again, because of its importance to fire suppression and rescue operations, the fire command center must be separated from the remainder of the building by 1-hour fire barriers and horizontal assemblies, including opening protectives, to protect the room, its contents and the occupants from an incident in adjacent areas of the building and to limit noise and distractions during command operations within the room.

[F] 911.1.3 Size. The room shall be not less than 200 square feet (19 m^2) with a minimum dimension of 10 feet (3048 mm).

❖ This section is intended to provide a minimum size and configuration of the fire command center that allows sufficient space for the necessary command personnel to effectively perform the required tasks associated with a fire command center without interfering with each other. Fire command centers need to be designed to accommodate several emergency response commanders wearing full protective equipment and also provide space to review building emergency plans during incidents, colocate decision makers within the Incident Command System (ICS) and interpret fire protection system and building system information generated by the features required by Section 911.1.5. Given the multiple uses of the fire command center, a room any smaller would compromise the effectiveness of incident management.

[F] 911.1.4 Layout approval. A layout of the fire command center and all features required by this section to be contained therein shall be submitted for approval prior to installation.

❖ The flow of critical tactical information into, within and out of a fire command center is, by its very nature, both high in volume and intense in nature and has a direct bearing on the safety of building occupants and the emergency response forces at work at an incident. For that reason, the layout and arrangement of the fire command center must comport with the operational procedures of the local fire department to optimize the receipt, processing and dissemination of operational information and orders. Accordingly, the fire code official must review and approve the arrangement of the fire command center prior to the installation of any of the controls and features required by Section 911.1.5. Consistent with Section 911.1.1, given the operational importance of the fire command center, the fire code official should work closely with the jurisdiction's fire chief to make sure that all operational needs are identified and met during the design stages.

[F] 911.1.5 Storage. Storage unrelated to operation of the fire command center shall be prohibited.

❖ Fire command centers are unique rooms in unique buildings and are strictly reserved for emergency management operations. As such, they must be neat and orderly at all times so as not to obstruct or limit access to all of the system controls that they contain. This section supports that need by prohibiting the storage within a fire command center of anything not directly related to the function of fire command.

[F] 911.1.6 Required features. The fire command center shall comply with NFPA 72 and shall contain all of the following features:

1. The emergency voice/alarm communication system control unit.
2. The fire department communications system.
3. Fire detection and alarm system annunciator.
4. Annunciator unit visually indicating the location of the elevators and whether they are operational.
5. Status indicators and controls for air distribution systems.
6. The fire fighter's control panel required by Section 909.16 for smoke control systems installed in the building.
7. Controls for unlocking *interior exit stairway* doors simultaneously.
8. Sprinkler valve and waterflow detector display panels.
9. Emergency and standby power status indicators.
10. A telephone for fire department use with controlled access to the public telephone system.
11. Fire pump status indicators.
12. Schematic building plans indicating the typical floor plan and detailing the building core, *means of egress*, fire protection systems, fire fighter air replenishment system, fire-fighting equipment and fire department access and the location of *fire walls, fire barriers, fire partitions, smoke barriers* and smoke partitions.
13. An *approved* Building Information Card that contains, but is not limited to, the following information:
    13.1. General building information that includes: property name, address, the number of floors in the building above and below grade, use and occupancy classification (for mixed uses,

INTERNATIONAL CODE COUNCIL®
Copyright © 2015 ICC. ALL RIGHTS RESERVED. Accessed by David Dammon on Jun 21, 2017 12:30:52 PM pursuant to License Agreement with ICC. No further reproduction or distribution authorized. ANY UNAUTHORIZED REPRODUCTION OR DISTRIBUTION IS A VIOLATION OF THE FEDERAL COPYRIGHT ACT AND THE LICENSE AGREEMENT, AND SUBJECT TO CIVIL AND CRIMINAL PENALTIES THEREUNDER.

identify the different types of occupancies on each floor), and the estimated building population during the day, night and weekend.

13.2. Building emergency contact information that includes: a list of the building's emergency contacts including but not limited to building manager and building engineer and their respective work phone number, cell phone number, e-mail address.

13.3. Building construction information that includes: the type of building construction including but not limited to floors, walls, columns, and roof assembly.

13.4. *Exit access* and *exit stairway* information that includes: number of *exit access* and *exit stairways* in the building, each *exit access* and *exit stairway* designation and floors served, location where each *exit access* and *exit stairway* discharges, *interior exit stairways* that are pressurized, *exit* stairways provided with emergency lighting, each *exit stairway* that allows reentry, *exit stairways* providing roof access; elevator information that includes: number of elevator banks, elevator bank designation, elevator car numbers and respective floors that they serve; location of elevator machine rooms, control rooms and control spaces; location of sky lobby, location of freight elevator banks.

13.5. Building services and system information that includes: location of mechanical rooms, location of building management system, location and capacity of all fuel oil tanks, location of emergency generator, location of natural gas service.

13.6. Fire protection system information that includes: location of standpipes, location of fire pump room, location of fire department connections, floors protected by automatic sprinklers, location of different types of *automatic sprinkler systems* installed including, but not limited to, dry, wet and pre-action.

13.7 Hazardous material information that includes: location of hazardous material, quantity of hazardous material.

14. Work table.

15. Generator supervision devices, manual start and transfer features.

16. Public address system, where specifically required by other sections of this code.

17. Elevator fire recall switch in accordance with ASME A17.1.

18. Elevator emergency or standby power selector switch(es), where emergency or standby power is provided.

❖ The fire command center must contain all equipment necessary to enable the incident commander to monitor or control fire protection and other building service systems as listed in this section (also see commentary, Section 909.16). This room houses fire protection, smoke control and building system controls, as well as a work space for emergency responders. The room also contains schematic plans and a work table so that responders have the basic layout and geometry of the building and can identify locations of utility controls, standby or emergency power systems, and where hazardous materials are stored or used. Providing concise information in a uniform format is essential to fire fighters and emergency responders and improves their ability to utilize building systems to their advantage. This was confirmed during the National Institute of Science and Technology (NIST) investigations of the World Trade Center attacks on September 11, 2001. The Final Report on the collapse of the World Trade Center contained 30-key recommendations compiled by NIST designed to address the building vulnerabilities learned in that tragedy. Three of those 30 recommendations embrace increasing situational awareness and emergency communications of first responders in large-scale emergencies. As a result of that investigation, this section includes an Item 13 that prescribes requirements for the Building Information Card (BIC).

The BIC is divided into multiple information areas and is intended to be formatted as a single form to provide a quick, concise source of information about the building. The code does not prescribe any particular format or layout for the BIC and does not have any limits on the level of information required to satisfy the requirements. It should be recognized that the intent of the BIC is to provide an easily understood and consistent tool to emergency responders who are taking control of systems in high-rise and smoke-protected assembly buildings. Jurisdictions should develop a policy to ensure that BICs are prepared in standard, consistent format to avoid confusing the responders, and yet provide the minimum information required so they can correctly and efficiently utilize all of the building features. The number and types of features required by this section can create a large volume of data, thus reinforcing the need for an approved layout as required by Section 911.1.4.

INTERNATIONAL CODE COUNCIL®
Copyright © 2015 ICC. ALL RIGHTS RESERVED. Accessed by David Dammon on Jun 21, 2017 12:30:52 PM pursuant to License Agreement with ICC. No further reproduction or distribution authorized. ANY UNAUTHORIZED REPRODUCTION OR DISTRIBUTION IS A VIOLATION OF THE FEDERAL COPYRIGHT ACT AND THE LICENSE AGREEMENT, AND SUBJECT TO CIVIL AND CRIMINAL PENALTIES THEREUNDER.

SECTION 912
FIRE DEPARTMENT CONNECTIONS

[F] 912.1 Installation. Fire department connections shall be installed in accordance with the NFPA standard applicable to the system design and shall comply with Sections 912.2 through 912.6.

❖ An FDC is required as part of a water-based suppression system as the auxiliary water supply. These connections give the fire department the capability of supplying the necessary water to the automatic sprinkler or standpipe system at a sufficient pressure. The FDC also serves as an alternative source of water should a valve in the primary water supply be closed. A fire department connection does not, however, constitute an automatic water source. See Commentary Figure 903.3.1.1 for a typical FDC arrangement on a wet pipe sprinkler system.

The requirements for the FDC depend on the type of sprinkler system installed and whether a standpipe system is installed. NFPA 13 and 13R, for example, include design considerations for FDCs that are an auxiliary water supply source for automatic sprinkler systems; NFPA 14 is the design standard to use for FDCs serving standpipe systems. Threads for FDCs to sprinkler systems, standpipes, yard hydrants or any other fire hose connection must be approved (NFPA 1963 may be utilized as part of the approval or as otherwise approved) and be compatible with the connections used by the local fire department (see commentary, Sections 903.3.6 and 905.1).

[F] 912.2 Location. With respect to hydrants, driveways, buildings and landscaping, fire department connections shall be so located that fire apparatus and hose connected to supply the system will not obstruct access to the buildings for other fire apparatus. The location of fire department connections shall be *approved* by the fire chief.

❖ This section specifies that the FDC must be located so that vehicles and hose lines will not interfere with access to the building for the use of other fire department apparatus. The location of potential connected hose lines to the FDC and hydrants must be preplanned with the fire department. Many fire departments have a policy restricting the distance that a FDC may be from a fire hydrant. Some also have policies that indicate the maximum distance from the nearest point of fire department vehicle access (often, the curb). Since fireground operations are based on local operational procedures, it is only reasonable that the fire chief of the jurisdiction have approval authority over the location of and access to the FDC.

Landscaping can also be a hindrance to fire department operations. Even where the FDC is visible, the extensive use of landscaping may make access difficult. Landscaping also changes over time. What may not have been an obstruction when it was planted can sometimes grow into an obstruction over time.

[F] 912.2.1 Visible location. Fire department connections shall be located on the street side of buildings, fully visible and recognizable from the street or nearest point of fire department vehicle access or as otherwise *approved* by the fire chief.

❖ FDCs must be readily visible and easily accessed. A local policy constituting what is readily visible and accessible needs to be established. While the intent is clearly understandable, its application can vary widely. A precise policy is the best way to avoid ambiguous directives that result in inconsistent and arbitrary enforcement. Usually, the policy will address issues such as location on the outside of the building and proximity to fire hydrants.

Landscaping is often used to hide the FDCs from the public. This can greatly hamper the efforts of the fire department in staging operations and supplying water to the fire protection systems. Landscaping must be designed so that it does not obstruct the visibility of the FDC. Since fireground operations are based on local operational procedures, it is only reasonable that the fire chief of the jurisdiction have final approval authority over the visibility of and access to the FDC.

[F] 912.2.2 Existing buildings. On existing buildings, wherever the fire department connection is not visible to approaching fire apparatus, the fire department connection shall be indicated by an *approved* sign mounted on the street front or on the side of the building. Such sign shall have the letters "FDC" not less than 6 inches (152 mm) high and words in letters not less than 2 inches (51 mm) high or an arrow to indicate the location. Such signs shall be subject to the approval of the fire code official.

❖ The section acknowledges that FDCs on existing buildings may not always be readily visible from the street or nearest point of fire department vehicle access. In those instances, the location of the connection must be clearly marked with signage. The FDC may be located on the side of the building or in an alley, not visible to arriving fire-fighting forces. A sign is necessary so that those driving the arriving apparatus know where to maneuver the vehicle to get close to the FDC.

[F] 912.3 Fire hose threads. Fire hose threads used in connection with standpipe systems shall be *approved* and shall be compatible with fire department hose threads.

❖ There are several sections in the code that contain requirements for fire department connections. This section simply correlates with those requirements by further clarifying that fire hose threads for standpipe systems must be approved.

[F] 912.4 Access. Immediate access to fire department connections shall be maintained at all times and without obstruction by fences, bushes, trees, walls or any other fixed or moveable object. Access to fire department connections shall be *approved* by the fire chief.

Exception: Fences, where provided with an access gate equipped with a sign complying with the legend requirements of this section and a means of emergency operation. The gate and the means of emergency operation shall be

INTERNATIONAL CODE COUNCIL®
Copyright © 2015 ICC. ALL RIGHTS RESERVED. Accessed by David Dammon on Jun 21, 2017 12:30:52 PM pursuant to License Agreement with ICC. No further reproduction or distribution authorized. ANY UNAUTHORIZED REPRODUCTION OR DISTRIBUTION IS A VIOLATION OF THE FEDERAL COPYRIGHT ACT AND THE LICENSE AGREEMENT, AND SUBJECT TO CIVIL AND CRIMINAL PENALTIES THEREUNDER.

approved by the fire chief and maintained operational at all times.

❖ The FDC must be readily accessible to fire fighters and allow fire-fighting personnel an adequate area to maneuver a hose for the connection. Landscaping design must not block a clear view of the FDC from arriving fire department vehicles. Depending on the type of landscaping materials, an active maintenance program may be necessary to maintain ready access over time. This section also recognizes that the obstructing objects regulated here can be either fixed or moveable (such as outdoor furnishings, shopping cart queue areas, etc.). Note that no specific dimension is given as was the case in previous editions of the code. This performance language avoids previous misinterpretations that the code intended to allow obstructions to FDC access as long as they were kept 3 feet (914 mm) away. Since fireground operations are based on local operational procedures, it is only reasonable that the fire chief of the jurisdiction have final approval authority over the access to the FDC.

The exception recognizes the practical fact that sometimes, security or other considerations make installation of a fence around a building necessary as long as the fence meets the stated criteria. The sign requirement intends to provide a visual location cue to approaching fire apparatus where the height of the fence may obscure the visibility of the FDC.

[F] 912.4.1 Locking fire department connection caps. The fire code official is authorized to require locking caps on fire department connections for water-based *fire protection systems* where the responding fire department carries appropriate key wrenches for removal.

❖ This section allows for the FDC caps to be equipped with locks as long as the fire departments that respond to that building or facility have the appropriate key wrenches. This avoids vandalism and affords a more functional FDC when needed. Locking caps, even more so than regular FDC caps, need proper maintenance so that they can be removed when required. Any time that an additional mechanical function is added to something that is exposed to the elements, it must be done with the understanding that the corrosive nature of the elements can place the FDC out of commission if the cap cannot be removed (see Commentary Figure 912.4.1).

[F] 912.4.2 Clear space around connections. A working space of not less than 36 inches (762 mm) in width, 36 inches (914 mm) in depth and 78 inches (1981 mm) in height shall be provided and maintained in front of and to the sides of wall-mounted fire department connections and around the circumference of free-standing fire department connections, except as otherwise required or *approved* by the fire chief.

❖ Care must be taken so that fences, utility poles, barricades and other obstructions do not prevent access to and use of FDCs. A clear space of 3 feet (914 mm) must be maintained in front of and to either side of wall-mounted FDCs and around free-standing FDCs to allow easy hose connections to the fitting and efficient use of spanner wrenches and other tools needed by the apparatus engineer.

Though not specifically mentioned in this section, it is also important that FDCs be installed with the hose connections well above adjoining grade to accommodate the free turning of a spanner wrench when connecting hoses to the FDC.

[F] 912.4.3 Physical protection. Where fire department connections are subject to impact by a motor vehicle, vehicle impact protection shall be provided in accordance with Section 312 of the *International Fire Code*.

❖ Section 312 of the IFC requires vehicle impact protection by placing steel posts filled with concrete around the FDC. Section 312 of the IFC gives the specifications for the posts.

[F] 912.5 Signs. A metal sign with raised letters not less than 1 inch (25 mm) in size shall be mounted on all fire department connections serving automatic sprinklers, standpipes or fire pump connections. Such signs shall read: AUTOMATIC SPRINKLERS or STANDPIPES or TEST CONNECTION or a combination thereof as applicable. Where the fire department connection does not serve the entire building, a sign shall be provided indicating the portions of the building served.

❖ The purpose of the sign is to provide the responding fire fighters with the correct information on which portions of a building are served by the fire department connection. They identify the type of system or zone served by a given FDC. Many buildings include multiple sets of fire department connections which are not interconnected, such as separate connections for the



Figure 912.4.1
LOCKING FDC CAPS
(Photo courtesy of Knox Company)

INTERNATIONAL CODE COUNCIL®
Copyright © 2015 ICC. ALL RIGHTS RESERVED. Accessed by David Dammon on Jun 21, 2017 12:30:52 PM pursuant to License Agreement with ICC. No further reproduction or distribution authorized. ANY UNAUTHORIZED REPRODUCTION OR DISTRIBUTION IS A VIOLATION OF THE FEDERAL COPYRIGHT ACT AND THE LICENSE AGREEMENT, AND SUBJECT TO CIVIL AND CRIMINAL PENALTIES THEREUNDER.

building sprinkler system and the dry standpipe system in open parking structures. Some buildings may have only a partial sprinkler system, such as rehabilitated buildings where a sprinkler system is only installed on certain floors or a building that only has basement sprinklers in accordance with Section 903.2.11.

Signs may also distinguish FDCs from fire pump test headers. Usually, FDCs may be distinguished from fire pump test headers by the types of couplings provided. FDCs are customarily equipped with female couplings, while fire pump test headers usually have separately valved male couplings. Furthermore, fire pump test headers are equipped with one $2^1/_2$-inch (64 mm) outlet for each 250 gallon per minute (gpm) (16 L/s) of rated capacity.

Raised letters are required so that any repainting or fading of the colors on the sign will not affect its ability to be read. Each letter must be at least 1 inch (25 mm) in height so that the wording is clear. Often the wording may be abbreviated such that "AUTOMATIC SPRINKLERS" reads as "AUTO. SPKR." Existing signs may use language slightly different than that noted in the code. As long as the information is adequately communicated, there should be no reason to require new signage to replace existing ones (see Commentary Figure 912.5).



Figure 912.5
FIRE DEPARTMENT CONNECTION WITH SIGN

[P] 912.6 Backflow protection. The potable water supply to automatic sprinkler and standpipe systems shall be protected against backflow as required by the *International Plumbing Code*.

❖ Section 608.16.4 of the IPC requires all connections to automatic sprinkler systems and standpipe systems to be equipped with a means to protect the potable water supply. The means of backflow protection can be either a double check-valve assembly or a reduced-pressure-principle backflow preventer. This, in general, assumes a FDC is required. For example, a limited-area sprinkler system off the domestic supply does not necessarily require a FDC and would not require backflow protection.

SECTION 913
FIRE PUMPS

[F] 913.1 General. Where provided, fire pumps shall be installed in accordance with this section and NFPA 20.

❖ This section contains specific installation requirements for fire pumps supplying water to fire protection systems. Inspection, testing and maintenance requirements comply with NFPA 20 unless noted otherwise. Applicable maintenance standards are also identified.

Fire pumps are installed in sprinkler and standpipe systems to pressurize the water supply for the minimum required sprinkler and standpipe operation. They are considered a design feature or component of the system. Fire pumps can improve only the pressure of the incoming water supply, not the volume of water available.

When the volume from a water supply is not adequate to supply sprinkler or standpipe demand, water tanks for private fire protection, improvements in the size and capacity of fire mains or water distribution systems or all of these for the installation of a fire pump are needed.

When fire pumps are required to meet the pressure requirements of sprinkler and standpipe systems, they must be installed and tested in accordance with NFPA 20.

[F] 913.2 Protection against interruption of service. The fire pump, driver and controller shall be protected in accordance with NFPA 20 against possible interruption of service through damage caused by explosion, fire, flood, earthquake, rodents, insects, windstorm, freezing, vandalism and other adverse conditions.

❖ This section lists hazards that must be taken into account when determining the extent of protection required for the fire pump and its auxiliary equipment. A pump room in a building that is protected against the listed hazards in compliance with the code would be considered in compliance. Because fire pumps are also typically located in separate detached structures, geographical and security issues must also be considered.

913.2.1 Protection of fire pump rooms. Fire pumps shall be located in rooms that are separated from all other areas of the building by 2-hour *fire barriers* constructed in accordance with Section 707 or 2-hour *horizontal assemblies* constructed in accordance with Section 711, or both.

Exceptions:

1. In other than high-rise buildings, separation by 1-hour *fire barriers* constructed in accordance with

INTERNATIONAL CODE COUNCIL®
Copyright © 2015 ICC. ALL RIGHTS RESERVED. Accessed by David Dammon on Jun 21, 2017 12:30:52 PM pursuant to License Agreement with ICC. No further reproduction or distribution authorized. ANY UNAUTHORIZED REPRODUCTION OR DISTRIBUTION IS A VIOLATION OF THE FEDERAL COPYRIGHT ACT AND THE LICENSE AGREEMENT, AND SUBJECT TO CIVIL AND CRIMINAL PENALTIES THEREUNDER.

Section 707 or 1-hour *horizontal assemblies* constructed in accordance with Section 711, or both, shall be permitted in buildings equipped throughout with an *automatic sprinkler system* in accordance with Section 903.3.1.1 or 903.3.1.2.

2. Separation is not required for fire pumps physically separated in accordance with NFPA 20.

❖ This section correlates the NFPA 20 requirements for separation of fire pumps with the IFC and specifies the required degree of fire resistance as a requirement in the code so that designers and building officials are made aware of it. It requires fire pumps to be separated using either fire-resistive barriers or horizontal assemblies when the pump is located inside of a building or by using spatial separation (physical distance) when the fire pump is located outside of the building it serves.

The requirements are based on the criteria found in NFPA 20. Table 508.2.5, when used as a means for dealing with mixed uses in a building, and this section require fire pump units located inside of high-rise buildings to have a minimum 2-hour separation from the remainder of the building. The 2-hour separation requirement is consistent with the requirements in NFPA 20. Separation must be in the form of fire barriers used in conjunction with a horizontal assembly, as applicable, with both being of 2-hour fire-resistance-rated construction.

In all other buildings, consistent with similar exceptions elsewhere in the code, Exception 1 and Table 508.2.5, if applicable, recognize the protection afforded by complete automatic sprinkler protection in accordance with NFPA 13 or 13R as being equivalent to 1 hour of fire resistance.

A fire pump unit also may be located outside of a building. This is a common practice because it limits the exposure of a fire pump unit from a fire inside of the building it is serving. When a fire pump unit is located outdoors, Exception 2 recognizes spatial separation of at least 50 feet (15 240 mm) in accordance with Section 5.12 of NFPA 20 as an acceptable alternative to fire-resistance-rated protection.

[F] 913.2.2 Circuits supplying fire pumps. Cables used for survivability of circuits supplying fire pumps shall be *listed* in accordance with UL 2196. Electrical circuit protective systems shall be installed in accordance with their listing requirements.

❖ This section is provided to better protect cables used for survivability of circuits associated with fire pumps by referencing the appropriate standard. UL 2196 is the ANSI-approved standard for tests of fire-resistive cables. NFPA 20 includes selective survivability requirements to ensure integrity of certain critical circuits. NFPA 70 does not specify the applicable standard within its mandatory provisions but recognizes electrical circuit protective systems as an alternative to listed cables. An electrical circuit protective system is a field assembly of components that must be installed according to the listing requirements and manufacturer's instructions in order to maintain the listing for the system. There are more than two dozen electrical circuit protective systems listed in the UL Fire Resistance Directory.

[F] 913.3 Temperature of pump room. Suitable means shall be provided for maintaining the temperature of a pump room or pump house, where required, above 40°F (5°C).

❖ As previously noted for sprinkler systems, standpipe systems and other water-based fire protection systems, pump rooms or pump houses must be maintained at a temperature of 40°F (4°C) or above to prevent the system from freezing. This is consistent with Section 5.12.2.1 of NFPA 20.

[F] 913.3.1 Engine manufacturer's recommendation. Temperature of the pump room, pump house or area where engines are installed shall never be less than the minimum recommended by the engine manufacturer. The engine manufacturer's recommendations for oil heaters shall be followed.

❖ The engine manufacturer's recommendation must be compiled with where the recommended minimum temperature is higher than the minimum established in Section 913.3. Maintaining the desired engine temperature enhances the startability of the engine. Maintaining water heaters and oil heaters as required for diesel engines, for example, will improve the starting capabilities of the fire pump and reduce engine wear and the drain on batteries.

[F] 913.4 Valve supervision. Where provided, the fire pump suction, discharge and bypass valves, and isolation valves on the backflow prevention device or assembly shall be supervised open by one of the following methods:

1. Central-station, proprietary or remote-station signaling service.
2. Local signaling service that will cause the sounding of an audible signal at a *constantly attended location*.
3. Locking valves open.
4. Sealing of valves and *approved* weekly recorded inspection where valves are located within fenced enclosures under the control of the owner.

❖ As was the case with sprinkler systems, water control valves that are a part of the fire pump installation must be supervised in the open position so that the system is operational when needed and also to reduce the chance of a system failure (see commentary, Section 903.4). In most cases the required water-based extinguishing system, of which the fire pump is an integral component, will be electrically supervised. Locking or sealing valves open as the only means of supervision may not be permitted, depending on the type of valve. Section 903.4, for example, specifically exempts jockey pump control valves from being electrically supervised if they are sealed or locked in the open position.

INTERNATIONAL CODE COUNCIL®
Copyright © 2015 ICC. ALL RIGHTS RESERVED. Accessed by David Dammon on Jun 21, 2017 12:30:52 PM pursuant to License Agreement with ICC. No further reproduction or distribution authorized. ANY UNAUTHORIZED REPRODUCTION OR DISTRIBUTION IS A VIOLATION OF THE FEDERAL COPYRIGHT ACT AND THE LICENSE AGREEMENT, AND SUBJECT TO CIVIL AND CRIMINAL PENALTIES THEREUNDER.

[F] 913.4.1 Test outlet valve supervision. Fire pump test outlet valves shall be supervised in the closed position.

❖ Fire pump test outlet valves are for performance testing of the fire pump and do not control the available water supply to either a sprinkler system or a standpipe system. These valves are normally in a closed position and are supervised accordingly.

[F] 913.5 Acceptance test. Acceptance testing shall be done in accordance with the requirements of NFPA 20.

❖ Chapter 14 of NFPA 20 details the procedure for conducting a fire pump acceptance test. This test is run to determine that the installation matches the sprinkler or standpipe system design criteria, the approved shop drawings and the pump manufacturer's performance specifications. The test is to be conducted in the presence of the building official in accordance with Section 901.5 by the installing contractor and representatives of the pump manufacturer and the controller manufacturer. Where the pump engine and/or transfer switch are separately supplied components, their manufacturer representatives must also be present.

SECTION 914
EMERGENCY RESPONDER SAFETY FEATURES

[F] 914.1 Shaftway markings. Vertical shafts shall be identified as required by Sections 914.1.1 and 914.1.2.

❖ This section was developed to prevent fire fighters from falling through shafts when entering buildings from ladders placed on the exterior of the building or from passing through an interior opening that leads to a shaft.

[F] 914.1.1 Exterior access to shaftways. Outside openings accessible to the fire department and that open directly on a hoistway or shaftway communicating between two or more floors in a building shall be plainly marked with the word "SHAFTWAY" in red letters not less than 6 inches (152 mm) high on a white background. Such warning signs shall be placed so as to be readily discernible from the outside of the building.

❖ All exterior wall openings that are accessible to fire fighters by way of ladders and aerial equipment and open directly into shafts or hoistways communicating between two or more floors must be clearly marked (see Commentary Figure 914.1.1). The markings serve to warn emergency responders that the opening is unsafe for laddering to gain access to upper floors and could result in a fall to the bottom of the shaft if such a mistake were made.

[F] 914.1.2 Interior access to shaftways. Door or window openings to a hoistway or shaftway from the interior of the building shall be plainly marked with the word "SHAFTWAY" in red letters not less than 6 inches (152 mm) high on a white background. Such warning signs shall be placed so as to be readily discernible.

Exception: Markings shall not be required on shaftway openings that are readily discernible as openings onto a shaftway by the construction or arrangement.

❖ Openings into shaftways from the interior of the building pose a threat to fire fighters when visibility is poor. Interior shaft openings must be marked so that they are plainly visible from the interior of the building. If fire fighters can readily identify an opening into a shaft by the way the opening is constructed, the shaft opening need not be marked, keeping in mind that the fire fighter may be feeling his or her way in heavy smoke or darkness.

[F] 914.2 Equipment room identification. Fire protection equipment shall be identified in an *approved* manner. Rooms containing controls for air-conditioning systems, sprinkler risers and valves or other fire detection, suppression or control elements shall be identified for the use of the fire department. *Approved* signs required to identify fire protection equipment and equipment location shall be constructed of durable materials, permanently installed and readily visible.

❖ In an emergency, it is vitally important that the fire department and other emergency responders be able to quickly locate and access critical controls for fire protection systems. Obstructed or poorly marked equipment can cause delays in fire-fighting operations while fire fighters locate other hose stations and stretch additional hose. Valves and other controls are often located in rooms or other enclosures and their location must be identified with written or pictographic signs, which must be clearly visible and legible. Signs using the NFPA 170 symbols for fire protection equipment can provide standardized markings throughout a jurisdiction. White reflective symbols on a red reflective background are effective. For exterior signs, heavy-gage, sign-grade aluminum is recom-

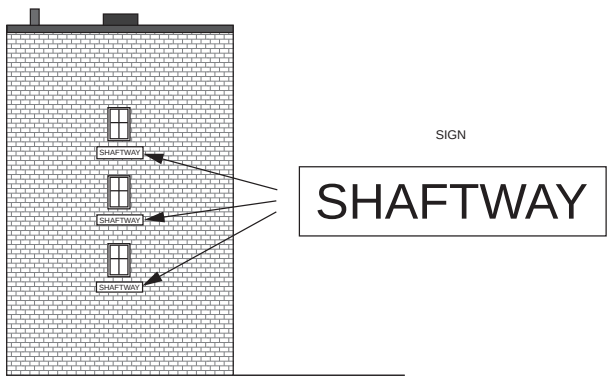

Figure 914.1.1
SHAFTWAY SIGNAGE

INTERNATIONAL CODE COUNCIL®
Copyright © 2015 ICC. ALL RIGHTS RESERVED. Accessed by David Dammon on Jun 21, 2017 12:30:52 PM pursuant to License Agreement with ICC. No further reproduction or distribution authorized. ANY UNAUTHORIZED REPRODUCTION OR DISTRIBUTION IS A VIOLATION OF THE FEDERAL COPYRIGHT ACT AND THE LICENSE AGREEMENT, AND SUBJECT TO CIVIL AND CRIMINAL PENALTIES THEREUNDER.

mended. Interior signs may be constructed of plastic, light-gage aluminum or other approved, durable, water-resistant material. As a general rule, fire protection piping, cabinets, enclosures, wiring, equipment and accessories are red or are identified by red or red/white markings. The manner of identification is subject to the approval of the building official.

SECTION 915
CARBON MONOXIDE DETECTION

[F] 915.1 General. Carbon monoxide detection shall be installed in new buildings in accordance with Sections 915.1.1 through 915.6. Carbon monoxide detection shall be installed in existing buildings in accordance with Chapter 11 of the *International Fire Code*.

❖ These provisions were added to the code and the IFC to be consistent with the requirements for carbon monoxide (CO) detectors in all new construction of one- and two-family dwellings that had been added to the IRC in the 2009 edition. Another reason for its approval was technical data in a 1998 article published by the *Journal of the American Medical Association* that stated that approximately 2,100 deaths occur annually as a result of CO poisoning. That annual number is based on the findings of a paper prepared by the U.S. Department of Health Centers for Disease Control (CDC). That paper documented epidemiological research by two CDC physicians who examined 56,133 death certificates over a 10-year period. Excluding suicides, homicides, structure fires and deaths resulting from CO poisoning in motor vehicles, the death rate steadily decreased for the sample period, from a value of 1,513 people in 1979 to 878 in 1988. The highest death rates occurred in winter and among males, African Americans, the elderly and residents in northern states.

CO is a colorless, tasteless, odorless gas that interrupts the attachment of oxygen molecules to hemoglobin in blood cells and can cause headaches, confusion and dizziness. At higher concentrations CO can cause loss of consciousness and eventual death. Exposures above 100 parts/million are dangerous to human health. It is not a toxic or highly toxic gas as defined in Chapter 2 but is classified as a flammable gas.

These provisions detail what occupancies require CO detection and where that detection is specifically to be located within the building. Also flexibility on the use of single- and multiple-station alarms versus CO detection systems is provided.

Retroactive requirements are found in Chapter 11 of the IFC. These requirements are essentially the same except that Group E classrooms are not addressed and the CO alarms can be battery powered.

[F] 915.1.1 Where required. Carbon monoxide detection shall be provided in Group I-1, I-2, I-4 and R occupancies and in classrooms in Group E occupancies in the locations specified in Section 915.2 where any of the conditions in Sections 915.1.2 through 915.1.6 exist.

❖ CO detection is provided to protect occupants of dwelling units and sleeping units within Group I-1, I-4, and R occupancies and classrooms in Group E occupancies. These are locations where occupants are likely to be sleeping or that young children may be at risk. Sections 915.1.2 through 915.1.5 address the different scenarios that warrant CO detection and are more specific than past editions of the code and the IFC.

[F] 915.1.2 Fuel-burning appliances and fuel-burning fireplaces. Carbon monoxide detection shall be provided in *dwelling units*, *sleeping units* and classrooms that contain a fuel-burning appliance or a fuel-burning fireplace.

❖ This section clarifies that CO detection is required where the dwelling or sleeping unit or the classroom actually contains a fuel-burning appliance or fuel-burning fireplace. Section 915.1.3 discusses dwelling and sleeping units and classrooms that are served by fuel-burning, forced-air furnaces.

[F] 915.1.3 Forced-air furnaces. Carbon monoxide detection shall be provided in *dwelling units*, *sleeping units* and classrooms served by a fuel-burning, forced-air furnace.

Exception: Carbon monoxide detection shall not be required in *dwelling units*, *sleeping units* and classrooms if carbon monoxide detection is provided in the first room or area served by each main duct leaving the furnace, and the carbon monoxide alarm signals are automatically transmitted to an approved location.

❖ This section addresses forced-air furnaces that physically move air. This potential source of CO is more indirect than having the fuel-burning appliance or fuel-burning fireplace within the space itself, but still creates a potential hazard.

The exception addresses the fact that if detection is provided closer to the source, then further detection within dwelling units, sleeping units and Group E classrooms is not necessary provided that a CO alarm signal is transmitted to an approved location from which emergency actions can be initiated and occupants in the portions of the building farther from the initial detection can be notified. The CO will continue to be generated until action is taken.

[F] 915.1.4 Fuel-burning appliances outside of dwelling units, sleeping units and classrooms. Carbon monoxide detection shall be provided in *dwelling units*, *sleeping units* and classrooms located in buildings that contain fuel-burning appliances or fuel-burning fireplaces.

Exceptions:

1. Carbon monoxide detection shall not be required in *dwelling units*, *sleeping units* and classrooms where there are no communicating openings between the fuel-burning appliance or fuel-burning fireplace and the *dwelling unit*, *sleeping unit* or classroom.
2. Carbon monoxide detection shall not be required in *dwelling units*, *sleeping units* and classrooms where

INTERNATIONAL CODE COUNCIL®
Copyright © 2015 ICC. ALL RIGHTS RESERVED. Accessed by David Dammon on Jun 21, 2017 12:30:52 PM pursuant to License Agreement with ICC. No further reproduction or distribution authorized. ANY UNAUTHORIZED REPRODUCTION OR DISTRIBUTION IS A VIOLATION OF THE FEDERAL COPYRIGHT ACT AND THE LICENSE AGREEMENT, AND SUBJECT TO CIVIL AND CRIMINAL PENALTIES THEREUNDER.

carbon monoxide detection is provided in one of the following locations:

2.1. In an approved location between the fuel-burning appliance or fuel-burning fireplace and the *dwelling unit*, *sleeping unit* or classroom.

2.2. On the ceiling of the room containing the fuel-burning appliance or fuel-burning fireplace.

❖ This section focuses on the presence of fuel-burning equipment in buildings containing dwelling units, sleeping units and classrooms but with the fuel-burning equipment located outside of those areas. CO detection is required in every dwelling unit, sleeping unit and classroom, even if that equipment does not serve those spaces. A good example of this is a multistory hotel that has all electric HVAC in the sleeping units, but perhaps a fireplace in the lobby, forced-air heating in the common area, and a boiler in an equipment room.

There are two exceptions provided that recognize, based on several factors, that CO is a very low risk to the spaces required to be protected by Section 915.

Exception 1 addresses buildings where there are no communicating openings between the location of the fuel-burning appliance and dwelling units, sleeping units and classrooms. The intent is that if the appliance is not serving the space and has no communication with the space, CO should not enter those spaces. This covers situations where CO emanating from the fuel-burning appliance has no direct path to a dwelling unit or sleeping unit, such as a water heater in an equipment room that only has access from the exterior of the building, and no openings through which the CO can get to dwelling units or sleeping units. An interior door, between the equipment room and a dwelling unit, even if it is self-closing, would not allow this exception to be used.

Exception 2 is similar to the exception to Section 915.1.3. This exception requires the installation of one or more CO alarms in approved locations between fuel-burning appliances and the nearest dwelling unit, sleeping unit or classroom or on the ceiling of the room in which a fuel-burning appliance is located. CO alarms are only required where there are communicating openings including ducts, concealed spaces, interior hallways, stairs and spaces between the fuel-burning appliance or fuel-burning fireplace and the dwelling unit or sleeping unit where air can flow from the appliance to the dwelling unit or sleeping unit.

[F] 915.1.5 Private garages. Carbon monoxide detection shall be provided in *dwelling units*, *sleeping units* and classrooms in buildings with attached private garages.

Exceptions:

1. Carbon monoxide detection shall not be required where there are no communicating openings between the private garage and the *dwelling unit*, *sleeping unit* or classroom.
2. Carbon monoxide detection shall not be required in *dwelling units*, *sleeping units* and classrooms located more than one story above or below a private garage.
3. Carbon monoxide detection shall not be required where the private garage connects to the building through an open-ended corridor.
4. Where carbon monoxide detection is provided in an approved location between openings to a private garage and *dwelling units*, *sleeping units* or classrooms, carbon monoxide detection shall not be required in the *dwelling units*, *sleeping units* or classrooms.

❖ This section addresses attached private garages. Private garages, a term defined in Chapter 2, are often sources of CO generation. When attached to a building containing dwelling units, sleeping units or classrooms in Group E, CO detection is required.

There are several exceptions to the requirement for CO detection. These are similar to those found in Sections 915.1.3 and 915.1.4.

Exception 1 is similar to Exception 1 in Section 915.1.4. If there are no communicating openings, then CO detection is not required. The likelihood of CO entering the dwelling units, sleeping units or classrooms is greatly reduced.

Exception 2 addresses buildings where the dwelling units, sleeping units and classrooms are two stories above or below the location of a fuel-burning appliance. The CO would need to travel through an entire story before reaching the areas of concern.

Exception 3 does not require CO alarms to be provided when the private garage is attached to the building by an open-ended corridor (a term defined in Chapter 2 and the IFC, and commonly called a breeze way). This allows the CO concentration to dissipate before becoming a hazard to building occupants.

Exception 4 is similar to the exception to Section 915.1.3 and recognizes that the detection can be located closer to the source of the hazard rather than requiring detection in every dwelling unit, sleeping unit or classroom.

INTERNATIONAL CODE COUNCIL®
Copyright © 2015 ICC. ALL RIGHTS RESERVED. Accessed by David Dammon on Jun 21, 2017 12:30:52 PM pursuant to License Agreement with ICC. No further reproduction or distribution authorized. ANY UNAUTHORIZED REPRODUCTION OR DISTRIBUTION IS A VIOLATION OF THE FEDERAL COPYRIGHT ACT AND THE LICENSE AGREEMENT, AND SUBJECT TO CIVIL AND CRIMINAL PENALTIES THEREUNDER.

[F] 915.1.6 Exempt garages. For determining compliance with Section 915.1.5, an *open parking garage* complying with Section 406.5 or an enclosed parking garage complying with Section 406.6 shall not be considered a private garage.

❖ This section is only provided to distinguish open parking garages and enclosed parking garages from private garages. Open parking garages and private garages are defined terms in Section 202 of the code.

[F] 915.2 Locations. Where required by Section 915.1.1, carbon monoxide detection shall be installed in the locations specified in Sections 915.2.1 through 915.2.3.

❖ Sections 915.2.1 through 915.2.3 provide more detail on where detection is specifically required to be installed. This is a clarification from previous editions. NFPA 720 does not provide detailed enough information as to where detection should be located, so specific direction is provided in the code. In some cases the locations differ from that provided in NFPA 720.

[F] 915.2.1 Dwelling units. Carbon monoxide detection shall be installed in dwelling units outside of each separate sleeping area in the immediate vicinity of the bedrooms. Where a fuel-burning appliance is located within a bedroom or its attached bathroom, carbon monoxide detection shall be installed within the bedroom.

❖ The language is similar to that required for smoke alarms, but the detection is only required outside of each sleeping area. If the fuel-burning appliance is within the bedroom or the attached bathroom, detection is required within the bedroom itself. Commentary Figure 915.2.1 shows the layout of carbon monoxide alarms versus smoke alarms. Note that if they are combined (smoke and CO alarms), the smoke alarm placement would be more restrictive.

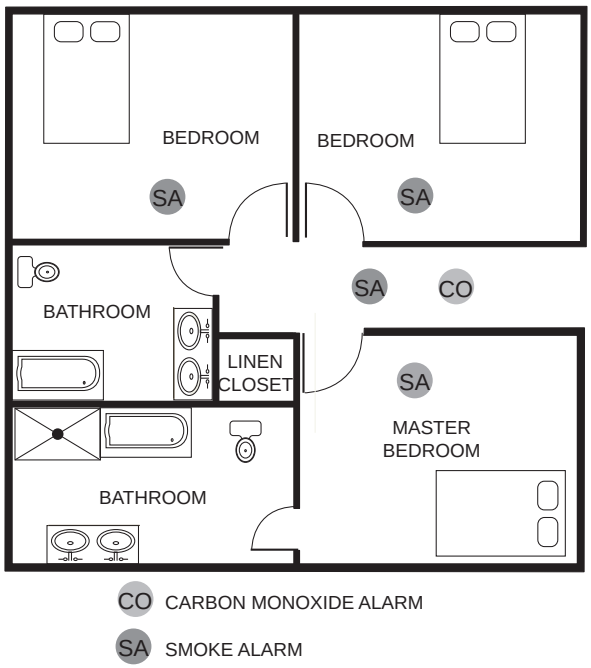

Figure 915.2.1
CARBON MONOXIDE ALARM PLACEMENT VERSUS SMOKE DETECTION PLACEMENT

[F] 915.2.2 Sleeping units. Carbon monoxide detection shall be installed in *sleeping units*.

Exception: Carbon monoxide detection shall be allowed to be installed outside of each separate sleeping area in the immediate vicinity of the *sleeping unit* where the *sleeping unit* or its attached bathroom does not contain a fuel-burning appliance and is not served by a forced air furnace.

❖ The intent of this section is the same as Section 915.2.1 except that it is applicable to sleeping units. Sleeping units can be as simple as a hotel room or a suite-type layout. This allows the detection to be either in the sleeping area itself, as with a simple hotel room, or outside the sleeping area as is the case for dwelling units.

[F] 915.2.3 Group E occupancies. Carbon monoxide detection shall be installed in classrooms in Group E occupancies. Carbon monoxide alarm signals shall be automatically transmitted to an on-site location that is staffed by school personnel.

Exception: Carbon monoxide alarm signals shall not be required to be automatically transmitted to an on-site location that is staffed by school personnel in Group E occupancies with an occupant load of 30 or less.

❖ This section clarifies that the detection is to be located within the classroom and that a signal from the CO detection be automatically transmitted to a location on-site where school personnel can react to the situation, such as the school office. The exception provides relief to small schools where it is very easy to communicate a hazardous situation throughout the building.

[F] 915.3 Detection equipment. Carbon monoxide detection required by Sections 915.1 through 915.2.3 shall be provided by carbon monoxide alarms complying with Section 915.4 or carbon monoxide detection systems complying with Section 915.5.

❖ This section provides the option of providing the CO detection through single- or multiple-station CO alarms or through a CO detection system. This is a similar concept to smoke alarms and smoke detection systems. Each type of CO detector is listed to a different UL standard depending on whether it is to be used as a stand-alone or interconnected detector (UL 2034) or a detector that is part of a CO detection system (UL 2075). Section 915.4 addresses CO alarms and Section 915.5 addresses CO detection systems.

[F] 915.4 Carbon monoxide alarms. Carbon monoxide alarms shall comply with Sections 915.4.1 through 915.4.3.

❖ If the option of using CO alarms is chosen, compliance is required with Sections 915.4.1 through 915.4.3. CO alarms can be stand-alone or interconnected (single- or multiple-station). Section 915 does not address whether such alarms are required to be interconnected.

INTERNATIONAL CODE COUNCIL®
Copyright © 2015 ICC. ALL RIGHTS RESERVED. Accessed by David Dammon on Jun 21, 2017 12:30:52 PM pursuant to License Agreement with ICC. No further reproduction or distribution authorized. ANY UNAUTHORIZED REPRODUCTION OR DISTRIBUTION IS A VIOLATION OF THE FEDERAL COPYRIGHT ACT AND THE LICENSE AGREEMENT, AND SUBJECT TO CIVIL AND CRIMINAL PENALTIES THEREUNDER.

CO alarms are designed to initiate an audible alarm when the level of CO is below that which can cause a loss of the ability to react to the dangers of CO exposure. UL specifies that CO alarms activate at a level where the CO concentration over a given period of time can achieve 10-percent carboxyhemoglobin (COHb) in the body. Ten-percent COHb will not cause physiological injury, but is a level at which increases in the CO concentration will begin to affect the human body.

[F] 915.4.1 Power source. Carbon monoxide alarms shall receive their primary power from the building wiring where such wiring is served from a commercial source, and when primary power is interrupted, shall receive power from a battery. Wiring shall be permanent and without a disconnecting switch other than that required for overcurrent protection.

Exception: Where installed in buildings without commercial power, battery-powered carbon monoxide alarms shall be an acceptable alternative.

❖ This section is very similar to that required for smoke alarms (i.e., Section 907.2.11.6). The power supply must be provided by the building with battery backup. As with smoke alarms, if commercial power is not available, battery power is acceptable.

[F] 915.4.2 Listings. Carbon monoxide alarms shall be listed in accordance with UL 2034.

❖ Single- or multiple-station CO alarms are required to be listed in accordance with UL 2034. This standard is specific to CO alarms that provide both detection and notification.

[F] 915.4.3 Combination alarms. Combination carbon monoxide/smoke alarms shall be an acceptable alternative to carbon monoxide alarms. Combination carbon monoxide/smoke alarms shall be listed in accordance with UL 2034 and UL 217.

❖ Since smoke alarms are required in many occupancies, often a single combination alarm is desired. In fact, in some jurisdictions the CO alarms are required to be combined with smoke alarms. To meet this requirement, the combination CO and smoke alarm must be listed to both UL 2034 and UL 217. See Commentary Figure 915.4.3 for an example of a combination CO and smoke alarm.

[F] 915.5 Carbon monoxide detection systems. Carbon monoxide detection systems shall be an acceptable alternative to carbon monoxide alarms and shall comply with Sections 915.5.1 through 915.5.3.

❖ If a CO detection system is preferred over CO alarms, compliance with Sections 915.5.1 through 915.5.3 is required.

[F] 915.5.1 General. Carbon monoxide detection systems shall comply with NFPA 720. Carbon monoxide detectors shall be listed in accordance with UL 2075.

❖ There are two standards applicable to CO detection systems. The systems are required to comply with NFPA 720 and the detectors themselves are required to comply with UL 2075.

[F] 915.5.2 Locations. Carbon monoxide detectors shall be installed in the locations specified in Section 915.2. These locations supersede the locations specified in NFPA 720.

❖ This section is provided to clarify that the locations required for CO detectors in Section 915.2 differ from NFPA 720 and that those locations will supersede the standard. This simply reaffirms the provisions of Section 102.4.1 regarding conflicts between the code and a referenced standard.

[F] 915.5.3 Combination detectors. Combination carbon monoxide/smoke detectors installed in carbon monoxide detection systems shall be an acceptable alternative to carbon monoxide detectors, provided they are listed in accordance with UL 2075 and UL 268.

❖ Similar to CO alarms, there is often a desire or a requirement to combine smoke detection and CO detection systems. If the detectors themselves are combined, they need to be listed in accordance with both UL 2075 and UL 268. NFPA 720 requires the CO alarm to be capable of transmitting a distinct audible signal that is different from the smoke alarm signal.

[F] 915.6 Maintenance. Carbon monoxide alarms and carbon monoxide detection systems shall be maintained in accordance with the *International Fire Code*.

❖ This section is simply a reference to the IFC maintenance requirements that require compliance with NFPA 720. In addition, when detectors become inoperable or start producing end-of-life signals, they are required to be replaced.



Figure 915.4.3
COMBINATION CARBON MONOXIDE AND SMOKE ALARM

INTERNATIONAL CODE COUNCIL®
Copyright © 2015 ICC. ALL RIGHTS RESERVED. Accessed by David Dammon on Jun 21, 2017 12:30:52 PM pursuant to License Agreement with ICC. No further reproduction or distribution authorized. ANY UNAUTHORIZED REPRODUCTION OR DISTRIBUTION IS A VIOLATION OF THE FEDERAL COPYRIGHT ACT AND THE LICENSE AGREEMENT, AND SUBJECT TO CIVIL AND CRIMINAL PENALTIES THEREUNDER.

SECTION 916
EMERGENCY RESPONDER RADIO COVERAGE

[F] 916.1 General. Emergency responder radio coverage shall be provided in all new buildings in accordance with Section 510 of the *International Fire Code*.

❖ The provisions of Section 915 are new to the 2009 edition and are concerned with the reliability of portable radios used by emergency responders inside of buildings. This is in keeping with the philosophy inherent in the *International Codes* that, when a facility grows too large or complex for effective fire response, fire protection features must be provided within the building. See the commentary to Section 510 of the IFC (and its companion Appendix J) for complete information on this topic.

Bibliography

The following resource materials were used in the preparation of the commentary for this chapter of the code.

Americans With Disabilities Act (ADA), *Standard for Accessible Design* 2010. Washington, DC: US Department of Justice, 2010.

ASHRAE Guideline 5-1994 (RA 2001), *Commissioning Smoke Management Systems*. Atlanta, GA: American Society of Heating, Refrigerating and Air-Conditioning Engineers, 2001.

Cobb, Nathaniel, and Ruth A. Etzel. "Unintentional Carbon Monoxide–Related Deaths in the United States, 1979 through 1988." *Journal of the American Medical Association*, August 7 1991, Vol. 266, No. 5, pp. 659-663.

Fire Protection Handbook, 19th edition. Quincy, MA: National Fire Protection Association, 2003.

International Code Interpretations. Washington, DC: International Code Council, 2009.

Grosshandler, William. *The Use of Portable Fire Extinguishers in Nightclubs*. Gaithersburg, MD: National Institute of Science and Technology, July 2008, pg. 5.

Klote, J., and D. Evans. *A Guide to Smoke Control in the 2006 IBC*. Washington, DC: International Code Council, 2007.

Klote, J., and J. Milke. *Principles of Smoke Management*. Atlanta, GA: American Society of Heating, Refrigerating and Air-Conditioning Engineers, 2002.

NFPA 75-13, Standard for the Fire Protection of Information Technology Equipment. Quincy, MA: National Fire Protection Association, 2013.

NIST Special Publication 1066: Residential Kitchen Fire Suppression Research Needs, Madrzykowski, Hamins & Mehta, Feb. 2007.

NIST IR 6196-1 report dated September 1998.

Occupational Safety and Health (NIOSH) 2005-132, *Preventing Injuries and Deaths of Fire Fighters Due to Truss Systems*, and NIOSH 2010-153, *Preventing Deaths and Injuries of Fire Fighters using Risk Management Principles at Structure Fires*.

Recommendations contained in the Initial Report of the Federal Emergency Management Agency (FEMA)/ National Fallen Firefighter Foundation (NFFF®) Firefighter Life Safety Summit held on April 14, 2004, in Tampa, Florida.

SFPE *Engineering Guide to Performance-based Fire Protection Analysis and Design of Buildings*. Quincy, MA: National Fire Protection Association, 2004.

The SFPE Handbook of Fire Protection Engineering, 4th edition. Quincy, MA: National Fire Protection Association, 2008.

INTERNATIONAL CODE COUNCIL®
Copyright © 2015 ICC. ALL RIGHTS RESERVED. Accessed by David Dammon on Jun 21, 2017 12:30:52 PM pursuant to License Agreement with ICC. No further reproduction or distribution authorized. ANY UNAUTHORIZED REPRODUCTION OR DISTRIBUTION IS A VIOLATION OF THE FEDERAL COPYRIGHT ACT AND THE LICENSE AGREEMENT, AND SUBJECT TO CIVIL AND CRIMINAL PENALTIES THEREUNDER.

INTERNATIONAL CODE COUNCIL®
Copyright © 2015 ICC. ALL RIGHTS RESERVED. Accessed by David Dammon on Jun 21, 2017 12:30:52 PM pursuant to License Agreement with ICC. No further reproduction or distribution authorized. ANY UNAUTHORIZED REPRODUCTION OR DISTRIBUTION IS A VIOLATION OF THE FEDERAL COPYRIGHT ACT AND THE LICENSE AGREEMENT, AND SUBJECT TO CIVIL AND CRIMINAL PENALTIES THEREUNDER.

Chapter 10: Means of Egress

General Comments

The general criteria set forth in Chapter 10 regulating the design of the means of egress are established as the primary method for protection of people in buildings. Chapter 10 provides the minimum requirements for means of egress in all buildings and structures. Both prescriptive and performance language is utilized in this chapter to provide a basic approach in determining a safe exiting system for all occupancies. It addresses all portions of the egress system and includes design requirements as well as provisions regulating individual components. The requirements detail the size, arrangement, number and protection of means of egress components. Functional and operational characteristics are also specified for the components, which will permit their safe use without special knowledge or effort.

A zonal approach to egress provides a general basis for the chapter's format. A means of egress system has three parts: exit access, exit and exit discharge.

Section 1001 includes the administrative provisions. Section 1002 shows a list of defined terms that are primarily associated with Chapter 10. For commentary on these definitions, see Chapter 2.

Sections 1003 through 1015 include general provisions that apply to all three components of an egress system. This includes general means of egress requirements; occupant loads; means of egress sizing; the number of exits and exit access doorways and their configuration; illumination for the means of egress; specific requirements for accessible means of egress; doors, gates and turnstiles; provisions for stairways and ramps along with their associated handrail and guard requirements; and exit signage (see commentary, Section 1003).

The exit access requirements are in Sections 1016 through 1021. This includes general exit access requirements; exit access travel distance; aisles (for other than assembly spaces); specific requirements for stairways and ramps that serve as part of the exit access; corridors; and egress balconies (see commentary, Section 1016).

The exit requirements are in Sections 1022 through 1027. Exit information includes provisions for exits; interior and exterior stairways and ramps that serve as an exit element; exit passageways; luminous egress path markings that are required on the exit stairways in high-rise buildings (see Section 403); and horizontal exits (see commentary, Section 1022).

The exit discharge requirements are in Section 1028.

Section 1029 includes those means of egress requirements that are unique to spaces used for assembly purposes.

Emergency escape and rescue opening requirements are in Section 1030.

Chapter 10 requirements are replicated in Chapter 10 of the *International Fire Code*® (IFC®). The IFC has one additional section at the end of the chapter dealing with maintenance of the means of egress (see commentary, Section 1001.3). For means of egress requirements in existing buildings, refer to the *International Existing Building Code*® (IEBC®) or Chapter 11 of the IFC.

The evolution of means of egress requirements has been influenced by lessons learned from real fire incidents. While contemporary fires may reinforce some of these lessons, one must view each incident as an opportunity to assess critically the safety and reasonability of current regulations.

Cooperation among the developers of model codes and standards has resulted in agreement on many basic terms and concepts. The text of the code, including this chapter, is consistent with these national uniformity efforts.

National uniformity in an area such as means of egress has many benefits for the building official and other code users. At the top of the list are the lessons to be learned from experiences throughout the nation and the world, which can be reported in commonly used terminology and conditions that we can all relate to and clearly understand.

Purpose

A primary purpose of codes in general and building codes in particular is to safeguard life in the presence of a fire. Integral to this purpose is the path of egress travel for occupants to escape and avoid a fire. Means of egress can be considered the lifeline of a building. The principles on which means of egress are based and that form the fundamental criteria for requirements are to provide a system that:

1. Will give occupants alternative paths of travel to a place of safety to avoid fire.
2. Will shelter occupants from fire and the products of combustion.
3. Will accommodate all occupants of a structure.
4. Is clear, unobstructed, well marked and illuminated and in which all components are under con-

INTERNATIONAL CODE COUNCIL®
Copyright © 2015 ICC. ALL RIGHTS RESERVED. Accessed by David Dammon on Jun 21, 2017 12:30:52 PM pursuant to License Agreement with ICC. No further reproduction or distribution authorized. ANY UNAUTHORIZED REPRODUCTION OR DISTRIBUTION IS A VIOLATION OF THE FEDERAL COPYRIGHT ACT AND THE LICENSE AGREEMENT, AND SUBJECT TO CIVIL AND CRIMINAL PENALTIES THEREUNDER.

trol of the user without requiring any tools, keys or special knowledge or effort.

History is marked with the severe loss of life from fire. Early, as well as contemporary, multiple-fatality fires can be traced to a compromise of one or more of the above principles.

Life safety from fire is a matter of successfully evacuating or relocating the occupants of a building to a place of safety. As a result, life safety is a function of time: time for detection, time for notification and time for safe egress. The fire growth rate over a period of time is also a critical factor in addressing life safety. Other sections of the code, such as protection of vertical openings (see Chapter 7), interior finish (see Chapter 8), fire suppression and detection systems (see Chapter 9) and numerous others, also have an impact on life safety. This chapter addresses the issues related to the means available to relocate or evacuate building occupants.

SECTION 1001
ADMINISTRATION

1001.1 General. Buildings or portions thereof shall be provided with a *means of egress* system as required by this chapter. The provisions of this chapter shall control the design, construction and arrangement of *means of egress* components required to provide an *approved means of egress* from structures and portions thereof.

❖ The minimum requirements for emergency evacuation, or means of egress, are to be incorporated in all new structures as specified in this chapter. The system shall include exit access, exit and exit discharge and address the needs for all occupants of the facility. Such application would be effective on the date the code is adopted and placed into effect.

1001.2 Minimum requirements. It shall be unlawful to alter a building or structure in a manner that will reduce the number of *exits* or the minimum width or required capacity of the *means of egress* to less than required by this code.

❖ A fundamental concept in life safety design is that the means of egress system is to be constantly available throughout the life of a building. Any change in the building or its contents, by physical reconstruction, alteration or a change of occupancy, is cause to review the resulting egress system. At a minimum, a building's means of egress is to be continued as initially approved. If a building or portion thereof has a change of occupancy, the complete egress system is to be evaluated and approved for compliance with the current code requirements for new occupancies (see the IEBC and the IFC Section 1031 and Chapter 11).

The means of egress in an existing building that experiences a change of occupancy, such as from Group S-2 (storage) to A-3 (assembly), would require reevaluation for code compliance based on the new occupancy. Similarly, the means of egress in an existing Group A-3 occupancy in which additional seating is to be provided, thereby increasing the occupant load, would require reevaluation for code compliance based on the increased occupant load.

The temptation is to temporarily remove egress components or other fire protection features from service during an alteration, repair to or temporary occupancy of a building. During such times, a building is frequently more vulnerable to fire and the rapid spread of products of combustion. Either the occupants should not occupy those spaces where the means of egress has been compromised by the construction or compensating fire safety features should be considered that will provide equivalent safety for the occupants. Occupants in adjacent areas may also require access to the egress facilities in the area under construction.

[F] 1001.3 Maintenance. *Means of egress* shall be maintained in accordance with the *International Fire Code*.

❖ This section provides a cross reference to the code requirements that address the maintenance of the means of egress in an existing building. The means of egress must be maintained so that occupants are not prevented from exiting the building quickly in case of an emergency.

Sections 1003 through 1029 in the code are repeated in the IFC. These sections are maintained by the IBC Means Of Egress Committee so that there will be consistency between the two documents. Note the [BE] in front of the main section headings in the IFC. Note the [F] in front of this section. This means that this section is maintained by the International Fire Code Development Committee. Additionally, the IFC includes Section 1031, which applies to maintenance of the means of egress. For means of egress in existing buildings, refer to Chapter 11 of the IFC and the IEBC.

[F] 1001.4 Fire safety and evacuation plans. Fire safety and evacuation plans shall be provided for all occupancies and buildings where required by the *International Fire Code*. Such fire safety and evacuation plans shall comply with the applicable provisions of Sections 401.2 and 404 of the *International Fire Code*.

❖ Preplanning how to handle emergencies and practicing those plans are important parts of managing emergencies in order to minimize the hazard to occupants. The reference to Section 401.2 of the IFC clarifies that fire and safety evacuation plans must be approved by the fire official. Section 404 of the IFC lists the facilities for which fire and safety evacuation plans are required. Fire evacuation plans include information on: emergency egress routes; phased evacuation options; operation of critical equipment; assisted rescue; verification of evacuation; notifica-

INTERNATIONAL CODE COUNCIL®
Copyright © 2015 ICC. ALL RIGHTS RESERVED. Accessed by David Dammon on Jun 21, 2017 12:30:52 PM pursuant to License Agreement with ICC. No further reproduction or distribution authorized. ANY UNAUTHORIZED REPRODUCTION OR DISTRIBUTION IS A VIOLATION OF THE FEDERAL COPYRIGHT ACT AND THE LICENSE AGREEMENT, AND SUBJECT TO CIVIL AND CRIMINAL PENALTIES THEREUNDER.

tion to occupants; and responders and responsible personnel. Fire safety plans include information on: reporting a fire; life-safety strategy; notifying, relocating or evacuating occupants; assisted rescue; site plans indicating occupancy assembly point, fire hydrants and fire department vehicle access; floor plans indicating exits, evacuation routes (general and accessible), fire alarm boxes, portable fire extinguishers, fire hose stations, fire alarms and controls; major fire hazards in the building; sprinkler systems; alarm and detection equipment; and responsible personnel. The IFC also addresses locations, such as hospitals or nursing homes, where it may be more appropriate to defend in place.

Some facilities, such as schools and courthouses, have developed lockdown plans for other emergencies. Rather than evacuating, the appropriate response may be to defend in place. Typically, there are different levels, depending on the emergency. For example a school may have: 1. Police emergency action in town; 2. Police emergency action in the immediate area; and 3. Police emergency in the building. Lockdown plans include information on: initiation of the plan; persons accountable; recall; communication; and practice drills.

These plans must be reevaluated when necessary and, at a minimum, on an annual basis. Copies must be provided to building tenants and the fire department. As with all plans, practice drills are an important part of full communication of the plans to everyone involved.

SECTION 1002
DEFINITIONS

1002.1 Definitions. The following terms are defined in Chapter 2:

ACCESSIBLE MEANS OF EGRESS.

AISLE.

AISLE ACCESSWAY.

ALTERNATING TREAD DEVICE.

AREA OF REFUGE.

BLEACHERS.

BREAKOUT.

COMMON PATH OF EGRESS TRAVEL.

CORRIDOR.

DOOR, BALANCED.

EGRESS COURT.

EMERGENCY ESCAPE AND RESCUE OPENING.

EXIT.

EXIT ACCESS.

EXIT ACCESS DOORWAY.

EXIT ACCESS RAMP.

EXIT ACCESS STAIRWAY.

EXIT DISCHARGE.

EXIT DISCHARGE, LEVEL OF.

EXIT, HORIZONTAL.

EXIT PASSAGEWAY.

EXTERIOR EXIT RAMP.

EXTERIOR EXIT STAIRWAY.

FIRE EXIT HARDWARE.

FIXED SEATING.

FLIGHT.

FLOOR AREA, GROSS.

FLOOR AREA, NET.

FOLDING AND TELESCOPIC SEATING.

GRANDSTAND.

GUARD.

HANDRAIL.

INTERIOR EXIT RAMP.

INTERIOR EXIT STAIRWAY.

LOW ENERGY POWER-OPERATED DOOR.

MEANS OF EGRESS.

MERCHANDISE PAD.

NOSING.

OCCUPANT LOAD.

OPEN-ENDED CORRIDOR.

PANIC HARDWARE.

PHOTOLUMINESCENT.

POWER-ASSISTED DOOR.

POWER-OPERATED DOOR.

PUBLIC WAY.

RAMP.

SCISSOR STAIRWAY.

SELF-LUMINOUS.

SMOKE-PROTECTED ASSEMBLY SEATING.

STAIR.

STAIRWAY.

STAIRWAY, SPIRAL.

WINDER.

❖ This section lists terms that are specifically associated with the subject matter of this chapter. It is important to emphasize that these terms are not exclusively related to this chapter, but may or may not also be applicable where the term is used elsewhere in the code.

Definitions of terms can help in the understanding and application of the code requirements. The purpose for including a list within this chapter is to provide more convenient access to terms that may have a specific or limited application within this chapter.

INTERNATIONAL CODE COUNCIL®
Copyright © 2015 ICC. ALL RIGHTS RESERVED. Accessed by David Dammon on Jun 21, 2017 12:30:52 PM pursuant to License Agreement with ICC. No further reproduction or distribution authorized. ANY UNAUTHORIZED REPRODUCTION OR DISTRIBUTION IS A VIOLATION OF THE FEDERAL COPYRIGHT ACT AND THE LICENSE AGREEMENT, AND SUBJECT TO CIVIL AND CRIMINAL PENALTIES THEREUNDER.

For the complete definition and associated commentary, refer back to Chapter 2. Terms that are italicized provide a visual identification throughout the code that a definition exists for that term. The use and application of all defined terms are set forth in Section 201.

SECTION 1003
GENERAL MEANS OF EGRESS

1003.1 Applicability. The general requirements specified in Sections 1003 through 1015 shall apply to all three elements of the *means of egress* system, in addition to those specific requirements for the *exit access*, the *exit* and the *exit discharge* detailed elsewhere in this chapter.

❖ The requirements in the chapter address the three parts of a means of egress system: the exit access, the exit and the exit discharge. This section specifies that the requirements of Sections 1003 through 1015 apply to the components of all three parts of the system. For example, the stair tread and riser dimensions in Section 1009 apply to interior exit access stairways, such as those leading from a mezzanine, and also apply to enclosed exit stairways per Section 1022, exterior exit stairways per Section 1026 and steps in the exit discharge per Section 1027.

The following sections are applicable for all parts of the means of egress:

- Section 1003 deals with the path for means of egress to remain free of obstructions and tripping hazards.
- Section 1004 provides criteria for determining occupant loads for a space. These numbers are used for determining means of egress, as a threshold for some suppression requirements and to determine the required plumbing fixture count.
- Section 1005 deals with the required size (i.e., width) of the path of travel for emergency evacuation. It is important not to create a "bottleneck" that could increase the amount of time necessary for occupants to exit the buildings.
- Section 1006 deals with the number of ways out of a space or off a floor, either by exit elements or exit access elements.
- Section 1007 provides placement and remoteness requirements for the exit and exit access elements prescribed in Section 1006.
- Section 1008 deals with illumination for the path of travel for the means of egress. Both general lighting and emergency backup lighting are addressed.
- Section 1009 – Chapter 11 indicates how to get people with mobility impairments into a building. Section 1009 explains the options to allow people with mobility impairments to self-evacuate or how to arrange for assisted rescue. The accessible means of egress is an important part of the fire and safety evacuation plans (see Section 1001.4).
- Section 1010 includes requirements for doors, gates and turnstiles that are part of the path of travel from any occupied spaces. For example, doors that lead to a walk-in closet must comply with this section, but doors for reach-in closets are exempted.
- Section 1011 provides information on all types of stairways: interior and exterior and from one riser to stairways with multiple flights and landings. Stepped aisles for areas within assembly seating are specifically addressed in Section 1029. For protection of the stairways between stories, see Sections 1019, 1023 and 1027.
- Section 1012 deals with ramps. Ramped aisles serving assembly seating areas are specifically addressed in Section 1029. The ramp provisions are coordinated with ICC A117.1 and the 2010 Standard for Accessible Design [formerly the Americans with Disabilities Act Accessibility Guidelines (ADAAG), now referred to as the 2010 ADA Standard]. For protection of the ramp between stories, see Sections 1019, 1023 and 1027.
- Section 1013 describes where exit signs are required and what criteria they need to meet to be readily visible.
- Section 1014 describes handrail requirements for stairways and ramps. Handrails are important for guidance and to arrest a possible fall.
- Section 1015 provides criteria for the vertical portions of barriers that serve to protect people from possible falls at dropoffs greater than 30 inches (762 mm).

1003.2 Ceiling height. The *means of egress* shall have a ceiling height of not less than 7 feet 6 inches (2286 mm).

Exceptions:

1. Sloped ceilings in accordance with Section 1208.2.
2. Ceilings of *dwelling units* and *sleeping units* within residential occupancies in accordance with Section 1208.2.
3. Allowable projections in accordance with Section 1003.3.
4. *Stair* headroom in accordance with Section 1011.3.
5. Door height in accordance with Section 1010.1.1.
6. *Ramp* headroom in accordance with Section 1012.5.2.
7. The clear height of floor levels in vehicular and pedestrian traffic areas of public and private parking garages in accordance with Section 406.4.1.
8. Areas above and below *mezzanine* floors in accordance with Section 505.2.

❖ Generally, the specified ceiling height is the minimum allowed in any part of the egress path. The excep-

INTERNATIONAL CODE COUNCIL®
Copyright © 2015 ICC. ALL RIGHTS RESERVED. Accessed by David Dammon on Jun 21, 2017 12:30:52 PM pursuant to License Agreement with ICC. No further reproduction or distribution authorized. ANY UNAUTHORIZED REPRODUCTION OR DISTRIBUTION IS A VIOLATION OF THE FEDERAL COPYRIGHT ACT AND THE LICENSE AGREEMENT, AND SUBJECT TO CIVIL AND CRIMINAL PENALTIES THEREUNDER.

tions are intended to address conditions where the code allows the ceiling height to be lower than specified in this section.

This section is consistent with the minimum ceiling height for other areas as specified in Section 1208. The exceptions are pointers to the lower headroom areas permitted in the code. For example, the headroom above and below a mezzanine is 7 feet (2134 mm) minimum.

1003.3 Protruding objects. Protruding objects on *circulation paths* shall comply with the requirements of Sections 1003.3.1 through 1003.3.4.

❖ This section begins the provisions that apply to protruding objects and helps to improve awareness of these safety and accessibility-related provisions. The intent of the phrase "on circulation paths" is intended to allow for judgment determining where people walk versus all floor surfaces. For example, a drinking fountain in an alcove is over a floor, but it is not over a circulation path; therefore, it typically it would not be considered a protruding object.

1003.3.1 Headroom. Protruding objects are permitted to extend below the minimum ceiling height required by Section 1003.2 where a minimum headroom of 80 inches (2032 mm) is provided over any walking surface, including walks, *corridors*, *aisles* and passageways. Not more than 50 percent of the ceiling area of a *means of egress* shall be reduced in height by protruding objects.

Exception: Door closers and stops shall not reduce headroom to less than 78 inches (1981 mm).

A barrier shall be provided where the vertical clearance is less than 80 inches (2032 mm) high. The leading edge of such a barrier shall be located 27 inches (686 mm) maximum above the floor.

❖ This provision is applicable to all routes that make up components of the means of egress. Specifically, the limitations in this section and those in Sections 1003.3.2 and 1003.3.3 provide a reasonable level of safety for people with vision impairments as well as during emergency events when vision may be obscured by smoke or low lighting.

Minimum dimensions for headroom clearance are specified in this section. The minimum headroom clearance over all walking surfaces or circulation paths is required to be maintained at 80 inches (2032 mm). This minimum headroom clearance is consistent with the requirements in Section 1011.3 for stairs and Section 1012.5.2 for ramps. Allowance must be made for door closers and stops, since their design and function necessitates placement within the door opening. The minimum headroom clearance for door closers and stops is allowed to be 78 inches (1981 mm) [see Commentary Figure 1003.3.1(1)]. The 2-inch (51 mm) projection into the doorway height is reasonable since these devices are normally mounted away from the center of the door opening, thus minimizing the potential for contact with a person moving through the opening. This is consistent with the exception to Section 1010.1.1.1.

The limitation on overhangs is of primary importance to individuals with visual impairments. When vertical clearance along a walking surface is less than 80 inches (2032 mm), such as underneath the stairway on the ground floor, some sort of barrier that is detectable by a person using a cane must be provided. This can be a full-height wall, a rail at or below 27 inches (686 mm), a planter, fixed seating, etc. A low curb is not effective as a barrier. A person with visual impairments might mistake it for a stair tread, step up onto it and strike their head. A rail at handrail height would not be detectable by a person using a cane, and he or she could possibly walk into the rail before detecting it. Also, when making decisions on the choice of type of barrier, keep in mind that persons of shorter stature and children have a detectable range that may be below 27 inches (686 mm) [see Commentary Figure 1003.3.1(2)].

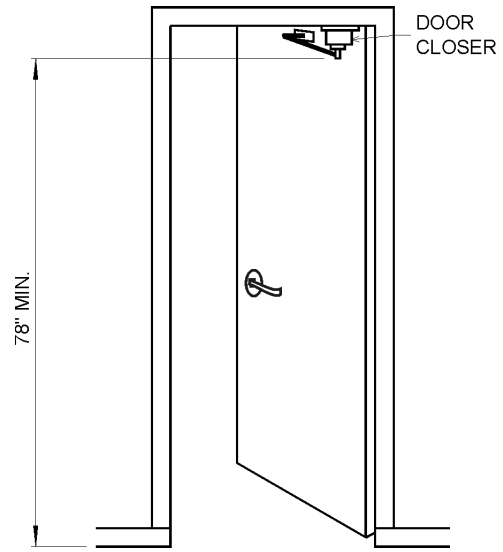

For SI: 1 inch = 25.4 mm.

Figure 1003.3.1(1)
DOOR CLOSER HEADROOM
PROTRUSIONS FOR WALKING SURFACES

1003.3.2 Post-mounted objects. A free-standing object mounted on a post or pylon shall not overhang that post or pylon more than 4 inches (102 mm) where the lowest point of the leading edge is more than 27 inches (686 mm) and less than 80 inches (2032 mm) above the walking surface. Where a sign or other obstruction is mounted between posts or pylons and the clear distance between the posts or pylons is greater than 12 inches (305 mm), the lowest edge of such sign or obstruction shall be 27 inches (686 mm) maximum or 80

INTERNATIONAL CODE COUNCIL®
Copyright © 2015 ICC. ALL RIGHTS RESERVED. Accessed by David Dammon on Jun 21, 2017 12:30:52 PM pursuant to License Agreement with ICC. No further reproduction or distribution authorized. ANY UNAUTHORIZED REPRODUCTION OR DISTRIBUTION IS A VIOLATION OF THE FEDERAL COPYRIGHT ACT AND THE LICENSE AGREEMENT, AND SUBJECT TO CIVIL AND CRIMINAL PENALTIES THEREUNDER.

inches (2032 mm) minimum above the finished floor or ground.

Exception: These requirements shall not apply to sloping portions of *handrails* between the top and bottom riser of *stairs* and above the *ramp* run.

❖ Post-mounted objects, such as signs or some types of drinking fountains or phone boxes, are not permitted to overhang more than 4 inches (102 mm) past the post where the bottom edge is located higher than 27 inches (686 mm) above the walking surface [see Commentary Figure 1003.3.2(1)]. Since the minimum required height of doorways, stairways and ramps in the means of egress is 80 inches (2032 mm), protruding objects located higher than 80 inches (2032 mm) above the walking surface are not regulated. Protrusions that are located lower than 27 inches (686 mm) above the walking surface are also permitted since they are more readily detected by a person using a long cane, provided that the minimum required width of the egress element is maintained. This is consistent with the post-mounted objects requirements in Section 307.3 of ICC A117.1, *Accessible and Usable Buildings and Facilities*. The intent is to reduce the potential for accidental impact for a person who is visually impaired.

When signs are provided on multiple posts, the posts must be located closer than 12 inches (305 mm) apart, or the bottom edge of the sign must be lower than 27 inches (686 mm) so it is within detectable cane range or above 80 inches (2032 mm) so that it is above headroom clearances [see Commentary Figure 1003.3.2(2)].

The exception is intended for handrails that are located along the run of a stairway flight or ramp run. The extensions at the top and bottom of stairways and ramps must meet the requirements for protruding objects where people walk perpendicular to the stair or ramp.

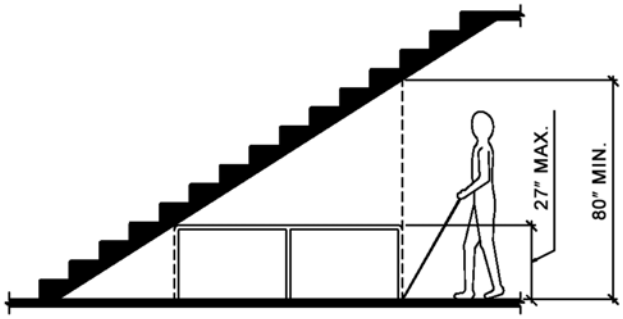

For SI: 1 inch = 25.4 mm.

Figure 1003.3.1(2)
REDUCED VERTICAL CLEARANCE

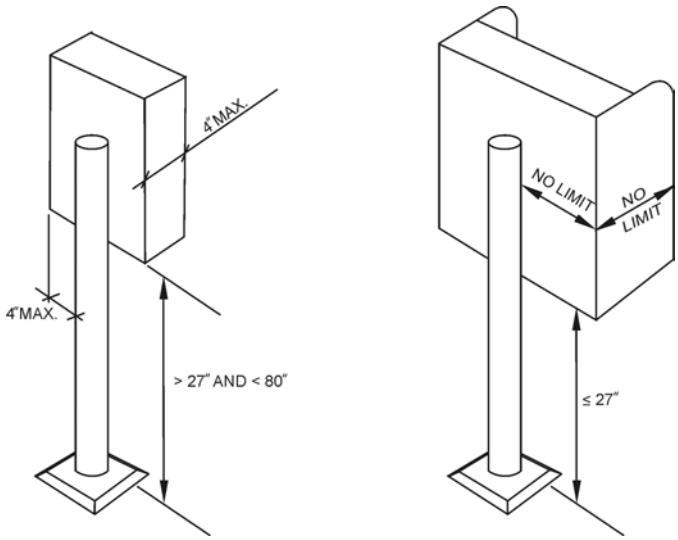

For SI: 1 inch = 25.4 mm.

Figure 1003.3.2(1)
POST-MOUNTED OBJECTS

INTERNATIONAL CODE COUNCIL®
Copyright © 2015 ICC. ALL RIGHTS RESERVED. Accessed by David Dammon on Jun 21, 2017 12:30:52 PM pursuant to License Agreement with ICC. No further reproduction or distribution authorized. ANY UNAUTHORIZED REPRODUCTION OR DISTRIBUTION IS A VIOLATION OF THE FEDERAL COPYRIGHT ACT AND THE LICENSE AGREEMENT, AND SUBJECT TO CIVIL AND CRIMINAL PENALTIES THEREUNDER.

1003.3.3 Horizontal projections. Objects with leading edges more than 27 inches (685 mm) and not more than 80 inches (2030 mm) above the floor shall not project horizontally more than 4 inches (102 mm) into the *circulation path*.

Exception: *Handrails* are permitted to protrude $4^1/_2$ inches (114 mm) from the wall.

❖ Protruding objects could slow the egress flow through a corridor or passageway and injure someone hurriedly passing by or someone with a visual impairment. Persons with a visual impairment who use a long cane for guidance must have sufficient warning of a protruding object. Where protrusions are located higher than 27 inches (686 mm) above the walking surface, the cane will most likely not encounter the protrusion before the person collides with the object.

Additionally, people with poor visual acuity or poor depth perception may have difficulty identifying protruding objects higher than 27 inches (686 mm). Therefore, objects such as lights, signs and door hardware, located between 27 inches (686 mm) and 80 inches (2032 mm) above the walking surface, are not permitted to extend more than 4 inches (102 mm) from each wall (see Commentary Figure 1003.3.3). The requirement for protrusions into the door clear width in Section 1010.1.1.1 is different because it deals with allowances for panic hardware on a door. It is not the intent of this section to prohibit columns,

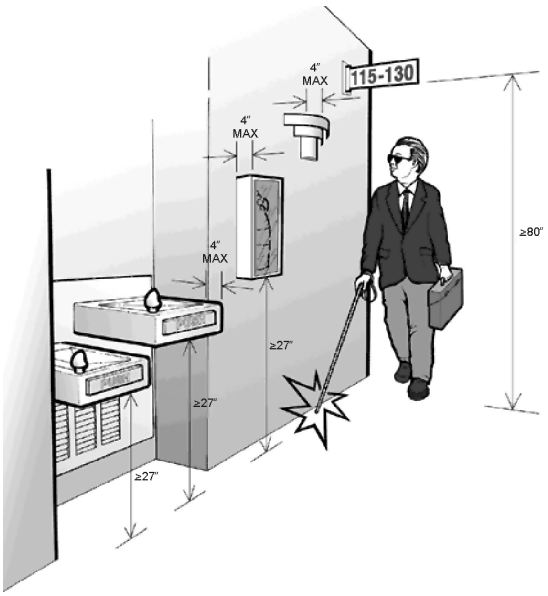

For SI: 1 inch = 25.4 mm.

Figure 1003.3.3
EXAMPLE OF HORIZONTAL PROJECTIONS

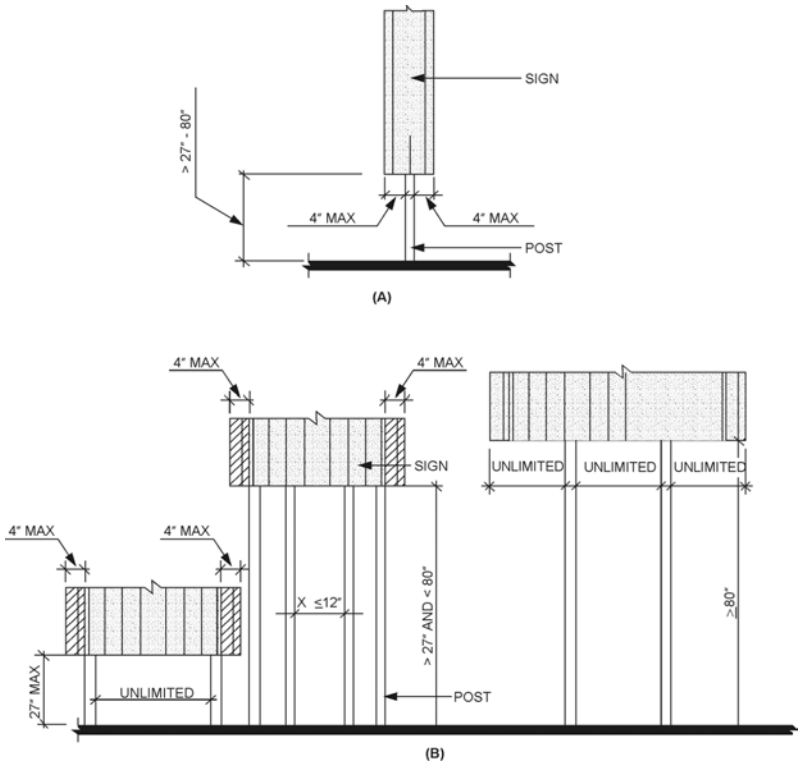

For SI: 1 inch = 25.4 mm.

Figure 1003.3.2(2)
POST-MOUNTED PROTRUDING OBJECTS

INTERNATIONAL CODE COUNCIL®
Copyright © 2015 ICC. ALL RIGHTS RESERVED. Accessed by David Dammon on Jun 21, 2017 12:30:52 PM pursuant to License Agreement with ICC. No further reproduction or distribution authorized. ANY UNAUTHORIZED REPRODUCTION OR DISTRIBUTION IS A VIOLATION OF THE FEDERAL COPYRIGHT ACT AND THE LICENSE AGREEMENT, AND SUBJECT TO CIVIL AND CRIMINAL PENALTIES THEREUNDER.

pilasters or wing walls to project into a corridor as long as adequate egress width is maintained. These types of structural elements are detectable by persons using a long cane.

The exception is an allowance for handrails when they are provided along a wall, such as in some hospitals or nursing homes. The $4^1/_2$-inch (114 mm) measurement is intended to be consistent with projections by handrails into the required width of stairways and ramps in Section 1014.8. There are additional requirements when talking about the required width (see Section 1005.2).

1003.3.4 Clear width. Protruding objects shall not reduce the minimum clear width of *accessible routes*.

❖ The intent of this section is to limit the projections into an accessible route so that a minimum clear width of 36 inches (914 mm) is maintained along the route. ICC A117.1 is referenced by Chapter 11 for technical requirements for accessibility. ICC A117.1, Section 403.5, allows the accessible route to be reduced in width to 32 inches (914 mm) for segments not to exceed 24 inches (635 mm) in length and spaced a minimum of 48 inches (1219 mm) apart. This allows for movement through a doorway or through a gap in planters or counters.

1003.4 Floor surface. Walking surfaces of the *means of egress* shall have a slip-resistant surface and be securely attached.

❖ As the pace of exit travel becomes hurried during emergency situations, the probability of slipping on smooth or slick floor surfaces increases. To minimize the hazard, all floor surfaces in the means of egress are required to be slip resistant. The use of hard floor materials with highly polished, glazed, glossy or finely finished surfaces should be avoided.

Field testing and uniform enforcement of the concept of slip resistance are not practical. One method used to establish slip resistance is that the static coefficient of friction between leather [Type 1 (Vegetable Tanned) of Federal Specification KK-L-165C] and the floor surface is greater than 0.5. Laboratory test procedures, such as ASTM D2047, can determine the static coefficient of resistance. Bulletin No. 4, "Surfaces," issued by the U.S. Architectural and Transportation Barriers Compliance Board (ATBCB or Access Board) contains further information regarding slip resistance.

1003.5 Elevation change. Where changes in elevation of less than 12 inches (305 mm) exist in the *means of egress*, sloped surfaces shall be used. Where the slope is greater than one unit vertical in 20 units horizontal (5-percent slope), *ramps* complying with Section 1012 shall be used. Where the difference in elevation is 6 inches (152 mm) or less, the *ramp* shall be equipped with either *handrails* or floor finish materials that contrast with adjacent floor finish materials.

Exceptions:

1. A single step with a maximum riser height of 7 inches (178 mm) is permitted for buildings with occupancies in Groups F, H, R-2, R-3, S and U at exterior doors not required to be *accessible* by Chapter 11.
2. A *stair* with a single riser or with two risers and a tread is permitted at locations not required to be *accessible* by Chapter 11 where the risers and treads comply with Section 1011.5, the minimum depth of the tread is 13 inches (330 mm) and not less than one *handrail* complying with Section 1014 is provided within 30 inches (762 mm) of the centerline of the normal path of egress travel on the *stair*.
3. A step is permitted in *aisles* serving seating that has a difference in elevation less than 12 inches (305 mm) at locations not required to be *accessible* by Chapter 11, provided that the risers and treads comply with Section 1029.13 and the *aisle* is provided with a *handrail* complying with Section 1029.15.

Throughout a story in a Group I-2 occupancy, any change in elevation in portions of the *means of egress* that serve nonambulatory persons shall be by means of a *ramp* or sloped walkway.

❖ Minor changes in elevation, such as a single step that is located in any portion of the means of egress (i.e., exit access, exit or exit discharge), may not be readily apparent during normal use or emergency egress and are considered to present a potential tripping hazard. Where the elevation change is less than 12 inches (305 mm), a ramp or sloped surface is specified to make the transition from higher to lower levels. This is intended to reduce accidental falls associated with the tripping hazard of an unseen step. Ramps must be constructed in accordance with Section 1012.1. Ramp provisions do not require handrails for ramps with a rise of 6 inches or less. However, the presence of the ramp must be readily apparent from the directions from which it is approached. Handrails are one method of identifying the change in elevation. In lieu of handrails, the surface of the ramp must be finished with materials that visually contrast with the surrounding floor surfaces. The walking surface of the ramp should contrast both visually and physically.

None of the exceptions are permitted along an accessible route required for either entry or egress from a space or building (see Section 1009 and Chapter 11).

Exception 1 allows up to a 7-inch (178 mm) step at exterior doors to avoid blocking the outward swing of the door by a buildup of snow or ice in locations that are not used by the public on a regular basis (see Commentary Figure 1003.5). This exception is coordinated with Exception 2 of Section 1010.1.5, and is only applicable in occupancies that have relatively low occupant densities, such as factory and industrial structures. This exception is not applicable to exterior doors that are required to serve as an accessible entrance or that are part of a required accessible route. If this exception is utilized at a Group R-2 or R-3 occupancy, the designer may want to consider the issues of potential tripping hazards if this is a com-

INTERNATIONAL CODE COUNCIL®
Copyright © 2015 ICC. ALL RIGHTS RESERVED. Accessed by David Dammon on Jun 21, 2017 12:30:52 PM pursuant to License Agreement with ICC. No further reproduction or distribution authorized. ANY UNAUTHORIZED REPRODUCTION OR DISTRIBUTION IS A VIOLATION OF THE FEDERAL COPYRIGHT ACT AND THE LICENSE AGREEMENT, AND SUBJECT TO CIVIL AND CRIMINAL PENALTIES THEREUNDER.

mon entrance for a large number of occupants.

Exception 2 allows the transition from higher to lower elevations to be accomplished through the construction of stairs with one or two risers. The pitch of the stairway, however, must be shallower than that required for typical stairways (see Section 1011.5.2). Since the total elevation change is limited to 12 inches (305 mm), each riser must be approximately 6 inches (152 mm) in height. The elevation change must be readily apparent from the directions from which it is approached. At least one handrail is required. It must be constructed in accordance with Section 1014 and located so as to provide a graspable surface from the normal walking path.

Exception 3 is basically a cross reference to the assembly provisions for stepped aisles in Section 1029.

None of the exceptions are permitted in a Group I-2 occupancy (e.g., nursing home, hospital) in areas where nonambulatory persons may need access. The mobility impairments of these individuals require additional consideration.

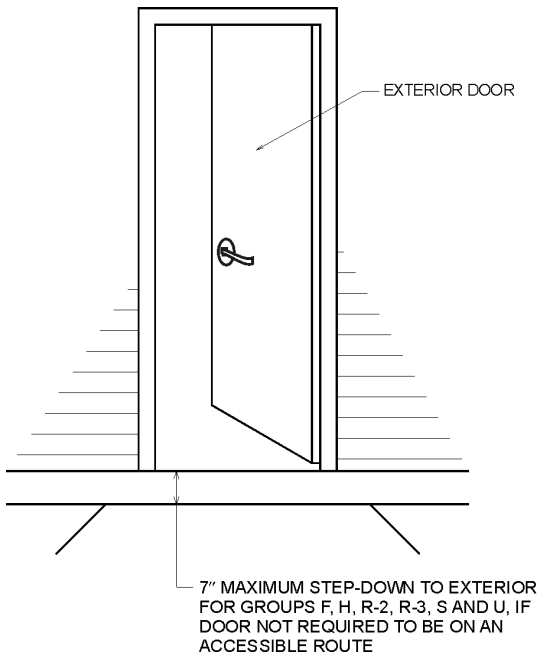

For SI: 1 inch = 25.4 mm.

Figure 1003.5
ELEVATION CHANGE

1003.6 Means of egress continuity. The path of egress travel along a *means of egress* shall not be interrupted by a building element other than a *means of egress* component as specified in this chapter. Obstructions shall not be placed in the minimum width or required capacity of a *means of egress* component except projections permitted by this chapter. The minimum width or required capacity of a *means of egress* system shall not be diminished along the path of egress travel.

❖ This section requires that the entire means of egress path be clear of obstructions that could reduce the egress path to below the minimum width at any point. The egress path is also not allowed to be reduced in width such that the design occupant load (required capacity) would not be served. Note, however, that the egress path could be reduced in width in situations where it is wider than required by the code based on the occupant load. For example, if the required width of a corridor was 52 inches (1321 mm) based on the number of occupants using the corridor and the corridor provided was 96 inches (2438 mm) in width, the corridor would be allowed to be reduced to the minimum required width of 52 inches (1321 mm) since that width would still serve the number of occupants required by the code. In the context of this section, a "means of egress component" would most likely be a door or doorway.

1003.7 Elevators, escalators and moving walks. Elevators, escalators and moving walks shall not be used as a component of a required *means of egress* from any other part of the building.

Exception: Elevators used as an accessible *means of egress* in accordance with Section 1009.4.

❖ Generally, the code does not allow elevators, escalators and moving sidewalks to be used as a required means of egress. The concern is that, because of possible power outages, escalators and moving sidewalks may not provide a safe and reliable means of egress that is available for use at all times.

Elevators are not typically used for unassisted evacuation during fire emergencies. However, in taller buildings, fire fighters use the elevators for both staging to fight the fire and assisted evacuation. They can verify that the shaft is not full of smoke, that the elevators will remain operational and, since they know the fire location, at which floors the elevator can be safely accessed. In accordance with the exception, elevators are allowed to be part of an accessible means of egress (i.e., assisted evacuation), provided they comply with the requirements of Section 1009.4. Where elevators are required to serve as part of the accessible means of egress is addressed in Section 1009.2.1. There are new provisions for fire service elevators and occupant evacuation elevators for high rises in Sections 403, 3007 and 3008. These specific provisions will provide a level of safety that would meet the intent of the means of egress provisions in Chapter 10.

SECTION 1004
OCCUPANT LOAD

1004.1 Design occupant load. In determining *means of egress* requirements, the number of occupants for whom

INTERNATIONAL CODE COUNCIL®
Copyright © 2015 ICC. ALL RIGHTS RESERVED. Accessed by David Dammon on Jun 21, 2017 12:30:52 PM pursuant to License Agreement with ICC. No further reproduction or distribution authorized. ANY UNAUTHORIZED REPRODUCTION OR DISTRIBUTION IS A VIOLATION OF THE FEDERAL COPYRIGHT ACT AND THE LICENSE AGREEMENT, AND SUBJECT TO CIVIL AND CRIMINAL PENALTIES THEREUNDER.

means of egress facilities are provided shall be determined in accordance with this section.

❖ The design occupant load is the number of people intended to occupy a building or portion thereof at any one time; essentially the number for which the means of egress is to be designed. It is the largest number derived by the application of Sections 1004.1 through 1004.6. Occupant density is limited to ensure a reasonable amount of freedom of movement (see Section 1004.2). The design occupant load is also utilized to determine the required plumbing fixture count (see commentary, Chapter 29) and other building requirements, such as automatic sprinkler systems and fire alarm and detection systems (see Chapter 9).

The intent of this section is to indicate the procedure by which design occupant loads are determined. This is particularly important because accurate determination of design occupant load is fundamental to the proper design of any means of egress system.

1004.1.1 Cumulative occupant loads. Where the path of egress travel includes intervening rooms, areas or spaces, cumulative *occupant loads* shall be determined in accordance with this section.

❖ When occupants from an accessory area move through another area to exit, the combined number of occupants must be utilized to determine the capacity that the egress components must be designed to accommodate. It is not the intent of this section to "double count" occupants. For example, the means of egress from a lobby must be sized for the cumulative occupant load of the adjacent office spaces if the occupants must travel through the lobby to reach an exit. Likewise, if an adjacent room has an egress route independent of the lobby, the occupant load of that room would not be combined with the occupant loads of the other rooms that pass through the lobby. If a portion of the adjacent room's occupant load is to travel through the lobby, only that portion would be combined with the lobby occupant load for determining lobby egress (see Commentary Figure 1004.1.1). This is particularly important in determining the number of ways out of a space or off a story and the required capacity of those elements.

1004.1.1.1 Intervening spaces or accessory areas. Where occupants egress from one or more rooms, areas or spaces through others, the design *occupant load* shall be the combined *occupant load* of interconnected accessory or intervening spaces. Design of egress path capacity shall be based on the cumulative portion of *occupant loads* of all rooms, areas or spaces to that point along the path of egress travel.

❖ An example of intervening spaces could be small tenant spaces within a large mercantile. It is common for banks or coffee shops to be located within large grocery stores. Another example would be a dentist's office where people in the staff and exam room areas would egress through the reception area.

1004.1.1.2 Adjacent levels for mezzanines. That portion of the *occupant load* of a *mezzanine* with required egress through a room, area or space on an adjacent level shall be added to the *occupant load* of that room, area or space.

❖ The egress requirements for mezzanines that use exit access stairways to move to the ground level are handled similarly to those spaces with accessory areas addressed in Section 1004.1.1.1, versus the requirements for exiting from multiple stories in Sections 1004.1.1.3, 1005.4.1 and 1006. That is, that portion of the mezzanine occupant load that travels

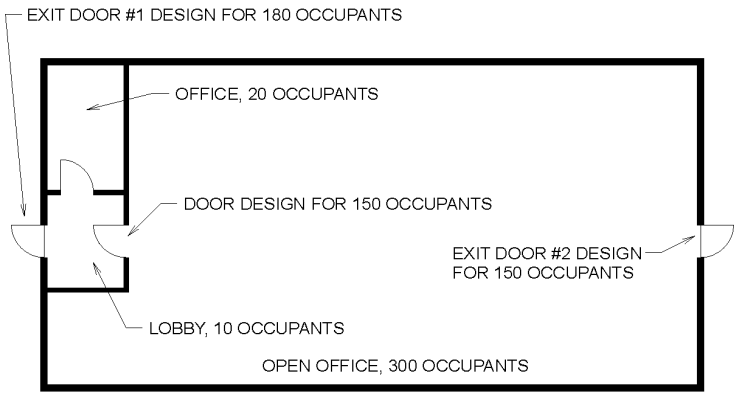

EXIT DOOR #1 DESIGN:

# OF OCCUPANTS FROM OPEN OFFICE	=	150
# OF OCCUPANTS FROM BUILDING OFFICE	=	20
# OF OCCUPANTS FROM LOBBY	=	10
TOTAL # OF OCCUPANTS (BY COMBINATION)	=	180

Figure 1004.1.1
COMBINED OCCUPANT LOAD FOR EGRESS DESIGN

INTERNATIONAL CODE COUNCIL®
Copyright © 2015 ICC. ALL RIGHTS RESERVED. Accessed by David Dammon on Jun 21, 2017 12:30:52 PM pursuant to License Agreement with ICC. No further reproduction or distribution authorized. ANY UNAUTHORIZED REPRODUCTION OR DISTRIBUTION IS A VIOLATION OF THE FEDERAL COPYRIGHT ACT AND THE LICENSE AGREEMENT, AND SUBJECT TO CIVIL AND CRIMINAL PENALTIES THEREUNDER.

through the space below to get to the exit is to be added to the occupant load of the space on the floor below. The sizing and number of the egress components must reflect this combined occupant load. Section 505.2.3 contains additional criteria for the means of egress from mezzanines or a portion of it is enclosed.

1004.1.1.3 Adjacent stories. Other than for the egress components designed for convergence in accordance with Section 1005.6, the *occupant load* from separate stories shall not be added.

❖ Second-floor egress requirements that use exit access stairways to move to the ground level are coordinated with the requirements for exiting from multiple stories found in Sections 1005.3.1, 1005.4.1 and 1006. That is, the portion of the second floor occupant load that travels through the floor below to the exit is not to be added to the occupant load of the space on the floor below as you would for a mezzanine. The sizing and number of the egress components do not have to reflect this combined occupant load. The exception to the rule is where there would be egress convergence of two stories at a level between the two stories (see Section 1005.6).

1004.1.2 Areas without fixed seating. The number of occupants shall be computed at the rate of one occupant per unit of area as prescribed in Table 1004.1.2. For areas without *fixed seating*, the occupant load shall be not less than that number determined by dividing the floor area under consideration by the *occupant load* factor assigned to the function of the space as set forth in Table 1004.1.2. Where an intended function is not listed in Table 1004.1.2, the *building official* shall establish a function based on a listed function that most nearly resembles the intended function.

Exception: Where *approved* by the *building official*, the actual number of occupants for whom each occupied space, floor or building is designed, although less than those determined by calculation, shall be permitted to be used in the determination of the design *occupant load*.

❖ The numbers for floor area per occupant load factor in Table 1004.1.2 reflect common and traditional occupant density based on empirical data for the density of similar spaces. The number determined using the occupant load factors in Table 1004.1.2 generally establishes the minimum occupant load for which the egress facilities of the rooms, spaces and building must be designed. The design occupant load is also utilized for other code requirements, such as determining the required plumbing fixture count (see commentary, Chapter 29) and other building requirements, including automatic sprinkler systems and alarm and detection systems (see Chapter 9).

It is difficult to predict the many conditions by which a space within a building will be occupied over time. An assembly banquet room in a hotel, for example, could be arranged with rows of chairs to host a business seminar one day and with mixed tables and chairs to host a dinner reception the next day. In some instances, the room will be arranged with no tables and very few chairs to accommodate primarily standing occupants. In such a situation, the egress facilities must safely accommodate the maximum number of persons permitted to occupy the space. When determining the occupant load of this type of occupancy, the various arrangements (e.g., tables and chairs, chairs only, standing space) should be recognized. The worst-case scenario should be utilized to determine the requirements for the means of egress elements. This is consistent with the requirements for multiple-use spaces addressed in Section 302.1.

While some of the values in the table utilize the net floor area, most utilize the gross floor area. See the commentary to Table 1004.1.2 and the definitions for "Floor area, gross" and "Floor area, net" in Chapter 2 for additional discussion and examples.

The occupant load determined in accordance with this section is typically the minimum occupant load on which means of egress requirements are to be based. Some occupancies may not typically contain an occupant load totally consistent with the occupant load density factors of Table 1004.1.2. The exception is intended to address the limited circumstances where the actual occupant load is less than the calculated occupant load. Previously, designing for a reduced occupant load was permitted only through the variance process. With this exception, the building official can make a determination if a design that would use the actual occupant load was permissible. The building official may want to create specific conditions for approval. For example, the building official could choose to permit the actual occupant load to be utilized to determine the plumbing fixture count, but not the means of egress or sprinkler design; the determination could be that the reduced occupant load may be utilized in a specific area, such as in the storage warehouse, but not in the factory or office areas. Another point to consider would be the potential of the space being utilized for different purposes at different times, or the potential of a future change of tenancy without knowledge of the building department. Any special considerations for such unique uses must be documented and justified. Additionally, the owner must be aware that such special considerations will impact the future use of the building with respect to the means of egress and other protection features.

TABLE 1004.1.2. See page 10-12.

❖ Table 1004.1.2 establishes minimum occupant densities based on the function or actual use of the space (not group classification).The table presents the maximum floor area allowance per occupant (i.e., occupant load factor) based on studies and counts of the number of occupants in typical buildings. The use of this table, then, results in the minimum occupant load for which rooms, spaces and the building must be designed. While an assumed normal occupancy may

INTERNATIONAL CODE COUNCIL®
Copyright © 2015 ICC. ALL RIGHTS RESERVED. Accessed by David Dammon on Jun 21, 2017 12:30:52 PM pursuant to License Agreement with ICC. No further reproduction or distribution authorized. ANY UNAUTHORIZED REPRODUCTION OR DISTRIBUTION IS A VIOLATION OF THE FEDERAL COPYRIGHT ACT AND THE LICENSE AGREEMENT, AND SUBJECT TO CIVIL AND CRIMINAL PENALTIES THEREUNDER.

be viewed as somewhat less than that determined by the use of the table factors, such a normal occupant load is not necessarily an appropriate design criterion. The greatest hazard to the occupants occurs when an unusually large crowd is present. The code does not limit the occupant load density of an area, except as provided for in Section 1004.2, but once the occupant load is established, the means of egress must be designed for at least that capacity. If it is intended that the occupant load will exceed that calculated in accordance with the table, then the occupant load is to be based on the estimated actual number of people, but not to exceed the maximum allowance in accordance with Section 1004.2. Therefore, the occupant load of the office or business areas in a storage warehouse or nightclub is to be determined using the occupant load factor most appropriate to that space—one person for each 100 square feet (9 m^2) of gross floor area.

The use of net and gross floor areas as defined in Chapter 2 is intended to provide a refinement in the occupant load determination. The gross floor area technique applied to a building only allows the deduction of the plan area of the exterior walls, vent shafts and interior courts from the plan area of the building.

The net floor area permits the exclusion of certain spaces that would be included in the gross floor area. The net floor area is intended to apply to the actual occupied floor areas. The area used for permanent building components, such as shafts, fixed equipment, thicknesses of walls, corridors, stairways, toilet rooms, mechanical rooms and closets, is not included in net floor area. For example, consider a restaurant dining area with dimensions measured from the inside of the enclosing walls of 80 feet by 60 feet (24 384 mm by 18 288 mm) (see Commentary Figure 1004.1.2). Within the restaurant area is a 6-inch (152 mm) privacy wall running the length of the room [80 feet by 0.5 feet = 40 square feet (3.7 m^2)], a fireplace [40 square feet (3.7 m^2)] and a cloak room [60 square feet (5.6 m^2)]. Each of these areas is deducted from the restaurant area, resulting in a net floor area of 4,660 square feet (433 m^2). Since the restaurant intends to have unconcentrated seating that involves loose tables and chairs, the resulting occupant load is 311 persons (4,660 divided by 15). As the definition of "Floor area, net" indicates, certain spaces are to be excluded from the gross floor area to derive the net floor area. The key point in this definition is that the net floor area is to include the actual occupied area and does not include spaces uncharacteristic of that occupancy.

In determining the occupant load of a building with mixed groups, each floor area of a single occupancy must be separately analyzed, such as required by Section 1004.6. The occupant load of the business portion of an office/warehouse building is determined at a rate of one person for each 100 square feet (9 m^2) of office space, whereas the occupant load of the warehouse portion is determined at the rate of one person for each 300 square feet (28 m^2). There may even be different uses within the same room. For example, a restaurant dining room would have seat-

TABLE 1004.1.2
MAXIMUM FLOOR AREA ALLOWANCES PER OCCUPANT

FUNCTION OF SPACE	OCCUPANT LOAD FACTOR[a]
Accessory storage areas, mechanical equipment room	300 gross
Agricultural building	300 gross
Aircraft hangars	500 gross
Airport terminal	
Baggage claim	20 gross
Baggage handling	300 gross
Concourse	100 gross
Waiting areas	15 gross
Assembly	
Gaming floors (keno, slots, etc.)	11 gross
Exhibit Gallery and Museum	30 net
Assembly with fixed seats	See Section 1004.4
Assembly without fixed seats	
Concentrated (chairs only-not fixed)	7 net
Standing space	5 net
Unconcentrated (tables and chairs)	15 net
Bowling centers, allow 5 persons for each lane including 15 feet of runway, and for additional areas	7 net
Business areas	100 gross
Courtrooms—other than fixed seating areas	40 net
Day care	35 net
Dormitories	50 gross
Educational	
Classroom area	20 net
Shops and other vocational room areas	50 net
Exercise rooms	50 gross
H-5 Fabrication and manufacturing areas	200 gross
Industrial areas	
Inpatient treatment areas	240 gross
Outpatient areas	100 gross
Sleeping areas	120 gross
Kitchens, commercial	200 gross
Library	
Reading rooms	50 net
Stack area	100 gross
Mall buildings—covered and open	See Section 402.8.2
Mercantile	
Areas on other floors	60 gross
Basement and grade floor areas	30 gross
Storage, stock, shipping areas	300 gross
Parking garages	200 gross
Residential	200 gross
Skating rinks, swimming pools	
Rink and pool	50 gross
Decks	15 gross
Stages and platforms	15 net
Warehouses	500 gross

For SI: 1 square foot = 0.0929 m^2.

INTERNATIONAL CODE COUNCIL®
Copyright © 2015 ICC. ALL RIGHTS RESERVED. Accessed by David Dammon on Jun 21, 2017 12:30:52 PM pursuant to License Agreement with ICC. No further reproduction or distribution authorized. ANY UNAUTHORIZED REPRODUCTION OR DISTRIBUTION IS A VIOLATION OF THE FEDERAL COPYRIGHT ACT AND THE LICENSE AGREEMENT, AND SUBJECT TO CIVIL AND CRIMINAL PENALTIES THEREUNDER.

ing but may also have a waiting area with standing room, a take-out window with a queue line or employee areas behind a bar or reception desk.

If a specific type of facility is not found in the table, the occupancy it most closely resembles should be utilized. For example, a training room in a business office may utilize the 20-square-feet (1.86 m^2) net established for educational classroom areas, or a dance or karate studio may use the occupant load for rinks and pools for the studio areas.

Table 1004.1.2 presents a method of determining the absolute base minimum occupant load of a space that the means of egress is to accommodate.

The table occupant loads are based on the stereotypical configuration of spaces. For example, the dorm requirements were written based on dormitories with sleeping rooms with two to four students, a gang bathroom and a meeting/study lounge on each floor. Dormitory buildings that operate like army barracks may have a heavier occupant load, while facilities with groups of rooms with private bathrooms, living and even kitchenette areas may have a lower occupant load. Industrial facilities are based on typical fabricating plants. Warehouses are based on consistent in and out movement of product by employees. Factories with largely mechanized operations or warehouses that contain long-term storage are other examples where discussion with the building official and the application of the exception in Section 1004.1.2 might be considered.

In addition to the table, Section 402 contains the basis for calculating the occupant load of a covered mall building; however, Table 1004.1.2 should be used for determining the occupant load of each anchor store.

1004.2 Increased occupant load. The *occupant load* permitted in any building, or portion thereof, is permitted to be increased from that number established for the occupancies in Table 1004.1.2, provided that all other requirements of the code are met based on such modified number and the *occupant load* does not exceed one occupant per 7 square feet (0.65 m^2) of occupiable floor space. Where required by the *building official*, an *approved aisle*, seating or fixed equipment diagram substantiating any increase in *occupant load*

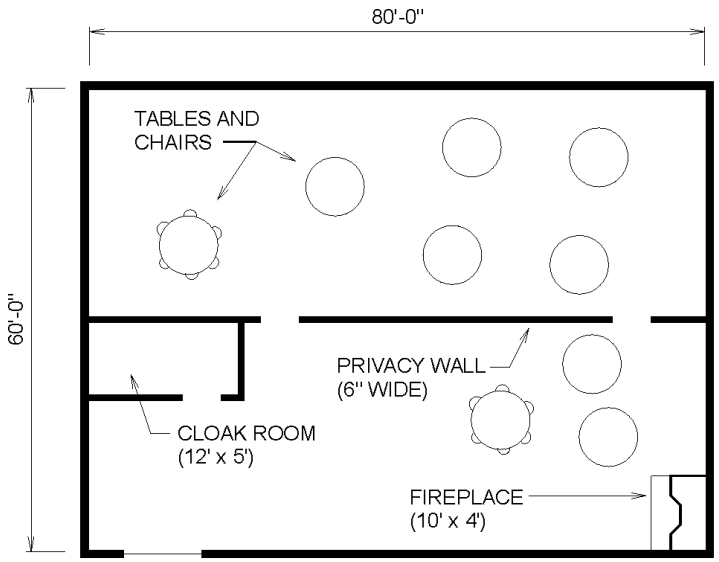

80' x 60' = 4,800 SQ.FT.

PRIVACY WALL:	40 SQ.FT.
FIREPLACE:	40 SQ.FT.
CLOAK ROOM:	60 SQ.FT.
TOTAL:	140 SQ.FT.

(TOTAL AREA WITHIN WALLS) - (EXCLUDED ITEMS) = (NET FLOOR AREA)
4,800 SQ.FT. - 140 SQ.FT. = 4,660 SQ.FT.

(NET FLOOR AREA)/(TABLE 1004.1.2 VALUE) = (OCCUPANT LOAD)
4,660 SQ.FT./15 SQ.FT. PER OCCUPANT = 311 OCCUPANTS

For SI: 1 inch = 25.4 mm, 1 foot = 304.8 mm,
1 square foot = 0.0929 m^2.

Figure 1004.1.2
TYPICAL NET FLOOR AREA OCCUPANT LOAD CALCULATION

INTERNATIONAL CODE COUNCIL®
Copyright © 2015 ICC. ALL RIGHTS RESERVED. Accessed by David Dammon on Jun 21, 2017 12:30:52 PM pursuant to License Agreement with ICC. No further reproduction or distribution authorized. ANY UNAUTHORIZED REPRODUCTION OR DISTRIBUTION IS A VIOLATION OF THE FEDERAL COPYRIGHT ACT AND THE LICENSE AGREEMENT, AND SUBJECT TO CIVIL AND CRIMINAL PENALTIES THEREUNDER.

shall be submitted. Where required by the *building official*, such diagram shall be posted.

❖ An increased occupant load is permitted above that developed by using Table 1004.1.2, for example, by utilizing the actual occupant load. However, if the occupant load exceeds that which is determined in accordance with Section 1004.1.2, the building official has the authority to require aisle, seating and equipment diagrams to confirm that all occupants have access to an exit, the exits provide sufficient capacity for all occupants and compliance with this section is attained.

The maximum area of 7 square feet (0.65 m^2) per occupant should allow for sufficient occupant movement in actual fire situations. This is not a conflict with the standing space provisions of 5 square feet (0.46 m^2) net in accordance with Table 1004.1.2. Standing space is typically limited to a portion of a larger area, such as the area immediately in front of the bar or the waiting area in a restaurant, while the rest of the dining area would use 15 square feet (1.4 m^2) net per occupant.

1004.3 Posting of occupant load. Every room or space that is an assembly occupancy shall have the *occupant load* of the room or space posted in a conspicuous place, near the main *exit* or *exit access doorway* from the room or space. Posted signs shall be of an approved legible permanent design and shall be maintained by the owner or the owner's authorized agent.

❖ Each room or space used for an assembly occupancy is required to display the approved occupant load. The placard must be posted in a visible location (near the main entrance) (see Commentary Figure 1004.3 for an example of an occupant load limit sign).

The posting is required to provide a means by which to determine that the maximum approved occupant load is not exceeded. This permanent and readily visible sign provides a constant reminder to building personnel and is a reference for building officials during periodic inspections. The posted occupant load could also be an indication that the room was designed for a layout of just tables and chairs, not a layout of chairs only (see Section 302.1).

While the composition and organization of information in the sign are not specified, information must be recorded in a permanent manner. This means that a sign with changeable numbers would not be acceptable.



Figure 1004.3
EXAMPLE OF OCCUPANT LOAD LIMIT SIGN

1004.4 Fixed seating. For areas having *fixed seats* and *aisles*, the *occupant load* shall be determined by the number of *fixed seats* installed therein. The *occupant load* for areas in which *fixed seating* is not installed, such as waiting spaces, shall be determined in accordance with Section 1004.1.2 and added to the number of *fixed seats*.

The *occupant load* of *wheelchair spaces* and the associated companion seat shall be based on one occupant for each *wheelchair space* and one occupant for the associated companion seat provided in accordance with Section 1108.2.3.

For areas having *fixed seating* without dividing arms, the *occupant load* shall be not less than the number of seats based on one person for each 18 inches (457 mm) of seating length.

The *occupant load* of seating booths shall be based on one person for each 24 inches (610 mm) of booth seat length measured at the backrest of the seating booth.

❖ The occupant load in an area with fixed seats is readily determined. In spaces with a combination of fixed and loose seating, the occupant load is determined by a combination of the occupant density number from Table 1004.1.2 and a count of the fixed seats.

For bleachers, booths and other seating facilities without dividing arms, the occupant load is simply based on the number of people that can be accommodated in the length of the seat. Measured at the hips, an average person occupies about 18 inches (457 mm) on a bench. In a booth, additional space is necessary for "elbow room" while eating. In a circular or curved booth or bench, the measurement should be taken just a few inches from the back of the seat, which is where a person's hips would be located (see Commentary Figure 1004.4).

Some assembly spaces may have areas for standing or waiting. For example, some large sports stadiums have "standing room only" areas used for sell-out games. The Globe Theater in England has standing room in an area at the front of the theater. This section is not intended to assign an occupant load to the typical circulation aisles in an assembly space. Occupant load for wheelchair spaces should be based on the number of wheelchairs and companion seats that the space was designed for. As specified in Section 1004.6, if the wheelchair spaces may also be utilized for standing space or removable seating, the occupant load must be determined by the worst-case scenario.

INTERNATIONAL CODE COUNCIL®
Copyright © 2015 ICC. ALL RIGHTS RESERVED. Accessed by David Dammon on Jun 21, 2017 12:30:52 PM pursuant to License Agreement with ICC. No further reproduction or distribution authorized. ANY UNAUTHORIZED REPRODUCTION OR DISTRIBUTION IS A VIOLATION OF THE FEDERAL COPYRIGHT ACT AND THE LICENSE AGREEMENT, AND SUBJECT TO CIVIL AND CRIMINAL PENALTIES THEREUNDER.

1004.5 Outdoor areas. *Yards*, patios, *courts* and similar outdoor areas accessible to and usable by the building occupants shall be provided with *means of egress* as required by this chapter. The *occupant load* of such outdoor areas shall be assigned by the *building official* in accordance with the anticipated use. Where outdoor areas are to be used by persons in addition to the occupants of the building, and the path of egress travel from the outdoor areas passes through the building, *means of egress* requirements for the building shall be based on the sum of the *occupant loads* of the building plus the outdoor areas.

Exceptions:

1. Outdoor areas used exclusively for service of the building need only have one *means of egress*.
2. Both outdoor areas associated with Group R-3 and individual dwelling units of Group R-2.

❖ This section addresses the means of egress of outdoor areas such as yards, patios and courts. The primary concern is for those outdoor areas, used for functions that may include occupants other than the building occupants or the building occupants alone, where egress from the outdoor area is back through the building to reach the exit discharge. An example is an interior court of an office building where assembly functions are held during normal business hours for persons other than the building occupants. When court occupants must egress from the interior court back through the building, the building's egress system is to be designed for the building occupants, plus the assembly occupants from the interior court. Another example would be an outdoor dining area that exited back through the restaurant.

The occupant load is to be assigned by the building official based on use. It is suggested that the design occupant load be determined in accordance with Section 1004.1.2.

Exception 1 describes conditions where the occupant load is very limited, such as areas where an interior courtyard had strictly plants or mechanical equipment. If the courtyard was open for building occupants, other than maintenance personnel, to use the space, the space must be designed with the occupant loads in Table 1004.1.2. Balconies or patios associated with individual dwelling units, in Exception 2, would typically be used by the occupants of the unit. Means of egress can be back through the building in accordance with Section 1016.2.

1004.6 Multiple occupancies. Where a building contains two or more occupancies, the *means of egress* requirements shall apply to each portion of the building based on the occupancy of that space. Where two or more occupancies utilize portions of the same *means of egress* system, those egress components shall meet the more stringent requirements of all occupancies that are served.

❖ Since the means of egress systems are designed for the specific occupancy of a space, the provisions of this chapter are to be applied based on the actual

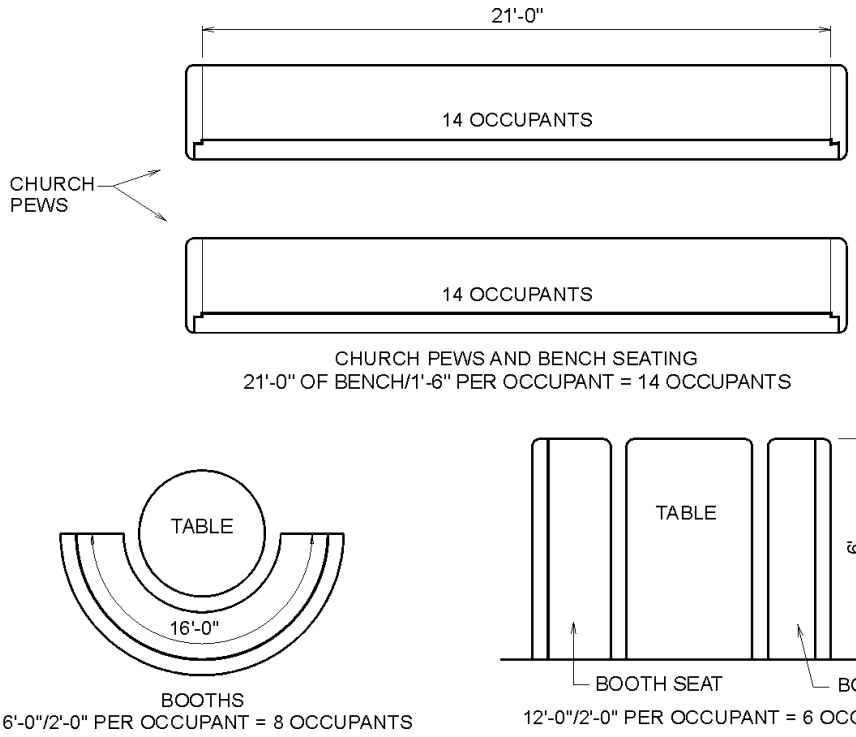

For SI: 1 inch = 25.4 mm, 1 foot = 304.8 mm.

Figure 1004.4
TYPICAL FIXED SEATING

INTERNATIONAL CODE COUNCIL®
Copyright © 2015 ICC. ALL RIGHTS RESERVED. Accessed by David Dammon on Jun 21, 2017 12:30:52 PM pursuant to License Agreement with ICC. No further reproduction or distribution authorized. ANY UNAUTHORIZED REPRODUCTION OR DISTRIBUTION IS A VIOLATION OF THE FEDERAL COPYRIGHT ACT AND THE LICENSE AGREEMENT, AND SUBJECT TO CIVIL AND CRIMINAL PENALTIES THEREUNDER.

occupancy conditions of the space served.

For example, a hospital is classified as Group I-2 and normally includes the associated administrative or business functions found in the same building. Chapter 3 would permit the entire building to be constructed to the more restrictive provisions for Group I-2; however, each area of the building need only have the means of egress designed in accordance with the actual occupancy conditions, such as Groups I-2 and B. If the corridor serves only the occupants in the business use (i.e., administrative staff), and is not intended to serve as a required means of egress for patients, the corridor need only be 36 or 44 inches (914 or 1118 mm) in width, depending on the occupant load.

Where the corridor is used by both Group I-2 and B occupancies, it must meet the most stringent requirement. For example, if a corridor in the business area is also used for the movement of beds (i.e., exit access from a patient care area), it would need to be a minimum of 96 inches (2438 mm) in clear width.

SECTION 1005
MEANS OF EGRESS SIZING

1005.1 General. All portions of the *means of egress* system shall be sized in accordance with this section.

Exception: *Aisles* and *aisle accessways* in rooms or spaces used for assembly purposes complying with Section 1029.

❖ This section is a charging paragraph for sizing for the means of egress system in a tenant space, floor or building. The exception is based on the understanding that means of egress paths within assembly areas have unique criteria based on the high occupant load and possibility of stepped or sloped aisles.

1005.2 Minimum width based on component. The minimum width, in inches (mm), of any *means of egress* components shall be not less than that specified for such component, elsewhere in this code.

❖ The code requires the utilization of two methods to determine the minimum width of egress components. While this section provides a methodology for determining required widths based on the design occupant load calculated in accordance with Section 1004.1, other sections provide minimum widths of various components. The actual width that is provided is to be the larger of the two widths.

1005.3 Required capacity based on occupant load. The required capacity, in inches (mm), of the *means of egress* for any room, area, space or story shall be not less than that determined in accordance with Sections 1005.3.1 and 1005.3.2.

❖ For this section, the sum of the capacities of the means of egress components that serve each space must equal or exceed the occupant load of that space. For example, the combined width of all of the exit stairways from a floor needs to be considered to determine if the stairways have adequate capacity for everyone to evacuate the building. All elements must meet the minimum width requirements specified in other sections (e.g., Section 1010.1.1 for doors; Sections 1009.3 and 1011.2 for stairs).

This section establishes the necessary width of each egress component on a "per-occupant" basis. Means of egress components are separated between "stairs" and "other;" "other" being doors, doorways, corridors, ramps, aisles, etc.

The traditional unit of measurement of egress capacity was based on a "unit exit width" that was to simulate the body ellipse with a basic dimensional width of 22 inches (559 mm)—approximately the shoulder width of an average adult male. This unit exit width was combined with assumed egress movement (such as single file or staggered file) to result in an egress capacity per unit exit width for various occupancies. This assumption simplifies the dynamic egress process since contemporary studies have indicated that people do not egress in such precise and predictable movements. As traditionally used in the codes, the method of determining capacity per unit of clear width implies a higher level of accuracy than can realistically be achieved. The resulting factors preserve the features of the past practices that can be documented, while providing a more straightforward method of determining egress capacity.

1005.3.1 Stairways. The capacity, in inches, of *means of egress stairways* shall be calculated by multiplying the *occupant load* served by such *stairways* by a means of egress capacity factor of 0.3 inch (7.6 mm) per occupant. Where *stairways* serve more than one story, only the occupant load of each story considered individually shall be used in calculating the required capacity of the *stairways* serving that story.

Exceptions:

1. For other than Group H and I-2 occupancies, the capacity, in inches, of *means of egress stairways* shall be calculated by multiplying the *occupant load* served by such *stairways* by a means of egress capacity factor of 0.2 inch (5.1 mm) per occupant in buildings equipped throughout with an automatic sprinkler system installed in accordance with Section 903.3.1.1 or 903.3.1.2 and an *emergency voice/alarm communication* system in accordance with Section 907.5.2.2.
2. Facilities with *smoke-protected assembly seating* shall be permitted to use the capacity factors in Table 1029.6.2 indicated for stepped aisles for *exit access* or *exit stairways* where the entire path for *means of egress* from the seating to the *exit discharge* is provided with a smoke control system complying with Section 909.
3. Facilities with outdoor *smoke-protected assembly seating* shall be permitted to the capacity factors in Section 1029.6.3 indicated for stepped aisles for *exit access* or *exit stairways* where the entire path for

INTERNATIONAL CODE COUNCIL®
Copyright © 2015 ICC. ALL RIGHTS RESERVED. Accessed by David Dammon on Jun 21, 2017 12:30:52 PM pursuant to License Agreement with ICC. No further reproduction or distribution authorized. ANY UNAUTHORIZED REPRODUCTION OR DISTRIBUTION IS A VIOLATION OF THE FEDERAL COPYRIGHT ACT AND THE LICENSE AGREEMENT, AND SUBJECT TO CIVIL AND CRIMINAL PENALTIES THEREUNDER.

means of egress from the seating to the *exit discharge* is open to the outdoors.

❖ The capacity factor for stairways is larger than "other egress components" because of the slowdown of travel to negotiate the steps. When the required occupant capacity of an egress component is determined, multiplication by the appropriate factor results in the required clear width of the component in inches, based on capacity. Similarly, if the clear width of a component is known, division by the appropriate factor results in the permitted capacity of that component.

Per Exception 1, other than in Group H or I-2, if the building is sprinklered and has an emergency voice/alarm communication system, the capacity factor for stairways is permitted to be reduced to 0.2 inches (5.1 mm) per occupant.

Smoke-protected seating is permitted to use a lower capacity number to determine the width of the egress components within the seating bowl. When designing the stepped aisles within the seating bowl, the provisions for Section 1029 are applicable. When designing components outside of the seating bowl, Section 1005.3 is applicable. Per Exceptions 2 and 3, if both the seating bowl and the entire route out of the building is smoke protected, the entire route can use the lower capacity numbers specified in Section 1029. For example, if an outdoor stadium has an enclosed concourse that spectators use to enter and exit the stadium seating, the smoke-protected capacity numbers can be used to design the stepped aisles in the stadium, but the higher numbers for stairways must be used to size the stairways in the concourse. Only if the concourse is also open to the outside air can the smoke-protected seating capacity numbers be used for the entire means of egress route. See the definition of "Smoke-protected assembly seating." See also Sections 1029.6.2 and 1029.6.3.

The following illustrate typical calculations for stairways from a nonsprinklered, two-story, two-exit office building:

1. Determine the minimum required stairway width with a second-floor occupant load of 350:
   - 350 occupants divided by 0.3 inch = 105 inches (2667 mm) minimum;
   - 105 inches divided by two stairways is $52^1/_2$ inches (1334 mm) minimum per stairway; or
   - Section 1009.1 prescribes that the width of an interior stairway cannot be less than 44 inches (1118 mm).

The capacity criteria are more restrictive and, therefore, the minimum required width for each stairway is $52^1/_2$ inches (1334 mm).

2. Determine the minimum required stairway width with a second-floor occupant load of 90:
   - 90 occupants divided by 0.3 inches (7.62 mm) = 27 inches (686 mm) minimum;
   - 27 inches (686 mm) divided by two stairways is $13^1/_2$ inches (343 mm); or
   - Section 1011.1 prescribes that the width of an interior stairway cannot be less than 44 inches (1118 mm). Note that the stair width reduction in Section 1011.2, Exception 1, is applicable only when the entire occupant load of a story is less than 50.

The minimum clear width requirements are more restrictive and, therefore, the minimum required width for each stairway is 44 inches (1118 mm).

The maximum capacity of a 44-inch (1118 mm) stairway is 44 inches divided by 0.3 inches (7.62 mm) per occupant = 146 occupants. Therefore, a floor level with two exit stairways could have 292 occupants before the capacity would control the stairway egress width.

Using the exception for sprinklered buildings, a 44-inch (1118 mm) stairway divided by 0.2 inches (5.08 mm) per occupant = 220 occupants. Therefore, a floor level with two exit stairways could have 440 occupants before the capacity would control the stairway egress width.

Keep in mind that accessible means of egress stairways in nonsprinklered buildings require a minimum clear width of 48 inches (1219 mm) between handrails.

1005.3.2 Other egress components. The capacity, in inches, of *means of egress* components other than *stairways* shall be calculated by multiplying the *occupant load* served by such component by a means of egress capacity factor of 0.2 inch (5.1 mm) per occupant.

Exceptions:

1. For other than Group H and I-2 occupancies, the capacity, in inches, of *means of egress* components other than *stairways* shall be calculated by multiplying the *occupant load* served by such component by a means of egress capacity factor of 0.15 inch (3.8 mm) per occupant in buildings equipped throughout with an automatic sprinkler system installed in accordance with Section 903.3.1.1 or 903.3.1.2 and an *emergency voice/alarm communication* system in accordance with Section 907.5.2.2.
2. Facilities with *smoke-protected assembly seating* shall be permitted to use the capacity factors in Table 1029.6.2 indicated for level or ramped *aisles* for *means of egress* components other than *stairways* where the entire path for *means of egress* from the seating to the *exit discharge* is provided with a smoke control system complying with Section 909.

INTERNATIONAL CODE COUNCIL®
Copyright © 2015 ICC. ALL RIGHTS RESERVED. Accessed by David Dammon on Jun 21, 2017 12:30:52 PM pursuant to License Agreement with ICC. No further reproduction or distribution authorized. ANY UNAUTHORIZED REPRODUCTION OR DISTRIBUTION IS A VIOLATION OF THE FEDERAL COPYRIGHT ACT AND THE LICENSE AGREEMENT, AND SUBJECT TO CIVIL AND CRIMINAL PENALTIES THEREUNDER.

3. Facilities with outdoor *smoke-protected assembly seating* shall be permitted to the capacity factors in Section 1029.6.3 indicated for level or ramped *aisles* for *means of egress* components other than *stairways* where the entire path for *means of egress* from the seating to the *exit discharge* is open to the outdoors.

❖ The capacity factor for "other egress components" (e.g., doors, gates, corridors, aisles, ramps) is less than stairways because of the slowdown of travel to negotiate the steps. When the required occupant capacity of an egress component is determined, multiplication by the appropriate factor results in the required clear width of the component in inches, based on capacity. Similarly, if the clear width of a component is known, division by the appropriate factor results in the permitted capacity of that component.

Per Exception 1, other than in Group H or I-2, if the building is sprinklered and has an emergency voice/alarm communication system, the capacity factor for doors, corridors, aisles, etc., is permitted to be reduced to 0.15 inches (3.8 mm) per occupant.

Smoke-protected seating is permitted to use a lower capacity number to determine the width of the egress components. When designing the ramped or level aisles and aisle accessways within the seating bowl, the provisions for Section 1029 are applicable. When designing components outside of the seating bowl, Section 1005.3 is applicable. Per Exceptions 2 and 3, if both the seating bowl and the entire route out of the building is smoke protected, the entire route can use the lower capacity numbers. For example, if an outdoor stadium has an enclosed concourse that spectators use to enter and exit the stadium seating, the smoke-protected capacity numbers can be used to design the ramped or level aisles in the stadium, but the higher numbers for other egress components must be used to size the corridors or ramps in the concourse. Only if the concourse is also open to the outside air can the smoke-protected seating capacity numbers be used for the entire means of egress route. See the definition of "Smoke-protected assembly seating." See also Sections 1029.6.2 and 1029.6.3.

For example, two exit access doorways from a room with an occupant load of 300 would each have a required capacity of not less than 150. Based on the minimum required clear door width [32-inch (813 mm) clear width per door divided by 0.2 inch (5.08 mm) per occupant = 160 occupants], two 32-inch (813 mm) clear width doors would meet both the minimum clear width (Section 1010.1.1) and the capacity requirements. Two exits from a space with an occupant load of 450 would each have a required capacity of not less than 225, necessitating more doors or larger door leaves.

Using the exception, the door capacity would increase [32-inch (813 mm) clear width per door divided by 0.15 inch (3.08 mm) per occupant = 213 occupants].

1005.4 Continuity. The minimum width or required capacity of the *means of egress* required from any story of a building shall not be reduced along the path of egress travel until arrival at the public way.

❖ The requirement that both the minimum widths and required capacity from any floor are to be provided all the way along the exit to the termination, typically down the stairway to the exterior exit door at the level of exit discharge, results in an egress width that is adequate for the exit discharge.

The sum total capacity of the exits that serve a floor is not to be less than the occupant load of the floor as determined by Section 1004.1. If an exit, such as a stairway, also serves a second floor and the required capacity of the exit serving the occupants of the second floor is greater than the first floor, the greater capacity would govern the egress components that the occupants of the floors share. For example, if an exit stairway serves two floors, with occupant loads of 300 on the lower floor and 500 on the upper floor, assuming that two stairways serve each floor, the two stairways would be designed for a capacity of 250 people each, using the upper-floor occupant load of 500 as the basis of determination. Note that the doors to the stairways on the lower floor would be designed for a capacity of 150 and the doors to the stairways on the upper floor would be designed for a capacity of 250. Reversing these two floors would result in the portion of the stairways that serves the upper floor to be designed for a capacity of 150 and the stairways that serve the lower floor to be designed for 250. Requiring the egress component to be designed for the largest tributary occupant load accommodates the worst-case situation.

Also note that the capacity of the exits is based on the occupant load of one floor. The occupant loads are not combined with other floors for the exit design. It is assumed that the peak demand or flow of occupants from more than one floor level at a common point in the means of egress will not occur simultaneously, except as provided for in Sections 1005.6 (Egress convergence) and 1004.1.1.2 (Adjacent levels for mezzanines).

1005.5 Distribution of minimum width and required capacity. Where more than one *exit*, or access to more than one *exit*, is required, the *means of egress* shall be configured such that the loss of any one *exit*, or access to one *exit*, shall not reduce the available capacity or width to less than 50 percent of the required capacity or width.

❖ It is critical that the distribution of both egress capacity and minimum width are examined. Where multiple means of egress are required, the loss of any one path cannot reduce the available capacity or width to less than 50 percent. The 50-percent minimum of the required egress capacity and width results in a fairly uniform distribution of egress paths. This requirement does not, however, require that the capacities be equally distributed when *more* than two means of egress are provided. An egress design with a dra-

INTERNATIONAL CODE COUNCIL®
Copyright © 2015 ICC. ALL RIGHTS RESERVED. Accessed by David Dammon on Jun 21, 2017 12:30:52 PM pursuant to License Agreement with ICC. No further reproduction or distribution authorized. ANY UNAUTHORIZED REPRODUCTION OR DISTRIBUTION IS A VIOLATION OF THE FEDERAL COPYRIGHT ACT AND THE LICENSE AGREEMENT, AND SUBJECT TO CIVIL AND CRIMINAL PENALTIES THEREUNDER.

matic imbalance of egress component capacities relative to occupant load distribution should be reviewed closely to avoid a needless delay in egressing a story or area. The balancing of the means of egress components, in accordance with the distribution of the occupant load, is reasonable and, in some cases, necessary for facilities having mixed occupancies with dramatically different occupant loads.

1005.6 Egress convergence. Where the *means of egress* from stories above and below converge at an intermediate level, the capacity of the *means of egress* from the point of convergence shall be not less than the largest minimum width or the sum of the required capacities for the *stairways* or *ramps* serving the two adjacent stories, whichever is larger.

❖ Convergence of occupants can occur whenever the occupants of an upper floor travel down and occupants of a lower floor travel up and meet at a common, intermediate egress component on the route to the exit discharge. The intermediate component may or may not be another occupiable floor and, most often, is an exit door [see Commentary Figures 1005.6(1) and 1005.6(2)].

The entire premise of egress convergence is based on the assumption of simultaneous notification (i.e., all occupants of all floors begin moving toward the exits at the same time). As illustrated in Commentary Figure 1005.6(3), the occupants of the first floor will have exited the building by the time most of the occupants of the second floor have reached the exit discharge door. However, as illustrated in Commentary Figure 1005.6(1), the occupants of a basement will reach the discharge door simultaneously with the second-floor occupants, thereby creating a bottleneck and the need for sizing the affected component for a larger combined occupant load.

An egress convergence situation can also be created when an intermediate floor level is not present, as illustrated in Commentary Figure 1005.6(2). Again, under the assumption of simultaneous notification, occupants of both floors would reach the exit discharge door at approximately the same time, invoking the requirements for increased egress capacity.

1005.7 Encroachment. Encroachments into the required *means of egress* width shall be in accordance with the provisions of this section.

❖ This section addresses maximum encroachment into the required width along the path of travel for means of egress. Types of encroachment are door leaves, door hardware, handrails, trim and protruding objects. These requirements are referenced for aisles (Section 1018.1), corridors (Section 1020.3), exit passageways (Section 1024.2) and exit courts (Section 1028.4.1). Along stairways, handrail projections are permitted per Section 1014.8.

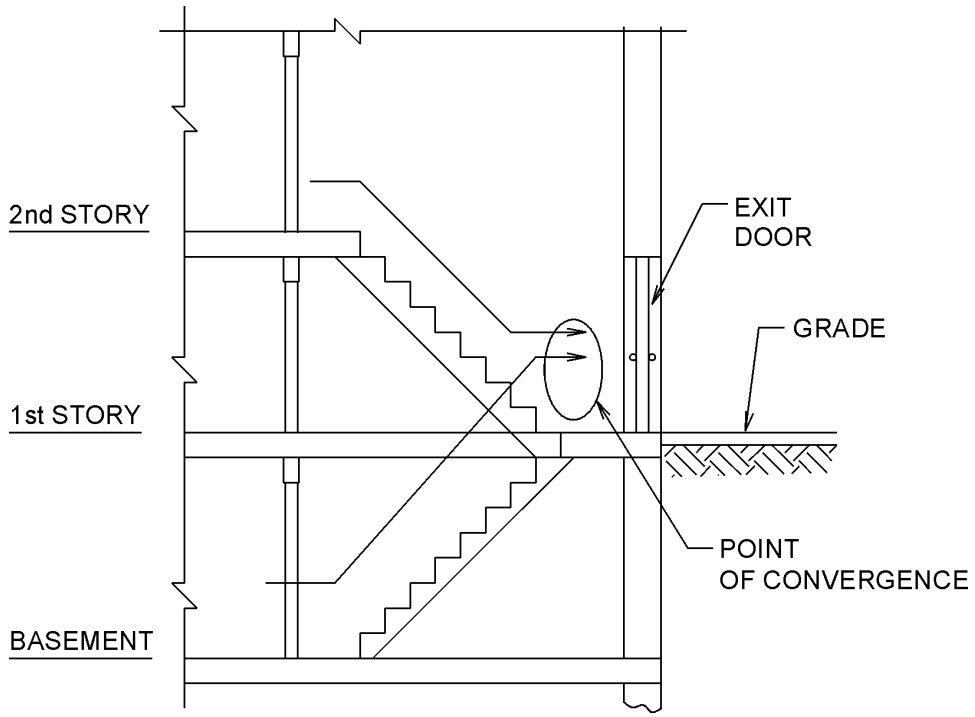

Figure 1005.6(1)
EGRESS CONVERGENCE AT FIRST STORY

INTERNATIONAL CODE COUNCIL®
Copyright © 2015 ICC. ALL RIGHTS RESERVED. Accessed by David Dammon on Jun 21, 2017 12:30:52 PM pursuant to License Agreement with ICC. No further reproduction or distribution authorized. ANY UNAUTHORIZED REPRODUCTION OR DISTRIBUTION IS A VIOLATION OF THE FEDERAL COPYRIGHT ACT AND THE LICENSE AGREEMENT, AND SUBJECT TO CIVIL AND CRIMINAL PENALTIES THEREUNDER.

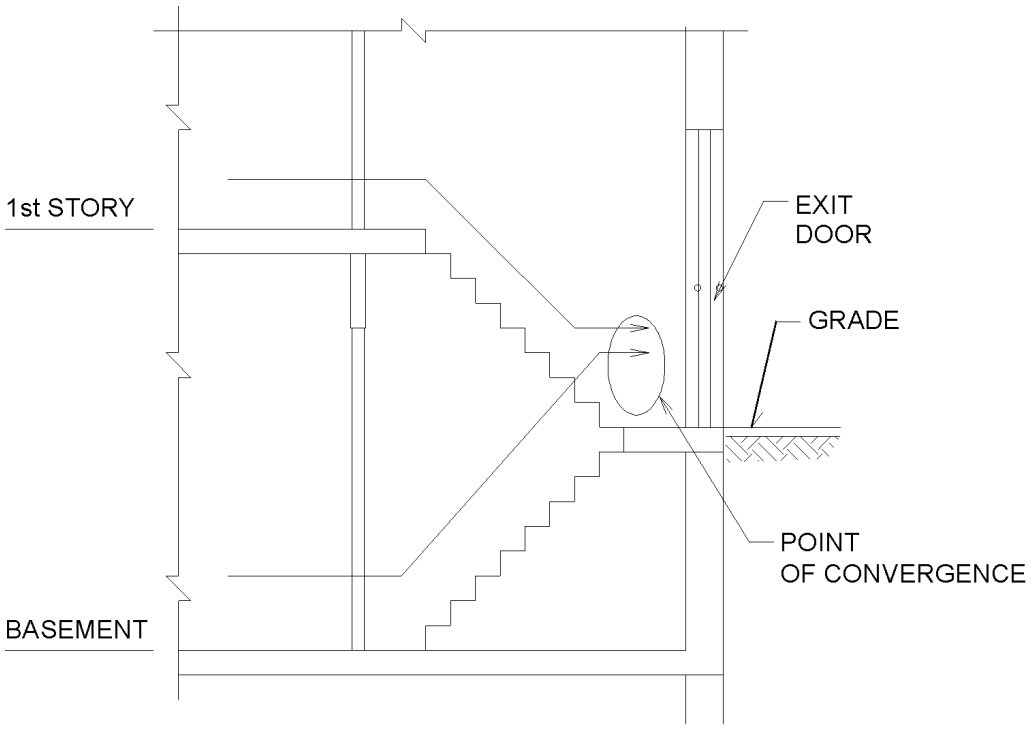

Figure 1005.6(2)
EGRESS CONVERGENCE AT INTERMEDIATE LEVEL

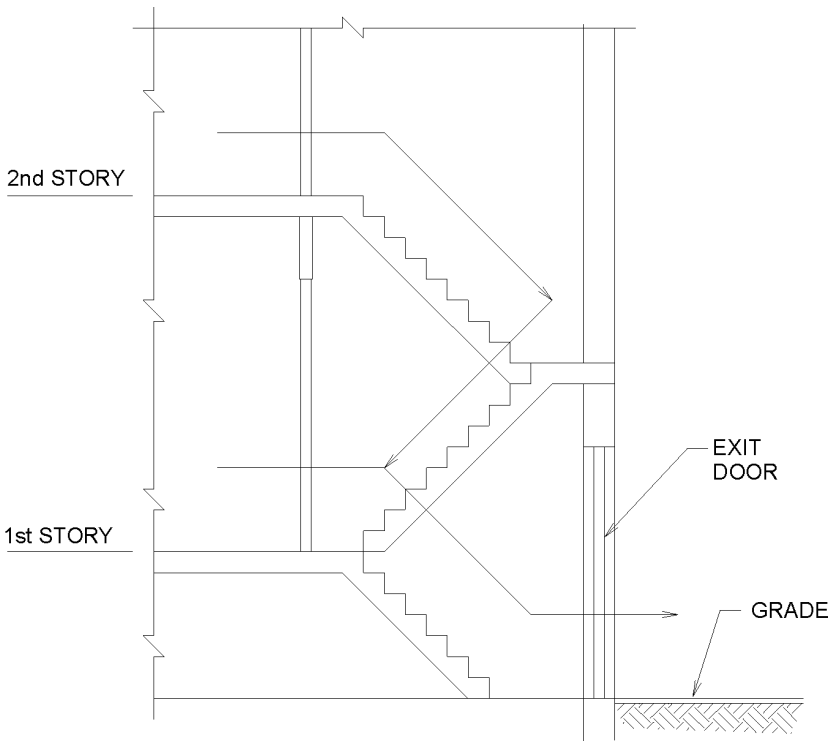

Figure 1005.6(3)
NO EGRESS CONVERGENCE

INTERNATIONAL CODE COUNCIL®
Copyright © 2015 ICC. ALL RIGHTS RESERVED. Accessed by David Dammon on Jun 21, 2017 12:30:52 PM pursuant to License Agreement with ICC. No further reproduction or distribution authorized. ANY UNAUTHORIZED REPRODUCTION OR DISTRIBUTION IS A VIOLATION OF THE FEDERAL COPYRIGHT ACT AND THE LICENSE AGREEMENT, AND SUBJECT TO CIVIL AND CRIMINAL PENALTIES THEREUNDER.

1005.7.1 Doors. Doors, when fully opened, shall not reduce the required width by more than 7 inches (178 mm). Doors in any position shall not reduce the required width by more than one-half.

Exceptions:

1. Surface-mounted latch release hardware shall be exempt from inclusion in the 7-inch maximum (178 mm) encroachment where both of the following conditions exist:
   1.1. The hardware is mounted to the side of the door facing away from the adjacent wall where the door is in the open position.
   1.2. The hardware is mounted not less than 34 inches (865 mm) nor more than 48 inches (1219 mm) above the finished floor.
2. The restrictions on door swing shall not apply to doors within individual *dwelling units* and *sleeping units* of Group R-2 occupancies and *dwelling units* of Group R-3 occupancies.

❖ Projections or restrictions in the required width can impede and restrict occupant travel, causing egress to occur less efficiently than expected. The swinging of a door, such as from a room into a corridor, and any handrails along the route are permitted projections.

Historically, this section has looked at doors on one wall at a time. Doors located across the hall from one another are not considered additive when considering protrusion limits. Doors would not typically be opened to the full extent at exactly the same moment, nor can they remain open at 90 degrees and totally blocking the hall because of the maximum limitation of 7 inches (178 mm) when fully open (typically approaching 180 degrees). Regarding door encroachment, there are two tests. The arc created by the door's outside edge cannot project into more than one-half of the required corridor width. When opened to its fullest extent, the door cannot project more than 7 inches (178 mm) into the required width, which is the dimension of the leaf thickness excluding the hardware as shown in Commentary Figure 1005.7.1. Door hardware encroachment is addressed separately in Exception 1. These projections are permitted because they are considered to be temporary and do not significantly impede the flow. Occupants will compensate for the projection by a reduction in the natural cushion they retain between themselves and a boundary, known as the edge effect.

Per Exception 2, the door swing restrictions do not apply within dwelling units since the occupant load is very low. Based on the intent of this section, other situations that could be approved by the official having jurisdiction would be situations where the opening door would not block the egress, such as the door at the end of a corridor, or the room was not typically occupied, such as a janitor's closet.

The provision in Exception 1 indicates that hardware facing the corridor when the door is fully open need not be considered when determining the allowable door encroachment into a corridor of 7 inches (178 mm) maximum. The allowance is applicable provided the hardware is mounted within a height range of 34 inches to 48 inches (865 to 1220 mm), which is consistent with the range for means of egress door hardware height as established in Section 1010.1.9.2. Where hardware extends across a door, such as panic hardware, the 4-inch (102 mm) projection in the door opening is addressed in Section 1010.1.1.1.

1005.7.2 Other projections. *Handrail* projections shall be in accordance with the provisions of Section 1014.8. Other nonstructural projections such as trim and similar decorative

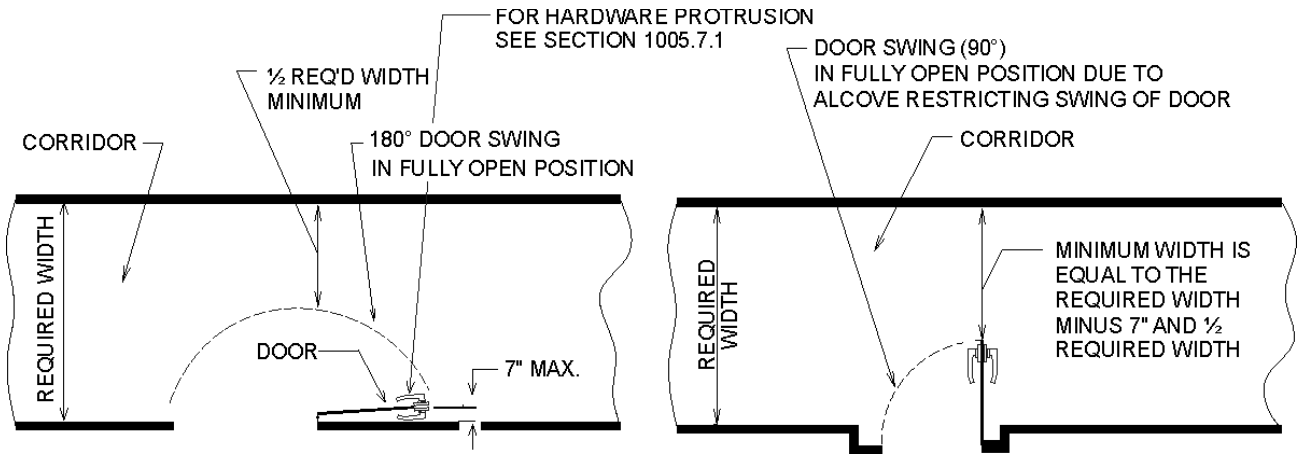

For SI: 1 inch = 25.4 mm, 1 degree = 0.01745 rad.

Figure 1005.7.1
TYPICAL DOOR RESTRICTIONS INTO PASSAGEWAY, AISLE AND CORRIDOR WIDTH

INTERNATIONAL CODE COUNCIL®
Copyright © 2015 ICC. ALL RIGHTS RESERVED. Accessed by David Dammon on Jun 21, 2017 12:30:52 PM pursuant to License Agreement with ICC. No further reproduction or distribution authorized. ANY UNAUTHORIZED REPRODUCTION OR DISTRIBUTION IS A VIOLATION OF THE FEDERAL COPYRIGHT ACT AND THE LICENSE AGREEMENT, AND SUBJECT TO CIVIL AND CRIMINAL PENALTIES THEREUNDER.

features shall be permitted to project into the required width not more than $1^1/_2$ inches (38 mm) on each side.

Exception: Projections are permitted in corridors within Group I-2 Condition 1 in accordance with Section 407.4.3.

❖ Handrails are not required along corridors, level aisles, exit passageways and exit corridors; however, if provided, Section 1014.8 would be applicable. Handrails are sometimes provided along the hallways in hospitals or nursing homes to aid the residents. Bumper guards along the walls are not handrails.

Items such as baseboards, chair rails, pilasters, etc., are limited to protruding over the *required* width of the corridor a maximum of $1^1/_2$ inches (38 mm); however, once again, Section 1003.3.3 would be applicable when the corridor was wider than required.

The exception is in recognition of a situation unique to nursing homes (Group I-2, Condition 1). Section 407.4.3 includes allowances for furniture in corridors to address the need of patients needing a place to sit to rest as well as the new style of design that emphasizes the residential aspects of the environment.

1005.7.3 Protruding objects. Protruding objects shall comply with the applicable requirements of Section 1003.3.

❖ This section is a reminder that protruding objects are applicable when looking at encroachments into a confined path of travel. The difference, however, is that door and other projections are applied to the required minimum width, while protruding object provisions apply to paths of travel even when wider than required.

SECTION 1006
NUMBER OF EXITS AND EXIT ACCESS DOORWAYS

1006.1 General. The number of *exits* or *exit access doorways* required within the *means of egress* system shall comply with the provisions of Section 1006.2 for spaces, including *mezzanines*, and Section 1006.3 for *stories*.

❖ The criteria in this section to determine the number of ways to leave rooms or spaces (including mezzanines) and stories are based on an empirical judgment of the associated risks.

1006.2 Egress from spaces. Rooms, areas or spaces, including *mezzanines*, within a *story* or *basement* shall be provided with the number of *exits* or access to *exits* in accordance with this section.

❖ This section dictates the minimum number of paths of travel an occupant is to have available to avoid a fire incident in the occupied room or space. While providing multiple egress doorways from every room is unrealistic, a point does exist where alternative egress paths must be provided based on the number of occupants at risk, the distance any one occupant must travel to reach a doorway and the relative hazards associated with the occupancy of the space. Generally, the number of egress doorways required from any room or space coincides with the occupant load threshold criteria set forth for the minimum number of exits required from a story (see Section 1006.3).

1006.2.1 Egress based on occupant load and common path of egress travel distance. Two *exits* or *exit access doorways* from any space shall be provided where the design *occupant load* or the *common path of egress travel* distance exceeds the values listed in Table 1006.2.1.

Exceptions:

1. In Group R-2 and R-3 occupancies, one *means of egress* is permitted within and from individual *dwelling units* with a maximum *occupant load* of 20 where the *dwelling unit* is equipped throughout with an *automatic sprinkler* system in accordance with Section 903.3.1.1 or 903.3.1.2 and the *common path of egress travel* does not exceed 125 feet (38 100 mm).
2. *Care suites* in Group I-2 occupancies complying with Section 407.4.

❖ This section dictates the minimum number of paths of travel an occupant is to have available to avoid a fire incident in the occupied room or space. While providing multiple egress doorways from every room is unrealistic, a point does exist where alternative egress paths must be provided based on the number of occupants at risk, the distance any one occupant must travel to reach a doorway and the relative hazards associated with the occupancy of the space. Generally, the number of egress doorways required from any room or space coincides with the occupant load threshold criteria set forth for determining the minimum number of exits required from a story (see Section 1006.3).

The limiting criteria in Table 1006.2.1 for rooms or spaces permitted to have a single exit access doorway are based on an empirical judgment of the associated risks.

If the occupants of a room are required to egress through another room, as permitted in Sections 1004.1.1.1 and 1016.2, the rooms are to be combined to determine if multiple doorways are required from the combined rooms. For example, if a suite of offices shares a common reception area, the entire suite with the reception area must meet both the occupant load and the travel distance criteria. The same logic would hold true for a space with a mezzanine (see Section 1004.1.1.2).

It should be noted that where two doorways are required, the remoteness requirement of Section 1007.1 is applicable.

The common path of travel is the distance measured from the most remote point in a space to the point in the exit path where the occupant has access to two required exits in separate directions. The distance limitations are applicable to all paths of travel that lead out of a space or building where two exits are required. An illustration of this distance is found in

INTERNATIONAL CODE COUNCIL®
Copyright © 2015 ICC. ALL RIGHTS RESERVED. Accessed by David Dammon on Jun 21, 2017 12:30:52 PM pursuant to License Agreement with ICC. No further reproduction or distribution authorized. ANY UNAUTHORIZED REPRODUCTION OR DISTRIBUTION IS A VIOLATION OF THE FEDERAL COPYRIGHT ACT AND THE LICENSE AGREEMENT, AND SUBJECT TO CIVIL AND CRIMINAL PENALTIES THEREUNDER.

Commentary Figure 1006.2.1. The illustration reflects two examples of a common path of travel where the occupants at points A and B are able to travel in only one direction before they reach a point at which they have a choice of two paths of travel to the required exits from the building. Note that from point A, the occupants have two available paths, but these merge to form a single path out of the space. This is also considered a common path of travel. The common path of travel is considered part of the overall travel distance limitations in Section 1017.2.

While a Group R-3 occupancy is typically a single-exit space, it is included in the table to address mixed-use buildings.

Exception 1 allows for individual dwelling units to be considered a space with one means of egress, provided they meet the same common path of travel requirements in Table 1006.2.1. If the building is sprinklered with an NFPA 13 or 13R system, the occupant load for the unit can be 20 (4,000-square-foot apartment/200 square feet per occupant = 20 occupants), whereas if the unit complies with the table, the occupant load is limited to 10 people per unit (2,000-square-foot apartment/200 square feet per occupant = 10 occupants).

Exception 2 allows for hospital patient rooms and care suites to egress in accordance with the specific criteria in Section 407.4, including the common path of egress travel provisions (Table 1006.2.1, Note d). Other areas in Group I-2 occupancies are addressed in Table 1006.2.1.

TABLE 1006.2.1. See page 10-24.

❖ The table represents an empirical judgment of the risks associated with a single means of egress from a room or space based on the occupant load in the room, the travel distance to the exit access door and the inherent risks associated with the occupancy (such as occupant mobility, occupant familiarity with the building, occupant response and the fire growth rate). The number 49 is for consistency with other occupant load thresholds, such as panic hardware (see Section 1010.1.10).

Since the occupants of Groups I and R may be sleeping and, therefore, not able to detect a fire in its early stages without staff supervision or room detectors, the number of occupants in a single egress room or space is limited to 10. See the exceptions to Section 1006.2.1 for Group R-2 and R-3 individual units and Group I-2 patient rooms and care suites.

Because of the potential for rapidly developing hazardous conditions, the single egress condition in Groups H-1, H-2 and H-3 is limited to a maximum of three persons. Because the materials contained in Groups H-4 and H-5 do not represent the same fire hazard potential as those found in Groups H-1, H-2 and H-3, the occupant load for spaces with one means of egress is increased.

Because of the reduced occupant density in Group S and the occupants' normal familiarity with the building, the single egress condition is permitted with an occupant load of 29.

In nonsprinklered business, storage and utility buildings, the length of the common path of egress travel is greater for single-exit spaces when the occupant load for that space is 30 or less. Business, factories and nontransient residential buildings get an increase in the common path of travel in recognition of the additional fire safety offered by a fully sprinklered building. While a Group R-4 is required to be sprinklered, the additional travel distance is not granted where they choose to use an NFPA 13D system as permitted in Section 903.3.1.3. Common path of egress travel does not apply to stories or buildings with one exit. The definition for "Common path" indicates the provisions are only applicable when access

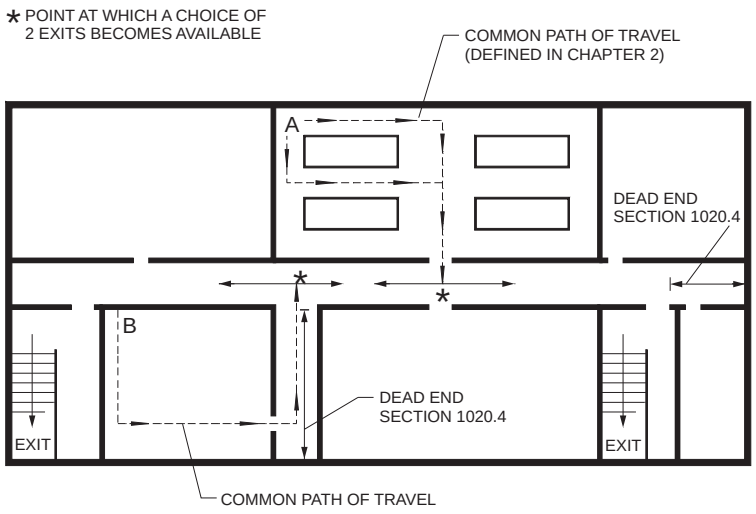

Figure 1006.2.1
COMMON PATH OF EGRESS TRAVEL

INTERNATIONAL CODE COUNCIL®
Copyright © 2015 ICC. ALL RIGHTS RESERVED. Accessed by David Dammon on Jun 21, 2017 12:30:52 PM pursuant to License Agreement with ICC. No further reproduction or distribution authorized. ANY UNAUTHORIZED REPRODUCTION OR DISTRIBUTION IS A VIOLATION OF THE FEDERAL COPYRIGHT ACT AND THE LICENSE AGREEMENT, AND SUBJECT TO CIVIL AND CRIMINAL PENALTIES THEREUNDER.

to two or more exits is required. See Section 1021.2 for travel limitations for single-exit one-, two- and three-story buildings and Section 1015.1 for spaces with one exit.

Note a indicates if the travel distance increase is based on an NFPA 13 or NFPA 13R sprinkler system being provided throughout the building, whichever is applicable to that occupancy. Where a Group R-4 occupancy can use an NFPA 13D system, the travel distance is indicated in the "without sprinkler system" column. The table does not currently provide information for a Group R-3 occupancy with an NFPA 13D system. Note b is a general reminder for special requirements for sprinklers in Group H.

The reference in Note c to Section 1029.8 is to allow for the unique common path of travel requirements in spaces with assembly seating, such as in a lecture room or sports facility.

Note d is a reference to the common path of travel provisions specific to Group I-2 care rooms and suites that are specifically addressed in Section 407.4.

As indicated in Note e, while Group R-3 dwellings are typically only required to have one exit (see 1006.2.1 Exception 1 and Section 1006.3.2, Exception 5), there can be a situation where a Group R-3 unit is included in a mixed-use building. In these situations, the travel distance limitations for common path of travel in the table are applicable.

Note f is an allowance for the common path of travel in an open parking garage to be 100 feet (30 480 mm) when the occupant load is greater than 30 and there is no sprinkler system provided. This is in recognition of the minimal possibility of smoke accumulation due to the openness requirements and the low fuel loads for open parking garages.

1006.2.1.1 Three or more exits or exit access doorways. Three *exits* or *exit access doorways* shall be provided from any space with an occupant load of 501 to 1,000. Four *exits* or *exit access doorways* shall be provided from any space with an occupant load greater than 1,000.

❖ Large facilities with high occupant loads are required to have more than two exits leading from each story. This is so that at least one exit will be available in case of a fire emergency and to increase the likelihood that a large number of occupants can be accommodated by the remaining exits when one exit is not available. Section 1005.5 specifies that the loss of one exit must not reduce the available exit capacity by more than 50 percent. This is reiterated in Sections 1029.2 and 1029.3 for spaces with assembly seating with more than 300 occupants. Exits should be separated in accordance with Section 1007.1.2. While an equal distribution of exit capacity among all the exits is not required, a proper design would con-

TABLE 1006.2.1
SPACES WITH ONE EXIT OR EXIT ACCESS DOORWAY

OCCUPANCY	MAXIMUM OCCUPANT LOAD OF SPACE	MAXIMUM COMMON PATH OF EGRESS TRAVEL DISTANCE (feet)		
		Without Sprinkler System (feet)		With Sprinkler System (feet)
		Occupant Load		
		OL ≤ 30	OL > 30	
A[c], E, M	49	75	75	75[a]
B	49	100	75	100[a]
F	49	75	75	100[a]
H-1, H-2, H-3	3	NP	NP	25[b]
H-4, H-5	10	NP	NP	75[b]
I-1, I-2[d], I-4	10	NP	NP	75[a]
I-3	10	NP	NP	100[a]
R-1	10	NP	NP	75[a]
R-2	10	NP	NP	125[a]
R-3[e]	10	NP	NP	125[a]
R-4[e]	10	75	75	125[a]
S[f]	29	100	75	100[a]
U	49	100	75	75[a]

For SI: 1 foot = 304.8 mm.

NP = Not Permitted.

a. Buildings equipped throughout with an *automatic sprinkler system* in accordance with Section 903.3.1.1 or 903.3.1.2. See Section 903 for occupancies where *automatic sprinkler systems* are permitted in accordance with Section 903.3.1.2.

b. Group H occupancies equipped throughout with an *automatic sprinkler system* in accordance with Section 903.2.5.

c. For a room or space used for assembly purposes having *fixed seating*, see Section 1029.8.

d. For the travel distance limitations in Group I-2, see Section 407.4.

e. The length of *common path of egress travel* distance in a Group R-3 occupancy located in a mixed occupancy building or within a Group R-3 or R-4 *congregate living facility*.

f. The length of *common path of egress travel* distance in a Group S-2 *open parking garage* shall be not more than 100 feet.

INTERNATIONAL CODE COUNCIL®
Copyright © 2015 ICC. ALL RIGHTS RESERVED. Accessed by David Dammon on Jun 21, 2017 12:30:52 PM pursuant to License Agreement with ICC. No further reproduction or distribution authorized. ANY UNAUTHORIZED REPRODUCTION OR DISTRIBUTION IS A VIOLATION OF THE FEDERAL COPYRIGHT ACT AND THE LICENSE AGREEMENT, AND SUBJECT TO CIVIL AND CRIMINAL PENALTIES THEREUNDER.

sider occupant load distribution as well as reasonable capacity distribution so as to avoid a severe dependence on one exit or bottlenecks in anticipated high-use areas.

1006.2.2 Egress based on use. The numbers of *exits* or access to *exits* shall be provided in the uses described in Sections 1006.2.2.1 through 1006.2.2.5.

❖ Five types of spaces, because of their levels of hazard, have egress requirements based on use rather than occupant load and travel distance.

1006.2.2.1 Boiler, incinerator and furnace rooms. Two *exit access doorways* are required in boiler, incinerator and furnace rooms where the area is over 500 square feet (46 m^2) and any fuel-fired equipment exceeds 400,000 British thermal units (Btu) (422 000 KJ) input capacity. Where two *exit access doorways* are required, one is permitted to be a fixed ladder or an *alternating tread device*. *Exit access doorways* shall be separated by a horizontal distance equal to one-half the length of the maximum overall diagonal dimension of the room.

❖ This section requires two exit access doorways for the specified mechanical equipment spaces because of the level of hazards in this type of space. A fixed ladder or an alternating tread device is permitted for service personnel to egress where two doorways are required. The remoteness of the exit access doorways specified in this section provides two paths of travel to exit the room so that if one doorway is not available, the alternate path can be used.

1006.2.2.2 Refrigeration machinery rooms. Machinery rooms larger than 1,000 square feet (93 m2) shall have not less than two *exits* or *exit access doorways*. Where two *exit access doorways* are required, one such doorway is permitted to be served by a fixed ladder or an *alternating tread device*. *Exit access doorways* shall be separated by a horizontal distance equal to one-half the maximum horizontal dimension of the room.

All portions of machinery rooms shall be within 150 feet (45 720 mm) of an *exit* or *exit access doorway*. An increase in *exit access* travel distance is permitted in accordance with Section 1017.1.

Doors shall swing in the direction of egress travel, regardless of the *occupant load* served. Doors shall be tight fitting and self-closing.

❖ The reasons for these requirements are the same as for Section 1006.2.2.1. Travel distance is to be limited in accordance with Section 1017.2. For example, the travel distance limit for a large refrigeration machinery room classified as Group F-1 that has a sprinkler system throughout the entire building in accordance with NFPA 13 would be 250 feet (76 200 mm) based on Table 1017.2. The 150-foot (45 720 mm) maximum distance to an exit or exit access doorway that is specified in this section would not apply in this example. The 150-foot (45 720 mm) travel distance is intended to be applied where a sprinkler system is not installed and to shorten the time that occupants would be exposed to the hazards within the machinery room.

1006.2.2.3 Refrigerated rooms or spaces. Rooms or spaces having a floor area larger than 1,000 square feet (93 m^2), containing a refrigerant evaporator and maintained at a temperature below 68°F (20°C), shall have access to not less than two *exits* or *exit access doorways*.

Exit access travel distance shall be determined as specified in Section 1017.1, but all portions of a refrigerated room or space shall be within 150 feet (45 720 mm) of an *exit* or *exit access doorway* where such rooms are not protected by an approved *automatic sprinkler system*. Egress is allowed through adjoining refrigerated rooms or spaces.

Exception: Where using refrigerants in quantities limited to the amounts based on the volume set forth in the *International Mechanical Code*.

❖ Refrigeration rooms also have a higher hazard level. The exception is intended to apply if Chapter 11 of the *International Mechanical Code*® (IMC®) does not require a separate refrigeration machinery room due to the small amount of refrigerant used (see the commentary to Section 1104 of the IMC for further explanation of the machinery room requirements).

1006.2.2.4 Day care means of egress. Day care facilities, rooms or spaces where care is provided for more than 10 children that are $2^1/_2$ years of age or less, shall have access to not less than two *exits* or *exit access doorways*.

❖ Day care occupancies are limited to a maximum of 10 occupants for rooms or spaces with infants and toddlers before two exits are required from a room. This limit is in consideration of needing a quick means of egress for children who would need to be carried or led for evacuation (i.e., children under $2^1/_2$ years of age).

There is an exception for the Group I-4 classification in Section 308.6.1 that allows day care facilities with up to 100 children $2^1/_2$ years of age or less with care rooms having direct access to the exterior to be classified as Group E. An exterior door to the outside from infant and toddler rooms can serve as the second exit to meet this section. It is not the intent that a day care classified as Group E, with children $2^1/_2$ years of age or less, could use the means of egress requirements for Group E for these rooms.

1006.2.2.5 Vehicular ramps. Vehicular ramps shall not be considered as an *exit access ramp* unless pedestrian facilities are provided.

❖ A vehicle-only ramp may be considered as one of the required exit access ramps if pedestrian walkways are provided along the ramp. The low-slope ramps that are lined with parking spaces are not considered vehicle ramps. In open parking garages, according to Section 1019.3, Exception 6, the exit access stairways and ramps are not required to be enclosed since an open parking structure is designed to permit the ready ventilation of the products of combustion to the outside by exterior wall openings (see Section

INTERNATIONAL CODE COUNCIL®
Copyright © 2015 ICC. ALL RIGHTS RESERVED. Accessed by David Dammon on Jun 21, 2017 12:30:52 PM pursuant to License Agreement with ICC. No further reproduction or distribution authorized. ANY UNAUTHORIZED REPRODUCTION OR DISTRIBUTION IS A VIOLATION OF THE FEDERAL COPYRIGHT ACT AND THE LICENSE AGREEMENT, AND SUBJECT TO CIVIL AND CRIMINAL PENALTIES THEREUNDER.

406.5.2). Also, parking structures are characterized by open floor areas that allow the occupants to observe a fire condition and choose a travel path that would avoid the fire threat.

1006.3 Egress from stories or occupied roofs. The *means of egress* system serving any *story* or occupied roof shall be provided with the number of *exits* or access to *exits* based on the aggregate *occupant load* served in accordance with this section. The *path of egress travel* to an *exit* shall not pass through more than one adjacent *story*.

❖ Emergency evacuation from a multistory building will typically involve stairways or ramps as the vertical element for the means of egress route. The number of required ways off the story (via exit or exit access elements) is based on the occupant loads shown in Table 1006.3.1. These stairways and ramps must comply with the general provisions (Sections 1011 and 1012 respectively), and can be exit access (Section 1019) or exits (Section 1023 and 1027). When exit access stairways or ramps are part of that route, the measurement of the exit access travel distance will include travel from the most remote point on the floor, to and down the exit access stairway or ramp and from the bottom of the stairway or ramp to an enclosure for an exit stairway or ramp or exterior exit door (see Section 1017.3). Vertical travel is slower than horizontal travel, so the exit access stairway or ramp in a building with two or more exits should not be used for more than one story before an exit is reached.

1006.3.1 Egress based on occupant load. Each *story* and occupied roof shall have the minimum number of independent *exits*, or access to *exits*, as specified in Table 1006.3.1. A single *exit* or access to a single *exit* shall be permitted in accordance with Section 1006.3.2. The required number of *exits*, or *exit access stairways* or *ramps* providing access to *exits*, from any *story* or occupied roof shall be maintained until arrival at the *exit discharge* or a *public way*.

❖ This section starts out saying that every occupant on a story must have access to the required number of means of egress as specified:

- Per Table 1006.3.1—at least two means of egress per floor;
- Three means of egress for floors with greater than 500 occupants and four means of egress for floors with greater than 1,000 occupants;
- Per Sections 1006.3.2.1 and 1006.3.2.2—limited allowance for a single means of egress from a floor.

Saying "means of egress" instead of "exits" acknowledges that direct entrances to exits on each story are not always mandatory since access to exits (i.e., exit access stairways or ramps) on some stories is permissible within certain limitations. This allows some freedom of design when, for instance, required exit stairways may not be available without passing through other tenant spaces. The intent is to allow for a balance of security concerns providing adequate safety for emergency evacuation.

If a designer chooses to use horizontal exits instead of exit stairways or exit ramps, those specific provisions are addressed in Section 1026. For buildings built into a hillside, an exit door directly to the outside would also provide the same or better level of protection as an interior exit element. It is not the intent of this provision to prohibit horizontal exits or direct exterior exit doors as an option.

Once the number of means of egress is determined, those paths must remain available until occupants leave the building (see Commentary Figure 1006.3.1). The need for exits to be independent of each other cannot be overstated. Each occupant of each floor must be provided with the required number of exits without having to pass through one exit to gain access to another. Each exit is required to be independent of other exits to prohibit such areas from merging downstream and becoming, in effect, one exit.

TABLE 1006.3.1
MINIMUM NUMBER OF EXITS OR ACCESS TO EXITS PER STORY

OCCUPANT LOAD PER STORY	MINIMUM NUMBER OF EXITS OR ACCESS TO EXITS FROM STORY
1-500	2
501-1,000	3
More than 1,000	4

❖ Table 1006.3.1 specifies that the minimum number of exits available to each occupant of a floor is based on the total occupant load of that floor. This is so that at least one exit will be available in case of a fire emergency and to increase the likelihood that a larger number of occupants can be accommodated by the remaining exits when one exit is not available. While an equal distribution of exit capacity among all of the exits is not required, a proper design would not only balance capacity with the occupant load distribution, but also consider a reasoned distribution of capacity to avoid a severe dependence on one exit.

1006.3.2 Single exits. A single *exit* or access to a single *exit* shall be permitted from any *story* or occupied roof where one of the following conditions exists:

1. The *occupant load*, number of *dwelling units* and *exit access* travel distance do not exceed the values in Table 1006.3.2(1) or 1006.3.2(2).
2. Rooms, areas and spaces complying with Section 1006.2.1 with *exits* that discharge directly to the exterior at the *level of exit discharge*, are permitted to have one *exit* or access to a single *exit*.
3. Parking garages where vehicles are mechanically parked shall be permitted to have one *exit* or access to a single *exit*.
4. Group R-3 and R-4 occupancies shall be permitted to have one *exit* or access to a single *exit*.
5. Individual single-story or multistory *dwelling units* shall be permitted to have a single exit or access to a

INTERNATIONAL CODE COUNCIL®
Copyright © 2015 ICC. ALL RIGHTS RESERVED. Accessed by David Dammon on Jun 21, 2017 12:30:52 PM pursuant to License Agreement with ICC. No further reproduction or distribution authorized. ANY UNAUTHORIZED REPRODUCTION OR DISTRIBUTION IS A VIOLATION OF THE FEDERAL COPYRIGHT ACT AND THE LICENSE AGREEMENT, AND SUBJECT TO CIVIL AND CRIMINAL PENALTIES THEREUNDER.

single *exit* from the *dwelling unit* provided that both of the following criteria are met:

5.1. The *dwelling unit* complies with Section 1006.2.1 as a space with one *means of egress.*

5.2. Either the *exit* from the *dwelling unit* discharges directly to the exterior at the *level of exit discharge*, or the *exit access* outside the dwelling unit's entrance door provides access to not less than two approved independent *exits*.

❖ The base assumption is that all stories of a building shall have access to at least two separate ways out for emergencies.

Single-exit stories can have access to an exit from any floor, therefore, single-exit stories can use an open exit access stairway for as many stories as permitted by Sections 1006.3.2 and 1019.3.3 provided they meet the exit access of travel distance limitations for that use in Sections 1006.2.1 and 1006.3.2 and Tables 1006.2.1, 1006.3.2(1) and 1006.3.2(2).

A story can have a single exit if the design meets one of the five items listed.

Item 1 states what situations permit one exit by a reference to Tables 1006.3.2(1) and 1006.3.2(2). If a story can meet the provisions for occupant load, number of units and travel distance in Table 1006.3.2(1) or 1006.3.2(2), then that story can have one means of egress. See the commentary for Tables 1006.3.2(1) and 1006.3.2(2) for information on single-exit buildings.

Item 2 references Table 1006.2.1 for single-exit spaces. Table 1006.2.1 is intended to be applicable to rooms and spaces on a floor, but not to an entire floor level. One of the main concerns has been that vertical travel takes longer than horizontal travel in emergency exiting situations. However, if the single-exit space can exit directly to the exterior rather than egress into an interior corridor, a higher level of safety is provided. While the term "building" limits the area addressed to that bordered by exterior walls or fire walls, a common application of Item 2 is on a tenant-by-tenant basis. For example, a single-story strip mall may not meet the provisions for a building with one means of egress but each tenant area meets the provisions for a space with one means of egress in accordance with Section 1006.1. This tenant could exist as either a stand-alone single-exit building or as a single-exit tenant space that exits into an interior corridor. Is it not just as safe to permit this tenant to exist as part of a larger building with the door exiting directly to the exterior? See also the commentary to Tables 1006.3.2(1) and 1006.3.2(2).

While not specifically stated in this section, there is a situation where the single means of egress can be used from a multilevel tenant space. When the combined occupant load of the space and a mezzanine meets the occupant load in Table 1006.2.1 and the common path of travel distance measured from the most remote point down the exit access stairway and to the exterior exit doorway, the ground floor space and its mezzanine can be considered a space with one means of egress.

Item 3 allows for one exit from all stories in a parking garage where the cars are mechanically parked. This is in recognition of the extremely low occupant load in this unique type of building. The single exit

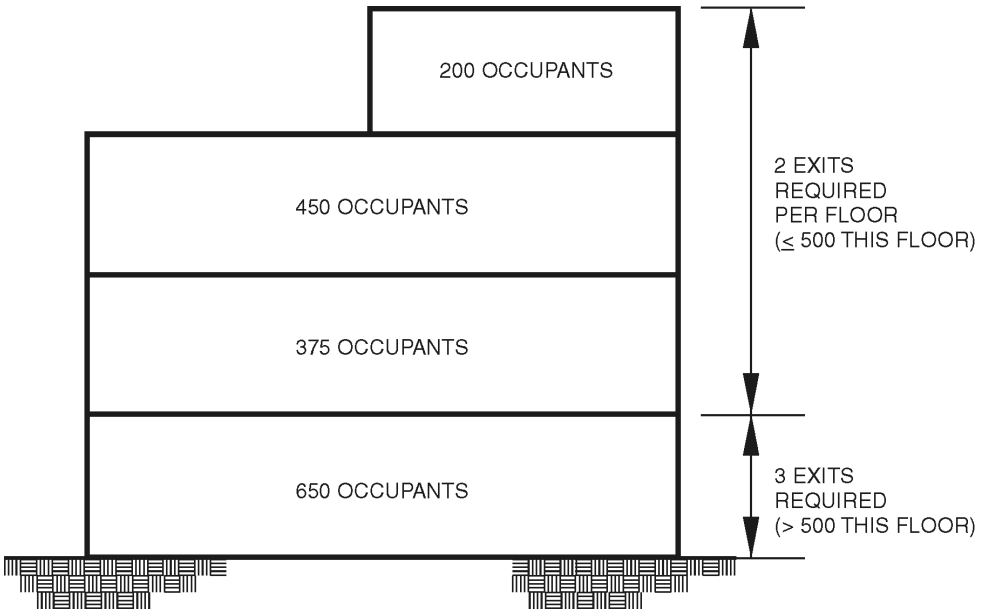

Figure 1006.3.1
NUMBER OF EXITS

INTERNATIONAL CODE COUNCIL®
Copyright © 2015 ICC. ALL RIGHTS RESERVED. Accessed by David Dammon on Jun 21, 2017 12:30:52 PM pursuant to License Agreement with ICC. No further reproduction or distribution authorized. ANY UNAUTHORIZED REPRODUCTION OR DISTRIBUTION IS A VIOLATION OF THE FEDERAL COPYRIGHT ACT AND THE LICENSE AGREEMENT, AND SUBJECT TO CIVIL AND CRIMINAL PENALTIES THEREUNDER.

would be for maintenance and service personnel who could be on the different levels. Exit access travel would still have to meet Table 1017.2. If this facility is an open parking garage, it could have one exit access stairway compliant with Sections 1017.2, Exception 1, and 1006.3.2, Exception 1.

Group R-3 is limited to no more than two dwelling units per building. Often these units are townhouse style with direct exits at grade or one unit on top of another. Residents in Group R-3 and R-4 congregate residences typically operate as a single-family home. The Fair Housing Act includes no discrimination based on familial status (i.e., family cannot be determined by blood or marriage). Many court cases have been filed under the Fair Housing Act (FHA) requiring that group homes be permitted to operate similar to a single-family home as a point of nondiscrimination. For additional information on the FHA, see the commentaries at the beginning of Chapter 11 and under Section 1107. In either configuration, per Item 4, each unit is required to have only one exit leading from the building. In a multistory unit, any interior stairway would be considered an exit access stairway (Section 1019.3, Exception 2) and would be part of the exit access travel distance in Table 1017.2.

Item 5 is based on decades of practice within an individual dwelling. Item 4 addresses single exits for a Group R-3 building; one or two apartments could be provided in a mixed-use building and still be considered Group R-3. This exception could be used within the unit. Multistory apartments may also be provided within Group R-2 high-rise residential buildings.

In Group R-2, R-3 and R-4 facilities with multistory dwelling units, the means of egress from a dwelling or sleeping unit is typically permitted to be from one level only. In a Group R-2 apartment- or townhouse-style building, if the building is sprinklered with an NFPA 13 or 13R system and the common path of travel from the most remote point on any level to the exit door from the unit itself is 125 feet (22 860 mm) maximum (see Section 1006.2.1), that unit may have only one means of egress. Section 1006.2.1, Exception 1, provides for an occupant load of 20, rather than the 10 occupants allowed in Table 1006.3(2). Therefore, this could allow apartments of up to 4,000 square feet (185.81 m^2). An exit access stairway would be permitted within the unit as part of the exit access travel distance (Section 1019.3, Exception 2). Once the occupants exit the unit itself, however, they must be outside at grade or the floor level must have access to two or more means of egress for all tenants, depending on the number required for the building as a whole [see Commentary Figures 1006.3.2(1) and 1006.3.2(3)]. The common path of egress within the unit would be part of the overall exit access travel distance of 250 feet (45 720 mm) required in Table 1017.2). It is not the intent to allow this exception for apartment-style dwelling units in conjunction with the allowances for a single-exit building. The emergency escape and rescue opening addressed in Section 1029 does not count toward the required number of exits.

TABLE 1006.3.2(1). See below.

❖ Per Note b, this table addresses when single exits can be provided from stories in Group R-2 occupancies having dwelling units only, such as apartments and condominiums. For Group R-2 occupancies with sleeping units, such as dormitories, sororities, fraternities, convents, monasteries or boarding houses, see Table 1006.3.2(2). The second row is to clarify that buildings containing Group R-2 single-exit buildings cannot be four stories or taller. In addition to meeting the number of dwelling units per floor and exit access travel distance, these buildings must be equipped throughout with an NFPA 13 or 13R sprinkler system and an emergency escape and rescue opening must be provided in every bedroom (Note a). The exit access travel distance would be measured from the most remote point in the unit to the exit from the floor. This is different from the travel distance in Section 1006.2.1, Exception 1 where the travel distance is measured to the door of the unit. However, in order to be able to use the single-exit building provisions, each unit must also meet the single-exit space requirements, so the occupant load of each apartment is limited. See Commentary Figures 1006.3.2(2) and 1006.3.2(3) for examples of the differences. Formal committee interpretation 21-14 states that this table allows for groups of four units on a story to have access to a single exit. These units would have to be separated in accordance with Section 420, but would not have to be separated by fire barriers or fire walls.

See the commentary to Table 1006.3.2(2) for additional discussion on single-exit building options.

This table is not intended to work in combination

TABLE 1006.3.2(1)
STORIES WITH ONE EXIT OR ACCESS TO ONE EXIT FOR R-2 OCCUPANCIES

STORY	OCCUPANCY	MAXIMUM NUMBER OF DWELLING UNITS	MAXIMUM COMMON PATH OF EGRESS TRAVEL DISTANCE
Basement, first, second or third story above grade plane	R-2[a, b]	4 dwelling units	125 feet
Fourth story above grade plane and higher	NP	NA	NA

For SI: 1 foot = 3048 mm.

NP = Not Permitted.

NA = Not Applicable.

a. Buildings classified as Group R-2 equipped throughout with an *automatic sprinkler system* in accordance with Section 903.3.1.1 or 903.3.1.2 and provided with *emergency escape and rescue openings* in accordance with Section 1030.

b. This table is used for R-2 occupancies consisting of *dwelling units*. For R-2 occupancies consisting of *sleeping units*, use Table 1006.3.2(2).

INTERNATIONAL CODE COUNCIL®
Copyright © 2015 ICC. ALL RIGHTS RESERVED. Accessed by David Dammon on Jun 21, 2017 12:30:52 PM pursuant to License Agreement with ICC. No further reproduction or distribution authorized. ANY UNAUTHORIZED REPRODUCTION OR DISTRIBUTION IS A VIOLATION OF THE FEDERAL COPYRIGHT ACT AND THE LICENSE AGREEMENT, AND SUBJECT TO CIVIL AND CRIMINAL PENALTIES THEREUNDER.

with Section 1006.3.2, Exception 5. That section requires a minimum of two exits from the floor.

TABLE 1006.3.2(2). See page 10-30.

❖ Buildings with one exit are permitted where the configuration and occupancy meet certain characteristics so as not to present an unacceptable fire risk to the occupants. Buildings that are relatively small in size have a shorter travel distance and fewer occupants; thus, having access to a single exit does not significantly compromise the safety of the occupants since they will also be alerted to and get away from the fire more quickly. It is important to note that the provisions in Section 1006.3.2 apply to individual stories. Multiple single-exit spaces or units may exist in the same building, including those cases where differing occupancies exist. Therefore, Tables 1006.3.2(1) and 1006.3.2(2) can address mixed occupancy buildings (see Section 1006.3.2.1).

Occupants of a story of limited size and configuration may have access to a single exit, provided that the building does not have more than one level below

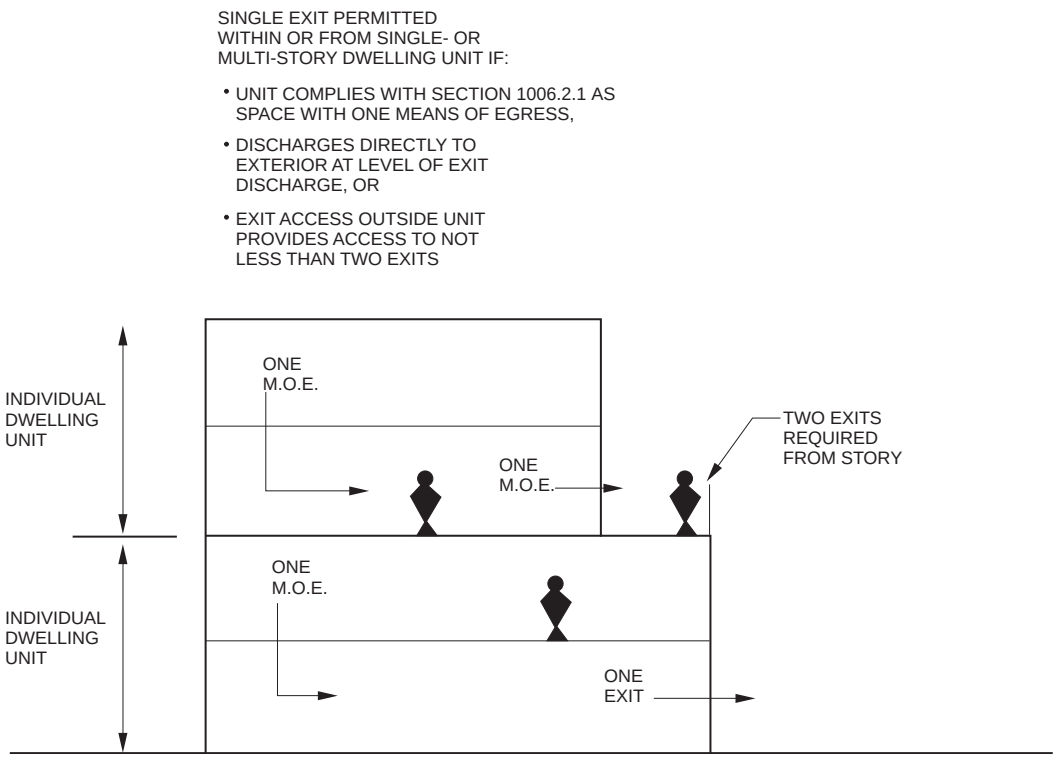

Figure 1006.3.2(1)
MULTISTORY DWELLING UNITS

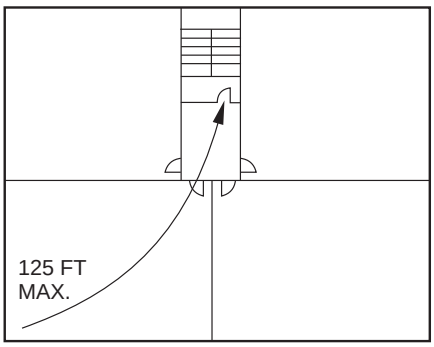

R-2 DWELLING UNITS

SECOND OR THIRD STORY
SINGLE EXIT PERMITTED

- MAXIMUM OF 4 UNITS AND 3 STORIES
- 125 FT. MAX. TRAVEL DISTANCE TO EXIT
- COMPLY WITH 1006.2.1, EXP 1. 20 OCCUPANTS MAX.

For SI: 1 foot = 304.8 mm.

Figure 1006.3.2(2)
EXAMPLE OF SINGLE-EXIT APARTMENT BUILDING

INTERNATIONAL CODE COUNCIL®
Copyright © 2015 ICC. ALL RIGHTS RESERVED. Accessed by David Dammon on Jun 21, 2017 12:30:52 PM pursuant to License Agreement with ICC. No further reproduction or distribution authorized. ANY UNAUTHORIZED REPRODUCTION OR DISTRIBUTION IS A VIOLATION OF THE FEDERAL COPYRIGHT ACT AND THE LICENSE AGREEMENT, AND SUBJECT TO CIVIL AND CRIMINAL PENALTIES THEREUNDER.

the first story above the grade plane. The limitation on the number of levels above and below the first story is intended to limit the vertical travel an occupant must accomplish to reach the exit discharge in a single-exit building (see Section 1006.3.2.2).

Only one exit is required from a story where permitted by Table 1006.3.2(1) or 1006.3.2(2) regardless of the number of exits required from other stories in the building. For example, a Group B occupancy on the second floor of a two-story building is only required to have one exit from the story, provided its occupant load does not exceed 29 and the maximum exit access travel distance to the exit stairway does not exceed 75 feet (22 860 mm). The number of occupants and travel distances on the first floor do not affect the determination of the second story as a single-exit story. Other stories are also regulated independently as to number of exits. For mixed-occupancy floors or floors where tenant spaces have separate exits, see Section 1006.3.2.1.

Tables 1006.3.2(1) and 1006.3.2(2) list the characteristics a building must have to be of single-exit construction, including occupancy, maximum height of building above grade plane, maximum occupants or dwelling units per floor and exit access travel distance per floor. The occupant load of each floor is determined in accordance with the provisions of Section 1004.1. The exit access travel distance is measured along the natural and unobstructed path to the exit, as described in Section 1017.3. If the occupant load or common path of travel is exceeded, two exits are required from each floor in the building.

The enclosure required for the exit in a two- or three-story, single-exit building is identical to any other complying exit (e.g., interior stairs, exterior stairs, etc.). Similarly, the fire-resistance rating required for opening protectives is identical to that required by Section 716. Exit access stairways could be used in two-story buildings, with or without basements, where permitted by Sections 1019.3 and 1006.3.1.

Per Note c, Group R-2 sleeping units, such as congregate residences, fraternities, sororities, dormitories, convents or monasteries, use Table 1021.2(2).

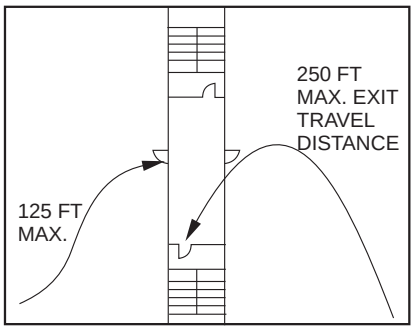

SINGLE EXIT WITHIN AND FROM UNIT

- 250 FT. MAX. EXIT TRAVEL DISTANCE
- NO LIMIT ON NUMBER OF UNITS
- 125 FT. MAX. COMMON PATH OF TRAVEL (TO APARTMENT DOOR)
- 20 OCCUPANT MAX. PER UNIT PER SECTION 1006.3.2, ITEM 5

For SI: 1 foot = 304.8 mm.

Figure 1006.3.2(3)
EXAMPLE OF SINGLE-EXIT APARTMENT WITHIN A TWO-EXIT BUILDING

TABLE 1006.3.2(2)
STORIES WITH ONE EXIT OR ACCESS TO ONE EXIT FOR OTHER OCCUPANCIES

STORY	OCCUPANCY	MAXIMUM OCCUPANT LOAD PER STORY	MAXIMUM COMMON PATH OF EGRESS TRAVEL DISTANCE (feet)
First story above or below grade plane	A, B[b], E F[b], M, U	49	75
	H-2, H-3	3	25
	H-4, H-5, I, R-1, R-2[a, c], R-4	10	75
	S[b, d]	29	75
Second story above grade plane	B, F, M, S[d]	29	75
Third story above grade plane and higher	NP	NA	NA

For SI: 1 foot = 304.8 mm.

NP = Not Permitted.

NA = Not Applicable.

a. Buildings classified as Group R-2 equipped throughout with an *automatic sprinkler system* in accordance with Section 903.3.1.1 or 903.3.1.2 and provided with *emergency escape and rescue openings* in accordance with Section 1030.

b. Group B, F and S occupancies in buildings equipped throughout with an *automatic sprinkler system* in accordance with Section 903.3.1.1 shall have a maximum *exit access* travel distance of 100 feet.

c. This table is used for R-2 occupancies consisting of *sleeping units*. For R-2 occupancies consisting of *dwelling units*, use Table 1006.3.2(1).

d. The length of *exit access* travel distance in a Group S-2 *open parking garage* shall be not more than 100 feet.

INTERNATIONAL CODE COUNCIL®
Copyright © 2015 ICC. ALL RIGHTS RESERVED. Accessed by David Dammon on Jun 21, 2017 12:30:52 PM pursuant to License Agreement with ICC. No further reproduction or distribution authorized. ANY UNAUTHORIZED REPRODUCTION OR DISTRIBUTION IS A VIOLATION OF THE FEDERAL COPYRIGHT ACT AND THE LICENSE AGREEMENT, AND SUBJECT TO CIVIL AND CRIMINAL PENALTIES THEREUNDER.

Table 1006.3.2(1) addresses dwelling units in Group R-2 occupancies. Effectively, this section allows for one-story congregate residences to have a single exit where there are 10 or fewer occupants on that first floor or basement. The travel distance from the most remote part of a unit to the exit must be less than 75 feet (22 860 mm). The maximum occupant load would limit the congregate residence to 2,000 square feet (185.81 m^2) maximum per floor. Per Note a, the congregate residence must be sprinklered throughout with an NFPA 13 or 13R system and all bedrooms must have an emergency escape and rescue opening (Section 1029.1). Alternatively, a congregate residence could use Section 1006.3.2, Item 4. Emergency escape windows would be required, but a single exit for upper floors would be allowed as well as an NFPA 13D sprinkler system where permitted by Section 903.2.8.

Table 1006.3.2(2) allows for two-story business, factory, mercantile and storage facilities to have a single-exit stairway or exit access stairway (see Section 1019.3) from the second floor if the space meets the maximums of 29 occupants and a 75-foot (22 860 mm) travel distance. The increased travel distance in Note b is not permitted for the second floor. However, there is an increase for travel distance permitted for Group S-2 open parking garages in Note d.

Table 1006.3.2(2) allows for a variety of single-story buildings, with or without basements, which meet the maximum occupant load and exit access travel distance specified. Exit access stairways from the basement would be a viable option where permitted by Section 1019.3.

Again, these tables are based on per-story criteria. These tables would also allow for mixed occupancies, such as four apartments over a restaurant or a business over a day care, as long as occupant loads and travel distances are met. Means of egress could be by a stairway through the floor below or a separate exterior stairway from the upper level. For additional information on a mixed-use floor, see Section 1006.3.2.1.

Formal code interpretation 21-14 states that this table allows for an exit configuration for multiple single-exit spaces for Groups B, M, F and S on the second floor where each group meets Table 1006.3.2(2).

1006.3.2.1 Mixed occupancies. Where one *exit*, or *exit access stairway* or *ramp* providing access to *exits* at other *stories*, is permitted to serve individual *stories*, mixed occupancies shall be permitted to be served by single *exits* provided each individual occupancy complies with the applicable requirements of Table 1006.3.2(1) or 1006.3.2(2) for that occupancy. Where applicable, cumulative *occupant loads* from adjacent occupancies shall be considered in accordance with the provisions of Section 1004.1. In each *story* of a mixed occupancy building, the maximum number of occupants served by a single *exit* shall be such that the sum of the ratios of the calculated number of occupants of the space divided by the allowable number of occupants indicated in Table 1006.3.2(2) for each occupancy does not exceed one. Where *dwelling units* are located on a story with other occupancies, the actual number of *dwelling units* divided by four plus the ratio from the other occupancy does not exceed one.

❖ Where multiple tenants or occupancies are located on a specific story, they are to be regulated by a "unity" formula if they want to use the same exit. If they have separate exits, they will be evaluated separately. This would allow for a second floor of a mixed-use occupancy to be evaluated similarly to Section 1016.2, which applies where multiple spaces combine. For example, the second story of a building houses two tenants, one business and one mercantile. Each tenant would be permitted a single, but separate, exit, provided each had an occupant load of less than 30 and a travel distance not exceeding 75 feet (22.860 m) (see Commentary Figure 1006.3.2.1, Option 2). However, if the tenants wanted to share

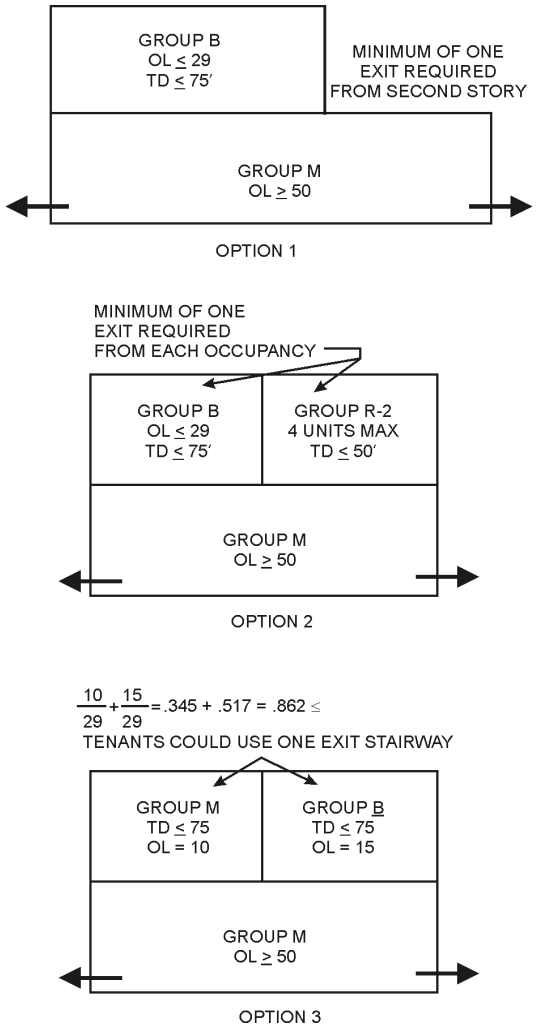

For SI: 1 foot = 304.8 mm.

Figure 1006.3.2.1
STORIES WITH ONE EXIT

INTERNATIONAL CODE COUNCIL®
Copyright © 2015 ICC. ALL RIGHTS RESERVED. Accessed by David Dammon on Jun 21, 2017 12:30:52 PM pursuant to License Agreement with ICC. No further reproduction or distribution authorized. ANY UNAUTHORIZED REPRODUCTION OR DISTRIBUTION IS A VIOLATION OF THE FEDERAL COPYRIGHT ACT AND THE LICENSE AGREEMENT, AND SUBJECT TO CIVIL AND CRIMINAL PENALTIES THEREUNDER.

the same single exit, the combined occupant load would have to be less than 30 (see Commentary Figure 1006.3.2.1, Option 3).

Where the mixed-use stories includes dwelling units, since four dwelling units are allowed per floor in a single-exit building, for the unity formula use 0.25 for one unit, 0.50 for two units and 0.75 for three units.

SECTION 1007
EXIT AND EXIT ACCESS DOORWAY CONFIGURATION

1007.1 General. *Exits*, *exit access doorways*, and *exit access stairways* and *ramps* serving spaces, including individual building *stories*, shall be separated in accordance with the provisions of this section.

❖ The final exits, as well as the doors, stairways and ramps that get occupants to those exits (exit access elements), need to be unobstructed and obvious at all times for occupants to evacuate the building safely in an emergency situation. This is consistent with the requirements in Section 1010.1 that exit or exit access doors are not to be concealed by curtains, drapes, decorations or mirrors. Whether the doors from the space are exit access doors leading to a hallway or actual exit doors leading to an exit enclosure or directly to the outside, they must be located in accordance with this section.

The need for exits from a space or story to be independent of each other cannot be overstated. Each occupant of each floor must be provided with the required number of exits without having to pass through one exit to gain access to another. Each exit is required to be independent of other exits to prohibit such areas from merging downstream and becoming, in effect, one exit.

The requirement for exits to be continuous is consistent with the exit termination requirements in Section 1023.3 and the exit discharge termination requirements in Section 1024.4. The intent is to provide safety in all portions of the exit by requiring continuity of the fire protection characteristics of the enclosure for the exit stairway or ramp. Exit passageways (see Section 1024) are a continuation of an exit enclosure. This would include, but not be limited to, the fire-resistance rating of the exit enclosure walls and the opening protection rating of the doors.

Section 1028.1, Exceptions 1 and 2, allows for an alternative for direct access to the outside via an intervening lobby or vestibule. Horizontal exits (see Section 1026), while not providing direct access to the outside of the structure, do move occupants to another "building" by moving through a fire wall (see Section 1026 and Section 1028.1, Exception 3) or into a refuge area protected by fire barriers and horizontal assemblies. Horizontal exits are commonly used in hospitals and jails for a defend-in-place type of protection.

1007.1.1 Two exits or exit access doorways. Where two *exits, exit access doorways, exit access stairways* or *ramps*, or any combination thereof, are required from any portion of the *exit access*, they shall be placed a distance apart equal to not less than one-half of the length of the maximum overall diagonal dimension of the building or area to be served measured in a straight line between them. Interlocking or *scissor stairways* shall be counted as one *exit stairway*.

Exceptions:

1. Where interior *exit stairways* or *ramps* are interconnected by a 1-hour fire-resistance-rated corridor conforming to the requirements of Section 1020, the required exit separation shall be measured along the shortest direct line of travel within the corridor.
2. Where a building is equipped throughout with an *automatic sprinkler system* in accordance with Section 903.3.1.1 or 903.3.1.2, the separation distance shall be not less than one-third of the length of the maximum overall diagonal dimension of the area served.

❖ This section provides a method to determine, quantitatively, remoteness between exits and exit access doors based on the dimensional characteristics of the space served. This measure has been common practice for some years with significant success. Very simply, the method involves determining the maximum dimension between any two points in a floor or a room (e.g., a diagonal between opposite corners in a rectangular room or building or the diameter in a circular room or building). If two doors or exits are required from the room or building (see Sections 1006.2 and 1006.3), the straight-line distance between the center of the thresholds of the doors must be at least one-half of the maximum dimension [see Commentary Figure 1007.1.1(1)].

While technical proof is not available to substantiate this method of determining remoteness, it has been found to be realistic and practical for most building designs. Buildings with exits in a center core and occupied spaces around the perimeter are addressed in Exception 1.

If a scissor stairway is utilized, regardless of the separation of the two entrances, the scissor stair may only be counted as one exit. Two independent stairways within the same enclosure could result in both stairways being usable in an emergency where smoke penetrates the single enclosure (see the definition for "Scissor stairways" in Chapter 2). Interlocking stairways that occur over the same building footprint but within separate enclosures are not "scissor stairways" and can count as two independent exits. Due to concern about smoke migration, careful review of the construction details and verification that they meet all the provisions for fire barriers and horizontal assemblies must be made. Of special concern would be the provisions for continuity, penetrations and joints.

The entrance to the enclosures for exit stairways or

INTERNATIONAL CODE COUNCIL®
Copyright © 2015 ICC. ALL RIGHTS RESERVED. Accessed by David Dammon on Jun 21, 2017 12:30:52 PM pursuant to License Agreement with ICC. No further reproduction or distribution authorized. ANY UNAUTHORIZED REPRODUCTION OR DISTRIBUTION IS A VIOLATION OF THE FEDERAL COPYRIGHT ACT AND THE LICENSE AGREEMENT, AND SUBJECT TO CIVIL AND CRIMINAL PENALTIES THEREUNDER.

ramps shall meet the same arrangement as exit and exit access doorways. The need for exits to be independent of each other cannot be overstated.

In Exception 1, a method of permitting the distance between exits to be measured along a complying corridor connecting the enclosure for the exit stairway or ramp has served to mitigate the disruption to this design concept [see Commentary Figure 1007.1.1(2)].

As reflected in Exception 2, the protection provided by an automatic sprinkler system can reduce the threat of fire buildup so that the reduction in remoteness to one-third of the diagonal dimension is not unreasonable, based on the presumption that it provides the occupants with an acceptable level of safety from fire [see Commentary Figure 1007.1.1(3)]. The automatic sprinkler system must be installed throughout the building in accordance with NFPA 13 or 13R. This reduced separation (one-third diagonal) may also be used when applying the requirements of Exception 1.

In applying the provisions of this section, it is important to recognize any convergence of egress paths that may exist. Commentary Figure 1007.1.1(4) illustrates an assembly room with remotely located exit access doors, but the doors from the entire space are not considered remote in accordance with this section.

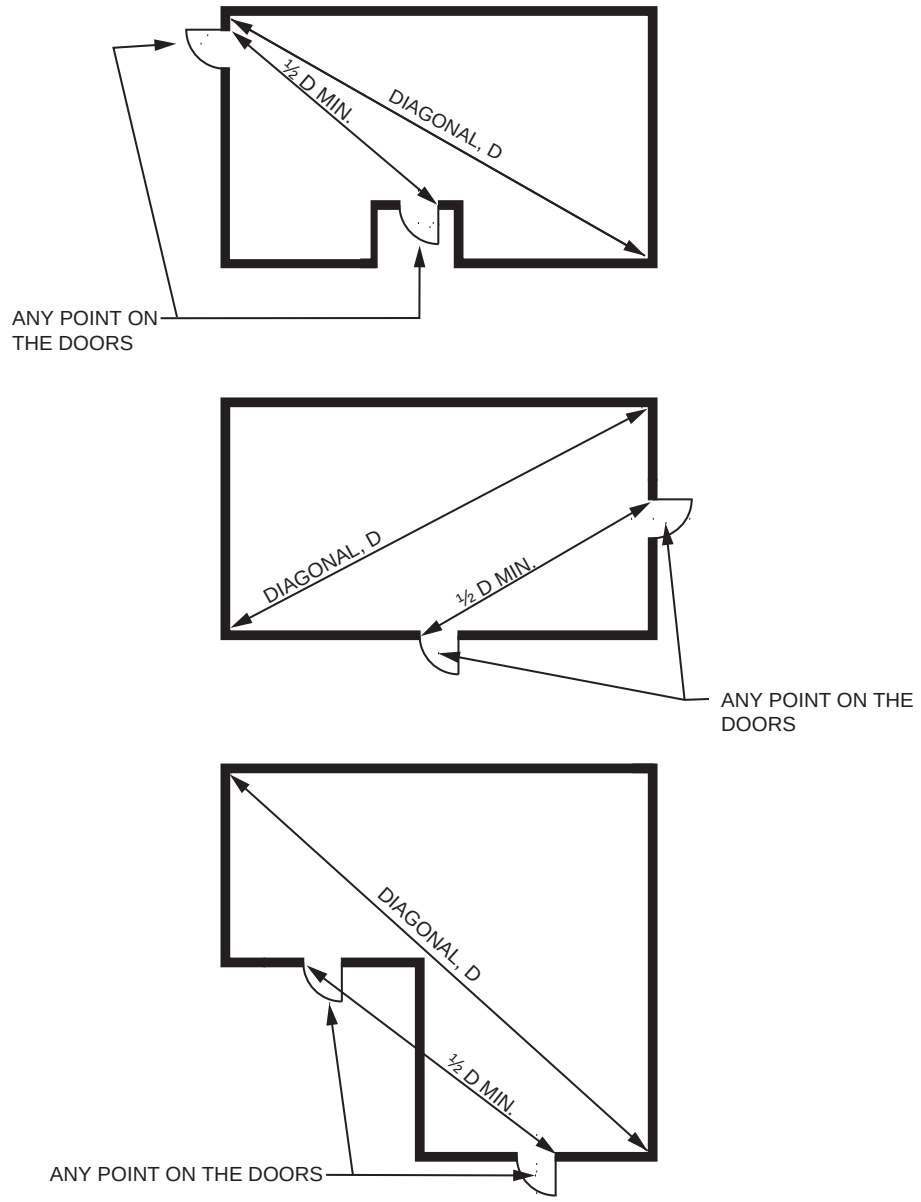

Figure 1007.1.1(1)
EXAMPLES OF REMOTENESS BETWEEN EXITS OR EXIT ACCESS DOORS FROM A ROOM OR BUILDING

INTERNATIONAL CODE COUNCIL®
Copyright © 2015 ICC. ALL RIGHTS RESERVED. Accessed by David Dammon on Jun 21, 2017 12:30:52 PM pursuant to License Agreement with ICC. No further reproduction or distribution authorized. ANY UNAUTHORIZED REPRODUCTION OR DISTRIBUTION IS A VIOLATION OF THE FEDERAL COPYRIGHT ACT AND THE LICENSE AGREEMENT, AND SUBJECT TO CIVIL AND CRIMINAL PENALTIES THEREUNDER.

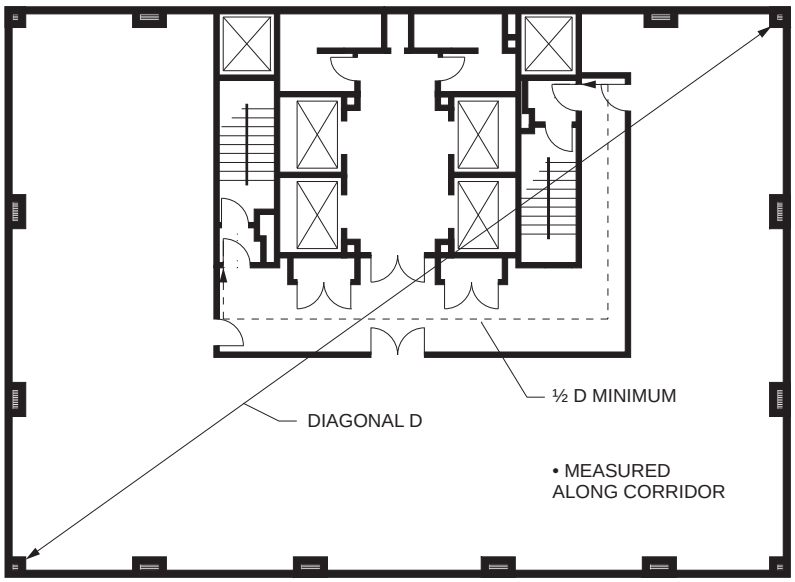

EXAMPLE:

DIAGONAL DIMENSION = 134′-0″
MIN. SEPARATION OF EXITS = 134′ ÷ 2 = 67″-0′

For SI: 1 inch = 25.4 mm, 1 foot = 304.8 mm.

Figure 1007.1.1(2)
REMOTENESS OF INTERCONNECTING BY A 1-HOUR FIRE-RESISTANCE-RATED CORRIDOR

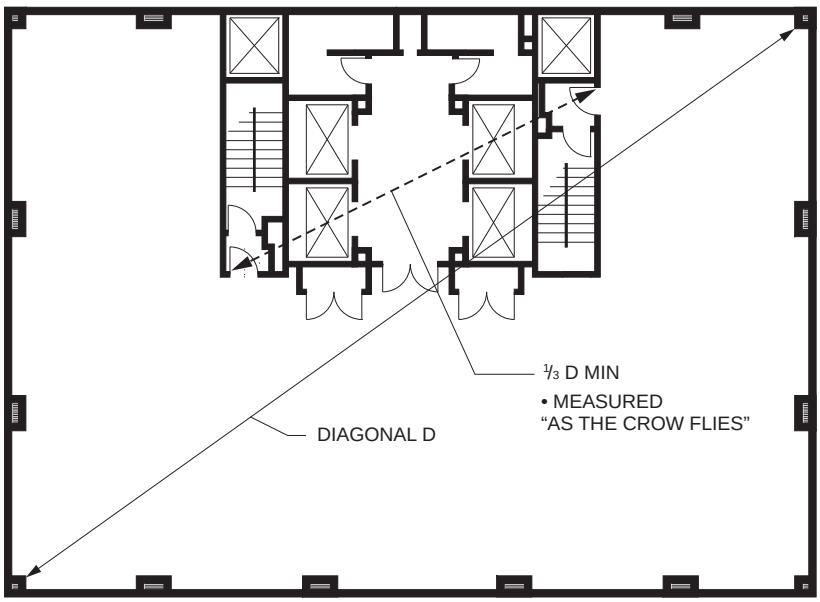

EXAMPLE:
DIAGONAL DIMENSION = 134′-0″
MIN. SEPARATION OF EXITS = 134′ ÷ 3 = 44′-8″

For SI: 1 inch = 25.4 mm, 1 foot = 304.8 mm.

Figure 1007.1.1(3)
REMOTENESS OF EXITS IN A BUILDING WITH AN AUTOMATIC SPRINKLER SYSTEM

INTERNATIONAL CODE COUNCIL®
Copyright © 2015 ICC. ALL RIGHTS RESERVED. Accessed by David Dammon on Jun 21, 2017 12:30:52 PM pursuant to License Agreement with ICC. No further reproduction or distribution authorized. ANY UNAUTHORIZED REPRODUCTION OR DISTRIBUTION IS A VIOLATION OF THE FEDERAL COPYRIGHT ACT AND THE LICENSE AGREEMENT, AND SUBJECT TO CIVIL AND CRIMINAL PENALTIES THEREUNDER.

DOES NOT COMPLY!

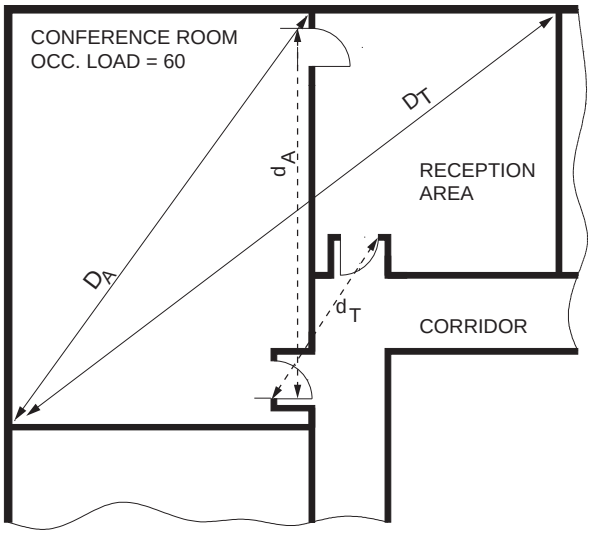

D_A = 42′-0″ ALTHOUGH d_A EQUALS 1/2 D_A
d_A = 21′-0″ THE OVERALL DESIGN FOR THE SPACE
D_T = 58′-0″ IS NOT ACCEPTABLE BECAUSE d_T IS
d_T = 7′-0″ LESS THAN 1/2 D_T.

For SI: 1 inch = 25.4 mm, 1 foot = 304.8 mm.

Figure 1007.1.1(4)
REMOTE LOCATION OF EXIT ACCESS DOORS
(ADJOINING ROOMS)

1007.1.1.1 Measurement point. The separation distance required in Section 1007.1.1 shall be measured in accordance with the following:

1. The separation distance to *exit* or *exit access doorways* shall be measured to any point along the width of the doorway.
2. The separation distance to *exit access stairways* shall be measured to the closest riser.
3. The separation distance to *exit access ramps* shall be measured to the start of the ramp run.

❖ Where exit access stairways are permitted to be unenclosed, the remoteness measurement for doorways shall begin at the center of the top riser of the unenclosed stairways; this is consistent with the exit access travel distance measurement in Section 1017.3. When enclosure is provided, distances are measured to the door of the enclosure. Typically, travel distance is measured to the center of the door, ramp or stairway; however, there is an allowance for that point to be at any location along the door, stairway or ramp. The intent is to reduce subjectivity in the determination of exit/exit access configuration. The result is that a designer could literally measure to the far extreme edge of the two doorways leading out of a room to meet the separation requirements.

1007.1.2 Three or more exits or exit access doorways. Where access to three or more *exits* is required, not less than two *exit* or *exit access doorways* shall be arranged in accordance with the provisions of Section 1007.1.1. Additional required *exit* or *exit access doorways* shall be arranged a reasonable distance apart so that if one becomes blocked, the others will be available.

❖ When there are three or more required exits from a building or exit access doors from a room, they are to be analyzed identically to the method described in Section 1007.1.1. Two of the exits or exit access doors must meet the remoteness test. Any additional exits or doors can be located anywhere within the floor plan that meets the code requirements, including independence, accessibility, capacity and continuity.

There is no specific separation requirement provided in Section 1007.1.2 for the third exit, but the exits must be located so that one fire event will not block two exits; thus, two doors immediately adjacent would not be acceptable. The appropriate separation is subjective and would be partially dependent on the

INTERNATIONAL CODE COUNCIL®
Copyright © 2015 ICC. ALL RIGHTS RESERVED. Accessed by David Dammon on Jun 21, 2017 12:30:52 PM pursuant to License Agreement with ICC. No further reproduction or distribution authorized. ANY UNAUTHORIZED REPRODUCTION OR DISTRIBUTION IS A VIOLATION OF THE FEDERAL COPYRIGHT ACT AND THE LICENSE AGREEMENT, AND SUBJECT TO CIVIL AND CRIMINAL PENALTIES THEREUNDER.

layout of the space. Using some other provisions in the code for guidance can help. Section 1005.5 states that multiple means of egress need to be sized such that the loss of any one will not reduce the capacity below 50 percent. This intent is repeated for an assembly space with more than 300 occupants. Sections 1029.2 and 1029.3 can require this space to have a main exit that accommodates one-half of the total occupant load and then require the balance of the exits (means of egress) to provide for the remaining one-half of the occupant load. The "main exit" is typically the result of a single "main entrance" for fee or ticket entry. If there is not a main exit, the exceptions to both Sections 1029.2 and 1029.3 require the means of egress to be "distributed around the perimeter of the building."

1007.1.3 Remoteness of exit access stairways or ramps. Where two *exit access stairways* or *ramps* provide the required *means of egress* to *exits* at another *story*, the required separation distance shall be maintained for all portions of such *exit access stairways* or *ramps*.

❖ The intent of these provisions are to prohibit open stairways and ramps that meet the separation distance at the first riser or start of the ramp run from converging toward one another such that the separation distance is reduced as the occupants follow the egress path to the lower level. Exit access stairways and ramps have to maintain the separation distance until the travel to the lower floor is complete (see Commentary Figure 1007.1.3).

1007.1.3.1 Three or more exit access stairways or ramps. Where more than two *exit access stairways* or *ramps* provide the required *means of egress*, not less than two shall be arranged in accordance with Section 1007.1.3.

❖ See the commentary to Section 1007.1.3, Remoteness of exit access stairways and ramps.

SECTION 1008
MEANS OF EGRESS ILLUMINATION

1008.1 Means of egress illumination. Illumination shall be provided in the *means of egress* in accordance with Section 1008.2. Under emergency power, means of egress illumination shall comply with Section 1008.3.

❖ This section is split into two distinct requirements: Section 1008.2 for egress lighting during typical lighting situations and Section 1008.3 for egress lighting for emergencies when the building has lost normal power.

1008.2 Illumination required. The *means of egress* serving a room or space shall be illuminated at all times that the room or space is occupied.

Exceptions:

1. Occupancies in Group U.
2. *Aisle accessways* in Group A.
3. *Dwelling units* and *sleeping units* in Groups R-1, R-2 and R-3.
4. *Sleeping units* of Group I occupancies.

❖ All portions of the means of egress serving a space must be illuminated by artificial lighting when that space is occupied, so that the paths of exit travel are always visible and available for evacuation of the occupants during emergencies. The intent is to allow portions of a building to have the lights turned off when that portion is unoccupied.

Three of the exceptions are for occupancies where the constant illumination of the means of egress would interfere with the use of space, such as sleeping areas or theater seating during a performance.

Bear in mind that means of egress lighting is not emergency lighting. For emergency lighting requirements, see Section 1008.3.

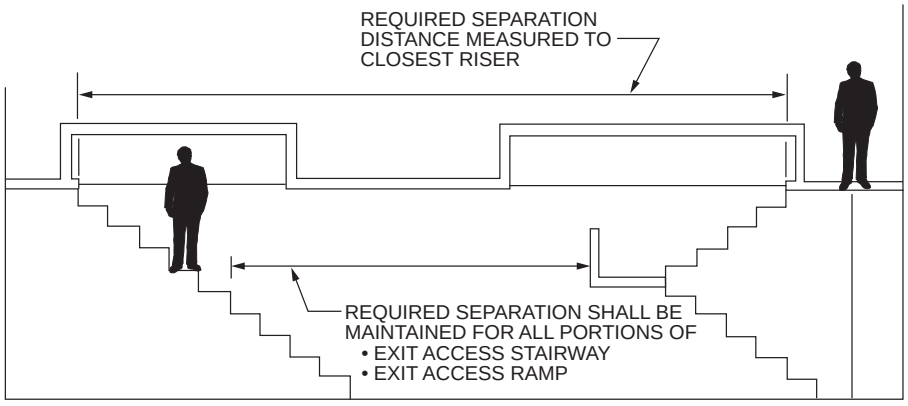

For SI: 1 inch = 25.4 mm, 1 foot = 304.8 mm.

Figure 1007.1.3
SEPARATION OF EXIT ACCESS STAIRWAYS AND RAMPS

INTERNATIONAL CODE COUNCIL®
Copyright © 2015 ICC. ALL RIGHTS RESERVED. Accessed by David Dammon on Jun 21, 2017 12:30:52 PM pursuant to License Agreement with ICC. No further reproduction or distribution authorized. ANY UNAUTHORIZED REPRODUCTION OR DISTRIBUTION IS A VIOLATION OF THE FEDERAL COPYRIGHT ACT AND THE LICENSE AGREEMENT, AND SUBJECT TO CIVIL AND CRIMINAL PENALTIES THEREUNDER.

The high-rise provisions in Section 403 utilize the means of egress lighting and emergency lighting in this section. High-rise buildings also require a secondary backup system of luminous egress path markings within enclosed exit stairways (Section 1025). Section 1025.5 requires the enclosed exit stairways to be illuminated for 60 minutes prior to the daily occupancy and during the entire time the building is occupied so that the self-luminous stripes can charge. In a building that is always occupied, such as a hospital or hotel, this would require at least some of the lights in the stairway to be on 24 hours per day.

1008.2.1 Illumination level under normal power. The *means of egress* illumination level shall be not less than 1 footcandle (11 lux) at the walking surface.

Exception: For auditoriums, theaters, concert or opera halls and similar assembly occupancies, the illumination at the walking surface is permitted to be reduced during performances by one of the following methods provided that the required illumination is automatically restored upon activation of a premises' fire alarm system:

1. Externally illuminated walking surfaces shall be permitted to be illuminated to not less than 0.2 footcandle (2.15 lux).
2. Steps, landings and the sides of ramps shall be permitted to be marked with self-luminous materials in accordance with Sections 1025.2.1, 1025.2.2 and 1025.2.4 by systems listed in accordance with UL 1994.

❖ The intensity of lighting along the entire means of egress, including open plan spaces, aisles, corridors and passageways, exit stairways, exit doors and places of exit discharge at the walking surface or floor level must not be less than 1 footcandle (11 lux). One footcandle (11 lux) is approximately the same lighting level as found outdoors at twilight. It has been found that even this relatively low level of lighting renders enough visibility for occupants to evacuate a building safely.

It is important to note that this lighting level is measured at the floor in order to make the floor surface visible. Levels of illumination above the floor may be higher or lower, thus allowing lights along steps to be used rather than general area lighting.

The exception addresses assembly occupancies where low light level is needed for the function of the space. It is not the intent of the exception to require a fire alarm system but to require a connection to the egress lighting where a fire alarm system is provided. There are two options for that path lighting. Per Exception 1, the level of intensity of aisle lighting in such spaces may be reduced to 0.2 footcandle (2.15 lux), but only during the time of a performance. This intensity of illumination is sufficient to distinguish the aisles and stairs leading to the egress doors and not be a source of distraction during a performance. The option in Exception 2 allows for internally illuminated luminous path stripes (see Section 1025). Since the illumination in the space between shows and the duration of the shows may not be compatible with luminous path markings that charge from a light source, this option is currently not permitted.

1008.2.2 Exit discharge. In Group I-2 occupancies where two or more exits are required, on the exterior landings required by Section 1010.6.1, means of egress illumination levels for the exit discharge shall be provided such that failure of any single lighting unit shall not reduce the illumination level on that landing to less than 1 footcandle (11 lux).

❖ Section 1006.1, by requiring the means of egress to be illuminated, would include the exit discharge. Often, when moving to the outside of the building, the lighting from the parking lot or street lights will sufficiently light the exit discharge without additional lighting from the building itself. The transition moving from a lighted space to the outside may be an issue at the exit door, therefore, many facilities do provide a light over the exit door on the outside. For hospitals, the fixture provided must have at least two light bulbs, so that if one burns out, the other will still provide sufficient light for this transition.

This proposal was submitted by the Adhoc Health Care Committee, so it is limited to their scope of work. To reduce potential hazards at this important juncture, this could be considered best practice for other occupancies.

1008.3 Emergency power for illumination. The power supply for means of egress illumination shall normally be provided by the premises' electrical supply.

❖ The main routes for means of egress must be illuminated in times of emergency when the occupants must have a lighted path of exit travel in order to evacuate the building safely. The code is very specific in the description of the areas that are required to be illuminated by the emergency, not the standby power system (see Section 2702.2.11).

1008.3.1 General. In the event of power supply failure in rooms and spaces that require two or more means of egress, an emergency electrical system shall automatically illuminate all of the following areas:

1. *Aisles*.
2. *Corridors*.
3. *Exit access stairways* and *ramps*.

❖ Where two means of egress are required from a room or space, emergency lighting must be provided along aisle corridors, exit access stairways and ramps. It is not the intent to require the entire space to be lit as during normal use situations addressed in Section 1008.2. However, the main egress paths out of the two exit spaces must be illuminated. This would always include the main corridor in a story with two exits required, and could include paths off that main corridor. For example, an aisle in an open office plan must be illuminated, but not the path within individual offices that egress through the open area. Exit

INTERNATIONAL CODE COUNCIL®
Copyright © 2015 ICC. ALL RIGHTS RESERVED. Accessed by David Dammon on Jun 21, 2017 12:30:52 PM pursuant to License Agreement with ICC. No further reproduction or distribution authorized. ANY UNAUTHORIZED REPRODUCTION OR DISTRIBUTION IS A VIOLATION OF THE FEDERAL COPYRIGHT ACT AND THE LICENSE AGREEMENT, AND SUBJECT TO CIVIL AND CRIMINAL PENALTIES THEREUNDER.

access stairways from a mezzanine or from a second floor (as permitted by Section 1019.3) and the route from the bottom of the stairway to the exit must also be illuminated.

1008.3.2 Buildings. In the event of power supply failure in buildings that require two or more *means of egress*, an emergency electrical system shall automatically illuminate all of the following areas:

1. *Interior exit access stairways* and *ramps*.
2. *Interior* and *exterior exit stairways* and *ramps*.
3. *Exit passageways.*
4. Vestibules and areas on the level of discharge used for *exit discharge* in accordance with Section 1028.1.
5. Exterior landings as required by Section 1010.1.6 for *exit doorways* that lead directly to the e*xit discharge*.

❖ Where two or more exits are required from a story, essential portions of the interior egress system must be illuminated. This includes:

- Exit access stairways from a second floor (as permitted by Section 1019.3) as well as the route from the bottom of the stairway to the exit (see Section 1008.3.1).
- All exit stairways and ramps along their entire length.
- Exit passageways used in facilities with long travel distances, such as malls, or as an extension of the exit stairway enclosure.
- Means of egress systems that use exit balconies (see Section 1021) or open exterior exit stairways or ramps (see Section 1028).
- Interior exit discharge elements, such as lobbies and vestibules (see Section 1028.1), where stairways discharge into these elements instead of directly to the exterior of a building.
- Exterior portions of the exit discharge. Note that only the portion of the exterior discharge that is immediately adjacent to the building exit discharge door is required to have emergency illumination and not the entire exterior discharge path to the public way.

1008.3.3 Rooms and spaces. In the event of power supply failure, an emergency electrical system shall automatically illuminate all of the following areas:

1. Electrical equipment rooms.
2. Fire command centers.
3. Fire pump rooms.
4. Generator rooms.
5. Public restrooms with an area greater than 300 square feet (27.87 m^2).

❖ The intent of Items 1 through 4 is to have emergency lighting in areas significant for emergency responders or maintenance personnel who may be trying to locate and fix the loss of power issue for the building.

Item 5 requires an emergency light in large restrooms. Given the activity, people may need some illumination to quickly get themselves ready to be able to evacuate.

1008.3.4 Duration. The emergency power system shall provide power for a duration of not less than 90 minutes and shall consist of storage batteries, unit equipment or an on-site generator. The installation of the emergency power system shall be in accordance with Section 2702.

❖ So that there will be a continuing source of electrical energy for maintaining the illumination of the means of egress when there is a loss of the main power supply, the means of egress lighting system must be connected to an emergency electrical system that consists of storage batteries, unit equipment or an on-site generator. This emergency power-generating facility must be capable of supplying electricity for at least 90 minutes, thereby giving the occupants sufficient time to leave the premises. In most cases, where the loss of the main electrical supply is attributed to a malfunction in the distribution system of the electric power company, experience has shown that such power outages do not usually last as long as 90 minutes.

The IFC requirements for emergency power for emergency egress lighting and exit signage in existing buildings only require a 60-minute time duration. This is not a conflict, but rather recognition of the loss of battery storage capability over a length of time.

1008.3.5 Illumination level under emergency power. Emergency lighting facilities shall be arranged to provide initial illumination that is not less than an average of 1 footcandle (11 lux) and a minimum at any point of 0.1 footcandle (1 lux) measured along the path of egress at floor level. Illumination levels shall be permitted to decline to 0.6 footcandle (6 lux) average and a minimum at any point of 0.06 footcandle (0.6 lux) at the end of the emergency lighting time duration. A maximum-to-minimum illumination uniformity ratio of 40 to 1 shall not be exceeded. In Group I-2 occupancies, failure of any single lighting unit shall not reduce the illumination level to less than 0.2 footcandle (2.2 lux).

❖ This section provides the criteria of the illumination levels of the emergency lighting system. The initial average level for the main egress paths is the same as for the overall means of egress illumination in Section 1008.2.1. The reduction of illumination recognizes the performance characteristics over time of some types of power supplies, such as batteries. The minimum levels are sufficient for the occupants to egress from the building. In addition, the emergency lighting system is a secondary system that is spaced along the main egress routes. It will not provide the same level of general lighting over the route as what can be provided by the building lighting system.

The maximum illumination uniformity ratio of 40 means that the variation in the illumination levels is not to exceed that number. For example, a minimum of 0.06 footcandle (0.6 lux) would establish a maximum illumination of 2.4 footcandles (24 lux) in an

INTERNATIONAL CODE COUNCIL®
Copyright © 2015 ICC. ALL RIGHTS RESERVED. Accessed by David Dammon on Jun 21, 2017 12:30:52 PM pursuant to License Agreement with ICC. No further reproduction or distribution authorized. ANY UNAUTHORIZED REPRODUCTION OR DISTRIBUTION IS A VIOLATION OF THE FEDERAL COPYRIGHT ACT AND THE LICENSE AGREEMENT, AND SUBJECT TO CIVIL AND CRIMINAL PENALTIES THEREUNDER.

adjacent area. This is to establish a variation limit such that the means of egress can be seen as a person walks from bright to darker areas along the egress path.

Group I-2 nursing homes and hospitals typically use a defend-in-place strategy for patients and residents who require assistance from a staff trained in the fire and safety evacuation plans. Given the possible critical nature of some of the patients and the need to move some people with life-sustaining equipment, there is an additional requirement that the lighting in the main corridors and along the exit path will always have some redundancy in the fixtures providing that illumination. This could be done with either two bulb fixtures, or locating emergency lighting fixtures close enough that if one burned out, light from fixtures on each side would overlap enough to not result in a dark spot.

SECTION 1009
ACCESSIBLE MEANS OF EGRESS

1009.1 Accessible means of egress required. Accessible *means of egress* shall comply with this section. *Accessible* spaces shall be provided with not less than one accessible *means of egress*. Where more than one *means of egress* are required by Section 1006.2 or 1006.3 from any *accessible* space, each *accessible* portion of the space shall be served by not less than two accessible *means of egress*.

Exceptions:

1. Accessible *means of egress* are not required to be provided in existing buildings.
2. One accessible *means of egress* is required from an *accessible mezzanine* level in accordance with Section 1009.3, 1009.4 or 1009.5.
3. In assembly areas with ramped *aisles* or stepped *aisles*, one accessible *means of egress* is permitted where the *common path of egress travel* is *accessible* and meets the requirements in Section 1029.8.

❖ The Access Board has revised and updated its accessibility guidelines for buildings and facilities covered by the Americans with Disabilities Act of 1990 (ADA) and the Architectural Barriers Act of 1968 (ABA). The final ADA/ABA Guidelines, published by the Access Board in July 2004, serve as the basis for the minimum standards when adopted by other federal agencies responsible for issuing enforceable standards. The plan is to eventually use this new document in place of the Uniform Federal Accessibility Standard (UFAS) and ADAAG. The U.S. Department of Justice officially adopted the new federal requirements on September 15, 2010. The new name is the *2010 Standard for Accessible Design,* otherwise known as the 2010 ADA Standard. The 2010 ADA Standard, Section 207/F207, references the 2000 edition of the IBC with 2001 Supplement, as well as the 2003 edition of the IBC, for accessible means of egress requirements. The International Code Council® (ICC®) is very proud to be recognized for its work regarding accessible means of egress in this manner. Refer to the Access Board website (www.accessboard.gov) for more specific information and the current status of this adoption process. Based on the date of the publication and the adoption process, later editions of the IBC are not specifically referenced; however, none of the later editions reduced the accessible means of egress requirements found in the referenced IBC editions, so they should be able to be considered as providing equivalent or better accessibility.

The accessible means of egress locations may not be near the accessible route used for ingress into the building (see Sections 1104 and 1105). For example, a two-story building requires one accessible route to connect all accessible spaces within the building. The accessible route to the second level is typically by an elevator. During a fire emergency, persons with mobility impairments on the second level should move to the exit stairways for assisted rescue, not back the way they came in via the elevator. Signage at the elevator will direct occupants to an exit stairway.

This section establishes the minimum requirements for means of egress facilities serving all spaces that are required to be accessible to people with physical disabilities. Previously, attention had been focused on response to the civil-rights-based issue of providing adequate access for people with physical disabilities into and throughout buildings. Concerns about life safety and evacuation of people with mobility impairments were frequently cited as reasons for not embracing widespread building accessibility, in the best interests of the disabled community.

The provisions for accessible means of egress are predominantly, though not exclusively, intended to address the safety of persons with a mobility impairment. These requirements reflect the balanced philosophy that accessible means of egress are to be provided for occupants who have gained access into the building but are incapable of independently utilizing the typical means of egress facilities, such as the exit stairways. By making such provisions, the code now addresses means of egress for all building occupants, with and without physical disabilities.

Any space that is not required by the code to be accessible in accordance with Chapter 11 is not required to be provided with accessible means of egress. This may include an entire story, a portion of a story, a mezzanine or an individual room. For example, a mechanical penthouse is not required to be accessible in accordance with Section 1103.2.9; therefore, the mechanical penthouse is not required to have an accessible means of egress.

In new construction and additions, at least two accessible means of egress are required. For example, in buildings, stories or spaces required by Section 1006.3.1 to have three or more exits or exit

INTERNATIONAL CODE COUNCIL®
Copyright © 2015 ICC. ALL RIGHTS RESERVED. Accessed by David Dammon on Jun 21, 2017 12:30:52 PM pursuant to License Agreement with ICC. No further reproduction or distribution authorized. ANY UNAUTHORIZED REPRODUCTION OR DISTRIBUTION IS A VIOLATION OF THE FEDERAL COPYRIGHT ACT AND THE LICENSE AGREEMENT, AND SUBJECT TO CIVIL AND CRIMINAL PENALTIES THEREUNDER.

access doors, a minimum of two accessible means of egress is required. The accessibility requirements are based on the required means of egress from both individual spaces and the building as a whole. Therefore, facilities with multiple large assembly rooms, such as banquet halls or multiplex theaters where the second exit from the space is often a door directly to the outside, may require additional accessible means of egress from the building because of space requirements.

While there are no dispersement requirements specific to accessible means of egress or travel distance limitations where there is no area of refuge requirement (see Sections 1009.3, 1009.4 and 1009.6), the code requires all exits to be distinct, separated and independent. The main intent is that a person with mobility impairments will always have options. If not all exits are accessible, possible entrapment should be a consideration in determining which exits are to be made accessible. In most buildings, the upper floors will already have an accessible route to all stairways. On the first floor, if the issue is accessible exit discharge, see Section 1009.7.

An accessible means of egress is required to provide a continuous path of travel to a public way. This principle is consistent with the general requirements for all means of egress, as reflected in Section 1003.1 and in the definition of “Means of egress” in Chapter 2. This section also emphasizes the intent that accessible means of egress must be available to a person with a mobility impairment, such as a person using a wheelchair, scooter or walker. Some mobility impairments do not allow for self-evacuation along a stairway; therefore, utilization of the exit and exit discharge may require assistance. The safety and fire evacuation plans (see Section 1001.4 of the code and Section 404 of the IFC) require planning for all occupants of a building. This assistance is typically with the fire department or other trained personnel, either along the exit stairways or in buildings five stories or taller, with the elevator system or a combination of both (see commentary, Section 1009.2.1). It is required that accessible routes, areas of refuge and exterior areas of rescue assistance are indicated on these plans. These plans must be approved by the local fire official and reviewed annually.

The exceptions address special situations where accessible means of egress requirements need special consideration. Note that these are exceptions for accessible means of egress; not exceptions for accessible entrance requirements (see Section 1105).

Exception 1 indicates that existing buildings undergoing alterations are not required to be provided with accessible means of egress as part of that alteration. In many cases, meeting the requirements for accessible means of egress, especially the 48-inch (1219 mm) clear stair width required in nonsprinklered buildings, would be considered technically infeasible. However, if an accessible means of egress was part of the original construction, it must be maintained in accordance with IEBC Section 410.2 or 705.1.

Exception 2 is a special consideration for mezzanines. The size of mezzanines is limited to a portion of the space below (see Section 505). Most are open to the space below; thus, with the same atmosphere and line of sight, fire recognition is quicker than in a two-story situation. If the elevator used for ingress has not gone into fire department recall, that system could be used for self-evacuation. There are three different scenarios:

1. If the mezzanine is exempted from accessibility, such as a mechanical mezzanine (see Section 1103.2.9), or small enough not to be required to be accessed by an accessible route (see Section 1104.4, Exception 1), no accessible means of egress is required.

2. If a mezzanine is required to be accessible (see Section 1104.4) and meets the provisions for spaces with one means of egress (see Section 1006.2), the exit access stairway must meet the provisions of Section 1009.3. Per Section 1009.3, Exception 1, this can be an open exit access stairway. Per Exception 4, in a nonsprinklered building, a designer would have the option of either an area of refuge or two-way communication at the elevator. Per Exception 5, in sprinklered buildings, the area of refuge would not be required.

3. If a mezzanine is required to be accessible (see Section 1104.4) and is required to have two means of egress, at least one of the means of egress stairways must meet the provisions of Section 1009.3. Per Section 1009.3, Exception 1, this can be an open exit access stairway. Per Exception 4, in a nonsprinklered building, a designer would have the option of either an area of refuge or two-way communication at the elevator. Per Exception 5, in sprinklered buildings, the area of refuge would not be required. Practically speaking, in a sprinklered building, both stairways from the mezzanine will meet Section 1009.3.

While under Scenarios 2 and 3 it is optional to have the elevator meet the requirements of Section 1009.4, the provisions for standby power at elevators are based on fire department assisted rescue. This is an expensive option that would likely never be used during a fire event. Where platform lifts can be used in new construction (see Section 1109.8), they are so limited that it is not likely that they will provide the accessible route to a mezzanine. If the platform lift serves as part of the route to the space, Section 1009.5 allows for platform lifts to serve as part of the accessible route for accessible means of egress when they have standby power.

Exception 3 is in consideration of the practical difficulties of providing accessible routes in assembly

INTERNATIONAL CODE COUNCIL®
Copyright © 2015 ICC. ALL RIGHTS RESERVED. Accessed by David Dammon on Jun 21, 2017 12:30:52 PM pursuant to License Agreement with ICC. No further reproduction or distribution authorized. ANY UNAUTHORIZED REPRODUCTION OR DISTRIBUTION IS A VIOLATION OF THE FEDERAL COPYRIGHT ACT AND THE LICENSE AGREEMENT, AND SUBJECT TO CIVIL AND CRIMINAL PENALTIES THEREUNDER.

areas with sloped floors and stepped aisles. Rooms with more than 50 persons are required to have two means of egress; therefore, each accessible seating location is required to have access to two accessible means of egress. Depending on the slope of the seating arrangement, providing an accessible route to both distinct exits can be difficult to achieve, especially in small theaters. A maximum travel distance of 30 feet (9144 mm) for ambulatory persons moving from the last seat in dead-end aisles or from box-type seating arrangements to where they have access to a choice of means of egress routes has been established in Section 1029.8. In accordance with Exception 3, persons using wheelchair seating spaces have the same maximum 30-foot (9144 mm) travel distance from the accessible seating locations to a cross aisle or out of the room to an adjacent corridor or space where two choices for accessible means of egress are provided. Note that there are increases in travel distance for smoke-protected seating and small spaces, such as boxes, galleries or balconies. For additional information, see Section 1029.8.

1009.2 Continuity and components. Each required accessible *means of egress* shall be continuous to a *public way* and shall consist of one or more of the following components:

1. *Accessible routes* complying with Section 1104.
2. *Interior exit stairways* complying with Sections 1009.3 and 1023.
3. *Exit access stairways* complying with Sections 1009.3 and 1019.3 or 1019.4.
4. *Exterior exit stairways* complying with Sections 1009.3 and 1027 and serving levels other than the *level of exit discharge*.
5. Elevators complying with Section 1009.4.
6. Platform lifts complying with Section 1009.5.
7. *Horizontal exits* complying with Section 1026.
8. *Ramps* complying with Section 1012.
9. *Areas of refuge* complying with Section 1009.6.
10. Exterior areas for assisted rescue complying with Section 1009.7 serving exits at the *level of exit discharge*.

❖ This section identifies the various building features that can serve as elements of an accessible means of egress. Accessible routes are readily recognizable as to how they can provide accessible means of egress; however, some nontraditional principles have been established for the total concept of accessible means of egress. This is evident in that stairways and elevators are also identified as elements that can be part of an accessible means of egress. For example, elevators are generally not available for egress during a fire, while stairways are not independently usable by a person using a wheelchair. The concept of accessible means of egress includes the idea that evacuating people with a mobility impairment may require the assistance of others. In some situations, provisions are also included for creating an area of refuge or exterior areas of rescue assistance wherein people can safely await either further instructions or evacuation assistance. Larger refuge areas can also be established by utilizing horizontal exits. All of these elements can be arranged in the manner prescribed in this section to provide accessible means of egress.

It is important to note that the subjects of Item 10, exterior areas for assisted rescue, are intended to be used only at the level of exit discharge (see commentary in Chapter 2 for the defined term, "Level of exit discharge"). Exterior exit stairways that are from other floors are addressed by Item 4.

1009.2.1 Elevators required. In buildings where a required *accessible* floor is four or more *stories* above or below a *level of exit discharge*, not less than one required accessible *means of egress* shall be an elevator complying with Section 1009.4.

Exceptions:

1. In buildings equipped throughout with an *automatic sprinkler system* installed in accordance with Section 903.3.1.1 or 903.3.1.2, the elevator shall not be required on floors provided with a *horizontal exit* and located at or above the *levels of exit discharge*.
2. In buildings equipped throughout with an *automatic sprinkler system* installed in accordance with Section 903.3.1.1 or 903.3.1.2, the elevator shall not be required on floors provided with a *ramp* conforming to the provisions of Section 1012.

❖ Elevators are the most common and convenient means of providing access to the upper floors in multistory buildings. As such, elevators represent a prime candidate for accessible means of egress from such buildings, especially in light of the difficulties involved in carrying a person up or down a stairway for multiple levels. The primary consideration for elevators as an accessible means of egress is that the elevator will be available and protected during a fire event to allow for fire department assisted rescue. Typically it is not the intent that people use the elevator for self-evacuation due to the hazards associated with smoke in the elevator shaft or the elevator taking people to the floor with a direct fire hazard. There are some new technological advances for "fire service access elevators" and "occupant evacuation elevators" that are discussed in Sections 403, 3007 and 3008.

This section addresses where an elevator must serve as part of an accessible means of egress. See Section 1104 for when elevators are required for the accessible route into a building. By a reference to Section 1009.4, both an area of refuge and a standby source of power for the elevator are required. The standby power requirement establishes a higher degree of reliability that the elevator will be available and usable by reducing the likelihood of power loss caused by fire or other conditions of power failure.

The code defines "Exit Discharge, Level of" as the story at which an exit terminates. In buildings having four or more stories above or below the level of exit discharge, it is unreasonable to rely solely on exit

INTERNATIONAL CODE COUNCIL®
Copyright © 2015 ICC. ALL RIGHTS RESERVED. Accessed by David Dammon on Jun 21, 2017 12:30:52 PM pursuant to License Agreement with ICC. No further reproduction or distribution authorized. ANY UNAUTHORIZED REPRODUCTION OR DISTRIBUTION IS A VIOLATION OF THE FEDERAL COPYRIGHT ACT AND THE LICENSE AGREEMENT, AND SUBJECT TO CIVIL AND CRIMINAL PENALTIES THEREUNDER.

stairways for all of the required accessible means of egress. This is the point at which complete reliance on assisted evacuation down the stairs will not be effective or adequate because of the limited availability of either experienced personnel who are trained to carry people safely (e.g., fire fighters) or the availability of special devices (i.e., self-braking stairway descent equipment or evacuation chairs). In this case, the code requires that at least one elevator, serving all floors of the building, is to serve as one of the required accessible means of egress. This should not represent a hardship, since elevators are typically provided in such buildings for the convenience of the occupants.

On a flat site, "buildings with four or more stories above the level of exit discharge" would typically be a five-story building. The level of exit discharge is the entire first story level (not merely the plane or level of the first floor); therefore, the fifth floor is the fourth story above the level of exit discharge. In a building with multiple basements, a story four stories below the level of exit discharge would be the fourth basement level. The actual vertical distance is the same from the fifth floor above grade down to discharge, as it is from the fourth floor below grade up to discharge. The verbiage is such that a building built on a sloped site can take into consideration that people may be exiting the building from different levels on different sides of the building (see Commentary Figure 1009.2.1).

Exception 1 establishes that accessible egress elevator service to floor levels at or above the level of exit discharge is not necessary under specified conditions. The conditions are that the building is equipped throughout with an automatic sprinkler system in accordance with NFPA 13 or NFPA 13R (see Section 903.3.1.1 or 903.3.1.2) and that floors not serviced by an accessible egress elevator are provided with a horizontal exit. The presence of an automatic sprinkler system significantly reduces the potential fire hazard and provides for increased evacuation time. The combination of automatic sprinklers and a horizontal exit provides adequate protection for the occupants despite their distance to the level of exit discharge. This exception does not apply to floor lev-

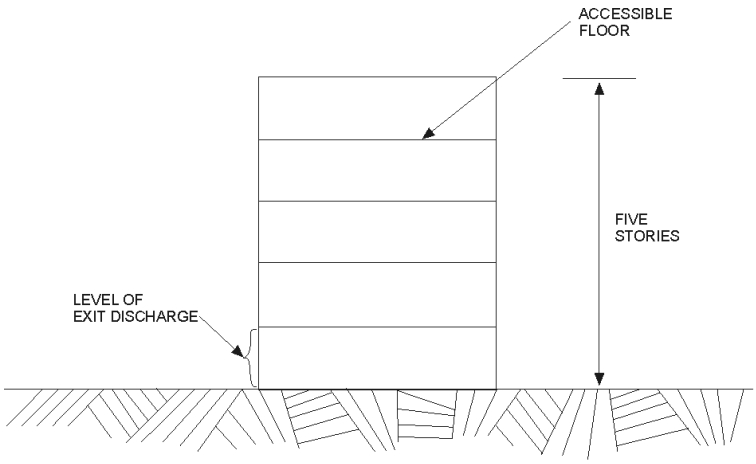

Figure 1009.2.1
ELEVATOR REQUIRED FOR ACCESSIBLE MEANS OF EGRESS

INTERNATIONAL CODE COUNCIL®
Copyright © 2015 ICC. ALL RIGHTS RESERVED. Accessed by David Dammon on Jun 21, 2017 12:30:52 PM pursuant to License Agreement with ICC. No further reproduction or distribution authorized. ANY UNAUTHORIZED REPRODUCTION OR DISTRIBUTION IS A VIOLATION OF THE FEDERAL COPYRIGHT ACT AND THE LICENSE AGREEMENT, AND SUBJECT TO CIVIL AND CRIMINAL PENALTIES THEREUNDER.

els below the level of exit discharge, since such levels are typically below grade and do not have the added advantage of exterior openings that are available for fire-fighting or rescue purposes. This option is most often utilized when a defend-in-place approach to occupant protection is utilized, such as in a hospital, nursing home or jail. Keep in mind that the horizontal exit (see Section 1026) creates large refuge areas that have separation requirements and capacity requirements that exceed area of refuge requirements.

Exception 2 specifies that a building sprinklered throughout in accordance with NFPA 13 or NFPA 13R (see Section 903.3.1.1 or 903.3.1.2), with ramp access to each level, such as in a sports stadium, is not required to also have an elevator for accessible means of egress. The reasoning behind this is that the issue of carrying people down stairways does not occur because the ramps may be utilized instead.

1009.3 Stairways. In order to be considered part of an accessible *means of egress,* a *stairway* between *stories* shall have a clear width of 48 inches (1219 mm) minimum between *handrails* and shall either incorporate an *area of refuge* within an enlarged floor-level landing or shall be accessed from an *area of refuge* complying with Section 1009.6. *Exit access stairways* that connect levels in the same *story* are not permitted as part of an accessible *means of egress*.

Exceptions:

1. *Exit access stairways* providing *means of egress* from *mezzanines* are permitted as part of an accessible *means of egress.*
2. The clear width of 48 inches (1219 mm) between *handrails* is not required in buildings equipped throughout with an *automatic sprinkler* system installed in accordance with Section 903.3.1.1 or 903.3.1.2.
3. The clear width of 48 inches (1219 mm) between *handrails* is not required for *stairways* accessed from a refuge area in conjunction with a *horizontal exit*.
4. *Areas of refuge* are not required at *exit access stairways* where two-way communication is provided at the elevator landing in accordance with Section 1009.8.
5. *Areas of refuge* are not required at *stairways* in buildings equipped throughout with an *automatic sprinkler system* installed in accordance with Section 903.3.1.1 or 903.3.1.2.
6. *Areas of refuge* are not required at *stairways* serving *open parking garages*.
7. *Areas of refuge* are not required for *smoke-protected assembly seating* areas complying with Section 1029.6.2.
8. *Areas of refuge* are not required at *stairways* in Group R-2 occupancies.
9. *Areas of refuge* are not required for *stairways* accessed from a refuge area in conjunction with a *horizontal exit.*

❖ This section addresses stairways between floor levels or to a mezzanine level (see Exception 1). The last sentence indicates that steps that connect raised or lowered areas on the same level are not permitted to be part of an accessible means of egress. People with mobility impairments cannot be asked to wait at the top of steps that may be anywhere in the building; they must be able to get to the stairways where the fire department will be coming into the building.

Stairways (exit or exit access) between floor levels, while not part of an accessible route, can serve as part of the accessible means of egress when they are used as part of an assisted evacuation route. The starting point for these requirements is that the stairways must be 48 inches (1219 mm) clear width between handrails; and either include or be accessed directly by a location where people can wait for assisted evacuation. This place to wait can be either an “area of refuge” (see Section 1009.6) or a “refuge area” created by a horizontal exit (see Exception 9 and Section 1026).

There are many mobility impairments that can limit or negate a person’s ability to walk up and down the stairs. The taller the building, the higher the percentage of the population that will be affected. For example, an elderly person or a person with a broken foot may be able to get down a couple of flights, but not from an upper floor in a high-rise.

Note that this section is for exit stairways as addressed in Sections 1023 and 1027 and exit access stairways as addressed in Section 1019. Therefore, exit access stairways between stories can be considered part of an accessible means of egress, but exit access steps within the same level, such as steps in a corridor or room leading to an exit or exit access doorway, cannot. Stairways that lead from the level of exit discharge (see the commentary to Chapter 2 for the defined term, “Exit discharge, level of”) to grade are considered part of the exit discharge. When the exit discharge is not accessible, the options are an interior area of refuge complying with Section 1009.6 or an exterior area of assisted rescue in accordance with Section 1009.7. Do not use the provisions in this section.

The dimension of 48 inches (1219 mm) clear width between handrails is sufficient to enable two or three persons to carry a person up or down to the level of exit discharge where access to a public way is afforded.

The enclosed exit stairway, in combination with an area of refuge, can provide for safety from fire in one of two ways. One approach is for the fire-resistance-rated stairway enclosure to afford the necessary safety. To accomplish this, the landing within the stairway enclosure must be able to contain the wheel-

INTERNATIONAL CODE COUNCIL®
Copyright © 2015 ICC. ALL RIGHTS RESERVED. Accessed by David Dammon on Jun 21, 2017 12:30:52 PM pursuant to License Agreement with ICC. No further reproduction or distribution authorized. ANY UNAUTHORIZED REPRODUCTION OR DISTRIBUTION IS A VIOLATION OF THE FEDERAL COPYRIGHT ACT AND THE LICENSE AGREEMENT, AND SUBJECT TO CIVIL AND CRIMINAL PENALTIES THEREUNDER.

chair. The concept is that the person in the wheelchair will remain on the stairway landing for a period of time awaiting further instructions or evacuation assistance; therefore, the stairway landing must be able to accommodate the wheelchair without obstructing the use of the stairway by other egressing occupants. An enlarged, story-level landing is required within the stairway enclosure and must be of sufficient size to accommodate the number of wheelchairs [see Section 1009.6 and Commentary Figure 1009.3(1)].

The other approach is to utilize an enclosed exit stairway that is accessed from an area of refuge complying with Section 1009.6. Under this approach, the stairway is made safe by virtue of its access being in an area that is separated and protected from the point of fire origin. An area of refuge can be created by constructing a vestibule adjacent and with direct access to the stair enclosure [see Section 1009.6 and Commentary Figure 1009.3(2)]. This is similar in theory to the approach of an enlarged landing within the stairway enclosure. Again, the general means of egress path must be available past the wheelchair spaces.

Exceptions may be combined. Exceptions 2 through 9 are either the area of refuge or the 48-inch (1219 mm) stairway width requirement. It is very important to note that an exception for the area of refuge in Section 1009.3 or 1009.4 is not an exception for the accessible means of egress. The accessible route must be available to the stairway or elevator so that people with mobility impairments and emergency responders can meet up as soon as possible.

The exceptions are applicable to all stairways between stories (i.e., exit access, interior exit and exterior exit). The same stairway that serves the ambulatory population for between floor levels can also serve as part of the accessible means of egress. Open exit access stairway requirements for mezzanines and in assembly seating arrangements are addressed in Exceptions 2 and 3 to Section 1009.1.

While the last sentence of Section 1009.3 says that exit access stairways between levels cannot serve as part of an accessible means of egress, Exception 1 allows for exit access stairways between a floor level and a mezzanine. Section 505.1 requires at least a 7-foot clearance below and above a mezzanine. Thus, while it is considered part of the floor below for other parts of the code, there are allowances for the height difference being similar to a story change in level and the difficulty of providing a ramp for that height. Therefore, the open exit access stairway from the mezzanine can serve as part of an accessible means of egress. In a sprinklered building, Exceptions 2 and

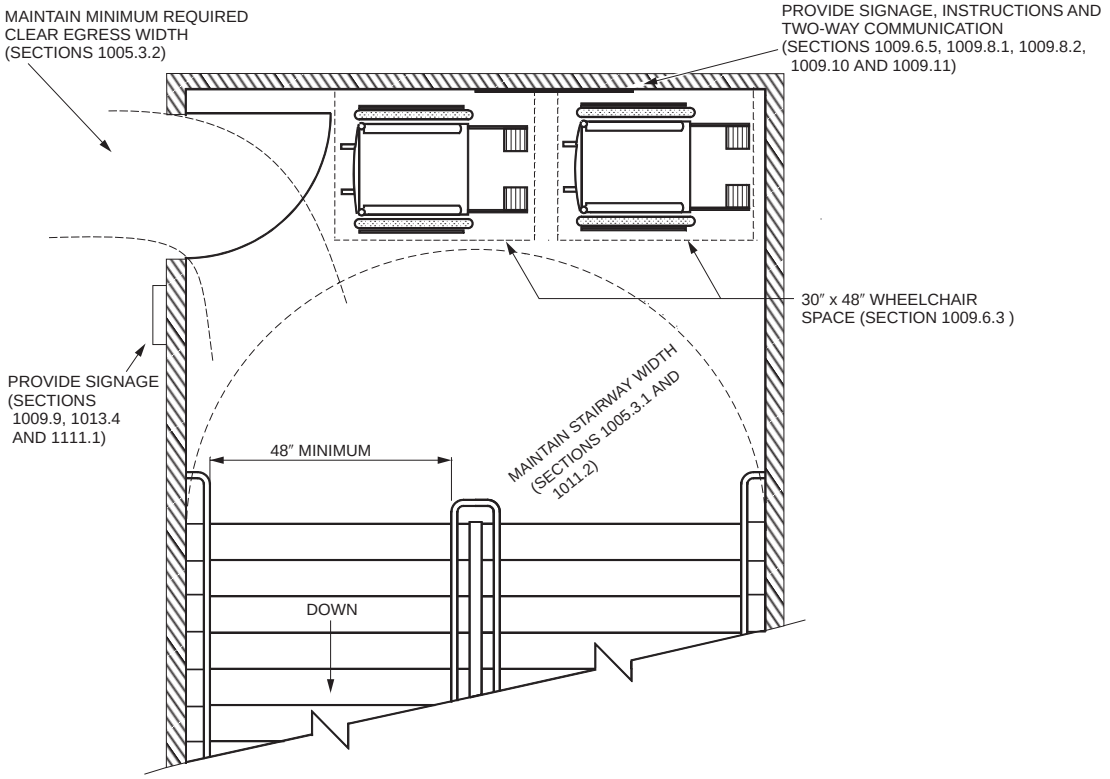

For SI: 1 inch = 25.4 mm.

Figure 1009.3(1)
ACCESSIBLE MEANS OF EGRESS STAIRWAY WITH ENLARGED STORY-LEVEL LANDING

INTERNATIONAL CODE COUNCIL®
Copyright © 2015 ICC. ALL RIGHTS RESERVED. Accessed by David Dammon on Jun 21, 2017 12:30:52 PM pursuant to License Agreement with ICC. No further reproduction or distribution authorized. ANY UNAUTHORIZED REPRODUCTION OR DISTRIBUTION IS A VIOLATION OF THE FEDERAL COPYRIGHT ACT AND THE LICENSE AGREEMENT, AND SUBJECT TO CIVIL AND CRIMINAL PENALTIES THEREUNDER.

5 would allow for a narrower stairway and no area of refuge. In a nonsprinklered building, Exception 4 would allow for two-way communication at the elevator as an alternative to providing an area of refuge at the top of the open stairway.

Exceptions 2 and 5 are in recognition of the increased level of safety and evacuation time that are afforded in a sprinklered occupancy. The expectation is that a supervised system will reduce the threat of fire by reliably controlling and confining the fire to the immediate area of origin. There is also additional safety afforded by sprinkler system requirements for automatic notification when the system is activated. This has been substantiated by a study of accessible means of egress conducted for the General Services Administration (GSA). A report issued by the National Institute for Standards and Technology (NIST), NIST IR 4770, *Staging Areas for Persons with Mobility Limitations*, concluded that the operation of a properly designed sprinkler system eliminates the life threat to all building occupants, regardless of their individual physical abilities, and is a superior form of protection as compared to areas of refuge. It was deemed that the ability of a properly designed and operational automatic sprinkler system to control a fire at its point of origin and to limit production of toxic products to a level that is not life-threatening to all occupants of the building, including persons with disabilities, eliminates the need for areas of refuge.

Exceptions 2 and 3 deal with stairway width. Exceptions 4 through 9 are exceptions for the area of refuge. These are not exceptions for the accessible route to the exit, just the area of refuge at the exit.

Exception 2 allows the stairway width to go back to the base requirements in Section 1011.2 in buildings sprinklered in accordance with NFPA 13 or NFPA 13R for both unenclosed and enclosed exit and exit access stairways (see Sections 1011, 1022 and 1027). Exception 2 is often used in conjunction with Exception 5. With the sprinkler system in place, there is more opportunity for the fire department to bring in evacuation chairs or possibly bring people to the elevator for evacuation, thus the extra width for carrying someone down the stairway is not needed. This is safer for both emergency responders and the evacuees.

Exception 5 is for the area of refuge for all exit access stairways (see Section 1011) and exit stairways, interior and exterior (see Sections 1023 and 1027), where the building is sprinklered throughout with an NFPA 13 or 13R system. Again, this is not an exception for the accessible route to the exit, just the area of refuge at the exit.

Exception 3 allows the stairway width to go back to

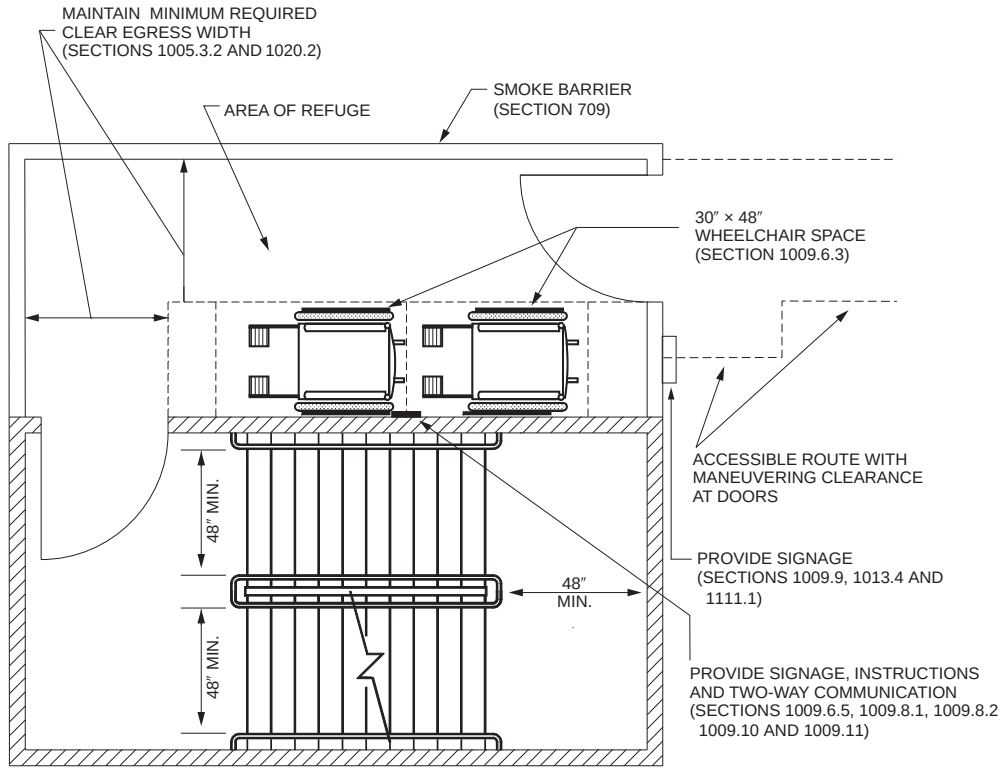

For SI: 1 inch = 25.4 mm.

Figure 1009.3(2)
ACCESSIBLE MEANS OF EGRESS STAIRWAY ACCESSED FROM AN AREA OF REFUGE

INTERNATIONAL CODE COUNCIL®
Copyright © 2015 ICC. ALL RIGHTS RESERVED. Accessed by David Dammon on Jun 21, 2017 12:30:52 PM pursuant to License Agreement with ICC. No further reproduction or distribution authorized. ANY UNAUTHORIZED REPRODUCTION OR DISTRIBUTION IS A VIOLATION OF THE FEDERAL COPYRIGHT ACT AND THE LICENSE AGREEMENT, AND SUBJECT TO CIVIL AND CRIMINAL PENALTIES THEREUNDER.

the base requirements in Section 1011.2 when the stairway is within the refuge area created by a horizontal exit. This exception considers that the extra exiting time will permit the egress down the stairway to be more deliberate. Horizontal exits are often used in hospitals or jails when the defense scenario is defend in place rather than evacuation.

Exception 5 can be used in conjunction with Exception 9. In the case of a horizontal exit [see Commentary Figure 1009.3(3)], each floor area on either side of the exit is considered a refuge area (see commentary, Section 1026.1) by virtue of the construction and separation requirements for horizontal exits. The discharge area is always assumed to be the nonfire side and, therefore, is protected from fire. Therefore, per Exception 9, stairways within this refuge area are not required to have areas of refuge.

Exceptions 6 and 7 are for structures where the natural ventilation of the products of combustion will be afforded by the exterior openings or smoke protection required of such structures (see Sections 406.3, 909 and 1029.6.2). The most immediate hazard for occupants in a fire incident is exposure to smoke and fumes. Floor areas in open parking structures communicate sufficiently with the outdoors such that the need for protection from smoke is not necessary; therefore, open parking garages are exempted from the requirements for an area of refuge (see also the exception to Section 1009.6.4). Because of this level of natural ventilation, parking garage exit stairways are not required to be enclosed (see Section 1019.3, Exception 6). The logic for exterior sports facilities and smoke-protected seating is the same: if there is no accumulation of smoke, there is no need for areas of refuge, even when a sprinkler system is not included (see Section 1019.3, Exception 7).

Exception 8 is in recognition of the dwelling unit separation and fire-resistance-rated corridors in Group R-2 facilities (see Sections 420 and 1020). Effectively, each dwelling unit can serve as a protected area. Since the current text requires all Group R structures to be sprinklered (see Section 903.2.8), Exceptions 2 and 5 could also be utilized.

1009.4 Elevators. In order to be considered part of an accessible *means of egress*, an elevator shall comply with the emergency operation and signaling device requirements of Section 2.27 of ASME/CSA B44 A17.1. Standby power shall be provided in accordance with Chapter 27 and Section 3003. The elevator shall be accessed from an *area of refuge* complying with Section 1009.6.

Exceptions:

1. *Areas of refuge* are not required at the elevator in *open parking garages.*
2. *Areas of refuge* are not required in buildings and facilities equipped throughout with an *automatic sprinkler system* installed in accordance with Section 903.3.1.1 or 903.3.1.2.
3. *Areas of refuge* are not required at elevators not required to be located in a shaft in accordance with Section 712.
4. *Areas of refuge* are not required at elevators serving *smoke-protected assembly seating* areas complying with Section 1029.6.2.

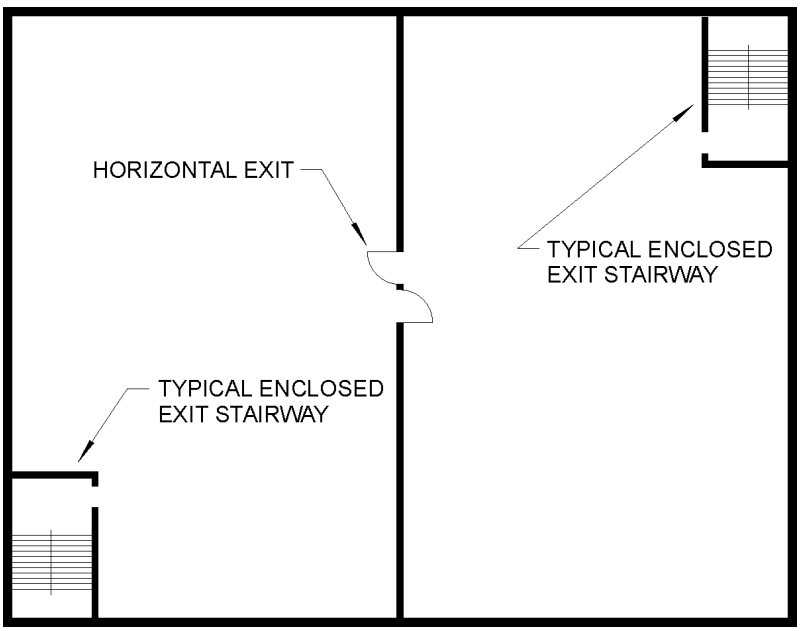

Figure 1009.3(3)
ACCESSIBLE MEANS OF EGRESS STAIRWAY ACCESSED FROM A HORIZONTAL EXIT

INTERNATIONAL CODE COUNCIL®
Copyright © 2015 ICC. ALL RIGHTS RESERVED. Accessed by David Dammon on Jun 21, 2017 12:30:52 PM pursuant to License Agreement with ICC. No further reproduction or distribution authorized. ANY UNAUTHORIZED REPRODUCTION OR DISTRIBUTION IS A VIOLATION OF THE FEDERAL COPYRIGHT ACT AND THE LICENSE AGREEMENT, AND SUBJECT TO CIVIL AND CRIMINAL PENALTIES THEREUNDER.

5. *Areas of refuge* are not required for elevators accessed from a refuge area in conjunction with a *horizontal exit*.

❖ Elevators are the most common and convenient means of providing access to upper and lower floors in multistory buildings. As such, elevators represent a prime candidate for accessible means of egress from such buildings, especially in light of the difficulties involved in carrying a person in a wheelchair up or down a stairway. The primary consideration for elevators as an accessible means of egress is that the elevator will be available and protected during a fire event. See Sections 403, 3007 and 3008 for new provisions in high-rise buildings for "fire service access elevators" and "occupant evacuation elevators."

This section addresses the use of an elevator as part of an accessible means of egress by requiring both a backup source of power for the elevator and access to the elevator from an area of refuge. For situations where elevators are required to be part of one of the accessible means of egress, see Section 1009.2.1. Note that an elevator lobby that is off a fire-resistance-rated corridor must also comply with Section 713.14 and Chapter 30. The backup power requirement establishes a higher degree of reliability that the elevator will be available and usable by reducing the likelihood of power loss caused by fire or other conditions. Requiring access from an area of refuge affords the same degree of fire safety as described for stairways (see commentary, Section 1009.3). Additionally, the reference to Chapter 27 and Section 3003 clarifies that the elevator will comply with the emergency operation features that relate to operating an elevator under fire conditions (see commentary, Sections 2702.2.2 and 3003). Elevators on an accessible route are also required to meet the accessibility provisions of ICC A117.1 (see commentary, Sections 1109.7 and 3001.3).

Exception 2 is for the area of refuge for all elevators where the building is sprinklered throughout with an NFPA 13 or 13R system. Again, this is not an exception for the accessible route to the exit, just the area of refuge at the elevator with standby power. Exception 2 is in recognition of the increased level of safety and evacuation time that is afforded in a sprinklered occupancy. The expectation is that a supervised system will reduce the threat of fire by reliably controlling and confining the fire to the immediate area of origin. There is also additional safety afforded by sprinkler system requirements for automatic notification when the system is activated. This has been substantiated by a study of accessible means of egress conducted for the GSA. NIST IR 4770 concluded that the operation of a properly designed sprinkler system eliminates the life threat to all building occupants, regardless of their individual physical abilities, and is a superior form of protection as compared to areas of refuge. It was deemed that the ability of a properly designed and operational automatic sprinkler system to control a fire at its point of origin and to limit production of toxic products to a level that is not life threatening to all occupants of the building, including persons with disabilities, eliminates the need for areas of refuge.

If a level in an open parking garage contains accessible parking spaces or is part of the route to and from those spaces, that level is required to have accessible means of egress. Exception 1, for open parking structures, is in recognition of the natural ventilation of the products of combustion that will be afforded by the exterior openings required of such structures (see Section 406.5.2). The most immediate hazard for occupants in a fire incident is exposure to smoke and fumes. Floor areas in open parking structures are sufficiently exposed to the outdoors; thus, the need for protection from smoke is not necessary. Therefore, open parking garages are exempt from the requirements for an area of refuge to access an elevator that is utilized as part of the accessible means of egress. The same idea holds true for smoke-protected seating areas, in accordance with Exception 4. The protection offered by the smoke control system allows for adequate evacuation time before there is danger from smoke and fume accumulation.

Exception 3 allows elevators not required to be enclosed by Section 712 to not have an area of refuge or be accessed by a horizontal exit. If there is no shaft enclosure around the elevator, construction of a smoke-tight compartment immediately in front of the elevator doors would be very difficult. While there are many items listed under Section 712, combined with the height requirements in Section 1009.2.1, typically this would be elevators in atriums or in open and enclosed parking garages. Again, the nature of the location adjacent to an atrium or with the open ramps in parking garages would minimize the chances of smoke accumulation at the elevators.

In the case of a horizontal exit [see Commentary Figure 1009.3(3)], each floor area on either side of the exit is considered a refuge area (see commentary, Section 1026.1) by virtue of the construction and separation requirements for horizontal exits. The discharge area is always assumed to be the nonfire side and, therefore, is protected from fire. Therefore, per Exception 5, any elevator within this refuge area is not required to have areas of refuge.

1009.5 Platform lifts. Platform lifts shall be permitted to serve as part of an accessible *means of egress* where allowed as part of a required *accessible route* in Section 1109.8 except for Item 10. Standby power for the platform lift shall be provided in accordance with Chapter 27.

❖ Previously, there have been concerns about whether a platform lift will be reliably available at all times. However, ASME A18.1, the standard for platform lifts, no longer requires key operation. It is important to note that platform lifts are not prohibited by the code. They simply cannot be counted as a required accessible means of egress in other than locations where

INTERNATIONAL CODE COUNCIL®
Copyright © 2015 ICC. ALL RIGHTS RESERVED. Accessed by David Dammon on Jun 21, 2017 12:30:52 PM pursuant to License Agreement with ICC. No further reproduction or distribution authorized. ANY UNAUTHORIZED REPRODUCTION OR DISTRIBUTION IS A VIOLATION OF THE FEDERAL COPYRIGHT ACT AND THE LICENSE AGREEMENT, AND SUBJECT TO CIVIL AND CRIMINAL PENALTIES THEREUNDER.

they are allowed as part of the accessible route into a space (see commentary, Section 1109.8). When platform lifts are utilized as part of an accessible means of egress, they must come equipped with standby power. Per ASME A18.1, the standby power needs to be sufficient to run the platform lift for at least five round trips. Note that platform lifts cannot be used to meet accessible means of egress requirements for a situation that utilizes Section 1109.8, Item 10. Accessible means of egress must be provided at other locations.

Section 1109.8, Item 10, recognizes that existing site constraints may make installation of a ramp or elevator infeasible. An example would be the situation of dealing with existing public sidewalks, easements and public ways in downtown urban areas. This situation would be most common in hilly areas where the street and sidewalk follow grade and the building's floor is level, resulting in steps up or down at entrances. The concern for allowing this as part of the accessible means of egress is due to standby power requiring only five cycles. If a platform lift was utilized to provide entry for a large building, or for a building with a large number of occupants that may use mobility devices, such as a hospital, it was deemed that there might not be sufficient time or power for everyone to evacuate safely.

In existing buildings undergoing alterations, platform lifts are allowed as part of an accessible route into a building (see commentary, IEBC Sections 410.8.3 and 705.1.3) at any location as long as they are compliant with ASME A18.1. Note that accessible means of egress are not required in existing buildings undergoing an alteration or a change of occupancy (see Sections 1007.1 and IEBC Sections 410.6 and 705.1).

1009.6 Areas of refuge. Every required *area of refuge* shall be accessible from the space it serves by an accessible *means of egress*.

❖ Areas of refuge, when provided, are an important component of fire and safety evacuation plans for buildings. These areas must be included in the plans required by Section 1001.4 of the code and Section 404 of the IFC.

An area of refuge is of no value as part of an accessible means of egress if it is not accessible. The code states an obvious but essential requirement: the path that leads to an area of refuge must qualify as an accessible means of egress. This provision is required so that there will be an accessible route leading from every accessible space to each required area of refuge. See Commentary Figure 1009.6.

1009.6.1 Travel distance. The maximum travel distance from any *accessible* space to an *area of refuge* shall not exceed the *exit access* travel distance permitted for the occupancy in accordance with Section 1017.1.

❖ For consistency in principle with the general means of egress design concepts, the code also limits the travel distance to the area of refuge. The limitation is the same distance as specified in Section 1017.2 for maximum exit access travel distance. This equates the maximum travel distance required to reach an exit with the maximum distance required to reach an area of refuge. It should be noted that an area of refuge is not necessarily an exit in the classic sense. For example, when the area of refuge is an enlarged, story-level landing within an exit stairway, the area of refuge is within the exit and the maximum travel distance for both the conventional exit and the accessible area of refuge is measured to the same point (the entrance to the exit stairway). If the area of refuge is a vestibule immediately adjacent to an enclosed exit stairway, the maximum travel distance for the required accessible means of egress is measured to the entrance of the area of refuge and, for the travel distance to the exit, to the entrance of the exit stairway (see Commentary Figure 1009.6). In the case of accessible means of egress with an elevator, the maximum travel distance may end up being measured along two different paths, with the only consistency between the conventional means of egress and the accessible means of egress being the maximum travel distance (see Commentary Figure 1009.6). The travel distance within an area of refuge is not directly regulated, but will be limited by the general provisions for maximum exit access travel distance, which are always applicable.

In summary, the code takes a reasonably consistent approach for both conventional and accessible means of egress by limiting the distance one must travel to reach a safe area from which further egress to a public way is available.

1009.6.2 Stairway or elevator access. Every required *area of refuge* shall have direct access to a *stairway* complying with Sections 1009.3 and 1023 or an elevator complying with Section 1009.4.

❖ To ensure that there is continuity in an accessible means of egress, the code requires that every area of refuge have direct access to either an exit stairway (see Section 1009.3) or an elevator (see Section 1009.4). This, again, may be viewed as stating the obvious, but it is necessary so that the egress layout does not involve entering an area of refuge and then having to leave that protected area before gaining access to a stairway or elevator. Once an occupant reaches the safety of an area of refuge, that level of protection must be continuous until the vertical transportation element (the stairway or elevator) is reached.

If one chooses to comply with accessible means of egress requirements by providing an accessible elevator with an area of refuge in the form of an elevator lobby, the elevator shaft and the lobby are required to be constructed in accordance with Sections 713.14 and Chapter 30. The requirements provide additional assurance that the elevator will not be rendered unavailable because of smoke movement into the elevator shaft. If the elevator is in a refuge area that is formed by the use of a horizontal exit (i.e., fire walls

INTERNATIONAL CODE COUNCIL®
Copyright © 2015 ICC. ALL RIGHTS RESERVED. Accessed by David Dammon on Jun 21, 2017 12:30:52 PM pursuant to License Agreement with ICC. No further reproduction or distribution authorized. ANY UNAUTHORIZED REPRODUCTION OR DISTRIBUTION IS A VIOLATION OF THE FEDERAL COPYRIGHT ACT AND THE LICENSE AGREEMENT, AND SUBJECT TO CIVIL AND CRIMINAL PENALTIES THEREUNDER.

or fire barriers in accordance with Section 1026.2) or smoke compartments formed by smoke barriers (see Sections 407.5 and 408.6), it is presumed that the refuge area is relatively free from smoke; therefore, the extra protection of Section 713.14 and Chapter 30 may not be needed.

1009.6.3 Size. Each *area of refuge* shall be sized to accommodate one *wheelchair space* of 30 inches by 48 inches (762 mm by 1219 mm) for each 200 occupants or portion thereof, based on the *occupant load* of the *area of refuge* and areas served by the *area of refuge*. Such *wheelchair spaces* shall not reduce the *means of egress* minimum width or required capacity. Access to any of the required *wheelchair spaces* in an *area of refuge* shall not be obstructed by more than one adjoining *wheelchair space*.

❖ The number of wheelchair spaces that are required to be provided in an area of refuge is intended to represent broadly the expected population of the average building. As one point of measurement, a 1977 survey conducted by the National Center for Health indicated that one in 333 civilian, noninstitutionalized persons uses a wheelchair. The 1990 ADA currently utilizes the criterion of one space for each 200 occupants, based on the space served by the area of refuge. Given the variations and difficulties involved in accurately predicting a representative ratio for application to all occupancies, it was concluded that a requirement for one space for each 200 occupants based on the area of refuge itself, plus the areas served by the area of refuge, represents a reasonable criterion. Very few buildings would ever require more than four wheelchair spaces on a floor, since nearly all buildings with an occupant load greater than 400 per floor would be sprinklered and using Exception 5 in Section 1009.3.

Arrangement of the required wheelchair spaces is critical so as not to interfere with the means of egress for ambulatory occupants (see Section 1011.6). Since the design concept is that wheelchair occupants will move to the area of refuge and await further instructions or evacuation assistance, the spaces must be located so as not to reduce the required means of egress width of the stairway, door, corridor or other egress path through the exterior area of rescue.

In order to provide for orderly maneuvering of wheelchairs, this section states that access to any of the required wheelchair spaces cannot be obstructed by more than one adjoining wheelchair space. For example, this precludes an arrangement that three or more wheelchairs could be stacked down a dead-end corridor. This also effectively limits the difficulty any given wheelchair occupant would have in reaching or leaving a given wheelchair space, as well as providing easier access to all wheelchair spaces by persons providing evacuation assistance.

1009.6.4 Separation. Each *area of refuge* shall be separated from the remainder of the story by a *smoke barrier* complying with Section 709 or a *horizontal* exit complying with Section 1026. Each *area of refuge* shall be designed to minimize the intrusion of smoke.

Exceptions:

1. *Areas of refuge* located within an enclosure for *interior exit stairways* complying with Section 1023.

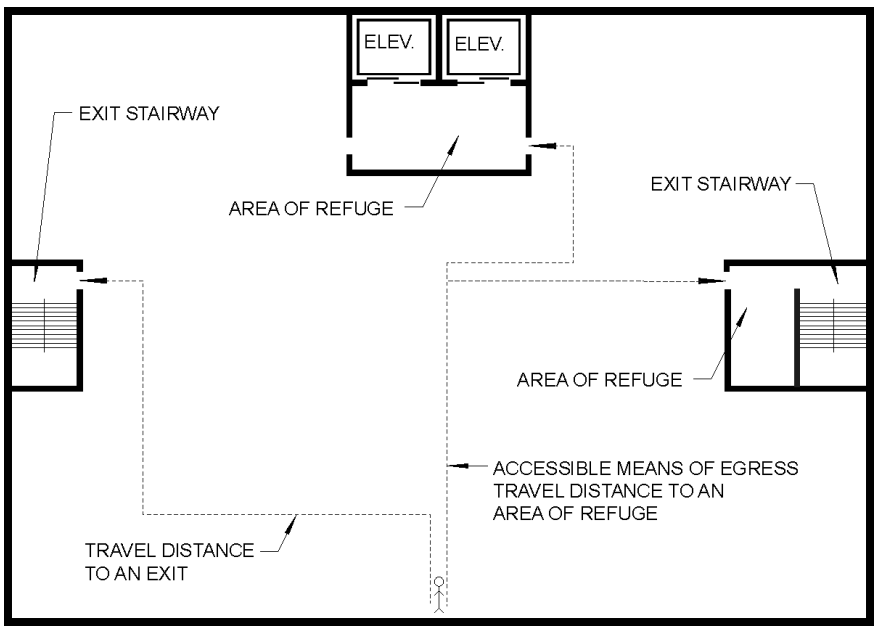

Figure 1009.6
SEPARATE TRAVEL DISTANCES TO AN AREA OF REFUGE

INTERNATIONAL CODE COUNCIL®
Copyright © 2015 ICC. ALL RIGHTS RESERVED. Accessed by David Dammon on Jun 21, 2017 12:30:52 PM pursuant to License Agreement with ICC. No further reproduction or distribution authorized. ANY UNAUTHORIZED REPRODUCTION OR DISTRIBUTION IS A VIOLATION OF THE FEDERAL COPYRIGHT ACT AND THE LICENSE AGREEMENT, AND SUBJECT TO CIVIL AND CRIMINAL PENALTIES THEREUNDER.

2. *Areas of refuge* in outdoor facilities where *exit access* is essentially open to the outside.

❖ The minimum standard for construction of an area of refuge is a smoke barrier, in accordance with Section 709. This establishes a minimum degree of performance by means of a 1-hour fire-resistance rating, including opening protectives and a minimum degree of performance against the intrusion of smoke into an enclosed area of refuge, as specified in Sections 709.4 and 709.5. By the nature of the connection to the stair enclosure or elevator shaft, the normal smoke barrier requirement for extension from exterior wall to exterior wall is replaced by connection to the shaft enclosure.

An alternative is to provide a refuge area created by a horizontal exit complying with Section 1026. Horizontal exits are formed by fire walls or fire barriers with a minimum fire-resistance rating of 2 hours. The horizontal exit separation must extend vertically through all levels of the building, unless floor assemblies have a fire-resistance rating of not less than 2 hours with no unprotected openings (see Section 1026.2). The other provisions for horizontal exits for additional egress elements, opening protection and capacity must also be complied with.

This section does not require an area of refuge within an exit stairway to be designed to prevent the intrusion of smoke. This was based on a study of areas of refuge conducted by the NIST for the GSA, which concluded that a story-level landing within a fire-resistance-rated exit stairway would provide a satisfactory staging area for evacuation assistance (see Exception 1).

Exception 2 is in recognition that, despite not being a sprinklered venue, where the entire facility is protected from smoke and fumes by the nature of being open to the outside a separation for areas of refuge is not required.

1009.6.5 Two-way communication. *Areas of refuge* shall be provided with a two-way communication system complying with Sections 1009.8.1 and 1009.8.2.

❖ If a building includes areas of refuge at the stairway or elevators, each area of refuge must include a two-way communication system. If the building uses one of the exceptions for areas of refuge, Section 1007.8 would still require a two-way communication system at the elevator. This way anyone needing assistance can communicate with a person at a constantly attended location to request evacuation assistance. This system is an important part of the fire and safety evacuation plans required by Section 1001.4 of the code and Section 404 of the IFC. See Sections 1009.8.1 and 1009.8.2 for specific requirements for this system.

1009.7 Exterior areas for assisted rescue. Exterior areas for assisted rescue shall be accessed by an *accessible route* from the area served.

Where the *exit discharge* does not include an *accessible route* from an *exit* located on the *level of exit discharge* to a *public way*, an exterior area of assisted rescue shall be provided on the exterior landing in accordance with Sections 1009.7.1 through 1009.7.4.

❖ Section 1009.2 requires the accessible means of egress to have an accessible route along the path for exit access, exit and exit discharge. Stairways that lead from the level of exit discharge (see the commentary to Chapter 2 for the defined term, "Exit discharge, level of") to grade are considered part of the exit discharge. When the exit discharge is not accessible, the options are an interior area of refuge complying with Section 1009.6 or an exterior area of assisted rescue in accordance with Section 1009.7. The provisions for stairways in Section 1009.3, including the exceptions for sprinklered buildings, are not an option to address nonaccessible exit discharge.

Exterior areas of assisted rescue are intended to be open-air locations for persons with physical disabilities to wait for assisted rescue. There must be an interior or exterior accessible route along the path of travel for access to this location. This allows a person unable to negotiate the exit discharge to get to a location where they can be quickly discovered by the fire department or other emergency responders.

In most situations, interior areas of refuge are not a positive alternative. Tenants tend to use such areas as convenient storage areas. Where persons with mobility impairments can wait for assisted rescue outside of the building, they are effectively protected from interior smoke and fumes—the deadliest of the fire hazards. Being immediately visible at an exit should also result in a shorter period of time before assisted rescue is achieved.

Exterior areas for assisted rescue, when provided, are an important component of the fire and safety evacuation plans for the buildings. These areas must be included in the plans required by Section 1001.4 of the code and Section 404 of the IFC.

The option under Section 1009.7 is commonly used only at the level of exit discharge for the second exit out the back of a building or tenant space. This will be either a single-story building, or the first level of a multistory building, where the secondary exit discharge is not accessible due to changes in elevation

INTERNATIONAL CODE COUNCIL®
Copyright © 2015 ICC. ALL RIGHTS RESERVED. Accessed by David Dammon on Jun 21, 2017 12:30:52 PM pursuant to License Agreement with ICC. No further reproduction or distribution authorized. ANY UNAUTHORIZED REPRODUCTION OR DISTRIBUTION IS A VIOLATION OF THE FEDERAL COPYRIGHT ACT AND THE LICENSE AGREEMENT, AND SUBJECT TO CIVIL AND CRIMINAL PENALTIES THEREUNDER.

around the perimeter. If this is an exterior exit stairway (i.e., more than one story of vertical travel), the provisions in Section 1009.3 would be applicable.

Examples of this issue are:

Example 1:
A strip mall would have accessible entrances to each tenant in the front (Section 1105.6). Many have service entrances or loading bays across the back, so the second exit door leads to steps. A ramp installed for accessible exit discharge could: be a prohibitively large structure due to the elevation change; block access to the loading docks; get damaged by the maneuvering trucks; or, be impossible because of space restrictions in a narrow alley.

Example 2:
An office building has a second exit that leads to a concrete stoop and the exit discharge is sloped, is uneven or may be blocked by snow. This is just as impassible for a person using a wheelchair as a series of steps. Providing a sidewalk all the way to the front of the building may not be practical because of adjacent buildings or because someone could be travelling adjacent to a burning building.

Sections 1009.7.1 through 1009.7.4 provide criteria for a safe place to wait temporarily for assistance. These address size, separation/protection, openness and any steps leading from the exterior area for assisted rescue.

1009.7.1 Size. Each exterior area for assisted rescue shall be sized to accommodate *wheelchair spaces* in accordance with Section 1009.6.3.

❖ The exterior area for assisted rescue must have an enlarged landing area with space for at least one wheelchair for every 200 occupants that will be using that exit. The wheelchair spaces must be located so that they do not obstruct the general means of egress. If these spaces are confined by walls, guards or edges, they must also meet the alcove provisions in ICC A117.1 so that persons using wheelchairs can maneuver into the space [see Commentary Figure 1009.7.1].

1009.7.2 Separation. Exterior walls separating the exterior area of assisted rescue from the interior of the building shall have a minimum *fire-resistance rating* of 1 hour, rated for exposure to fire from the inside. The fire-resistance-rated exterior wall construction shall extend horizontally 10 feet (3048 mm) beyond the landing on either side of the landing or equivalent fire-resistance-rated construction is permitted to extend out perpendicular to the exterior wall 4 feet (1220 mm) minimum on the side of the landing. The *fire-resistance-rated* construction shall extend vertically from the ground to a point 10 feet (3048 mm) above the floor level of the area for assisted rescue or to the roof line, whichever is lower. Openings within such *fire-resistance-rated* exterior walls shall be protected in accordance with Section 716.

❖ The protection provided by an exterior area for assisted rescue would be equivalent to that required

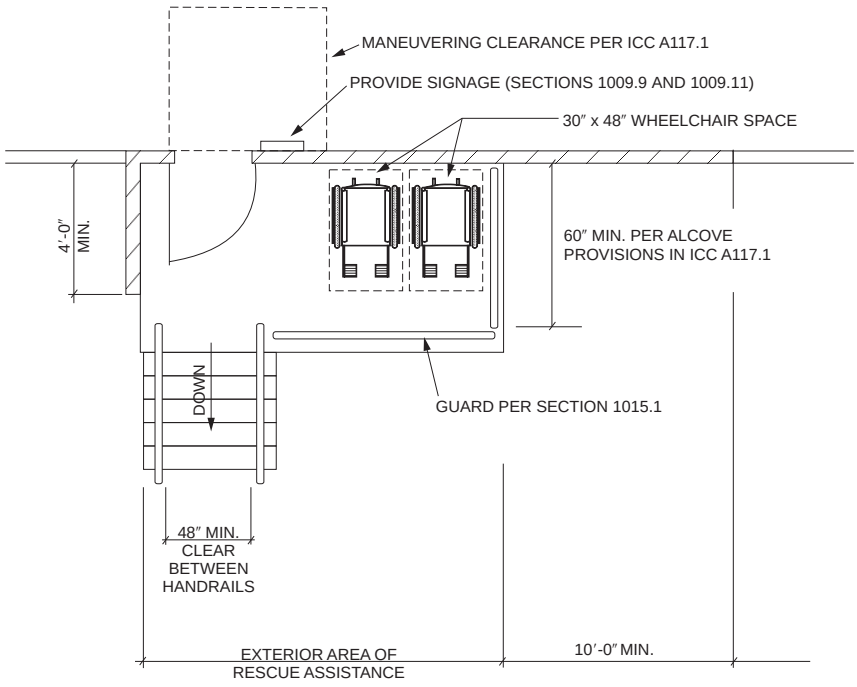

For SI: 1 inch = 25.4 mm, 1 foot = 304.8 mm.

Figure 1009.7.1
EXTERIOR AREA OF RESCUE ASSISTANCE—PLAN VIEW

INTERNATIONAL CODE COUNCIL®
Copyright © 2015 ICC. ALL RIGHTS RESERVED. Accessed by David Dammon on Jun 21, 2017 12:30:52 PM pursuant to License Agreement with ICC. No further reproduction or distribution authorized. ANY UNAUTHORIZED REPRODUCTION OR DISTRIBUTION IS A VIOLATION OF THE FEDERAL COPYRIGHT ACT AND THE LICENSE AGREEMENT, AND SUBJECT TO CIVIL AND CRIMINAL PENALTIES THEREUNDER.

for an interior area of refuge. Note that there is no exception for the exterior area of assisted rescue for buildings that contain sprinkler systems. The separation requirements are similar to exterior exit stairways, rated walls and protected openings for 10 feet (3048 mm) above, below and to the sides of the landing (see Sections 1023.7 and 1027.6). The exceptions for exterior exit stairway protection in Section 1027.6 would not be applicable where the area includes an exterior area for assisted rescue (see Commentary Figure 1009.7.2).

The current separation requirements address typical rear exit situations. Other locations may require alternative protection measures to "shield" an exterior area for assisted rescue. The principle of "wing" walls (as used at a fire wall extension) suggests an alternative to $^{3}/_{4}$-hour opening protectives at dock doors adjacent to an exterior area for assisted rescue.

Note that providing a rescue location 10 feet (3048 mm) away from an exterior wall does not serve as a viable alternative to a fire-resistance-rated exterior wall. Persons waiting for assistance must have a minimum level of shielding from a fire in the building.

A common situation is for the path of egress travel from the first floor to move through the bottom level of an enclosed exit stairway. If there are steps outside the exit door of the stairway, there is no accessible path for exit discharge. Where approved by the code official (see Section 104.11), the stairway enclosure could be considered equivalent to a protected exterior wall. It is assumed that the fire is in the building somewhere, not in the stairway. A person with a mobility impairment could be provided with a place to wait either inside the stairway enclosure, or outside the building with the stairway enclosure as the separation between them and the fire – as an alternative to Section 1009.7.2. The exterior wall of an interior exit stairway can be nonfire-resistance rated where permitted by Section 1023.7.

1009.7.3 Openness. The exterior area for assisted rescue shall be open to the outside air. The sides other than the separation walls shall be not less than 50 percent open, and the open area shall be distributed so as to minimize the accumulation of smoke or toxic gases.

❖ The openness criteria for exterior areas of assisted rescue are similar to the requirements for exterior balconies. The purpose is to ensure that a person at an exterior area of rescue assistance is not in danger from smoke and fumes. The criteria are to address the situation where the rescue area is open to outside air, but a combination of roof overhangs and perimeter walls or guards could still trap enough smoke that the safety of the occupants would be jeopardized.

1009.7.4 Stairways. *Stairways* that are part of the *means of egress* for the exterior area for assisted rescue shall provide a clear width of 48 inches (1220 mm) between *handrails*.

Exception: The clear width of 48 inches (1220 mm) between *handrails* is not required at *stairways* serving buildings equipped throughout with an *automatic sprinkler system* installed in accordance with Section 903.3.1.1 or 903.3.1.2.

❖ Any steps that lead from an exterior area for assisted rescue to grade must have a clear width of 48 inches (1219 mm) between handrails. The additional width is to permit adequate room to assist a mobility-impaired person down the steps and to a safe location.

If the building is sprinklered, the exception allows for the stairway to utilize the minimum widths required in Section 1011.2. This is consistent with Section 1009.3, Exceptions 2 and 3.

1009.8 Two-way communication. A two-way communication system complying with Sections 1009.8.1 and 1009.8.2

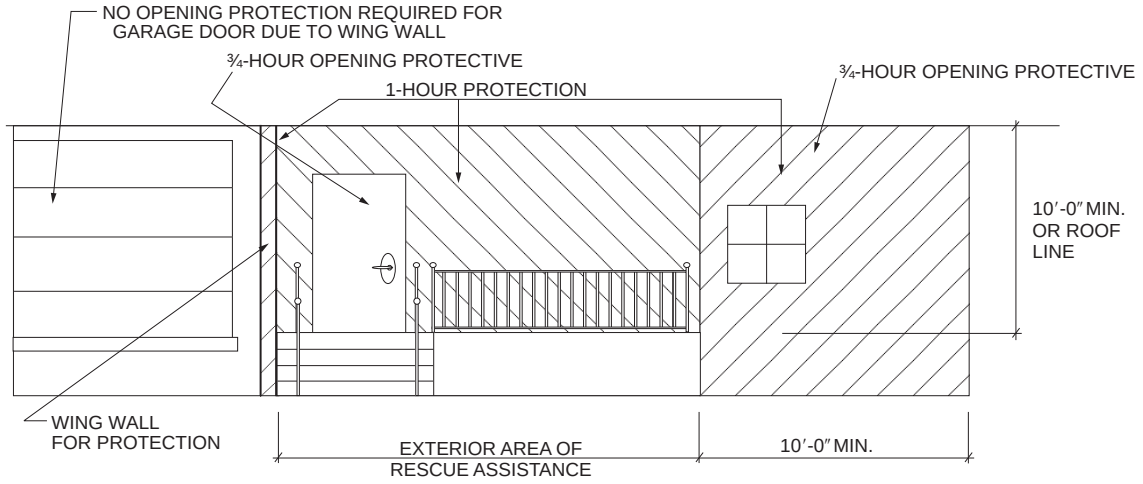

For SI: 1 inch = 25.4 mm, 1 foot = 304.8 mm.

Figure 1009.7.2
EXTERIOR AREA OF RESCUE ASSISTANCE—ELEVATION

INTERNATIONAL CODE COUNCIL®
Copyright © 2015 ICC. ALL RIGHTS RESERVED. Accessed by David Dammon on Jun 21, 2017 12:30:52 PM pursuant to License Agreement with ICC. No further reproduction or distribution authorized. ANY UNAUTHORIZED REPRODUCTION OR DISTRIBUTION IS A VIOLATION OF THE FEDERAL COPYRIGHT ACT AND THE LICENSE AGREEMENT, AND SUBJECT TO CIVIL AND CRIMINAL PENALTIES THEREUNDER.

shall be provided at the landing serving each elevator or bank of elevators on each accessible floor that is one or more stories above or below the *level of exit discharge*.

Exceptions:

1. Two-way communication systems are not required at the landing serving each elevator or bank of elevators where the two-way communication system is provided within *areas of refuge* in accordance with Section 1009.6.5.
2. Two-way communication systems are not required on floors provided with *ramps* conforming to the provisions of Section 1012.
3. Two-way communication systems are not required at the landings serving only service elevators that are not designated as part of the accessible *means of egress* or serve as part of the required *accessible route* into a facility.
4. Two-way communication systems are not required at the landings serving only freight elevators.
5. Two-way communication systems are not required at the landing serving a private residence elevator.

❖ Unless provided in areas of refuge, in multistory buildings a two-way communication system must be located at the elevator landing of each accessible floor level other than the level of exit discharge. The system is intended to offer a means of communication to individuals with mobility impairment, either permanent or temporary, who need assistance during an emergency situation. Such a system can be useful not only in the event of a fire, but also in the case of a natural or technological disaster by providing emergency responders with the location of individuals who will require assistance in being evacuated from floor levels above or below the discharge level. The ability of emergency responders to locate persons needing assistance quickly is an important part of the fire and safety plan. The two-way communication system is a critical element in that plan.

Exception 1 exempts the requirement for locating the communication systems at the elevator landings where the building is provided with complying areas of refuge. Since areas of refuge are required by Section 1009.6.5 to be equipped with two-way communication systems, there is limited need to provide such additional systems at the elevator landings. However, where multistory buildings are not provided with areas of refuge, such as is the case with most sprinklered buildings, the installation of communications systems at the elevator landings is important to those individuals unable to negotiate egress stairways during an emergency. As a result, both sprinklered and nonsprinklered multistory buildings will be provided with the means for two-way communication at all accessible floor levels other than the level of exit discharge.

Exception 2 applies to floor levels that utilize ramps as vertical accessible means of egress elements. Where complying ramps are available for independent evacuation, such as occurs in a sports stadium, the two-way communication system is not required at the elevator landings.

Because persons at an exterior area of rescue assistance provided at ground level (i.e., level of exit discharge) are immediately visible and such locations are at high risk for vandalism, two-way communication systems are not required for exterior areas of assisted rescue.

If the option of horizontal exits is utilized, the code does not currently address whether a two-way communication system should be provided within a refuge area without an elevator. Since the horizontal exit is not typically recognizable by a person not familiar with the building plan, the most logical location for the two-way communication, if provided, would seem to be adjacent to the exit stairway that was located within the refuge area.

Exceptions 3, 4 and 5 address types of elevators where two way communications are not required. The two-way communication is intended for anyone to be able to communicate with emergency responders. If it is located in the lobby of the public elevator, a system at a back of house service elevator would be redundant and not easy for most occupants to find. A freight elevator cannot be part of an accessible route, so again, this is not the elevator that occupants would typically use. The ASME A17.1 limits the use of private residence elevators to within or serving individual dwelling units. If a person lives in a unit with an elevator, it is not unreasonable to expect them to address communication needs that may arise on their own, such as carrying a portable or cell phone with them.

1009.8.1 System requirements. Two-way communication systems shall provide communication between each required location and the *fire command center* or a central control point location *approved* by the fire department. Where the central control point is not a *constantly attended location*, a two-way communication system shall have a timed automatic telephone dial-out capability to a monitoring location or 9-1-1. The two-way communication system shall include both audible and visible signals.

❖ Use of an elevator, stair enclosure or other area of refuge as part of an accessible means of egress requires a person to wait for evacuation assistance or relevant instructions. The two-way communication system allows this person to inform emergency personnel of his or her location and to receive additional instructions or assistance as needed.

The arrangement and design of the two-way communication system is specified in Section 1009.8.1. In addition to the required locations specified in Section 1009.6.5 for areas of refuge or Section 1009.8 for elevator landings, a communication device is also required to be located in a high-rise building's fire command center or at a central control point whose location is approved by the fire department (see Sections 403.4.4 and 907.2.13.2). "Central control point" is not a defined term. However, given the intent and

INTERNATIONAL CODE COUNCIL®
Copyright © 2015 ICC. ALL RIGHTS RESERVED. Accessed by David Dammon on Jun 21, 2017 12:30:52 PM pursuant to License Agreement with ICC. No further reproduction or distribution authorized. ANY UNAUTHORIZED REPRODUCTION OR DISTRIBUTION IS A VIOLATION OF THE FEDERAL COPYRIGHT ACT AND THE LICENSE AGREEMENT, AND SUBJECT TO CIVIL AND CRIMINAL PENALTIES THEREUNDER.

function of the two-way communication system, a central control point is a location where an individual answers the call for assistance and either provides or requests aid for a person who needs help. A suitable central control point is often not available in low-rise buildings or in a high-rise building where the central control point may not be manned on a 24-hour basis. In order that a caller may reach an appropriate emergency location, the fire department must approve the configuration of the system. A central control point could be the lobby of a building constantly staffed by a security officer, an alarm company, a public safety answering point such as a 9-1-1 center or a central supervising station in a Group I occupancy. There could be a combination solution—such as a system configured to automatically call 9-1-1 when the central control point within the building is not manned. The communication system provides visual signals for the hearing impaired and audible signals to assist the vision impaired.

1009.8.2 Directions. Directions for the use of the two-way communication system, instructions for summoning assistance via the two-way communication system and written identification of the location shall be posted adjacent to the two-way communication system. Signage shall comply with the ICC A117.1 requirements for visual characters.

❖ Guidance to the users of a two-way communication system is also specified. Operating instructions for the two-way communication system must be posted and the instructions are to include a means of identifying the physical location of the communication device. If a signal from a two-way communication system terminates to a public safety answering point, such as a fire department communication center, current 9-1-1 telephony technology only reports the address of the location of the emergency—it does not report a floor or area from the address reporting the emergency. The "identification of the location" posted adjacent to the communication system should ensure that most discrete location information can be provided to the central control point. This will aid emergency responders, especially in high-rise buildings or corporate campuses with multiple multistory structures. The signage is not required to be raised letters or braille, but is required to meet the style, size and contrast requirements for visual signage in A117.1.

1009.9 Signage. Signage indicating special accessibility provisions shall be provided as shown:

1. Each door providing access to an *area of refuge* from an adjacent floor area shall be identified by a sign stating: AREA OF REFUGE.
2. Each door providing access to an exterior area for assisted rescue shall be identified by a sign stating: EXTERIOR AREA FOR ASSISTED RESCUE.

Signage shall comply with the *ICC A117.1* requirements for visual characters and include the International Symbol of Accessibility. Where exit sign illumination is required by Section 1013.3, the signs shall be illuminated. Additionally, visual characters, raised character and braille signage complying with ICC A117.1 shall be located at each door to an *area of refuge* and exterior area for assisted rescue in accordance with Section 1013.4.

❖ Signage enables an occupant to become aware of an area of refuge and/or the exterior area for rescue assistance. The assistance areas must provide signage on or above the door stating either "AREA OF REFUGE" or "EXTERIOR AREA FOR ASSISTED RESCUE" and includes the International Symbol of Accessibility. The approach that the code takes for identification of the area of refuge is comparable to the general provisions for identification of exits, including the requirement for lighted signage. Raised letters and braille stating "EXIT" are also required adjacent to the door for the benefit of persons with a visual impairment.

The current text does not clearly indicate how to identify a refuge area formed by a horizontal exit. In hospitals and jails, where this option is typically utilized, the location of the horizontal exits must be part of the staff training for the fire safety and evacuation plans.

1009.10 Directional signage. Directional signage indicating the location of all other *means of egress* and which of those are accessible *means of egress* shall be provided at the following:

1. At *exits* serving a required *accessible* space but not providing an approved accessible *means of egress*.
2. At elevator landings.
3. Within *areas of refuge*.

❖ The additional signage required by this section is intended to advise persons of the locations of all means of egress and which of those also serve as accessible means of egress. Since not all of the exits will necessarily be accessible means of egress, it is appropriate to provide this information at exit stairways and, particularly, at all elevators, regardless of whether they are part of an accessible means of egress. Directional signage is not required to meet raised character or braille signage requirements. Depending on the facility, this could be as simple as a basic block plan of the main corridors and stairways in the building in relation to the elevator.

1009.11 Instructions. In *areas of refuge* and exterior areas for assisted rescue, instructions on the use of the area under emergency conditions shall be posted. Signage shall comply with the ICC A117.1 requirements for visual characters. The instructions shall include all of the following:

1. Persons able to use the *exit stairway* do so as soon as possible, unless they are assisting others.
2. Information on planned availability of assistance in the use of *stairs* or supervised operation of elevators and how to summon such assistance.

INTERNATIONAL CODE COUNCIL®
Copyright © 2015 ICC. ALL RIGHTS RESERVED. Accessed by David Dammon on Jun 21, 2017 12:30:52 PM pursuant to License Agreement with ICC. No further reproduction or distribution authorized. ANY UNAUTHORIZED REPRODUCTION OR DISTRIBUTION IS A VIOLATION OF THE FEDERAL COPYRIGHT ACT AND THE LICENSE AGREEMENT, AND SUBJECT TO CIVIL AND CRIMINAL PENALTIES THEREUNDER.

3. Directions for use of the two-way communication system where provided.

❖ The instructions provided at the exterior area of rescue assistance and the areas of refuge will differ. The required instructions on the proper use of the area of refuge and the communication system provide a greater likelihood that the communication system will accomplish its intended function and occupants will behave as expected. A two-way communication system will not be of much value if a person in that area does not know how to operate it. Also, since the area of refuge is required by Section 1009.9 to be identified as such, ambulatory occupants may mistakenly conclude that they should remain in that area. The instructions remind ambulatory occupants that they should continue to egress as soon as possible.

For an exterior area of assisted rescue at grade level, a two-way communication system is not required so this portion of the instructions is not needed. However, instructions for any ambulatory persons to move to the exit discharge are still required, as well as information on how assistance will be provided at this location.

Since each building's means of egress and fire and safety evacuation plans are unique, specific requirements for verbiage are not indicated, but will depend on the situation. The signage is not required to be raised letters or braille, but is required to meet the style, size and contrast requirements for visual signage in A117.1.

SECTION 1010
DOORS, GATES AND TURNSTILES

1010.1 Doors. *Means of egress* doors shall meet the requirements of this section. Doors serving a *means of egress* system shall meet the requirements of this section and Section 1022.2. Doors provided for egress purposes in numbers greater than required by this code shall meet the requirements of this section.

Means of egress doors shall be readily distinguishable from the adjacent construction and finishes such that the doors are easily recognizable as doors. Mirrors or similar reflecting materials shall not be used on *means of egress* doors. *Means of egress* doors shall not be concealed by curtains, drapes, decorations or similar materials.

❖ The general requirements for doors are in this section and the following subsections. The reference to Section 1022.2 is intended to emphasize that exterior exit doors must lead to a route that will allow a path to a public street or alley (see definition for "Public way"). A door that is intended to be used for egress purposes, even though that door may not be required by the code, is also required to meet the requirements of this section. An example may be an assembly occupancy where four doors would be required to meet the required capacity of the occupant load. But assume the designer elects to provide six doors for aesthetic reasons or occupant convenience. All six doors must comply with the requirements of this section.

Doors need to be easily recognizable for immediate use in an emergency condition. Thus, the code specifies that doors are not to be hidden in such a manner that a person would have trouble seeing where to egress.

1010.1.1 Size of doors. The required capacity of each door opening shall be sufficient for the *occupant load* thereof and shall provide a minimum clear width of 32 inches (813 mm). Clear openings of doorways with swinging doors shall be measured between the face of the door and the stop, with the door open 90 degrees (1.57 rad). Where this section requires a minimum clear width of 32 inches (813 mm) and a door opening includes two door leaves without a mullion, one leaf shall provide a clear opening width of 32 inches (813 mm). The maximum width of a swinging door leaf shall be 48 inches (1219 mm) nominal. *Means of egress* doors in a Group I-2 occupancy used for the movement of beds shall provide a clear width not less than $41^1/_2$ inches (1054 mm). The height of door openings shall be not less than 80 inches (2032 mm).

Exceptions:

1. The minimum and maximum width shall not apply to door openings that are not part of the required *means of egress* in Group R-2 and R-3 occupancies.
2. Door openings to resident *sleeping units* in Group I-3 occupancies shall have a clear width of not less than 28 inches (711 mm).
3. Door openings to storage closets less than 10 square feet (0.93 m^2) in area shall not be limited by the minimum width.
4. Width of door leaves in revolving doors that comply with Section 1010.1.4.1 shall not be limited.
5. Door openings within a *dwelling unit* or *sleeping unit* shall be not less than 78 inches (1981 mm) in height.
6. Exterior door openings in *dwelling units* and *sleeping units*, other than the required *exit* door, shall be not less than 76 inches (1930 mm) in height.
7. In other than Group R-1 occupancies, the minimum widths shall not apply to interior egress doors within a *dwelling unit* or *sleeping unit* that is not required to be an *Accessible unit*, *Type A unit* or *Type B unit*.
8. Door openings required to be *accessible* within *Type B units* shall have a minimum clear width of 31.75 inches (806 mm).
9. Doors to walk-in freezers and coolers less than 1,000 square feet (93 m^2) in area shall have a maximum width of 60 inches (1524 mm).
10. In Group R-1 *dwelling units* or *sleeping units* not required to be *Accessible units*, the minimum

INTERNATIONAL CODE COUNCIL®
Copyright © 2015 ICC. ALL RIGHTS RESERVED. Accessed by David Dammon on Jun 21, 2017 12:30:52 PM pursuant to License Agreement with ICC. No further reproduction or distribution authorized. ANY UNAUTHORIZED REPRODUCTION OR DISTRIBUTION IS A VIOLATION OF THE FEDERAL COPYRIGHT ACT AND THE LICENSE AGREEMENT, AND SUBJECT TO CIVIL AND CRIMINAL PENALTIES THEREUNDER.

width shall not apply to doors for showers or saunas.

❖ The size of a door opening determines its capacity as a component of egress and its ability to fulfill its function in normal use. A door opening must meet certain minimum criteria as to its width and height in order to be used safely and to provide accessibility to people with physical disabilities. Doorways that are not in the means of egress are not limited in size by this section. However, doors that are used for egress purposes, including additional doors over and above the number of means of egress required by the code, are required to meet the requirements of this section unless one of the exceptions applies.

The minimum clear width of an egress doorway for occupant capacity is based on the portion of the occupant load (see Section 1004.1) intended to utilize the doorway for egress purposes, multiplied by the egress width per occupant from Section 1005.1. The capacity of a 32-inch (813 mm) clear width door is 32/0.2 = 160 occupants. The 0.15-inch (3.81 mm) allowance for capacity is permitted in sprinklered buildings (32/0.15 = 213 occupants). The clear width of a swinging door opening is the horizontal dimension measured between the face of the door and the door stops when the door is in the 90-degree (1.57 rad) position [see Commentary Figure 1010.1.1(1)].

Using the face of the door as the measurement point is consistent with the provisions of ICC A117.1 and the ADAAG Review Advisory Committee. Further, this measurement is not intended to prohibit other projections into the required clear width, such as latching or panic hardware [see the commentary to Section 1010.1.1.1 and Commentary Figure 1010.1.1(2) for further discussion on the specific projections allowed in the required clear width]. For nonswinging means of egress doors, such as a sliding door, the clear width is to be measured from the face of the door jambs.

The minimum clear width in a doorway of 32 inches (813 mm) is to allow passage of a wheelchair as well as persons utilizing walking devices or other support apparatus. Similarly, because of the difficulties that a person with physical disabilities would have in opening a pair of doors simultaneously, the 32-inch (813 mm) minimum must be provided by a single door leaf.

Note that in some cases, with standard door construction and hardware, a 36-inch-wide (914 mm) door is the narrowest door that can be used while still providing the minimum clear width of 32 inches (813 mm). A standard 34-inch-wide (864 mm) door has less than a 32-inch (813 mm) clear opening depending on the thickness of the opposing doorstop, the door thickness and the type of hinge. The building designer must verify that the swinging door specified will in fact provide the required clear width.

A minimum clear width of $41^1/_2$ inches (1054 mm) is required for doors in any portion of Group I-2 where patients may need to be moved in beds. This is especially important for evacuating patients from the area in the event of a fire.

The maximum width for a means of egress door leaf in a swinging door is 48 inches (1219 mm) because larger doors are difficult to handle and are of sizes that typically are not fire tested. The maximum width only applies to swinging doors and not to horizontal sliding doors.

Minimum door heights are required to provide clear headroom for the users. A minimum height of 80 inches (2032 mm) has been empirically derived as sufficient for most users. Note that although the clear height of a doorway is not specified, typical door frame dimensions will render an opening very close to 80 inches (2032 mm) in clear height. The exception in Sections 1003.3.1 and 1010.1.1.1 allows for door closers and doorstops to be as low as 78 inches (1981 mm).

Exception 1 is very limited in scope and is primarily

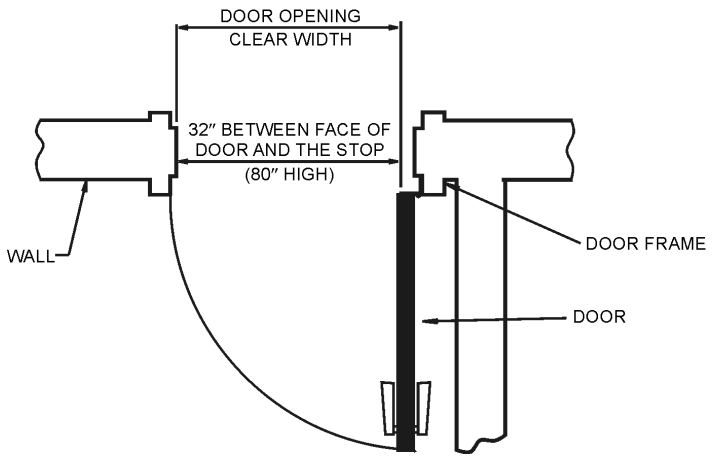

For SI: 1 inch = 25.4 mm.

Figure 1010.1.1(1)
TYPICAL DOOR OPENING CLEARANCE

INTERNATIONAL CODE COUNCIL®
Copyright © 2015 ICC. ALL RIGHTS RESERVED. Accessed by David Dammon on Jun 21, 2017 12:30:52 PM pursuant to License Agreement with ICC. No further reproduction or distribution authorized. ANY UNAUTHORIZED REPRODUCTION OR DISTRIBUTION IS A VIOLATION OF THE FEDERAL COPYRIGHT ACT AND THE LICENSE AGREEMENT, AND SUBJECT TO CIVIL AND CRIMINAL PENALTIES THEREUNDER.

intended to permit decorative-type doors, e.g., café doors, in dwelling units. This exception addresses spaces that are provided with two or more doors when only one means of egress is required. These nonrequired doors are exempted from the minimum and maximum dimensions.

Exception 2 permits the continued use of doors to resident sleeping rooms (cells) in jails (Group I-3) to be a minimum of 28 inches (711 mm), according to current practices.

Exception 3 is for all occupancies. This exception permits doors to storage closets less than 10 square feet (0.9 m^2) in area to be less than 32 inches (813 mm). This provision is intended to include those closets that can be reached in an arm's length and thus do not require full passage into the closet to be functional.

Exception 4 permits the door leaves in a revolving door assembly to comply with Section 1010.1.4.1, which provides for adequate egress width when the revolving door is collapsed into a breakout position.

Exception 5 permits the doorway within a dwelling or sleeping unit to be a minimum of 78 inches (1981 mm) in clear height. This is deemed acceptable because of the familiarity persons in a dwelling or sleeping unit usually have with the egress system and the lack of adverse injury statistics relating to such doors. Note that this exception does not apply to exterior doors of a townhouse or the main entrance doors leading to the hallway in hotels or apartment buildings. However, exterior doors could use the limited exception for doorstops and closers in Sections 1003.3.1 and 1010.1.1.1.

Exception 6 permits exterior doorways to a dwelling or sleeping unit, except for the required exit door, to be a minimum of 76 inches (1930 mm) in clear height. Accordingly, the required exterior exit door to a dwelling or sleeping unit must be 80 inches (2032 mm) in height (exterior doors are not within the scope of Exception 5), but other exterior doors are allowed to be a height of only 76 inches (1930 mm). This provision allows for the continued use of 76-inch-high (1930 mm) sliding patio doors and swinging doors sized to replace such doors.

Exception 7 allows interior means of egress doors within dwelling or sleeping units to have a clear width less than 32 inches (813 mm). If the dwelling or sleeping unit is required to be an Accessible, Type A or Type B unit, this exception is not applicable. ICC A117.1 requires door openings within Accessible and Type A units to be 32 inches (813 mm) clear and doors within Type B units to be $31^3/_4$ inches (806 mm) clear. This exception is not applicable to Group R-1. The requirement for all doorways within a Group R-1 unit to be sized to provide access to persons with physical disabilities is applicable to both entrance doors to the units and all doors to rooms in the unit (e.g., bathroom doors). Because of the social interaction and visitation that often occur in lodging facilities, a door opening sized for accessibility (e.g., wheelchairs, walkers, canes, crutches) is deemed necessary to allow people with disabilities to visit a friend's, colleague's or relative's unit. In addition, wider doors provide an additional benefit to all persons handling luggage and bulky items, or for the situation when an Accessible unit is not available. This requirement for Group R-1 occupancies is consistent with the 2010 ADA Standard.

Exception 10 has put in an allowance for sauna and steam room doors in hotels rooms that are not Accessible units. The doors to the bathroom would still have to provide a 32-inch clear width.

Exception 8 addresses the clear width of doors within a Type B dwelling or sleeping unit. The $31^3/_4$-inch (806

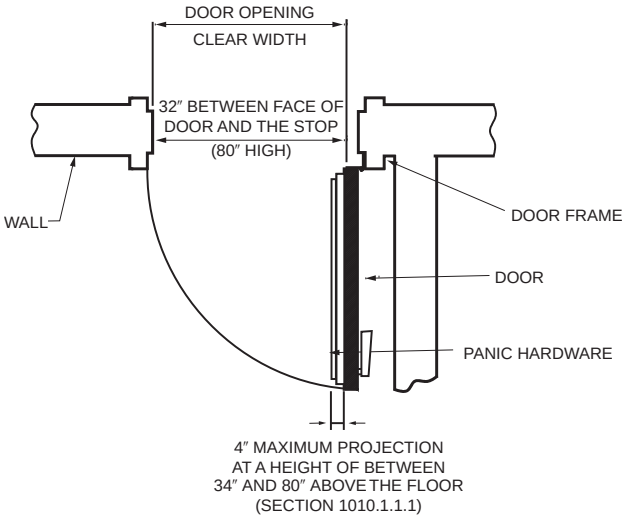

For SI: 1 inch = 25.4 mm.

Figure 1010.1.1(2)
TYPICAL DOOR OPENING CLEARANCE WITH PANIC HARDWARE

INTERNATIONAL CODE COUNCIL®
Copyright © 2015 ICC. ALL RIGHTS RESERVED. Accessed by David Dammon on Jun 21, 2017 12:30:52 PM pursuant to License Agreement with ICC. No further reproduction or distribution authorized. ANY UNAUTHORIZED REPRODUCTION OR DISTRIBUTION IS A VIOLATION OF THE FEDERAL COPYRIGHT ACT AND THE LICENSE AGREEMENT, AND SUBJECT TO CIVIL AND CRIMINAL PENALTIES THEREUNDER.

mm) dimension effectively allows for 2-foot, 10-inch (864 mm) doors to be used inside the unit. Again, note that the exterior door to the garden-style apartments or the main door to the hallway from units in an apartment building are not covered by this exception. ICC A117.1 requires the exterior doors of Type B dwelling units to provide a 32-inch (813 mm) clear width. This is consistent with the correlative text in ICC A117.1 for Type B units. Refer to Chapter 11 for additional information related to Type B dwelling and sleeping units.

Exception 9 allows for doors on walk-in freezers and coolers that would allow for the use of small carts to move supplies in and out. Such doors would still have to meet the force requirements in Section 1010.1.3.

1010.1.1.1 Projections into clear width. There shall not be projections into the required clear width lower than 34 inches (864 mm) above the floor or ground. Projections into the clear opening width between 34 inches (864 mm) and 80 inches (2032 mm) above the floor or ground shall not exceed 4 inches (102 mm).

Exception: Door closers and door stops shall be permitted to be 78 inches (1980 mm) minimum above the floor.

❖ This section of the code provides specific allowances for projection into the required clear widths of means of egress doors. These allowances directly correspond with the method of measuring the required clear width of the door as specified in Section 1010.1.1. A reasonable range of projections for door hardware and trim has been established by these requirements. The use of the means of egress door by a wheelchair occupant will not be significantly impacted by small projections located in inconspicuous areas. The key to these allowances is their location. Projections are allowed at a height between 34 inches (864 mm) and 80 inches (2032 mm). Below the 34-inch (864 mm) height, the code does not permit any projections since they would decrease the available width for wheelchair operation. The full 32-inch (813 mm) width must be provided at this location. At 34 inches (864 mm) and higher, projections of up to and including 4 inches (102 mm) are permitted. The 4-inch (102 mm) projection is consistent with the allowances of Section 1003.3.3. This section permits door hardware, such as panic hardware, to extend into the clear width, yet maintain accessibility for persons with physical disabilities [see Commentary Figure 1010.1.1(2)].

Allowance must be made for door closers and stops, since their design and function necessitates placement within the door opening. The minimum headroom clearance for door closers and stops is allowed to be 78 inches (1981 mm) [see Commentary Figure 1003.3.1(1)]. The 2-inch (51 mm) projection into the doorway height is reasonable since these devices are normally mounted away from the center of the door opening, thus minimizing the potential for contact with a person moving through the opening. This is consistent with the exception in Section 1003.3.1. Other items that are mounted at the top of the door opening, such as an electromagnetic lock on a pair of doors, would still require an 80-inch (2032 mm) minimum headroom.

While this section deals with door hardware projection within the clear door opening width, door hardware projection into the required width of corridors, aisles, exit passageways and exit discharge is addressed in Section 1005.7.1.

1010.1.2 Door swing. Egress doors shall be of the pivoted or side-hinged swinging type.

Exceptions:

1. Private garages, office areas, factory and storage areas with an *occupant load* of 10 or less.
2. Group I-3 occupancies used as a place of detention.
3. Critical or intensive care patient rooms within suites of health care facilities.
4. Doors within or serving a single *dwelling unit* in Groups R-2 and R-3.
5. In other than Group H occupancies, revolving doors complying with Section 1010.1.4.1.
6. In other than Group H occupancies, special purpose horizontal sliding, accordion or folding door assemblies complying with Section 1010.1.4.3.
7. Power-operated doors in accordance with Section 1010.1.4.2.
8. Doors serving a bathroom within an individual *sleeping unit* in Group R-1.
9. In other than Group H occupancies, manually operated horizontal sliding doors are permitted in a *means of egress* from spaces with an *occupant load* of 10 or less.

❖ Generally, egress doors are required to be the side-swinging type. The swinging hardware can be either a hinge or a pivot type (see the definition for "Balanced door"). Side-swinging doors are familiar to all occupants in the method of operation. Door designs with pivots are permitted by this section since the door action itself has little difference between the side-hinged-type door.

The code has several conditions where it allows doors that are not side-hinged-swinging types.

Examples of the doors permitted in Exception 1 are overhead garage doors and horizontal sliding doors. Exception 1 allows doors other than the swinging type for the listed uses where the number of occupants is very low.

Exception 2 allows for the sliding-type doors that are commonly used in prisons and jails.

Exception 3 allows for sliding doors between nursing areas and patient rooms in critical care and intensive care suites. Patients are not typically moving around on their own in these areas, visitors are extremely limited, the glass doors allow a better view for nurse supervision and the sliding option allows for equipment locations unaffected by door swing. See

INTERNATIONAL CODE COUNCIL®
Copyright © 2015 ICC. ALL RIGHTS RESERVED. Accessed by David Dammon on Jun 21, 2017 12:30:52 PM pursuant to License Agreement with ICC. No further reproduction or distribution authorized. ANY UNAUTHORIZED REPRODUCTION OR DISTRIBUTION IS A VIOLATION OF THE FEDERAL COPYRIGHT ACT AND THE LICENSE AGREEMENT, AND SUBJECT TO CIVIL AND CRIMINAL PENALTIES THEREUNDER.

also Sections 407, 1010.1.9.6 and 1010.1.9.8 for these types of areas.

Exception 4 allows for sliding-type doors or pocket-type doors within or serving individual units in a non-transient residential occupancy. Residents are typically familiar with the door operation. The use of sliding doors on the interior of dwelling units is permitted by the Fair Housing Accessibility Guidelines (FHAG) and by ICC A117.1 for Accessible, Type A and Type B units.

Exception 5 allows for revolving doors that meet the requirements of Section 1010.1.4.1. Revolving doors are not permitted for egress from high-hazard spaces.

Exception 6 allows for special-purpose horizontal sliding, accordion or folding doors that meet the requirements of Section 1010.1.4.3 to be used in the means of egress. The doors addressed by Section 101.4.3 are commonly in the normally-open position (hidden in their enclosure). In the event of fire or smoke, where these doors are installed in the means of egress, Section 1010.1.4.3 requires the doors to be power operated but also openable manually to the required minimum egress width. This exception is intended to allow wide span openings to be used in a means of egress.

Exception 7 allows for power-operated doors that meet the requirements of Section 1010.1.4.2. This is to enhance the movement of the general population as well as people with mobility impairments to areas of safety without obstructions, since the specified doors afford simple operation by persons for both typical and emergency operation.

Exception 8 allows for pocket doors between the bathrooms and living or sleeping space within hotel rooms. Since the bathroom is most commonly placed immediately inside the entrance to the room, a side-swinging door could be an obstruction for a person entering carrying suitcases. Familiarity with these types of doors and minimal occupant loads makes this situation acceptable.

Exception 9 partially overlaps the allowances in Exception 1 for horizontal sliding doors by matching the 10 or less occupant load, but extends the use to all other groups except for high hazard. For example, some emergency rooms or clinics use glazed horizontal sliding doors to divide patient care rooms providing for increased privacy and infection control while still allowing visual supervision. Another example would be that a pocket door may be used for access to a bathroom within a private office. The allowance for such a manually operated horizontal sliding door provides greater design flexibility and efficiency, while at the same time maintaining an acceptable level of safety.

1010.1.2.1 Direction of swing. Pivot or side-hinged swinging doors shall swing in the direction of egress travel where serving a room or area containing an occupant load of 50 or more persons or a Group H occupancy.

❖ A side-hinged door must swing in the direction of egress travel where the required occupant capacity of the room is 50 or more. As such, a room with two doors and an occupant load of 99 would require both doors to swing in the direction of egress travel, even though each door has a calculated occupant usage of less than 50. At this level of occupant load, the possibility exists that, in an emergency situation, a compact line of people could form at a closed door that swings in a direction opposite the egress flow. This could delay or eliminate the first person's ability to open the door inward with the rest of the queue behind the person.

In a Group H occupancy, the threat of rapid fire buildup, or worse, is such that any delay in egress caused by door swing may jeopardize the opportunity for all occupants to evacuate the premises. For this reason, all egress doors in Group H occupancies are to swing in the direction of egress.

1010.1.3 Door opening force. The force for pushing or pulling open interior swinging egress doors, other than fire doors, shall not exceed 5 pounds (22 N). These forces do not apply to the force required to retract latch bolts or disengage other devices that hold the door in a closed position. For other swinging doors, as well as sliding and folding doors, the door latch shall release when subjected to a 15-pound (67 N) force. The door shall be set in motion when subjected to a 30-pound (133 N) force. The door shall swing to a full-open position when subjected to a 15-pound (67 N) force.

❖ The ability of all potential users to be physically capable of opening an egress door is a function of the forces required to open the door. The 5-pound (22 N) maximum force for pushing and pulling interior swinging doors without closers that are part of the means of egress inside a building is based on that which has been deemed appropriate for people with a physical limitation due to size, age or disability. The operating force is permitted to be higher for all exterior doors, interior swinging doors that are not part of the means of egress, doors that are part of the means of egress but also serve as opening protectives in fire-resistance-rated walls (i.e., fire doors), sliding doors and folding doors. This recognizes that doors with closers, particularly fire doors, require greater operating forces in order to close fully in an emergency where combustion gases may be exerting pressure on the door assembly. Similarly, exterior doors are exempted because air pressure differentials and strong winds may prevent doors from being fully automatically closed.

The opening force is different than the force to retract bolts or operate other types of door hardware. A maximum force of 15 pounds (67 N) is required for operating the latching mechanism. Once unlatched, a maximum force of 30 pounds (133 N) is applied to the

INTERNATIONAL CODE COUNCIL®
Copyright © 2015 ICC. ALL RIGHTS RESERVED. Accessed by David Dammon on Jun 21, 2017 12:30:52 PM pursuant to License Agreement with ICC. No further reproduction or distribution authorized. ANY UNAUTHORIZED REPRODUCTION OR DISTRIBUTION IS A VIOLATION OF THE FEDERAL COPYRIGHT ACT AND THE LICENSE AGREEMENT, AND SUBJECT TO CIVIL AND CRIMINAL PENALTIES THEREUNDER.

latch side of the leaf to start the door in motion by overcoming its stationary inertia. Once in motion, it must not take more than 15 pounds (67 N) of force to keep the door in motion until it reaches its full open position and the required clear width is available. To conform to this requirement on a continual basis, door closers must be adjusted periodically and door fits must also be checked and adjusted when necessary.

1010.1.3.1 Location of applied forces. Forces shall be applied to the latch side of the door.

❖ See the commentary for door opening forces in Section 1010.1.3.

1010.1.4 Special doors. Special doors and security grilles shall comply with the requirements of Sections 1010.1.4.1 through 1010.1.4.4.

❖ This section simply defines the scope of the code requirements for special doors such as revolving doors, power-operated swinging doors, power-operated horizontal sliding doors and security grilles

1010.1.4.1 Revolving doors. Revolving doors shall comply with the following:

1. Revolving doors shall comply with BHMA A156.27 and shall be installed in accordance with the manufacturer's instructions.
2. Each revolving door shall be capable of *breakout* in accordance with BHMA A156.27 and shall provide an aggregate width of not less than 36 inches (914 mm).
3. A revolving door shall not be located within 10 feet (3048 mm) of the foot or top of *stairways* or escalators. A dispersal area shall be provided between the *stairways* or escalators and the revolving doors.
4. The revolutions per minute (rpm) for a revolving door shall not exceed the maximum rpm as specified in BHMA A156.27. Manual revolving doors shall comply with Table 1010.1.4.1(1). Automatic or power-operated revolving doors shall comply with Table 1010.1.4.1(2).
5. An emergency stop switch shall be provided near each entry point of power or automatic operated revolving doors within 48 inches (1220 mm) of the door and between 24 inches (610 mm) and 48 inches (1220 mm) above the floor. The activation area of the emergency stop switch button shall be not less than 1 inch (25 mm) in diameter and shall be red.
6. Each revolving door shall have a side-hinged swinging door that complies with Section 1010.1 in the same wall and within 10 feet (3048 mm) of the revolving door.
7. Revolving doors shall not be part of an *accessible route* required by Section 1009 and Chapter 11.

❖ Revolving doors must comply with all seven provisions.

Item 1: BHMA A156.27 is the revolving door industry standard and includes numerous safety-related requirements for revolving doors. For example, BHMA A156.27 requires manually operated revolving doors to contain governors to limit the rotational speed of the door. For automatic, or power-operated, revolving doors, BHMA A156.27 includes requirements for numerous sensors and switches, and complex motor controls to safely operate the door.

Item 2: One of the causes contributing to the loss of lives in the 1942 Cocoanut Grove fire in Boston was that the revolving doors at the club's entrance could not collapse (*breakout*) for emergency egress and there was not an alternative means of egress adjacent to the revolving doors. Thus, in the panic of the fire, the door became jammed and the club's occupants were trapped.

As a result of this fire experience, all revolving doors, including those for air structures, now are required to be equipped with a breakout feature. A breakout operation is where all leaves collapse parallel to each other and to the direction of egress [see Commentary Figure 1010.1.4.1(1)]. A breakout operation creates two openings of approximately equal width. The sum of the widths is not to be less than 36 inches (914 mm) so that a stream of pedestrians may use each side of the opening. BHMA A156.27 includes explicit breakout requirements for the wide range of sizes and configurations of manual and automatic revolving doors.

Item 3: If a stairway or escalator delivers users to a landing in front of a revolving door at a greater rate than the capacity of the door, a compact line of people will develop. Lines of people formed on a stairway or escalator create an unsafe situation, since stairways and escalators are not intended to be used as standing space for persons who may be waiting to

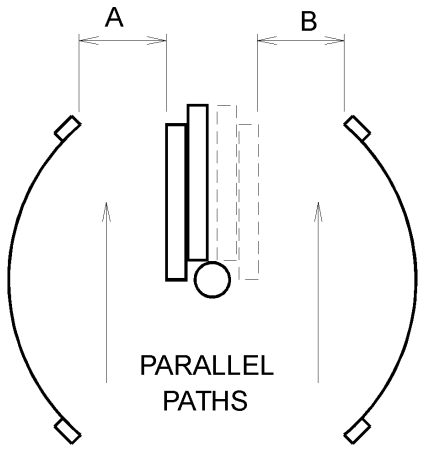

For SI: 1 inch = 25.4 mm.

Figure 1010.1.4.1(1)
REVOLVING DOORS IN BREAKOUT POSITION

INTERNATIONAL CODE COUNCIL®
Copyright © 2015 ICC. ALL RIGHTS RESERVED. Accessed by David Dammon on Jun 21, 2017 12:30:52 PM pursuant to License Agreement with ICC. No further reproduction or distribution authorized. ANY UNAUTHORIZED REPRODUCTION OR DISTRIBUTION IS A VIOLATION OF THE FEDERAL COPYRIGHT ACT AND THE LICENSE AGREEMENT, AND SUBJECT TO CIVIL AND CRIMINAL PENALTIES THEREUNDER.

use the revolving doors. Therefore, to avoid congestion at a revolving door that under normal operation has a maximum delivery capacity of users, a dispersal area is required between the stairways or escalators and the revolving doors to allow for the queuing of people as they enter the door. Accordingly, to create a dispersal area for users of a revolving door, the door is not to be placed closer than 10 feet (3048 mm) from the foot or top of a stairway or escalator.

Item 4: Door speeds also directly relate to the capacity of a revolving door, which is calculated by multiplying the number of leaves (wings) by the revolutions per minute (rpm). For example, if you have a four-leaf door (four-bay door) moving at 10 rpm, the door will allow 40 people to move in either direction in 1 minute. The larger revolving doors are designed to allow more than one person in each bay, and this should be taken into account when calculating the capacity of a revolving door.

Item 5: An emergency stop switch near each entry point of automatic or power-operated revolving doors provides a method to stop the door's operation.

Item 6: In case a revolving door malfunctions or becomes obstructed, the adjacent area is to be equipped with a conventional side-hinged door to provide users with an immediate alternative way to exit a building. The side-hinged door is intended to be used as a relief device for people lined up to use the revolving door or who desire to avoid it because of a physical disability or other reason. It also can be used when the revolving door is obstructed or out of service. The swinging door is to be immediately adjacent to the revolving door so that its availability is obvious [see Commentary Figure 1010.1.4.1(2)]. A single swinging door can be located between side-by-side revolving doors in order to comply with this provision.

Item 7: While some revolving doors may be considered part of a means of egress, they cannot be considered part of a required accessible route for either ingress or egress. This requirement is consistent with ICC A117.1, which also prohibits revolving gates and turnstiles along the only accessible route. The side-swinging door required by Item 6 can serve as the accessible entrance or exit required by Sections 1009 and 1105.

A route through a hinged or sliding door differs remarkably from that provided through a revolving door. For a revolving door, the route includes a turn into the doorway, an arcing path of travel as the door revolves, followed by a change of direction when leaving the door. Items that may cause difficulty for anyone with mobility impairments could involve the overall doorway diameter, the number of leaves and their relative angle, and the configuration of the return walls surrounding the revolving door. Additionally, the speed of the door movement if motorized, or the force required for movement if not motorized, would be a concern for anyone who needed to keep both hands on their device to move forward (e.g., walker or wheelchair).

Automatic revolving doors, if large enough, may be usable by many people who use wheelchairs. How-

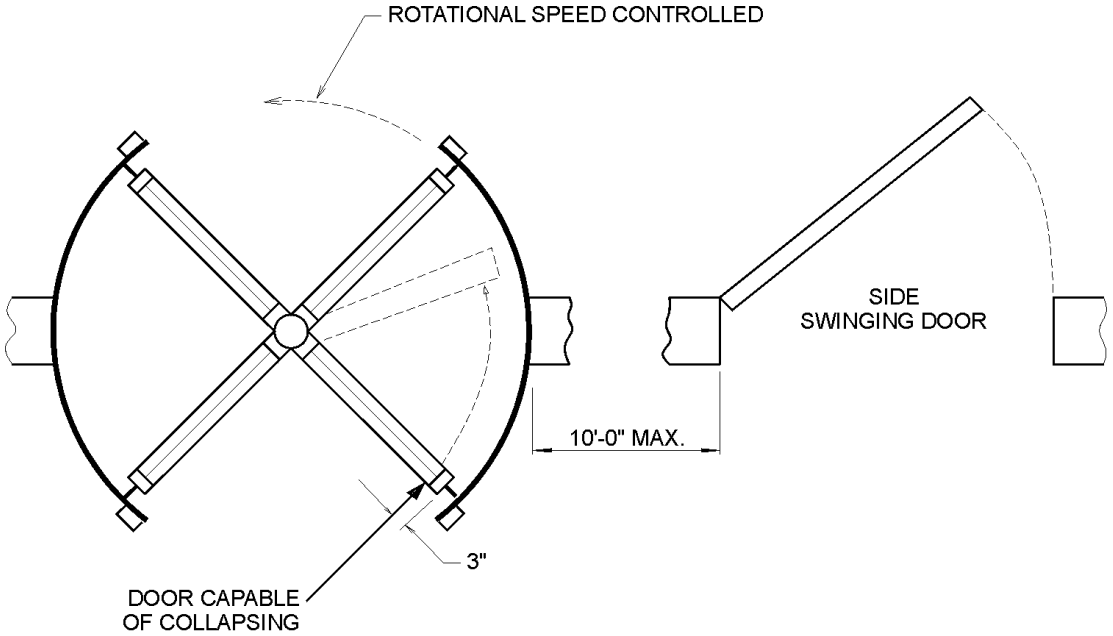

For SI: 1 foot = 304.8 mm.

Figure 1010.1.4.1(2)
TYPICAL REVOLVING DOOR/SIDE SWINGING DOOR ARRANGEMENT

INTERNATIONAL CODE COUNCIL®
Copyright © 2015 ICC. ALL RIGHTS RESERVED. Accessed by David Dammon on Jun 21, 2017 12:30:52 PM pursuant to License Agreement with ICC. No further reproduction or distribution authorized. ANY UNAUTHORIZED REPRODUCTION OR DISTRIBUTION IS A VIOLATION OF THE FEDERAL COPYRIGHT ACT AND THE LICENSE AGREEMENT, AND SUBJECT TO CIVIL AND CRIMINAL PENALTIES THEREUNDER.

ever, the intent of this section is that these types of doors not be the only means of passage at an entrance or exit. An alternative door in full compliance with this section is considered necessary because some people with disabilities may be uncertain of the usability, or may not have enough strength or speed to use them. Although manufacturers have developed safety criteria, certain questions remain, such as the appropriate maximum and minimum speeds that would work for persons trying to maneuver a wheelchair through a revolving door.

Revolving doors range from (smaller) manually operated revolving door systems to automatic (power operated) revolving doors of small (8-foot) to large (24-foot) diameter. Three configurations of revolving doors are illustrated in Commentary FIgures 1010.1.4(3) through 1010.1.4(5).



Figure 1010.1.4.1(3)
EXAMPLE OF MANUAL REVOLVING DOOR
(7-FOOT DIAMETER)



Figure 1010.1.4.1(4)
EXAMPLE OF AUTOMATIC REVOLVING DOOR
(8-FOOT DIAMETER)

TABLE 1010.1.4.1(1)
MAXIMUM DOOR SPEED MANUAL REVOLVING DOORS

REVOLVING DOOR MAXIMUM NOMINAL DIAMETER (FT-IN)	MAXIMUM ALLOWABLE REVOLVING DOOR SPEED (RPM)
6-0	12
7-0	11
8-0	10
9-0	9
10-0	8

For SI: 1 inch = 25.4 mm, 1 foot = 304.8 mm.

❖ See the commentary for Section 1010.1.4 and Table 1010.1.4.1(2).

TABLE 1010.1.4.1(2)
MAXIMUM DOOR SPEED AUTOMATIC OR POWER-OPERATED REVOLVING DOORS

REVOLVING DOOR MAXIMUM NOMINAL DIAMETER (FT-IN)	MAXIMUM ALLOWABLE REVOLVING DOOR SPEED (RPM)
8-0	7.2
9-0	6.4
10-0	5.7
11-0	5.2
12-0	4.8
12-6	4.6
14-0	4.1
16-0	3.6
17-0	3.4
18-0	3.2
20-0	2.9
24-0	2.4

For SI: 1 inch = 25.4 mm, 1 foot = 304.8 mm.

❖ Door speeds also directly relate to the capacity of a revolving door, which is calculated for smaller revolving doors by multiplying the number of leaves (wings) by the revolutions per minute (rpm). For example, if you have an 8-foot diameter four-leaf door (four-bay door) moving at 10 rpm, the door will allow 40 people to move in either direction in 1 minute. Larger revolving doors may be designed to allow for more than one person in each bay as the door rotates, which should be taken into account when determining maximum egress capacity of the revolving door.

INTERNATIONAL CODE COUNCIL®
Copyright © 2015 ICC. ALL RIGHTS RESERVED. Accessed by David Dammon on Jun 21, 2017 12:30:52 PM pursuant to License Agreement with ICC. No further reproduction or distribution authorized. ANY UNAUTHORIZED REPRODUCTION OR DISTRIBUTION IS A VIOLATION OF THE FEDERAL COPYRIGHT ACT AND THE LICENSE AGREEMENT, AND SUBJECT TO CIVIL AND CRIMINAL PENALTIES THEREUNDER.



Figure 1010.1.4.1(5)
EXAMPLE OF AUTOMATIC REVOLVING DOOR (20-FOOT DIAMETER)

1010.1.4.1.1 Egress component. A revolving door used as a component of a *means of egress* shall comply with Section 1010.1.4.1 and the following three conditions:

1. Revolving doors shall not be given credit for more than 50 percent of the minimum width or required capacity.
2. Each revolving door shall be credited with a capacity based on not more than a 50-person *occupant load*.
3. Each revolving door shall provide for egress in accordance with BHMA A156.27 with a *breakout* force of not more than 130 pounds (578 N).

❖ A revolving door can be incorporated, to a very limited extent, in a means of egress. Compliance with these three additional conditions is required.

Condition 1 limits the exit capacity that revolving doors can provide in a building. This is so that 50 percent of the capacity has conventional egress components and is not dependent on mechanical devices or fail-safe mechanisms.

Condition 2 limits the capacity of any one revolving door for the same reasons as stated in Condition 1. Each revolving door is therefore limited to a 50-person capacity.

Condition 3 limits the breakout force to 130 pounds (578 N), as opposed to the 180-pound (792 N) value listed in Section 1010.1.4.1.2. Revolving doors used as means of egress are not permitted to have the breakout force exceed 130 pounds (578 N) under any circumstances.

1010.1.4.1.2 Other than egress component. A revolving door used as other than a component of a *means of egress* shall comply with Section 1010.1.4.1. The *breakout* force of a revolving door not used as a component of a *means of egress* shall not be more than 180 pounds (801 N).

Exception: A *breakout* force in excess of 180 pounds (801 N) is permitted if the collapsing force is reduced to not more than 130 pounds (578 N) when not less than one of the following conditions is satisfied:

1. There is a power failure or power is removed to the device holding the door wings in position.
2. There is an actuation of the *automatic sprinkler system* where such system is provided.
3. There is an actuation of a smoke detection system that is installed in accordance with Section 907 to provide coverage in areas within the building that are within 75 feet (22 860 mm) of the revolving doors.
4. There is an actuation of a manual control switch, in an approved location and clearly identified, that reduces the *breakout* force to not more than 130 pounds (578 N).

❖ This section addresses revolving doors that are not used to serve any portion of the occupant egress capacity. For example, where adjacent side-hinged doors have more than the required egress capacity, the revolving door would not be part of the required means of egress.

The maximum breakout force of 180 pounds (792 N), applied within 3 inches (76 mm) of the outer edge of a wing, is based on industry standards to accommodate normal use conditions and other forces that may act on the leaves, such as those caused by wind or air pressure. An exception for revolving doors that are not a component of a required means of egress allows the breakout force to exceed 180 pounds (792 N) in normal operating conditions provided that a force of not more than 130 pounds (578 N) is required whenever any one of the listed conditions is satisfied.

1010.1.4.2 Power-operated doors. Where *means of egress* doors are operated or assisted by power, the design shall be such that in the event of power failure, the door is capable of being opened manually to permit *means of egress* travel or closed where necessary to safeguard *means of egress*. The forces required to open these doors manually shall not exceed those specified in Section 1010.1.3, except that the force to set the door in motion shall not exceed 50 pounds (220 N). The door shall be capable of swinging open from any position to the full width of the opening in which such door is installed when a force is applied to the door on the side from which egress is made. Power-operated swinging doors, power-operated sliding doors and power-operated folding doors shall comply with BHMA A156.10. Power-assisted swinging doors and low-energy power-operated swinging doors shall comply with BHMA A156.19.

Exceptions:

1. Occupancies in Group I-3.

INTERNATIONAL CODE COUNCIL®
Copyright © 2015 ICC. ALL RIGHTS RESERVED. Accessed by David Dammon on Jun 21, 2017 12:30:52 PM pursuant to License Agreement with ICC. No further reproduction or distribution authorized. ANY UNAUTHORIZED REPRODUCTION OR DISTRIBUTION IS A VIOLATION OF THE FEDERAL COPYRIGHT ACT AND THE LICENSE AGREEMENT, AND SUBJECT TO CIVIL AND CRIMINAL PENALTIES THEREUNDER.

2. Horizontal sliding doors complying with Section 1010.1.4.3.

3. For a biparting door in the emergency breakout mode, a door leaf located within a multiple-leaf opening shall be exempt from the minimum 32-inch (813 mm) single-leaf requirement of Section 1010.1.1, provided a minimum 32-inch (813 mm) clear opening is provided when the two biparting leaves meeting in the center are broken out.

❖ For convenience purposes, power-operated doors are intended to facilitate the normal nonemergency flow of persons through a doorway. Where a power-operated or power-assisted door is also required to be an egress door, the door must conform to the requirements of this section. The essential characteristic is that the door is to be manually openable from any position to its full open position at any time, with or without a power failure or a failure of a door mechanism. Hence, both swinging and horizontal sliding doors, complying with this section, may be used, provided the door can be operated manually from any position as a swinging door and that the minimum required clear width for egress capacity is not less than 32 inches (813 mm). Note that the opening forces of Section 1010.1.3 are applicable, except that the 30-pound (133 N) force needed to set the door in motion is increased to 50 pounds (220 N) as an operational tolerance in the design of the power-operated door.

Definitions for the different types of power-operated doors were added to the 2015 IBC to help clarify which standard (BHMA A156.10 or BHMA A156.19) is applicable to which type of power-operated door.

Power-operated doors are required to comply with BHMA A156.10. These doors open automatically when approached by a person or upon an action by a person, close automatically and include provisions such as presence sensors to prevent entrapment. *Low-energy power-operated doors* are required to comply with BHMA A56.19. These doors are always swinging doors which open automatically upon an action by a person such as pressing a push plate or waving a hand in front of a sensor. Additionally, these doors close automatically and operate with decreased forces and decreased speeds (compared to *power-operated doors*). Least common are *power-assisted doors*, which are required to comply with BHMA A156.19. These doors are swinging doors which open by reduced pushing or pulling force on the door-operating hardware, close automatically after the pushing or pulling force is released and function with decreased forces.

In accordance with Exception 1, power-operated doors in detention and correctional occupancies (Group I-3) are not required to be manually operable by the occupants (inmates) for security reasons, but otherwise are required to conform to Section 408.

Exception 2 states that power-operated, special-purpose horizontal sliding accordion or folding doors that meet the requirements of Section 1010.1.4.3 are not required to meet the requirements of Section 1010.1.4.2. This is consistent with the option offered in Section 1010.1.2 by Exception 6.

Exception 3 allows an individual leaf of a four-panel biparting door to be less than 32 inches (813 mm) wide, provided 32 inches (813 mm) of clear space is available when the two center biparting leaves are broken out as part of the emergency breakaway feature.

1010.1.4.3 Special purpose horizontal sliding, accordion or folding doors. In other than Group H occupancies, special purpose horizontal sliding, accordion or folding door assemblies permitted to be a component of a *means of egress* in accordance with Exception 6 to Section 1010.1.2 shall comply with all of the following criteria:

1. The doors shall be power operated and shall be capable of being operated manually in the event of power failure.

2. The doors shall be openable by a simple method from both sides without special knowledge or effort.

3. The force required to operate the door shall not exceed 30 pounds (133 N) to set the door in motion and 15 pounds (67 N) to close the door or open it to the minimum required width.

4. The door shall be openable with a force not to exceed 15 pounds (67 N) when a force of 250 pounds (1100 N) is applied perpendicular to the door adjacent to the operating device.

5. The door assembly shall comply with the applicable *fire protection rating* and, where rated, shall be self-closing or automatic closing by smoke detection in accordance with Section 716.5.9.3, shall be installed in accordance with NFPA 80 and shall comply with Section 716.

6. The door assembly shall have an integrated standby power supply.

7. The door assembly power supply shall be electrically supervised.

8. The door shall open to the minimum required width within 10 seconds after activation of the operating device.

❖ Special purpose horizontal sliding, accordion or folding doors are permitted in the means of egress, in other than rooms or areas of Group H, under the conditions set forth in this section. Special purpose horizontal sliding, accordion or folding doors are not permitted to be used in Group H occupancies because of the potential for delaying or impeding egress from those areas and the additional risk to occupants in hazardous occupancies. Note that this section regulates doors that are part of the means of egress to meet a set of requirements different than Section 1010.1.4.2 (e.g., a power-operated horizontal sliding door that does not have “breakout” capabilities to allow the door panels to swing if power is lost). The

INTERNATIONAL CODE COUNCIL®
Copyright © 2015 ICC. ALL RIGHTS RESERVED. Accessed by David Dammon on Jun 21, 2017 12:30:52 PM pursuant to License Agreement with ICC. No further reproduction or distribution authorized. ANY UNAUTHORIZED REPRODUCTION OR DISTRIBUTION IS A VIOLATION OF THE FEDERAL COPYRIGHT ACT AND THE LICENSE AGREEMENT, AND SUBJECT TO CIVIL AND CRIMINAL PENALTIES THEREUNDER.

doors addressed by Section 1010.1.4.3 are commonly in the normally open position (hidden in their enclosure).

All eight of the criteria listed in this section must be met for a special purpose horizontal sliding, accordion or folding door since there is a concern that it must be able to be easily opened to the minimum required width under all conditions.

Additionally, the door must be openable even if a force of 250 pounds (1100 N) is being applied perpendicular to it, as may occur if a group of people were pushing on it.

Since the doors are manually operable, they need not automatically open or close during a loss of power; however, a standby power supply must be provided. The primary power supply must be supervised so that an alarm is received at a constantly attended location (such as a security desk) on loss of the primary power. If the doors are also serving as opening protective (i.e., fire doors), they must be automatic closing or self-closing in accordance with Section 716.

Since the maximum swinging door leaf width limitations of Section 1008.1.1 do not apply, a maximum opening time of 10 seconds is permitted. It should be noted, however, that the door need not open fully within the 10 seconds; rather, it must open to the minimum required width. For example, if the door is protecting an opening that is 10 feet (3048 mm) wide, but the minimum required width of the opening is 32 inches (813 mm) (as determined by Section 1008.1.1), the door need only open 32 inches (813 mm) within the 10-second criterion. In fact, the door may have controls such that the automatic opening feature only opens the door to a width of 32 inches (813 mm). If additional width is required, it can be accomplished by manual means and, possibly, by an additional activation of the operating device.

1010.1.4.4 Security grilles. In Groups B, F, M and S, horizontal sliding or vertical security grilles are permitted at the main *exit* and shall be openable from the inside without the use of a key or special knowledge or effort during periods that the space is occupied. The grilles shall remain secured in the full-open position during the period of occupancy by the general public. Where two or more *means of egress* are required, not more than one-half of the *exits* or *exit access doorways* shall be equipped with horizontal sliding or vertical security grilles.

❖ This section really functions as an exception to several sections, including Sections 1010.1.2 (Door swing) and 1010.1.9.3 (Locks and latches), and permits the use of these security grilles under conditions that are similar to those found in Section 402 for covered mall buildings. These security grilles will be open when the space is occupied and will, therefore, not obstruct any egress path. Since the building may be partially used (e.g., team practice in a football stadium) when not fully occupied, no more than one-half of the exits from the building can be through security grilles.

1010.1.5 Floor elevation. There shall be a floor or landing on each side of a door. Such floor or landing shall be at the same elevation on each side of the door. Landings shall be level except for exterior landings, which are permitted to have a slope not to exceed 0.25 unit vertical in 12 units horizontal (2-percent slope).

Exceptions:

1. Doors serving individual *dwelling units* in Groups R-2 and R-3 where the following apply:
   1.1. A door is permitted to open at the top step of an interior *flight* of *stairs*, provided the door does not swing over the top step.
   1.2. Screen doors and storm doors are permitted to swing over *stairs* or landings.
2. Exterior doors as provided for in Section 1003.5, Exception 1, and Section 1022.2, which are not on an *accessible route*.
3. In Group R-3 occupancies not required to be *Accessible units*, *Type A units* or *Type B units*, the landing at an exterior doorway shall be not more than $7^3/_4$ inches (197 mm) below the top of the threshold, provided the door, other than an exterior storm or screen door, does not swing over the landing.
4. Variations in elevation due to differences in finish materials, but not more than $^1/_2$ inch (12.7 mm).
5. Exterior decks, patios or balconies that are part of *Type B dwelling units*, have impervious surfaces and that are not more than 4 inches (102 mm) below the finished floor level of the adjacent interior space of the dwelling unit.
6. Doors serving equipment spaces not required to be *accessible* in accordance with Section 1103.2.9 and serving an occupant load of five or less shall be permitted to have a landing on one side to be not more than 7 inches (178 mm) above or below the landing on the egress side of the door.

❖ Changes in floor surface elevation at a door, however small, often are slip or trip hazards. This is because persons passing through a door, including those who may have some mobility impairments, usually do not expect changes in floor surface elevation or are not able to recognize them because of the intervening door leaf. Under emergency conditions, a fall in a doorway could result not only in injury to the falling occupant but also interruption of orderly egress by other occupants. The exterior landing is allowed to slope to drain.

The size of this landing is set by Section 1010.1.6. In accordance with Exception 4, the floor surface elevation of the landing is to be at the same elevation plus or minus $^1/_2$ inch (12.7 mm) (see Commentary Figure 1010.1.5).

Note that some of the exceptions indicate which direction the door swings to allow the exceptions while others do not limit the door swing direction.

Exception 1, which applies to nontransient residential occupancies, recognizes that occupants are famil-

INTERNATIONAL CODE COUNCIL®
Copyright © 2015 ICC. ALL RIGHTS RESERVED. Accessed by David Dammon on Jun 21, 2017 12:30:52 PM pursuant to License Agreement with ICC. No further reproduction or distribution authorized. ANY UNAUTHORIZED REPRODUCTION OR DISTRIBUTION IS A VIOLATION OF THE FEDERAL COPYRIGHT ACT AND THE LICENSE AGREEMENT, AND SUBJECT TO CIVIL AND CRIMINAL PENALTIES THEREUNDER.

iar with the stair and landing arrangements. In Exception 1.1, an interior stairway can start immediately at the door, provided the door leaf does not swing over the stairway. Exception 1.2 clarifies that a screen door or storm door would not be considered the main door prohibited from swinging over the stairway by Exception 1.1.

Exception 2 references two other locations. Section 1003.5, Exception 1, permits a 7-inch (178 mm) change in elevation at exterior doors in Groups F, H, R-2, R-3, S and U if they are not on an accessible route. The door could swing in either direction for this exception and may actually be required to swing out in accordance with Section 1010.1.2. A reference to Section 1022.2 does not address a change in elevation but does address exterior exit doors.

In accordance with Exception 3, for a residential unit, the step-down is limited to $7^3/_4$ inches (197 mm) measured from the top of the threshold rather than the interior floor surface. In addition, the exterior door cannot swing over the exterior landing. A screen door or storm door could swing over the exterior landing. This is consistent with the exception to Section 1010.1.7.

Exception 4 addresses a change in floor finish material (see Commentary Figure 1010.1.5).

In accordance with Exception 5, Type B dwelling or sleeping units are not required to have level landings on both sides of some of the exterior doors. Please note that this exception is not applicable for the primary entrance door to the unit (see Section 1105.1.7). Exterior doors that open out onto an exterior deck, patio or balcony are allowed a 4-inch (102 mm) step down. Type B units are established by Chapter 11 for residential occupancies containing four or more dwelling or sleeping units. In order to use this exception, the exterior decks, patios or balconies must be of solid and impervious construction, such as concrete or wood. A 4-inch (102 mm) step from inside the unit down to the exterior surfaces is allowed for weather purposes. This allowance is consistent with the provisions of ICC A117.1 and Fair Housing Accessibility Guidelines (FHAG).

While Exception 2 would allow for exterior doors of Group F or S to have a step down, it would not have this same allowance for small equipment spaces within a building. Sometimes these rooms have a step down to allow for spills within the space to not leak out under the door. This space is not required to be accessible (Section 1103.2.9) and the space is only accessed by maintenance and service personnel, so a step down would not be a barrier.

1010.1.6 Landings at doors. Landings shall have a width not less than the width of the *stairway* or the door, whichever is greater. Doors in the fully open position shall not reduce a required dimension by more than 7 inches (178 mm). Where a landing serves an *occupant load* of 50 or more, doors in any position shall not reduce the landing to less than one-half its required width. Landings shall have a length measured in the direction of travel of not less than 44 inches (1118 mm).

Exception: Landing length in the direction of travel in Groups R-3 and U and within individual units of Group R-2 need not exceed 36 inches (914 mm).

❖ Door landings are at either side of the door. Landings can overlap floor surfaces within a room or corridor, overlap an exterior porch or balcony, or share the landings for stairways. The 7-inch (178 mm) encroachment and one-half required width limitations are consistent with Section 1005.7 for door encroachment. Section 1005.7 deals with egress width and capacity and is referenced from aisles (see Section 1018.1), corridors (see Section 1020.3), exit passageways (see Section 1024.2) and egress courts (see Section 1028.4.1).

This section also is intended to address landings at

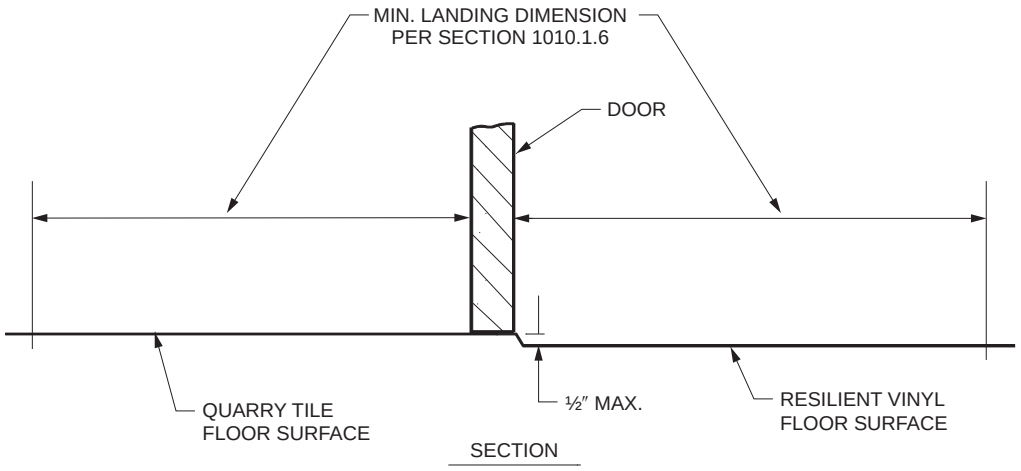

For SI: 1 inch = 25.4 mm.

Figure 1010.1.5
DOOR LANDINGS

INTERNATIONAL CODE COUNCIL®
Copyright © 2015 ICC. ALL RIGHTS RESERVED. Accessed by David Dammon on Jun 21, 2017 12:30:52 PM pursuant to License Agreement with ICC. No further reproduction or distribution authorized. ANY UNAUTHORIZED REPRODUCTION OR DISTRIBUTION IS A VIOLATION OF THE FEDERAL COPYRIGHT ACT AND THE LICENSE AGREEMENT, AND SUBJECT TO CIVIL AND CRIMINAL PENALTIES THEREUNDER.

the entrance door to enclosed stairways (also see Section 1011.6 for stairway landings). The width of a landing at a door in a stairway is to be not less than the width of the stairway or the door, whichever is greater [see Commentary Figure 1011.6(4) for an example of these provisions].

No matter what size the door or stair landing is, door landings are to have the floor elevation requirements of Section 1010.1.5 extending at least 44 inches (1118 mm) in the direction of egress travel.

The reduction in landing length from 44 inches minimum to 36 inches minimum for certain residential occupancies allowed by the exception is in recognition of their low occupant load.

1010.1.7 Thresholds. Thresholds at doorways shall not exceed $^3/_4$ inch (19.1 mm) in height above the finished floor or landing for sliding doors serving *dwelling units* or $^1/_2$ inch (12.7 mm) above the finished floor or landing for other doors. Raised thresholds and floor level changes greater than $^1/_4$ inch (6.4 mm) at doorways shall be beveled with a slope not greater than one unit vertical in two units horizontal (50-percent slope).

Exceptions:

1. In occupancy Group R-2 or R-3, threshold heights for sliding and side-hinged exterior doors shall be permitted to be up to $7^3/_4$ inches (197 mm) in height if all of the following apply:
   1.1. The door is not part of the required *means of egress*.
   1.2. The door is not part of an *accessible route* as required by Chapter 11.
   1.3. The door is not part of an *Accessible unit*, *Type A unit* or *Type B unit*.
2. In *Type B units*, where Exception 5 to Section 1010.1.5 permits a 4-inch (102 mm) elevation change at the door, the threshold height on the exterior side of the door shall not exceed $4^3/_4$ inches (120 mm) in height above the exterior deck, patio or balcony for sliding doors or $4^1/_2$ inches (114 mm) above the exterior deck, patio or balcony for other doors.

❖ A threshold is a potential tripping hazard and a barrier to accessibility by people with mobility impairments. For these reasons, thresholds for all doorways, except exterior sliding doors serving dwelling units, are to be a maximum of $^1/_2$ inch (12.7 mm) high. Exterior sliding doors serving dwelling units, however, are permitted to be $^3/_4$ inch (19.1 mm) high because of practical design considerations, concern for deterioration of the doorway because of snow and ice buildup and lack of adequate drainage in severe climates. Raised threshold and floor level changes at doorways without beveled edge treatment [see Commentary Figure 1010.1.7(1)] are limited to $^1/_4$ inch (6.3 mm) high vertically.

Commentary Figures 1010.1.7(2), 1010.1.7(3) and 1010.1.7(4) illustrate configurations where the change in elevation is between $^1/_4$ inch (6.4 mm) and $^1/_2$ inch (12.7 mm). The slope of required beveled edges cannot exceed one unit vertical in two units horizontal (1:2 or 50-percent slope) but lesser slopes are fully compliant. This kind of threshold treatment provides for mini-



For SI: 1 inch = 25.4 mm.

Figure 1010.1.7(1)
VERTICAL CHANGES IN LEVEL

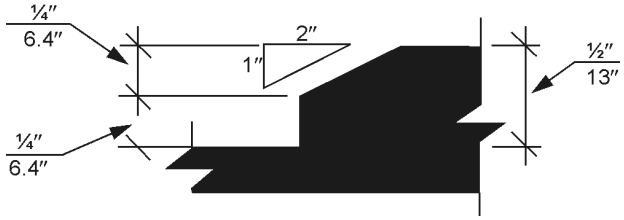

For SI: 1 inch = 25.4 mm.

Figure 1010.1.7(2)
BEVELED CHANGES IN LEVEL

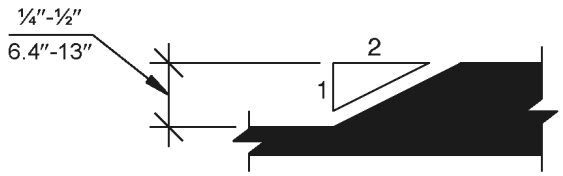

For SI: 1 inch = 25.4 mm.

Figure 1010.1.7(3)
BEVELED CHANGES IN LEVEL

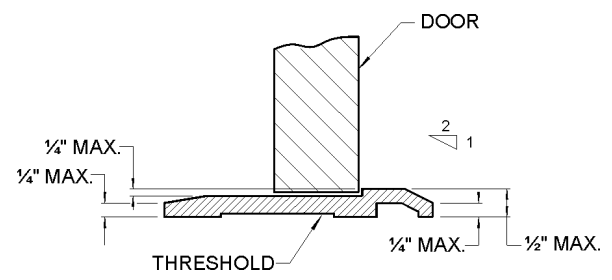

For SI: 1 inch = 25.4 mm.

Figure 1010.1.7(4)
DOOR THRESHOLD HEIGHT LIMITATIONS

INTERNATIONAL CODE COUNCIL®
Copyright © 2015 ICC. ALL RIGHTS RESERVED. Accessed by David Dammon on Jun 21, 2017 12:30:52 PM pursuant to License Agreement with ICC. No further reproduction or distribution authorized. ANY UNAUTHORIZED REPRODUCTION OR DISTRIBUTION IS A VIOLATION OF THE FEDERAL COPYRIGHT ACT AND THE LICENSE AGREEMENT, AND SUBJECT TO CIVIL AND CRIMINAL PENALTIES THEREUNDER.

mum obstructions for wheelchair users and limits the trip hazard for those with other mobility disabilities.

The first exception permits a $7^3/_4$-inch (197 mm) threshold at both side-swinging and sliding exterior doors in Group R-2 and R-3 buildings. However, this door cannot be part of the required means of egress out of a building; cannot be part of an accessible route required into a building or unit (see Sections 1104 and 1105) and cannot serve an Accessible, Type A or Type B unit. The result would be that this exception would be permitted at the "back door," stoop or patio in single-family homes (see Section 1103.2.3) or upper floor balconies within individual apartments in buildings without elevators (see Section 1107). This terminology is consistent with the $7^3/_4$-inch (197 mm) step down in Section 1010.1.5, Exception 3; however, this exception is to the threshold requirements, not the landing elevations.

The second exception is for doors where a 4-inch step down is permitted in Type B dwelling units between the interior finished floor surface and the exterior surface of exterior decks, patios and balconies (Section 1010.1.5 Exception 5). This section would permit the height of the threshold itself to exceed $^1/_2$ or $^3/_4$ inch in height, as long as the resultant profile from the interior floor to the exterior surface is maintained.

The threshold itself can be higher than $^1/_2$ or $^3/_4$ inch measured from the outside. The additional height, however, is contained within the 4-inch step down. The height of the threshold is limited to $^1/_2$ inch or $^3/_4$ inch above the interior floor and the total height must not be more than $4^1/_2$ or $4^3/_4$ inches above the exterior surface, depending upon the type of door. If the threshold is greater than $^1/_4$ inch above the interior floor, it is to be beveled. See Commentary Figure 1010.1.7(5).

1010.1.8 Door arrangement. Space between two doors in a series shall be 48 inches (1219 mm) minimum plus the width of a door swinging into the space. Doors in a series shall swing either in the same direction or away from the space between the doors.

Exceptions:

1. The minimum distance between horizontal sliding power-operated doors in a series shall be 48 inches (1219 mm).
2. Storm and screen doors serving individual *dwelling units* in Groups R-2 and R-3 need not be spaced 48 inches (1219 mm) from the other door.
3. Doors within individual *dwelling units* in Groups R-2 and R-3 other than within *Type A dwelling units*.

❖ Door arrangement is required to be such that an occupant's use of a means of egress doorway is not hampered by the operation of a preceding door located in the same line of travel so that the occupant flow can be smooth through the openings. Successive doors in a single egress path (i.e., in a series) can cause such interference. The 4-foot (1219 mm) clear distance between doors when the first door is open at 90 degrees allows an occupant, including a person using a wheelchair, to move past one door and its swing before beginning the operation of the next door [see Commentary Figure 1010.1.8(1)]. Note that where doors in a series are not arranged in a straight line, the intent of the code is to provide sufficient space to enable occupants to negotiate the second door without being encumbered by the first door's swing arc. To facilitate accessibility, the space between doors should provide sufficient clear space for a wheelchair [30 inches by 48 inches (762 mm by 1219 mm)] beyond the arc of the door swing [see Commentary Figure 1010.1.8(2)]. Additionally, the approach and access provisions of ICC A117.1 must be considered for all doors along an accessible route.

The exception is to permit horizontal sliding power-operated doors (see Section 1010.1.4.2) to be designed with a lesser distance between them in a series arrangement because they are customarily designed to open simultaneously or in sequence

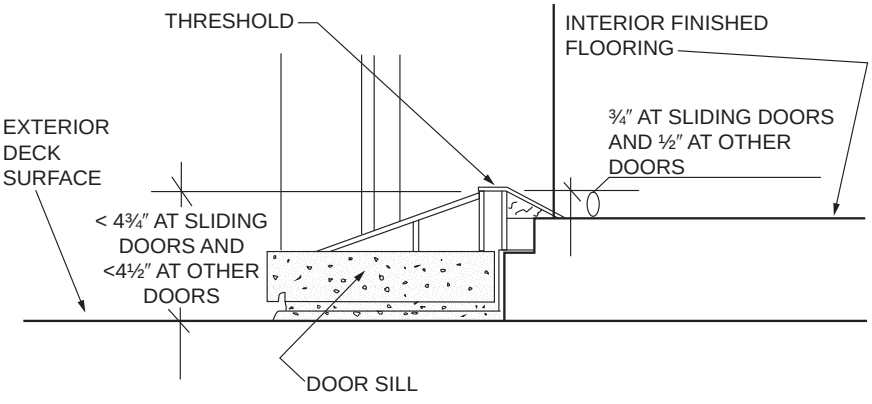

For SI: 1 inch = 25.4 mm.

Figure 1010.1.7(5)
EXAMPLE OF EXCEPTON 2

INTERNATIONAL CODE COUNCIL®
Copyright © 2015 ICC. ALL RIGHTS RESERVED. Accessed by David Dammon on Jun 21, 2017 12:30:52 PM pursuant to License Agreement with ICC. No further reproduction or distribution authorized. ANY UNAUTHORIZED REPRODUCTION OR DISTRIBUTION IS A VIOLATION OF THE FEDERAL COPYRIGHT ACT AND THE LICENSE AGREEMENT, AND SUBJECT TO CIVIL AND CRIMINAL PENALTIES THEREUNDER.

such that movement through them is unhampered. Storm and screen doors on residential dwelling units need not be spaced at 48 inches (1219 mm) since it would be impractical, and they do not operate the same as doors in a series. Doors within dwelling units of Group R-2 or R-3 that are not Type A dwelling units (see Section 1107) are also permitted to have a lesser distance between doors, because the accessibility provisions do not apply. There are requirements in Chapter 10 of the ICC A117.1 for door arrangements within Accessible and Type A dwelling and sleeping units.

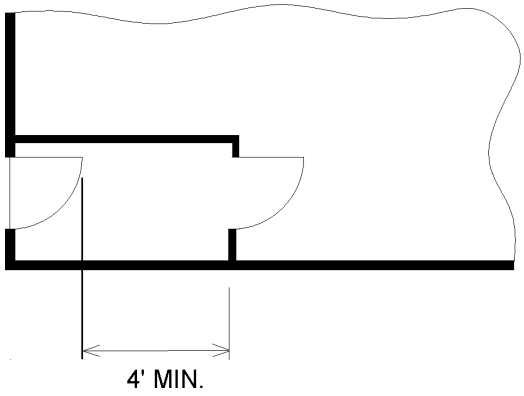

For SI: 1 foot = 304.8 mm.

Figure 1010.1.8(1)
SPACING OF DOORS IN A SERIES

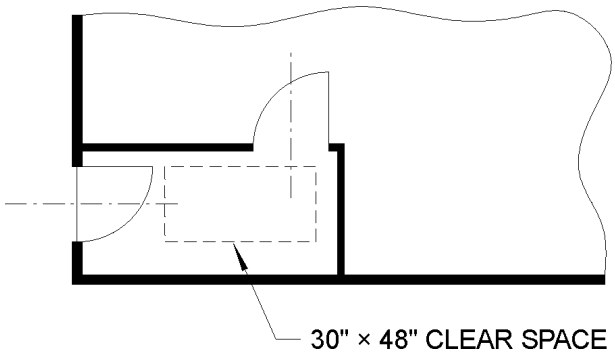

For SI: 1 inch = 25.4 mm.

Figure 1010.1.8(2)
SPACING OF DOORS IN A SERIES

1010.1.9 Door operations. Except as specifically permitted by this section, egress doors shall be readily openable from the egress side without the use of a key or special knowledge or effort.

❖ When installed for security purposes, locks and latches can intentionally prohibit the use of an egress door and thus interfere with or prevent the egress of occupants at the time of a fire. While the security of property is important, the life safety of occupants is essential. Where security and life safety objectives conflict, alternative measures, such as those permitted by each of the exceptions in Section 1010.1.9.3, may be applicable.

Egress doors are permitted to be locked, but must be capable of being unlocked and readily openable from the side from which egress is to be made. The outside of a door can be key locked as long as the inside—the side from which egress is to be made—can be unlocked without the use of tools, keys or special knowledge or effort. For example, an unlocking operation that is integral with an unlatching operation is acceptable.

Examples of special knowledge would be a combination lock or an unlocking device or deadbolt in an unknown, unexpected or hidden location. Special effort would dictate the need for unusual and unexpected physical ability to unlock or make the door fully available for egress.

Where a pair of egress door leaves is installed, with or without a center mullion, the general requirement is that each leaf must be provided with its own releasing or unlatching device so as to be readily openable. Door arrangements or devices that depend on the release of one door before the other can be opened are not to be used except as permitted by Section 1010.1.9.4.

1010.1.9.1 Hardware. Door handles, pulls, latches, locks and other operating devices on doors required to be *accessible* by Chapter 11 shall not require tight grasping, tight pinching or twisting of the wrist to operate.

❖ Any doors that are located along an accessible route for ingress or egress must have door hardware that is easy to operate by a person with limited mobility or dexterity. This would include all elements of the door hardware used in typical door operation, such as door levers, locks, security changes, etc. This requirement is also an advantage for persons with arthritis in their hands. Items such as small, full-twist thumb turns or smooth circular knobs are examples of hardware that is not acceptable. There are many types latching or locking devices can be operated without tight grasping, tight pinching, or twisting of the wrist what would comply with the requirements of this section.

Some people with disabilities are unable to grasp objects with their hands or twist their wrists. Such people are unable to operate, or have great difficulty operating, door hardware other than lever-operated mechanisms, push-type mechanisms and U-shaped door pulls. Door hardware that can be operated with a closed fist or a loose grip accommodates the greatest range of users. Hardware operated by simultaneous hand and finger movement requires greater dexterity and coordination and should be avoided for doors along an accessible route (see Commentary Figure 1010.1.9.1).

INTERNATIONAL CODE COUNCIL®
Copyright © 2015 ICC. ALL RIGHTS RESERVED. Accessed by David Dammon on Jun 21, 2017 12:30:52 PM pursuant to License Agreement with ICC. No further reproduction or distribution authorized. ANY UNAUTHORIZED REPRODUCTION OR DISTRIBUTION IS A VIOLATION OF THE FEDERAL COPYRIGHT ACT AND THE LICENSE AGREEMENT, AND SUBJECT TO CIVIL AND CRIMINAL PENALTIES THEREUNDER.

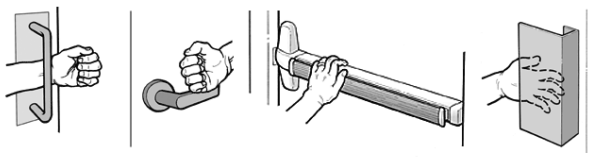

Figure 1010.1.9.1
DOOR HARDWARE

1010.1.9.2 Hardware height. Door handles, pulls, latches, locks and other operating devices shall be installed 34 inches (864 mm) minimum and 48 inches (1219 mm) maximum above the finished floor. Locks used only for security purposes and not used for normal operation are permitted at any height.

Exception: Access doors or gates in barrier walls and fences protecting pools, spas and hot tubs shall be permitted to have operable parts of the release of latch on self-latching devices at 54 inches (1370 mm) maximum above the finished floor or ground, provided the self-latching devices are not also self-locking devices operated by means of a key, electronic opener or integral combination lock.

❖ The requirements in this section place the door hardware at a level that is usable by most people, including a person using a wheelchair. The exception allows security locks to be placed at any height. An example would be an unframed glass door at the front door of a tenant space in a mall that has the lock near the floor level. The lock is only used when the store is not open for business. Such locks are not required for the normal operation of the door.

The exception permits a special allowance for security latches at pools, spas and hot tubs. The concern is that the 48-inch (1219 mm) maximum height would place the security latch within reach of children. The 54-inch (1372 mm) maximum height is intended to override the maximum 48-inch (1219 mm) reach range in ICC A117.1. This compromise addresses concerns for children's safety and still maintains accessibility to a reasonable level. Based on the last phrase in the exception, if the gate hardware also had a locking function and a key or other similar device would be needed to unlock the hardware to allow unlatching the latch, then the exception to allow the hardware to be 54-inches (1372 mm) above the floor is not applicable. A reference to this exception is found in Section 1109.13, Exception 7, for the accessibility requirements for operable parts. This is consistent with the 2010 Standard and ANSI/NSPI-8 1996, *Model Barrier Code for Residential Swimming Pools, Spas, and Hot Tubs*.

1010.1.9.3 Locks and latches. Locks and latches shall be permitted to prevent operation of doors where any of the following exist:

1. Places of detention or restraint.
2. In buildings in occupancy Group A having an *occupant load* of 300 or less, Groups B, F, M and S, and in *places of religious worship*, the main door or doors are permitted to be equipped with key-operated locking devices from the egress side provided:
   2.1. The locking device is readily distinguishable as locked.
   2.2. A readily visible durable sign is posted on the egress side on or adjacent to the door stating: THIS DOOR TO REMAIN UNLOCKED WHEN THIS SPACE IS OCCUPIED. The sign shall be in letters 1 inch (25 mm) high on a contrasting background.
   2.3. The use of the key-operated locking device is revokable by the *building official* for due cause.
3. Where egress doors are used in pairs, *approved* automatic flush bolts shall be permitted to be used, provided that the door leaf having the automatic flush bolts does not have a doorknob or surface-mounted hardware.
4. Doors from individual *dwelling* or *sleeping units* of Group R occupancies having an *occupant load* of 10 or less are permitted to be equipped with a night latch, dead bolt or security chain, provided such devices are openable from the inside without the use of a key or tool.
5. *Fire doors* after the minimum elevated temperature has disabled the unlatching mechanism in accordance with *listed fire door* test procedures.

❖ Where security and life safety objectives conflict, alternative measures, such as those permitted by each of the listed situations, may be applicable.

Item 1 is needed for jails and prisons or locations where someone must be kept inside for their own safety (i.e., dementia wards, psychiatric wards).

Item 2 permits a locking device, such as a double-cylinder dead bolt, on the main entrance door to a building or space. It must be immediately apparent that these doors are locked. For example, such locking devices may have an integral indicator that automatically reflects the "locked" or "unlocked" status of the device. In addition, a sign must be provided that clearly states that the door is to be unlocked when the building or space is occupied. The sign on or adjacent to the door not only reminds employees to unlock the door, but also advises the public that an unacceptable arrangement exists if one finds the door locked. Ideally, the individual who encounters the locked door will notify management and possibly the building official. Note that the use of the key-locking device is revocable by the building official. The locking arrangement is not permitted on any door other than the main exit and, therefore, the employees, security and cleaning crews will have access to other exits without requiring the use of a key. This allowance is not limited just to multiple-exit buildings but also to small buildings with one exit. This option is an alternative to the panic hardware required by Section 1010.1.10.

INTERNATIONAL CODE COUNCIL®
Copyright © 2015 ICC. ALL RIGHTS RESERVED. Accessed by David Dammon on Jun 21, 2017 12:30:52 PM pursuant to License Agreement with ICC. No further reproduction or distribution authorized. ANY UNAUTHORIZED REPRODUCTION OR DISTRIBUTION IS A VIOLATION OF THE FEDERAL COPYRIGHT ACT AND THE LICENSE AGREEMENT, AND SUBJECT TO CIVIL AND CRIMINAL PENALTIES THEREUNDER.

In Item 3, an automatic flush bolt device is one that is internal to the inactive leaf of a pair of doors. The device has a small "knuckle" that extends from the inactive leaf into an opening in the active leaf. When the active leaf is opened, the bolt is automatically retracted. When the active leaf is closed, the knuckle is pressed into the inactive leaf by the active leaf, extending the flush bolt(s), in the head or sill of the inactive leaf (see Commentary Figure 1010.1.9.3).

Automatic flush bolts on one leaf of a pair of egress doors are acceptable, provided the leaf with the automatic flush bolts is not equipped with a doorknob or other hardware that would imply to the user that the door leaf is unlatched independently of the companion leaf.

Item 4 addresses the need for security in residential dwelling and sleeping units such as hotel rooms, apartments, dormitory rooms or townhouses. The occupants are familiar with the operation of the indicated devices, which are intended to be relatively simple to operate without the use of a key or tool. Note that this item only applies to the door leading from individual dwelling or sleeping units in a building. This item would not be applicable for doors locked as part of a security system in a multiunit building.

Item 5 is in recognition of required test procedures (UL 10B or UL 10C) for listed fire doors, which include the disabling of the locking mechanism when a fire door is exposed to the elevated temperatures of a fire.

1010.1.9.4 Bolt locks. Manually operated flush bolts or surface bolts are not permitted.

Exceptions:

1. On doors not required for egress in individual *dwelling units* or *sleeping units*.
2. Where a pair of doors serves a storage or equipment room, manually operated edge- or surface-mounted bolts are permitted on the inactive leaf.
3. Where a pair of doors serves an *occupant load* of less than 50 persons in a Group B, F or S occupancy, manually operated edge- or surface-mounted bolts are permitted on the inactive leaf. The inactive leaf shall not contain doorknobs, panic bars or similar operating hardware.
4. Where a pair of doors serves a Group B, F or S occupancy, manually operated edge- or surface-mounted bolts are permitted on the inactive leaf provided such inactive leaf is not needed to meet egress capacity requirements and the building is equipped throughout with an *automatic sprinkler system* in accordance with Section 903.3.1.1. The inactive leaf shall not contain doorknobs, panic bars or similar operating hardware.
5. Where a pair of doors serves patient care rooms in Group I-2 occupancies, self-latching edge- or surface-mounted bolts are permitted on the inactive leaf provided that the inactive leaf is not needed to meet egress capacity requirements and the inactive leaf

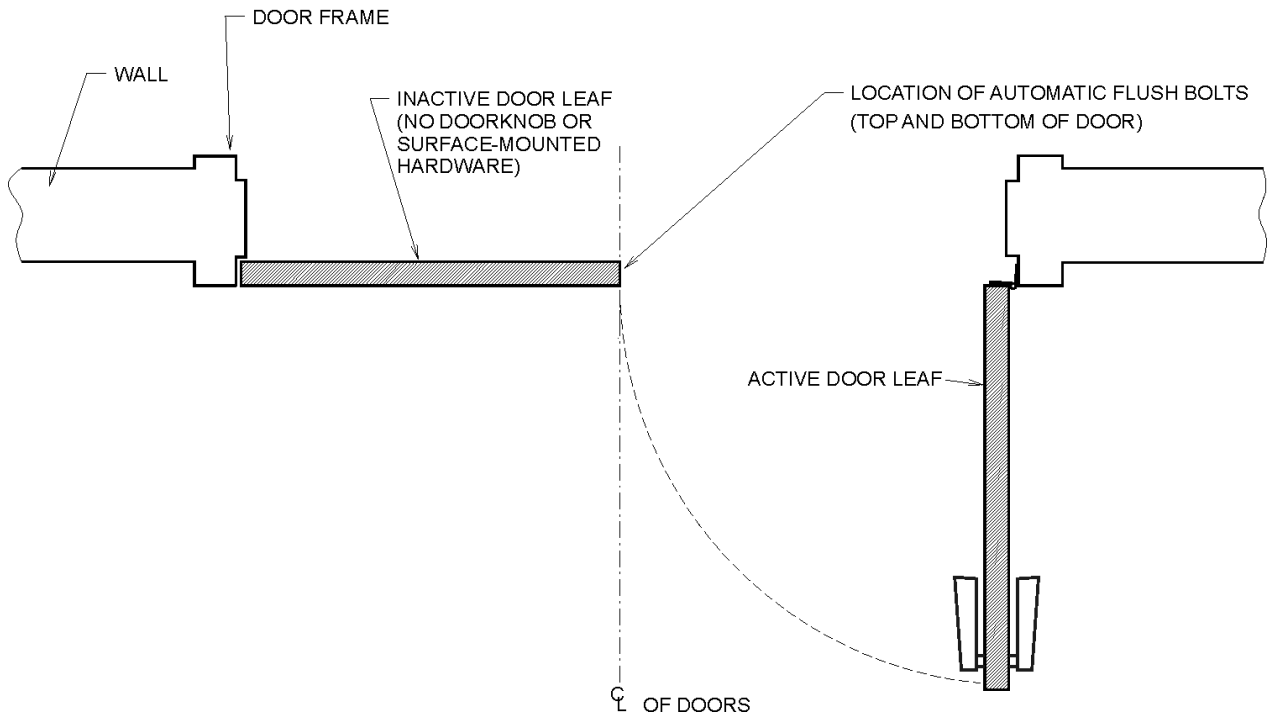

Figure 1010.1.9.3
SURFACE AND FLUSH BOLT LOCATIONS

INTERNATIONAL CODE COUNCIL®
Copyright © 2015 ICC. ALL RIGHTS RESERVED. Accessed by David Dammon on Jun 21, 2017 12:30:52 PM pursuant to License Agreement with ICC. No further reproduction or distribution authorized. ANY UNAUTHORIZED REPRODUCTION OR DISTRIBUTION IS A VIOLATION OF THE FEDERAL COPYRIGHT ACT AND THE LICENSE AGREEMENT, AND SUBJECT TO CIVIL AND CRIMINAL PENALTIES THEREUNDER.

shall not contain doorknobs, panic bars or similar operating hardware.

❖ This section is applicable to doors that are required to be for means of egress purposes or are identified as a means of egress, such as by an "Exit" sign or other device. Doors, as well as a second leaf in a doorway that is provided for a purpose other than means of egress, such as for convenience or building operations, should be arranged or identified so as not to be mistaken as a means of egress. The use of manually operated flush bolts or surface bolts on means of egress doors have traditionally been prohibited because of the inability of users to quickly identify and operate such devices under emergency conditions.

This section prohibits installation of manually operated flush and surface bolts except in limited situations. The exceptions allowing the use of such hardware are intended to expand the use of manually operated edge- or surface-mounted bolts under specified conditions while maintaining an appropriate degree of safety for the building occupants. Flush and surface bolts represent locking devices that may be difficult to operate because of their location and operation (see Commentary Figure 1010.1.9.4).

Where edge-mounted or surface-mounted manually operated bolts are installed on the inactive leaf of a pair of doors, per the exceptions below, the manually operated bolts must have no effect on the egress operation of the active leaf.

Exception 1 allows manual flush bolts and surface bolts at some doors within an individual dwelling or sleeping unit. Even then, such bolts may only be used on doors not required for egress (see Section 1010.1.9.3, Item 4, for security of doors from individual dwelling and sleeping units).

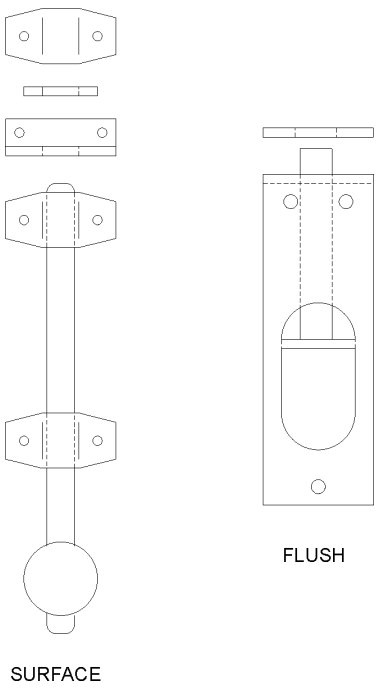

Figure 1010.1.9.4
TYPICAL MANUAL BOLT HARDWARE

Exception 2 provides for edge-mounted or surface-mounted bolts on the inactive leaf of a pair of doors from storage or equipment areas. Double doors are often provided to allow for the easy removal or replacement of large pieces of equipment or bulk movement of goods.

Exceptions 3 and 4 offer two options for limited doors in Group B, F and S occupancies. Again, the wider door is sometimes needed for the movement of equipment. Automatic flush bolts and removable center posts can be easily damaged and difficult to maintain in areas of frequent door usage. Revisions to the requirements for door hardware on such pairs of doors will increase building functionality while maintaining a very high degree of occupant safety.

In Exception 3, the number of occupants within the space must be less than 50, the active leaf must meet means of egress requirements and the inactive leaf must not have any operating hardware so that it could be mistaken for an egress door.

In accordance with Exception 4, if the Group B, F or S building is sprinklered throughout with an NFPA 13 system, the room served by the double door can have any occupant load if the inactive leaf is not required for egress capacity and has no operating hardware.

Exception 5 is in recognition of the need to move equipment into some patient sleeping and treatment rooms in hospital and nursing home environments. Again, the inactive leaf must not be needed for means of egress or have any operating hardware. This is consistent with Section 407.1.1, which allows for staff to operate patient sleeping and treatment room doors during emergency events. The doors would still have to meet smoke barrier opening protective requirements. The clear width requirement of $41^1/_2$ inches (1054 mm) in Section 1010.1.1 would still have to be met with the active door leaf.

1010.1.9.5 Unlatching. The unlatching of any door or leaf shall not require more than one operation.

Exceptions:

1. Places of detention or restraint.
2. Where manually operated bolt locks are permitted by Section 1010.1.9.4.
3. Doors with automatic flush bolts as permitted by Section 1010.1.9.3, Item 3.
4. Doors from individual *dwelling units* and *sleeping units* of Group R occupancies as permitted by Section 1010.1.9.3, Item 4.

❖ The code prohibits the use of locks or latching devices that require more than one operation on any door required or used for egress, which could be a safety hazard in an emergency situation. The exceptions address locations where multiple locks or latch-

INTERNATIONAL CODE COUNCIL®
Copyright © 2015 ICC. ALL RIGHTS RESERVED. Accessed by David Dammon on Jun 21, 2017 12:30:52 PM pursuant to License Agreement with ICC. No further reproduction or distribution authorized. ANY UNAUTHORIZED REPRODUCTION OR DISTRIBUTION IS A VIOLATION OF THE FEDERAL COPYRIGHT ACT AND THE LICENSE AGREEMENT, AND SUBJECT TO CIVIL AND CRIMINAL PENALTIES THEREUNDER.

ing devices which require more than one operation are acceptable. See the referenced sections for additional commentary.

1010.1.9.5.1 Closet and bathroom doors in Group R-4 occupancies. In Group R-4 occupancies, closet doors that latch in the closed position shall be openable from inside the closet, and bathroom doors that latch in the closed position shall be capable of being unlocked from the ingress side.

❖ The intent of this provision is to address possible entrapment concerns in group homes. If a closet door has a door latch, the closet door must be openable from both inside and outside. This will ensure that someone cannot get stuck inside a closet by accident. If a closet does not latch, no interior hardware is required. In case a resident needs assistance in a bathroom, the bathroom door must have a type of hardware that would allow the door to be unlocked from the outside by staff. This requirement is unique to Group R-4. There are not similar requirements for other Group R occupancies, Group I-1 assisted living facilities or Group I-2 nursing homes; however, some assisted living or nursing home facilities install such devices to increase patient safety. Section 2902.3.5 and the equivalent section in the *International Plumbing Code*® (IPC®) (Section 403.3.6) prohibits the doors leading from multistall bathrooms from being lockable from the inside.

1010.1.9.6 Controlled egress doors in Groups I-1 and I-2. Electric locking systems, including electro-mechanical locking systems and electromagnetic locking systems, shall be permitted to be locked in the means of egress in Group I-1 or I-2 occupancies where the clinical needs of persons receiving care require their containment. Controlled egress doors shall be permitted in such occupancies where the building is equipped throughout with an *automatic sprinkler system* in accordance with Section 903.3.1.1 or an *approved automatic smoke* or *heat detection system* installed in accordance with Section 907, provided that the doors are installed and operate in accordance with all of the following:

1. The door locks shall unlock on actuation of the *automatic sprinkler system* or *automatic fire detection system*.
2. The door locks shall unlock on loss of power controlling the lock or lock mechanism.
3. The door locking system shall be installed to have the capability of being unlocked by a switch located at the *fire command center*, a nursing station or other approved location. The switch shall directly break power to the lock.
4. A building occupant shall not be required to pass through more than one door equipped with a controlled egress locking system before entering an exit.
5. The procedures for unlocking the doors shall be described and approved as part of the emergency planning and preparedness required by Chapter 4 of the *International Fire Code*.
6. All clinical staff shall have the keys, codes or other means necessary to operate the locking systems.
7. Emergency lighting shall be provided at the door.
8. The door locking system units shall be listed in accordance with UL 294.

Exceptions:

1. Items 1 through 4 shall not apply to doors to areas occupied by persons who, because of clinical needs, require restraint or containment as part of the function of a psychiatric treatment area.
2. Items 1 through 4 shall not apply to doors to areas where a *listed* egress control system is utilized to reduce the risk of child abduction from nursery and obstetric areas of a Group I-2 hospital.

❖ The intent of these provisions is to address the special safety needs for wards, units, or areas in assisted living facilities, nursing homes and hospitals where egress may need to be controlled for the safety of the occupants or where specialized protective measures are needed for patients. “Controlled egress” means simply that the ability of occupants, such as patients or residents, to leave a space is controlled by others, such as staff. The areas where controlled egress may be permitted include psychiatric areas, dementia units, Alzheimer’s units, maternity units, and newborn nurseries. Code officials may also permit these provisions in other areas such as emergency departments or pediatric areas where the safety and/or security of the occupants are of primary concern. In all situations, there must be a balance between maintaining a safe and secure environment and providing for emergency egress.

The requirements of this section apply to locking systems controlling egress. The functions of an ingress control locking system are not addressed in the codes and are unrelated as long as egress is provided as required or permitted by this section and other applicable provisions of the code.

In areas where additional security may be a concern, a door hardware system may include an unlocking device, such as a keypad, card reader, eye scanner, thumbprint scanner or other credential device. Where these credential unlocking systems are only on the ingress side of a building or space, there are no limitations in the codes. Where these credential unlocking systems are on the egress side of a space (perhaps to monitor personnel movement), egress must be available through one of the locking systems addressed in Section 1010.1.9.7, 1010.1.9.8 or 1010.1.9.9. Such a credential unlocking device could also be included in the controlled locking arrangements of Sections 408.4 and 1010.1.9.6 (Item 6).

IBC Section 907.6 requires a fire alarm system to be installed in accordance with the requirements of that section and NFPA 72. NFPA 72 includes specific requirements for unlocking doors in the direction of egress that are consistent with the requirements in

INTERNATIONAL CODE COUNCIL®
Copyright © 2015 ICC. ALL RIGHTS RESERVED. Accessed by David Dammon on Jun 21, 2017 12:30:52 PM pursuant to License Agreement with ICC. No further reproduction or distribution authorized. ANY UNAUTHORIZED REPRODUCTION OR DISTRIBUTION IS A VIOLATION OF THE FEDERAL COPYRIGHT ACT AND THE LICENSE AGREEMENT, AND SUBJECT TO CIVIL AND CRIMINAL PENALTIES THEREUNDER.

this section for controlled egress locking systems. Additionally, NFPA 72 includes specific requirements and guidance for backup power where the backup power is used to keep these doors in a locked condition in the direction of egress.

Items 1 through 3 address when the controlled egress locks would be required to automatically unlock allowing unrestricted egress.

Item 4 requires that no occupant shall have to pass through more than one controlled egress lock before entering an exit.

Item 5 requires the procedures for unlocking the doors to be described, approved by the code official, and included in the emergency planning and preparedness plan required by Chapter 4 of the *International Fire Code*.

Item 6 requires clinical staff to have the means necessary to operate the controlled egress locking system, such as keys, codes, etc.

Item 7 requires emergency lighting at the controlled egress door to ensure visibility for egress during a possible power outage.

Item 8 requires the units of the controlled egress locking system to be listed to UL 294. The UL 294 Access Control Systems standard applies to construction, performance, and operation of systems which control passage through a door, and electrical, electronic, or mechanical units of these systems.

The first exception allows for the automatic unlocking requirements to be omitted for doors in a psychiatric treatment area in hospitals or nursing homes due to additional safety concerns for the residents.

The second exception allows for automatic unlocking requirements to be omitted where a listed egress control system is installed for the specific purposes of reducing child abductions from nursery and obstetric areas of hospitals.

1010.1.9.7 Delayed egress. Delayed egress locking systems shall be permitted to be installed on doors serving any occupancy except Group A, E and H in buildings that are equipped throughout with an *automatic sprinkler system* in accordance with Section 903.3.1.1 or an *approved automatic smoke* or *heat detection system* installed in accordance with Section 907. The locking system shall be installed and operated in accordance with all of the following:

1. The delay electronics of the delayed egress locking system shall deactivate upon actuation of the *automatic sprinkler system* or *automatic fire detection system*, allowing immediate, free egress.
2. The delay electronics of the delayed egress locking system shall deactivate upon loss of power controlling the lock or lock mechanism, allowing immediate free egress.
3. The delayed egress locking system shall have the capability of being deactivated at the f*ire command center* and other *approved* locations.
4. An attempt to egress shall initiate an irreversible process that shall allow such egress in not more than 15 seconds when a physical effort to exit is applied to the egress side door hardware for not more than 3 seconds. Initiation of the irreversible process shall activate an audible signal in the vicinity of the door. Once the delay electronics have been deactivated, rearming the delay electronics shall be by manual means only.

   Exception: Where approved, a delay of not more than 30 seconds is permitted on a delayed egress door.
5. The egress path from any point shall not pass through more than one delayed egress locking system.

   Exception: In Group I-2 or I-3 occupancies, the egress path from any point in the building shall pass through not more than two delayed egress locking systems provided the combined delay does not exceed 30 seconds.
6. A sign shall be provided on the door and shall be located above and within 12 inches (305 mm) of the door exit hardware:

   6.1. For doors that swing in the direction of egress, the sign shall read: PUSH UNTIL ALARM SOUNDS. DOOR CAN BE OPENED IN 15 [30] SECONDS.

   6.2. For doors that swing in the opposite direction of egress, the sign shall read: PULL UNTIL ALARM SOUNDS. DOOR CAN BE OPENED IN 15 [30] SECONDS.

   6.3. The sign shall comply with the visual character requirements in ICC A117.1.

   Exception: Where approved, in Group I occupancies, the installation of a sign is not required where care recipients who because of clinical needs require restraint or containment as part of the function of the treatment area.
7. Emergency lighting shall be provided on the egress side of the door.
8. The delayed egress locking system units shall be listed in accordance with UL 294.

❖ The intent of these provisions is to address special needs where there are concerns about internal security. Delays in egress, as allowed in this section, are not considered detrimental to occupant evacuation. The intent of these provisions is also to address special needs where occupants may need to be protected from harm because of their own actions. For example, residents or patients in some Group I-1 or Group I-2 occupancies may present a danger to themselves of elopement from the building into traffic, weather and other environmental hazards.

Delayed egress locking systems are permitted for doors in a means of egress serving occupancies other than those in Groups A, E and H. Delayed egress locking systems are not permitted in assembly or educational occupancies because the resulting delay in egress is not acceptable given the greater number of occupants who may be unfamiliar with the space or of a young age. Also, the delay from Group

INTERNATIONAL CODE COUNCIL®
Copyright © 2015 ICC. ALL RIGHTS RESERVED. Accessed by David Dammon on Jun 21, 2017 12:30:52 PM pursuant to License Agreement with ICC. No further reproduction or distribution authorized. ANY UNAUTHORIZED REPRODUCTION OR DISTRIBUTION IS A VIOLATION OF THE FEDERAL COPYRIGHT ACT AND THE LICENSE AGREEMENT, AND SUBJECT TO CIVIL AND CRIMINAL PENALTIES THEREUNDER.

H would be unreasonable given the potential for rapid fire buildup in such areas.

This locking system is called "delayed egress" because of Item 4, which permits a fixed amount of time to pass prior to allowing egress.

The requirements of this section apply to locking systems which delay egress. The functions of an ingress control locking system are unrelated and are not addressed as long as egress is provided as required or permitted by this section and other applicable provisions of the code.

The requirements of this section apply to electromagnetic locking systems which open on hardware activation. The functions of an ingress control locking system are not addressed in the codes and are unrelated as long as egress is provided as required or permitted by this section and other applicable provisions of the code.

In areas where additional security may be a concern, a door hardware system may include an unlocking device, such as a keypad, card reader, eye scanner, thumbprint scanner or other credential device. Where these credential unlocking systems are only on the ingress side of a building or space, there are no limitations in the codes. Where these credential unlocking systems are on the egress side of a space (perhaps to monitor personnel movement), egress must be available through one of the locking systems addressed in Section 1010.1.9.7, 1010.1.9.8 or 1010.1.9.9. Such a credential unlocking device could also be included in the controlled locking arrangements of Sections 408.4 and 1010.1.9.6 (Item 6).

IBC Section 907.6 requires a fire alarm system to be installed in accordance with the requirements of that section and NFPA 72. NFPA 72 includes specific requirements for unlocking doors in the direction of egress that are consistent with the requirements in this section for delayed egress locking systems. Additionally, NFPA 72 includes specific requirements and guidance for backup power where the backup power is used to keep these doors in a locked condition in the direction of egress.

Because of the egress delay caused by the system on the egress door, the building must be provided throughout with compensating fire protection features to promptly warn occupants of a fire condition. All listed conditions must be met in order to permit use of a delayed egress locking system.

Item 1 interconnects the locking system with an automatic sprinkler system in accordance with NFPA 13 or, alternatively, an automatic fire detection system in accordance with Section 907, which is required to be installed throughout the building. Such systems are to provide occupants with an early warning of a fire event, and thus additional time for egress. Note that actuation of the automatic sprinkler system or actuation of the automatic fire detection system must eliminate the delay of the delayed egress locking system so the door immediately allows egress (without delay).

Item 2 specifies the delay is to be eliminated on loss of power. Since the operation of the delayed egress locking system is dependent on electrical power, in the event of electrical power loss to the lock or locking mechanism, the doors must immediately allow egress (without delay).

Item 3 specifies that the delay in the delayed egress locking system is capable of being eliminated by a signal sent from a fire command center or other approved locations. Personnel at the fire command center location would normally be the first alerted to an emergency event and would be expected to take appropriate action to allow immediate egress at all doors equipped with delayed egress locking systems. Other locations may be alternates to or back up the fire command center. Item 3 facilitates remotely eliminating the delay in the delayed egress locking system in the event of a fire or in the event of other nonfire emergencies.

Item 4 specifies the operational characteristics of the delayed egress locking system. The delay timer of the system and the audible signal (alarm) at the door may be configured one of two ways. In some occupancies, the delay timer is initiated and the alarm sounded immediately upon an attempt to open the door by pushing on the panic bar, or causing a slight movement of the door. In other occupancies, to prevent nuisance alarms from inadvertent bumps or accidental contact, the initiation of the delay timer and sounding of the alarm may be deferred by up to 3 seconds, requiring the occupant to attempt to operate the door hardware for up to, but not more than, 3 seconds.

Once the delay timer starts, the door is required to be openable from the egress side in not more than 15 seconds (or not more than 30 seconds where approved by the code official, per the exception). At the end of the delay, the door's locking system is required to allow the door to be opened by the occupant operating the egress side door hardware (i.e. pushing on the panic bar), allowing egress. The unlocking cycle is irreversible; once it is started, it does not stop. Once the door is openable from the egress side at the end of the delay, it remains openable allowing immediate egress until someone comes to the door and manually rearms the delay. The first user to the door may face a delay, but after that other users would be able to exit immediately. A method of automatically rearming the delayed egress locking system at the door from a remote location such as a central control station or security office is not permitted.

The exception to Item 4 permits the building official to allow the time delay prior to allowing egress to be increased beyond 15 seconds, but not in excess of 30 seconds. This exception is more often granted for the safety/security of occupants (e.g., to reduce or prevent elopement of patients) than for loss or theft prevention.

Item 5 limits the egress path to not more than one door with a delayed egress locking system. However, the exception to Item 5 allows not more than two

INTERNATIONAL CODE COUNCIL®
Copyright © 2015 ICC. ALL RIGHTS RESERVED. Accessed by David Dammon on Jun 21, 2017 12:30:52 PM pursuant to License Agreement with ICC. No further reproduction or distribution authorized. ANY UNAUTHORIZED REPRODUCTION OR DISTRIBUTION IS A VIOLATION OF THE FEDERAL COPYRIGHT ACT AND THE LICENSE AGREEMENT, AND SUBJECT TO CIVIL AND CRIMINAL PENALTIES THEREUNDER.

doors with delayed egress locking systems in Groups I-2 and I-3 with the delay of the two systems to be not more than 30 seconds total.

Having multiple doors can help with preventing resident elopement and yet the overall delay does not exceed the previously accepted time period. An example of where the two-door arrangement may be helpful is a multistory facility where both the door from the story and the door from the building could be controlled.

Item 6 requires a sign to inform occupants how to operate the delayed egress locking system and when that door will become available for egress. An undesirable consequence of the door not unlocking immediately is if the user assumes it will never be available for egress and then proceeds to another exit door. In some occupancies, delayed egress locking systems may be utilized on doors not required to swing in the direction of egress travel. Options 6.1 and 6.2 allow for signs appropriate for the swing of the door. The required sign is typically supplied with the delayed egress locking system. The reference to ICC A117.1 visual requirements would not require raised letters or braille, but would require readable text, with good finish and contrast. The exception in Item 6 allows the sign to be omitted if the clinical needs of occupants require restraint or containment, as these patients may be capable of reading and following the sign's instructions then potentially putting themselves in harm's way. Based on the level of staff training within these facilities, the need to protect the patients by preventing elopement and the facts that these systems are required to be interconnected with the sprinkler or fire detection systems and unlock upon loss of power, it was determined that eliminating the sign in these facilities is reasonable.

Item 7 requires emergency lighting on the egress side of the door so that the user can read the sign required by Item 5.

Item 8 requires the units of the delayed egress locking system to be listed to UL 294. The UL 294 Access Control Systems standard applies to construction, performance and operation of systems which control passage through a door, and electrical, electronic or mechanical units of these systems.

1010.1.9.8 Sensor release of electrically locked egress doors. The electric locks on sensor released doors located in a *means of egress* in buildings with an occupancy in Group A, B, E, I-1, I-2, I-4, M, R-1 or R-2 and entrance doors to tenant spaces in occupancies in Group A, B, E, I-1, I-2, I-4, M, R-1 or R-2 are permitted where installed and operated in accordance with all of the following criteria:

1. The sensor shall be installed on the egress side, arranged to detect an occupant approaching the doors. The doors shall be arranged to unlock by a signal from or loss of power to the sensor.
2. Loss of power to the lock or locking system shall automatically unlock the doors.
3. The doors shall be arranged to unlock from a manual unlocking device located 40 inches to 48 inches (1016 mm to 1219 mm) vertically above the floor and within 5 feet (1524 mm) of the secured doors. Ready access shall be provided to the manual unlocking device and the device shall be clearly identified by a sign that reads "PUSH TO EXIT." When operated, the manual unlocking device shall result in direct interruption of power to the lock—independent of other electronics—and the doors shall remain unlocked for not less than 30 seconds.
4. Activation of the building *fire alarm system*, where provided, shall automatically unlock the doors, and the doors shall remain unlocked until the fire alarm system has been reset.
5. Activation of the building *automatic sprinkler system* or *fire detection system*, where provided, shall automatically unlock the doors. The doors shall remain unlocked until the *fire alarm system* has been reset.
6. The door locking system units shall be listed in accordance with UL 294.

❖ The intent of this section is to provide consistent requirements where an electronically locked door is unlocked by activating devices mounted somewhere other than on the door itself. The unlocking activation is designed to be from a passive action by the occupant (e.g., walking to the door triggering a sensor), but the system includes a required nearby manual unlocking device (such as a push button) as a secondary electrical lock release device.

This section permits doors in a means of egress and entrance doors to tenant spaces in occupancies of Groups A, B, E, I-1, I-2, I-4, M, R-1 and R-2 to be electronically secured (locked) to control ingress while maintaining the doors as a means of egress. Typically these systems are used in high-security areas where a record of who has entered and left a space is desired. Or this system may be used where there is a concern for elopement or child abduction (Group I-1, I-2 or I-4).

This section of the IBC does not limit the number of doors in a means of egress that may be equipped with sensor-released electrically locked doors.

IBC Section 907.6 requires that a fire alarm system, where provided, is installed in accordance with the requirements of that section and NFPA 72. NFPA 72 includes specific requirements for unlocking doors in the direction of egress, which are consistent with the requirements in this section for sensor release of electrically locked egress doors. Additionally, NFPA 72 includes specific requirements and guidance for backup power where the backup power is used to keep these doors in a locked condition.

The requirements of this section apply to locking systems with a sensor release. The functions of an ingress control locking system are not addressed in the codes and are unrelated as long as egress is pro-

INTERNATIONAL CODE COUNCIL®
Copyright © 2015 ICC. ALL RIGHTS RESERVED. Accessed by David Dammon on Jun 21, 2017 12:30:52 PM pursuant to License Agreement with ICC. No further reproduction or distribution authorized. ANY UNAUTHORIZED REPRODUCTION OR DISTRIBUTION IS A VIOLATION OF THE FEDERAL COPYRIGHT ACT AND THE LICENSE AGREEMENT, AND SUBJECT TO CIVIL AND CRIMINAL PENALTIES THEREUNDER.

vided as required or permitted by this section and other applicable provisions of the code.

In areas where additional security may be a concern, a door hardware system may include an unlocking device, such as a keypad, card reader, eye scanner, thumbprint scanner or other credential device. Where these credential unlocking systems are only on the ingress side of a building or space, there are no limitations in the codes. Where these credential unlocking systems are on the egress side of a space (perhaps to monitor personnel movement), egress must be available through one of the locking systems addressed in Section 1010.1.9.7, 1010.1.9.8 or 1010.1.9.9. Such a credential unlocking device could also be included in the controlled locking arrangements of Sections 408.4 and 1010.1.9.6 (Item 6).

In areas where additional security may be a concern, a door hardware system may include a remote unlocking device, such as a keypad, card reader, eye scanner or thumbprint scanner. Where these systems are only on the ingress side of a building or space, there are no limitations in the codes. Where these systems are on the egress side of a space, free egress must still be available through one of the electromagnetic systems addressed in Section 11010.1.9.7, 1010.1.9.8 or 1010.1.9.9. Such a remote unlocking device could also be included in the controlled locking arrangements for Sections 408.4 and 1010.9.6.

Items 1 through 6 provide operational criteria to ensure egress during normal and emergency situations. Occupancies in Groups F, S and H are not included here because of their increased hazard caused by fuel load and other potentially life-threatening factors.

Item 1 requires that such doors be provided with an occupant sensor on the egress side of the door. These sensors typically operate on an infrared, microwave or sonic principle, but other technologies may be available. This sensor is required to automatically release the electrical lock on approach of an occupant from the egress side or when there is a loss of power to the sensor. This provision is written as "performance-based," where any means of sensor design can be utilized to cause the doors to unlock, allowing immediate egress. This section does not indicate at what distance the sensor should be set to operate. The sensor may be set to detect an approaching occupant in time to unlock the electrical locks prior to the occupant reaching the door, to permit egress without the occupant realizing the doors were electrically locked. In other applications, the sensor may be set to require the occupant to be closer to the door prior to unlocking the electrical lock to allow egress.

Item 2 states that if there is a loss of power to the electrical lock or to the locking system, the electrical lock on the door must unlock. These doors are commonly secured with fail-safe devices which prioritize life safety over security (such as electromagnetic locks or fail-safe power bolts) so that the electrical locks on these doors will automatically unlock when power to the electrical locking device or locking system is interrupted. In some instances, the locking system controller may be powered from a different source than the electrical locking device itself. In these cases, a loss of power to the locking system controller (while power remains applied to the locking device) must also cause the electrical locking device on the egress door to automatically unlock.

Item 3 requires that there be a manual unlocking device (push button), within 5 feet of the door, mounted 40 to 48 inches above the floor, unobstructed and with a clearly identifiable sign that says "PUSH TO EXIT." When operated, the manual unlocking device is to directly interrupt, independent of other electronics, the power to the electrical lock and cause the doors to remain electrically unlocked for a minimum of 30 seconds. To achieve a minimum 30-second delay independent of other electronics, the push button unlocking device should be designed and installed to provide this delay. The 30-second minimum is to allow adequate time for an individual to operate the manual unlocking device and then to egress through the door.

Items 4 and 5 require the building fire alarm system, automatic fire detection system or sprinkler system, if provided, to be interfaced with the door's electric locking system to unlock automatically on activation. The electrical locks on the doors are to remain unlocked until the fire alarm system is reset, ensuring egress is not impeded by the electric locking system.

Item 6 requires the units of the locking system to be listed to UL 294. The UL 294 Access Control System standard applies to construction, performance, and operation of systems which control passage through a door, and electrical, electronic, or mechanical units of these systems.

To summarize, it is important to keep in mind that an egress door equipped with a sensor release system must always allow egress whether power is present or not. The egress door must be "fail-safe" and must assume this "fail-safe" condition when power is removed from any part of the senor release system. In other words, if the sensor release system loses power, the egress door must be capable of being opened. People must be kept from being involuntarily locked inside buildings.

1010.1.9.9 Electromagnetically locked egress doors. Doors in the *means of egress* in buildings with an occupancy in Group A, B, E, I-1, I-2, I-4, M, R-1 or R-2 and doors to tenant spaces in Group A, B, E, I-1, I-2, I-4, M, R-1 or R-2 shall be permitted to be locked with an electromagnetic locking system where equipped with hardware that incorporates a built-in switch and where installed and operated in accordance with all of the following:

1. The hardware that is affixed to the door leaf has an obvious method of operation that is readily operated under all lighting conditions.

INTERNATIONAL CODE COUNCIL®
Copyright © 2015 ICC. ALL RIGHTS RESERVED. Accessed by David Dammon on Jun 21, 2017 12:30:52 PM pursuant to License Agreement with ICC. No further reproduction or distribution authorized. ANY UNAUTHORIZED REPRODUCTION OR DISTRIBUTION IS A VIOLATION OF THE FEDERAL COPYRIGHT ACT AND THE LICENSE AGREEMENT, AND SUBJECT TO CIVIL AND CRIMINAL PENALTIES THEREUNDER.

2. The hardware is capable of being operated with one hand.
3. Operation of the hardware directly interrupts the power to the electromagnetic lock and unlocks the door immediately.
4. Loss of power to the locking system automatically unlocks the door.
5. Where *panic* or *fire exit hardware* is required by Section 1010.1.10, operation of the *panic* or *fire exit hardware* also releases the electromagnetic lock.
6. The locking system units shall be listed in accordance with UL 294.

❖ The intent of this section is to provide consistent requirements where an electromagnetic lock is released by door-mounted hardware such as a panic bar, lockset/latchset, or touch-sense bar, all of which would be equipped with an integral switch that, when actuated by the normal actions of opening the door, causes the electromagnetic lock to release allowing immediate egress. In the identified occupancy groups, doors in the means of egress are permitted to be locked with an electromagnetic locking system where equipped with door hardware that incorporates a built-in switch, provided all the specified conditions are met. Additionally, doors to tenant spaces of the identified occupancy groups may be equipped with electromagnetic locks, provided all of the specified conditions are met. The use of this type of locking system may provide for a greater degree of security preventing or controlling access or ingress than that offered by a door with mechanical locking devices alone. The allowance for electromagnetically locked egress doors is limited to low- and moderate-hazard occupancies where security may be a concern.

It may be important to note other "shall be permitted" locking arrangements in the code may also use electromagnetic locks as part of their system. Controlled egress locking systems (Section 1010.1.9.6), delayed egress locking systems (Section 1010.1.9.7), and sensor release of electrically locked door systems (Section 1010.1.9.8) all frequently use electromagnetic locks.

The requirements of this section apply to electromagnetic locking systems which open on hardware activation. The functions of an ingress control locking system are not addressed in the codes and are unrelated as long as egress is provided as required or permitted by this section and other applicable provisions of the code.

In areas where additional security may be a concern, a door hardware system may include an unlocking device, such as a keypad, card reader, eye scanner, thumbprint scanner or other credential device. Where these credential unlocking systems are only on the ingress side of a building or space, there are no limitations in the codes. Where these credential unlocking systems are on the egress side of a space (perhaps to monitor personnel movement), egress must be available through one of the locking systems addressed in Section 1010.1.9.7, 1010.1.9.8 or 1010.1.9.9. Such a credential unlocking device could also be included in the controlled locking arrangements of Sections 408.4 and 1010.1.9.6 (Item 6).

When the occupant prepares to egress through the door, the method of operating the door hardware must be obvious, even under poor lighting conditions. The operation shall be accomplished through the use of a single motion and meet the general requirement that the door be readily openable without the use of special knowledge or effort. The release of the electromagnetic lock on the door must occur immediately on the operation of the door hardware by interrupting the power supply to the electromagnetic lock. This requirement is the same regardless of the type of door hardware: panic hardware, fire exit hardware, a latchset/lockset, or a touch-sense bar. As an additional safeguard, the loss of power to the locking system is required to automatically release the electromagnetic lock on the door.

A properly designed and installed electromagnetic locking system complying with the requirements of this section of the IBC may not be obvious to the occupants, as the door unlatches/unlocks (electromagnetically and mechanically) allowing egress through the normal operation of the door hardware (panic or fire exit hardware, latchset/lockset, or touch-sense bar). Considering these performance requirements, this section of the IBC does not include a requirement that the electromagnetic lock be unlocked (released) on activation of the building fire alarm system. Also, this section of the IBC does not limit the number of doors in the means of egress which may be equipped with electromagnetic locking systems.

The units of the electromagnetic locking system are required to be listed in accordance with UL 294. The UL 294 Access Control Systems standard applies to construction, performance, and operation of systems which control passage through a door, and electrical, electronic, or mechanical units of these systems. Where these special provisions are utilized, the requirements of Section 1010.1.10 regarding panic hardware remain applicable. In Group A and E occupancies having occupant loads of 50 or more, the door hardware must also comply with the requirements for panic hardware.

1010.1.9.10 Locking arrangements in correctional facilities. In occupancies in Groups A-2, A-3, A-4, B, E, F, I-2, I-3, M and S within correctional and detention facilities, doors in *means of egress* serving rooms or spaces occupied by persons whose movements are controlled for security reasons shall be permitted to be locked where equipped with egress control devices that shall unlock manually and by not less than one of the following means:

1. Activation of an *automatic sprinkler system* installed in accordance with Section 903.3.1.1.
2. Activation of an *approved manual fire alarm box*.

INTERNATIONAL CODE COUNCIL®
Copyright © 2015 ICC. ALL RIGHTS RESERVED. Accessed by David Dammon on Jun 21, 2017 12:30:52 PM pursuant to License Agreement with ICC. No further reproduction or distribution authorized. ANY UNAUTHORIZED REPRODUCTION OR DISTRIBUTION IS A VIOLATION OF THE FEDERAL COPYRIGHT ACT AND THE LICENSE AGREEMENT, AND SUBJECT TO CIVIL AND CRIMINAL PENALTIES THEREUNDER.

3. A signal from a *constantly attended location*.

❖ Correctional facilities can include a variety of uses where detainees may be gathered for eating, recreational activities, education, technical training, job training, etc. Correctional facilities can also contain types of support services, such as a store, storage areas or hospital area. Security is still a concern within these areas. This provision will allow the correctional facility to maintain security on all areas. Most commonly the doors would be opened by staff from a central control point under Item 3, but Items 1 and 2 allow for other alternatives in lower security facilities. This provision is not intended to apply to these groups when located outside of a detention or correctional facility.

1010.1.9.11 Stairway doors. Interior *stairway means of egress* doors shall be openable from both sides without the use of a key or special knowledge or effort.

Exceptions:

1. *Stairway* discharge doors shall be openable from the egress side and shall only be locked from the opposite side.
2. This section shall not apply to doors arranged in accordance with Section 403.5.3.
3. In *stairways* serving not more than four stories, doors are permitted to be locked from the side opposite the egress side, provided they are openable from the egress side and capable of being unlocked simultaneously without unlatching upon a signal from the *fire command center*, if present, or a signal by emergency personnel from a single location inside the main entrance to the building.
4. *Stairway exit* doors shall be openable from the egress side and shall only be locked from the opposite side in Group B, F, M and S occupancies where the only interior access to the tenant space is from a single *exit stairway* where permitted in Section 1006.3.2.
5. *Stairway exit* doors shall be openable from the egress side and shall only be locked from the opposite side in Group R-2 occupancies where the only interior access to the *dwelling unit* is from a single *exit stairway* where permitted in Section 1006.3.2.

❖ Based on adverse fire experience where occupants have become trapped in smoke-filled stairway enclosures, stairway doors generally must be arranged to permit reentry into the building without the use of any tools, keys or special knowledge or effort. For security reasons, this restriction does not apply to the discharge door from the stairway enclosure to the outside or into an exit passageway (Exception 1). Section 403 for high-rise buildings permits locking doors from the stairway side, provided the doors are capable of being unlocked from a fire command station and there is a communication system within the stairway enclosure that allows contact with the fire command station (Exception 2).

Exception 3 addresses the need for security. The exception is limited to four-story buildings to provide a short travel distance to the stairway discharge door for the building occupants. In addition, to allow quick entrance for fire fighters and emergency responders, a means of simultaneously unlocking all of the doors by emergency personnel must be provided. This provision further requires that the stairway doors be unlocked without unlatching. Stairway doors will typically be fire door assemblies, and their continued latching is necessary to maintain the integrity of the fire-resistive separation for the exit enclosure. The remote unlocking signal shall be initiated from the fire command station, if provided, or a single point of signal initiation at an approved location inside the building's main entrance.

Exceptions 4 and 5 allow for stairways in single-exit buildings to have doorways that lead to multiple tenants and dwelling units. For security reasons, those doors can remain locked from the stairway side so no one can enter another tenant space or dwelling unit from the exit stairway.

1010.1.10 Panic and fire exit hardware. Doors serving a Group H occupancy and doors serving rooms or spaces with an *occupant load* of 50 or more in a Group A or E occupancy shall not be provided with a latch or lock other than *panic hardware* or *fire exit hardware*.

Exceptions:

1. A main *exit* of a Group A occupancy shall be permitted to be locking in accordance with Section 1010.1.9.3, Item 2.
2. Doors serving a Group A or E occupancy shall be permitted to be electromagnetically locked in accordance with Section 1010.1.9.9.

Electrical rooms with equipment rated 1,200 amperes or more and over 6 feet (1829 mm) wide, and that contain overcurrent devices, switching devices or control devices with *exit* or *exit access doors*, shall be equipped with *panic hardware* or *fire exit hardware*. The doors shall swing in the direction of egress travel.

❖ Doors that are part of a means of egress from the locations listed in this section shall not be provided with a latch or lock other than panic hardware or fire exit hardware unless one of the two exceptions is met. Fire exit hardware is essentially panic hardware with internal modifications for use on fire-rated doors. Also see the commentaries to the definitions for "Fire exit hardware" or "Panic hardware" and Sections 1010.1.10.1 and 1010.1.10.2.

For all Group H occupancies, regardless of the occupant load, if latching (or locking) hardware is installed, it must be panic hardware or fire exit hardware because of the physical hazards of these spaces.

For all doors that provide means of egress for rooms and spaces of assembly and educational

INTERNATIONAL CODE COUNCIL®
Copyright © 2015 ICC. ALL RIGHTS RESERVED. Accessed by David Dammon on Jun 21, 2017 12:30:52 PM pursuant to License Agreement with ICC. No further reproduction or distribution authorized. ANY UNAUTHORIZED REPRODUCTION OR DISTRIBUTION IS A VIOLATION OF THE FEDERAL COPYRIGHT ACT AND THE LICENSE AGREEMENT, AND SUBJECT TO CIVIL AND CRIMINAL PENALTIES THEREUNDER.

(Group A and E) occupancies with an occupant load of 50 or more, if latching (or locking) hardware is installed, it must be panic hardware or fire exit hardware. This would include large assembly spaces in mixed-use buildings. These uses are characterized by higher occupant load densities. Whereas doors from an assembly or educational room with an occupant load of less than 50 do not require panic hardware or fire exit hardware, a door that provides means of egress for two or more such rooms would require panic hardware or fire exit hardware when the combination of spaces has a total occupant load of 50 or more.

The first exception clarifies that the provisions for key-locking hardware at the main exit in Group A occupancies are permitted instead of panic hardware at those specific locations. (For the Group A exception, see the commentary to Section 1010.1.9.3, Item 2.)

The second exception resolves a potential conflict with Section 1010.1.9.9, and specifically Item 5, which allows an electromagnetic lock to be installed in addition to panic or fire exit hardware where panic or fire exit hardware would be required as long as the operation of the panic hardware or fire exit hardware releases the electromagnetic lock.

Certain electrical rooms are required to have panic hardware. Refer to IBC Chapter 27 and *NFPA 70: National Electrical Code*® (NEC) for specific requirements for when panic hardware or fire exit hardware is required. This requirement is applicable only where multiple conditions are present. The type of room regulated creates a potentially hazardous environment. In the event of an electrical accident, the more immediate egress provided by the panic hardware is desirable.

1010.1.10.1 Installation. Where *panic* or *fire exit hardware* is installed, it shall comply with the following:

1. *Panic hardware* shall be *listed* in accordance with UL 305.
2. *Fire exit hardware* shall be *listed* in accordance with UL 10C and UL 305.
3. The actuating portion of the releasing device shall extend not less than one-half of the door leaf width.
4. The maximum unlatching force shall not exceed 15 pounds (67 N).

❖ As its name implies, panic hardware is special unlatching and unlocking hardware that is intended to simplify the unlatching and unlocking operation to a single, no more than 15-pound (67 N), force applied in the direction of egress [see Commentary Figures 1010.1.10.1(1) and (2)]. In a panic situation with a rush of persons trying to utilize a door, devices such as doorknobs or thumb turns may cause sufficient delay so as to create a crush at the door and prevent or slow the opening operation.

The locational specifications for the activating panel or bar are based on ready availability and access to the unlatching device. Note that the section requires the width of the actuating portion of the panic hardware or fire exit hardware to measure at least one-half the width of the door leaf. For example, on a

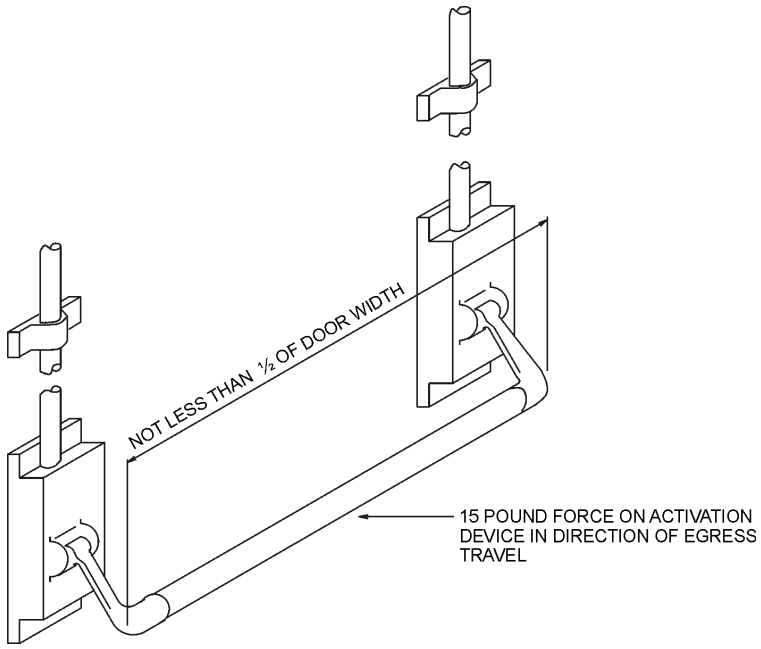

For SI: 1 pound = 4.4 N.

Figure 1010.1.10.1(1)
EXAMPLES OF TYPICAL PANIC HARDWARE

INTERNATIONAL CODE COUNCIL®
Copyright © 2015 ICC. ALL RIGHTS RESERVED. Accessed by David Dammon on Jun 21, 2017 12:30:52 PM pursuant to License Agreement with ICC. No further reproduction or distribution authorized. ANY UNAUTHORIZED REPRODUCTION OR DISTRIBUTION IS A VIOLATION OF THE FEDERAL COPYRIGHT ACT AND THE LICENSE AGREEMENT, AND SUBJECT TO CIVIL AND CRIMINAL PENALTIES THEREUNDER.

3-0 door (nominal 36 inches wide), the activating portion of the panic or fire hardware would measure at least 18 inches. Panic and fire exit hardware must be listed. UL 305, *Standard for Safety Panic Hardware*, includes construction and performance requirements dealing with endurance, emergency operation, elevated ambient exposure and low-temperature impact tests to ensure that the panic device operates properly (for panic hardware on a balanced door, see Section 1010.1.10.2). The activation device must be mounted between 34 inches and 48 inches (864 mm and 1219 mm) above the floor in accordance with Section 1010.1.9.2. Section 1010.1.1.1 allows the panic hardware to extend the full width of the door as long as it does not protrude more than 4 inches (102 mm) into the door's required minimum clear width.

Standard panic hardware or "listed panic hardware" is not approved for use on fire door assemblies. Panic hardware and fire exit hardware can be similar in appearance.

Where a fire door, such as to an exit stairway, is required to be equipped with panic hardware, the hardware must accomplish the dual objectives of panic hardware and continuity of the enclosure in which it is located—thus the reference to UL 10C, *Standard for Safety Positive Pressure Fire Tests of Door Assemblies*. In this case, fire exit hardware is to be provided that meets both objectives and requirements, since panic hardware is not tested for use on fire doors. There are standard test procedures designed to evaluate the performance of panic and fire exit hardware from the panic standpoint as well as from a fire protection standpoint. "Fire door assemblies" are defined in Section 716.5 as a combination of doors, frame, hardware and other accessories required to provide a specific degree of fire and smoke barrier protection to the opening in a fire wall, fire barrier, fire partition, smoke barrier or exterior wall required to have a fire-resistance rating.

Fire doors must close and positively latch in order to protect exit stairways, corridors and other areas of the building from the spread of smoke and fire. Additionally, fire doors are required to self-close and automatically latch after each use. Positive latching of fire doors is not related to the locking of the door and should never be confused with locking or security issues.

The requirement for positive latching means that dogging devices are not permitted on fire exit hardware. A dogging device is an option on the hardware that allows for the panic hardware to be locked in the fully depressed position. A dogging device mechanically defeats the latching feature of panic hardware preventing the door from positively latching when in the closed position. The dogging device is typically manually activated with a small wrench or tool and is



Figure 1010.1.10.1(2)
EXAMPLES OF TYPICAL PANIC HARDWARE

INTERNATIONAL CODE COUNCIL®
Copyright © 2015 ICC. ALL RIGHTS RESERVED. Accessed by David Dammon on Jun 21, 2017 12:30:52 PM pursuant to License Agreement with ICC. No further reproduction or distribution authorized. ANY UNAUTHORIZED REPRODUCTION OR DISTRIBUTION IS A VIOLATION OF THE FEDERAL COPYRIGHT ACT AND THE LICENSE AGREEMENT, AND SUBJECT TO CIVIL AND CRIMINAL PENALTIES THEREUNDER.

activated through a hole adjacent to the activation bar. Dogging capability is often provided on exterior doors that are intended as building entrances.

Fire exit hardware must be labeled. Typical locations are on either end of the hardware. Information on the label must include the words "listed" and "fire exit hardware" and indicate a control or serial number. The label on the fire door itself should indicate that it is a fire door suitable for use with fire exit hardware.

1010.1.10.2 Balanced doors. If *balanced doors* are used and *panic hardware* is required, the *panic hardware* shall be the push-pad type and the pad shall not extend more than one-half the width of the door measured from the latch side.

❖ The provisions for balanced doors ensure that the occupants push only on the latch side of the door since the hinge side of a balanced door pivots "against" the direction of egress (see the commentary for the definition of "Door, balanced" in Chapter 2).

1010.2 Gates. Gates serving the *means of egress* system shall comply with the requirements of this section. Gates used as a component in a *means of egress* shall conform to the applicable requirements for doors.

Exception: Horizontal sliding or swinging gates exceeding the 4-foot (1219 mm) maximum leaf width limitation are permitted in fences and walls surrounding a stadium.

❖ This section specifies that all requirements for doors also apply to gates, except that gates surrounding a stadium are allowed to exceed 4 feet (1219 mm) in width. Usually a large gate is required to adequately serve a stadium crowd for egress purposes.

1010.2.1 Stadiums. *Panic hardware* is not required on gates surrounding stadiums where such gates are under constant immediate supervision while the public is present, and where safe dispersal areas based on 3 square feet (0.28 m^2) per occupant are located between the fence and enclosed space. Such required safe dispersal areas shall not be located less than 50 feet (15 240 mm) from the enclosed space. See Section 1028.5 for *means of egress* from safe dispersal areas.

❖ Panic hardware is impractical for large gates that surround stadiums. Normally, these gates are opened and closed by the stadium's grounds crew, which is constantly in attendance during the use of such gates. The safe dispersal area requirement provides for the safety of the crowd if for some reason the gate is not open. The safe dispersal area is to be between the stadium enclosure and the surrounding fence and the area to be occupied is not to be closer than 50 feet (15 240 mm) to the stadium enclosure.

See the commentary for Section 1028.5 for access to a safe dispersal area when access to a public way is not available.

1010.3 Turnstiles. Turnstiles or similar devices that restrict travel to one direction shall not be placed so as to obstruct any required *means of egress*.

Exception: Each turnstile or similar device shall be credited with a capacity based on not more than a 50-person *occupant load* where all of the following provisions are met:

1. Each device shall turn free in the direction of egress travel when primary power is lost and on the manual release by an employee in the area.
2. Such devices are not given credit for more than 50 percent of the required egress capacity or width.
3. Each device is not more than 39 inches (991 mm) high.
4. Each device has not less than $16^1/_2$ inches (419 mm) clear width at and below a height of 39 inches (991 mm) and not less than 22 inches (559 mm) clear width at heights above 39 inches (991 mm).

Where located as part of an *accessible route*, turnstiles shall have not less than 36 inches (914 mm) clear at and below a height of 34 inches (864 mm), not less than 32 inches (813 mm) clear width between 34 inches (864 mm) and 80 inches (2032 mm) and shall consist of a mechanism other than a revolving device.

❖ This section provides for a limited use of turnstiles to serve as a means of egress component. The exception to this section limits each turnstile to a maximum egress capacity of 50 persons. The turnstile must comply with all four listed items to be considered as serving any part of the occupant load for means of egress. The turnstiles must rotate freely both when there is a loss of power and when they are manually released. Note that the 50-person limit applies to each individual turnstile. These provisions are similar to the revolving door provisions in Section 1010.1.4.1.

If turnstiles are located along an accessible route, the route for persons using mobility devices must be something other than a revolving device, such as a swinging gate. A common example would be the turnstiles for automatic ticket taking, such as at the entrance to a mass transit platform.

1010.3.1 High turnstile. Turnstiles more than 39 inches (991 mm) high shall meet the requirements for revolving doors.

❖ Where a turnstile is higher than 39 inches (991 mm), the restriction to egress is much like a revolving door. Thus, the egress limitations for revolving doors in Section 1010.1.4.1 apply to this type of turnstile. If a high turnstile does not meet the revolving door requirements for doors that are an egress component, it is not to be included as serving a portion of the means of egress. It would be necessary to provide doors in these areas for egress. High turnstiles may not be part of an accessible route for ingress or egress.

1010.3.2 Additional door. Where serving an *occupant load* greater than 300, each turnstile that is not portable shall have a side-hinged swinging door that conforms to Section 1010.1 within 50 feet (15 240 mm).

❖ This section addresses a common egress condition for sports arenas where a number of turnstiles are

INTERNATIONAL CODE COUNCIL®
Copyright © 2015 ICC. ALL RIGHTS RESERVED. Accessed by David Dammon on Jun 21, 2017 12:30:52 PM pursuant to License Agreement with ICC. No further reproduction or distribution authorized. ANY UNAUTHORIZED REPRODUCTION OR DISTRIBUTION IS A VIOLATION OF THE FEDERAL COPYRIGHT ACT AND THE LICENSE AGREEMENT, AND SUBJECT TO CIVIL AND CRIMINAL PENALTIES THEREUNDER.

installed for ticket taking. Portable turnstiles are moved from the egress path for proper exiting capacity. Permanent turnstiles are not considered as providing any of the required egress capacity when serving an occupant load greater than 300, no matter how many turnstiles are installed. Doors are required to provide occupants with a path of egress other than through the turnstiles. The doors are to be located within 50 feet (15 240 mm) of the turnstiles.

SECTION 1011
STAIRWAYS

1011.1 General. *Stairways* serving occupied portions of a building shall comply with the requirements of Sections 1011.2 through 1011.13. *Alternating tread devices* shall comply with Section 1011.14. Ship's ladders shall comply with Section 1011.15. Ladders shall comply with Section 1011.16.

Exception: Within rooms or spaces used for assembly purposes, stepped aisles shall comply with Section 1029.

❖ It is important for stairway safety that all stairways meet the provisions in this section. This would include all elevation changes using stairways; everything from one riser to multiple flights and landings between stories (see the definitions for "Stair" and "Stairway" in Chapter 2). These provisions will be applicable for interior exit access stairways, interior exit stairways and exterior exit stairways, as well as any steps along the paths for exit access or exit discharge. It is intended that this section be applicable to required stairways as well as what can be called "convenience" stairways.

It is important to understand the terminology. Exit stairways are stairways that provide a protected path of travel between the exit access and the exit discharge. Interior exit stairways are required to be enclosed in accordance with Section 1022. Exterior exit stairways are protected by the exterior wall of the building and must comply with Section 1027. Exit access stairways are typically unenclosed interior stairways and comply with Section 1019 when they provide access between stories. Exit access travel distance stops at an exit stairway enclosure, but includes any travel down an exit access stairway. Stairways that are outside and provide a route from the level of exit discharge to grade are considered part of the exit discharge. See the commentary in Chapter 2 for the defined term, "Exit discharge, level of."

Sections 1011.2 through 1011.13 provide criteria for the typical stairway. Special provisions are provided for curved stairways (Section 1011.9), spiral stairways (Section 1011.10), and stairways to the roof for fire department access and for elevator equipment service (Sections 1011.12 and 1011.13).

Items that provide vertical access similar to stairways are also addressed in this section: alternating tread devices (Section 1011.14), ship's ladders (Section 1011.15) and ladders (Section 1011.16). These devices are only permitted to provide access to very limited spaces.

The exception indicates that stepped aisles (previously called aisle stairs) are addressed in Section 1029. Having this exception at the beginning of the stairway section negated the need for repeated exceptions throughout the stairway provisions. While both stairways and stepped aisles are a series of treads and risers, how occupants move on and off and configurations are very different. Occupants leave and join stepped aisles along the entire run, while occupants only enter the stairways at the top and bottom. Stepped aisles have center handrails with breaks to allow for access into the seating, while most stairways have handrails on both sides. Stepped aisles can be nonuniform in some locations to allow for parabolic seating bowls, while with stairways, uniform tread and riser configurations are required. Section 1029 should be used for stepped aisles between and immediately adjacent to seating or where the steps are a direct continuation of the stepped aisles and lead to a level cross aisle or floor. Section 1011 is used for stairways that lead from the balcony, concourse or cross aisle to a floor level above or below the seating areas (see Sections 1011.5.2, 1011.5.4 and 1011.6).

1011.2 Width and capacity. The required capacity of *stairways* shall be determined as specified in Section 1005.1, but the minimum width shall be not less than 44 inches (1118 mm). See Section 1009.3 for accessible *means of egress stairways*.

Exceptions:

1. *Stairways* serving an *occupant load* of less than 50 shall have a width of not less than 36 inches (914 mm).
2. *Spiral stairways* as provided for in Section 1011.10.
3. Where an incline platform lift or stairway chairlift is installed on *stairways* serving occupancies in Group R-3, or within *dwelling units* in occupancies in Group R-2, a clear passage width not less than 20 inches (508 mm) shall be provided. Where the seat and platform can be folded when not in use, the distance shall be measured from the folded position.

❖ To provide adequate space for occupants traveling in opposite directions and to permit the intended full egress capacity to be developed, minimum dimensions are dictated for means of egress stairways. A minimum width of 44 inches (1118 mm) is required for stairway construction to permit two columns of users to travel in the same or opposite directions. The reference to Section 1005.1 is for the determination of stairway width based on the occupant load it will serve (i.e, capacity). The larger of the two widths is to be used.

Exception 1 recognizes the relatively small occupant loads of less than 50 that permit a staggered file of users when traveling in the same direction. When

INTERNATIONAL CODE COUNCIL®
Copyright © 2015 ICC. ALL RIGHTS RESERVED. Accessed by David Dammon on Jun 21, 2017 12:30:52 PM pursuant to License Agreement with ICC. No further reproduction or distribution authorized. ANY UNAUTHORIZED REPRODUCTION OR DISTRIBUTION IS A VIOLATION OF THE FEDERAL COPYRIGHT ACT AND THE LICENSE AGREEMENT, AND SUBJECT TO CIVIL AND CRIMINAL PENALTIES THEREUNDER.

traveling in opposite directions, one column of users must stop their ascent (or descent) to permit the opposite column to continue. Again, considering the relatively small occupant loads, any disruption of orderly flow will be infrequent. The use of this exception is limited to buildings where the entire occupant load of each upper story and/or basement is less than 50.

Exception 2 permits a spiral stairway to have a minimum width of 26 inches (660 mm) when it conforms to Section 1011.10, on the basis that the configuration of a spiral stairway will allow nothing other than single-file travel.

Exception 3 addresses the use of inclined platform lifts or stairway chairlifts for individual dwelling units. For clarification on the types of lifts, see the commentary to Section 1109.8. Both types of lifts may be installed to aid persons with mobility impairments in their homes. The code and ASME A18.1 allow for a reduction in the width of the stair to a minimum of 20 inches (508 mm) of clear passageway to be maintained on a stairway where a lift is located. If a portion of the lift, such as a platform or seat, can be folded, the minimum clear dimension is to be measured from the folded position. If the lift cannot be folded, then the 20 inches (508 mm) is measured from the fixed position. The track for these lifts typically extends 9 to 12 inches (229 to 305 mm) from the wall, making the 20-inch (508 mm) clear measurement actually 24 to 27 inches (610 to 686 mm) from the edge of the track.

The code does not have any specific provisions for where incline platform lifts are utilized along stairways in locations other than within dwelling units. Section 1109.8 limits the use of platform lifts in new construction to mainly areas with minimal occupant loads or where elevators and ramps are impracticable. IEBC Sections 410.8.3 and 705.1.3 allows for platform lifts anywhere in existing buildings in order to gain accessibility for persons with mobility impairments. When in the closed and off position, the platform lifts should not block the clear width required for the stairway, or use of the handrails. The industry is currently working on different options to address the concern that the lift may be in operation during an event that requires evacuation.

1011.3 Headroom. *Stairways* shall have a headroom clearance of not less than 80 inches (2032 mm) measured vertically from a line connecting the edge of the *nosings*. Such headroom shall be continuous above the *stairway* to the point where the line intersects the landing below, one tread depth beyond the bottom riser. The minimum clearance shall be maintained the full width of the *stairway* and landing.

Exceptions:

1. *Spiral stairways* complying with Section 1011.10 are permitted a 78-inch (1981 mm) headroom clearance.
2. In Group R-3 occupancies; within *dwelling units* in Group R-2 occupancies; and in Group U occupancies that are accessory to a Group R-3 occupancy or accessory to individual *dwelling units* in Group R-2 occupancies; where the *nosings* of treads at the side of a *flight* extend under the edge of a floor opening through which the *stair* passes, the floor opening shall be allowed to project horizontally into the required headroom not more than $4^3/_4$ inches (121 mm).

❖ This headroom requirement is necessary to avoid an obstruction to orderly flow and to provide visibility to the users so that the desired path of travel can be planned and negotiated. Height is a vertical measurement above every point along the stairway stepping and walking surfaces, with minimum height measured vertically from the tread nosing or from the surface of a landing or platform up to the ceiling [see Commentary Figure 1011.3(1)].

Sections 1003.2 and 1208.2 require a minimum ceiling height within a room of 7 feet, 6 inches (2307 mm). A bulkhead or doorway at the bottom of the stairway would be allowed to meet the minimum headroom height of 80 inches (2032 mm), as permitted in Section 1003.3.

Exception 1, allowing for a clear headroom of 6 feet, 6 inches (1981 mm) for spiral stairs, correlates with the provisions of Section 1011.10.

Exception 2 recognizes a common method of stairwell construction in which the stringer on the open side of a stair is supported by the same floor joists or wall that supports the edge of the opening through which the stairway passes to the floor above, thus resulting in the stairway being wider at the lower portion than at the top portion. In this case, headroom is not required for a distance of up to $4^3/_4$ inches (121 mm) measured horizontally from the edge of the opening above to the handrail or guard system, which limits the clear width on the lower open sides of the stairway. The $4^3/_4$ inches (121 mm) maximum is derived from the finished width of a typical 2 by 4 supporting wall and is not critical to obstructing orderly flow or visibility in the desired path of travel [see Commentary Figure 1011.3(2)].

1011.4 Walkline. The walkline across *winder* treads shall be concentric to the direction of travel through the turn and located 12 inches (305 mm) from the side where the *winders* are narrower. The 12-inch (305 mm) dimension shall be measured from the widest point of the clear *stair* width at the walking surface of the *winder*. Where *winders* are adjacent within the *flight*, the point of the widest clear *stair* width of the adjacent *winders* shall be used.

❖ This requirement is essential for smooth, consistent travel on stairs that turn with winder treads. It provides a standard location for the regulation of the uniform tread depth of winders. Because of the wide range of anthropometrics of stairway users, there is no one line that all persons will travel on stairs; however, the code recognizes a standard location of a walkline is essential to design and enforcement. Each footfall of the user through the turn can be associated with an arc to describe the path traveled. As a user

INTERNATIONAL CODE COUNCIL®
Copyright © 2015 ICC. ALL RIGHTS RESERVED. Accessed by David Dammon on Jun 21, 2017 12:30:52 PM pursuant to License Agreement with ICC. No further reproduction or distribution authorized. ANY UNAUTHORIZED REPRODUCTION OR DISTRIBUTION IS A VIOLATION OF THE FEDERAL COPYRIGHT ACT AND THE LICENSE AGREEMENT, AND SUBJECT TO CIVIL AND CRIMINAL PENALTIES THEREUNDER.

ascends or descends the flight, the turning at each step should be consistent through the turn. The walkline is established concentric to, or having the same center (approximately parallel) as, the arc of travel of the user. The tread depth dimension at the walkline is one of two tread depths across the width of the stair at which winder tread depth is regulated, cited in Section 1011.5.2. The second is the minimum tread depth. Regulation at these two points controls the angularity of the turn and the configuration of the flight. In order to establish consistently shaped winders, tread depths must always be measured concentric to the arc of travel. The walkline is unique as the only line or path of travel where winder tread depth is controlled by the same minimum tread depth as rectangular treads. However, Exception 2 of Section 1011.5.4 recognizes that winder tread depth need not be compared to rectangular tread depths for dimensional uniformity in the same flight because the location of the walkline is chosen for the purpose of

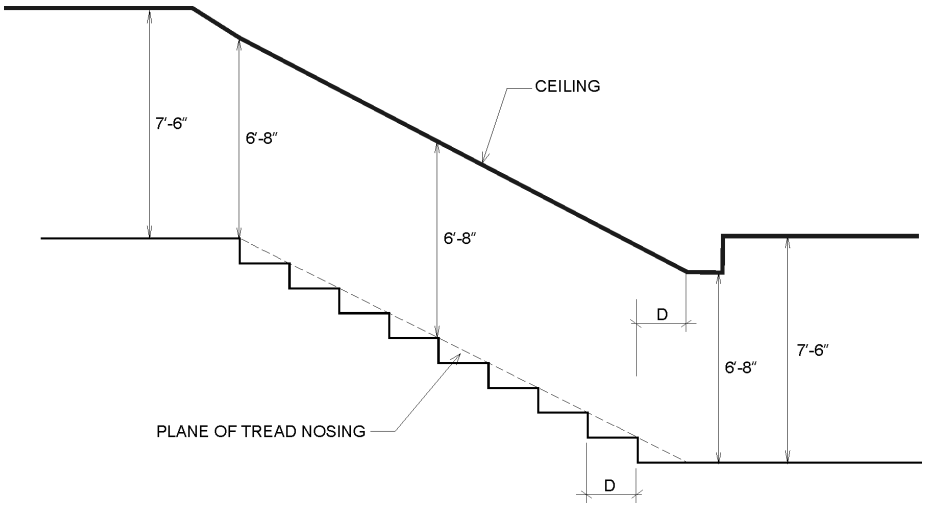

For SI: 1 inch = 25.4 mm, 1 foot = 304.8 mm.

Figure 1011.3(1)
STAIRWAY HEADROOM REQUIREMENTS



Figure 1011.3(2)
EXAMPLE OF SECTION 1011.3, EXCEPTION 2

INTERNATIONAL CODE COUNCIL®
Copyright © 2015 ICC. ALL RIGHTS RESERVED. Accessed by David Dammon on Jun 21, 2017 12:30:52 PM pursuant to License Agreement with ICC. No further reproduction or distribution authorized. ANY UNAUTHORIZED REPRODUCTION OR DISTRIBUTION IS A VIOLATION OF THE FEDERAL COPYRIGHT ACT AND THE LICENSE AGREEMENT, AND SUBJECT TO CIVIL AND CRIMINAL PENALTIES THEREUNDER.

providing a standard and cannot be specific to the variety of actual paths followed by all users. This specific line location is determined by measuring along each nosing edge 12 inches (305 mm) from the extreme of the clear width of the stair at the surface of the winder tread or the limit of where the foot might be placed in use of the stair. If adjacent winders are present, the point of the widest clear stair width at the surface of the tread in the group of adjacent consecutive winders is used to provide the reference from which the 12-inch (305 mm) dimension will be measured along each nosing. The tread depth may be determined by measuring between adjacent nosings at these determined intersections of the nosings with the walkline. It is important to note that the clear stair width is only that portion of the stair width that is clear for passage. Portions of the stair beyond the clear width are not consequential to use of the stair, consistent travel or location of the walkline.

1011.5 Stair treads and risers. *Stair* treads and risers shall comply with Sections 1011.5.1 through 1011.5.5.3.

❖ The provisions for treads and risers contribute to the efficient use of the stairway, facilitating smooth and consistent travel. This section provides dimensional ranges and tolerances for the component elements to allow the flexibility required to design and construct a stair or a flight of stairs that are elements of a stairway. The allowed proportion of maximum riser height and minimum tread depth provide for a maximum angle of ascent but there is no maximum tread depth to consider with the minimum riser height that would define a minimum angle for a stairway. Nor is the proportion of riser height to tread depth compared with the limitations of the length of the user's stride on stairways, which is significantly foreshortened from the user's stride on the level. For this reason, care should be taken when incorporating larger tread depths and controlling the point at which a tread might be wide enough to require more than one step to cross, which can vary significantly when considering ascent and descent movement patterns. Especially in areas where all segments of the public might use the stairs, those persons requiring two smaller sequential steps to cross the tread would progress at significantly different rates than those who might be able to stretch or jump and lead to dangerous complications, especially in egress. Of equal significance is the use of shorter risers without increasing tread depth resulting in a proportion that could cause overstepping. With these same limitations for proportion in mind, however, by controlling the minimum depth of rectangular treads and the minimum depth and angularity of winder treads, these components can control the configuration of the plan of a flight of stairs to provide for smooth and consistent travel.

Section 1011.5.1 provides for consistent identification of the surfaces that are to be measured. This is as critical to the users' experience throughout the built environment as it is to determining all the dimensions in this section as they must relate to each other and the ultimate design and construction of a safe stairway.

The remaining sections address the uniformity and essential attributes of the tread and riser. Of particular note is the nosing or leading edge of the tread. The nosing shape and projection affect the determination of the tread depth and the riser height and are regulated at all steps throughout the stairway, including the nosings at landings to provide for smooth and consistent travel. Furthermore, the line connecting the nosings is used to determine handrail height, guard height and headroom, causing consistent nosings to be a dependent integral of every element of the stairway design, construction and regulation.

1011.5.1 Dimension reference surfaces. For the purpose of this section, all dimensions are exclusive of carpets, rugs or runners.

❖ Carpets, rugs and runners, like furniture, are frequently changed by the occupants and are not regulated by the code. For this reason it is essential that the riser height and tread depth be regulated exclusive of these transitory surfaces to provide an enforceable standard. This practice minimizes the possible variation because of the removal of nonpermanent carpeting throughout the life of a structure and provides a standard enforcement methodology that will provide consistency across the build environment for all users. When owners or occupants add carpeting, rugs or runners, they need to add it to all tread and landing surfaces in the stairway. It is important that the tread and landing surfaces are consistent and comply with the code prior to the addition of carpet. This methodology of enforcement makes it unnecessary to reconstruct floor and stair elevations in the stairway when nonpermanent carpet surfaces are changed that do not require a building permit and eliminates the resulting variations in the built environment that will not comply with the tolerance in Section 1011.5.4 (see Commentary Figure 1011.5.1).

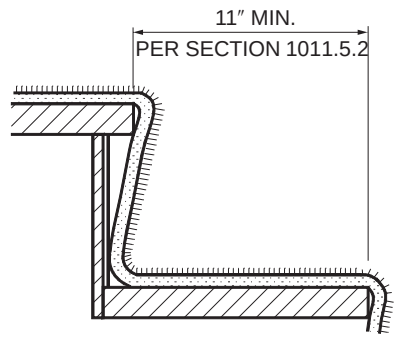

For SI: 1 inch = 25.4 mm.

Figure 1011.5.1
TREAD DEPTH MEASUREMENT

INTERNATIONAL CODE COUNCIL®
Copyright © 2015 ICC. ALL RIGHTS RESERVED. Accessed by David Dammon on Jun 21, 2017 12:30:52 PM pursuant to License Agreement with ICC. No further reproduction or distribution authorized. ANY UNAUTHORIZED REPRODUCTION OR DISTRIBUTION IS A VIOLATION OF THE FEDERAL COPYRIGHT ACT AND THE LICENSE AGREEMENT, AND SUBJECT TO CIVIL AND CRIMINAL PENALTIES THEREUNDER.

1011.5.2 Riser height and tread depth. *Stair* riser heights shall be 7 inches (178 mm) maximum and 4 inches (102 mm) minimum. The riser height shall be measured vertically between the *nosings* of adjacent treads. Rectangular tread depths shall be 11 inches (279 mm) minimum measured horizontally between the vertical planes of the foremost projection of adjacent treads and at a right angle to the tread's *nosing*. *Winder* treads shall have a minimum tread depth of 11 inches (279 mm) between the vertical planes of the foremost projection of adjacent treads at the intersections with the walkline and a minimum tread depth of 10 inches (254 mm) within the clear width of the *stair*.

Exceptions:

1. *Spiral stairways* in accordance with Section 1011.10.
2. *Stairways* connecting stepped *aisles* to cross *aisles* or concourses shall be permitted to use the riser/tread dimension in Section 1029.13.2.
3. In Group R-3 occupancies; within *dwelling units* in Group R-2 occupancies; and in Group U occupancies that are accessory to a Group R-3 occupancy or accessory to individual *dwelling units* in Group R-2 occupancies; the maximum riser height shall be $7^3/_4$ inches (197 mm); the minimum tread depth shall be 10 inches (254 mm); the minimum *winder* tread depth at the walkline shall be 10 inches (254 mm); and the minimum *winder* tread depth shall be 6 inches (152 mm). A *nosing* projection not less than $^3/_4$ inch (19.1 mm) but not more than $1^1/_4$ inches (32 mm) shall be provided on *stairways* with solid risers where the tread depth is less than 11 inches (279 mm).
4. See Section 403.1 of the *International Existing Building Code* for the replacement of existing *stairways*.
5. In Group I-3 facilities, *stairways* providing access to guard towers, observation stations and control rooms, not more than 250 square feet (23 m^2) in area, shall be permitted to have a maximum riser height of 8 inches (203 mm) and a minimum tread depth of 9 inches (229 mm).

❖ The riser height—the vertical dimension from tread surface to tread surface or tread surface to landing surface—is typically limited to not more than 7 inches (178 mm) or less than 4 inches (102 mm). The minimum tread depth—the horizontal distance from the leading edge (nosing) of one tread to the leading edge (nosing) of the next adjacent tread or landing—is typically limited to not less than 11 inches (279 mm) [see Commentary Figure 1011.5.2]. The minimum tread depth of 11 inches (279 mm) is intended to accommodate the largest shoe size found in 95 percent of the adult population, allowing for an appropriate overhang of the foot beyond the tread nosing while descending a stairway. Tread depths under 11 inches (279 mm) could cause a larger overhang (depending on the size of the foot) and could force users with larger feet to increase the angle of their foot to the line of travel while descending a stairway. Based on the probability of adequate foot placement, the rate of misstep with various step sizes and consideration for the user's comfort and energy expenditure, it was agreed that the 11-inch (279 mm) minimum tread depth and maximum 7-inch (178 mm) riser height resulted in the reasonable proportion of riser height and tread depth for stairway construction. A minimum riser height of 4 inches (102 mm) is considered to allow the visual identification of the presence of the riser in ascent or descent.

The precise location of rectangular tread depth and riser measurements is to be perpendicular to the

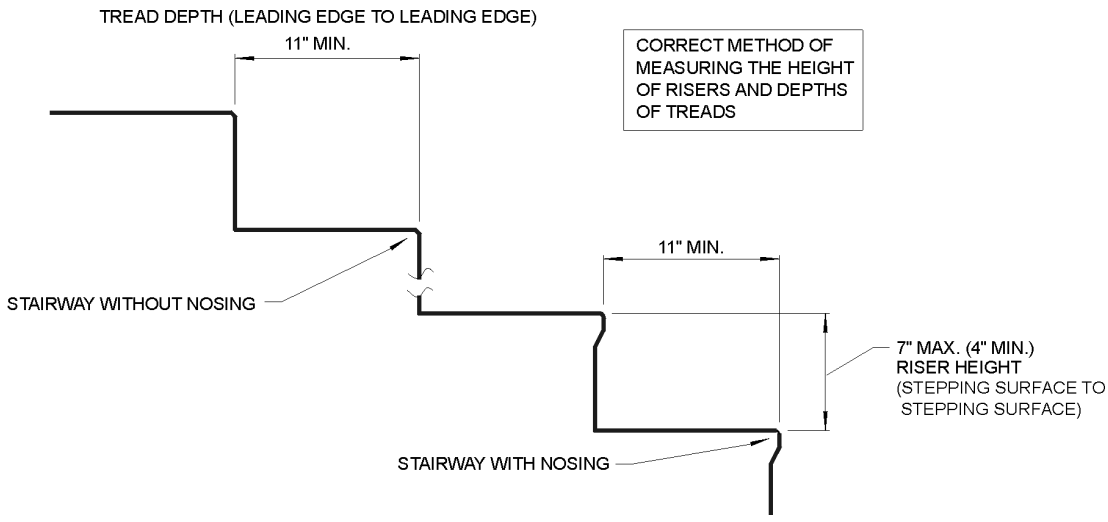

For SI: 1 inch = 25.4 mm.

Figure 1011.5.2
TREAD/RISER DIMENSIONS

INTERNATIONAL CODE COUNCIL®
Copyright © 2015 ICC. ALL RIGHTS RESERVED. Accessed by David Dammon on Jun 21, 2017 12:30:52 PM pursuant to License Agreement with ICC. No further reproduction or distribution authorized. ANY UNAUTHORIZED REPRODUCTION OR DISTRIBUTION IS A VIOLATION OF THE FEDERAL COPYRIGHT ACT AND THE LICENSE AGREEMENT, AND SUBJECT TO CIVIL AND CRIMINAL PENALTIES THEREUNDER.

tread's nosing or leading edge. This is to duplicate the user's anticipated foot placement in traveling the stairway.

The size for a winder tread is also considered for proper foot placement along the walkline [see Commentary Figure 1011.9 and the commentary for Section 1011.4]. The dimensional requirements are consistent with the straight tread.

The exceptions apply only to the extent of the text of each exception. For example, the entire text of Section 1011.5.2 is set aside for spiral stairways conforming to Section 1011.10 (see Exception 3). However, Exception 3 allows a different maximum riser and minimum tread under limited conditions, but retains the minimum riser height and measurement method of Section 1011.5.2.

The requirements for dimensional uniformity are found in Sections 1011.5.4 and 1011.5.4.1.

Exception 1 is for spiral staircases, a unique type of stairway. Section 1011.5.2 is not applicable to this stair type, again because of construction issues and limited applications. For a discussion on spiral staircases, see Section 1011.10.

Exception 2 provides a practical exception where assembly facilities are designed for viewing. See Sections 1029.13 through 1029.13.2.4 for assembly stepped aisle-walking surfaces. This exception is limited to when stairways are a direct continuation of the path of travel from the level cross aisle to the stepped aisles. It is not permitted for other stairways within the assembly space.

Exception 3 allows revisions to the 7 inches/11 inches (178 mm/279 mm) riser/tread requirements for Group R-3 and any associated utility (such as barns, connected garages or detached garages) and within individual units of Group R-2 and their associated utility areas (such as attached garages). This change is allowed because of the low occupant load and the high degree of occupant familiarity with the stairways. When this exception is taken for stairways that have solid risers, each tread is required to have a nosing projection with a minimum dimension of $^3/_4$ inch (19.1 mm) and maximum dimension of $1^1/_4$ inches (32 mm) where the tread depth is less than 11 inches (279 mm). Nosing projections are created where the nosing of the tread above extends beyond the trailing edge of the tread below or when a solid riser is angled under the tread above and connected to the trailing edge of the tread below. Nosing projections are not required for residential stairs with open risers and 10-inch (254 mm) treads. A nosing projection provides a greater stepping surface for those ascending the stairway. For users descending the stairway, the nosing projection allows the toe of the foot to be placed further away from the riser above, providing the necessary clearance for the heel of the foot as it swings down in an arc to its position on the tread (see Commentary Figure 1011.5.3).

Exception 4 allows for the replacement of an existing stair. Where a change of occupancy would require compliance with current standards, this exception allows a stairway that may be steeper than that permitted, provided it does not constitute a hazard [see *International Existing Building Code*® (IEBC®) Section 403.1].

Exception 5 allows steeper stairs in spaces of not more than 250 square feet (23 m^2) in correctional facilities (Group I-3) with a maximum riser height of 8 inches (203 mm) and a minimum tread depth of 9 inches (229 mm) because of the minimal occupant load and the familiarity of the users with the stairway. Although not stated in this exception, utilizing a nosing projection to provide effective tread depth, as stated in Exception 3 for tread depths less than 11 inches (279 mm), is a good design practice.

1011.5.3 Winder treads. *Winder* treads are not permitted in *means of egress stairways* except within a *dwelling unit*.

Exceptions:

1. Curved *stairways* in accordance with Section 1011.9.
2. *Spiral stairways* in accordance with Section 1011.10.

❖ The intent of this section is to coordinate the general provisions for stairway tread and riser dimensions in Section 1011.5.2 with the provisions for winder treads permitted in curved and spiral stairways (see Sections 1011.9 and 1011.10). Winders are permitted in means of egress stairways within dwelling units where occupant loads are smaller and occupants have increased familiarity (see Commentary Figure 1011.5.3 and Section 1011.5.2, Exception 3). This is consistent with provisions in the *International Residential Code*® (IRC®).

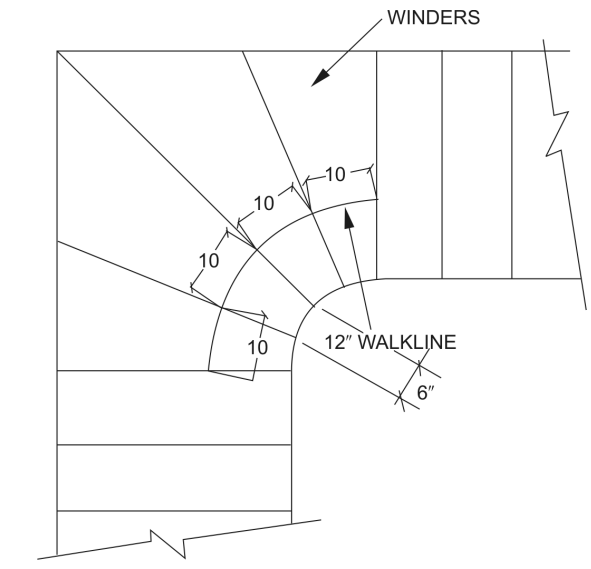

For SI: 1 inch = 25.4 mm.

Figure 1011.5.3
STAIR WINDERS WITHIN A DWELLING

INTERNATIONAL CODE COUNCIL®
Copyright © 2015 ICC. ALL RIGHTS RESERVED. Accessed by David Dammon on Jun 21, 2017 12:30:52 PM pursuant to License Agreement with ICC. No further reproduction or distribution authorized. ANY UNAUTHORIZED REPRODUCTION OR DISTRIBUTION IS A VIOLATION OF THE FEDERAL COPYRIGHT ACT AND THE LICENSE AGREEMENT, AND SUBJECT TO CIVIL AND CRIMINAL PENALTIES THEREUNDER.

Winders are used to change the direction of a flight by introducing a consistent incremental turn associated with each tread. The risk of injury in the use of stairways constructed with winders is considered to be greater than for stairways constructed as straight runs where users may be restricted by the presence of other users limiting visual clues or influencing the rate of travel. Additional user attention in the turn and the aid of the turn in arresting falls similar to turns at landings is also understood to negate this.

The employment of winders in stairway construction may necessitate the change of the user's gait in both ascent and descent where the tread depth of the winder is not equal to the tread depth of any rectangular treads in the same flight. For example, a person descending a straight flight of stairs will develop a particular gait conforming to the proportion of the riser height and tread depth that will be consistent throughout the flight. However, in a flight that includes winders and rectangular treads, the user must accommodate a change in the proportion of the riser height and tread depth as determined by the path of travel chosen. Visual clues are important to the users' instinctive responses to alter the path of travel, the length of the stride, or a combination of both that may result in nonconcentric movement. To ensure users of the visual clues necessary to alter their gait and limit the need to alter the path of travel in conditions of higher occupant loading, flights with winders must meet the specific safety provisions listed for curved or spiral stairways unless they are within a dwelling unit.

1011.5.4 Dimensional uniformity. *Stair* treads and risers shall be of uniform size and shape. The tolerance between the largest and smallest riser height or between the largest and smallest tread depth shall not exceed $^3/_8$ inch (9.5 mm) in any *flight* of *stairs*. The greatest *winder* tread depth at the walkline within any *flight* of *stairs* shall not exceed the smallest by more than $^3/_8$ inch (9.5 mm).

Exceptions:

1. *Stairways* connecting stepped *aisles* to cross *aisles* or concourses shall be permitted to comply with the dimensional nonuniformity in Section 1029.13.2.
2. Consistently shaped *winders*, complying with Section 1011.5, differing from rectangular treads in the same *flight* of *stairs*.
3. Nonuniform riser dimension complying with Section 1011.5.4.1.

❖ Dimensional uniformity in the design and construction of stairways contributes to safe stairway use. When ascending or descending a stair, users establish a gait based on the instinctive expectation or "feel" that each step taken will be at the same height and will land in approximately the same position on the tread as the previous steps in the pattern. A change in tread or riser dimensions in a stairway flight in excess of the allowed dimensional tolerance can break the rhythm and cause a misstep, stumbling or physical strain that may result in a fall or serious injury. Therefore, this section limits the dimensional variations to a tolerance of $^3/_8$ inch (9.5 mm) between the largest and smallest riser or tread dimension in a flight of stairs. A "flight" of stairs is defined as a run of stairs between landings.

For special conditions of construction and as a practical matter, this section allows some greater variations in stairway tread and riser dimensions than the general limitations specified above.

Exception 1 provides a practical exception where assembly facilities are designed for viewing. See Sections 1029.13 through 1029.13.2.4 for assembly stepped aisle walking surfaces. This exception is limited to when stairways are a direct continuation of the path of travel from the level cross aisle to the stepped aisles. It is not permitted for other stairways within the assembly space.

Exception 2 addresses winder treads, which must be consistent along the walkline (see Commentary Figure 1011.5.4) when compared to other winder treads in the same flight but are not required to meet the tolerance when compared to the uniform dimension of rectangular treads in the same flight.

Exception 3 is in recognition of the situation where a stairway moves down to a surface that slopes up or down perpendicular to the stairway. See the commentary to Section 1105.4.1.

1011.5.4.1 Nonuniform height risers. Where the bottom or top riser adjoins a sloping *public way*, walkway or driveway having an established grade and serving as a landing, the bottom or top riser is permitted to be reduced along the slope to less than 4 inches (102 mm) in height, with the variation in height of the bottom or top riser not to exceed one unit vertical in 12 units horizontal (8-percent slope) of *stair* width. The *nosings* or leading edges of treads at such nonuniform height risers shall have a distinctive marking stripe, different from any other *nosing* marking provided on the *stair flight*. The distinctive marking stripe shall be visible in descent of the *stair* and shall have a slip-resistant surface. Marking stripes shall have a width of not less than 1 inch (25 mm) but not more than 2 inches (51 mm).

❖ This section addresses the situation where the bottom riser of a flight of stairways meets a sloped landing, such as a public way, walk or driveway (see Commentary Figure 1011.5.4.1). Because the sidewalk landing is sloped perpendicular to the stairway run, stepping off the bottom tread on one side will result in a higher riser than stepping off the bottom tread on the other side. This is permitted provided the bottom riser is marked so that someone using the stairs will be aware of the hazard of a nonuniform riser.

INTERNATIONAL CODE COUNCIL®
Copyright © 2015 ICC. ALL RIGHTS RESERVED. Accessed by David Dammon on Jun 21, 2017 12:30:52 PM pursuant to License Agreement with ICC. No further reproduction or distribution authorized. ANY UNAUTHORIZED REPRODUCTION OR DISTRIBUTION IS A VIOLATION OF THE FEDERAL COPYRIGHT ACT AND THE LICENSE AGREEMENT, AND SUBJECT TO CIVIL AND CRIMINAL PENALTIES THEREUNDER.

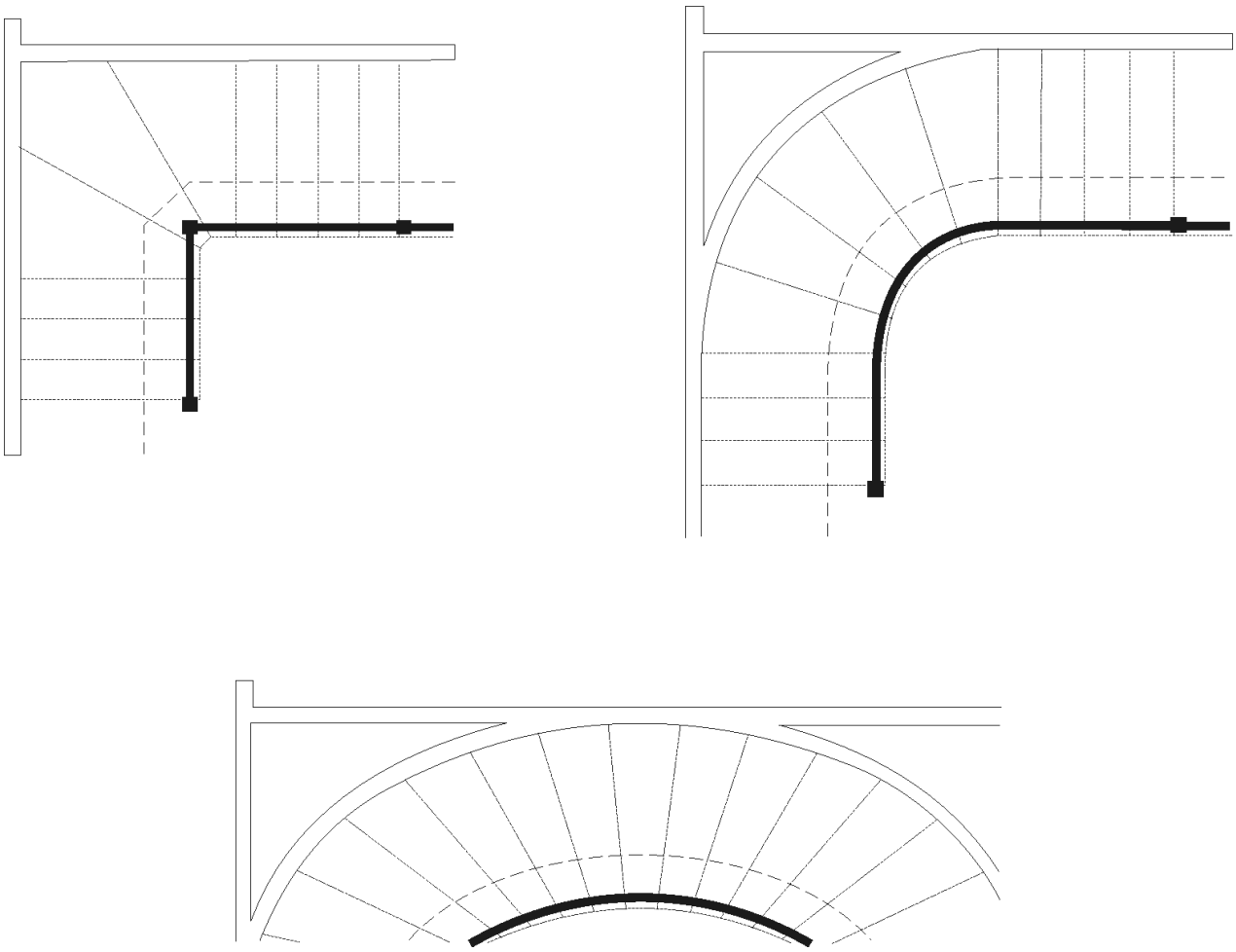

Figure 1011.5.4
CONSISTENTLY SHAPED WINDERS

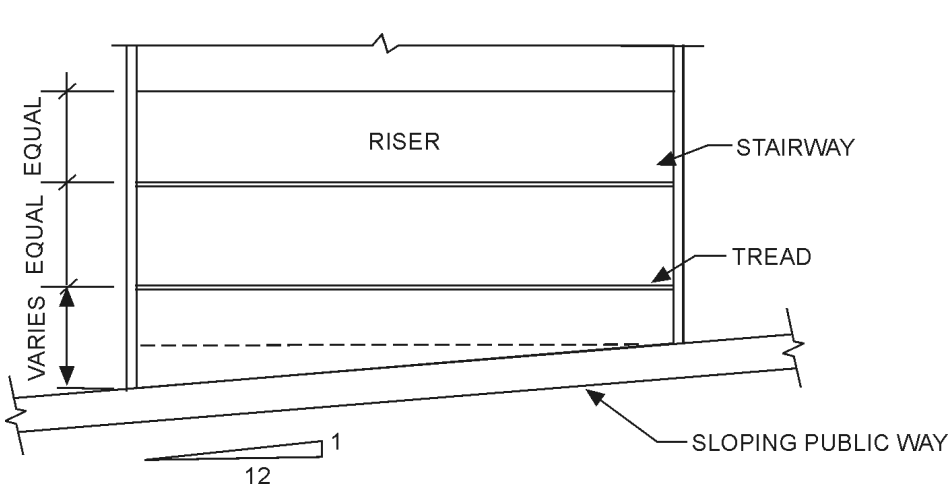

Figure 1011.5.4.1
SLOPED LANDING

INTERNATIONAL CODE COUNCIL®
Copyright © 2015 ICC. ALL RIGHTS RESERVED. Accessed by David Dammon on Jun 21, 2017 12:30:52 PM pursuant to License Agreement with ICC. No further reproduction or distribution authorized. ANY UNAUTHORIZED REPRODUCTION OR DISTRIBUTION IS A VIOLATION OF THE FEDERAL COPYRIGHT ACT AND THE LICENSE AGREEMENT, AND SUBJECT TO CIVIL AND CRIMINAL PENALTIES THEREUNDER.

1011.5.5 Nosing and riser profile. *Nosings* shall have a curvature or bevel of not less than $^1/_{16}$ inch (1.6 mm) but not more than $^9/_{16}$ inch (14.3 mm) from the foremost projection of the tread. Risers shall be solid and vertical or sloped under the tread above from the underside of the *nosing* above at an angle not more than 30 degrees (0.52 rad) from the vertical.

❖ The profiles of treads and risers contribute to stairway safety. The radius or bevel of the nosing eases the otherwise square edge of the tread and prevents irregular chipping and wear that can become a maintenance issue and seriously affect the safe use of the stair. The minimum curvature or bevel of $^1/_{16}$ inch (1.6 mm) eliminates a sharp square edge that will cause greater injury in falls and provides a certain contrast from the other surfaces of the stair for easier visual location of the start of the tread surface. The $^9/_{16}$-inch (14.3 mm) limit of beveling and maximum radius of curvature at the leading edge of the tread is intended to allow descending foot placement on a surface that does not pitch the foot forward or allow the ball of the foot to slide off the treads and ascending foot placement to slide onto the tread without catching on a square edge. This section also states that risers shall be solid; however, Section 1011.5.5.3 specifically states exceptions to this requirement that are to be applied. The sloping of risers allows the step profile to have a nosing projection without a lip that might cause a foot to catch when dragged up the face of the riser. Such designs are subject to the maximum nosing projection stated in Section 1011.5.5.1 that must be considered when choosing the angle to slope the riser.

1011.5.5.1 Nosing projection size. The leading edge (*nosings*) of treads shall project not more than $1^1/_4$ inches (32 mm) beyond the tread below.

❖ A nosing projection allows the descending foot to be placed further forward on the tread and the heel to then clear the nosing of the tread above as it swings down in an arc, landing on a tread that is effectively deeper than if no nosing projection is used. Nosing projections are so common in stair design that they are usually only noticed by users when they are absent since the lack of nose projection can affect one's gait. Treads with vertical risers are allowed with or without a nosing projection. A nosing projection may also be accommodated by slanting the riser under the tread above. The nosing projection is limited to $1^1/_4$ inch (32 mm) maximum. Treads designed with rounding or bevel on the underside would reduce the chance that a user's toe might catch while ascending the stairway (see Commentary Figure 1011.5.5.1).

1011.5.5.2 Nosing projection uniformity. *Nosing* projections of the leading edges shall be of uniform size, including the projections of the *nosing's* leading edge of the floor at the top of a *flight*.

❖ See the commentary to Section 1011.5.5.1.

1011.5.5.3 Solid risers. Risers shall be solid.

Exceptions:

1. Solid risers are not required for *stairways* that are not required to comply with Section 1009.3, provided that the opening between treads does not permit the passage of a sphere with a diameter of 4 inches (102 mm).
2. Solid risers are not required for occupancies in Group I-3 or in Group F, H and S occupancies other than areas accessible to the public. There are no restrictions on the size of the opening in the riser.
3. Solid risers are not required for *spiral stairways* constructed in accordance with Section 1011.10.

❖ The code does not address when a riser could contain openings and still be considered "solid." How-

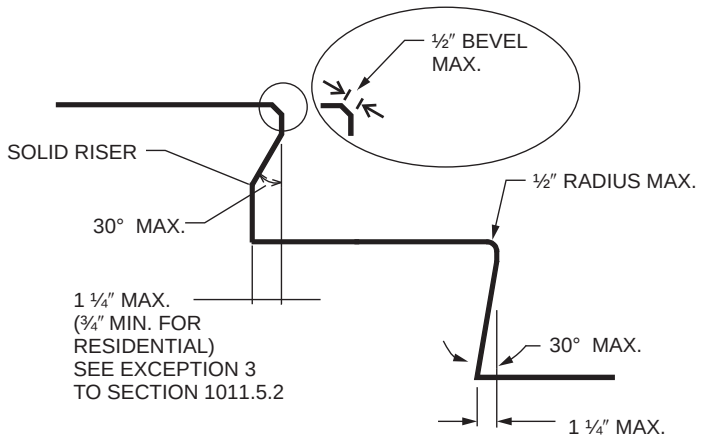

For SI: 1 inch = 25.4 mm, 1 degree = 0.01745 rad.

Figure 1011.5.5.1
TREAD/RISER PROFILE
(SOLID RISER)

INTERNATIONAL CODE COUNCIL®
Copyright © 2015 ICC. ALL RIGHTS RESERVED. Accessed by David Dammon on Jun 21, 2017 12:30:52 PM pursuant to License Agreement with ICC. No further reproduction or distribution authorized. ANY UNAUTHORIZED REPRODUCTION OR DISTRIBUTION IS A VIOLATION OF THE FEDERAL COPYRIGHT ACT AND THE LICENSE AGREEMENT, AND SUBJECT TO CIVIL AND CRIMINAL PENALTIES THEREUNDER.

ever, the intent is so that someone would not catch their toe as they moved up the stairway (see the commentary for nosing projections in Section 1011.5.5). It is not the intent to prohibit risers made of grills or other designs where a toe would not catch. Grill stairways are often used in exterior locations to allow for the passage of snow or rain and decrease the chance of accumulation and possible slips and falls on the stairways.

Exception 1 allows the use of open risers on all stairs that are not part of an accessible means of egress. Where the riser is allowed to be open, the opening is limited to be consistent with the requirements for guards (see Commentary Figure 1011.5.5.3). While not required, the second option shown in Commentary Figure 1011.5.5.3 would limit the possibility of a toe catch as someone moved up the stairways and would be a safer design. The code does not reference ICC A117.1 for stairways, because stairways are not part of an accessible route; however, the code and standard provide opening limitations in tread surfaces. Section 1011.7.1 does allow for treads to have a maximum opening that allows for a $^1/_2$-inch (12.7 mm) sphere.

Exception 2 recognizes that open risers are commonly used for stairs in occupancies such as detention facilities, storage, industrial and high-hazard areas for practical reasons. In detention facilities, open risers provide a greater degree of security and supervision because people cannot effectively conceal themselves behind the stair. Factories, high-hazard buildings and storage facilities have areas where workers may need the open risers to decrease the chance of spillage, water or snow accumulating on the stairs. See Section 1011.7.1 for permitted openings in the treads.

Exception 3 recognizes open risers as necessary for adequate foot placement in spiral stairways. The 4-inch (102 mm) opening limitations of Exception 1 are not applicable to spiral stairways.

1011.6 Stairway landings. There shall be a floor or landing at the top and bottom of each *stairway*. The width of landings shall be not less than the width of *stairways* served. Every landing shall have a minimum width measured perpendicular to the direction of travel equal to the width of the *stairway*. Where the *stairway* has a straight run the depth need not exceed 48 inches (1219 mm). Doors opening onto a landing shall not reduce the landing to less than one-half the required width. When fully open, the door shall not project more than 7 inches (178 mm) into a landing. Where *wheelchair spaces* are required on the *stairway* landing in accordance with Section 1009.6.3, the *wheelchair space* shall not be located in the required width of the landing and doors shall not swing over the *wheelchair spaces*.

Exception: Where *stairways* connect stepped *aisles* to cross *aisles* or concourses, *stairway* landings are not required at the transition between *stairways* and stepped *aisles* constructed in accordance with Section 1029.

❖ A level portion of a stairway provides users with a place to rest in their ascent or descent, to enter a stairway and to adjust their gait before continuing. Landings also break up the run of a stairway, especially at a turn, to aid in the arrest of falls that may occur (see Section 1011.8).

The minimum size (width and depth) of all landings in a stairway is determined by the actual width of the stairway. If Section 1011.2 requires a stairway to have a width of at least 44 inches (1118 mm) and the stairway is constructed with that minimum width, then all landings serving that stairway must be at least 44 inches (1118 mm) wide and 44 inches (1118 mm) deep [see Commentary Figure 1011.6(1)]. If a stairway is constructed wider than required, landings must increase accordingly so as to not create a bottleneck situation in the egress travel. However, when a stairway is configured so that it has a straight run, the depth of the landing between flights in the direction of egress travel is not required to exceed 48 inches (1219 mm), even though the actual width of

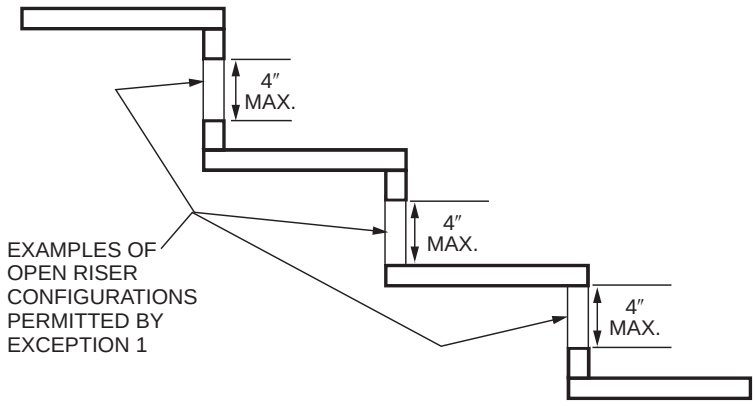

For SI: 1 inch = 25.4 mm.

Figure 1011.5.5.3
TREAD/RISER PROFILE
(OPEN RISER)

INTERNATIONAL CODE COUNCIL®
Copyright © 2015 ICC. ALL RIGHTS RESERVED. Accessed by David Dammon on Jun 21, 2017 12:30:52 PM pursuant to License Agreement with ICC. No further reproduction or distribution authorized. ANY UNAUTHORIZED REPRODUCTION OR DISTRIBUTION IS A VIOLATION OF THE FEDERAL COPYRIGHT ACT AND THE LICENSE AGREEMENT, AND SUBJECT TO CIVIL AND CRIMINAL PENALTIES THEREUNDER.

the stair may exceed 48 inches (1219 mm) [see Commentary Figure 1011.6(2)].

It is not the intent of this section to require that a stairway landing be shaped as a square or rectangle. A landing turning the stairway 90 degrees (1.57 rad) or more with a curved or segmented outside periphery would be permitted, as long as the landing provides an area described by an arc with a radius equal to the actual stairway width [see Commentary Figure 1011.6(3)]. In this case, the space necessary for means of egress will be available.

The last portion of the requirement limits the extent to which doors that swing onto landings may interfere or encroach upon the required landing space. This limits the arc of the door swing on a landing, so that the effect on the means of egress is minimized [see Commentary Figure 1011.6(4)]. This is consistent with a door opening into an exit access corridor in Section 1005.7. For safety reasons and to ensure the means of egress is continually available for everyone, where an area of refuge/wheelchair space must be located on a landing, the wheelchair spaces must not be within the required landing width and the entrance door to the stair enclosure may not swing over the wheelchair spaces [see Commentary Figure 1009.3(1)].

Exception 1 provides a practical exception where assembly facilities are designed for viewing. See Sections 1029.13 through 1029.13.2.4 for assembly stepped aisle walking surfaces. This exception is limited to when stairways are a direct continuation of the path of travel from the level cross aisle to the stepped aisles. It is not permitted for other stairways within the assembly space.

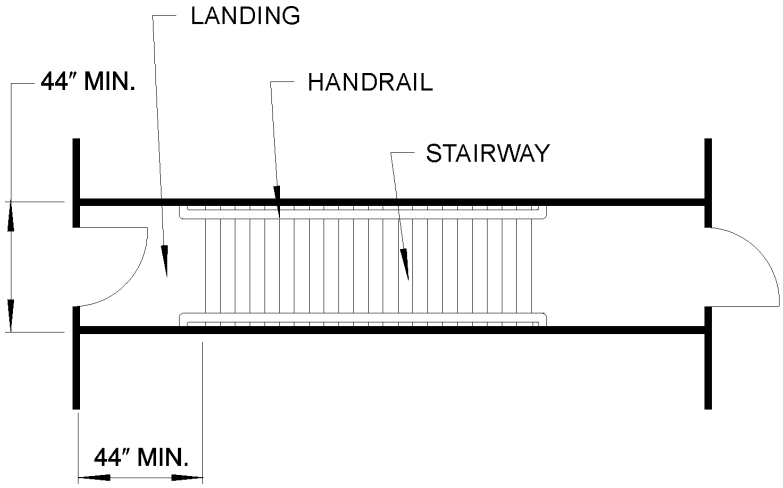

For SI: 1 inch = 25.4 mm.

Figure 1011.6(1)
TYPICAL LANDING DIMENSIONS STRAIGHT-RUN STAIRWAY

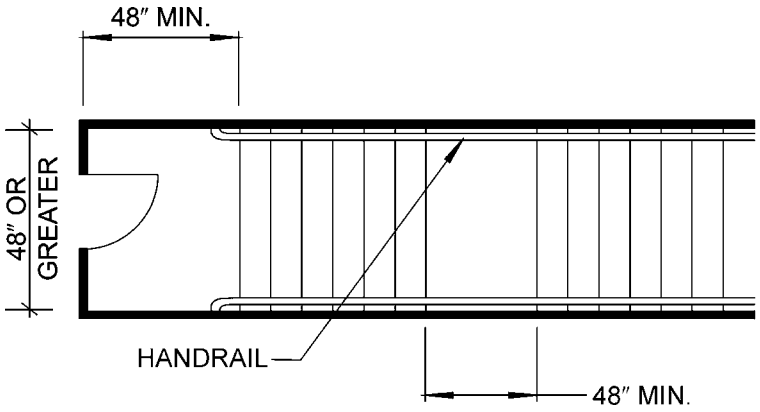

For SI: 1 inch = 25.4 mm.

Figure 1011.6(2)
TYPICAL LANDING DIMENSIONS STRAIGHT-RUN STAIRWAY WIDER THAN 48 INCHES

INTERNATIONAL CODE COUNCIL®
Copyright © 2015 ICC. ALL RIGHTS RESERVED. Accessed by David Dammon on Jun 21, 2017 12:30:52 PM pursuant to License Agreement with ICC. No further reproduction or distribution authorized. ANY UNAUTHORIZED REPRODUCTION OR DISTRIBUTION IS A VIOLATION OF THE FEDERAL COPYRIGHT ACT AND THE LICENSE AGREEMENT, AND SUBJECT TO CIVIL AND CRIMINAL PENALTIES THEREUNDER.

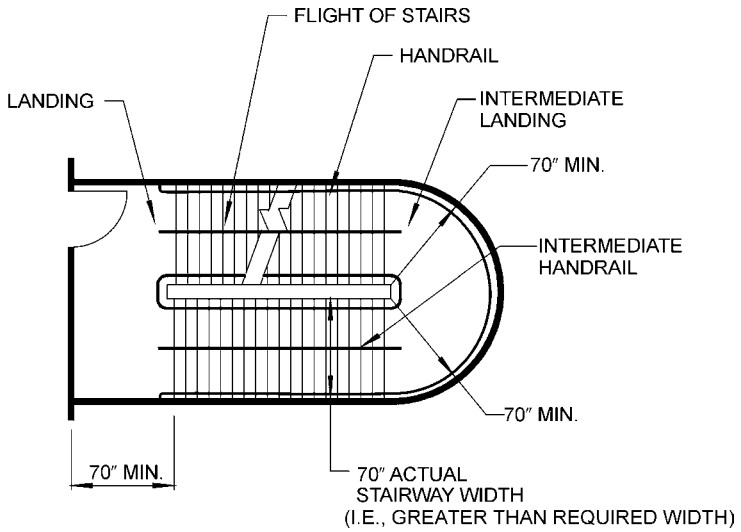

For SI: 1 inch = 25.4 mm.

Figure 1011.6(3)
REVERSING RUN STAIRWAY

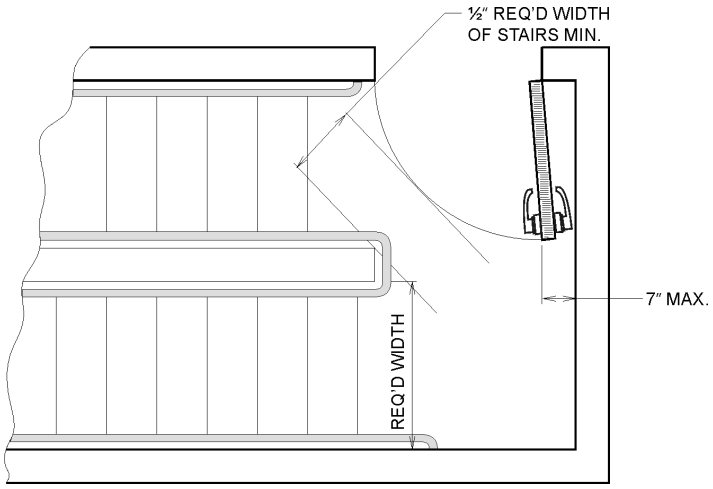

For SI: 1 inch = 25.4 mm.

Figure 1011.6(4)
DOOR CLEARANCE REQUIREMENTS IN STAIRWAY

1011.7 Stairway construction. *Stairways* shall be built of materials consistent with the types permitted for the type of construction of the building, except that wood *handrails* shall be permitted for all types of construction.

❖ In keeping with the different levels of fire protection provided by each of the five basic types of construction designated in Chapter 6, the materials used for stairway construction must meet the appropriate combustibility/noncombustibility requirements indicated in Section 602 for the particular type of construction of the building in which the stairway is located. This is required whether or not the stair is part of the required means of egress. Any structure supporting the stairway and the stairway enclosure must be fire-resistance rated consistent with the construction type; however, the stairway components inside the enclosure need only comply with the material limits for the type of construction.

If desired, wood handrails may be used on the basis that the fuel load contributed by this combustible component of stairway construction is insignificant and will not pose a fire hazard.

1011.7.1 Stairway walking surface. The walking surface of treads and landings of a *stairway* shall not be sloped steeper

INTERNATIONAL CODE COUNCIL®
Copyright © 2015 ICC. ALL RIGHTS RESERVED. Accessed by David Dammon on Jun 21, 2017 12:30:52 PM pursuant to License Agreement with ICC. No further reproduction or distribution authorized. ANY UNAUTHORIZED REPRODUCTION OR DISTRIBUTION IS A VIOLATION OF THE FEDERAL COPYRIGHT ACT AND THE LICENSE AGREEMENT, AND SUBJECT TO CIVIL AND CRIMINAL PENALTIES THEREUNDER.

than one unit vertical in 48 units horizontal (2-percent slope) in any direction. *Stairway* treads and landings shall have a solid surface. Finish floor surfaces shall be securely attached.

Exceptions:

1. Openings in *stair* walking surfaces shall be a size that does not permit the passage of $^1/_2$-inch-diameter (12.7 mm) sphere. Elongated openings shall be placed so that the long dimension is perpendicular to the direction of travel.
2. In Group F, H and S occupancies, other than areas of parking structures accessible to the public, openings in treads and landings shall not be prohibited provided a sphere with a diameter of $1^1/_8$ inches (29 mm) cannot pass through the opening.

❖ It is the intent of this section that both landing and stair treads be solid and level with firmly attached surface materials; however, the 1:48 slope should be adequate to allow for drainage to limit the chance for an accumulation of water where someone might slip.

The exceptions permit the use of open grate-type material or slotted grill for stairway treads and landings in two different situations.

Exception 1 allows for a maximum $^1/_2$-inch (12.7 mm) opening on stairway treads in public areas and serving any use (see Commentary Figure 1011.7.1). This is very beneficial on exterior stairways where snow, ice or water may accumulate. The $^1/_2$-inch (12.7 mm) limitation is based on the size of a crutch or cane tip and is consistent with ICC A117.1 and federal accessibility requirements. The opening limitation is also small enough that most shoe heels will not get stuck. If a slotted grill pattern is used, the slots must run side to side on the stairway tread, not nosing to back.

Exception 2 is applicable in factory, industrial, storage and high-hazard occupancies. This provision is intended to apply primarily to stairs that provide access to areas not required to be accessible, such as pits, catwalks, tanks, equipment platforms, roofs or mezzanines. Walking surfaces with limited-size openings are typically used because open grate-type material is less susceptible to accumulation of dirt, debris or moisture, as well as being more resistant to corrosion. Most commercially available grate material is manufactured with a maximum nominal 1-inch (25 mm) opening; therefore, the limitation that the openings not allow the passage of a sphere of $1^1/_8$ inches (29 mm) diameter allows the use of most material as well as accounting for manufacturing tolerances.

The allowances for openings in risers is addressed in Section 1011.5.5.3.



Figure 1011.7.1
OPEN TREAD IN ACCORDANCE WITH EXCEPTION 1

1011.7.2 Outdoor conditions. Outdoor *stairways* and outdoor approaches to *stairways* shall be designed so that water will not accumulate on walking surfaces.

❖ Outdoor stairways and approaches to stairways are to be constructed with a slope that complies with Section 1011.7.1 or are required to be protected such that walking surfaces do not accumulate water. While not specifically stated, any interior locations, such as near a pool, should also have the stair designed to limit the accumulation of water in order to maintain slip resistance (see Section 1003.4).

Where exterior stairways are used in moderate or severe climates, there may also be a concern to protect the stairway from accumulations of snow and ice to provide a safe path of egress travel at all times. Maintenance of the means of egress in the IFC requires an unobstructed path to allow for full instant use in case of a fire or emergency (see Section 1031.3 of the IFC). Typical methods for protecting these egress elements include roof overhangs or canopies; heated slabs; grated treads and landings; or, when approved by the building official, a reliable snow removal maintenance program.

1011.7.3 Enclosures under interior stairways. The walls and soffits within enclosed usable spaces under enclosed and unenclosed stairways shall be protected by 1-hour fire-resistance-rated construction or the fire-resistance rating of the stairway enclosure, whichever is greater. Access to the enclosed space shall not be directly from within the stairway enclosure.

Exception: Spaces under *stairways* serving and contained within a single residential dwelling unit in Group R-2 or R-3 shall be permitted to be protected on the enclosed side with $^1/_2$-inch (12.7 mm) gypsum board.

❖ This section addresses the fire hazard of storage under an interior stairway, whether it is an exit access stairway or exit stairway. The stairway must be protected from a storage area under it, even if the stair is not required to be enclosed. The section also requires that the storage area not open into a stairway enclosure. This limits the potential of a fire that starts in the storage area from affecting the means of egress. The exception provides specific criteria for separation for storage areas under an interior stairway for the indicated residential occupancies.

INTERNATIONAL CODE COUNCIL®
Copyright © 2015 ICC. ALL RIGHTS RESERVED. Accessed by David Dammon on Jun 21, 2017 12:30:52 PM pursuant to License Agreement with ICC. No further reproduction or distribution authorized. ANY UNAUTHORIZED REPRODUCTION OR DISTRIBUTION IS A VIOLATION OF THE FEDERAL COPYRIGHT ACT AND THE LICENSE AGREEMENT, AND SUBJECT TO CIVIL AND CRIMINAL PENALTIES THEREUNDER.

1011.7.4 Enclosures under exterior stairways. There shall not be enclosed usable space under *exterior exit stairways* unless the space is completely enclosed in 1-hour fire-resistance-rated construction. The open space under *exterior stairways* shall not be used for any purpose.

❖ If the space under an exterior stairway is to be used, such as for storage, the area below the stairway must be separated from the stairway with walls and a ceiling with a fire-resistance rating of at least 1 hour. If the space under the exterior stairway is open, it must remain free and clear. A fire occurring in this space would jeopardize the use of the stairway for exiting during an emergency.

1011.8 Vertical rise. A flight of stairs shall not have a vertical rise greater than 12 feet (3658 mm) between floor levels or landings.

Exception: Spiral stairways used as a means of egress from technical production areas.

❖ Between landings and platforms, the vertical rise is to be measured from one landing walking surface to another (see Commentary Figure 1011.8). The limited height provides a reasonable interval for users with physical limitations to rest on a level surface and also serves to alleviate potential negative psychological effects of long and uninterrupted stairway flights.

The exception allows for spiral stairways that only serve technical production areas to eliminate intermediate landings regardless of height. These stairways typically have limited use and serve areas such as catwalks or lighting booths in stadiums and theaters. In addition, there is the technical difficulty of maintaining proper headroom in a spiral stairway with an intermediate landing.

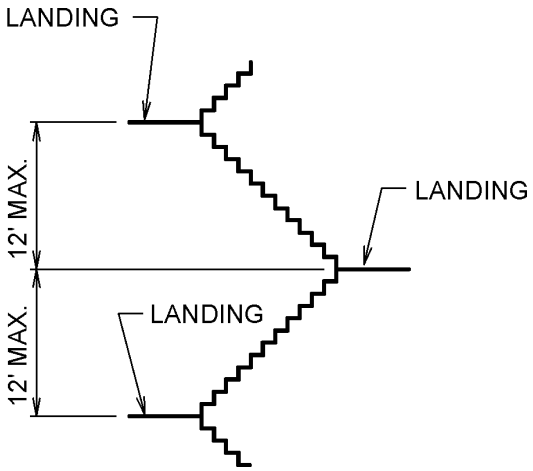

For SI: 1 foot = 304.8 mm.

Figure 1011.8
STAIRWAY RISE LIMITATION

1011.9 Curved stairways. Curved stairways with winder treads shall have treads and risers in accordance with Section 1011.5 and the smallest radius shall be not less than twice the minimum width or required capacity of the stairway.

Exception: The radius restriction shall not apply to curved stairways in Group R-3 and within individual dwelling units in Group R-2.

❖ Curved stairway construction consists of a series of winder treads that form a stairway configuration. Options are many, including circular, S-shaped, oval, elliptical, hourglass, etc. The commentary to Section 1011.5.3 regarding the possible event of nonconcentric movement on stairways with winders also applies to curved stairways. This type of stairway is allowed to be used as a component of a means of egress when tread and riser dimensions meet the requirements or exceptions of Section 1011.5. This section also requires that the shorter radius must be equal to or greater than twice the required width (see Section 1011.2) of the stairway to limit the degree of turning thereby expediting egress from higher occupancies (see Commentary Figure 1011.9).

The exception for residential units eliminates the minimum radius requirement where the occupants are familiar with the extent of the turning of the stair through the curve.

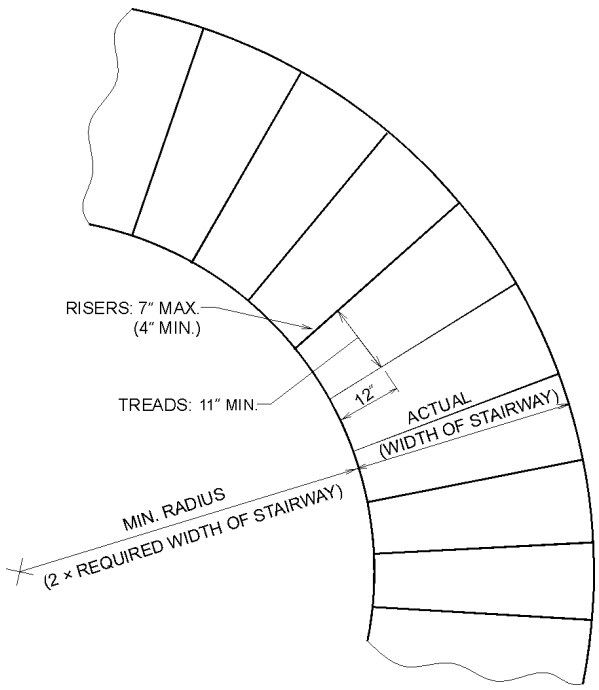

For SI: 1 inch = 25.4 mm.

Figure 1011.9
CURVED STAIRWAYS—MINIMUM DIMENSIONAL REQUIREMENTS

INTERNATIONAL CODE COUNCIL®
Copyright © 2015 ICC. ALL RIGHTS RESERVED. Accessed by David Dammon on Jun 21, 2017 12:30:52 PM pursuant to License Agreement with ICC. No further reproduction or distribution authorized. ANY UNAUTHORIZED REPRODUCTION OR DISTRIBUTION IS A VIOLATION OF THE FEDERAL COPYRIGHT ACT AND THE LICENSE AGREEMENT, AND SUBJECT TO CIVIL AND CRIMINAL PENALTIES THEREUNDER.

1011.10 Spiral stairways. *Spiral stairways* are permitted to be used as a component in the *means of egress* only within *dwelling units* or from a space not more than 250 square feet (23 m^2) in area and serving not more than five occupants, or from *technical production areas* in accordance with Section 410.6.

A *spiral stairway* shall have a $7^1/_2$-inch (191 mm) minimum clear tread depth at a point 12 inches (305 mm) from the narrow edge. The risers shall be sufficient to provide a headroom of 78 inches (1981 mm) minimum, but riser height shall not be more than $9^1/_2$ inches (241 mm). The minimum *stairway* clear width at and below the *handrail* shall be 26 inches (660 mm).

❖ Spiral stairways can be used within an individual dwelling unit, from small spaces in other occupancies and from technical production areas in spaces such as theaters. Spiral stairways are permitted to provide access between the levels within a live/work unit (see Section 419.3.2).

Spiral stairways are generally constructed with a fixed center pole that serves as either the primary or the only means of support from which pie-shaped treads radiate to form a winding stairway. The term "spiral" in the geometrical sense describes a curve that diminishes in radius and relates to the form of the stair as viewed in perspective from above or below; however, "spiral" does not describe the actual geometry of the stair. The unique turning of spiral stairs allows the center pole to act as the guard at the inside of the stair and the typically narrow width requires users to choose a walkline along the outer perimeter near the only required handrail. On spiral stairways of larger widths, where two users can pass and restrict access to the single handrail, the provision of a handrail at both sides should be considered.

The commentary to Section 1011.5.3 regarding the possible event of nonconcentric movement on stairways with winders also applies to spiral stairways. The nature of stairway construction is such that it does not serve well when used in emergencies that require immediate evacuation, nor does a spiral stairway configuration permit the handling of a large occupant load in an efficient and safe manner. Furthermore, it is impossible for fire service personnel to use a spiral stairway at the same time and in a direction opposite that being used by occupants to exit the premises, possibly causing a serious delay in firefighting operations. Therefore, this section allows only very limited use of spiral stairways when used as part of a required means of egress. Spiral stairways may be used in any occupancy as long as such stairways are not a component of a required means of egress.

Spiral stairways are required to have dimensional uniformity. The stairway must have a clear width of at least 26 inches (660 mm) at and below the handrail. The depth of the treads must not be less than $7^1/_2$ inches (191 mm) measured at a point that is 12 inches (305 mm) out from the narrow edge (see Commentary Figure 1011.10). Riser heights are required to be the same throughout the stairway, but are not to exceed $9^1/_2$ inches (241 mm). Minimum headroom of 6 feet, 6 inches (1981 mm) is required.

1011.11 Handrails. Stairways shall have handrails on each side and shall comply with Section 1014. Where glass is used to provide the handrail, the handrail shall comply with Section 2407.

Exceptions:

1. Stairways within dwelling units and spiral stairways are permitted to have a handrail on one side only.
2. Decks, patios and walkways that have a single change in elevation where the landing depth on each side of the change of elevation is greater than what is required for a landing do not require handrails.
3. In Group R-3 occupancies, a change in elevation consisting of a single riser at an entrance or egress door does not require handrails.
4. Changes in room elevations of three or fewer risers within dwelling units and sleeping units in Group R-2 and R-3 do not require handrails.

❖ Handrails are required along each side of a flight of stairs; however, handrails are not required along stairway landings. Handrail continuity and extensions that will overlap the landings are addressed in Sections 1014.4 and 1014.6.

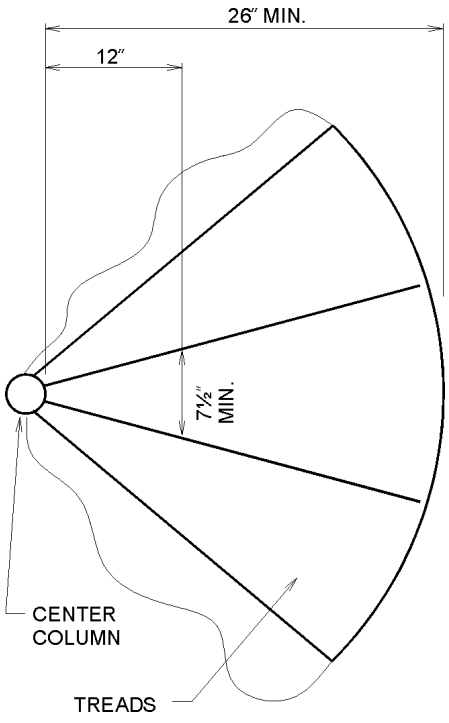

For SI: 1 inch = 25.4 mm.

Figure 1011.10
SPIRAL STAIRWAYS

INTERNATIONAL CODE COUNCIL®
Copyright © 2015 ICC. ALL RIGHTS RESERVED. Accessed by David Dammon on Jun 21, 2017 12:30:52 PM pursuant to License Agreement with ICC. No further reproduction or distribution authorized. ANY UNAUTHORIZED REPRODUCTION OR DISTRIBUTION IS A VIOLATION OF THE FEDERAL COPYRIGHT ACT AND THE LICENSE AGREEMENT, AND SUBJECT TO CIVIL AND CRIMINAL PENALTIES THEREUNDER.

Handrails have four recognized functions in stairway use. First, they serve to guide persons in ascent and descent along the path of egress travel, especially important for those with low vision, and in cases of fire where vision might be obscured by smoke. Second, they provide a tool for the user to exert stabilizing forces longitudinally (along the length of the rail), vertically and, most importantly, transversely (perpendicular) to the rail as the body transfers weight from side to side with each leg swing of the unique gait used on stairs. Third, they provide for pulling when arms are used to augment legs in ascent of steeper angles or when such climbing strategies result in more efficient use of the strengths of the user. Fourth, they are a tool that can be utilized to help in the arrest of a fall. In these capacities handrails serve to aid in the use of the stairway and are required on both sides of stairways in compliance with Section 1014 to allow passing users unencumbered access to a handrail. Finally, when glass is the material used to provide the handrail, it must comply with Section 2407.

Note that if the handrail extension is at a location that could be considered a protruding object, the handrail must return to the post at a height of less than 27 inches (686 mm) above the floor. Handrails along the stair runs are not considered protruding objects.

The exceptions state conditions where handrails are only required on one side or are not needed at all. By the nature of their construction, spiral stairways can only have a single handrail (see Exception 1). In accordance with Exceptions 1 and 4, within dwelling units, all stairways can have a handrail on one side only, and stairs with three or fewer rises are not required to have any handrails. Since "Stair" is defined as one or more risers, Exceptions 2 and 3 are necessary. Exception 3 exempts the single step at the front or back door of a Group R-3 dwelling unit (i.e., townhouse). Decks, patios and walkways often move down with the grade. When there are single steps, either off a patio or deck to grade, or along the surface, a handrail is not required (Exception 2, see Commentary Figure 1011.11). Many of these exceptions dealing with residential units are consistent with the IRC.

For guard requirements at stairways, see Section 1011.13.

1011.12 Stairway to roof. In buildings four or more stories above *grade plane*, one *stairway* shall extend to the roof surface unless the roof has a slope steeper than four units vertical in 12 units horizontal (33-percent slope).

Exception: Other than where required by Section 1011.12.1, in buildings without an occupied roof access to the roof from the top story shall be permitted to be by an *alternating tread device*, a ship's ladder or a permanent ladder.

❖ Because of safety considerations, roofs used for habitable purposes such as roof gardens, observation decks, sporting facilities (including jogging or walking tracks and tennis courts) or similar uses, must be provided with conventional stairways that will serve as required means of egress. Access by ladders or an alternating tread device for such uses is not permitted.

In buildings four or more stories high, roofs that are not used for habitable purposes must be provided with ready access by conventional stairways or by an alternating tread device (see Section 1011.14). If this stair is also to provide access to an elevator penthouse on the roof, see additional requirements in Section 1011.12.1. Two reasons for this are access for roof or rooftop equipment repair and fire department access during a fire event. Sloping roofs with a rise greater than 4 inches (102 mm) for every 12 inches (305 mm) in horizontal measurement (4:12) are exempt from the requirements of this section because of the steepness of the construction and the inherent dangers to life safety.

While it is not specifically required that roof access be through an exit stairway enclosure, since part of the intent is for fire department access to the roof, it is strongly advised. Section 1023.9 requires signage at the level of exit discharge indicating whether the stairway has roof access.

1011.12.1 Stairway to elevator equipment. Roofs and penthouses containing elevator equipment that must be accessed for maintenance are required to be accessed by a stairway.

❖ The requirement for a stair to the roof for maintaining elevator equipment correlates the code with ASME A17.1/CSA B44, *Safety Code for Elevators and Escalators*. This referenced standard (see Section 3001.2) has required stairs and a door to access elevator equipment since 1955. More specifically, Section 2.27.3.2.1 of ASME A17.1/CSA B44 states the following: "a stairway with a swinging door and platform at



Figure 1011.11
EXAMPLE OF SECTION 1011.11, EXCEPTION 2

INTERNATIONAL CODE COUNCIL®
Copyright © 2015 ICC. ALL RIGHTS RESERVED. Accessed by David Dammon on Jun 21, 2017 12:30:52 PM pursuant to License Agreement with ICC. No further reproduction or distribution authorized. ANY UNAUTHORIZED REPRODUCTION OR DISTRIBUTION IS A VIOLATION OF THE FEDERAL COPYRIGHT ACT AND THE LICENSE AGREEMENT, AND SUBJECT TO CIVIL AND CRIMINAL PENALTIES THEREUNDER.

the top level, conforming to 2.7.3.3 shall be provided from the top floor of the building to the roof level. Hatch covers as a means of access to the roofs shall not be permitted." Alternating tread devices or ladders are not permitted as an alternative to the stairway for access to the elevator penthouse. This provision is more specific; therefore, while not prohibiting using the same stairway for access to the roof and the elevator penthouse (see Sections 1011.12 and 1011.12.2), access to that elevator penthouse must be via a stairway with door access, not an alternating tread device and hatch.

1011.12.2 Roof access. Where a stairway is provided to a roof, access to the roof shall be provided through a penthouse complying with Section 1510.2.

Exception: In buildings without an occupied roof, access to the roof shall be permitted to be a roof hatch or trap door not less than 16 square feet (1.5 m^2) in area and having a minimum dimension of 2 feet (610 mm).

❖ The purpose of the penthouse or stairway bulkhead requirement in this section is to protect the walking surface of the stairway to the roof. The exception provides for situations when roof access is only needed for service or maintenance purposes, and where the access may be permitted by alternatives such as alternating tread devices, ship's ladders or ladders.

1011.13 Guards. Guards shall be provided along stairways and landings where required by Section 1015 and shall be constructed in accordance with Section 1015. Where the roof hatch opening providing the required access is located within 10 feet (3049 mm) of the roof edge, such roof access or roof edge shall be protected by guards installed in accordance with Section 1015.

❖ While guards are required at the edge of a normally occupied roof by Section 1015, there is also a safety concern for roof areas that need to be accessed by service personnel, inspectors and emergency responders. This requirement for guards provides a minimum measure of safety when the roof access is close to the roof edge. This is consistent with the requirements at mechanical equipment in Section 1015.6 and 1015.7.

1011.14 Alternating tread devices. *Alternating tread devices* are limited to an element of a *means of egress* in buildings of Groups F, H and S from a mezzanine not more than 250 square feet (23 m^2) in area and that serves not more than five occupants; in buildings of Group I-3 from a guard tower, observation station or control room not more than 250 square feet (23 m^2) in area and for access to unoccupied roofs. *Alternating tread devices* used as a means of egress shall not have a rise greater than 20 feet (6096 mm) between floor levels or landings.

❖ This type of device is constructed in such a way that each tread alternates with each adjacent tread so that the device consists of a system of right-footed and left-footed treads (see Commentary Figure 1011.14).

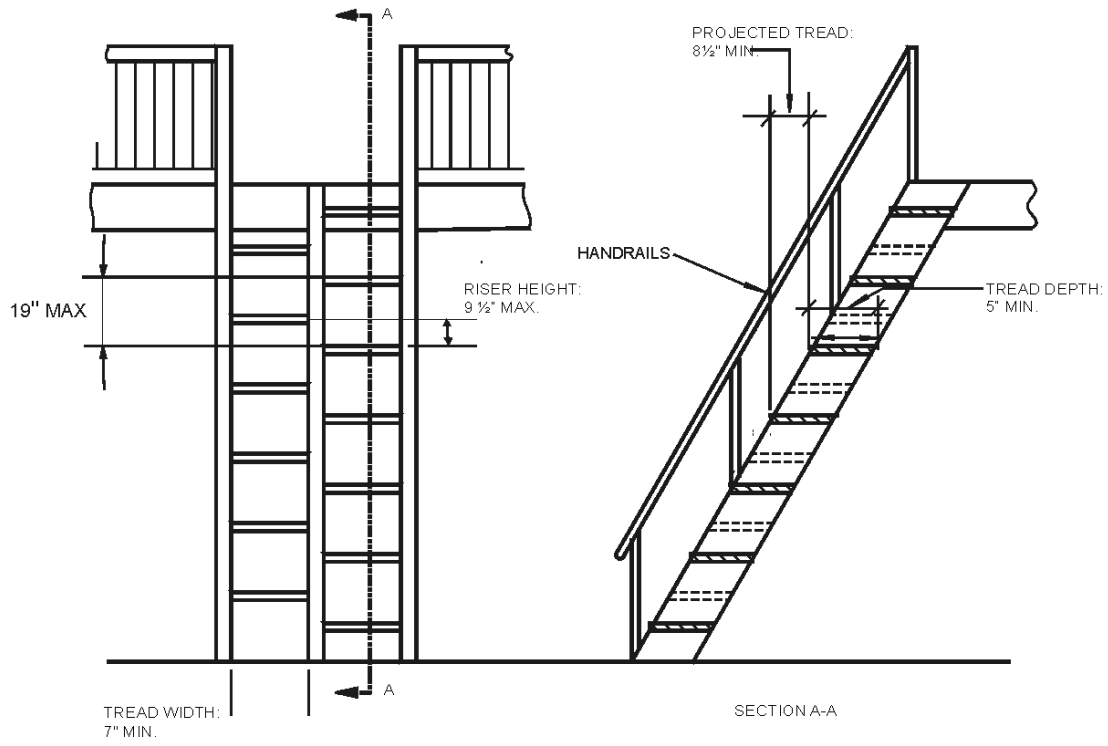

For SI: 1 inch = 25.4 mm.

Figure 1011.14
TYPICAL ALTERNATING TREAD DEVICE

INTERNATIONAL CODE COUNCIL®
Copyright © 2015 ICC. ALL RIGHTS RESERVED. Accessed by David Dammon on Jun 21, 2017 12:30:52 PM pursuant to License Agreement with ICC. No further reproduction or distribution authorized. ANY UNAUTHORIZED REPRODUCTION OR DISTRIBUTION IS A VIOLATION OF THE FEDERAL COPYRIGHT ACT AND THE LICENSE AGREEMENT, AND SUBJECT TO CIVIL AND CRIMINAL PENALTIES THEREUNDER.

The use of center stringer construction, half-treads and an incline that is considerably steeper than allowed for ordinary stairway construction makes the alternating tread device unique. However, because of its structural feature, only single-file use of the device (between handrails) is possible, thus preventing the occupants from passing one another. The pace of occupant travel is set by the slowest user, a condition that could become critical in an emergency situation. Furthermore, it is impossible for fire service personnel to use an alternating tread device at the same time and in a direction opposite that being used by occupants to exit the premises, possibly causing a serious delay in fire-fighting operations. For these reasons, this section greatly restricts the use of alternating tread devices as a means of egress. Alternating tread devices may be used in any occupancy as long as such stairways are not a component of a required means of egress.

Alternating tread devices are considered a modest improvement to ladder construction and, therefore, can be used as an unoccupied roof access in accordance with the requirements of Section 1011.12.

Alternating tread devices are permitted 20 feet (6096 mm) between landings given their limited application and low occupant loads. In addition, it is recognized a vertical rise higher than the typical stairway is needed for these steeper devices which are used where space is often too restrictive for a regular stairway.

1011.14.1 Handrails of alternating tread devices. Handrails shall be provided on both sides of alternating tread devices and shall comply with Section 1014.

❖ For the safety of occupants, this section references the dimensional requirements for handrail locations to be used in conjunction with the special construction features of alternating tread devices provided in Section 1011.14. Because of the steepness of these devices, handrails on both sides are essential for safe functional use and additional clearances are required so that hand movement will not be encumbered by obstructions. Section 1015.3, Exception 5, permits the handrails along alternating tread devices to also serve as guards.

1011.14.2 Treads of alternating tread devices. *Alternating tread devices* shall have a minimum tread depth of 5 inches (127 mm), a minimum projected tread depth of $8^1/_2$ inches (216 mm), a minimum tread width of 7 inches (178 mm) and a maximum riser height of $9^1/_2$ inches (241 mm). The tread depth shall be measured horizontally between the vertical planes of the foremost projections of adjacent treads. The riser height shall be measured vertically between the leading edges of adjacent treads. The riser height and tread depth provided shall result in an angle of ascent from the horizontal of between 50 and 70 degrees (0.87 and 1.22 rad). The initial tread of the device shall begin at the same elevation as the platform, landing or floor surface.

Exception: *Alternating tread devices* used as an element of a *means of egress* in buildings from a mezzanine area not more than 250 square feet (23 m^2) in area that serves not more than five occupants shall have a minimum tread depth of 3 inches (76 mm) with a minimum projected tread depth of $10^1/_2$ inches (267 mm). The rise to the next alternating tread surface shall not exceed 8 inches (203 mm).

❖ Alternating tread stairways (see Section 1009.13) are required to have tread depths of at least 5 inches (127 mm). Tread projections are not to be less than $3^1/_2$ inches (89 mm) when measured from tread nosing to tread nosing [next adjacent tread to the left or right to provide a minimum projected tread depth of $8^1/_2$ inches (216 mm)] (see Commentary Figure 1011.14).

The risers are to be not more than $9^1/_2$ inches (241 mm) when measured from tread to alternating tread (next adjacent tread to the left or right). The rise between treads on the same side would be 19 inches (482 mm) maximum. Applying the limiting dimensions stated above results in a device with a very steep incline that is common to ladders; however, because the device may be walked facing down in descent, it is considered a type of stairway in the code.

Tread widths are required to be a minimum of 7 inches (178 mm) or more. With a center support, the total width will be more than 15 inches (381 mm). Although no maximum width of the tread is stated, the device must be of a width to provide for functional use of both handrails at the same time in ascent and descent. For this same reason, handrail heights for alternating tread devices are modified from those stairways in Section 1014.2.

Just using the dimensions could result in an alternating tread device with an angle greater than 75 degrees (1.3 rad). In any case, the overall angle of the device must be between 50 and 70 degrees (0.87 and 1.22 rad).

For alternating tread devices used as a means of egress from small-area mezzanines as prescribed in the exception, the treads must project at least $7^1/_2$ inches (191 mm) as compared to the $3^1/_2$ inches (89 mm) stated above; treads are to be at least 3 inches (76 mm) in depth [compared to 5 inches (127 mm)] and risers are not to exceed 8 inches (203 mm) in height [compared to $9^1/_2$ inches (341 mm)].

1011.15 Ship's ladders. Ship's ladders are permitted to be used in Group I-3 as a component of a *means of egress* to and from control rooms or elevated facility observation stations not more than 250 square feet (23 m^2) with not more than three occupants and for access to unoccupied roofs. The minimum clear width at and below the *handrails* shall be 20 inches (508 mm).

❖ Ship's ladders can be used in correctional facilities for access to small control rooms, observation stations and unoccupied roofs. Where approved by the code official, ship's ladders could be used for access to unoccupied roofs in other occupancies. Ship's ladders are of similar gradient or pitch to alternating tread devices; however, the treads span the full width

INTERNATIONAL CODE COUNCIL®
Copyright © 2015 ICC. ALL RIGHTS RESERVED. Accessed by David Dammon on Jun 21, 2017 12:30:52 PM pursuant to License Agreement with ICC. No further reproduction or distribution authorized. ANY UNAUTHORIZED REPRODUCTION OR DISTRIBUTION IS A VIOLATION OF THE FEDERAL COPYRIGHT ACT AND THE LICENSE AGREEMENT, AND SUBJECT TO CIVIL AND CRIMINAL PENALTIES THEREUNDER.

like that of a ladder rather than being staggered to either side (see Commentary Figure 1011.15).

1011.15.1 Handrails of ship's ladders. *Handrails* shall be provided on both sides of ship's ladders.

❖ Handrails are needed on both sides to assist in ascent and descent and the absence of a maximum width. Section 1015.3, Exception 5, permits the handrails along ship's ladders to also serve as guards.

1011.15.2 Treads of ship's ladders. Ship's ladders shall have a minimum tread depth of 5 inches (127 mm). The tread shall be projected such that the total of the tread depth plus the *nosing* projection is not less than $8^1/_2$ inches (216 mm). The maximum riser height shall be $9^1/_2$ inches (241 mm).

❖ See Commentary Figure 1011.15 for an example of this configuration.

1011.16 Ladders. Permanent ladders shall not serve as a part of the *means of egress* from occupied spaces within a building. Permanent ladders shall be permitted to provide access to the following areas:

1. Spaces frequented only by personnel for maintenance, repair or monitoring of equipment.
2. Nonoccupiable spaces accessed only by catwalks, crawl spaces, freight elevators or very narrow passageways.
3. Raised areas used primarily for purposes of security, life safety or fire safety including, but not limited to, observation galleries, prison guard towers, fire towers or lifeguard stands.
4. Elevated levels in Group U not open to the general public.
5. Nonoccupied roofs that are not required to have *stairway* access in accordance with Section 1011.12.1.
6. Ladders shall be constructed in accordance with Section 306.5 of the *International Mechanical Code*.

❖ Permanent ladders are permitted as a means of ingress and egress to very limited spaces. Typically, these spaces are not considered occupied and, as such, are not required to have a means of egress. While the term "technical production areas" is not used in this section, Section 410.6.3.4, Item 6, allows for ladders to be used to access technical production areas. Item 6 of this section references the IMC for when ladders can be used to access mechanical equipment that is located in an elevated space or in a room. The details and construction requirements for a permanent ladder are also found in that section. This will help make sure that permanent ladders are safe and useable, while providing consistency for both the designer and the building official.

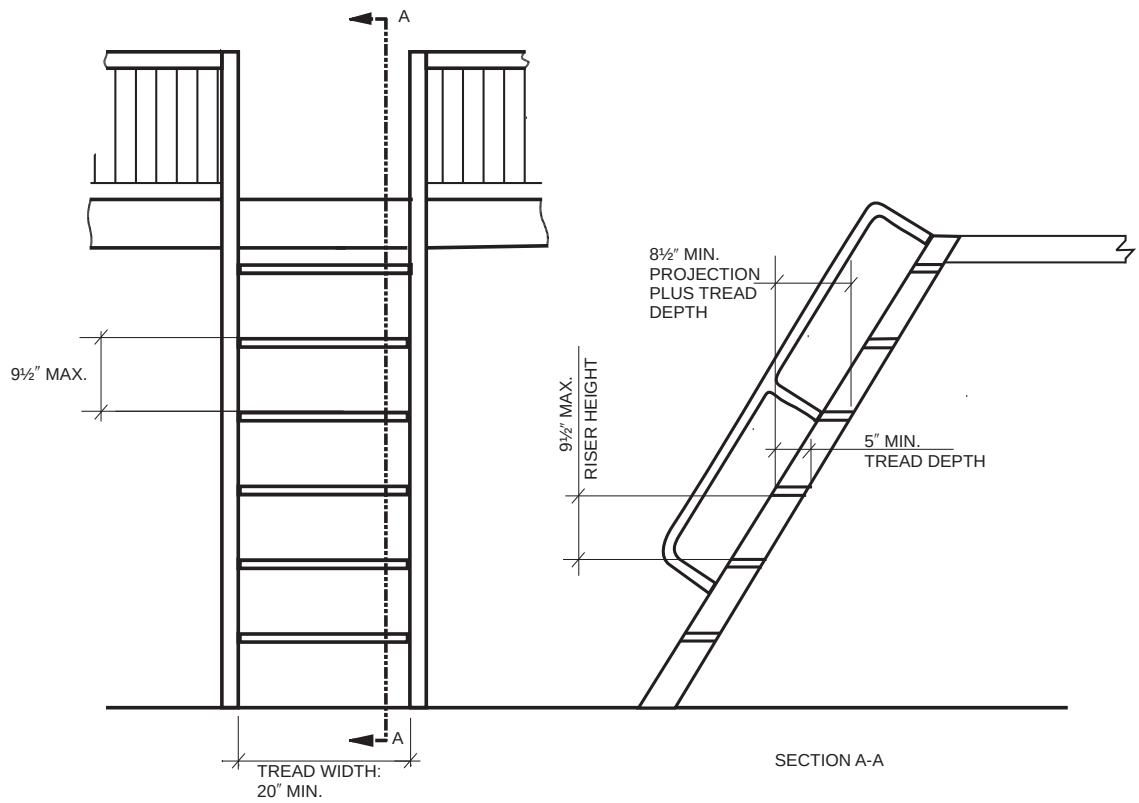

For SI: 1 inch = 25.4 mm.

Figure 1011.15
TYPICAL SHIP'S LADDER

INTERNATIONAL CODE COUNCIL®
Copyright © 2015 ICC. ALL RIGHTS RESERVED. Accessed by David Dammon on Jun 21, 2017 12:30:52 PM pursuant to License Agreement with ICC. No further reproduction or distribution authorized. ANY UNAUTHORIZED REPRODUCTION OR DISTRIBUTION IS A VIOLATION OF THE FEDERAL COPYRIGHT ACT AND THE LICENSE AGREEMENT, AND SUBJECT TO CIVIL AND CRIMINAL PENALTIES THEREUNDER.

SECTION 1012
RAMPS

1012.1 Scope. The provisions of this section shall apply to ramps used as a component of a *means of egress.*

Exceptions:

1. Ramped *aisles* within assembly rooms or spaces shall comply with the provisions in Section 1029.
2. Curb ramps shall comply with ICC A117.1.
3. Vehicle ramps in parking garages for pedestrian *exit access* shall not be required to comply with Sections 1012.3 through 1012.10 where they are not an *accessible route* serving *accessible* parking spaces, other required *accessible* elements or part of an accessible *means of egress.*

❖ Ramps provide an alternative method of vertical means of access to or egress from a building. Ramps are required for access to building areas for persons who are mobility impaired (see Chapter 11) and for small changes in floor elevations that are a safety hazard in themselves (see Section 1003.5). All ramps intended for pedestrian usage, whether required or otherwise provided, must comply with the requirements of this section. The code considers any walking surface that has a slope steeper than one unit vertical in 20 units horizontal (5-percent slope) to be a ramp (see the definition for "Ramp" in Chapter 2).

As with stairways, it is important to understand the terminology. Exit ramps are ramps that provide a protected path of travel between the exit access and the exit discharge. Interior exit ramps are required to be enclosed in accordance with Section 1022. Exterior exit ramps are protected by the exterior wall of the building and must comply with Section 1027. Exit access ramps are typically unenclosed interior ramps and comply with Section 1019 when they provide access between stories. Exit access travel distance stops at an exit ramp enclosure, but includes any travel down an exit access ramp. Ramps that are outside and provide a route from the level of exit discharge to grade are considered part of the exit discharge. See the commentary in Chapter 2 for the defined term, "Exit discharge, level of."

Exception 1 indicates that ramped aisles are addressed in Section 1029. Having this exception at the beginning of the ramp section negated the need for repeated exceptions throughout the ramp provisions. While ramps and ramped aisles may look similar, configurations and how occupants move on and off those walking surfaces are very different. Occupants leave and join ramped aisles along the entire run, while occupants only enter the ramp at the top and bottom. Ramped aisles may have no or only one handrail in order to allow for access to the seats, while most ramps have handrails on both sides. Ramped aisles can have steeper slopes to allow for seating bowls to address line of sight. Section 1029 should be used for ramped aisles between and immediately adjacent to seating or where the ramps are a direct continuation of the ramped aisles and lead to a level cross aisle or floor. Section 1012 is used for ramps that lead from the balcony, concourse or cross aisle to a floor level above or below the seating areas.

Exception 2 references specific curb cut requirements found in Section 406 of ICC A117.1. It is important to realize there are different provisions for curb ramps and ramps. For example, a curb ramp can have a rise of any height and not require handrails. Ramps require handrails when the rise is more than 6 inches.

Exception 3 addresses parking garages. An accessible route is required to and from any accessible parking space, and all ramp provisions must be followed. However, ramps that provide access to and from nonaccessible spaces in the remainder of the parking garage need only comply with the provisions for slope and guard requirements. This permits nonaccessible portions of garages to be constructed as a continuous slope. Ramps that are strictly for vehicles, such as jump ramps, are not required to meet any of the ramp provisions.

1012.2 Slope. *Ramps* used as part of a *means of egress* shall have a running slope not steeper than one unit vertical in 12 units horizontal (8-percent slope). The slope of other pedestrian *ramps* shall not be steeper than one unit vertical in eight units horizontal (12.5-percent slope).

❖ Maximum slope is limited to facilitate the ease of ascent and to control the descent of persons with or without a mobility impairment. The maximum slope of a ramp in the direction of travel is limited to one unit vertical in 12 units horizontal (1:12) (see Commentary Figure 1012.2). Ramps in existing buildings may be permitted to have a steeper slope at small changes in elevation (see Sections 410.8.5 and 705.1.4 of the IEBC). An example of a ramp that is not part of a means of egress and, therefore, allowed to be a maximum slope of 1:8, is a loading dock or delivery ramp where the ramp is not part of any required exit discharge.

1012.3 Cross slope. The slope measured perpendicular to the direction of travel of a *ramp* shall not be steeper than one unit vertical in 48 units horizontal (2-percent slope).

❖ The limitation of one unit vertical in 48 units horizontal on the slope across the direction of travel is to prevent a severe cross slope that would pitch a user to one side (see Commentary Figure 1012.2).

1012.4 Vertical rise. The rise for any *ramp* run shall be 30 inches (762 mm) maximum.

Because pushing a wheelchair up a ramp requires a great deal of energy, landings must be situated so that a person can rest after each 30-inch (762 mm) elevation change (see Commentary Figure 1012.2).

INTERNATIONAL CODE COUNCIL®
Copyright © 2015 ICC. ALL RIGHTS RESERVED. Accessed by David Dammon on Jun 21, 2017 12:30:52 PM pursuant to License Agreement with ICC. No further reproduction or distribution authorized. ANY UNAUTHORIZED REPRODUCTION OR DISTRIBUTION IS A VIOLATION OF THE FEDERAL COPYRIGHT ACT AND THE LICENSE AGREEMENT, AND SUBJECT TO CIVIL AND CRIMINAL PENALTIES THEREUNDER.

1012.5 Minimum dimensions. The minimum dimensions of *means of egress ramps* shall comply with Sections 1012.5.1 through 1012.5.3.

❖ These minimum dimension requirements allow the ramp to function as a means of egress and an accessible route.

1012.5.1 Width and capacity. The minimum width and required capacity of a *means of egress ramp* shall be not less than that required for *corridors* by Section 1020.2. The clear width of a *ramp* between *handrails*, if provided, or other permissible projections shall be 36 inches (914 mm) minimum

❖ .The requirements for the width of a means of egress ramp is based on the width required for minimum width [typically 36 inches (941 mm)] and the capacity based on the occupant load to be served (see Section 1005.3.2). Note that the clear width of 36 inches (914 mm) is required between the handrails and any other obstructions (e.g., handrail supports, curbs) for proper clearance for a person in a wheelchair. This is different from stairways where handrails are permitted to project into the required width. The 36-inch (914 mm) minimum clear width between handrails is consistent with ICC A117.1 and the federal 2010 ADA Standard.

1012.5.2 Headroom. The minimum headroom in all parts of the *means of egress ramp* shall be not less than 80 inches (2032 mm).

❖ The requirement for headroom on any part of an egress ramp is identical to the requirement of a conventional (nonspiral) stairway (see Section 1011.3). General headroom heights along the means of egress are addressed in Section 1003.2.

1012.5.3 Restrictions. *Means of egress ramps* shall not reduce in width in the direction of egress travel. Projections into the required *ramp* and landing width are prohibited. Doors opening onto a landing shall not reduce the clear width to less than 42 inches (1067 mm).

❖ The purpose of not allowing ramps to reduce in width in the direction of egress travel is to prevent a restriction that would interfere with the flow of occupants out of a facility. This would include ramp landings in accordance with Section 1012.6.2. Handrails are the only exception in accordance with Sections 1012.5.1 and 1014.8.

Doors that open onto a ramp landing, including those at the top and bottom landings, must not reduce the clear width to less than 42 inches (1067 mm). This is a more restrictive provision than for cor-

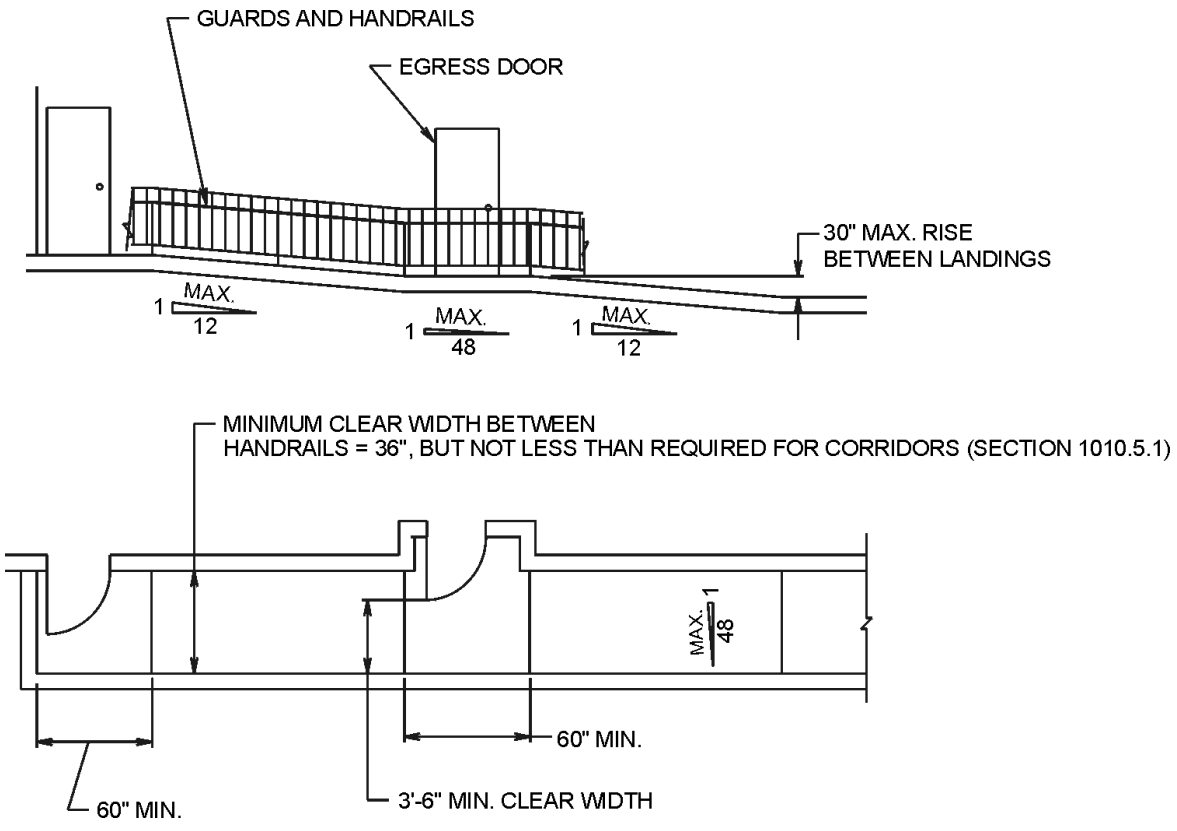

For SI: 1 inch = 25.4 mm, 1 foot = 304.8 mm.

Figure 1012.2
TYPICAL MEANS OF EGRESS RAMP

INTERNATIONAL CODE COUNCIL®
Copyright © 2015 ICC. ALL RIGHTS RESERVED. Accessed by David Dammon on Jun 21, 2017 12:30:52 PM pursuant to License Agreement with ICC. No further reproduction or distribution authorized. ANY UNAUTHORIZED REPRODUCTION OR DISTRIBUTION IS A VIOLATION OF THE FEDERAL COPYRIGHT ACT AND THE LICENSE AGREEMENT, AND SUBJECT TO CIVIL AND CRIMINAL PENALTIES THEREUNDER.

ridors that would permit the reduction to one-half the required width (see Section 1005.7). Since one of the purposes of a ramp is to accommodate persons with physical disabilities, it must provide the additional clear width for access by those confined to wheelchairs without the interference or potential blockage caused by the swing of a door (see Commentary Figures 1012.2 and 1012.5.3).

1012.6 Landings. *Ramps* shall have landings at the bottom and top of each *ramp*, points of turning, entrance, exits and at doors. Landings shall comply with Sections 1012.6.1 through 1012.6.5.

❖ Landings must be provided to allow users of a ramp to rest on a level floor surface and to adjust to the change in floor surface pitch.

Landings are required at the top and bottom of each ramp run (see Commentary Figure 1012.6). In addition, Section 1012.4 requires a landing every 30 inches (762 mm) of vertical rise of the ramp. The requirements for landings allow those occupants of the structure the ability to negotiate all changes in direction, and prepare themselves to either ascend or descend the ramp and to rest. If there is a door at the top or the bottom of the ramp, there are additional requirements in Section 1012.5.3 for door swing over the landing and Section 405 of ICC A117.1 for maneuvering space and turning space at the door.

1012.6.1 Slope. Landings shall have a slope not steeper than one unit vertical in 48 units horizontal (2-percent slope) in any direction. Changes in level are not permitted.

❖ Landings must be almost flat. This allows persons confined to a wheelchair to come to a complete stop without having to activate the brake or hold themselves stationary at the landing. The maximum slope or cross slope of the landing in any direction is 1:48 (see Commentary Figure 1012.2). This minimum slope is to allow for drainage to limit the accumulation of water on the landing surface.

1012.6.2 Width. The landing width shall be not less than the width of the widest *ramp* run adjoining the landing.

❖ The width of all landings must be consistently as wide as the widths of the ramp runs leading to them. Means of egress ramps cannot be reduced in width in the direction of egress travel. This is also applicable to the landings connecting the ramp runs (see Commentary Figure 1012.6).

1012.6.3 Length. The landing length shall be 60 inches (1525 mm) minimum.

Exceptions:

1. In Group R-2 and R-3 individual *dwelling* and *sleeping units* that are not required to be *Accessible units*, *Type A units* or *Type B units* in accordance with Sec-

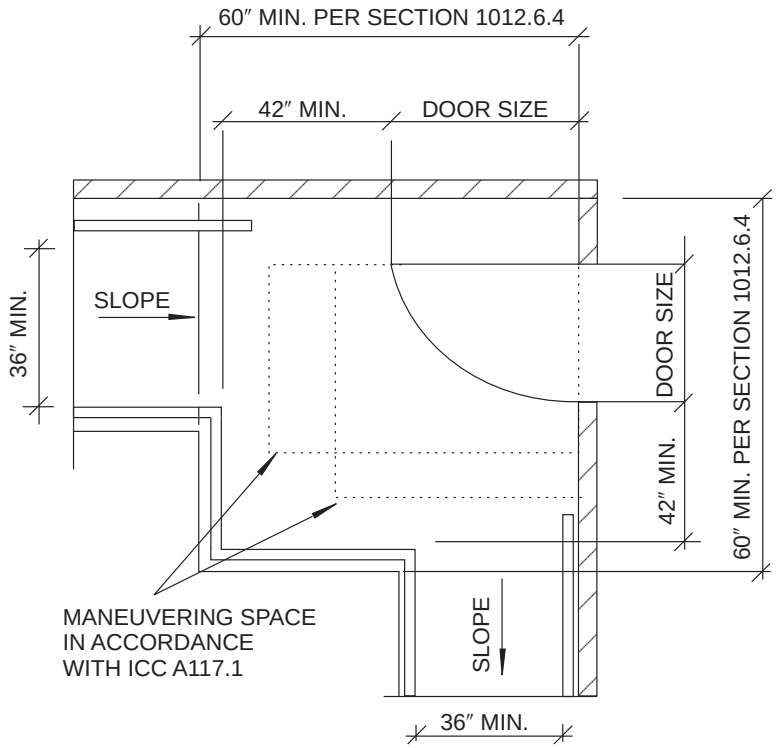

For SI: 1 inch = 25.4 mm.

Figure 1012.5.3
DOORWAY OPENING ONTO LANDING

INTERNATIONAL CODE COUNCIL®
Copyright © 2015 ICC. ALL RIGHTS RESERVED. Accessed by David Dammon on Jun 21, 2017 12:30:52 PM pursuant to License Agreement with ICC. No further reproduction or distribution authorized. ANY UNAUTHORIZED REPRODUCTION OR DISTRIBUTION IS A VIOLATION OF THE FEDERAL COPYRIGHT ACT AND THE LICENSE AGREEMENT, AND SUBJECT TO CIVIL AND CRIMINAL PENALTIES THEREUNDER.

tion 1107, landings are permitted to be 36 inches (914 mm) minimum.

2. Where the *ramp* is not a part of an *accessible route*, the length of the landing shall not be required to be more than 48 inches (1220 mm) in the direction of travel.

❖ The landings for ramps must be at least 60 inches (1524 mm) long (see Commentary Figure 1012.6). This allows persons confined to wheelchairs a sufficient distance to stop and rest along with any persons who may be assisting them. This requirement is directly applicable to straight-run ramps that may require an intermediate landing at every 30 inches (762 mm) of vertical rise (see Commentary Figure 1012.2). If the landing is also to be used to negotiate a change in the ramp's direction, Section 1012.6.4 is applicable. If a door overlaps the landing, Section 1012.5.3 is applicable.

The exceptions provide for smaller landings in dwelling and sleeping units and other locations where the ramp is not part of an accessible route. Exception 1 is consistent with the IRC. Exception 2 would be applicable in areas such as service ramps and ramps serving assembly seating areas that do not contain any wheelchair spaces.

1012.6.4 Change in direction. Where changes in direction of travel occur at landings provided between *ramp* runs, the landing shall be 60 inches by 60 inches (1524 mm by 1524 mm) minimum.

Exception: In Group R-2 and R-3 individual *dwelling* or *sleeping units* that are not required to be *Accessible units*, *Type A units* or *Type B units* in accordance with Section 1107, landings are permitted to be 36 inches by 36 inches (914 mm by 914 mm) minimum.

❖ When a change in direction is made in the ramp at a landing, the landing must be a square of at least 60 inches (1524 mm). This allows the person confined to a wheelchair enough room to negotiate the turn with minimal effort. The length of the landing may need to exceed 60 inches (1524 mm) to match the widths of the two ramp runs. In any case, the landing would still need to be 60 inches (1524 mm) wide (see Commentary Figures 1012.5.3 and 1012.6). If a door overlaps the landing, Section 1012.5.3 is applicable. It is not the intent of this provision to prohibit curved ramps. As long as the cross slope meets the limitations in Section 1010.4, the curved ramp is permitted.

The exception provides for smaller landings in dwelling and sleeping units where the ramp is not part of an accessible route. This is consistent with requirements in the IRC.

1012.6.5 Doorways. Where doorways are located adjacent to a *ramp* landing, maneuvering clearances required by *ICC A117.1* are permitted to overlap the required landing area.

❖ This section specifies that the area required for maneuvering to open the door and the area of the landing are allowed to overlap. It is not necessary to provide the sum of the two area requirements (see Commentary Figure 1012.5.3). Requirements for maneuvering space and turning space at the top and bottom of ramps are found in Section 405 of ICC A117.1. ICC A117.1 requires a turning space at the top or bottom landing of a ramp where the door may be locked. This allows people to turn around to travel back along the ramp.

1012.7 Ramp construction. *Ramps* shall be built of materials consistent with the types permitted for the type of construction of the building, except that wood *handrails* shall be permitted for all types of construction.

❖ Material requirements for the type of construction as required by Section 602 for floors are also the material requirements for ramp construction.

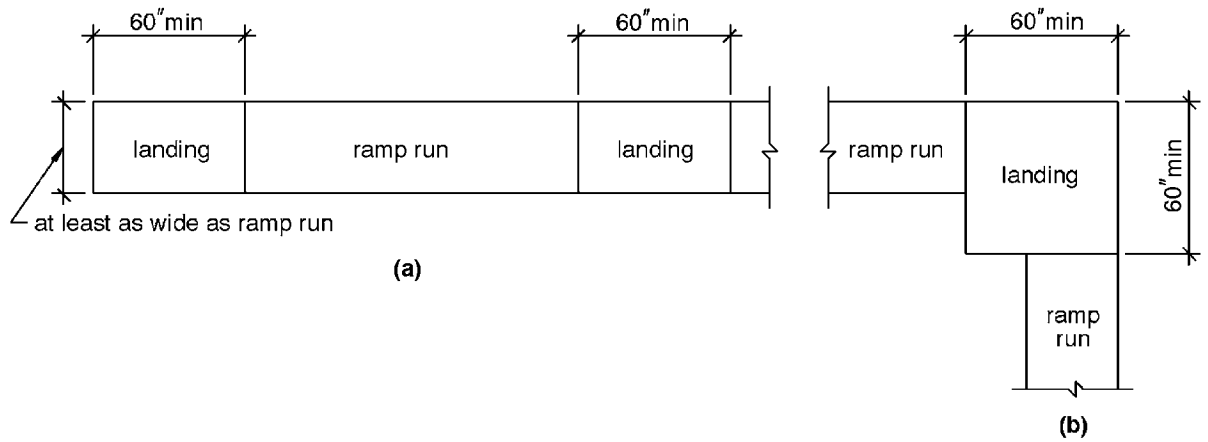

For SI: 1 inch = 25.4 mm.

Figure 1012.6
RAMP LANDINGS

INTERNATIONAL CODE COUNCIL®
Copyright © 2015 ICC. ALL RIGHTS RESERVED. Accessed by David Dammon on Jun 21, 2017 12:30:52 PM pursuant to License Agreement with ICC. No further reproduction or distribution authorized. ANY UNAUTHORIZED REPRODUCTION OR DISTRIBUTION IS A VIOLATION OF THE FEDERAL COPYRIGHT ACT AND THE LICENSE AGREEMENT, AND SUBJECT TO CIVIL AND CRIMINAL PENALTIES THEREUNDER.

1012.7.1 Ramp surface. The surface of *ramps* shall be of slip-resistant materials that are securely attached.

❖ As the pace of exit travel becomes hurried during emergency situations, the probability of slipping on smooth or slick floor surfaces increases. To minimize the hazard, all floor surfaces in the means of egress are required to be slip resistant. The use of hard floor materials with highly polished, glazed, glossy or finely finished surfaces should be avoided. This is consistent with Section 1003.4.

Field testing and uniform enforcement of the concept of slip resistance is not practical. One method used to establish slip resistance is that the static coefficient of friction between leather [Type 1 (Vegetable Tanned) of Federal Specification KK-L-165C] and the floor surface is greater than 0.5. Laboratory test procedures such as ASTM D2047 can determine the static coefficient of resistance. Bulletin No. 4 entitled "Surfaces" issued by the U.S. Access Board (ATBCB) contains further information regarding slip resistance.

1012.7.2 Outdoor conditions. Outdoor *ramps* and outdoor approaches to *ramps* shall be designed so that water will not accumulate on walking surfaces.

❖ Outdoor ramps, landings and the approaches to the ramp must be sloped so that surfaces do not accumulate water so as to provide a safe path of egress travel at all times. While not specifically stated, any interior locations, such as near a pool, should also have the ramps designed to limit the accumulation of water in order to maintain slip resistance (see Sections 1003.4 and 1012.7.1).

Where exterior ramps are used in moderate or severe climates, there may also be a concern to protect the ramp from accumulations of snow and ice to provide a safe path of egress travel at all times, including inclement weather. Maintenance of the means of egress in the IFC requires an unobstructed path to allow for full instant use in case of a fire or emergency (see Section 1031.3 of the IFC). Typical methods for protecting these egress elements include roof overhangs or canopies, heated slabs and, when approved by the building official, a reliable snow removal maintenance program.

1012.8 Handrails. *Ramps* with a rise greater than 6 inches (152 mm) shall have *handrails* on both sides. *Handrails* shall comply with Section 1014.

❖ To aid in the use of a ramp, handrails are to be provided. Handrails are intended to provide the user with a graspable surface for guidance and support. All ramps with a vertical rise greater than 6 inches (152 mm) between landings are to be provided with handrails on both sides [see Commentary Figures 1012.8(1) and 1014.2]. General strength requirements for handrails are found in Section 1014 with a reference to Section 1607.8. Note that if the handrail extension is at a location that could be considered a protruding object, the handrail extension must return to the post at a height of less than 27 inches (686 mm) above the floor. Handrails along the ramp runs are not considered protruding objects.

Depending on the configuration of the ramp and the adjacent walking surface, ramps may require a combination of handrails, edge protection and guards. See Commentary Figures 1012.8(1), 1012.8(2), 1012.8(3) and 1012.8(4) for illustrations of some alternatives.

1012.9 Guards. *Guards* shall be provided where required by Section 1015 and shall be constructed in accordance with Section 1015.

❖ To protect the user from falls to surfaces below, guards are to be provided where the sides of a ramp or landing are more than 30 inches (762 mm) above the adjacent grade. Guards are to be constructed in accordance with Section 1015, including the mini-

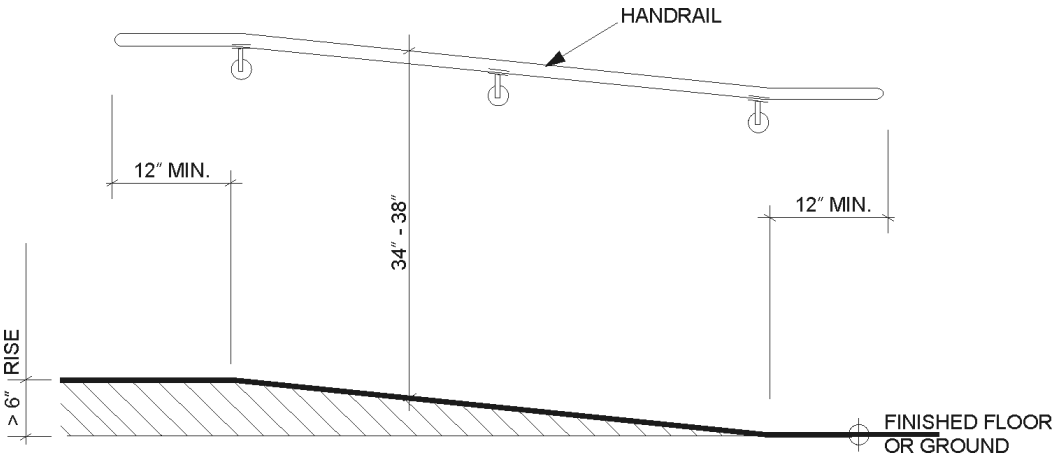

For SI: 1 inch = 25.4 mm.

Figure 1012.8(1)
RAMP WITH HANDRAIL AT WALL

INTERNATIONAL CODE COUNCIL®
Copyright © 2015 ICC. ALL RIGHTS RESERVED. Accessed by David Dammon on Jun 21, 2017 12:30:52 PM pursuant to License Agreement with ICC. No further reproduction or distribution authorized. ANY UNAUTHORIZED REPRODUCTION OR DISTRIBUTION IS A VIOLATION OF THE FEDERAL COPYRIGHT ACT AND THE LICENSE AGREEMENT, AND SUBJECT TO CIVIL AND CRIMINAL PENALTIES THEREUNDER.

mum height of 42 inches (1067 mm) [see Commentary Figure 1012.8(4)].

Depending on the configuration of the ramp and the adjacent walking surface, ramps may require a combination of handrails, edge protection and guards. See Commentary Figures 1012.8(1), 1012.8(2), 1012.8(3) and 1012.8(4) for illustrations of some alternatives.

1012.10 Edge protection. Edge protection complying with Section 1012.10.1 or 1012.10.2 shall be provided on each side of *ramp* runs and at each side of *ramp* landings.

Exceptions:

1. Edge protection is not required on *ramps* that are not required to have *handrails*, provided they have flared sides that comply with the *ICC A117.1* curb ramp provisions.
2. Edge protection is not required on the sides of *ramp* landings serving an adjoining *ramp* run or *stairway*.
3. Edge protection is not required on the sides of *ramp* landings having a vertical dropoff of not more than $^1/_2$ inch (12.7 mm) within 10 inches (254 mm) horizontally of the required landing area.

❖ This section of the code now addresses the comprehensive requirements for edge protection for all ramps. It must be noted that edge protection is not the same as the requirements for guards. The presence of a guard does not necessarily provide adequate edge protection and the presence of adequate edge protection does not satisfy the requirements for a guard. Edge protection is necessary to prevent the wheels of a wheelchair from leaving the ramp surface or becoming lodged between the edge of the ramp and any adjacent construction. For example, a ramp may be located relatively adjacent to the exterior wall of a building. However, between the ramp edge and the exterior wall, there is a strip of earth for landscape purposes. Without adequate edge protection, per-

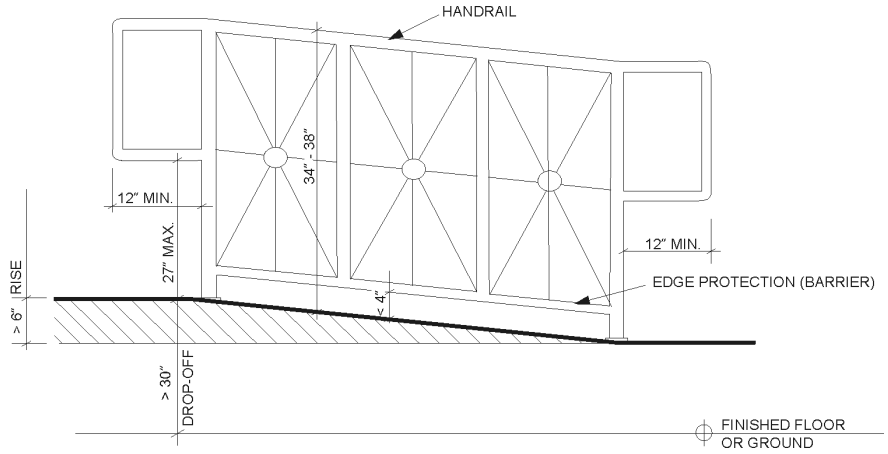

For SI: 1 inch = 25.4 mm.

Figure 1012.8(2)
RAMP WITH HANDRAIL AND BARRIER

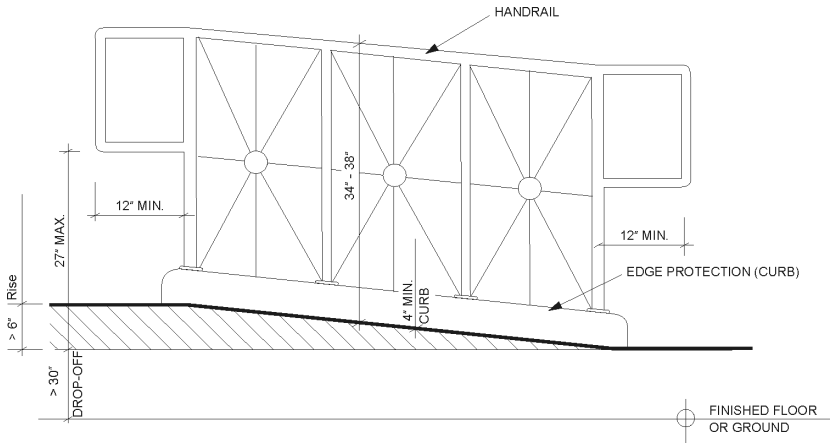

For SI: 1 inch = 25.4 mm.

Figure 1012.8(3)
RAMP WITH HANDRAIL AND CURB

INTERNATIONAL CODE COUNCIL®
Copyright © 2015 ICC. ALL RIGHTS RESERVED. Accessed by David Dammon on Jun 21, 2017 12:30:52 PM pursuant to License Agreement with ICC. No further reproduction or distribution authorized. ANY UNAUTHORIZED REPRODUCTION OR DISTRIBUTION IS A VIOLATION OF THE FEDERAL COPYRIGHT ACT AND THE LICENSE AGREEMENT, AND SUBJECT TO CIVIL AND CRIMINAL PENALTIES THEREUNDER.

sons confined to wheelchairs could possibly have their wheels run off the side of the ramp into the landscape, causing them to tip. These requirements are consistent with Section 405 of ICC A117.1 and those in the federal 2010 ADA Standard.

Exception 1 allows a ramp to have minimal edge protection as long as its vertical rise is 6 inches (152 mm) or less. The exception is predicated on the ramp not needing any handrails, which is established by the provisions of Section 1012.8. Such a ramp would only need flared sides or returned curbs. Edge protection without handrails or guards could be a tripping hazard for ambulatory persons. For specific details of these types of edge protection, the provisions of Section 406 of ICC A117.1 for curb ramps must be followed.

Exception 2 reiterates that edge protection is not literally required entirely around a ramp landing. Obviously, edge protection is not required along that portion of the landing that directly adjoins a ramp run; it is only required along the the edges of the landing with a dropoff (other than steps of ramp runs).

Exception 3 states that edge protection is not required for those sides of a ramp landing directly adjacent to the ground surface that gently slopes away from the edge of the landing. If the grade adjacent to the ramp landing slopes no more than 1/2:10 (which equates to 1:20) away from the landing, additional edge protection is not required. Such a gradual slope would not be detrimental to persons confined to wheelchairs as they negotiate the ramp landing. Note that this exception is limited to landings, not the ramp surface itself. The ramp must meet the edge protection in Section 1012.10.1 or 1012.10.2.

Depending on the configuration of the ramp and the adjacent walking surface, ramps may require a combination of handrails, edge protection and guards. See Commentary Figures 1012.8(1), 1012.8(2), 1012.8(3) and 1012.8(4) for illustrations of some alternatives.

1012.10.1 Curb, rail, wall or barrier. A curb, rail, wall or barrier shall be provided to serve as edge protection. A curb shall be not less than 4 inches (102 mm) in height. Barriers shall be constructed so that the barrier prevents the passage of a 4-inch-diameter (102 mm) sphere, where any portion of the sphere is within 4 inches (102 mm) of the floor or ground surface.

❖ Edge protection for ramps and ramp landings may be achieved with a built-up curb or other barrier, such as a rail, wall or guard. The barrier must be located near the surface of the ramp and landing such that a 4-inch-diameter (102 mm) sphere cannot pass through any openings. An example of an effective barrier would be the bottom rail of a guard system. If the bottom rail is located less than 4 inches (102 mm) above the ramp and landing surface, edge protection has been provided. If a curb option is used, the curb must be a minimum of 4 inches (102 mm) high. The curb or barrier prevents the wheel of a wheelchair from running off the edge of the surface and provides people with visual disabilities a toe stop at the edge of the walking surface (see Commentary Figure 1012.10.1).

1012.10.2 Extended floor or ground surface. The floor or ground surface of the *ramp* run or landing shall extend 12 inches (305 mm) minimum beyond the inside face of a *handrail* complying with Section 1014.

❖ An alternative to providing some type of barrier at the edge of the ramp (see Section 1012.10.1) is to make the ramp surface wider than the handrails provided at either side. The combination of the wider surface and the handrail barrier would assist in preventing a wheelchair or crutch tip from moving very far off the ramp during a temporary slip (see Commentary Figure 1012.10.1).

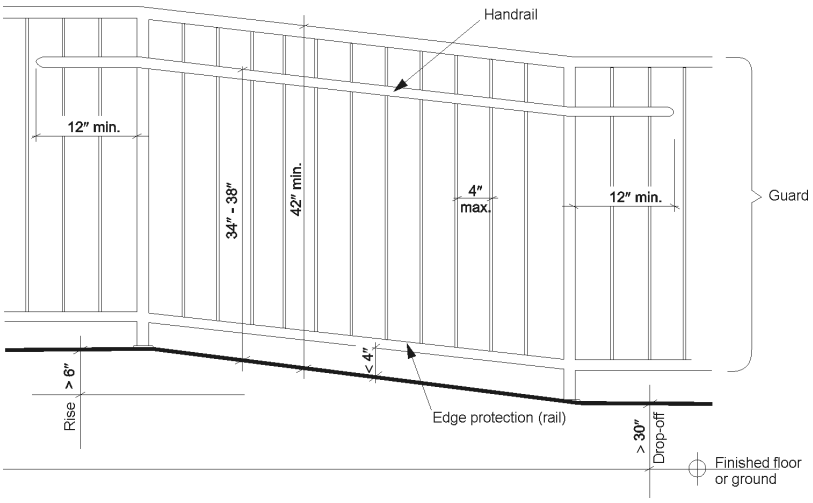

For SI: 1 inch = 25.4 mm.

Figure 1012.8(4)
RAMP WITH HANDRAIL AND GUARD

INTERNATIONAL CODE COUNCIL®
Copyright © 2015 ICC. ALL RIGHTS RESERVED. Accessed by David Dammon on Jun 21, 2017 12:30:52 PM pursuant to License Agreement with ICC. No further reproduction or distribution authorized. ANY UNAUTHORIZED REPRODUCTION OR DISTRIBUTION IS A VIOLATION OF THE FEDERAL COPYRIGHT ACT AND THE LICENSE AGREEMENT, AND SUBJECT TO CIVIL AND CRIMINAL PENALTIES THEREUNDER.

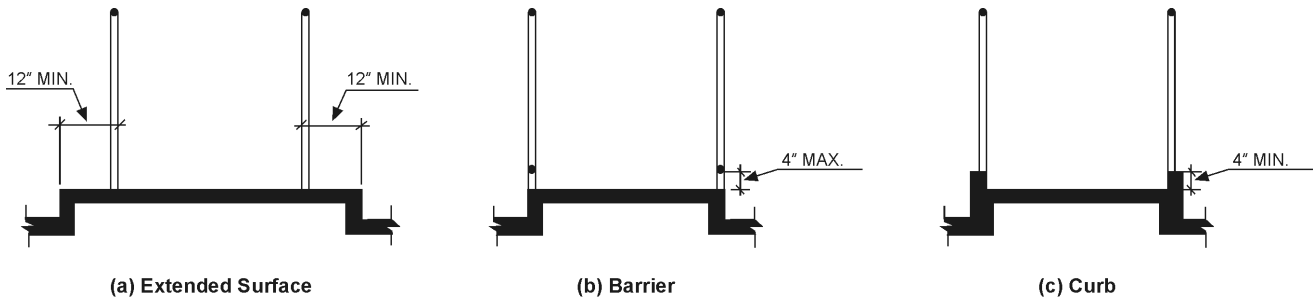

For SI: 1 inch = 25.4 mm.

Figure 1012.10.1
EDGE PROTECTION

SECTION 1013
EXIT SIGNS

1013.1 Where required. *Exits* and *exit access* doors shall be marked by an *approved* exit sign readily visible from any direction of egress travel. The path of egress travel to *exits* and within *exits* shall be marked by readily visible exit signs to clearly indicate the direction of egress travel in cases where the *exit* or the path of egress travel is not immediately visible to the occupants. Intervening *means of egress* doors within *exits* shall be marked by exit signs. Exit sign placement shall be such that no point in an *exit access corridor* or *exit passageway* is more than 100 feet (30 480 mm) or the *listed* viewing distance for the sign, whichever is less, from the nearest visible exit sign.

Exceptions:

1. Exit signs are not required in rooms or areas that require only one *exit* or *exit access*.
2. Main exterior *exit* doors or gates that are obviously and clearly identifiable as *exits* need not have exit signs where *approved* by the *building official*.
3. Exit signs are not required in occupancies in Group U and individual *sleeping units* or *dwelling units* in Group R-1, R-2 or R-3.
4. Exit signs are not required in dayrooms, sleeping rooms or dormitories in occupancies in Group I-3.
5. In occupancies in Groups A-4 and A-5, exit signs are not required on the seating side of vomitories or openings into seating areas where exit signs are provided in the concourse that are readily apparent from the vomitories. Egress lighting is provided to identify each vomitory or opening within the seating area in an emergency.

❖ Where an occupancy has two or more required exits or exit accesses, the means of egress must be provided with illuminated signs that readily identify the location of, and indicate the path of travel to, the exits. The signs must be illuminated with letters reading "Exit." The illumination may be internal or external to the sign. The signs should be visible from all directions in the exit access route. In cases where the signs are not visible to the occupants because of turns in the corridor or for other reasons, additional illuminated signs must be provided indicating the direction of egress to an exit. Exit signs must be located so that, where required, the nearest one is within 100 feet (30 480 mm), of the sign's listed viewing distance. UL 924 permits exit signs to be listed with a viewing distance of less than 100 feet (30 480 mm) (see Section 1013.5). When a sign is listed for a viewing distance of less than 100 feet (30 480 mm) the label on the sign will indicate the appropriate viewing distance. If such a sign is used, the spacing of the signs should be based on the listed viewing distance.

Typically, once an occupant enters an exit enclosure, exit signs are no longer needed; however, in buildings with more complicated egress layouts, it is possible that the direction for egress travel within the exit is not immediately apparent. For example, exit passageways can be part of the path of exit travel at the level of exit discharge or transfer floors. Evacuees may hesitate or be confused when the vertical travel becomes horizontal travel, which may result in a delay in evacuation. In these situations, exit signs may be needed within the exit enclosure (see Commentary Figure 1013.1).

The exceptions identify conditions where exit signs are not necessary since they would not increase the safety of the egress path.

For Exceptions 1 and 3, the assumption is that the occupants are familiar enough with the space to know the way out and/or the exits are obvious. In addition, in most cases, the way out is the same as the way in.

In accordance with Exception 2, when the main exterior door through which occupants enter the building is obviously an exit, exit signs are not required. For example, a two-story Group B building has a main employee/customer entrance. The entrance consists of a storefront arrangement with glass doors and sidelights. The entrance is centrally located within the building. These main exterior exit doors can be quickly observed as being an exit and would not need to be marked with an exit sign.

INTERNATIONAL CODE COUNCIL®
Copyright © 2015 ICC. ALL RIGHTS RESERVED. Accessed by David Dammon on Jun 21, 2017 12:30:52 PM pursuant to License Agreement with ICC. No further reproduction or distribution authorized. ANY UNAUTHORIZED REPRODUCTION OR DISTRIBUTION IS A VIOLATION OF THE FEDERAL COPYRIGHT ACT AND THE LICENSE AGREEMENT, AND SUBJECT TO CIVIL AND CRIMINAL PENALTIES THEREUNDER.

In accordance with Exception 4, exit signs are not required in detainee living and sleeping room areas of Group I-3 buildings. In cases of emergency, occupants in Group I-3 are escorted by staff to the exits and to safety. exit sign materials can also be potential weapons when they are accessible to the detainees.

In the Group A-4 and A-5 occupancies described in Exception 5, the egress path is obvious and thus exit signs are not needed. Additionally, because of the configuration of the vomitories, the exit signs are not readily visible to the persons immediately adjacent to or above the vomitory.

1013.2 Floor-level exit signs in Group R-1. Where exit signs are required in Group R-1 occupancies by Section 1013.1, additional low-level exit signs shall be provided in all areas serving guest rooms in Group R-1 occupancies and shall comply with Section 1013.5.

The bottom of the sign shall be not less than 10 inches (254 mm) nor more than 12 inches (305 mm) above the floor level. The sign shall be flush mounted to the door or wall. Where mounted on the wall, the edge of the sign shall be within 4 inches (102 mm) of the door frame on the latch side.

❖ Because people may be sleeping and because most residents are transient (and thus unfamiliar with the space) in hotels (i.e., Group R-1), low-level exit signs must be provided for emergency exit routes from guestrooms. When smoke at the ceiling obscures the exit signs required by Section 1013.1, these signs will serve as a backup identification of the exit door. By the reference to Section 1013.5, these signs must be internally illuminated and listed and labeled in accordance with UL 924. It is not the intent of this section to require low level exit signs in the guestrooms. The low level exit signs are required only in areas where Section 1013.1 requires exit signs and only leading from the guestroom area, not throughout the entire hotel.

The exit signs must be mounted on the exit door itself or to the side of the exit door on the latch side. The height of the bottom of the exit sign will allow for exit signs not to conflict with accessible route requirements. ICC A117.1 requires doors on an accessible route to have a smooth surface for the bottom 10 inches (254 mm) so that someone could use the footplates on their wheelchair to assist in opening the door.

The requirements do not indicate what low-level signage is appropriate for exit signs that provide direction rather than at the exit. It is also not clear on how an exit sign on a door will be visible from down the corridor if the door is perpendicular to the direction of the hallway.

1013.3 Illumination. Exit signs shall be internally or externally illuminated.

Exception: Tactile signs required by Section 1013.4 need not be provided with illumination.

❖ This section simply provides the scope for illumination of regulated exit signs. Exit signs must be illuminated so that they are readily apparent in situations where the lights may be off or the building has lost power. Exit signs with raised letters and braille are specifically addressed in Section 1013.4.

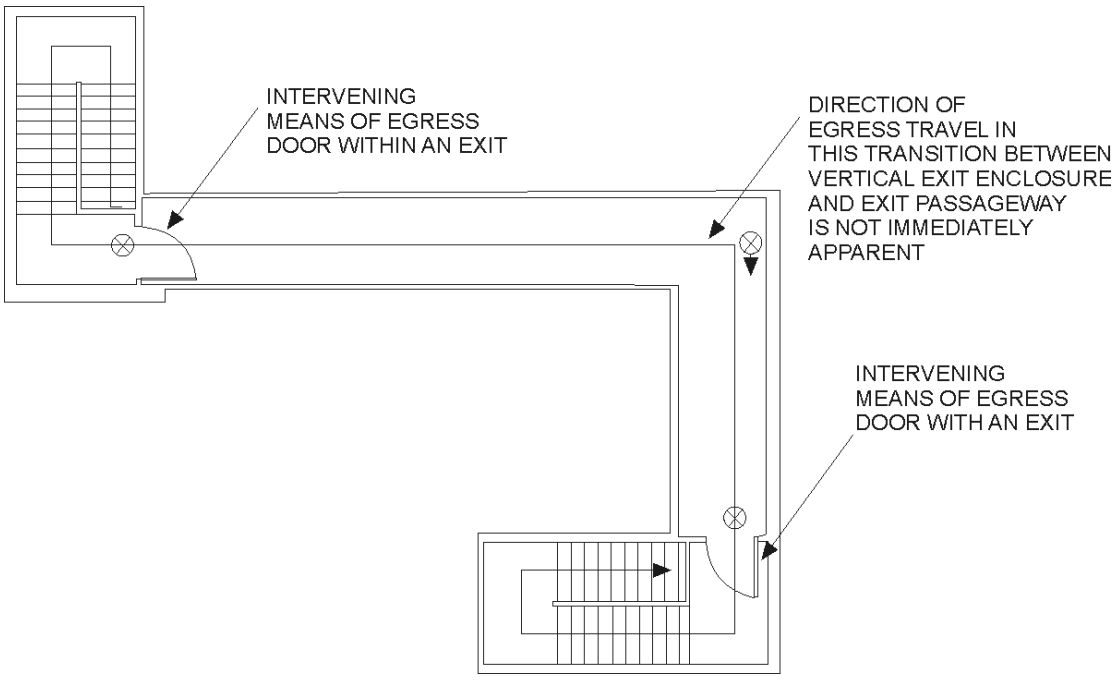

Figure 1013.1
EXIT SIGNS WITHIN AN EXIT ENCLOSURE

INTERNATIONAL CODE COUNCIL®
Copyright © 2015 ICC. ALL RIGHTS RESERVED. Accessed by David Dammon on Jun 21, 2017 12:30:52 PM pursuant to License Agreement with ICC. No further reproduction or distribution authorized. ANY UNAUTHORIZED REPRODUCTION OR DISTRIBUTION IS A VIOLATION OF THE FEDERAL COPYRIGHT ACT AND THE LICENSE AGREEMENT, AND SUBJECT TO CIVIL AND CRIMINAL PENALTIES THEREUNDER.

1013.4 Raised character and braille exit signs. A sign stating EXIT in visual characters, raised characters and braille and complying with *ICC A117.1* shall be provided adjacent to each door to an *area of refuge*, an exterior area for assisted rescue, an *exit stairway* or *ramp*, an *exit passageway* and the *exit discharge*.

❖ The purpose of this sign is to serve as way finding for a person with vision impairments. This is in addition to the exit signs required by Section 1013.1.

"Tactile" is defined as "used for the sense of touch;" therefore, signage that has either raised letters or braille is considered tactile. For exit signage, visual, raised letters and braille are required. ICC A117.1 includes requirements for the sign and the correct placement. Typically, the sign is placed at about 4 feet, 6 inches (1375 mm) above the floor and on the wall at the latch side of the door. While not required to be illuminated by these provisions, illumination would be advantageous for a person with partial sight. High contrast is important (see Commentary Figure 1013.4).

This signage is needed to indicate which doors are serving as exits for those persons with visual impairments. Signs are needed on the required exit doors in the building: including at doors leading to an interior or exterior exit stairway or ramp; doors leading to an exit passageway; within the exit enclosures leading to the outside or to an exit passageway; and exit doors that lead directly to the outside.

While an area of refuge may be located within an enclosure for an exit stairway, Section 1009.3 also allows the area of refuge to be located immediately outside of the enclosure for the exit stairway. In this situation, exit signage with visual, raised letters and braille would be required both at the door leading into the area of refuge and the door leading to the exit stairway. Exterior areas for assisted rescue are typically located immediately outside of an exit door (see Section 1009.7).

This is not intended to preclude the signage from including additional information as long as "Exit" is first. For example, labeling the door to the exit enclosure as "Exit Stairway" would indicate to the visually impaired person that once they moved through the door they would be dealing with vertical travel. This could be considered an additional safety feature. This section is also referenced in Section 1111.3. For additional way-finding signage inside the stairway enclosure, see Section 1023.9.



Figure 1013.4
EXAMPLE OF EXIT SIGNAGE WITH VISUAL AND RAISED CHARACTERS WITH BRAILLE

1013.5 Internally illuminated exit signs. Electrically powered, *self-luminous* and *photoluminescent* exit signs shall be *listed* and *labeled* in accordance with UL 924 and shall be installed in accordance with the manufacturer's instructions and Chapter 27. Exit signs shall be illuminated at all times.

❖ All exit signage must be listed and labeled as indicated in UL 924, *Standard for Safety of Emergency Lighting and Power Equipment*. Listed "Exit" signs are required by UL 924 to meet the same graphics, illumination and power sources defined in Sections 1013.6.1 through 1013.6.3 for externally illuminated signs. Internal illumination may be electrically powered or be of a self-luminous or photoluminescent product. Electrically powered would include LED, incandescent, fluorescent and electroluminescent types of signs. If a sign is photoluminescent, the "charging" source must be continually available (see the definitions in Chapter 2 for "Photoluminescent" and "Self-luminous"). "Exit" signs must be illuminated at all times, including when the building may not be fully occupied. If a fire occurs late at night, there may be cleaning crews or persons working overtime in the building who will need to be able to find the exits. The reference to Chapter 27 is so the signs will be equipped with a connection to an emergency power supply.

1013.6 Externally illuminated exit signs. Externally illuminated exit signs shall comply with Sections 1013.6.1 through 1013.6.3.

❖ Externally illuminated exit signage must meet the graphic, illumination and emergency power requirements in the referenced sections. The requirements are the same as for internally illuminated signage.

1013.6.1 Graphics. Every exit sign and directional exit sign shall have plainly legible letters not less than 6 inches (152 mm) high with the principal strokes of the letters not less than $^3/_4$ inch (19.1 mm) wide. The word "EXIT" shall have letters having a width not less than 2 inches (51 mm) wide, except the letter "I," and the minimum spacing between letters shall be not less than $^3/_8$ inch (9.5 mm). Signs larger than the minimum established in this section shall have letter widths, strokes and spacing in proportion to their height.

The word "EXIT" shall be in high contrast with the background and shall be clearly discernible when the means of exit sign illumination is or is not energized. If a chevron directional indicator is provided as part of the exit sign, the

INTERNATIONAL CODE COUNCIL®
Copyright © 2015 ICC. ALL RIGHTS RESERVED. Accessed by David Dammon on Jun 21, 2017 12:30:52 PM pursuant to License Agreement with ICC. No further reproduction or distribution authorized. ANY UNAUTHORIZED REPRODUCTION OR DISTRIBUTION IS A VIOLATION OF THE FEDERAL COPYRIGHT ACT AND THE LICENSE AGREEMENT, AND SUBJECT TO CIVIL AND CRIMINAL PENALTIES THEREUNDER.

construction shall be such that the direction of the chevron directional indicator cannot be readily changed.

❖ Every exit sign and directional sign located in the exit access or exit route is required to have a color contrast vivid enough to make the signs readily visible, even when not illuminated. Letters must be at least 6 inches (152 mm) high and their stroke not less than $^3/_4$ inch (19.1 mm) wide (see Commentary Figure 1013.6.1). The sizing of the letters is predicated on the readability of the wording from a distance of 100 feet (30 480 mm).

While red letters are common for exit signs, sometimes green on black is used in auditorium areas with low-lighting levels, such as theaters, because that color combination tends not to distract the audience's attention. It is more important that the exit sign be readily visible with respect to the background.

Exit signs may be larger than the minimum size specified; however, the standardized proportion of the letters must be maintained. Externally illuminated signage that is smaller could use the requirements in UL 924 for guidance; however, sign spacing would need to be adjusted, and alternative approval would be through the building official having jurisdiction.

A "chevron directional indicator" is the same as a directional arrow. The language is intended to be consistent with UL 924.

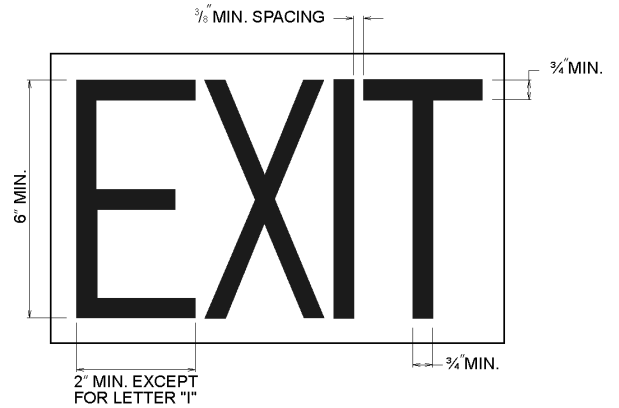

For SI: 1 inch = 25.4 mm.

Figure 1013.6.1
MINIMUM SIZES OF EXIT SIGNS

1013.6.2 Exit sign illumination. The face of an exit sign illuminated from an external source shall have an intensity of not less than 5 footcandles (54 lux).

❖ Every exit sign and directional sign must be continuously illuminated to provide a light intensity at the illuminated surface of at least 5 footcandles (54 lux). It is not a requirement that the exit signs be internally illuminated. An external illumination source with the power capabilities specified by Section 1013.6.3 is acceptable.

1013.6.3 Power source. Exit signs shall be illuminated at all times. To ensure continued illumination for a duration of not less than 90 minutes in case of primary power loss, the sign illumination means shall be connected to an emergency power system provided from storage batteries, unit equipment or an on-site generator. The installation of the emergency power system shall be in accordance with Chapter 27.

Exceptions:

1. *Approved* exit sign illumination means that provide continuous illumination independent of external power sources for a duration of not less than 90 minutes, in case of primary power loss, are not required to be connected to an emergency electrical system.
2. Group I-2 Condition 2 exit sign illumination shall not be provided by unit equipment battery only.

❖ Exit signs must be illuminated on a continuous basis so that when a fire emergency occurs, occupants will be able to identify the locations of the exits. The reliability of the power sources supplying the electrical energy required for maintaining the illumination of exit signs is important. When power interruptions occur, exit sign illumination must be obtained from an emergency power system. This does not imply that the sign must be internally illuminated. Whatever illumination system is used, whether internal or external, it must be connected to a system designed to pick up the power load required by the exit signs after loss of the normal power supply.

Per Exception 1, where self-luminous signs are used, connection to the emergency electrical supply system is not required. A trickle-charge battery to illuminate the exit sign is another option.

Exception 2 is really a more restrictive requirement for hospitals. Hospitals cannot only rely on equipment batteries for the illumination of their exit signs. Typically, hospitals connect illumination of their exit signage to the emergency on-site generator.

The IFC requirements for emergency power for emergency egress lighting and exit signage in existing buildings only requires a 60-minute time duration. This is not a conflict, but rather recognition of the loss of battery storage capability over a length of time.

SECTION 1014
HANDRAILS

1014.1 Where required. *Handrails* serving *stairways*, *ramps*, stepped *aisles* and ramped *aisles* shall be adequate in strength and attachment in accordance with Section 1607.8. *Handrails* required for *stairways* by Section 1011.11 shall comply with Sections 1014.2 through 1014.9. *Handrails* required for *ramps* by Section 1012.8 shall comply with Sections 1014.2 through 1014.8. *Handrails* for stepped *aisles* and ramped *aisles* required by Section 1029.15 shall comply with Sections 1014.2 through 1014.8.

❖ Handrails are required at stairways and ramps. In all situations, they must be designed in accordance with the structural requirements in Section 1607.8. There

INTERNATIONAL CODE COUNCIL®
Copyright © 2015 ICC. ALL RIGHTS RESERVED. Accessed by David Dammon on Jun 21, 2017 12:30:52 PM pursuant to License Agreement with ICC. No further reproduction or distribution authorized. ANY UNAUTHORIZED REPRODUCTION OR DISTRIBUTION IS A VIOLATION OF THE FEDERAL COPYRIGHT ACT AND THE LICENSE AGREEMENT, AND SUBJECT TO CIVIL AND CRIMINAL PENALTIES THEREUNDER.

are, however, distinct differences in how the handrail requirements are applied in stairways, ramps, stepped aisles and ramped aisles. The specific section references allow for this consideration. Where and how many handrails for stairways and ramps are specified in Sections 1003.5, 1011.11 and 1012.8. Where handrails are required in assembly seating for stepped aisles and ramped aisles is specified in Section 1029.15.

Stairways and their handrails are not part of an accessible route and are not subject to the stairway technical requirements in ICC A117.1. Standards are only referenced to the extent specified by the code (see Section 102.4).

Handrails are also very distinct from guards, even though they are sometimes incorrectly called "guardrails." The "handrail" is the element that is grasped during vertical travel for guidance, stabilization, pulling and as an aid in arresting a possible fall. Guards are located near the side of an elevated walking surface to minimize the possibility of a fall to a lower level and are discussed in Section 1015. However, in residential applications, in some locations in assembly seating and along alternating tread devices and ship's ladders, the top rail of a guard may also serve as a handrail (see Section 1015.3, Exceptions 3, 4 and 5, and Section 1029.16).

1014.2 Height. *Handrail* height, measured above *stair* tread *nosings*, or finish surface of *ramp* slope, shall be uniform, not less than 34 inches (864 mm) and not more than 38 inches (965 mm). *Handrail* height of *alternating tread devices* and ship's ladders, measured above tread *nosings*, shall be uniform, not less than 30 inches (762 mm) and not more than 34 inches (864 mm).

Exceptions:

1. Where handrail fittings or bendings are used to provide continuous transition between *flights*, the fittings or bendings shall be permitted to exceed the maximum height.
2. In Group R-3 occupancies; within *dwelling units* in Group R-2 occupancies; and in Group U occupancies that are associated with a Group R-3 occupancy or associated with individual *dwelling units* in Group R-2 occupancies; where handrail fittings or bendings are used to provide continuous transition between *flights*, transition at *winder* treads, transition from *handrail* to *guard*, or where used at the start of a *flight*, the *handrail* height at the fittings or bendings shall be permitted to exceed the maximum height.
3. *Handrails* on top of a guard where permitted along stepped aisles and ramped aisles in accordance with Section 1029.15.

❖ It has been demonstrated that for safe use, the height of handrails must not be less than 34 inches (864 mm) nor more than 38 inches (965 mm) above the leading edge of stairway treads, landings or other walking surfaces (see Commentary Figure 1014.2). This requirement is applicable for all uses, including handrails within a dwelling unit.

The fundamental stairway requirements are not appropriate for alternating tread devices and ship's ladders since they differ significantly from other types of stairways. The permitted range for handrail height for alternating tread devices and ship's ladders allows for a lower height above the tread nosings. The minimum required height is reduced from 34 inches (864 mm) to 30 inches (762 mm), with a maximum permitted height of 34 inches (864 mm). The special features of an alternating tread device or ship's ladder result in differences of handrail use, such as different arm posture, the hand gripping the handrail near a higher part of the body and the use of handrails under the arms for stabilization when descending. Therefore, a lower handrail height is more appropriate.

Exceptions 1 and 2 allow for the use of common fittings and bendings to provide for continuous transition of the handrail at specified turns and pitch changes in the stairway where the fitting or bending might exceed the maximum handrail height. In some

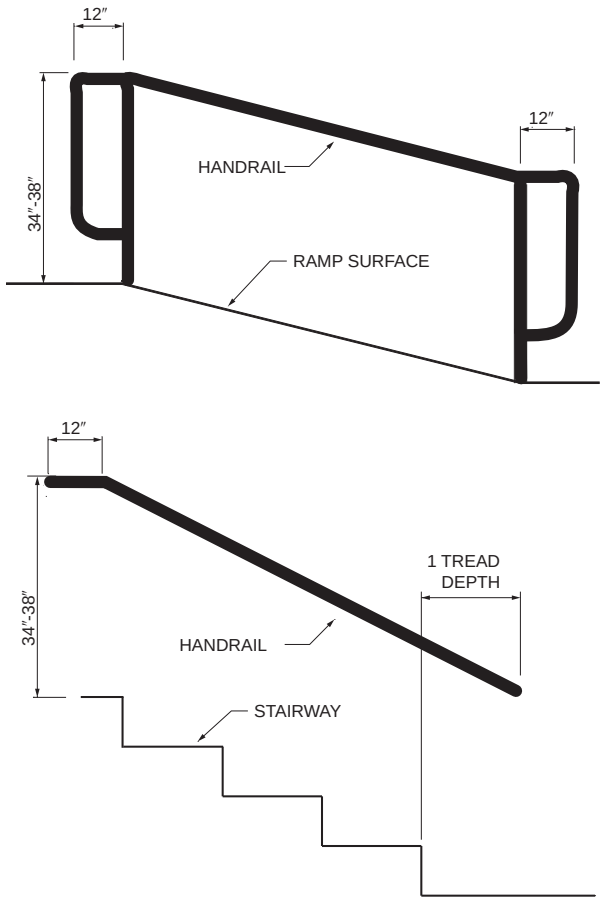

For SI: 1 inch = 25.4 mm.

Figure 1014.2
HANDRAIL REQUIREMENTS

INTERNATIONAL CODE COUNCIL®
Copyright © 2015 ICC. ALL RIGHTS RESERVED. Accessed by David Dammon on Jun 21, 2017 12:30:52 PM pursuant to License Agreement with ICC. No further reproduction or distribution authorized. ANY UNAUTHORIZED REPRODUCTION OR DISTRIBUTION IS A VIOLATION OF THE FEDERAL COPYRIGHT ACT AND THE LICENSE AGREEMENT, AND SUBJECT TO CIVIL AND CRIMINAL PENALTIES THEREUNDER.

cases, there is no reference for the height when the fitting or handrail might extend beyond the nosings at the intersection of adjoining flights. Exception 1 applies to all stairways between flights. This typically occurs at the center handrail at the landings on a dogleg or switchback stairway configuration. Although the handrails are not required on the landing, the code requirement for handrail extensions or for handrail continuity often creates the need for some type of transition, especially at turns (see also Section 1014.6). This exception would allow for an easing or gooseneck riser over the landing to be used for a smooth transition of the handrail. The use of the new exceptions may permit a more gradual variation in the height even though it will allow for portions of the handrail to exceed the normal 38-inch (965 mm) maximum height. The belief is that handrail continuity is more important than staying within the height limitation.

Exception 2 applies to dwelling units with the intent to allow transition elements at common locations, such as the start of the flight, at winder treads or from handrail to guard at landings. Combined with the guard height reduction in Section 1015.3, Exception 1, the end result may be fewer transition pieces. This is consistent with provisions in the IRC.

Exception 3 is in recognition of the special allowances for the top rail of a guard to serve as a handrail in limited situations in an assembly seating area. See Section 1029.15 for specifics.

1014.3 Handrail graspability. Required *handrails* shall comply with Section 1014.3.1 or shall provide equivalent graspability.

Exception: In Group R-3 occupancies; within *dwelling units* in Group R-2 occupancies; and in Group U occupancies that are accessory to a Group R-3 occupancy or accessory to individual *dwelling units* in Group R-2 occupancies; *handrails* shall be Type I in accordance with Section 1014.3.1, Type II in accordance with Section 1014.3.2 or shall provide equivalent graspability.

❖ The abilities to grasp a handrail firmly and slide a hand along the rail's gripping surface without meeting obstructions are important factors in the safe use of stairways and ramps. These properties are largely functions of the shape of the handrail. Handrails for stairways and ramps must meet the specifications of Section 1014.3.1 or be determined to have grasping properties and attributes equivalent to profiles allowed in Section 1014.3.1. Such determinations of equivalence are an allowed option made by local building officials based on the profile presented and the building official's evaluation of its properties. A complete evaluation will consider the four basic functions of a handrail: guidance, stabilization, pulling and aid in arresting a fall. The determination is best made by comparative use on stairs or ramps of properly mounted samples. Handrails that meet neither Type I nor Type II characteristics may be considered to have equivalent graspability. Complete evaluation will also consider the mounting of the handrail and understanding the interference of handrail mounts on the gripping surfaces of smaller profiles. For a discussion of this, see Section 1014.4.

The exception allows for an alternative, Type II handrails, within residential units and their associated structures. A handrail on common stairways within an apartment building or on the steps to the front door of a townhouse could not use this exception unless approved by the building official as being equivalent to Type I. The residential allowance is consistent with the IRC.

1014.3.1 Type I. *Handrails* with a circular cross section shall have an outside diameter of not less than $1^1/_4$ inches (32 mm) and not greater than 2 inches (51 mm). Where the *handrail* is not circular, it shall have a perimeter dimension of not less than 4 inches (102 mm) and not greater than $6^1/_4$ inches (160 mm) with a maximum cross-sectional dimension of $2^1/_4$ inches (57 mm) and minimum cross-sectional dimension of 1 inch (25 mm). Edges shall have a minimum radius of 0.01 inch (0.25 mm).

❖ Handrails have traditionally been regulated as either circular or noncircular rails. The noncircular rails have previously been limited to a maximum perimeter dimension of $6^1/_4$ inches (160 mm), with other limitations addressing minimum perimeter and minimum and maximum cross-sectional dimensions. These handrails shapes are now referred to as Type I handrails.

Type I handrails include circular cross sections with an outside diameter of at least $1^1/_4$ inches (32 mm) but not greater than 2 inches (51 mm). This limits the perimeter of the cross section such that the gripping surface incorporates the bottom of the rail. A handrail with either a very narrow or a large cross section is not graspable in a power grip by all able-bodied users and certainly not by those with hand-strength or flexibility deficiencies. A power grip typically accesses the bottom surface of the handrail, such as around a bar. A pinching grip is not as effective when there is a need to arrest a fall. An example of a pinching grip would be where a 2x4 stud on edge was used as a handrail. This would not comply with graspability concerns.

Noncircular Type I cross sections must meet the alternative noncircular criteria in this section, and the bottom of the rail must be considered part of the suitable gripping surface. Of note is that this criteria now includes a minimum cross section of 1 inch (25 mm) to provide for designs that reduce the interference of fingers and an opposing thumb that occurs when small objects are tightly grasped. Edges must be slightly rounded and not sharp. An example is shown in Commentary Figure 1014.3.1.

Ramp requirements in ICC A117.1 are referenced as part of the accessible route requirements in Chapter 11. Current handrail provisions are largely coordinated with the Type I handrail requirements in this section. Section 103 of ICC A117.1 would also permit

INTERNATIONAL CODE COUNCIL®
Copyright © 2015 ICC. ALL RIGHTS RESERVED. Accessed by David Dammon on Jun 21, 2017 12:30:52 PM pursuant to License Agreement with ICC. No further reproduction or distribution authorized. ANY UNAUTHORIZED REPRODUCTION OR DISTRIBUTION IS A VIOLATION OF THE FEDERAL COPYRIGHT ACT AND THE LICENSE AGREEMENT, AND SUBJECT TO CIVIL AND CRIMINAL PENALTIES THEREUNDER.

alternative handrail shapes if they provided equivalent or better graspability.

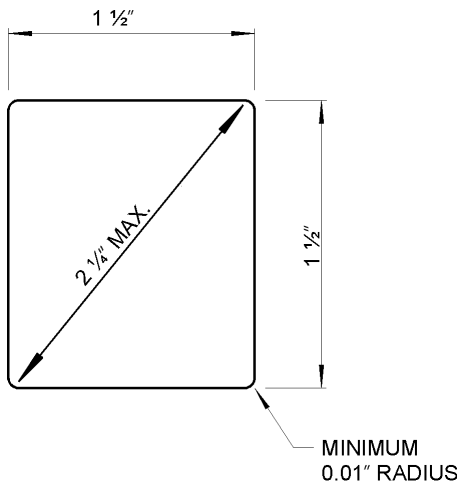

For SI: 1 inch = 25.4 mm.

Figure 1014.3.1
EXAMPLE OF TYPE I ALTERNATIVE HANDRAIL CONFIGURATION

1014.3.2 Type II. *Handrails* with a perimeter greater than $6^1/_4$ inches (160 mm) shall provide a graspable finger recess area on both sides of the profile. The finger recess shall begin within a distance of $^3/_4$ inch (19 mm) measured vertically from the tallest portion of the profile and achieve a depth of not less than $^5/_{16}$ inch (8 mm) within $^7/_8$ inch (22 mm) below the widest portion of the profile. This required depth shall continue for not less than $^3/_8$ inch (10 mm) to a level that is not less than $1^3/_4$ inches (45 mm) below the tallest portion of the profile. The width of the *handrail* above the recess shall be not less than $1^1/_4$ inches (32 mm) to not greater than $2^3/_4$ inches (70 mm). Edges shall have a minimum radius of 0.01 inch (0.25 mm).

❖ Handrail profiles having a perimeter dimension greater than $6^1/_4$ inches (160 mm), identified as Type II handrails, are acceptable within dwelling units and their associated structures when complying with all of the specific dimensional requirements.

Research has shown that Type II handrails have graspability that is essentially equal to or greater than the graspability of handrails meeting the long-accepted and codified shape and size now defined as Type I.

The key features of the graspability of Type II handrails are graspable finger recesses on both sides of the handrail. These recesses allow users to firmly grip a properly proportioned grasping surface on the top of the handrail, ensuring that the user can tightly retain a power-span grip on the handrail for all forces that are associated with attempts to arrest a fall.

This class of handrails incorporates a grip surface with controlled recesses for the purchase of the fingers and opposing thumb. These handrail shapes allow the use of power-span grips that need not encompass the bottom surfaces of the rail, allowing the design of taller cross sections that can eliminate the interference of mountings and provide a completely uninterrupted gripping surface for the user. The limits of the position and depth of the required recesses represent the minimum standard. Optimizing the design within the parameters with larger recesses and complete finger clearance from mountings will enhance the performance of these profiles. Although this standard allows design flexibility, it is important to follow the specifications accurately to comply. Each drawing in Commentary Figure 1014.3.2 illustrates the requirements of each sentence for clarity.

1014.4 Continuity. Handrail gripping surfaces shall be continuous, without interruption by newel posts or other obstructions.

Exceptions:

1. *Handrails* within *dwelling units* are permitted to be interrupted by a newel post at a turn or landing.
2. Within a *dwelling unit*, the use of a volute, turnout, starting easing or starting newel is allowed over the lowest tread.
3. Handrail brackets or balusters attached to the bottom surface of the *handrail* that do not project horizontally beyond the sides of the *handrail* within $1^1/_2$ inches (38 mm) of the bottom of the *handrail* shall not be considered obstructions. For each $^1/_2$ inch (12.7 mm) of additional handrail perimeter dimension above 4 inches (102 mm), the vertical clearance dimension of $1^1/_2$ inches (38 mm) shall be permitted to be reduced by $^1/_8$ inch (3.2 mm).
4. Where *handrails* are provided along walking surfaces with slopes not steeper than 1:20, the bottoms of the handrail gripping surfaces shall be permitted to be obstructed along their entire length where they are integral to crash rails or bumper guards.
5. *Handrails* serving stepped *aisles* or ramped *aisles* are permitted to be discontinuous in accordance with Section 1029.15.1.

❖ Handrails must be usable for their entire length without requiring the users to release their grasp. Typically, when using the handrail while traveling the means of egress, an individual's arm is extended to lead the body with the hand forming a loose grip on the top and sides of the rail. If handrails are to be of service to users, they must be uninterrupted and continuous. Oversize newels, changes in the guard system, or excessive supports at the bottom of small perimeter handrails can cause interruption of the handrail, requiring the occupants to release their grip [see Commentary Figure 1014.4(1)]. Exception 1 allows the interruption of the handrail by a newel post at the intersection of two handrail sections at a turn within a flight or at a landing in dwelling units; however, this exception is not applicable to curved or spi-

INTERNATIONAL CODE COUNCIL®
Copyright © 2015 ICC. ALL RIGHTS RESERVED. Accessed by David Dammon on Jun 21, 2017 12:30:52 PM pursuant to License Agreement with ICC. No further reproduction or distribution authorized. ANY UNAUTHORIZED REPRODUCTION OR DISTRIBUTION IS A VIOLATION OF THE FEDERAL COPYRIGHT ACT AND THE LICENSE AGREEMENT, AND SUBJECT TO CIVIL AND CRIMINAL PENALTIES THEREUNDER.

ral stairs. Exception 2 provides for familiar and historical handrail details, often combined with guards, that have been used for decades in dwelling units without substantiated detriment to the safety of the occupants. Exception 3 provides specifications for the attachment of brackets and balusters to the bottom of handrails to provide for minimum finger clearance such that they will not be considered obstructions. This method of handrail support limits interruptions of the grip surfaces at the bottom of smaller perimeter shapes that otherwise would deter or impede the user's ability to attain a stabilizing grip essential to safe stairway use. Larger handrail sizes permit shorter brackets since geometrically the finger

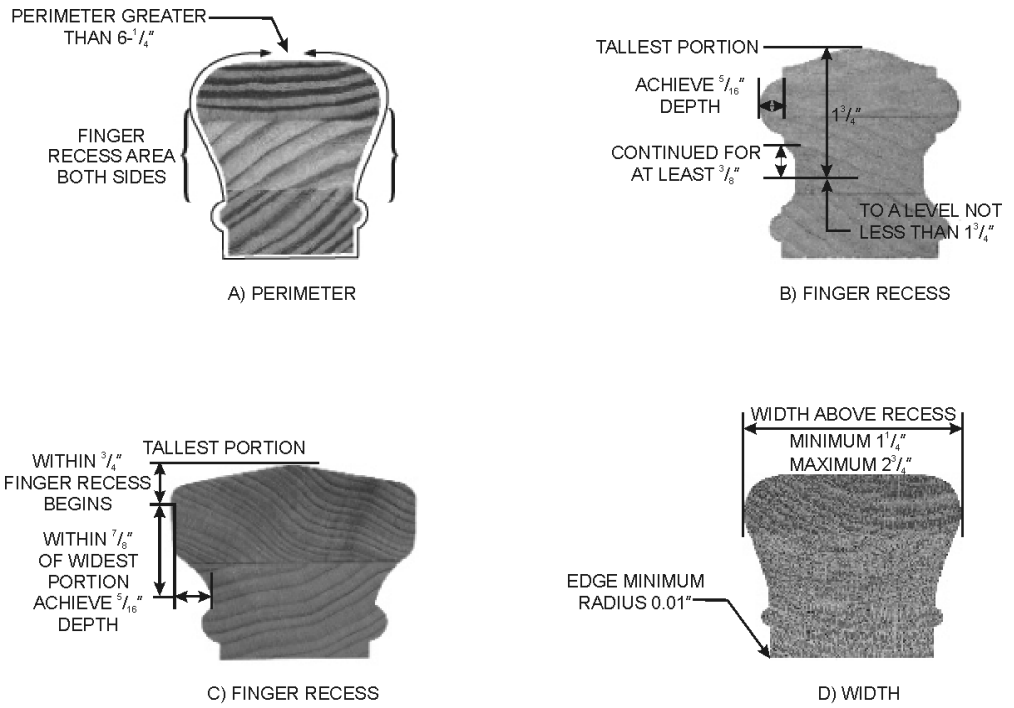

For SI: 1 inch = 25.4 mm.

Figure 1014.3.2
EXAMPLES OF TYPE II HANDRAIL CONFIGURATIONS

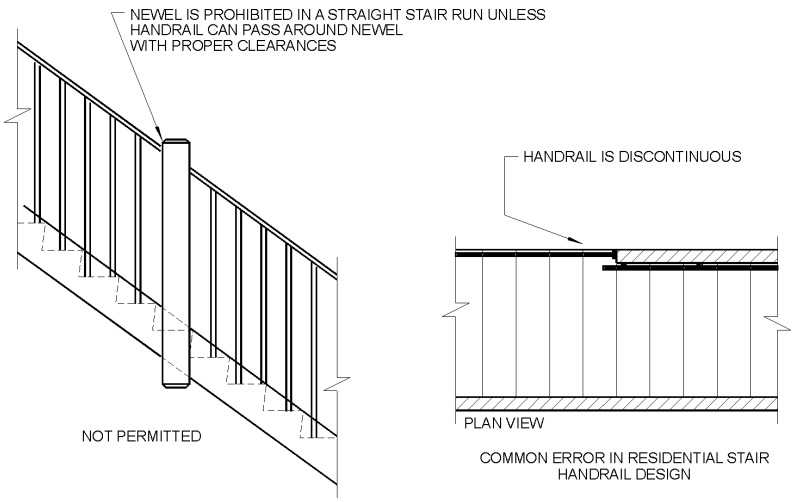

Figure 1014.4(1)
EXAMPLES OF PROHIBITED HANDRAIL DESIGNS

INTERNATIONAL CODE COUNCIL®
Copyright © 2015 ICC. ALL RIGHTS RESERVED. Accessed by David Dammon on Jun 21, 2017 12:30:52 PM pursuant to License Agreement with ICC. No further reproduction or distribution authorized. ANY UNAUTHORIZED REPRODUCTION OR DISTRIBUTION IS A VIOLATION OF THE FEDERAL COPYRIGHT ACT AND THE LICENSE AGREEMENT, AND SUBJECT TO CIVIL AND CRIMINAL PENALTIES THEREUNDER.

clearance is still maintained [see Commentary Figure 1014.4(2)]. For example, a Type II handrail may elevate the fingertips completely above the supports, allowing the rail to be mounted by other means that do not obstruct when providing the clearances specified. Exception 4 allows for products that serve dual purposes, such as the bumper guard/handrail found in hospitals and nursing homes along corridors, to have a continuous bottom support. Since these are only permitted on slopes that are less than what is defined as a ramp, the handrails are more for assistance in mobility or balance rather than to arrest a fall.

Exception 5 references back to provisions for stepped and ramped aisles in assembly seating. Discontinuous handrails are permitted to allow for access to seats. Such discontinuous handrails must still extend the full run of the aisle stairs or ramp. See Section 1029.15.1.

1014.5 Fittings. *Handrails* shall not rotate within their fittings.

❖ Fittings are those component pieces of a continuous handrail that are shaped or bent and attached to the longer sections of straight or curved handrail to provide for transition at changes in pitch, direction or to provide for termination of a continuous handrail. Fittings and handrails must be securely joined to ensure a stable handrail that does not allow any portion to rotate when grasped.

1014.6 Handrail extensions. *Handrails* shall return to a wall, *guard* or the walking surface or shall be continuous to the handrail of an adjacent *flight* of *stairs* or *ramp* run. Where *handrails* are not continuous between *flights*, the *handrails* shall extend horizontally not less than 12 inches (305 mm) beyond the top riser and continue to slope for the depth of one tread beyond the bottom riser. At *ramps* where *handrails* are not continuous between runs, the *handrails* shall extend horizontally above the landing 12 inches (305 mm) minimum beyond the top and bottom of *ramp* runs. The extensions of *handrails* shall be in the same direction of the *flights* of *stairs* at *stairways* and the *ramp* runs at *ramps*.

Exceptions:

1. *Handrails* within a *dwelling unit* that is not required to be *accessible* need extend only from the top riser to the bottom riser.
2. *Handrails* serving aisles in rooms or spaces used for assembly purposes are permitted to comply with the handrail extensions in accordance with Section 1029.15.
3. *Handrails* for *alternating tread devices* and ship's ladders are permitted to terminate at a location vertically above the top and bottom risers. *Handrails* for *alternating tread devices* are not required to be continuous between *flights* or to extend beyond the top or bottom risers.

❖ The purpose of return requirements at handrail ends is to prevent a person from catching an article of clothing or satchel straps, or from being injured by falling on the extended end of a handrail.

The length that a handrail extends beyond the top and bottom of a stairway, ramp or intermediate landing where handrails are not continuous to another stair flight or ramp run is an important factor for the safety of the users. An occupant must be able to grasp securely a handrail beyond the last riser of a stairway or the last sloped segment of a ramp. Handrail terminations that bend around a corner do not provide this stability; therefore, the handrail must extend in the direction of the stair flight or ramp run. The handrail extensions are not required where a user could keep his or her hand on the handrail, such as the continuous handrail at the landing of a switchback stairway or ramp (see Section 1014.2, Exception 1).

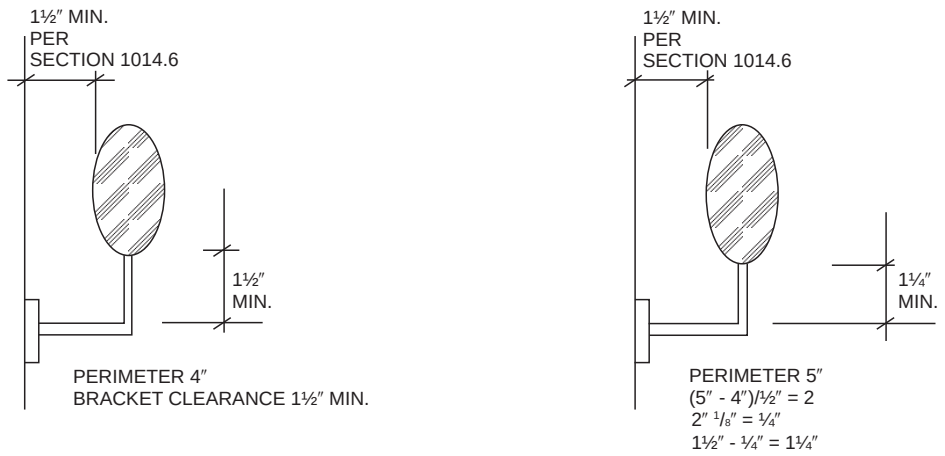

For SI: 1 inch = 25.4 mm.

Figure 1014.4(2)
REDUCED BRACKET EXTENSIONS EXAMPLE PER SECTION 1014.4, EXCEPTION 3

INTERNATIONAL CODE COUNCIL®
Copyright © 2015 ICC. ALL RIGHTS RESERVED. Accessed by David Dammon on Jun 21, 2017 12:30:52 PM pursuant to License Agreement with ICC. No further reproduction or distribution authorized. ANY UNAUTHORIZED REPRODUCTION OR DISTRIBUTION IS A VIOLATION OF THE FEDERAL COPYRIGHT ACT AND THE LICENSE AGREEMENT, AND SUBJECT TO CIVIL AND CRIMINAL PENALTIES THEREUNDER.

For stairways, handrails must be extended 12 inches (305 mm) horizontally beyond the top riser and sloped a distance of one tread depth beyond the bottom riser. For ramps, handrails must be extended 12 inches (305 mm) horizontally beyond the last sloped ramp segment at both the top and bottom locations. These handrail extensions are not only required at the top and bottom on both sides of stairways and ramps, but also at other places where handrails are not continuous, such as landings and platforms. These requirements are intended to reflect the current provisions of ICC A117.1 (see Commentary Figure 1014.2) and the 2010 ADA Standard. Note that if the handrail extension is at a location that could be considered a protruding object, the handrail must return to the post at a height of less than 27 inches (686 mm) above the floor (see Sections 1003.3.2 and 1003.3.3).

In accordance with Exception 1, handrail extensions are not required where a dwelling unit is not required to meet any level of accessibility (i.e., Accessible unit, Type A unit or Type B unit). Handrail extensions are permitted to end at a newel post or turnaround.

Exception 2 provides for handrails along ramped or stepped aisles in assembly seating configurations, such as in sports facilities, theaters and lecture halls. It is necessary to limit handrail extensions in assembly aisles so that circulation in cross aisles that run perpendicular to the stepped or sloped aisles is not compromised.

Exception 3 allows for the unique construction considerations for alternating tread devices and ship's ladders. Again, usage of these devices is very limited. Since alternative tread devices and ship's ladders are typically utilized as a safer alternative to a vertical ladder, they are often located in tight spaces where traditional-type stairs cannot be used or are not required. With a much steeper angle than traditional stairs and differing usage, handrail extensions and continuity provisions are not practical.

1014.7 Clearance. Clear space between a handrail and a wall or other surface shall be not less than $1^1/_2$ inches (38 mm). A handrail and a wall or other surface adjacent to the *handrail* shall be free of any sharp or abrasive elements.

❖ A clear space is needed between a handrail and the wall or other surface to allow the user to slide his or her hand along the rail with fingers in the gripping position without contacting the wall surface, which could have an abrasive texture. In climates where persons may be expected to be wearing heavy gloves during the winter, an open design with greater clearance would be desirable at an exterior stairway, or a stairway directly inside the entrance to a building. [See Commentary Figures 1014.4(2) and 1014.8(2) for an illustration of handrail clearance.]

1014.8 Projections. On *ramps* and on ramped *aisles* that are part of an *accessible route*, the clear width between *handrails* shall be 36 inches (914 mm) minimum. Projections into the required width of *aisles*, *stairways* and *ramps* at each side shall not exceed $4^1/_2$ inches (114 mm) at or below the handrail height. Projections into the required width shall not be limited above the minimum headroom height required in Section 1011.3. Projections due to intermediate *handrails* shall not constitute a reduction in the egress width. Where a pair of intermediate *handrails* are provided within the *stairway* width without a walking surface between the pair of intermediate *handrails* and the distance between the pair of intermediate *handrails* is greater than 6 inches (152 mm), the available egress width shall be reduced by the distance between the closest edges of each such intermediate pair of *handrails* that is greater than 6 inches (152 mm).

❖ Handrails may not project more than $4^1/_2$ inches (114 mm) into the required width of a stairway, so that the clear width of the passage will not be seriously reduced [see Commentary Figure 1014.8(1)]. This is consistent with Section 1003.3.3. This projection may exist below the handrail height as well [see Commentary Figure 1014.8(2)]. The projection can be greater on stairways or ramps exceeding minimum width requirements.

The requirement for some stairways to have center handrails (Section 1014.9) could result in a single or double handrail down the center of the flight of stairs. Since these stairways are 60 inches (1525 mm) or wider, a center handrail would typically not be an obstruction and, therefore, would not reduce the capacity of the stairway. Schools and large assembly spaces commonly put in center handrails to aid in the flow up and down the stairs during peak usage times. If the center handrail is a double rail with a spacing of more than 6 inches (152 mm), the width of the stairway many need to be adjusted to compensate for the loss of available width.

1014.9 Intermediate handrails. *Stairways* shall have intermediate *handrails* located in such a manner that all portions of the *stairway* minimum width or required capacity are within 30 inches (762 mm) of a handrail. On monumental *stairs*, *handrails* shall be located along the most direct path of egress travel.

❖ In order to always be available to the user of the stairway, the maximum horizontal distance to a handrail from within the width required must not exceed 30 inches (762 mm). People tend to walk close to handrails, and if intermediate handrails are not provided for very wide stairways, the center portion of such stairways will normally receive less use. More importantly, in emergencies, the center portions of wide stairways with handrails would enhance egress travel rather than delay it by overcrowding at the sides with the handrails. This would especially be true under panic conditions where the use of wide interior stairways could become particularly hazardous.

The distance to the handrail applies to the "required" width of the stairway. If a stairway is greater than 60 inches (1524 mm) in width, but only 60 inches (1524 mm) total width is required based on occupant load (see Section 1005.3.1), intermediate

INTERNATIONAL CODE COUNCIL®
Copyright © 2015 ICC. ALL RIGHTS RESERVED. Accessed by David Dammon on Jun 21, 2017 12:30:52 PM pursuant to License Agreement with ICC. No further reproduction or distribution authorized. ANY UNAUTHORIZED REPRODUCTION OR DISTRIBUTION IS A VIOLATION OF THE FEDERAL COPYRIGHT ACT AND THE LICENSE AGREEMENT, AND SUBJECT TO CIVIL AND CRIMINAL PENALTIES THEREUNDER.

handrails are not required. Adequate safety is provided since every user is within 30 inches (762 mm) of a handrail.

Monumental stairways are typically provided for architectural effect and may or may not be considered required egress stairs. The criteria for monumental egress stairways deal with the very wide stairway in relation to the required width. While handrails on both sides of the stairway may be sufficient to accommodate the required width, the handrails may not be near the stream of traffic or even apparent to the user. In this case, the handrails are to be placed in a location more reflective of the egress path (see Commentary Figure 1014.9).

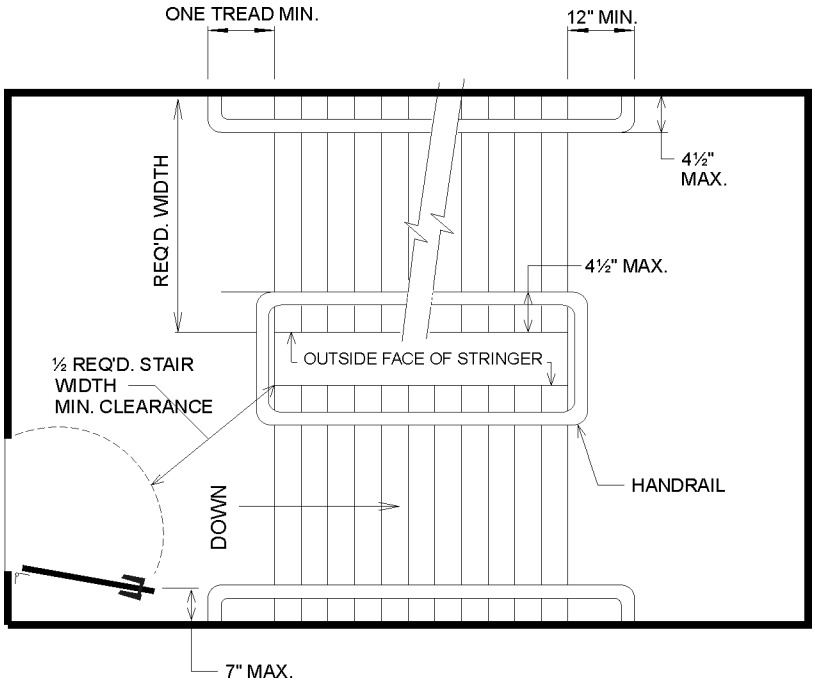

For SI: 1 inch = 25.4 mm.

Figure 1014.8(1)
TYPICAL HANDRAIL ARRANGEMENT

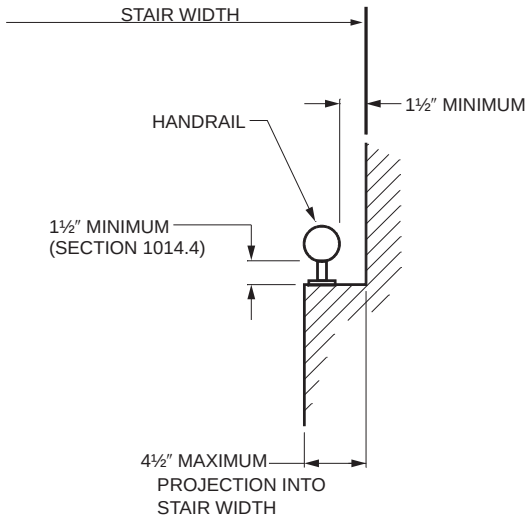

For SI: 1 inch = 25.4 mm.

Figure 1014.8(2)
PROJECTION OF HANDRAIL

INTERNATIONAL CODE COUNCIL®
Copyright © 2015 ICC. ALL RIGHTS RESERVED. Accessed by David Dammon on Jun 21, 2017 12:30:52 PM pursuant to License Agreement with ICC. No further reproduction or distribution authorized. ANY UNAUTHORIZED REPRODUCTION OR DISTRIBUTION IS A VIOLATION OF THE FEDERAL COPYRIGHT ACT AND THE LICENSE AGREEMENT, AND SUBJECT TO CIVIL AND CRIMINAL PENALTIES THEREUNDER.

SECTION 1015
GUARDS

1015.1 General. *Guards* shall comply with the provisions of Sections 1015.2 through 1015.7. Operable windows with sills located more than 72 inches (1829 mm) above finished grade or other surface below shall comply with Section 1015.8.

❖ Guards required along dropoffs must comply with the provisions for height, strength and opening limitations. Special provisions are provided for unique locations, such as screened-in porches, around mechanical equipment on platforms or roofs and at hatch openings.

Where there are operable windows on upper floors, there is a concern over the possibility of a child falling; thus, the placement of this requirement is in the guard section. Such windows must comply with Section 1015.8.

1015.2 Where required. *Guards* shall be located along open-sided walking surfaces, including *mezzanines*, *equipment platforms*, *aisles*, *stairs*, *ramps* and landings that are located more than 30 inches (762 mm) measured vertically to the floor or grade below at any point within 36 inches (914 mm) horizontally to the edge of the open side. *Guards* shall be adequate in strength and attachment in accordance with Section 1607.8.

Exception: *Guards* are not required for the following locations:

1. On the loading side of loading docks or piers.
2. On the audience side of *stages* and raised *platforms*, including *stairs* leading up to the *stage* and raised *platforms.*
3. On raised *stage* and *platform* floor areas, such as runways, *ramps* and side *stages* used for entertainment or presentations.
4. At vertical openings in the performance area of *stages* and *platforms*.
5. At elevated walking surfaces appurtenant to *stages* and *platforms* for access to and utilization of special lighting or equipment.
6. Along vehicle service pits not accessible to the public.
7. In assembly seating areas at cross aisles in accordance with Section 1029.16.2.

❖ Where one or more sides of a walking surface are open to the floor level or grade below, a guard system must be provided to minimize the possibility of occupants accidentally falling to the surface below. A guard is required only where the difference in elevation between the higher walking surface and the surface below is greater than 30 inches (762 mm). When the ground slopes away from the edge, the vertical distance from the walking surface to the grade or floor below must also be more than 30 inches (762 mm) on the lowest point within a 36-inch (914 mm) radius measured horizontally from the edge of the open-sided walking surface (see Commentary Figure 1015.2).

The loads for guard design are addressed in Section 1607 and are typically 50 plf (222 N) along the top with a 200-pound (90.72 kg) concentrated force. If glazing is used as part of a guard system, or windows are located adjacent to stairways or ramps, the guard must also comply with Section 1015.2.1 (see Sections 1015.2.1, 1607.8 and 2407).

Most of the exceptions identify situations when guards are not practical, such as along loading docks, stages and their approaches, and vehicle service pits. Exception 7 references assembly spaces where a lower guard is permitted or the alternative of seat backs where the dropoff is adjacent to a cross aisle.

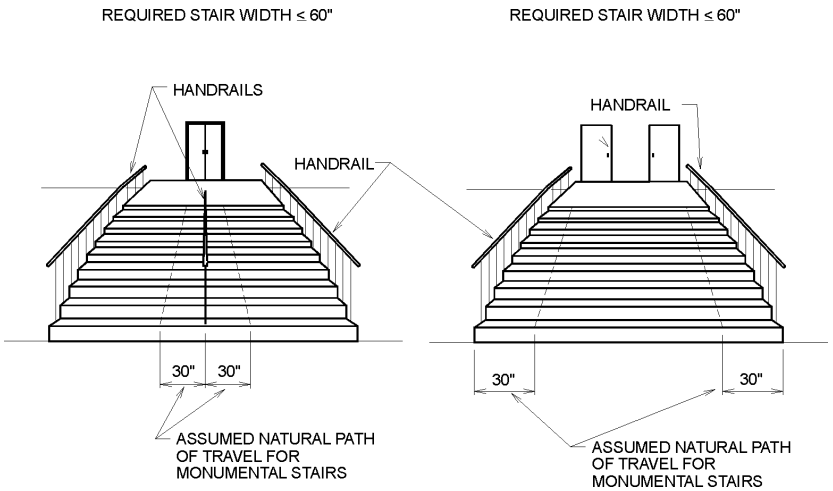

For SI: 1 inch = 25.4 mm.

Figure 1014.9
HANDRAILS FOR MONUMENTAL STAIRS

INTERNATIONAL CODE COUNCIL®
Copyright © 2015 ICC. ALL RIGHTS RESERVED. Accessed by David Dammon on Jun 21, 2017 12:30:52 PM pursuant to License Agreement with ICC. No further reproduction or distribution authorized. ANY UNAUTHORIZED REPRODUCTION OR DISTRIBUTION IS A VIOLATION OF THE FEDERAL COPYRIGHT ACT AND THE LICENSE AGREEMENT, AND SUBJECT TO CIVIL AND CRIMINAL PENALTIES THEREUNDER.

1015.2.1 Glazing. Where glass is used to provide a *guard* or as a portion of the *guard* system, the *guard* shall comply with Section 2407. Where the glazing provided does not meet the strength and attachment requirements of Section 1607.8, complying *guards* shall be located along glazed sides of open-sided walking surfaces.

❖ Glazing in guards may be infill or structural. The loads for guard design in Section 1015.2, which references Section 1607, are typically 50 plf (222 N) along the top with a 200-pound (90.72 kg) concentrated force. Two different situations are addressed with glazing: where glazing is installed in a guard on the side of a stairway, ramp or landing; or when a stairway, ramp or landing is immediately adjacent to a window where the glazing has not been designed to resist the forces from a fall (see Sections 1607.8 and 2407 and Commentary Figure 1015.2.1).

1015.3 Height. Required *guards* shall be not less than 42 inches (1067 mm) high, measured vertically as follows:

1. From the adjacent walking surfaces.
2. On *stairways* and stepped *aisles*, from the line connecting the leading edges of the tread *nosings*.
3. On *ramps* and ramped *aisles*, from the *ramp* surface at the *guard*.

Exceptions:

1. For occupancies in Group R-3 not more than three stories above grade in height and within individual *dwelling units* in occupancies in Group R-2 not more than three stories above grade in height with separate *means of egress*, required *guards* shall be not less than 36 inches (914 mm) in height measured vertically above the adjacent walking surfaces or adjacent *fixed seating*.
2. For occupancies in Group R-3, and within individual *dwelling units* in occupancies in Group R-2, *guards*

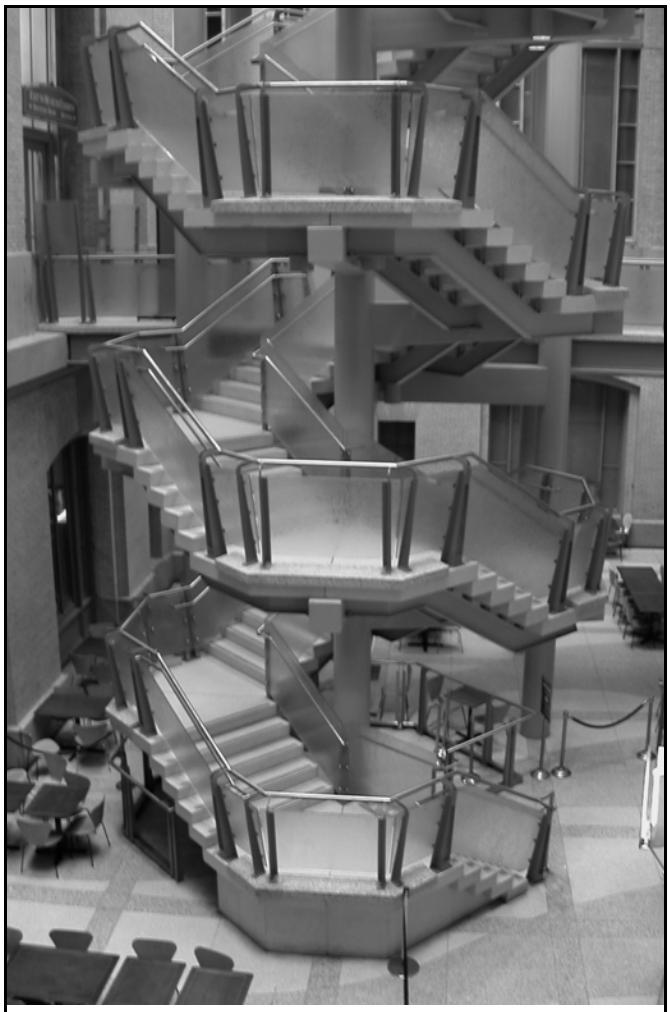

Figure 1015.2.1
GUARD SYSTEM WITH GLAZING

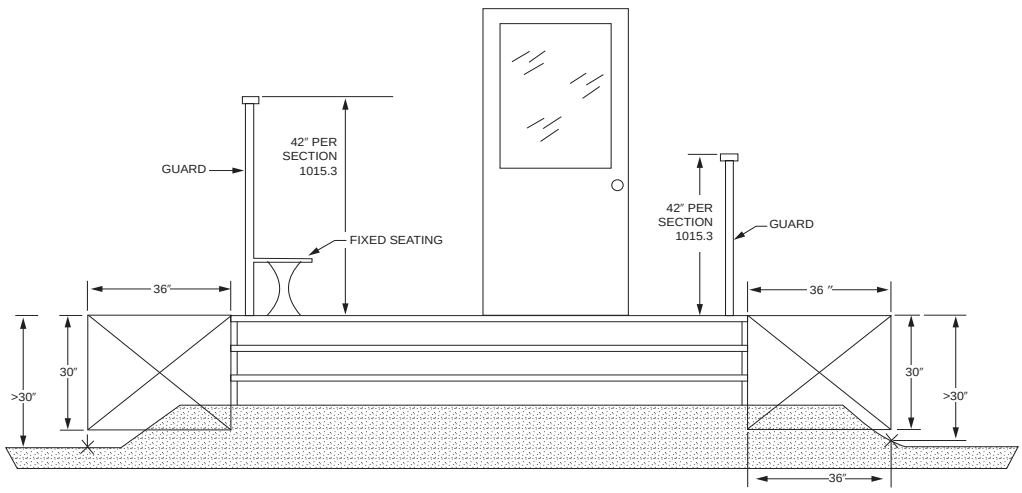

For SI: 1 inch = 25.4 mm.

Figure 1015.2
DROPOFF MEASUREMENTS AND GUARD HEIGHTS

INTERNATIONAL CODE COUNCIL®
Copyright © 2015 ICC. ALL RIGHTS RESERVED. Accessed by David Dammon on Jun 21, 2017 12:30:52 PM pursuant to License Agreement with ICC. No further reproduction or distribution authorized. ANY UNAUTHORIZED REPRODUCTION OR DISTRIBUTION IS A VIOLATION OF THE FEDERAL COPYRIGHT ACT AND THE LICENSE AGREEMENT, AND SUBJECT TO CIVIL AND CRIMINAL PENALTIES THEREUNDER.

on the open sides of *stairs* shall have a height not less than 34 inches (864 mm) measured vertically from a line connecting the leading edges of the treads.

3. For occupancies in Group R-3, and within individual *dwelling units* in occupancies in Group R-2, where the top of the *guard* also serves as a *handrail* on the open sides of *stairs*, the top of the *guard* shall be not less than 34 inches (864 mm) and not more than 38 inches (965 mm) measured vertically from a line connecting the leading edges of the treads.
4. The *guard* height in assembly seating areas shall comply with Section 1029.16 as applicable.
5. Along *alternating tread devices* and ship's ladders, *guards* where the top rail also serves as a *handrail* shall have height not less than 30 inches (762 mm) and not more than 34 inches (864 mm), measured vertically from the leading edge of the device tread *nosing*.

❖ Guards must not be less than 42 inches (1067 mm) in height as measured vertically from the top of the guard down to the sloped line connecting the leading edge of the tread along stairways or stepped aisles or to an adjacent walking surface for floors, ramps and ramped aisles [see Commentary Figures 1015.2, 1015.4(1) and (2) and 1012.8(4)]. Experience has shown that 42 inches (1067 mm) or more provides adequate height to minimize accidental falls in occupancies where crowding is more likely to occur. This puts the top of the guard above the center of gravity of the average adult. The height requirement is not intended to consider such items as planters or loose furniture next to the dropoff as walking surfaces. Because of safety concerns, the designer often chooses to install a barrier where there is a dropoff of less than 30 inches (762 mm). Decorative barriers may be utilized to support handrails or serve as part of the edge protection along a ramp. Where nonrequired guards/barriers are provided, provisions for guard height, openings and strength may be used for design, but are not required. It is common practice to follow the strength provisions, but not always the opening or height provisions for nonrequired guards.

Exception 1 measures the guard height differently. In Group R-2 and R-3 units that are three stories or less, where there is a fixed seat along the edge of deck or balcony, it is reasonable to consider the additional exposure for young children that may use the seat as standing or walking surfaces. In this situation, while the dropoff is measured from the floor, the guard height is measured from the top of the seat surface (see Commentary Figure 1015.3). Within dwelling units the incidence of the exposure to crowds and to egress from higher occupancy spaces is extremely limited, thus a minimum guard height of 36 inches (914 mm) is appropriate. Exception 1 is consistent with provisions in the 2012 IRC, however, the requirement to measure the guard height above a fixed seat has been deleted in the 2015 IRC.

Where the minimum guard height requirement is 42 inches (1067 mm), where both a guard and handrail are required, the handrail cannot be the top of the guard, but must be placed along the inside face of the guard unless specifically permitted in Exceptions 2 through 5.

Exceptions 2 and 3 are for nontransient residential occupancies and only address guard heights along the stairways, not at other dropoffs such as balconies or second-floor landings. For Group R-2, these guard height exceptions are only permitted for stairways within individual dwelling units, not common stairways within the building. The handrail provisions

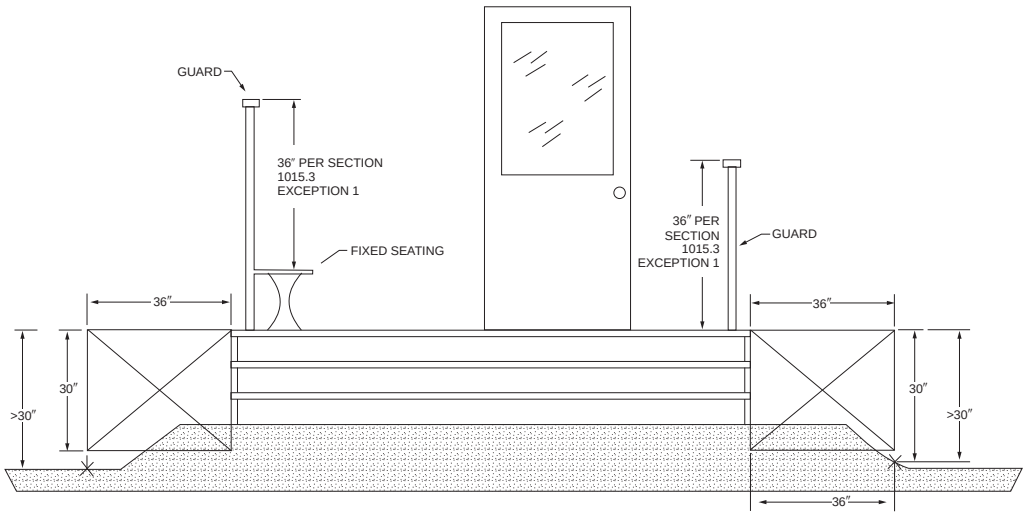

For SI: 1 inch = 25.4 mm.

Figure 1015.3
DROPOFF MEASUREMENTS AND GUARD HEIGHTS FOR TWO- AND THREE-STORY GROUPS R-2 AND R-3

INTERNATIONAL CODE COUNCIL®
Copyright © 2015 ICC. ALL RIGHTS RESERVED. Accessed by David Dammon on Jun 21, 2017 12:30:52 PM pursuant to License Agreement with ICC. No further reproduction or distribution authorized. ANY UNAUTHORIZED REPRODUCTION OR DISTRIBUTION IS A VIOLATION OF THE FEDERAL COPYRIGHT ACT AND THE LICENSE AGREEMENT, AND SUBJECT TO CIVIL AND CRIMINAL PENALTIES THEREUNDER.

allow some residential stairways to only have one handrail (see Section 1011.11). Exceptions 2 and 3 allow for a reduced guard height when the guard is also used as a handrail and when it just serves the purpose of a guard along a stairway. The reduced allowable guard height along stairways is consistent with current construction practice. Unless a dwelling could comply with Exception 1, the guard height along other dropoffs would have to be 42 inches (1067 mm) measured from the floor.

Exception 4 references the lower guards permitted at limited locations where a line of sight for assembly spaces is part of the consideration. There are also allowances in Section 1029.16 that would allow for the top of the guard to serve as a handrail.

Exception 5 permits a reduction in guard heights based on the limited used and unique design considerations for alternating tread devices and ship's ladders (see Sections 1011.14 and 1011.15).

1015.4 Opening limitations. Required *guards* shall not have openings that allow passage of a sphere 4 inches (102 mm) in diameter from the walking surface to the required *guard* height.

Exceptions:

1. From a height of 36 inches (914 mm) to 42 inches (1067 mm), *guards* shall not have openings that allow passage of a sphere $4^3/_8$ inches (111 mm) in diameter.
2. The triangular openings at the open sides of a *stair*, formed by the riser, tread and bottom rail shall not allow passage of a sphere 6 inches (152 mm) in diameter.
3. At elevated walking surfaces for access to and use of electrical, mechanical or plumbing systems or equipment, *guards* shall not have openings that allow passage of a sphere 21 inches (533 mm) in diameter.
4. In areas that are not open to the public within occupancies in Group I-3, F, H or S, and for *alternating tread devices* and ship's ladders, *guards* shall not have openings that allow passage of a sphere 21 inches (533 mm) in diameter.
5. In assembly seating areas, *guards* required at the end of aisles in accordance with Section 1029.16.4 shall not have openings that allow passage of a sphere 4 inches (102 mm) in diameter up to a height of 26 inches (660 mm). From a height of 26 inches (660 mm) to 42 inches (1067 mm) above the adjacent walking surfaces, *guards* shall not have openings that allow passage of a sphere 8 inches (203 mm) in diameter.
6. Within individual *dwelling units* and *sleeping units* in Group R-2 and R-3 occupancies, *guards* on the open sides of *stairs* shall not have openings that allow passage of a sphere $4^3/_8$ (111 mm) inches in diameter.

❖ The opening limitations in a guard are based on anthropometric research that indicates children in the 99th percentile who have developed to the point of being able to crawl will have chest depth and head size of at least $4^3/_4$ inches. Both the 4-inch (102 mm) and the $4^3/_8$-inch (111 mm) sphere rules are intended to provide an additional margin of safety. Note that the opening limitations are stated as preventing the passage of a sphere, requiring the openings to be smaller than the dimension stated.

Exception 1 allows the $4^3/_8$-inch (203 mm) opening limitation at heights where falling through the guard is not a risk for children of early development who cannot access the opening [i.e., above 36 inches (914 mm) in height] [see Commentary Figure 1015.4(1)].

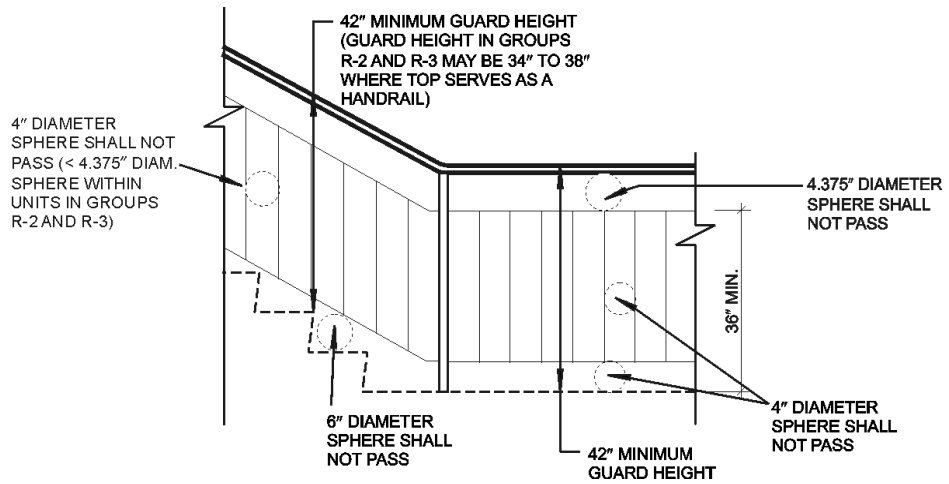

Note: Handrail not shown for clarity.
For SI: 1 inch = 25.4 mm.

Figure 1015.4(1)
GUARD HEIGHT AND OPENING LIMITATIONS

INTERNATIONAL CODE COUNCIL®
Copyright © 2015 ICC. ALL RIGHTS RESERVED. Accessed by David Dammon on Jun 21, 2017 12:30:52 PM pursuant to License Agreement with ICC. No further reproduction or distribution authorized. ANY UNAUTHORIZED REPRODUCTION OR DISTRIBUTION IS A VIOLATION OF THE FEDERAL COPYRIGHT ACT AND THE LICENSE AGREEMENT, AND SUBJECT TO CIVIL AND CRIMINAL PENALTIES THEREUNDER.

Exception 2 allows a 6-inch (152 mm) opening limitation at openings formed by the riser, tread and bottom rail of guards at the open side of a stairway. The geometry of these openings is such that the entire body cannot pass through the triangular opening, and further limiting such openings is impractical to achieve with a sloped bottom member in the guard without intersecting the tread nosings [see Commentary Figure 1015.4(1)].

Exceptions 3 and 4 address areas where the presence of small children is unlikely and often prohibited. Guards along walkways leading to electrical, mechanical and plumbing systems or equipment and in occupancies in Groups I-3, F, H and S may be constructed in such a way that a sphere 21 inches (533 mm) in diameter will not pass through any of the openings [see Commentary Figure 1015.4(2)]. This requirement allows the use of one horizontal intermediate member with the standard top-of-guard height of 42 inches (1067 mm).

Exception 5, for the guard infill near the top of the aisle guard in assembly seating areas, is provided to reduce sightline problems in limited locations (see Section 1029.16.4).

Exception 6 recognizes a standard construction practice within residential units. In practicality this allows a stairway with the 7-inch riser height/11-inch tread depth (178 mm riser height/279 mm tread depth) step geometry to have two common $1^1/_4$-inch (32 mm) balusters per stair tread instead of three. Where the $7^3/_4$-inch riser height/10-inch tread depth (197 mm riser height/254 mm tread depth) step geometry (see Section 1011.5.2, Exception 3) is utilized, the two balusters would meet the 4-inch (102 mm) opening limitation and most profiled or turned balusters would meet the $4^3/_8$-inch (111 mm) sphere rule.

The provisions of guards are to minimize accidental falls through or over a guard. Opening limitations do not prohibit the use of horizontal members or ornamentation infill as guard components. Research has shown that no practical design for guard infill, including solid panels, can prevent climbing; but good design practices can greatly reduce the opportunity for small children to "climb" the guard [see Commentary Figure 1015.4(3)]. In this example, the handrail stops a child from climbing the guard.

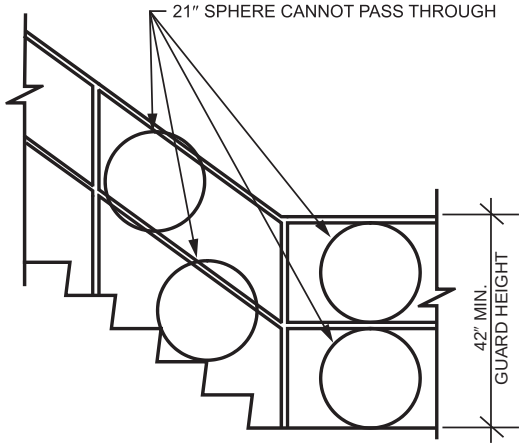

For SI: 1 inch = 25.4 mm.

Figure 1015.4(2)
GUARD OPENING LIMITATIONS, SECTION 1015.4, EXCEPTIONS 3 AND 4

1015.5 Screen porches. Porches and decks that are enclosed with insect screening shall be provided with *guards* where the walking surface is located more than 30 inches (762 mm) above the floor or grade below.

❖ Insect screening located on the open sides of porches and decks does not provide an adequate barrier to reasonably protect an occupant from falling to the surface below. Guards are required on the open sides of porches and decks where the floor is located more than 30 inches (762 mm) above the surface below. The guards must comply with all of the provisions of Section 1015.

1015.6 Mechanical equipment, systems and devices. *Guards* shall be provided where various components that require service are located within 10 feet (3048 mm) of a roof edge or open side of a walking surface and such edge or open side is located more than 30 inches (762 mm) above the floor, roof or grade below. The *guard* shall extend not less than 30 inches (762 mm) beyond each end of such components. The *guard* shall be constructed so as to prevent the passage of a sphere 21 inches (533 mm) in diameter.

Exception: *Guards* are not required where permanent fall arrest/restraint anchorage connector devices that comply with ANSI/ASSE Z 359.1 are affixed for use during the



Figure 1015.4(3)
EXAMPLE OF GUARD WITH HORIZONTAL MEMBERS

INTERNATIONAL CODE COUNCIL®
Copyright © 2015 ICC. ALL RIGHTS RESERVED. Accessed by David Dammon on Jun 21, 2017 12:30:52 PM pursuant to License Agreement with ICC. No further reproduction or distribution authorized. ANY UNAUTHORIZED REPRODUCTION OR DISTRIBUTION IS A VIOLATION OF THE FEDERAL COPYRIGHT ACT AND THE LICENSE AGREEMENT, AND SUBJECT TO CIVIL AND CRIMINAL PENALTIES THEREUNDER.

entire roof covering lifetime. The devices shall be reevaluated for possible replacement when the entire roof covering is replaced. The devices shall be placed not more than 10 feet (3048 mm) on center along hip and ridge lines and placed not less than 10 feet (3048 mm) from the roof edge or open side of the walking surface.

❖ The purpose of this requirement is to protect workers from falls off of roofs or from open-sided walking surfaces when doing maintenance work on equipment. The guard opening is allowed to be up to 21 inches (533 mm) since children are not likely to be in such areas. Either the equipment should be located so that it is more than 10 feet from the roof edge, or a guard or raised parapet must be provided to prevent falls. The guard also has to extend at least 30 inches (762 mm) in all directions past the corners of the equipment (see Commentary Figure 1015.7).

The exception for the guards is an alternative of a personal fall arrest system with anchorage points, more commonly called tie down points for restraining harnesses. The code does not specify who has to provide the equipment that fits the maintenance crew and attaches to the system. If this option is chosen, when the roof covering is replaced, the system must also be reevaluated and possibly replaced. This system is more commonly used on sloped roofs while guards are more often used on flat roofs.

1015.7 Roof access. *Guards* shall be provided where the roof hatch opening is located within 10 feet (3048 mm) of a roof edge or open side of a walking surface and such edge or open side is located more than 30 inches (762 mm) above the floor, roof or grade below. The *guard* shall be constructed so as to prevent the passage of a sphere 21 inches (533 mm) in diameter.

Exception: *Guards* are not required where permanent fall arrest/restraint anchorage connector devices that comply with ANSI/ASSE Z 359.1 are affixed for use during the entire roof covering lifetime. The devices shall be reevaluated for possible replacement when the entire roof covering is replaced. The devices shall be placed not more than 10 feet (3048 mm) on center along hip and ridge lines and placed not less than 10 feet (3048 mm) from the roof edge or open side of the walking surface.

❖ The code already requires guards around equipment on the roof; this section is intended to provide the same level of safety at the hatch opening service personnel use to access the roof (see Commentary Figure 1015.7 and the commentary to Section 1015.6). While not specifically indicated for roof hatches, Section 1015.6 requires the guard to extend at least 30 inches (752 mm) past the corners of the equipment.

1015.8 Window openings. Windows in Group R-2 and R-3 buildings including *dwelling units*, where the top of the sill of an operable window opening is located less than 36 inches above the finished floor and more than 72 inches (1829 mm) above the finished grade or other surface below on the exterior of the building, shall comply with one of the following:

1. Operable windows where the top of the sill of the opening is located more than 75 feet (22 860 mm) above the finished grade or other surface below and that are provided with window fall prevention devices that comply with ASTM F2006.

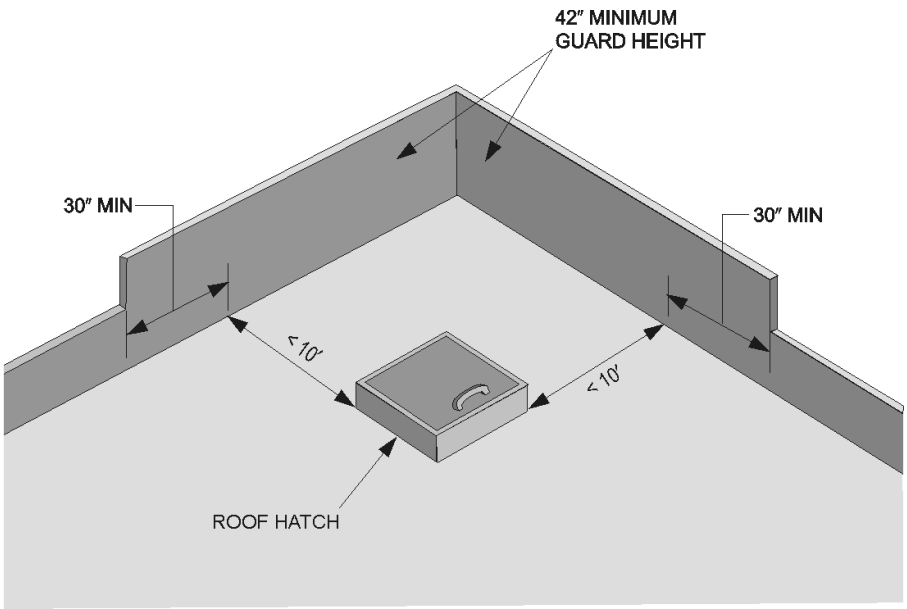

For SI: 1 inch = 25.4 mm, 1 foot = 304.8 mm.

Figure 1015.7
PROTECTION AT ROOF-HATCH OPENING

INTERNATIONAL CODE COUNCIL®
Copyright © 2015 ICC. ALL RIGHTS RESERVED. Accessed by David Dammon on Jun 21, 2017 12:30:52 PM pursuant to License Agreement with ICC. No further reproduction or distribution authorized. ANY UNAUTHORIZED REPRODUCTION OR DISTRIBUTION IS A VIOLATION OF THE FEDERAL COPYRIGHT ACT AND THE LICENSE AGREEMENT, AND SUBJECT TO CIVIL AND CRIMINAL PENALTIES THEREUNDER.

2. Operable windows where the openings will not allow a 4-inch-diameter (102 mm) sphere to pass through the opening when the window is in its largest opened position.

3. Operable windows where the openings are provided with window fall prevention devices that comply with ASTM F2090.

4. Operable windows that are provided with window opening control devices that comply with Section 1015.8.1.

❖ The window limitations specified here are intended for Group R-2 and R-3 units. These facilities have the highest potential for infants and toddlers being present for an extended period of time. The requirement is intended to provide a level of protection to children and to help limit the chances of them falling through window openings. In most cases, these provisions are not applicable to first-floor windows. Typically, the 72 inches (1829 mm) to finished grade would make these provisions applicable for windows starting at the second floor. For windows in bedrooms that may also be required to serve as emergency escape and rescue openings, see Section 1030.

There are basically five options offered:

One option is to locate the window so that any opening is at least 36 inches (915 mm) above the floor. By raising the lowest operable portion of a window to 36 inches (915 mm) or more, the sill height is above the center of gravity of smaller children. The National Ornamental & Miscellaneous Metals Association (NOMMA) commissioned a paper on child safety related to falls. The report indicates that the standing center of gravity of children aged 2 to 3.5 years is 24.1 inches (612 mm) [50th percentile is 22.2 inches (564 mm)] and of children aged 3.5 to 4.5 years is 25.2 inches (640 mm) [50th percentile is 23.6 inches (599 mm)]. The 36-inch (915 mm) sill height was chosen to reduce the ability of a child to climb onto the sill, enabling the fall through the opening. Windows that are also to serve as emergency escape windows must also comply with Section 10309.3 sill height requirements for 44 inches (1118 mm) maximum. Note that Section R612.2 of the IRC requires a minimum sill height of 24 inches (610 mm).

A second option (Item 1) would be for windows with an opening lower than 36 inches (915 mm) to limit the opening to 4 inches (102 mm) maximum. This opening size is consistent with the guard opening provisions (see Section 1015.4). Many awning or hopper-type casement windows have control arms that limit the opening width.

The third option offered (Item 2) allows for fixed fall-prevention devices to be installed in accordance with ASTM F2006. The limitation for window sills over 75 feet (22 860 mm) is for consistency with Section 1.3 of ASTM F2006, which states: "This safety specification applies only to devices intended to be applied to windows installed at height of more than 75 feet above the ground level in multiple family dwelling buildings. This safety specification is not intended to apply to windows below 75 feet (22 860 mm) because all windows below 75 feet (22 860 mm) that are operable could be used as a possible secondary means of escape." Since these devices will always prevent the opening of the window, they cannot be used for windows that are required to also serve as emergency escape openings.

ASTM F2090 includes window fall prevention devices (Item 3) and window opening control devices (Item 4) (see Section 1015.8.1). Window fall-prevention devices (such as a window guard) must be removable from the interior of the building so the window can be used for emergency escape. Window opening-control devices allow the window to be opened beyond 4 inches, so that a window can be used for emergency escape. This standard is specifically written for window openings within 75 feet (22 860 mm) of grade and specifically allows for windows to be used for emergency escape and rescue. Both the code and IRC reference ASTM F2090, *Specification for Window Fall Prevention Devices with Emergency Escape (Egress Release Mechanisms)*. This standard was updated in 2008 to address window opening control devices. Opening control devices allow for normal operation to result in a 4-inch (102 mm) maximum opening (Section 1015.8 and Section R612.4.1 of the IRC). This control device can be released from the inside to allow the window to be fully opened in order to comply with the emergency escape provisions in both the code (Section 1030.2) and IRC (Section R310.1.1).

Criteria have also been added to IEBC to address window opening controls in existing buildings.

1015.8.1 Window opening control devices. Window opening control devices shall comply with ASTM F2090. The window opening control device, after operation to release the control device allowing the window to fully open, shall not reduce the minimum net clear opening area of the window unit to less than the area required by Section 1030.2.

❖ See the commentary to Section 1015.8.

SECTION 1016
EXIT ACCESS

1016.1 General. The *exit access* shall comply with the applicable provisions of Sections 1003 through 1015. *Exit access* arrangement shall comply with Sections 1016 through 1021.

❖ Sections 1016 through 1021 include the design requirements for exit access and exit access components. The general requirements that also apply to the exit access are in Sections 1003 through 1015.

The following sections are included under exit access:

- Section 1016 deals with egress through intervening spaces, as well as travel and separation of the common path of travel to the exit.

INTERNATIONAL CODE COUNCIL®
Copyright © 2015 ICC. ALL RIGHTS RESERVED. Accessed by David Dammon on Jun 21, 2017 12:30:52 PM pursuant to License Agreement with ICC. No further reproduction or distribution authorized. ANY UNAUTHORIZED REPRODUCTION OR DISTRIBUTION IS A VIOLATION OF THE FEDERAL COPYRIGHT ACT AND THE LICENSE AGREEMENT, AND SUBJECT TO CIVIL AND CRIMINAL PENALTIES THEREUNDER.

- Section 1017 lists the total exit access travel distance from an occupied space to an exit. This distance includes the common path of travel addressed in Sections 1006.2.1 and 1006.3.2.
- Section 1018 takes a look at requirements for aisles and aisle accessways for occupancies other than assembly spaces. Aisle and aisle accessways in spaces used for assembly purposes are specifically addressed in Section 1029.
- Section 1019 provides criteria for when an open stairway between floors can serve as a required exit access stairway.
- Section 1020 deals with another type of confined part of the exit access path: corridors.
- Section 1021 addresses egress balconies, where the path of travel to the exterior exit stairway is partially open to the exterior.

1016.2 Egress through intervening spaces. Egress through intervening spaces shall comply with this section.

1. *Exit access* through an enclosed elevator lobby is permitted. Access to not less than one of the required *exits* shall be provided without travel through the enclosed elevator lobbies required by Section 3006. Where the path of exit access travel passes through an enclosed elevator lobby, the level of protection required for the enclosed elevator lobby is not required to be extended to the *exit* unless direct access to an *exit* is required by other sections of this code.
2. Egress from a room or space shall not pass through adjoining or intervening rooms or areas, except where such adjoining rooms or areas and the area served are accessory to one or the other, are not a Group H occupancy and provide a discernible path of egress travel to an *exit*.

   Exception: *Means of egress* are not prohibited through adjoining or intervening rooms or spaces in a Group H, S or F occupancy where the adjoining or intervening rooms or spaces are the same or a lesser hazard occupancy group.
3. An *exit access* shall not pass through a room that can be locked to prevent egress.
4. *Means of egress* from *dwelling units* or sleeping areas shall not lead through other sleeping areas, toilet rooms or bathrooms.
5. Egress shall not pass through kitchens, storage rooms, closets or spaces used for similar purposes.

   Exceptions:

   1. *Means of egress* are not prohibited through a kitchen area serving adjoining rooms constituting part of the same *dwelling unit* or *sleeping unit.*
   2. *Means of egress* are not prohibited through stockrooms in Group M occupancies where all of the following are met:
      2.1. The stock is of the same hazard classification as that found in the main retail area.
      2.2. Not more than 50 percent of the *exit access* is through the stockroom.
      2.3. The stockroom is not subject to locking from the egress side.
      2.4. There is a demarcated, minimum 44-inch-wide (1118 mm) *aisle* defined by full- or partial-height fixed walls or similar construction that will maintain the required width and lead directly from the retail area to the *exit* without obstructions.

❖ This section allows adjoining spaces to be considered a part of the room or space from which egress originates, provided that there are reasonable assurances that the continuous egress path will always be available. The code does not limit the number of intervening or adjoining rooms through which egress can be made, provided that all other code requirements (e.g., travel distance, number of doorways, etc.) are met. An exit access route, for example, may be laid out such that an occupant leaves a room or space, passes through an adjoining space, enters an exit access corridor, passes through another room and, finally, into an exit [see Commentary Figure 1016.2(2)], as long as all other code requirements are satisfied.

The intent of Item 1 is to correlate the provision for corridor continuity (Section 1020.6) and elevator lobbies. This is especially important since elevator lobbies for fire service access elevators require direction connection to a stairway. Therefore, occupants may need to egress through an elevator lobby to get to the exit stairway. In a two-exit building, only one exit can be through an elevator lobby, but at the same time, the elevator lobby will not be considered an intervening room [see Commentary Figure 1020.6(3)]. This also clarifies that the protection requirements for corridors would not be put on top of protection requirements for the elevator lobbies.

The intent of Item 2 is not that the accessory space be limited to the 10-percent area in Section 508.2.3, but that the spaces be interrelated so that doors between the spaces will not risk being blocked or locked. For example, a conference room and managers' offices could exit through the secretary's office to reach the exit access corridor; or several office spaces could exit through a common reception/lobby area. Requiring occupants to egress from an area and pass through an adjoining Group H that can be

INTERNATIONAL CODE COUNCIL®
Copyright © 2015 ICC. ALL RIGHTS RESERVED. Accessed by David Dammon on Jun 21, 2017 12:30:52 PM pursuant to License Agreement with ICC. No further reproduction or distribution authorized. ANY UNAUTHORIZED REPRODUCTION OR DISTRIBUTION IS A VIOLATION OF THE FEDERAL COPYRIGHT ACT AND THE LICENSE AGREEMENT, AND SUBJECT TO CIVIL AND CRIMINAL PENALTIES THEREUNDER.

characterized by rapid fire buildup places them in an unreasonable risk situation [see Commentary Figure 1016.2(1)]; therefore, this illustrated egress path would be prohibited. As an exception to Item 2, in facilities that may contain a Group H area, buildings of Group H, S or F can exit through adjoining rooms or spaces that have the same or lesser hazard. For example, a person exiting from a Group H storage room (see Section 415) could egress either through a similar Group H storage area or through the factory to get to an exit, but the person in the factory could not egress through the Group H storage rooms to get to the outside.

As expressed in Item 3, a common code enforcement problem is a locked door in the egress path. Twenty-five workers perished in September 1991 when they were trapped inside the Imperial Food Processing Plant in Hamlet, North Carolina, in part because of locked exit doors. As long as the egress door is readily openable in the direction of egress travel without the use of keys, special knowledge or effort (see Section 1010.1.9.5), the occupants can move unimpeded away from a fire emergency. Relying on an egress path through an adjacent dwelling unit to be available at all times is not a reasonable expectation. Egress through an adjacent business tenant space can be unreasonable given the security and privacy measures the adjacent tenant may take to secure such a space. However, egress through a reception area that serves a suite of offices of the same tenant is clearly accessible and is permitted.

Item 4 addresses concerns along the path of

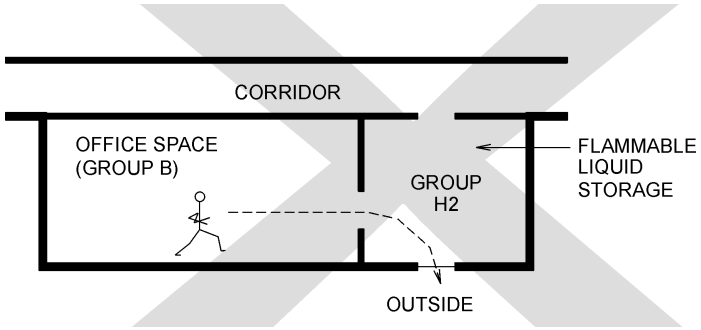

Figure 1016.2(1)
EGRESS PROHIBITED THROUGH GROUP H AREAS

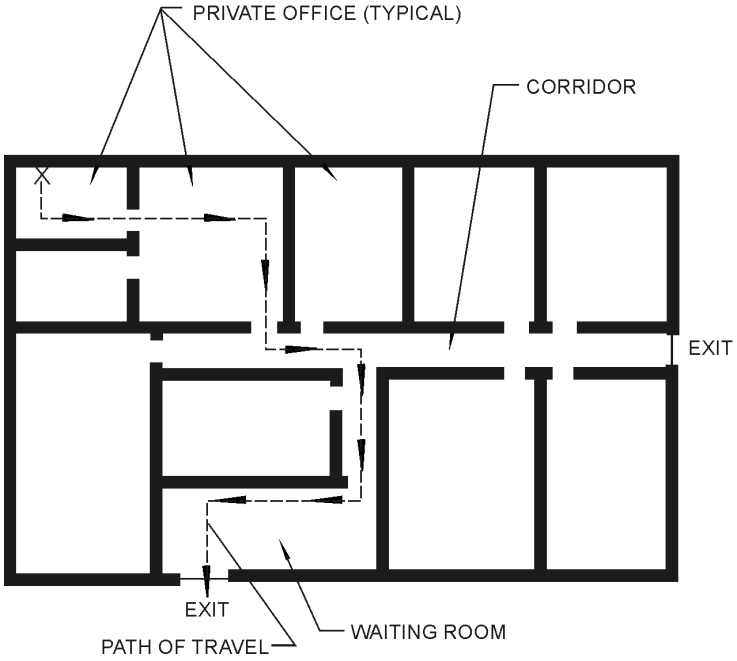

Figure 1016.2(2)
EGRESS THROUGH ADJOINING ROOMS AND SPACES

INTERNATIONAL CODE COUNCIL®
Copyright © 2015 ICC. ALL RIGHTS RESERVED. Accessed by David Dammon on Jun 21, 2017 12:30:52 PM pursuant to License Agreement with ICC. No further reproduction or distribution authorized. ANY UNAUTHORIZED REPRODUCTION OR DISTRIBUTION IS A VIOLATION OF THE FEDERAL COPYRIGHT ACT AND THE LICENSE AGREEMENT, AND SUBJECT TO CIVIL AND CRIMINAL PENALTIES THEREUNDER.

egress travel within individual dwelling or sleeping units. The concern once again is possible locking devices. Egress for one bedroom should not be through another bedroom or bathroom.

The concern in Item 5 is that kitchens, storage rooms and similar spaces may be subject to locking or blockage of the exit access path. This is not a general provision for all Group S occupancies; therefore, it is not the intent of this provision to address the situation of egress for offices through an associated warehouse space. Item 5, Exception 1, does not apply this same prohibition to areas within dwelling or sleeping units. However, for other spaces, a customer means of egress should not be through the working portions of a commercial kitchen in a restaurant or the stock storage area of a storage room in a mercantile occupancy. A dedicated path must be established through such space. The four items listed in Item 5, Exception 2, are intended to provide measurable criteria to increase the likelihood that the exit access path of travel would always be available and identifiable through the stock room of a store. It is not acceptable to just mark the path on the floor. Whatever defines the route must permanently establish the egress path in a manner to maintain the minimum required unobstructed width.

1016.2.1 Multiple tenants. Where more than one tenant occupies any one floor of a building or structure, each tenant space, *dwelling unit* and *sleeping unit* shall be provided with access to the required *exits* without passing through adjacent tenant spaces, *dwelling units* and *sleeping units*.

Exception: The *means of egress* from a smaller tenant space shall not be prohibited from passing through a larger adjoining tenant space where such rooms or spaces of the smaller tenant occupy less than 10 percent of the area of the larger tenant space through which they pass; are the same or similar occupancy group; a discernible path of egress travel to an *exit* is provided; and the *means of egress* into the adjoining space is not subject to locking from the egress side. A required *means of egress* serving the larger tenant space shall not pass through the smaller tenant space or spaces.

❖ Where a floor is occupied by multiple tenants, each tenant must be provided with full and direct access to the required exits serving that floor without passing through another tenant space. Tenants typically lock the doors to their spaces for privacy and security. Should an egress door that is shared by both tenants be locked, occupants in one of the spaces could be trapped and unable to reach a secondary exit. Therefore, an egress layout where occupants from one tenant space travel through another tenant space to gain access to one of the required exits from that floor is prohibited.

This limitation is so that occupants from all tenant spaces will have unrestricted access to the required egress elements while maintaining the security and privacy of the individual tenants. This limitation is based on one of the fundamental principles of egress: to provide a means of egress where all components are capable of being used by the occupants without keys, tools, special knowledge or special effort (see Section 1010.1.9.5).

A common practice is to have a bank or small restaurant located within a large grocery store or department store. These can be separate tenants. In these situations, the small tenants are not open when the main store is closed. The intent of the exception is to allow those small tenants to egress through the large tenant. Since there may be times when the larger tenant is open and the smaller is closed (e.g., bank holidays), the larger tenant cannot exit through the smaller tenant.

SECTION 1017
EXIT ACCESS TRAVEL DISTANCE

1017.1 General. Travel distance within the *exit access* portion of the *means of egress* system shall be in accordance with this section.

❖ "Exit access" is defined as "that portion of a means of egress system that leads from any occupied portion of a building or structure to an exit" (see the commentary for the definition in Chapter 2). Exit access includes rooms, spaces, aisles and corridors that an occupant would travel along to get to an exit. This can also include stairways and ramps between levels, or between stories where permitted by Section 1019. Doors and doorways along this route are exit access doorways, but may sometimes be called "exit doors." True exits for this exit access travel can be: 1. An exterior exit door at grade; 2. The door to an enclosure for an interior exit stairway, ramp or exit passageway; 3. The exit door leading to an exterior exit door or ramp; or 4. A door leading through a horizontal exit. How exit access travel distance is measured is one of the key differences between interior exit access stairways/ramps (see Section 1017.3.1) and interior exit stairways/ramps (see Section 1017.3).

It is important to understand the relationship between the common path of travel limitations of Sections 1006.2.1 and 1006.3.2 and the exit access travel distance limitations of this section. Measurements start at the same location, i.e., the most remote location in any occupied space. Both are measured in the exit access portion of the means of egress system. The common path of travel is measured to the point where the occupant has two distinct paths of travel, which will lead to two distinct exits. Travel distance is measured all the way until the exit is reached. The common path of travel measurement can end within a space or at a corridor where a single means of egress space (Section 1006.2.1) has its door to a corridor that provides access to two exits.

INTERNATIONAL CODE COUNCIL®
Copyright © 2015 ICC. ALL RIGHTS RESERVED. Accessed by David Dammon on Jun 21, 2017 12:30:52 PM pursuant to License Agreement with ICC. No further reproduction or distribution authorized. ANY UNAUTHORIZED REPRODUCTION OR DISTRIBUTION IS A VIOLATION OF THE FEDERAL COPYRIGHT ACT AND THE LICENSE AGREEMENT, AND SUBJECT TO CIVIL AND CRIMINAL PENALTIES THEREUNDER.

1017.2 Limitations. *Exit access* travel distance shall not exceed the values given in Table 1017.2.

❖ The table includes the travel distance measurements for buildings with or without sprinkler systems. "Not Permitted" is in support of the Chapter 9 requirements for all Group I and H occupancies to be sprinklered. While the other occupancies may also be required to be sprinklered, the exit access travel distance is indicated for existing buildings.

TABLE 1017.2. See next column.

❖ This table reflects the maximum distance a person is allowed to travel from any point in a building floor area to the nearest exit along a natural and unobstructed path. While quantitative determinations or formulas are not available to substantiate the tabular distances, empirical factors are utilized to make relative judgments as to reasonable limitations. Such considerations include the nature and fitness of the occupants; the typical configuration within the space; the level of fire hazard with respect to the specific uses of the facilities, including fire spread and the potential intensity of a fire. The inclusion of an automatic sprinkler system throughout the building can serve to control, confine or possibly eliminate the fire threat to the occupants so an increased travel distance is permitted. Increased travel distances are permitted when an automatic sprinkler system is installed in accordance with NFPA 13 or 13R.

When measuring travel distance, it is important to consider the natural path of travel [see Commentary Figure 1017.3(1)]. In many cases, the actual layout of furnishings and equipment is not known or is not identified on the plans submitted with the permit application. In such instances, it may be necessary to measure travel distance using the legs of a triangle instead of the hypotenuse [see Commentary Figure 1017.3(2)]. Since most people tend to migrate to more open spaces while egressing, measurement of the natural path of travel typically excludes floor areas within 1 foot (305 mm) of walls, corners, columns and other permanent construction. Where the travel path includes passage through a doorway, the natural route is generally measured through the centerline of the door openings.

The common path of travel addressed in Sections 1006.2.1 and 1006.3.2 is part of the overall exit access travel distance, with both starting at the same point. Common path of travel stops when the occupant has a choice of at least two exits, and overall travel distance stops when an occupant gets to the closest exit. The references in Note a are to sections where specific requirements are addressed—this can be an increase or decrease in travel distance.

Note a is a reference to other travel distance limitations in the code. Notes b and c are simply references to the allowed types of sprinkler system—NFPA 13 or 13R. Some travel distance increases are based on the type of sprinkler system provided. The table does not currently address a building with an NFPA 13D sprinkler system.

Note d addresses the sprinkler requirements in Group H. Group H occupancies are only required to be sprinklered within Group H and not throughout the building; therefore, Note d distinguishes this requirement from Notes b and c. The travel distance is the same if the path is through Group H or leaves Group H and continues through a nonsprinklered occupancy (see Section 1018.2, Item 2.)

TABLE 1017.2
EXIT ACCESS TRAVEL DISTANCE[a]

OCCUPANCY	WITHOUT SPRINKLER SYSTEM (feet)	WITH SPRINKLER SYSTEM (feet)
A, E, F-1, M, R, S-1	200	250[b]
I-1	Not Permitted	250[b]
B	200	300[c]
F-2, S-2, U	300	400[c]
H-1	Not Permitted	75[d]
H-2	Not Permitted	100[d]
H-3	Not Permitted	150[d]
H-4	Not Permitted	175[d]
H-5	Not Permitted	200[c]
I-2, I-3, I-4	Not Permitted	200[c]

For SI: 1 foot = 304.8 mm.

a. See the following sections for modifications to *exit access* travel distance requirements:
   Section 402.8: For the distance limitation in malls.
   Section 404.9: For the distance limitation through an atrium space.
   Section 407.4: For the distance limitation in Group I-2.
   Sections 408.6.1 and 408.8.1: For the distance limitations in Group I-3.
   Section 411.4: For the distance limitation in special amusement buildings.
   Section 412.7: For the distance limitations in aircraft manufacturing facilities.
   Section 1006.2.2.2: For the distance limitation in refrigeration machinery rooms.
   Section 1006.2.2.3: For the distance limitation in refrigerated rooms and spaces.
   Section 1006.3.2: For buildings with one exit.
   Section 1017.2.2: For increased distance limitation in Groups F-1 and S-1.
   Section 1029.7: For increased limitation in assembly seating.
   Section 3103.4: For temporary structures.
   Section 3104.9: For pedestrian walkways.
b. Buildings equipped throughout with an *automatic sprinkler system* in accordance with Section 903.3.1.1 or 903.3.1.2. See Section 903 for occupancies where *automatic sprinkler systems* are permitted in accordance with Section 903.3.1.2.
c. Buildings equipped throughout with an *automatic sprinkler system* in accordance with Section 903.3.1.1.
d. Group H occupancies equipped throughout with an *automatic sprinkler system* in accordance with Section 903.2.5.1.

1017.2.1 Exterior egress balcony increase. *Exit access* travel distances specified in Table 1017.2 shall be increased up to an additional 100 feet (30 480 mm) provided the last

INTERNATIONAL CODE COUNCIL®
Copyright © 2015 ICC. ALL RIGHTS RESERVED. Accessed by David Dammon on Jun 21, 2017 12:30:52 PM pursuant to License Agreement with ICC. No further reproduction or distribution authorized. ANY UNAUTHORIZED REPRODUCTION OR DISTRIBUTION IS A VIOLATION OF THE FEDERAL COPYRIGHT ACT AND THE LICENSE AGREEMENT, AND SUBJECT TO CIVIL AND CRIMINAL PENALTIES THEREUNDER.

portion of the *exit access* leading to the *exit* occurs on an exterior egress balcony constructed in accordance with Section 1021. The length of such balcony shall be not less than the amount of the increase taken.

❖ This section allows an additional travel distance on exterior egress balconies since smoke disperses rapidly. Note that the length of the increase is not to be more than the length of the exterior balcony. For example, if the length of the balcony is 75 feet (22 860 mm), the additional travel distance is limited to 75 feet (22 860 mm). In order for the increase to apply, the exterior balcony must be located at the end of the path of egress travel and not in some other portion of the egress path.

1017.2.2 Group F-1 and S-1 increase. The maximum *exit access* travel distance shall be 400 feet (122 m) in Group F-1 or S-1 occupancies where all of the following conditions are met:

1. The portion of the building classified as Group F-1 or S-1 is limited to one story in height.
2. The minimum height from the finished floor to the bottom of the ceiling or roof slab or deck is 24 feet (7315 mm).
3. The building is equipped throughout with an *automatic sprinkler system* in accordance with Section 903.3.1.1.

❖ This section provides the criteria for an increased exit access travel distance of 400 feet in Group F-1 and S-1 occupancies when three criteria are met: the S-1/F-1 area is one story, has a ceiling height of at least 24 feet, and is sprinklered.

The travel distance increase is only applicable to portions of the building that are one story in height. This is not intended to preclude a building with a one-story storage warehouse or factory area and a two-story office or a mezzanine from also utilizing this section. The section is written so that the one-story limitation is only applicable to the area where the 400-foot travel distance is utilized.

The 24 feet of clearance is based on the “Fire Modeling Analysis Report” by Aon Fire Protection Engineering. The ceiling height is used to provide a volume for the smoke to accumulate during the fire and provide time for egress, much like the concept used for smoke-protected seating. Control mode sprinklers were utilized in the fire modeling to demonstrate the more conservative approach.

The building is required to sprinklered in accordance with NFPA 13 requirements. While not required, ESFR or specialty sprinklers would be more effective.

1017.3 Measurement. *Exit access* travel distance shall be measured from the most remote point within a story along the natural and unobstructed path of horizontal and vertical egress travel to the entrance to an *exit*.

Exception: In *open parking garages*, *exit access* travel distance is permitted to be measured to the closest riser of an *exit access stairway* or the closest slope of an *exit access ramp*.

❖ The length of travel, as measured from the most remote point within a structure to an exit, is limited to restrict the amount of time that the occupant is exposed to a potential fire condition [see Commentary Figure 1017.3(1)]. The route must be assumed to be the natural path of travel without obstruction. This commonly results in a rectilinear path similar to what can be experienced in most occupancies, such as a schoolroom or an office with rows of desks [see Commentary Figure 1017.3(2)]. The "arc" method, using an "as the crow flies" linear measurement, must be used with caution, as it seldom represents typical floor design and room layout and, in most cases, would not be the natural, unobstructed path.

The travel distance is measured from every occupiable point on a floor to the closest exit. While each occupant may be required to have access to a second or third exit, the travel distance limitation is only applicable to the distance to the nearest exit. In effect, this means that the distance an occupant must travel to the second or third exit is not regulated.

For exit access travel distances that include vertical elements, such as stairways or ramps, see Section 1017.3.1. For outdoor assembly seating, see Section 1029.7.

The exception provides for a travel distance terminating at the top of an open exit access stairway in an open parking structure (see Section 1019.3, Exception 6). This is appropriate in view of the low hazard and minimal possible smoke accumulation in these facilities. While Section 1006.3 does say that an open exit access stairway can only be used for one story, travel distance typically does include the exit access stairway. With the exception here for travel distance, the intent is to allow open parking garages to have open exit access stairways all the way down and out of the building. The number of means of egress requirements are met when the exit access travel distance requirement is met on each floor.

The distance of travel within an exit enclosure (e.g., enclosed interior exit stairway or ramp or exit passageway) and in the exit discharge portion of the means of egress are also not regulated. Section 1006.3.2 permits certain buildings to be provided with a single exit. In instances where there is a single exit, travel distances less than those permitted in Table 1017.2 apply [see Tables 1006.3.2(1) and 1006.3.2(2)].

1017.3.1 Exit access stairways and ramps. Travel distance on *exit access stairways* or *ramps* shall be included in the *exit access* travel distance measurement. The measurement along *stairways* shall be made on a plane parallel and tangent to the *stair* tread *nosings* in the center of the *stair* and landings. The measurement along *ramps* shall be made on the walking surface in the center of the *ramp* and landings.

❖ Travel distance is measured along the exit access path. Exit access travel distance may include travel on an interior stairway or ramp if it is not enclosed

INTERNATIONAL CODE COUNCIL®
Copyright © 2015 ICC. ALL RIGHTS RESERVED. Accessed by David Dammon on Jun 21, 2017 12:30:52 PM pursuant to License Agreement with ICC. No further reproduction or distribution authorized. ANY UNAUTHORIZED REPRODUCTION OR DISTRIBUTION IS A VIOLATION OF THE FEDERAL COPYRIGHT ACT AND THE LICENSE AGREEMENT, AND SUBJECT TO CIVIL AND CRIMINAL PENALTIES THEREUNDER.

and constructed to meet the definition of an exit (see Section 1023). An example of exit access stairways would be unenclosed exit access stairways from a mezzanine level, open exit access stairways from a second floor (see Section 1019.3, Exception 1), or steps along the path of travel in a split floor-level situation. An example of an open exit access ramp would be a ramp between levels or ramps leading from the upper levels in an open parking garage (see Section 1019.3, Exception 7). For the last example, Section 1016.3, Exception 1, allows for the exit access travel distance to be measured to the top of the ramp or stairway rather than down the ramp or stairway and to the exit.

When Section 1019.3 permits an exit access stairway to be unenclosed, the travel distance would also include travel down the open stairway and to an enclosed exit stairway, a horizontal exit or an exit door to the outside. An example of this would be an open exit stairway within an individual dwelling unit (see Section 1019.3, Exception 2) or an open exit stairway from a press box (see Section 1019.3, Exception 8).

SECTION 1018
AISLES

1018.1 General. *Aisles* and *aisle accessways* serving as a portion of the *exit access* in the *means of egress* system shall comply with the requirements of this section. *Aisles* or *aisle accessways* shall be provided from all occupied portions of the *exit access* that contain seats, tables, furnishings, displays and similar fixtures or equipment. The minimum width or required capacity of *aisles* shall be unobstructed.

Exception: Encroachments complying with Section 1005.7.

❖ This section addresses aisles and aisle accessways, primarily in occupancies other than assembly seating areas. Current provisions address aisles in all uses, but only address aisle accessways for assembly spaces and mercantile.

"Aisle accessway" is defined in Chapter 2 as "that portion of exit access that leads to an aisle." The term "Aisle" is defined in Chapter 2 as "an exit access component that defines and provides a path of egress travel." Given the many possible configurations of fixtures and furniture, both permanent and

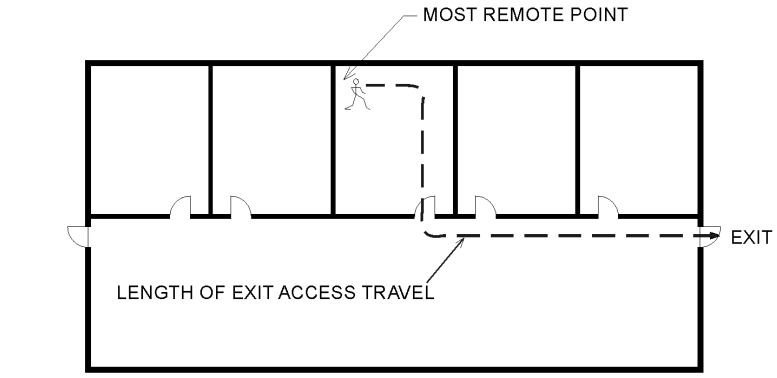

Figure 1017.3(1)
LENGTH OF EXIT ACCESS TRAVEL

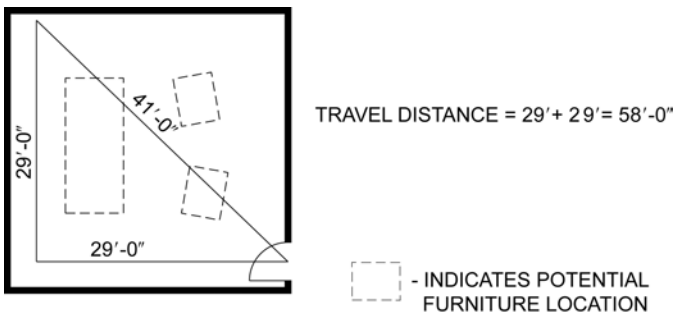

For SI: 1 foot = 304.8 mm.

Figure 1017.3(2)
MEASURING TRAVEL DISTANCE USING RECTILINEAR APPROACH

INTERNATIONAL CODE COUNCIL®
Copyright © 2015 ICC. ALL RIGHTS RESERVED. Accessed by David Dammon on Jun 21, 2017 12:30:52 PM pursuant to License Agreement with ICC. No further reproduction or distribution authorized. ANY UNAUTHORIZED REPRODUCTION OR DISTRIBUTION IS A VIOLATION OF THE FEDERAL COPYRIGHT ACT AND THE LICENSE AGREEMENT, AND SUBJECT TO CIVIL AND CRIMINAL PENALTIES THEREUNDER.

movable, the determination of where aisle accessways stop and aisles begin is often subject to interpretation.

Typically, the aisle accessways lead to the aisles, which in turn lead to the exits. Since the aisle serves as a path for means of egress similar to a corridor, the requirements for doors obstructing the aisle are the same (see Section 1005.7).

A cross reference back to Section 1005.7 from the exceptions for width in aisles (see Section 1018.1), corridors (see Section 1020.3), exit passageways (see Section 1024.2) and exit courts (see Section 1028.4.1) reinforces the fact that encroachment limits are generally applicable for these types of confined routes.

1018.2 Aisles in assembly spaces. *Aisles and aisle accessways* serving a room or space used for assembly purposes shall comply with Section 1029.

❖ The provisions for aisles and aisle accessways in spaces with assembly seating, such as restaurants, theaters and sports arenas, are unique. See Section 1029 for criteria.

1018.3 Aisles in Groups B and M. In Group B and M occupancies, the minimum clear aisle width shall be determined by Section 1005.1 for the *occupant load* served, but shall be not less than that required for corridors by Section 1020.2.

Exception: Nonpublic *aisles* serving less than 50 people and not required to be *accessible* by Chapter 11 need not exceed 28 inches (711 mm) in width.

❖ This requirement establishes aisle-width criteria for Group B and M occupancies based on the occupant load served by the aisle. While not providing as confined a path as corridors, the displays or equipment would limit the choice of paths, so the minimum width is the same as corridors (see Section 1020.2). The reference to Section 1005.1 would trigger a requirement for aisles wider than 44 inches (914 mm) when the anticipated occupant load that the aisle served was larger than 220 (44 inches/0.2 = 220 occupants for nonsprinklered buildings and 44 inches/0.15 = 293 occupants in sprinklered buildings). When an aisle allows for access to exits in two directions, the occupant load could be split, similar to corridors. The exception addresses aisles that may be found in an archival file room or stock storage racks.

For mercantile, if fixtures are permanent, such as in a typical grocery store or office cubicles in a business, the aisle provisions would be applicable throughout. In a situation where there were groups of displays separated by aisles, the area within the displays may be considered aisle accessways (see Section 1018.4).

1018.4 Aisle accessways in Group M. An *aisle accessway* shall be provided on not less than one side of each element within the *merchandise pad*. The minimum clear width for an *aisle accessway* not required to be *accessible* shall be 30 inches (762 mm). The required clear width of the *aisle accessway* shall be measured perpendicular to the elements and merchandise within the *merchandise pad*. The 30-inch (762 mm) minimum clear width shall be maintained to provide a path to an adjacent *aisle* or *aisle accessway*. The *common path of egress travel* shall not exceed 30 feet (9144 mm) from any point in the *merchandise pad*.

Exception: For areas serving not more than 50 occupants, the *common path of egress travel* shall not exceed 75 feet (22 860 mm).

❖ The definition for "Merchandise pad" can be found in Chapter 2. The idea is that a merchandise pad contains movable displays and aisle accessways. A surrounding aisle or permanent walls or displays would define the extent of the merchandise pad. Large department stores will have numerous merchandise pads (see Commentary Figure 1018.3). In accordance with Section 105.2, Item 13, movable cases, counters and partitions not over 5 feet, 9 inches (1753 mm) in height do not require a building permit to move, add or alter. Every element within a merchandise pad must adjoin a minimum 30-inch-wide (762 mm) aisle accessway on at least one side. Travel within a merchandise pad is limited, with a maximum common path of travel of 30 feet (9144 mm). The common path of travel limitation is extended to 75 feet (22 m) in those areas serving a maximum occupant load of 50.



Figure 1018.3
AISLES AND AISLE ACCESSWAYS IN MERCANTILE

1018.5 Aisles in other than assembly spaces and Groups B and M. In other than rooms or spaces used for assembly purposes and Group B and M occupancies, the minimum clear *aisle* capacity shall be determined by Section 1005.1 for the

INTERNATIONAL CODE COUNCIL®
Copyright © 2015 ICC. ALL RIGHTS RESERVED. Accessed by David Dammon on Jun 21, 2017 12:30:52 PM pursuant to License Agreement with ICC. No further reproduction or distribution authorized. ANY UNAUTHORIZED REPRODUCTION OR DISTRIBUTION IS A VIOLATION OF THE FEDERAL COPYRIGHT ACT AND THE LICENSE AGREEMENT, AND SUBJECT TO CIVIL AND CRIMINAL PENALTIES THEREUNDER.

occupant load served, but the width shall be not less than that required for corridors by Section 1020.2.

Exception: Nonpublic *aisles* serving less than 50 people and not required to be *accessible* by Chapter 11 need not exceed 28 inches (711 mm) in width.

❖ Aisles can occur in other occupancies when there is a confined path of travel to the exit access or exit door leading from a space.

While not providing as confined a path as corridors, the displays or equipment would limit the choice of paths, so the minimum width is the same as corridors (see Section 1020.2). The reference to Section 1005.1 would trigger a requirement for aisles wider than 44 inches (914 mm) when the anticipated occupant load that the aisle served was larger than 220 (44 inches/0.2 = 220 occupants for nonsprinklered buildings and 44 inches/0.15 = 293 occupants in sprinklered buildings). When an aisle allows for access to exits in two directions, the occupant load could be split, similar to corridors. The exception addresses aisles that may be found in an archival file room or stock storage racks.

SECTION 1019
EXIT ACCESS STAIRWAYS AND RAMPS

1019.1 General. *Exit access stairways* and *ramps* serving as an *exit access* component in a *means of egress* system shall comply with the requirements of this section. The number of stories connected by *exit access stairways* and *ramps* shall include *basements*, but not *mezzanines*.

❖ This is a general scoping section. Exit access stairways can be between levels or between stories. Section 1019.3 addresses egress between stories. It is important to clarify that basements are considered a story, but not mezzanines. While the exit access travel distance would be measured along the open stairway or ramp for a change in level, a mezzanine, a basement or a second floor, a mezzanine is a space that is considered part of the room to which it is open and is addressed accordingly. Exit stairways are addressed under Sections 1023 and 1027. All stairways and ramps are required to comply with Sections 1011 and 1012, respectively.

1019.2 All occupancies. *Exit access stairways* and *ramps* that serve floor levels within a single story are not required to be enclosed.

❖ Exit access stairways and ramps between levels on the same story and between a story and an associated mezzanine are always permitted to be open unless they are part of a fire-resistance-rated corridor (see Section 1020.6).

1019.3 Occupancies other than Groups I-2 and I-3. In other than Group I-2 and I-3 occupancies, floor openings containing *exit access stairways* or *ramps* that do not comply with one of the conditions listed in this section shall be enclosed with a shaft enclosure constructed in accordance with Section 713.

1. *Exit access stairways* and *ramps* that serve or atmospherically communicate between only two stories. Such interconnected stories shall not be open to other stories.
2. In Group R-1, R-2 or R-3 occupancies, *exit access stairways* and *ramps* connecting four stories or less serving and contained within an individual *dwelling unit* or *sleeping unit* or *live/work unit.*
3. *Exit access stairways* serving and contained within a Group R-3 congregate residence or a Group R-4 facility are not required to be enclosed.
4. *Exit access stairways* and *ramps* in buildings equipped throughout with an *automatic sprinkler system* in accordance with Section 903.3.1.1, where the area of the vertical opening between stories does not exceed twice the horizontal projected area of the *stairway* or *ramp* and the opening is protected by a draft curtain and closely spaced sprinklers in accordance with NFPA 13. In other than Group B and M occupancies, this provision is limited to openings that do not connect more than four stories.
5. *Exit access stairways* and *ramps* within an *atrium* complying with the provisions of Section 404.
6. *Exit access stairways* and *ramps* in *open parking garages* that serve only the parking garage.
7. *Exit access stairways* and *ramps* serving open-air seating complying with the *exit access* travel distance requirements of Section 1029.7.
8. *Exit access stairways* and *ramps* serving the balcony, gallery or press box and the main assembly floor in occupancies such as theaters, *places of religious worship*, auditoriums and sports facilities.

❖ This section includes conditions which permit unprotected floor openings for exit access stairways and ramps. Groups I-2 and I-3 use smoke compartments as part of their defend-in-place strategies; as such, they are addressed separately in Section 1019.4.

The allowances listed are for "interior exit access stairways and ramps" that are between stories. Exit access stairways and ramps between elevation changes on the same story or serving mezzanines do not serve different stories; therefore, the enclosure requirements in this section are not applicable. The general provisions for stairways in Section 1011 and ramps in Section 1012 would be applicable. For simplicity in the commentary to Sections 1019.3 and 1019.4, when interior exit access stairways are mentioned, let it be understood that the same rules apply to interior exit access ramps.

The primary difference between "interior exit access stairways" and "interior exit stairways" is how exit access travel distance is measured (see Section 1017.3). Where a designer chooses to use an exit

INTERNATIONAL CODE COUNCIL®
Copyright © 2015 ICC. ALL RIGHTS RESERVED. Accessed by David Dammon on Jun 21, 2017 12:30:52 PM pursuant to License Agreement with ICC. No further reproduction or distribution authorized. ANY UNAUTHORIZED REPRODUCTION OR DISTRIBUTION IS A VIOLATION OF THE FEDERAL COPYRIGHT ACT AND THE LICENSE AGREEMENT, AND SUBJECT TO CIVIL AND CRIMINAL PENALTIES THEREUNDER.

access stairway, the exit access travel distance includes travel along the slope of the exit access stairway, similar to stairways leading from an open mezzanine or steps at a change in level on a floor.

The base requirement is that exit access stairways between floors are protected in a similar manner as floor openings (see Section 713). The enclosure is needed because a stairway penetrates the floor/ceiling assemblies between the levels, thus creating a vertical opening or shaft. In cases of fire, a vertical opening may act as a chimney, causing smoke, hot gases and light-burning products to flow upward (buoyant force). If an opening is unprotected, these products of combustion will be forced by positive pressure differentials to spread horizontally into the building spaces. There are exceptions for shaft protection around openings in Section 712.1 or exit access stairways as permitted in this section in Items 1 through 8 (see also Section 712.1.12).

Exit access stairways are not required to discharge directly to the exterior as are interior exit stairways (see Section 1023.3). Instead, exit access stairways are part of the route that leads to the exit (i.e., exterior exit door, horizontal exit or enclosed interior exit stairway). See the commentary to Sections 712 and 713 for a discussion of other differences in protection permitted for the enclosure of exit access stairways versus exit stairways.

While this section does not state that exit access stairways cannot be used for any purpose other than means of egress (see Section 1021.1), the provisions for no obstructions in the path of travel or reduction of the capacity for means of egress (Section 1003.6) are applicable. If one of the items eliminating enclosures for a stairway is utilized, the exit access stairway openings would still have to meet the exit and exit access door separation requirement specified in Section 1006 for the space or floor.

It is important to remember that while exit access stairways may be open for multiple floors, Section 1006.3 states “Access to exits at other levels shall be from an adjacent story.” However, single-exit buildings do allow for exit access from any story. Therefore, if there are provisions in both Sections 1006.3.3 and 1019.3, the exit access travel distance could be measured all the way down the open exit access stairway.

Item 1 allows an open exit access stairway when the opening is only between two floors. There cannot be any other unprotected openings that connect to other floors since this could create a staggered stack effect for the movement of smoke between multiple stories. In two-story buildings, this would allow for open stairways between the basement and ground level or between the first and second floors. Another example would be an open exit access stairway between the fifth and sixth floors of a building, provided there were no other unprotected openings between the fourth and fifth floor or the sixth and seventh floors. This is consistent with Section 712.1.9 for openings between two stories.

In Item 2, for residential occupancies, exit access stairways within a single-family home or townhouse are not required to be enclosed because of the small occupant load and resident familiarity with the space. Examples of “within an individual dwelling or sleeping unit” would be a two-story hotel suite or a multistory apartment unit. See Section 1006.3.3, Items 3 and 7, for the allowance for these to be single-exit stories. Live/work units call for the egress to be designed for the “function served,” and vertical opening are not required to be enclosed (Sections 419.3 and 419.4); therefore, it is appropriate to allow open exit access stairways to serve the dwelling portion of the live/work unit. Note that Section 712.1.2 limits any vertical opening within dwelling units, including stairways, to four stories or less.

Item 3 - A congregate residence would not be considered an individual dwelling unit so Item 2 would not be applicable; however, these small facilities operate similarly to a single-family home. Thus, they have an allowance for open exit access stairways for the same reasons as dwelling units in Item 2. See Section 1006.3.2, Item 4, which allows a single exit in Group R-3 and R-4 congregate residences. These congregate residences are limited to 16 occupants that are capable of self-preservation in Sections 308.3.3, 310.5 and 310.6. If a facility offers medical care, it needs to comply with Section 1019.4.

Item 4 discusses buildings sprinklered throughout with an NFPA 13 system. The size of the opening is limited to twice the size of the stairway footprint. The opening must be protected with a draft curtain and closely spaced sprinklers (see Commentary Figure 1019.3). This allows for such an opening to extend the entire height of the building; however, to serve as part of the means of egress, the exit access stairway must still be able to meet the exit access travel distance and provide the number of exits or access to exits from each story (see Section 1006.3). This item is similar to what is permitted for escalators (see Sections 712.1.3 and 712.1.3.1). The power-operated automatic shutter permitted in Section 712.1.3.2 would not be an option for exit access stairways since they must be available for exit access travel. For groups other than business and mercantile, there is the additional limitation of a maximum of four stories.

Item 5 allows for exit access stairways to travel down through an atrium. Atriums often penetrate more than two floors. Atriums must meet the provisions in Section 404 for sprinklers, fire alarms, smoke control, enclosure, limitations on flame spread and smoke development of interior finishes, and the reduction in the normal exit access travel distance. In no case can the exit access travel distance through the atrium, including travel along the stairway, be more than 200 feet (60 960 mm). If the stairway in the atrium serves as part of the required means of

INTERNATIONAL CODE COUNCIL®
Copyright © 2015 ICC. ALL RIGHTS RESERVED. Accessed by David Dammon on Jun 21, 2017 12:30:52 PM pursuant to License Agreement with ICC. No further reproduction or distribution authorized. ANY UNAUTHORIZED REPRODUCTION OR DISTRIBUTION IS A VIOLATION OF THE FEDERAL COPYRIGHT ACT AND THE LICENSE AGREEMENT, AND SUBJECT TO CIVIL AND CRIMINAL PENALTIES THEREUNDER.

egress, each story must also meet the number of exits or access to exits required by Section 1006.

In Item 6, exit access stairways located in open parking structures are exempt from the enclosure requirements because of the ease of accessibility by the fire services, the natural ventilation of such structures, the low level of fire hazard, the small number of people using the structure at any one time and the excellent fire record of such structures. The exception to Section 1017.3 permits the exit access travel distance to be measured to the top step of the exit access stairway in open parking garages. In essence, open parking garages using this item can have open stairways for the full height of the building. By the travel distance being met at the top of the stairway, the means of egress requirements have been met.

In Item 7, stairways in outdoor facilities (i.e., Group A-5) in which the means of egress is essentially open to the outside need not be enclosed because of the ability to vent the fire to the outside. This item is coordinated with the requirements for open-air seating as regulated by Section 1028.7, which allows unlimited travel distance in noncombustible construction that has open-air seating and 400 feet in combustible construction.

Item 8 addresses the unique situation for large indoor assembly seating areas. Since press boxes, galleries and balconies all have the same atmosphere and fire recognition ability as the rest of the seating, the stairways serving these spaces are protected by the same system as the seating (e.g., open to the interior volume and smoke protected; open to the outside); therefore, it is logical to treat the access to these spaces the same as the seating bowl. Open exit access stairways can serve the press box where those stairways move the occupants directly from the press box into the seating bowl. See Sections 1029.5 and 1029.8 for the number of exit access stairways required.

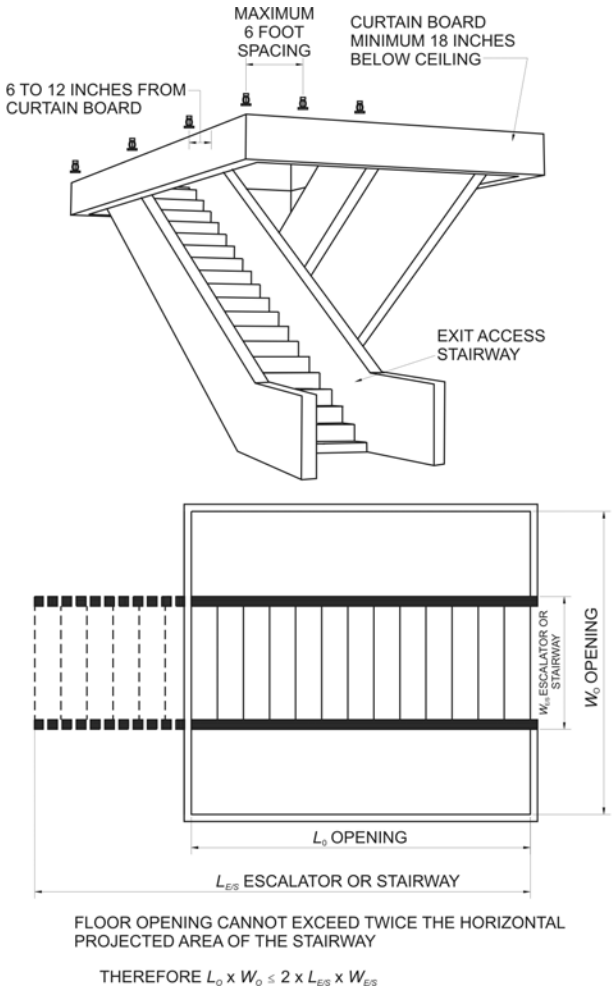

For SI: 1 inch = 25.4 mm, 1 foot = 304.8 mm.

Figure 1019.3
DRAFT CURTAIN, ITEM 4

INTERNATIONAL CODE COUNCIL®
Copyright © 2015 ICC. ALL RIGHTS RESERVED. Accessed by David Dammon on Jun 21, 2017 12:30:52 PM pursuant to License Agreement with ICC. No further reproduction or distribution authorized. ANY UNAUTHORIZED REPRODUCTION OR DISTRIBUTION IS A VIOLATION OF THE FEDERAL COPYRIGHT ACT AND THE LICENSE AGREEMENT, AND SUBJECT TO CIVIL AND CRIMINAL PENALTIES THEREUNDER.

1019.4 Group I-2 and I-3 occupancies. In Group I-2 and I-3 occupancies, floor openings between stories containing *exit access stairways* or *ramps* are required to be enclosed with a shaft enclosure constructed in accordance with Section 713.

Exception: In Group I-3 occupancies, *exit access stairways* or *ramps* constructed in accordance with Section 408 are not required to be enclosed.

❖ Groups I-2 and I-3 use smoke compartments as part of their defend-in-place strategies; as such, they are addressed separately in this section. Any openings in the floors must be protected the same as a shaft.

The exception allows for observation and security needs in detention facilities, and exit access stairways within a housing unit to not be required to be enclosed (see Section 408.5.1). Section 1023.2 also includes a limited exception for enclosure of exit stairways within jails per Section 408.3.8.

SECTION 1020
CORRIDORS

1020.1 Construction. *Corridors* shall be fire-resistance rated in accordance with Table 1020.1. The *corridor* walls required to be fire-resistance rated shall comply with Section 708 for *fire partitions*.

Exceptions:

1. A *fire-resistance rating* is not required for *corridors* in an occupancy in Group E where each room that is used for instruction has not less than one door opening directly to the exterior and rooms for assembly purposes have not less than one-half of the required *means of egress* doors opening directly to the exterior. Exterior doors specified in this exception are required to be at ground level.
2. A *fire-resistance rating* is not required for *corridors* contained within a *dwelling unit* or *sleeping unit* in an occupancy in Groups I-1 and R.
3. A *fire-resistance rating* is not required for *corridors* in *open parking garages*.
4. A *fire-resistance rating* is not required for *corridors* in an occupancy in Group B that is a space requiring only a single *means of egress* complying with Section 1006.2.
5. *Corridors* adjacent to the *exterior walls* of buildings shall be permitted to have unprotected openings on unrated *exterior walls* where unrated walls are permitted by Table 602 and unprotected openings are permitted by Table 705.8.

❖ It is not the intent of this section to require corridors. Once corridors are provided, so that occupants are limited to a confined path of travel, then these provisions apply.

The purpose of corridor enclosures is to provide fire protection to occupants as they travel the confined path, perhaps unaware of a fire buildup in an adjacent floor area. The base protection is a fire partition having a 1-hour fire-resistance rating (see Table 1020.1). The table allows a reduction or elimination of the fire-resistance rating depending on the occupant load and the presence of an NFPA 13 or 13R automatic sprinkler system throughout the building.

Section 708 addresses the continuity of fire partitions serving as corridor walls. In addition to allowing the fire partitions to terminate at the underside of a fire-resistance-rated floor/ceiling or roof/ceiling assembly, the supporting construction need not have the same fire-resistance rating in buildings of Type IIB, IIIB and VB construction as specified in Section 708. If such walls were required to be supported by fire-resistance-rated construction, the use of these construction types would be severely restricted when the corridors are required to have a fire-resistance rating. Section 407.3 requires that corridor walls in Group I-2 occupancies that are required to have a fire-resistance rating must be continuous to the underside of the floor or roof deck above or at a smoke-limiting ceiling membrane. Continuity is required because of the defend-in-place protection strategy utilized in such buildings. Requirements for corridor construction within Group I-3 occupancies are found in Section 408.8. Dwelling unit separation in Groups I-1, R-1, R-2 and R-3 is found in Sections 420.2 and 420.3. Ambulatory care facilities have special requirements in Section 422.2 when some of the patients can be incapable of self-preservation. For additional requirements for an elevator lobby that is adjacent to or part of a corridor, see the commentaries to Sections 713.14 and 3006.

Exception 1 indicates a fire-resistance rating is not required for corridors in Group E when any room adjacent to the corridor that is used for instruction or assembly purposes has a door directly to the outside. The need for a fire-resistance-rated corridor is eliminated because these rooms are provided with an alternative egress path because of the requirement for exterior exits. This option is typically utilized in nonsprinklered buildings, such as day care facilities, since a sprinkler system would also allow for unrated corridors in Group E (see Table 1020.1). Grade schools and high schools have security concerns that sometimes make the outdoor exit for every classroom not a preferred option.

In accordance with Exception 2, a fire-resistance rating for a corridor contained within a single dwelling unit (e.g., apartment, townhouse) or sleeping unit (e.g., hotel guestroom, assistive living suite) is not required for practical reasons. It is unreasonable to expect fire doors and the associated hardware and closing devices to be within dwellings and similar occupancies.

Given the relatively smoke-free environment of open parking structures, Exception 3 does not require rated corridors in these types of facilities.

If an office suite is small enough that only one means of egress is required from the suite, Exception 4 indicates that a rated corridor would not be required in that area. The main corridor that connected these

INTERNATIONAL CODE COUNCIL®
Copyright © 2015 ICC. ALL RIGHTS RESERVED. Accessed by David Dammon on Jun 21, 2017 12:30:52 PM pursuant to License Agreement with ICC. No further reproduction or distribution authorized. ANY UNAUTHORIZED REPRODUCTION OR DISTRIBUTION IS A VIOLATION OF THE FEDERAL COPYRIGHT ACT AND THE LICENSE AGREEMENT, AND SUBJECT TO CIVIL AND CRIMINAL PENALTIES THEREUNDER.

suites to the exits would be evaluated in accordance with Table 1020.1.

Exception 5 addresses when the exterior wall of a building is also the wall of the corridor. The exterior wall is not required to be rated by the corridor provisions where there is a sufficient fire separation distance for the exterior wall to be able to have unprotected openings. This is similar to the exterior wall for an enclosed interior exit stairway. The fire is assumed to be inside the building, so that is where the protection is required.

TABLE 1020.1
CORRIDOR FIRE-RESISTANCE RATING

OCCUPANCY	OCCUPANT LOAD SERVED BY CORRIDOR	REQUIRED FIRE-RESISTANCE RATING (hours)	
		Without sprinkler system	With sprinkler system[c]
H-1, H-2, H-3	All	Not Permitted	1
H-4, H-5	Greater than 30	Not Permitted	1
A, B, E, F, M, S, U	Greater than 30	1	0
R	Greater than 10	Not Permitted	0.5
I-2[a], I-4	All	Not Permitted	0
I-1, I-3	All	Not Permitted	1[b]

a. For requirements for occupancies in Group I-2, see Sections 407.2 and 407.3.

b. For a reduction in the *fire-resistance rating* for occupancies in Group I-3, see Section 408.8.

c. Buildings equipped throughout with an *automatic sprinkler system* in accordance with Section 903.3.1.1 or 903.3.1.2 where allowed.

❖ The required fire-resistance ratings of corridors serving adjacent spaces are provided in Table 1020.1. The fire-resistance rating is based on the group classification (considering characteristics such as occupant mobility, density and familiarity with the building as well as the fire hazard associated with the classification), the total occupant load served by the corridor and the presence of an automatic sprinkler system.

Where the corridor serves a limited number of people (second column in Table 1020.1), the fire-resistance rating is eliminated because of the limited size of the facility and the likelihood that the occupants would become aware of a fire buildup in sufficient time to exit the structure safely. The total occupant load that the corridor serves is used to determine the requirement for a rated corridor enclosure. The number of occupants served is the total occupants that will move into the corridor to egress. Corridors serving a total occupant load equal to or less than that indicated in the second column of Table 1020.1 are not required to be enclosed with fire-resistance-rated construction. For example, a corridor serving an occupant load of 30 or less in an unsprinklered Group B occupancy is not required to be enclosed with fire-resistance-rated construction. This example is illustrated in Commentary Figure 1020.1.

The purpose of corridor enclosures is to provide fire protection to occupants as they travel the confined path, perhaps unaware of a fire buildup in an adjacent floor area. The base protection is a fire partition having a 1-hour fire-resistance rating. The table allows a reduction or elimination of the fire-resistance rating depending on the occupant load and the presence of an NFPA 13 or 13R automatic sprinkler system throughout the building.

A common mistake is assuming a building is sprinklered throughout and utilizing the corridor rating reductions, when in fact certain requirements in NFPA 13 would not consider the building sprinklered throughout. For example, a health club installs a sprinkler system, but chooses to eliminate the sprinklers over the swimming pool in accordance with the exception in Section 507.4. Any corridors within the building that serve greater than 30 occupants must be rated because the building would not be considered sprinklered throughout in accordance with NFPA 13 requirements.

Note that because of the hazardous nature of occupancies in Groups H-1, H-2 and H-3, fire-resistance-rated corridors are required under all conditions. Regardless of the presence of a fire sprinkler system, a 1-hour-rated corridor enclosure is required in high-hazard occupancies with detonation, deflagration,

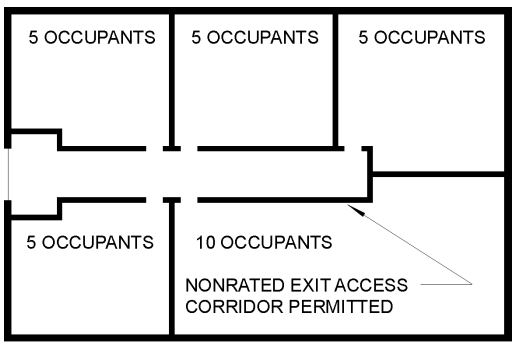

UNSPRINKLERED, SINGLE-EXIT GROUP B BUILDING

Figure 1020.1
APPLICATION OF TABLE 1020.1

INTERNATIONAL CODE COUNCIL®
Copyright © 2015 ICC. ALL RIGHTS RESERVED. Accessed by David Dammon on Jun 21, 2017 12:30:52 PM pursuant to License Agreement with ICC. No further reproduction or distribution authorized. ANY UNAUTHORIZED REPRODUCTION OR DISTRIBUTION IS A VIOLATION OF THE FEDERAL COPYRIGHT ACT AND THE LICENSE AGREEMENT, AND SUBJECT TO CIVIL AND CRIMINAL PENALTIES THEREUNDER.

accelerated burning, readily supported combustion or physical hazards. Group H-4 and H-5 occupancies that contain semiconductor fabrication materials or operations constituting a health hazard do not pose the same relative fire or explosion hazard as Group H-1, H-2 or H-3 materials. As such, in Group H-4 or H-5, where the corridor serves a total occupant load of 30 or less, a fire-resistance-rated enclosure is not required. The "not permitted" in the third column is in coordination with Section 903.2.5, which requires all Group H buildings to be fully sprinklered.

The code acknowledges that an automatic sprinkler system can serve to control or eliminate fire development that could threaten the exit access corridor. Most occupancies where sleeping rooms are not present (Groups A, B, E, F, M, S and U) are permitted to have nonfire-resistance-rated corridors if a sprinkler system is installed throughout the building in accordance with NFPA 13.

In residential facilities, the response time to a fire may be delayed because the residents may be sleeping. With this additional safety concern, the requirements for corridors are more restrictive than for nonresidential occupancies. If the corridor serves more than 10 occupants, it is required to be rated for 1 hour. If the building is sprinklered throughout with either an NFPA 13 or 13R system, then the rating of the corridor may be reduced to $^1/_2$ hour. Note the exception for fire-resistance-rated corridors within an individual dwelling or sleeping unit in Section 1020.1. Also note that the reduction in the rating of the corridor walls is not permitted when an NFPA 13D sprinkler system is provided.

While all Group I facilities are supervised environments, the level of supervision in Group I-2 and I-4 occupancies would permit assisted evacuation by staff in an emergency; therefore, corridors are not required to be rated. Corridors in Groups I-2 are also regulated by Section 407.3. Because of the lower staff/resident ratio in Group I-1 and the limitation on free egress in Group I-3, corridors must have a 1-hour fire-resistance rating (see Section 408.8 for a reduction in the corridors in Group I-3). The "not permitted" in the third column is in coordination with Section 903.2.6, which requires all Group I buildings to be fully sprinklered.

1020.2 Width and capacity. The required capacity of *corridors* shall be determined as specified in Section 1005.1, but the minimum width shall be not less than that specified in Table 1020.2.

Exception: In Group I-2 occupancies, *corridors* are not required to have a clear width of 96 inches (2438 mm) in areas where there will not be stretcher or bed movement for access to care or as part of the defend-in-place strategy.

❖ The corridor widths specified in Table 1020.2 are long-established minimums originally derived from human dimensions, practical concerns, occupant loads and psychological considerations. Additional corridor capacity, when necessary for large crowds, is determined in accordance with Section 1005.

The number of occupants using a corridor for egress establishes the required capacity of a corridor, as well as for any specific portion of a multileg corridor system. Portions of a corridor system may differ in width for a variety of reasons not related to code minimums. The designer and building official are expected to verify that corridor widths and corridor fire-resistance ratings are in accordance with Sections 1005 and 1020, whichever is more restrictive.

The required occupant capacity of a corridor is based on the total occupant load of the rooms and spaces served by the corridor as determined by Section 1004. Where a corridor is served by two exits in opposite directions, the corridor capacity is split to determine the minimum required width of those exits (i.e., exit door, exit stairway) at each end of the corridor. The total occupant load served by a corridor is not split to establish the corridor fire-resistance rating (see Section 1020.1) or the required capacity.

The exception is because of an item in Table 1020.2 that requires a 96-inch-wide (2438 mm) corridor in Group I-2 facilities. In a hospital, while this is required in the area of patient sleeping rooms and patient care areas, there are a large number of areas that will not be for the movement of beds, either for patient care or for the hospital's defend-in-place strategies. For example, the hospital may have office or therapy areas where patients are brought in walking on their own or using wheelchairs. Many nursing homes do not move patients in beds at all. The intent of the exception is to clarify that the 96-inch (2438 mm) corridor width is not a minimum for all corridors throughout a hospital or nursing home, but only in certain areas.

TABLE 1020.2
MINIMUM CORRIDOR WIDTH

OCCUPANCY	MINIMUM WIDTH (inches)
Any facilities not listed below	44
Access to and utilization of mechanical, plumbing or electrical systems or equipment	24
With an occupant load of less than 50	36
Within a *dwelling unit*	36
In Group E with a *corridor* having an occupant load of 100 or more	72
In *corridors* and areas serving stretcher traffic in occupancies where patients receive outpatient medical care that causes the patient to be incapable of self-preservation	72
Group I-2 in areas where required for bed movement	96

For SI: 1 inch = 25.4 mm.

❖ The widths of passageways, aisles and corridors are functional elements of building construction that allow the occupants to circulate freely and comfortably throughout the floor area under nonemergency condi-

INTERNATIONAL CODE COUNCIL®
Copyright © 2015 ICC. ALL RIGHTS RESERVED. Accessed by David Dammon on Jun 21, 2017 12:30:52 PM pursuant to License Agreement with ICC. No further reproduction or distribution authorized. ANY UNAUTHORIZED REPRODUCTION OR DISTRIBUTION IS A VIOLATION OF THE FEDERAL COPYRIGHT ACT AND THE LICENSE AGREEMENT, AND SUBJECT TO CIVIL AND CRIMINAL PENALTIES THEREUNDER.

tions. Under emergency situations, the egress paths must provide the needed width to accommodate the number of occupants that must utilize the corridor for egress.

When the occupant load of the space exceeds 49, the minimum width of the passageway, aisle or corridor serving that space is required to be at least 44 inches (1118 mm) to permit two unimpeded parallel columns of users to travel in opposite directions. When the total occupant load served by a corridor is 49 or less, a minimum width of 36 inches (914 mm) is permitted and the users are expected to encounter some intermittent travel interference from fellow users, but the lower occupant load makes those occasions infrequent and tolerable. The 36-inch (914 mm) minimum width is also required within a dwelling unit.

Passageways that lead to building equipment and systems must be at least 24 inches (610 mm) in width to provide a means to access and service the equipment when needed. Because of the frequency of the servicing intervals and the limited number of occupants in these normally unoccupied areas, a reduced width is warranted. This minimum width criteria applies to many common situations, such as stage lighting and special-effects catwalks; catwalks leading to heating and cooling equipment; as well as passageways providing access to boilers, furnaces, transformers, pumps, piping and other equipment.

Except for small buildings, Group E occupancies are required to have minimum 72-inch-wide (1829 mm) corridors where the corridors serve educational areas. This width is needed not only for proper functional use, but also because of the edge effect caused by student lockers and other boundary attractions and objects. Service and other corridors outside of educational areas, such as an administrative area, would be regulated consistent with their use. Note that Section 1020.3 would not allow the wall lockers to overlap the required corridor width.

In Group I-2 occupancies, where the corridor is utilized during a fire emergency for moving patients confined to beds, it is required to be at least 96 inches (2438 mm) in clear width. This width requirement is applicable to all areas where there are patient sleeping rooms, and may also be required in some of the treatment room areas where in-house patients will be brought in on beds or rolling stretchers. This minimum width allows two rolling beds or stretchers to pass in a corridor and permits the movement of a bed/stretcher into the corridor through a room door. In Group I-2 and ambulatory care center areas, where the movement of beds is not anticipated, such as administrative and some outpatient areas of a hospital or clinic, the corridor would not be required to be 96 inches (2438 mm) wide. The minimum width would be determined by one of the appropriate applicable criteria. For outpatient medical care, where the patient may be incapable of self-preservation, such as some outpatient surgery areas or dialysis treatment areas, the 72-inch-wide (1829 mm) corridor is required. This would include Group I surgical areas, areas such as MRI suites or dialysis centers, emergency rooms or Group B ambulatory care centers.

1020.3 Obstruction. The minimum width or required capacity of *corridors* shall be unobstructed.

Exception: Encroachments complying with Section 1005.7.

❖ It is important to maintain required corridor width so that the path of travel to an exit is continually available and unobstructed. Because corridors tend to be lined with user passage doors, there are allowances under Section 1005.7. In no case may a door block more than 50 percent of the required corridor width. In addition, when fully open, the doors must not protrude more than 7 inches (178 mm) into the required width. Where doors swing out into the corridor, options would be to move doors back into alcoves or to provide corridors wider than the required width. The alcoves would have to be deep enough to also meet the 7-inch (118 mm) maximum protrusion when doors are open, or at least 29 inches (737 mm) deep. For an example of the wider corridor: a standard door is 36 inches (914 mm) wide, and the typical minimum corridor width is 44 inches (1118 mm). By adding the door leaf and half the required corridor width (36+22=58), a designer could provide a corridor width of 58 inches (1473 mm) and not have any issues with encroachment of doors. This is consistent with the provisions in aisles, corridors, stairways, ramps, exit passageways and exit discharge courts.

A cross reference back to Section 1005.7 from the exceptions for width in (see Section 1019.1), corridors (see Section 1020.3), aisles exit passageways (see Section 1024.2) and exit courts (see Section 1028.4.1) reinforces the fact that the protrusion limits provision is generally applicable for these types of confined routes.

1020.4 Dead ends. Where more than one *exit* or *exit access doorway* is required, the *exit access* shall be arranged such that there are no dead ends in *corridors* more than 20 feet (6096 mm) in length.

Exceptions:

1. In occupancies in Group I-3 of Condition 2, 3 or 4, the dead end in a *corridor* shall not exceed 50 feet (15 240 mm).
2. In occupancies in Groups B, E, F, I-1, M, R-1, R-2, R-4, S and U, where the building is equipped throughout with an *automatic sprinkler system* in accordance with Section 903.3.1.1, the length of the dead-end *corridors* shall not exceed 50 feet (15 240 mm).
3. A dead-end *corridor* shall not be limited in length where the length of the dead-end *corridor* is less

INTERNATIONAL CODE COUNCIL®
Copyright © 2015 ICC. ALL RIGHTS RESERVED. Accessed by David Dammon on Jun 21, 2017 12:30:52 PM pursuant to License Agreement with ICC. No further reproduction or distribution authorized. ANY UNAUTHORIZED REPRODUCTION OR DISTRIBUTION IS A VIOLATION OF THE FEDERAL COPYRIGHT ACT AND THE LICENSE AGREEMENT, AND SUBJECT TO CIVIL AND CRIMINAL PENALTIES THEREUNDER.

than 2.5 times the least width of the dead-end *corridor*.

❖ The requirements of this section apply where a space is required to have more than one means of egress according to Section 1006.2.

Dead ends in corridors and passageways can seriously increase the time needed for an occupant, especially if unfamiliar with the space, to locate the exits. More importantly, dead ends will allow a single fire event to eliminate access to all of the exits by trapping the occupants in the dead-end area. A dead end exists whenever a user of the corridor or passageway has only one direction to travel to reach any building exit [see Commentary Figure 1020.4(1)]. While a preferred building layout would be one without dead ends, a maximum dead-end length of 20 feet (6096 mm) is permitted and is to be measured from the extreme point in the dead end to the point where occupants have a choice of two directions to separate exits. Having to go back only 20 feet (6096 mm) after coming to a dead end is not such a significant distance as to cause a serious delay in reaching an exit during an emergency situation.

A dead end results whether or not egress elements open into it. A dead end is a hazard for occupants who enter the area from adjacent spaces, travel past an exit into a dead end or enter a dead end with the mistaken assumption that an exit is directly accessible from the dead end.

Note that Section 402.8.6 deals with dead-end distances in a covered mall and assumes that, with a sufficiently wide mall in relation to its length, alternative paths of travel will be available in the mall itself to reach an exit (i.e., the common mall area is not to be construed as a corridor).

Under special conditions, exceptions to the 20-foot (6096 mm) dead-end limitation apply.

Exception 1 is permitted based on the considerations of the functional needs of Group I-3 Occupancy Condition 2, 3 or 4, the requirements for smoke compartmentalization in Section 408.6 and the requirement for automatic sprinkler protection of the facility in Section 903.2.6.

Exception 2 recognizes the fire protection benefits and performance history of automatic fire sprinkler systems. While the degree of hazard in Group B, E, F, M, S and U occupancies does not initially require an automatic fire suppression system, the length of a dead-end corridor or passageway is permitted to be extended to 50 feet (15 240 mm) where an automatic fire sprinkler system in accordance with NFPA 13 is provided throughout the building. This exception is also permitted in Group I-1, R-1, R-2 and R-4 occupancies, but only when they use an NFPA 13 system, not an NFPA 13R system. In addition, these provisions are consistent with those in the IEBC and IFC in the regulation of dead-end corridors in existing buildings undergoing alterations. Dead-end provisions are not applicable in single-exit spaces; therefore, dead-end provisions are not applicable in Group R-3 and R-4 occupancies.

Exception 3 addresses the condition presented by "cul-de-sac" elevator lobbies directly accessible from exit access corridors. In such an elevator lobby, lengths of 20 to 30 feet (6096 to 9144 mm) are common for three- or four-car elevator banks. Typically, the width of this elevator lobby is such that the possibility of confusion with a path of egress is minimized. Below the $2^1/_2$:1 ratio, the dead end becomes so wide that it is less likely to be perceived as a corridor leading to an exit. For example, based on the $2^1/_2$:1 ratio limitation, a 25-foot-long (7620 mm) dead end over 10 feet (3048 mm) in width would not be considered a dead-end corridor [see Commentary Figure 1020.4(2)]. For additional elevator lobby requirements, see the commentaries to Sections 713.14 and 3006.

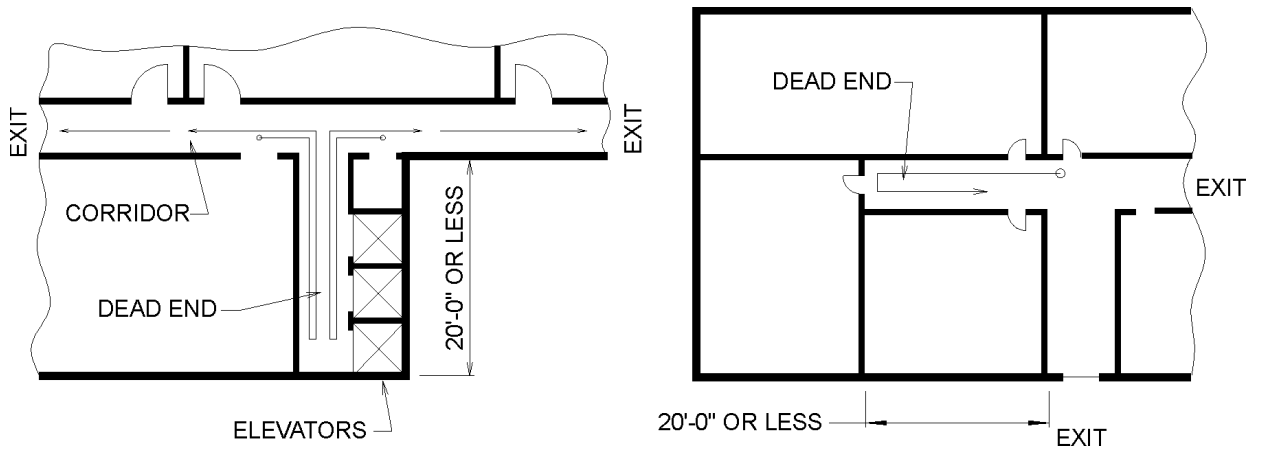

For SI: 1 foot = 304.8 mm.

Figure 1020.4(1)
ALLOWABLE DEAD-END CONDITIONS

INTERNATIONAL CODE COUNCIL®
Copyright © 2015 ICC. ALL RIGHTS RESERVED. Accessed by David Dammon on Jun 21, 2017 12:30:52 PM pursuant to License Agreement with ICC. No further reproduction or distribution authorized. ANY UNAUTHORIZED REPRODUCTION OR DISTRIBUTION IS A VIOLATION OF THE FEDERAL COPYRIGHT ACT AND THE LICENSE AGREEMENT, AND SUBJECT TO CIVIL AND CRIMINAL PENALTIES THEREUNDER.

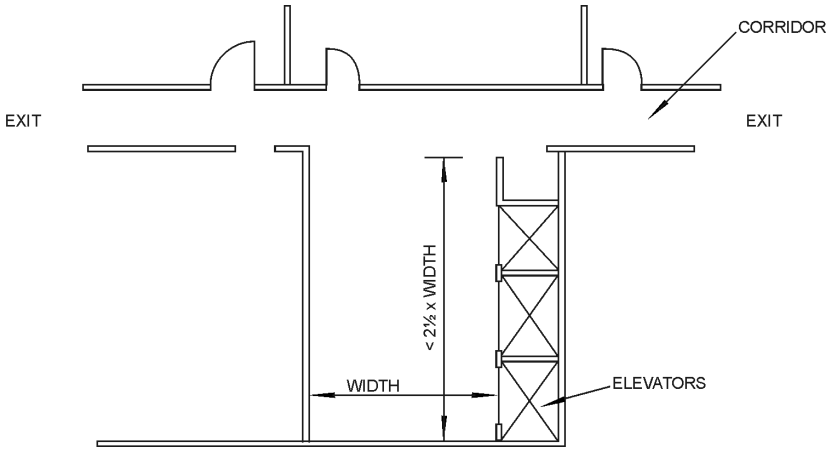

Figure 1020.4(2)
CORRIDOR LENGTH/WIDTH RATIO FOR DEAD-END CONSIDERATIONS

1020.5 Air movement in corridors. *Corridors* shall not serve as supply, return, exhaust, relief or ventilation air ducts.

Exceptions:

1. Use of a *corridor* as a source of makeup air for exhaust systems in rooms that open directly onto such *corridors*, including toilet rooms, bathrooms, dressing rooms, smoking lounges and janitor closets, shall be permitted, provided that each such *corridor* is directly supplied with outdoor air at a rate greater than the rate of makeup air taken from the *corridor*.
2. Where located within a *dwelling unit*, the use of *corridors* for conveying return air shall not be prohibited.
3. Where located within tenant spaces of 1,000 square feet (93 m^2) or less in area, utilization of *corridors* for conveying return air is permitted.
4. Incidental air movement from pressurized rooms within health care facilities, provided that the *corridor* is not the primary source of supply or return to the room.

❖ Two of the most critical elements of the means of egress are the required exit stairways and corridors. Exit stairways serve as protected areas in the building that provide occupants with safe passage to the level of exit discharge. Since required exits and corridors are critical elements in the means of egress, the potential spread of smoke and fire into these spaces must be minimized. The scope of this section is corridors. For requirements for the exits, see Section 1023.

The use of these corridors as part of the air distribution system could render those egress elements unusable. The intent is to have positive pressure in the corridors. Therefore, any air movement condition that could introduce smoke into these vital egress elements is prohibited. It is not the intent of this section to prohibit the air movement necessary for ventilation and space conditioning of corridors, but rather to prevent those spaces from serving as conduits for the distribution of air to, or the collection of air from, adjacent spaces. This restriction also extends to door transoms and door grilles that would allow the spread of smoke into a corridor. This limitation is not, however, intended to restrict slight pressure differences across corridor doors, such as a negative pressure differential maintained in kitchens to prevent odor migration into dining rooms. Note that air distribution via ducted systems located in or above corridors is acceptable since the corridor itself would not be functioning as a duct.

The four exceptions to this section identify conditions where a corridor can be utilized as part of the air distribution system. The exceptions apply only to exit access corridors, not to exit passageways.

Exception 1 addresses the common practice of using air from the corridor as makeup air for small exhaust fans in adjacent rooms. Where the corridor is supplied directly with outdoor air at a rate equal to or greater than the makeup air rate, negative pressure will not be created in the corridor with respect to the adjoining rooms and smoke would generally not be drawn into the corridor.

Regarding Exception 2, it is common practice to locate return air openings in the corridors of dwelling units and draw return air from adjoining spaces through the corridor. Such use of dwelling unit corridors for conveying return air is not considered to be a significant hazard and is permitted. Individual dwelling units are permitted to have unprotected openings between floors. Corridors within dwelling units that serve small occupant loads are short in length and are not required to be fire-resistance rated. For these reasons, the use of the corridor or the space above a corridor ceiling for conveying return air does not constitute an unacceptable hazard.

INTERNATIONAL CODE COUNCIL®
Copyright © 2015 ICC. ALL RIGHTS RESERVED. Accessed by David Dammon on Jun 21, 2017 12:30:52 PM pursuant to License Agreement with ICC. No further reproduction or distribution authorized. ANY UNAUTHORIZED REPRODUCTION OR DISTRIBUTION IS A VIOLATION OF THE FEDERAL COPYRIGHT ACT AND THE LICENSE AGREEMENT, AND SUBJECT TO CIVIL AND CRIMINAL PENALTIES THEREUNDER.

Exception 3 permits corridors located in small tenant spaces to be used for conveying return air based on the relatively low occupant load and the relatively short length of the corridor. These conditions do not pose a significant hazard. In the event of an emergency, the occupants of the space would tend to simply retrace their steps to the entrance.

Health care facilities require direct pressurization control of certain rooms to provide a clean and sterile environment for patients. For example, operating rooms and pharmacies are required to have positive air pressure in the room, resulting in a general air movement out of the room. This ensures that airborne contaminants do not infect a sterile procedure or supplies. Pressurization is achieved by supplying air at a greater or lesser rate than the return air. Exception 4 recognizes the need of infection control and clarifies that the corridor should not be the primary source of supply return. There should be supply and return air in the room.

1020.5.1 Corridor ceiling. Use of the space between the *corridor* ceiling and the floor or roof structure above as a return air plenum is permitted for one or more of the following conditions:

1. The *corridor* is not required to be of *fire-resistance-rated* construction.
2. The *corridor* is separated from the plenum by *fire-resistance-rated* construction.
3. The air-handling system serving the *corridor* is shut down upon activation of the air-handling unit *smoke detectors* required by the *International Mechanical Code*.
4. The air-handling system serving the *corridor* is shut down upon detection of sprinkler water flow where the building is equipped throughout with an *automatic sprinkler system*.
5. The space between the *corridor* ceiling and the floor or roof structure above the *corridor* is used as a component of an approved engineered smoke control system.

❖ This section identifies five different conditions where the space above the corridor ceiling is permitted to serve as a return air plenum. Since a return air plenum operates at a negative pressure with respect to the corridor, any smoke and gases within the plenum should be contained within that space. Conversely, a supply plenum operates at a positive pressure with respect to the corridor, thus increasing the likelihood that smoke and gases will infiltrate the corridor enclosure. Where any one of the five conditions is present, the use of the corridor ceiling space as a return air plenum is permitted. This is consistent with IMC Section 601.2.1.

Where the corridor is permitted to be constructed without a fire-resistance rating (see Section 1020.1), Item 1 permits the space above the ceiling to be utilized as a return air plenum without requiring it to be separated from the corridor with fire-resistance-rated construction.

Item 2 is only applicable to corridors that are required to be enclosed with fire-resistance-rated construction. Compliance with this item requires the plenum to be separated from the corridor by fire-resistance-rated construction equivalent to the rating of the corridor enclosure itself. Therefore, the ceiling membrane itself must provide the fire-resistance rating required of the corridor enclosure. Section 708.4, Exception 3, is an example of this method of construction.

Items 3 and 4 recognize that the hazard associated with smoke spread through a plenum is minimized if the air movement is stopped.

It is not uncommon for an above-ceiling plenum to be utilized as part of the smoke removal system. This practice is permitted by Item 5. Because of the way these systems are designed, the higher equipment ratings and the power supply provisions, this is considered acceptable.

1020.6 Corridor continuity. *Fire-resistance-rated corridors* shall be continuous from the point of entry to an *exit*, and shall not be interrupted by intervening rooms. Where the path of egress travel within a *fire-resistance-rated corridor* to the exit includes travel along unenclosed *exit access stairways* or *ramps*, the *fire-resistance rating* shall be continuous for the length of the *stairway* or *ramp* and for the length of the connecting *corridor* on the adjacent floor leading to the *exit*.

Exceptions:

1. Foyers, lobbies or reception rooms constructed as required for *corridors* shall not be construed as intervening rooms.
2. Enclosed elevator lobbies as permitted by Item 1 of Section 1016.2 shall not be construed as intervening rooms.

❖ This section requires that where fire protection is offered by a corridor, it is to be continuous from the point of entry into the corridor to an exit. This is to protect occupants from the accumulation of smoke or fire exposure and to allow for sufficient time to evacuate the building. Where a corridor is served by two or more exits, only one of the exits is required to be accessed directly from the corridor. Other exits may be accessed through intervening spaces in accordance with Section 1016.2, provided that there is an opening protective at the end of the corridor to separate the rated corridor from the intervening rooms. Thus, occupants will always have their protected path to an exit, and at the same time a reasonable degree of design freedom is allowed [see Commentary Figures 1020.6(1) and 1020.6(3)].

When a level is permitted to have unenclosed exit access stairways in accordance with Section 1019.3, the corridor protection is required to continue down the exit access stairway to an enclosure for an interior exit stairway or to an exit door leading to the outside. Since the exit access stairway effectively becomes part of the corridor, doors would not be required at the top and bottom of the open exit

INTERNATIONAL CODE COUNCIL®
Copyright © 2015 ICC. ALL RIGHTS RESERVED. Accessed by David Dammon on Jun 21, 2017 12:30:52 PM pursuant to License Agreement with ICC. No further reproduction or distribution authorized. ANY UNAUTHORIZED REPRODUCTION OR DISTRIBUTION IS A VIOLATION OF THE FEDERAL COPYRIGHT ACT AND THE LICENSE AGREEMENT, AND SUBJECT TO CIVIL AND CRIMINAL PENALTIES THEREUNDER.

access stairway as they are when entering enclosures for exit stairways.

Exception 1 allows a foyer, lobby or reception room to be located on the path of egress from a corridor or as part of the fire-resistance-rated corridor, provided the room has the same fire-resistance-rated walls and doors as required for the corridor. The use of this provision should be viewed as limiting the types of uses that may occur within the protected corridor. Occupied spaces within the corridor should have very limited uses and hazards. Foyers and lobbies are included in this exception based on the low fire hazard of the contents in such rooms [see Commentary Figure 1020.6(2)].

Another consideration is corridor continuity at an elevator opening. When an elevator opens into a corridor that is required to be of fire-resistance-rated construction, the opening between the elevator shaft and the corridor must be protected to meet not only the shaft's fire protection rating but also the additional smoke and draft protection requirements necessary to limit the spread of smoke into the corridor. This

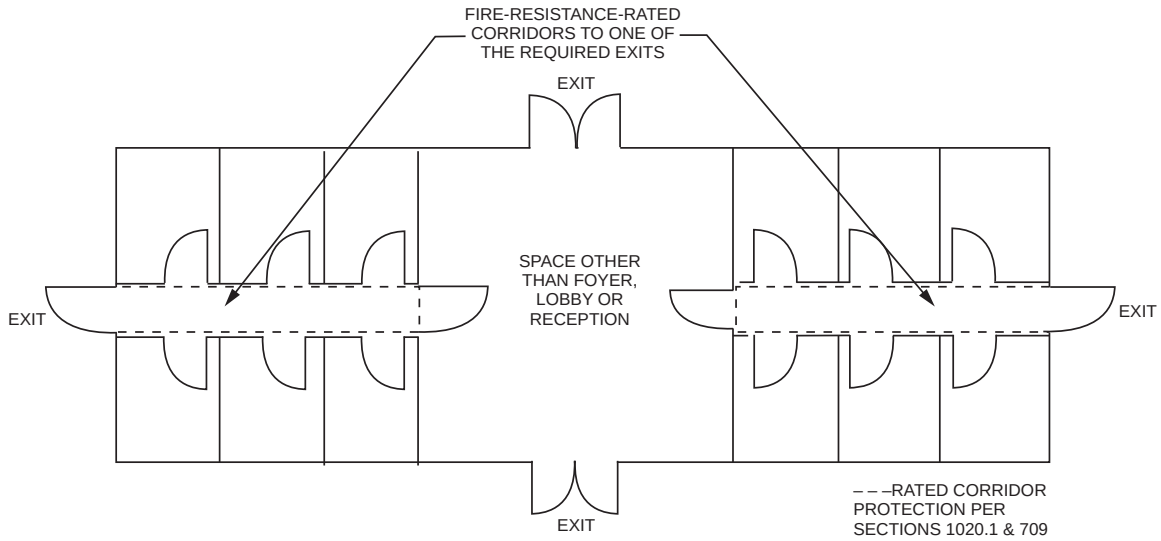

Figure 1020.6(1)
CORRIDOR CONTINUITY—EXAMPLE 1

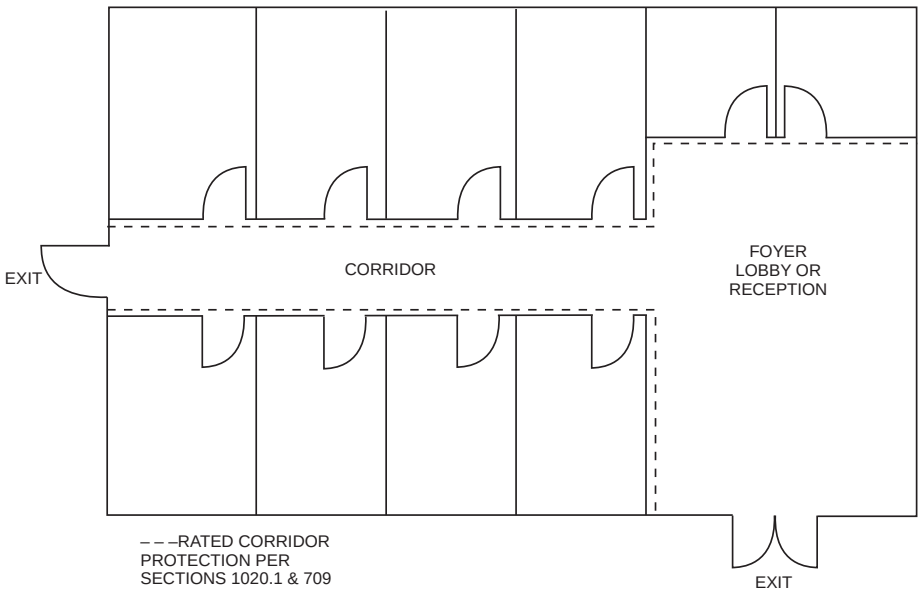

Figure 1020.6(2)
CORRIDOR CONTINUITY—EXAMPLE 2

INTERNATIONAL CODE COUNCIL®
Copyright © 2015 ICC. ALL RIGHTS RESERVED. Accessed by David Dammon on Jun 21, 2017 12:30:52 PM pursuant to License Agreement with ICC. No further reproduction or distribution authorized. ANY UNAUTHORIZED REPRODUCTION OR DISTRIBUTION IS A VIOLATION OF THE FEDERAL COPYRIGHT ACT AND THE LICENSE AGREEMENT, AND SUBJECT TO CIVIL AND CRIMINAL PENALTIES THEREUNDER.

additional smoke and draft control requirement is found in Section 716.5.3.1. Because elevator hoistway doors do not typically comply as smoke- and draft-control assemblies, they would not be able to open directly into a corridor that is required to have protected openings. The provisions in Sections 713.14 and 3006 waiving the requirements for an elevator lobby do not waive the corridor opening protection requirements. Therefore, to maintain the integrity of the corridor, the elevator hoistway shaft doors opening into such rated corridors will need to be separated from the corridor by one of the following methods of protection:

1. A lobby needs to be provided with the appropriate walls and doors [see Commentary Figure 1020.6(4) and Section 3006.3, Items 1 and 2] to separate the lobby from the corridor.
2. Additional doors must be provided at the hoistway [see Commentary Figure 1020.6(5) and

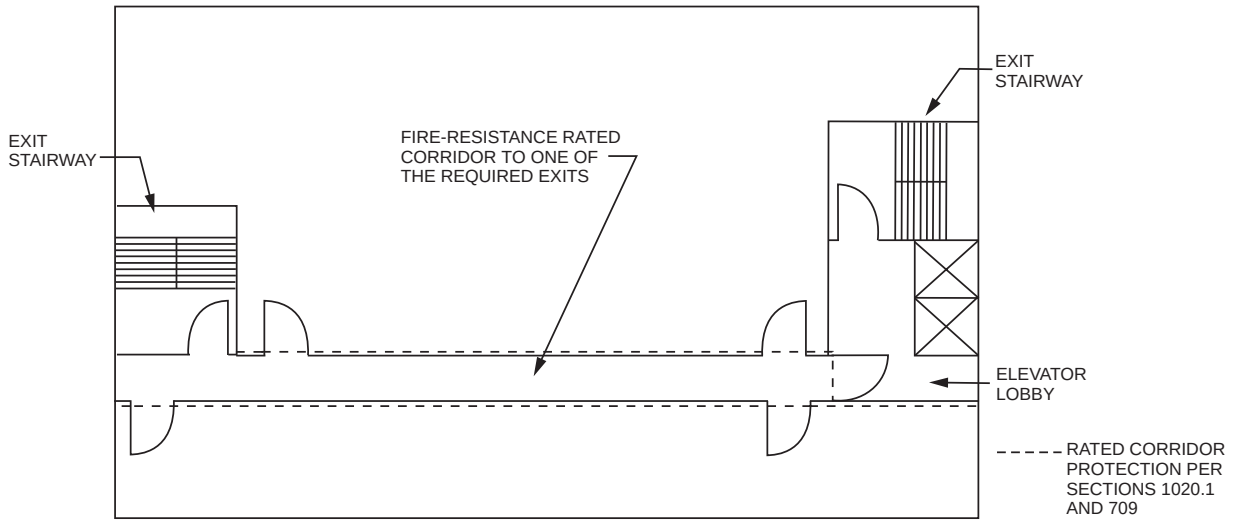

Figure 1020.6(3)
CORRIDOR CONTINUITY—EXAMPLE 3

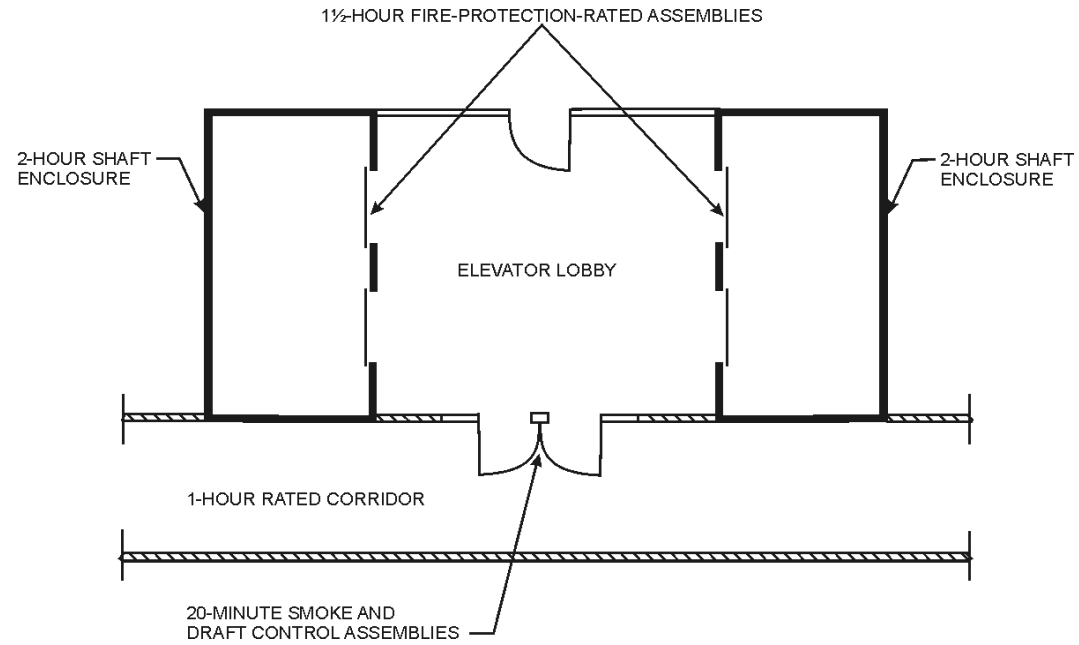

Figure 1020.6(4)
ELEVATOR LOBBY/CORRIDOR OPTION 1

INTERNATIONAL CODE COUNCIL®
Copyright © 2015 ICC. ALL RIGHTS RESERVED. Accessed by David Dammon on Jun 21, 2017 12:30:52 PM pursuant to License Agreement with ICC. No further reproduction or distribution authorized. ANY UNAUTHORIZED REPRODUCTION OR DISTRIBUTION IS A VIOLATION OF THE FEDERAL COPYRIGHT ACT AND THE LICENSE AGREEMENT, AND SUBJECT TO CIVIL AND CRIMINAL PENALTIES THEREUNDER.

Sections 3006.3 Item 3] that will protect the shaft openings the same as required for the corridor doors.

3. An elevator shaft door meeting both the smoke and draft protection requirements for corridor doors in Section 716.5.3.1 and the appropriate fire protection rating of Table 716.5 for the shaft must be provided.
4. The corridor must be separated from the lobby [see Commentary Figure 1020.6(6) and Section 3006.3, Items 1 and 2]. Per Exception 2 of Section 1020.6, Option 4 is permitted for corridor

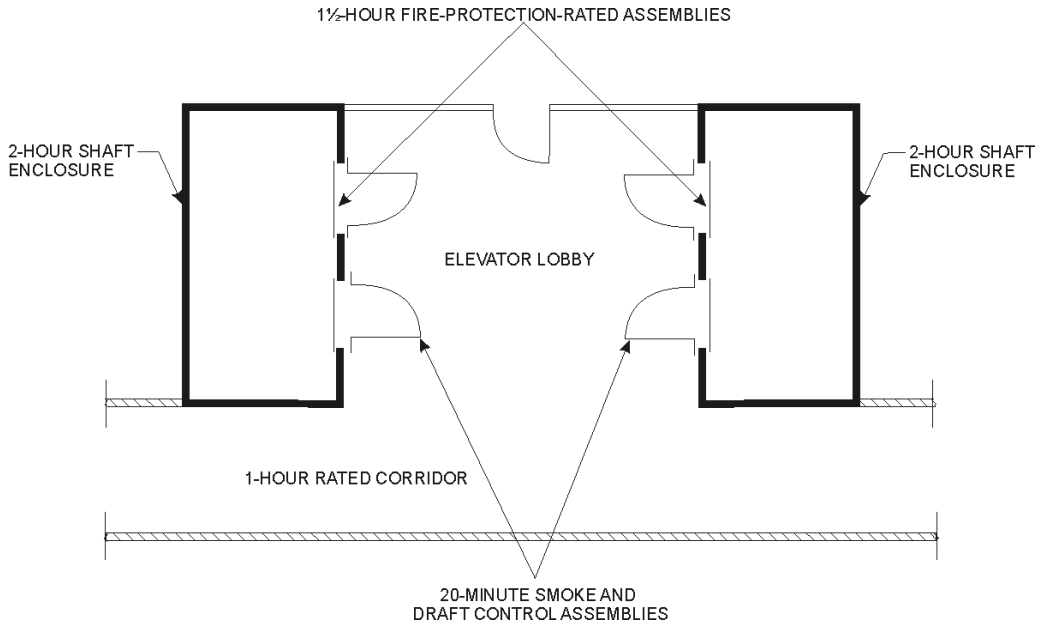

Figure 1020.6(5)
ELEVATOR LOBBY/CORRIDOR OPTION 2

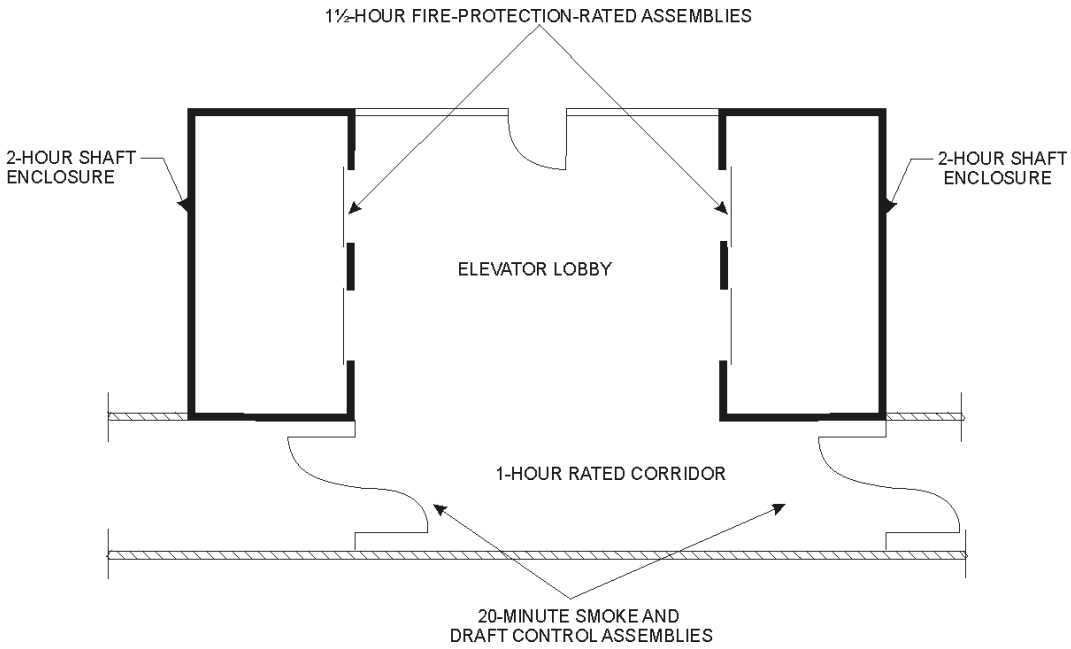

Figure 1020.6(6)
ELEVATOR LOBBY/CORRIDOR OPTION 3

INTERNATIONAL CODE COUNCIL®
Copyright © 2015 ICC. ALL RIGHTS RESERVED. Accessed by David Dammon on Jun 21, 2017 12:30:52 PM pursuant to License Agreement with ICC. No further reproduction or distribution authorized. ANY UNAUTHORIZED REPRODUCTION OR DISTRIBUTION IS A VIOLATION OF THE FEDERAL COPYRIGHT ACT AND THE LICENSE AGREEMENT, AND SUBJECT TO CIVIL AND CRIMINAL PENALTIES THEREUNDER.

continuity since the elevator lobby is also not considered an intervening room. Section 1016.2, Item 1, states that at least one end of a fire-resistance-rated corridor leads directly to an exit without going through the lobby. Alternatively, the second means of egress serving the corridor can be an elevator lobby with direct access to an exit [see Commentary Figure 1020.6(3)].

5. The elevator hoistway can be pressurized so that smoke will not move up the shaft (see Section 3006.3, Item 4).

While many elevator hoistway shaft doors are tested and labeled for the 1-hour or $1^1/_2$-hour fire-resistance rating (see Section 716.5), very few, if any of the doors typically sold in the U.S. will also meet the smoke and draft requirements (see Section 716.5.3.1) that would allow them to open directly into a fire-resistance-rated corridor. Because of this, Items 1, 2 and 4 above will be the general methods for protecting such openings.

For additional explanation of the requirements for elevator lobbies that are adjacent to rated corridors, see Section 3006. For requirements for exit enclosures, see Section 1023.

SECTION 1021
EGRESS BALCONIES

1021.1 General. Balconies used for egress purposes shall conform to the same requirements as *corridors* for minimum width, required capacity, headroom, dead ends and projections.

❖ This section regulates balconies that are used as an exit access element. Requirements are the same as exit access corridors, except for the enclosure.

Where exterior egress balconies are used in moderate or severe climates, there may also be a concern to protect the egress balcony from accumulations of snow and ice to provide a safe path of egress travel at all times, including winter. Maintenance of the means of egress in the IFC requires an unobstructed path to allow for full instant use in case of a fire or emergency. Typical methods for protecting these egress elements include roof overhangs or canopies, a heated slab and, when approved by the building official, a reliable snow removal maintenance program.

1021.2 Wall separation. Exterior egress balconies shall be separated from the interior of the building by walls and opening protectives as required for *corridors*.

Exception: Separation is not required where the exterior egress balcony is served by not less than two *stairways* and a dead-end travel condition does not require travel past an unprotected opening to reach a *stairway*.

❖ An exterior exit access balcony has a valuable attribute in that the products of combustion may be freely vented to the open air. In the event of a fire in an adjacent space, the products of combustion would not be expected to build up in the balcony area as would commonly occur in an interior corridor. However, there is still a concern for the egress of occupants who must use the balcony for exit access, and, consequently, may have to pass the room or space where the fire is located. Therefore, an exterior exit access balcony is required to be separated from interior spaces by fire partitions, as is required for interior corridors. The other provisions of Section 1020 relative to dead ends and opening protectives also apply.

If there are no dead-end conditions that require travel past an unprotected opening and the balcony is provided with at least two stairways, then the wall separating the balcony from the interior spaces need not have a fire-resistance rating (see Commentary Figure 1021.2). Such an arrangement reduces the probability that occupants will need to pass the area with the fire to gain access to an exit.

1021.3 Openness. The long side of an egress balcony shall be at least 50 percent open, and the open area above the *guards* shall be so distributed as to minimize the accumulation of smoke or toxic gases.

❖ This section provides an opening requirement that is intended to preclude the rapid buildup of smoke and toxic gases. A minimum of one side of the exterior

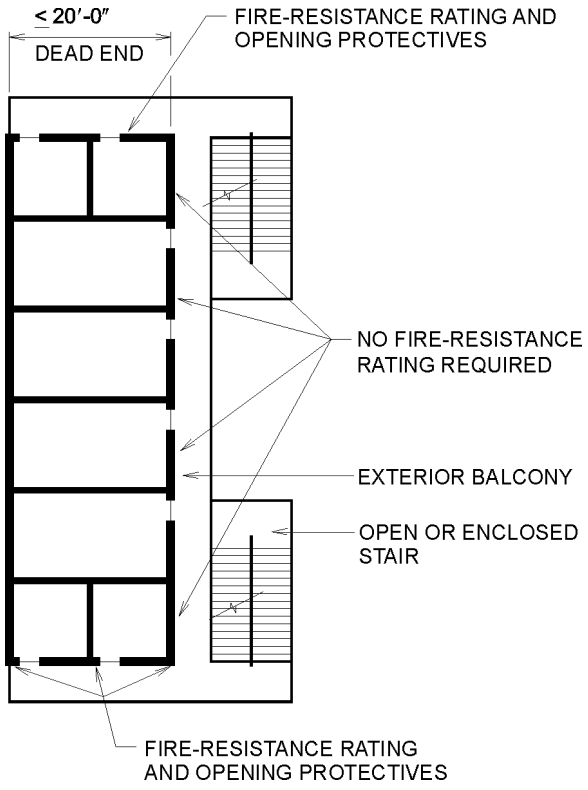

For SI: 1 foot = 304.8 mm.

Figure 1021.2
EGRESS BALCONIES

INTERNATIONAL CODE COUNCIL®
Copyright © 2015 ICC. ALL RIGHTS RESERVED. Accessed by David Dammon on Jun 21, 2017 12:30:52 PM pursuant to License Agreement with ICC. No further reproduction or distribution authorized. ANY UNAUTHORIZED REPRODUCTION OR DISTRIBUTION IS A VIOLATION OF THE FEDERAL COPYRIGHT ACT AND THE LICENSE AGREEMENT, AND SUBJECT TO CIVIL AND CRIMINAL PENALTIES THEREUNDER.

balcony is required to have a minimum open exterior area of 50 percent of the side area of the balcony. The side openings are to be uniformly distributed along the length of the balcony.

1021.4 Location. Exterior egress balconies shall have a minimum *fire separation distance* of 10 feet (3048 mm) measured at right angles from the exterior edge of the egress balcony to the following:

1. Adjacent *lot lines*.
2. Other portions of the building.
3. Other buildings on the same lot unless the adjacent building *exterior walls* and openings are protected in accordance with Section 705 based on *fire separation distance*.

For the purposes of this section, other portions of the building shall be treated as separate buildings.

❖ The location requirements for exterior egress balconies given by this section protect the users of the egress balcony from the effects of a fire in another building on the same lot or an adjacent lot. The separation distance reduces the exposure to heat and smoke. If the egress balcony is closer than specified, then the adjacent buildings' exterior walls and openings are to be protected in accordance with Section 705 so that the users of the egress balcony are protected. The reason for the required distance to a lot line is to provide for a future building that could be built on the adjacent lot. While buildings on the same lot can be considered one building for height and area limitations (see Section 503.1.2), they must be separated by a minimum of 10 feet (3048 mm) if there is a path for exit discharge between them. The purpose of the last sentence is to clarify that an egress balcony needs a minimum 10-foot separation where a building wraps around on itself, such as a U-shaped building. It is not intended that the distance be measured to the imaginary lot line between buildings on the same lot.

Requirements are the same for exterior exit stairways and ramps. For an illustration of how exterior egress balconies and exterior exit stairways work together, see Commentary Figure 1027.5.

SECTION 1022
EXITS

1022.1 General. *Exits* shall comply with Sections 1022 through 1027 and the applicable requirements of Sections 1003 through 1015. An *exit* shall not be used for any purpose that interferes with its function as a *means of egress*. Once a given level of *exit* protection is achieved, such level of protection shall not be reduced until arrival at the *exit discharge*. *Exits* shall be continuous from the point of entry into the *exit* to the *exit discharge*.

❖ This group of sections is applicable to the "exit" portion of the three-part means of egress system. Sections 1003 through 1015 are also applicable to exits. The following sections are covered in this group:

- Section 1022 provides general requirements for exterior exit doorways.
- Section 1023 provides criteria for interior exit stairways and ramps.
- Section 1024 covers horizontal portions of the exit and exit passageways.
- Section 1025 is referenced by the high-rise provisions in Section 403. This section addresses a backup system for means of egress lighting (see Section 1008). "Glow-in-the-dark" stripes identify steps, handrails, obstructions and doorways within the enclosure for interior exit stairways.
- Section 1026 discusses the option of horizontal exits. This type of system is most commonly used for buildings such as hospitals and jails where building evacuation is not always the best option.
- Section 1027 provides criteria for stairways or ramps that are primarily open to the exterior, thus reducing the chance of accumulation of smoke or fumes.

The use of required exterior exit doors, exit stairways, exit passageways and horizontal exits for any purpose other than exiting is prohibited, because it might interfere with use as an exit. This is *not* intended to prohibit a door or stairway being used as part of normal circulation patterns, such as the exit doors also serving as entrances, or using the stairway to move between floors when there is not an emergency. However, these spaces must not include furniture, storage or work space. For example, the use of an exit stairway landing for storage, vending machines, copy machines, displays or any purpose other than for exiting is not permitted. Such a situation could not only lead to obstruction of the path of exit travel, thereby creating a hazard to life safety, but if the contents consist of combustible materials, then the use of the stairway as a means of egress could be jeopardized by fire or smoke in the exit enclosure.

It is recognized that standpipe risers are provided within the stair enclosure and that vertical electrical conduit may be necessary for power or lighting. However, such risers must be located so as not to interfere with the required clear width of the exit. For example, a standpipe riser located in the corner of a stairway will not reduce the required clear radius of the landing. This also applies when the stairway landing is used as an area of refuge. The spaces for wheelchairs must not obstruct the general path of egress travel [see Commentary Figures 1009.3(1) and 1009.3(2)]. Electrical conduit and mechanical equipment are permitted when necessary to serve the exit enclosure.

In existing buildings, sometimes the only viable option for providing access into the space is a plat-

INTERNATIONAL CODE COUNCIL®
Copyright © 2015 ICC. ALL RIGHTS RESERVED. Accessed by David Dammon on Jun 21, 2017 12:30:52 PM pursuant to License Agreement with ICC. No further reproduction or distribution authorized. ANY UNAUTHORIZED REPRODUCTION OR DISTRIBUTION IS A VIOLATION OF THE FEDERAL COPYRIGHT ACT AND THE LICENSE AGREEMENT, AND SUBJECT TO CIVIL AND CRIMINAL PENALTIES THEREUNDER.

form lift. These platform lifts can be located within the enclosure for the exit (see IEBC Sections 410.8.3 and 705.1.3). Regulations in ASME A18.1 would limit the potential for any concerns for platform lifts being a fuel load in an exit stairway. However, the platform lift must be located so that it is not an obstruction to the exit pathway. Typically, this is reviewed when the platform lift is in the off and folded position.

Sections 1022 through 1027 apply to all exits but do not apply to elements of the means of egress that are not actually exits, such as exit access stairways, ramps, corridors and passageways or elements of the exit discharge. Once an exit is entered, that same level of protection must be available until the occupants leave the building at the level of exit discharge. For exit discharge options for the enclosure, other than a door leading directly to the outside, see the requirements for exit passageways in Section 1024 or the options permitting usage of a lobby or vestibule in the exceptions to Section 1028.1.

1022.2 Exterior exit doors. Buildings or structures used for human occupancy shall have not less than one exterior door that meets the requirements of Section 1010.1.1.

❖ The purpose of this section is to specify that at least one exterior exit door is required to meet the door size requirements in Section 1010.1.1. It is not the intent of this section to specify the number of exit doors required, which is addressed in Section 1006.

1022.2.1 Detailed requirements. Exterior *exit* doors shall comply with the applicable requirements of Section 1010.1.

❖ The purpose of this section is simply to provide a cross reference from the exit section to all of the detailed requirements for doors that are included in Section 1010.1 and all of its subsections. For example, the requirements for door operation on exterior exit doors are controlled by Section 1010.1.9.

1022.2.2 Arrangement. Exterior *exit* doors shall lead directly to the *exit discharge* or the *public way*.

❖ The exterior exit door is to be the entry point of the exit discharge or lead directly to the public way. When a person reaches the exterior exit door, he or she is directly outside, where smoke and toxic gases are not a health hazard. Additionally, this section will keep exterior doors at other locations, such as to an egress balcony, from being viewed as an exit element.

SECTION 1023
INTERIOR EXIT STAIRWAYS AND RAMPS

1023.1 General. *Interior exit stairways* and *ramps* serving as an *exit* component in a *means of egress* system shall comply with the requirements of this section. *Interior exit stairways* and *ramps* shall be enclosed and lead directly to the exterior of the building or shall be extended to the exterior of the building with an *exit passageway* conforming to the requirements of Section 1024, except as permitted in Section 1028.1. An *interior exit stairway* or *ramp* shall not be used for any purpose other than as a *means of egress* and a circulation path.

❖ The first sentence is a general reference to the rest of the section. Sections 1023.2 through 1023.7 deal with the construction of the walls and ceiling that enclose the exit stairway or exit ramp. Sections 1023.8 and 1023.9 deal with information required in the enclosure for safe exiting. Section 1023.10 provides criteria for stairways in high-rise or underground buildings where a smokeproof enclosure and pressurization of the stair tower are required (see Sections 403.5.4 and 405.7.2).

Most exit stairways or ramps have an exterior door at the level of exit discharge that leads directly to the outside. From this doorway, there must be a path for exit discharge that leads to the public way; however, there are other options. Exit passageways are considered an extension of the exit enclosure. The stairway enclosure discharges into the exit passageway, which in turn leads to the outside of the building. There are limited allowances for the exit enclosure to discharge through a lobby or vestibule (see Section 1028.1, Exceptions 1 and 2). A stairway enclosure could also discharge through a horizontal exit (see Section 1028.1, Exception 3). The termination requirements are the same as stated in Section 1023.3.

It is important that an exit stairway or ramp not be used for any purpose other than as a means of egress. For example, there is a tendency to use stairway landings for storage purposes. Such a situation obstructs the path of exit travel and if the stored contents consist of combustible materials, the use of the exit stairway as part of the path for a means of egress may be jeopardized, creating a hazard to life safety. It is not the intent of these provisions to prohibit an exit stairway from being used as part of the normal building circulation system. If the tenants or building owner have security concerns that would prompt them to wish to limit stairway access, consult Section 1010.1.9.11.

It is not the intent of this provision to exclude inclined platform lifts in the enclosure for the stairway; however, it is important that when not in operation they do not block access to the exit stairway or handrails. The referenced technical standard, ASME A18.1, basically requires noncombustible elements, so there is not a fire load issue associated with the lifts. Platform lifts are an important option for providing accessibility in a building. Section 1109.7 limits the use of platform lifts in new construction to mainly areas with minimal occupant loads or where elevators and ramps are impracticable. Platform lifts can be part of an accessible means of egress in limited situations (Section 1007.5). IEBC Sections 410.8.3 and 705.1.3 allow for platform lifts anywhere in existing buildings in order to gain accessibility for persons with mobility impairments. The industry is currently

INTERNATIONAL CODE COUNCIL®
Copyright © 2015 ICC. ALL RIGHTS RESERVED. Accessed by David Dammon on Jun 21, 2017 12:30:52 PM pursuant to License Agreement with ICC. No further reproduction or distribution authorized. ANY UNAUTHORIZED REPRODUCTION OR DISTRIBUTION IS A VIOLATION OF THE FEDERAL COPYRIGHT ACT AND THE LICENSE AGREEMENT, AND SUBJECT TO CIVIL AND CRIMINAL PENALTIES THEREUNDER.

working on different options to address the concern that the lift may be in operation during an event that requires evacuation.

1023.2 Construction. Enclosures for *interior exit stairways* and *ramps* shall be constructed as *fire barriers* in accordance with Section 707 or *horizontal assemblies* constructed in accordance with Section 711, or both. *Interior exit stairway* and *ramp* enclosures shall have a *fire-resistance rating* of not less than 2 hours where connecting four stories or more and not less than 1 hour where connecting less than four stories. The number of stories connected by the *interior exit stairways* or *ramps* shall include any *basements*, but not any *mezzanines. Interior exit stairways* and *ramps* shall have a *fire-resistance rating* not less than the floor assembly penetrated, but need not exceed 2 hours.

Exceptions:

1. *Interior exit stairways* and *ramps* in Group I-3 occupancies in accordance with the provisions of Section 408.3.8.
2. *Interior exit stairways* within an *atrium* enclosed in accordance with Section 404.6.

❖ This section requires that all interior exit stairways or ramps are to be enclosed with rated walls (i.e., fire barriers) and floor/ceiling assemblies (i.e., horizontal assemblies). The fire-resistance rating required depends on the number of connected stories and the required fire-resistance rating of the penetrated floors. The minimum fire-resistance rating of an enclosure for an exit stairway or ramp is at least 1 hour. The fire-resistance rating of the enclosure must be increased to 2 hours if the stairway or ramp connects four or more stories or if it penetrates a floor system with a fire-resistance rating of 2 hours or more (see Table 602 for Type I construction). Note that the criteria are based on the number of stories connected by the stairway or ramp and not the height of the building. Therefore, a building that has three stories located entirely above the grade plane and a basement would require an enclosure with a 2-hour fire-resistance rating if the stairway or ramp connects all four stories. Where the floor construction penetrated by the enclosure has a fire-resistance rating, the enclosure must have the same minimum rating. For example, an enclosure that penetrates a 2-hour floor assembly must have a minimum fire-resistance rating of 2 hours, regardless of the number of stories the enclosure connects. The fire-resistance rating of an enclosure need never exceed 2 hours. If the floor assembly penetrated requires a minimum 3-hour fire-resistance rating, the enclosure rating is only required to be 2-hour fire-resistance rated. All linear voids at joints between fire-resistance-rated wall and floor/ceiling assemblies and where an enclosure would intersect with an exterior wall must be filled so that the integrity of the enclosure is maintained (see Section 715). The fire-resistance-rated requirements for enclosures for exit stairways and ramps are consistent with those for shaft enclosures and enclosures for exit access stairways and ramps.

The enclosure is needed because an exit stairway or ramp penetrates the floor/ceiling assemblies between the levels, thus creating a vertical opening or shaft. In cases of fire, a vertical opening may act as a chimney, causing smoke, hot gases and light-burning products to flow upward (buoyant force). If an opening is unprotected, these products of combustion will be forced by positive pressure differentials to spread horizontally into the building spaces. There are exceptions for shaft protection around stairways and ramps that are not part of a required means of egress in Section 712 or exit access stairways as permitted in Section 1019.3.

The enclosure of interior stairways or ramps with construction having a fire-resistance rating is intended to prevent the spread of fire from floor to floor. Another important purpose is to provide a safe path of travel for the building occupants and to serve as a protected means of access to the fire floor by fire department personnel. For this reason, Sections 1023.4 through 1023.6 limit the penetrations and openings permitted in the enclosure for an exit stairway or ramp.

For travel distance measurements at the exit stairways, see the commentary to Section 1017.3. While not specifically mentioned as an exception, Section 1027 for exterior exit stairways is considered to provide an equivalent level of protection to enclosed interior stairways.

Per Exception 1, because of security needs in detention facilities, one of the exit stairways is permitted to be glazed in a manner similar to atrium enclosures. Specific limitations and requirements are discussed in Section 408.3.8. Exit access stairways within housing units are addressed in Sections 408.5.1 and 1019.4.

Exception 2 is in consideration of an increased level of safety in an atrium. Section 404 for atriums requires the space to be enclosed by a 1-hour passive enclosure and also protected by various active systems including fire suppression and smoke control features. The natural configuration of an atrium affords building occupants immediate views of the entire egress to the bottom of the atrium.

1023.3 Termination. *Interior exit stairways* and *ramps* shall terminate at an *exit discharge* or a *public way*.

Exception: A combination of *interior exit stairways*, *interior exit ramps* and *exit passageways*, constructed in accordance with Sections 1023.2, 1023.3.1 and 1024, respectively, and forming a continuous protected enclosure, shall be permitted to extend an *interior exit stairway* or *ramp* to the *exit discharge* or a *public way*.

❖ The intent of this section is to provide safety in all portions of the exit by requiring continuity of the fire protection characteristics of the enclosure for the exit stairway. Exit passageways (see Section 1024) are a

INTERNATIONAL CODE COUNCIL®
Copyright © 2015 ICC. ALL RIGHTS RESERVED. Accessed by David Dammon on Jun 21, 2017 12:30:52 PM pursuant to License Agreement with ICC. No further reproduction or distribution authorized. ANY UNAUTHORIZED REPRODUCTION OR DISTRIBUTION IS A VIOLATION OF THE FEDERAL COPYRIGHT ACT AND THE LICENSE AGREEMENT, AND SUBJECT TO CIVIL AND CRIMINAL PENALTIES THEREUNDER.

continuation of the enclosure for the exit stairway. This would include, but not be limited to, the fire-resistance rating of the exit enclosure walls and the opening protection rating of the doors. While an exit passageway is most commonly found on the level of exit discharge as a means to connect a stairway enclosure to the exterior, in buildings that step back in footprint as the rise, the stairways may not be totally vertical shafts, but move out as they move down to keep the required separation distance. Exit passageways can be at any level to connect the stair towers. There are special exit signage considerations for this particular issue in Section 1013.1 (see Commentary Figure 1013.1).

Section 1028.1 would allow for an alternative for direct access to the outside via an intervening lobby or vestibule.

Horizontal exits (see Section 1026), while not providing direct access to the outside of the structure, do move occupants to another "building" by moving through a fire wall (see Sections 1026 and 1028.1, Exception 3) into a refuge area protected by fire barriers and horizontal assemblies. Horizontal exits are commonly used in hospitals and jails for a defend-in-place type of protection.

1023.3.1 Extension. Where *interior exit stairways* and *ramps* are extended to an *exit discharge* or a *public way* by an *exit passageway*, the *interior exit stairway* and *ramp* shall be separated from the *exit passageway* by a *fire barrier* constructed in accordance with Section 707 or a *horizontal assembly* constructed in accordance with Section 711, or both. The *fire-resistance rating* shall be not less than that required for the *interior exit stairway* and *ramp*. A *fire door* assembly complying with Section 716.5 shall be installed in the *fire barrier* to provide a *means of egress* from the *interior exit stairway* and *ramp* to the *exit passageway*. Openings in the *fire barrier* other than the *fire door* assembly are prohibited. Penetrations of the *fire barrier* are prohibited.

Exceptions:

1. Penetrations of the *fire barrier* in accordance with Section 1023.5 shall be permitted.
2. Separation between an *interior exit stairway* or *ramp* and the *exit passageway* extension shall not be required where there are no openings into the *exit passageway* extension.

❖ Once a person enters the enclosure surrounding an exit stairway, that same level of protection should be provided to them until they can leave the building. When an enclosure for an exit stairway connects to an exit passageway, either at the ground level or at an intermediate transition floor, the exit passageway must provide the same level of protection as the enclosure for the exit stairway, including fire-resistance of the walls, floor, ceiling and supporting construction and protection of any openings. At the junction between the enclosure for the exit stairway and the exit passageway, there must be both a rated fire barrier and a fire door. This has the additional benefit of preventing any smoke that may migrate into the exit passageway from also moving up the exit stairway or ramp. Permitted penetrations for the exit passageway are the same as those limitations set for the enclosure for the exit stairway. See Sections 1013.1 and 1025 for egress markings and signage within these types of spaces.

For the situation when an exit stairway is constructed as a smokeproof enclosure or a pressurized stairway, see Section 1023.10.1.

Exception 1—The penetrations for the exit passageway are allowed to be the same as permitted for the stairway enclosure.

Exception 2—The purpose in having a door at this interface in the existing requirement is to prevent smoke from a possible open door or other penetration in the passageway from traveling up the exit enclosure. This is prevented if there are no openings or penetrations in the exit passageway. Then the exit passageway is horizontal offset of the exit enclosure and does not propose the same hazard. Egress can proceed faster if there are no intermediate doors contained at the enclosure transitions.

1023.4 Openings. *Interior exit stairway* and *ramp* opening protectives shall be in accordance with the requirements of Section 716.

Openings in *interior exit stairways* and *ramps* other than unprotected exterior openings shall be limited to those necessary for *exit access* to the enclosure from normally occupied spaces and for egress from the enclosure.

Elevators shall not open into *interior exit stairways* and *ramps*.

❖ In order for fire doors to be effective, they must be in the closed position; therefore, the preferred arrangement is to install self-closing doors. Recognizing that operational practices often require doors to be open for an extended period of time, automatic-closing doors are permitted as long as this opening will not pose a threat to occupant safety and the doors will be self-latching. Automatic-closing devices enable the opening to be protected during a fire condition. The basic requirement for closing devices and specific requirements for automatic-closing and self-closing devices are given in NFPA 80. Automatic-closing doors that are provided at protected openings in exits are also required to close on the actuation of smoke detectors or loss of power to the smoke detectors (see Section 716.5.9.3).

The only openings that are permitted in fire-resistance-rated enclosures for exit stairways or ramps are doors that lead from normally occupied spaces into the enclosure and doors leading out of the enclosure to the outside. This restriction on openings essentially prohibits the use of windows in an exit enclosure except for those exterior windows that are not exposed to any hazards. This requirement is not intended to prohibit windows or other openings in the exterior walls of the exit enclosure. The verbiage

INTERNATIONAL CODE COUNCIL®
Copyright © 2015 ICC. ALL RIGHTS RESERVED. Accessed by David Dammon on Jun 21, 2017 12:30:52 PM pursuant to License Agreement with ICC. No further reproduction or distribution authorized. ANY UNAUTHORIZED REPRODUCTION OR DISTRIBUTION IS A VIOLATION OF THE FEDERAL COPYRIGHT ACT AND THE LICENSE AGREEMENT, AND SUBJECT TO CIVIL AND CRIMINAL PENALTIES THEREUNDER.

"unprotected exterior openings" includes windows or doors not required to be protected by either Section 705.8 or 1023.7. The only exception would be window assemblies that have been tested as wall assemblies in accordance with ASTM E119 or UL 263. The objective of this provision is to minimize the possibility of fire spreading into an enclosure and endangering the occupants or even preventing the use of the exit at a time when it is most needed. The limitation on openings applies regardless of the fire protection rating of the opening protective. The limitation on openings from normally occupied areas is intended to reduce the probability of a fire occurring in an unoccupied area, such as a storage closet, which has an opening into the stairway, thereby possibly resulting in fire spread into the stairway. Other spaces that are not normally occupied include, but are not limited to, toilet rooms, electrical/mechanical equipment rooms and janitorial closets. For connection between the vertical exit enclosure and an exit passageway, see Section 1023.3.1.

Elevators may not open into exit enclosures. The difficulty is to have elevator doors that can meet the opening protectives for a fire barrier, but still operate effectively as elevator doors. For additional information on elevator lobbies and doors, see the commentary for Sections 713.14, 1020.6 and 3006.

These opening limitations are very similar to those required for an exit passageway (see Section 1024.5).

1023.5 Penetrations. Penetrations into or through *interior exit stairways* and *ramps* are prohibited except for equipment and ductwork necessary for independent ventilation or pressurization, sprinkler piping, standpipes, electrical raceway for fire department communication systems and electrical raceway serving the *interior exit stairway* and *ramp* and terminating at a steel box not exceeding 16 square inches (0.010 m^2). Such penetrations shall be protected in accordance with Section 714. There shall not be penetrations or communication openings, whether protected or not, between adjacent *interior exit stairways* and *ramps*.

Exception: Membrane penetrations shall be permitted on the outside of the *interior exit stairway* and *ramp*. Such penetrations shall be protected in accordance with Section 714.3.2.

❖ This section specifically lists the items that are allowed to penetrate the walls and ceiling of the enclosure for the exit stairway. This is consistent for all types of enclosures for exits, including interior exit stairways or interior exit ramps and exit passageways (see Section 1024.6). In general, only portions of the building service systems that serve the enclosure are allowed to penetrate the enclosure. As indicated in the commentary to Section 1022.1, standpipe systems are commonly located in the exit stair enclosures. If two exit enclosures are adjacent to one another, there must be no penetrations between them, thereby limiting the chances of smoke being in both stairwells.

Section 714 addresses through penetrations and membrane penetrations for fire-resistance-rated wall and floor/ceiling assemblies. The intent is to maintain the integrity of the enclosure for the exit access stairway. This section and Section 1023.6 are meant to work together. Penetrations in exterior walls are addressed in Section 1023.7.

The exception allows for electrical boxes, "Exit" signs or fire alarm pull stations to be installed on the outside of the enclosure, provided that the boxes are installed so that the required fire-resistance rating is not reduced (see Section 714.3.2).

1023.6 Ventilation. Equipment and ductwork for *interior exit stairway* and *ramp* ventilation as permitted by Section 1023.5 shall comply with one of the following items:

1. Such equipment and ductwork shall be located exterior to the building and shall be directly connected to the *interior exit stairway* and *ramp* by ductwork enclosed in construction as required for shafts.
2. Where such equipment and ductwork is located within the *interior exit stairway* and *ramp*, the intake air shall be taken directly from the outdoors and the exhaust air shall be discharged directly to the outdoors, or such air shall be conveyed through ducts enclosed in construction as required for shafts.
3. Where located within the building, such equipment and ductwork shall be separated from the remainder of the building, including other mechanical equipment, with construction as required for shafts.

In each case, openings into the *fire-resistance-rated* construction shall be limited to those needed for maintenance and operation and shall be protected by opening protectives in accordance with Section 716 for shaft enclosures.

The *interior exit stairway* and *ramp* ventilation systems shall be independent of other building ventilation systems.

❖ The purpose of the requirements for ventilation system equipment and ductwork is to maintain the fire resistance of the enclosure for the exit stairway. The ventilation system serving the enclosure is to be independent of other building systems to prevent smoke in the enclosure from traveling to other areas of the building. This section and Section 1023.5 are meant to work together. Where ductwork penetrates the outside wall, if it is not required to be rated by Section 1023.7, then the duct does not require a fire and smoke damper. If the ductwork serving the shaft does penetrate a rated wall or rated floor/ceiling assembly, a fire and smoke damper would be required by Section 717.5.3. Openings required for access to the ventilation system for maintenance and operation shall be protected in accordance with Section 716.

1023.7 Interior exit stairway and ramp exterior walls. *Exterior walls* of the *interior exit stairway* or *ramp* shall comply with the requirements of Section 705 for *exterior walls*. Where nonrated walls or unprotected openings enclose the exterior of the *stairway* or *ramps* and the walls or openings are exposed by other parts of the building at an angle of less than 180 degrees (3.14 rad), the building *exterior walls*

INTERNATIONAL CODE COUNCIL®
Copyright © 2015 ICC. ALL RIGHTS RESERVED. Accessed by David Dammon on Jun 21, 2017 12:30:52 PM pursuant to License Agreement with ICC. No further reproduction or distribution authorized. ANY UNAUTHORIZED REPRODUCTION OR DISTRIBUTION IS A VIOLATION OF THE FEDERAL COPYRIGHT ACT AND THE LICENSE AGREEMENT, AND SUBJECT TO CIVIL AND CRIMINAL PENALTIES THEREUNDER.

within 10 feet (3048 mm) horizontally of a nonrated wall or unprotected opening shall have a *fire-resistance rating* of not less than 1 hour. Openings within such *exterior* walls shall be protected by opening protectives having a *fire protection rating* of not less than $^3/_4$ hour. This construction shall extend vertically from the ground to a point 10 feet (3048 mm) above the topmost landing of the *stairway* or *ramp*, or to the roof line, whichever is lower.

❖ This section does not require exterior walls of an enclosure for an exit stairway or ramp to have the same fire-resistance rating as the interior walls. Table 602 and Section 705 establish when exterior walls are required to be rated and openings limited due to adjacent buildings or lot lines. This exposure is different from exterior load-bearing walls that are required to be rated because of the type of construction per Table 601. What is unique to exterior walls at exit stairways is the need to stop fires from burning through an exterior wall adjacent to the enclosure, which may then jeopardize the occupant's ability to continue to use that exit stairway. Essentially, there are two alternatives where an exposure hazard exists: 1. Provide protection to the stairway by having a fire-resistance rating on its exterior wall; or 2. Provide a fire-resistance rating to the walls adjacent to the stairway. The ratings apply for a distance of 10 feet (3048 mm) measured horizontally and vertically from the stairway enclosure where those walls are at an angle of less than 180 degrees (3.14 rad) from the exterior wall portion of the enclosure [see Condition 1 in Commentary Figure 1023.7(1)]. When the adjacent exterior wall is protected in lieu of the stairway enclosure wall, the protection is to extend from the ground to a level of 10 feet (3048 mm) above the highest landing of the stairway. However, the protection is not required to extend beyond the normal roof line of the building.

The 180-degree (3.14 rad) angle criterion is based on the scenario where the exterior wall of the stair enclosure is in the same plane and flush with the exterior wall of the building [see Conditions 2 and 3 in Commentary Figure 1023.7(1)]. In this scenario, heat or fire would need to travel 180 degrees (3.14 rad) around in order to impinge on the stair. Based on studies of existing buildings, this 180-degree (3.14 rad) spread of fire does not appear to be a problem. This criterion is only applicable when the angle between the walls is 180 degrees (3.14 rad) or less.

As the fire exposure on the exterior is different than can be expected on the interior, the fire-resistance rating of the exterior wall is not required to exceed 1 hour, regardless of whether it is the stairway enclosure wall or the adjacent exterior wall, unless the exterior wall is required by other sections of the code to have a higher fire-resistance rating (see Tables 601 and 602). The fire protection rating on any openings in the exterior wall of a stairway enclosure or adjacent exterior wall within 180 degrees (3.14 rad) is to be a minimum of $^3/_4$ hour [see Commentary Figure 1023.7(2)].

In a situation where the upper levels are smaller than lower levels, an interior stairway can end up having an exterior wall when it moves above the roof of the lower levels. In this situation, the question is the rating requirements for the exterior wall of the stairway over the roof. Therefore, the exterior wall of the stairway must meet the vertical opening provisions in Section 705.8.6.

1023.8 Discharge identification. An *interior exit stairway* and *ramp* shall not continue below its *level of exit discharge* unless an *approved* barrier is provided at the *level of exit discharge* to prevent persons from unintentionally continuing into levels below. Directional exit signs shall be provided as specified in Section 1013.

❖ So that building occupants using an exit stairway during an emergency situation will be prevented from going past the level of exit discharge, the run of the stairway is to be interrupted by a partition, door, gate or other approved means. These devices help the users of the stairway to recognize when they have reached the point that is the level of exit discharge. Exit signs, including raised letters and braille, are to be provided for occupant guidance at the door leading to the way out (i.e., directly to the exterior, or via an exit passageway, lobby or vestibule). Furthermore, signs are to be placed at each floor landing in all interior exit stairways connecting more than three floor levels, designating the level or story of the landings in accordance with Section 1023.9.

The code does not specify the type of material or construction of the barrier used to identify the level of exit discharge. The key issues to be considered in the selection and approval of the type of barrier to be used are: 1. Whether the barrier provides a visible and physical means of alerting occupants who are exiting under emergency conditions that they have reached the level of exit discharge; and 2. Whether the barrier is constructed of materials that are permitted by the construction type of the building. In an emergency situation, some occupants are likely to come in contact with the barrier during exiting before realizing that they are at the level of exit discharge. Therefore, the barrier should be constructed in a manner that is substantial enough to withstand the anticipated physical contact, such as pushing or shoving. It would be reasonable, as a minimum, to design the barrier to withstand the structural load requirements of Section 1607.5 for interior walls and partitions. The barrier could be opaque (such as gypsum wallboard and stud framing) or not (such as a wire grid-type material).

The use of signage only or relatively insubstantial barriers, such as ropes or chains strung across the opening, is typically not sufficient to prevent occupants from attempting to continue past the level of exit discharge during an emergency.

Commentary Figure 1023.8 is an example of one method of discharge identification.

INTERNATIONAL CODE COUNCIL®
Copyright © 2015 ICC. ALL RIGHTS RESERVED. Accessed by David Dammon on Jun 21, 2017 12:30:52 PM pursuant to License Agreement with ICC. No further reproduction or distribution authorized. ANY UNAUTHORIZED REPRODUCTION OR DISTRIBUTION IS A VIOLATION OF THE FEDERAL COPYRIGHT ACT AND THE LICENSE AGREEMENT, AND SUBJECT TO CIVIL AND CRIMINAL PENALTIES THEREUNDER.

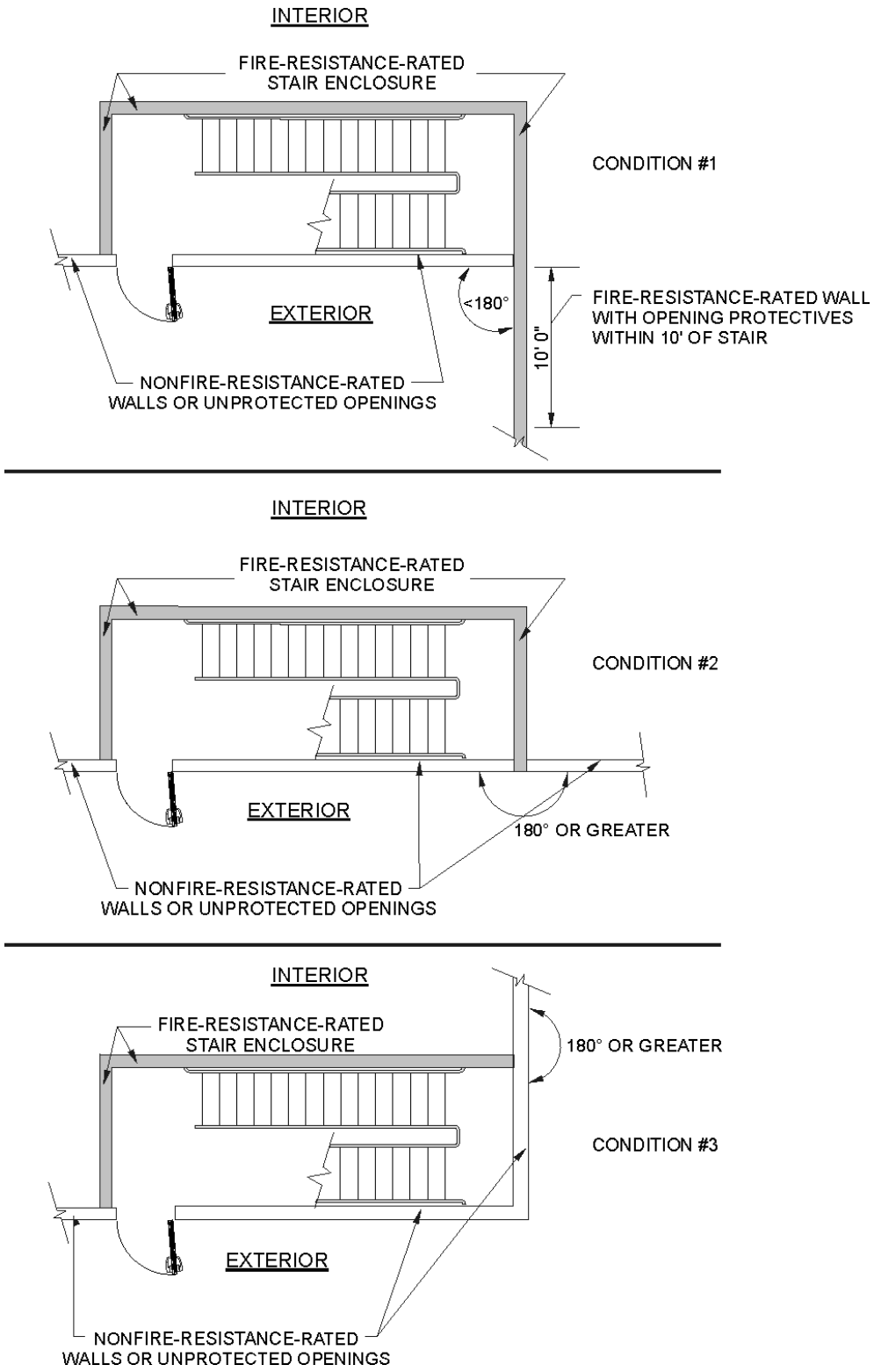

For SI: 1 foot = 304.8 mm, 1 degree = 0.01745 rad.

Figure 1023.7(1)
EXAMPLES OF EXTERIOR WALL PROTECTIVES

INTERNATIONAL CODE COUNCIL®
Copyright © 2015 ICC. ALL RIGHTS RESERVED. Accessed by David Dammon on Jun 21, 2017 12:30:52 PM pursuant to License Agreement with ICC. No further reproduction or distribution authorized. ANY UNAUTHORIZED REPRODUCTION OR DISTRIBUTION IS A VIOLATION OF THE FEDERAL COPYRIGHT ACT AND THE LICENSE AGREEMENT, AND SUBJECT TO CIVIL AND CRIMINAL PENALTIES THEREUNDER.

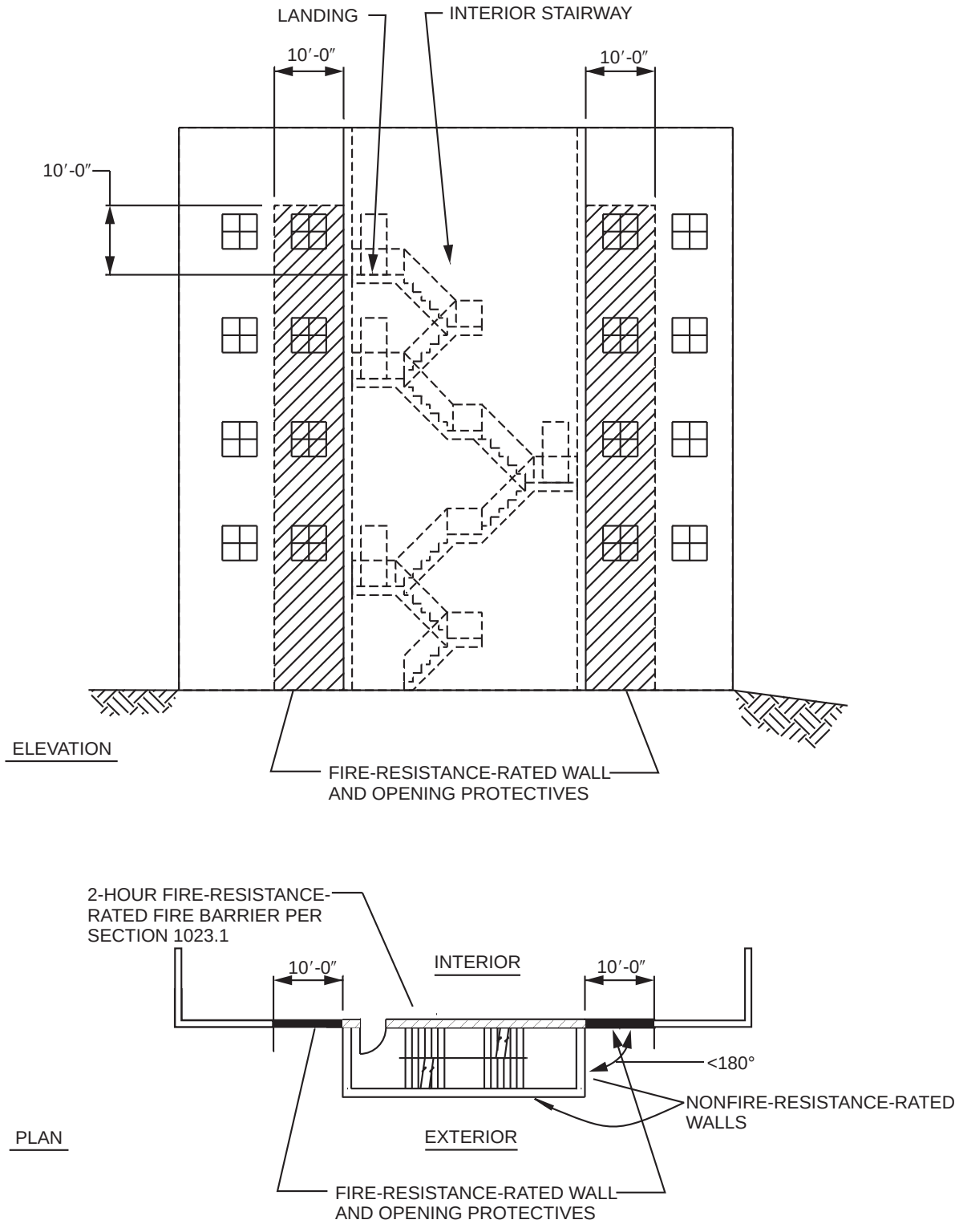

For SI: 1 foot = 304.8 mm, 1 degree = 0.01745 rad.

Figure 1023.7(2)
EXTERIOR WALL PROTECTION

INTERNATIONAL CODE COUNCIL®
Copyright © 2015 ICC. ALL RIGHTS RESERVED. Accessed by David Dammon on Jun 21, 2017 12:30:52 PM pursuant to License Agreement with ICC. No further reproduction or distribution authorized. ANY UNAUTHORIZED REPRODUCTION OR DISTRIBUTION IS A VIOLATION OF THE FEDERAL COPYRIGHT ACT AND THE LICENSE AGREEMENT, AND SUBJECT TO CIVIL AND CRIMINAL PENALTIES THEREUNDER.

1023.9 Stairway identification signs. A sign shall be provided at each floor landing in an *interior exit stairway* and *ramp* connecting more than three stories designating the floor level, the terminus of the top and bottom of the *interior exit stairway* and *ramp* and the identification of the *stairway* or *ramp*. The signage shall also state the story of, and the direction to, the *exit discharge* and the availability of roof access from the *interior exit stairway* and *ramp* for the fire department. The sign shall be located 5 feet (1524 mm) above the floor landing in a position that is readily visible when the doors are in the open and closed positions. In addition to the *stairway* identification sign, a floor-level sign in visual characters, raised characters and braille complying with *ICC A117.1* shall be located at each floor-level landing adjacent to the door leading from the *interior exit stairway* and *ramp* into the *corridor* to identify the floor level.

❖ This section discusses two distinct sign requirements that have totally different purposes.

Signs are to be placed at each floor landing in all exit stairways connecting more than three stories. The signs are to designate the level or story of the landings above or below the level of exit discharge. The purpose is to inform the occupants of their location with respect to the level of exit discharge as they use the stairway to leave the building. More importantly, it allows the fire service to locate and gain quick access to the fire floor. At each level, the direction to the exit discharge is required to be indicated. The identification of the level that is the exit discharge is also to be indicated at each level. The identification of the roof access availability is for the fire department (see Commentary Figure 1023.9.1). Roof access is required by Section 1011.13. For visibility, the signs are required to be located approximately 5 feet (1524 mm) above the floor surface and to be vis-



Figure 1023.9.1
STAIRWAY IDENTIFICATION SIGN



Figure 1023.8
EXAMPLE OF A STAIRWAY BARRIER AT THE LEVEL OF EXIT DISCHARGE

INTERNATIONAL CODE COUNCIL®
Copyright © 2015 ICC. ALL RIGHTS RESERVED. Accessed by David Dammon on Jun 21, 2017 12:30:52 PM pursuant to License Agreement with ICC. No further reproduction or distribution authorized. ANY UNAUTHORIZED REPRODUCTION OR DISTRIBUTION IS A VIOLATION OF THE FEDERAL COPYRIGHT ACT AND THE LICENSE AGREEMENT, AND SUBJECT TO CIVIL AND CRIMINAL PENALTIES THEREUNDER.

ible when the stairway door is open. The need to designate levels remaining to reach the level of exit discharge may mean that the numbering is other than the normal designation used by building management. For example, a designation of P1, P2, P3, etc., would not be acceptable for stairways in the basement parking garage, since in themselves they do not designate the floor level below the level of exit discharge.

To aid people with vision impairments, the floor designation must also be available in visual and raised letters and braille at each door. The intent is to let persons with vision impairments be able to find out what floor they are on without leaving the stairway enclosure. Visual and raised letters and braille signage indicating the door leading to the exterior is covered in Section 1013.4.

1023.9.1 Signage requirements. *Stairway* identification signs shall comply with all of the following requirements:

1. The signs shall be a minimum size of 18 inches (457 mm) by 12 inches (305 mm).
2. The letters designating the identification of the *interior exit stairway* and *ramp* shall be not less than $1^1/_2$ inches (38 mm) in height.
3. The number designating the floor level shall be not less than 5 inches (127 mm) in height and located in the center of the sign.
4. Other lettering and numbers shall be not less than 1 inch (25 mm) in height.
5. Characters and their background shall have a nonglare finish. Characters shall contrast with their background, with either light characters on a dark background or dark characters on a light background.
6. Where signs required by Section 1023.9 are installed in the *interior exit stairways* and *ramps* of buildings subject to Section 1025, the signs shall be made of the same materials as required by Section 1025.4.

❖ The requirements for stairway identification signage will provide for a consistent approach. The intent is to make signs visible and immediately recognizable to occupants and emergency responders using the stairway (see Commentary Figure 1023.9.1).

In addition, if the building is a high-rise and luminous egress path markings are required (see Section 1025.1), the stairway identification signage must also be self-luminous or photoluminescent. In order to also meet the contrast requirements in Item 5, typically the sign will have dark letters on a glow-in-the-dark background.

1023.10 Elevator lobby identification signs. At landings in *interior exit stairways* where two or more doors lead to the floor level, any door with direct access to an enclosed elevator lobby shall be identified by signage located on the door or directly adjacent to the door stating "Elevator Lobby." Signage shall be in accordance with Section 1023.9.1, Items 4, 5 and 6.

❖ This section is mainly related to fire service access elevators required in Section 403.6.1 for a building with an occupied floor more than 120 feet (3048 mm) above the street. The elevator lobby is required to have direct access to an exit stairway (Section 3007.6.1). In addition, that same exit enclosure has to have access to the floor without going back through the elevator lobby (see Section 3007.9.1). This leads to two doors at each floor landing. Elevator lobby signs identify the correct door though which fire fighters should access the floor so that lobby smoke protection is maintained.

Since typically the fire service access elevators will use the same lobby as the occupant evacuation elevators (when provided), this signage would effectively be required for the doors in the stairway enclosure that lead to occupant evacuation elevator lobbies as well.

1023.11 Smokeproof enclosures. Where required by Section 403.5.4 or 405.7.2, *interior exit stairways* and *ramps* shall be *smokeproof enclosures* in accordance with Section 909.20.

❖ While smokeproof enclosures and pressurized stairways for exiting can, at the designer's option, be used in buildings of any occupancy, height or area, this section specifically requires smokeproof enclosures or pressurized stairways to be provided when either of two conditions occur.

The first condition requires all exit stairways in high-rise buildings [i.e., buildings with floor levels higher than 75 feet (22 860 mm) above the level of exit discharge (see Section 403.5.4)] to be smokeproof enclosures or pressurized stairways. The reason for this provision is that in very tall buildings, often during fire emergencies, total and immediate evacuation of the occupants cannot be readily accomplished. In such situations, exit stairways become places of safety for the occupants and must be adequately protected with smokeproof enclosures or pressurization to provide a safe egress environment. In order to provide this safe environment, the enclosure must be constructed to resist the migration of smoke caused by the "stack effect." Stack effect occurs in tall enclosures such as chimneys, when a fluid such as smoke, which is less dense than the ambient air, is introduced into the enclosure. The smoke will rise because of the effects of buoyancy and will induce additional flow into the enclosure through openings of any size at the lower levels.

The second condition applies for underground buildings [i.e., when an occupiable floor level is located more than 30 feet (9144 mm) below the level of exit discharge (see Section 405.7.2)]. Stairways serving those levels are also required to be protected by smokeproof enclosures or pressurization because

INTERNATIONAL CODE COUNCIL®
Copyright © 2015 ICC. ALL RIGHTS RESERVED. Accessed by David Dammon on Jun 21, 2017 12:30:52 PM pursuant to License Agreement with ICC. No further reproduction or distribution authorized. ANY UNAUTHORIZED REPRODUCTION OR DISTRIBUTION IS A VIOLATION OF THE FEDERAL COPYRIGHT ACT AND THE LICENSE AGREEMENT, AND SUBJECT TO CIVIL AND CRIMINAL PENALTIES THEREUNDER.

underground portions of a building present unique problems in providing not only for life safety but also access for fire-fighting purposes. The choice of a 30-foot (9144 mm) threshold for this requirement is intended to provide a reasonable limitation on vertical travel distance before the requirement applies.

Detailed system requirements for a smokeproof enclosure or pressurization are in Section 909.20. Note that Sections 403 and 405 each have exceptions for specific building types that are not to be regulated by those sections. Likewise, the requirements of this section do not apply to buildings identified in those exceptions.

1023.11.1 Termination and extension. A *smokeproof enclosure* shall terminate at an *exit discharge* or a *public way*. The *smokeproof enclosure* shall be permitted to be extended by an *exit passageway* in accordance with Section 1023.3. The *exit passageway* shall be without openings other than the *fire door assembly* required by Section 1023.3.1 and those necessary for egress from the *exit passageway*. The *exit passageway* shall be separated from the remainder of the building by 2-hour *fire barriers* constructed in accordance with Section 707 or *horizontal assemblies* constructed in accordance with Section 711, or both.

Exceptions:

1. Openings in the *exit passageway* serving a *smokeproof enclosure* are permitted where the *exit passageway* is protected and pressurized in the same manner as the *smokeproof enclosure*, and openings are protected as required for access from other floors.
2. The *fire barrier* separating the *smokeproof enclosure* from the *exit passageway* is not required, provided the *exit passageway* is protected and pressurized in the same manner as the *smokeproof enclosure*.
3. A *smokeproof enclosure* shall be permitted to egress through areas on the *level of exit discharge* or vestibules as permitted by Section 1028.

❖ The walls forming the smokeproof enclosure, which includes the stairway shaft and the vestibules, must be fire barriers having a fire-resistance rating of at least 2 hours. This level of fire endurance is specified because exit stairways in high-rise buildings serve as principal components of the egress system and as the source of fire service access to the fire floor. This supersedes any allowed reduction of enclosure rating, even if the stair from the level that is more than 30 feet (9144 mm) below exit discharge connects three stories or less. A pressurized stairway is a special case of a smokeproof enclosure; therefore, the requirements would be the same.

The first exception applies to openings in the exit passageway that are permitted, provided the exit passageway is protected and pressurized. If the exit stairway enclosure is connected to an exit passageway, Exception 2 allows the elimination of a door between, since this would interfere with the pressurization of the stairway and passageway as a combined exit system. In accordance with Exception 3, 50 percent of the stairways in smokeproof enclosures or pressurized stairways can use the exit discharge exceptions in Section 1028 to egress through a lobby or vestibule.

1023.11.2 Enclosure access. Access to the *stairway* or *ramp* within a *smokeproof enclosure* shall be by way of a vestibule or an open exterior balcony.

Exception: Access is not required by way of a vestibule or exterior balcony for *stairways* and *ramps* using the pressurization alternative complying with Section 909.20.5.

❖ See Commentary Figures 1023.11.2(1) and 1023.11.2(2) for illustrations of access to the smokeproof stairway or ramp by way of a vestibule or an exterior balcony. The purpose of this requirement is to keep the enclosure clear of smoke. Where a pressurized stairway is used, these elements are not necessary.

SECTION 1024
EXIT PASSAGEWAYS

1024.1 Exit passageways. *Exit passageways* serving as an exit component in a *means of egress* system shall comply with the requirements of this section. An *exit passageway* shall not be used for any purpose other than as a *means of egress* and a *circulation path*.

❖ This section provides acceptable methods of continuing the protected path of travel for building occupants. The building designer or owner is given different options for achieving this protected path of travel. See Commentary Figure 1024.1 for an illustration of an exit passageway arrangement. In the case of office buildings or similar structures, the exit stairways are often located at the central core or in line with the centrally located exit access corridors. Exit passageways may be used to connect the exit stair to the exterior exit door or to connect enclosures for exit stairways that are not vertically continuous. Such an arrangement provides great flexibility in the design use of the building. Without an exit passageway at the grade floor or the level of exit discharge, the occupants of the upper floors or basement levels would have to leave the safety of the exit stairway to travel to the exterior doors. Such a reduction of protection is not acceptable (see Section 1028 for exit discharge alternatives).

Exit passageways may also be used on their own in locations not connected with an enclosure for an exit stairway. The exit passageway is often used as a protected horizontal exit path, such as in a mall or unlimited area building. Sometimes on large floor plans, an exit passageway may be used to extend an exit into areas that would not otherwise be able to meet the travel distance requirements. Like exit stairways, there is no travel distance limitation within an exit passageway.

INTERNATIONAL CODE COUNCIL®
Copyright © 2015 ICC. ALL RIGHTS RESERVED. Accessed by David Dammon on Jun 21, 2017 12:30:52 PM pursuant to License Agreement with ICC. No further reproduction or distribution authorized. ANY UNAUTHORIZED REPRODUCTION OR DISTRIBUTION IS A VIOLATION OF THE FEDERAL COPYRIGHT ACT AND THE LICENSE AGREEMENT, AND SUBJECT TO CIVIL AND CRIMINAL PENALTIES THEREUNDER.

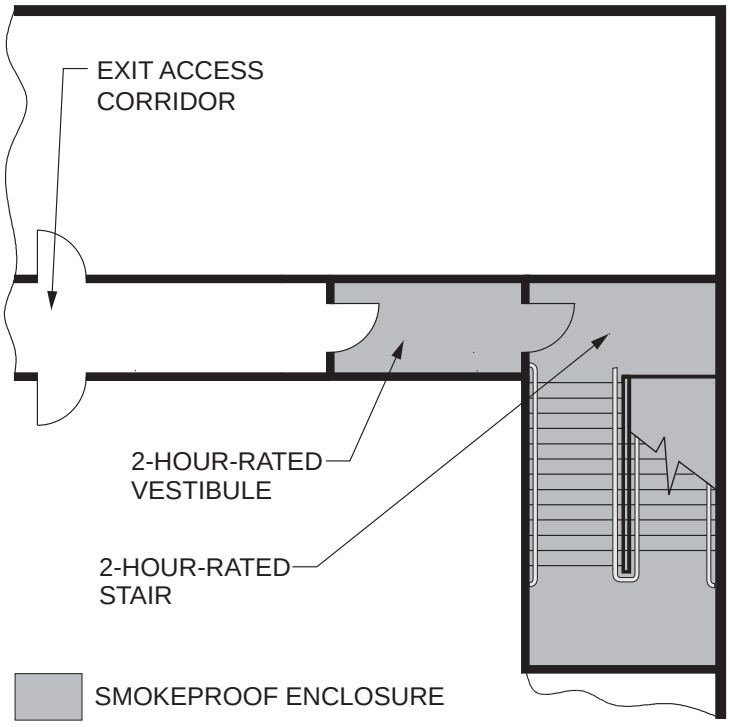

Figure 1023.11.2(1)
TYPICAL SMOKEPROOF ENCLOSURE ENTRY

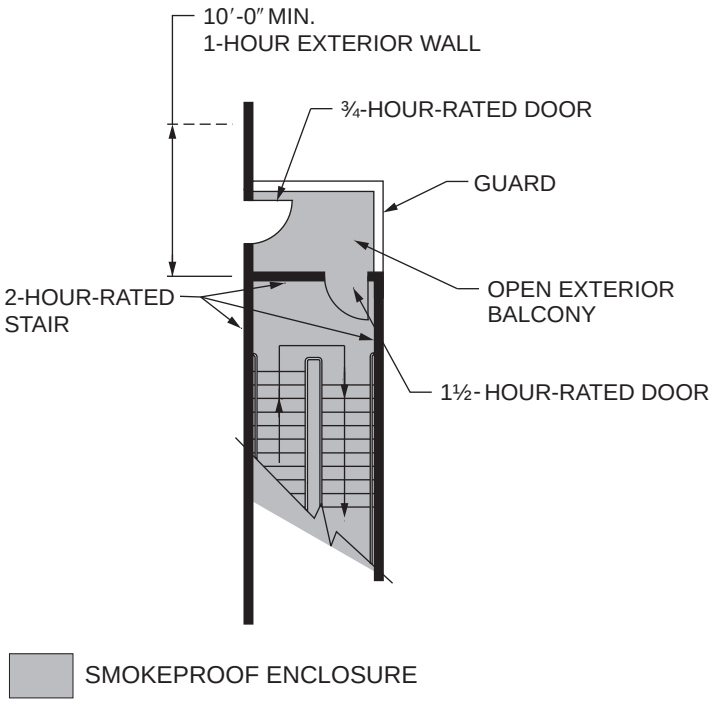

For SI: 1 foot = 304.8 mm.

Figure 1023.11.2(2)
TYPICAL SMOKEPROOF ENCLOSURE WITH OPEN BALCONY ARRANGEMENT

INTERNATIONAL CODE COUNCIL®
Copyright © 2015 ICC. ALL RIGHTS RESERVED. Accessed by David Dammon on Jun 21, 2017 12:30:52 PM pursuant to License Agreement with ICC. No further reproduction or distribution authorized. ANY UNAUTHORIZED REPRODUCTION OR DISTRIBUTION IS A VIOLATION OF THE FEDERAL COPYRIGHT ACT AND THE LICENSE AGREEMENT, AND SUBJECT TO CIVIL AND CRIMINAL PENALTIES THEREUNDER.

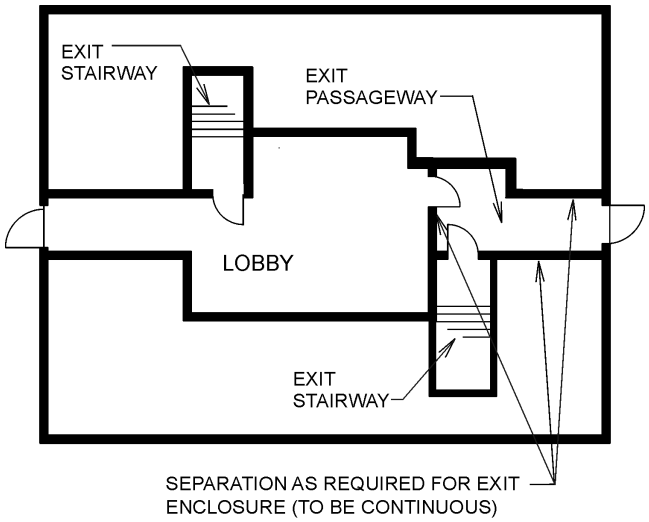

Figure 1024.1
ARRANGEMENT FOR LOBBY AND PASSAGEWAY

1024.2 Width. The required capacity of *exit passageways* shall be determined as specified in Section 1005.1 but the minimum width shall be not less than 44 inches (1118 mm), except that *exit passageways* serving an occupant load of less than 50 shall be not less than 36 inches (914 mm) in width. The minimum width or required capacity of *exit passageways* shall be unobstructed.

Exception: Encroachments complying with Section 1005.7.

❖ The width of an exit passageway is to be determined in accordance with Section 1005.1, based on the number of occupants served in the same manner as for corridors. The greater of the minimum required width or the width determined based on occupancy is to be used. In situations where the exit passageway also serves as an exit access corridor for the first floor, the corridor width must comply with the stricter requirement.

A cross reference back to Section 1005.7 from the exceptions for encroachments in the required width in aisles (see Section 1011.1), corridors (see Section 1020.3), exit passageways (see Section 1024.2) and exit courts (see Section 1028.4.1) reinforces the fact that the protrusion limits provision is generally applicable for these types of confined routes.

1024.3 Construction. *Exit passageway* enclosures shall have walls, floors and ceilings of not less than a 1-hour *fire-resistance rating*, and not less than that required for any connecting *interior exit stairway* or *ramp*. *Exit passageways* shall be constructed as *fire barriers* in accordance with Section 707 or *horizontal assemblies* constructed in accordance with Section 711, or both.

❖ The entire exit passageway enclosure is to be fire-resistance rated as specified. The floors and ceilings are required to be rated in addition to the walls. When used separately, a minimum 1-hour fire-resistance rating is required. Where extending an enclosure for an exit stairway, the rating must not be less than the enclosure for the exit stairway so that the degree of protection is kept at the same level. Remember that if the exit passageway extends over a lower level, such as a basement, all supporting construction is to have the same fire-resistance rating as the elements supported in accordance with the continuity requirements for fire barriers and horizontal assemblies (see Sections 707.5 and 711.2.3). The continuity requirements would also be a concern for the rated ceiling of the exit passageway. An alternative for the ceiling of the exit passageway could be a top-of-shaft enclosure (see Section 713.12).

1024.4 Termination. *Exit passageways* on the *level of exit discharge* shall terminate at an *exit discharge*. *Exit passageways* on other levels shall terminate at an *exit*.

❖ This is consistent with the exit continuity and enclosure requirements in Section 1023.3. Section 1023.3 has an exception that allows for combinations of interior exit stairways and ramps with the exit passageway. The intent of this section is to provide safety in all portions of the exit by requiring continuity of the fire protection characteristics of the enclosure for the exit stairway in combination with an exit passageway. This would include, but not be limited to, the fire-resistance rating of the enclosure walls for the exit stairways and the opening protection rating of the doors. When an exit passageway is supported by the structure, the supporting construction must be fire-resistance rated equal to the walls and floors of the passageway being supported.

Section 1028.1, Exceptions 1 and 2, allow for an alternative for direct access to the outside via an intervening lobby or vestibule.

Horizontal exits, while not providing direct access to the outside of the structure, do move occupants to

INTERNATIONAL CODE COUNCIL®
Copyright © 2015 ICC. ALL RIGHTS RESERVED. Accessed by David Dammon on Jun 21, 2017 12:30:52 PM pursuant to License Agreement with ICC. No further reproduction or distribution authorized. ANY UNAUTHORIZED REPRODUCTION OR DISTRIBUTION IS A VIOLATION OF THE FEDERAL COPYRIGHT ACT AND THE LICENSE AGREEMENT, AND SUBJECT TO CIVIL AND CRIMINAL PENALTIES THEREUNDER.

another "building" by moving through a fire wall (see Sections 1026 and 1028.1, Exception 3) into a refuge area protected by fire barriers and horizontal assemblies. Horizontal exits are commonly used in hospitals and jails for a defend-in-place type of protection.

An exit passageway may be used to move between vertical enclosures for exit stairways. This may occur when a building is shaped like a wedding cake, so the stairway towers move outward as the building gets larger toward grade level. If this situation happens, it is very important to let occupants know how to proceed. See Section 1013.1 for exit signage requirements for within the exit passageways.

1024.5 Openings. *Exit passageway* opening protectives shall be in accordance with the requirements of Section 716.

Except as permitted in Section 402.8.7, openings in *exit passageways* other than unprotected exterior openings shall be limited to those necessary for *exit access* to the *exit passageway* from normally occupied spaces and for egress from the *exit passageway*.

Where an *interior exit stairway* or *ramp* is extended to an *exit discharge* or a *public way* by an *exit passageway*, the *exit passageway* shall comply with Section 1023.3.1.

Elevators shall not open into an *exit passageway*.

❖ In order for fire doors to be effective, they must be in the closed position; therefore, the preferred arrangement is to install self-closing doors. Recognizing that operational practices often require doors to be open for an extended period of time, automatic-closing doors are permitted as long as this opening will not pose a threat to occupant safety and the doors will be self-latching. Automatic-closing devices enable the opening to be protected during a fire condition. The basic requirement for closing devices and specific requirements for automatic-closing and self-closing devices are given in NFPA 80. Automatic-closing doors that protect openings into exits are also required to close on the actuation of smoke detectors or loss of power to the smoke detectors (see Section 716.5.9.3).

The requirements for exit passageways are very similar to those required for enclosures for interior exit stairways (see Section 1023.4). The only openings that are permitted in fire-resistance-rated exit passageways are doors that lead from normally occupied spaces, from the enclosure for the exit stairway and to the outside. This restriction on openings essentially prohibits the use of windows in an exit passageway except for those exterior windows that are not exposed to any hazards. This requirement is not intended to prohibit windows or other openings in the exterior walls of the exit enclosure. The verbiage "unprotected exterior openings" includes windows or doors not required to be protected by either Section 705.8 or 1023.7. The only exception would be window assemblies that have been tested as wall assemblies in accordance with ASTM E119 and UL 263. The objective of this provision is to minimize the possibility of fire spreading into an exit passageway and endangering the occupants or even preventing the use of the exit at a time when it is most needed. The limitation on openings applies regardless of the fire protection rating of the opening protective. The limitation on openings from normally occupied areas is intended to reduce the probability of a fire occurring in an unoccupied area, such as a storage closet, that has an opening into the exit passageway, thereby resulting in smoke spreading into the exit passageway. Other spaces that are not normally occupied include, but are not limited to, toilet rooms, electrical/mechanical equipment rooms and janitorial closets. Note that exit passageways prohibit elevators from opening directly into the passageway. There are some exceptions for these unoccupied spaces in exit passageways in covered malls (see Section 402.4.6).

The third paragraph addresses when the vertical enclosure for an exit stairway or ramp transitions to the exit passageway. While the exit passageway is an extension of the protection offered by the vertical exit, there must still be a door (i.e., opening protective) between the bottom of the stairway or ramp enclosure and the exit passageway. This is to prevent any smoke that may migrate into the exit passageway from also moving up the exit stairway or ramp. This door is not required if the exit stairway and exit passageway are protected by pressurization (see Section 1023.10.1).

Elevators may not open into exit passageways. The difficulty is to have elevator doors that can meet the opening protectives for a fire barrier, but still operate effectively. For additional information on elevator lobbies and doors, see the commentary to Sections 713.14 and 1020.6.

These opening limitations are very similar to those required for an exit enclosure (see Section 1023.3).

1024.6 Penetrations. Penetrations into or through an *exit passageway* are prohibited except for equipment and ductwork necessary for independent pressurization, sprinkler piping, standpipes, electrical raceway for fire department communication and electrical raceway serving the *exit passageway* and terminating at a steel box not exceeding 16 square inches (0.010 m2). Such penetrations shall be protected in accordance with Section 714. There shall not be penetrations or communicating openings, whether protected or not, between adjacent *exit passageways*.

Exception: Membrane penetrations shall be permitted on the outside of the *exit passageway*. Such penetrations shall be protected in accordance with Section 714.3.2.

❖ This section specifically lists the items that are allowed to penetrate an exit passageway. This is consistent for all types of exit enclosures, including enclosures for exit stairways or ramps (see Section 1023.5) and exit passageways. In general, only portions of the building service systems that serve the exit passageways are allowed to penetrate the exit passageway. Section 714 addresses through penetrations and membrane penetrations for fire-resis-

INTERNATIONAL CODE COUNCIL®
Copyright © 2015 ICC. ALL RIGHTS RESERVED. Accessed by David Dammon on Jun 21, 2017 12:30:52 PM pursuant to License Agreement with ICC. No further reproduction or distribution authorized. ANY UNAUTHORIZED REPRODUCTION OR DISTRIBUTION IS A VIOLATION OF THE FEDERAL COPYRIGHT ACT AND THE LICENSE AGREEMENT, AND SUBJECT TO CIVIL AND CRIMINAL PENALTIES THEREUNDER.

tance-rated wall and floor/ceiling assemblies. The intent is to maintain the integrity of the enclosure for the exit access stairway. If the ductwork serving the exit passageway penetrates a rated wall or floor/ceiling assembly, a fire and smoke damper is required by Section 717.5.3. This requirement is not intended to prohibit windows in the exterior walls of exit passageways that are not required to be rated.

The exception allows for electrical boxes or fire alarm pull stations to be installed on the outside of the enclosure, provided that the boxes are installed so that the required fire-resistance rating is not reduced (see Section 714.3.2).

1024.7 Ventilation. Equipment and ductwork for *exit passageway* ventilation as permitted by Section 1024.6 shall comply with one of the following:

1. The equipment and ductwork shall be located exterior to the building and shall be directly connected to the *exit passageway* by ductwork enclosed in construction as required for shafts.
2. Where the equipment and ductwork is located within the *exit passageway*, the intake air shall be taken directly from the outdoors and the exhaust air shall be discharged directly to the outdoors, or the air shall be conveyed through ducts enclosed in construction as required for shafts.
3. Where located within the building, the equipment and ductwork shall be separated from the remainder of the building, including other mechanical equipment, with construction as required for shafts.

In each case, openings into the fire-resistance-rated construction shall be limited to those needed for maintenance and operation and shall be protected by opening protectives in accordance with Section 716 for shaft enclosures.

Exit passageway ventilation systems shall be independent of other building ventilation systems.

❖ As a continuation of an exit stairway enclosure, an exit passageway has the same considerations for protection. While an exit passageway may look like a regular hallway, it is important that it be maintained as free of smoke as the exit stairway. See the commentary to Section 1023.6.

SECTION 1025
LUMINOUS EGRESS PATH MARKINGS

1025.1 General. *Approved* luminous egress path markings delineating the exit path shall be provided in *high-rise buildings* of Group A, B, E, I, M, and R-1 occupancies in accordance with Sections 1025.1 through 1025.5.

Exception: Luminous egress path markings shall not be required on the *level of exit discharge* in lobbies that serve as part of the exit path in accordance with Section 1028.1, Exception 1.

❖ Improved safety for individuals negotiating stairs during egress of a high-rise building is provided by improving the visibility of stair treads and handrails under emergency conditions. A second source of emergency power for exit illumination, exit signs and stair shaft pressurization systems in smokeproof enclosures is currently mandated for high-rise buildings. In the event of an emergency that disconnects utility power, the emergency power source should engage, causing the stair shaft to be illuminated and kept smoke free by the pressurization system. Unfortunately, such systems can fail under demand conditions. The provisions of Section 1025 add an additional level of safety to the egress path by requiring the installation of photoluminescent or self-illuminating marking systems that do not require electrical power and its associated wiring and circuits. An additional means for ensuring that occupants can safely egress a building via exit stairways is now available even if the emergency power supply and system fails to operate. The groups indicated have a high anticipated occupant load or occupants may not be as familiar with the space. Note that the provisions only require these markings within the enclosure for the exit stairway, exit ramp and the exit passageway used for enclosure continuation. The markings are not required before reaching the exit (i.e., exit access) or after leaving the exit (i.e., exit discharge).

The exception indicates that if the exit stairway enclosure discharges through the lobby (see Section 1028.1, Exception 1), the egress markings would not be required outside the stairway enclosure for the portion from the stairway enclosure to the door leading to the outside. If the exit stairway discharges through an exit passageway, the exit path markings must continue to the door leading to the outside. The current text is silent for the options of vestibules and horizontal exits, but since Sections 1025.1 through 1025.5 only address within the enclosure for the exit, and not the exit discharge, exit path markings in the vestibule or after the horizontal exit are not required.

1025.2 Markings within exit components. Egress path markings shall be provided in *interior exit stairways*, *interior exit ramps* and *exit passageways*, in accordance with Sections 1025.2.1 through 1025.2.6.

❖ Luminous egress path markings are required inside the enclosure for exit stairways or ramps for all floors. If the stairway connects to an exit passageway as part of the travel down to the level of exit discharge or on the level of exit discharge, the path markings must also be continued in the exit passageway.

The subsections include marking the tread nosings, the surrounding edges of landings and any exit passageways, handrails and any protruding objects within the protected enclosure.

All exit path markings are required to be solid and continuous stripes. A key requirement for marking systems is that their design must be uniform. The placement and dimensions of markings must be consistent along the entire exit stairway. By specifying a standard marking dimension, the requirements will

INTERNATIONAL CODE COUNCIL®
Copyright © 2015 ICC. ALL RIGHTS RESERVED. Accessed by David Dammon on Jun 21, 2017 12:30:52 PM pursuant to License Agreement with ICC. No further reproduction or distribution authorized. ANY UNAUTHORIZED REPRODUCTION OR DISTRIBUTION IS A VIOLATION OF THE FEDERAL COPYRIGHT ACT AND THE LICENSE AGREEMENT, AND SUBJECT TO CIVIL AND CRIMINAL PENALTIES THEREUNDER.

ensure that the marking is visible during dark conditions and provides consistent and standard application in the design and enforcement of exit path markings. Markings installed on stair steps, perimeter demarcation lines and handrails must have a minimum width of 1 inch (25 mm). For stair steps and perimeter demarcation lines, their maximum width cannot exceed 2 inches (51 mm). The provisions for stair steps, perimeter demarcation lines and handrails allow the width of the marking to be reduced to less than 1 inch (25 mm) when marking stripes are listed in accordance with UL 1994.

1025.2.1 Steps. A solid and continuous stripe shall be applied to the horizontal leading edge of each step and shall extend for the full length of the step. Outlining stripes shall have a minimum horizontal width of 1 inch (25 mm) and a maximum width of 2 inches (51 mm). The leading edge of the stripe shall be placed not more than $^1/_2$ inch (12.7 mm) from the leading edge of the step and the stripe shall not overlap the leading edge of the step by not more than $^1/_2$ inch (12.7 mm) down the vertical face of the step.

Exception: The minimum width of 1 inch (25 mm) shall not apply to outlining stripes listed in accordance with UL 1994.

❖ Luminous stripes are required the full width of the stairway on all tread nosings and along the leading edge of stair landings. These demarcation lines serve to identify the transition from the stair steps to the landing, which is important to minimize the risk of a fall inside of a stairway enclosure that is not illuminated. In order to clearly identify the leading edge of the step, the front edge of the stripe must be within $^1/_2$ inch (13 mm) plus or minus of the leading edge of the tread (see Commentary Figure 1025.2.1).

The code does not specify any minimum slip-resistance requirements for luminous products installed on walking surfaces. However, Section 1003.4 requires all walking surfaces for means of egress to be slip resistant. Persons with vision impairments often rely on high-contrast elements to delineate changes in elevation such as that required in Sections 1011.5.4 and 1029.13.2.2. In medium light conditions, the luminous materials may be hard to discern. Luminous materials installed adjacent to dark contrasting materials may help with both situations.

The provisions for stair steps, perimeter demarcation lines and handrails allow the width of the marking to be reduced to less than 1 inch (25 mm) when marking stripes are listed in accordance with UL 1994.

1025.2.2 Landings. The leading edge of landings shall be marked with a stripe consistent with the dimensional requirements for steps.

❖ The edge of the landing at the top of the steps must be marked in the same manner as the tread nosing so that a person can tell where the steps start. See the commentary to Section 1025.2.1 and Commentary Figure 1025.2.1.

1025.2.3 Handrails. *Handrails* and handrail extensions shall be marked with a solid and continuous stripe having a minimum width of 1 inch (25 mm). The stripe shall be placed on the top surface of the *handrail* for the entire length of the *handrail*, including extensions and newel post caps. Where *handrails* or handrail extensions bend or turn corners, the stripe shall not have a gap of more than 4 inches (102 mm).

Exception: The minimum width of 1 inch (25 mm) shall not apply to outlining stripes listed in accordance with UL 1994.

❖ The handrail must have a glow-in-the-dark stripe down the entire length. The 1-inch (25 mm) minimum width stripe must be on the top of the handrail so it can charge and maximize its visibility in the dark. Bends or turns may result in a break in the marking, which must not be more than 4 inches (102 mm) maximum (see Commentary Figure 1025.2.3).

The provisions for stair steps, perimeter demarcation lines and handrails allow the width of the marking to be reduced to less than 1 inch (25 mm) when marking stripes are listed in accordance with UL 1994.

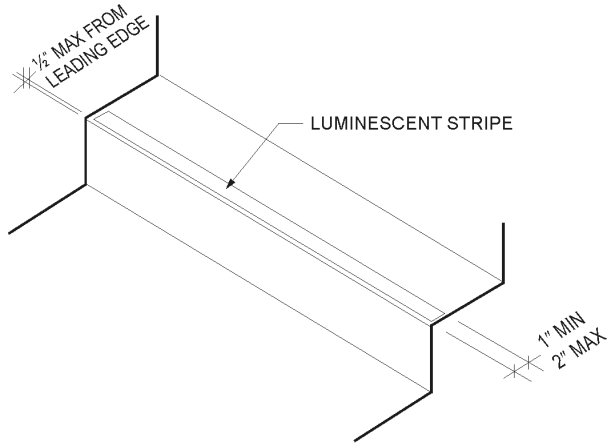

For SI: 1 inch = 25.4 mm.

Figure 1025.2.1
LEADING EDGE OF STEP AND LANDING

INTERNATIONAL CODE COUNCIL®
Copyright © 2015 ICC. ALL RIGHTS RESERVED. Accessed by David Dammon on Jun 21, 2017 12:30:52 PM pursuant to License Agreement with ICC. No further reproduction or distribution authorized. ANY UNAUTHORIZED REPRODUCTION OR DISTRIBUTION IS A VIOLATION OF THE FEDERAL COPYRIGHT ACT AND THE LICENSE AGREEMENT, AND SUBJECT TO CIVIL AND CRIMINAL PENALTIES THEREUNDER.

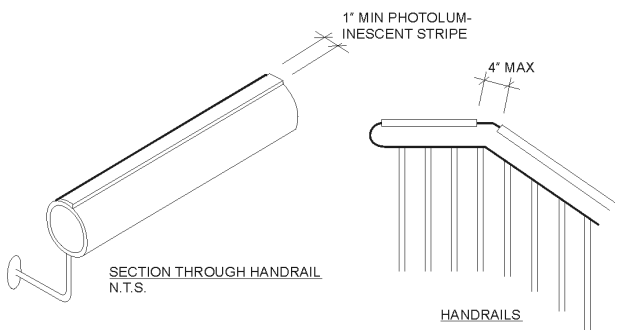

For SI: 1 inch = 25.4 mm.

Figure 1025.2.3
HANDRAIL MARKINGS

1025.2.4 Perimeter demarcation lines. Stair landings and other floor areas within *interior exit stairways*, *interior exit ramps* and *exit passageways*, with the exception of the sides of steps, shall be provided with solid and continuous demarcation lines on the floor or on the walls or a combination of both. The stripes shall be 1 to 2 inches (25 mm to 51 mm) wide with interruptions not exceeding 4 inches (102 mm).

Exception: The minimum width of 1 inch (25 mm) shall not apply to outlining stripes listed in accordance with UL 1994.

❖ In addition to the leading edge of the landing, the landing must have a luminous stripe all the way around the edge. If the enclosure includes any type of exit passageway, that corridor must also have a perimeter stripe. The stripe can be on the floor or on the wall at baseboard height (see Sections 1025.2.4.1 and 1025.2.4.2).

The provisions for stair steps, perimeter demarcation lines and handrails allow the width of the marking to be reduced to less than 1 inch (25 mm) when marking stripes are listed in accordance with UL 1994.

1025.2.4.1 Floor-mounted demarcation lines. Perimeter demarcation lines shall be placed within 4 inches (102 mm) of the wall and shall extend to within 2 inches (51 mm) of the markings on the leading edge of landings. The demarcation lines shall continue across the floor in front of all doors.

Exception: Demarcation lines shall not extend in front of *exit discharge* doors that lead out of an *exit* and through which occupants must travel to complete the exit path.

❖ Luminous stripes shall extend all the way around any stair landings. This section specifies the option of stripes on the floor (see Commentary Figure 1025.2.4.1). On a typical landing, the stripe will extend across the front of the door, indicating to someone moving down the stairway that they should continue (see Commentary Figure 1025.2.4.3). At the level of exit discharge the occupant has a different visual cue. The line should not extend in front of the door leading to the exterior (see Commentary Figure 1025.2.6). This should allow people to understand which door they need to move through to get to safety.

1025.2.4.2 Wall-mounted demarcation lines. Perimeter demarcation lines shall be placed on the wall with the bottom edge of the stripe not more than 4 inches (102 mm) above the finished floor. At the top or bottom of the *stairs*, demarcation lines shall drop vertically to the floor within 2 inches (51 mm) of the step or landing edge. Demarcation lines on walls shall transition vertically to the floor and then extend across the floor where a line on the floor is the only practical method of outlining the path. Where the wall line is broken by a door, demarcation lines on walls shall continue across the face of the door or transition to the floor and extend across the floor in front of such door.

Exception: Demarcation lines shall not extend in front of *exit discharge* doors that lead out of an *exit* and through which occupants must travel to complete the exit path.

❖ Luminous stripes that surround the stairway landings can be on the floor or on the wall. This section specifies the option of stripes on the wall (see Commentary Figure 1025.2.4.2). See the commentary to Sections 1025.2.4 and 1025.2.4.1.

1025.2.4.3 Transition. Where a wall-mounted demarcation line transitions to a floor-mounted demarcation line, or vice versa, the wall-mounted demarcation line shall drop vertically to the floor to meet a complimentary extension of the

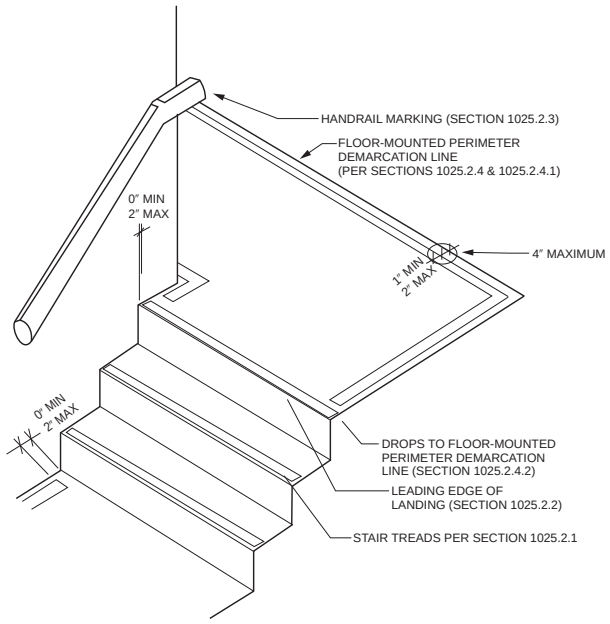

For SI: 1 inch = 25.4 mm.

Figure 1025.2.4.1
PERIMETER DEMARCATION LINES—
FLOOR-MOUNTED OPTION

INTERNATIONAL CODE COUNCIL®
Copyright © 2015 ICC. ALL RIGHTS RESERVED. Accessed by David Dammon on Jun 21, 2017 12:30:52 PM pursuant to License Agreement with ICC. No further reproduction or distribution authorized. ANY UNAUTHORIZED REPRODUCTION OR DISTRIBUTION IS A VIOLATION OF THE FEDERAL COPYRIGHT ACT AND THE LICENSE AGREEMENT, AND SUBJECT TO CIVIL AND CRIMINAL PENALTIES THEREUNDER.

floor-mounted demarcation line, thus forming a continuous marking.

❖ While the luminous perimeter stripes on a landing can be on either the wall or the floor, when they transition from one to another, the lines should appear continuous. See Section 1025.2.4.2 for special requirements for when the wall perimeter marking transitions to the floor stripe indicating the leading edge of the landing.

When perimeter lines cross a door frame, the lines can transition or stay on the same plain (see Commentary Figure 1025.2.4.3).

1025.2.5 Obstacles. Obstacles at or below 6 feet 6 inches (1981 mm) in height and projecting more than 4 inches (102 mm) into the egress path shall be outlined with markings not less than 1 inch (25 mm) in width comprised of a pattern of alternating equal bands, of luminous material and black, with the alternating bands not more than 2 inches (51 mm) thick and angled at 45 degrees (0.79 rad). Obstacles shall include, but are not limited to, standpipes, hose cabinets, wall projections and restricted height areas. However, such markings shall not conceal any required information or indicators including but not limited to instructions to occupants for the use of standpipes.

❖ Any obstacles within the stairway must be marked with a dashed line of diagonal slashes (see Commentary Figure 1025.2.5). The markings of obstacles are consistent with the intent of protruding object provisions in Section 1003.3. However, there is a difference in the height of 6 feet, 6 inches (1981 mm) instead of 6 feet, 8 inches (2032 mm). Items permitted within the enclosures for exit stairways are limited by Sections 1023.2 and 1023.5.

1025.2.6 Doors within the exit path. Doors through which occupants must pass in order to complete the exit path shall be provided with markings complying with Sections 1025.2.6.1 through 1025.2.6.3.

❖ Doors within an enclosure for an exit stairway can:

- Lead directly to the exterior.
- Pass through a horizontal exit (Section 1028.1, Exception 3).
- Lead to an exit passageway on the level of exit discharge, to a lobby or vestibule at the level of exit discharge (Section 1028.1, Exceptions 2 and 3).
- Lead to an exit passageway on a transition level.

Doors at these locations should be marked as indicated in the following three subsections. Combined with the landing markings not extending across the bottom of this door, this will provide several visual cues to indicate that this is the door to continue through to get out of the building (see Commentary Figure 1025.2.6).

The NIST egress study of the World Trade Center indicated that transition floors can cause delays in egress because people hesitate when it is unclear about which way they should continue. Effectively marking these doors in four different ways will decrease that hazard. Which doors to mark is consistent with the exit sign requirements within exit enclosures in Section 1013.1.

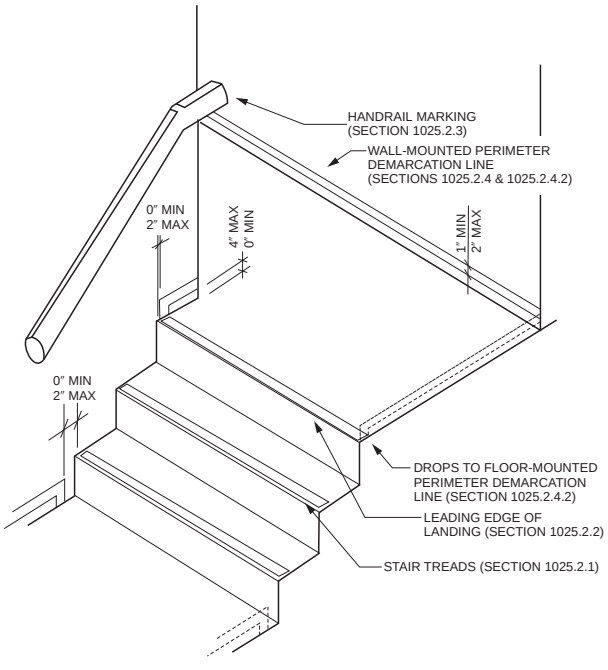

For SI: 1 inch = 25.4 mm.

Figure 1025.2.4.2
PERIMETER DEMARCATION LINES—
WALL-MOUNTED OPTION

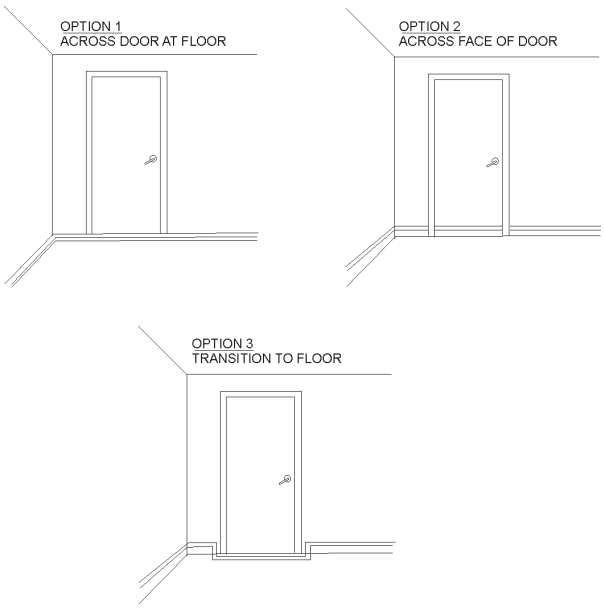

Figure 1025.2.4.3
PERIMETER DEMARCATION LINES—
OPTIONS AT DOORS INTO EXIT ENCLOSURES

INTERNATIONAL CODE COUNCIL®
Copyright © 2015 ICC. ALL RIGHTS RESERVED. Accessed by David Dammon on Jun 21, 2017 12:30:52 PM pursuant to License Agreement with ICC. No further reproduction or distribution authorized. ANY UNAUTHORIZED REPRODUCTION OR DISTRIBUTION IS A VIOLATION OF THE FEDERAL COPYRIGHT ACT AND THE LICENSE AGREEMENT, AND SUBJECT TO CIVIL AND CRIMINAL PENALTIES THEREUNDER.

1025.2.6.1 Emergency exit symbol. The doors shall be identified by a low-location luminous emergency exit symbol complying with NFPA 170. The exit symbol shall be not less than 4 inches (102 mm) in height and shall be mounted on the door, centered horizontally, with the top of the symbol not higher than 18 inches (457 mm) above the finished floor.

❖ The door shall include a low luminous level exit symbol within 18 inches (457 mm) of the floor. For an example of the emergency exit symbol, see Commentary Figure 1025.2.6.1. The sign on the door can be just this symbol or it can also contain additional information such as a directional arrow or "EXIT."

1025.2.6.2 Door hardware markings. Door hardware shall be marked with not less than 16 square inches (406 mm^2) of luminous material. This marking shall be located behind, immediately adjacent to, or on the door handle or escutcheon. Where a panic bar is installed, such material shall not be less than 1 inch (25 mm) wide for the entire length of the actuating bar or touchpad.

❖ Door hardware locations must be clearly visible. If a panic bar is used, a luminous stripe with a minimum width of 1 inch (25 mm) should be provided down the entire length of the activation bar/paddle [see Commentary Figure 1025.2.6, Example 1]. If lever hardware is used, a donut, square or rectangle with a minimum area of 16 square inches (10 322 mm^2) should be provided behind the hardware [see Commentary Figure 1025.2.6, Example 2]. There is also the option of marking the door handle itself, but it would be difficult to get 16 square inches (10 322 mm^2) of visible surface area. Plus, over time, a finish on the hardware has a greater chance of wearing off with normal use. The language allows the designer the freedom to decide (with wear and hardware options) which configuration would give the best results.

1025.2.6.3 Door frame markings. The top and sides of the door frame shall be marked with a solid and continuous 1-inch- to 2-inch-wide (25 mm to 51 mm) stripe. Where the door molding does not provide sufficient flat surface on which to locate the stripe, the stripe shall be permitted to be located on the wall surrounding the frame.

❖ Doors must be marked along the sides and top with stripes similar to those provided on the stair nosing.



For SI: 1 inch = 25.4 mm.

Figure 1025.2.6.1
EMERGENCY EXIT SYMBOL

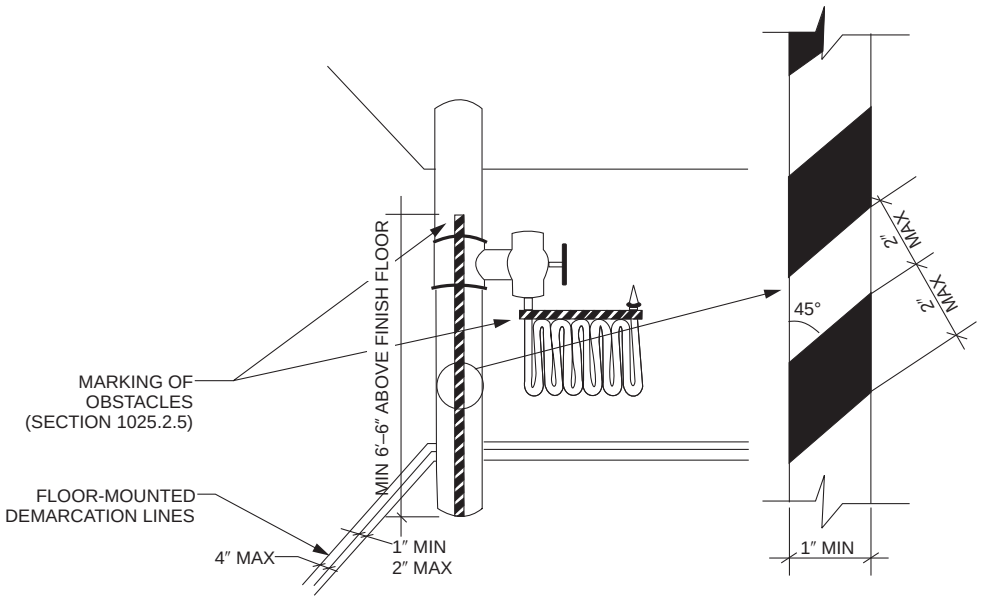

For SI: 1 foot = 304.8 mm, 1 inch= 25.4 mm;
1 degree = 0.01745 rad.

Figure 1025.2.5
OBSTACLE MARKINGS

INTERNATIONAL CODE COUNCIL®
Copyright © 2015 ICC. ALL RIGHTS RESERVED. Accessed by David Dammon on Jun 21, 2017 12:30:52 PM pursuant to License Agreement with ICC. No further reproduction or distribution authorized. ANY UNAUTHORIZED REPRODUCTION OR DISTRIBUTION IS A VIOLATION OF THE FEDERAL COPYRIGHT ACT AND THE LICENSE AGREEMENT, AND SUBJECT TO CIVIL AND CRIMINAL PENALTIES THEREUNDER.

Door frames come in a variety of shapes. If there is not space on the door for the marking stripe, the stripe can be around the perimeter of the door [see Commentary Figure 1025.2.6, Examples 1 and 2].

1025.3 Uniformity. Placement and dimensions of markings shall be consistent and uniform throughout the same enclosure.

❖ All exit path markings are required to be solid and have continuous stripes. A key requirement for marking systems is that their design must be uniform. The placement and dimensions of markings must be consistent for the path of travel along the exit stairway. By specifying a standard marking dimension, the requirements will ensure that the marking is visible during dark conditions and provides consistent and standard application in the design and enforcement of exit path markings. Markings installed on stair steps, perimeter demarcation lines and handrails must have a minimum width of 1 inch (25 mm). For

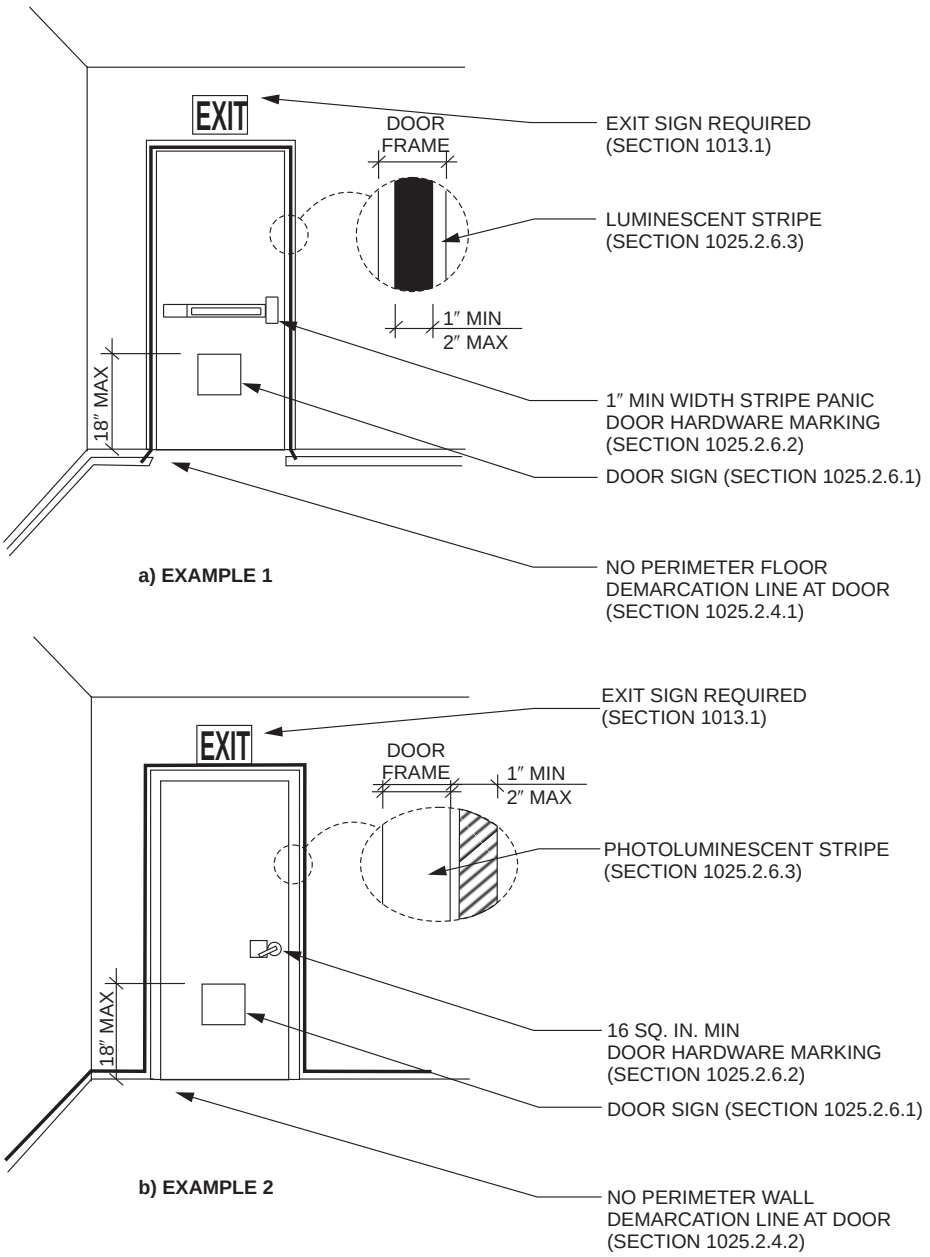

For SI: 1 inch = 25.4 mm,
1 square inch = 645.16 mm.

Figure 1025.2.6
EXAMPLES OF EXIT DOOR TO EXTERIOR OPTIONS

INTERNATIONAL CODE COUNCIL®
Copyright © 2015 ICC. ALL RIGHTS RESERVED. Accessed by David Dammon on Jun 21, 2017 12:30:52 PM pursuant to License Agreement with ICC. No further reproduction or distribution authorized. ANY UNAUTHORIZED REPRODUCTION OR DISTRIBUTION IS A VIOLATION OF THE FEDERAL COPYRIGHT ACT AND THE LICENSE AGREEMENT, AND SUBJECT TO CIVIL AND CRIMINAL PENALTIES THEREUNDER.

stair steps and perimeter demarcation lines, their maximum width cannot exceed 2 inches (51 mm). The provisions for stair steps, perimeter demarcation lines and handrails allow the width of the marking to be reduced to less than 1 inch (25 mm) when marking stripes are listed in accordance with UL 1994.

1025.4 Self-luminous and photoluminescent. Luminous egress path markings shall be permitted to be made of any material, including paint, provided that an electrical charge is not required to maintain the required luminance. Such materials shall include, but not be limited to, *self-luminous* materials and *photoluminescent* materials. Materials shall comply with either of the following standards:

1. UL 1994.
2. ASTM E2072, except that the charging source shall be 1 footcandle (11 lux) of fluorescent illumination for 60 minutes, and the minimum luminance shall be 30 millicandelas per square meter at 10 minutes and 5 millicandelas per square meter after 90 minutes.

❖ Products utilized to meet the requirements for luminous egress path markings in high-rise buildings (see Sections 411.7 and 1025) or exit signs (see Section 1013.5) may be photoluminescent or self-luminous (see definitions in Chapter 2). An example of photoluminescent material is paint or tape that is charged by exposure to light. When the lights are turned off, the product will "glow" in the dark. Self-luminous products do not need an outside light source to charge them like photoluminescent materials do.

A variety of materials can comply with the referenced standards for egress path markings (UL 1994, and ASTM E2072) and for signs (UL 924).

ASTM E2072 allows the use of paints and coatings, which can be useful because it avoids a potential tripping hazard, especially in locations where the surface substrate may not be even. The luminescence of the selected marking system must provide an illumination of 1 footcandle (11 lux) for 60 minutes, which is consistent with the requirement in Section 1008.2 for the illumination of walking surfaces. Section 1008.3 requires the emergency lighting system to have power for 90 minutes; however, because of normal battery considerations, the IFC only requires a 60-minute duration in existing buildings.

1025.5 Illumination. Where *photoluminescent* exit path markings are installed, they shall be provided with not less than 1 footcandle (11 lux) of illumination for not less than 60 minutes prior to periods when the building is occupied and continuously during occupancy.

❖ Analogous to rechargeable batteries, many photoluminescent egress path markings require exposure to light to perform properly. Thus, photoluminescent egress path markings must be exposed to a minimum 1 footcandle (11 lux) of light energy at the walking surface for at least 60 minutes prior to the building being occupied. The charging rate for photoluminescent egress path markings is based on the wattage of lamps used to provide egress path illumination. Therefore it is important to verify that the specified lamps have sufficient wattage to meet the specified time period. This requirement may be a concern for buildings developed with the IECC or trying for LEED certification.

Note that this requirement does not apply to self-luminous materials since these materials operate independently of the external power source. See the definitions for "Photoluminescent" and "Self-luminous" in Chapter 2.

SECTION 1026
HORIZONTAL EXITS

1026.1 Horizontal exits. *Horizontal exits* serving as an *exit* in a *means of egress* system shall comply with the requirements of this section. A *horizontal exit* shall not serve as the only *exit* from a portion of a building, and where two or more *exits* are required, not more than one-half of the total number of *exits* or total *exit* minimum width or required capacity shall be *horizontal exits*.

Exceptions:

1. *Horizontal exits* are permitted to comprise two-thirds of the required *exits* from any building or floor area for occupancies in Group I-2.
2. *Horizontal exits* are permitted to comprise 100 percent of the *exits* required for occupancies in Group I-3. Not less than 6 square feet (0.6 m^2) of accessible space per occupant shall be provided on each side of the *horizontal exit* for the total number of people in adjoining compartments.

❖ Horizontal exits can provide up to 50 percent of the exits from a given area of a building. The percentage is higher for Group I-2 and I-3 occupancies where the evacuation strategy is defend in place rather than direct egress (see Commentary Figure 1026.1 for a typical horizontal exit arrangement). However, a horizontal exit cannot serve as the only exit from a single exit space. Section 1026.4 allows for some areas to have all the exits from a space to be horizontal exits under specific conditions. A horizontal exit can be designed for either one-way or two-way operation, depending on the exiting needs of each side of the wall providing the horizontal exit.

A horizontal exit may be an element of a means of egress when in compliance with the requirements of this section. The actual horizontal exit is the protected door opening in a wall, or the open-air balcony or bridge that separates two areas of a building. A horizontal exit is often used in hospitals and in prisons where it is not feasible or desirable that all occupants exit the facility (see Chapter 2 for the definition of a "Horizontal exit").

Horizontal exits and their associated "refuge areas" are considered to provide the same or higher level of protection as an "area of refuge" for people who can-

INTERNATIONAL CODE COUNCIL®
Copyright © 2015 ICC. ALL RIGHTS RESERVED. Accessed by David Dammon on Jun 21, 2017 12:30:52 PM pursuant to License Agreement with ICC. No further reproduction or distribution authorized. ANY UNAUTHORIZED REPRODUCTION OR DISTRIBUTION IS A VIOLATION OF THE FEDERAL COPYRIGHT ACT AND THE LICENSE AGREEMENT, AND SUBJECT TO CIVIL AND CRIMINAL PENALTIES THEREUNDER.

not use the egress system. Sections 1009.3 and 1009.4 allow for a horizontal exit or an area of refuge as alternatives. See these sections for exceptions for buildings with sprinkler systems and/or where the path of travel has protection from the accumulation of smoke (i.e., open parking garages, open air assembly seating, smoke-protected assembly seating).

1026.2 Separation. The separation between buildings or refuge areas connected by a *horizontal exit* shall be provided by a *fire wall* complying with Section 706; or by a *fire barrier* complying with Section 707 or a *horizontal assembly* complying with Section 711, or both. The minimum *fire-resistance rating* of the separation shall be 2 hours. Opening protectives in *horizontal exits* shall also comply with Section 716. Duct and air transfer openings in a *fire wall* or *fire barrier* that serves as a *horizontal exit* shall also comply with Section 717. The *horizontal exit* separation shall extend vertically through all levels of the building unless floor assemblies have a *fire-resistance rating* of not less than 2 hours with no unprotected openings.

Exception: A *fire-resistance rating* is not required at *horizontal exits* between a building area and an above-grade *pedestrian walkway* constructed in accordance with Section 3104, provided that the distance between connected buildings is more than 20 feet (6096 mm).

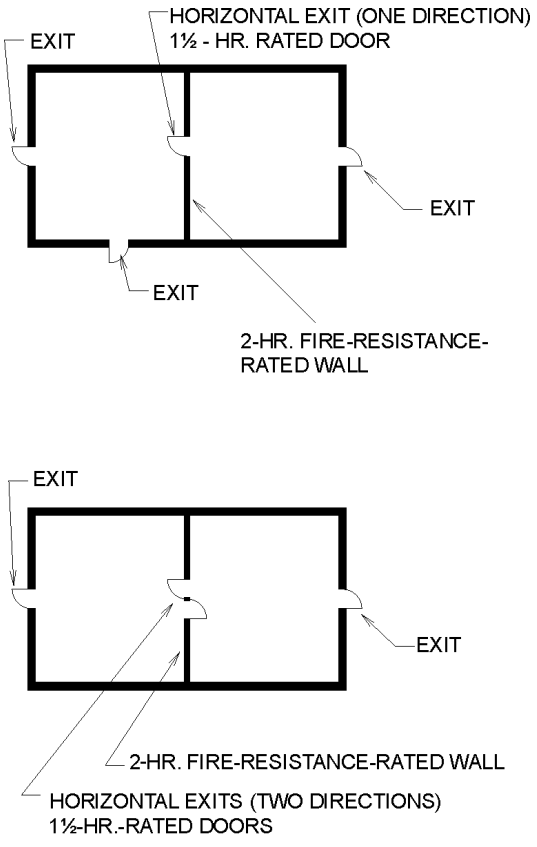

Figure 1026.1
TYPICAL HORIZONTAL EXITS

Horizontal exits constructed as *fire barriers* shall be continuous from *exterior wall* to *exterior wall* so as to divide completely the floor served by the *horizontal exit*.

❖ The basic concept of a horizontal exit is that during a fire emergency, the occupants of a floor will transfer from one fire area to another. Separation between areas of a building can be accomplished by a fire wall (see Section 706), a fire barrier (see Section 707), horizontal assemblies (see Section 711) or a combination thereof, with a fire-resistance rating not less than 2 hours. Any fire shutters or fire doors must have an opening protective of not less than $1^1/_2$ hours (see Table 716.5). Ducts and air transfer openings must comply with Section 717.

In buildings of Groups I-2 and I-3, it may also be desirable (while not mandatory) for the horizontal exit to serve as a smoke barrier. In such cases, the wall containing the horizontal exit must also comply with the requirements for a smoke barrier (see Section 709).

In order to decrease the amount of smoke able to migrate around the edges of a horizontal exit, the horizontal exit must extend from at least the floor to the deck above (i.e., fire barrier), as well as across the floor level from one side of the building to another. Moving up from floor to floor, there are two choices. One option is that the horizontal exit can extend vertically through all levels of the building (i.e., fire wall or fire barriers). The second option is to utilize fire barriers that are not aligned vertically (i.e., a combination of fire barriers and horizontal assemblies), but then the floor must have a 2-hour fire-resistance rating and no unprotected openings are permitted between any two refuge areas. The supporting construction would also have to be a minimum of 2 hours.

The exception is permitting a pedestrian walkway or sky bridge to act as a horizontal exit when buildings are at least 20 feet (6096 mm) apart.

1026.3 Opening protectives. *Fire doors* in *horizontal exits* shall be self-closing or automatic-closing when activated by a *smoke detector* in accordance with Section 716.5.9.3. Doors, where located in a cross-corridor condition, shall be automatic-closing by activation of a *smoke detector* installed in accordance with Section 716.5.9.3.

❖ For the safety of occupants using a horizontal exit, it is important for the doors to be fire doors that are self-closing or automatic-closing by activation of a smoke detector. Smoke detectors that initiate automatic-closing should be located at both sides of the doors (see the commentary to Section 907.3 for an additional explanation of the installation requirements). Any openings in the fire barriers or fire walls used as horizontal exits must be protected in coordination with the rating of the wall. There is a reference to Section 716 for opening protectives.

INTERNATIONAL CODE COUNCIL®
Copyright © 2015 ICC. ALL RIGHTS RESERVED. Accessed by David Dammon on Jun 21, 2017 12:30:52 PM pursuant to License Agreement with ICC. No further reproduction or distribution authorized. ANY UNAUTHORIZED REPRODUCTION OR DISTRIBUTION IS A VIOLATION OF THE FEDERAL COPYRIGHT ACT AND THE LICENSE AGREEMENT, AND SUBJECT TO CIVIL AND CRIMINAL PENALTIES THEREUNDER.

1026.4 Refuge area. The refuge area of a *horizontal exit* shall be a space occupied by the same tenant or a public area and each such refuge area shall be adequate to accommodate the original *occupant load* of the refuge area plus the *occupant load* anticipated from the adjoining compartment. The anticipated *occupant load* from the adjoining compartment shall be based on the capacity of the *horizontal exit doors* entering the refuge area.

❖ The building area on the discharge side of a horizontal exit must serve as a refuge area for the occupants of both sides of the floor areas connected by the horizontal exit. Therefore, adequate space must be available on each side of the wall to hold the full occupant load of that side, plus the number of occupants from the other side that may be required to use the horizontal exit. Explaining the anticipated occupant load is easiest with an example. If one side of the horizontal exit contained an assembly space with 750 occupants, three exits would be required. If one of the exits through the horizontal exit was a double door, that double exit door would have a capacity of 320 (64 inches/0.2 = 320 occupants). Therefore, the refuge area must be sized for the occupant load in the space, plus the 320 people who might come through the horizontal exit. This is a higher number than would be anticipated if the occupant load of the assembly space was divided equally between the three exits, but it is also not the entire occupant load of the assembly space.

1026.4.1 Capacity. The capacity of the refuge area shall be computed based on a *net floor area* allowance of 3 square feet (0.2787 m^2) for each occupant to be accommodated therein.

Exceptions: The *net floor area* allowable per occupant shall be as follows for the indicated occupancies:

1. Six square feet (0.6 m^2) per occupant for occupancies in Group I-3.
2. Fifteen square feet (1.4 m^2) per occupant for ambulatory occupancies in Group I-2.
3. Thirty square feet (2.8 m^2) per occupant for nonambulatory occupancies in Group I-2.

❖ These refuge areas are meant to hold the occupants temporarily in a safe place until they can evacuate the premises in an orderly manner or, in the case of hospitals and like facilities, to hold bedridden patients and other nonambulatory occupants in a protected area until the fire emergency has ended. This is commonly referred to as a defend-in-place strategy. The size of the refuge area is based on the nature of the expected occupants. In the case of Group I-3, the area will be used to hold the occupants until deliberate egress can be accomplished with staff assistance or supervision. In other cases, it is assumed that the occupants simply wait in line to egress through the required exit facilities provided on the discharge side. Although similar language is used in describing the "area of refuge" for an accessible means of egress, Section 1009.6 specifies area requirements that are insufficient for use as a "refuge area" for a horizontal exit. Care must be taken when applying both principles to the same horizontal exit.

The 3-square-feet (0.28 m^2) per occupant requirement is based on the maximum permitted occupant density at which orderly movement to the exits is reasonable. The 30-square-feet (2.8 m^2) per hospital or nursing home patient requirement is based on the space necessary for a bed or litter. It should be noted that 30 square feet (2.8 m^2) is not based on the total occupant load, as would be determined in accordance with Section 1004.1, but rather on the number of nonambulatory patients. The 15-square-foot (1.4 m^2) requirement for occupancies in Group I-2 facilities is based on each ambulatory patient having a staff attendant.

1026.4.2 Number of exits. The refuge area into which a *horizontal exit* leads shall be provided with *exits* adequate to meet the occupant requirements of this chapter, but not including the added *occupant load* imposed by persons entering the refuge area through *horizontal exits* from other areas. Not less than one refuge area exit shall lead directly to the exterior or to an *interior exit stairway* or *ramp*.

Exception: The adjoining compartment shall not be required to have a *stairway* or door leading directly outside, provided the refuge area into which a *horizontal exit* leads has *stairways* or doors leading directly outside and are so arranged that egress shall not require the occupants to return through the compartment from which egress originates.

❖ In a single-tenant facility, any of the spaces that are constantly available (i.e., not lockable) can be used as places of refuge. However, in spaces housing more than one tenant, public refuge areas, such as corridors or passageways, must be provided and be accessible at all times. This requirement is necessary because if a horizontal exit connected two areas occupied by different tenants, the tenants could (for privacy and security purposes) render the necessary free access through the horizontal exit ineffective. When the horizontal exit discharges into a public or common space, such as a corridor leading to an exit, each tenant can obtain the desired security.

Note that the capacity of exits (such as an exit stairway) from a refuge area into which a horizontal exit leads is required to be sufficient for the design occupant load in the area, and does not include those who come into the space from other areas via the horizontal exit. This is because the adjacent refuge area is of sufficient safety to house occupants during a fire or until the egress system is available.

The door through the horizontal exit and the second exit must meet the separation requirements in Section 1007.1.1. Measurement of the travel distance stops at the doorway that serves as the horizontal exit. There are no requirements for travel distance from the horizontal exit to the exit (i.e., exterior exit doorway, exit stairway or exit ramp) on the other side;

INTERNATIONAL CODE COUNCIL®
Copyright © 2015 ICC. ALL RIGHTS RESERVED. Accessed by David Dammon on Jun 21, 2017 12:30:52 PM pursuant to License Agreement with ICC. No further reproduction or distribution authorized. ANY UNAUTHORIZED REPRODUCTION OR DISTRIBUTION IS A VIOLATION OF THE FEDERAL COPYRIGHT ACT AND THE LICENSE AGREEMENT, AND SUBJECT TO CIVIL AND CRIMINAL PENALTIES THEREUNDER.

however, the areas on each side need to be evaluated for all means of egress requirements individually.

When there is one horizontal exit and two fire compartments, at least one exit from each side of the horizontal exit must go directly to the outside of an exit stairway or ramp enclosure (see Commentary Figure 1026.1). The exception allows for a central building/fire area with access to two horizontal exits and no direct exterior exit door or exit stairway/ramp enclosure as long as the piece on each side has access to exterior exits or exit stairways/ramps (see Commentary Figure 1026.4.2).

SECTION 1027
EXTERIOR EXIT STAIRWAYS AND RAMPS

1027.1 Exterior exit stairways and ramps. *Exterior exit stairways* and *ramps* serving as an element of a required *means of egress* shall comply with this section.

❖ Stairways and ramps can be exit access, exit or exit discharge elements. Exterior exit access and exit discharge stairways and ramps typically involve a change of elevation of less than a story. Exterior exit access stairways or ramps between stories must comply with Section 1019.3 and, where permitted as part of the required means of egress, are limited by Section 1006.3. Exit stairways and ramps traverse a full story or more. Interior exit stairways and ramps must be enclosed in accordance with Section 1023. This section addresses exterior stairways and ramps that function as exit elements.

Exterior exit stairways and ramps are an important element of the means of egress system and must be designed and constructed so that they will serve as a safe path of travel. The general requirements in Section 1011 also apply to exterior stairways (for ramp provisions, see Section 1012).

Outdoor stadiums and open parking garages are examples of buildings that may appear to have exterior exit stairways, but actually have open exit access stairways (Sections 1017, 1019 and 1029).

1027.2 Use in a means of egress. *Exterior exit stairways* shall not be used as an element of a required *means of egress* for Group I-2 occupancies. For occupancies in other than Group I-2, *exterior exit stairways* and *ramps* shall be permitted as an element of a required *means of egress* for buildings not exceeding six stories above *grade plane* or that are not *high-rise buildings.*

❖ This section specifies the conditions where exterior exit ramps or stairways can be used as required exits. Exterior exit stairways are not permitted for Group I-2 since quick evacuation of nonambulatory patients from buildings using exterior stairways is impractical. Some patients may not be capable of self-preservation and, therefore, may require assistance from staff. The period of evacuation of nonambulatory patients could become lengthy, especially in bad weather conditions.

Exterior stairways or ramps are not allowed to be required exits in buildings that exceed six stories in height because of the hazard of using such a stairway or ramp in poor weather. Some persons may not be willing to use such a stair due to vertigo. When

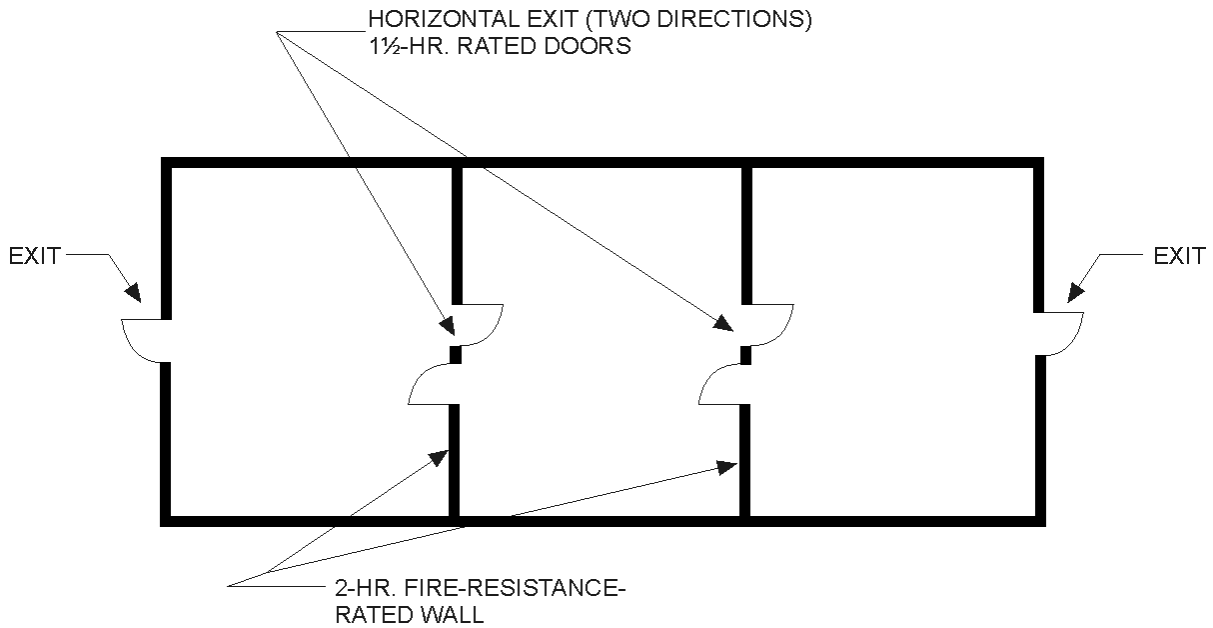

Figure 1026.4.2
REFUGE AREA EXCEPTION

INTERNATIONAL CODE COUNCIL®
Copyright © 2015 ICC. ALL RIGHTS RESERVED. Accessed by David Dammon on Jun 21, 2017 12:30:52 PM pursuant to License Agreement with ICC. No further reproduction or distribution authorized. ANY UNAUTHORIZED REPRODUCTION OR DISTRIBUTION IS A VIOLATION OF THE FEDERAL COPYRIGHT ACT AND THE LICENSE AGREEMENT, AND SUBJECT TO CIVIL AND CRIMINAL PENALTIES THEREUNDER.

confronted with a view from a great height, vertigo sufferers can become confused, disoriented and dizzy. They could injure themselves, become disoriented or refuse to move (freeze). In a fire situation, they could become an obstruction in the path of travel, possibly causing panic and injuries to other users of the exit.

1027.3 Open side. *Exterior exit stairways* and *ramps* serving as an element of a required *means of egress* shall be open on not less than one side, except for required structural columns, beams, *handrails* and *guards*. An open side shall have not less than 35 square feet (3.3 m^2) of aggregate open area adjacent to each floor level and the level of each intermediate landing. The required open area shall be located not less than 42 inches (1067 mm) above the adjacent floor or landing level.

❖ An important factor in exterior exit stairways or ramps is natural ventilation. Sufficient natural ventilation is necessary so that smoke will not be trapped above the stairway or ramp walking surfaces, thereby compromising safe egress.

The exterior exit stairway or ramp must have at least one of its sides directly facing an outer court, yard or public way. This will allow the products of combustion escaping from the interior of the building to quickly vent to the outdoor atmosphere and let the building occupants egress down the exterior exit stairway or ramp. Since exterior exit stairways or ramps are partially bounded by exterior walls, a minimum amount of exterior openness is specified by the code.

The openings on each and every floor level and landing must total 35 square feet (3.3 m^2) or greater. The openings for which credit is given must occur higher than 42 inches (1067 mm) above each floor and intermediate landing level. [The bottom edge of the opening is consistent with the height requirements for guards (see Section 1015.3)]. With a standard 8-foot (2438 mm) ceiling height minus the 42-inch-high (1067 mm) guard and a typical 8-foot-wide (2438 mm) opening, the result would be $4^1/_2$ feet x 8 feet = 36 square feet (3.34 m^2). Openings of this height and area readily dissipate the smoke buildup from the exterior exit stairway or ramp (see Commentary Figure 1027.3).

1027.4 Side yards. The open areas adjoining *exterior exit stairways* or *ramps* shall be either *yards*, *courts* or *public ways*; the remaining sides are permitted to be enclosed by the *exterior walls* of the building.

❖ This section simply specifies the type of areas that the exterior opening of the exterior exit stairway or ramp is to adjoin. These open spaces will enable the smoke to dissipate from the exterior exit stairway or ramp so it will be usable as a required exit. See Section 1027.3 for a discussion of the opening requirements. See Sections 1027.4 and 1206 for the minimum sizes of yards and courts.

1027.5 Location. *Exterior exit stairways* and *ramps* shall have a minimum fire separation distance of 10 feet (3048 mm) measured at right angles from the exterior edge of the *stairway* or *ramps*, including landings, to:

1. Adjacent *lot lines*.
2. Other portions of the building.
3. Other buildings on the same lot unless the adjacent building *exterior walls* and openings are protected in accordance with Section 705 based on *fire separation distance.*

For the purposes of this section, other portions of the building shall be treated as separate buildings.

❖ The location requirements of this section protect the users of the exterior exit stairway or ramp from the effects of a fire in another building on the same lot or an adjacent lot. The separation distance reduces the exposure to heat and smoke. If the exterior exit stairway or ramp is closer than specified, then adjacent buildings' exterior walls and openings are to be protected in accordance with Section 705 so that the users of the exterior exit stairway or ramp are protected. The reason for a minimum required distance to a lot line is to provide for a future building that could be built on an adjacent lot. While buildings on the same lot can be considered one building for height and area limitations (see Section 503.1.2), they must be separated by a minimum of 10 feet (3048 mm) if there is a path for exit discharge between them. The purpose of the last sentence is to clarify that an exterior exit stairway or ramp needs a minimum 10-foot separation where a building wraps around on itself, such as a U-shaped building. It is not intended that the distance be measured to an imaginary lot line between buildings on the same lot.

Requirements are the same for exterior egress balconies (Section 1021.4). For an illustration of exterior egress balconies and exterior exit stairways working together, see Commentary Figure 1027.5.

INTERNATIONAL CODE COUNCIL®
Copyright © 2015 ICC. ALL RIGHTS RESERVED. Accessed by David Dammon on Jun 21, 2017 12:30:52 PM pursuant to License Agreement with ICC. No further reproduction or distribution authorized. ANY UNAUTHORIZED REPRODUCTION OR DISTRIBUTION IS A VIOLATION OF THE FEDERAL COPYRIGHT ACT AND THE LICENSE AGREEMENT, AND SUBJECT TO CIVIL AND CRIMINAL PENALTIES THEREUNDER.

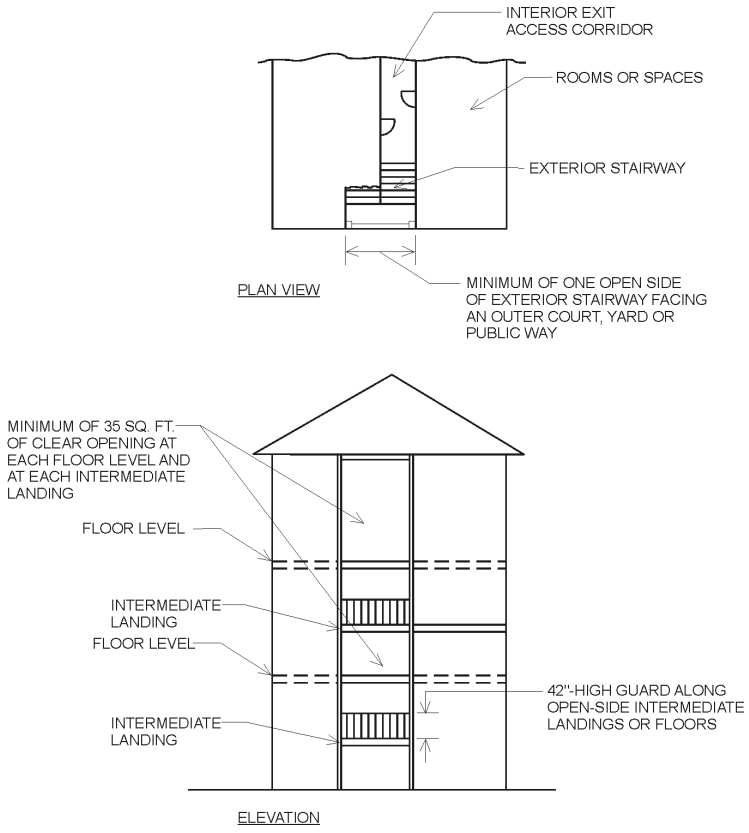

For SI: 1 inch= 25.4 mm;
1 square foot = 0.0929 mm.

Figure 1027.3
EXTERIOR STAIRWAY

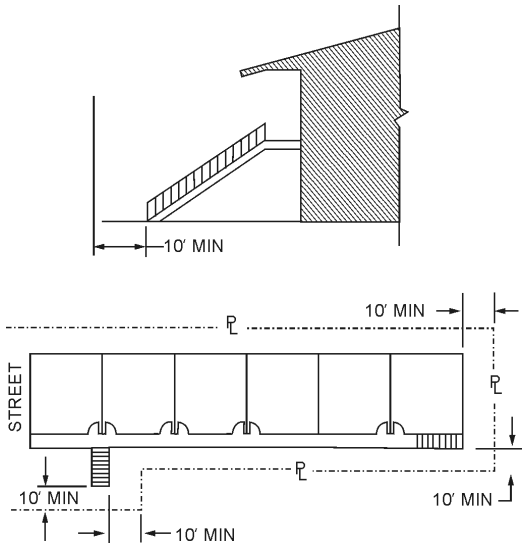

For SI: 1 foot = 304.8 mm.

Figure 1027.5
EXTERIOR BALCONY AND STAIRWAY ADJACENT TO LOT LINE

INTERNATIONAL CODE COUNCIL®
Copyright © 2015 ICC. ALL RIGHTS RESERVED. Accessed by David Dammon on Jun 21, 2017 12:30:52 PM pursuant to License Agreement with ICC. No further reproduction or distribution authorized. ANY UNAUTHORIZED REPRODUCTION OR DISTRIBUTION IS A VIOLATION OF THE FEDERAL COPYRIGHT ACT AND THE LICENSE AGREEMENT, AND SUBJECT TO CIVIL AND CRIMINAL PENALTIES THEREUNDER.

1027.6 Exterior exit stairway and ramp protection. *Exterior exit stairways* and *ramps* shall be separated from the interior of the building as required in Section 1023.2. Openings shall be limited to those necessary for egress from normally occupied spaces. Where a vertical plane projecting from the edge of an *exterior exit stairway* or *ramp* and landings is exposed by other parts of the building at an angle of less than 180 degrees (3.14 rad), the exterior wall shall be rated in accordance with Section 1023.7.

Exceptions:

1. Separation from the interior of the building is not required for occupancies, other than those in Group R-1 or R-2, in buildings that are not more than two stories above *grade plane* where a *level of exit discharge* serving such occupancies is the first story above *grade plane*.
2. Separation from the interior of the building is not required where the *exterior exit stairway* or *ramp* is served by an *exterior exit ramp* or balcony that connects two remote *exterior exit stairways* or other *approved exits* with a perimeter that is not less than 50 percent open. To be considered open, the opening shall be not less than 50 percent of the height of the enclosing wall, with the top of the openings not less than 7 feet (2134 mm) above the top of the balcony.
3. Separation from the open-ended *corridor* of the building is not required for *exterior exit stairways* or *ramps*, provided that Items 3.1 through 3.5 are met:
    - 3.1. The building, including open-ended *corridors*, and *stairways* and *ramps*, shall be equipped throughout with an *automatic sprinkler system* in accordance with Section 903.3.1.1 or 903.3.1.2.
    - 3.2. The open-ended *corridors* comply with Section 1020.
    - 3.3. The open-ended *corridors* are connected on each end to an *exterior exit stairway* or *ramp* complying with Section 1027.
    - 3.4. The *exterior walls* and openings adjacent to the *exterior exit stairway* or *ramp* comply with Section 1023.7.
    - 3.5. At any location in an open-ended *corridor* where a change of direction exceeding 45 degrees (0.79 rad) occurs, a clear opening of not less than 35 square feet (3.3 m^2) or an *exterior stairway* or *ramp* shall be provided. Where clear openings are provided, they shall be located so as to minimize the accumulation of smoke or toxic gases.

❖ Exterior exit stairways or ramps must be protected from interior fires that may project through windows or other openings adjacent to the exit stairway or ramp, possibly endangering the occupants using this means of egress to reach grade. The protection of an exterior exit stairway or ramp is to be obtained by separating the exterior exit from the interior of the building using exterior walls having a fire-resistance rating of at least 1 hour with opening protectives. Consistent with the protection required in Sections 1023.2 and 1023.7 for interior exit stairways, the fire-resistance rating must be provided for a distance of 10 feet (3048 mm) horizontally and vertically from the ramp or stairway edges, and from the ground to a level of 10 feet (3048 mm) above the highest landing.

All window and door openings falling inside the 10-foot (3048 mm) horizontal separation distance as well as all window and door openings 10 feet (3048 mm) above the topmost landing and below the stairway must be protected with minimum $^3/_4$-hour fire protection-rated opening protectives [see Commentary Figure 1027.6(1)]. The last sentence is similar to Section 1023.7 except that instead of measuring the angle between the building exterior walls and the unprotected walls at the exterior of the stairway or ramp, the measurement is between the building exterior walls and a vertical projection for the planes of the guard of the exterior stairway and ramp including landings.

Openings within the width of the stairway must only be from normally occupied spaces. This is consistent with the requirements for vertical exit enclosures (see Sections 1023.4 and 1023.5).

Exception 1 indicates that opening protectives are not required for occupancies (other than Groups R-1 and R-2) that are two stories or less above grade when the level of exit discharge is at the lower story. The reason for this exception is that in cases of fire in low buildings, the occupants are usually able to evacuate the premises before the fire can emerge through exterior wall openings and endanger the exit ramp or stairways. In hotels and apartments, however, the occupants' response to a fire emergency could be significantly reduced because they may be either unfamiliar with the surroundings or sleeping.

Exception 2 allows the opening protectives to be omitted when an exterior exit access balcony is served by two exits and when the exits are remote from each other. Remoteness is regulated by Section 1007. This exception is applicable to all groups. In such instances, it is unlikely that the users of the exterior stairway or ramp will become trapped by fire, since they have the option of using the balcony to gain access to either of the two available exits, and the products of combustion will be vented directly to the outside (see Section 1021.1 regarding exterior balconies). At least one-half of the total perimeter of the exterior balcony must be permanently open to the outside. The requirement for at least one-half the height of that level to be open allows for columns, solid guards and architectural or decorative elements, such as arches. With the top of the opening at least 7 feet (2134 mm) above the walking surface, products of combustion can vent and allow occupant passage below the smoke layer [see Commentary Figure 1027.6(2)].

An open-ended corridor is not defined in Chapter 2. Exception 3 deletes the requirement for a separation

INTERNATIONAL CODE COUNCIL®
Copyright © 2015 ICC. ALL RIGHTS RESERVED. Accessed by David Dammon on Jun 21, 2017 12:30:52 PM pursuant to License Agreement with ICC. No further reproduction or distribution authorized. ANY UNAUTHORIZED REPRODUCTION OR DISTRIBUTION IS A VIOLATION OF THE FEDERAL COPYRIGHT ACT AND THE LICENSE AGREEMENT, AND SUBJECT TO CIVIL AND CRIMINAL PENALTIES THEREUNDER.

between the interior of the building and the exterior wall area immediately adjacent to the exit stairway where an open-ended corridor (breezeway) interfaces with an exterior stairway or ramp. In other words, a door is not required between the exterior exit stairway and the open-ended corridor. The separation is not needed because of the NFPA 13 or 13R sprinkler system is required in all areas of the building, including the open-ended corridor. The other characteristics of the open-ended corridor described in this exception are needed so that it is safe to be used in the event of a fire. The requirements for an exterior stairway or ramp at each end, and the additional openings or exterior stairways or ramps where the open-ended corridor has a change of direction of greater than 45 degrees (0.79 rad), are for adequate ventilation of the open-ended corridor. The corridor may be required to be rated per Table 1020.1. The reference back to Section 1023.7 results in any exterior walls that form an angle less than 180 degrees (3.14 rad) from the side of the exterior exit stairway to be protected for a distance of 10 feet (3048 mm) [see Commentary Figure 1027.6(3)]. Exit access travel distance on an open-ended corridor is measured to the first riser of an exterior stair or the beginning slope of an exterior ramp.

Similar separation language is used in describing the exterior wall requirements for an exterior area for assisted rescue that is provided at an exit located above grade level. Where there are steps, they are merely part of the exit discharge, not exterior exit stairways as addressed in this section.

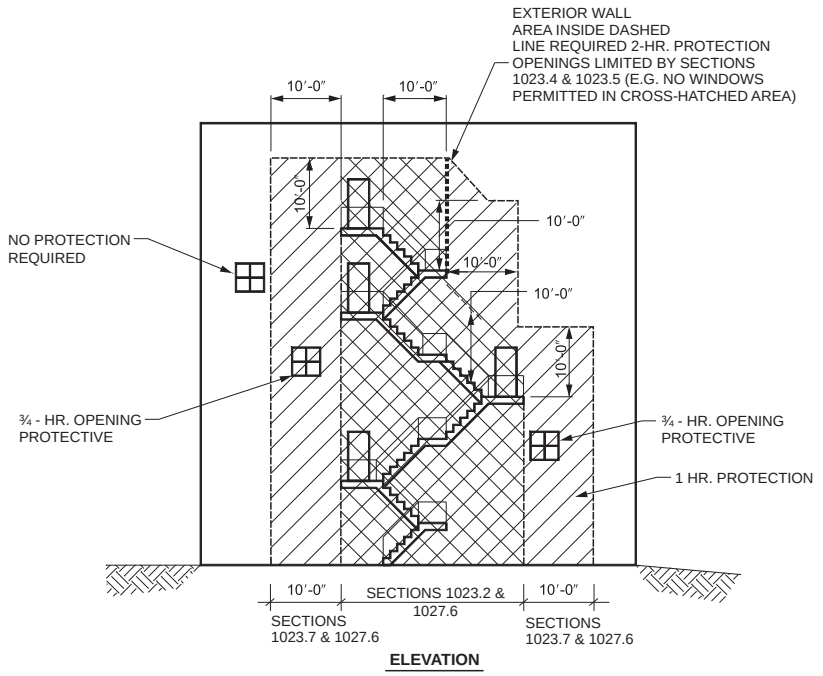

For SI: 1 foot = 304.8 mm.

Figure 1027.6(1)
PROTECTION OF EXTERIOR STAIRWAYS

INTERNATIONAL CODE COUNCIL®
Copyright © 2015 ICC. ALL RIGHTS RESERVED. Accessed by David Dammon on Jun 21, 2017 12:30:52 PM pursuant to License Agreement with ICC. No further reproduction or distribution authorized. ANY UNAUTHORIZED REPRODUCTION OR DISTRIBUTION IS A VIOLATION OF THE FEDERAL COPYRIGHT ACT AND THE LICENSE AGREEMENT, AND SUBJECT TO CIVIL AND CRIMINAL PENALTIES THEREUNDER.

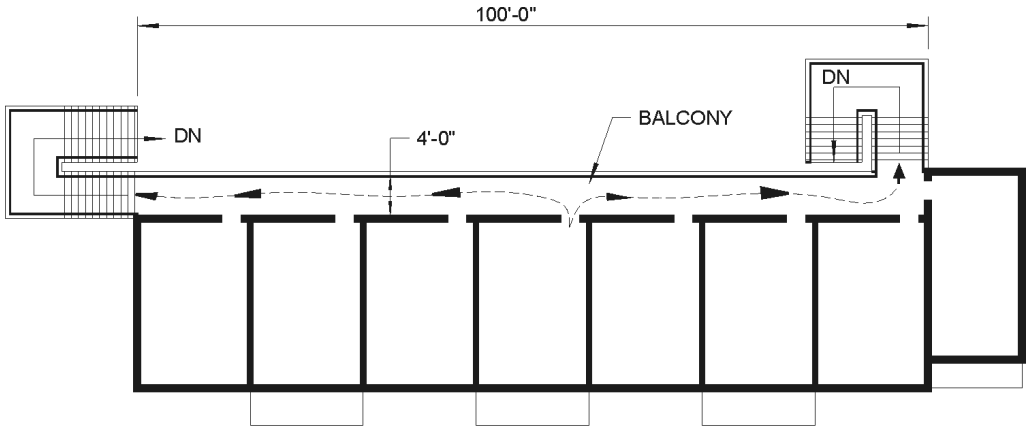

For SI: 1 foot = 304.8 mm.

Figure 1027.6(2)
EXTERIOR BALCONY WITH REMOTE STAIRWAYS

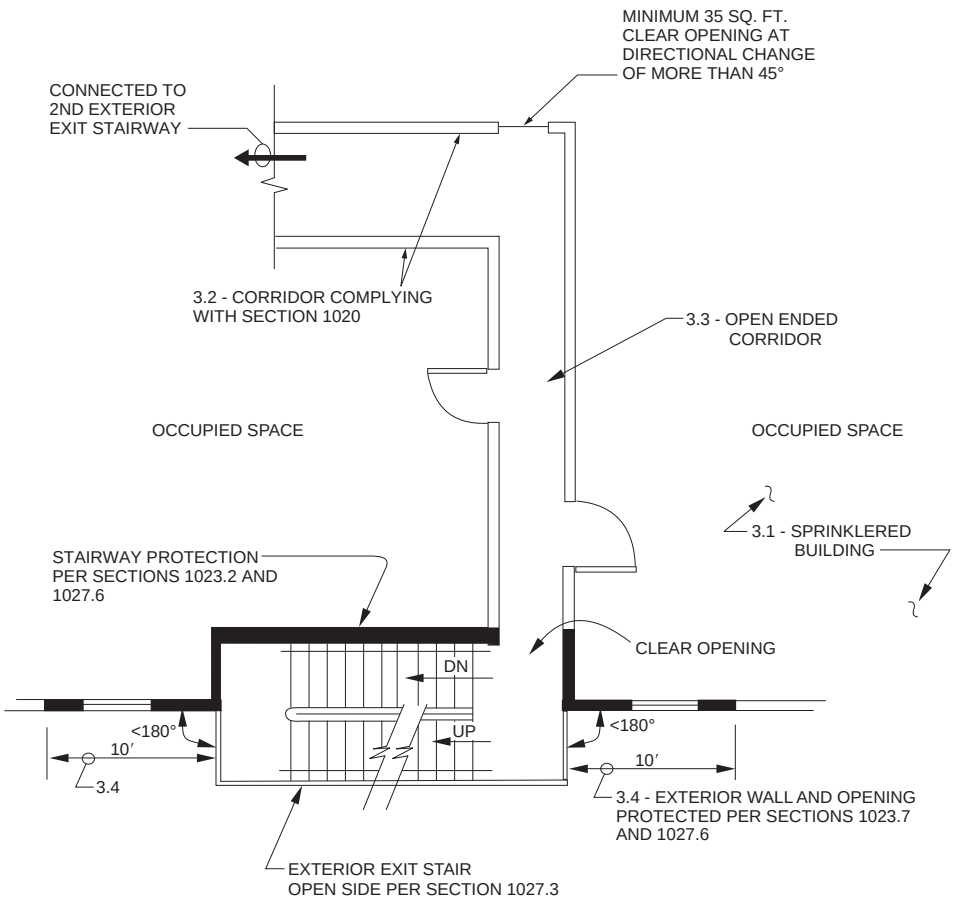

For SI: 1 foot = 304.8 mm.

Figure 1027.6(3)
EXAMPLE OF EXCEPTION 3

INTERNATIONAL CODE COUNCIL®
Copyright © 2015 ICC. ALL RIGHTS RESERVED. Accessed by David Dammon on Jun 21, 2017 12:30:52 PM pursuant to License Agreement with ICC. No further reproduction or distribution authorized. ANY UNAUTHORIZED REPRODUCTION OR DISTRIBUTION IS A VIOLATION OF THE FEDERAL COPYRIGHT ACT AND THE LICENSE AGREEMENT, AND SUBJECT TO CIVIL AND CRIMINAL PENALTIES THEREUNDER.

SECTION 1028
EXIT DISCHARGE

1028.1 General. *Exits* shall discharge directly to the exterior of the building. The *exit discharge* shall be at grade or shall provide a direct path of egress travel to grade. The *exit discharge* shall not reenter a building. The combined use of Exceptions 1 and 2 shall not exceed 50 percent of the number and minimum width or required capacity of the required exits.

Exceptions:

1. Not more than 50 percent of the number and minimum width or required capacity of *interior exit stairways* and *ramps* is permitted to egress through areas on the level of discharge provided all of the following conditions are met:
   - 1.1. Discharge of *interior exit stairways* and *ramps* shall be provided with a free and unobstructed path of travel to an exterior *exit* door and such *exit* is readily visible and identifiable from the point of termination of the enclosure.
   - 1.2. The entire area of the *level of exit discharge* is separated from areas below by construction conforming to the *fire-resistance rating* for the enclosure.
   - 1.3. The egress path from the *interior exit stairway* and *ramp* on the *level of exit discharge* is protected throughout by an *approved automatic sprinkler system*. Portions of the *level of exit discharge* with access to the egress path shall be either equipped throughout with an *automatic sprinkler system* installed in accordance with Section 903.3.1.1 or 903.3.1.2, or separated from the egress path in accordance with the requirements for the enclosure of *interior exit stairways* or *ramps*.
   - 1.4. Where a required *interior exit stairway* or *ramp* and an *exit access stairway* or *ramp* serve the same floor level and terminate at the same *level of exit discharge*, the termination of the *exit access stairway* or *ramp* and the *exit discharge* door of the *interior exit stairway* or *ramp* shall be separated by a distance of not less than 30 feet (9144 mm) or not less than one-fourth the length of the maximum overall diagonal dimension of the building, whichever is less. The distance shall be measured in a straight line between the *exit discharge* door from the *interior exit stairway* or *ramp* and the last tread of the *exit access stairway* or termination of slope of the *exit access ramp*.
2. Not more than 50 percent of the number and minimum width or required capacity of the *interior exit stairways* and *ramps* is permitted to egress through a vestibule provided all of the following conditions are met:
   - 2.1. The entire area of the vestibule is separated from areas below by construction conforming to the *fire-resistance rating* of the *interior exit stairway* or *ramp enclosure*.
   - 2.2. The depth from the exterior of the building is not greater than 10 feet (3048 mm) and the length is not greater than 30 feet (9144 mm).
   - 2.3. The area is separated from the remainder of the *level of exit discharge* by a *fire partition* constructed in accordance with Section 708.

     Exception: The maximum transmitted temperature rise is not required.
   - 2.4. The area is used only for *means of egress* and *exits* directly to the outside.
3. *Horizontal exits* complying with Section 1026 shall not be required to discharge directly to the exterior of the building.

❖ The exit discharge is the third piece of the means of egress system, which includes exit access, exit and exit discharge. The general provisions for means of egress in Sections 1003 through 1015 are applicable to the exit discharge. The basic provision is that exits must discharge directly to the outside of the building. The exit discharge is the path from the termination of the exit to the public way. When it is not practical to discharge directly to the outside, there are four alternatives: an exit passageway (see Section 1024), an exit discharge lobby (see Section 1028.1, Exception 1), an exit discharge vestibule (see Section 1028.1, Exception 2) or a horizontal exit (see Sections 1026 and 1028.1, Exception 3). While Exceptions 1 and 2 could be applicable for exit passageways and exit ramps, they are most often applied for exit stairways. The commentary for Section 1027 will be limited to interior exit stairways that are enclosed in accordance with Section 1023 (see Sections 1006 and 1019.3 for exit access stairway requirements). Up to 50 percent of the interior exit stairways in a building may use either Exception 1 or 2; therefore, neither exception is viable for a single-exit building. In a two- or three-exit building, either a lobby or a vestibule can be used for exit discharge for one of the exit stairways. In a four-exit building, two of the exit stairways can use either a lobby or a vestibule for exit discharge.

An interior exit discharge lobby is permitted to receive the discharge from an exit stairway in lieu of the stairway discharging directly to the exterior. A fire door must be provided at the point where the exit stairway discharges into the lobby. Without an opening protective between the stairway and a lobby, it would be possible for the stairway to be directly

INTERNATIONAL CODE COUNCIL®
Copyright © 2015 ICC. ALL RIGHTS RESERVED. Accessed by David Dammon on Jun 21, 2017 12:30:52 PM pursuant to License Agreement with ICC. No further reproduction or distribution authorized. ANY UNAUTHORIZED REPRODUCTION OR DISTRIBUTION IS A VIOLATION OF THE FEDERAL COPYRIGHT ACT AND THE LICENSE AGREEMENT, AND SUBJECT TO CIVIL AND CRIMINAL PENALTIES THEREUNDER.

exposed to smoke movement from a fire in the lobby. The opening protective provides for full continuity of the vertical component of the exit arrangement. Additionally, in buildings where stair towers must be pressurized, pressurization would not be possible without a door at the lobby level.

An exit discharge lobby is the sole location recognized in the code where an exit element can be used for purposes other than pedestrian travel for means of egress. The lobby may contain furniture or decoration and nonoccupiable spaces may open directly into the lobby. The lobby, and all other areas on the same level that are not separated from the lobby by fire barriers consistent with the rating of the stair enclosure, must be sprinklered in accordance with an NFPA 13 or NFPA 13R system [see Commentary Figure 1028.1(1)]. If the entire level is sprinklered, no separation is required. In this case, the automatic sprinkler system is anticipated to control and (perhaps) eliminate the fire threat so as not to jeopardize the path of egress of the occupants. The lobby floor and any supporting construction must be rated the same as the stairway enclosure. If the lobby is slab on grade, this requirement is not applicable. This is consistent with the fundamental concept that an exit enclosure provides the necessary level of protection from adjacent areas. A path of travel through the lobby must be continually clear and available. The exit door leading out of the building must be visible and identifiable immediately when a person leaves the exit. This does not mean the exterior exit door must be directly in front of the door at the bottom of the stairway, but the intent is that it should be within the general range of vision. A person should not have to turn completely around or go around a corner to be able to see the way out.

Item 1.4 addresses when an exit access stairway and an exit stairway both discharge into the same lobby on the ground floor. For example, many hotels have meeting rooms on the level immediately above the lobby. This heavier occupant load, or circulation considerations, may result in an exit access stairway coming down from that second level into the same lobby that is being used for discharge from the upper floors for one of the required exit stairways. This limitation for a 30-foot (9144) separation is to prevent an exit access stairway and an exit stairway from termination too close together on the level of exit discharge. The intent is that one localized fire event in the lobby will not jeopardize the use of both means of egress components. The 30-foot or $^1/_4$ diagonal separation distances were based on the 30-foot or $^1/_4$ diagonal that is specified for separation of interior stairways in a high-rise building (see Section 403.5.1). This measurement is taken only at the bottom of the exit access stairway and the door to the

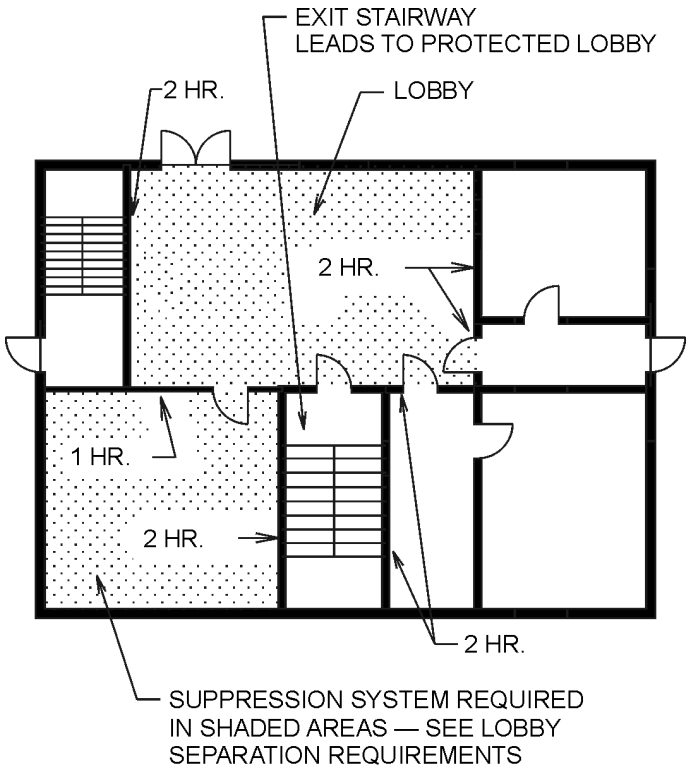

Figure 1028.1(1)
PROTECTION OF LOBBY WITH AN EXIT DISCHARGE

INTERNATIONAL CODE COUNCIL®
Copyright © 2015 ICC. ALL RIGHTS RESERVED. Accessed by David Dammon on Jun 21, 2017 12:30:52 PM pursuant to License Agreement with ICC. No further reproduction or distribution authorized. ANY UNAUTHORIZED REPRODUCTION OR DISTRIBUTION IS A VIOLATION OF THE FEDERAL COPYRIGHT ACT AND THE LICENSE AGREEMENT, AND SUBJECT TO CIVIL AND CRIMINAL PENALTIES THEREUNDER.

exit enclosure. It is not required to be maintained the entire length of the stairway as required for two exit access stairways in Section 1007.1.3. The enclosure of the exit stairway offers sufficient separation protection. The intent of the exception is to allow for glazing that meets the smoke partition requirements.

An exit is also allowed to discharge through a vestibule, provided it complies with the specified requirements of Exception 2. Vestibules utilizing this provision are not to be used for other purposes, such as access to closets, furniture/seating, drinking fountains, vending machines, etc. The vestibule floor and any supporting construction must be rated the same as the stairway enclosure. If the vestibule is slab on grade, this requirement is not applicable. The size of the vestibule is limited so that it cannot be used for other activities, and the travel distance from the exit stairway to the exterior exit doorway is limited [see Commentary Figures 1028.1(2) and 1028.1(3)]. The interior walls of the vestibule must be constructed as fire partitions with a fire-protection rating of at least 1 hour. Section 708 does not reference a specific test standard for fire partitions. As such, fire partitions must comply with ASTM E119 or UL 263 per Section 703.2 (see Section 703.2 for additional commentary on the tests). ASTM E119 and UL 263 have a transmission of heat criterion for nonbearing partitions to be considered as having passed the test. The exception exempts fire partitions for the separation of a vestibule from having to comply with the transmission of heat criterion. Glass panels set in a metal frame can be used for the vestibule as long as they meet the rest of the ASTM E119 criteria.

Exception 3 acknowledges that horizontal exits offer refuge areas that will have access to an exit on the other side; therefore, a stairway that exits through a horizontal exit is not required to exit to the exterior. Many hospitals and correctional facilities use horizontal exits to "defend in place" rather than require an immediate building evacuation. There are exit stairways or exits available from the refuge areas, so occupants can move to the outside if needed (see Section 1026 for additional information).

1028.2 Exit discharge width or capacity. The minimum width or required capacity of the *exit discharge* shall be not less than the minimum width or required capacity of the *exits* being served.

❖ This section specifies the exit discharge width based on minimum width and the number of occupants exiting (capacity). The exit discharge is required to be designed for the occupant from all of the exits it serves. If the exit discharge serves two exits, it is to be designed for the sum of the occupants served by both exits. Note that the capacity of the exit discharge is not required to match the total provided capacity of both exits, which is typically higher than the sum of the occupants served by both exits.

1028.3 Exit discharge components. *Exit discharge* components shall be sufficiently open to the exterior so as to minimize the accumulation of smoke and toxic gases.

❖ An exit discharge component could be a large open space where people could discharge in a number of different directions or it could be limited to a narrower path by landscaping or walls (i.e., egress court). In all cases, the space must be open enough to the outside that smoke and fumes will vent upward and away from people evacuating the building.

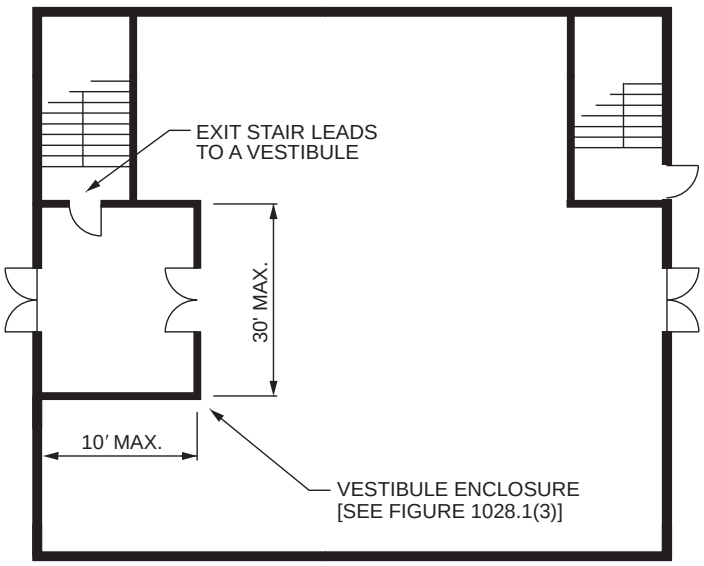

For SI: 1 foot = 304.8 mm.

Figure 1028.1(2)
VESTIBULE WITH EXIT DISCHARGE

INTERNATIONAL CODE COUNCIL®
Copyright © 2015 ICC. ALL RIGHTS RESERVED. Accessed by David Dammon on Jun 21, 2017 12:30:52 PM pursuant to License Agreement with ICC. No further reproduction or distribution authorized. ANY UNAUTHORIZED REPRODUCTION OR DISTRIBUTION IS A VIOLATION OF THE FEDERAL COPYRIGHT ACT AND THE LICENSE AGREEMENT, AND SUBJECT TO CIVIL AND CRIMINAL PENALTIES THEREUNDER.

1028.4 Egress courts. *Egress courts* serving as a portion of the *exit discharge* in the *means of egress* system shall comply with the requirements of Sections 1028.4.1 and 1028.4.2.

❖ A portion of the exit discharge that is partially confined by exterior walls or other elements that confine the discharge path to a single narrow route is regulated as an egress court.

This section and the following subsections address the detailed requirements for egress courts. It is essential that exterior egress courts serving occupants from an exit to a public way be sufficiently open to prevent the accumulation of smoke and toxic gases in the event of a fire as well as wide enough to accommodate the number of occupants leaving in that direction.

See Section 1206 for additional minimum width and openness requirements when yards and courts are needed for natural light or ventilation.

1028.4.1 Width or capacity. The required capacity of *egress courts* shall be determined as specified in Section 1005.1, but the minimum width shall be not less than 44 inches (1118 mm), except as specified herein. *Egress courts* serving Group R-3 and U occupancies shall be not less than 36 inches (914 mm) in width. The required capacity and width of *egress courts* shall be unobstructed to a height of 7 feet (2134 mm).

Exception: Encroachments complying with Section 1005.7.

Where an *egress court* exceeds the minimum required width and the width of such *egress court* is then reduced along the path of exit travel, the reduction in width shall be gradual. The transition in width shall be affected by a guard not less than 36 inches (914 mm) in height and shall not create an angle of more than 30 degrees (0.52 rad) with respect to the axis of the *egress court* along the path of egress travel. The width of the *egress court* shall not be less than the required capacity.

❖ The width of an exterior court is to be determined in the same fashion as for an interior corridor. The width is not to be less than required to serve the number of occupants from the exit or exits and not less than the minimum specified in this section (see also Section 1206). A cross reference back to Section 1005.7 for obstructions in the width in aisles (see Section 1018.1), corridors (see Section 1020.3), exit passageways (see Section 1024.2) and exit courts (see Section 1028.4.1) reinforces the fact that the protrusion limits provision is generally applicable for these types of confined routes.

Many egress courts are significantly larger than required. Thus, the code allows such an egress court to decrease in width along the path of travel to the public way. The gradual transition requirement is so the flow of the occupants will be uniform without pockets of congestion. The transition requirements should be applied to egress courts where a reduction results in a width that is near the minimum based on the number of occupants served. It is this condition where the uniform flow of occupants is essential.

1028.4.2 Construction and openings. Where an *egress court* serving a building or portion thereof is less than 10 feet (3048 mm) in width, the *egress court* walls shall have not less than 1-hour *fire-resistance-rated* construction for a distance of 10 feet (3048 mm) above the floor of the *egress court*. Openings

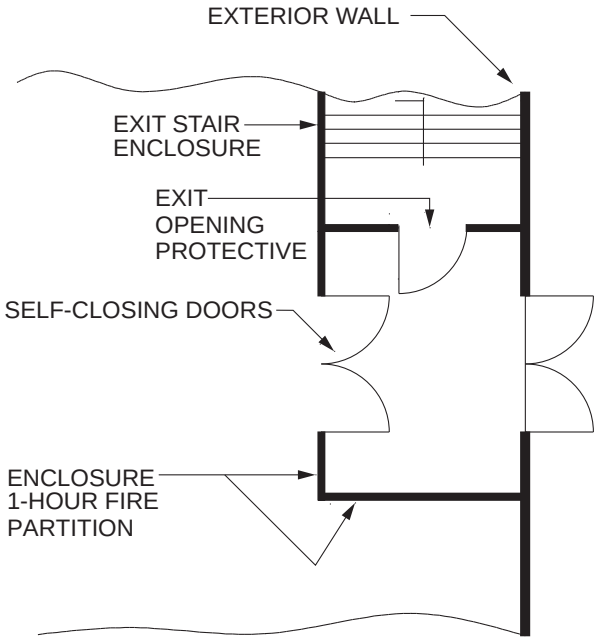

For SI: 1 inch = 25.4 mm.

Figure 1028.1(3)
SEPARATION DETAILS FOR VESTIBULE WITH EXIT DISCHARGE

INTERNATIONAL CODE COUNCIL®
Copyright © 2015 ICC. ALL RIGHTS RESERVED. Accessed by David Dammon on Jun 21, 2017 12:30:52 PM pursuant to License Agreement with ICC. No further reproduction or distribution authorized. ANY UNAUTHORIZED REPRODUCTION OR DISTRIBUTION IS A VIOLATION OF THE FEDERAL COPYRIGHT ACT AND THE LICENSE AGREEMENT, AND SUBJECT TO CIVIL AND CRIMINAL PENALTIES THEREUNDER.

within such walls shall be protected by opening protectives having a fire protection rating of not less than $^3/_4$ hour.

Exceptions:

1. *Egress courts* serving an *occupant load* of less than 10.
2. *Egress courts* serving Group R-3.

❖ The purpose of this section is to protect the occupants served by the egress court from the building that they are exiting from. If occupants must walk closely by the exterior walls of the court, the walls are required to have the specified fire-resistance rating and the openings are required to be protected as specified. This requirement is only for the first 10 feet (3048 mm) above the level of the egress court since the exposure hazard from walls and openings above 10 feet (3048 mm) is reduced. The two exceptions provide for egress courts that serve a very low number of occupants and the specified residential occupancy where the protection requirement would be located.

1028.5 Access to a public way. The *exit discharge* shall provide a direct and unobstructed access to a *public way*.

Exception: Where access to a *public way* cannot be provided, a safe dispersal area shall be provided where all of the following are met:

1. The area shall be of a size to accommodate not less than 5 square feet (0.46 m2) for each person.
2. The area shall be located on the same lot not less than 50 feet (15 240 mm) away from the building requiring egress.
3. The area shall be permanently maintained and identified as a safe dispersal area.
4. The area shall be provided with a safe and unobstructed path of travel from the building.

❖ There are instances where the path of travel to the public way is not safe or not achievable because of site constraints or security concerns. The provisions in this section specify what would constitute a safe area to allow occupants of a building to assemble in an emergency. The requirement of 5 square feet (0.28 m^2) would allow adequate space for standing persons as well as some space for persons in wheelchairs or on stretchers. Everyone who is expected to wait in this dispersal area for fire department assistance must be a minimum of 50 feet (15 240 mm) away from the building. This refuge must always remain open and not be used for parking, storage or temporary structures. A safe dispersal area is commonly found at schools or jails. Stadiums are more specifically addressed in Section 1010.2.1. Walls or fences may surround the building and part of the site due to other safety concerns. These walls and fences could stop occupants from reaching the public way.

SECTION 1029
ASSEMBLY

1029.1 General. A room or space used for assembly purposes that contains seats, tables, displays, equipment or other material shall comply with this section.

❖ Any room that is used for assembly purposes, regardless of the occupancy of the rest of the building, must comply with this section. Spaces used for assembly seating may appear in buildings of other occupancy types; for example, a library in a school, or a meeting room in an office building. This includes spaces with less than 50 occupants in other occupancies. For evaluation of the occupant load and the means of egress in these spaces, these spaces are regulated based on their function, rather than their occupancy group.

Although most of the provisions in Section 1029 focus on fixed seating auditoriums or theaters, this section also addresses loose seats, tables, displays, equipment, etc. Rooms or spaces used for assembly purposes contain elements that would affect the path of travel for the means of egress. These spaces require special consideration because of the larger occupant loads and possible low lighting (e.g., nightclubs, theaters), which can possibly lead to slower fire recognition or crowd concerns.

Since this section is extensive, here is a basic breakdown:

- Sections 1029.1.1 and 1029.1.1.1 deal with bleachers and grandstands.
- Sections 1029.3 through 1029.5 deal with number and dispersement of exits.
- Section 1029.6 and subsections discuss aisle widths based on the required capacity.
- Sections 1029.7 and 1029.8 are for travel distances and aisle accessways.
- Section 1029.9 deals with where aisles are required, minimum widths, and layouts. This includes provisions for where stairways are a direct continuation of a stepped aisle (Sections 1029.9.7 through 1029.10.3).
- Section 1029.11 discusses types of materials and walking surfaces.
- Section 1029.12 covers the aisle accessways that lead to the main aisles as they move through tables (Section 1029.12.1) and seating in rows (Section 1029.12.2).
- Section 1029.13 deals with slope, landings and edge protection for ramped aisles (Sections 1029.13.1 through 1029.13.1.3) and treads and risers for stepped aisles (Sections 1029.13.2 through 1029.13.2.4).
- Section 1029.14 discusses where seating needs to be fastened to the floor in order for aisles and accessways to be maintained.

INTERNATIONAL CODE COUNCIL®
Copyright © 2015 ICC. ALL RIGHTS RESERVED. Accessed by David Dammon on Jun 21, 2017 12:30:52 PM pursuant to License Agreement with ICC. No further reproduction or distribution authorized. ANY UNAUTHORIZED REPRODUCTION OR DISTRIBUTION IS A VIOLATION OF THE FEDERAL COPYRIGHT ACT AND THE LICENSE AGREEMENT, AND SUBJECT TO CIVIL AND CRIMINAL PENALTIES THEREUNDER.

- Section 1029.15 includes handrail provisions for ramped and stepped aisles.
- Section 1029.16 states where guards are required.

1029.1.1 Bleachers. *Bleachers*, *grandstands* and *folding and telescopic seating*, that are not building elements, shall comply with ICC 300.

❖ On February 24, 1999, the Bleacher Safety Act of 1999 was introduced in the House of Representatives. The bill, which cites the ICC and the code, authorizes the U.S. Consumer Product Safety Commission (CPSC) to issue a standard for bleacher safety. This was in response to concerns relative to accidents on bleacher-type structures. As a result, the CPSC developed and revised the *Guidelines for Retrofitting Bleachers*. The ICC Board of Directors decided that a comprehensive standard dealing with all aspects of both new and existing bleachers was warranted and authorized the formation of the ICC Consensus Committee on Bleacher Safety. The committee is composed of 12 members, including the requisite balance of general, user interest and producer interest.

ICC 300 was completed in December 2001, and submitted to ANSI on January 1, 2002. ICC 300 was reissued with some revisions in 2007 and 2012. While the term "bleachers" is generic, the standard addresses all aspects of tiered seating associated with bleachers, grandstands, and folding and telescopic seating. These types of seating are supported on dedicated structural systems, which in turn may sit on the ground or on a building floor system. Single seats or bench seats bolted down to a stepped floor are not considered a bleacher or grandstand and should comply with Section 1029. See the definitions in Chapter 2 for "Building element," "Bleachers," "Grandstands" and "Folding and telescopic seating." While ICC 300 is consistent and also relies on Chapter 10 of the code for some provisions, the standard addresses items specific to these types of seating arrangements. For example, the minimum number of exits from a bleacher is addressed in ICC 300, Section 404.1; however, to determine the minimum number of exits from the room the bleacher is located in, Section 1006 is applicable. The bleacher standard references Chapter 11 of the code and ICC A117.1 for accessibility requirements.

The ICC 300 has minimum requirements for new, alterations, repair, operation and maintenance of bleacher systems. A bleacher or grandstand is defined as "Tiered seating supported on a dedicated structural system and two or more rows high and is not a building element." The intent of the terms "dedicated structural system" and "not a building element" in the definition is to recognize that bleacher systems sit on the floor or ground and have a support system separate from the building system. However, the bleacher could rely on the building system for lateral or gravity support. The intent of "two or more rows" is so that a tiered floor system with a bench or row of seats on each tier would not be considered a bleacher.

The criteria in ICC 300 include provisions for construction; means of egress within the bleacher system; inspection and maintenance for existing bleachers; and for when seating systems are relocated.

1029.1.1.1 Spaces under grandstands and bleachers. Where spaces under *grandstands* or *bleachers* are used for purposes other than ticket booths less than 100 square feet (9.29 m^2) and toilet rooms, such spaces shall be separated by *fire barriers* complying with Section 707 and *horizontal assemblies* complying with Section 711 with not less than 1-hour *fire-resistance-rated* construction.

❖ Sometimes spaces under grandstands are used for other purposes such as bathrooms, concession stands, storage, etc. If that space caught on fire, it could jeopardize the safe evacuation options for persons on the bleachers. For safety, the spaces below must be separated from the bleachers by fire-resistance-rated construction. This is typically the roof and back walls of the concession stand or storage room. If the space below is either a small ticket booth or bathrooms of any size, the potential fire load is low enough that these spaces are not required to be separated.

Note that Section 903.2.1.5 requires enclosed spaces with an area of over 1,000 square feet (93 m^2) and under an outdoor bleacher system to be sprinklered.

While the path for means of egress passing under the bleachers (i.e., vomitory) is not specifically addressed in this section, when a bleacher system is outside, the capacity factors for determining minimum egress width [Table 404.5(3) of ICC 300] are based on the assumption that the egress route is essentially open to the outside and, therefore, has a limited chance for the accumulation of smoke along that route. Two of the three legacy codes specifically exempted open means of egress routes under bleachers from separation requirements.

1029.2 Assembly main exit. A building, room or space used for assembly purposes that has an *occupant load* of greater than 300 and is provided with a main *exit*, that main *exit* shall be of sufficient capacity to accommodate not less than one-half of the *occupant load*, but such capacity shall be not less than the total required capacity of all *means of egress* leading to the *exit*. Where the building is classified as a Group A occupancy, the main *exit* shall front on not less than one street or an unoccupied space of not less than 10 feet (3048 mm) in width that adjoins a street or *public way*. In a building, room or space used for assembly purposes where there is not a well-defined main *exit* or where multiple main *exits* are provided, *exits* shall be permitted to be distributed around the perimeter of the building provided that the total capacity of egress is not less than 100 percent of the required capacity.

❖ Assembly buildings, as well as other buildings including spaces that function as assembly spaces (e.g., the band classroom in a school, the training room in

INTERNATIONAL CODE COUNCIL®
Copyright © 2015 ICC. ALL RIGHTS RESERVED. Accessed by David Dammon on Jun 21, 2017 12:30:52 PM pursuant to License Agreement with ICC. No further reproduction or distribution authorized. ANY UNAUTHORIZED REPRODUCTION OR DISTRIBUTION IS A VIOLATION OF THE FEDERAL COPYRIGHT ACT AND THE LICENSE AGREEMENT, AND SUBJECT TO CIVIL AND CRIMINAL PENALTIES THEREUNDER.

an office, the cafeteria in a large factory), present an unusual life safety problem that includes frequent higher occupant densities and, therefore, larger occupant loads and the opportunity for irrational mass response to a perceived emergency (i.e., panic). For this reason, the code requires a specific arrangement of the exits. Studies have indicated that in any emergency, occupants will tend to egress via the same path of travel used to enter the room and building. Therefore, a main entrance to the building or space must also be designed as the main exit to accommodate this behavior, even if the required exit capacity might be more easily accommodated elsewhere. The main entrance (and exit) must be sized to accommodate at least 50 percent of the total occupant load of the structure and must front on a large, open space, such as a street or lobby, for rapid dispersal of the occupants outside the building or space. The remaining exits must also accommodate at least 50 percent of the total occupant load from each level (see Commentary Figure 1029.2). The total occupant load includes those within the theater seating area, the foyer and any other space (e.g., ticket booth, concession stand, offices, storage and the like). When the assembly space is within a mixed use building, the intent is that the main exits from the space comply with these provisions for one-half the capacity, but not necessarily that they lead directly to the outside. Egress requirements from the building would depend on how it was anticipated for the assembly space occupants to disperse. For example, an office building may have a large training/conference room where the path of exit access travel from the room goes out a main exit from the space and then disseminates into the general floor egress system. The room exit access doors may need to meet the 50-percent criterion, but once the occupants leave the room and enter the general floor egress system, exit capacity can be dispersed.

The required width of the means of egress in places of assembly is more often determined by the occupant load than in most other occupancies. In other occupancies, the minimum required widths and the travel distances will often determine the required widths and locations of the exits.

This section only requires the main exit to accommodate 50 percent of the occupant load when there is a single main entrance. Therefore, a large stadium or civic center, in which there are numerous entrances (and exits), need not comply with the main entrance criteria.

1029.3 Assembly other exits. In addition to having access to a main *exit*, each level in a building used for assembly purposes having an *occupant load* greater than 300 and provided with a main *exit*, shall be provided with additional *means of egress* that shall provide an egress capacity for not less than one-half of the total *occupant load* served by that level and shall comply with Section 1007.1. In a building used for assembly purposes where there is not a well-defined main *exit* or where multiple main *exits* are provided, *exits* for each level shall be permitted to be distributed around the perimeter

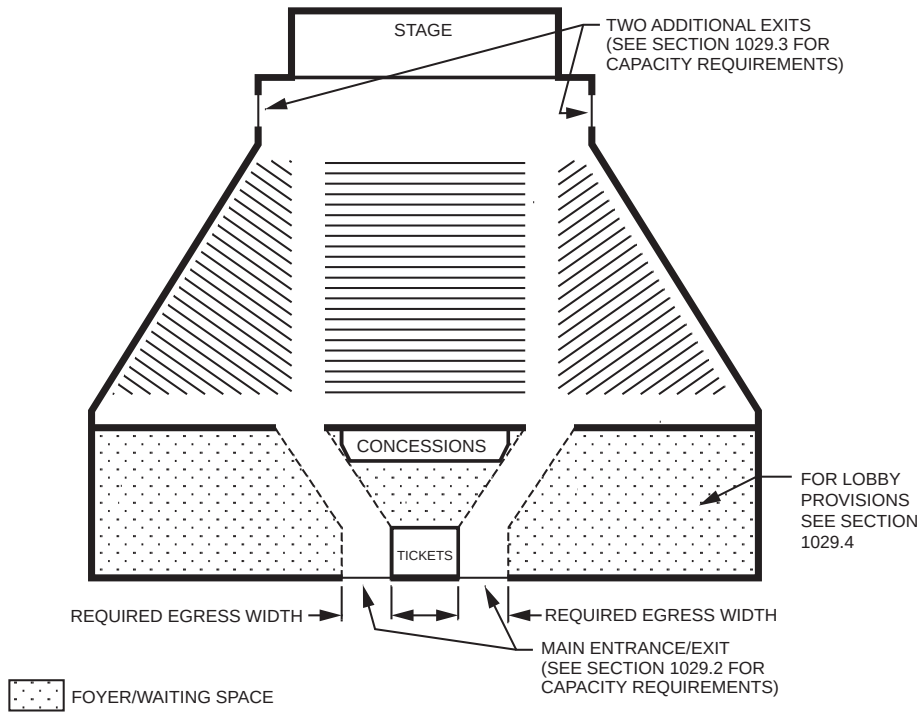

Figure 1029.2
GROUP A-1 WITH WAITING SPACE

INTERNATIONAL CODE COUNCIL®
Copyright © 2015 ICC. ALL RIGHTS RESERVED. Accessed by David Dammon on Jun 21, 2017 12:30:52 PM pursuant to License Agreement with ICC. No further reproduction or distribution authorized. ANY UNAUTHORIZED REPRODUCTION OR DISTRIBUTION IS A VIOLATION OF THE FEDERAL COPYRIGHT ACT AND THE LICENSE AGREEMENT, AND SUBJECT TO CIVIL AND CRIMINAL PENALTIES THEREUNDER.

of the building, provided that the total width of egress is not less than 100 percent of the required width.

❖ This section provides for the egress of one-half of the total occupant load by way of exits other than the main exit that is described in Section 1029.2. Assembly buildings, as well as other buildings including spaces that function as assembly spaces, that are provided with multiple entrances but no single main entrance do not provide a well-defined main exit; therefore, the total required exit width needs to be distributed around the perimeter of the space or building. Examples of these assemblies would be a school gymnasium or a large stadium or civic center in which there are numerous entrances (and exits).

1029.4 Foyers and lobbies. In Group A-1 occupancies, where persons are admitted to the building at times when seats are not available, such persons shall be allowed to wait in a lobby or similar space, provided such lobby or similar space shall not encroach upon the minimum width or required capacity of the *means of egress*. Such foyer, if not directly connected to a public street by all the main entrances or *exits*, shall have a straight and unobstructed *corridor* or path of travel to every such main entrance or *exit*.

❖ In theaters, people may arrive and wait for the next show while another group has yet to exit. This is extremely common in multiplex theater complexes. In every case, the main entrance (exit) and all other exits are to be constantly available for the entire building occupant load.

For example, because of the queuing of large crowds, particularly in theaters where a performance may be in progress and people must wait to attend the next one, standing space is often provided. For reasons of safety, such spaces cannot be located in or interfere with established paths of egress from the assembly areas. While a facility may choose to separate the route for means of egress using partitions or railings from the general lobby space to allow for easy traffic flow through the lobby to the street, it is not required to designate these areas (see Commentary Figure 1029.2).

1029.5 Interior balcony and gallery means of egress. For balconies, galleries or press boxes having a seating capacity of 50 or more located in a building, room or space used for assembly purposes, not less than two *means of egress* shall be provided, with one from each side of every balcony, gallery or press box.

❖ This section states the threshold where two means of egress are required based on the occupant load of the interior balcony, gallery or press box. Those two exits need to be dispersed. Section 1019.3, Exception 8, allows for both stairways to be unenclosed exit access stairways where they are effectively part of the main seating bowl. These requirements will ensure that at least one path of travel is always available and occupants face a minimum number of hazards.

For balconies, galleries or press boxes with 50 or fewer occupants, see Section 1029.8. When balconies, galleries or press boxes contain wheelchair spaces, the area must also meet the accessible means of egress requirements (Sections 1009.1, Exception 3, and 1029.8).

1029.6 Capacity of aisle for assembly. The required capacity of *aisles* shall be not less than that determined in accordance with Section 1029.6.1 where *smoke-protected assembly seating* is not provided and with Section 1029.6.2 or 1029.6.3 where *smoke-protected assembly seating* is provided.

❖ The means of egress width for spaces used for assembly is to be in accordance with this section and the referenced sections instead of the criteria specified in Section 1005 when dealing with the means of egress within the seating area. The width factors in Section 1029.6 and its subsections apply to those doorways, passageways, stepped aisles, ramped aisles and level aisles that are within the assembly seating areas.

The Board for the Coordination of Model Codes (BCMC) issued a report on means of egress dated June 10, 1985. The provisions in Section 1029 are based on this report. This report limits the application of these provisions to aisles and aisle accessways that provide exit access within the room or space with the assembly seating. This would include aisle accessways, level aisles, stepped aisles and ramped aisles. The primary concern for occupant safety would be that where the different provisions for the capacity requirements in Sections 1005 and 1029 were utilized, there would not be a bottleneck in the path of travel for means of egress. For example, a common configuration at football fields is to have the seating area raised several feet above grade. Where a step or series of steps leading to grade from a raised seating area are a continuation of the stepped aisle, the width of the stepped aisle between seats and the continuation without adjacent seats should be the same. In theaters, commonly the occupants leave the seating area for a concourse or lobby area that leads to exit stairways between floor levels. In this situation, the capacity requirement in Section 1005.3 would be applicable for the exit stairway. For the many situations between these two scenarios, the decision would be based on the configuration of the seating and exit stairways between levels.

For example, in a facility without smoke protection and an occupant load of 800, doorways would need to be calculated based on 0.20 inches (5.1 mm) per occupant (see Item 4 of Section 1029.6.1). An occupant load of 800 x 0.2 inches (4064 mm) = 160 inches (4064 mm) of egress width capacity, which translates into not less than five doors [assuming each with a minimum 32-inch (813 mm) clear opening]. This facility needs to have not less than three distinct means of egress (Section 1006.3). A main exit must accommodate not less than one-half of the occupant load (Section 1029.2). Therefore, the result would be not less

INTERNATIONAL CODE COUNCIL®
Copyright © 2015 ICC. ALL RIGHTS RESERVED. Accessed by David Dammon on Jun 21, 2017 12:30:52 PM pursuant to License Agreement with ICC. No further reproduction or distribution authorized. ANY UNAUTHORIZED REPRODUCTION OR DISTRIBUTION IS A VIOLATION OF THE FEDERAL COPYRIGHT ACT AND THE LICENSE AGREEMENT, AND SUBJECT TO CIVIL AND CRIMINAL PENALTIES THEREUNDER.

than six doors: three located at the main exit and three others distributed to at least two other locations (Section 1029.3).

Different means of egress width criteria are also specified for assembly seating where smoke protection is provided versus areas where smoke protection is not provided. The egress width for smoke-protected seating is allowed to be less than for areas where smoke protection is not provided, since the smoke level is required to be maintained at least 6 feet (1829 mm) above the floor of the means of egress, according to Section 1029.6.2.1.

1029.6.1 Without smoke protection. The required capacity in inches (mm) of the *aisles* for assembly seating without smoke protection shall be not less than the *occupant load* served by the egress element in accordance with all of the following, as applicable:

1. Not less than 0.3 inch (7.6 mm) of *aisle* capacity for each occupant served shall be provided on stepped *aisles* having riser heights 7 inches (178 mm) or less and tread depths 11 inches (279 mm) or greater, measured horizontally between tread *nosings*.
2. Not less than 0.005 inch (0.127 mm) of additional *aisle* capacity for each occupant shall be provided for each 0.10 inch (2.5 mm) of riser height above 7 inches (178 mm).
3. Where egress requires stepped *aisle* descent, not less than 0.075 inch (1.9 mm) of additional *aisle* capacity for each occupant shall be provided on those portions of *aisle* capacity having no *handrail* within a horizontal distance of 30 inches (762 mm).
4. Ramped *aisles*, where slopes are steeper than one unit vertical in 12 units horizontal (8-percent slope), shall have not less than 0.22 inch (5.6 mm) of clear *aisle* capacity for each occupant served. Level or ramped *aisles*, where slopes are not steeper than one unit vertical in 12 units horizontal (8-percent slope), shall have not less than 0.20 inch (5.1 mm) of clear *aisle* capacity for each occupant served.

❖ This section prescribes the criteria needed to calculate the clear widths of aisles and aisle accessways in order to provide sufficient capacity to handle the occupant loads established by the "catchment areas" described in Section 1029.9.2. Clear width is to be measured to walls, edges of seating and tread edges.

The criteria for determining the required widths are based on analytical studies and field tests that used people to model egress situations [see Commentary Figures 1029.6.1(1) and 1029.6.1(2)].

Criterion 1 addresses the method for determining the required egress width for stepped aisles. This method corresponds with the requirements of Section 1005.3.1 for egress width per occupant of stairways in an unsprinklered building.

Criterion 2 addresses the method for determining the additional stepped aisle width required where the risers along that stepped aisle are greater than 7 inches (178 mm) high.

Criterion 3 addresses the method for determining the additional stepped aisle width where a handrail is not located within 30 inches (762 mm). With a center handrail, that would be stepped aisles wider than 60 inches (1524 mm). Side aisles have handrails along the wall. If the handrail is the top of the guard, then this requirement would apply to any side aisles greater than 30 inches (762 mm) wide. Because of the increased chance of falling and not being within reach of a handrail, the capacity per occupant is increased by 25 percent for the entire stepped aisle. For example, to calculate the capacity of a 72-inch-wide (1829 mm) stepped aisle, the answer would be 72 inches/0.375 inch = 192 occupants.

Criterion 4 addresses the method for determining the required widths for level or ramped and level means of egress. Where slopes are less than 1:12 (see definition for "Ramp"), the capacity requirements are also less. Level floors are quicker to negotiate than ramped surfaces for persons with limited mobility. Ramped aisle slopes are addressed in Section 1029.13.1.

These provisions are applicable within the seating area itself. When the occupants have left the seating bowl and have moved to stairways outside of the room, or have moved to cross aisles and then stairways or ramps leaving the balcony level, Section 1005.3 would be applicable. See Sections 1029.9.6.1

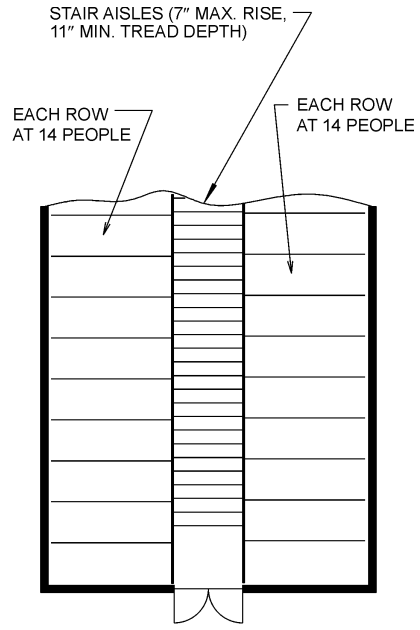

For SI: 1 inch = 25.4 mm.

Figure 1029.6.1(1)
COMPUTATION OF WIDTH FOR STEPPED AISLES

INTERNATIONAL CODE COUNCIL®
Copyright © 2015 ICC. ALL RIGHTS RESERVED. Accessed by David Dammon on Jun 21, 2017 12:30:52 PM pursuant to License Agreement with ICC. No further reproduction or distribution authorized. ANY UNAUTHORIZED REPRODUCTION OR DISTRIBUTION IS A VIOLATION OF THE FEDERAL COPYRIGHT ACT AND THE LICENSE AGREEMENT, AND SUBJECT TO CIVIL AND CRIMINAL PENALTIES THEREUNDER.

through 1029.10.3 for stairways that are a direct continuation of stepped aisles.

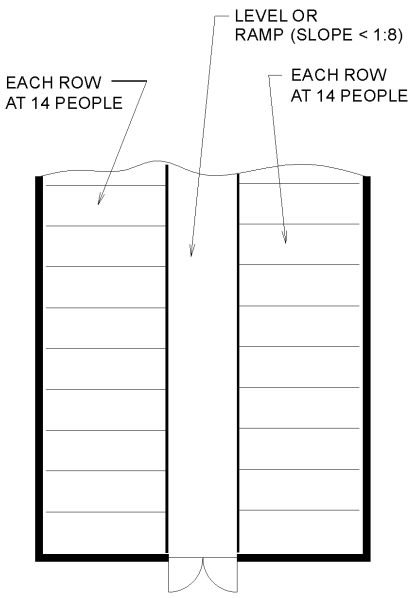

For SI: 1 inch = 25.4 mm.

Figure 1029.6.1(2)
COMPUTATION OF WIDTH FOR LEVEL, SLOPED OR RAMPED AISLES

1029.6.2 Smoke-protected assembly seating. The required capacity in inches (mm) of the aisle for *smoke-protected assembly seating* shall be not less than the occupant load served by the egress element multiplied by the appropriate factor in Table 1029.6.2. The total number of seats specified shall be those within the space exposed to the same smoke-protected environment. Interpolation is permitted between the specific values shown. A life safety evaluation, complying with NFPA 101, shall be done for a facility utilizing the reduced width requirements of Table 1029.6.2 for *smoke-protected assembly seating*.

Exception: For outdoor *smoke-protected assembly seating* with an *occupant load* not greater than 18,000, the required capacity in inches (mm) shall be determined using the factors in Section 1029.6.3.

❖ Special consideration is given to facilities with features that will prevent the means of egress from being blocked by smoke. Facilities to be considered smoke protected by Sections 1029.6.2.1 through 1029.6.2.3 are permitted increases in travel distance, egress capacity, and dead-end aisle and row lengths. Smoke control increases allowable egress time. Typically, model codes based on research by Dr. John Fruin and others recognize the need for occupants exposed to the fire environment to evacuate to a safe area within 90 seconds of notification and to reach the exterior or enclosed exit stairway within 5 minutes. With the increases permitted for smoke-protected facilities, these times are effectively doubled since the time available for safe egress also increases.

The exception is a pointer to the specific criteria for outdoor seating areas. For outdoor stadiums with 18,000 seats or greater, use Table 1029.6.2.

TABLE 1029.6.2. See page 10-187.

❖ This section requires the egress component to be of adequate size to accommodate the occupant load. For smoke-protected seating, the egress width per occupant is based on Table 1029.6.2. Typically, the larger the facility, the higher the ceiling; therefore, more space for smoke containment is associated with more time for egress. The egress width per occupant for nonsmoke-protected seating is to be based on Section 1029.6.1 and is similar to the provisions in Section 1005.3.

Where the entire means of egress is smoke protected, the concourse and any stairways and ramps can also use the same capacity numbers (see Section 1005.3.1, Exception 2, and Section 1005.3.2, Exception 2) to determine egress width. If the concourse surrounding the smoke-protected seating bowl is not also smoke protected, the requirements in Sections 1005.3.2 and 1005.3.1 would be applicable to determine widths required for capacity of the concourse, stairways and ramps providing means of egress from the seating bowl to the exterior of the building. See Sections 1029.9.6.1 through 1029.10.3 for stairways that are a direct continuation of stepped aisles.

1029.6.2.1 Smoke control. *Aisles* and *aisle accessways* serving a *smoke-protected assembly seating* area shall be provided with a smoke control system complying with Section 909 or natural ventilation designed to maintain the smoke level not less than 6 feet (1829 mm) above the floor of the *means of egress*.

❖ The means of egress (aisles and aisle accessways) within the assembly seating area are required to have some type of smoke control system that will prevent smoke buildup from encroaching on the egress path. This may be a mechanical smoke control system, designed in accordance with Section 909, or natural ventilation as in open-air stadiums.

In either type of system, the major consideration is that a smoke-free environment be maintained at least 6 feet (1829 mm) above the floor of the means of egress for a period of at least 20 minutes.

1029.6.2.2 Roof height. A *smoke-protected assembly seating* area with a roof shall have the lowest portion of the roof deck not less than 15 feet (4572 mm) above the highest *aisle* or *aisle accessway*.

Exception: A roof canopy in an outdoor stadium shall be permitted to be less than 15 feet (4572 mm) above the

INTERNATIONAL CODE COUNCIL®
Copyright © 2015 ICC. ALL RIGHTS RESERVED. Accessed by David Dammon on Jun 21, 2017 12:30:52 PM pursuant to License Agreement with ICC. No further reproduction or distribution authorized. ANY UNAUTHORIZED REPRODUCTION OR DISTRIBUTION IS A VIOLATION OF THE FEDERAL COPYRIGHT ACT AND THE LICENSE AGREEMENT, AND SUBJECT TO CIVIL AND CRIMINAL PENALTIES THEREUNDER.

highest *aisle* or *aisle accessway* provided that there are no objects less than 80 inches (2032 mm) above the highest *aisle* or *aisle accessway*.

❖ One element of a smoke-protected assembly seating facility is that the lowest portion of the roof is required to be at least 15 feet (4572 mm) above the highest aisle or aisle accessway. The objective of this provision is to have a minimum 6-foot (1829 mm) smoke-free height to accommodate safe egress through the area. The additional 9 feet (2743 mm) of height is to provide a volume of space that will act to dissipate smoke. The measurement of the height is shown in Commentary Figures 1029.6.2.2(1) and 1029.6.2.2(2).

1029.6.2.3 Automatic sprinklers. Enclosed areas with walls and ceilings in buildings or structures containing *smoke-protected assembly seating* shall be protected with an *approved automatic sprinkler system* in accordance with Section 903.3.1.1.

Exceptions:

1. The floor area used for contests, performances or entertainment provided the roof construction is more than 50 feet (15 240 mm) above the floor level and the use is restricted to low-fire-hazard uses.
2. Press boxes and storage facilities less than 1,000 square feet (93 m^2) in area.
3. Outdoor seating facilities where seating and the *means of egress* in the seating area are essentially open to the outside.

❖ If there are areas in the smoke-protected assembly seating structure enclosed by walls and ceilings, the entire structure is to be provided with an automatic sprinkler designed to meet the requirements of NFPA 13.

Exception 1 indicates that the area over the playing field or performance area is not required to be sprinklered if the use of the floor area is restricted. If the facility is used for conventions, trade shows, displays or similar purposes, sprinklers are required throughout, since the occupancy would no longer be a low-fire-hazard use. A characteristic of a low-fire-hazard occupancy is that the fuel load caused by combustibles is approximately 2 pounds per square foot (9.8 kg/m^2) or less.

In order for the contest, performance or entertainment area to be nonsprinklered, the roof over that area must be at least 50 feet (15 240 mm) above the

TABLE 1029.6.2
CAPACITY FOR AISLES FOR SMOKE-PROTECTED ASSEMBLY

TOTAL NUMBER OF SEATS IN THE SMOKE-PROTECTED ASSEMBLY SEATING	INCHES OF CAPACITY PER SEAT SERVED			
	Stepped aisles with handrails within 30 inches	Stepped aisles without handrails within 30 inches	Level aisles or ramped aisles not steeper than 1 in 10 in slope	Ramped aisles steeper than 1 in 10 in slope
Equal to or less than 5,000	0.200	0.250	0.150	0.165
10,000	0.130	0.163	0.100	0.110
15,000	0.096	0.120	0.070	0.077
20,000	0.076	0.095	0.056	0.062
Equal to or greater than 25,000	0.060	0.075	0.044	0.048

For SI: 1 inch = 25.4 mm.

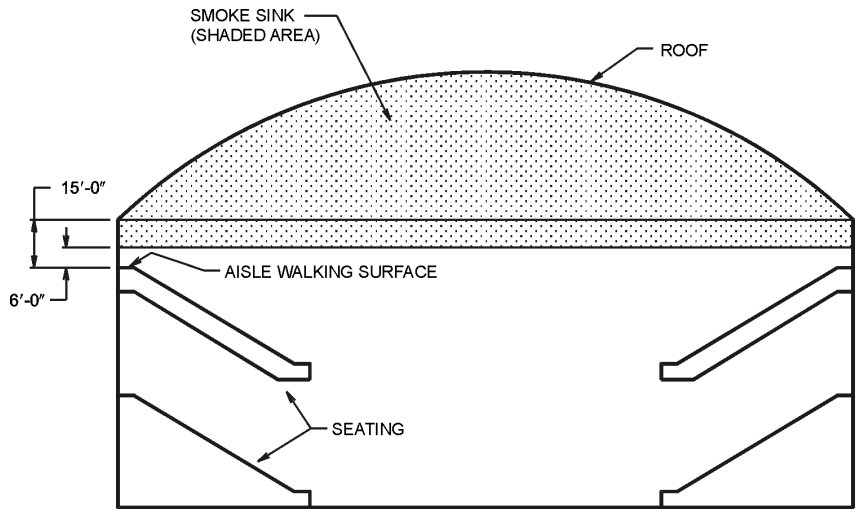

For SI: 1 foot = 304.8 mm.

Figure 1029.6.2.2(1)
ROOF HEIGHT (CONVEX DOME ROOF)

INTERNATIONAL CODE COUNCIL®
Copyright © 2015 ICC. ALL RIGHTS RESERVED. Accessed by David Dammon on Jun 21, 2017 12:30:52 PM pursuant to License Agreement with ICC. No further reproduction or distribution authorized. ANY UNAUTHORIZED REPRODUCTION OR DISTRIBUTION IS A VIOLATION OF THE FEDERAL COPYRIGHT ACT AND THE LICENSE AGREEMENT, AND SUBJECT TO CIVIL AND CRIMINAL PENALTIES THEREUNDER.

floor in addition to the floor area meeting the-low fire-hazard criteria. The 50-foot (15 240 mm) criterion was selected because the response time for sprinklers at this height is extremely slow. It is estimated that the response time for standard sprinklers [50 feet (15 240 mm) above a floor with a fire having a heat release rate of 5 British thermal units (Btu) per square foot per second] exceeds 15 minutes. Therefore, it is not reasonable to install sprinklers at that height with little expectation of timely activation [see Commentary Figure 1029.6.2.3(1)]. Note that if this exception is utilized, the tradeoffs for a fully sprinklered building, such as increased height and area limitations or decreased corridor ratings, are no longer permitted.

Exception 2 indicates that automatic sprinklers are not required in small spaces in buildings. Sprinklers are required in press box and storage areas of outdoor facilities when the area exceeds 1,000 square feet (93 m^2). The primary reason for sprinklers in these areas is that both are anticipated to have a relatively large combustible load when compared to the main seating and participant areas. Additionally, in the case of storage areas, there is an increased potential for an undetected fire condition to occur [see Commentary Figure 1029.6.2.3(2)].

Exception 3 provides for outdoor seating facilities where smoke entrapment is not a safety concern.

1029.6.3 Outdoor smoke-protected assembly seating. The required capacity in inches (mm) of *aisles* shall be not less than the total *occupant load* served by the egress element multiplied by 0.08 (2.0 mm) where egress is by stepped *aisle* and multiplied by 0.06 (1.52 mm) where egress is by level *aisles* and ramped *aisles*.

Exception: The required capacity in inches (mm) of *aisles* shall be permitted to comply with Section 1029.6.2 for the number of seats in the outdoor *smoke-protected assembly seating* where Section 1029.6.2 permits less capacity.

❖ This section lists the coefficients determining the width of aisles required for outdoor smoke-protected assembly seating areas. Note that the coefficients are significantly less when compared to the values in Section 1029.6.1 for assembly areas without smoke protection. The coefficients are also less than those for smoke-protected assembly seating in Table 1029.6.2 except for very large assembly areas. The exception in this section would apply where the coefficients in Table 1029.6.2 are less than those in this section.

Low coefficients are a result of the very low hazards for outdoor smoke-protected assembly areas and increased egress time. Where the entire means of egress is essentially open to the exterior, the concourse and any stairways and ramps can also use the same capacity numbers (see Section 1005.3.1, Exception 2, and Section 1005.3.2, Exception 2) to determine egress width. If the concourse surrounding the outdoor seating bowl is enclosed, the requirements in Sections 1005.3.2 and 1005.3.1 would be applicable to determine widths required for capacity of the concourse, stairways and ramps providing means of egress from the seating bowl to the exterior of the building. See Sections 1029.9.6.1 through 1029.10.3 for stairways that are a direct continuation of stepped aisles.

Generally, an outdoor assembly area meets the smoke control requirements of Section 1029.6.2 by natural ventilation and does not require an automatic sprinkler system according to Section 1029.6.2.3, Exception 3.

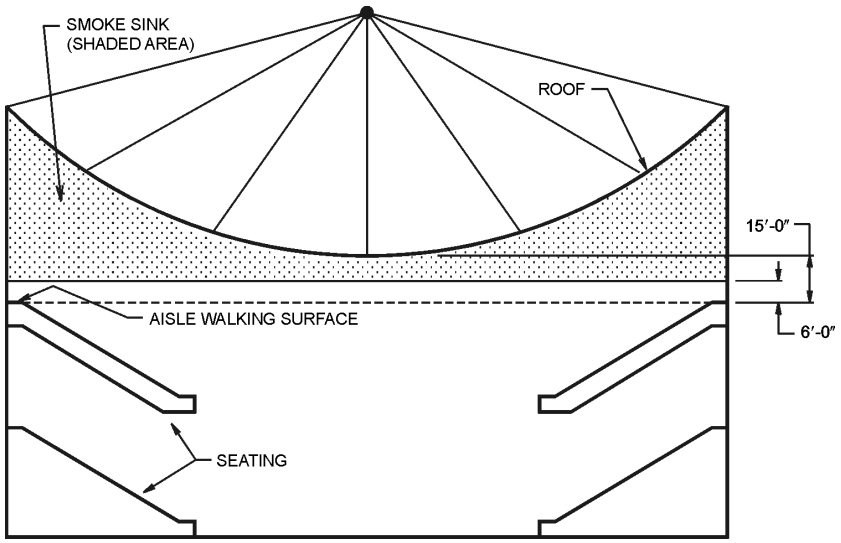

For SI: 1 foot = 304.8 mm.

Figure 1029.6.2.2(2)
ROOF HEIGHT (CONCAVE SUSPENDED ROOF)

INTERNATIONAL CODE COUNCIL®
Copyright © 2015 ICC. ALL RIGHTS RESERVED. Accessed by David Dammon on Jun 21, 2017 12:30:52 PM pursuant to License Agreement with ICC. No further reproduction or distribution authorized. ANY UNAUTHORIZED REPRODUCTION OR DISTRIBUTION IS A VIOLATION OF THE FEDERAL COPYRIGHT ACT AND THE LICENSE AGREEMENT, AND SUBJECT TO CIVIL AND CRIMINAL PENALTIES THEREUNDER.

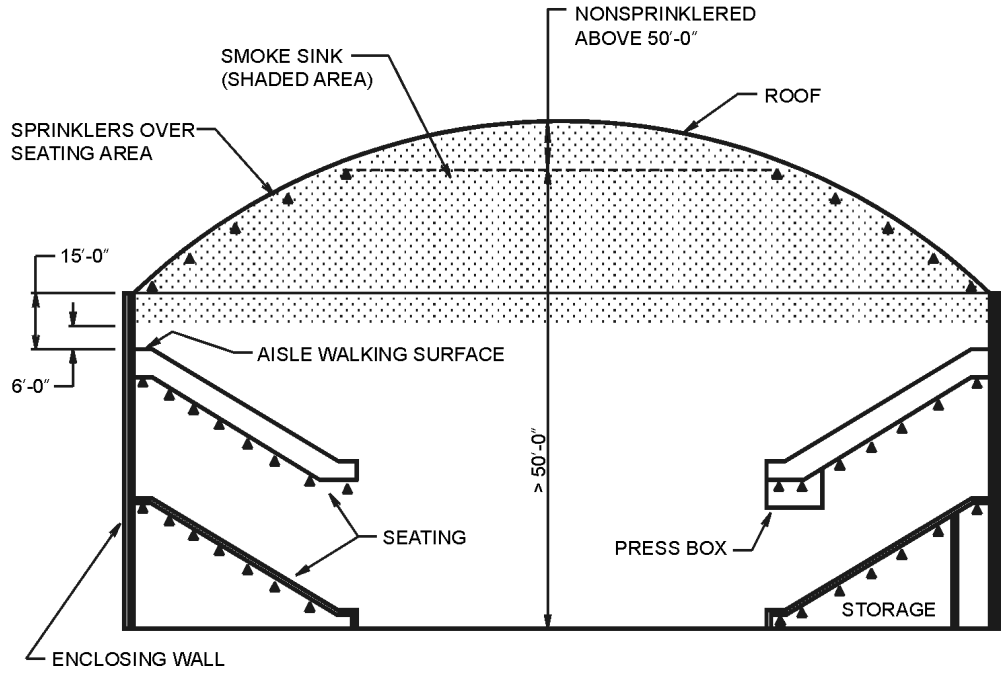

For SI: 1 foot = 304.8 mm.

Figure 1029.6.2.3(1)
INDOOR SEATING SPRINKLERED AREAS (CONVEX DOME ROOF)

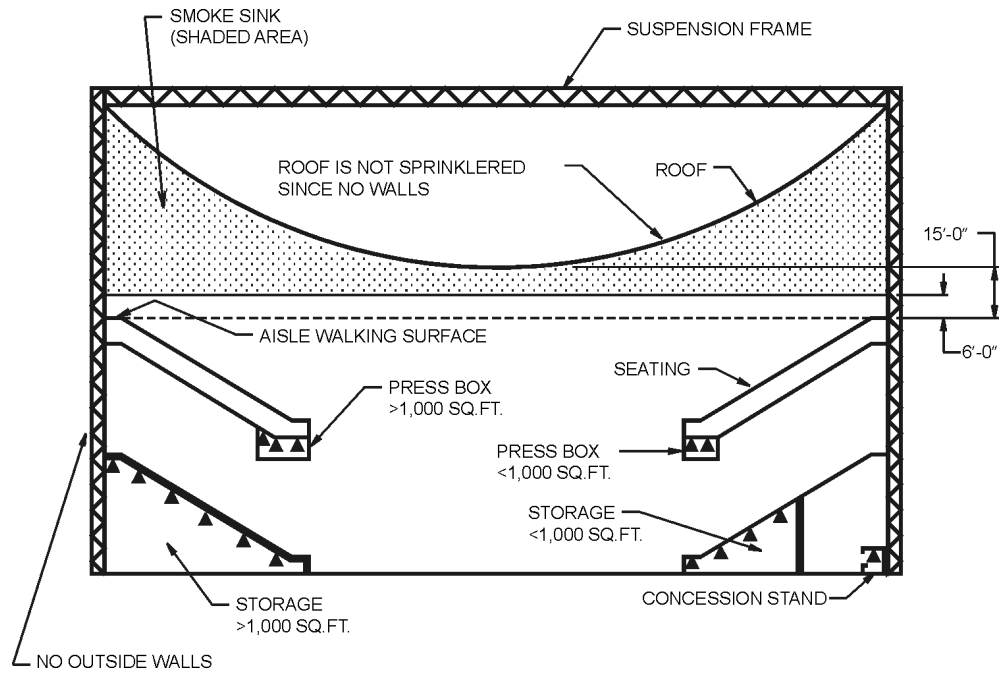

For SI: 1 foot = 304.8 mm,
1 square foot = 0.0929 m^2.

Figure 1029.6.2.3(2)
INDOOR SEATING SPRINKLERED AREAS (CONCAVE SUSPENDED ROOF)

INTERNATIONAL CODE COUNCIL®
Copyright © 2015 ICC. ALL RIGHTS RESERVED. Accessed by David Dammon on Jun 21, 2017 12:30:52 PM pursuant to License Agreement with ICC. No further reproduction or distribution authorized. ANY UNAUTHORIZED REPRODUCTION OR DISTRIBUTION IS A VIOLATION OF THE FEDERAL COPYRIGHT ACT AND THE LICENSE AGREEMENT, AND SUBJECT TO CIVIL AND CRIMINAL PENALTIES THEREUNDER.

1029.7 Travel distance. *Exits* and *aisles* shall be so located that the travel distance to an *exit* door shall be not greater than 200 feet (60 960 mm) measured along the line of travel in nonsprinklered buildings. Travel distance shall be not more than 250 feet (76 200 mm) in sprinklered buildings. Where *aisles* are provided for seating, the distance shall be measured along the *aisles* and *aisle accessways* without travel over or on the seats.

Exceptions:

1. *Smoke-protected assembly seating*: The travel distance from each seat to the nearest entrance to a vomitory or concourse shall not exceed 200 feet (60 960 mm). The travel distance from the entrance to the vomitory or concourse to a *stairway*, *ramp* or walk on the exterior of the building shall not exceed 200 feet (60 960 mm).
2. Open-air seating: The travel distance from each seat to the building exterior shall not exceed 400 feet (122 m). The travel distance shall not be limited in facilities of Type I or II construction.

❖ This section includes the travel distance limits for an assembly occupancy, which are the same as those in Table 1017.2 for Group A. The travel distance is to be measured along the same path the occupants would normally take to exit the facility.

Exception 1 provides an extended travel distance for smoke-protected assembly seating that meets the requirements of Sections 1029.6.2 through 1029.6.2.3.

Exception 2 applies to open-air seating areas where the smoke and fire hazard is very low. The Type I and II construction referred to in this exception is described in Section 602.

1029.8 Common path of egress travel. The *common path of egress travel* shall not exceed 30 feet (9144 mm) from any seat to a point where an occupant has a choice of two paths of egress travel to two *exits*.

Exceptions:

1. For areas serving less than 50 occupants, the *common path of egress travel* shall not exceed 75 feet (22 860 mm).
2. For *smoke-protected assembly seating*, the *common path of egress travel* shall not exceed 50 feet (15 240 mm).

❖ The maximum travel distance down a single aisle accessway between rows of seating to a location where a patron would have two choices for a way out of the space is 30 feet (9144 mm). In smoke-protected seating, the common path of travel can be up to 50 feet (15 240 mm).

If the room or space (e.g., box, gallery or balcony) has 50 or fewer occupants, the travel distance can be increased to 75 feet (22 860 mm). For example, this allows for a path of travel from a box seat, out of the box and to a main aisle or even a corridor located outside the assembly room itself.

When this section is referenced for accessible means of egress (see Section 1009.1, Exception 3), the utilization of Exception 1 would include the entire occupant load of the seating area, box, gallery or balcony, not just the number of wheelchair spaces and/or companion seats. Wheelchair spaces that are integrated into the general seating would have the same common path of travel distance of 30 feet (9144 mm) before the person needing the accessible route could choose two different paths for accessible means of egress. This provides the same level of protection for the persons in the accessible seating as provided for others within the space.

Sections 1006.2.1, 1006.3.2 and 1029.8 must be considered when determining the common path of travel requirements for a building. Section 1006.2.1 regulates the means of egress from a room or space. Section 1029.8, however, regulates the distance to a decision point within a room or space used for assembly seating where a single access row of seating is provided to a location where a patron would have two choices for a way out of the space.

1029.8.1 Path through adjacent row. Where one of the two paths of travel is across the *aisle* through a row of seats to another *aisle*, there shall be not more than 24 seats between the two *aisles*, and the minimum clear width between rows for the row between the two *aisles* shall be 12 inches (305 mm) plus 0.6 inch (15.2 mm) for each additional seat above seven in the row between *aisles*.

Exception: For *smoke-protected assembly seating* there shall be not more than 40 seats between the two *aisles* and the minimum clear width shall be 12 inches (305 mm) plus 0.3 inch (7.6 mm) for each additional seat.

❖ In establishing the point where the occupants of a row served by a single access aisle have two distinct paths of travel, the code allows one of those paths to be through the rows of an adjacent seating area or section. This requirement increases the row widths for the single-access seating section and the adjacent dual-access seating section. This allows the occupants to either travel down the single access aisle or readily traverse the oversized row widths to gain access to a second means of egress (see Commentary Figure 1029.8.1). This exception allows a greater number of seats spaced with a minimum clearance of 12 inches (305 mm) for smoke-protected assembly seating that complies with Sections 1029.6.2 through 1029.6.2.3 or Section 1029.6.3. For the base width requirements for single- and dual-access rows, see the commentary to Sections 1029.12.2 through 1029.12.2.2.

1029.9 Assembly aisles are required. Every occupied portion of any building, room or space used for assembly purposes that contains seats, tables, displays, similar fixtures or equipment shall be provided with *aisles* leading to *exits* or *exit access doorways* in accordance with this section.

❖ This section requires that each assembly space have designated aisles. For aisle accessway requirements,

INTERNATIONAL CODE COUNCIL®
Copyright © 2015 ICC. ALL RIGHTS RESERVED. Accessed by David Dammon on Jun 21, 2017 12:30:52 PM pursuant to License Agreement with ICC. No further reproduction or distribution authorized. ANY UNAUTHORIZED REPRODUCTION OR DISTRIBUTION IS A VIOLATION OF THE FEDERAL COPYRIGHT ACT AND THE LICENSE AGREEMENT, AND SUBJECT TO CIVIL AND CRIMINAL PENALTIES THEREUNDER.

see Section 1029.10. For aisles in other occupancies, see Section 1018.

1029.9.1 Minimum aisle width. The minimum clear width for *aisles* shall comply with one of the following:

1. Forty-eight inches (1219 mm) for stepped *aisles* having seating on each side.

   Exception: Thirty-six inches (914 mm) where the stepped *aisles* serve less than 50 seats.

2. Thirty-six inches (914 mm) for stepped *aisles* having seating on only one side.

   Exception: Twenty-three inches (584 mm) between a stepped *aisle handrail* and seating where a stepped *aisle* does not serve more than five rows on one side.

3. Twenty-three inches (584 mm) between a stepped *aisle handrail* or *guard* and seating where the stepped *aisle* is subdivided by a mid-aisle *handrail*.

4. Forty-two inches (1067 mm) for level or ramped *aisles* having seating on both sides.

   Exceptions:

   1. Thirty-six inches (914 mm) where the *aisle* serves less than 50 seats.
   2. Thirty inches (762 mm) where the *aisle* does not serve more than 14 seats.

5. Thirty-six inches (914 mm) for level or ramped *aisles* having seating on only one side.

   Exception: For other than ramped *aisles* that serve as part of an *accessible route*, 30 inches (762 mm) where the ramped *aisle* does not serve more than 14 seats.

❖ The clear widths of aisles established by the formulas given in Section 1029.6 must not be less than the minimum width requirements of this section. The development of minimum width requirements is based on the association of aisle capacity with the path of exit travel as influenced by the different features of aisle construction. The purpose is to create an aisle system that would provide an even flow of occupant egress. The minimum width of the aisles is also based on an anticipated movement of people in two directions.

Items 1, 2 and 3 deal with stepped aisles. Items 4 and 5 deal with ramped and level aisles. Items 1, 3 and 4 deal with aisles with seating on both sides. Items 2 and 5 deal with aisles with seating on one

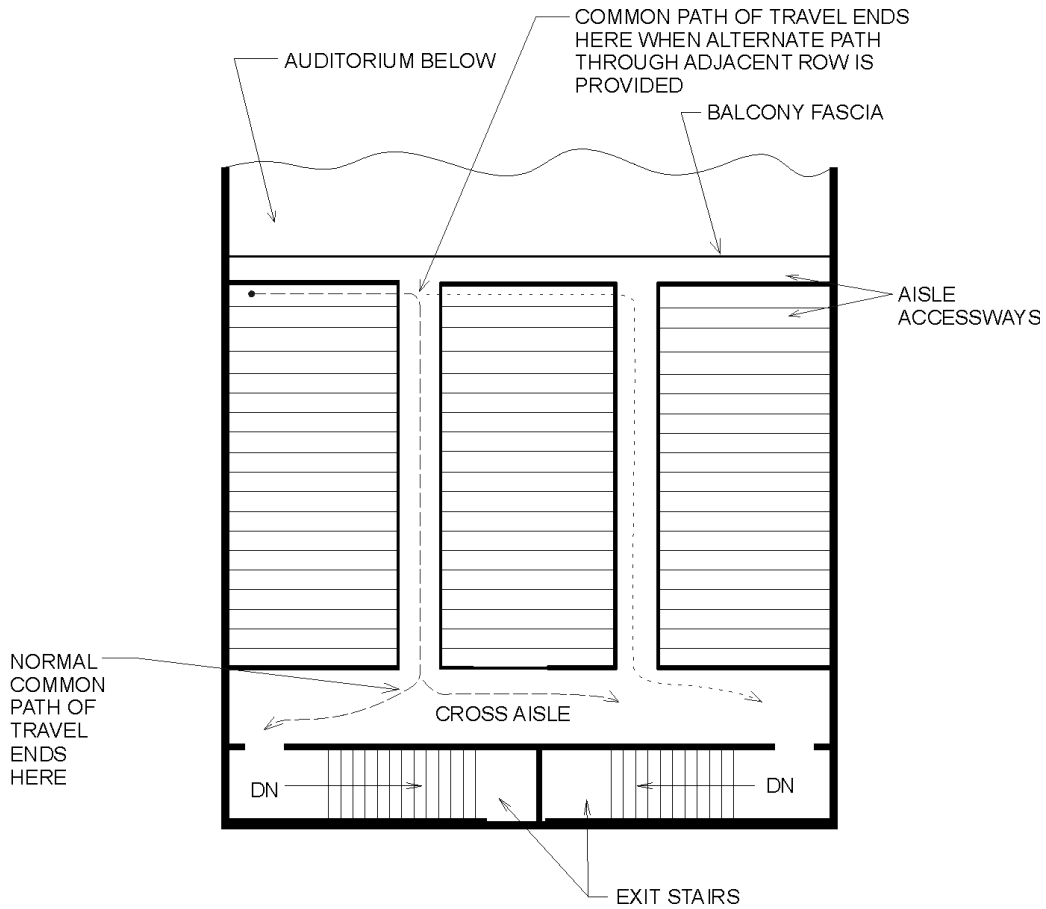

Figure 1029.8.1
PATH THROUGH ADJACENT ROWS

INTERNATIONAL CODE COUNCIL®
Copyright © 2015 ICC. ALL RIGHTS RESERVED. Accessed by David Dammon on Jun 21, 2017 12:30:52 PM pursuant to License Agreement with ICC. No further reproduction or distribution authorized. ANY UNAUTHORIZED REPRODUCTION OR DISTRIBUTION IS A VIOLATION OF THE FEDERAL COPYRIGHT ACT AND THE LICENSE AGREEMENT, AND SUBJECT TO CIVIL AND CRIMINAL PENALTIES THEREUNDER.

side. Note that each exception is only applicable to the item directly above. For example, per Item 4, where there is seating on both sides, the minimum ramped or level aisle width is 42 inches (1219 mm), except where that aisle serves less than 50 seats it can be 36 inches (914 mm) wide (Exception 1) and where that aisle serves less than 15 seats it can be 30 inches (762 mm) wide (Exception 2).

1029.9.2 Aisle catchment area. The *aisle* shall provide sufficient capacity for the number of persons accommodated by the catchment area served by the *aisle*. The catchment area served by an *aisle* is that portion of the total space served by that section of the *aisle*. In establishing catchment areas, the assumption shall be made that there is a balanced use of all *means of egress*, with the number of persons in proportion to egress capacity.

❖ The determination of required aisle and aisle accessway width is a function of the occupant load. In calculating the required widths, the assumption is that in a system or network of aisles and aisle accessways serving an occupied area, people will normally exit the area in a way that will distribute the occupant load throughout the system in proportion to the egress capacity of the aisles and aisle accessways. Each aisle and aisle accessway would take its tributary share (catchment area) of the total occupant load (see Commentary Figure 1029.9.2).

In addition to the provisions in this section, the requirement for the capacity of the main exit and other exits must also be considered (see Sections 1029.2 and 1029.3). While this section assumes an equal distribution, Section 1029.2 requires that where the facility has a main exit, the main exit and the access thereto must be capable of handling 50 percent of the occupant load.

1029.9.3 Converging aisles. Where *aisles* converge to form a single path of egress travel, the required capacity of that path shall be not less than the combined required capacity of the converging aisles.

❖ Where one or more aisles or aisle accessways meet to form a single path of egress travel, that path must be sized to handle the combined occupant capacity of the converging aisles and aisle accessways (see Commentary Figure 1029.9.3). The reason for this requirement is to maintain the natural pace of travel all the way through the aisle accessways or aisles to the exits and to minimize the queuing of occupants.

This section requires combining the required occupant capacity of converging aisles and aisle accessways, but not necessarily the required widths. For example, if two 48-inch (1219 mm) aisles converge, the result need not be a 96-inch (2438 mm) aisle unless the 48-inch (1219 mm) width of the aisles is required based on the requirements of Section 1029.6 for the actual occupant load served. However, if the 48-inch (1219 mm) width is not based on the occupant load but is required to comply with the minimum aisle width requirements of Section 1029.9.1, the resulting aisle width must be sized for the total occupant load served by the converging aisles, as determined by Section 1029.6, but not less than the minimum widths of Section 1029.9.1.

1029.9.4 Uniform width and capacity. Those portions of *aisles*, where egress is possible in either of two directions, shall be uniform in minimum width or required capacity.

❖ Aisles that connect or lead to opposite exits must, at a minimum, be of uniform width throughout their entire lengths to allow for exit travel in two directions without creating a traffic bottleneck (see Commentary Figure 1029.9.4). They may need to be wider based on Section 1029.9.2 or 1029.9.3.

1029.9.5 Dead end aisles. Each end of an *aisle* shall be continuous to a cross *aisle*, foyer, doorway, vomitory, concourse or *stairway* in accordance with Section 1029.9.7 having access to an *exit*.

Exceptions:

1. Dead-end *aisles* shall be not greater than 20 feet (6096 mm) in length.
2. Dead-end *aisles* longer than 16 rows are permitted where seats beyond the 16th row dead-end *aisle* are not more than 24 seats from another *aisle*, measured along a row of seats having a minimum clear width of 12 inches (305 mm) plus 0.6 inch (15.2 mm) for each additional seat above seven in the row where seats have backrests or beyond 10 where seats are without backrests in the row.
3. For *smoke-protected assembly seating*, the dead end *aisle* length of vertical *aisles* shall not exceed a distance of 21 rows.
4. For *smoke-protected assembly seating*, a longer dead-end *aisle* is permitted where seats beyond the 21-row dead-end *aisle* are not more than 40 seats from another *aisle*, measured along a row of seats having an *aisle* accessway with a minimum clear width of 12 inches (305 mm) plus 0.3 inch (7.6 mm) for each additional seat above seven in the row where seats have backrests or beyond 10 where seats are without backrests in the row.

❖ Both ends of a cross aisle must terminate at either an intersecting aisle, a foyer, a doorway or a vomitory (lane) that gives access to an exit(s). Each exception allows an aisle to have a dead end of limited length. Exceptions 1 and 2 address dead-end aisles in assembly spaces with or without smoke protection. Exceptions 3 and 4 address dead-end aisles only in smoke-protected assembly seating. In accordance with Exception 1, dead-end aisles (similar to corridors and passageways) that terminate at one end of a cross aisle or at a foyer, doorway or vomitory must not be more than 20 feet (6096 mm) in length. The intent of the row width requirements in the exceptions is to provide sufficient clear width between rows of

INTERNATIONAL CODE COUNCIL®
Copyright © 2015 ICC. ALL RIGHTS RESERVED. Accessed by David Dammon on Jun 21, 2017 12:30:52 PM pursuant to License Agreement with ICC. No further reproduction or distribution authorized. ANY UNAUTHORIZED REPRODUCTION OR DISTRIBUTION IS A VIOLATION OF THE FEDERAL COPYRIGHT ACT AND THE LICENSE AGREEMENT, AND SUBJECT TO CIVIL AND CRIMINAL PENALTIES THEREUNDER.

seating to allow the occupants in times of emergency to pass quickly from a dead-end aisle to the aisle at the opposite end.

In Exception 2, the 0.6-inch (15 mm) increase beyond seven seats with backrests is consistent with the minimum width determined in accordance with Section 1029.12.2 for single access rows. The code recognizes that one dead-end aisle may not be usable, thus creating a single access row condition. There is a greater allowance for seating that looks similar to bleacher style seating. This is consistent with ICC 300 (see Section 1029.1.1).

Exceptions 3 and 4 allow longer dead-end aisles for smoke-protected assembly seating that complies with Sections 1029.6.2 through 1029.6.2.3 or Section 1029.6.3 (see Commentary Figure 1029.9.5). In Exception 4, there is a greater allowance for seating that looks similar to bleacher style seating. This is consistent with ICC 300 (see Section 1029.1.1).

The overall purpose of this section is to provide aisle/seating arrangements that would allow the occupants to seek safe and rapid passage to exits in case of fire or other emergency.

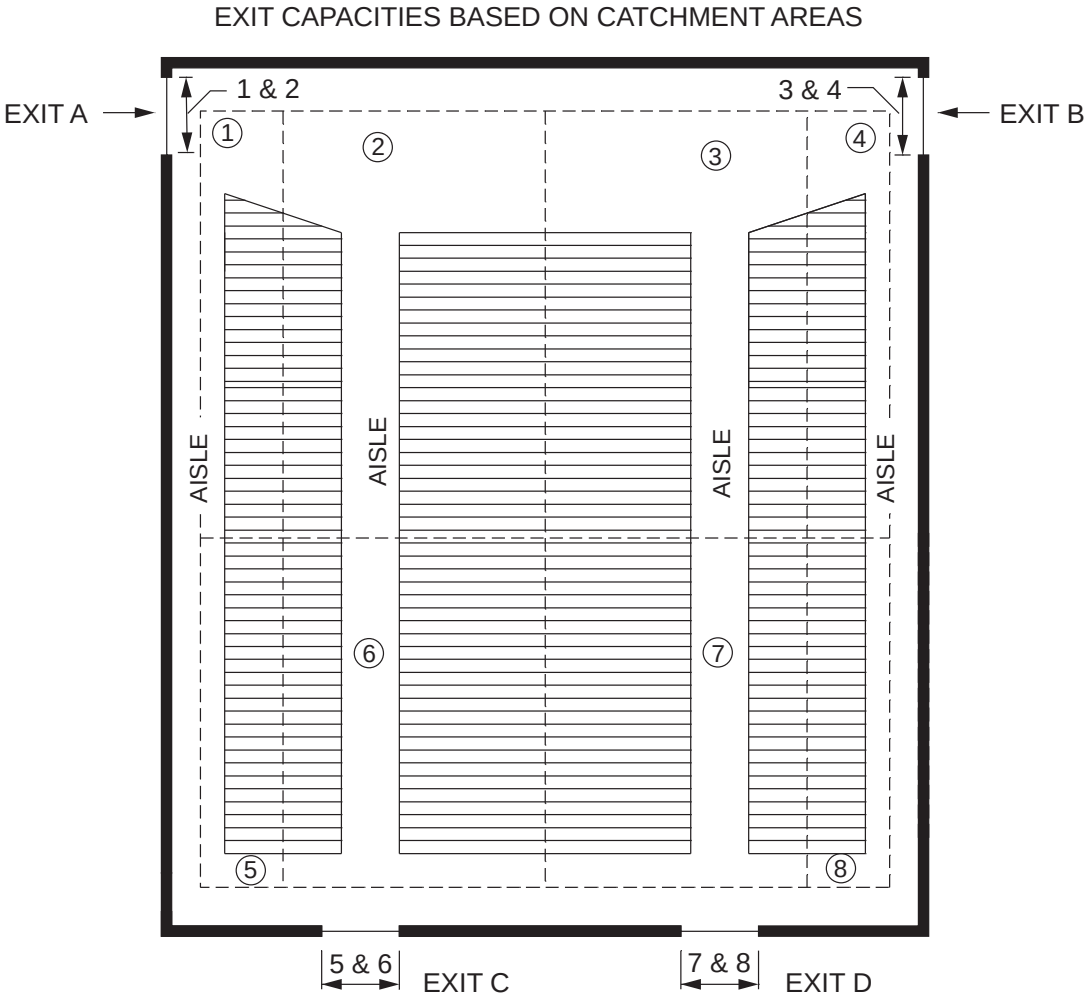

Figure 1029.9.2
TYPICAL AISLE CATCHMENTS

INTERNATIONAL CODE COUNCIL®
Copyright © 2015 ICC. ALL RIGHTS RESERVED. Accessed by David Dammon on Jun 21, 2017 12:30:52 PM pursuant to License Agreement with ICC. No further reproduction or distribution authorized. ANY UNAUTHORIZED REPRODUCTION OR DISTRIBUTION IS A VIOLATION OF THE FEDERAL COPYRIGHT ACT AND THE LICENSE AGREEMENT, AND SUBJECT TO CIVIL AND CRIMINAL PENALTIES THEREUNDER.

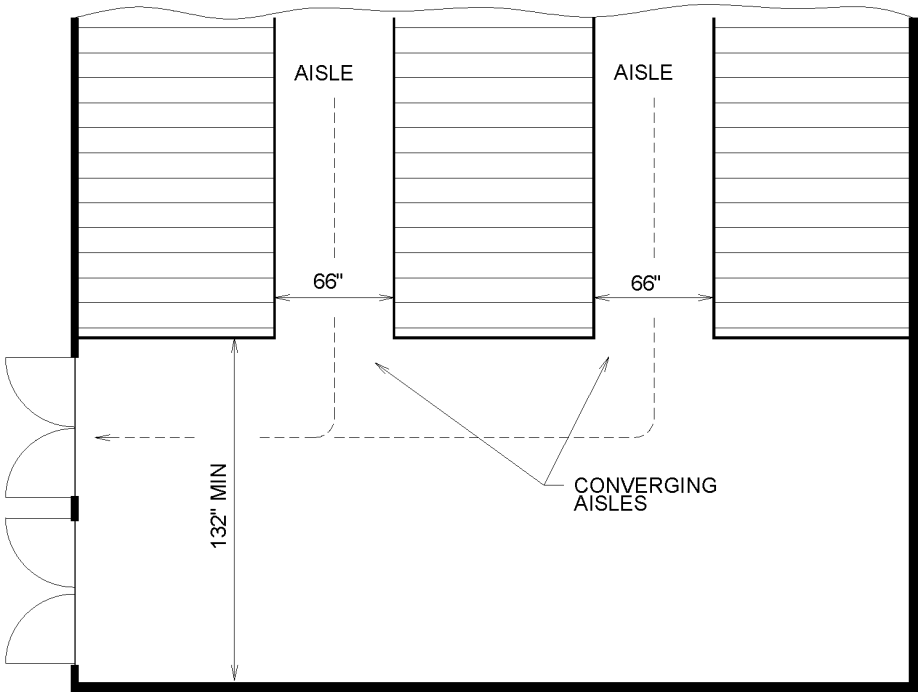

For SI: 1 inch = 25.4 mm.

Figure 1029.9.3
COMPUTATION OF EXIT PASSAGE FOR CONVERGING AISLES

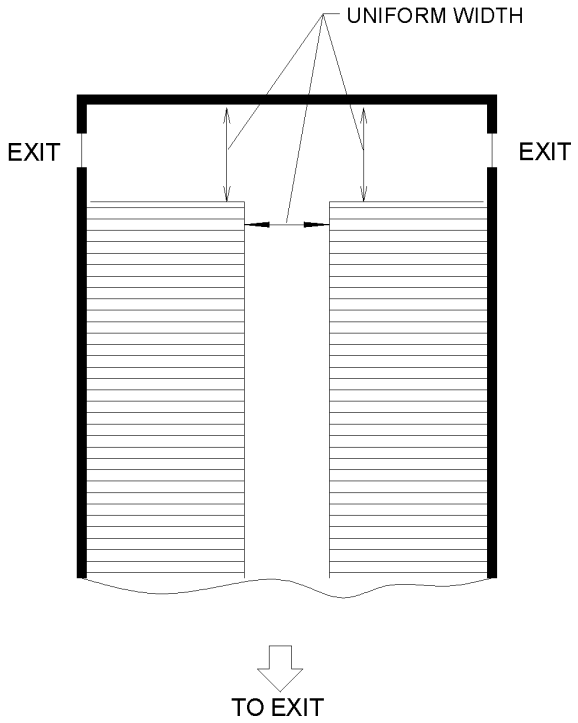

Figure 1029.9.4
AISLE WITH OPPOSITE EXITS

INTERNATIONAL CODE COUNCIL®
Copyright © 2015 ICC. ALL RIGHTS RESERVED. Accessed by David Dammon on Jun 21, 2017 12:30:52 PM pursuant to License Agreement with ICC. No further reproduction or distribution authorized. ANY UNAUTHORIZED REPRODUCTION OR DISTRIBUTION IS A VIOLATION OF THE FEDERAL COPYRIGHT ACT AND THE LICENSE AGREEMENT, AND SUBJECT TO CIVIL AND CRIMINAL PENALTIES THEREUNDER.

1029.9.6 Aisle measurement. The clear width for *aisles* shall be measured to walls, edges of seating and tread edges except for permitted projections.

Exception: The clear width of *aisles* adjacent to seating at tables shall be permitted to be measured in accordance with Section 1029.12.1.

❖ The clear width for stepped, ramped and level aisles is measured consistently with stairways and ramps to ensure a clear width for egress. The exception is dealing with aisles in dining areas and how to measure with loose tables and chairs.

1029.9.6.1 Assembly aisle obstructions. There shall not be obstructions in the minimum width or required capacity of *aisles*.

Exception: *Handrails* are permitted to project into the required width of stepped *aisles* and ramped *aisles* in accordance with Section 1014.8.

❖ Except for handrails, aisles are required to be clear of any obstructions so that the full width is available for egress purposes. Handrails are allowed to project into the required aisle width in the same manner as handrail projections in stairways.

1029.9.7 Stairways connecting to stepped aisles. A *stairway* that connects a stepped *aisle* to a cross *aisle* or concourse shall be permitted to comply with the assembly *aisle* walking surface requirements of Section 1029.13. Transitions between *stairways* and stepped *aisles* shall comply with Section 1029.10.

❖ Stairways that are a direct continuation of a stepped aisle, either at the top or bottom of the stepped aisle, and provide access to a cross aisle, shall be handled the same way as a stepped aisle for treads and risers (see Section 1029.13). For the transitions between the stepped aisle and the stairway, see Section 1029.10. For examples, see Commentary Figures 1029.9.7(1) and 1029.9.7(2).

1029.9.8 Stairways connecting to vomitories. A *stairway* that connects a vomitory to a cross aisle or concourse shall be permitted to comply with the assembly *aisle* walking surface requirements of Section 1029.13. Transitions between *stairways* and stepped *aisles* shall comply with Section 1029.10.

❖ A vomitory is an entrance that pierces the back of a seating bowl of a theater or stadium that allows for entrance into the seating area. Stairways that provide a direct connection between that vomitory and an aisle or concourse shall be handled the same way as a stepped aisle for treads and risers (see Section 1029.13). For the transitions between the stepped aisle and the stairway, see Section 1029.10.

1029.10 Transitions. Transitions between *stairways* and stepped *aisles* shall comply with either Section 1029.10.1 or 1029.10.2.

❖ Line of sight in assembly seating is an important issue that needs to be balanced with safe egress for people seated in the assembly spaces. In order to maintain line of site, sometime it is necessary to have a transition between stairways and stepped aisles that does not meet the standard tread, riser and landing provisions for stairway. This section replaces the standard landing requirements for stairways with a transition tread/landing.

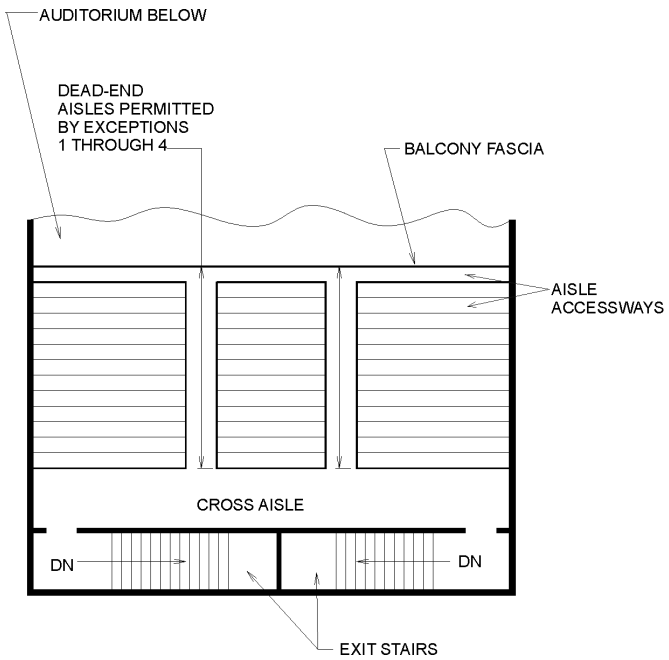

Figure 1029.9.5
TYPICAL BALCONY ARRANGEMENT

INTERNATIONAL CODE COUNCIL®
Copyright © 2015 ICC. ALL RIGHTS RESERVED. Accessed by David Dammon on Jun 21, 2017 12:30:52 PM pursuant to License Agreement with ICC. No further reproduction or distribution authorized. ANY UNAUTHORIZED REPRODUCTION OR DISTRIBUTION IS A VIOLATION OF THE FEDERAL COPYRIGHT ACT AND THE LICENSE AGREEMENT, AND SUBJECT TO CIVIL AND CRIMINAL PENALTIES THEREUNDER.

1029.10.1 Transitions and stairways that maintain stepped aisle riser and tread dimensions. Stepped *aisles*, transitions and *stairways* that maintain riser and tread dimensions shall comply with Section 1029.13 as one *exit access* component.

❖ Where the treads and risers on the stairway and the treads and risers on the stepped aisle are the same, the whole run can be considered as one long stepped aisle.

1029.10.2 Transitions to stairways that do not maintain stepped aisle riser and tread dimensions. Transitions to *stairways* from stepped *aisles* with riser and tread dimensions that differ from the *stairways* shall comply with Sections 1029.10.2.1 through 1029.10.3.

❖ Where the stepped aisle and directly connected stairways do not have the same tread and riser dimensions, there are options for the transition between the two sections. This transition is the tread(s) between the stepped aisle and the stairway.

1029.10.2.1 Stairways and stepped aisles in a straight run. Transitions where the *stairway* is a straight run from the stepped *aisle* shall have a minimum depth of 22 inches (559 mm) where the treads on the descending side of the transition have greater depth and 30 inches (762 mm) where the treads on the descending side of the transition have lesser depth.

❖ Typically, the treads on the stairway will have a smaller depth than the treads at the seating. Assuming that is the case, where the stairway is at the high end of the stepped aisle, a transition tread 22 inches (559 mm) in depth shall be provided between the stairway and the stepped aisle [see Commentary Figure 1029.10.2.1(1)]. Where the stairway is at the low end of the stepped aisle, a transition tread a minimum of 30 inches (762 mm) in depth shall be provided between the stepped aisle and the stairway [see Commentary Figure 1029.10.2.1(2)].

1029.10.2.2 Stairways and stepped aisles that change direction. Transitions where the *stairway* changes direction from the stepped *aisle* shall have a minimum depth of 11 inches (280 mm) or the stepped *aisle* tread depth, whichever is greater, between the stepped *aisle* and *stairway*.

❖ Where the stepped aisle takes a turn or takes a turn and becomes a stairway, the aisle width must be maintained (see Sections 1029.6 and 1029.9.1). The transition between the stepped aisle and the turn must continue the tread depth of the stepped aisle, or have a minimum depth of 11 inches (280 mm) to match the stairway treads, whichever is greater. There may be more than one transition between the stepped aisle and the turn [see Commentary Figures 1029.10.2.2(1) and 1029.10.2.2(2)].

1029.10.3 Transition marking. A distinctive marking stripe shall be provided at each *nosing* or leading edge adjacent to the transition. Such stripe shall be not less than 1 inch (25 mm), and not more than 2 inches (51 mm), wide. The edge marking stripe shall be distinctively different from the stepped *aisle* contrasting marking stripe.

❖ At these transitions there may be a change in riser height, even if the tread depth stayed the same. The stripe is to draw attention to the transition to reduce the chance of a trip and fall. This is different from the stripes required for the stepped aisles in Sections 1029.13.2.2.1 and 1029.13.2.3.

1029.11 Construction. *Aisles*, stepped *aisles* and ramped *aisles* shall be built of materials consistent with the types permitted for the type of construction of the building.

Exception: Wood *handrails* shall be permitted for all types of construction.

❖ The construction materials permitted for stepped, ramped and level aisles are consistent with stairways and ramps.



Figure 1029.9.7(1)
EXAMPLE OF A CONTINUATION OF A STEPPED AISLE UP TO A CROSS AISLE



Figure 1029.9.7(2)
EXAMPLE OF A CONTINUATION OF A STEPPED AISLE DOWN TO A FLOOR

INTERNATIONAL CODE COUNCIL®
Copyright © 2015 ICC. ALL RIGHTS RESERVED. Accessed by David Dammon on Jun 21, 2017 12:30:52 PM pursuant to License Agreement with ICC. No further reproduction or distribution authorized. ANY UNAUTHORIZED REPRODUCTION OR DISTRIBUTION IS A VIOLATION OF THE FEDERAL COPYRIGHT ACT AND THE LICENSE AGREEMENT, AND SUBJECT TO CIVIL AND CRIMINAL PENALTIES THEREUNDER.

1029.11.1 Walking surface. The surface of *aisles*, stepped *aisles* and ramped *aisles* shall be of slip-resistant materials that are securely attached. The surface for stepped *aisles* shall comply with Section 1011.7.1.

❖ It is the intent of this section that for walking surfaces, stepped aisles will be addressed similar to stairways (Section 1011.7.1), level aisles the same as floors (Section 1003.4) and ramped aisles the same as ramps (Section 1012.7.1). See the commentary for these sections.

1029.11.2 Outdoor conditions. Outdoor *aisles*, stepped *aisles* and ramped *aisles* and outdoor approaches to *aisles*, stepped *aisles* and ramped *aisles* shall be designed so that water will not accumulate on the walking surface.

❖ Where stepped, ramped and level aisles are located in an outdoor situation, there is the same concern for the accumulation of ice and snow as there would be for exterior stairways or ramps. See Sections 1011.7.2 and 1012.7.2 regarding maximum slope to allow for drainage and when grated walking surfaces are permitted.

1029.12 Aisle accessways. *Aisle accessways* for seating at tables shall comply with Section 1029.12.1. *Aisle accessways* for seating in rows shall comply with Section 1029.12.2.

❖ Aisle accessways are paths for means of egress between rows of seats or between tables. The aisle accessway leads to aisles, which in turn lead toward exits from the space. This is the same idea as moving through a room full of furniture to a corridor to reach an exit. In both situations, the path for means of egress is confined. For aisle accessway requirements in other occupancies, see Section 1018.

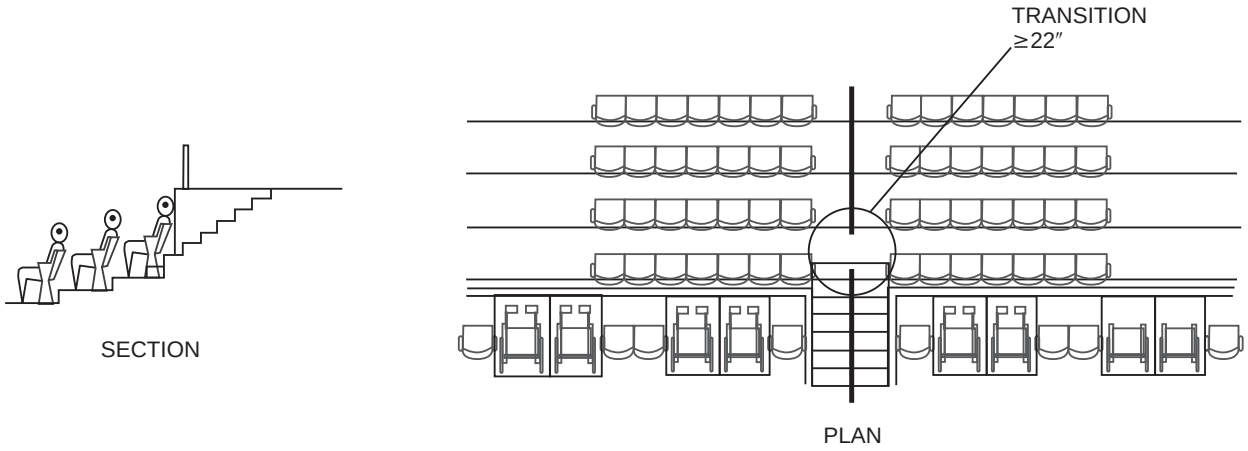

Figure 1029.10.2.1(1)
TRANSITION BETWEEN STAIRWAY AND STEPPED AISLE AT THE HIGHER END OF THE FLIGHT

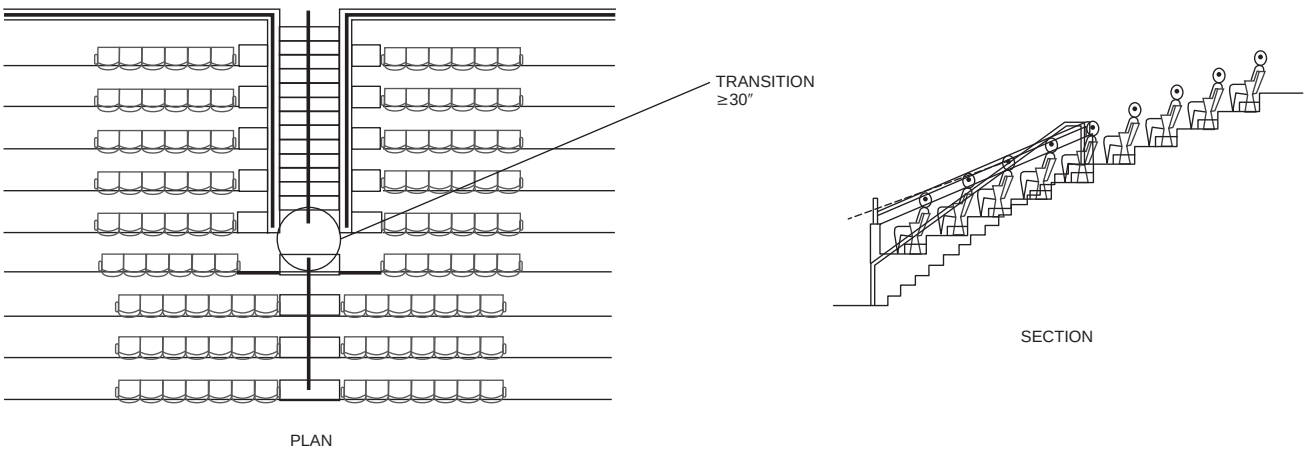

Figure 1029.10.2.1(2)
TRANSITION BETWEEN STEPPED AISLE AND STAIRWAY AND THE LOWER END OF THE FLIGHT

INTERNATIONAL CODE COUNCIL®
Copyright © 2015 ICC. ALL RIGHTS RESERVED. Accessed by David Dammon on Jun 21, 2017 12:30:52 PM pursuant to License Agreement with ICC. No further reproduction or distribution authorized. ANY UNAUTHORIZED REPRODUCTION OR DISTRIBUTION IS A VIOLATION OF THE FEDERAL COPYRIGHT ACT AND THE LICENSE AGREEMENT, AND SUBJECT TO CIVIL AND CRIMINAL PENALTIES THEREUNDER.

1029.12.1 Seating at tables. Where seating is located at a table or counter and is adjacent to an *aisle* or *aisle accessway*, the measurement of required clear width of the *aisle* or *aisle accessway* shall be made to a line 19 inches (483 mm) away from and parallel to the edge of the table or counter. The 19-inch (483 mm) distance shall be measured perpendicular to the side of the table or counter. In the case of other side boundaries for *aisles* or *aisle accessways*, the clear width shall be measured to walls, edges of seating and tread edges.

Exception: Where tables or counters are served by *fixed seats*, the width of the *aisle* or *aisle accessway* shall be measured from the back of the seat.

❖ Most seating at tables should be adjacent to aisles or aisle accessways. In measuring the width of an aisle or aisle accessway for movable seating, the measurement is taken at a distance of 19 inches (483 mm) perpendicular to the side of the table or counter. This 19-inch (483 mm) space from the edge of the table or counter to the line where the aisle or aisle accessway measurement begins is intended to represent the space occupied by a typical seated occupant. This dimension is also considered to be adequate to accommodate seats with armrests that are too high to fit under the table where fixed seats are used. The aisle width is permitted to be measured from the back of the seat based on the exception. As indicated in Commentary Figure 1029.12.1, where seating abuts an aisle or aisle accessway, 19 inches (483 mm) must be added to the required aisle or aisle accessway width for seating on only one side and 38 inches (965 mm) for seating on both sides. When

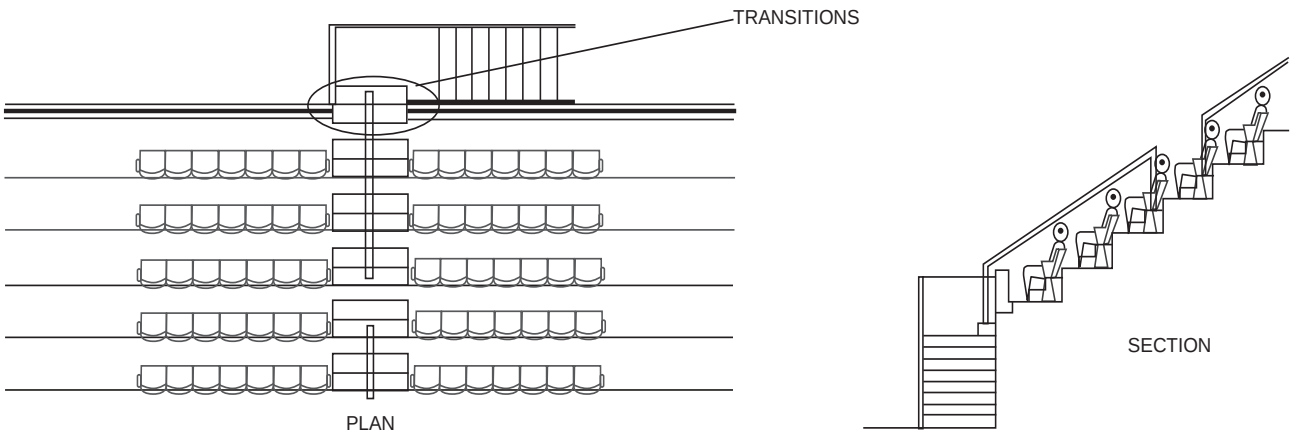

Figure 1029.10.2.2(1)
EXAMPLE OF A STEPPED AISLE TURNING TO A STAIRWAY

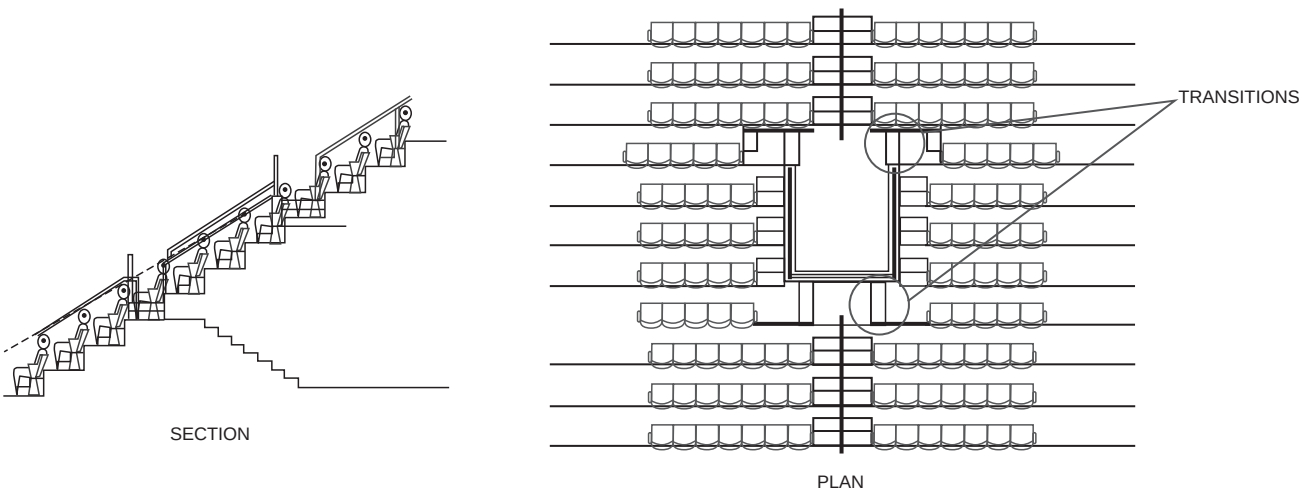

Figure 1029.10.2.2(2)
EXAMPLE OF TURNS IN A STEPPED AISLE

INTERNATIONAL CODE COUNCIL®
Copyright © 2015 ICC. ALL RIGHTS RESERVED. Accessed by David Dammon on Jun 21, 2017 12:30:52 PM pursuant to License Agreement with ICC. No further reproduction or distribution authorized. ANY UNAUTHORIZED REPRODUCTION OR DISTRIBUTION IS A VIOLATION OF THE FEDERAL COPYRIGHT ACT AND THE LICENSE AGREEMENT, AND SUBJECT TO CIVIL AND CRIMINAL PENALTIES THEREUNDER.

seating will not be adjacent to the aisles or aisle passageways, as is the case when tables are at an angle to the aisle or aisle accessway, the measurement may be taken to the edge of the seating, table, counter or tread. Sections 1029.12.1.1 and 1029.12.1.2 address width and travel along aisle accessways. For aisles between tables, see the general requirements for aisles in assembly spaces.

1029.12.1.1 Aisle accessway capacity and width for seating at tables. *Aisle accessways* serving arrangements of seating at tables or counters shall comply with the capacity requirements of Section 1005.1 but shall not have less than 12 inches (305 mm) of width plus $^1/_2$ inch (12.7 mm) of width for each additional 1 foot (305 mm), or fraction thereof, beyond 12 feet (3658 mm) of *aisle accessway* length measured from the center of the seat farthest from an *aisle*.

Exception: Portions of an *aisle accessway* having a length not exceeding 6 feet (1829 mm) and used by a total of not more than four persons.

❖ This section specifies two criteria for the determination of the required width of aisle accessways at tables: the requirements of Section 1005.1 for capacity based on the number of occupants and the option described in this section. The aisle accessway width is to be the wider of the two requirements. The aisle accessway width between tables is determined similarly to the aisle accessway between rows of seats that view an event.

The relationship of tables and seating sometimes results in a situation in which it is difficult to determine which chairs are served by which aisle accessway; therefore, the width of the aisle accessway is a function of the distance from the aisle. The same minimum 12 inches (305 mm) is used and is increased $^1/_2$ inch (12.7 mm) for each additional foot of travel beyond 12 feet (3658 mm).

Recognizing that the normal use of table and chair seating will require some clearance for access and service, the exception eliminates the minimum width criteria if the distance to the aisle [or an aisle accessway of at least 12 inches (305 mm)] is less than 6 feet (1829 mm) and the number of people served is not more than four. Therefore, the first 6 feet (1829 mm) are not required to meet any minimum width criteria. After the first 6 feet (1829 mm), the requirements for an aisle accessway will apply. The length of the aisle accessway is then restricted by Section 1029.12.1.2. When the maximum length of the aisle accessway is reached, an aisle, corridor or exit access door must be provided (see Commentary Figure 1029.12.1.1).

1029.12.1.2 Seating at table aisle accessway length. The length of travel along the *aisle accessway* shall not exceed 30 feet (9144 mm) from any seat to the point where a person has a choice of two or more paths of egress travel to separate *exits*.

❖ At some point in the exit access travel, it is necessary to reach an aisle complying with the minimum widths of Section 1029.9.1. Aisle accessway travel distance for seating at tables is not to exceed 30 feet (9144 mm), which may represent a dead-end condition (see Commentary Figure 1029.12.1.1).

More and more sports facilities are starting to add venues that include dining while watching the sporting event. At this time, the code does not include provisions for dining that occurs in smoke-protected areas.

1029.12.2 Clear width of aisle accessways serving seating in rows. Where seating rows have 14 or fewer seats, the minimum clear *aisle accessway* width shall be not less than 12 inches (305 mm) measured as the clear horizontal distance from the back of the row ahead and the nearest projection of the row behind. Where chairs have automatic or self-rising seats, the measurement shall be made with seats in the raised position. Where any chair in the row does not have an automatic or self-rising seat, the measurements shall be made with the seat in the down position. For seats with folding tab-

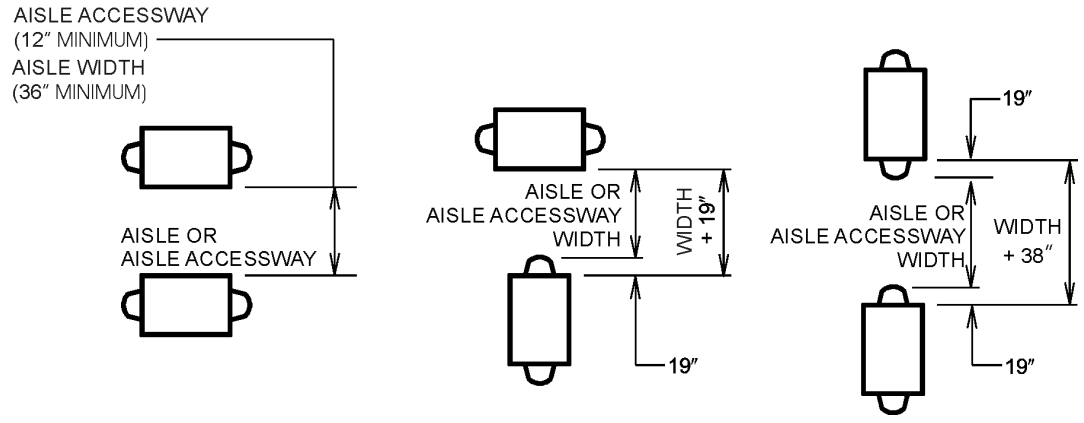

For SI: 1 inch = 25.4 mm.

Figure 1029.12.1
AISLE AND AISLE ACCESSWAY MEASUREMENT WITH SEATING AND TABLES

INTERNATIONAL CODE COUNCIL®
Copyright © 2015 ICC. ALL RIGHTS RESERVED. Accessed by David Dammon on Jun 21, 2017 12:30:52 PM pursuant to License Agreement with ICC. No further reproduction or distribution authorized. ANY UNAUTHORIZED REPRODUCTION OR DISTRIBUTION IS A VIOLATION OF THE FEDERAL COPYRIGHT ACT AND THE LICENSE AGREEMENT, AND SUBJECT TO CIVIL AND CRIMINAL PENALTIES THEREUNDER.

let arms, row spacing shall be determined with the tablet arm in the used position.

Exception: For seats with folding tablet arms, row spacing is permitted to be determined with the tablet arm in the stored position where the tablet arm when raised manually to vertical position in one motion automatically returns to the stored position by force of gravity.

❖ The requirements of this section are applicable to theater-type seating arrangements. This includes both "continental" and "traditional" seating arrangements. Theater-type seating is characterized by a number of seats arranged side by side and in rows. In this type of seating arrangement, the potential exists for a large number of occupants to be present in a confined environment where the ability of the occupants to move quickly is limited. In order to egress, people are required to move single file within a narrow row (i.e., aisle accessway) before reaching an aisle; both the aisle or aisle accessway limit movement toward an exit. To provide adequate passage between rows of seats, this section requires that the clear width between the back of a row to the nearest projection of the seating immediately behind must be at least 12 inches (305 mm) [see Commentary Figure 1029.12.2(1)]. Where chairs are manufactured with automatic or self-lifting seats, the minimum width requirement may be measured with the seats in a raised position. Commonly used in college lecture halls, seats with built-in tablet arms are provided so that students can take notes. For an example of a type of tablet arm that complies with the exception, see Commentary Figure 1029.12.2(2).

When tablet arm chairs are used, the required

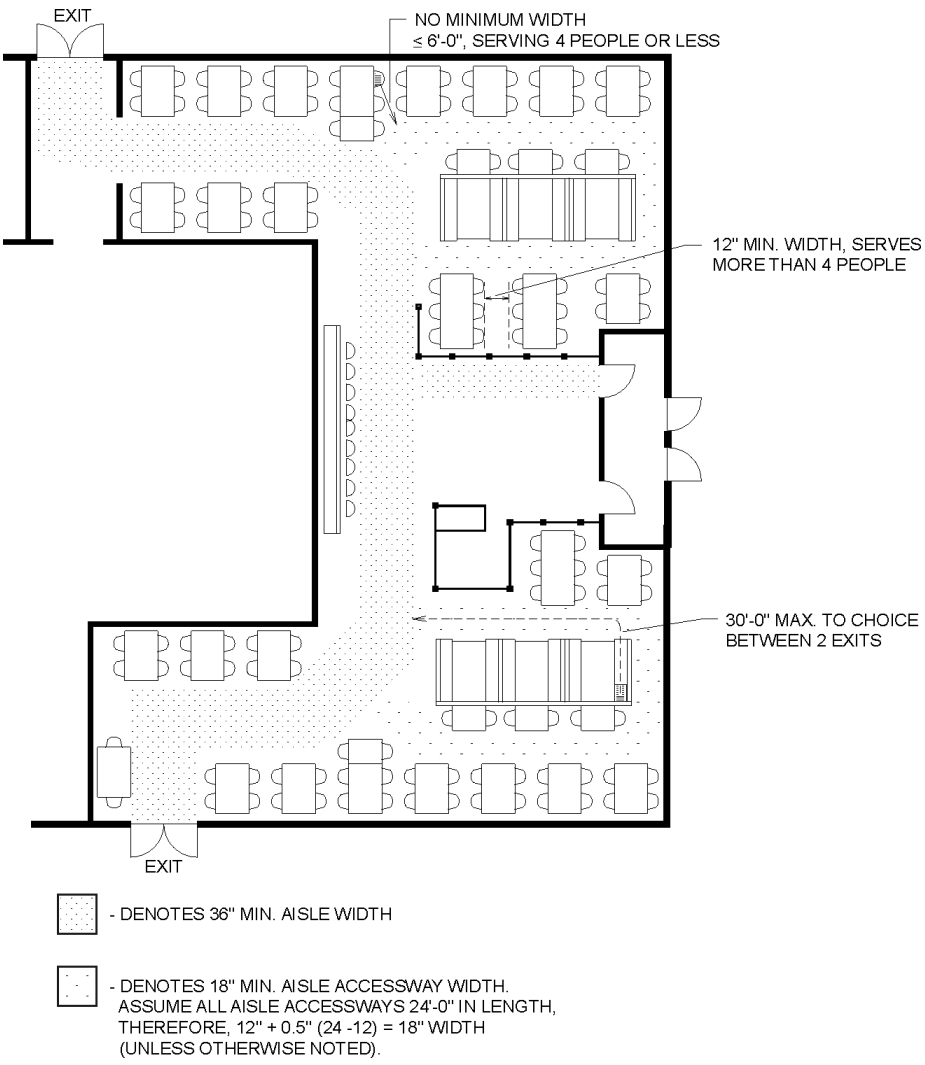

For SI: 1 inch = 25.4 mm, 1 foot = 304.8 mm.

Figure 1029.12.1.1
ACCESS FOR TABLES AND SEATING

INTERNATIONAL CODE COUNCIL®
Copyright © 2015 ICC. ALL RIGHTS RESERVED. Accessed by David Dammon on Jun 21, 2017 12:30:52 PM pursuant to License Agreement with ICC. No further reproduction or distribution authorized. ANY UNAUTHORIZED REPRODUCTION OR DISTRIBUTION IS A VIOLATION OF THE FEDERAL COPYRIGHT ACT AND THE LICENSE AGREEMENT, AND SUBJECT TO CIVIL AND CRIMINAL PENALTIES THEREUNDER.

width is to be determined with the tablet arm in its usable position. The exception allows for folding tablet arms that fall back into the stored position when a person rises out of the seat. With seats occupied and tablets raised, students egressing en masse down the row would at most encounter one tablet to move out of the way. With these types of arms, the aisle accessway can be measured for the seat or arm as indicated in Commentary Figure 1029.12.2(1).

With respect to self-rising seats, ASTM F851 provides one method of determining acceptability.

1029.12.2.1 Dual access. For rows of seating served by *aisles* or doorways at both ends, there shall be not more than 100 seats per row. The minimum clear width of 12 inches (305 mm) between rows shall be increased by 0.3 inch (7.6 mm) for every additional seat beyond 14 seats where seats have backrests or beyond 21 where seats are without backrests. The minimum clear width is not required to exceed 22 inches (559 mm).

Exception: For s*moke-protected assembly seating*, the row length limits for a 12-inch-wide (305 mm) *aisle accessway*, beyond which the *aisle accessway* minimum clear width shall be increased, are in Table 1029.12.2.1.

❖ Where rows of seating are served by aisles or doorways located at both ends of the path of row travel, the number of seats that may be used in a row may be up to, but not more than, 100 (continental seating) and the minimum required clear width aisle accessway of 12 inches (305 mm) between rows of seats must be increased by 0.3 inch (8 mm) for every additional seat with backrests beyond 14, but not more than a total of 22 inches (559 mm) (see Commentary Figure 1029.12.2.1). The increase for seating without backrests is to allow for bench seating similar to bleacher requirements in ICC 300 (see Section 1029.1.1). For example, in a row of 24 seats, the minimum clear width would compute to 15 inches (381 mm) [12 + (0.3 x 10)]. For a row of 34 seats, a clear width of 18 inches (457 mm) would be required. Increases in the clear width between rows of seats would occur up to a row of 46 seats. From 47 to 100 seats, a maximum clear width between rows of 22 inches (559 mm) would apply.

Since the row is to provide access to an aisle in both directions, the minimum width applies to the entire length of the row aisle accessway.

The exception allows more seats in a row with the minimum 12-inch (305 mm) seat spacing since safe egress time is extended for this condition.

When a second means of egress for occupants of a single access row is possible through an adjacent dual access row, see Section 1029.8.1.

TABLE 1029.12.2.1. See page 10-202.

❖ Table 1029.10.1 recognizes the increased egress time available in smoke-protected assembly seating areas. Therefore, the table permits greater lengths of rows that have the minimum 12 inches (305 mm) of clear width. When a row exceeds the lengths identified in the table, the row width is to be increased in accordance with Section 1029.12.2.1 [0.3 inch (8



For SI: 1 inch = 25.4 mm.

Figure 1029.12.2(2)
EXAMPLE OF FOLDING TABLET ARMS

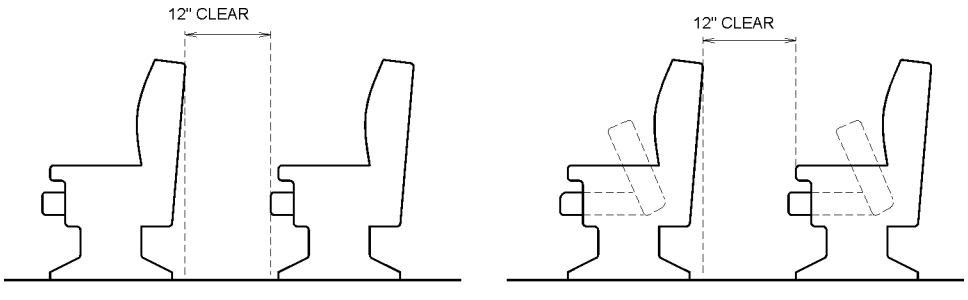

For SI: 1 inch = 25.4 mm.

Figure 1029.12.2(1)
MINIMUM REQUIRED ROW WIDTH CLEARANCE FOR AISLE ACCESSWAYS

INTERNATIONAL CODE COUNCIL®
Copyright © 2015 ICC. ALL RIGHTS RESERVED. Accessed by David Dammon on Jun 21, 2017 12:30:52 PM pursuant to License Agreement with ICC. No further reproduction or distribution authorized. ANY UNAUTHORIZED REPRODUCTION OR DISTRIBUTION IS A VIOLATION OF THE FEDERAL COPYRIGHT ACT AND THE LICENSE AGREEMENT, AND SUBJECT TO CIVIL AND CRIMINAL PENALTIES THEREUNDER.

mm) per additional seat] for dual-access rows and Section 1029.12.2.2 [0.6 inch (15 mm) per additional seat] for single-access rows. Column one in this table is based on the total number of seats contained within the assembly space, not the seats per level. The increase for seating without backrests is to allow for bench seating similar to bleacher requirements in ICC 300 (see Section 1029.1.1).

1029.12.2.2 Single access. For rows of seating served by an *aisle* or doorway at only one end of the row, the minimum clear width of 12 inches (305 mm) between rows shall be increased by 0.6 inch (15.2 mm) for every additional seat beyond seven seats where seats have backrests or beyond 10 where seats are without backrests. The minimum clear width is not required to exceed 22 inches (559 mm).

Exception: For *smoke-protected assembly seating*, the row length limits for a 12-inch-wide (305 mm) *aisle accessway*, beyond which the *aisle accessway* minimum clear width shall be increased, are in Table 1029.12.2.1.

❖ Where rows of seating are served by an aisle or doorway at only one end of a row, the minimum clear width of 12 inches (305 mm) between rows of seats must be increased by 0.6 inch (15 mm) for every additional seat beyond seven for seats with backrests, but not more than a total of 22 inches (559 mm) (see Commentary Figure 1029.12.2.2). The increase for seating without backrests is to allow for bench seating similar to bleacher requirements in ICC 300 (see Section 1029.1.1). While this section does not specify the maximum number of seats permitted in a row, the 30-foot (9144 mm) common path of travel limitation (see Section 1029.8) essentially restricts the single-access row to approximately 20 seats, based on an 18-inch (457 mm) width per seat. A row

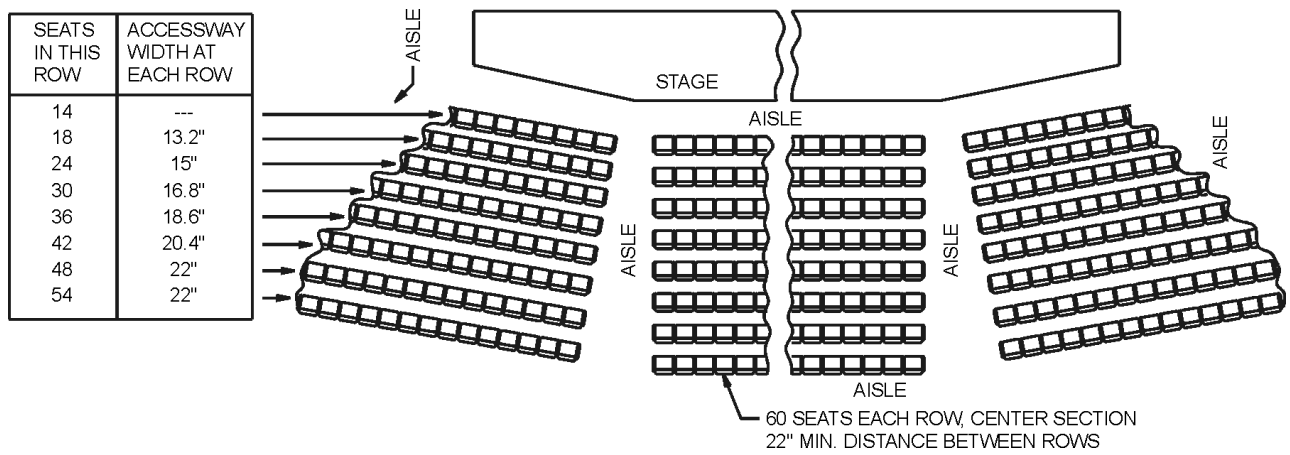

For SI: 1 inch = 25.4 mm.

Figure 1029.12.2.1
TYPICAL DUAL-ACCESS ROW—MINIMUM AISLE ACCESSWAY WIDTH

TABLE 1029.12.2.1
SMOKE-PROTECTED ASSEMBLY AISLE ACCESSWAYS

TOTAL NUMBER OF SEATS IN THE SMOKE-PROTECTED ASSEMBLY SEATING	MAXIMUM NUMBER OF SEATS PER ROW PERMITTED TO HAVE A MINIMUM 12-INCH CLEAR WIDTH AISLE ACCESSWAY			
	Aisle or doorway at both ends of row		Aisle or doorway at one end of row only	
	Seats with backrests	Seats without backrests	Seats with backrests	Seats without backrests
Less than 4,000	14	21	7	10
4,000	15	22	7	10
7,000	16	23	8	11
10,000	17	24	8	11
13,000	18	25	9	12
16,000	19	26	9	12
19,000	20	27	10	13
22,000 and greater	21	28	11	14

For SI: 1 inch = 25.4 mm.

INTERNATIONAL CODE COUNCIL®
Copyright © 2015 ICC. ALL RIGHTS RESERVED. Accessed by David Dammon on Jun 21, 2017 12:30:52 PM pursuant to License Agreement with ICC. No further reproduction or distribution authorized. ANY UNAUTHORIZED REPRODUCTION OR DISTRIBUTION IS A VIOLATION OF THE FEDERAL COPYRIGHT ACT AND THE LICENSE AGREEMENT, AND SUBJECT TO CIVIL AND CRIMINAL PENALTIES THEREUNDER.

of 12 seats with backrests would compute to a required minimum width of 15 inches [12 + (0.5 x 5)]. Similarly, a row of 17 seats with backrests would require a clear width of 18 inches (457 mm) and so on. Since dual access is not provided, incremental increases would be permitted in the aisle accessway width as shown in Commentary Figure 1029.12.2.2. Incremental increases in the required width would occur up to the maximum number of seats, which is determined by the 30-foot (9144 mm) dead-end limitation.

The reason for increasing the row accessway widths incrementally with increases in the number of seats per row is to provide more efficient passage for the occupants who are using the aisle accessway. As a practical matter, where dual-access (see Section 1029.12.2.1) and single-access seating arrangements are used together, the largest computed clear width dimension would normally be applied by the designer to both arrangements so that the rows of seats will be in alignment. When a second means of egress for occupants of a single-access row is possible through an adjacent dual access row, see Section 1029.8.1.

1029.13 Assembly aisle walking surfaces. Ramped *aisles* shall comply with Sections 1029.13.1 through 1029.13.1.3. Stepped *aisles* shall comply with Sections 1029.13.2 through 1029.13.2.4.

❖ Assembly facilities such as theaters and auditoriums often require sloping or stepped floors to provide seated occupants with preferred sightlines for viewing presentations (for sightlines for wheelchair spaces, see Section 1108.2). Aisles must, therefore, be designed to accommodate the changing elevations of the floor in such a manner that the path of travel will allow occupants to leave the area at a rapid pace with minimal possibilities for stumbling or falling during times of emergency.

1029.13.1 Ramped aisles. *Aisles* that are sloped more than one unit vertical in 20 units horizontal (5-percent slope) shall be considered a ramped *aisle*. Ramped *aisles* that serve as part of an *accessible route* in accordance with Sections 1009 and 1108.2 shall have a maximum slope of one unit vertical in 12 units horizontal (8-percent slope). The slope of other ramped *aisles* shall not exceed one unit vertical in 8 units horizontal (12.5-percent slope).

❖ Similar to the definition for ramp in Chapter 2, aisles that slope 1:20 or less are considered sloped aisles, but are not ramps. Note that ramps that serve as part of an accessible route to and from accessible wheelchair spaces (Sections 1009 and 1108.2) must comply with the more restrictive requirements for ramps in Section 1012. This section requires that aisles with a gradient from 1:20 to 1:8 (12.5 percent slope) must meet the ramped aisle provisions in this section. Aisles with a gradient exceeding one unit vertical and eight units horizontal (12.5-percent slope) must consist of a series of treads and risers that comply with the requirements of stepped aisles in Section 1029.13.2.

1029.13.1.1 Cross slope. The slope measured perpendicular to the direction of travel of a ramped *aisle* shall not be steeper than one unit vertical in 48 units horizontal (2-percent slope).

❖ The limitation of one unit vertical in 48 units horizontal on the slope across the direction of travel is to prevent a severe cross slope that would pitch a user to one side (see Commentary Figure 1012.2).

1029.13.1.2 Landings. Ramped *aisles* shall have landings in accordance with Sections 1012.6 through 1012.6.5. Landings for ramped *aisles* shall be permitted to overlap required *aisles* or cross *aisles*.

❖ The reference for ramp landings to Sections 1012.6 through 1012.6.5 picks up the requirements for ramps to have a landing at the top and bottom of each run and when ramps change direction. This also includes requirements for landing slope, width and length. This does not pick up the requirement for ramps to have a landing at every 30 inches (762 mm) in rise as indicated in Section 1012.4. This is in con-

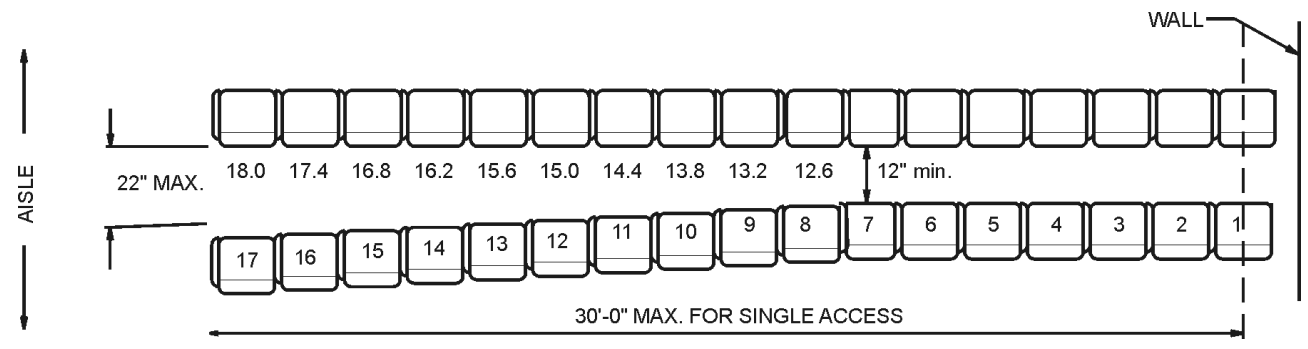

For SI: 1 inch = 25.4 mm, 1 foot = 304.8 mm.

Figure 1029.12.2.2
TYPICAL SINGLE-ACCESS ROW—MINIMUM AISLE ACCESSWAY WIDTH FOR SEATS WITH BACKRESTS

INTERNATIONAL CODE COUNCIL®
Copyright © 2015 ICC. ALL RIGHTS RESERVED. Accessed by David Dammon on Jun 21, 2017 12:30:52 PM pursuant to License Agreement with ICC. No further reproduction or distribution authorized. ANY UNAUTHORIZED REPRODUCTION OR DISTRIBUTION IS A VIOLATION OF THE FEDERAL COPYRIGHT ACT AND THE LICENSE AGREEMENT, AND SUBJECT TO CIVIL AND CRIMINAL PENALTIES THEREUNDER.

sideration of the line of sight requirements for the different venues and the ability to provide a safe and smooth transition between the ramped aisles and the adjacent aisle accessways as patrons move into and out of their rows. A cross aisle or aisle can also serve as the ramp landing as long as it meets the 1:48 maximum slope provisions for landings.

1029.13.1.3 Edge protection. Ramped *aisles* shall have edge protection in accordance with Sections 1012.10 and 1012.10.1.

Exception: In assembly spaces with *fixed seating*, edge protection is not required on the sides of ramped *aisles* where the ramped *aisles* provide access to the adjacent seating and *aisle accessways*.

❖ Where an aisle has a dropoff on either side, it needs edge protection. In a seating venue, this would typically be the ramped aisle at the perimeter of the seating. This edge protection can be a wall, a horizontal rail that prevents the passage of a 4-inch (102 mm) sphere between the ramp surface and the rail, or a minimum 4-inch-high (102 mm) curb (see Commentary Figure 1012.10.1). Edge protection is not required between the ramped aisle and adjacent seating, including wheelchair seating spaces, as this could be a tripping hazard for people coming in and out of the rows.

1029.13.2 Stepped aisles. *Aisles* with a slope exceeding one unit vertical in eight units horizontal (12.5-percent slope) shall consist of a series of risers and treads that extends across the full width of *aisles* and complies with Sections 1029.13.2.1 through 1029.13.2.4.

❖ What must be recognized here is that stepped aisles are part of the floor construction and are intended to provide horizontal egress. Tread and riser construction for this purpose should not be directly compared to the requirements for treads and risers in conventional stairways that serve as means of vertical egress. Sometimes, because of design considerations, the gradient of an aisle is required to change from a level floor to a ramp and then to steps. In cases where there is no uniformity in the path of travel, occupants tend to be considerably more cautious, particularly in the use of stepped aisles, than they would normally be in the use of conventional stairways.

This section requires aisles with a slope of greater than 1:8 to use steps. Aisles with slopes of greater than 1:20 to 1:8 must comply with provisions for ramped aisles in Section 1029.13.1.

1029.13.2.1 Treads. Tread depths shall be not less than 11 inches (279 mm) and shall have dimensional uniformity.

Exception: The tolerance between adjacent treads shall not exceed $^{3}/_{16}$ inch (4.8 mm).

❖ Depths of treads are not to be less than 11 inches (279 mm) and uniform throughout each flight, except that a variance of not more than $^{3}/_{16}$ inch (4.8 mm) is permitted between adjacent treads to accommodate variations in construction. While the minimum tread depth provision is the same as the limiting dimension for treads in interior stairways (see Section 1011.5.2), it rarely applies in the construction of stepped aisles. A more common form of stepped aisle construction is to provide a tread depth equal to the back-to-back distance between rows of seats. This way the treads can be extended across the full length of the row and serve as a supporting platform for the seats. Other arrangements might require two treads between rows of seats, each tread equaling one-half of the depth of the seat row.

In theaters, for example, the back-to-back distance between rows of fixed seats usually ranges somewhere between 3 and 4 feet (914 and 1219 mm), depending on seat style and seat dimensions as well as the ease of passage between the rows (see Commentary Figure 1029.13.2.1). The selection of single-tread or two-tread construction between rows of seats depends on the gradient and suitable riser height (see Section 1029.13.2.2), as needed for sightlines.

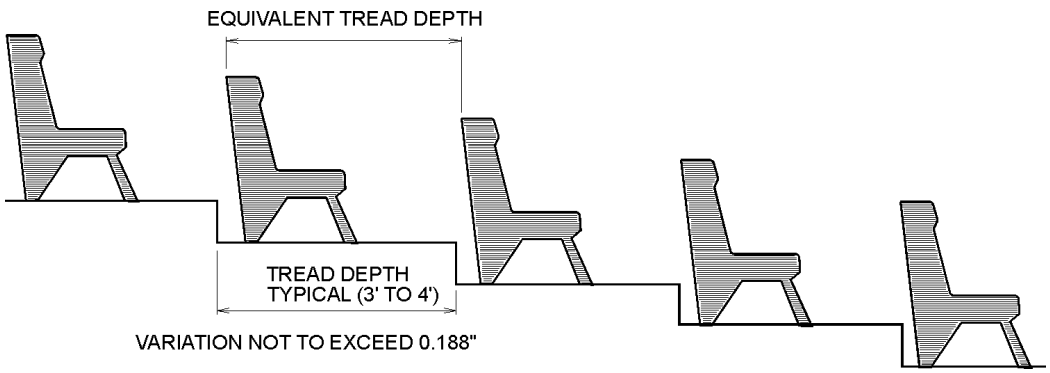

For SI: 1 inch = 25.4 mm, 1 foot = 304.8 mm.

Figure 1029.13.2.1
TYPICAL SEATING PLATFORMS ALSO USED AS STEPPING AISLES

INTERNATIONAL CODE COUNCIL®
Copyright © 2015 ICC. ALL RIGHTS RESERVED. Accessed by David Dammon on Jun 21, 2017 12:30:52 PM pursuant to License Agreement with ICC. No further reproduction or distribution authorized. ANY UNAUTHORIZED REPRODUCTION OR DISTRIBUTION IS A VIOLATION OF THE FEDERAL COPYRIGHT ACT AND THE LICENSE AGREEMENT, AND SUBJECT TO CIVIL AND CRIMINAL PENALTIES THEREUNDER.

In comparing this section to Section 1029.13.2.2, it is significant to note the emphasis placed on the tread dimension. While not desirable, the code permits riser heights to deviate; however, tread dimensions must not vary beyond the $^3/_{16}$-inch (4.8 mm) tolerance.

1029.13.2.2 Risers. Where the gradient of stepped *aisles* is to be the same as the gradient of adjoining seating areas, the riser height shall be not less than 4 inches (102 mm) nor more than 8 inches (203 mm) and shall be uniform within each *flight*.

Exceptions:

1. Riser height nonuniformity shall be limited to the extent necessitated by changes in the gradient of the adjoining seating area to maintain adequate sightlines. Where nonuniformities exceed $^3/_{16}$ inch (4.8 mm) between adjacent risers, the exact location of such nonuniformities shall be indicated with a distinctive marking stripe on each tread at the *nosing* or leading edge adjacent to the nonuniform risers. Such stripe shall be not less than 1 inch (25 mm), and not more than 2 inches (51 mm), wide. The edge marking stripe shall be distinctively different from the contrasting marking stripe.
2. Riser heights not exceeding 9 inches (229 mm) shall be permitted where they are necessitated by the slope of the adjacent seating areas to maintain sightlines.

❖ In stepped aisles where the gradient of the aisle is the same as the gradient of the adjoining seating area, riser heights are not to be less than 4 inches (102 mm) nor more than 8 inches (203 mm) (see Commentary Figure 1029.13.2.2). For the safety of the occupants, risers should have uniform heights, where possible, throughout each flight. However, nonuniformity of riser heights is permitted in cases where changes to the gradient in the adjoining seating area are required because of sightlines and other seating layout considerations.

Where variations in height exceed $^3/_{16}$ inch (4.8 mm) between adjacent risers, a distinctive marking stripe between 1 inch (25 mm) and 2 inches (51 mm) wide is to be located on the nosings of each tread as a visual warning to the occupants to be cautious. Frequently, this is done with "runway" lights. Note that this stripe must be different from the tread contrast marking stripes required for transitions in Section 1029.10.3 and the tread stripes in Section 1029.13.2.2.1. All of these stripes must be visible in lighted conditions; therefore, they are not required to comply with the provisions for luminous tread markings in Section 1025.

While the riser height may vary to adjust to sight lines of the associated seating, there is a maximum change for adjacent treads so that there is consistency in the flight (see Section 1029.13.2.2.1).

In comparing this section with Section 1029.13.2.1, it is significant to note the emphasis placed on the tread dimension. While not desirable, the code permits riser heights to deviate; however, Section 1029.13.2.1 does not permit tread dimensions to vary beyond the $^3/_{16}$-inch (4.8 mm) tolerance.

1029.13.2.2.1 Construction tolerances. The tolerance between adjacent risers on a stepped *aisle* that were designed to be equal height shall not exceed 3/16 inch (4.8 mm). Where the stepped *aisle* is designed in accordance with Exception 1 of Section 1029.13.2.2, the stepped *aisle* shall be constructed so that each riser of unequal height, determined in the direction of descent, is not more than 3/8 inch (9.5 mm) in height different from adjacent risers where stepped *aisle* treads are less than 22 inches (560 mm) in depth and 3/4 inch (19.1 mm) in height different from adjacent risers where stepped *aisle* treads are 22 inches (560 mm) or greater in depth.

❖ Where risers in a stepped aisle are consistent, the construction tolerance between adjacent treads allows for a maximum difference of $^3/_{16}$ inch (4.8 mm). Stairways allow for $^3/_8$ inch (9.5 mm), but this is for the flight of stairs (see Section 1011.5.4). Where the

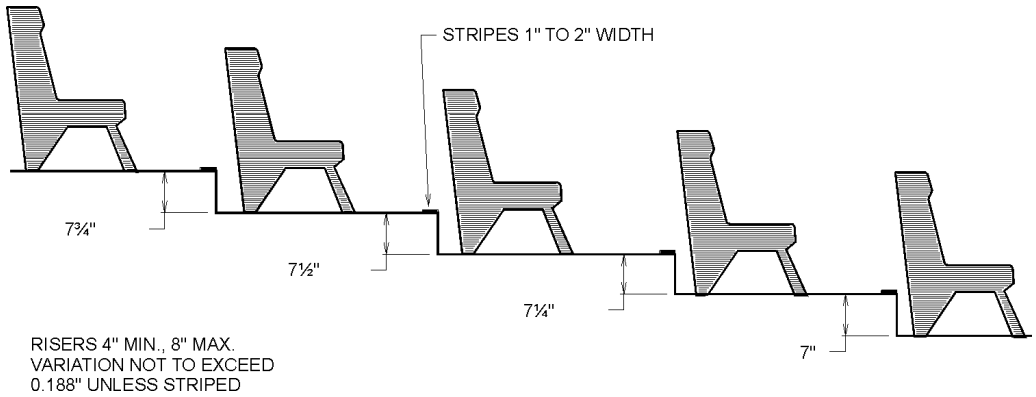

For SI: 1 inch = 25.4 mm.

Figure 1029.13.2.2
TYPICAL RISER CONSTRUCTION IN STEPPED AISLES

INTERNATIONAL CODE COUNCIL®
Copyright © 2015 ICC. ALL RIGHTS RESERVED. Accessed by David Dammon on Jun 21, 2017 12:30:52 PM pursuant to License Agreement with ICC. No further reproduction or distribution authorized. ANY UNAUTHORIZED REPRODUCTION OR DISTRIBUTION IS A VIOLATION OF THE FEDERAL COPYRIGHT ACT AND THE LICENSE AGREEMENT, AND SUBJECT TO CIVIL AND CRIMINAL PENALTIES THEREUNDER.

seating arrangement allows for unequal heights, the difference between adjacent risers is greater for situations with deeper treads. With a tread of 22 inches (560 mm) or greater, most people will be taking more than one step on each tread.

1029.13.2.3 Tread contrasting marking stripe. A contrasting marking stripe shall be provided on each tread at the *nosing* or leading edge such that the location of each tread is readily apparent when viewed in descent. Such stripe shall be not less than 1 inch (25 mm), and not more than 2 inches (51 mm), wide.

Exception: The contrasting marking stripe is permitted to be omitted where tread surfaces are such that the location of each tread is readily apparent when viewed in descent.

❖ The exception provides for the omission of the contrasting marking stripe where the tread is readily apparent, such as when aisle stair treads are provided with a roughened metal nosing strip or where lighted nosings occur. In this situation, the user is aware of the treads without the marking stripe. This stripe must be different from the marking stripe required for nonuniform risers in Section 1029.13.2.2.1and the tread contrast marking stripes required for transitions in Section 1029.10.3

These stripes must be visible in lighted conditions; therefore, these stripes are not required to comply with the provisions for luminous tread markings in Section 1025.

1029.13.2.4 Nosing and profile. *Nosing* and riser profile shall comply with Sections 1011.5.5 through 1011.5.5.3.

❖ The profiles of treads and risers contribute to stepped aisle safety. The radius or bevel of the nosing eases the otherwise square edge of the tread and prevents irregular chipping and wear that can become a maintenance issue and seriously affect the safe use of the stepped aisles. Since safety considerations for stepped aisles and stairways are the same for nosing and riser profiles, the provisions in stairways are referenced for this requirement.

1029.14 Seat stability. In a building, room or space used for assembly purposes, the seats shall be securely fastened to the floor.

Exceptions:

1. In a building, room or space used for assembly purposes or portions thereof without ramped or tiered floors for seating and with 200 or fewer seats, the seats shall not be required to be fastened to the floor.
2. In a building, room or space used for assembly purposes or portions thereof without ramped or tiered floors for seating, the seats shall not be required to be fastened to the floor.
3. In a building, room or space used for assembly purposes or portions thereof without seating at tables and without ramped or tiered floors for seating and with greater than 200 seats, the seats shall be fastened together in groups of not less than three or the seats shall be securely fastened to the floor.
4. In a building, room or space used for assembly purposes where flexibility of the seating arrangement is an integral part of the design and function of the space and seating is on tiered levels, not more than 200 seats shall not be required to be fastened to the floor. Plans showing seating, tiers and *aisles* shall be submitted for approval.
5. Groups of seats within a building, room or space used for assembly purposes separated from other seating by railings, *guards*, partial height walls or similar barriers with level floors and having not more than 14 seats per group shall not be required to be fastened to the floor.
6. Seats intended for musicians or other performers and separated by railings, *guards*, partial height walls or similar barriers shall not be required to be fastened to the floor.

❖ The purpose of this section is to require that assembly seating be fastened to the floor where it would be a significant hazard if loose and subject to tipping over. The exceptions allow loose assembly seating for situations where the hazard is lower, such as floors where ramped or tiered seating is not used, where not more than 200 seats are used and for box seating arrangements and where a limited number of seats are within railings, guards or partial height walls.

1029.15 Handrails. Ramped *aisles* having a slope exceeding one unit vertical in 15 units horizontal (6.7-percent slope) and stepped *aisles* shall be provided with *handrails* in compliance with Section 1014 located either at one or both sides of the *aisle* or within the *aisle* width.

Exceptions:

1. *Handrails* are not required for ramped *aisles* with seating on both sides.
2. *Handrails* are not required where, at the side of the *aisle*, there is a *guard* with a top surface that complies with the graspability requirements of *handrails* in accordance with Section 1014.3.
3. *Handrail* extensions are not required at the top and bottom of stepped *aisles* and ramped *aisles* to permit crossovers within the *aisles*.

❖ For the safety of occupants, handrails must be provided in aisles where ramps exceed a gradient of one unit vertical in 15 units horizontal (6.67-percent slope) (see Commentary Figure 1029.15). All stepped aisles are required to have handrails. Handrails can be on one side, both sides or in the center of the aisle. Typically, handrails are in the center of the aisle when there is seating on both sides or on one side when the aisle is adjacent to the side walls of the room or a guard. While Sections 1011.11 and 1012.8 specify that handrails are required on both sides of stairways or ramps, the exceptions in Sections 1011.1 and 1012.1 and throughout Section 1014 allow for Section 1029.13 to be utilized for handrail location when dealing with stepped aisles, transitions and ramped

INTERNATIONAL CODE COUNCIL®
Copyright © 2015 ICC. ALL RIGHTS RESERVED. Accessed by David Dammon on Jun 21, 2017 12:30:52 PM pursuant to License Agreement with ICC. No further reproduction or distribution authorized. ANY UNAUTHORIZED REPRODUCTION OR DISTRIBUTION IS A VIOLATION OF THE FEDERAL COPYRIGHT ACT AND THE LICENSE AGREEMENT, AND SUBJECT TO CIVIL AND CRIMINAL PENALTIES THEREUNDER.

aisles within assembly seating areas. This would include requiring handrails being within 30 inches (762 mm) (Section 1014.2) of the required stairway width. Safety for aisles with center handrails wider than 60 inches (1524 mm) and side aisles wider than 30 inches (762 mm) is specifically addressed with the capacity increases in Sections 1029.6.1 and 1029.6.2. What the reference to Section 1014 will require are the provisions for handrail height, graspability and fittings. Continuity, extensions, clearance and projections are more specifically addressed in Section 1029.9.1, this section and subsequent subsections.

Exception 1 omits the handrail requirements where ramped aisles are steeper, but the seats on both sides of the aisle effectively reduce the fall hazard.

Exception 2 allows handrails to be omitted where there is a guard at the side of the ramped or stepped aisle with a top rail that complies with the requirements for handrail graspability (see Section 1014.3). Note that the guard must meet the height and opening requirements specified in Section 1015 or 1029.16, as applicable.

While Section 1029.15.1 allows for discontinuous handrails, and Exception 3 (as well as Section 1014.6, Exception 2) exempts handrail extensions where they could block access to the seating, the handrail must extend the full run of the aisle stair. Stopping the handrail short of the bottom riser flight (except where permitted for mid-aisle handrails by Section 1029.15.3) would be considered a code violation. Handrails along the wall adjacent to stepped aisles or ramps should include the handrail extensions where feasible.

1029.15.1 Discontinuous handrails. Where there is seating on both sides of the *aisle*, the mid-aisle *handrails* shall be discontinuous with gaps or breaks at intervals not exceeding five rows to facilitate access to seating and to permit crossing from one side of the *aisle* to the other. These gaps or breaks shall have a clear width of not less than 22 inches (559 mm) and not greater than 36 inches (914 mm), measured horizontally, and the mid-aisle *handrail* shall have rounded terminations or bends.

❖ Where aisles have seating on both sides, handrails may be located at the sides of the aisles, but are typically located in the center of the aisle. (Handrails on both sides of a stepped aisle will typically either block access to the aisle accessways or not be able to meet the gap requirements. Transitions per Section 1029.10 can have handrails on both sides or mid-width.) The width of each section of the subdivided aisle between the handrail and the edge of seating is to be not less than 23 inches (584 mm) measured to the handrail centerline (see Section 1029.9.1, Item 3).

For reasons of life safety in fire situations and also as a practical matter in the efficient use of the facility, a handrail down the middle of an aisle should not be continuous along its entire length. Crossovers must be provided by means of gaps or breaks in the handrail installation. Such openings must not be less than 22 inches (559 mm) or more than 36 inches (914 mm) wide, and must be provided at intervals not exceeding the distance of five rows of seats (see Commentary Figure 1029.15.1). All handrail terminations should be designed to have rounded ends or bends to avoid possible injury to the occupants (see Commentary Figure 1029.15).

1029.15.2 Handrail termination. *Handrails* located on the side of stepped *aisles* shall return to a wall, *guard* or the walking surface or shall be continuous to the *handrail* of an adjacent stepped *aisle flight*.

❖ The purpose of return requirements at handrail ends is to prevent a person from catching an article of clothing or satchel straps or from being injured by falling on the extended end of a handrail. When a handrail is on a wall adjacent to a stepped aisle, it can return the same as a handrail on a stairway.

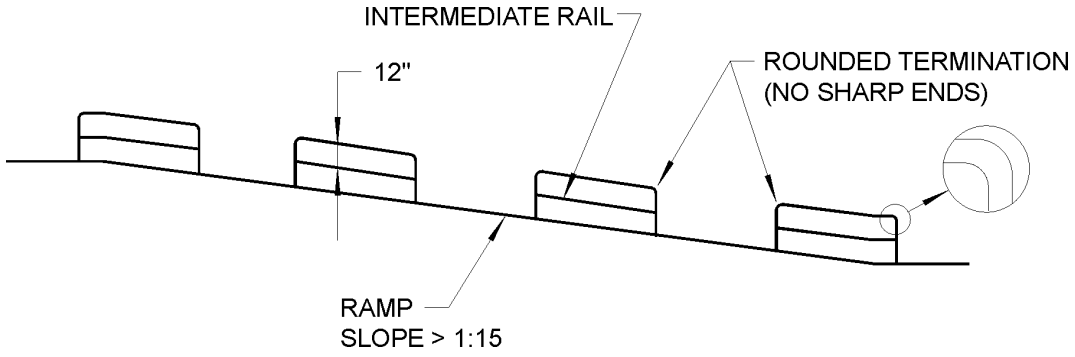

For SI: 1 inch = 25.4 mm.

Figure 1029.15
TYPICAL RAILING FOR RAMPED AISLES WITH RAILING IN THE AISLE

INTERNATIONAL CODE COUNCIL®
Copyright © 2015 ICC. ALL RIGHTS RESERVED. Accessed by David Dammon on Jun 21, 2017 12:30:52 PM pursuant to License Agreement with ICC. No further reproduction or distribution authorized. ANY UNAUTHORIZED REPRODUCTION OR DISTRIBUTION IS A VIOLATION OF THE FEDERAL COPYRIGHT ACT AND THE LICENSE AGREEMENT, AND SUBJECT TO CIVIL AND CRIMINAL PENALTIES THEREUNDER.

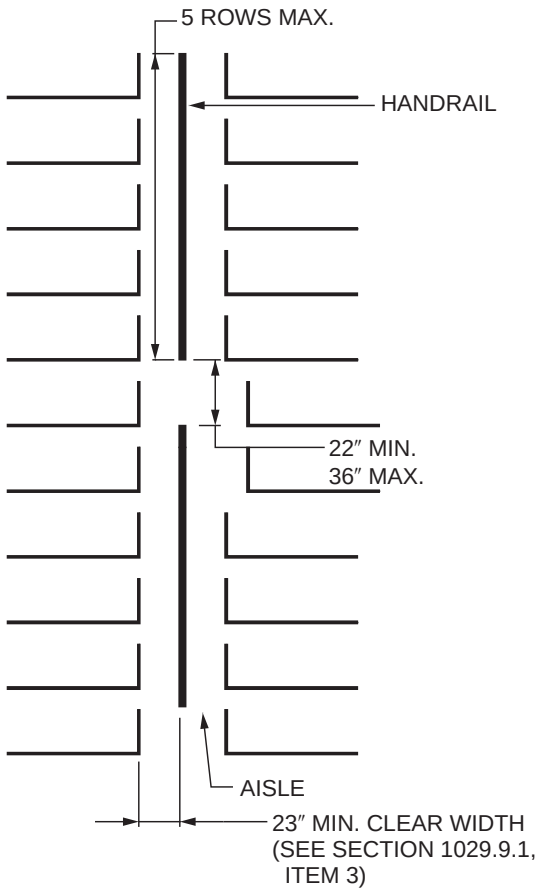

For SI: 1 inch = 25.4 mm.

Figure 1029.15.1
DISCONTINUOUS AISLE HANDRAILS

1029.15.3 Mid-aisle termination. Mid-aisle *handrails* shall not extend beyond the lowest riser and shall terminate within 18 inches (381 mm), measured horizontally, from the lowest riser. *Handrail* extensions are not required.

Exception: Mid-aisle *handrails* shall be permitted to extend beyond the lowest riser where the *handrail* extensions do not obstruct the width of the cross *aisle*.

❖ The intent is to clarify how far a mid-aisle handrail can stop from the bottom of a stepped aisle and still allow for a person to get past the front of the rail to enter the first row of seating. Since the purpose of a handrail is to arrest a fall or provide stability for someone moving up or down the stepped aisle, the handrails should also not start so far back that someone could not reach the handrail from the cross aisle, or have to let go too soon before they get to the cross aisle. The intent of the exception is to allow for a mid-aisle handrail to have a bottom extension if it will not block the cross aisle. However, if a designer wants to not have a handrail extension in order to provide access to the front row of raised seats, the handrail must extend to at least 18 inches (381 mm) from the nosing of the bottom riser.

1029.15.4 Rails. Where mid-aisle *handrails* are provided in stepped *aisles*, there shall be an additional rail located approximately 12 inches (305 mm) below the *handrail*. The rail shall be adequate in strength and attachment in accordance with Section 1607.8.1.2.

❖ Handrail installations down the middle of an aisle must be constructed with intermediate rails located 12 inches (305 mm) below and parallel to main handrails. The rail below the handrail is to stop people from going under the handrail or swinging on the handrail (see Commentary Figure 1029.15). The lower rail is not intended to meet all handrail provisions for graspability; however, it does have to meet the same strength criteria as a handrail.

1029.16 Assembly guards. *Guards* adjacent to seating in a building, room or space used for assembly purposes shall be provided where required by Section 1015 and shall be constructed in accordance with Section 1015 except where provided in accordance with Sections 1029.16.1 through 1029.16.4. At *bleachers*, *grandstands* and *folding and telescopic seating*, *guards* must be provided where required by ICC 300 and Section 1029.16.1.

❖ This section establishes the scope of the guard provisions within assembly seating. Depending on the event, the sightline constraints can be for a wide viewing angle. For example, to see the entire football field, a person may have to look right and left. Good design will establish a balance between safety and sight issues that will need to be evaluated on a case-by-case basis.

Some situations unique to assembly make it necessary to strike a balance between safety requirements and line of sight issues. Section 1029.16.1 addresses the guards around the outside edge of a seating area, such as a bleacher or tiered seating arrangement that is on each side of a high-school football field, or along the first- and third-base lines at a baseball field. The perimeter guards are required for assembly seating addressed in Section 1029 and seating covered by ICC 300. The purpose of Section 1029.16.2 is to provide for occupant safety with guards along elevated cross aisles, typically in aisles that occupants use to move side to side across the seating bowl. If there is only an aisle accessway between the seats and the guard, typically found at the front of a balcony or raised section, then Section 1029.16.3 is applicable. If the aisle is moving down through the seating toward a dropoff, then Section 1029.16.4 is applicable.

1029.16.1 Perimeter guards. Perimeter *guards* shall be provided where the footboards or walking surface of seating facilities are more than 30 inches (762 mm) above the floor or grade below. Where the seatboards are adjacent to the perimeter, *guard* height shall be 42 inches (1067 mm) high minimum, measured from the seatboard. Where the seats are self-rising, *guard* height shall be 42 inches (1067 mm) high mini-

INTERNATIONAL CODE COUNCIL®
Copyright © 2015 ICC. ALL RIGHTS RESERVED. Accessed by David Dammon on Jun 21, 2017 12:30:52 PM pursuant to License Agreement with ICC. No further reproduction or distribution authorized. ANY UNAUTHORIZED REPRODUCTION OR DISTRIBUTION IS A VIOLATION OF THE FEDERAL COPYRIGHT ACT AND THE LICENSE AGREEMENT, AND SUBJECT TO CIVIL AND CRIMINAL PENALTIES THEREUNDER.

mum, measured from the floor surface. Where there is an *aisle* between the seating and the perimeter, the *guard* height shall be measured in accordance with Section 1015.2.

Exceptions:

1. *Guards* that impact sightlines shall be permitted to comply with Section 1029.16.3.
2. *Bleachers*, *grandstands* and *folding and telescopic seating* shall not be required to have perimeter *guards* where the seating is located adjacent to a wall and the space between the wall and the seating is less than 4 inches (102 mm).

❖ The intent of perimeter guards is to address the risk of falling from the side and back of a seating area. This question is applicable for bleacher, grandstands and folding and telescopic seating addressed in ICC 300 and other assembly seating arrangements.

ICC 300 requires guards with 4-inch openings where the floor surface has an adjacent 30-inch dropoff (ICC 300, Section 408). The dropoff is measured from the floor rather than the seatboard because the ICC 300 committee did not believe it was appropriate to require guards in a two- or three-row bleacher system. For fixed seats and benches, the height for perimeter guards is measured from the seatboard, to address when people stand on the seats. Where seats are self-rising, the guard height would be measured from the floor. Self-rising seats have backs and are very difficult to stand on.

Exception 1 is to allow for the limited situation where guards at the sides of the seating may affect the line of sight in wide venues.

Exception 2 will permit bleacher systems constructed inside the building to use the building walls as perimeter guards if the opening between the bleacher and the wall is less than the opening permitted for guards.

1029.16.2 Cross aisles. Cross *aisles* located more than 30 inches (762 mm) above the floor or grade below shall have *guards* in accordance with Section 1015.

Where an elevation change of 30 inches (762 mm) or less occurs between a cross *aisle* and the adjacent floor or grade below, *guards* not less than 26 inches (660 mm) above the *aisle* floor shall be provided.

Exception: Where the backs of seats on the front of the cross *aisle* project 24 inches (610 mm) or more above the adjacent floor of the *aisle*, a *guard* need not be provided.

❖ The purpose of this section is to provide for occupant safety with guards along elevated cross aisles. The minimum height of the guard is a function of the cross-aisle elevation above the adjacent floor or grade below [i.e., 42 inches (1067 mm) high with more than a 30-inch (762 mm) dropoff and 26 inches (660 mm) high with a 30-inch (762 mm) or less dropoff]. When the seatbacks adjacent to cross aisles are a minimum of 24 inches (610 mm) above the floor level of the cross aisle, they will serve as the guard (see Commentary Figure 1029.16.3 for an illustration of the requirements in this section).

1029.16.3 Sightline-constrained guard heights. Unless subject to the requirements of Section 1029.16.4, a fascia or railing system in accordance with the *guard* requirements of Section 1015 and having a minimum height of 26 inches (660 mm) shall be provided where the floor or footboard elevation is more than 30 inches (762 mm) above the floor or grade below and the fascia or railing would otherwise interfere with the sightlines of immediately adjacent seating.

❖ The purpose of this section is to provide for occupant safety with guards along elevated seating for areas other than cross aisles, such as the front of a raised area or balcony level. The seats would only have an access aisle between the seat and the dropoff.

This section specifies a height of 26 inches (660 mm) for guards along fascias. The guard height and the dropoff are measured from the floor or footboard. This is to provide a reasonable degree of safety while improving sightlines for persons seated immediately behind a fascia or balcony edge. The guard opening configuration must comply with Section 1015.3 (see Commentary Figure 1029.16.3 for an illustration of the requirements in this section).

1029.16.4 Guards at the end of aisles. A fascia or railing system complying with the *guard* requirements of Section 1015 shall be provided for the full width of the *aisle* where the foot of the *aisle* is more than 30 inches (762 mm) above the floor or grade below. The fascia or railing shall be a minimum of 36 inches (914 mm) high and shall provide a minimum 42 inches (1067 mm) measured diagonally between the top of the rail and the *nosing* of the nearest tread.

❖ This section applies only where the foot end of aisles (the lower end) is greater than 30 inches (762 mm) above the adjacent floor or grade below. This typically occurs where aisles move down through rows of seating to the front edge of a balcony or raised seating area. The guard must satisfy both of the specified height requirements to provide safety for persons at the end of the aisle in case someone trips moving down the stepped or ramped aisle. The 36-inch (914 mm) minimum height is measured from the floor vertically to the top of the guard. The minimum 42-inch (1067 mm) diagonal dimension from the nosing of the nearest stair tread to the top of the fascia or guard provides sufficient height to arrest a fall from the nearest aisle riser (see Commentary Figure 1029.16.3 for an illustration of the requirements in this section). The end result could be a guard with a vertical height of more than 36 inches (914 mm).

SECTION 1030
EMERGENCY ESCAPE AND RESCUE

1030.1 General. In addition to the *means of egress* required by this chapter, provisions shall be made for *emergency escape and rescue openings* in Group R-2 occupancies in

INTERNATIONAL CODE COUNCIL®
Copyright © 2015 ICC. ALL RIGHTS RESERVED. Accessed by David Dammon on Jun 21, 2017 12:30:52 PM pursuant to License Agreement with ICC. No further reproduction or distribution authorized. ANY UNAUTHORIZED REPRODUCTION OR DISTRIBUTION IS A VIOLATION OF THE FEDERAL COPYRIGHT ACT AND THE LICENSE AGREEMENT, AND SUBJECT TO CIVIL AND CRIMINAL PENALTIES THEREUNDER.

accordance with Tables 1006.3.2(1) and 1006.3.2(2) and Group R-3 occupancies. *Basements* and sleeping rooms below the fourth story above *grade plane* shall have at least one exterior *emergency escape and rescue opening* in accordance with this section. Where *basements* contain one or more sleeping rooms, *emergency escape and rescue openings* shall be required in each sleeping room, but shall not be required in adjoining areas of the *basement*. Such openings shall open directly into a *public way* or to a *yard* or *court* that opens to a *public way*.

Exceptions:

1. *Basements* with a ceiling height of less than 80 inches (2032 mm) shall not be required to have *emergency escape and rescue openings*.
2. *Emergency escape and rescue openings* are not required from *basements* or sleeping rooms that have an *exit* door or *exit access* door that opens directly into a *public way* or to a *yard*, *court* or exterior exit balcony that opens to a *public way*.
3. *Basements* without *habitable spaces* and having not more than 200 square feet (18.6 m^2) in floor area shall not be required to have *emergency escape and rescue openings*.

❖ Emergency escape and rescue openings (EERO) are required in single-exit residential buildings where occupants may be sleeping during a potential fire buildup (Groups R-2, R-3 and R-4). Group R-2 apartment buildings permitted to have a single exit from a story are required to have EERO by Table 1006.3.2(1), Note a. Group R-2 congregate residences permitted to have a single exit are required to have an EERO by Table 1006.3.2(2), Note a. All Group R-4 congregate residences would also be required to have EERO because Group R-4 follows Group R-3 provisions unless specifically mentioned otherwise (Section 310.6).

All basements and each bedroom/sleeping room are to be provided with an exterior window or door that meets the minimum size requirements and is operable for emergency escape by methods that are obvious and clearly understood by all users. Sleeping rooms four stories or more above grade are not required to be so equipped, since fire service access at that height, as well as escape through such an opening, may not be practical or reliable. Since single-exit apartment buildings are limited to three stories and most Group R-3 and R-4 buildings are two or three stories, this limit is not applicable very often. Section 1018.3 limits Groups R-3 and R-4 to four stories where using a single open exit access stairway.

The provision for basements is in recognition that they typically have only a single means of egress without alternative routes through standard windows. Many times a basement is finished at a later time; therefore, as a safety precaution; at least one EERO is required in every basement. If bedrooms are provided within the basement, the location and number of EERO are determined by the bedrooms.

It is important to note that this window is only an element of escape and is not part of the means of egress required from the story unless it is a door conforming to normal egress requirements.

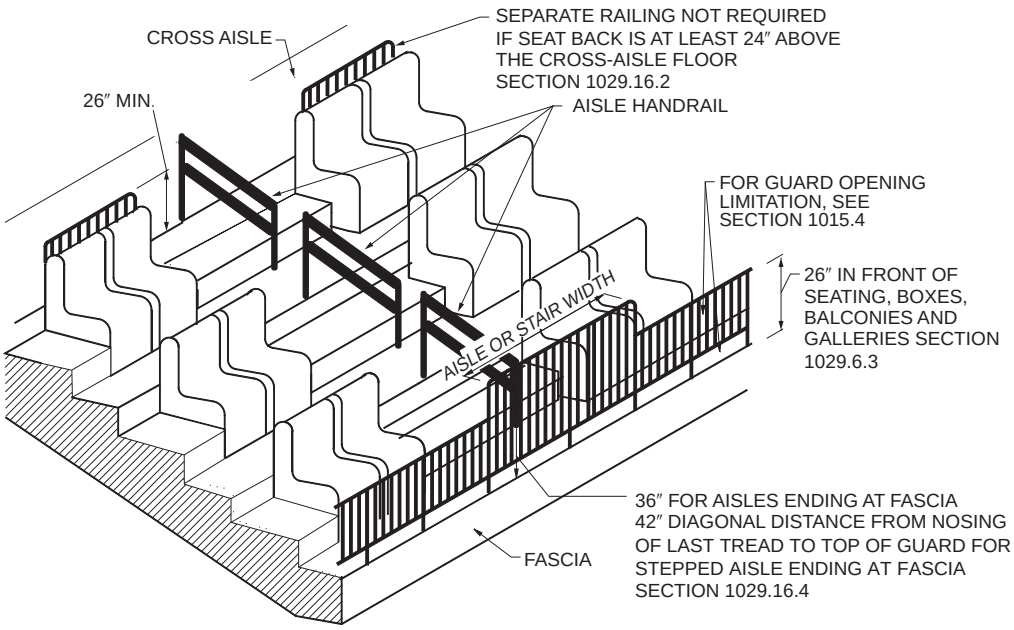

For SI: 1 inch = 25.4 mm.

Figure 1029.16.3
TYPICAL BALCONY GUARDS AT FASCIA

INTERNATIONAL CODE COUNCIL®
Copyright © 2015 ICC. ALL RIGHTS RESERVED. Accessed by David Dammon on Jun 21, 2017 12:30:52 PM pursuant to License Agreement with ICC. No further reproduction or distribution authorized. ANY UNAUTHORIZED REPRODUCTION OR DISTRIBUTION IS A VIOLATION OF THE FEDERAL COPYRIGHT ACT AND THE LICENSE AGREEMENT, AND SUBJECT TO CIVIL AND CRIMINAL PENALTIES THEREUNDER.

Exceptions 1 and 3 are intended to exempt basements that would not be likely to be finished as living space, and thus have sleeping rooms in them.

The intent of Exception 2 is to permit sleeping rooms with a door that has direct access to an exterior-type environment, such as a street or exit balcony, to not have an EERO. The open atmosphere of the escape route would increase the likelihood that the means of egress would be available even with the delayed response time for sleeping residents. This would also exempt walk-out basements that did not include bedrooms.

1030.2 Minimum size. *Emergency escape and rescue openings* shall have a minimum net clear opening of 5.7 square feet (0.53 m^2).

Exception: The minimum net clear opening for grade-floor *emergency escape and rescue openings* shall be 5 square feet (0.46 m^2).

❖ The dimensional criteria of the openings are intended to permit fire service personnel (in full protective clothing with a breathing apparatus) to enter from a ladder, as well as permit occupants to escape. The net clear opening area and minimum dimensions are intended to provide a clear opening through which an occupant can pass to escape the building or a fire fighter can pass to enter the building for rescue or fire suppression activities. Since the emergency escape windows must be usable to all occupants, including children and guests, the required opening dimensions must be achieved by the normal operation of the window from the inside (e.g., sliding, swinging or lifting the sash). It is impractical to assume that all occupants can operate a window that requires a special sequence of operations to achieve the required opening size. While most occupants are familiar with the normal operation by which to open the window, children and guests are frequently unfamiliar with any special procedures that may be necessary to remove or tilt the sashes. The time spent in comprehending the special operation unnecessarily delays egress from the bedroom and could lead to panic and further confusion. Thus, windows that achieve the required opening dimensions only through operations such as the removal of sashes or mullions are not permitted. It should be noted that the minimum area cannot be achieved by using both the minimum height and minimum width specified in Section 1030.2.1 (see Commentary Figure 1030.2).

1030.2.1 Minimum dimensions. The minimum net clear opening height dimension shall be 24 inches (610 mm). The minimum net clear opening width dimension shall be 20 inches (508 mm). The net clear opening dimensions shall be the result of normal operation of the opening.

❖ Note that both the minimum dimensions in this section and the minimum area requirements in Section 1030.2 apply. Thus, a grade-floor window that is only 24 inches (610 mm) in height must be 30 inches (762 mm) wide to meet the 5-square-foot (0.46 m^2) area requirement of Section 1030.2 for grade-floor window (see Commentary Figure 1030.2).

1030.3 Maximum height from floor. *Emergency escape and rescue openings* shall have the bottom of the clear opening not greater than 44 inches (1118 mm) measured from the floor.

❖ This section limits the height of the bottom of the clear opening to 44 inches (1118 mm) or less such that it can be used effectively as an emergency escape (see Commentary Figure 1030.2).

Windows in Group R-2, R-3 and R-4 dwelling units may also have to meet window-opening limitations because of concerns about child falls (see Section 1015.8). Only some of the window opening-control devices will also work for emergency escape and rescue openings.

1030.4 Operational constraints. *Emergency escape and rescue openings* shall be operational from the inside of the room without the use of keys or tools. Bars, grilles, grates or similar devices are permitted to be placed over *emergency escape and rescue openings* provided the minimum net clear opening size complies with Section 1030.2 and such devices shall be releasable or removable from the inside without the use of a key, tool or force greater than that which is required for normal operation of the *emergency escape and rescue opening*. Where such bars, grilles, grates or similar devices are installed in existing buildings, *smoke alarms* shall be installed

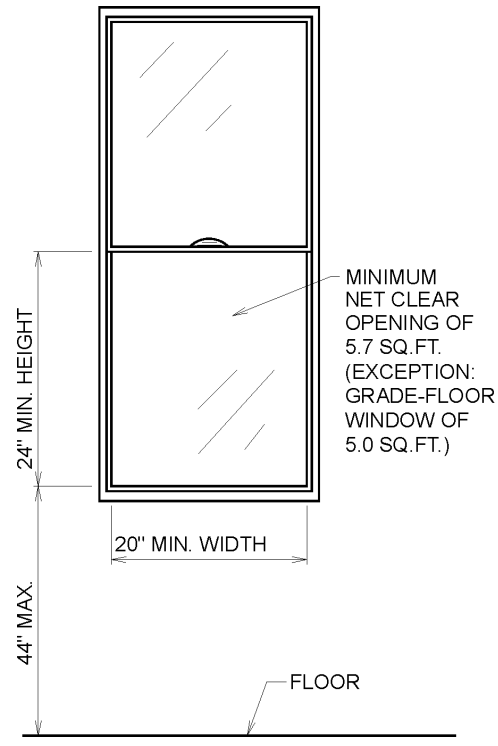

For SI: 1 inch = 25.4 mm, 1 square foot = 0.0929 m^2.

Figure 1030.2
EMERGENCY ESCAPE WINDOW

INTERNATIONAL CODE COUNCIL®
Copyright © 2015 ICC. ALL RIGHTS RESERVED. Accessed by David Dammon on Jun 21, 2017 12:30:52 PM pursuant to License Agreement with ICC. No further reproduction or distribution authorized. ANY UNAUTHORIZED REPRODUCTION OR DISTRIBUTION IS A VIOLATION OF THE FEDERAL COPYRIGHT ACT AND THE LICENSE AGREEMENT, AND SUBJECT TO CIVIL AND CRIMINAL PENALTIES THEREUNDER.

in accordance with Section 907.2.11 regardless of the valuation of the *alteration*.

❖ If security grilles, decorations or similar devices are installed on escape windows, such items must be readily removable to permit occupant escape without the use of any tools, keys or a force greater than that required for the normal operation of the window. This would include any window fall-prevention devices and window opening-control devices required by Section 1013.8.

Where bars, grilles, grates or other devices that prevent full operation of the window are placed over the emergency escape and rescue opening, it is important that they are easily removable. Thus, the requirements for ease of operation are the same as required for windows.

Windows in Group R-2, R-3 and R-4 dwelling units may also have to meet window opening limitations because of concerns about child falls (see Section 1015.8). Only some of the window opening-control devices will also work for emergency escape and rescue openings.

Where smoke alarms are not already provided and when items that could possibly slow the opening of emergency escape and rescue windows are installed in existing buildings, smoke alarms must also be installed. Smoke alarms are necessary to provide advance warning of a fire for safety purposes.

1030.5 Window wells. An *emergency escape and rescue opening* with a finished sill height below the adjacent ground level shall be provided with a window well in accordance with Sections 1030.5.1 and 1030.5.2.

❖ Emergency escape and rescue openings that are partially or completely below grade need to have window wells so that they can be used effectively (see Commentary Figure 1030.5).

1030.5.1 Minimum size. The minimum horizontal area of the window well shall be 9 square feet (0.84 m^2), with a minimum dimension of 36 inches (914 mm). The area of the window well shall allow the *emergency escape and rescue opening* to be fully opened.

❖ This section specifies the size of the window well that is needed for a rescue person in full protective clothing and breathing apparatus to use the rescue opening. The required 9 square feet (0.84 m^2) is the size of

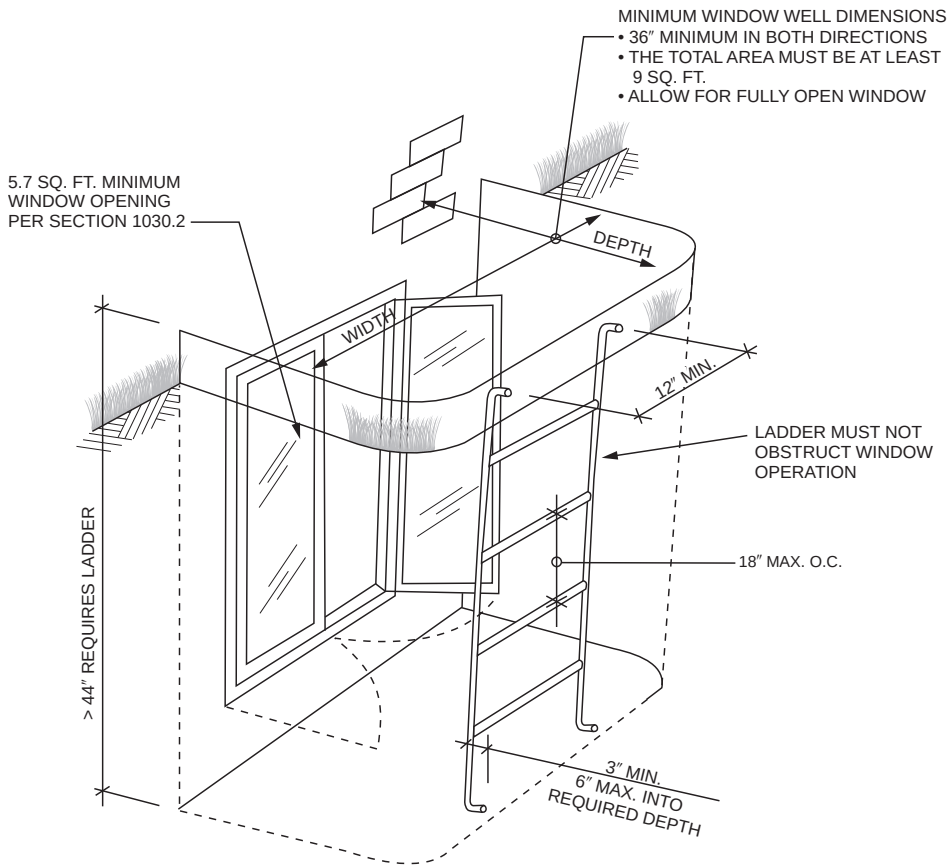

For SI: 1 inch = 25.4 mm, 1 square foot = 0.0929 m^2.

Figure 1030.5
WINDOW WELLS AT EMERGENCY ESCAPE WINDOWS

INTERNATIONAL CODE COUNCIL®
Copyright © 2015 ICC. ALL RIGHTS RESERVED. Accessed by David Dammon on Jun 21, 2017 12:30:52 PM pursuant to License Agreement with ICC. No further reproduction or distribution authorized. ANY UNAUTHORIZED REPRODUCTION OR DISTRIBUTION IS A VIOLATION OF THE FEDERAL COPYRIGHT ACT AND THE LICENSE AGREEMENT, AND SUBJECT TO CIVIL AND CRIMINAL PENALTIES THEREUNDER.

the window well. Thus, the window well must project away from the plane of the window at least 3 feet (914 mm), and the required dimension in the plane of the window along the wall is also 3 feet (914 mm) (see Commentary Figure 1030.5).

1030.5.2 Ladders or steps. Window wells with a vertical depth of more than 44 inches (1118 mm) shall be equipped with an *approved* permanently affixed ladder or steps. Ladders or rungs shall have an inside width of at least 12 inches (305 mm), shall project at least 3 inches (76 mm) from the wall and shall be spaced not more than 18 inches (457 mm) on center (o.c.) vertically for the full height of the window well. The ladder or steps shall not encroach into the required dimensions of the window well by more than 6 inches (152 mm). The ladder or steps shall not be obstructed by the *emergency escape and rescue opening*. Ladders or steps required by this section are exempt from the *stairway* requirements of Section 1011.

❖ This section specifies that a ladder or steps be provided for ease of getting into and out of window wells that are more than 44 inches (1118 mm) deep.

Usually, ladder rungs are embedded in the wall of the window well. The 44-inch (1118 mm) dimension is the depth of the window well, not the distance from the bottom of the window well to grade. Thus, if the floor of a window well is 40 inches (1016 mm) below grade, but the wall of the window well projects above grade by 6 inches (152 mm), steps or a ladder are required since the vertical depth is 46 inches (1168 mm).

It is important that the ladder not obstruct the operation of the emergency escape window (see Commentary Figure 1030.5).

Bibliography

The following resource materials were used in the preparation of the commentary for this chapter of the code.

24 CFR, *Fair Housing Accessibility Guidelines* (FHAG). Washington, DC: Department of Housing and Urban Development, 1991.

28 CFR Part 35 and 36 Final Rule, *2010 Standard for Accessible Design*. Washington, DC: U.S. Department of Justice, September 15, 2010.

36 CFR Parts 1190 and 1191 Final Rule, *The Americans with Disabilities Act (ADA) Accessibility Guidelines; Architectural Barriers Act (ABA) Accessibility Guidelines*. Washington, DC: Architectural and Transportation Barriers Compliance Board, July 23, 2004.

Appendix B to Part 36, *Analysis and Commentary on the 2010 ADA Standards for Accessible Design*. Washington, DC: Department of Justice, September 15, 2010.

Architectural and Transportation Barriers Compliance Board, 42 USC 3601-88, *Fair Housing Amendments Act (FHAA)*. Washington, DC: United States Code, 1988.

ASME A17.1-2010/CSA B44-10, *Safety Code for Elevators and Escalators*. New York: American Society of Mechanical Engineers, 2010.

ASME A18.1-2008, *Safety Standard for Platform Lifts and Stairway Chairlifts*. New York: American Society of Mechanical Engineers, 2008.

ASTM D2047-04, *Standard Test Method for Static Coefficient of Friction Polish-coated Flooring Surfaces as Measured by the James Machine*. West Conshohocken, PA: ASTM International, 2004.

ASTM E119-10b, *Standard Test Methods for Fire Tests of Building Construction and Materials*. West Conshohocken, PA: ASTM International, 2010.

ASTM E2072-10, *Standard Specification for Photoluminescent (Phosphorescent) Safety Markings*. West Conshohocken, PA: ASTM International, 2010.

ASTM F851-87 (Reapproved 2005), *Standard Test Method for Self-Rising Seat Mechanisms*. West Conshohocken, PA: ASTM International, 2005.

DOJ 28 CFR, Part 36 (Appendix A)-91, *ADA Accessibility Guidelines for Buildings and Facilities*. Washington, DC: U.S. Department of Justice, 1991.

DOJ 28 CFR, Part 36-91, *Americans with Disabilities Act* (ADA). Washington, DC: U.S. Department of Justice, 1991.

Final Report of the HUD Review of the Fair Housing Accessibility Requirements and the 2003 International Building Code (IBC). February 18, 2005 (Docket No FR-4943-N-02).

Final Report of the HUD Review of the Fair Housing Accessibility Requirements and the 2006 International Building Code (IBC). May 31, 2007 (Docket No FR-5136-N-01).

Fire Modeling Analysis Report, July 20, 2011 and *The Report to the California State Fire Marshal on Exit Access Travel Distance of 400 Feet by Task Group 400*, December 20, 2010 by Aon Fire Protection Engineering. The complete report can be found on the California State Fire Marshal's website at: http://osfm.fire.ca.gov/codedevelopment/pdf/2010interimcodeadoption/Part-9_ISOR_Attachment_A_rev20110720comp.pdf.

HUD 24 CFR, Part 100, *Federal Fair Housing Accessibility Guidelines*. Washington, DC: U.S. Department of Housing and Urban Development.

NIST IR 4770-92, *Report on Staging Areas for Persons with Mobility Limitations*. Washington, DC: National Institute of Standards and Technology, 1992.

"Review of Fall Safety of Children Between the Ages of 18 months and 4 Years in Relation to Guards and Climbing in the Built Environment," prepared for the National Ornamental & Miscellaneous Metals Association (NOMMA). Upper Marlboro, MD: NAHB Research Center, Inc., 2007.

INTERNATIONAL CODE COUNCIL®
Copyright © 2015 ICC. ALL RIGHTS RESERVED. Accessed by David Dammon on Jun 21, 2017 12:30:52 PM pursuant to License Agreement with ICC. No further reproduction or distribution authorized. ANY UNAUTHORIZED REPRODUCTION OR DISTRIBUTION IS A VIOLATION OF THE FEDERAL COPYRIGHT ACT AND THE LICENSE AGREEMENT, AND SUBJECT TO CIVIL AND CRIMINAL PENALTIES THEREUNDER.

UL 10C-09, *Positive Pressure Fire Tests of Door Assemblies*. Northbrook, IL: Underwriters Laboratories, Inc., 2009.

UL 305-07, *Panic Hardware*. Northbrook, IL: Underwriters Laboratories, Inc., 2007.

UL 924-06, *Standard for Safety Emergency Lighting and Power Equipment—with Revisions through 2009*. Northbrook, IL: Underwriters Laboratories Inc., 2009.

UL 1994-04, *Standard for Luminous Egress Path Marking Systems—with Revisions through 2010*. Northbrook, IL: Underwriters Laboratories, Inc., *2010*.

INTERNATIONAL CODE COUNCIL®

Copyright © 2015 ICC. ALL RIGHTS RESERVED. Accessed by David Dammon on Jun 21, 2017 12:30:52 PM pursuant to License Agreement with ICC. No further reproduction or distribution authorized. ANY UNAUTHORIZED REPRODUCTION OR DISTRIBUTION IS A VIOLATION OF THE FEDERAL COPYRIGHT ACT AND THE LICENSE AGREEMENT, AND SUBJECT TO CIVIL AND CRIMINAL PENALTIES THEREUNDER.

Chapter 11: Accessibility

General Comments

Chapter 11 contains provisions that set forth requirements for accessibility of buildings and their associated sites and facilities for people with physical disabilities. Existing building criteria are addressed in the *International Existing Building Code*® (IEBC®). Appendix E is included in the code to address accessibility for items in the 2010 ADA Standard that were not typically enforceable through the standard traditional building code enforcement approach system (e.g., beds, room signage).

In July 2004, the United States Architectural and Transportation Barriers Compliance Board (Access Board) published new design guidelines under the name *Americans with Disabilities Act and Architectural Barriers Act Accessibility Guidelines*, otherwise known as the "ADA/ABA Guidelines." On September 15, 2010, the U.S. Department of Justice (DOJ) published/adopted the 2004 ADA/ABA Guidelines, officially renaming them the *2010 ADA Standards for Accessible Design*. For purposes of the following discussion, the 2010 document will be referred to as the "2010 ADA Standard," while the original guidelines of 1991 are referred to as "ADAAG." For additional technical assistance and information on the 2010 ADA Standard, visit the Access Board website at www.access-board.gov.

The *International Residential Code*® (IRC®) references Chapter 11 for accessibility provisions. Therefore, this chapter may be applicable to housing covered under the IRC (see commentary, Sections 1107.6 and 1107.6.3). Structures referenced to Chapter 11 from the IRC would be considered Group R-3.

Section 1101 contains the broad scope statement of the chapter and identifies the baseline criteria for accessibility as being in compliance with this chapter and 2009 ICC A117.1. ICC A117.1, *Accessible and Useable Buildings and Facilities,* is the consensus national standard that sets forth the technical details, dimensions and construction specifications for accessibility.

Section 1102 contains a list of terms that are associated with accessibility. For the complete definitions and their commentary, see Chapter 2 of this code.

Section 1103 describes the applicability of the provisions of this chapter. Accessibility is broadly required in all buildings, structures, sites and facilities. Those specific circumstances in which accessibility is not required (or is limited) are set forth as exceptions.

Section 1104 contains the requirements for interior and exterior accessible routes. An accessible route is a key component of the built environment that provides a person with a disability access to spaces, elements, facilities and buildings. Note that ramps are addressed in Section 1010.

Section 1105 contains requirements for accessible entrances to buildings and structures. Note that requirements for accessible means of egress are addressed in Section 1009.

Section 1106 sets forth the requirements for accessible parking facilities and passenger loading zones.

Section 1107 contains various accessibility requirements that are unique to occupancies that contain dwelling units and sleeping units and are applicable in addition to other general requirements of this chapter. Specific provisions unique to Group I and R occupancies are included. The Type B dwelling- and sleeping-unit requirements in this section are coordinated with the requirements found in the *Fair Housing Accessibility Guidelines* (FHAG). Requirements for institutional and transient lodging are also consistent with the 2010 ADA Standard. When federal funding is provided for the project, there may be a higher level of accessibility required.

Section 1108 contains various accessibility requirements that are unique to specific occupancies, other than Groups I and R, and are applicable in addition to all other general requirements of Chapter 11. Specific provisions unique to assembly seating, performance areas, dining areas, self-storage and judicial facilities are included.

Section 1109 contains various requirements that are applicable to features and facilities that are not occupancy related, including requirements for toilet and bathing facilities; sinks; kitchens and kitchenettes; drinking fountains; sauna/steam rooms; elevators; platform lifts; storage facilities; detectable warnings; seating at tables, counters and work surfaces; service facilities; controls and operating mechanisms; fuel dispensing systems; and gaming machines and gaming tables.

Section 1110 provides scoping for a variety of different types of recreational facilities. Basically all recreational facilities are required to have an accessible route to them. Section 1110.4 includes additional requirements specific to certain types or recreational facilities (e.g., pools, miniature golf courses) or exceptions (e.g., raised boxing rings, water slides and diving boards).

Section 1111 sets forth requirements for signage identifying certain required accessible elements or where communication must be offered by alternative means.

INTERNATIONAL CODE COUNCIL®
Copyright © 2015 ICC. ALL RIGHTS RESERVED. Accessed by David Dammon on Jun 21, 2017 12:30:52 PM pursuant to License Agreement with ICC. No further reproduction or distribution authorized. ANY UNAUTHORIZED REPRODUCTION OR DISTRIBUTION IS A VIOLATION OF THE FEDERAL COPYRIGHT ACT AND THE LICENSE AGREEMENT, AND SUBJECT TO CIVIL AND CRIMINAL PENALTIES THEREUNDER.

History—Building Codes and Federal Laws

Access to buildings and structures for people with physical disabilities has been a subject that building codes have regulated since the early 1970s. The codes have consistently relied on a consensus national standard, CABO/ANSI A117.1, as the technical basis for accessibility. The title of CABO/ANSI A117.1 is now ICC A117.1 to reflect that the International Code Council® (ICC®) is the secretariat for this standard. Accessibility is not a new subject to the construction regulatory community. There has been a great deal of emphasis and awareness placed on the subject of accessibility through the passage of two federal laws. The Americans with Disabilities Act (ADA) and the Fair Housing Amendment Act (FHA) are two examples of federal regulations that affect building construction as it relates to accessibility.

The ADA, signed into law in July 1990, is a very broad civil rights law designed to protect persons with disabilities. There are five sections of the ADA that address different aspects of civil rights for people with disabilities. Title I deals with employment and generally prohibits discrimination against disabled people in employment. Title II deals with public services, including access to all services and facilities receiving federal funding, and access to public transportation, including buses, rail lines and passenger transit facilities. Title III requires access to a large category of buildings and structures in a manner that is equal or comparable to that available to the general public. Title IV deals with accessible telecommunication facilities and Title V further defines miscellaneous issues dealing with ADA compliance.

Note that the FHA is a companion law to the ADA. The FHA deals with residential and institutional living arrangements that, for the most part, are not covered under the ADA. However, there is some overlap. See the commentary to Section 1107 for additional information. Titles II and III of the ADA overlap numerous requirements customarily regulated by building codes. When the ADA was originally written, Title II facilities had the option to follow either the FED-STD-795-88, *Uniform Federal Accessibility Standards* (UFAS) or ADAAG for compliance with accessibility requirements. Title II facilities include those receiving federal funding for the building or for programs offered in the building, i.e., colleges, schools, park districts, local and state governments, hospitals, etc. Implementation of Title III of the ADA was based on the requirements of ADAAG. Both UFAS and ADAAG set forth scoping and technical requirements for building design and construction. The federal government is interested in bringing more uniformity to federal accessibility standards and is continuously looking at ways in which harmonization of all federal and private-sector standards can be accomplished. In many ways, UFAS and ADAAG are similar to a building code and in fact cover many of the same matters that are dealt with in such codes. With this in mind, the Access Board developed new and additional requirements within the past decade. The new requirements are organized in a building code format. The ICC and Access Board both worked toward harmonization between the federal and building code requirements. The 2010 ADA Standard replaced UFAS (1984) and ADAAG (1991) as the standard referenced for compliance with the ADA and another federal law, the Architectural Barriers Act (ABA, 1968). From September 15, 2010, to March 15, 2012, compliance with either the 1991 ADAAG or the 2010 ADA Standard was an option. Beginning March 15, 2012, compliance with the 2010 ADA Standard is required for all new construction and as well as for alterations to existing facilities.

It is important to emphasize, however, that the ADA (a law) is written as civil rights legislation and not as a building code. The enforcement mechanism for civil rights laws is significantly different than that for traditional building regulation. The ADA does not preempt the adoption or enforcement of accessibility-related codes by state and local governments. All buildings constructed within a jurisdiction must comply with locally adopted building codes and any applicable state codes, as well as the 2010 ADA Standard. However, as a federal law, state and local governments have neither the authority nor the responsibility to enforce the ADA. Enforcement of the ADA is the responsibility of the U.S. DOJ. As previously described, the ADA covers a large range of issues dealing with disabilities. Under Titles II and III, the scoping and technical requirements of the 2010 ADA Standard deal directly with accessibility of buildings. Typically, enforcement of these regulations takes place after the construction process. Any differences between the regulations and proposed design must be ultimately reconciled by the building owner or designer. Building code compliance is typically evaluated during the plan review and construction process. This is a less costly time to make changes to a facility that are necessary for compliance. Again, the building official is expected to enforce the code adopted by the state or local jurisdiction, and any applicable state laws. The building official is not responsible for interpretation or enforcement of the ADA unless the state or local jurisdiction has referenced ADAAG or the 2010 ADA Standard in a state's accessibility laws. No attempt should be made to represent that the 2010 ADA Standard is being interpreted or enforced by the building official or the jurisdiction when the 2010 ADA Standard has not been specifically adopted by the jurisdiction.

The concept of two completely separate and independent, broad-based sets of regulations that affect building design and construction may sound onerous, but the situation may not be quite as bad as it appears. The reason is that the code has a high level of consistency with the 2010 ADA Standard. Since the early 1990s, code change activity has incorporated the recommendations of the Council of American Building Officials' (CABO) Board for the Coordination of the Model Codes (BCMC) [succeeded in 1995 by the ICC Board for the Development of the Model Codes (BDMC)]. The BDMC undertook the effort to review comprehensively all facets of the accessibility issue. This effort included a com-

INTERNATIONAL CODE COUNCIL®
Copyright © 2015 ICC. ALL RIGHTS RESERVED. Accessed by David Dammon on Jun 21, 2017 12:30:52 PM pursuant to License Agreement with ICC. No further reproduction or distribution authorized. ANY UNAUTHORIZED REPRODUCTION OR DISTRIBUTION IS A VIOLATION OF THE FEDERAL COPYRIGHT ACT AND THE LICENSE AGREEMENT, AND SUBJECT TO CIVIL AND CRIMINAL PENALTIES THEREUNDER.

parison of ADAAG with the provisions of the model codes in use at that time. The BDMC's recommendations were ultimately reflected in codes. This work has continued to evolve as the industry learns and new technologies become readily available. There are still differences between the code and the 2010 ADA Standard, but they are minimal and will become less in future code editions. The ICC Code Technology Committee (CTC) currently has a study group that is reviewing the IBC, IEBC and the 2010 ADA Standard, and proposing code changes to address any areas in the IBC or IEBC that may fall below the 2010 ADA Standard requirements. In addition, interested parties have proposed changes to clarify requirements as well as address new technologies. An example of clarification would be the specific requirements for 4-inch (102 mm) minimum-height curbs when used as edge protection for a ramp (see Section 1012.10.1). An example of new technology would be the requirements for variable message signs (see Section 1111.4). There are also types of facilities that the IBC covers, that are exempted under the ADA. This includes church facilities and private clubs. The IBC sees these buildings as public buildings and requires full compliance, including accessibility. See the ADA for specific requirements for these exceptions.

Efforts for harmonization with the federal accessibility requirements are ongoing. Representatives from interested accessibility groups, the Department of Housing and Urban Development (HUD) and the Access Board have been attending and participating in the code change process for the code and ICC A117.1. Additionally, the ICC has participated in the public comment process on the development of federal regulations. The ICC has worked toward, and will continue to strive for, accessibility regulations that reflect the highest possible degree of consistency with federal regulations and, more importantly, reasonable and appropriate provisions to meet the needs of people with disabilities.

The FHA is federal legislation promulgated by HUD that extends fair housing protection against discrimination on the basis of family status or persons with disabilities. The standard for the FHA is the Fair Housing Accessibility Guidelines (FHAG), which sets forth accessibility scoping and technical requirements for a broad category of residential construction. The scope of ADAAG generally excludes occupancies that are covered by FHAG; however, the FHA is being interpreted to overlap the scope of the coverage of the ADA in some respects (e.g., dorms, nursing homes). Residential buildings that are covered by FHAG must also comply with the locally adopted building code. The same circumstances with respect to differences in the requirements and responsibility for enforcement described for ADA also exist with the FHA.

Again, as a federal law, building officials have neither the responsibility nor the authority to enforce the requirements of FHAG. Inquiries regarding those laws should be referred to the DOJ or HUD. Until such time that their laws are coordinated with and consider traditional code enforcement mechanisms and methods, building officials are advised not to attempt to interpret or enforce these laws. Permit applicants should be advised that the work they propose has not been reviewed for compliance with FHAG.

Due to concerns about residential construction complying with all applicable codes and laws, the National Association of Home Builders (NAHB), along with others, approached the model code groups about incorporating the FHAG requirements into the model code requirements. Since the FHA is a civil rights law rather than a building code, careful study was needed to interpret them into enforceable language that could be utilized in model codes. Through the efforts of the BDMC, recommendations to the model codes were proposed in 1994. The "adaptable" dwelling unit requirements were carried forward as a Type A unit, with the FHA requirements reflected in the Type B units.

In 2000, HUD reviewed the 2000 edition of the IBC and the referenced accessibility standard ICC/ANSI A117.1-1998 for compliance with FHAG. Based on HUD's report, a series of modifications were proposed as part of the 2000 code change cycle. The proposed modifications were accepted by the voting members and were incorporated into the 2001 Supplement to the IBC and eventually into all subsequent editions of the code. As a result of the earlier code changes, HUD eventually issued press releases stating that the 2000 code with the 2001 Supplement and 2003 code (with the ICC/ANSI A117.1-1998 accessibility standard) and the 2006 IBC (with the ICC/ANSI A117.1-2003 accessibility standard) could be considered "safe harbor" for anyone wanting to comply with FHAG scoping and technical requirements. The original safe harbor status that was bestowed on the 2000 IBC and its accessory documents was identified in the preamble of HUD's *Fair Housing Act Design Manual*.

With the 2003 and the 2006 editions of the code being safe harbor documents, architects and developers could design and be reviewed for compliance with the code through the typical building code review process. At the same time, they would also be in compliance with the building requirements for the FHAG. At the time this commentary was written, HUD had not completed its review of the 2009, 2012 or 2015 editions of the IBC code or the 2009 ICC A117.1 for safe-harbor status. Since the code is developed through a code change/public comment process, there have been changes to items in Chapter 11. This is typically a good way for new concerns, concepts or procedures to be incorporated into the requirements. It is the ICC's opinion that none of these changes have jeopardized the safe-harbor status between FHA and the code requirements in this edition.

Philosophy

The fundamental philosophy of the code on the subject of accessibility is that everything is required to be accessible. This is reflected in the basic applicability

INTERNATIONAL CODE COUNCIL®
Copyright © 2015 ICC. ALL RIGHTS RESERVED. Accessed by David Dammon on Jun 21, 2017 12:30:52 PM pursuant to License Agreement with ICC. No further reproduction or distribution authorized. ANY UNAUTHORIZED REPRODUCTION OR DISTRIBUTION IS A VIOLATION OF THE FEDERAL COPYRIGHT ACT AND THE LICENSE AGREEMENT, AND SUBJECT TO CIVIL AND CRIMINAL PENALTIES THEREUNDER.

requirement (see Section 1103.1). The code's scoping requirements then address the conditions under which accessibility is not required in terms of exceptions to this general mandate. In the early 1990s, building codes tended to describe where accessibility was required in each occupancy, and any circumstance not specifically identified was excluded. The more recent codes represent a fundamental change in approach. Now one must think of accessibility in terms of "if it is not specifically exempted, it must be accessible."

Another important concept is that of "mainstreaming." There are many accessibility issues that not only benefit people with disabilities, but also provide a tangible benefit to people who do not consider themselves disabled, especially as the population ages. This type of requirement can be set forth in the code as generally applicable without necessarily identifying it specifically as an accessibility-related issue. Such a requirement would then be considered as having been mainstreamed. For example, the limitation on objects protruding into corridors, aisles and passageways (see Section 1003.3) is intended to aid people with a vision impairment by reducing the potential for unintended contact that may cause injury. Clearly, this has an additional benefit to people without a vision impairment. A protruding object can be encountered by a sighted person who is simply not paying close attention, or is exiting a building during an event where smoke may obscure vision. The concept of mainstreaming is responsive to the desire of people with disabilities to not be singled out and categorized separately from the remainder of society. It is therefore important to recognize that, while the provisions of Chapter 11 are specifically grouped and identified as accessibility related, they do not represent all of the issues that must be taken into consideration when evaluating accessibility in buildings.

There are many items that have some basis in accessibility requirements, but actually result in more "user-friendly" buildings for all of us. Physical disabilities can be permanent or temporary; can affect all age groups; can involve all levels of abilities; and can range from persons with minor visual, hearing or mobility impairments to persons who are blind, deaf or confined to a wheelchair. Everyone will benefit from accessible features in buildings, either directly or indirectly. With some foresight in designing our built environment, access into and throughout buildings can be better for everyone throughout their lifetimes.

Purpose

The purpose of this chapter is to set forth requirements for accessibility applicable to those elements of the built environment that are included within the scope of the code. There are two categories or types of requirements that must be addressed in order to accomplish accessibility: scoping and technical. Scoping requirements describe what and where accessibility is required, or how many accessible features or elements must be provided. For example, a requirement that at least one of the first 25 sleeping units in a hotel must be accessible is referred to as a scoping requirement because it describes what and how many accessible features are required. Another example of scoping is the exception for detached one- and two-family dwellings from accessibility requirements because it defines what is not required to be accessible. A technical requirement is intended to refer to a statement indicating how accessibility is to be accomplished. For example, a requirement indicating that in order for a parking space to be accessible, it must have a width of 96 inches (2438 mm) with an adjacent 60-inch (1524 mm) access aisle is considered a technical requirement. The provisions of Chapter 11 are scoping requirements in that they all address what and where accessibility is required or how many accessible elements are required. ICC A117.1 indicates how to make something accessible and is the consensus national standard that is referenced for establishing technical requirements. In addition to the provisions of Chapter 11, there are accessibility-related technical requirements elsewhere in the code. These are subject-matter-specific provisions that have been mainstreamed into the chapter or section of the code that deals with those subjects. As such, the code and its references regulate accessibility comprehensively by setting forth the scoping and technical requirements that establish the minimum level of accessibility required in the built environment.

INTERNATIONAL CODE COUNCIL®
Copyright © 2015 ICC. ALL RIGHTS RESERVED. Accessed by David Dammon on Jun 21, 2017 12:30:52 PM pursuant to License Agreement with ICC. No further reproduction or distribution authorized. ANY UNAUTHORIZED REPRODUCTION OR DISTRIBUTION IS A VIOLATION OF THE FEDERAL COPYRIGHT ACT AND THE LICENSE AGREEMENT, AND SUBJECT TO CIVIL AND CRIMINAL PENALTIES THEREUNDER.

SECTION 1101
GENERAL

1101.1 Scope. The provisions of this chapter shall control the design and construction of facilities for accessibility for individuals with disabilities.

❖ This section establishes the scope of the chapter as providing for design and construction of facilities for accessibility for persons with a disability. The scope is broadly inclusive of all aspects of construction that affect the ability of people with disabilities to approach, enter and utilize a facility. The term "facility," as defined in Chapter 2, includes not only buildings and structures, but also the site on which they are located. Features of a site, such as parking areas and paths of travel from a public way to a structure, affect accessibility and are, therefore, within the scope of Chapter 11. Chapter 11, in conjunction with mainstreamed provisions throughout the code, sets forth scoping requirements.

1101.2 Design. Buildings and facilities shall be designed and constructed to be *accessible* in accordance with this code and ICC A117.1.

❖ This section establishes the primary and fundamental relationship of ICC A117.1 to the code. The code text is intended to "scope" or provide thresholds for application of required accessibility features. The referenced standard contains technical provisions indicating how compliance with the code is achieved. In short, Chapter 11 specifies what, when and how many accessible features are required; the referenced standard indicates how to make that feature accessible. Compliance with both the code and the standard is required.

In accordance with Section 102.4, standards are utilized only to the extent that they are referenced. Note that ICC A117.1 includes technical criteria for several items that are not actually scoped in the code. Such items are not required to comply with ICC A117.1 criteria unless specifically scoped by the authority have jurisdiction. Some examples of items in ICC A117.1 that are not referenced by the code are:

- Section 403.6 – Corridor handrails
- Section 504 – Stairways
- Section 704 – Telephones (scoped in IBC Appendix E)
- Section 707 – Automatic Teller Machines (scoped in IBC Appendix E)

SECTION 1102
DEFINITIONS

1102.1 Definitions. The following terms are defined in Chapter 2:

ACCESSIBLE.

ACCESSIBLE ROUTE.

ACCESSIBLE UNIT.

AREA OF SPORT ACTIVITY.

CIRCULATION PATH.

COMMON USE.

DETECTABLE WARNING.

EMPLOYEE WORK AREA.

FACILITY.

INTENDED TO BE OCCUPIED AS A RESIDENCE.

MULTILEVEL ASSEMBLY SEATING.

MULTISTORY UNIT.

PUBLIC ENTRANCE.

PUBLIC-USE AREAS.

RESTRICTED ENTRANCE.

SELF-SERVICE STORAGE FACILITY.

SERVICE ENTRANCE.

SITE.

TYPE A UNIT.

TYPE B UNIT.

WHEELCHAIR SPACE.

❖ This section lists terms that are specifically associated with the subject matter of this chapter. It is important to emphasize that these terms are not exclusively related to this chapter but may or may not also be applicable where the term is used elsewhere in the code. For example, the defined term "Accessible" is applicable to where a space or element is required to be designed to address the needs of persons with mobility, hearing or vision impairments. However, when other chapters provide criteria for equipment or construction elements to be accessible for maintenance or inspections (e.g., Section 110.1), the intent is for an inspector or maintenance person to have physical and visual access to that element—not wheelchair access.

Definitions of terms can help in the understanding and application of the code requirements. The purpose for including a list within this chapter is to provide more convenient access to terms that may have a specific or limited application within this chapter. For the complete definition and associated commentary, refer back to Chapter 2. Terms that are italicized provide a visual identification throughout the code that a definition exists for that term. The use and application of all defined terms are set forth in Section 201.

INTERNATIONAL CODE COUNCIL®
Copyright © 2015 ICC. ALL RIGHTS RESERVED. Accessed by David Dammon on Jun 21, 2017 12:30:52 PM pursuant to License Agreement with ICC. No further reproduction or distribution authorized. ANY UNAUTHORIZED REPRODUCTION OR DISTRIBUTION IS A VIOLATION OF THE FEDERAL COPYRIGHT ACT AND THE LICENSE AGREEMENT, AND SUBJECT TO CIVIL AND CRIMINAL PENALTIES THEREUNDER.

SECTION 1103
SCOPING REQUIREMENTS

1103.1 Where required. *Sites*, buildings, *structures*, *facilities*, elements and spaces, temporary or permanent, shall be *accessible* to individuals with disabilities.

❖ This section establishes the broad principle that all buildings, structures and their associated sites and facilities are required to be accessible to persons with disabilities. Such persons would include anyone who utilizes a space, including occupants, employees, students, spectators, participants and visitors. The approach taken by the code on the subject of accessibility is to require all construction to be accessible and then allow for the level of inaccessibility that is reasonable and logical. In codes created before the early 1990s, the approach was to list the conditions and occupancies to which the accessibility requirements applied. This is no longer practical, since the exceptions are far fewer than the circumstances to which accessibility applies. The 14 exceptions to this section, Sections 1103.2.1 to 1103.2.14 reflect the extent to which accessibility in construction is either exempted or reduced in scope.

1103.2 General exceptions. *Sites*, buildings, *structures*, *facilities*, elements and spaces shall be exempt from this chapter to the extent specified in this section.

❖ Accessibility is generally applicable to all building sites and all spaces and elements within constructed facilities except as specifically exempted in the subsections to Section 1103.2.

Note that many of the exceptions say "are not required to comply with this chapter." This means that not only are the areas themselves exempted, but also that an accessible route is not required to those elements.

1103.2.1 Specific requirements. *Accessibility* is not required in buildings and *facilities*, or portions thereof, to the extent permitted by Sections 1104 through 1111.

❖ This section provides a reference to the various sections in Chapter 11 that identify when the intended number of accessible elements in various occupancies is less than 100 percent. The number of accessible fixtures and elements required by the referenced sections are deemed to provide adequate accessibility for those circumstances. For example, Section 1106 does not require all parking spaces in a parking facility to be accessible, Section 1107.6.1 does not require all sleeping units in Group R-1 to be fully accessible and Section 1109.12.1 does not require all dressing rooms to be accessible.

1103.2.2 Employee work areas. Spaces and elements within *employee work areas* shall only be required to comply with Sections 907.5.2.3.1, 1009 and 1104.3.1 and shall be designed and constructed so that individuals with disabilities can approach, enter and exit the work area. Work areas, or portions of work areas, other than raised courtroom stations in accordance with Section 1108.4.1.4, that are less than 300 square feet (30 m^2) in area and located 7 inches (178 mm) or more above or below the ground or finished floor where the change in elevation is essential to the function of the space shall be exempt from all requirements.

❖ This section states that elements within individual work areas are not required to be fully accessible, but must be provided with accessible means of egress (see Section 1009) and accessible circulation paths (see Section 1104.3.1). In addition, these spaces must be provided with visible alarms (see Section 907.5.2.3). The assumption is that the employment nondiscrimination requirements of the ADA will provide for "reasonable accommodations" to the disability of the employee and the area in which they work. In other words, employers will modify individual work areas for the specific requirements of the individual utilizing the space. An accessible route will be required to each work area. An example of this is an individual work station in a laboratory. Installing sinks and built-in counters at accessible levels (see commentary, Sections 1109.3 and 1109.11) could make the station impractical for use by a person who is standing. Ergonomic researchers used to recommend a standing counter at a minimum of 36 inches (914 mm), but are now advising even higher counters to reduce fatigue. When a station is required to be adapted for an individual, it would be revised based on the individual's needs and abilities. An accessible route to each work station in the laboratory would be required so that access to and from that station would be available. Note that the 36-inch (914 mm) clear width for the accessible route is the same as the minimum required width of an exit access aisle. For exceptions to the route to work areas, see Section 1104.3.1.

There is an additional exception for work areas that are required to be raised or lowered 7 inches (178 mm) or more above the floor and have an area of less than 300 square feet (30 m^2). The key word is "required" to be raised, not just that some decided to make that work station raised. Examples of raised work areas required to be raised would include an area around a metal stamping machine, a safety manager's observation station on a production line or the pulpit area in a church. Raised courtroom areas are specifically addressed in Section 1108.4.1.4. An example of a work area required to be lowered might be a pit under a car in a car-repair station.

An employee's work area can be something as simple as an office or cubicle, or it can extend over a much wider area. For example, an office space might include copy rooms, file rooms, mail rooms, etc., or a nurse or doctor in a clinic would have part of their work area in each exam room as well as at a central station area. In addition, not all employee-only spaces are considered work areas. Areas used by employees not for work (i.e., break rooms, bathrooms, corridors) would not fall under this exception (see the definition for "Employee work area").

INTERNATIONAL CODE COUNCIL®
Copyright © 2015 ICC. ALL RIGHTS RESERVED. Accessed by David Dammon on Jun 21, 2017 12:30:52 PM pursuant to License Agreement with ICC. No further reproduction or distribution authorized. ANY UNAUTHORIZED REPRODUCTION OR DISTRIBUTION IS A VIOLATION OF THE FEDERAL COPYRIGHT ACT AND THE LICENSE AGREEMENT, AND SUBJECT TO CIVIL AND CRIMINAL PENALTIES THEREUNDER.

1103.2.3 Detached dwellings. Detached one- and two-family *dwellings*, their accessory structures and their associated *sites* and *facilities* are not required to comply with this chapter.

❖ This section exempts detached one- and two-family dwellings from accessibility requirements. The key word here is "detached." For example, a structure containing four or more dwelling units, even if the dwelling units are separated by fire walls, would still be required to be accessible as indicated in Section 1107.

Although one- and two-family detached dwellings are typically regulated by the IRC, this exception in the code is still necessary. Single-family dwellings or duplexes that are four stories or higher would be designed and constructed under Group R-3 requirements of the code. The IRC references Chapter 11 of the code for accessibility requirements in Section R320. Those multiple-family structures with four or more dwelling units that qualify as townhouses or congregate residences with four or more sleeping units under the IRC are required to comply with the requirements for Group R-3 in Section 1107.6.3.

1103.2.4 Utility buildings. Group U occupancies are not required to comply with this chapter other than the following:

1. In agricultural buildings, access is required to paved work areas and areas open to the general public.
2. Private garages or carports that contain required *accessible* parking.

❖ This section exempts Group U from accessibility requirements except as indicated, on the basis that such structures are a low priority when considering the need for accessibility. Areas in utility buildings that are required to be accessible would be paved work areas or areas open to the general public, such as if a farmer included a farmstand within his or her barn or buildings in which accessible parking spaces are located.

1103.2.5 Construction sites. Structures, *sites* and equipment directly associated with the actual processes of construction including, but not limited to, scaffolding, bridging, materials hoists, materials storage or construction trailers are not required to comply with this chapter.

❖ This section exempts structures directly associated with the construction process because the need for accessibility on a continuous or regular basis in those circumstances is unlikely to arise. Portable toilets that are for the construction workers would also be exempted as part of this exception. Note that all structures that may be involved during a construction project are not exempt—only those specifically involved in the actual process of construction. For example, if mobile units are brought into house classrooms during a school addition, these classrooms must be accessible. A construction trailer that also serves as a sales office would also be required to be accessible.

1103.2.6 Raised areas. Raised areas used primarily for purposes of security, life safety or fire safety including, but not limited to, observation galleries, prison guard towers, fire towers or lifeguard stands are not required to comply with this chapter.

❖ If there is a reason to elevate an area for concerns about security or safety, these areas are not required to be accessible (see Commentary Figure 1103.2.6).



Figure 1103.2.6
EXAMPLE OF THE EXCEPTION FOR RAISED AREA

1103.2.7 Limited access spaces. Spaces accessed only by ladders, catwalks, crawl spaces, freight elevators or very narrow passageways are not required to comply with this chapter.

❖ Limited access spaces are considered areas where work could not reasonably be performed by a person using a wheelchair because of the physical requirements of the job activity. These areas are not required to be accessible.

1103.2.8 Areas in places of religious worship. Raised or lowered areas, or portions of areas, in *places of religious worship* that are less than 300 square feet (30 m^2) in area and located 7 inches (178 mm) or more above or below the finished floor and used primarily for the performance of religious ceremonies are not required to comply with this chapter.

❖ While the ADA does not cover churches and other places of worship, under the IBC such facilities must comply with the codes including accessibility provisions. This exception is similar to the allowance for employee work areas in Section 1103.2.2, however, in a religious facility, a raised area may be utilized by anyone participating in a service, not just employees of the church.

There are some areas of a religious facility that are

INTERNATIONAL CODE COUNCIL®
Copyright © 2015 ICC. ALL RIGHTS RESERVED. Accessed by David Dammon on Jun 21, 2017 12:30:52 PM pursuant to License Agreement with ICC. No further reproduction or distribution authorized. ANY UNAUTHORIZED REPRODUCTION OR DISTRIBUTION IS A VIOLATION OF THE FEDERAL COPYRIGHT ACT AND THE LICENSE AGREEMENT, AND SUBJECT TO CIVIL AND CRIMINAL PENALTIES THEREUNDER.

required to be raised to allow for a line of site (e.g., a pulpit), or raised as part of the tradition or symbology in the religious facility (e.g., minibar in a mosque, high altars, torah arks in a synagogue) (see Commentary Figure 1103.2.8). There are also areas in a religious facility where everyone will be assisted (e.g., a full-immersion baptistery). Where the area is used primarily for the performance of religious ceremonies, that raised or lowered area is not required to be accessible. Discussions during the code change process indicated that many jurisdictions were allowing some exceptions for religious facilities, but it varied greatly by jurisdiction and involved the religious facilities going through the variance process. The new allowance will provide guidance and create consistency.

It is not the intent of this exception to exempt the entire sanctuary area from being accessible. Allowing participation by everyone in the church, mosque or synagogue should be considered.



Figure 1103.2.8
EXAMPLE OF A RAISED AREA IN A PLACE OF RELIGIOUS WORSHIP

1103.2.9 Equipment spaces. Spaces frequented only by service personnel for maintenance, repair or occasional monitoring of equipment are not required to comply with this chapter.

❖ Spaces that only contain heating, ventilation and air conditioning (HVAC), electrical, elevator, communication and similar types of equipment are considered areas where work could not reasonably be performed by a person utilizing a wheelchair because of the physical requirements of the job activity. Such spaces include, but are not limited to, elevator pits; elevator penthouses; mechanical, electrical or communications equipment rooms; piping or equipment catwalks; water or sewage treatment pump rooms and stations; electric substations and transformer vaults; and highway and tunnel utility facilities. These areas are not required to be accessible.

1103.2.10 Highway tollbooths. Highway tollbooths where the access is provided only by bridges above the vehicular traffic or underground tunnels are not required to comply with this chapter.

❖ This section addresses facilities such as toll booths, which are raised to facilitate access to higher vehicles as well as to provide protection from being struck by vehicles. Access to these spaces are often by tunnel or bridge. Similar facilities could also be addressed by Sections 1103.2.2 and 1104.3.1.

1103.2.11 Residential Group R-1. Buildings of Group R-1 containing not more than five *sleeping units* for rent or hire that are also occupied as the residence of the proprietor are not required to comply with this chapter.

❖ This section exempts small bed-and-breakfast or transient boarding house facilities that are also the home of the owner. These types of facilities can be constructed using the IRC (see Section 101.2). The IRC also exempts these same facilities from accessibility in Section 320.

1103.2.12 Day care facilities. Where a day care facility is part of a *dwelling unit*, only the portion of the structure utilized for the day care facility is required to comply with this chapter.

❖ When an adult day care or child day care facility is part of a person's home, the accessibility requirements are only applicable to the portion of the home that constitutes the day care facility, not the home itself. For other home-based businesses, see the discussion on live/work units in Sections 419 and 1107.6.2.1.

1103.2.13 Detention and correctional facilities. In detention and correctional facilities, *common use* areas that are used only by inmates or detainees and security personnel, and that do not serve holding cells or housing cells required to be *Accessible units*, are not required to comply with this chapter.

❖ Section 1107.5.5 addresses when sleeping units, special holding or housing cells and medical care units in detention and correctional facilities are required to be accessible. If the purpose of any common or shared space is to serve only the associated cells that are not required to be accessible (e.g., shared bathrooms or living space serving a specific group of cells), then those common or shared spaces are not required to be accessible.

1103.2.14 Walk-in coolers and freezers. Walk-in coolers and freezers intended for employee use only are not required to comply with this chapter.

❖ Walk-in coolers and freezers usually have features that make accessibility difficult. For thermal efficiency they may have raised floors, special door seals,

INTERNATIONAL CODE COUNCIL®
Copyright © 2015 ICC. ALL RIGHTS RESERVED. Accessed by David Dammon on Jun 21, 2017 12:30:52 PM pursuant to License Agreement with ICC. No further reproduction or distribution authorized. ANY UNAUTHORIZED REPRODUCTION OR DISTRIBUTION IS A VIOLATION OF THE FEDERAL COPYRIGHT ACT AND THE LICENSE AGREEMENT, AND SUBJECT TO CIVIL AND CRIMINAL PENALTIES THEREUNDER.

unconventional door-operating hardware, tight internal storage, wheeled racking systems, etc. For these and other reasons they are not required to have an accessible entry or to be accessible within. Walk-in coolers and freezers may also be considered exempted under Sections 1103.2.2 and 1104.3.1. Coolers that are accessed from the front by customers would need to comply with operable parts and display criteria on the public side (see Sections 1109.9.2 and 1109.13).

SECTION 1104
ACCESSIBLE ROUTE

1104.1 Site arrival points. At least one *accessible route* within the *site* shall be provided from public transportation stops, *accessible* parking, *accessible* passenger loading zones, and public streets or sidewalks to the *accessible* building entrance served.

Exception: Other than in buildings or *facilities* containing or serving *Type B units*, an *accessible route* shall not be required between *site* arrival points and the building or *facility* entrance if the only means of access between them is a vehicular way not providing for pedestrian access.

❖ The intent of this section is to require an accessible route from the point at which one enters the site to any buildings or facilities that are required to be accessible on that site. It is presumed that people with disabilities are capable of gaining access to the site from such locations as accessible parking, public transportation stops, loading zones, public streets or sidewalks. Due to possible site limiting factors, at least one from each arrival point, but not every route available, is required to be an accessible route. When not every route is accessible, good signage, while not required at site arrival points, would aid persons with mobility impairments in finding the routes without backtracking.

The exception addresses vehicular routes that provide the only route between an arrival point and an accessible entrance. An accessible route for pedestrian access is not required except in buildings or structures having or serving Type B units. For example, if there is a bus stop at the front of an industrial complex, but the only route to the building entrance is via a long driveway, an accessible pedestrian route to that entrance from the bus stop is not required. For special considerations in residential developments, see the commentaries to Sections 1107.4, 1107.7.4, 1107.7.5, and 1110.4.1.

1104.2 Within a site. At least one *accessible route* shall connect *accessible* buildings, *accessible* facilities, *accessible* elements and *accessible* spaces that are on the same *site*.

Exceptions:

1. An *accessible route* is not required between *accessible* buildings, *accessible* facilities, *accessible* elements and *accessible* spaces that have, as the only means of access between them, a vehicular way not providing for pedestrian access.
2. An *accessible route* to recreational facilities shall only be required to the extent specified in Section 1110.

❖ Developments may include several buildings on the same site. The intent of this section is to require an accessible route to all facilities offered on a site. Often sites are designed such that the only way to reach a building or facility is by automobile. If there are multiple, separated parking areas serving one or more buildings on a site, an accessible route is required between the parking facilities and the buildings they serve. If there is an exterior feature, such as a swimming pool, located on a site containing multiple buildings, an accessible route is required from each building to the swimming pool. For residential facilities, also see Section 1107.3.

Exception 1 clarifies that an accessible route is not required where no pedestrian access (i.e., sidewalk) is otherwise intended or provided to a particular building or feature on the site. For example, on a multibuilding site with a road between and no sidewalks, it is not the intent to require a sidewalk be built strictly for accessible route requirements. If it is expected that everyone will drive between buildings, then accessible parking at each building is sufficient.

Per Exception 2, for special considerations for the route to recreational facilities, see the commentary to Section 1110.

1104.3 Connected spaces. When a building or portion of a building is required to be *accessible*, at least one *accessible route* shall be provided to each portion of the building, to *accessible* building entrances connecting *accessible* pedestrian walkways and to the *public way*.

Exceptions:

1. *Stories* and *mezzanines* exempted by Section 1104.4.
2. In a building, room or space used for assembly purposes with *fixed seating*, an *accessible route* shall not be required to serve levels where *wheelchair spaces* are not provided.
3. Vertical access to elevated employee work stations within a courtroom complying with Section 1108.4.1.4.
4. An *accessible route* to recreational facilities shall only be required to the extent specified in Section 1110.

❖ This section requires that there be at least one route from an accessible entrance to all required accessible features within a building. If an area is addressed with a specific exception, then an accessible route is not required. For example, mechanical penthouses are exempt under Section 1103.2.9; therefore, an accessible route would not be required to this area.

Once someone gets into a space, they must also

INTERNATIONAL CODE COUNCIL®
Copyright © 2015 ICC. ALL RIGHTS RESERVED. Accessed by David Dammon on Jun 21, 2017 12:30:52 PM pursuant to License Agreement with ICC. No further reproduction or distribution authorized. ANY UNAUTHORIZED REPRODUCTION OR DISTRIBUTION IS A VIOLATION OF THE FEDERAL COPYRIGHT ACT AND THE LICENSE AGREEMENT, AND SUBJECT TO CIVIL AND CRIMINAL PENALTIES THEREUNDER.

be able to evacuate in an emergency situation. This may or may not be via the same route. For accessible means of egress requirements, see Section 1009.

Exception 1 correlates with Section 1104.4 so that it is clear that the requirements for connecting spaces within a building are not intended to override the exception for an accessible route between stories and mezzanines.

Exception 2 reemphasizes that levels in assembly seating that do not contain wheelchair seating locations are not required to be accessed by an accessible route. However, the types of services available in the facility must be considered when determining what services must be available to accessible seats. A route is required to services from accessible seats in accordance with Section 1108.2.1.

Exception 3 is a pointer to the more specific criteria for courtroom work stations in Section 1108.4.1.4.

Exception 4 deals with recreational facilities that may be within a building. For example, the same accessible route requirements apply for an ice rink, regardless of whether it was located inside or outside. See Section 1110 for information specific to recreational facilities.

1104.3.1 Employee work areas. *Common use circulation paths* within *employee work areas* shall be *accessible routes*.

Exceptions:

1. *Common use circulation paths,* located within *employee work areas* that are less than 1,000 square feet (93 m^2) in size and defined by permanently installed partitions, counters, casework or furnishings, shall not be required to be *accessible routes*.
2. *Common use circulation paths,* located within *employee work areas,* that are an integral component of equipment, shall not be required to be *accessible routes*.
3. *Common use circulation paths,* located within exterior *employee work areas* that are fully exposed to the weather, shall not be required to be *accessible routes*.

❖ This requirement for common use circulation paths within employee work areas is consistent with the exception in Section 1103.2.2. An accessible route is required to each employee work area. When employees share work areas, an accessible route must be available throughout that area. Note that the accessible route minimum width of 36 inches (914 mm) clear is consistent with the minimum means of egress pathways.

Exception 1 addresses the accessible route within small employee work areas. Shared work areas that are less than 1,000 square feet (93 m^2) and confined by walls, partitions, permanently installed equipment, cabinets and counters are not required to have an accessible route through that particular area. The square footage limitation does not always pertain to a room, but also to part of a room. The intent was to allow such areas as the last two work stations down an aisle, two or three work stations in a small office, the employee side of a beverage bar, portions of commercial kitchens, etc. An accessible route is required to these areas, but not necessarily throughout the area. There can be multiple exceptions within the same area, such as in a commercial kitchen. Again, modifications would be performed at a later date based on employee needs.

Exception 2 permits nonaccessible areas around and through pieces of equipment. An example would be the shared work areas around a piece of assembly equipment in a factory where one or more persons are required to monitor and operate the machine and incoming or outgoing product.

Exception 3 is an exception for outdoor work areas. This would be applicable to landscapers, sewer workers, gravel pit crews, etc.

1104.3.2 Press boxes. Press boxes in a building, room or space used for assembly purposes shall be on an *accessible route*.

Exceptions:

1. An *accessible route* shall not be required to press boxes in *bleachers* that have a single point of entry from the *bleachers*, provided that the aggregate area of all press boxes for each playing field is not more than 500 square feet (46 m^2).
2. An *accessible route* shall not be required to free-standing press boxes that are more than 12 feet (3660 mm) above grade provided that the aggregate area of all press boxes for each playing field is not more than 500 square feet (46 m^2).

❖ Press boxes are required to be served by an accessible route. If the occupant load is five or less, this could be provided by a platform lift (see Section 1109.8, Item 3).

Exception 1 is mainly applicable to press boxes located at the back of the bleacher seating in an outdoor sports facility. The “single point of entry” refers to access to the press box directly from the bleacher seating (see Commentary Figure 1104.3.2).

Exception 2 is mainly applicable to the free-standing press box. If that press box is either less than 12 feet (3677 mm) above the ground or more than 500 square feet (46 m^2) in area, it must be served by an accessible route. Historically, the 12-foot (3677 mm) height limit was chosen because that was the maximum rise for a platform lift in previous editions of ASME A18.1.

For both exceptions, if one press box is provided, the total area of the press box must be less than 500 square feet (46 m^2). If more than one press box overlooks the same playing field, the aggregate area of both press boxes must be less than 500 square feet (46 m^2). The aggregate area is not intended to be applicable to press boxes that happen to be on the same multiple-facility site. For example, if a high school has a football field with two press boxes, the area of those two press boxes must be added

INTERNATIONAL CODE COUNCIL®
Copyright © 2015 ICC. ALL RIGHTS RESERVED. Accessed by David Dammon on Jun 21, 2017 12:30:52 PM pursuant to License Agreement with ICC. No further reproduction or distribution authorized. ANY UNAUTHORIZED REPRODUCTION OR DISTRIBUTION IS A VIOLATION OF THE FEDERAL COPYRIGHT ACT AND THE LICENSE AGREEMENT, AND SUBJECT TO CIVIL AND CRIMINAL PENALTIES THEREUNDER.

together. However, if the same high school also has a press box for the baseball field, the area of the press box in the baseball field would not be included with the area of the press boxes in the football field.



Figure 1104.3.2
EXAMPLE OF PRESS BOX
ACCESSED FROM BLEACHER SEATING

1104.4 Multistory buildings and facilities. At least one *accessible route* shall connect each *accessible story* and *mezzanine* in multilevel buildings and *facilities*.

Exceptions:

1. An *accessible route* is not required to *stories* and *mezzanines* that have an aggregate area of not more than 3,000 square feet (278.7 m^2) and are located above and below *accessible* levels. This exception shall not apply to:
   1.1. Multiple tenant facilities of Group M occupancies containing five or more tenant spaces used for the sales or rental of goods and where at least one such tenant space is located on a floor level above or below the *accessible* levels;
   1.2. *Stories* or *mezzanines* containing offices of health care providers (Group B or I);
   1.3. Passenger transportation facilities and airports (Group A-3 or B); or
   1.4. Government buildings.
2. *Stories* or *mezzanines* that do not contain *accessible* elements or other spaces as determined by Section 1107 or 1108 are not required to be served by an *accessible route* from an *accessible* level.
3. In air traffic control towers, an *accessible route* is not required to serve the cab and the floor immediately below the cab.
4. Where a two-story building or facility has one *story* or *mezzanine* with an *occupant load* of five or fewer persons that does not contain *public use* space, that *story* or *mezzanine* shall not be required to be connected by an *accessible route* to the *story* above or below.

❖ At least one accessible route is required between stories or mezzanines in a facility. Other changes in level within a story are addressed in Section 1104.3. This requirement does not mandate an elevator. The accessible route between levels can be via ramps, platform lifts (where permitted), limited use/limited access (LULA) elevators, passenger elevators, etc. The intent of the exceptions is to allow limited areas to be inaccessible without restricting access to services available to the general public.

Exception 1 addresses conditions under which it may not be practical or economical to provide an accessible route in multilevel buildings. The primary economic consideration is that, in the vast majority of circumstances, the means of providing an accessible route to floor levels above or below the entrance level of the building will be by an elevator. This exception applies to levels above and below the entry level that have an aggregate area of 3,000 square feet (279 m^2) or less. The 3,000 square feet does not include the area of the accessible level. For example, if a building had a second floor that is 2,000 square feet (186 m^2) and a basement that is 2,000 square feet (186 m^2), since the aggregate area of the basement and second floor is 4,000 square feet (372 m^2), at least one of the two floor areas would be required to be connected to the entrance level by an accessible route. There are certain facilities that, despite being relatively small in size, are not exempt from the requirement for an accessible route. Because of the critical nature of the services provided, offices of health care providers, passenger transportation facilities and airports are not included in this exception. Multitenant mercantile occupancies (i.e., five or more tenants in the facility), which include facilities such as shopping malls, are not included in the exception because individual retail stores have limited types of commodities (i.e., shoes, eyeglasses, sporting goods, etc.), and the exception would mean that people with disabilities would not have access to the same range of goods that are available to the general public. In these cases, access must be provided such that people with disabilities may patronize all the establishments within the facility. The 3,000-square-foot (279 m^2) exception can be applied to a mercantile facility with fewer than five tenants, or where all tenants have space on an accessible ground level.

A mezzanine is required by Section 505.2 to have a clear height below of at least 7 feet (2134 mm). Therefore, Exception 1 cannot be applied to platforms or raised or lowered floor areas.

Government buildings, such as state or city office buildings, police stations, fire stations or schools, cannot use the 3,000-square-foot exception. This is intended to be consistent with what the ADA would refer to as a Title II building.

INTERNATIONAL CODE COUNCIL®
Copyright © 2015 ICC. ALL RIGHTS RESERVED. Accessed by David Dammon on Jun 21, 2017 12:30:52 PM pursuant to License Agreement with ICC. No further reproduction or distribution authorized. ANY UNAUTHORIZED REPRODUCTION OR DISTRIBUTION IS A VIOLATION OF THE FEDERAL COPYRIGHT ACT AND THE LICENSE AGREEMENT, AND SUBJECT TO CIVIL AND CRIMINAL PENALTIES THEREUNDER.

Exception 2 is a direct reference to the specific items addressed in Sections 1107 and 1108. It is not a general exception for Groups A, I, R and S. The purpose of Exception 2 is to address areas within specific occupancies where a single element would be repeated multiple times on a level. Where Sections 1107 and 1108 would allow construction of a floor level with no accessible features, this section is not intended to trigger an accessible route to that otherwise inaccessible level. For example, an accessible route would not be required to upper levels in a hotel with all public spaces and all Accessible sleeping units (see Section 1197.6.1.1) located on the ground floor. Another example: Section 1108.2 requires wheelchair spaces on different levels, and access to all services. ICC A117.1 requires dispersion of the wheelchair space locations. Once those criteria are met, the tiers that do not contain wheelchair space locations or the associated services are not required to be served by an accessible route. This exception does not have a square footage limitation.

Exception 3 is specific to the unique situations found in air traffic control towers. Because air traffic control towers are required to have a 360-degree line of sight for air traffic safety, an elevator or the elevator penthouse cannot be located so that it could block the line of sight and create a safety issue.

Exception 4 permits small nonpublic second floors or mezzanines to not be served by an accessible route. An example would be the second floor in a doctor's office that is used only for storage. The occupant load table in Section 1004.1.1 would limit this storage area to 1,500 square feet (139 m^2) [i.e., 300 square feet (28 m^2) per occupant x 5 occupants maximum = 1,500 square feet (28 m^2)]. If the second floor also contained a mechanical room, that area would be exempt under Section 1103.2.9. However, if the doctor chose later to expand exam rooms into this second floor, he or she would have to provide an accessible route. Another example would be a second level in an airport that included only operational offices. In this case, the area would be limited by the occupant load table in Section 1004.1.1 to 500 square feet (46 m^2) [i.e., 100 square feet (9 m^2) per occupant x 5 occupants maximum = 500 square feet (46 m^2)]. While the exception is specifically stated as applicable only to second-story buildings or mezzanines, it could be interpreted to apply to a one-story building with a basement level.

1104.5 Location. *Accessible routes* shall coincide with or be located in the same area as a general *circulation path*. Where the *circulation path* is interior, the *accessible route* shall also be interior. Where only one *accessible route* is provided, the *accessible route* shall not pass through kitchens, storage rooms, restrooms, closets or similar spaces.

Exceptions:

1. *Accessible routes* from parking garages contained within and serving *Type B units* are not required to be interior.
2. A single *accessible route* is permitted to pass through a kitchen or storage room in an *Accessible unit*, *Type A unit* or *Type B unit*.

❖ One of the objectives of accessibility requirements is to normalize, to the extent possible, the facilities provided for disabled persons and those comparable facilities that exist for people without disabilities. In addition, the intent of this section is to avoid the circumstance where an interior path between facilities is provided but the only accessible route between those same facilities is an exterior path.

When only one accessible route is provided, this section puts limits on the types of spaces through which that accessible route may pass so that it is readily available. Spaces, such as storage rooms, restrooms, closets and kitchens, can be subject to being locked or their availability may be restricted to authorized personnel; therefore, they would not serve as reliable accessible routes for all building occupants.

Exception 1 addresses individual dwelling units that include their own garages and residential facilities with shared garage levels. This exception is limited to accessible parking for Type B units. It is intended to allow a person to exit the garage and enter through the front door, instead of requiring access from the garage into the unit directly. Section 1106.2 requires that when parking is provided within a building, accessible parking must also be located within the building. If this exception is utilized in accordance with Sections 1104.1 and 1107.4, an accessible route must be provided from the accessible parking spaces to the front door.

Exception 2 allows a single accessible route to pass through a kitchen or storage room within a unit that is required to be an Accessible, Type A or Type B dwelling or sleeping unit. Given the space limitations and typical arrangements of dwelling units, it is not unreasonable to allow access, for example, through a kitchen, to reach an eating area or an exterior patio as the only means of access.

1104.6 Security barriers. Security barriers including, but not limited to, security bollards and security check points shall not obstruct a required *accessible route* or accessible *means of egress*.

Exception: Where security barriers incorporate elements that cannot comply with these requirements, such as certain metal detectors, fluoroscopes or other similar devices, the *accessible route* shall be permitted to be provided adjacent to security screening devices. The *accessible route* shall permit persons with disabilities passing around security barriers to maintain visual contact with their personal items to the same extent provided others passing through the security barrier.

❖ This requirement provides guidance for when a security feature is required along an accessible route. An example would be the security checkpoints in airports. The intent is that the route for a person with

INTERNATIONAL CODE COUNCIL®
Copyright © 2015 ICC. ALL RIGHTS RESERVED. Accessed by David Dammon on Jun 21, 2017 12:30:52 PM pursuant to License Agreement with ICC. No further reproduction or distribution authorized. ANY UNAUTHORIZED REPRODUCTION OR DISTRIBUTION IS A VIOLATION OF THE FEDERAL COPYRIGHT ACT AND THE LICENSE AGREEMENT, AND SUBJECT TO CIVIL AND CRIMINAL PENALTIES THEREUNDER.

mobility impairments should move through security checkpoints as close to the typical route as possible. It is recognized that some people using wheelchairs or with braces could not move through standard security barriers, such as metal detectors.

SECTION 1105
ACCESSIBLE ENTRANCES

1105.1 Public entrances. In addition to *accessible* entrances required by Sections 1105.1.1 through 1105.1.7, at least 60 percent of all *public entrances* shall be *accessible*.

Exceptions:

1. An *accessible* entrance is not required to areas not required to be *accessible*.
2. Loading and *service entrances* that are not the only entrance to a tenant space.

❖ A facility is not accessible if the entrances into it are inaccessible. This section establishes reasonable criteria for providing accessible entrances. A facility is not required to have all of its entrances accessible in order to provide reasonable accommodation to disabled persons. If a facility has multiple public entrances, it is not considered unreasonable, as a minimum, to require at least 60 percent of the entrances to be accessible. In addition to the 60-percent overall requirements, entrances that have a specific function or provide access to only certain portions of the facility must be addressed (see commentary, Sections 1105.1.1 through 1105.1.7). Sections 1111.1 and 1111.2 require signage at all entrances if all entrances are not accessible. "Public entrance," "Restricted entrance" and "Service entrance" are defined in Chapter 2.

Doors that are only for means of egress are not considered when determining the number of entrances required to be accessible. However, these doors may need to be on an accessible route for accessible means of egress requirements (see Section 1009). Depending on the arrangement, sometimes the entrance requirements are more restrictive, and sometimes the means of egress requirements are more restrictive. For example, take a small tenant space with two exterior doors—the front door is the public entrance and the back door is the service entrance. Section 1105.1 along with Exception 2 would require only the front door to be on an accessible route for ingress into the building. However, when a space has two means of egress required, Section 1009.1 would require both doors to be on an accessible route for means of egress purposes.

Exception 1 is self-evident in that if a facility or portion of a facility is not required to be accessible, then the entrances to such facilities or spaces are not required to be accessible. An example would be an exterior entrance to the sprinkler room (see Section 1103.2.9).

Exception 2 exempts loading and service entrances from the accessibility requirement on the basis that such entrances are unlikely to be used on a regular basis and may be raised to allow truck unloading. Loading and service entrances are required to be accessible if they are the only means of access into a facility or tenant space. This is consistent with Section 1105.1.5.

The intent of the reference to Sections 1105.1.1 through 1105.1.7 is to provide reasonable and convenient availability of an accessible entrance from the accessible facilities provided on the site. All entrances that serve distinct arrival points on the site are required to be accessible. For example, a public entrance from a public parking structure must be accessible (see Section 1105.1.1), as well as the employees-only entrance adjacent to separate employee parking (see Section 1105.1.3). This should deter the formerly common practice of designating an entrance as "the handicapped entrance" (which is inappropriate) without regard to its location relative to such arrival points as accessible parking facilities, transportation facilities, passenger loading zones, taxi stands, public streets or sidewalks and tunnels or elevated walkways. In conjunction with Section 1104.5, this section is also intended to provide reasonable and convenient availability of an accessible entrance to the building's accessible vertical movement elements, such as the elevators. This would allow a person with disabilities to move readily throughout all levels of the building.

1105.1.1 Parking garage entrances. Where provided, direct access for pedestrians from parking structures to buildings or facility entrances shall be *accessible*.

❖ Occasionally, a parking garage is attached to an office building or mall. An accessible route must be provided from the accessible parking spaces in that parking garage to an accessible entrance into the office or mall portion of the building.

1105.1.2 Entrances from tunnels or elevated walkways. Where direct access is provided for pedestrians from a pedestrian tunnel or elevated walkway to a building or facility, at least one entrance to the building or facility from each tunnel or walkway shall be *accessible*.

❖ Elevated walkways are sometimes provided between adjacent buildings for easy access or protection from the weather for people who must commonly move between certain buildings. Tunnels may serve the same purpose. Washington, DC, has tunnels between many of its congressional buildings. Chicago has a "pedway" system connecting the commuter train stations with the basement level of many buildings in the downtown area. Minneapolis deals with the extreme winter weather conditions in that city by having a system of elevated walkways that connect many of the downtown buildings (see Commentary Figure 1105.1.2). When these types of walkways or tunnels are provided, at least one of the building entrances off of these walkways or tunnels must be an accessible entrance.

INTERNATIONAL CODE COUNCIL®
Copyright © 2015 ICC. ALL RIGHTS RESERVED. Accessed by David Dammon on Jun 21, 2017 12:30:52 PM pursuant to License Agreement with ICC. No further reproduction or distribution authorized. ANY UNAUTHORIZED REPRODUCTION OR DISTRIBUTION IS A VIOLATION OF THE FEDERAL COPYRIGHT ACT AND THE LICENSE AGREEMENT, AND SUBJECT TO CIVIL AND CRIMINAL PENALTIES THEREUNDER.



Figure 1105.1.2
EXAMPLE OF ELEVATED WALKWAY ENTRANCE

1105.1.3 Restricted entrances. Where *restricted entrances* are provided to a building or facility, at least one *restricted entrance* to the building or facility shall be *accessible*.

❖ Where access into a specific entrance is controlled (see the definition for "Restricted entrance" in Chapter 2), at least one of that type of entrance must be accessible. An entrance that is locked is not necessarily a restricted entrance. For example, an apartment building may have multiple entrances for tenants where they enter with their key; however, there may be only one entrance for visitors if they need to access a tenant intercom system to gain entrance. The one visitor entrance is considered to be the restricted entrance and is required to be accessible.

1105.1.4 Entrances for inmates or detainees. Where entrances used only by inmates or detainees and security personnel are provided at judicial facilities, detention facilities or correctional facilities, at least one such entrance shall be *accessible*.

❖ Where access to a specific entrance is limited for security reasons to inmates or detainees and the staff supervising them, that entrance must be accessible. This type of situation could occur at courthouses, jails and police stations (see also Sections 1103.2.13, 1107.5.5 and 1108.4.2).

1105.1.5 Service entrances. If a *service entrance* is the only entrance to a building or a tenant space in a facility, that entrance shall be *accessible*.

❖ Loading and service entrances are required to be accessible if they are the only means of access into a facility or tenant space. Typically, loading and service entrances are exempted from the accessibility requirement on the basis that such entrances are unlikely to be used on a regular basis and may be raised to allow for truck unloading (see the definition for "Service entrance" in Chapter 2). This is consistent with Section 1105.1, Exception 2.

1105.1.6 Tenant spaces. At least one *accessible* entrance shall be provided to each tenant in a facility.

Exception: An *accessible* entrance is not required to self-service storage facilities that are not required to be *accessible*.

❖ Each tenant space must have at least one accessible entrance. For multiple-tenant buildings with shared entrances, the 60-percent entrance requirement in Section 1105.1 is also applicable. Per the exception, in a self-storage facility, the specific criteria in Section 1108.3 would allow for some of the self-storage facilities to not have an accessible entrance.

1105.1.7 Dwelling units and sleeping units. At least one *accessible* entrance shall be provided to each *dwelling unit* and *sleeping unit* in a facility.

Exception: An *accessible* entrance is not required to *dwelling units* and *sleeping units* that are not required to be *Accessible units*, *Type A units* or *Type B units*.

❖ Dwelling and sleeping units that are Accessible, Type A or Type B units must have at least one accessible entrance. If a dwelling unit or sleeping unit does not have accessibility requirements, then an accessible entrance is not required to that unit. For multiunit buildings with shared entrances, the 60-percent entrance requirement in Section 1105.1 for the building as a whole would also be applicable.

SECTION 1106
PARKING AND PASSENGER LOADING FACILITIES

1106.1 Required. Where parking is provided, *accessible* parking spaces shall be provided in compliance with Table 1106.1, except as required by Sections 1106.2 through 1106.4. Where more than one parking facility is provided on a *site*, the number of parking spaces required to be *accessible* shall be calculated separately for each parking facility.

Exception: This section does not apply to parking spaces used exclusively for buses, trucks, other delivery vehicles, law enforcement vehicles or vehicular impound and motor pools where lots accessed by the public are provided with an *accessible* passenger loading zone.

❖ Accessible parking facilities are an important component of building and site accessibility. This section addresses the number of parking spaces required. The location of such parking spaces in relation to accessible building entrances is addressed in Section 1106.6. Parking facility requirements are primarily intended to facilitate accessibility for people with mobility impairments, not just persons who use wheelchairs.

This section is not intended to require that parking facilities be provided. Rather, when parking is provided, the minimum number of accessible parking spaces specified herein must be provided. ICC A117.1 contains detailed requirements on the size

INTERNATIONAL CODE COUNCIL®
Copyright © 2015 ICC. ALL RIGHTS RESERVED. Accessed by David Dammon on Jun 21, 2017 12:30:52 PM pursuant to License Agreement with ICC. No further reproduction or distribution authorized. ANY UNAUTHORIZED REPRODUCTION OR DISTRIBUTION IS A VIOLATION OF THE FEDERAL COPYRIGHT ACT AND THE LICENSE AGREEMENT, AND SUBJECT TO CIVIL AND CRIMINAL PENALTIES THEREUNDER.

and configuration of accessible parking spaces, including the required access aisle adjacent to the space, as well as the dimensional requirements for van-accessible parking spaces required by Section 1106.5.

Multiple-tenant facilities, such as shopping malls, or large facilities, such as hospitals or assembly occupancies, may have multiple parking lots or parking garages. If multiple parking lots, or a combination of parking garages and parking lots are provided for a facility, the number of spaces in each separate parking facility is utilized to determine the number of accessible spaces required. Accessible car and van parking would then be provided in each parking facility accordingly, except as otherwise permitted by Section 1106.6. What constitutes a multiple facility is somewhat subjective. Putting a line of trees or landscaping along the side of the parking spaces does not always constitute a separate facility. From a practical viewpoint, the separate facilities would serve specific groups of people (e.g., employee-only parking), provide different types of parking (e.g., surface lots, garage parking, covered parking) or serve distinct areas of the building (e.g., upper and lower levels as you move around a large mall).

In certain types of lots, it is not logical to require accessible parking spaces. The exception helps to clarify these situations. Parking lots that contain only parking for buses, trucks and delivery vehicles would not need accessible parking spaces. Lots where the parked cars are limited to vehicles used by law enforcement, impound lots or motor pools are also not required to provide accessible spaces. An accessible passenger dropoff is required to be provided on the site, so that when a person with mobility impairments comes to that site, he or she has a place to exit the arrival vehicle safely and enter a vehicle coming from the lot.

TABLE 1106.1. See next column.

❖ The required number of accessible parking spaces is based on the accessible parking requirements of the 2010 ADA Standard. It does not reflect the demographic statistics on wheelchair usage that were used to scope other requirements in Chapter 11, because the majority of disabled parking permit and license plate holders in most states are ambulatory, mobility-impaired persons. The required ratios are intended to be responsive to the anticipated demand for all facilities, such that accessible parking spaces will be reasonably available on demand. Section 1111.1 states that signage is not required on the one required accessible parking space when the total number of parking spaces provided is four or less. This could be burdensome for the building tenant in that the accessible parking space, which is restricted for use only by authorized vehicles, could constitute anywhere from 25 to 100 percent of the available parking. This may unduly restrict the availability of parking for all other vehicles and patrons of the facility. While not reserved by signage, the space must still be sized in accordance with a van-accessible space.

1106.2 Groups I-1, R-1, R-2, R-3 and R-4. *Accessible* parking spaces shall be provided in Group I-1, R-1, R-2, R-3 and R-4 occupancies in accordance with Items 1 through 4 as applicable.

1. In Group R-2, R-3 and R-4 occupancies that are required to have *Accessible, Type A* or *Type B dwelling units* or *sleeping units*, at least 2 percent, but not less than one, of each type of parking space provided shall be *accessible*.
2. In Group I-1 and R-1 occupancies, *accessible* parking shall be provided in accordance with Table 1106.1.
3. Where at least one parking space is provided for each *dwelling unit* or *sleeping unit*, at least one *accessible* parking space shall be provided for each *Accessible* and *Type A unit*.
4. Where parking is provided within or beneath a building, *accessible* parking spaces shall also be provided within or beneath the building.

❖ This section provides a separate criterion for the required number of accessible parking spaces for occupancies in Groups I-1, R-1, R-2, R-3 and R-4 that include Accessible, Type A or Type B units.

The 2-percent requirement in Item 1 for R-2, R-3 and R-4 is based on HUD's FHAG. Section 1107.7 identifies buildings where Type A and Type B units may not be required. For example, a townhouse development may not have any Type A or Type B dwelling units required, therefore, no accessible parking spaces are required. Designers should keep in mind that asking for accessible parking spaces is a common accommodation asked for by residents in both townhouse and apartment developments. While not required, it would be good design practice to exceed code and at least have space on the parking lot to add accessible parking when requested.

TABLE 1106.1
ACCESSIBLE PARKING SPACES

TOTAL PARKING SPACES PROVIDED IN PARKING FACILITIES	REQUIRED MINIMUM NUMBER OF ACCESSIBLE SPACES
1 to 25	1
26 to 50	2
51 to 75	3
76 to 100	4
101 to 150	5
151 to 200	6
201 to 300	7
301 to 400	8
401 to 500	9
501 to 1,000	2% of total
1,001 and over	20, plus one for each 100, or fraction thereof, over 1,000

INTERNATIONAL CODE COUNCIL®
Copyright © 2015 ICC. ALL RIGHTS RESERVED. Accessed by David Dammon on Jun 21, 2017 12:30:52 PM pursuant to License Agreement with ICC. No further reproduction or distribution authorized. ANY UNAUTHORIZED REPRODUCTION OR DISTRIBUTION IS A VIOLATION OF THE FEDERAL COPYRIGHT ACT AND THE LICENSE AGREEMENT, AND SUBJECT TO CIVIL AND CRIMINAL PENALTIES THEREUNDER.

Per Item 2, assisted living facilities (Group I-1) and hotels and motels (Group R-1) should use Table 1106.1 to determine the number of accessible parking spaces required.

Due to the higher anticipated need, per Item 3, when a residential parking lot provides one or more spaces for each dwelling or sleeping unit, there should be accessible parking spaces for each Accessible or Type A unit in the facility, in addition to the 2 percent required by Items 1 or 2. For example, a 100-unit hotel has 100 parking spaces for the guests. Four Accessible guestrooms are required. Table 1106.1 would require four accessible spaces. Item 3 would require an additional four accessible spaces. Therefore the hotel will have to provide eight accessible parking spaces, two sized for a van.

Per Item 4, where parking is provided within or beneath a building, accessible parking spaces also are to be provided within or beneath the building. If a combination of surface and covered parking is provided, accessible parking may be provided in both locations. This is intended to establish consistency in the type and location of parking spaces available to all people. If parking is provided in individual private parking garages, 2 percent of the parking garages would have to contain accessible parking spaces (see the exception to Section 1106.5).

In a development, typically parking for dwelling units is considered on a site basis rather than a building by building basis. Accessible parking should be dispersed throughout the development so as to provide the best access possible. It is not the intent to require accessible parking spaces at the entrance to every building, or within every strip of parking garages. For example, it would not be logical to ask for a surface space and a garage space for each building in developments with multiple four-unit buildings. See Section 1106.5 for a discussion of the distribution of van-accessible spaces.

1106.3 Hospital outpatient facilities. At least 10 percent, but not less than one, of care recipient and visitor parking spaces provided to serve hospital outpatient facilities shall be *accessible*.

❖ Certain facilities can be expected to have a higher demand for accessible parking spaces than that reflected in Table 1106.1. Medical outpatient facilities are one such type of facility. This section requires that at least 10 percent of the parking provided for patients and visitors of these types of facilities be accessible. Parking provided for the employees of these facilities should comply with Table 1106.1. If a hospital contains multiple clinics or types of facilities, the amount of parking dedicated to the outpatient facility is interpretive. Options for determining the number of accessible spaces could be based on the area percentage of the outpatient facilities to other facilities, or the anticipated number of patients and visitors to these facilities in relation to other facilities.

1106.4 Rehabilitation facilities and outpatient physical therapy facilities. At least 20 percent, but not less than one, of the portion of care recipient and visitor parking spaces serving rehabilitation facilities specializing in treating conditions that affect mobility and outpatient physical therapy facilities shall be *accessible*.

❖ Medical facilities that specialize in treatment or other services for people with mobility impairments can be expected to have a higher demand for accessible parking spaces. In these cases, at least 20 percent of the parking spaces provided for visitors and care recipients are required to be accessible. Parking provided for the employees of these facilities should comply with Table 1106.1. If a hospital contains multiple types of facilities, the amount of parking dedicated to the rehabilitation and physical therapy facility is interpretive. Options for determining the number of accessible spaces could be based on the area percentage of the rehabilitation and physical therapy facilities to other facilities or the anticipated number of care recipients and visitors to these facilities in relation to other facilities.

1106.5 Van spaces. For every six or fraction of six *accessible* parking spaces, at least one shall be a van-accessible parking space.

Exception: In Group R-2 and R-3 occupancies, van-accessible spaces located within private garages shall be permitted to have vehicular routes, entrances, parking spaces and access aisles with a minimum vertical clearance of 7 feet (2134 mm).

❖ Vans that are specially equipped to accommodate a person using a wheelchair require wider parking spaces than the typical accessible parking space. This is because vans are usually equipped with a mechanized loading/unloading platform that extends outward from the passenger side of the vehicle. ICC A117.1 contains the dimensional requirements for van-accessible spaces. In order to accommodate the growing usage of these specially equipped vans, this section requires that one in every six accessible parking spaces, or a fraction thereof, be of a size to accommodate these vans. The requirement for van-accessible spaces is not intended to require a greater number of accessible spaces than required by Table 1106.1. For example, if Table 1106.1 requires six accessible parking spaces, one of those six must be van accessible. If seven accessible spaces are required by Table 1106.1, two of those seven are required to be van accessible. On the other hand, if only one accessible parking space is required by Table 1106.1, that space would be a van-accessible space.

The exception modifies the height criteria for van-accessible spaces in ICC A117.1 for private garages serving dwelling units. (See Section 406.3 for the criteria for what can be considered a private garage.) This is a reduction from the 98-inch (2489 mm) height requirement in ICC A117.1. Since many vans are now converted by lowering the floor rather than rais-

INTERNATIONAL CODE COUNCIL®
Copyright © 2015 ICC. ALL RIGHTS RESERVED. Accessed by David Dammon on Jun 21, 2017 12:30:52 PM pursuant to License Agreement with ICC. No further reproduction or distribution authorized. ANY UNAUTHORIZED REPRODUCTION OR DISTRIBUTION IS A VIOLATION OF THE FEDERAL COPYRIGHT ACT AND THE LICENSE AGREEMENT, AND SUBJECT TO CIVIL AND CRIMINAL PENALTIES THEREUNDER.

ing the roof, the 82-inch (2083 mm) height should accommodate most private passenger vans with lifts.

Note that the determination of the number of van-accessible spaces is not tied to separate facilities as the number of spaces is in Sections 1106.1 and 1106.2. However, distribution of van-accessible spaces throughout the accessible parking space in large facilities is good design practice. Van-accessible spaces can be used by cars with accessible placards. It is just common courtesy to leave the van-accessible space for vans when there are other accessible spaces available. However, the van space is not reserved for vans only; in small parking lots the van space may be the only accessible parking provided.

1106.6 Location. *Accessible* parking spaces shall be located on the shortest *accessible route* of travel from adjacent parking to an *accessible* building entrance. In parking facilities that do not serve a particular building, *accessible* parking spaces shall be located on the shortest route to an *accessible* pedestrian entrance to the parking facility. Where buildings have multiple *accessible* entrances with adjacent parking, *accessible* parking spaces shall be dispersed and located near the *accessible* entrances.

Exceptions:

1. In multilevel parking structures, van-accessible parking spaces are permitted on one level.
2. *Accessible* parking spaces shall be permitted to be located in different parking facilities if substantially equivalent or greater accessibility is provided in terms of distance from an *accessible* entrance or entrances, parking fee and user convenience.

❖ As previously stated, the majority of disabled parking permits and license plate holders in most states are ambulatory, mobility-impaired persons. Travel distance, as well as severe weather conditions encountered when traversing from the parking lot to the building entrance, are more difficult for persons with mobility impairments to deal with than the general population. The intent of this section is to locate the parking so that the people utilizing the accessible parking spaces have to travel a minimum distance to an accessible entrance (see Commentary Figure 1106.6). This requirement is stated in performance terms and requires a degree of subjective judgment on the part of both the designer and the building official in determining the appropriate location for accessible spaces that meets the intent of this section. If a facility has multiple accessible entrances, accessible parking spaces are to be dispersed consistent with the location of these entrances.

Exception 1 is intended to acknowledge a practical difficulty associated with multilevel parking structures. In many cases, a multilevel parking structure will serve accessible building entrances on more than one or all of its parking levels. While more common now for multiperson vans rather than private vehicles, vans equipped to transport persons using wheelchairs may be modified by raising the roof of the vehicle in order to provide greater interior headroom. Consequently, such vans require greater vertical clearances. Typical parking structure design may not easily accommodate the necessary vertical clearance for accessible vans due to their low floor-to-ceiling heights. It would be impractical and economically unjustified to require parking structures to be designed solely for the purpose of enabling van-accessible spaces to be located on upper levels. Accordingly, the exception allows the required van-accessible parking spaces to be located on only one level of a multilevel parking structure. The route to and from the space, as well as at the van space and associated access aisle, must meet the minimum clear height of 98 inches (2489 mm) as specified in Section 502.6 of ICC A117.1. This will usually be the entry level of the parking facility. While directional signage is not required, best practice would be to indicate the routes in and out for someone who has a vehicle where the headroom height may be an issue.

Exception 2 addresses sites where multiple parking facilities are provided to serve a single destination or facility. Since one or more of the parking lots or parking garages may be more attractive to users for various reasons, it is acceptable to locate the required accessible parking based on perceived user convenience and preferences, including distance, parking fees and amenities. For example, if a hospital has a remote parking garage, and a surface lot close an accessible entrance, it can be argued that the shorter route provides a higher level of access. Therefore, all or a portion of the accessible spaces could be located on the surface lot.



Figure 1106.6
EXAMPLE OF ACCESSIBLE PARKING SPACES

1106.7 Passenger loading zones. Passenger loading zones shall be *accessible*.

❖ This section does not require passenger loading zones to be provided; however, where provided, they

INTERNATIONAL CODE COUNCIL®
Copyright © 2015 ICC. ALL RIGHTS RESERVED. Accessed by David Dammon on Jun 21, 2017 12:30:52 PM pursuant to License Agreement with ICC. No further reproduction or distribution authorized. ANY UNAUTHORIZED REPRODUCTION OR DISTRIBUTION IS A VIOLATION OF THE FEDERAL COPYRIGHT ACT AND THE LICENSE AGREEMENT, AND SUBJECT TO CIVIL AND CRIMINAL PENALTIES THEREUNDER.

must be accessible in accordance with Section 503 of ICC A117.1. For locations where passenger loading zones are required, see Sections 1106.7.1 through 1106.7.4.

1106.7.1 Continuous loading zones. Where passenger loading zones are provided, one passenger loading zone in every continuous 100 linear feet (30.4 m) maximum of loading zone space shall be *accessible*.

❖ The intent of this section is to address the continuous loading zones found at most larger airports as well as some other types of transportation facilities, such as commuter train "kiss-n-ride" drop-off areas. At least one 20-foot (6096 mm) section for every 100 feet (30 480 mm) of passenger loading zone must meet the accessibility provisions in Section 503 of ICC A117.1.

1106.7.2 Medical facilities. A passenger loading zone shall be provided at an *accessible* entrance to licensed medical and long-term care facilities where people receive physical or medical treatment or care and where the period of stay exceeds 24 hours.

❖ The requirement for accessible passenger loading zones is applicable to both medical and long-term care facilities. The most common examples are hospitals and nursing homes; however, this could also be applicable to some rehabilitation and assisted living facilities (typically Group I-2). Medical and long-term care facilities typically have a higher percentage of people with mobility impairments living in the facility or visiting on a regular basis. Because of their mobility impairments, some people will be driven by a friend or family member, and it is desirable and convenient to first drop them off at the entrance and then park, rather than first parking and then requiring travel from the parking lot to the facility's entrance. As such, this section requires that a passenger loading zone be provided at no less than one accessible entrance to the facility.

1106.7.3 Valet parking. A passenger loading zone shall be provided at valet parking services.

❖ Valet parking is typically the public access point to a facility. When valet parking is provided, the passenger loading zone must be accessible so that it may be utilized by persons requiring wheelchairs. This would include the access aisle and an accessible route from the access aisle to the front entrance. Note that providing valet parking services does not eliminate the need for accessible parking spaces where parking is provided. Some vehicles that are modified for persons with disabilities may not be drivable by a valet attendant. In addition, valet parking may only be provided during certain periods of time, such as during dinner hours at a restaurant.

1106.7.4 Mechanical access parking garages. Mechanical access parking garages shall provide at least one passenger loading zone at vehicle drop-off and vehicle pick-up areas.

❖ Mechanical parking garages allow a much higher density of vehicles in a given footprint because of the elimination of ramps and drive lanes. With respect to the customer interface, mechanical garages are similar to valet parking and, therefore, require similar scoping for accessibility.

SECTION 1107
DWELLING UNITS AND SLEEPING UNITS

❖ The development of this section was part of the coordination effort with the FHA and the FHAG. For further explanation, see the general comments for this chapter.

One of the phrases developed as part of this coordination was the defined phrase "Intended to be occupied as a residence." This defines a type of dwelling or sleeping unit that is a person's home or place of abode. The intent of this language is to clarify that, consistent with the FHA, all dwelling units or sleeping units that can or will be used as a place of abode—even for a short period of stay—must meet the requirements for Type B dwellings. There is a presumption in the IBC that if a building is nontransient (i.e., occupants stay more than 30 days), it is covered by the requirements in this section. In addition, in coordination with the FHA, occupancies that allow stays of fewer than 30 days may be required to meet Type B design and construction requirements.

Accordingly, this commentary will provide guidance for determining when short-term occupancies that might not typically be viewed as housing are covered by this section. Such short-term Group R occupancies may include residential hotels and motels; corporate housing; seasonal vacation units; timeshares; boarding houses; dormitories and migrant farmworker housing. Also included are some occupancies in Group I, such as nursing homes, assisted living facilities, hospices and homeless shelters.

The key factor in determining whether any of these occupancies are subject to Type B requirements is whether the occupant will have the right to return to the property and whether he or she would have anywhere else to which to return. If it is intended that an occupant will have a right to return to the property and will not have anywhere else to return, the unit is "intended to be occupied as a residence" and must meet the Type B requirements regardless of the length of stay. Thus, for example, homeless shelters where occupants have a right to return nightly must comply with Type B unit criteria even if the occupants stay only a few nights. Additionally, nursing homes in which a resident moves after vacating his or her primary residence are subject to Type B requirements.

If the occupants have a right to return to the property but also have another place to which to return, the unit may still be subject to Type B criteria. Additional factors must be considered to determine whether the property is a short-term dwelling or sleeping unit that must meet Type B criteria, or a transient property that is not required to comply with Type B criteria. These factors must be considered by own-

INTERNATIONAL CODE COUNCIL®
Copyright © 2015 ICC. ALL RIGHTS RESERVED. Accessed by David Dammon on Jun 21, 2017 12:30:52 PM pursuant to License Agreement with ICC. No further reproduction or distribution authorized. ANY UNAUTHORIZED REPRODUCTION OR DISTRIBUTION IS A VIOLATION OF THE FEDERAL COPYRIGHT ACT AND THE LICENSE AGREEMENT, AND SUBJECT TO CIVIL AND CRIMINAL PENALTIES THEREUNDER.

ers, builders, developers, architects and other designers to determine whether a building must be designed and constructed in accordance with Type B unit requirements.

For additional discussion on the elements related to hotels, motels, corporate housing and seasonal vacation units and timeshares, see the commentary to Section 1107.6.1 (Group R-1). With respect to most other occupancies, the following factors are also relevant to determine whether the units are subject to Type B requirements:

1. Whether the property is to be marketed as short-term housing;
2. Whether the terms and length of occupancy will be established through a written agreement;
3. How payment will be calculated (e.g., on a daily, weekly, monthly or yearly basis); and
4. What types of amenities and services are offered with the occupancy.

For example, an assisted living facility that provides sleeping units and custodial services to its occupants, and bills them on a monthly basis, is subject to Type B design and construction requirements. In addition, housing for migrant farm workers that is provided in conjunction with the worker's employment (whether or not rent is paid) and contains amenities for cooking and sleeping would be subject to Type B criteria.

1107.1 General. In addition to the other requirements of this chapter, occupancies having *dwelling units* or *sleeping units* shall be provided with *accessible* features in accordance with this section.

❖ There are two basic types of facilities that this section covers: dwelling units and sleeping units. A "Dwelling unit" is defined in Chapter 2 as a single unit that contains permanent provisions for "living, sleeping, eating, cooking and sanitation." A "Sleeping unit" is defined in Chapter 2 as a room in which people sleep that can include some of the provisions found in a dwelling unit but not all. Occupancy of dwelling units or sleeping units can be transient or nontransient. Dwelling units are typically apartments, condominiums, detached homes or townhouses. Dwelling units can be located in hotels that offer cabins, suites or rooms with kitchen facilities. Bedrooms within dwelling units are not considered sleeping units.

A sleeping unit could be a typical hotel guestroom; a bedroom in a congregate residence, such as a dorm, sorority house, fraternity house, convent, monastery or boarding house; a nursing home room; or a jail cell.

1107.2 Design. *Dwelling units* and *sleeping units* that are required to be *Accessible units*, *Type A units* and *Type B units* shall comply with the applicable portions of Chapter 10 of ICC A117.1. Units required to be *Type A units* are permitted to be designed and constructed as *Accessible units*. Units required to be *Type B units* are permitted to be designed and constructed as *Accessible units* or as *Type A units*.

❖ There are three levels of accessibility that can be required in a dwelling unit or sleeping unit: Accessible units, Type A units and Type B units. All three types are defined in Chapter 2.

An Accessible unit is constructed for full accessibility in accordance with Section 1002 of ICC A117.1. For example, grab bars are in place in the bathrooms, a clear floor space is provided for front approach at the kitchen sink and bathroom lavatories, 32-inch (813 mm) clear width doors with maneuvering clearances and lever hardware are provided, etc. None of the elements in the unit are constructed for adaptability. The requirements for an Accessible unit provide a higher level of accessibility than either a Type A unit or a Type B unit.

A Type A unit has some elements that are constructed accessible [e.g., 32-inch (813 mm) clear width doors with maneuvering clearances and lever hardware] and some elements designed to be added or altered when needed (e.g., grab bars can be easily added in bathrooms since blocking in the walls is in place). Type A units follow the technical criteria in Section 1003 of ICC A117.1. This type of unit is less accessible than an Accessible unit and more accessible than a Type B unit.

The scoping or technical requirements for Type B units are consistent with the requirements for units required by the FHAG (see the definition for "Type B units" in Chapter 2). A Type B unit is constructed to a lower level of accessibility than either an Accessible unit or a Type A unit. While a person who uses a wheelchair could maneuver in a Type B unit, the technical requirements are geared more toward persons with lesser mobility impairments. Type B units follow the technical requirements in Section 1004 of ICC A117.1. Areas of a Type B unit are allowed to be totally nonaccessible (e.g., sunken living room, extra bedrooms on a mezzanine level). Side approach is permitted to sinks in the kitchen and lavatories in the bathroom rather than planning for a front approach. Some elements are constructed with a minimal level of accessibility [e.g., doors within the unit have a $31^{3}/_{4}$-inch (806 mm) clear width but do not require maneuvering clearances], while some elements are designed to be altered when needed (e.g., blocking in the walls of the bathroom for future installation of grab bars).

This section also takes into consideration the fact that Accessible unit requirements provide a higher level of accessibility than Type A requirements, and Type A requirements provide a higher level of accessibility than Type B requirements. Units are permitted to be constructed to a higher level of accessibility than required. In other words, Accessible units are con-

INTERNATIONAL CODE COUNCIL®
Copyright © 2015 ICC. ALL RIGHTS RESERVED. Accessed by David Dammon on Jun 21, 2017 12:30:52 PM pursuant to License Agreement with ICC. No further reproduction or distribution authorized. ANY UNAUTHORIZED REPRODUCTION OR DISTRIBUTION IS A VIOLATION OF THE FEDERAL COPYRIGHT ACT AND THE LICENSE AGREEMENT, AND SUBJECT TO CIVIL AND CRIMINAL PENALTIES THEREUNDER.

structed wheelchair ready. Type A units are constructed wheelchair friendly and Type B units are constructed wheelchair usable.

The technical criteria for each type of unit in ICC A117.1 is organized in the same order and section number for each element, making comparisons between types easier. For example, looking at the door provisions in Sections 1002.5, 1003.5 and 1004.5 of ICC A117.1 would clarify that the maneuvering clearances are required at all doors that are part of the accessible route through an Accessible unit or a Type A unit, but for the Type B unit, the maneuvering clearance is only required at the front door to the unit, not within the unit. Another example would be the requirements for operable parts: Sections 1002.9 and 1003.9 address requirements for plumbing fixture and appliance controls, while in accordance with Section 1004.9, Type B units do not require plumbing fixture and appliance controls to meet operable parts requirements.

1107.3 Accessible spaces. Rooms and spaces available to the general public or available for use by residents and serving *Accessible units*, *Type A units* or *Type B units* shall be *accessible*. *Accessible* spaces shall include toilet and bathing rooms, kitchen, living and dining areas and any exterior spaces, including patios, terraces and balconies.

Exceptions:

1. *Stories* and *mezzanines* exempted by Section 1107.4.
2. Recreational facilities in accordance with Section 1110.2.
3. Exterior decks, patios or balconies that are part of *Type B units* and have impervious surfaces, and that are not more than 4 inches (102 mm) below the finished floor level of the adjacent interior space of the unit.

❖ Spaces available for use by residents or the general public that are associated with Accessible units, Type A units or Type B units are required to be accessible. This would include spaces within the unit and outside the unit in the same building, as well as facilities that may be outside the building somewhere else on the site. The intent is that a person with a disability could take full advantage of the amenities associated with his or her dwelling or sleeping unit. While it is fairly clear which elements within a unit must be accessible, the associated facilities outside the unit vary depending on the type of building and facilities provided. Public use spaces within a building would include lobby areas while spaces for residents could include shared storage areas or refuse rooms. Shared spaces in nursing homes or assisted living facilities might be dining rooms, therapy rooms and recreational rooms. In dormitories, residents may share study rooms, laundry rooms or mail rooms and facilities located remotely, such as cafeterias. Examples of shared spaces in congregate residences could include community kitchens, living rooms and shared bathrooms. Examples in apartment complexes could include grouped mailboxes, rental offices, exercise rooms and exterior spaces, such as community buildings and swimming pools.

Exception 1 is a correlation with Section 1107.4, so that it is clear that the requirements for connecting spaces within a building are not intended to override the exception for an accessible route between stories and mezzanines.

Exception 2 allows for limited access to exterior recreational facilities when multiples of the same type of facility are provided. An example would be multiple tennis courts on the same site for use by residents in a complex (see Section 1110 for additional information). The net result is that a person with a disability, either a resident or guest, can access all Accessible, Type A and Type B units, as well as any associated facilities and public areas on the site.

Exception 3 is intended for application to Type B units with a private deck, patio or balcony within an individual unit, or a shared deck, patio or balcony in a "residents only" area of a congregate residence. Decks, patios or balconies located in areas such as the community building or swimming pool should be constructed accessible. When the outside walking surface is impervious to water, such as concrete, there may be a 4-inch (102 mm) step-down between the inside finished floor surface and the outside floor surface. The step-down is permitted to address the concern of water infiltration under the doors at such locations. With a maximum 4-inch (102 mm) difference in elevation, adaptation for accessibility is achievable with raised sleepers and decking. Normal door threshold criteria apply.

1107.4 Accessible route. At least one *accessible route* shall connect *accessible* building or facility entrances with the primary entrance of each *Accessible unit*, *Type A unit* and *Type B unit* within the building or facility and with those exterior and interior spaces and facilities that serve the units.

Exceptions:

1. If due to circumstances outside the control of the owner, either the slope of the finished ground level between *accessible* facilities and buildings exceeds one unit vertical in 12 units horizontal (1:12), or where physical barriers or legal restrictions prevent the installation of an *accessible route*, a vehicular route with parking that complies with Section 1106 at each *public* or *common use* facility or building is permitted in place of the *accessible route*.
2. In Group I-3 facilities, an *accessible route* is not required to connect *stories* or *mezzanines* where *Accessible units*, all *common use* areas serving *Accessible units* and all *public use* areas are on an *accessible* route.
3. In Group R-2 facilities with *Type A units* complying with Section 1107.6.2.2.1, an *accessible route* is not required to connect *stories* or *mezzanines* where *Type A units*, all *common use* areas serving *Type A*

INTERNATIONAL CODE COUNCIL®
Copyright © 2015 ICC. ALL RIGHTS RESERVED. Accessed by David Dammon on Jun 21, 2017 12:30:52 PM pursuant to License Agreement with ICC. No further reproduction or distribution authorized. ANY UNAUTHORIZED REPRODUCTION OR DISTRIBUTION IS A VIOLATION OF THE FEDERAL COPYRIGHT ACT AND THE LICENSE AGREEMENT, AND SUBJECT TO CIVIL AND CRIMINAL PENALTIES THEREUNDER.

units and all public use areas are on an *accessible route*.

4. In other than Group R-2 dormitory housing provided by places of education, in Group R-2 facilities with *Accessible units* complying with Section 1107.6.2.3.1, an *accessible route* is not required to connect *stories* or *mezzanines* where *Accessible units*, all *common use* areas serving *Accessible units* and all *public use* areas are on an *accessible* route.
5. In Group R-1, an *accessible route* is not required to connect *stories* or *mezzanines* within individual units, provided the *accessible* level meets the provisions for *Accessible units* and sleeping accommodations for two persons minimum and a toilet facility are provided on that level.
6. In congregate residences in Groups R-3 and R-4, an *accessible route* is not required to connect *stories* or *mezzanines* where *Accessible units* or *Type B units*, all *common use* areas serving *Accessible units* and *Type B units* and all *public use* areas serving *Accessible units* and *Type B units* are on an *accessible route*.
7. An *accessible route* between *stories* is not required where *Type B units* are exempted by Section 1107.7.

❖ Section 1107.3 indicates which spaces associated with accessible dwelling and sleeping units (i.e., Accessible, Type A and Type B units) are required to be accessible. Section 1105 indicates which building entrances are required to be accessible. The intent of this section is twofold: that there will be at least one accessible route that connects required accessible building entrances with the entrance of all accessible dwelling and sleeping units, and that there also must be accessible routes connecting accessible unit entrances with all interior and exterior common and public use spaces and facilities that serve the accessible dwelling or sleeping unit. Some additional facilities that serve units that are not really considered spaces would be accessible parking (see Section 1106.1), passenger loading zones (see Section 1106.7) and public transportation stops located either on site or adjacent to the perimeter. In determining the site arrival points that serve an accessible unit, the designer should make a reasonable determination of how pedestrians and vehicles would arrive at the site.

HUD's review of the 2003 and 2006 editions of the code found that the codes meet or exceed the seven design and construction requirements of the FHA and are "safe harbor" documents for complying with the FHAG. To read the final report of the HUD review, go to http://www.hud.gov/offices/fheo/disabilities/modelcodes/. HUD stated, "Having a more recent edition of the IBC recognized by HUD as a safe harbor will ensure that covered dwelling units will be built with the accessible features required by the Act." For additional information, see the commentary at the beginning of this chapter. At this writing, the 2009, 2012 and 2015 IBC and the 2009 ICC A117.1 are being reviewed by HUD to be considered as "safe harbor" documents. There is no set timeline for HUD to complete their review of these documents.

(*The following commentary concerning the accessible route serving dwelling units and sleeping units has been provided by HUD*.)

The five examples serve to illustrate a variety of conditions that may be encountered on nonlevel building sites where Exception 1 is applicable. These examples pertain to the accessible route between facilities on a site. In addition to the on-site accessible routes, the accessible route(s) between the site arrival point(s) and facilities on the site must be considered. Note that the exception in Section 1104.1 does not apply to facilities containing or serving Type B units.

The intent of this section is to ensure that there will be at least one accessible route that connects all accessible building and facility entrances with the entrance of all Accessible, Type A and Type B units. To qualify as an accessible route, that route must serve pedestrians (e.g., sidewalk or other walkway). People with disabilities who need the features of an Accessible, Type A or Type B dwelling or sleeping unit cannot use them if accessible routes are not provided from the entrances to buildings or facilities to the primary entrance of their dwelling or sleeping unit. There also must be accessible routes connecting accessible building or facility entrances with all interior and exterior spaces and facilities that serve such dwelling or sleeping units. For example, if a development has a recreational facility, such as a community center, persons with disabilities who need the features of an Accessible, Type A or Type B unit need an accessible route from their dwelling unit to that community center.

Exception 1 is intended to provide consistency with the federal FHA, which recognizes that, in very rare circumstances, an accessible pedestrian route between an accessible entrance to an accessible unit or an accessible entrance to a building containing accessible units and an exterior public use or common use facility may be impractical because of factors outside the control of the owner. Section 1107.4 requires an accessible pedestrian route between covered dwelling units and public use or common use areas and facilities that are required to be accessible, except in rare circumstances that are outside the control of the owner where extreme terrain or impractical site characteristics result in a finished grade exceeding 8.33 percent or physical barriers or legal restrictions prevent the installation of an accessible pedestrian route. In these cases, Exception 1 allows access to be provided by means of a vehicular route leading from the accessible parking serving the accessible unit to the accessible parking serving the public use or common use facility. Accessible parking complying with Section 1106 must be provided in each parking area. If a building containing accessible

INTERNATIONAL CODE COUNCIL®
Copyright © 2015 ICC. ALL RIGHTS RESERVED. Accessed by David Dammon on Jun 21, 2017 12:30:52 PM pursuant to License Agreement with ICC. No further reproduction or distribution authorized. ANY UNAUTHORIZED REPRODUCTION OR DISTRIBUTION IS A VIOLATION OF THE FEDERAL COPYRIGHT ACT AND THE LICENSE AGREEMENT, AND SUBJECT TO CIVIL AND CRIMINAL PENALTIES THEREUNDER.

units also contains accessible features that are required by other code provisions or federal, state or local laws, then Exception 1 may not apply at all.

It is important to understand that compliance with the accessible design and construction requirements of the FHA is a legal obligation applicable to all architects, engineers, builders, developers and others involved in the design and construction of housing. HUD's regulations implementing the FHA make it clear that the burden of showing the applicability of exceptions is the responsibility of those individuals and entities involved in the design and construction of such housing. In order to ensure compliance with FHA, architects, engineers, developers, builders and others who use the code must make accessibility a priority at the planning and design phase of Group I and R developments, including the siting of housing and public use or common use areas. To do this, at the initial stage of site planning and design for all sites, before considering whether Exception 1 applies, persons and entities involved in the design of covered residential occupancies must determine whether and how the exceptions of Sections 1107.7.4 and 1107.7.5 apply.

After careful site planning and design has been completed, the following factors may then be considered to determine whether it is outside the control of the owner to provide an accessible pedestrian route between a building/Type B dwelling unit entrance and a given public use or common use facility. Each such route must be analyzed individually. Exception 1 will only apply when at least one of the following factors is present:

1. Legal restrictions outside the control of the owner. These include setback requirements, tree-save ordinances, easements, environmental restrictions and other limitations that prevent installation of an accessible pedestrian route without violating the law.

2. Physical barriers outside the control of the owner. These include physical characteristics of the site, which are outside the control of the owner that prevent the installation of an accessible pedestrian route.

3. On sites that qualify for the exceptions of Sections 1107.7.4 and 1107.7.5, the presence of extreme terrain or other unusual site characteristics (e.g., flood plain, wetlands) outside the control of the owner that would require substantial additional grading to achieve a slope that will allow for an accessible pedestrian route.

In considering whether the additional grading is substantial enough to qualify for Exception 1, the extent to which the builder has elected to grade the site for other purposes unassociated with accessibility must be considered. If grading for those other purposes is extensive, then substantial additional grading would be necessary to provide the required accessible pedestrian route. If grading for other purposes is not extensive, and substantial additional grading is necessary to provide an accessible pedestrian route, then reliance on Exception 1 would be appropriate. Note that when determining whether the additional grading is substantial, one may not consider the grading that the builder must perform to provide accessible pedestrian routes from site arrival points to the accessible entrances of accessible dwelling or sleeping units. If none of the factors above are present, Exception 1 does not apply. If one or more of these factors is present, then the next step in determining whether Exception 1 applies (i.e., the vehicular route is the only feasible option) is to consider alternative locations and designs for buildings, facilities and accessible pedestrian routes connecting each accessible building and accessible dwelling unit entrance and each public use or common use area required to be accessible to ensure that there is no other way to provide the required accessible pedestrian routes. It is important to recognize that if a road sloping 8.33 percent or less can be provided, then an accessible pedestrian route would also be feasible and must be provided.

Following are some examples to illustrate the proper application of Exception 1:

Example 1: An undisturbed site has slopes of 8.33 percent or less between required accessible entrances to Type B dwelling units and public use or common use areas and there are no legal restrictions or other unique characteristics preventing the construction of accessible routes. For aesthetic reasons, the developer would like to create some hills or decorative berms on the site. Because there are no extreme site conditions (severe terrain or unusual site characteristics such as flood plains), and no legal barriers that prevent installation of an accessible pedestrian route between the buildings/Type B dwelling units and any planned public use or common use facilities, the developer will still be obligated to provide accessible pedestrian routes. Exception 1 to Section 1107.4 is inapplicable in this circumstance.

Example 2: A developer plans to construct several buildings with Type B units clustered in a level area of a site that has some slopes of 10 percent. A swimming pool and tennis court will be added on the two opposing sides of the site. The builder plans grading that will result in a finished grade exceeding a slope of 8.33 percent along the route between the Type B units and the swimming pool and tennis court. There are no physical barriers or legal restrictions outside the control of the owner or builder that prevent him or her from reducing the existing grade to provide an accessible pedestrian route between the Type B units and the pool and tennis court. Therefore, the builder's building plan would not be approved under the code because it is within the owner's control to have the final grading fall below 8.33 percent and meet the slope and other requirements for an accessible pedestrian route. Accessible pedestrian routes between the Type B units, pool and tennis court must be provided.

INTERNATIONAL CODE COUNCIL®
Copyright © 2015 ICC. ALL RIGHTS RESERVED. Accessed by David Dammon on Jun 21, 2017 12:30:52 PM pursuant to License Agreement with ICC. No further reproduction or distribution authorized. ANY UNAUTHORIZED REPRODUCTION OR DISTRIBUTION IS A VIOLATION OF THE FEDERAL COPYRIGHT ACT AND THE LICENSE AGREEMENT, AND SUBJECT TO CIVIL AND CRIMINAL PENALTIES THEREUNDER.

Example 3: A multiple-family housing complex is built on two sections of a large piece of property, which is divided by a wide stream running through protected wetlands. Both sections of the property are at the same relative elevation and have dwelling units with accessible routes from site arrival points; however, a combination clubhouse and swimming pool is located on one section of the property. Access to each section is provided by an existing public road outside the boundary of the site, which includes a bridge over the stream. Environmental restrictions prevent construction of any type of paved surface between the two sections within the boundary of the site. If environmental restrictions do not prevent the construction of an accessible pedestrian route, such as a boardwalk, through the wetlands connecting the two sections, then the accessible pedestrian route must be provided even if a road cannot be provided. If construction of any type of pedestrian route is prohibited, then a vehicular route that utilizes the public road and bridge is permitted with parking complying with Section 1106 located at the clubhouse/swimming pool, even though the vehicular route relies on a public road instead of a road through the development.

Example 4: A narrow and deep site has a level section in the front taking up most of the site and another level section at the back that is located up a steep incline. The developer chooses to place all of the buildings/Type B dwelling units on the front section to provide for accessible routes from site arrival points to building entrances. After considering all options for siting buildings and facilities in different locations, including the priority of accessibility, the most feasible location for a planned swimming pool is at the top of the higher section to the rear of the property. Because of the narrowness of the site and the relative elevation of the upper level at the rear of the property, it is impracticable to construct an accessible pedestrian route to the pool; however, a road that slopes more than 8.33 percent can be provided. Under these circumstances, Exception 1 is applicable and access to the swimming pool on the upper level of the site may be provided by means of a vehicular route with parking complying with Section 1106 provided at the Type B dwelling units and the pool.

Example 5: A developer plans to build a multiple-family housing complex with nonelevator buildings on a site with hilly terrain. All of these buildings will have some Type B dwelling units. The developer plans to locate a tennis court on the site. There are gentle slopes exceeding 8.33 percent with existing trees between the entrances to the Type B units and the tennis court. There is also a tree-save ordinance in place. If the builder can grade the site to allow for an accessible pedestrian route to the tennis court without disturbing the trees in violation of the tree-save ordinance, then an accessible pedestrian route between the Type B units and the planned location of the tennis court must be provided. If, however, the grading necessary to reduce the slope of the site near the trees to provide an accessible route would cause tree loss or damage in violation of the ordinance, then the developer cannot grade without violating the tree-save ordinance. The developer must then consider whether the tennis court can be relocated so it is served by an accessible pedestrian route, and if so, the tennis court must be relocated. If the tennis court cannot be relocated so it can be served by an accessible pedestrian route, then the developer may provide a vehicular route from the Type B dwelling units to the tennis court with parking complying with Section 1106 at the Type B dwelling units and the tennis court. Note, however, that if the developer can provide an accessible pedestrian route from some of the buildings without violating the ordinance, the developer must do so, even if it is necessary to provide a vehicular route from other buildings. Additionally, if the grading and construction of the proposed vehicular route can be limited to 8.33 percent by design and would not violate the tree-save ordinance, it is likely that an additional accessible walkway adjacent to the vehicular route would also fall under the scope of work that would not violate the tree-save ordinance and, therefore, must be provided, eliminating the use of Exception 1.

(*This completes the guidance on this topic provided by HUD for inclusion in this commentary*.)

Exceptions 2 through 7 are intended to clarify when an elevator is required between floors. Exceptions 2, 3, 4 and 6 provide exceptions for the accessible route to upper levels where the units required to be accessible, all common use areas associated with those units and all public use areas are on an accessible level.

Exception 2 is coordination with jail (Group I-3) provisions in Sections 1103.2.13 and 1107.5.5. Due to safety and security concerns, Accessible units are required in jails, and must be dispersed by type, but not by location. This would result in areas of a jail having only cells (i.e., sleeping units) that are exempted from accessibility. An accessible route is not required to those cells or the common areas associated with those cells. The public and administrative side of the jail cannot use this exception.

Exception 3 deals with large apartment buildings or complexes (i.e., more than dwelling units), or convents and monasteries where Type A units are required. If the common use and public use spaces associated with the Type A units are on an accessible level, Section 1107.4 would not require an elevator between stories. Section 1107.7.1 would possibly allow for no elevator in the building for the upper floors.

Exception 4 is a similar idea to Exception 3, only dealing with Group R-2 larger congregate residences (i.e., more than 16 residents, per Section 310.4), such as sororities, fraternities and boarding houses where Accessible units are required. If the common use and public use spaces associated with the Accessible units are on an accessible level, Section 1107.4 would not require an elevator between stories. Section 1107.7.1 would possibly allow for no elevator in the building for the upper floors. When applying Exception 4 it is important to recognize that dormitories at colleges or boarding schools are excluded from this exception. Based upon the DOJ adoption of the 2010 ADA Standard, these facilities are required to provide elevators by federal law. The

INTERNATIONAL CODE COUNCIL®
Copyright © 2015 ICC. ALL RIGHTS RESERVED. Accessed by David Dammon on Jun 21, 2017 12:30:52 PM pursuant to License Agreement with ICC. No further reproduction or distribution authorized. ANY UNAUTHORIZED REPRODUCTION OR DISTRIBUTION IS A VIOLATION OF THE FEDERAL COPYRIGHT ACT AND THE LICENSE AGREEMENT, AND SUBJECT TO CIVIL AND CRIMINAL PENALTIES THEREUNDER.

IBC is consistent with that intent, but it does not differentiate between public and private schools. Many colleges now provide "living communities," or living arrangements for students with shared studies or interests, on different levels within dormitories. This accessible route requirement is intended to allow for full participation in all activities, as well as to visit or study with students on other levels in the dormitory.

Exception 5 is applicable within individual units in a hotel where the unit itself is multistory or has a mezzanine. If a sleeping area and toilet are located on the accessible level of the unit, there may be other amenities or bedrooms on the nonaccessible level. This exception was added to coordinate with the 2010 ADA Standard Section 206.2.3, Exception 5.

Exception 6 is consistent with Exceptions 3 and 4; this time dealing with congregate residences with 16 or fewer residents (see Sections 310.5 and 310.6). In a Group R-3, at least one Type B sleeping unit would have to be provided on the accessible level. In a Group R-4, at least one Accessible sleeping unit would have to be provided on the accessible level. If the common use and public use spaces associated with the those particular units are on an accessible level, Section 1107.4 would not require an elevator between stories. Section 1107.7.1 would possibly allow for no elevator in the building for the upper floors.

Exception 7 is a correlation with Section 1107.7, so that it is clear that the requirements for connecting spaces within a building are not intended to override the exception for an accessible route between stories and mezzanines.

1107.5 Group I. *Accessible units* and *Type B units* shall be provided in Group I occupancies in accordance with Sections 1107.5.1 through 1107.5.5.

❖ This section introduces five subsections that set forth the threshold for accessibility in institutional occupancies.

Note that among the various categories of institutional facilities, only Accessible units and Type B units are scoped. There are no requirements for Type A units in institutional occupancies. The criteria for Accessible units and Type B units are specified in Chapter 10 of ICC A117.1.

1107.5.1 Group I-1. *Accessible units* and *Type B units* shall be provided in Group I-1 occupancies in accordance with Sections 1107.5.1.1 and 1107.5.1.2.

❖ Group I-1 is comparable in many respects to Group R-2 in that it is a residential setting. However, the difference is that Group I-1 is a supervised environment where custodial care is provided due to the reduced physical or mental abilities of the occupants (see Section 308.3).

1107.5.1.1 Accessible units. In Group I-1 Condition 1, at least 4 percent, but not less than one, of the *dwelling units* and *sleeping units* shall be *Accessible units*. In Group I-1 Condition 2, at least 10 percent, but not less than one, of the *dwelling units* and *sleeping units* shall be *Accessible units*.

❖ The threshold for accessibility in apartments (Group R-2), in accordance with Section 1107.6.2.1.1, is that 2 percent of the units are required to be Type A units. It is anticipated that Group I-1 will experience a greater demand for accessible facilities because of the nature of the occupants and the frequency of occupant turnover. As such, this section requires that 4 percent of the sleeping units and their associated facilities (e.g., bathing and toilet facilities) must meet the criteria for Accessible units in Group I-1 Condition 1, and 10 percent of the sleeping units and their associated facilities in Group I-1 Condition 2. To understand the care level and resident capability thresholds demarcating a Condition 1 or 2 facility, see the commentary to Section 308.3. The higher level of accessible units is based on the anticipated need. Group I-1 Condition 2 is not the same level of care as a nursing home. The main difference is custodial versus medical care provided for residents of the facility. These Group I-1 types of facilities are not scoped in the 2010 ADA Standard.

1107.5.1.2 Type B units. In structures with four or more *dwelling units* or *sleeping units intended to be occupied as a residence*, every *dwelling unit* and *sleeping unit intended to be occupied as a residence* shall be a *Type B unit*.

Exception: The number of *Type B units* is permitted to be reduced in accordance with Section 1107.7.

❖ As discussed in the general comments to this section, most Group I-1 assisted living facilities are intended to serve as a person's place of residence. Since a Group I-1 starts at an occupant load of more than 16 residents, the Type B criteria for any units that are not Accessible units are almost always required. The exception is a general reference to Section 1107.7, which addresses situations where it is logical to back off on the requirements for Type B units within a structure.

1107.5.2 Group I-2 nursing homes. *Accessible units* and *Type B units* shall be provided in nursing homes of Group I-2 occupancies in accordance with Sections 1107.5.2.1 and 1107.5.2.2.

❖ The requirements for accessibility in Group I-2 are based on the anticipated frequency of usage by disabled persons. There are different thresholds established for different types of health care occupancies, based on the nature of their activity (see Section 308.4). A nursing home is anticipated to have a high percentage of residents who use wheelchairs or some type of mobility aid.

1107.5.2.1 Accessible units. At least 50 percent but not less than one of each type of the *dwelling units* and *sleeping units* shall be *Accessible units*.

❖ Nursing homes, which generally provide long-term care, are more likely to have patients with physical disabilities. As such, 50 percent of the patient sleeping rooms and their associated facilities (e.g., bathing and toilet facilities) must meet the criteria for Accessible units. Housings for the elderly should not automatically be classified as a "nursing home." Some residential care/assisted living facilities provide quar-

INTERNATIONAL CODE COUNCIL®
Copyright © 2015 ICC. ALL RIGHTS RESERVED. Accessed by David Dammon on Jun 21, 2017 12:30:52 PM pursuant to License Agreement with ICC. No further reproduction or distribution authorized. ANY UNAUTHORIZED REPRODUCTION OR DISTRIBUTION IS A VIOLATION OF THE FEDERAL COPYRIGHT ACT AND THE LICENSE AGREEMENT, AND SUBJECT TO CIVIL AND CRIMINAL PENALTIES THEREUNDER.

ters for residents that more closely represent a residential setting (i.e., sleeping, eating, cooking and sanitation within the individual living accommodations) and the residents are more ambulatory than in a nursing home. Based on the anticipated frequency of residents needing wheelchairs, these facilities might be more appropriately classified within the 4- or 10-percent requirement for Accessible units (see Sections 1107.5.1.1 and 1107.5.3.1).

1107.5.2.2 Type B units. In structures with four or more *dwelling units* or *sleeping units intended to be occupied as a residence*, every *dwelling unit* and *sleeping unit intended to be occupied as a residence* shall be a *Type B unit*.

Exception: The number of *Type B units* is permitted to be reduced in accordance with Section 1107.7.

❖ As discussed in the general comments to this section, most Group I-2 nursing homes are intended to serve as a person's place of residence. The Type B criteria for any units that are not Accessible units are almost always required. The exception is a general reference to Section 1107.7, which addresses situations where it is logical to back off on the requirements for Type B units within a structure.

1107.5.3 Group I-2 hospitals. *Accessible units* and *Type B units* shall be provided in general-purpose hospitals, psychiatric facilities and detoxification facilities of Group I-2 occupancies in accordance with Sections 1107.5.3.1 and 1107.5.3.2.

❖ The requirements for accessibility in Group I-2 are based on the anticipated number of disabled occupants. There are different thresholds established for different types of health care occupancies based on the nature of their services and level of care provided. The anticipated need in hospitals is partially based on patients needing varying levels of assistance due to temporary disabilities resulting from illness or surgery.

1107.5.3.1 Accessible units. At least 10 percent, but not less than one, of the *dwelling units* and *sleeping units* shall be *Accessible units*.

Exception: Entry doors to *Accessible dwelling units* or *sleeping units* shall not be required to provide the maneuvering clearance beyond the latch side of the door.

❖ While the anticipated percentage of patients in general-purpose hospitals is typically higher than 10 percent, there is also an anticipation that many of the patients will be routinely assisted by staff. Section 1109.2, Exception 5, exempts the bathrooms associated with critical care or intensive care.

The exception recognizes the practical implications of door maneuvering clearances on the room side at in-swinging doors in smaller-sized patient sleeping rooms in hospitals. The maneuvering clearance is still required on the outside of the Accessible patient sleeping room door. Since the maneuvering clearance in ICC A117.1 is based on the size of the door, there is no credit provided for the wider $41^1/_2$-inch (1054 mm) clear width door (required in Section 1010.1.1 in Group I-2 for movement of beds) versus the standard 32-inch (813 mm) clear width door. Without this exception, a patient room would likely require extra width for maneuvering clearance at the door when a toilet room is located on the same wall as the door. Due to operational procedures and observation needs, the door position is normally open. Therefore, the need for door maneuvering clearance on the interior side is reduced. At hospitals, the patient room door is usually closed only when privacy is needed during procedures.

Maneuvering clearances are part of an accessible route, and accessible routes connect accessible elements; therefore, maneuvering clearances at patient sleeping rooms that are not Accessible or Type B units are not required since an accessible route is not required. See Section 1107.5.3.2 regarding Type B units in hospitals.

1107.5.3.2 Type B units. In structures with four or more *dwelling units* or *sleeping units intended to be occupied as a residence*, every *dwelling unit* and *sleeping unit intended to be occupied as a residence* shall be a *Type B unit*.

Exception: The number of *Type B units* is permitted to be reduced in accordance with Section 1107.7.

❖ As discussed in the general comments to this section, most Group I-2 hospitals are not intended to serve as a person's place of residence; therefore, Type B units are not required in most hospitals. However, whether a Group I-2 psychiatric or detoxification facility is a person's place of abode is subject for interpretation. Please see the general discussion to this section for additional information. The exception is a general reference to Section 1107.7, which addresses situations where it is logical to back off on the requirements for Type B units within a structure.

1107.5.4 Group I-2 rehabilitation facilities. In hospitals and rehabilitation facilities of Group I-2 occupancies that specialize in treating conditions that affect mobility, or units within either that specialize in treating conditions that affect mobility, 100 percent of the *dwelling units* and *sleeping units* shall be *Accessible units*.

❖ The requirements for accessibility in Group I-2 are based on the anticipated frequency of usage by disabled persons. There are different thresholds established for different types of health care occupancies based on the nature of their activity. In rehabilitation facilities that specialize in treating conditions that affect mobility, the anticipated need is very high compared to other Group I-2 facilities. In such cases, it is realistic to presume that the majority, if not all, of the patients will have some degree of mobility impairment and will, thus, require accessible features. Accordingly, all patient rooms and their associated bathing and toilet facilities are required to be Accessible units.

INTERNATIONAL CODE COUNCIL®
Copyright © 2015 ICC. ALL RIGHTS RESERVED. Accessed by David Dammon on Jun 21, 2017 12:30:52 PM pursuant to License Agreement with ICC. No further reproduction or distribution authorized. ANY UNAUTHORIZED REPRODUCTION OR DISTRIBUTION IS A VIOLATION OF THE FEDERAL COPYRIGHT ACT AND THE LICENSE AGREEMENT, AND SUBJECT TO CIVIL AND CRIMINAL PENALTIES THEREUNDER.

1107.5.5 Group I-3. *Accessible units* shall be provided in Group I-3 occupancies in accordance with Sections 1107.5.5.1 through 1107.5.5.3.

❖ The requirement for accessibility in Group I-3 facilities was taken from the 2010 ADA Standard (see Section 308.5 for Group I-3). Section 1107.5.5.1 contains requirements for general housing cells. Sections 1107.5.5.2 and 1107.5.5.3 are additional requirements for special types of cells or holding areas. While jail cells may be considered a detainee's residence, since the FHA does not cover detention and correctional facilities, Type B units are not required in Group I-3 occupancies. For visiting areas in jails, see Section 1109.12.2.

1107.5.5.1 Group I-3 sleeping units. In Group I-3 occupancies, at least 3 percent of the total number of *sleeping units* in the facility, but not less than one unit in each classification level, shall be *Accessible units.*

❖ The requirement for sleeping units or cells in Group I-3 is for 3 percent of the general housing cells and their associated facilities to be Accessible units. The current trend in jail design is to group housing cells into "pods." Since the administration of the correctional facility will determine where detainees will reside, there are no requirements for distribution of the Accessible units within the same basic security level or type (e.g., woman, men, juvenile). Most jails are all one security level and only house male or female inmates. A correctional facility may decide to locate all its Accessible cells in one pod due to suicide prevention and other safety concerns. Sections 1103.2.13 and 1107.4 have exceptions for spaces shared by detainees for areas within the jail where Accessible units are not provided.

1107.5.5.2 Special holding cells and special housing cells or rooms. In addition to the *Accessible units* required by Section 1107.5.5.1, where special holding cells or special housing cells or rooms are provided, at least one serving each purpose shall be an *Accessible unit.* Cells or rooms subject to this requirement include, but are not limited to, those used for purposes of orientation, protective custody, administrative or disciplinary detention or segregation, detoxification and medical isolation.

Exception: Cells or rooms specially designed without protrusions and that are used solely for purposes of suicide prevention shall not be required to include grab bars.

❖ If special types of holding or housing cells are provided within a facility (e.g., orientation, protective custody, disciplinary detention, segregation, detoxification, medical isolation), at least one of each type must be an Accessible unit. A cell that is designed specifically for a suicide watch is required to meet Accessible unit criteria, but if a toilet is provided, grab bars are not required.

1107.5.5.3 Medical care facilities. Patient *sleeping units* or cells required to be *Accessible units* in medical care facilities shall be provided in addition to any medical isolation cells required to comply with Section 1107.5.5.2.

❖ When medical care facilities are provided within a detention or correctional facility, 10 percent of the units are required to be Accessible units. The intent is to be consistent with the hospital requirements found in Section 1107.5.3.1.

1107.6 Group R. *Accessible units*, *Type A units* and *Type B units* shall be provided in Group R occupancies in accordance with Sections 1107.6.1 through 1107.6.4.

❖ This section introduces four subsections that address accessibility requirements for occupancies in Group R. Criteria for Accessible units, Type A units and Type B units are specified in Chapter 10 of ICC A117.1.

The IRC references this chapter for accessibility provisions. Therefore, this chapter may be applicable to housing covered under the IRC (see commentary, Section 1107.6.3). Structures referenced to Chapter 11 from the IRC would be considered Group R-3 for purposes of accessibility only.

1107.6.1 Group R-1. *Accessible units* and *Type B units* shall be provided in Group R-1 occupancies in accordance with Sections 1107.6.1.1 and 1107.6.1.2.

❖ The terms "dwelling unit" and "sleeping unit" are utilized instead of "guestrooms" so that the amenities in the units themselves are reflected. An exception applicable to small bed-and-breakfast style hotels is provided in Section 1103.2.11.

Hotels, motels, boarding houses and other short-term housing types are required to provide Accessible units. Where such facilities are also intended to be occupied as a residence, Type B unit criteria are applicable. For additional discussion, please see the general comments at the beginning of this chapter.

The following factors should be considered where persons can stay more or less than 30 days, including hotels, motels, corporate housing and seasonal vacation units, in determining the applicability of Type B unit criteria:

1. Amenities included inside the units, including kitchen facilities;
2. Whether the property is to be marketed to the public as short-term housing;
3. Whether the terms and length of the occupancy will be established through a lease or other written agreement; and
4. How payment is calculated (e.g., on a daily, weekly, monthly or yearly basis).

If the amenities and operation of the units are closer to those of apartments than of hotels, they are subject to Type B requirements. For example, if a hotel is marketed as short-term housing, payment is made monthly, and if the units contain kitchens, the hotel would be subject to Type B unit criteria. For

INTERNATIONAL CODE COUNCIL®
Copyright © 2015 ICC. ALL RIGHTS RESERVED. Accessed by David Dammon on Jun 21, 2017 12:30:52 PM pursuant to License Agreement with ICC. No further reproduction or distribution authorized. ANY UNAUTHORIZED REPRODUCTION OR DISTRIBUTION IS A VIOLATION OF THE FEDERAL COPYRIGHT ACT AND THE LICENSE AGREEMENT, AND SUBJECT TO CIVIL AND CRIMINAL PENALTIES THEREUNDER.

additional information see the commentary at the beginning of this chapter and Section 1107.

1107.6.1.1 Accessible units. *Accessible dwelling units* and *sleeping units* shall be provided in accordance with Table 1107.6.1.1. Where buildings contain more than 50 *dwelling units* or *sleeping units*, the number of *Accessible units* shall be determined per building. Where buildings contain 50 or fewer *dwelling units* or *sleeping units*, all *dwelling units* and *sleeping units* on a *site* shall be considered to determine the total number of *Accessible units*. *Accessible units* shall be dispersed among the various classes of units.

❖ The required number of Accessible dwelling or sleeping units in Group R-1 is indicated in Table 1107.6.1.1. The table requires Accessible units to include a variety of bathing options. Where roll-in-type showers are provided, ICC A117.1 requires seats in roll-in showers. These showers can then serve the dual purpose of roll-in and transfer showers.

For sites where the hotel rooms are provided in multiple buildings, all units on the site should be considered to determine the number of Accessible units if each building has 50 or fewer units. For example, if a hotel consists of several small buildings on a site, the same number of Accessible units would be required as if the hotel was constructed as a single structure. If the hotel has buildings with more than 50 units, those buildings must be considered separately to determine the number of Accessible units. See Commentary Figure 1107.6.1.1.

Accessible units must be dispersed among the different types of units. This is not an automatic requirement to disperse the Accessible units to different floor levels (see Section 1107.4). When different classes of dwelling or sleeping units are available, special amenities must also be made available in the Accessible units, including suites or larger rooms, kitchenettes, executive levels, etc. For example, if sleeping unit options include single rooms, suites or kitchenettes, and two Accessible units are required, the Accessible units must be provided in two of the three options. If no other types of amenities are provided on other levels, the hotel could provide the Accessible units on the main level. Some hotels provide all Accessible units on the main level due to concerns for disabled guests' ease of escape from the building during an emergency, such as a fire. Keep in mind that services available to guests (e.g., pools, exercise rooms, laundry rooms) must also be on an accessible route for guests in the Accessible units.

Note that, in accordance with Section 1010.1.1, all doors within a hotel room are required to have a clear width of 32 inches, even in the nonaccessible rooms. The U.S. Access Board and DOJ had received numerous complaints that persons who requested Accessible hotel rooms were not provided with those rooms when they arrived at the hotel. With a 32-inch clear width on all doors, a person using a mobility device should at least be able to get into the bathroom in the nonaccessible units.

TABLE 1107.6.1.1. See page 11-28.

❖ The number of Accessible dwelling and sleeping units required is coordinated with the 2010 ADA Standard requirements. The ADAAG Review Federal Advisory Committee reviewed all information and data provided by the industry in support of a lower

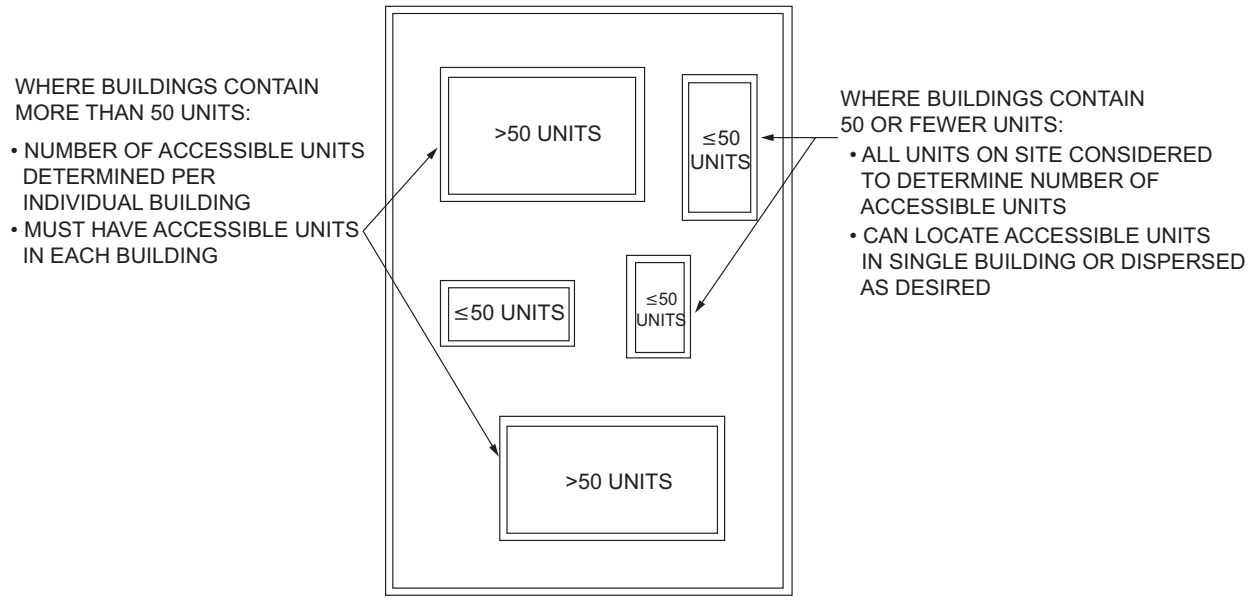

Figure 1107.6.1.1
DETERMINING THE NUMBER OF ACCESSIBLE UNITS IN GROUP R-1

INTERNATIONAL CODE COUNCIL®
Copyright © 2015 ICC. ALL RIGHTS RESERVED. Accessed by David Dammon on Jun 21, 2017 12:30:52 PM pursuant to License Agreement with ICC. No further reproduction or distribution authorized. ANY UNAUTHORIZED REPRODUCTION OR DISTRIBUTION IS A VIOLATION OF THE FEDERAL COPYRIGHT ACT AND THE LICENSE AGREEMENT, AND SUBJECT TO CIVIL AND CRIMINAL PENALTIES THEREUNDER.

number of Accessible units being required. The committee determined that accessible features are useful to persons with disabilities beyond those who use wheelchairs, and that good design would lessen the "institutional" impression that may make Accessible units less attractive to nondisabled guests. To accommodate wheelchair users in relatively large facilities, this table requires a minimum number of units to be equipped with roll-in-type showers. The intent of the second column in this table is that different options (e.g., roll-in shower, transfer shower or bathtubs) are available in the Accessible units. It is not the intent of this column to prohibit roll-in showers with seats when there are only one or two Accessible units in the hotel.

1107.6.1.2 Type B units. In structures with four or more *dwelling units* or *sleeping units intended to be occupied as a residence*, every *dwelling unit* and *sleeping unit intended to be occupied as a residence* shall be a *Type B unit*.

Exception: The number of *Type B units* is permitted to be reduced in accordance with Section 1107.7.

❖ Most hotels and motels are not intended to be occupied as a residence; therefore, the criteria for Type B units would not be applicable. However, in certain situations, extended-stay hotels or similar corporate housing arrangements are required to meet Type B unit criteria. For additional information on how to determine if this section is applicable, see the comments at the beginning of this chapter and Sections 1107 and 1107.6.1. The Accessible sleeping units required by Section 1107.6.1.1 exceed Type B unit requirements. The exception is a general reference to Section 1107.7, which addresses situations where it is logical to back off on the requirements for Type B units within a structure.

1107.6.2 Group R-2. *Accessible units*, *Type A units* and *Type B units* shall be provided in Group R-2 occupancies in accordance with Sections 1107.6.2.1 through 1107.6.2.3.

❖ The terms "dwelling unit" and "sleeping unit" are utilized instead of "apartment," "dorm room," "sleeping accommodations," "suites," etc., so that the amenities in the units themselves are reflected and for consistent application within all Group R-2 facilities. Since these types of facilities are intended to be occupied as a residence, Type B unit criteria would be applicable. For a complete discussion, please see the comments to this chapter and this section.

Timeshare properties require a different analysis. Timeshare owners have an interest in the property, yet they typically stay less than 30 days. For a timeshare property to be subject to Type B requirements, the owners must have an ownership interest in the property itself, rather than in just coming to the area for a vacation without ties to a particular property. The following additional factors must be considered to determine whether timeshare units must meet Type B design and construction requirements:

1. Whether traditional rights of ownership are to be unrestricted (e.g., whether the timeshare owner has the right to occupy, alter or exercise control over a particular unit over a period of time);
2. The nature of the ownership interest conveyed (e.g., fee simple); and
3. The extent to which operations resemble those of a hotel, motel or inn (e.g., reservation, central registration, meals, laundry service).

If an owner's rights regarding the units are subject to few restrictions and the operation of the units is closer to that of condominiums/apartments than hotels, the units are subject to Type B requirements.

TABLE 1107.6.1.1
ACCESSIBLE DWELLING UNITS AND SLEEPING UNITS

TOTAL NUMBER OF UNITS PROVIDED	MINIMUM REQUIRED NUMBER OF ACCESSIBLE UNITS WITHOUT ROLL-IN SHOWERS	MINIMUM REQUIRED NUMBER OF ACCESSIBLE UNITS WITH ROLL-IN SHOWERS	TOTAL NUMBER OF REQUIRED ACCESSIBLE UNITS
1 to 25	1	0	1
26 to 50	2	0	2
51 to 75	3	1	4
76 to 100	4	1	5
101 to 150	5	2	7
151 to 200	6	2	8
201 to 300	7	3	10
301 to 400	8	4	12
401 to 500	9	4	13
501 to 1,000	2% of total	1% of total	3% of total
Over 1,000	20, plus 1 for each 100, or fraction thereof, over 1,000	10 plus 1 for each 100, or fraction thereof, over 1,000	30 plus 2 for each 100, or fraction thereof, over 1,000

INTERNATIONAL CODE COUNCIL®
Copyright © 2015 ICC. ALL RIGHTS RESERVED. Accessed by David Dammon on Jun 21, 2017 12:30:52 PM pursuant to License Agreement with ICC. No further reproduction or distribution authorized. ANY UNAUTHORIZED REPRODUCTION OR DISTRIBUTION IS A VIOLATION OF THE FEDERAL COPYRIGHT ACT AND THE LICENSE AGREEMENT, AND SUBJECT TO CIVIL AND CRIMINAL PENALTIES THEREUNDER.

1107.6.2.1 Live/work units. In *live/work units* constructed in accordance with Section 419, the nonresidential portion is required to be *accessible*. In a structure where there are four or more *live/work units intended to be occupied as a residence*, the residential portion of the *live/work unit* shall be a *Type B unit*.

Exception: The number of *Type B units* is permitted to be reduced in accordance with Section 1107.7.

❖ Live/work units are dwelling units in which a significant portion of the space includes a nonresidential use operated by the tenant/owner. Although the entire unit is classified as a Group R-2 occupancy for construction purposes, for accessibility purposes it is viewed more as a mixed-use condition. The residential portion of the unit is regulated differently for accessibility purposes than the nonresidential portion.

When live/work units are built in a strip, similar to townhouses, the exceptions for Type B units set forth in Section 1107.7 would also exempt such units where applicable. For example, a two-story dwelling unit above the work unit in a nonelevator building would not be subject to Type B requirements because of the exemption in Section 1107.7.2. The code does not clarify if a two-story live/work unit with the business on the entire first floor and the residence on the entire second floor would be considered a multistory dwelling unit for purposes of the exception in Section 1107.7.2. Where a portion of the dwelling unit was on the first floor and all of the second floor, the unit would be exempted as a multistory unit without elevator service. If the dwelling unit was the entire second and third floors, the same exception would be applicable. Just as a reminder, Type B units are applied per structure, not per building, so legal property lines may not be relevant when evaluating accessibility requirements (see Section 1107).

In the nonresidential portion of the unit, full accessibility would be required based on the intended use. For example, if the nonresidential area of the unit is utilized for hair care services, all elements related to the service activity must be accessible. This would include site parking where provided, site and building accessible routes, the public entrance, and applicable patron services. In essence, the work portion of the live/work unit would be regulated in the same manner as a stand-alone commercial occupancy.

1107.6.2.2 Apartment houses, monasteries and convents. *Type A units* and *Type B units* shall be provided in apartment houses, monasteries and convents in accordance with Sections 1107.6.2.2.1 and 1107.6.2.2.2.

❖ Unless they receive some type of federal funding, apartments and condominiums are not covered by the 2010 ADA Standard. Note that the code deals with apartments and condominiums in the same manner when dealing with accessibility requirements.

Because convents and monasteries are associated with religious organizations, they also are not covered by ADA requirements. Since all of these facilities may serve as a person's residence, they are covered by FHAG. A convent or monastery cannot be sued under the FHA for selectively limiting its residents. However, a convent or monastery must comply with the FHAG construction requirements for the residential units that it provides. The scope for Type B units is consistent with FHAG requirements.

1107.6.2.2.1 Type A units. In Group R-2 occupancies containing more than 20 *dwelling units* or *sleeping units*, at least 2 percent but not less than one of the units shall be a *Type A unit*. All Group R-2 units on a *site* shall be considered to determine the total number of units and the required number of *Type A units*. *Type A units* shall be dispersed among the various classes of units. Bedrooms in monasteries and convents shall be counted as *sleeping units* for the purpose of determining the number of units. Where the *sleeping units* are grouped into suites, only one *sleeping unit* in each suite shall count towards the number of required *Type A units*.

Exceptions:

1. The number of *Type A units* is permitted to be reduced in accordance with Section 1107.7.
2. *Existing structures* on a *site* shall not contribute to the total number of units on a *site*.

❖ To be able to better accommodate a person who uses a wheelchair, 2 percent of apartments and condominiums are required to provide Type A units within the development. Congregate residences, such as convents and monasteries, must also provide Type A units. (Other types of congregate living arrangements are addressed in Section 1107.6.2.2.) The housing industry has been concerned that dwelling units equipped with the full range of features to accomplish accessibility will not be marketable to people without disabilities. The Type A requirements are intended to establish a middle ground that will satisfy both needs. Allowances made during the construction process for future conversion for accessibility, such as reinforcement in bathroom walls for future installation of grab bars, will allow a unit to be altered later at a considerably lesser cost.

Type A units are required when the site contains more than 20 dwelling units or sleeping units. So that there is a consistent number of Type A units in multiple-building sites based on the size of a development as a whole, all the buildings are added together to determine the number required. For example, a 300-unit building would require six Type A units, and a development with 75 buildings with four units per building would also require six Type A units. Exception 2 is in recognition that a development may be built in stages and does not exempt existing buildings that are being altered from complying with the requirement for Type A units. Only the units that are being constructed as part of that development phase are considered in determining the number of Type A units. For specific provisions see the IEBC Sections 410.8.6, 705.1.8 and 1105.3.

INTERNATIONAL CODE COUNCIL®
Copyright © 2015 ICC. ALL RIGHTS RESERVED. Accessed by David Dammon on Jun 21, 2017 12:30:52 PM pursuant to License Agreement with ICC. No further reproduction or distribution authorized. ANY UNAUTHORIZED REPRODUCTION OR DISTRIBUTION IS A VIOLATION OF THE FEDERAL COPYRIGHT ACT AND THE LICENSE AGREEMENT, AND SUBJECT TO CIVIL AND CRIMINAL PENALTIES THEREUNDER.

There has been some discussion that congregate living facilities, such as convents and monasteries, should be considered dwelling units instead of a group of sleeping units with common-use living areas. As a single-family dwelling unit, they would not have to provide any level of accessibility (see Section 1103.2.3). This is not the correct interpretation for providing accessibility features. The last sentence is intended to make clear that for the purpose of determining the number of Type A units, the bedrooms in the congregate residence must be counted separately. See the commentaries to Sections 1107.3 and 1107.4 regarding what shared elements must be accessible.

The Type A units must be dispersed among the classes of units provided. For example, if one-, two- and three-bedroom units are available with the development and two Type A units are required, it is the designer's choice as to which two of the options to provide as Type A units. The designer, however, cannot choose to only provide the one-bedroom option with both Type A units. This is not intended to require Type A units to be provided in different buildings in a multiple-building site. Many times in multiple-building developments, there are shared facilities such as clubhouses or pools. The designer may choose to locate the Type A units in the building closest to those amenities for ease of access for the residents. This is acceptable as long as the dispersion-by-type requirement is met.

In limited circumstances, townhouse-style units can be Group R-2 facilities (see Section 310.4). If multistory units are provided for the Type A units, ICC A117.1 would require an accessible route between levels. Within the dwelling, this can be provided by a passenger elevator, a LULA, a private residence elevator (see Section 1109.7) or a platform lift (see Section 1109.8, Item 4). A possible alternative would be to provide some single-story units within the development to meet Type A unit requirements. If the amenities and size are the same, they could be considered the same type as a multilevel unit. The multistory exception in Section 1107.7.2 is not applicable to Type A units.

Exception 1 allows the number of Type A units to be reduced in accordance with Section 1107.7.5 when the building's first-floor elevation is required to be raised due to flood-plain regulations. This is the only exception that allows for a reduction in the number of Type A units required.

1107.6.2.2.2 Type B units. Where there are four or more *dwelling units* or *sleeping units intended to be occupied as a residence* in a single structure, every *dwelling unit* and *sleeping unit intended to be occupied as a residence* shall be a *Type B unit*.

Exception: The number of *Type B units* is permitted to be reduced in accordance with Section 1107.7.

❖ When four or more dwelling or sleeping units are provided in a single structure, those units must meet Type B criteria (note the use of the term "structure" instead of "building"). The criteria are applicable if four dwelling units are built together, regardless of fire walls [see Commentary Figures 1107.6.2.2.2(1) and 1107.6.2.2.2(2)]. The exception is a general reference to Section 1107.7, which addresses situations where it is logical to back off on the requirements for Type B units within a structure.

Type A units provided in accordance with Section 1107.6.2.1.1 exceed Type B unit requirements.

1107.6.2.3 Group R-2 other than live/work units, apartment houses, monasteries and convents. In Group R-2 occupancies, other than *live/work units*, apartment houses, monasteries and convents falling within the scope of Sections 1107.6.2.1 and 1107.6.2.2, *Accessible units* and *Type B units* shall be provided in accordance with Sections 1107.6.2.3.1 and 1107.6.2.3.2. Bedrooms within congregate living facilities shall be counted as *sleeping units* for the purpose of determining the number of units. Where the *sleeping units* are grouped into suites, only one *sleeping unit* in each suite shall be permitted to count towards the number of required *Accessible units*.

❖ This would include congregate housing types, such as dormitories, boarding houses, fraternities and sororities. Nontransient hotels and motels would typically be grouped with these requirements since they may also be operating as transient and nontransient. A building

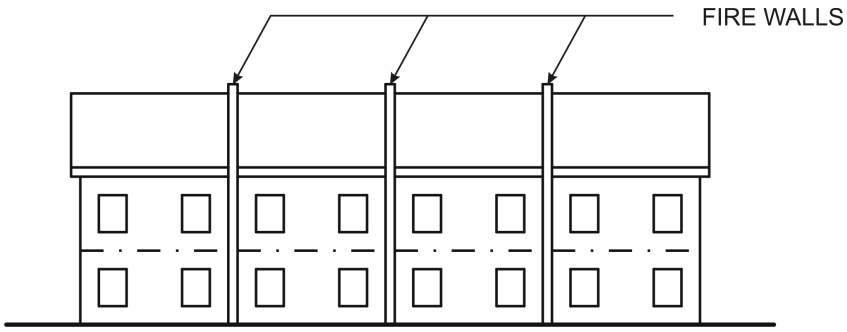

Figure 1107.6.2.2.2(1)
BUILDING WITH FIRE WALLS IS TREATED AS A SINGLE STRUCTURE

INTERNATIONAL CODE COUNCIL®
Copyright © 2015 ICC. ALL RIGHTS RESERVED. Accessed by David Dammon on Jun 21, 2017 12:30:52 PM pursuant to License Agreement with ICC. No further reproduction or distribution authorized. ANY UNAUTHORIZED REPRODUCTION OR DISTRIBUTION IS A VIOLATION OF THE FEDERAL COPYRIGHT ACT AND THE LICENSE AGREEMENT, AND SUBJECT TO CIVIL AND CRIMINAL PENALTIES THEREUNDER.

used for two purposes must be designed for the most restrictive provisions (see Section 302.1). A time-share should comply with Section 1107.6.2.1 or 1107.6.2.2, based on whichever it most closely represents (see also commentary, Section 1107.6.2).

Dormitories are typically located in universities. Universities are required to make all programs accessible. Therefore, dormitories are covered by ADA requirements. Boarding houses, fraternity houses and sorority houses have similar types of living arrangements. It seems logical that the same anticipated need should result in the same level of required Accessible units. Since all these facilities typically serve as a person's residence, they are covered by FHAG. The scope for Accessible units is consistent with ADA requirements for dormitories. The scope for Type B units is consistent with FHAG requirements.

There has been some discussion that congregate living facilities, such as sororities and fraternities, should be considered dwelling units instead of a group of sleeping units with common-use living areas. As a single-family dwelling unit, they would not have to provide any level of accessibility (see Section 1103.2.3). This is not the correct interpretation for providing accessibility features. The new style of dormitory living is groups of bedrooms that share a common living space, sometimes with a kitchen or kitchenette. If these are counted as dwelling units instead of sleeping units, the number of Accessible rooms available may be less, or multiple bedrooms in the same suite would be interpreted to all be Accessible units. Administratively, when housing students, the universities still treat this style of units as the old-style dorm rooms down a long hallway. The last sentence is intended to make clear that for the purpose of determining the number of Accessible units, the bedrooms in any congregate residence must be counted separately. In a suite configuration, only one of the sleeping units can be counted as part of the required number of Accessible units. See the commentary to Sections 1107.3 and 1107.4 regarding what shared elements must be accessible.

1107.6.2.3.1 Accessible units. *Accessible dwelling units* and *sleeping unit*s shall be provided in accordance with Table 1107.6.1.1.

❖ The number of Accessible units required in these Group R-2 facilities is the same as that required in hotels and motels. All associated and shared areas (e.g., bathrooms, kitchens, study rooms) must also be accessible in accordance with Section 1002 of ICC A117.1. A certain number of the Accessible units must have associated bathrooms equipped with a roll-in shower. See the commentary for Section 1107.6.2.3 regarding how to count the number of units to determine the number of Accessible units required.

1107.6.2.3.2 Type B units. Where there are four or more *dwelling units* or *sleeping unit*s *intended to be occupied as a residence* in a single structure, every *dwelling unit* and every *sleeping unit intended to be occupied as a residence* shall be a *Type B unit*.

Exception: The number of *Type B units* is permitted to be reduced in accordance with Section 1107.7.

❖ The FHA specifically considers dormitories as places where students live, even if it is just for the school year. Therefore, when four or more sleeping units are provided in a single structure, those units must meet Type B criteria. The Accessible sleeping units required by Section 1107.6.2.2.1 exceed Type B unit requirements. The exception is a general reference to Section 1107.7, which addresses situations where it is logical to back off on the requirements for Type B units within a structure. See the commentary to Section 1107.4 regarding elevator requirements in dormitories.

1107.6.3 Group R-3. In Group R-3 occupancies where there are four or more *dwelling units* or *sleeping units intended to be occupied as a residence* in a single structure, every *dwell-*

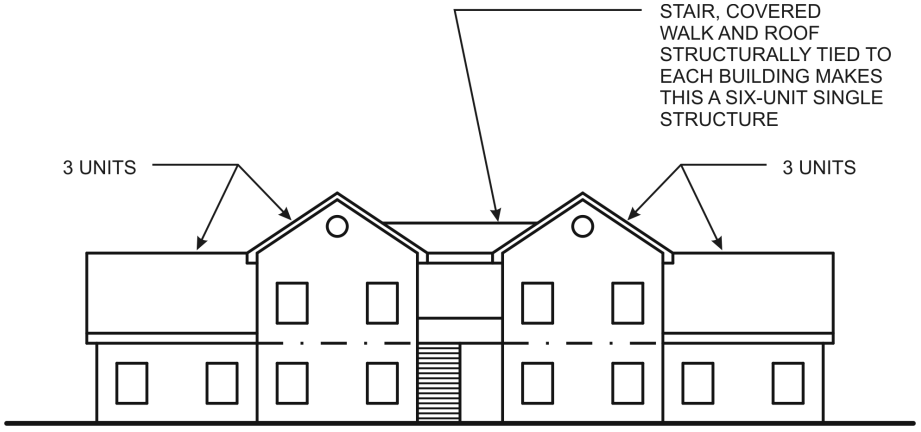

Figure 1107.6.2.2.2(2)
TWO STRUCTURALLY JOINED BUILDINGS ARE TREATED AS A SINGLE STRUCTURE

INTERNATIONAL CODE COUNCIL®
Copyright © 2015 ICC. ALL RIGHTS RESERVED. Accessed by David Dammon on Jun 21, 2017 12:30:52 PM pursuant to License Agreement with ICC. No further reproduction or distribution authorized. ANY UNAUTHORIZED REPRODUCTION OR DISTRIBUTION IS A VIOLATION OF THE FEDERAL COPYRIGHT ACT AND THE LICENSE AGREEMENT, AND SUBJECT TO CIVIL AND CRIMINAL PENALTIES THEREUNDER.

ing unit and *sleeping unit intended to be occupied as a residence* shall be a *Type B unit*. Bedrooms within congregate living facilities shall be counted as *sleeping units* for the purpose of determining the number of units.

Exception: The number of *Type B units* is permitted to be reduced in accordance with Section 1107.7.

❖ When four or more dwelling or sleeping units are provided in a single structure, those units must meet Type B criteria (note the use of the term "structure" instead of "building"). Since Group R-3 structures can be a series of one or two dwellings per building separated by fire walls (see Section 310.5), the provisions for Type B units would apply to groups of R-3 units. The criteria are applicable if four dwelling units are built together, regardless of fire walls. The exception is a general reference to Section 1107.7, which addresses situations where it is logical to back off on the requirements for Type B units within a structure.

Transient congregate residences with 10 or fewer occupants and nontransient congregate residences with 16 or fewer occupants are permitted to comply with Group R-3 construction requirements (see Section 310.5). Small bed-and-breakfast-type hotels are exempted from accessibility under Section 1103.2.11 (and IRC Section 320). There has been some discussion that congregate living facilities, such as group homes and boarding houses, should be considered dwelling units instead of a group of sleeping units with common-use living areas. As a single-family dwelling unit, they would not have to provide any level of accessibility (see Section 1103.2.3). This is not the correct interpretation for providing accessibility features. The last sentence is intended to make clear that for the purpose of determining the number of Accessible units, the bedrooms in the congregate residence must be counted separately. See the commentaries to Sections 1107.3 and 1107.4 regarding what shared elements must be accessible.

Section 101.2, Exception 1 states that detached one- and two-family dwellings and townhouses that are both three stories or less and have an independent means of egress must comply with the IRC. Section 1103.2.3 exempts detached single-family homes and duplexes from accessibility requirements, but not townhouses. In the IRC, townhouses are further defined as extending from foundation to roof and open on at least two sides. Therefore, the typical side-by-side townhouse is constructed using the IRC. Any configuration of townhouses that does not meet all four criteria has to be constructed under the IBC as Group R-2 or possibly Group R-3. If the structure is divided into one or two dwelling units per building with fire walls, the structure is a Group R-3 (see commentaries, Sections 310.4 and 310.5). Group I-1 and I-2 institutional-type facilities with five or fewer residents have the option of complying with the IBC or the IRC, since they often operate similarly to a single-family home (see Sections 308.3.4, 308.4.2 and 310.5.1). Day care facilities within single-family homes are specifically addressed under Section 1103.2.12. Live/work units are specifically addressed under Section 1107.6.2.1.

Section 320.1 of the IRC refers any structure with four or more sleeping units or dwelling units back to the IBC as Group R-3 buildings for accessibility requirements. Since these types of facilities typically serve as a person's permanent residence, the units must meet Type B criteria. The exception is a general reference to Section 1107.7, which addresses situations where it is logical to back off on the requirements for Type B units within a structure.

1107.6.4 Group R-4. *Accessible units* and *Type B units* shall be provided in Group R-4 occupancies in accordance with Sections 1107.6.4.1 and 1107.6.4.2. Bedrooms in Group R-4 facilities shall be counted as *sleeping units* for the purpose of determining the number of units.

❖ Group R-4 facilities are limited to between six and 16 residents. A Group R-4 is basically a small Group I-1 facility (see Sections 308.3.3 and 310.6). The Group R-4 occupancy was originally developed in response to some lawsuits filed under FHA concerning homes for mentally disabled adults. Under the past legacy codes, a structure where persons live in a supervised environment is a Group I occupancy. In neighborhoods zoned residential only, a variance is required if a group of mentally disabled adults wants to move into a single-family-style dwelling. Additionally, Group I facilities are typically required to be sprinklered throughout with an NFPA 13 system. This type of sprinkler system is not what is typically used in a single-family home. The 16-resident criterion is based on two things: 1. In the last census, 98 percent of the households in the United States that identified themselves as single family had 16 or fewer residents; and 2. In facilities where residents are capable of self-preservation, the number 16 also happens to be the limit of residents permitted in a building where an NFPA 13D sprinkler system can be utilized. Establishing these types of facilities as part of Group R eliminates potential conflict with the zoning issue. The limit on the number of residents and allowing the alternative sprinkler system addresses the discrimination in housing concerns and provides a reasonable level of sprinkler protection for the residents.

There has been some discussion that congregate living facilities, such as group homes, should be considered dwelling units instead of a group of sleeping units with common-use living areas. As a single-family dwelling unit, they would not have to provide any level of accessibility (see Section 1103.2.3). This is not the correct interpretation for providing accessibility features. The last sentence is intended to make clear that for the purpose of determining the number of Accessible units, the bedrooms in the congregate residence must be counted separately. See the commentaries to Sections 1107.3 and 1107.4 regarding what shared elements must be accessible.

INTERNATIONAL CODE COUNCIL®
Copyright © 2015 ICC. ALL RIGHTS RESERVED. Accessed by David Dammon on Jun 21, 2017 12:30:52 PM pursuant to License Agreement with ICC. No further reproduction or distribution authorized. ANY UNAUTHORIZED REPRODUCTION OR DISTRIBUTION IS A VIOLATION OF THE FEDERAL COPYRIGHT ACT AND THE LICENSE AGREEMENT, AND SUBJECT TO CIVIL AND CRIMINAL PENALTIES THEREUNDER.

1107.6.4.1 Accessible units. In Group R-4 Condition 1, at least one of the *sleeping units* shall be an *Accessible unit*.

❖ The requirement for one sleeping unit and its associated facilities (e.g., bathrooms) to meet Accessible unit criteria is consistent with Group I-1 Condition 1 requirements, and for two units, it is consistent with Group I-2 Condition 2 requirements. All common rooms are required to be fully accessible (see Section 1107.3). Section 1002 of ICC A117.1 provides the technical criteria for Accessible sleeping units.

1107.6.4.2 Type B units. In structures with four or more *sleeping units intended to be occupied as a residence*, every *sleeping unit intended to be occupied as a residence* shall be a *Type B unit*.

Exception: The number of *Type B units* is permitted to be reduced in accordance with Section 1107.7.

❖ Since these types of facilities typically serve as a person's permanent residence, the sleeping unit must meet Type B criteria. The Accessible sleeping unit required by Section 1107.6.4.1 exceeds Type B unit requirements. The exception is a general reference to Section 1107.7, which addresses situations where it is logical to back off on the requirements for Type B units within a structure. Since Group R-4 is a congregate residence, this section would be applicable when four or more sleeping units are provided.

1107.7 General exceptions. Where specifically permitted by Section 1107.5 or 1107.6, the required number of *Type A units* and *Type B units* is permitted to be reduced in accordance with Sections 1107.7.1 through 1107.7.5.

❖ Sections 1107.5 and 1107.6 establish when Accessible, Type A or Type B units are expected to be provided. Section 1107.7 covers the general exceptions where it is reasonable and logical to not provide accessibility for some of the units. This would be consistent with the general provisions of Section 1103.2.1. Code users should start out with the assumption that everything, in this case Group I and R dwelling and sleeping units, is required to be accessible, and then back off from that level of accessibility when specific exceptions are indicated. Note that there are no exceptions for Accessible units. While Type A units are mentioned in Section 1107.7.1, the only exception for Type A units is found in Section 1107.7.5.

Sections 1107.7.1 through 1107.7.4 primarily deal with nonelevator buildings. If elevators are provided, except as addressed in Section 1107.7.3, all units in the building are required to meet Type B criteria or better. Providing access to the upper floors in these cases would require either an elevator or a ramp system (or multiple elevators or ramps), both of which would be unreasonable. These exceptions are intended to be consistent with the scope of FHAG. It should be noted that these are only exceptions to the requirements for Type B dwelling units.

In accordance with Section 1107.2, Accessible and Type A units provide a higher level of accessibility than Type B units. Therefore, if Accessible or Type A units are provided on the accessible levels, this would exceed Type B unit requirements. For clarity in the commentary for the exceptions, only Type B units will be mentioned.

1107.7.1 Structures without elevator service. Where no elevator service is provided in a structure, only the *dwelling units* and *sleeping units* that are located on stories indicated in Sections 1107.7.1.1 and 1107.7.1.2 are required to be *Type A units* and *Type B units*, respectively. The number of *Type A units* shall be determined in accordance with Section 1107.6.2.2.1.

❖ Only the units located on the floor levels defined in Sections 1107.7.1.1 and 1107.7.1.2 are required to contain Type A or Type B units when no elevator service is provided in the building. Floor levels that do not meet the criteria are not required to have an accessible route to that level, nor do the dwelling units or sleeping units on those levels have to meet Type A or Type B unit criteria. The building must still have the minimum number of Type A units required on the first floor.

1107.7.1.1 One story with Type B units required. At least one *story* containing *dwelling units* or *sleeping units intended to be occupied as a residence* shall be provided with an *accessible* entrance from the exterior of the structure and all units *intended to be occupied as a residence* on that *story* shall be *Type B units*.

❖ This section basically states that Type B units must be provided on at least one level of a building that is not equipped with elevator service. For example, on a flat site, a two-story structure with Type B dwelling units or sleeping units on the first floor would not require an accessible route to, or Type B units on, the second floor (see Commentary Figure 1107.7.1.1).

1107.7.1.2 Additional stories with Type B units. On all other stories that have a building entrance in proximity to arrival points intended to serve units on that *story*, as indicated in Items 1 and 2, all *dwelling units* and *sleeping units intended to be occupied as a residence* served by that entrance on that *story* shall be *Type B units*.

1. Where the slopes of the undisturbed *site* measured between the planned entrance and all vehicular or pedestrian arrival points within 50 feet (15 240 mm) of the planned entrance are 10 percent or less, and
2. Where the slopes of the planned finished grade measured between the entrance and all vehicular or pedestrian arrival points within 50 feet (15 240 mm) of the planned entrance are 10 percent or less.

Where no such arrival points are within 50 feet (15 240 mm) of the entrance, the closest arrival point shall be used unless that arrival point serves the *story* required by Section 1107.7.1.1.

❖ This section addresses the idea that a building could have two levels that would be provided with accessible routes. This could be a structure built into a hill or a building with the first level a few feet down and the

INTERNATIONAL CODE COUNCIL®
Copyright © 2015 ICC. ALL RIGHTS RESERVED. Accessed by David Dammon on Jun 21, 2017 12:30:52 PM pursuant to License Agreement with ICC. No further reproduction or distribution authorized. ANY UNAUTHORIZED REPRODUCTION OR DISTRIBUTION IS A VIOLATION OF THE FEDERAL COPYRIGHT ACT AND THE LICENSE AGREEMENT, AND SUBJECT TO CIVIL AND CRIMINAL PENALTIES THEREUNDER.

second level a few feet up from grade level [see Commentary Figure 1107.7.1.2(1)].

The basic test for multiple accessible levels is to check for the slope between the building entrance and any arrival points within a 50-foot (15 240 mm) arc. If no arrival points (e.g., sidewalk, parking) are within that 50-foot (15 240 mm) arc, the closest arrival point should be used as a reference. If the slope between these two points is 10 percent or less both before and after grading of the site, then an accessible route is required to that level [see Commentary Figures 1107.7.1.2(2) and 1107.7.1.2(3)].

In the case of sidewalks, the closest point to the entrance will be where a public sidewalk entering the site intersects with the sidewalk to the entrance. In the case of resident parking areas, the closest point to the planned entrance will be measured from the entry point to the parking area that is located closest to the planned entrance. The measurement for elevation should be taken from the center of the entrance door to the top of the pavement at the arrival point.

1107.7.2 Multistory units. A *multistory dwelling unit* or *sleeping unit* that is not provided with elevator service is not required to be a *Type B unit*. Where a *multistory unit* is provided with external elevator service to only one floor, the floor provided with elevator service shall be the primary entry to the unit, shall comply with the requirements for a

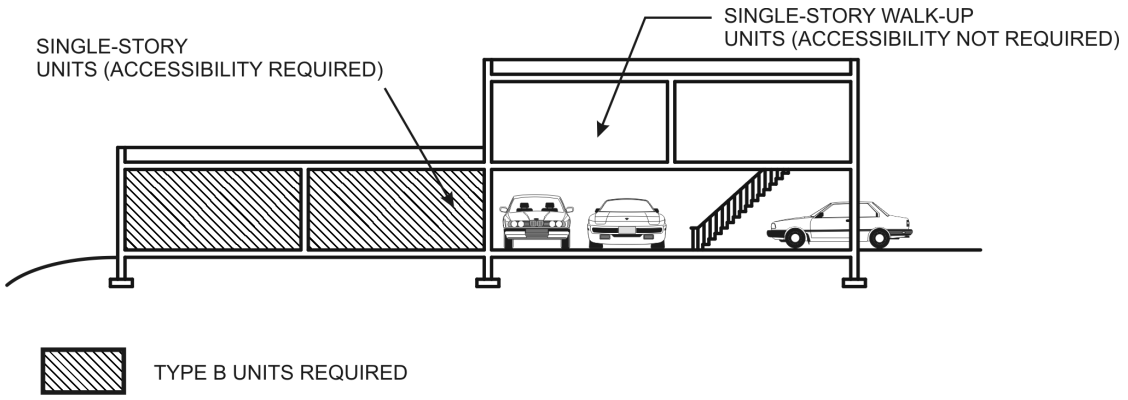

Figure 1107.7.1.1
DWELLING UNITS ON ONE STORY

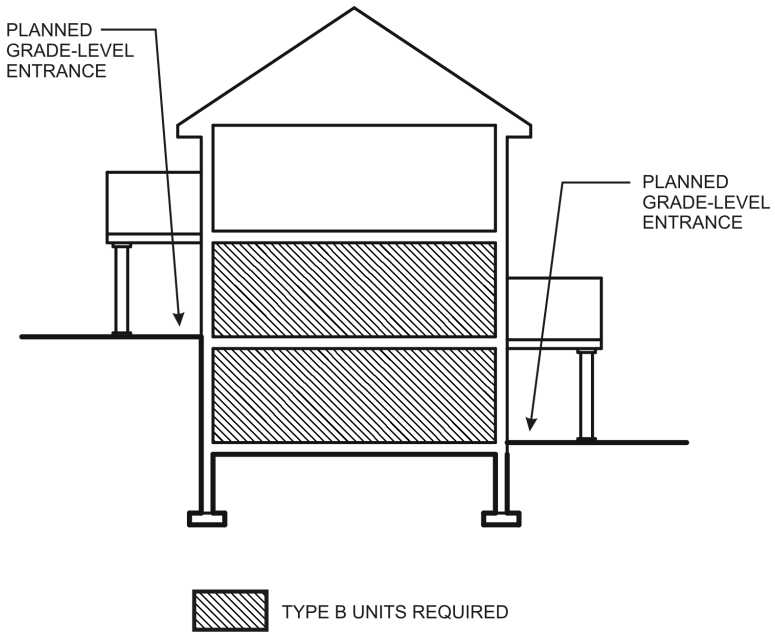

Figure 1107.7.1.2(1)
BUILDING HAS TWO ACCESSIBLE LEVELS, EACH WITH AN ACCESSIBLE ENTRANCE ON AN ACCESSIBLE ROUTE

INTERNATIONAL CODE COUNCIL®
Copyright © 2015 ICC. ALL RIGHTS RESERVED. Accessed by David Dammon on Jun 21, 2017 12:30:52 PM pursuant to License Agreement with ICC. No further reproduction or distribution authorized. ANY UNAUTHORIZED REPRODUCTION OR DISTRIBUTION IS A VIOLATION OF THE FEDERAL COPYRIGHT ACT AND THE LICENSE AGREEMENT, AND SUBJECT TO CIVIL AND CRIMINAL PENALTIES THEREUNDER.

Type B unit and, where provided within the unit, a living area, a kitchen and a toilet facility shall be provided on that floor.

❖ Section 1107.7.2 addresses "multistory units" (see the definition in Chapter 2). For example, the typical townhouse scenario, where there is a series of multistory units adjacent to each other in a single structure and no elevators are provided, would not require Type B units. If a townhouse has a private residence elevator, it would have to meet Type B criteria. In a multistory dwelling or sleeping unit that only has elevator access at one floor level, that level must be accessible and contain a living area kitchen and toilet facility [see Commentary Figures 1107.7.2(1) and 1107.7.2(2)].

1107.7.3 Elevator service to the lowest story with units. Where elevator service in the building provides an *accessible route* only to the lowest *story* containing *dwelling units* or *sleeping units intended to be occupied as a residence*, only the units on that *story* that are *intended to be occupied as a residence* are required to be *Type B units*.

❖ Section 1107.7.3 exempts dwelling units located on upper floors as long as the dwelling units on the first floor containing dwelling units are at least Type B units. For example, a three-story structure has a business on the first floor with apartments on the second and third levels. An accessible route is required to the second level, and all dwelling units on that level are required to be Type B units; however, an accessible route and Type B units are not required to the third level. (Note: If an elevator is utilized to provide access to only the lowest level containing dwelling or sleeping units, this building would not be considered an "elevator" building) [see Commentary Figures 1107.7.3(1) and 1107.7.3(2)].

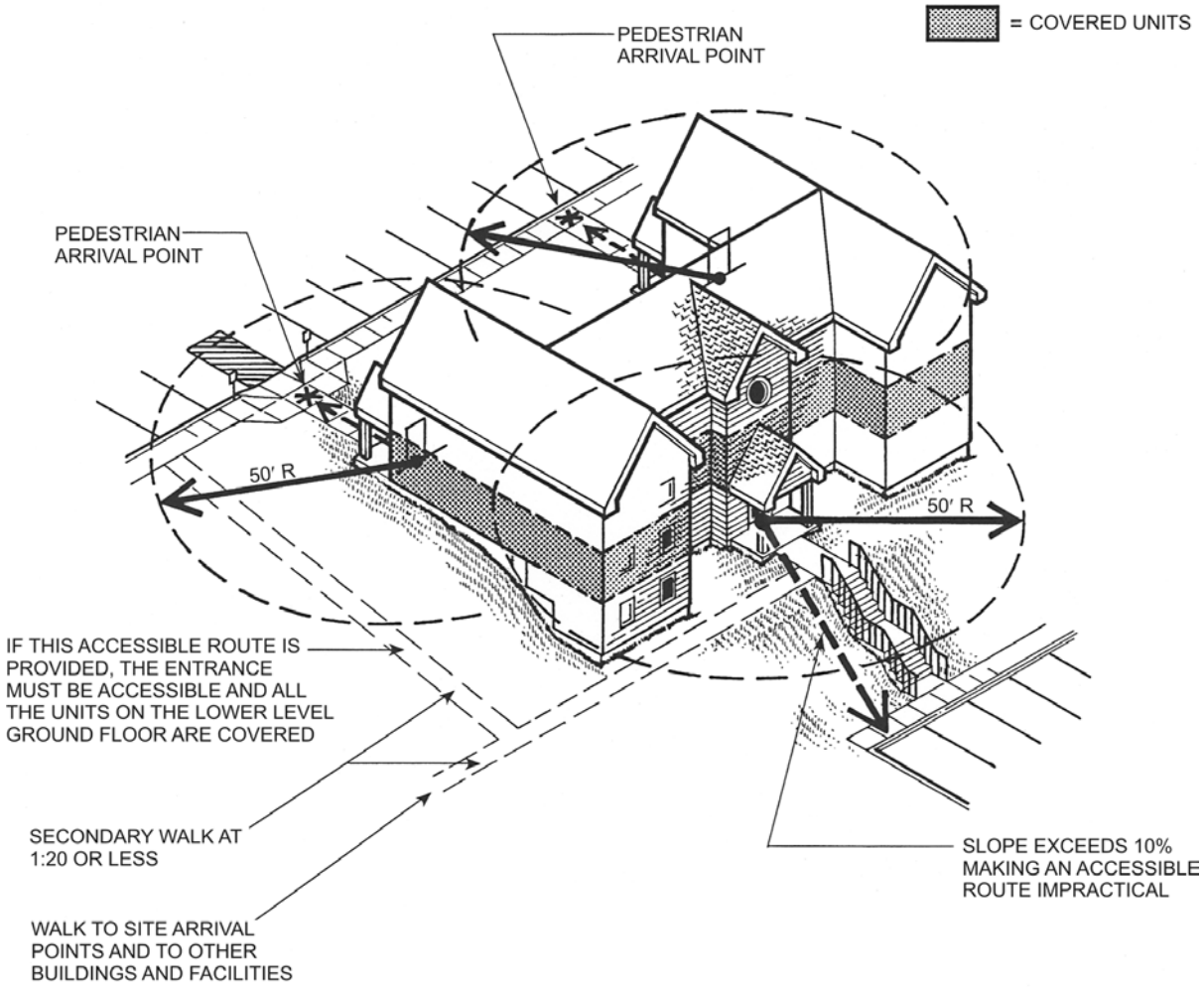

For SI: 1 foot = 304.8 mm.

Figure 1107.7.1.2(2)
SINGLE BUILDING WITH MULTIPLE COMMON ENTRANCES—LOWER GROUND FLOOR UNITS MAY BE COVERED

INTERNATIONAL CODE COUNCIL®
Copyright © 2015 ICC. ALL RIGHTS RESERVED. Accessed by David Dammon on Jun 21, 2017 12:30:52 PM pursuant to License Agreement with ICC. No further reproduction or distribution authorized. ANY UNAUTHORIZED REPRODUCTION OR DISTRIBUTION IS A VIOLATION OF THE FEDERAL COPYRIGHT ACT AND THE LICENSE AGREEMENT, AND SUBJECT TO CIVIL AND CRIMINAL PENALTIES THEREUNDER.

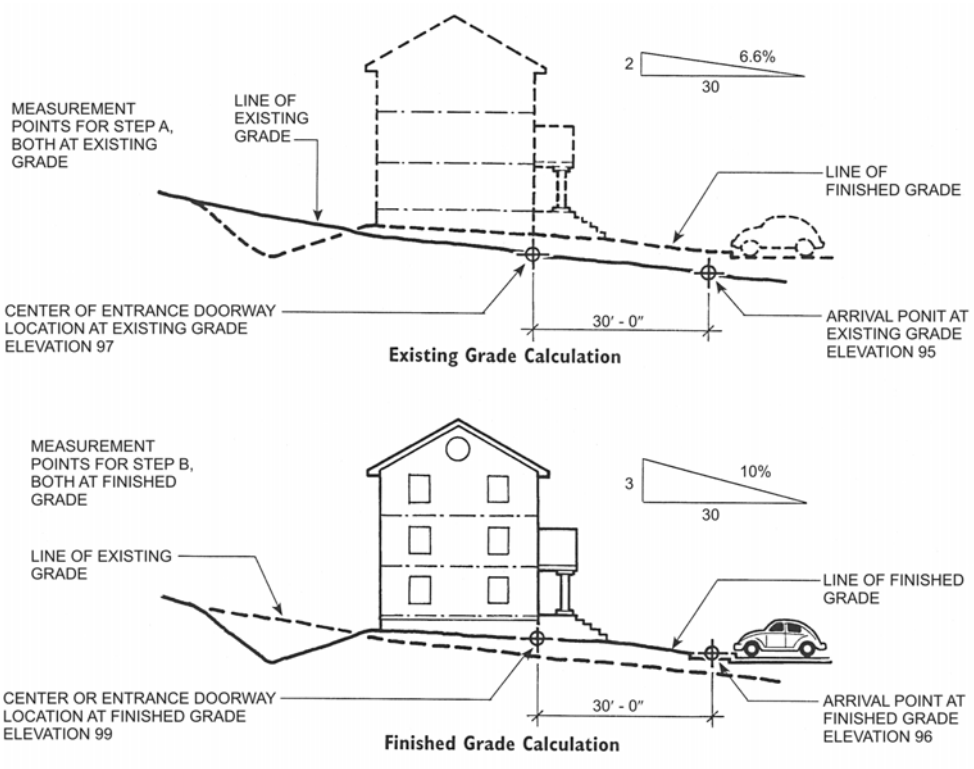

For SI: 1 foot = 304.8 mm.

Figure 1107.7.1.2(3)
EXAMPLE FOR GRADE CALCULATIONS

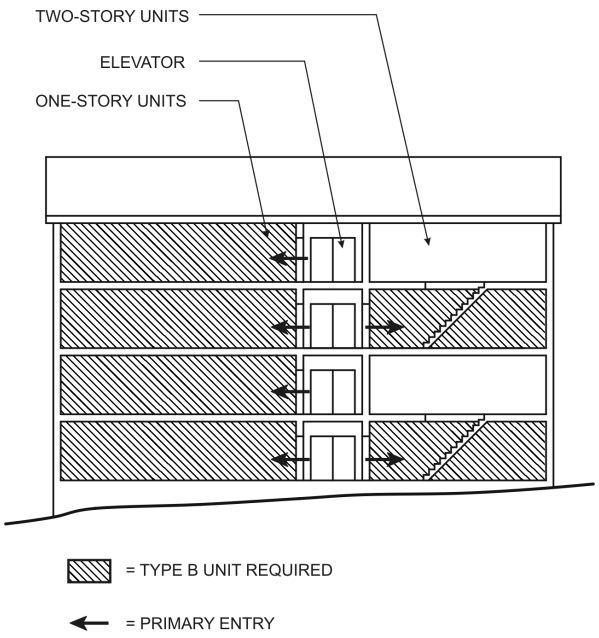

Figure 1107.7.2(1)
BUILDINGS WITH ELEVATOR(S): ALL SINGLE-STORY UNITS AND THE PRIMARY ENTRY LEVEL OF MULTISTORY UNITS

INTERNATIONAL CODE COUNCIL®
Copyright © 2015 ICC. ALL RIGHTS RESERVED. Accessed by David Dammon on Jun 21, 2017 12:30:52 PM pursuant to License Agreement with ICC. No further reproduction or distribution authorized. ANY UNAUTHORIZED REPRODUCTION OR DISTRIBUTION IS A VIOLATION OF THE FEDERAL COPYRIGHT ACT AND THE LICENSE AGREEMENT, AND SUBJECT TO CIVIL AND CRIMINAL PENALTIES THEREUNDER.

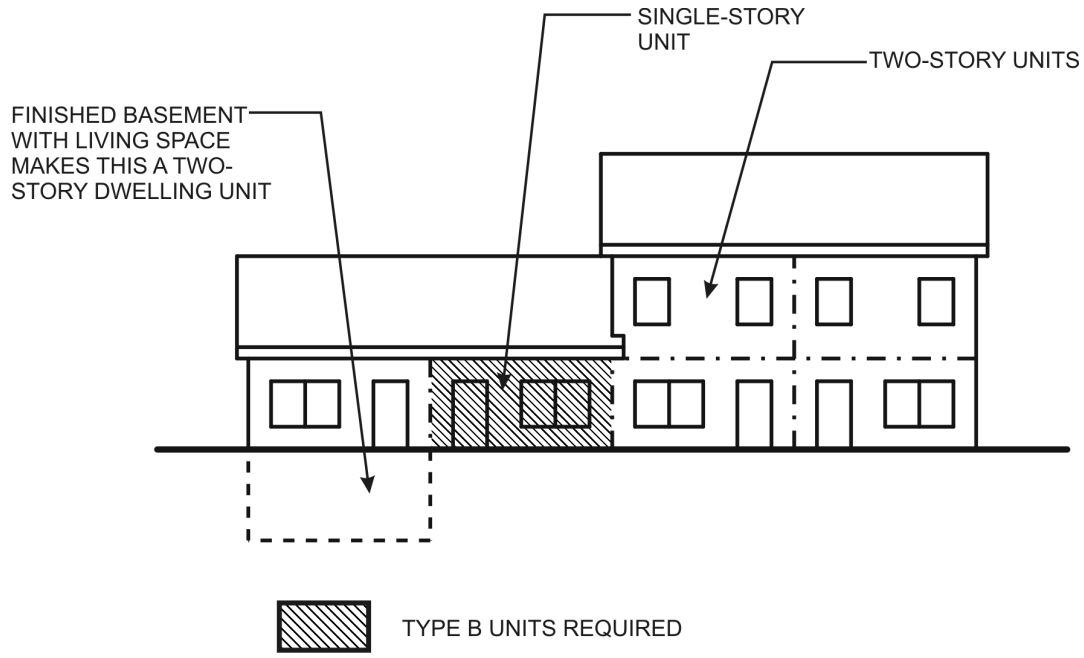

Figure 1107.7.2(2)
GROUND FLOOR UNITS IN BUILDINGS OF FOUR OR MORE UNITS

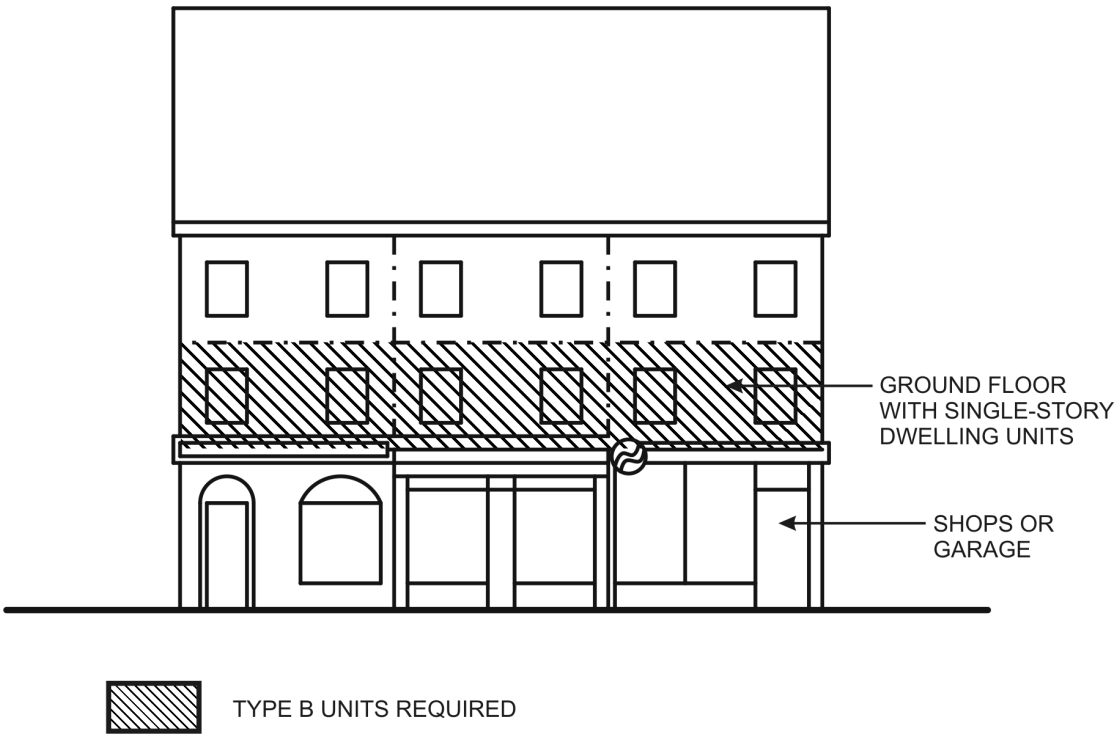

Figure 1107.7.3(1)
DWELLING UNITS OVER SHOPS AND GARAGES

INTERNATIONAL CODE COUNCIL®
Copyright © 2015 ICC. ALL RIGHTS RESERVED. Accessed by David Dammon on Jun 21, 2017 12:30:52 PM pursuant to License Agreement with ICC. No further reproduction or distribution authorized. ANY UNAUTHORIZED REPRODUCTION OR DISTRIBUTION IS A VIOLATION OF THE FEDERAL COPYRIGHT ACT AND THE LICENSE AGREEMENT, AND SUBJECT TO CIVIL AND CRIMINAL PENALTIES THEREUNDER.

1107.7.4 Site impracticality. On a *site* with multiple nonelevator buildings, the number of units required by Section 1107.7.1 to be *Type B units* is permitted to be reduced to a percentage that is equal to the percentage of the entire *site* having grades, prior to development, that are less than 10 percent, provided that all of the following conditions are met:

1. Not less than 20 percent of the units required by Section 1107.7.1 on the *site* are *Type B units*;
2. Units required by Section 1107.7.1, where the slope between the building entrance serving the units on that *story* and a pedestrian or vehicular arrival point is no greater than 8.33 percent, are *Type B units*;
3. Units required by Section 1107.7.1, where an elevated walkway is planned between a building entrance serving the units on that *story* and a pedestrian or vehicular arrival point and the slope between them is 10 percent or less, are *Type B units*; and
4. Units served by an elevator in accordance with Section 1107.7.3 are *Type B units*.

❖ Section 1107.7.4 addresses multiple buildings on a sloping site. For example, if an apartment complex was built on a steep or hilly site, the number of Type B dwelling units required on the ground floor could be reduced because of the difficulty of providing accessible routes. A minimum of 20 percent of the total ground floor units on the site must be Type B units, regardless of site complications (see Commentary Figure 1107.7.4).

1107.7.5 Design flood elevation. The required number of *Type A units* and *Type B units* shall not apply to a *site* where the required elevation of the lowest floor or the lowest horizontal structural building members of nonelevator buildings are at or above the *design flood elevation* resulting in:

1. A difference in elevation between the minimum required floor elevation at the primary entrances and vehicular and pedestrian arrival points within 50 feet (15 240 mm) exceeding 30 inches (762 mm), and
2. A slope exceeding 10 percent between the minimum required floor elevation at the primary entrances and vehicular and pedestrian arrival points within 50 feet (15 240 mm).

Where no such arrival points are within 50 feet (15 240 mm) of the primary entrances, the closest arrival points shall be used.

❖ Residential structures in flood hazard areas must be elevated (see Section 1612). If, based on the required floor elevation, the criteria in either Item 1 or 2 are met, it is considered that an accessible route to the units is not feasible. This section applies to both Type A and Type B dwelling units [see Commentary Figures 1107.7.5(1) and 1107.7.5(2)].

Flood-resistant requirements address, in part, concerns about public safety. The code provides for reductions in the level of accessibility in residential facilities without elevators that are elevated to comply with Section 1612. Note that the exception is based on the required design flood elevation. If the first-floor elevation is higher than the design flood elevation by choice, the measurement would still be from the design flood elevation rather than the actual floor elevation.

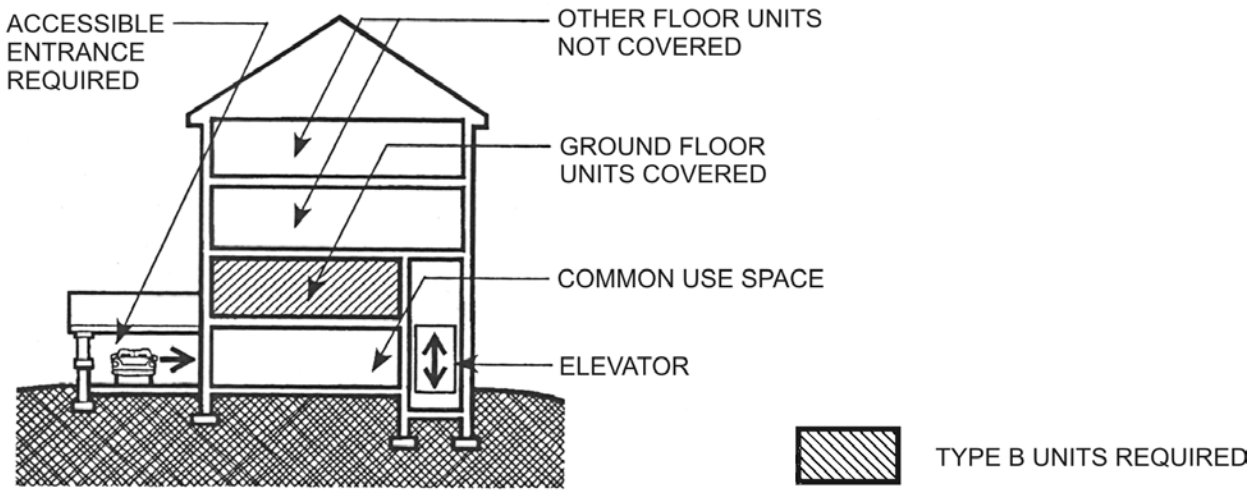

Figure 1107.7.3(2)
ELEVATOR TO FIRST FLOOR OF DWELLING UNITS ABOVE GRADE OR ENTRANCE LEVEL DOES NOT MAKE AN ELEVATOR BUILDING

INTERNATIONAL CODE COUNCIL®
Copyright © 2015 ICC. ALL RIGHTS RESERVED. Accessed by David Dammon on Jun 21, 2017 12:30:52 PM pursuant to License Agreement with ICC. No further reproduction or distribution authorized. ANY UNAUTHORIZED REPRODUCTION OR DISTRIBUTION IS A VIOLATION OF THE FEDERAL COPYRIGHT ACT AND THE LICENSE AGREEMENT, AND SUBJECT TO CIVIL AND CRIMINAL PENALTIES THEREUNDER.

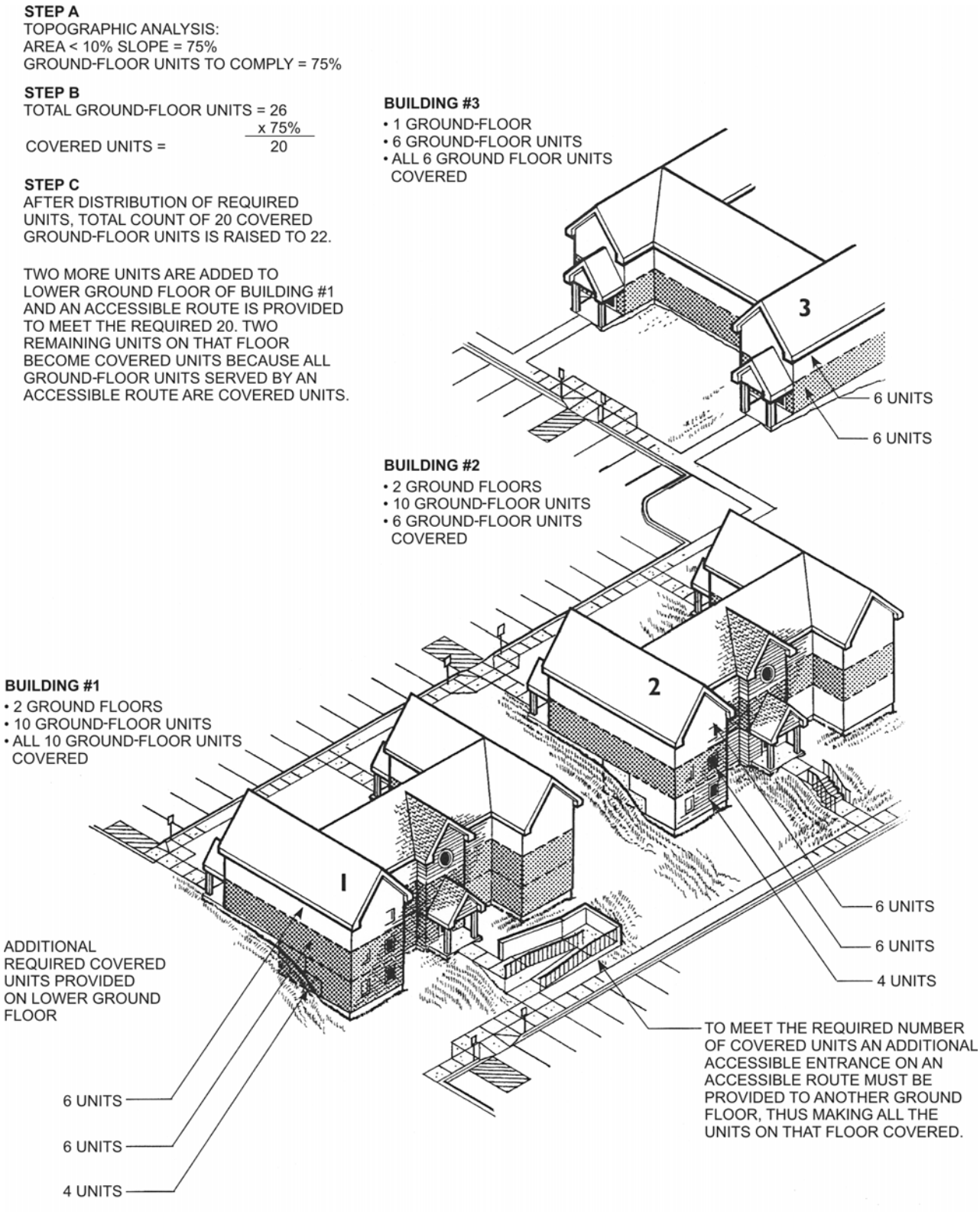

Figure 1107.7.4
SITE ANALYSIS TEST: THE NUMBER OF COVERED UNITS

INTERNATIONAL CODE COUNCIL®
Copyright © 2015 ICC. ALL RIGHTS RESERVED. Accessed by David Dammon on Jun 21, 2017 12:30:52 PM pursuant to License Agreement with ICC. No further reproduction or distribution authorized. ANY UNAUTHORIZED REPRODUCTION OR DISTRIBUTION IS A VIOLATION OF THE FEDERAL COPYRIGHT ACT AND THE LICENSE AGREEMENT, AND SUBJECT TO CIVIL AND CRIMINAL PENALTIES THEREUNDER.

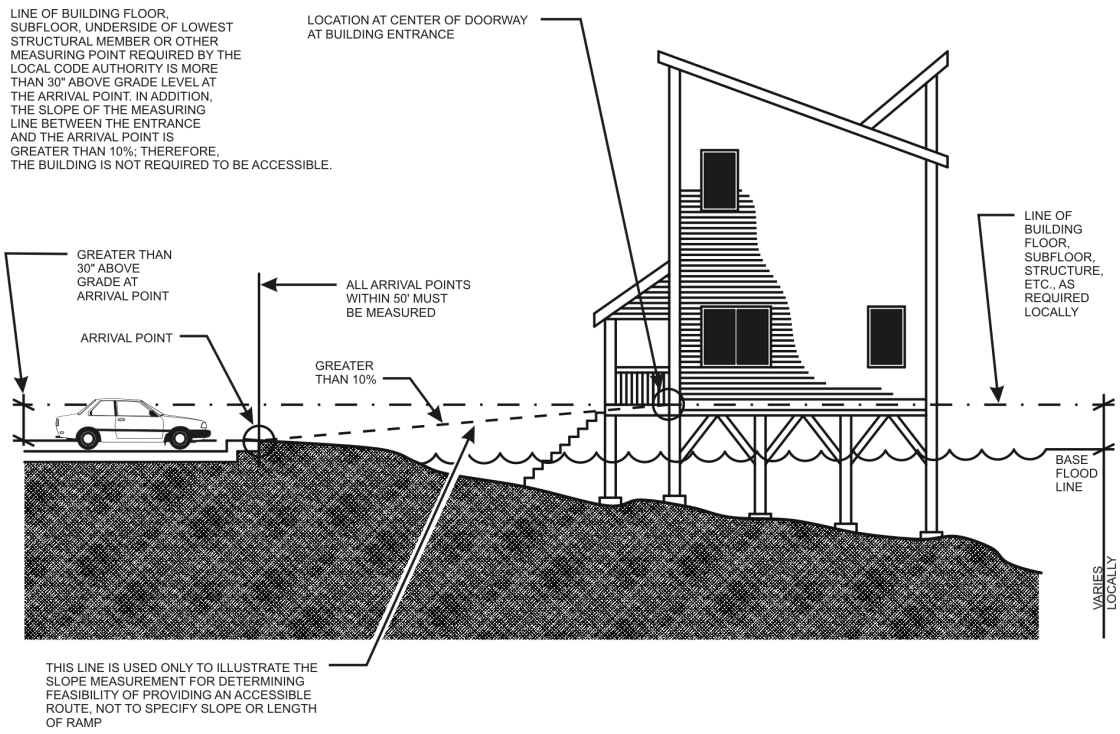

For SI: 1 inch = 25.4 mm, 1 foot = 304.8 mm.

Figure 1107.7.5(1)
BUILDING MEETS BOTH ACCESSIBILITY CRITERIA FOR EXEMPTION

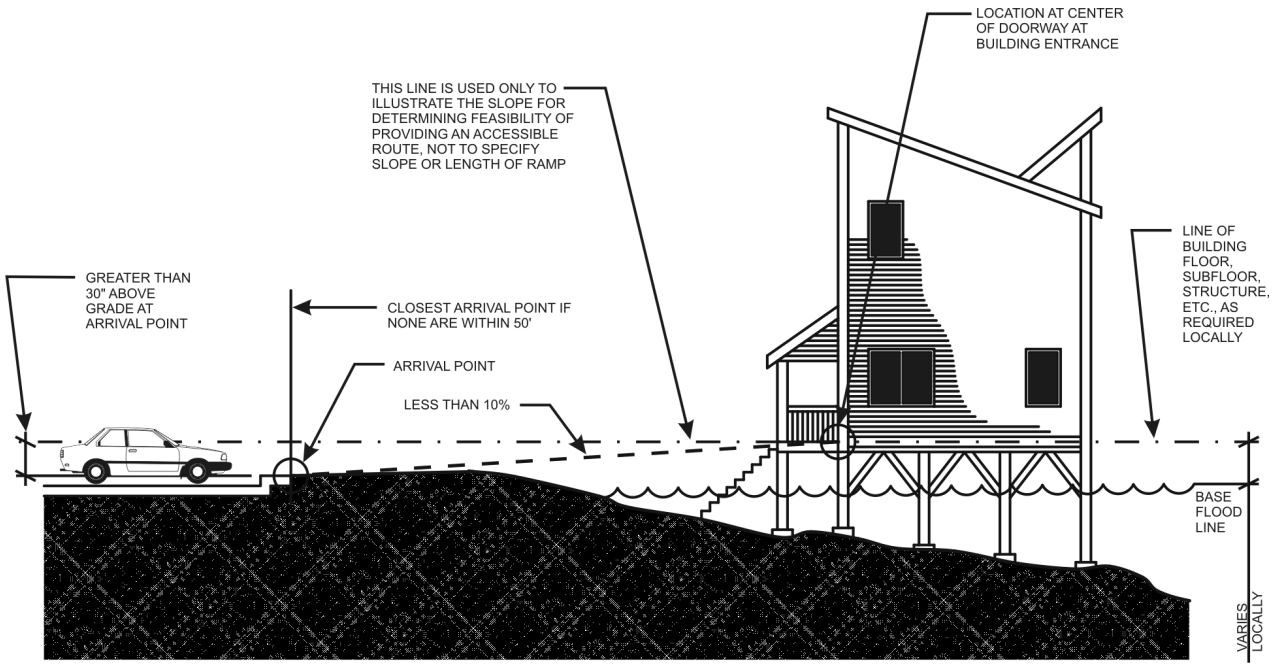

For SI: 1 inch = 25.4 mm, 1 foot = 304.8 mm.

Figure 1107.7.5(2)
BUILDING MUST COMPLY WITH ACCESSIBILITY REQUIREMENTS

INTERNATIONAL CODE COUNCIL®
Copyright © 2015 ICC. ALL RIGHTS RESERVED. Accessed by David Dammon on Jun 21, 2017 12:30:52 PM pursuant to License Agreement with ICC. No further reproduction or distribution authorized. ANY UNAUTHORIZED REPRODUCTION OR DISTRIBUTION IS A VIOLATION OF THE FEDERAL COPYRIGHT ACT AND THE LICENSE AGREEMENT, AND SUBJECT TO CIVIL AND CRIMINAL PENALTIES THEREUNDER.

SECTION 1108
SPECIAL OCCUPANCIES

1108.1 General. In addition to the other requirements of this chapter, the requirements of Sections 1108.2 through 1108.4 shall apply to specific occupancies.

❖ The criteria provided herein are occupancy specific, and are intended to result in a reasonable level of accessibility in areas with assembly seating, self-service storage facilities and judicial facilities.

1108.2 Assembly area seating. A building, room or space used for assembly purposes with *fixed seating* shall comply with Sections 1108.2.1 through 1108.2.5. Lawn seating shall comply with Section 1108.2.6. Assistive listening systems shall comply with Section 1108.2.7. Performance areas viewed from assembly seating areas shall comply with Section 1108.2.8. Dining areas shall comply with Section 1108.2.9.

❖ Sections 1108.2.1 through 1108.2.5 specifically address facilities with fixed seating utilized for purposes of viewing an event, typically facilities and spaces of occupancies of Groups A-1, A-3, A-4 and A-5. These criteria would also be applicable in assembly-type spaces with fixed seats that are located in buildings of other occupancies. Assembly spaces with fixed seating must provide accessible viewing locations that have: access to services; the number of wheelchair spaces and their associated companion seats dispersed so that persons using wheelchair spaces have options; and designated aisle seats. Lawn seating is a unique type of seating arrangement that is typically exterior and not associated with fixed seating. When there is a stage or platform associated with the assembly space, assistive listening systems and performance areas are addressed. The requirements for seating in areas for eating or drinking, typically Group A-2 spaces or facilities, and the dispersion of this seating are addressed in Section 1108.2.9.

1108.2.1 Services. If a service or facility is provided in an area that is not *accessible*, the same service or facility shall be provided on an *accessible* level and shall be *accessible*.

❖ This section establishes an important concept. The intent is that all types of services provided by a facility must be accessible. For example, after providing and dispersing wheelchair spaces in a venue, and because of tiered seating to provide a line of sight to the event, a stadium may have many tiers or sections of seating that are not accessible. This section establishes that if a souvenir stand is located in or near that non-accessible section, one of three circumstances would apply: an additional souvenir stand must be provided in the facility on an accessible level; the souvenir stand would have to be relocated to an accessible level; or the area where the souvenir stand is located must be made accessible. This section also emphasizes that not only must that service or facility be located on an accessible level, but the service itself must also be accessible. Obviously, it would be inappropriate to locate a souvenir stand on an accessible level if the approach or entrance to that stand is inaccessible.

1108.2.2 Wheelchair spaces. In rooms and spaces used for assembly purposes with *fixed seating*, *accessible wheelchair spaces* shall be provided in accordance with Sections 1108.2.2.1 through 1108.2.2.3.

❖ The intent of this section is to provide a reasonable number of spaces in an assembly occupancy with fixed seating to accommodate persons who use wheelchairs or scooters. Demographic statistics from the National Center for Health Statistics on the number of noninstitutionalized Americans who use wheelchairs indicate that these requirements are realistic. These required wheelchair spaces consist of an open, available floor space in which the wheelchair takes the place of the fixed seat that would otherwise occupy that space. Section 1108.2.3 is consistent with ICC A117.1 in requiring companion seating adjacent to each wheelchair space.

1108.2.2.1 General seating. *Wheelchair spaces* shall be provided in accordance with Table 1108.2.2.1.

❖ The number of required wheelchair spaces is indicated in Table 1108.2.2.1 and is based on the total number of fixed seats set up to view the same event, with the exception of box seats covered in Sections 1108.2.2.2 and 1108.2.2.3. For example, the fixed seating on all levels and all types provided in a sports stadium, excluding box seats, is used to calculate the number of required wheelchair spaces for general seating. The requirements for box- or suite-type seating are calculated separately. Seating provided in different rooms, such as in a series of lecture halls in a university, must be calculated separately. Note that the percentage of wheelchair spaces is less for facilities with a capacity of more than 5,000. The industry has been able to provide statistics to show that the higher percentage of wheelchair spaces is not typically utilized in large facilities.

TABLE 1108.2.2.1
ACCESSIBLE WHEELCHAIR SPACES

CAPACITY OF SEATING IN ASSEMBLY AREAS	MINIMUM REQUIRED NUMBER OF WHEELCHAIR SPACES
4 to 25	1
26 to 50	2
51 to 100	4
101 to 300	5
301 to 500	6
501 to 5,000	6, plus 1 for each 150, or fraction thereof, between 501 through 5,000
5,001 and over	36 plus 1 for each 200, or fraction thereof, over 5,000

❖ This table sets forth the required number of wheelchair spaces based on the capacity of seating in the space containing the fixed seating. Any fixed seating with less than four seats is not required to provide

INTERNATIONAL CODE COUNCIL®
Copyright © 2015 ICC. ALL RIGHTS RESERVED. Accessed by David Dammon on Jun 21, 2017 12:30:52 PM pursuant to License Agreement with ICC. No further reproduction or distribution authorized. ANY UNAUTHORIZED REPRODUCTION OR DISTRIBUTION IS A VIOLATION OF THE FEDERAL COPYRIGHT ACT AND THE LICENSE AGREEMENT, AND SUBJECT TO CIVIL AND CRIMINAL PENALTIES THEREUNDER.

wheelchair spaces. There are special criteria for wheelchair spaces in facilities with seating capacities of over 500 and over 5,000. For example, six wheelchair spaces would be required for an assembly space with a seating capacity of 500. Seven wheelchair spaces would be required for a seating capacity of 501 through 650. Both of the last two rows use the term "or fraction thereof" to designate the next step up.

1108.2.2.2 Luxury boxes, club boxes and suites. In each luxury box, club box and suite within arenas, stadiums and *grandstands*, *wheelchair spaces* shall be provided in accordance with Table 1108.2.2.1.

❖ When luxury boxes, club boxes or suites are provided, each luxury box, club box or suite must have an accessible route to that box and at least one wheelchair space and associated companion space. If the luxury box, club box or suite has more than 25 seats, the number of required wheelchair spaces is increased in accordance with Table 1108.2.2.1. For example, if a stadium has three luxury boxes with 51 seats in each, at least four wheelchair spaces and their associated companion seats must be provided in each box. While the total of all three luxury boxes (i.e., 153 occupants) would only require five total wheelchair spaces, these specific types of boxes must be calculated individually.

Luxury boxes are most commonly found in larger facilities, thus the reference to arenas, stadiums and grandstands. Boxes that are portions of balconies, such as in an opera house, or boxes separated by rails in general seating areas, such as behind home plate in baseball stadiums, are addressed in Section 1108.2.2.3.

1108.2.2.3 Other boxes. In boxes other than those required to comply with Section 1108.2.2.2, the total number of *wheelchair spaces* provided shall be determined in accordance with Table 1108.2.2.1. *Wheelchair spaces* shall be located in not less than 20 percent of all boxes provided.

❖ Examples of the boxes covered in this section are the seats separated by railings or low walls behind home plate in a baseball stadium [see Commentary Figure 1108.2.2.3(1)], or side balconies in opera houses [see Commentary Figure 1108.2.2.3(2)]. Luxury boxes are typically located in a separate level, and are often attached to some type of party room behind a group of seats.

When boxes other than luxury boxes, club boxes or suites are provided, at least 20 percent of the boxes must have an accessible route to that box and at least one wheelchair space and associated companion space in that box. The total number of box seats is utilized to calculate the total number of required wheelchair spaces in accordance with Table 1108.2.2.1. For example, if a stadium has five boxes with 51 seats in each, the total of all five boxes (i.e., 255 occupants) would require five total wheelchair spaces. The wheelchair spaces could be located in one box (i.e., 20 percent minimum) or dispersed to all five boxes. Note that there is additional dispersion criteria for assembly seating based on lines of sight in Section 802.8 of ICC A117.1, as well as dispersion by level in Section 1108.2.4.

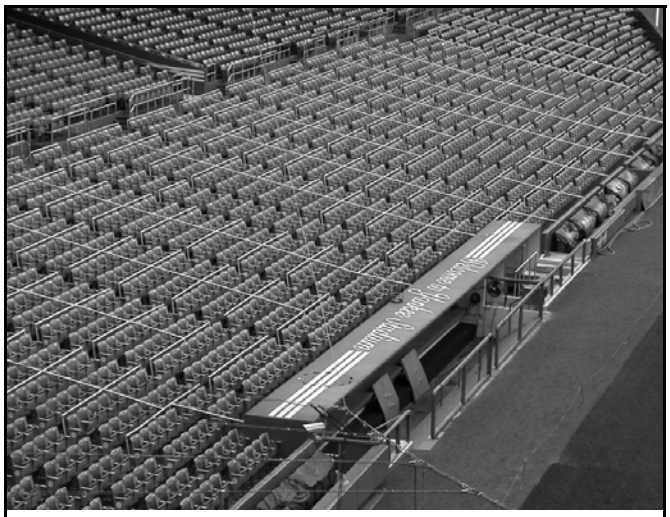

Figure 1108.2.2.3(1)
EXAMPLE OF BOX SEATING IN A SPORTS VENUE



Figure 1108.2.2.3(2)
EXAMPLE OF BOX SEATING IN A THEATER

1108.2.3 Companion seats. At least one companion seat shall be provided for each *wheelchair space* required by Sections 1108.2.2.1 through 1108.2.2.3.

❖ A companion seat allows a friend, relative, associate, etc., to accompany a person using a wheelchair at an event and to share in the experience with the same level of companionship as others attending the event. The ICC A117.1 standard permits two wheelchair spaces to be located next to each other; however, each wheelchair space must also be adjacent to at least one companion seat. Accessible seating areas

INTERNATIONAL CODE COUNCIL®
Copyright © 2015 ICC. ALL RIGHTS RESERVED. Accessed by David Dammon on Jun 21, 2017 12:30:52 PM pursuant to License Agreement with ICC. No further reproduction or distribution authorized. ANY UNAUTHORIZED REPRODUCTION OR DISTRIBUTION IS A VIOLATION OF THE FEDERAL COPYRIGHT ACT AND THE LICENSE AGREEMENT, AND SUBJECT TO CIVIL AND CRIMINAL PENALTIES THEREUNDER.

are sometimes provided with nonfixed companion chairs allowing the users to adjust the adjacency of seats and wheelchair spaces to their liking. If fixed seats are provided, the companion seat must have shoulder alignment with the person using the wheelchair space.

1108.2.4 Dispersion of wheelchair spaces in multilevel assembly seating areas. In *multilevel assembly seating* areas, *wheelchair spaces* shall be provided on the main floor level and on one of each two additional floor or *mezzanine* levels. *Wheelchair spaces* shall be provided in each luxury box, club box and suite within assembly facilities.

Exceptions:

1. In *multilevel assembly seating* areas utilized for worship services where the second floor or *mezzanine* level contains 25 percent or less of the total seating capacity, *wheelchair spaces* shall be permitted to all be located on the main level.
2. In *multilevel assembly seating* areas where the second floor or *mezzanine* level provides 25 percent or less of the total seating capacity and 300 or fewer seats, all *wheelchair spaces* shall be permitted to be located on the main level.
3. *Wheelchair spaces* in team or player seating serving areas of sport activity are not required to be dispersed.

❖ When facilities provide seating on multiple levels, wheelchair spaces must also be provided on multiple levels. For example, if a theater has a main level and a balcony level, wheelchair spaces must be provided on both. If a theater has a main level and two balcony levels, wheelchair spaces must be provided on the main level and at least one of the two balcony levels. While the term "level" is difficult to define in some assembly arrangements, the intent is to provide the wheelchair user with a choice of seating similar to what is available to all persons in the space. A "level" is not each time that there is a step-down to another row of seating. Multilevel seating facilities are typically separate floor levels, commonly referred to as balconies. Subjective judgment on the part of both the designer and the building official is required for each individual facility.

There are three specific exceptions to this multilevel dispersion requirement.

Exception 1 is applicable to assembly spaces utilized for worship services. There is typically not a cost or line-of-sight issue in this type of facility, as there is in other assembly seating areas. The balcony is not required to contain accessible seating or have an accessible route, as long as accessible seating is provided on the main level and the balcony does not contain more than 25 percent of the seating.

Exception 2 is applicable to balconies in assembly facilities with a limited number of seats in the upper level. If accessible seating is provided on the main level and the balcony contains less than 25 percent of the seating and less than 300 seats, then the balcony is not required to contain accessible seating or have an accessible route. This can be used for small theaters with up to 900 seats on the main floor and 300 seats on the balcony.

Exception 3 relieves the requirement for wheelchair space dispersion among the various team or player seating options that may be provided in a facility. However, there must be at least one wheelchair space for each team.

The dispersement requirements in the code must be combined with the additional wheelchair dispersement requirements in ICC A117.1, including side to side (horizontally) across a venue, front to back (variety of distances) within the seating, and by type (distinct service or amenities) of seating. The standard also looks at requirements for line of sight or seated or standing spectators. Wheelchair spaces and their associated companion seats may be grouped, but must, at a minimum, be distributed into the number of locations indicated in Table 802.10 of ICC A117.1.

For requirements for accessible means of egress from these wheelchair spaces, please see Section 1009.1, Exception 3 and Section 1029.8.

1108.2.5 Designated aisle seats. At least 5 percent, but not less than one, of the total number of aisle seats provided shall be designated aisle seats and shall be the aisle seats located closest to *accessible routes*.

Exception: Designated aisle seats are not required in team or player seating serving *areas of sport activity*.

❖ Designated aisle seats allow some persons with mobility impairments to be able to easily access certain seats along aisles. Due to an impairment, it may be difficult or impossible for some to move further into the narrow space between rows. It is not the intent of the designated aisle seats to be transfer locations. The person using this space can be someone using a walker, crutches or cane or anyone who may have difficulty with steps; hence, the requirement that the designated aisle seats be close to accessible routes. When seats have armrests, ICC A117.1 requires each designated aisle seat to have a folding or retractable armrest allowing easier access or better fit.

1108.2.6 Lawn seating. Lawn seating areas and exterior overflow seating areas, where fixed seats are not provided, shall connect to an *accessible route*.

❖ Lawn seating on both flat and sloped sites is fairly common at less formal venues. It may be the only type of seating provided or one of several options. Sometimes lawns are overflow areas, with or without movable chairs, located beyond the fixed seating areas. In any case, these lawn areas must be located on an accessible route. Access onto the lawn seating depends on the ability of the person and/or assistance from companions (see Commentary Figure 1108.2.6).

INTERNATIONAL CODE COUNCIL®
Copyright © 2015 ICC. ALL RIGHTS RESERVED. Accessed by David Dammon on Jun 21, 2017 12:30:52 PM pursuant to License Agreement with ICC. No further reproduction or distribution authorized. ANY UNAUTHORIZED REPRODUCTION OR DISTRIBUTION IS A VIOLATION OF THE FEDERAL COPYRIGHT ACT AND THE LICENSE AGREEMENT, AND SUBJECT TO CIVIL AND CRIMINAL PENALTIES THEREUNDER.



Figure 1108.2.6
EXAMPLE OF LAWN SEATING

1108.2.7 Assistive listening systems. Each building, room or space used for assembly purposes where audible communications are integral to the use of the space shall have an assistive listening system.

Exception: Other than in courtrooms, an assistive listening system is not required where there is no audio amplification system.

❖ This section is intended to accommodate people with a hearing impairment. Assembly seating areas, such as stadiums, theaters, auditoriums, lecture halls and similar spaces, are required to make provisions for the use of assistive listening devices in accordance with Section 1108.2.7.1 and Table 1108.2.7.1. In these assembly areas, audible communication is often integral to the use and full enjoyment of the space. This requirement offers the possibility for individuals with hearing impairments to attend functions in these facilities without having to give advance notice and without disrupting the event in order to have a portable assistive listening system set up and made ready for use.

There are three primary types of listening systems available: induction loop, AM/FM and infrared. Each type of system has certain advantages and disadvantages that the designer should take into consideration when choosing the type of system that is most appropriate for the intended application. Signage notifying the general public of the availability of these systems must be provided in accordance with Section 1111.3.

If an audio amplification system is not provided within a facility, an assistive listening system is not required. Given the essential nature of the proceedings, this exception is not applicable to courtrooms. All courtrooms must have an assistive listening system.

1108.2.7.1 Receivers. The number and type of receivers shall be provided for assistive listening systems in accordance with Table 1108.2.7.1.

Exceptions:

1. Where a building contains more than one room or space used for assembly purposes, the total number of required receivers shall be permitted to be calculated based on the total number of seats in the building, provided that all receivers are usable with all systems and if the rooms or spaces used for assembly purposes required to provide assistive listening are under one management.
2. Where all seats in a building, room or space used for assembly purposes are served by an induction loop assistive listening system, the minimum number of receivers required by Table 1108.2.7.1 to be hearing-aid compatible shall not be required.

❖ Table 1108.2.7.1 specifies the number and types of required receivers that must be available to use in an assembly area. Exception 1 states that if a facility has more than one assembly space with an audio amplification system, such as a multiplex theater, then the total seating for all the spaces may be used to determine the number of receivers required.

Exception 2 states that because induction loop technology renders an entire space accessible to the assistive listening system, hearing-aid compatible receivers are not necessary.

TABLE 1108.2.7.1. See below.

❖ Table 1108.2.7.1 specifies the number and type of required receivers in an assembly occupancy. At least 25 percent of the receivers provided (but not

TABLE 1108.2.7.1
RECEIVERS FOR ASSISTIVE LISTENING SYSTEMS

CAPACITY OF SEATING IN ASSEMBLY AREAS	MINIMUM REQUIRED NUMBER OF RECEIVERS	MINIMUM NUMBER OF RECEIVERS TO BE HEARING-AID COMPATIBLE
50 or less	2	2
51 to 200	2, plus 1 per 25 seats over 50 seats*	2
201 to 500	2, plus 1 per 25 seats over 50 seats*	1 per 4 receivers*
501 to 1,000	20, plus 1 per 33 seats over 500 seats*	1 per 4 receivers*
1,001 to 2,000	35, plus 1 per 50 seats over 1,000 seats*	1 per 4 receivers*
Over 2,000	55, plus 1 per 100 seats over 2,000 seats*	1 per 4 receivers*

Note: * = or fraction thereof

INTERNATIONAL CODE COUNCIL®
Copyright © 2015 ICC. ALL RIGHTS RESERVED. Accessed by David Dammon on Jun 21, 2017 12:30:52 PM pursuant to License Agreement with ICC. No further reproduction or distribution authorized. ANY UNAUTHORIZED REPRODUCTION OR DISTRIBUTION IS A VIOLATION OF THE FEDERAL COPYRIGHT ACT AND THE LICENSE AGREEMENT, AND SUBJECT TO CIVIL AND CRIMINAL PENALTIES THEREUNDER.

less than two receivers) must be hearing-aid compatible, as persons with hearing aids typically cannot use earpieces or headphone-equipped receivers. When determining the general number of receivers required, the table is to be applied as though it reads "2 plus 1 for each additional 25 over 50, or a fraction thereof." For example, where 51 to 75 total seats are provided, three assistive listening devices are required. Where 76 to 100 total seats are provided, four assistive listening devices are required.

The number of required receivers is based on the capacity of the assembly areas. Note that as the size of the assembly area increases, the number of required receivers also increases. However, the percentage of receivers to seats decreases. This is based on the actual usage in large assembly areas.

1108.2.7.2 Ticket windows. Where ticket windows are provided in stadiums and arenas, at least one window at each location shall have an assistive listening system.

❖ An assistive-listening system is required at one window in each location where tickets are sold. Note that this is limited to stadiums and arenas where it is assumed that the technology is already provided for inside the space (see Section 1108.2.7). This will allow a person with a hearing impairment to be able to communicate with the ticket salesperson regarding date, cost and location of tickets being purchased. The New York Yankees and Minnesota Twin stadiums are currently using an induction-loop system at their ticket windows.

1108.2.7.3 Public address systems. Where stadiums, arenas and *grandstands* have 15,000 fixed seats or more and provide audible public announcements, they shall also provide prerecorded or real-time captions of those audible public announcements.

❖ If stadiums, arenas or grandstands provide public announcements, the same information should be displayed on some type of electronic signage. With seating of 15,000 or more, most stadiums, arenas and grandstands have electronic scoreboards that are capable of displaying text messages. This is especially important when dealing with emergency evacuation situations. Prerecorded messages related to emergencies should be worked out with the fire department as part of the fire and safety evacuation plans [see Section 404 of the *International Fire Code*® (IFC®)]. Fire alarm systems for assembly occupancies (Section 907.2.1.1) with an occupant load of 1,000 or more must include an emergency voice/alarm communication system. Where captioned audible public announcements are required for stadiums by this section, the emergency voice/alarm communication system must also be captioned (see Section 907.2.1.2). Specific criteria are provided in Section 907.5.2.2.4.

ICC A117.1 has new provisions for variable message signs (VMS), which provides guidance for appropriate case, style, size, spacing, contrast and rate of change. There are special allowances that address large assembly occupancies and the distance from the viewer to the sign.

1108.2.8 Performance areas. An *accessible route* shall directly connect the performance area to the assembly seating area where a *circulation path* directly connects a performance area to an assembly seating area. An *accessible route* shall be provided from performance areas to ancillary areas or facilities used by performers.

❖ Performance areas, such as stages, orchestra pits, band platforms, choir lofts and similar spaces, must be accessible. If there is a direct route from the seating to the performance area, there must also be an accessible route. For example, if steps are provided from the assembly seating area to the stage within the theater, then an accessible route (e.g., ramp or platform lift) to the stage must also be provided within the theater. An accessible route must also be provided to any ancillary areas, such as green rooms or practice/warm-up rooms. The intent is that a person with mobility impairments could participate in the event. This could include high-school graduation with students coming from the audience onto the stage to receive their diplomas; participating with the community band; playing in the orchestra for a performance; acting in a production; or giving a speech. Technical production areas for the stage, such as catwalks, are exempted under Section 1103.2.7.

1108.2.9 Dining and drinking areas. In dining and drinking areas, all interior and exterior floor areas shall be *accessible* and be on an *accessible route*.

Exceptions:

1. An *accessible route* between *accessible* levels and stories above or below is not required where permitted by Section 1104.4, Exception 1.
2. An *accessible route* to dining and drinking areas in a *mezzanine* is not required, provided that the *mezzanine* contains less than 25 percent of the total combined area for dining and drinking and the same services, and decor are provided in the *accessible* area.
3. In sports facilities, tiered dining areas providing seating required to be *accessible* shall be required to have *accessible routes* serving at least 25 percent of the dining area, provided that *accessible routes* serve *accessible* seating and where each tier is provided with the same services.
4. Employee-only work areas shall comply with Sections 1103.2.2 and 1104.3.1.

❖ Dining and drinking areas most frequently occur in Group A-2 buildings (restaurants, cafeterias, nightclubs, dinner theaters, etc.). The provisions of this section are intended to govern such areas, rather than the criteria specified in Sections 1108.2.2 through 1108.2.5. This section requires the total floor area allotted for dining and drinking to be accessible, including areas with tables and chairs, bar seating, standing spaces, gaming areas, outdoor decks, etc.

INTERNATIONAL CODE COUNCIL®
Copyright © 2015 ICC. ALL RIGHTS RESERVED. Accessed by David Dammon on Jun 21, 2017 12:30:52 PM pursuant to License Agreement with ICC. No further reproduction or distribution authorized. ANY UNAUTHORIZED REPRODUCTION OR DISTRIBUTION IS A VIOLATION OF THE FEDERAL COPYRIGHT ACT AND THE LICENSE AGREEMENT, AND SUBJECT TO CIVIL AND CRIMINAL PENALTIES THEREUNDER.

An accessible route would be required to dining areas that are raised or lowered. The intent is that a person with a disability may not be able to get to every seat, but they will still have a choice of tables.

Exception 1, with a reference back to Exception 1 in Section 1104.4, exempts a basement, mezzanine or second floor from being served by an accessible route, provided the aggregate area of the nonaccessible levels is 3,000 square feet (278.7 m^2) or less. Keep in mind that a mezzanine is required by Section 505.2 to have a clear height below of at least 7 feet (2134 mm). Therefore, Exception 1 cannot be applied to platforms or raised or lowered floor areas.

Exception 2 is intended to acknowledge a practical and reasonable limitation in buildings with a mezzanine level that provides less than 25 percent of the total area for dining and drinking. In addition, all services and amenities provided in the mezzanine must also be available in an accessible area. Any mezzanine condition that does not meet the criteria of this exception does not qualify for the exception and must be served by an accessible route. Nonqualifying examples are as follows: a dining mezzanine that contains 25 percent or more of the total dining area; a raised or depressed dining area that is not actually a mezzanine; and a mezzanine level that contains the only area where a specific service or amenity is provided, like a bar or private party room. The area of the mezzanine is not limited by this exception to 3,000 square feet (278.7 m^2); it could be a larger area or a smaller area.

Exception 3 is for sports facilities. Some sports facilities also have accommodations for dining or picnicking while watching the event. For line-of-sight issues, the dining terraces are tiered. If the same services are available on the accessible level as any other level, only 25 percent of the dining area is required to be on an accessible route.

At this time, the code does not contain specific information on tiered dining facilities that also have issue of line of sight for viewing an event, such as a dinner theater, movie theaters that offer dining during a show, or dinner seating during a sport event such as at a racetrack. These types of spaces may want to look at the provisions for both dining (see Section 1108.2.9) and seating for viewing an event (see Section 1108.2.2) and develop a reasonable compromise.

Exception 4 is simply a reference to employee work area exceptions. Employee work areas may be within the mezzanine levels, such as the area behind a bar.

1108.2.9.1 Dining surfaces. Where dining surfaces for the consumption of food or drink are provided, at least 5 percent, but not less than one, of the dining surfaces for the seating and standing spaces shall be *accessible* and be distributed throughout the facility and located on a level accessed by an *accessible route*.

❖ A dining facility may offer spaces for people to eat or drink at tables, booths, bars and counters (see Commentary Figure 1108.2.9.1). The numbers provided at all locations are used to determine the total, and then 5 percent of the total of these spaces must be capable of allowing for a person in a wheelchair to move to and sit at that location. The accessible surfaces are also required to be distributed throughout the facility, but are not necessarily required to be dispersed by type. This requirement, in conjunction with Section 1108.2.9, should provide a variety of seating options. There are many considerations. For example, a table may be at the right height and provide knee and toe clearances, but the aisle and aisle accessway layout only allows for one or two approaches to the table. A booth may allow clearance at the end, but the location may not work out if a person sitting at that location may get bumped repeatedly by wait staff and customers trying to move in and out of the area, so this may be an operational issue for the restaurant. There are practical reasons to not require dispersment by type. You could take the booth seat off one side to provide better access to a booth, but then you have banquet seating. If you require a high table to be lowered, you no longer have a high table.

The issue of whether a portion of a bar or dining counter in a restaurant is required to be lowered to be accessible is subjective. The assumption is that if other types of seating are provided adjacent to the counter, then services provided at the counter will also be available at the adjacent seating. Therefore, if adequate accessible seating is available adjacent to the bar area, the bar is not required to be lowered. If the bar is the only eating or dining surface in a restaurant, or in a separate room in the restaurant, then a portion of the bar must be made accessible.



Figure 1108.2.9.1
EXAMPLE OF DINING SURFACES

1108.3 Self-service storage facilities. *Self-service storage facilities* shall provide *accessible* individual self-storage spaces in accordance with Table 1108.3.

❖ This section addresses facilities that provide self-storage units or spaces. These types of facilities are often storage garages located in long rows. Some

INTERNATIONAL CODE COUNCIL®
Copyright © 2015 ICC. ALL RIGHTS RESERVED. Accessed by David Dammon on Jun 21, 2017 12:30:52 PM pursuant to License Agreement with ICC. No further reproduction or distribution authorized. ANY UNAUTHORIZED REPRODUCTION OR DISTRIBUTION IS A VIOLATION OF THE FEDERAL COPYRIGHT ACT AND THE LICENSE AGREEMENT, AND SUBJECT TO CIVIL AND CRIMINAL PENALTIES THEREUNDER.

facilities also provide climate-controlled storage within large multistory warehouses. The key is that the storage is moved in and out and accessed by the renter of the space. The intent is to provide access for persons with disabilities to this service without requiring the entire facility to be accessible.

TABLE 1108.3
ACCESSIBLE SELF-SERVICE STORAGE FACILITIES

TOTAL SPACES IN FACILITY	MINIMUM NUMBER OF REQUIRED ACCESSIBLE SPACES
1 to 200	5%, but not less than 1
Over 200	10, plus 2% of total number of units over 200

❖ The minimum number of accessible spaces is based on the total number of self-storage spaces available in a facility.

1108.3.1 Dispersion. *Accessible* individual self-service storage spaces shall be dispersed throughout the various classes of spaces provided. Where more classes of spaces are provided than the number of required *accessible* spaces, the number of *accessible* spaces shall not be required to exceed that required by Table 1108.3. *Accessible* spaces are permitted to be dispersed in a single building of a multibuilding facility.

❖ Self-storage facilities may offer a variety of spaces, such as heated/nonheated, different sizes, etc. If the variety offered is greater than the number of accessible spaces required, the accessible spaces should be dispersed as much as possible. For example, if a facility offers the choice of a 10-foot by 10-foot (3048 mm by 3048 mm) unit and a 10-foot by 20-foot (3048 mm by 6096 mm) unit, but only one accessible space is required, then only one unit is required to be accessible. The choice of which unit is made accessible is up to the building owner or designer. When a facility has multiple buildings, accessible spaces are permitted to be located in a single building. This is in consideration that many of these facilities do not have paved roads to access them. This allows for only a small portion of the site to be considered when looking at arrival points, accessible routes and entrances.

At this time, ICC A117.1 does not provide specific information on how to make a self-service storage unit accessible. Since overhead doors are not typically considered accessible, alternatives to be discussed between the owner/designer and code official are the possibility of man doors on the side of the unit or electric garage door openers.

1108.4 Judicial facilities. Judicial facilities shall comply with Sections 1108.4.1 and 1108.4.2.

❖ Accessibility in judicial facilities (e.g., courthouses) includes access to all public areas as well as special requirements for the courtrooms, holding cells and visitation areas. This section was added for coordination with new requirements for judicial facilities from the DOJ. For requirements addressing lawyer/client visitation spaces, see Section 1109.11.2.

1108.4.1 Courtrooms. Each courtroom shall be *accessible* and comply with Sections 1108.4.1.1 through 1108.4.1.5.

❖ All courtrooms are required to be accessible for participants at every level. This would include participation as a employee of the court, counselor, litigant, juror, witness or observer. All courtrooms must be on an accessible route from both the public side and courtroom staff side. The waiting areas, lawyer meeting rooms and vestibules that are sometimes located immediately adjacent to the courtroom entrance must be accessible. Access must be readily available to the gallery, as well as the witness stand and jury box. Members of the jury must have an accessible route to the jury deliberation room. The witness box in a courtroom is often raised to have a line of sight between the judge and witness. It is not acceptable to ask someone to testify from an area outside the box; therefore, the witness box must always be accessible. Elements would include an accessible route to all portions of the courtroom unless limited by the following subsections which identify areas and features of courtrooms that have specific accessibility requirements.

An accessible route must also be available between the courtroom and the association holding cells addressed in Section 1108.4.2.

The ICC was very proud to participate in a special Courthouse Access Advisory Committee that assisted the Access Board in developing recommendations for accessibility to courtrooms and courthouses. This report includes information on both requirements and recommended design practices. The committee was able to construct actual mock-ups to verify design configurations. The committee report can be located at http://www.access-board.gov/guidelines-and-standards/buildings-and-sites/120-ada-standards/background/courthouse-access.

1108.4.1.1 Jury box. A *wheelchair space* shall be provided within the jury box.

Exception: Adjacent companion seating is not required.

❖ Jury boxes may be configured in numerous ways, including with multiple tiers. At least one wheelchair space within the "box" is required. A wheelchair space adjacent to (or outside of) the jury box could not be used to satisfy the requirement. Since only jury members are seated in the jury box, companion seating is not required.

1108.4.1.2 Gallery seating. *Wheelchair spaces* shall be provided in accordance with Table 1108.2.2.1. Designated aisle seats shall be provided in accordance with Section 1108.2.5.

❖ Gallery seating in a courtroom is regulated similarly to other assembly seating areas with respect to wheelchair spaces, associated companion seating and

INTERNATIONAL CODE COUNCIL®
Copyright © 2015 ICC. ALL RIGHTS RESERVED. Accessed by David Dammon on Jun 21, 2017 12:30:52 PM pursuant to License Agreement with ICC. No further reproduction or distribution authorized. ANY UNAUTHORIZED REPRODUCTION OR DISTRIBUTION IS A VIOLATION OF THE FEDERAL COPYRIGHT ACT AND THE LICENSE AGREEMENT, AND SUBJECT TO CIVIL AND CRIMINAL PENALTIES THEREUNDER.

designated aisle seats (see Commentary Figure 1108.4.1.2).



Figure 1108.4.1.2
GALLERY SEATING

1108.4.1.3 Assistive listening systems. An assistive listening system must be provided. Receivers shall be provided for the assistive listening system in accordance with Section 1108.2.7.1.

❖ Every courtroom must have an assistive listening system. Unlike other assembly occupancies, the requirement is not dependent on an audio amplification system being provided. The assumption is that any person in a courtroom with a hearing impairment should be provided with an enhanced ability to hear the proceedings when desired. Issues of privacy may dictate the type of system provided within the courtrooms. Signage indicating that assistive listening devices are available is required and is typically located near the public entry to the courtroom (see Section 1111.3)

1108.4.1.4 Employee work stations. The judge's bench, clerk's station, bailiff's station, deputy clerk's station and court reporter's station shall be located on an accessible route. The vertical access to elevated employee work stations within a courtroom is not required at the time of initial construction, provided a *ramp*, lift or elevator can be installed without requiring reconfiguration or extension of the courtroom or extension of the electrical system.

❖ Employee work stations in courtrooms are permitted to be constructed as adaptable for a future accessible route if and when a route is necessary for a mobility-impaired employee. Depending on the type of courtroom (e.g., panel, trial, jury, traffic), employee work stations will vary. The judge is typically raised to establish a level of authority over the courtroom and to have his or her eyes approximately level with those of the standing lawyers. Associated clerk stations are raised to ease interaction with the judge. The vertical portion of the accessible route (ramp, platform lift, elevator) can be an adapting element and is expected to be predesigned and readily incorporated into the courtroom when needed. This option is consistent with the modification for employees based on the need of the employee expressed in Section 1103.2.2. This option does not apply to the raised public areas in courtrooms, namely, witness stands, jury boxes and galleries, which are required to be constructed accessible.

1108.4.1.5 Other work stations. The litigant's and counsel stations, including the lectern, shall be *accessible*.

❖ The well of the court typically contains the area for the litigant's and counselor's tables and a lectern for lawyers to address the judge and/or jury. Depending on the courtroom, this configuration may vary. Both defendant and prosecutor tables should be constructed appropriately for a front approach for work stations (see Commentary Figure 1108.4.1.5). The lectern can be adjustable so that it can work for lawyers seated in wheelchairs as well as those standing.



Figure 1108.4.1.5
COURTROOM WELL WORK STATIONS

1108.4.2 Holding cells. Central holding cells and court-floor holding cells shall comply with Sections 1108.4.2.1 and 1108.4.2.2.

❖ Where holding cells are provided, Sections 1108.4.2.1 and 1108.4.2.2 indicate which cells shall be accessible.

1108.4.2.1 Central holding cells. Where separate central holding cells are provided for adult males, juvenile males, adult females or juvenile females, one of each type shall be *accessible*. Where central holding cells are provided and are not separated by age or sex, at least one *accessible* cell shall be provided.

❖ Some courthouse facilities have a central holding area for detainees that are in the courthouse for judicial proceedings. At least one central holding cell is required to be accessible. If separate holding cells

INTERNATIONAL CODE COUNCIL®
Copyright © 2015 ICC. ALL RIGHTS RESERVED. Accessed by David Dammon on Jun 21, 2017 12:30:52 PM pursuant to License Agreement with ICC. No further reproduction or distribution authorized. ANY UNAUTHORIZED REPRODUCTION OR DISTRIBUTION IS A VIOLATION OF THE FEDERAL COPYRIGHT ACT AND THE LICENSE AGREEMENT, AND SUBJECT TO CIVIL AND CRIMINAL PENALTIES THEREUNDER.

are provided for males and females or to separate juvenile offenders from the adult offenders, at least one of each type is required to be accessible.

1108.4.2.2 Court-floor holding cells. Where separate court-floor holding cells are provided for adult males, juvenile males, adult females or juvenile females, each courtroom shall be served by one *accessible* cell of each type. Where court-floor holding cells are provided and are not separated by age or sex, courtrooms shall be served by at least one *accessible* cell. *Accessible* cells shall be permitted to serve more than one courtroom.

❖ Some courthouse facilities have a holding cell located in the area of the courtroom for detainees who are in the courthouse for judicial proceedings. For security reasons, these holding cells may be provided on each floor of the facility in order to have the detainees as close to the courtrooms they are to appear in as possible. At least one holding cell per floor is required to be accessible. One accessible holding cell could serve all the courtrooms on one floor. If separate holding cells are provided for males and females or to separate juvenile offenders from the adult offenders, at least one of each type is required to be accessible.

SECTION 1109
OTHER FEATURES AND FACILITIES

1109.1 General. *Accessible* building features and facilities shall be provided in accordance with Sections 1109.2 through 1109.15.

Exception: *Accessible units*, *Type A units* and *Type B units* shall comply with Chapter 10 of ICC A117.1.

❖ This section clarifies that the provisions of Section 1109 are applicable in addition to all other requirements of Chapter 11. For example, although Section 1109.2 sets forth accessibility requirements for toilet rooms and bathing facilities within a store, it is not intended to mean that these are the only accessibility requirements that are applicable to stores. The building features and facilities covered by this section are required to be accessible to the extent set forth herein. The exception is a reminder that Accessible Type A and Type B dwelling and sleeping units should comply with Chapter 10 of ICC A117.1 within the individual dwelling units. Common and public areas associated with Group R-2 and R-3 occupancies should comply with Section 1109.

1109.2 Toilet and bathing facilities. Each toilet room and bathing room shall be *accessible*. Where a floor level is not required to be connected by an *accessible route*, the only toilet rooms or bathing rooms provided within the facility shall not be located on the inaccessible floor. Except as provided for in Sections 1109.2.2 and 1109.2.3, at least one of each type of fixture, element, control or dispenser in each accessible toilet room and bathing room shall be *accessible*.

Exceptions:

1. Toilet rooms or bathing rooms accessed only through a private office, not for *common* or *public use* and intended for use by a single occupant, shall be permitted to comply with the specific exceptions in ICC A117.1.
2. This section is not applicable to toilet and bathing rooms that serve *dwelling units* or *sleeping units* that are not required to be *accessible* by Section 1107.
3. Where multiple single-user toilet rooms or bathing rooms are clustered at a single location, at least 50 percent but not less than one room for each use at each cluster shall be *accessible*.
4. Where no more than one urinal is provided in a toilet room or bathing room, the urinal is not required to be *accessible*.
5. Toilet rooms or bathing rooms that are part of critical care or intensive care patient sleeping rooms serving *Accessible units* are not required to be *accessible*.
6. Toilet rooms or bathing rooms designed for bariatrics patients are not required to comply with the toilet room and bathing room requirement in ICC A117.1. The *sleeping units* served by bariatrics toilet or bathing rooms shall not count toward the required number of *Accessible sleeping units.*
7. Where toilet facilities are primarily for children's use, required *accessible* water closets, toilet compartments and lavatories shall be permitted to comply with children's provision of ICC A117.1.

❖ This section generally requires all toilet rooms and bathing rooms provided to be accessible. A person using a wheelchair must be able to approach and enter the room. Within the toilet room and/or bathing room, a minimum of one of each element or fixture provided is required to be accessible. Elements and fixtures include such things as water closets, lavatories, mirrors, towel dispensers, hand dryers and any other device that is installed and intended for use by the occupants of the room. Showers and bathtubs are both considered bathing fixtures, but not as different types of bathing fixtures. If a shower and a bathtub are both provided in the same bathing room, only one is required to be accessible. The designer or owner can choose which one. Requirements for the total number of bathing and toilet rooms are in Chapter 29 of the code [which is duplicated from Section 403 of the *International Plumbing Code*® (IPC®)]. Large assembly and mercantile occupancies must also include a family or assisted use toilet room in addition to their other toilet facilities (see commentary, Section 1109.2.1). Facilities with more than 20 toilet compartments or 20 lavatories in a single toilet room should also comply with Sections 1109.2.2 and 1109.2.3.

Provisions for accessible bathrooms are required even on levels that are not accessed by an accessible route. Many people benefit from the accessibility provisions in accessible bathrooms. For example, a person who is arthritic can use the grab bars to stand up and sit down, as well as finding the lever handles on the lavatory easier to use. In addition, Title I of the

INTERNATIONAL CODE COUNCIL®
Copyright © 2015 ICC. ALL RIGHTS RESERVED. Accessed by David Dammon on Jun 21, 2017 12:30:52 PM pursuant to License Agreement with ICC. No further reproduction or distribution authorized. ANY UNAUTHORIZED REPRODUCTION OR DISTRIBUTION IS A VIOLATION OF THE FEDERAL COPYRIGHT ACT AND THE LICENSE AGREEMENT, AND SUBJECT TO CIVIL AND CRIMINAL PENALTIES THEREUNDER.

ADA might require that level to be made accessible as part of an employee modification. If the bathroom is already accessible, it does not need to be modified, thus reducing the changes that need to be made to the building.

ICC A117.1 is the document referenced for all accessible toilet room requirements. The technical requirements in ICC A117.1 are based on allowing a person in a wheelchair to perform a side transfer [see Commentary Figure 1109.2(1)]. Maintaining a clear floor space at each fixture is important [see Commentary Figure 1109.2(2) for possible configurations]. The single-occupant bathroom requirements in the 2010 ADA Standard are now consistent with the provisions in ICC A117.1.

Exception 1 addresses a condition in which a toilet room or bathing room is permitted to be adaptable rather than fully accessible. The intent is that if a toilet room is part of an individual office and serves only the occupant of that office, the adaptable toilet room can be readily modified to be fully accessible based on that individual's needs. Preplanning during construction and design will facilitate future alterations. The ICC A117.1 indicates exactly what those adaptable features can be (e.g., reversible door swing; water closet seat height; blocking for grab bars; removable cabinets under the lavatory). This is not intended to be a general exception to allow a very small bathroom that would require walls or fixtures relocated to provide accessibility at a later date. The bathrooms must be sized to be accessible.

Exception 2 is intended to correlate with the provisions of Section 1107, which establish the minimum number of facilities required to be Accessible, Type A or Type B units. Without this exception, the code would literally be requiring accessible fixtures in inaccessible dwelling and sleeping units. It is important to note that the bathrooms associated with required Accessible, Type A and Type B dwelling and sleeping units must comply with the requirements in Chapter 10 of ICC A117.1.

Exception 3 specifies where toilet rooms are clustered together (i.e., entrance doors next to each other or across the hall), not all need to be accessible. In such configurations, typically found in a doctor's office or drug test center, the requirement is reduced to a 50-percent minimum. If these toilet rooms are clustered in separate locations, such as in a multiclinic facility, the 50-percent minimum would be applied to each cluster. A single-occupant women's bathroom adjacent to a single-occupant men's bathroom is not considered a cluster since they each serve a different sex. The IPC does have an allowance that would let some small occupancies have two unisex single-occupant toilet rooms, rather than having the same rooms labeled men's and women's (see Section 2902.2.1) If these toilet rooms are clustered, they can use this 50-percent exception since they are the same type.

Exception 4—The IPC permits urinals to be substituted for water closets to a maximum of 67 percent in each toilet room (see Section 419.2 of the IPC). Exception 4 states that if only one urinal is provided within a toilet room, that urinal is not required to be accessible. This situation would typically only occur in toilet rooms that also had one water closet compartment.

Exception 5—While Exception 2 would exempt all the nonaccessible patient rooms in a hospital from accessible bathroom requirements, the intent of Exception 5 is also to exempt the Accessible units that may be provided within the critical-care or intensive-care units from requiring accessible bathrooms. In critical-care or intensive-care units, the patients are

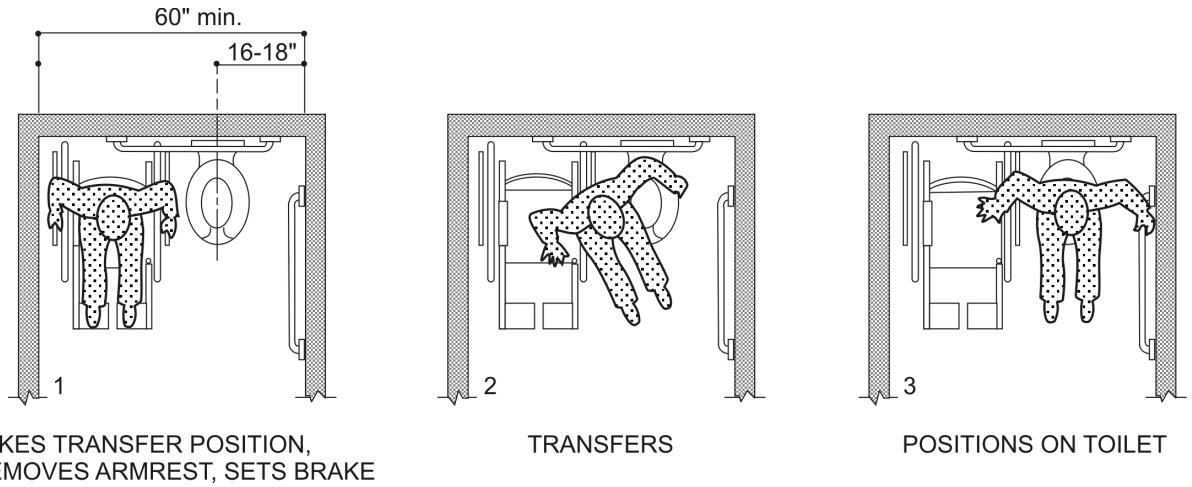

For SI: 1 inch = 25.4 mm.

Figure 1109.2(1)
SIDE APPROACH WHEELCHAIR TRANSFER

INTERNATIONAL CODE COUNCIL®
Copyright © 2015 ICC. ALL RIGHTS RESERVED. Accessed by David Dammon on Jun 21, 2017 12:30:52 PM pursuant to License Agreement with ICC. No further reproduction or distribution authorized. ANY UNAUTHORIZED REPRODUCTION OR DISTRIBUTION IS A VIOLATION OF THE FEDERAL COPYRIGHT ACT AND THE LICENSE AGREEMENT, AND SUBJECT TO CIVIL AND CRIMINAL PENALTIES THEREUNDER.

often too ill to use the bathroom without assistance. Therefore, assistance is offered and expected in these areas to all patients. In addition, critical-care and intensive-care rooms often must be designed to maximize free space for equipment and personnel in case of emergency care situations.

Exception 6—Toilet rooms for bariatric patients must have a unique design to address the special needs for size and weight of the patient. The provisions in ICC A117.1 do not have specific requirements for bariatric toilet and bathing facilities. The patients would need higher toilets that were located farther from the wall than standard accessible toilet configurations. Designing specifically for these patients is permitted by Section 104.11 and ICC A117.1 Section 103. However, since use of these rooms would be limited to those patients, these rooms shall not count towards the number of Accessible patient sleeping units required in Section 1107.5.3.

Exception 7 acknowledges the allowances in the ICC A117.1 for a toilet room and water closet compartment specifically designed for children's use. This may be appropriate in areas such as day care facilities and certain areas of elementary schools.

1109.2.1 Family or assisted-use toilet and bathing rooms. In assembly and mercantile occupancies, an *accessible* family or assisted-use toilet room shall be provided where an aggregate of six or more male and female water closets is required. In buildings of mixed occupancy, only those water closets required for the assembly or mercantile occupancy shall be used to determine the family or assisted-use toilet room requirement. In recreational facilities where separate-sex bathing rooms are provided, an *accessible* family or assisted-

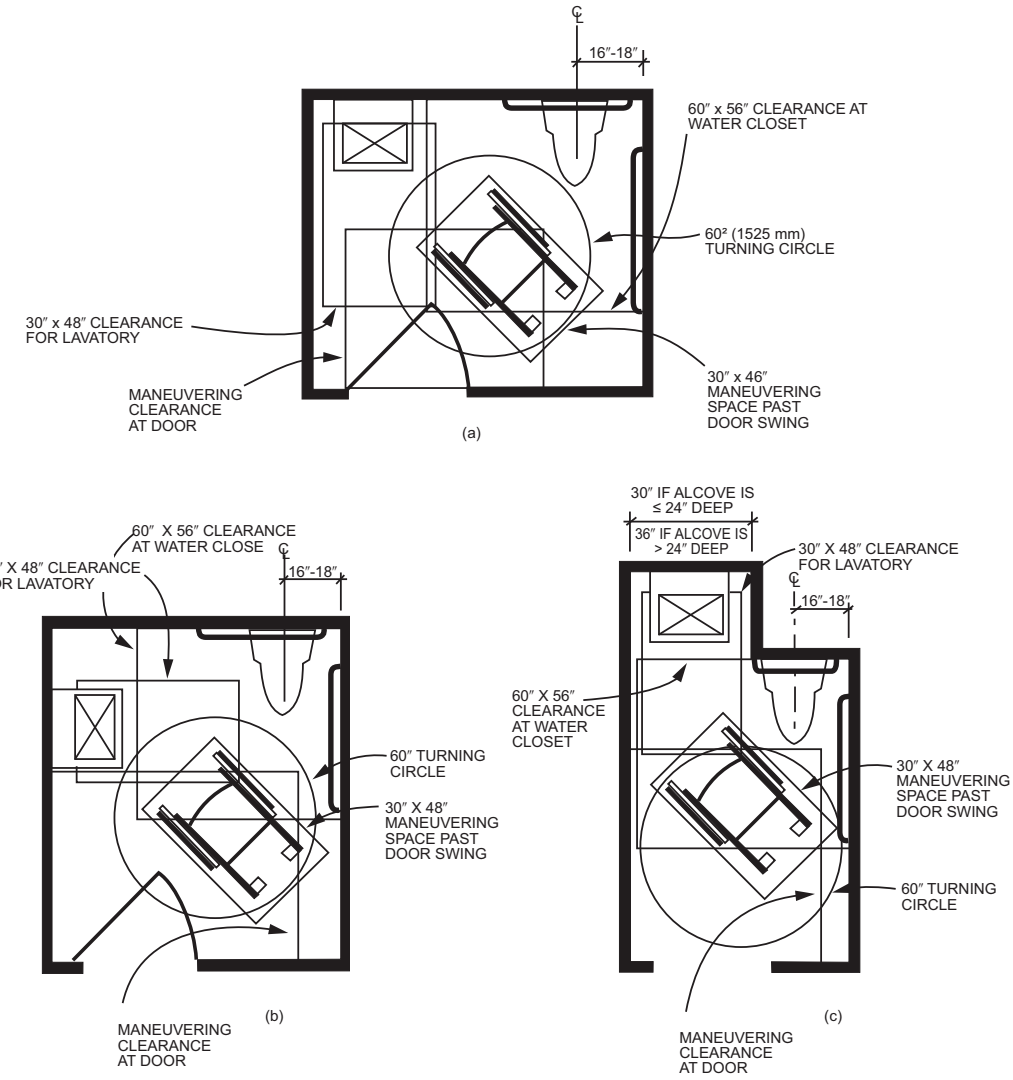

For SI: 1 inch = 25.4 mm.

Figure 1109.2(2)
EXAMPLES OF TOILET ROOM PLANS WITH OVERLAP

INTERNATIONAL CODE COUNCIL®
Copyright © 2015 ICC. ALL RIGHTS RESERVED. Accessed by David Dammon on Jun 21, 2017 12:30:52 PM pursuant to License Agreement with ICC. No further reproduction or distribution authorized. ANY UNAUTHORIZED REPRODUCTION OR DISTRIBUTION IS A VIOLATION OF THE FEDERAL COPYRIGHT ACT AND THE LICENSE AGREEMENT, AND SUBJECT TO CIVIL AND CRIMINAL PENALTIES THEREUNDER.

use bathing room shall be provided. Fixtures located within family or assisted-use toilet and bathing rooms shall be included in determining the number of fixtures provided in an occupancy.

Exception: Where each separate-sex bathing room has only one shower or bathtub fixture, a family or assisted-use bathing room is not required.

❖ The primary issue relative to family toilet/bathing facilities is that some people with disabilities require assistance to utilize them. If that attendant is of the opposite sex, a toilet or bathing facility that can accommodate both persons is required. This person and their care giver using the facilities in multistall toilet rooms for either men or women becomes a privacy concern for everyone trying to use the toilet room. Also, it is important to note that family/assisted use bathrooms are not reserved for persons with disabilities like a parking space. This bathroom is also an advantage to any family with small children that are the opposite sex of the parent they are with. There are situations where the parent does not feel comfortable letting the child go into the opposite sex toilet room without them, but the child is too old to be comfortable going into the toilet room with the parent. This bathroom is also a benefit for persons who may need assistance because of a temporary disability, like a broken arm or leg. It is important to note that these provisions will typically not result in a substantial cost burden to the building owners, since the fixtures provided also count toward the minimum number required (see Section 2902.1.2, or Section 403.1.2 of the IPC).

The family or assisted-use bathing room requirements, although beneficial to all occupancies and building sizes, are only required in those structures that typically have large transient occupant loads or typically are occupied by large numbers of families, namely large assembly and mercantile. The section also identifies how mixed-occupancy buildings are to be addressed relative to the calculation. The fixtures provided in family toilet and bathing rooms count toward the number of required fixtures for the occupancy. The number of fixtures to be located in such rooms is limited, based on the premise that these rooms are securable (see commentary, Section 1109.2.1.2). The provision for bathing facilities is primarily geared toward recreational facilities. It is only required where the designer has chosen to provide separate-sex facilities for bathing and has provided more than one tub or shower for each sex. The exception acknowledges that smaller bathing rooms such as those described can be utilized by a disabled person with assistance without much hardship to a nondisabled person.

Many facilities have been installing family bathrooms as part of their standard bathroom layouts prior to the code requirement, viewing them as "customer friendly." For example, a person requiring assistance can also be a small child or an elderly adult. A parent shopping or attending an event with a child of the opposite sex can utilize this facility as well as an adult who may need assistance from a spouse.

Note that the requirement for family bathrooms does not exempt separate-sex bathrooms from providing accessible or ambulatory stalls. For a discussion of family bathrooms in existing buildings, see IEBC Sections 410.8.10 and 705.1.9.

1109.2.1.1 Standard. Family or assisted-use toilet and bathing rooms shall comply with Sections 1109.2.1.2 through 1109.2.1.7.

❖ Facilities are required to comply with the accessible technical provisions for toilet rooms in ICC A117.1 as well as the additional criteria established in the following subsections. In smaller tenant spaces, the IPC now permits two family or assisted-use toilet rooms in place of two single-occupant separate-sex bathrooms (see Section 2902.2.2 and Section 403.2.1 of the IPC).

1109.2.1.2 Family or assisted-use toilet rooms. Family or assisted-use toilet rooms shall include only one water closet and only one lavatory. A family or assisted-use bathing room in accordance with Section 1109.2.1.3 shall be considered a family or assisted-use toilet room.

Exception: A urinal is permitted to be provided in addition to the water closet in a family or assisted-use toilet room.

❖ A family toilet room must include a lavatory and a water closet. The exception permits a urinal to also be installed in the family toilet room if desired. If a family bathing room is provided within a facility, it can serve as the required family toilet room.

1109.2.1.3 Family or assisted-use bathing rooms. Family or assisted-use bathing rooms shall include only one shower or bathtub fixture. Family or assisted-use bathing rooms shall also include one water closet and one lavatory. Where storage facilities are provided for separate-sex bathing rooms, *accessible* storage facilities shall be provided for family or assisted-use bathing rooms.

❖ A family bathing facility is required to have one shower or tub, one water closet and one lavatory. The shower can be a transfer type, a roll-in type or a combination of the two. Accessible storage facilities, such as lockers, are also required if storage facilities are provided in the separate-sex bathing facilities. A family bathing room can also serve a dual purpose (bathing and toilet) as the required family toilet room (see commentary, Section 1109.2.1.2).

1109.2.1.4 Location. Family or assisted-use toilet and bathing rooms shall be located on an *accessible route*. Family or assisted-use toilet rooms shall be located not more than one *story* above or below separate-sex toilet rooms. The *accessible route* from any separate-sex toilet room to a family or assisted-use toilet room shall not exceed 500 feet (152 m).

❖ A one-story, 500-foot (1524 mm) limitation for access to customer toilet facilities is currently in Section 2902.3.2 (which is duplicated from Section 403.3.3 of

INTERNATIONAL CODE COUNCIL®
Copyright © 2015 ICC. ALL RIGHTS RESERVED. Accessed by David Dammon on Jun 21, 2017 12:30:52 PM pursuant to License Agreement with ICC. No further reproduction or distribution authorized. ANY UNAUTHORIZED REPRODUCTION OR DISTRIBUTION IS A VIOLATION OF THE FEDERAL COPYRIGHT ACT AND THE LICENSE AGREEMENT, AND SUBJECT TO CIVIL AND CRIMINAL PENALTIES THEREUNDER.

the IPC). The distance to the customer toilet facilities is measured from the main entrance of a store or space to the toilet facility. The distance in this section is measured from the separate-sex facility to the family facility. The general travel distance requirement, in combination with this section, could result in a total travel distance for a family toilet room of two stories or 1,000 feet (3048 mm) maximum. The travel distance limitation is why there is more than one family bathroom in large facilities. An accessible route is required to provide access to the family facilities. Signage is required at both the separate-sex and family facilities in accordance with Sections 1111.1 and 1111.2.

1109.2.1.5 Prohibited location. In passenger transportation facilities and airports, the *accessible route* from separate-sex toilet rooms to a family or assisted-use toilet room shall not pass through security checkpoints.

❖ Security checkpoints in airports and similar facilities represent a potential delay, which may cause missed flights or connections. Because of security concerns, more and more facilities are adding security checkpoints. For example, many large sports facilities, courthouses and government buildings have checkpoints where the public moves into certain portions of the facilities. While not required, due to the delay in moving through a security system, a designer might want to follow this same guidance for location of the family bathrooms in other types of facilities.

1109.2.1.6 Clear floor space. Where doors swing into a family or assisted-use toilet or bathing room, a clear floor space not less than 30 inches by 48 inches (762 mm by 1219 mm) shall be provided, within the room, beyond the area of the door swing.

❖ The clear floor space provisions are intended to provide a room that is large enough to allow a person in a wheelchair to enter and close the door before utilizing the fixtures. This requirement is also in ICC A117.1 [see Commentary Figure 1109.2(2)].

1109.2.1.7 Privacy. Doors to family or assisted-use toilet and bathing rooms shall be securable from within the room.

❖ Since privacy while utilizing bathing and toilet facilities is an issue, the door to the facility must be securable from the inside. The securing mechanism must meet the operable parts requirements, including being within reach ranges and not require any tight pinching, grasping or sharp turning of the wrist to operate.

While it is not prohibited to lock bathrooms, this bathroom should be as easily accessed as the separate men's and women's bathrooms. A person who needed this facility should not have to find someone with a key for the family bathroom if the men's and women's bathrooms are readily available. This bathroom does count towards the required fixture count (see Section 2902.1.2) and as such must be available.

1109.2.2 Water closet compartment. Where water closet compartments are provided in a toilet room or bathing room, at least 5 percent of the total number of compartments shall be wheelchair *accessible*. Where the combined total water closet compartments and urinals provided in a toilet room or bathing room is six or more, at least 5 percent of the total number of compartments shall be ambulatory *accessible*, provided in addition to the wheelchair-*accessible* compartment.

❖ There are different configurations of water closet compartments that facilitate different degrees of physical disability. The provisions of ICC A117.1 establish the configuration and dimensional requirements for various types of water closet compartments. A wheelchair-accessible compartment is one in which sufficient space is provided for the wheelchair to enter completely the water closet compartment [see Commentary Figures 1109.2.2(2) and 1109.2.2(3)]. The wheelchair user then transfers from the wheelchair to the water closet in order to utilize the fixture. It is important that the required clear floor space be maintained. The configuration did not intend for a lavatory to be provided within the minimum-sized compartment. If a lavatory is located within a compartment, it must meet the same provisions as a single-occupant toilet room.

An ambulatory-accessible compartment is intended to facilitate use by a person with a mobility impairment that necessitates the use of a walking aid, such as a cane or walker [see Commentary Figure 1109.2.2(1)]. An ambulatory-accessible water closet compartment is not intended to be utilized by a person in a wheelchair. The 36-inch (914 mm) width is intended to allow standing persons to support themselves utilizing the grab bars on both sides. A wider compartment would not allow adequate bearing. Since these provisions are intended to address, within reason, the needs of both ranges of mobility impairment, this section requires a wheelchair-accessible compartment in all cases. In larger toilet rooms (i.e., those with a total of six or more water closet compartments and urinals), one ambulatory-accessible compartment is required in addition to the wheelchair-accessible compartment. In very large facilities with more than 20 toilet compartments in a single toilet room, an additional accessible and ambulatory water closet may be required to meet the 5-percent requirements.

This section is not intended to increase the required number of fixtures beyond that required by the IPC. For example, if a toilet room contains 10 water closets, eight water closet compartments may be of conventional design, one water closet compartment must be wheelchair accessible and one must be ambulatory accessible.

1109.2.3 Lavatories. Where lavatories are provided, at least 5 percent, but not less than one, shall be *accessible*. Where an *accessible* lavatory is located within the *accessible* water closet compartment at least one additional *accessible* lavatory

INTERNATIONAL CODE COUNCIL®
Copyright © 2015 ICC. ALL RIGHTS RESERVED. Accessed by David Dammon on Jun 21, 2017 12:30:52 PM pursuant to License Agreement with ICC. No further reproduction or distribution authorized. ANY UNAUTHORIZED REPRODUCTION OR DISTRIBUTION IS A VIOLATION OF THE FEDERAL COPYRIGHT ACT AND THE LICENSE AGREEMENT, AND SUBJECT TO CIVIL AND CRIMINAL PENALTIES THEREUNDER.

shall be provided in the multicompartment toilet room outside the water closet compartment. Where the total lavatories provided in a toilet room or bathing facility is six or more, at least one lavatory with enhanced reach ranges shall be provided.

❖ A lavatory is a type of sink for which the primary purpose is hand washing. This section provides scoping requirements for lavatories located in spaces not specifically addressed or exempted by Section 1109.2. If a lavatory is provided in toilet and bathing rooms specifically exempted by Section 1109.2, it is not required to be accessible. Lavatories that are part of an employee work station are exempted under Section 1103.2.2. An example of a lavatory that was part of an employee's work area would be the lavatories found in the exam rooms. The lavatories are there for the nurses and doctors to wash their hands before examining a patient.

When lavatories are provided in other areas, a minimum of 5 percent, but not less than one, is required to be accessible via a front approach with appropriate knee and toe clearances.

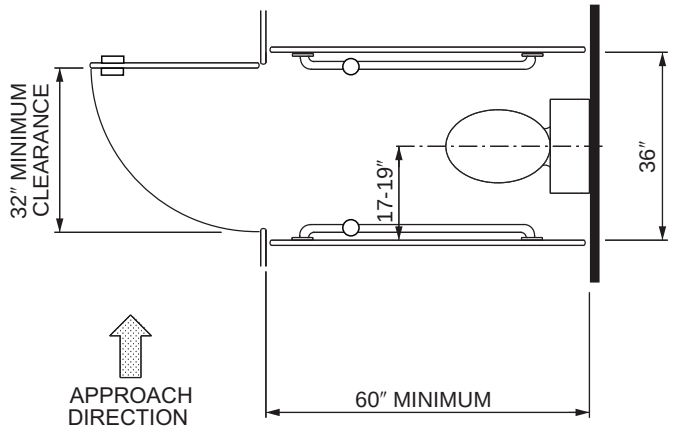

For SI: 1 inch = 25.4 mm.

Figure 1109.2.2(1)
AMBULATORY-ACCESSIBLE COMPARTMENT

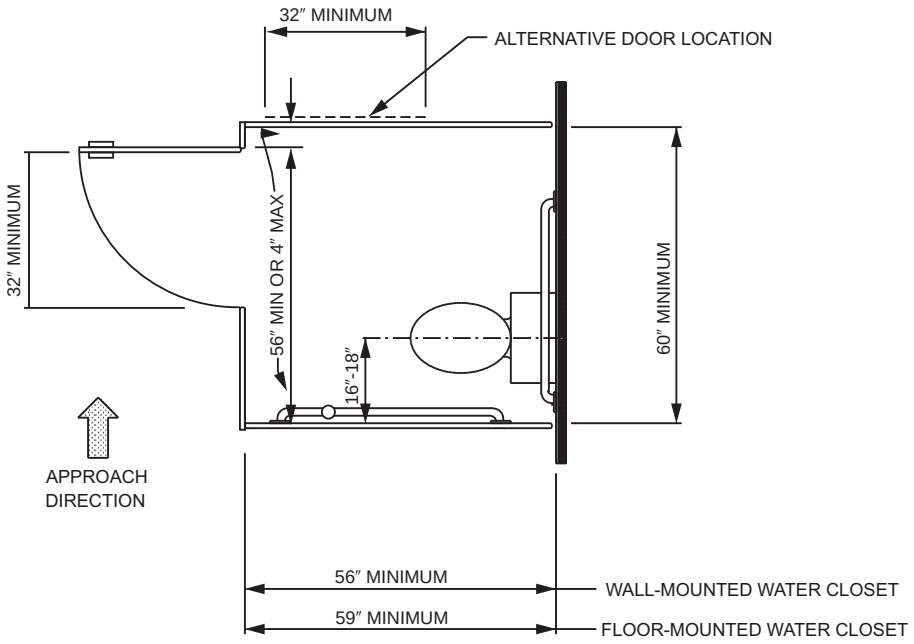

For SI: 1 inch = 25.4 mm.

Figure 1109.2.2(2)
WHEELCHAIR-ACCESSIBLE COMPARTMENT; OUT-SWINGING DOOR

INTERNATIONAL CODE COUNCIL®
Copyright © 2015 ICC. ALL RIGHTS RESERVED. Accessed by David Dammon on Jun 21, 2017 12:30:52 PM pursuant to License Agreement with ICC. No further reproduction or distribution authorized. ANY UNAUTHORIZED REPRODUCTION OR DISTRIBUTION IS A VIOLATION OF THE FEDERAL COPYRIGHT ACT AND THE LICENSE AGREEMENT, AND SUBJECT TO CIVIL AND CRIMINAL PENALTIES THEREUNDER.

A designer can choose to locate an accessible lavatory actually within the accessible toilet stall for customer convenience. If this is the case, that cannot be the only accessible lavatory within the toilet room. An additional accessible lavatory must be provided outside of the accessible stall.

In large facilities, where the designer has located six or more lavatories within one toilet facility (similar to the ambulatory stall), one of the lavatories must also be provided with enhanced reach range for the faucet controls in accordance with Section 606.5 of ICC A117.1. This would require the faucets to be located on the side of the lavatory, or provide access to the side of one of the lavatories, or to have automatic controls. This is to address the needs of persons who may have a limited reach over the lavatory where they may have difficulty reaching the controls. The lavatory with enhanced reach range could be the same lavatory as the accessible lavatory, or it could be another lavatory.

There are allowances in ICC A117.1 for lavatories specifically designed for children's use. This may be appropriate in areas such as day care facilities and certain areas of elementary schools.

1109.3 Sinks. Where sinks are provided, at least 5 percent but not less than one provided in *accessible* spaces shall be *accessible*.

Exception: Mop or service sinks are not required to be *accessible*.

❖ A sink may have numerous functions, unlike a lavatory, which is primarily provided for hand washing. Sinks in kitchens, kitchenettes and classrooms are examples that may have scoping and accessibility requirements different than those for lavatories. When sinks are provided, a minimum of 5 percent, but not less than one, is required to be accessible via a front approach with knee and toe clearances. There is a specific exception here for mop or service-type sinks. Service sinks include a wide variety of specialized sinks manufactured for multiple or specific functions. Service sinks are typically sized to be very deep and positioned for their function, which often renders them incapable of being accessible. Also, when a sink is part of an individual work station, that sink is not required to be accessible in accordance with Section 1103.2.2.

A forward approach to sinks is not always required (see commentary, Section 1109.4).

There are allowances in ICC A117.1 for sinks specifically designed for children's use. This may be appropriate in areas such as day care facilities and certain areas of elementary schools.

1109.4 Kitchens and kitchenettes. Where kitchens and kitchenettes are provided in *accessible* spaces or rooms, they shall be *accessible*.

❖ Kitchens, kitchenettes and wet bars in accessible spaces, other than within Type A and Type B dwelling units, must be accessible. An accessible kitchen would include clear floor spaces at all appliances, a sink with a front approach and a work surface with a front approach (see Section 804 of ICC A117.1 for specific details). Kitchenettes (where a cooktop or conventional range is not provided) allow a side approach to the sink (Section 606 of ICC A117.1) and do not require an accessible work surface. A common mistake is to forget that the sink must be set at a maximum height of 34 inches (864 mm) to allow for reach to the faucets (see Commentary Figure 1109.4).

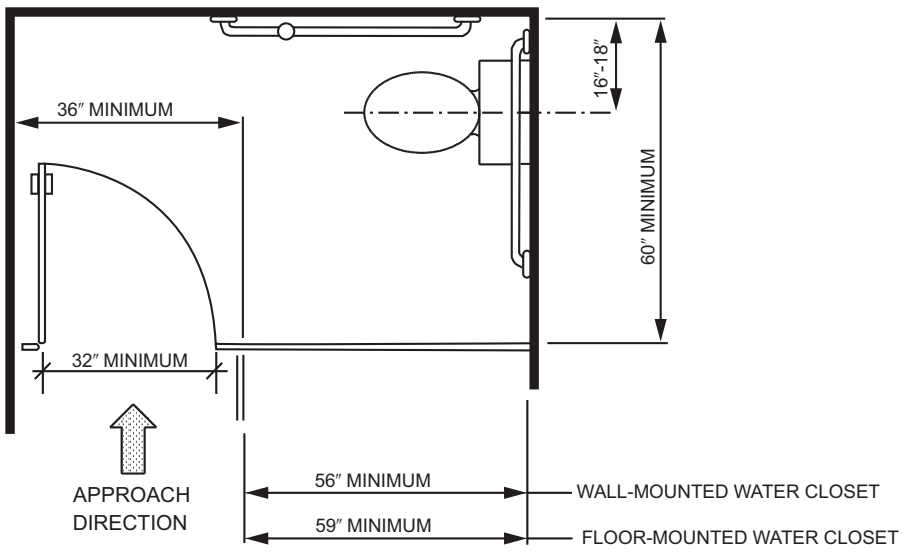

For SI: 1 inch = 25.4 mm.

Figure 1109.2.2(3)
WHEELCHAIR-ACCESSIBLE COMPARTMENT; IN-SWINGING DOOR

INTERNATIONAL CODE COUNCIL®
Copyright © 2015 ICC. ALL RIGHTS RESERVED. Accessed by David Dammon on Jun 21, 2017 12:30:52 PM pursuant to License Agreement with ICC. No further reproduction or distribution authorized. ANY UNAUTHORIZED REPRODUCTION OR DISTRIBUTION IS A VIOLATION OF THE FEDERAL COPYRIGHT ACT AND THE LICENSE AGREEMENT, AND SUBJECT TO CIVIL AND CRIMINAL PENALTIES THEREUNDER.

Commercial kitchens are considered employee work areas. See the commentaries to Sections 1103.2.2 and 1104.3.1. Kitchenettes that are part of an employee break room are specifically excluded in the definition of employee work areas (see Chapter 2) and must be accessible.



Figure 1109.4
EXAMPLE OF KITCHENETTE

1109.5 Drinking fountains. Where drinking fountains are provided on an exterior site, on a floor or within a secured area, the drinking fountains shall be provided in accordance with Sections 1109.5.1 and 1109.5.2.

❖ This section establishes a reasonable threshold for the required number of accessible drinking fountains. It should be noted that this section does not require the installation of drinking fountains where none are required or provided. Chapter 29 (which is duplicated from Section 403 of the IPC) contains criteria indicating the number of drinking fountains that are required based on occupancy. There are spaces that are not required to have drinking fountains. Examples are spaces with fewer than 15 occupants and spaces that serve water, such as a restaurant.

Current requirements for plumbing fixtures (see Table 2902 and Table 403 of the IPC) stipulate only one drinking fountain for many facilities or tenant spaces. The provisions in Section 1109.5.1 and Section 410.2 of the IPC stipulate a minimum of two drinking fountains for these facilities and spaces in order to meet the high/low criteria. Additionally, the plumbing requirements would allow for 50 percent of the drinking fountains to be substituted with water dispensers (see Section 410.3 of the IPC). While the provisions in Sections 1109.5.1 and 1109.5.2 and Section 410.2 of the IPC would not prohibit the substitution, the requirement for two drinking fountains would effectively negate this substitution unless there were at least three drinking fountains required for a floor. The IPC has defined, "drinking fountain," "water cooler" and "water dispenser" in an effort to clarify the differences between drinking fountains (including water coolers) and stand-alone water dispensers. A water dispenser cannot be considered as an alternative to either the high or low drinking fountain. However, water dispensers that are permanently installed would have to comply with Section 1109.13 for operable parts.

The IPC now includes provisions for travel distance to a drinking fountain (see Section 403.5 of the IPC), which are 500 feet (152 400 mm) and one-story maximum travel. In malls, the maximum travel is reduced to 300 feet (91 440 mm).

1109.5.1 Minimum number. No fewer than two drinking fountains shall be provided. One drinking fountain shall comply with the requirements for people who use a wheelchair and one drinking fountain shall comply with the requirements for standing persons.

Exceptions:

1. A single drinking fountain with two separate spouts that complies with the requirements for people who use a wheelchair and standing persons shall be permitted to be substituted for two separate drinking fountains.
2. Where drinking fountains are primarily for children's use, drinking fountains for people using wheelchairs shall be permitted to comply with the children's provisions in ICC A117.1 and drinking fountains for standing children shall be permitted to provide the spout at 30 inches (762 mm) minimum above the floor.

❖ Where a single drinking fountain is provided, this section mandates a minimum of two fixtures be provided: one for persons seated in a wheelchair (low) and one for standing persons (high). The high and low drinking fountains that serve a facility need not be provided at the same location in the facility. If the high and low drinking fountains are remotely located, signage is required to indicate the location of the other fountains (see Section 1111.2). Technical criteria for both high and low fountains are located in Section 602 of ICC A117.1 (see Commentary Figure 1109.5.1). The drinking fountains must be located so that they are not protruding objects (see Section 1003.3).

Exception 1 allows for a single drinking fountain to meet the requirements for both high and low heights by providing two spouts at one bowl; however, at this time there are only a few drinking fountains on the market that can meet this criterion. See the commentary to Section 1109.5.

Exception 2 allows for both the high and low drinking fountains to be designed for children. There are technical criteria in A117.1 for wheelchair-accessible drinking fountains specifically designed for children who are age 12 and younger. This may be appropriate for facilities such as day care facilities and certain areas of elementary schools.

INTERNATIONAL CODE COUNCIL®
Copyright © 2015 ICC. ALL RIGHTS RESERVED. Accessed by David Dammon on Jun 21, 2017 12:30:52 PM pursuant to License Agreement with ICC. No further reproduction or distribution authorized. ANY UNAUTHORIZED REPRODUCTION OR DISTRIBUTION IS A VIOLATION OF THE FEDERAL COPYRIGHT ACT AND THE LICENSE AGREEMENT, AND SUBJECT TO CIVIL AND CRIMINAL PENALTIES THEREUNDER.



Figure 1109.5.1
EXAMPLE OF DRINKING FOUNTAINS FOR PERSONS USING WHEELCHAIRS (LOW) AND STANDING PERSONS (HIGH)

1109.5.2 More than the minimum number. Where more than the minimum number of drinking fountains specified in Section 1109.5.1 is provided, 50 percent of the total number of drinking fountains provided shall comply with the requirements for persons who use a wheelchair and 50 percent of the total number of drinking fountains provided shall comply with the requirements for standing persons.

Exceptions:

1. Where 50 percent of the drinking fountains yields a fraction, 50 percent shall be permitted to be rounded up or down, provided that the total number of drinking fountains complying with this section equals 100 percent of the drinking fountains.
2. Where drinking fountains are primarily for children's use, drinking fountains for people using wheelchairs shall be permitted to comply with the children's provisions in ICC A117.1 and drinking fountains for standing children shall be permitted to provide the spout at 30 inches (762 mm) minimum above the floor.

❖ When an even number of drinking fountains is provided, half must accommodate persons seated in wheelchairs (low) and half must accommodate standing persons (high). Exception 1 addresses when an odd number of drinking fountains is provided.

An example:

- Two drinking fountains are required by Section 1109.5.1 and Section 410.2 of the IPC.
- Seven drinking fountains are provided.
- Fifty percent of seven is three and one-half.
- Rounding up yields four; rounding down yields three.
- Therefore, there are two choices:
  - Provide four low and three high fountains; or
  - Provide three low and four high fountains.
- Both choices comply since the complying fixtures total 100 percent.

This logic applies whenever an odd number of three or more drinking fountains is provided, regardless of the total quantity. This is based on the number provided—not the number required. In accordance with Section 410.3 of the IPC, a designer/owner could switch out some of the required drinking fountains for bottled water dispensers (see commentary to Section 1109.5).

Exception 2 is consistent with the same exception in Section 1109.5.2, allowing for both high and low drinking fountains to be designed for children. There are technical criteria in ICC A117.1 for wheelchair-accessible drinking fountains specifically designed for children who are age 12 and younger. This may be appropriate for day care facilities and certain areas of elementary schools.

1109.6 Saunas and steam rooms. Where provided, saunas and steam rooms shall be *accessible*.

Exception: Where saunas or steam rooms are clustered at a single location, at least 5 percent of the saunas and steam rooms, but not less than one, of each type in each cluster shall be *accessible*.

❖ The 2009 edition of the ICC A117.1 standard has included technical requirements for saunas and steam rooms. The scoping in the IBC is consistent with bathrooms and coordinates with the 2010 ADA Standard. What constitutes a "cluster" is subjective; however, typically the rooms would have to have entrances immediately adjacent or across the hall from one another to be considered "clustered."

The requirements within the standard provide for entering the room, closing the door and then transfering to the bench in the room. Removing the wheelchair from the space is not addressed, so perhaps a special chair might be utilized. Section 914 of the *International Mechanical Code*® (IMC®) addresses safety requirements for sauna rooms.

1109.7 Elevators. Passenger elevators on an *accessible route* shall be *accessible* and comply with Chapter 30.

❖ This section requires all passenger elevators on an accessible route to be accessible. The reference to Chapter 30 requires all passenger elevators to conform to general elevator safety standards as well as accessibility standards. It is not the intent of this section to prohibit service elevators, Limited Use Limited Access (LULA) elevators, private residence elevators or platform lifts (as permitted by Section 1109.8). Service, LULA and private residence elevators are rec-

INTERNATIONAL CODE COUNCIL®
Copyright © 2015 ICC. ALL RIGHTS RESERVED. Accessed by David Dammon on Jun 21, 2017 12:30:52 PM pursuant to License Agreement with ICC. No further reproduction or distribution authorized. ANY UNAUTHORIZED REPRODUCTION OR DISTRIBUTION IS A VIOLATION OF THE FEDERAL COPYRIGHT ACT AND THE LICENSE AGREEMENT, AND SUBJECT TO CIVIL AND CRIMINAL PENALTIES THEREUNDER.

ognized as types of passenger lifts by ASME A17.1/CSA B44.

Elevators are defined in ASME A17.1 as "a hoisting and lowering mechanism, equipped with a car, that moves within guides and serves two or more landings …." The limitations of use for the different types of elevators are controlled by the standard.

ASME limits the occupants in "freight elevators" to just the operator and the people needed to load and unload the freight. Also "construction elevators" are limited to construction purposes only. Only passenger-type elevators can serve as part of an accessible route. Therefore, freight and construction types of elevators are not required to be accessible.

The term "service elevator" is not defined in ASME A17.1. This is a slang term used by building owners to separate the "back of the house" passenger elevator used by staff (and typically designed to accommodate a heavier load) from the passenger elevators used by the general public for circulation. As part of an accessible route to employee work areas, a service elevator is required to be accessible.

LULA elevators have a maximum vertical travel distance of 25 feet (7620 mm). Private residence elevators are limited to within or serving individual dwelling units.

It should also be noted that unlike plumbing fixtures, this section does not establish that a certain number of passenger elevators are required to be accessible while other passenger elevators may be of a design that is not fully accessible. All passenger elevators that are on an accessible route are required to be accessible. If a bank of passenger elevators is provided as part of an accessible route, all elevators in that bank must be accessible. See IEBC Sections 410.8.2 and 705.1.2 for existing elevators being altered.

The reference to an accessible route (see Sections 1104.3, 1004.4 and 1109.7) is important because some areas in certain buildings may not be required to be accessible (see Sections 1103.2 and 1104.4). For example, since an elevator penthouse is not required to be accessible (see Section 1103.2.9), the passenger elevator is not required to serve that level. Keep in mind that the penthouse that contains elevator equipment must be accessed by a stairway (see Section 1011.12.1). In addition, certain types of elevators (e.g., freight elevators) may not be part of an accessible route.

Note that there are additional requirements for elevators depending on the building height:

- In buildings four stories and higher, at least one elevator must be sized in order to accommodate stretchers (see Section 3002.4).
- In buildings five stories and higher, an elevator must be available for serving as part of an accessible means of egress (see Section 1009.2.1).
- Buildings 120 feet (36 576 mm) or taller shall have two fire service access elevators, both sized to fit a stretcher (see Sections 403 and 3007).
- Occupant evacuation elevators are also an option (see Section 3008).

Note that fire service access elevators and occupant evacuation elevators can also serve as elevators that are part of an accessible means of egress.

1109.8 Lifts. Platform (wheelchair) lifts are permitted to be a part of a required *accessible route* in new construction where indicated in Items 1 through 10. Platform (wheelchair) lifts shall be installed in accordance with ASME A18.1.

1. An *accessible route* to a performing area and speaker platforms.
2. An *accessible route* to *wheelchair spaces* required to comply with the *wheelchair space* dispersion requirements of Sections 1108.2.2 through 1108.2.6.
3. An *accessible route* to spaces that are not open to the general public with an *occupant load* of not more than five.
4. An *accessible route* within an individual *dwelling unit* or *sleeping unit* required to be an *Accessible unit*, *Type A unit* or *Type B unit*.
5. An *accessible route* to jury boxes and witness stands; raised courtroom stations including judges' benches, clerks' stations, bailiffs' stations, deputy clerks' stations and court reporters' stations; and to depressed areas such as the well of the court.
6. An *accessible route* to load and unload areas serving amusement rides.
7. An *accessible route* to play components or soft contained play structures.
8. An *accessible route* to team or player seating areas serving *areas of sport activity*.
9. An *accessible route* instead of gangways serving recreational boating facilities and fishing piers and platforms.
10. An *accessible route* where existing exterior *site* constraints make use of a *ramp* or elevator infeasible.

❖ This section indicates that platform (wheelchair) lifts are only permitted to be part of a required accessible route in new construction in limited situations. If a platform lift is permitted as part of the accessible route into a space, it can also serve as part of the accessible route used for means of egress out of the space (with the exception of Item 10) if it has standby power (see Section 1007.5). There are concerns about the potential for a large number of people needing to exit the building under the allowances for Item 10; therefore, an accessible means of egress must be via another route. Platform lifts may be used more extensively in existing construction (see IEBC Sections 410.8.3 and 705.1.3). This is in recognition that circumstances in existing buildings may make it

INTERNATIONAL CODE COUNCIL®
Copyright © 2015 ICC. ALL RIGHTS RESERVED. Accessed by David Dammon on Jun 21, 2017 12:30:52 PM pursuant to License Agreement with ICC. No further reproduction or distribution authorized. ANY UNAUTHORIZED REPRODUCTION OR DISTRIBUTION IS A VIOLATION OF THE FEDERAL COPYRIGHT ACT AND THE LICENSE AGREEMENT, AND SUBJECT TO CIVIL AND CRIMINAL PENALTIES THEREUNDER.

impractical to accomplish accessibility by use of an elevator, in which case a platform lift is a reasonable alternative. Accessible means of egress is not required in existing buildings undergoing alterations (see Section 1009.1, Exception 1, or IEBC Sections 410.1, Exception 2 and 705.1, Exception 2); therefore, a platform lift as part of the accessible means of egress in these situations is not an issue.

A previous edition of the technical standard (i.e., ASME A17.1-1996) required key operation to platform lifts, which unnecessarily inhibited independent access by persons with physical disabilities. The requirements for platform lifts have been removed from the elevator standard and now have their own standard, ASME A18.1, *Safety Standard for Platform Lifts and Stairway Chairlifts*. This newer standard allows push-button operation of platform lifts, thus making independent access much easier.

The listed items indicate when a platform lift can be utilized as part of a required accessible route in new construction. Items 1 and 2 allow platform lifts to be utilized for access to performing (e.g., stages, orchestra pits) and wheelchair space locations used to view an event.

Item 3 specifies that a platform lift may be used to provide access to a nonpublic area with five or less occupants, such as a projection booth.

Item 4 allows for a platform lift within an individual dwelling or sleeping unit.

Item 5 permits platform lifts to provide access to the raised or lowered areas typically found in courtroom settings. This is consistent with Section 1108.4.1.4.

Item 6 allows platform lifts for access to loading and unloading areas serving amusement rides. It does not attempt to address access to any other element of a ride. There are provisions for amusement rides in Section 1110.4.8 and Chapter 11 of the 2009 ICC A117.1.

Item 7 identifies children's play spaces, the entry to which may be raised or depressed, as an appropriate place for a platform lift. Such spaces are often associated with restaurants, shopping malls and preschools. There are provisions for children's play areas in Chapter 11 of the 2009 ICC A117.1.

Item 8 acknowledges that team or player seating may be a small depressed area (i.e., dugout) capable of being efficiently served by a platform lift.

Item 9 allows for a platform lift to serve as part of the accessible route to recreational boating and fishing piers required to be on an accessible route per Sections 1110.4.9 and 1110.4.11.

Item 10 recognizes that existing site constraints may make installation of a ramp or elevator infeasible. An example would be the situation of dealing with existing public sidewalks, easements and public ways in downtown urban areas. This situation would be most common in hilly areas where the street and sidewalk follows grade and the building's floor is level, resulting in steps up or down at entrances.

Note that a platform lift that was not part of the required accessible route could be used to facilitate access to any space. The governing factor in those situations would be the limitations of the product itself for capacity and travel distance. Item 4 permits platform lifts to be utilized within individual dwelling or sleeping units as part of a required accessible route. Single-family homes are not required to be accessible. However, persons with mobility impairments may choose to install stairway chairlifts in their private homes. Section 1011.2, Exception 3, specifies a minimum stairway width for platform lifts or chair lifts provided within dwelling units.

A platform lift is an electrically operated, mechanical device designed to transport a person who cannot use stairs over a short vertical distance. Platform lifts must be sized to accommodate a wheelchair. Platform lifts can be used by persons who use wheelchairs or scooters and persons with limited mobility. Some platform lifts are equipped with folding seats. A fold-down seat that moves up the stairway is not a platform lift, but rather a chair lift. A stairway chair lift is not suitable for a person using a wheelchair and cannot serve as part of a required accessible route. A platform lift is most suitable for changes of elevation of one story or less where the installation of a ramp is not feasible. ASME A18.1 limits the rise of platform lifts to 14 feet or less. [see Commentary Figures 1109.8(1) and 1109.8(2)].

While new technologies are expanding current options, there are two basic types of platform lifts:



Figure 1109.8(1)
PLATFORM (WHEELCHAIR) LIFT
(Photo courtesy of Wheel-evator)

INTERNATIONAL CODE COUNCIL®
Copyright © 2015 ICC. ALL RIGHTS RESERVED. Accessed by David Dammon on Jun 21, 2017 12:30:52 PM pursuant to License Agreement with ICC. No further reproduction or distribution authorized. ANY UNAUTHORIZED REPRODUCTION OR DISTRIBUTION IS A VIOLATION OF THE FEDERAL COPYRIGHT ACT AND THE LICENSE AGREEMENT, AND SUBJECT TO CIVIL AND CRIMINAL PENALTIES THEREUNDER.

vertical lifts and inclined lifts. Vertical lifts are similar to elevators in that they travel only up and down in a fixed vertical space. Platform lifts should not be confused with Limited Access Limited Use elevators or private residence elevators (see Section 1109.7). Inclined platform lifts are usually installed in conjunction with a stairway and travel along the slope of the stairway. Inclined lifts are a design consideration for long flights of stairs where a vertical platform lift is not practical, where headroom is limited or where ceilings are low.



Figure 1109.8(2)
STAIRWAY CHAIRLIFT
(Photo courtesy of Wheel-evator)

1109.9 Storage. Where fixed or built-in storage elements such as cabinets, coat hooks, shelves, medicine cabinets, lockers, closets and drawers are provided in required *accessible* spaces, at least 5 percent, but not less than one of each type shall be *accessible*.

❖ Fixed or built-in storage elements are common in many occupancies, including both residential and nonresidential occupancies such as office buildings, recreational facilities, etc. Examples would include coat closets, storage closets, lockers, etc. The code does not require storage facilities, but when such facilities are provided, this section requires at least 5 percent, but not less than one, of each type to contain storage space in accordance with ICC A117.1 (see Commentary Figure 1109.9). This could be a portion of shelving or coat rods, a number of lockers, etc. Requirements would include a wheelchair space in front of the element, operable parts (if applicable) and the shelf, box or hook within the 15- to 48-inch (381 to 1219 mm) reach ranges. Storage within kitchens and kitchenettes is more specifically addressed in Section 804 of ICC A117.1. For the kitchen or kitchenette to be able to have both upper and lower cabinets at heights that keep the counter useable, storage elements are not required to meet the reach range. Storage elements within Accessible, Type A and Type B units are specifically addressed under Chapter 10 of ICC A117.1.

Storage elements that would be part of an employee work space, such as a lab in a doctor's office, are exempted under Section 1103.2.2.



Figure 1109.9
EXAMPLE OF LOCKER AREA

1109.9.1 Equity. *Accessible* facilities and spaces shall be provided with the same storage elements as provided in the similar nonaccessible facilities and spaces.

❖ This section is really about the issue of equal access to amenities. This requirement is consistent with the requirements for family or assisted-use bathrooms to have the same lockers, hand dryers, baby-changing stations, etc., as provided in the men's and women's bathrooms. For example, hotel rooms commonly provide closets and dressers for guests. These same storage facilities must also be available in Accessible sleeping units. They cannot be eliminated as an option to providing an accessible route or turning space within the Accessible unit. For hotel rooms, ICC A117.1 has a requirement for providing equal bathroom counter space in similar Accessible and nonaccessible guestrooms.

1109.9.2 Shelving and display units. Self-service shelves and display units shall be located on an *accessible route*. Such shelving and display units shall not be required to comply with reach-range provisions.

❖ The intent of this section is that persons who utilize wheelchairs can see items on shelves in stores and libraries, but someone may be required to assist them in reaching the items. Putting all items within the 15- to 48-inch (381 to 1219 mm) reach range would adversely affect the space allowed for products or information.

INTERNATIONAL CODE COUNCIL®
Copyright © 2015 ICC. ALL RIGHTS RESERVED. Accessed by David Dammon on Jun 21, 2017 12:30:52 PM pursuant to License Agreement with ICC. No further reproduction or distribution authorized. ANY UNAUTHORIZED REPRODUCTION OR DISTRIBUTION IS A VIOLATION OF THE FEDERAL COPYRIGHT ACT AND THE LICENSE AGREEMENT, AND SUBJECT TO CIVIL AND CRIMINAL PENALTIES THEREUNDER.

1109.10 Detectable warnings. Passenger transit platform edges bordering a drop-off and not protected by platform screens or *guards* shall have a *detectable warning*.

Exception: *Detectable warnings* are not required at bus stops.

❖ A detectable warning is a standardized feature built in or applied to walking surfaces to warn a visually impaired person of a hazard on or near his or her path of travel and which could result in injury to that person, such as moving into a street, or at a significant drop-off.

This section requires a detectable warning at the edges of passenger transit platforms where they border a drop-off (see Commentary Figure 1109.10). For example, loading platforms in both light- and heavy-rail transit stations where passengers await the arrival of trains are a serious potential hazard to a person with a vision impairment when there is no train at the station. There have been incidents where people with severe vision impairments have fallen off the transit platform and been killed or seriously injured. The presence of a detectable warning at the platform edge where it borders the drop-off would be encountered and recognized by a person with a vision impairment either through detection by a long cane or by foot contact with the detectable warning surface.

The exception for bus stops is established so as not to require a detectable warning at the curb between a sidewalk and the street. Detectable warnings at curbs are contradictory to the envisioned application of detectable warnings in the built environment. The curb itself is a recognizable and well-known cue to people with vision impairments to proceed with caution.

There is a great deal of controversy and general disagreement as to the benefit or advisability of detectable warning surfaces throughout the built environment. The use of such warnings at transit stations is, to date, the only well-documented use of detectable warnings, as discussed in studies such as "Tactile Warnings to Promote Safety in the Vicinity of Transit Platform Edges," conducted by the Urban Mass Transportation Administration, and "Pathfinder Tactile Tile Demonstration Test Project," conducted by the Metro-Dade Transit Agency. The Access Board will be looking into this issue as part of the development of the *Public Rights-of-Way Guidelines* for intersections of public sidewalks and roads. The 2010 ADA Standard has dropped the requirement for detectable warnings at curb cuts. Neither the code nor ICC A117.1 requires detectable warnings at curb cuts. ICC A117.1 only addresses the technical criteria for when someone chooses to provide detectable warnings.

ICC A117.1 prescribes the type of surface that constitutes a detectable warning in Section 705. One option for the detectable warning surface that is currently considered suitable consists of raised, truncated domes with a diameter between 0.9 inches (23 mm) and 1.4 inches (36 mm), a height of approximately 0.2 inch (5.1 mm) and center-to-center spacing of between 1.6 inches (41 mm) and 2.4 inches (61 mm). However, there is current and ongoing research into the use and application of truncated domes as a suitable detectable warning surface for various applications, including interior and exterior locations. ICC A117.1 requires that the type of detectable warning surface utilized must be standard throughout a building, facility, site or complex of buildings. If different types of detectable warning surfaces are utilized, their usefulness is diminished. The different messages they would convey to a person with a vision impairment would not be consistent and may be confusing and easily misinterpreted.

It is anticipated that future applications of detectable warnings will be considered when additional research and documentation of their usefulness and suitability is available. One issue, among many, is the durability of a detectable warning surface in an exterior application and the potential difficulty that truncated domes may present to a person in a wheelchair, as well as to nondisabled persons who may have to negotiate the surface.



Figure 1109.10
DETECTABLE WARNINGS AT TRANSIT PLATFORM EDGE

INTERNATIONAL CODE COUNCIL®
Copyright © 2015 ICC. ALL RIGHTS RESERVED. Accessed by David Dammon on Jun 21, 2017 12:30:52 PM pursuant to License Agreement with ICC. No further reproduction or distribution authorized. ANY UNAUTHORIZED REPRODUCTION OR DISTRIBUTION IS A VIOLATION OF THE FEDERAL COPYRIGHT ACT AND THE LICENSE AGREEMENT, AND SUBJECT TO CIVIL AND CRIMINAL PENALTIES THEREUNDER.

1109.11 Seating at tables, counters and work surfaces. Where seating or standing space at fixed or built-in tables, counters or work surfaces is provided in *accessible* spaces, at least 5 percent of the seating and standing spaces, but not less than one, shall be *accessible*.

Exception: Check-writing surfaces at check-out aisles not required to comply with Section 1109.12.2 are not required to be *accessible*.

❖ Many occupancies, such as libraries, classrooms and other public spaces, are equipped with fixed seating, tables or both (see Commentary Figure 1109.11). The threshold of 5 percent is consistent with the requirement for accessible seating in dining areas as specified in Section 1108.2.9.1. Fixed or built-in seating that is part of an individual work station is not required to be accessible (see Section 1103.2.2). Where required, accessible tables and work surfaces are expected to include adequate knee and toe clearances as specified in ICC A117.1. For requirements for points of sales or service that do not include a work station, see Section 1109.12.3. For example, the check-writing station in the center of the bank lobby is considered a work station, whereas the teller window is typically considered a service counter. The accessible check-writing station would require knee and toe clearances, while the accessible teller window would not.

Note that the requirement addresses built-in counters, tables or work stations for standing or seating. Built-in surfaces where persons are typically standing are most often installed at a height of 36 to 48 inches (914 to 1219 mm). Depending on the overall configuration of the counters in the space, a portion of the counter for standing persons may need to be lowered to an accessible height of 28 to 34 inches (711 to 864 mm) and configured for forward approach.

The intent of Exception 1 is that if a check-writing surface is provided at a nonaccessible checkout aisle, this surface is not required to meet the counter and work surface requirements in ICC A117.1 (see Section 1109.12.2).

There are allowances in ICC A117.1 for work surfaces specifically designed for children's use. This may be appropriate in facilities such as day care facilities and certain areas of elementary schools, or areas frequented mostly by children, such as children's museums or the children's areas in libraries.



Figure 1109.11
EXAMPLE OF ACCESSIBLE WORK STATION

1109.11.1 Dispersion. *Accessible* fixed or built-in seating at tables, counters or work surfaces shall be distributed throughout the space or facility containing such elements and located on a level accessed by an *accessible route*.

❖ An appropriate distribution of seating and tables is required and is intended to be consistent with the distribution of all such seating and tables in the facility. For example, a library may contain several separate areas in which fixed seating or tables are installed. This provision would prohibit the location of all accessible seating and tables in a single specific area of the facility. However, this should not be construed to mean that every separate area in which fixed seating or tables are provided is required to contain an accessible seat or table. For example, if there are four areas in which fixed seating or tables are located, and two such seats or tables are required by this section to be accessible, the intent of this section is to require that one accessible seat or table be located in two of the four areas.

If the facility has floor levels exempted from an accessible route (see Section 1104.4), accessible work surfaces are not required to be located on the nonaccessible level.

1109.11.2 Visiting areas. Visiting areas in judicial facilities and Group I-3 shall comply with Sections 1109.11.2.1 and 1109.11.2.2.

❖ Persons appearing in court proceedings may need to talk with their lawyer, social worker, parole officer, etc. If a prisoner is serving a sentence, they may need to talk with all these individuals, as well as have visitations from family. Typically, these visitation areas include cubicles or counters in supervised areas.

1109.11.2.1 Cubicles and counters. At least 5 percent, but not less than one of the cubicles, shall be *accessible* on both the visitor and detainee sides. Where counters are provided, at least one shall be *accessible* on both the visitor and detainee sides.

Exception: This requirement shall not apply to the detainee side of cubicles or counters at noncontact visiting areas not serving *Accessible unit* holding cells.

❖ If detainee/visitor counters or cubicles are provided, at least 5 percent must be accessible. Since it is not known if the person needing the accessible counter is on the visitor side or the detainee side, at least one counter location shall be accessible on both sides. In accordance with the exception, visiting areas that do

INTERNATIONAL CODE COUNCIL®
Copyright © 2015 ICC. ALL RIGHTS RESERVED. Accessed by David Dammon on Jun 21, 2017 12:30:52 PM pursuant to License Agreement with ICC. No further reproduction or distribution authorized. ANY UNAUTHORIZED REPRODUCTION OR DISTRIBUTION IS A VIOLATION OF THE FEDERAL COPYRIGHT ACT AND THE LICENSE AGREEMENT, AND SUBJECT TO CIVIL AND CRIMINAL PENALTIES THEREUNDER.

not serve accessible cells would still require 5 percent of the counters or cubicles to be accessible on the visitor's side (see Commentary Figure 1109.11.2.1). This is consistent with the exception to certain areas of jails in accordance with Section 1103.2.13.



Figure 1109.11.2.1
EXAMPLE OF ACCESSIBLE VISITOR'S CUBICLE

1109.11.2.2 Partitions. Where solid partitions or security glazing separate visitors from detainees, at least one of each type of cubicle or counter partition shall be *accessible*.

❖ Section 1109.11.2.1 requires 5 percent of cubicles or counters in courthouse and jail visiting areas to be accessible in accordance with the built-in counter/ work surface requirements. This section deals with the visiting situation where solid partitions of security glazing separate visitors from detainees. To facilitate communication, the system may include some type of handset, headphones or microphone. The system must consider in its design that either user may use a wheelchair or have difficulty bending or stooping. Any type of telephone or headphone system provided to address communication must have a volume control.

1109.12 Service facilities. Service facilities shall provide for *accessible* features in accordance with Sections 1109.12.1 through 1109.12.5.

❖ This section introduces five subsections that address accessibility of dressing rooms: service counters and windows; check-out aisles; food service; queues and waiting lines, etc. These types of elements are broadly termed "service facilities" and are intended to permit usage by persons with physical disabilities.

1109.12.1 Dressing, fitting and locker rooms. Where dressing rooms, fitting rooms or locker rooms are provided, at least 5 percent, but not less than one, of each type of use in each cluster provided shall be *accessible*.

❖ This section establishes a reasonable minimum threshold for accessible dressing, fitting and locker rooms. This section does not require that dressing, fitting and locker rooms be provided, but when such facilities are provided, at least 5 percent of each group of rooms is required to be accessible. This section also requires an appropriate distribution of accessible facilities based on distinct and different functions of each group of facilities provided. For example, a department store may have one group of fitting rooms serving the menswear department and a separate group of fitting rooms serving the women's wear department. This section would not permit the location of all accessible fitting rooms in one department and no accessible fitting rooms in another department. This may result in a number of accessible fitting rooms greater than 5 percent of the total number of all fitting rooms in the facility. For example, if there are two dressing rooms in each of three different departments in a retail store, a total of three accessible fitting rooms would be required: one in each of the three areas. Where amenities such as coat hooks, lockers or shelves are provided in inaccessible dressing, fitting or locker rooms, they must also be provided in the accessible rooms (see Section 1109.9). In accordance with Section 803.4 of ICC A117.1, an accessible bench must be provided in all accessible dressing, fitting and locker rooms (see Commentary Figure 1109.12.1).

1109.12.2 Check-out aisles. Where check-out aisles are provided, *accessible* check-out aisles shall be provided in accordance with Table 1109.12.2. Where check-out aisles serve different functions, accessible check-out aisles shall be provided in accordance with Table 1109.12.2 for each function. Where check-out aisles are dispersed throughout the building or facility, *accessible* check-out aisles shall also be dispersed. Traffic control devices, security devices and turnstiles located in *accessible* check-out aisles or lanes shall be *accessible*.

Exception: Where the public use area is under 5,000 square feet (465 m^2) not more than one *accessible* check-out aisle shall be required.

❖ This section applies to sales locations configured as lanes or aisles, often designed to accommodate shopping carts such as typically found in supermarkets, drugstores, discount retail stores, etc. If check-out aisles serve different functions, at least one check-out aisle that serves each function shall be accessible. If a facility offers check-out stations at a variety of locations, the accessible locations must also be dispersed. Where security devices such as turnstiles and automatically activated gates are provided, they are required to be accessible. The required number of check-out aisles for each function

INTERNATIONAL CODE COUNCIL®
Copyright © 2015 ICC. ALL RIGHTS RESERVED. Accessed by David Dammon on Jun 21, 2017 12:30:52 PM pursuant to License Agreement with ICC. No further reproduction or distribution authorized. ANY UNAUTHORIZED REPRODUCTION OR DISTRIBUTION IS A VIOLATION OF THE FEDERAL COPYRIGHT ACT AND THE LICENSE AGREEMENT, AND SUBJECT TO CIVIL AND CRIMINAL PENALTIES THEREUNDER.

is set forth in Table 1109.12.2. Signage is required in accordance with Section 1111.1.

Providing a cash register at a location does not automatically create a check-out aisle. See Section 1109.12.3 for sales and service counters.

The exception allows for small retail facilities to only provide one accessible check-out counter.

TABLE 1109.12.2
ACCESSIBLE CHECK-OUT AISLES

TOTAL CHECK-OUT AISLES OF EACH FUNCTION	MINIMUM NUMBER OF ACCESSIBLE CHECK-OUT AISLES OF EACH FUNCTION
1 to 4	1
5 to 8	2
9 to 15	3
Over 15	3, plus 20% of additional aisles

1109.12.3 Point of sale and service counters. Where counters are provided for sales or distribution of goods or services, at least one of each type provided shall be *accessible*. Where such counters are dispersed throughout the building or facility, *accessible* counters shall also be dispersed.

❖ Wherever sales or service counters or windows are provided, at least one window or a portion of a counter is required to be accessible. For example, most hotel registration and check-out functions occur at a counter. The intent of this section is to require that one portion of the counter area be accessible. Accessibility is accomplished by providing a lower counter height to accommodate a person using a wheelchair and locating that counter on an accessible route. This is not necessarily intended to require that multiple lower counter heights be provided based on the different types of services that are offered. For example, this is not intended to require two separate, lower counter heights: one for hotel registration and one for check-out. One lower counter height can be provided at which both functions are accomplished. In the above-described situation, dispersion of the accessible counters would be required if the counters themselves were dispersed in separate locations.

The intent of the accessible service window is to permit the customer to interact with the service representative the same way they interact with the general public. An extra piece of counter stuck on the front of the high service counter [typically 42- to 48-inches (1067 to 1219 mm) high] may be appropriate as a temporary fix for barrier removal but is not acceptable in new construction. ICC A117.1 permits a maximum counter height of 36 inches (914 mm) at a service window (see commentary, Section 1109.11 and Commentary Figure 1109.12.3).

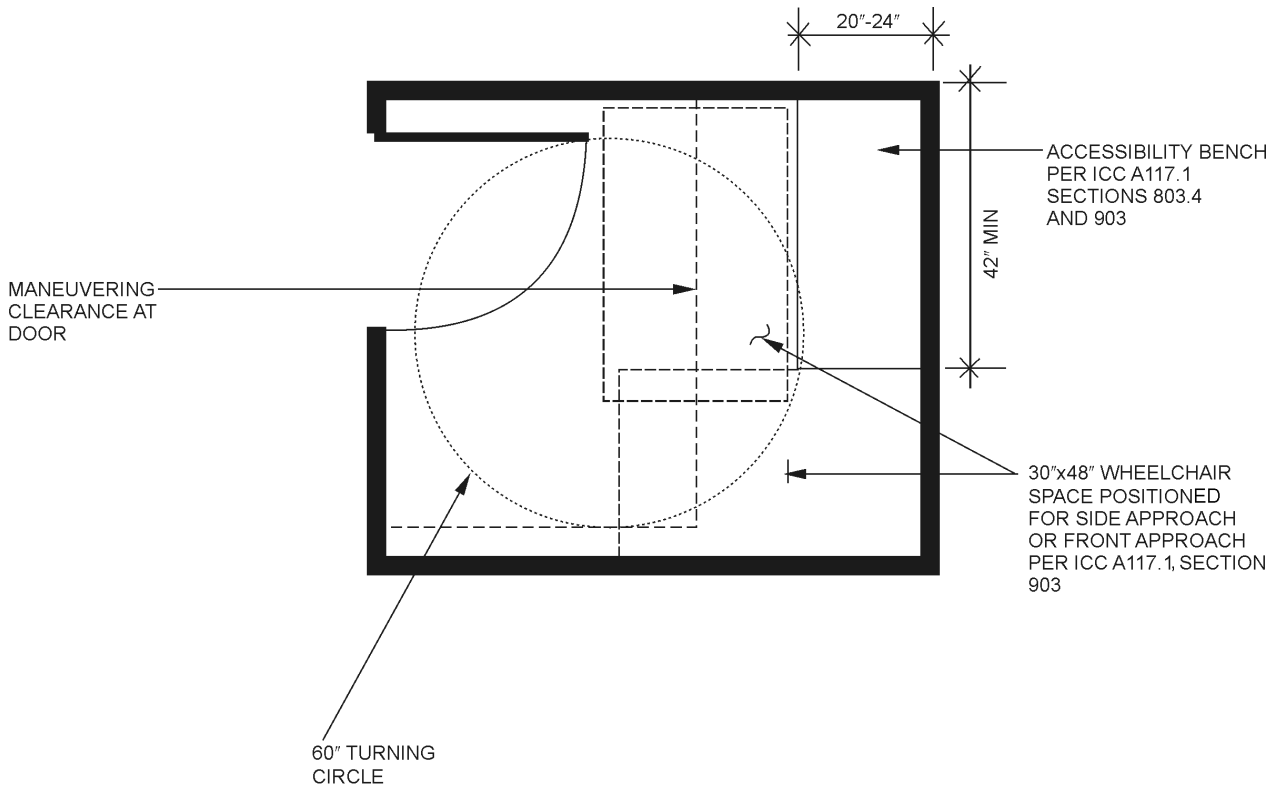

For SI: 1 inch = 25.4 mm.

Figure 1109.12.1
EXAMPLE OF ACCESSIBLE DRESSING ROOM

INTERNATIONAL CODE COUNCIL®
Copyright © 2015 ICC. ALL RIGHTS RESERVED. Accessed by David Dammon on Jun 21, 2017 12:30:52 PM pursuant to License Agreement with ICC. No further reproduction or distribution authorized. ANY UNAUTHORIZED REPRODUCTION OR DISTRIBUTION IS A VIOLATION OF THE FEDERAL COPYRIGHT ACT AND THE LICENSE AGREEMENT, AND SUBJECT TO CIVIL AND CRIMINAL PENALTIES THEREUNDER.

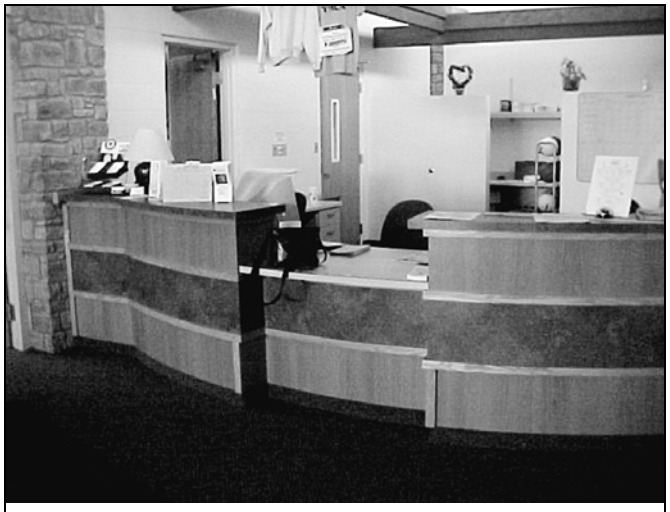

Figure 1109.12.3
SERVICE COUNTERS

1109.12.4 Food service lines. Food service lines shall be *accessible*. Where self-service shelves are provided, at least 50 percent, but not less than one, of each type provided shall be *accessible*.

❖ All lines that provide access to food service must meet the accessible route provisions in ICC A117.1. Where self-service shelves are utilized, such as in a cafeteria, at least half of each type must be on an accessible route and be located within reach ranges (see Commentary Figure 1109.12.4).



Figure 1109.12.4
EXAMPLE OF SELF-SERVICE SHELVING

1109.12.5 Queue and waiting lines. Queue and waiting lines servicing *accessible* counters or check-out aisles shall be *accessible*.

❖ If patrons must form a line for service, then the waiting line must meet the accessible route provisions of ICC A117.1. Accessible waiting lines are required at locations where accessible counters, windows or check-out aisles are provided, such as banks, ticket counters, fast-food establishments and similar facilities. A separate waiting line for persons with disabilities is not a viable alternative. This section does not require permanent designation of queue lines. However, where permanent crowd control barriers are provided, special attention must be paid to turns around such obstructions or dividers.

1109.13 Controls, operating mechanisms and hardware. Controls, operating mechanisms and hardware intended for operation by the occupant, including switches that control lighting and ventilation and electrical convenience outlets, in *accessible* spaces, along *accessible routes* or as parts of *accessible* elements shall be *accessible*.

Exceptions:

1. Operable parts that are intended for use only by service or maintenance personnel shall not be required to be *accessible*.
2. Electrical or communication receptacles serving a dedicated use shall not be required to be *accessible*.
3. Where two or more outlets are provided in a kitchen above a length of counter top that is uninterrupted by a sink or appliance, one outlet shall not be required to be *accessible*.
4. Floor electrical receptacles shall not be required to be *accessible*.
5. HVAC diffusers shall not be required to be *accessible*.
6. Except for light switches, where redundant controls are provided for a single element, one control in each space shall not be required to be *accessible*.
7. Access doors or gates in barrier walls and fences protecting pools, spas and hot tubs shall be permitted to comply with Section 1010.1.9.2.

❖ This section requires that any controls intended to be utilized by the occupants of the space be accessible when such controls are located in an accessible space, along accessible routes or as part of an accessible element. For example, the switch controlling the general lighting of a room that is required to be accessible also must be accessible. This is also true for most of the electrical outlets that are located in the room. Thermostats that are intended to be adjustable by the occupants must also be accessible. Another example would be the button or switch that activates an automatic hand dryer in a toilet room. If the fixture is mounted such that the outlet for the air is at an accessible height, the purpose is defeated if the switch to activate the device is inaccessible.

The exceptions listed are similar to the exceptions already located in ICC A117.1 for Accessible, Type A and Type B dwelling and sleeping units. Since the same problems exist in nonresidential facilities, the exceptions are appropriate.

INTERNATIONAL CODE COUNCIL®
Copyright © 2015 ICC. ALL RIGHTS RESERVED. Accessed by David Dammon on Jun 21, 2017 12:30:52 PM pursuant to License Agreement with ICC. No further reproduction or distribution authorized. ANY UNAUTHORIZED REPRODUCTION OR DISTRIBUTION IS A VIOLATION OF THE FEDERAL COPYRIGHT ACT AND THE LICENSE AGREEMENT, AND SUBJECT TO CIVIL AND CRIMINAL PENALTIES THEREUNDER.

Exception 1 deals with items that are not intended for use by the general occupants of the space. This would include controls such as thermostats that are intended to be adjustable only by authorized personnel. Another example would be the controls restricted to use by authorized personnel for a public address system in a meeting room.

Exception 2 deals with connections for a dedicated use. For example, the outlet behind the refrigerator, where it plugs in, is not required to be accessible.

Exception 3 is for kitchens and kitchenettes. If more than one electrical outlet is provided over a portion of the countertop, only one is required to be accessible.

Exception 4 permits floor receptacles not to be accessible, since by being in the floor they are out of the reach range.

Exception 5 is for HVAC diffusers. The typical locations for these elements are most often in the floor, high up on the walls or on the ceiling.

Exception 6 allows for redundant controls for everything but lighting. For example, a ceiling fan could be operated by a wall switch as well as by the chain on the fan itself.

Exception 7 addresses the operable parts on safety gates and doors serving pools, spas and hot tubs. The operable parts are required to be higher than normal to be above the reach of young children (see Section 1010.1.9.2).

1109.14 Fuel-dispensing systems. Fuel-dispensing systems shall be *accessible*.

❖ With the exceptions specific to fuel-dispensing systems (e.g., gas pumps) in ICC A117.1 under "operable parts," this section asks for operable parts to be within the unobstructed reach range provisions in ICC A117.1. Because of safety concerns, these operable parts do not have to meet the 5-pounds-force (22.24 N) requirement. Basically, all operable parts (e.g., pump controls, credit card readers, receipt dispensers, etc.) must be located between 15 inches and 48 inches (381 mm and 1219 mm) above the parking surface. Curbs must be considered when determining the height of controls. The intent is to address the needs of persons with limited reach range. Fuel-dispensing systems that are part of a work station are exempted by Section 1103.2.2.

1109.15 Gaming machines and gaming tables. Two percent, but not less than one, of each type of gaming table provided shall be *accessible* and provided with a front approach. Two percent of gaming machines provided shall be *accessible* and provided with a front approach. *Accessible* gaming machines shall be distributed throughout the different types of gaming machines provided.

❖ Gaming machines and tables are now found nationwide. Accessibility must be considered to allow for all people access to these services/games. Side approach access is not practical or comfortable for extended playing time. Front access allows integration with other players for equal play time and communication.

When gaming tables (e.g., blackjack, roulette, craps, poker) are provided, at least one of each type should be accessible. This may require one of the tables to be positioned at a height that would allow for all players to sit at the same height as the person using the wheelchair rather than on bar stools.

With gaming machines, there may be many different games and amounts within one facility. Distribution of 2 percent throughout the types should provide players with a variety of options.

If the variety offered is greater than the number of accessible gaming machines required, the accessible machines should be dispersed as much as possible. For example, if a facility offers 25-cent, $1 and $10 slot machines, but only two accessible machines are required, then only two of the types are required to be accessible. The choice of which machines are made accessible is up to the building owner or designer.

SECTION 1110
RECREATIONAL FACILITIES

1110.1 General. Recreational facilities shall be provided with *accessible* features in accordance with Sections 1110.2 through 1110.4.

❖ Recreational and sports facilities such as tennis courts, swimming pools, baseball fields, etc., may be part of development on a site such as a school or apartment complex. Group R-2, R-3 and R-4 facilities are addressed in Sections 1110.2 through 1110.2.3 so that equitable opportunity for use by all occupants of a multibuilding site would be evaluated. All other occupancies must comply with Section 1110.3.

The intent of the provisions is to allow for equal access for all persons to participate in the recreational activity to the best of their abilities. It is not intended to change the playing surface or how the game is played. This could be considered analogous to the approach, enter and exit requirements for employee work areas. See the commentary to Section 1110.4.1.

The Access Board has included requirements for many types of recreational facilities in the new 2010 ADA Standard for Accessible Design. The 2009 edition of ICC A117.1 includes a new chapter with technical information on accessibility for many types of recreational facilities. The new Chapter 11 in ICC A117.1 contains technical provisions for amusement rides; recreational boating facilities; exercise machinery and equipment; fishing piers and platforms; golf facilities; miniature golf facilities; play areas; swimming pools; wading pools; hot tubs; spas and shooting and firing positions.

1110.2 Facilities serving Group R-2, R-3 and R-4 occupancies. Recreational facilities that serve Group R-2, R-3 and

INTERNATIONAL CODE COUNCIL®
Copyright © 2015 ICC. ALL RIGHTS RESERVED. Accessed by David Dammon on Jun 21, 2017 12:30:52 PM pursuant to License Agreement with ICC. No further reproduction or distribution authorized. ANY UNAUTHORIZED REPRODUCTION OR DISTRIBUTION IS A VIOLATION OF THE FEDERAL COPYRIGHT ACT AND THE LICENSE AGREEMENT, AND SUBJECT TO CIVIL AND CRIMINAL PENALTIES THEREUNDER.

Group R-4 occupancies shall comply with Sections 1110.2.1 through 1110.2.3, as applicable.

❖ Group R-2, R-3 and R-4 facilities are addressed in Sections 1110.2 through 1110.2.3 so that equitable opportunity for use by all occupants of a single or multibuilding site would be evaluated.

1110.2.1 Facilities serving Accessible units. In Group R-2 and R-4 occupancies where recreational facilities serve *Accessible units*, every recreational facility of each type serving *Accessible units* shall be *accessible*.

❖ See Sections 1107.6.2.3 and 1107.6.4.1 for when Accessible units are required in Group R-2 and R-4 facilities. When a facility such as a dormitory, fraternity, sorority or group home has Accessible units, any recreational facilities that might serve the residents must also be accessible to the extent specified in Section 1110.4. Examples include an accessible route to the edge of a sand volleyball court, and an accessible route to and into a pool.

1110.2.2 Facilities serving Type A and Type B units in a single building. In Group R-2, R-3 and R-4 occupancies where recreational facilities serve a single building containing *Type A units* or *Type B units*, 25 percent, but not less than one, of each type of recreational facility shall be *accessible*. Every recreational facility of each type on a site shall be considered to determine the total number of each type that is required to be *accessible*.

❖ Many multiple-family developments include common recreational facilities, such as a swimming pool, tennis court, playground, etc., which are available for use by residents of the complex. In some cases, there may be more than one type of recreational facility located at different points within the development. This section establishes the criterion that 25 percent, but not less than one, of each type of recreational facility has to be accessible. For example, if two separate tennis court areas are provided, one containing two tennis courts and the other containing seven, then a total of three courts must be accessible. In a single building site, the three accessible tennis courts could all be in one area or divided between the two areas. This satisfies the requirement that at least 25 percent of the total number of courts be made accessible.

1110.2.3 Facilities serving Type A and Type B units in multiple buildings. In Group R-2, R-3 and R-4 occupancies on a single site where multiple buildings containing *Type A units* or *Type B units* are served by recreational facilities, 25 percent, but not less than one, of each type of recreational facility serving each building shall be *accessible*. The total number of each type of recreational facility that is required to be *accessible* shall be determined by considering every recreational facility of each type serving each building on the site.

❖ In a multibuilding site, the same criteria apply as for single building sites. However, in addition, if certain facilities only serve certain buildings, at least 25 percent of the facilities in each area must be accessible. For example, if two separate tennis court areas are provided, each serving a specific building, and one contains two tennis courts while the other contains seven courts, then 25 percent at each location, for a total of three courts, must be accessible. While the number is the same for the single building, the distribution requirement is different. In this case, one tennis court in the two-court area must be made accessible and two of the tennis courts in the seven-court area must be made accessible. This satisfies the requirement that at least 25 percent of the courts for each building are made accessible. If all tennis courts serve all of the buildings, then the distribution could be the same as discussed in Section 1110.2.3.

1110.3 Other occupancies. Recreational facilities not falling within the purview of Section 1110.2 shall be *accessible*.

❖ When tennis courts, pools, baseball diamonds, playgrounds or other recreational facilities are provided in occupancies other than the Group R-2, R-3 or R-4 occupancies discussed in Section 1110.2, all facilities must be accessible. For recreational facilities associated with Groups R-2, R-3 and R-4, see the commentary for Sections 1110.2 through 1110.2.3.

1110.4 Recreational facilities. Recreational facilities shall be *accessible* and shall be on an *accessible route* to the extent specified in this section.

❖ Accessible recreation facilities must have an accessible route to them. Depending on the type of facility, additional requirements may be indicated to provide further access, such as into a pool, or on the playing surface of a miniature golf course. It is not intended to change the nature of the game or how the game is played. The intent is to allow for someone to participate to the best of their abilities. These items are intended to harmonize with the federal 2010 ADA Standard for Accessible Design.

1110.4.1 Area of sport activity. Each *area of sport activity* shall be on an *accessible route* and shall not be required to be *accessible* except as provided for in Sections 1110.4.2 through 1110.4.14.

❖ "Area of sports activity" is defined in Chapter 2. The broad term, "area of sports activity," addresses indoor and outdoor courts, fields and other sport areas. Examples include basketball and tennis courts; practice areas for dance or gymnastics; baseball, soccer and football fields; skating rinks; running tracks; and skateboard parks. The phrase "portion…where the play or practice of a sport occurs" varies depending on the sports. Football fields include the playing field boundary lines, the end zones and the space between the boundary lines and safety border. Players may run or be pushed into this safety zone during play. In football, this safety zone is used as part of the playing field, and is therefore included in the area of sports activity.

This section requires an accessible route to the edge of a recreational facility. See Sections 1110.4.2 through 1110.4.14 for additional requirements or exceptions for specific types of recreational facilities.

INTERNATIONAL CODE COUNCIL®
Copyright © 2015 ICC. ALL RIGHTS RESERVED. Accessed by David Dammon on Jun 21, 2017 12:30:52 PM pursuant to License Agreement with ICC. No further reproduction or distribution authorized. ANY UNAUTHORIZED REPRODUCTION OR DISTRIBUTION IS A VIOLATION OF THE FEDERAL COPYRIGHT ACT AND THE LICENSE AGREEMENT, AND SUBJECT TO CIVIL AND CRIMINAL PENALTIES THEREUNDER.

1110.4.2 Team or player seating. At least one wheelchair space shall be provided in team or player seating areas serving *areas of sport activity*.

Exception: Wheelchair spaces shall not be required in team or player seating areas serving bowling lanes that are not required to be *accessible* in accordance with Section 1110.4.3.

❖ Accessible seating for sports teams and players is a logical requirement that allows players to maintain team participation when injured as well as allowing for coaches or players with mobility impairments to participate. When there is team seating provided on opposite sides for home and visitor teams, an accessible route must be provided to both locations. See Commentary Figure 1110.4.2. The exception acknowledges that only 5 percent of lanes in bowling facilities are required to be provided with an accessible route. Since teams sit at their lanes while playing, this provides a balance between player seating and access to the accessible bowling lanes (see Section 1110.4.3).



Figure 1110.4.2
EXAMPLE OF TEAM SEATING IN A BASEBALL DUGOUT

1110.4.3 Bowling lanes. An *accessible* route shall be provided to at least 5 percent, but not less than one, of each type of bowling lane.

❖ Bowling lanes are typically depressed from the main circulation routes and viewing areas in bowling facilities for sightline purposes. Since bowling lanes repeat each other, only 5 percent of bowling lanes and their associated team or player seating areas are required to be on an accessible route. See also Section 1110.4.2.

1110.4.4 Court sports. In court sports, at least one *accessible* route shall directly connect both sides of the court.

❖ If you have court sports, most games have you switch sides during the course of the game. An accessible route is required to both sides of the court without leaving the immediate area. In a multicourt facility, such as a tennis facility, best design practice would provide the accessible routes so that they would not have to go through other courts where someone else may be playing. See Commentary Figure 1110.4.4.



Figure 1110.4.4
EXAMPLE OF COURT SPORTS

1110.4.5 Raised boxing or wrestling rings. Raised boxing or wrestling rings are not required to be *accessible* or to be on an *accessible* route.

❖ Boxing and wrestling rings are raised to allow for a line a site from the audience to the ring, similar to a stage. These unique types of facilities are not required to be on an accessible route or be accessible. This exception is in step with several of the general exceptions in Section 1103.2 where small raised areas provided for specific purposes are exempted. As with any other exception, there is nothing that would prohibit the installation of specialized equipment to allow a disabled person to perform the particular function.

1110.4.6 Raised refereeing, judging and scoring areas. Raised structures used solely for refereeing, judging or scoring a sport are not required to be *accessible* or to be on an *accessible route*.

❖ In order for a judge or referee to see the entire playing surface, they may be sitting on a raised platform or high chair. Where these areas are used solely for refereeing, judging or scoring, they are not required to be accessible or be on an accessible route. See Commentary Figure 1110.4.6.

INTERNATIONAL CODE COUNCIL®
Copyright © 2015 ICC. ALL RIGHTS RESERVED. Accessed by David Dammon on Jun 21, 2017 12:30:52 PM pursuant to License Agreement with ICC. No further reproduction or distribution authorized. ANY UNAUTHORIZED REPRODUCTION OR DISTRIBUTION IS A VIOLATION OF THE FEDERAL COPYRIGHT ACT AND THE LICENSE AGREEMENT, AND SUBJECT TO CIVIL AND CRIMINAL PENALTIES THEREUNDER.

This exception is in step with several of the general exceptions in Section 1103.2 where small raised areas provided for specific purposes are exempted. As with any other exception, there is nothing that would prohibit the installation of specialized equipment to allow a disabled person to perform the particular function.



Figure 1110.4.6
EXAMPLE OF RAISED REFEREE STAND

1110.4.7 Animal containment areas. Animal containment areas that are not within public use areas are not required to be *accessible* or to be on an *accessible route*.

❖ "Public use area" is defined as "…made available to the general public." There may be areas of a facility, such as a horse riding arena, where portions of the facility are not open to the general public. Those areas are not required to be accessible or be on an accessible route. Areas such as the riding arena would have to be on an accessible route. The arena itself, as an area of sports activity, could be a dirt floor.

1110.4.8 Amusement rides. Amusement rides that move persons through a fixed course within a defined area shall comply with Sections 1110.4.8.1 through 1110.4.8.3.

Exception: Mobile or portable amusement rides shall not be required to be *accessible*.

❖ Amusement rides that move a person through a fixed course and along a specific route are required to be accessible to the extent specified. Typical examples would be a roller coaster, a Ferris wheel, a ride that moves the rider along to view different scenes (e.g., omnimover or rail transport), or pendulum or swing rides. See Commentary Figures 1110.4.8(1) and (2). There is an exception for these types of rides that are mobile or portable. For example, the portable amusement rides that come in each year for the State or County Fair are not required to meet this section. There are also many types of rides that do not have a fixed course. Rides where the route is controlled by the user, such as go-carts or bumper cars, are not required to meet this section. These rides should have the ride entrance on an accessible route, but they are not required to provide additional accessible features specified in Sections 1110.4.8.1 through 1110.4.8.3.



Figure 1110.4.8(1)
EXAMPLE OF AN
AMUSEMENT RIDE WITH A FIXED COURSE



Figure 1110.4.8(2)
EXAMPLE OF AN
AMUSEMENT RIDE WITH A FIXED COURSE

1110.4.8.1 Load and unload areas. Load and unload areas serving amusement rides shall be *accessible* and be on an *accessible route*. Where load and unload areas have more than one loading or unloading position, at least one loading and unloading position shall be on an *accessible route*.

❖ Sections 1110.4.8.1, 1110.4.8.2 and 1110.4.8.3 work together. For the types of rides scoped by Section

INTERNATIONAL CODE COUNCIL®
Copyright © 2015 ICC. ALL RIGHTS RESERVED. Accessed by David Dammon on Jun 21, 2017 12:30:52 PM pursuant to License Agreement with ICC. No further reproduction or distribution authorized. ANY UNAUTHORIZED REPRODUCTION OR DISTRIBUTION IS A VIOLATION OF THE FEDERAL COPYRIGHT ACT AND THE LICENSE AGREEMENT, AND SUBJECT TO CIVIL AND CRIMINAL PENALTIES THEREUNDER.

1110.4.8, an accessible route must be provided from the entrance to the ride to at least one of the areas where people will get on and off the ride. Since it is difficult for someone to wait on a sloped surface, Section 1109.8 allows for a platform lift to be used to provide an accessible route. In accordance with Section 1104.5, that platform lift should be in the same area as the general circulation route.

For the ride itself, there are the options of having a person transfer from his or her wheelchair to a ride seat or to physically move the wheelchair onto the ride [see Commentary Figures 1110.4.8.1(1) and (2)]. Sometimes, a type of transfer device, such as a transfer board, is necessary for someone to slide from the wheelchair over a gap to the ride seat. This transfer point must also be on an accessible route. If there is a transfer situation, best design practice may include a location for the wheelchair to be stored while the person is on the ride or a means to move the wheelchair to a different unload area.

1110.4.8.2 Wheelchair spaces, ride seats designed for transfer and transfer devices. Where amusement rides are in the load and unload position, the following shall be on an *accessible route*.

1. The position serving a wheelchair space.
2. Amusement ride seats designed for transfer.
3. Transfer devices.

❖ See the commentary to Sections 1110.4.8 and 1110.4.8.1.



Figure 1110.4.8.1(2)
EXAMPLE OF A PERSON IN A WHEELCHAIR TRANSFERRING ONTO A RIDE SEAT



Figure 1110.4.8.1(1)
EXAMPLE OF A PERSON IN A WHEELCHAIR MOVING ONTO A RIDE

INTERNATIONAL CODE COUNCIL®
Copyright © 2015 ICC. ALL RIGHTS RESERVED. Accessed by David Dammon on Jun 21, 2017 12:30:52 PM pursuant to License Agreement with ICC. No further reproduction or distribution authorized. ANY UNAUTHORIZED REPRODUCTION OR DISTRIBUTION IS A VIOLATION OF THE FEDERAL COPYRIGHT ACT AND THE LICENSE AGREEMENT, AND SUBJECT TO CIVIL AND CRIMINAL PENALTIES THEREUNDER.

1110.4.8.3 Minimum number. Amusement rides shall provide at least one wheelchair space, amusement ride seat designed for transfer or transfer device.

Exceptions:

1. Amusement rides that are controlled or operated by the rider are not required to comply with this section.
2. Amusement rides designed primarily for children, where children are assisted on and off the ride by an adult, are not required to comply with this section.
3. Amusement rides that do not provide seats that are built-in or mechanically fastened shall not be required to comply with this section.

❖ See the commentary to Sections 1110.4.8 and 1110.4.8.1.

The exceptions apply to types of rides that need an accessible route to the load and unload areas, but do not need to have the ability to transfer directly from the wheelchair to a ride seat. If a person has limited mobility, they may be able to walk a short distance to be able to enjoy the rides. An example of Exception 1 would be bumper cars or go-carts. An example of Exception 2 would be a merry-go-round or other ride designed specifically for small children, even though an adult may choose to go on the ride with that child. An example of a ride that does not provide seats might be a water flume ride that uses inner tubes. See Commentary Figures 1110.4.8.3(1) and (2).

1110.4.9 Recreational boating facilities. Boat slips required to be *accessible* by Sections 1110.4.9.1 and 1110.4.9.2 and boarding piers at boat launch ramps required to be *accessible* by Section 1110.4.9.3 shall be on an *accessible route*.

❖ This section addresses two different types of piers that are found in a harbor or on a lake: the slips where people dock and store their boats and the piers adjacent to boat launch ramps. ICC A117.1 offers technical data on where to provide that accessible route. There are allowances for the difference in elevation between the land piers and a floating pier, as well as consideration of the different water levels caused by tides and drought.

1110.4.9.1 Boat slips. *Accessible* boat slips shall be provided in accordance with Table 1110.4.9.1. All units on the site shall be combined to determine the number of *accessible* boat slips required. Where the number of boat slips is not identified, each 40 feet (12 m) of boat slip edge provided along the perimeter of the pier shall be counted as one boat slip for the purpose of this section.

Exception: Boat slips not designed for embarking or disembarking are not required to be *accessible* or be on an *accessible route*.

❖ Marinas offer separate slips for types of boats, sometimes separating sail boats from power boats or offering slips of different lengths and widths to accommodate boats of different sizes (see Commentary Figure 1110.4.9.1). Similar to parking spaces for cars, the number of accessible spaces depends on the number of slips provided. The total number of slips provided in the arena may be added together to determine the number of slips that have to be on an accessible route.

In accordance with Section 1110.4.9.2, the accessible slips must be dispersed to the different types of slips provided. It is not the intent of the dispersion requirements to result in more accessible slips than those required by Section 1110.4.9.1.

If there are locations where slips are provided, such as areas to get gas, where it is not intended for persons to get on or off their boats, an accessible route is not required to those areas and no accessible slips are required to be dispersed to those locations.



Figure 1110.4.8.3(1)
EXAMPLE OF AN AMUSEMENT RIDE ADDRESSED IN EXCEPTION 1



Figure 1110.4.8.3(2)
EXAMPLE OF AN AMUSEMENT RIDE ADDRESSED IN EXCEPTION 2

INTERNATIONAL CODE COUNCIL®
Copyright © 2015 ICC. ALL RIGHTS RESERVED. Accessed by David Dammon on Jun 21, 2017 12:30:52 PM pursuant to License Agreement with ICC. No further reproduction or distribution authorized. ANY UNAUTHORIZED REPRODUCTION OR DISTRIBUTION IS A VIOLATION OF THE FEDERAL COPYRIGHT ACT AND THE LICENSE AGREEMENT, AND SUBJECT TO CIVIL AND CRIMINAL PENALTIES THEREUNDER.

TABLE 1110.4.9.1. See below.

❖ See commentary to Section 1110.4.9.1.

1110.4.9.2 Dispersion. *Accessible* boat slips shall be dispersed throughout the various types of boat slips provided. Where the minimum number of *accessible* boat slips has been met, no further dispersion shall be required.

❖ See commentary to Section 1110.4.9.1.

1110.4.9.3 Boarding piers at boat launch ramps. Where boarding piers are provided at boat launch ramps, at least 5 percent, but not less than one, of the boarding piers shall be *accessible*.

❖ Boat launch ramps are designated locations where people can move their boat between a towing trailer and the water. If the boat launch has an adjacent boarding pier to allow people to load or access their boat when it is in the water, that boarding pier is required to be accessible (see Commentary Figure 1110.4.9.3). If a boarding pier is not provided at a boat launch ramp, this provision is not intended to require that a boarding pier be provided.

1110.4.10 Exercise machines and equipment. At least one of each type of exercise machine and equipment shall be on an *accessible route*.

❖ Where exercise equipment is provided, an accessible route is required to at least one of each type of machine provided. There are no requirements to provide transfer devices, or change the nature of the equipment itself (ICC A117.1 has a specific exception for exercise equipment stating that it does not have to meet the height, grasping or force requirements for operable parts). Access to exercise equipment is necessary for persons who are in a recovery process from a temporary disability, and for persons with dis-

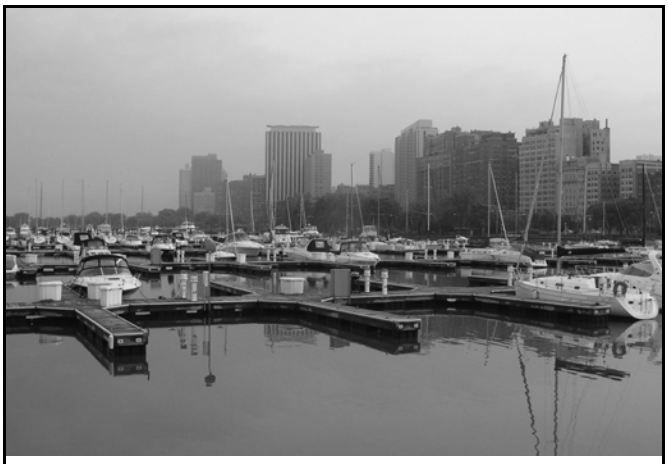

Figure 1110.4.9.1
EXAMPLE OF BOAT SLIPS



Figure 1110.4.9.3
EXAMPLE OF BOAT LAUNCH RAMP WITH BOARDING PIER

TABLE 1110.4.9.1
BOAT SLIPS

TOTAL NUMBER OF BOAT SLIPS PROVIDED	MINIMUM NUMBER OF REQUIRED ACCESSIBLE BOAT SLIPS
1 to 25	1
26 to 50	2
51 to 100	3
101 to 150	4
151 to 300	5
301 to 400	6
401 to 500	7
501 to 600	8
601 to 700	9
701 to 800	10
801 to 900	11
901 to 1000	12
1001 and over	12, plus 1 for every 100, or fraction thereof, over 1,000

INTERNATIONAL CODE COUNCIL®
Copyright © 2015 ICC. ALL RIGHTS RESERVED. Accessed by David Dammon on Jun 21, 2017 12:30:52 PM pursuant to License Agreement with ICC. No further reproduction or distribution authorized. ANY UNAUTHORIZED REPRODUCTION OR DISTRIBUTION IS A VIOLATION OF THE FEDERAL COPYRIGHT ACT AND THE LICENSE AGREEMENT, AND SUBJECT TO CIVIL AND CRIMINAL PENALTIES THEREUNDER.

abilities who need to maintain the muscles that they use to operate their equipment. Regarding "type," it is not the intent to require an accessible route to each of group of exercise bikes simply because they happen to be supplied by different manufacturers. Generally the muscle group exercised by a piece of equipment determines its type.

1110.4.11 Fishing piers and platforms. Fishing piers and platforms shall be *accessible* and be on an *accessible route*.

❖ Fishing piers and platforms are also required on an accessible route (see Commentary Figure 1110.4.11). In the ICC A117.1 standard there are allowances for locations where the ramp between the land elevation and the water elevation vary too greatly because of tides or topography, similar to boat piers. There is also the intent to coordinate with safety requirements due to concerns about falls. Some fishing platforms and piers do not have a barrier or guard, and the accessibility provisions do not require one. However, if a 42-inch-high (1067 mm) guard is provided for safety concerns, the requirement for a lower portion of rail to allow for a sitting person to fish is waived.



Figure 1110.4.11
EXAMPLE OF AN ACCESSIBLE FISHING PLATFORM

1110.4.12 Miniature golf facilities. Miniature golf facilities shall comply with Sections 1110.4.12.1 through 1110.4.12.3.

❖ Miniature golf has been a family pastime for decades. Undulating or sloped playing surfaces, changes in level, shooting through an object with a surprise as to where it comes out, water, sandtraps and rough turf all help make the game interesting. The provisions in the following subsections allow for access to at least portions of the course.

1110.4.12.1 Minimum number. At least 50 percent of holes on miniature golf courses shall be *accessible*.

❖ Half of the holes provided must be on an accessible route and meet the technical criteria in ICC A117.1. The first hole on the course, considered the start of play, must be accessible. The standard allows for the accessible route to be on the playing surface or adjacent where a certain reach can be maintained. Limited curbs are permitted across the route in order to keep the ball in play.

1110.4.12.2 Miniature golf course configuration. Miniature golf courses shall be configured so that the *accessible* holes are consecutive. Miniature golf courses shall provide an *accessible route* from the last *accessible* hole to the course entrance or exit without requiring travel through any other holes on the course.

Exception: One break in the sequence of consecutive holes shall be permitted provided that the last hole on the miniature golf course is the last hole in the sequence.

❖ In order that a person does not have to move through other holes that may be in play, the accessible route must not travel through nonaccessible holes. There can be a one break in the accessible holes, as long as the last hole is included in the route. Traditionally that is the hole where you can shoot to win a free game or a prize. For example, in an 18-hole course, you could make holes 1 through 5 and 15 through 18 the accessible holes. Possible routes will vary depending on the layout of the facility.

1110.4.12.3 Accessible route. Holes required to comply with Section 1110.4.12.1, including the start of play, shall be on an *accessible route*.

❖ See the commentary to Section 1110.4.12.1.

1110.4.13 Swimming pools, wading pools, hot tubs and spas. Swimming pools, wading pools, hot tubs and spas shall be *accessible* and be on an *accessible route*.

Exceptions:

1. Catch pools or a designated section of a pool used as a terminus for a water slide flume shall not be required to provide an *accessible* means of entry, provided that a portion of the catch pool edge is on an *accessible route*.
2. Where spas or hot tubs are provided in a cluster, at least 5 percent, but not less than one spa or hot tub in each cluster, shall be *accessible* and be on an *accessible route*.
3. Swimming pools, wading pools, spas and hot tubs that are required to be *accessible* by Sections 1110.2.2 and 1110.2.3 are not required to provide *accessible* means of entry into the water.

❖ Swimming pools are required to have a route to them and a route into the water. ICC A117.1 offers several

INTERNATIONAL CODE COUNCIL®
Copyright © 2015 ICC. ALL RIGHTS RESERVED. Accessed by David Dammon on Jun 21, 2017 12:30:52 PM pursuant to License Agreement with ICC. No further reproduction or distribution authorized. ANY UNAUTHORIZED REPRODUCTION OR DISTRIBUTION IS A VIOLATION OF THE FEDERAL COPYRIGHT ACT AND THE LICENSE AGREEMENT, AND SUBJECT TO CIVIL AND CRIMINAL PENALTIES THEREUNDER.

different options for access into the water depending the type and size of the pool (see Commentary Figure 1110.4.13). Technical criteria are provided for sloped entries, ramps, pool lifts, transfer walls, transfer steps and pool stairs.

For Exception 1, see the commentary to Section 1110.4.13.2.

In accordance with Exception 2, when hot tubs are grouped, 5 percent must be accessible. In accordance with ICC A117.1, the accessible hot tub can use a pool or lift or a transfer wall to allow access into the water.

Exception 3 is an exception for the route into the water for swimming pools that serve Type A and Type B dwelling units in Groups R-2, R-3 and R-4. Group R-2 with Accessible units, such as dormitories, cannot use this exception.

1110.4.13.1 Raised diving boards and diving platforms. Raised diving boards and diving platforms are not required to be *accessible* or to be on an *accessible route*.

❖ Raised diving boards and diving platforms are not required to be accessible. It would be impractical to provide ramps or lifts to these very small areas.

1110.4.13.2 Water slides. Water slides are not required to be *accessible* or to be on an *accessible route*.

❖ Water slides are not required to be accessible. It would be impractical to provide ramps or lifts to these very small areas. When the swimming pool at the bottom is only for the slide, swimmers are not permitted there for safety reasons. That catch pool is not required to have a route into the water (see Section 1110.4.13, Exception 1, and Commentary Figure 1110.4.13.2).

1110.4.14 Shooting facilities with firing positions. Where shooting facilities with firing positions are designed and constructed at a site, at least 5 percent, but not less than one, of each type of firing position shall be *accessible* and be on an *accessible route*.

❖ There are a variety of shooting facilities that are used for target practice. Typically this is practice for shooting bows and arrows, handguns, rifles or shotguns. Participants aim at fixed targets, decoys or clay pigeons. These facilities can be constructed inside or outside. An accessible route is required to at least 5 percent of the firing position at each type of arrangement provided. ICC A117.1 will require a level space and a turning radius at that firing position.

SECTION 1111
SIGNAGE

1111.1 Signs. Required *accessible* elements shall be identified by the International Symbol of Accessibility at the following locations.

1. *Accessible* parking spaces required by Section 1106.1.

   Exception: Where the total number of parking spaces provided is four or less, identification of *accessible* parking spaces is not required.

2. *Accessible* parking spaces required by Section 1106.2.

   Exception: In Group I-1, R-2, R-3 and R-4 facilities, where parking spaces are assigned to specific *dwelling units* or *sleeping units*, identification of *accessible* parking spaces is not required.

3. *Accessible* passenger loading zones.
4. *Accessible* rooms where multiple single-user toilet or bathing rooms are clustered at a single location.
5. *Accessible* entrances where not all entrances are *accessible*.
6. *Accessible* check-out aisles where not all aisles are *accessible*. The sign, where provided, shall be above

POOL TYPE	SLOPED ENTRY/ RAMP	POOL LIFT	TRANSFER WALLS	TRANSFER STEPS	POOL STAIRS
Swimming pool (less than 300 linear feet of pool wall)	X	X			
Swimming pool (300 or more linear feet of pool wall) – two means of entry required	X[b]	X[b]	X	X	X
Wave action, leisure river, and other pools where user entry is limited to one area	X	X		X	
Wading pools	X				
Spas/hot tubs		X	X	X	

Notes:

a. For technical requirements for pool entry, see ICC A117.1.

b. Primary means must be by sloped entry, ramp or pool lift. The secondary means may be by any of the permitted types.

For SI: 1 foot - 304.8 mm.

Figure 1110.4.13
PERMITTED MEANS OF POOL ACCESS[a]

INTERNATIONAL CODE COUNCIL®
Copyright © 2015 ICC. ALL RIGHTS RESERVED. Accessed by David Dammon on Jun 21, 2017 12:30:52 PM pursuant to License Agreement with ICC. No further reproduction or distribution authorized. ANY UNAUTHORIZED REPRODUCTION OR DISTRIBUTION IS A VIOLATION OF THE FEDERAL COPYRIGHT ACT AND THE LICENSE AGREEMENT, AND SUBJECT TO CIVIL AND CRIMINAL PENALTIES THEREUNDER.



Figure 1110.4.13.2
EXAMPLE OF A CATCH POOL FOR A WATER SLIDE

the check-out aisle in the same location as the check-out aisle number or type of check-out identification.

7. Family or assisted-use toilet and bathing rooms.
8. *Accessible* dressing, fitting and locker rooms where not all such rooms are *accessible*.
9. *Accessible* areas of refuge in accordance with Section 1009.9.
10. Exterior areas for assisted rescue in accordance with Section 1009.9.
11. In recreational facilities, lockers that are required to be *accessible* in accordance with Section 1109.9.

❖ Identification of accessible elements can be accomplished by use of an International Symbol of Accessibility (see Commentary Figure 1111.1). These symbols are international in that they are recognized throughout the world as identifying accessibility. The signs listed here are typically visual signage. Raised letters and braille are not required.

There are 11 specific circumstances in which required accessible elements are to be identified, as indicated in Items 1 through 11 of this section. Generally, these are locations in which not all of the facilities provided are accessible and, therefore, it is necessary to identify those that are accessible so that they can be readily recognized by the intended user. For example, Section 1106.1 specifies the required number of accessible parking spaces. If these are not identified by signage, it would be difficult and unnecessarily inconvenient for one to identify their location. One of the concepts embodied by the code is to mainstream accessibility in recognition that many of the features making facilities and elements accessible are also useful and of benefit to people without disabilities. Part of this principle includes the idea that if an element is universally usable by people both with and without disabilities, there is no need for signage specifically identifying the element as being accessible. Hence, the signage requirements generally address circumstances in which not all of the elements will be accessible. Items 9 and 10 require the International Symbol of Accessibility in order to identify elements important to keep open as part of an accessible means of egress.

Item 11 is only to identify lockers in recreational facilities where use of a locker is temporary for the duration of the visit to the recreational facility. It is not intended to apply to lockers in other locations, such as lockers provided for students in school. In those situations, the identification of the assigned locker as accessible might be perceived to have negative connotations for the student assigned to the locker.

There are two exceptions specific to identification of accessible parking spaces in Items 1 and 2. Note that the spaces must be sized in accordance with Sections 1106.1 and 1106.2; the exceptions are only for the identification. Item 1 has an exception where

INTERNATIONAL CODE COUNCIL®
Copyright © 2015 ICC. ALL RIGHTS RESERVED. Accessed by David Dammon on Jun 21, 2017 12:30:52 PM pursuant to License Agreement with ICC. No further reproduction or distribution authorized. ANY UNAUTHORIZED REPRODUCTION OR DISTRIBUTION IS A VIOLATION OF THE FEDERAL COPYRIGHT ACT AND THE LICENSE AGREEMENT, AND SUBJECT TO CIVIL AND CRIMINAL PENALTIES THEREUNDER.

the entire parking provided is four or fewer spaces. To require an accessible space to be reserved when it involves from 25 to 100 percent of the parking provided is an undue hardship to the building's employees and customers. With the area equal to an accessible parking space being provided, accessible parking is still available if it is needed, it is just not reserved. In Item 2, when a parking lot has assigned spaces for the people who live there, the identification to reserve an accessible space is not required. Who is assigned to that space can be handled administratively when a resident needs an accessible parking space.

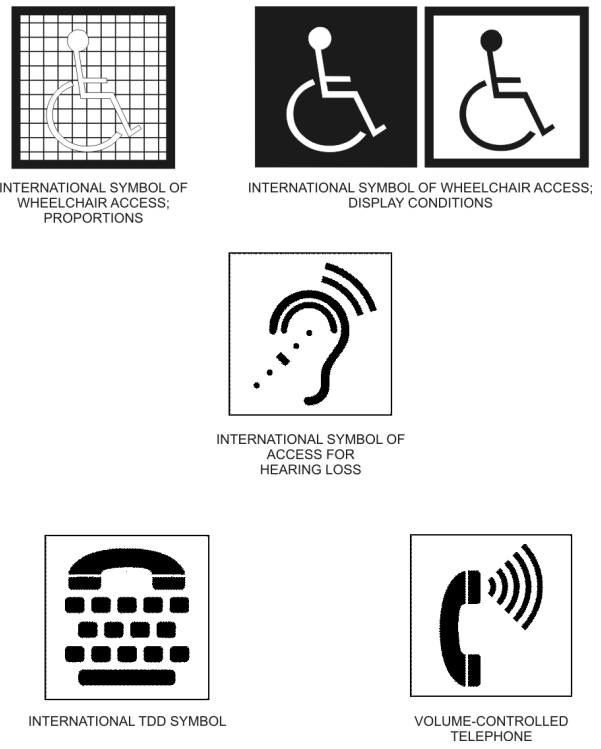

Figure 1111.1
INTERNATIONAL SYMBOLS OF ACCESSIBILITY

1111.2 Directional signage. Directional signage indicating the route to the nearest like *accessible* element shall be provided at the following locations. These directional signs shall include the International Symbol of Accessibility and sign characters shall meet the visual character requirements in accordance with ICC A117.1.

1. Inaccessible building entrances.
2. Inaccessible public toilets and bathing facilities.
3. Elevators not serving an *accessible route.*
4. At each separate-sex toilet and bathing room indicating the location of the nearest family/assisted use toilet or bathing room where provided in accordance with Section 1109.2.1.
5. At *exits* and *exit stairways* serving a required *accessible* space, but not providing an *approved* accessible *means of egress*, signage shall be provided in accordance with Section 1009.10.
6. Where drinking fountains for persons using wheelchairs and drinking fountains for standing persons are not located adjacent to each other, directional signage shall be provided indicating the location of the other drinking fountains.

❖ The direction signs listed here are typically visual signage. Raised letters and braille are not required.

There are circumstances in which it is useful and necessary to locate directional signage at certain inaccessible elements to indicate the route to the nearest like accessible element. For example, not all building entrances are required to be accessible (see Section 1105). Should a person in a wheelchair happen to approach an inaccessible building entrance at an unfamiliar facility, it is appropriate to provide direction indicating where the nearest accessible entrance is located. The same circumstance presents itself at inaccessible public toilet and bathing facilities, at elevators that do not serve an accessible route and at exits that are not part of the accessible means of egress (see Section 1009 for additional information on accessible means of egress). Directional signage is also needed to point people to specific accessible features they may need, such assembly and mercantile occupancies where family or assisted-use accessible toilet and bathing facilities are required or when high-low drinking fountains are not located adjacent to each other (Items 4 and 6).

Requiring the sign to meet visual character requirements allows for the sign to be read at the viewing distance. For example, if an entrance is not accessible and the closest a person using a wheelchair can get to the entrance is the bottom of the steps, the sign can be on the door and be large enough for a person to read from the bottom of the steps, or the sign can be smaller and placed at the bottom of the steps. Both methods would provide the information on where the accessible entrance is located.

This requirement for directional signage works in conjunction with the fact that everything is initially assumed to be accessible. Some items are not required to be identified by the International Symbols of Accessibility in the interest of mainstreaming. See the general comments to this chapter and the commentary to Section 1111.1 for a further discussion of mainstreaming.

1111.3 Other signs. Signage indicating special accessibility provisions shall be provided as shown.

1. Each assembly area required to comply with Section 1108.2.7 shall provide a sign notifying patrons of the

INTERNATIONAL CODE COUNCIL®
Copyright © 2015 ICC. ALL RIGHTS RESERVED. Accessed by David Dammon on Jun 21, 2017 12:30:52 PM pursuant to License Agreement with ICC. No further reproduction or distribution authorized. ANY UNAUTHORIZED REPRODUCTION OR DISTRIBUTION IS A VIOLATION OF THE FEDERAL COPYRIGHT ACT AND THE LICENSE AGREEMENT, AND SUBJECT TO CIVIL AND CRIMINAL PENALTIES THEREUNDER.

availability of assistive listening systems. The sign shall comply with ICC A117.1 requirements for visual characters and include the International Symbol of Access for Hearing Loss.

Exception: Where ticket offices or windows are provided, signs are not required at each assembly area provided that signs are displayed at each ticket office or window informing patrons of the availability of assistive listening systems.

2. At each door to an *area of refuge*, an exterior area for assisted rescue, an egress *stairway*, *exit passageway* and *exit discharge*, signage shall be provided in accordance with Section 1013.4.
3. At *areas of refuge*, signage shall be provided in accordance with Section 1009.11.
4. At exterior areas for assisted rescue, signage shall be provided in accordance with Section 1009.11.
5. At two-way communication systems, signage shall be provided in accordance with Section 1009.8.2.
6. In *interior exit stairways* and *ramps*, floor level signage shall be provided in accordance with Section 1023.9.
7. Signs identifying the type of access provided on amusement rides required to be *accessible* by Section 1110.4.8 shall be provided at entries to queues and waiting lines. In addition, where *accessible* unload areas also serve as *accessible* load areas, signs indicating the location of the *accessible* load and unload areas shall be provided at entries to queues and waiting lines. These directional sign characters shall meet the visual character requirements in accordance with ICC A117.1.

❖ The signs listed here are typically visual signage. Raised letters and braille are only required by Item 2.

It is considered desirable that all the requirements for accessible signage be in one location. Item 1 requires signage indicating that assistive listening systems are provided when they are required by Section 1108.2.7. The sign may be located within each of the assembly rooms, typically near the entrance, or at the ticket office. The sign should also include the International Symbol of Access for Hearing Loss. (See Commentary Figure 1111.1).

Items 2 through 6 are references to signage criteria in specific sections that have been mainstreamed in Chapter 10.

Item 7 requires one or two signs at the start of the waiting line for an amusement ride. The intent is that the rider is aware of the options before waiting in line for the ride. One sign will provide information on what transfer options are available. On most rides, for crowd control, the way in and the way out are two different paths. When the ride uses the unload area (instead of the load area) as the accessible load and unload area, directions for that alternative route must be provided.

1111.4 Variable message signs. Where provided in the locations in Sections 1111.4.1 and 1111.4.2, variable message signs shall comply with the variable message sign requirements of ICC A117.1.

❖ ICC A117.1 defines Variable Message Signs (VMS) as, "Electronic signs that have a message with the capacity to change by means of scrolling, streaming, or paging across a background." Requirements vary depending on whether the sign resolution is high or low. Requirements for high-resolution signs are consistent with printed signs. The ICC A117.1 language modifies requirements for visual signs primarily by requiring increased character height and spacing for low-resolution VMS. Even for users with unimpaired vision, there is strong research evidence that character height in low-resolution VMS, such as the LED signs that are common in the transportation environment and elsewhere, must be approximately 30 percent greater than for equivalent print signs or VMS with high resolution. The requirements for increased character height, etc., for low-resolution VMS are not applicable to high-resolution VMS, such as video (see Commentary Figure 1111.4).

The section does not "require" that VMS be installed in any facility type, but instead requires that, where provided within transportation facilities and emergency shelters, VMS comply with the standard and are usable by most of the population.



Figure 1111.4
VARIABLE MESSAGE SIGNAGE

1111.4.1 Transportation facilities. Where provided in transportation facilities, variable message signs conveying transportation-related information shall comply with Section 1111.4.

❖ The phrasing "conveying transportation-related information" was included to limit the application of the ICC A117.1 VMS requirements to signs that are necessary for the most effective use of transportation information. The intent of this text is that signs that present information that is not necessary for transportation would be exempt. For example, neither a VMS that advertised dining options in an airport nor a tele-

INTERNATIONAL CODE COUNCIL®
Copyright © 2015 ICC. ALL RIGHTS RESERVED. Accessed by David Dammon on Jun 21, 2017 12:30:52 PM pursuant to License Agreement with ICC. No further reproduction or distribution authorized. ANY UNAUTHORIZED REPRODUCTION OR DISTRIBUTION IS A VIOLATION OF THE FEDERAL COPYRIGHT ACT AND THE LICENSE AGREEMENT, AND SUBJECT TO CIVIL AND CRIMINAL PENALTIES THEREUNDER.

vision set in the waiting area that had closed captioning of a news program would be required to comply with the standard's VMS provisions. However, any VMS that indicated flight departure times or gate assignments would be regulated.

Signage in transportation facilities is important for several reasons. Riders with reduced vision are especially dependent on public transportation for travel and are required by the ADA to have information that is equivalent to that provided to riders having unimpaired vision. This section coordinates the code requirements with those of the ADA. Currently, Sections E109 and E110 in Appendix E address some signage requirements within transportation facilities, stations and airports. The VMS are often used within transportation facilities (see Sections E109.2.2.2, E109.2.2.3, E109.2.7, E110.3) as a primary means of conveying information to riders. Since the ICC A117 committee has provided specific regulations for these signs, it is appropriate to reference these provisions so that designers and building officials know exactly what the technical requirements for the signs are. As noted earlier, this section does not "require" VMS, but "where provided" is intended to ensure that VMS comply with the requirements established by the ICC A117.1 committee.

The exception for equivalent audible information (see Section 1111.4.2) is not included in this section. This is done not only to coordinate with the ADA, but, also because in many such facilities, the audible information is simply not easily understood. Anyone who has stood on a subway or train platform and tried to understand an audible message at the same time that the train is pulling up to the platform will understand this exclusion. Because of the problems with hearing messages in many transportation facilities, the audible message delivery is simply not considered as being adequate to replace or eliminate the clear visual sign information.

1111.4.2 Emergency shelters. Where provided in buildings that are designated as emergency shelters, variable message signs conveying emergency-related information shall comply with Section 1111.4.

Exception: Where equivalent information is provided in an audible manner, variable message signs are not required to comply with ICC A117.1.

❖ The phrasing "conveying emergency-related information" was included in the section to limit the application of ICC A117.1 VMS requirements to signs that are necessary for the most effective use of information in emergency shelters. The intent of this text is that signs presenting information that is not necessary for the emergency use of facilities would be exempt. For example, in the case of an emergency shelter located at a school, only the signage related to the shelter would be covered. The signage dealing with the school and what school activities were occurring that week would not be expected to comply with the VMS requirements.

Emergency shelters are typically identified by a jurisdiction when they are studying emergency planning or working with the Federal Emergency Management Agency (FEMA) to develop community plans. Although any building could ultimately be pressed into service as an emergency shelter in some circumstances, the intent of this text is to apply the requirement only to those facilities that are designated in advance or during that planning stage as an intended shelter. In many communities, this may include certain schools, civic administration buildings or even large convention facilities. Emergency-related information provided by VMS in emergency shelters is most likely to be information or instructions regarding additional problems or the recovery process.

The emergency shelter provisions contain an exception that would eliminate the requirement to meet the VMS provisions of the standard. Where audible information is conveyed that is either the same or equivalent to the information provided by the sign, compliance with ICC A117.1's VMS requirements is not needed. The VMS provides the information in a visual method and ICC A117.1 provisions ensure that the information is clearly visible and legible to both the general population and to people with some level of visual impairment. Providing the equivalent information in an audible manner makes the information accessible to people with severe visual impairment or who are blind.

Bibliography

The following resource materials were used in the preparation of the commentary for this chapter o the code.

24 CFR, *Fair Housing Accessibility Guidelines* (FHAG). Washington, DC: Department of Housing and Urban Development, 1991.

36 CFR, Parts 1190 and 1191 Final Rule, *The Americans with Disabilities Act (ADA) Accessibility Guidelines; Architectural Barriers Act (ABA) Accessibility Guidelines*. Washington, DC: Architectural and Transportation Barriers Compliance Board, July 23, 2004.

42 USC 3601-88, *Fair Housing Amendments Act (FHA)*. Washington, DC: United States Code, 1988.

2010 *ADA Standard for Accessible Design*. Washington, DC: Department of Justice, September 15, 2010.

"Accessibility and Egress for People with Physical Disabilities." Falls Church, VA: CABO Board for the Coordination of the Model Codes Report, 1993.

ASME A17.1/CSA B44-07, *Safety Code for Elevators and Escalators*. New York, NY: American National Standards Institute, 2007.

INTERNATIONAL CODE COUNCIL®

Copyright © 2015 ICC. ALL RIGHTS RESERVED. Accessed by David Dammon on Jun 21, 2017 12:30:52 PM pursuant to License Agreement with ICC. No further reproduction or distribution authorized. ANY UNAUTHORIZED REPRODUCTION OR DISTRIBUTION IS A VIOLATION OF THE FEDERAL COPYRIGHT ACT AND THE LICENSE AGREEMENT, AND SUBJECT TO CIVIL AND CRIMINAL PENALTIES THEREUNDER.

ASME A18.1-05, *Safety Standard for Platform Lifts and Stairway Chairlifts*. New York, NY: American National Standards Institute, 2005.

DOJ 28 CFR, Parts 36-91, *Americans with Disabilities Act (ADA)*. Washington, DC: Department of Justice, 1991.

DOJ 28 CFR, Part 36-91 (Appendix A), *ADA Accessibility Guidelines for Building and Facilities (ADAAG)*. Washington, DC: Department of Justice, 1991.

Fair Housing Act Design Manual. Washington, DC: U.S. Department of Housing and Urban Development, Revised 1998.

FED-STD-795-88, *Uniform Federal Accessibility Standards*. Washington, DC: General Services Administration; Department of Defense; Department of Housing and Urban Development; U.S. Postal Service, 1988.

Final Report of the HUD Review of the Fair Housing Accessibility Requirements and the 2003 International Building Code (IBC). Washington, DC: February 18, 2005 (Docket No FR-4943-N-02).

Final Report of the HUD Review of the Fair Housing Accessibility Requirements and the 2006 International Building Code (IBC). Washington, DC: May 31, 2007 (Docket No FR-5136-N-01).

HUD 24 CFR, Part 100, *Fair Housing Accessibility Guidelines*. Washington, DC: U.S. Department of Housing and Urban Development, 1991.

"Pathfinder Tactile Tile Demonstration Test Project." Miami, FL: Metro-Dade Transit Agency, 1988.

"Tactile Warnings to Promote Safety in the Vicinity of Transit Platform Edges." Washington, DC: Urban Mass Transportation Administration, 1987.

Vital Health Statistics, Series 10, No. 135, Tables 1 & 2. 1977 National Health Interview Survey. Huntsville, MD: National Center for Health Statistics, 1977.

INTERNATIONAL CODE COUNCIL®
Copyright © 2015 ICC. ALL RIGHTS RESERVED. Accessed by David Dammon on Jun 21, 2017 12:30:52 PM pursuant to License Agreement with ICC. No further reproduction or distribution authorized. ANY UNAUTHORIZED REPRODUCTION OR DISTRIBUTION IS A VIOLATION OF THE FEDERAL COPYRIGHT ACT AND THE LICENSE AGREEMENT, AND SUBJECT TO CIVIL AND CRIMINAL PENALTIES THEREUNDER.

INTERNATIONAL CODE COUNCIL®
Copyright © 2015 ICC. ALL RIGHTS RESERVED. Accessed by David Dammon on Jun 21, 2017 12:30:52 PM pursuant to License Agreement with ICC. No further reproduction or distribution authorized. ANY UNAUTHORIZED REPRODUCTION OR DISTRIBUTION IS A VIOLATION OF THE FEDERAL COPYRIGHT ACT AND THE LICENSE AGREEMENT, AND SUBJECT TO CIVIL AND CRIMINAL PENALTIES THEREUNDER.

Chapter 12: Interior Environment

General Comments

Chapter 12 contains provisions governing the interior environment requirements of all buildings and structures intended for human occupancy.

Section 1201 identifies the scope of the chapter. Section 1202 provides definitions applicable to terms used in this chapter.

Section 1203 identifies special enclosed spaces where accumulated moisture must be removed by ventilation and establishes criteria (minimum openable area) for the only method of measuring compliance with the natural ventilation requirements for occupied spaces.

Section 1204 identifies the minimum space-heating requirement for interior spaces intended for human occupancy.

Section 1205 requires light for every room or space intended for human occupancy. The method of compliance is the choice of the designer, who may elect to provide artificial instead of natural light. Prescriptive requirements for stairway lighting in dwelling units are also included.

Section 1206 specifies the minimum requirements for courts and yards, including area width, accessibility for cleaning and the location of air intakes when natural light or natural ventilation is the chosen design option.

Section 1207 establishes the sound transmission control requirements for air-borne and structure-borne sound in residential buildings.

Section 1208 addresses the minimum ceiling height for all habitable and occupiable spaces along with other spaces as specified (i.e., toilet rooms and bathrooms). The minimum floor area for rooms in dwelling units is also specified.

Section 1209 provides minimal opening requirements for access to crawl spaces and attics.

Section 1210 contains requirements for toilet room surfaces and fixture surrounds.

The environmental and physiological justification for the code requirements relevant to light and ventilation of occupiable spaces is based on knowledge, technology and practices developed over centuries of building structures in which humans live and work. These design practices have been further validated by studies during the 19th and 20th centuries.

Purpose

The purpose of Chapter 12 is to establish minimum conditions for the interior environment of a building. The size of spaces, light, ventilation and noise intrusion are all addressed in order to define the acceptable conditions to which any occupant may be exposed. Design options of natural and mechanical systems are introduced and the criteria for performance are specified.

Even though it was not completely understood, the need for "fresh air" had been recognized for centuries. Designers of centuries-old adobe buildings in the southwestern United States, hide-covered Native American tepees of the plains and frame houses of early settlers in the eastern United States all relied upon the buoyancy of warm air, enabling it to rise and cooler air to flow in to replace it. Whether the design relied on solar energy, thermal mass or even wind velocity to cause the movement, it reflected a natural movement and, as a result, has been termed "natural ventilation." Only recently have we begun to recognize the reasons for ventilation and the implications of failing to provide an adequate quantity and acceptable quality of air for all occupants. The expression "sick building syndrome" has crept into our vocabulary and reflects the increased understanding of the relationship between interior environment requirements and the physiological well-being of the occupants.

The other purpose of regulating the interior environment is psychological. Merely providing adequate conditions is not sufficient if the occupant does not perceive them as adequate. Minimum space requirements (floor area, yard dimensions or ceiling height) address the need to perceive adequate light, ventilation and space to promote psychological well-being. Regulation of sound transmission also bears directly on the psychological and long-term physical well-being of the occupant.

Finally, adequate lighting from natural sources also meets the physical and psychological needs of the occupants and contributes directly to their overall safety. Safe use of any building under ordinary and emergency conditions depends greatly on proper illumination of the space. This chapter references the *International Mechanical Code*® (IMC®) as the performance standard to which ventilation must be compared and the installation standard for mechanical systems used in buildings regulated by the code.

INTERNATIONAL CODE COUNCIL®
Copyright © 2015 ICC. ALL RIGHTS RESERVED. Accessed by David Dammon on Jun 21, 2017 12:30:52 PM pursuant to License Agreement with ICC. No further reproduction or distribution authorized. ANY UNAUTHORIZED REPRODUCTION OR DISTRIBUTION IS A VIOLATION OF THE FEDERAL COPYRIGHT ACT AND THE LICENSE AGREEMENT, AND SUBJECT TO CIVIL AND CRIMINAL PENALTIES THEREUNDER.

SECTION 1201
GENERAL

1201.1 Scope. The provisions of this chapter shall govern ventilation, temperature control, lighting, *yards* and *courts*, sound transmission, room dimensions, surrounding materials and rodentproofing associated with the interior spaces of buildings.

❖ This section identifies the scope of Chapter 12. The requirements of this chapter are intended to govern and regulate the need for light, ventilation, sound transmission control, interior space dimensions and materials surrounding plumbing fixtures in all buildings. It is the intent of the code that the user must comply with these regulations for all newly constructed buildings and structures and for all buildings and structures, or portions thereof, when there is to be a change of occupancy or within any additions to a building.

SECTION 1202
DEFINITIONS

1202.1 General. The following terms are defined in Chapter 2:

❖ Definitions of terms that are associated with the content of this section are contained herein. These definitions can help in the understanding and application of the code requirements. It is important to emphasize that these terms are not exclusively related to this section but are applicable everywhere the term is used in the code. The purpose for including these definitions within this section is to provide more convenient access to them without having to refer back to Chapter 2. For convenience, these terms are also listed in Chapter 2 with a cross reference to this section. The use and application of all defined terms, including those defined herein, are set forth in Section 201.

SUNROOM.

❖ This terminology is provided in order to address separate requirements for sunrooms with regard to ventilation of adjoining spaces (see Section 1203.5.1.1). In the 2009 code the term "sunroom addition" was simplified to "sunroom." Provisions later in the chapter that still say sunroom addition. Those provisions are applicable regardless of whether the sunroom is an addition to an existing structure or is part of the original design and construction.

THERMAL ISOLATION.

❖ This terminology is required for the same reason provided in the definition of "Sunroom" (see above). Although the exact phrase "thermal isolation" is not used in the code, the phrase "thermally isolated" is found in a number of provisions. This definition provides guidance in applying this variation on the defined term.

SECTION 1203
VENTILATION

1203.1 General. Buildings shall be provided with natural ventilation in accordance with Section 1203.4, or mechanical ventilation in accordance with the *International Mechanical Code*.

Where the air infiltration rate in a *dwelling unit* is less than 5 air changes per hour when tested with a blower door at a pressure 0.2 inch w.c. (50 Pa) in accordance with Section 402.4.1.2 of the *International Energy Conservation Code—Residential Provisions*, the *dwelling unit* shall be ventilated by mechanical means in accordance with Section 403 of the *International Mechanical Code*. *Ambulatory care facilities* and Group I-2 occupancies shall be ventilated by mechanical means in accordance with Section 407 of the *International Mechanical Code*.

❖ Every room or space must be provided with ventilation. The selection of natural or mechanical ventilation on a room-by-room or space-by-space basis is the designer's prerogative. Certain conditions require mechanical exhaust even though natural ventilation systems have been selected by the designer. Section 1203.5.2 of the code, and Sections 401.6 and 403 of the IMC, direct the treatment of those special situations. Existence of these conditions, however, does not require providing mechanical ventilation other than to address the specific condition. Other rooms or spaces not affected by those conditions may be served by natural systems.

The second paragraph requires mechanical ventilation for residences when the building has been sealed very tightly against air infiltration. The measure will be 5 air changes per hour (ACH) at 50 pascals when tested in accordance with the *International Energy Conservation Code*® (IECC®), which requires air leakage testing for all new residences.

Indoor air quality has direct impact on the health of building occupants. Poor indoor air quality is listed by the Environmental Protection Agency (EPA) as being the fourth largest environmental threat to our country. A 2007 California study revealed formaldehyde exposure in most new homes is beyond limits recommended by the California Air Resources Board. Multiple studies have shown that relying on window operation to provide ventilation is not sufficient enough for the health of occupants. If unchecked, pollutants from cleaning chemicals, finishes, furniture and occupant activities can cause serious health effects on building occupants. Whole-house mechanical ventilation reduces occupant exposure to such pollutants.

Traditionally, 0.35 natural air changes per hour has been the consensus ventilation rate to provide sufficient fresh air to building occupants. This ventilation rate was typically achieved without mechanical ventilation because homes were built without an effective

INTERNATIONAL CODE COUNCIL®
Copyright © 2015 ICC. ALL RIGHTS RESERVED. Accessed by David Dammon on Jun 21, 2017 12:30:52 PM pursuant to License Agreement with ICC. No further reproduction or distribution authorized. ANY UNAUTHORIZED REPRODUCTION OR DISTRIBUTION IS A VIOLATION OF THE FEDERAL COPYRIGHT ACT AND THE LICENSE AGREEMENT, AND SUBJECT TO CIVIL AND CRIMINAL PENALTIES THEREUNDER.

air barrier. As building practices have improved, homes have become tighter, and as homes become tighter, mechanical ventilation must be introduced to provide sufficient levels of ventilation.

ASHRAE 136 was developed to enable calculation of natural air changes per hour as a function of air changes at various pressures. By following the calculation procedures in this standard, it can be shown that a natural infiltration rate of 0.35 is equivalent to somewhere between 7 and 10 air changes per hour at 50 pascals (7 ACH 50 to 10 ACH 50) depending on the local climatic conditions of the home. Because most dwellings are built this tight, ASHRAE 62.2 requires mechanical ventilation for all homes, with few exceptions. However, based on ASHRAE 136, a conservative code might prescribe whole-house mechanical ventilation for any home with an infiltration leakage rate of 10 ACH 50 or less.

As a second point of reference, Chapter 6 of California's 2010 Title 24 requires that "Continuous mechanical ventilation (either exhaust or supply ventilation) must be installed when the target specific leakage area (SLA) is below 3.0." California's SLA of 3.0 is roughly equivalent to 6 ACH 50. As a third point of reference, National Association of Home Builders (NAHB) National Green Building Standard requires whole-house mechanical ventilation when the infiltration rate falls below 5.0 ACH 50. This requirement provides clear recognition from a consensus standard that whole-house mechanical ventilation should be provided for all homes that meet this threshold.

Based on the previous references, there is broad consensus across states and within consensus standards that whole-house mechanical ventilation should be required when a dwelling's infiltration falls below 5.0 ACH 50.

The section also specifies that Group I-2 and Ambulatory Care facilities be ventilated in accordance with Section 407 of the IMC. Section 407 of the IMC essentially references ASHRAE 170, which is a standard specific to the ventilation needs of health care facilities. Previously the IMC contained requirements for ventilation of certain spaces in healthcare facilities. A reference to a more specific standard was preferred. See the commentary to Section 407 of the IMC.

1203.2 Ventilation required. Enclosed *attics* and enclosed rafter spaces formed where ceilings are applied directly to the underside of roof framing members shall have cross ventilation for each separate space by ventilation openings protected against the entrance of rain and snow. Blocking and bridging shall be arranged so as not to interfere with the movement of air. An airspace of not less than 1 inch (25 mm) shall be provided between the insulation and the roof sheathing. The net free ventilating area shall be not less than $^1/_{150}$ of the area of the space ventilated. Ventilators shall be installed in accordance with manufacturer's installation instructions.

Exception: The net free cross-ventilation area shall be permitted to be reduced to $^1/_{300}$ provided both of the following conditions are met:

1. In Climate Zones 6, 7 and 8, a Class I or II vapor retarder is installed on the warm-in-winter side of the ceiling.
2. At least 40 percent and not more than 50 percent of the required venting area is provided by ventilators located in the upper portion of the *attic* or rafter space. Upper ventilators shall be located not more than 3 feet (914 mm) below the ridge or highest point of the space, measured vertically, with the balance of the *ventilation* provided by eave or cornice vents. Where the location of wall or roof framing members conflicts with the installation of upper ventilators, installation more than 3 feet (914 mm) below the ridge or highest point of the space shall be permitted.

❖ All attic spaces and each separate space formed between solid roof rafters are required to be cross ventilated where the ceiling is applied directly to the underside of the roof rafters. Care must be taken, however, to provide cross ventilation in a manner that does not introduce moisture to the attic area.

Snow infiltration can occur when the attic ventilation openings are not sufficiently protected against the entrance of snow or rain, or when more than 50 percent of the ventilation openings are located along the ridge or gable wall of the roof rather than at the eave. When the wind blows perpendicular to a roof ridge vent, a negative pressure builds up across the ridge that draws air out of the attic space through the attic vents. Cross flow of air through the attic can be achieved when outside air is drawn into the attic through the eave or cornice and exits through the ridge or gable vents. In order for this to occur, eave or cornice vents must be greater than or equal to the area of the ridge or gable vents.

Vents that permit snow or rain to infiltrate the attic are not permitted. While there is no specific test standard for this performance aspect of vents, snow infiltration through roof vents can be addressed by what is referred to as "balanced" venting. Balanced venting is providing at least 50 percent of the required ventilating area in the upper third of the space being ventilated (e.g., through ridge or gable vents). The balance of the required ventilation is provided by eave or cornice vents that are greater than or equal to the ventilation area provided by the ridge or gable vents. Most ridge vent manufacturers require slightly more ventilation area in the eaves than provided in

INTERNATIONAL CODE COUNCIL®
Copyright © 2015 ICC. ALL RIGHTS RESERVED. Accessed by David Dammon on Jun 21, 2017 12:30:52 PM pursuant to License Agreement with ICC. No further reproduction or distribution authorized. ANY UNAUTHORIZED REPRODUCTION OR DISTRIBUTION IS A VIOLATION OF THE FEDERAL COPYRIGHT ACT AND THE LICENSE AGREEMENT, AND SUBJECT TO CIVIL AND CRIMINAL PENALTIES THEREUNDER.

the ridge vent to help prevent snow infiltration. If insufficient eave or cornice ventilation is provided, air will be drawn through the ridge or gable vents. Snow-laden air can enter the attic space through a ridge or gable vent. Therefore, it is preferable to have both eave and ridge vents, with the eave vent area being greater than or equal to the ridge vent area (i.e., "balanced" venting).

If an adequate amount of ventilation area in the upper portion of the space is not provided and the ventilation area is provided mainly at the eave or cornice vents, then air will enter and leave the attic space at the eave, and very little cross flow of air will occur.

A test method that has been devised for ridge vent manufacturers involves the use of a 13-foot, 6-inch-diameter (4115 mm) propeller of a 2,650-horsepower aircraft engine wind generator. Snow is simulated with fine, soft wood sawdust, added to the airstream at about 5 pounds (2 kg) per minute. Using this method, the wind speed is varied, because it is not known at what speed the most snow infiltration will occur or the factors that will determine that each wind speed was sustained for a period of 5 minutes. The entire roof system, with all vents, must be installed in the test set-up in order to get a true measure of the potential (or lack thereof) for snow infiltration.

Attic ventilation openings cannot be placed in roof areas subject to snow drifts. These roof areas are subject to greater concentrations of snow, which could increase the chances of snow entering the attic through the ventilation openings. In addition, the ventilation openings are required to be covered with corrosion-resistant mesh or similar material in accordance with Section 1203.2.1. If roof spaces are not created (e.g., solid concrete roof sections), ventilation is not required, as there is no concealed space for condensation to accumulate.

The amount of area needed for ventilating a roof space is also established in this section.

The following example illustrates the calculation of required ventilation areas for an attic space [see Commentary Figure 1203.2(1)]:

Note: The area of the attic must include the area of the eave or soffit.

Attic ventilation area = $^{1}/_{150}$ of area

Required ventilating area = $^{1,100}/_{150}$
= 7.33 sq. ft.
= 1056 sq. in.

For application of exception:

Attic ventilation area = $^{1}/_{300}$ of area

Required ventilating area = $^{1,100}/_{300}$
3.67 sq. ft.
528 sq. in.

Provide 50% by = 528 x 0.5 ridge or roof vent
= 264 sq. in.

Provide soffit ventilation = 264 sq. in. total or 264/2(50)
= 2.64 sq. in./ft.

Area of attic = 1,100 sq. ft.

For SI: 1 square inch = 0.000645 m^2,
1 square foot = 0.0929 m^2.

Common methods used to provide soffit ventilation include manufactured units, strips or soffit panels and holes or slots (with screening) that meet the criteria and are approved.

It is important to note that the distribution of ventilation openings should be uniform along the length of the soffits and ridge.

Common methods used to provide roof ridge ventilation include manufactured roof units, ridge vents and gable louvers.

Common methods used to provide soffit ventilation include manufactured units, strips or soffit panels and holes or slots (with screening) that meet the criteria and are approved.

Note that the net-free ventilation area of equipment used for soffit, roof and gable ventilation must be determined. One cannot simply calculate the ventilation area based on the opening created in the roof, wall or soffit. Products vary by manufacturer, and a review of the listing and specifications is necessary to verify actual or net-free ventilation areas.

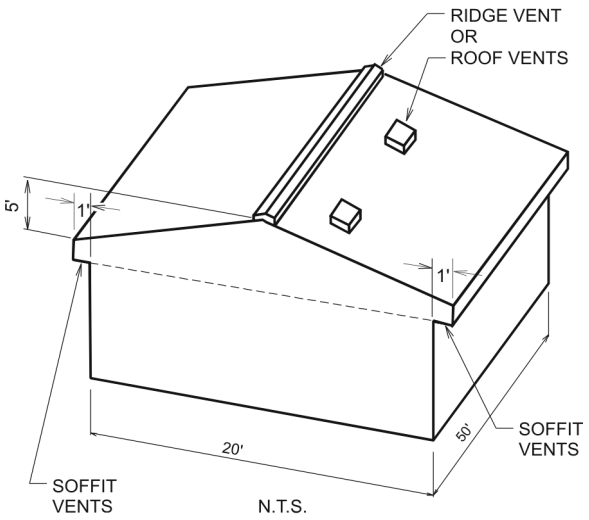

For SI: 1 foot = 304.8 mm.

Figure 1203.2(1)
COMBINATION OF SOFFIT AND RIDGE VENTS

INTERNATIONAL CODE COUNCIL®
Copyright © 2015 ICC. ALL RIGHTS RESERVED. Accessed by David Dammon on Jun 21, 2017 12:30:52 PM pursuant to License Agreement with ICC. No further reproduction or distribution authorized. ANY UNAUTHORIZED REPRODUCTION OR DISTRIBUTION IS A VIOLATION OF THE FEDERAL COPYRIGHT ACT AND THE LICENSE AGREEMENT, AND SUBJECT TO CIVIL AND CRIMINAL PENALTIES THEREUNDER.

Where an attic space is not created, but the ceiling membrane is applied directly to the bottom of the solid roof rafters, each rafter space is to be ventilated separately. In this type of installation, it is particularly important that cross ventilation is developed between each rafter space by providing vents at the ridge and eave [see Commentary Figure 1203.2(2)]. For small sections of roofs such as above dormers and for roofs that are flat or of very low slope, the 30-inch (762 mm) height difference between the highest and lowest vent locations may not be readily achievable. The designer and building official need to ensure that the ventilation openings for such roofs will result in adequate ventilation.

The exception permits a reduction in the required venting area to $^1/_{300}$ (as calculated in the example) where both conditions are met. Condition 1 recognizes that in cold climates a vapor retarder is required and permits a reduction based on the vapor retarder being installed on the warm-in-winter side of the ceiling. Condition 2 requires that proper cross ventilation be supplied. Ventilators used to apply this exception are required to be in compliance with the manufacturer's instructions to be effective.

1203.2.1 Openings into attic. Exterior openings into the *attic* space of any building intended for human occupancy shall be protected to prevent the entry of birds, squirrels, rodents, snakes and other similar creatures. Openings for ventilation having a least dimension of not less than $^1/_{16}$ inch (1.6 mm) and not more than $^1/_4$ inch (6.4 mm) shall be permitted. Openings for ventilation having a least dimension larger than $^1/_4$ inch (6.4 mm) shall be provided with corrosion-resistant wire cloth screening, hardware cloth, perforated vinyl or similar material with openings having a least dimension of not less than $^1/_{16}$ inch (1.6 mm) and not more than $^1/_4$ inch (6.4 mm). Where combustion air is obtained from an *attic* area, it shall be in accordance with Chapter 7 of the *International Mechanical Code*.

❖ Ventilation openings that would permit the entrance of small animals into the structure must be protected in accordance with this section. Hardware cloth is a particular kind of metal wire cloth screening, and perforated vinyl is a plastic screening or grid with openings of similar dimensions. Metal or vinyl are specified because of their resistance to deterioration over time. Therefore, whatever material is used, it must be nondeteriorating in addition to having the least dimension of the minimum and maximum openings of $^1/_{16}$ and $^1/_4$ inches (3.2 and 6.4 mm), respectively.

Combustion air is air supplied to the room where a fuel-burning appliance is located in order that combustion of the fuel can take place in a safe and complete manner. Chapter 7 of the IMC permits combustion air to be taken from an attic space that is ventilated by openings to the exterior, under certain conditions. Those conditions are based on the configuration of the attic space and the ventilation openings themselves (see Chapter 7 of the IMC and commentary for more information).

1203.3 Unvented attic and unvented enclosed rafter assemblies. Unvented *attics* and unvented enclosed roof framing assemblies created by ceilings applied directly to the underside of the roof framing members/rafters and the structural roof sheathing at the top of the roof framing members shall be permitted where all the following conditions are met:

1. The unvented *attic* space is completely within the *building thermal envelope*.
2. No interior Class I vapor retarders are installed on the ceiling side (*attic* floor) of the unvented *attic* assembly or on the ceiling side of the unvented enclosed roof framing assembly.

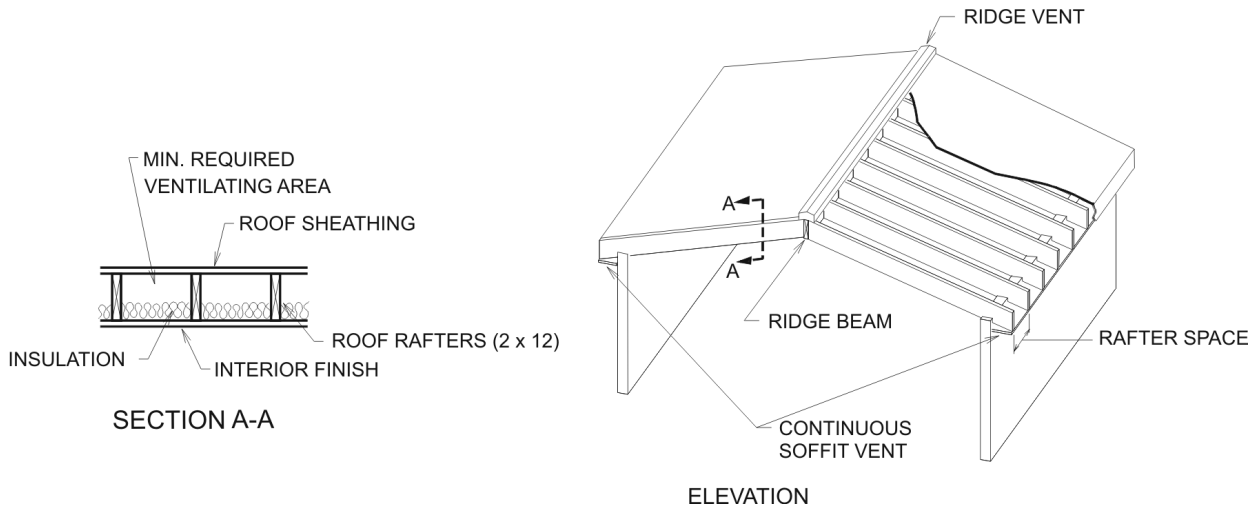

Figure 1203.2(2)
VENTILATION OF RAFTER SPACE

INTERNATIONAL CODE COUNCIL®
Copyright © 2015 ICC. ALL RIGHTS RESERVED. Accessed by David Dammon on Jun 21, 2017 12:30:52 PM pursuant to License Agreement with ICC. No further reproduction or distribution authorized. ANY UNAUTHORIZED REPRODUCTION OR DISTRIBUTION IS A VIOLATION OF THE FEDERAL COPYRIGHT ACT AND THE LICENSE AGREEMENT, AND SUBJECT TO CIVIL AND CRIMINAL PENALTIES THEREUNDER.

3. Where wood shingles or shakes are used, a minimum $^1/_4$-inch (6.4 mm) vented airspace separates the shingles or shakes and the roofing underlayment above the structural sheathing.
4. In Climate Zones 5, 6, 7 and 8, any air-impermeable insulation shall be a Class II vapor retarder or shall have a Class II vapor retarder coating or covering in direct contact with the underside of the insulation.
5. Insulation shall be located in accordance with the following:

   5.1. Item 5.1.1, 5.1.2, 5.1.3 or 5.1.4 shall be met, depending on the air permeability of the insulation directly under the structural roof sheathing.

      5.1.1. Where only air-impermeable insulation is provided, it shall be applied in direct contact with the underside of the structural roof sheathing.

      5.1.2. Where air-permeable insulation is provided inside the building thermal envelope, it shall be installed in accordance with Item 5.1. In addition to the air-permeable insulation installed directly below the structural sheathing, rigid board or sheet insulation shall be installed directly above the structural roof sheathing in accordance with the R values in Table 1203.3 for condensation control.

      5.1.3. Where both air-impermeable and air-permeable insulation are provided, the *air-impermeable insulation* shall be applied in direct contact with the underside of the structural roof sheathing in accordance with Item 5.1.1 and shall be in accordance with the R values in Table 1203.3 for condensation control. The *air-permeable insulation* shall be installed directly under the *air-impermeable insulation.*

      5.1.4. Alternatively, sufficient rigid board or sheet insulation shall be installed directly above the structural roof sheathing to maintain the monthly average temperature of the underside of the structural roof sheathing above 45°F (7°C). For calculation purposes, an interior air temperature of 68°F (20°C) is assumed and the exterior air temperature is assumed to be the monthly average outside air temperature of the three coldest months.

   5.2. Where preformed insulation board is used as the *air-permeable insulation* layer, it shall be sealed at the perimeter of each individual sheet interior surface to form a continuous layer.

Exceptions:

1. Section 1203.3 does not apply to special use structures or enclosures such as swimming pool enclosures, data processing centers, hospitals or art galleries.
2. Section 1203.3 does not apply to enclosures in Climate Zones 5 through 8 that are humidified beyond 35 percent during the three coldest months.

❖ Unvented attics are attics where the insulation and air barrier boundary are moved to be directly above the attic space, instead of on top of the ceiling. Unvented attics eliminate the extreme temperatures of the attic, thereby placing the HVAC, ducts, pipes, and anything in the attic space into a more favorable environment. Unvented attics increase energy efficiency and decrease wear and tear on equipment in the attic. This section describes attics where the insulation and air barrier are above instead of below the attic space. Moving the insulation and placing an air-impermeable barrier above the attic moderates attic conditions so they are similar to the conditions of the residential space below. The primary benefit of having the insulation and air barrier above the attic is that ducts and/or HVAC equipment in the attic are not delivering cooled air through a hot summer attic and heated air through a cold winter attic. Another benefit is to eliminate the attic vents that sometimes allow moisture to condense inside the attic, admit rain during extreme weather and possibly admit sparks in fires.

Because this space is inside the building's thermal envelope, the traditional attic ventilation required by Sections 1203.2 is not required. Unvented attics require water/moisture control. Water moves in (or out) of buildings three main ways. The greatest amount of moisture is moved as bulk water (rain or any kind of water flow). Less moisture is moved by moving moist air, such as with infiltration. The least amount of moisture is moved by moisture migration through materials. As with any attic, the roof itself is the main barrier for keeping water from entering the attic.

The provisions of this section can be applied to any attic area which is in compliance with this section. The attic is a traditional attic space, with the exception that it need not be ventilated and it will not get as hot or as cold as an attic that is open to the exterior.

It is very important that all of the five listed conditions be reviewed and considered for each building that uses the provisions of this section.

Item 1 requires that the attic space be completely contained within the building thermal envelope.

Item 2, which applies to all climate zones, prohibits the installation of a vapor retarder where it is typically installed at the ceiling level (attic floor) of a traditional ventilated attic. This assures that no barrier is installed which would separate the conditioned attic area from the

INTERNATIONAL CODE COUNCIL®
Copyright © 2015 ICC. ALL RIGHTS RESERVED. Accessed by David Dammon on Jun 21, 2017 12:30:52 PM pursuant to License Agreement with ICC. No further reproduction or distribution authorized. ANY UNAUTHORIZED REPRODUCTION OR DISTRIBUTION IS A VIOLATION OF THE FEDERAL COPYRIGHT ACT AND THE LICENSE AGREEMENT, AND SUBJECT TO CIVIL AND CRIMINAL PENALTIES THEREUNDER.

remaining portion of the home. This requirement gives the attic space a limited potential to dry into the space beneath the attic so that small amounts of excess moisture can be removed from the attic. A sheet of polyurethane film or any material with a foil film facing are examples of vapor barriers that are not permitted on the attic floor.

Item 3 applies to all climate zones and contains special requirements which apply to wood shingle and shake roof coverings. Wood shakes and shingles require a vented space under them to allow the wood to dry after it gets wet from rain.

Item 4 applies only to Climate Zones 5 or higher. The air-impermeable insulation must qualify as a vapor retarder or have a vapor retarder in direct contact with the insulation on the underside (interior) face of the insulation.

Item 5 requires sufficient insulation to keep moisture from condensing on the "condensing surface" inside the attic in "average conditions." The insulation works to prevent condensation by keeping the condensing surface above the temperature where condensation will occur. Small amounts of condensation may occasionally occur at more extreme conditions; however, this is not a concern. The condensing surface is the interior side of the roof deck for air-permeable insulation and the interior of the insulation for air-impermeable insulation. The condensing surfaces differ because attic air can circulate through air-permeable insulation to contact the roof deck but can get only to the interior of air-impermeable insulation. The requirement for "air-impermeable" insulation will ensure that air and the moisture it can contain will not pass through the insulation to reach a point where it could condense because of the temperature. Item 5 specifies that air-impermeable insulation be in direct contact with the interior side of the roof deck. Air-impermeable insulation prevents the movement of moist air that comes in as infiltration through the roof into the interior of the attic. Air-impermeable insulation is defined as having an air permanence of 0.02 L/s-m^2 (at 75 Pa pressure) or less. Expanding spray foams and insulated sheathing (hard-foam sheathing board) are common types of air-impermeable insulation. When using insulated sheathing, attention to the details of completing the air sealing is required as the sheathing is installed in the roof. Fiberglass and cellulose are common types of air-permeable insulation.

Because the insulation typically used with this provision is some type of foam plastic, the requirements of Section 2603 must be applied. The provisions of Section 1203.3 do not in any way modify or eliminate the requirements for a thermal barrier (Section 2603.4). Ducts in this unvented attic construction would be considered as being inside the building thermal envelope and would not require insulation.

The provisions of this section consider the attic assembly as a "conditioned" space; there is no requirement for the space to be provided with conditioned air supply. The attic space is considered indirectly conditioned because of omission of the air barrier, insulation at the ceiling and leakage around the attic access opening. An attic assembly complying with Section 1203.3 will generally fall within the temperature ranges specified in the definition of "Conditioned space."

The key concept of this section is to move the thermal envelope (insulation) above the attic, resulting in the attic being in a conditioned (or sometimes semi-conditioned) space. Direct air supply to the attic is not required if the attic floor is not insulated; the attic temperature would be similar to interior conditioned spaces. Ducts and/or HVAC equipment in the attic also help moderate the attic conditions.

Table 1203.3. See below.

❖ This table is to be used with Section 1203.3, Items 5.1.2 and 5.1.3, in determining the correct R-value to prevent condensation inside the building thermal envelope.

1203.4 Under-floor ventilation. The space between the bottom of the floor joists and the earth under any building except spaces occupied by basements or cellars shall be provided with ventilation openings through foundation walls or *exterior walls*. Such openings shall be placed so as to provide cross ventilation of the under-floor space.

TABLE 1203.3
INSULATION FOR CONDENSATION CONTROL

CLIMATE ZONE	MINIMUM R-VALUE OF AIR-IMPERMEABLE INSULATION[a]
2B and 3B tile roof only	0 (none required)
1, 2A, 2B, 3A, 3B, 3C	R-5
4C	R-10
4A, 4B	R-15
5	R-20
6	R-25
7	R-30
8	R-35

a. Contributes to, but does not supersede, thermal resistance requirements for attic and roof assemblies in Section C402.2.1 of the *International Energy Conservation Code*.

INTERNATIONAL CODE COUNCIL®
Copyright © 2015 ICC. ALL RIGHTS RESERVED. Accessed by David Dammon on Jun 21, 2017 12:30:52 PM pursuant to License Agreement with ICC. No further reproduction or distribution authorized. ANY UNAUTHORIZED REPRODUCTION OR DISTRIBUTION IS A VIOLATION OF THE FEDERAL COPYRIGHT ACT AND THE LICENSE AGREEMENT, AND SUBJECT TO CIVIL AND CRIMINAL PENALTIES THEREUNDER.

❖ The intent of this section is to create an adequate flow of air through crawl spaces to achieve the ventilation goals of controlling temperature, humidity and accumulation of gases. The entire space must be properly ventilated by openings that are distributed to effect cross flow and include corner areas. Although the code does not specify the exact location of openings, an equal distribution of openings on at least three sides of a building, with at least one opening near each corner of the building, is typically sufficient.

Mechanical ventilating devices also can be installed to force air movement and ventilate the space, in which case the location and number of ventilation openings are less critical (see Section 1203.4.2, Exception 3). The amount of ventilation openings required can be drastically reduced if a vapor retarder is used on the ground surface in the crawl space, in accordance with Section 1203.4.2, Exception 2. Also, in accordance with Exception 3 of that section, when a vapor retarder is used, the installation of operable louvers (to close the openings in the coldest times of the year) is permitted.

1203.4.1 Openings for under-floor ventilation. The net area of ventilation openings shall be not less than 1 square foot for each 150 square feet (0.67 m^2 for each 100 m^2) of crawl-space area. Ventilation openings shall be covered for their height and width with any of the following materials, provided that the least dimension of the covering shall be not greater than $^1/_4$ inch (6.4 mm):

1. Perforated sheet metal plates not less than 0.070 inch (1.8 mm) thick.
2. Expanded sheet metal plates not less than 0.047 inch (1.2 mm) thick.
3. Cast-iron grilles or gratings.
4. Extruded load-bearing vents.
5. Hardware cloth of 0.035-inch (0.89 mm) wire or heavier.
6. Corrosion-resistant wire mesh, with the least dimension not greater than $^1/_8$ inch (3.2 mm).

❖ An example of the area calculation: A rectangular building that is 60 feet (18 288 mm) long and 20 feet (6096 mm) wide has a plan area of 1,200 square feet (111.5 m^2). The amount of ventilation opening required is $^{1,200}/_{150}$ = 8 square feet (0.74 m^2) by 144 square inches (92 903 mm^2) per square foot = 1,152 square inches (0.74 m^2). This is the total (aggregate) amount of ventilation opening that must be distributed among all the openings. This required amount of openings may be reduced by a factor of 10 if a vapor retarder is used on the ground surface in accordance with Section 1203.4.2, Exception 2.

The requirement for covering the openings with perforated plates, corrosion-resistant wire mesh or other covering is to keep small animals out. Six alternatives are given for this covering, and they all must have openings that have no dimension exceeding $^1/_4$ inch (6.4 mm).

1203.4.2 Exceptions. The following are exceptions to Sections 1203.4 and 1203.4.1:

1. Where warranted by climatic conditions, ventilation openings to the outdoors are not required if ventilation openings to the interior are provided.
2. The total area of ventilation openings is permitted to be reduced to $^1/_{1,500}$ of the under-floor area where the ground surface is covered with a Class I vapor retarder material and the required openings are placed so as to provide cross ventilation of the space. The installation of operable louvers shall not be prohibited.
3. Ventilation openings are not required where continuously operated mechanical ventilation is provided at a rate of 1.0 cubic foot per minute (cfm) for each 50 square feet (1.02 L/s for each 10 m^2) of crawl- space floor area and the ground surface is covered with a Class I vapor retarder.
4. Ventilation openings are not required where the ground surface is covered with a Class I vapor retarder, the perimeter walls are insulated and the space is conditioned in accordance with the *International Energy Conservation Code*.
5. For buildings in flood hazard areas as established in Section 1612.3, the openings for under-floor ventilation shall be deemed as meeting the flood opening requirements of ASCE 24 provided that the ventilation openings are designed and installed in accordance with ASCE 24.

❖ This section lists the locations and conditions where ventilation openings can be omitted entirely or the area of required openings can be reduced. Exception 1 could be used in extremely cold climates, where ventilation openings are a serious breach of the structure in terms of energy usage. It provides for ventilating the crawl space to the interior conditioned space of the building, which is heated and can accept moisture from the underground space without detrimental effects on the building structure.

The use of a Class I vapor retarder material on the ground surface inhibits the flow of moisture from the ground surface into the crawl space and thus reduces, if not virtually eliminates, the need for ventilation. Therefore, Exception 2 provides for a drastic reduction in the amount of ventilation openings required. While the vapor retarder may significantly reduce the moisture accumulation, ventilation openings are still required but may be equipped with manual dampers to permit them to be closed during the coldest weeks of the year in northern climates.

Exception 3 provides for the use of mechanical ventilation, such as an exhaust fan similar to a bathroom exhaust fan, to keep air moving through the crawl space. A Class I vapor retarder on the ground surface is also required when using Exception 3.

When a crawl space is provided with a Class I vapor retarder on the ground surface and is mechanically conditioned and insulated, it becomes like any

INTERNATIONAL CODE COUNCIL®
Copyright © 2015 ICC. ALL RIGHTS RESERVED. Accessed by David Dammon on Jun 21, 2017 12:30:52 PM pursuant to License Agreement with ICC. No further reproduction or distribution authorized. ANY UNAUTHORIZED REPRODUCTION OR DISTRIBUTION IS A VIOLATION OF THE FEDERAL COPYRIGHT ACT AND THE LICENSE AGREEMENT, AND SUBJECT TO CIVIL AND CRIMINAL PENALTIES THEREUNDER.

other space in the conditioned structure and ventilation openings are not required in accordance with Exception 4. Requirements for insulating structures are found in the IECC.

Section 1612 of the code requires buildings located in flood hazard areas to be constructed in accordance with ASCE 24. Exception 5 is necessary to coordinate the requirements for openings in ASCE 24 with this section. In most cases, the ventilation requirements of Section 1203.4 are not satisfied by installation of the flood openings because the requirements in ASCE 24 specify that flood openings are to be no more than 1 foot (305 mm) above the adjacent grade, while most airflow vents that meet the requirements of Section 1203.3 are installed immediately below the elevated floor. If there is a sufficient number of airflow vents located within 1 foot (305 mm) of the adjacent grade, both requirements may be satisfied. In either case, both airflow ventilation and flood opening requirements must be met for buildings and structures located in flood hazard areas. For further guidance, refer to FEMA FIA-TB-1, *Openings in Foundation Walls for Buildings Located in Special Flood Hazard Areas.*

1203.5 Natural ventilation. Natural *ventilation* of an occupied space shall be through windows, doors, louvers or other openings to the outdoors. The operating mechanism for such openings shall be provided with ready access so that the openings are readily controllable by the building occupants.

❖ This section provides the standard of natural ventilation for all occupied spaces. Openings to the outdoor air, such as doors, windows and louvers, provide natural ventilation. The section does not, however, state or intend that the doors, windows or openings actually be constantly open. The intent is that they be maintained in an operable condition so that they are available for use at the discretion of the occupant.

1203.5.1 Ventilation area required. The openable area of the openings to the outdoors shall be not less than 4 percent of the floor area being ventilated.

❖ This section specifies the ratio of openable doors, windows or openings to the floor space being ventilated but does not address the distribution around the space or location of these openings. It is the designer's prerogative to distribute openings in such a manner as to accomplish the natural ventilation of the space. When inadequate natural ventilation is provided, mechanical ventilation can supplement any inadequacy (see Chapter 4 of the IMC). The plan reviewer can determine compliance with this section. For example, in Commentary Figure 1203.5.1, the combined openable area (the net-free area of a door, window, louver, vent or skylight, etc., when fully open) of double-hung windows B and C is equal to 4 percent of the floor area [300 × 0.04 = 12 square feet (1 m^2)]. The openable area of window A is not required and need not open onto a court or yard complying with Section 1206.

1203.5.1.1 Adjoining spaces. Where rooms and spaces without openings to the outdoors are ventilated through an adjoining room, the opening to the adjoining room shall be unobstructed and shall have an area of not less than 8 percent of the floor area of the interior room or space, but not less than 25 square feet (2.3 m^2). The openable area of the openings to the outdoors shall be based on the total floor area being ventilated.

Exception: Exterior openings required for *ventilation* shall be permitted to open into a sunroom with *thermal isolation* or a patio cover provided that the openable area between the sunroom addition or patio cover and the interior room shall have an area of not less than 8 percent of the floor area of the interior room or space, but not less than 20 square feet (1.86 m^2). The openable area of the openings to the outdoors shall be based on the total floor area being ventilated.

❖ Adjacent spaces with large connecting openings may share sources of light and ventilation. This section deals with the natural ventilation of connecting interior spaces, and it is the designer's obligation to place openings between rooms with exterior openings and connecting spaces without exterior openings in such a manner as to accomplish natural ventilation of the connected space. For purposes of ventilation, this section establishes a minimum openness requirement for the common wall between a room with openings to the exterior and an interior room without openings to the exterior. The minimum amount of openness required in that common wall is 8 percent of the floor area of the interior room or 25 square feet (2.33 m^2), whichever is greater. The openable area of the exterior openings in the "outer" room is required to be equal to or greater than 4 percent (in accordance with Section 1203.4.1) of the total combined floor areas served.

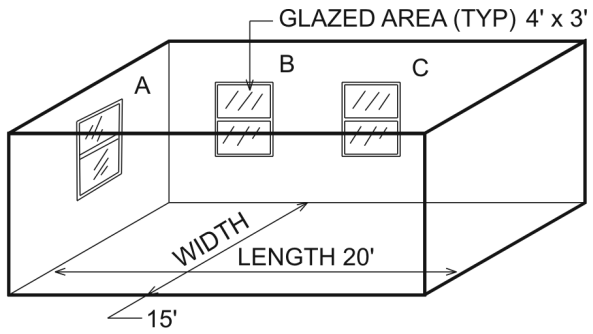

FLOOR AREA = (WIDTH) x (LENGTH)
15 x 20 = 300 sq.ft.

For SI: 1 foot = 304.8 mm, 1 square foot = 0.0929 m^2.

Figure 1203.5.1
NATURAL LIGHT AND VENTILATION WINDOWS

INTERNATIONAL CODE COUNCIL®
Copyright © 2015 ICC. ALL RIGHTS RESERVED. Accessed by David Dammon on Jun 21, 2017 12:30:52 PM pursuant to License Agreement with ICC. No further reproduction or distribution authorized. ANY UNAUTHORIZED REPRODUCTION OR DISTRIBUTION IS A VIOLATION OF THE FEDERAL COPYRIGHT ACT AND THE LICENSE AGREEMENT, AND SUBJECT TO CIVIL AND CRIMINAL PENALTIES THEREUNDER.

Commentary Figure 1203.5.1.1 shows a cutaway of an interior room (Space A) adjacent to a room with openings to the exterior (Space B). The openable area of exterior openings in Space B is required to be equal to or greater than 0.04 times the area of the entire space (floor area of Space A plus floor area of interior Space B). The opening in the wall between adjacent spaces must be a minimum of 25 square feet (2.33 m^2), but not less than 0.08 times the floor area of interior Space A. Since the opening between the adjacent spaces must be unobstructed in accordance with this section, a door cannot be installed in the opening.

The exception deals with a very common circumstance, especially in residential construction. As long as the sunroom is large enough and is thermally isolated, the building owner need not move ventilation openings when installing an addition that falls within the definition of "Sunroom." Sunrooms can be part of initial construction.

1203.5.1.2 Openings below grade. Where openings below grade provide required natural *ventilation*, the outside horizontal clear space measured perpendicular to the opening shall be one and one-half times the depth of the opening. The depth of the opening shall be measured from the average adjoining ground level to the bottom of the opening.

❖ This section is applicable where occupied spaces below grade are dependent on natural ventilation through structures such as window wells. In order to provide adequate ventilation, this section sets the minimum horizontal clear space adjacent to the opening used for natural ventilation. Without this minimum horizontal area, there will be inadequate air movement through the opening.

As illustrated in Commentary Figure 1203.5.1.2, the opening area required for the story below grade intended for human occupancy is:

$$A = 0.04 (L \times W)$$

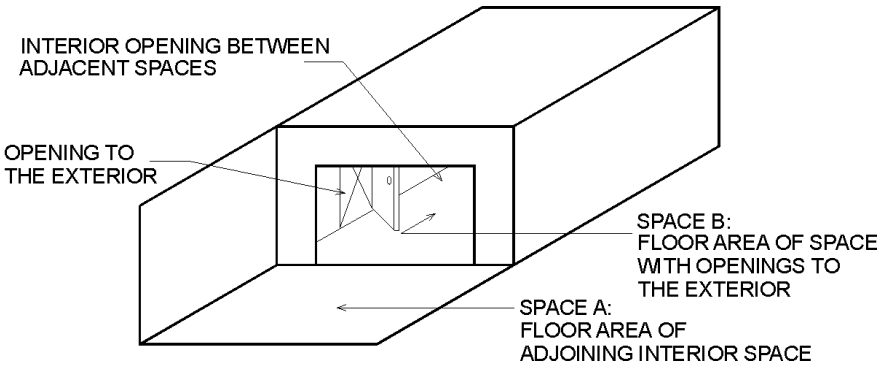

Figure 1203.5.1.1
NATURAL VENTILATION FROM ADJOINING SPACE

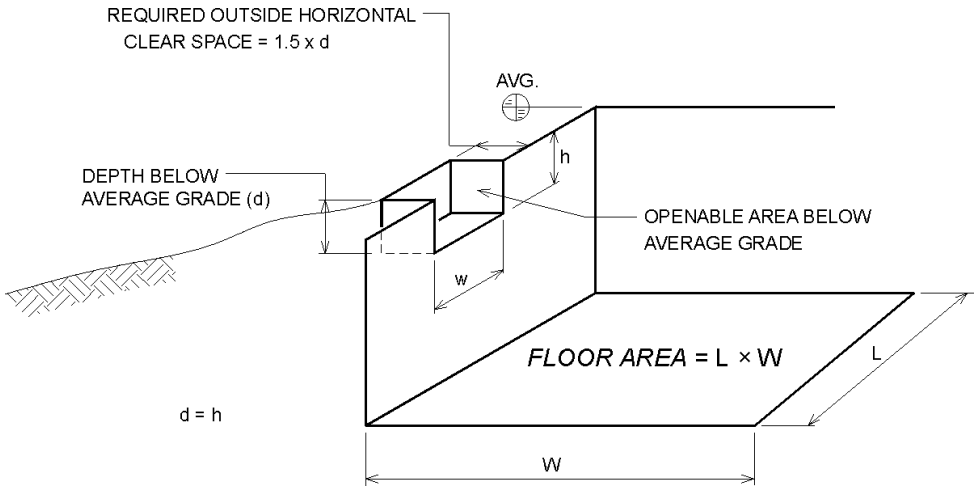

Figure 1203.5.1.2
VENTILATION OPENINGS BELOW GRADE

INTERNATIONAL CODE COUNCIL®
Copyright © 2015 ICC. ALL RIGHTS RESERVED. Accessed by David Dammon on Jun 21, 2017 12:30:52 PM pursuant to License Agreement with ICC. No further reproduction or distribution authorized. ANY UNAUTHORIZED REPRODUCTION OR DISTRIBUTION IS A VIOLATION OF THE FEDERAL COPYRIGHT ACT AND THE LICENSE AGREEMENT, AND SUBJECT TO CIVIL AND CRIMINAL PENALTIES THEREUNDER.

The area of the window in the vertical plane (w × h) must equal or exceed the required opening area. Additionally, the horizontal dimension from the window to the well wall must equal one and one-half times the depth of the openable portion of the window at the lowest point. If the story below grade is not intended for human occupancy, ventilation is required to be provided in accordance with Section 1203.4 for under-floor spaces.

1203.5.2 Contaminants exhausted. Contaminant sources in naturally ventilated spaces shall be removed in accordance with the *International Mechanical Code* and the *International Fire Code*.

❖ Contaminants in the air are to be collected and exhausted by special means. Chapters 4 and 5 of the IMC specify areas or conditions that must be separately addressed. For example, there are many operations listed in Chapter 5 of the IMC that produce contaminants that cannot be properly or safely treated by natural means. Natural ventilation only anticipates normal occupancy by people and not the extra heat loads, dust, vapors and other contaminants generated by some activities.

1203.5.2.1 Bathrooms. Rooms containing bathtubs, showers, spas and similar bathing fixtures shall be mechanically ventilated in accordance with the *International Mechanical Code*.

❖ Chapter 4 of the IMC contains provisions for bathroom ventilation, requiring mechanical exhaust without recirculation of air at specific rates that depend on the occupancy group.

1203.5.3 Openings on yards or courts. Where natural *ventilation* is to be provided by openings onto *yards* or *courts*, such *yards* or *courts* shall comply with Section 1206.

❖ To ensure that adequate air movement will be provided through openings to naturally ventilated rooms, the openings must directly connect to yards or courts with the minimum dimensions specified in Section 1206.

1203.6 Other ventilation and exhaust systems. *Ventilation* and exhaust systems for occupancies and operations involving flammable or combustible hazards or other contaminant sources as covered in the *International Mechanical Code* or the *International Fire Code* shall be provided as required by both codes.

❖ Chapter 5 of the IMC contains specific provisions for hazardous exhaust systems in occupancies such as vehicle repair garages, aircraft fueling stations, dry cleaning plants, spray-painting operations and hazardous production materials (HPM) facilities. Many of these provisions are duplicated from the *International Fire Code*® (IFC®), which also contains provisions for the handling and storage of hazardous materials.

SECTION 1204
TEMPERATURE CONTROL

1204.1 Equipment and systems. Interior spaces intended for human occupancy shall be provided with active or passive space heating systems capable of maintaining an indoor temperature of not less than 68°F (20°C) at a point 3 feet (914 mm) above the floor on the design heating day.

Exceptions: Space heating systems are not required for:

1. Interior spaces where the primary purpose of the space is not associated with human comfort.
2. Group F, H, S or U occupancies.

❖ Heating facilities are required for comfort in all new construction. The systems may be either active (such as a forced-air furnace) or passive (such as solar systems), as long as the specified performance is achieved.

The outdoor design temperatures are taken from the ASHRAE *Handbook of Fundamentals* and are listed in Appendix D of the *International Plumbing Code*® (IPC®). Outdoor design temperatures provide a baseline from which heat load calculations are made. Heating system capacity is dependent on the predicted outdoor temperatures during the heating season. As the outdoor temperature falls, the heat input to a building must increase to offset the increasing heat losses through the building envelope. Heating systems are designed to have the capacity to maintain the desired indoor temperature when the outdoor temperature is at or above the outdoor design temperature. When the outdoor temperatures are below the outdoor design temperature, the heating system will not be able to maintain a desired indoor temperature. It would be impractical, for example, to design a heating system based on the assumption that someday it might be -20°F (-29°C) outdoors if the outdoor temperature in that region rarely, if ever, dropped that low. In such a case, the heating system would be oversized and, thereby, less efficient and economical.

The winter outdoor design temperature is defined as follows: for 97.5 percent of the total hours in the northern hemisphere heating season, from December through February, the predicted outdoor temperatures will be at or above the values given in Appendix D of the IPC. It would be unreasonable to expect any heating system to maintain a desired indoor temperature when the outdoor temperature is below the design temperature. When the 97.5-percent column in Appendix D of the IPC is used, it can be assumed that the actual outdoor temperature will be at or below the design temperature for roughly 54 hours of the total of 2,160 hours in the months of December through February (2.5 percent of 2,160 hours = 54).

INTERNATIONAL CODE COUNCIL®
Copyright © 2015 ICC. ALL RIGHTS RESERVED. Accessed by David Dammon on Jun 21, 2017 12:30:52 PM pursuant to License Agreement with ICC. No further reproduction or distribution authorized. ANY UNAUTHORIZED REPRODUCTION OR DISTRIBUTION IS A VIOLATION OF THE FEDERAL COPYRIGHT ACT AND THE LICENSE AGREEMENT, AND SUBJECT TO CIVIL AND CRIMINAL PENALTIES THEREUNDER.

Exception 1 recognizes that not all interior spaces are associated with human comfort by the nature of their uses, such as a commercial cooler or freezer. These and similar spaces would not require heating systems.

Exception 2 specifically exempts Group F, H, S or U occupancies from the heating requirement in the IBC. The requirement for heating in these uses is governed by OSHA regulations (Groups F, H and S) or is not needed (Group U) or, in some cases, not desired (Group H). As an example, in the past there have been incidents of industrial bakeries being required to install heating systems in rooms that contain ovens.

SECTION 1205
LIGHTING

1205.1 General. Every space intended for human occupancy shall be provided with natural light by means of exterior glazed openings in accordance with Section 1205.2 or shall be provided with artificial light in accordance with Section 1205.3. Exterior glazed openings shall open directly onto a *public way* or onto a *yard* or *court* in accordance with Section 1206.

❖ This section establishes that an option can be exercised on a room-by-room or space-by-space basis. The option allows the designer to provide either natural light in accordance with this chapter or equivalent levels of artificial lighting.

1205.2 Natural light. The minimum net glazed area shall be not less than 8 percent of the floor area of the room served.

❖ This section establishes the minimum glazed area required based on the floor area served by the window. This is required only for spaces that are not provided with artificial light in accordance with Section 1205.3. It is the intent of the code to establish this ratio as the minimum glazed opening onto yards or courts, in accordance with Section 1205.1.

Early codes set this standard at 10 percent of the floor area served. This ratio was derived from certain architectural styles that yielded adequate light and ventilation. However, this is a more-than-adequate amount and has been reduced to the current levels because of energy conservation issues. Openings in excess of that minimum area are permitted to open onto areas other than a complying court or yard. In Commentary Figure 1203.5.1, the room dimensions are 15 feet by 20 feet (4572 mm by 6096 mm), or 300 square feet (27.9 m^2) of area. If windows B and C are double hung, with a combined glazed area of 24 square feet (2.23 m^2), they provide the minimum area required of 8 percent of the floor area (24/300 = 0.08). In this example, glazing unit A is not required for natural light; therefore, it need not face onto a required yard or court.

1205.2.1 Adjoining spaces. For the purpose of natural lighting, any room is permitted to be considered as a portion of an adjoining room where one-half of the area of the common wall is open and unobstructed and provides an opening of not less than one-tenth of the floor area of the interior room or 25 square feet (2.32 m^2), whichever is greater.

Exception: Openings required for natural light shall be permitted to open into a sunroom with *thermal isolation* or a patio cover where the common wall provides a glazed area of not less than one-tenth of the floor area of the interior room or 20 square feet (1.86 m^2), whichever is greater.

❖ In a case where a space (or room) has no glazed area open to the required courts or yards but is adjacent to one that does, it may "borrow" natural lighting from the adjacent space if: 1. The wall between the adjoining spaces is at least one-half open and unobstructed; 2. The opening equals at least 10 percent of the floor area of the interior space; and 3. The opening is not less than 25 square feet (2.33 m^2). The required glazed area facing the required court or yard must not be less than 8 percent of the total floor area of all rooms served. For example, in Commentary Figure 1205.2.1, the glazed area in Space B is required to be equal to or greater than 0.08 (floor area of Space A + floor area of Space B).

In the figure, the opening between the adjacent spaces must meet these three criteria: the wall must be at least half open and unobstructed, it must be a minimum of 25 square feet (2.33 m^2), and it must be not less than one-tenth of the floor area of Space A.

The exception deals with a very common circumstance, especially in residential construction. As long as the sunroom is large enough and is thermally isolated, the building owner need not move openings for lighting when installing an addition that falls within the definition of "Sunroom." Note that sunrooms can also be part of the initial construction of a building.

1205.2.2 Exterior openings. Exterior openings required by Section 1205.2 for natural light shall open directly onto a *public way*, *yard* or *court*, as set forth in Section 1206.

Exceptions:

1. Required exterior openings are permitted to open into a roofed porch where the porch meets all of the following criteria:
   - 1.1. Abuts a *public way*, *yard* or *court*.
   - 1.2. Has a ceiling height of not less than 7 feet (2134 mm).
   - 1.3. Has a longer side at least 65 percent open and unobstructed.
2. Skylights are not required to open directly onto a *public way*, *yard* or *court*.

❖ In order that enough light will be provided through openings to naturally lit rooms, the openings must open onto yards or courts with the minimum dimensions specified in Section 1206. Skylights admit light directly from above and, therefore, are not required to face a court or yard in accordance with Exception 2. Exception 1 gives the criteria by which a roofed porch

INTERNATIONAL CODE COUNCIL®
Copyright © 2015 ICC. ALL RIGHTS RESERVED. Accessed by David Dammon on Jun 21, 2017 12:30:52 PM pursuant to License Agreement with ICC. No further reproduction or distribution authorized. ANY UNAUTHORIZED REPRODUCTION OR DISTRIBUTION IS A VIOLATION OF THE FEDERAL COPYRIGHT ACT AND THE LICENSE AGREEMENT, AND SUBJECT TO CIVIL AND CRIMINAL PENALTIES THEREUNDER.

may be located directly outside required openings without significantly obstructing the entrance of light to the space.

1205.3 Artificial light. Artificial light shall be provided that is adequate to provide an average illumination of 10 footcandles (107 lux) over the area of the room at a height of 30 inches (762 mm) above the floor level.

❖ The section establishes the minimum required illumination for rooms without the minimum required natural light (see Commentary Figure 1205.3). Please note that Section 1008.2 requires 1 footcandle (11 lux) of light at the walking surface of all means of egress.

1205.4 Stairway illumination. *Stairways* within *dwelling units* and *exterior stairways* serving a *dwelling unit* shall have an illumination level on tread runs of not less than 1 footcandle (11 lux). *Stairways* in other occupancies shall be governed by Chapter 10.

❖ Illumination is essential for stairway safety during normal use, as well as during egress in an emergency. The lighting must be operable by switches in the vicinity of the stairway, located as required by NFPA 70, *National Electrical Code*® (NEC). Emergency egress lighting, also referred to as "means of egress illumination," is required in occupancies other than dwelling units at a lower rate of illumination (see commentary, Sections 1008 and 1205.5).

1205.4.1 Controls. The control for activation of the required *stairway* lighting shall be in accordance with NFPA 70.

❖ The NEC provides for controls at the top and bottom of stairways within dwelling units, allowing an occupant to illuminate the stairways before traversing any stairways, regardless of the direction of travel. Illuminated switches, where required, allow an occupant to quickly find the switches when the stairways are dark.

Illumination controls for exterior stairways that are operable from the inside of a dwelling unit allow an occupant to safely egress by activating exterior stairway illumination prior to leaving the building. Exterior stairways must be provided with the minimum illumination level specified in Section 1205.4.

1205.5 Emergency egress lighting. The *means of egress* shall be illuminated in accordance with Section 1008.1.

❖ Means of egress illumination is required in all buildings to allow occupants enough light to negotiate the

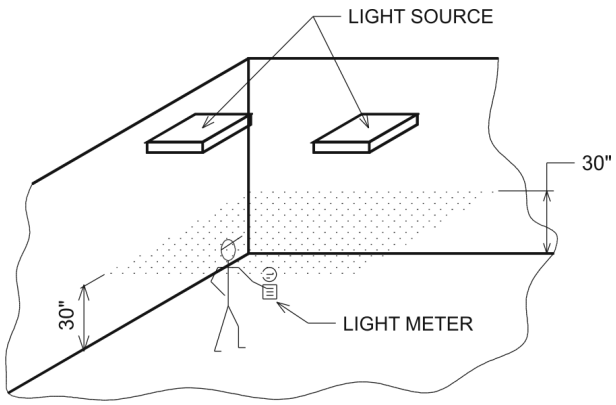

For SI: 1 inch = 25.4 mm.

Figure 1205.3
ARTIFICIAL LIGHTING IN A ROOM

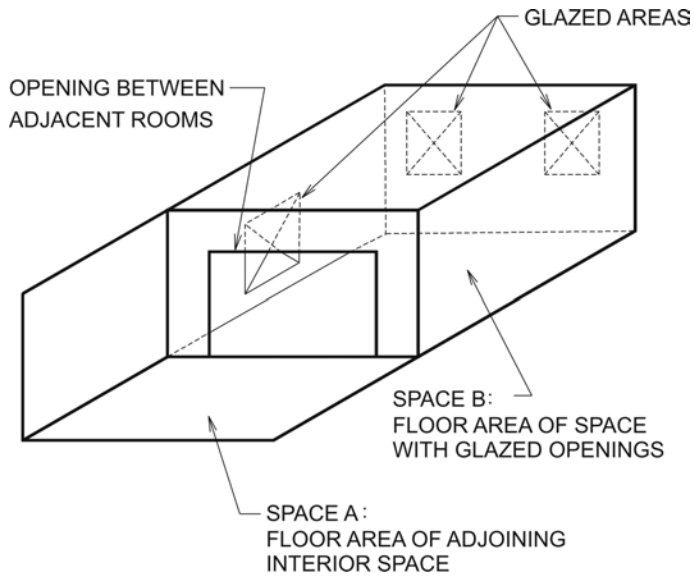

Figure 1205.2.1
NATURAL LIGHT FROM ADJACENT SPACE

INTERNATIONAL CODE COUNCIL®
Copyright © 2015 ICC. ALL RIGHTS RESERVED. Accessed by David Dammon on Jun 21, 2017 12:30:52 PM pursuant to License Agreement with ICC. No further reproduction or distribution authorized. ANY UNAUTHORIZED REPRODUCTION OR DISTRIBUTION IS A VIOLATION OF THE FEDERAL COPYRIGHT ACT AND THE LICENSE AGREEMENT, AND SUBJECT TO CIVIL AND CRIMINAL PENALTIES THEREUNDER.

exit access (such as corridors) and exits (such as enclosed stairways) at all times the building is occupied (see commentary, Section 1008.1).

SECTION 1206
YARDS OR COURTS

1206.1 General. This section shall apply to *yards* and *courts* adjacent to exterior openings that provide natural light or ventilation. Such *yards* and *courts* shall be on the same *lot* as the building.

❖ These provisions are intended to regulate those exterior areas of a building or structure that are supposed to supply required natural light or ventilation to interior spaces. These requirements are intended to increase the likelihood that the exterior walls are provided with enough adjacent open space to allow the required light and ventilating air to freely enter the exterior wall openings. These exterior areas are defined as "Courts" and "Yards." Courts and yards must be open, uncovered and on the same lot as the building. They may be either partly or wholly enclosed by the building. Requirements are provided in Section 1206, which regulates the minimum width, area, air intake and drainage of courts and yards. The requirements of Sections 1206.2 through 1206.3.3 do not apply if artificial ventilation and lighting is provided for the spaces opening onto the court or yard in accordance with Section 1203.1 or 1205.1. See Commentary Figure 1206.1 for examples of courts and yards.

1206.2 Yards. *Yards* shall be not less than 3 feet (914 mm) in width for buildings two *stories* or less above *grade plane*. For buildings more than two *stories above grade plane*, the minimum width of the *yard* shall be increased at the rate of 1 foot (305 mm) for each additional *story*. For buildings exceeding 14 *stories above grade plane*, the required width of the *yard* shall be computed on the basis of 14 *stories above grade plane*.

❖ A yard is distinguished from a court by the definitions in Chapter 2 (see commentary, Chapter 2). A court is bounded on at least three sides by exterior building walls or similar enclosing devices, whereas a yard is

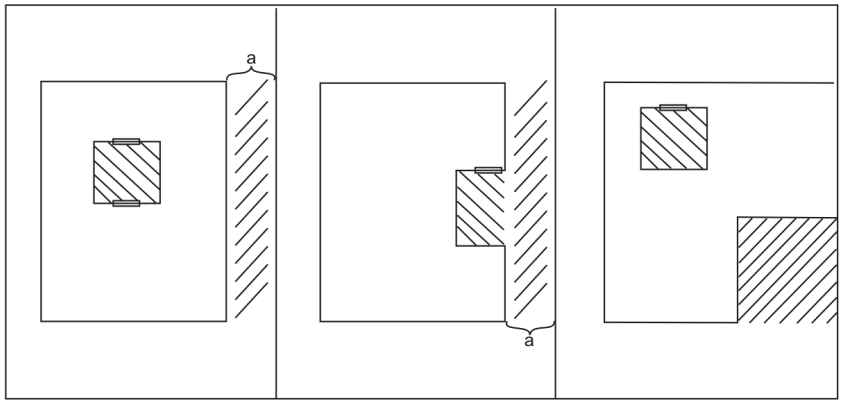

Number of Stories	Minimum width of yard in feet (a)
1 or 2	3
3	4
4	5
5	6
6	7
7	8
8	9
9	10
10	11
11	12
12	13
13	14
14	15
15 or more	15

For SI: 1 foot = 304.8 mm.

Figure 1206.1
YARDS AND COURTS

INTERNATIONAL CODE COUNCIL®
Copyright © 2015 ICC. ALL RIGHTS RESERVED. Accessed by David Dammon on Jun 21, 2017 12:30:52 PM pursuant to License Agreement with ICC. No further reproduction or distribution authorized. ANY UNAUTHORIZED REPRODUCTION OR DISTRIBUTION IS A VIOLATION OF THE FEDERAL COPYRIGHT ACT AND THE LICENSE AGREEMENT, AND SUBJECT TO CIVIL AND CRIMINAL PENALTIES THEREUNDER.

typically located between a building and a lot line and is open on at least two sides or ends (see Commentary Figure 1206.1).

The required width of a yard is measured perpendicular from the face of the wall to the opposing wall on the other side of the yard. A five-story building would be required to have a yard at least 6 feet (1829 mm) in width [3 feet (914 mm) plus 1 foot (305 mm) each for stories three through five]. A 20-story building is required to have a yard at least 15 feet (4572 mm) [3 feet (914 mm) plus 1 foot (305 mm) each for stories three through 14]. The last sentence of the section simply requires a minimum yard width of 15 feet (4572 mm) for all buildings over 14 stories in height. If the building is adjacent to a court rather than a yard, the requirements of Section 1206.3 apply. Neither Section 1206.2 nor 1206.3 is applicable if artificial lighting and ventilation is provided for spaces facing the yard or court in accordance with Sections 1203.1 and 1205.1. Note that the stories are measured above grade plane.

1206.3 Courts. *Courts* shall be not less than 3 feet (914 mm) in width. *Courts* having windows opening on opposite sides shall be not less than 6 feet (1829 mm) in width. *Courts* shall be not less than 10 feet (3048 mm) in length unless bounded on one end by a *public way* or *yard*. For buildings more than two *stories above grade plane*, the *court* shall be increased 1 foot (305 mm) in width and 2 feet (610 mm) in length for each additional *story*. For buildings exceeding 14 *stories above grade plane*, the required dimensions shall be computed on the basis of 14 *stories above grade plane*.

❖ "Courts" are defined in Chapter 2 as being bounded on no less than three sides by walls or other enclosing construction. A court adjacent to a five-story building would be required to have a width measured perpendicular from the wall facing the court of at least 6 feet (1829 mm) when required openings are on one wall and 9 feet (2743 mm) when required openings are on opposing walls [3 feet (914 mm) plus 1 foot (305 mm) each for stories three through five, or 6 feet (1829 mm) plus 1 foot (305 mm) each for stories three through five]. If the same court is bounded on all sides, the required minimum length would be 16 feet (4877 mm) [10 feet (3048 mm) plus 2 feet (610 mm) each for stories three through five]. The last sentence simply requires all buildings higher than 14 stories to have a minimum court width of 15 feet (4572 mm) without opposing required openings, a minimum width of 18 feet (5486 mm) where required openings oppose each other and a minimum length of 34 feet (10 363 mm) if bounded on all sides [width equals 3 feet (914 mm) or 6 feet (1829 mm) plus 1 foot (305 mm) each for stories three through 14, and length equals 10 feet (3048 mm) plus 2 feet (610 mm) each for stories three through 14]. The requirements of this section are not applicable if artificial lighting and ventilation are provided for spaces facing the court in accordance with Sections 1203.1 and 1205.1. Note that the stories are measured above grade plane. See Commentary Figure 1206.3 for examples of court dimensions.

1206.3.1 Court access. Access shall be provided to the bottom of *courts* for cleaning purposes.

❖ Courts must be accessed for maintenance. Clearly, a court intended to be a source of ventilation air must be maintained in a manner conducive to its purpose.

1206.3.2 Air intake. *Courts* more than two *stories* in height shall be provided with a horizontal air intake at the bottom not less than 10 square feet (0.93 m^2) in area and leading to the exterior of the building unless abutting a *yard* or *public way*.

❖ This section is applicable only to courts that are bounded on all four sides by walls or other construction. A fully bounded court takes on characteristics similar to a chimney during summer weather when the building mass is heated from the daytime sun. In order for a fully bounded court to function as an efficient source of natural ventilation, the bottom of the court must have a source of fresh air (similar to a chimney). This source of fresh air is supplied through the required opening of 10 square feet (0.93 m^2) connected directly to a street or yard. The requirements of this section are not applicable if artificial lighting and ventilation are provided for spaces facing the court in accordance with Sections 1203.1 and 1206.1.

1206.3.3 Court drainage. The bottom of every *court* shall be properly graded and drained to a public sewer or other *approved* disposal system complying with the *International Plumbing Code*.

❖ A court is an inherent water trap. A court that is not both graded and drained will accumulate water and remain in a saturated condition, which will promote an insanitary condition, including odors. Stagnant water is often a breeding ground for disease-carrying insects. Based on the design and nature of the soil after construction, paving the court may be the best solution to eliminate a problem.

SECTION 1207
SOUND TRANSMISSION

1207.1 Scope. This section shall apply to common interior walls, partitions and floor/ceiling assemblies between adjacent *dwelling units* and *sleeping units* or between *dwelling units* and *sleeping units* and adjacent public areas such as halls, *corridors*, *stairways* or *service areas*.

❖ Since noise transmission can be quantified and affects the quality of life, the code incorporates regulations that address noise transmission in multiple-family residential construction, wherein the occupants may have no control over noise. The regulated components of construction are those through which noise is primarily transmitted.

1207.2 Air-borne sound. Walls, partitions and floor/ceiling assemblies separating *dwelling units* and *sleeping units* from

INTERNATIONAL CODE COUNCIL®
Copyright © 2015 ICC. ALL RIGHTS RESERVED. Accessed by David Dammon on Jun 21, 2017 12:30:52 PM pursuant to License Agreement with ICC. No further reproduction or distribution authorized. ANY UNAUTHORIZED REPRODUCTION OR DISTRIBUTION IS A VIOLATION OF THE FEDERAL COPYRIGHT ACT AND THE LICENSE AGREEMENT, AND SUBJECT TO CIVIL AND CRIMINAL PENALTIES THEREUNDER.

each other or from public or service areas shall have a sound transmission class of not less than 50, or not less than 45 if field tested, for air-borne noise when tested in accordance with ASTM E90. Penetrations or openings in construction assemblies for piping; electrical devices; recessed cabinets; bathtubs; soffits; or heating, ventilating or exhaust ducts shall be sealed, lined, insulated or otherwise treated to maintain the required ratings. This requirement shall not apply to entrance doors; however, such doors shall be tight fitting to the frame and sill.

❖ The code requires common walls between dwelling units and sleeping units, and between dwelling units and sleeping units and public areas to have a minimum sound transmission class (STC) of 50. The STC is a measure of an assembly's ability to resist sound transmission. The higher the number (rating), the higher the resistance (less sound transmission). Many standard architectural wall construction assemblies have been tested for sound transmission ratings. Construction specifications will usually say if they have been tested. Air-borne noise originates in the air, such as voice or music. For structure-borne sound, see the commentary to Section 1207.3.

As a rule, vertical assemblies meeting the requirements of this section consist of double walls or walls containing insulation similar to exterior walls.

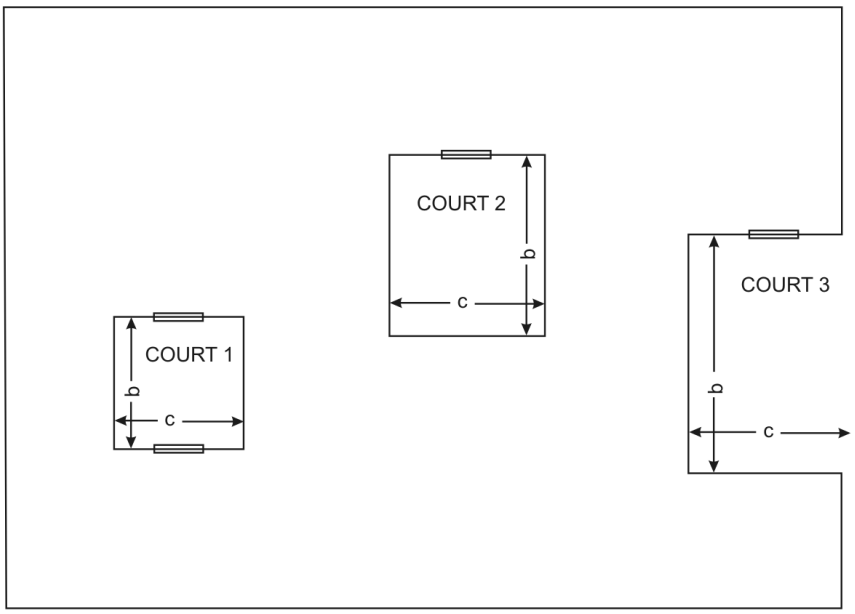

Number of Stories	Court 1		Court 2		Court 3	
	Width-b	Length-c	Width-b	Length-c	Width-b	Length-c
1 or 2	6	10	3	10	3	NA
3	7	12	4	12	4	NA
4	8	14	5	14	5	NA
5	9	16	6	16	6	NA
6	10	18	7	18	7	NA
7	11	20	8	20	8	NA
8	12	22	9	22	9	NA
9	13	24	10	24	10	NA
10	14	26	11	26	11	NA
11	15	28	12	28	12	NA
12	16	30	13	30	13	NA
13	17	32	14	32	14	NA
14	18	34	15	34	15	NA
15 or more	18	34	15	34	15	NA

N/A: Not regulated by Section 1206.3.
Note: Dimensions in feet.
For SI: 1 foot = 304.8 mm.

Figure 1206.3
DIMENSIONS OF COURTS

INTERNATIONAL CODE COUNCIL®
Copyright © 2015 ICC. ALL RIGHTS RESERVED. Accessed by David Dammon on Jun 21, 2017 12:30:52 PM pursuant to License Agreement with ICC. No further reproduction or distribution authorized. ANY UNAUTHORIZED REPRODUCTION OR DISTRIBUTION IS A VIOLATION OF THE FEDERAL COPYRIGHT ACT AND THE LICENSE AGREEMENT, AND SUBJECT TO CIVIL AND CRIMINAL PENALTIES THEREUNDER.

1207.2.1 Masonry. The sound transmission class of concrete masonry and clay masonry assemblies shall be calculated in accordance with TMS 0302 or determined through testing in accordance with ASTM E90.

❖ The STC values found in the referenced standard TMS 0302 are derived from laboratory testing of masonry assemblies in accordance with ASTM E90. This reference provides a quicker alternative for compliance with the STC ratings required by Section 1207.2 of the code for masonry and clay masonry assemblies.

1207.3 Structure-borne sound. Floor/ceiling assemblies between *dwelling units* and *sleeping units* or between a *dwelling unit* or *sleeping unit* and a public or service area within the structure shall have an impact insulation class rating of not less than 50, or not less than 45 if field tested, when tested in accordance with ASTM E492.

❖ The impact insulation class (IIC) is a measure of an assembly's ability to resist sound transmission. The higher the number (rating), the higher the resistance (less sound transmission). Floors between dwelling units and sleeping units and those floors between dwelling units and sleeping units and public areas are required to have a minimum IIC rating of 50.

Usually, floor assemblies that are carpeted meet the minimum requirement for an IIC rating of 50. Other areas with hard-surfaced finishes may require additional treatment or insulation to comply with these requirements.

There are various resource documents containing STC ratings and IIC ratings, including the following: GA 600, *Fire Resistance Design Manual*, by the Gypsum Association; NCMA TEK 69A, *New Data on Sound Reduction with Concrete Masonry Walls*, by the National Concrete Masonry Association; and BIA TN 5A, *Sound Insulation—Clay Masonry Walls*, by the Brick Institute of America. These or any other similar sources can be submitted as a basis for approval once it is demonstrated to the building official that the data are based on ASTM E90 and E492.

SECTION 1208
INTERIOR SPACE DIMENSIONS

1208.1 Minimum room widths. *Habitable spaces*, other than a kitchen, shall be not less than 7 feet (2134 mm) in any plan dimension. Kitchens shall have a clear passageway of not less than 3 feet (914 mm) between counter fronts and appliances or counter fronts and walls.

❖ This provision specifies the minimum horizontal dimensions required for all habitable rooms. Any room that functions as a living room, bedroom, dining room or any other similar habitable room must be sized such that a cylinder with a diameter of 7 feet (2134 mm) may be placed in it. Only kitchens are exempt from this requirement. This code provision allows the circulation of ventilation air through the space while maintaining reasonably sized living quarters for the occupants. "Habitable space" is defined in Chapter 2. Smaller spaces, such as bathrooms and hallways, do not need to meet the minimum room width requirements because they are not considered habitable rooms.

1208.2 Minimum ceiling heights. Occupiable spaces, *habitable spaces* and *corridors* shall have a ceiling height of not less than 7 feet 6 inches (2286 mm). Bathrooms, toilet rooms, kitchens, storage rooms and laundry rooms shall have a ceiling height of not less than 7 feet (2134 mm).

Exceptions:

1. In one- and two-family *dwellings*, beams or girders spaced not less than 4 feet (1219 mm) on center shall be permitted to project not more than 6 inches (152 mm) below the required ceiling height.
2. If any room in a building has a sloped ceiling, the prescribed ceiling height for the room is required in one-half the area thereof. Any portion of the room measuring less than 5 feet (1524 mm) from the finished floor to the ceiling shall not be included in any computation of the minimum area thereof.
3. The height of *mezzanines* and spaces below *mezzanines* shall be in accordance with Section 505.1.
4. Corridors contained within a *dwelling unit* or *sleeping unit* in a Group R occupancy shall have a ceiling height of not less than 7 feet (2134 mm).

❖ Occupiable spaces or rooms (including habitable spaces) are required to have a specific minimum ceiling height. Bathrooms, toilet rooms, kitchens, storage rooms and laundry rooms are permitted to have a lower minimum ceiling height in accordance with this section. Ceiling height is one of the variables that affects the circulation of air in a space. Additionally, there is a psychological need for spaciousness in a living space or in one of the accessory spaces.

Commentary Figure 1208.2(1) illustrates the application of Exception 1 for beams and girders spaced

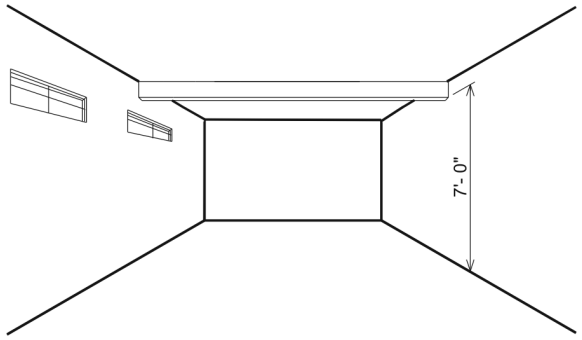

For SI: 1 foot = 304.8 mm.

Figure 1208.2(1)
MINIMUM CEILING HEIGHT—
ALLOWABLE PROJECTIONS IN
ONE- AND TWO-FAMILY DWELLINGS

INTERNATIONAL CODE COUNCIL®
Copyright © 2015 ICC. ALL RIGHTS RESERVED. Accessed by David Dammon on Jun 21, 2017 12:30:52 PM pursuant to License Agreement with ICC. No further reproduction or distribution authorized. ANY UNAUTHORIZED REPRODUCTION OR DISTRIBUTION IS A VIOLATION OF THE FEDERAL COPYRIGHT ACT AND THE LICENSE AGREEMENT, AND SUBJECT TO CIVIL AND CRIMINAL PENALTIES THEREUNDER.

no more than 4 feet (1219 mm) on center in one- and two-family dwellings.

Commentary Figure 1208.2(2) illustrates the application of Exception 2. Rooms with sloped ceilings are required to meet two distinct conditions. First, the area of the room having a floor-to-ceiling clearance of less than 5 feet (1524 mm) does not contribute to the minimum floor area required by Section 1208.3. Second, at least one-half of the actual total area of the room must meet the minimum ceiling height requirements of Section 1208.2 [see Commentary Figure 1208.2(2)].

Exception 3 is consistent with Section 505.1, which establishes the minimum ceiling height for mezzanines at 7 feet (2134 mm). In accordance with Section 505.2, mezzanines cannot exceed one-third of the area of the room in which they are located.

Finally, Exception 4 allows corridors in Group R occupancies to be 7 feet (2134 mm). This is consistent with the IRC.

1208.2.1 Furred ceiling. Any room with a furred ceiling shall be required to have the minimum ceiling height in two-thirds of the area thereof, but in no case shall the height of the furred ceiling be less than 7 feet (2134 mm).

❖ This section only applies to rooms required to have a ceiling height of no less than 7 feet, 6 inches (2286 mm). In Commentary Figure 1208.2.1, floor area A_1 must be greater than or equal to two-thirds (length times width). Note that only those ceiling heights furred to a height of less than 7 feet, 6 inches (2286 mm) affect area A_1.

1208.3 Room area. Every *dwelling unit* shall have no fewer than one room that shall have not less than 120 square feet (13.9 m^2) of *net floor area*. Other habitable rooms shall have a *net floor area* of not less than 70 square feet (6.5 m^2).

Exception: Kitchens are not required to be of a minimum floor area.

❖ This section applies only to dwelling units. A minimum area of 120 square feet (13.9 m^2) for at least one room of each dwelling unit and a minimum of 70 square feet (6.5 m^2) for all other habitable rooms, except kitchens, are the minimum standards for habitable rooms. These minimums reflect the physiological requirements of light and ventilation and also preserve the individual's perception of space and the elements necessary for a psychological sense of well-being. The code does not regulate the minimum area of rooms and spaces in other than residential occupancies.

The exception permits smaller kitchens in dwelling units built under the code. There is no minimum area or dimension required for kitchens.

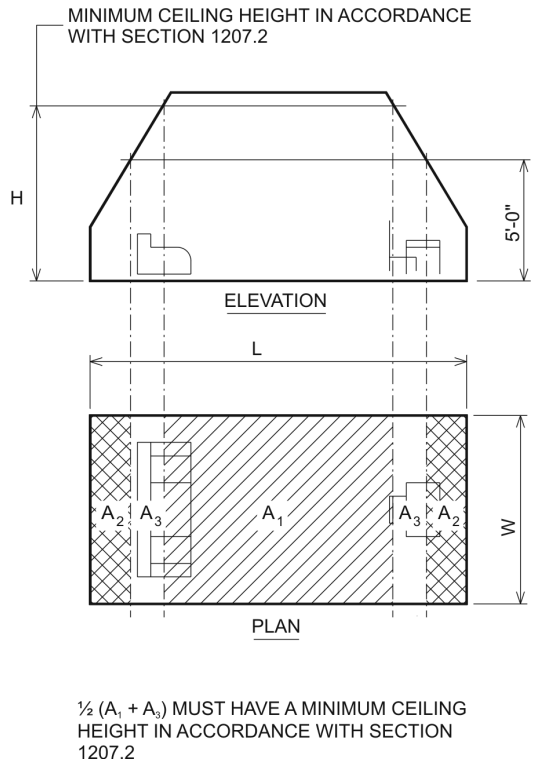

For SI: 1 foot = 304.8 mm.

Figure 1208.2(2)
SLOPED CEILING HEIGHTS

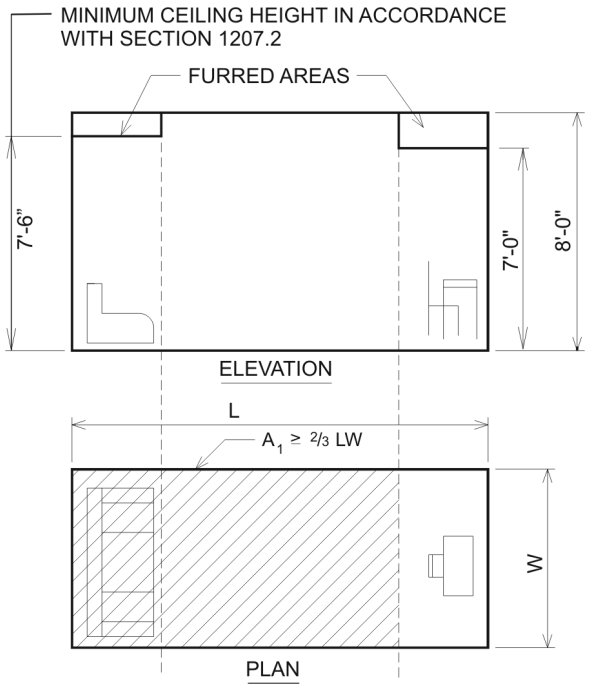

For SI: 1 inch = 25.4 mm, 1 foot = 304.8 mm.

Figure 1208.2.1
FURRED CEILING HEIGHTS

INTERNATIONAL CODE COUNCIL®
Copyright © 2015 ICC. ALL RIGHTS RESERVED. Accessed by David Dammon on Jun 21, 2017 12:30:52 PM pursuant to License Agreement with ICC. No further reproduction or distribution authorized. ANY UNAUTHORIZED REPRODUCTION OR DISTRIBUTION IS A VIOLATION OF THE FEDERAL COPYRIGHT ACT AND THE LICENSE AGREEMENT, AND SUBJECT TO CIVIL AND CRIMINAL PENALTIES THEREUNDER.

1208.4 Efficiency dwelling units. An efficiency living unit shall conform to the requirements of the code except as modified herein:

1. The unit shall have a living room of not less than 220 square feet (20.4 m^2) of floor area. An additional 100 square feet (9.3 m^2) of floor area shall be provided for each occupant of such unit in excess of two.
2. The unit shall be provided with a separate closet.
3. The unit shall be provided with a kitchen sink, cooking appliance and refrigeration facilities, each having a clear working space of not less than 30 inches (762 mm) in front. Light and *ventilation* conforming to this code shall be provided.
4. The unit shall be provided with a separate bathroom containing a water closet, lavatory and bathtub or shower.

❖ Efficiency units are very small apartments consisting of one or two rooms and a bathroom. Efficiency units that comply with this section are not required to comply with the minimum area requirements in Section 1208.3. However, the total allowable number of occupants in the dwelling is limited, depending on the area of the unit in accordance with Item 1. The purpose of both efficiency units and this section is to provide for combined use of spaces in an economical or "efficient" manner without jeopardizing health or comfort. This is possible because of the occupant limitation.

In addition to the living room, the apartment must have a separate closet and bathroom. There are no minimum area requirements for these spaces; however, the fixture clearances in the bathroom must be as required in the IPC. There is not a requirement for a separate kitchen, but if the required sink and appliances are located in the living room, they cannot encroach on the required minimum floor space.

SECTION 1209
ACCESS TO UNOCCUPIED SPACES

1209.1 Crawl spaces. Crawl spaces shall be provided with not fewer than one access opening that shall be not less than 18 inches by 24 inches (457 mm by 610 mm).

❖ The requirements of this section establish 18 inches by 24 inches (457 mm by 610 mm) as the minimum size opening for crawl spaces. If access is through a wall, the 18-inch (457 mm) minimum would be the height and the 24-inch (610 mm) minimum would be the width.

Items such as plumbing and wiring installations pass through crawl spaces at times. Required initial and periodic inspections, and repairs cannot be carried out without access to such crawl spaces.

1209.2 Attic spaces. An opening not less than 20 inches by 30 inches (559 mm by 762 mm) shall be provided to any *attic* area having a clear height of over 30 inches (762 mm). Clear headroom of not less than 30 inches (762 mm) shall be provided in the *attic* space at or above the access opening.

❖ Access to the attic provides a convenient and nondestructive means for fire department personnel to visually check for an attic fire and, if need be, gain entry to the concealed spaces and suppress a fire. Access to attic spaces can be provided through the ceiling within each compartment that is created by draftstops or through openings within the draftstops themselves. Openings located within the draftstop are required to be self-closing and the opening protective must provide structural fire integrity (the ability to remain in place) similar to the draftstop. Access is required when the attic space has a clear height greater than 30 inches (762 mm) measured from the top of the ceiling joists (or top of the floor sheathing, if present) to the underside of the roof rafters.

1209.3 Mechanical appliances. Access to mechanical appliances installed in under-floor areas, in *attic* spaces and on roofs or elevated structures shall be in accordance with the *International Mechanical Code*.

❖ Access to mechanical appliances is needed to maintain and service the equipment. See Section 306 in the IMC for detailed requirements.

SECTION 1210
TOILET AND BATHROOM REQUIREMENTS

[P] 1210.1 Required fixtures. The number and type of plumbing fixtures provided in any occupancy shall comply with Chapter 29.

❖ The minimum number of plumbing fixtures depends upon the occupant load and use of the building. Chapter 29 contains a table for determination of the number of facilities.

1210.2 Finish materials. Walls, floors and partitions in toilet and bathrooms shall comply with Sections 1210.2.1 through 1210.2.4.

1210.2.1 Floors and wall bases. In other than *dwelling units*, toilet, bathing and shower room floor finish materials shall have a smooth, hard, nonabsorbent surface. The intersections of such floors with walls shall have a smooth, hard, nonabsorbent vertical base that extends upward onto the walls not less than 4 inches (102 mm).

❖ The purpose of this requirement is to provide nonabsorbent surfaces that can be maintained in a sanitary condition. The 4-inch (152 mm) extension of the surface up the surrounding walls is so that the wall will not absorb moisture during cleaning and, thus, will be left in a clean condition. This provision does not require that the same material that is on the floor be extended up the wall. As long as the wall material is smooth, hard and nonabsorbent, and there is adequate seal between the materials to restrict moisture from getting behind the surface material and into the wall construction, the intent of the requirement should be met.

INTERNATIONAL CODE COUNCIL®
Copyright © 2015 ICC. ALL RIGHTS RESERVED. Accessed by David Dammon on Jun 21, 2017 12:30:52 PM pursuant to License Agreement with ICC. No further reproduction or distribution authorized. ANY UNAUTHORIZED REPRODUCTION OR DISTRIBUTION IS A VIOLATION OF THE FEDERAL COPYRIGHT ACT AND THE LICENSE AGREEMENT, AND SUBJECT TO CIVIL AND CRIMINAL PENALTIES THEREUNDER.

1210.2.2 Walls and partitions. Walls and partitions within 2 feet (610 mm) of service sinks, urinals and water closets shall have a smooth, hard, nonabsorbent surface, to a height of not less than 4 feet (1219 mm) above the floor, and except for structural elements, the materials used in such walls shall be of a type that is not adversely affected by moisture.

Exception: This section does not apply to the following buildings and spaces:

1. Dwelling units and sleeping units.
2. Toilet rooms that are not accessible to the public and that have not more than one water closet.

Accessories such as grab bars, towel bars, paper dispensers and soap dishes, provided on or within walls, shall be installed and sealed to protect structural elements from moisture.

❖ The walls and partitions near urinals and water closets must have the surface specified in this section since they are subject to moisture. Exception 1 recognizes that water closet facilities in dwelling units and sleeping units are not exposed to as much use as those that serve the public and, thus, are easier to maintain. Exception 2 acknowledges that toilet fixtures that do not serve the public are also subject to less use. This section requires protection of the structural supports for accessories so that they will maintain their strength.

1210.2.3 Showers. Shower compartments and walls above bathtubs with installed shower heads shall be finished with a smooth, nonabsorbent surface to a height not less than 72 inches (1829 mm) above the drain inlet.

❖ The 72-inch (1778 mm) requirement in this section is based on the height of the shower compartment and walls that are exposed to significant moisture that would cause the surface to become insanitary over a long period of time. This height is consistent with the IRC.

1210.2.4 Waterproof joints. Built-in tubs with showers shall have waterproof joints between the tub and adjacent wall.

❖ The joint between the tub and wall must be sealed to prevent moisture from getting into the supporting floor and framing. Waterproof joints are also needed to keep the concealed area of the wall in a sanitary condition.

[P] 1210.3 Privacy. Privacy at water closets and urinals shall be provided in accordance with Sections 1210.3.1 and 1210.3.2.

❖ For most people, a certain amount of privacy in public facilities is desirable. For some, it is imperative. This section provides requirements for water-closet compartments and urinal dividers.

[P] 1210.3.1 Water closet compartment. Each water closet utilized by the public or employees shall occupy a separate compartment with walls or partitions and a door enclosing the fixtures to ensure privacy.

Exceptions:

1. Water closet compartments shall not be required in a single-occupant toilet room with a lockable door.
2. Toilet rooms located in child day care facilities and containing two or more water closets shall be permitted to have one water closet without an enclosing compartment.
3. This provision is not applicable to toilet areas located within Group I-3 occupancy housing areas.

❖ Psychological studies have proven that lack of privacy places a burden on an individual's physical ability to use bathroom facilities. This is caused by uneasiness, inhibition or indignation. A partitioned compartment can provide the necessary privacy. Also, a single-occupant toilet room with a lockable door can provide the required privacy as stated in Exception 1. Exception 2, allowing an unenclosed water closet in a child care facility, recognizes the need for people to be able to assist children. Exception 3 was added in the 2009 code edition to allow for security personal to better monitor for illicit activities of inmates in Group I-3 occupancies.

[P] 1210.3.2 Urinal partitions. Each urinal utilized by the public or employees shall occupy a separate area with walls or partitions to provide privacy. The walls or partitions shall begin at a height not more than 12 inches (305 mm) from and extend not less than 60 inches (1524 mm) above the finished floor surface. The walls or partitions shall extend from the wall surface at each side of the urinal not less than 18 inches (457 mm) or to a point not less than 6 inches (152 mm) beyond the outermost front lip of the urinal measured from the finished backwall surface, whichever is greater.

Exceptions:

1. Urinal partitions shall not be required in a single-occupant or family or assisted-use toilet room with a lockable door.
2. Toilet rooms located in child day care facilities and containing two or more urinals shall be permitted to have one urinal without partitions.

❖ Users of urinals in a public toilet room need to be afforded a level of privacy for the reasons stated in the commentary for Section 1210.3.1. In addition, partitions aid in protecting adjacent users from splash. Because of the likelihood of splashing, the partition surfaces must be designed so that they can be easily cleaned and sanitized during normal restroom maintenance. Exception 1 assumes that in a single-occupant toilet room or a family/assisted-use toilet room privacy is afforded by locking the door. Exception 2 allows day care and child care centers to have one urinal out of two or more urinals in a toilet room to be

INTERNATIONAL CODE COUNCIL®
Copyright © 2015 ICC. ALL RIGHTS RESERVED. Accessed by David Dammon on Jun 21, 2017 12:30:52 PM pursuant to License Agreement with ICC. No further reproduction or distribution authorized. ANY UNAUTHORIZED REPRODUCTION OR DISTRIBUTION IS A VIOLATION OF THE FEDERAL COPYRIGHT ACT AND THE LICENSE AGREEMENT, AND SUBJECT TO CIVIL AND CRIMINAL PENALTIES THEREUNDER.

without partitions. This affords care providers the ability to assist or supervise certain children with use of the urinal (e.g., those just learning to use a urinal or those with difficult clothing arrangements). Where urinal partitions are provided, occupants are more inclined to use a urinal rather than a water closet for urination. This will result in less soiling of water closet seats and surrounding surfaces. Note that where partitions are used, the distance from the center of the urinal to the face of the partition must be at least 15 inches (381 mm).The thickness of partitions cannot encroach into the required spaces for fixtures.

Bibliography

The following resource materials were used in the preparation of the commentary for this chapter of the code.

BIA TN 5A-83, *Sound Insulation—Clay Masonry Walls*. Reston, VA: Brick Institute of America, 1983.

FEMA FIA-TB 1, *Openings in Foundation Walls for Buildings Located in Special Flood Hazard Areas*. Washington, DC: Federal Emergency Management Agency, 2008.

GA 600-06, *Fire Resistance Design Manual*. Evanston, IL: Gypsum Association, 2006.

NCMA TEK 69A-92, *New Data on Sound Reduction with Concrete Masonry Walls*. Herndon, VA: National Concrete Masonry Association, 1992.

INTERNATIONAL CODE COUNCIL®
Copyright © 2015 ICC. ALL RIGHTS RESERVED. Accessed by David Dammon on Jun 21, 2017 12:30:52 PM pursuant to License Agreement with ICC. No further reproduction or distribution authorized. ANY UNAUTHORIZED REPRODUCTION OR DISTRIBUTION IS A VIOLATION OF THE FEDERAL COPYRIGHT ACT AND THE LICENSE AGREEMENT, AND SUBJECT TO CIVIL AND CRIMINAL PENALTIES THEREUNDER.

INTERNATIONAL CODE COUNCIL®
Copyright © 2015 ICC. ALL RIGHTS RESERVED. Accessed by David Dammon on Jun 21, 2017 12:30:52 PM pursuant to License Agreement with ICC. No further reproduction or distribution authorized. ANY UNAUTHORIZED REPRODUCTION OR DISTRIBUTION IS A VIOLATION OF THE FEDERAL COPYRIGHT ACT AND THE LICENSE AGREEMENT, AND SUBJECT TO CIVIL AND CRIMINAL PENALTIES THEREUNDER.

Chapter 13: Energy Efficiency

General Comments

Chapter 13 provides for the design and construction of energy-efficient buildings and structures or portions thereof intended primarily for human occupancy by direct reference to the *International Energy Conservation Code*® (IECC®).

Purpose

The purpose of Chapter 13 is to provide minimum design requirements that will promote efficient utilization of energy in building construction. The requirements are directed toward the design of building envelopes with adequate thermal resistance and low air leakage, and toward the design and selection of mechanical, service water heating, electrical and illumination systems that will promote the effective use of depletable energy resources and encourage the use of nondepletable energy resources.

SECTION 1301 GENERAL

[E] 1301.1 Scope. This chapter governs the design and construction of buildings for energy efficiency.

❖ The scope of Chapter 13 is applicable to all buildings and structures, as well as their components and systems that are regulated by the IECC. The IECC thereby addresses the design of energy-efficient building envelopes, and the selection and installation of energy-efficient mechanical, service-water heating, electrical distribution and illumination systems and equipment for the effective use of energy in both residential and commercial buildings.

[E] 1301.1.1 Criteria. Buildings shall be designed and constructed in accordance with the *International Energy Conservation Code*.

❖ The energy conservation requirements of this chapter rely exclusively on the technical provisions of the IECC. Compliance with the IECC is the sole means of demonstrating compliance with the technical provisions of Chapter 13.

The climate basis for the 2015 IECC is derived from geographical zones that are based on multiple climate variables (so that both heating and cooling considerations are accommodated). Further, within the U.S., the zones are completely defined by political boundaries (county lines) so that code users will never have to choose from disparate climate data sources to determine local requirements. The climate zones were developed in an open process, in consultation with relevant standards committees of the American Society of Heating, Refrigerating and Air-conditioning Engineers (ASHRAE). The zones are designed to be an appropriate foundation for both residential and commercial codes, and may be useful in other contexts as well.

The IECC is designed to increase consumer awareness of a home's energy features by making baseline requirements uniform within a jurisdiction and by requiring a disclosure of each house's *R*-values, *U*-factors and heating, ventilating and air-conditioning (HVAC) efficiencies.

The IECC is designed, to the extent practicable, to incorporate aspects of the latest building science regarding energy efficiency and its effects on moisture control and durability. For example, the IECC contains provisions related to unvented crawl spaces, modifies vapor retarder requirements, requires sealing of air handlers in garages and limits worst-case glazing *U*-factors in locations where moisture condensation can be a serious problem.

Bibliography

The following resource material was used in the preparation of the commentary for this chapter of the code.

IECC-15, *International Energy Conservation Code*. Washington, DC: International Code Council, 2014.

INTERNATIONAL CODE COUNCIL®
Copyright © 2015 ICC. ALL RIGHTS RESERVED. Accessed by David Dammon on Jun 21, 2017 12:30:52 PM pursuant to License Agreement with ICC. No further reproduction or distribution authorized. ANY UNAUTHORIZED REPRODUCTION OR DISTRIBUTION IS A VIOLATION OF THE FEDERAL COPYRIGHT ACT AND THE LICENSE AGREEMENT, AND SUBJECT TO CIVIL AND CRIMINAL PENALTIES THEREUNDER.

INTERNATIONAL CODE COUNCIL®
Copyright © 2015 ICC. ALL RIGHTS RESERVED. Accessed by David Dammon on Jun 21, 2017 12:30:52 PM pursuant to License Agreement with ICC. No further reproduction or distribution authorized. ANY UNAUTHORIZED REPRODUCTION OR DISTRIBUTION IS A VIOLATION OF THE FEDERAL COPYRIGHT ACT AND THE LICENSE AGREEMENT, AND SUBJECT TO CIVIL AND CRIMINAL PENALTIES THEREUNDER.

Chapter 14: Exterior Walls

General Comments

Chapter 14 provides requirements for the materials and construction creating finished exterior surfaces of a building or structure. The chapter provides requirements resulting in minimum permitted weather resistance and fire performance.

In the past, there were relatively few materials available for application to exterior walls for protection against weather and exposure to other outside elements. With the development of new methods and materials over the years, architects and builders began to use a variety of materials for different appearances, improved insulating quality, sound transmission control and fire resistance. The code has developed prescriptive and performance regulations to control these aspects and the types and thickness of exterior wall coverings.

Purpose

The purpose of Chapter 14 is to provide the minimum requirements for exterior wall coverings. This chapter also includes the minimum regulations for materials, and the minimum thicknesses and installation requirements for exterior weather coverings and various wall veneers. Limitations on the use of combustible exterior wall finishes are also included.

SECTION 1401 GENERAL

1401.1 Scope. The provisions of this chapter shall establish the minimum requirements for exterior walls; *exterior wall* coverings; *exterior wall* openings; exterior windows and doors; architectural *trim*; balconies and similar projections; and bay and oriel windows.

❖ The requirements for exterior wall construction, including components such as openings, doors, windows, trim and balconies, are specified herein. Also specified are provisions intended to prevent damage to a building from the effects of weather and from moisture intrusion into or through the exterior walls.

SECTION 1402 DEFINITIONS

1402.1 Definitions. The following terms are defined in Chapter 2:

ADHERED MASONRY VENEER.

ANCHORED MASONRY VENEER.

BACKING.

EXTERIOR INSULATION AND FINISH SYSTEMS (EIFS).

EXTERIOR INSULATION AND FINISH SYSTEMS (EIFS) WITH DRAINAGE.

EXTERIOR WALL.

EXTERIOR WALL COVERING.

EXTERIOR WALL ENVELOPE.

FENESTRATION.

FIBER-CEMENT SIDING.

HIGH-PRESSURE DECORATIVE EXTERIOR-GRADE COMPACT LAMINATE (HPL).

HIGH-PRESSURE DECORATIVE EXTERIOR-GRADE COMPACT LAMINATE (HPL) SYSTEM.

METAL COMPOSITE MATERIAL (MCM).

METAL COMPOSITE MATERIAL (MCM) SYSTEM.

POLYPROPYLENE SIDING.

PORCELAIN TILE.

VENEER.

VINYL SIDING.

WATER-RESISTIVE BARRIER.

❖ Definitions facilitate the understanding of code provisions and minimize potential confusion. To that end, this section lists definitions of terms associated with roof assemblies, roof coverings and rooftop structures. Note that these definitions are found in Chapter 2. The use and application of defined terms, as well as undefined terms, are set forth in Section 201.

SECTION 1403 PERFORMANCE REQUIREMENTS

1403.1 General. The provisions of this section shall apply to exterior walls, wall coverings and components thereof.

❖ The exterior walls of buildings provide support for the floor and roof systems; act as barriers against the outside environment; reduce heat loss from the interior and, in some instances, provide the sole resistance to such destructive forces as earthquakes and

INTERNATIONAL CODE COUNCIL®
Copyright © 2015 ICC. ALL RIGHTS RESERVED. Accessed by David Dammon on Jun 21, 2017 12:30:52 PM pursuant to License Agreement with ICC. No further reproduction or distribution authorized. ANY UNAUTHORIZED REPRODUCTION OR DISTRIBUTION IS A VIOLATION OF THE FEDERAL COPYRIGHT ACT AND THE LICENSE AGREEMENT, AND SUBJECT TO CIVIL AND CRIMINAL PENALTIES THEREUNDER.

floods. This section provides references to other applicable sections of the code that are intended to detail specific requirements to accomplish these objectives. Additionally, this chapter contains detailed requirements related to the performance of exterior wall coverings and the exterior wall envelope.

1403.2 Weather protection. Exterior walls shall provide the building with a weather-resistant *exterior wall envelope*. The *exterior wall envelope* shall include flashing, as described in Section 1405.4. The *exterior wall envelope* shall be designed and constructed in such a manner as to prevent the accumulation of water within the wall assembly by providing a *water-resistive barrier* behind the exterior veneer, as described in Section 1404.2, and a means for draining water that enters the assembly to the exterior. Protection against condensation in the *exterior wall* assembly shall be provided in accordance with Section 1405.3.

Exceptions:

1. A weather-resistant *exterior wall envelope* shall not be required over concrete or masonry walls designed in accordance with Chapters 19 and 21, respectively.
2. Compliance with the requirements for a means of drainage, and the requirements of Sections 1404.2 and 1405.4, shall not be required for an *exterior wall envelope* that has been demonstrated through testing to resist wind-driven rain, including joints, penetrations and intersections with dissimilar materials, in accordance with ASTM E331 under the following conditions:
   2.1. *Exterior wall envelope* test assemblies shall include at least one opening, one control joint, one wall/eave interface and one wall sill. Tested openings and penetrations shall be representative of the intended end-use configuration.
   2.2. *Exterior wall envelope* test assemblies shall be at least 4 feet by 8 feet (1219 mm by 2438 mm) in size.
   2.3. *Exterior wall envelope* assemblies shall be tested at a minimum differential pressure of 6.24 pounds per square foot (psf) (0.297 kN/m^2).
   2.4. *Exterior wall envelope* assemblies shall be subjected to a minimum test exposure duration of 2 hours.

   The *exterior wall envelope* design shall be considered to resist wind-driven rain where the results of testing indicate that water did not penetrate control joints in the *exterior wall* envelope, joints at the perimeter of openings or intersections of terminations with dissimilar materials.
3. Exterior insulation and finish systems (EIFS) complying with Section 1408.4.1.

❖ All exterior walls of buildings must be protected against damage caused by precipitation, wind and other weather conditions.

The main text of this section prescribes three basic components of a weather-resistive exterior wall assembly: a water-resistive barrier installed over the building substrate; flashings at penetrations and terminations of the exterior wall finish; and a means of draining moisture that may penetrate behind the finish back to the exterior.

Section 1404.2 is referenced for the requirements of the water-resistive barrier and Section 1405.3 is referenced for requirements for the flashings (see commentary, Sections 1404.2 and 1405.3). This section does not, however, contain a prescriptive requirement for the means of drainage to be provided. The method to provide the means of drainage is a performance criterion and must be evaluated based on its ability to allow moisture behind the exterior wall covering to drain back to the exterior. This may be as complicated as a rain-screen, pressure-equalized type of exterior assembly or as simple as providing discontinuities or gaps between the surface of the substrate and the back side of the finish, such as through the use of noncorrodible furring.

For common types of construction, such as vinyl siding or brick veneer, the typical practice of installing building paper and weeps will comply with the intent of this section. Discontinuities between the exterior covering and substrate must be such that they encourage the flow of moisture via gravity or capillary action to a location where the water may exit, such as at flashings and weeps. The absence of a means of drainage may result in the accumulation of moisture that becomes trapped between the finish and the substrate. Over time, extended exposure to moisture may contribute to the degradation of the finish, building substrate or even the structural elements of the exterior wall.

Exception 1 states that where the exterior wall envelope is designed and constructed of concrete or masonry materials in accordance with the requirements of Chapters 19 and 21, respectively, the water-resistive barrier and means of drainage may be omitted. This is because the penetration of moisture behind the exterior wall finish is not detrimental to concrete and masonry substrates.

Exception 2 permits the use of exterior wall finishes that do not meet the prescriptive requirements of Section 1403.2, provided that the system, with penetration details, is tested for wind-driven rain resistance. The test specimen(s) must incorporate those penetration and termination details intended for use and the system will be limited to use with those details that successfully pass the test. The minimum panel size specified represents that which is commonly used in testing to ASTM E331; however, this does not preclude the testing of larger panels if desired. The modifications to the test pressure differential and test duration are intended to represent more closely conditions that will be encountered in service. The pass/fail criteria is based upon the visual observation of moisture on the rear side of the wall

INTERNATIONAL CODE COUNCIL®
Copyright © 2015 ICC. ALL RIGHTS RESERVED. Accessed by David Dammon on Jun 21, 2017 12:30:52 PM pursuant to License Agreement with ICC. No further reproduction or distribution authorized. ANY UNAUTHORIZED REPRODUCTION OR DISTRIBUTION IS A VIOLATION OF THE FEDERAL COPYRIGHT ACT AND THE LICENSE AGREEMENT, AND SUBJECT TO CIVIL AND CRIMINAL PENALTIES THEREUNDER.

assembly. In cavity-type assemblies, such as stud walls, this requires the observation of locations such as the rear face of the exterior wall sheathing and wall framing members for the presence of moisture. The test method is intended to assess the performance of the method(s) intended for use in sealing the interface between the termination of the exterior wall finish and the penetration items or abutting construction. The method is not necessarily intended to test the performance of the penetrating item.

Exception 3 relates to exterior insulation and finish systems (EIFS) constructed in accordance with Section 1408.2. This material does not have the means for draining water specified in this section.

Walls designed and constructed in accordance with this chapter must also comply with the requirements of the *International Energy Conservation Code*® (IECC®).

[BS] 1403.3 Structural. *Exterior walls*, and the associated openings, shall be designed and constructed to resist safely the superimposed loads required by Chapter 16.

❖ Exterior walls and their associated openings are required to resist all structural loads in accordance with the provisions of Chapter 16. This section is a correlative cross reference to emphasize the applicability of Chapter 16.

1403.4 Fire resistance. *Exterior walls* shall be fire-resistance rated as required by other sections of this code with opening protection as required by Chapter 7.

❖ The required fire-resistance rating of exterior walls is set forth in Tables 601 and 602. Table 602 is applicable to both load-bearing and nonload-bearing walls, since it addresses the prevention of fire spread from one building to an adjacent building. Load-bearing walls must comply with the greater of the requirements in Tables 601 and 602, based on the type of construction of the building. The size of openings in exterior walls is limited to prevent the spread of fire to other buildings. The commentary to Section 705 should also be reviewed when designing exterior walls. Trim on exterior walls is regulated by Section 1406.

The allowable size of openings in exterior walls is tabulated in Table 705.8. Section 715.4 specifies the required fire protection rating for opening protectives when required by Table 705.8. Where a fire-resistance rating is not required for the wall and unprotected openings are allowed, the glazing and the sash or frame may be of any material permitted by the code.

1403.5 Vertical and lateral flame propagation. Exterior walls on buildings of Type I, II, III or IV construction that are greater than 40 feet (12 192 mm) in height above grade plane and contain a combustible *water-resistive barrier* shall be tested in accordance with and comply with the acceptance criteria of NFPA 285. For the purposes of this section, fenestration products and flashing of fenestration products shall not be considered part of the *water-resistive barrier*.

Exceptions:

1. Walls in which the *water-resistive barrier* is the only combustible component and the *exterior wall* has a wall covering of brick, concrete, stone, terra cotta, stucco or steel with minimum thicknesses in accordance with Table 1405.2.
2. Walls in which the *water-resistive barrier* is the only combustible component and the *water-resistive barrier* has a peak heat release rate of less than 150 kW/m^2, a total heat release of less than 20 MJ/m^2 and an effective heat of combustion of less than 18 MJ/kg as determined in accordance with ASTM E1354 and has a flame spread index of 25 or less and a smoke-developed index of 450 or less as determined in accordance with ASTM E84 or UL 723. The ASTM E1354 test shall be conducted on specimens at the thickness intended for use, in the horizontal orientation and at an incident radiant heat flux of 50 kW/m^2.

❖ This section addresses the potential vertical and lateral flame spread that can occur either on or within exterior wall assemblies that contain combustible materials.

Construction practices, such as the addition of combustible water-resistant barriers, allow significant amounts of combustible materials/products (other than foam plastics) to be installed on or in exterior walls. This section requires testing in accordance with NFPA 285 for exterior walls that contain these types of combustible materials. This requirement is already in place for any exterior walls that contain foam plastic insulation or use metal composite material (MCM) exterior veneers. Small-scale testing has shown that these types of materials can provide significant amounts of combustible fuel loading to a wall assembly.

With the advent of newer exterior wall technologies, such as “rainscreen” systems, the openings in the exterior veneer will allow flames and heat to readily impact and ignite the barrier material. Due to the built-in standoffs of these systems, the barrier materials could then exhibit significant vertical or lateral flame propagation.

The testing requirements are applicable for exterior walls on Type I, II, III or IV construction since these types of construction allow either no or limited combustibles in the exterior walls. The 40-foot (12 192 mm) height limit is consistent with the code provisions for combustible exterior wall coverings.

The purpose of the last sentence is to clarify that this section does not apply to fenestration products and the flashing of fenestration products. The intent of this section is to apply to the installation of water-resistive barriers over the opaque section of exterior

INTERNATIONAL CODE COUNCIL®
Copyright © 2015 ICC. ALL RIGHTS RESERVED. Accessed by David Dammon on Jun 21, 2017 12:30:52 PM pursuant to License Agreement with ICC. No further reproduction or distribution authorized. ANY UNAUTHORIZED REPRODUCTION OR DISTRIBUTION IS A VIOLATION OF THE FEDERAL COPYRIGHT ACT AND THE LICENSE AGREEMENT, AND SUBJECT TO CIVIL AND CRIMINAL PENALTIES THEREUNDER.

walls. Where water-resistive barriers are installed in a large quantity, such as over the entire opaque section of exterior walls, they can add a significant fuel load to the exterior wall. The amount of combustible material used in the flashing of fenestration products is insignificant and will contribute very little to the fuel load or spread of fire over an exterior wall.

Exception 1 recognizes that "heavy" types of noncombustible exterior wall veneers can provide protection to the water-resistive barrier, thus eliminating the need for NFPA 285 testing where the water-resistive barrier is the only combustible component in the exterior wall. Table 1405.2, which describes the allowable minimum thicknesses of brick, concrete, stone, terra cotta, stucco or steel, is referenced.

Exception 2 provides an exception for NFPA 285 testing where the water-resistive barrier is the only combustible material in any exterior wall and demonstrates low combustibility characteristics when tested in accordance with ASTM E1354 and ASTM E84. The pass criteria are based upon a proprietary test program that evaluated a number of market-available water-resistive barriers.

[BS] 1403.6 Flood resistance. For buildings in flood hazard areas as established in Section 1612.3, *exterior walls* extending below the elevation required by Section 1612 shall be constructed with flood-damage-resistant materials.

❖ The flood-damage-resistant requirements of this section apply to exterior walls enclosing areas below buildings that are elevated as required by Section 1612. Some of the properties these materials must possess include resistance to prolonged contact with water, the ability to be cleaned and disinfected after the water recedes and negligible loss of physical properties after exposure to water. Additionally, systems must possess structural strength to resist the hydrodynamic and impact forces related to flooding.

[BS] 1403.7 Flood resistance for coastal high-hazard areas and coastal A zones. For buildings in coastal high-hazard areas and coastal A zones as established in Section 1612.3, electrical, mechanical and plumbing system components shall not be mounted on or penetrate through exterior walls that are designed to break away under flood loads.

❖ ASCE 24 and Section 1612.3 require exterior walls that enclose areas below elevated buildings to break away under flood loads in coastal high-hazard areas (Zone V) and Coastal A Zones. This section prohibits the installation of penetrations for electrical, plumbing or mechanical systems through such exterior walls. The breakaway provisions are a method of protecting the remaining building frame and building system. Penetrations through these walls could defeat that purpose or reduce the ability of the breakaway system to perform as designed, thereby increasing flood damage.

SECTION 1404
MATERIALS

1404.1 General. Materials used for the construction of *exterior walls* shall comply with the provisions of this section. Materials not prescribed herein shall be permitted, provided that any such alternative has been *approved*.

❖ Section 1404 contains performance requirements and detailed installation specifications for a number of common materials used in or on exterior walls of buildings. Reference is made to the applicable chapters that contain additional requirements. These chapters should be reviewed by the reader.

It is not the intent of the code to prevent the use of any material that is equivalent in performance to those specified in Section 1404.

1404.2 Water-resistive barrier. Not fewer than one layer of No.15 asphalt felt, complying with ASTM D226 for Type 1 felt or other *approved* materials, shall be attached to the studs or sheathing, with flashing as described in Section 1405.4, in such a manner as to provide a continuous *water-resistive barrier* behind the *exterior wall* veneer.

❖ Many exterior veneers provide weather resistance but may allow either penetration of water through joints or seams or the development of condensation to occur behind the veneer. To increase the weather resistance of the wall, a layer of asphalt felt or other approved material is required to be installed over the wall backing. The felt layer and the flashing provide a water-resistive barrier behind the exterior veneer. The water-resistive membrane must be attached to the studs or sheathing in a way that will not allow the penetration of water as a result of the attachment method.

[BS] 1404.3 Wood. *Exterior walls* of wood construction shall be designed and constructed in accordance with Chapter 23.

❖ Chapter 23 contains general requirements regulating the use of wood in buildings. This section contains specific provisions for the minimum thicknesses of wood siding, wood backing surfaces and hardboard siding, as well as installation and nailing requirements for wood used as weatherboarding or a wall covering.

[BS] 1404.3.1 Basic hardboard. Basic hardboard shall conform to the requirements of AHA A135.4.

❖ Basic hardboard is required to comply with AHA A135.4. This material is not intended for use as exposed siding or as a weather covering, but it is often a component of veneered wall construction.

[BS] 1404.3.2 Hardboard siding. Hardboard siding shall conform to the requirements of AHA A135.6 and, where used structurally, shall be so identified by the *label* of an *approved* agency.

❖ Hardboard conforming to AHA A135.6 is manufactured in panels that are usually 4 feet by 8 feet (1219

INTERNATIONAL CODE COUNCIL®
Copyright © 2015 ICC. ALL RIGHTS RESERVED. Accessed by David Dammon on Jun 21, 2017 12:30:52 PM pursuant to License Agreement with ICC. No further reproduction or distribution authorized. ANY UNAUTHORIZED REPRODUCTION OR DISTRIBUTION IS A VIOLATION OF THE FEDERAL COPYRIGHT ACT AND THE LICENSE AGREEMENT, AND SUBJECT TO CIVIL AND CRIMINAL PENALTIES THEREUNDER.

mm by 2438 mm) in size or in sizes simulating drop siding where the material is to be applied horizontally over structural sheathing. When used as a panel, hardboard siding is applied directly to the wood-framing members as a backing material. Hardboard panels are not adequate to serve as a nailing base (spanning between studs) for coverings. Coverings are fastened directly at framing locations, through the panels.

[BS] 1404.4 Masonry. *Exterior walls* of masonry construction shall be designed and constructed in accordance with this section and Chapter 21. Masonry units, mortar and metal accessories used in anchored and adhered veneer shall meet the physical requirements of Chapter 21. The backing of anchored and adhered veneer shall be of concrete, masonry, steel framing or wood framing. Continuous insulation meeting the applicable requirements of this code shall be permitted between the backing and the masonry veneer.

❖ Chapter 21 contains the general requirements for the use of masonry in buildings. The material classification of masonry in this section includes materials such as concrete masonry; bricks of clay, shale or calcium silicate; clay-tile units; glazed masonry units; terra cotta; natural or cast stone; and ceramic tile. Chapter 21 and this section contain provisions for the minimum thickness of masonry units, limitations on loading, heights of veneers, backing and attachment. The last sentence allows typical continuous insulation, meeting applicable code requirements, between backing and masonry veneer. This insulation could be insulation board or other type of continuous insulations.

[BS] 1404.5 Metal. *Exterior walls* constructed of cold-formed steel, structural steel or aluminum shall be designed in accordance with Chapters 22 and 20, respectively.

❖ Chapters 20 and 22 contain the general requirements for use of metal in buildings. Chapters 20 and 22 as well as this section contain provisions for the minimum thickness of metal weather coverings, and requirements for protection from corrosion, installation and grounding.

[BS] 1404.5.1 Aluminum siding. Aluminum siding shall conform to the requirements of AAMA 1402.

❖ Although aluminum siding is addressed in Chapter 20, it is more specifically addressed here as an exterior wall covering. Aluminum siding is required to conform to the referenced standard. The thickness, installation and protection provisions of this section are also applicable (see commentary, Sections 1405.11, 1405.11.1, 1405.11.2, 1405.11.3 and 1405.11.4).

[BS] 1404.5.2 Cold-rolled copper. Copper shall conform to the requirements of ASTM B370.

❖ This material is commonly used for roofing, flashing, gutters, downspouts and general sheet metal work. ASTM B370 provides the specification for both copper sheet and copper strip materials.

[BS] 1404.5.3 Lead-coated copper. Lead-coated copper shall conform to the requirements of ASTM B101.

❖ This material is commonly used for roofing, flashing, gutters, downspouts and general sheet metal work. Among other requirements, ASTM B101 specifies that the lead must uniformly coat the surfaces, edges and ends of the copper.

[BS] 1404.6 Concrete. Exterior walls of concrete construction shall be designed and constructed in accordance with Chapter 19.

❖ Chapter 19 contains the general requirements for use of concrete in buildings, including provisions for the minimum thickness of concrete units used as veneers and wall coverings, and their installation and protection.

[BS] 1404.7 Glass-unit masonry. Exterior walls of glass-unit masonry shall be designed and constructed in accordance with Chapter 21.

❖ Structural glass block is generally regulated by the provisions of Sections 2103 and 2104. However, structural glass veneers used as wall coverings must comply with the thickness requirement of Table 1405.2.

1404.8 Plastics. Plastic panel, apron or spandrel walls as defined in this code shall not be limited in thickness, provided that such plastics and their assemblies conform to the requirements of Chapter 26 and are constructed of *approved* weather-resistant materials of adequate strength to resist the wind loads for cladding specified in Chapter 16.

❖ This section provides for the use of plastic panels for exterior walls. The code uses the term “light-transmitting plastic” to apply to plastics used for exterior wall panels and roof panels, as well as for glazing and skylights. The panels must meet the requirements of Chapter 26, as well as certain requirements of Chapter 14 for weather resistance and Chapter 16 for structural capabilities.

1404.9 Vinyl siding. Vinyl siding shall be certified and labeled as conforming to the requirements of ASTM D3679 by an *approved* quality control agency.

❖ Plastics are addressed in Chapter 26. However, polyvinyl chloride (PVC) siding is specifically addressed here as an exterior wall covering. PVC siding is required to conform to the provisions of ASTM D3679. Installation of vinyl siding is prescribed by Section 1405.14 (see the commentary to Section 1405.14 for additional discussion on the installation of vinyl siding). Note that the product must be certified and labeled, which means that the manufacturer must have regular inspections by an approved quality control agency.

INTERNATIONAL CODE COUNCIL®
Copyright © 2015 ICC. ALL RIGHTS RESERVED. Accessed by David Dammon on Jun 21, 2017 12:30:52 PM pursuant to License Agreement with ICC. No further reproduction or distribution authorized. ANY UNAUTHORIZED REPRODUCTION OR DISTRIBUTION IS A VIOLATION OF THE FEDERAL COPYRIGHT ACT AND THE LICENSE AGREEMENT, AND SUBJECT TO CIVIL AND CRIMINAL PENALTIES THEREUNDER.

1404.10 Fiber-cement siding. Fiber-cement siding shall conform to the requirements of ASTM C1186, Type A (or ISO 8336, Category A), and shall be so identified on labeling listing an *approved* quality control agency.

❖ Fiber-cement siding is also a material used for weather-resistant siding. It is manufactured from fiber-reinforced cement. The code permits its use as either panel siding or horizontal lap siding. The material standard options for compliance are ASTM C1186 and ISO 8336. Note that the product is required to bear a label, which means that the manufacturer must have regular inspections by a third-party inspection quality control agency.

1404.11 Exterior insulation and finish systems. Exterior insulation and finish systems (EIFS) and exterior insulation and finish systems (EIFS) with drainage shall comply with Section 1408.

❖ EIFS and EIFS with drainage are relatively complex exterior veneers that require great care and attention regarding the materials used and the installation details. This exterior veneer is now dealt with in Section 1408. All of the performance criteria, installation and design are covered in this section.

1404.12 Polypropylene siding. Polypropylene siding shall be certified and labeled as conforming to the requirements of ASTM D7254 and those of Section 1404.12.1 or 1404.12.2 by an approved quality control agency. Polypropylene siding shall be installed in accordance with the requirements of Section 1405.18 and in accordance with the manufacturer's instructions. Polypropylene siding shall be secured to the building so as to provide weather protection for the exterior walls of the building.

❖ The requirements for polypropylene siding are similar to the requirements for vinyl siding, except for the fire testing. The required standard for polypropylene siding is ASTM D7254. This specification addresses many of the key requirements for the material.

1404.12.1 Flame spread index. The certification of the flame spread index shall be accompanied by a test report stating that all portions of the test specimen ahead of the flame front remained in position during the test in accordance with ASTM E84 or UL 723.

❖ It is critical for exposed materials to remain in place during the flame spread testing so that the flame spread index assesses actual surface flame spread on the material surface; therefore, this section requires that the certification of compliance with ASTM D7254 indicates that the specimen remained in place during the test procedure.

1404.12.2 Fire separation distance. The fire separation distance between a building with polypropylene siding and the adjacent building shall be not less than 10 feet (3048 mm).

❖ Based on the heat-release rate exhibited by polypropylene material, a minimum distance of 10 feet (3048 mm) is required between the structure with the polypropylene siding and any adjacent structure.

1404.13 Foam plastic insulation. Foam plastic insulation used in *exterior wall covering* assemblies shall comply with Chapter 26.

❖ Foam plastic insulation is commonly included as a component in exterior wall covering assemblies for energy code compliance and is included in the current definition of exterior wall coverings. Therefore, this section appropriately references the applicable material requirements in Chapter 26.

SECTION 1405
INSTALLATION OF WALL COVERINGS

1405.1 General. *Exterior wall coverings* shall be designed and constructed in accordance with the applicable provisions of this section.

❖ Exterior wall coverings used to provide weather protection to the structure are required to comply with all the applicable provisions contained in Section 1405.

1405.2 Weather protection. *Exterior walls* shall provide weather protection for the building. The materials of the minimum nominal thickness specified in Table 1405.2 shall be acceptable as *approved* weather coverings.

❖ The exterior walls of a structure must be designed and constructed to provide for the health and safety of the occupants and to protect the structure from the detrimental effects of weather exposure.

This section introduces Table 1405.2, which is a tabulation of the minimum acceptable nominal thicknesses for a number of common weather coverings.

TABLE 1405.2. See page 14-7.

❖ This table should be used in addition to all other applicable chapters and requirements of the code for the specific material listed. Testing and experience have determined that the minimum tabulated thicknesses will be durable and protect the building against the elements for relatively long periods of time when attached and maintained as required.

Note a of Table 1405.2 allows material less than $^1/_2$-inch-thick (12.7 mm) wood siding to be used, provided that it is installed over an approved sheathing conforming to the requirements of Section 2304.6.1 (see commentary, Section 2304.6.1).

Note b of Table 1405.2 establishes that the minimum permitted nominal thickness is based on the narrowest solid thickness of material, exclusive of texture.

Section 2304.6.1 allows fiberboard and particleboard for sheathing. Although permitted as sheathing, fiberboard and particleboard materials, and other similar materials, do not provide a nailing base for weatherboarding. When used over such materials, $^1/_2$-inch (12.7 mm) wood siding is to be fastened to the wood-framing members or otherwise adequately secured.

INTERNATIONAL CODE COUNCIL®
Copyright © 2015 ICC. ALL RIGHTS RESERVED. Accessed by David Dammon on Jun 21, 2017 12:30:52 PM pursuant to License Agreement with ICC. No further reproduction or distribution authorized. ANY UNAUTHORIZED REPRODUCTION OR DISTRIBUTION IS A VIOLATION OF THE FEDERAL COPYRIGHT ACT AND THE LICENSE AGREEMENT, AND SUBJECT TO CIVIL AND CRIMINAL PENALTIES THEREUNDER.

Wood siding having a thickness of less than $^1/_2$ inch (12.7 mm) is not permitted to be fastened to foam plastic and other sheathing materials not having adequate strength as a nailing base spanning between studs or framing members.

1405.3 Vapor retarders. Vapor retarders as described in Section 1405.3.3 shall be provided in accordance with Sections 1405.3.1 and 1405.3.2, or an approved design using accepted engineering practice for hygrothermal analysis.

❖ The purpose of these requirements is to provide prescriptive methods for moisture control. The code prescribes three different vapor retarder classes, based upon the vapor permeability of the material. These are defined in Chapter 2.

1405.3.1 Class I and II vapor retarders. Class I and II vapor retarders shall not be provided on the interior side of frame walls in Zones 1 and 2. Class I vapor retarders shall not be provided on the interior side of frame walls in Zones 3 and 4. Class I or II vapor retarders shall be provided on the interior side of frame walls in Zones 5, 6, 7, 8 and Marine 4. The appropriate zone shall be selected in accordance with Chapter 3 of the *International Energy Conservation Code*—Commercial Provisions.

Exceptions:

1. Basement walls.
2. Below-grade portion of any wall.
3. Construction where moisture or its freezing will not damage the materials.
4. Conditions where Class III vapor retarders are required in Section 1405.3.2.

❖ The basic requirement is for Class I or II vapor retarders to be installed on the interior side of frame walls in Climate Zones 5, 6, 7, 8 and Marine 4. These climate zones are defined in the IECC. Figure 301.1 and Table 301.1 of the IECC provide information regarding the climate zones for all geographic locations in the United States. These are reproduced here for convenience [see Commentary Figures 1405.3.1(1) and 1405.3.1(2)]. Also, Tables 301.3(1) and 301.3(2) of the IECC define international climate zones outside of the United States. These are reprinted in this commentary as well [see Commentary Figures 1405.3.1(3) and 1405.3.1(4)]. As can be seen by studying Commentary Figure 1405.3.1(1), Climate Zones 5, 6, 7, 8 and Marine 4 are in the middle to northern portions of the continental United States and Alaska. These are areas where colder temperatures can be expected in winter months, causing moisture from the interior of the building to form condensate in the exterior walls of the building. A Class I or II vapor retarder is therefore called for on the interior side of the exterior wall.

TABLE 1405.2
MINIMUM THICKNESS OF WEATHER COVERINGS

COVERING TYPE	MINIMUM THICKNESS (inches)
Adhered masonry veneer	0.25
Aluminum siding	0.019
Anchored masonry veneer	2.625
Asbestos-cement boards	0.125
Asbestos shingles	0.156
Cold-rolled copper[d]	0.0216 nominal
Copper shingles[d]	0.0162 nominal
Exterior plywood (with sheathing)	0.313
Exterior plywood (without sheathing)	See Section 2304.6
Fiber cement lap siding	0.25[c]
Fiber cement panel siding	0.25[c]
Fiberboard siding	0.5
Glass-fiber reinforced concrete panels	0.375
Hardboard siding[c]	0.25
High-yield copper[d]	0.0162 nominal
Lead-coated copper[d]	0.0216 nominal
Lead-coated high-yield copper	0.0162 nominal
Marble slabs	1
Particleboard (with sheathing)	See Section 2304.6
Particleboard (without sheathing)	See Section 2304.6
Porcelain tile	0.25
Steel (approved corrosion resistant)	0.0149
Stone (cast artificial, anchored)	1.5
Stone (natural)	2
Structural glass	0.344
Stucco or exterior cement plaster	
Three-coat work over:	
Metal plaster base	0.875[b]
Unit masonry	0.625[b]
Cast-in-place or precast concrete	0.625[b]
Two-coat work over:	
Unit masonry	0.5[b]
Cast-in-place or precast concrete	0.375[b]
Terra cotta (anchored)	1
Terra cotta (adhered)	0.25
Vinyl siding	0.035
Wood shingles	0.375
Wood siding (without sheathing)[a]	0.5

For SI: 1 inch = 25.4 mm, 1 ounce = 28.35 g, 1 square foot = 0.093 m^2.

a. Wood siding of thicknesses less than 0.5 inch shall be placed over sheathing that conforms to Section 2304.6.

b. Exclusive of texture.

c. As measured at the bottom of decorative grooves.

d. 16 ounces per square foot for cold-rolled copper and lead-coated copper, 12 ounces per square foot for copper shingles, high-yield copper and lead-coated high-yield copper.

INTERNATIONAL CODE COUNCIL®
Copyright © 2015 ICC. ALL RIGHTS RESERVED. Accessed by David Dammon on Jun 21, 2017 12:30:52 PM pursuant to License Agreement with ICC. No further reproduction or distribution authorized. ANY UNAUTHORIZED REPRODUCTION OR DISTRIBUTION IS A VIOLATION OF THE FEDERAL COPYRIGHT ACT AND THE LICENSE AGREEMENT, AND SUBJECT TO CIVIL AND CRIMINAL PENALTIES THEREUNDER.

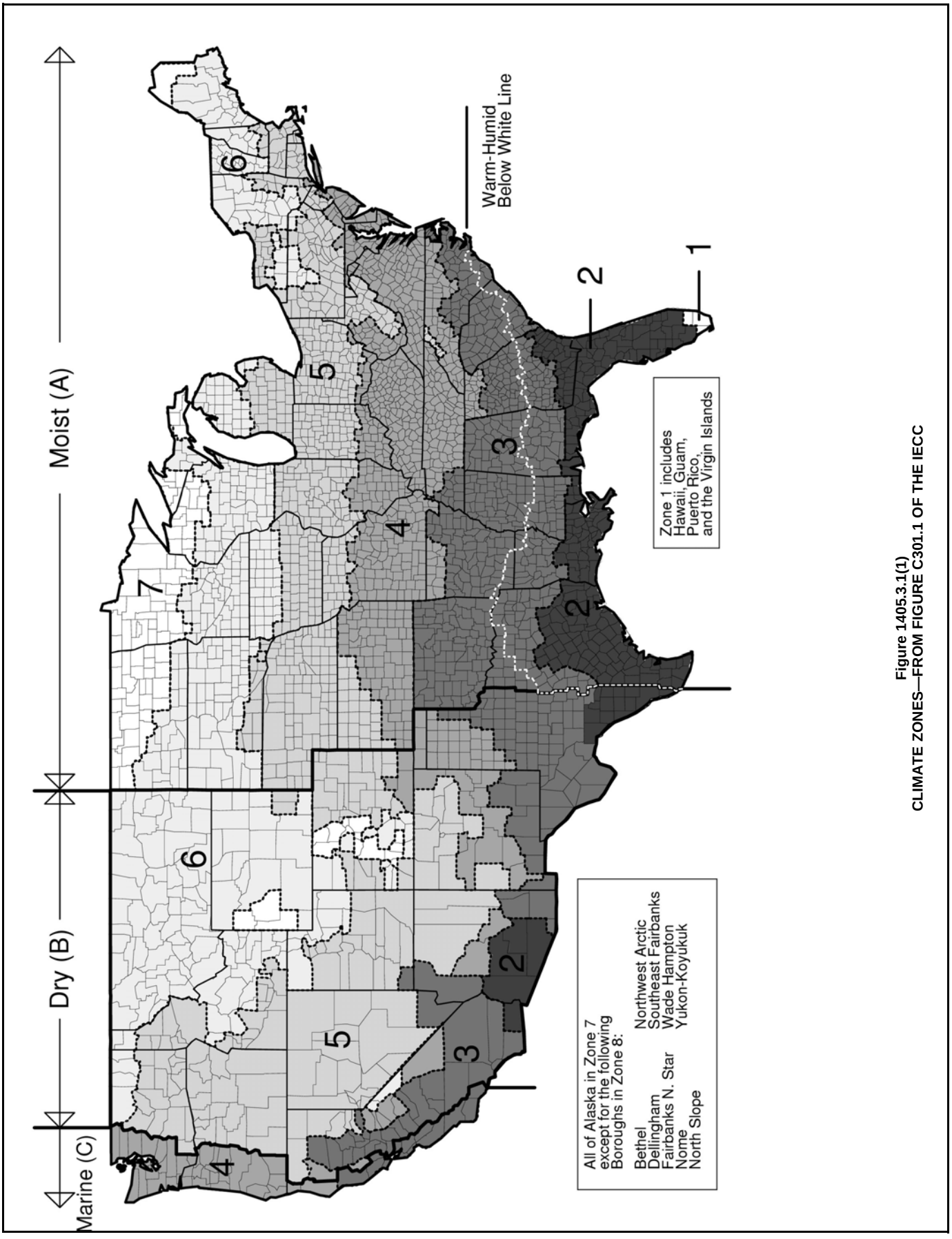

Figure 1405.3.1(1)
CLIMATE ZONES—FROM FIGURE C301.1 OF THE IECC

INTERNATIONAL CODE COUNCIL®
Copyright © 2015 ICC. ALL RIGHTS RESERVED. Accessed by David Dammon on Jun 21, 2017 12:30:52 PM pursuant to License Agreement with ICC. No further reproduction or distribution authorized. ANY UNAUTHORIZED REPRODUCTION OR DISTRIBUTION IS A VIOLATION OF THE FEDERAL COPYRIGHT ACT AND THE LICENSE AGREEMENT, AND SUBJECT TO CIVIL AND CRIMINAL PENALTIES THEREUNDER.

Key: A – Moist, B – Dry, C – Marine. Absence of moisture designation indicates moisture regime is irrelevant. Asterisk (*) indicates a warm-humid location.

US STATES

ALABAMA

3A Autauga*
2A Baldwin*
3A Barbour*
3A Bibb
3A Blount
3A Bullock*
3A Butler*
3A Calhoun
3A Chambers
3A Cherokee
3A Chilton
3A Choctaw*
3A Clarke*
3A Clay
3A Cleburne
3A Coffee*
3A Colbert
3A Conecuh*
3A Coosa
3A Covington*
3A Crenshaw*
3A Cullman
3A Dale*
3A Dallas*
3A DeKalb
3A Elmore*
3A Escambia*
3A Etowah
3A Fayette
3A Franklin
3A Geneva*
3A Greene
3A Hale
3A Henry*
3A Houston*
3A Jackson
3A Jefferson
3A Lamar
3A Lauderdale
3A Lawrence
3A Lee
3A Limestone
3A Lowndes*
3A Macon*
3A Madison
3A Marengo*
3A Marion
3A Marshall
2A Mobile*
3A Monroe*
3A Montgomery*
3A Morgan
3A Perry*
3A Pickens
3A Pike*
3A Randolph
3A Russell*
3A Shelby
3A St. Clair
3A Sumter
3A Talladega
3A Tallapoosa
3A Tuscaloosa
3A Walker
3A Washington*
3A Wilcox*
3A Winston

ALASKA

7 Aleutians East
7 Aleutians West
7 Anchorage
8 Bethel
7 Bristol Bay
7 Denali
8 Dillingham
8 Fairbanks North Star
7 Haines
7 Juneau
7 Kenai Peninsula
7 Ketchikan Gateway
7 Kodiak Island
7 Lake and Peninsula
7 Matanuska-Susitna
8 Nome
8 North Slope
8 Northwest Arctic
7 Prince of Wales Outer Ketchikan
7 Sitka
7 Skagway-Hoonah-Angoon
8 Southeast Fairbanks
7 Valdez-Cordova
8 Wade Hampton
7 Wrangell-Petersburg
7 Yakutat
8 Yukon-Koyukuk

ARIZONA

5B Apache
3B Cochise
5B Coconino
4B Gila
3B Graham
3B Greenlee
2B La Paz
2B Maricopa
3B Mohave
5B Navajo
2B Pima
2B Pinal
3B Santa Cruz
4B Yavapai
2B Yuma

ARKANSAS

3A Arkansas
3A Ashley
4A Baxter
4A Benton
4A Boone
3A Bradley
3A Calhoun
4A Carroll
3A Chicot
3A Clark
3A Clay
3A Cleburne
3A Cleveland
3A Columbia*
3A Conway
3A Craighead
3A Crawford
3A Crittenden
3A Cross
3A Dallas
3A Desha
3A Drew
3A Faulkner
3A Franklin
4A Fulton
3A Garland
3A Grant
3A Greene
3A Hempstead*
3A Hot Spring
3A Howard
3A Independence
4A Izard
3A Jackson
3A Jefferson
3A Johnson
3A Lafayette*
3A Lawrence
3A Lee
3A Lincoln
3A Little River*
3A Logan
3A Lonoke
4A Madison
4A Marion
3A Miller*
3A Mississippi
3A Monroe
3A Montgomery
3A Nevada
4A Newton
3A Ouachita
3A Perry
3A Phillips
3A Pike
3A Poinsett
3A Polk
3A Pope
3A Prairie
3A Pulaski
3A Randolph
3A Saline
3A Scott
4A Searcy
3A Sebastian
3A Sevier*
3A Sharp
3A St. Francis
4A Stone
3A Union*
3A Van Buren
4A Washington
3A White
3A Woodruff
3A Yell

CALIFORNIA

3C Alameda
6B Alpine
4B Amador
3B Butte
4B Calaveras
3B Colusa
3B Contra Costa
4C Del Norte
4B El Dorado
3B Fresno
3B Glenn

Figure 1405.3.1(2)
CLIMATE ZONES, MOISTURE REGIMES, AND WARM-HUMID DESIGNATIONS BY STATE, COUNTY AND TERRITORY—FROM TABLE C301.1 OF THE IECC

(continued)

INTERNATIONAL CODE COUNCIL®
Copyright © 2015 ICC. ALL RIGHTS RESERVED. Accessed by David Dammon on Jun 21, 2017 12:30:52 PM pursuant to License Agreement with ICC. No further reproduction or distribution authorized. ANY UNAUTHORIZED REPRODUCTION OR DISTRIBUTION IS A VIOLATION OF THE FEDERAL COPYRIGHT ACT AND THE LICENSE AGREEMENT, AND SUBJECT TO CIVIL AND CRIMINAL PENALTIES THEREUNDER.

4C Humboldt
2B Imperial
4B Inyo
3B Kern
3B Kings
4B Lake
5B Lassen
3B Los Angeles
3B Madera
3C Marin
4B Mariposa
3C Mendocino
3B Merced
5B Modoc
6B Mono
3C Monterey
3C Napa
5B Nevada
3B Orange
3B Placer
5B Plumas
3B Riverside
3B Sacramento
3C San Benito
3B San Bernardino
3B San Diego
3C San Francisco
3B San Joaquin
3C San Luis Obispo
3C San Mateo
3C Santa Barbara
3C Santa Clara
3C Santa Cruz
3B Shasta
5B Sierra
5B Siskiyou
3B Solano
3C Sonoma
3B Stanislaus
3B Sutter
3B Tehama
4B Trinity
3B Tulare
4B Tuolumne
3C Ventura
3B Yolo
3B Yuba

COLORADO

5B Adams
6B Alamosa
5B Arapahoe
6B Archuleta
4B Baca
5B Bent
5B Boulder
6B Chaffee
5B Cheyenne
7 Clear Creek
6B Conejos
6B Costilla
5B Crowley
6B Custer
5B Delta
5B Denver
6B Dolores
5B Douglas
6B Eagle
5B Elbert
5B El Paso
5B Fremont
5B Garfield
5B Gilpin
7 Grand
7 Gunnison
7 Hinsdale
5B Huerfano
7 Jackson
5B Jefferson
5B Kiowa
5B Kit Carson
7 Lake
5B La Plata
5B Larimer
4B Las Animas
5B Lincoln
5B Logan
5B Mesa
7 Mineral
6B Moffat
5B Montezuma
5B Montrose
5B Morgan
4B Otero
6B Ouray
7 Park
5B Phillips
7 Pitkin
5B Prowers
5B Pueblo
6B Rio Blanco
7 Rio Grande
7 Routt
6B Saguache
7 San Juan
6B San Miguel
5B Sedgwick
7 Summit
5B Teller
5B Washington
5B Weld
5B Yuma

CONNECTICUT

5A (all)

DELAWARE

4A (all)

DISTRICT OF COLUMBIA

4A (all)

FLORIDA

2A Alachua*
2A Baker*
2A Bay*
2A Bradford*
2A Brevard*
1A Broward*
2A Calhoun*
2A Charlotte*
2A Citrus*
2A Clay*
2A Collier*
2A Columbia*
2A DeSoto*
2A Dixie*
2A Duval*
2A Escambia*
2A Flagler*
2A Franklin*
2A Gadsden*
2A Gilchrist*
2A Glades*
2A Gulf*
2A Hamilton*
2A Hardee*
2A Hendry*
2A Hernando*
2A Highlands*
2A Hillsborough*
2A Holmes*
2A Indian River*
2A Jackson*
2A Jefferson*
2A Lafayette*
2A Lake*
2A Lee*
2A Leon*
2A Levy*
2A Liberty*
2A Madison*
2A Manatee*
2A Marion*
2A Martin*
1A Miami-Dade*
1A Monroe*
2A Nassau*
2A Okaloosa*
2A Okeechobee*
2A Orange*
2A Osceola*
2A Palm Beach*
2A Pasco*
2A Pinellas*
2A Polk*
2A Putnam*
2A Santa Rosa*
2A Sarasota*
2A Seminole*
2A St. Johns*
2A St. Lucie*
2A Sumter*
2A Suwannee*
2A Taylor*
2A Union*
2A Volusia*
2A Wakulla*
2A Walton*
2A Washington*

GEORGIA

2A Appling*
2A Atkinson*
2A Bacon*
2A Baker*
3A Baldwin
4A Banks
3A Barrow
3A Bartow
3A Ben Hill*
2A Berrien*
3A Bibb
3A Bleckley*
2A Brantley*
2A Brooks*
2A Bryan*
3A Bulloch*
3A Burke
3A Butts
3A Calhoun*
2A Camden*
3A Candler*
3A Carroll
4A Catoosa
2A Charlton*
2A Chatham*
3A Chattahoochee*
4A Chattooga
3A Cherokee
3A Clarke
3A Clay*
3A Clayton
2A Clinch*
3A Cobb
3A Coffee*
2A Colquitt*
3A Columbia
2A Cook*
3A Coweta

Figure 1405.3.1(2)
CLIMATE ZONES, MOISTURE REGIMES, AND WARM-HUMID DESIGNATIONS BY STATE, COUNTY AND TERRITORY—FROM TABLE C301.1 OF THE IECC

(continued)

INTERNATIONAL CODE COUNCIL®
Copyright © 2015 ICC. ALL RIGHTS RESERVED. Accessed by David Dammon on Jun 21, 2017 12:30:52 PM pursuant to License Agreement with ICC. No further reproduction or distribution authorized. ANY UNAUTHORIZED REPRODUCTION OR DISTRIBUTION IS A VIOLATION OF THE FEDERAL COPYRIGHT ACT AND THE LICENSE AGREEMENT, AND SUBJECT TO CIVIL AND CRIMINAL PENALTIES THEREUNDER.

3A Crawford
3A Crisp*
4A Dade
4A Dawson
2A Decatur*
3A DeKalb
3A Dodge*
3A Dooly*
3A Dougherty*
3A Douglas
3A Early*
2A Echols*
2A Effingham*
3A Elbert
3A Emanuel*
2A Evans*
4A Fannin
3A Fayette
4A Floyd
3A Forsyth
4A Franklin
3A Fulton
4A Gilmer
3A Glascock
2A Glynn*
4A Gordon
2A Grady*
3A Greene
3A Gwinnett
4A Habersham
4A Hall
3A Hancock
3A Haralson
3A Harris
3A Hart
3A Heard
3A Henry
3A Houston*
3A Irwin*
3A Jackson
3A Jasper
2A Jeff Davis*
3A Jefferson
3A Jenkins*
3A Johnson*
3A Jones
3A Lamar
2A Lanier*
3A Laurens*
3A Lee*
2A Liberty*
3A Lincoln
2A Long*
2A Lowndes*
4A Lumpkin
3A Macon*
3A Madison
3A Marion*
3A McDuffie
2A McIntosh*
3A Meriwether
2A Miller*
2A Mitchell*
3A Monroe
3A Montgomery*
3A Morgan
4A Murray
3A Muscogee
3A Newton
3A Oconee
3A Oglethorpe
3A Paulding
3A Peach*
4A Pickens
2A Pierce*
3A Pike
3A Polk
3A Pulaski*
3A Putnam
3A Quitman*
4A Rabun
3A Randolph*
3A Richmond
3A Rockdale
3A Schley*
3A Screven*
2A Seminole*
3A Spalding
4A Stephens
3A Stewart*
3A Sumter*
3A Talbot
3A Taliaferro
2A Tattnall*
3A Taylor*
3A Telfair*
3A Terrell*
2A Thomas*
3A Tift*
2A Toombs*
4A Towns
3A Treutlen*
3A Troup
3A Turner*
3A Twiggs*
4A Union
3A Upson
4A Walker
3A Walton
2A Ware*
3A Warren
3A Washington
2A Wayne*
3A Webster*
3A Wheeler*
4A White
4A Whitfield
3A Wilcox*
3A Wilkes
3A Wilkinson
3A Worth*

HAWAII

1A (all)*

IDAHO

5B Ada
6B Adams
6B Bannock
6B Bear Lake
5B Benewah
6B Bingham
6B Blaine
6B Boise
6B Bonner
6B Bonneville
6B Boundary
6B Butte
6B Camas
5B Canyon
6B Caribou
5B Cassia
6B Clark
5B Clearwater
6B Custer
5B Elmore
6B Franklin
6B Fremont
5B Gem
5B Gooding
5B Idaho
6B Jefferson
5B Jerome
5B Kootenai
5B Latah
6B Lemhi
5B Lewis
5B Lincoln
6B Madison
5B Minidoka
5B Nez Perce
6B Oneida
5B Owyhee
5B Payette
5B Power
5B Shoshone
6B Teton
5B Twin Falls
6B Valley
5B Washington

ILLINOIS

5A Adams
4A Alexander
4A Bond
5A Boone
5A Brown
5A Bureau
5A Calhoun
5A Carroll
5A Cass
5A Champaign
4A Christian
5A Clark
4A Clay
4A Clinton
5A Coles
5A Cook
4A Crawford
5A Cumberland
5A DeKalb
5A De Witt
5A Douglas
5A DuPage
5A Edgar
4A Edwards
4A Effingham
4A Fayette
5A Ford
4A Franklin
5A Fulton
4A Gallatin
5A Greene
5A Grundy
4A Hamilton
5A Hancock
4A Hardin
5A Henderson
5A Henry
5A Iroquois
4A Jackson
4A Jasper
4A Jefferson
5A Jersey
5A Jo Daviess
4A Johnson
5A Kane
5A Kankakee
5A Kendall
5A Knox
5A Lake
5A La Salle
4A Lawrence
5A Lee
5A Livingston
5A Logan
5A Macon

Figure 1405.3.1(2)
CLIMATE ZONES, MOISTURE REGIMES, AND WARM-HUMID DESIGNATIONS BY STATE, COUNTY AND TERRITORY—FROM TABLE C301.1 OF THE IECC

(continued)

INTERNATIONAL CODE COUNCIL®
Copyright © 2015 ICC. ALL RIGHTS RESERVED. Accessed by David Dammon on Jun 21, 2017 12:30:52 PM pursuant to License Agreement with ICC. No further reproduction or distribution authorized. ANY UNAUTHORIZED REPRODUCTION OR DISTRIBUTION IS A VIOLATION OF THE FEDERAL COPYRIGHT ACT AND THE LICENSE AGREEMENT, AND SUBJECT TO CIVIL AND CRIMINAL PENALTIES THEREUNDER.

4A Macoupin
4A Madison
4A Marion
5A Marshall
5A Mason
4A Massac
5A McDonough
5A McHenry
5A McLean
5A Menard
5A Mercer
4A Monroe
4A Montgomery
5A Morgan
5A Moultrie
5A Ogle
5A Peoria
4A Perry
5A Piatt
5A Pike
4A Pope
4A Pulaski
5A Putnam
4A Randolph
4A Richland
5A Rock Island
4A Saline
5A Sangamon
5A Schuyler
5A Scott
4A Shelby
5A Stark
4A St. Clair
5A Stephenson
5A Tazewell
4A Union
5A Vermilion
4A Wabash
5A Warren
4A Washington
4A Wayne
4A White
5A Whiteside
5A Will
4A Williamson
5A Winnebago
5A Woodford

INDIANA

5A Adams
5A Allen
5A Bartholomew
5A Benton
5A Blackford
5A Boone
4A Brown
5A Carroll
5A Cass
4A Clark
5A Clay
5A Clinton
4A Crawford
4A Daviess
4A Dearborn
5A Decatur
5A De Kalb
5A Delaware
4A Dubois
5A Elkhart
5A Fayette
4A Floyd
5A Fountain
5A Franklin
5A Fulton
4A Gibson
5A Grant
4A Greene
5A Hamilton
5A Hancock
4A Harrison
5A Hendricks
5A Henry
5A Howard
5A Huntington
4A Jackson
5A Jasper
5A Jay
4A Jefferson
4A Jennings
5A Johnson
4A Knox
5A Kosciusko
5A Lagrange
5A Lake
5A La Porte
4A Lawrence
5A Madison
5A Marion
5A Marshall
4A Martin
5A Miami
4A Monroe
5A Montgomery
5A Morgan
5A Newton
5A Noble
4A Ohio
4A Orange
5A Owen
5A Parke
4A Perry
4A Pike
5A Porter
4A Posey
5A Pulaski
5A Putnam
5A Randolph
4A Ripley
5A Rush
4A Scott
5A Shelby
4A Spencer
5A Starke
5A Steuben
5A St. Joseph
4A Sullivan
4A Switzerland
5A Tippecanoe
5A Tipton
5A Union
4A Vanderburgh
5A Vermillion
5A Vigo
5A Wabash
5A Warren
4A Warrick
4A Washington
5A Wayne
5A Wells
5A White
5A Whitley

IOWA

5A Adair
5A Adams
6A Allamakee
5A Appanoose
5A Audubon
5A Benton
6A Black Hawk
5A Boone
6A Bremer
6A Buchanan
6A Buena Vista
6A Butler
6A Calhoun
5A Carroll
5A Cass
5A Cedar
6A Cerro Gordo
6A Cherokee
6A Chickasaw
5A Clarke
6A Clay
6A Clayton
5A Clinton
5A Crawford
5A Dallas
5A Davis
5A Decatur
6A Delaware
5A Des Moines
6A Dickinson
5A Dubuque
6A Emmet
6A Fayette
6A Floyd
6A Franklin
5A Fremont
5A Greene
6A Grundy
5A Guthrie
6A Hamilton
6A Hancock
6A Hardin
5A Harrison
5A Henry
6A Howard
6A Humboldt
6A Ida
5A Iowa
5A Jackson
5A Jasper
5A Jefferson
5A Johnson
5A Jones
5A Keokuk
6A Kossuth
5A Lee
5A Linn
5A Louisa
5A Lucas
6A Lyon
5A Madison
5A Mahaska
5A Marion
5A Marshall
5A Mills
6A Mitchell
5A Monona
5A Monroe
5A Montgomery
5A Muscatine
6A O'Brien
6A Osceola
5A Page
6A Palo Alto
6A Plymouth
6A Pocahontas
5A Polk
5A Pottawattamie
5A Poweshiek
5A Ringgold
6A Sac
5A Scott

Figure 1405.3.1(2)
CLIMATE ZONES, MOISTURE REGIMES, AND WARM-HUMID DESIGNATIONS BY STATE, COUNTY AND TERRITORY—FROM TABLE C301.1 OF THE IECC

(continued)

INTERNATIONAL CODE COUNCIL®
Copyright © 2015 ICC. ALL RIGHTS RESERVED. Accessed by David Dammon on Jun 21, 2017 12:30:52 PM pursuant to License Agreement with ICC. No further reproduction or distribution authorized. ANY UNAUTHORIZED REPRODUCTION OR DISTRIBUTION IS A VIOLATION OF THE FEDERAL COPYRIGHT ACT AND THE LICENSE AGREEMENT, AND SUBJECT TO CIVIL AND CRIMINAL PENALTIES THEREUNDER.

5A Shelby
6A Sioux
5A Story
5A Tama
5A Taylor
5A Union
5A Van Buren
5A Wapello
5A Warren
5A Washington
5A Wayne
6A Webster
6A Winnebago
6A Winneshiek
5A Woodbury
6A Worth
6A Wright

KANSAS

4A Allen
4A Anderson
4A Atchison
4A Barber
4A Barton
4A Bourbon
4A Brown
4A Butler
4A Chase
4A Chautauqua
4A Cherokee
5A Cheyenne
4A Clark
4A Clay
5A Cloud
4A Coffey
4A Comanche
4A Cowley
4A Crawford
5A Decatur
4A Dickinson
4A Doniphan
4A Douglas
4A Edwards
4A Elk
5A Ellis
4A Ellsworth
4A Finney
4A Ford
4A Franklin
4A Geary
5A Gove
5A Graham
4A Grant
4A Gray
5A Greeley
4A Greenwood
5A Hamilton
4A Harper
4A Harvey
4A Haskell
4A Hodgeman
4A Jackson
4A Jefferson
5A Jewell
4A Johnson
4A Kearny
4A Kingman
4A Kiowa
4A Labette
5A Lane
4A Leavenworth
4A Lincoln
4A Linn
5A Logan
4A Lyon
4A Marion
4A Marshall
4A McPherson
4A Meade
4A Miami
5A Mitchell
4A Montgomery
4A Morris
4A Morton
4A Nemaha
4A Neosho
5A Ness
5A Norton
4A Osage
5A Osborne
4A Ottawa
4A Pawnee
5A Phillips
4A Pottawatomie
4A Pratt
5A Rawlins
4A Reno
5A Republic
4A Rice
4A Riley
5A Rooks
4A Rush
4A Russell
4A Saline
5A Scott
4A Sedgwick
4A Seward
4A Shawnee
5A Sheridan
5A Sherman
5A Smith
4A Stafford
4A Stanton
4A Stevens
4A Sumner
5A Thomas
5A Trego
4A Wabaunsee
5A Wallace
4A Washington
5A Wichita
4A Wilson
4A Woodson
4A Wyandotte

KENTUCKY

4A (all)

LOUISIANA

2A Acadia*
2A Allen*
2A Ascension*
2A Assumption*
2A Avoyelles*
2A Beauregard*
3A Bienville*
3A Bossier*
3A Caddo*
2A Calcasieu*
3A Caldwell*
2A Cameron*
3A Catahoula*
3A Claiborne*
3A Concordia*
3A De Soto*
2A East Baton Rouge*
3A East Carroll
2A East Feliciana*
2A Evangeline*
3A Franklin*
3A Grant*
2A Iberia*
2A Iberville*
3A Jackson*
2A Jefferson*
2A Jefferson Davis*
2A Lafayette*
2A Lafourche*
3A La Salle*
3A Lincoln*
2A Livingston*
3A Madison*
3A Morehouse
3A Natchitoches*
2A Orleans*
3A Ouachita*
2A Plaquemines*
2A Pointe Coupee*
2A Rapides*
3A Red River*
3A Richland*
3A Sabine*
2A St. Bernard*
2A St. Charles*
2A St. Helena*
2A St. James*
2A St. John the Baptist*
2A St. Landry*
2A St. Martin*
2A St. Mary*
2A St. Tammany*
2A Tangipahoa*
3A Tensas*
2A Terrebonne*
3A Union*
2A Vermilion*
3A Vernon*
2A Washington*
3A Webster*
2A West Baton Rouge*
3A West Carroll
2A West Feliciana*
3A Winn*

MAINE

6A Androscoggin
7 Aroostook
6A Cumberland
6A Franklin
6A Hancock
6A Kennebec
6A Knox
6A Lincoln
6A Oxford
6A Penobscot
6A Piscataquis
6A Sagadahoc
6A Somerset
6A Waldo
6A Washington
6A York

MARYLAND

4A Allegany
4A Anne Arundel
4A Baltimore
4A Baltimore (city)
4A Calvert
4A Caroline
4A Carroll
4A Cecil
4A Charles
4A Dorchester
4A Frederick
5A Garrett
4A Harford

Figure 1405.3.1(2)
CLIMATE ZONES, MOISTURE REGIMES, AND WARM-HUMID DESIGNATIONS BY STATE, COUNTY AND TERRITORY—FROM TABLE C301.1 OF THE IECC

(continued)

INTERNATIONAL CODE COUNCIL®
Copyright © 2015 ICC. ALL RIGHTS RESERVED. Accessed by David Dammon on Jun 21, 2017 12:30:52 PM pursuant to License Agreement with ICC. No further reproduction or distribution authorized. ANY UNAUTHORIZED REPRODUCTION OR DISTRIBUTION IS A VIOLATION OF THE FEDERAL COPYRIGHT ACT AND THE LICENSE AGREEMENT, AND SUBJECT TO CIVIL AND CRIMINAL PENALTIES THEREUNDER.

4A Howard
4A Kent
4A Montgomery
4A Prince George's
4A Queen Anne's
4A Somerset
4A St. Mary's
4A Talbot
4A Washington
4A Wicomico
4A Worcester

MASSACHSETTS

5A (all)

MICHIGAN

6A Alcona
6A Alger
5A Allegan
6A Alpena
6A Antrim
6A Arenac
7 Baraga
5A Barry
5A Bay
6A Benzie
5A Berrien
5A Branch
5A Calhoun
5A Cass
6A Charlevoix
6A Cheboygan
7 Chippewa
6A Clare
5A Clinton
6A Crawford
6A Delta
6A Dickinson
5A Eaton
6A Emmet
5A Genesee
6A Gladwin
7 Gogebic
6A Grand Traverse
5A Gratiot
5A Hillsdale
7 Houghton
6A Huron
5A Ingham
5A Ionia
6A Iosco
7 Iron
6A Isabella
5A Jackson
5A Kalamazoo
6A Kalkaska
5A Kent
7 Keweenaw
6A Lake
5A Lapeer
6A Leelanau
5A Lenawee
5A Livingston
7 Luce
7 Mackinac
5A Macomb
6A Manistee
6A Marquette
6A Mason
6A Mecosta
6A Menominee
5A Midland
6A Missaukee
5A Monroe
5A Montcalm
6A Montmorency
5A Muskegon
6A Newaygo
5A Oakland
6A Oceana
6A Ogemaw
7 Ontonagon
6A Osceola
6A Oscoda
6A Otsego
5A Ottawa
6A Presque Isle
6A Roscommon
5A Saginaw
6A Sanilac
7 Schoolcraft
5A Shiawassee
5A St. Clair
5A St. Joseph
5A Tuscola
5A Van Buren
5A Washtenaw
5A Wayne
6A Wexford

MINNESOTA

7 Aitkin
6A Anoka
7 Becker
7 Beltrami
6A Benton
6A Big Stone
6A Blue Earth
6A Brown
7 Carlton

6A Carver
7 Cass
6A Chippewa
6A Chisago
7 Clay
7 Clearwater
7 Cook
6A Cottonwood
7 Crow Wing
6A Dakota
6A Dodge
6A Douglas
6A Faribault
6A Fillmore
6A Freeborn
6A Goodhue
7 Grant
6A Hennepin
6A Houston
7 Hubbard
6A Isanti
7 Itasca
6A Jackson
7 Kanabec
6A Kandiyohi
7 Kittson
7 Koochiching
6A Lac qui Parle
7 Lake
7 Lake of the Woods
6A Le Sueur
6A Lincoln
6A Lyon
7 Mahnomen
7 Marshall
6A Martin
6A McLeod
6A Meeker
7 Mille Lacs
6A Morrison
6A Mower
6A Murray
6A Nicollet
6A Nobles
7 Norman
6A Olmsted
7 Otter Tail
7 Pennington
7 Pine
6A Pipestone
7 Polk
6A Pope
6A Ramsey
7 Red Lake
6A Redwood
6A Renville
6A Rice
6A Rock
7 Roseau
6A Scott
6A Sherburne
6A Sibley
6A Stearns
6A Steele
6A Stevens
7 St. Louis
6A Swift
6A Todd
6A Traverse
6A Wabasha
7 Wadena
6A Waseca
6A Washington
6A Watonwan
7 Wilkin
6A Winona
6A Wright
6A Yellow Medicine

MISSISSIPPI

3A Adams*
3A Alcorn
3A Amite*
3A Attala
3A Benton
3A Bolivar
3A Calhoun
3A Carroll
3A Chickasaw
3A Choctaw
3A Claiborne*
3A Clarke
3A Clay
3A Coahoma
3A Copiah*
3A Covington*
3A DeSoto
3A Forrest*
3A Franklin*
3A George*
3A Greene*
3A Grenada
2A Hancock*
2A Harrison*
3A Hinds*
3A Holmes
3A Humphreys
3A Issaquena
3A Itawamba
2A Jackson*
3A Jasper
3A Jefferson*
3A Jefferson Davis*
3A Jones*
3A Kemper

Figure 1405.3.1(2)
CLIMATE ZONES, MOISTURE REGIMES, AND WARM-HUMID DESIGNATIONS BY STATE, COUNTY AND TERRITORY—FROM TABLE C301.1 OF THE IECC

(continued)

INTERNATIONAL CODE COUNCIL®
Copyright © 2015 ICC. ALL RIGHTS RESERVED. Accessed by David Dammon on Jun 21, 2017 12:30:52 PM pursuant to License Agreement with ICC. No further reproduction or distribution authorized. ANY UNAUTHORIZED REPRODUCTION OR DISTRIBUTION IS A VIOLATION OF THE FEDERAL COPYRIGHT ACT AND THE LICENSE AGREEMENT, AND SUBJECT TO CIVIL AND CRIMINAL PENALTIES THEREUNDER.

3A Lafayette
3A Lamar*
3A Lauderdale
3A Lawrence*
3A Leake
3A Lee
3A Leflore
3A Lincoln*
3A Lowndes
3A Madison
3A Marion*
3A Marshall
3A Monroe
3A Montgomery
3A Neshoba
3A Newton
3A Noxubee
3A Oktibbeha
3A Panola
2A Pearl River*
3A Perry*
3A Pike*
3A Pontotoc
3A Prentiss
3A Quitman
3A Rankin*
3A Scott
3A Sharkey
3A Simpson*
3A Smith*
2A Stone*
3A Sunflower
3A Tallahatchie
3A Tate
3A Tippah
3A Tishomingo
3A Tunica
3A Union
3A Walthall*
3A Warren*
3A Washington
3A Wayne*
3A Webster
3A Wilkinson*
3A Winston
3A Yalobusha
3A Yazoo

MISSOURI

5A Adair
5A Andrew
5A Atchison
4A Audrain
4A Barry
4A Barton
4A Bates
4A Benton
4A Bollinger
4A Boone
5A Buchanan
4A Butler
5A Caldwell
4A Callaway
4A Camden
4A Cape Girardeau
4A Carroll
4A Carter
4A Cass
4A Cedar
5A Chariton
4A Christian
5A Clark
4A Clay
5A Clinton
4A Cole
4A Cooper
4A Crawford
4A Dade
4A Dallas
5A Daviess
5A DeKalb
4A Dent
4A Douglas
4A Dunklin
4A Franklin
4A Gasconade
5A Gentry
4A Greene
5A Grundy
5A Harrison
4A Henry
4A Hickory
5A Holt
4A Howard
4A Howell
4A Iron
4A Jackson
4A Jasper
4A Jefferson
4A Johnson
5A Knox
4A Laclede
4A Lafayette
4A Lawrence
5A Lewis
4A Lincoln
5A Linn
5A Livingston
5A Macon
4A Madison
4A Maries
5A Marion
4A McDonald
5A Mercer
4A Miller
4A Mississippi
4A Moniteau
4A Monroe
4A Montgomery
4A Morgan
4A New Madrid
4A Newton
5A Nodaway
4A Oregon
4A Osage
4A Ozark
4A Pemiscot
4A Perry
4A Pettis
4A Phelps
5A Pike
4A Platte
4A Polk
4A Pulaski
5A Putnam
5A Ralls
4A Randolph
4A Ray
4A Reynolds
4A Ripley
4A Saline
5A Schuyler
5A Scotland
4A Scott
4A Shannon
5A Shelby
4A St. Charles
4A St. Clair
4A Ste. Genevieve
4A St. Francois
4A St. Louis
4A St. Louis (city)
4A Stoddard
4A Stone
5A Sullivan
4A Taney
4A Texas
4A Vernon
4A Warren
4A Washington
4A Wayne
4A Webster
5A Worth
4A Wright

MONTANA

6B (all)

NEBRASKA

5A (all)

NEVADA

5B Carson City (city)
5B Churchill
3B Clark
5B Douglas
5B Elko
5B Esmeralda
5B Eureka
5B Humboldt
5B Lander
5B Lincoln
5B Lyon
5B Mineral
5B Nye
5B Pershing
5B Storey
5B Washoe
5B White Pine

NEW HAMPSHIRE

6A Belknap
6A Carroll
5A Cheshire
6A Coos
6A Grafton
5A Hillsborough
6A Merrimack
5A Rockingham
5A Strafford
6A Sullivan

NEW JERSEY

4A Atlantic
5A Bergen
4A Burlington
4A Camden
4A Cape May
4A Cumberland
4A Essex
4A Gloucester
4A Hudson
5A Hunterdon
5A Mercer
4A Middlesex
4A Monmouth
5A Morris
4A Ocean
5A Passaic
4A Salem
5A Somerset
5A Sussex
4A Union
5A Warren

Figure 1405.3.1(2)
CLIMATE ZONES, MOISTURE REGIMES, AND WARM-HUMID DESIGNATIONS BY STATE, COUNTY AND TERRITORY—FROM TABLE C301.1 OF THE IECC

(continued)

INTERNATIONAL CODE COUNCIL®
Copyright © 2015 ICC. ALL RIGHTS RESERVED. Accessed by David Dammon on Jun 21, 2017 12:30:52 PM pursuant to License Agreement with ICC. No further reproduction or distribution authorized. ANY UNAUTHORIZED REPRODUCTION OR DISTRIBUTION IS A VIOLATION OF THE FEDERAL COPYRIGHT ACT AND THE LICENSE AGREEMENT, AND SUBJECT TO CIVIL AND CRIMINAL PENALTIES THEREUNDER.

NEW MEXICO

4B Bernalillo
5B Catron
3B Chaves
4B Cibola
5B Colfax
4B Curry
4B DeBaca
3B Dona Ana
3B Eddy
4B Grant
4B Guadalupe
5B Harding
3B Hidalgo
3B Lea
4B Lincoln
5B Los Alamos
3B Luna
5B McKinley
5B Mora
3B Otero
4B Quay
5B Rio Arriba
4B Roosevelt
5B Sandoval
5B San Juan
5B San Miguel
5B Santa Fe
4B Sierra
4B Socorro
5B Taos
5B Torrance
4B Union
4B Valencia

NEW YORK

5A Albany
6A Allegany
4A Bronx
6A Broome
6A Cattaraugus
5A Cayuga
5A Chautauqua
5A Chemung
6A Chenango
6A Clinton
5A Columbia
5A Cortland
6A Delaware
5A Dutchess
5A Erie
6A Essex
6A Franklin
6A Fulton
5A Genesee
5A Greene
6A Hamilton
6A Herkimer
6A Jefferson
4A Kings
6A Lewis
5A Livingston
6A Madison
5A Monroe
6A Montgomery
4A Nassau
4A New York
5A Niagara
6A Oneida
5A Onondaga
5A Ontario
5A Orange
5A Orleans
5A Oswego
6A Otsego
5A Putnam
4A Queens
5A Rensselaer
4A Richmond
5A Rockland
5A Saratoga
5A Schenectady
6A Schoharie
6A Schuyler
5A Seneca
6A Steuben
6A St. Lawrence
4A Suffolk
6A Sullivan
5A Tioga
6A Tompkins
6A Ulster
6A Warren
5A Washington
5A Wayne
4A Westchester
6A Wyoming
5A Yates

NORTH CAROLINA

4A Alamance
4A Alexander
5A Alleghany
3A Anson
5A Ashe
5A Avery
3A Beaufort
4A Bertie
3A Bladen
3A Brunswick*
4A Buncombe
4A Burke
3A Cabarrus
4A Caldwell
3A Camden
3A Carteret*
4A Caswell
4A Catawba
4A Chatham
4A Cherokee
3A Chowan
4A Clay
4A Cleveland
3A Columbus*
3A Craven
3A Cumberland
3A Currituck
3A Dare
3A Davidson
4A Davie
3A Duplin
4A Durham
3A Edgecombe
4A Forsyth
4A Franklin
3A Gaston
4A Gates
4A Graham
4A Granville
3A Greene
4A Guilford
4A Halifax
4A Harnett
4A Haywood
4A Henderson
4A Hertford
3A Hoke
3A Hyde
4A Iredell
4A Jackson
3A Johnston
3A Jones
4A Lee
3A Lenoir
4A Lincoln
4A Macon
4A Madison
3A Martin
4A McDowell
3A Mecklenburg
5A Mitchell
3A Montgomery
3A Moore
4A Nash
3A New Hanover*
4A Northampton
3A Onslow*
4A Orange
3A Pamlico
3A Pasquotank
3A Pender*
3A Perquimans
4A Person
3A Pitt
4A Polk
3A Randolph
3A Richmond
3A Robeson
4A Rockingham
3A Rowan
4A Rutherford
3A Sampson
3A Scotland
3A Stanly
4A Stokes
4A Surry
4A Swain
4A Transylvania
3A Tyrrell
3A Union
4A Vance
4A Wake
4A Warren
3A Washington
5A Watauga
3A Wayne
4A Wilkes
3A Wilson
4A Yadkin
5A Yancey

NORTH DAKOTA

6A Adams
7 Barnes
7 Benson
6A Billings
7 Bottineau
6A Bowman
7 Burke
6A Burleigh
7 Cass
7 Cavalier
6A Dickey
7 Divide
6A Dunn
7 Eddy
6A Emmons
7 Foster
6A Golden Valley
7 Grand Forks
6A Grant
7 Griggs
6A Hettinger
7 Kidder

Figure 1405.3.1(2)
CLIMATE ZONES, MOISTURE REGIMES, AND WARM-HUMID DESIGNATIONS BY STATE, COUNTY AND TERRITORY—FROM TABLE C301.1 OF THE IECC

(continued)

INTERNATIONAL CODE COUNCIL®
Copyright © 2015 ICC. ALL RIGHTS RESERVED. Accessed by David Dammon on Jun 21, 2017 12:30:52 PM pursuant to License Agreement with ICC. No further reproduction or distribution authorized. ANY UNAUTHORIZED REPRODUCTION OR DISTRIBUTION IS A VIOLATION OF THE FEDERAL COPYRIGHT ACT AND THE LICENSE AGREEMENT, AND SUBJECT TO CIVIL AND CRIMINAL PENALTIES THEREUNDER.

6A LaMoure
6A Logan
7 McHenry
6A McIntosh
6A McKenzie
7 McLean
6A Mercer
6A Morton
7 Mountrail
7 Nelson
6A Oliver
7 Pembina
7 Pierce
7 Ramsey
6A Ransom
7 Renville
6A Richland
7 Rolette
6A Sargent
7 Sheridan
6A Sioux
6A Slope
6A Stark
7 Steele
7 Stutsman
7 Towner
7 Traill
7 Walsh
7 Ward
7 Wells
7 Williams

OHIO

4A Adams
5A Allen
5A Ashland
5A Ashtabula
5A Athens
5A Auglaize
5A Belmont
4A Brown
5A Butler
5A Carroll
5A Champaign
5A Clark
4A Clermont
5A Clinton
5A Columbiana
5A Coshocton
5A Crawford
5A Cuyahoga
5A Darke
5A Defiance
5A Delaware
5A Erie
5A Fairfield
5A Fayette
5A Franklin
5A Fulton
4A Gallia
5A Geauga
5A Greene
5A Guernsey
4A Hamilton
5A Hancock
5A Hardin
5A Harrison
5A Henry
5A Highland
5A Hocking
5A Holmes
5A Huron
5A Jackson
5A Jefferson
5A Knox
5A Lake
4A Lawrence
5A Licking
5A Logan
5A Lorain
5A Lucas
5A Madison
5A Mahoning
5A Marion
5A Medina
5A Meigs
5A Mercer
5A Miami
5A Monroe
5A Montgomery
5A Morgan
5A Morrow
5A Muskingum
5A Noble
5A Ottawa
5A Paulding
5A Perry
5A Pickaway
4A Pike
5A Portage
5A Preble
5A Putnam
5A Richland
5A Ross
5A Sandusky
4A Scioto
5A Seneca
5A Shelby
5A Stark
5A Summit
5A Trumbull
5A Tuscarawas
5A Union
5A Van Wert
5A Vinton
5A Warren
4A Washington
5A Wayne
5A Williams
5A Wood
5A Wyandot

OKLAHOMA

3A Adair
3A Alfalfa
3A Atoka
4B Beaver
3A Beckham
3A Blaine
3A Bryan
3A Caddo
3A Canadian
3A Carter
3A Cherokee
3A Choctaw
4B Cimarron
3A Cleveland
3A Coal
3A Comanche
3A Cotton
3A Craig
3A Creek
3A Custer
3A Delaware
3A Dewey
3A Ellis
3A Garfield
3A Garvin
3A Grady
3A Grant
3A Greer
3A Harmon
3A Harper
3A Haskell
3A Hughes
3A Jackson
3A Jefferson
3A Johnston
3A Kay
3A Kingfisher
3A Kiowa
3A Latimer
3A Le Flore
3A Lincoln
3A Logan
3A Love
3A Major
3A Marshall
3A Mayes
3A McClain
3A McCurtain
3A McIntosh
3A Murray
3A Muskogee
3A Noble
3A Nowata
3A Okfuskee
3A Oklahoma
3A Okmulgee
3A Osage
3A Ottawa
3A Pawnee
3A Payne
3A Pittsburg
3A Pontotoc
3A Pottawatomie
3A Pushmataha
3A Roger Mills
3A Rogers
3A Seminole
3A Sequoyah
3A Stephens
4B Texas
3A Tillman
3A Tulsa
3A Wagoner
3A Washington
3A Washita
3A Woods
3A Woodward

OREGON

5B Baker
4C Benton
4C Clackamas
4C Clatsop
4C Columbia
4C Coos
5B Crook
4C Curry
5B Deschutes
4C Douglas
5B Gilliam
5B Grant
5B Harney
5B Hood River
4C Jackson
5B Jefferson
4C Josephine
5B Klamath
5B Lake
4C Lane
4C Lincoln
4C Linn
5B Malheur
4C Marion

Figure 1405.3.1(2)
CLIMATE ZONES, MOISTURE REGIMES, AND WARM-HUMID DESIGNATIONS BY STATE, COUNTY AND TERRITORY—FROM TABLE C301.1 OF THE IECC

(continued)

INTERNATIONAL CODE COUNCIL®
Copyright © 2015 ICC. ALL RIGHTS RESERVED. Accessed by David Dammon on Jun 21, 2017 12:30:52 PM pursuant to License Agreement with ICC. No further reproduction or distribution authorized. ANY UNAUTHORIZED REPRODUCTION OR DISTRIBUTION IS A VIOLATION OF THE FEDERAL COPYRIGHT ACT AND THE LICENSE AGREEMENT, AND SUBJECT TO CIVIL AND CRIMINAL PENALTIES THEREUNDER.

5B Morrow
4C Multnomah
4C Polk
5B Sherman
4C Tillamook
5B Umatilla
5B Union
5B Wallowa
5B Wasco
4C Washington
5B Wheeler
4C Yamhill

PENNSYLVANIA

5A Adams
5A Allegheny
5A Armstrong
5A Beaver
5A Bedford
5A Berks
5A Blair
5A Bradford
4A Bucks
5A Butler
5A Cambria
6A Cameron
5A Carbon
5A Centre
4A Chester
5A Clarion
6A Clearfield
5A Clinton
5A Columbia
5A Crawford
5A Cumberland
5A Dauphin
4A Delaware
6A Elk
5A Erie
5A Fayette
5A Forest
5A Franklin
5A Fulton
5A Greene
5A Huntingdon
5A Indiana
5A Jefferson
5A Juniata
5A Lackawanna
5A Lancaster
5A Lawrence
5A Lebanon
5A Lehigh
5A Luzerne
5A Lycoming
6A McKean
5A Mercer
5A Mifflin
5A Monroe
4A Montgomery
5A Montour
5A Northampton
5A Northumberland
5A Perry
4A Philadelphia
5A Pike
6A Potter
5A Schuylkill
5A Snyder
5A Somerset
5A Sullivan
6A Susquehanna
6A Tioga
5A Union
5A Venango
5A Warren
5A Washington
6A Wayne
5A Westmoreland
5A Wyoming
4A York

RHODE ISLAND

5A (all)

SOUTH CAROLINA

3A Abbeville
3A Aiken
3A Allendale*
3A Anderson
3A Bamberg*
3A Barnwell*
3A Beaufort*
3A Berkeley*
3A Calhoun
3A Charleston*
3A Cherokee
3A Chester
3A Chesterfield
3A Clarendon
3A Colleton*
3A Darlington
3A Dillon
3A Dorchester*
3A Edgefield
3A Fairfield
3A Florence
3A Georgetown*
3A Greenville
3A Greenwood
3A Hampton*
3A Horry*
3A Jasper*
3A Kershaw
3A Lancaster
3A Laurens
3A Lee
3A Lexington
3A Marion
3A Marlboro
3A McCormick
3A Newberry
3A Oconee
3A Orangeburg
3A Pickens
3A Richland
3A Saluda
3A Spartanburg
3A Sumter
3A Union
3A Williamsburg
3A York

SOUTH DAKOTA

6A Aurora
6A Beadle
5A Bennett
5A Bon Homme
6A Brookings
6A Brown
6A Brule
6A Buffalo
6A Butte
6A Campbell
5A Charles Mix
6A Clark
5A Clay
6A Codington
6A Corson
6A Custer
6A Davison
6A Day
6A Deuel
6A Dewey
5A Douglas
6A Edmunds
6A Fall River
6A Faulk
6A Grant
5A Gregory
6A Haakon
6A Hamlin
6A Hand
6A Hanson
6A Harding
6A Hughes
5A Hutchinson
6A Hyde
5A Jackson
6A Jerauld
6A Jones
6A Kingsbury
6A Lake
6A Lawrence
6A Lincoln
6A Lyman
6A Marshall
6A McCook
6A McPherson
6A Meade
5A Mellette
6A Miner
6A Minnehaha
6A Moody
6A Pennington
6A Perkins
6A Potter
6A Roberts
6A Sanborn
6A Shannon
6A Spink
6A Stanley
6A Sully
5A Todd
5A Tripp
6A Turner
5A Union
6A Walworth
5A Yankton
6A Ziebach

TENNESSEE

4A Anderson
4A Bedford
4A Benton
4A Bledsoe
4A Blount
4A Bradley
4A Campbell
4A Cannon
4A Carroll
4A Carter
4A Cheatham
3A Chester
4A Claiborne
4A Clay
4A Cocke
4A Coffee
3A Crockett
4A Cumberland
4A Davidson
4A Decatur
4A DeKalb
4A Dickson
3A Dyer

Figure 1405.3.1(2)
CLIMATE ZONES, MOISTURE REGIMES, AND WARM-HUMID DESIGNATIONS BY STATE, COUNTY AND TERRITORY—FROM TABLE C301.1 OF THE IECC

(continued)

INTERNATIONAL CODE COUNCIL®
Copyright © 2015 ICC. ALL RIGHTS RESERVED. Accessed by David Dammon on Jun 21, 2017 12:30:52 PM pursuant to License Agreement with ICC. No further reproduction or distribution authorized. ANY UNAUTHORIZED REPRODUCTION OR DISTRIBUTION IS A VIOLATION OF THE FEDERAL COPYRIGHT ACT AND THE LICENSE AGREEMENT, AND SUBJECT TO CIVIL AND CRIMINAL PENALTIES THEREUNDER.

3A Fayette
4A Fentress
4A Franklin
4A Gibson
4A Giles
4A Grainger
4A Greene
4A Grundy
4A Hamblen
4A Hamilton
4A Hancock
3A Hardeman
3A Hardin
4A Hawkins
3A Haywood
3A Henderson
4A Henry
4A Hickman
4A Houston
4A Humphreys
4A Jackson
4A Jefferson
4A Johnson
4A Knox
3A Lake
3A Lauderdale
4A Lawrence
4A Lewis
4A Lincoln
4A Loudon
4A Macon
3A Madison
4A Marion
4A Marshall
4A Maury
4A McMinn
3A McNairy
4A Meigs
4A Monroe
4A Montgomery
4A Moore
4A Morgan
4A Obion
4A Overton
4A Perry
4A Pickett
4A Polk
4A Putnam
4A Rhea
4A Roane
4A Robertson
4A Rutherford
4A Scott
4A Sequatchie
4A Sevier
3A Shelby
4A Smith
4A Stewart
4A Sullivan
4A Sumner
3A Tipton
4A Trousdale
4A Unicoi
4A Union
4A Van Buren
4A Warren
4A Washington
4A Wayne
4A Weakley
4A White
4A Williamson
4A Wilson

TEXAS

2A Anderson*
3B Andrews
2A Angelina*
2A Aransas*
3A Archer
4B Armstrong
2A Atascosa*
2A Austin*
4B Bailey
2B Bandera*
2A Bastrop*
3B Baylor
2A Bee*
2A Bell*
2A Bexar*
3A Blanco*
3B Borden
2A Bosque*
3A Bowie*
2A Brazoria*
2A Brazos*
3B Brewster
4B Briscoe
2A Brooks*
3A Brown*
2A Burleson*
3A Burnet*
2A Caldwell*
2A Calhoun*
3B Callahan
2A Cameron*
3A Camp*
4B Carson
3A Cass*
4B Castro
2A Chambers*
2A Cherokee*
3B Childress
3A Clay
4B Cochran
3B Coke
3B Coleman
3A Collin*
3B Collingsworth
2A Colorado*
2A Comal*
3A Comanche*
3B Concho
3A Cooke
2A Coryell*
3B Cottle
3B Crane
3B Crockett
3B Crosby
3B Culberson
4B Dallam
3A Dallas*
3B Dawson
4B Deaf Smith
3A Delta
3A Denton*
2A DeWitt*
3B Dickens
2B Dimmit*
4B Donley
2A Duval*
3A Eastland
3B Ector
2B Edwards*
3A Ellis*
3B El Paso
3A Erath*
2A Falls*
3A Fannin
2A Fayette*
3B Fisher
4B Floyd
3B Foard
2A Fort Bend*
3A Franklin*
2A Freestone*
2B Frio*
3B Gaines
2A Galveston*
3B Garza
3A Gillespie*
3B Glasscock
2A Goliad*
2A Gonzales*
4B Gray
3A Grayson
3A Gregg*
2A Grimes*
2A Guadalupe*
4B Hale
3B Hall
3A Hamilton*
4B Hansford
3B Hardeman
2A Hardin*
2A Harris*
3A Harrison*
4B Hartley
3B Haskell
2A Hays*
3B Hemphill
3A Henderson*
2A Hidalgo*
2A Hill*
4B Hockley
3A Hood*
3A Hopkins*
2A Houston*
3B Howard
3B Hudspeth
3A Hunt*
4B Hutchinson
3B Irion
3A Jack
2A Jackson*
2A Jasper*
3B Jeff Davis
2A Jefferson*
2A Jim Hogg*
2A Jim Wells*
3A Johnson*
3B Jones
2A Karnes*
3A Kaufman*
3A Kendall*
2A Kenedy*
3B Kent
3B Kerr
3B Kimble
3B King
2B Kinney*
2A Kleberg*
3B Knox
3A Lamar*
4B Lamb
3A Lampasas*
2B La Salle*
2A Lavaca*
2A Lee*
2A Leon*
2A Liberty*
2A Limestone*
4B Lipscomb
2A Live Oak*
3A Llano*
3B Loving

Figure 1405.3.1(2)
CLIMATE ZONES, MOISTURE REGIMES, AND WARM-HUMID DESIGNATIONS BY STATE, COUNTY AND TERRITORY—FROM TABLE C301.1 OF THE IECC

(continued)

INTERNATIONAL CODE COUNCIL®
Copyright © 2015 ICC. ALL RIGHTS RESERVED. Accessed by David Dammon on Jun 21, 2017 12:30:52 PM pursuant to License Agreement with ICC. No further reproduction or distribution authorized. ANY UNAUTHORIZED REPRODUCTION OR DISTRIBUTION IS A VIOLATION OF THE FEDERAL COPYRIGHT ACT AND THE LICENSE AGREEMENT, AND SUBJECT TO CIVIL AND CRIMINAL PENALTIES THEREUNDER.

3B Lubbock
3B Lynn
2A Madison*
3A Marion*
3B Martin
3B Mason
2A Matagorda*
2B Maverick*
3B McCulloch
2A McLennan*
2A McMullen*
2B Medina*
3B Menard
3B Midland
2A Milam*
3A Mills*
3B Mitchell
3A Montague
2A Montgomery*
4B Moore
3A Morris*
3B Motley
3A Nacogdoches*
3A Navarro*
2A Newton*
3B Nolan
2A Nueces*
4B Ochiltree
4B Oldham
2A Orange*
3A Palo Pinto*
3A Panola*
3A Parker*
4B Parmer
3B Pecos
2A Polk*
4B Potter
3B Presidio
3A Rains*
4B Randall
3B Reagan
2B Real*
3A Red River*
3B Reeves
2A Refugio*
4B Roberts
2A Robertson*
3A Rockwall*
3B Runnels
3A Rusk*
3A Sabine*
3A San Augustine*
2A San Jacinto*
2A San Patricio*
3A San Saba*
3B Schleicher
3B Scurry
3B Shackelford
3A Shelby*
4B Sherman
3A Smith*
3A Somervell*
2A Starr*
3A Stephens
3B Sterling
3B Stonewall
3B Sutton
4B Swisher
3A Tarrant*
3B Taylor
3B Terrell
3B Terry
3B Throckmorton
3A Titus*
3B Tom Green
2A Travis*
2A Trinity*
2A Tyler*
3A Upshur*
3B Upton
2B Uvalde*
2B Val Verde*
3A Van Zandt*
2A Victoria*
2A Walker*
2A Waller*
3B Ward
2A Washington*
2B Webb*
2A Wharton*
3B Wheeler
3A Wichita
3B Wilbarger
2A Willacy*
2A Williamson*
2A Wilson*
3B Winkler
3A Wise
3A Wood*
4B Yoakum
3A Young
2B Zapata*
2B Zavala*

UTAH

5B Beaver
6B Box Elder
6B Cache
6B Carbon
6B Daggett
5B Davis
6B Duchesne
5B Emery
5B Garfield
5B Grand
5B Iron
5B Juab
5B Kane
5B Millard
6B Morgan
5B Piute
6B Rich
5B Salt Lake
5B San Juan
5B Sanpete
5B Sevier
6B Summit
5B Tooele
6B Uintah
5B Utah
6B Wasatch
3B Washington
5B Wayne
5B Weber

VERMONT

6A (all)

VIRGINIA

4A (all)

WASHINGTON

5B Adams
5B Asotin
5B Benton
5B Chelan
4C Clallam
4C Clark
5B Columbia
4C Cowlitz
5B Douglas
6B Ferry
5B Franklin
5B Garfield
5B Grant
4C Grays Harbor
4C Island
4C Jefferson
4C King
4C Kitsap
5B Kittitas
5B Klickitat
4C Lewis
5B Lincoln
4C Mason
6B Okanogan
4C Pacific
6B Pend Oreille
4C Pierce
4C San Juan
4C Skagit
5B Skamania
4C Snohomish
5B Spokane
6B Stevens
4C Thurston
4C Wahkiakum
5B Walla Walla
4C Whatcom
5B Whitman
5B Yakima

WEST VIRGINIA

5A Barbour
4A Berkeley
4A Boone
4A Braxton
5A Brooke
4A Cabell
4A Calhoun
4A Clay
5A Doddridge
5A Fayette
4A Gilmer
5A Grant
5A Greenbrier
5A Hampshire
5A Hancock
5A Hardy
5A Harrison
4A Jackson
4A Jefferson
4A Kanawha
5A Lewis
4A Lincoln
4A Logan
5A Marion
5A Marshall
4A Mason
4A McDowell
4A Mercer
5A Mineral
4A Mingo
5A Monongalia
4A Monroe
4A Morgan
5A Nicholas
5A Ohio
5A Pendleton
4A Pleasants
5A Pocahontas
5A Preston
4A Putnam
5A Raleigh
5A Randolph

Figure 1405.3.1(2)
CLIMATE ZONES, MOISTURE REGIMES, AND WARM-HUMID DESIGNATIONS BY STATE, COUNTY AND TERRITORY—FROM TABLE C301.1 OF THE IECC

(continued)

INTERNATIONAL CODE COUNCIL®
Copyright © 2015 ICC. ALL RIGHTS RESERVED. Accessed by David Dammon on Jun 21, 2017 12:30:52 PM pursuant to License Agreement with ICC. No further reproduction or distribution authorized. ANY UNAUTHORIZED REPRODUCTION OR DISTRIBUTION IS A VIOLATION OF THE FEDERAL COPYRIGHT ACT AND THE LICENSE AGREEMENT, AND SUBJECT TO CIVIL AND CRIMINAL PENALTIES THEREUNDER.

4A Ritchie
4A Roane
5A Summers
5A Taylor
5A Tucker
4A Tyler
5A Upshur
4A Wayne
5A Webster
5A Wetzel
4A Wirt
4A Wood
4A Wyoming

WISCONSIN

6A Adams
7 Ashland
6A Barro
7 Bayfield
6A Brown
6A Buffalo
7 Burnett
6A Calumet
6A Chippewa
6A Clark
6A Columbia
6A Crawford
6A Dane
6A Dodge
6A Door
7 Douglas
6A Dunn
6A Eau Claire
7 Florence
6A Fond du Lac
7 Forest
6A Grant
6A Green
6A Green Lake
6A Iowa
7 Iron
6A Jackson
6A Jefferson
6A Juneau
6A Kenosha
6A Kewaunee
6A La Crosse
6A Lafayette
7 Langlade
7 Lincoln
6A Manitowoc
6A Marathon
6A Marinette
6A Marquette
6A Menominee
6A Milwaukee
6A Monroe
6A Oconto
7 Oneida
6A Outagamie
6A Ozaukee
6A Pepin
6A Pierce
6A Polk
6A Portage
7 Price
6A Racine
6A Richland
6A Rock
6A Rusk
6A Sauk
7 Sawyer
6A Shawano
6A Sheboygan
6A St. Croix
7 Taylor
6A Trempealeau
6A Vernon
7 Vilas
6A Walworth
7 Washburn
6A Washington
6A Waukesha
6A Waupaca
6A Waushara
6A Winnebago
6A Wood

WYOMING

6B Albany
6B Big Horn
6B Campbell
6B Carbon
6B Converse
6B Crook
6B Fremont
5B Goshen
6B Hot Springs
6B Johnson
6B Laramie
7 Lincoln
6B Natrona
6B Niobrara
6B Park
5B Platte
6B Sheridan
7 Sublette
6B Sweetwater
7 Teton
6B Uinta
6B Washakie
6B Weston

US TERRITORIES

AMERICAN SAMOA

1A (all)*

GUAM

1A (all)*

NORTHERN MARIANA ISLANDS

1A (all)*

PUERTO RICO

1A (all)*

VIRGIN ISLANDS

1A (all)*

Figure 1405.3.1(2)
CLIMATE ZONES, MOISTURE REGIMES, AND WARM-HUMID DESIGNATIONS BY STATE, COUNTY AND TERRITORY—FROM TABLE C301.1 OF THE IECC

INTERNATIONAL CODE COUNCIL®
Copyright © 2015 ICC. ALL RIGHTS RESERVED. Accessed by David Dammon on Jun 21, 2017 12:30:52 PM pursuant to License Agreement with ICC. No further reproduction or distribution authorized. ANY UNAUTHORIZED REPRODUCTION OR DISTRIBUTION IS A VIOLATION OF THE FEDERAL COPYRIGHT ACT AND THE LICENSE AGREEMENT, AND SUBJECT TO CIVIL AND CRIMINAL PENALTIES THEREUNDER.

MAJOR CLIMATE TYPE DEFINITIONS
Marine (C) Definition—Locations meeting all four criteria: 1. Mean temperature of coldest month between -3°C (27°F) and 18°C (65°F). 2. Warmest month mean < 22°C (72°F). 3. At least four months with mean temperatures over 10°C (50°F). 4. Dry season in summer. The month with the heaviest precipitation in the cold season has at least three times as much precipitation as the month with the least precipitation in the rest of the year. The cold season is October through March in the Northern Hemisphere and April through September in the Southern Hemisphere.
Dry (B) Definition—Locations meeting the following criteria: Not marine and $P_{in} < 0.44 \times (TF - 19.5)$ [$P_{cm} < 2.0 \times (TC + 7)$ in SI units] where: P_{in} = Annual precipitation in inches (cm) T = Annual mean temperature in °F (°C)
Moist (A) Definition—Locations that are not marine and not dry.
Warm-humid Definition—Moist (A) locations where either of the following wet-bulb temperature conditions shall occur during the warmest six consecutive months of the year: 1. 67°F (19.4°C) or higher for 3,000 or more hours; or 2. 73°F (22.8°C) or higher for 1,500 or more hours.

For SI: °C = [(°F)-32]/1.8, 1 inch = 2.54 cm.

Figure 1405.3.1(3)
INTERNATIONAL CLIMATE ZONE DEFINITIONS—FROM TABLE C301.3(1) OF THE IECC

ZONE NUMBER	THERMAL CRITERIA	
	IP Units	SI Units
1	9000 < CDD50°F	5000 < CDD10°C
2	6300 < CDD50°F ≤ 9000	3500 < CDD10°C ≤ 5000
3A and 3B	4500 < CDD50°F ≤ 6300 AND HDD65°F ≤ 5400	2500 < CDD10°C ≤ 3500 AND HDD18°C ≤ 3000
4A and 4B	CDD50°F ≤ 4500 AND HDD65°F ≤ 5400	CDD10°C ≤ 2500 AND HDD18°C ≤ 3000
3C	HDD65°F ≤ 3600	HDD18°C ≤ 2000
4C	3600 < HDD65°F ≤ 5400	2000 < HDD18°C ≤ 3000
5	5400 < HDD65°F ≤ 7200	3000 < HDD18°C ≤ 4000
6	7200 < HDD65°F ≤ 9000	4000 < HDD18°C ≤ 5000
7	9000 < HDD65°F ≤ 12600	5000 < HDD18°C ≤ 7000
8	12600 < HDD65°F	7000 < HDD18°C

For SI: °C = [(°F)-32]/1.8.

Figure 1405.3.1(4)
INTERNATIONAL CLIMATE ZONE DEFINITIONS—FROM TABLE C301.3(2) OF THE IECC

INTERNATIONAL CODE COUNCIL®
Copyright © 2015 ICC. ALL RIGHTS RESERVED. Accessed by David Dammon on Jun 21, 2017 12:30:52 PM pursuant to License Agreement with ICC. No further reproduction or distribution authorized. ANY UNAUTHORIZED REPRODUCTION OR DISTRIBUTION IS A VIOLATION OF THE FEDERAL COPYRIGHT ACT AND THE LICENSE AGREEMENT, AND SUBJECT TO CIVIL AND CRIMINAL PENALTIES THEREUNDER.

1405.3.2 Class III vapor retarders. Class III vapor retarders shall be permitted where any one of the conditions in Table 1405.3.2 is met. Only Class III vapor retarders shall be used on the interior side of frame walls where foam plastic insulating sheathing with a perm rating of less than 1 is applied in accordance with Table 1405.3.2 on the exterior side of the frame wall.

❖ Wall assemblies can be designed and constructed to dry inward, outward and to both sides in all climate zones. This section allows more flexibility in the design and construction of moisture-forgiving wall systems. These requirements recognize that many common materials function to various degrees to slow the passage of moisture. In many situations, common materials such as latex paint or the kraft facing on a fiberglass batt may serve to retard moisture sufficiently. In particular, the "standard" sheet of polyethylene is usually not required as a vapor retarder in walls. This section therefore allows the use of Class III vapor retarders in lieu of the Class I or II otherwise specified in Section 1405.3.1. Classes of vapor retarders are defined in Chapter 2.

Class III vapor retarders allow more moisture vapor to pass through them. They are allowed to be used with exterior wall assemblies, described in Table 1405.3.2, that can be expected to dry. Section 1405.3.3 describes materials that are deemed to be Class III vapor retarders, and Section 1405.3.4 describes cladding deemed "vented" for the purpose of Table 1405.3.2.

TABLE 1405.3.2
CLASS III VAPOR RETARDERS

ZONE	CLASS III VAPOR RETARDERS PERMITTED FOR:[a]
Marine 4	Vented cladding over wood structural panels Vented cladding over fiberboard Vented cladding over gypsum Insulated sheathing with *R*-value ≥ R2.5 over 2 × 4 wall Insulated sheathing with *R*-value ≥ R3.75 over 2 × 6 wall
5	Vented cladding over wood structural panels Vented cladding over fiberboard Vented cladding over gypsum Insulated sheathing with *R*-value ≥ R5 over 2 × 4 wall Insulated sheathing with *R*-value ≥ R7.5 over 2 × 6 wall
6	Vented cladding over fiberboard Vented cladding over gypsum Insulated sheathing with *R*-value ≥ R7.5 over 2 × 4 wall Insulated sheathing with *R*-value ≥ R11.25 over 2 × 6 wall
7 and 8	Insulated sheathing with *R*-value ≥ R10 over 2 × 4 wall Insulated sheathing with *R*-value ≥ R15 over 2 × 6 wall

For SI: 1 pound per cubic foot = 16 kg/m^3.

a. Spray foam with a minimum density of 2 lbs/ft^3 applied to the interior cavity side of wood structural panels, fiberboard, insulating sheathing or gypsum is deemed to meet the insulating sheathing requirement where the spray foam *R*-value meets or exceeds the specified insulating sheathing *R*-value.

❖ This table describes the situations where it is permissible to use Class III vapor retarders instead of Class I or II. Class III vapor retarders allow more moisture vapor to pass through them. They are allowed to be used with exterior wall assemblies, described in Table 1405.3.2, that can be expected to dry. The table provides types of wall assemblies that can be used with Class III vapor retarders in different climate zones. The climate zones are determined based upon Chapter 3 of the IECC.

1405.3.3 Material vapor retarder class. The *vapor retarder class* shall be based on the manufacturer's certified testing or a tested assembly.

The following shall be deemed to meet the class specified:

Class I: Sheet polyethylene, nonperforated aluminum foil with a perm rating of less than or equal to 0.1.

Class II: Kraft-faced fiberglass batts or paint with a perm rating greater than 0.1 and less than or equal to 1.0.

Class III: Latex or enamel paint with a perm rating of greater than 1.0 and less than or equal to 10.0.

❖ The vapor retarder class is defined in Section 202 of the code in terms of vapor permeability. The test method used to determine perm value is ASTM E96. However, this section provides a list of materials that can be used for each class of vapor retarder and are deemed to comply with the test standard. No testing is required for these materials. All other materials are required to be tested.

1405.3.4 Minimum clear airspaces and vented openings for vented cladding. For the purposes of this section, vented cladding shall include the following minimum clear airspaces:

1. Vinyl lap or horizontal aluminum siding applied over a weather-resistive barrier as specified in this chapter.
2. Brick veneer with a clear airspace as specified in this code.
3. Other *approved* vented claddings.

❖ This section is intended to define "vented cladding" for the purposes of Table 1405.3.2. As can be seen, vented cladding is material commonly used in the code and includes vinyl siding, aluminum siding and brick with a clear airspace.

By "other approved vented claddings," the code intends materials that can be shown to allow drying of the components behind them in the same manner and at the same rate as the specific materials in Items 1 and 2.

1405.4 Flashing. Flashing shall be installed in such a manner so as to prevent moisture from entering the wall or to redirect that moisture to the exterior. Flashing shall be installed at the perimeters of exterior door and window assemblies, penetrations and terminations of *exterior wall* assemblies, *exterior wall* intersections with roofs, chimneys, porches, decks, balconies and similar projections and at built-in gutters and similar locations where moisture could enter the wall. Flashing with projecting flanges shall be installed on both sides and

INTERNATIONAL CODE COUNCIL®
Copyright © 2015 ICC. ALL RIGHTS RESERVED. Accessed by David Dammon on Jun 21, 2017 12:30:52 PM pursuant to License Agreement with ICC. No further reproduction or distribution authorized. ANY UNAUTHORIZED REPRODUCTION OR DISTRIBUTION IS A VIOLATION OF THE FEDERAL COPYRIGHT ACT AND THE LICENSE AGREEMENT, AND SUBJECT TO CIVIL AND CRIMINAL PENALTIES THEREUNDER.

the ends of copings, under sills and continuously above projecting *trim*.

❖ Water that enters the exterior wall can lead to the decay of wood and the degradation of other building materials that are sensitive to moisture. Some of the most common points of moisture penetration in an exterior wall are at intersections of windows, doors, chimneys and roof lines with other framing These potential points of moisture intrusion must be closed by corrosion-resistant flashings or by other acceptable practices [see Commentary Figures 1405.4(1) through 1405.4(5)]. Materials such as asphalt-saturated felt or building paper are not acceptable for flashing at required locations, in part due to the fact that these materials have a limited ability to resist water penetration. The flashing installation locations stated in this section represent those that are most commonly encountered. As an alternative to the installation of flashings, testing of the specific penetrations, terminations and intersections of the exterior wall finish must be performed in accordance with Section 1403.2 (see commentary, Section 1403.2).

Improperly sloped flashings may enable the accumulation of moisture in the wall assembly, which may result in eventual degradation of the wall finish, building substrate or even the flashing material. Without the extension of the flashing beyond the face of the exterior wall finish, moisture may reenter the wall assembly directly below the flashing through capillary action as indicated in Commentary Figure 1405.4(5).

1405.4.1 Exterior wall pockets. In exterior walls of buildings or structures, wall pockets or crevices in which moisture can accumulate shall be avoided or protected with caps or drips, or other *approved* means shall be provided to prevent water damage.

❖ Changes in building lines and elevations, materials and tops of walls, etc., can produce wall pockets, crevices and other openings that allow the entry of rain, snow, ice and other sources of moisture. Where these openings are present, additional covers, caps, flashings, etc., must be provided to prevent the entry of moisture.

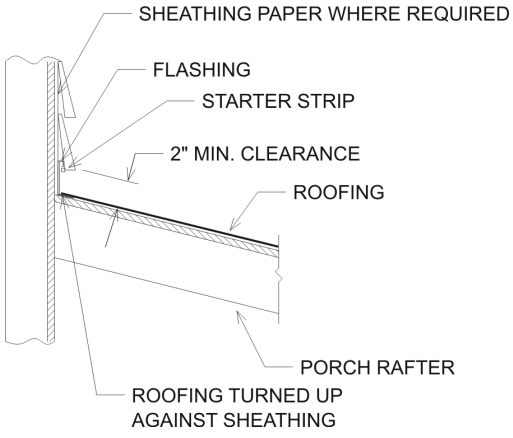

For SI: 1 inch = 25.4 mm.

Figure 1405.4(1)
FLASHING SIDING/ROOF INTERFACE

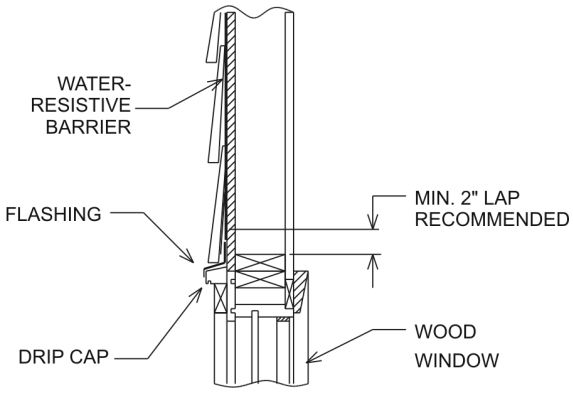

For SI: 1 inch = 25.4 mm.

Figure 1405.4(2)
FLASHING AT SIDING/WINDOW INTERFACE

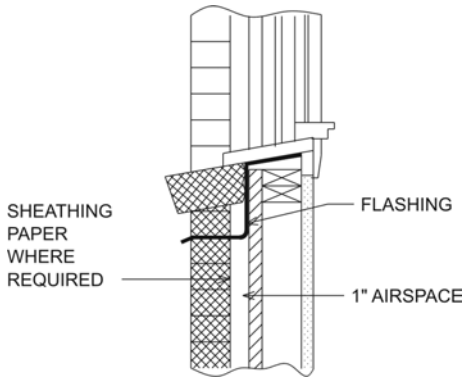

For SI: 1 inch = 25.4 mm.

Figure 1405.4(3)
FLASHING UNDER WINDOW IN EXTERIOR WALL

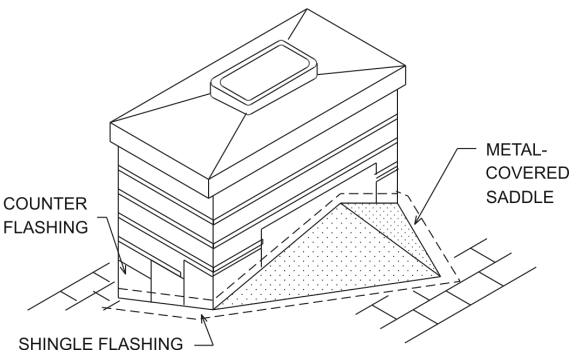

Figure 1405.4(4)
FLASHING AT VARIOUS POINTS

INTERNATIONAL CODE COUNCIL®
Copyright © 2015 ICC. ALL RIGHTS RESERVED. Accessed by David Dammon on Jun 21, 2017 12:30:52 PM pursuant to License Agreement with ICC. No further reproduction or distribution authorized. ANY UNAUTHORIZED REPRODUCTION OR DISTRIBUTION IS A VIOLATION OF THE FEDERAL COPYRIGHT ACT AND THE LICENSE AGREEMENT, AND SUBJECT TO CIVIL AND CRIMINAL PENALTIES THEREUNDER.

1405.4.2 Masonry. Flashing and weep holes in anchored veneer shall be located in the first course of masonry above finished ground level above the foundation wall or slab, and other points of support, including structural floors, shelf angles and lintels where anchored veneers are designed in accordance with Section 1405.6.

❖ Water can penetrate walls constructed of masonry materials from a number of sources. Some of the most common causes of water penetration are: the porous nature of many masonry materials; openings such as small cracks that may occur between the masonry unit and mortar joint due to expansion and contraction of the wall over time; and the interface between the masonry and penetrations or dissimilar materials.

Walls constructed of anchored masonry veneer must be designed to accommodate water penetration and to provide a means to both stop the moisture penetration and for the moisture to leave the wall. This stipulates the use of flashing to stop moisture penetration into the wall backing and small openings (weepholes) to allow the moisture to exit the wall. In order for these two components to function as intended, the weepholes must be installed immediately above the flashing so that moisture collected by the flashing can exit the wall, preventing the accumulation of water at the flashing location.

1405.5 Wood veneers. Wood veneers on exterior walls of buildings of Type I, II, III and IV construction shall be not less than 1 inch (25 mm) nominal thickness, 0.438-inch (11.1 mm) exterior hardboard siding or 0.375-inch (9.5 mm) exterior-type wood structural panels or particleboard and shall conform to the following:

1. The veneer shall not exceed 40 feet (12 190 mm) in height above grade. Where fire-retardant-treated wood is used, the height shall not exceed 60 feet (18 290 mm) in height above grade.
2. The veneer is attached to or furred from a noncombustible backing that is fire-resistance rated as required by other provisions of this code.

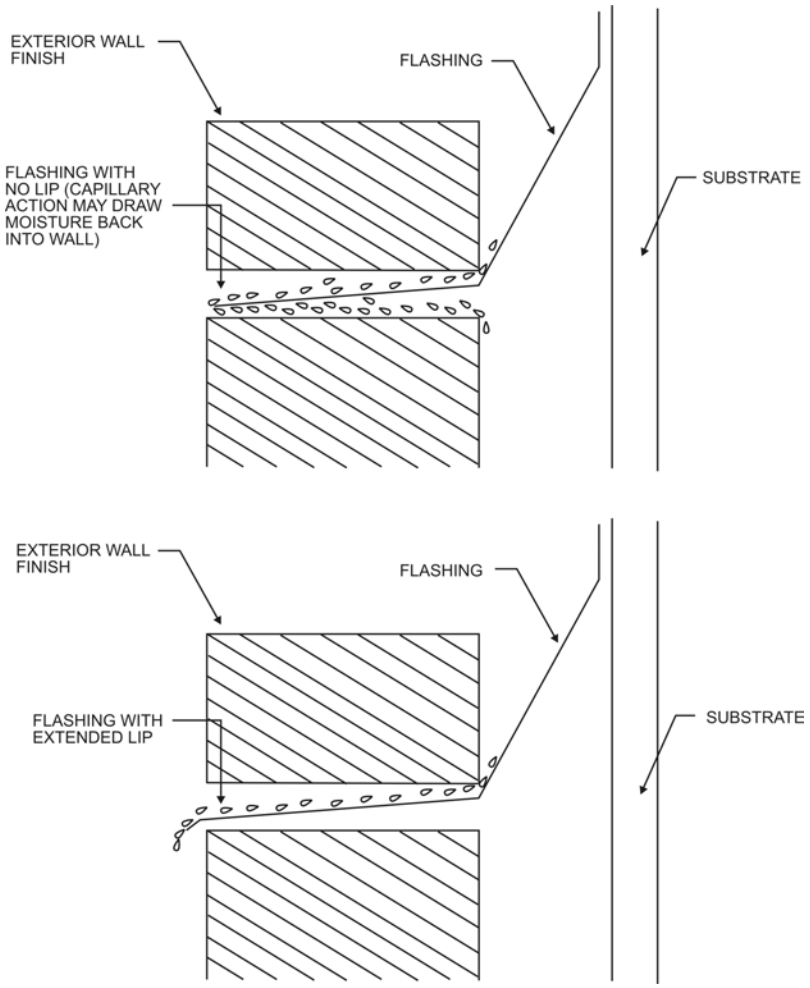

Figure 1405.4(5)
FLASHING EXTENSION

INTERNATIONAL CODE COUNCIL®
Copyright © 2015 ICC. ALL RIGHTS RESERVED. Accessed by David Dammon on Jun 21, 2017 12:30:52 PM pursuant to License Agreement with ICC. No further reproduction or distribution authorized. ANY UNAUTHORIZED REPRODUCTION OR DISTRIBUTION IS A VIOLATION OF THE FEDERAL COPYRIGHT ACT AND THE LICENSE AGREEMENT, AND SUBJECT TO CIVIL AND CRIMINAL PENALTIES THEREUNDER.

3. Where open or spaced wood veneers (without concealed spaces) are used, they shall not project more than 24 inches (610 mm) from the building wall.

❖ Wood veneers, which are combustible exterior materials, are permitted for use on buildings of other than combustible (Type V) construction where the minimum thickness requirements of this section and three construction criteria are met (see the commentary to Section 1406.2.1.1 for more discussion of wood veneers as a combustible material on exterior walls).

Item 1 limits the maximum height of the installation of the wood veneer and is coordinated with the provisions of Section 1406.2.1 (see the commentary to Section 1406.2.1 for more discussion of the limitations of use of combustible exterior materials). The increase of one additional story is permitted due to the limited combustible nature of fire-retardant-treated wood (FRTW) siding (see commentary, Section 2303.2). Item 2 requires the backing to be noncombustible, which is consistent with requirements of Chapter 6 for buildings of Type I, II, Ill and IV construction. The backing must also have the fire-resistance rating required by other provisions of the code, such as in Tables 601 and 602. Item 3 limits the maximum distance that wood veneers may project from the face of the building.

[BS] 1405.6 Anchored masonry veneer. Anchored masonry veneer shall comply with the provisions of Sections 1405.6, 1405.7, 1405.8 and 1405.9 and Sections 12.1 and 12.2 of TMS 402/ACI 530/ASCE 5.

❖ Sections 12.1 and 12.2 of ACI 530/ASCE 5/TMS 402 are to be used for the design and detailing requirements for anchored masonry veneers. See the commentary for ACI 530/ASCE 5/TMS 402 for an explanation of the anchored masonry veneer requirements.

[BS] 1405.6.1 Tolerances. Anchored masonry veneers in accordance with Chapter 14 are not required to meet the tolerances in Article 3.3 F1 of TMS 602/ACI 530.1/ASCE 6.

❖ The tolerances in the referenced standard apply to masonry units that are utilized in masonry wall construction and are not intended to be applied to masonry veneers.

[BS] 1405.6.2 Seismic requirements. Anchored masonry veneer located in Seismic Design Category C, D, E or F shall conform to the requirements of Section 12.2.2.10 of TMS 402/ACI 530/ASCE 5.

❖ This requires that the seismic design and detailing of anchored masonry veneer be performed in accordance with referenced standard ACI 530 for veneers located in Seismic Design Categories C, D, E and F (see Chapter 16 for more information on seismic design categories). Section 6.2.2.10 of ACI 530 contains criteria for components such as masonry anchor spacing, joint reinforcement bedding and splicing.

[BS] 1405.7 Stone veneer. Anchored stone veneer units not exceeding 10 inches (254 mm) in thickness shall be anchored directly to masonry, concrete or to stud construction by one of the following methods:

1. With concrete or masonry backing, anchor ties shall be not less than 0.1055-inch (2.68 mm) corrosion-resistant wire, or *approved* equal, formed beyond the base of the backing. The legs of the loops shall be not less than 6 inches (152 mm) in length bent at right angles and laid in the mortar joint, and spaced so that the eyes or loops are 12 inches (305 mm) maximum on center in both directions. There shall be provided not less than a 0.1055-inch (2.68 mm) corrosion-resistant wire tie, or *approved* equal, threaded through the exposed loops for every 2 square feet (0.2 m^2) of stone veneer. This tie shall be a loop having legs not less than 15 inches (381 mm) in length bent so that the tie will lie in the stone veneer mortar joint. The last 2 inches (51 mm) of each wire leg shall have a right-angle bend. One-inch (25 mm) minimum thickness of cement grout shall be placed between the backing and the stone veneer.
2. With wood stud backing, a 2-inch by 2-inch (51 by 51 mm) 0.0625-inch (1.59 mm) zinc-coated or nonmetallic coated wire mesh with two layers of water-resistive barrier in accordance with Section 1404.2 shall be applied directly to wood studs spaced not more than 16 inches (406 mm) on center. On studs, the mesh shall be attached with 2-inch-long (51 mm) corrosion-resistant steel wire furring nails at 4 inches (102 mm) on center providing a minimum 1.125-inch (29 mm) penetration into each stud and with 8d annular threaded nails at 8 inches (203 mm) on center. into top and bottom plates or with equivalent wire ties. There shall be not less than a 0.1055-inch (2.68 mm) zinc-coated or nonmetallic coated wire, or approved equal, attached to the stud with not smaller than an 8d (0.120 in. diameter) annular threaded nail for every 2 square feet (0.2 m^2) of stone veneer. This tie shall be a loop having legs not less than 15 inches (381 mm) in length, so bent that the tie will lie in the stone veneer mortar joint. The last 2 inches (51 mm) of each wire leg shall have a right-angle bend. One-inch (25 mm) minimum thickness of cement grout shall be placed between the backing and the stone veneer.
3. With cold-formed steel stud backing, a 2-inch by 2-inch (51 by 51 mm) 0.0625-inch (1.59 mm) zinc-coated or nonmetallic coated wire mesh with two layers of water-resistive barrier in accordance with Section 1404.2 shall be applied directly to steel studs spaced a not more than 16 inches (406 mm) on center. The mesh shall be attached with corrosion-resistant #8 self-drilling, tapping screws at 4 inches (102 mm) on center, and at 8 inches (203 mm) on center into top and bottom tracks or with equivalent wire ties. Screws shall extend through the steel connection not fewer than three exposed threads. There shall be not less than a 0.1055-inch (2.68 mm) corrosion-resistant wire, or approved equal, attached to the stud with not smaller than a #8 self-drilling, tapping screw extending through the steel framing not fewer than three exposed threads for every 2 square feet (0.2 m^2) of stone veneer. This tie shall be

INTERNATIONAL CODE COUNCIL®
Copyright © 2015 ICC. ALL RIGHTS RESERVED. Accessed by David Dammon on Jun 21, 2017 12:30:52 PM pursuant to License Agreement with ICC. No further reproduction or distribution authorized. ANY UNAUTHORIZED REPRODUCTION OR DISTRIBUTION IS A VIOLATION OF THE FEDERAL COPYRIGHT ACT AND THE LICENSE AGREEMENT, AND SUBJECT TO CIVIL AND CRIMINAL PENALTIES THEREUNDER.

a loop having legs not less than 15 inches (381 mm) in length, so bent that the tie will lie in the stone veneer mortar joint. The last 2 inches (51 mm) of each wire leg shall have a right-angle bend. One-inch (25 mm) minimum thickness of cement grout shall be placed between the backing and the stone veneer. The cold-formed steel framing members shall have a minimum bare steel thickness of 0.0428 inches (1.087 mm).

❖ This section permits direct anchorage of anchored stone veneers to the wall backing by one of three specified methods. It should be noted that support from below is required in accordance with Section 1405.6. Since the framing is providing only lateral anchorage, thicknesses up to 10 inches (254 mm) are permitted.

There are three methods of anchorage prescribed in this section, based upon the construction of the wall backing. The first method specifies the anchor type, size and spacing for concrete and masonry backing (see Commentary Figure 1405.7). The second method specifies the anchorage requirements for wood-frame walls. The third method specifies the anchorage requirements for cold-formed steel stud-framed walls.

All methods require that the anchorage ties be of corrosion-resistant material, such as zinc or nonmetallic coated material. Corrosion-resistant ties are necessary because of the potential for corrosion caused by both water penetration and an adverse reaction of the metal with the mortar or other masonry material.

According to the first method, the specified tie spacings, in conjunction with the cement grout, are intended to achieve lateral support points of the veneer at adequate spacings. Where lateral ties are not installed at the required locations, buckling of the masonry veneer under vertical dead loads and lateral loads is possible. It should be noted that the required 1 inch (25 mm) of mortar grout creates walls that are not considered cavity wall construction.

The second and third methods require that two layers of a water-resistive barrier be installed over the wood-stud construction to provide protection from moisture penetration.

[BS] 1405.8 Slab-type veneer. Anchored slab-type veneer units not exceeding 2 inches (51 mm) in thickness shall be anchored directly to masonry, concrete or light-frame construction. For veneer units of marble, travertine, granite or other stone units of slab form, ties of corrosion-resistant dowels in drilled holes shall be located in the middle third of the

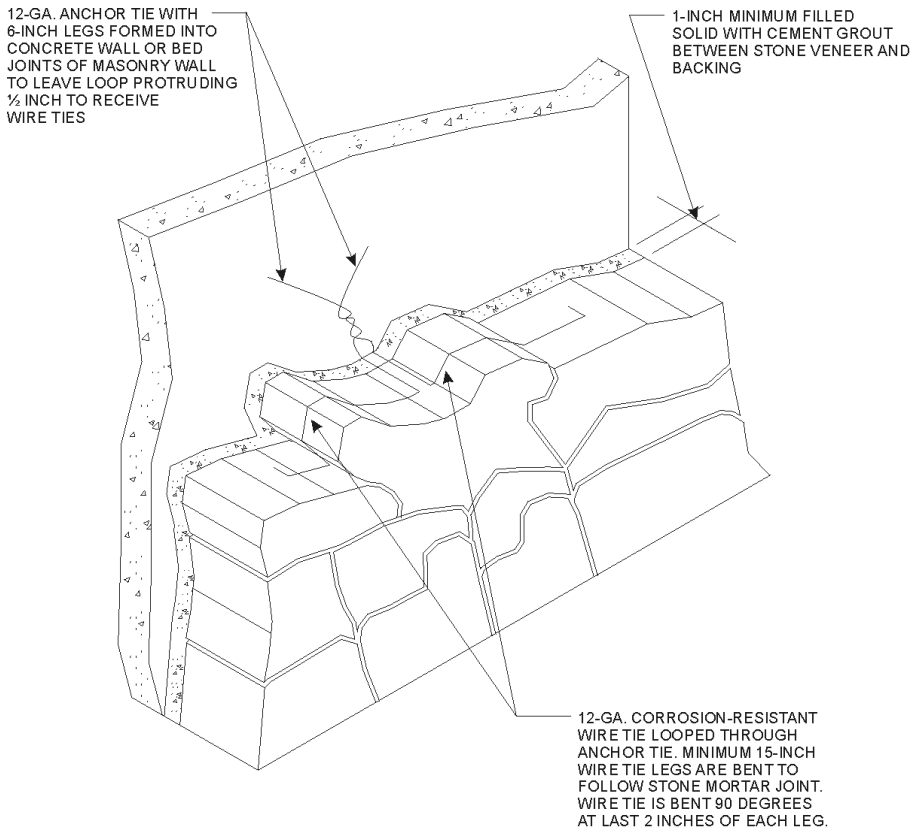

For SI: 1 inch = 25.4 mm, 90 degrees = 1.57 rad.

Figure 1405.7
STONE VENEER WITH CONCRETE BACKING

INTERNATIONAL CODE COUNCIL®
Copyright © 2015 ICC. ALL RIGHTS RESERVED. Accessed by David Dammon on Jun 21, 2017 12:30:52 PM pursuant to License Agreement with ICC. No further reproduction or distribution authorized. ANY UNAUTHORIZED REPRODUCTION OR DISTRIBUTION IS A VIOLATION OF THE FEDERAL COPYRIGHT ACT AND THE LICENSE AGREEMENT, AND SUBJECT TO CIVIL AND CRIMINAL PENALTIES THEREUNDER.

edge of the units, spaced not more than 24 inches (610 mm) apart around the periphery of each unit with not less than four ties per veneer unit. Units shall not exceed 20 square feet (1.9 m^2) in area. If the dowels are not tight fitting, the holes shall be drilled not more than 0.063 inch (1.6 mm) larger in diameter than the dowel, with the hole countersunk to a diameter and depth equal to twice the diameter of the dowel in order to provide a tight-fitting key of cement mortar at the dowel locations where the mortar in the joint has set. Veneer ties shall be corrosion-resistant metal capable of resisting, in tension or compression, a force equal to two times the weight of the attached veneer. If made of sheet metal, veneer ties shall be not smaller in area than 0.0336 by 1 inch (0.853 by 25 mm) or, if made of wire, not smaller in diameter than 0.1483-inch (3.76 mm) wire.

❖ Anchored slab-type veneer refers to thin stone masonry veneers that are individually supported. These units do not bear on the successive units below, but are anchored to and supported vertically by the backup construction with corrosion-resistant dowels located at the edges of each unit. This type of veneer anchorage applies to the use of thin stone units that are typically not set in mortar, but are made water tight at the edges through the use of sealant materials. The strength of the veneer ties is required to be adequate to support twice the weight of the veneer in tension to provide for an adequate margin of safety, such that the veneer will remain in place in case it works loose of the grout and backing.

[BS] 1405.9 Terra cotta. Anchored terra cotta or ceramic units not less than $1^5/_8$ inches (41 mm) thick shall be anchored directly to masonry, concrete or stud construction. Tied terra cotta or ceramic veneer units shall be not less than $1^5/_8$ inches (41 mm) thick with projecting dovetail webs on the back surface spaced approximately 8 inches (203 mm) on center. The facing shall be tied to the backing wall with corrosion-resistant metal anchors of not less than No. 8 gage wire installed at the top of each piece in horizontal bed joints not less than 12 inches (305 mm) nor more than 18 inches (457 mm) on center; these anchors shall be secured to $^1/_4$-inch (6.4 mm) corrosion-resistant pencil rods that pass through the vertical aligned loop anchors in the backing wall. The veneer ties shall have sufficient strength to support the full weight of the veneer in tension. The facing shall be set with not less than a 2-inch (51 mm) space from the backing wall and the space shall be filled solidly with Portland cement grout and pea gravel. Immediately prior to setting, the backing wall and the facing shall be drenched with clean water and shall be distinctly damp when the grout is poured.

❖ The minimum permitted $1^5/_8$-inch (41 mm) thickness for terra cotta units is necessary in order for each unit to have an inherent level of structural integrity. In order to increase the mechanical anchorage of the backing, dovetail webs are required and are embedded in the 2-inch (51 mm) cement grout space. The strength of the veneer ties is required to be adequate to support the full weight of the veneer in tension in order to achieve an adequate margin of safety, such that the veneer will remain in place in case it works loose of the grout and backing (see Commentary Figure 1405.9).

[BS] 1405.10 Adhered masonry veneer. Adhered masonry veneer shall comply with the applicable requirements in this section and Sections 12.1 and 12.3 of TMS 402/ACI 530/ASCE 5.

❖ Sections 12.1 and 12.3 of ACI 530/ASCE 5/TMS 402 are to be used for the design and detailing requirements for adhered masonry veneers. See the commentary for ACI 530/ASCE 5/TMS 402 for an explanation of the adhered masonry veneer requirements. Commentary Figures 1405.10(1) and 1405.10(2) illustrate two examples of an adhered masonry veneer.

[BS] 1405.10.1 Exterior adhered masonry veneer. Exterior adhered masonry veneer shall be installed in accordance with Section 1405.10 and the manufacturer's instructions.

❖ This section sets out the requirements for exterior adhered masonry veneer by reference to Section 1405.10 as a whole. Additionally, this section requires the installation to comply with the specific manufacturer's instructions.

[BS] 1405.10.1.1 Water-resistive barriers. Water-resistive barriers shall be installed as required in Section 2510.6.

❖ Requirements for the installation of water-resistive barriers are found in Section 2510.6 (stucco). Wall preparation for stucco and for exterior adhered masonry veneer is very similar, so referring to Section 2510.6 provides consistency in the code for water-resistive barrier requirements.

[BS] 1405.10.1.2 Flashing. Flashing shall comply with the applicable requirements of Section 1405.4 and the following.

❖ This section contains specific flashing requirements for exterior adhered masonry veneer at the foundation. Compliance with the general flashing requirements in Section 1405.4 is still applicable.

[BS] 1405.10.1.2.1 Flashing at foundation. A corrosion-resistant screed or flashing of a minimum 0.019-inch (0.48 mm) or 26 gage galvanized or plastic with a minimum vertical attachment flange of $3^1/_2$ inches (89 mm) shall be installed to extend not less than 1 inch (25 mm) below the foundation plate line on exterior stud walls in accordance with Section 1405.4. The water-resistive barrier shall lap over the exterior of the attachment flange of the screed or flashing.

❖ This section contains requirements for the flashing at the foundation, which are similar to the weep-screed requirements for stucco while at the same time allowing for alternatives to the stucco-specific weep screed.

INTERNATIONAL CODE COUNCIL®
Copyright © 2015 ICC. ALL RIGHTS RESERVED. Accessed by David Dammon on Jun 21, 2017 12:30:52 PM pursuant to License Agreement with ICC. No further reproduction or distribution authorized. ANY UNAUTHORIZED REPRODUCTION OR DISTRIBUTION IS A VIOLATION OF THE FEDERAL COPYRIGHT ACT AND THE LICENSE AGREEMENT, AND SUBJECT TO CIVIL AND CRIMINAL PENALTIES THEREUNDER.

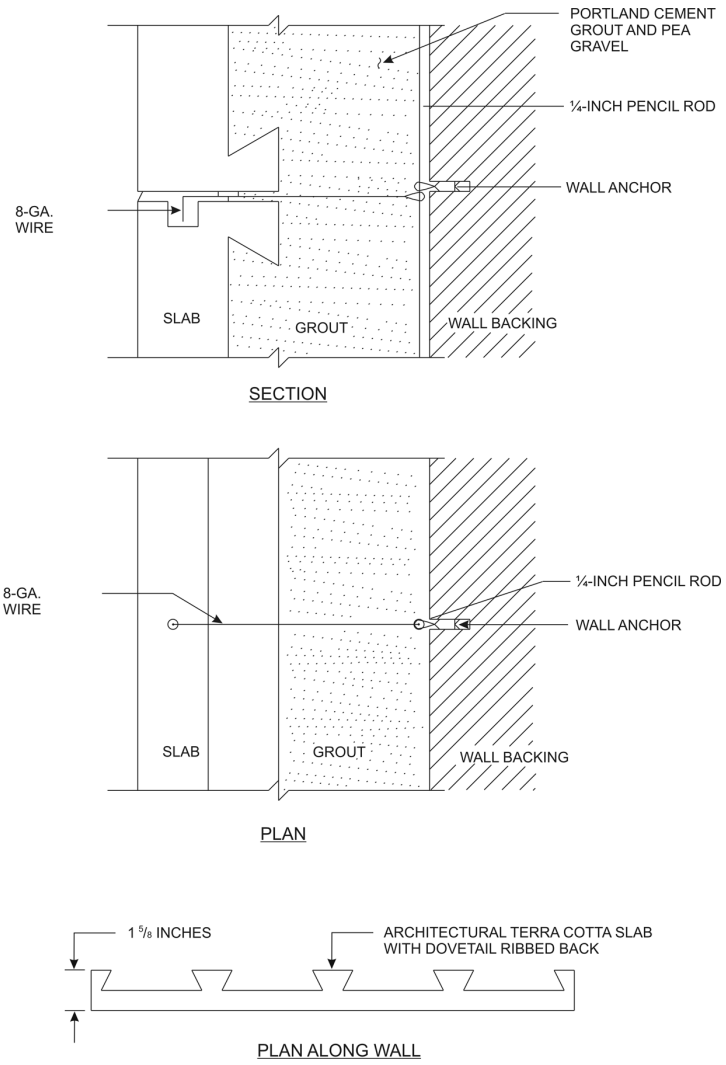

For SI: 1 inch = 25.4 mm.

Figure 1405.9
TERRA COTTA VENEER

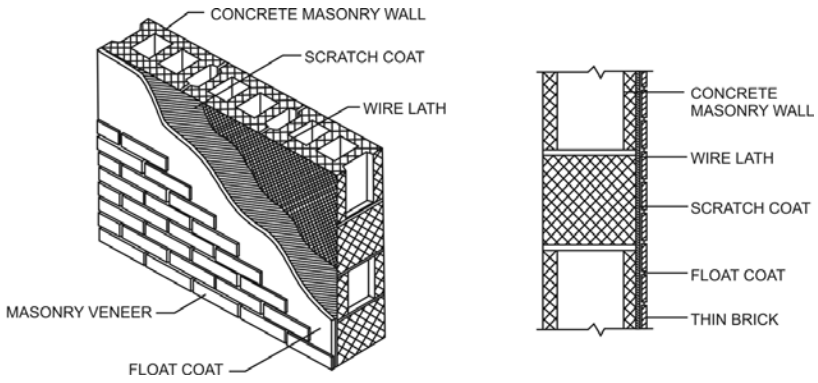

Figure 1405.10(1)
MASONRY VENEER ADHERED TO MASONRY BACKING
(Courtesy of Brick Industry)

INTERNATIONAL CODE COUNCIL®
Copyright © 2015 ICC. ALL RIGHTS RESERVED. Accessed by David Dammon on Jun 21, 2017 12:30:52 PM pursuant to License Agreement with ICC. No further reproduction or distribution authorized. ANY UNAUTHORIZED REPRODUCTION OR DISTRIBUTION IS A VIOLATION OF THE FEDERAL COPYRIGHT ACT AND THE LICENSE AGREEMENT, AND SUBJECT TO CIVIL AND CRIMINAL PENALTIES THEREUNDER.

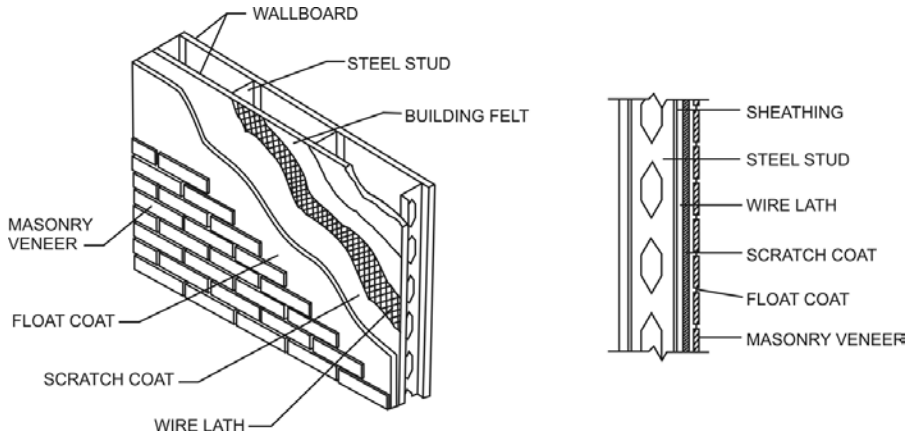

Figure 1405.10(2)
MASONRY VENEER ADHERED TO STEEL-FRAME BACKING
(Courtesy of Brick Industry)

[BS] 1405.10.1.3 Clearances. On exterior stud walls, adhered masonry veneer shall be installed not less than 4 inches (102 mm) above the earth, or not less than 2 inches (51 mm) above paved areas, or not less than $^1/_2$ inch (12.7 mm) above exterior walking surfaces that are supported by the same foundation that supports the exterior wall.

❖ The clearance requirements within this section are consistent with stucco applications. However they go one step further by specifying a minimum $^1/_2$-inch (12 mm) clearance to exterior walking surfaces that are supported by the same foundation that supports the wall to which the exterior veneer is adhered. This $^1/_2$-inch (12 mm) clearance requirement allows for architectural and aesthetic improvements in the installation of adhered masonry veneer.

[BS] 1405.10.1.4 Adhered masonry veneer installed with lath and mortar. Exterior adhered masonry veneer installed with lath and mortar shall comply with the following.

❖ The purpose of this section is to establish the minimum material and installation requirements for adhered masonry veneer installed with lath and mortar, including lathing; scratch coat; adhering veneer to scratch coat and to masonry and concrete; cold weather construction; and hot weather construction.

[BS] 1405.10.1.4.1 Lathing. Lathing shall comply with the requirements of Section 2510.

❖ Section 2510 contains material specifications and installation requirements specific to lathing for cement plaster. These requirements are applicable to adhered masonry veneer installation.

[BS] 1405.10.1.4.2 Scratch coat. A nominal $^1/_2$-inch-thick (12.7 mm) layer of mortar complying with the material requirements of Sections 2103 and 2512.2 shall be applied, encapsulating the lathing. The surface of this mortar shall be scored horizontally, resulting in a scratch coat.

❖ This section provides the minimum thickness requirement for the scratch coat to be used in the installation of the adhered veneer. The material requirements for the mortar must comply with Sections 2103.15 and 2512.2, which contain minimum mortar specifications and plasticity agent limitations.

[BS] 1405.10.1.4.3 Adhering veneer. The masonry veneer units shall be adhered to the mortar scratch coat with a nominal $^1/_2$-inch-thick (12.7 mm) setting bed of mortar complying with Sections 2103 and 2512.2 applied to create a full setting bed for the back of the masonry veneer units. The masonry veneer units shall be worked into the setting bed resulting in a nominal $^3/_8$-inch (9.5 mm) setting bed after the masonry veneer units are applied.

❖ This section provides requirements specific to adhering the masonry veneer to the scratch coat. The veneer is required to be installed in a minimum $^1/_2$-inch setting bed of mortar complying with Sections 2103.15 and 2512.2, which contain minimum mortar specifications and plasticity agent limitations.

[BS] 1405.10.1.5 Adhered masonry veneer applied directly to masonry and concrete. Adhered masonry veneer applied directly to masonry or concrete shall comply with the applicable requirements of Section 1405.10 and with the requirements of Section 1405.10.1.4 or 2510.7.

❖ Adhered masonry veneer can also be applied to masonry and concrete. This section provides minimum requirements for this application. Compliance options include application in accordance with the requirements for adhering masonry veneer with lath and mortar, bonding agents or Portland cement dash bond as described in Section 2510.7.

[BS] 1405.10.1.6 Cold weather construction. Cold weather construction of adhered masonry veneer shall comply with the requirements of Sections 2104 and 2512.4.

❖ Temperature extremes affect materials used for the installation of masonry materials. This section contains additional requirements for materials when the construction is during cold weather [ambient air tem-

INTERNATIONAL CODE COUNCIL®
Copyright © 2015 ICC. ALL RIGHTS RESERVED. Accessed by David Dammon on Jun 21, 2017 12:30:52 PM pursuant to License Agreement with ICC. No further reproduction or distribution authorized. ANY UNAUTHORIZED REPRODUCTION OR DISTRIBUTION IS A VIOLATION OF THE FEDERAL COPYRIGHT ACT AND THE LICENSE AGREEMENT, AND SUBJECT TO CIVIL AND CRIMINAL PENALTIES THEREUNDER.

perature less than 40°F (4°C)]. Section 2104.3 references a minimum standard for construction provisions to be used. Section 2512.4 contains minimum temperature requirements for cement plaster coats.

[BS] 1405.10.1.7 Hot weather construction. Hot weather construction of adhered masonry veneer shall comply with the requirements of Section 2104.

❖ Temperature extremes affect materials used for the installation of masonry materials. This section contains additional requirements for materials when the construction is during hot weather (ambient air temperature exceeding 100°F (37.8°C)]. Section 2104.4 references a minimum standard for construction provisions to be used.

[BS] 1405.10.2 Exterior adhered masonry veneers—porcelain tile. Adhered units shall not exceed $^5/_8$ inch (15.8 mm) thickness and 24 inches (610 mm) in any face dimension nor more than 3 square feet (0.28 m^2) in total face area and shall not weigh more than 9 pounds psf (0.43 kN/m^2). Porcelain tile shall be adhered to an approved backing system.

❖ To ensure proper installation, this section limits the thickness, size and weight of porcelain tile units. These limitations are consistent with current construction practices and current adhesive capabilities.

[BS] 1405.10.3 Interior adhered masonry veneers. Interior adhered masonry veneers shall have a maximum weight of 20 psf (0.958 kg/m^2) and shall be installed in accordance with Section 1405.10. Where the interior adhered masonry veneer is supported by wood construction, the supporting members shall be designed to limit deflection to $^1/_{600}$ of the span of the supporting members.

❖ This section addresses masonry veneer that is supported on wood members. The provisions of Section 2104.1.6 are not intended to preclude masonry veneer on wood supports. The deflection limit is to minimize cracking of the veneer.

[BS] 1405.11 Metal veneers. Veneers of metal shall be fabricated from *approved* corrosion-resistant materials or shall be protected front and back with porcelain enamel, or otherwise be treated to render the metal resistant to corrosion. Such veneers shall be not less than 0.0149-inch (0.378 mm) nominal thickness sheet steel mounted on wood or metal furring strips or approved sheathing on light-frame construction.

❖ All metal veneers used as exterior weather coverings are required to be manufactured from materials that are inherently corrosion resistant or protected with other materials, such as coatings, to prevent corrosion.

For sheet steel, the minimum nominal thickness is 0.0149 inches (0.38 mm), not including the thickness of the corrosion-resistant coating. For aluminum siding, a 0.019-inch-thick (0.48 mm) value is the minimum. Aluminum siding must also conform to AAMA 1402. The minimum thicknesses for other weather coverings are obtained from Table 1405.2.

[BS] 1405.11.1 Attachment. Exterior metal veneer shall be securely attached to the supporting masonry or framing members with corrosion-resistant fastenings, metal ties or by other *approved* devices or methods. The spacing of the fastenings or ties shall not exceed 24 inches (610 mm) either vertically or horizontally, but where units exceed 4 square feet (0.4 m^2) in area there shall be not less than four attachments per unit. The metal attachments shall have a cross-sectional area not less than provided by W 1.7 wire. Such attachments and their supports shall be designed and constructed to resist the wind loads as specified in Section 1609 for components and cladding.

❖ This section prescribes minimum requirements for the attachment of metal veneers to the exterior wall construction. The attachment of the veneer may be accomplished through the use of fasteners, metal ties, clips or other means. The means of attaching panels to supporting members must be able to resist the design wind loads determined in accordance with Section 1609 as required for components and cladding.

1405.11.2 Weather protection. Metal supports for exterior metal veneer shall be protected by painting, galvanizing or by other equivalent coating or treatment. Wood studs, furring strips or other wood supports for exterior metal veneer shall be *approved* pressure-treated wood or protected as required in Section 1403.2. Joints and edges exposed to the weather shall be caulked with *approved* durable waterproofing material or by other *approved* means to prevent penetration of moisture.

❖ Supports for metal veneers are required to be protected from corrosion induced by moisture. The corrosion resistance may be provided through a surface treatment applied to the metal or through the use of materials that are inherently corrosion resistant. Where wood supports are used, they must be protected through pressure treatment or covered with a minimum of one layer of water-resistive barrier as specified in Section 1404.2. Protection of joints and edges must be provided to prevent the entrance of moisture that may result in damage to the veneer, supports or building framing.

1405.11.3 Backup. Masonry backup shall not be required for metal veneer unless required by the fire-resistance requirements of this code.

❖ The type of substrate that metal veneers may be installed over is not limited, except in cases where the wall is required to have a fire-resistance rating in accordance with other sections of the code.

1405.11.4 Grounding. Grounding of metal veneers on buildings shall comply with the requirements of Chapter 27 of this code.

❖ The need to provide electrical grounding for metal veneers has been widely discussed for more than 30 years. Examples of hazards have been demonstrated where electric services have been violated. Most metal-siding manufacturers have made provisions in

INTERNATIONAL CODE COUNCIL®
Copyright © 2015 ICC. ALL RIGHTS RESERVED. Accessed by David Dammon on Jun 21, 2017 12:30:52 PM pursuant to License Agreement with ICC. No further reproduction or distribution authorized. ANY UNAUTHORIZED REPRODUCTION OR DISTRIBUTION IS A VIOLATION OF THE FEDERAL COPYRIGHT ACT AND THE LICENSE AGREEMENT, AND SUBJECT TO CIVIL AND CRIMINAL PENALTIES THEREUNDER.

their designs for grounding. This section references Chapter 27 without providing additional specifics regarding grounding of siding.

[BS] 1405.12 Glass veneer. The area of a single section of thin exterior structural glass veneer shall not exceed 10 square feet (0.93 m^2) where that section is not more than 15 feet (4572 mm) above the level of the sidewalk or grade level directly below, and shall not exceed 6 square feet (0.56 m^2) where it is more than 15 feet (4572 mm) above that level.

❖ Structural glass veneer is produced in the same manner as plate glass (see commentary, Chapter 24), with the addition of metallic oxides that are blended into the glass to provide opacity and color. To accommodate the forces due to expansion and contraction of differing materials in exterior installations, the maximum area of structural glass veneer is limited based upon the height above grade.

[BS] 1405.12.1 Length and height. The length or height of any section of thin exterior structural glass veneer shall not exceed 48 inches (1219 mm).

❖ Where Section 1405.12 regulates the maximum area of any single section of structural glass veneer, this section limits the maximum dimension of any single section to 48 inches (1219 mm) when used in exterior application.

[BS] 1405.12.2 Thickness. The thickness of thin exterior structural glass veneer shall be not less than 0.344 inch (8.7 mm).

❖ Structural glass veneers are produced in a range of thicknesses; however, the minimum thickness permitted for use as an exterior veneer is limited to $1^1/_{32}$ inches (8.7 mm).

[BS] 1405.12.3 Application. Thin exterior structural glass veneer shall be set only after backing is thoroughly dry and after application of an *approved* bond coat uniformly over the entire surface of the backing so as to effectively seal the surface. Glass shall be set in place with an *approved* mastic cement in sufficient quantity so that at least 50 percent of the area of each glass unit is directly bonded to the backing by mastic not less than $^1/_4$ inch (6.4 mm) thick and not more than $^5/_8$ inch (15.9 mm) thick. The bond coat and mastic shall be evaluated for compatibility and shall bond firmly together.

❖ Structural glass veneer is bonded to a solid backing, such as masonry, through the use of a mastic adhesive. The backing must be provided with a coating that will serve to seal it from moisture absorption, provide a uniform surface to which the mastic can adhere and provide a relatively level surface. The bond coat must be compatible for use with the backing material so that debonding will not occur over time. Some common types of bond coats are a float coat of cement mortar and portland cement stucco.

The glass veneer is attached to the bond coat by applying mastic adhesives. Mastics are characterized by their ability to remain pliable over time, rather than harden. The minimum and maximum thicknesses permitted for the mastic application are specified, since an application that is too thin would not provide an adequate bond and one that is too thick could sag over time. To minimize the possibility of debonding, it is necessary to determine that the materials intended for use as a mastic and as a bond coat are compatible with one another.

[BS] 1405.12.4 Installation at sidewalk level. Where glass extends to a sidewalk surface, each section shall rest in an *approved* metal molding, and be set at least $^1/_4$ inch (6.4 mm) above the highest point of the sidewalk. The space between the molding and the sidewalk shall be thoroughly caulked and made water tight.

❖ To protect glass veneer from breakage when installed at sidewalk level, the veneer is required to be supported by a metal molding. The molding must be protected from corrosion and be constructed of a material that is compatible for contact with the glass. The molding is to be located a minimum of $^1/_4$ inch (6.4 mm) above the sidewalk to minimize the potential for cracking of the veneer due to expansion and contraction.

[BS] 1405.12.4.1 Installation above sidewalk level. Where thin exterior structural glass veneer is installed above the level of the top of a bulkhead facing, or at a level more than 36 inches (914 mm) above the sidewalk level, the mastic cement binding shall be supplemented with *approved* nonferrous metal shelf angles located in the horizontal joints in every course. Such shelf angles shall be not less than 0.0478-inch (1.2 mm) thick and not less than 2 inches (51 mm) long and shall be spaced at *approved* intervals, with not less than two angles for each glass unit. Shelf angles shall be secured to the wall or backing with expansion bolts, toggle bolts or by other *approved* methods.

❖ Structural glass veneer installed more than 36 inches (914 mm) above sidewalk level is subject to impact from pedestrians and can pose a hazard if the veneer were to become dislodged from the backing. To minimize the potential for this occurring, it is necessary to provide additional supports that are attached to the backing. The supports are intended to supplement the mastic.

[BS] 1405.12.5 Joints. Unless otherwise specifically *approved* by the *building official*, abutting edges of thin exterior structural glass veneer shall be ground square. Mitered joints shall not be used except where specifically *approved* for wide angles. Joints shall be uniformly buttered with an *approved* jointing compound and horizontal joints shall be held to not less than 0.063 inch (1.6 mm) by an *approved* nonrigid substance or device. Where thin exterior structural glass veneer abuts nonresilient material at sides or top, expansion joints not less than $^1/_4$ inch (6.4 mm) wide shall be provided.

❖ Glass has an expansion coefficient of roughly 4.5, which is less than most metals. To minimize the potential for cracking or chipping of glass panels and the development of sharp edges due to differential movement, this section stipulates both the requirements for factory finishing of glass veneer panel

INTERNATIONAL CODE COUNCIL®
Copyright © 2015 ICC. ALL RIGHTS RESERVED. Accessed by David Dammon on Jun 21, 2017 12:30:52 PM pursuant to License Agreement with ICC. No further reproduction or distribution authorized. ANY UNAUTHORIZED REPRODUCTION OR DISTRIBUTION IS A VIOLATION OF THE FEDERAL COPYRIGHT ACT AND THE LICENSE AGREEMENT, AND SUBJECT TO CIVIL AND CRIMINAL PENALTIES THEREUNDER.

edges and the minimum requirements for joints between sections.

[BS] 1405.12.6 Mechanical fastenings. Thin exterior structural glass veneer installed above the level of the heads of show windows and veneer installed more than 12 feet (3658 mm) above sidewalk level shall, in addition to the mastic cement and shelf angles, be held in place by the use of fastenings at each vertical or horizontal edge, or at the four corners of each glass unit. Fastenings shall be secured to the wall or backing with expansion bolts, toggle bolts or by other methods. Fastenings shall be so designed as to hold the glass veneer in a vertical plane independent of the mastic cement. Shelf angles providing both support and fastenings shall be permitted.

❖ While Section 1405.12.4.1 addresses the requirements for protection of pedestrians for installations of veneer that exceed 3 feet (914 mm) above sidewalk level, this section addresses installations that exceed 12 feet (3658 mm) above sidewalk level. Installations above 12 feet (3658 mm) are not subject to impact from pedestrians but are subject to wind loads. Therefore, each veneer section must be secured in place by mechanical means, in addition to the mastic and shelf angles specified in Sections 1405.12.3 and 1405.12.6, respectively.

[BS] 1405.12.7 Flashing. Exposed edges of thin exterior structural glass veneer shall be flashed with overlapping corrosion-resistant metal flashing and caulked with a waterproof compound in a manner to effectively prevent the entrance of moisture between the glass veneer and the backing.

❖ The presence of moisture behind the glass veneer can result in loss of strength of either the mastic, the bond coat or both. In addition, corrosion of the supports or fasteners can occur. This can increase the potential for failure of the structural glass veneer. This section addresses the requirements for flashing of structural glass veneers to prevent the penetration of moisture behind the veneers.

1405.13 Exterior windows and doors. Windows and doors installed in exterior walls shall conform to the testing and performance requirements of Section 1709.5.

❖ Windows and doors that are part of the exterior building envelope are to be tested for wind-load resistance in accordance with the methods specified in Section 1710.5.2 (see commentary, Section 1710.5.2).

1405.13.1 Installation. Windows and doors shall be installed in accordance with *approved* manufacturer's instructions. Fastener size and spacing shall be provided in such instructions and shall be calculated based on maximum loads and spacing used in the tests.

❖ Windows and doors that are part of the exterior envelope are to be installed in accordance with the method in which they were tested (see Section 1405.13) and the window or door manufacturer's installation instructions.

[BS] 1405.14 Vinyl siding. Vinyl siding conforming to the requirements of this section and complying with ASTM D3679 shall be permitted on exterior walls of buildings located in areas where V_{asd} as determined in accordance with Section 1609.3.1 does not exceed 100 miles per hour (45 m/s) and the *building height* is less than or equal to 40 feet (12 192 mm) in Exposure C. Where construction is located in areas where V_{asd} as determined in accordance with Section 1609.3.1 exceeds 100 miles per hour (45 m/s), or building heights are in excess of 40 feet (12 192 mm), tests or calculations indicating compliance with Chapter 16 shall be submitted. Vinyl siding shall be secured to the building so as to provide weather protection for the exterior walls of the building.

❖ The installation of vinyl siding on Type V buildings is limited based upon the basic wind speed for a given location. For areas where the basic wind speed is greater than 100 miles per hour (44 m/s), wind load resistance testing and structural calculations supporting the ability of the siding to withstand the basic wind speed must be provided.

[BS] 1405.14.1 Application. The siding shall be applied over sheathing or materials listed in Section 2304.6. Siding shall be applied to conform to the *water-resistive barrier* requirements in Section 1403. Siding and accessories shall be installed in accordance with *approved* manufacturer's instructions. Unless otherwise specified in the *approved* manufacturer's instructions, nails used to fasten the siding and accessories shall have a minimum 0.313-inch (7.9 mm) head diameter and $^1/_8$-inch (3.18 mm) shank diameter. The nails shall be corrosion resistant and shall be long enough to penetrate the studs or nailing strip at least $^3/_4$ inch (19 mm). For cold-formed steel light-frame construction, corrosion-resistant fasteners shall be used. Screw fasteners shall penetrate the cold-formed steel framing at least three exposed threads. Other fasteners shall be installed in accordance with the approved construction documents and manufacturer's instructions. Where the siding is installed horizontally, the fastener spacing shall not exceed 16 inches (406 mm) horizontally and 12 inches (305 mm) vertically. Where the siding is installed vertically, the fastener spacing shall not exceed 12 inches (305 mm) horizontally and 12 inches (305 mm) vertically.

❖ This section prescribes requirements for the installation of vinyl siding. The installation must also comply with ASTM D4756, which is referenced in ASTM D3679 (see commentary, Section 1404.9) and the manufacturer's instructions. These instructions are necessary for compliance with the performance requirements of this chapter. The prescriptive fastener requirements of this section correspond with the requirements contained in ASTM D4756. Note that other fastening methods are allowed and must be in compliance with both the manufacturer's instructions and the construction documents.

[BS] 1405.15 Cement plaster. Cement plaster applied to exterior walls shall conform to the requirements specified in Chapter 25.

❖ The materials and installation of cement plaster (sometimes referred to as "stucco") are governed by the requirements of Chapter 25. It should be noted

INTERNATIONAL CODE COUNCIL®
Copyright © 2015 ICC. ALL RIGHTS RESERVED. Accessed by David Dammon on Jun 21, 2017 12:30:52 PM pursuant to License Agreement with ICC. No further reproduction or distribution authorized. ANY UNAUTHORIZED REPRODUCTION OR DISTRIBUTION IS A VIOLATION OF THE FEDERAL COPYRIGHT ACT AND THE LICENSE AGREEMENT, AND SUBJECT TO CIVIL AND CRIMINAL PENALTIES THEREUNDER.

that cement plaster is the only plaster type that is permitted for exterior use. Gypsum plaster, which is also governed by Chapter 25, is generally subject to deterioration in the presence of moisture and is therefore not permitted for use in exterior applications.

[BS] 1405.16 Fiber-cement siding. Fiber-cement siding complying with Section 1404.10 shall be permitted on exterior walls of Type I, II, III, IV and V construction for wind pressure resistance or wind speed exposures as indicated by the manufacturer's listing and *label* and *approved* installation instructions. Where specified, the siding shall be installed over sheathing or materials *listed* in Section 2304.6 and shall be installed to conform to the *water-resistive barrier* requirements in Section 1403. Siding and accessories shall be installed in accordance with *approved* manufacturer's instructions. Unless otherwise specified in the *approved* manufacturer's instructions, nails used to fasten the siding to wood studs shall be corrosion-resistant round head smooth shank and shall be long enough to penetrate the studs at least 1 inch (25 mm). For cold-formed steel light-frame construction, corrosion-resistant fasteners shall be used. Screw fasteners shall penetrate the cold-formed steel framing at least three exposed full threads. Other fasteners shall be installed in accordance with the approved construction documents and manufacturer's instructions.

❖ Fiber cement siding is also a material used for weather-resistant siding. It is manufactured from fiber-reinforced cement, and the code permits its use as either panel siding or horizontal lap siding. Sections 1405.16.1 and 1405.16.2 state that the applicable material standard is ASTM C1186. Note that the product is required to bear a label, which means that the manufacturer must have regular inspections by a third-party control agency. This section contains prescriptive fastener requirements. However, other fastening methods are allowed and must be in compliance with both the manufacturer's instructions and the construction documents.

[BS] 1405.16.1 Panel siding. Fiber-cement panels shall comply with the requirements of ASTM C1186**,** Type A, minimum Grade II (or ISO 8336, Category A, minimum Class 2). Panels shall be installed with the long dimension either parallel or perpendicular to framing. Vertical and horizontal joints shall occur over framing members and shall be protected with caulking, with battens or flashing, or be vertical or horizontal shiplap or otherwise designed to comply with Section 1403.2. Panel siding shall be installed with fasteners in accordance with the *approved* manufacturer's instructions.

❖ This section specifies the material standards and type of material required for fiber cement siding used in a panel configuration. In addition, details of installation necessary for fiber cement siding are specified.

[BS] 1405.16.2 Lap siding. Fiber-cement lap siding having a maximum width of 12 inches (305 mm) shall comply with the requirements of ASTM C1186, Type A, minimum Grade II (or ISO 8336, Category A, minimum Class 2). Lap siding shall be lapped a minimum of $1^1/_4$ inches (32 mm) and lap siding not having tongue-and-groove end joints shall have the ends protected with caulking, covered with an H-section joint cover, located over a strip of flashing or shall be otherwise designed to comply with Section 1403.2. Lap siding courses shall be installed with the fastener heads exposed or concealed in accordance with the *approved* manufacturer's instructions.

❖ This section specifies the material standards and type of material required for fiber cement siding used in a lap configuration. In addition, details of installation necessary for fiber cement siding are specified.

[BS] 1405.17 Fastening. Weather boarding and wall coverings shall be securely fastened with aluminum, copper, zinc, zinc-coated or other *approved* corrosion-resistant fasteners in accordance with the nailing schedule in Table 2304.10.1 or the *approved* manufacturer's instructions. Shingles and other weather coverings shall be attached with appropriate standard-shingle nails to furring strips securely nailed to studs, or with *approved* mechanically bonding nails, except where sheathing is of wood not less than 1-inch (25 mm) nominal thickness or of wood structural panels as specified in Table 2308.9.3(3).

❖ The proper attachment of exterior weatherboard or cladding is critical in order for those items to remain durable and stay in place under anticipated weather conditions. This section requires noncorrodible nails and other connectors. The requirements of Table 2304.9.1 address the attachment of wood structural panels and panels of particleboard and fiberboard. Lapped siding products of these materials are to be attached in accordance with the manufacturer's installation instructions.

The relatively narrow and variable widths of wood shingles and shakes make it necessary to provide a continuous nailing base. This is permitted to be wood sheathing, wood structural panels not less than $^5/_{16}$ inch (7.9 mm) thick or horizontal furring strips. Dimension lumber furring strips are required to be 1-inch (25 mm) minimum nominal thickness. Shingles are attached with special mechanically bonded nails.

Wood shingles and shakes are required to be fastened with at least No. 14 B&S-gage corrosion-resistant nails in accordance with Table 2304.9.1. The nail must be long enough to penetrate the framing, sheathing or furring strip at least $^3/_4$ inch (19.1 mm). In accordance with Sections 1507.8.6 (shingles) and 1507.9.7 (shakes), shingles and shakes must be fastened with not more than two fasteners per shingle or shake.

Wood siding must be attached to the sheathing or framing in accordance with Table 2304.10.1. The method of nailing for the various siding patterns is illustrated in Commentary Figure 1405.17. Wood siding, especially plain bevel siding, applied over foam plastic sheathing requires special attention to nailing. Cooperative research by the lumber and plastic industries has shown that poor performance may be expected if the nailing is inadequate. Since the foam plastic sheathing is not an adequate nail base, the siding is required to be nailed through the sheathing to the wood-framing members. Condensation can

INTERNATIONAL CODE COUNCIL®
Copyright © 2015 ICC. ALL RIGHTS RESERVED. Accessed by David Dammon on Jun 21, 2017 12:30:52 PM pursuant to License Agreement with ICC. No further reproduction or distribution authorized. ANY UNAUTHORIZED REPRODUCTION OR DISTRIBUTION IS A VIOLATION OF THE FEDERAL COPYRIGHT ACT AND THE LICENSE AGREEMENT, AND SUBJECT TO CIVIL AND CRIMINAL PENALTIES THEREUNDER.

occur on the sheathing and the back of the siding, keeping the back wet. The weather face will remain dry. This differential moisture condition will cause the siding to "curl" or warp and pull improperly installed nails out of the framing members.

[BS] 1405.18 Polypropylene siding. Polypropylene siding conforming to the requirements of this section and complying with Section 1404.12 shall be limited to exterior walls of Type VB construction located in areas where the wind speed specified in Chapter 16 does not exceed 100 miles per hour (45 m/s) and the building height is less than or equal to 40 feet (12 192 mm) in Exposure C. Where construction is located in areas where the basic wind speed exceeds 100 miles per hour (45 m/s), or building heights are in excess of 40 feet (12 192 mm), tests or calculations indicating compliance with Chapter 16 shall be submitted. Polypropylene siding shall be installed in accordance with the manufacturer's instructions. Polypropylene siding shall be secured to the building so as to provide weather protection for the exterior walls of the building.

❖ The installation of polypropylene siding is limited to Type VB buildings and is further limited based upon the basic wind speed, building height and exposure category for a given location. For areas where the basic wind speed is greater than 100 miles per hour (44 m/s), wind-load-resistance testing and structural calculations supporting the ability of the siding to withstand the basic wind speed must be provided.

SECTION 1406
COMBUSTIBLE MATERIALS ON THE EXTERIOR SIDE OF EXTERIOR WALLS

1406.1 General. Section 1406 shall apply to *exterior wall coverings*; balconies and similar projections; and bay and oriel windows constructed of combustible materials.

❖ The requirements given in this section apply to exterior elements of combustible construction. The elements included are exterior wall veneers such as vinyl or wood siding, architectural trim, gutters, half-timbering, balconies, bay and oriel windows, plastic panels and foam plastics. The code requires walls to be noncombustible for buildings of construction Types I, II, III and IV, in order to limit the fuel load. Many common types of materials used for architectural enhancement of exterior walls are combustible. Therefore, the code provides limitations as well as requirements for flame spread and radiant heat exposure testing in order to mitigate the hazards associated with combustible materials as permitted elements of noncombustible construction.

1406.2 Combustible exterior wall coverings. Combustible *exterior wall coverings* shall comply with this section.

Exception: Plastics complying with Chapter 26.

❖ The specific requirements relating to the combustible exterior wall finish include resistance to ignition through radiant heat-exposure testing (see Section 1406.2.1.1) and limitations on the height and the amount of combustible materials.

The exception is provided for plastic materials that comply with the requirements of Chapter 26 for limitations on flame spread, ignition properties and amount of plastic.

1406.2.1 Type I, II, III and IV construction. On buildings of Type I, II, III and IV construction, exterior wall coverings shall be permitted to be constructed of combustible materials, complying with the following limitations:

1. Combustible exterior wall coverings shall not exceed 10 percent of an exterior wall surface area where the fire separation distance is 5 feet (1524 mm) or less.
2. Combustible exterior wall coverings shall be limited to 40 feet (12 192 mm) in height above grade plane.
3. Combustible exterior wall coverings constructed of fire-retardant-treated wood complying with Section 2303.2 for exterior installation shall not be limited in wall surface area where the fire separation distance is 5 feet (1524 mm) or less and shall be permitted up to 60 feet (18 288 mm) in height above grade plane regardless of the fire separation distance.

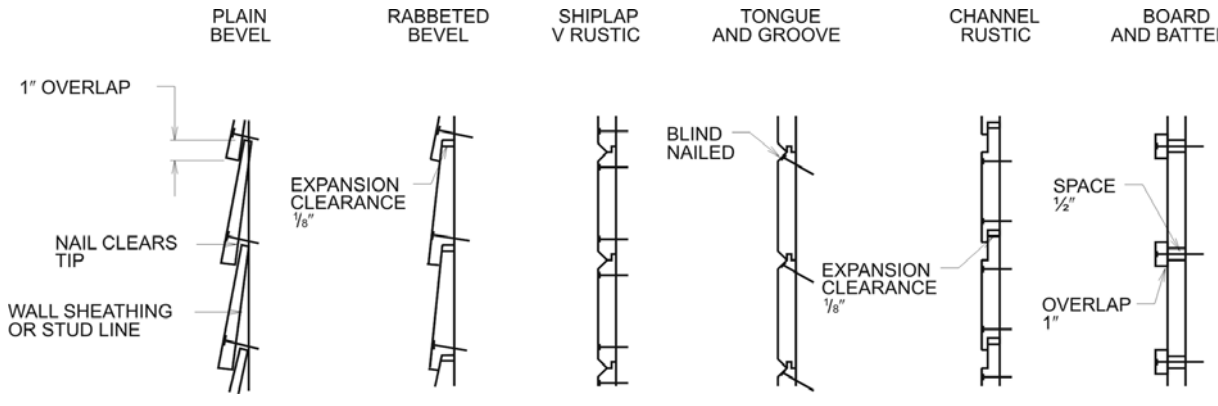

For SI: 1 inch = 25.4 mm.

Figure 1405.17
WOOD WEATHERBOARD ATTACHMENT

INTERNATIONAL CODE COUNCIL®
Copyright © 2015 ICC. ALL RIGHTS RESERVED. Accessed by David Dammon on Jun 21, 2017 12:30:52 PM pursuant to License Agreement with ICC. No further reproduction or distribution authorized. ANY UNAUTHORIZED REPRODUCTION OR DISTRIBUTION IS A VIOLATION OF THE FEDERAL COPYRIGHT ACT AND THE LICENSE AGREEMENT, AND SUBJECT TO CIVIL AND CRIMINAL PENALTIES THEREUNDER.

4. Wood veneers shall comply with Section 1405.5.

❖ The purpose of this section is to address the hazards associated with combustible material used on exterior walls of building and structures (i.e., "Exterior wall coverings" as defined in Chapter 2). This section allows combustible exterior wall coverings under specific limitations. The first limitation addresses fire exposure from adjacent structures by limiting the area of the combustible covering when the fire separation distance is 5 feet (1524 mm) or less. When applying the second limitation, all architectural trim and exterior veneers on buildings of Type I, II, Ill and IV construction that are more than 40 feet (12 192 mm) above grade are required to be noncombustible. This is primarily because of the difficulties associated with fire-fighter access to higher portions of a building and to minimize potential injury from flying brands at high elevation. Combustible architectural trim and exterior veneers are permitted below the 40-foot (12 192 mm) height even when the overall building height exceeds 40 feet (12 192 mm). The third limitation addresses the FRTW. FRTW used as an exterior wall covering is unlimited in area regardless of the fire separation distance. The only qualification is that the material is limited to 60 feet (18 288 mm) in height above grade. FRTW is pressure treated with chemicals that make the wood more resistant to flame spread. Therefore, it can be expected to perform better than other combustible materials in the resistance to flame. The fourth limitation requires wood materials to comply with Section 1405.5, which contains limitations specific to wood veneers. Lastly, combustible exterior wall coverings are permitted on buildings of Type V construction without limitation. It should be noted that although Table 504.3 limits buildings of Type V construction to 40 feet (12 192 mm) in height, such buildings may be increased in height when protected with an automatic sprinkler system in accordance with Section 903.3.1.1.

1406.2.1.1 Ignition resistance. Where permitted by Section 1406.2.1, combustible exterior wall coverings shall be tested in accordance with NFPA 268.

Exceptions:

1. Wood or wood-based products.
2. Other combustible materials covered with an exterior weather covering, other than vinyl sidings, included in and complying with the thickness requirements of Table 1405.2.
3. Aluminum having a minimum thickness of 0.019 inch (0.48 mm).

❖ In order to provide a level of safety for adjoining property that is consistent with the fire-safety provisions for opening limitations in exterior walls, radiant-heat testing is required for combustible materials other than wood, using 1.25 W/cm^2 as a baseline exposure criterion.

This section requires that testing be performed in accordance with the NFPA 268 test method to measure the incident radiant heat that will cause a given exterior finish material to ignite.

There are three exceptions to the test requirements. Exception 1 is given because wood or wood-based products have been chosen as the baseline criteria for evaluation of other combustible materials. Testing in accordance with this section would be redundant since such materials are in compliance by virtue of being the baseline material.

Exception 2 relates to materials covered by one of the veneers listed in Table 1405.2, including the minimum material thickness requirements. For example, the exception would apply to the building paper under vinyl siding, not the vinyl siding itself. Again, this is an exception to eliminate any confusion that might result from the presence within a wall assembly of combustible components that are not the exposed exterior finish.

Exception 3 is provided because, although most aluminum alloys are combustible, aluminum has a higher ignition temperature than wood. Although not tested, it is anticipated that the critical radiant heat flux would therefore also be higher.

1406.2.1.1.1 Fire separation 5 feet or less. Where installed on exterior walls having a fire separation distance of 5 feet (1524 mm) or less, combustible exterior wall coverings shall not exhibit sustained flaming as defined in NFPA 268.

❖ In order to qualify for use on walls with a fire separation distance as little as 5 feet (1524 mm), the material must not flame when exposed to a 12.5 kW/m^2 exposure.

1406.2.1.1.2 Fire separation greater than 5 feet. For fire separation distances greater than 5 feet (1524 mm), any exterior wall covering shall be permitted that has been exposed to a reduced level of incident radiant heat flux in accordance with the NFPA 268 test method without exhibiting sustained flaming. The minimum fire separation distance required for the exterior wall covering shall be determined from Table 1406.2.1.1.2 based on the maximum tolerable level of inci-

INTERNATIONAL CODE COUNCIL®
Copyright © 2015 ICC. ALL RIGHTS RESERVED. Accessed by David Dammon on Jun 21, 2017 12:30:52 PM pursuant to License Agreement with ICC. No further reproduction or distribution authorized. ANY UNAUTHORIZED REPRODUCTION OR DISTRIBUTION IS A VIOLATION OF THE FEDERAL COPYRIGHT ACT AND THE LICENSE AGREEMENT, AND SUBJECT TO CIVIL AND CRIMINAL PENALTIES THEREUNDER.

dent radiant heat flux that does not cause sustained flaming of the exterior wall covering.

❖ Exterior wall coverings with a lower tolerance to radiant heat (less than 12.5 kW/m^2) can be used, but the trade-off is an increased fire separation distance to reduce the potential of ignition from radiant heat.

TABLE 1406.2.1.1.2
MINIMUM FIRE SEPARATION FOR COMBUSTIBLE EXTERIOR WALL COVERINGS

FIRE SEPARATION DISTANCE (feet)	TOLERABLE LEVEL INCIDENT RADIANT HEAT ENERGY (kW/m^2)	FIRE SEPARATION DISTANCE (feet)	TOLERABLE LEVEL INCIDENT RADIANT HEAT ENERGY (kW/m^2)
5	12.5	16	5.9
6	11.8	17	5.5
7	11.0	18	5.2
8	10.3	19	4.9
9	9.6	20	4.6
10	8.9	21	4.4
11	8.3	22	4.1
12	7.7	23	3.9
13	7.2	24	3.7
14	6.7	25	3.5
15	6.3		

For SI: 1 foot = 304.8 mm, 1 Btu/H^2 × °F = 0.0057 kW/m^2 × K.

❖ The table provides an increased minimum fire separation distance where the resistance of a material to radiant heat is less than the 12.5 kW/m^2 required for veneers on walls with a separation distance of 5 feet (1524 mm). The required resistance to radiant heat decreases with increasing separation distances. It is not anticipated that interpolation will be involved, since fire separation distances are not enforced in fractions of feet. For example, if testing indicated a tolerable level of radiant heat energy of 9.5 kW/m^2, the required minimum fire separation distance would be 10 feet (30 480 mm).

1406.2.2 Location. Combustible exterior wall coverings located along the top of exterior walls shall be completely backed up by the exterior wall and shall not extend over or above the top of the exterior wall.

❖ Combustible trim is not permitted to extend above the exterior wall to which it is attached. This is intended to limit the overall potential involvement of exterior combustible materials in a fire and to reduce the risk of fire spreading to or from such materials from the interior limits of the building. A typical example of architectural trim in this instance is a wood canopy attached to the exterior wall of a strip shopping center, with the canopy fully backed up by the wall.

1406.2.3 Fireblocking. Where the combustible exterior wall covering is furred out from the exterior wall and forms a solid surface, the distance between the back of the exterior wall covering and the exterior wall shall not exceed $1^5/_8$ inches (41 mm). The concealed space thereby created shall be fireblocked in accordance with Section 718.

Exception: The distance between the back of the exterior wall covering and the exterior wall shall be permitted to exceed $1^5/_8$ inches (41 mm) where the concealed space is not required to be fireblocked by Section 718.

❖ This section limits the area of concealed space behind combustible veneers installed on the exterior of buildings of Type I, II, III or IV construction. The intent of fireblocking is to limit the potential for fire to spread through the concealed spaces formed by combustible veneers or architectural trim. Fireblocking materials and methods are regulated by Section 718.

The exception allows for larger distances between the exterior wall covering and the exterior wall, provided that firestopping in accordance with Section 718 is not required. The applicable exception in Section 718.2.6 is Exception 2, which allows the fireblocking to be omitted when the face of the combustible exterior wall covering exposed to the concealed space is covered by the noncombustible materials listed in that exception. Furthermore, Exception 3 to Section 718.2.6 allows the omission of fireblocking in these concealed spaces when the exterior wall covering has been tested in accordance with NFPA 285 and has successfully met the acceptance criteria therein. In both those cases, there will be little opportunity for a fire in the concealed space to spread via the materials in the concealed space because of their noncombustible coverings or because they successfully passed NFPA 285 to show limited fire and flame spread over the face of, as well as within the interior of, the exterior wall system.

1406.3 Balconies and similar projections. Balconies and similar projections of combustible construction other than fire-retardant-treated wood shall be fire-resistance rated where required by Table 601 for floor construction or shall be of Type IV construction in accordance with Section 602.4. The aggregate length of the projections shall not exceed 50 percent of the building's perimeter on each floor.

Exceptions:

1. On buildings of Type I and II construction, three stories or less above *grade plane*, *fire-retardant-treated wood* shall be permitted for balconies, porches, decks and exterior stairways not used as required exits.
2. Untreated wood is permitted for pickets and rails or similar guardrail devices that are limited to 42 inches (1067 mm) in height.
3. Balconies and similar projections on buildings of Type III, IV and V construction shall be permitted to be of Type V construction, and shall not be required to have a *fire-resistance rating* where sprinkler protection is extended to these areas.

INTERNATIONAL CODE COUNCIL®
Copyright © 2015 ICC. ALL RIGHTS RESERVED. Accessed by David Dammon on Jun 21, 2017 12:30:52 PM pursuant to License Agreement with ICC. No further reproduction or distribution authorized. ANY UNAUTHORIZED REPRODUCTION OR DISTRIBUTION IS A VIOLATION OF THE FEDERAL COPYRIGHT ACT AND THE LICENSE AGREEMENT, AND SUBJECT TO CIVIL AND CRIMINAL PENALTIES THEREUNDER.

4. Where sprinkler protection is extended to the balcony areas, the aggregate length of the balcony on each floor shall not be limited.

❖ Because these elements are, in a sense, an extension of floor construction, combustible appendages are required to afford the same required fire-resistance rating as required for floor construction in Table 602, unless the appendage is of FRTW or heavy timber construction (Type IV construction). As an additional safeguard against exterior fire spread, the aggregate length of combustible appendages must not exceed 50 percent of the building perimeter on each floor. Balconies, porches, decks, supplemental exterior stairs and similar appendages in buildings of Types I and II construction are required to be constructed of noncombustible materials in order to prevent fire involvement and fire spread up or along the exterior of a noncombustible building. In buildings of Types III, IV and V construction, the use of combustible materials for these elements is permitted.

Exception 1 permits balconies and similar appendages to be constructed of FRTW where buildings of Types I and II construction do not exceed three stories in height. This is because of limited combustibility of FRTW. The three-story limitation is similar to the provisions contained in Section 1406.2.1 for combustible trim.

Exception 2 permits the use of combustible guardrails and handrails for all types of construction in an attempt to alleviate the warping and maintenance problems associated with thin lumber members used for pickets and rails. These items need not be constructed of FRTW.

Exception 3 is applicable to buildings of Types III, IV and V construction. Balconies and similar projections need not be constructed of FRTW nor have a fire-resistance rating when the appendages are protected with an automatic sprinkler system. The presence of sprinkler protection, such as a dry pendent sprinkler, will also serve to limit fire spread from floor to floor.

Balconies, porches, decks and supplemental exterior stairways that are not attached to or supported by the building are separate structures and are to be built accordingly. Although the structural support may be independent, such structures could serve to assist vertical fire spread depending on the construction of the exterior wall and the presence or lack of opening protectives.

1406.4 Bay and oriel windows. Bay and oriel windows shall conform to the type of construction required for the building to which they are attached.

Exception: *Fire-retardant-treated wood* shall be permitted on buildings three stories or less above grade plane of Type I, II, III or IV construction.

❖ In all buildings of other than Type V construction, bay windows and similar appendages are required to be constructed of noncombustible materials (see Commentary Figure 1406.4). This is consistent with the requirements for exterior walls in Type I, II, lll or IV construction in Sections 602.2 through 602.4. Based upon the limited combustibility of these elements of FRTW, the exception permits their use on buildings of

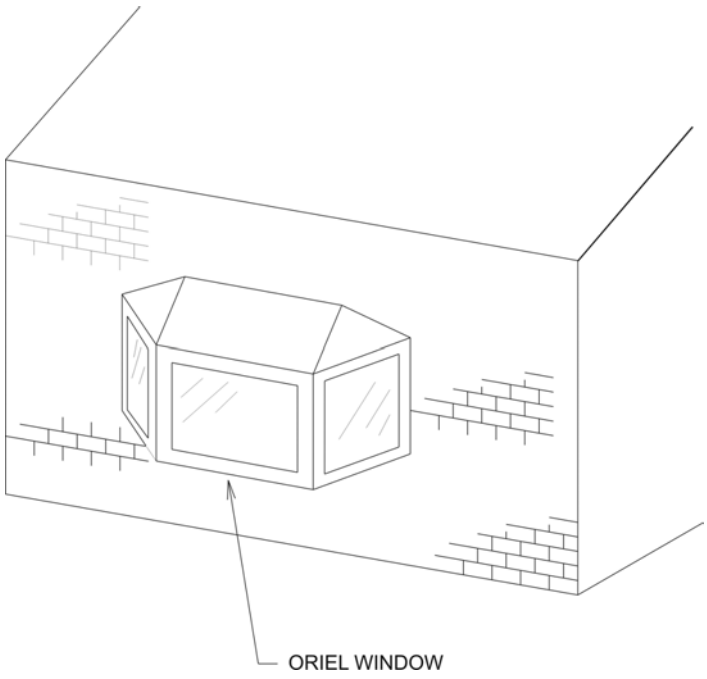

Figure 1406.4
ORIEL WINDOW

INTERNATIONAL CODE COUNCIL®
Copyright © 2015 ICC. ALL RIGHTS RESERVED. Accessed by David Dammon on Jun 21, 2017 12:30:52 PM pursuant to License Agreement with ICC. No further reproduction or distribution authorized. ANY UNAUTHORIZED REPRODUCTION OR DISTRIBUTION IS A VIOLATION OF THE FEDERAL COPYRIGHT ACT AND THE LICENSE AGREEMENT, AND SUBJECT TO CIVIL AND CRIMINAL PENALTIES THEREUNDER.

Type I, II, Ill or IV construction when the elements are constructed of FRTW and the building does not exceed three stories.

SECTION 1407
METAL COMPOSITE MATERIALS (MCM)

1407.1 General. The provisions of this section shall govern the materials, construction and quality of metal composite materials (MCM) for use as *exterior wall coverings* in addition to other applicable requirements of Chapters 14 and 16.

❖ MCMs are panels with a solid plastic core that is encapsulated with an aluminum facer on both sides. MCMs are typically used in exterior applications as a weather covering; however, they do not provide insulation. Section 1407 regulates MCMs that are used as exterior wall coverings. MCM used in a specific assembly, including joints and structure attachments and attachment members, are MCM systems. Commentary Figures 1407.1(1), 1407.1(2) and 1407.1(3) illustrate the details of some types of MCM systems.

1407.2 Exterior wall finish. MCM used as *exterior wall* finish or as elements of balconies and similar projections and bay and oriel windows to provide cladding or weather resistance shall comply with Sections 1407.4 through 1407.14.

❖ The plastic core of aluminum composite materials is a combustible material. This section provides a correlation with Sections 1406.2, 1406.3 and 1406.4 regulating the use of combustible materials on the exterior of buildings.

1407.3 Architectural trim and embellishments. MCM used as architectural *trim* or embellishments shall comply with Sections 1407.7 through 1407.14.

❖ In a manner similar to Section 1407.2, the provisions of this section provide a correlation with Section 1406.2.1, which regulates the use of combustible trim on the exterior of buildings.

1407.4 Structural design. MCM systems shall be designed and constructed to resist wind loads as required by Chapter 16 for components and cladding.

❖ As previously stated in numerous locations throughout this chapter, exterior weather coverings must be designed and installed to resist the design wind loads required by Chapter 16. These provisions apply to the MCM panels, the supporting elements that are part of the MCM system and the attachment of the system to the building frame.

1407.5 Approval. Results of *approved* tests or an engineering analysis shall be submitted to the *building official* to verify compliance with the requirements of Chapter 16 for wind loads.

❖ The determination that an MCM system will be able to resist a specific wind load may be accomplished through wind load testing, structural engineering calculations or a combination of both. In all instances, documentation substantiating the system's ability to resist the design wind loads is required to be submitted to the building official.

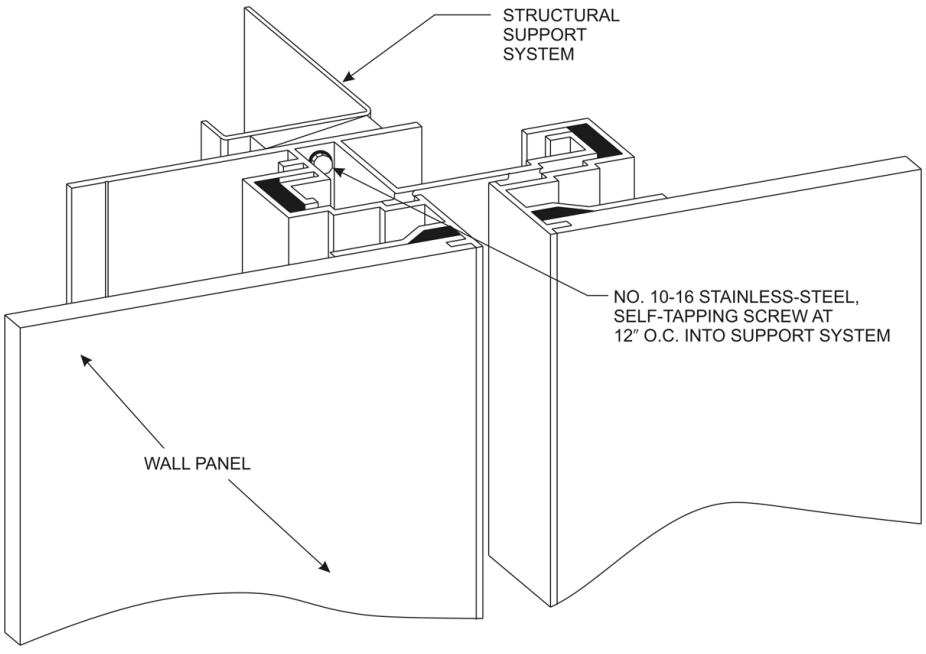

For SI: 1 inch = 25.4 mm.

Figure 1407.1(1)
CONTINUOUS EDGE GRIP SYSTEM

INTERNATIONAL CODE COUNCIL®
Copyright © 2015 ICC. ALL RIGHTS RESERVED. Accessed by David Dammon on Jun 21, 2017 12:30:52 PM pursuant to License Agreement with ICC. No further reproduction or distribution authorized. ANY UNAUTHORIZED REPRODUCTION OR DISTRIBUTION IS A VIOLATION OF THE FEDERAL COPYRIGHT ACT AND THE LICENSE AGREEMENT, AND SUBJECT TO CIVIL AND CRIMINAL PENALTIES THEREUNDER.

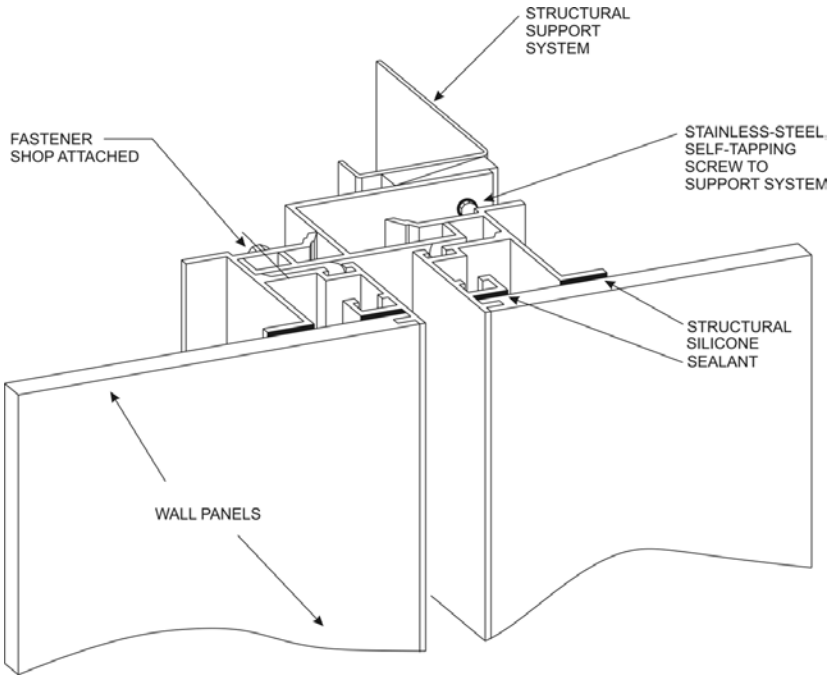

Figure 1407.1(2)
SECTION THROUGH VERTICAL JOINT (HORIZONTAL JOINT SIMILAR)

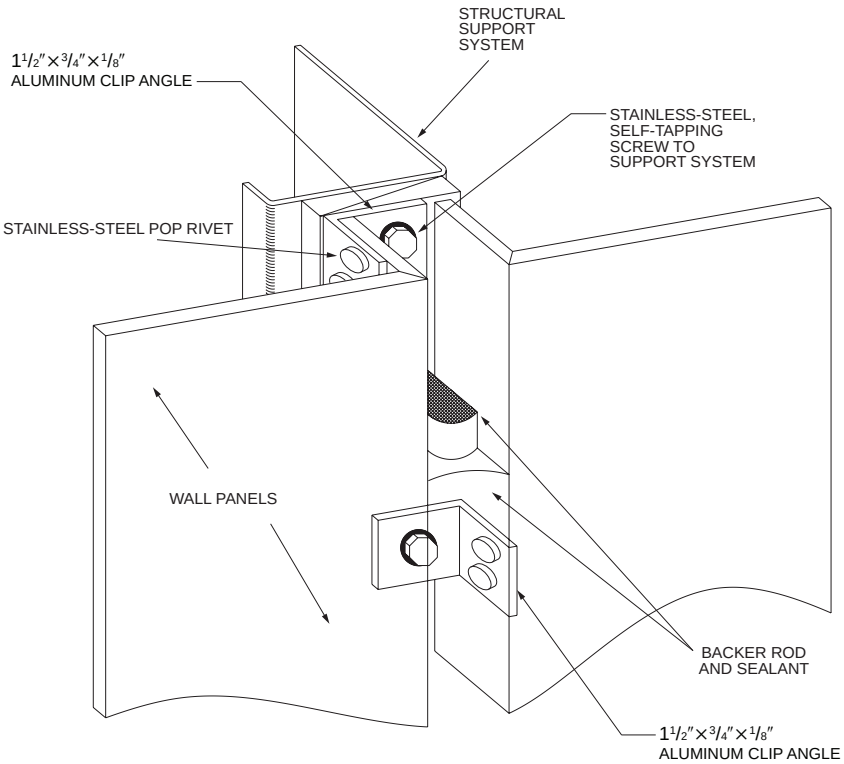

For SI: 1 inch = 25.4 mm.

Figure 1407.1(3)
TYPICAL RUT AND RETURN SYSTEM SECTION THROUGH VERTICAL JOINT (HORIZONTAL JOINT SIMILAR)

INTERNATIONAL CODE COUNCIL®
Copyright © 2015 ICC. ALL RIGHTS RESERVED. Accessed by David Dammon on Jun 21, 2017 12:30:52 PM pursuant to License Agreement with ICC. No further reproduction or distribution authorized. ANY UNAUTHORIZED REPRODUCTION OR DISTRIBUTION IS A VIOLATION OF THE FEDERAL COPYRIGHT ACT AND THE LICENSE AGREEMENT, AND SUBJECT TO CIVIL AND CRIMINAL PENALTIES THEREUNDER.

1407.6 Weather resistance. MCM systems shall comply with Section 1403 and shall be designed and constructed to resist wind and rain in accordance with this section and the manufacturer's installation instructions.

❖ As with other exterior weather coverings, MCM systems must comply with the requirements of Section 1403 to prevent the entry of moisture into the building or structure. The manufacturer's installation instructions contain details that are specific to a weather-tight installation.

1407.7 Durability. MCM systems shall be constructed of *approved* materials that maintain the performance characteristics required in Section 1407 for the duration of use.

❖ All materials used as weather coverings are required to exhibit a certain level of durability to be effective in providing protection to the structure and its occupants. MCM panels are a composite construction and the bond between the aluminum facing and plastic core must be maintained for the material to maintain the performance characteristics specified in Section 1407. For example, if the bond between the panel and core is not durable, debonding could occur. This could result in detrimental performance, such as possible water intrusion.

1407.8 Fire-resistance rating. Where MCM systems are used on exterior walls required to have a *fire-resistance rating* in accordance with Section 705, evidence shall be submitted to the *building official* that the required *fire-resistance rating* is maintained.

Exception: MCM systems not containing foam plastic insulation, which are installed on the outer surface of a fire-resistance-rated *exterior wall* in a manner such that the attachments do not penetrate through the entire *exterior wall* assembly, shall not be required to comply with this section.

❖ Evidence must be submitted to confirm that the installation of MCM systems will not reduce the fire-resistance rating of exterior walls that are required by Section 704.5 to have a rating. These data may consist of testing performed in accordance with ASTM E119 of the MCM applied to the fire-resistance-rated wall assembly, as provided for in Section 703.2, or an alternative method, such as engineering analysis, as provided for in Section 703.3, respectively (see commentary, Sections 703.2 and 703.3).

1407.9 Surface-burning characteristics. Unless otherwise specified, MCM shall have a *flame spread index* of 75 or less and a smoke-developed index of 450 or less when tested in the maximum thickness intended for use in accordance with ASTM E84 or UL 723.

❖ MCMs are required to have a basic flame spread index of 75 and a smoke-developed index of 450. This is consistent with the requirements for other types of plastics intended for use in building construction, including foam plastics. As indicated in Section 1407.10.1, the flame spread rating required is more restrictive (25 or less) when MCMs are installed on buildings of Types I, II, Ill and IV construction.

1407.10 Type I, II, III and IV construction. Where installed on buildings of Type I, II, III and IV construction, MCM systems shall comply with Sections 1407.10.1 through 1407.10.4, or Section 1407.11.

❖ Due to the combustible core of MCM panels, the fire performance of these panels is regulated. Sections 1407.10.1 through 1407.10.4 stipulate the fire testing that is required to permit the use of these materials on buildings of other than Type V construction. It should be noted that the requirements of these sections are similar to the provisions contained in Chapter 26 for foam plastic materials. Where fire testing is specified, the panels are required to be tested in the maximum thickness intended for use. This is because the maximum thickness represents the greatest potential fuel load in a fire condition.

It should be noted that since MCM panels have an aluminum facing with a minimum thickness of 0.019 inch (0.48 mm), these materials are not required to undergo the ignition-resistance testing required by Section 1406.2.1.

1407.10.1 Surface-burning characteristics. MCM shall have a *flame spread index* of not more than 25 and a smoke-developed index of not more than 450 when tested as an assembly in the maximum thickness intended for use in accordance with ASTM E84 or UL 723.

❖ The limitations on the maximum flame spread and smoke-developed indexes correspond with the requirements of Section 2603.5.4 for foam plastic materials used on the exterior of buildings of other than Type V construction (see commentary, Section 2603.5.4).

1407.10.2 Thermal barriers. MCM shall be separated from the interior of a building by an approved thermal barrier consisting of $^1/_2$-inch (12.7 mm) gypsum wallboard or a material that is tested in accordance with and meets the acceptance criteria of both the Temperature Transmission Fire Test and the Integrity Fire Test of NFPA 275.

❖ The requirements for the installation of a thermal barrier to separate the MCM from the interior of the building are similar to the requirements contained in Section 2603.5.2. Before 1975, experience had shown that foam plastics covered with plaster or $^1/_2$-inch (12.7 mm) gypsum wallboard had performed satisfactorily in building fires. For this reason, $^1/_2$-inch (12.7 mm) gypsum wallboard was included in the code as a minimum requirement. It was recognized that specifying a single material would not be desirable in a performance code. Therefore, testing in accordance with NFPA 275 is allowed to qualify other materials. This test method was developed to specifically address the testing of materials to qualify as a thermal barrier. The test method provides specific construction samples, fire exposures and acceptance criteria to qualify a material to be a 15-minute thermal barrier. The test method addresses both the capabil-

INTERNATIONAL CODE COUNCIL®
Copyright © 2015 ICC. ALL RIGHTS RESERVED. Accessed by David Dammon on Jun 21, 2017 12:30:52 PM pursuant to License Agreement with ICC. No further reproduction or distribution authorized. ANY UNAUTHORIZED REPRODUCTION OR DISTRIBUTION IS A VIOLATION OF THE FEDERAL COPYRIGHT ACT AND THE LICENSE AGREEMENT, AND SUBJECT TO CIVIL AND CRIMINAL PENALTIES THEREUNDER.

ity of the material to retard heat transfer via a fire-resistance test and to remain in place via a full-scale fire test.

1407.10.3 Thermal barrier not required. The thermal barrier specified for MCM in Section 1407.10.2 is not required where:

1. The MCM system is specifically approved based on tests conducted in accordance with NFPA 286 and with the acceptance criteria of Section 803.1.2.1, UL 1040 or UL 1715. Such testing shall be performed with the MCM in the maximum thickness intended for use. The MCM system shall include seams, joints and other typical details used in the installation and shall be tested in the manner intended for use.
2. The MCM is used as elements of balconies and similar projections, architectural *trim* or embellishments.

❖ The exemption of the installation of the thermal barrier required by Section 1407.10.2 may be accomplished in two ways. The first is through the use of large-scale fire testing of the MCM system. The system must be tested in a configuration that incorporates details that are representative of a typical installation. The second provision of this section exempts the installation of a thermal barrier where the MCM is limited to use as a component of balconies and similar projections or as architectural trim and embellishments.

1407.10.4 Full-scale tests. The MCM system shall be tested in accordance with, and comply with, the acceptance criteria of NFPA 285. Such testing shall be performed on the MCM system with the MCM in the maximum thickness intended for use.

❖ The final data required to permit the use of MCM systems on buildings of Types I, II, III and IV construction are the result of full-scale testing of the system. This testing is intended to determine that the system will not have the tendency to propagate the spread of fire over the surface of the panels or through the panel core.

1407.11 Alternate conditions. MCM and MCM systems shall not be required to comply with Sections 1407.10.1 through 1407.10.4 provided such systems comply with Section 1407.11.1, 1407.11.2, 1407.11.3 or 1407.11.4.

❖ Section 1407.11 provides an alternative to compliance with the requirements of Section 1407.10, based upon a specific set of criteria. These criteria limit the amount and height of MCM above grade on buildings of Types I, II, III and IV construction in a manner similar to the provisions of Section 1406 for combustible materials.

1407.11.1 Installations up to 40 feet in height. MCM shall not be installed more than 40 feet (12 190 mm) in height above grade where installed in accordance with Sections 1407.11.1.1 and 1407.11.1.2.

❖ The height limitation of 40 feet (12 192 mm) corresponds to the limitations of Section 1406.2.1 for architectural trim. In addition to the height limitation, the material must comply with the requirements of Sections 1407.11.1.1 and 1407.11.1.2.

1407.11.1.1 Fire separation distance of 5 feet or less. Where the *fire separation distance* is 5 feet (1524 mm) or less, the area of MCM shall not exceed 10 percent of the *exterior wall* surface.

❖ To limit the potential for the spread of fire between buildings that are in close proximity to one another, the maximum amount of combustible exterior veneer is limited in size. These limitations are identical to those of Section 1406.2.1 for combustible veneers.

1407.11.1.2 Fire separation distance greater than 5 feet. Where the *fire separation distance* is greater than 5 feet (1524 mm), there shall be no limit on the area of *exterior wall* surface coverage using MCM.

❖ Based on the decreased potential for the spread of fire between buildings with greater fire separation distances, there is no limit on the area of the MCM on such exterior walls. It is important to remember that the height of the MCM installation is also limited to 40 feet (12 190 mm). This is also a factor as it further limits the area of the MCM.

1407.11.2 Installations up to 50 feet in height. MCM shall not be installed more than 50 feet (15 240 mm) in height above grade where installed in accordance with Sections 1407.11.2.1 and 1407.11.2.2.

❖ The maximum installed height of MCM on buildings of Types I, II, Ill and IV construction may be increased up to 50 feet (15 240 mm) when the requirements of Sections 1407.11.2.1 and 1407.11.2.2 are complied with.

1407.11.2.1 Self-ignition temperature. MCM shall have a self-ignition temperature of 650°F (343°C) or greater when tested in accordance with ASTM D1929.

❖ Keeping with the requirements in Chapter 26 for other plastic materials, the flame spread of the MCM is not permitted to exceed 75 and the smoke-developed index may not exceed 450. In addition to the limitations on flame spread and smoke development, the MCM must be tested for self-ignition in accordance with ASTM D1929. These requirements are identical to those contained in Section 2606.4 for light-transmitting plastics (see commentary, Section 2606.4).

1407.11.2.2 Limitations. Sections of MCM shall not exceed 300 square feet (27.9 m^2) in area and shall be separated by not less than 4 feet (1219 mm) vertically.

❖ The size limitations of this section are consistent with the provisions of Section 2605.2, Item 3 and Section 2606.7.3. The area limitation is intended to minimize the amount of concentrated combustible materials on the exterior of noncombustible buildings. The separation requirement is intended to minimize the potential for extensive flame propagation over the face of the wall.

INTERNATIONAL CODE COUNCIL®
Copyright © 2015 ICC. ALL RIGHTS RESERVED. Accessed by David Dammon on Jun 21, 2017 12:30:52 PM pursuant to License Agreement with ICC. No further reproduction or distribution authorized. ANY UNAUTHORIZED REPRODUCTION OR DISTRIBUTION IS A VIOLATION OF THE FEDERAL COPYRIGHT ACT AND THE LICENSE AGREEMENT, AND SUBJECT TO CIVIL AND CRIMINAL PENALTIES THEREUNDER.

1407.11.3 Installations up to 75 feet in height (Option 1). MCM shall not be installed more than 75 feet (22 860 mm) in height above grade plane where installed in accordance with Sections 1407.11.3.1 through 1407.11.3.5.

Exception: Buildings equipped throughout with an automatic sprinkler system in accordance with Section 903.3.1.1 shall be exempt from the height limitation.

❖ The maximum installed height of MCM on buildings of Type I, II, Ill and IV construction may be increased up to 75 feet (22 860 mm) when the requirements of Sections 1407.11.3.1 through 1407.11.3.5 are complied with. The exception allows for installations over 75 feet (22 860 mm) in recognition of the protection provided by the installation of an automatic sprinkler system throughout the building.

1407.11.3.1 Prohibited occupancies. MCM shall not be permitted on buildings classified as Group A-1, A-2, H, I-2 or I-3 occupancies.

❖ Consistent with the requirements for plastic wall panels in accordance with Section 2607.1, MCM is permitted to be installed to a maximum height of 75 feet (22 860 mm) only in occupancies classified as Groups A-3, A-4, A-5, B, E, F-1, F-2, 1-1, M, R-1, R-2, R-3, R-4, S-1, S-2 and U. MCM is not allowed for these installations in occupancies where the generated products of combustion would significantly impair the egress of the impaired, confined or crowded occupants.

1407.11.3.2 Nonfire-resistance-rated exterior walls. MCM shall not be permitted on exterior walls required to have a *fire-resistance rating* by other provisions of this code.

❖ Consistent with the requirements for plastic wall panels in accordance with Section 2607.1, MCM is not permitted where the exterior walls are required to be fire-resistance rated when installed to heights of 75 feet (22 860 mm).

1407.11.3.3 Specifications. MCM shall be required to comply with all of the following:

1. MCM shall have a self-ignition temperature of 650°F (343°C) or greater when tested in accordance with ASTM D1929.
2. MCM shall conform to one of the following combustibility classifications when tested in accordance with ASTM D635:

   Class CC1: Materials that have a burning extent of 1 inch (25 mm) or less when tested at a nominal thickness of 0.060 inch (1.5 mm) or in the thickness intended for use.

   Class CC2: Materials that have a burning rate of $2^1/_2$ inches per minute (1.06 mm/s) or less when tested at a nominal thickness of 0.060 inch (1.5 mm) or in the thickness intended for use.

❖ For installations up to 75 feet (22 860 mm) above grade plane, MCMs require a minimum self-ignition temperature of 650°F (343°C) when tested in accordance with ASTM D1929. This temperature excludes the use of easily ignited materials. For comparative purposes, untreated wood and paper ignite at about 500°F (260°C).

In order for an MCM to be approved for these installations, its smoke-development index or smoke-density rating is limited and must be evaluated by one of two test methods prescribed (smoke-developed index limited to 450 by ASTM E84 or UL 263, or a maximum average smoke-density rating of 75 by ASTM D2843). For comparative purposes, these smoke-developed values are the maximum that can be expected from some wood products tested under similar conditions. However, there is no intent to indicate a correlation between the results from the two test methods.

MCMs are also to be tested in accordance with ASTM D635 and be of combustibility Class CC1 or CC2. Class CC1 plastic materials burn at a slower rate than Class CC2 plastics. The above requirements are consistent with the requirements for plastic materials in Chapter 26.

1407.11.3.4 Area limitation and separation. The maximum area of a single MCM panel and the minimum vertical and horizontal separation requirements for MCM panels shall be as provided for in Table 1407.11.3.4. The maximum percentage of exterior wall area of any story covered with MCM panels shall not exceed that indicated in Table 1407.11.3.4 or the percentage of unprotected openings permitted by Section 705.8, whichever is smaller.

Exception: In buildings provided with flame barriers complying with Section 705.8.5 and extending 30 inches (760 mm) beyond the exterior wall in the plane of the floor, a vertical separation shall not be required at the floor other than that provided by the vertical thickness of the flame barrier.

❖ Refer to Table 1407.11.3.4 for area limitations of single MCM panels and the minimum separation requirements (vertical and horizontal) between adjacent panels. The maximum percentage of wall area faced with MCM panels is limited by Table 1407.11.3.4, as well as by the percentage of unprotected openings allowed by Section 705.8. At all times, the most restrictive requirement prevails.

Vertical separation of panels (see Table 1407.11.3.4) is not required where continuous architectural projections create at least a 30-inch (762 mm) barrier (called a flame barrier) between adjacent panels. Under most conditions, this flame barrier will delay or prevent vertical fire spread from one story to the next. This horizontal barrier is seen as protection equivalent to the vertical separation typically required by Table 1407.11.3.4 (see Commentary Figure 1407.11.3.4).

INTERNATIONAL CODE COUNCIL®
Copyright © 2015 ICC. ALL RIGHTS RESERVED. Accessed by David Dammon on Jun 21, 2017 12:30:52 PM pursuant to License Agreement with ICC. No further reproduction or distribution authorized. ANY UNAUTHORIZED REPRODUCTION OR DISTRIBUTION IS A VIOLATION OF THE FEDERAL COPYRIGHT ACT AND THE LICENSE AGREEMENT, AND SUBJECT TO CIVIL AND CRIMINAL PENALTIES THEREUNDER.

TABLE 1407.11.3.4. See below.

❖ This table establishes size and separation limitations for exterior MCM panels. The requirements are determined by the combustibility class of the MCM (Class CC1 or CC2) and fire separation distance. MCM panels are only permitted where a minimum fire separation distance of 6 feet (1829 mm) is provided. The vertical separation requirements can be modified by Section 1407.11.3.4 (see Table 1407.11.3.4, Note a). The maximum area limitations of a single panel and the maximum percentage area of an exterior wall can be doubled when the structure is sprinklered throughout in accordance with NFPA 13 (see Section 1407.11.3.4).

1407.11.3.5 Automatic sprinkler system increases. Where the building is equipped throughout with an automatic sprinkler system in accordance with Section 903.3.1.1, the maximum percentage area of exterior wall of any story covered with MCM panels and the maximum square footage of a single area of MCM panels in Table 1407.11.3.4 shall be increased 100 percent. The area of MCM panels shall not exceed 50 percent of the exterior wall area of any story or the area permitted by Section 704.8 for unprotected openings, whichever is smaller.

❖ The extra protection provided by a complete NFPA 13 automatic fire sprinkler system enables the limitations placed on MCM panels to be reduced. In order for these modifications to apply, the structure must be sprinklered throughout. When this protection is achieved, the height to which plastic wall panels can be installed is not limited. Furthermore, the single panel size and exterior wall area limitations can be doubled. At no time, however, can the area of wall panels per story exceed 50 percent of the wall area of that story. The percentage limitation of Section 705.8 for unprotected openings is also applicable and the most restrictive area shall apply.

1407.11.4 Installations up to 75 feet in height (Option 2). MCM shall not be installed more than 75 feet (22 860 mm) in height above grade plane where installed in accordance with Sections 1407.11.4.1 through 1407.11.4.4.

Exception: Buildings equipped throughout with an automatic sprinkler system in accordance with Section 903.3.1.1 shall be exempt from the height limitation.

❖ The maximum installed height of MCM on buildings of Types I, II, III and IV construction may be increased

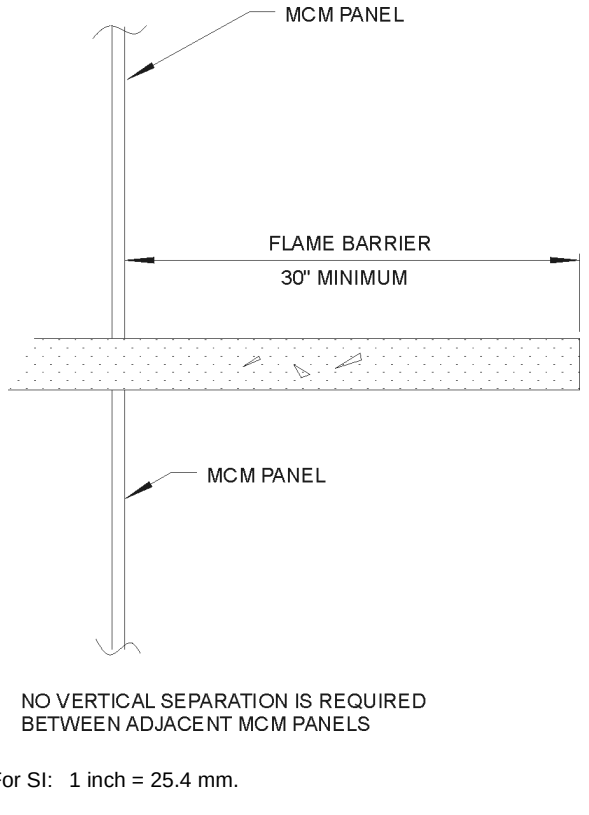

Figure 1407.11.3.4
FLAME BARRIER

TABLE 1407.11.3.4
AREA LIMITATION AND SEPARATION REQUIREMENTS FOR MCM PANELS

FIRE SEPARATION DISTANCE (feet)	COMBUSTIBILITY CLASS OF MCM	MAXIMUM PERCENTAGE AREA OF EXTERIOR WALL COVERED WITH MCM PANELS	MAXIMUM SINGLE AREA OF MCM PANELS (square feet)	MINIMUM SEPARATION OF MCM PANELS (feet)	
				Vertical	Horizontal
Less than 6	—	Not Permitted	Not Permitted	—	—
6 or more but less than 11	CC1	10	50	8	4
	CC2	Not Permitted	Not Permitted	—	—
11 or more but less than or equal to 30	CC1	25	90	6	4
	CC2	15	70	8	4
More than 30	CC1	50	Not Permitted	3[a]	0
	CC2	50	100	6[a]	3

For SI: 1 foot = 304.8 mm, 1 square foot = 0.0929 m^2.

a. For reductions in the minimum vertical separation, see Section 1407.11.3.4.

INTERNATIONAL CODE COUNCIL®
Copyright © 2015 ICC. ALL RIGHTS RESERVED. Accessed by David Dammon on Jun 21, 2017 12:30:52 PM pursuant to License Agreement with ICC. No further reproduction or distribution authorized. ANY UNAUTHORIZED REPRODUCTION OR DISTRIBUTION IS A VIOLATION OF THE FEDERAL COPYRIGHT ACT AND THE LICENSE AGREEMENT, AND SUBJECT TO CIVIL AND CRIMINAL PENALTIES THEREUNDER.

up to 75 feet (22 860 mm) when the requirements of Sections 1407.11.4.1 through 1407.11.4.4 are complied with. The exception allows for installations over 75 feet (22 860 mm) in recognition of the protection provided by the installation of an automatic sprinkler system throughout the building. These provisions are intended as an alternative to the requirements in Section 1407.11.3. This option relies on more restrictive fire separation distances and area and size limitations to achieve a level of safety equivalent to that of Section 1407.11.3. This option also allows for installation of MCM on buildings of any occupancy and on walls that are fire-resistance rated.

1407.11.4.1 Minimum fire separation distance. MCM shall not be installed on any wall with a fire separation distance less than 30 feet (9 144 mm).

Exception: Where the building is equipped throughout with an *automatic sprinkler system* in accordance with Section 903.3.1.1, the fire separation distance shall be permitted to be reduced to not less than 20 feet (6096 mm).

❖ This section requires a minimum fire separation distance of 30 feet (9144 mm), which greatly decreases the threat of fire to or from adjacent structures. The exception allows this distance to be reduced to 20 feet (6096 mm) in recognition of the protection provided by the installation of an automatic sprinkler system throughout the building.

1407.11.4.2 Specifications. MCM shall be required to comply with all of the following:

1. MCM shall have a self-ignition temperature of 650°F (343°C) or greater when tested in accordance with ASTM D1929.
2. MCM shall conform to one of the following combustibility classifications when tested in accordance with ASTM D635:

   Class CC1: Materials that have a burning extent of 1 inch (25 mm) or less when tested at a nominal thickness of 0.060 inch (1.5 mm), or in the thickness intended for use.

   Class CC2: Materials that have a burning rate of $2^1/_2$ inches per minute (1.06 mm/s) or less when tested at a nominal thickness of 0.060 inch (1.5 mm), or in the thickness intended for use.

❖ The minimum specifications for MCM used in Option 2 are identical to those required in Option 1. However, for Option 2 the combustibility classification of the MCM does not relate to differing requirements as with Option 1. These specifications, therefore, are a minimum benchmark for the MCM.

1407.11.4.3 Area and size limitations. The aggregate area of MCM panels shall not exceed 25 percent of the area of any exterior wall face of the story on which those panels are installed. The area of a single MCM panel installed above the first story above grade plane shall not exceed 16 square feet (1.5 m^2) and the vertical dimension of a single MCM panel shall not exceed 4 feet (1219 mm).

Exception: Where the building is equipped throughout with an *automatic sprinkler system* in accordance with Section 903.3.1.1, the maximum aggregate area of MCM panels shall be increased to 50 percent of the exterior wall face of the story on which those panels are installed and there shall not be a limit on the maximum dimension or area of a single MCM panel.

❖ This section sets forth the maximum area and size limitations for MCM under Option 2. These limitations are much more restrictive than those in Option 1; however, as indicated in the commentary to Section 1407.11.4, this option is applicable to buildings of any occupancy and on walls that are fire-resistance rated. The exception recognizes the extra protection provided by a complete NFPA 13 automatic fire sprinkler system and allows the limitations placed on MCM panels to be reduced. In order for these modifications to apply, the structure must be sprinklered throughout. When this protection is achieved, the single panel size (dimension and area) is not limited and exterior wall area limitations can be increased by 50 percent.

1407.11.4.4 Vertical separations. Flame barriers complying with Section 705.8 and extending 30 inches (762 mm) beyond the exterior wall or a vertical separation of not less than 4 feet (1219 mm) in height shall be provided to separate MCM panels located on the exterior walls at one-story intervals.

Exception: Buildings equipped throughout with an *automatic sprinkler system* in accordance with Section 903.3.1.1.

❖ Consistent with other provisions to limit fire spread, this section places restrictions on the size and vertical separation of MCM panels. The 4-foot (1219 mm) vertical separation is widely accepted as adequate for spandrels and other intervening construction between floors. Vertical separation of panels is not required where continuous projections create at least a 30-inch (762 mm) barrier (called a flame barrier) between adjacent panels. Under most conditions, this flame barrier will delay or prevent vertical fire spread from one story to the next. This horizontal barrier is seen as protection equivalent to the vertical separation required by this section (see Figure 1407.11.3.4).

1407.12 Type V construction. MCM shall be permitted to be installed on buildings of Type V construction.

❖ Because of the combustible nature of Type V construction, the fire testing requirements for MCM used as exterior veneers on these buildings is less severe than for other construction types. This is similar in concept to the provisions of Section 1406.

INTERNATIONAL CODE COUNCIL®
Copyright © 2015 ICC. ALL RIGHTS RESERVED. Accessed by David Dammon on Jun 21, 2017 12:30:52 PM pursuant to License Agreement with ICC. No further reproduction or distribution authorized. ANY UNAUTHORIZED REPRODUCTION OR DISTRIBUTION IS A VIOLATION OF THE FEDERAL COPYRIGHT ACT AND THE LICENSE AGREEMENT, AND SUBJECT TO CIVIL AND CRIMINAL PENALTIES THEREUNDER.

1407.13 Foam plastic insulation. MCM systems containing foam plastic insulation shall also comply with the requirements of Section 2603.

❖ The purpose of this section is to simply point the user of the code to Section 2603 for foam plastics when the MCM contains foam plastic components. The common use of foam plastic in MCM insulation would be the core of the material.

1407.14 Labeling. MCM shall be labeled in accordance with Section 1703.5.

❖ Because of the composite nature of MCMs and the proprietary nature of the panel cores, the fabrication of the panels must be subject to independent third-party verification. The verification of this inspection is evidenced by labeling of the product by the third-party agency (refer to Section 1703.5 for more discussion on the labeling of products).

SECTION 1408
EXTERIOR INSULATION AND FINISH SYSTEMS (EIFS)

1408.1 General. The provisions of this section shall govern the materials, construction and quality of exterior insulation and finish systems (EIFS) for use as *exterior wall coverings* in addition to other applicable requirements of Chapters 7, 14, 16, 17 and 26.

❖ EIFS and EIFS with drainage are relatively complex exterior veneers that require great care and attention in the materials used and the installation details. This exterior veneer is now dealt with in this separate section. All of the performance criteria, installation, and design are covered in this section. EIFS is defined in Section 1402 of this code as wall cladding systems consisting of a foam plastic insulation material covered by a plastic reinforced Portland cement base coat and a textured finish coat. The complexity of this material comes in the installation details. For the material to be able to perform as a watertight barrier, the various layers must be carefully applied to strict specifications.

1408.2 Performance characteristics. EIFS shall be constructed such that it meets the performance characteristics required in ASTM E2568.

❖ ASTM E2568 defines the necessary performance of EIFS systems. This standard contains basic test criteria for the materials and the entire system. These are generally tests that provide minimum performance levels for the system, including salt spray, accelerated weathering, ignition resistance, fire endurance and wind resistance.

[BS] 1408.3 Structural design. The underlying structural framing and substrate shall be designed and constructed to resist loads as required by Chapter 16.

❖ This section addresses the structural design of the supporting members. The section underscores the fact that Section 1408 does not obviate the need to support the EIFS with a structural support system.

1408.4 Weather resistance. EIFS shall comply with Section 1403 and shall be designed and constructed to resist wind and rain in accordance with this section and the manufacturer's application instructions.

❖ The important aspect of this section is that, like all other exterior cladding materials, EIFS must be weather resistant as well. Section 1403 provides the performance criteria for exterior cladding.

1408.4.1 EIFS with drainage. EIFS with drainage shall have an average minimum drainage efficiency of 90 percent when tested in accordance the requirements of ASTM E2273 and is required on framed walls of Type V construction, Group R1, R2, R3 and R4 occupancies.

❖ For wood-framed walls or any light-frame construction using wood sheathing or other water soluble materials, it is essential to protect the supporting substrate from moisture. The EIFS system, like all other exterior veneers, must be able to allow water that gets behind the cladding to drain.

1408.4.1.1 Water-resistive barrier. For EIFS with drainage, the *water-resistive barrier* shall comply with Section 1404.2 or ASTM E2570.

❖ The EIFS systems with drainage are required to have a barrier behind the cladding that serves as the "drainage plane" where all water penetration is stopped and directed downward and out of the wall. The section or referenced standard provide basic test criteria for the materials that would be used behind an EIFS system with drainage.

1408.5 Installation. Installation of the EIFS and EIFS with drainage shall be in accordance with the EIFS manufacturer's instructions.

❖ Manufacturers' instructions provide the proper installation parameters for these materials, including, among other information, the proper mix proportions for the cement-based substrate, the correct sequence for installation and setting times. The manufacturer's instructions form the job specifications for this material.

1408.6 Special inspections. EIFS installations shall comply with the provisions of Sections 1704.2 and 1705.16.

❖ The installation of EIFS systems require attention to detail because the performance of the system can

INTERNATIONAL CODE COUNCIL®
Copyright © 2015 ICC. ALL RIGHTS RESERVED. Accessed by David Dammon on Jun 21, 2017 12:30:52 PM pursuant to License Agreement with ICC. No further reproduction or distribution authorized. ANY UNAUTHORIZED REPRODUCTION OR DISTRIBUTION IS A VIOLATION OF THE FEDERAL COPYRIGHT ACT AND THE LICENSE AGREEMENT, AND SUBJECT TO CIVIL AND CRIMINAL PENALTIES THEREUNDER.

only be assured if the system is installed correctly. This sensitivity requires that special inspections be performed to ensure that ambient conditions were within acceptable range, installation sequences were followed, and all components meet the manufacturer's requirements.

SECTION 1409
HIGH-PRESSURE DECORATIVE EXTERIOR-GRADE COMPACT LAMINATES (HPL)

1409.1 General. The provisions of this section shall govern the materials, construction and quality of High-Pressure Decorative Exterior-Grade Compact Laminates (HPL) for use as exterior wall coverings in addition to other applicable requirements of Chapters 14 and 16.

❖ High-pressure decorative exterior-grade compact laminates (HPL) are panels with a cellulose fibrous material bonded with a thermosetting resin by a high-pressure process. HPL are typically used in exterior applications as a weather covering; however, they do not provide insulation.

1409.2 Exterior wall finish. HPL used as exterior wall covering or as elements of balconies and similar projections and bay and oriel windows to provide cladding or weather resistance shall comply with Sections 1409.4 and 1409.14.

❖ The plastic core of aluminum composite material is a combustible material. This section provides a correlation with Sections 1406.2, 1406.3 and 1406.4, which regulate the use of combustible materials on the exterior of buildings.

1409.3 Architectural trim and embellishments. HPL used as architectural trim or embellishments shall comply with Sections 1409.7 through 1409.14.

❖ In a manner similar to Section 1409.2, the provisions of this section provide a correlation with Section 1406.2.1, which regulates the use of combustible trim on the exterior of buildings.

[BS] 1409.4 Structural design. HPL systems shall be designed and constructed to resist wind loads as required by Chapter 16 for components and cladding.

❖ As previously stated in numerous locations throughout this chapter, exterior weather coverings must be designed and installed to resist the design wind loads required by Chapter 16. These provisions apply to the HPL panels, the supporting elements that are part of the HPL system and the attachment of the system to the building frame.

1409.5 Approval. Results of approved tests or an engineering analysis shall be submitted to the building official to verify compliance with the requirements of Chapter 16 for wind loads.

❖ The determination that an HPL system will be able to resist a specific wind load may be accomplished through wind-load testing, structural engineering calculations or a combination of both. In all instances, documentation substantiating the system's ability to resist the design wind loads is required to be submitted to the building official.

1409.6 Weather resistance. HPL systems shall comply with Section 1403 and shall be designed and constructed to resist wind and rain in accordance with this section and the manufacturer's instructions.

❖ As with other exterior weather coverings, HPL systems must comply with the requirements of Section 1403 to prevent the entry of moisture into the building or structure. The manufacturer's installation instructions contain details that are specific to a weather-tight installation.

1409.7 Durability. HPL systems shall be constructed of approved materials that maintain the performance characteristics required in Section 1409 for the duration of use.

❖ All materials used as weather coverings are required to exhibit a certain level of durability to be effective in providing protection to the structure and its occupants.

1409.8 Fire-resistance rating. Where HPL systems are used on exterior walls required to have a *fire-resistance rating* in accordance with Section 705, evidence shall be submitted to the building official that the required *fire-resistance rating* is maintained.

Exception: HPL systems not containing foam plastic insulation, which are installed on the outer surface of a fire-resistance-rated exterior wall in a manner such that the attachments do not penetrate through the entire exterior wall assembly, shall not be required to comply with this section.

❖ Evidence must be submitted to confirm that the installation of HCL systems will not reduce the fire-resistance rating of exterior walls required by Section 705.5. These data may consist of testing performed in accordance with ASTM E119 of the HCL applied to the fire-resistance-rated wall assembly, as provided for in Section 703.2, or an alternative method, such as engineering analysis, as provided for in Section 703.3 (see commentary, Sections 703.2 and 703.3).

1409.9 Surface-burning characteristics. Unless otherwise specified, HPL shall have a flame spread index of 75 or less and a smoke-developed index of 450 or less when tested in the minimum and maximum thicknesses intended for use in accordance with ASTM E84 or UL 723.

❖ HCL are required to have a basic flame spread index of 75 and a smoke-developed index of 450. This is consistent with the requirements for other types of plastics intended for use in building construction, including foam plastics. As indicated in Section 1407.10.1, the flame spread rating required is more restrictive (not more than 25) when HCL are installed on buildings of Types I, II, III and IV construction.

1409.10 Type I, II, III and IV construction. Where installed on buildings of Type I, II, III and IV construction,

INTERNATIONAL CODE COUNCIL®
Copyright © 2015 ICC. ALL RIGHTS RESERVED. Accessed by David Dammon on Jun 21, 2017 12:30:52 PM pursuant to License Agreement with ICC. No further reproduction or distribution authorized. ANY UNAUTHORIZED REPRODUCTION OR DISTRIBUTION IS A VIOLATION OF THE FEDERAL COPYRIGHT ACT AND THE LICENSE AGREEMENT, AND SUBJECT TO CIVIL AND CRIMINAL PENALTIES THEREUNDER.

HPL systems shall comply with Sections 1409.10.1 through 1409.10.4, or Section 1409.11.

❖ Due to the combustible core of HCL panels, the fire performance of these panels is regulated. Sections 1407.10.1 through 1407.10.4 stipulate the fire testing that is required to permit the use of these materials on buildings of other than Type V construction. It should be noted that the requirements of these sections are similar to the provisions contained in Chapter 26 for foam plastic materials. Where fire testing is specified, the panels are required to be tested in the maximum thickness intended for use. This is because the maximum thickness represents the greatest potential fuel load in a fire condition.

1409.10.1 Surface-burning characteristics. HPL shall have a flame spread index of not more than 25 and a smoke-developed index of not more than 450 when tested in the minimum and maximum thicknesses intended for use in accordance with ASTM E84 or UL 723.

❖ The limitations on the maximum flame spread and smoke-developed indexes of the HCL used in this application correspond with the requirements of Section 2603.5.4 for foam plastic materials used on the exterior of buildings of other than Type V construction (see commentary, Section 2603.5.4).

1409.10.2 Thermal barriers. HPL shall be separated from the interior of a building by an approved thermal barrier consisting of $^1/_2$-inch (12.7 mm) gypsum wallboard or a material that is tested in accordance with and meets the acceptance criteria of both the Temperature Transmission Fire Test and the Integrity Fire Test of NFPA 275.

❖ The requirements for the installation of a thermal barrier to separate the HPL from the interior of the building are similar to the requirements contained in Section 2603.5.2. Before 1975, experience had shown that foam plastics covered with plaster or $^1/_2$-inch (12.7 mm) gypsum wallboard had performed satisfactorily in building fires. For this reason, $^1/_2$-inch (12.7 mm) gypsum wallboard was included in the code as a minimum requirement. It was recognized that specifying a single material would not be desirable in a performance code. Therefore, testing in accordance with NFPA 275 is allowed to qualify other materials. This test method was developed to specifically address the testing of materials to qualify as a thermal barrier. The test method provides specific construction samples, fire exposures and acceptance criteria to qualify a material to be a 15-minute thermal barrier. The test method addresses both the capability of the material to retard heat transfer via a fire-resistance test and to remain in place via a full-scale fire test.

1409.10.3 Thermal barrier not required. The thermal barrier specified for HPL in Section 1409.10.2 is not required where:

1. The HPL system is specifically approved based on tests conducted in accordance with UL 1040 or UL 1715. Such testing shall be performed with the HPL in the minimum and maximum thicknesses intended for use. The HPL system shall include seams, joints and other typical details used in the installation and shall be tested in the manner intended for use.
2. The HPL is used as elements of balconies and similar projections, architectural *trim* or embellishments.

❖ The exemption of the installation of the thermal barrier required by Section 1407.10.2 may be accomplished in two ways. The first is through the use of large-scale fire testing of the HCL system. The system must be tested in a configuration that incorporates details that are representative of a typical installation. The second provision of this section exempts the installation of a thermal barrier where the use of HCL is limited to a component of balconies and similar projections or as architectural trim and embellishments.

1409.10.4 Full-scale tests. The HPL system shall be tested in accordance with, and comply with, the acceptance criteria of NFPA 285. Such testing shall be performed on the HPL system with the HPL in the minimum and maximum thicknesses intended for use.

❖ The final data required to permit the use of HCL systems on buildings of Types I, II, III and IV construction are the result of full-scale testing of the system. This testing is intended to determine that the system will not have the tendency to propagate the spread of fire over the surface of the panels or through the panel core.

1409.11 Alternate conditions. HPL and HPL systems shall not be required to comply with Sections 1409.10.1 through 1409.10.4 provided such systems comply with Section 1409.11.1 or 1409.11.2.

❖ Section 1407.11 provides an alternative to compliance with the requirements of Section 1407.10, based upon a specific set of criteria. These criteria limit the amount of material and height above grade in a manner similar to the provisions of Section 1406 for combustible materials.

1409.11.1 Installations up to 40 feet in height. HPL shall not be installed more than 40 feet (12 190 mm) in height above grade plane where installed in accordance with Sections 1409.11.1.1 and 1409.11.1.2.

❖ The height limitation of 40 feet (12 192 mm) corresponds to the limitations of Section 1406.2.2 for architectural trim. In addition to the height limitation, the material must comply with the requirements of Sections 1407.11.1 and 1407.11.2.

1409.11.1.1 Fire separation distance of 5 feet or less. Where the fire separation distance is 5 feet (1524 mm) or less, the area of HPL shall not exceed 10 percent of the exterior wall surface.

❖ To limit the potential for the spread of fire between buildings that are in close proximity to one another, the maximum amount of combustible exterior veneer is limited in size. These limitations are identical to those of Section 1406.2.1 for combustible veneers.

INTERNATIONAL CODE COUNCIL®
Copyright © 2015 ICC. ALL RIGHTS RESERVED. Accessed by David Dammon on Jun 21, 2017 12:30:52 PM pursuant to License Agreement with ICC. No further reproduction or distribution authorized. ANY UNAUTHORIZED REPRODUCTION OR DISTRIBUTION IS A VIOLATION OF THE FEDERAL COPYRIGHT ACT AND THE LICENSE AGREEMENT, AND SUBJECT TO CIVIL AND CRIMINAL PENALTIES THEREUNDER.

1409.11.1.2 Fire separation distance greater than 5 feet. Where the fire separation distance is greater than 5 feet (1524 mm), there shall be no limit on the area of exterior wall surface coverage using HPL.

❖ Based on the decreased potential for the spread of fire between buildings with greater fire separation distances, there is no limit on the area of the HCL on such exterior walls. It is important to remember that the height of the HCL installation is also limited to 40 feet (12 192 mm). This is also a factor as it further limits the area of the HCL.

1409.11.2 Installations up to 50 feet in height. HPL shall not be installed more than 50 feet (15 240 mm) in height above grade plane where installed in accordance with Sections 1409.11.2.1 and 1409.11.2.2.

❖ The maximum installed height of HCL on buildings of Type I, II, III and IV construction may be increased up to 50 feet (15 240 mm) when the requirements of Sections 1407.11.2.1 and 1407.11.2.2 are complied with.

1409.11.2.1 Self-ignition temperature. HPL shall have a self-ignition temperature of 650°F (343°C) or greater when tested in accordance with ASTM D1929.

❖ In addition to the limitations on flame spread and smoke development, the HCL must be tested for self-ignition in accordance with ASTM D1929. These requirements are identical to those contained in Section 2606.4 for light-transmitting plastics (see commentary, Section 2606.4).

1409.11.2.2 Limitations. Sections of HPL shall not exceed 300 square feet (27.9 m^2) in area and shall be separated by a minimum 4 feet (1219 mm) vertically.

❖ The size limitations of this section are consistent with the provisions of Section 2605.2, Item 3, and Section 2606.7.3. The area limitation is intended to minimize the amount of concentrated combustible materials on the exterior of noncombustible buildings. The separation requirement is intended to minimize the potential for extensive flame propagation over the face of the wall.

1409.12 Type V construction. HPL shall be permitted to be installed on buildings of Type V construction.

❖ Because of the combustible nature of Type V construction, the fire-testing requirements for HCL used as exterior veneers on these buildings is less severe than for other construction types. This is similar in concept to the provisions of Section 1406.

1409.13 Foam plastic insulation. HPL systems containing foam plastic insulation shall also comply with the requirements of Section 2603.

❖ The purpose of this section is to simply point the code user to Section 2603 for foam plastics when the HCL contains foam plastic components. The common use of foam plastic in HCL insulation would be the core of the material.

1409.14 Labeling. HPL shall be labeled in accordance with Section 1703.5.

❖ Because of the composite nature of HCL and the proprietary nature of the panel cores, the fabrication of the panels must be subject to independent third-party verification. The verification of this inspection is evidenced by labeling of the product by the third-party agency (refer to Section 1703.5 for more discussion on the labeling of products).

SECTION 1410
PLASTIC COMPOSITE DECKING

1410.1 Plastic composite decking. Exterior deck boards, stair treads, handrails and guardrail systems constructed of plastic composites, including plastic lumber, shall comply with Section 2612.

❖ Plastic composite decking is a recognized exterior deck component material. Provisions for this material are contained in Section 2612, which includes minimum requirements related to labeling, structural performance, flame spread, termite and decay resistance, and construction requirements.

Bibliography

The following resource materials were used in the preparation of the commentary for this chapter of the code.

ACI 530-13, *Building Code Requirements for Masonry Structures*. Farmington Hills, MI: American Concrete Institute, 2013.

ASCE 5-13, *Building Code Requirements for Masonry Structures*. Reston, VA: American Society of Civil Engineers, 2013.

ASTM B101-12, *Specification for Lead-coated Copper Sheet and Strip for Building Construction*. West Conshohocken, PA: ASTM International, 2012.

ASTM D3679-11, *Specification for Rigid Poly (Vinyl Chloride)(PVC) Siding*. West Conshohocken, PA: ASTM International, 2011.

ASTM D7254-07, *Standard Specification for Polypropylene (PP) Siding.* West Conshohocken, PA: ASTM International, 2007.

ASTM E96-13, *Standard Test Method for Water Vapor Transmission of Materials*. West Conshohocken, PA: ASTM International, 2013.

INTERNATIONAL CODE COUNCIL®
Copyright © 2015 ICC. ALL RIGHTS RESERVED. Accessed by David Dammon on Jun 21, 2017 12:30:52 PM pursuant to License Agreement with ICC. No further reproduction or distribution authorized. ANY UNAUTHORIZED REPRODUCTION OR DISTRIBUTION IS A VIOLATION OF THE FEDERAL COPYRIGHT ACT AND THE LICENSE AGREEMENT, AND SUBJECT TO CIVIL AND CRIMINAL PENALTIES THEREUNDER.

ASTM E119-2012A, *Test Methods for Fire Tests of Building Construction Materials*. West Conshohocken, PA: ASTM International, 2012.

ASTM E2568-09e1, *Standard Practice for Specimen Preparation and Mounting of Site-Fabricated Stretch Systems to Assess Surface Burning Characteristics*. West Conshohocken, PA: ASTM International, 2009.

NFPA 275-13, *Standard Method of Fire Tests for the Evaluation of Thermal Barriers Used Over Foam Plastic Insulation*. Quincy, MA: National Fire Protection Association, 2013.

TMS 402-2013, *Building Code for Masonry Structures*. Longmont, CO: The Masonry Society, 2013.

INTERNATIONAL CODE COUNCIL®

Copyright © 2015 ICC. ALL RIGHTS RESERVED. Accessed by David Dammon on Jun 21, 2017 12:30:52 PM pursuant to License Agreement with ICC. No further reproduction or distribution authorized. ANY UNAUTHORIZED REPRODUCTION OR DISTRIBUTION IS A VIOLATION OF THE FEDERAL COPYRIGHT ACT AND THE LICENSE AGREEMENT, AND SUBJECT TO CIVIL AND CRIMINAL PENALTIES THEREUNDER.

Chapter 15:
Roof Assemblies and Rooftop Structures

General Comments

Chapter 15 regulates the materials, design, construction and quality of roofs and roof structures for all buildings and structures. Requirements for weather protection, fire classification, flashings and insulation are provided to govern the roof slab or deck and its supporting members, in addition to the covering that is applied to the roof for weather resistance, fire resistance or appearance. Specific installation requirements for certain steep-slope and low-slope roof coverings are provided.

Section 1502 lists the defined terms that are most closely associated with the provisions in this chapter.

Section 1503 provides requirements for roof coverings to protect against the effects of weather.

Section 1504 provides performance requirements including referenced standards for evaluating the performance of new and innovative roof coverings.

Section 1505 provides a classification system to determine a roof covering's effectiveness against certain fire test exposures. Specific classifications of roof coverings are required based on the type of construction classification of the structure.

Section 1506 provides requirements for the application of roof covering materials.

Section 1507 provides requirements for the installation of roof coverings.

Section 1508 establishes requirements for the use of combustible roof insulation in all types of construction.

Section 1509 provides testing and installation requirements for radiant barriers that are installed over a roof deck.

Section 1510 establishes minimum requirements for specific structures that can be constructed on and above the roof.

Section 1511 provides requirements for reroofing, including adequate structural supports, recovering of existing roof materials and replacement.

Section 1512 provides references to roof and structural roof-frame requirements necessary for solar energy systems.

Purpose

The provisions in Chapter 15 for roof construction and coverings are intended to provide a weather-protective barrier at the roof and, in most circumstances, a fire-retardant barrier to prevent flaming combustible materials, such as flying brands from nearby fires, from penetrating the roof construction. The chapter is essentially prescriptive in nature and is based on decades of experience with various traditional roofing materials. These prescriptive rules are very important for satisfactory performance of the roof covering even though the reasoning behind particular requirements may be lost. The provisions are based on preventing a repeat of past unsatisfactory performance of the various roofing materials and components.

SECTION 1501
GENERAL

1501.1 Scope. The provisions of this chapter shall govern the design, materials, construction and quality of roof assemblies, and rooftop structures.

❖ This section specifies the scope and applicability of the code for all roofs, roof assemblies and roof structures. Requirements are provided to regulate the materials, design and construction of roofs and rooftop structures such as penthouses, water tanks and other structures. See also the definition of "Roof assembly" in Section 202. Other roof assemblies addressed elsewhere in the code and not addressed in this chapter include membrane structures (see Section 3102) and light-transmitting plastics (see Section 2606).

SECTION 1502
DEFINITIONS

1502.1 Definitions. The following terms are defined in Chapter 2:

AGGREGATE.

BALLAST.

BUILDING-INTEGRATED PHOTOVOLTAIC (BIPV) PRODUCT.

BUILT-UP ROOF COVERING.

INTERLAYMENT.

MECHANICAL EQUIPMENT SCREEN.

METAL ROOF PANEL.

METAL ROOF SHINGLE.

INTERNATIONAL CODE COUNCIL®
Copyright © 2015 ICC. ALL RIGHTS RESERVED. Accessed by David Dammon on Jun 21, 2017 12:30:52 PM pursuant to License Agreement with ICC. No further reproduction or distribution authorized. ANY UNAUTHORIZED REPRODUCTION OR DISTRIBUTION IS A VIOLATION OF THE FEDERAL COPYRIGHT ACT AND THE LICENSE AGREEMENT, AND SUBJECT TO CIVIL AND CRIMINAL PENALTIES THEREUNDER.

MODIFIED BITUMEN ROOF COVERING.

PENTHOUSE.

PHOTOVOLTAIC MODULE.

PHOTOVOLTAIC PANEL.

PHOTOVOLTAIC PANEL SYSTEM.

PHOTOVOLTAIC SHINGLES.

POSITIVE ROOF DRAINAGE.

RADIANT BARRIER.

REROOFING.

ROOF ASSEMBLY.

ROOF COVERING.

ROOF COVERING SYSTEM.

ROOF DECK.

ROOF RECOVER.

ROOF REPAIR.

ROOF REPLACEMENT.

ROOF VENTILATION.

ROOFTOP STRUCTURE.

SCUPPER.

SINGLE-PLY MEMBRANE.

UNDERLAYMENT.

VEGETATIVE ROOF.

❖ Definitions facilitate the understanding of code provisions and minimize potential confusion. To that end, this section lists definitions of terms associated with roof assemblies, roof coverings and rooftop structures. Note that these definitions are found in Chapter 2. The use and application of defined terms, as well as undefined terms, are set forth in Section 201.

SECTION 1503
WEATHER PROTECTION

1503.1 General. Roof decks shall be covered with *approved* roof coverings secured to the building or structure in accordance with the provisions of this chapter. Roof coverings shall be designed and installed in accordance with this code and the *approved* manufacturer's instructions such that the roof covering shall serve to protect the building or structure.

❖ The roof covering provides protection from water intrusion into a building. The roofing system has historically been one of the most problematic areas of a building. Without a properly constructed roof assembly, water may infiltrate the building causing damage to building materials and contents. A roof assembly, for the purposes of this chapter, is defined as including the roof deck and components above that make up the roof covering. For a roof covering to perform the way it must to protect the building, it must meet certain requirements. The code provides basic requirements for the construction of roof assemblies. The designer, in his or her roof specifications, will typically include compatibility of materials, deck type, weather conditions, roof slope, structural loads, roof drainage, roof penetrations and future reroofing.

1503.2 Flashing. Flashing shall be installed in such a manner so as to prevent moisture entering the wall and roof through joints in copings, through moisture-permeable materials and at intersections with parapet walls and other penetrations through the roof plane.

❖ Water that penetrates the building envelope can lead to the degradation of building materials that are sensitive to moisture. Flashing must be installed in a very specific manner so that moisture does not enter the building construction or get under the roof covering. As indicated, flashing is required anywhere the roof covering is interrupted or terminated.

1503.2.1 Locations. Flashing shall be installed at wall and roof intersections, at gutters, wherever there is a change in roof slope or direction and around roof openings. Where flashing is of metal, the metal shall be corrosion resistant with a thickness of not less than 0.019 inch (0.483 mm) (No. 26 galvanized sheet).

❖ Flashing consists of components that weatherproof or seal the roof system at discontinuities, such as perimeters, penetrations, walls [see Commentary Figure 1405.4(1)], expansion joints, valleys, drains and other places, where the roof covering is interrupted or terminated. For example, membrane base flashing covers the edge of the field membrane, and cap flashings or counterflashings shield the upper edges of the base flashing.

Metal flashing must be no less than the specified minimum thickness and be corrosion resistant. "Corrosion resistance" is defined in Section 202 as, "The ability of a material to withstand deterioration of its surface or its properties when exposed to its environment." This definition includes metallic and nonmetallic materials.

1503.3 Coping. Parapet walls shall be properly coped with noncombustible, weatherproof materials of a width no less than the thickness of the parapet wall.

❖ Coping is the covering piece on top of a wall, exposed to the weather and usually made of metal, masonry or stone. It is typically sloped to shed water back onto the roof.

[P] 1503.4 Roof drainage. Design and installation of roof drainage systems shall comply with Section 1503 of this code and Sections 1106 and 1108, as applicable, of the *International Plumbing Code*.

❖ The purpose of this section is to call attention to the need for providing roof drainage as well as the requirements for sizing and locating secondary drains. Positive roof drainage is required to prevent excessive ponding of water and the consequent rapid deterioration or early failure of the roof-covering material, roof structure, or the need for increased strength of the roof system to support ponding. Sec-

INTERNATIONAL CODE COUNCIL®
Copyright © 2015 ICC. ALL RIGHTS RESERVED. Accessed by David Dammon on Jun 21, 2017 12:30:52 PM pursuant to License Agreement with ICC. No further reproduction or distribution authorized. ANY UNAUTHORIZED REPRODUCTION OR DISTRIBUTION IS A VIOLATION OF THE FEDERAL COPYRIGHT ACT AND THE LICENSE AGREEMENT, AND SUBJECT TO CIVIL AND CRIMINAL PENALTIES THEREUNDER.

tion 1611.2 requires the structural design calculations to consider ponding in order to prevent a progressive deflection of the structural roof members.

[P] 1503.4.1 Secondary (emergency overflow) drains or scuppers. Where roof drains are required, secondary (emergency overflow) roof drains or scuppers shall be provided where the roof perimeter construction extends above the roof in such a manner that water will be entrapped if the primary drains allow buildup for any reason. The installation and sizing of secondary emergency overflow drains, leaders and conductors shall comply with Sections 1106 and 1108, as applicable, of the *International Plumbing Code.*

❖ These requirements alert the roofer to the need for providing properly sized secondary drains or scuppers. A secondary drainage system is required where the building has parapet walls or other construction that could restrict drainage at the roof's perimeter. This section requires all buildings to have some method for preventing the accumulation of unplanned excessive rainwater.

The intent here is to limit the amount of ponding water that can accumulate on the roof due to rainfall. If the roof is constructed so water cannot pond on the roof, such as with roofs sloped toward the edge of the building, secondary drainage is not required. This criteria should be applied to all portions of the roof, so that if any portion is designed so water can pond, secondary drains would be required.

Bear in mind that a roof could be intentionally designed to allow ponding to some design depth such as for a rainwater harvesting system.

1503.4.2 Scuppers. When scuppers are used for secondary (emergency overflow) roof drainage, the quantity, size, location and inlet elevation of the scuppers shall be sized to prevent the depth of ponding water from exceeding that for which the roof was designed as determined by Section 1611.1. Scuppers shall not have an opening dimension of less than 4 inches (102 mm). The flow through the primary system shall not be considered when locating and sizing scuppers.

❖ Scuppers allow water to drain at the perimeter of a roof. These devices are commonly larger than the roof drain. This section provides performance requirements for roofs using wall scuppers as a means of secondary roof drainage. This section also provides minimum prescriptive opening dimensions for scuppers regardless of the results of the performance design. The performance design typically takes into account the flow rate, the length of the scupper opening and the water pressure (head) on the scupper.

1503.4.3 Gutters. Gutters and leaders placed on the outside of buildings, other than Group R-3, private garages and buildings of Type V construction, shall be of noncombustible material or a minimum of Schedule 40 plastic pipe.

❖ All roofs are required to be designed and built with positive drainage (see Section 1507.10.1 for the slope requirements of built-up roofs). "Positive roof drainage" is defined in Section 202. Ponding water has detrimental effects on a roof system, including roof surface and membrane deterioration due to debris accumulation; vegetation and fungal growth; deck deflections which can lead to structural damage; ice formation; tensile splitting; and the possibility of water entering the building.

1503.5 Attic and rafter ventilation. Intake and exhaust vents shall be provided in accordance with Section 1203.2 and the vent product manufacturer's installation instructions.

❖ During cold weather, condensation is deposited on cold surfaces when, for example, warm, moist air rising from the interior of a building and through the attic comes in contact with the roof deck. Ventilation minimizes condensation on the cold surfaces and, therefore, will reduce or prevent dry rot on the bottom surface of shingles or wood roof decks.

1503.6 Crickets and saddles. A cricket or saddle shall be installed on the ridge side of any chimney or penetration greater than 30 inches (762 mm) wide as measured perpendicular to the slope. Cricket or saddle coverings shall be sheet metal or of the same material as the roof covering.

Exception: Unit skylights installed in accordance with Section 2405.5 and flashed in accordance with the manufacturer's instructions shall be permitted to be installed without a cricket or saddle.

❖ A cricket or saddle is a raised roof substrate or structure constructed to channel or direct surface water around a chimney or other similar roof penetration. The exception recognizes the use of engineered skylight systems that are designed to prevent water infiltration without the use of a cricket. It applies to unit skylights that are installed in accordance with Section 2405.5.

SECTION 1504
PERFORMANCE REQUIREMENTS

1504.1 Wind resistance of roofs. Roof decks and roof coverings shall be designed for wind loads in accordance with Chapter 16 and Sections 1504.2, 1504.3 and 1504.4.

❖ It is important that roof coverings and roof decks remain intact and in place when subjected to high winds. Without an intact roof system, the building would be subjected either to water damage, which would reduce its structural stability, or to higher wind pressures for which the building is not designed. The following sections specify requirements for different roof coverings regarding wind loads. The roof decks are included in the requirements of Chapter 16.

1504.1.1 Wind resistance of asphalt shingles. Asphalt shingles shall be tested in accordance with ASTM D7158. Asphalt shingles shall meet the classification requirements of Table 1504.1.1 for the appropriate maximum basic wind speed. Asphalt shingle packaging shall bear a label to indicate

INTERNATIONAL CODE COUNCIL®
Copyright © 2015 ICC. ALL RIGHTS RESERVED. Accessed by David Dammon on Jun 21, 2017 12:30:52 PM pursuant to License Agreement with ICC. No further reproduction or distribution authorized. ANY UNAUTHORIZED REPRODUCTION OR DISTRIBUTION IS A VIOLATION OF THE FEDERAL COPYRIGHT ACT AND THE LICENSE AGREEMENT, AND SUBJECT TO CIVIL AND CRIMINAL PENALTIES THEREUNDER.

compliance with ASTM D7158 and the required classification in Table 1504.1.1.

Exception: Asphalt shingles that are not included in the scope of ASTM D7158 shall be tested and labeled to indicate compliance with ASTM D3161 and the required classification in Table 1504.1.1.

❖ This section recognizes two test methods for the wind resistance of asphalt shingles: ASTM D7158, which provides a method of testing that is appropriate for sealed asphalt shingles, and ASTM D3161, which provides a method of testing that is appropriate for unsealed asphalt shingles. Each of these standards results in a shingle "classification" based on the ability of the asphalt shingle installation to resist wind uplift. Table 1504.1.1 contains minimum classification requirements based on either the mapped wind speed or the nominal design wind speed as determined from Section 1609.3.1.

TABLE 1504.1.1. See below.

❖ See the commentary to Section 1504.1.1.

1504.2 Wind resistance of clay and concrete tile. Wind loads on clay and concrete tile roof coverings shall be in accordance with Section 1609.5.

❖ To determine the minimum wind loads to use in the design and installation of clay and concrete roof tile, this section refers to Section 1609.5. When required by Table 1507.3.7, the tiles must be installed to resist the wind loads as calculated in accordance with Section 1609.5.

1504.2.1 Testing. Testing of concrete and clay roof tiles shall be in accordance with Sections 1504.2.1.1 and 1504.2.1.2.

❖ This section prescribes the test standards and criteria to be used to determine the overturning resistance and wind characteristics of concrete and clay roof tiles.

1504.2.1.1 Overturning resistance. Concrete and clay roof tiles shall be tested to determine their resistance to overturning due to wind in accordance with SBCCI SSTD 11 and Chapter 15.

❖ This section requires concrete and clay tiles to be tested to determine their overturning resistance in accordance with SBCCI SSTD 11. SBCCI SSTD 11 prescribes methods for determining the allowable overturning moment for mechanically fastened, adhesive-set and mortar-set tiles. A test procedure is also prescribed for determining the allowable uplift loads on hip/ridge tiles.

1504.2.1.2 Wind tunnel testing. Where concrete and clay roof tiles do not satisfy the limitations in Chapter 16 for rigid tile, a wind tunnel test shall be used to determine the wind characteristics of the concrete or clay tile roof covering in accordance with SBCCI SSTD 11 and Chapter 15.

❖ The wind tunnel test procedures in SBCCI SSTD 11 must be used if the roof tiles do not meet the limitations of Chapter 16 for rigid tile.

1504.3 Wind resistance of nonballasted roofs. Roof coverings installed on roofs in accordance with Section 1507 that are mechanically attached or adhered to the roof deck shall be designed to resist the design wind load pressures for components and cladding in accordance with Section 1609.

❖ This section addresses wind resistance of steep-slope systems that are mechanically attached by fasteners or adhered to the roof slab or deck by adhesives. Steep-slope roof coverings are those described in Section 1507 with a roof slope of 2:12 or greater. The basic wind speed as obtained from Chapter 16 for the building's location must be modified for the building's overall height above grade and exposure category, wind gust effect and wind importance factor. A structural design is required to demonstrate that the proposed fastening schedule will resist the wind uplift loads.

1504.3.1 Other roof systems. Built-up, modified bitumen, fully adhered or mechanically attached single-ply roof systems, metal panel roof systems applied to a solid or closely

TABLE 1504.1.1
CLASSIFICATION OF ASPHALT SHINGLES

MAXIMUM BASIC WIND SPEED, V_{ult}, FROM FIGURE 1609A, B, C OR ASCE 7	MAXIMUM BASIC WIND SPEED, V_{asd}, FROM TABLE 1609.3.1	ASTM D7158[a] CLASSIFICATION	ASTM D3161 CLASSIFICATION
110	85	D, G or H	A, D or F
116	90	D, G or H	A, D or F
129	100	G or H	A, D or F
142	110	G or H	F
155	120	G or H	F
168	130	H	F
181	140	H	F
194	150	H	F

For SI: 1 foot = 304.8 mm; 1 mph = 0.447 m/s.

a. The standard calculations contained in ASTM D7158 assume Exposure Category B or C and building height of 60 feet or less. Additional calculations are required for conditions outside of these assumptions.

INTERNATIONAL CODE COUNCIL®
Copyright © 2015 ICC. ALL RIGHTS RESERVED. Accessed by David Dammon on Jun 21, 2017 12:30:52 PM pursuant to License Agreement with ICC. No further reproduction or distribution authorized. ANY UNAUTHORIZED REPRODUCTION OR DISTRIBUTION IS A VIOLATION OF THE FEDERAL COPYRIGHT ACT AND THE LICENSE AGREEMENT, AND SUBJECT TO CIVIL AND CRIMINAL PENALTIES THEREUNDER.

fitted deck and other types of membrane roof coverings shall be tested in accordance with FM 4474, UL 580 or UL 1897.

❖ Additional requirements addressing the wind resistance of built-up, modified bitumen, fully adhered or mechanically attached single-ply roof systems, metal panel systems that are applied to a solid or closely fitted deck as well as other types of membrane roof coverings are established in this section. Besides compliance with the requirements of Section 1504.3, these roof coverings are required to be physically tested for compliance with one of three standards: FM 4474, UL 580 or UL 1897.

1504.3.2 Structural metal panel roof systems. Where the metal roof panel functions as the roof deck and roof covering and it provides both weather protection and support for loads, the structural metal panel roof system shall comply with this section. Structural standing-seam metal panel roof systems shall be tested in accordance with ASTM E1592 or FM 4474. Structural through-fastened metal panel roof systems shall be tested in accordance with FM 4474, UL 580 or ASTM E1592.

Exceptions:

1. Metal roofs constructed of cold-formed steel shall be permitted to be designed and tested in accordance with the applicable referenced structural design standard in Section 2210.1.
2. Metal roofs constructed of aluminum shall be permitted to be designed and tested in accordance with the applicable referenced structural design standard in Section 2002.1.

❖ This section specifies the test that metal panel roof systems are required to pass before installation. Standards and test methods have been established for the proper installation of metal panel roof systems whether fastened or standing seamed.

The exceptions recognize metal decks that provide both weather protection and support for structural loads, including wind and live loads. Many of these metal decks are structural elements where stresses can be calculated just like the design approach used for the roof-framing members that support the roof deck. For steel decks covered in Exception 1, the American Iron and Steel Institute (AISI) specification that is referenced in Section 2210.1 recognizes a wide variety of roofing profiles where calculations are applicable. For roofing profiles that cannot be directly calculated, the specification requires additional testing, including many of the tests currently referenced by the code for wind resistance. In addition, unlike many of the wind tests, the specification gives guidance on the selection of appropriate safety factors.

1504.4 Ballasted low-slope roof systems. Ballasted low-slope (roof slope < 2:12) single-ply roof system coverings installed in accordance with Sections 1507.12 and 1507.13 shall be designed in accordance with Section 1504.8 and ANSI/SPRI RP-4.

❖ Sections 1507.12 and 1507.13 prescribe the installation for ballasted low-slope, single-ply roof system coverings. These coverings are to be designed in accordance with Section 1504.8 and ANSI/SPRI RP-4, which is listed in Chapter 35.

1504.5 Edge securement for low-slope roofs. Low-slope built-up, modified bitumen and single-ply roof system metal edge securement, except gutters, shall be designed and installed for wind loads in accordance with Chapter 16 and tested for resistance in accordance with Test Methods RE-1, RE-2 and RE-3 of ANSI/SPRI ES-1, except V_{ult} wind speed shall be determined from Figure 1609.3(1), 1609.3(2), or 1609.3(3) as applicable.

❖ These requirements are specific to low-slope membrane roofs, namely built-up, modified bitumen and single-ply roofs. This section references the appropriate standard for low-slope roofs, which is ANSI/SPRI ES-1. This standard is important in preventing failures of the edge attachment on low-slope roof systems. ANSI/SPRI ES-1 consists of two primary parts. In the portion of ANSI/SPRI ES-1 that is included in the scope of reference, the edge metal flashings' wind resistance is determined according to RE-1, RE-2 and RE-3 test methods. By specifically referencing those test methods in ANSI/SPRI ES-1, any confusion with the determination of wind loads should be avoided since other portions of the standard can be used to determine the wind loads at a roof edge. Also, by referring the code user to code Figures 1609.3(1), 1609.3(2) and 1609.3(3), the intent that wind speeds must be determined using Chapter 16 is reinforced.

1504.6 Physical properties. Roof coverings installed on low-slope roofs (roof slope < 2:12) in accordance with Section 1507 shall demonstrate physical integrity over the working life of the roof based upon 2,000 hours of exposure to accelerated weathering tests conducted in accordance with ASTM G152, ASTM G155 or ASTM G154. Those roof coverings that are subject to cyclical flexural response due to wind loads shall not demonstrate any significant loss of tensile strength for unreinforced membranes or breaking strength for reinforced membranes when tested as herein required.

❖ This section, which addresses the effects of weather on the performance of the roof covering, requires that weather testing be performed and includes performance criteria for those roof coverings that will have to perform while subjected to wind loads.

The ASTM International (ASTM) test methods that are referenced cover exposure to carbon-arc-type or xenon-arc-type light (with or without water), fluorescent ultraviolet-condensation-type rays and concentrated natural sunlight. In conjunction with these

INTERNATIONAL CODE COUNCIL®
Copyright © 2015 ICC. ALL RIGHTS RESERVED. Accessed by David Dammon on Jun 21, 2017 12:30:52 PM pursuant to License Agreement with ICC. No further reproduction or distribution authorized. ANY UNAUTHORIZED REPRODUCTION OR DISTRIBUTION IS A VIOLATION OF THE FEDERAL COPYRIGHT ACT AND THE LICENSE AGREEMENT, AND SUBJECT TO CIVIL AND CRIMINAL PENALTIES THEREUNDER.

tests, roofing materials must not show any significant signs of failure caused by cyclical wind conditions. The tensile strength in unreinforced membranes and the breaking strength in reinforced membranes must endure such conditions without any significant strength reduction.

1504.7 Impact resistance. Roof coverings installed on low-slope roofs (roof slope < 2:12) in accordance with Section 1507 shall resist impact damage based on the results of tests conducted in accordance with ASTM D3746, ASTM D4272, CGSB 37-GP-52M or the "Resistance to Foot Traffic Test" in Section 5.5 of FM 4470.

❖ All roof-covering materials must withstand impact loads, such as hail and driving rainstorms. The referenced standards set criteria for the testing of certain roofing materials, such as plastic film and bituminous roofing systems, on low-slope roofs. Each test uses similar devices to test the material. The tests consist of dropping a dart or missile, which weighs from $2^1/_2$ to 5 pounds (1.1 to 2.3 kg), approximately 4 to 5 feet (1219 to 1524 mm) and then evaluating the material for failure.

1504.8 Aggregate. Aggregate used as surfacing for roof coverings and aggregate, gravel or stone used as ballast shall not be used on the roof of a building located in a hurricane-prone region as defined in Section 202, or on any other building with a mean roof height exceeding that permitted by Table 1504.8 based on the exposure category and basic wind speed at the site.

❖ This section recognizes that aggregate, gravel and stone used on roofs can be blown off when subjected to hurricane-strength winds or higher wind effects due to the roof height on a taller building. Field assessments of damage to buildings caused by high-wind events have shown that gravel or stone blown from the roofs of buildings has exacerbated damage to neighboring buildings due to breakage of glass. Once glass is broken, higher internal pressures are created within the building, which can result in structural damage to interior walls, and to the cladding of wall and roof surfaces subjected to negative external pressures. Even where the higher internal pressure is considered and the building is designed accordingly, the breakage of windows will generally result in substantial wind and water damage to the building's interior and contents.

TABLE 1504.8. See next column.

❖ This table establishes maximum roof heights where aggregate can be used on roofs of buildings outside a hurricane-prone region. The heights are a function of basic wind speed and exposure category.

SECTION 1505
FIRE CLASSIFICATION

[BF] 1505.1 General. Roof assemblies shall be divided into the classes defined below. Class A, B and C roof assemblies and roof coverings required to be listed by this section shall be tested in accordance with ASTM E108 or UL 790. In addition, *fire-retardant-treated wood* roof coverings shall be tested in accordance with ASTM D2898. The minimum roof coverings installed on buildings shall comply with Table 1505.1 based on the type of construction of the building.

Exception: Skylights and sloped glazing that comply with Chapter 24 or Section 2610.

❖ The code designates the use of any particular classification of roof coverings based on the type of construction of the building. A minimum Class B roof covering is required for all roofs that have a minimum 1-hour fire-resistance rating in accordance with Table 602. Roofs without a required fire-resistance rating require a minimum Class C roof covering.

The exception clarifies that skylights and sloped glazing are not required to be tested for fire classification. Skylights and sloped glazing are considered to be individual assemblies that are required to meet specific requirements listed in other portions of the code. For example, the fire requirements for light-transmitting plastic skylights are covered in Section

TABLE 1504.8
MAXIMUM ALLOWABLE MEAN ROOF HEIGHT PERMITTED FOR BUILDINGS WITH AGGREGATE ON THE ROOF IN AREAS OUTSIDE A HURRICANE-PRONE REGION

NOMINAL DESIGN WIND SPEED, V_{asd} (mph)[b, d]	MAXIMUM MEAN ROOF HEIGHT (ft)[a, c]		
	Exposure category		
	B	C	D
85	170	60	30
90	110	35	15
95	75	20	NP
100	55	15	NP
105	40	NP	NP
110	30	NP	NP
115	20	NP	NP
120	15	NP	NP
Greater than 120	NP	NP	NP

For SI: 1 foot = 304.8 mm; 1 mile per hour = 0.447 m/s.

a. Mean roof height as defined in ASCE 7.

b. For intermediate values of V_{asd}, the height associated with the next higher value of V_{asd} shall be used, or direct interpolation is permitted.

c. NP = gravel and stone not permitted for any roof height.

d. V_{asd} shall be determined in accordance with Section 1609.3.1.

INTERNATIONAL CODE COUNCIL®
Copyright © 2015 ICC. ALL RIGHTS RESERVED. Accessed by David Dammon on Jun 21, 2017 12:30:52 PM pursuant to License Agreement with ICC. No further reproduction or distribution authorized. ANY UNAUTHORIZED REPRODUCTION OR DISTRIBUTION IS A VIOLATION OF THE FEDERAL COPYRIGHT ACT AND THE LICENSE AGREEMENT, AND SUBJECT TO CIVIL AND CRIMINAL PENALTIES THEREUNDER.

2610 and the material and curbing requirements for glass skylights and sloped glazing are given in Chapter 24.

TABLE 1505.1[a, b]
MINIMUM ROOF COVERING CLASSIFICATION FOR TYPES OF CONSTRUCTION

IA	IB	IIA	IIB	IIIA	IIIB	IV	VA	VB
B	B	B	C[c]	B	C[c]	B	B	C[c]

For SI: 1 foot = 304.8 mm, 1 square foot = 0.0929 m^2.

a. Unless otherwise required in accordance with the *International Wildland-Urban Interface Code* or due to the location of the building within a fire district in accordance with Appendix D.

b. Nonclassified roof coverings shall be permitted on buildings of Group R-3 and Group U occupancies, where there is a minimum fire-separation distance of 6 feet measured from the leading edge of the roof.

c. Buildings that are not more than two stories above grade plane and having not more than 6,000 square feet of projected roof area and where there is a minimum 10-foot fire-separation distance from the leading edge of the roof to a lot line on all sides of the building, except for street fronts or public ways, shall be permitted to have roofs of No. 1 cedar or redwood shakes and No. 1 shingles constructed in accordance with Section 1505.7.

❖ See the commentary to Section 1505.1.

[BF] 1505.2 Class A roof assemblies. Class A roof assemblies are those that are effective against severe fire test exposure. Class A roof assemblies and roof coverings shall be *listed* and identified as Class A by an *approved* testing agency. Class A roof assemblies shall be permitted for use in buildings or structures of all types of construction.

Exceptions:

1. Class A roof assemblies include those with coverings of brick, masonry or an exposed concrete roof deck.
2. Class A roof assemblies also include ferrous or copper shingles or sheets, metal sheets and shingles, clay or concrete roof tile or slate installed on noncombustible decks or ferrous, copper or metal sheets installed without a roof deck on noncombustible framing.
3. Class A roof assemblies include minimum 16 ounce per square foot (0.0416 kg/m^2) copper sheets installed over combustible decks.
4. Class A roof assemblies include slate installed over ASTM D226, Type II underlayment over combustible decks.

❖ Roof coverings that are effective against the severe fire-test exposure of ASTM E108 are classified as Class A. Exception 1 prescribes roof-covering materials that are identified as Class A without having to be tested in accordance with ASTM E108, based on the past performance of these materials. These include the following noncombustible coverings: brick, masonry or exposed concrete. Any assembly that is tested in accordance with ASTM E108 requirements for severe fire exposure, and that is listed and labeled by an approved testing agency as a Class A roof covering, is allowed as a roof covering on any type of construction designated in the code. Similarly, Exception 2 prescribes roof-covering materials that are identified as Class A as long as they are installed over a noncombustible deck or, in some cases, without a deck but over noncombustible framing. Exception 3 allows copper sheets over combustible decking to serve as a Class A roof covering. Exception 4 includes slate installed over a specific underlayment over a combustible deck as a Class A roof assembly based on fire tests that demonstrated the requirements of UL 790 Class A are satisfied. Lastly, note that the materials and specific installations in all four exceptions do not require listing or labeling by an approved agency.

[BF] 1505.3 Class B roof assemblies. Class B roof assemblies are those that are effective against moderate fire-test exposure. Class B roof assemblies and roof coverings shall be *listed* and identified as Class B by an *approved* testing agency.

❖ Roof coverings that are effective against the moderate fire test exposure of ASTM E108 are classified as Class B. Those roof coverings listed and identified as Class A by an approved testing agency are also allowed to be used where Class B is required. For buildings and structures of any type of construction designated in the code, Class A or B roof coverings are allowed.

[BF] 1505.4 Class C roof assemblies. Class C roof assemblies are those that are effective against light fire-test exposure. Class C roof assemblies and roof coverings shall be *listed* and identified as Class C by an *approved* testing agency.

❖ Roof coverings that are effective against the light fire test exposure of ASTM E108 are classified as Class C. There are no specific materials or products that automatically qualify as Class C roof coverings. However, note that those roof coverings listed and identified as Class A or B are allowed to be used where a Class C is required. Class C roof coverings that are listed and labeled by an approved testing agency may only be used on Types IIB, IIIB and VB construction.

[BF] 1505.5 Nonclassified roofing. Nonclassified roofing is *approved* material that is not *listed* as a Class A, B or C roof covering.

❖ Nonclassified roofing is a roofing material that is approved by the building official and is not otherwise classified (see the definition of "Approved" in Section 202).

[BF] 1505.6 Fire-retardant-treated wood shingles and shakes. *Fire-retardant-treated wood* shakes and shingles shall be treated by impregnation with chemicals by the full-cell vacuum-pressure process, in accordance with AWPA C1. Each bundle shall be marked to identify the manufactured unit and the manufacturer, and shall also be *labeled* to iden-

INTERNATIONAL CODE COUNCIL®
Copyright © 2015 ICC. ALL RIGHTS RESERVED. Accessed by David Dammon on Jun 21, 2017 12:30:52 PM pursuant to License Agreement with ICC. No further reproduction or distribution authorized. ANY UNAUTHORIZED REPRODUCTION OR DISTRIBUTION IS A VIOLATION OF THE FEDERAL COPYRIGHT ACT AND THE LICENSE AGREEMENT, AND SUBJECT TO CIVIL AND CRIMINAL PENALTIES THEREUNDER.

tify the classification of the material in accordance with the testing required in Section 1505.1, the treating company and the quality control agency.

❖ This section specifically identifies the particular pressure-impregnation method to be used to treat wood shakes and shingles. This method consists of placing bundles of the roofing materials inside a retort, which is a huge cylindrical pressure container. A vacuum is then created inside the retort, which in turn draws the air and moisture from the millions of cells per square inch in western red cedar. The fire-retardant chemical mixture is then injected at pressures reaching 150 psi (1034 kPa). The chemical is forced into every cell of the shakes and shingles—even the innermost layers. After the products are pressure treated, they are then placed in a special drying kiln where they undergo finishing with a thermal cure at temperatures of up to 2,000°F (1093°C). This section further identifies the test standard to be followed, the method of labeling and the information required per bundle of shingles in order for the building official to evaluate code compliance. This includes the testing requirements found in Section 1505.1.

[BF] 1505.7 Special purpose roofs. Special purpose wood shingle or wood shake roofing shall conform to the grading and application requirements of Section 1507.8 or 1507.9. In addition, an underlayment of $^{5}/_{8}$-inch (15.9 mm) Type X water-resistant gypsum backing board or gypsum sheathing shall be placed under minimum nominal $^{1}/_{2}$-inch-thick (12.7 mm) wood structural panel solid sheathing or 1-inch (25 mm) nominal spaced sheathing.

❖ Informal tests of special purpose roofs have shown that they provide a significant increase in protection for combustible roof coverings, and again the protection offered is considered appropriate if applied in the manner stipulated. Buildings that are permitted to utilize this roof construction are identified in Note c to Table 1505.1.

[BF] 1505.8 Building-integrated photovoltaic products. *Building-integrated photovoltaic products* installed as the roof covering shall be tested, *listed* and *labeled* for fire classification in accordance with Section 1505.1.

❖ This section requires photovoltaic products integrated into the envelope as a roof covering to comply with UL 790 or ASTM E108.

[BF] 1505.9 Photovoltaic panels and modules. Rooftop-mounted *photovoltaic panel systems* shall be tested, *listed* and identified with a fire classification in accordance with UL 1703. The fire classification shall comply with Table 1505.1 based on the type of construction of the building.

❖ This section recognizes that stand-off rack-mounted photovoltaic panels and modules are better tested in accordance with UL 1703 rather than UL 790 or ASTM E108. It also clarifies that the fire classification listed for the photovoltaic panels and modules must be consistent with the fire classification requirement for the roof covering.

[BF] 1505.10 Roof gardens and landscaped roofs. Roof gardens and landscaped roofs shall comply with Section 1507.16 and shall be installed in accordance with ANSI/SPRI VF-1.

❖ This section requires SPRI VF-1 for the fire design for roof gardens and landscaped roofs since the approach contained within the standard is more appropriate than the traditional test methods used to determine fire classification of roof coverings. This standard provides a design method that provides an acceptable level of performance of roof gardens and landscaped roofs when exposed to exterior fire sources. The general approach used in this standard is to design in fire breaks for large roof areas, around rooftop equipment and penetrations, and next to adjacent walls.

SECTION 1506
MATERIALS

1506.1 Scope. The requirements set forth in this section shall apply to the application of roof-covering materials specified herein. Roof coverings shall be applied in accordance with this chapter and the manufacturer's installation instructions. Installation of roof coverings shall comply with the applicable provisions of Section 1507.

❖ This section establishes specifications and standards for materials and installation techniques in conjunction with recognized industry standards and acceptable roofing applications. By complying with the specified material requirements, slope limitations, underlayment requirements and fastening schedules, the proposed roof covering can be expected to perform as anticipated.

1506.2 Material specifications and physical characteristics. Roof-covering materials shall conform to the applicable standards listed in this chapter.

❖ Whenever possible, this chapter references appropriate material standards for roof covering materials. Because there may be materials on the market for which the code does not currently reference a test standard, there are occasions where the building official will have to require testing by an approved lab to determine the character, quality and application limitations of the materials. This is something that should be considered as an alternative material and approached in accordance with Section 104.11.

1506.3 Product identification. Roof-covering materials shall be delivered in packages bearing the manufacturer's identifying marks and *approved* testing agency labels required in accordance with Section 1505. Bulk shipments of materials shall be accompanied with the same information issued in the form of a certificate or on a bill of lading by the manufacturer.

❖ Identification of the roofing materials is mandatory in order to verify that they comply with quality standards. In addition to bearing the manufacturer's label or iden-

INTERNATIONAL CODE COUNCIL®
Copyright © 2015 ICC. ALL RIGHTS RESERVED. Accessed by David Dammon on Jun 21, 2017 12:30:52 PM pursuant to License Agreement with ICC. No further reproduction or distribution authorized. ANY UNAUTHORIZED REPRODUCTION OR DISTRIBUTION IS A VIOLATION OF THE FEDERAL COPYRIGHT ACT AND THE LICENSE AGREEMENT, AND SUBJECT TO CIVIL AND CRIMINAL PENALTIES THEREUNDER.

tifying mark, prepared roofing and built-up roofing materials are required by the code to carry a label of an approved agency that inspects the material and finished products during manufacture.

SECTION 1507
REQUIREMENTS FOR ROOF COVERINGS

1507.1 Scope. Roof coverings shall be applied in accordance with the applicable provisions of this section and the manufacturer's installation instructions.

❖ Roof coverings serve as the membrane of the roof system, making it critical in providing weather protection. This section requires that the installation of roof coverings be in accordance with the code and the manufacturer's installation instructions. Often, other requirements must be met, such as UL or FM requirements. It is very possible that there will be times that these requirements conflict. Once adopted, the code is law. The other provisions are not law, and compliance with them does not necessarily mean that compliance with the code has been achieved. In cases where conflicts arise, the code requirements govern.

1507.2 Asphalt shingles. The installation of asphalt shingles shall comply with the provisions of this section.

❖ This section establishes the criteria for asphalt shingle roofs. Two general types of asphalt shingles specifically apply to this section: strip shingles (e.g., three-tab shingles) and individual interlocking shingles (e.g., T-lock shingles). Asphalt strip shingles, which are the most common, are produced in a variety of finished appearances, including three-tab, random or multiple-tab, no-cutout and laminated architectural.

Asphalt shingles are typically classified as one of two types: cellulose felt reinforced (e.g., organic shingles) and fiberglass mat reinforced (e.g., fiberglass shingles).

Although it is not specifically addressed in this section, the roofing industry generally recommends the attic space below asphalt shingle roofs be properly ventilated (see Section 1503.5).

Additional information regarding asphalt shingle roofs is provided in the *NRCA Roofing Manual: Steep-slope Roof Systems* published by the National Roofing Contractors Association (NRCA).

1507.2.1 Deck requirements. Asphalt shingles shall be fastened to solidly sheathed decks.

❖ Solid sheathed roof decks typically include nominal 1-inch (25 mm) solid lumber or wood structural panels. It is recommended that solid sawn lumber, not more than 8 inches (203 mm) in width, be used. Wider pieces are more likely to warp and cup. The code is specific about the types of decking allowed depending on the material used. For example, wood roof decking is addressed in Chapter 23. Manufacturers may also require the application of their roof coverings to specific roof deck materials for warranty of their products.

1507.2.2 Slope. Asphalt shingles shall only be used on roof slopes of two units vertical in 12 units horizontal (17-percent slope) or greater. For roof slopes from two units vertical in 12 units horizontal (17-percent slope) up to four units vertical in 12 units horizontal (33-percent slope), double underlayment application is required in accordance with Section 1507.2.8.

❖ Asphalt shingles are intended to be applied to a steep roof. A minimum slope is crucial in the performance of such shingles because it is a primary indicator of a roof's ability to shed water. Where the roof slope is less than four units vertical in 12 units horizontal (33-percent slope), water drainage from the roof is slower, which can cause it to back up under the roofing and cause leaks. Thus, this section also specifies double coverage of the underlayment where the slope is between two units vertical in 12 units horizontal (17-percent slope) and four units vertical in 12 units horizontal (33-percent slope). One layer of underlayment must be provided under asphalt shingle roof coverings with a slope greater than four units vertical in 12 units horizontal (33-percent slope). Also, the effect of ice dams at the eaves is more pronounced on low-sloped roofs and, as a result, special precautions are necessary for satisfactory performance of the roofing materials.

1507.2.3 Underlayment. Unless otherwise noted, required underlayment shall conform to ASTM D226, Type I, ASTM D4869, Type I, or ASTM D6757.

❖ Asphalt shingle roofs are required to be installed with a felt underlayment. Underlayment serves as secondary protection against wind-driven rain and other moisture penetration when individual shingles become damaged or dislodged. Underlayment for asphalt shingle roofs is required to comply with ASTM D226, Type I, or ASTM D4869, Type I. Products complying with the "Type I" designation of these standards are commonly called "No. 15 asphalt felt." See application requirements for underlayment in Section 1507.2.8 as well as additional restrictions on underlayment applied in high-wind areas in Section 1507.2.8.1.

Underlayment also serves as a separator sheet between the shingles and deck. As a separator, the underlayment provides some protection to the shingles from uneven roof deck edges and deck fasteners. Underlayment also helps eliminate a rectangular pattern of ridges in the membrane over insulation or deck joints.

Underlayment offers protection from resins and other chemicals contained in wood board sheathing.

Using the appropriate underlayments, decking materials and shingles will help in meeting the fire classification ratings.

INTERNATIONAL CODE COUNCIL®
Copyright © 2015 ICC. ALL RIGHTS RESERVED. Accessed by David Dammon on Jun 21, 2017 12:30:52 PM pursuant to License Agreement with ICC. No further reproduction or distribution authorized. ANY UNAUTHORIZED REPRODUCTION OR DISTRIBUTION IS A VIOLATION OF THE FEDERAL COPYRIGHT ACT AND THE LICENSE AGREEMENT, AND SUBJECT TO CIVIL AND CRIMINAL PENALTIES THEREUNDER.

1507.2.4 Self-adhering polymer modified bitumen sheet. Self-adhering polymer modified bitumen sheet shall comply with ASTM D1970.

❖ Self-adhering polymer modified bitumen sheets meeting ASTM D1970 requirements are intended for use as underlayment for ice dam protection. These underlayments have an adhesive layer that is exposed by removal of a protective sheet. The top surface of the sheet is suitable to work on during the application of the exposed roofing.

1507.2.5 Asphalt shingles. Asphalt shingles shall comply with ASTM D225 or ASTM D3462.

❖ ASTM D225 is a specification for asphalt roofing in shingle form, composed of single or multiple thicknesses of organic felt saturated and coated on both sides with asphalt and surfaced on the weather side with mineral granules. This standard is well established in the roofing industry. Generally, all organic shingles currently manufactured comply with this standard.

ASTM D3462 is a specification for asphalt roofing in shingle form, composed of single or multiple thicknesses of glass felt impregnated and coated on both sides with asphalt, and surfaced on the weather side with mineral granules. The shingles may be either locked together during installation, or have a factory-applied self-sealing adhesive. Additionally, asphalt shingles meeting this standard must pass the Class A fire exposure test requirements of ASTM E108 and the wind-resistance test requirements of ASTM D7158 (see also Section 1504.1.1).

Some "20-year warranted" shingles and "25-year warranted" shingles currently on the market may not necessarily comply with ASTM D3462. Fiberglass shingles complying with ASTM D3462 will typically be identified as such on the shingle bundle packaging or the manufacturer will supply a written certification of compliance with the standard.

1507.2.6 Fasteners. Fasteners for asphalt shingles shall be galvanized, stainless steel, aluminum or copper roofing nails, minimum 12-gage [0.105 inch (2.67 mm)] shank with a minimum $^3/_8$-inch-diameter (9.5 mm) head, of a length to penetrate through the roofing materials and a minimum of $^3/_4$ inch (19.1 mm) into the roof sheathing. Where the roof sheathing is less than $^3/_4$ inch (19.1 mm) thick, the nails shall penetrate through the sheathing. Fasteners shall comply with ASTM F1667.

❖ The fasteners allowed are either of metal that is corrosion resistant or galvanized to be corrosion resistant. It is important to use fasteners that are long enough to penetrate the roof covering, flashing, underlayment and into the deck a minimum of $^3/_4$ inch (19.1 mm). When the deck is less than $^3/_4$ inch (19.1 mm) in thickness, the fastener must penetrate through the deck. It is recommended that the nail be at least $^1/_8$ inch (3.2 mm) through the deck.

1507.2.7 Attachment. Asphalt shingles shall have the minimum number of fasteners required by the manufacturer, but not less than four fasteners per strip shingle or two fasteners per individual shingle. Where the roof slope exceeds 21 units vertical in 12 units horizontal (21:12), shingles shall be installed as required by the manufacturer.

❖ This section clarifies that the manufacturer's instructions must be consulted when installing asphalt shingles, unless the manufacturer's instructions contain fastening requirements less than those prescribed in this section. As a minimum, there needs to be four fasteners for each strip-type shingle and two fasteners for individual shingles.

For roof slopes greater than 21:12, the manufacturer should be consulted for installation requirements. Typically such an installation will include a 5-inch (127 mm) exposure, with each tab cemented in place using asphalt roofing cement compatible with the shingle.

1507.2.8 Underlayment application. For roof slopes from two units vertical in 12 units horizontal (17-percent slope) and up to four units vertical in 12 units horizontal (33-percent slope), underlayment shall be two layers applied in the following manner. Apply a minimum 19-inch-wide (483 mm) strip of underlayment felt parallel with and starting at the eaves, fastened sufficiently to hold in place. Starting at the eave, apply 36-inch-wide (914 mm) sheets of underlayment overlapping successive sheets 19 inches (483 mm) and fasten sufficiently to hold in place. Distortions in the underlayment shall not interfere with the ability of the shingles to seal. For roof slopes of four units vertical in 12 units horizontal (33-percent slope) or greater, underlayment shall be one layer applied in the following manner. Underlayment shall be applied shingle fashion, parallel to and starting from the eave and lapped 2 inches (51 mm), fastened sufficiently to hold in place. Distortions in the underlayment shall not interfere with the ability of the shingles to seal.

❖ Low-sloped roofs, 2:12 to 4:12, shed water more slowly than steeper roofs, therefore requiring greater protection from water backing up under the shingles. This is particularly important when considering wind-driven water and ice damming. For this reason, two layers of underlayment are required. For greater slopes, only one layer of underlayment is necessary, except at eaves where ice dams are potentially a problem.

Installation of underlayment material over a distorted surface can result in reduced wind and weather (moisture) resistance and poor aesthetics. Regardless of the slope, underlayment need only be fastened well enough to stay in place until the shingles are applied. The application of shingle fasteners will serve to fasten the underlayment.

1507.2.8.1 High wind attachment. Underlayment applied in areas subject to high winds [V_{asd} greater than 110 mph (49 m/s) as determined in accordance with Section 1609.3.1] shall be

INTERNATIONAL CODE COUNCIL®
Copyright © 2015 ICC. ALL RIGHTS RESERVED. Accessed by David Dammon on Jun 21, 2017 12:30:52 PM pursuant to License Agreement with ICC. No further reproduction or distribution authorized. ANY UNAUTHORIZED REPRODUCTION OR DISTRIBUTION IS A VIOLATION OF THE FEDERAL COPYRIGHT ACT AND THE LICENSE AGREEMENT, AND SUBJECT TO CIVIL AND CRIMINAL PENALTIES THEREUNDER.

applied with corrosion-resistant fasteners in accordance with the manufacturer's instructions. Fasteners are to be applied along the overlap not more than 36 inches (914 mm) on center.

Underlayment installed where V_{asd}, in accordance with Section 1609.3.1, equals or exceeds 120 mph (54 m/s) shall comply with ASTM D226 Type II, ASTM D4869 Type IV, or ASTM D6757. The underlayment shall be attached in a grid pattern of 12 inches (305 mm) between side laps with a 6-inch (152 mm) spacing at the side laps. Underlayment shall be applied in accordance with Section 1507.2.8 except all laps shall be a minimum of 4 inches (102 mm). Underlayment shall be attached using metal or plastic cap nails with a head diameter of not less than 1 inch (25 mm) with a thickness of at least 32-gage [0.0134 inch (0.34 mm)] sheet metal. The cap nail shank shall be a minimum of 12 gage [0.105 inch (2.67 mm)] with a length to penetrate through the roof sheathing or a minimum of $^3/_4$ inch (19.1 mm) into the roof sheathing.

Exception: As an alternative, adhered underlayment complying with ASTM D1970 shall be permitted.

❖ These provisions are intended to improve the performance of underlayment on roofs subjected to high winds, particularly if shingles are lost due to a high-wind event. Where the nominal wind speed is greater than 110 mph (49 m/s), fasteners must be approved for asphalt shingle installation and should be flat headed and corrosion resistant.

Based on observations of roof underlayment performance both in the field following hurricanes as well as in laboratory tests, ASTM 226, Type I, underlayment is not permitted where the nominal wind speed exceeds 120 mph (54 m/s). In laboratory tests, ASTM 226, Types I and II, underlayment performed dramatically different, with the ASTM 226, Type II, material remaining in place and exhibiting fewer signs of distress. In addition, the attachment of the underlayment must be accomplished with cap nails. A 1-inch (25.4 mm) head diameter of the cap portion recognizes the type most commonly used in the field. The exception specifically permits the use of a self-adhered underlayment in accordance with Section 1507.2.4 (ASTM D1970).

1507.2.8.2 Ice barrier. In areas where there has been a history of ice forming along the eaves causing a backup of water, an ice barrier that consists of at least two layers of underlayment cemented together or of a self-adhering polymer modified bitumen sheet shall be used in lieu of normal underlayment and extend from the lowest edges of all roof surfaces to a point at least 24 inches (610 mm) inside the *exterior wall* line of the building.

Exception: Detached accessory structures that contain no conditioned floor area.

❖ Ice dams form when snow melts over the warmer parts of a roof and refreezes over the colder eaves. This ice formation acts like a dam and causes water to back up beneath the roof covering. The water will eventually leak causing damage to the structure, including the walls, ceilings and roof [see Commentary Figures 1507.8.4(1) and (2)]. In areas where this is prevalent, the installation of an ice barrier is required in accordance with this section.

The exception exempts accessory buildings from such restrictions as they are unheated structures where the need for protection against ice dams is unnecessary. The same exception is found in Sections 1507.5.4, 1507.6.4, 1507.7.4, 1507.8.4 and 1507.9.4.

1507.2.9 Flashings. Flashing for asphalt shingles shall comply with this section. Flashing shall be applied in accordance with this section and the asphalt shingle manufacturer's printed instructions.

❖ This section establishes the requirement for roof flashings for asphalt shingles to prevent leakage, and further establishes performance criteria.

1507.2.9.1 Base and cap flashing. Base and cap flashing shall be installed in accordance with the manufacturer's instructions. Base flashing shall be of either corrosion-resistant metal of minimum nominal 0.019-inch (0.483 mm) thickness or mineral-surfaced roll roofing weighing a minimum of 77 pounds per 100 square feet (3.76 kg/m^2). Cap flashing shall be corrosion-resistant metal of minimum nominal 0.019-inch (0.483 mm) thickness.

❖ Roof system edges must be weatherproofed or sealed where they intersect with other vertical components, such as walls or chimneys. Flashing is composed of two parts: the base and cap. For a general discussion of roof flashings, see the commentary to Section 1503.2.

1507.2.9.2 Valleys. Valley linings shall be installed in accordance with the manufacturer's instructions before applying shingles. Valley linings of the following types shall be permitted:

1. For open valleys (valley lining exposed) lined with metal, the valley lining shall be at least 24 inches (610 mm) wide and of any of the corrosion-resistant metals in Table 1507.2.9.2.
2. For open valleys, valley lining of two plies of mineral-surfaced roll roofing complying with ASTM D3909 or ASTM D6380 shall be permitted. The bottom layer shall be 18 inches (457 mm) and the top layer a minimum of 36 inches (914 mm) wide.
3. For closed valleys (valleys covered with shingles), valley lining of one ply of smooth roll roofing complying with ASTM D6380, and at least 36 inches (914 mm) wide or types as described in Item 1 or 2 above shall be permitted. Self-adhering polymer modified bitumen underlayment complying with ASTM D1970 shall be permitted in lieu of the lining material.

❖ Valleys are the internal angle formed by the intersection of two sloping roof planes. For asphalt shingle roofs, the valley protection is categorized as open or closed. An open valley is a method of construction in which the steep-slope roofing on both sides is

INTERNATIONAL CODE COUNCIL®
Copyright © 2015 ICC. ALL RIGHTS RESERVED. Accessed by David Dammon on Jun 21, 2017 12:30:52 PM pursuant to License Agreement with ICC. No further reproduction or distribution authorized. ANY UNAUTHORIZED REPRODUCTION OR DISTRIBUTION IS A VIOLATION OF THE FEDERAL COPYRIGHT ACT AND THE LICENSE AGREEMENT, AND SUBJECT TO CIVIL AND CRIMINAL PENALTIES THEREUNDER.

trimmed along each side of the valley, exposing the valley flashing.

Closed valleys are those that are covered with shingles, and include methods known as closed-cut valleys and woven valleys.

Closed-cut valleys feature a method of valley construction in which shingles from one side of the valley extend across the valley, while shingles from the other side are trimmed back approximately 2 inches (51 mm) from the valley centerline.

Woven valley construction is a method in which shingles from both sides of the valley extend across the valley and are woven together by overlapping alternate courses as they are applied.

TABLE 1507.2.9.2. See below.

❖ These corrosion-resistant metals may be used in open-valley construction as valley lining where the lining is exposed.

1507.2.9.3 Drip edge. A drip edge shall be provided at eaves and rake edges of shingle roofs. Adjacent segments of the drip edge shall be lapped a minimum of 2 inches (51 mm). The vertical leg of drip edges shall be a minimum of $1^1/_2$ inches (38 mm) in width and shall extend a minimum of $^1/_4$ inch (6.4 mm) below sheathing. The drip edge shall extend back on the roof a minimum of 2 inches (51 mm). Underlayment shall be installed over drip edges along eaves. Drip edges shall be installed over underlayment along rake edges. Drip edges shall be mechanically fastened a maximum of 12 inches (305 mm) on center.

❖ A drip edge is a metal flashing or other overhanging component applied at the roof edge that is intended to control the direction of dripping water and help protect the underlying building components. Drip edges have an outward projecting lower edge to direct the water away from the building. It is also used to break the continuity of contact between the roof perimeter and the wall components to help prevent capillary action.

A metal drip edge is a formed metal flashing that extends back from, and bends down over, the roof edge. Along roof gables and rakes, the drip edge is applied over the underlayment. Along the eave, the underlayment is applied over the drip edge.

1507.3 Clay and concrete tile. The installation of clay and concrete tile shall comply with the provisions of this section.

❖ Additional information regarding clay and concrete tile roofs is provided in the *NRCA Roofing Manual: Steep-slope Roof Systems* published by the NRCA.

1507.3.1 Deck requirements. Concrete and clay tile shall be installed only over solid sheathing or spaced structural sheathing boards.

❖ The choice of deck material is critical to the life of the roof system. Decks must be capable of withstanding loads such as the weight of the tile and associated roof components and accessories. The weight of tile can increase significantly due to water absorption, depending on its porosity. It is important for designers to note that some types of roof tiles may develop increased porosity with age.

1507.3.2 Deck slope. Clay and concrete roof tile shall be installed on roof slopes of $2^1/_2$ units vertical in 12 units horizontal (21-percent slope) or greater. For roof slopes from $2^1/_2$ units vertical in 12 units horizontal (21-percent slope) to four units vertical in 12 units horizontal (33-percent slope), double underlayment application is required in accordance with Section 1507.3.3.

❖ Along with the manufacturer's installation specifications, this section gives specific limitations on the application of concrete and clay tile. Thus, tile is not allowed to be installed on slopes less than $2^1/_2$:12 regardless of the manufacturer's literature. Additionally, for low-sloped roofs, double underlayment is required.

1507.3.3 Underlayment. Unless otherwise noted, required underlayment shall conform to: ASTM D226, Type II; ASTM D2626 or ASTM D6380, Class M mineral-surfaced roll roofing.

❖ Because of the long service life of many tile roofs, an underlayment should be chosen that will provide protection for a comparable period of time. ASTM D226

TABLE 1507.2.9.2
VALLEY LINING MATERIAL

MATERIAL	MINIMUM THICKNESS	GAGE	WEIGHT
Aluminum	0.024 in.	—	—
Cold-rolled copper	0.0216 in.	—	ASTM B370, 16 oz. per square ft.
Copper	—	—	16 oz
Galvanized steel	0.0179 in.	26 (zinc-coated G90)	—
High-yield copper	0.0162 in.	—	ASTM B370, 12 oz. per square ft.
Lead	—	—	2.5 pounds
Lead-coated copper	0.0216 in.	—	ASTM B101, 16 oz. per square ft.
Lead-coated high-yield copper	0.0162 in.	—	ASTM B101, 12 oz. per square ft.
Painted terne	—	—	20 pounds
Stainless steel	—	28	—
Zinc alloy	0.027 in.	—	—

For SI: 1 inch = 25.4 mm, 1 pound = 0.454 kg, 1 ounce = 28.35 g, 1 square foot = 0.0929 m^2.

INTERNATIONAL CODE COUNCIL®
Copyright © 2015 ICC. ALL RIGHTS RESERVED. Accessed by David Dammon on Jun 21, 2017 12:30:52 PM pursuant to License Agreement with ICC. No further reproduction or distribution authorized. ANY UNAUTHORIZED REPRODUCTION OR DISTRIBUTION IS A VIOLATION OF THE FEDERAL COPYRIGHT ACT AND THE LICENSE AGREEMENT, AND SUBJECT TO CIVIL AND CRIMINAL PENALTIES THEREUNDER.

includes the physical requirements for Type II asphalt-saturated felt, which is commonly called No. 30 asphalt felt.

ASTM D2626 covers the felt base sheet with fine mineral surfacing on the top side, with or without perforations. It is intended that nonperforated felt be used in this application. The *NRCA Roofing Manual: Steep-slope Roof Systems* has recommendations regarding the choice of underlayment for specific roof slopes and applications.

ASTM D6380, Class M, designates mineral-surfaced roll-roofing products.

1507.3.3.1 Low-slope roofs. For roof slopes from $2^1/_2$ units vertical in 12 units horizontal (21-percent slope), up to four units vertical in 12 units horizontal (33-percent slope), underlayment shall be a minimum of two layers applied as follows:

1. Starting at the eave, a 19-inch (483 mm) strip of underlayment shall be applied parallel with the eave and fastened sufficiently in place.
2. Starting at the eave, 36-inch-wide (914 mm) strips of underlayment felt shall be applied overlapping successive sheets 19 inches (483 mm) and fastened sufficiently in place.

❖ The code requires that the underlayment be laid with two layers in a manner that provides two thicknesses at any point.

1507.3.3.2 High-slope roofs. For roof slopes of four units vertical in 12 units horizontal (33-percent slope) or greater, underlayment shall be a minimum of one layer of underlayment felt applied shingle fashion, parallel to, and starting from the eaves and lapped 2 inches (51 mm), fastened only as necessary to hold in place.

❖ A single layer of underlayment is required on all roof slopes of 4:12 or greater. Reinforced underlayment is required on all roofs with spaced sheathing in order to avoid breakthrough of the tiles.

1507.3.3.3 High wind attachment. Underlayment applied in areas subject to high wind [V_{asd} greater than 110 mph (49 m/s) as determined in accordance with Section 1609.3.1] shall be applied with corrosion-resistant fasteners in accordance with the manufacturer's installation instructions. Fasteners are to be applied along the overlap not more than 36 inches (914 mm) on center.

Underlayment installed where V_{asd}, in accordance with Section 1609.3.1, equals or exceeds 120 mph (54 m/s) shall be attached in a grid pattern of 12 inches (305 mm) between side laps with a 6-inch (152 mm) spacing at the side laps. Underlayment shall be applied in accordance with Sections 1507.3.3.1 and 1507.3.3.2 except all laps shall be a minimum of 4 inches (102 mm). Underlayment shall be attached using metal or plastic cap nails with a head diameter of not less than 1 inch (25 mm) with a thickness of at least 32-gage [0.0134 inch (0.34 mm)] sheet metal. The cap nail shank shall be a minimum of 12 gage [0.105 inch (2.67 mm)] with a length to penetrate through the roof sheathing or a minimum of $^3/_4$ inch (19.1 mm) into the roof sheathing.

Exception: As an alternative, adhered underlayment complying with ASTM D1970 shall be permitted.

❖ These provisions are intended to improve the performance of underlayment on roofs subjected to high winds, particularly if tiles are lost due to a high-wind event. Where the nominal design wind speed is greater than 110 mph (49 m/s), fasteners must be corrosion resistant in accordance with the manufacturer's instructions.

Where the nominal design wind speed exceeds 120 mph (54 m/s), the attachment of the underlayment must be accomplished with cap nails. A 1-inch (25.4 mm) head diameter of the cap portion recognizes the type most commonly used in the field. The exception specifically permits the use of a self-adhered underlayment as an alternative in accordance with ASTM D1970.

1507.3.4 Clay tile. Clay roof tile shall comply with ASTM C1167.

❖ ASTM C1167 specifies material characteristics and physical properties for clay tiles that are intended for use as a roof covering where durability and appearance are required to provide a weather-resistant surface of specified design. These tiles are made of clay, shale or other earthy substances and are heat treated at an elevated temperature. The process develops a fired bond between the particulate constituents to provide the strength and durability requirements of ASTM C1167. The tiles are classified into three grades based on their resistance to weathering. Additionally, the standard covers performance characteristics, including durability; freezing and thawing; strength; efflorescence; permeability; and reactive particulates.

1507.3.5 Concrete tile. Concrete roof tile shall comply with ASTM C1492.

❖ ASTM C1492 is the standard that covers the physical properties and material characteristics for concrete roof tiles. The water absorption requirement in ASTM C1492 for normal roof weight tiles is $12^1/_2$ percent, which is lower than the 15 percent previously listed in the code. In addition, ASTM C1492 adds clarity with regards to the water absorption requirements for medium- and lightweight roof tiles. ASTM C140 is still referenced for the testing procedures in ASTM C1492, even though it is no longer directly referenced by the code.

1507.3.6 Fasteners. Tile fasteners shall be corrosion resistant and not less than 11-gage, $^5/_{16}$-inch (8.0 mm) head, and of sufficient length to penetrate the deck a minimum of $^3/_4$ inch (19.1 mm) or through the thickness of the deck, whichever is less. Attaching wire for clay or concrete tile shall not be

INTERNATIONAL CODE COUNCIL®
Copyright © 2015 ICC. ALL RIGHTS RESERVED. Accessed by David Dammon on Jun 21, 2017 12:30:52 PM pursuant to License Agreement with ICC. No further reproduction or distribution authorized. ANY UNAUTHORIZED REPRODUCTION OR DISTRIBUTION IS A VIOLATION OF THE FEDERAL COPYRIGHT ACT AND THE LICENSE AGREEMENT, AND SUBJECT TO CIVIL AND CRIMINAL PENALTIES THEREUNDER.

smaller than 0.083 inch (2.1 mm). Perimeter fastening areas include three tile courses but not less than 36 inches (914 mm) from either side of hips or ridges and edges of eaves and gable rakes.

❖ Fasteners are to be corrosion resistant, such as hot-dipped galvanized steel, aluminum or stainless steel, needle or diamond pointed, with large flat heads.

1507.3.7 Attachment. Clay and concrete roof tiles shall be fastened in accordance with Table 1507.3.7.

❖ Refer to the commentary to Section 1504.2 for other information in the code related to the wind resistance of clay and concrete roof tile.

TABLE 1507.3.7. See page 15-15.

❖ The tabulated requirements for fastener installation are based on wind speed, mean roof height and roof slope. It also covers interlocking requirements for specific areas and criteria for roofs.

1507.3.8 Application. Tile shall be applied according to the manufacturer's installation instructions, based on the following:

1. Climatic conditions.
2. Roof slope.
3. Underlayment system.
4. Type of tile being installed.

❖ Clay and concrete tiles come in two generic forms: roll tile and flat tile. Either one may be interlocking but must be applied according to the manufacturer's instructions.

1507.3.9 Flashing. At the juncture of the roof vertical surfaces, flashing and counterflashing shall be provided in accordance with the manufacturer's installation instructions, and where of metal, shall not be less than 0.019-inch (0.48 mm) (No. 26 galvanized sheet gage) corrosion-resistant metal. The valley flashing shall extend at least 11 inches (279 mm) from the centerline each way and have a splash diverter rib not less than 1 inch (25 mm) high at the flow line formed as part of the flashing. Sections of flashing shall have an end lap of not less than 4 inches (102 mm). For roof slopes of three units vertical in 12 units horizontal (25-percent slope) and over, the valley flashing shall have a 36-inch-wide (914 mm) underlayment of either one layer of Type I underlayment running the full length of the valley, or a self-adhering polymer-modified bitumen sheet complying with ASTM D1970, in addition to other required underlayment. In areas where the average daily temperature in January is 25°F (-4°C) or less or where there is a possibility of ice forming along the eaves causing a backup of water, the metal valley flashing underlayment shall be solid cemented to the roofing underlayment for slopes under seven units vertical in 12 units horizontal (58-percent slope) or self-adhering polymer-modified bitumen sheet shall be installed.

❖ Flashings are required to maintain the integrity of weather-resistant roofs (see commentary, Section 1503.2).

1507.4 Metal roof panels. The installation of metal roof panels shall comply with the provisions of this section.

❖ There are two general categories of metal roofing systems: architectural metal roofing and structural metal roofing. Architectural metal roofs are generally water-shedding roof systems. Structural metal roofs have hydrostatic (water barrier) characteristics.

Architectural metal roof systems are usually characterized by a flat pan with $^3/_4$- to $1^1/_2$-inch (19.1 to 38 mm) ribs on each side. The absence of intermediate ribs and massive side ribs gives a clean appearance, but does not provide the panels with the strength to be considered a structural panel. Architectural metal roofing systems are typically designed for steep slopes so that water will shed off the roof panels. This type of design does not require the seams to be water tight. Therefore, the slope for such nonwater-tight roof panels is required to be not less than 3:12. One exception is traditional flat seamed, soldered or welded metal roofing, which is acceptable on slopes less than 3:12. An example of roofing that has traditionally been used this way is copper. Architectural metal roofing systems require solid decking.

"Metal roof panels" are defined in Section 202 as an interlocking metal sheet having a minimum installed weather exposure of 3 square feet (0.28 m^2) per sheet. In contrast, metal roof shingles have less than 3 square feet (0.28 m^2) of exposure.

1507.4.1 Deck requirements. Metal roof panel roof coverings shall be applied to a solid or closely fitted deck, except where the roof covering is specifically designed to be applied to spaced supports.

❖ The deck for metal roofing is required to be solid or closely fitted, except where the panels are specifically designed to be applied to spaced supports. Structural standing seam metal panel roof systems possess strength characteristics that allow them to span between structural supports, and are commonly used on preengineered metal buildings. The metal panel ribs are not seamed or interlocked like a true standing seam metal roof system.

INTERNATIONAL CODE COUNCIL®
Copyright © 2015 ICC. ALL RIGHTS RESERVED. Accessed by David Dammon on Jun 21, 2017 12:30:52 PM pursuant to License Agreement with ICC. No further reproduction or distribution authorized. ANY UNAUTHORIZED REPRODUCTION OR DISTRIBUTION IS A VIOLATION OF THE FEDERAL COPYRIGHT ACT AND THE LICENSE AGREEMENT, AND SUBJECT TO CIVIL AND CRIMINAL PENALTIES THEREUNDER.

TABLE 1507.3.7
CLAY AND CONCRETE TILE ATTACHMENT[a, b, c]

GENERAL - CLAY OR CONCRETE ROOF TILE				
Maximum Nominal Design Wind Speed, V_{asd} [f] (mph)	**Mean roof height (feet)**	**Roof slope < 3:12**	**Roof slope 3:12 and over**	
85	0-60	One fastener per tile. Flat tile without vertical laps, two fasteners per tile.	Two fasteners per tile. Only one fastener on slopes of 7:12 and less for tiles with installed weight exceeding 7.5 lbs./sq. ft. having a width not more than 16 inches.	
100	0-40			
100	>40-60	The head of all tiles shall be nailed. The nose of all eave tiles shall be fastened with approved clips. All rake tiles shall be nailed with two nails. The nose of all ridge, hip and rake tiles shall be set in a bead of roofer's mastic.		
110	0-60	The fastening system shall resist the wind forces in Section 1609.5.3.		
120	0-60	The fastening system shall resist the wind forces in Section 1609.5.3.		
130	0-60	The fastening system shall resist the wind forces in Section 1609.5.3.		
All	>60	The fastening system shall resist the wind forces in Section 1609.5.3.		
INTERLOCKING CLAY OR CONCRETE ROOF TILE WITH PROJECTING ANCHOR LUGS[d, e] (Installations on spaced/solid sheathing with battens or spaced sheathing)				
Maximum Nominal Design Wind Speed, V_{asd} [f] (mph)	**Mean roof height (feet)**	**Roof slope < 5:12**	**Roof slope 5:12 < 12:12**	**Roof slope 12:12 and over**
85	0-60	Fasteners are not required. Tiles with installed weight less than 9 lbs./sq. ft. require a minimum of one fastener per tile.	One fastener per tile every other row. All perimeter tiles require one fastener. Tiles with installed weight less than 9 lbs./sq. ft. require a minimum of one fastener per tile.	One fastener required for every tile. Tiles with installed weight less than 9 lbs./sq. ft. require a minimum of one fastener per tile.
100	0-40			
100	>40-60	The head of all tiles shall be nailed. The nose of all eave tiles shall be fastened with approved clips. All rake tiles shall be nailed with two nails. The nose of all ridge, hip and rake tiles shall be set in a bead of roofer's mastic.		
110	0-60	The fastening system shall resist the wind forces in Section 1609.5.3.		
120	0-60	The fastening system shall resist the wind forces in Section 1609.5.3.		
130	0-60	The fastening system shall resist the wind forces in Section 1609.5.3.		
All	>60	The fastening system shall resist the wind forces in Section 1609.5.3.		
INTERLOCKING CLAY OR CONCRETE ROOF TILE WITH PROJECTING ANCHOR LUGS (Installations on solid sheathing without battens)				
Maximum Nominal Design Wind Speed, V_{asd} [f](mph)	**Mean roof height (feet)**	**All roof slopes**		
85	0-60	One fastener per tile.		
100	0-40	One fastener per tile.		
100	> 40-60	The head of all tiles shall be nailed. The nose of all eave tiles shall be fastened with approved clips. All rake tiles shall be nailed with two nails. The nose of all ridge, hip and rake tiles shall be set in a bead of roofer's mastic.		
110	0-60	The fastening system shall resist the wind forces in Section 1609.5.3.		
120	0-60	The fastening system shall resist the wind forces in Section 1609.5.3.		
130	0-60	The fastening system shall resist the wind forces in Section 1609.5.3.		
All	> 60	The fastening system shall resist the wind forces in Section 1609.5.3.		

For SI: 1 inch = 25.4 mm, 1 foot = 304.8 mm, 1 mile per hour = 0.447 m/s, 1 pound per square foot = 4.882 kg/m^2.

a. Minimum fastener size. Corrosion-resistant nails not less than No. 11 gage with $^5/_{16}$-inch head. Fasteners shall be long enough to penetrate into the sheathing $^3/_4$ inch or through the thickness of the sheathing, whichever is less. Attaching wire for clay and concrete tile shall not be smaller than 0.083 inch.

b. Snow areas. A minimum of two fasteners per tile are required or battens and one fastener.

c. Roof slopes greater than 24:12. The nose of all tiles shall be securely fastened.

d. Horizontal battens. Battens shall be not less than 1 inch by 2 inch nominal. Provisions shall be made for drainage by a minimum of $^1/_8$-inch riser at each nail or by 4-foot-long battens with at least a $^1/_2$-inch separation between battens. Horizontal battens are required for slopes over 7:12.

e. Perimeter fastening areas include three tile courses but not less than 36 inches from either side of hips or ridges and edges of eaves and gable rakes.

f. V_{asd} shall be determined in accordance with Section 1609.3.1.

INTERNATIONAL CODE COUNCIL®
Copyright © 2015 ICC. ALL RIGHTS RESERVED. Accessed by David Dammon on Jun 21, 2017 12:30:52 PM pursuant to License Agreement with ICC. No further reproduction or distribution authorized. ANY UNAUTHORIZED REPRODUCTION OR DISTRIBUTION IS A VIOLATION OF THE FEDERAL COPYRIGHT ACT AND THE LICENSE AGREEMENT, AND SUBJECT TO CIVIL AND CRIMINAL PENALTIES THEREUNDER.

1507.4.2 Deck slope. Minimum slopes for metal roof panels shall comply with the following:

1. The minimum slope for lapped, nonsoldered seam metal roof panels without applied lap sealant shall be three units vertical in 12 units horizontal (25-percent slope).
2. The minimum slope for lapped, nonsoldered seam metal roof panels with applied lap sealant shall be one-half unit vertical in 12 units horizontal (4-percent slope). Lap sealants shall be applied in accordance with the approved manufacturer's installation instructions.
3. The minimum slope for standing-seam metal roof panel systems shall be one-quarter unit vertical in 12 units horizontal (2-percent slope).

❖ Typically, structural metal roofing systems are designed to resist water at laps and seams with sealants applied in the seams. It is usually recommended that these types of roof systems have a slope of not less than $^1/_2$:12, although some manufacturers allow slopes as low as $^1/_4$:12. While the code requires a minimum slope of 3:12, a lower slope is permitted on standing-seam-type roof systems, which require only $^1/_4$:12. The term "standing seam" is used to refer to almost any roof panel with a raised vertical rib. Strictly speaking, it only indicates those metal panels that interlock or are seamed together vertically above the panel's pan.

1507.4.3 Material standards. Metal-sheet roof covering systems that incorporate supporting structural members shall be designed in accordance with Chapter 22. Metal-sheet roof coverings installed over structural decking shall comply with Table 1507.4.3(1). The materials used for metal-sheet roof coverings shall be naturally corrosion resistant or provided with corrosion resistance in accordance with the standards and minimum thicknesses shown in Table 1507.4.3(2).

❖ The requirements for metal roof coverings that incorporate supporting structural members into their design are contained in Chapter 22. Other metal-sheet roof coverings are required to comply with Table 1507.4.3(1).

Many of the materials listed in Table 1507.4.3(1) are inherently corrosion resistant, such as aluminum, copper and lead. For these corrosion-resistant materials a material standard is listed for the base material; however, for steel roofing products, coatings are added to the base material to provide the necessary corrosion resistance.

TABLE 1507.4.3(1). See page 15-17.

❖ This table provides specific guidance and appropriate metal roof coverings. The requirements vary based upon the type of metal used, such as aluminum, steel, copper, lead and zinc. In some cases, standards are referenced; in other cases, basic criteria are provided.

TABLE 1507.4.3(2). See page 15-17.

❖ Steel coating standards are located in Table 1507.4.3(2). Having this table separate from Table 1507.4.3(1) helps to clarify that these standards only address the process necessary to provide corrosion resistance for the base steel. The coating descriptions in Table 1507.4.3(2) are consistent with the applicable coating standards.

1507.4.4 Attachment. Metal roof panels shall be secured to the supports in accordance with the approved manufacturer's fasteners. In the absence of manufacturer recommendations, the following fasteners shall be used:

1. Galvanized fasteners shall be used for steel roofs.
2. Copper, brass, bronze, copper alloy or 300 series stainless-steel fasteners shall be used for copper roofs.
3. Stainless-steel fasteners are acceptable for all types of metal roofs.
4. Aluminum fasteners are acceptable for aluminum roofs attached to aluminum supports.

❖ Fasteners used to attach metal roofing to their supporting construction are to be in accordance with the roofing manufacturer's recommendations and approved for that purpose. If such approval is not available, then the code provides a default list of several fasteners that are permitted for the type of metal roof shown. The purpose of this provision is to provide compatibility with roof materials and prevent corrosion.

1507.4.5 Underlayment and high wind. Underlayment applied in areas subject to high winds [V_{asd} greater than 110 mph (49 m/s) as determined in accordance with Section 1609.3.1] shall be applied with corrosion-resistant fasteners in accordance with the manufacturer's installation instructions. Fasteners are to be applied along the overlap not more than 36 inches (914 mm) on center.

Underlayment installed where V_{asd}, in accordance with Section 1609.3.1, equals or exceeds 120 mph (54 m/s) shall comply with ASTM D226 Type II, ASTM D4869 Type IV, or ASTM D1970. The underlayment shall be attached in a grid pattern of 12 inches (305 mm) between side laps with a 6-inch (152 mm) spacing at the side laps. Underlayment shall be applied in accordance with the manufacturer's installation instructions except all laps shall be a minimum of 4 inches (102 mm). Underlayment shall be attached using metal or plastic cap nails with a head diameter of not less than 1 inch (25 mm) with a thickness of at least 32-gage [0.0134 inch (0.34 mm)] sheet metal. The cap nail shank shall be a minimum of 12 gage [0.105 inch (2.67 mm)] with a length to penetrate through the roof sheathing or a minimum of $^3/_4$ inch (19.1 mm) into the roof sheathing.

Exception: As an alternative, adhered underlayment complying with ASTM D1970 shall be permitted.

❖ These provisions are intended to improve the performance of roofs subjected to high winds, particularly if the roof covering is lost due to a high-wind event.

INTERNATIONAL CODE COUNCIL®
Copyright © 2015 ICC. ALL RIGHTS RESERVED. Accessed by David Dammon on Jun 21, 2017 12:30:52 PM pursuant to License Agreement with ICC. No further reproduction or distribution authorized. ANY UNAUTHORIZED REPRODUCTION OR DISTRIBUTION IS A VIOLATION OF THE FEDERAL COPYRIGHT ACT AND THE LICENSE AGREEMENT, AND SUBJECT TO CIVIL AND CRIMINAL PENALTIES THEREUNDER.

Where the nominal design wind speed is greater than 110 mph (49 m/s), underlayment is required to be applied with fasteners that are corrosion resistant and in accordance with the manufacturer's instructions.

Where the nominal design wind speed exceeds 120 mph (54 m/s), the attachment of the underlayment must be accomplished with cap nails. A 1-inch (25.4 mm) head diameter of the cap portion recognizes the type most commonly used in the field. The exception recognizes that a self-adhered underlayment can be used as an alternative in accordance with ASTM D1970.

1507.5 Metal roof shingles. The installation of metal roof shingles shall comply with the provisions of this section.

❖ See the commentary to Section 1507.4 for a general discussion about metal roof systems.

1507.5.1 Deck requirements. Metal roof shingles shall be applied to a solid or closely fitted deck, except where the roof covering is specifically designed to be applied to spaced sheathing.

❖ The manufacturer's instructions must be followed in addition to any restrictions required by the code.

1507.5.2 Deck slope. Metal roof shingles shall not be installed on roof slopes below three units vertical in 12 units horizontal (25-percent slope).

❖ Metal shingles cannot be installed on roof slopes less than 3:12.

1507.5.3 Underlayment. Underlayment shall comply with ASTM D226, Type I or ASTM D4869.

❖ A single layer of underlayment is the minimum requirement under all metal shingles other than flat metal shingles. The underlayment must meet the performance criteria of ASTM D226, Type I, or ASTM D4869.

1507.5.3.1 Underlayment and high wind. Underlayment applied in areas subject to high winds [V_{asd} greater than 110 mph (49 m/s) as determined in accordance with Section 1609.3.1] shall be applied with corrosion-resistant fasteners in accordance with the manufacturer's installation instructions. Fasteners are to be applied along the overlap not farther apart than 36 inches (914 mm) on center.

Underlayment installed where V_{asd}, in accordance with Section 1609.3.1, equals or exceeds 120 mph (54 m/s) shall comply with ASTM D226 Type II or ASTM D4869 Type IV. The underlayment shall be attached in a grid pattern of 12 inches (305 mm) between side laps with a 6-inch spacing (152 mm) at the side laps. Underlayment shall be applied in accordance with the manufacturer's installation instructions except all laps shall be a minimum of 4 inches (102 mm). Underlayment shall be attached using metal or plastic cap nails with a head diameter of not less than 1 inch (25 mm) with a thickness of at least 32-gage [0.0134 inch (0.34 mm)] sheet metal. The cap nail shank shall be a minimum of 12 gage [0.105 inch (2.67 mm)] with a length to penetrate

TABLE 1507.4.3(1)
METAL ROOF COVERINGS

ROOF COVERING TYPE	STANDARD APPLICATION RATE/THICKNESS
Aluminum	ASTM B209, 0.024 inch minimum thickness for roll-formed panels and 0.019 inch minimum thickness for press-formed shingles.
Aluminum-zinc alloy coated steel	ASTM A792 AZ 50
Cold-rolled copper	ASTM B370 minimum 16 oz./sq. ft. and 12 oz./sq. ft. high yield copper for metal-sheet roof covering systems: 12 oz./sq. ft. for preformed metal shingle systems.
Copper	16 oz./sq. ft. for metal-sheet roof-covering systems; 12 oz./sq. ft. for preformed metal shingle systems.
Galvanized steel	ASTM A653 G-90 zinc-coated[a].
Hard lead	2 lbs./sq. ft.
Lead-coated copper	ASTM B101
Prepainted steel	ASTM A755
Soft lead	3 lbs./sq. ft.
Stainless steel	ASTM A240, 300 Series Alloys
Steel	ASTM A924
Terne and terne-coated stainless	Terne coating of 40 lbs. per double base box, field painted where applicable in accordance with manufacturer's installation instructions.
Zinc	0.027 inch minimum thickness; 99.995% electrolytic high grade zinc with alloy additives of copper (0.08% - 0.20%), titanium (0.07% - 0.12%) and aluminum (0.015%).

For SI: 1 ounce per square foot = 0.305 kg/m^2,
1 pound per square foot = 4.882 kg/m^2,
1 inch = 25.4 mm, 1 pound = 0.454 kg.

a. For Group U buildings, the minimum coating thickness for ASTM A653 galvanized steel roofing shall be G-60.

TABLE 1507.4.3(2)
MINIMUM CORROSION RESISTANCE

55% Aluminum-zinc alloy coated steel	ASTM A792 AZ 50
5% Aluminum alloy-coated steel	ASTM A875 GF60
Aluminum-coated steel	ASTM A463 T2 65
Galvanized steel	ASTM A653 G-90
Prepainted steel	ASTM A755[a]

a. Paint systems in accordance with ASTM A755 shall be applied over steel products with corrosion-resistant coatings complying with ASTM A792, ASTM A875, ASTM A463 or ASTM A653.

INTERNATIONAL CODE COUNCIL®
Copyright © 2015 ICC. ALL RIGHTS RESERVED. Accessed by David Dammon on Jun 21, 2017 12:30:52 PM pursuant to License Agreement with ICC. No further reproduction or distribution authorized. ANY UNAUTHORIZED REPRODUCTION OR DISTRIBUTION IS A VIOLATION OF THE FEDERAL COPYRIGHT ACT AND THE LICENSE AGREEMENT, AND SUBJECT TO CIVIL AND CRIMINAL PENALTIES THEREUNDER.

through the roof sheathing or a minimum of $^3/_4$ inch (19.1 mm) into the roof sheathing.

Exception: As an alternative, adhered underlayment complying with ASTM D1970 shall be permitted.

❖ These provisions are intended to improve the performance of underlayment on roofs subjected to high winds, particularly if shingles are lost due to a high-wind event. Where the design nominal wind speed is greater than 110 mph (49 m/s), fasteners must be corrosion resistant and in accordance with the manufacturer's instructions.

Based on observations of roof underlayment performance both in the field following hurricanes as well as in laboratory tests, ASTM 226 Type I underlayment is not permitted where the nominal design wind speed exceeds 120 mph (54 m/s). In laboratory tests, ASTM 226 Types I and II underlayment performed dramatically different, with the ASTM 226 Type II material remaining in place and exhibiting fewer signs of distress. In addition, the attachment of the underlayment must be accomplished with cap nails. A 1-inch (25.4 mm) head diameter of the cap portion recognizes the type most commonly used in the field. The exception recognizes the use of a self-adhered underlayment as an alernative in accordance with ASTM D1970.

1507.5.4 Ice barrier. In areas where there has been a history of ice forming along the eaves causing a backup of water, an ice barrier that consists of at least two layers of underlayment cemented together or of a self-adhering polymer-modified bitumen sheet shall be used in lieu of normal underlayment and extend from the lowest edges of all roof surfaces to a point at least 24 inches (610 mm) inside the exterior wall line of the building.

Exception: Detached accessory structures that contain no conditioned floor area.

❖ Ice dams form when snow melts over the warmer parts of a roof and refreezes over the colder eaves. This ice formation acts like a dam and causes water to back up beneath the roof covering. The roof will eventually leak, causing damage to the structure, including the walls, ceilings and roof [see Commentary Figures 1507.8.4(1) and (2)] (see Section 1507.8.4). In areas where this is prevalent, the installation of an ice barrier is required in accordance with this section.

The exception exempts accessory buildings from such restrictions as they are unheated structures where the need for protection against ice dams is unnecessary.

1507.5.5 Material standards. Metal roof shingle roof coverings shall comply with Table 1507.4.3(1). The materials used for metal-roof shingle roof coverings shall be naturally corrosion resistant or provided with corrosion resistance in accordance with the standards and minimum thicknesses specified in the standards listed in Table 1507.4.3(2).

❖ ASTM A653 regulates steel sheet for roofing and siding that is zinc coated on continuous lines and by the cut-length method. Material of this quality is furnished flat, in coils and cut lengths, and is formed in cut lengths. Roofing and siding includes corrugated, V-crimp, roll roofing and many special patterns. Corrugated roofing and siding sheet is produced in a number of corrugations, with variations of pitch and depth. ASTM A755 covers steel sheet that is metallic coated by the hot-dipped process and prepainted by the coil-coating process with organic films for exterior-exposed building products of various qualities. Sheet material of this designation is furnished in coils, cut lengths and formed cut lengths. ASTM B101 covers lead-coated copper sheets for architectural uses.

Many of the materials listed in Table 1507.4.3(1) are inherently corrosion resistant, such as aluminum, copper and lead. For these corrosion-resistant materials, a material standard is listed for the base material. However, for steel roofing products, coatings are added to the base material to provide the necessary corrosion resistance.

Steel coating standards are located in Table 1507.4.3(2). Having this table separate from Table 1507.4.3(1) helps to clarify that these standards only address the process necessary to provide corrosion resistance for the base steel. The coating descriptions in Table 1507.4.3(2) are consistent with the applicable coating standards.

1507.5.6 Attachment. Metal roof shingles shall be secured to the roof in accordance with the *approved* manufacturer's installation instructions.

❖ Fasteners used to attach metal roofing to the roof are to have the manufacturer's approval for that purpose.

1507.5.7 Flashing. Roof valley flashing shall be of corrosion-resistant metal of the same material as the roof covering or shall comply with the standards in Table 1507.4.3(1). The valley flashing shall extend at least 8 inches (203 mm) from the centerline each way and shall have a splash diverter rib not less than $^3/_4$ inch (19.1 mm) high at the flow line formed as part of the flashing. Sections of flashing shall have an end lap of not less than 4 inches (102 mm). In areas where the average daily temperature in January is 25°F (-4°C) or less or where there is a possibility of ice forming along the eaves causing a backup of water, the metal valley flashing shall have a 36-inch-wide (914 mm) underlayment directly under it consisting of either one layer of underlayment running the full length of the valley or a self-adhering polymer-modified bitumen sheet complying with ASTM D1970, in addition to underlayment required for metal roof shingles. The metal valley flashing underlayment shall be solidly cemented to the roofing underlayment for roof slopes under seven units vertical in 12 units horizontal (58-percent slope) or self-adhering polymer-modified bitumen sheet shall be installed.

❖ See the commentary to Section 1503.2.

1507.6 Mineral-surfaced roll roofing. The installation of mineral-surfaced roll roofing shall comply with this section.

❖ Mineral-surfaced roll roofing is an asphalt roll roofing material in some cases having a selvage edge, which is a specially defined edge (lined for demarcation)

INTERNATIONAL CODE COUNCIL®
Copyright © 2015 ICC. ALL RIGHTS RESERVED. Accessed by David Dammon on Jun 21, 2017 12:30:52 PM pursuant to License Agreement with ICC. No further reproduction or distribution authorized. ANY UNAUTHORIZED REPRODUCTION OR DISTRIBUTION IS A VIOLATION OF THE FEDERAL COPYRIGHT ACT AND THE LICENSE AGREEMENT, AND SUBJECT TO CIVIL AND CRIMINAL PENALTIES THEREUNDER.

designed for some special purpose, such as overlapping or seaming. It is typically 36 inches (914 mm) in width and is surfaced with coarse mineral granules. In mineral-surfaced roll roofing, the selvage is not surfaced with coarse mineral granules to allow better adhesion of the overlapping sheet.

There are two general methods for applying roll roofing: the exposed nail method and the concealed nail method. Depending on the slope and nailing method used, roll roofing can be applied parallel (downslope roof edge) or perpendicular to the eave (parallel with the rake) (see Section 1507.6.1).

1507.6.1 Deck requirements. Mineral-surfaced roll roofing shall be fastened to solidly sheathed roofs.

❖ Prior to the application of the roll roofing on wood plank or plywood decks, the deck should be inspected for delamination of plywood, warped boards and proper nailing.

For roll roofing applied parallel to the eave, a minimum roof slope of 2:12 is recommended for application by the concealed-nail method, and 6:12 is recommended for application by the exposed-nail method.

For roll roofing applied parallel to the rake, a minimum roof slope of 3:12 is recommended for application by the concealed-nail method, and 4:12 is recommended for application by the exposed-nail method.

1507.6.2 Deck slope. Mineral-surfaced roll roofing shall not be applied on roof slopes below one unit vertical in 12 units horizontal (8-percent slope).

❖ It is not recommended that asphalt roll roofing be applied to deck slopes of less than 2:12, with one exception. Roll roofing with a 19-inch (483 mm) selvage edge (commonly referred to as double coverage or split-sheet) may be applied on a deck with a slope as low as 1:12; however, it should only be used on roofs that will drain by gravity. It is not recommended for decks that will allow puddling and require evaporation to dry the roof.

1507.6.3 Underlayment. Underlayment shall comply with ASTM D226, Type I or ASTM D4869.

❖ A single layer of underlayment is the minimum requirement under mineral-surfaced rolled roofing. The underlayment must meet the performance criteria of ASTM D226 Type I, or ASTM D4869.

1507.6.3.1 Underlayment and high wind. Underlayment applied in areas subject to high winds [V_{asd} greater than 110 mph (49 m/s) as determined in accordance with Section 1609.3.1] shall be applied with corrosion-resistant fasteners in accordance with the manufacturer's installation instructions. Fasteners are to be applied along the overlap not more than 36 inches (914 mm) on center.

Underlayment installed where V_{asd}, in accordance with Section 1609.3.1, equals or exceeds 120 mph (54 m/s) shall comply with ASTM D226 Type II. The underlayment shall be attached in a grid pattern of 12 inches (305 mm) between side laps with a 6-inch (152 mm) spacing at the side laps. Underlayment shall be applied in accordance with the manufacturer's installation instructions except all laps shall be a minimum of 4 inches (102 mm). Underlayment shall be attached using metal or plastic cap nails with a head diameter of not less than 1 inch (25 mm) with a thickness of at least 32-gage [0.0134 inch (0.34 mm)] sheet metal. The cap nail shank shall be a minimum of 12 gage [0.105 inch (2.67 mm)] with a length to penetrate through the roof sheathing or a minimum of $^3/_4$ inch (19.1 mm) into the roof sheathing.

Exception: As an alternative, adhered underlayment complying with ASTM D1970 shall be permitted.

❖ These provisions are intended to improve the performance of underlayment on roofs subjected to high winds, particularly if the roof covering is lost due to a high-wind event. Where the nominal design wind speed is greater than 110 mph (49 m/s), fasteners must be corrosion resistant and in accordance with the manufacturer's instructions.

Based on observations of roof underlayment performance both in the field following hurricanes as well as in laboratory tests, ASTM 226 Type I underlayment is not permitted where the nominal design wind speed exceeds 120 mph (54 m/s). In laboratory tests, ASTM 226 Types I and II underlayment performed dramatically different, with the ASTM 226 Type II material remaining in place and exhibiting fewer signs of distress. In addition, the attachment of the underlayment must be accomplished with cap nails. A 1-inch (25.4 mm) head diameter of the cap portion recognizes the type most commonly used in the field. The exception recognizes the use of a self-adhered underlayment as an alternative in accordance with ASTM D1970.

1507.6.4 Ice barrier. In areas where there has been a history of ice forming along the eaves causing a backup of water, an ice barrier that consists of at least two layers of underlayment cemented together or of a self-adhering polymer-modified bitumen sheet shall be used in lieu of normal underlayment and extend from the lowest edges of all roof surfaces to a point at least 24 inches (610 mm) inside the exterior wall line of the building.

Exception: Detached accessory structures that contain no conditioned floor area.

❖ Ice dams form when snow melts over the warmer parts of a roof and refreezes over the colder eaves. This ice formation acts like a dam and causes water to back up beneath the roof covering. The roof will eventually leak, causing damage to the structure, including the walls, ceilings and roof [see Commentary Figures 1507.8.4(1) and (2)]. In areas where this is prevalent, the installation of an ice barrier is required in accordance with this section.

The exception exempts accessory buildings from such restrictions, as they are unheated structures where the need for protection against ice dams is unnecessary.

INTERNATIONAL CODE COUNCIL®
Copyright © 2015 ICC. ALL RIGHTS RESERVED. Accessed by David Dammon on Jun 21, 2017 12:30:52 PM pursuant to License Agreement with ICC. No further reproduction or distribution authorized. ANY UNAUTHORIZED REPRODUCTION OR DISTRIBUTION IS A VIOLATION OF THE FEDERAL COPYRIGHT ACT AND THE LICENSE AGREEMENT, AND SUBJECT TO CIVIL AND CRIMINAL PENALTIES THEREUNDER.

1507.6.5 Material standards. Mineral-surfaced roll roofing shall conform to ASTM D3909 or ASTM D6380.

❖ ASTM D6380 covers asphalt roll roofing (organic felt). ASTM D3909 covers asphalt-impregnated and coated glass felt roll roofing surfaced on the weather side with mineral granules for use as a cap sheet in the construction of built-up roofs.

1507.7 Slate shingles. The installation of slate shingles shall comply with the provisions of this section.

❖ Slate is a dense, tough, durable natural rock or stone material that is practically nonabsorbent. This natural rock has cleavage planes that allow the slate to be easily split into relatively thin layers. Slate also possesses a natural grain that usually runs perpendicular to the cleavage. Slate is usually split so the length of the shingle runs in the direction of the grain.

Slate roofing has a long service life when consideration is given to all components of the roofing system. Some grades of slate combined with proper roof deck, underlayments, fastening and accessories have a service life in excess of 75 years.

1507.7.1 Deck requirements. Slate shingles shall be fastened to solidly sheathed roofs.

❖ Due to the long service life expected of a slate roof system, careful consideration should be given to the deck material. Deck material that can be expected to last as long as the service life of the roof should be chosen. Additionally, consideration should be given to the weight of the slate when choosing the deck. Slate is available in many different thicknesses and, therefore, the weight will vary.

1507.7.2 Deck slope. Slate shingles shall only be used on slopes of four units vertical in 12 units horizontal (4:12) or greater.

❖ This type of roof covering cannot be installed on roof slopes that are less than 4:12.

1507.7.3 Underlayment. Underlayment shall comply with ASTM D226, Type II or ASTM D4869, Type III or IV.

❖ A single layer of underlayment is the minimum requirement under mineral-surfaced rolled roofing. The underlayment must meet the performance criteria of ASTM D226, Type II, or ASTM D4869, Type III and IV.

1507.7.3.1 Underlayment and high wind. Underlayment applied in areas subject to high winds [V_{asd} greater than 110 mph (49 m/s) as determined in accordance with Section 1609.3.1] shall be applied with corrosion-resistant fasteners in accordance with the manufacturer's installation instructions. Fasteners are to be applied along the overlap not more than 36 inches (914 mm) on center.

Underlayment installed where V_{asd}, in accordance with Section 1609.3.1, equals or exceeds 120 mph (54 m/s) shall comply with ASTM D226, Type II or ASTM D4869, Type IV. The underlayment shall be attached in a grid pattern of 12 inches (305 mm) between side laps with a 6-inch (152 mm) spacing at the side laps. Underlayment shall be applied in accordance with the manufacturer's installation instructions except all laps shall be a minimum of 4 inches (102 mm). Underlayment shall be attached using metal or plastic cap nails with a head diameter of not less than 1 inch (25 mm) with a thickness of at least 32-gage [0.0134 inch (0.34 mm)] sheet metal. The cap nail shank shall be a minimum of 12 gage [0.105 inch (2.67 mm)] with a length to penetrate through the roof sheathing or a minimum of $^3/_4$ inch (19.1 mm) into the roof sheathing.

Exception: As an alternative, adhered underlayment complying with ASTM D1970 shall be permitted.

❖ These provisions are intended to improve the performance of underlayment on roofs subjected to high winds, particularly if the roof covering is lost due to a high-wind event. Where the nominal design wind speed is greater than 110 mph (49 m/s), fasteners must be corrosion resistant and in accordance with the manufacturer's instructions.

Based on observations of roof underlayment performance both in the field following hurricanes as well as in laboratory tests, ASTM 226 Type I underlayment is not permitted where the nominal design wind speed exceeds 120 mph (54 m/s). In laboratory tests, ASTM 226 Types I and II underlayment performed dramatically different, with the ASTM 226 Type II material remaining in place and exhibiting fewer signs of distress. In addition, the attachment of the underlayment must be accomplished with cap nails. A 1-inch (25.4 mm) head diameter of the cap portion recognizes the type most commonly used in the field. The exception recognizes the use of a self-adhered underlayment as an alernative in accordance with ASTM D1970.

1507.7.4 Ice barrier. In areas where the average daily temperature in January is 25°F (-4°C) or less or where there is a possibility of ice forming along the eaves causing a backup of water, an ice barrier that consists of at least two layers of underlayment cemented together or of a self-adhering polymer-modified bitumen sheet shall extend from the lowest edges of all roof surfaces to a point at least 24 inches (610 mm) inside the exterior wall line of the building.

Exception: Detached accessory structures that contain no conditioned floor area.

❖ Ice dams form when snow melts over the warmer parts of a roof and refreezes over the colder eaves. This ice formation acts like a dam and causes water to back up beneath the roof covering. The roof will eventually leak, causing damage to the structure, including the walls, ceilings and roof [see Commentary Figures 1507.8.4(1) and (2)]. In areas where this is prevalent, the installation of an ice barrier is required in accordance with this section.

There is an exception to this section that exempts accessory buildings from such restrictions, as they are unheated structures where the need for protection against ice dams is unnecessary.

INTERNATIONAL CODE COUNCIL®
Copyright © 2015 ICC. ALL RIGHTS RESERVED. Accessed by David Dammon on Jun 21, 2017 12:30:52 PM pursuant to License Agreement with ICC. No further reproduction or distribution authorized. ANY UNAUTHORIZED REPRODUCTION OR DISTRIBUTION IS A VIOLATION OF THE FEDERAL COPYRIGHT ACT AND THE LICENSE AGREEMENT, AND SUBJECT TO CIVIL AND CRIMINAL PENALTIES THEREUNDER.

1507.7.5 Material standards. Slate shingles shall comply with ASTM C406.

❖ ASTM C406 covers the material characteristics, physical requirements and sampling appropriate for the selection of slate as a roofing material.

1507.7.6 Application. Minimum headlap for slate shingles shall be in accordance with Table 1507.7.6. Slate shingles shall be secured to the roof with two fasteners per slate.

❖ Slate shingles are drilled or punched with holes for fasteners with consideration for proper headlap. Fastener material should be chosen based on the expected service life. Copper slating nails, stainless steel, aluminum-alloy, bronze or cut-brass roofing nails are often specified, depending on the particular project. Unprotected black-iron, electroplated and hot-dipped galvanized fasteners are usually not recommended.

TABLE 1507.7.6
SLATE SHINGLE HEADLAP

SLOPE	HEADLAP (inches)
4:12 < slope < 8:12	4
8:12 < slope < 20:12	3
slope ≥ 20:12	2

For SI: 1 inch = 25.4 mm.

❖ Headlap is the distance of overlap measured from the uppermost ply or course to the point that it overlaps the undermost ply or course.

1507.7.7 Flashing. Flashing and counterflashing shall be made with sheet metal. Valley flashing shall be a minimum of 15 inches (381 mm) wide. Valley and flashing metal shall be a minimum uncoated thickness of 0.0179-inch (0.455 mm) zinc-coated G90. Chimneys, stucco or brick walls shall have a minimum of two plies of felt for a cap flashing consisting of a 4-inch-wide (102 mm) strip of felt set in plastic cement and extending 1 inch (25 mm) above the first felt and a top coating of plastic cement. The felt shall extend over the base flashing 2 inches (51 mm).

❖ Flashing is required at all intersections between exterior walls and roofs. These are areas where rainwater can easily penetrate the building envelope (see Section 1503.2).

1507.8 Wood shingles. The installation of wood shingles shall comply with the provisions of this section and Table 1507.8.

❖ "Wood shingles" are defined by the roofing industry as sawn wood products featuring a uniform butt thickness per individual length.

TABLE 1507.8. See page 15-22.

❖ Wood shingles cannot be installed on roof slopes below 3:12. Single-layer underlayment is required at eaves, ridges, hips, valleys and all other changes of roof slope or direction to protect the roof from leakage caused by water backup. Each shingle must be securely fastened to the roof deck with a maximum of two fasteners. Care should be taken so that the fasteners do not cause splitting of the wood shingle. Fasteners are to be specified in the manufacturer's installation instructions.

1507.8.1 Deck requirements. Wood shingles shall be installed on solid or spaced sheathing. Where spaced sheathing is used, sheathing boards shall be not less than 1-inch by 4-inch (25 mm by 102 mm) nominal dimensions and shall be spaced on centers equal to the weather exposure to coincide with the placement of fasteners.

❖ Spaced sheathing is usually of 1-inch by 4-inch (25 mm by 102 mm) or 1-inch by 6-inch (25 mm by 152 mm) softwood boards. Note that solid sheathing is required for certain locations by Section 1507.8.1.1.

1507.8.1.1 Solid sheathing required. Solid sheathing is required in areas where the average daily temperature in January is 25°F (-4°C) or less or where there is a possibility of ice forming along the eaves causing a backup of water.

❖ Solid sheathing is usually softwood panels, which provide a smooth, even base for the roofing material and help stiffen the entire roof structure. Solid sheathing provides an extra degree of protection where ice damming is a possibility.

1507.8.2 Deck slope. Wood shingles shall be installed on slopes of not less than three units vertical in 12 units horizontal (25-percent slope).

❖ Wood shingles cannot be installed on roof slopes below 3:12.

1507.8.3 Underlayment. Underlayment shall comply with ASTM D226, Type I or ASTM D4869.

❖ A single layer of underlayment is the minimum required under wood shingles. The underlayment must meet the performance criteria of ASTM D226, Type I, or ASTM D4869.

1507.8.3.1 Underlayment and high wind. Underlayment applied in areas subject to high winds [V_{asd} greater than 110 mph (49 m/s) as determined in accordance with Section 1609.3.1] shall be applied with corrosion-resistant fasteners in accordance with the manufacturer's installation instructions. Fasteners are to be applied along the overlap not more than 36 inches (914 mm) on center.

Underlayment installed where V_{asd}, in accordance with Section 1609.3.1, equals or exceeds 120 mph (54 m/s) shall comply with ASTM D226, Type II or ASTM D4869, Type IV. The underlayment shall be attached in a grid pattern of 12 inches (305 mm) between side laps with a 6-inch (152 mm) spacing at the side laps. Underlayment shall be applied in accordance with the manufacturer's installation instructions except all laps shall be a minimum of 4 inches (102 mm). Underlayment shall be attached using metal or plastic cap nails with a head diameter of not less than 1 inch (25 mm) with a thickness of at least 32-gage [0.0134 inch (0.34 mm)] sheet metal. The cap nail shank shall be a minimum of 12 gage [0.105 inch (2.67 mm)] with a length to penetrate

INTERNATIONAL CODE COUNCIL®
Copyright © 2015 ICC. ALL RIGHTS RESERVED. Accessed by David Dammon on Jun 21, 2017 12:30:52 PM pursuant to License Agreement with ICC. No further reproduction or distribution authorized. ANY UNAUTHORIZED REPRODUCTION OR DISTRIBUTION IS A VIOLATION OF THE FEDERAL COPYRIGHT ACT AND THE LICENSE AGREEMENT, AND SUBJECT TO CIVIL AND CRIMINAL PENALTIES THEREUNDER.

through the roof sheathing or a minimum of $^{3}/_{4}$ inch (19.1 mm) into the roof sheathing.

Exception: As an alternative, adhered underlayment complying with ASTM D1970 shall be permitted.

❖ These provisions are intended to improve the performance of underlayment on roofs subjected to high winds, particularly if wood shingles are lost in a high-wind event. Where the nominal design wind speed is greater than 110 mph (49 m/s), fasteners must be corrosion resistant and in accordance with the manufacturer's instructions.

Based on observations of roof underlayment performance both in the field following hurricanes as well

TABLE 1507.8
WOOD SHINGLE AND SHAKE INSTALLATION

ROOF ITEM	WOOD SHINGLES	WOOD SHAKES
1. Roof slope	Wood shingles shall be installed on slopes of not less than three units vertical in 12 units horizontal (3:12).	Wood shakes shall be installed on slopes of not less than four units vertical in 12 units horizontal (4:12).
2. Deck requirement		
Temperate climate	Shingles shall be applied to roofs with solid or spaced sheathing. Where spaced sheathing is used, sheathing boards shall be not less than 1″ × 4″ nominal dimensions and shall be spaced on centers equal to the weather exposure to coincide with the placement of fasteners.	Shakes shall be applied to roofs with solid or spaced sheathing. Where spaced sheathing is used, sheathing boards shall be not less than 1″ × 4″ nominal dimensions and shall be spaced on centers equal to the weather exposure to coincide with the placement of fasteners. When 1″ × 4″ spaced sheathing is installed at 10 inches, boards must be installed between the sheathing boards.
In areas where the average daily temperature in January is 25°F or less or where there is a possibility of ice forming along the eaves causing a backup of water.	Solid sheathing is required.	Solid sheathing is required.
3. Interlayment	No requirements.	Interlayment shall comply with ASTM D226, Type 1.
4. Underlayment		
Temperate climate	Underlayment shall comply with ASTM D226, Type 1.	Underlayment shall comply with ASTM D226, Type 1.
In areas where there is a possibility of ice forming along the eaves causing a backup of water.	An ice barrier that consists of at least two layers of underlayment cemented together or of a self-adhering polymer-modified bitumen sheet shall extend from the eave's edge to a point at least 24 inches inside the exterior wall line of the building.	An ice barrier that consists of at least two layers of underlayment cemented together or of a self-adhering polymer-modified bitumen sheet shall extend from the lowest edges of all roof surfaces to a point at least 24 inches inside the exterior wall line of the building.
5. Application		
Attachment	Fasteners for wood shingles shall be hot-dipped galvanized or Type 304 (Type 316 for coastal areas) stainless steel with a minimum penetration of 0.75 inch into the sheathing. For sheathing less than 0.5 inch thick, the fasteners shall extend through the sheathing.	Fasteners for wood shakes shall be hot-dipped galvanized or Type 304 (Type 316 for coastal areas) with a minimum penetration of 0.75 inch into the sheathing. For sheathing less than 0.5 inch thick, the fasteners shall extend through the sheathing.
No. of fasteners	Two per shingle.	Two per shake.
Exposure	Weather exposures shall not exceed those set forth in Table 1507.8.7.	Weather exposures shall not exceed those set forth in Table 1507.9.8.
Method	Shingles shall be laid with a side lap of not less than 1.5 inches between joints in courses, and no two joints in any three adjacent courses shall be in direct alignment. Spacing between shingles shall be 0.25 to 0.375 inch.	Shakes shall be laid with a side lap of not less than 1.5 inches between joints in adjacent courses. Spacing between shakes shall not be less than 0.375 inch or more than 0.625 inch for shakes and taper sawn shakes of naturally durable wood and shall be 0.25 to 0.375 inch for preservative-treated taper sawn shakes.
Flashing	In accordance with Section 1507.8.8.	In accordance with Section 1507.9.9.

For SI: 1 inch = 25.4 mm, °C = [(°F) - 32]/1.8.

INTERNATIONAL CODE COUNCIL®
Copyright © 2015 ICC. ALL RIGHTS RESERVED. Accessed by David Dammon on Jun 21, 2017 12:30:52 PM pursuant to License Agreement with ICC. No further reproduction or distribution authorized. ANY UNAUTHORIZED REPRODUCTION OR DISTRIBUTION IS A VIOLATION OF THE FEDERAL COPYRIGHT ACT AND THE LICENSE AGREEMENT, AND SUBJECT TO CIVIL AND CRIMINAL PENALTIES THEREUNDER.

as in laboratory tests, ASTM 226 Type I underlayment is not permitted where the nominal design wind speed exceeds 120 mph (54 m/s). In laboratory tests, ASTM 226 Types I and II underlayment performed dramatically different, with the ASTM 226 Type II material remaining in place and exhibiting fewer signs of distress. In addition, the attachment of the underlayment must be accomplished with cap nails. A 1-inch (25.4 mm) head diameter of the cap portion recognizes the type most commonly used in the field. The exception specifically permits the use of a self-adhered underlayment as an alernative in accordance with ASTM D1970.

1507.8.4 Ice barrier. In areas where there has been a history of ice forming along the eaves causing a backup of water, an ice barrier that consists of at least two layers of underlayment cemented together or of a self-adhering polymer-modified bitumen sheet shall be used in lieu of normal underlayment and extend from the lowest edges of all roof surfaces to a point at least 24 inches (610 mm) inside the exterior wall line of the building.

Exception: Detached accessory structures that contain no conditioned floor area.

❖ Ice dams form when snow melts over the warmer parts of a roof and refreezes over the colder eaves. This ice formation acts like a dam and causes water to back up beneath the roof covering. The roof will eventually leak, causing damage to the structure, including the walls, ceilings and roof [see Commentary Figures 1507.8.4(1) and (2)]. In areas where this is prevalent, the installation of an ice barrier is required in accordance with this section.

The exception exempts accessory buildings from such restrictions, as they are unheated structures where the need for protection against ice dams is unnecessary.

1507.8.5 Material standards. Wood shingles shall be of naturally durable wood and comply with the requirements of Table 1507.8.5.

❖ Information about the installation of wood shingles is available in the *Design and Application Manual for New Roof Construction* published by the Cedar Shake and Shingle Bureau (CSSB). Additional information regarding wood shingle roofs is provided in the wood roofing section of the *NRCA Roofing Manual: Steep-slope Roof Systems* published by the NRCA.

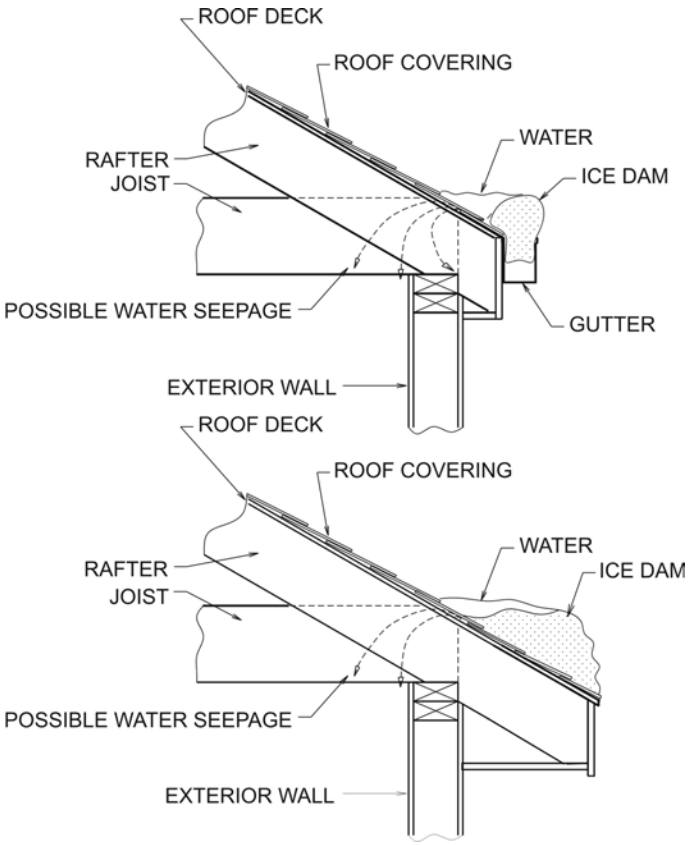

Figure 1507.8.4(1)
POSSIBLE WATER DAMAGE AT ICE DAMS

INTERNATIONAL CODE COUNCIL®
Copyright © 2015 ICC. ALL RIGHTS RESERVED. Accessed by David Dammon on Jun 21, 2017 12:30:52 PM pursuant to License Agreement with ICC. No further reproduction or distribution authorized. ANY UNAUTHORIZED REPRODUCTION OR DISTRIBUTION IS A VIOLATION OF THE FEDERAL COPYRIGHT ACT AND THE LICENSE AGREEMENT, AND SUBJECT TO CIVIL AND CRIMINAL PENALTIES THEREUNDER.

TABLE 1507.8.5
WOOD SHINGLE MATERIAL REQUIREMENTS

MATERIAL	APPLICABLE MINIMUM GRADES	GRADING RULES
Wood shingles of naturally durable wood	1, 2 or 3	CSSB

CSSB = Cedar Shake and Shingle Bureau

❖ The standards published by CSSB contain useful information on the grading rules for wood shingles. A third-party inspection agency's label is now required to document compliance of the shingle.

1507.8.6 Attachment. Fasteners for wood shingles shall be corrosion resistant with a minimum penetration of $^3/_4$ inch (19.1 mm) into the sheathing. For sheathing less than $^1/_2$ inch (12.7 mm) in thickness, the fasteners shall extend through the sheathing. Each shingle shall be attached with a minimum of two fasteners.

❖ Each shingle must be securely fastened to the roof deck with a minimum of two fasteners. Care should be taken so that the fasteners do not cause splitting of the wood shingle. Fasteners are to be as specified in the manufacturer's installation instructions.

1507.8.7 Application. Wood shingles shall be laid with a side lap not less than $1^1/_2$ inches (38 mm) between joints in adjacent courses, and not be in direct alignment in alternate courses. Spacing between shingles shall be $^1/_4$ to $^3/_8$ inch (6.4 to 9.5 mm). Weather exposure for wood shingles shall not exceed that set in Table 1507.8.7.

❖ Wood shingle exposure is specified in Table 1507.8.7. Depending on the grade of the material, total shingle length and slope of the roof deck, the table specifies the maximum length of exposure for weathering purposes.

TABLE 1507.8.7
WOOD SHINGLE WEATHER EXPOSURE AND ROOF SLOPE

ROOFING MATERIAL	LENGTH (inches)	GRADE	EXPOSURE (inches)	
			3:12 pitch to < 4:12	4:12 pitch or steeper
Shingles of naturally durable wood	16	No. 1 No. 2 No. 3	3.75 3.5 3	5 4 3.5
	18	No. 1 No. 2 No. 3	4.25 4 3.5	5.5 4.5 4
	24	No. 1 No. 2 No. 3	5.75 5.5 5	7.5 6.5 5.5

For SI: 1 inch = 25.4 mm.

❖ The grade of the shingle will be listed on the label required for wood shingles. Each of the three different grades is available in three different lengths. For lower-sloped roofs (3:12 to 4:12), where wind uplift is more significant, the maximum weather exposure is always less than for steeper-sloped roofs (4:12 and greater).

1507.8.8 Flashing. At the juncture of the roof and vertical surfaces, flashing and counterflashing shall be provided in accordance with the manufacturer's installation instructions, and where of metal, shall be not less than 0.019-inch (0.48 mm) (No. 26 galvanized sheet gage) corrosion-resistant metal. The valley flashing shall extend at least 11 inches (279 mm) from the centerline each way and have a splash diverter

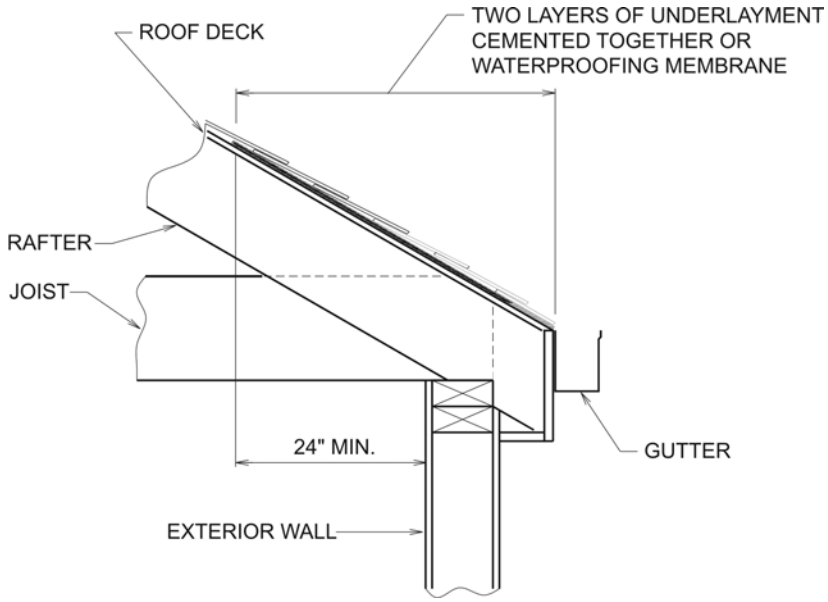

For SI: 1 inch = 25.4 mm.

Figure 1507.8.4(2)
PROTECTIVE ICE SHIELD

INTERNATIONAL CODE COUNCIL®
Copyright © 2015 ICC. ALL RIGHTS RESERVED. Accessed by David Dammon on Jun 21, 2017 12:30:52 PM pursuant to License Agreement with ICC. No further reproduction or distribution authorized. ANY UNAUTHORIZED REPRODUCTION OR DISTRIBUTION IS A VIOLATION OF THE FEDERAL COPYRIGHT ACT AND THE LICENSE AGREEMENT, AND SUBJECT TO CIVIL AND CRIMINAL PENALTIES THEREUNDER.

rib not less than 1 inch (25 mm) high at the flow line formed as part of the flashing. Sections of flashing shall have an end lap of not less than 4 inches (102 mm). For roof slopes of three units vertical in 12 units horizontal (25-percent slope) and over, the valley flashing shall have a 36-inch-wide (914 mm) underlayment of either one layer of Type I underlayment running the full length of the valley or a self-adhering polymer-modified bitumen sheet complying with ASTM D1970, in addition to other required underlayment. In areas where the average daily temperature in January is 25°F (-4°C) or less or where there is a possibility of ice forming along the eaves causing a backup of water, the metal valley flashing underlayment shall be solidly cemented to the roofing underlayment for slopes under seven units vertical in 12 units horizontal (58-percent slope) or self-adhering polymer-modified bitumen sheet shall be installed.

❖ Improper installation of flashing is the greatest cause of failures of roof covering systems. Wherever one plane of a roof intersects another plane, flashing is required (see Section 1503.2).

1507.9 Wood shakes. The installation of wood shakes shall comply with the provisions of this section and Table 1507.8.

❖ This section establishes design and installation requirements for wood shakes, which are defined as roofing products split from logs and then shaped as required by the individual manufacturers. Wood shakes must be labeled by an approved third-party inspection agency. A quality control program is required to contain a set of grading rules.

Information about the installation of wood shakes is available in the *Design and Application Manual for New Roof Construction* published by the CSSB. Additional information is provided in the wood roofing section of the *NRCA Roofing Manual: Steep-slope Roof Systems* published by the NRCA.

1507.9.1 Deck requirements. Wood shakes shall only be used on solid or spaced sheathing. Where spaced sheathing is used, sheathing boards shall be not less than 1-inch by 4-inch (25 mm by 102 mm) nominal dimensions and shall be spaced on centers equal to the weather exposure to coincide with the placement of fasteners. Where 1-inch by 4-inch (25 mm by 102 mm) spaced sheathing is installed at 10 inches (254 mm) on center, additional 1-inch by 4-inch (25 mm by 102 mm) boards shall be installed between the sheathing boards.

❖ See the commentary to Section 1507.8.1.

1507.9.1.1 Solid sheathing required. Solid sheathing is required in areas where the average daily temperature in January is 25°F (-4°C) or less or where there is a possibility of ice forming along the eaves causing a backup of water.

❖ See the commentary to Section 1507.8.1.1.

1507.9.2 Deck slope. Wood shakes shall only be used on slopes of not less than four units vertical in 12 units horizontal (33-percent slope).

❖ Wood shakes cannot be installed on roof slopes less than 4:12 to provide for adequate drainage of the roof.

1507.9.3 Underlayment. Underlayment shall comply with ASTM D226, Type I or ASTM D4869.

❖ A single layer of underlayment is the minimum requirement under wood shakes. The underlayment must meet the performance criteria of ASTM D226, Type I, or ASTM D4869.

1507.9.3.1 Underlayment and high wind. Underlayment applied in areas subject to high winds [V_{asd} greater than 110 mph (49 m/s) as determined in accordance with Section 1609.3.1] shall be applied with corrosion-resistant fasteners in accordance with the manufacturer's installation instructions. Fasteners are to be applied along the overlap not more than 36 inches (914 mm) on center.

Underlayment installed where V_{asd}, in accordance with Section 1609.3.1, equals or exceeds 120 mph (54 m/s) shall comply with ASTM D226, Type II or ASTM D4869, Type IV. The underlayment shall be attached in a grid pattern of 12 inches (305 mm) between side laps with a 6-inch (152 mm) spacing at the side laps. Underlayment shall be applied in accordance with the manufacturer's installation instructions except all laps shall be a minimum of 4 inches (102 mm). Underlayment shall be attached using metal or plastic cap nails with a head diameter of not less than 1 inch (25 mm) with a thickness of at least 32-gage [0.0134 inch (0.34 mm)] sheet metal. The cap nail shank shall be a minimum of 12 gage [0.105 inch (2.67 mm)] with a length to penetrate through the roof sheathing or a minimum of $^3/_4$ inch (19.1 mm) into the roof sheathing.

Exception: As an alternative, adhered underlayment complying with ASTM D1970 shall be permitted.

❖ These provisions are intended to improve the performance of underlayment on roofs subjected to high winds, particularly if wood shakes are lost in a high-wind event. Where the nominal design wind speed is greater than 110 mph (49 m/s), fasteners must be corrosion resistant and in accordance with the manufacturer's instructions.

Based on observations of roof underlayment performance both in the field following hurricanes as well as in laboratory tests, ASTM 226 Type I underlayment is not permitted where the nominal design wind speed exceeds 120 mph (54 m/s). In laboratory tests ASTM 226 Types I and II underlayment performed dramatically different, with the ASTM 226 Type II material remaining in place and exhibiting fewer signs of distress. In addition, the attachment of the underlayment must be accomplished with cap nails. A 1-inch (25.4 mm) head diameter of the cap portion recognizes the type most commonly used in the field. The exception recognizes that a self-adhered underlayment can be used as an alternative in accordance with ASTM D1970.

1507.9.4 Ice barrier. In areas where there has been a history of ice forming along the eaves causing a backup of water, an ice barrier that consists of at least two layers of underlayment cemented together or of a self-adhering polymer-modified bitumen sheet shall be used in lieu of normal underlayment and extend from the lowest edges of all roof surfaces to a

INTERNATIONAL CODE COUNCIL®
Copyright © 2015 ICC. ALL RIGHTS RESERVED. Accessed by David Dammon on Jun 21, 2017 12:30:52 PM pursuant to License Agreement with ICC. No further reproduction or distribution authorized. ANY UNAUTHORIZED REPRODUCTION OR DISTRIBUTION IS A VIOLATION OF THE FEDERAL COPYRIGHT ACT AND THE LICENSE AGREEMENT, AND SUBJECT TO CIVIL AND CRIMINAL PENALTIES THEREUNDER.

point at least 24 inches (610 mm) inside the exterior wall line of the building.

Exception: Detached accessory structures that contain no conditioned floor area.

❖ Ice dams form when snow melts over the warmer parts of a roof and refreezes over the colder eaves. This ice formation acts like a dam and causes water to back up beneath the roof covering. The roof will eventually leak, causing damage to the structure, including the walls, ceilings and roof [see Commentary Figures 1507.8.4(1) and (2)]. In areas where this is prevalent, the installation of an ice barrier is required in accordance with this section.

The exception exempts accessory buildings from such restrictions, as they are unheated structures where the need for protection against ice dams is unnecessary.

1507.9.5 Interlayment. Interlayment shall comply with ASTM D226, Type I.

❖ A single layer of felt interlayment must be shingled between each course on all roof slopes.

1507.9.6 Material standards. Wood shakes shall comply with the requirements of Table 1507.9.6.

❖ Information about the installation of wood shingles is available in the *Design and Application Manual for New Roof Construction* published by CSSB. Additional information is provided in the wood roofing section of the *NRCA Roofing Manual: Steep-slope Roof Systems* published by the NRCA.

TABLE 1507.9.6
WOOD SHAKE MATERIAL REQUIREMENTS

MATERIAL	MINIMUM GRADES	APPLICABLE GRADING RULES
Wood shakes of naturally durable wood	1	CSSB
Taper sawn shakes of naturally durable wood	1 or 2	CSSB
Preservative-treated shakes and shingles of naturally durable wood	1	CSSB
Fire-retardant-treated shakes and shingles of naturally durable wood	1	CSSB
Preservative-treated taper sawn shakes of Southern pine treated in accordance with AWPA U1 (Commodity Specification A, Use Category 3B and Section 5.6)	1 or 2	TFS

CSSB = Cedar Shake and Shingle Bureau.

TFS = Forest Products Laboratory of the Texas Forest Services.

❖ Wood shakes must be labeled by an approved third-party inspection agency. A quality control program is required to contain a set of grading rules. Care must be taken to completely follow the manufacturer's installation instructions for each particular product. The building official must review and approve all installations with special note of any application limitations.

1507.9.7 Attachment. Fasteners for wood shakes shall be corrosion resistant with a minimum penetration of $^{3}/_{4}$ inch (19.1 mm) into the sheathing. For sheathing less than $^{1}/_{2}$ inch (12.7 mm) in thickness, the fasteners shall extend through the sheathing. Each shake shall be attached with a minimum of two fasteners.

❖ Each shake must be secured with a minimum of two fasteners. Fasteners are to be as specified in the manufacturer's installation instructions.

1507.9.8 Application. Wood shakes shall be laid with a side lap not less than $1^{1}/_{2}$ inches (38 mm) between joints in adjacent courses. Spacing between shakes in the same course shall be $^{3}/_{8}$ to $^{5}/_{8}$ inch (9.5 to 15.9 mm) for shakes and taper sawn shakes of naturally durable wood and shall be $^{1}/_{4}$ to $^{3}/_{8}$ inch (6.4 to 9.5 mm) for preservative taper sawn shakes. Weather exposure for wood shakes shall not exceed those set in Table 1507.9.8.

❖ Care must be taken to follow completely the manufacturer's installation instructions for each particular product. The building official must review and approve all installations with special note of any application limitations.

TABLE 1507.9.8. See page 15-27.

❖ The code provides specific weather exposure limitations for two different lengths of shakes. As with wood shingles, the longer the shake, the greater the exposure allowance, since wind uplift resistance is greater for the longer shakes. The reduced weather exposure enhances the wind uplift resistance that these wood shakes will be able to provide. The exposure limitations are applicable regardless of the roof slope since they are only permitted on steep slopes roofs (4:12 or greater).

1507.9.9 Flashing. At the juncture of the roof and vertical surfaces, flashing and counterflashing shall be provided in accordance with the manufacturer's installation instructions, and where of metal, shall be not less than 0.019-inch (0.48 mm) (No. 26 galvanized sheet gage) corrosion-resistant metal. The valley flashing shall extend at least 11 inches (279 mm) from the centerline each way and have a splash diverter rib not less than 1 inch (25 mm) high at the flow line formed as part of the flashing. Sections of flashing shall have an end lap of not less than 4 inches (102 mm). For roof slopes of three units vertical in 12 units horizontal (25-percent slope) and over, the valley flashing shall have a 36-inch-wide (914 mm) underlayment of either one layer of Type I underlayment running the full length of the valley or a self-adhering polymer-modified bitumen sheet complying with ASTM D1970, in addition to other required underlayment. In areas where the average daily temperature in January is 25°F (-4°C) or less or where there is a possibility of ice forming along the eaves causing a backup of water, the metal valley flashing underlayment shall be solidly cemented to the roofing underlayment for slopes under seven units vertical in 12 units horizontal (58-percent slope) or self-adhering polymer-modified bitumen sheet shall be installed.

❖ Improper installation of flashing is the greatest cause of failure of roof covering systems. Whenever one

INTERNATIONAL CODE COUNCIL®
Copyright © 2015 ICC. ALL RIGHTS RESERVED. Accessed by David Dammon on Jun 21, 2017 12:30:52 PM pursuant to License Agreement with ICC. No further reproduction or distribution authorized. ANY UNAUTHORIZED REPRODUCTION OR DISTRIBUTION IS A VIOLATION OF THE FEDERAL COPYRIGHT ACT AND THE LICENSE AGREEMENT, AND SUBJECT TO CIVIL AND CRIMINAL PENALTIES THEREUNDER.

plane of a roof intersects another plane, flashing is required where the planes intersect [see commentary, Section 1503.2 and Commentary Figures 1507.8.4(1) and (2)].

1507.10 Built-up roofs. The installation of built-up roofs shall comply with the provisions of this section.

❖ A built-up roof membrane is a continuous, semiflexible multiple-ply roof membrane, consisting of plies or layers of saturated felts, coated felts, fabrics or mats between which alternate layers of bitumen are applied. Generally, built-up roof membranes are surfaced with mineral aggregate and bitumen, a liquid-applied coating or granule-surfaced cap sheet.

1507.10.1 Slope. Built-up roofs shall have a design slope of not less than one-fourth unit vertical in 12 units horizontal (2-percent slope) for drainage, except for coal-tar built-up roofs that shall have a design slope of not less than one-eighth unit vertical in 12 units horizontal (1-percent slope).

❖ Because of their low melting points and self-healing characteristics, coal tar membranes are permitted on lower slopes of one-eighth inch per foot (1 percent).

1507.10.2 Material standards. Built-up roof covering materials shall comply with the standards in Table 1507.10.2 or UL 55A.

❖ Asphalt and coal tar are the principal bitumens used for roofing purposes. As an alternative to the ASTM material standards that are referenced, the code also permits materials that are evaluated for compliance in accordance with UL 55A.

TABLE 1507.10.2. See next column.

❖ The various types of materials permitted in typical built-up roofing must comply with applicable standards as noted in the table. The following discusses some of those standards and what they address. Note that the titles and specific editions of all the standards are located in Chapter 35 of the code.

ASTM D1863 covers the quality and grading of crushed stone, crushed slag and water-worn gravel suitable for use as aggregate surfacing on built-up roofs.

ASTM D4601 covers asphalt-impregnated and coated glass fiber base sheet, with or without perforations, for use as the first ply of the built-up roofing. When not perforated, this sheet may be used as a vapor retarder under or between roof insulation with a solid top coating of asphaltic material.

ASTM D2178 covers glass felt impregnated to varying degrees with asphalt, which may be used both with asphalts conforming to the requirements of

TABLE 1507.10.2
BUILT-UP ROOFING MATERIAL STANDARDS

MATERIAL STANDARD	STANDARD
Acrylic coatings used in roofing	ASTM D6083
Aggregate surfacing	ASTM D1863
Asphalt adhesive used in roofing	ASTM D3747
Asphalt cements used in roofing	ASTM D3019; D2822; D4586
Asphalt-coated glass fiber base sheet	ASTM D4601
Asphalt coatings used in roofing	ASTM D1227; D2823; D2824; D4479
Asphalt glass felt	ASTM D2178
Asphalt primer used in roofing	ASTM D41
Asphalt-saturated and asphalt-coated organic felt base sheet	ASTM D2626
Asphalt-saturated organic felt (perforated)	ASTM D226
Asphalt used in roofing	ASTM D312
Coal-tar cements used in roofing	ASTM D4022; D5643
Coal-tar saturated organic felt	ASTM D227
Coal-tar pitch used in roofing	ASTM D450; Type I or II
Coal-tar primer used in roofing, dampproofing and waterproofing	ASTM D43
Glass mat, coal tar	ASTM D4990
Glass mat, venting type	ASTM D4897
Mineral-surfaced inorganic cap sheet	ASTM D3909
Thermoplastic fabrics used in roofing	ASTM D5665, D5726

TABLE 1507.9.8
WOOD SHAKE WEATHER EXPOSURE AND ROOF SLOPE

ROOFING MATERIAL	LENGTH (inches)	GRADE	EXPOSURE (inches) 4:12 PITCH OR STEEPER
Shakes of naturally durable wood	18 24	No. 1 No. 1	7.5 10[a]
Preservative-treated taper sawn shakes of Southern yellow pine	18 24	No. 1 No. 1	7.5 10
	18 24	No. 2 No. 2	5.5 7.5
Taper sawn shakes of naturally durable wood	18 24	No. 1 No. 1	7.5 10
	18 24	No. 2 No. 2	5.5 7.5

For SI: 1 inch = 25.4 mm.

a. For 24-inch by 0.375-inch handsplit shakes, the maximum exposure is 7.5 inches.

INTERNATIONAL CODE COUNCIL®
Copyright © 2015 ICC. ALL RIGHTS RESERVED. Accessed by David Dammon on Jun 21, 2017 12:30:52 PM pursuant to License Agreement with ICC. No further reproduction or distribution authorized. ANY UNAUTHORIZED REPRODUCTION OR DISTRIBUTION IS A VIOLATION OF THE FEDERAL COPYRIGHT ACT AND THE LICENSE AGREEMENT, AND SUBJECT TO CIVIL AND CRIMINAL PENALTIES THEREUNDER.

ASTM D312 in the construction of built-up roofs, and asphalts conforming to the requirements of ASTM D449 in the membrane system of waterproofing.

ASTM D2626 covers the base sheet with fine mineral surfacing on the top side, with or without perforations, for use as the first ply of a built-up roof. When not perforated, this sheet may be used as a vapor retarder under roof insulation.

ASTM D226 covers asphalt-saturated organic felts, with perforations, that may be used with asphalts conforming to the requirements of ASTM D312 in the construction of built-up roofs, and with asphalts conforming to the requirements of ASTM D449 in the membrane system of waterproofing.

ASTM D312 covers four types of asphalt intended for use in built-up roof construction. The specification is intended for general classification purposes only, and does not imply restrictions on the slope at which an asphalt must be used. There are four classification types. Type I includes asphalts that are relatively susceptible to flow at roof temperatures with good adhesive and self-sealing properties. Type II includes asphalts that are moderately susceptible to flow at roof temperatures. Type III includes asphalts that are relatively nonsusceptible to flow at roof temperatures for use in built-up roof construction on slope inclines from 8.3 to 25 percent. Type IV includes asphalts that are generally nonsusceptible to flow at roof temperatures for use in built-up roof construction on slope inclines from approximately 16.7 to 50 percent.

ASTM D227 covers coal-tar saturated organic felt that may be used with coal-tar pitches conforming to the appropriate requirements of ASTM D450 in the construction of built-up roofs and in the membrane system of waterproofing.

ASTM D450 covers three types of coal-tar pitch suitable for use in the construction of built-up roofing, dampproofing and membrane waterproofing systems. Only Type I or III can be used in code-recognized roofing systems. Type I is suitable for use in built-up roofing systems with felts conforming to the requirements of ASTM D227 or as specified by the manufacturer. Type III is suitable for use in built-up roofing systems, but has less-volatile components than Type I.

ASTM D3909 covers asphalt-impregnated and coated glass felt roll roofing surfaced on the weather side with mineral granules for use as a cap sheet in the construction of built-up roofs.

As noted, this list is not all-inclusive when compared to Table 1507.10.2, but includes materials commonly used as built-up roofing materials.

1507.11 Modified bitumen roofing. The installation of modified bitumen roofing shall comply with the provisions of this section.

❖ Modified bitumen roofing is a membrane-type roofing made up of composite sheets consisting of polymer-modified bitumen often reinforced and sometimes surfaced with various types of mats, films, foils and mineral granules. The bitumen is modified through inclusion of one or more polymers. There are two general types of polymer-modified bitumen membranes: those with the principal modifier being atactic polypropylene (APP), and those with bitumen modified with styrene butadiene styrene (SBS). They differ in characteristics, as well as application. For more information on the application of polymer-modified bitumen roofing membranes, refer to the *NRCA Roofing Manual: Membrane Roof Systems*.

1507.11.1 Slope. Modified bitumen membrane roofs shall have a design slope of not less than one-fourth unit vertical in 12 units horizontal (2-percent slope) for drainage.

❖ According to this section, all roofs must have a minimum slope of $^1/_4$:12 so that there is positive drainage of storm water to gutters, roof drains and other components of an approved storm drainage system in order to divert water away from the building or structure.

1507.11.2 Material standards. Modified bitumen roof coverings shall comply with CGSB 37-GP-56M, ASTM D6162, ASTM D6163, ASTM D6164, ASTM D6222, ASTM D6223, ASTM D6298 or ASTM D6509.

❖ The materials and installation of modified bitumen roof coverings must be in accordance with the listed standards, which regulate modified bituminous roofing membranes, either prefabricated or reinforced. The standards are: CGSB 37-GP-56M, which regulates membrane, modified, bituminous, prefabricated and reinforced for roofing; ASTM D6162, which regulates SBS modified bituminous sheet materials; ASTM D6163, which regulates SBS using glass fiber reinforcements; ASTM D6164, which regulates SBS using polyester reinforcements; ASTM D6222, which regulates APP modified bituminous sheet materials; ASTM D6223, which regulates APP using polyester and glass fiber reinforcements; ASTM D6298, which regulates SBS with a metal surface; and ASTM D6509, which regulates APP using glass fiber reinforcements.

1507.12 Thermoset single-ply roofing. The installation of thermoset single-ply roofing shall comply with the provisions of this section.

❖ Thermoset is a material that solidifies or "sets" irreversibly when heated. Thinners evaporate during the curing process. Thermoset materials are those whose polymers are chemically cross-linked, commonly referred to as being "cured." Once they are fully cured, they can only be bonded to like material with an adhesive, as new molecular links may not be formed. There are four common subcategories of thermoset roof membranes: neoprene, chlorosulfonated polyethylene (CSPE), epichlorohydrin (DCH) and ethylene-propylene-diene monomer (or terpolymer) (EPDM).

INTERNATIONAL CODE COUNCIL®
Copyright © 2015 ICC. ALL RIGHTS RESERVED. Accessed by David Dammon on Jun 21, 2017 12:30:52 PM pursuant to License Agreement with ICC. No further reproduction or distribution authorized. ANY UNAUTHORIZED REPRODUCTION OR DISTRIBUTION IS A VIOLATION OF THE FEDERAL COPYRIGHT ACT AND THE LICENSE AGREEMENT, AND SUBJECT TO CIVIL AND CRIMINAL PENALTIES THEREUNDER.

1507.12.1 Slope. Thermoset single-ply membrane roofs shall have a design slope of not less than one-fourth unit vertical in 12 units horizontal (2-percent slope) for drainage.

❖ All roofs must have a minimum slope of $^1/_4$:12 so that there is positive drainage of storm water to gutters, roof drains and other components of an approved storm drainage system in order to divert water away from the building or structure.

1507.12.2 Material standards. Thermoset single-ply roof coverings shall comply with ASTM D4637, ASTM D5019 or CGSB 37-GP-52M.

❖ This section describes the standards to be used for materials and installation. The standards are: 1. ASTM D4637, which regulates unreinforced and fabric-reinforced vulcanized rubber sheets made from EPDM or polychloroprene, and is intended for use in single-ply roof membranes exposed to weather; 2. ASTM D5019, which regulates reinforced nonvulcanized polymeric sheets made from CSPE and polyisobutylene used in single-ply roof membranes; and 3. CGSB 37-GP-52M, which regulates sheet-applied elastomeric roofing membranes.

1507.12.3 Ballasted thermoset low-slope roofs. Ballasted thermoset low-slope roofs (roof slope < 2:12) shall be installed in accordance with this section and Section 1504.4. Stone used as ballast shall comply with ASTM D448 or ASTM D7655.

❖ The purpose of this section is to identify that this type of roof covering is allowed and to provide installation requirements. Further, this section specifies the minimum requirements for stone ballast to be used with this type of roofing system.

1507.13 Thermoplastic single-ply roofing. The installation of thermoplastic single-ply roofing shall comply with the provisions of this section.

❖ Thermoplastics are materials that soften when heated and harden when cooled. This process can be repeated, provided the material is not heated above the point at which decomposition occurs. Thermoplastic materials are distinguished from thermosets in that there is no chemical cross linking. Because of the materials' chemical nature, some thermoplastic membranes may be seamed by either heat (hot air) or solvent welding.

1507.13.1 Slope. Thermoplastic single-ply membrane roofs shall have a design slope of not less than one-fourth unit vertical in 12 units horizontal (2-percent slope).

❖ All roofs must have a minimum slope of $^1/_4$:12 so that there is positive drainage of storm water to gutters, roof drains and other components of an approved storm drainage system in order to divert water away from the building or structure.

1507.13.2 Material standards. Thermoplastic single-ply roof coverings shall comply with ASTM D4434, ASTM D6754, ASTM D6878 or CGSB CAN/CGSB 37-54.

❖ This section establishes standards and performance criteria for the installation of thermoplastic single-ply roof coverings. Four standards are recognized: ASTM D4434, ASTM D6754, ASTM D6878 and CGSB 37-GP-54M. These specifications cover flexible sheet made from poly (vinyl chloride) resin, ketone ethylene ester-based sheet roofing and thermoplastic polyolefin-based sheet roofing.

1507.13.3 Ballasted thermoplastic low-slope roofs. Ballasted thermoplastic low-slope roofs (roof slope < 2:12) shall be installed in accordance with this section and Section 1504.4. Stone used as ballast shall comply with ASTM D448 or ASTM D7655.

❖ The purpose of this section is to identify that this type of roof covering is allowed and to provide installation requirements. Further, this section specifies the minimum requirements for stone ballast to be used with this type of roofing system.

1507.14 Sprayed polyurethane foam roofing. The installation of sprayed polyurethane foam roofing shall comply with the provisions of this section.

❖ Sprayed polyurethane foam is a foamed plastic material constructed by mixing a two-part liquid that is spray applied to form the base of an adhered roof system. The two-part component mixture reacts chemically and immediately expands when applied through special metering equipment to form a closed-cell foam. As the foam rises, it sets into a solid and a skin forms on the surface. The foam provides a thermal insulation and the skin provides a water-resistant surface.

1507.14.1 Slope. Sprayed polyurethane foam roofs shall have a design slope of not less than one-fourth unit vertical in 12 units horizontal (2-percent slope) for drainage.

❖ All roofs must have a minimum slope of $^1/_4$:12 so that there is positive drainage of storm water to gutters, roof drains and other components of an approved storm drainage system in order to divert water away from the building or structure.

1507.14.2 Material standards. Spray-applied polyurethane foam insulation shall comply with Type III or IV as defined in ASTM C1029.

❖ ASTM C1029 is the standard that regulates spray-applied rigid cellular polyurethane thermally insulated roof coverings. This specification covers the types and physical properties of spray-applied rigid cellular polyurethane intended for use as thermal insulation. Type III or IV foam insulation is required based on their higher compressive strengths. The operating temperatures of the surfaces to which the insulation

INTERNATIONAL CODE COUNCIL®
Copyright © 2015 ICC. ALL RIGHTS RESERVED. Accessed by David Dammon on Jun 21, 2017 12:30:52 PM pursuant to License Agreement with ICC. No further reproduction or distribution authorized. ANY UNAUTHORIZED REPRODUCTION OR DISTRIBUTION IS A VIOLATION OF THE FEDERAL COPYRIGHT ACT AND THE LICENSE AGREEMENT, AND SUBJECT TO CIVIL AND CRIMINAL PENALTIES THEREUNDER.

is applied cannot be lower than -22°F (-30°C) or greater than 225°F (107°C).

1507.14.3 Application. Foamed-in-place roof insulation shall be installed in accordance with the manufacturer's instructions. A liquid-applied protective coating that complies with Table 1507.14.3 shall be applied no less than 2 hours nor more than 72 hours following the application of the foam.

❖ The roof system must be protected from ultraviolet light and degradation through the use of surfacing. Liquid-applied protected elastomeric coatings are the recommended surfacing for sprayed polyurethane foam roofing systems.

TABLE 1507.14.3
PROTECTIVE COATING MATERIAL STANDARDS

MATERIAL	STANDARD
Acrylic coating	ASTM D6083
Silicone coating	ASTM D6694
Moisture-cured polyurethane coating	ASTM D6947

❖ This table identifies the applicable material standards for protective coating materials that are suitable for sprayed polyurethane foam roof systems.

1507.14.4 Foam plastics. Foam plastic materials and installation shall comply with Chapter 26.

❖ Chapter 26 addresses foam plastic materials and installation.

1507.15 Liquid-applied roofing. The installation of liquid-applied roofing shall comply with the provisions of this section.

❖ Liquid-applied coatings are nonsynthetic roofing materials that are termed "cold applied" because hot bitumen is not employed in their application.

1507.15.1 Slope. Liquid-applied roofing shall have a design slope of not less than one-fourth unit vertical in 12 units horizontal (2-percent slope).

❖ All roofs must have a minimum slope of $^1/_4$:12 so that there is positive drainage of storm water to gutters, roof drains and other components of an approved storm drainage system in order to divert water away from the building or structure.

1507.15.2 Material standards. Liquid-applied roofing shall comply with ASTM C836, ASTM C957, ASTM D1227 or ASTM D3468, ASTM D6083, ASTM D6694 or ASTM D6947.

❖ Liquid-applied roof coatings must be installed in accordance with the manufacturer's instructions. The coatings must comply with ASTM C836, ASTM C957, ASTM D1227, D3468 or ASTM D6694. ASTM C836 describes the required properties and test methods for a cold liquid-applied elastomeric membrane, one or two components, for waterproofing building decks subject to hydrostatic pressure in building areas to be occupied by personnel, vehicles or equipment. This specification only applies to a membrane system above which a separate wearing or traffic course will be applied. ASTM C957 describes the required properties and test methods for a cold liquid-applied elastomeric membrane for waterproofing building decks not subject to hydrostatic pressure. The specification applies only to a membrane system that has an integral wearing surface. It does not include specific requirements for skid resistance or fire retardance, although both may be important in specific applications. ASTM D1227 describes emulsified asphalt suitable for use as a protective coating for built-up roofs and other exposed surfaces with inclines of not less than 4 percent. ASTM D3468 describes liquid-applied neoprene and CSPE synthetic rubber solutions suitable for use in roofing and waterproofing. ASTM D6694 describes liquid-applied silicone coatings used in spray on polyurethane foam roofing. ASTM D6947 describes liquid-applied moisture cured polyurethane coatings used in spray polyurethane foam roofing systems.

1507.16 Vegetative roofs, roof gardens and landscaped roofs. *Vegetative roofs*, roof gardens and landscaped roofs shall comply with the requirements of this chapter, Sections 1607.12.3 and 1607.12.3.1 and the *International Fire Code*.

❖ The purpose of this section is to require vegetative roofs, roof gardens and landscaped roofs to comply with the requirements for other roof systems contained in this chapter. Further, this section requires these types of roofs to meet the requirements for special purpose roofs as contained in Chapters 15 and 16 as well as providing a reference to the *International Fire Code*® (IFC®).

[BF] 1507.16.1 Structural fire resistance. The structural frame and roof construction supporting the load imposed upon the roof by the *vegetative roof*, roof gardens or landscaped roofs shall comply with the requirements of Table 601.

❖ This section is a reminder to verify compliance with Table 601 for the portion of the structure that supports the additional load of a landscaped roof.

1507.17 Photovoltaic shingles. The installation of *photovoltaic shingles* shall comply with the provisions of this section.

❖ This section provides guidance for the installation of photovoltaic shingles. These shingles are integrated with the building and provide both a roof covering and source of electrical power.

1507.17.1 Deck requirements. *Photovoltaic shingles* shall be applied to a solid or closely fitted deck, except where the shingles are specifically designed to be applied over spaced sheathing.

❖ These provisions provide requirements and limitations for roof decks, roof deck slope, underlayment, underlayment application, underlayment attachment in high wind regions, ice barriers and fasteners that are considered appropriate for the installation of photovoltaic shingles. The specific requirements included here have been adapted from and are intended to be consistent with similar attributes for other steep-

INTERNATIONAL CODE COUNCIL®
Copyright © 2015 ICC. ALL RIGHTS RESERVED. Accessed by David Dammon on Jun 21, 2017 12:30:52 PM pursuant to License Agreement with ICC. No further reproduction or distribution authorized. ANY UNAUTHORIZED REPRODUCTION OR DISTRIBUTION IS A VIOLATION OF THE FEDERAL COPYRIGHT ACT AND THE LICENSE AGREEMENT, AND SUBJECT TO CIVIL AND CRIMINAL PENALTIES THEREUNDER.

slope, shingle-type roof coverings. Sections 1507.17.1 and 1507.17.2 are adapted from Sections 1507.5.1 and 1507.5.2, respectively; Sections 1507.17.3 and 1507.17.4 are adapted from Sections 1507.2.3 and 1507.2.8, respectively; and Section 1507.17.5 is adapted from Section 1507.2.6.

1507.17.2 Deck slope. *Photovoltaic shingles* shall not be installed on roof slopes less than three units vertical in 12 units horizontal (25-percent slope).

❖ See the commentary to Section 1507.17.1.

1507.17.3 Underlayment. Unless otherwise noted, required underlayment shall conform to ASTM D226, ASTM D4869 or ASTM D6757.

❖ See the commentary to Section 1507.17.1.

1507.17.4 Underlayment application. Underlayment shall be applied shingle fashion, parallel to and starting from the eave, lapped 2 inches (51 mm) and fastened sufficiently to hold in place.

❖ See the commentary to Section 1507.17.1.

1507.17.4.1 High wind attachment. Underlayment applied in areas subject to high winds [V_{asd} greater than 110 mph (49 m/s) as determined in accordance with Section 1609.3.1] shall be applied with corrosion-resistant fasteners in accordance with the manufacturer's instructions. Fasteners shall be applied along the overlap at not more than 36 inches (914 mm) on center. Underlayment installed where V_{asd} is not less than 120 mph (54 m/s) shall comply with ASTM D226, Type II, ASTM D4869, Type IV or ASTM D6757. The underlayment shall be attached in a grid pattern of 12 inches (305 mm) between side laps with a 6-inch (152 mm) spacing at the side laps. Underlayment shall be applied in accordance with Section 1507.2.8 except all laps shall be a minimum of 4 inches (102 mm). Underlayment shall be attached using metal or plastic cap nails with a head diameter of not less than 1 inch (25 mm) with a thickness of not less than 32-gage [0.0134 inch (0.34 mm)] sheet metal. The cap nail shank shall be a minimum of 12 gage [0.105 inch (2.67 mm)] with a length to penetrate through the roof sheathing or a minimum of $^3/_4$ inch (19.1 mm) into the roof sheathing.

Exception: As an alternative, adhered underlayment complying with ASTM D1970 shall be permitted.

❖ See the commentary to Section 1507.17.1.

1507.17.4.2 Ice barrier. In areas where there has been a history of ice forming along the eaves causing a backup of water, an ice barrier that consists of at least two layers of underlayment cemented together or of a self-adhering polymer modified bitumen sheet shall be used instead of normal underlayment and extend from the lowest edges of all roof surfaces to a point not less than 24 inches (610 mm) inside the *exterior wall* line of the building.

Exception: Detached accessory structures that contain no conditioned floor area.

❖ See the commentary to Section 1507.17.1.

1507.17.5 Fasteners. Fasteners for photovoltaic shingles shall be galvanized, stainless steel, aluminum or copper roofing nails, minimum 12-gage [0.105 inch (2.67 mm)] shank with a minimum $^3/_8$-inch-diameter (9.5 mm) head, of a length to penetrate through the roofing materials and a minimum of $^3/_4$ inch (19.1 mm) into the roof sheathing. Where the roof sheathing is less than $^3/_4$ inch (19.1 mm) thick, the nails shall penetrate through the sheathing. Fasteners shall comply with ASTM F1667.

❖ See the commentary to Section 1507.17.1.

1507.17.6 Material standards. *Photovoltaic shingles* shall be *listed* and labeled in accordance with UL 1703.

❖ This section references UL 1703 as the standard used for determining code compliance of photovoltaic shingles.

1507.17.7 Attachment. *Photovoltaic shingles* shall be attached in accordance with the manufacturer's installation instructions.

❖ Referring to the manufacturer's instructions is appropriate since the required slope and fastening of the photovoltaic shingles are different for each manufacturer's product.

1507.17.8 Wind resistance. *Photovoltaic shingles* shall be tested in accordance with procedures and acceptance criteria in ASTM D3161. *Photovoltaic shingles* shall comply with the classification requirements of Table 1504.1.1 for the appropriate maximum nominal design wind speed. *Photovoltaic shingle* packaging shall bear a *label* to indicate compliance with the procedures in ASTM D3161 and the required classification from Table 1504.1.1.

❖ For wind resistance, the procedures and acceptance criteria used in ASTM D3161 for asphalt shingles are appropriate when adapted for photovoltaic shingles.

SECTION 1508
ROOF INSULATION

[BF] 1508.1 General. The use of above-deck thermal insulation shall be permitted provided such insulation is covered with an approved roof covering and passes the tests of NFPA 276 or UL 1256 when tested as an assembly.

Exceptions:

1. Foam plastic roof insulation shall conform to the material and installation requirements of Chapter 26.
2. Where a concrete roof deck is used and the above-deck thermal insulation is covered with an approved roof covering.

❖ This section addresses two requirements for the use of above-deck thermal insulation. The first requirement is that an approved roof covering be used. The second requirement is that an under-deck flame spread test must be conducted and passed using either NFPA 276 or the UL 1256 test methods. These tests were developed to evaluate the contribution of above-deck thermal insulations and their installation

INTERNATIONAL CODE COUNCIL®
Copyright © 2015 ICC. ALL RIGHTS RESERVED. Accessed by David Dammon on Jun 21, 2017 12:30:52 PM pursuant to License Agreement with ICC. No further reproduction or distribution authorized. ANY UNAUTHORIZED REPRODUCTION OR DISTRIBUTION IS A VIOLATION OF THE FEDERAL COPYRIGHT ACT AND THE LICENSE AGREEMENT, AND SUBJECT TO CIVIL AND CRIMINAL PENALTIES THEREUNDER.

when exposed to a fire from below the deck. The primary construction for which these tests have been developed are roof assemblies that utilize a steel roof deck with above-deck insulation materials.

In addition to serving as thermal insulation, roof insulation may be used as a substrate to which the roof membrane is applied. In protected roof membrane systems, the insulation is applied over the membrane and is not expected to act as a substrate. The insulation should provide adequate support for the membrane and other associated rooftop materials and stand up to limited rooftop traffic, such as for regular roof inspections and maintenance.

Rigid board roof insulations currently among the most commonly used for low-slope roofs are: cellular glass, glass fiber, mineral fiber, perlite, phenolic foam, polyisocyanurate foam, polystyrene foam, polyurethane foam, wood fiberboard and composite board.

Nonrigid roof insulations are generally used in steep-slope and some metal-roof assembly construction. Commonly made from cellulose, glass fiber and mineral fiber, these nonrigid insulations may be available in batts, blankets and loose-fiber forms.

Exception 2 recognizes that if a concrete deck is employed as part of the assembly it will provide protection to the above-deck insulation materials. This exception will apply to nonfoam plastic roof insulation materials, since foam plastic roof insulations are covered under Exception 1 and Chapter 26 of the code.

[BF] 1508.1.1 Cellulosic fiberboard. Cellulosic fiberboard roof insulation shall conform to the material and installation requirements of Chapter 23.

❖ Chapter 23 addresses cellulosic fiberboard roof installation.

[BF] 1508.2 Material standards. Above-deck thermal insulation board shall comply with the standards in Table 1508.2.

❖ The referenced material standards provide additional guidance on the physical properties of roof insulation when utilized as above-deck components of roof assemblies.

[BF] TABLE 1508.2
MATERIAL STANDARDS FOR ROOF INSULATION

Cellular glass board	ASTM C552
Composite boards	ASTM C1289, Type III, IV, V or VI
Expanded polystyrene	ASTM C578
Extruded polystyrene	ASTM C578
Fiber-reinforced gypsum board	ASTM C1278
Glass-faced gypsum board	ASTM C1177
Mineral fiber insulation board	ASTM C726
Perlite board	ASTM C728
Polyisocyanurate board	ASTM C1289, Type I or II
Wood fiberboard	ASTM C208

❖ This table incorporates industry-recognized material standards into the code for materials commonly used in above-roof-deck insulation practices. For instance, the table references ASTM C726, which specifies the composition and physical properties for mineral fiber insulation board.

SECTION 1509
RADIANT BARRIERS INSTALLED ABOVE DECK

[BF] 1509.1 General. A *radiant barrier* installed above a deck shall comply with Sections 1509.2 through 1509.4.

❖ This section provides requirements for fire testing, proper installation, and the appropriate material standard for a radiant barrier installed above a roof deck. The definition of the term “Radiant barrier” in Chapter 2 is derived from the definition for radiant barrier in ASTM C1313.

[BF] 1509.2 Fire testing. *Radiant barriers* shall be permitted for use above decks where the *radiant barrier* is covered with an approved roof covering and the system consisting of the *radiant barrier* and the roof covering complies with the requirements of either FM 4550 or UL 1256.

❖ The key issue addressed in this section is how the fire testing of the system utilizing a radiant barrier is to be done. It clarifies that the testing must be done using the combination of the radiant barrier and the approved roof covering, and that the system must pass the fire test.

[BF] 1509.3 Installation. The low emittance surface of the *radiant barrier* shall face the continuous airspace between the *radiant barrier* and the roof covering.

❖ A radiant barrier product that is installed above the roof deck is typically located between the deck and the felt. This section clarifies orientation of the radiant barrier and air gap for above-deck radiant barriers.

[BF] 1509.4 Material standards. A *radiant barrier* installed above a deck shall comply with ASTM C1313/1313M.

❖ The standard that is referenced for radiant barriers that are used in buildings, ASTM C1313, Standard Specification for Sheet Radiant Barriers for Building Construction Applications, helps to differentiate these products from reflective insulations (see ASTM C1224, Standard Specification for Reflective Insulation for Building Applications). The abstract of ASTM C1313 reads as follows. “...The scope is specifically limited to requirements for radiant barrier sheet materials that consist of at least one surface, such as metallic foils or metallic deposits mounted or unmounted on substrates. Sheet radiant barrier materials shall consist of low emittance surface(s) that may be in combination with any substrates and adhesives required to meet the specified physical material properties.”

INTERNATIONAL CODE COUNCIL®
Copyright © 2015 ICC. ALL RIGHTS RESERVED. Accessed by David Dammon on Jun 21, 2017 12:30:52 PM pursuant to License Agreement with ICC. No further reproduction or distribution authorized. ANY UNAUTHORIZED REPRODUCTION OR DISTRIBUTION IS A VIOLATION OF THE FEDERAL COPYRIGHT ACT AND THE LICENSE AGREEMENT, AND SUBJECT TO CIVIL AND CRIMINAL PENALTIES THEREUNDER.

SECTION 1510
ROOFTOP STRUCTURES

[BG] 1510.1 General. The provisions of this section shall govern the construction of rooftop structures.

❖ This section identifies and establishes the criteria used in evaluating penthouse-type roof structures. Other rooftop structures, such as water tanks, cooling towers, towers, spires, domes, cupolas, etc., are not to be considered as penthouses since the code has specific provisions for these structures (see Sections 1510.3 through 1510.6).

[BG] 1510.2 Penthouses. Penthouses in compliance with Sections 1510.2.1 through 1510.2.5 shall be considered as a portion of the story directly below the roof deck on which such penthouses are located. All other penthouses shall be considered as an additional story of the building.

❖ This section introduces the requirements necessary for a penthouse to be considered as a portion of the story directly below. Section 1510.2.1 contains height limitations, Section 1510.2.2 contains area limitations and Section 1510.2.3 contains use limitations.

[BG] 1510.2.1 Height above roof deck. Penthouses constructed on buildings of other than Type I construction shall not exceed 18 feet (5486 mm) in height above the roof deck as measured to the average height of the roof of the penthouse.

Exceptions:

1. Where used to enclose tanks or elevators that travel to the roof level, penthouses shall be permitted to have a maximum height of 28 feet (8534 mm) above the roof deck.
2. Penthouses located on the roof of buildings of Type I construction shall not be limited in height.

❖ The height of roof structures is not limited on buildings of Type I construction (see Exception 2). For other types of construction, the roof structure is limited to 18 feet (3658 mm) in height unless it encloses tanks or elevators that extend to the roof (see Exception 1), for which the maximum height is 28 feet (8534 mm). If the height exceeds that permitted, the roof structure should be counted as, and meet all the requirements for, an additional story. This section also addresses how the height of a penthouse is measured.

[BG] 1510.2.2 Area limitation. The aggregate area of penthouses and other enclosed rooftop structures shall not exceed one-third the area of the supporting roof deck. Such penthouses and other enclosed rooftop structures shall not be required to be included in determining the building area or number of stories as regulated by Section 503.1. The area of such penthouses shall not be included in determining the fire area specified in Section 901.7.

❖ The aggregate area of penthouses and any other enclosed rooftop structure is limited to one-third of the supporting roof deck. If the area of the penthouse exceeds this threshold, regardless of height, then the penthouse must be considered an additional story.

[BG] 1510.2.3 Use limitations. Penthouses shall not be used for purposes other than the shelter of mechanical or electrical equipment, tanks, or vertical shaft openings in the roof assembly.

❖ The use of the penthouse is also limited. Regardless of height or area, roof structures used for anything except sheltering electrical or mechanical equipment or vertical shaft openings must be considered as an additional story.

[BG] 1510.2.4 Weather protection. Provisions such as louvers, louver blades or flashing shall be made to protect the mechanical and electrical equipment and the building interior from the elements.

❖ Since the penthouse is a shelter for equipment or vertical shaft openings, it is often necessary to incorporate air intake and ventilation openings in the penthouse construction. In order to protect the equipment and the building from the detrimental effects of weather exposure, this section requires that measures be taken to minimize exposure to the elements. In so doing, this section essentially reiterates other provisions that address the integrity of the building envelope (see Sections 1405.2 and 1503).

[BG] 1510.2.5 Type of construction. Penthouses shall be constructed with walls, floors and roofs as required for the type of construction of the building on which such penthouses are built.

Exceptions:

1. On buildings of Type I construction, the exterior walls and roofs of penthouses with a *fire separation distance* greater than 5 feet (1524 mm) and less than 20 feet (6096 mm) shall be permitted to have not less than a 1-hour fire-resistance rating. The exterior walls and roofs of penthouses with a fire separation distance of 20 feet (6096 mm) or greater shall not be required to have a fire-resistance rating.
2. On buildings of Type I construction two stories or less in height above grade plane or of Type II construction, the exterior walls and roofs of penthouses with a *fire separation distance* greater than 5 feet (1524 mm) and less than 20 feet (6096 mm) shall be permitted to have not less than a 1-hour fire-resistance rating or a lesser fire-resistance rating as required by Table 602 and be constructed of fire-retardant-treated wood. The exterior walls and roofs of penthouses with a *fire separation distance* of 20 feet (6096 mm) or greater shall be permitted to be constructed of fire-retardant-treated wood and shall not be required to have a fire-resistance rating. Interior framing and walls shall be permitted to be constructed of fire-retardant-treated wood.
3. On buildings of Type III, IV or V construction, the exterior walls of penthouses with a fire separation distance greater than 5 feet (1524 mm) and less than

INTERNATIONAL CODE COUNCIL®
Copyright © 2015 ICC. ALL RIGHTS RESERVED. Accessed by David Dammon on Jun 21, 2017 12:30:52 PM pursuant to License Agreement with ICC. No further reproduction or distribution authorized. ANY UNAUTHORIZED REPRODUCTION OR DISTRIBUTION IS A VIOLATION OF THE FEDERAL COPYRIGHT ACT AND THE LICENSE AGREEMENT, AND SUBJECT TO CIVIL AND CRIMINAL PENALTIES THEREUNDER.

20 feet (6096 mm) shall be permitted to have not less than a 1-hour fire-resistance rating or a lesser fire-resistance rating as required by Table 602. On buildings of Type III, IV or VA construction, the exterior walls of penthouses with a fire separation distance of 20 feet (6096 mm) or greater shall be permitted to be of Type IV or noncombustible construction or fire-retardant-treated wood and shall not be required to have a fire-resistance rating.

❖ The general premise of this section requires a penthouse to be treated no differently than any other portion of the building, as it is constructed of exterior walls, a floor and a roof. Where the exterior walls of the penthouse are located within 5 feet (1524 mm) of the building's lot line, they are required to be of the same fire-resistance rating as the exterior wall of the story immediately below the penthouse. However, the exceptions recognize the reduced exposure where the exterior wall of a penthouse is set back from the exterior wall line of the building itself. Thus, the exceptions are based on two thresholds of fire separation distance: the first is greater than 5 feet (1524 mm) and up to 20 feet (6096 mm); the second is greater than 20 feet (6096 mm) (see Section 202 for the definition of "Fire separation distance").

If a penthouse is set back by a fire separation distance of 5 feet (1524 mm) or more from the lot line, the risk of exposure to adjacent property from a fire within the penthouse, as well as fire exposure to the penthouse from the adjacent lot, is reduced. Accordingly, if a penthouse is set back 5 feet (1524 mm) or more from the building's lot line, the penthouse construction may be able to take advantage of one of the exceptions, typically based on the type of construction, resulting in a reduction in rating of the exterior wall of the penthouse. It should be noted that, in many cases, penthouses located at least 20 feet (6096 mm) from the lot line are allowed further reductions.

[BG] 1510.3 Tanks. Tanks having a capacity of more than 500 gallons (1893 L) located on the roof deck of a building shall be supported on masonry, reinforced concrete, steel or Type IV construction provided that, where such supports are located in the building above the lowest *story*, the support shall be fire-resistance rated as required for Type IA construction.

❖ This section establishes the criteria used in evaluating rooftop tanks, such as water tanks.

[BG] 1510.3.1 Valve and drain. In the bottom or on the side near the bottom of the tank, a pipe or outlet, fitted with a suitable quick-opening valve for discharging the contents into a drain in an emergency shall be provided.

❖ In the event of an emergency, there must be a means to drain the tank. This not only involves a quick-opening valve on the tank but also drains that are capable of handling the discharge. The drains must be sized and installed in accordance with the *International Plumbing Code*® (IPC®).

[BG] 1510.3.2 Location. Tanks shall not be placed over or near a stairway or an elevator shaft, unless there is a solid roof or floor underneath the tank.

❖ Tanks are not permitted to be located above a stairway or elevator enclosure unless a solid roof or floor deck is provided underneath the tank. This is intended to prevent discharges from a leaking tank from affecting a shaft.

[BG] 1510.3.3 Tank cover. Unenclosed roof tanks shall have covers sloping toward the perimeter of the tanks.

❖ Roof tanks must be covered to prevent the accumulation of rain, ice and snow, which may cause an uncovered tank to overflow.

[BG] 1510.4 Cooling towers. Cooling towers located on the roof deck of a building and greater than 250 square feet (23.2 m^2) in base area or greater than 15 feet (4572 mm) in height above the roof deck, as measured to the highest point on the cooling tower, where the roof is greater than 50 feet (15 240 mm) in height above grade plane shall be constructed of noncombustible materials. The base area of cooling towers shall not exceed one-third the area of the supporting roof deck.

Exception: Drip boards and the enclosing construction shall be permitted to be of wood not less than 1 inch (25 mm) nominal thickness, provided the wood is covered on the exterior of the tower with noncombustible material.

❖ This section identifies and establishes criteria that require rooftop cooling towers to be of noncombustible construction.

[BG] 1510.5 Towers, spires, domes and cupolas. Towers, spires, domes and cupolas shall be of a type of construction having fire-resistance ratings not less than required for the building on top of which such tower, spire, dome or cupola is built. Towers, spires, domes and cupolas greater than 85 feet (25 908 mm) in height above grade plane as measured to the highest point on such structures, and either greater than 200 square feet (18.6 m^2) in horizontal area or used for any purpose other than a belfry or an architectural embellishment, shall be constructed of and supported on Type I or II construction.

❖ This section identifies the criteria used in evaluating structures such as towers, spires, domes and cupolas. When any of those structures exceed either 85 feet (25 908 mm) in height above grade plane or are greater than 200 square feet (18.6 m^2) in area, the construction type is limited to Type I or II. Section 1510.5.1 further restricts construction to noncombustible when the heights become more excessive (see commentary, Section 1510.5.1). These restrictions are related to the difficultly posed in fighting fires in such structures and also the danger to surrounding people, emergency responders and other buildings if such elements should fail during a fire.

[BG] 1510.5.1 Noncombustible construction required. Towers, spires, domes and cupolas greater than 60 feet (18 288 mm) in height above the highest point at which such structure contacts the roof as measured to the highest point on such structure, or that exceeds 200 square feet (18.6 m^2) in

INTERNATIONAL CODE COUNCIL®
Copyright © 2015 ICC. ALL RIGHTS RESERVED. Accessed by David Dammon on Jun 21, 2017 12:30:52 PM pursuant to License Agreement with ICC. No further reproduction or distribution authorized. ANY UNAUTHORIZED REPRODUCTION OR DISTRIBUTION IS A VIOLATION OF THE FEDERAL COPYRIGHT ACT AND THE LICENSE AGREEMENT, AND SUBJECT TO CIVIL AND CRIMINAL PENALTIES THEREUNDER.

area at any horizontal section, or which is intended to be used for any purpose other than a belfry or architectural embellishment, or is located on the top of a building greater than 50 feet (1524 mm) in building height shall be constructed of and supported by noncombustible materials and shall be separated from the building below by construction having a fire-resistance rating of not less than 1.5 hours with openings protected in accordance with Section 712. Such structures located on the top of a building greater than 50 feet (15 240 mm) in building height shall be supported by noncombustible construction.

❖ These rooftop structures include communication towers, spires, cupolas and similar structures. Such structures must generally be constructed of the same type of construction as the building to which they are attached. Because of the difficulty in fighting fires on tall buildings and structures and the hazards associated with locating combustible materials on roofs of taller buildings, when the height of such structures exceeds 60 feet (18 288 mm) above the highest point at which it comes in contact with the roof or is in excess of 200 square feet (19 m^2) in area at any horizontal section, the structure and its supports must be of noncombustible construction. In addition, they must be separated from the building with construction that has a minimum 1.5-hour fire-resistance rating. Any opening in that construction must be protected in accordance with Section 712, which addresses the protection of openings in horizontal assemblies. While openings in horizontal assemblies are typically protected with shaft enclosures, there are floor fire door assemblies that could be used in this situation.

For similar reasons, most roof structures of any height or area placed on tall buildings [greater than 50 feet (15 240 mm) in height] are required to be constructed of noncombustible materials and be supported by noncombustible construction.

[BG] 1510.5.2 Towers and spires. Enclosed towers and spires shall have exterior walls constructed as required for the building on top of which such towers and spires are built. The roof covering of spires shall be not less than the same class of roof covering required for the building on top of which the spire is located.

❖ As with penthouses and roof structures, the code intends to obtain construction and fire resistance for enclosed towers and spires that is consistent with that of the building on which they are supported.

[BG] 1510.6 Mechanical equipment screens. *Mechanical equipment screens* shall be constructed of the materials specified for the exterior walls in accordance with the type of construction of the building. Where the fire separation distance is greater than 5 feet (1524 mm), *mechanical equipment screens* shall not be required to comply with the fire-resistance rating requirements.

❖ As the definition for "Mechanical equipment screen" makes clear, it is a rooftop structure that is not covered by a roof. This section conservatively requires that mechanical equipment screens must be constructed of the same materials as required for exterior walls, based on the type of construction of the building on which they are located. However, it does exempt them from any fire-resistance-rating requirement once the fire separation distance is greater than 5 feet (1524 mm) since, without a roof, they do not fully enclose a space and they pose a lesser exposure hazard than a penthouse.

[BG] 1510.6.1 Height limitations. *Mechanical equipment screens* shall not exceed 18 feet (5486 mm) in height above the roof deck, as measured to the highest point on the mechanical equipment screen.

Exception: Where located on buildings of Type IA construction, the height of *mechanical equipment screens* shall not be limited.

❖ The height limits specified in this section are based on those required for penthouses in Section 1510.2.1. The exception for mechanical equipment screens located on buildings of Type IA construction is for consistency, since Table 503 does not limit the building height.

[BG] 1510.6.2 Type I, II, III and IV construction. Regardless of the requirements in Section 1510.6, *mechanical equipment screens* that are located on the roof decks of buildings of Type I, II, III or IV construction shall be permitted to be constructed of combustible materials in accordance with any one of the following limitations:

1. The fire separation distance shall be not less than 20 feet (6096 mm) and the height of the *mechanical equipment screen* above the roof deck shall not exceed 4 feet (1219 mm) as measured to the highest point on the *mechanical equipment screen.*
2. The fire separation distance shall be not less than 20 feet (6096 mm) and the *mechanical equipment screen* shall be constructed of fire-retardant-treated wood complying with Section 2303.2 for exterior installation.
3. Where exterior wall covering panels are used, the panels shall have a flame spread index of 25 or less when tested in the minimum and maximum thicknesses intended for use, with each face tested independently in accordance with ASTM E84 or UL 723. The panels shall be tested in the minimum and maximum thicknesses intended for use in accordance with, and shall comply with the acceptance criteria of, NFPA 285 and shall be installed as tested. Where the panels are tested as part of an exterior wall assembly in accordance with NFPA 285, the panels shall be installed on the face of the *mechanical equipment screen* supporting structure in the same manner as they were installed on the tested exterior wall assembly.

❖ This section is an exception to the requirements in Section 1510.6 for the types of construction that typically require the exterior walls to be constructed of noncombustible materials. The three itemized limitations in this section allow for combustible materials to be used for the construction of mechanical equipment screens when the stated conditions are met.

INTERNATIONAL CODE COUNCIL®
Copyright © 2015 ICC. ALL RIGHTS RESERVED. Accessed by David Dammon on Jun 21, 2017 12:30:52 PM pursuant to License Agreement with ICC. No further reproduction or distribution authorized. ANY UNAUTHORIZED REPRODUCTION OR DISTRIBUTION IS A VIOLATION OF THE FEDERAL COPYRIGHT ACT AND THE LICENSE AGREEMENT, AND SUBJECT TO CIVIL AND CRIMINAL PENALTIES THEREUNDER.

Item 1 recognizes that the hazard posed by a combustible mechanical equipment screen located on the roof of a Type I, II, III or IV building with a fire separation distance of at least 20 feet (6096 mm) and with the height of the mechanical equipment screen limited to 4 feet (1219 mm) above the roof deck is not significant.

Item 2 is based on Exceptions 2 and 3 for penthouses in Section 1510.2.5. The two-story limit in Exception 2 for Type I buildings is omitted. This is considered reasonable since the hazard doesn't justify limiting the Type I buildings to two stories in height where fire-retardant-treated wood is used to construct an unenclosed mechanical equipment screen. The main difference between this limitation and Item 1 is that it does not include the 4-foot (1219 mm) height limit on the mechanical equipment screen. This is because it must be constructed of fire-retardant-treated wood as compared to any combustible material allowed by the code. The height of the mechanical equipment screen would still be limited to 18 feet (5486 mm) by Section 1510.6.1. It is also limited to the maximum building height, based on the type of construction of the building in accordance with Section 1510.6.1.

Item 3 applies where the combustible materials used to build the mechanical equipment screen are limited to a maximum flame spread index of 25 (similar to fire-retardant-treated wood) and the materials are successfully tested in accordance with NFPA 285, *Standard Method of Test for the Evaluation of Flammability Characteristics of Exterior Nonload-Bearing Wall Assemblies Containing Combustible Components*. This is the test method that is used to validate the use of foam plastic insulations in exterior walls of Types I, II, III and IV construction, as well as for the use of metal composite materials in accordance with Section 1407.10. Although the material would be tested as the outer face of the exterior wall in the NFPA 285 test as part of an exterior wall assembly, the test assesses the surface flame spread resistance of the materials constituting the outer face, as well as to a certain degree, the inner face where it is exposed to any open cavities in the wall assembly. The NFPA 285 test is conducted for a full 30 minutes under severe fire-exposure conditions to both the inside of the wall assembly and the outside of the wall assembly with an exterior window burner replicating a fire that has gone to post-flashover and has broken out a window, exposing the outside face of the exterior wall finish. Since the materials used to construct the mechanical equipment screen do not comprise a completely enclosed wall assembly, the maximum flame spread index of 25 has been proposed as a conservative limitation for the backside face of the material, which may not have been directly exposed to the exterior window burner flame in the NFPA 285 test. Since the NFPA 285 test is used to qualify combustible materials for use where noncombustible exterior walls are required, it seems reasonable to allow panels tested as wall assemblies to be installed as equipment screen panels, utilizing the materials tested on the exterior face of the wall system in accordance with NFPA 285.

[BS] 1510.6.3 Type V construction. The height of mechanical equipment screens located on the roof decks of buildings of Type V construction, as measured from grade plane to the highest point on the mechanical equipment screen, shall be permitted to exceed the maximum building height allowed for the building by other provisions of this code where complying with any one of the following limitations, provided the fire separation distance is greater than 5 feet (1524 mm):

1. Where the fire separation distance is not less than 20 feet (6096 mm), the height above grade plane of the mechanical equipment screen shall not exceed 4 feet (1219 mm) more than the maximum building height allowed;
2. The *mechanical equipment screen* shall be constructed of noncombustible materials;
3. The *mechanical equipment screen* shall be constructed of fire-retardant-treated wood complying with Section 2303.2 for exterior installation; or
4. Where the fire separation distance is not less than 20 feet (6096 mm), the *mechanical equipment screen* shall be constructed of materials having a flame spread index of 25 or less when tested in the minimum and maximum thicknesses intended for use with each face tested independently in accordance with ASTM E84 or UL 723.

❖ This section is an exception to the height limitations in Section 1510.6.1. It is specific for Type V buildings, which are allowed to be constructed entirely of combustible materials. The one condition that must be met for all four options in this section is that the minimum fire separation distance must be greater than 5 feet (1524 mm). That restriction is based on Section 1406.

Item 1 is based on the belief that a 4-foot (1219 mm) height increase due to the presence of a mechanical equipment screen represents a relatively minor hazard on a building of Type V construction, particularly if the fire separation distance is at least 20 feet (6096 mm).

Item 2 allows these mechanical equipment screens to be taller when they are constructed of noncombustible materials where combustible materials would otherwise be permitted. Noncombustible materials pose no additional fire load or fire exposure to the building.

Item 3 allows the use of fire-retardant-treated wood which, although combustible, does not pose a significant fire hazard when constructed as a mechanical equipment screen where there is a minimum 5-foot (1524 mm) fire separation distance.

Item 4 criteria follows from Item 3 since fire-retardant-treated wood is required to have a maximum flame spread index of 25. There is an additional requirement that the fire separation distance is at least 20 feet (6096 mm). The lesser fire hazard associated with this type of installation should allow the

INTERNATIONAL CODE COUNCIL®
Copyright © 2015 ICC. ALL RIGHTS RESERVED. Accessed by David Dammon on Jun 21, 2017 12:30:52 PM pursuant to License Agreement with ICC. No further reproduction or distribution authorized. ANY UNAUTHORIZED REPRODUCTION OR DISTRIBUTION IS A VIOLATION OF THE FEDERAL COPYRIGHT ACT AND THE LICENSE AGREEMENT, AND SUBJECT TO CIVIL AND CRIMINAL PENALTIES THEREUNDER.

greater heights for the mechanical equipment screens installed on these Type V buildings.

[BS] 1510.7 Photovoltaic panels and modules. Rooftop-mounted *photovoltaic panels* and *modules* shall be designed in accordance with this section.

❖ Rooftop-mounted photovoltaic panels and modules need to comply with building code requirements similar to other rooftop structures.

[BS] 1510.7.1 Wind resistance. Rooftop-mounted *photovoltaic panels* and *modules* shall be designed for component and cladding wind loads in accordance with Chapter 16 using an effective wind area based on the dimensions of a single unit frame.

❖ This section clarifies that rooftop-mounted photovoltaic panels and modules need to resist component and cladding wind loads and specifies that a single unit must be used to establish the effective wind area.

[BS] 1510.7.2 Fire classification. Rooftop-mounted *photovoltaic panels* and *modules* shall have the fire classification in accordance with Section 1505.9.

❖ The minimum requirements set forth here are intended for the rooftop-mounted photovoltaic panels and modules to comply with the same minimum requirements as the underlying roof assembly.

[BS] 1510.7.3 Installation. Rooftop-mounted *photovoltaic panels* and *modules* shall be installed in accordance with the manufacturer's instructions.

❖ Rooftop-mounted photovoltaic panels and modules need to be installed in accordance with the manufacturer's instructions.

[BS] 1510.7.4 Photovoltaic panels and modules. Rooftop-mounted *photovoltaic panels* and *modules* shall be *listed* and labeled in accordance with UL 1703 and shall be installed in accordance with the manufacturer's instructions.

❖ This section addresses the safety of photovoltaic panels and modules by requiring these products to comply with UL 1703 and to be installed in accordance with the manufacturer's instructions. UL 1703 is a standard used to investigate photovoltaic modules and panels and includes construction and performance requirements that address potential safety hazards.

[BS] 1510.8 Other rooftop structures. Rooftop structures not regulated by Sections 1510.2 through 1510.7 shall comply with Sections 1510.8.1 through 1510.8.5, as applicable.

❖ This section addresses other rooftop structures that are not specifically regulated by Sections 1510.2 through 1510.7. These include rooftop structures such as aerial supports (Section 1510.8.1), bulkheads (Section 1510.8.2), dormers (Section 1510.8.3), fences (Section 1510.8.4) and flagpoles (Section 1510.8.5).

[BS] 1510.8.1 Aerial supports. Aerial supports shall be constructed of noncombustible materials.

Exception: Aerial supports not greater than 12 feet (3658 mm) in height as measured from the roof deck to the highest point on the aerial supports shall be permitted to be constructed of combustible materials.

❖ This section addresses construction of aerial supports.

[BS] 1510.8.2 Bulkheads. Bulkheads used for the shelter of mechanical or electrical equipment or vertical shaft openings in the roof assembly shall comply with Section 1510.2 as penthouses. Bulkheads used for any other purpose shall be considered as an additional story of the building.

❖ This provision treats bulkheads like penthouses. A definition of the term "bulkhead" that is closest to the context of Section 1510 is "a projecting framework with a sloping door giving access to a cellar stairway or a shaft."

[BS] 1510.8.3 Dormers. Dormers shall be of the same type of construction as required for the roof in which such dormers are located or the exterior walls of the building.

❖ This section recognizes typical dormer construction and requires dormers to be the same type of construction as the roof or exterior wall in which the dormer is located.

[BS] 1510.8.4 Fences. Fences and similar structures shall comply with Section 1510.6 as *mechanical equipment screens*.

❖ This section treats fences similar to mechanical equipment screens since they are similar structures and can be considered to have a similar fire hazard.

1510.8.5 Flagpoles. Flagpoles and similar structures shall not be required to be constructed of noncombustible materials and shall not be limited in height or number.

❖ This section exempts flagpoles from the rooftop height and construction limitations that apply to most other rooftop structures.

[BS] 1510.9 Structural fire resistance. The structural frame and roof construction supporting imposed loads upon the roof by any rooftop structure shall comply with the requirements of Table 601. The fire-resistance reduction permitted by Table 601, Note a, shall not apply to roofs containing rooftop structures.

❖ This section is a reminder to verify compliance with Table 601 for roofs that support the additional load of a rooftop structure. Furthermore, it clarifies that the reduction permitted in Table 601, Note a, is not applicable where the roof supports a rooftop structure.

INTERNATIONAL CODE COUNCIL®
Copyright © 2015 ICC. ALL RIGHTS RESERVED. Accessed by David Dammon on Jun 21, 2017 12:30:52 PM pursuant to License Agreement with ICC. No further reproduction or distribution authorized. ANY UNAUTHORIZED REPRODUCTION OR DISTRIBUTION IS A VIOLATION OF THE FEDERAL COPYRIGHT ACT AND THE LICENSE AGREEMENT, AND SUBJECT TO CIVIL AND CRIMINAL PENALTIES THEREUNDER.

SECTION 1511
REROOFING

1511.1 General. Materials and methods of application used for recovering or replacing an existing roof covering shall comply with the requirements of Chapter 15.

Exceptions:

1. *Roof replacement* or *roof recover* of existing low-slope roof coverings shall not be required to meet the minimum design slope requirement of one-quarter unit vertical in 12 units horizontal (2-percent slope) in Section 1507 for roofs that provide positive roof drainage.
2. Recovering or replacing an existing roof covering shall not be required to meet the requirement for secondary (emergency overflow) drains or scuppers in Section 1503.4 for roofs that provide for positive roof drainage. For the purposes of this exception, existing secondary drainage or scupper systems required in accordance with this code shall not be removed unless they are replaced by secondary drains or scuppers designed and installed in accordance with Section 1503.4.

❖ This section simply states that when a roof is replaced or recovered it must comply with Chapter 15 for the materials and methods used with exceptions for low-sloped roofs as well as a waiver of the secondary drainage provision when reroofing an existing building where the roof drains properly. This section does not mandate that the entire roof be replaced but simply that the portion being replaced complies with Chapter 15.

For low-sloped roofs, the exception indicates that reroofing (i.e., recovering or replacement) is not required to meet the $^1/_4$:12 minimum slope requirement of Section 1507, provided that the roof has positive drainage. The term "positive drainage" is defined as the drainage condition in which consideration has been made for all loading deflections of the roof deck, and additional roof slope has been provided to ensure drainage of the roof area within 48 hours of rainfall.

1511.2 Structural and construction loads. Structural roof components shall be capable of supporting the roof-covering system and the material and equipment loads that will be encountered during installation of the system.

❖ The structural integrity of the roof must be maintained during reroofing operations, which can significantly contribute to the loading of the roof due to workers and material being present during this period of time. The roof support system must be able to structurally support all additional layers of roof covering material.

1511.3 Roof replacement. *Roof replacement* shall include the removal of all existing layers of roof coverings down to the roof deck.

Exception: Where the existing roof assembly includes an ice barrier membrane that is adhered to the roof deck, the existing ice barrier membrane shall be permitted to remain in place and covered with an additional layer of ice barrier membrane in accordance with Section 1507.

❖ The term "Roof replacement" is defined in Chapter 2. When removing roof coverings, it can be difficult, if not impossible, to remove an existing layer of adhered ice barrier membrane without damaging or replacing the roof deck. The exception accounts for this condition by allowing an existing adhered ice barrier membrane to remain in place and be covered with a new ice barrier membrane as required in Section 1507, followed by the installation of the new primary roof-covering material.

1511.3.1 Roof recover. The installation of a new roof covering over an existing roof covering shall be permitted where any of the following conditions occur:

1. Where the new roof covering is installed in accordance with the roof covering manufacturer's approved instructions.
2. Complete and separate roofing systems, such as standing-seam metal roof panel systems, that are designed to transmit the roof loads directly to the building's structural system and that do not rely on existing roofs and roof coverings for support, shall not require the removal of existing roof coverings.
3. Metal panel, metal shingle and concrete and clay tile roof coverings shall be permitted to be installed over existing wood shake roofs when applied in accordance with Section 1511.4.
4. The application of a new protective coating over an existing spray polyurethane foam roofing system shall be permitted without tear off of existing roof coverings.

❖ The term "Roof recover" is defined in Chapter 2 and this section identifies conditions where a recover is permitted. Item 2 states that new roofing systems that are designed to transmit all roof loads directly to the structural supports of the building do not necessitate that the existing roofing system be removed. Item 3 allows certain roof covering, including metal, concrete panel and clay, to be placed over wood shingle and shake roofs only if any concealed combustible spaces are properly addressed in accordance with Section 1511.4 (see commentary, Section 1511.4). Item 4 refers to the practice of "recoating" in which a new protective coating is placed over an existing spray polyurethane foam roofing system. Recoating can add many years to the effective life of a spray polyurethane foam roofing system without the downside of adding significant weight associated with other reroofing-type systems.

1511.3.1.1 Exceptions. A *roof recover* shall not be permitted where any of the following conditions occur:

1. Where the existing roof or roof covering is water soaked or has deteriorated to the point that the existing roof or roof covering is not adequate as a base for additional roofing.
2. Where the existing roof covering is slate, clay, cement or asbestos-cement tile.

INTERNATIONAL CODE COUNCIL®
Copyright © 2015 ICC. ALL RIGHTS RESERVED. Accessed by David Dammon on Jun 21, 2017 12:30:52 PM pursuant to License Agreement with ICC. No further reproduction or distribution authorized. ANY UNAUTHORIZED REPRODUCTION OR DISTRIBUTION IS A VIOLATION OF THE FEDERAL COPYRIGHT ACT AND THE LICENSE AGREEMENT, AND SUBJECT TO CIVIL AND CRIMINAL PENALTIES THEREUNDER.

3. Where the existing roof has two or more applications of any type of roof covering.

❖ This section identifies the conditions where a recover is not permitted, and all layers of previously installed roof covering systems must be removed prior to the installation of the new roof covering system.

When the existing roof or roof covering is water soaked, it must be allowed to dry completely so as not to trap moisture beneath the new layer of covering. This could cause a rapid deterioration of the new covering material, as well as the existing sheathing. The existing covering is required to be removed if it cannot adequately dry out or if its physical properties have been permanently altered.

Existing roof coverings such as wood shake, slate, clay, cement or asbestos-cement tile historically do not provide an adequate base for new roof coverings and could prevent the new covering from achieving a weather-tight seal. They could also allow penetration of water, snow, etc. These types of existing coverings must always be removed.

When the existing roof has two or more layers of any type of covering system, all layers need to be removed to enable the inspector and contractor to verify that the existing sheathing is not water damaged and still capable of providing an adequate nailing base.

1511.4 Roof recovering. Where the application of a new roof covering over wood shingle or shake roofs creates a combustible concealed space, the entire existing surface shall be covered with gypsum board, mineral fiber, glass fiber or other *approved* materials securely fastened in place.

❖ "Roof recovering" is defined as the process of installing an additional roof covering over a prepared existing roof covering without removing the existing roof covering. Where recovering over wood shingles or shakes creates a combustible concealed space, the code requires that the entire surface of the wood shakes and shingles be covered with a material that will reduce the possibility of such materials adding fuel to a fire in such a space.

1511.5 Reinstallation of materials. Existing slate, clay or cement tile shall be permitted for reinstallation, except that damaged, cracked or broken slate or tile shall not be reinstalled. Existing vent flashing, metal edgings, drain outlets, collars and metal counterflashings shall not be reinstalled where rusted, damaged or deteriorated. Aggregate surfacing materials shall not be reinstalled.

❖ This section places conditions on the reuse of roof-covering materials. Historically, various types of materials have been removable without substantially damaging the material. Materials such as wood shingles and shakes, roll roofing and asphalt shingles are usually torn or cracked and cannot be reused. Fastener holes also violate the integrity of the material. Before reuse is allowed, materials such as slate, clay or cement tile should be examined thoroughly for cracks and deterioration.

1511.6 Flashings. Flashings shall be reconstructed in accordance with *approved* manufacturer's installation instructions. Metal flashing to which bituminous materials are to be adhered shall be primed prior to installation.

❖ Flashings to be reused or reconstructed must be in accordance with the manufacturer's installation instructions. Metal flashings that are to be reused for bituminous materials must be primed in accordance with the manufacturer's instructions.

SECTION 1512
PHOTOVOLTAIC PANELS AND MODULES

1512.1 Photovoltaic panels and modules. *Photovoltaic panels* and *modules* installed upon a roof or as an integral part of a roof assembly shall comply with the requirements of this code and the *International Fire Code*.

❖ Roof-mounted photovoltaic panels and modules should comply with roofing requirements, such as supporting the load of these systems on roofs and structural framing. This section also makes a needed reference to relevant requirements in the IFC.

Bibliography

The following resource materials were used in the preparation of the commentary for this chapter of the code.

ANSI/SPRI ES-1-11, *Wind Design Standard for Edge Systems Used with Low-Slope Roofing Systems*. Waltham, MA: Single-Ply Roofing Institute, 2011.

ANSI/SPRI VF-1-10, *External Fire Design Standard for Vegetative Roofs*. Waltham, MA: Single-Ply Roofing Institute, 2010.

ASTM C1167-11, *Specification for Clay Roof Tiles*. West Conshohocken, PA: ASTM International, 2011.

ASTM C1313/C 1313M-12, *Standard Specification for Sheet Radiant Barriers for Building Construction Applications*. West Conshohocken, PA: ASTM International, 2012.

ASTM D312-00 (2006), *Specification for Asphalt Used in Roofing*. West Conshohocken, PA: ASTM International, 2006.

ASTM E108-11, *Standard Test Method for Fire Tests of Roof Coverings*. West Conshohocken, PA: ASTM International, 2011.

CSSB, *New Roof Construction Manual*. Sumas, WA: Cedar Shake and Shingle Bureau, 2010.

INTERNATIONAL CODE COUNCIL®
Copyright © 2015 ICC. ALL RIGHTS RESERVED. Accessed by David Dammon on Jun 21, 2017 12:30:52 PM pursuant to License Agreement with ICC. No further reproduction or distribution authorized. ANY UNAUTHORIZED REPRODUCTION OR DISTRIBUTION IS A VIOLATION OF THE FEDERAL COPYRIGHT ACT AND THE LICENSE AGREEMENT, AND SUBJECT TO CIVIL AND CRIMINAL PENALTIES THEREUNDER.

NFPA 285-12, *Standard Fire Test Method for the Evaluation of Fire Propagation Characteristics of Exterior Nonload-bearing Wall Assemblies Containing Combustible Components.* Quincy, MA: National Fire Protection Association, 2012.

NRCA Roofing Manual: Membrane Roof Systems-2007. Rosemont, IL: National Roofing Contractors Association (NRCA), 2007.

NRCA Roofing Manual: Steep-slope Roof Systems-2009. Rosemont, IL: National Roofing Contractors Association (NRCA), 2009.

SBCCI SSTD 11-97, *Standard for Determining Wind Resistance of Concrete or Clay Roof Tiles*. Birmingham, AL: Southern Building Code Congress International, 1997.

INTERNATIONAL CODE COUNCIL®

Copyright © 2015 ICC. ALL RIGHTS RESERVED. Accessed by David Dammon on Jun 21, 2017 12:30:52 PM pursuant to License Agreement with ICC. No further reproduction or distribution authorized. ANY UNAUTHORIZED REPRODUCTION OR DISTRIBUTION IS A VIOLATION OF THE FEDERAL COPYRIGHT ACT AND THE LICENSE AGREEMENT, AND SUBJECT TO CIVIL AND CRIMINAL PENALTIES THEREUNDER.

INDEX

A

ACCESS OPENINGS
Attic 1209.2
Crawl space 1209.1
Doors 712.3.2
Fire damper 716.4
Fire department 402.7.5
Mechanical appliances 1209.3
Refuse/laundry chutes 708.13.3
ACCESSIBILITY . . . . . .1009, Chapter 11, Appendix E
Airports 412.3.5, E110
Assembly 1009.1, 1108.2, 1109.11, 1110
Bus stops E108
Construction sites 1103.2.5
Controls 1109.13
Detectable warnings 1109.10
Detention and correctional facilities 1103.2.13, 1107.5.5,1108.4.2, E104.1
Dining areas 1108.2.9, 1109.11
Dressing rooms 1109.12.1
Drinking fountains 1109.5
Dwelling units 1103.2.3, 1105.1.6, 1107
Egress (see ACCESSIBLE MEANS OF EGRESS) . . . 1009
Elevators 1009.2.1, 1009.4, 1009.7.3, 1109.7, 3001.3
Employee work areas 907.5.2.31, 1103.2.2, 1104.3.1
Entrances 1105
Exceptions 1103.2, 1104.4, 1107.7
Existing buildings 1009.1
Fuel dispensing 1109.14
Gaming tables and machines 1109.15, E105.3
Institutional 1103.2.12, 1103.2.13, 1107, 1109.11.2
Judicial facilities 1108.4, 1109.11.2
Kitchens 1109.4
Laundry E105.2
Lifts 1009.5, 1109.8
Live/work unit 419.7, 1107.6.2.1
Parking and passenger loading facilities 1106
Performance areas 1108.2.8
Platform 1108.2.8, E103.1
Press box 1104.3.2
Ramps 1012
Recreational facilities (see RECREATION FACILITIES) . . . 1104.2, 1110
Religious worship, places of 1103.2.8
Residential 1103.2.3, 1103.2.11, 1107
Route 1003.3.4, 1104, 1107.4
Saunas and steam rooms 1109.6
Scoping 1101, 1103.1, E101.1
Seating 1108.2, 1109.11
Service facility 1109.12
Signage . . . . . 1009.8 through 1009.11, 1110, E107
Sleeping units 1107, 1105.1.6
Storage 1108.3, 1109.9
Telephone E106
Toilet and bathing facilities 1107.6.1.1, 1109.2, 1109.3E105.1
Train and light-rail stations E109
Transient lodging 1103.2.11, 1107.6.1E104.2
Utility 1103.2.4
ACCESSIBLE MEANS OF EGRESS 1009
Areas of refuge (see AREA OF REFUGE)
Assembly 1009.1, 1029.8
Elevators 1009.2.1, 1009.4, 1009.8
Existing building 1009.1
Exterior area for assisted rescue (see EXTERIOR AREA FOR ASSISTED RESCUE)
Horizontal exit (see HORIZONTAL EXIT)
Mezzanine 1009.1
Platform lift 1009.5
Required 1009.1
Stairways 1009.3
Signage . . . . . 1009.8 through 1009.11, 3002.3
ACCESSORY OCCUPANCIES 303.1.2, 303.1.4, 305.1.1, 312.1, 419.1, 508.2
ADDITION 101.4.8, D103.1
Means of egress 3302.1, 3310
ADMINISTRATION . . . . . Chapter 1
ADOBE CONSTRUCTION 202, 2109.3
AEROSOLS 202, 307.1, 311.2, 414.1.2.1, 414.2.5, 907.2.16
AGGREGATE 202
Ballast 1504.8
AGRICULTURAL BUILDINGS (see GROUP U) . . . . . 312.1, 1103.2.4, Appendix C
AIR CONDITIONING (see MECHANICAL) 2801.1, 3005.2
AIR INTAKES (see YARDS OR COURTS) . . . 1206.3.2
AIRCRAFT HANGARS 412.4
Aircraft paint hangars 412.6, 507.10
Basements 412.4.2
Construction 412.4.1, 412.4.5, 412.6.2
Fire area 412.4.6.2
Fire suppression system 412.4.6, 412.6.5

INTERNATIONAL CODE COUNCIL®
Copyright © 2015 ICC. ALL RIGHTS RESERVED. Accessed by David Dammon on Jun 21, 2017 12:30:52 PM pursuant to License Agreement with ICC. No further reproduction or distribution authorized. ANY UNAUTHORIZED REPRODUCTION OR DISTRIBUTION IS A VIOLATION OF THE FEDERAL COPYRIGHT ACT AND THE LICENSE AGREEMENT, AND SUBJECT TO CIVIL AND CRIMINAL PENALTIES THEREUNDER.

Heliports and helistops 412.5, 905.3.6, 906.1, 1605.4
Residential 412.5, 907.2.21
Unlimited height and area 504.1, 507.10
AIRCRAFT MANUFACTURING FACILITIES . . . 412.7
AIRCRAFT-RELATED OCCUPANCIES . . . 412, E110
Airport traffic control towers 412.3, 907.2.22
Traffic control towers 412.3
Alarms and detection . . 412.3.4, 412.3.5, 907.2.22
Construction type 412.3.1, 412.3.2
Egress 412.3.2, 412.3.3, 412.3.4
AISLE 1018, 1029.9, 1029.13
Aisle accessways 1018.4, 1029.12
Assembly seating 1018.2, 1029.6
Bleachers 1029.1.1
Business 1018.3
Check-out 1109.12.2
Construction 1029.11
Converging 1029.9.3
Egress 1018, 1029
Folding and telescopic seating 1029.1.1
Grandstands 1029.1.1
Mercantile 1018.3, 1018.4
Obstructions 1029.9.6
Tables 1029.12.1
Tents 3103.4
Transitions 1029.10
Width 1029.9
ALARM SYSTEMS, EMERGENCY 908
ALARMS, FIRE (see FIRE ALARM AND SMOKE DETECTION SYSTEMS)
ALARMS, VISIBLE 907.5.2.3
Common areas 907.5.2.3.1
Employee work areas 907.5.2.3.1
Group I-1 . . . . . 907.5.2.3.2
Group R-1 . . . . . 907.5.2.3.2
Group R-2 . . . . . 907.5.2.3.3
Public areas 907.5.2.3.1
ALARMS, VOICE 907.5.2.2
Amusement buildings, special 411.6, 907.2.12.3
Covered and open mall buildings 402.7.4, 907.2.20,
Emergency power 2702.2.4
High-rise buildings 403.4.4, 907.2.13
Occupant evacuation elevators 3008.9
Underground buildings 405.8.2, 907.2.19
ALLOWABLE STRESS DESIGN 202
Load combinations 1605.3
Masonry design 2107
Wood design 2301.2, 2306
ALTERATIONS 101.4.8, D103.1
Means of egress 3302.1, 3310.2
ALTERNATING TREAD DEVICES 1011.14
Construction 1011.14.2
Equipment platform 505.5
Heliports 412.8.3
Technical production areas 410.6.3.4
ALTERNATIVE MATERIALS, DESIGN AND METHODS 104.11
ALUMINUM . . . . . 1404.5.1, 1604.3.5, Chapter 20
AMBULATORY CARE FACILITIES 422
Alarm and detection 907.2.2.1
Smoke compartment 422.2, 422.3
AMUSEMENT BUILDING, SPECIAL 411
Alarm and detection 411.3, 411.5, 907.2.12
Classification 411.1
Emergency voice/alarm communications system 411.6, 907.2.12.3
Exit marking 411.7, 411.7.1
Interior finish 411.8
Sprinklers protection 411.4
AMUSEMENT PARK STRUCTURES 303
Accessibility 1110.4.8
ANCHOR STORE (see COVERED MALL AND OPEN MALL BUILDINGS) 402
Construction type 402.4.12
Means of egress 402.8.4.1
Occupant load 402.8.2.3
Separation 402.4.2.2, 402.4.2.3
Sprinkler protection 402.5
ANCHORAGE 1604.8
Braced wall line sills 2308.6.7.3
Concrete 1901.3
Conventional light-frame construction 2308.3.1, 2308.3.2, 2308.4.10
Decks 1604.8.3
Seismic anchorage for masonry chimneys . . . 2113.4
Seismic anchorage for masonry fireplaces . . . 2111.5
Walls 1604.8.2
Wood sill plates 2308.3
APARTMENT HOUSES 310.4
APPEALS 113
APPROVED AGENCY 202, 1703.1
ARCHITECT (see definition for REGISTERED DESIGN PROFESSIONAL)
ARCHITECTURAL TRIM 603.1, 1406.2.2, D102.2.7
AREA, BUILDING . . . . . Chapter 5, 506
Accessory uses 508.2.3
Aircraft hangars, residential 412.5.5
Covered and open mall building 402.4.1
Enclosed parking garage 406.6.1, 510.3

INTERNATIONAL CODE COUNCIL®
Copyright © 2015 ICC. ALL RIGHTS RESERVED. Accessed by David Dammon on Jun 21, 2017 12:30:52 PM pursuant to License Agreement with ICC. No further reproduction or distribution authorized. ANY UNAUTHORIZED REPRODUCTION OR DISTRIBUTION IS A VIOLATION OF THE FEDERAL COPYRIGHT ACT AND THE LICENSE AGREEMENT, AND SUBJECT TO CIVIL AND CRIMINAL PENALTIES THEREUNDER.

Equipment platforms 505.3.1
Incidental uses 509.3
Limitations 503, 506
Membrane structures 3102.4
Mezzanines 505.2.1
Mixed construction types 3102.6
Mixed occupancy 508.2.3, 508.3.2, 508.4.2
Modifications 506, 510
Open mall building 402.4.1
Open parking garage 406.5.4, 406.5.4.1, 406.5.5, 510.2, 510.3, 510.4, 510.7, 510.8, 510.9
Private garages and carports 406.3.1
Unlimited area 503.1.1, 503.1.3, 506.1.1, 506.2, 507

AREA FOR ASSISTED RESCUE, EXTERIOR (see EXTERIOR AREAS FOR ASSISTED RESCUE)

AREA OF REFUGE (see ACCESSIBLE MEANS OF EGRESS)

Requirements 1009.6
Signage 1009.9, 1009.10, 1009.11
Two-way communication 1009.6.5
Where required 1009.2, 1009.3, 1009.4

ASSEMBLY OCCUPANCY (GROUP A) 303, 1029

Accessibility 1108.2, 1108.4, 1109.2.1, 1110
Alarms and detection 907.2.1
Area 503, 506, 507, 508
Bleachers (see BLEACHERS)
Folding and telescopic seating (see BLEACHERS)
Grandstands (see GRANDSTANDS)
Group-specific provisions
A-1 . . . . . 303.2
A-2 . . . . . 303.3
A-3 . . . . . 303.4
A-4 . . . . . 303.5
A-5 . . . . . 303.6
Motion picture theater 409, 507.12
Special amusement buildings 411
Stages and platforms 410
Height 503, 504, 505, 508, 510
Incidental uses 509
Interior finishes . . . . . Table 803.11, 804
Live load . . . . . Table 1607.1, 1607.12.3
Means of egress
Aisles 1018.2, 1029.9, 1029.10
Assembly spaces 1029
Exit signs 1013.1
Guards 1015.2, 1029.16
Main exit 1029.3
Outdoors 1005.3.1, 1005.3.2, 1006.3, 1009.6.4,1019.3, 1027, 1029.6.2
Panic hardware 1010.1.10, 1010.2.1
Stairway, exit access 1019
Travel distance 1016.2.1, 1017.2, 1006.3.1, 1006.3.2, 1029.7
Mixed occupancies 508.3, 508.4
Accessory 508.2
Education 303.1.3
Live/work units 419
Mall buildings 402
Other occupancies 303.1.1, 303.1.2, 303.1.3
Parking below/above 510.7, 510.9
Religious facilities 303.1.4
Special mixed 510.2
Motion picture theaters 409, 507.11
Occupancy exceptions 303.1.1, 303.1.2, 303.1.3, 303.1.4, 305.1.1, 305.2.1
Plumbing fixtures 2902
Risk category . . . . . Table 1604.5
Seating, fixed (see SEATING, FIXED)
Seating, smoke-protected 1029.6.2
Sprinkler protection 410, 504.3, 506.2, 507.3, 507.4, 507.6, 507.7, 507.12, 903.2.1
Stages and platforms 410, 905.3.4
Standpipes 905.3.2, 905.3.4, 905.5.1
Unlimited area 507.4, 507.4.1, 507.6, 507.7, 507.12

ASSISTED LIVING (see GROUP I-1) 308.3, 310.6

Sixteen or fewer residents (see Group R-4) 308.3.1, 308.3.2, 310.5.1

ATMOSPHERIC ICE LOADS 1614

ATRIUM 404

Alarms and detection 404.4, 907.2.14
Enclosure 404.6, 707.3.5
Interior finish 404.8
Smoke control 404.5, 909
Sprinkler protection 404.3
Standby power 404.7
Travel distance 404.9, 1016.2.1, 1017.2, 1006.3.2
Use 404.2

ATTIC

Access 1209.2
Combustible storage 413.2
Draftstopping 718.4
Insulation 719.3.1
Live load . . . . . Table 1607.1
Unusable space fire protection 711.3.3
Ventilation 1203.2

AUDITORIUM 303, 305.1.1

Accessibility 1108.2
Foyers and lobbies 1029.4
Interior balconies 1029.5

INTERNATIONAL CODE COUNCIL®
Copyright © 2015 ICC. ALL RIGHTS RESERVED. Accessed by David Dammon on Jun 21, 2017 12:30:52 PM pursuant to License Agreement with ICC. No further reproduction or distribution authorized. ANY UNAUTHORIZED REPRODUCTION OR DISTRIBUTION IS A VIOLATION OF THE FEDERAL COPYRIGHT ACT AND THE LICENSE AGREEMENT, AND SUBJECT TO CIVIL AND CRIMINAL PENALTIES THEREUNDER.

Motion picture projection rooms. 409
Stages and platforms. 410
AUTOMOBILE PARKING GARAGE (see GARAGE, AUTOMOBILE PARKING) 406
AWNINGS. 3105
Design and construction 3105.3
Drainage, water 3201.4
Encroachment, public right-of-way 3202.2.3, 3202.3.1, 3202.4
Fire district D102.2.8
Live load . . . . Table 1607.1, 1607.12.2.1, 1607.12.4
Materials 3105.4
Motor vehicle service stations 406.7.2
Permanent D102.2.8
Plastic 2606.10

B

BALCONIES
Accessibility 1108.2.4
Assembly 1029.5
Construction, exterior. 1406.3
Guards 1015.2
Live load . . . . . Table 1607.1
Means of egress 1021, 1029.5
Open mall building 402.4.3, 402.5
Projection. 705.2, 1406.3
Public right-of-way encroachments 3202.3.2, 3202.3.3
Travel distance 1017.2.1
BARBECUES 2801
BARRIERS
Fire (see FIRE BARRIER)
Pedestrian protection. 3306
Smoke (see SMOKE BARRIER)
Vehicle 406.4.3, 1602.1, 1607.8.3
BASEMENT
Aircraft hangars 412.4.2
Area modification 506.1.3
Considered a story. 202
Emergency escape 1030.1
Exits 106.3.2.2
Flood loads 1612.2, 1612.5
Height modifications for 510.5
Prohibited. 415.6, 415.7, 415.11.5.2, 418.1
Rodentproofing . . . . . Appendix F
Sprinkler protection 903.2.11.1
Waterproofing and dampproofing 1805
BASEMENT WALLS
Soil loads 1610.1
Waterproofing and dampproofing 1805
BATH AND BATHING ROOMS (see TOILET AND TOILET ROOMS) . . . . . 101.4.3, 105.2, Chapter 29
BAY AND ORIEL WINDOWS. 1406.4
Public right-of-way encroachments 3202.3.2, 3202.3.3
BLEACHERS 303.6, 1029.1.1
Accessibility 1108.2
Egress 1029.1.1
Live load. . . . . Table 1607.1
Occupant load 1004.7
Separation 1029.1.1.1
BLOCK (see CONCRETE BLOCK AND GLASS UNIT MASONRY)
BOARD OF APPEALS . . . . . 113, Appendix B
Alternate members. B101.2.1
Application for appeal. B101.1
Board decision B101.4
Limitations on authority 113.2
Membership of board B101.2
Notice of meeting B101.3
Qualifications 113.3, B101.2.2
BOILER ROOM
Exits 1006.2.2.1
BOLTS 2204.2
Anchor rods 1908, 1909, 2204.2.1
BONDING, MASONRY. 2204.3, 2109.2
BRACED WALL LINE 202
Bracing. 2308.6
Seismic requirements. 2308.6.10.2, 2308.6.2, 2308.6.8
Sill anchorage 2308.6.7.3
Spacing 2308.6.1
Support. 2308.6.8
BRACED WALL PANEL 202
Alternative bracing 2308.6.5.1, 2308.6.5.2
Connections 2308.6.7
Length 2308.6.4
Location 2308.6.2
Method 2308.6.3
BRICK (see MASONRY)
BUILDING
Area (see AREA, BUILDING). 502.1, 503, 505, 506, 507, 508, 510
Demolition 3303
Existing. 101.4.8
Fire walls 706.1
Height (see HEIGHT, BUILDING) 502.1, 503, 504, 505, 508, 510
Occupancy classification . . . . . Chapter 3
Party walls 706.1.1

INTERNATIONAL CODE COUNCIL®
Copyright © 2015 ICC. ALL RIGHTS RESERVED. Accessed by David Dammon on Jun 21, 2017 12:30:52 PM pursuant to License Agreement with ICC. No further reproduction or distribution authorized. ANY UNAUTHORIZED REPRODUCTION OR DISTRIBUTION IS A VIOLATION OF THE FEDERAL COPYRIGHT ACT AND THE LICENSE AGREEMENT, AND SUBJECT TO CIVIL AND CRIMINAL PENALTIES THEREUNDER.

BUILDING DEPARTMENT 103
BUILDING OFFICIAL
Approval 202
Duties and powers 103
Qualifications A101.1
Records 104.7
Termination. A101.4
BUILT-UP ROOFS 1507.10
BUSINESS OCCUPANCY (GROUP B) 303.1.1, 303.1.2, 304
Alarms and detection 907.2.2
Ambulatory care facilities 304, 422
Area 503, 505, 506, 507, 508
Height 503, 504, 505, 508, 510
Incidental uses 509
Interior finishes . . . . . Table 803.11, 804
Live load . . . . . Table 1607.1
Means of egress
Aisles 1018.3
Stairway, exit access 1019
Travel distance 1016.2.1, 1017.2, 1006.3.2
Mixed occupancies 508.2, 508.3, 508.4
Accessory 303.1.2, 508.2
Ambulatory care facilities 422
Assembly 303.1.2
Educational. 303.1, 304.1
Live/work units 419
Mall buildings 402
Parking below/above 510.7, 510.8, 510.9
Special mixed 510.2
Occupancy exceptions 303.1.1, 303.1.2
Plumbing fixtures 2902
Risk category . . . . . Table 1604.5
Sprinkler protection. 903.2.2
Unlimited area 507.4, 507.5

C

CABLES, STEEL STRUCTURAL 2208
CALCULATED FIRE RESISTANCE
(see FIRE RESISTANCE, CALCULATED)
CANOPIES 3105
Design and construction 3105.3
Drainage, water 3201.4
Encroachment, public right-of-way 3202.3.1
Fire district D102.2.8
Live load . . . . . Table 1607.1, 1607.12.2.1, 1607.12.4
Materials 3105.4
Motor vehicle service stations 406.7.2
Permanent D102.2.8
Plastic 2606.10
CARBON MONOXIDE
ALARMS AND DETECTION 915
CARE FACILITIES (see HEALTH CARE)
CARE PROVIDER STATIONS 407.2.2
CARE SUITES 202, 407.4.4
CARPET
Floor covering 804.2
Textile ceiling finish. 803.6
Textile wall coverings 803.5
CATWALKS
(see TECHNICAL PRODUCTION AREAS)
Construction 410.3.2
Live loads . . . . . Table 1607.1
Means of egress 410.6.3
Sprinkler protection. 410.7
CEILING
Acoustical 808
Height 406.4.1, 409.2, 909.20.4.3, 1003.2, 1011.3, 1010.5.2, 1205.2.2, 1208.2
Interior finish 803
Penetration of fire-resistant assemblies 713.4, 716.2, 716.6
Suspended acoustical. 808.1.1
CELLULOSE NITRATE FILM 409.1, 903.2.5.3
CERAMIC TILE
Mortar 2103.2.3
CERTIFICATE OF OCCUPANCY 106.2, 111
CHANGE OF OCCUPANCY 101.4.8, D103.2
CHILD CARE (see DAY CARE) 305.2, 308.6, 310.5.1
CHILDREN'S PLAY STRUCTURES 424
Accessibility 1110
Covered and open mall building 402.6.3
CHIMNEYS 202
Factory-built 718.2.5
Flashing 1503.6
Masonry 2111, 2112, 2113
Protection from adjacent construction. 3307.1
CHURCHES
(see RELIGIOUS WORSHIP, PLACES OF)
CIRCULAR STAIRWAYS
(see CURVED STAIRWAYS)
CLAY ROOF TILE 1507.3
Testing 1504.2
CLINIC
Hospital
[see INSTITUTIONAL (GROUP I-2)] 308.3
Outpatient
(see AMBULATORY CARE FACILITIES) 202, 304.1, 422
COAL POCKETS. 426.1.6
CODES 101.2, 101.4, 102.2, 102.4, 102.6, Chapter 35

INTERNATIONAL CODE COUNCIL®
Copyright © 2015 ICC. ALL RIGHTS RESERVED. Accessed by David Dammon on Jun 21, 2017 12:30:52 PM pursuant to License Agreement with ICC. No further reproduction or distribution authorized. ANY UNAUTHORIZED REPRODUCTION OR DISTRIBUTION IS A VIOLATION OF THE FEDERAL COPYRIGHT ACT AND THE LICENSE AGREEMENT, AND SUBJECT TO CIVIL AND CRIMINAL PENALTIES THEREUNDER.

COLD STORAGE
(see FOAM PLASTIC INSULATION)
COLD-FORMED STEEL 202, 2210
Light-frame construction 2211
Special inspection 1705.2.2, 1705.2.4, 1705.11.2, 1705.12.3
COMBUSTIBLE DUSTS 307.4, 414.5.1, 426.1
COMBUSTIBLE LIQUIDS 307.1, 307.4, 307.5, 414.2.5, 414.5.3, 415.9.2, 415.10.1, 418.6
COMBUSTIBLE MATERIAL
Concealed spaces 413.2, 718.5
Exterior side of exterior wall 1406
High-pile stock or rack storage 413.1, 910.2.2
Type I and Type II 603, 805
COMBUSTIBLE PROJECTIONS 705.2, 1406.3
COMBUSTIBLE STORAGE 413, 910.2.2
COMMON PATH OF EGRESS TRAVEL 1016.2.1
COMPARTMENTATION
Ambulatory care facilities 422.2, 422.3
Group I-2 . . . . . 407.5, 407.6
Group I-3 . . . . . 408.6
Underground buildings 405.4, 405.5.2
COMPLIANCE ALTERNATIVES 101.4.8
COMPRESSED GAS 307.2, 415.11.7
CONCEALED SPACES 413.2, 718
CONCRETE . . . . . Chapter 19
ACI 318 modifications 1901.2, 1903.1, 1905
Anchorage 1901.3
Calculated fire resistance 721.2
Construction documents 1901.5
Durability 1904
Footings 1809
Foundation walls 1807.1.5, 1808.8
Materials 1705.3.2, 1903
Plain, structural 1906
Reinforced gypsum concrete 2514
Rodentproofing . . . . . Appendix F
Roof tile 1507.3, 1504.2
Shotcrete 1908
Slab, minimum 1907
Special inspections . . . . . 1705.3, Table 1705.3
Specifications 1903
Strength testing 1705.3.2
Wood support 2304.13
CONCRETE MASONRY
Calculated fire resistance 721.3
Construction 2104
Design 2101.2, 2108, 2109
Materials 2103.1
Surface bonding 2109.2
Wood support 2304.13
CONCRETE ROOF TILE 1507.3
Wind resistance 1504.2, 1609.5.3
CONDOMINIUM (see APARTMENT HOUSES)
CONDUIT, PENETRATION PROTECTION 713.3, 1023.5
CONFLICTS IN CODE 102
CONGREGATE LIVING FACILITIES 202, 310
CONSTRUCTION
(see SAFEGUARDS DURING CONSTRUCTION)
CONSTRUCTION DOCUMENTS 107, 202, 1603
Alarms and detection 907.1.1
Concrete construction 1901.5
Design load-bearing capacity 1803.6
Fire-resistant joint systems 714
Flood 1603.1.7
Floor live load 1603.1.1
Geotechnical 1603.1.6
Means of egress 107.2.3
Penetrations 713
Permit application 105.1
Retention 107.5
Review 107.3
Roof assemblies 1503
Roof live load 1603.1.2
Roof snow load 1603.1.3
Seismic 1603.1.5,
Seismic certification 1705.13.2, 1705.13.3
Site plan 107.2.5
Special loads 1603.1.8
Temporary structures 3103.2
Wind load 1603.1.4
CONSTRUCTION JOINTS
Shotcrete 1908.7
CONSTRUCTION TYPES . . . . . Chapter 6
Aircraft paint hangers 412.6.2
Classification 602
Combustible material in Type I and Type II construction 603, 805
Covered and open mall buildings 402.4.1
Fire district D102.2.3
Fire resistance . . . . . Table 601, Table 602
High-rise 403.2
Type I . . . . . Table 601, 602.2, 603
Type II . . . . . Table 601, 602.2, 603
Type III . . . . . Table 601, 602.3
Type IV . . . . . Table 601, 602.4
Type V . . . . . Table 601, 602.5
Underground buildings 405.2
CONTRACTOR'S RESPONSIBILITIES 901.5, 1704.4

INTERNATIONAL CODE COUNCIL®
Copyright © 2015 ICC. ALL RIGHTS RESERVED. Accessed by David Dammon on Jun 21, 2017 12:30:52 PM pursuant to License Agreement with ICC. No further reproduction or distribution authorized. ANY UNAUTHORIZED REPRODUCTION OR DISTRIBUTION IS A VIOLATION OF THE FEDERAL COPYRIGHT ACT AND THE LICENSE AGREEMENT, AND SUBJECT TO CIVIL AND CRIMINAL PENALTIES THEREUNDER.

CONTROL AREA 414.2, 707.3.7
Fire-resistance rating 414.2.4
Maximum allowed quantities 414.2.2
Number 414.2.3
CONVENTIONAL LIGHT-FRAME CONSTRUCTION 202, 2301.2, 2308
Additional seismic requirements 2308.6.6, 2308.6.8, 2308.6.10
Braced wall lines 2308.6
Connections and fasteners 2308.1.2
Design of elements 2308.8
Floor joists 2308.4.2
Foundation plates or sills 2308.3
Girders 2308.7
Limitations 2308.2
Roof and ceiling framing 2308.7
Wall framing 2308.5
CONVEYING SYSTEMS 3004
CORNICES
Definition 202
Draftstopping 718.2.6
Live load . . . . . Table 1607.1
Masonry 2104.1.2
Projection 705.2, 1406.3
Public right-of-way encroachments 3202.3.2, 3202.3.3
CORRIDOR (see CORRIDOR PROTECTION, EXIT ACCESS, FIRE PARTITIONS and SERVICE CORRIDORS) 1020
Air movement 1020.5
Continuity 1020.6
Covered and open mall buildings . . . 402.8.1, 402.8.6
Dead end 1020.4
Encroachment 1020.3
Elevation change 1003.5
Group I-2 . . . . . 407.2, 407.3, 407.4.1, 407.4.3
Hazardous 415.11
Headroom 1003.2, 1003.3
HPM service 903.2.5.2
Live load . . . . . Table 1607.1
Walls 709.1, 1020.1
Width/capacity 1003.3.4, 1003.6, 1005.2, 1005.7, 1020.2, 1020.3
CORRIDOR PROTECTION, EXIT ACCESS
Construction, fire protection . . . . . 709.1, Table 1020.1, 1020.6
Doors 715.4
Glazing 715.5
Group I-2 . . . . . 407.3
Interior finish . . . . . Table 803.11, 804.4
Opening protection 715, 716.5.4.1
Ventilation 1020.5, 1020.5.1
CORROSIVES . . . . . 307.2, 307.6, Table 414.2.5(1), 414.3, 415.10.3, Table 415.11.1.1.1
COURTS (see YARDS OR COURTS) 1206
COVERED AND OPEN MALL BUILDINGS 402
Alarms and detection 402.7.4, 907.2.20, 2702.2.14
Children's play structures 402.6.3, 424
Construction type 402.4
Fire department 402.3, 402.7.5
Interior finish 402.6.1
Kiosk 402.6.2
Means of egress 402.8
Occupant load 402.8.3
Open mall construction 402.4.3
Perimeter line 402.1.2
Separation 402.4.2
Signs 402.6.4
Smoke control 402.7.2
Sprinkler protection 402.5
Standby power 402.7.3, 2702.2.14
Standpipe system 402.7.1, 905.3.3
Travel distance 402.8.5, 1016.2.1, 1017.2, 1006.3.2
COVERED WALKWAY (see PEDESTRIAN WALKWAY) 3104, 3306.7
CRAWL SPACE
Access 1209.1
Drainage 1805.1.2
Unusable space fire protection 711.3.3
Ventilation 1203.4
CRIPPLE WALL 202, 2308.6.6.2, 2308.9.4,
CROSS-LAMINATED TIMBER 602.4.2
CRYOGENIC . . . . . Table 307.1, Table 414.5.1, Table 415.11.1.1.1

D

DAMPERS (see FIRE DAMPERS AND SMOKE DAMPERS) . . . . . 716.2 through 716.5
DAMPPROOFING AND WATERPROOFING 1805
Required 1805.2, 1805.3
Subsoil drainage system 1805.4
DAY CARE 305.2, 308.6, 310.5
Accessibility 1103.2.12
Adult care 308.6
Child care 308.6, 310.5
Egress . . . . . 308.6, Table 1004.1.1, 1006.2.2.4
DAY SURGERY CENTER (see AMBULATORY CARE FACILITIES)
DEAD END 1020.4

INTERNATIONAL CODE COUNCIL®
Copyright © 2015 ICC. ALL RIGHTS RESERVED. Accessed by David Dammon on Jun 21, 2017 12:30:52 PM pursuant to License Agreement with ICC. No further reproduction or distribution authorized. ANY UNAUTHORIZED REPRODUCTION OR DISTRIBUTION IS A VIOLATION OF THE FEDERAL COPYRIGHT ACT AND THE LICENSE AGREEMENT, AND SUBJECT TO CIVIL AND CRIMINAL PENALTIES THEREUNDER.

DEAD LOAD. 202, 1606
Foundation design load 1808.3
DECK
Anchorage 1604.8.3
Live loads. . . . . Table 1607.1
DEFLECTIONS. 1604.3.1
Framing supporting glass 2403.3
Preconstruction load tests 1709.3.1
Wood diaphragms 2305
Wood shear walls 2305
DEMOLITION 3303
DESIGN STRENGTH 202
Conformance to standards 1706.1
New materials 1706.2
DESIGNATED SEISMIC SYSTEM. 202
Seismic certification 1705.13.3
Special inspection 1705.12.4
DIAPHRAGMS 202
Analysis 1604.4
Ceilings 2508.5
Special inspection 1705.5.1, 1705.11.1, 1705.12.2
Wood 2305, 2306.2
DOORS. 1010
Access-controlled 1010.1.9.8
Atrium enclosures 404.6
Configuration 1007
Dwelling unit separations. 406.3.4, 412.5.1
Emergency escape 1030.1
Fabrication (HPM) areas 415.11.1.2
Fire (see OPENING PROTECTIVES) . . . 715.4, 1023.4
Glazing. 715.4.7, 715.5, 1405.13
Hazardous storage 415.11.5.7
Hardware (see LOCKS AND LATCHES) 1005.7.1, 1010.1.9.8, 1010.1.9, 1010.1.10
Horizontal sliding 1010.1.4.3
I-2 occupancies 407.3.1
I-3 occupancies 408.3, 408.4, 408.8.4
Landings 1010.1.5, 1010.1.6
Operation. 1010.1.3, 1010.1.9, 1010.1.10
Panic and fire exit hardware 1010.1.10
Power-operated 1010.1.4.2
Revolving 1010.1.4.1
Security grilles 402.8.8, 1010.1.4.4
Side swinging. 1010.1.2
Smoke 710.5
Stairways 1010.1.9.11
Stairways, high-rise 403.5.3
Structural testing, exterior 1709.5
Thresholds 1003.5, 1010.1.5, 1010.1.7
Vestibule 1010.1.8
Width 1010.1.1, 1010.1.1.1
DRAFTSTOPPING
Attics 718.4
Floor-ceiling assemblies. 718.3
DRINKING FOUNTAINS. 1109.5, 2902.5, 2902.6
DRY CLEANING PLANTS 415.9.3
DRYING ROOMS 417
DUCTS AND AIR TRANSFER OPENINGS (see MECHANICAL)
DUMBWAITERS. 708.14
DWELLING UNITS 202
Accessibility 1103.2.3, 1103.2.12, 1105.1.6, 1106.2, 1107
Alarms and detection 420.6, 907.2.8, 907.2.9, 907.2.11
Area 1208.3, 1208.4
Group R 310
Live/work units (see LIVE/WORK UNITS)
Scoping 101.2
Separation 420.2, 420.3
Sound transmission 1207
Sprinkler protection 420.5, 903.2.8

E

EARTHQUAKE LOADS (see SEISMIC) 1613
EARTHQUAKE RECORDING EQUIPMENT. . . . . Appendix L
EAVES (see COMBUSTIBLE PROJECTIONS AND CORNICES)
EDUCATIONAL OCCUPANCY (GROUP E) 305
Accessibility 1108.2, 1109.5.1, 1109.5.2
Alarms and detection 907.2.3
Area 503, 505, 506, 507, 508
Height. 503, 504, 505, 508
Incidental uses 509
Interior finishes. . . . . Table 803.11, 804
Live load. . . . . Table 1607.1
Means of egress
Aisles 1018.5
Corridors 1020.1, 1020.2
Panic hardware 1010.1.10
Stairway, exit access 1019
Travel distance. 1016.2.1, 1017.2, 1006.3.2
Mixed occupancies. 508.3, 508.4
Accessory 303.1.3, 508.2
Assembly 303.1.3
Day care. 305.2, 308.5, 310.1
Education for students above the 12th grade 304

INTERNATIONAL CODE COUNCIL®
Copyright © 2015 ICC. ALL RIGHTS RESERVED. Accessed by David Dammon on Jun 21, 2017 12:30:52 PM pursuant to License Agreement with ICC. No further reproduction or distribution authorized. ANY UNAUTHORIZED REPRODUCTION OR DISTRIBUTION IS A VIOLATION OF THE FEDERAL COPYRIGHT ACT AND THE LICENSE AGREEMENT, AND SUBJECT TO CIVIL AND CRIMINAL PENALTIES THEREUNDER.

Gyms (see GYMNASIUMS) 303.1.3
Libraries (see LIBRARIES). 303.4
Religious facilities 305.2
Stages and platforms 410
Plumbing fixtures 2902
Risk category . . . . . Table 1604.5
Sprinkler protection. 903.2.3
Unlimited area 507.11
EGRESS (see MEANS OF EGRESS). . . . . Chapter 10
ELECTRICAL . . . 105.2, 112, Chapter 27, Appendix K
ELEVATOR . . . . . Chapter 30
Accessibility 1009.2.1, 1009.4, 1009.8, 1109.6, 3001.3
Car size 403.6.1, 3001.3, 3002.4
Construction 708.14, 1607.9.1
Conveying systems 3004
Emergency operations 3002.3, 3002.5, 3003, 3007.1, 3008.1.3
Fire service access. 403.6.1, 3007
Glass 2409, 3002.8
High-rise 403.2.3, 403.4.8, 403.6
Hoistway enclosures. 403.2.3, 708, 1023.4, 1024.5, 3002, 3007.5, 3008.5
Hoistway lighting. 3007.5.2
Hoistway pressurization 909.21
Keys 3003.3
Lobby 708.14.1, 709.1, 1009.4, 1009.8,3006, 3007.6, 3008.6
Machine rooms . . . . . Table 1607.1, 3005
Means of egress 403.6, 1003.7, 1009.2.1, 1009.4, 3008
Number of elevator cars in hoistway. 3002.2
Occupant evacuation elevators 403.6.2, 3008
Personnel and material hoists 3004.4
Roof access 1011.12.2
Shaft enclosure. 712, 3006
Signs. 914, 1009.10, 3002.3, 3007.6.5, 3008.6.5
Stairway to elevator equipment 1011.12.2.1
Standards 3001
Standby power 2702.2.2, 3007.8, 3008.8
System monitoring 3007.7, 3008.7
Underground. 405.4.3
EMERGENCY COMMUNICATIONS
Accessible means of egress. 1009.8
Alarms (see FIRE ALARMS)
Elevators, occupant evacuation 3008.6.6
Fire command center 403.4.6, 911, 3007.7, 3008.6.6, 3008.7
Radio coverage 403.4.5, 916
EMERGENCY EGRESS OPENINGS 1030
Required . . . . . Table 1006.3.2(2), 1030.1
Window wells 1030.5
EMERGENCY LIGHTING 1008.3, 1205.5
EMERGENCY POWER 2702.1, 2702.4
Exit signs. 1013.6.3, 2702.2.5, 2702.2.12
Group I-2. . . . . 2702.2.6
Group I-3. . . . . 408.4.2, 2702.2.7
Hazardous. 415.11.10, 2702.2.13, 2702.2.14
High-rise 403.4.8, 2702.2.9
Means of egress illumination 1008.3, 2702.2.11
Semiconductor fabrication 415.11.10, 2702.2.14
Underground buildings 405.9, 2702.2.16
EMERGENCY RESPONDERS
Additional exit stairway 403.5.2
Elevators. 403.6, 1009.2.1, 3002.4, 3003, 3007, 3008
Fire command center 403.4.6, 911, 3007.7, 3008.6.6, 3008.7
Mall access 402.7.5
Radio coverage. 403.4.4, 916
Roof access 1011.12
Safety features 914
EMPIRICAL DESIGN OF MASONRY 2109
Adobe construction 2109.3
General 2109.1
Special inspection 1705.4
Surface-bonded 2109.2
EMPLOYEE
Accessibility for work areas. 907.5.2.3.1, 1103.2.2, 1104.3.1
Deputies to building official 103.3
Liability 104.8
Qualifications A101
Termination of employment A101.4
ENCROACHMENTS INTO THE PUBLIC RIGHT-OF-WAY. . . . . Chapter 32
END-JOINTED LUMBER 2303.1.1.2
Relocated structures 101.4.8, D103.3
Rodentproofing . . . . . Appendix F
ENERGY EFFICIENCY . . . . . 101.4.6, 110.3.7, Chapter 13
ENGINEER (see definition for REGISTERED DESIGN PROFESSIONAL)
EQUIPMENT PLATFORM. 505.5
EQUIVALENT OPENING FACTOR . . . . . Figure 705.7
ESCALATORS 3004
Floor opening protection 708.2
Means of egress 1003.7
ESSENTIAL FACILITIES (see RISK CATEGORY). . . . . 202, Table 1604.5
EXCAVATION, GRADING AND FILL 1804, 3304
EXISTING BUILDING 101.4.8, 102.6
Additions D103.1
Alteration. D103.1

INTERNATIONAL CODE COUNCIL®
Copyright © 2015 ICC. ALL RIGHTS RESERVED. Accessed by David Dammon on Jun 21, 2017 12:30:52 PM pursuant to License Agreement with ICC. No further reproduction or distribution authorized. ANY UNAUTHORIZED REPRODUCTION OR DISTRIBUTION IS A VIOLATION OF THE FEDERAL COPYRIGHT ACT AND THE LICENSE AGREEMENT, AND SUBJECT TO CIVIL AND CRIMINAL PENALTIES THEREUNDER.

Change of occupancy D103.2
Flood-resistant . . . . . Appendix G
Historic 101.4.8
Relocated structures D103.3
Repairs 101.4.8
Rodentproofing . . . . . Appendix F

EXIT
(see MEANS OF EGRESS) . . . . 1022 through 1027
Basement 1006.3.2.2
Boiler rooms 1006.2.2.1
Configuration 1007
Construction 713.2, 1019, 1023.2
Doorways 1007
Dwellings 1006.3.2.1
Enclosure 707.3, 1023.2
Fire resistance 707.3, 1019, 1023.2
Furnace rooms 1006.2.2.1
Group H 415.11.3.3, 415.11.5.6
Group I-2 . . . . . 407.4
Group I-3 . . . . . 408.3
High rise 403.5, 403.6, 1025
Horizontal 707.3.5, 1026
Incinerator rooms 1006.2.2.1
Interior finish . . . . . Table 803.11, 804
Luminous 403.5.5, 411.7.1, 1025
Mall buildings 402.8
Mezzanines 505.3, 505.4, 1004.1.1.2
Number, minimum 402.8.3, 403.5, 1006.2, 1006
Occupant load 402.8.2, 1004.1.1
Passageway 1024
Ramps, exterior 1027
Ramp, interior 1023
Refrigerated rooms or spaces 1006.2.2.3
Refrigeration machinery rooms 1006.2.2.2
Signs 1013
Stairways, exterior 1027
Stairway, interior 1023
Stories 1004.1.1.3, 1006,3, 1017.3.1
Travel distance 402.8.3, 402.8.5, 402.8.6, 404.9, 407.4.2, 408.6.1, 408.8.1, 410.6.3.2, 411.4, 1006.3.2, 1016.2.1, 1017, 1029.7, 1029.8
Underground buildings 405.7

EXIT ACCESS (see MEANS OF EGRESS) . . . . . 1016 through 1021
Aisles 1018
Balconies 1017.2.1, 1021
Common path 1016.2.1
Corridors 1020
Doors 1005.7, 1006.2, 1007, 1010, 1022.2
Intervening space 1016.2
Path of egress travel, common 1016.2.1
Ramps 1019
Seating at tables 1029.12.1
Single exit 1006.2, 1006.3.2
Stages 410.6.2
Stairway 1019
Travel distance 402.8.3, 402.8.5, 402.8.6, 404.9, 408.6.1, 408.8.1, 410.6.3.2, 411.4, 1006.2, 1016.2.1, 1017, 1006.3.2, 1029.7

EXIT DISCHARGE
(see MEANS OF EGRESS) 1028
Atrium 404.10
Courts 1028.4
Horizontal exit 1028.1
Lobbies 1028.1
Marquees 3106.4
Public way 1028.5
Termination 1023.3
Vestibules 1028.1

EXIT PASSAGEWAY
(see MEANS OF EGRESS) 402.8.6.1, 707.3.4, 1024
Construction 1019, 1024.3
Discharge 1024.4, 1028.1
Elevators within 1024.5, 3002.7
Fire-resistant construction 1024.3
High-rise 403.5
Openings 1024.5
Penetrations 1024.6
Pressurization 909.6, 909.20.5
Smokeproof 403.5.4, 405.7.2, 909.20
Width 1024.2
Ventilation 1024.7

EXIT SIGNS 1013
Accessibility 1013.4
Floor level exit signs 1013.2
Group R-1 . . . . . 1013.2
Illumination 1013.3, 1013.5, 1013.6
Required 1013.1
Special amusement buildings` 411.7

EXPLOSIVES . . . . . 202, Table 414.5.1, Table 415.6.2
Detached building 415.6.2, 415.8
Explosion control 415.7

EXPOSURE CATEGORY
(see WIND LOAD) 1609.4

EXTERIOR AREAS FOR ASSISTED RESCUE
Requirements 1009.7
Signage 1009.9, 1009.10, 1009.11
Where required 1009.2

INTERNATIONAL CODE COUNCIL®
Copyright © 2015 ICC. ALL RIGHTS RESERVED. Accessed by David Dammon on Jun 21, 2017 12:30:52 PM pursuant to License Agreement with ICC. No further reproduction or distribution authorized. ANY UNAUTHORIZED REPRODUCTION OR DISTRIBUTION IS A VIOLATION OF THE FEDERAL COPYRIGHT ACT AND THE LICENSE AGREEMENT, AND SUBJECT TO CIVIL AND CRIMINAL PENALTIES THEREUNDER.

EXTERIOR INSULATION AND FINISH SYSTEMS (EIFS) 1408
Special inspection 1705.16
EXTERIOR WALLS (see WALLS, EXTERIOR) . . . . . Table 601, 602, 705, Chapter 14

F

FACTORY OCCUPANCY (GROUP F) 306
Alarm and detection 907.2.4
Area 503, 503.1.1, 505, 506, 507, 508
Equipment platforms 505.2
Groups
Low-hazard occupancy 306.3
Moderate-hazard occupancy 306.2
Height 503, 504, 505, 508
Incidental uses 509
Interior finishes . . . . . Table 803.11, 804
Live load . . . . . Table 1607.1
Means of Egress
Aisles 1018.5
Dead end corridor 1020.4
Stairway, exit access 1019
Travel distance 1006.2, 1016.2.1, 1017.2, 1017.2.2, 1006.3.2
Mixed occupancies 508.2, 508.3, 508.4
Plumbing fixtures 2902
Risk category . . . . . Table 1604.5
Sprinkler protection 903.2.4
Unlimited area 507.3, 507.4, 507.5
FARM BUILDINGS . . . . . Appendix C
FEES, PERMIT 109
Refunds 109.6
Related fees 109.5
Work commencing before issuance 109.4
FENCES 105.2, 312.1
FIBERBOARD 202, 2303.1.6
Shear wall . . . . . Table 2306.3(2)
FILL MATERIAL 1804, 3304
FINGER-JOINTED LUMBER (see END-JOINTED LUMBER)
FIRE ALARM AND SMOKE DETECTION SYSTEMS
Aerosol storage 907.2.16
Aircraft hangars, residential 412.5.3, 907.2.21
Airport traffic control towers 412.3.5, 907.2.22
Ambulatory care facilities 422.5, 907.2.2.1
Assembly 907.2.1
Atriums 404.4, 907.2.14
Audible alarm 907.5.2.1
Battery room 907.2.23
Children's play structure 424.3
Construction documents 907.1.1
Covered and open mall building 402.6.2, 402.7, 907.2.20
Education 907.2.3
Emergency alarm system 908
Factory 907.2.4
Group H 907.2.5
Group I 907.2.6, 907.5.2.3.2
Group M 907.2.7
Group R 420.6, 907.2.8, 907.2.9, 907.2.10, 907.2.11, 907.5.2.3.2, 907.5.2.3.3
High-rise 403.4.1, 403.4.2, 907.2.13
Live/work 419.5
Lumber mills 907.2.17
Occupancy requirements 907.2
Special amusement buildings 411.3, 411.5, 907.2.12
Underground buildings 405.6, 907.2.18, 907.2.19
Visible alarm 907.5.2.3
FIRE ALARM BOX, MANUAL 907.4.2
FIRE AREA 202, 901.7
Ambulatory care facilities 903.2.2, 907.2.2
Assembly 903.2.1
Education 903.2.3
Enclosed parking garages 903.2.10
Factory 903.2.4
Institutional 903.2.6
Mercantile 903.2.7
Residential 903.2.8
Storage 903.2.9, 903.2.10
FIRE BARRIERS 202, 707
Continuity 707.5, 713.5
Exterior walls . . . . . Table 602, 707.4, 713.6
Fire-resistance rating of walls . . . . . 603.1(1), 603.1(22), 603.1(23), 703, 707.3, 713.4
Glazing, rated 716.6
Incidental 509.4
Inspection 110.3.6
Joints 707.8, 713.9, 715, 2508.4
Marking 703.7
Materials 707.2, 713.3
Opening protection 707.6, 707.10, 713.7, 713.10, 714.3, 716, 717.5.2
Penetrations 707.7, 713.8
Shaft enclosure 713.1
Special provisions
Aircraft hangars 412.4.4
Atriums 404.3, 404.6

INTERNATIONAL CODE COUNCIL®
Copyright © 2015 ICC. ALL RIGHTS RESERVED. Accessed by David Dammon on Jun 21, 2017 12:30:52 PM pursuant to License Agreement with ICC. No further reproduction or distribution authorized. ANY UNAUTHORIZED REPRODUCTION OR DISTRIBUTION IS A VIOLATION OF THE FEDERAL COPYRIGHT ACT AND THE LICENSE AGREEMENT, AND SUBJECT TO CIVIL AND CRIMINAL PENALTIES THEREUNDER.

Covered and open mall buildings 402.4.2,
Fire pumps. 403.3.4, 901.8, 913.2.1
Flammable finishes 416.2
Group H-2 . . . . . 415.9.1.2, 426.1.2
Group H-3 and H-4 . . . . . 415.10
Group H-5 . . . . . 415.11.1.2, 415.11.1.5, 415.11.5.1, 415.11.6.4
Group I-3 . . . . . 408.5, 408.7
Hazardous materials 414.2
High-rise 403.2.1.2, 403.2.3, 403.3, 403.4.8.1
Organic coating 418.4, 418.5, 418.6
Stages and platforms. 410.5.1, 410.5.2

FIRE COMMAND CENTER 403.4.6, 911, 3007.7, 3008.6.6, 3008.7

FIRE DAMPERS. . . . . 717.2 through 717.5

FIRE DEPARTMENT (see EMERGENCY RESPONDERS)

FIRE DETECTION SYSTEM (see FIRE ALARM AND SMOKE DETECTION SYSTEMS)

FIRE DISTRICT . . . . . Appendix D

FIRE DOOR (see OPENING PROTECTIVES) 716, 1023.4

FIRE ESCAPE 412.8.3

FIRE EXTINGUISHERS, PORTABLE 906, 3309

FIRE EXTINGUISHING SYSTEMS 416.5, 417.4, 903, 904

FIRE PARTITION 202, 709
Continuity. 708.4
Elevator lobby 3006.3
Exterior walls . . . . . Table 602, 709.5
Fire-resistance rating . . . . . 603.1(1), 603.1(22), 603.1(23), 703, 708.3
Glazing, rated 716.6
Inspection 110.3.6
Joint treatment gypsum 2508.4
Joints 708.8, 715
Marking 703.6
Materials 708.2
Opening protection 709.6, 714.3, 716, 717.5.4
Penetrations. 708.7, 708.9, 714, 717
Special provisions
Covered and open mall buildings 402.4.2.1
Group I-3 . . . . . 408.7
Group I-1, R-1, R-2, R-3 . . . . . 420.2

FIRE PREVENTION 101.4.5

FIRE PROTECTION
Explosion control 414.5.1, 415.6, 421.7, 426.1.4
Fire extinguishers, portable 906
Glazing, rated 716.2
Smoke and heat removal. 910
Smoke control systems 909
Sprinkler systems, automatic. 903

FIRE PROTECTION SYSTEMS . . . . . Chapter 9

FIRE PUMPS 403.3.4, 901.8, 913, 914.2

FIRE RESISTANCE
Calculated 722
Conditions of restraint 703.2.3
Ducts and air transfer openings 717
Exterior walls . . . . . Table 602, 705.5, 708.5
Fire district D102.2.5
High-rise. 403.2
Joint systems 715
Multiple use fire assemblies. 701.2
Prescriptive 721
Ratings. . . . . Chapter 6, 703, 705.5, 707.3.10
Roof assemblies. 1505
Structural members 704
Tests 703
Thermal and sound insulating materials 720.1

FIRE RESISTANCE, CALCULATED 722
Clay brick and tile masonry 722.4
Concrete assemblies 722.2
Concrete masonry 722.3
Steel assemblies 722.5
Wood assemblies. 722.6

FIRE-RETARDANT-TREATED WOOD 202, 2303.2
Awnings 3105.3
Balconies 1406.3
Canopies 3105.3
Concealed spaces 718.5
Fastening 2304.10.5
Fire wall vertical continuity 706.6
Partitions . . . . . 603.1(1)
Platforms 410.4
Projections 705.2.3
Roof construction . . . . . Table 601, 705.11, 706.6, 1505
Shakes and shingles 1505.6
Type I and II construction. . . . . 603.1(1), 603.1(11)
Type III construction. 602.3
Type IV construction 602.4
Veneer 1405.5

FIRE SEPARATION DISTANCE . . . . . 202, Table 602, 702
Exterior walls 1406.2.1.1.1, 1406.2.1.1.2

FIRE SERVICE ACCESS ELEVATORS 403.6.1, 3007

FIRE SHUTTER (see OPENING PROTECTIVES). 716.5, 716.5.10, 716.5.11

FIRE WALLS 706
Aircraft 412.4.6.2
Combustible framing 706.7

INTERNATIONAL CODE COUNCIL®
Copyright © 2015 ICC. ALL RIGHTS RESERVED. Accessed by David Dammon on Jun 21, 2017 12:30:52 PM pursuant to License Agreement with ICC. No further reproduction or distribution authorized. ANY UNAUTHORIZED REPRODUCTION OR DISTRIBUTION IS A VIOLATION OF THE FEDERAL COPYRIGHT ACT AND THE LICENSE AGREEMENT, AND SUBJECT TO CIVIL AND CRIMINAL PENALTIES THEREUNDER.

Continuity 706.5, 706.6
Exterior walls . . . . . Table 602, 706.5.1
Fire-resistance rating 703, 706.4
Glazing, rated 716.6
Inspection 110.3.6
Joints 706.10, 715
Marking 703.6
Materials 706.3
Opening protection 706.8, 706.11, 714.3, 716, 717.5.1
Penetration 706.9, 714.3
Special provisions
Aircraft hangars 412.4.6.2
Covered and open mall buildings 402.4.2.2
Group H-5 . . . . . 415.11.1.6
Structural stability 706.2
FIRE WINDOWS (see OPENING PROTECTIVES)
FIREBLOCKING 718.2
Chimneys 718.2.5.1, 2113.20
Fireplaces 2111.13
Wood construction 718.2.1, 718.2.7, 1406.2.3
Wood stairways 718.2.4
FIREPLACES, FACTORY-BUILT 2111.14.1
FIREPLACES, MASONRY 202
Combustibles 2111.12
Drawings 2111.2
General provisions 2111
Hearth extension 2111.10, 2111.11
Steel units 2111.6.1
FIREWORKS 202, 307.2, 307.3, 307.5
FLAMESPREAD . . . . . 802, 803.1.1, Table 803.11
FLAMMABLE FINISHES 307.1, 416
FLAMMABLE LIQUIDS 307.4, 307.5, 406, 412, 414, 415
FLAMMABLE SOLIDS 307.5, 415
FLASHING
Roof 1503.2, 1503.6, 1507.2.9, 1507.3.9, 1507.5.7, 1507.7.7, 1507.8.8, 1507.9.9, 1511.6
Wall, veneer 1405.4, 1405.12.7
FLOOD HAZARD AREAS 202, 1612.3
Coastal A zone 202
Coastal high hazard area 202
Flood insurance rate map 202
FLOOD-RESISTANT CONSTRUCTION
Accessibility 1107.7.5
Administration . . . . . G101 through G105
Elevation certificate 110.3.3
Existing 101.4.8
Flood elevation 107.2.5.1, 1612
Flood loads 1603.1, 1603.1.7, 1612, 3001.2, 3102.7
Flood resistance 1403.6, 1403.7
Flood-resistant construction . . . . . Appendix G
Grading and fill 1804.5, 1805.1.2.1
Historic buildings G105.3
Interior finishes 801.1.3
Manufactured homes G501
Modifications 104.10.1
Recreational vehicles G601
Site improvements G401
Site plan 107.2.5
Subdivisions G301
Tank G701
Temporary G901
Utility G1001
Ventilation, under floor 1203.3.2
FLOOR/CEILING (see FLOOR CONSTRUCTION)
FLOOR CONSTRUCTION (see FLOOR CONSTRUCTION, WOOD)
Draftstopping 718.3
Finishes 804, 805, 1003.4, 1210.1
Fire resistance . . . . . Table 601, 711
Loads (see FLOOR LOADS)
Materials . . . . . Chapter 6
Penetration of fire-resistant assemblies 711, 714.4, 717.2, 717.6
FLOOR CONSTRUCTION, WOOD
Beams and girders 2304.12.1.1, 2308.4.1
Bridging/blocking 2308.4.6, 2308.7.8
Diaphragms 2305.1
Fastening schedule 2304.10.1
Framing . . . . . Table 602.4, 602.4.2, 602.4.4, 2304.4
Joists 2308.4.2
Sheathing 2304.8
FLOOR LEVEL 1003.5, 1010.1.5
FLOOR LOADS
Construction documents 107.2
Live 1603.1.1, 1607
Posting 106.1
FLOOR OPENING PROTECTION (see VERTICAL OPENING PROTECTION)
FOAM PLASTICS
Attics 720.1, 2603.4.1.6
Cladding attachment 2603.11, 2603.12
Cold storage 2603.3, 2603.4.1.2, 2603.5
Concealed 603
Covered mall and open mall buildings 402.6.2, 402.6.4.5
Crawl space 2603.4.1.6
Doors . . . . . 2603.4.1.7 through 2603.4.1.9
Exterior wall covering 806.5
Exterior walls of multistory buildings 1404.13, 2603.5

INTERNATIONAL CODE COUNCIL®
Copyright © 2015 ICC. ALL RIGHTS RESERVED. Accessed by David Dammon on Jun 21, 2017 12:30:52 PM pursuant to License Agreement with ICC. No further reproduction or distribution authorized. ANY UNAUTHORIZED REPRODUCTION OR DISTRIBUTION IS A VIOLATION OF THE FEDERAL COPYRIGHT ACT AND THE LICENSE AGREEMENT, AND SUBJECT TO CIVIL AND CRIMINAL PENALTIES THEREUNDER.

Interior finish 801.2.2, 2603.10, 2604
Label/identification 2603.2
Metal composite materials (MCM) 1407.13
Roofing 2603.4.1.5
Siding backer board 2603.4.1.10
Stages and platform scenery 410.3.6
Surface burning characteristics 2603.3
Termites, protection from 2603.9
Thermal barrier requirements 2603.5.2
Trim 806.5, 2604.2
Type I and II construction . . . . . 603.1(2), 603.1(3)
Walk-in coolers 2603.4.1.3
Wind resistance 2603.10
FOLDING AND TELESCOPIC SEATING . . . 1029.1.1
Accessibility 1108.2
Egress 1029.1.1
Live load . . . . . Table 1607.1
Occupant load 1004.7
Separation 1029.1.1.1
FOOD COURT 202
Occupant load 402.8.2.4
Separation 402.4.2
FOOTBOARDS 1029.16.2
FOUNDATION (see FOUNDATION, DEEP and FOUNDATION, SHALLOW) . . . . . Chapter 18
Basement 1610, 1805.1.1, 1806.3, 1807
Concrete 1808.8, 1809.8, 1810.3.2.1
Dampproofing 1805.2
Encroachment, public right-of-way 3202.1
Formwork 3304.1
Geotechnical investigation (see SOILS AND FOUNDATIONS) 1803
Inspection 110.3.1
Load-bearing value 1806, 1808, 1810
Masonry 1808.9
Pedestrian protection 3306.9
Pier (see FOUNDATION, SHALLOW)
Pile (see FOUNDATION, DEEP)
Plates or sills 2308.3
Protection from adjacent construction 3303.5, 3307.1
Rodentproofing . . . . . Appendix F
Special inspections 1705.3, 1705.4.2, 1705.7, 1705.8, 1705.9
Steel 1809.11, 1810.3.2.3, 1810.3.5.3
Timber 1809.12, 1810.3.2.4
Waterproofing 1805.3
FOUNDATION, DEEP 202, 1810
Drilled shaft 202
Existing 1810.10.1.2
Geotechnical investigation 1803.5.5
Grade beams 1810.3.12
Helical pile . . . . . 202, 1810.3.1.5, Table 1810.3.2.6, 1810.3.3.1.9, 1810.3.5.3.3, 1810.4.11, 1810.4.12
Micropile . . . . . 202, Table 1808.8.1, Table 1810.3.2.6, 1810.3.5.2.3, 1810.3.10, 1810.4.10
Piles . . . . Table 1808.8.1, 1809.12, 1810, 1810.3.1.4
FOUNDATION, SHALLOW 202, 1809
Pier and curtain wall 1809.10
Slab-on-grade 1808.6.2
Strip footing 1808.8, 1809
FOYERS
Assembly occupancy 1029.4, 1029.9.5
Corridors 1020.6
Covered and open mall building 402.1
FRAME INSPECTION 110.3.4
FRATERNITIES 310.4
FROST PROTECTION 1809.5
FURNACE ROOMS 1006.2.2.1

G

GALLERIES (see TECHNICAL PRODUCTION AREAS)
GARAGE, AUTOMOBILE PARKING (see PARKING GARAGES)
GARAGE, REPAIR 406.8
Floor surface 406.8.3
Gas detection system 406.8.5, 908.5
Sprinkler protection 406.8.6, 903.2.9.1
Ventilation 406.8.2
GARAGES, TRUCK AND BUS
Live load 1607.7
Sprinkler protection 903.2.10.1
GARAGES AND CARPORTS, PRIVATE
Area limitations 406.3.1
Classification 406.3.1
Parking surfaces 406.3.3, 406.3.5
Separation 406.3.4, 406.3.5.1
GAS 101.4.1, 105.2, 112
Accessibility 1109.14
Gas detection system 406.6.6, 406.8.5, 415.8.7, 415.11.7, 421.6, 908
Hydrogen cutoff room 421.6
Motor fuel-dispensing 406.7
GATES 1010.2
Vehicular 3110
GIFT SHOPS 407.2.4
GIRDERS
Fire resistance . . . . . Table 601

INTERNATIONAL CODE COUNCIL®
Copyright © 2015 ICC. ALL RIGHTS RESERVED. Accessed by David Dammon on Jun 21, 2017 12:30:52 PM pursuant to License Agreement with ICC. No further reproduction or distribution authorized. ANY UNAUTHORIZED REPRODUCTION OR DISTRIBUTION IS A VIOLATION OF THE FEDERAL COPYRIGHT ACT AND THE LICENSE AGREEMENT, AND SUBJECT TO CIVIL AND CRIMINAL PENALTIES THEREUNDER.

Materials . . . . . Chapter 6
Wood construction 2304.12.1.1, 2308.4.1
GLASS (see GLAZING)
GLASS BLOCK (see GLASS UNIT MASONRY)
GLASS UNIT MASONRY 202, 2110
Atrium enclosure 404.6
Fire resistance 2110.1.1
Hazardous locations 2406.1.3
GLAZING
Athletic facilities 2408
Atrium enclosure 404.6
Doors 705.8, 709.5, 710.5, 716.4.3.2, 1405.13, 1709.1
Elevator hoistway and car 2409
Fire doors 716.5.5.1, 716.5.8
Fire-resistant walls 716.5.3.2
Fire windows 703.5, 716.5
Group I-3 . . . . . 408.7
Guards 1015.2.1, 2406.4.4, 2407
Handrail 1011.11, 2407
Identification 2403.1, 2406.3
Impact loads 2406.1, 2407.1.4.2, 2408.2.1, 2408.3
Impact resistant 1609.1.2
Jalousies 2403.5
Label/identification 716.3.1, 716.3.2, 716.5.7.1, 716.5.8.3, 716.6.8
Loads 2404
Louvered windows 2403.5
Opening protection 716.2
Replacement 2401.2
Safety 716.5.8.4, 716.6.3, 2406
Security 408.7
Skylights 2405
Sloped 2404.2, 2405
Supports 2403.2
Swimming pools 2406.4
Testing 1709.5, 2406.1.1, 2408.2.1
Veneer 1405.12
Vertical 2404.1
Walkways 2409.1
GRADE, LUMBER (see LUMBER) 202
GRADE PLANE 202
GRAIN ELEVATORS 426.1.5
GRANDSTANDS 303.1, 1029.1.1
Accessibility 1108.2
Egress 1029.1.1
Exit sign 1013.1
Live load . . . . . Table 1607.1
Occupant load 1004.4
Separation 1029.1.1.1
GREENHOUSES 312.1
Area 503, 506, 507, 508
Deflections . . . . . Table 1604.3
Live load 1607.12.2.1
Membrane structure 3102.1
Plastic 2606.11
Sloped glazing 2405
Wind load 1609.1.2
GRIDIRON (see TECHNICAL PRODUCTION AREAS)
GRINDING ROOMS 426.1.2
GROSS LEASABLE AREA (see COVERED MALL AND OPEN MALL BUILDINGS) 202, 402.3, 402.8.2
GROUT 714.3.1.1, 714.4.1
GUARDS 1015
Assembly seating 1029.1.1, 1029.16
Equipment platform 505.3.3
Exceptions 1015.2
Glazing 1015.2.1, 2406.4.4, 2407
Height 1015.3
Loads 1607.8
Mechanical equipment 1015.6
Opening limitations 1015.4
Parking garage 406.4.2
Ramps 1012.9
Residential 1015.3
Roof access 1015.7
Screen porches 1015.5
Stairs 1015.2
Vehicle barrier 406.4.3, 1607.8.3
Windows 1015.8
GUTTERS 1503.4.3
GYMNASIUMS 303.1
Group E 303.1.3
Live load . . . . . Table 1607.1
Occupant load 1004.1
GYPSUM . . . . . Chapter 25
Aggregate, exposed 2513
Board . . . . . 202, Chapter 25
Ceiling diaphragms 2508.5
Concrete, reinforced 2514
Construction 2508
Draftstopping 718.3.1
Exterior soffit . . . . . Table 2506.2
Fastening . . . . . Table 2306.3(3), 2508.1
Fire resistance 719, 722.2.1.4, 722.6.2
Fire-resistant joint treatment 2508.4
Inspection 2503
Lath 2507, 2510
Lathing and furring for cement plaster 719, 2510

INTERNATIONAL CODE COUNCIL®
Copyright © 2015 ICC. ALL RIGHTS RESERVED. Accessed by David Dammon on Jun 21, 2017 12:30:52 PM pursuant to License Agreement with ICC. No further reproduction or distribution authorized. ANY UNAUTHORIZED REPRODUCTION OR DISTRIBUTION IS A VIOLATION OF THE FEDERAL COPYRIGHT ACT AND THE LICENSE AGREEMENT, AND SUBJECT TO CIVIL AND CRIMINAL PENALTIES THEREUNDER.

Lathing and plastering 2507
Materials 2506
Panel products . . . . . 202, Chapter 25
Plaster, exterior 2512
Plaster, interior 2511
Shear wall construction . . . . . Table 2306.3(3), 2308.9.3, 2505
Sheathing . . . . . Table 2308.5.11
Showers and water closets 2509
Stucco 2510
Veneer base 2507.2
Veneer plaster 2507.2
Vertical and horizontal assemblies 2504
Wallboard . . . . . Table 2506.2
Water-resistant backing board 2506.2, 2509.2

H

HANDRAILS 1014
Alternating tread devices 1011.14
Assembly aisles 1029.15
Construction 1014.4, 1014.5, 1014.6
Extensions 1014.6
Glazing 2407
Graspability 1014.3
Guards 1015.3
Height 1014.2
Loads 1607.8
Location 1014.1, 1014.7, 1014.8, 1014.9
Ramps 1012.8
Stairs 1011.11
HARDBOARD 202, 1404.3.2, 2303.1.7
HARDWARE
(see DOORS and LOCKS AND LATCHES)
HARDWOOD
Fastening 2304.10
Quality 2303.3
Veneer 1404.3.2
HAZARDOUS MATERIALS 307, 414, 415
Control areas 414.2
Explosion control . . . . . 414.5.1, Table 414.5.1, 415.8, 415.11.5.5, 426.1.4
Special provisions 415.7
Sprinkler protection . . . . . Table 414.2.5(1), Table 414.2.5(2), 415.4, 415.11.11, 903.2.5
Ventilation 414.3, 414.5.4, 415.8.11.3, 415.9.1.7, 415.11.1.6, 415.11.1.8.1, 415.11.3.2, 415.11.5.8, 415.11.6.4, 415.11.7, 415.11.10, 1203.6
Weather protection 414.6.1
HAZARDOUS OCCUPANCY (GROUP H),
(see HAZARDOUS MATERIALS) 307, 414, 415
Alarm and detection 415.3, 415.5, 415.11.2, 415.11.3.5, 415.11.5.9, 415.11.8, 901.6.3, 907.2.5, 908.1, 908.2
Area 503, 505, 506, 507, 508
Dispensing 414.5, 414.6, 414.7.2, 415.6
Gas detection systems 415.11.7
Group provisions
H-1 (detonation) 307.3, 415.6.1.1, 415.6.2 415.7, 415.7.1
H-2 (deflagration) 307.4, 415.8, 415.9
H-3 (physical hazard) 307.5, 415.8, 415.10
H-4 (health hazard) 307.6, 415.10
H-5 (semiconductor 307.7, 415.11
Height 415.7, 415.8.1, 415.9.1.1, 415.8.1.6, 426.1.1, 503, 504, 505, 508
Incidental uses 509
Interior finishes . . . . . 416.2.1, 416.3.1, Table 803.11, 804
Live load . . . . . Table 1607.1
Location on property 414.6.1.2, 415.6
Low hazard (See Factory – Group F-2 and Storage – Group S-2)
Means of egress
Aisles 107.5
Corridors 415.11.2
One means of egress . . . . . Table 1006.2.1, Table 1006.3.2
Panic hardware 1010.1.10
Stairway, exit access 1019
Travel distance . . Table 1017.2, 1016.2.1, 1006.3.2
Mixed occupancies 508.3, 508.4
Accessory 508.2
Moderate hazard (See Factory – Group F-1 and Storage – Group S-1)
Multiple hazards 307.8
Occupancy exceptions 307.1
Plumbing fixtures . . . . . Chapter 29
Prohibited locations 419.2
Risk category . . . . . Table 1604.5
Smoke and heat removal 910.2
Special provisions—General
Detached buildings 415.6.2, 415.8
Dry cleaning (see DRY CLEANING PLANTS)
Equipment platforms 505.3
Fire district D102.2.2
Fire separation distance 415.6
Grain elevators 426.1, 426.1.5
Grinding rooms 426.1.2

INTERNATIONAL CODE COUNCIL®
Copyright © 2015 ICC. ALL RIGHTS RESERVED. Accessed by David Dammon on Jun 21, 2017 12:30:52 PM pursuant to License Agreement with ICC. No further reproduction or distribution authorized. ANY UNAUTHORIZED REPRODUCTION OR DISTRIBUTION IS A VIOLATION OF THE FEDERAL COPYRIGHT ACT AND THE LICENSE AGREEMENT, AND SUBJECT TO CIVIL AND CRIMINAL PENALTIES THEREUNDER.

Separation from other occupancies 415.6.1, 508.2.4, 508.3.3, 508.4
Special provisions based on materials
Combustible liquids . . . . . Table 307.1(1), 307.4, 307.5, 414.2.5, 414.5.3, 415.9.2
Corrosives . . . . . 307.6, Table 414.2.5(1), 414.3, 415.10.3, Table 415.11.1.1.1
Cryogenic . . . . . Table 307.1(1), Table 414.5.1, Table 415.11.1.1.1
Explosives . . . 202, 307.3, 307.3.1, Table 415.6.2
Flammable liquids. 307.4, 307.5, 415.9.1
Flammable solids 307.5, 415.11.1.1.1
Health-hazard materials . . . . . 202, Table 414.2.5(1), 415.6, Table 415.11.1.1.1, 415.11.6.1, 415.11.7.2
Irritants . . . . . Table 414.2.5(1), Table 415.11.1.1.1
Liquid, highly toxic and toxic. . . . . 307.6, Table 414.2.5(1), 415.8.3, 415.9.3, Table 415.11.1.1.1, 908.3
Organic peroxides . . . . . Table 414.5.1, 415.6.1, 415.8.4, Table 415.11.1.1.1, 418
Oxidizers, liquid and solid. . . . . Table 414.2.5(1), Table 414.5.1, 415.8.4, Table 415.11.1.1.1,
Pyrophoric materials. . . . . 307.4, Table 307.1(1), Table 414.5.1, 415.7.1, 415.8.4, Table 415.11.1.1.1
Sensitizers . . . . . Table 415.11.1.1.1
Solids, highly toxic and toxic. . . . . 307.6, Table 414.2.5(1), 415.10.4, Table 415.11.1.1.1, 908.3
Unstable materials . . . . . 307.3, Table 414.2.5(1), Table 414.5.1, 415.5.4, Table 415.11.1.1.1
Water-reactive materials. . . . . Table 414.5.1, 415.8.3, 415.8.4, 415.8.5, 415.11, Table 415.11.1.1.1
Sprinkler protection. 415.2, 415.11.6.4, 415.11.9, 415.11.10.1, 415.11.11, 705.8.1, 903.2.5
Standby, emergency power 2702.2.8, 2702.2.13, 2702.2.14
Storage . . . . . 413, 414.1, 414.2.5, 414.5, 414.6, 414.7.1, 415.6, Table 415.6.2, 415.7.1, 415.9.1, 426.1
Unlimited area 507.8
HEAD JOINT, MASONRY. 202
HEADROOM 406.4.1, 505.1, 1003.2, 1003.3, 1010.1.1, 1010.1.1.1, 1011.3, 1012.5.2, 1208.2
HEALTH CARE (see INSTITUTIONAL I-1 AND INSTITUTIONAL I-2)
Ambulatory care facilities 202, 422
Clinics, outpatient 304.1
Hospitals 308.4
HEALTH-HAZARD MATERIALS . . . . . 307.2, Table 414.2.5(1), 415.2, 415.11.1.1.1, Table 415.11.6.1
HEAT VENTS 910
HEATING (see MECHANICAL) 101.4.2
Aircraft hangars. 412.4.4
Fire pump rooms. 913.3
Fireplace 2111
Masonry heaters 2112
Parking garages 406.4.7
Repair garages 406.8.4
HEIGHT, BUILDING 503, 504, 505, 508, 510
Limitations. 503
Mixed construction types 510
Modifications 504
Roof structures 504.3
HELIPORT
Definition 202
Live loads 1607.6
HIGH-PILED COMBUSTIBLE STORAGE 413, 907.2.15, 910.2.2
HIGH-RISE BUILDINGS 403
Alarms and detection 403.4.1, 403.4.2, 907.2.13
Application 403.1
Construction 403.2
Elevators. 403.6, 1009.2.1, 3007, 3008
Emergency power 403.4.8, 2702.2.9
Emergency systems 403.4
Fire command station 403.4.6
Fire department communication 403.4.3, 403.4.4
Fire service elevators 403.6.1, 3007
Occupant evacuation elevators. 403.6.2, 3008
Smoke removal 403.4.6
Smokeproof enclosure 403.5.4, 1023.11
Sprayed fire-resistant materials (SFRM). 403.2.4
Sprinkler protection 403.3, 903.2.11.3
Stairways 403.5
Standby power 403.4.7, 2702.2.2, 2702.2.9
Structural integrity 403.2.3, 1615
Super high-rise (over 420 feet) 403.2.1, 403.2.3, 403.2.4, 403.3.1, 403.5.2
Voice alarm 403.4.3, 907.2.13
Zones 907.6.3, 907.6.4
HISTORIC BUILDINGS 101.4.8
Flood provisions G105.3

INTERNATIONAL CODE COUNCIL®
Copyright © 2015 ICC. ALL RIGHTS RESERVED. Accessed by David Dammon on Jun 21, 2017 12:30:52 PM pursuant to License Agreement with ICC. No further reproduction or distribution authorized. ANY UNAUTHORIZED REPRODUCTION OR DISTRIBUTION IS A VIOLATION OF THE FEDERAL COPYRIGHT ACT AND THE LICENSE AGREEMENT, AND SUBJECT TO CIVIL AND CRIMINAL PENALTIES THEREUNDER.

HORIZONTAL ASSEMBLY 711
Continuity 508.2.5.1, 711.2.2, 711.2.3, 713.11, 713.12
Fire-resistance rating . . . . . 603.1(1), 603.1(22), 603.1(23), 703, 704.4.2, 707.3.10, 711.2.4
Glazing, rated 716.6
Group I-1 . . . . . 420.3
Group R 420.3
Incidental 509.4
Insulation 720, 807, 808
Joints 715, 2508.4
Non-fire-resistance rating 711.3
Opening protection . . . 712.1.13.1, 714.4, 716, 717.6
Shaft enclosure 713.1
Special provisions
Aircraft hangars 412.4.4
Atrium 404.3, 404.6
Covered and open mall buildings 402.4.2.3, 402.8.7
Fire pumps 913.2.1
Flammable finishes 416.2
Group H-2 . . . . . 415.9.1.1, 415.9.1.2
Groups H-3 and H-4 . . . . . 415.10.2
Group H-5 . . . . . 415.11.1.2, 415.11.5.1
Group I-2 . . . . . 407.5.3
Groups I-1, R-1, R-2 and R-3 . . . . . 420.3
Hazardous materials 414.2
High-rise 403.2.1, 403.3, 403.4.7.1
Hydrogen fuel gas 421.4
Organic coating 418.4, 418.5, 418.6
Stages and platforms 410.4, 410.5.1
HORIZONTAL EXIT 1026
Accessible means of egress 1009.2, 1009.2.1, 1009.3, 1009.4, 1009.6, 1009.6.2
Doors 1026.3
Exit discharge 1028.1
Fire resistance 1026.2
Institutional I-2 occupancy 407.4, 1026.1
Institutional I-3 occupancy 408.2, 1026.1
Refuge area (see REFUGE AREAS)
HORIZONTAL FIRE SEPARATION (see HORIZONTAL ASSEMBLY)
HOSE CONNECTIONS (see STANDPIPES, REQUIRED)
HOSPITAL (see INSTITUTIONAL GROUP I-2) 308.4, 407
HURRICANE-PRONE REGIONS (see WIND LOADS) 202
HURRICANE SHELTER (see STORM SHELTER)
HURRICANE SHUTTERS 1609.1.2
HYDROGEN FUEL GAS ROOMS . . . . 421, Table 509
HYPERBARIC FACILITIES 425

I

ICE-SENSITIVE STRUCTURE
Atmospheric ice loads 1614.1
Definition 202
IDENTIFICATION, REQUIREMENTS FOR
Fire barriers 703.6
Fire partitions 703.6
Fire wall 703.6
Glazing 2403.1, 2406.3
Inspection certificate 1702.1
Labeling 1703.5
Preservative-treated wood 2303.1.9.1
Smoke barrier 703.6
Smoke partition 703.6
Steel 2203.1
IMPACT LOAD 202, 1603.1.1, 1607.9
INCIDENTAL USES
Area 509.3
Occupancy classification 509.2
Separation and protection 509.4
INCINERATOR ROOMS . . . . . Table 509, 1006.2.2.2
INDUSTRIAL (see FACTORY OCCUPANCY)
INSPECTIONS 110, 1704, 1705
Alternative methods and materials 1705.1.1
Approval required 110.6
Concrete construction 110.3.1, 110.3.2, 110.3.9, 1705.3
Concrete slab 110.3.2
EIFS 110.3.9, 1705.16
Energy efficiency 110.3.7
Fabricators 1704.2.5
Fees 109
Final 110.3.10
Fire-extinguishing systems 904.4
Fire-resistant materials 110.3.9, 1705.14, 1705.15
Fire-resistant penetrations 110.3.6, 1705.17
Footing or foundation 110.3.1, 110.3.9, 1705.3, 1705.4, 1705.7, 1705.8, 1705.9
Flood hazard 110.3.3, 110.3.10.1
Frame 110.3.4
Lath or gypsum board 110.3.5, 2503
Liability 104.8
Masonry 110.3.9, 1705.4
Preliminary 110.2
Required 110.3
Right of entry 104.6
Seismic 1705.12
Smoke control 104.16, 909.18.8, 1705.18

INTERNATIONAL CODE COUNCIL®
Copyright © 2015 ICC. ALL RIGHTS RESERVED. Accessed by David Dammon on Jun 21, 2017 12:30:52 PM pursuant to License Agreement with ICC. No further reproduction or distribution authorized. ANY UNAUTHORIZED REPRODUCTION OR DISTRIBUTION IS A VIOLATION OF THE FEDERAL COPYRIGHT ACT AND THE LICENSE AGREEMENT, AND SUBJECT TO CIVIL AND CRIMINAL PENALTIES THEREUNDER.

Soils 110.3.9, 1705.6
Special (see SPECIAL INSPECTIONS AND TESTS) 110.3.9, 1704, 1705
Sprayed fire-resistant materials 1705.14
Sprinkler protection 903.5
Steel 110.3.4, 110.3.9, 1705.2
Third party 110.4
Welding 110.3.9, 1705.2, 2204.1
Wind 110.3.9, 1705.10
Wood 110.3.9, 1705.5

INSTITUTIONAL I-1
[see INSTITUTIONAL OCCUPANCY (GROUP I) and RESIDENTIAL (GROUP R-4)] 308.3, 420
Accessibility 1106.2, 1107.2, 1107.3, 1107.4, 1107.5.1
Alarm and detection 420.6, 907.2.6.1, 907.2.10, 907.2.11.2, 907.5.2.3.2
Combustible decorations 806.1
Emergency escape and rescue 1030
Means of egress
Aisles 1018.5
Corridors 1020.1
Stairway, exit access 1019
Travel distance 1017.2, 1006.3.2
Occupancy exceptions . . . . . 308.3.1 through 308.3.4
Separation, unit 420.2, 420.3
Sprinkler protection 420.4, 903.2.6, 903.3.2

INSTITUTIONAL I-2
[see INSTITUTIONAL OCCUPANCY (GROUP I)] 308.4, 407
Accessibility 1106.3, 1106.4, 1106.7.2, 1107.2, 1107.3, 1107.4, 1107.5.2, 1107.5.3, 1107.5.4, 1109.2, E106.4.6
Alarms and detection 407.7, 407.8, 907.2.6.2
Care suites 407.4.4
Combustible decorations 806.1
Electrical systems 407.10, 2702.1.7, 2702.2.6
Hyperbaric facilities 425
Means of egress 407.4
Aisles 1018.5
Corridors 407.2, 407.3, 407.4, 1020.2
Doors 407.3.1, 1010.1.9.6, 1010.1.9.8
Exterior exit stairway 1027.2
Hardware 1010.1.9.3, 1010.1.9.6
Stairway, exit access 1019.3
Travel distance 407.4
Occupancy exceptions . . . . . 308.4.1 through 308.4.4
Separation 410
Smoke barriers 407.5
Smoke compartment 407.2.1, 407.2.3, 407.5
Smoke partitions 407.3
Sprinkler protection 407.6, 903.2.6, 903.3.2
Yards 407.9

INSTITUTIONAL I-3
[see INSTITUTIONAL OCCUPANCY (GROUP I)] 308.5, 408
Accessibility 1103.2.13, 1105.4, 1107.2, 1107.3, 1107.4, 1107.5.5, 1108.4.2, 1109.11.2, E104.2.2, E106.4.8
Alarm and detection 408.10, 907.2.6.3
Combustible decorations 806.1
Means of egress 408.2, 408.3, 408.4
Aisles 1018.5
Doors 408.4, 1010.1.1, 1010.1.2
Exit discharge 408.3.6
Exit sign exemption 1013.1
Hardware 408.4, 1010.1.9.3, 1010.1.9.7, 1010.1.9.8
Stairway, exit access 1019.3
Travel distance 408.6.1, 408.8.1, 1017.2, 1006.3.2
Security glazing 408.7
Separation 408.5, 408.8
Smoke barrier 408.6
Smoke compartment 408.4.1, 408.6, 408.9
Sprinkler protection 408.11, 903.2.6
Standby/emergency power 2702.2.7

INSTITUTIONAL I-4
[see INSTITUTIONAL OCCUPANCY (GROUP I)] 308.6
Accessibility 1103.2.12
Alarms and detection 907.2.6
Corridor rating 1020.1
Educational 303.1.3, 305.1
Means of egress
Day care 1006.2.2.4
Stairway, exit access 1019
Travel distance 1016.2.1, 1017.2, 1006.3.2
Occupancy exceptions 308.6.1, 308.6.2, 308.6.3, 308.6.4
Sprinkler protection 903.2.6

INSTITUTIONAL OCCUPANCY (GROUP I) 308
Accessory 508.2
Adult care 308.6
Area 503, 505, 506, 507, 508
Child care 303.1.3, 308.6.4, 308.11, 310.1
Group specific provisions
Group I-1 (see INSTITUTIONAL I-1) 308.2
Group I-2 (see INSTITUTIONAL I-2) . . . 308.3, 407
Group I-3 (see INSTITUTIONAL I-3) . . . 308.4, 408
Group I-4 (see INSTITUTIONAL I-4) 308.1, 310.5.1
Height 503, 504, 505, 508

INTERNATIONAL CODE COUNCIL®
Copyright © 2015 ICC. ALL RIGHTS RESERVED. Accessed by David Dammon on Jun 21, 2017 12:30:52 PM pursuant to License Agreement with ICC. No further reproduction or distribution authorized. ANY UNAUTHORIZED REPRODUCTION OR DISTRIBUTION IS A VIOLATION OF THE FEDERAL COPYRIGHT ACT AND THE LICENSE AGREEMENT, AND SUBJECT TO CIVIL AND CRIMINAL PENALTIES THEREUNDER.

Incidental uses 509
Interior finishes . . . . . Table 803.11, 804
Live load . . . . . Table 1607.1
Means of egress
Corridors 1020.2
Stairway, exit access 1019
Travel distance 407, 1006.3.2, 1016.2.1, 1017.2,
Mixed occupancies 508.3, 508.4
Occupancy exceptions . . . . . 303.1.1, 303.1.2, 308.3.3, 308.3.4, 308.4.2, 308.6.1 through 308.6.4, 310.5.1
Plumbing fixtures 2902
Risk category . . . . . Table 1604.5
Standby, emergency power 2702.2
INSULATION
Concealed 720.2
Duct insulation 720.1
Exposed 720.3
Fiberboard 720.1, 1508.1.1, 2303.1.6.2, 2303.1.6.3
Foam plastic (see FOAM PLASTICS) 720.1
Loose fill 720.4, 720.6
Pipe insulation 720.1, 720.7
Reflective plastic core 2614
Roof 720.5, 1508
Sound 720, 807, 1207
Thermal 720, 807, 1508
INTERIOR ENVIRONMENT
Lighting 1205
Rodentproofing . . . . . 415.11.1.6, Appendix F
Sound transmission 1207
Space dimensions 1208
Temperature control 1204
Ventilation 409.3, 414.3, 415.9.1.7, 1203.5
Yards or courts 1206.2, 1206.3
INTERIOR FINISHES . . . . . Chapter 8
Acoustical ceiling systems 807, 808
Application 803.12, 804.4
Atriums 404.8
Children's play structures 424
Covered and open mall buildings 402.6
Decorative materials 801.1.2, 806
Floor finish 804, 805
Foam plastic insulation 2603.3, 2603.4
Foam plastic trim 806.5, 2604.2
Insulation 807
Light-transmitting plastics 2606
Signs 402.6.4, 2611
Trim 806.7, 806.8
Wall and ceiling finishes 803
Wet location 1210
INTERPRETATION, CODE 104.1

J

JAILS (see INSTITUTIONAL I-3) 308.5, 408
JOINT
Gypsum board 2508.4
Lumber sheathing 2308.7.11
Shotcrete 1908.7
Waterproofing 1805.3.3
JOINTS, FIRE-RESISTANT SYSTEMS 715
Special inspection 1705.17

K

KIOSKS 402.6.2
KITCHENS 303.3, 306.2
Accessibility 1109.4
Dimensions 1208
Means of egress 1016.2
Occupant load . . . . . Table 1004.1.1
Sinks 2902.1

L

LABORATORIES
Classification of 304.1
Hazardous materials 414, 415
Incidental uses . . . . . Table 509
LADDERS
Boiler, incinerator and furnace rooms 1006.2.2.1
Construction 1011.15, 1011.16, 1014.2, 1014.6, 1015.3, 1015.4
Emergency escape window wells 1030.5.2
Group I-3 . . . . . 408.3.5, 1011.15, 1011.16
Heliport 412.8.3
Refrigeration machinery room 1006.2.2.2
Ship's ladders 1011.14
Stage 410.6.3.4
LAMINATED TIMBER, STRUCTURAL GLUED 602.4, 2303.1, 2303.1.3, 2304.12.2.4, 2306.1, 2308.4.3, 2308.7.9
LANDINGS
Doors 1010.1.6
Ramp 1012.6
Stair 1011.6
LATH, METAL OR WIRE . . . . . Table 2507.2
LAUNDRIES . . . . . 304.1, 306.2, Table 509
LAUNDRY CHUTE 713.13, 903.2.11.2
LEGAL
Federal and state authority 102.2

INTERNATIONAL CODE COUNCIL®
Copyright © 2015 ICC. ALL RIGHTS RESERVED. Accessed by David Dammon on Jun 21, 2017 12:30:52 PM pursuant to License Agreement with ICC. No further reproduction or distribution authorized. ANY UNAUTHORIZED REPRODUCTION OR DISTRIBUTION IS A VIOLATION OF THE FEDERAL COPYRIGHT ACT AND THE LICENSE AGREEMENT, AND SUBJECT TO CIVIL AND CRIMINAL PENALTIES THEREUNDER.

Liability 104.8
Notice of violation 114.2, 116.3
Registered design professional 107.1, 107.3.4
Right of entry 104.6
Unsafe buildings or systems 116
Violation penalties 114.4
LIBRARIES
Classification, other than school 303.1.3, 303.4
Classification, school 303.1.3, 305.1
Live load . . . . . Table 1607.1
LIGHT, REQUIRED 1205
Artificial 1205.3
Emergency (see EMERGENCY LIGHTING)
Means of egress 1008.2
Natural 1205.2
Stairways 1205.4
Yards and courts 1206
LIGHT-FRAME CONSTRUCTION
Definition 202
Cold-formed steel 2211
Conventional (wood) 2308
LIGHTS, PLASTIC CEILING DIFFUSERS 2606.7
LINEN CHUTE 713.13, 903.2.11.2
LINTEL
Adobe 2109.3.4.9
Fire resistance 704.11
Masonry, wood support 2304.13
LIQUEFIED PETROLEUM GAS . . . . . Table 414.5.1, 415.9.2
LIVE LOADS 202, 1607
Construction documents 107.2, 1603.1.1
Posting of 106.1
LIVE/WORK UNITS 202, 310.4, 419
Accessibility 1107.6.2.1
Separation 508.1
LOAD AND RESISTANCE FACTOR DESIGN (LRFD) 1602.1
Factored load 202
Limit state 202
Load combinations 1605.2
Load factor 202
Resistance factor 202
Wood design 2301.2, 2307
LOAD COMBINATIONS 1605
Allowable stress design 1605.3
Load and resistance factor design 1605.2
Strength design 1605.2
LOADS 106, 202
Atmospheric ice 1614
Combinations 1605
Dead 202, 1606
Factored load 202, 1604.2
Flood 1603.1.7, 1612
Impact 202, 1607.9
Live 419.6, 1603.1.1, 1607
Load effects 202
Nominal load 202, 1604.2
Rain 1611
Seismic 1603.1.5, 1613
Snow 1603.1.3, 1608
Soil lateral 1610
Wind 1603.1.4, 1609
LOBBIES
Assembly occupancy 1029.4
Elevator 405.4.3, 1009.2.1, 1009.4, 3006, 3007.6, 3008.6
Exit discharge 1028.1
Underground buildings 405.4.3
LOCKS AND LATCHES 1010.1.9, 1010.1.10
Access-controlled egress 1010.1.9.8
Delayed egress locks 1010.1.9.7
Electromagnetically locked 1010.1.9.9
Group I-2 . . . . . 407.4.1.1, 1010.1.9.6
Group I-3 . . . . . 408.4, 1010.1.9.10
Group R-4 . . . . . 1010.1.9.5.1
High-rise 403.5.3
Toilet rooms 2902.3.5
LUMBER
General provisions . . . . . Chapter 23
Quality standards 2303

M

MAINTENANCE . . . . .
Means of egress 1001.3, 3310.2
Property 101.4.4
MALL
(see COVERED AND OPEN MALL BUILDINGS)
MANUAL FIRE ALARM BOX 907.4.2
MANUFACTURED HOMES
Flood resistant G501
MARQUEES 202, 3106, H113
Drainage, water 3201.4
Construction 3106.5
Live load . . . . . Table 1607.1, 1607.12
Prohibited location 3106.4
Roof construction 3106.3
MASONRY
Adhered veneer 1405.10
Adobe 2109.3
Anchorage 1604.8.2
Anchored veneer 1405.6

INTERNATIONAL CODE COUNCIL®
Copyright © 2015 ICC. ALL RIGHTS RESERVED. Accessed by David Dammon on Jun 21, 2017 12:30:52 PM pursuant to License Agreement with ICC. No further reproduction or distribution authorized. ANY UNAUTHORIZED REPRODUCTION OR DISTRIBUTION IS A VIOLATION OF THE FEDERAL COPYRIGHT ACT AND THE LICENSE AGREEMENT, AND SUBJECT TO CIVIL AND CRIMINAL PENALTIES THEREUNDER.

Architectural cast stone 2103.1
Ashlar stone 202
Autoclaved aerated concrete (AAC) 202
Calculated fire resistance 722.4
Chimneys 2113
Construction 2104, 2109.2.2
Corbelled 2104.1.2
Dampproofing 1805.2.2
Design, methods 2101.2, 2107, 2108, 2109
Fire resistance, calculated 722.3.2, 722.3.4
Fireplaces 2111
Floor anchorage 1604.8.2
Foundation walls 1807.1.5
Foundations, adobe 2109.3.4.5
Glass unit 2110
Grouted 202
Headers (see BONDING, MASONRY) 2109.2
Heaters 2112
Inspection, special 1705.4
Joint reinforcement 2103.4
Materials 2103
Penetrations 714
Quality assurance 2105
Rodentproofing . . . . . Appendix F
Roof anchorage 1604.8.1
Rubble stone 202
Seismic provisions 2106
Serviceability 1604.3.4
Stone 2109.2
Support 2304.13
Surface bonding 2103.2
Veneer 1405.6, 1405.10, 2101.2.1, 2308.6.10
Wall, composite 202
Wall, hollow 202
Wall anchorage 1604.8.2
Waterproofing 1805.3.2
Wythe 202

MATERIALS
Alternates 104.11
Aluminum . . . . . Chapter 20
Concrete . . . . . Chapter 19
Glass and glazing . . . . . Chapter 24
Gypsum . . . . . Chapter 25
Masonry . . . . . Chapter 21
Noncombustible 703.4
Plastic . . . . . Chapter 26
Steel . . . . . Chapter 22
Testing (see TESTING) 1707
Wood . . . . . Chapter 23

MEANS OF EGRESS . . . . . Chapter 10
Accessible 1009, 2702.2.2
Aircraft related 412.3.2, 412.3.3, 412.3.4, 412.5.2, 412.7.1
Alternating tread device 412.7.3, 505.3, 1006.2.1, 1006.2.2.2, 1011.14,
Ambulatory care facilities 422.3.1, 422.3.3
Assembly 1009.1, 1029
Atrium 404.9, 404.10, 707.3.6
Capacity 1005.3
Ceiling height 1003.2
Child care facilities (see Day care facilities)
Construction drawings 107.2.3
Configuration 1007
Convergence 1005.6
Covered and open mall buildings 402.8
Day care facilities . . . . . 308.6, 310.5.1, Table 1004.1.1, 1006.2.2.4
Distribution 1005.5
Doors 1005.7, 1006.2, 1010, 1022.2, 2702.2.10
During construction 3303.3, 3310
Elevation change 1003.5
Elevators 403.5.2, 403.6.1, 1003.7, 1009, 3008
Emergency escape and rescue 1030
Encroachment 1005.7
Equipment platform 505.3
Escalators 1003.7
Existing buildings 1009.1, 3310
Exit (see EXIT) . . . . . 1022 through 1027
Exit access (see EXIT ACCESS) . . . . . 1016 through 1021
Exit discharge (see EXIT DISCHARGE) 1028
Exit enclosures 1023.2
Exit passageway (see EXIT PASSAGWAY) 1024
Exit signs 1013, 2702.2.5,
Fire escapes 412.8.3
Floor surface 804, 1003.4
Gates 1010.2
Group I-2 . . . . . 407.2, 407.3, 407.4, 1019.3
Group I-3 . . . . . 408.2, 408.3, 408.4, 408.6, 408.8, 1019.3
Guards 1015
Handrails 1014
Hazardous materials 414.6.1.2, 415.11.2, 415.11.5.6
Headroom 1003.2, 1003.3
Heliports 412.8.3
High-hazard Group H 415.11.2
High-rise 403.5, 403.6
Illumination 1008, 2702.2.4
Interior finish 803.11, 804

INTERNATIONAL CODE COUNCIL®
Copyright © 2015 ICC. ALL RIGHTS RESERVED. Accessed by David Dammon on Jun 21, 2017 12:30:52 PM pursuant to License Agreement with ICC. No further reproduction or distribution authorized. ANY UNAUTHORIZED REPRODUCTION OR DISTRIBUTION IS A VIOLATION OF THE FEDERAL COPYRIGHT ACT AND THE LICENSE AGREEMENT, AND SUBJECT TO CIVIL AND CRIMINAL PENALTIES THEREUNDER.

Ladders (see LADDERS)
Live loads . . . . . Table 1607.1
Live/work units 419.3
Mezzanines 505.2.2, 505.2.3, 1004.1.1.2, 1009.1
Moving walk 1003.7
Number 1006
Occupant load 1004.1, 1004.1.2, 1004.2
Parking 406.5.7
Protruding objects 1003.3, 1005.7
Ramps 1012, 1027
Scoping 101.3, 105.2.2, 108.2, 1001.1
Seating, fixed 1009.1, 1029
Special amusement 411.7
Stages 410.3.3, 410.6
Stairways 403.5, 404.6, 1005.3.1, 1011, 1023.2, 1027
Temporary structures 3103.4
Travel distance (see TRAVEL DISTANCE) 1016.2.1, 1017
Turnstile 1010.3
Underground buildings 405.5.1, 405.7
Width 1005.1, 1005.2, 1005.4, 1011.2, 1012.5.1, 1020.2, 1029.6, 1029.8

MECHANICAL (see AIR CONDITIONING, HEATING, REFRIGERATION, AND VENTILATION) . . . 101.4.2
Access 1011.12, 1209.3
Air transfer openings 705.10, 706.11, 707.10, 708.9, 709.8, 711.7, 713.10, 714.1.1, 717
Chimneys (see CHIMNEYS)
Code . . . . . Chapter 28
Disconnected 3303.6
Ducts 704.8, 705.10, 706.11, 707.10, 712.1.6, 712.1.10.3, 713.10, 708.9, 709.8, 710.8, 711.7, 714.1.1, 717
Encroachment, public right-of-way 3202.3.2
Equipment on roof 1510, 1511.2
Equipment platforms 505.3
Factory-built fireplace 2111.14.1
Fireplaces 2111
Incidental use room . . . . . Table 509
Motion picture projection room 409.3
Permit required 105.1, 105.2
Roof access 1011.12
Seismic inspection and testing 1705.12.6, 1705.13.2
Smoke control systems 909
Systems . . . . . 202, Chapter 28

MECHANICALLY LAMINATED DECKING 2304.9.3

MEMBRANE ROOF COVERINGS 1507.11, 1507.12, 1507.13

MEMBRANE STRUCTURES 2702.2.12, 3102

MENTAL HOSPITALS (see INSTITUTIONAL I-2)

MERCANTILE OCCUPANCY (GROUP M) 309
Accessible 1109.12
Alarm and detection 907.2.7
Area 503, 505, 506, 507, 508
Covered and open mall buildings 402
Hazardous material display and storage 414.2.5
Height 503, 504, 505, 508
Incidental uses 509
Interior finishes . . . . . Table 803.11, 804
Live load . . . . . Table 1607.1
Means of egress
Aisles 1018.3, 1018.4
Stairway, exit access 1019
Travel distance 402.8, 1016.2.1, 1017.2, 1006.3.2
Mixed occupancies 508.3, 508.4
Accessory 508.2
Live/work units 419
Mall buildings 402
Parking below/above 510.7, 510.8, 510.9
Special mixed 510.2
Occupancy exceptions 307.1.1
Plumbing fixtures 2902
Sprinkler protection 903.2.7
Standpipes 905.3.3
Unlimited area 507.5, 507.4, 507.13

METAL
Aluminum . . . . . Chapter 20
Roof coverings 1504.3.2, 1507.5
Steel . . . . . Chapter 22
Veneer 1404.5

MEZZANINES 505
Accessibility 1104.4, 1108.2.4, 1108.2.9
Area limitations 505.2.1, 505.3.1
Egress 505.2.2, 505.2.3, 1004.6, 1009.1
Equipment platforms 505.3
Guards 505.3.3, 1015.1
Height 505.2, 1003.2
Occupant load 1004.1.1.2
Stairways 712.1.11, 1011.14, 1023.2

MIRRORS 1010.1, 2406.1

MIXED OCCUPANCY (see OCCUPANCY SEPARATION)

MODIFICATIONS 104.4, 104.10

MOISTURE PROTECTION 1210, 1403.2, 1503

MONASTERIES 310.4

INTERNATIONAL CODE COUNCIL®
Copyright © 2015 ICC. ALL RIGHTS RESERVED. Accessed by David Dammon on Jun 21, 2017 12:30:52 PM pursuant to License Agreement with ICC. No further reproduction or distribution authorized. ANY UNAUTHORIZED REPRODUCTION OR DISTRIBUTION IS A VIOLATION OF THE FEDERAL COPYRIGHT ACT AND THE LICENSE AGREEMENT, AND SUBJECT TO CIVIL AND CRIMINAL PENALTIES THEREUNDER.

MORTAR 202
Ceramic tile 2103.2.3
Dampproofing 1805.2.2
Fire resistance 714.3.1, 714.4.1
Glass unit masonry 2110.1.1
Masonry 2103.2
Rodentproofing . . . . . Appendix F
MOTELS 310.3, 310.4
MOTION PICTURE PROJECTION ROOMS 409
Construction 409.2
Exhaust air 409.3.2, 409.3.3
Lighting control 409.4
Projection room 409.3
Supply air 409.3.1
Ventilation 409.3
MOTOR FUEL-DISPENSING SYSTEM 406.5
Accessibility 1109.14
MOTOR VEHICLE FACILITIES 304, 311, 406.7
MOVING, BUILDINGS 101.4.8, D103.3
MOVING WALKS 3004.2
Means of egress 1003.7

N

NAILING 202, 2303.6, 2304, 2304.10
NONCOMBUSTIBLE BUILDING MATERIAL 703.4
NURSES STATIONS (See CARE PROVIDER STATIONS)
NURSING HOMES (see INSTITUTIONAL, GROUP I-2) 308.4, 407

O

OCCUPANCY
Accessory 508.2
Certificates (see CERTIFICATE OF OCCUPANCY)
Change (see CHANGE OF OCCUPANCY)
Floor loads . . . . . Table 1607.1
Special . . . . . Chapter 4
OCCUPANCY CLASSIFICATION 302
Covered and open mall buildings 402
HPM 415.11
Mixed 508, 510
Special . . . . . Chapter 4
OCCUPANCY SEPARATION
Accessory 508.2
Aircraft related 412.5.1
Covered mall and open mall building 402.4.2
Mixed occupancy 508, 510, 707.3.9
Private parking garages . . . . . 406.3.4, Table 508.4
Repair garages 406.8.1
Required fire resistance . . . . . Table 508.4, 510
OCCUPANT EVACUATION ELEVATORS 403.5.2, 403.6.2, 3008
OCCUPANT LOAD
Actual 1004.1.2
Certificate of occupancy 111
Covered and open mall building 402.8.2
Cumulative 1004.1.1
Determination of 1004.1, 1004.1.1, 1004.6
Increased 1004.2
Outdoors 1004.5
Seating, fixed 1004.4
Signs 1004.3
OFFICE BUILDINGS (See GROUP B OCCUPANCIES)
Classification 304
Live loads . . . . . Table 1607.1, 1607.5
OPEN MALL BUILDINGS (see COVERED AND OPEN MALL BUILDINGS)
OPENING PROTECTION, EXTERIOR WALLS 705.8
OPENING PROTECTION, FLOORS (see VERTICAL OPENING PROTECTION)
OPENING PROTECTIVES 705.8, 706.8, 707.6, 708.6, 709.5, 712.1.13.1, 713.7, 716
Automatic-closing devices 909.5.3
Fire door and shutter assemblies 705.8.2, 712.1.13.1, 716.5
Fire windows 716.6
Glass unit masonry (see GLASS UNIT MASONRY) 2110.1.1
Glazing 716.6
ORGANIC COATINGS 418
ORGANIC PEROXIDES 307.4, 307.5
OXIDIZERS, LIQUID AND SOLID 307.3, 307.4, 307.5

P

PANIC HARDWARE 1010.1.10
PARAPET, EXTERIOR WALL 705.11, 2109.3.4.3
Construction 705.11.1
Fire wall 706.6
Height 705.11.1
PARKING, ACCESSIBLE 1106, 1111.1
PARKING GARAGES 406.4, 406.5, 406.6
Accessibility 1105.1.1, 1106.1, 1106.7.4, 1111.1
Barriers, vehicle 202, 406.4.3, 1607.8.3
Classification 311, 406.3, 406.4

INTERNATIONAL CODE COUNCIL®
Copyright © 2015 ICC. ALL RIGHTS RESERVED. Accessed by David Dammon on Jun 21, 2017 12:30:52 PM pursuant to License Agreement with ICC. No further reproduction or distribution authorized. ANY UNAUTHORIZED REPRODUCTION OR DISTRIBUTION IS A VIOLATION OF THE FEDERAL COPYRIGHT ACT AND THE LICENSE AGREEMENT, AND SUBJECT TO CIVIL AND CRIMINAL PENALTIES THEREUNDER.

Construction type . . . . . 406.5.1, Table 601
Enclosed (see PARKING GARAGE, ENCLOSED) 406.6
Gates 3110
Guards 406.4.2, 2407.1.3
Height, clear 406.4.1
Live loads . . . . . Table 1607.1, 1607.10.1.3
Means of egress 1006.3.1, 1006.2.2.5, 1019
Occupancy separation 508, 510
Open (see PARKING GARAGE, OPEN) 406.5
Special provisions 510
Sprinkler protection 903.2.10
Underground 405
Vertical openings 712.1.10
PARKING GARAGES, ENCLOSED 406.6
Area and height [see STORAGE OCCUPANCY (GROUP S)] 406.6.1
Means of egress 1003.2, 1006.3.2, 1012.1
Ventilation 406.6.2
PARKING GARAGES, OPEN 202, 406.5
Area and height [see STORAGE OCCUPANCY (GROUP S)] . . . . . 406.5, 406.5.1, Table 406.5.4
Construction type 406.5.1
Means of egress . . . . . 406.5.7, 1003.2, Table 1006.2.1, 1006.3, 1009.3, 1009.4, 1012.1, 1017.3, 1019, 1020.1, 1028.1
Mixed occupancy 406.5.3
Standpipes 406.5.8
Ventilation 406.5.10
PARTICLEBOARD 202
Draftstopping 718.3.1
Moisture protection 1403.2, 1405.2
Quality 2303.1.8
Veneer 1405.5
Wall bracing 2308.6.3
PARTITIONS
Fabric partition 202, 1607.14.1
Fire (see FIRE PARTITION)
Live loads 1607.5, 1607.14
Materials . . . . . 602.4.6, 603.1(1), 603.1(11)
Occupancy, specific 708.1
Smoke (see SMOKE PARTITION)
Toilets 1210
PARTY WALLS (see FIRE WALLS) . . . . . 706.1.1, Table 716.6
PASSAGEWAY, EXIT (see EXIT) 1024.1
PASSENGER STATIONS 303.4
PATIO COVERS . . . . . 2606.10, Appendix I
PEDESTRIAN
Protection at construction site 3303.2, 3306
Walkways and tunnels 3104, 3202.3.4
PENALTIES 114.4
PENETRATION-FIRESTOP SYSTEM
Fire-rated walls 714.3.2
Fire-rated horizontal assemblies 714.4.2
PENETRATIONS 714, 717
Fire-resistant assemblies
Exterior wall 705.10
Fire barrier 707.7, 707.10
Fire partition 708.7, 708.9
Fire wall 706.9, 706.11
Horizontal assemblies 714.4
Shaft enclosures 712.1, 713.1, 713.8, 713.10
Smoke barriers 709.6, 709.8, 714.4.4
Smoke partitions 710.6, 710.7
Special inspection 1705.17
Walls 714.3
Nonfire-resistant assemblies 714.5
PERFORMANCE CATEGORY
Definition 202
Wood structural panels 2302.1.5
PERLITE . . . . . Table 721.1(1), Table 2507.2
PERMITS 105
Application for 104.2, 105.1, 105.3
Drawings and specifications 107.2.1
Expiration 105.5
Fees 109
Liability for issuing 104.8
Placement of permit 105.7
Plan review 104.2, 107.3
Suspension or revocation 105.6
Time limitations 105.3.2, 105.5
PHOTOVOLTAIC PANEL SYSTEMS 202
Fire classification 1505.8, 1505.9
Panels/modules 1512
Photovoltaic module 202
Photovoltaic panel 202
Roof live loads 1607.12.5
Rooftop mounted 1510.7
PIER FOUNDATIONS (see FOUNDATION, SHALLOW)
PILE FOUNDATIONS (see FOUNDATION, DEEP)
PIPES
Embedded in fire protection 704.8
Insulation covering 720.1, 720.7
Penetration protection 714, 1023.5
Under platform 410.4
PLAIN CONCRETE (see CONCRETE) 1906
PLAN REVIEW 107.3
PLASTER
Fire-resistance requirements 719

INTERNATIONAL CODE COUNCIL®
Copyright © 2015 ICC. ALL RIGHTS RESERVED. Accessed by David Dammon on Jun 21, 2017 12:30:52 PM pursuant to License Agreement with ICC. No further reproduction or distribution authorized. ANY UNAUTHORIZED REPRODUCTION OR DISTRIBUTION IS A VIOLATION OF THE FEDERAL COPYRIGHT ACT AND THE LICENSE AGREEMENT, AND SUBJECT TO CIVIL AND CRIMINAL PENALTIES THEREUNDER.

Gypsum 719.1, 719.2
Inspection 110.3.5
Portland cement. . . . . 719.5, Table 2507.2, Table 2511.1.1

PLASTIC. . . . . Chapter 26
Approval for use. 2606.2
Composites 2612
Core insulation, reflective plastic 2614
Decking 1410, 2612
Fiber-reinforced polymer 2613
Finish and trim, interior 2604
Light-transmitting panels 2401.1, 2607
Roof panels 2609
Signs 402.6.4, 2611, D102.2.10, H107.1.1
Thermal barrier 2603.4
Veneer 1404.8, 2605, D102.2.11
Walls, exterior 2603.4.1.4, 2603.5

PLASTIC, FOAM
Children's play structures 424.2
Insulation (see FOAM PLASTICS) 2603
Interior finish 803.4, 2603.9
Malls 402.6.2, 402.6.4.5
Stages and platforms. 410.3.6

PLASTIC, LIGHT-TRANSMITTING
Awnings and patio covers 2606.10
Bathroom accessories 2606.9
Exterior wall panels 2607
Fiber-reinforced polymer 2613.4
Fiberglass-reinforced polymer 2613.4
Glazing. 2608
Greenhouses 2606.11
Light-diffusing systems 2606.7
Roof panels 2609
Signs, interior. 2611
Skylight 2610
Solar collectors 2606.12
Structural requirements 2606.5
Unprotected openings 2608.1, 2608.2
Veneer, exterior . . . . . 603.1(15), 603.1(17), 2605
Wall panels 2607

PLATFORM
(see STAGES AND PLATFORMS) 410
Construction. 410.4
Temporary 410.4.1

PLATFORM, EQUIMENT
(see EQUIPMENT PLATFORM)

PLATFORM LIFTS, WHEELCHAIR
Accessible means of egress 1009.2, 1009.5, 1109.4, 2702.2.2
Accessibility 1109.8

PLUMBING
(see TOILET AND TOILET ROOMS) . . . . . 101.4.3, 105.2, Chapter 29
Aircraft hangars, residential 412.5.4
Facilities, minimum. 2902, 3305.1
Fixtures . . . . . Table 2902.1
Room requirements 1210, 2606.9

PLYWOOD
(see WOOD STRUCTURAL PANELS). 202
Preservative-treated. 2303.1.9.1

PRESCRIPTIVE FIRE RESISTANCE. 721

PRESERVATIVE-TREATED WOOD 202
Fastenings 2304.10.5
Quality 2303.1.9
Required. 1403.6, 2304.12
Shakes, roof covering 1507.9.6, 1507.9.8

PROJECTION ROOMS
Motion picture. 409

PROJECTIONS, COMBUSTIBLE 705.2.3, 1406.3

PROPERTY LINE
(see FIRE SEPARATION DISTANCE) 705.3

PROPERTY MAINTENANCE. 101.4.4

PROSCENIUM
Opening protection. 410.3.5
Wall 410.3.4

PSYCHIATRIC HOSPITALS
(see INSTITUTIONAL I-2) 308.4

PUBLIC ADDRESS SYSTEM
(see EMERGENCY COMMUNICATIONS)
Covered and open mall buildings. 402.7, 907.2.20, 2702.2.4
Special amusement buildings 411.6

PUBLIC PROPERTY . . . . . Chapter 32, Chapter 33

PUBLIC RIGHT-OF-WAY
Encroachments . . . . . Chapter 32

PYROPHORIC MATERIALS . . . Table 307.1(1), 307.4

R

RAILING (see GUARDS AND HANDRAILS)

RAMPS 1012
Assembly occupancy 1029.13
Construction. . . . . 1012.2 through 1012.5.3, 1012.7, 1012.10
Exit 1023
Exit access. 1019
Exterior. 1027
Guards 1012.9, 1015, 1607.8
Handrails 1012.8, 1014, 1607.8
Interior 1012.2
Landings. 1012.6

INTERNATIONAL CODE COUNCIL®
Copyright © 2015 ICC. ALL RIGHTS RESERVED. Accessed by David Dammon on Jun 21, 2017 12:30:52 PM pursuant to License Agreement with ICC. No further reproduction or distribution authorized. ANY UNAUTHORIZED REPRODUCTION OR DISTRIBUTION IS A VIOLATION OF THE FEDERAL COPYRIGHT ACT AND THE LICENSE AGREEMENT, AND SUBJECT TO CIVIL AND CRIMINAL PENALTIES THEREUNDER.

Parking garage 406.4.4
Slope 1012.2
RECREATIONAL FACILITIES
Accessibility 1110
Amusement rides 1110.4.8
Animal containment areas 1110.4.7
Areas of sports activity 202, 1110.4.1
Boat slips 1110.4.9
Boxing rings 1110.4.5
Bowling lanes 1110.4.3
Court sports 1110.4.4
Exercise equipment 1110.4.10
Fishing piers 1110.4.11
Hot tubs 1110.4.13
Miniature golf 1110.4.12
Referee stands 1110.4.6
Shooting facilities 1110.4.14
Swimming pools 1110.4.13
Team or player seating 1110.4.2
Children's play structure 402.6.3, 424
Special amusement buildings (see AMUSEMENT BUILDINGS, SPECIAL)
REFERENCED STANDARDS . . . . . Chapter 35
Applicability 102.3, 102.4
Fire resistance 703.2
List . . . . . Chapter 35
Organizations . . . . . Chapter 35
REFORMATORIES 308.4
REFRIGERATION (see MECHANICAL) 101.4.2
Machinery room 1006.2.2.2
REFUGE AREAS (see HORIZONTAL EXIT, SMOKE COMPARTMENTS, STORM SHELTERS) 407.5.1, 408.6.2, 420.4.1, 422.3.2, 423.1.1, 423.3, 423.4, 1026.4
REFUSE CHUTE 713.13
REINFORCED CONCRETE (see CONCRETE)
General 1901.2
Inspections 1705.3
REINFORCEMENT
Concrete 1908.4
Masonry 2103.4
RELIGIOUS WORSHIP, PLACES OF
Accessibility 1103.2.8, 1108.2.4
Alarms and detection 907.2.1
Balcony 1029.5, 1108.2.4
Classification 303.1.4, 303.4, 305.1.1, 305.2.1, 308.6.2
Door operations 1010.1.9.3
Egress 1029
Interior finishes . . . . . Table 803.11, 804
Unlimited area 507.6, 507.7
RELOCATING, BUILDING 101.4.8, D103.3
REPAIRS, BUILDING 101.4.8, 202
Flood 1612.1, 1612.2
Minor 105.2.2
Permit required 105.1
RESIDENTIAL OCCUPANCY (GROUP R) 310
Accessibility 1103.2.3, 1103.2.11, 1105.1.7, 1106.2, 1107.2, 1107.3, 1107.4, 1107.6, E104.2
Alarm and detection 907.5.2.3.2, 907.5.2.3.3, 907.2.8, 907.2.9, 907.2.10, 907.2.11
Area 503, 505, 506, 508, 510
Draftstopping 718.3.2, 718.4.2
Group provisions
Group R-1 (transient) 310.3
Group R-2 (apartment) 310.4
Group R-3 (two dwellings per building) 310.5
Group R-4 (group homes) 310.6, 1010.1.9.5.1
Height 503, 504, 505, 508, 510
Incidental uses 509
Interior finishes . . . . . Table 803.11, 804
Live load . . . . . Table 1607.1
Live/work units 419
Means of egress
Aisles 1018.5
Corridors 1020.1, 1020.2
Doors 1010.1.1, 1010.1.9.5.1
Emergency escape and rescue 1030.1
Exit signs 1013.1, 1013.2
Single exits 1006.3.2,
Stairway, exit access 1019
Travel distance 1016.2.1, 1017.2, 1006.3.2
Mixed occupancies 508.3, 508.4
Accessory 508.2, G801.1
Live/work units 419
Parking, private 406.3
Parking below/above 510.4, 510.7, 510.9
Special mixed 510.2
Plumbing fixtures 2902
Risk category . . . . . Table 1604.5.1
Special provisions 510.2, 510.5, 510.6
Separation 419, 420, 508.2.4, 508.3.3
Swimming pools 3109.4
Sprinkler protection 903.2.8, 903.3.2
RETAINING WALLS 1807.2, 2304.12.5
Flood provisions G801.4
Seismic 1803.5.12
REVIEWING STANDS (see BLEACHERS AND GRANDSTANDS)
RISERS, STAIR (see STAIRWAY CONSTRUCTION)
Alternating tread device 1011.14

INTERNATIONAL CODE COUNCIL®
Copyright © 2015 ICC. ALL RIGHTS RESERVED. Accessed by David Dammon on Jun 21, 2017 12:30:52 PM pursuant to License Agreement with ICC. No further reproduction or distribution authorized. ANY UNAUTHORIZED REPRODUCTION OR DISTRIBUTION IS A VIOLATION OF THE FEDERAL COPYRIGHT ACT AND THE LICENSE AGREEMENT, AND SUBJECT TO CIVIL AND CRIMINAL PENALTIES THEREUNDER.

Assembly 1011.5.2, 1029.6, 1029.7, 1029.9, 1029.13
Closed 1011.5.5.3
General 1011.5
Spiral 1011.10
Uniformity 1011.5.4
RISK CATEGORY (Structural Design) . . . 202, 1604.5
Multiple occupancies 1604.5.1
RODENTPROOFING . . . . . Appendix F
ROLL ROOFING 1507.6
ROOF ACCESS 1011.12
ROOF ASSEMBLIES AND ROOFTOP STRUCTURES 202
Cooling towers 1510.4
Drainage 1503.4, 3201.4
Fire classification 1505
Fire district D102.2.9
Height modifications 504.3
Impact resistance 1504.7
Insulation 1508
Materials 1506
Mechanical equipment screen 1510.6
Parapet walls 1503.3, 1503.6
Penthouses 1510.2
Photovoltaic panels and modules . . . 1510.7, 1512.1
Radiant barrier 202, 1509
Roof ventilation 202
Tanks 1510.3
Towers, spires, domes and cupolas 1510.5
Weather protection 1503
Wind resistance 1504.1, 1609.5
ROOF CONSTRUCTION
Construction walkways 3306.7
Coverings (see ROOF COVERINGS) 1609.5.2
Deck 1609.5.1
Draftstopping 718.4
Fire resistance . . . . . Table 601
Fireblocking 718.2
Live loads . . . . . Table 1607.1, 1607.12
Materials . . . . . Chapter 6
Penetration of fire-resistant assemblies 714
Protection from adjacent construction 3307.1
Rain loads 1611
Roof structures 504.3, 1509, D102.2.9
Signs, roof mounted H110
Slope, minimum . . . . . Chapter 15
Snow load 1608
Trusses 2211.3, 2303.4, 2308.7.13
Wood (see ROOF CONSTRUCTION, WOOD)
ROOF CONSTRUCTION, WOOD . . . 602.4.3, 602.4.5
Anchorage to walls 1604.8.2
Attic access 1209.2
Ceiling joists 2308.7.1
Diaphragms 2305.1, 2306.2
Fastening requirements 2304.10
Fire-retardant-treated . . . . . Table 601, 603.1(1)
Framing 2304.11.3, 2308.7
Rafters 2306.1.1
Sheathing 2304.7, 2308.7.10
Trusses 2303.4, 2308.7.13
Ventilation, attic 1203.2
Wind uplift 2308.7.5
ROOF COVERINGS 1507
Asphalt shingles 1507.2
Built up 1507.10
Clay tile 1507.3
Concrete tile 1507.3
Fire district D102.2.4
Fire resistance . . . . . 603.1(3), 1505
Flashing 1503.2, 1503.6, 1507.2.9, 1507.3.9, 1507.5.7, 1507.7.7, 1507.8.8, 1507.9.9, 1510.6
Impact resistance 1504.7
Insulation 1508
Liquid-applied coating 1507.15
Membrane 3102
Metal roof panels 1507.4
Metal roof shingles 1507.5
Modified bitumen 1507.11
Photovoltaic shingles 1507.17
Plastics, light-transmitting panels 2609
Roof replacement 202, 1511.3
Reroofing 202, 1511
Roll 1507.6
Roof recover 202, 1511.3.1
Single-ply 202, 1507.12
Slate shingles 1507.7
Sprayed polyurethane foam 1507.14
Thermoplastic single-ply 1507.13
Wind loads 1504.1, 1609.5
Wood shakes 1507.9
Wood shingles 1507.8
ROOF DECK 202
ROOF DRAINAGE 1503.4
Scuppers 202, 1503.4.2
ROOF REPLACEMENT/RECOVERING 1511.3
ROOF STRUCTURE (see ROOF ASSEMBLIES AND ROOFTOP STRUCTURES)
ROOM DIMENSIONS 1208
ROOMING HOUSE (see BOARDING HOUSE) . . . 310

INTERNATIONAL CODE COUNCIL®
Copyright © 2015 ICC. ALL RIGHTS RESERVED. Accessed by David Dammon on Jun 21, 2017 12:30:52 PM pursuant to License Agreement with ICC. No further reproduction or distribution authorized. ANY UNAUTHORIZED REPRODUCTION OR DISTRIBUTION IS A VIOLATION OF THE FEDERAL COPYRIGHT ACT AND THE LICENSE AGREEMENT, AND SUBJECT TO CIVIL AND CRIMINAL PENALTIES THEREUNDER.

S

SAFEGUARDS
DURING CONSTRUCTION . . . . . Chapter 33
Accessibility 1103.2.5
Adjoining property protection 3307
Construction 3302
Demolition. 3303
Excavations 1804.1
Fire extinguishers 3309
Means of egress 3310
Protection of pedestrians 3306
Sanitary facilities. 3305
Site work. 3304
Sprinkler protection. 3312
Standpipes 3308.1.1, 3311
Temporary use of streets, alleys and public property. 3308
SAFETY GLAZING 716.5.8.4, 2406
SCHOOLS (see EDUCATIONAL OCCUPANCY)
SEATING
Accessibility 1108.2, 1109.11
Tables. 1029.9, 1029.12.1
SEATING, FIXED 1029
Accessibility 1108.2, 1109.11
Aisles 1029.9, 1029.12
Bleachers (see BLEACHERS)
Grandstands (see GRANDSTANDS)
Guards 1029.16
Live load . . . . . Table 1607.1
Occupant load 1004.4
Stability. 1029.14
Temporary 108
SECURITY GLAZING 408.7
SECURITY GRILLES 402.8.8, 1010.1.4.4
SEISMIC 1613
Construction documents. . . . 107, 1603.1.5, 1603.1.9
Earthquake recording equipment . . . . . Appendix L
Fire resistance 704.12
Geotechnical investigation 1803.5.11, 1803.5.12
Glazing 2404
Loads 1613
Mapped acceleration parameters . . . . . 1613.3.1, Figures 1613.3.1(1) through1613.3.1(8)
Masonry 2106
Membrane structure 3102.7
Seismic design category. 202, 1613.5.6
Seismic detailing. 1604.10
Site class 202, 1613.5.2
Site coefficients 202, 1613.5.3
Special inspection. 1705.12
Statement of special inspections 1704.3
Steel 2205.2, 2206.2
Structural observations 1704.6.1
Structural testing. 1705.13
Wood. 2305, 2308.6.6, 2308.6.8, 2308.6.10
SERVICE SINKS . . . . . 1109.3, Table 2902.1
SERVICE STATION
(see MOTOR FUEL-DISPENSING FACILITIES)
SHAFT (see SHAFT ENCLOSURE
AND VERTICAL OPENING PROTECTION) 202
SHAFT ENCLOSURE
(see VERTICAL OPENING PROTECTION) 713
Continuity 713.5, 713.11, 713.12
Elevators. 713.14
Exceptions 713.2, 1019, 1023,
Exterior walls. 713.6
Fire-resistance rating 707.3.1, 713.4
Group I-3. . . . . 408.5
High-rise buildings 403.2.1.2, 403.2.3, 403.3.1.1, 403.5.1
Joints. 713.9, 715
Materials 713.3
Opening protection 713.8, 713.10, 714, 717.5.3
Penetrations 713.8
Refuse and laundry chutes 713.13
Required 713.1
SHEAR WALL
Gypsum board and plaster 2505
Masonry 202
Wood. 202, 2305.1, 2306.3
SHEATHING
Clearance from earth 2304.12.1.2
Fastening 2304.10
Fiberboard. . . . . Table 2306.3(2)
Floor 2304.8, 2308.4.7
Gypsum. . . . . Table 2506.2, 2508
Moisture protection 2304.12.1.2
Roof 2304.8
Roof sheathing 2308.7.10
Wall. 2304.6, 2308.5.11
Wood structural panels 2303.1.5, 2211.3
SHOPPING CENTERS
(see COVERED AND OPEN MALL BUILDINGS)
SHOTCRETE 1908
SHUTTERS, FIRE
(see OPENING PROTECTIVES) 716.5
SIDEWALKS . . . . . 105.2(6), G801.4
Live loads . . . . . Table 1607.1
SIGNS . . . . . 3107, Appendix H
Accessibility 1013.4, 1110, E106.4.9, E107, E109.2.2
Accessible means of egress . . . . . 1009.8.2, 1009.9 through 1009.11

INTERNATIONAL CODE COUNCIL®
Copyright © 2015 ICC. ALL RIGHTS RESERVED. Accessed by David Dammon on Jun 21, 2017 12:30:52 PM pursuant to License Agreement with ICC. No further reproduction or distribution authorized. ANY UNAUTHORIZED REPRODUCTION OR DISTRIBUTION IS A VIOLATION OF THE FEDERAL COPYRIGHT ACT AND THE LICENSE AGREEMENT, AND SUBJECT TO CIVIL AND CRIMINAL PENALTIES THEREUNDER.

Animated devices H108
Construction. H105, H107
Covered and open mall building 402.6.4
Doors 1010.1.9.3, 1010.1.9.7, 1010.1.9.8
Electrical H106
Elevators 1109.7, 1111.2, 3002.3, 3007.6.5, 3008.6.5
Encroachment, public right-of-way 3202.3.1
Exit. 1013, 2702.2.5
Floor loads 106.1
Ground. H109
Height limitation H109.1, H112.4
Illumination. H106.1
Luminous 403.5.5, 1013.5, 1025
Marquee. H113
Obstruction 1003.3.2, 1003.3.3, H103
Occupant load, assembly 1004.3
Parking spaces 1111.1
Plastic 2611, D102.2.10
Portable H114
Projecting. H112
Protruding objects 1003.3
Roof H110
Stairway identification 1023.8, 1023.9, 1111.2, 1111.3
Standpipe control valve 905.7.1
Toilet room. 1111.1, 1111.2, 2902.4, 2902.4.1
Variable message 1111.4
Walls 703.6, H111

SITE DRAWINGS. 107.2.5
SITE WORK 3304
SKYLIGHTS 2405, 3106.3
Light, required 1205.2
Loads. 2404
Plastic 2610
Protection from adjacent construction 3307.1
Vertical opening protective 712.1.15

SLAB ON GROUND, CONCRETE. 1907, 2304.12.1.4
SLATE SHINGLES. 1507.7
SLEEPING UNITS 202
Accessibility 1103.2.11, 1105.1.6, 1106.2, 1106.7.2, 1107
Group I. 308
Group R 310
Scoping 101.2
Separation 420.2, 420.3

SMOKE ALARMS
Bathrooms 907.2.11.4
Cooking appliances 907.2.11.3
Live/work unit. 419.5, 907.2.11.2
Multiple-station. 907.2.11
Residential aircraft hangars 412.5.3, 412.5.4, 907.2.21
Residential occupancies 420.5, 907.2.11.1, 907.2.11.2
Single-station 907.2.11

SMOKE BARRIERS 202
Construction. 407.4.3, 709.4, 909.5
Doors 709.5, 716.5.3, 909.5.3
Fire-resistance rating 703, 709.3
Glazing, rated. 716.6
Inspection. 110.3.6
Joints 709.7, 715
Marking 703.6
Materials. 709.2
Opening protection. 709.5, 714.3, 714.4.4, 716, 717.5.5, 909.5.3
Penetrations. 709.6, 714
Smoke control 909.5
Special provisions
Ambulatory care facilities. 422.2, 422.3, 709.5.1
Group I-1 . . . . . 420.4, 709.5.1
Group I-2 . . . . . 407.5
Group I-3 . . . . . 408.6, 408.7
Underground 405.4.2, 405.4.3

SMOKE COMPARTMENT 407, 408, 422
Refuge area (see REFUGE AREA)

SMOKE CONTROL 909
Amusement buildings, special 411.1
Atrium buildings 404.5
Covered and open mall building. 402.7.2
Group I-3 . . . . . 408.9
High-rise (smoke removal). 403.4.7, 1023.11
Special inspections 1705.18
Stages 410.3.7.2
Standby power systems. 909.11, 909.20.6.2, 2702.2.15
Underground buildings. 405.5

SMOKE DAMPERS . . . . . 717.2 through 717.5

SMOKE DETECTION SYSTEM (see FIRE ALARM AND SMOKE DETECTION SYSTEMS). 907

SMOKE DETECTORS
Covered and open mall building. 402.8.6.1, 907.2.20
High-rise buildings 403.4.1, 907.2.13
HPM 415.11.9.3
Institutional I-2 . . . . . 407.8
Smoke-activated doors 716.5.9.3
Special amusement buildings 411.5
Underground buildings. 907.2.18,

INTERNATIONAL CODE COUNCIL®
Copyright © 2015 ICC. ALL RIGHTS RESERVED. Accessed by David Dammon on Jun 21, 2017 12:30:52 PM pursuant to License Agreement with ICC. No further reproduction or distribution authorized. ANY UNAUTHORIZED REPRODUCTION OR DISTRIBUTION IS A VIOLATION OF THE FEDERAL COPYRIGHT ACT AND THE LICENSE AGREEMENT, AND SUBJECT TO CIVIL AND CRIMINAL PENALTIES THEREUNDER.

SMOKE DEVELOPMENT . . . . . 802, 803.1.1, Table 803.11
SMOKE EXHAUST SYSTEMS
Underground buildings 405.5, 907.2.18, 909.2
SMOKE PARTITIONS 202, 710
Continuity 710.4
Doors 710.5
Ducts and air transfer openings 710.8
Fire-resistance rating 710.3
Inspection 110.3.6
Joints 710.7
Marking 703.6
Materials 710.2
Opening protection 710.5, 717.5.7
Penetrations 710.6
Special provisions
Atriums 404.6
Group I-2 . . . . . 407.3
SMOKE REMOVAL (High rise) 403.4.7
SMOKE VENTS 410.3.7.1, 910
SMOKEPROOF ENCLOSURES 403.5.4, 1023.11
Design 909.20
SNOW LOAD 1608
Glazing 2404
SOILS AND FOUNDATIONS (see FOUNDATION) . . . . . Chapter 18
Depth of footings 1809.4
Excavation, grading and fill . . . 1804, 3304, J106, J107
Expansive 1803.5.3, 1808.6
Flood hazard 1808.4
Footings and foundations 1808
Footings on or adjacent to slopes . . 1808.7, 3304.1.3
Foundation walls 1807.1.5, 3304.1.4
Geotechnical investigation 1803
Grading . . . . . 1804.4, Appendix J
Load-bearing values 1806
Soil boring and sampling 1803.4
Soil lateral load 1610
Special inspection 1705.6
SORORITIES 310.4
SOUND-INSULATING MATERIALS (see INSULATION) 720
SOUND TRANSMISSION 1207
SPECIAL CONSTRUCTION . . . . . Chapter 31
Automatic vehicular gates 3110
Awnings and canopies (see AWNINGS and CANOPIES) 3105
Marquees (see MARQUEES) 3106
Membrane structures (see MEMBRANE STRUCTURES) 3102
Pedestrian walkways and tunnels (see WALKWAYS and TUNNELED WALKWAYS) 3104
Photovoltaic panels and modules 3111
Signs (see SIGNS) 3107
Swimming pool enclosures and safety devices (see SWIMMING POOL) 3109
Telecommunication and broadcast towers (see TOWERS) 3108
Temporary structures (see TEMPORARY STRUCTURES) 3103
SPECIAL INSPECTIONS AND TESTS (see INSPECTIONS) . . . . . 110.3.9, Chapter 17
Alternative test procedure 1707
Approvals 1703
Continuous special inspection 202
Contractor responsibilities 1704.4
Design strengths of materials 1706
General 1701
In-situ load tests 1708
Periodic special inspection 202
Preconstruction load tests 1709
Special inspections 1705
Statement of special inspections 1704.3
Structural observations 1704.6
Testing seismic resistance 1705.13
SPECIAL INSPECTOR 202
Qualifications 1704.2.1
SPIRAL STAIRWAYS 1011.10
Construction 1011.2, 1011.3, 1011.10
Exceptions 1011.5.2, 1011.5.3, 1011.5.5.3, 1011.10
Group I-3 . . . . . 408.3.4
Live/work 419.3.2
Stages 410.6.3.4
SPORTS ACTIVITY, AREA OF (see RECREATIONAL FACILITIES) 202, 1110.4.1
SPRAYED FIRE-RESISTANT MATERIALS 202, 1702.1
Application 704.13
Inspection 1705.14, 1705.15
Steel column calculated fire resistance 722.5.2.2
SPRINKLER SYSTEM, AUTOMATIC 903, 3312
Exempt locations 903.3.1.1.1, 903.3.1.1.2
Fire department location 912
Limited area sprinkler systems 903.3.8
Signs 914.2
Substitute for fire rating . . . . . Table 601(4)
SPRINKLER SYSTEM, REQUIRED 903
Aircraft related 412.4.6, 412.6.5
Ambulatory care facilities 422.4, 903.2.2
Amusement buildings, special 411.4
Assembly 903.2.1, 1029.6.2.3
Atrium 404.3

INTERNATIONAL CODE COUNCIL®
Copyright © 2015 ICC. ALL RIGHTS RESERVED. Accessed by David Dammon on Jun 21, 2017 12:30:52 PM pursuant to License Agreement with ICC. No further reproduction or distribution authorized. ANY UNAUTHORIZED REPRODUCTION OR DISTRIBUTION IS A VIOLATION OF THE FEDERAL COPYRIGHT ACT AND THE LICENSE AGREEMENT, AND SUBJECT TO CIVIL AND CRIMINAL PENALTIES THEREUNDER.

Basements 903.2.11.1
Building area 506.2
Children's play structures 424.3
Combustible storage 413
Commercial kitchen 903.2.11.5
Construction 903.2.12
Covered and open mall building 402.5
Drying rooms 417.4
Education 903.2.3
Exempt locations 903.3.1.1.1, 903.3.1.1.2
Factory 903.2.4
Fire areas 707.3.10
Hazardous materials . . . . . Table 414.2.5(1), Table 414.2.5(2), 903.2.11.4
Hazardous occupancies 415.4, 415.11.6.4, 415.11.11, 705.8.1, 903.2.5
Height increase . . . . . Table 504.3
High-rise buildings 403.3, 903.2.11.3
Incidental uses . . . . . Table 509
Institutional 407.6, 408.11, 420.5, 903.2.6, 903.3.2
Laundry chutes, refuse chutes, termination rooms and incinerator rooms 713.13, 903.2.11.2
Live/work units 419.5, 903.2.8
Mercantile 903.2.7
Mezzanines 505.2.1, 505.2.3, 505.3.2
Multistory buildings 903.2.11.3
Parking garages 406.6.3, 903.2.9.1, 903.2.10.1
Residential 420.5, 903.2.8, 903.3.2
Special amusement buildings 411.4
Spray finishing booth 416.5
Stages 410.7
Storage 903.2.9, 903.2.10
Supervision (see SPRINKLER SYSTEM, SUPERVISION) 903.4
Underground buildings 405.3, 903.2.11.1
Unlimited area 507

SPRINKLER SYSTEM, SUPERVISION 903.4
Service 901.6
Underground buildings 405.3

STAGES AND PLATFORMS 303, 410
Dressing rooms 410.5
Fire barrier wall 410.5.1, 410.5.2
Floor finish and floor covering 410.3, 410.4, 804.4, 805.1
Horizontal assembly 410.5.1, 410.5.2
Means of egress 410.6
Platform, temporary 410.4.1
Platform construction . . . . . 410.4, 603.1(12)
Proscenium curtain 410.3.5
Proscenium wall 410.3.4
Roof vents 410.3.7.1
Scenery 410.3.6
Smoke control 410.3.7.2
Sprinkler protection 410.7
Stage construction . . . . . 410.3, 603.1(12)
Standpipes 410.8, 905.3.4
Technical production areas 202, 410.3.2, 410.6.3
Ventilation 410.3.7

STAIRWAY
(see ALTERNATING TREAD DEVICES, SPIRAL STAIRWAYS, STAIRWAY CONSTRUCTION and STAIRWAY ENCLOSURE)

STAIRWAY CONSTRUCTION
Alternating tread 1011.14
Circular (see Curved)
Construction 1011.7
Curved 1011.4, 1011.9
Discharge barrier 1023.8
During construction 3310.1
Elevators 1011.12.1, 1023.4, 1023.10, 3002.7
Enclosure under 1011.7.3, 1011.7.4
Exit access 1019
Exterior exit 1027, 1028.1
Fireblocking 718.2.4
Guards 1015.2, 1015.3, 1607.7
Handrails 1011.11, 1014, 1607.7
Headroom 1011.3
Interior exit 1022
Illumination 1008.2, 1205.4, 1205.5
Ladders 408.3.5, 410.6.3.4, 1011.15, 1011.16
Landings 1011.6, 1011.8
Live load . . . . . Table 1607.1, 1607.8
Luminous 403.5.5, 411.7.1, 1025
Roof access 1011.12
Seismic anchorage 2308.4.7
Spiral (see SPIRAL STAIRWAYS) 408.3.4, 410.6.3.4, 419.3.2, 1011.10
Stepped aisles 1029.13.2
Transitions 1029.9.7, 1029.9.8, 1029.10
Travel distance 1017.3.1
Treads and risers 1011.4, 1011.5
Width/capacity 1005.3.1, 1011.2
Winders 1011.4, 1011.5, 1011.10

STAIRWAY ENCLOSURE 713.1, 1019, 1023
Accessibility 1009.3
Construction 1019, 1023.2
Discharge 1023.3.1, 1028.1
Doors 716.5.9, 1010.1.9.11
Elevators within 1023.4, 3002.7

INTERNATIONAL CODE COUNCIL®
Copyright © 2015 ICC. ALL RIGHTS RESERVED. Accessed by David Dammon on Jun 21, 2017 12:30:52 PM pursuant to License Agreement with ICC. No further reproduction or distribution authorized. ANY UNAUTHORIZED REPRODUCTION OR DISTRIBUTION IS A VIOLATION OF THE FEDERAL COPYRIGHT ACT AND THE LICENSE AGREEMENT, AND SUBJECT TO CIVIL AND CRIMINAL PENALTIES THEREUNDER.

Exit access 1019
Exterior walls 705.2, 707.4, 708.5, 713.6, 1009.3.1.8, 1023.2, 1027.6
Fire-resistant construction 1019.3, 1023.2
Group I-2 . . . . . 1019.4
Group I-3 . . . . . 408.3.8, 1019.4
High-rise 403.5
Penetrations 1023.5
Pressurization 909.6, 909.20.5, 1023.11
Smokeproof 403.5.4, 405.7.2, 909.20, 1023.11
Space below, use 1011.7.3, 1011.7.4
Ventilation 1023.6
STANDARDS (see REFERENCED STANDARDS)
STANDBY POWER 2702.1, 2702.2, 2702.4
Atriums 404.7, 2702.2.15
Covered and open mall buildings 402.7.3, 2702.2.4
Elevators 1009.4, 2702.2.2, 3003.1, 3007.8, 3008.8
Hazardous occupancy 414.5.2, 415.11.10, 421.8, 2702.2.8, 2702.2.13,
High-rise 403.4.5, 2702.2.9
Horizontal sliding doors 1010.1.4.3, 2702.2.10
Membrane structures 2702.2.12, 3102.8.2
Platform lifts 1009.5, 2702.2.2
Smoke control 909.11, 2702.2.15
Smokeproof enclosure 909.20.6.2, 2702.2.15
Special inspection 1705.12.6
Underground buildings 405.8, 2702.2.16
STANDPIPE AND HOSE SYSTEMS (see STANDPIPES, REQUIRED) 905, 3106.4, 3308.1.1, 3311
Cabinet locks 905.7.2
Dry 905.8
Hose connection location . . . . . 905.1, 905.4 through 905.6, 912
STANDPIPES, REQUIRED
Assembly 905.3.1, 905.3.2, 905.3.4
Covered and open mall buildings 402.7.1, 905.3.3
During construction 905.10, 3311
Elevators, fire service access 3007.9
Helistops 905.3.6
Marinas 905.3.7
Parking garages 406.5.8
Roof gardens and landscaped roofs 905.3.8
Stages 410.8, 905.3.4
Underground buildings 405.9, 905.3.5
STATE LAW 102.2
STEEL . . . . . Chapter 22
Bolting 2204.2
Cable structures 2208
Calculated fire resistance 722.5
Cold-formed 202, 2210, 2211
Composite structural steel and concrete 2206
Conditions of restraint 703.2.3
Decks 2210.1.1
Identification and protection 2203
Joists 202, 2207
Open web joist 2207
Parapet walls 1503.3, 1503.6
Seismic provisions 2205.2, 2206.2, 2207.1.1, 2210.2
Special inspections 1705.3
Storage racks 2209
Structural steel 2205
Welding 2204.1
STONE VENEER 1405.7
Slab-type 1405.8
STOP WORK ORDERS 115
STORAGE OCCUPANCY (GROUP S) 311
Accessibility 1108.3
Area 406.5.4, 406.5.5, 406.6.1, 503, 505, 506, 507, 508
Equipment platforms 505.2
Group provisions
Hazard storage, low, Group S-2 . . . . . 311.3
Hazard storage, moderate, Group S-1 . . . . . 311.2
Hazardous material display and storage 414.2.5
Height 406.5.4, 406.6.1, 503, 504, 505, 508, 510
Incidental uses 509
Interior finishes . . . . . Table 803.11, 804
Live loads . . . . . Table 1607.1
Means of egress
Aisles 1018.5
Stairway, exit access 1019
Travel distance 1016.2.1, 1017.2, 1017.2.2, 1006.3.2
Mixed occupancies 508.3, 508.4
Accessory 508.2
Parking above/below 510.3, 510.4, 510.7, 510.8, 510.9
Special mixed 510.2
Plumbing fixtures 2902
Special provisions
Aircraft related occupancies 412
High-piled combustible 413
Parking garages 406
Sprinkler protection 903.2.10
Unlimited area 507.3, 507.4, 507.5
STORM SHELTER 423
Emergency operation facilities 423.3

INTERNATIONAL CODE COUNCIL®
Copyright © 2015 ICC. ALL RIGHTS RESERVED. Accessed by David Dammon on Jun 21, 2017 12:30:52 PM pursuant to License Agreement with ICC. No further reproduction or distribution authorized. ANY UNAUTHORIZED REPRODUCTION OR DISTRIBUTION IS A VIOLATION OF THE FEDERAL COPYRIGHT ACT AND THE LICENSE AGREEMENT, AND SUBJECT TO CIVIL AND CRIMINAL PENALTIES THEREUNDER.

Education 423.4
Refuge area (see REFUGE AREA)
STRENGTH
Design requirements 1604.2
Masonry 202
Nominal 202
Required 202
STRENGTH DESIGN 202, 1604.1
Factored load 202
Limit state 202
Load combinations 1605.2
Load factor 202
Masonry 2108
STRUCTURAL DESIGN . . . . . Chapter 16
Aluminum . . . . . Chapter 20
Concrete . . . . . Chapter 19
Foundations . . . . . Chapter 18
Masonry . . . . . Chapter 21
Steel . . . . . Chapter 22
Wood . . . . . Chapter 23
STRUCTURAL OBSERVATION 202, 1704.6
STUCCO 2512
SUSCEPTIBLE BAY
Definition 202
Ponding instability 1611.2
SWIMMING POOL 3109
Accessibility 1110.2, 1110.3, 1110.4.13
Flood provisions G801.5
Gates, access 3109.4.1.7
Glass 2406.4
Indoor 3109.4.2
Public 3109.3
Residential 3109.4

T

TECHNICAL PRODUCTION AREAS 410.3.2, 410.6.3
TELEPHONE EXCHANGES 304
TELESCOPIC SEATING
(see FOLDING AND TELESCOPIC SEATING)
TEMPORARY STRUCTURES 3103
Certificate of occupancy 108.3
Conformance 108.2, 3103.1.1
Construction documents 3103.2
Encroachment, public rights-of-way 3202.3
Flood provisions G901
Means of egress 3103.4
Permit 108.1, 3103.1.2
Power, temporary 108.3
Termination of approval 108.4
TENANT SEPARATION
Covered and open mall building 402.4.2.1, 708.1
TENTS (see TEMPORARY STRUCTURES)
TERMITES, PROTECTION FROM 2304.12
TERRA COTTA 1405.9
TESTING
Automatic fire-extinguishing systems 904.4
Automatic water mist systems 904.11.3
Building official required 104.11.1
Carbon dioxide systems 904.8
Clean agent system 904.10
Dry chemical systems 904.6
Emergency and standby power 2702.4
Fire-resistant materials 703.2
Fire alarm systems 907.7, 907.8
Fire pumps 913.5
Foam systems 904.7
Glazing 2406, 2408.2.1
Halon systems 904.9
Personnel and material hoists 3004.4
Roof tile 1711.2
Seismic 1705.13
Sound transmission 1207
Smoke control 909.3, 909.5.2, 909.10.2, 909.12.1, 909.13.3, 909.18, 909.20.6.3, 909.21.7 1705.18
Soils 1803
Sprinkler protection 903.5
Structural
(see SPECIAL INSPECTIONS AND TESTS)
Wet chemical systems 904.5
THEATERS
[see ASSEMBLY OCCUPANCY (GROUP A, PROJECTION ROOMS and STAGES AND PLATFORMS)] 303.2
THERMAL BARRIER, FOAM PLASTIC INSULATION 2603.4, 2603.5.2
THERMAL-INSULATING MATERIALS (see INSULATION) 719
TILE 202
Ceramic (see CERAMIC TILE)
Fire resistance, clay or shale 721.1
TOILETS and TOILET ROOMS . . . . Chapter 29, 3305
Accessible 1109.2, 1109.3, 1607.8.2
Construction/finish materials 1210
Door locking 1010.1.9.5.1, 1109.2.1.7, 2902.3.5
Family or assisted-use 1109.2.1, 2902.1.2, 2902.2.1
Fixture count . . . . . Table 2902.1
Grab bar live loads 1607.8.2
Location 2902.3.1, 2902.3.2, 2902.3.3, 2903.3.6

INTERNATIONAL CODE COUNCIL®
Copyright © 2015 ICC. ALL RIGHTS RESERVED. Accessed by David Dammon on Jun 21, 2017 12:30:52 PM pursuant to License Agreement with ICC. No further reproduction or distribution authorized. ANY UNAUTHORIZED REPRODUCTION OR DISTRIBUTION IS A VIOLATION OF THE FEDERAL COPYRIGHT ACT AND THE LICENSE AGREEMENT, AND SUBJECT TO CIVIL AND CRIMINAL PENALTIES THEREUNDER.

Partitions 1210.3
Privacy 1210.3
Public facilities 2902.3
Signs 1111.1, 1111.2, 2902.4, 2902.4.1
Ventilation 1203.5.2.1

TORNADO SHELTER (see STORM SHELTER)

TOWERS
Airport traffic control 412.3
Cooling 1510.4
Location and access 3108.2
Radio 3108
Television 3108

TOXIC MATERIALS [see HIGH-HAZARD OCCUPANCY (GROUP H)]
Classification 307.6, 414, 415
Gas detection system 415.11.7, 421.6, 908.3

TRAVEL DISTANCE
Area of refuge 1009.6.1
Assembly seating 1029.7
Atrium 404.9
Balcony, exterior 1017.2.1
Care suites (Group I-2) 407.4.2, 407.4.4
Common path of travel 1016.2.1
Drinking fountains 2902.5
Exit access 1017.2
Mall 402.8.5, 402.8.6
Measurement 1017.3
Refrigeration machinery/ refrigerated rooms 1006.2.2.2, 1006.2.2.3
Smoke compartments (Group I-2 and I-3) 407.5, 408.6., 408.9
Special amusement building 411.4
Stories with one exit 1006.3.2
Toilet facilities 2902.3.2, 2902.3.3

TREADS, STAIR (see STAIRWAY CONSTRUCTION)
Concentrated live load . . . . . Table 1607.1

TREATED WOOD 202
Fire-retardant-treated wood 2303.2
Pressure-treated wood 2303.1.9
Stress adjustments 2306.1.3

TRUSSES
Cold-formed steel 2211.3
Fire resistance 704.5
Materials . . . . . Chapter 6
Metal-plate-connected wood 2303.4.6
Wood 2303.4

TSUNAMI-GENERATED FLOOD HAZARD . . . . . Appendix M

TUNNELED WALKWAY 3104, 3202.1

TURNSTILES 1010.3

U

UNDERGROUND BUILDINGS 405
Alarms and detection 405.6
Compartmentation 405.4
Construction type 405.2
Elevators 405.4.3
Emergency power loads 405.8, 2702.2.16
Means of egress 405.7
Smoke barrier 405.4.2, 405.4.3
Smoke exhaust/control 405.5
Smokeproof enclosure 405.7.2, 1023.11
Sprinkler protection 405.3
Standby power 405.8, 2702.2.16
Standpipe system 405.9, 905.3.5

UNDERLAYMENT . . . . . 202, 1707.2.3, 1507.3.3, 1507.5.3, 1507.6.3, 1507.7.3, Table 1507.8, 1507.8.3, 1507.9.3, 1507.17.3
Application 1507.2.8, 1507.3.3, 1507.4.5, 1507.5.3.1, 1507.6.3.1, 1507.7.3.1, 1507.8.3.1, 1507.9.3.1, 1507.17.4
Ice barrier 1507.2.8.2, 1507.5.4, 1507.6.4, 1507.7.4, 1507.8.4, 1507.9.4, 1507.17.4.2

UNLIMITED AREA BUILDINGS 507

UNSAFE STRUCTURES AND EQUIPMENT (see STRUCTURES, UNSAFE) 115
Appeals . . . . . 113, Appendix B
Restoration 115.5
Revocation of permit 105.6
Stop work orders 115
Utilities disconnection 112.3

UNSTABLE MATERIALS . . . . 307.3, Table 414.2.5(1), Table 414.5.1, Table 415.6.2, 415.7.1, 415.9

UNUSABLE SPACE 712.3.3

USE AND OCCUPANCY . . . . . Chapter 3
Accessory 508.2
Incidental uses . . . . . 509, Table 509
Mixed 508.3, 508.4
Special . . . . . Chapter 4

UTILITIES 112
Service connection 112.1
Service disconnection 112.3
Temporary connection 112.2

UTILITY AND MISCELLANEOUS OCCUPANCY (GROUP U) 312
Accessibility 1103.2.4, 1104.3.1
Agricultural buildings . . . . . Appendix C
Area 503, 505, 506, 507, 508
Flood provisions G1001

INTERNATIONAL CODE COUNCIL®
Copyright © 2015 ICC. ALL RIGHTS RESERVED. Accessed by David Dammon on Jun 21, 2017 12:30:52 PM pursuant to License Agreement with ICC. No further reproduction or distribution authorized. ANY UNAUTHORIZED REPRODUCTION OR DISTRIBUTION IS A VIOLATION OF THE FEDERAL COPYRIGHT ACT AND THE LICENSE AGREEMENT, AND SUBJECT TO CIVIL AND CRIMINAL PENALTIES THEREUNDER.

Height 503, 504, 508
Incidental uses 509
Live loads . . . . . Table 1607.1
Means of egress
Exit signs 1013.1
Stairway, exit access 1019
Mixed occupancies 508.3, 508.4
Special provisions
Private garages and carports 406.3
Residential aircraft hangers 412.5
Sprinkler protection 903.2.11
Travel distance 1016.2.1, 1017.1, 1006.3.2

V

VALUATION OR VALUE (see FEES, PERMIT) 109.3
VEHICLE BARRIER SYSTEMS 202, 406.4.3, 1607.8.3
VEHICLE SHOW ROOMS 304
VEHICULAR FUELING 406.7
VEHICULAR GATES 3110
VEHICULAR REPAIR 406.8
VENEER
Cement plaster 1405.15
Fastening 1405.17
Fiber-cement siding 1405.16
Glazing 1405.12
Masonry, adhered 1405.10, 2101.2.1, 2103.2.4
Masonry, anchored 1405.6, 2101.2.1
Metal 1405.11
Plastic 2605
Slab-type 1405.8
Stone 1405.7
Terra cotta 1405.9
Vinyl 1405.14
Wood 1405.5
VENTILATION (see MECHANICAL) 101.4.2
Attic 1203.2, 1503.5
Aircraft paint hangars 412.6.6
Bathrooms 1203.4.2.1
Crawl space 1203.3
Exhaust, hazardous 1203.6
Exhaust, HPM 415.11.10.2
Exit enclosure 1023.6
Fabrication areas, HPM 415.11.1.6
Hazardous 414.3, 415.9.1.7, 415.11.1.6, 415.11.5.8, 415.11.6.4, 415.11.7, 415.11.9.3
High-rise stairways 1022.10
HPM service corridors 415.11.3.2
Live/work unit 419.8
Mechanical 1203.1
Natural 1203.5
Parking 406.5.2, 406.5.5, 406.5.10, 406.6.2
Projection rooms 409.3
Repair garages 406.8.2
Roof 1203.2
Smoke exhaust 910
Smoke removal, high-rise buildings 403.4.7
Smokeproof enclosures 909.20.3, 909.20.4, 909.20.6, 1023.11
Spray rooms and spaces 416.2.2, 416.3
Stages 410.3.5, 410.3.7
Under-floor ventilation 1203.4
VENTS, PENETRATION PROTECTION 714
VERMICULITE, FIRE RESISTANT 721
VERTICAL OPENING PROTECTION
Atriums 404.6
Duct penetrations 717.1
Elevators 713.14, 3007.6.1, 3008.6.1
Exceptions 1022.1
Group I-3 . . . . . 408.5
High-rise 403.2.1.2, 403.2.3, 403.5.1
Live/work units 419.4
Open parking garages 406.5.9
Permitted vertical openings 712
Shaft enclosure 713, 1019, 1023.2
VESTIBULES, EXIT DISCHARGE 1028.1
VINYL
Expanded 802, 803.7, 803.8
Rigid 1405.14
VIOLATIONS 114
VOICE ALARM (see ALARMS, VOICE)

W

WALKWAY 3104
During construction 3306
Encroachment, public right-of-way 3202.3.4
Fire resistance . . . . . Table 601
Live load . . . . . Table 1607.1
Materials per construction type . . . . . Chapter 6
Opening protection 716, 717
WALL, EXTERIOR 705
Bearing . . . . . Chapter 6
Coverings 1405
Exterior Insulation and Finish Systems (EIFS) . . 1408
Exterior structural members 704.10
Fire district D102.1, D102.2.6
Fire-resistance ratings . . . . . Table 602, 703, 705.5, 706.5.1, 707.4, 1403.4
Flashing, veneered walls 1405.4, 1405.10.1
Foam plastic insulation 2603.4.1.4, 2603.5

INTERNATIONAL CODE COUNCIL®
Copyright © 2015 ICC. ALL RIGHTS RESERVED. Accessed by David Dammon on Jun 21, 2017 12:30:52 PM pursuant to License Agreement with ICC. No further reproduction or distribution authorized. ANY UNAUTHORIZED REPRODUCTION OR DISTRIBUTION IS A VIOLATION OF THE FEDERAL COPYRIGHT ACT AND THE LICENSE AGREEMENT, AND SUBJECT TO CIVIL AND CRIMINAL PENALTIES THEREUNDER.

Glazing, rated 715.5
Joints 705.9, 714
Light-transmitting plastic panels 2607
Materials 705.4, 1406
Metal Composite Materials (MCM) 1407
Nonbearing . . . . . Chapter 6
Opening protection 705.8, 705.10, 716.5.6
Parapets 705.11
Projections 705.2
Structural stability 705.6
Vapor retarders 1405.3
Veneer (see VENEER)
Weather resistance 1403.2, 1405.2, 1407.6, 1408.4
Weather-resistant barriers 1405.2

WALL, FIRE (see FIRE WALLS)
WALL, FOUNDATION (see FOUNDATION)
WALL, INTERIOR
Finishes 803, 1210.2
Opening protection 716, 717
WALL, INTERIOR NONBEARING (see PARTITIONS)
WALL, MASONRY 202
Wood contact 2304.12.1.3, 2304.12.1.5
WALL, PARAPET 705.11, 1503.3, 1503.6, 2109.3.4.3
WALL, PARTY (see FIRE WALLS)
WALL, PENETRATIONS 714.3
WALL, RETAINING (see RETAINING WALL)
WALL, VENEERED (see VENEER) . . . . . Chapter 14
WALL, WOOD CONSTRUCTION
Bracing 2308.6
Cutting, notching, boring 2308.5.9
Exterior framing 2308.5
Fastening schedule . . . . . Table 2304.10.1
Framing 2304.3, 2308.5
Interior bearing partition 2308.5.1
Interior nonbearing partition 2308.5.1
Openings 2308.5.5
Shear walls 2305.1, 2306.3
Sheathing (see SHEATHING)
Studs 2308.5.1
Top plates 2308.5.3.2

WATER-REACTIVE MATERIALS . . . . Table 307.1(1), 307.4, 307.5. 415.8.4

WEATHER PROTECTION
Exterior walls 1405.2
Roofs 1503

WELDING 2204.1
Materials, verification of steel reinforcement 1705.3.2
Special inspections 1705.2, 1705.3.1, 1705.12.3
Splices of reinforcement in masonry 2107.4

WIND LOAD 1609
Alternate all-heights method 1609.6
Construction documents 107, 1603.1.4
Exposure category 1609.4
Glazing 1609.1.2, 2404
Hurricane-prone regions 202
Masonry, empirical design 2109.1.1
Nominal design wind speed 1609.3.1
Roofs 1504.1, 1609.5, 2308.7.5
Seismic detailing required 1604.10
Special inspection 1705.11
Statement of special inspections 1704.3
Structural observation 1704.6.2
Ultimate design wind speed 1609.3
Wind-borne debris region 202
Wind tunnel testing 1504.2.1.2, 1609.1.1

WINDERS, STAIR (see STAIRWAY CONSTRUCTION)
WINDOW
Accessibility 1109.13.1
Emergency egress 1030
Exterior, structural testing 1709.5
Fire (see OPENING PROTECTIVES) 716.5.10, 716.5.11
Glass (see GLAZING) 1405.13
Guards 1015.8
Required light 1205.2
Wells 1030.5

WIRES, PENETRATION PROTECTION 714

WOOD . . . . . Chapter 23
Allowable stress design 2306
Bracing, walls 2308.6
Calculated fire resistance 722.6
Ceiling framing 2308.7
Connectors and fasteners 2304.10
Contacting concrete, masonry or earth 2304.1.4, 2304.12.1.3, 2304.12.2.1, 2304.12.2.2, 2304.12.3
Decay, protection against 2304.12
Diaphragms 2305.1, 2305.2, 2306.2
Draftstopping 718.3, 718.4
End-jointed lumber 2303.1.1.2
Fiberboard . . . . . 2303.1.5, Table 2306.3(2)
Fire-retardant treated 2303.2
Fireblocking 718.2
Floor and roof framing (see FLOOR CONSTRUCTION, WOOD) 2304.4
Floor sheathing 2304.8
Foundation 1807.1.4, 2308.6.7.4
Grade, lumber 2303.1.1
Hardboard 2303.1.7

INTERNATIONAL CODE COUNCIL®
Copyright © 2015 ICC. ALL RIGHTS RESERVED. Accessed by David Dammon on Jun 21, 2017 12:30:52 PM pursuant to License Agreement with ICC. No further reproduction or distribution authorized. ANY UNAUTHORIZED REPRODUCTION OR DISTRIBUTION IS A VIOLATION OF THE FEDERAL COPYRIGHT ACT AND THE LICENSE AGREEMENT, AND SUBJECT TO CIVIL AND CRIMINAL PENALTIES THEREUNDER.

Heavy timber construction 602.4, 2304.11
Hurricane shutters 1609.1.2
I-joist 2303.1.2
Inspection, special 1705.5, 1705.11.1, 1705.12.2
Lateral force-resisting systems 2305
Light-frame construction, conventional 2308
Load and resistance factor design 2307
Moisture content 2303.1.9.2, 2303.2.6
Nails and staples 2303.6
Plywood, hardwood 2303.3
Preservative treated 1403.5, 1403.6, 2303.1.9
Roof framing
(see ROOF CONSTRUCTION, WOOD) . . . 2304.4
Roof sheathing 2304.8
Seismic provisions 2305, 2306, 2308.6.6, 2308.6.8, 2308.6.10
Shear walls 2305, 2306.3
Standards and quality, minimum 2303
Structural panels 202, 2303.1.5
Supporting concrete or masonry 2304.13
Termite, protection against 2304.12
Trusses 2303.4
Veneer . . . . . Chapter 14
Wall framing
(see WALL, WOOD CONSTRUCTION) 2304.3
Wall sheathing, exterior 2304.6
WOOD SHINGLES AND SHAKES . . . 1507.8, 1507.9
WOOD STRUCTURAL PANELS
(see WOOD) 202, 2303.1.5
Bracing 2308.6
Decorative 2303.3
Diaphragms 2305.2, 2306.2
Fastening 2304.10
Fire-retardant-treated 2303.2
Performance category 202
Quality 2303.1.5
Roof sheathing 2304.8, 2308.7.10
Seismic shear panels 2305.1, 2308.6.6.2
Shear walls 2306.3
Sheathing 2304.6.1
Standards 2306.1
Subfloors 804.4
Veneer 1405.5

Y

YARDS OR COURTS 1206
Exit discharge 1028.4
Group I-2 . . . . . 407.9
Group I-3 . . . . . 408.3.6, 408.6.2
Light, natural 1205
Motor fuel-dispensing facilities 406.7.2
Occupant load 1004.5
Parking garage, open 406.5.5
Unlimited area building 507.2, 507.2.1

INTERNATIONAL CODE COUNCIL®
Copyright © 2015 ICC. ALL RIGHTS RESERVED. Accessed by David Dammon on Jun 21, 2017 12:30:52 PM pursuant to License Agreement with ICC. No further reproduction or distribution authorized. ANY UNAUTHORIZED REPRODUCTION OR DISTRIBUTION IS A VIOLATION OF THE FEDERAL COPYRIGHT ACT AND THE LICENSE AGREEMENT, AND SUBJECT TO CIVIL AND CRIMINAL PENALTIES THEREUNDER.

ICC INTERNATIONAL CODE COUNCIL®

People Helping People Build a Safer World®

Valuable Guides to Changes in the 2015 I-Codes®

NEW!

FULL COLOR! HUNDREDS OF PHOTOS AND ILLUSTRATIONS!

SIGNIFICANT CHANGES TO THE 2015 INTERNATIONAL CODES®

Practical resources that offer a comprehensive analysis of the critical changes made between the 2012 and 2015 editions of the codes. Authored by ICC code experts, these useful tools are "must-have" guides to the many important changes in the 2015 International Codes.



SIGNIFICANT CHANGES TO THE IBC, 2015 EDITION
#7024S15

SIGNIFICANT CHANGES TO THE IRC, 2015 EDITION
#7101S15

SIGNIFICANT CHANGES TO THE IFC, 2015 EDITION
#7404S15

SIGNIFICANT CHANGES TO THE IPC/IMC/IFGC, 2015 EDITION
#7202S15

Changes are identified then followed by in-depth discussion of how the change affects real world application. Photos, tables and illustrations further clarify application.

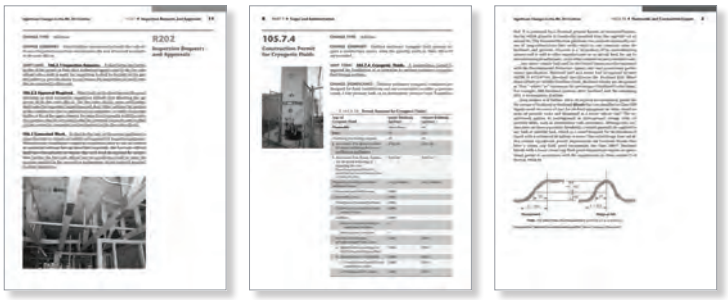

ORDER YOUR HELPFUL GUIDES TODAY!
1-800-786-4452 | www.iccsafe.org/books

HIRE ICC TO TEACH

Want your group to learn the Significant Changes to the I-Codes from an ICC expert instructor? Schedule a seminar today!
email: **ICCTraining@iccsafe.org** | phone: **1-888-422-7233 ext. 33818**

14-09379

INTERNATIONAL CODE COUNCIL®

Copyright © 2015 ICC. ALL RIGHTS RESERVED. Accessed by David Dammon on Jun 21, 2017 12:30:52 PM pursuant to License Agreement with ICC. No further reproduction or distribution authorized. ANY UNAUTHORIZED REPRODUCTION OR DISTRIBUTION IS A VIOLATION OF THE FEDERAL COPYRIGHT ACT AND THE LICENSE AGREEMENT, AND SUBJECT TO CIVIL AND CRIMINAL PENALTIES THEREUNDER.

ICC EVALUATION SERVICE







APPROVE WITH CONFIDENCE

- ICC-ES® Evaluation Reports are the most widely accepted and trusted in the nation.
- ICC-ES is dedicated to providing evaluation reports, PMG and Building Product Listings to the highest quality and technical excellence.
- ICC-ES is a subsidiary of ICC®, the publisher of the IBC®, IRC®, IPC® and other I-Codes®.

We do thorough evaluations. You approve with confidence.

ICC ES · ICC ES PMG · ICC ES LISTED

Look for the ICC-ES marks of conformity before approving for installation

Code Officials — Contact Us With Your Questions About ICC-ES Reports at:
800-423-6587 ext. ES help (374357) or email EShelp@icc-es.org
www.icc-es.org

14-09329

Subsidiary of ICC INTERNATIONAL CODE COUNCIL®

INTERNATIONAL CODE COUNCIL®

Copyright © 2015 ICC. ALL RIGHTS RESERVED. Accessed by David Dammon on Jun 21, 2017 12:30:52 PM pursuant to License Agreement with ICC. No further reproduction or distribution authorized. ANY UNAUTHORIZED REPRODUCTION OR DISTRIBUTION IS A VIOLATION OF THE FEDERAL COPYRIGHT ACT AND THE LICENSE AGREEMENT, AND SUBJECT TO CIVIL AND CRIMINAL PENALTIES THEREUNDER.

INTERNATIONAL CODE COUNCIL®

People Helping People Build a Safer World®

The International Code Council's Training and Education Department

Industry professionals look to ICC to provide the critical knowledge and experiences necessary to excel in today's challenging world. ICC's educational programs cover a broad spectrum of code and construction related topics, offering some of the highest quality instruction direct from the source.

INSTITUTES

Acquire Skills, Share Experiences, Earn CEUs

ICC's training institutes offer a comprehensive education experience and a great way to earn much needed CEUs. Learn best practices from the leading experts in the field, build your network of professional contacts and share experiences. Institutes are held across the country throughout the year. To see the full schedule go to www.iccsafe.org/training.

HIRE ICC TO TEACH

Bring ICC On-Site and Earn CEUs

Give your group the confidence they need to meet tough challenges head-on so they can reach their full potential. ICC's course catalog contains a wide variety of educational topics that are available for contract at a location of your choice. Customized training is also available to fit your needs. For our full course catalogue go to www.iccsafe.org/hireicc.

ICC ONLINE CAMPUS

Earn CEUs at Your Own Pace

Online courses offer access to a comprehensive training and education portal, providing you with an effective and convenient tool to enhance your professional skills. Courses are available anytime for 99 days following registration. For a quick and easy way to earn CEUs towards your certification, try our Online Certifications Renewal section. Go to www.iccsafe.org/onlinecampus for our full offerings.

For more information about ICC's Training please contact us at **888-ICC-SAFE (422-7233) ext. 33818** or email us at **icctraining@iccsafe.org.**

14-09372

INTERNATIONAL CODE COUNCIL®

Copyright © 2015 ICC. ALL RIGHTS RESERVED. Accessed by David Dammon on Jun 21, 2017 12:30:52 PM pursuant to License Agreement with ICC. No further reproduction or distribution authorized. ANY UNAUTHORIZED REPRODUCTION OR DISTRIBUTION IS A VIOLATION OF THE FEDERAL COPYRIGHT ACT AND THE LICENSE AGREEMENT, AND SUBJECT TO CIVIL AND CRIMINAL PENALTIES THEREUNDER.

INTERNATIONAL CODE COUNCIL®

People Helping People Build a Safer World®

2015 I-Code Essentials

This helpful series uses a straightforward, focused approach to explore code requirements with non-code language, allowing readers to gain confidence in their understanding of the material. Each book is an invaluable companion guide to the 2015 IBC, IRC, IFC or IECC for both new and experienced code users.

- **Detailed full-color illustrations enhance comprehension of code provisions**
- **A focused, concise approach facilitates understanding of the essential code provisions**
- **References to corresponding code sections provide added value as companion guides to the 2015 I-Codes**
- **Glossary of code and construction terms clarifies their meaning in the context of the code**



A

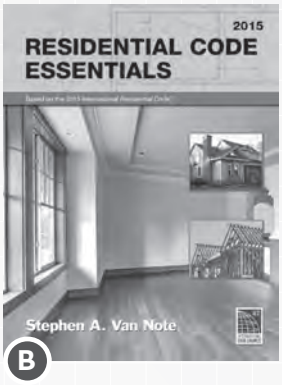

B

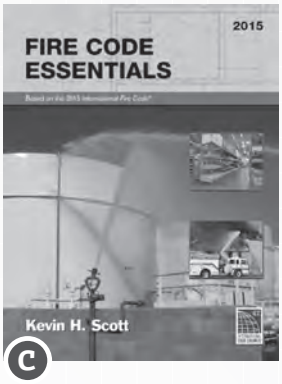

C

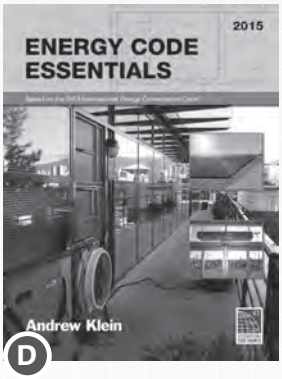

D

A. BUILDING CODE ESSENTIALS: BASED ON THE 2015 INTERNATIONAL BUILDING CODE

Explores those code provisions essential to understanding the application of the IBC in an easy-to-read format. The user-friendly approach of the text simplifies critical concepts so users can achieve a more complete understanding of the code's intent. Full-color illustrations, examples and simplified tables assist the reader in visualizing the code requirements. This up-to-date, step-by-step guide's topic organization reflects the intent of the IBC and facilitates understanding and application of the code provisions.

SOFT COVER #4031S15
PDF DOWNLOAD #8950P596

B. RESIDENTIAL CODE ESSENTIALS: BASED ON THE 2015 INTERNATIONAL RESIDENTIAL CODE

Explains those code provisions essential to understanding the application of the IRC to the most commonly encountered building practices. The information is presented in a user-friendly manner with an emphasis on technical accuracy and clear non-code language. Full-color illustrations, examples and simplified tables assist the reader in visualizing the code requirements.

SOFT COVER #4131S15
PDF DOWNLOAD #8950P59

C. FIRE CODE ESSENTIALS: BASED ON THE 2015 INTERNATIONAL FIRE CODE

Focuses on the essential provisions of the IFC for controlling ignition sources and fire hazards, fire department access to buildings, building uses and processes, fire protection and life safety systems, special processes and uses and hazardous materials.

SOFT COVER #4431S15
PDF DOWNLOAD #8950P59

D. ENERGY CODE ESSENTIALS: BASED ON THE 2015 INTERNATIONAL ENERGY CONSERVATION CODE®

Designed to provide a straightforward, easy-to-read companion guide to the IECC for both beginning and experienced code users. The text provides accurate information on critical energy code applications in the office and in the field for residential and commercial construction. The focused coverage examines those code provisions essential to understanding the application of the IECC to the most commonly encountered building practices and discusses the reasons behind the requirements.

SOFT COVER #4831S15
PDF DOWNLOAD #8950P651

ORDER YOUR I-CODE ESSENTIALS TODAY! 1-800-786-4452 | www.iccsafe.org/books

14-10387

INTERNATIONAL CODE COUNCIL®

Copyright © 2015 ICC. ALL RIGHTS RESERVED. Accessed by David Dammon on Jun 21, 2017 12:30:52 PM pursuant to License Agreement with ICC. No further reproduction or distribution authorized. ANY UNAUTHORIZED REPRODUCTION OR DISTRIBUTION IS A VIOLATION OF THE FEDERAL COPYRIGHT ACT AND THE LICENSE AGREEMENT, AND SUBJECT TO CIVIL AND CRIMINAL PENALTIES THEREUNDER.

2015 IBC®

CODE AND COMMENTARY

VOLUME 2

The complete IBC with commentary after each section



INTERNATIONAL CODE COUNCIL®

Copyright © 2015 ICC. ALL RIGHTS RESERVED. Accessed by David Dammon on Jun 21, 2017 12:30:52 PM pursuant to License Agreement with ICC. No further reproduction or distribution authorized. ANY UNAUTHORIZED REPRODUCTION OR DISTRIBUTION IS A VIOLATION OF THE FEDERAL COPYRIGHT ACT AND THE LICENSE AGREEMENT, AND SUBJECT TO CIVIL AND CRIMINAL PENALTIES THEREUNDER.

2015 IBC®

CODE AND COMMENTARY

VOLUME 2

The complete IBC with commentary after each section

INTERNATIONAL CODE COUNCIL®

Copyright © 2015 ICC. ALL RIGHTS RESERVED. Accessed by David Dammon on Jun 21, 2017 12:30:52 PM pursuant to License Agreement with ICC. No further reproduction or distribution authorized. ANY UNAUTHORIZED REPRODUCTION OR DISTRIBUTION IS A VIOLATION OF THE FEDERAL COPYRIGHT ACT AND THE LICENSE AGREEMENT, AND SUBJECT TO CIVIL AND CRIMINAL PENALTIES THEREUNDER.

2015 International Building Code® Commentary

First Printing: March 2015

ISBN: 978-1-60983-282-7 (soft-cover edition)

COPYRIGHT © 2015
by
INTERNATIONAL CODE COUNCIL, INC.

ALL RIGHTS RESERVED. This 2015 *International Building Code® Commentary—Volume II* is a copyrighted work owned by the International Code Council, Inc. Without advance written permission from the copyright owner, no part of this book may be reproduced, distributed or transmitted in any form or by any means, including, without limitation, electronic, optical or mechanical means (by way of example, and not limitation, photocopying, or recording by or in an information storage retrieval system). For information on permission to copy material exceeding fair use, please contact: Publications, 4051 Flossmoor Road, Country Club Hills, IL 60478. Phone 1-888-ICC-SAFE (422-7233).

Trademarks: "International Code Council," the "International Code Council" logo and the "International Building Code" are trademarks of the International Code Council, Inc.

PRINTED IN THE U.S.A.

INTERNATIONAL CODE COUNCIL®

Copyright © 2015 ICC. ALL RIGHTS RESERVED. Accessed by David Dammon on Jun 21, 2017 12:30:52 PM pursuant to License Agreement with ICC. No further reproduction or distribution authorized. ANY UNAUTHORIZED REPRODUCTION OR DISTRIBUTION IS A VIOLATION OF THE FEDERAL COPYRIGHT ACT AND THE LICENSE AGREEMENT, AND SUBJECT TO CIVIL AND CRIMINAL PENALTIES THEREUNDER.

PREFACE

The principal purpose of the Commentary is to provide a basic volume of knowledge and facts relating to building construction as it pertains to the regulations set forth in the 2015 *International Building Code*. The person who is serious about effectively designing, constructing and regulating buildings and structures will find the Commentary to be a reliable data source and reference to almost all components of the built environment.

As a follow-up to the *International Building Code*, we offer a companion document, the *International Building Code Commentary—Volume II*. Volume II covers Chapters 16 through 35 of the 2015 *International Building Code*. The basic appeal of the Commentary is thus: it provides in a small package and at reasonable cost thorough coverage of many issues likely to be dealt with when using the *International Building Code* — and then supplements that coverage with historical and technical background. Reference lists, information sources and bibliographies are also included.

Throughout all of this, effort has been made to keep the vast quantity of material accessible and its method of presentation useful. With a comprehensive yet concise summary of each section, the Commentary provides a convenient reference for regulations applicable to the construction of buildings and structures. In the chapters that follow, discussions focus on the full meaning and implications of the code text. Guidelines suggest the most effective method of application, and the consequences of not adhering to the code text. Illustrations are provided to aid understanding; they do not necessarily illustrate the only methods of achieving code compliance.

The format of the Commentary includes the full text of each section, table and figure in the code, followed immediately by the commentary applicable to that text. At the time of printing, the Commentary reflects the most up-to-date text of the 2015 *International Building Code*. As stated in the preface to the *International Building Code*, the content of sections in the code which begin with a letter designation (i.e., Section [F]307.1) are maintained by another code development committee. Each section's narrative includes a statement of its objective and intent, and usually includes a discussion about why the requirement commands the conditions set forth. Code text and commentary text are easily distinguished from each other. All code text is shown as it appears in the *International Building Code*, and all commentary is indented below the code text and begins with the symbol ❖.

Readers should note that the Commentary is to be used in conjunction with the *International Building Code* and not as a substitute for the code. The Commentary is advisory only; the code official alone possesses the authority and responsibility for interpreting the code.

Comments and recommendations are encouraged, for through your input, we can improve future editions. Please direct your comments to the Codes and Standards Development Department at the Chicago District Office.

The International Code Council would like to extend its thanks to the following individuals for their contributions to the technical content of this commentary:

Brian Black
John Woestman
David Cooper
Dave Collins
Vickie Lovell
John Valiulis
Marcelo Hirschler
Jeff Hugo
Kevin Brinkman
Gregory Cahanin
Rebecca Quinn
Joann Surmar
James Milke
Richard Walke
Dave Frable
Elley Klausbruckner
Dick Bukowski

INTERNATIONAL CODE COUNCIL®
Copyright © 2015 ICC. ALL RIGHTS RESERVED. Accessed by David Dammon on Jun 21, 2017 12:30:52 PM pursuant to License Agreement with ICC. No further reproduction or distribution authorized. ANY UNAUTHORIZED REPRODUCTION OR DISTRIBUTION IS A VIOLATION OF THE FEDERAL COPYRIGHT ACT AND THE LICENSE AGREEMENT, AND SUBJECT TO CIVIL AND CRIMINAL PENALTIES THEREUNDER.

S.I. CONVERSION CHART FOR ENGLISH UNITS

English Unit	Metric Equivalent
1 inch (in.)	25.4 millimeters (mm)
1 foot (ft.)	304.8 millimeters (mm)
1 square inch (in^2)	645.2 square millimeters (mm^2)
1 square foot (ft^2)	0.093 square meters (m^2)
1 cubic foot (ft^3)	0.028 cubic meters (m^3)
1 gallon (gal.)	.00379 cubic meters (m^3)
1 gallon (gal.)	3.79 liters (L)
1 pound (lb.)	0.454 kilograms (kg)
1 ton (T)	0.907 metric ton
1 ton (T)	907.2 kilograms (kg)
1 pound per square inch (psi)	6.894 kilo- Pascals (kPa)
1 pound per square inch (psi)	.0703 kilogram force per square centimeter
1 pound per square foot (psf)	47.88 Pascals (Pa)
1 pound per square foot (psf)	47.88 Newton per square meter (N/m^2)
1 foot candle	10.764 lux
1 inch water column	248.84 Pascal
1 degree	0.01745 radian
1 Btu/hr	0.2931 Watt
Temperature degrees Fahrenheit	1.8 x degrees C + 32.

INTERNATIONAL CODE COUNCIL®
Copyright © 2015 ICC. ALL RIGHTS RESERVED. Accessed by David Dammon on Jun 21, 2017 12:30:52 PM pursuant to License Agreement with ICC. No further reproduction or distribution authorized. ANY UNAUTHORIZED REPRODUCTION OR DISTRIBUTION IS A VIOLATION OF THE FEDERAL COPYRIGHT ACT AND THE LICENSE AGREEMENT, AND SUBJECT TO CIVIL AND CRIMINAL PENALTIES THEREUNDER.

TABLE OF CONTENTS

CHAPTER 16 STRUCTURAL DESIGN . . . . . 16-1 – 16-90

CHAPTER 17 SPECIAL INSPECTIONS AND TESTS . . . . . 17-1 – 17-28

CHAPTER 18 SOILS AND FOUNDATIONS . . . . . 18-1 – 18-80

CHAPTER 19 CONCRETE . . . . . 19-1 – 19-20

CHAPTER 20 ALUMINUM . . . . . 20-1 – 20-2

CHAPTER 21 MASONRY . . . . . 21-1 – 21-40

CHAPTER 22 STEEL . . . . . 22-1 – 22-10

CHAPTER 23 WOOD . . . . . 23-1 – 23-118

CHAPTER 24 GLASS AND GLAZING . . . . . 24-1 – 24-28

CHAPTER 25 GYPSUM BOARD, GYPSUM PANEL PRODUCTS AND PLASTER . . . . . 25-1 – 25-24

CHAPTER 26 PLASTIC . . . . . 26-1 – 26-32

CHAPTER 27 ELECTRICAL . . . . . 27-1 – 27-4

CHAPTER 28 MECHANICAL SYSTEMS . . . . . 28-1 – 28-2

CHAPTER 29 PLUMBING SYSTEMS . . . . . 29-1 – 29-20

CHAPTER 30 ELEVATORS AND CONVEYING SYSTEMS . . . . . 30-1 – 30-26

CHAPTER 31 SPECIAL CONSTRUCTION . . . . . 31-1 – 31-20

CHAPTER 32 ENCROACHMENTS INTO THE PUBLIC RIGHT-OF-WAY . . . . . 32-1 – 32-6

CHAPTER 33 SAFEGUARDS DURING CONSTRUCTION . . . . . 33-1 – 33-8

CHAPTER 34 RESERVED . . . . . 34-1 – 34-2

CHAPTER 35 REFERENCED STANDARDS . . . . . 35-1 – 35-26

APPENDIX A EMPLOYEE QUALIFICATIONS . . . . . A-1 – A-2

APPENDIX B BOARD OF APPEALS . . . . . B-1 – B-4

APPENDIX C GROUP U — AGRICULTURAL BUILDINGS . . . . . C-1 – C-4

INTERNATIONAL CODE COUNCIL®

Copyright © 2015 ICC. ALL RIGHTS RESERVED. Accessed by David Dammon on Jun 21, 2017 12:30:52 PM pursuant to License Agreement with ICC. No further reproduction or distribution authorized. ANY UNAUTHORIZED REPRODUCTION OR DISTRIBUTION IS A VIOLATION OF THE FEDERAL COPYRIGHT ACT AND THE LICENSE AGREEMENT, AND SUBJECT TO CIVIL AND CRIMINAL PENALTIES THEREUNDER.

APPENDIX D FIRE DISTRICTS . . . . . D-1 – D-8

APPENDIX E SUPPLEMENTARY ACCESSIBILITY REQUIREMENTS . . . . . E-1 – E-12

APPENDIX F RODENTPROOFING . . . . . F-1 – F-2

APPENDIX G FLOOD-RESISTANT CONSTRUCTION . . . . . G-1 – G-18

APPENDIX H SIGNS . . . . . H-1 – H-10

APPENDIX I PATIO COVERS . . . . . I-1 – I-2

APPENDIX J GRADING . . . . . J-1 – J-8

APPENDIX K ADMINISTRATIVE PROVISIONS . . . . . K-1 – K-4

APPENDIX L EARTHQUAKE RECORDING INSTRUMENTATION . . . . . L-1 – L-2

APPENDIX M TSUNAMI-GENERATED FLOOD HAZARD . . . . . M-1 – M-4

INDEX . . . . . INDEX-1 – INDEX-38

INTERNATIONAL CODE COUNCIL®

Copyright © 2015 ICC. ALL RIGHTS RESERVED. Accessed by David Dammon on Jun 21, 2017 12:30:52 PM pursuant to License Agreement with ICC. No further reproduction or distribution authorized. ANY UNAUTHORIZED REPRODUCTION OR DISTRIBUTION IS A VIOLATION OF THE FEDERAL COPYRIGHT ACT AND THE LICENSE AGREEMENT, AND SUBJECT TO CIVIL AND CRIMINAL PENALTIES THEREUNDER.

Chapter 16: Structural Design

General Comments

This chapter contains the commentary for the following structural topics: definitions of structural terms, construction document requirements, load combinations, dead loads, live loads, snow loads, wind loads, soil lateral loads, rain loads, flood loads and earthquake loads. This chapter provides minimum design requirements so that all buildings and structures are proportioned to resist the loads and forces that are likely to be encountered. The loads specified herein have been established through research and service performance of buildings and structures. The application of these loads and adherence to the serviceability criteria will enhance the protection of life and property. The earthquake loads, wind loads and snow loads in this chapter are based on the 2010 edition of ASCE 7. The earthquake criteria and ASCE 7 load requirements are based on the National Earthquake Hazards Reduction Program's (NEHRP) *Recommended Provisions for Seismic Regulations for New Buildings and Other Structures* (FEMA 450). The NEHRP provisions were prepared by the Building Seismic Safety Council (BSSC) for the Federal Emergency Management Agency (FEMA).

Purpose

The purpose of this chapter is to prescribe minimum structural loading requirements for use in the design and construction of buildings and structures with the intent to minimize hazard to life and improve the occupancy capability of essential facilities after a design level event or occurrence.

SECTION 1601 GENERAL

1601.1 Scope. The provisions of this chapter shall govern the structural design of buildings, structures and portions thereof regulated by this code.

❖ While a significant portion of Chapter 16 is dedicated to the determination of minimum design loads, it also includes other important criteria that impact the design of structures, such as the permitted design methodologies, as well as the combinations of design loads used to establish the required minimum strength of structural members. Unless stated otherwise, the criteria found in this chapter are applicable to all buildings and structures. See Chapter 34 for application of these requirements to alterations, additions or repairs to existing structures.

SECTION 1602 DEFINITIONS AND NOTATIONS

1602.1 Definitions. The following terms are defined in Chapter 2:

❖ Definitions facilitate the understanding of code provisions and minimize potential confusion. To that end, this section lists definitions of terms associated with structural design. Note that these definitions are found in Chapter 2. The use and application of defined terms, as well as undefined terms, are set forth in Section 201.

ALLOWABLE STRESS DESIGN.

DEAD LOADS.

DESIGN STRENGTH.

DIAPHRAGM.

Diaphragm, blocked.

Diaphragm boundary.

Diaphragm chord.

ESSENTIAL FACILITIES.

FABRIC PARTITION.

FACTORED LOAD.

HELIPAD.

ICE-SENSITIVE STRUCTURE.

IMPACT LOAD.

LIMIT STATE.

LIVE LOAD.

LIVE LOAD (ROOF).

LOAD AND RESISTANCE FACTOR DESIGN (LRFD).

LOAD EFFECTS.

LOAD FACTOR.

LOADS.

NOMINAL LOADS.

OTHER STRUCTURES.

PANEL (PART OF A STRUCTURE).

RESISTANCE FACTOR.

INTERNATIONAL CODE COUNCIL®
Copyright © 2015 ICC. ALL RIGHTS RESERVED. Accessed by David Dammon on Jun 21, 2017 12:30:52 PM pursuant to License Agreement with ICC. No further reproduction or distribution authorized. ANY UNAUTHORIZED REPRODUCTION OR DISTRIBUTION IS A VIOLATION OF THE FEDERAL COPYRIGHT ACT AND THE LICENSE AGREEMENT, AND SUBJECT TO CIVIL AND CRIMINAL PENALTIES THEREUNDER.

RISK CATEGORY.

STRENGTH, NOMINAL.

STRENGTH, REQUIRED.

STRENGTH DESIGN.

SUSCEPTIBLE BAY.

VEHICLE BARRIER.

NOTATIONS.

D = Dead load.

D_i = Weight of ice in accordance with Chapter 10 of ASCE 7.

E = Combined effect of horizontal and vertical earthquake induced forces as defined in Section 12.4.2 of ASCE 7.

F = Load due to fluids with well-defined pressures and maximum heights.

F_a = Flood load in accordance with Chapter 5 of ASCE 7.

H = Load due to lateral earth pressures, ground water pressure or pressure of bulk materials.

L = Roof live load greater than 20 psf (0.96 kN/m^2) and floor live load.

L_r = Roof live load of 20 psf (0.96 kN/m^2) or less.

R = Rain load.

S = Snow load.

T = Self-straining load.

V_{asd} = Nominal design wind speed (3-second gust), miles per hour (mph) (km/hr) where applicable.

V_{ult} = Ultimate design wind speeds (3-second gust), miles per hour (mph) (km/hr) determined from Figure 1609.3(1), 1609.3(2), 1609.3(3) or ASCE 7.

W = Load due to wind pressure.

W_i = Wind-on-ice in accordance with Chapter 10 of ASCE 7.

❖ These notations are used to refer to specific nominal loads that are determined in this chapter for use in the load combinations in Section 1605:

- D is the nominal dead load determined in Section 1606. Also see the definition of "Dead load."
- D_i is the weight of ice. See the ASCE 7 provisions referenced in Section 1614.
- Earthquake load effect, E, in Section 12.4.2 of ASCE 7 includes the effects of the horizontal load, E_h, as well as a vertical component, E_v. E_h is the product of the redundancy factor, ρ, and Q_E, the effects of horizontal earthquake forces. E_v accounts for vertical acceleration due to earthquake ground motion and is taken as $0.2S_{DS}D$. Note that its magnitude is not intended to represent a total vertical response, since that is not likely to coincide with the maximum horizontal response. It is essentially a portion of the dead load, D, that is added in "additive" load combinations or subtracted in "counteractive" load combinations. The term S_{DS}, design spectral re-sponse acceleration at short periods, is explained in the commentary to Section 1613.3.4.

For example, when this expression is used in the alternative allowable stress design load combinations of Section 1605.3.2 that include earthquake load effects, the resulting combinations are as follows:

(see Equation 16-21)

$$D + L + S + E/1.4 = (1 + 0.143S_{Ds})D + L + S + \rho Q_E/1.4$$

(see Equation 16-22)

$$0.9D + E/1.4 = (0.9 - 0.143S_{Ds})D + \rho Q_E/1.4$$

Earthquake design criteria are provided in Section 1613, which, in turn, references the relevant ASCE 7 provisions for computation of the earthquake load effects. While these loads are necessary for establishing the required strength, the computed forces approximate the expected deformations under the design earthquake ground motions and are not applied to a structure in an actual earthquake.

- F refers to the nominal load due to fluids having "well-defined pressures and maximum heights." Unlike most other nominal loads, there is no code section governing the determination of fluid loads. Also note that F includes a vertical component (fluid weight), as well as a horizontal component (lateral pressure).
- F_a is used to refer to the flood load that is determined under Chapter 5 of ASCE 7. Note that Section 1612 does not directly refer to ASCE 7 for flood loads, but instead requires buildings in flood hazard areas to be designed and constructed in accordance with ASCE 24, *Flood Resistant Design and Construction*. This, in turn, refers to ASCE 7 for determination of flood loads. Note that F_a is not explicitly included under other loads listed for the alternative ASD combination in Section 1605.3.2.
- H is used to refer to the nominal load resulting from lateral soil pressure, lateral pressure of ground water or the lateral pressure of bulk materials. Section 1610 specifies minimum requirements for lateral soil loads. Note that there are no specific provisions for the determination of loads resulting from the lateral pressure of bulk materials.
- L is the nominal live load determined in accordance with Section 1607 (also see the definition of "Live load"). In addition to floor live loads, it includes roof live loads that exceed the limit on L_r. L_r represents nominal roof live loads up to 20 psf (0.96 N/m^2).
- R is the nominal rain load determined in accordance with Section 1611.

INTERNATIONAL CODE COUNCIL®
Copyright © 2015 ICC. ALL RIGHTS RESERVED. Accessed by David Dammon on Jun 21, 2017 12:30:52 PM pursuant to License Agreement with ICC. No further reproduction or distribution authorized. ANY UNAUTHORIZED REPRODUCTION OR DISTRIBUTION IS A VIOLATION OF THE FEDERAL COPYRIGHT ACT AND THE LICENSE AGREEMENT, AND SUBJECT TO CIVIL AND CRIMINAL PENALTIES THEREUNDER.

- S is the nominal snow load determined in accordance with Section 1608.
- T is used to refer to self-straining forces resulting from contraction or expansion caused by temperature change, shrinkage, moisture change or creep, as well as movement caused by differential settlement. A thermal gradient at an exterior wall is an example of a structural element where these self-straining forces can affect the design. Unlike most other nominal loads, there is no code section governing the determination of self-straining forces. T is not included directly in the load combinations, but reference to it is found in Sections 1605.2.1 and 1605.3.1.2.
- V_{asd} refers to nominal design wind speeds that are determined in Section 1609.3.1.
- V_{ult} refers to mapped wind speeds in order to differentiate them from the nominal design wind speeds.
- W is the strength-level wind load determined in accordance with Section 1609.
- W_i is the wind-on-ice loading. See the ASCE 7 provisions referenced in Section 1614.

SECTION 1603
CONSTRUCTION DOCUMENTS

1603.1 General. *Construction documents* shall show the size, section and relative locations of structural members with floor levels, column centers and offsets dimensioned. The design loads and other information pertinent to the structural design required by Sections 1603.1.1 through 1603.1.8 shall be indicated on the *construction documents*.

Exception: *Construction documents* for buildings constructed in accordance with the *conventional light-frame construction* provisions of Section 2308 shall indicate the following structural design information:

1. Floor and roof live loads.
2. Ground snow load, P_g.
3. Ultimate design wind speed, $V_{ult,}$ (3-second gust), miles per hour (mph) (km/hr) and nominal design wind speed, V_{asd}, as determined in accordance with Section 1609.3.1 and wind exposure.
4. *Seismic design category* and *site class*.
5. Flood design data, if located in *flood hazard areas* established in Section 1612.3.
6. Design load-bearing values of soils.

❖ The term "construction documents" is defined in Chapter 2. It is commonly used to refer to calculations, drawings and specifications, but it includes other data that is required to indicate compliance with the code as described in Section 107. The purpose of this section is to specifically require the design professional to provide the building official with the appropriate structural details, criteria and design load data for verifying compliance with the provisions of this chapter. Note that additional structural information and specific submittal documents may also be required to be incorporated by Chapters 17 through 23.

The construction documents are required to contain sufficient detail for the building official to perform plan review and field inspection, as well as for construction activity. Dimensions indicated on architectural drawings are not required to be duplicated on the structural drawings and vice versa. The design loads, to be indicated by the design professional on the construction documents, are to be consistent with the loads used in the structural calculations. While the loads are not required to be on the construction drawings, they must be included within the construction documents in a manner such that the design loads are clear. It is good practice, however, to include the design loads on the construction drawings, as these are often the only documents retained by the owner and the building official after construction is completed. The building official is to compare the loads on the construction documents with the applicable minimum required loads as specified by this chapter. The inclusion of the load design information is an indication that the structure has been designed for the loads required by the code. It should be emphasized that these requirements for construction documents are applicable regardless of the involvement of a registered design professional, which is regulated by the applicable state's licensing laws. The exception provides a less extensive list of structural data to be indicated for buildings constructed in accordance with the conventional wood-frame provisions of Section 2308. This is appropriate in view of the prescriptive nature of these requirements.

1603.1.1 Floor live load. The uniformly distributed, concentrated and impact floor live load used in the design shall be indicated for floor areas. Use of live load reduction in accordance with Section 1607.10 shall be indicated for each type of live load used in the design.

❖ This section provides information for the building official to facilitate the plan review process. The floor live loads, which are indicated on the construction documents by the design professional, are required to meet or exceed the loads in Section 1607. Any live load reductions taken are also to be indicated.

1603.1.2 Roof live load. The roof live load used in the design shall be indicated for roof areas (Section 1607.12).

❖ This section provides information to facilitate the plan review process. The roof live loads, indicated on the construction documents by the design professional, are required to meet or exceed the loads in Section 1607.12.

1603.1.3 Roof snow load data. The ground snow load, P_g, shall be indicated. In areas where the ground snow load, P_g,

INTERNATIONAL CODE COUNCIL®
Copyright © 2015 ICC. ALL RIGHTS RESERVED. Accessed by David Dammon on Jun 21, 2017 12:30:52 PM pursuant to License Agreement with ICC. No further reproduction or distribution authorized. ANY UNAUTHORIZED REPRODUCTION OR DISTRIBUTION IS A VIOLATION OF THE FEDERAL COPYRIGHT ACT AND THE LICENSE AGREEMENT, AND SUBJECT TO CIVIL AND CRIMINAL PENALTIES THEREUNDER.

exceeds 10 pounds per square foot (psf) (0.479 kN/m^2), the following additional information shall also be provided, regardless of whether snow loads govern the design of the roof:

1. Flat-roof snow load, P_f.
2. Snow exposure factor, C_e.
3. Snow load importance factor, I_s.
4. Thermal factor, C_t.
5. Drift surcharge load(s), P_d, where the sum of P_d and P_f exceeds 20 psf (0.96 kN/m^2).
6. Width of snow drift(s), w.

❖ Providing the roof snow load design basis on the construction documents facilitates the plan review process. The flat-roof snow load, snow exposure factor, snow load importance factor, I_s, roof thermal factor, drift surcharge loads, and snow drift widths are not to be less than the minimum requirements established by Section 1608.

1603.1.4 Wind design data. The following information related to wind loads shall be shown, regardless of whether wind loads govern the design of the lateral force-resisting system of the structure:

1. Ultimate design wind speed, V_{ult}, (3-second gust), miles per hour (km/hr) and nominal design wind speed, V_{asd}, as determined in accordance with Section 1609.3.1.
2. *Risk category*.
3. Wind exposure. Applicable wind direction if more than one wind exposure is utilized.
4. Applicable internal pressure coefficient.
5. Design wind pressures to be used for exterior component and cladding materials not specifically designed by the *registered design professional* responsible for the design of the structure, psf (kN/m^2).

❖ Providing the wind load design basis on the construction documents facilitates the plan review process. All five of the indicated items are to be on the submitted construction documents. Each of the indicated items is an important parameter in the determination of the wind resistance that is required in the building framework. The building official should verify that the information is on the construction documents during the plan review process.

1603.1.5 Earthquake design data. The following information related to seismic loads shall be shown, regardless of whether seismic loads govern the design of the lateral force-resisting system of the structure:

1. *Risk category*.
2. Seismic importance factor, I_e.
3. Mapped spectral response acceleration parameters, S_S and S_1.
4. *Site class*.
5. Design spectral response acceleration parameters, S_{DS} and S_{D1}.
6. *Seismic design category*.
7. Basic seismic force-resisting system(s).
8. Design base shear(s).
9. Seismic response coefficient(s), C_S.
10. Response modification coefficient(s), R.
11. Analysis procedure used.

❖ Providing the earthquake load design basis on the construction documents facilitates the plan review process. All buildings, except those indicated in the exceptions to Section 1613.1, are to be designed for earthquake effects. The earthquake design data for a specific building are required to meet or exceed the minimum requirements established by Section 1613.

1603.1.6 Geotechnical information. The design load-bearing values of soils shall be shown on the *construction documents*.

❖ Load-bearing values for soils must be documented so that the foundation design can be verified.

1603.1.7 Flood design data. For buildings located in whole or in part in *flood hazard areas* as established in Section 1612.3, the documentation pertaining to design, if required in Section 1612.5, shall be included and the following information, referenced to the datum on the community's Flood Insurance Rate Map (FIRM), shall be shown, regardless of whether flood loads govern the design of the building:

1. Flood design class assigned according to ASCE 24.
2. In *flood hazard areas* other than *coastal high-hazard areas* or *coastal A zones*, the elevation of the proposed lowest floor, including the basement.
3. In *flood hazard areas* other than *coastal high-hazard areas* or *coastal A zones*, the elevation to which any nonresidential building will be dry floodproofed.
4. In *coastal high-hazard areas* and *coastal A zones*, the proposed elevation of the bottom of the lowest horizontal structural member of the lowest floor, including the basement.

❖ ASCE 24 requires each building and structure to be assigned to a "Flood Design Class," which is then used throughout the standard to specify elevation requirements and floodproofing limitations. The flood hazard elevation information to be shown on the construction documents by the registered design professional provides information that allows the building official to facilitate the plan review process. By providing the design documentation required in Section 1612.5 and by citing the specified flood information, the registered design professional is indicating that the building was designed in accordance with the flood hazard requirements of Section 1612. If any portion of a building is in a flood hazard area, then the building must meet the corresponding flood requirements.

Depending on the nature of the flood hazard area (flood zone), certain elevation requirements are to be met. In flood hazard areas not subject to high-velocity

INTERNATIONAL CODE COUNCIL®
Copyright © 2015 ICC. ALL RIGHTS RESERVED. Accessed by David Dammon on Jun 21, 2017 12:30:52 PM pursuant to License Agreement with ICC. No further reproduction or distribution authorized. ANY UNAUTHORIZED REPRODUCTION OR DISTRIBUTION IS A VIOLATION OF THE FEDERAL COPYRIGHT ACT AND THE LICENSE AGREEMENT, AND SUBJECT TO CIVIL AND CRIMINAL PENALTIES THEREUNDER.

wave action (commonly called A/AE zones), the lowest floor of all buildings and structures or the elevation to which nonresidential buildings are dry floodproofed must be located at or above the elevation specified in Section 1612.4 (which references ASCE 24). In coastal high-hazard areas (commonly called V or VE zones), the bottom of the lowest horizontal structural member must be located at or above the elevation specified in Section 1612.4 (which references ASCE 24). These elevations are the main factor used in determining flood insurance premium rates. Constructing a building or structure with its lowest floor (or dry floodproofing) below the required elevation will result in significantly higher flood insurance premiums for the building owner.

1603.1.8 Special loads. Special loads that are applicable to the design of the building, structure or portions thereof shall be indicated along with the specified section of this code that addresses the special loading condition.

❖ Indication of special loads on the construction documents facilitates the plan review process. The design professional is expected to identify any special loads that the occupancy will impose on the structure. These could include the operating weight of specialty equipment, for instance. There are also instances outside of Chapter 16 where the code specifies loading criteria that the structural design must address. For example, Section 415.9.2 requires that liquid petroleum gas facilities be in accordance with NFPA 58. In that document, a room housing a liquefied petroleum gas distribution facility must be separated from an adjacent use with ceilings and walls that are designed for a static pressure of 100 pounds per square foot (psf) (4788 Pa).

1603.1.8.1 Photovoltaic panel systems. The dead load of rooftop-mounted *photovoltaic panel systems*, including rack support systems, shall be indicated on the construction documents.

❖ Providing the loads caused by photovoltaic panel systems facilitates the plan review process. Although dead loads are not generally provided on the construction documents, the dead loads from photovoltaic panel systems can affect large areas of a structure's roof and should be provided, including the weight of rack supports and any ballast.

SECTION 1604
GENERAL DESIGN REQUIREMENTS

1604.1 General. Building, structures and parts thereof shall be designed and constructed in accordance with strength design, *load and resistance factor design*, *allowable stress design*, empirical design or conventional construction methods, as permitted by the applicable material chapters.

❖ This section identifies the various design methods that are permitted by the code and referenced design standards. The details for these design methods are either explicitly specified in the code or are located in the design standards that are referenced in the structural material design chapters for concrete, aluminum, masonry, steel and wood. For example, empirical design of masonry is addressed in Section 2109. The design of masonry using allowable stress design is required to be in accordance with TMS 402/ACI 530/ASCE 5 with the modifications in Section 2107.

1604.2 Strength. Buildings and other structures, and parts thereof, shall be designed and constructed to support safely the factored loads in load combinations defined in this code without exceeding the appropriate strength limit states for the materials of construction. Alternatively, buildings and other structures, and parts thereof, shall be designed and constructed to support safely the *nominal loads* in load combinations defined in this code without exceeding the appropriate specified allowable stresses for the materials of construction.

Loads and forces for occupancies or uses not covered in this chapter shall be subject to the approval of the *building official*.

❖ This section describes the strength and allowable stress design methods in the code. It also gives the building official approval authority for structural loads in buildings used for occupancies that are not specifically addressed in this chapter.

1604.3 Serviceability. Structural systems and members thereof shall be designed to have adequate stiffness to limit deflections and lateral drift. See Section 12.12.1 of ASCE 7 for drift limits applicable to earthquake loading.

❖ The stated objective in this section is to limit member deflections and system drifts by providing adequate stiffness. Note that the definition of "Limit state" describes a serviceability limit state as a condition beyond which a structure or member is no longer useful for its intended purpose. This would be in contrast to a strength limit state beyond which the structure or member is considered unsafe. The code does not directly address a serviceability limit state. Instead the code limits certain member deflections for specific nominal loads in addition to the story drift limits for earthquake load effects.

The deflection limits for structural members must be in accordance with the requirements in this and subsequent sections. This section also provides a reference to the story drift limitations in the earthquake provisions. Generally, deflection limits are needed for the comfort of the building occupants and so that the structural member's deflection does not cause damage to supported construction. Excessive deflection can also contribute to excessive vibration, which is discomforting to the occupants of the building.

TABLE 1604.3. See page 16-6.

❖ The deflection limits in this table apply when they are more restrictive than those in the structural design standards that are indicated in Sections 1604.3.2 through 1604.3.5. Note that the deflection limits for exterior walls and interior partitions vary depending

INTERNATIONAL CODE COUNCIL®
Copyright © 2015 ICC. ALL RIGHTS RESERVED. Accessed by David Dammon on Jun 21, 2017 12:30:52 PM pursuant to License Agreement with ICC. No further reproduction or distribution authorized. ANY UNAUTHORIZED REPRODUCTION OR DISTRIBUTION IS A VIOLATION OF THE FEDERAL COPYRIGHT ACT AND THE LICENSE AGREEMENT, AND SUBJECT TO CIVIL AND CRIMINAL PENALTIES THEREUNDER.

on the type of finish (i.e., flexible, plaster and stucco or other brittle finishes). A flexible finish is intended to be one that has been designed to accommodate the higher deflection indicated and remain serviceable. A brittle finish is any finish that has not been designed to accommodate the deflection allowed for a flexible finish. The more restrictive limit for plaster or stucco is based on ASTM C926. The deflection limit for a roof member supporting a plaster ceiling is intended to apply only for a plaster ceiling. The limit for a roof member supporting a gypsum board ceiling is that listed in the table for "supporting a nonplaster ceiling."

The answers to the following frequently asked questions provide further guidance on applying the deflection limits of the code.

Frequently Asked Questions—Table 1604.3

Q1. For purposes of checking the deflection limits of Table 1604.3, should the calculated wind load be used directly or the combined loads from Section 1605.3.1 or 1605.3.2?

A1. In computing deflections to verify compliance with Table 1604.3 limits, the loads shown in the column headings of Table 1604.3 are the only loads that must be applied to the member. The load used to check the deflection in this case is *W*, the nominal wind load in accordance with Section 1609. It is not necessary to use the load combinations of Section 1605.3 for verifying that the deflection limits have been met.

Q2. Note f permits the wind load to be taken as 0.42 times the "component and cladding" loads for the purpose of determining deflection limits. Please explain the basis for this 0.42 adjustment.

A2. There are two aspects to this adjustment. The first is the conversion from a wind speed with a 50-year mean recurrence interval (MRI) to a 10-year MRI event at an allowable stress design level. The mapped wind speeds of the code have generally been based on an MRI of 50

TABLE 1604.3
DEFLECTION LIMITS[a, b, c, h, i]

CONSTRUCTION	*L*	*S* or *W* [f]	*D* + *L*[d, g]
Roof members:[e]			
Supporting plaster or stucco ceiling	*l*/360	*l*/360	*l*/240
Supporting nonplaster ceiling	*l*/240	*l*/240	*l*/180
Not supporting ceiling	*l*/180	*l*/180	*l*/120
Floor members	*l*/360	—	*l*/240
Exterior walls:			
With plaster or stucco finishes	—	*l*/360	—
With other brittle finishes	—	*l*/240	—
With flexible finishes	—	*l*/120	—
Interior partitions:[b]			
With plaster or stucco finishes	*l*/360	—	—
With other brittle finishes	*l*/240	—	—
With flexible finishes	*l*/120	—	—
Farm buildings	—	—	*l*/180
Greenhouses	—	—	*l*/120

For SI: 1 foot = 304.8 mm.

a. For structural roofing and siding made of formed metal sheets, the total load deflection shall not exceed *1*/60. For secondary roof structural members supporting formed metal roofing, the live load deflection shall not exceed *1*/150. For secondary wall members supporting formed metal siding, the design wind load deflection shall not exceed *1*/90. For roofs, this exception only applies when the metal sheets have no roof covering.

b. Flexible, folding and portable partitions are not governed by the provisions of this section. The deflection criterion for interior partitions is based on the horizontal load defined in Section 1607.14.

c. See Section 2403 for glass supports.

d. The deflection limit for the *D*+*L* load combination only applies to the deflection due to the creep component of long-term dead load deflection plus the short-term live load deflection. For wood structural members that are dry at time of installation and used under dry conditions in accordance with the ANSI/AWC NDS, the creep component of the long-term deflection shall be permitted to be estimated as the immediate dead load deflection resulting from 0.5*D*. For wood structural members at all other moisture conditions, the creep component of the long-term deflection is permitted to be estimated as the immediate dead load deflection resulting from *D*. The value of 0.5*D* shall not be used in combination with ANSI/AWC NDS provisions for long-term loading.

e. The above deflections do not ensure against ponding. Roofs that do not have sufficient slope or camber to ensure adequate drainage shall be investigated for ponding. See Section 1611 for rain and ponding requirements and Section 1503.4 for roof drainage requirements.

f. The wind load is permitted to be taken as 0.42 times the "component and cladding" loads for the purpose of determining deflection limits herein. Where members support glass in accordance with Section 2403 using the deflection limit therein, the wind load shall be no less than 0.6 times the "component and cladding" loads for the purpose of determining deflection.

g. For steel structural members, the dead load shall be taken as zero.

h. For aluminum structural members or aluminum panels used in skylights and sloped glazing framing, roofs or walls of sunroom additions or patio covers not supporting edge of glass or aluminum sandwich panels, the total load deflection shall not exceed *1*/60. For continuous aluminum structural members supporting edge of glass, the total load deflection shall not exceed *1*/175 for each glass lite or *1*/60 for the entire length of the member, whichever is more stringent. For aluminum sandwich panels used in roofs or walls of sunroom additions or patio covers, the total load deflection shall not exceed *1*/120.

i. For cantilever members, *1* shall be taken as twice the length of the cantilever.

INTERNATIONAL CODE COUNCIL®
Copyright © 2015 ICC. ALL RIGHTS RESERVED. Accessed by David Dammon on Jun 21, 2017 12:30:52 PM pursuant to License Agreement with ICC. No further reproduction or distribution authorized. ANY UNAUTHORIZED REPRODUCTION OR DISTRIBUTION IS A VIOLATION OF THE FEDERAL COPYRIGHT ACT AND THE LICENSE AGREEMENT, AND SUBJECT TO CIVIL AND CRIMINAL PENALTIES THEREUNDER.

years. Serviceability checks, such as deflection, have typically been based on a lower MRI (for example, 10 years). The ASCE 7 commentary to the 2005 edition provided factors to convert to wind speeds with MRIs other than 50 years in Table C6-7. For wind speeds between 85 mph (38 m/s) and 100 mph (45 m/s), the factor for 10 years in Table C6-7 was 0.84. This conversion factor applies to the wind speed, V. Since design wind pressure is a function of V^2, the conversion factor must be squared before applying it to the design wind pressure. The factor 0.84 squared is 0.7056, which is rounded off to 0.7, which was the factor given in previous editions of the code. The second aspect is the conversion of the wind load from strength level to allowable stress design level, which means the 0.7 factor is multiplied by 0.6, giving rise to the factor of 0.42 in the footnote.

Q3. In Table 1604.3, Note g states that the dead load shall be taken as zero for structural steel members. Would this apply to the precomposition check of composite beam deflection limits under wet weight of concrete?

A3. No. The serviceability requirements of Section 1604.3 apply to the finished construction. The loading condition described would be a construction consideration, which is not directly regulated by the serviceability criteria.

1604.3.1 Deflections. The deflections of structural members shall not exceed the more restrictive of the limitations of Sections 1604.3.2 through 1604.3.5 or that permitted by Table 1604.3.

❖ The deflection of structural members is limited by the code, as well as certain material standards for damage control of supported construction and human comfort. Generally, the public equates visible deflection, or even detectable vibration, with a potentially unsafe condition (which in many cases is not true). The intent of this section is that calculated deflection is not to exceed either the limitations in the applicable material design standard or the applicable specified requirements.

1604.3.2 Reinforced concrete. The deflection of reinforced concrete structural members shall not exceed that permitted by ACI 318.

❖ The deflection limitations in ACI 318 are not to be exceeded for reinforced (and prestressed) concrete (see ACI 318 for detailed deflection requirements).

1604.3.3 Steel. The deflection of steel structural members shall not exceed that permitted by AISC 360, AISI S100, ASCE 8, SJI CJ, SJI JG, SJI K or SJI LH/DLH, as applicable.

❖ The design standard to be met depends on the type of steel structural member. For example, steel joists are to meet the deflection limitations in the Steel Joist Institute's (SJI) standard, which is applicable to the type of joist, and rolled steel members are to meet the deflection criteria in AISC 360.

1604.3.4 Masonry. The deflection of masonry structural members shall not exceed that permitted by TMS 402/ACI 530/ASCE 5.

❖ The deflection limits for masonry beams and lintels is specified in TMS 402/ACI 530/ASCE 5.

1604.3.5 Aluminum. The deflection of aluminum structural members shall not exceed that permitted by AA ADM1.

❖ The deflection of aluminum structural members is limited to that in AA ADM1 for aluminum or that permitted by Table 1604.3 of the code.

1604.3.6 Limits. The deflection limits of Section 1604.3.1 shall be used unless more restrictive deflection limits are required by a referenced standard for the element or finish material.

❖ The limits specified in Table 1604.3 apply to the indicated members for any structural material. As indicated in Section 1604.3.1, the deflection limits in the structural material standards apply when they are more restrictive than indicated in the table.

Deflection limits applicable to a flat concrete roof member that does not support any nonstructural elements likely to be damaged by large deflections are summarized in Commentary Figure 1604.3.6. As can be seen, the code deflection criterion is more stringent and would govern the design of this type of member.

Construction	LOADS		
	L	*S* or *W*	*D* + *L*
IBC Table 1604.3			
Roof members	*l*/360	*l*/360	*l*/240
Concrete per ACI 318 See Table 9.5(b)			
Flat roofs	*l*/180	Note a	Note a

a. No deflection limit specified in ACI 318.

Figure 1604.3.6
CONCRETE ROOF MEMBER DEFLECTION CRITERIA

1604.4 Analysis. *Load effects* on structural members and their connections shall be determined by methods of structural analysis that take into account equilibrium, general stability, geometric compatibility and both short- and long-term material properties.

Members that tend to accumulate residual deformations under repeated service loads shall have included in their analysis the added eccentricities expected to occur during their service life.

Any system or method of construction to be used shall be based on a rational analysis in accordance with well-established principles of mechanics. Such analysis shall result in a system that provides a complete load path capable of transferring loads from their point of origin to the load-resisting elements.

INTERNATIONAL CODE COUNCIL®
Copyright © 2015 ICC. ALL RIGHTS RESERVED. Accessed by David Dammon on Jun 21, 2017 12:30:52 PM pursuant to License Agreement with ICC. No further reproduction or distribution authorized. ANY UNAUTHORIZED REPRODUCTION OR DISTRIBUTION IS A VIOLATION OF THE FEDERAL COPYRIGHT ACT AND THE LICENSE AGREEMENT, AND SUBJECT TO CIVIL AND CRIMINAL PENALTIES THEREUNDER.

The total lateral force shall be distributed to the various vertical elements of the lateral force-resisting system in proportion to their rigidities, considering the rigidity of the horizontal bracing system or diaphragm. Rigid elements assumed not to be a part of the lateral force-resisting system are permitted to be incorporated into buildings provided their effect on the action of the system is considered and provided for in the design. A diaphragm is rigid for the purpose of distribution of story shear and torsional moment when the lateral deformation of the diaphragm is less than or equal to two times the average story drift. Where required by ASCE 7, provisions shall be made for the increased forces induced on resisting elements of the structural system resulting from torsion due to eccentricity between the center of application of the lateral forces and the center of rigidity of the lateral force-resisting system.

Every structure shall be designed to resist the overturning effects caused by the lateral forces specified in this chapter. See Section 1609 for wind loads, Section 1610 for lateral soil loads and Section 1613 for earthquake loads.

❖ This section includes the general requirements for structural analysis. The principles stated in this section are those commonly found in structural engineering textbooks. The requirement that structural analysis be capable of demonstrating a complete load path is essential to the adequate resistance of the structural system to wind loads or earthquake effects. The load path is to be capable of transferring all of the loads from their point of application onto the structure to the foundation. It is also important that nonstructural rigid elements be properly accounted for in the design. For example, a partial-height rigid masonry wall placed between steel columns in a steel frame will resist the horizontal shear load and cause bending in the column unless a flexible joint is provided between the wall and the column.

The definition of "Diaphragm" in Section 202.1 includes definitions that distinguish a rigid diaphragm from a flexible diaphragm. The distribution of forces in buildings with flexible diaphragms differs from those having rigid diaphragms. Where the diaphragm is determined to be flexible, the effect of torsion on the distribution of lateral forces is considered to be negligible and can therefore be neglected in the structural analysis. Otherwise, for structures having rigid diaphragms, this section requires the engineer to distribute lateral forces to the vertical supporting elements in proportion to their rigidities, and to include the effect of the increased forces induced on the vertical supporting elements resulting from torsion due to eccentricity between the center of mass and the center of rigidity.

1604.5 Risk category. Each building and structure shall be assigned a risk category in accordance with Table 1604.5. Where a referenced standard specifies an occupancy category, the risk category shall not be taken as lower than the occupancy category specified therein. Where a referenced standard specifies that the assignment of a risk category be in accordance with ASCE 7, Table 1.5-1, Table 1604.5 shall be used in lieu of ASCE 7, Table 1.5-1.

❖ This section requires classification of the risk category of any building in accordance with the nature of occupancy as described in Table 1604.5. The risk category serves as a threshold for a variety of code provisions related to earthquake, flood, snow and wind loads. Particularly noteworthy are the importance factors that are used in the calculation of design earthquake, snow and wind loads. The value of the importance factor generally increases with the importance of the facility. Structures assigned greater importance factors must be designed for larger forces. The result is a more robust structure that would be less likely to sustain damage under the same conditions than a structure with a lower importance factor. The intent is to enhance a structure's performance based on its use or the need to remain in operation during and after a design event.

The impact of a higher risk category classification is not limited to increasing the design loads. Compared to Risk Category I, II or III, for instance, a Risk Category IV classification can lead to a higher seismic design category classification that can, in turn, require more stringent seismic detailing and limitations on the seismic-force-resisting system. This can also affect the seismic design requirements for architectural, mechanical and electrical components and systems.

In the event that a referenced standard refers to ASCE 7 for determination of risk category, the determination of risk category is required to be made according to Table 1604.5, not according to ASCE 7. This requirement is intended to address conflicts between ASCE 7 and this code with respect to determination of risk category.

TABLE 1604.5. See page 16-9.

❖ The risk category determined in this table generally increases with the importance of the facility, which relates to the availability of the facility after an emergency, and the consequence of a structural failure on human life. The categories range from Risk Category I, which represents the lowest hazard to life, through Risk Category IV, which encompasses essential facilities.

Risk Category IV: These are buildings that are considered to be essential in that their continuous use is needed, particularly in response to disasters. Fire, rescue and police stations, and emergency vehicle garages must remain operational during and after major events, such as earthquakes, floods or hurricanes. The phrase "designated as essential facilities" refers to designation by the building official that certain facilities are required for emergency response or disaster recovery. This provides jurisdictions the lati-

INTERNATIONAL CODE COUNCIL®
Copyright © 2015 ICC. ALL RIGHTS RESERVED. Accessed by David Dammon on Jun 21, 2017 12:30:52 PM pursuant to License Agreement with ICC. No further reproduction or distribution authorized. ANY UNAUTHORIZED REPRODUCTION OR DISTRIBUTION IS A VIOLATION OF THE FEDERAL COPYRIGHT ACT AND THE LICENSE AGREEMENT, AND SUBJECT TO CIVIL AND CRIMINAL PENALTIES THEREUNDER.

tude to identify specific facilities that should be considered essential in responding to various types of emergencies. These could include structures that would not otherwise be included in this risk category. This designation would only be made with consideration of broader public policy, as well as emergency preparedness planning within the jurisdiction in question. The reasons for including facilities, such as hospitals, fire stations, police stations, emergency response operations centers, etc., should be self-evident. Some items warranting additional discussion are as follows:

- *Designated emergency shelters and designated emergency response facilities.* These items repeat the term "designated," which is referring to designation by the building official that the facilities have been identified as necessary for sheltering evacuees or responding to emergencies (see discussion of "designated" above). For example, an elementary school hav-

TABLE 1604.5
RISK CATEGORY OF BUILDINGS AND OTHER STRUCTURES

RISK CATEGORY	NATURE OF OCCUPANCY
I	Buildings and other structures that represent a low hazard to human life in the event of failure, including but not limited to: • Agricultural facilities. • Certain temporary facilities. • Minor storage facilities.
II	Buildings and other structures except those listed in Risk Categories I, III and IV.
III	Buildings and other structures that represent a substantial hazard to human life in the event of failure, including but not limited to: • Buildings and other structures whose primary occupancy is public assembly with an occupant load greater than 300. • Buildings and other structures containing Group E occupancies with an occupant load greater than 250. • Buildings and other structures containing educational occupancies for students above the 12th grade with an occupant load greater than 500. • Group I-2 occupancies with an occupant load of 50 or more resident care recipients but not having surgery or emergency treatment facilities. • Group I-3 occupancies. • Any other occupancy with an occupant load greater than 5,000.[a] • Power-generating stations, water treatment facilities for potable water, wastewater treatment facilities and other public utility facilities not included in Risk Category IV. • Buildings and other structures not included in Risk Category IV containing quantities of toxic or explosive materials that: Exceed maximum allowable quantities per control area as given in Table 307.1(1) or 307.1(2) or per outdoor control area in accordance with the *International Fire Code*; and Are sufficient to pose a threat to the public if released.[b]
IV	Buildings and other structures designated as essential facilities, including but not limited to: • Group I-2 occupancies having surgery or emergency treatment facilities. • Fire, rescue, ambulance and police stations and emergency vehicle garages. • Designated earthquake, hurricane or other emergency shelters. • Designated emergency preparedness, communications and operations centers and other facilities required for emergency response. • Power-generating stations and other public utility facilities required as emergency backup facilities for Risk Category IV structures. • Buildings and other structures containing quantities of highly toxic materials that: Exceed maximum allowable quantities per control area as given in Table 307.1(2) or per outdoor control area in accordance with the *International Fire Code*; and Are sufficient to pose a threat to the public if released.[b] • Aviation control towers, air traffic control centers and emergency aircraft hangars. • Buildings and other structures having critical national defense functions. • Water storage facilities and pump structures required to maintain water pressure for fire suppression.

a. For purposes of occupant load calculation, occupancies required by Table 1004.1.2 to use gross floor area calculations shall be permitted to use net floor areas to determine the total occupant load.

b. Where approved by the building official, the classification of buildings and other structures as Risk Category III or IV based on their quantities of toxic, highly toxic or explosive materials is permitted to be reduced to Risk Category II, provided it can be demonstrated by a hazard assessment in accordance with Section 1.5.3 of ASCE 7 that a release of the toxic, highly toxic or explosive materials is not sufficient to pose a threat to the public.

INTERNATIONAL CODE COUNCIL®
Copyright © 2015 ICC. ALL RIGHTS RESERVED. Accessed by David Dammon on Jun 21, 2017 12:30:52 PM pursuant to License Agreement with ICC. No further reproduction or distribution authorized. ANY UNAUTHORIZED REPRODUCTION OR DISTRIBUTION IS A VIOLATION OF THE FEDERAL COPYRIGHT ACT AND THE LICENSE AGREEMENT, AND SUBJECT TO CIVIL AND CRIMINAL PENALTIES THEREUNDER.

ing an occupant load of 275 would typically be considered a Risk Category III facility. If that school is designated as an emergency shelter, then the school will be considered a Risk Category IV building.

- *Facilities supplying emergency backup power for Risk Category IV.* A power-generating station or other utility (such as a natural gas facility) is to be classified as Risk Category IV only if the facility serves an emergency backup function for a Risk Category IV building, such as a fire station or police station. Otherwise, the power-generating station or utility should be classified as Risk Category III.
- *Structures with quantities of highly toxic materials in excess of the quantities permitted for a control area in Table 307.1(2).* This applies only to "Highly toxic materials" (see definition in Section 307.2), which are covered in the second row of Table 307.1(2). That table lists the maximum allowable quantities per control area of materials posing a health hazard. Since the use of control areas is permitted by Table 307.1(2), it is reasonable to recognize the control area for the purpose of making this risk category determination. In other words, this applies to occupancies that are classified as Group H-4 based on the quantities of highly toxic material exceeding the permitted quantity within a control area. However, recognizing control areas means that both the risk category as well as the occupancy classification could be lowered by adding either fire-resistance-rated walls or floor/ceiling assemblies in order to divide the building into a number of smaller control areas. The additional wording "….sufficient to pose a threat to the public if released," places a further qualification on the material quantity, but it is subjective since the threat to the public could be difficult to determine. Also note that a Group H-4 occupancy classification could be based on exceeding the quantities permitted for toxics or corrosives [see Table 307.1(2)], but the presence of those materials would not affect the assessment of the facility as Risk Category IV.

Risk Category III: Risk Category III buildings include those occupancies that have relatively large numbers of occupants because of the overall size of the building. They also include uses that pose an elevated life-safety hazard to the occupants, such as public assembly, schools or colleges. In addition, Risk Category III includes uses where the occupants' ability to respond to an emergency is restricted, such as in jails, or otherwise impaired, such as in nursing homes housing patients who require skilled nursing care. A discussion of some of the specific table listings follows:

- *Buildings and other structures with a primary occupancy that is public assembly with an occupant load greater than 300.* Public assembly occupancies meeting this criterion will typically be classified as Group A in Chapter 3. The wording requires agreement on the determination that a building's "primary occupancy" is in fact public assembly. This could be as simple as verifying that the portion of the building housing the public assembly occupancy is more than 50 percent of the total building area.
- *Group 1-2 occupancies with an occupant load of 50 or more resident patients, but not having surgery or emergency treatment facilities.* This category applies to health care facilities with at least 50 resident patients. The term "resident patient" is not defined or used elsewhere in the code, but would seem to refer to locations where those patients receive around-the-clock (24-hour) care as opposed to ambulatory surgery centers or outpatient units. This table entry covers facilities where patients have difficulty responding to an emergency or are incapable of self-preservation.
- *Buildings having an occupant load greater than 5,000.* Uses that pose elevated life-safety concerns, such as public assembly uses, schools and health care facilities, are covered elsewhere and have a much lower threshold based on the number of occupants. This table entry covers buildings that are large enough to have more than 5,000 occupants, providing added protection for the occupants of larger structures whatever the use happens to be. In order to determine occupant load, the methods outlined in Section 1004 are normally used. Chapter 10 sets forth standards that provide a reasonably conservative number of occupants for all spaces, and while actual loads are commonly less than the design amount, it is not unusual in the life of a space in a building to have periods when high actual occupant loads exist. Because there is no clear rationale that connects the occupant load used to calculate minimum means of egress requirements to the risks associated with structural design, Note a provides some reasonable adjustment to this determination by permitting the use of net floor area. It provides a more reasonable approach for occupancies, such as office, mercantile and residential, that are required to base occupant load on gross area—an area that includes corridors, stairways, elevators, closets, accessory areas, structural walls and columns, etc.
- *Power-generating stations, potable water treatment facilities, wastewater treatment and other public utilities not included in Risk Category IV.* A failure and subsequent shutdown of these types of facilities would not pose an immediate threat to life safety. These infrastructure items are considered Risk Category III because of the

INTERNATIONAL CODE COUNCIL®
Copyright © 2015 ICC. ALL RIGHTS RESERVED. Accessed by David Dammon on Jun 21, 2017 12:30:52 PM pursuant to License Agreement with ICC. No further reproduction or distribution authorized. ANY UNAUTHORIZED REPRODUCTION OR DISTRIBUTION IS A VIOLATION OF THE FEDERAL COPYRIGHT ACT AND THE LICENSE AGREEMENT, AND SUBJECT TO CIVIL AND CRIMINAL PENALTIES THEREUNDER.

impact an extended disruption in service can have on the public.

- *Buildings not included in Risk Category IV containing quantities of toxic or explosive materials that exceed permitted quantities per control area in Table 307.1(1) or 307.1(2) and are sufficient to pose a threat to the public if released.* Buildings included under Risk Category IV would be those containing quantities of highly toxic materials that exceed the permitted quantity in Table 307.1(2) (see discussion under "Risk Category IV" above). This item addresses buildings with explosives or toxic substances, both of which are defined in Section 307.2.

Risk Category II: Risk Category II buildings represent a lesser hazard to life because of fewer building occupants and smaller building size compared to those that are considered Risk Category III. Since Risk Categories III and IV represent buildings with higher risk or essential facilities, on a relative scale Risk Category II can be thought of as a "standard occupancy" building as evidenced by importance factors for earthquake, snow and wind that are all equal to 1. Most buildings and structures are considered to be Risk Category II.

Risk Category I: Risk Category I buildings exhibit the lowest hazard to life since they have little or no human occupants or, for those that are temporary, the exposure to the hazards of earthquakes, floods, snow and wind would be considerably less than that of a permanent structure. Note that this category includes "minor storage facilities," but the code does not provide an explanation of which storage facilities could be considered minor.

1604.5.1 Multiple occupancies. Where a building or structure is occupied by two or more occupancies not included in the same *risk category*, it shall be assigned the classification of the highest *risk category* corresponding to the various occupancies. Where buildings or structures have two or more portions that are structurally separated, each portion shall be separately classified. Where a separated portion of a building or structure provides required access to, required egress from or shares life safety components with another portion having a higher *risk category*, both portions shall be assigned to the higher *risk category*.

❖ Buildings are frequently occupied by a mixture of uses or occupancies. Where multiple occupancies are proposed in a building, the risk category of each one must be considered. In some cases, the proposed occupancies in a building will fall into more than one risk category and the requirements for multiple occupancies stated in Section 1604.5.1 must be satisfied. These requirements were previously part of the earthquake load provisions. As of the 2006 edition, they were relocated so that they now apply regardless of the type of load being considered. The code identifies two design options for mixed-use buildings. The entire structure can be designed as a single unit based on the requirements for the most stringent risk category for the building. Alternatively, the engineer can structurally separate portions of the structure containing distinct occupancy categories and design each portion accordingly based on its risk category.

This section also provides direction regarding access to and egress from adjacent structures that fall into different occupancy categories by making the requirements for the more stringent risk category applicable to both structures. This requirement is the result of lessons learned from events, such as earthquakes, in which essential functions have been rendered unusable because of a failure in an adjacent structure.

1604.6 In-situ load tests. The *building official* is authorized to require an engineering analysis or a load test, or both, of any construction whenever there is reason to question the safety of the construction for the intended occupancy. Engineering analysis and load tests shall be conducted in accordance with Section 1708.

❖ Engineering analyses and load tests are means of assessing whether there exists a significant risk to life safety from a structure. The building official should document his or her reasons for invoking this section. A third-party review by an engineering firm acceptable to both the building official and the owner would be appropriate in the event that a structural analysis is required. A load test is also an appropriate means of assessing a structure. If the structure being tested supports the test loads and meets the performance criteria in the applicable standard or test protocol, the structure or element is deemed to have sufficient structural capacity. Test protocols for concrete and steel are provided in ACI 318 and AISC 360, respectively. Load tests can also be used by engineers who want to verify that a structure has sufficient capacity.

1604.7 Preconstruction load tests. Materials and methods of construction that are not capable of being designed by *approved* engineering analysis or that do not comply with the applicable referenced standards, or alternative test procedures in accordance with Section 1707, shall be load tested in accordance with Section 1709.

❖ The alternative test procedure described in Section 1707 and the preconstruction load test procedure described in Section 1709 are intended to apply to materials or an assembly of structural materials that generally do not have an accepted analysis technique; thus, they are approved for use by way of the alternative test procedure. The preconstruction test procedure in Section 1709 includes the determination of the allowable superimposed design load (see Section 1709 for details).

INTERNATIONAL CODE COUNCIL®
Copyright © 2015 ICC. ALL RIGHTS RESERVED. Accessed by David Dammon on Jun 21, 2017 12:30:52 PM pursuant to License Agreement with ICC. No further reproduction or distribution authorized. ANY UNAUTHORIZED REPRODUCTION OR DISTRIBUTION IS A VIOLATION OF THE FEDERAL COPYRIGHT ACT AND THE LICENSE AGREEMENT, AND SUBJECT TO CIVIL AND CRIMINAL PENALTIES THEREUNDER.

1604.8 Anchorage. Buildings and other structures, and portions thereof, shall be provided with anchorage in accordance with Sections 1604.8.1 through 1604.8.3, as applicable.

❖ Sections 1604.8.1 through 1606.8.3 contain general anchorage requirements as well as specific requirements for the anchorage of walls and decks.

1604.8.1 General. Anchorage of the roof to walls and columns, and of walls and columns to foundations, shall be provided to resist the uplift and sliding forces that result from the application of the prescribed loads.

❖ This section states a specific load path requirement for anchorage that is already required in more general terms by Section 1604.4. Required anchorage resistance to uplift and sliding is determined in accordance with the appropriate load combinations in Section 1605, which account for the effects of earthquakes, fluid pressures, lateral earth pressure or wind (also see Section 1604.9).

An example of the condition described in this section is roof uplift as a result of high winds. Table 2308.10.1 requires roof uplift connectors for wood-frame construction designed and installed in accordance with the prescriptive requirements for conventional light-frame construction. Note that net roof uplift occurs at all wind speeds indicated in the table; thus, uplift connectors are required for roof wood framing for all of the indicated wind speed locations.

1604.8.2 Structural walls. Walls that provide vertical load-bearing resistance or lateral shear resistance for a portion of the structure shall be anchored to the roof and to all floors and members that provide lateral support for the wall or that are supported by the wall. The connections shall be capable of resisting the horizontal forces specified in Section 1.4.5 of ASCE 7 for walls of structures assigned to *Seismic Design Category* A and to Section 12.11 of ASCE 7 for walls of structures assigned to all other *seismic design categories*. Required anchors in masonry walls of hollow units or cavity walls shall be embedded in a reinforced grouted structural element of the wall. See Sections 1609 for wind design requirements and 1613 for earthquake design requirements.

❖ This section refers to the ASCE 7 technical provisions for the minimum strength design load on anchorages of walls to the horizontal diaphragms that provide lateral support. The connection requirements apply to both bearing walls and walls that resist lateral loads. The wall anchorage must be a positive connection that does not rely on friction for load transfer. Earthquake detailing provisions may result in higher anchorage design forces based on the seismic design category of the building, as well as the mass of the wall.

1604.8.3 Decks. Where supported by attachment to an *exterior wall*, decks shall be positively anchored to the primary structure and designed for both vertical and lateral loads as applicable. Such attachment shall not be accomplished by the use of toenails or nails subject to withdrawal. Where positive connection to the primary building structure cannot be verified during inspection, decks shall be self-supporting. Connections of decks with cantilevered framing members to exterior walls or other framing members shall be designed for both of the following:

1. The reactions resulting from the dead load and live load specified in Table 1607.1, or the snow load specified in Section 1608, in accordance with Section 1605, acting on all portions of the deck.
2. The reactions resulting from the dead load and live load specified in Table 1607.1, or the snow load specified in Section 1608, in accordance with Section 1605, acting on the cantilevered portion of the deck, and no live load or snow load on the remaining portion of the deck.

❖ This requirement for the positive anchorage of decks is a result of failures that have occurred primarily on nonengineered residential decks. Toenail connections are relatively weak and less reliable since many of the field connections split the wood framing member. Nails that are installed in line with applied tension forces pull out easily.

In order to make the loading considerations clear for decks with cantilevers, this section states the two loading conditions that are applicable. The second condition covers the case where uplift can occur at the back-span support. This highlights the need for resistance to uplift by a positive connection at the exterior wall. These conditions also clarify that snow load should be considered.

1604.9 Counteracting structural actions. Structural members, systems, components and cladding shall be designed to resist forces due to earthquakes and wind, with consideration of overturning, sliding and uplift. Continuous load paths shall be provided for transmitting these forces to the foundation. Where sliding is used to isolate the elements, the effects of friction between sliding elements shall be included as a force.

❖ This section requires that all elements of the structure be designed to resist the required earthquake and wind effects. The required level of resistance will be based on the appropriate load combinations of Section 1605. The term "counteracting" used in the section title refers to so-called counteracting load combinations as opposed to those in which the load effects are additive. The effects of overturning, uplift and sliding are most pronounced in these counteractive load combinations. These would consist of the following depending on the design method chosen:

- Load and resistance factor design or strength design, Section 1605.2:

  $0.9D + 1.0W + 1.6H$ Equation 16-6
  $0.9(D + F) + 1.0E + 1.6H$ Equation 16-7

- Basic allowable stress design load combinations, Section 1605.3.1:

  $0.6D + 0.6W + H$ Equation 16-15
  $0.6(D + F) + 0.7E + H$ Equation 16-16

- Alternative allowable stress design load combinations, Section 1605.3.2:

INTERNATIONAL CODE COUNCIL®
Copyright © 2015 ICC. ALL RIGHTS RESERVED. Accessed by David Dammon on Jun 21, 2017 12:30:52 PM pursuant to License Agreement with ICC. No further reproduction or distribution authorized. ANY UNAUTHORIZED REPRODUCTION OR DISTRIBUTION IS A VIOLATION OF THE FEDERAL COPYRIGHT ACT AND THE LICENSE AGREEMENT, AND SUBJECT TO CIVIL AND CRIMINAL PENALTIES THEREUNDER.

$0.9D + E/1.4$ Equation 16-22

(Note the adjustment to the vertical component of earthquake load effect that is permitted for evaluating foundations.)

$(^2/_3)D + (0.6 \times 1.3)W$ Equation 16-18

(Equation 16-18 with $L = 0$ in accordance with Section 1605.1 requirement to investigate each load combination with one or more variable loads equal to zero, two-thirds of the dead load in accordance with requirement in Section 1605.3.2 and ω set equal to 1.3 for 3-second gust wind speed.)

As can be seen, for the critical counteracting load combinations, resistance to overturning, uplift and sliding is largely provided by dead load. Note that Section 1605.3.2 requires the designer to consider only the dead load likely to be in place during a design wind event when using the alternative allowable stress load combinations. Regardless of the design methodology utilized, the designer should be cautious in estimating dead loads that resist overturning, sliding and uplift. In order to remain conservative, estimated dead load should be no more than the actual dead load in these cases (see design dead load in Section 1606.2). To keep a structure from sliding horizontally, the dead load must generate enough friction at the base of the structure to resist the horizontal base shear due to earthquake and wind. Otherwise, adequate anchorage must be provided to resist the base shear.

1604.10 Wind and seismic detailing. Lateral force-resisting systems shall meet seismic detailing requirements and limitations prescribed in this code and ASCE 7, excluding Chapter 14 and Appendix 11A, even when wind *load effects* are greater than seismic *load effects*.

❖ This section is needed to clarify that the seismic detailing requirements of the code always apply, even where the wind load effects are higher than the seismic load effects. This is required because the calculated earthquake load is dependent upon an assumed level of ductility to be provided in the selected seismic-force-resisting system. If the designer does not follow through by providing the detailing required to achieve the ductility of the selected system, the assumption is invalid and the structure may not perform adequately in the event of an earthquake.

For example, consider the case where the earthquake load provisions apply in accordance with Section 1613.1, the seismic-force-resisting system is an ordinary concentrically braced steel frame and, based on the seismic design category, Section 2205 requires that the AISC 341 seismic provisions are to be met. For this case, the requirements in Section 14 of AISC 341 must be satisfied in the design of the steel frame, even if the wind load effects exceed the seismic load effects.

SECTION 1605
LOAD COMBINATIONS

1605.1 General. Buildings and other structures and portions thereof shall be designed to resist:

1. The load combinations specified in Section 1605.2, 1605.3.1 or 1605.3.2;
2. The load combinations specified in Chapters 18 through 23; and
3. The seismic load effects including overstrength factor in accordance with Section 12.4.3 of ASCE 7 where required by Section 12.2.5.2, 12.3.3.3 or 12.10.2.1 of ASCE 7. With the simplified procedure of ASCE 7 Section 12.14, the seismic load effects including overstrength factor in accordance with Section 12.14.3.2 of ASCE 7 shall be used.

Applicable loads shall be considered, including both earthquake and wind, in accordance with the specified load combinations. Each load combination shall also be investigated with one or more of the variable loads set to zero.

Where the load combinations with overstrength factor in Section 12.4.3.2 of ASCE 7 apply, they shall be used as follows:

1. The basic combinations for strength design with overstrength factor in lieu of Equations 16-5 and 16-7 in Section 1605.2.
2. The basic combinations for *allowable stress design* with overstrength factor in lieu of Equations 16-12, 16-14 and 16-16 in Section 1605.3.1.
3. The basic combinations for *allowable stress design* with overstrength factor in lieu of Equations 16-21 and 16-22 in Section 1605.3.2.

❖ Generally, there are two types of load combinations specified in the code: those to be used with a strength design [or load and resistance factor design (LRFD)] and those to be used with allowable stress design. Where additional load combinations are specified in the structural material chapters, they apply also. Note that this section also requires that for a given load combination engineers also consider additional load cases where one or more variable loads are not acting concurrently with other variable loads. It is necessary to explore such possibilities, since they can at times result in the most critical load effect for some elements of a structure. According to the definition of "Loads," loads that are not considered permanent are variable loads.

The load combinations with overstrength factor in Section 12.4.3.2 of ASCE 7 only apply where specifically required by the seismic provisions. They do not replace the applicable load combinations for strength design or allowable stress design. They constitute an additional requirement that must be considered in the design of specific structural elements.

The purpose of these load combinations with overstrength factor is to account for the maximum earth-

INTERNATIONAL CODE COUNCIL®
Copyright © 2015 ICC. ALL RIGHTS RESERVED. Accessed by David Dammon on Jun 21, 2017 12:30:52 PM pursuant to License Agreement with ICC. No further reproduction or distribution authorized. ANY UNAUTHORIZED REPRODUCTION OR DISTRIBUTION IS A VIOLATION OF THE FEDERAL COPYRIGHT ACT AND THE LICENSE AGREEMENT, AND SUBJECT TO CIVIL AND CRIMINAL PENALTIES THEREUNDER.

quake load effect, E_m, which considers "system overstrength." This system characteristic is accounted for by multiplying the effects of the lateral earthquake load by the overstrength factor, Ω_0, for the seismic-force-resiting system that is utilized. It is representative of the upper bound system strength for purposes of designing nonyielding elements for the maximum expected load. Under the design earthquake ground motions, the forces generated in the seismic-force-resisting system can be much greater than the prescribed seismic design forces. If not accounted for, the system overstrength effect can cause failures of structural elements that are subjected to these forces. Because system overstrength is unavoidable, design for the maximum earthquake force that can be developed is warranted for certain elements. The intent is to provide key elements with sufficient overstrength so that inelastic (ductile) response/behavior appropriately occurs within the vertical-resisting elements.

The ASCE 7 earthquake load provisions that require consideration of the load combinations with overstrength factor are stated in this section. Note that these load combinations are not general load cases, but are only to be applied where specified in the indicated earthquake load provisions (see above) or in the structural materials requirements (see Section 1810.3.11.2 for an example of the latter).

For example, Section 12.3.3.3 of ASCE 7 applies to structural elements that support discontinuous frames or shear wall systems where the discontinuity is severe enough to be deemed a structural irregularity. See Commentary Figure 1605.1(1) for examples of building configurations that include discontinuous vertical systems. Also see the commentary to Section 12.3.3.3 of ASCE 7.

Section 12.10.2.1 of ASCE 7 applies to collector elements in structures assigned to Seismic Design Category C or higher. The term "collector" describes an element used to transfer forces from a diaphragm to the supporting element(s) of the lateral-force-resisting system where the length of the vertical element is less than the diaphragm dimension at that location. Commentary Figure 1605.1(2) illustrates this relationship. Failures of collectors can result in loads not being delivered to resisting elements and separation of a portion of a building from its lateral-force-resisting system. Where a collector also supports gravity loads, such a failure would result in the loss of a portion of the gravity load-carrying system. The intent is to provide collector elements that have sufficient overstrength so that any inelastic behavior appropriately occurs within the seismic-force-resisting system rather than the collector elements.

Maximum earthquake load effect, E_m, in Section 12.4.3 of ASCE 7 includes effects of the horizontal

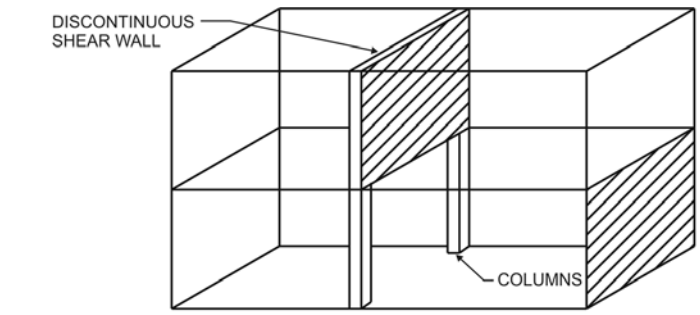

HORIZONTAL IRREGULARITY TYPE 4... OUT-OF-PLANE OFFSETS OF THE LATERAL-FORCE-RESISTING ELEMENTS

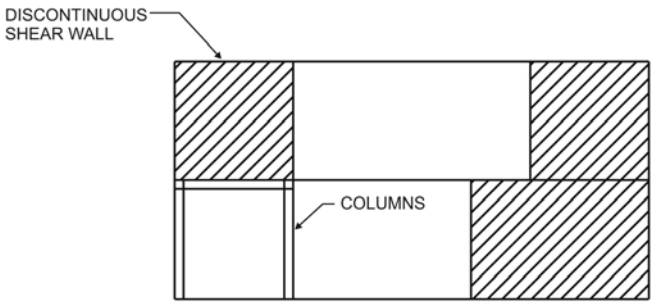

VERTICAL IRREGULARITY TYPE 4... AN IN-PLANE OFFSET OF THE LATERAL-FORCE-RESISTING ELEMENTS

Figure 1605.1(1)
EXAMPLES OF DISCONTINUOUS SHEAR WALLS

INTERNATIONAL CODE COUNCIL®
Copyright © 2015 ICC. ALL RIGHTS RESERVED. Accessed by David Dammon on Jun 21, 2017 12:30:52 PM pursuant to License Agreement with ICC. No further reproduction or distribution authorized. ANY UNAUTHORIZED REPRODUCTION OR DISTRIBUTION IS A VIOLATION OF THE FEDERAL COPYRIGHT ACT AND THE LICENSE AGREEMENT, AND SUBJECT TO CIVIL AND CRIMINAL PENALTIES THEREUNDER.

load, E_{mh}, as well as a vertical component, E_v. E_{mh} is the product of the overstrength factor, Ω_0, and Q_E, the effects of horizontal earthquake forces. E_v is the same vertical component used for the earthquake load effect, E (see commentary, Section 1602.1).

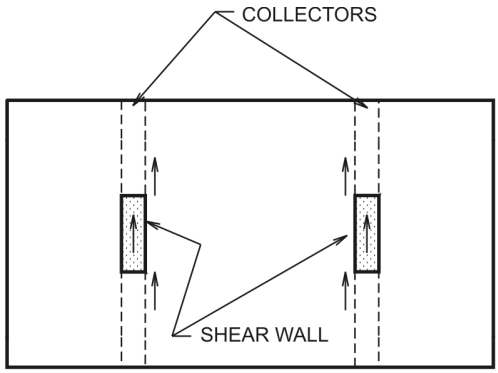

Figure 1605.1(2)
COLLECTORS

1605.1.1 Stability. Regardless of which load combinations are used to design for strength, where overall structure stability (such as stability against overturning, sliding, or buoyancy) is being verified, use of the load combinations specified in Section 1605.2 or 1605.3 shall be permitted. Where the load combinations specified in Section 1605.2 are used, strength reduction factors applicable to soil resistance shall be provided by a *registered design professional*. The stability of retaining walls shall be verified in accordance with Section 1807.2.3.

❖ This section permits soil resistance and strength reduction factors to be considered where strength design factored loads are used in foundation design.

1605.2 Load combinations using strength design or load and resistance factor design. Where strength design or load and resistance factor design is used, buildings and other structures, and portions thereof, shall be designed to resist the most critical effects resulting from the following combinations of factored loads:

$1.4(D + F)$ **(Equation 16-1)**

$1.2(D + F) + 1.6(L + H) + 0.5(L_r \text{ or } S \text{ or } R)$ **(Equation 16-2)**

$1.2(D + F) + 1.6(L_r \text{ or } S \text{ or } R) + 1.6H + (f_1 L \text{ or } 0.5W)$ **(Equation 16-3)**

$1.2(D + F) + 1.0W + f_1 L + 1.6H + 0.5(L_r \text{ or } S \text{ or } R)$ **(Equation 16-4)**

$1.2(D + F) + 1.0E + f_1 L + 1.6H + f_2 S$ **(Equation 16-5)**

$0.9D + 1.0W + 1.6H$ **(Equation 16-6)**

$0.9(D + F) + 1.0E + 1.6H$ **(Equation 16-7)**

where:

f_1 = 1 for places of public assembly live loads in excess of 100 pounds per square foot (4.79 kN/m^2), and parking garages; and 0.5 for other live loads.

f_2 = 0.7 for roof configurations (such as saw tooth) that do not shed snow off the structure, and 0.2 for other roof configurations.

Exceptions:

1. Where other factored load combinations are specifically required by other provisions of this code, such combinations shall take precedence.
2. Where the effect of H resists the primary variable load effect, a load factor of 0.9 shall be included with H where H is permanent and H shall be set to zero for all other conditions.

❖ This section lists the load combinations for strength design or load and resistance factor design methods. See the definitions in Section 1602 for an explanation of the load notations. The basis for these load combinations is Section 2.3.2 of ASCE 7. These combinations of factored loads are the agreed-upon strength-limit states that establish the required strength to be provided in the structural component being designed. In spite of the precise appearance of the load and resistance factor design load combinations, one should keep in mind their probabilistic nature. The goal is to allow a wide variety of structures to be designed economically with an acceptably low probability that the strength of the structure will be exceeded. Doing so necessitates combining loads in scenarios that are likely to occur. Dead load is a permanent load and it appears in every combination. The load combinations are constructed by adding the dead load to one of the variable loads at its maximum value, which is typically indicated by the load factor of 1.6. In addition, other variable loads are included with load factors that are less than 1.0. Those so-called "companion loads" represent arbitrary point-in-time values for those loads. The exception is the maximum earthquake load that has a load factor of 1.0 (see the commentary to the definitions "Factored load" and "Nominal load" in Section 202).

1605.2.1 Other loads. Where flood loads, F_a, are to be considered in the design, the load combinations of Section 2.3.3 of ASCE 7 shall be used. Where self-straining loads, T, are considered in design, their structural effects in combination with other loads shall be determined in accordance with Section 2.3.5 of ASCE 7. Where an ice-sensitive structure is subjected to loads due to atmospheric icing, the load combinations of Section 2.3.4 of ASCE 7 shall be considered.

❖ For all buildings and structures located in flood hazard areas, this section specifies that flood load and flood load combinations using the strength design method are to be determined in accordance with Section 2.3.3 of ASCE 7, which states:

> When a structure is located in a flood zone (Section 5.3.1), the following load combinations shall

INTERNATIONAL CODE COUNCIL®
Copyright © 2015 ICC. ALL RIGHTS RESERVED. Accessed by David Dammon on Jun 21, 2017 12:30:52 PM pursuant to License Agreement with ICC. No further reproduction or distribution authorized. ANY UNAUTHORIZED REPRODUCTION OR DISTRIBUTION IS A VIOLATION OF THE FEDERAL COPYRIGHT ACT AND THE LICENSE AGREEMENT, AND SUBJECT TO CIVIL AND CRIMINAL PENALTIES THEREUNDER.

be considered in addition to the basic combinations in Section 2.3.2:

1. In V-Zones or Coastal A-Zones, 1.0*W* in combinations 4 and 6 shall be replaced by 1.0*W* + 2.0F_a.
2. In noncoastal A-Zones, 1.0*W* in combinations 4 and 6 shall be replaced by 0.5*W* + 1.0F_a.

1605.3 Load combinations using allowable stress design.

1605.3.1 Basic load combinations. Where *allowable stress design* (working stress design), as permitted by this code, is used, structures and portions thereof shall resist the most critical effects resulting from the following combinations of loads:

$D + F$ **(Equation 16-8)**

$D + H + F + L$ **(Equation 16-9)**

$D + H + F + (L_r$ or S or $R)$ **(Equation 16-10)**

$D + H + F + 0.75(L) + 0.75(L_r$ or S or $R)$ **(Equation 16-11)**

$D + H + F + (0.6W$ or $0.7E)$ **(Equation 16-12)**

$D + H + F + 0.75(0.6W) + 0.75L + 0.75(L_r$ or S or $R)$ **(Equation 16-13)**

$D + H + F + 0.75\ (0.7\ E) + 0.75\ L + 0.75\ S$ **(Equation 16-14)**

$0.6D + 0.6W + H$ **(Equation 16-15)**

$0.6(D + F) + 0.7E + H$ **(Equation 16-16)**

Exceptions:

1. Crane hook loads need not be combined with roof live load or with more than three-fourths of the snow load or one-half of the wind load.
2. Flat roof snow loads of 30 psf (1.44 kN/m^2) or less and roof live loads of 30 psf (1.44 kN/m^2) or less need not be combined with seismic loads. Where flat roof snow loads exceed 30 psf (1.44 kN/m^2), 20 percent shall be combined with seismic loads.
3. Where the effect of *H* resists the primary variable load effect, a load factor of 0.6 shall be included with *H* where *H* is permanent and *H* shall be set to zero for all other conditions.
4. In Equation 16-15, the wind load, *W*, is permitted to be reduced in accordance with Exception 2 of Section 2.4.1 of ASCE 7.
5. In Equation 16-16, 0.6 *D* is permitted to be increased to 0.9 *D* for the design of special reinforced masonry shear walls complying with Chapter 21.

❖ See Section 1602 for an explanation of the notations. These basic load combinations for allowable stress design are based on Section 2.4.1 of ASCE 7. Note that a 0.75 factor is applied where these combinations include more than one variable load. This reduces the combined effect of these variable loads in recognition of the lower probability that two or more variable loads will reach their maximum values simultaneously.

Previous editions of the model codes specified that the overturning moment and sliding due to wind load could not exceed two-thirds of the dead load stabilizing moment; however, it was not typically applied to all elements in the building. In the code, this limitation on dead load is accomplished through the load combinations. The applicable combination is 0.6*D* + 0.6*W* + *H*. This load combination limits the dead load resisting wind loads to 60 percent ($^2/_3$ = 0.67; round down) and it applies to all elements where dead load is used to resist wind loads.

The load combination, 0.6 (D + *F*) + 0.7*E* + *H*, applies throughout the structure and provides for overall stability of the structure similar to the load combination for wind. In determining seismic load effect, *E*, the definition of effective seismic weight requires inclusion of a portion of roof snow under certain conditions. Frequently the question is asked whether it is logical to include a component of snow load in determining *E*, but not to use that same weight of snow in the load case to resist the overturning or uplift due to *E*. This apparent inconsistency has been built into the seismic requirements for some time. It introduces a bit more conservatism into the earthquake loading where heavier snow loads are concerned.

Exception 1 for crane hook loads has been a longstanding allowance in the alternative basic load combinations of Section 1605.3.1 under the legacy model codes and is now permitted in the code. It allows special consideration in combining crane loads with wind, snow and roof live loads due to a lower probability that these maximum loads occur simultaneously. As noted above, these basic load combinations are based on ASCE 7 allowable stress load combinations, but there is no corresponding exception for crane loads under ASCE 7. In the development of the 2000 edition of this code, this exception was added to the basic load combinations in an attempt to provide "parity" with the alternative basic load combinations. It is worth noting that these two sets of load combinations come from two different sources as described above and, from an overall perspective, they never have provided parity. Crane loads are considered live loads (see Section 1607.13). Exception 1 has no effect on dead load, other floor live loads, rain loads or earthquake loads; thus, where crane live loads are to be considered, the exception eliminates the roof live load, L_r, altogether and reduces the snow load to 0.75*S* and wind load to 0.5(0.6*W*). This exception does not negate the need to combine live loads other than the crane live loads in the usual manner with wind and snow loads. In other words, the load combinations in Equations 16-11 and 16-13 must be investigated without the crane live load and then modified versions of these combinations that include crane live

INTERNATIONAL CODE COUNCIL®
Copyright © 2015 ICC. ALL RIGHTS RESERVED. Accessed by David Dammon on Jun 21, 2017 12:30:52 PM pursuant to License Agreement with ICC. No further reproduction or distribution authorized. ANY UNAUTHORIZED REPRODUCTION OR DISTRIBUTION IS A VIOLATION OF THE FEDERAL COPYRIGHT ACT AND THE LICENSE AGREEMENT, AND SUBJECT TO CIVIL AND CRIMINAL PENALTIES THEREUNDER.

load (use L_0 to denote crane live load) would be considered to make use of the exception as follows:

Equation 16-11
$D + H + F + 0.75L + 0.75$ (L, or S or R)

Equation 16-11c
$D + H + F + 0.75$ ($L + L_c$) $+ 0.75$ ($0.75S$ or R)

Equation 16-13
$D + H + F + 0.75$ ($0.6W$) $+ 0.75L + 0.75$ (L, or S or R)

Equation 16-13c
$D + H + F + 0.75$ ($0.5 \times 0.6W$) $+ 0.75[L + L_c] + 0.75$ ($0.75S$ or R)

Equation 16-14
$D + H + F + 0.75$ ($0.7E$) $+ 0.75L + 0.75S$

Equation 16-14c
$D + H + F + 0.75$ ($0.7E$) $+ 0.75[L + L_c] + 0.75$ ($0.75S$)

Exception 2 states, "flat roof snow loads of 30 psf (1.44 kN/m^2) or less need not be combined with seismic loads." This is an exception to the requirement to combine the effects of snow and earthquake load as would otherwise be required by Equation 16-14.

1605.3.1.1 Stress increases. Increases in allowable stresses specified in the appropriate material chapter or the referenced standards shall not be used with the load combinations of Section 1605.3.1, except that increases shall be permitted in accordance with Chapter 23.

❖ Some code sections and some referenced standards permit increases in the allowable stress where load combinations include either wind or earthquake loads. Such increases are expressly prohibited with the basic allowable stress load combinations. This prohibition is due to the 0.75 reduction applied to multiple variable loads in these load combinations, which has replaced the concept of allowable stress increases. Several adjustment factors for the design of wood construction allow increases to reference design values, such as the load duration factor, size factor, flat use factor, repetitive member factor, buckling stiffness factor and bearing area factor. These wood adjustment factors are considered to be material dependent. Since they are not related to the presence of particular design loads, this section recognizes their use.

1605.3.1.2 Other loads. Where flood loads, F_a, are to be considered in design, the load combinations of Section 2.4.2 of ASCE 7 shall be used. Where self-straining loads, T, are considered in design, their structural effects in combination with other loads shall be determined in accordance with Section 2.4.4 of ASCE 7. Where an ice-sensitive structure is subjected to loads due to atmospheric icing, the load combinations of Section 2.4.3 of ASCE 7 shall be considered.

❖ The study discussed in the commentary to Section 1605.2.1 determined flood load and flood load combination factors for use with the allowable stress method. This section specifies that flood load and flood load combinations using the allowable stress design method are to be determined in accordance with Section 2.4.2 of ASCE 7, which states:

> When a structure is located in a flood zone, the following load combinations shall be considered in addition to the basic combinations in Section 2.4.1:
>
> 1. In V-Zones or Coastal A-Zones (Section 5.3.1), $1.5F_a$ shall be added to other loads in combinations 5, 6, and 7, and E shall be set equal to zero in 5 and 6.
> 2. In noncoastal A-Zones, $0.75F_a$ shall be added to the combinations 5, 6, and 7, and E shall be set equal to zero in 5 and 6.

1605.3.2 Alternative basic load combinations. In lieu of the basic load combinations specified in Section 1605.3.1, structures and portions thereof shall be permitted to be designed for the most critical effects resulting from the following combinations. When using these alternative basic load combinations that include wind or seismic loads, allowable stresses are permitted to be increased or load combinations reduced where permitted by the material chapter of this code or the referenced standards. For load combinations that include the counteracting effects of dead and wind loads, only two-thirds of the minimum dead load likely to be in place during a design wind event shall be used. When using allowable stresses that have been increased or load combinations that have been reduced as permitted by the material chapter of this code or the referenced standards, where wind loads are calculated in accordance with Chapters 26 through 31 of ASCE 7, the coefficient (ω) in the following equations shall be taken as 1.3. For other wind loads, (ω) shall be taken as 1. When allowable stresses have not been increased or load combinations have not been reduced as permitted by the material chapter of this code or the referenced standards, (ω) shall be taken as 1. When using these alternative load combinations to evaluate sliding, overturning and soil bearing at the soil-structure interface, the reduction of foundation overturning from Section 12.13.4 in ASCE 7 shall not be used. When using these alternative basic load combinations for proportioning foundations for loadings, which include seismic loads, the vertical seismic *load effect*, E_v, in Equation 12.4-4 of ASCE 7 is permitted to be taken equal to zero.

$D + L + (L_r$ or S or $R)$ **(Equation 16-17)**

$D + L + 0.6\,\omega W$ **(Equation 16-18)**

$D + L + 0.6\,\omega W + S/2$ **(Equation 16-19)**

$D + L + S + 0.6\,\omega W/2$ **(Equation 16-20)**

$D + L + S + E/1.4$ **(Equation 16-21)**

$0.9D + E/1.4$ **(Equation 16-22)**

Exceptions:

1. Crane hook loads need not be combined with roof live loads or with more than three-fourths of the snow load or one-half of the wind load.
2. Flat roof snow loads of 30 psf (1.44 kN/m^2) or less and roof live loads of 30 psf (1.44 kN/m^2) or less need not be combined with seismic loads. Where flat

INTERNATIONAL CODE COUNCIL®
Copyright © 2015 ICC. ALL RIGHTS RESERVED. Accessed by David Dammon on Jun 21, 2017 12:30:52 PM pursuant to License Agreement with ICC. No further reproduction or distribution authorized. ANY UNAUTHORIZED REPRODUCTION OR DISTRIBUTION IS A VIOLATION OF THE FEDERAL COPYRIGHT ACT AND THE LICENSE AGREEMENT, AND SUBJECT TO CIVIL AND CRIMINAL PENALTIES THEREUNDER.

roof snow loads exceed 30 psf (1.44 kN/m^2), 20 percent shall be combined with seismic loads.

❖ These are alternative load combinations to those in Section 1605.3.1 for use with allowable stress design. They are based on the allowable stress load combinations in the *Uniform Building Code*™ (UBC™).

Note that the dead load is limited to two-thirds of the dead load likely to be in place during a design wind event. Section 1604.9 requires that all elements of a building be anchored to resist overturning, uplift and sliding. Often, a considerable portion of this resistance is provided by the dead load of a building, including the weight of foundations and any soil directly above them. This section requires the designer to give consideration to the dead load used to resist wind loads by stating that only the minimum dead load likely to be in place during a design wind event is permitted to be used. This, however, does not imply that certain parts or elements of a building are not designed to remain in place. This criteria simply cautions the designer against using dead loads that may not be installed or in place, such as can occur where a design includes an allowance for a planned future expansion.

Although allowable stresses are permitted to be increased (or load combinations are permitted to be reduced) where permitted by the material chapter of this code or the referenced standards for wind and seismic loads, the wind forces are then required to be increased by an approximately equal amount where the wind loads are determined in accordance with ASCE 7. This effectively negates the effect of the increase in allowable stresses (or reduction in load combinations) associated with wind.

Exception 1 for crane hook loads has been a longstanding allowance under the legacy model codes that were also the source of these alternative basic load combinations. It allows special consideration in combining crane live loads with wind, snow and roof live loads due to a lower probability that these maximum loads occur simultaneously.

Exception 2 states, "flat roof snow loads of 30 psf (1.44 N/m^2) or less need not be combined with seismic loads." This is an exception to the requirement to combine the effects of snow and earthquake load as would otherwise be required by Equation 16-21.

Also see the commentary to Section 1602.1 for discussion of earthquake load effect, *E*, as well as other loads required by these load combinations.

1605.3.2.1 Other loads. Where *F*, *H* or *T* are to be considered in the design, each applicable load shall be added to the combinations specified in Section 1605.3.2. Where self-straining loads, *T*, are considered in design, their structural effects in combination with other loads shall be determined in accordance with Section 2.4.4 of ASCE 7.

❖ See Section 1602 for an explanation of the notation used in this section. As indicated, the applicable loads are to be added to each of the load combinations in Section 1605.3.2.

SECTION 1606
DEAD LOADS

1606.1 General. Dead loads are those loads defined in Chapter 2 of this code. Dead loads shall be considered permanent loads.

❖ The nominal dead load, *D*, is determined in accordance with Section 1606. Similar to the general section on live loads (see Section 1607.1), this section provides a reminder that the term "dead loads" is defined, establishing exactly what should be considered a dead load. It also states that dead loads are considered permanent. This affects how dead loads are classified (permanent versus variable), which is a necessary distinction to make when applying the provisions for load combinations.

1606.2 Design dead load. For purposes of design, the actual weights of materials of construction and fixed service equipment shall be used. In the absence of definite information, values used shall be subject to the approval of the *building official*.

❖ When determining the design dead loads, the actual weights of all materials, equipment, construction, etc., are to be used for the structural design. Often the exact type of materials and equipment to be installed has not yet been determined by the design team at the time the structural design is initiated. Where the actual weights are not known, it is common to use an estimate of the anticipated materials and equipment. While the actual dead load itself does not vary, the estimate of the dead load that is used in structural computations can vary. Such estimates of dead loads are typically greater than the actual dead loads so that the computations are conservative and a redesign of the structure will not be necessary when the actual weights become known. This section clarifies that the building official must approve these estimated dead loads.

Overestimating the actual dead load, so that the design computations are conservative, is acceptable when considering load combinations in Section 1605 that are additive. But the same cannot be said when using counteracting load combinations (see commentary, Section 1604.9). In determining the anchorage required to resist the overturning or uplift effects of wind or seismic loads, some resistance is typically provided by the dead load. For example, wind uplift forces cause tension to develop in hold-down connections. If the dead load used to resist the wind uplift is overestimated, the resulting resistance to overturning or uplift will be less than the code intends. Note that Section 1605.3.2 restricts the dead load used to counteract the effects of overturning and uplift to be the minimum dead load likely to be in place during a design wind event.

INTERNATIONAL CODE COUNCIL®
Copyright © 2015 ICC. ALL RIGHTS RESERVED. Accessed by David Dammon on Jun 21, 2017 12:30:52 PM pursuant to License Agreement with ICC. No further reproduction or distribution authorized. ANY UNAUTHORIZED REPRODUCTION OR DISTRIBUTION IS A VIOLATION OF THE FEDERAL COPYRIGHT ACT AND THE LICENSE AGREEMENT, AND SUBJECT TO CIVIL AND CRIMINAL PENALTIES THEREUNDER.

As a design guideline, see the unit weights of common construction materials and assemblies in Tables C3-1 and C3-2 of the commentary to ASCE 7. The unit dead loads listed in the tables for assembled elements are usually given in units of pounds per square foot (psf) of surface area (e.g., floor areas, wall areas, ceiling areas, etc.). Unit dead loads for materials used in construction are given in terms of density. The unit weights given in the tables are generally single values, even though a range of weights may actually exist. The average unit weights given are generally suitable for design purposes. However, where there is reason to believe that the actual weights of assembled elements or construction materials may substantially exceed the tabular values, then the situation should be investigated and the higher values used.

SECTION 1607
LIVE LOADS

1607.1 General. Live loads are those loads defined in Chapter 2 of this code.

❖ Nominal live loads are determined in accordance with Section 1607. The live load requirements for the design of buildings and structures are based on the type of occupancy. Live loads are transient loads that vary with time. Generally, the design live load is that which is believed to be near the maximum transient load that is reasonably expected to occur for a given occupancy.

TABLE 1607.1. See pages 16-20 through 16-22.

❖ The design values of live loads for both uniform and concentrated loads are shown in the table as a function of occupancy. The values given are conservative and include both the sustained and variable portions of the live load. Section 1607.3 directs the designer to utilize the greater live loads produced by the intended occupancy, but not less than the minimum uniformly distributed live loads listed in Table 1607.1. It should also be noted that the "occupancy" category listed is not necessarily group specific. For example, an office building may be classified as Group B, but still contain incidental storage areas. Depending on the type of storage, the areas may warrant storage live loads of either 125 or 250 psf (5.98 or 11.9 kN/m^2) to be applied to the space in question.

Table 1607.1 specifies minimum uniform live load in residential attics for three distinct conditions: uninhabitable attics without storage; uninhabitable attics with limited storage; and habitable attics and sleeping areas. Commentary Figure 1607.1(1) summarizes the uniform live loads that apply to uninhabitable attics based on the criteria contained in Notes i, j and k to Table 1607.1. The process for determining which load is applicable is summarized in the flow chart in Commentary Figure 1607.1(2).

Description	Uniform Load
Without storage	10 psf
With storage	20 psf
Served by a stairway	30 psf

Figure 1607.1(1)
SUMMARY OF MINIMUM LIVE LOAD REQUIRED IN UNINHABITABLE ATTICS

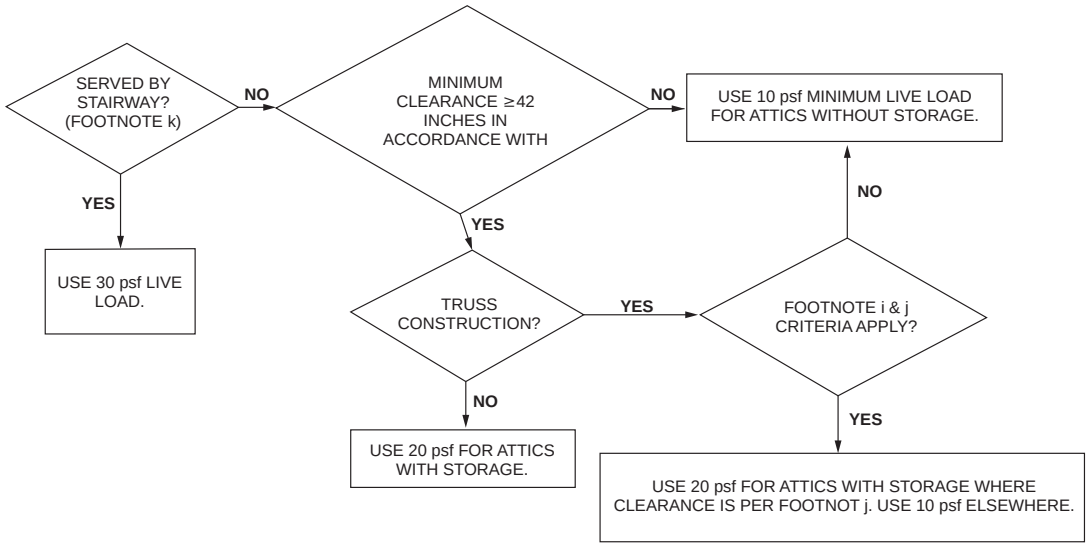

For SI: 1 inch = 25.4 mm, 1 pound per square foot = 47.88 Pa.

Figure 1607.1(2)
DETERMINATION OF ATTIC LIVE LOAD IN ACCORDANCE WITH TABLE 1607.1 FOOTNOTES i, j and k

INTERNATIONAL CODE COUNCIL®
Copyright © 2015 ICC. ALL RIGHTS RESERVED. Accessed by David Dammon on Jun 21, 2017 12:30:52 PM pursuant to License Agreement with ICC. No further reproduction or distribution authorized. ANY UNAUTHORIZED REPRODUCTION OR DISTRIBUTION IS A VIOLATION OF THE FEDERAL COPYRIGHT ACT AND THE LICENSE AGREEMENT, AND SUBJECT TO CIVIL AND CRIMINAL PENALTIES THEREUNDER.

One noteworthy distinction made by Note k is that any uninhabitable attic that is served by a stairway (other than a pull-down type) must be designed using the load of 30 psf (1.44 kN/m^2) that is applicable to habitable attics (see Note k). The implication is that the presence of a stairway is more conducive to using the attic for storage and therefore warrants a greater design live load. This recognizes that the stairway is likely to serve an attic with greater headroom, providing more storage capacity. For an attic that is accessed by other means, such as a framed opening or pull-down stairs, it is necessary to determine whether the attic storage load applies in accordance with the criteria contained in Notes i and j.

Historically, a minimum load of 10 psf (0.48 kN/m^2) has been viewed as appropriate where occasional access to the attic is anticipated for maintenance purposes, but significant storage is restricted by physical constraints, such as low clearance or the configuration of truss webs. It provides a minimum degree of structural integrity, allowing for occasional access to an attic space for maintenance purposes. Allowing the application of this load to be independent of other live loads is deemed appropriate, since it would be rare for this load and other maximum live loads to occur at once.

Note m clarifies that a live load reduction is not permitted unless specific exceptions of Section 1607.10 apply. The note appears at each specific use or occupancy in Table 1607.1 where a live load reduction is restricted, which serves to clarify the limitations on live load reduction. References appear in Sections 1607.10.1 and 1607.10.2 to correlate with the note.

TABLE 1607.1
MINIMUM UNIFORMLY DISTRIBUTED LIVE LOADS, L_o, AND MINIMUM CONCENTRATED LIVE LOADS[g]

OCCUPANCY OR USE	UNIFORM (psf)	CONCENTRATED (pounds)
1. Apartments (see residential)	—	—
2. Access floor systems		
Office use	50	2,000
Computer use	100	2,000
3. Armories and drill rooms	150[m]	—
4. Assembly areas		
Fixed seats (fastened to floor)	60[m]	
Follow spot, projections and control rooms	50	
Lobbies	100[m]	—
Movable seats	100[m]	
Stage floors	150[m]	
Platforms (assembly)	100[m]	
Other assembly areas	100[m]	
5. Balconies and decks[h]	Same as occupancy served	—
6. Catwalks	40	300
7. Cornices	60	—
8. Corridors		
First floor	100	
Other floors	Same as occupancy served except as indicated	—
9. Dining rooms and restaurants	100[m]	—
10. Dwellings (see residential)	—	—
11. Elevator machine room and control room grating (on area of 2 inches by 2 inches)	—	300
12. Finish light floor plate construction (on area of 1 inch by 1 inch)	—	200
13. Fire escapes	100	—
On single-family dwellings only	40	
14. Garages (passenger vehicles only)	40[m]	Note a
Trucks and buses	See Section 1607.7	
15. Handrails, guards and grab bars	See Section 1607.8	
16. Helipads	See Section 1607.6	
17. Hospitals		
Corridors above first floor	80	1,000
Operating rooms, laboratories	60	1,000
Patient rooms	40	1,000
18. Hotels (see residential)	—	—
19. Libraries		
Corridors above first floor	80	1,000
Reading rooms	60	1,000
Stack rooms	150[b, m]	1,000
20. Manufacturing		
Heavy	250[m]	3,000
Light	125[m]	2,000
21. Marquees, except one- and two-family dwellings	75	—
22. Office buildings		
Corridors above first floor	80	2,000
File and computer rooms shall be designed for heavier loads based on anticipated occupancy	—	—
Lobbies and first-floor corridors	100	2,000
Offices	50	2,000

(continued)

INTERNATIONAL CODE COUNCIL®
Copyright © 2015 ICC. ALL RIGHTS RESERVED. Accessed by David Dammon on Jun 21, 2017 12:30:52 PM pursuant to License Agreement with ICC. No further reproduction or distribution authorized. ANY UNAUTHORIZED REPRODUCTION OR DISTRIBUTION IS A VIOLATION OF THE FEDERAL COPYRIGHT ACT AND THE LICENSE AGREEMENT, AND SUBJECT TO CIVIL AND CRIMINAL PENALTIES THEREUNDER.

TABLE 1607.1—continued
MINIMUM UNIFORMLY DISTRIBUTED LIVE LOADS, L_o, AND MINIMUM CONCENTRATED LIVE LOADS[g]

OCCUPANCY OR USE	UNIFORM (psf)	CONCENTRATED (pounds)
23. Penal institutions		
Cell blocks	40	—
Corridors	100	
24. Recreational uses:		
Bowling alleys, poolrooms and similar uses	75[m]	
Dance halls and ballrooms	100[m]	
Gymnasiums	100[m]	
Ice skating rink	250[m]	—
Reviewing stands, grandstands and bleachers	100[c, m]	
Roller skating rink	100[m]	
Stadiums and arenas with fixed seats (fastened to floor)	60[c, m]	
25. Residential		
One- and two-family dwellings		
Uninhabitable attics without storage[i]	10	
Uninhabitable attics with storage[i, j, k]	20	
Habitable attics and sleeping areas[k]	30	
Canopies, including marquees	20	—
All other areas	40	
Hotels and multifamily dwellings		
Private rooms and corridors serving them	40	
Public rooms[m] and corridors serving them	100	
26. Roofs		
All roof surfaces subject to maintenance workers		300
Awnings and canopies:		
Fabric construction supported by a skeleton structure	5 Nonreducible	
All other construction, except one- and two-family dwellings	20	
Ordinary flat, pitched, and curved roofs (that are not occupiable)	20	
Primary roof members exposed to a work floor		
Single panel point of lower chord of roof trusses or any point along primary structural members supporting roofs over manufacturing, storage warehouses, and repair garages		2,000
All other primary roof members		300
Occupiable roofs:		
Roof gardens	100	
Assembly areas	100[m]	
All other similar areas	Note 1	Note 1
27. Schools		
Classrooms	40	1,000
Corridors above first floor	80	1,000
First-floor corridors	100	1,000
28. Scuttles, skylight ribs and accessible ceilings	—	200
29. Sidewalks, vehicular driveways and yards, subject to trucking	250[d, m]	8,000[e]

(continued)

TABLE 1607.1—continued
MINIMUM UNIFORMLY DISTRIBUTED LIVE LOADS, L_o, AND MINIMUM CONCENTRATED LIVE LOADS[g]

OCCUPANCY OR USE	UNIFORM (psf)	CONCENTRATED (pounds)
30. Stairs and exits		
One- and two-family dwellings	40	300[f]
All other	100	300[f]
31. Storage warehouses (shall be designed for heavier loads if required for anticipated storage)		—
Heavy	250[m]	
Light	125[m]	
32. Stores		
Retail		
First floor	100	1,000
Upper floors	75	1,000
Wholesale, all floors	125[m]	1,000
33. Vehicle barriers	See Section 1607.8.3	
34. Walkways and elevated platforms (other than exitways)	60	—
35. Yards and terraces, pedestrians	100[m]	—

For SI: 1 inch = 25.4 mm, 1 square inch = 645.16 mm^2, 1 square foot = 0.0929 m^2, 1 pound per square foot = 0.0479 kN/m^2, 1 pound = 0.004448 kN, 1 pound per cubic foot = 16 kg/m^3.

a. Floors in garages or portions of buildings used for the storage of motor vehicles shall be designed for the uniformly distributed live loads of this table or the following concentrated loads: (1) for garages restricted to passenger vehicles accommodating not more than nine passengers, 3,000 pounds acting on an area of $4^1/_2$ inches by $4^1/_2$ inches; (2) for mechanical parking structures without slab or deck that are used for storing passenger vehicles only, 2,250 pounds per wheel.

b. The loading applies to stack room floors that support nonmobile, double-faced library book stacks, subject to the following limitations:
   1. The nominal book stack unit height shall not exceed 90 inches;
   2. The nominal shelf depth shall not exceed 12 inches for each face; and
   3. Parallel rows of double-faced book stacks shall be separated by aisles not less than 36 inches wide.

c. Design in accordance with ICC 300.

d. Other uniform loads in accordance with an approved method containing provisions for truck loadings shall be considered where appropriate.

e. The concentrated wheel load shall be applied on an area of $4^1/_2$ inches by $4^1/_2$ inches.

f. The minimum concentrated load on stair treads shall be applied on an area of 2 inches by 2 inches. This load need not be assumed to act concurrently with the uniform load.

g. Where snow loads occur that are in excess of the design conditions, the structure shall be designed to support the loads due to the increased loads caused by drift buildup or a greater snow design determined by the building official (see Section 1608).

h. See Section 1604.8.3 for decks attached to exterior walls.

i. Uninhabitable attics without storage are those where the maximum clear height between the joists and rafters is less than 42 inches, or where there are not two or more adjacent trusses with web configurations capable of accommodating an assumed rectangle 42 inches in height by 24 inches in width, or greater, within the plane of the trusses. This live load need not be assumed to act concurrently with any other live load requirements.

(continued)

INTERNATIONAL CODE COUNCIL®
Copyright © 2015 ICC. ALL RIGHTS RESERVED. Accessed by David Dammon on Jun 21, 2017 12:30:52 PM pursuant to License Agreement with ICC. No further reproduction or distribution authorized. ANY UNAUTHORIZED REPRODUCTION OR DISTRIBUTION IS A VIOLATION OF THE FEDERAL COPYRIGHT ACT AND THE LICENSE AGREEMENT, AND SUBJECT TO CIVIL AND CRIMINAL PENALTIES THEREUNDER.

TABLE 1607.1—continued
MINIMUM UNIFORMLY DISTRIBUTED LIVE LOADS, L_o, AND MINIMUM CONCENTRATED LIVE LOADS[g]

j. Uninhabitable attics with storage are those where the maximum clear height between the joists and rafters is 42 inches or greater, or where there are two or more adjacent trusses with web configurations capable of accommodating an assumed rectangle 42 inches in height by 24 inches in width, or greater, within the plane of the trusses.

The live load need only be applied to those portions of the joists or truss bottom chords where both of the following conditions are met:

i. The attic area is accessible from an opening not less than 20 inches in width by 30 inches in length that is located where the clear height in the attic is a minimum of 30 inches; and

ii. The slopes of the joists or truss bottom chords are no greater than two units vertical in 12 units horizontal.

The remaining portions of the joists or truss bottom chords shall be designed for a uniformly distributed concurrent live load of not less than 10 pounds per square foot.

k. Attic spaces served by stairways other than the pull-down type shall be designed to support the minimum live load specified for habitable attics and sleeping rooms.

l. Areas of occupiable roofs, other than roof gardens and assembly areas, shall be designed for appropriate loads as approved by the building official. Unoccupied landscaped areas of roofs shall be designed in accordance with Section 1607.12.3.

m. Live load reduction is not permitted unless specific exceptions of Section 1607.10 apply.

1607.2 Loads not specified. For occupancies or uses not designated in Table 1607.1, the live load shall be determined in accordance with a method *approved* by the *building official*.

❖ Whenever an occupancy or use of a structure cannot be identified with the listing shown in Table 1607.1, then the live load values used for design are required to be determined by the design professional and subject to the approval of the building official. Aside from the obvious intent of this requirement, which is to prescribe a minimum design load value, some caution needs to be exercised by the design professional in determining the appropriate design live load value. For example, the table shows that heavy storage areas must be designed for a uniform live load of 250 psf (11.9 kN/m^2). This is a minimum value. Storage warehouses or storage areas within manufacturing facilities containing items such as automobile parts, electrical goods, coiled steel, plumbing supplies and bulk building materials generally have live loads ranging between 300 and 400 psf (14.4 and 19 kN/m^2). Similarly, storage facilities containing dry goods, paints, oil, groceries or liquor often have loadings that range from 200 to 300 psf (9.6 to 14.4 kN/m^2). Another example is a heavy manufacturing facility that makes generators for the electric power industry. Some of the production areas in this type of facility require structural floors that support loads of 1,000 psf (47.9 kN/m^2) or more, which is about seven times the live load specified in Table 1607.1.

1607.3 Uniform live loads. The live loads used in the design of buildings and other structures shall be the maximum loads expected by the intended use or occupancy but shall in no case be less than the minimum uniformly distributed live loads given in Table 1607.1.

❖ Studies have shown that building live loads consist of a sustained portion based on the day-to-day use of the facilities, and a variable portion created by unusual events, such as remodeling, temporary storage of materials, the extraordinary assemblage of people for an occasional business meeting or social function (e.g., a holiday party) and similar events. The sustained portion of the live load will likely vary during the life of a building because of tenant changes, rearrangement of office space and furnishings, changes in the nature of the occupancy (i.e., number of people or type of business), traffic patterns and so on. In light of the variability of loadings that are apt to be imposed on a building, the code provisions simplify the design procedure by expressing the applicable load as either a uniformly distributed live load or a concentrated live load on the floor area. It should be pointed out that this section does not require the concurrent application of uniform live load and concentrated live load. In other words, this section requires that either the uniform load or the concentrated load be applied, so long as the type of load that produces the greater stress in the structural element under consideration is utilized.

1607.4 Concentrated live loads. Floors and other similar surfaces shall be designed to support the uniformly distributed live loads prescribed in Section 1607.3 or the concentrated live loads, given in Table 1607.1, whichever produces the greater *load effects*. Unless otherwise specified, the indicated concentration shall be assumed to be uniformly distributed over an area of $2^1/_2$ feet by $2^1/_2$ feet (762 mm by 762 mm) and shall be located so as to produce the maximum *load effects* in the structural members.

❖ A building or portion thereof is subjected to concentrated floor loads commensurate with the use of the facility. For example, in Group B, a law office may have stacks of books and files that impose large concentrations of loads on the supporting structural elements. An industrial facility may have a tank full of liquid material on a mezzanine that feeds a machine on the floor below. The structural floor of a stockroom may support heavy bins containing metal parts and so on. The exact locations or nature of such concentrated loadings is not usually known at the time of the design of the building. Furthermore, new sources of concentrated loadings will be added during the life of the structure, while some or all of the existing sources will be relocated; therefore, because of the uncertainties of the sources of concentrated loads, as well as their weights and locations, the code provides typical loads to be used in the design of structural floors consistent with the type of use of the facility. The minimum concentrated loads to be used for design are contained in Table 1607.1. Concentrated loads are not required to be applied simultaneously, with the

INTERNATIONAL CODE COUNCIL®
Copyright © 2015 ICC. ALL RIGHTS RESERVED. Accessed by David Dammon on Jun 21, 2017 12:30:52 PM pursuant to License Agreement with ICC. No further reproduction or distribution authorized. ANY UNAUTHORIZED REPRODUCTION OR DISTRIBUTION IS A VIOLATION OF THE FEDERAL COPYRIGHT ACT AND THE LICENSE AGREEMENT, AND SUBJECT TO CIVIL AND CRIMINAL PENALTIES THEREUNDER.

uniform live loads also specified in Table 1607.1. Concentrated loads are to be applied as an independent load condition at the location on the floor that produces the greatest stress in the structural members being designed. The single concentrated load is to be placed at any location on the floor. For example, in an office use area, the floor system is to be designed for either a 2,000-pound (8897 N) concentrated load (unless the anticipated actual concentrated load is higher) applied at any location in the office area, or the 50 psf (2.40 kN/m^2) live load specified in Table 1607.1, whichever results in the greater stress in the supporting structural member.

1607.5 Partition loads. In office buildings and in other buildings where partition locations are subject to change, provisions for partition weight shall be made, whether or not partitions are shown on the construction documents, unless the specified live load is 80 psf (3.83 kN/m^2) or greater. The partition load shall be not less than a uniformly distributed live load of 15 psf (0.72 kN/m^2).

❖ Provision for the weight of partitions must be made in the structural design. Buildings where partitions are subject to change must include a live load of 15 psf (0.74 kN/m^2) if the uniform floor live load is less than 80 psf (3.83 kN/m^2). This partition allowance is included under live loads because the loads may vary in size and location during the life of the building. The weight of any permanent partitions should be considered a dead load in accordance with the definition in Section 202.

1607.6 Helipads. Helipads shall be designed for the following live loads:

1. A uniform live load, *L*, as specified below. This load shall not be reduced.
   1.1. 40 psf (1.92 kN/m^2) where the design basis helicopter has a maximum take-off weight of 3,000 pounds (13.35 kN) or less.
   1.2. 60 psf (2.87 kN/m^2) where the design basis helicopter has a maximum take-off weight greater than 3,000 pounds (13.35 kN).
2. A single concentrated live load, *L*, of 3,000 pounds (13.35 kN) applied over an area of 4.5 inches by 4.5 inches (114 mm by 114 mm) and located so as to produce the maximum load effects on the structural elements under consideration. The concentrated load is not required to act concurrently with other uniform or concentrated live loads.
3. Two single concentrated live loads, *L*, 8 feet (2438 mm) apart applied on the landing pad (representing the helicopter's two main landing gear, whether skid type or wheeled type), each having a magnitude of 0.75 times the maximum take-off weight of the helicopter, and located so as to produce the maximum load effects on the structural elements under consideration. The concentrated loads shall be applied over an area of 8 inches by 8 inches (203 mm by 203 mm) and are not required to act concurrently with other uniform or concentrated live loads.

Landing areas designed for a design basis helicopter with maximum take-off weight of 3,000-pounds (13.35 kN) shall be identified with a 3,000 pound (13.34 kN) weight limitation. The landing area weight limitation shall be indicated by the numeral "3" (kips) located in the bottom right corner of the landing area as viewed from the primary approach path. The indication for the landing area weight limitation shall be a minimum 5 feet (1524 mm) in height.

❖ Detailed requirements for helistops and heliports, including definitions, can be found in Section 412 of the code. For example, Section 412.8.1 requires a minimum landing area size of 20 feet by 20 feet (6096 mm by 6096 mm) for helicopters weighing less than 3,500 pounds (15.57 kN). In addition, Section 2007 of the *International Fire Code*® (IFC®) regulates helistops and heliports. Section 2007.8 of the IFC requires Federal Aviation Administration (FAA) approval of these facilities.

The term "helipad" is used to describe a helicopter landing area, which is the subject of this provision. These structural design requirements establish the minimum live load criteria that are specific to the design of the landing area and the supporting structural elements.

Items 1 and 2 specify the uniform live load based on the threshold weight of 3,000 pounds (13.34 kN). The majority of helicopters used in general aviation have a gross weight of 3,000 pounds (13.34 kN) or less. With weights comparable to those of passenger vehicles and considering the size of the landing area, the equivalent uniform load on these landing areas is actually lower than the minimum uniform live load required for a passenger vehicle parking garage. Thus, a reduced design live load is permitted for the design of such helipads. Since marking the weight limitation of the landing area is standard practice, as well as an FAA recommendation, indicating the weight limitation on the landing area was included as a condition for using the uniform load associated with helicopters weighing up to 3,000 pounds (13.34 kN).

1607.7 Heavy vehicle loads. Floors and other surfaces that are intended to support vehicle loads greater than a 10,000-pound (4536 kg) gross vehicle weight rating shall comply with Sections 1607.7.1 through 1607.7.5.

❖ Sections 1607.7.1 through 1607.7.5 give criteria for addressing heavy vehicle loads, including fire trucks and forklifts.

1607.7.1 Loads. Where any structure does not restrict access for vehicles that exceed a 10,000-pound (4536 kg) gross vehicle weight rating, those portions of the structure subject to such loads shall be designed using the vehicular live loads, including consideration of impact and fatigue, in accordance with the codes and specifications required by the jurisdiction

INTERNATIONAL CODE COUNCIL®
Copyright © 2015 ICC. ALL RIGHTS RESERVED. Accessed by David Dammon on Jun 21, 2017 12:30:52 PM pursuant to License Agreement with ICC. No further reproduction or distribution authorized. ANY UNAUTHORIZED REPRODUCTION OR DISTRIBUTION IS A VIOLATION OF THE FEDERAL COPYRIGHT ACT AND THE LICENSE AGREEMENT, AND SUBJECT TO CIVIL AND CRIMINAL PENALTIES THEREUNDER.

having authority for the design and construction of the roadways and bridges in the same location of the structure.

❖ Where heavy highway-type vehicles have access onto a structure, this section requires the structure to be designed using the requirements applicable to roadways in that jurisdiction. This loading may in fact be the loading from American Association of State Highway and Transportation Officials (AASHTO), or the loading for other elements such as lids of large detention tanks or utility vaults. The registered design professional should consult with the jurisdiction for design loads for these special conditions.

1607.7.2 Fire truck and emergency vehicles. Where a structure or portions of a structure are accessed and loaded by fire department access vehicles and other similar emergency vehicles, the structure shall be designed for the greater of the following loads:

1. The actual operational loads, including outrigger reactions and contact areas of the vehicles as stipulated and approved by the building official; or
2. The live loading specified in Section 1607.7.1.

❖ This establishes two criteria for addressing heavy vehicle loads due to fire trucks and other similar emergency vehicles.

1607.7.3 Heavy vehicle garages. Garages designed to accommodate vehicles that exceed a 10,000-pound (4536 kg) gross vehicle weight rating, shall be designed using the live loading specified by Section 1607.7.1. For garages the design for impact and fatigue is not required.

Exception: The vehicular live loads and load placement are allowed to be determined using the actual vehicle weights for the vehicles allowed onto the garage floors, provided such loads and placement are based on rational engineering principles and are approved by the building official, but shall not be less than 50 psf (2.9 kN/m^2). This live load shall not be reduced.

❖ This section helps clarify that the passenger vehicle garage loads are not applicable to garages that accommodate heavier vehicles.

1607.7.4 Forklifts and movable equipment. Where a structure is intended to have forklifts or other movable equipment present, the structure shall be designed for the total vehicle or equipment load and the individual wheel loads for the anticipated vehicles as specified by the owner of the facility. These loads shall be posted in accordance with Section 1607.7.5.

❖ Heavy vehicle loads due to forklifts and other moveable equipment require that a structure be designed for the total vehicle or equipment load as well as the individual wheel loads. The owner of the facility needs to make the planned usage of such a vehicle clear to the design team. As a precaution, these loads must be posted (see Section 1607.7.5).

1607.7.4.1 Impact and fatigue. Impact loads and fatigue loading shall be considered in the design of the supporting structure. For the purposes of design, the vehicle and wheel loads shall be increased by 30 percent to account for impact.

❖ This section clarifies that consideration of impact and fatigue loading is a design requirement for structures subjected to heavy moving equipment, such as forklifts.

1607.7.5 Posting. The maximum weight of vehicles allowed into or on a garage or other structure shall be posted by the owner or the owner's authorized agent in accordance with Section 106.1.

❖ Posting the maximum allowed weight of vehicles allows vehicle operators to assess whether the structure was designed with their vehicle in mind, making it less likely that a vehicle will overload a structure.

1607.8 Loads on handrails, guards, grab bars, seats and vehicle barriers. Handrails, *guards*, grab bars, accessible seats, accessible benches and vehicle barriers shall be designed and constructed for the structural loading conditions set forth in this section.

❖ The requirements of this section are intended to provide an adequate degree of structural strength and stability to handrails, guards, grab bars and vehicle barriers.

1607.8.1 Handrails and guards. Handrails and *guards* shall be designed to resist a linear load of 50 pounds per linear foot (plf) (0.73 kN/m) in accordance with Section 4.5.1 of ASCE 7. Glass handrail assemblies and *guards* shall also comply with Section 2407.

Exceptions:

1. For one- and two-family dwellings, only the single concentrated load required by Section 1607.8.1.1 shall be applied.
2. In Group I-3, F, H and S occupancies, for areas that are not accessible to the general public and that have an *occupant load* less than 50, the minimum load shall be 20 pounds per foot (0.29 kN/m).

❖ The loading in this section represents the maximum anticipated load on a handrail or guard due to a crowd of people on the adjacent walking surface. The exceptions allow lower loads for handrails in locations that are not typically open to the public. These loads, depicted in Commentary Figure 1607.8.1, are permitted to be applied independent of other loads.

1607.8.1.1 Concentrated load. Handrails and guards shall be designed to resist a concentrated load of 200 pounds (0.89 kN) in accordance with Section 4.5.1 of ASCE 7.

❖ The concentrated loading in this section is not to be applied with any other design load; it is a separate load case. The load simulates the maximum anticipated load from a person grabbing or falling into the handrail or guard.

1607.8.1.2 Intermediate rails. Intermediate rails (all those except the handrail), balusters and panel fillers shall be

INTERNATIONAL CODE COUNCIL®
Copyright © 2015 ICC. ALL RIGHTS RESERVED. Accessed by David Dammon on Jun 21, 2017 12:30:52 PM pursuant to License Agreement with ICC. No further reproduction or distribution authorized. ANY UNAUTHORIZED REPRODUCTION OR DISTRIBUTION IS A VIOLATION OF THE FEDERAL COPYRIGHT ACT AND THE LICENSE AGREEMENT, AND SUBJECT TO CIVIL AND CRIMINAL PENALTIES THEREUNDER.

designed to resist a concentrated load of 50 pounds (0.22 kN) in accordance with Section 4.5.1 of ASCE 7.

❖ This is a localized design load for the guard members and is not to be applied with any other loads. It is to be applied horizontally at a 90-degree (1.57 rad) angle with the guard members. The number of balusters that would resist this load are those within the 1-square-foot (0.093 m^2) area in the plane of the guard as shown in Commentary Figure 1607.8.1.2.

1607.8.2 Grab bars, shower seats and dressing room bench seats. Grab bars, shower seats and dressing room bench seats shall be designed to resist a single concentrated load of 250 pounds (1.11 kN) applied in any direction at any point on the grab bar or seat so as to produce the maximum load effects.

❖ These live loads provide for the loads associated with the use of the grab bars, shower seats and dressing room bench seats. These structural requirements provide consistency with Americans with Disabilities Act (ADA) *Accessibility Guidelines* (ADAAG).

1607.8.3 Vehicle barriers. Vehicle barriers for passenger vehicles shall be designed to resist a concentrated load of 6,000 pounds (26.70 kN) in accordance with Section 4.5.3 of ASCE 7. Garages accommodating trucks and buses shall be designed in accordance with an *approved* method that contains provisions for traffic railings.

❖ Vehicle barriers provide a passive restraint system in locations where vehicles could fall to a lower level (see definition of "Vehicle barrier," Section 202). Commentary Figure 1607.8.3 depicts criteria for the design of passenger car and light truck vehicle barriers. The 6,000-pound (26.70 kN) load considers impact. The load is applied at a height, *h*, that is representative of vehicle bumper heights. Because of the variety of barrier configurations and anchorage methods, it is necessary to consider any height within the specified size in order to determine the most critical load effects for design of the barrier. For bus and heavy truck vehicle barrier design criteria, a state's Department of Transportation should be contacted (also see Section 1607.7).

1607.9 Impact loads. The live loads specified in Sections 1607.3 through 1607.8 shall be assumed to include adequate allowance for ordinary impact conditions. Provisions shall be made in the structural design for uses and loads that involve unusual vibration and impact forces.

❖ In cases where "unusual" live loads occur in a building and impose impact or vibratory forces on structural elements (e.g., elevators, machinery, craneways, etc.), additional stresses and deflections are imposed on the structural system. Where unusual vibration (dynamic) and impact loads are likely to occur, the code requires that the structural design take these effects into account. Typically, the dynamic effects are approximated through the application of an equivalent static load equal to the dynamic load effects. In most cases, an equivalent static load is sufficient. A dynamic analysis is usually not required.

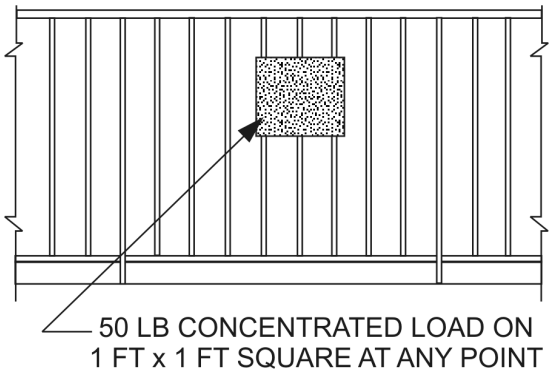

For SI: 1 pound per square foot = 47.88 Pa.

Figure 1607.8.1.2
COMPONENT DESIGN LOAD

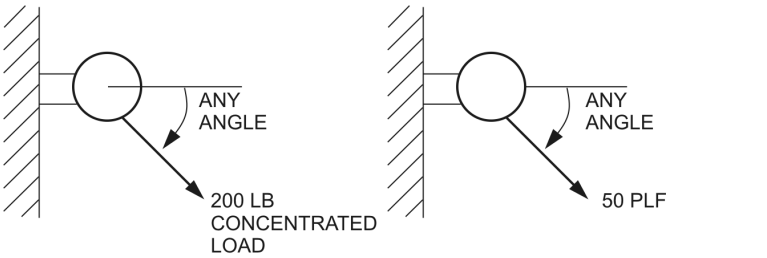

(ALL BUILDINGS)

LOADING CONDITION 1

(NOT APPLICABLE TO ONE- AND TWO-FAMILY DWELLINGS)

LOADING CONDITION 2

For SI: 1 pound = 0.454 kg, 1 pound per foot = 14.59 N/m.

Figure 1607.8.1
HANDRAIL DESIGN LOAD

INTERNATIONAL CODE COUNCIL®
Copyright © 2015 ICC. ALL RIGHTS RESERVED. Accessed by David Dammon on Jun 21, 2017 12:30:52 PM pursuant to License Agreement with ICC. No further reproduction or distribution authorized. ANY UNAUTHORIZED REPRODUCTION OR DISTRIBUTION IS A VIOLATION OF THE FEDERAL COPYRIGHT ACT AND THE LICENSE AGREEMENT, AND SUBJECT TO CIVIL AND CRIMINAL PENALTIES THEREUNDER.

1607.9.1 Elevators. Members, elements and components subject to dynamic loads from elevators shall be designed for impact loads and deflection limits prescribed by ASME A17.1.

❖ The static load of an elevator must be increased to account for the effect of the elevator's motion. For example, when an elevator comes to a stop, the load on the elevator's supports is significantly higher than the weight of the elevator and the occupants. This effect varies with the acceleration and deceleration rate of the elevator. This section clarifies that the impact load from elevators applies specifically to members, elements and components subject to dynamic loading from the elevator mechanism and directs the code user to the elevator standard to determine the increases.

1607.9.2 Machinery. For the purpose of design, the weight of machinery and moving loads shall be increased as follows to allow for impact: (1) light machinery, shaft- or motor-driven, 20 percent; and (2) reciprocating machinery or power-driven units, 50 percent. Percentages shall be increased where specified by the manufacturer.

❖ The specified increases for machinery loads include the vibration of the equipment, which increases the effective load. The load increase for reciprocating machinery versus rotating shaft-driven machinery is to account for the higher vibration.

1607.9.3 Elements supporting hoists for façade access equipment. In addition to any other applicable live loads, structural elements that support hoists for façade access equipment shall be designed for a live load consisting of the larger of the rated load of the hoist times 2.5 and the stall load of the hoist.

❖ Façade access equipment is used to suspend workers over the side of a building for a number of reasons, including window washing, performing routine maintenance, replacing broken glazing, painting, hanging signs, etc. The Occupational Safety & Health Administration (OSHA) requires that elements that support the hoists or motors for façade access equipment must be able to sustain without failure at least four times the rated load of the hoist, where the rated load is the maximum anticipated load or the total design weight of the suspended platform plus occupants and equipment and supplies. In addition, OSHA requires façade access equipment used for activities such as painting or hanging signs or holiday lights to be designed to sustain without failure at least 1.5 times the stall load of the hoist, where the stall load is permitted to be as much as three times the rated load. Using a design live load of the greater of 2.5 times the rated load and the stall load of the hoist, when combined with a live load factor of 1.6, meets or slightly exceeds OSHA's requirements. The load is used to design the davit bases and anchorages that support façade access equipment as well as the structural elements that support the bases and anchorages.

1607.9.4 Lifeline anchorages for façade access equipment. In addition to any other applicable live loads, lifeline anchorages and structural elements that support lifeline anchorages shall be designed for a live load of at least 3,100 pounds (13.8 kN) for each attached lifeline, in every direction that a fall arrest load may be applied.

❖ Lifeline anchorages, also known as fall arrest anchorages, are called on to resist impact loads when a suspended worker on the face of a building experiences a fall. Because the loads are highly variable depending on the weight of the worker, the fall distance, and the energy-absorbing characteristics of the fall arrest system, and because the lifeline is the last defense against a fall, the Occupational Safety & Health Administration (OSHA) requires that lifeline anchor-

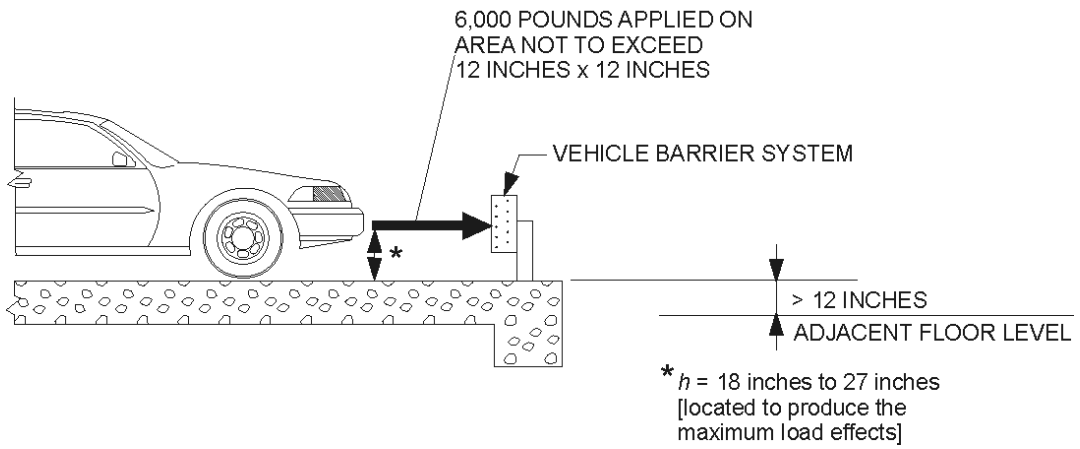

For SI: 1 inch = 25.4 mm, 1 pound = 4.448 N.

Figure 1607.8.3
VEHICLE BARRIER REQUIREMENTS

INTERNATIONAL CODE COUNCIL®
Copyright © 2015 ICC. ALL RIGHTS RESERVED. Accessed by David Dammon on Jun 21, 2017 12:30:52 PM pursuant to License Agreement with ICC. No further reproduction or distribution authorized. ANY UNAUTHORIZED REPRODUCTION OR DISTRIBUTION IS A VIOLATION OF THE FEDERAL COPYRIGHT ACT AND THE LICENSE AGREEMENT, AND SUBJECT TO CIVIL AND CRIMINAL PENALTIES THEREUNDER.

ages be capable of sustaining without failure an ultimate load of 5,000 pounds (22.2 kN) per person. Using a design live load of 3,100 pounds (13.8 kN), when combined with a live load factor of 1.6, results in a total factored load of 4,960 pounds (22.1 kN), which matches OSHA's requirements for lifeline anchorages within an acceptable margin of error. The load is used to design the lifeline anchorage and the structural elements that support the anchorage.

1607.10 Reduction in uniform live loads. Except for uniform live loads at roofs, all other minimum uniformly distributed live loads, L_o, in Table 1607.1 are permitted to be reduced in accordance with Section 1607.10.1 or 1607.10.2. Uniform live loads at roofs are permitted to be reduced in accordance with Section 1607.12.2.

❖ Small floor areas are more likely to be subjected to the full uniform load than larger floor areas. Unloaded or lightly loaded areas tend to reduce the total load on the structural members supporting those floors. The specified uniformly distributed live loads from Table 1607.1 are permitted to be reduced, with some notable exceptions or limitations, in recognition that the larger the tributary area of a structural member, the lower the likelihood that the full live load will be realized. The basis for the live load reduction in Sections 1607.10.1 through 1607.10.1.3 is ASCE 7. An alternative method of live load reduction, retained from legacy model codes, is provided in Section 1607.10.2.

1607.10.1 Basic uniform live load reduction. Subject to the limitations of Sections 1607.10.1.1 through 1607.10.1.3 and Table 1607.1, members for which a value of $K_{LL}A_T$ is 400 square feet (37.16 m^2) or more are permitted to be designed for a reduced uniformly distributed live load, L, in accordance with the following equation:

$$L = L_o\left(0.25 + \frac{15}{\sqrt{K_{LL}A_T}}\right) \qquad \textbf{(Equation 16-23)}$$

For SI:

$$L = L_o\left(0.25 + \frac{4.57}{\sqrt{K_{LL}A_T}}\right)$$

where:

L = Reduced design live load per square foot (m^2) of area supported by the member.

L_o = Unreduced design live load per square foot (m^2) of area supported by the member (see Table 1607.1).

K_{LL} = Live load element factor (see Table 1607.10.1).

A_T = Tributary area, in square feet (m^2).

L shall be not less than $0.50L_o$ for members supporting one floor and L shall be not less than $0.40L_o$ for members supporting two or more floors.

❖ This section provides a method of reducing uniform floor live loads that is based on the provisions of ASCE 7. The concept is that where the design live load is governed by the minimum live loads in Table 1607.1, the actual load on a large area of the floor is very likely to be less than the nominal live load in the table. Thus, the allowable reduction increases with the tributary area of the floor that is supported by a structural member; therefore, a girder that supports a large tributary area would be allowed to be designed for somewhat lower uniform live load than a floor beam that supports a smaller floor area.

The following example demonstrates the live load reduction calculation for the conditions shown in Commentary Figure 1607.10.1:

Solution:

For interior beam K_a = 2 (Table 1607.10.1)

K, A_T = (2)(750 sq. ft.) = 1500 sq. ft. (139 m^2)

Using Equation 16-23

$$L = 50\left(0.25 + \frac{15}{\sqrt{1500}}\right) = 35\,\text{psf} \quad (1.68\ \text{kN/m}^2)$$

0.5 L_o = 25 psf < 32 psf (1.53 kN/m^2)

❖ Use reduced live load, L = 32 psf (1.53 kN/m^2).

TABLE 1607.10.1. See below.

❖ The purpose of this table is to provide tributary area adjustment factors, K_{LL}, for determining live load reductions in Section 1607.10.1. The factor converts the tributary area of the structural member to an "influence area." This "influence area" of a structural member is considered to be the adjacent floor area from which it derives any of its load. These adjustments to the tributary area range from 1 through 4 based on the type of structural element being designed and are meant to reflect the element's ability to share load with adjacent elements.

TABLE 1607.10.1
LIVE LOAD ELEMENT FACTOR, K_{LL}

ELEMENT	K_{LL}
Interior columns	4
Exterior columns without cantilever slabs	4
Edge columns with cantilever slabs	3
Corner columns with cantilever slabs	2
Edge beams without cantilever slabs	2
Interior beams	2
All other members not identified above including: Edge beams with cantilever slabs Cantilever beams One-way slabs Two-way slabs Members without provisions for continuous shear transfer normal to their span	1

1607.10.1.1 One-way slabs. The tributary area, A_T, for use in Equation 16-23 for one-way slabs shall not exceed an area defined by the slab span times a width normal to the span of 1.5 times the slab span.

❖ This section limits the tributary area that can be utilized to determine a live load reduction for one-way slabs.

INTERNATIONAL CODE COUNCIL®
Copyright © 2015 ICC. ALL RIGHTS RESERVED. Accessed by David Dammon on Jun 21, 2017 12:30:52 PM pursuant to License Agreement with ICC. No further reproduction or distribution authorized. ANY UNAUTHORIZED REPRODUCTION OR DISTRIBUTION IS A VIOLATION OF THE FEDERAL COPYRIGHT ACT AND THE LICENSE AGREEMENT, AND SUBJECT TO CIVIL AND CRIMINAL PENALTIES THEREUNDER.

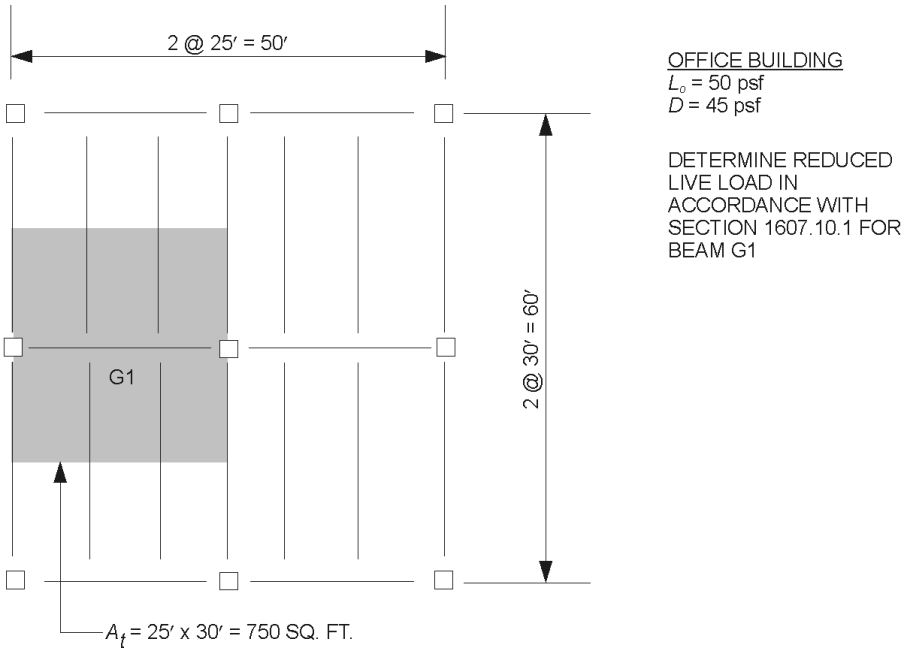

For SI: 1 foot = 304.8 mm, 1 square foot = 0.0929 m^2, 1 pound per square foot = 47.88 Pa.

Figure 1607.10.1
LIVE LOAD REDUCTION EXAMPLE

1607.10.1.2 Heavy live loads. Live loads that exceed 100 psf (4.79 kN/m^2) shall not be reduced.

Exceptions:

1. The live loads for members supporting two or more floors are permitted to be reduced by a maximum of 20 percent, but the live load shall be not less than L as calculated in Section 1607.10.1.
2. For uses other than storage, where *approved*, additional live load reductions shall be permitted where shown by the *registered design professional* that a rational approach has been used and that such reductions are warranted.

❖ The purpose of this section is to prohibit live load reductions where the live loads exceed 100 psf (4.79 kN/m^2). Such live loads are typically intended for storage or related purposes. It is more likely that the full live load will be realized at a given floor level for such occupancies. Thus, reduced live loads are not allowed for these conditions except as described in this section.

In Exception 1, the loads on structural members, such as columns and bearing walls that support two or more floors, are allowed to be reduced by 20 percent. Surveys have indicated that it is rare for the total live load on any story to exceed 80 percent of the tabulated uniform live loads. Conservatively, the full load should apply to beams and girders, but a member supporting multiple floors is allowed some live load reduction.

Recognizing that there are circumstances under which live loads exceed 100 psf (4.79 kN/m^2) in occupancies other than storage, Exception 2 allows the registered design professional to present a "rational" live load reduction proposal to be applied for members with larger tributary areas (e.g., girders, columns, foundations, etc.). Examples would be mechanical rooms, electrical rooms, process mezzanines in industrial buildings, etc. These types of areas may have very high localized uniform loads under the equipment footprints, for instance, but the live loads to members having larger tributary areas are much less, on average.

1607.10.1.3 Passenger vehicle garages. The live loads shall not be reduced in passenger vehicle garages.

Exception: The live loads for members supporting two or more floors are permitted to be reduced by a maximum of 20 percent, but the live load shall not be less than L as calculated in Section 1607.10.1.

❖ This section limits the live load reduction for passenger vehicle garages to only those members that support more than two floors. Thus, floor framing members that support only a part of one floor do not warrant a reduction to the live load of 40 psf (1.92 kN/m^2) that is specified in Table 1607.1. The rationale for allowing some live load reduction for members supporting multiple floors is similar to that given under Section 1607.10.1.2, Exception 1.

INTERNATIONAL CODE COUNCIL®
Copyright © 2015 ICC. ALL RIGHTS RESERVED. Accessed by David Dammon on Jun 21, 2017 12:30:52 PM pursuant to License Agreement with ICC. No further reproduction or distribution authorized. ANY UNAUTHORIZED REPRODUCTION OR DISTRIBUTION IS A VIOLATION OF THE FEDERAL COPYRIGHT ACT AND THE LICENSE AGREEMENT, AND SUBJECT TO CIVIL AND CRIMINAL PENALTIES THEREUNDER.

1607.10.2 Alternative uniform live load reduction. As an alternative to Section 1607.10.1 and subject to the limitations of Table 1607.1, uniformly distributed live loads are permitted to be reduced in accordance with the following provisions. Such reductions shall apply to slab systems, beams, girders, columns, piers, walls and foundations.

1. A reduction shall not be permitted where the live load exceeds 100 psf (4.79 kN/m^2) except that the design live load for members supporting two or more floors is permitted to be reduced by a maximum of 20 percent.

   Exception: For uses other than storage, where approved, additional live load reductions shall be permitted where shown by the *registered design professional* that a rational approach has been used and that such reductions are warranted.

2. A reduction shall not be permitted in passenger vehicle parking garages except that the live loads for members supporting two or more floors are permitted to be reduced by a maximum of 20 percent.

3. For live loads not exceeding 100 psf (4.79 kN/m^2), the design live load for any structural member supporting 150 square feet (13.94 m^2) or more is permitted to be reduced in accordance with Equation 16-24.

4. For one-way slabs, the area, A, for use in Equation 16-24 shall not exceed the product of the slab span and a width normal to the span of 0.5 times the slab span.

   $R = 0.08(A - 150)$ **(Equation 16-24)**

   For SI: $R = 0.861(A - 13.94)$

   Such reduction shall not exceed the smallest of:

   1. 40 percent for members supporting one floor.
   2. 60 percent for members supporting two or more floors.
   3. R as determined by the following equation:

   $R = 23.1(1 + D/L_o)$ **(Equation 16-25)**

   where:

   A = Area of floor supported by the member, square feet (m^2).

   D = Dead load per square foot (m^2) of area supported.

   L_o = Unreduced live load per square foot (m^2) of area supported.

   R = Reduction in percent.

❖ This section includes an alternative floor live load method that is permitted to be used instead of the method indicated in Sections 1607.10.1 through 1607.10.1.3. The basis for this section is the 1997 UBC.

Where reductions are permitted, they are allowed at a rate of 0.08 percent per square foot of area in excess of 150 square feet (14 m^2). This value cannot exceed 60 percent for members supporting two or more floors, such as columns and bearing walls below the top floor of a building or 40 percent for members supporting loads from just one floor or level, such as most slabs, beams and girders. Additionally, the reduction cannot be more than the value determined by Equation 16-25.

Example of an alternate floor live load reduction:

For beam G1 given in Figure 1607.10.1, determine the reduced floor live load in accordance with Section 1607.10.2.

Solution: A_T = 750 square feet (69 m^2) > 150 square feet (14 m^2); therefore, a reduction is permitted.

Equation 16-24

$$R = (0.08\%)(750 - 150) = 48\% > 40\%$$

Equation 16-25

$$R = (23.1\%)\left(1 + \frac{45}{50}\right) = 43.7\% > 40\%$$

Use the maximum 40-percent reduction allowed for horizontal members.

Use L = 50(1-0.4) = 30 psf (144 kN/m^2).

1607.11 Distribution of floor loads. Where uniform floor live loads are involved in the design of structural members arranged so as to create continuity, the minimum applied loads shall be the full dead loads on all spans in combination with the floor live loads on spans selected to produce the greatest *load effect* at each location under consideration. Floor live loads are permitted to be reduced in accordance with Section 1607.10.

❖ For continuous floor members loaded such that the live loads of a building are distributed in some bays and not in others, some of the structural elements will be subjected to greater stresses because of partial loading conditions as compared to full loading on all spans. This code section requires the engineer to consider partial loadings that produce the greatest design forces for any location in the design of continuous floor elements.

For example, Commentary Figure 1607.11 shows a continuous multispan girder with partial loading. The Type I loading condition shows that only the alternate spans have uniform live loads, which produces:

- Maximum positive moments at the centers of the loaded spans (A-B, C-D, E-F); and
- Maximum negative moments at the centers of the unloaded spans (B-C, D-E, F-G).

The Type II live load distribution shows two loaded adjacent spans with alternate spans loaded beyond these, which produces:

- Maximum negative moment at Support D; and
- Maximum girder shears.

To obtain the maximum total stresses imposed on the girder, the dead load moments and shears must be added to those produced by the partial live loadings.

INTERNATIONAL CODE COUNCIL®
Copyright © 2015 ICC. ALL RIGHTS RESERVED. Accessed by David Dammon on Jun 21, 2017 12:30:52 PM pursuant to License Agreement with ICC. No further reproduction or distribution authorized. ANY UNAUTHORIZED REPRODUCTION OR DISTRIBUTION IS A VIOLATION OF THE FEDERAL COPYRIGHT ACT AND THE LICENSE AGREEMENT, AND SUBJECT TO CIVIL AND CRIMINAL PENALTIES THEREUNDER.

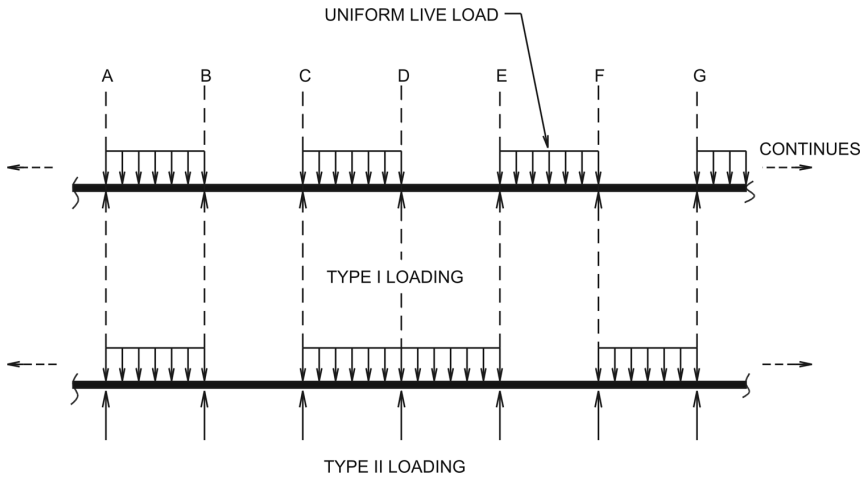

Figure 1607.11
PARTIAL LOADING

1607.12 Roof loads. The structural supports of roofs and marquees shall be designed to resist wind and, where applicable, snow and earthquake loads, in addition to the dead load of construction and the appropriate live loads as prescribed in this section, or as set forth in Table 1607.1. The live loads acting on a sloping surface shall be assumed to act vertically on the horizontal projection of that surface.

❖ In addition to dead and live loads, the roof's structural system is to be designed and constructed to resist environmental loads caused by wind, snow and earthquakes. According to the definition of "Roof live loads" in Section 202, these are typically an allowance for maintenance of equipment as well as the roof system itself. Other roof live-loads must be considered where appropriate, such as "occupiable roofs" (see Section 1607.12.3) where an occupancy-related live load would be applicable.

1607.12.1 Distribution of roof loads. Where uniform roof live loads are reduced to less than 20 psf (0.96 kN/m^2) in accordance with Section 1607.12.2.1 and are applied to the design of structural members arranged so as to create continuity, the reduced roof live load shall be applied to adjacent spans or to alternate spans, whichever produces the most unfavorable *load effect*. See Section 1607.12.2 for reductions in minimum roof live loads and Section 7.5 of ASCE 7 for partial snow loading.

❖ For continuous roof construction, where live loads are reduced to less than 20 psf (0.96 kN/m^2) as permitted in Section 1607.12.2.1, partial loadings must be included in the design of structural elements to determine the governing loading situation. For example, Commentary Figure 1607.11 shows a continuous multispan girder with partial loading. The Type I loading condition shows that only the alternate spans have uniform live loads, which produces:

- Maximum positive moments at the centers of the loaded spans (A-B, C-D, E-F); and
- Maximum negative moments at the centers of the unloaded spans (B-C, D-E, F-G).

The Type II live load distribution shows two loaded adjacent spans with alternate spans loaded beyond these, which produces:

- Maximum negative moment at Support D; and
- Maximum girder shears.

To obtain the maximum total stresses imposed on the girder, the dead load moments and shears must be added to those produced by the partial live loadings.

1607.12.2 General. The minimum uniformly distributed live loads of roofs and marquees, L_o, in Table 1607.1 are permitted to be reduced in accordance with Section 1607.12.2.1.

❖ The minimum roof live loads typically reflect loads that occur during roof maintenance, construction or repair. In addition to the standard roof live load of 20 psf (0.96 kN/m^2), Table 1607.1 includes roof live loads for special purpose roofs and fabric awnings. While this section seems to refer to reducing any of the tabulated uniformly distributed live loads, the actual reduction method provided in Section 1607.12.2.1 is limited to the 20 psf (0.96 kN/m^2) live load. This is made evident by the limits on Equation 16-26 of $12 \le L_r \le 20$.

1607.12.2.1 Ordinary roofs, awnings and canopies. Ordinary flat, pitched and curved roofs, and awnings and canopies other than of fabric construction supported by a skeleton structure, are permitted to be designed for a reduced uniformly distributed roof live load, L_r, as specified in the following equations or other controlling combinations of loads as specified in Section 1605, whichever produces the greater *load effect*.

In structures such as greenhouses, where special scaffolding is used as a work surface for workers and materials during maintenance and repair operations, a lower roof load than

INTERNATIONAL CODE COUNCIL®
Copyright © 2015 ICC. ALL RIGHTS RESERVED. Accessed by David Dammon on Jun 21, 2017 12:30:52 PM pursuant to License Agreement with ICC. No further reproduction or distribution authorized. ANY UNAUTHORIZED REPRODUCTION OR DISTRIBUTION IS A VIOLATION OF THE FEDERAL COPYRIGHT ACT AND THE LICENSE AGREEMENT, AND SUBJECT TO CIVIL AND CRIMINAL PENALTIES THEREUNDER.

specified in the following equations shall not be used unless *approved* by the *building official*. Such structures shall be designed for a minimum roof live load of 12 psf (0.58 kN/m^2).

$L_r = L_o R_1 R_2$ **(Equation 16-26)**

where: $12 \le L_r \le 20$

For SI: $L_r = L_o R_1 R_2$

where: $0.58 \le L_r \le 0.96$

L_o = Unreduced roof live load per square foot (m^2) of horizontal projection supported by the member (see Table 1607.1).

L_r = Reduced roof live load per square foot (m^2) of horizontal projection supported by the member.

The reduction factors R_1 and R_2 shall be determined as follows:

$R_1 = 1$ for $A_t \le 200$ square feet (18.58 m^2) **(Equation 16-27)**

$R_1 = 1.2 - 0.001A_t$ for 200 square feet $< A_t <$ 600 square feet **(Equation 16-28)**

For SI: $1.2 - 0.011A_t$ for 18.58 square meters $< A_t <$ 55.74 square meters

$R_1 = 0.6$ for $A_t \ge 600$ square feet (55.74 m^2) **(Equation 16-29)**

where:

A_t = Tributary area (span length multiplied by effective width) in square feet (m^2) supported by the member, and

$R_2 = 1$ for $F \le 4$ **(Equation 16-30)**

$R_2 = 1.2 - 0.05F$ for $4 < F < 12$ **(Equation 16-31)**

$R_2 = 0.6$ for $F \ge 12$ **(Equation 16-32)**

where:

F = For a sloped roof, the number of inches of rise per foot (for SI: $F = 0.12 \times$ slope, with slope expressed as a percentage), or for an arch or dome, the rise-to-span ratio multiplied by 32.

❖ This section provides a formula for the determination of the live load for the design of flat, pitched or curved roofs. The live load from Table 1607.1 that applies is 20 psf (0.96 kN/m^2). Reduced roof live loads are based on the roof slope and the tributary area of the member being considered. The portion of the live load reduction based on tributary area does not apply to roof members that support small tributary areas of less than 200 square feet (18.58 m^2). The load can be reduced as the tributary area increases but never to less than 12 psf (0.58 kN/m^2). For roof slopes between 4:12 and 12:12, live load reductions based on slope apply. Commentary Figure 1607.12.2.1 shows the roof live load, L_r, determined by Equation 16-26 for increments of roof slope. Since the relationship of variables is linear, intermediate values can be interpolated from the figure.

This section also provides for a lower roof live load for a greenhouse, since it is not likely that loads from maintenance or repair will exceed the specified 12 psf (0.58 kN/m^2).

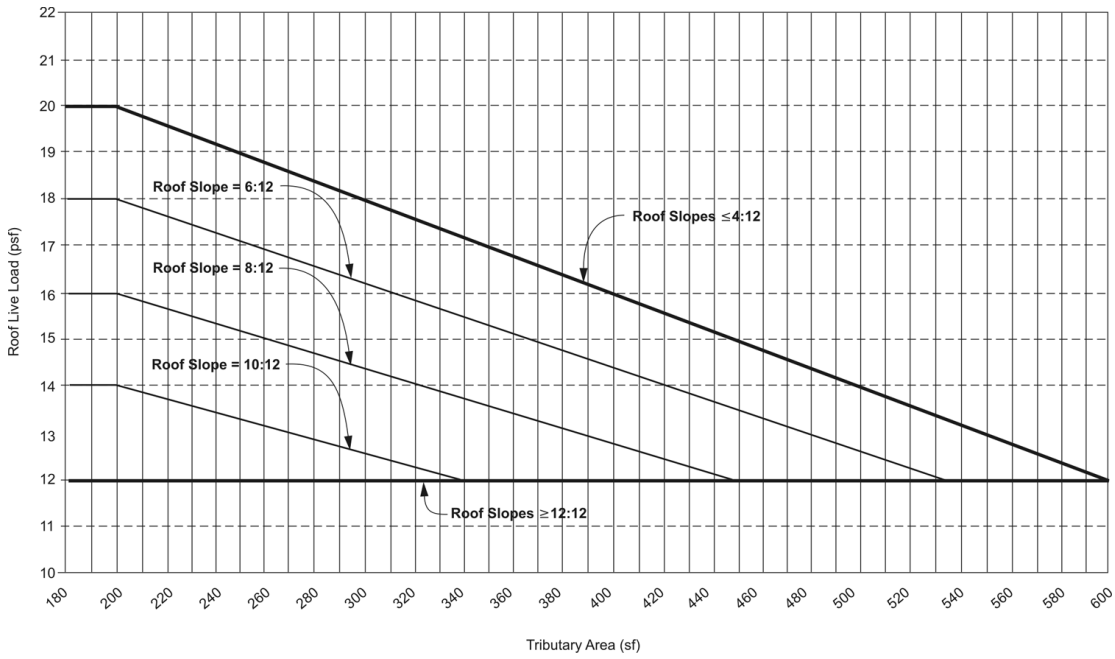

For SI: 1 pound per square foot = 47.88 Pa, 1 square foot = 0.0929 m^2.

Figure 1607.12.2.1
MINUMUM ROOF LIVE LOAD IN ACCORDANCE WITH EQUATION 16-26

INTERNATIONAL CODE COUNCIL®
Copyright © 2015 ICC. ALL RIGHTS RESERVED. Accessed by David Dammon on Jun 21, 2017 12:30:52 PM pursuant to License Agreement with ICC. No further reproduction or distribution authorized. ANY UNAUTHORIZED REPRODUCTION OR DISTRIBUTION IS A VIOLATION OF THE FEDERAL COPYRIGHT ACT AND THE LICENSE AGREEMENT, AND SUBJECT TO CIVIL AND CRIMINAL PENALTIES THEREUNDER.

1607.12.3 Occupiable roofs. Areas of roofs that are occupiable, such as *vegetative roofs*, roof gardens or for assembly or other similar purposes, and marquees are permitted to have their uniformly distributed live loads reduced in accordance with Section 1607.10.

❖ Most roofs are considered to be unoccupiable, meaning that while maintenance personnel may be present on occasion, the general public does not have access to the area. Therefore, the design live loads for most roofs are generally low [e.g., 20 psf (0.958 kNm^2) reducible live load]. Roofs that are occupied or accessible by the public are designed for larger loads. Live loads for roof gardens may be reduced per Section 1607.10. Live loads for assembly areas may not be reduced, except as described in the limited exceptions to Section 1607.10. The distinction between roof gardens and assembly areas is based on the likelihood that a large number of people will congregate on the roof. Roof gardens are landscaped areas where assembly use is not anticipated, such as a promenade deck located on the main roof of an apartment building. Roofs that are used for assembly purposes have the same live load requirements as any other similar assembly area.

1607.12.3.1 Vegetative and landscaped roofs. The weight of all landscaping materials shall be considered as dead load and shall be computed on the basis of saturation of the soil as determined in accordance with ASTM E2397. The uniform design live load in unoccupied landscaped areas on roofs shall be 20 psf (0.958 kN/m^2). The uniform design live load for occupied landscaped areas on roofs shall be determined in accordance with Table 1607.1.

❖ Those unoccupied areas of a roof that are to be landscaped or covered in vegetation are required to be designed for a minimum uniform live load of 20 psf (0.96 kN/m^2) to accommodate the occasional loads associated with the maintenance of plantings. The weight of landscaping materials and saturated soil is to be considered a dead load in the design of the roof structure, which is to be combined with the live load (see Section 1605 for applicable load combinations). Vegetative roofs are commonly referred to as "green roofs," and are generally not intended to be occupied.

1607.12.4 Awnings and canopies. Awnings and canopies shall be designed for uniform live loads as required in Table 1607.1 as well as for snow loads and wind loads as specified in Sections 1608 and 1609.

❖ Awning structures are lightweight frames that are typically covered with fabric materials and are designed to sustain a live load of 5 psf (0.24 kN/m^2), as well as the specified snow and wind loads of Sections 1608 and 1609. The live load, snow load and wind load are to be combined according to Section 1605.

1607.12.5 Photovoltaic panel systems. Roof structures that provide support for *photovoltaic panel systems* shall be designed in accordance with Sections 1607.12.5.1 through 1607.12.5.4, as applicable.

❖ Photovoltaic (PV) panel systems, also known as "solar panels," are required to be designed to resist the live loads in this section.

1607.12.5.1 Roof live load. Roof surfaces to be covered by solar photovoltaic panels or modules shall be designed for the roof live load, L_r, assuming that the photovoltaic panels or modules are not present. The roof photovoltaic live load in areas covered by solar photovoltaic panels or modules shall be in addition to the panel loading unless the area covered by each solar photovoltaic panel or module is inaccessible. Areas where the clear space between the panels and the rooftop is not more than 24 inches (610 mm) shall be considered inaccessible. Roof surfaces not covered by photovoltaic panels shall be designed for the roof live load.

❖ PV panels can affect where live loads occur or are placed on the roof. The intent is for two design conditions to be checked: 1. Assuming that the panels are not present; and 2. Assuming that the panels are present. The first analysis addresses cases where panels are anticipated to be installed but for some reason end up being omitted, or where the panels are initially installed but are removed at some point in the building's life. In the second analysis, live load may be omitted in areas where the clear space under the panels is 24 inches (710 mm) or less, which is considered inaccessible. Live load should be applied to all accessible areas, including roof surfaces not covered by panels.

1607.12.5.2 Photovoltaic panels or modules. The structure of a roof that supports solar photovoltaic panels or modules shall be designed to accommodate the full solar photovoltaic panels or modules and ballast dead load, including concentrated loads from support frames in combination with the loads from Section 1607.12.5.1 and other applicable loads. Where applicable, snow drift loads created by the photovoltaic panels or modules shall be included.

❖ The effects of concentrated loads from the support frames, including ballast, must be considered. If the panels will tend to cause snow drifts, these loads shall be considered as well.

1607.12.5.3 Photovoltaic panels or modules installed as an independent structure. Solar photovoltaic panels or modules that are independent structures and do not have accessible/occupied space underneath are not required to accommodate a roof photovoltaic live load, provided the area under the structure is restricted to keep the public away. All other loads and combinations in accordance with Section 1605 shall be accommodated.

Solar photovoltaic panels or modules that are designed to be the roof, span to structural supports and have accessible/occupied space underneath shall have the panels or modules and all supporting structures designed to support a roof photovoltaic live load, as defined in Section 1607.12.5.1 in com-

INTERNATIONAL CODE COUNCIL®
Copyright © 2015 ICC. ALL RIGHTS RESERVED. Accessed by David Dammon on Jun 21, 2017 12:30:52 PM pursuant to License Agreement with ICC. No further reproduction or distribution authorized. ANY UNAUTHORIZED REPRODUCTION OR DISTRIBUTION IS A VIOLATION OF THE FEDERAL COPYRIGHT ACT AND THE LICENSE AGREEMENT, AND SUBJECT TO CIVIL AND CRIMINAL PENALTIES THEREUNDER.

bination with other applicable loads. Solar photovoltaic panels or modules in this application are not permitted to be classified as "not accessible" in accordance with Section 1607.12.5.1.

❖ PV panels that are designed as part of an independent ground-supported structure are not required to be designed for roof live loads if the space under them is inaccessible. PV panels that are designed to act as a roofing over an occupied space (e.g., panels that form a carport roof) must be designed for roof live loads.

1607.12.5.4 Ballasted photovoltaic panel systems. Roof structures that provide support for ballasted *photovoltaic panel systems* shall be designed, or analyzed, in accordance with Section 1604.4; checked in accordance with Section 1604.3.6 for deflections; and checked in accordance with Section 1611 for ponding.

❖ Although the design of all roof members is required to consider deflection and ponding, as are all roof members that support unballasted PV panels, given the weight of typical ballasted PV systems it was believed appropriate to reinforce the fact that roof members supporting such systems must be analyzed for deflection and ponding as well as meet minimum capacity requirements.

1607.13 Crane loads. The crane live load shall be the rated capacity of the crane. Design loads for the runway beams, including connections and support brackets, of moving bridge cranes and monorail cranes shall include the maximum wheel loads of the crane and the vertical impact, lateral and longitudinal forces induced by the moving crane.

❖ This section provides a general description of the crane loads that are required to be included in the design. The supporting structure for the crane is to be designed for a combination of the maximum wheel load, vertical impact and horizontal load as a simultaneous load combination. The typical arrangement for a top-running bridge crane is shown in Commentary Figure 1607.13.

1607.13.1 Maximum wheel load. The maximum wheel loads shall be the wheel loads produced by the weight of the bridge, as applicable, plus the sum of the rated capacity and the weight of the trolley with the trolley positioned on its runway at the location where the resulting load effect is maximum.

❖ The maximum vertical wheel load occurs when the trolley is moved as close as possible to the supporting beams under consideration. This results in the greatest portion of the crane weight, the design weight lifted load and the wheel vertical impact load on the supporting beams.

1607.13.2 Vertical impact force. The maximum wheel loads of the crane shall be increased by the percentages shown below to determine the induced vertical impact or vibration force:

Monorail cranes (powered)	25 percent
Cab-operated or remotely operated bridge cranes (powered)	25 percent
Pendant-operated bridge cranes (powered)	10 percent
Bridge cranes or monorail cranes with hand-geared bridge, trolley and hoist	0 percent

❖ A vertical impact force is necessary to account for the impact from the starting and stopping movement of the suspended weight from the crane. Vertical impact is also created by the movement of the crane along the rails.

1607.13.3 Lateral force. The lateral force on crane runway beams with electrically powered trolleys shall be calculated as 20 percent of the sum of the rated capacity of the crane and the weight of the hoist and trolley. The lateral force shall be assumed to act horizontally at the traction surface of a runway beam, in either direction perpendicular to the beam, and

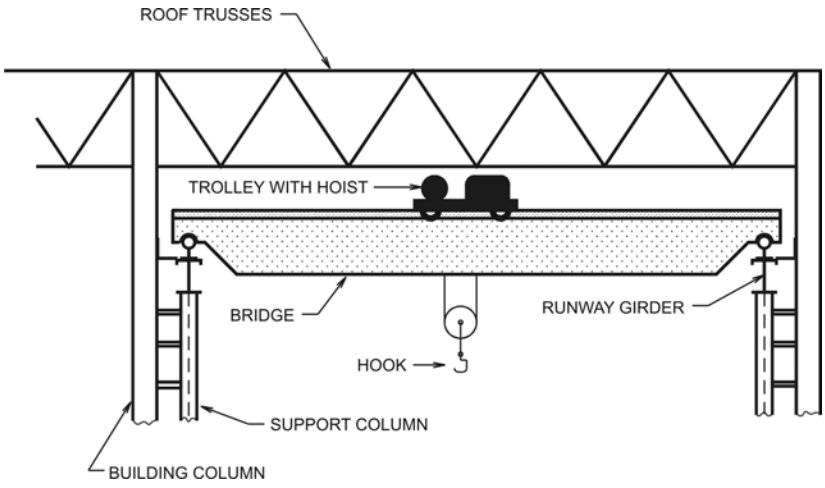

Figure 1607.13
TOP-RUNNING BRIDGE CRANE

INTERNATIONAL CODE COUNCIL®
Copyright © 2015 ICC. ALL RIGHTS RESERVED. Accessed by David Dammon on Jun 21, 2017 12:30:52 PM pursuant to License Agreement with ICC. No further reproduction or distribution authorized. ANY UNAUTHORIZED REPRODUCTION OR DISTRIBUTION IS A VIOLATION OF THE FEDERAL COPYRIGHT ACT AND THE LICENSE AGREEMENT, AND SUBJECT TO CIVIL AND CRIMINAL PENALTIES THEREUNDER.

shall be distributed with due regard to the lateral stiffness of the runway beam and supporting structure.

❖ This section is necessary to define the design lateral force on the crane supports. Lateral force at the right angle to the crane rail is caused by the lateral movement of the lifted load and from the frame action of the crane.

1607.13.4 Longitudinal force. The longitudinal force on crane runway beams, except for bridge cranes with hand-geared bridges, shall be calculated as 10 percent of the maximum wheel loads of the crane. The longitudinal force shall be assumed to act horizontally at the traction surface of a runway beam, in either direction parallel to the beam.

❖ This section is needed to define the longitudinal force on the crane supports, which is caused from the longitudinal motion of the crane with the lifted load.

1607.14 Interior walls and partitions. Interior walls and partitions that exceed 6 feet (1829 mm) in height, including their finish materials, shall have adequate strength and stiffness to resist the loads to which they are subjected but not less than a horizontal load of 5 psf (0.240 kN/m^2).

❖ The minimum lateral live load is intended to provide sufficient strength and durability of the wall framing and of the finished construction to provide a minimum level of resistance to nominal impact loads that commonly occur in the use of a facility, such as impacts from moving furniture or equipment, as well as to resist heating, ventilating and air-conditioning (HVAC) pressurization.

1607.14.1 Fabric partitions. Fabric partitions that exceed 6 feet (1829 mm) in height, including their finish materials, shall have adequate strength and stiffness to resist the following load conditions:

1. The horizontal distributed load need only be applied to the partition framing. The total area used to determine the distributed load shall be the area of the fabric face between the framing members to which the fabric is attached. The total distributed load shall be uniformly applied to such framing members in proportion to the length of each member.
2. A concentrated load of 40 pounds (0.176 kN) applied to an 8-inch-diameter (203 mm) area [50.3 square inches (32 452 mm^2)] of the fabric face at a height of 54 inches (1372 mm) above the floor.

❖ This section provides criteria for fabric partitions (see definition, Section 202) as an alternative to Section 1607.14. The construction of these partitions is unique, which makes it difficult to meet the full requirements of Section 1607.14. Condition 1 requires the partition framing to be capable of resisting a minimum lateral load. Condition 2 approximates the load of a person leaning against the fabric using their hand as the point of contact. This criterion is based on test standards that are used to evaluate the tip-over resistance of office furniture panel systems that are often used to provide open plan offices.

SECTION 1608
SNOW LOADS

1608.1 General. Design snow loads shall be determined in accordance with Chapter 7 of ASCE 7, but the design roof load shall not be less than that determined by Section 1607.

❖ The determination of the nominal snow load, *S*, must be in accordance with this section. The intent of this section is that the code requirements are based on the technical requirements in Chapter 7 of ASCE 7. The snow load provisions in ASCE 7 are based on over 40 years of ground snow load data, and include consideration of thermal resistance of the roof structure, a rain-on-snow surcharge, partial loading on continuous beam systems and ponding instability from melting snow or rain on snow. The variables that affect the determination of roof snow loads are:

- Ground snow load (p_g) – see Section 1608.2.
- Importance factor (I) – a factor determined in Section 7.3.3 of ASCE 7, ranging from 0.8 to 1.2, based on the risk category assigned in accordance with Section 1604.5.
- Exposure factor (C_e) and Thermal factor (C_t) – see Sections 7.3.1 and 7.3.2 of ASCE 7.

In addition to the above, the roof slope affects the snow load determination, as well as other design considerations. Roofs with low slopes are designed for a flat roof snow load, p_f, determined in accordance with Section 7.3 of ASCE 7, using the previously mentioned criteria. Other considerations for low roof slopes include ponding instability and rain-on-snow surcharge loading. For sloped roofs, the sloped roof snow load, p_s, in accordance with Section 7.4 of ASCE 7 applies. The sloped roof snow load essentially modifies the flat roof snow load by the slope factor (C_s), which varies from 1.0 at a low slope (i.e., no effect) to zero at a slope of 70 degrees (1.36 rad).

The flat roof snow load or sloped roof snow load applied uniformly to the entire roof is referred to as the balanced snow load condition. This loading is always a design consideration. Depending on factors such as the type of roof structural system, the geometry of the roof, etc., the following additional snow loadings may require evaluation:

- Partial loading (see Section 7.5, ASCE 7) is a pattern consisting of balanced snow load and one-half of balanced snow load arranged to produce the maximum effects on the structural member being considered.
- Unbalanced snow loads (see Section 7.6, ASCE 7) reflect an uneven loading pattern, such as can occur on a sawtooth roof [see Commentary Figure 1608.1(1)].
- Drifting (see Sections 7.7 and 7.8, ASCE 7) is a concern where adjacent roof surfaces are at different elevations [see Commentary Figures 1608.1(2) and (3)] or at projections above the roof level, such as at equipment or parapets.

INTERNATIONAL CODE COUNCIL®
Copyright © 2015 ICC. ALL RIGHTS RESERVED. Accessed by David Dammon on Jun 21, 2017 12:30:52 PM pursuant to License Agreement with ICC. No further reproduction or distribution authorized. ANY UNAUTHORIZED REPRODUCTION OR DISTRIBUTION IS A VIOLATION OF THE FEDERAL COPYRIGHT ACT AND THE LICENSE AGREEMENT, AND SUBJECT TO CIVIL AND CRIMINAL PENALTIES THEREUNDER.

1608.2 Ground snow loads. The ground snow loads to be used in determining the design snow loads for roofs shall be determined in accordance with ASCE 7 or Figure 1608.2 for the contiguous United States and Table 1608.2 for Alaska. Site-specific case studies shall be made in areas designated "CS" in Figure 1608.2. Ground snow loads for sites at elevations above the limits indicated in Figure 1608.2 and for all sites within the CS areas shall be *approved*. Ground snow load determination for such sites shall be based on an extreme value statistical analysis of data available in the vicinity of the site using a value with a 2-percent annual probability of being exceeded (50-year mean recurrence interval). Snow loads are zero for Hawaii, except in mountainous regions as *approved* by the *building official*.

❖ The ground snow loads on the maps in Figure 1608.2 of the code are generally based on over 40 years of snow depth records. The snow loads on the maps are those that have a 2-percent annual probability of being exceeded (a 50-year mean recurrence interval). The maps were generated from data through the winter of 1991-92, and from data through the winter

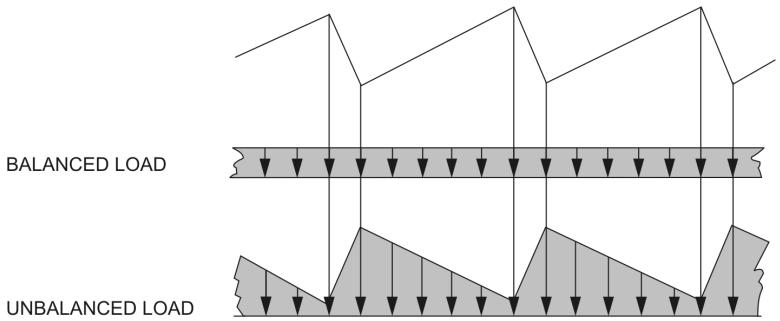

Figure 1608.1(1)
BALANCED AND UNBALANCED LOADS FOR A SAWTOOTH ROOF

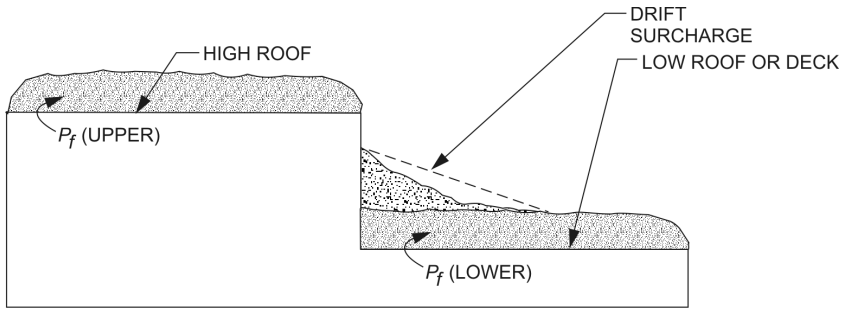

Figure 1608.1(2)
DRIFTING SNOW ON LOW ROOFS AND DECKS

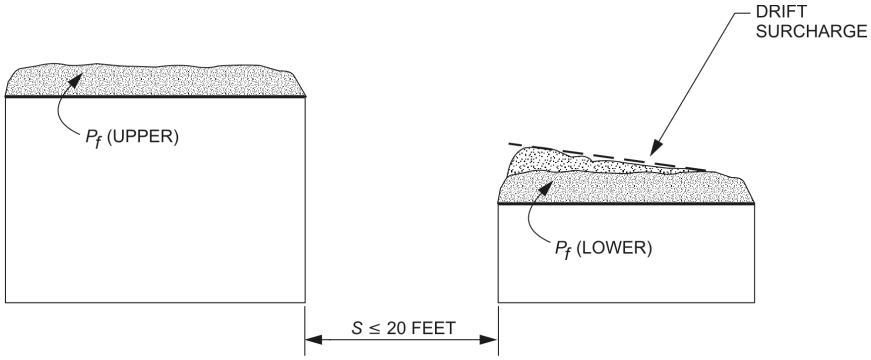

For SI: 1 foot = 304.8 mm.

Figure 1608.1(3)
DRIFTING SNOW ONTO ADJACENT LOW STRUCTURE

INTERNATIONAL CODE COUNCIL®
Copyright © 2015 ICC. ALL RIGHTS RESERVED. Accessed by David Dammon on Jun 21, 2017 12:30:52 PM pursuant to License Agreement with ICC. No further reproduction or distribution authorized. ANY UNAUTHORIZED REPRODUCTION OR DISTRIBUTION IS A VIOLATION OF THE FEDERAL COPYRIGHT ACT AND THE LICENSE AGREEMENT, AND SUBJECT TO CIVIL AND CRIMINAL PENALTIES THEREUNDER.

of 1993-94 where the snows were heavy. The mapped snow loads are not increased much from a single snowy winter, since most reporting stations have more than 20 years of snow data. The map values indicate the ground snow load in pounds per square foot. In mountainous areas, the map also indicates the highest elevation that is appropriate for the use of the associated snow load. Where the elevation limit is exceeded, a site-specific case study is necessary to establish the appropriate ground snow load. In some areas the ground snow load is too variable to allow mapping. These areas are noted as "CS," which indicates a site-specific case study is necessary. Assistance in the determination of an appropriate ground snow load for these areas may be obtained from the U.S. Department of Army Cold Regions Research and Engineering Laboratory (CRREL) in Hanover, New Hampshire.

TABLE 1608.2. See below.

❖ Since Alaska in not shown on Figure 1608.2, this table provides the ground snow loads, P_g, for Alaskan locations. These values are needed to determine the appropriate roof snow loads for the indicated locations. The roof snow load is to be determined according to Section 7.3 of ASCE 7 for flat roofs and Section 7.4 of ASCE 7 for sloped roofs.

FIGURE 1608.2. See pages 16-38 through 16-39.

❖ See the commentary to Section 1608.2 for an overview of the snow load map. See the commentary for Section 7.2 of ASCE 7 for a complete description of the methodology used in developing the contour lines shown on the figure.

1608.3 Ponding instability. Susceptible bays of roofs shall be evaluated for ponding instability in accordance with Section 7.11 of ASCE 7.

❖ Susceptible bays of roofs are required to meet the technical provisions of ASCE 7 for consideration of progressive deflection. The term "Susceptible bay" is defined in Section 202 and provides a technical basis for determining which bays of a roof need to be investigated for ponding instability. Section 1611.2 also relies on the determination of which bays are susceptible bays.

SECTION 1609
WIND LOADS

1609.1 Applications. Buildings, structures and parts thereof shall be designed to withstand the minimum wind loads prescribed herein. Decreases in wind loads shall not be made for the effect of shielding by other structures.

❖ The determination of the wind load, *W*, must be in accordance with Section 1609. The intent of this section is to provide minimum criteria for the design and construction of buildings and other structures to resist wind loads. These regulations serve to reduce the potential for damage to property caused by windstorms and to provide an acceptable level of protection to building occupants. The objective also includes the prevention of damage to adjacent properties because of the possible detachment of major building components (e.g., walls, roofs, etc.), structural collapse or flying debris and for the safety of people in the immediate vicinity.

The criteria for wind design given in this section of the code generally reflect the wind load provisions of ASCE 7. For a better understanding of the wind load provisions it is important to have a fundamental knowledge of the effects of high-velocity wind forces on buildings and other structures. Wind/structure interactions can be characterized as follows:

When wind encounters a stationary object, such as a building, the airflow changes direction and produces several effects on the building that are illustrated in Commentary Figure 1609.1(1). Exterior walls and other vertical surfaces facing the wind (windward side) and perpendicular to its path are subjected to inward (positive) pressures. However, wind does not stop on contact with a facing surface, but flows around and over the building surfaces. This

TABLE 1608.2
GROUND SNOW LOADS, p_g, FOR ALASKAN LOCATIONS

LOCATION	POUNDS PER SQUARE FOOT	LOCATION	POUNDS PER SQUARE FOOT	LOCATION	POUNDS PER SQUARE FOOT
Adak	30	Galena	60	Petersburg	150
Anchorage	50	Gulkana	70	St. Paul Islands	40
Angoon	70	Homer	40	Seward	50
Barrow	25	Juneau	60	Shemya	25
Barter Island	35	Kenai	70	Sitka	50
Bethel	40	Kodiak	30	Talkeetna	120
Big Delta	50	Kotzebue	60	Unalakleet	50
Cold Bay	25	McGrath	70	Valdez	160
Cordova	100	Nenana	80	Whittier	300
Fairbanks	60	Nome	70	Wrangell	60
Fort Yukon	60	Palmer	50	Yakutat	150

For SI: 1 pound per square foot = 0.0479 kN/m^2.

INTERNATIONAL CODE COUNCIL®
Copyright © 2015 ICC. ALL RIGHTS RESERVED. Accessed by David Dammon on Jun 21, 2017 12:30:52 PM pursuant to License Agreement with ICC. No further reproduction or distribution authorized. ANY UNAUTHORIZED REPRODUCTION OR DISTRIBUTION IS A VIOLATION OF THE FEDERAL COPYRIGHT ACT AND THE LICENSE AGREEMENT, AND SUBJECT TO CIVIL AND CRIMINAL PENALTIES THEREUNDER.

airflow does not instantaneously change directions at surface discontinuities, such as corners of walls or eaves, or over ridges and roof corners. Instead it separates from the downwind surfaces due to high turbulence and localized pressures, resulting in outward (negative) pressures. This phenomena produces suction or outward pressures (negative) on the sidewalls, leeward wall and, depending on geometry, the roof.

Commentary Figure 1609.1(1) shows a flat roof and the resulting negative pressures caused by external wind; however, pressures may differ on sloping roofs in the direction perpendicular to the ridge. Roof surfaces (on the windward side) with shallow slopes are generally subjected to outward (negative) pressures—the same as flat roofs. Moderately sloping roofs [about 30 degrees (0.5235 rad)] may be subjected to inward (positive) pressures, outward (negative) pressures or both—negative pressure in the lower part of the roof and positive pressure in the area of the ridge. However, the code does not require consideration of this scenario. High-sloping roofs (windward side) respond similar to walls and sustain positive wind pressures. The leeward side of a sloped roof is subjected to negative pressure, regardless of the angle. When the wind acts parallel to the ridge, the pressures on a sloped roof are similar to the pressures on a flat roof, meaning the roof is subject to negative pressures.

Openings in the building envelope can impact the magnitude of wind pressure on a structure by increasing the internal pressures that, in turn, will affect the net pressures on the structure. Commentary Figure 1609.1(2) illustrates the effects of openings in a building's exterior walls. An opening in the leeward wall causes negative pressure on the interior, increasing the total load on the windward wall. Openings on the windward wall cause positive internal pressure against all the walls from the interior of the building. As the figure shows, the result is an increase in the total load on the leeward wall. In extreme cases, failures resulting from this type of wind flow appear as if the building has exploded.

The definition of "Openings" is worth noting, since in the nonstructural code provisions the term "openings" typically refers to doors, ducts or windows. The definition of "Openings" that is relevant to wind load is in Section 26.2 of ASCE 7. They are all described as "apertures or holes in the building envelope that allow air to flow through the building envelope and that are designed as 'open' during design wind loads." Such openings are then considered in classifying the building as enclosed, partially enclosed or open. The wind load considerations will differ based on that classification.

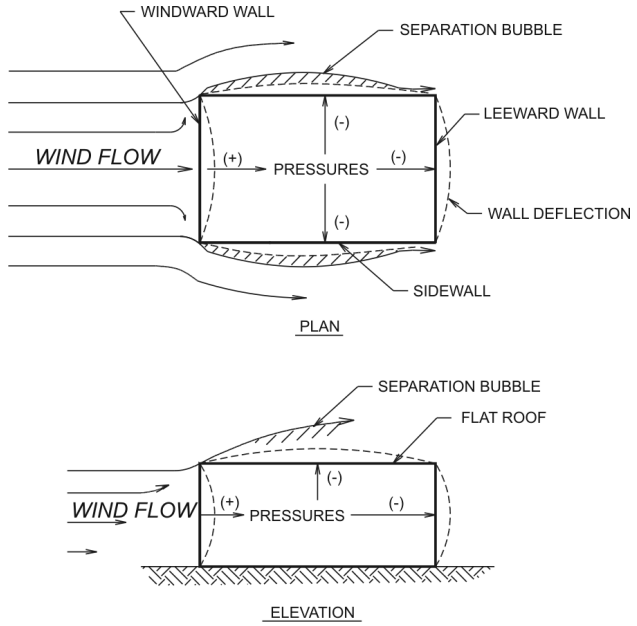

Figure 1609.1(1)
WIND PRESSURES CAUSED BY EXTERNAL WIND FLOW

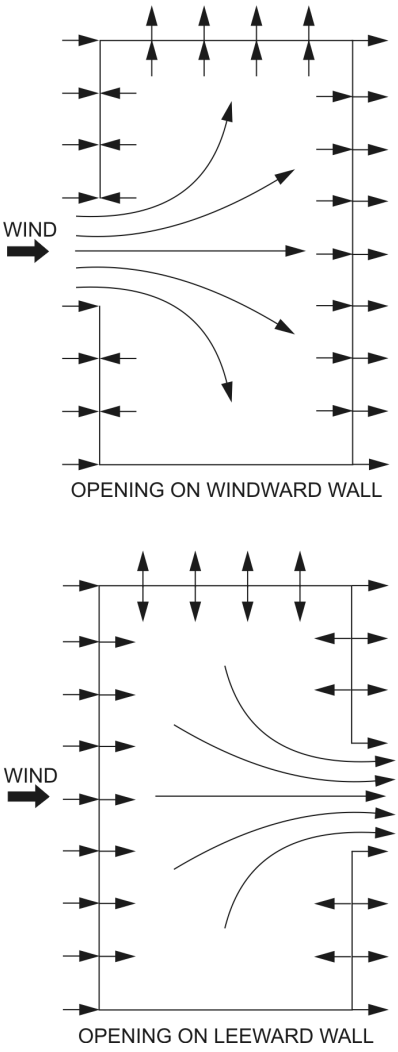

Figure 1609.1(2)
OPENING IN EXTERIOR WALL OF BUILDING

INTERNATIONAL CODE COUNCIL®
Copyright © 2015 ICC. ALL RIGHTS RESERVED. Accessed by David Dammon on Jun 21, 2017 12:30:52 PM pursuant to License Agreement with ICC. No further reproduction or distribution authorized. ANY UNAUTHORIZED REPRODUCTION OR DISTRIBUTION IS A VIOLATION OF THE FEDERAL COPYRIGHT ACT AND THE LICENSE AGREEMENT, AND SUBJECT TO CIVIL AND CRIMINAL PENALTIES THEREUNDER.

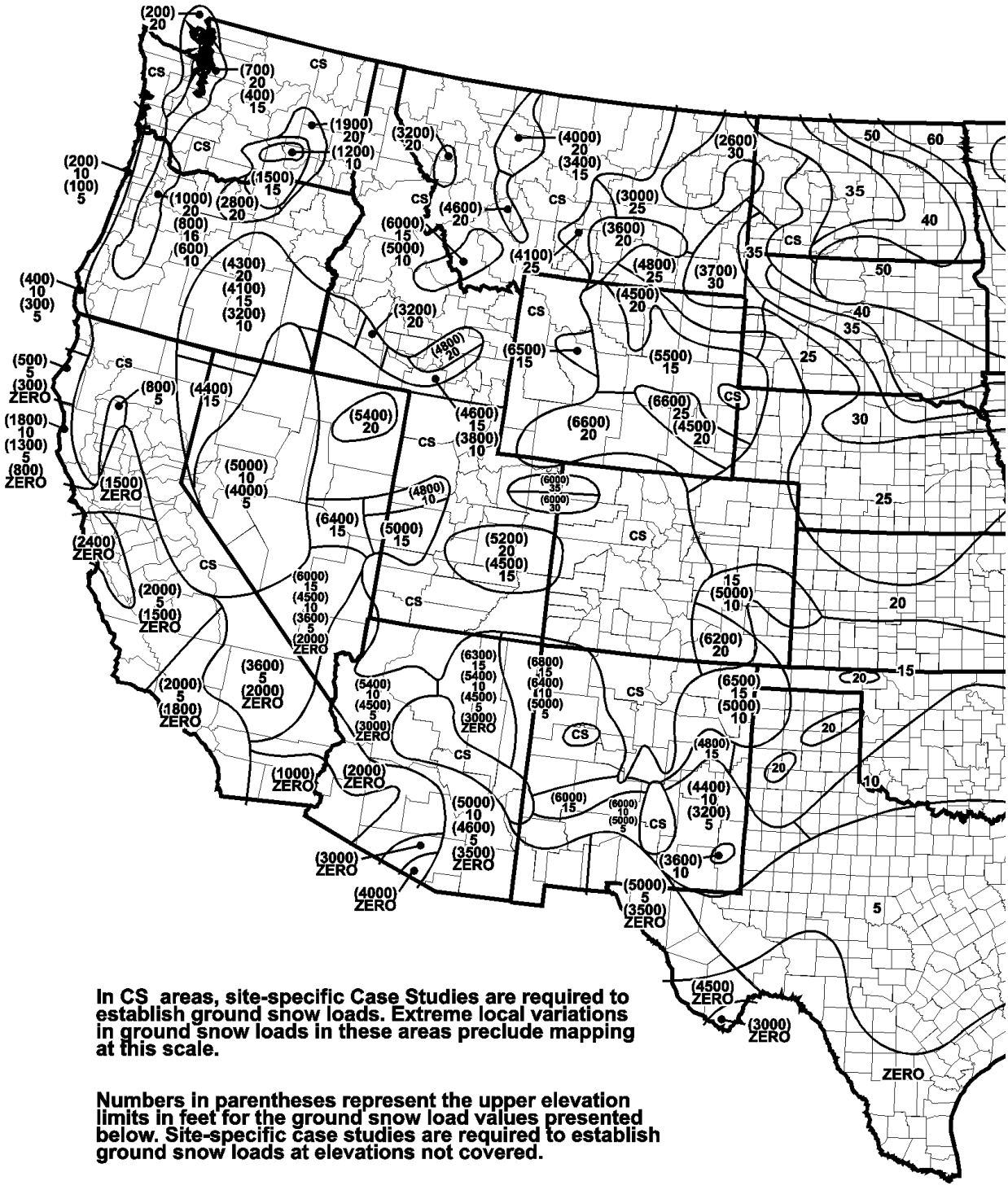

FIGURE 1608.2
GROUND SNOW LOADS, p_g, FOR THE UNITED STATES (psf)

INTERNATIONAL CODE COUNCIL®
Copyright © 2015 ICC. ALL RIGHTS RESERVED. Accessed by David Dammon on Jun 21, 2017 12:30:52 PM pursuant to License Agreement with ICC. No further reproduction or distribution authorized. ANY UNAUTHORIZED REPRODUCTION OR DISTRIBUTION IS A VIOLATION OF THE FEDERAL COPYRIGHT ACT AND THE LICENSE AGREEMENT, AND SUBJECT TO CIVIL AND CRIMINAL PENALTIES THEREUNDER.



FIGURE 1608.2—continued
GROUND SNOW LOADS, p_g, FOR THE UNITED STATES (psf)

INTERNATIONAL CODE COUNCIL®
Copyright © 2015 ICC. ALL RIGHTS RESERVED. Accessed by David Dammon on Jun 21, 2017 12:30:52 PM pursuant to License Agreement with ICC. No further reproduction or distribution authorized. ANY UNAUTHORIZED REPRODUCTION OR DISTRIBUTION IS A VIOLATION OF THE FEDERAL COPYRIGHT ACT AND THE LICENSE AGREEMENT, AND SUBJECT TO CIVIL AND CRIMINAL PENALTIES THEREUNDER.

1609.1.1 Determination of wind loads. Wind loads on every building or structure shall be determined in accordance with Chapters 26 to 30 of ASCE 7 or provisions of the alternate all-heights method in Section 1609.6. The type of opening protection required, the ultimate design wind speed, V_{ult}, and the exposure category for a site is permitted to be determined in accordance with Section 1609 or ASCE 7. Wind shall be assumed to come from any horizontal direction and wind pressures shall be assumed to act normal to the surface considered.

Exceptions:

1. Subject to the limitations of Section 1609.1.1.1, the provisions of ICC 600 shall be permitted for applicable Group R-2 and R-3 buildings.
2. Subject to the limitations of Section 1609.1.1.1, residential structures using the provisions of AWC WFCM.
3. Subject to the limitations of Section 1609.1.1.1, residential structures using the provisions of AISI S230.
4. Designs using NAAMM FP 1001.
5. Designs using TIA-222 for antenna-supporting structures and antennas, provided the horizontal extent of Topographic Category 2 escarpments in Section 2.6.6.2 of TIA-222 shall be 16 times the height of the escarpment.
6. Wind tunnel tests in accordance with ASCE 49 and Sections 31.4 and 31.5 of ASCE 7.

The wind speeds in Figures 1609.3(1), 1609.3(2) and 1609.3(3) are ultimate design wind speeds, V_{ult}, and shall be converted in accordance with Section 1609.3.1 to nominal design wind speeds, V_{asd}, when the provisions of the standards referenced in Exceptions 4 and 5 are used.

❖ The intent of Section 1609 is to require that buildings and structures be designed and constructed to resist the wind loads quantified in Chapters 26 through 30 of ASCE 7.

There are six exceptions to using the provisions of ASCE 7 for the determination of wind loads.

Exception 1 provides for the use of ICC 600 for Group R-2 and R-3 buildings where they are located within Exposure B or C as defined in Section 1609.4 and not sited on the upper half of an isolated hill, escarpment or ridge with the characteristics described in Section 1609.1.1.1. ICC 600 has prescriptive construction requirements and required load capacity tables that replace the requirement for structural analysis, which is intended to provide improved design construction details to achieve greater structural performance for single- and multiple-family dwellings in a high-wind event (see ICC 600 for other detailed application limitations).

Exception 2 provides for the use of the AWC *Wood Frame Construction Manual for One- and Two-family Dwellings* where the building is sited within Exposure B or C as defined in Section 1609.4 and not on the upper half of an isolated hill, escarpment or ridge with the characteristics described in Section 1609.1.1.1. The AWC *Wood Frame Construction Manual for One- and Two-family Dwellings* has prescriptive construction requirements and required load-resistance tables that replace the requirement for structural analysis. The tabulated engineered and prescriptive design provisions apply to one- and two-family wood frame dwellings where the fastest-mile basic wind speed is between 90 and 120 mph (40 and 54 m/s). See Table 1609.3.1 for conversion between the 3-second-gust and fastest-mile wind speeds (see the AWC *Wood Frame Construction Manual for One- and Two-family Dwellings*, Chapter 1, for other detailed application limitations). Similarly, Exception 3 allows the cold-formed steel prescriptive standard for one- and two-family dwellings.

Exception 4 simply refers to a national standard dealing specifically with the design of flag poles.

Exception 5 allows the use of TIA 222-G for antennas and their supporting structures. This standard provides a simplification of the topographic wind speed-up effect. The TIA 222-G standard allows a designer to use the full topographic wind speed-up method of ASCE 7 in order to avoid the conservatism of the simplified method. A code modification makes sure that the simplified method is safe in all cases.

TIA 222-G accounts for the worst-case wind speed-up at the crest for a steep slope, but overlooks the fact that less-sloped escarpments create pressure increases that cannot be safely ignored beyond the "steep slope" influence. As written, the standard stops considering the topographic wind speed-up effect at "8 times the height" from the crest. At this distance, a shallow slope can still increase wind pressure by more than 20 percent.

The modification changes "8 times the height" in the standard to "16 times the height." The intent is that the "Topographic category 2" definition in TIA 222-G should be applied as follows:

> Category 2. Structures located at or near the crest of an escarpment. Wind speed-up shall be considered to occur in all directions. Structures located vertically on the lower half of an escarpment or horizontally beyond 16 times the height of the escarpment from its crest, shall be permitted to be considered as Topographic Category 1.

1609.1.1.1 Applicability. The provisions of ICC 600 are applicable only to buildings located within Exposure B or C as defined in Section 1609.4. The provisions of ICC 600, AWC WFCM and AISI S230 shall not apply to buildings sited on the upper half of an isolated hill, ridge or escarpment meeting the following conditions:

1. The hill, ridge or escarpment is 60 feet (18 288 mm) or higher if located in Exposure B or 30 feet (9144 mm) or higher if located in Exposure C;
2. The maximum average slope of the hill exceeds 10 percent; and
3. The hill, ridge or escarpment is unobstructed upwind by other such topographic features for a distance from

INTERNATIONAL CODE COUNCIL®
Copyright © 2015 ICC. ALL RIGHTS RESERVED. Accessed by David Dammon on Jun 21, 2017 12:30:52 PM pursuant to License Agreement with ICC. No further reproduction or distribution authorized. ANY UNAUTHORIZED REPRODUCTION OR DISTRIBUTION IS A VIOLATION OF THE FEDERAL COPYRIGHT ACT AND THE LICENSE AGREEMENT, AND SUBJECT TO CIVIL AND CRIMINAL PENALTIES THEREUNDER.

the high point of 50 times the height of the hill or 1 mile (1.61 km), whichever is greater.

❖ This section places limitations on the use of ICC 600 and the AWC *Wood Frame Construction Manual for One- and Two-family Dwellings*. Neither of these standards accounts for the effect of isolated hills, ridges or escarpments. As illustrated in Commentary Figure 1609.1.1.1, the wind speed increases when a mass of air passes over those terrain features. This phenomenon is referred to as the "wind speed-up" effect and requires the use of ASCE 7.

1609.1.2 Protection of openings. In *wind-borne debris regions*, glazing in buildings shall be impact resistant or protected with an impact-resistant covering meeting the requirements of an *approved* impact-resistant standard or ASTM E1996 and ASTM E1886 referenced herein as follows:

1. Glazed openings located within 30 feet (9144 mm) of grade shall meet the requirements of the large missile test of ASTM E1996.
2. Glazed openings located more than 30 feet (9144 mm) above grade shall meet the provisions of the small missile test of ASTM E1996.

Exceptions:

1. Wood structural panels with a minimum thickness of $^{7}/_{16}$ inch (11.1 mm) and maximum panel span of 8 feet (2438 mm) shall be permitted for opening protection in buildings with a mean roof height of 33 feet (10 058 mm) or less that are classified as a Group R-3 or R-4 occupancy. Panels shall be precut so that they shall be attached to the framing surrounding the opening containing the product with the glazed opening. Panels shall be predrilled as required for the anchorage method and shall be secured with the attachment hardware provided. Attachments shall be designed to resist the components and cladding loads determined in accordance with the provisions of ASCE 7, with corrosion-resistant attachment hardware provided and anchors permanently installed on the building. Attachment in accordance with Table 1609.1.2 with corrosion-resistant attachment hardware provided and anchors permanently installed on the building is permitted for buildings with a mean roof height of 45 feet (13 716 mm) or less where V_{asd} determined in accordance with Section 1609.3.1 does not exceed 140 mph (63 m/s)
2. Glazing in *Risk Category* I buildings, including greenhouses that are occupied for growing plants on a production or research basis, without public access shall be permitted to be unprotected.
3. Glazing in *Risk Category* II, III or IV buildings located over 60 feet (18 288 mm) above the ground and over 30 feet (9144 mm) above aggregate surface roofs located within 1,500 feet (458 m) of the building shall be permitted to be unprotected.

❖ The purpose of this section is to address risks associated with wind-borne debris in high-wind areas. See the definitions of "Wind-borne debris region" and "Hurricane-prone regions" in Section 202 for an explanation of where these provisions apply. This section requires protection of glazed openings in buildings in wind-borne debris regions. This can be provided in the form of a protective assembly that is impact tested or by using impact-resistant glazing.

During a hurricane, buildings are impacted from wind-borne debris due to high-velocity winds. This debris can impact the glazing, causing breakage and creating an opening within the building envelope. The presence of openings in the building envelope can

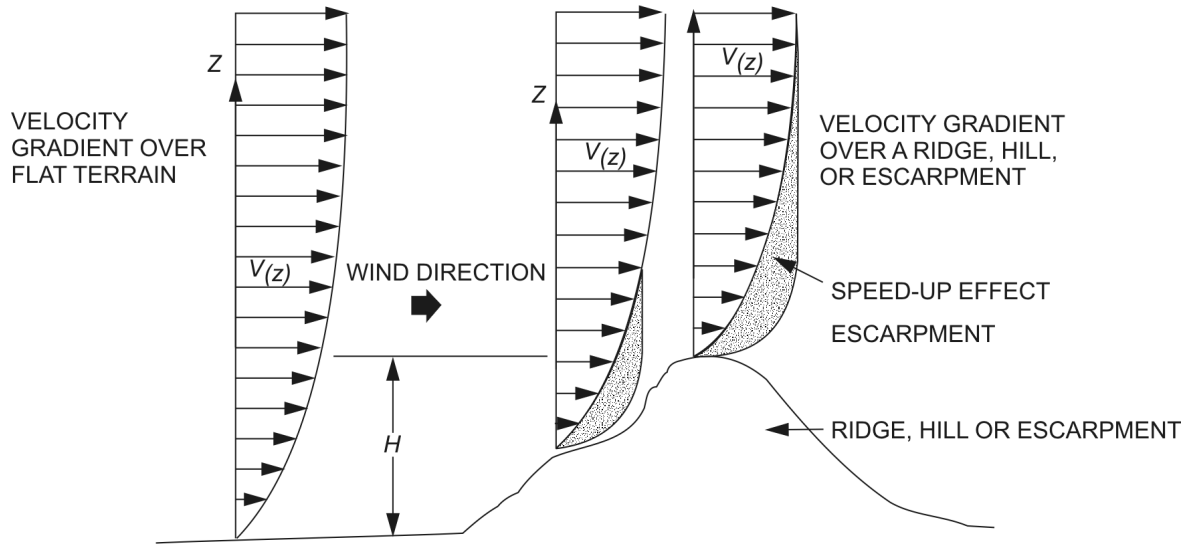

Figure 1609.1.1.1
WIND SPEED-UP EFFECT

INTERNATIONAL CODE COUNCIL®
Copyright © 2015 ICC. ALL RIGHTS RESERVED. Accessed by David Dammon on Jun 21, 2017 12:30:52 PM pursuant to License Agreement with ICC. No further reproduction or distribution authorized. ANY UNAUTHORIZED REPRODUCTION OR DISTRIBUTION IS A VIOLATION OF THE FEDERAL COPYRIGHT ACT AND THE LICENSE AGREEMENT, AND SUBJECT TO CIVIL AND CRIMINAL PENALTIES THEREUNDER.

have a significant effect on the magnitude of the total wind pressure required to be resisted by each structural element of a building. Depending on the location of these openings with respect to wind direction and the amount of background porosity, external and internal pressures may act in the same direction to produce higher forces on some walls and the roof. An example of this is shown in Commentary Figure 1609.1.2. In this scenario, as the wind flows over the building, pressures are developed on the external surface, as shown. Introduction of an opening in the windward wall causes the wind to rush into the building, exerting internal pressures (positive) against all interior surfaces. This type of opening has the net effect of producing potentially high internal pressures that will act in the same direction as the external pressures on the roof, side and leeward walls. Considering the high probability of wind-borne debris during a hurricane and the effect of an unintended opening in the building envelope, the code requires glazing in designated regions to be protected.

Where wind-borne debris protection is provided, the section specifies two types of tests to demonstrate adequate resistance: the large missile test to simulate large debris up to 30 feet (9144 mm) above grade and the small missile test to simulate smaller debris up to 60 feet (18 288 mm) above grade, both of which are common during very high winds. An example of small debris is gravel from the surrounding area that becomes air borne.

Impact-resistant coverings or glazing must meet the test requirements of an approved impact standard or ASTM E1886 and ASTM E1996. Other impact standards the building official may consider are SBCCI SSTD 12 or Florida Building Code Test Protocol TAS 201, TAS 202 and TAS 203. These standards specify similar-type testing with a large missile test (2 by 4), small missile test (2 gram balls) and cyclic pressure loading test. ASTM E1886 and ASTM E1996 work together with the standard test method (E1886) and the test specification (E1996), including scoping, technical requirements and pass/fail criteria.

Exception 1 permits the use of $^{7}/_{16}$-inch (11.1 mm) wood structural panels with maximum spans of 8 feet (2438 mm) as an impact-resistant covering for buildings having a mean roof height of not more than 33 feet (10 058 mm). Panel attachments have to be designed to resist the component and cladding pressure from ASCE 7 or attached in accordance with Table 1609.1.2. This protective system has been tested and meets the requirements of SBCCI SSTD 12. The intent is that precut panel coverings and attachment hardware are provided on site.

Exception 2 exempts low-hazard (Risk Category I) buildings from this requirement for protecting openings against wind-borne debris.

Exception 3 exempts openings in buildings that are classified in Risk Category II, III or IV where the opening locations meet the stated conditions.

TABLE 1609.1.2
WIND-BORNE DEBRIS PROTECTION FASTENING SCHEDULE FOR WOOD STRUCTURAL PANELS[a, b, c, d]

FASTENER TYPE	FASTENER SPACING (inches)		
	Panel Span ≤ 4 feet	4 feet < Panel Span ≤ 6 feet	6 feet < Panel Span ≤ 8 feet
No. 8 wood-screw-based anchor with 2-inch embedment length	16	10	8
No. 10 wood-screw-based anchor with 2-inch embedment length	16	12	9
$^{1}/_{4}$-inch diameter lag-screw-based anchor with 2-inch embedment length	16	16	16

For SI: 1 inch = 25.4 mm, 1 foot = 304.8 mm, 1 pound = 4.448 N, 1 mile per hour = 0.447 m/s.

a. This table is based on 140 mph wind speeds and a 45-foot mean roof height.

b. Fasteners shall be installed at opposing ends of the wood structural panel. Fasteners shall be located a minimum of 1 inch from the edge of the panel.

c. Anchors shall penetrate through the exterior wall covering with an embedment length of 2 inches minimum into the building frame. Fasteners shall be located a minimum of $2^{1}/_{2}$ inches from the edge of concrete block or concrete.

d. Where panels are attached to masonry or masonry/stucco, they shall be attached using vibration-resistant anchors having a minimum ultimate withdrawal capacity of 1,500 pounds.

❖ This table provides the connections for the wood structural panel impact-resistant covering that is described in the exception to Section 1609.1.2. The table lists the spacing of the screws around the perimeter of the panel for the indicated panel spans. Note that Table 1609.1.2 is only applicable to buildings with a mean roof height of 33 feet (10 058 mm) or less.

1609.1.2.1 Louvers. Louvers protecting intake and exhaust ventilation ducts not assumed to be open that are located within 30 feet (9144 mm) of grade shall meet the requirements of AMCA 540.

❖ This section provides direction for impact testing of louvers that cover intake or exhaust duct openings in wind-borne debris regions. Louvers often have blades or slats affixed to and covering an opening in the exterior envelope, making them similar to certain types of porous shutters used to protect glazed openings. When a louver in an exterior wall is damaged by wind-borne debris during a high-wind event, the air-leakage-rated damper inside the ventilation duct may also be exposed to damage.

The scope of ASTM E1996 covers impact testing of exterior building features, such as windows, glazed curtain walls, doors and storm shutters, in buildings located in geographic regions that are prone to hurricanes, simulating impact by both large and small missiles. For glazed openings and nonporous shutters that protect the fenestration assembly, the impact

INTERNATIONAL CODE COUNCIL®
Copyright © 2015 ICC. ALL RIGHTS RESERVED. Accessed by David Dammon on Jun 21, 2017 12:30:52 PM pursuant to License Agreement with ICC. No further reproduction or distribution authorized. ANY UNAUTHORIZED REPRODUCTION OR DISTRIBUTION IS A VIOLATION OF THE FEDERAL COPYRIGHT ACT AND THE LICENSE AGREEMENT, AND SUBJECT TO CIVIL AND CRIMINAL PENALTIES THEREUNDER.

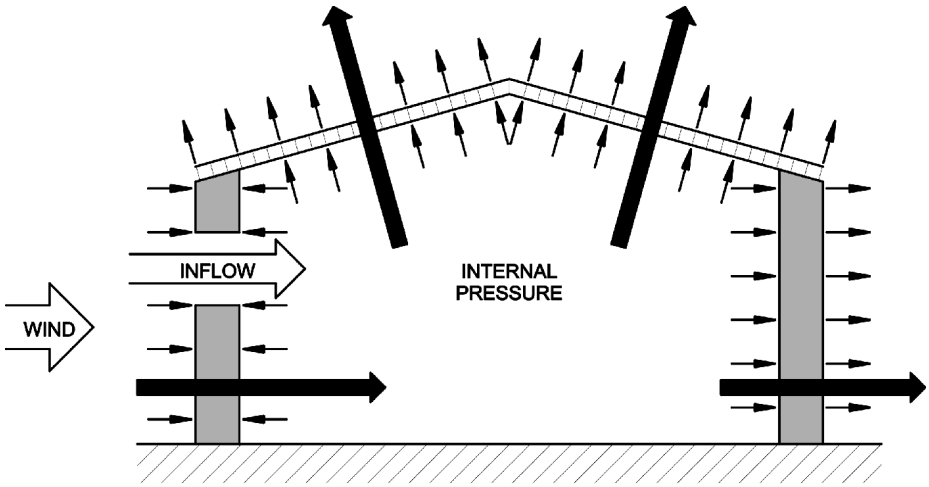

Figure 1609.1.2
EFFECTS OF OPENINGS IN THE BUILDING ENVELOPE

testing is followed by a cyclic loading test. There is no specific provision in the standard for testing louvers that cover ventilation openings, either for impact or air pressure cycling. Nevertheless, in the absence of an appropriate specification and test method for louvers, some jurisdictions have based their product approvals on the performance criteria of the large missile test of ASTM E1886 and ASTM E1996. The Air Movement Control Association (AMCA) has developed a standard specification for louvers that provides a uniform set of guidelines and a consistent basis for evaluating the ability of the louver to maintain its integrity during the large missile test of ASTM E1886 and ASTM E1996.

1609.1.2.2. Application of ASTM E1996. The text of Section 6.2.2 of ASTM E1996 shall be substituted as follows:

6.2.2 Unless otherwise specified, select the wind zone based on the strength design wind speed, V_{ult}, as follows:

6.2.2.1 *Wind Zone 1*—130 mph ≤ ultimate design wind speed, V_{ult} < 140 mph.

6.2.2.2 *Wind Zone 2*—140 mph ≤ ultimate design wind speed, V_{ult} < 150 mph at greater than one mile (1.6 km) from the coastline. The coastline shall be measured from the mean high water mark.

6.2.2.3 *Wind Zone 3*—150 mph (58 m/s) ≤ ultimate design wind speed, V_{ult} ≤ 160 mph (63 m/s), or 140 mph (54 m/s) ≤ ultimate design wind speed, V_{ult} ≤ 160 mph (63 m/s) and within one mile (1.6 km) of the coastline. The coastline shall be measured from the mean high water mark.

6.2.2.4 *Wind Zone 4*— ultimate design wind speed, V_{ult} >160 mph (63 m/s).

❖ The purpose of this section is to correlate the wind zones of ASTM E1996 with the new wind speed maps. It is needed to delineate the wind zones because ASTM E1996 does not use V_{ult}.

1609.1.2.3 Garage doors. Garage door glazed opening protection for wind-borne debris shall meet the requirements of an *approved* impact-resisting standard or ANSI/DASMA 115.

❖ This provision references a standard for the wind-borne debris resistance testing of glazing installed in garage doors. Because ASTM E1886 and ASTM E1996 require interpretation regarding their application to garage doors, DASMA 115 is the primary standard referenced for this purpose.

1609.2 Definitions. For the purposes of Section 1609 and as used elsewhere in this code, the following terms are defined in Chapter 2.

❖ Definitions facilitate the understanding of code provisions and minimize potential confusion. To that end, this section lists definitions of terms associated with wind loads. Note that these definitions are found in Chapter 2. The use and application of defined terms, as well as undefined terms, are set forth in Section 201.

HURRICANE-PRONE REGIONS.

WIND-BORNE DEBRIS REGION.

WIND SPEED, V_{ult}.

WIND SPEED, V_{asd}.

1609.3 Ultimate design wind speed. The ultimate design wind speed, V_{ult}, in mph, for the determination of the wind loads shall be determined by Figures 1609.3(1), 1609.3(2) and 1609.3(3). The ultimate design wind speed, V_{ult}, for use in the design of Risk Category II buildings and structures shall be obtained from Figure 1609.3(1). The ultimate design wind speed, V_{ult}, for use in the design of Risk Category III and IV buildings and structures shall be obtained from Figure 1609.3(2). The ultimate design wind speed, V_{ult}, for use in the design of Risk Category I buildings and structures shall be obtained from Figure 1609.3(3). The ultimate design wind

INTERNATIONAL CODE COUNCIL®
Copyright © 2015 ICC. ALL RIGHTS RESERVED. Accessed by David Dammon on Jun 21, 2017 12:30:52 PM pursuant to License Agreement with ICC. No further reproduction or distribution authorized. ANY UNAUTHORIZED REPRODUCTION OR DISTRIBUTION IS A VIOLATION OF THE FEDERAL COPYRIGHT ACT AND THE LICENSE AGREEMENT, AND SUBJECT TO CIVIL AND CRIMINAL PENALTIES THEREUNDER.

speed, V_{ult}, for the special wind regions indicated near mountainous terrain and near gorges shall be in accordance with local jurisdiction requirements. The ultimate design wind speeds, V_{ult}, determined by the local jurisdiction shall be in accordance with Section 26.5.1 of ASCE 7.

In nonhurricane-prone regions, when the ultimate design wind speed, V_{ult}, is estimated from regional climatic data, the ultimate design wind speed, V_{ult}, shall be determined in accordance with Section 26.5.3 of ASCE 7.

❖ This section establishes the wind speed that is to be used for design. Ultimate design wind speed maps identify special wind regions where speeds vary substantially within a very short distance due to topographic effects, such as mountains and valleys. This section specifies appropriate recurrence interval criteria to be used for estimating the ultimate design wind speeds from regional climatic data in other than hurricane-prone regions. See Section 26.5.3 of ASCE 7 for issues to be addressed in the data analysis and the associated commentary for further details [also see the commentary to Figures 1609.3(1), 1609.3(2) and 1609.3(3)].

FIGURES 1609.3(1), 1609.3(2) & 1609.3(3). See pages 16-46 through 16-48.

❖ Over the past decade, new data and research have indicated that the mapped hurricane wind speeds have been overly conservative. Significantly more hurricane data have become available, which in turn allows for improvements in the hurricane simulation model that is used to develop wind speed maps. The new hurricane hazard model yields hurricane wind speeds that are lower than those given in previous editions of ASCE 7 and the code, even though the overall rate of intense storms (as defined by central pressure) produced by the new model is increased compared to those produced by the hurricane simulation model used to develop previous maps. In preparing new maps, it was decided to use multiple ultimate event or strength design maps in conjunction with a wind load factor of 1.0 for strength design (see Section 1605.2). For allowable stress design, the load factor has been reduced from 1.0 to 0.6 (see Section 1605.3). Several factors that are important to an accurate wind load standard led to this decision:

1. An ultimate event or strength design wind speed map makes the overall approach consistent with that used in seismic design in that they both map ultimate events and use a load factor of 1.0 for strength design.

2. Utilizing different maps for the different risk categories eliminates the problems associated with using "importance factors" that vary with category. The difference in the importance factors in hurricane-prone and nonhurricane-prone regions for Risk Category I structures, which prompted many questions, is gone.

3. The use of multiple maps eliminates the confusion associated with the recurrence interval associated with the previous wind speed map—the map was not a uniform 50-year return period map. This created a situation where the level of safety that was provided within the overall design was not consistent along the hurricane coast.

Utilizing the new wind speed maps and integrating their use into the code necessitated the introduction of the terms "V_{ult}" and "V_{asd}" to be associated with the "ultimate" design wind speed and the "nominal" design wind speed, respectively. Because of the number of different provisions that use the wind speed map to "trigger" different requirements, it was necessary to provide a conversion methodology in Section 1609.3.1 so that those provisions were not affected. The terms "ultimate design wind speed" and "nominal design wind speed" have been incorporated to clarify the different levels of wind speed.

Prior to 1998, earlier editions of ASCE 7 as well as the legacy model codes incorporated fastest-mile wind speed maps. "Fastest mile" is defined as the average speed of one mile of air that passes a specific reference point. It is important to recognize the differences in averaging times between fastest-mile and the 3-second-gust maps. The averaging time for a 90-mph (40 m/s) fastest-mile wind speed is (t = 3,600/V) 40 seconds. Obviously, due to greater averaging time, for a given location the fastest-mile wind speed will be less than the 3-second-gust wind speed. The fact that the wind speed values are higher does not necessarily indicate higher wind loads. Buildings and structures resist wind loads, not wind speeds. Wind speed, although a significant contributor, is only one of several variables and factors that affect wind forces. Wind loads are affected by atmosphere and aerodynamics. Other elements that affect actual wind forces as wind flows across a bluff body include shape factors (C_a), gust effect factors (G) and the velocity pressure that is a function of wind speed, exposure and topography, among others.

The change from the fastest-mile wind speed map to a 3-second-gust map in the 2000 code (based on the 1998 edition of ASCE 7) was necessary for the following reasons: First, weather stations across the United States no longer collect fastest-mile wind speed data. Additionally, the perception of the general public will be more favorable where the code wind speeds are higher, although the design wind pressures were not changed significantly.

The map includes a more complete analysis of hurricane wind speeds than previous maps, since more data where available for sites away from the coast. In western states, the 85- to 90-mph (38 m/s to 40 m/s) contour boundary follows along the Washington, Oregon and California eastern state lines. This is because inland wind data were such that there was no statistical basis to place them elsewhere. The reference to the 50-year MRI used in previous maps

INTERNATIONAL CODE COUNCIL®
Copyright © 2015 ICC. ALL RIGHTS RESERVED. Accessed by David Dammon on Jun 21, 2017 12:30:52 PM pursuant to License Agreement with ICC. No further reproduction or distribution authorized. ANY UNAUTHORIZED REPRODUCTION OR DISTRIBUTION IS A VIOLATION OF THE FEDERAL COPYRIGHT ACT AND THE LICENSE AGREEMENT, AND SUBJECT TO CIVIL AND CRIMINAL PENALTIES THEREUNDER.

was removed, reflecting the fact that the MRI is greater than 50 years along the hurricane coastline. However, nonhurricane wind speeds are based on a 50-year MRI, as Section 1609.3 specifically requires when estimating basic wind speeds from local climatic data.

1609.3.1 Wind speed conversion. When required, the ultimate design wind speeds of Figures 1609.3(1), 1609.3(2) and 1609.3(3) shall be converted to nominal design wind speeds, V_{asd}, using Table 1609.3.1 or Equation 16-33.

$$V_{asd} = V_{ult}\sqrt{0.6} \qquad \textbf{(Equation 16-33)}$$

where:

V_{asd} = Nominal design wind speed applicable to methods specified in Exceptions 4 and 5 of Section 1609.1.1.

V_{ult} = Ultimate design wind speeds determined from Figures 1609.3(1), 1609.3(2) or 1609.3(3).

❖ Because many code provisions are driven by wind speed, it is necessary to include a mechanism that provides a comparable wind speed so that the provisions triggered by wind speed are not affected. The terms "ultimate design wind speed" and "nominal design wind speed" have been incorporated in numerous locations to help the code user distinguish between them. For example, in a case where the code previously imposed requirements where the basic wind speed exceeds 100 mph (45 m/s), it now imposes the requirements where V_{asd} exceeds 100 mph (45 m/s). A nominal design speed, V_{asd}, equal to 100 mph (45 m/s) corresponds to an ultimate design wind speed, V_{ult}, equal to 129 mph (58 m/s). The conversion between the two is accomplished using Equation 16-33 or Table 1609.3.1. This conversion equation is the result of the wind load being proportional to the square of the velocity pressure and the ASD wind load being 0.6 times the strength level wind load.

It should be noted that the term "basic wind speed" remains in ASCE 7, but it corresponds to the "ultimate design wind speed" in the code. For a comparison of ASCE 7-93 fastest-mile wind speeds and ASCE 7-05 3-second gust (ASD) wind speeds to ASCE 7-10 3-second gust wind speeds, refer to Table C26.5-6 in the ASCE 7-10.

TABLE 1609.3.1. See below.

❖ The table converts the mapped ultimate wind speed to nominal design wind speed for use where necessary, such as in the standards that are referenced in Section 1609.1.1.

1609.4 Exposure category. For each wind direction considered, an exposure category that adequately reflects the characteristics of ground surface irregularities shall be determined for the site at which the building or structure is to be constructed. Account shall be taken of variations in ground surface roughness that arise from natural topography and vegetation as well as from constructed features.

❖ The concept of exposure categories provides a means of accounting for the relative roughness of the boundary layer. The earth's surface exerts a horizontal drag force on wind due to ground obstructions that retard the flow of air close to the ground. The reduction in the flow of air is a function of height above ground and terrain roughness. Wind speeds increase with height above ground, and the relationship between height above ground and wind speed is exponential. The rate of increase in wind speeds with height is a function of the terrain features. The rougher the terrain (such as large city centers), the shallower the slope of the wind speed profile. The smoother the terrain (open water), the steeper the slope of the wind speed profile.

The definitions of exposure and roughness categories are used to account for this roughness in the boundary layer and are intended to provide an adequate assessment of surface roughness for most situations. Exposure B is considered the roughest boundary layer condition. Exposure D is considered the smoothest boundary layer condition. Accordingly, calculated wind loads are less for Exposure B, which has more surface obstructions, as compared to Exposure D, with all other variables the same (see ASCE 7 commentary for guidance on performing a more detailed analysis of surface roughness).

1609.4.1 Wind directions and sectors. For each selected wind direction at which the wind loads are to be evaluated, the exposure of the building or structure shall be determined for the two upwind sectors extending 45 degrees (0.79 rad) either side of the selected wind direction. The exposures in these two sectors shall be determined in accordance with Sections 1609.4.2 and 1609.4.3 and the exposure resulting in the highest wind loads shall be used to represent winds from that direction.

❖ An exposure category must be determined for each direction in which wind loading is being considered. This section describes the method for doing so, and requires use of the more restrictive exposure category where the two sectors in a given wind direction would be classified in different exposure categories.

TABLE 1609.3.1
WIND SPEED CONVERSIONS[a, b, c]

V_{ult}	100	110	120	130	140	150	160	170	180	190	200
V_{asd}	78	85	93	101	108	116	124	132	139	147	155

For SI: 1 mile per hour = 0.44 m/s.

a. Linear interpolation is permitted.

b. V_{asd} = nominal design wind speed applicable to methods specified in Exceptions 1 through 5 of Section 1609.1.1.

c. V_{ult} = ultimate design wind speeds determined from Figure 1609.3(1), 1609.3(2) or 1609.3(3).

INTERNATIONAL CODE COUNCIL®
Copyright © 2015 ICC. ALL RIGHTS RESERVED. Accessed by David Dammon on Jun 21, 2017 12:30:52 PM pursuant to License Agreement with ICC. No further reproduction or distribution authorized. ANY UNAUTHORIZED REPRODUCTION OR DISTRIBUTION IS A VIOLATION OF THE FEDERAL COPYRIGHT ACT AND THE LICENSE AGREEMENT, AND SUBJECT TO CIVIL AND CRIMINAL PENALTIES THEREUNDER.

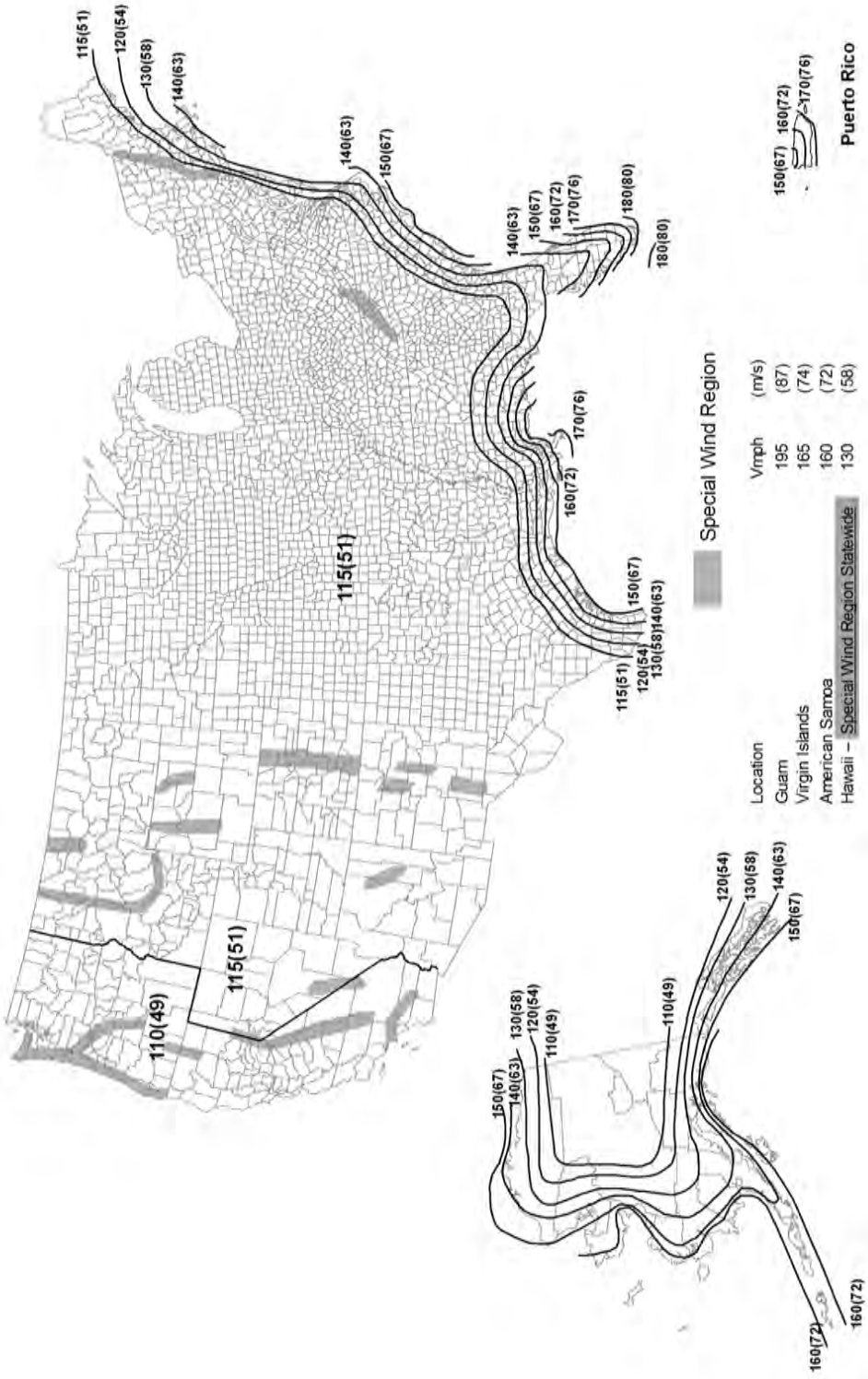

FIGURE 1609.3(1)
ULTIMATE DESIGN WIND SPEEDS, V_{ult}, FOR RISK CATEGORY II BUILDINGS AND OTHER STRUCTURES

Notes:
1. Values are nominal design 3-second gust wind speeds in miles per hour (m/s) at 33 ft (10m) above ground for Exposure C category.
2. Linear interpolation between contours is permitted.
3. Islands and coastal areas outside the last contour shall use the last wind speed contour of the coastal area.
4. Mountainous terrain, gorges, ocean promontories, and special wind regions shall be examined for unusual wind conditions.
5. Wind speeds correspond to approximately a 7% probability of exceedance in 50 years (Annual Exceedance Probability = 0.00143, MRI = 700 Years).

INTERNATIONAL CODE COUNCIL®
Copyright © 2015 ICC. ALL RIGHTS RESERVED. Accessed by David Dammon on Jun 21, 2017 12:30:52 PM pursuant to License Agreement with ICC. No further reproduction or distribution authorized. ANY UNAUTHORIZED REPRODUCTION OR DISTRIBUTION IS A VIOLATION OF THE FEDERAL COPYRIGHT ACT AND THE LICENSE AGREEMENT, AND SUBJECT TO CIVIL AND CRIMINAL PENALTIES THEREUNDER.

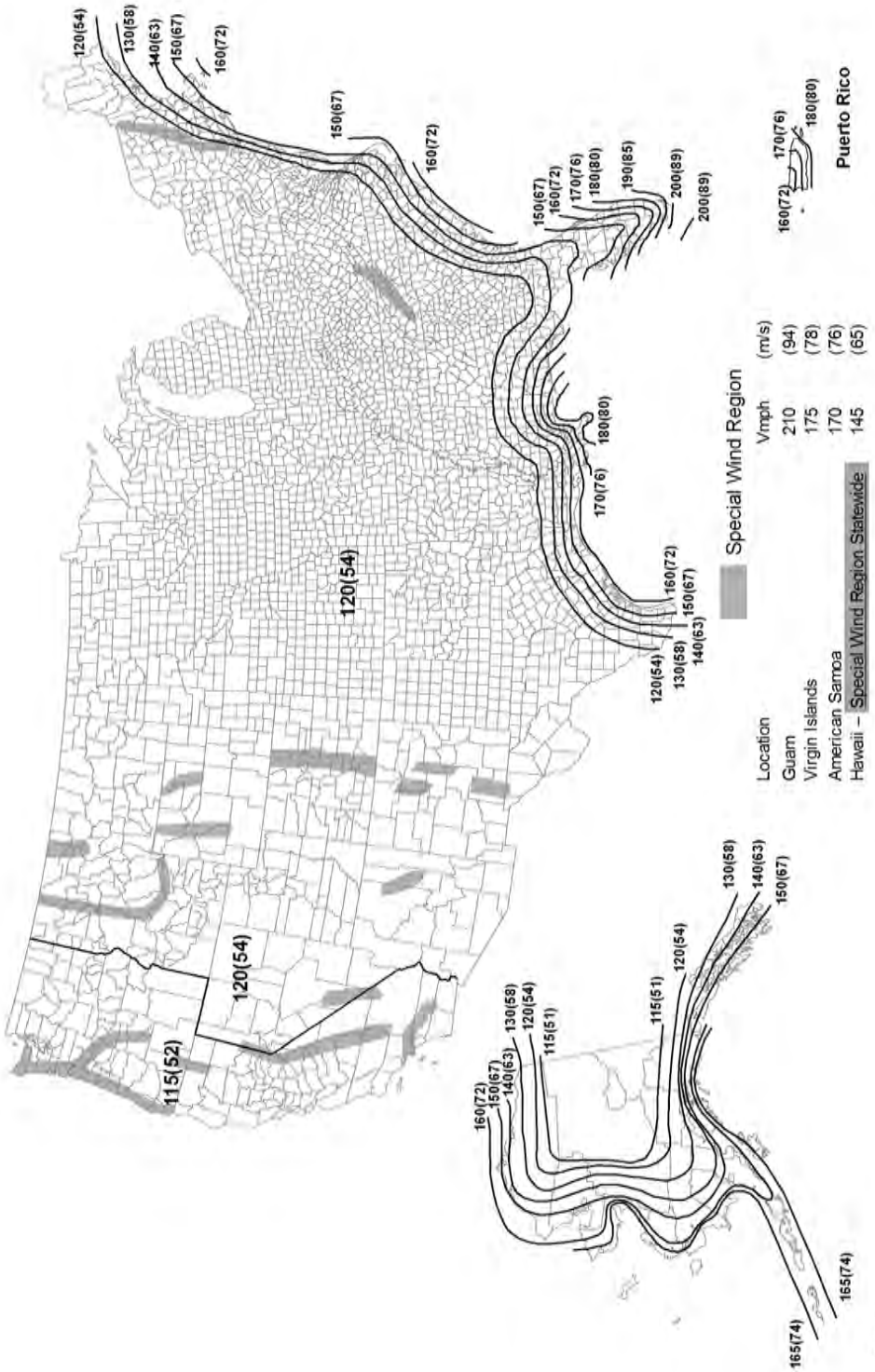

Notes:

1. Values are nominal design 3-second gust wind speeds in miles per hour (m/s) at 33 ft (10m) above ground for Exposure C category.
2. Linear interpolation between contours is permitted.
3. Islands and coastal areas outside the last contour shall use the last wind speed contour of the coastal area.
4. Mountainous terrain, gorges, ocean promontories, and special wind regions shall be examined for unusual wind conditions.
5. Wind speeds correspond to approximately a 3% probability of exceedance in 50 years (Annual Exceedance Probability = 0.000588, MRI = 1700 Years).

FIGURE 1609.3(2)
ULTIMATE DESIGN WIND SPEEDS, v_{ult}, FOR RISK CATEGORY III AND IV BUILDINGS AND OTHER STRUCTURES

INTERNATIONAL CODE COUNCIL®
Copyright © 2015 ICC. ALL RIGHTS RESERVED. Accessed by David Dammon on Jun 21, 2017 12:30:52 PM pursuant to License Agreement with ICC. No further reproduction or distribution authorized. ANY UNAUTHORIZED REPRODUCTION OR DISTRIBUTION IS A VIOLATION OF THE FEDERAL COPYRIGHT ACT AND THE LICENSE AGREEMENT, AND SUBJECT TO CIVIL AND CRIMINAL PENALTIES THEREUNDER.

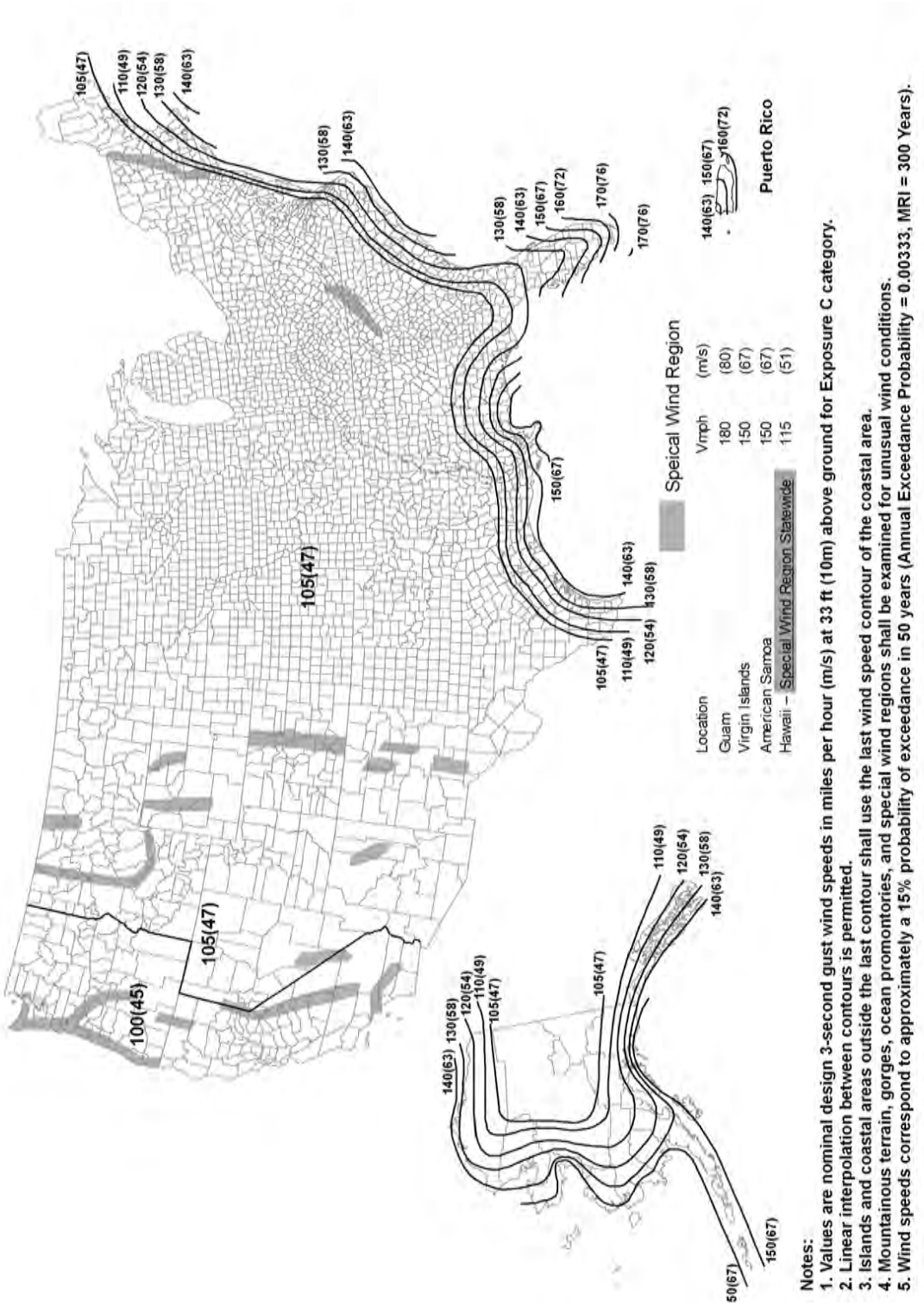

FIGURE 1609.3(3)
ULTIMATE DESIGN WIND SPEEDS, V_{ult}, FOR RISK CATEGORY I BUILDINGS AND OTHER STRUCTURES

Notes:
1. Values are nominal design 3-second gust wind speeds in miles per hour (m/s) at 33 ft (10m) above ground for Exposure C category.
2. Linear interpolation between contours is permitted.
3. Islands and coastal areas outside the last contour shall use the last wind speed contour of the coastal area.
4. Mountainous terrain, gorges, ocean promontories, and special wind regions shall be examined for unusual wind conditions.
5. Wind speeds correspond to approximately a 15% probability of exceedance in 50 years (Annual Exceedance Probability = 0.00333, MRI = 300 Years).

INTERNATIONAL CODE COUNCIL®
Copyright © 2015 ICC. ALL RIGHTS RESERVED. Accessed by David Dammon on Jun 21, 2017 12:30:52 PM pursuant to License Agreement with ICC. No further reproduction or distribution authorized. ANY UNAUTHORIZED REPRODUCTION OR DISTRIBUTION IS A VIOLATION OF THE FEDERAL COPYRIGHT ACT AND THE LICENSE AGREEMENT, AND SUBJECT TO CIVIL AND CRIMINAL PENALTIES THEREUNDER.

1609.4.2 Surface roughness categories. A ground surface roughness within each 45-degree (0.79 rad) sector shall be determined for a distance upwind of the site as defined in Section 1609.4.3 from the categories defined below, for the purpose of assigning an exposure category as defined in Section 1609.4.3.

Surface Roughness B. Urban and suburban areas, wooded areas or other terrain with numerous closely spaced obstructions having the size of single-family dwellings or larger.

Surface Roughness C. Open terrain with scattered obstructions having heights generally less than 30 feet (9144 mm). This category includes flat open country, and grasslands.

Surface Roughness D. Flat, unobstructed areas and water surfaces. This category includes smooth mud flats, salt flats and unbroken ice.

❖ This section defines three surface roughness categories that are used in evaluating each sector and, subsequently, in determining an exposure category. These surface roughnesses were previously included in the corresponding exposure category definition. The required upwind distance that must be considered varies according to the exposure category definition in Section 1609.4.3.

A significant philosophical change in determination of exposure categories occurred with the inclusion of shorelines in hurricane-prone regions in the definition of Exposure Category C (Surface Roughness C). Exposure Category D (Surface Roughness D) had been used for wind flowing over open water until further research determined that wave action at the water's surface in a hurricane had produced, because of the intensity of the turbulence, substantial surface obstructions and friction that reduces the wind profile values to be more in line with Surface Roughness C as opposed to Surface Roughness D. Surface Roughness D would still apply to inland waterways and shorelines that are not in the hurricane-prone regions, such as coastal California, Oregon, Washington and Alaska.

1609.4.3 Exposure categories. An exposure category shall be determined in accordance with the following:

Exposure B. For buildings with a mean roof height of less than or equal to 30 feet (9144 mm), Exposure B shall apply where the ground surface roughness, as defined by Surface Roughness B, prevails in the upwind direction for a distance of at least 1,500 feet (457 m). For buildings with a mean roof height greater than 30 feet (9144 mm), Exposure B shall apply where Surface Roughness B prevails in the upwind direction for a distance of at least 2,600 feet (792 m) or 20 times the height of the building, whichever is greater.

Exposure C. Exposure C shall apply for all cases where Exposure B or D does not apply.

Exposure D. Exposure D shall apply where the ground surface roughness, as defined by Surface Roughness D, prevails in the upwind direction for a distance of at least 5,000 feet (1524 m) or 20 times the height of the building, whichever is greater. Exposure D shall also apply where the ground surface roughness immediately upwind of the site is B or C, and the site is within a distance of 600 feet (183 m) or 20 times the building height, whichever is greater, from an Exposure D condition as defined in the previous sentence.

❖ This section defines the three exposure categories that are used to determine various wind load parameters. Exposure categories are used along with basic wind speed elsewhere in the code as a threshold for wind requirements, such as establishing the need for structural observation in Section 1704.6.

Exposure B is the most common type of exposure category in the country. A study by the National Association of Home Builders (NAHB) indicated that perhaps up to 80 percent of all buildings were located in Exposure B.

1609.5 Roof systems. Roof systems shall be designed and constructed in accordance with Sections 1609.5.1 through 1609.5.3, as applicable.

❖ This section clarifies the design wind loads that are applied to roof decks and roof coverings.

1609.5.1 Roof deck. The roof deck shall be designed to withstand the wind pressures determined in accordance with ASCE 7.

❖ This section specifies the wind load criteria for the roof deck. The roof deck is a structural component of the building and must resist the applicable wind pressures of ASCE 7. This section is referenced by Section 1609.5.2 as the criteria for the wind design for roof coverings that are relatively impermeable.

1609.5.2 Roof coverings. Roof coverings shall comply with Section 1609.5.1.

Exception: Rigid tile roof coverings that are air permeable and installed over a roof deck complying with Section 1609.5.1 are permitted to be designed in accordance with Section 1609.5.3.

Asphalt shingles installed over a roof deck complying with Section 1609.5.1 shall comply with the wind-resistance requirements of Section 1504.1.1.

❖ This section establishes the wind design criteria for roof coverings. The exception references the use of Section 1609.5.3 for air-permeable rigid tile roof coverings. If the roof deck is relatively impermeable, wind pressures will act through it to the building frame system. The roof covering may or may not be subjected to the same wind pressures as the roof deck. If the roof covering is also relatively impermeable and fastened to the roof deck, the two components will react to and resist the same wind pressures. If the roof covering is not impermeable, the wind pressures will be able to develop on both the top of, and underneath, the roof covering. This "venting action" will negate some wind pressure on the roof covering.

INTERNATIONAL CODE COUNCIL®
Copyright © 2015 ICC. ALL RIGHTS RESERVED. Accessed by David Dammon on Jun 21, 2017 12:30:52 PM pursuant to License Agreement with ICC. No further reproduction or distribution authorized. ANY UNAUTHORIZED REPRODUCTION OR DISTRIBUTION IS A VIOLATION OF THE FEDERAL COPYRIGHT ACT AND THE LICENSE AGREEMENT, AND SUBJECT TO CIVIL AND CRIMINAL PENALTIES THEREUNDER.

1609.5.3 Rigid tile. Wind loads on rigid tile roof coverings shall be determined in accordance with the following equation:

$$M_a = q_h C_L b L L_a [1.0 - GC_p] \quad \textbf{(Equation 16-34)}$$

For SI:

$$M_a = \frac{q_h C_L b L L_a [1.0 - GC_p]}{1,000}$$

where:

b = Exposed width, feet (mm) of the roof tile.

C_L = Lift coefficient. The lift coefficient for concrete and clay tile shall be 0.2 or shall be determined by test in accordance with Section 1504.2.1.

GC_p = Roof pressure coefficient for each applicable roof zone determined from Chapter 30 of ASCE 7. Roof coefficients shall not be adjusted for internal pressure.

L = Length, feet (mm) of the roof tile.

L_a = Moment arm, feet (mm) from the axis of rotation to the point of uplift on the roof tile. The point of uplift shall be taken at 0.76L from the head of the tile and the middle of the exposed width. For roof tiles with nails or screws (with or without a tail clip), the axis of rotation shall be taken as the head of the tile for direct deck application or as the top edge of the batten for battened applications. For roof tiles fastened only by a nail or screw along the side of the tile, the axis of rotation shall be determined by testing. For roof tiles installed with battens and fastened only by a clip near the tail of the tile, the moment arm shall be determined about the top edge of the batten with consideration given for the point of rotation of the tiles based on straight bond or broken bond and the tile profile.

M_a = Aerodynamic uplift moment, feet-pounds (N-mm) acting to raise the tail of the tile.

q_h = Wind velocity pressure, psf (kN/m^2) determined from Section 27.3.2 of ASCE 7.

Concrete and clay roof tiles complying with the following limitations shall be designed to withstand the aerodynamic uplift moment as determined by this section.

1. The roof tiles shall be either loose laid on battens, mechanically fastened, mortar set or adhesive set.
2. The roof tiles shall be installed on solid sheathing that has been designed as components and cladding.
3. An underlayment shall be installed in accordance with Chapter 15.
4. The tile shall be single lapped interlocking with a minimum head lap of not less than 2 inches (51 mm).
5. The length of the tile shall be between 1.0 and 1.75 feet (305 mm and 533 mm).
6. The exposed width of the tile shall be between 0.67 and 1.25 feet (204 mm and 381 mm).
7. The maximum thickness of the tail of the tile shall not exceed 1.3 inches (33 mm).
8. Roof tiles using mortar set or adhesive set systems shall have at least two-thirds of the tile's area free of mortar or adhesive contact.

❖ This section includes the wind design method for clay or concrete rigid tile roofs. The method consists of the calculation of the aerodynamic uplift moment from the wind that acts to raise the end of the tile. This section includes the characteristics and the type of installation of the concrete or clay roof tile that are required for the use of the design method.

In certain types of installations, the roof covering is not exposed to the same wind loads as the roof deck. Concrete and clay roof tiles are typical of this type of installation and are not subject to wind loads that would be obtained from current wind-loading criteria. This is because gaps at the tile joints allow some equalization of pressure between the inner and outer face of the tiles, leading to reduced loads. A procedure has been developed through research for determining the uplift moment on loose-laid and mechanically fastened roof tiles when laid over sheathing with an underlayment. The procedure is based on practical measurements on real tiles to determine the effect of air being able to penetrate the roof covering.

1609.6 Alternate all-heights method. The alternate wind design provisions in this section are simplifications of the ASCE 7 Directional Procedure.

❖ In response to concerns from design engineers on the complexity of wind design procedures, member organizations of the National Council of Standard Engineering Associations (NCSEA) assembled this alternative method for determining wind loads. The procedure has been developed to give results equal to or more conservative than the Directional Procedure that is found in ASCE 7. The intention is to reduce the effort required in determining wind forces for the main windforce-resisting system, as well as for components and cladding (C & C).

1609.6.1 Scope. As an alternative to ASCE 7 Chapters 27 and 30, the following provisions are permitted to be used to determine the wind effects on regularly shaped buildings, or other structures that are regularly shaped, that meet all of the following conditions:

1. The building or other structure is less than or equal to 75 feet (22 860 mm) in height with a height-to-least-width ratio of 4 or less, or the building or other structure has a fundamental frequency greater than or equal to 1 hertz.
2. The building or other structure is not sensitive to dynamic effects.
3. The building or other structure is not located on a site for which channeling effects or buffeting in the wake of upwind obstructions warrant special consideration.
4. The building shall meet the requirements of a simple diaphragm building as defined in ASCE 7 Section 26.2,

INTERNATIONAL CODE COUNCIL®
Copyright © 2015 ICC. ALL RIGHTS RESERVED. Accessed by David Dammon on Jun 21, 2017 12:30:52 PM pursuant to License Agreement with ICC. No further reproduction or distribution authorized. ANY UNAUTHORIZED REPRODUCTION OR DISTRIBUTION IS A VIOLATION OF THE FEDERAL COPYRIGHT ACT AND THE LICENSE AGREEMENT, AND SUBJECT TO CIVIL AND CRIMINAL PENALTIES THEREUNDER.

where wind loads are only transmitted to the main windforce-resisting system (MWFRS) at the diaphragms.

5. For open buildings, multispan gable roofs, stepped roofs, sawtooth roofs, domed roofs, roofs with slopes greater than 45 degrees (0.79 rad), solid free-standing walls and solid signs, and rooftop equipment, apply ASCE 7 provisions.

❖ While ASCE 7 already includes a simplified procedure, it necessarily includes numerous limitations. Similarly, this alternative design procedure is limited, though it was developed to apply to a broader range of buildings.

Note that Item 1 limits application to buildings with a frequency of at least 1 hertz. In other words, this can only be used for rigid structures (see definition of "Rigid buildings and other structures" in Section 26.2 of ASCE 7). Item 1 also allows any building up to 75 feet (22 860 mm) in height that has a height-to-least-width ratio of 4 or less to qualify without calculating the frequency. Buildings must also be regularly shaped, simple diaphragm buildings with envelopes classified as either enclosed or partially enclosed. Item 5 provides a partial list of structures that must be analyzed using the ASCE 7 provisions.

1609.6.1.1 Modifications. The following modifications shall be made to certain subsections in ASCE 7: in Section 1609.6.2, symbols and notations that are specific to this section are used in conjunction with the symbols and notations in ASCE 7 Section 26.3.

❖ These alternative provisions are an adaptation of the ASCE 7 analytical procedure. In providing the intended simplifications, this section alerts the code user that these are modifications to the ASCE 7 procedure.

1609.6.2 Symbols and notations. Coefficients and variables used in the alternative all-heights method equations are as follows:

C_{net} = Net-pressure coefficient based on K_d [(G) (C_p) - (GC_{pi})], in accordance with Table 1609.6.2.

G = Gust effect factor for rigid structures in accordance with ASCE 7 Section 26.9.1.

K_d = Wind directionality factor in accordance with ASCE 7 Table 26-6.

P_{net} = Design wind pressure to be used in determination of wind loads on buildings or other structures or their components and cladding, in psf (kN/m^2).

❖ The primary simplification is accomplished by generating a table of net pressure coefficients (C_{net}), combining a number of parameters in a simple, yet conservative manner. These are shown in the definition of notation C_{net}. Application of the tabulated net pressure coefficients reduces the number of steps required for performing a wind analysis, resulting in net wind forces that meet or exceed those calculated using the Directional Procedure of ASCE 7. A gust factor of 0.85 is used for the tabulated C_{net} values, as Section 26.9.2 of ASCE 7 permits for rigid structures.

TABLE 1609.6.2. See pages 16-52 through 16-55.

❖ Net pressure coefficients are tabulated for both enclosed and partially enclosed structures (see Section 26.10 of ASCE 7).

For main windforce-resisting system roofs, Table 1609.6.2 refers to Conditions 1 and 2 for "windward roof slopes," which correspond to the two values of C_p listed in Figure 27.4.1-1 of ASCE 7 (Note 3 at the bottom of that figure also refers to "both conditions").

The basis is $C_{net} = K_d$ [(G) (C_p) – (GC_{pi})] (see Section 1609.6.2) and the values obtained for C_p. When considering the wind loads on the "windward roof slope," see Figure 27.4.1-1 of ASCE 7. On the windward side of a sloping roof for "Gable, hip roof," there are two wind load conditions, one "upward" and the other "downward" as indicated by the two arrows. Two conditions on the windward roof slope provide two values of C_p, and thereby two values of C_{net} shown in Table 1609.6.2.

1609.6.3 Design equations. When using the alternative all-heights method, the MWFRS, and components and cladding of every structure shall be designed to resist the effects of wind pressures on the building envelope in accordance with Equation 16-35.

$$P_{net} = 0.00256V^2K_zC_{net}K_{zt} \qquad \textbf{(Equation 16-35)}$$

Design wind forces for the MWFRS shall be not less than 16 psf (0.77 kN/m^2) multiplied by the area of the structure projected on a plane normal to the assumed wind direction (see ASCE 7 Section 27.4.7 for criteria). Design net wind pressure for components and cladding shall be not less than 16 psf (0.77 kN/m^2) acting in either direction normal to the surface.

❖ This section provides the formula that is used for the design wind pressure. It also incorporates the ASCE 7 minimum wind pressure for main windforce-resisting systems and components and cladding.

1609.6.4 Design procedure. The MWFRS and the components and cladding of every building or other structure shall be designed for the pressures calculated using Equation 16-35.

❖ Using Equation 16-35, the design pressures can be calculated for the main windforce-resisting system. Similarly, the components and cladding design pressures are calculated for the various portions of the building envelope.

1609.6.4.1 Main windforce-resisting systems. The MWFRS shall be investigated for the torsional effects identified in ASCE 7 Figure 27.4-8.

❖ A reference is made to the ASCE 7 figure that illustrates the design wind load cases that must be considered, specifically making mention of the torsional load cases.

INTERNATIONAL CODE COUNCIL®
Copyright © 2015 ICC. ALL RIGHTS RESERVED. Accessed by David Dammon on Jun 21, 2017 12:30:52 PM pursuant to License Agreement with ICC. No further reproduction or distribution authorized. ANY UNAUTHORIZED REPRODUCTION OR DISTRIBUTION IS A VIOLATION OF THE FEDERAL COPYRIGHT ACT AND THE LICENSE AGREEMENT, AND SUBJECT TO CIVIL AND CRIMINAL PENALTIES THEREUNDER.

TABLE 1609.6.2
NET PRESSURE COEFFICIENTS, C_{net} [a, b]

STRUCTURE OR PART THEREOF	DESCRIPTION		C_{net} FACTOR			
			Enclosed		Partially enclosed	
	Walls:		+ Internal pressure	- Internal pressure	+ Internal pressure	- Internal pressure
	Windward wall		0.43	0.73	0.11	1.05
	Leeward wall		-0.51	-0.21	-0.83	0.11
	Sidewall		-0.66	-0.35	-0.97	-0.04
	Parapet wall	Windward	1.28		1.28	
		Leeward	-0.85		-0.85	
	Roofs:		Enclosed		Partially enclosed	
	Wind perpendicular to ridge		+ Internal pressure	- Internal pressure	+ Internal pressure	- Internal pressure
	Leeward roof or flat roof		-0.66	-0.35	-0.97	-0.04
	Windward roof slopes**:**					
	Slope < 2:12 (10°)	Condition 1	-1.09	-0.79	-1.41	-0.47
		Condition 2	-0.28	0.02	-0.60	0.34
	Slope = 4:12 (18°)	Condition 1	-0.73	-0.42	-1.04	-0.11
		Condition 2	-0.05	0.25	-0.37	0.57
	Slope = 5:12 (23°)	Condition 1	-0.58	-0.28	-0.90	0.04
		Condition 2	0.03	0.34	-0.29	0.65
1. Main windforce-resisting frames and systems	Slope = 6:12 (27°)	Condition 1	-0.47	-0.16	-0.78	0.15
		Condition 2	0.06	0.37	-0.25	0.68
	Slope = 7:12 (30°)	Condition 1	-0.37	-0.06	-0.68	0.25
		Condition 2	0.07	0.37	-0.25	0.69
	Slope = 9:12 (37°)	Condition 1	-0.27	0.04	-0.58	0.35
		Condition 2	0.14	0.44	-0.18	0.76
	Slope = 12:12 (45°)		0.14	0.44	-0.18	0.76
	Wind parallel to ridge and flat roofs		-1.09	-0.79	-1.41	-0.47
	Nonbuilding Structures: Chimneys, Tanks and Similar Structures:					
				h/D		
				1	7	25
	Square (Wind normal to face)			0.99	1.07	1.53
	Square (Wind on diagonal)			0.77	0.84	1.15
	Hexagonal or octagonal			0.81	0.97	1.13
	Round			0.65	0.81	0.97
	Open signs and lattice frameworks			Ratio of solid to gross area		
				< 0.1	0.1 to 0.29	0.3 to 0.7
	Flat			1.45	1.30	1.16
	Round			0.87	0.94	1.08

(continued)

INTERNATIONAL CODE COUNCIL®
Copyright © 2015 ICC. ALL RIGHTS RESERVED. Accessed by David Dammon on Jun 21, 2017 12:30:52 PM pursuant to License Agreement with ICC. No further reproduction or distribution authorized. ANY UNAUTHORIZED REPRODUCTION OR DISTRIBUTION IS A VIOLATION OF THE FEDERAL COPYRIGHT ACT AND THE LICENSE AGREEMENT, AND SUBJECT TO CIVIL AND CRIMINAL PENALTIES THEREUNDER.

TABLE 1609.6.2—continued
NET PRESSURE COEFFICIENTS, C_{net} [a, b]

STRUCTURE OR PART THEREOF	DESCRIPTION		C_{net} FACTOR	
2. Components and cladding not in areas of discontinuity—roofs and overhangs	**Roof elements and slopes**		**Enclosed**	**Partially enclosed**
	Gable of hipped configurations (Zone 1)			
	Flat < Slope < 6:12 (27°) See ASCE 7 Figure 30.4-2B Zone 1			
	Positive	10 square feet or less	0.58	0.89
		100 square feet or more	0.41	0.72
	Negative	10 square feet or less	-1.00	-1.32
		100 square feet or more	-0.92	-1.23
	Overhang: Flat < Slope < 6:12 (27°) See ASCE 7 Figure 30.4-2A Zone 1			
	Negative	10 square feet or less	-1.45	
		100 square feet or more	-1.36	
		500 square feet or more	-0.94	
	6:12 (27°) < Slope < 12:12 (45°) See ASCE 7 Figure 30.4-2C Zone 1			
	Positive	10 square feet or less	0.92	1.23
		100 square feet or more	0.83	1.15
	Negative	10 square feet or less	-1.00	-1.32
		100 square feet or more	-0.83	-1.15
	Monosloped configurations (Zone 1)		**Enclosed**	**Partially enclosed**
	Flat < Slope < 7:12 (30°) See ASCE 7 Figure 30.4-5B Zone 1			
	Positive	10 square feet or less	0.49	0.81
		100 square feet or more	0.41	0.72
	Negative	10 square feet or less	-1.26	-1.57
		100 square feet or more	-1.09	-1.40
	Tall flat-topped roofs h > 60 feet		**Enclosed**	**Partially enclosed**
	Flat < Slope < 2:12 (10°) (Zone 1) See ASCE 7 Figure 30.8-1 Zone 1			
	Negative	10 square feet or less	-1.34	-1.66
		500 square feet or more	-0.92	-1.23
3. Components and cladding in areas of discontinuity—roofs and overhangs (continued)	Gable or hipped configurations at ridges, eaves and rakes (Zone 2)			
	Flat < Slope < 6:12 (27°) See ASCE 7 Figure 30.4-2B Zone 2			
	Positive	10 square feet or less	0.58	0.89
		100 square feet or more	0.41	0.72
	Negative	10 square feet or less	-1.68	-2.00
		100 square feet or more	-1.17	-1.49
	Overhang for Slope Flat < Slope < 6:12 (27°) See ASCE 7 Figure 30.4-2B Zone 2			
	Negative	10 square feet or less	-1.87	
		100 square feet or more	-1.87	
	6:12 (27°) < Slope < 12:12 (45°) Figure 30.4-2C		**Enclosed**	**Partially enclosed**
	Positive	10 square feet or less	0.92	1.23
		100 square feet or more	0.83	1.15
	Negative	10 square feet or less	-1.17	-1.49
		100 square feet or more	-1.00	-1.32
	Overhang for 6:12 (27°) < Slope < 12:12 (45°) See ASCE 7 Figure 30.4-2C Zone 2			
	Negative	10 square feet or less	-1.70	
		500 square feet or more	-1.53	

(continued)

INTERNATIONAL CODE COUNCIL®
Copyright © 2015 ICC. ALL RIGHTS RESERVED. Accessed by David Dammon on Jun 21, 2017 12:30:52 PM pursuant to License Agreement with ICC. No further reproduction or distribution authorized. ANY UNAUTHORIZED REPRODUCTION OR DISTRIBUTION IS A VIOLATION OF THE FEDERAL COPYRIGHT ACT AND THE LICENSE AGREEMENT, AND SUBJECT TO CIVIL AND CRIMINAL PENALTIES THEREUNDER.

TABLE 1609.6.2—continued
NET PRESSURE COEFFICIENTS, C_{net} [a, b]

STRUCTURE OR PART THEREOF	DESCRIPTION		C_{net} FACTOR	
3. Components and cladding in areas of discontinuity—roofs and overhangs	**Roof elements and slopes**		**Enclosed**	**Partially enclosed**
	Monosloped configurations at ridges, eaves and rakes (Zone 2)			
	Flat < Slope < 7:12 (30°) See ASCE 7 Figure 30.4-5B Zone 2			
	Positive	10 square feet or less	0.49	0.81
		100 square feet or more	0.41	0.72
	Negative	10 square feet or less	-1.51	-1.83
		100 square feet or more	-1.43	-1.74
	Tall flat topped roofs h > 60 feet		**Enclosed**	**Partially enclosed**
	Flat < Slope < 2:12 (10°) (Zone 2) See ASCE 7 Figure 30.8-1 Zone 2			
	Negative	10 square feet or less	-2.11	-2.42
		500 square feet or more	-1.51	-1.83
	Gable or hipped configurations at corners (Zone 3) See ASCE 7 Figure 30.4-2B Zone 3			
	Flat < Slope < 6:12 (27°)		**Enclosed**	**Partially enclosed**
	Positive	10 square feet or less	0.58	0.89
		100 square feet or more	0.41	0.72
	Negative	10 square feet or less	-2.53	-2.85
		100 square feet or more	-1.85	-2.17
	Overhang for Slope Flat < Slope < 6:12 (27°) See ASCE 7 Figure 30.4-2B Zone 3			
	Negative	10 square feet or less	-3.15	
		100 square feet or more	-2.13	
	6:12 (27°) < 12:12 (45°) See ASCE 7 Figure 30.4-2C Zone 3			
	Positive	10 square feet or less	0.92	1.23
		100 square feet or more	0.83	1.15
	Negative	10 square feet or less	-1.17	-1.49
		100 square feet or more	-1.00	-1.32
	Overhang for 6:12 (27°) < Slope < 12:12 (45°)		**Enclosed**	**Partially enclosed**
	Negative	10 square feet or less	-1.70	
		100 square feet or more	-1.53	
	Monosloped Configurations at corners (Zone 3) See ASCE 7 Figure 30.4-5B Zone 3			
	Flat < Slope < 7:12 (30°)			
	Positive	10 square feet or less	0.49	0.81
		100 square feet or more	0.41	0.72
	Negative	10 square feet or less	-2.62	-2.93
		100 square feet or more	-1.85	-2.17
	Tall flat topped roofs h > 60 feet		**Enclosed**	**Partially enclosed**
	Flat < Slope < 2:12 (10°) (Zone 3) See ASCE 7 Figure 30.8-1 Zone 3			
	Negative	10 square feet or less	-2.87	-3.19
		500 square feet or more	-2.11	-2.42
4. Components and cladding not in areas of discontinuity—walls and parapets (continued)	Wall Elements: $h \leq 60$ feet (Zone 4) ASCE 7 Figure 30.4-1		**Enclosed**	**Partially enclosed**
	Positive	10 square feet or less	1.00	1.32
		500 square feet or more	0.75	1.06
	Negative	10 square feet or less	-1.09	-1.40
		500 square feet or more	-0.83	-1.15
	Wall Elements: h > 60 feet (Zone 4) See ASCE 7 Figure 30.6-1 Zone 4			
	Positive	20 square feet or less	0.92	1.23
		500 square feet or more	0.66	0.98

(continued)

INTERNATIONAL CODE COUNCIL®
Copyright © 2015 ICC. ALL RIGHTS RESERVED. Accessed by David Dammon on Jun 21, 2017 12:30:52 PM pursuant to License Agreement with ICC. No further reproduction or distribution authorized. ANY UNAUTHORIZED REPRODUCTION OR DISTRIBUTION IS A VIOLATION OF THE FEDERAL COPYRIGHT ACT AND THE LICENSE AGREEMENT, AND SUBJECT TO CIVIL AND CRIMINAL PENALTIES THEREUNDER.

TABLE 1609.6.2—continued
NET PRESSURE COEFFICIENTS, C_{net} [a, b]

STRUCTURE OR PART THEREOF	DESCRIPTION		C_{net} FACTOR	
4. Components and cladding not in areas of discontinuity—walls and parapets	Negative	20 square feet or less	-0.92	-1.23
		500 square feet or more	-0.75	-1.06
	Parapet Walls			
	Positive		2.87	3.19
	Negative		-1.68	-2.00
5. Components and cladding in areas of discontinuity—walls and parapets	Wall elements: $h \le 60$ feet (Zone 5) ASCE 7 Figure 30.4-1		Enclosed	Partially enclosed
	Positive	10 square feet or less	1.00	1.32
		500 square feet or more	0.75	1.06
	Negative	10 square feet or less	-1.34	-1.66
		500 square feet or more	-0.83	-1.15
	Wall elements: $h > 60$ feet (Zone 5) See ASCE 7 Figure 30.6-1 Zone 4			
	Positive	20 square feet or less	0.92	1.23
		500 square feet or more	0.66	0.98
	Negative	20 square feet or less	-1.68	-2.00
		500 square feet or more	-1.00	-1.32
	Parapet walls			
	Positive		3.64	3.95
	Negative		-2.45	-2.76

For SI: 1 foot = 304.8 mm, 1 square foot = 0.0929m^2, 1 degree = 0.0175 rad.

a. Linear interpolation between values in the table is permitted.

b. Some C_{net} values have been grouped together. Less conservative results may be obtained by applying ASCE 7 provisions.

1609.6.4.2 Determination of K_z and K_{zt}. Velocity pressure exposure coefficient, K_z, shall be determined in accordance with ASCE 7 Section 27.3.1 and the topographic factor, K_{zt}, shall be determined in accordance with ASCE 7 Section 26.8.

1. For the windward side of a structure, K_{zt} and K_z shall be based on height z.
2. For leeward and sidewalls, and for windward and leeward roofs, K_{zt} and K_z shall be based on mean roof height h.

❖ For the velocity pressure exposure coefficient, the user is referred to the corresponding ASCE 7 section. For the topographic factor, the user is referred to the corresponding ASCE 7 section. Note that these are evaluated only at the mean roof height for leeward walls, sidewalls and roofs.

1609.6.4.3 Determination of net pressure coefficients, C_{net}. For the design of the MWFRS and for components and cladding, the sum of the internal and external net pressure shall be based on the net pressure coefficient, C_{net}.

1. The pressure coefficient, $C_{net,}$ for walls and roofs shall be determined from Table 1609.6.2.
2. Where C_{net} has more than one value, the more severe wind load condition shall be used for design.

❖ The tabulated C_{net} values represent the sum of external and internal pressure coefficients as shown in the notation defined in Section 1609.6.2.

1609.6.4.4 Application of wind pressures. When using the alternative all-heights method, wind pressures shall be applied simultaneously on, and in a direction normal to, all building envelope wall and roof surfaces.

❖ This section clarifies how the wind pressures are applied relative to the surfaces of the building envelope.

1609.6.4.4.1 Components and cladding. Wind pressure for each component or cladding element is applied as follows using C_{net} values based on the effective wind area, A, contained within the zones in areas of discontinuity of width and/or length "a," "2a" or "4a" at: corners of roofs and walls; edge strips for ridges, rakes and eaves; or field areas on walls or roofs as indicated in figures in tables in ASCE 7 as referenced in Table 1609.6.2 in accordance with the following:

1. Calculated pressures at local discontinuities acting over specific edge strips or corner boundary areas.
2. Include "field" (Zone 1, 2 or 4, as applicable) pressures applied to areas beyond the boundaries of the areas of discontinuity.
3. Where applicable, the calculated pressures at discontinuities (Zone 2 or 3) shall be combined with design pressures that apply specifically on rakes or eave overhangs.

❖ The C_{net} values for C & C pressures are separately tabulated for roof and walls. These portions of the structure are further divided into those that are in

INTERNATIONAL CODE COUNCIL®
Copyright © 2015 ICC. ALL RIGHTS RESERVED. Accessed by David Dammon on Jun 21, 2017 12:30:52 PM pursuant to License Agreement with ICC. No further reproduction or distribution authorized. ANY UNAUTHORIZED REPRODUCTION OR DISTRIBUTION IS A VIOLATION OF THE FEDERAL COPYRIGHT ACT AND THE LICENSE AGREEMENT, AND SUBJECT TO CIVIL AND CRIMINAL PENALTIES THEREUNDER.

areas of discontinuities and those that are not. Effective wind area is another factor in selecting the correct C & C value. While the lateral-load-resisting system design may be controlled by earthquake forces, it is necessary to consider these C & C wind pressures, which can control the design of the component and attachments.

SECTION 1610
SOIL LATERAL LOADS

1610.1 General. Foundation walls and retaining walls shall be designed to resist lateral soil loads. Soil loads specified in Table 1610.1 shall be used as the minimum design lateral soil loads unless determined otherwise by a geotechnical investigation in accordance with Section 1803. Foundation walls and other walls in which horizontal movement is restricted at the top shall be designed for at-rest pressure. Retaining walls free to move and rotate at the top shall be permitted to be designed for active pressure. Design lateral pressure from surcharge loads shall be added to the lateral earth pressure load. Design lateral pressure shall be increased if soils at the site are expansive. Foundation walls shall be designed to support the weight of the full hydrostatic pressure of undrained backfill unless a drainage system is installed in accordance with Sections 1805.4.2 and 1805.4.3.

Exception: Foundation walls extending not more than 8 feet (2438 mm) below grade and laterally supported at the top by flexible diaphragms shall be permitted to be designed for active pressure.

❖ Nominal loads attributable to lateral earth pressures are determined in accordance with this section. This section provides lateral loads for various soil types. This section requires that foundation and retaining walls be designed to be capable of resisting the lateral soil loads specified by Table 1610.1 where a specific soil investigation has not been performed. Consideration must be given to additional lateral soil pressures caused by surcharge loads that result from sloping backfill, driveways or parking spaces that are close to a foundation wall, as well as the foundation of an adjacent structure.

TABLE 1610.1. See below.

❖ The table lists at-rest and active soil pressures for a number of different types of moist soils. The basis of the soil classification into the various types listed is ASTM D2487. Soils identified by Note b in Table 1610.1 have unpredictable characteristics. These are called expansive soils. Because of their ability to absorb water, they shrink and swell to a higher degree than other soils. As expansive soils swell, they are capable of exerting large forces on soil-retaining structures; thus, these types of soils are not to be used as backfill.

TABLE 1610.1
LATERAL SOIL LOAD

DESCRIPTION OF BACKFILL MATERIAL[c]	UNIFIED SOIL CLASSIFICATION	DESIGN LATERAL SOIL LOAD[a] (pound per square foot per foot of depth)	
		Active pressure	At-rest pressure
Well-graded, clean gravels; gravel-sand mixes	GW	30	60
Poorly graded clean gravels; gravel-sand mixes	GP	30	60
Silty gravels, poorly graded gravel-sand mixes	GM	40	60
Clayey gravels, poorly graded gravel-and-clay mixes	GC	45	60
Well-graded, clean sands; gravelly sand mixes	SW	30	60
Poorly graded clean sands; sand-gravel mixes	SP	30	60
Silty sands, poorly graded sand-silt mixes	SM	45	60
Sand-silt clay mix with plastic fines	SM-SC	45	100
Clayey sands, poorly graded sand-clay mixes	SC	60	100
Inorganic silts and clayey silts	ML	45	100
Mixture of inorganic silt and clay	ML-CL	60	100
Inorganic clays of low to medium plasticity	CL	60	100
Organic silts and silt clays, low plasticity	OL	Note b	Note b
Inorganic clayey silts, elastic silts	MH	Note b	Note b
Inorganic clays of high plasticity	CH	Note b	Note b
Organic clays and silty clays	OH	Note b	Note b

For SI: 1 pound per square foot per foot of depth = 0.157 kPa/m, 1 foot = 304.8 mm.

a. Design lateral soil loads are given for moist conditions for the specified soils at their optimum densities. Actual field conditions shall govern. Submerged or saturated soil pressures shall include the weight of the buoyant soil plus the hydrostatic loads.

b. Unsuitable as backfill material.

c. The definition and classification of soil materials shall be in accordance with ASTM D2487.

INTERNATIONAL CODE COUNCIL®
Copyright © 2015 ICC. ALL RIGHTS RESERVED. Accessed by David Dammon on Jun 21, 2017 12:30:52 PM pursuant to License Agreement with ICC. No further reproduction or distribution authorized. ANY UNAUTHORIZED REPRODUCTION OR DISTRIBUTION IS A VIOLATION OF THE FEDERAL COPYRIGHT ACT AND THE LICENSE AGREEMENT, AND SUBJECT TO CIVIL AND CRIMINAL PENALTIES THEREUNDER.

SECTION 1611
RAIN LOADS

1611.1 Design rain loads. Each portion of a roof shall be designed to sustain the load of rainwater that will accumulate on it if the primary drainage system for that portion is blocked plus the uniform load caused by water that rises above the inlet of the secondary drainage system at its design flow. The design rainfall shall be based on the 100-year hourly rainfall rate indicated in Figure 1611.1 or on other rainfall rates determined from *approved* local weather data.

$R = 5.2(d_s + d_h)$ **(Equation 16-36)**

For SI: $R = 0.0098(d_s + d_h)$

where:

d_h = Additional depth of water on the undeflected roof above the inlet of secondary drainage system at its design flow (i.e., the hydraulic head), in inches (mm).

d_s = Depth of water on the undeflected roof up to the inlet of secondary drainage system when the primary drainage system is blocked (i.e., the static head), in inches (mm).

R = Rain load on the undeflected roof, in psf (kN/m^2). When the phrase "undeflected roof" is used, deflections from loads (including dead loads) shall not be considered when determining the amount of rain on the roof.

❖ The nominal rain load, *R*, is determined in accordance with this section. It represents the weight of accumulated rainwater, assuming a blockage of the primary roof drainage system. The design of the roof drainage systems must be in accordance with Chapter 11 of the *International Plumbing Code*® (IPC®). The primary roof drainage system can include roof drains, leaders, conductors and horizontal storm drains within the structure. Drainage system design is based on a specified design rainfall intensity, as well as the roof area it drains. The criteria for sizing the components of the drainage system are provided in Section 1106 of the IPC. Where the building is configured such that water will not collect on the roof, there is no requirement for a secondary drainage system [see Commentary Figure 1611.1(1)]. Likewise, there would be no rain load required in the design of the roof.

It is not uncommon to find that roof drains have become blocked by debris, leading to ponding of rainwater where the roof construction is conducive to retaining water. While the objective of providing roof drainage is typically to prevent the accumulation of water, the code also recognizes controlled drainage systems that are engineered to retain rainwater (see Section 1611.3). The important point is that wherever the potential exists for the accumulation of rainwater on a roof, whether it is intentional or otherwise, the roof must be designed for this load. Furthermore, Section 1101.7 of the IPC requires the maximum depth of water to be determined, assuming all primary roof drainage to be blocked. The water will rise above the primary roof drain until it reaches the elevation of the roof edge, scuppers or another serviceable drain. At the design rainfall intensity, this depth will be based on the flow rate of the secondary drainage system. This depth, referred to as the hydraulic head, can be determined from Commentary Figure 1611.1(2) for various types of drains and flow rates. Its use is illustrated in the example on page 16-59. Section 1108 of the IPC specifically requires a secondary roof drainage system where the building construction extends above the roof at the perimeter. This applies to parapet walls, stepped buildings or any other construction that would allow rainwater to pond on the roof. The sizing of a secondary drainage system is identical to the process used for the primary system. Instead of using a "piped" secondary system, designers may prefer to install scuppers to allow rainwater to overflow the roof. Examples of both types of secondary systems are shown in Commentary Figure 1611.1(3). Also note that the IPC requires a secondary system to be completely separate and to discharge above grade. Since the secondary system

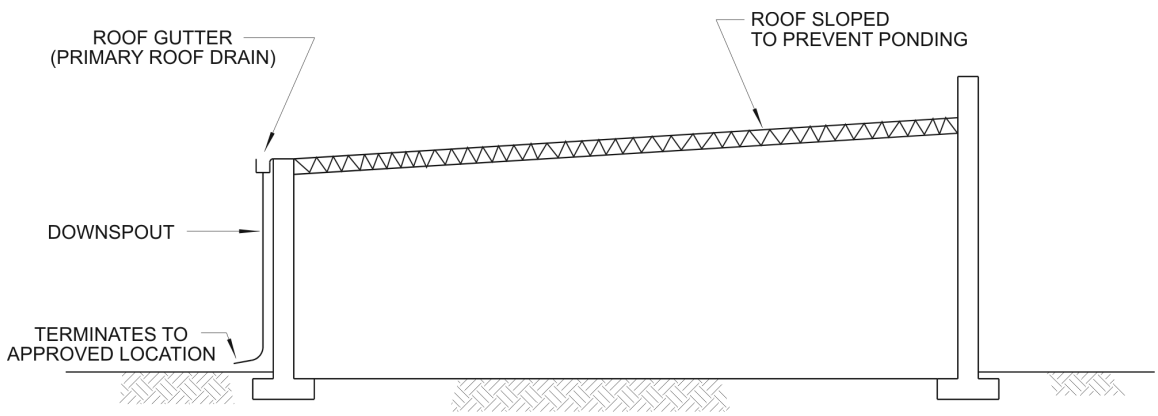

Figure 1611.1(1)
SECONDARY ROOF DRAINAGE NOT REQUIRED

INTERNATIONAL CODE COUNCIL®
Copyright © 2015 ICC. ALL RIGHTS RESERVED. Accessed by David Dammon on Jun 21, 2017 12:30:52 PM pursuant to License Agreement with ICC. No further reproduction or distribution authorized. ANY UNAUTHORIZED REPRODUCTION OR DISTRIBUTION IS A VIOLATION OF THE FEDERAL COPYRIGHT ACT AND THE LICENSE AGREEMENT, AND SUBJECT TO CIVIL AND CRIMINAL PENALTIES THEREUNDER.

serves as an emergency backup, requiring it to discharge above grade provides a means of signaling that there is a blockage of the primary drainage system.

Some roof failures have been attributed to the increased loads from ponding water. This section requires the roof to be capable of resisting the maximum water depth that can occur if the primary means of roof drainage becomes blocked. Blockages are typically caused by debris at the inlet to the primary roof drains, but they can occur anywhere along the primary piping system, such as an under-slab pipe collapse. Computation of rain load, R, is in accordance with Equation 16-36. The coefficient of that equation is merely the conversion of the unit weight of water to an equivalent unit load per inch of water

DRAINAGE SYSTEM	FLOW RATE (gpm)									
	Depth of water above drain inlet (hydraulic head) (inches)									
	1	2	2.5	3	3.5	4	4.5	5	7	8
4-inch-diameter drain	80	170	180							
6-inch-diameter drain	100	190	270	380	540					
8-inch-diameter drain	125	230	340	560	850	1,100	1,170			
6-inch-wide, open-top scupper	18	50	*	90	*	140	**	194	321	393
24-inch-wide, open-top scupper	72	200	*	360	*	560	*	776	1,284	1,572
6-inch-wide, 4-inch-high, closed-top scupper	18	50	*	90	*	140	*	177	231	253
24-inch-wide, 4-inch-high, closed-top scupper	72	200	*	360	*	560	*	708	924	1,012
6-inch-wide, 6-inch-high, closed-top scupper	18	50	*	90	*	140	*	194	303	343
24-inch-wide, 6-inch-high, closed-top scupper	72	200	*	360	*	560	*	776	1,212	1,372

For SI: 1 inch = 25.4 mm, 1 gallon per minute = 3.785 L/m.
Source: Factory Mutual Engineering Corp. Loss Prevention Data 1-54.

Figure 1611.1(2)
FLOW RATE, IN GALLONS PER MINUTE, OF VARIOUS ROOF DRAINS AT VARIOUS WATER DEPTHS AT DRAIN INLETS (INCHES)

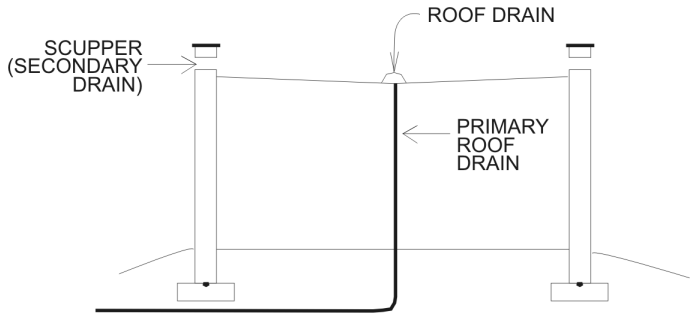

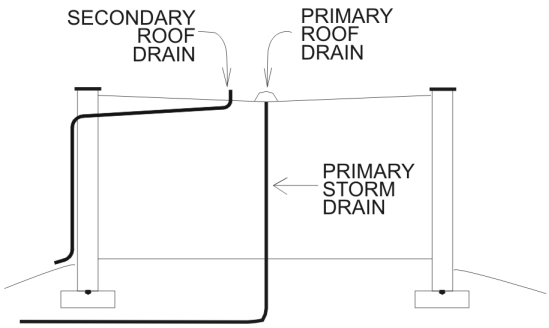

Figure 1611.1(3)
SEPARATE PRIMARY AND SECONDARY ROOF DRAINS

INTERNATIONAL CODE COUNCIL®
Copyright © 2015 ICC. ALL RIGHTS RESERVED. Accessed by David Dammon on Jun 21, 2017 12:30:52 PM pursuant to License Agreement with ICC. No further reproduction or distribution authorized. ANY UNAUTHORIZED REPRODUCTION OR DISTRIBUTION IS A VIOLATION OF THE FEDERAL COPYRIGHT ACT AND THE LICENSE AGREEMENT, AND SUBJECT TO CIVIL AND CRIMINAL PENALTIES THEREUNDER.

depth as Commentary Figure 1611.1(4) illustrates. Two variables are considered to determine rain load: the depth of the water on the undeflected roof, as measured from the low point elevation to the inlet elevation of the secondary drain; and the additional depth of water at the secondary drainage flow, respectively referred to as static head and hydraulic head. The sum of these depths is the design depth for computing rain load, R, as indicated in Equation 16-36. An example of the computation of rain load is provided in the following example [also see Commentary Figure 1611.1(5)].

EXAMPLE
Rain Load on Roof with Overflow Scuppers

Given:

Primary roof drain and overflow scupper shown in Commentary Figure 1611.1(5).

Static head, d_s = 7 inches (178 mm)

Tributary area, A = 5,400 square feet (502 m^2)

Rainfall rate, i = 2.5 inches/hour
= 0.208333 feet/hour
(0.0635 m/hr)

Determine:

Hydraulic head, d_h

Rain load, R

Calculate required flow rate, Q, at scupper in gallons per minute (gpm).

$Q = A \times i$ = 5,400 square feet (502 m^2) × 0.2083 feet/hour
= 1125 cubic feet/hour (31.9 m^3/hr)
= 18.75 cubic feet/minute (0.531 m^3/min)
= 140.25 gpm (531 L/m)

Look up hydraulic head using Table 1611.1(2).

For 6 inches wide, 6 inches (152 mm) high scupper, find 140 gpm. (530 L/m)

d_h = 4 inches (102 mm)

Determine rain load, R

Total head = ($d_s + d_h$) = 11 inches (279 mm)

$R = 5.2 (d_s + d_h)$

R = 57.2 psf (2.74 kN/m^2)

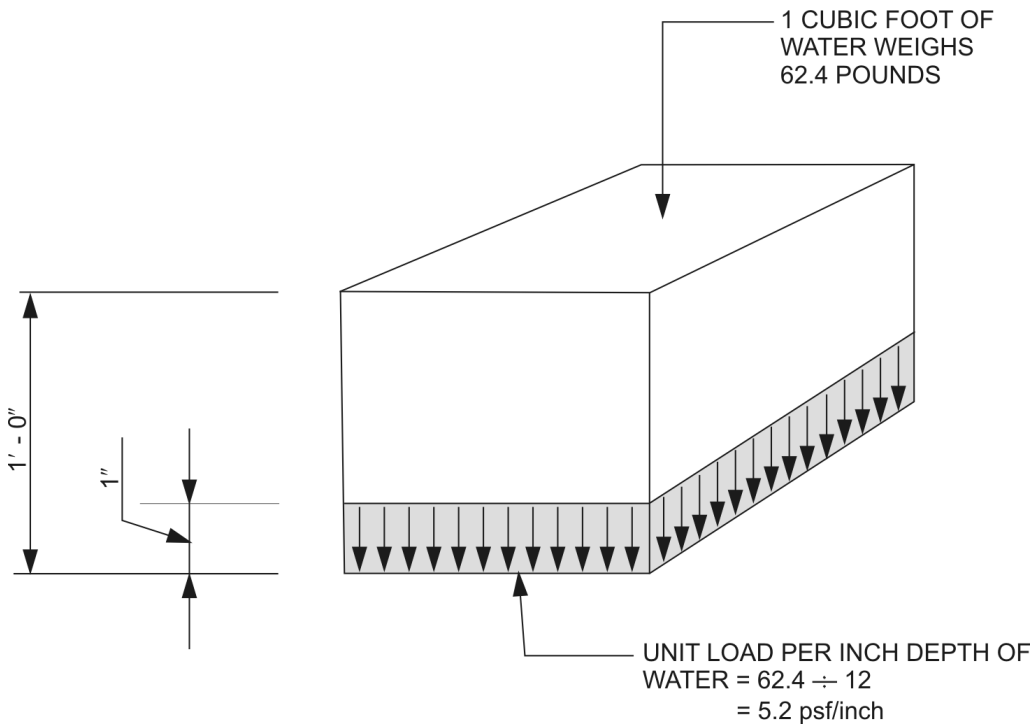

For SI: 1 inch = 25.4 mm, 1 foot = 304.8 mm,
1 cubic foot = 0.02832 m^2, 1 pound = 0.454 kg,
1 pound per square foot = 47.88 Pa.

Figure 1611.1(4)
EQUATION 16-36 COEFFICIENT

INTERNATIONAL CODE COUNCIL®
Copyright © 2015 ICC. ALL RIGHTS RESERVED. Accessed by David Dammon on Jun 21, 2017 12:30:52 PM pursuant to License Agreement with ICC. No further reproduction or distribution authorized. ANY UNAUTHORIZED REPRODUCTION OR DISTRIBUTION IS A VIOLATION OF THE FEDERAL COPYRIGHT ACT AND THE LICENSE AGREEMENT, AND SUBJECT TO CIVIL AND CRIMINAL PENALTIES THEREUNDER.

FIGURE 1611.1. See pages 16-61 through 16-65.

❖ Including these IPC maps in the code provides the structural designer with design criteria that are essential for determining the rain load. Figure 1611.1 consists of five maps for various regions of the country. This figure provides the rainfall rates for a storm of 1-hour duration that has a 100-year return period. Rainfall rates indicate the maximum rate of rainfall within the given period of time occurring at the stated frequency. For example, the map indicates a rainfall rate of 2.1 inches (53 mm) per hour for Burlington, Vermont. Thus, it is estimated that it will rain 2.1 inches (53 mm) within 1 hour once every 100 years. The rainfall rates are calculated by a statistical analysis of weather records. Because the statistics are based on previous or historical weather conditions, it is possible to have more than one 100-year storm in a much shorter time frame. The probability of this occurring, however, is low.

1611.2 Ponding instability. Susceptible bays of roofs shall be evaluated for ponding instability in accordance with Section 8.4 of ASCE 7.

❖ In roofs lacking sufficient framing stiffness, a condition known as "ponding instability" can occur where increasingly larger deflections caused by the continued accumulation of rainwater are large enough to overload the structure and result in a roof collapse. This must be countered by providing adequate stiffness in order to prevent increasingly larger deflections due to the buildup of rainwater. Another means to minimize the accumulation of rainwater is to camber the roof framing. This section requires a check for ponding instability at susceptible bays (see definition in Section 202). A ponding instability check is to be made assuming the primary roof drains are blocked. The determination of ponding instability is typically done by an iterative structural analysis where the incremental deflection is determined and the resulting increased rain load from the deflection is added to the original rain load.

1611.3 Controlled drainage. Roofs equipped with hardware to control the rate of drainage shall be equipped with a secondary drainage system at a higher elevation that limits accumulation of water on the roof above that elevation. Such roofs shall be designed to sustain the load of rainwater that will accumulate on them to the elevation of the secondary drainage system plus the uniform load caused by water that rises above the inlet of the secondary drainage system at its design flow determined from Section 1611.1. Such roofs shall also be checked for ponding instability in accordance with Section 1611.2.

❖ Controlled drainage is the limitation of the drainage flow rate to a rate that is less than the rainfall rate such that the depth of the water intentionally builds up on the roof during a design rainfall. Controlled flow roof drain systems must be designed in accordance with Section 1110 of the IPC. A secondary roof drain system is needed to limit the buildup of water to a specific depth for roof design. The depth of water on the roof is also to include the depth of the water above the inlet of the secondary drain when the design flow rate is reached. Consideration of the effect of the accumulated rainwater is identical to assuming a blockage in the primary drainage system as discussed under Section 1611.1.

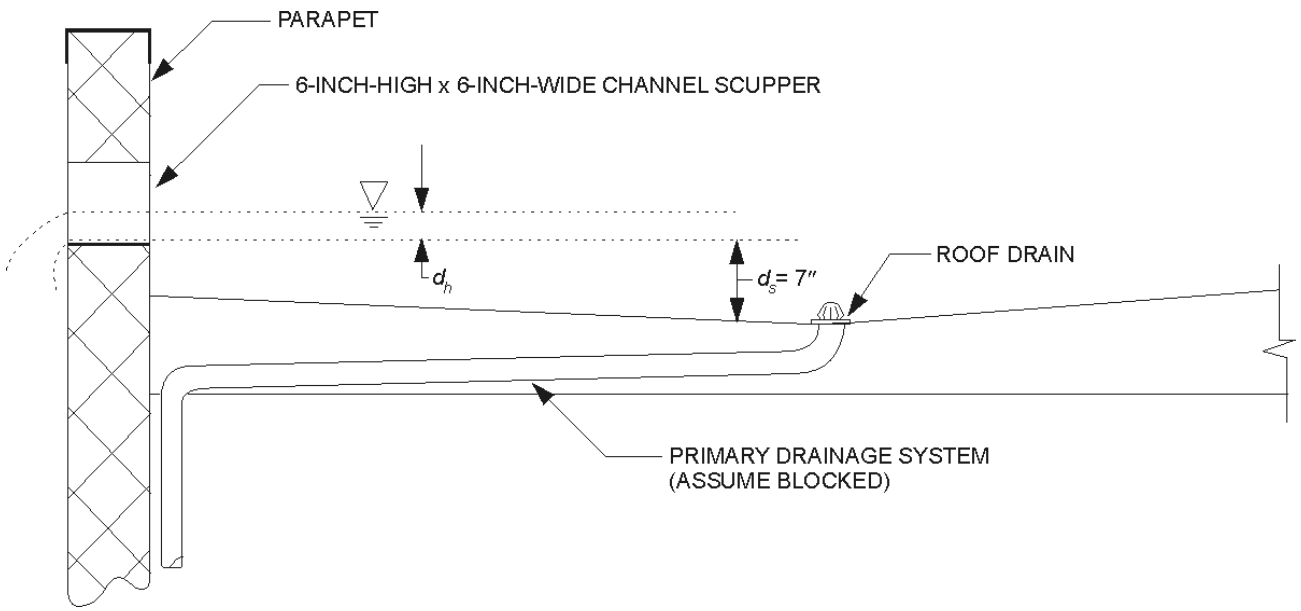

For SI: 1 inch = 25.4 mm.

Figure 1611.1(5)
RAIN LOAD EXAMPLE

INTERNATIONAL CODE COUNCIL®
Copyright © 2015 ICC. ALL RIGHTS RESERVED. Accessed by David Dammon on Jun 21, 2017 12:30:52 PM pursuant to License Agreement with ICC. No further reproduction or distribution authorized. ANY UNAUTHORIZED REPRODUCTION OR DISTRIBUTION IS A VIOLATION OF THE FEDERAL COPYRIGHT ACT AND THE LICENSE AGREEMENT, AND SUBJECT TO CIVIL AND CRIMINAL PENALTIES THEREUNDER.

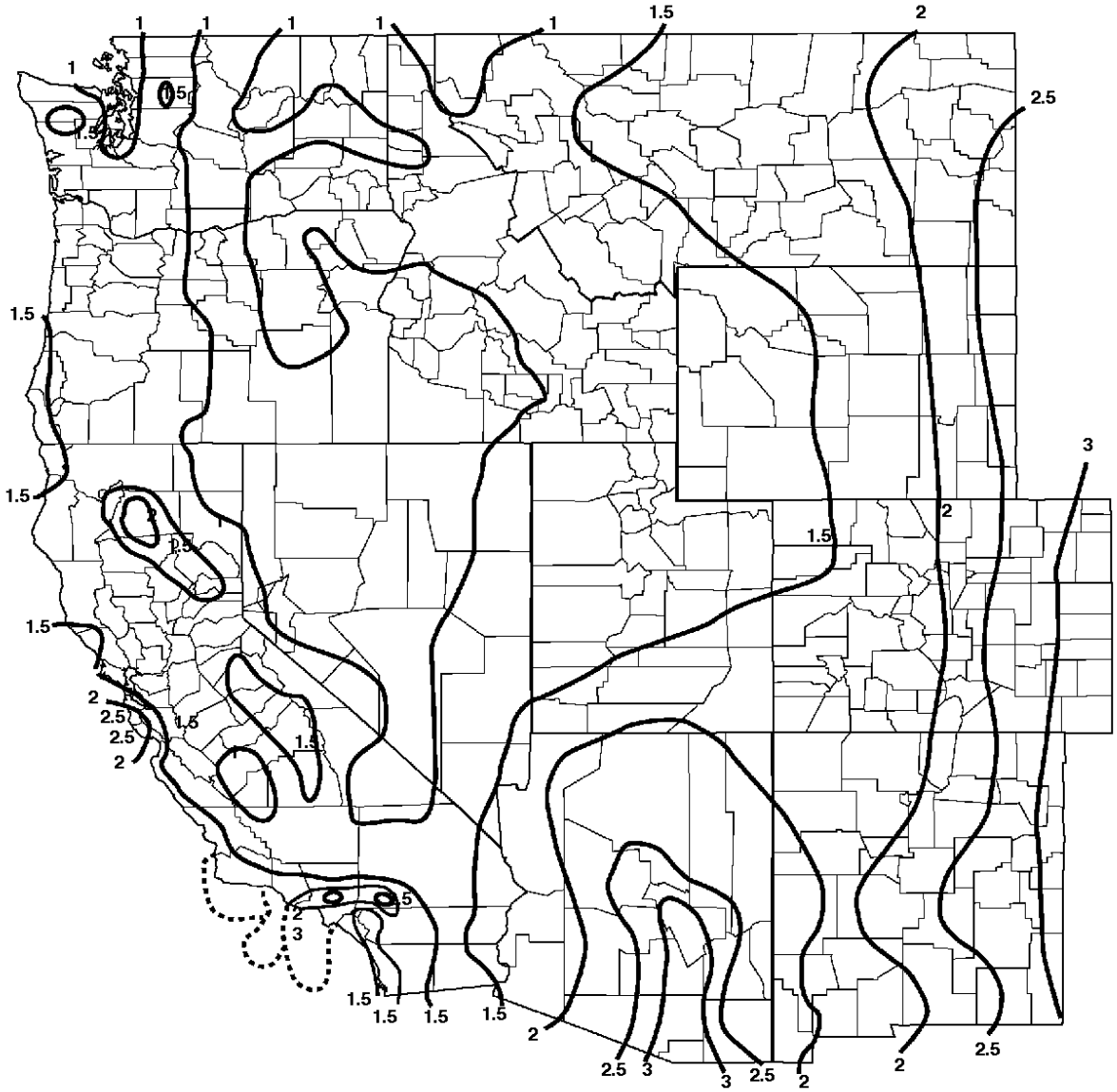

[P] FIGURE 1611.1
100-YEAR, 1-HOUR RAINFALL (INCHES) WESTERN UNITED STATES

For SI: 1 inch = 25.4 mm.
Source: National Weather Service, National Oceanic and Atmospheric Administration, Washington, DC.

INTERNATIONAL CODE COUNCIL®
Copyright © 2015 ICC. ALL RIGHTS RESERVED. Accessed by David Dammon on Jun 21, 2017 12:30:52 PM pursuant to License Agreement with ICC. No further reproduction or distribution authorized. ANY UNAUTHORIZED REPRODUCTION OR DISTRIBUTION IS A VIOLATION OF THE FEDERAL COPYRIGHT ACT AND THE LICENSE AGREEMENT, AND SUBJECT TO CIVIL AND CRIMINAL PENALTIES THEREUNDER.

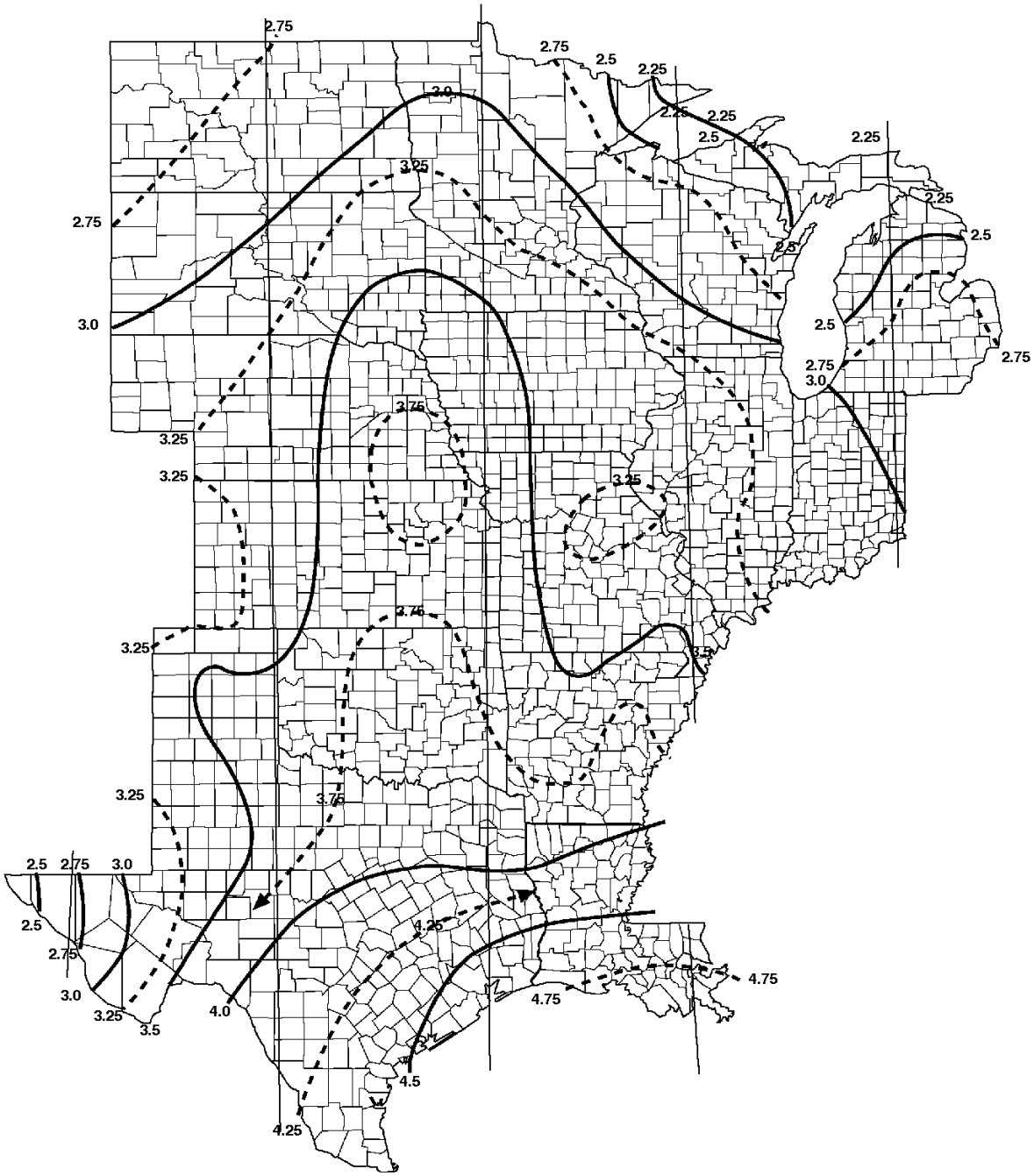

[P] FIGURE 1611.1—continued
100-YEAR, 1-HOUR RAINFALL (INCHES) CENTRAL UNITED STATES

For SI: 1 inch = 25.4 mm.
Source: National Weather Service, National Oceanic and Atmospheric Administration, Washington, DC.

INTERNATIONAL CODE COUNCIL®
Copyright © 2015 ICC. ALL RIGHTS RESERVED. Accessed by David Dammon on Jun 21, 2017 12:30:52 PM pursuant to License Agreement with ICC. No further reproduction or distribution authorized. ANY UNAUTHORIZED REPRODUCTION OR DISTRIBUTION IS A VIOLATION OF THE FEDERAL COPYRIGHT ACT AND THE LICENSE AGREEMENT, AND SUBJECT TO CIVIL AND CRIMINAL PENALTIES THEREUNDER.



[P] FIGURE 1611.1—continued
100-YEAR, 1-HOUR RAINFALL (INCHES) EASTERN UNITED STATES

For SI: 1 inch = 25.4 mm.
Source: National Weather Service, National Oceanic and Atmospheric Administration, Washington, DC.

INTERNATIONAL CODE COUNCIL®
Copyright © 2015 ICC. ALL RIGHTS RESERVED. Accessed by David Dammon on Jun 21, 2017 12:30:52 PM pursuant to License Agreement with ICC. No further reproduction or distribution authorized. ANY UNAUTHORIZED REPRODUCTION OR DISTRIBUTION IS A VIOLATION OF THE FEDERAL COPYRIGHT ACT AND THE LICENSE AGREEMENT, AND SUBJECT TO CIVIL AND CRIMINAL PENALTIES THEREUNDER.

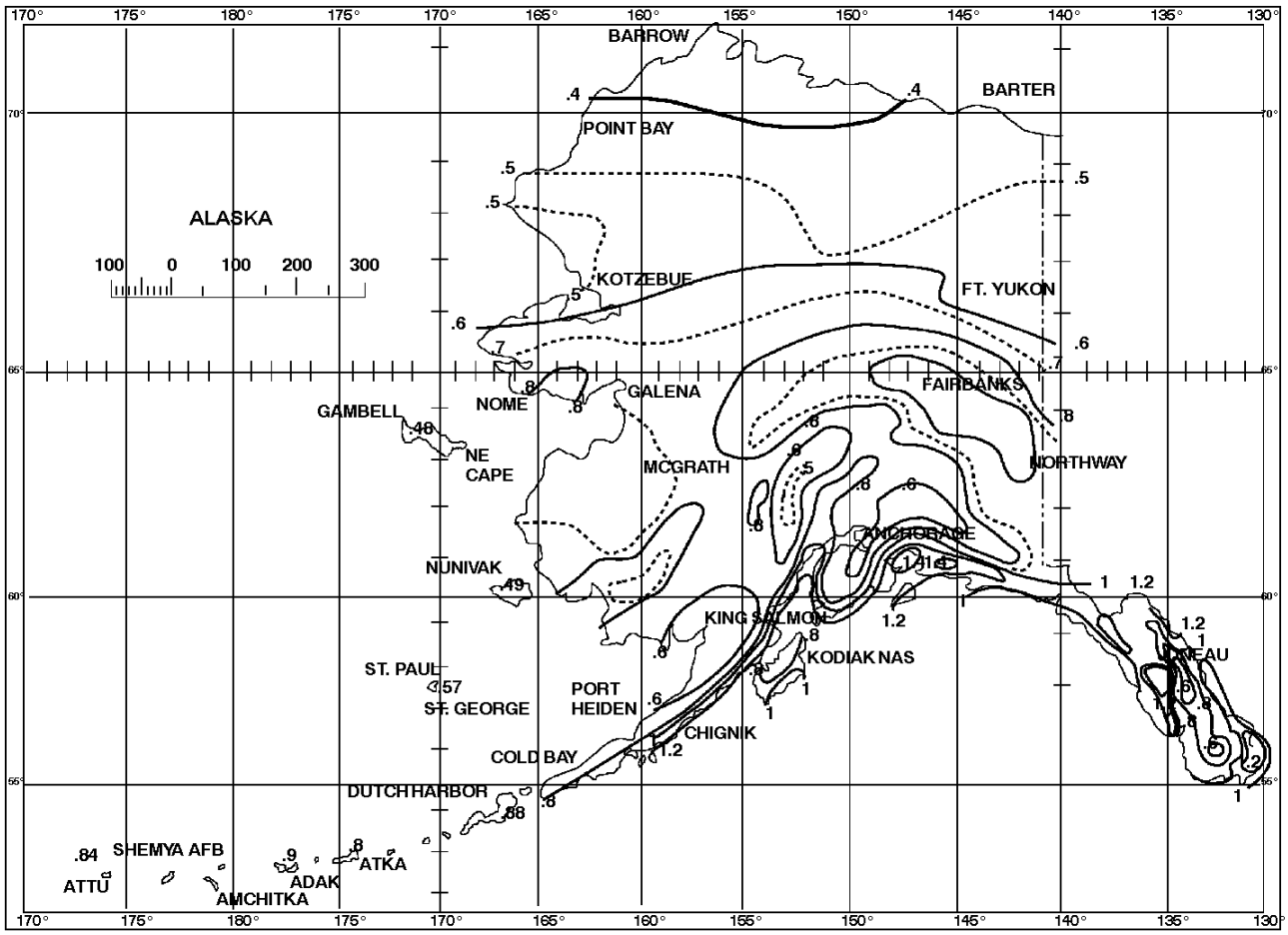

[P] FIGURE 1611.1—continued
100-YEAR, 1-HOUR RAINFALL (INCHES) ALASKA

For SI: 1 inch = 25.4 mm.
Source: National Weather Service, National Oceanic and Atmospheric Administration, Washington, DC.

INTERNATIONAL CODE COUNCIL®
Copyright © 2015 ICC. ALL RIGHTS RESERVED. Accessed by David Dammon on Jun 21, 2017 12:30:52 PM pursuant to License Agreement with ICC. No further reproduction or distribution authorized. ANY UNAUTHORIZED REPRODUCTION OR DISTRIBUTION IS A VIOLATION OF THE FEDERAL COPYRIGHT ACT AND THE LICENSE AGREEMENT, AND SUBJECT TO CIVIL AND CRIMINAL PENALTIES THEREUNDER.

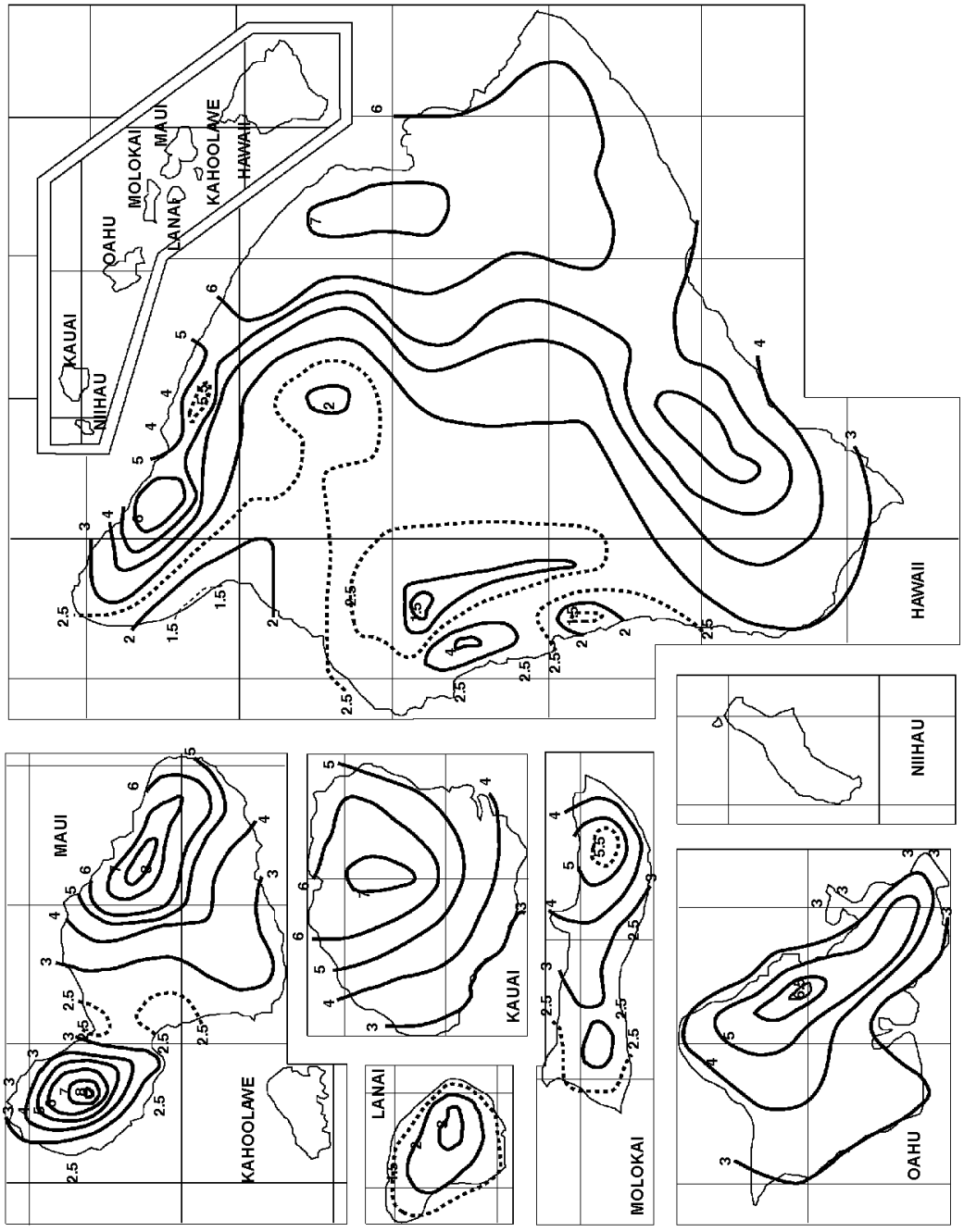

[P] FIGURE 1611.1—continued
100-YEAR, 1-HOUR RAINFALL (INCHES) HAWAII

For SI: 1 inch = 25.4 mm.
Source: National Weather Service, National Oceanic and Atmospheric Administration, Washington, DC.

INTERNATIONAL CODE COUNCIL®
Copyright © 2015 ICC. ALL RIGHTS RESERVED. Accessed by David Dammon on Jun 21, 2017 12:30:52 PM pursuant to License Agreement with ICC. No further reproduction or distribution authorized. ANY UNAUTHORIZED REPRODUCTION OR DISTRIBUTION IS A VIOLATION OF THE FEDERAL COPYRIGHT ACT AND THE LICENSE AGREEMENT, AND SUBJECT TO CIVIL AND CRIMINAL PENALTIES THEREUNDER.

SECTION 1612
FLOOD LOADS

1612.1 General. Within *flood hazard areas* as established in Section 1612.3, all new construction of buildings, structures and portions of buildings and structures, including substantial improvement and restoration of substantial damage to buildings and structures, shall be designed and constructed to resist the effects of flood hazards and flood loads. For buildings that are located in more than one *flood hazard area*, the provisions associated with the most restrictive *flood hazard area* shall apply.

❖ This section addresses requirements for all buildings and structures in flood hazard areas. These areas are commonly referred to as "floodplains" and are shown on a community's Flood Insurance Rate Map (FIRM) prepared by FEMA, or on another flood hazard map adopted by the jurisdiction. Code users should be aware that floods often affect areas outside the flood hazard area boundaries shown on FIRMs and can exceed the base flood elevation.

Through the adoption of the code, communities meet a significant portion of the floodplain management regulation requirements necessary to participate in the National Flood Insurance Program (NFIP). To participate in the NFIP, a jurisdiction must adopt regulations that at least meet the requirements of federal regulations in Section 60.3 of 44 CFR. This requirement can be satisfied by adopting the *International Building Code*® (IBC®) (including Appendix G) and the *International Residential Code*® (IRC®). The *International Existing Building Code*® (IEBC®) also has provisions that are consistent with the NFIP requirements for existing buildings. If Appendix G (Flood-resistant Construction) is not adopted, its provisions must be captured in a companion floodplain management ordinance adopted by the community. The NFIP requires communities to regulate all development in flood hazard areas. Section 201.2 of Appendix G defines "Development" as "any man-made change to improved or unimproved real estate, including but not limited to buildings or other structures; temporary or permanent storage of materials; mining; dredging; filling; grading; paving; excavations; operations and other land-disturbing activities." For additional guidance on how to use the I-Codes to participate in the NFIP, see *Reducing Flood Losses through the International Codes: Coordinating Building Codes and Floodplain Management Regulations*.

The NFIP was established to reduce flood losses, to better indemnify individuals from flood losses and to reduce federal expenditures for disaster assistance. A community that has been determined to have flood hazard areas elects to participate in the NFIP to protect health, safety and property, so that its citizens can purchase federally backed flood insurance. FEMA administers the NFIP, which includes monitoring community compliance with the flood plain management requirements of the NFIP.

New buildings and structures, and substantial improvements to existing buildings and structures, are to be designed and constructed to resist flood forces to minimize damage. Flood forces include flotation, lateral (hydrostatic) pressures, moving water (hydrodynamic) pressures, wave impact and debris impact. Flood-related hazards may include erosion and scour.

Many states and communities have elected to regulate floodplain development to a higher standard than the minimum required to participate in the NFIP. Communities considering using the code and other *International Codes*® to meet the floodplain management requirements of the NFIP are advised to consult with their NFIP state coordinator or the appropriate FEMA regional office. A number of flood provisions in the *International Codes*® (in part, by reference to ASCE 24), are more stringent requirements and some are more specific than the minimum requirements specified in the NFIP regulations (see *Flood Provisions of the International Code Series: Higher Standards and More Specific Requirements than the Minimum Requirements of the National Flood Insurance Program*).

If located in flood hazard areas, buildings and structures that are damaged by any cause are to be evaluated by the building official to determine if the damage constitutes substantial damage, in which the cost to repair or restore the building or structure to its predamaged condition equals or exceeds 50 percent of its market value before the damage occurred. All substantial improvements and repairs of buildings and structures that are substantially damaged must meet the flood-resistant provisions of the code. For additional guidance, see FEMA P-758, *Substantial Improvement/Substantial Damage Desk Reference*.

Some buildings are proposed to be located such that either they are in more than one flood zone or only a portion of the building is in a flood zone. Where this occurs, the entire building or structure is required to be designed and constructed according to the requirements of the more restrictive flood zone. For example, if a building is partially in a coastal high-hazard area (V zone), then the entire building must meet the requirements for that area. Similarly, if a building is partially in a flood hazard area and partially out of the mapped flood hazard area, then the entire building must be designed and constructed in accordance with the flood-resistant provisions of the code.

1612.2 Definitions. The following terms are defined in Chapter 2:

BASE FLOOD.

BASE FLOOD ELEVATION.

BASEMENT.

COASTAL A ZONE.

COASTAL HIGH-HAZARD AREA.

INTERNATIONAL CODE COUNCIL®
Copyright © 2015 ICC. ALL RIGHTS RESERVED. Accessed by David Dammon on Jun 21, 2017 12:30:52 PM pursuant to License Agreement with ICC. No further reproduction or distribution authorized. ANY UNAUTHORIZED REPRODUCTION OR DISTRIBUTION IS A VIOLATION OF THE FEDERAL COPYRIGHT ACT AND THE LICENSE AGREEMENT, AND SUBJECT TO CIVIL AND CRIMINAL PENALTIES THEREUNDER.

DESIGN FLOOD.

DESIGN FLOOD ELEVATION.

DRY FLOODPROOFING.

EXISTING STRUCTURE.

FLOOD or FLOODING.

FLOOD DAMAGE-RESISTANT MATERIALS.

FLOOD HAZARD AREA.

FLOOD INSURANCE RATE MAP (FIRM).

FLOOD INSURANCE STUDY.

FLOODWAY.

LOWEST FLOOR.

SPECIAL FLOOD HAZARD AREA.

START OF CONSTRUCTION.

SUBSTANTIAL DAMAGE.

SUBSTANTIAL IMPROVEMENT.

❖ Definitions facilitate the understanding of code provisions and minimize potential confusion. To that end, this section lists definitions of terms associated with flood requirements. Note that these definitions are found in Chapter 2. The use and application of defined terms, as well as undefined terms, are set forth in Section 201.

1612.3 Establishment of flood hazard areas. To establish *flood hazard areas*, the applicable governing authority shall adopt a flood hazard map and supporting data. The flood hazard map shall include, at a minimum, areas of special flood hazard as identified by the Federal Emergency Management Agency in an engineering report entitled "The Flood Insurance Study for **[INSERT NAME OF JURISDICTION]**," dated **[INSERT DATE OF ISSUANCE]**, as amended or revised with the accompanying Flood Insurance Rate Map (FIRM) and Flood Boundary and Floodway Map (FBFM) and related supporting data along with any revisions thereto. The adopted flood hazard map and supporting data are hereby adopted by reference and declared to be part of this section.

❖ Flood Insurance Rate Maps (FIRMs) and studies are prepared by FEMA and are to be used as a community's official map, unless the community chooses to adopt a map that shows more extensive flood hazard areas. Most communities have multiple flood map panels, all of which may be listed in the adopting ordinance by panel number and date so that the appropriate effective map is used.

From time to time, FEMA may revise and republish FIRMs and studies. New FIRMs and revised FIRMs are produced in digital format. Affected communities also receive paper maps to support legal adoption of the maps and supporting data. Communities that prefer to cite the digital data should obtain a legal opinion as to whether doing so is acceptable. Federal law and FEMA policy allow use of the paper or digital maps. However, in some cases, state or local law or policy may require adoption of the paper map as the official record.

When maps are revised and flood hazard areas, base flood elevations and flood zones are changed, FEMA involves the community and provides a formal opportunity to review the documents. Once the revisions are finalized, FEMA requires the community to adopt the revised maps. Communities may be able to minimize having to adopt each revision by referencing the date of the current effective map and study and "any revisions thereto." This is a method by which subsequent revisions to flood maps and studies may be automatically adopted administratively without requiring legislative action on the part of the community. Communities will need to determine whether this "adoption by reference" approach is allowed under their state's enabling authority and due process requirements. If not allowed, communities are to follow their state's requirements, which typically require public notices, hearings and specific adoption of revised maps by the community's legislative body.

1612.3.1 Design flood elevations. Where design flood elevations are not included in the *flood hazard areas* established in Section 1612.3, or where floodways are not designated, the *building official* is authorized to require the applicant to:

1. Obtain and reasonably utilize any design flood elevation and floodway data available from a federal, state or other source; or
2. Determine the design flood elevation and/or floodway in accordance with accepted hydrologic and hydraulic engineering practices used to define special flood hazard areas. Determinations shall be undertaken by a *registered design professional* who shall document that the technical methods used reflect currently accepted engineering practice.

❖ The purpose of this provision is to clarify how design flood elevations are to be determined for those flood hazard areas that do not have the flood elevation already specified. Section 107.2 requires that the construction documents submitted are to be accompanied by a site plan, which must show flood hazard areas, floodways, and design flood elevations, as applicable. While flood elevations are often available, a large percentage of areas that are mapped by FEMA do not have base flood elevations or do not have floodway designations. This section clarifies the authority of the building official to require use of other data, which may be obtained from other sources, or to require the applicant to develop flood hazard data. This section is based on the NFIP regulation in 44 CFR §60.3(b)(4).

1612.3.2 Determination of impacts. In riverine *flood hazard areas* where design flood elevations are specified but floodways have not been designated, the applicant shall provide a floodway analysis that demonstrates that the proposed work will not increase the design flood elevation more than 1 foot

INTERNATIONAL CODE COUNCIL®
Copyright © 2015 ICC. ALL RIGHTS RESERVED. Accessed by David Dammon on Jun 21, 2017 12:30:52 PM pursuant to License Agreement with ICC. No further reproduction or distribution authorized. ANY UNAUTHORIZED REPRODUCTION OR DISTRIBUTION IS A VIOLATION OF THE FEDERAL COPYRIGHT ACT AND THE LICENSE AGREEMENT, AND SUBJECT TO CIVIL AND CRIMINAL PENALTIES THEREUNDER.

(305 mm) at any point within the jurisdiction of the applicable governing authority.

❖ This section requires a floodway analysis to determine impacts. Development in riverine floodplains can increase flood levels and loads on other properties, especially if it occurs in areas known as "floodways" that must be reserved to convey flood flows. Commercial software for these analyses is readily available and FEMA provides technical guidance at http://www.fema.gov/software.

This section provides consistency with the NFIP, which requires applicants to demonstrate whether their proposed work will increase flood levels in floodplains where the NFIP's FIRM shows base flood elevations, but floodways are not shown. A small percentage of riverine floodplains where FEMA has specified base flood elevations do not have designated floodways.

1612.4 Design and construction. The design and construction of buildings and structures located in *flood hazard areas*, including *coastal high hazard areas* and *coastal A zones*, shall be in accordance with Chapter 5 of ASCE 7 and ASCE 24.

❖ FEMA uses multiple designations for flood hazard areas shown on each FIRM, including A, AO, AH, A1-30, AE, A99, AR, AR/A1-30, AR/AE, AR/A0, AR/AH, AR/A, VO or V1-30, VE and V. Along many open coasts and lake shorelines where wind-driven waves are predicted, the flood hazard area is commonly referred to as the "V zone." Flood hazard areas that are inland of areas subject to high-velocity wave action and flood hazard areas along rivers and streams are commonly referred to as "A zones." Because of waves, the flood loads in coastal high-hazard areas differ from those in other flood hazard areas. Since 2009, FIRMs prepared for coastal communities show the "Limit of Moderate Wave Action," which is the inland extent of the 1.5-foot (457 mm) wave height. In ASCE 7 and ASCE 24, as well as in common usage, the area between the V zone and the Limit of Moderate Wave Action is called "Coastal A Zone."

ASCE 24 outlines in detail the specific requirements that are to be applied to buildings and structures in all flood hazard areas. Communities that have AR zones and A99 zones shown on their FIRMs should consult with the appropriate state agency or FEMA regional office for guidance on the requirements that apply. AR zones are areas that result from the decertification of a previously accredited flood protection system (such as a levee) that is determined to be in the process of being restored to provide base flood protection. A99 zones are areas subject to inundation by the 1-percent-annual-chance flood event, but which will ultimately be protected upon completion of an under-construction federal flood protection system.

1612.5 Flood hazard documentation. The following documentation shall be prepared and sealed by a *registered design professional* and submitted to the *building official*:

1. For construction in *flood hazard areas* other than *coastal high-hazard areas* or *coastal A zones*:
   - 1.1. The elevation of the lowest floor, including the basement, as required by the lowest floor elevation inspection in Section 110.3.3 and for the final inspection in Section 110.3.10.1.
   - 1.2. For fully enclosed areas below the design flood elevation where provisions to allow for the automatic entry and exit of floodwaters do not meet the minimum requirements in Section 2.6.2.1 of ASCE 24, *construction documents* shall include a statement that the design will provide for equalization of hydrostatic flood forces in accordance with Section 2.6.2.2 of ASCE 24.
   - 1.3. For dry floodproofed nonresidential buildings, *construction documents* shall include a statement that the dry floodproofing is designed in accordance with ASCE 24.
2. For construction in *coastal high-hazard areas* and *coastal A zones*:
   - 2.1. The elevation of the bottom of the lowest horizontal structural member as required by the lowest floor elevation inspection in Section 110.3.3 and for the final inspection in Section 110.3.10.1.
   - 2.2. *Construction documents* shall include a statement that the building is designed in accordance with ASCE 24, including that the pile or column foundation and building or structure to be attached thereto is designed to be anchored to resist flotation, collapse and lateral movement due to the effects of wind and flood loads acting simultaneously on all building components, and other load requirements of Chapter 16.
   - 2.3. For breakaway walls designed to have a resistance of more than 20 psf (0.96 kN/m^2) determined using allowable stress design, *construction documents* shall include a statement that the breakaway wall is designed in accordance with ASCE 24.

❖ The NFIP requires certain documentation to be submitted by the applicant in order to demonstrate compliance with provisions of the code that cannot be easily verified during a site inspection. The most common, described in Items 1.1 and 2.1, is the documentation of elevations. Elevation is one of the most important aspects of flood-resistant construction and is a significant factor used to determine flood insurance premium rates. FEMA Form 086-0-33, *Elevation Certificate*, which includes illustrations and instructions, is recom-

INTERNATIONAL CODE COUNCIL®
Copyright © 2015 ICC. ALL RIGHTS RESERVED. Accessed by David Dammon on Jun 21, 2017 12:30:52 PM pursuant to License Agreement with ICC. No further reproduction or distribution authorized. ANY UNAUTHORIZED REPRODUCTION OR DISTRIBUTION IS A VIOLATION OF THE FEDERAL COPYRIGHT ACT AND THE LICENSE AGREEMENT, AND SUBJECT TO CIVIL AND CRIMINAL PENALTIES THEREUNDER.

mended (download from http://www.fema.gov/national-flood-insurance-program-2/elevation-certificate).

Building owners need elevation certificates to obtain NFIP flood insurance, and insurance agents use the certificates to compute the proper flood insurance premium rates.

The criteria for the minimum number and size of flood openings to allow free inflow and outflow of floodwaters under all types of flood conditions are set in ASCE 24. The statement described in Item 1.2 is required in the construction documents if the engineered openings are used (see Section 2.7.2.2 of ASCE 24); this statement is not required if nonengineered (prescriptive) openings meet the criteria of Section 2.7.2.1 of ASCE 24. For further guidance, refer to FEMA TB #1, *Openings in Foundation Walls and Walls of Enclosures Below Elevated Buildings in Special Flood Hazard Areas*.

The statement described in Item 1.3 must be included in the construction documents for nonresidential buildings that are designed to be dry floodproofed. It is important to note that dry floodproofing is allowed only for nonresidential buildings (and nonresidential portions of mixed-use buildings) and only if those structures are not located in coastal high-hazard areas and Coastal A Zones. The registered design professional who seals the construction documents is indicating that, based on development or review of the structural design, specifications and plans for construction, the design and methods of construction are in accordance with accepted standards of practice in ASCE 24 to meet the following provisions: 1. The structure, together with attendant utilities and sanitary facilities, is water tight to the floodproofed design elevation indicated with walls that are substantially impermeable to the passage of water; and 2. All structural components are capable of resisting hydrostatic and hydrodynamic flood forces, including the effects of buoyancy and anticipated debris impact forces. The use of FEMA Form 086-0-34, *Floodproofing Certificate*, is recommended (download from http://www.fema.gov/floodplain-management/floodproofing-certificate). This certificate is used by insurance agents to determine NFIP flood insurance premium rates for dry floodproofed nonresidential buildings. Insurance rates are higher for buildings that use dry floodproofing measures that require human intervention. For further guidance, refer to FEMA TB #3, *Nonresidential Floodproofing—Requirements and Certification for Buildings Located in Special Flood Hazard Areas*.

The statement described in Item 2.2 is included in the construction documents to indicate that the design meets the flood load provisions of ASCE 24 and other loads required by this chapter. Buildings located in coastal high-hazard areas and Coastal A Zones are expected to experience significant flood and wind loads simultaneously. FEMA and coastal communities report significant damage to buildings that are not built to current code.

The documentation described in Item 2.3 is used only for specific situations in which properly elevated buildings in coastal high-hazard areas and Coastal A Zones have enclosures beneath them, and then only if the walls of the enclosures are designed to resist more than 20 psf (0.96 kN/m^2) determined using ASD. Because breakaway walls will fail under flood conditions, building materials can become water-borne debris that may damage adjacent buildings. Refer to FEMA TB #5, *Free-of-Obstruction Requirements for Buildings Located in Coastal High-Hazard Areas,* and FEMA TB #9, *Design and Construction Guidance for Breakaway Walls Below Elevated Buildings in Coastal High-Hazard Areas*.

SECTION 1613
EARTHQUAKE LOADS

1613.1 Scope. Every structure, and portion thereof, including nonstructural components that are permanently attached to structures and their supports and attachments, shall be designed and constructed to resist the effects of earthquake motions in accordance with ASCE 7, excluding Chapter 14 and Appendix 11A. The *seismic design category* for a structure is permitted to be determined in accordance with Section 1613 or ASCE 7.

Exceptions:

1. Detached one- and two-family dwellings, assigned to *Seismic Design Category* A, B or C, or located where the mapped short-period spectral response acceleration, S_S, is less than 0.4 g.
2. The seismic force-resisting system of wood-frame buildings that conform to the provisions of Section 2308 are not required to be analyzed as specified in this section.
3. Agricultural storage structures intended only for incidental human occupancy.
4. Structures that require special consideration of their response characteristics and environment that are not addressed by this code or ASCE 7 and for which other regulations provide seismic criteria, such as vehicular bridges, electrical transmission towers, hydraulic structures, buried utility lines and their appurtenances and nuclear reactors.

❖ These code provisions provide the requirements essential to determining a building's seismic design category. The balance of the earthquake load provisions are contained in the ASCE 7 load standard. The chapters that are noted as excluded from the ASCE 7 referenced standard are those that can create conflicts with Chapters 17 through 23. The balance of ASCE 7 earthquake load provisions are as follows:

Chapter Subject

11 Seismic Design Criteria

12 Seismic Design Requirements for Building Structures

INTERNATIONAL CODE COUNCIL®
Copyright © 2015 ICC. ALL RIGHTS RESERVED. Accessed by David Dammon on Jun 21, 2017 12:30:52 PM pursuant to License Agreement with ICC. No further reproduction or distribution authorized. ANY UNAUTHORIZED REPRODUCTION OR DISTRIBUTION IS A VIOLATION OF THE FEDERAL COPYRIGHT ACT AND THE LICENSE AGREEMENT, AND SUBJECT TO CIVIL AND CRIMINAL PENALTIES THEREUNDER.

13 Seismic Design Requirements for Nonstructural Components

15 Seismic Design Requirements for Nonbuilding Structures

16 Seismic Response History Procedures

17 Seismic Design Requirements for Seismically Isolated Structures

18 Seismic Design Requirements for Structures with Damping Systems

19 Soil Structure Interaction for Seismic Design

20 Site Classification Procedure for Seismic Design

21 Site-specific Ground Motion Procedures for Seismic Design

22 Seismic Ground Motion and Long-Period Transition Maps

23 Seismic Design Reference Documents

These seismic requirements are based, for the most part, on the NEHRP *Recommended Provisions for Seismic Regulations for New Buildings and Other Structures*. A new set of NEHRP recommended provisions has been prepared by the BSSC approximately every three years since the first edition in 1985. The code uses the NEHRP recommended provisions as the technical basis for seismic design requirements because of the nationwide input into the development of these design criteria. The NEHRP recommended provisions present up-to-date criteria for the design and construction of buildings subject to earthquake ground motions that are applicable anywhere in the nation. The requirements are intended to minimize the hazard to life for all buildings, increase the expected performance of higher-occupancy buildings as compared to ordinary buildings, and improve the capability of essential facilities to function during and after an earthquake. These minimum criteria are considered to be prudent and economically justified for the protection of life safety in buildings subject to earthquakes. Achieving the intended performance depends on a number of factors, including the type of structural framing, configuration, construction materials and as-built details of construction.

Detailed descriptions of changes made for the 2009 NEHRP *Recommended Provisions for Seismic Regulations for New Building and Other Structures* are available at www.bssconline.org under the explanation of changes made for the 2009 edition of the Provisions.

There are four exceptions to the seismic design requirements included in this section. The following discussion addresses each of the exceptions.

Exception 1 exempts detached one- and two-family dwellings under two conditions. The first applies to structures assigned to Seismic Design Category A, B or C (meaning that both S_{DS} < 0.5g and S_{DI} < 0.2g). The second is for structures having a value for mapped short-period spectral response acceleration, S_s, less than 0.4g. The latter condition is derived from the ASCE 7 seismic provisions. Since it is based solely on the mapped value for short periods, it may allow structures to qualify more directly for this exception than will the first condition. In other words, the value of S_s should be checked first. If the structure qualifies based on S_s, then it is not necessary to check the seismic design category.

Exception 2 exempts conventional light-frame wood construction from the seismic requirements in this chapter. It should be noted that the limitations for conventional light-frame wood construction are included in Section 2308.2. There is no limitation on the use of the structure, except that Risk Category IV structures are not permitted to be constructed using conventional light-frame wood construction provisions. Similarly, irregular portions of Seismic Design Category D and E structures are very limited when using conventional light-frame wood construction (see commentary, Sections 2308.6.8.1 and 2308.6.8.2). The conventional light-frame wood construction provisions are deemed to provide equivalent seismic resistance as compared to construction designed in accordance with the requirements of this chapter based on the history of such conventional construction.

In Exception 3, agricultural buildings are exempt because they present a minimal life-safety hazard due to the low probability of human occupancy.

Exception 4 corresponds to an ASCE 7 exception regarding structures that are covered under other regulations, making it unnecessary to comply with the earthquake load requirements of the code.

1613.2 Definitions. The following terms are defined in Chapter 2:

❖ Definitions facilitate the understanding of code provisions and minimize potential confusion. To that end, this section lists definitions of terms associated with earthquake loads. Note that these definitions are found in Chapter 2. The use and application of defined terms, as well as undefined terms, are set forth in Section 201.

DESIGN EARTHQUAKE GROUND MOTION.

ORTHOGONAL.

RISK-TARGETED MAXIMUM CONSIDERED EARTHQUAKE (MCE_R) GROUND MOTION RESPONSE ACCELERATION.

SEISMIC DESIGN CATEGORY.

SEISMIC FORCE-RESISTING SYSTEM.

SITE CLASS.

SITE COEFFICIENTS.

1613.3 Seismic ground motion values. Seismic ground motion values shall be determined in accordance with this section.

❖ The design earthquake ground motion levels determined in this section may result in damage, both

INTERNATIONAL CODE COUNCIL®
Copyright © 2015 ICC. ALL RIGHTS RESERVED. Accessed by David Dammon on Jun 21, 2017 12:30:52 PM pursuant to License Agreement with ICC. No further reproduction or distribution authorized. ANY UNAUTHORIZED REPRODUCTION OR DISTRIBUTION IS A VIOLATION OF THE FEDERAL COPYRIGHT ACT AND THE LICENSE AGREEMENT, AND SUBJECT TO CIVIL AND CRIMINAL PENALTIES THEREUNDER.

structural and nonstructural, from the high stresses that occur because of the dynamic nature of seismic events. For most structures, damage from the design earthquake ground motion would be repairable, but might be so costly as to make it economically undesirable. For essential facilities, it is expected that damage from the design earthquake ground motion would not be so severe as to prevent continued occupancy and function of the facility. For ground motions greater than the design levels, the intent is that there be a low likelihood of structural collapse.

1613.3.1 Mapped acceleration parameters. The parameters S_S and S_1 shall be determined from the 0.2 and 1-second spectral response accelerations shown on Figures 1613.3.1(1) through 1613.3.1(8). Where S_1 is less than or equal to 0.04 and S_S is less than or equal to 0.15, the structure is permitted to be assigned *Seismic Design Category* A.

❖ The mapped maximum considered earthquake spectral response accelerations at 0.2-second period (S_s) and 1-second period (S_1) for a particular site are to be determined from Figures 1613.3.1(1) through (8). Where a site is between contours, as would usually be the case, straight-line interpolation or the value of the higher contour may be used. Areas that are considered to have a low seismic risk based solely on the mapped ground motions are placed directly into Seismic Design Category A.

The mapped maximum considered earthquake spectral response accelerations for a site may also be obtained using a seismic parameter program that has been developed by the United States Geological Survey (USGS) in cooperation with BSSC and FEMA. This program is available on the USGS earthquake hazards web site. The data are interpolated for a specific latitude-longitude or zip code, which the user enters. Output for an entry uses the built-in database to interpolate for the specific site. Caution should be used when using a zip code. In regions with highly variable mapped ground motions, the design parameters within a zip code may vary considerably from the value at the centroid of the zip code area. The code/NEHRP maximum considered earthquake (MCE) output for a site are the two spectral values required for design. The user may also use the program to calculate an MCE response spectrum, with or without site coefficients. Site coefficients can be calculated and included in calculations by simply selecting the site class; the program then calculates the site coefficient.

FIGURES 1613.3.1(1) through 1613.3.1(8). See pages 16-72 through 16-81.

❖ These code figures provide the 5-percent damped spectral response accelerations at 0.2-second period (S_s), as well as at 1-second period (S_i) for Site Class B soil profiles. The code has incorporated updated earthquake ground motion maps that reflect the 2008 maps developed by the USGS National Seismic Hazard Mapping Project as well as technical changes adopted for the 2009 NEHRP *Recommended Seismic Provisions for New Buildings and Other Structures* (FEMA P-750). In the NEHRP update process, the title for these maps was revised from "Maximum Considered Earthquake (MCE) Ground Motions" to "Risk-Targeted Earthquake (RTE) Ground Motions."

The seismic hazard maps incorporate new information on earthquake sources and ground motion prediction equations, including the new Next Generation Attenuation (NGA) relations. The ground motion maps further incorporate technical changes that reflect the use of: 1. Risk-targeted ground motions; 2. Maximum direction ground motions; and 3. Near-source 84th percentile ground motions.

Precise design values can be obtained from a USGS web site (http://earthquake.usgs.gov/research/hazmaps/design/index.php) using the longitude and latitude of the building site, obtained from GPS mapping programs or web sites.

1613.3.2 Site class definitions. Based on the site soil properties, the site shall be classified as *Site Class* A, B, C, D, E or F in accordance with Chapter 20 of ASCE 7.

Where the soil properties are not known in sufficient detail to determine the site class, Site Class D shall be used unless the building official or geotechnical data determines Site Class E or F soils are present at the site.

❖ Each site is to be classified as one of six site classes (A through F), as defined in ASCE 7, based on one of three soil properties measured over the top 100 feet (30 480 mm) of the site. If the top 100 feet (30 480 mm) are not homogeneous, the ASCE 7 provisions address how to determine average properties. Site Class A is hard rock typically found in the eastern United States. Site Class B is softer rock, typical of the western parts of the country. Site Class C, D or E indicates progressively softer soils. From an earthquake-resistance perspective, rock is the best material for most structures to be founded on. Site Class F indicates soil so poor that site-specific geotechnical investigation and dynamic site-response analysis are needed to determine appropriate site coefficients.

The three soil properties forming the basis of site classification are: shear wave velocity, standard penetration resistance or blow count (determined in accordance with ASTM D1586), and undrained shear strength (determined in accordance with ASTM D2166 or ASTM D2850). Site Class A and B designations must be based on shear wave velocity measurements or estimates.

Where soil property measurements to a depth of 100 feet (30 480 mm) are not feasible, the registered design professional performing the geotechnical investigation may estimate appropriate soil properties based on known geologic conditions.

When soil properties are not known in sufficient detail to determine the site class, the default site class is D, unless the building official determines that Site Class E or F soil may exist at the site.

INTERNATIONAL CODE COUNCIL®
Copyright © 2015 ICC. ALL RIGHTS RESERVED. Accessed by David Dammon on Jun 21, 2017 12:30:52 PM pursuant to License Agreement with ICC. No further reproduction or distribution authorized. ANY UNAUTHORIZED REPRODUCTION OR DISTRIBUTION IS A VIOLATION OF THE FEDERAL COPYRIGHT ACT AND THE LICENSE AGREEMENT, AND SUBJECT TO CIVIL AND CRIMINAL PENALTIES THEREUNDER.

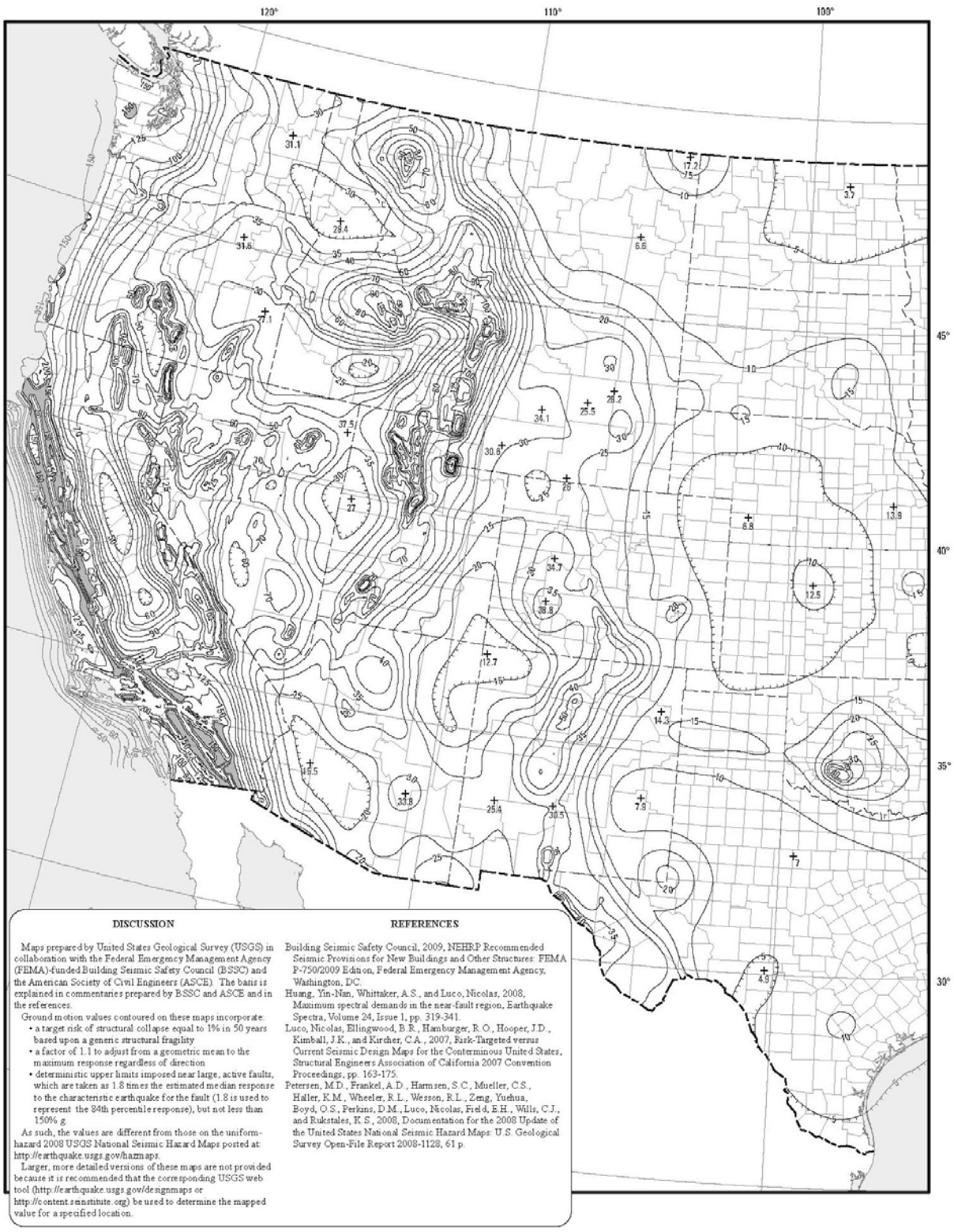

FIGURE 1613.3.1(1)
RISK-TARGETED MAXIMUM CONSIDERED EARTHQUAKE (MCE_R) GROUND MOTION RESPONSE ACCELERATIONS FOR THE CONTERMINOUS UNITED STATES OF 0.2-SECOND SPECTRAL RESPONSE ACCELERATION (5% OF CRITICAL DAMPING), SITE CLASS B

(continued)

INTERNATIONAL CODE COUNCIL®
Copyright © 2015 ICC. ALL RIGHTS RESERVED. Accessed by David Dammon on Jun 21, 2017 12:30:52 PM pursuant to License Agreement with ICC. No further reproduction or distribution authorized. ANY UNAUTHORIZED REPRODUCTION OR DISTRIBUTION IS A VIOLATION OF THE FEDERAL COPYRIGHT ACT AND THE LICENSE AGREEMENT, AND SUBJECT TO CIVIL AND CRIMINAL PENALTIES THEREUNDER.

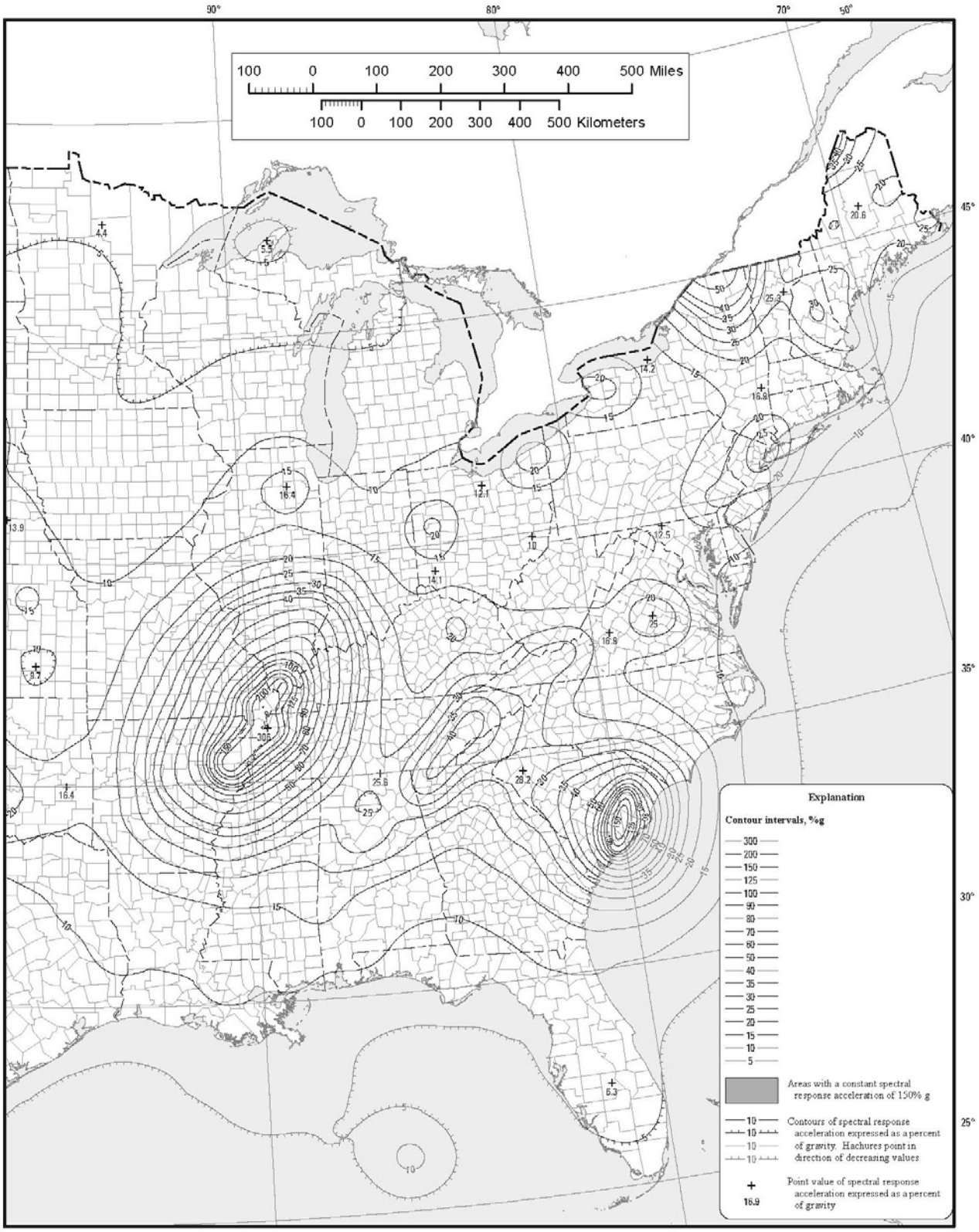

FIGURE 1613.3.1(1)—continued
RISK-TARGETED MAXIMUM CONSIDERED EARTHQUAKE (MCE_R) GROUND MOTION RESPONSE ACCELERATIONS FOR THE CONTERMINOUS UNITED STATES OF 0.2-SECOND SPECTRAL RESPONSE ACCELERATION (5% OF CRITICAL DAMPING), SITE CLASS B

INTERNATIONAL CODE COUNCIL®
Copyright © 2015 ICC. ALL RIGHTS RESERVED. Accessed by David Dammon on Jun 21, 2017 12:30:52 PM pursuant to License Agreement with ICC. No further reproduction or distribution authorized. ANY UNAUTHORIZED REPRODUCTION OR DISTRIBUTION IS A VIOLATION OF THE FEDERAL COPYRIGHT ACT AND THE LICENSE AGREEMENT, AND SUBJECT TO CIVIL AND CRIMINAL PENALTIES THEREUNDER.

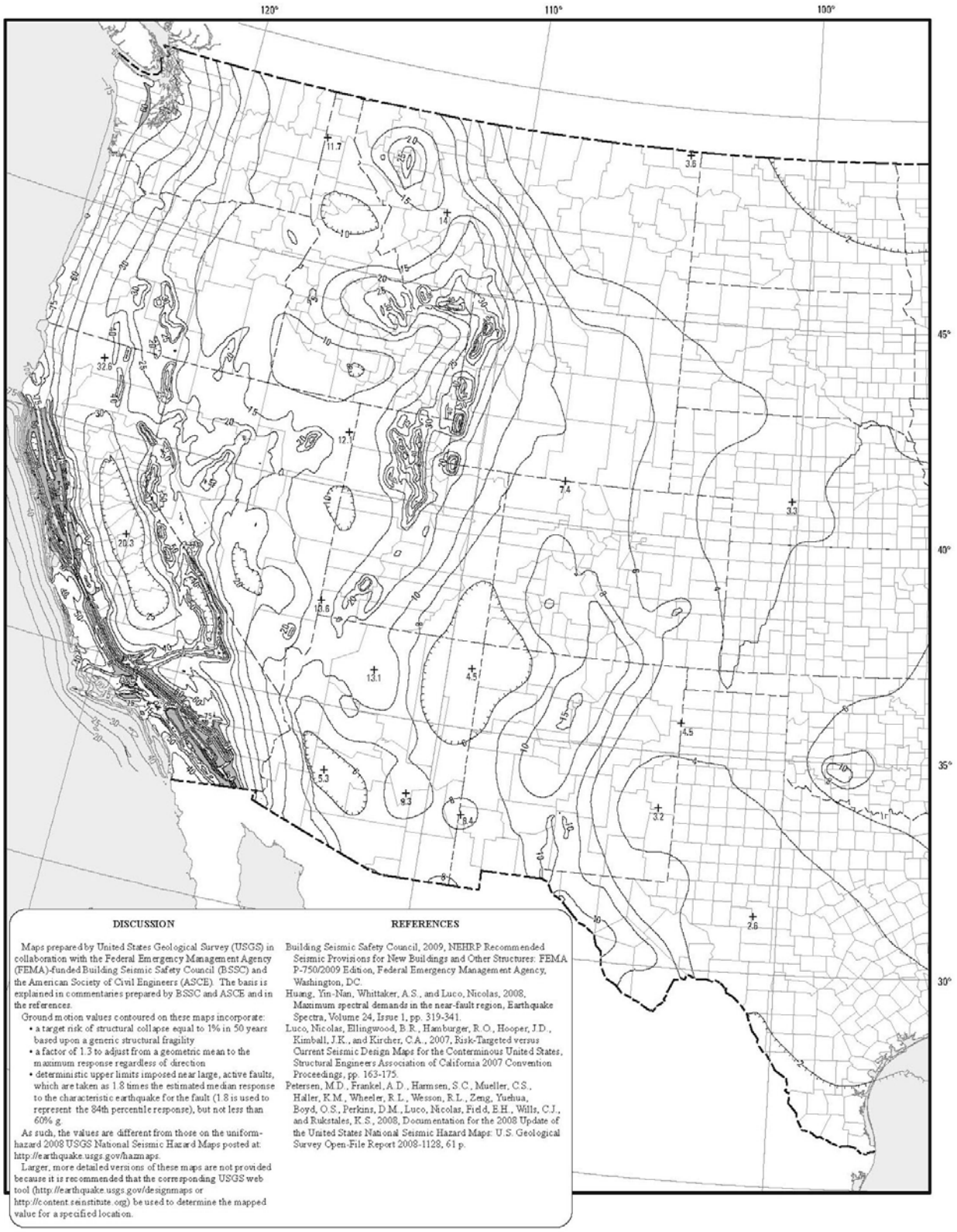

FIGURE 1613.3.1(2)
RISK-TARGETED MAXIMUM CONSIDERED EARTHQUAKE (MCE_R) GROUND MOTION RESPONSE ACCELERATIONS FOR THE CONTERMINOUS UNITED STATES OF 1-SECOND SPECTRAL RESPONSE ACCELERATION (5% OF CRITICAL DAMPING), SITE CLASS B

(continued)

INTERNATIONAL CODE COUNCIL®
Copyright © 2015 ICC. ALL RIGHTS RESERVED. Accessed by David Dammon on Jun 21, 2017 12:30:52 PM pursuant to License Agreement with ICC. No further reproduction or distribution authorized. ANY UNAUTHORIZED REPRODUCTION OR DISTRIBUTION IS A VIOLATION OF THE FEDERAL COPYRIGHT ACT AND THE LICENSE AGREEMENT, AND SUBJECT TO CIVIL AND CRIMINAL PENALTIES THEREUNDER.

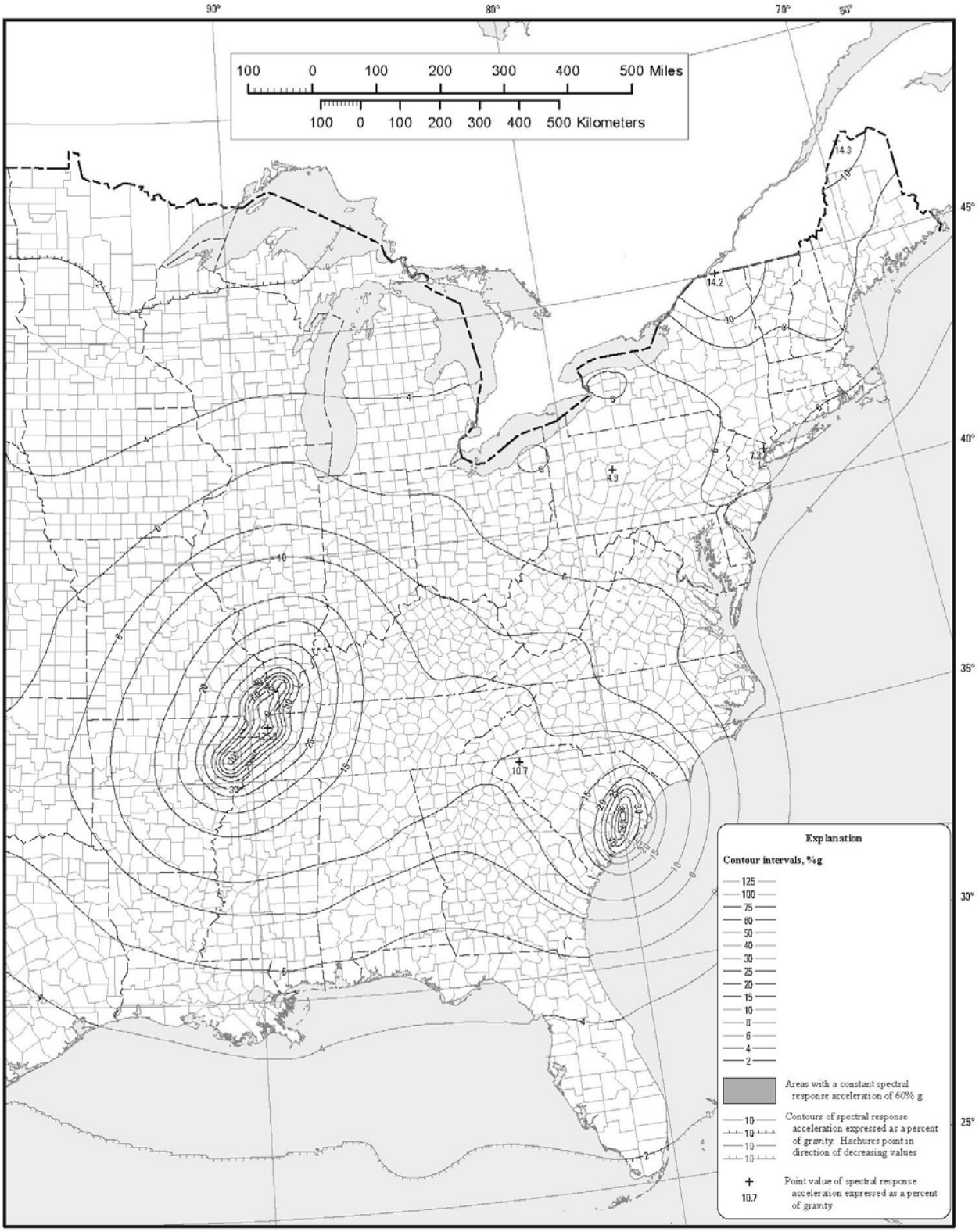

FIGURE 1613.3.1(2)—continued
RISK-TARGETED MAXIMUM CONSIDERED EARTHQUAKE (MCE_R) GROUND MOTION RESPONSE ACCELERATIONS FOR THE CONTERMINOUS UNITED STATES OF 1-SECOND SPECTRAL RESPONSE ACCELERATION (5% OF CRITICAL DAMPING), SITE CLASS B

INTERNATIONAL CODE COUNCIL®
Copyright © 2015 ICC. ALL RIGHTS RESERVED. Accessed by David Dammon on Jun 21, 2017 12:30:52 PM pursuant to License Agreement with ICC. No further reproduction or distribution authorized. ANY UNAUTHORIZED REPRODUCTION OR DISTRIBUTION IS A VIOLATION OF THE FEDERAL COPYRIGHT ACT AND THE LICENSE AGREEMENT, AND SUBJECT TO CIVIL AND CRIMINAL PENALTIES THEREUNDER.

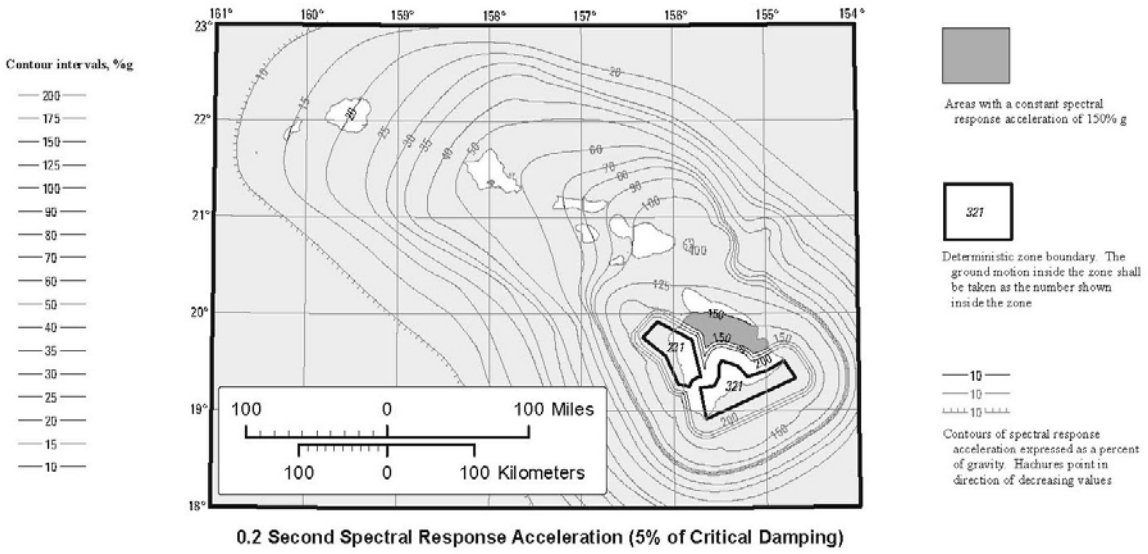

0.2 Second Spectral Response Acceleration (5% of Critical Damping)

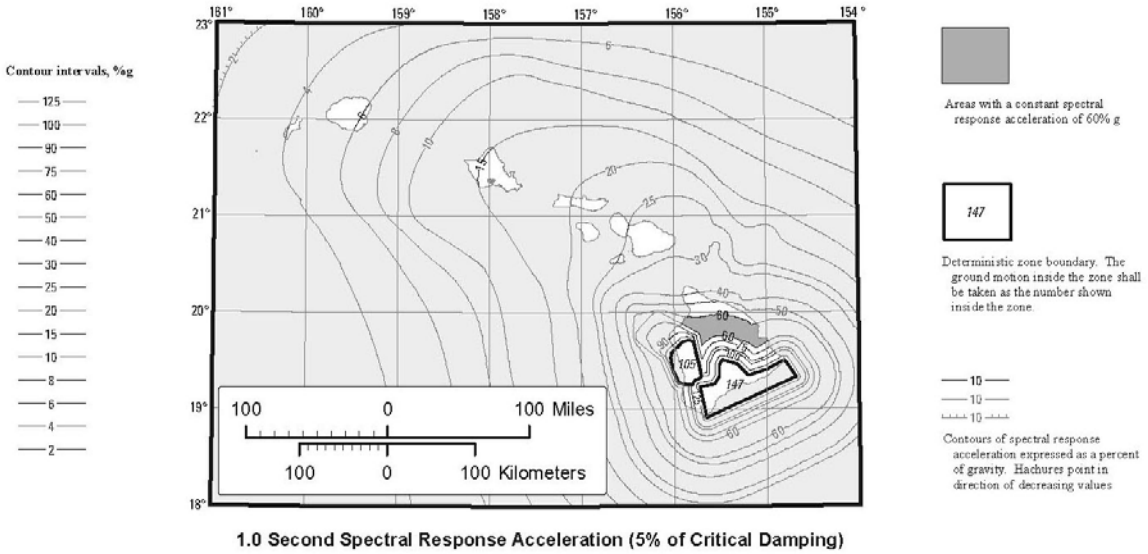

1.0 Second Spectral Response Acceleration (5% of Critical Damping)

DISCUSSION

Maps prepared by United States Geological Survey (USGS) in collaboration with the Federal Emergency Management Agency (FEMA)-funded Building Seismic Safety Council (BSSC) and the American Society of Civil Engineers (ASCE). The basis is explained in commentaries prepared by BSSC and ASCE and in the references.

Ground motion values contoured on these maps incorporate:

- a target risk of structural collapse equal to 1% in 50 years based upon a generic structural fragility
- deterministic upper limits imposed near large, active faults, which are taken as 1.8 times the estimated median response to the characteristic earthquake for the fault (1.8 is used to represent the 84th percentile response), but not less than 150% and 60% g for 0.2 and 1.0 sec, respectively.

As such, the values are different from those on the uniform-hazard 1998 USGS National Seismic Hazard Maps for Hawaii posted at http://earthquake.usgs.gov/hazmaps.

Larger, more detailed versions of these maps are not provided because it is recommended that the corresponding USGS web tool (http://earthquake.usgs.gov/designmaps or http://content.seinstitute.org) be used to determine the mapped value for a specified location.

REFERENCES

Building Seismic Safety Council, 2009, NEHRP Recommended Seismic Provisions for New Buildings and Other Structures: FEMA P-750/2009 Edition, Federal Emergency Management Agency, Washington, D.C.

Huang, Yin-Nan, Whittaker, A.S., and Luco, Nicolas, 2008, Maximum spectral demands in the near-fault region, Earthquake Spectra, Volume 24, Issue 1, pp. 319-341.

Klein, F., Frankel, A.D., Mueller, C.S., Wesson, R.L., and Okubo, P., 2001, Seismic hazard in Hawaii: high rate of large earthquakes and probabilistic ground-motion maps, Bulletin of the Seismological Society of America, Volume 91, pp. 479-498.

Luco, Nicolas, Ellingwood, B.R., Hamburger, R.O., Hooper, J.D., Kimball, J.K., and Kircher, C.A., 2007, Risk-Targeted versus Current Seismic Design Maps for the Conterminous United States, Structural Engineers Association of California 2007 Convention Proceedings, pp. 163-175.

FIGURE 1613.3.1(3)
RISK-TARGETED MAXIMUM CONSIDERED EARTHQUAKE (MCE_R) GROUND MOTION RESPONSE ACCELERATIONS FOR HAWAII OF 0.2- AND 1-SECOND SPECTRAL RESPONSE ACCELERATION (5% OF CRITICAL DAMPING), SITE CLASS B

INTERNATIONAL CODE COUNCIL®
Copyright © 2015 ICC. ALL RIGHTS RESERVED. Accessed by David Dammon on Jun 21, 2017 12:30:52 PM pursuant to License Agreement with ICC. No further reproduction or distribution authorized. ANY UNAUTHORIZED REPRODUCTION OR DISTRIBUTION IS A VIOLATION OF THE FEDERAL COPYRIGHT ACT AND THE LICENSE AGREEMENT, AND SUBJECT TO CIVIL AND CRIMINAL PENALTIES THEREUNDER.

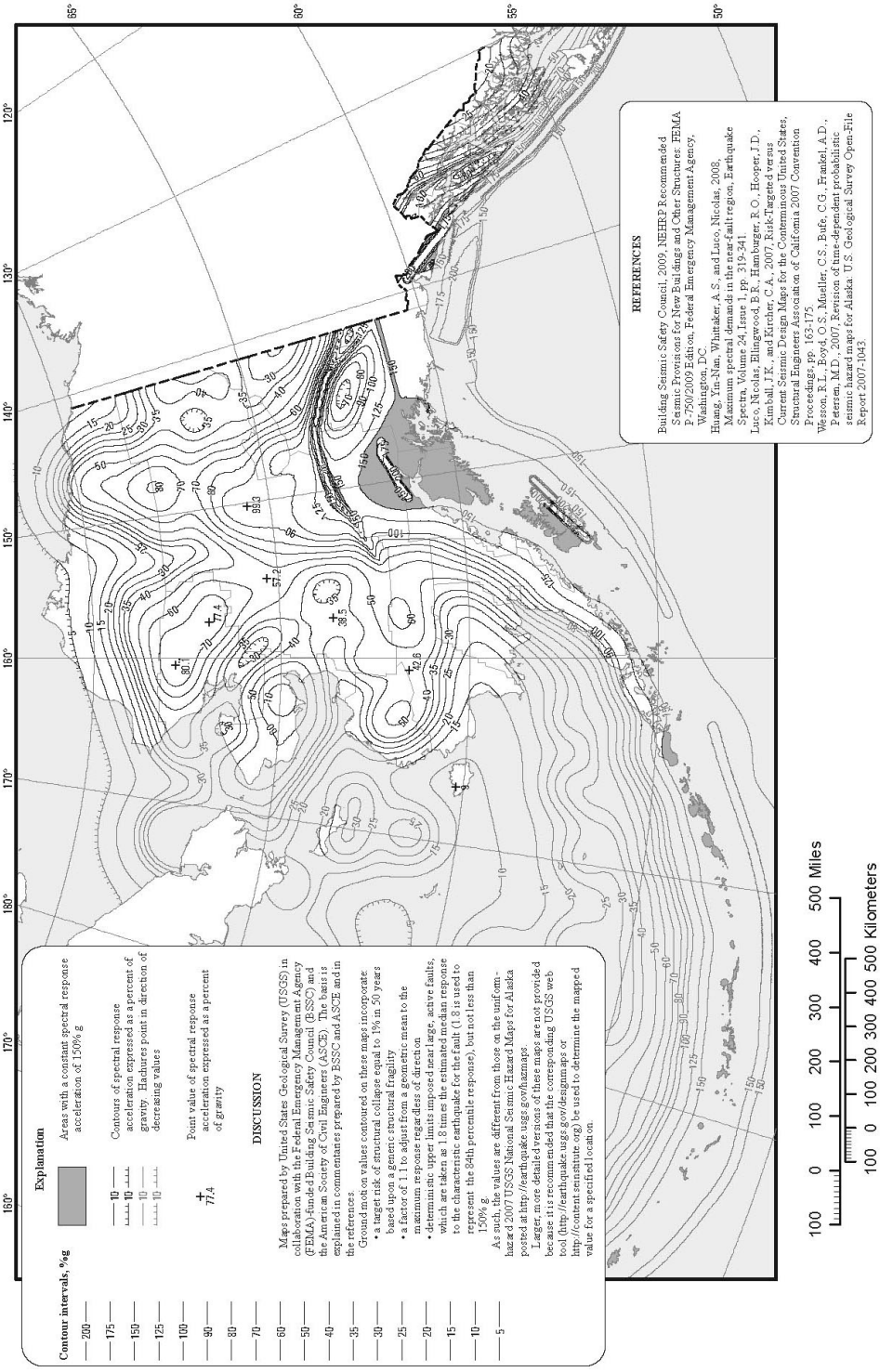

FIGURE 1613.3.1(4)
RISK-TARGETED MAXIMUM CONSIDERED EARTHQUAKE (MCE_R) GROUND MOTION RESPONSE ACCELERATIONS FOR ALASKA OF 0.2-SECOND SPECTRAL RESPONSE ACCELERATION (5% OF CRITICAL DAMPING), SITE CLASS B

INTERNATIONAL CODE COUNCIL®
Copyright © 2015 ICC. ALL RIGHTS RESERVED. Accessed by David Dammon on Jun 21, 2017 12:30:52 PM pursuant to License Agreement with ICC. No further reproduction or distribution authorized. ANY UNAUTHORIZED REPRODUCTION OR DISTRIBUTION IS A VIOLATION OF THE FEDERAL COPYRIGHT ACT AND THE LICENSE AGREEMENT, AND SUBJECT TO CIVIL AND CRIMINAL PENALTIES THEREUNDER.

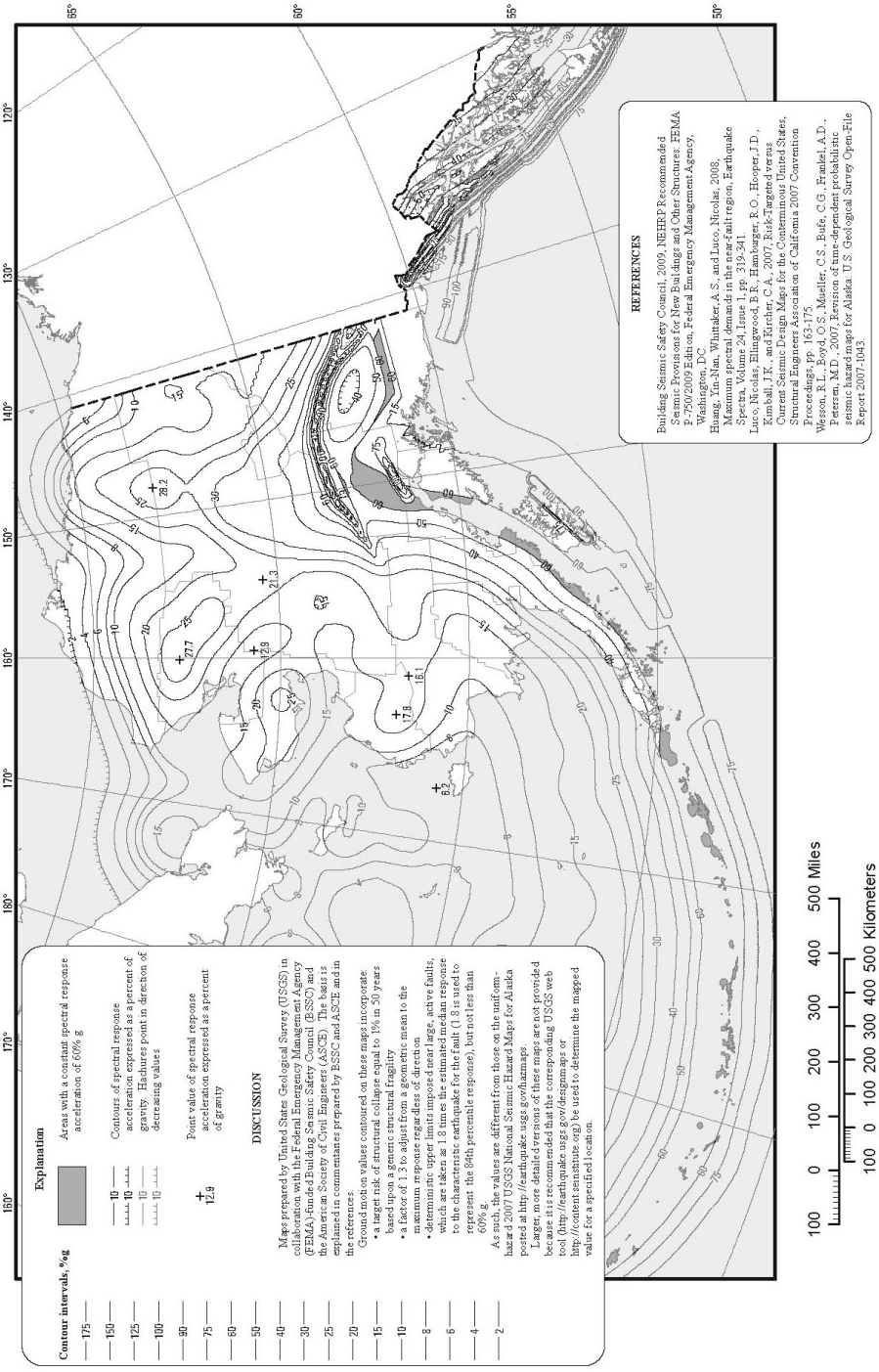

FIGURE 1613.3.1(5)
RISK-TARGETED MAXIMUM CONSIDERED EARTHQUAKE (MCE_R) GROUND MOTION RESPONSE ACCELERATIONS FOR ALASKA OF 1.0-SECOND SPECTRAL RESPONSE ACCELERATION (5% OF CRITICAL DAMPING), SITE CLASS B

INTERNATIONAL CODE COUNCIL®
Copyright © 2015 ICC. ALL RIGHTS RESERVED. Accessed by David Dammon on Jun 21, 2017 12:30:52 PM pursuant to License Agreement with ICC. No further reproduction or distribution authorized. ANY UNAUTHORIZED REPRODUCTION OR DISTRIBUTION IS A VIOLATION OF THE FEDERAL COPYRIGHT ACT AND THE LICENSE AGREEMENT, AND SUBJECT TO CIVIL AND CRIMINAL PENALTIES THEREUNDER.

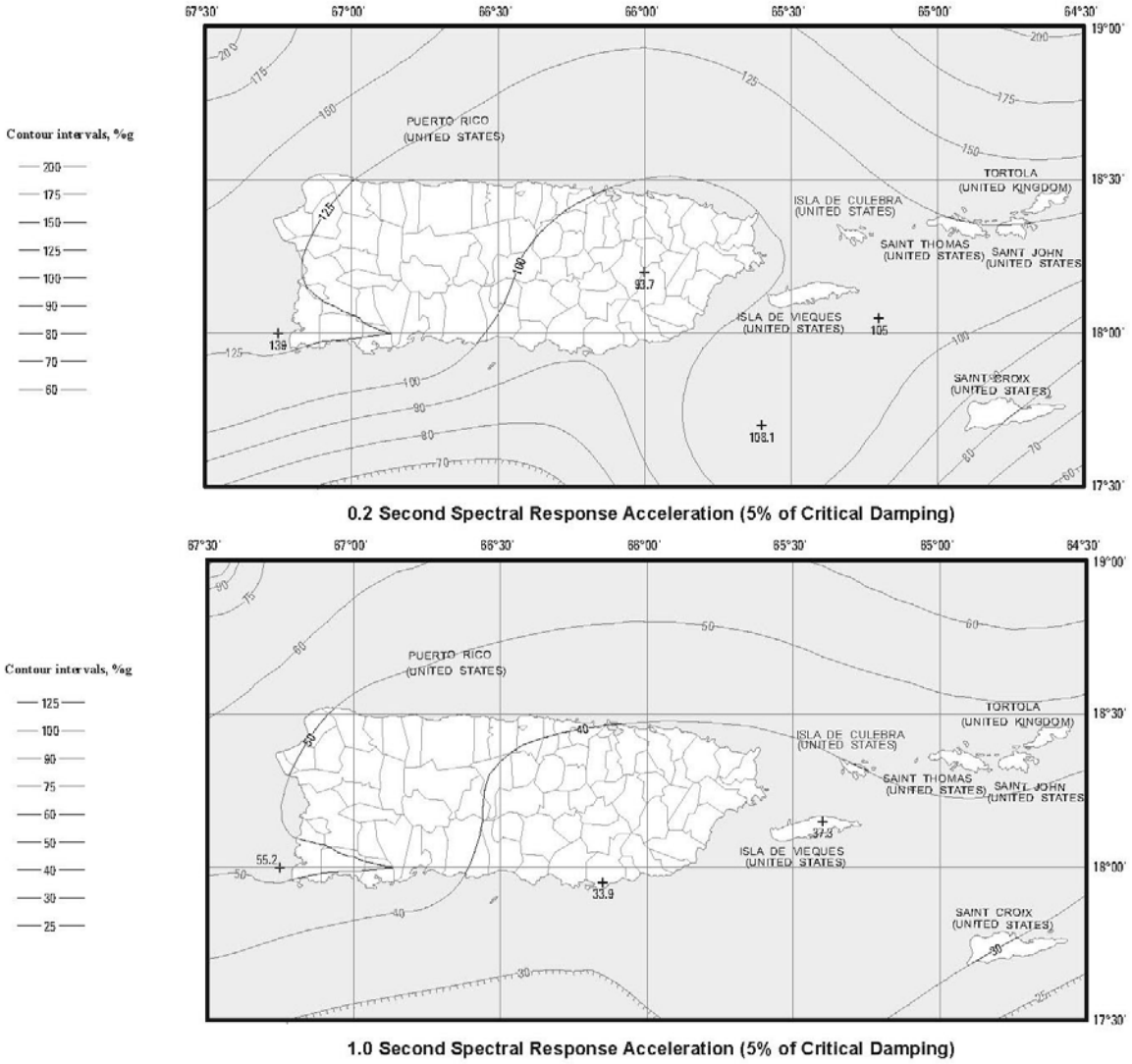

FIGURE 1613.3.1(6)
RISK-TARGETED MAXIMUM CONSIDERED EARTHQUAKE (MCE_R) GROUND MOTION RESPONSE ACCELERATIONS FOR PUERTO RICO AND THE UNITED STATES VIRGIN ISLANDS OF 0.2- AND 1-SECOND SPECTRAL RESPONSE ACCELERATION (5% OF CRITICAL DAMPING), SITE CLASS B

INTERNATIONAL CODE COUNCIL®
Copyright © 2015 ICC. ALL RIGHTS RESERVED. Accessed by David Dammon on Jun 21, 2017 12:30:52 PM pursuant to License Agreement with ICC. No further reproduction or distribution authorized. ANY UNAUTHORIZED REPRODUCTION OR DISTRIBUTION IS A VIOLATION OF THE FEDERAL COPYRIGHT ACT AND THE LICENSE AGREEMENT, AND SUBJECT TO CIVIL AND CRIMINAL PENALTIES THEREUNDER.

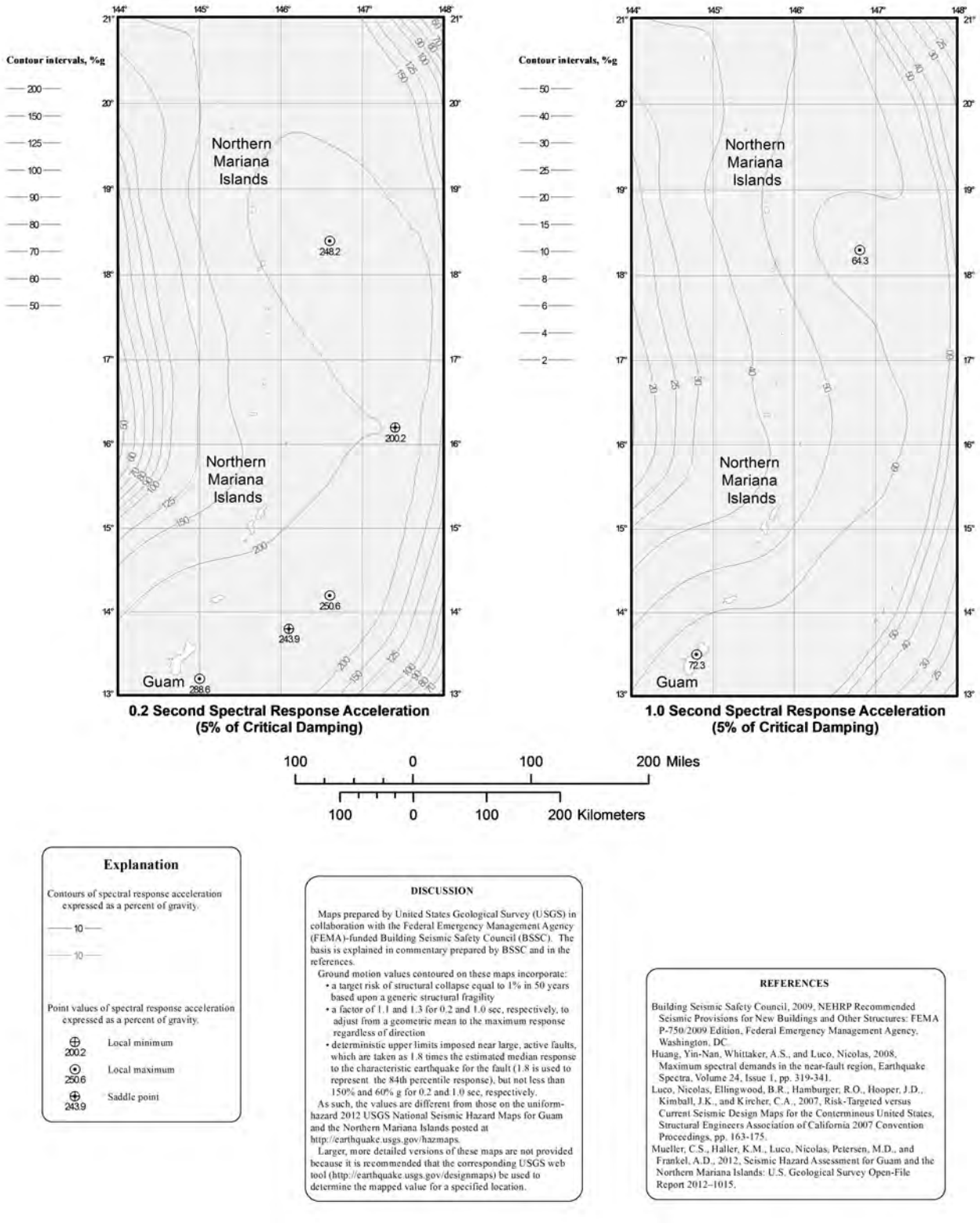

FIGURE 1613.3.1(7)
RISK-TARGETED MAXIMUM CONSIDERED EARTHQUAKE (MCE_R) GROUND MOTION RESPONSE ACCELERATIONS FOR GUAM AND THE NORTHERN MARIANA ISLANDS OF 0.2- AND 1-SECOND SPECTRAL RESPONSE ACCELERATION (5% OF CRITICAL DAMPING), SITE CLASS B

INTERNATIONAL CODE COUNCIL®
Copyright © 2015 ICC. ALL RIGHTS RESERVED. Accessed by David Dammon on Jun 21, 2017 12:30:52 PM pursuant to License Agreement with ICC. No further reproduction or distribution authorized. ANY UNAUTHORIZED REPRODUCTION OR DISTRIBUTION IS A VIOLATION OF THE FEDERAL COPYRIGHT ACT AND THE LICENSE AGREEMENT, AND SUBJECT TO CIVIL AND CRIMINAL PENALTIES THEREUNDER.

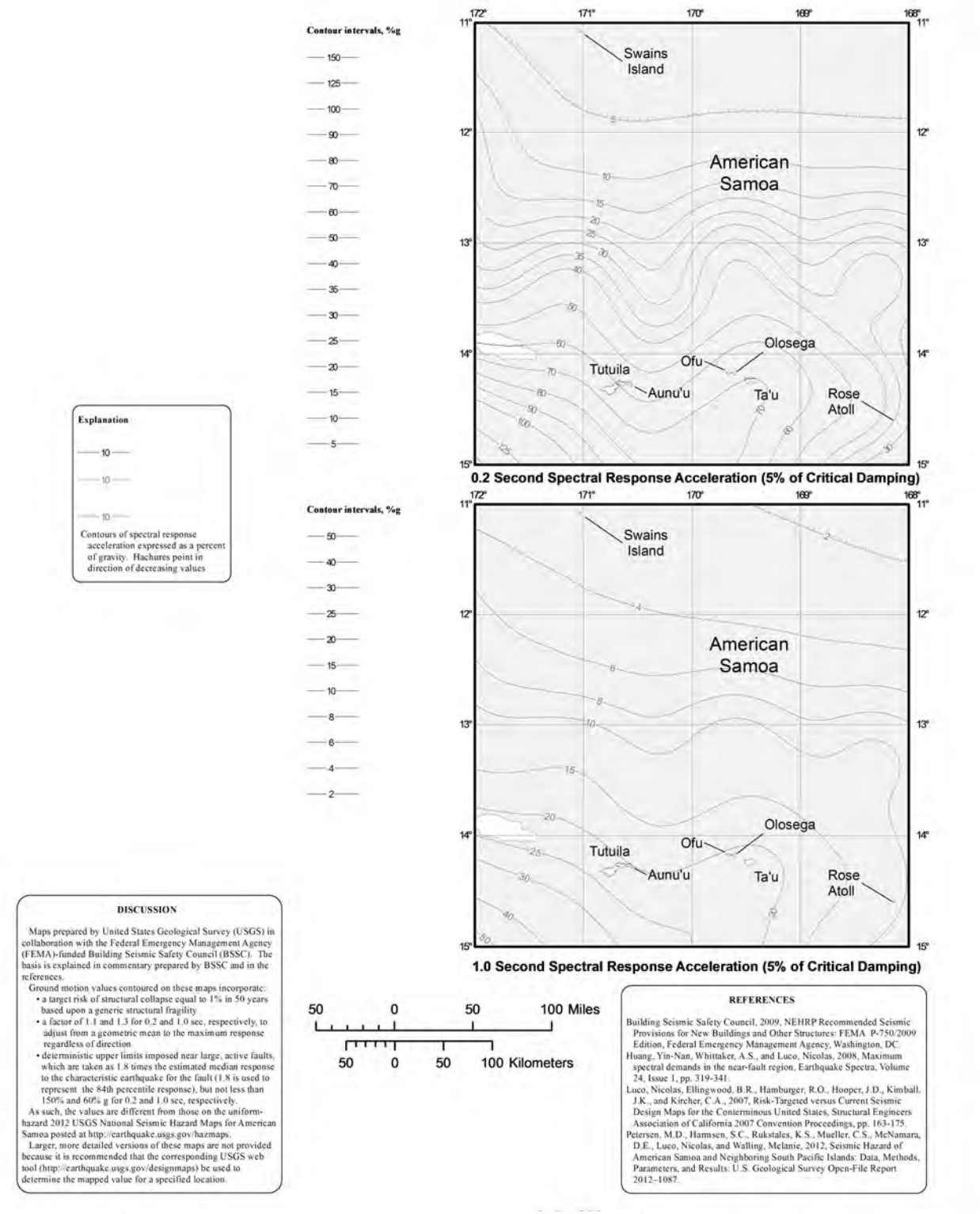

FIGURE 1613.3.1(8)
RISK-TARGETED MAXIMUM CONSIDERED EARTHQUAKE (MCE_R) GROUND MOTION RESPONSE ACCELERATIONS FOR AMERICAN SAMOA OF 0.2- AND 1-SECOND SPECTRAL RESPONSE ACCELERATION (5% OF CRITICAL DAMPING), SITE CLASS B

INTERNATIONAL CODE COUNCIL®
Copyright © 2015 ICC. ALL RIGHTS RESERVED. Accessed by David Dammon on Jun 21, 2017 12:30:52 PM pursuant to License Agreement with ICC. No further reproduction or distribution authorized. ANY UNAUTHORIZED REPRODUCTION OR DISTRIBUTION IS A VIOLATION OF THE FEDERAL COPYRIGHT ACT AND THE LICENSE AGREEMENT, AND SUBJECT TO CIVIL AND CRIMINAL PENALTIES THEREUNDER.

1613.3.3 Site coefficients and adjusted maximum considered earthquake spectral response acceleration parameters. The maximum considered earthquake spectral response acceleration for short periods, S_{MS}, and at 1-second period, S_{M1}, adjusted for *site class* effects shall be determined by Equations 16-37 and 16-38, respectively:

$$S_{MS} = F_a S_s \quad \textbf{(Equation 16-37)}$$

$$S_{M1} = F_v S_1 \quad \textbf{(Equation 16-38)}$$

where:

F_a = Site coefficient defined in Table 1613.3.3(1).

F_v = Site coefficient defined in Table 1613.3.3(2).

S_S = The mapped spectral accelerations for short periods as determined in Section 1613.3.1.

S_1 = The mapped spectral accelerations for a 1-second period as determined in Section 1613.3.1.

❖ Table 1613.3.3(1) defines an acceleration-related or short-period site coefficient, F_a, as a function of site class and the mapped spectral response acceleration at 0.2-second period, S_s. Table 1613.3.3(2) similarly defines a velocity-related or long-period site coefficient, F_v, as a function of site class and the mapped spectral response acceleration at 1-second period, S_1. The acceleration-related or short-period site coefficient, F_a times S_s, is S_{MS}, the 5-percent damped soil-modified maximum considered earthquake spectral response acceleration at short periods. The velocity-related or long-period site coefficient, F_v times S_1, is S_{M1}, the 5-percent damped soil-modified maximum considered earthquake spectral response acceleration at 1-second period. Such modification by site coefficients is necessary because the mapped quantities are for Site Class B soils. Softer soils (Site Classes C through E) would typically amplify, and stiffer soils (Site Class A) would deamplify ground motion referenced to Site Class B.

As one would expect, both the short-period site coefficient, F_a, and the long-period site coefficient, F_v, are equal to unity for the benchmark Site Class B, irrespective of seismicity of the site. For Site Class A, both coefficients are smaller than unity, indicating reduction of benchmark Site Class B ground motion caused by the stiffer soils. For Site Classes C through E, both site coefficients, with the exception of F_a for Site Class E where $S_s \geq 1.00$, are larger than 1, indicating amplification of benchmark Site Class B ground motion on softer soils. For the same site class, each site coefficient is typically larger in areas of low seismicity than in areas of high seismicity. The basis of this lies in observations that low-magnitude subsurface rock motion is amplified to a larger extent by overlying softer soils than is high-magnitude rock motion. The site coefficients typically become larger for progressively softer soils. The only exception is provided by the short-period site coefficient in areas of high seismicity ($S_s > 0.75$), which remain unchanged or even decrease as the site class changes from D to E. The basis for this also lies in observations that very soft soils are not capable of amplifying the short-period components of subsurface rock motion. Deamplification, in fact, takes place when the subsurface rock motion is high in magnitude.

TABLE 1613.3.3(1). See below.

❖ F_a, the acceleration-related or short-period site coefficient, is defined in this table as a function of site class and the seismicity at the site in the form of the mapped spectral response acceleration at 0.2-second period, S_s.

TABLE 1613.3.3(2). See page 16-83.

❖ F_v, the velocity-related or long-period site coefficient, is defined in this table as a function of site class and the seismicity at the site in the form of the mapped spectral response acceleration at 1-second period, S_1.

1613.3.4 Design spectral response acceleration parameters. Five-percent damped design spectral response acceleration at short periods, $S_{DS,}$ and at 1-second period, S_{D1}, shall be determined from Equations 16-39 and 16-40, respectively:

$$S_{DS} = \frac{2}{3} S_{MS} \quad \textbf{(Equation 16-39)}$$

$$S_{D1} = \frac{2}{3} S_{M1} \quad \textbf{(Equation 16-40)}$$

TABLE 1613.3.3(1)
VALUES OF SITE COEFFICIENT F_a [a]

SITE CLASS	MAPPED SPECTRAL RESPONSE ACCELERATION AT SHORT PERIOD				
	$S_s \leq 0.25$	$S_s = 0.50$	$S_s = 0.75$	$S_s = 1.00$	$S_s \geq 1.25$
A	0.8	0.8	0.8	0.8	0.8
B	1.0	1.0	1.0	1.0	1.0
C	1.2	1.2	1.1	1.0	1.0
D	1.6	1.4	1.2	1.1	1.0
E	2.5	1.7	1.2	0.9	0.9
F	Note b	Note b	Note b	Note b	Note b

a. Use straight-line interpolation for intermediate values of mapped spectral response acceleration at short period, S_s.
b. Values shall be determined in accordance with Section 11.4.7 of ASCE 7.

INTERNATIONAL CODE COUNCIL®
Copyright © 2015 ICC. ALL RIGHTS RESERVED. Accessed by David Dammon on Jun 21, 2017 12:30:52 PM pursuant to License Agreement with ICC. No further reproduction or distribution authorized. ANY UNAUTHORIZED REPRODUCTION OR DISTRIBUTION IS A VIOLATION OF THE FEDERAL COPYRIGHT ACT AND THE LICENSE AGREEMENT, AND SUBJECT TO CIVIL AND CRIMINAL PENALTIES THEREUNDER.

where:

S_{MS} = The maximum considered earthquake spectral response accelerations for short period as determined in Section 1613.3.3.

S_{M1} = The maximum considered earthquake spectral response accelerations for 1-second period as determined in Section 1613.3.3.

❖ The design spectral response acceleration at 0.2-second period, S_{DS}, is two-thirds of the S_{MS} value calculated in accordance with Section 1613.3.3. The design spectral response acceleration at 1-second period, S_{D1}, is two-thirds of the S_{M1} value calculated in accordance with Section 1613.3.3 and the reciprocal of two-thirds is 1.5. Thus, the design ground motion is the soil-modified maximum considered earthquake ground motion divided by 1.5. This is in recognition of the inherent margin contained in the NEHRP provisions that would make collapse unlikely under 1.5 times the design-level ground motion. The idea is to avoid collapse when a structure is subjected to the soil-modified maximum considered earthquake ground motion.

1613.3.5 Determination of seismic design category. Structures classified as *Risk Category* I, II or III that are located where the mapped spectral response acceleration parameter at 1-second period, S_1, is greater than or equal to 0.75 shall be assigned to *Seismic Design Category* E. Structures classified as *Risk Category* IV that are located where the mapped spectral response acceleration parameter at 1-second period, S_1, is greater than or equal to 0.75 shall be assigned to *Seismic Design Category* F. All other structures shall be assigned to a *seismic design category* based on their *risk category* and the design spectral response acceleration parameters, S_{DS} and S_{D1}, determined in accordance with Section 1613.3.4 or the site-specific procedures of ASCE 7. Each building and structure shall be assigned to the more severe *seismic design category* in accordance with Table 1613.3.5(1) or 1613.3.5(2), irrespective of the fundamental period of vibration of the structure, *T*.

❖ The seismic design category classification provides a relative scale of earthquake risk to structures. The seismic design category considers not only the seismicity of the site in terms of the mapped spectral response accelerations, but also the site soil profile and the nature of the structure's risk category (see the step-by-step description of this process under the definition of "Seismic design category"). It is important to note that there are two tables that are used in order to establish the most restrictive seismic design category classification.

There are two conditions that allow the seismic design category to be determined based upon mapped spectral accelerations, making it unnecessary to go through the process described above. The first is Section 1613.3.1, which identifies areas that have a low seismic risk and are classified as Seismic Design Category A without the need to go through the usual steps. The second instance is an area that is close to a major active fault where S_1 is greater than or equal to 0.75g. These areas are deemed to be areas of considerable seismic risk, and the seismic design category is classified as E or F depending on the structure's risk category.

The seismic design category classification is a key criterion in using and understanding the seismic requirements because the analysis method, general design, structural material detailing and the structure's component and system design requirements are determined, at least in part, by the seismic design category. Some of the special inspection requirements in Section 1705.12 and structural observation requirements in Section 1704.6 are dependent on the seismic design category classification, as well.

TABLE 1613.3.5(1). See page 16-84.

❖ This table defines seismic design category as a function of risk category and the short-period (0.2 second) spectral response acceleration at the site of a structure. As the value of S_{DS} increases, the structure is assigned a higher seismic design category and the earthquake design requirements become more stringent.

TABLE 1613.3.5(2). See page 16-84.

❖ This table defines seismic design category as a function of risk category and the long-period (1-second) spectral response acceleration at the site of a structure. As the value of S_{M1} increases, the structure is assigned a higher seismic design category and the earthquake design requirements become more stringent.

TABLE 1613.3.3(2)
VALUES OF SITE COEFFICIENT F_v [a]

SITE CLASS	MAPPED SPECTRAL RESPONSE ACCELERATION AT 1-SECOND PERIOD				
	$S_1 \leq 0.1$	$S_1 = 0.2$	$S_1 = 0.3$	$S_1 = 0.4$	$S_1 \geq 0.5$
A	0.8	0.8	0.8	0.8	0.8
B	1.0	1.0	1.0	1.0	1.0
C	1.7	1.6	1.5	1.4	1.3
D	2.4	2.0	1.8	1.6	1.5
E	3.5	3.2	2.8	2.4	2.4
F	Note b	Note b	Note b	Note b	Note b

a. Use straight-line interpolation for intermediate values of mapped spectral response acceleration at 1-second period, S_1.
b. Values shall be determined in accordance with Section 11.4.7 of ASCE 7.

INTERNATIONAL CODE COUNCIL®
Copyright © 2015 ICC. ALL RIGHTS RESERVED. Accessed by David Dammon on Jun 21, 2017 12:30:52 PM pursuant to License Agreement with ICC. No further reproduction or distribution authorized. ANY UNAUTHORIZED REPRODUCTION OR DISTRIBUTION IS A VIOLATION OF THE FEDERAL COPYRIGHT ACT AND THE LICENSE AGREEMENT, AND SUBJECT TO CIVIL AND CRIMINAL PENALTIES THEREUNDER.

1613.3.5.1 Alternative seismic design category determination. Where S_1 is less than 0.75, the *seismic design category* is permitted to be determined from Table 1613.3.5(1) alone when all of the following apply:

1. In each of the two orthogonal directions, the approximate fundamental period of the structure, *Ta*, in each of the two orthogonal directions determined in accordance with Section 12.8.2.1 of ASCE 7, is less than 0.8 T_s determined in accordance with Section 11.4.5 of ASCE 7.
2. In each of the two orthogonal directions, the fundamental period of the structure used to calculate the story drift is less than T_s.
3. Equation 12.8-2 of ASCE 7 is used to determine the seismic response coefficient, C_s.
4. The diaphragms are rigid or are permitted to be idealized as rigid in accordance with Section 12.3.1 of ASCE 7 or, for diaphragms permitted to be idealized as flexible in accordance with Section 12.3.1 of ASCE 7, the distances between vertical elements of the seismic force-resisting system do not exceed 40 feet (12 192 mm).

❖ This section permits the seismic design category of short-period structures meeting the four listed conditions to be based solely on the short-period design spectral coefficient, S_{DS}. This is similar to the approach taken in mapping seismic design categories for use in the IRC, as well as for the simplified earthquake analysis procedure.

1613.3.5.2 Simplified design procedure. Where the alternate simplified design procedure of ASCE 7 is used, the *seismic design category* shall be determined in accordance with ASCE 7.

❖ A simplified earthquake procedure was first introduced under the 1997 UBC and continued, with minor changes, through the first two editions of the code. The 2005 edition of ASCE 7 introduced the first stand-alone version of a simplified earthquake analysis for simple bearing wall or building frame systems that comply with the 12 limitations listed in Section 12.14.1.1 of ASCE 7. For structures that qualify to use this method of analysis, the simplified procedure permits the determination of the seismic design category to be based solely on the short-period design spectral coefficient, S_{DS}.

1613.4 Alternatives to ASCE 7. The provisions of Section 1613.4 shall be permitted as alternatives to the relevant provisions of ASCE 7.

❖ This section is intended to provide permitted alternatives to the corresponding ASCE 7 requirements. As such, they should be viewed as options that are available to the design professional in demonstrating compliance with the earthquake provisions.

1613.4.1 Additional seismic force-resisting systems for seismically isolated structures. Add the following exception to the end of Section 17.5.4.2 of ASCE 7:

Exception: For isolated structures designed in accordance with this standard, the structural system limitations including structural height limits, in Table 12.2-1 for ordinary steel concentrically braced frames (OCBFs) as defined in Chapter 11 and ordinary moment frames (OMFs) as defined in Chapter 11 are permitted to be taken as 160 feet (48 768 mm) for structures assigned to *Seismic Design Category* D, E or F, provided that the following conditions are satisfied:

1. The value of R_I as defined in Chapter 17 is taken as 1.
2. For OMFs and OCBFs, design is in accordance with AISC 341.

❖ The ASCE 7 provisions include requirements for structures that utilize seismic base isolation. It is worth noting that use of seismic isolation is never required by the code. This method is an optional method of design for earthquake loading that has

TABLE 1613.3.5(1)
SEISMIC DESIGN CATEGORY BASED ON SHORT-PERIOD (0.2 second) RESPONSE ACCELERATION

VALUE OF S_{DS}	RISK CATEGORY		
	I or II	III	IV
$S_{DS} < 0.167g$	A	A	A
$0.167g \le S_{DS} < 0.33g$	B	B	C
$0.33g \le S_{DS} < 0.50g$	C	C	D
$0.50g \le S_{DS}$	D	D	D

TABLE 1613.3.5(2)
SEISMIC DESIGN CATEGORY BASED ON 1-SECOND PERIOD RESPONSE ACCELERATION

VALUE OF S_{D1}	RISK CATEGORY		
	I or II	III	IV
$S_{D1} < 0.067g$	A	A	A
$0.067g \le S_{D1} < 0.133g$	B	B	C
$0.133g \le S_{D1} < 0.20g$	C	C	D
$0.20g \le S_{D1}$	D	D	D

INTERNATIONAL CODE COUNCIL®
Copyright © 2015 ICC. ALL RIGHTS RESERVED. Accessed by David Dammon on Jun 21, 2017 12:30:52 PM pursuant to License Agreement with ICC. No further reproduction or distribution authorized. ANY UNAUTHORIZED REPRODUCTION OR DISTRIBUTION IS A VIOLATION OF THE FEDERAL COPYRIGHT ACT AND THE LICENSE AGREEMENT, AND SUBJECT TO CIVIL AND CRIMINAL PENALTIES THEREUNDER.

been recognized under legacy model codes, such as the UBC. The modification adds an exception to the ASCE 7 requirements for structural systems above the isolation system. It corrects an oversight that unnecessarily changes prior practice by restricting the use of certain seismic force-resisting systems that have been used successfully. As modified, it would allow ordinary concentric-braced frames and ordinary moment frame systems with heights up to 160 feet (48 768 mm) when the stated conditions are met.

1613.5 Amendments to ASCE 7. The provisions of Section 1613.5 shall be permitted as an amendment to the relevant provisions of ASCE 7.

❖ This section deals with specific amendments to ASCE 7 seismic provisions.

1613.5.1 Transfer of anchorage forces into diaphragm. Modify ASCE 7 Section 12.11.2.2.1 as follows:

12.11.2.2.1 Transfer of anchorage forces into diaphragm. Diaphragms shall be provided with continuous ties or struts between diaphragm chords to distribute these anchorage forces into the diaphragms. Diaphragm connections shall be positive, mechanical or welded. Added chords are permitted to be used to form subdiaphragms to transmit the anchorage forces to the main continuous cross-ties. The maximum length-to-width ratio of a wood, wood structural panel or untopped steel deck sheathed structural subdiaphragm that serves as part of the continuous tie system shall be 2.5 to 1. Connections and anchorages capable of resisting the prescribed forces shall be provided between the diaphragm and the attached components. Connections shall extend into the diaphragm a sufficient distance to develop the force transferred into the diaphragm.

❖ This section modifies ASCE 7 Section 12.11.2.2.1 by effectively adding "wood, wood structural panel or untopped steel deck sheathed structural subdiaphragm that serves as part of the continuous tie system" to the existing language in ASCE 7. This requirement originated in the 1997 UBC, where it was added to address the relatively poor performance of nailed wood-sheathed diaphragms observed in prior earthquakes. When the IBC was developed, this limitation was dropped, resulting in the aspect-ratio restriction being applied to all diaphragm types, including concrete, composite deck with concrete fill, and other diaphragm types where such a requirement is not considered necessary for good performance. Although untopped steel decking was not included in the original UBC wording, it is included here because of similarities in construction and perceived structural behavior.

1613.6 Ballasted photovoltaic panel systems. Ballasted, roof-mounted *photovoltaic panel systems* need not be rigidly attached to the roof or supporting structure. Ballasted nonpenetrating systems shall be designed and installed only on roofs with slopes not more than one unit vertical in 12 units horizontal. Ballasted nonpenetrating systems shall be designed to resist sliding and uplift resulting from lateral and vertical forces as required by Section 1605, using a coefficient of friction determined by acceptable engineering principles. In structures assigned to *Seismic Design Category* C, D, E or F, ballasted nonpenetrating systems shall be designed to accommodate seismic displacement determined by nonlinear response-history analysis or shake-table testing, using input motions consistent with ASCE 7 lateral and vertical seismic forces for nonstructural components on roofs.

❖ In general, nonstructural rooftop elements that have significant mass or sail area are required to be positively anchored to competent structural elements. Photovoltaic panel systems that have sufficient weight to preclude sliding and uplift from wind need not be positively anchored to resist seismic loads provided that the slope of the roof is low, and provided that the systems are designed to accommodate the anticipated seismic displacement (i.e., sliding).

SECTION 1614
ATMOSPHERIC ICE LOADS

1614.1 General. Ice-sensitive structures shall be designed for atmospheric ice loads in accordance with Chapter 10 of ASCE 7.

❖ This section provides charging text in the code in conjunction with technical provisions in ASCE 7 for computing atmospheric ice loads. Section 202 provides a definition of and technical basis for identifying ice-sensitive structures. Such an identification prompts the need to comply with the applicable provisions of ASCE 7.

SECTION 1615
STRUCTURAL INTEGRITY

1615.1 General. *High-rise buildings* that are assigned to *Risk Category* III or IV shall comply with the requirements of this section. Frame structures shall comply with the requirements of Section 1615.3. Bearing wall structures shall comply with the requirements of Section 1615.4.

❖ The requirements in the codes and standards together with the common structural design and construction practices prevalent in the United States have provided the overwhelming majority of structures with adequate levels of reliability and safety. Many buildings simply do not have integrity issues. Low-rise buildings do not pose the same risk as high-rise buildings. The structural integrity provisions reflect this relative risk. By limiting this requirement to Risk Category III and IV buildings that are also high-rise buildings, the provision does not affect buildings that are commonly built and do not exhibit integrity issues.

1615.2 Definitions. The following words and terms are defined in Chapter 2:

❖ Definitions facilitate the understanding of code provisions and minimize potential confusion. To that end, this section lists definitions of terms associated with

INTERNATIONAL CODE COUNCIL®
Copyright © 2015 ICC. ALL RIGHTS RESERVED. Accessed by David Dammon on Jun 21, 2017 12:30:52 PM pursuant to License Agreement with ICC. No further reproduction or distribution authorized. ANY UNAUTHORIZED REPRODUCTION OR DISTRIBUTION IS A VIOLATION OF THE FEDERAL COPYRIGHT ACT AND THE LICENSE AGREEMENT, AND SUBJECT TO CIVIL AND CRIMINAL PENALTIES THEREUNDER.

these provisions for structural integrity. Note that these definitions are found in Chapter 2. The use and application of defined terms, as well as undefined terms, are set forth in Section 201.

BEARING WALL STRUCTURE.

FRAME STRUCTURE.

1615.3 Frame structures. Frame structures shall comply with the requirements of this section.

❖ These provisions enhance the overall structural integrity and resistance of frame structures by establishing minimum requirements for tying together the primary structural elements.

1615.3.1 Concrete frame structures. Frame structures constructed primarily of reinforced or prestressed concrete, either cast-in-place or precast, or a combination of these, shall conform to the requirements of Section 4.10 of ACI 318. Where ACI 318 requires that nonprestressed reinforcing or prestressing steel pass through the region bounded by the longitudinal column reinforcement, that reinforcing or prestressing steel shall have a minimum nominal tensile strength equal to two-thirds of the required one-way vertical strength of the connection of the floor or roof system to the column in each direction of beam or slab reinforcement passing through the column.

Exception: Where concrete slabs with continuous reinforcement having an area not less than 0.0015 times the concrete area in each of two orthogonal directions are present and are either monolithic with or equivalently bonded to beams, girders or columns, the longitudinal reinforcing or prestressing steel passing through the column reinforcement shall have a nominal tensile strength of one-third of the required one-way vertical strength of the connection of the floor or roof system to the column in each direction of beam or slab reinforcement passing through the column.

❖ This section refers to ACI 318 requirements for structural integrity that are applicable to concrete frames. These provisions establish minimum requirements for tying together the primary structural elements. These ACI 318 structural integrity requirements are already incorporated in the code by the general reference to ACI 318 in Section 1901.2 for the design and construction of structural concrete. The only additional requirement for concrete frame structures is the minimum nominal tensile strength that is established for reinforcement that must pass through the longitudinal column reinforcement. The exception reduces this minimum nominal tensile strength for slab construction that meets certain conditions.

1615.3.2 Structural steel, open web steel joist or joist girder, or composite steel and concrete frame structures. Frame structures constructed with a structural steel frame or a frame composed of open web steel joists, joist girders with or without other structural steel elements or a frame composed of composite steel or composite steel joists and reinforced concrete elements shall conform to the requirements of this section.

❖ The provisions contained in this section have been adapted from requirements contained in the ACI 318 standard for many years. By adapting those requirements to structural steel, open web steel joists, joist girders or composite steel and concrete frame structures, their overall structural integrity is enhanced.

1615.3.2.1 Columns. Each column splice shall have the minimum design strength in tension to transfer the design dead and live load tributary to the column between the splice and the splice or base immediately below.

❖ The additional requirement for the tensile strength of column splices enhances the column's performance in unforeseen events.

1615.3.2.2 Beams. End connections of all beams and girders shall have a minimum nominal axial tensile strength equal to the required vertical shear strength for *allowable stress design* (ASD) or two-thirds of the required shear strength for *load and resistance factor design* (LRFD) but not less than 10 kips (45 kN). For the purpose of this section, the shear force and the axial tensile force need not be considered to act simultaneously.

Exception: Where beams, girders, open web joist and joist girders support a concrete slab or concrete slab on metal deck that is attached to the beam or girder with not less than $^3/_8$-inch-diameter (9.5 mm) headed shear studs, at a spacing of not more than 12 inches (305 mm) on center, averaged over the length of the member, or other attachment having equivalent shear strength, and the slab contains continuous distributed reinforcement in each of two orthogonal directions with an area not less than 0.0015 times the concrete area, the nominal axial tension strength of the end connection shall be permitted to be taken as half the required vertical shear strength for ASD or one-third of the required shear strength for LRFD, but not less than 10 kips (45 kN).

❖ Providing the required tensile strength for all beam and girder connections provides some ability to carry, transfer and/or redistribute load in the event there is loss of support. The exception allows a reduced tensile strength in the beam and girder connection where a concrete slab is utilized.

1615.4 Bearing wall structures. Bearing wall structures shall have vertical ties in all load-bearing walls and longitudinal ties, transverse ties and perimeter ties at each floor level in accordance with this section and as shown in Figure 1615.4.

❖ These provisions enhance the overall structural integrity and resistance of bearing wall structures by establishing minimum requirements for tying together the primary structural elements.

FIGURE 1615.4. See page 16-87.

❖ This figure illustrates the ties that are required in Sections 1614.4.1 through 1614.4.2.4.

INTERNATIONAL CODE COUNCIL®
Copyright © 2015 ICC. ALL RIGHTS RESERVED. Accessed by David Dammon on Jun 21, 2017 12:30:52 PM pursuant to License Agreement with ICC. No further reproduction or distribution authorized. ANY UNAUTHORIZED REPRODUCTION OR DISTRIBUTION IS A VIOLATION OF THE FEDERAL COPYRIGHT ACT AND THE LICENSE AGREEMENT, AND SUBJECT TO CIVIL AND CRIMINAL PENALTIES THEREUNDER.

1615.4.1 Concrete wall structures. Precast bearing wall structures constructed solely of reinforced or prestressed concrete, or combinations of these shall conform to the requirements of Sections 16.2.4 and 16.2.5 of ACI 318.

❖ This section refers to the ACI 318 requirements that are applicable to concrete wall structures. These provisions establish minimum requirements for tying together the primary structural elements. These ACI 318 structural integrity requirements are already incorporated into the code by the general reference to ACI 318 in Section 1901.2 for the design and construction of structural concrete.

1615.4.2 Other bearing wall structures. Ties in bearing wall structures other than those covered in Section 1615.4.1 shall conform to this section.

❖ The provisions contained in this section have been adapted from requirements contained within the ACI 318 standard for many years. By adapting those requirements to other bearing wall structures, these provisions enhance their overall structural integrity.

1615.4.2.1 Longitudinal ties. Longitudinal ties shall consist of continuous reinforcement in slabs; continuous or spliced decks or sheathing; continuous or spliced members framing to, within or across walls; or connections of continuous framing members to walls. Longitudinal ties shall extend across interior load-bearing walls and shall connect to exterior load-bearing walls and shall be spaced at not greater than 10 feet (3038 mm) on center. Ties shall have a minimum nominal tensile strength, T_T, given by Equation 16-41. For ASD the minimum nominal tensile strength shall be permitted to be taken as 1.5 times the allowable tensile stress times the area of the tie.

$$T_T = w\,LS \le \alpha_T S \qquad \textbf{(Equation 16-41)}$$

where:

L = The span of the horizontal element in the direction of the tie, between bearing walls, feet (m).

w = The weight per unit area of the floor or roof in the span being tied to or across the wall, psf (N/m^2).

S = The spacing between ties, feet (m).

α_T = A coefficient with a value of 1,500 pounds per foot (2.25 kN/m) for masonry bearing wall structures and a value of 375 pounds per foot (0.6 kN/m) for structures with bearing walls of cold-formed steel light-frame construction.

❖ Requirements for tying together horizontal elements in the longitudinal direction (spanning between bearing walls—noted as "L" in Commentary Figure 1615.4) provide for transfer and/or redistribution of loads in the event there is loss of support.

1615.4.2.2 Transverse ties. Transverse ties shall consist of continuous reinforcement in slabs; continuous or spliced decks or sheathing; continuous or spliced members framing to, within or across walls; or connections of continuous framing members to walls. Transverse ties shall be placed no farther apart than the spacing of load-bearing walls. Transverse ties shall have minimum nominal tensile strength T_T, given by Equation 16-41. For ASD the minimum nominal tensile

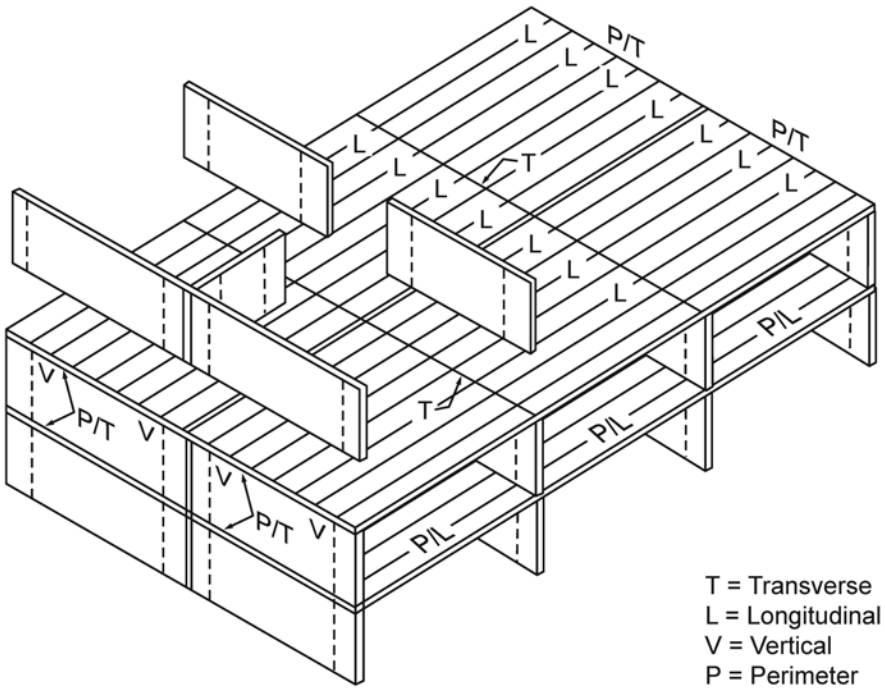

FIGURE 1615.4
LONGITUDINAL, PERIMETER, TRANSVERSE AND VERTICAL TIES

INTERNATIONAL CODE COUNCIL®
Copyright © 2015 ICC. ALL RIGHTS RESERVED. Accessed by David Dammon on Jun 21, 2017 12:30:52 PM pursuant to License Agreement with ICC. No further reproduction or distribution authorized. ANY UNAUTHORIZED REPRODUCTION OR DISTRIBUTION IS A VIOLATION OF THE FEDERAL COPYRIGHT ACT AND THE LICENSE AGREEMENT, AND SUBJECT TO CIVIL AND CRIMINAL PENALTIES THEREUNDER.

strength shall be permitted to be taken as 1.5 times the allowable tensile stress times the area of the tie.

❖ Requirements for ties in the transverse direction at bearing walls (noted as "T" in Commentary Figure 1615.4) provide for transfer and/or redistribution of loads in the event there is loss of support.

1615.4.2.3 Perimeter ties. Perimeter ties shall consist of continuous reinforcement in slabs; continuous or spliced decks or sheathing; continuous or spliced members framing to, within or across walls; or connections of continuous framing members to walls. Ties around the perimeter of each floor and roof shall be located within 4 feet (1219 mm) of the edge and shall provide a nominal strength in tension not less than T_p, given by Equation 16-42. For ASD the minimum nominal tensile strength shall be permitted to be taken as 1.5 times the allowable tensile stress times the area of the tie.

$$T_p = 200w \le \beta_T \qquad \textbf{(Equation 16-42)}$$

For SI: $T_p = 90.7w \le \beta_T$

where:

w = As defined in Section 1615.4.2.1.

β_T = A coefficient with a value of 16,000 pounds (7200 kN) for structures with masonry bearing walls and a value of 4,000 pounds (1300 kN) for structures with bearing walls of cold-formed steel light-frame construction.

❖ Requirements for tying together horizontal elements at the perimeter in both the longitudinal and transverse directions (noted as "P/L" and "P/T" in Commentary Figure 1615.4) provide for transfer and/or redistribution of loads in the event there is loss of support.

1615.4.2.4 Vertical ties. Vertical ties shall consist of continuous or spliced reinforcing, continuous or spliced members, wall sheathing or other engineered systems. Vertical tension ties shall be provided in bearing walls and shall be continuous over the height of the building. The minimum nominal tensile strength for vertical ties within a bearing wall shall be equal to the weight of the wall within that *story* plus the weight of the diaphragm tributary to the wall in the *story* below. No fewer than two ties shall be provided for each wall. The strength of each tie need not exceed 3,000 pounds per foot (450 kN/m) of wall tributary to the tie for walls of masonry construction or 750 pounds per foot (140 kN/m) of wall tributary to the tie for walls of cold-formed steel light-frame construction.

❖ The additional requirement for continuous vertical ties enhances the performance of bearing walls in unforeseen events (noted as "V" in Commentary Figure 1615.4).

Bibliography

The following resource materials were used in the preparation of the commentary for this chapter of the code.

ADA, *Accessibility Guidelines for Building and Facilities*. 28 CFR, Part 36 revised, July 1, 1994.

AWC WFCM-15, *Wood Frame Construction Manual for One- and Two-family Dwellings*. Leesburg, VA: American Wood Council, 2015.

AISC 341-10, *Seismic Provisions for Structural Steel Buildings*. Chicago: American Institute of Steel Construction, Inc., 2010.

AISC 360-10, *Specification for Structural Steel Buildings*. Chicago, IL: American Institute of Steel Construction, Inc., 2010.

ASCE 7-10, *Minimum Design Loads for Buildings and Other Structures* Including Supplement No. 1. New York: American Society of Civil Engineers, 2010.

ASCE 24-13, *Flood-resistance Design and Construction Standard*. Reston, VA: American Society of Civil Engineers, 2013.

ASTM E1886-05, *Test Method for Performance of Exterior Windows, Curtain Walls, Doors and Storm Shutters Impacted by Missiles and Exposed to Cyclic Pressure Differentials*. West Conshohocken, PA: ASTM International, 2005.

ASTM E1996-12A, *Specification for Performance of Exterior Windows, Curtain Walls, Doors and Storm Shutters Impacted by Wind-borne Debris in Hurricanes*. West Conshohocken, PA: ASTM International, 2012.

FEMA 44 CFR, Parts 59-73, *National Flood Insurance Program (NFIP)*. Washington, DC: Federal Emergency Management Agency.

FEMA (various dates). NFIP *Technical Bulletin Series*. Washington, DC: National Flood Insurance Program. Available at www.fema.gov,plan/prevent/floodplain/techbul.shtm.

FEMA Form 086-0-33. *NFIP Elevation Certificate.* Washington, DC: Federal Emergency Management Agency, 2012.

FEMA Form 086-0-34, *Floodproofing Certificate.* Washington, DC: Federal Emergency Management Agency, 2012.

FEMA P-750-1, NEHRP *Recommended Provisions for Seismic Regulations for New Buildings and Other Structures, Part 1*. Washington, DC: Prepared by the Building Seismic Safety Council for the Federal Emergency Management Agency, 2009.

FEMA P-750-2, NEHRP *Recommended Provisions for Seismic Regulations for New Buildings and Other Structures, Part 2 Commentary*. Washington, DC: Prepared by the Building Seismic Safety Council for the Federal Emergency Management Agency, 2009.

INTERNATIONAL CODE COUNCIL®

Copyright © 2015 ICC. ALL RIGHTS RESERVED. Accessed by David Dammon on Jun 21, 2017 12:30:52 PM pursuant to License Agreement with ICC. No further reproduction or distribution authorized. ANY UNAUTHORIZED REPRODUCTION OR DISTRIBUTION IS A VIOLATION OF THE FEDERAL COPYRIGHT ACT AND THE LICENSE AGREEMENT, AND SUBJECT TO CIVIL AND CRIMINAL PENALTIES THEREUNDER.

FEMA P-758, *Substantial Improvement/Substantial Damage Desk Reference*. Washington, DC: Federal Emergency Management Agency, 2009.

FEMA TB #1, *Openings in Foundation Walls and Walls of Enclosures Below Elevated Buildings Located in Special Flood Hazard Areas*. Washington, DC: Federal Emergency Management Agency, 2008.

FEMA TB #3, *Nonresidential Floodproofing Requirements and Certification for Buildings Located in Special Flood Hazard Areas*. Washington, DC: Federal Emergency Management Agency, 1993.

FEMA TB #5, *Free-of-Obstruction Requirements for Buildings Located in Coastal High-hazard Areas*. Washington, DC: Federal Emergency Management Agency, 2008.

FEMA TB #9, *Design and Construction Guidance for Breakaway Walls Below Elevated Coastal Buildings.* Washington, DC: Federal Emergency Management Agency, 2008.

ICC 600-08, *Standard for Residential Construction in High-wind Regions*. Washington, DC: International Code Council, 2008.

Reducing Flood Losses Through the International Code Series: Meeting the Requirements of the National Flood Insurance Program (3rd ed.). Washington, DC: International Code Council, 2008.

SEAW's *Handbook of a Rapid-solutions Methodology for Wind Design*. Redwood City, CA: Structural Engineers Association of Washington, Applied Technology Council, 2004.

SEAW/ATC 60, SEAW *Commentary on Wind Code Provisions, Volume 1*. Redwood City, CA: Applied Technology Council, 2004.

SEAW/ATC 60, SEAW *Commentary on Wind Code Provisions, Volume 2—Example Problems*. Redwood City, CA: Applied Technology Council, 2004.

Taly, Narendra. *Loads and Load Paths in Buildings: Principles of Structural Design*. Washington, DC: International Code Council, 2003.

Taly, Narendra. *Loads and Load Paths in Buildings: Principles of Structural Design—Problems and Solutions*. Washington, DC: International Code Council, 2005.

Williams, Alan. *Seismic- and Wind-forces Structural Design Examples, Second Edition*. Washington, DC: International Code Council, 2005.

INTERNATIONAL CODE COUNCIL®
Copyright © 2015 ICC. ALL RIGHTS RESERVED. Accessed by David Dammon on Jun 21, 2017 12:30:52 PM pursuant to License Agreement with ICC. No further reproduction or distribution authorized. ANY UNAUTHORIZED REPRODUCTION OR DISTRIBUTION IS A VIOLATION OF THE FEDERAL COPYRIGHT ACT AND THE LICENSE AGREEMENT, AND SUBJECT TO CIVIL AND CRIMINAL PENALTIES THEREUNDER.

INTERNATIONAL CODE COUNCIL®
Copyright © 2015 ICC. ALL RIGHTS RESERVED. Accessed by David Dammon on Jun 21, 2017 12:30:52 PM pursuant to License Agreement with ICC. No further reproduction or distribution authorized. ANY UNAUTHORIZED REPRODUCTION OR DISTRIBUTION IS A VIOLATION OF THE FEDERAL COPYRIGHT ACT AND THE LICENSE AGREEMENT, AND SUBJECT TO CIVIL AND CRIMINAL PENALTIES THEREUNDER.

Chapter 17: Special Inspections and Tests

General Comments

In this chapter, the code sets minimum quality standards for the acceptance of materials used in building construction. It also establishes requirements for special inspections, structural observations and load testing.

Section 1701 contains the scope statement and general statement for testing of new materials.

The terms primarily related to this chapter are listed in Section 1702 and their definitions are provided in Chapter 2.

Section 1703 addresses the approval process and labeling by approved agencies. Special inspections, contractor responsibility and structural observation are specified in Section 1704.

Section 1704 also includes detailed requirements pertaining to the statement of special inspections.

Section 1705 contains detailed special inspection and verification requirements for various building elements based on the type of construction involved. Included are special inspection and verification requirements for steel, concrete, masonry, wood, soils, deep foundations, wind, seismic, fire resistance, Exterior Insulation and Finish Systems (EIFS) and smoke control. Structural testing and qualification for seismic resistance is also addressed in Section 1705.

The general requirements for determining the design strengths of materials are in Section 1706.

Section 1707 provides for an alternative test procedure in the absence of approved standards.

Section 1708 includes requirements for field load testing of a structure.

Preconstruction load testing of materials and methods of construction that are not capable of being designed by an approved analysis is covered by Section 1709.

Chapter 17 provides information regarding the evaluation, inspection and approval process for any material or system proposed for use as a component of a structure. These are general requirements that expand on the requirements of Chapter 1 relating to the roles and responsibilities of the building official regarding approval of building components. Additionally, the chapter includes general requirements relating to the roles and responsibilities of the owner, contractor, special inspectors and architects or engineers.

Purpose

This chapter provides procedures and criteria for: testing materials or assemblies; labeling materials; systems and assemblies; and special inspection and verification of structural assemblies.

SECTION 1701 GENERAL

1701.1 Scope. The provisions of this chapter shall govern the quality, workmanship and requirements for materials covered. Materials of construction and tests shall conform to the applicable standards listed in this code.

❖ This chapter gives provisions for quality, workmanship, testing and labeling of all materials covered within. In general, all construction materials and tests must conform to the standards, or portions thereof, that are referenced in the code. This chapter provides requirements for materials and tests when there are no applicable standards. Specific tests and standards are referenced in other chapters of the code. Additionally, this chapter provides basic requirements for labeling construction materials and assemblies, and for special inspection and verification of structural systems and components.

1701.2 New materials. New building materials, equipment, appliances, systems or methods of construction not provided for in this code, and any material of questioned suitability proposed for use in the construction of a building or structure, shall be subjected to the tests prescribed in this chapter and in the *approved* rules to determine character, quality and limitations of use.

❖ Testing is required to be performed on materials that are not specifically provided for in the code. For example, suppose a manufacturer of a sandwich panel consisting of aluminum skins and a foam plastic core wishes to use this panel as an exterior weather covering. The material does not conform to any of the standards referenced in Chapter 14, so an appropriate test protocol must be developed. The same provision for acceptance of alternative materials is already given in Section 104.11. That section provides a strong, definitive statement for performance requirements for alternative materials, requiring the proposed alternative to be equivalent to that prescribed by the code in quality, strength, effectiveness, durability and safety. Section 1701.2 simply reasserts that alternative materials (new materials)

INTERNATIONAL CODE COUNCIL®
Copyright © 2015 ICC. ALL RIGHTS RESERVED. Accessed by David Dammon on Jun 21, 2017 12:30:52 PM pursuant to License Agreement with ICC. No further reproduction or distribution authorized. ANY UNAUTHORIZED REPRODUCTION OR DISTRIBUTION IS A VIOLATION OF THE FEDERAL COPYRIGHT ACT AND THE LICENSE AGREEMENT, AND SUBJECT TO CIVIL AND CRIMINAL PENALTIES THEREUNDER.

may be used, as long as the performance characteristics and quality can be established.

SECTION 1702
DEFINITIONS

1702.1 Definitions. The following terms are defined in Chapter 2:

❖ Definitions facilitate the understanding of code provisions and minimize potential confusion. To that end, this section lists definitions of terms associated with special inspections and testing. Note that these definitions are found in Chapter 2. The use and application of defined terms, as well as undefined terms, are set forth in Section 201.

APPROVED AGENCY.

APPROVED FABRICATOR.

CERTIFICATE OF COMPLIANCE.

DESIGNATED SEISMIC SYSTEM.

FABRICATED ITEM.

INTUMESCENT FIRE-RESISTANT COATINGS.

MAIN WINDFORCE-RESISTING SYSTEM.

MASTIC FIRE-RESISTANT COATINGS.

SPECIAL INSPECTION.

Continuous special inspection.

Periodic special inspection.

SPECIAL INSPECTOR.

SPRAYED FIRE-RESISTANT MATERIALS.

STRUCTURAL OBSERVATION.

SECTION 1703
APPROVALS

1703.1 Approved agency. An approved agency shall provide all information as necessary for the *building official* to determine that the agency meets the applicable requirements specified in Sections 1703.1.1 through 1703.1.3.

❖ This section specifies the information that an approved agency must provide to the building official to enable him or her to determine whether the agency and its personnel have the requisite qualifications to provide adequate quality control.

1703.1.1 Independence. An *approved agency* shall be objective, competent and independent from the contractor responsible for the work being inspected. The agency shall also disclose to the *building official* and the *registered design professional in responsible charge* possible conflicts of intere0st so that objectivity can be confirmed.

❖ As part of the basis for a building official's approval of a particular inspection agency, the agency must demonstrate its competence and objectivity. The competence of the agency is judged by its experience and organization, and the experience of its personnel. To avoid conflicts of interest, the inspection agency must be independent from the contractor performing the work. In cases where the contractor hires and coordinates the special inspector, the conflict of interest can be mitigated if the owner pays for the special inspector. In some instances, the contractor is also the owner. In those cases, care should be exercised to verify that the special inspector is not influenced by the conflict of interest.

For example, suppose that ACME Agency is the inspection agency employed by Builders, Inc. for factory-built fireplaces. During an investigation of the agency, it is discovered that ACME and Builders are subsidiaries of the same parent company, Conglomerate, Inc. The inspection agency and manufacturer clearly have a relationship that is undesirable from the standpoint of independence. Similarly, suppose that a general contractor hires an inspection agency to perform inspection services. This could also create a conflict of interest situation if the inspection agency needs to reject the work of the firm that is paying them.

1703.1.2 Equipment. An *approved agency* shall have adequate equipment to perform required tests. The equipment shall be periodically calibrated.

❖ As part of judging the ability of a testing or inspection agency, the building official should assess whether the agency has the proper equipment to perform the required tests or inspections.

1703.1.3 Personnel. An *approved agency* shall employ experienced personnel educated in conducting, supervising and evaluating tests and *special inspections*.

❖ The competence of an inspection or testing agency is also based on the experience and training of its personnel. If the personnel lack the requisite experience, they are less likely to catch critical errors.

If the services being provided by the inspection or test agency come within the purview of the professional registration laws of the state in which the building is being constructed, the building official should request evidence that the personnel are qualified to perform the work in accordance with this professional registration law.

1703.2 Written approval. Any material, appliance, equipment, system or method of construction meeting the requirements of this code shall be *approved* in writing after satisfactory completion of the required tests and submission of required test reports.

❖ So that there is a documented record of the approval and basis for it, including any conditions or limitations, the building official must approve the submission in writing. The code also requires the approval to be granted within a reasonable period of time, after all documentation has been satisfactorily developed and submitted, so as to avoid any unnecessary delay in completion of construction.

1703.3 Record of approval. For any material, appliance, equipment, system or method of construction that has been

INTERNATIONAL CODE COUNCIL®
Copyright © 2015 ICC. ALL RIGHTS RESERVED. Accessed by David Dammon on Jun 21, 2017 12:30:52 PM pursuant to License Agreement with ICC. No further reproduction or distribution authorized. ANY UNAUTHORIZED REPRODUCTION OR DISTRIBUTION IS A VIOLATION OF THE FEDERAL COPYRIGHT ACT AND THE LICENSE AGREEMENT, AND SUBJECT TO CIVIL AND CRIMINAL PENALTIES THEREUNDER.

approved, a record of such approval, including the conditions and limitations of the approval, shall be kept on file in the *building official's* office and shall be available for public review at appropriate times.

❖ Written approvals must be kept on file by the building official, and be available and open to the public. This provides reasonable access to the records on approvals of materials and systems should there be any subsequent investigation or further evaluation.

1703.4 Performance. Specific information consisting of test reports conducted by an *approved* agency in accordance with the appropriate referenced standards, or other such information as necessary, shall be provided for the *building official* to determine that the product, material or assembly meets the applicable code requirements.

❖ When conformance to the code is predicated on the performance and quality of products, materials or assemblies, the building official must require the submittal of testing reports from an approved agency.

1703.4.1 Research and investigation. Sufficient technical data shall be submitted to the *building official* to substantiate the proposed use of any product, material or assembly. If it is determined that the evidence submitted is satisfactory proof of performance for the use intended, the *building official* shall approve the use of the product, material or assembly subject to the requirements of this code. The costs, reports and investigations required under these provisions shall be paid by the owner or the owner's authorized agent.

❖ This section is usually used in conjunction with Section 104.11 when analysis of any construction material, such as new and innovative materials, is required to determine code compliance. The analysis is based entirely upon technical data. All costs of testing and investigations must be paid by the applicant.

1703.4.2 Research reports. Supporting data, where necessary to assist in the approval of products, materials or assemblies not specifically provided for in this code, shall consist of valid research reports from *approved* sources.

❖ Reports prepared by approved agencies, such as those published by organizations affiliated with model code groups, may be accepted as part of the information needed by the building official to evaluate proposed construction and form the basis for approval. Such reports can supplement building department resources by eliminating the need for the building official to conduct a detailed analysis on each new product, material or system. It is important that such material be truly objective and credible, and not consist merely of the manufacturer's brochures or similar proprietary information. It is also important to note that when the building official is utilizing research reports in evaluating compliance with the code, such as those issued by organizations affiliated with model code groups, he or she is not mandated to approve these reports just because the code is the legally adopted building code in the jurisdiction. These reports are not code text. They are advisory only and intended for technical reference.

1703.5 Labeling. Products, materials or assemblies required to be *labeled* shall be *labeled* in accordance with the procedures set forth in Sections 1703.5.1 through 1703.5.4.

❖ This section provides requirements for third-party inspection of a manufacturer of a material or assembly when the code says that the material or assembly must be labeled. The materials or assemblies required to be labeled are given in other chapters of the code, the *International Mechanical Code*® (IMC®), the *International Fire Code*® (IFC®) and the *International Plumbing Code*® (IPC®). Labeling provides a readily available source of information that is useful for field inspection of installed products. The label identifies the product or material and provides other information that can be investigated further if there is any question as to its suitability for the specific installation.

Some examples are gas appliances, fire doors, prefabricated construction (when the building official does not inspect it), electrical appliances, glass, factory-built fireplaces, plywood and other wood members when used structurally, lumber and foam plastics.

1703.5.1 Testing. An *approved agency* shall test a representative sample of the product, material or assembly being *labeled* to the relevant standard or standards. The *approved agency* shall maintain a record of the tests performed. The record shall provide sufficient detail to verify compliance with the test standard.

❖ As a basis for the allowed use of an agency's label, the agency is required to perform testing on the material or product in accordance with the standard(s) referenced by the code. For example, Section 903.1 of the IMC requires that factory-built fireplaces be tested in accordance with the referenced standard UL 127 and states that factory-built fireplaces are required to be listed and labeled by an approved agency.

1703.5.2 Inspection and identification. The *approved agency* shall periodically perform an inspection, which shall be in-plant if necessary, of the product or material that is to be *labeled*. The inspection shall verify that the labeled product, material or assembly is representative of the product, material or assembly tested.

❖ The approved agency whose label is to be applied to a product must perform periodic inspections. The primary objective of these inspections is to determine that the manufacturer is, indeed, making the same product that was tested. For example, using the factory-built fireplace discussed in the commentary to Section 1703.5.1, if the fire chamber wall in the test was $^{3}/_{8}$-inch-thick (9.5 mm) steel, the inspection agency must check to see that this thickness is being used. If the manufacturer has decided to use $^{1}/_{4}$-inch (6.4 mm) steel, then the inspection agency would be required to withdraw the use of its label and listing.

INTERNATIONAL CODE COUNCIL®
Copyright © 2015 ICC. ALL RIGHTS RESERVED. Accessed by David Dammon on Jun 21, 2017 12:30:52 PM pursuant to License Agreement with ICC. No further reproduction or distribution authorized. ANY UNAUTHORIZED REPRODUCTION OR DISTRIBUTION IS A VIOLATION OF THE FEDERAL COPYRIGHT ACT AND THE LICENSE AGREEMENT, AND SUBJECT TO CIVIL AND CRIMINAL PENALTIES THEREUNDER.

1703.5.3 Label information. The *label* shall contain the manufacturer's identification, model number, serial number or definitive information describing the performance characteristics of the product, material or assembly and the *approved agency's* identification.

❖ This section lists the information that is required on a label (see Commentary Figure 1703.5.3). The purpose is to provide sufficient information for the inspector to verify that the installed product is consistent with what was approved during the plan review process.



Figure 1703.5.3
TYPICAL LABEL INFORMATION

1703.5.4 Method of labeling. Information required to be permanently identified on the product, material or assembly shall be acid etched, sand blasted, ceramic fired, laser etched, embossed or of a type that, once applied, cannot be removed without being destroyed.

❖ The section requires that permanent labeling be of a nature that cannot be removed, and specifies acceptable methods of permanent labeling.

1703.6 Evaluation and follow-up inspection services. Where structural components or other items regulated by this code are not visible for inspection after completion of a prefabricated assembly, the owner or the owner's authorized agent shall submit a report of each prefabricated assembly. The report shall indicate the complete details of the assembly, including a description of the assembly and its components, the basis upon which the assembly is being evaluated, test results and similar information and other data as necessary for the *building official* to determine conformance to this code. Such a report shall be *approved* by the *building official*.

❖ As an alternative to physical inspection by the building official in the plant or location where prefabricated components such as modular homes, trusses, etc., are manufactured, the building official has the option of accepting an evaluation report from an approved agency detailing such inspections.

1703.6.1 Follow-up inspection. The owner or the owner's authorized agent shall provide for *special inspections* of fabricated items in accordance with Section 1704.2.5.

❖ The owner is required to provide special inspections of fabricated assemblies at the fabrication plant in accordance with Section 1704.2.5. The intent of the special inspections is to verify that the assemblies are constructed properly, with particular attention paid to those elements that cannot be easily observed after fabrication.

1703.6.2 Test and inspection records. Copies of necessary test and *special inspection* records shall be filed with the building official.

❖ All testing and inspection records related to a fabricated assembly must be filed with the building official so as to maintain a complete and legal record of the assembly and erection of the building components.

SECTION 1704
SPECIAL INSPECTIONS AND TESTS, CONTRACTOR RESPONSIBILITY AND STRUCTURAL OBSERVATION

1704.1 General. Special inspections and tests, statements of special inspections, responsibilities of contractors, submittals to the *building official* and structural observations shall meet the applicable requirements of this section.

❖ Section 1704 provides minimum requirements for special inspections and tests, including what is required to be included in the statement of special inspections, the conditions that would require structural observation as well as contractor responsibility requirements related to construction of the lateral force-resisting systems for wind and seismic loads.

1704.2 Special inspections and tests. Where application is made to the *building official* for construction as specified in Section 105, the owner or the owner's authorized agent, other than the contractor, shall employ one or more *approved agencies* to provide *special inspections* and tests during construction on the types of work specified in Section 1705 and identify the *approved agencies* to the *building official*. These *special inspections* and tests are in addition to the inspections by the *building official* that are identified in Section 110.

Exceptions:

1. *Special inspections* and tests are not required for construction of a minor nature or as warranted by conditions in the jurisdiction as *approved* by the *building official.*
2. Unless otherwise required by the *building official*, *special inspections* and tests are not required for Group U occupancies that are accessory to a residential occupancy including, but not limited to, those listed in Section 312.1.
3. *Special inspections* and tests are not required for portions of structures designed and constructed in accordance with the cold-formed steel light-frame

INTERNATIONAL CODE COUNCIL®
Copyright © 2015 ICC. ALL RIGHTS RESERVED. Accessed by David Dammon on Jun 21, 2017 12:30:52 PM pursuant to License Agreement with ICC. No further reproduction or distribution authorized. ANY UNAUTHORIZED REPRODUCTION OR DISTRIBUTION IS A VIOLATION OF THE FEDERAL COPYRIGHT ACT AND THE LICENSE AGREEMENT, AND SUBJECT TO CIVIL AND CRIMINAL PENALTIES THEREUNDER.

construction provisions of Section 2211.7 or the conventional light-frame construction provisions of Section 2308.

4. The contractor is permitted to employ the *approved agencies* where the contractor is also the owner.

❖ Special inspections provide a means of quality assurance. Structural properties of concrete or steel are not usually discernible by a mere visual inspection. Typically, construction materials must be tested and their installation must be monitored in order to provide a finished structure that performs in accordance with the design professional's intent. Trained specialists performing these inspections give the building official and engineer an indication that the intended structural performance will be achieved. According to Section 105.1, the permit applicant may be the owner or authorized agent in connection with the project (see Section 105.1 for further details).

Neither special inspections nor observations by the design professional replace inspections performed by the jurisdiction. Rather, they are intended as an enhancement to those inspections. Similarly, observations by the design professional do not replace special inspections, though the building official may accept inspections by the design professional if the design professional is sufficiently competent to perform the inspections.

Exceptions to the requirement for special inspections include minor work, Group U occupancies accessory to residential occupancies and prescriptive light-frame construction consisting of cold-formed steel or wood framing. Minor work is work that, if not performed properly, will not result in a life-safety hazard and will not adversely affect the performance of the finished product to meet its design intent. As an example, in a nonstructural application such as a sidewalk, a designer may specify higher strength concrete than required for nonstructural work. The concrete may not require special inspection if failure to meet the higher strength will not result in a life-safety hazard and is unlikely to result in adverse performance.

In addition to exempting minor work, Exception 1 refers to "conditions in the jurisdiction" as a possible exception. The primary "condition" envisioned is one in which the jurisdiction has the resources and skills to perform these inspection tasks. This exception should not be interpreted as one that can be invoked by the permit applicant. A jurisdiction should not be obligated to allow this exception. The purpose of this exception is merely to allow jurisdictions to perform these inspections to the extent they are capable of doing so, rather than requiring a special inspector.

Exception 2 eliminates the special inspection requirement for Group U occupancies that are accessory to a residential occupancy and where allowed by the building official. Because Group U occupancies could have elements or structural systems that require special inspection, the building official has the authority to require special inspection in such cases.

Exception 3 waives the requirement for special inspections for portions of structures designed and constructed in accordance with the prescriptive provisions of Section 2211.7 for cold-formed steel light-frame structures or Section 2308 for conventional light-frame wood structures.

1704.2.1 Special inspector qualifications. Prior to the start of the construction, the *approved agencies* shall provide written documentation to the *building official* demonstrating the competence and relevant experience or training of the *special inspectors* who will perform the *special inspections* and tests during construction. Experience or training shall be considered relevant where the documented experience or training is related in complexity to the same type of *special inspection* or testing activities for projects of similar complexity and material qualities. These qualifications are in addition to qualifications specified in other sections of this code.

The *registered design professional in responsible charge* and engineers of record involved in the design of the project are permitted to act as the *approved agency* and their personnel are permitted to act as special inspectors for the work designed by them, provided they qualify as special inspectors.

❖ This section attempts to standardize special inspector qualifications in an effort to provide for the availability of an adequate pool of qualified and knowledgeable special inspectors. The code requires the special inspector to demonstrate competence to the satisfaction of the building official. There are many certification and training programs for various facets of special inspections that may provide guidance to the building official in making this judgment. The provision allows the registered design professional in responsible charge and engineers of record who designed the project to act as an approved agency and perform special inspections for work designed by them, provided they also satisfy the qualification requirements for special inspectors.

1704.2.2 Access for special inspection. The construction or work for which *special inspection* or testing is required shall remain accessible and exposed for *special inspection* or testing purposes until completion of the required *special inspections* or tests.

❖ This section is similar to Section 110.1 in requiring that work remain accessible to the special inspector until any required inspections or testing have been performed.

1704.2.3 Statement of special inspections. The applicant shall submit a statement of *special inspections* in accordance with Section 107.1 as a condition for permit issuance. This statement shall be in accordance with Section 1704.3.

Exception: A statement of *special inspections* is not required for portions of structures designed and constructed in accordance with the cold-formed steel light-

INTERNATIONAL CODE COUNCIL®
Copyright © 2015 ICC. ALL RIGHTS RESERVED. Accessed by David Dammon on Jun 21, 2017 12:30:52 PM pursuant to License Agreement with ICC. No further reproduction or distribution authorized. ANY UNAUTHORIZED REPRODUCTION OR DISTRIBUTION IS A VIOLATION OF THE FEDERAL COPYRIGHT ACT AND THE LICENSE AGREEMENT, AND SUBJECT TO CIVIL AND CRIMINAL PENALTIES THEREUNDER.

frame construction provisions of Section 2211.7 or the conventional light-frame construction provisions of Section 2308.

❖ The applicant must submit for approval a list showing what special inspections are required, in addition to other construction documents, before issuance of the building permit. This section refers to Section 1704.3 for specific details, while Section 1704.3.1 identifies the materials, components and work to be covered in the statement of special inspections. The list of required special inspections may be included on the design drawings.

Since special inspections are not required for structures and portions thereof designed and constructed in accordance with the prescriptive provisions of Section 2211.7 for cold-formed steel light-frame structures or Section 2308 for conventional light-frame wood structures, a special inspection statement is not required for these structures.

1704.2.4 Report requirement. *Approved agencies* shall keep records of special inspections and tests. The *approved agency* shall submit reports of *special* inspections and tests to the *building official* and to the *registered design professional in responsible charge*. Reports shall indicate that work inspected or tested was or was not completed in conformance to *approved construction documents*. Discrepancies shall be brought to the immediate attention of the contractor for correction. If they are not corrected, the discrepancies shall be brought to the attention of the *building official* and to the *registered design professional in responsible charge* prior to the completion of that phase of the work. A final report documenting required *special inspections* and tests, and correction of any discrepancies noted in the inspections or tests, shall be submitted at a point in time agreed upon prior to the start of work by the owner or the owner's authorized agent to the *building official*.

❖ Records of each inspection must be submitted to the building official so as to compile a complete legal record of the project. These records must include all inspections made, any violations noted and discrepancies. Before a certificate of occupancy is issued, a final report must be submitted indicating that all special inspections have been made and all discrepancies have been addressed in order to show compliance with the applicable code requirements. It is the responsibility of the special inspector to document and submit inspection records to the building official and the registered design professional in responsible charge of the project. Examples of reports of special inspections and tests submitted by approved agencies are: tests of concrete for strength, slump and air content (see Table 1705.3); tests of masonry units, grout and mortar; and strength tests of shotcrete.

1704.2.5 Special inspection of fabricated items. Where fabrication of structural, load-bearing or lateral load-resisting members or assemblies is being conducted on the premises of a fabricator's shop, *special inspections* of the *fabricated items* shall be performed during fabrication.

Exceptions:

1. *Special inspections* during fabrication are not required where the fabricator maintains *approved* detailed fabrication and quality control procedures that provide a basis for control of the workmanship and the fabricator's ability to conform to *approved construction documents* and this code. Approval shall be based upon review of fabrication and quality control procedures and periodic inspection of fabrication practices by the building official.
2. Special inspections are not required where the fabricator is registered and *approved* in accordance with Section 1704.2.5.1.

❖ Inspection of in-plant fabrications and the requirements for special inspections are addressed herein. This section should be used in conjunction with Section 1703.6 relating to evaluation and follow-up inspections. The special inspector is required to verify not only that the fabricator complies with the design details and in-house quality control procedures at the plant, but also that the plant has the capability to construct/fabricate according to the approved drawings, standards and specifications. An example of this would be an inspection of proper placement and rolling of truss-plate connectors at a wood-truss manufacturing plant. Improper procedures could result in the connectors "popping out" or "peeling back" after the truss is concealed and loaded, thus causing structural failure. Another example is the fabrication of precast, prestressed, concrete members (e.g., hollow-core slabs), which is subject to the special inspections required by Section 1705.10 as well as those of Section 1705.3 for concrete construction. Note that Item 9 of Table 1705.3 specifies inspection of prestressed concrete. Special inspections are not necessary where an approved independent agency conducts in-house inspections during fabrication.

1704.2.5.1 Fabricator approval. *Special inspections* during fabrication are not required where the work is done on the premises of a fabricator registered and approved to perform such work without *special inspection*. Approval shall be based upon review of the fabricator's written procedural and quality control manuals and periodic auditing of fabrication practices by an *approved agency*. At completion of fabrication, the *approved* fabricator shall submit a *certificate of compliance* to the owner or the owner's authorized agent for submittal to the *building official* as specified in Section 1704.5 stating that the work was performed in accordance with the *approved construction documents*.

❖ "Approved fabricator" is defined in Section 202, and this section provides the basis for such approval by the building official. If the fabricator is approved by the building official, then its internal quality control procedures are deemed to be sufficient without the

INTERNATIONAL CODE COUNCIL®
Copyright © 2015 ICC. ALL RIGHTS RESERVED. Accessed by David Dammon on Jun 21, 2017 12:30:52 PM pursuant to License Agreement with ICC. No further reproduction or distribution authorized. ANY UNAUTHORIZED REPRODUCTION OR DISTRIBUTION IS A VIOLATION OF THE FEDERAL COPYRIGHT ACT AND THE LICENSE AGREEMENT, AND SUBJECT TO CIVIL AND CRIMINAL PENALTIES THEREUNDER.

need for a special inspection. A certificate of compliance provides the building official with evidence on each project that the work has been performed in accordance with the code and construction documents.

1704.3 Statement of special inspections. Where *special inspections* or tests are required by Section 1705, the *registered design professional in responsible charge* shall prepare a statement of *special inspections* in accordance with Section 1704.3.1 for submittal by the applicant in accordance with Section 1704.2.3.

Exception: The statement of *special inspections* is permitted to be prepared by a qualified person *approved* by the *building official* for construction not designed by a *registered design professional*.

❖ The statement of special inspections is required to be prepared by the registered design professional responsible for the building or structure. This is because the special inspections statement relates directly to the construction documents, which are the responsibility of the registered design professional. The exception states conditions under which the statement of special inspections may be prepared by someone other than the registered design professional. The section outlines the basic content required to be included in the statement of special inspections as well as the specific requirements for seismic and wind resistance, arranging them in logical order. The intent is to document the required inspections and testing in order to foster a systematic approach that helps to achieve the goal of a finished structure that meets or exceeds the minimum performance expectations.

1704.3.1 Content of statement of special inspections. The statement of *special inspections* shall identify the following:

1. The materials, systems, components and work required to have *special inspections* or tests by the *building official* or by the *registered design professional* responsible for each portion of the work.
2. The type and extent of each *special inspection*.
3. The type and extent of each test.
4. Additional requirements for *special inspections* or tests for seismic or wind resistance as specified in Sections 1705.11, 1705.12 and 1705.13.
5. For each type of *special inspection*, identification as to whether it will be continuous *special inspection*, periodic *special inspection* or performed in accordance with the notation used in the referenced standard where the inspections are defined.

❖ This section details the areas to be addressed in the statement of special inspection. It requires a list of materials and work that is subject to special inspection or testing, the type and frequency of inspections and whether the inspections are continuous or periodic.

1704.3.2 Seismic requirements in the statement of special inspections. Where Section 1705.12 or 1705.13 specifies *special inspections* or tests for seismic resistance, the statement of *special inspections* shall identify the designated seismic systems and seismic force-resisting systems that are subject to the *special inspections* or tests.

❖ Where special inspection or testing for seismic resistance is required, the statement of special inspections must identify the designated seismic systems and seismic force-resisting systems that are required to have special inspection.

1704.3.3 Wind requirements in the statement of special inspections. Where Section 1705.11 specifies *special inspection* for wind resistance, the statement of *special inspections* shall identify the main windforce-resisting systems and wind-resisting components that are subject to *special inspections*.

❖ Where special inspection for wind resistance is required, the statement of special inspections must identify the main wind-force-resisting systems and components and cladding that are required to have special inspection.

1704.4 Contractor responsibility. Each contractor responsible for the construction of a main wind- or seismic force-resisting system, designated seismic system or a wind- or seismic force-resisting component listed in the statement of special inspections shall submit a written statement of responsibility to the *building official* and the owner or the owner's authorized agent prior to the commencement of work on the system or component. The contractor's statement of responsibility shall contain acknowledgement of awareness of the special requirements contained in the statement of *special inspections*.

❖ The statement of contractor responsibility is required wherever the statement of special inspections includes additional wind- or seismic-resistance inspections. This statement by the contractor is separate from the statement of special inspections. It is the contractor's acknowledgment of the special inspections or testing that are beyond what is typically required.

1704.5 Submittals to the building official. In addition to the submittal of reports of *special inspections* and tests in accordance with Section 1704.2.4, reports and certificates shall be submitted by the owner or the owner's authorized agent to the *building official* for each of the following:

1. *Certificates of compliance* for the fabrication of structural, load-bearing or lateral load-resisting members or assemblies on the premises of a registered and *approved fabricator* in accordance with Section 1704.2.5.1.
2. *Certificates of compliance* for the seismic qualification of nonstructural components, supports and attachments in accordance with Section 1705.13.2.
3. *Certificates of compliance* for *designated seismic systems* in accordance with Section 1705.13.3.

INTERNATIONAL CODE COUNCIL®
Copyright © 2015 ICC. ALL RIGHTS RESERVED. Accessed by David Dammon on Jun 21, 2017 12:30:52 PM pursuant to License Agreement with ICC. No further reproduction or distribution authorized. ANY UNAUTHORIZED REPRODUCTION OR DISTRIBUTION IS A VIOLATION OF THE FEDERAL COPYRIGHT ACT AND THE LICENSE AGREEMENT, AND SUBJECT TO CIVIL AND CRIMINAL PENALTIES THEREUNDER.

4. Reports of preconstruction tests for shotcrete in accordance with Section 1908.5.
5. *Certificates of compliance* for open web steel joists and joist girders in accordance with Section 2207.5.
6. Reports of material properties verifying compliance with the requirements of AWS D1.4 for weldability as specified in Section 26.5.4 of ACI 318 for reinforcing bars in concrete complying with a standard other than ASTM A706 that are to be welded; and
7. Reports of mill tests in accordance with Section 20.2.2.5 of ACI 318 for reinforcing bars complying with ASTM A615 and used to resist earthquake-induced flexural or axial forces in the special moment frames, special structural walls or coupling beams connecting special structural walls of *seismic force-resisting systems* in *structures* assigned to *Seismic Design Category* B, C, D, E or F.

❖ The purpose of this section is to comprehensively specify the requirements for submittal of reports and certificates related to construction that is subject to special inspections and tests required primarily in Chapter 17. Typically, these documents certify or otherwise verify that a material or product meets certain special requirements, or is an alternative to the general requirements, of the building code. The listed items are typically references to provisions elsewhere in the building code or a referenced standard. The charging language of the new section specifies the requirements for submittal to the building official (e.g., by whom, after review and acceptance, and before the work begins) and the requirements apply equally to each listed submittal. The referenced provisions, however, contain additional requirements unique to each situation. The charging statement also clarifies that the submittals are in addition to the submittal of reports that are the responsibility of approved agencies and are already covered under Section 1704.2.4. By contrast, the submittals listed in this section are the responsibility of the owner or owner's authorized agent.

1704.6 Structural observations. Where required by the provisions of Section 1704.6.1 or 1704.6.2, the owner or the owner's authorized agent shall employ a *registered design professional* to perform structural observations. Structural observation does not include or waive the responsibility for the inspections in Section 110 or the *special inspections* in Section 1705 or other sections of this code.

Prior to the commencement of observations, the structural observer shall submit to the *building official* a written statement identifying the frequency and extent of structural observations.

At the conclusion of the work included in the permit, the structural observer shall submit to the *building official* a written statement that the site visits have been made and identify any reported deficiencies that, to the best of the structural observer's knowledge, have not been resolved.

❖ This section requires that a registered design professional such as an engineer or architect be employed by the owner to provide on-site visits to observe compliance with the structural drawings when required by Section 1704.6.1 or 1704.6.2. Structural observations are required under certain conditions in high-seismic and high-wind locations (see Section 202 for the definition of "Structural observation"), providing an additional level of inspections beyond those provided by the building inspector or a special inspector. The intent of requiring structural observations by a registered design professional for these structures is to verify that the structural systems are constructed in general conformance with the approved construction documents.

This section provides guidance on the frequency of observations. It requires submittal of a written statement by the structural observer to the building official prior to the commencement of observations identifying the frequency and extent of structural observations. The determination of the frequency of structural observations should be by the structural observer and the owner in consultation with the local building official. The structural observer must also submit a written statement to the building official at the conclusion of the work included in the permit.

1704.6.1 Structural observations for seismic resistance. Structural observations shall be provided for those structures assigned to *Seismic Design Category* D, E or F where one or more of the following conditions exist:

1. The structure is classified as *Risk Category* III or IV.
2. The height of the structure is greater than 75 feet (22 860 mm) above the base as defined in ASCE 7.
3. The structure is assigned to *Seismic Design Category* E, is classified as *Risk Category* I or II, and is greater than two *stories above grade plane*.
4. When so designated by the *registered design professional* responsible for the structural design.
5. When such observation is specifically required by the *building official*.

❖ This section lists the thresholds of seismic risk that necessitate structural observation. Items 1 through 3 are specific conditions that require structural observation, while Items 4 and 5 give discretion to the registered design professional or building official to require structural observation in other instances (see commentary, Section 1704.6).

1704.6.2 Structural observations for wind requirements. Structural observations shall be provided for those structures

INTERNATIONAL CODE COUNCIL®
Copyright © 2015 ICC. ALL RIGHTS RESERVED. Accessed by David Dammon on Jun 21, 2017 12:30:52 PM pursuant to License Agreement with ICC. No further reproduction or distribution authorized. ANY UNAUTHORIZED REPRODUCTION OR DISTRIBUTION IS A VIOLATION OF THE FEDERAL COPYRIGHT ACT AND THE LICENSE AGREEMENT, AND SUBJECT TO CIVIL AND CRIMINAL PENALTIES THEREUNDER.

sited where V_{asd} as determined in accordance with Section 1609.3.1 exceeds 110 mph (49 m/sec), where one or more of the following conditions exist:

1. The structure is classified as *Risk Category* III or IV.
2. The *building height* is greater than 75 feet (22 860 mm).
3. When so designated by the *registered design professional* responsible for the structural design.
4. When such observation is specifically required by the *building official*.

❖ This section lists the thresholds of high-wind exposure that necessitate structural observation. Items 1 and 2 are specific conditions that require structural observation, while Items 3 and 4 give discretion to the registered design professional or building official to require structural observation in other instances (see commentary, Section 1704.6).

SECTION 1705
REQUIRED SPECIAL INSPECTIONS AND TESTS

1705.1 General. *Special inspections* and tests of elements and nonstructural components of buildings and structures shall meet the applicable requirements of this section.

❖ The specific elements that require verification by special inspection or testing are covered in Section 1705.

1705.1.1 Special cases. *Special inspections* and tests shall be required for proposed work that is, in the opinion of the building official, unusual in its nature, such as, but not limited to, the following examples:

1. Construction materials and systems that are alternatives to materials and systems prescribed by this code.
2. Unusual design applications of materials described in this code.
3. Materials and systems required to be installed in accordance with additional manufacturer's instructions that prescribe requirements not contained in this code or in standards referenced by this code.

❖ This section requires special inspections for proposed work that is unique and not specifically addressed in the code or in standards that are referenced by the code. For example, a designer may chooses to utilize a new shear wall anchorage system that is not specifically covered by the code. Because the product is approved as an alternative under Section 104.11, the inspector must rely on installation requirements such as embedment, edge distances, etc., given in approved reports from the manufacturer, provided that the system is previously approved for installation by the building official.

1705.2 Steel construction. The *special inspections* and nondestructive testing of steel construction in buildings, structures, and portions thereof shall be in accordance with this section.

Exception: *Special inspections* of the steel fabrication process shall not be required where the fabricator does not perform any welding, thermal cutting or heating operation of any kind as part of the fabrication process. In such cases, the fabricator shall be required to submit a detailed procedure for material control that demonstrates the fabricator's ability to maintain suitable records and procedures such that, at any time during the fabrication process, the material specification and grade for the main stress-carrying elements are capable of being determined. Mill test reports shall be identifiable to the main stress-carrying elements when required by the *approved construction documents*.

❖ The required special inspections and testing for steel construction are covered in this section. The exception is allowed if the fabrication plant does not utilize any facilities or methods that may alter the physical characteristics or properties of the steel members or components, such as welding, thermal cutting or heating operations. The fabricator must, in any case, provide evidence that procedures are used to verify that the proper material specification and grade for the main stress-carrying elements are met in accordance with the job specifications and shop drawings.

1705.2.1 Structural steel. *Special inspections* and nondestructive testing of *structural steel elements* in buildings, structures and portions thereof shall be in accordance with the quality assurance inspection requirements of AISC 360.

Exception: *Special inspection* of railing systems composed of *structural steel elements* shall be limited to welding inspection of welds at the base of cantilevered rail posts.

❖ The 2010 edition of AISC 360, *AISC Specification for Structural Steel Buildings,* contains quality assurance and inspection requirements for structural steel buildings. This section references ASIC 360 for special inspection requirements related to structural steel.

1705.2.2 Cold-formed steel deck. *Special inspections* and qualification of welding special inspectors for cold-formed steel floor and roof deck shall be in accordance with the quality assurance inspection requirements of SDI QA/QC.

The SDI QA/QC Standard contains provisions for quality assurance inspections of steel floor and roof deck, and is intended to coordinate with the requirements of AISC 360, which is referenced in Section 1705.2.1. SDI QA/QC includes the prior requirements of the IBC for using AWS D1.3 for weld quality and requiring material verification. The standard clarifies the scope of required inspections for both the deck installer's quality control personnel and the quality assurance inspector.

INTERNATIONAL CODE COUNCIL®
Copyright © 2015 ICC. ALL RIGHTS RESERVED. Accessed by David Dammon on Jun 21, 2017 12:30:52 PM pursuant to License Agreement with ICC. No further reproduction or distribution authorized. ANY UNAUTHORIZED REPRODUCTION OR DISTRIBUTION IS A VIOLATION OF THE FEDERAL COPYRIGHT ACT AND THE LICENSE AGREEMENT, AND SUBJECT TO CIVIL AND CRIMINAL PENALTIES THEREUNDER.

1705.2.3 Open-web steel joists and joist girders. *Special inspections* of open-web steel joists and joist girders in buildings, structures and portions thereof shall be in accordance with Table 1705.2.3.

❖ The purpose of this section is to require special inspections of particular aspects of the installation of open web steel joists and joist girders. The standard Steel Joist Institute specifications for open web steel joists, joist girders and composite steel joists merely contain provisions for inspections by the manufacturer before shipment to verify compliance with the requirements of the specifications. Because their structural design is sufficiently complex to warrant inspection by a person with the expertise of a special inspector, requirements for inspecting the installation of steel joists and joist girders are given in Table 1705.2.3.

TABLE 1705.2.3. See below.

❖ Requiring special inspections for the bearing seat attachments and bridging attachments of open web steel joist and joist girder installation reflects the complexity of the structural designs and the importance of these installation requirements.

1705.2.4 Cold-formed steel trusses spanning 60 feet or greater. Where a cold-formed steel truss clear span is 60 feet (18 288 mm) or greater, the special inspector shall verify that the temporary installation restraint/bracing and the permanent individual truss member restraint/bracing are installed in accordance with the *approved* truss submittal package.

❖ Longer span trusses require additional care during handling and installation due to their size and weight. Special inspection of the bracing provides verification that these critical elements are properly installed in accordance with the approved truss submittal.

1705.3 Concrete construction. *Special inspections* and tests of concrete construction shall be performed in accordance with this section and Table 1705.3.

Exception: *Special inspections* and tests shall not be required for:

1. Isolated spread concrete footings of buildings three stories or less above *grade plane* that are fully supported on earth or rock.
2. Continuous concrete footings supporting walls of buildings three stories or less above *grade plane* that are fully supported on earth or rock where:
   2.1. The footings support walls of light-frame construction.
   2.2. The footings are designed in accordance with Table 1809.7.
   2.3. The structural design of the footing is based on a specified compressive strength, f'_c, not more than 2,500 pounds per square inch (psi) (17.2 MPa), regardless of the compressive strength specified in the *approved construction documents* or used in the footing construction.
3. Nonstructural concrete slabs supported directly on the ground, including prestressed slabs on grade, where the effective prestress in the concrete is less than 150 psi (1.03 MPa).
4. Concrete foundation walls constructed in accordance with Table 1807.1.6.2.
5. Concrete patios, driveways and sidewalks, on grade.

❖ This section establishes criteria for special inspections of elements of buildings and structures of concrete construction. Exceptions to the requirements of this section address concrete components that have little or no load-carrying requirements, such as nonstructural slabs on grade, driveways, patios or footings and foundations that require little or no reinforcement and carry relatively low loads.

TABLE 1705.3. See page 17-11.

❖ Required verifications and inspections during concrete construction operations are listed in Table 1705.3. This table provides a complete list of the types of inspections required, whether the inspection is continuous or periodic, and the applicable referenced standards for the placing, curing, prestressing and erection of concrete construction. Note a of the table references Section 1705.12 for any additional special inspections related to seismic resistance.

1705.3.1 Welding of reinforcing bars. *Special inspections* of welding and qualifications of *special inspectors* for rein-

TABLE 1705.2.3
REQUIRED SPECIAL INSPECTIONS OF OPEN-WEB STEEL JOISTS AND JOIST GIRDERS

TYPE	CONTINUOUS SPECIAL INSPECTION	PERIODIC SPECIAL INSPECTION	REFERENCED STANDARD[a]
1. Installation of open-web steel joists and joist girders.			
a. End connections – welding or bolted.	—	X	SJI specifications listed in Section 2207.1.
b. Bridging – horizontal or diagonal.	—		
1. Standard bridging.	—	X	SJI specifications listed in Section 2207.1.
2. Bridging that differs from the SJI specifications listed in Section 2207.1.		X	

For SI: 1 inch = 25.4 mm.

a. Where applicable, see also Section 1705.12, Special inspections for seismic resistance.

INTERNATIONAL CODE COUNCIL®
Copyright © 2015 ICC. ALL RIGHTS RESERVED. Accessed by David Dammon on Jun 21, 2017 12:30:52 PM pursuant to License Agreement with ICC. No further reproduction or distribution authorized. ANY UNAUTHORIZED REPRODUCTION OR DISTRIBUTION IS A VIOLATION OF THE FEDERAL COPYRIGHT ACT AND THE LICENSE AGREEMENT, AND SUBJECT TO CIVIL AND CRIMINAL PENALTIES THEREUNDER.

forcing bars shall be in accordance with the requirements of AWS D1.4 for *special inspection* and of AWS D1.4 for special inspector qualification.

❖ This section refers to AWS D1.4 for guidance on welding inspection and welder inspector qualifications.

1705.3.2 Material tests. In the absence of sufficient data or documentation providing evidence of conformance to quality standards for materials in Chapters 19 and 20 of ACI 318, the *building official* shall require testing of materials in accordance with the appropriate standards and criteria for the material in Chapters 19 and 20 of ACI 318.

❖ Concrete materials, such as cement, aggregates and admixtures and water, must comply with the ACI 318, which regulates materials and addresses specific standards. In the absence of sufficient data or documentation, the building official must require testing in accordance with the standards listed in ACI 318.

ASTM A706 is the standard for reinforcing steel that is weldable, meaning that the chemical composi-

TABLE 1705.3
REQUIRED SPECIAL INSPECTIONS AND TESTS OF CONCRETE CONSTRUCTION

TYPE	CONTINUOUS SPECIAL INSPECTION	PERIODIC SPECIAL INSPECTION	REFERENCED STANDARD[a]	IBC REFERENCE
1. Inspect reinforcement, including prestressing tendons, and verify placement.	—	X	ACI 318 Ch. 20, 25.2, 25.3, 26.5.1-26.5.3	1908.4
2. Reinforcing bar welding: a. Verify weldability of reinforcing bars other than ASTM A706; b. Inspect single-pass fillet welds, maximum $^5/_{16}$″; and c. Inspect all other welds.	— X	X X	AWS D1.4 ACI 318: 26.5.4	—
3. Inspect anchors cast in concrete.	—	X	ACI 318: 17.8.2	—
4. Inspect anchors post-installed in hardened concrete members.[b] a. Adhesive anchors installed in horizontally or upwardly inclined orientations to resist sustained tension loads. b. Mechanical anchors and adhesive anchors not defined in 4.a.	X	X	ACI 318: 17.8.2.4 ACI 318: 17.8.2	—
5. Verify use of required design mix.	—	X	ACI 318: Ch. 19, 26.4.3, 26.4.4	1904.1, 1904.2, 1908.2, 1908.3
6. Prior to concrete placement, fabricate specimens for strength tests, perform slump and air content tests, and determine the temperature of the concrete.	X	—	ASTM C172 ASTM C31 ACI 318: 26.4.5, 26.12	1908.10
7. Inspect concrete and shotcrete placement for proper application techniques.	X	—	ACI 318: 26.4.5	1908.6, 1908.7, 1908.8
8. Verify maintenance of specified curing temperature and techniques.	—	X	ACI 318: 26.4.7-26.4.9	1908.9
9. Inspect prestressed concrete for: a. Application of prestressing forces; and b. Grouting of bonded prestressing tendons.	 X X	 — —	 ACI 318: 26.9.2.1 ACI 318: 26.9.2.3	—
10. Inspect erection of precast concrete members.	—	X	ACI 318: Ch. 26.8	—
11. Verify in-situ concrete strength, prior to stressing of tendons in post-tensioned concrete and prior to removal of shores and forms from beams and structural slabs.	—	X	ACI 318: 26.10.2	—
12. Inspect formwork for shape, location and dimensions of the concrete member being formed.	—	X	ACI 318: 26.10.1(b)	—

For SI: 1 inch = 25.4 mm.

a. Where applicable, see also Section 1705.12, Special inspections for seismic resistance.

b. Specific requirements for special inspection shall be included in the research report for the anchor issued by an approved source in accordance with 17.8.2 in ACI 318, or other qualification procedures. Where specific requirements are not provided, special inspection requirements shall be specified by the registered design professional and shall be approved by the building official prior to the commencement of the work.

INTERNATIONAL CODE COUNCIL®
Copyright © 2015 ICC. ALL RIGHTS RESERVED. Accessed by David Dammon on Jun 21, 2017 12:30:52 PM pursuant to License Agreement with ICC. No further reproduction or distribution authorized. ANY UNAUTHORIZED REPRODUCTION OR DISTRIBUTION IS A VIOLATION OF THE FEDERAL COPYRIGHT ACT AND THE LICENSE AGREEMENT, AND SUBJECT TO CIVIL AND CRIMINAL PENALTIES THEREUNDER.

tion and manufacturing processes are such that the material is well suited for an acceptable quality of weld. ACI 318 states that any standard other than ASTM A706 used for reinforcement material would need to be supplemented for weldability requirements. The intent of this provision is that, where welding of reinforcing steel is required, the steel specified and delivered must be checked for weldability.

1705.4 Masonry construction. *Special inspections* and tests of masonry construction shall be performed in accordance with the quality assurance program requirements of TMS 402/ACI 530/ASCE 5 and TMS 602/ACI 530.1/ASCE 6.

Exception: *Special inspections* and tests shall not be required for:

1. Empirically designed masonry, glass unit masonry or masonry veneer designed in accordance with Section 2109, 2110 or Chapter 14, respectively, where they are part of a structure classified as *Risk Category* I, II or III.
2. Masonry foundation walls constructed in accordance with Table 1807.1.6.3(1), 1807.1.6.3(2), 1807.1.6.3(3) or 1807.1.6.3(4).
3. Masonry fireplaces, masonry heaters or masonry chimneys installed or constructed in accordance with Section 2111, 2112 or 2113, respectively.

❖ Because the Masonry Standards Joint Committee (MSJC) Code (TMS 402/ACI 530/ASCE 5) contains quality assurance and inspection requirements for masonry structures, this section references TMS 402/ACI 530/ASCE 5 and TMS 602/ACI 530.1/ASCE 6 MSJC Code and Specification for special inspection requirements related to masonry construction. The three exceptions exempt special inspection for: 1. Empirically designed masonry, glass unit masonry or masonry veneer in structures classified as Risk Category I, II or III; 2. Prescriptive masonry foundation walls constructed in accordance with the tables in Section 1807.1.6.3; and 3. Masonry fireplaces, heaters and chimneys constructed in accordance with the requirements of Chapter 21.

1705.4.1 Empirically designed masonry, glass unit masonry and masonry veneer in Risk Category IV. *Special inspections* and tests for empirically designed masonry, glass unit masonry or masonry veneer designed in accordance with Section 2109, 2110 or Chapter 14, respectively, where they are part of a structure classified as *Risk Category* IV shall be performed in accordance with TMS 402/ACI 530/ASCE 5, Level B Quality Assurance.

❖ This section defines the minimum level of special inspections required for empirically designed masonry, glass unit masonry and masonry veneer in Risk Category IV buildings. The section requires compliance with the Level B Quality Assurance provisions contained in TMS 402/ACI 530/ASCE 5.

1705.4.2 Vertical masonry foundation elements. *Special inspections* and tests of *vertical masonry foundation elements* shall be performed in accordance with Section 1705.4.

❖ Vertical masonry foundation elements such as masonry foundation walls must meet the special inspection requirements specified for other masonry elements. The section refers to the general provisions for special inspection of masonry structures in Section 1705.4. It should be noted that masonry foundation walls constructed in accordance with the prescriptive provisions and tables in Section 1807.1.6 are specifically exempted from special inspection.

1705.5 Wood construction. *Special inspections* of prefabricated wood structural elements and assemblies shall be in accordance with Section 1704.2.5. *Special inspections* of site-built assemblies shall be in accordance with this section.

❖ The fabrication process of wood structural elements and assemblies (such as wood trusses) that is being performed on the premises of a fabricator's shop must have special inspection in accordance with Section 1704.2.5. As noted in Section 1704.2.5.1, special inspection is not required in an approved fabricator's shop.

1705.5.1 High-load diaphragms. High-load diaphragms designed in accordance with Section 2306.2 shall be installed with *special inspections* as indicated in Section 1704.2. The special inspector shall inspect the wood structural panel sheathing to ascertain whether it is of the grade and thickness shown on the *approved construction documents*. Additionally, the special inspector must verify the nominal size of framing members at adjoining panel edges, the nail or staple diameter and length, the number of fastener lines and that the spacing between fasteners in each line and at edge margins agrees with the *approved construction documents*.

❖ This section requires special inspection of specific portions of high-load diaphragms with multiple rows of fasteners that are designed in accordance with Section 2306.2 [see Table 2306.2(2)]. These "high-load" diaphragms have multiple rows of fasteners and are designed to carry higher wind or seismic loads, making it necessary to have a special inspector verify the installation details.

1705.5.2 Metal-plate-connected wood trusses spanning 60 feet or greater. Where a truss clear span is 60 feet (18 288 mm) or greater, the special inspector shall verify that the temporary installation restraint/bracing and the permanent individual truss member restraint/bracing are installed in accordance with the approved truss submittal package.

❖ Longer span wood trusses require additional care during handling and installation due to their size and weight. Special inspection of the bracing provides verification that these critical elements are properly installed in accordance with the approved truss submittal.

1705.6 Soils. *Special inspections* and tests of existing site soil conditions, fill placement and load-bearing requirements shall be performed in accordance with this section and Table

INTERNATIONAL CODE COUNCIL®
Copyright © 2015 ICC. ALL RIGHTS RESERVED. Accessed by David Dammon on Jun 21, 2017 12:30:52 PM pursuant to License Agreement with ICC. No further reproduction or distribution authorized. ANY UNAUTHORIZED REPRODUCTION OR DISTRIBUTION IS A VIOLATION OF THE FEDERAL COPYRIGHT ACT AND THE LICENSE AGREEMENT, AND SUBJECT TO CIVIL AND CRIMINAL PENALTIES THEREUNDER.

1705.6. The *approved* geotechnical report and the *construction documents* prepared by the *registered design professionals* shall be used to determine compliance. During fill placement, the special inspector shall verify that proper materials and procedures are used in accordance with the provisions of the *approved* geotechnical report.

Exception: Where Section 1803 does not require reporting of materials and procedures for fill placement, the special inspector shall verify that the in-place dry density of the compacted fill is not less than 90 percent of the maximum dry density at optimum moisture content determined in accordance with ASTM D1557.

❖ The load-bearing capacity of the supporting soil has a significant impact on the structural integrity of any building. The amount and methods of compaction vary depending on the particular design. Use of proper compaction, lift and density, however, is critical to achieving the desired bearing capacity (see Table 1705.6 for the specific inspections that are required). When required by Section 1803, a geotechnical report must be provided, which would list the soil criteria that must be verified. Section 1804.5 clarifies that compacted fill used to support foundations must be in accordance with the criteria of an approved geotechnical report, except for fill depths of 12 inches (305 mm) or less. The exception in this section provides minimum verification requirements of compacted fill when it is not necessary to provide a geotechnical report.

TABLE 1705.6. See below.

❖ Tabular formatting of soil inspections clearly conveys the requirements for determining soil-bearing capacity and for testing inspection of soils for controlled fill. The verifications prior to fill placement include verifying that the site preparation meets specified requirements, including proper excavation depth, removal of all deleterious material and any other special requirements that the soils engineer deems necessary for the design (see Items 1, 2 and 5). Verifications of the fill material and the placement operation are treated in Items 3 and 4. Without observing and documenting that the proper material is used and the specified compaction techniques and lifts are employed, the specified load-bearing capacity may not be achieved. A major factor in the design of the fill is the in-place density. This evaluation is needed so that the compaction methods result in adequate soil-bearing capacity.

1705.7 Driven deep foundations. *Special inspections* and tests shall be performed during installation of driven deep foundation elements as specified in Table 1705.7. The approved geotechnical report and the *construction documents* prepared by the *registered design professionals* shall be used to determine compliance.

❖ Table 1705.7 lists the special inspection verifications that are required for installation and testing of driven elements of deep foundations. A geotechnical investigation is required by Section 1803.5.5. The section establishes specific criteria that the geotechnical report should include, which would also serve as the basis for the field verifications by a special inspector.

TABLE 1705.7. See page 17-14.

❖ This table provides a concise list of requirements for inspection and verification of materials, testing and installation of driven deep foundation elements and indicates whether the inspection is continuous or periodic.

1705.8 Cast-in-place deep foundations. *Special inspections* and tests shall be performed during installation of cast-in-place deep foundation elements as specified in Table 1705.8. The *approved* geotechnical report and the *construction documents* prepared by the *registered design professionals* shall be used to determine compliance.

❖ Table 1705.8 lists the special inspections that are required for cast-in-place elements of deep foundations. A geotechnical investigation is required by Section 1803.5.5. This section establishes specific criteria that the geotechnical report should include, which would also serve as the basis for field verifications by a special inspector.

TABLE 1705.8. See page 17-14.

❖ This table provides a concise list of requirements for inspection and verification of materials, testing and installation of cast-in-place deep foundation elements and indicates whether the inspection is continuous or periodic.

1705.9 Helical pile foundations. *Continuous special inspections* shall be performed during installation of helical pile foundations. The information recorded shall include installa-

TABLE 1705.6
REQUIRED SPECIAL INSPECTIONS AND TESTS OF SOILS

TYPE	CONTINUOUS SPECIAL INSPECTION	PERIODIC SPECIAL INSPECTION
1. Verify materials below shallow foundations are adequate to achieve the design bearing capacity.	—	X
2. Verify excavations are extended to proper depth and have reached proper material.	—	X
3. Perform classification and testing of compacted fill materials.	—	X
4. Verify use of proper materials, densities and lift thicknesses during placement and compaction of compacted fill.	X	—
5. Prior to placement of compacted fill, inspect subgrade and verify that site has been prepared properly.	—	X

INTERNATIONAL CODE COUNCIL®
Copyright © 2015 ICC. ALL RIGHTS RESERVED. Accessed by David Dammon on Jun 21, 2017 12:30:52 PM pursuant to License Agreement with ICC. No further reproduction or distribution authorized. ANY UNAUTHORIZED REPRODUCTION OR DISTRIBUTION IS A VIOLATION OF THE FEDERAL COPYRIGHT ACT AND THE LICENSE AGREEMENT, AND SUBJECT TO CIVIL AND CRIMINAL PENALTIES THEREUNDER.

tion equipment used, pile dimensions, tip elevations, final depth, final installation torque and other pertinent installation data as required by the *registered design professional in responsible charge*. The *approved* geotechnical report and the *construction documents* prepared by the *registered design professional* shall be used to determine compliance.

❖ Helical piles are premanufactured and installed by rotating them into the ground (see definition of "Helical pile" in Section 202). As with other types of deep foundation elements, special inspection must be provided to verify that their installation conforms with the approved geotechnical report and construction documents.

1705.10 Fabricated items. *Special inspections* of *fabricated items* shall be performed in accordance with Section 1704.2.5.

❖ This section serves as a reminder that the inspection of fabricated items is generally required except where work is done on the premises of an approved fabricator in accordance with Section 1704.2.5.

1705.11 Special inspections for wind resistance. *Special inspections* for wind resistance specified in Sections 1705.11.1 through 1705.11.3, unless exempted by the exceptions to Section 1704.2, are required for buildings and structures constructed in the following areas:

1. In wind Exposure Category B, where V_{asd} as determined in accordance with Section 1609.3.1 is 120 miles per hour (52.8 m/sec) or greater.
2. In wind Exposure Category C or D, where V_{asd} as determined in accordance with Section 1609.3.1 is 110 mph (49 m/sec) or greater.

❖ This section contains the additional required special inspections in areas that are more likely to experience higher wind forces. This section focuses on the specific areas of concern with respect to wind resistance as detailed in Sections 1705.11.1 for structural wood, Section 1705.11.2 for cold-formed steel and Section 1705.11.3 for components and cladding.

1705.11.1 Structural wood. *Continuous special inspection* is required during field gluing operations of elements of the main windforce-resisting system. *Periodic special inspection* is required for nailing, bolting, anchoring and other fastening of elements of the main windforce-resisting system, including

TABLE 1705.7
REQUIRED SPECIAL INSPECTIONS AND TESTS OF DRIVEN DEEP FOUNDATION ELEMENTS

TYPE	CONTINUOUS SPECIAL INSPECTION	PERIODIC SPECIAL INSPECTION
1. Verify element materials, sizes and lengths comply with the requirements.	X	—
2. Determine capacities of test elements and conduct additional load tests, as required.	X	—
3. Inspect driving operations and maintain complete and accurate records for each element.	X	—
4. Verify placement locations and plumbness, confirm type and size of hammer, record number of blows per foot of penetration, determine required penetrations to achieve design capacity, record tip and butt elevations and document any damage to foundation element.	X	—
5. For steel elements, perform additional special inspections in accordance with Section 1705.2.	—	—
6. For concrete elements and concrete-filled elements, perform tests and additional special inspections in accordance with Section 1705.3.	—	—
7. For specialty elements, perform additional inspections as determined by the registered design professional in responsible charge.	—	—

TABLE 1705.8
REQUIRED SPECIAL INSPECTIONS AND TESTS OF CAST-IN-PLACE DEEP FOUNDATION ELEMENTS

TYPE	CONTINUOUS SPECIAL INSPECTION	PERIODIC SPECIAL INSPECTION
1. Inspect drilling operations and maintain complete and accurate records for each element.	X	—
2. Verify placement locations and plumbness, confirm element diameters, bell diameters (if applicable), lengths, embedment into bedrock (if applicable) and adequate end-bearing strata capacity. Record concrete or grout volumes.	X	—
3. For concrete elements, perform tests and additional special inspections in accordance with Section 1705.3.	—	—

INTERNATIONAL CODE COUNCIL®
Copyright © 2015 ICC. ALL RIGHTS RESERVED. Accessed by David Dammon on Jun 21, 2017 12:30:52 PM pursuant to License Agreement with ICC. No further reproduction or distribution authorized. ANY UNAUTHORIZED REPRODUCTION OR DISTRIBUTION IS A VIOLATION OF THE FEDERAL COPYRIGHT ACT AND THE LICENSE AGREEMENT, AND SUBJECT TO CIVIL AND CRIMINAL PENALTIES THEREUNDER.

wood shear walls, wood diaphragms, drag struts, braces and hold-downs.

Exception: *Special inspections* are not required for wood shear walls, shear panels and diaphragms, including nailing, bolting, anchoring and other fastening to other elements of the main windforce-resisting system, where the fastener spacing of the sheathing is more than 4 inches (102 mm) on center.

❖ The risk of damage in buildings having main windforce-resisting systems that are constructed of wood warrants additional special inspections. The exception relaxes the special inspection requirement where demands are low, which is reflected by the sheathing fastener spacing of more than 4 inches (102 mm) on center.

1705.11.2 Cold-formed steel light-frame construction. *Periodic special inspection* is required for welding operations of elements of the main windforce-resisting system. *Periodic special inspection* is required for screw attachment, bolting, anchoring and other fastening of elements of the main windforce-resisting system, including shear walls, braces, diaphragms, collectors (drag struts) and hold-downs.

Exception: *Special inspections* are not required for cold-formed steel light-frame shear walls and diaphragms, including screwing, bolting, anchoring and other fastening to components of the windforce resisting system, where either of the following applies:

1. The sheathing is gypsum board or fiberboard.
2. The sheathing is wood structural panel or steel sheets on only one side of the shear wall, shear panel or diaphragm assembly and the fastener spacing of the sheathing is more than 4 inches (102 mm) on center (o.c.).

❖ The risk of damage in buildings having main windforce-resisting systems that are constructed of cold-formed steel warrants additional special inspections. The exception relaxes the special inspection requirement where demands are low, which is reflected by the sheathing fastener spacing of more than 4 inches (102 mm) on center, or where gypsum board or fiberboard sheathing is used.

1705.11.3 Wind-resisting components. *Periodic special inspection* is required for fastening of the following systems and components:

1. Roof covering, roof deck and roof framing connections.
2. Exterior wall covering and wall connections to roof and floor diaphragms and framing.

❖ The hazard addressed by this section is the cladding on buildings and structures in areas expected to experience higher wind forces. Damage to buildings due to high wind forces often begins with a failure of the cladding system, which in turn exposes the main windforce-resisting system to forces that this system is typically not designed to withstand, as well as the effects of wind-driven rain. Wind-driven rain damage occurs to building interiors when roof coverings are blown off, windows are broken or other parts of the structure fail. These are major causes of insurance claims. While such damage is not necessarily life-threatening to the occupants, it does result in costly repairs and renovations. Estimates from Hurricane Andrew, for example, indicate that water damage was responsible for roughly 60 percent of the insured losses.

1705.12 Special inspections for seismic resistance. *Special inspections* for seismic resistance shall be required as specified in Sections 1705.12.1 through 1705.12.9, unless exempted by the exceptions of Section 1704.2.

Exception: The *special inspections* specified in Sections 1705.12.1 through 1705.12.9 are not required for structures designed and constructed in accordance with one of the following:

1. The structure consists of light-frame construction; the design spectral response acceleration at short periods, S_{DS}, as determined in Section 1613.3.4, does not exceed 0.5; and the *building height* of the structure does not exceed 35 feet (10 668 mm).
2. The seismic force-resisting system of the structure consists of reinforced masonry or reinforced concrete; the design spectral response acceleration at short periods, S_{DS}, as determined in Section 1613.3.4, does not exceed 0.5; and the *building height* of the structure does not exceed 25 feet (7620 mm).
3. The structure is a detached one- or two-family dwelling not exceeding two *stories above grade plane* and does not have any of the following horizontal or vertical irregularities in accordance with Section 12.3 of ASCE 7:
    3.1. Torsional or extreme torsional irregularity.
    3.2. Nonparallel systems irregularity.
    3.3. Stiffness-soft story or stiffness-extreme soft story irregularity.
    3.4. Discontinuity in lateral strength-weak story irregularity.

❖ The added special inspection requirements for seismic resistance in this section are an important consideration in carrying out the intent of the seismic provisions of the code. A certain amount of inelastic behavior is inherent in a building's response to the design earthquake. Strong ground shaking caused by earthquakes tends to expose any underlying flaws in a building's construction or design. Thus, the code specifies additional special inspections of various structural and nonstructural components for seismic resistance in order to provide further verification that these portions of the finished structure are constructed in accordance with the construction documents. It is imperative that the registered design professional who designs systems that are critical to earthquake performance also identifies them and specifies the necessary inspection and testing.

INTERNATIONAL CODE COUNCIL®
Copyright © 2015 ICC. ALL RIGHTS RESERVED. Accessed by David Dammon on Jun 21, 2017 12:30:52 PM pursuant to License Agreement with ICC. No further reproduction or distribution authorized. ANY UNAUTHORIZED REPRODUCTION OR DISTRIBUTION IS A VIOLATION OF THE FEDERAL COPYRIGHT ACT AND THE LICENSE AGREEMENT, AND SUBJECT TO CIVIL AND CRIMINAL PENALTIES THEREUNDER.

Items 1 and 2 of the exception apply to light-frame structures with a height no greater than 35 feet (10 668 mm) and concrete or masonry structures not more than 25 feet (7620 mm) in height that have a relatively low seismic risk (where S_{DS} does not exceed 0.50g).

Item 3 applies to detached one- or two-family dwellings not exceeding two stories above grade plane without significant structural irregularities. The exception is limited to those structures that do not have any of the following irregularities: torsional irregularity; extreme torsional irregularity; nonparallel systems; stiffness irregularity (soft story); stiffness irregularity (extreme soft story); or discontinuity in capacity (weak story).

It is important to emphasize that this exception allows exemption from additional special inspections, not from the design of the structure in accordance with the structural the requirements of the code.

1705.12.1 Structural steel. *Special inspections* for seismic resistance shall be in accordance with Section 1705.12.1.1 or 1705.12.1.2, as applicable.

❖ This section distinguishes between structural steel seismic-force resisting systems and structural steel elements that work as struts, collectors, chords and foundation elements in seismic force-resisting systems composed of other structural materials.

1705.12.1.1 Seismic force-resisting systems. *Special inspections* of structural steel in the seismic force-resisting systems of buildings and structures assigned to *Seismic Design Category* B, C, D, E or F shall be performed in accordance with the quality assurance requirements of AISC 341.

Exception: *Special inspections* are not required in the seismic force-resisting systems of buildings and structures assigned to *Seismic Design Category* B or C that are not specifically detailed for seismic resistance, with a response modification coefficient, *R*, of 3 or less, excluding cantilever column systems.

❖ This section requires the special inspection of seismic force-resisting systems of structures classified as Seismic Design Category B, C, D, E or F. It is applicable to structural steel seismic force-resisting systems, which are the 16 structural steel systems listed in ASCE 7, Table 12.2-1.

This section makes a general reference to Seismic Design Category B and higher for seismic force-resisting systems because many of the structural systems that are required utilize special seismic detailing. The exception recognizes that buildings classified as Seismic Design Category B or C may utilize a seismic system that is designed using a response coefficient, $R = 3$. This recognizes the inherent ductility of these structures that are permitted to be constructed in accordance with AISC 360 rather than being detailed in accordance with the provisions of AISC 341. Since these construction details and connections are the same as would be used in any steel buildings designed according to AISC 360, no additional inspection or testing is required beyond that required for typical steel buildings in Section 1705.2.1.

1705.12.1.2 Structural steel elements. *Special inspections* of *structural steel elements* in the seismic force-resisting systems of buildings and structures assigned to *Seismic Design Category* B, C, D, E or F other than those covered in Section 1705.12.1.1, including struts, collectors, chords and foundation elements, shall be performed in accordance with the quality assurance requirements of AISC 341.

Exception: *Special inspections* of *structural steel elements* are not required in the seismic force-resisting systems of buildings and structures assigned to *Seismic Design Category* B or C with a response modification coefficient, *R*, of 3 or less.

❖ This section covers structural steel elements such as struts, collectors, chords and foundation elements that provide resistance to seismic forces. These structural steel elements should be inspected in accordance with the quality assurance requirements of AISC 341 if they are used in a seismic force-resisting system that relies heavily on nonelastic energy dissipation, in this case chosen as a system with a response modification coefficient, *R*, greater than 3.

1705.12.2 Structural wood. For the seismic force-resisting systems of structures assigned to *Seismic Design Category* C, D, E or F:

1. *Continuous special inspection* shall be required during field gluing operations of elements of the seismic force-resisting system.
2. *Periodic special inspection* shall be required for nailing, bolting, anchoring and other fastening of elements of the seismic force-resisting system, including wood shear walls, wood diaphragms, drag struts, braces, shear panels and hold-downs.

Exception: *Special inspections* are not required for wood shear walls, shear panels and diaphragms, including nailing, bolting, anchoring and other fastening to other elements of the seismic force-resisting system, where the fastener spacing of the sheathing is more than 4 inches (102 mm) on center.

❖ Continuous special inspection of field gluing operations of structural wood is required, while special inspection of fastenings of components within the seismic force-resisting system is required on a periodic basis. Since special inspection should only be necessary for complex, highly loaded systems, an exception waives the special inspection of fastening in shear walls and diaphragms that are lightly loaded. Lower design loads mean these elements will have less stringent requirements for bolting, anchoring and fastening. The building official who is already inspecting the sheathing will also inspect fastening in these instances. Rather than being based on the component's design shear, the exception is based on the sheathing fastener spacing as a more practical threshold. All things being equal, as the fastener

INTERNATIONAL CODE COUNCIL®
Copyright © 2015 ICC. ALL RIGHTS RESERVED. Accessed by David Dammon on Jun 21, 2017 12:30:52 PM pursuant to License Agreement with ICC. No further reproduction or distribution authorized. ANY UNAUTHORIZED REPRODUCTION OR DISTRIBUTION IS A VIOLATION OF THE FEDERAL COPYRIGHT ACT AND THE LICENSE AGREEMENT, AND SUBJECT TO CIVIL AND CRIMINAL PENALTIES THEREUNDER.

spacing decreases the component's design load is higher and the tighter spacing increases the potential for splitting framing members. The latter concern is a quality issue associated primarily with nailing.

1705.12.3 Cold-formed steel light-frame construction. For the seismic force-resisting systems of structures assigned to *Seismic Design Category* C, D, E or F, periodic special inspection shall be required:

1. For welding operations of elements of the seismic force-resisting system; and
2. For screw attachment, bolting, anchoring and other fastening of elements of the seismic force-resisting system, including shear walls, braces, diaphragms, collectors (drag struts) and hold-downs.

Exception: *Special inspections* are not required for cold-formed steel light-frame shear walls and diaphragms, including screw installation, bolting, anchoring and other fastening to components of the seismic force-resisting system, where either of the following applies:

1. The sheathing is gypsum board or fiberboard.
2. The sheathing is wood structural panel or steel sheets on only one side of the shear wall, shear panel or diaphragm assembly and the fastener spacing of the sheathing is more than 4 inches (102 mm) on center.

❖ Periodic special inspection is required for cold-formed steel framing and its fastening. The exception relaxes the special inspection requirement where demands are low, which is reflected by the sheathing fastener spacing of more than 4 inches (102 mm) on center, or where gypsum board or fiberboard sheathing is used.

1705.12.4 Designated seismic systems. For structures assigned to *Seismic Design Category* C, D, E or F, the special inspector shall examine *designated seismic systems* requiring seismic qualification in accordance with Section 13.2.2 of ASCE 7 and verify that the label, anchorage and mounting conform to the *certificate of compliance*.

❖ For elements of the designated seismic system as defined in Section 202, the special inspector is required to verify that the component label, anchorage and mounting conforms to the certificate of compliance.

1705.12.5 Architectural components. *Periodic special inspection* is required for the erection and fastening of exterior cladding, interior and exterior nonbearing walls and interior and exterior veneer in structures assigned to *Seismic Design Category* D, E or F.

Exception: *Periodic special inspection* is not required for the following:

1. Exterior cladding, interior and exterior nonbearing walls and interior and exterior veneer 30 feet (9144 mm) or less in height above grade or walking surface.
2. Exterior cladding and interior and exterior veneer weighing 5 psf (24.5 N/m^2) or less.
3. Interior nonbearing walls weighing 15 psf (73.5 N/m2) or less.

❖ Although this section is titled "Architectural components," the requirements refer specifically to exterior cladding, interior and exterior nonbearing walls and interior and exterior veneer. It follows that architectural components other than exterior cladding, interior and exterior nonbearing walls and interior and exterior veneer are not subject to these inspections. It applies to nonbearing walls, which are considered nonstructural components as opposed to bearing walls, which are structural elements and are therefore subject to the special inspections required for the material used to construct the wall. Periodic special inspection of the installation of the listed architectural components verifies that the intent of the design is carried out in the field. The listed components are often supported at different levels of a structure, meaning the component and connection design must consider relative movements. Where connections are designed to allow for relative displacements, verifying that the installation is in accordance with the construction documents is a prudent measure. The special inspector should verify that the method of anchoring or fastening and the number, spacing and types of fasteners actually used conform with the approved construction documents for the component installed.

Exception 1 exempts construction that is not more than 30 feet (9144 mm) above grade or above a walking surface. Exception 2 exempts cladding and veneer weighing 5 psf (24.5 N/m^2) or less from special inspection. Exception 3 exempts interior nonbearing walls, but not exterior nonbearing walls, weighing 15 psf (73.5 N/m^2) or less from special inspection. Restated, this section requires periodic special inspection for the erection and fastening of exterior nonbearing walls, cladding and veneer weighing more than 5 psf (24.5 N/m^2) and interior nonbearing walls weighing more than 15 psf (73.5 N/m^2) when any of these components are installed more than 30 feet (9144 mm) above grade or a walking surface.

1705.12.5.1 Access floors. Periodic *special inspection* is required for the anchorage of access floors in structures assigned to *Seismic Design Category* D, E or F.

❖ Access floors consist of a system of panels and supports that create a raised floor above the actual structural floor system. By raising the floor, a space is created between the raised floor and the structural floor where various components such as wiring for power, voice and data can be routed. This space has also become increasingly valuable for heating, ventilation, and air-conditioning (HVAC) distribution either as a plenum space or with defined ductwork. Because failure of the floor system can pose a threat to the occupants in high seismic areas, anchorage of access floors require periodic special inspection in buildings as classified Seismic Design Category D, E or F.

INTERNATIONAL CODE COUNCIL®
Copyright © 2015 ICC. ALL RIGHTS RESERVED. Accessed by David Dammon on Jun 21, 2017 12:30:52 PM pursuant to License Agreement with ICC. No further reproduction or distribution authorized. ANY UNAUTHORIZED REPRODUCTION OR DISTRIBUTION IS A VIOLATION OF THE FEDERAL COPYRIGHT ACT AND THE LICENSE AGREEMENT, AND SUBJECT TO CIVIL AND CRIMINAL PENALTIES THEREUNDER.

1705.12.6 Plumbing, mechanical and electrical components. *Periodic special inspection* of plumbing, mechanical and electrical components shall be required for the following:

1. Anchorage of electrical equipment for emergency and standby power systems in structures assigned to *Seismic Design Category* C, D, E or F.
2. Anchorage of other electrical equipment in structures assigned to *Seismic Design Category* E or F.
3. Installation and anchorage of piping systems designed to carry hazardous materials and their associated mechanical units in structures assigned to *Seismic Design Category* C, D, E or F.
4. Installation and anchorage of ductwork designed to carry hazardous materials in structures assigned to *Seismic Design Category* C, D, E or F.
5. Installation and anchorage of vibration isolation systems in structures assigned to *Seismic Design Category* C, D, E or F where the *approved construction documents* require a nominal clearance of 1/4 inch (6.4 mm) or less between the equipment support frame and restraint.

❖ It is anticipated that the minimum requirements for mechanical and electrical components will be complied with when the special inspector is satisfied that the method of anchoring or fastening and the number, spacing and types of fasteners actually used conform to the approved construction documents for the components installed. It is noted that such special inspection requirements are for selected electrical, lighting, piping and ductwork components in structures that are assigned to Seismic Design Category C, D, E or F. Periodic special inspection is required during the anchorage of electrical equipment for emergency or standby power systems, installation and anchorage of piping systems designed to carry hazardous materials and their mechanical units, and installation and anchorage of ductwork designed to carry hazardous materials in structures assigned to Seismic Design Category C, D, E or F. Periodic special inspection is required during the anchorage for other electrical equipment in structures assigned to Seismic Design Category E or F.

Item 5 requires the inspection of vibration isolation systems where an optional lower clearance is specified by the design. Typically, vibration-isolated mechanical equipment requires an increased seismic design force. Note b of Table 13.6-1 of ASCE 7 provides an option to reduce this seismic design force on vibration-isolated components and systems having a clearance of $^1/_4$ inch (6.4 mm) or less between the equipment support frame and restraint. To confirm that the design intent is carried out in the field, isolated equipment installations that utilize a reduced clearance are subject to special inspection.

1705.12.7 Storage racks. *Periodic special inspection* is required for the anchorage of storage racks that are 8 feet (2438 mm) or greater in height in structures assigned to *Seismic Design Category* D, E or F.

❖ Tall storage racks such as those found in large building supply stores pose a threat to the public in high seismic areas. Because anchorage is the most critical element, anchorage of storage racks greater than or equal to 8 feet (2438 mm) in height in structures assigned to Seismic Design Category D, E or F require periodic special inspection.

1705.12.8 Seismic isolation systems. *Periodic special inspection* shall be provided for seismic isolation systems in seismically isolated structures assigned to *Seismic Design Category* B, C, D, E or F during the fabrication and installation of isolator units and energy dissipation devices.

❖ Seismic isolation units and energy dissipation devices are required to have periodic special inspection during fabrication and installation.

1705.12.9 Cold-formed steel special bolted moment frames. *Periodic special inspection* shall be provided for the installation of cold-formed steel special bolted moment frames in the *seismic force-resisting systems* of structures assigned to *Seismic Design Category* D, E or F.

❖ This section requires special inspections for the installation of cold-formed steel special bolted moment frames, which are a newer type of seismic force-resisting system that is permitted by ASCE 7. The standard for Seismic Design of Cold-formed Steel Structural Systems: Special Bolted Moment Frames, AISI S110, contains provisions for inspections that are limited to quality control by the fabricator and inspections by qualified inspectors representing the owner. The structural design of these frames is sufficiently complex to warrant inspection by a person with the expertise of a special inspector. Especially complex areas of the structural design that warrant special inspection of the installation include the beam-to-column connections and the anchorage to the foundation.

1705.13 Testing for seismic resistance. Testing for seismic resistance shall be required as specified in Sections 1705.13.1 through 1705.13.4, unless exempted from *special inspections* by the exceptions of Section 1704.2.

❖ This section specifies when material seismic-resistance tests for seismic force-resisting systems and designated seismic systems are required. These requirements supplement the test requirements contained in the referenced standards given in other sections of the code. The seismic provisions of the code are frequently based on assumed material behavior. Material tests are key to verifying the quality of material that is used for certain seismic-resistant construction.

Some inelastic behavior can be anticipated in a building's response to the design earthquake. Strong ground shaking caused by earthquakes tends to expose any underlying flaws in a building's construction or design. Thus, the code specifies testing of some

INTERNATIONAL CODE COUNCIL®
Copyright © 2015 ICC. ALL RIGHTS RESERVED. Accessed by David Dammon on Jun 21, 2017 12:30:52 PM pursuant to License Agreement with ICC. No further reproduction or distribution authorized. ANY UNAUTHORIZED REPRODUCTION OR DISTRIBUTION IS A VIOLATION OF THE FEDERAL COPYRIGHT ACT AND THE LICENSE AGREEMENT, AND SUBJECT TO CIVIL AND CRIMINAL PENALTIES THEREUNDER.

structural and nonstructural components as additional verification that the seismic resistance provided in the finished structure meets the intent of the design. It is imperative that the professional who designs systems that are critical to the earthquake performance also identifies them and specifies the necessary testing in the statement of special inspections

1705.13.1 Structural steel. Nondestructive testing for seismic resistance shall be in accordance with Section 1705.13.1.1 or 1705.13.1.2, as applicable.

❖ This section requires nondestructive testing for seismic resistance and distinctions are drawn between structural steel seismic force-resisting systems and structural steel elements that work as struts, collectors, chords and foundation elements in seismic force-resisting systems.

1705.13.1.1 Seismic force-resisting systems. Nondestructive testing of structural steel in the seismic force-resisting systems of buildings and structures assigned to *Seismic Design Category* B, C, D, E or F shall be performed in accordance with the quality assurance requirements of AISC 341.

Exception: Nondestructive testing is not required in the seismic force-resisting systems of buildings and structures assigned to *Seismic Design Category* B or C that are not specifically detailed for seismic resistance, with a response modification coefficient, *R*, of 3 or less, excluding cantilever column systems.

❖ Structural steel must be tested as required by AISC 341. Appendix Q of AISC 341 provides the code user with the minimum acceptable requirements for a quality assurance plan that applies to the construction of welded joints, bolted joints and other details in the seismic-force-resisting system. Where appropriate, the appendix references AWS D1.1 for specific acceptance criteria.

This section makes a general reference to Seismic Design Category B and higher for seismic-force-resisting systems because many of the structural systems that are required utilize special detailing. The exception recognizes that buildings classified as Seismic Design Category B or C may employ a seismic system that is designed using a response coefficient, $R = 3$. This recognizes the inherent ductility of these structures that are permitted to be constructed in accordance with AISC 360, and not be detailed in accordance with the provisions of AISC 341. Since these construction details and connections are the same as would be used in any steel building designed according to AISC 360, no additional inspection or testing is required beyond that required for typical steel buildings in Section 1705.2.1.

1705.13.1.2 Structural steel elements. Nondestructive testing of structural steel elements in the seismic force-resisting systems of buildings and structures assigned to *Seismic Design Category* B, C, D, E or F other than those covered in Section 1705.13.1.1, including struts, collectors, chords and foundation elements, shall be performed in accordance with the quality assurance requirements of AISC 341.

Exception: Nondestructive testing of *structural steel elements* is not required in the seismic force-resisting systems of buildings and structures assigned to *Seismic Design Category* B or C with a response modification coefficient, *R*, of 3 or less.

❖ Testing for these structural steel elements should be provided in accordance with the quality assurance requirements of AISC 341 if they are used in a seismic force-resisting system that relies heavily on nonelastic energy dissipation, in this case chosen as a system with a response modification coefficient, *R*, greater than 3. Requirements for nondestructive testing of structural steel elements is now governed by AISC 341. Testing is not required for Seismic Design Categories B and C where relatively low inelastic demands are expected (i.e., where the response modification coefficient, *R*, is 3 or less). Because of their low redundancy, cantilever column systems are not exempted from testing.

1705.13.2 Nonstructural components. For structures assigned to *Seismic Design Category* B, C, D, E or F, where the requirements of Section 13.2.1 of ASCE 7 for nonstructural components, supports or attachments are met by seismic qualification as specified in Item 2 therein, the *registered design professional* shall specify on the *approved construction documents* the requirements for seismic qualification by analysis, testing or experience data. *Certificates of compliance* for the seismic qualification shall be submitted to the *building official* as specified in Section 1704.5.

❖ Where required, nonstructural components must comply with the general design provisions of Section 13.2.1 of ASCE 7, which permits justification of components by project-specific design or certification by the manufacturer (through analysis, testing or experience data). Where the option of seismic qualification by analysis, testing or experience data detailed in Section 13.2.1, Item 2, of ASCE 7 is chosen, the requirements to document the parameters for seismic qualification on the construction documents and to submit the certificate of compliance for seismic qualification to the building official apply. These requirements are the consequence of the design team choosing to comply utilizing seismic qualification rather than the design option in Section 13.2.1, Item 1 of ASCE 7. In addition, the registered design professional responsible should review and accept the certificate of compliance before its submission to the building official. Note that ICC Evaluation Service's AC 156, "Acceptance Criteria for Seismic Qualification by Shake-table Testing of Nonstructural Components and Systems," provides testing criteria that can be used to comply with this provision.

1705.13.3 Designated seismic systems. For structures assigned to *Seismic Design Category* C, D, E or F and with *designated seismic systems* that are subject to the requirements of Section 13.2.2 of ASCE 7 for certification, the *reg-*

INTERNATIONAL CODE COUNCIL®
Copyright © 2015 ICC. ALL RIGHTS RESERVED. Accessed by David Dammon on Jun 21, 2017 12:30:52 PM pursuant to License Agreement with ICC. No further reproduction or distribution authorized. ANY UNAUTHORIZED REPRODUCTION OR DISTRIBUTION IS A VIOLATION OF THE FEDERAL COPYRIGHT ACT AND THE LICENSE AGREEMENT, AND SUBJECT TO CIVIL AND CRIMINAL PENALTIES THEREUNDER.

istered design professional shall specify on the *approved construction documents* the requirements to be met by analysis, testing or experience data as specified therein. *Certificates of compliance* documenting that the requirements are met shall be submitted to the *building official* as specified in Section 1704.5.

❖ The registered design professional is required to specify the applicable seismic certification requirements on the construction documents for designated seismic systems. This is necessary for the manufacturer who is required to provide a certificate of compliance. Affected mechanical and electrical components are required to demonstrate seismic performance by testing or analytical methods. The intent is to verify the ability of critical equipment to not only survive an earthquake but also to remain functional. This is accomplished by the special certification of designated seismic systems.

1705.13.4 Seismic isolation systems. Seismic isolation systems in seismically isolated structures assigned to *Seismic Design Category* B, C, D, E or F shall be tested in accordance with Section 17.8 of ASCE 7.

❖ The referenced section of ASCE 7 contains detailed provisions for isolation system testing. This testing provides effective stiffness and damping values to be used in the design of a seismically isolated structure. A minimum of two full-size specimens must be tested for each proposed type and size of isolator. These prototypes are not to be used in the construction unless approved by both the registered design professional and building official.

[BF] 1705.14 Sprayed fire-resistant materials. *Special inspections* and tests of sprayed fire-resistant materials applied to floor, roof and wall assemblies and structural members shall be performed in accordance with Sections 1705.14.1 through 1705.14.6. *Special inspections* shall be based on the fire-resistance design as designated in the *approved construction documents*. The tests set forth in this section shall be based on samplings from specific floor, roof and wall assemblies and structural members. *Special inspections* and tests shall be performed after the rough installation of electrical, automatic sprinkler, mechanical and plumbing systems and suspension systems for ceilings, where applicable.

❖ Section 704.13 contains code requirements for the application of sprayed fire-resistant materials (SFRM). The application must be in accordance with the terms and conditions of the listing and the manufacturer's instructions. The special inspection of SFRM verifies that the requirements for thickness, density and bond strength specified in the design have been satisfied by the actual installation. These inspections are to be performed after the rough installation of mechanical, electrical, plumbing, automatic sprinkler systems and ceiling suspension systems.

[BF] 1705.14.1 Physical and visual tests. The *special inspections* and tests shall include the following to demonstrate compliance with the listing and the *fire-resistance rating*:

1. Condition of substrates.
2. Thickness of application.
3. Density in pounds per cubic foot (kg/m^3).
4. Bond strength adhesion/cohesion.
5. Condition of finished application.

❖ To verify that an SFRM performs as intended, certain conditions are required to be met. The verifications include: substrate conditions, thickness and density of material and condition of the finished application. Section 704.13 states the substrate condition and finished condition requirements.

[BF] 1705.14.2 Structural member surface conditions. The surfaces shall be prepared in accordance with the *approved* fire-resistance design and the written instructions of *approved* manufacturers. The prepared surface of structural members to be sprayed shall be inspected by the special inspector before the application of the sprayed fire-resistant material.

❖ The integrity of an SFRM system depends on the conditions of the surface of the steel member to which it is applied. The system must be fully adhered to the surface for proper performance, in accordance with design values. See Section 704.13.3.1 for requirements related to the substrate surface conditions.

[BF] 1705.14.3 Application. The substrate shall have a minimum ambient temperature before and after application as specified in the written instructions of *approved* manufacturers. The area for application shall be ventilated during and after application as required by the written instructions of *approved* manufacturers.

❖ During application of SFRM, and immediately thereafter during cure of the material, several items must be controlled, including the ambient temperature during the application and temperature of the substrate and the SFRM. Temperature control is important to determine that the necessary chemical reactions needed to make a particular material bond to the steel surfaces and hold together do, in fact, happen. The minimum or maximum temperatures necessary for proper bond and cure depend on the specific type of material (see Section 704.13.4 for more information). The scope of the special inspection also includes verification of the proper ventilation during application, as well as for curing.

[BF] 1705.14.4 Thickness. No more than 10 percent of the thickness measurements of the sprayed fire-resistant materials applied to floor, roof and wall assemblies and structural members shall be less than the thickness required by the *approved* fire-resistance design, but in no case less than the minimum allowable thickness required by Section 1705.14.4.1.

❖ For the system to provide the required design fire-resistance rating, it must be applied at the appropri-

INTERNATIONAL CODE COUNCIL®
Copyright © 2015 ICC. ALL RIGHTS RESERVED. Accessed by David Dammon on Jun 21, 2017 12:30:52 PM pursuant to License Agreement with ICC. No further reproduction or distribution authorized. ANY UNAUTHORIZED REPRODUCTION OR DISTRIBUTION IS A VIOLATION OF THE FEDERAL COPYRIGHT ACT AND THE LICENSE AGREEMENT, AND SUBJECT TO CIVIL AND CRIMINAL PENALTIES THEREUNDER.

ate thickness. This section establishes an acceptable percentage of thickness readings that can fall below the specified design value, provided none of these readings are less than the minimum established in Section 1705.14.4.1. These limitations on the thickness measurements are intended to provide a high confidence level that the installed material meets, or exceeds, the design requirements.

[BF] 1705.14.4.1 Minimum allowable thickness. For design thicknesses 1 inch (25 mm) or greater, the minimum allowable individual thickness shall be the design thickness minus 1/4 inch (6.4 mm). For design thicknesses less than 1 inch (25 mm), the minimum allowable individual thickness shall be the design thickness minus 25 percent. Thickness shall be determined in accordance with ASTM E605. Samples of the sprayed fire-resistant materials shall be selected in accordance with Sections 1705.14.4.2 and 1705.14.4.3.

❖ This requirement prevents the combination of very thin readings with thicker readings in order to show compliance. The required sampling provided for floor, roof and wall assemblies in Section 1705.14.4.2 and structural members in Section 1705.14.4.3 is based on ASTM E605 with some modifications. This standard also provides testing methods that are commonly used by the industry.

[BF] 1705.14.4.2 Floor, roof and wall assemblies. The thickness of the sprayed fire-resistant material applied to floor, roof and wall assemblies shall be determined in accordance with ASTM E605, making not less than four measurements for each 1,000 square feet (93 m^2) of the sprayed area, or portion thereof, in each *story*.

❖ Sampling of an SFRM for membrane components (floors, roofs or walls) is based on the square footage of the components. The number of samples is increased in the code by using a sampling area of every 1,000 square feet (93 m^2) rather than 10,000 square feet (929 m^2) as is specified in ASTM E605. This is intended to provide a higher level of confidence in the performance of the installed assembly.

[BF] 1705.14.4.3 Cellular decks. Thickness measurements shall be selected from a square area, 12 inches by 12 inches (305 mm by 305 mm) in size. A minimum of four measurements shall be made, located symmetrically within the square area.

❖ This section is consistent with the procedure in ASTM E605 for flat decks.

[BF] 1705.14.4.4 Fluted decks. Thickness measurements shall be selected from a square area, 12 inches by 12 inches (305 mm by 305 mm) in size. A minimum of four measurements shall be made, located symmetrically within the square area, including one each of the following: valley, crest and sides. The average of the measurements shall be reported.

❖ This section is consistent with the procedure in ASTM E605 for fluted decks.

[BF] 1705.14.4.5 Structural members. The thickness of the sprayed fire-resistant material applied to structural members shall be determined in accordance with ASTM E605. Thickness testing shall be performed on not less than 25 percent of the structural members on each floor.

❖ Sampling of the SFRM for structural elements is based on the square footage of each floor. Sample size and number of elements represented are based on ASTM E605.

[BF] 1705.14.4.6 Beams and girders. At beams and girders thickness measurements shall be made at nine locations around the beam or girder at each end of a 12-inch (305 mm) length.

❖ This section is consistent with the procedure in ASTM E605 for beams.

[BF] 1705.14.4.7 Joists and trusses. At joists and trusses, thickness measurements shall be made at seven locations around the joist or truss at each end of a 12-inch (305 mm) length.

❖ This section is consistent with the procedure in ASTM E605 for joists.

[BF] 1705.14.4.8 Wide-flanged columns. At wide-flanged columns, thickness measurements shall be made at 12 locations around the column at each end of a 12-inch (305 mm) length.

❖ This section is consistent with the procedure in ASTM E605 for columns.

[BF] 1705.14.4.9 Hollow structural section and pipe columns. At hollow structural section and pipe columns, thickness measurements shall be made at a minimum of four locations around the column at each end of a 12-inch (305 mm) length.

❖ This section provides guidance for the thickness sampling of hollow structural sections that is not provided in ASTM E605.

[BF] 1705.14.5 Density. The density of the sprayed fire-resistant material shall not be less than the density specified in the *approved* fire-resistance design. Density of the sprayed fire-resistant material shall be determined in accordance with ASTM E605. The test samples for determining the density of the sprayed fire-resistant materials shall be selected as follows:

1. From each floor, roof and wall assembly at the rate of not less than one sample for every 2,500 square feet (232 m2) or portion thereof of the sprayed area in each *story*.
2. From beams, girders, trusses and columns at the rate of not less than one sample for each type of structural member for each 2,500 square feet (232 m2) of floor area or portion thereof in each *story*.

❖ The density of an SFRM will have an impact on the fire-resistance rating of the system. Therefore, it is important that the density of the material be measured to verify that the product is as designed. The sampling requirements differ from those for thickness measurements. The required method of determining density is provided in ASTM E605, but the sample size is based on a sampling area of every 2,500

INTERNATIONAL CODE COUNCIL®
Copyright © 2015 ICC. ALL RIGHTS RESERVED. Accessed by David Dammon on Jun 21, 2017 12:30:52 PM pursuant to License Agreement with ICC. No further reproduction or distribution authorized. ANY UNAUTHORIZED REPRODUCTION OR DISTRIBUTION IS A VIOLATION OF THE FEDERAL COPYRIGHT ACT AND THE LICENSE AGREEMENT, AND SUBJECT TO CIVIL AND CRIMINAL PENALTIES THEREUNDER.

square feet (232 m^2) rather than 10,000 square feet (929 m^2), as is specified in ASTM E605. This is intended to provide a higher level of confidence in the performance of the finished assembly.

[BF] 1705.14.6 Bond strength. The cohesive/adhesive bond strength of the cured sprayed fire-resistant material applied to floor, roof and wall assemblies and structural members shall not be less than 150 pounds per square foot (psf) (7.18 kN/m2). The cohesive/adhesive bond strength shall be determined in accordance with the field test specified in ASTM E736 by testing in-place samples of the sprayed fire-resistant material selected in accordance with Sections 1705.14.6.1 through 1705.14.6.3.

❖ The adhesion of a sprayed-on material is critical to its performance. This is the key factor in minimizing the chances of the material becoming dislodged. A minimum cohesive/adhesive bond strength of 150 pounds per square foot (psf) (7.18 kN/m^2) is required in this section based on the American Institute of Architects (AIA) Master Specification and the recommendations of the General Services Administration (GSA) for durability and serviceability of the material. While this minimum bond strength may be generally suitable, note that Section 403.2.4 provides more stringent requirements that apply to high-rise buildings, where the consequences of dislodged materials can be much greater.

[BF] 1705.14.6.1 Floor, roof and wall assemblies. The test samples for determining the cohesive/adhesive bond strength of the sprayed fire-resistant materials shall be selected from each floor, roof and wall assembly at the rate of not less than one sample for every 2,500 square feet (232 m^2) of the sprayed area, or portion thereof, in each *story*.

❖ The sampling rate for bond in this section matches the sampling rate for determining density.

[BF] 1705.14.6.2 Structural members. The test samples for determining the cohesive/adhesive bond strength of the sprayed fire-resistant materials shall be selected from beams, girders, trusses, columns and other structural members at the rate of not less than one sample for each type of structural member for each 2,500 square feet (232 m^2) of floor area or portion thereof in each *story*.

❖ The bond strength sampling rate in this section is the same as that indicated in Section 1705.14.5 for determining density.

[BF] 1705.14.6.3 Primer, paint and encapsulant bond tests. Bond tests to qualify a primer, paint or encapsulant shall be conducted when the sprayed fire-resistant material is applied to a primed, painted or encapsulated surface for which acceptable bond-strength performance between these coatings and the fire-resistant material has not been determined. A bonding agent *approved* by the SFRM manufacturer shall be applied to a primed, painted or encapsulated surface where the bond strengths are found to be less than required values.

❖ The in-place adhesion of SFRM can be reduced by a factor of 10 when applied over certain primers as opposed to the adhesion obtained by the rated material applied on bare, clean steel. Where the listing does not consider application over such materials, then its bond strength must be determined as described in this section. It is necessary to apply a bonding agent when the bond strength is less than required due to the effect of an encapsulated, painted or primed surface. Also see Section 704.13.3.2 for additional conditions on application of the SFRM.

[BF] 1705.15 Mastic and intumescent fire-resistant coatings. *Special inspections* and tests for mastic and intumescent fire-resistant coatings applied to structural elements and decks shall be performed in accordance with AWCI 12-B. *Special inspections* and tests shall be based on the fire-resistance design as designated in the *approved construction documents*.

❖ Special inspection of mastic and intumescent fire-resistant coatings is needed because these products are often complex systems that require special expertise from applicators and quality assurance personnel. It is essential to confirm that their installation is in accordance with the manufacturer's instructions and the terms of their listing so that they will perform as expected.

1705.16 Exterior insulation and finish systems (EIFS). *Special inspections* shall be required for all EIFS applications.

Exceptions:

1. *Special inspections* shall not be required for EIFS applications installed over a *water-resistive barrier* with a means of draining moisture to the exterior.
2. *Special inspections* shall not be required for EIFS applications installed over masonry or concrete walls.

❖ Special inspections are required for all EIFS installations except for the two exceptions in this section. Exception 1 recognizes that EIFS that are installed over a water-resistive barrier, incorporate flashings at penetrations and terminations, and drain to the exterior afford a built-in redundancy against water penetration that makes the need for special inspections less critical.

Exception 2 recognizes that concrete and masonry substrates are relatively durable and the exposure to moisture does not necessarily have a detrimental effect on these materials. In addition, these substrates pose a barrier to moisture and tend to provide some redundancy against water infiltration.

1705.16.1 Water-resistive barrier coating. A *water-resistive barrier* coating complying with ASTM E2570 requires *special inspection* of the *water-resistive barrier* coating when installed over a sheathing substrate.

❖ Where an EIFS is utilized in residential occupancies of Type V construction, an EIFS with drainage is required by Chapter 14. This specific type of system incorporates a means of drainage applied over a water-resistive barrier, and Chapter 14 allows a

INTERNATIONAL CODE COUNCIL®
Copyright © 2015 ICC. ALL RIGHTS RESERVED. Accessed by David Dammon on Jun 21, 2017 12:30:52 PM pursuant to License Agreement with ICC. No further reproduction or distribution authorized. ANY UNAUTHORIZED REPRODUCTION OR DISTRIBUTION IS A VIOLATION OF THE FEDERAL COPYRIGHT ACT AND THE LICENSE AGREEMENT, AND SUBJECT TO CIVIL AND CRIMINAL PENALTIES THEREUNDER.

water-resistive barrier coating complying with ASTM E2570 as an option. This section requires special inspection of that barrier coating.

[BF] 1705.17 Fire-resistant penetrations and joints. In *high-rise buildings* or in buildings assigned to *Risk Category* III or IV, *special inspections* for *through-penetrations*, membrane penetration firestops, *fire-resistant joint systems* and perimeter fire barrier systems that are tested and *listed* in accordance with Sections 714.3.1.2, 714.4.2, 715.3 and 715.4 shall be in accordance with Section 1705.17.1 or 1705.17.2.

❖ Through-penetration and membrane-penetration firestop systems, as well as fire-resistant joint systems and perimeter fire barrier systems, are critical to maintaining the fire-resistive integrity of fire-resistance-rated construction, including fire walls, fire barriers, fire partitions, smoke barriers and horizontal assemblies. The proper selection and installation of such systems must be in compliance with the code and/or appropriate listing. With thousands of listed firestop and joint systems available, each with variations that multiply possible systems for a building exponentially, the selection of the correct system is not a generic process. Where such systems are used in two types of buildings considered as "high risk," it is mandatory that they be included as a part of the special inspection process. Such "high risk" buildings are identified as:

- Buildings assigned to Risk Category III or IV in accordance with Section 1604.5; and
- High-rise buildings.

Although the proper application of firestop and joint system requirements is very important in all types and sizes of buildings, the requirement for special inspection is limited to specific building types that represent a substantial hazard to human life in the event of a system failure or that are considered to be essential facilities. Inspection to ASTM E2174 for penetration firestop systems and ASTM E2393 for fire-resistant joint systems brings an increased level of review to these applications.

[BF] 1705.17.1 Penetration firestops. Inspections of penetration firestop systems that are tested and *listed* in accordance with Sections 714.3.1.2 and 714.4.2 shall be conducted by an *approved agency* in accordance with ASTM E2174.

❖ A primary method of addressing a penetration of a fire-resistance-rated wall assembly is through the use of an approved firestop system installed in accordance with ASTM E814 or UL 1479. The system must have an F rating that is not less than the fire-resistance rating of the wall being penetrated. It is critical that the firestop system be appropriate for the penetration being protected. The choice of firestop systems varies based upon the size and material of the penetrating item, as well as the construction materials and fire-resistance rating of the wall being penetrated. Special inspection of the firestop system is intended to verify that the appropriate system has been specified and that the installation is in conformance with its listing.

[BF] 1705.17.2 Fire-resistant joint systems. Inspection of fire-resistant joint systems that are tested and *listed* in accordance with Sections 715.3 and 715.4 shall be conducted by an *approved agency* in accordance with ASTM E2393.

❖ A "joint" is defined as a "linear opening in or between adjacent fire-resistance-rated assemblies that is designed to allow independent movement of the building in any plane caused by thermal, seismic, wind or any other loading." The joint creates an interruption of the fire-resistant integrity of the wall or floor system, requiring the use of an appropriate fire-resistant joint system. The code mandates general installation criteria for such systems and requires them to be tested in accordance with ASTM E1966 or UL 2079. Much like the inspection of penetration firestop systems, the proper choice and installation of fire-resistant joint systems can be verified through a comprehensive special inspection process.

Although regulated under the provisions for fire-resistant joint systems, a second type of system is technically not a joint but rather an extension of protection afforded by a horizontal assembly. The void created at the intersection of an exterior curtain wall assembly and a fire-resistance-rated floor or floor/ceiling assembly must be filled in a manner that maintains the integrity of the horizontal assembly. The system utilized to fill the void must be in compliance with ASTM E2307 and able to resist the passage of flame for a time period equal to that of the floor assembly. Special inspection is necessary to verify that the appropriate joint system is chosen and installed.

[F] 1705.18 Testing for smoke control. Smoke control systems shall be tested by a special inspector.

❖ Smoke control systems are unique and complex life safety systems that need to be tested by special inspection.

[F] 1705.18.1 Testing scope. The test scope shall be as follows:

1. During erection of ductwork and prior to concealment for the purposes of leakage testing and recording of device location.
2. Prior to occupancy and after sufficient completion for the purposes of pressure difference testing, flow measurements and detection and control verification.

❖ Special inspections must occur at two different stages during the installation of a smoke control system. The first round of special inspections occurs before concealment of the ductwork or fire protection elements. At this stage, the special inspector needs to verify that duct leakage is in accordance with Section 909.10.2. Additionally, the locations of all fire protection devices need to be verified and documented at this time. The second round of special inspections

INTERNATIONAL CODE COUNCIL®
Copyright © 2015 ICC. ALL RIGHTS RESERVED. Accessed by David Dammon on Jun 21, 2017 12:30:52 PM pursuant to License Agreement with ICC. No further reproduction or distribution authorized. ANY UNAUTHORIZED REPRODUCTION OR DISTRIBUTION IS A VIOLATION OF THE FEDERAL COPYRIGHT ACT AND THE LICENSE AGREEMENT, AND SUBJECT TO CIVIL AND CRIMINAL PENALTIES THEREUNDER.

occurs just prior to occupancy in order to more closely replicate the conditions under which the system must operate. The inspections include the verification of pressure differences across smoke barriers as required in Sections 909.5.1 and 909.18.6, the verification of appropriate volumes of airflow as noted in the design, and the verification of the appropriate operation of the detection and control mechanisms as required in Sections 909.18.1 and 909.18.7 (see Section 909.18.8.3 for report requirements).

[F] 1705.18.2 Qualifications. *Approved agencies* for smoke control testing shall have expertise in fire protection engineering, mechanical engineering and certification as air balancers.

❖ Expertise in fire protection engineering, mechanical engineering and certification as air balancers is required in order to verify that the smoke control testing will be performed in a competent manner.

SECTION 1706
DESIGN STRENGTHS OF MATERIALS

1706.1 Conformance to standards. The design strengths and permissible stresses of any structural material that are identified by a manufacturer's designation as to manufacture and grade by mill tests, or the strength and stress grade is otherwise confirmed to the satisfaction of the *building official*, shall conform to the specifications and methods of design of accepted engineering practice or the *approved* rules in the absence of applicable standards.

❖ Structural materials must conform to applicable design standards, approved rules and accepted methods of engineering practice. Conformance to these provisions and to the manufacturer's designations provides the building official with the information needed to verify whether the materials will perform their intended function satisfactorily.

1706.2 New materials. For materials that are not specifically provided for in this code, the design strengths and permissible stresses shall be established by tests as provided for in Section 1707.

❖ Materials that are not explicitly covered by the code are allowed when subjected to the appropriate tests, demonstrating adequate performance (see Sections 1701.2 and 1707).

SECTION 1707
ALTERNATIVE TEST PROCEDURE

1707.1 General. In the absence of *approved* rules or other *approved* standards, the *building official* shall make, or cause to be made, the necessary tests and investigations; or the *building official* shall accept duly authenticated reports from *approved agencies* in respect to the quality and manner of use of new materials or assemblies as provided for in Section 104.11. The cost of all tests and other investigations required under the provisions of this code shall be borne by the owner or the owner's authorized agent.

❖ Test reports from approved agencies may be used as a basis for approval of materials that are not within the purview of any approved rules (i.e., "new materials" as mentioned in Section 1701.2). This section directly references Section 104.11. It is within the power of the building official to accept reports from an approved agency. In determining the approval, the building official should check that the agency is an independent third-party agency with no financial or fiduciary affiliations with the applicant or material supplier. The capability and competency of the agency must also be examined.

SECTION 1708
IN-SITU LOAD TESTS

1708.1 General. Whenever there is a reasonable doubt as to the stability or load-bearing capacity of a completed building, structure or portion thereof for the expected loads, an engineering assessment shall be required. The engineering assessment shall involve either a structural analysis or an in-situ load test, or both. The structural analysis shall be based on actual material properties and other as-built conditions that affect stability or load-bearing capacity, and shall be conducted in accordance with the applicable design standard. If the structural assessment determines that the load-bearing capacity is less than that required by the code, load tests shall be conducted in accordance with Section 1708.2. If the building, structure or portion thereof is found to have inadequate stability or load-bearing capacity for the expected loads, modifications to ensure structural adequacy or the removal of the inadequate construction shall be required.

❖ The intent of this section is to verify the adequacy of a structure via structural analyses and/or load tests where there is reasonable doubt whether the structure has sufficient capacity.

A load test procedure must simulate the actual load conditions to which the structure will be subjected (see Section 1708.3 for details).

1708.2 Test standards. Structural components and assemblies shall be tested in accordance with the appropriate referenced standards. In the absence of a standard that contains an applicable load test procedure, the test procedure shall be developed by a *registered design professional* and *approved*. The test procedure shall simulate loads and conditions of application that the completed structure or portion thereof will be subjected to in normal use.

❖ When load test procedures for materials are given by the applicable referenced material standard, the test procedure outlined in that specific standard must be adhered to without variation. If a referenced standard lacks a load test procedure, or a material or assembly does not have a specific referenced standard, then such a test must be developed by a registered design professional and approved by the building official.

INTERNATIONAL CODE COUNCIL®
Copyright © 2015 ICC. ALL RIGHTS RESERVED. Accessed by David Dammon on Jun 21, 2017 12:30:52 PM pursuant to License Agreement with ICC. No further reproduction or distribution authorized. ANY UNAUTHORIZED REPRODUCTION OR DISTRIBUTION IS A VIOLATION OF THE FEDERAL COPYRIGHT ACT AND THE LICENSE AGREEMENT, AND SUBJECT TO CIVIL AND CRIMINAL PENALTIES THEREUNDER.

The test procedure must be representative of, and simulate the actual loading conditions that, the completed structure or portion thereof will be subjected to as the loads are typically applied (i.e., load direction, location, etc.) during use. The test loads themselves are determined according to Section 1708.3 and are to be the full factored loads where required by Section 1708.3.

1708.3 In-situ load tests. In-situ load tests shall be conducted in accordance with Section 1708.3.1 or 1708.3.2 and shall be supervised by a *registered design professional*. The test shall simulate the applicable loading conditions specified in Chapter 16 as necessary to address the concerns regarding structural stability of the building, structure or portion thereof.

❖ The criteria for in-situ load tests are set forth for two categories: procedures specified, which are regulated by Section 1708.3.1, and procedures not specified, which are regulated by Section 1708.3.2.

1708.3.1 Load test procedure specified. Where a referenced standard contains an applicable load test procedure and acceptance criteria, the test procedure and acceptance criteria in the standard shall apply. In the absence of specific load factors or acceptance criteria, the load factors and acceptance criteria in Section 1708.3.2 shall apply.

❖ The load test must be in accordance with the applicable referenced standard. Section 1708.3.2 must only be utilized in the absence of either a specific standard or specific load factors and acceptance criteria from applicable referenced standards.

1708.3.2 Load test procedure not specified. In the absence of applicable load test procedures contained within a standard referenced by this code or acceptance criteria for a specific material or method of construction, such *existing structure* shall be subjected to a test procedure developed by a *registered design professional* that simulates applicable loading and deformation conditions. For components that are not a part of the seismic force-resisting system, at a minimum the test load shall be equal to the specified factored design loads. For materials such as wood that have strengths that are dependent on load duration, the test load shall be adjusted to account for the difference in load duration of the test compared to the expected duration of the design loads being considered. For statically loaded components, the test load shall be left in place for a period of 24 hours. For components that carry dynamic loads (e.g., machine supports or fall arrest anchors), the load shall be left in place for a period consistent with the component's actual function. The structure shall be considered to have successfully met the test requirements where the following criteria are satisfied:

1. Under the design load, the deflection shall not exceed the limitations specified in Section 1604.3.
2. Within 24 hours after removal of the test load, the structure shall have recovered not less than 75 percent of the maximum deflection.
3. During and immediately after the test, the structure shall not show evidence of failure.

❖ If the applicable standards do not specify load factor or testing criteria acceptance methods, then the testing criteria listed in this section must be followed. The intent of this section is to essentially match the in-situ load test procedures such as these found in AISC 360 and ACI 318 for materials such as aluminum and wood. Test loads shall be factored design loads, and the controlling load combination should be used to determine the test load that must be applied. Where material behavior is affected by load duration, the test load shall be appropriately adjusted. For example, in a wood structure, if long-term dead load is the controlling or most critical load combination and the test is only going to last a few hours, the load must be increased to account for the fact that wood is stronger under short-term loads. Where the critical load combination is a short-duration load, such as impact loads from machine supports or fall arrest anchors, the test load should be held for a period of time consistent with the tested component's use.

SECTION 1709
PRECONSTRUCTION LOAD TESTS

1709.1 General. Where proposed construction is not capable of being designed by *approved* engineering analysis, or where proposed construction design method does not comply with the applicable material design standard, the system of construction or the structural unit and the connections shall be subjected to the tests prescribed in Section 1709. The *building official* shall accept certified reports of such tests conducted by an *approved* testing agency, provided that such tests meet the requirements of this code and *approved* procedures.

❖ This section establishes requirements for load testing structural assemblies that cannot be designed via conventional methods or do not comply with the applicable material design standards. This section does not govern the load testing of existing buildings or components of existing buildings, which is governed by Section 1708.

The different categories of preconstruction load tests are addressed herein. Specified load test procedures are regulated by Section 1709.2. Load test procedures that are not specified are regulated by Section 1709.3. Wall and partition assemblies are regulated by Section 1709.4. Exterior window and door assemblies are regulated by Section 1709.5, skylights and sloped glazing by Section 1709.6 and test specimens by Section 1709.7.

1709.2 Load test procedures specified. Where specific load test procedures, load factors and acceptance criteria are included in the applicable referenced standards, such test procedures, load factors and acceptance criteria shall apply. In

INTERNATIONAL CODE COUNCIL®
Copyright © 2015 ICC. ALL RIGHTS RESERVED. Accessed by David Dammon on Jun 21, 2017 12:30:52 PM pursuant to License Agreement with ICC. No further reproduction or distribution authorized. ANY UNAUTHORIZED REPRODUCTION OR DISTRIBUTION IS A VIOLATION OF THE FEDERAL COPYRIGHT ACT AND THE LICENSE AGREEMENT, AND SUBJECT TO CIVIL AND CRIMINAL PENALTIES THEREUNDER.

the absence of specific test procedures, load factors or acceptance criteria, the corresponding provisions in Section 1709.3 shall apply.

❖ This section takes precedence over Section 1709.3, provided that load factors and acceptance criteria are established in the applicable design standards.

1709.3 Load test procedures not specified. Where load test procedures are not specified in the applicable referenced standards, the load-bearing and deformation capacity of structural components and assemblies shall be determined on the basis of a test procedure developed by a *registered design professional* that simulates applicable loading and deformation conditions. For components and assemblies that are not a part of the seismic force-resisting system, the test shall be as specified in Section 1709.3.1. Load tests shall simulate the applicable loading conditions specified in Chapter 16.

❖ In the absence of load factors and acceptance criteria in the applicable design standards, and in accordance with Section 1709.2, this section is to be used by the building official to assess whether conformance to the applicable code requirements has been achieved. Additionally, this section provides the design professional and building official with specific loading and pass/fail criteria.

1709.3.1 Test procedure. The test assembly shall be subjected to an increasing superimposed load equal to not less than two times the superimposed design load. The test load shall be left in place for a period of 24 hours. The tested assembly shall be considered to have successfully met the test requirements if the assembly recovers not less than 75 percent of the maximum deflection within 24 hours after the removal of the test load. The test assembly shall then be reloaded and subjected to an increasing superimposed load until either structural failure occurs or the superimposed load is equal to two and one-half times the load at which the deflection limitations specified in Section 1709.3.2 were reached, or the load is equal to two and one-half times the superimposed design load. In the case of structural components and assemblies for which deflection limitations are not specified in Section 1709.3.2, the test specimen shall be subjected to an increasing superimposed load until structural failure occurs or the load is equal to two and one-half times the desired superimposed design load. The allowable superimposed design load shall be taken as the lesser of:

1. The load at the deflection limitation given in Section 1709.3.2.
2. The failure load divided by 2.5.
3. The maximum load applied divided by 2.5.

❖ Load test criteria relating to superimposed design loads are established herein. These requirements are a compilation of commonly accepted engineering practices to determine an allowable load.

In the case of structural components and assemblies for which maximum deflection limitations are not addressed in Section 1709.3.2, the test assemblies must be subjected to increasing superimposed loads until failure occurs or the load is equal to 2.5 times the superimposed design load, whichever occurs first.

1709.3.2 Deflection. The deflection of structural members under the design load shall not exceed the limitations in Section 1604.3.

❖ Acceptance criteria for deflection of structural systems when subjected to the allowable design load are used to demonstrate adequate structural performance and are addressed in Section 1604.3.

1709.4 Wall and partition assemblies. *Load-bearing wall* and partition assemblies shall sustain the test load both with and without window framing. The test load shall include all design load components. Wall and partition assemblies shall be tested both with and without door and window framing.

❖ Load-bearing wall and partition assemblies must sustain loads with and without window framing. It is not appropriate to assume that a wall will sustain loads better if window framing is involved in the test. Each individual design must be evaluated separately based on the construction of that assembly. All design loads, such as vertical and lateral forces, must be included in the test.

1709.5 Exterior window and door assemblies. The design pressure rating of exterior windows and doors in buildings shall be determined in accordance with Section 1709.5.1 or 1709.5.2. For the purposes of this section, the required design pressure shall be determined using the allowable stress design load combinations of Section 1605.3.

Exception: Structural wind load design pressures for window units smaller than the size tested in accordance with Section 1709.5.1 or 1709.5.2 shall be permitted to be higher than the design value of the tested unit provided such higher pressures are determined by accepted engineering analysis. All components of the small unit shall be the same as the tested unit. Where such calculated design pressures are used, they shall be validated by an additional test of the window unit having the highest allowable design pressure.

❖ This section allows two methods of load testing for exterior window and door assemblies. The first method, provided for in Section 1709.5.1, allows products to be tested and labeled as conforming to AAMA/WMDA/CSA101/I.S.2/A440. The second method allows products to be tested in accordance with ASTM E330, and the glazing must comply with Section 2403. The exception allows window units smaller than the size tested to have higher design pressures, provided the higher pressures are determined by accepted engineering analysis, all components of the smaller unit are the same as the tested unit and an additional test of the smaller unit having the highest calculated design pressure is performed in accordance with Section 1709.5.1 or 1709.5.2.

INTERNATIONAL CODE COUNCIL®
Copyright © 2015 ICC. ALL RIGHTS RESERVED. Accessed by David Dammon on Jun 21, 2017 12:30:52 PM pursuant to License Agreement with ICC. No further reproduction or distribution authorized. ANY UNAUTHORIZED REPRODUCTION OR DISTRIBUTION IS A VIOLATION OF THE FEDERAL COPYRIGHT ACT AND THE LICENSE AGREEMENT, AND SUBJECT TO CIVIL AND CRIMINAL PENALTIES THEREUNDER.

1709.5.1 Exterior windows and doors. Exterior windows and sliding doors shall be tested and *labeled* as conforming to AAMA/WDMA/CSA101/I.S.2/A440. The *label* shall state the name of the manufacturer, the *approved* labeling agency and the product designation as specified in AAMA/WDMA/CSA101/I.S.2/A440. Exterior side-hinged doors shall be tested and *labeled* as conforming to AAMA/WDMA/CSA101/I.S.2/A440 or comply with Section 1709.5.2. Products tested and *labeled* as conforming to AAMA/WDMA/CSA 101/I.S.2/A440 shall not be subject to the requirements of Sections 2403.2 and 2403.3.

❖ This section requires exterior windows and doors complying with AAMA/WMDA/CSA 101/I.S.2/A440 to be labeled as such. Products so tested and labeled must not be required to meet the provisions of Sections 2403.2 and 2403.3. By requiring the product to be labeled, the building official does not have to interpret test results and determine load-carrying capacities, or accept the manufacturer's interpretation of tests.

1709.5.2 Exterior windows and door assemblies not provided for in Section 1709.5.1. Exterior window and door assemblies shall be tested in accordance with ASTM E330. Structural performance of garage doors and rolling doors shall be determined in accordance with either ASTM E330 or ANSI/DASMA 108, and shall meet the acceptance criteria of ANSI/DASMA 108. Exterior window and door assemblies containing glass shall comply with Section 2403. The design pressure for testing shall be calculated in accordance with Chapter 16. Each assembly shall be tested for 10 seconds at a load equal to 1.5 times the design pressure.

❖ This section allows an alternative to the provisions of Section 1709.5.1. This procedure is to be used to verify the integrity of door and window assemblies as a whole, and its results do not supersede, but rather complement, the requirements of Chapter 24. Glass thickness must be determined in accordance with the provisions of Chapter 24. The assemblies must comply with Section 2403 and the design pressure for testing is determined from Chapter 16. Each assembly is required to be tested for 10 seconds at a load equal to 1.5 times the design pressure. When testing a product line that has a variety of sizes, the most critical size can usually be tested and the results used to qualify other similar products within its family. In general, the larger size and most heavily loaded of each particular design, type, construction or configuration should be tested. The code does not specify how many specimens are to be tested. ASTM E330 states that if only one sample is tested, it should be selected by the specifying authority. ANSI/DASMA 108 addresses the pressure testing of garage doors and includes garage door acceptance criteria, which is not provided by ASTM E330.

1709.6 Skylights and sloped glazing. Skylights and sloped glazing shall comply with the requirements of Chapter 24.

❖ A tubular daylighting device (TDD) is typically field-assembled from a manufactured kit, unlike a unit skylight which is typically shipped as a factory-assembled unit. The dome of a TDD is not necessarily constructed out of a single panel of glazing material. Thus, a separate definition of a TDD was added to Chapter 2 based on the definition in AAMA/WDMA A440. The section refers to Section 2405 for sloped unit skylight and TDD requirements.

1709.7 Test specimens. Test specimens and construction shall be representative of the materials, workmanship and details normally used in practice. The properties of the materials used to construct the test assembly shall be determined on the basis of tests on samples taken from the load assembly or on representative samples of the materials used to construct the load test assembly. Required tests shall be conducted or witnessed by an *approved agency*.

❖ The test specimen must resemble and simulate as much as possible the design being tested, using materials and workmanship that could be expected in the actual construction or fabrication. The test itself must be witnessed or conducted by an agency acceptable to and approved by the building official.

Bibliography

The following resource materials were used in the preparation of the commentary for this chapter of the code.

AAMA/WMDA/CSA 101/1.S.2/A440-11, *Voluntary Specifications for Aluminum Vinyl (PVC) and Wood Windows and Glass Doors*. Schaumburg, IL: American Architectural Manufacturers Association, 2011.

ACI 318-14, *Building Code Requirements for Structural Concrete*. Farmington Hills, MI: American Concrete Institute, 2014.

AISC 341-10, *Seismic Provisions for Structural Steel Buildings*. Chicago: American Institute of Steel Construction, 2010.

AISC 360-10, *Specification for Structural Steel Buildings*. Chicago: American Institute of Steel Construction, 2010.

ASCE 7-10, *Minimum Design Loads for Buildings and Other Structures*, Including Supplement No. 1. New York: American Society of Civil Engineers, 2010.

ASTM E330-02, *Standard Test Methods for Structural Performance of Exterior Windows, Curtain Walls, and Doors by Uniform Static Air Pressure Difference*. West Conshohocken, PA: ASTM International, 2002.

ASTM E605-93(2011), *Test Methods for Thickness and Density of Sprayed Fire-resistive Material Applied to Structural Members*. West Conshohocken, PA: ASTM International, 2011.

DASMA 108-12, *Standard Method for Testing Sectional Garage Doors and Rolling Doors Determination of Structural Performance Under Uniform Static Pressure*. Cleveland, OH: Door and Access Systems Manufacturers Association International, 2012.

INTERNATIONAL CODE COUNCIL®
Copyright © 2015 ICC. ALL RIGHTS RESERVED. Accessed by David Dammon on Jun 21, 2017 12:30:52 PM pursuant to License Agreement with ICC. No further reproduction or distribution authorized. ANY UNAUTHORIZED REPRODUCTION OR DISTRIBUTION IS A VIOLATION OF THE FEDERAL COPYRIGHT ACT AND THE LICENSE AGREEMENT, AND SUBJECT TO CIVIL AND CRIMINAL PENALTIES THEREUNDER.

FEMA 450, *NEHRP Recommended Provisions for Seismic Regulations for New Buildings and Other Structures*. Washington, DC: Federal Emergency Management Agency, 2004.

ICC-ES AC 156, *Acceptance Criteria for Seismic Qualification Testing of Nonstructural Components*. Whittier, CA: International Code Council Evaluation Service, 2000.

INTERNATIONAL CODE COUNCIL®

Copyright © 2015 ICC. ALL RIGHTS RESERVED. Accessed by David Dammon on Jun 21, 2017 12:30:52 PM pursuant to License Agreement with ICC. No further reproduction or distribution authorized. ANY UNAUTHORIZED REPRODUCTION OR DISTRIBUTION IS A VIOLATION OF THE FEDERAL COPYRIGHT ACT AND THE LICENSE AGREEMENT, AND SUBJECT TO CIVIL AND CRIMINAL PENALTIES THEREUNDER.

Chapter 18: Soils and Foundations

General Comments

Chapter 18 contains provisions regulating the design and construction of foundations for buildings and other structures. Geotechnical and structural considerations toward selecting and installing adequate supports for loads transferred from the structure above are discussed.

Section 1801 gives the general scope or purpose of the provisions in Chapter 18.

Section 1802 lists definitions that pertain to foundations.

Section 1803 provides the requirements for foundation and geotechnical investigations that are to be conducted at the site prior to design and construction.

Section 1804 includes excavation, grading and backfill provisions.

Section 1805 provides specifications for the dampproofing and waterproofing of floor slabs and below-grade walls.

Section 1806 establishes the allowable load-bearing values for soils where site soil tests do not verify that higher soil values are appropriate.

Section 1807 provides requirements for foundation walls, retaining walls and embedded posts.

Section 1808 gives general requirements for foundations.

Section 1809 provides the specifications for shallow foundations.

Section 1810 includes the provisions for deep foundations.

The proper design and construction of a foundation system is critical to the satisfactory performance of the entire building structure that it supports.

Foundation problems are not uncommon and vary greatly. They may be simple or complex in nature and may be manageable or without practical remedy. The uncertainties of foundation construction make it extremely difficult to address every potential problem area within the text of the code. The provisions of the code are meant to establish minimum standards and conventional practices for the design and construction of foundation systems so as to provide adequate safety to life and property. Due care must be exercised in the planning and design of foundation systems based on obtaining sufficient soils information, the use of accepted engineering procedures, experience and good technical judgement.

Essentially, there are two parts to the foundation system: the substructure and the soil. The substructure consists of structural components that serve as the medium through which the building loads are transmitted to the supporting earth (soil or rock). The substructure may consist of shallow or deep foundations. Shallow foundations may include basement walls, grade walls, beams, isolated spread footings or combinations of these components, and may also involve the use of mat or raft foundations. Deep foundations may involve the use of piles, drilled shafts or piers, caissons or other similar components. The second part of the foundation system involves the use of soil (including rock) as a structural material to carry the load of the building or any other load transmitted through the substructure.

The substructure and the soil are interdependent elements of the foundation system and must be understood and dealt with as a composite engineering consideration. The selection of the kind of substructure to be used, whether a shallow or deep foundation, is a direct function of the nature of the soil encountered at the project site. Chapter 18 broadly outlines the conventional systems of foundation construction. Although it does not specifically include special or patented systems, it does not preclude their use because most such construction will fall into the general categories of foundation systems prescribed in the provisions and, thus, meet the intent of the code.

In determining the load-bearing capacity and other values of the soil mass, the code provisions address such considerations in terms of “undisturbed” soil. Special provisions are included where prepared fill is to be utilized for foundation support.

Purpose

The provisions of this chapter set forth the minimum requirements for the design and construction of foundation systems for buildings and other structures.

INTERNATIONAL CODE COUNCIL®
Copyright © 2015 ICC. ALL RIGHTS RESERVED. Accessed by David Dammon on Jun 21, 2017 12:30:52 PM pursuant to License Agreement with ICC. No further reproduction or distribution authorized. ANY UNAUTHORIZED REPRODUCTION OR DISTRIBUTION IS A VIOLATION OF THE FEDERAL COPYRIGHT ACT AND THE LICENSE AGREEMENT, AND SUBJECT TO CIVIL AND CRIMINAL PENALTIES THEREUNDER.

SECTION 1801
GENERAL

1801.1 Scope. The provisions of this chapter shall apply to building and foundation systems.

❖ The provisions contained in this chapter for foundation design and construction apply to all structures.

1801.2 Design basis. Allowable bearing pressures, allowable stresses and design formulas provided in this chapter shall be used with the *allowable stress design* load combinations specified in Section 1605.3. The quality and design of materials used structurally in excavations and foundations shall comply with the requirements specified in Chapters 16, 19, 21, 22 and 23 of this code. Excavations and fills shall also comply with Chapter 33.

❖ Design requirements in Chapter 18 are generally based on an allowable stress design (ASD) approach. Allowable stresses and service loads should not be used with the load combinations for strength design, and vice versa. This section clarifies the applicable load combinations from Chapter 16 that are to be used for the design of foundations.

SECTION 1802
DEFINITIONS

1802.1 Definitions. The following words and terms are defined in Chapter 2:

DEEP FOUNDATION.

DRILLED SHAFT.

Socketed drilled shaft.

HELICAL PILE.

MICROPILE.

SHALLOW FOUNDATION.

❖ Definitions are intended to facilitate the understanding of code provisions and to minimize potential confusion. To that end, this section lists the definitions of terms associated with foundations that can be found in Chapter 2. The use and application of all defined terms, as well as undefined terms, are set forth in Section 201.

SECTION 1803
GEOTECHNICAL INVESTIGATIONS

1803.1 General. Geotechnical investigations shall be conducted in accordance with Section 1803.2 and reported in accordance with Section 1803.6. Where required by the *building official* or where geotechnical investigations involve in-situ testing, laboratory testing or engineering calculations, such investigations shall be conducted by a *registered design professional.*

❖ This section addresses the conditions that mandate a geotechnical investigation, as well as the information that must be included in the report. That the investigation of soils must be done by a registered design professional recognizes that testing and calculations require individuals with expertise in soil and foundation analysis. The field of soil mechanics and foundation engineering is diverse and complicated, and since it is not an exact science, its application requires specialized knowledge and judgment based on experience. Where subsurface conditions are found or suspected to be of a critical nature, the building official is encouraged to seek the professional advice of experienced foundation engineers.

1803.2 Investigations required. Geotechnical investigations shall be conducted in accordance with Sections 1803.3 through 1803.5.

Exception: The *building official* shall be permitted to waive the requirement for a geotechnical investigation where satisfactory data from adjacent areas is available that demonstrates an investigation is not necessary for any of the conditions in Sections 1803.5.1 through 1803.5.6 and Sections 1803.5.10 and 1803.5.11.

❖ Soils investigations to determine subsurface conditions should be made prior to the design and construction of new buildings and other structures. Such investigations should also be conducted when additions to existing facilities are considered and are of such a scope that would significantly increase or change the distribution of foundation loads.

There are two main objectives for conducting a soils investigation. The first is of a confirmatory nature. Its purpose is to obtain information already known from adjacent structures, such as soil-boring records, field test results, laboratory test data and analyses and any other knowledge useful in the design of the foundation system. The second objective is of an exploratory nature. It is warranted where soils information does not exist or is insufficient or unsatisfactory for use in the design of the foundation system.

Regardless of the objective of the soils investigation, the information generally required includes one or more of the following items for determining subsurface conditions:

1. The depth, thickness and composition of each soil stratum.
2. For rock, the characteristics of the rock stratum (or strata), including the thickness of the rock to a reasonable depth.
3. The depth of ground water below the site surface.
4. The engineering properties of the soil and rock strata that are pertinent for the proper design and performance of the foundation system.

For shallow foundations, the soils investigation should yield sufficient information to establish the character and load-bearing capacity of the soil (or rock) at depths that will receive the foundations.

Foundation problems are not uncommon and may vary greatly, ranging from very simple and manage-

INTERNATIONAL CODE COUNCIL®
Copyright © 2015 ICC. ALL RIGHTS RESERVED. Accessed by David Dammon on Jun 21, 2017 12:30:52 PM pursuant to License Agreement with ICC. No further reproduction or distribution authorized. ANY UNAUTHORIZED REPRODUCTION OR DISTRIBUTION IS A VIOLATION OF THE FEDERAL COPYRIGHT ACT AND THE LICENSE AGREEMENT, AND SUBJECT TO CIVIL AND CRIMINAL PENALTIES THEREUNDER.

able problems to very complex situations that may be either manageable or without practical remedy.

As indicated in the exception, where geotechnical data from adjacent areas are well known, the building official can accept the use of local engineering practices for the design of foundations.

1803.3 Basis of investigation. Soil classification shall be based on observation and any necessary tests of the materials disclosed by borings, test pits or other subsurface exploration made in appropriate locations. Additional studies shall be made as necessary to evaluate slope stability, soil strength, position and adequacy of load-bearing soils, the effect of moisture variation on soil-bearing capacity, compressibility, liquefaction and expansiveness.

❖ When soils are required to be classified, the classification must be based on observations and tests, such as borings or test pits. In addition to the situations specified that require a soils investigation and classification, the building official or registered design professional may also require the evaluation of slope stability, soil strength, position and adequacy of load-bearing soils, moisture effects, compressibility and liquefaction.

1803.3.1 Scope of investigation. The scope of the geotechnical investigation including the number and types of borings or soundings, the equipment used to drill or sample, the in-situ testing equipment and the laboratory testing program shall be determined by a *registered design professional*.

❖ Whenever the load capacity of a soil is in doubt and a field investigation is necessary, exploratory borings are to be made to determine the load-bearing value of the soil. The investigation is to be performed by a registered design professional, which in most cases would be a geotechnical engineer. Exploratory borings and their associated tests should be conducted in each area of relatively dissimilar subsoil conditions.

1803.4 Qualified representative. The investigation procedure and apparatus shall be in accordance with generally accepted engineering practice. The *registered design professional* shall have a fully qualified representative on site during all boring or sampling operations.

❖ A qualified representative is required on site to verify that the information obtained from the investigation will be adequate, valid and acceptable to the building official.

1803.5 Investigated conditions. Geotechnical investigations shall be conducted as indicated in Sections 1803.5.1 through 1803.5.12.

❖ Sections 1803.5.1 through 1803.5.12 state conditions that necessitate a subsurface investigation.

1803.5.1 Classification. Soil materials shall be classified in accordance with ASTM D2487.

❖ Where required, soils are to be classified in accordance with ASTM D2487. This standard provides a system for classifying soils for engineering purposes based on laboratory determination of particle size characteristics, liquid limit and plasticity index. The classification system identifies three major soil divisions—course-grained, fine-grained and highly organic—which are separated further into 15 basic soil groups. ASTM D2487 is the ASTM International version of the Unified Soil Classification System.

1803.5.2 Questionable soil. Where the classification, strength or compressibility of the soil is in doubt or where a load-bearing value superior to that specified in this code is claimed, the *building official* shall be permitted to require that a geotechnical investigation be conducted.

❖ Whenever relevant soil characteristics are in doubt, or where a design is based upon load-bearing values that are greater than those specified in the code, the building official may require investigation and testing of the soil.

One such method of investigation includes construction test pits for field load-bearing tests. Test pits are usually required to be at least 4 square feet (0.37 m^2) in area and be excavated down to the elevation of the proposed bearing surface. The typical test involves placing the test loads on a platform supported on a post through which the applied loads are transferred to a bearing plate of a specified size and, in turn, to the soil below. A typical setup for field load tests is shown in Commentary Figure 1803.5.2.

It is important that the load (weights on platform) is applied such that all of it will be transmitted to the soil as a static load without impact, fluctuation or eccen-

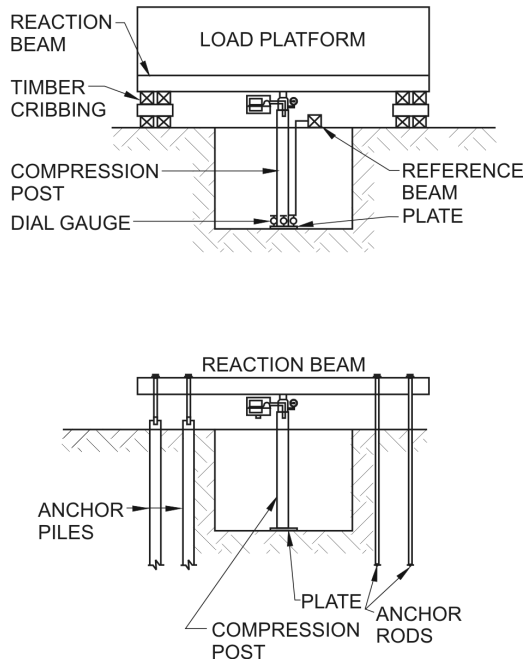

Figure 1803.5.2
TYPICAL SETUP FOR CONDUCTING STATIC LOAD TESTS

INTERNATIONAL CODE COUNCIL®
Copyright © 2015 ICC. ALL RIGHTS RESERVED. Accessed by David Dammon on Jun 21, 2017 12:30:52 PM pursuant to License Agreement with ICC. No further reproduction or distribution authorized. ANY UNAUTHORIZED REPRODUCTION OR DISTRIBUTION IS A VIOLATION OF THE FEDERAL COPYRIGHT ACT AND THE LICENSE AGREEMENT, AND SUBJECT TO CIVIL AND CRIMINAL PENALTIES THEREUNDER.

tricity. The load should be applied incrementally, and continuous records of all settlements should be kept. Measurements are usually made by settlement recording devices, such as dial gauges, capable of measuring the settlement of the test bearing plate to an accuracy of 0.01 inch (0.25 mm) or less.

The test is continued until either the maximum test load is reached or the ratio of load increment to settlement increment reaches a minimum, steady magnitude sustained for a period of 48 hours. After the load is released, the elastic rebound of the soil is also measured for a period of time.

Load test results are normally presented in a load settlement diagram in which the applied test load measured in tons per square foot is plotted in relation to the settlement readings recorded in fractions of an inch. The bearing capacity of the soil can be computed from the test results.

There are some drawbacks to the use of field load tests for determining soil-bearing capacity. Test results can be misleading if the soil under the footing is not uniform for the full depth of load influence, which is equal to about twice the width of the footing. Also, since a load test is conducted for a short duration, settlements that occur due to the consolidation of the soil over a very long time cannot be predicted. Since this type of field load-bearing testing is relatively expensive, it is not widely used.

Other methods for determining the safe bearing capacity of soils may be more appropriate. Standard laboratory tests can usually produce sufficient proof of satisfactory bearing capacity and settlement information. However, there are conditions when standard laboratory tests may not produce reliable results, such as when clay materials contain a pattern of cracks or when stiff clays may have suffered differential movement or expansion. As stated in Section 1803.3.1, a registered design professional must establish an appropriate testing program.

1803.5.3 Expansive soil. In areas likely to have expansive soil, the *building official* shall require soil tests to determine where such soils do exist.

Soils meeting all four of the following provisions shall be considered expansive, except that tests to show compliance with Items 1, 2 and 3 shall not be required if the test prescribed in Item 4 is conducted:

1. Plasticity index (PI) of 15 or greater, determined in accordance with ASTM D4318.
2. More than 10 percent of the soil particles pass a No. 200 sieve (75 µm), determined in accordance with ASTM D422.
3. More than 10 percent of the soil particles are less than 5 micrometers in size, determined in accordance with ASTM D422.
4. Expansion index greater than 20, determined in accordance with ASTM D4829.

❖ Expansive soils, often referred to as "swelling soils," contain montmorillonite minerals and have the characteristics of swelling when absorbing water and shrinking and cracking when drying. Significant volume changes can cause serious damage to buildings and other structures as well as to pavements and sidewalks. Swelling soils are found throughout the nation, but are more prevalent in regions with dry or moderately arid climates.

There is a general relationship between the plasticity index (PI) of a soil, as determined by the ASTM D4318 standard test method, and the potential for expansion, as shown in Commentary Figure 1803.5.3.

This section defines "Expansive soil" as any plastic material: with a PI of 15 or greater (Item 1); with more than 10 percent of the soil particles passing a No. 200 sieve (Item 2); less than 5 micrometers in size (Item 3); and having an expansion index (EI) greater than 20 (Item 4). Alternatively, the EI in accordance with ASTM D4829 can be used exclusively. The EI value is a measure of the swelling potential of the soil. A soil with an EI value of 20 or less has a very low potential for expansion.

The amount and depth of potential swelling that can occur in a clay material are, to some extent, functions of the cyclical moisture content in the soil. In dryer climates where the moisture content in the soil near the ground surface is low because of evaporation, there is a greater potential for extensive swelling than the same soil in wetter climates where the variations of moisture content are not as severe. Volume changes in highly expansive soils typically range between 7 and 10 percent. Occasionally, under abnormal conditions, changes can reach as high as 25 percent.

SWELLING POTENTIAL	PLASTICITY INDEX
Low	0-15
Medium	10-35
High	20-55
Very high	35 and above

Figure 1803.5.3
SWELLING POTENTIAL OF SOILS AND PLASTICITY INDEX

Source: R.B. Peck, W.E. Hanson and T.H. Thornburn. *Foundation Engineering*, 2nd ed. (New York: John Wiley & Sons, 1974).

1803.5.4 Ground-water table. A subsurface soil investigation shall be performed to determine whether the existing ground-water table is above or within 5 feet (1524 mm) below the elevation of the lowest floor level where such floor is located below the finished ground level adjacent to the foundation.

Exception: A subsurface soil investigation to determine the location of the ground-water table shall not be required

INTERNATIONAL CODE COUNCIL®
Copyright © 2015 ICC. ALL RIGHTS RESERVED. Accessed by David Dammon on Jun 21, 2017 12:30:52 PM pursuant to License Agreement with ICC. No further reproduction or distribution authorized. ANY UNAUTHORIZED REPRODUCTION OR DISTRIBUTION IS A VIOLATION OF THE FEDERAL COPYRIGHT ACT AND THE LICENSE AGREEMENT, AND SUBJECT TO CIVIL AND CRIMINAL PENALTIES THEREUNDER.

where waterproofing is provided in accordance with Section 1805.

❖ There are several reasons for conducting a subsurface investigation to determine the level of ground water at a construction site. If the ground-water table is above subsurface slabs (i.e., basement floors), then walls and floors need to be designed to resist hydrostatic pressures. Foundation walls and basement slabs may need to be dampproofed or waterproofed, depending on the location of the ground-water table. A subsurface investigation will also determine the type of drainage system needed as a permanent installation, whether there will be any major water problems that could affect the excavation operations and construction of the foundation system, and if it is necessary to provide a temporary drainage system of a type and size that will control ground-water seepage.

Ground-water levels can vary significantly over a year's time, as well as from year to year. While it would be ideal to make ground-water table observations that encompass a full annual cycle, the reality is that such an undertaking would not normally facilitate a design/construction program and would be impractical. Ground-water observations must be made in shorter time intervals; however, this situation poses some real problems. For example, measurements of ground-water levels in bore holes taken 24 hours after completion of the soil borings can provide an acceptable indication of the water level in permeable soils, such as sand, gravel or sand/gravel mixtures. Fine-grained soils of low permeability, such as clays, require the use of observation tubes (piezometers) and, depending on the specific properties of the soil, a time period of 10 weeks or longer to obtain acceptable readings.

Water levels established by either of the two methods described above are sufficient indication of the water conditions at the time of measurement, but do not necessarily represent the highest possible ground-water levels that can occur. For design purposes, the water levels established by field observations may need to be adjusted with the climatological and hydrological records of the region in order to establish the high and low points.

As indicated in the exception, a subsurface investigation is not required where floors, walls, joints and penetrations are waterproofed as required in Section 1805.3.

1803.5.5 Deep foundations. Where deep foundations will be used, a geotechnical investigation shall be conducted and shall include all of the following, unless sufficient data upon which to base the design and installation is otherwise available:

1. Recommended deep foundation types and installed capacities.
2. Recommended center-to-center spacing of deep foundation elements.
3. Driving criteria.
4. Installation procedures.
5. Field inspection and reporting procedures (to include procedures for verification of the installed bearing capacity where required).
6. Load test requirements.
7. Suitability of deep foundation materials for the intended environment.
8. Designation of bearing stratum or strata.
9. Reductions for group action, where necessary.

❖ A foundation investigation is required when deep foundations are proposed. Such investigations are needed to define as accurately as possible the subsurface conditions of soil and rock materials, establish the soil and rock profiles across the construction site and locate the ground-water table. Sometimes, it may also be necessary to determine specific soil properties, such as shear strength, relative density, compressibility and other such technical data required for analyzing subsurface conditions. Foundation investigations may also be used to render such valuable data as information on existing construction at the site or on neighboring properties (including boring and test records), the type and condition of the existing structures, their age, the type of foundations used and performance over the years. Other helpful information includes knowledge of existing deleterious substances in the soils that could affect the durability (as well as the performance) of the piles, data on geologic conditions at the site (including such information as the existence of mines, earth cavities, underground streams or other adverse water conditions), as well as a history of any seismic activity.

The types of information described above are usually obtained by means of soil and rock borings, laboratory and field tests and engineering analyses. Such information is used for determining design loads, types and lengths of piles, driving criteria, selection of equipment and probable durability of pile materials in relation to subsurface conditions.

1803.5.6 Rock strata. Where subsurface explorations at the project site indicate variations in the structure of rock upon which foundations are to be constructed, a sufficient number of borings shall be drilled to sufficient depths to assess the competency of the rock and its load-bearing capacity.

❖ Rock may be found at levels near or at the earth's surface, upon which shallow foundations can be supported, or will range downward to very low levels, upon which piles and other types of deep foundations can bear.

Most intact rock will have compressive strengths that far exceed the requirements for foundation support. It is most common, however, to find cracks, joints and other defects in rock formations that will increase the compressibility of the material. Depend-

INTERNATIONAL CODE COUNCIL®
Copyright © 2015 ICC. ALL RIGHTS RESERVED. Accessed by David Dammon on Jun 21, 2017 12:30:52 PM pursuant to License Agreement with ICC. No further reproduction or distribution authorized. ANY UNAUTHORIZED REPRODUCTION OR DISTRIBUTION IS A VIOLATION OF THE FEDERAL COPYRIGHT ACT AND THE LICENSE AGREEMENT, AND SUBJECT TO CIVIL AND CRIMINAL PENALTIES THEREUNDER.

ing on the nature and extent of the defects, settlement may become the governing factor in determining allowable load-bearing capacity rather than rock strength.

Where the condition of the rock is in doubt, borings must be performed to verify the soundness of the material and to determine its load-bearing capacity.

1803.5.7 Excavation near foundations. Where excavation will reduce support from any foundation, a *registered design professional* shall prepare an assessment of the structure as determined from examination of the structure, the review of available design documents and, if necessary, excavation of test pits. The *registered design professional* shall determine the requirements for underpinning and protection and prepare site-specific plans, details and sequence of work for submission. Such support shall be provided by underpinning, sheeting and bracing, or by other means acceptable to the *building official*.

❖ Section 1804.1 addresses soil stability when excavations are made adjacent to existing foundations. This provision makes it clear where an assessment by a registered design professional is necessary for these situations.

1803.5.8 Compacted fill material. Where shallow foundations will bear on compacted fill material more than 12 inches (305 mm) in depth, a geotechnical investigation shall be conducted and shall include all of the following:

1. Specifications for the preparation of the site prior to placement of compacted fill material.
2. Specifications for material to be used as compacted fill.
3. Test methods to be used to determine the maximum dry density and optimum moisture content of the material to be used as compacted fill.
4. Maximum allowable thickness of each lift of compacted fill material.
5. Field test method for determining the in-place dry density of the compacted fill.
6. Minimum acceptable in-place dry density expressed as a percentage of the maximum dry density determined in accordance with Item 3.
7. Number and frequency of field tests required to determine compliance with Item 6.

❖ The information on prepared fill in the soils report is necessary to permit a reasonable prediction as to the load-bearing capacity of the fill material. Where prepared fill is to be utilized for foundation support, the geotechnical report is to contain detailed information for approval of the fill. Additionally, when prepared fill is to be utilized where special inspections are required, the fill operation itself must be performed under the scrutiny of a special inspector. Where one (or more) of the exceptions in Section 1704.1 applies, special inspection of the prepared fill operation is not required.

1803.5.9 Controlled low-strength material (CLSM). Where shallow foundations will bear on controlled low-strength material (CLSM), a geotechnical investigation shall be conducted and shall include all of the following:

1. Specifications for the preparation of the site prior to placement of the CLSM.
2. Specifications for the CLSM.
3. Laboratory or field test method(s) to be used to determine the compressive strength or bearing capacity of the CLSM.
4. Test methods for determining the acceptance of the CLSM in the field.
5. Number and frequency of field tests required to determine compliance with Item 4.

❖ As an alternative to compacted fill, the code permits the use of controlled low-strength material (CLSM) for the support of footings. CLSM must be placed in accordance with an approved report that includes requirements for the material strength and field verification.

In Chapter 2, "CLSM" is defined as "self-compacting cementitious materials." This class of material is commonly referred to by a variety of other names, which include flowable fill, controlled density fill, unshrinkable fill and soil-cement slurry. Guidance on the use of these materials can be found in ACI 229R. Additional documents that may be useful references for sampling and testing these materials include the following ASTM International standards:

ASTM D4832, *Standard Test Method for Preparation and Testing of Controlled Low-strength Material (CLSM) Test Cylinders.*

ASTM D5971, *Standard Practice for Sampling Freshly Mixed Controlled Low-strength Material.*

ASTM D6023, *Standard Test Method for Unit Weight, Yield, Cement Content, and Air Content (Gravimetric) of Controlled Low-strength Material (CLSM).*

ASTM D6024, *Standard Test Method for Ball Drop on Controlled Low-strength Material (CLSM) to Determine Suitability for Load Application.*

ASTM D6103, *Standard Test Method for Flow Consistency of Controlled Low-strength Material (CLSM)*.

1803.5.10 Alternate setback and clearance. Where setbacks or clearances other than those required in Section 1808.7 are desired, the *building official* shall be permitted to require a geotechnical investigation by a *registered design professional* to demonstrate that the intent of Section 1808.7 would be satisfied. Such an investigation shall include consideration of material, height of slope, slope gradient, load intensity and erosion characteristics of slope material.

❖ Section 1808.7 regulates the placement of foundations adjacent to slopes that are greater than one unit vertical to three units horizontal (33.3-percent slope). This section provides the building official the authority to approve alternative setbacks and clearances to those required in Section 1808.7. The building official

INTERNATIONAL CODE COUNCIL®
Copyright © 2015 ICC. ALL RIGHTS RESERVED. Accessed by David Dammon on Jun 21, 2017 12:30:52 PM pursuant to License Agreement with ICC. No further reproduction or distribution authorized. ANY UNAUTHORIZED REPRODUCTION OR DISTRIBUTION IS A VIOLATION OF THE FEDERAL COPYRIGHT ACT AND THE LICENSE AGREEMENT, AND SUBJECT TO CIVIL AND CRIMINAL PENALTIES THEREUNDER.

has the authority to require an investigation by a registered design professional to show that the intent of the code has been met. This item also specifies the parameters that must be considered by the registered design professional in the investigation.

1803.5.11 Seismic Design Categories C through F. For structures assigned to *Seismic Design Category* C, D, E or F, a geotechnical investigation shall be conducted, and shall include an evaluation of all of the following potential geologic and seismic hazards:

1. Slope instability.
2. Liquefaction.
3. Total and differential settlement.
4. Surface displacement due to faulting or seismically induced lateral spreading or lateral flow.

❖ The potential for liquefaction, surface rupture or slope instability at a building site is greater in areas of moderate and high seismicity than in areas of low seismicity. Also, the consequences of damage resulting from such hazards are more severe for buildings in higher risk categories (such as essential facilities). Thus, this section requires an investigation report, for building sites that are assigned to Seismic Design Category C or higher, that includes an evaluation of the specific earthquake hazards listed. The purpose of this section is to reduce the hazard of large ground movement and the damaging effects on the structure.

Liquefaction of saturated granular soils has been a major source of building damage during past earthquakes. For example, many structures in Niigata, Japan suffered major damage as a consequence of liquefaction during its 1964 earthquake. Loss of bearing strength, differential settlement and differential horizontal displacement due to lateral spread were the direct causes of damage. Many structures have been similarly damaged by differential ground displacements during U.S. earthquakes, such as the San Fernando Valley Juvenile Hall during the 1971 San Fernando, California, earthquake and the Marine Sciences Laboratory at Moss Landing, California, during the 1989 Loma Prieta event.

For more information regarding evaluation of slope instability, liquefaction and surface rupture caused by faulting or lateral spreading, see Section 7.4 of the National Earthquake Hazards Reduction Program (NEHRP) Provisions commentary (FEMA 450-2).

1803.5.12 Seismic Design Categories D through F. For structures assigned to *Seismic Design Category* D, E or F, the geotechnical investigation required by Section 1803.5.11 shall also include all of the following as applicable:

1. The determination of dynamic seismic lateral earth pressures on foundation walls and retaining walls supporting more than 6 feet (1.83 m) of backfill height due to design earthquake ground motions.
2. The potential for liquefaction and soil strength loss evaluated for site peak ground acceleration, earthquake magnitude and source characteristics consistent with the maximum considered earthquake ground motions. Peak ground acceleration shall be determined based on one of the following:
    2.1. A site-specific study in accordance with Section 21.5 of ASCE 7.
    2.2. In accordance with Section 11.8.3 of ASCE 7.
3. An assessment of potential consequences of liquefaction and soil strength loss including, but not limited to, the following:
    3.1. Estimation of total and differential settlement.
    3.2. Lateral soil movement.
    3.3. Lateral soil loads on foundations.
    3.4. Reduction in foundation soil-bearing capacity and lateral soil reaction.
    3.5. Soil downdrag and reduction in axial and lateral soil reaction for pile foundations.
    3.6. Increases in soil lateral pressures on retaining walls.
    3.7. Flotation of buried structures.
4. Discussion of mitigation measures such as, but not limited to, the following:
    4.1. Selection of appropriate foundation type and depths.
    4.2. Selection of appropriate structural systems to accommodate anticipated displacements and forces.
    4.3. Ground stabilization.
    4.4. Any combination of these measures and how they shall be considered in the design of the structure.

❖ This section includes additional requirements for the soil investigation report for sites with structures assigned to Seismic Design Categories D and higher. The investigation must determine lateral earth pressures on basement and retaining walls caused by earthquake motions. Earthquake motions create increased lateral soil pressure on walls below the ground surface, especially in soft soils in areas of high seismicity. This requirement makes certain that the dynamic soil pressures are included in the design of basement and retaining walls. Because the requirement can be onerous for small structures and retaining walls, the applicability is limited to those walls that are higher than 6 feet (1.83 m). Section 7.5.1 of the 1997 NEHRP Provisions commentary includes a discussion about how earth-retaining structures have been designed for dynamic loads.

Additionally, a thorough assessment of potential consequences of any liquefaction and soil strength loss needs to be made and considered in the design of the structure. See the commentary to Section 1803.5.11 for a discussion of earthquake damage caused by liquefaction. Design to mitigate damage

INTERNATIONAL CODE COUNCIL®
Copyright © 2015 ICC. ALL RIGHTS RESERVED. Accessed by David Dammon on Jun 21, 2017 12:30:52 PM pursuant to License Agreement with ICC. No further reproduction or distribution authorized. ANY UNAUTHORIZED REPRODUCTION OR DISTRIBUTION IS A VIOLATION OF THE FEDERAL COPYRIGHT ACT AND THE LICENSE AGREEMENT, AND SUBJECT TO CIVIL AND CRIMINAL PENALTIES THEREUNDER.

caused by liquefaction consists of three parts: 1. Evaluation of liquefaction hazard; 2. Evaluation of potential ground displacement; and 3. Designing to resist ground displacement, reducing the potential for liquefaction or choosing an alternative site with a lower hazard. The assessment is required to be made for the site's peak ground accelerations that are consistent with the maximum considered earthquake (MCE) ground motions. In this way, the potential for liquefaction as well as the effects of liquefaction during the MCE are considered in the design. This is consistent with the risk-based targets for collapse prevention as a performance goal and other evaluations for the MCE.

1803.6 Reporting. Where geotechnical investigations are required, a written report of the investigations shall be submitted to the *building official* by the permit applicant at the time of permit application. This geotechnical report shall include, but need not be limited to, the following information:

1. A plot showing the location of the soil investigations.
2. A complete record of the soil boring and penetration test logs and soil samples.
3. A record of the soil profile.
4. Elevation of the water table, if encountered.
5. Recommendations for foundation type and design criteria, including but not limited to: bearing capacity of natural or compacted soil; provisions to mitigate the effects of expansive soils; mitigation of the effects of liquefaction, differential settlement and varying soil strength; and the effects of adjacent loads.
6. Expected total and differential settlement.
7. Deep foundation information in accordance with Section 1803.5.5.
8. Special design and construction provisions for foundations of structures founded on expansive soils, as necessary.
9. Compacted fill material properties and testing in accordance with Section 1803.5.8.
10. Controlled low-strength material properties and testing in accordance with Section 1803.5.9.

❖ If a written report is required by the building official, it is required to include at a minimum the items listed in this section. These items will establish a retrievable and verifiable record of the soil conditions if problems are encountered in the future. These items also provide the minimum necessary information for compliance with the code and an adequate foundation system.

SECTION 1804
EXCAVATION, GRADING AND FILL

1804.1 Excavation near foundations. Excavation for any purpose shall not reduce lateral support from any foundation or adjacent foundation without first underpinning or protecting the foundation against detrimental lateral or vertical movement, or both.

❖ The purpose of this section is to provide for stability of adjacent foundations when excavations are made. The method to be used, whether shoring or underpinning, must be addressed by the assessment as required in Section 1803.5.7. Because of its lack of shear strength, cohesionless soils, such as sand, will slide to the bottom of an excavation until a certain slope of the sides is reached. This slope is known as the "angle of repose of natural slope" and is independent of the depth of the excavation.

Cohesive (fine-grained) soils, such as clay, behave much differently than granular materials. For example, unsupported vertical cuts of 20 feet (6096 mm) or more can be made in stiff plastic clay materials. This is because of a firm bond between the particles of the cohesive soil. But the strength of this bond (cohesiveness) will vary based on the conditions of the soil, such as density, water content, plasticity and sensitivity (loss of shear strength on disturbance).

In cohesive soils, when a certain critical depth of excavation is reached, the sides of the cut will fail and the soil mass will fall to the bottom. Unlike granular materials, such as sand, the steepest slope at which a cohesive soil will stand decreases as the depth of the excavation increases. Technically, in cohesive soils, the resistance against sliding is a function of the shearing resistance of the material and its corresponding angle of internal friction (frictional resistance between particles).

The use of the angle of internal friction (and other factors) to calculate slope stability is applicable not only to cohesive soils, but also to granular materials. For example, when the slope angle of an excavation in a bed of sand exceeds the angle of internal friction of the material, the sand will slide down the slope; therefore, the steepest slope that sand can attain is equal to the angle of internal friction. The angle of repose (previously discussed) will be approximately the same value as the angle of internal friction only when the sand is in a dry and loose condition (such as in a stockpile) or is fully immersed in water.

For simplicity, what we have been dealing with in this part of the commentary is slope stability as it relates to homogeneous soils, such as sand and clay. In nature, however, soils often occur as mixtures or layers (strata) of different materials, making the determination of slope stability a highly technical and complex subject. Normally for shallow excavations, determination of safe slopes is a matter of applying local experience. In cases of deep cuts, however, slope stability is best determined through tests and analytical methods performed by professionals experienced in foundation engineering.

Some texts dealing with soil mechanics contain tables that indicate the angles of slopes that can be expected for various soil materials commonly found

INTERNATIONAL CODE COUNCIL®
Copyright © 2015 ICC. ALL RIGHTS RESERVED. Accessed by David Dammon on Jun 21, 2017 12:30:52 PM pursuant to License Agreement with ICC. No further reproduction or distribution authorized. ANY UNAUTHORIZED REPRODUCTION OR DISTRIBUTION IS A VIOLATION OF THE FEDERAL COPYRIGHT ACT AND THE LICENSE AGREEMENT, AND SUBJECT TO CIVIL AND CRIMINAL PENALTIES THEREUNDER.

throughout the country. While such tables provide useful information, they should be used only as a guide. They should not be used for design purposes, nor employed when a critical subsurface condition exists or when the type of soil (established by borings) does not closely fit those described in the tables.

1804.2 Underpinning. Where underpinning is chosen to provide the protection or support of adjacent structures, the underpinning system shall be designed and installed in accordance with provisions of this chapter and Chapter 33.

❖ Where the structure is to be protected by underpinning, this section states the general requirements that apply.

1804.2.1 Underpinning sequencing. Underpinning shall be installed in a sequential manner that protects the neighboring structure and the working construction site. The sequence of installation shall be identified in the *approved construction documents*.

❖ This provision improves underpinning installation by making the sequencing a required part of the construction documents.

1804.3 Placement of backfill. The excavation outside the foundation shall be backfilled with soil that is free of organic material, construction debris, cobbles and boulders or with a controlled low-strength material (CLSM). The backfill shall be placed in lifts and compacted in a manner that does not damage the foundation or the waterproofing or dampproofing material.

Exception: CLSM need not be compacted.

❖ This section requires that soils used for backfilling foundation excavations must be free of organic material, construction debris or large rocks. The type of soil used for backfill purposes becomes an important consideration in the design of foundation walls. For example, clean sand, gravel or a mixture of these two granular materials is considered the best kind of backfill to use because each is free draining and generally has frost-free properties. On the other hand, fine-grained soils, such as clays, tend to accumulate moisture and are susceptible to swelling and shrinking, as well as frost action. Such backfill materials, particularly at times when shrinkage cracks occur, can become loaded with rainwater, thus subjecting foundation walls and basement floors to hydrostatic pressures and possible structural damage.

Backfilling and related work should be performed in such a way as to prevent the movement of the earth of adjoining properties or the subsequent caving in of backfilled areas. Backfilling should not be done until retaining walls, foundation walls or other construction against which backfill is to be placed is in a suitable condition to resist lateral pressures. This section requires that backfill be free of organic materials, construction debris, cobbles and boulders.

In addition to carefully selecting the backfill material, the soil should be placed in lifts, usually 9 inches (229 mm) or less, and compacted to prevent significant subsidence due to consolidation under its own weight. While compaction is done by hand-operated tampers or other portable compaction equipment, care should be taken to prevent any possible damage to waterproofing or dampproofing installations and to avoid overcompaction of backfill since it may cause excessive earth pressure against foundation walls. As an alternative to compacted backfill, the code also permits CLSM (see commentary, Section 1804.7).

1804.4 Site grading. The ground immediately adjacent to the foundation shall be sloped away from the building at a slope of not less than one unit vertical in 20 units horizontal (5-percent slope) for a minimum distance of 10 feet (3048 mm) measured perpendicular to the face of the wall. If physical obstructions or lot lines prohibit 10 feet (3048 mm) of horizontal distance, a 5-percent slope shall be provided to an *approved* alternative method of diverting water away from the foundation. Swales used for this purpose shall be sloped a minimum of 2 percent where located within 10 feet (3048 mm) of the building foundation. Impervious surfaces within 10 feet (3048 mm) of the building foundation shall be sloped a minimum of 2 percent away from the building.

Exception: Where climatic or soil conditions warrant, the slope of the ground away from the building foundation shall be permitted to be reduced to not less than one unit vertical in 48 units horizontal (2-percent slope).

The procedure used to establish the final ground level adjacent to the foundation shall account for additional settlement of the backfill.

❖ This section requires that the ground immediately adjacent to the foundation be sloped away from the building. The intent is to facilitate water drainage and reduce the potential for water standing under and around the building.

Where a full 10 feet (3048 mm) of slope is not available on a building site, an alternative method of diverting water away from the foundation is permitted by providing a minimum 5-percent slope to an approved diversion structure. The use of swales to convey surface water is recognized, provided the minimum slope is provided where necessary.

The exception permits the slope to be reduced to a rate of 1 unit vertical in 48 units horizontal (2-percent slope) where climatic or soil conditions warrant. This exception would be applicable in arid areas or sites that are surrounded by free-draining soils, such as sand.

1804.5 Grading and fill in flood hazard areas. In *flood hazard areas* established in Section 1612.3, grading, fill, or both, shall not be *approved*:

1. Unless such fill is placed, compacted and sloped to minimize shifting, slumping and erosion during the rise and fall of flood water and, as applicable, wave action.
2. In floodways, unless it has been demonstrated through hydrologic and hydraulic analyses performed by a *registered design professional* in accordance with standard engineering practice that the proposed grading or fill, or

INTERNATIONAL CODE COUNCIL®
Copyright © 2015 ICC. ALL RIGHTS RESERVED. Accessed by David Dammon on Jun 21, 2017 12:30:52 PM pursuant to License Agreement with ICC. No further reproduction or distribution authorized. ANY UNAUTHORIZED REPRODUCTION OR DISTRIBUTION IS A VIOLATION OF THE FEDERAL COPYRIGHT ACT AND THE LICENSE AGREEMENT, AND SUBJECT TO CIVIL AND CRIMINAL PENALTIES THEREUNDER.

both, will not result in any increase in flood levels during the occurrence of the *design flood*.

3. In *coastal high-hazard areas*, unless such fill is conducted and/or placed to avoid diversion of water and waves toward any building or structure.
4. Where design flood elevations are specified but floodways have not been designated, unless it has been demonstrated that the cumulative effect of the proposed *flood hazard area* encroachment, when combined with all other existing and anticipated *flood hazard area* encroachment, will not increase the design flood elevation more than 1 foot (305 mm) at any point.

❖ This section puts limitations on fill and grading in flood hazard areas. In many flood hazard areas it is common to use fill to achieve the appropriate elevation of the building's lowest floor. Item 1 intends to minimize the risk of fill materials becoming unstable. Fill materials that become saturated during conditions of flooding may become unstable and fill slopes may be exposed to erosive velocities and waves. When placed in a flood hazard area, fill and grading should be done so as to be stable as floodwaters rise and, in particular, as floodwaters fall and the saturated materials drain.

Item 2 permits grading or fill in a floodway, if designated on a Flood Insurance Rate Map (FIRM), only if it is demonstrated that it will not adversely affect surrounding areas by increasing the design flood elevation. As defined, a "Floodway" is that portion of flood hazard areas along rivers and streams that must be reserved for the discharge of the design flood event. The National Flood Insurance Program (NFIP) requires that the impact of development or encroachment into the floodway must be addressed.

In coastal high-hazard areas, fill can divert the flow of floodwaters and increase flood risks on other properties. Item 3 provides coordination with ASCE 24 provisions relating to fill in coastal high-hazard areas and Coastal A Zones. Coastal high-hazard areas are commonly referred to as "V zones," and typically are indicated on flood hazard maps of communities along the open coast. See the commentary to the definition of “Coastal A Zone” for a description of the wave conditions in these areas. Changing the shape of the ground through grading or fill can divert erosive flows and increase wave energies that, in turn, increase the forces that affect a building and any adjacent structures. It is also notable that ASCE 24 specifies that fill may not be used for structural support of buildings in these areas.

Although the Federal Emergency Management Agency (FEMA) designates floodways on many rivers and streams shown on FIRMs, some riverine flood hazard areas have base flood elevations, but do not have delineated floodways. In these areas, the effect of anticipated floodplain development on flood elevations has not been evaluated. Development in riverine floodplains can increase flood levels and loads on other properties, especially if it occurs in areas where the greatest volume of flood flows occur (see the definition of "Floodway"). Item 4 provides consistency with the NFIP with respect to development in areas where a base flood elevation has been established, but no floodway has been designated. It allows a proposed development to be approved if it is demonstrated that the flood elevations will not be increased by more than 1 foot (305 mm).

FEMA TB #10, *Ensuring That Structures Built on Fill In or Near Special Flood Hazard Areas Are Reasonably Safe From Flooding,* offers guidance to communities to determine whether structures on fill are reasonably safe from flooding. This determination is required by FEMA if property owners submit documentation requesting that FEMA show filled land is (or will be) no longer subject to flooding by the base flood. If the documentation meets FEMA’s requirements, a Letter of Map Revision based on fill (LOMR-F) is issued to revise the FIRM.

1804.6 Compacted fill material. Where shallow foundations will bear on compacted fill material, the compacted fill shall comply with the provisions of an *approved* geotechnical report, as set forth in Section 1803.

> **Exception:** Compacted fill material 12 inches (305 mm) in depth or less need not comply with an *approved* report, provided the in-place dry density is not less than 90 percent of the maximum dry density at optimum moisture content determined in accordance with ASTM D1557. The compaction shall be verified by *special inspection* in accordance with Section 1705.6.

❖ Where prepared fill is to be utilized for foundation support, the geotechnical report is to contain detailed information for approval of the fill. The information on the prepared fill in the geotechnical report is necessary to permit a reasonable prediction as to the load-bearing capacity of the fill material. Additionally, when prepared fill is to be utilized where special inspections are required, the fill operation itself must be performed under the scrutiny of a special inspector. The exception permits a limited depth of fill to be placed in accordance with prescriptive criteria rather than requiring details of fill placement in a geotechnical report. Special inspection is a requirement.

1804.7 Controlled low-strength material (CLSM). Where shallow foundations will bear on controlled low-strength material (CLSM), the CLSM shall comply with the provisions of an *approved* geotechnical report, as set forth in Section 1803.

❖ As an alternative to compacted fill in accordance with Section 1804.5, this section permits the use of CLSM for the support of footings. CLSM must be placed in accordance with an approved report that includes requirements for the material strength and field verification. In Chapter 2, CLSM is defined as “self-compacting cementitious materials.” This class of material is commonly referred to by a variety of other names, which include flowable fill, controlled density fill,

INTERNATIONAL CODE COUNCIL®
Copyright © 2015 ICC. ALL RIGHTS RESERVED. Accessed by David Dammon on Jun 21, 2017 12:30:52 PM pursuant to License Agreement with ICC. No further reproduction or distribution authorized. ANY UNAUTHORIZED REPRODUCTION OR DISTRIBUTION IS A VIOLATION OF THE FEDERAL COPYRIGHT ACT AND THE LICENSE AGREEMENT, AND SUBJECT TO CIVIL AND CRIMINAL PENALTIES THEREUNDER.

unshrinkable fill and soil-cement slurry. Guidance on the use of these materials can be found in ACI 229R (see Section 1803.5.9).

SECTION 1805
DAMPPROOFING AND WATERPROOFING

1805.1 General. Walls or portions thereof that retain earth and enclose interior spaces and floors below grade shall be waterproofed and dampproofed in accordance with this section, with the exception of those spaces containing groups other than residential and institutional where such omission is not detrimental to the building or occupancy.

Ventilation for crawl spaces shall comply with Section 1203.4.

❖ Section 1805 covers the requirements for waterproofing and dampproofing those parts of substructure construction that need to be provided with moisture protection. It identifies the locations where moisture barriers are required and specifies the materials to be used and the methods of application. The provisions also deal with subsurface water conditions, drainage systems and other protection requirements.

The term "waterproofing" is at times used where dampproofing is the minimum requirement. Although both terms are intended to apply to the installation and use of moisture barriers, dampproofing does not furnish the same degree of protection against moisture.

Dampproofing generally refers to the application of one or more coatings of a compound or other materials that are impervious to water, which are used to prevent the passage of water vapor through walls or other building components, and which restrict the flow of water under slight hydrostatic pressure. Waterproofing, on the other hand, refers to the application of coatings and sealing materials to walls or other building components to prevent moisture from penetrating in either a vapor or liquid form, even under conditions of significant hydrostatic pressure. Hydrostatic pressure is created by the presence of water under pressure. This pressure can occur when the ground-water table rises above the bottom of the foundation wall, or the soil next to the foundation wall becomes saturated with water caused by uncontrolled storm water runoff.

Section 1805.1 is an overall requirement that waterproofing and dampproofing applications are to be made to horizontal and vertical surfaces of below-ground spaces where the occupancy would normally be affected by the intrusion of water or moisture. Moisture or water in a floor below grade can cause damage to structural members, such as columns, posts or load-bearing walls, as well as pose a health hazard by promoting the growth of bacteria or fungi and adversely affect any mechanical and electrical appliances that may be located at that level. It can also cause a great deal of damage to goods that may be located or stored in that lower level. These vertical and horizontal surfaces include foundation walls, retaining walls, underfloor spaces and floor slabs. Waterproofing and dampproofing are not required in locations where the omission of moisture barriers would not adversely affect the use of the spaces. An example of a location where waterproofing or dampproofing would not be required is in an open parking structure, as long as the structural components are individually protected against the effects of water. Waterproofing and dampproofing are not permitted to be omitted from residential and institutional occupancies where people may be sleeping or services are provided on the floor below grade. A person walking in a flooded basement may be in a very hazardous situation, particularly if the possibility of an electrical charge in the water exists that is caused by electrical service at that level.

Section 1805.1.1 addresses the type of problem faced when a portion of a story is above grade, while Section 1805.1.2 limits any infiltration of water into crawl spaces so as to protect this area from potential water damage and prevent ponding of water. Both of these sections reference other applicable sections of the code, as well as the exceptions.

1805.1.1 Story above grade plane. Where a basement is considered a *story above grade plane* and the finished ground level adjacent to the basement wall is below the basement floor elevation for 25 percent or more of the perimeter, the floor and walls shall be dampproofed in accordance with Section 1805.2 and a foundation drain shall be installed in accordance with Section 1805.4.2. The foundation drain shall be installed around the portion of the perimeter where the basement floor is below ground level. The provisions of Sections 1803.5.4, 1805.3 and 1805.4.1 shall not apply in this case.

❖ The provisions of this section, stated in another way, require that where a basement is deemed to be a story above grade plane (see definition, Section 202), the section of the basement floor that occurs below the exterior ground level and the walls that bound that part of the floor are to be dampproofed in accordance with the requirements of Section 1805.2.

The use of dampproofing, rather than waterproofing, is permitted here since hydrostatic pressure will not tend to develop against the walls if the basement is a story above grade plane and the ground level adjacent to the basement wall is below the basement floor elevation for no less than 25 percent of the basement perimeter.

Any water pressure that may occur against the walls below ground or under the basement floor would be relieved by the water drainage system required in this section. The drainage system would be installed at the base of the wall construction in accordance with Section 1805.4.2 for a minimum distance along those portions of the wall perimeter where the basement floor is below ground level. Because of the relationship of grade to the basement floor and the inclusion of foundation drains, the potential for hydrostatic pressure buildup is not significant; therefore, a ground-water table investigation,

INTERNATIONAL CODE COUNCIL®
Copyright © 2015 ICC. ALL RIGHTS RESERVED. Accessed by David Dammon on Jun 21, 2017 12:30:52 PM pursuant to License Agreement with ICC. No further reproduction or distribution authorized. ANY UNAUTHORIZED REPRODUCTION OR DISTRIBUTION IS A VIOLATION OF THE FEDERAL COPYRIGHT ACT AND THE LICENSE AGREEMENT, AND SUBJECT TO CIVIL AND CRIMINAL PENALTIES THEREUNDER.

waterproofing and the basement floor gravel base course are not required.

The objective of Section 1805.4.1 is to prevent moisture migration in basement spaces. In story-above-grade construction that meets the requirements of this section, the basement floor would be only partly below ground level (sometimes a small part) and the need for moisture protection as required by Section 1805.4.1 would be unnecessary. Dampproofing of the floor slab would be required, however, in accordance with Section 1805.2.1.

1805.1.2 Under-floor space. The finished ground level of an under-floor space such as a crawl space shall not be located below the bottom of the footings. Where there is evidence that the ground-water table rises to within 6 inches (152 mm) of the ground level at the outside building perimeter, or that the surface water does not readily drain from the building site, the ground level of the under-floor space shall be as high as the outside finished ground level, unless an *approved* drainage system is provided. The provisions of Sections 1803.5.4, 1805.2, 1805.3 and 1805.4 shall not apply in this case.

❖ The requirements of this section are designed to prevent any ponding of water in underfloor spaces such as crawl spaces. Crawl spaces are particularly susceptible to ponding of water, since they are usually uninhabitable spaces that are observed very infrequently. Water can build up in these spaces and remain for an extended period of time without being noticed by the building occupants. This type of stagnant water under a building, which can harbor disease, mold and disease-carrying insects such as mosquitoes, can result in a serious health concern. Water buildup in a crawl space can also damage the structural integrity of the building. Wood exposed to water will deteriorate and rot, while concrete and masonry exposed to water will deteriorate with a loss of strength.

Steel exposed to water or high humidity can eventually rust to the extent that effective structural capability is jeopardized. Water buildup in a crawl space can also damage any mechanical or electrical appliances, which may be located in the space, by causing corrosion of electrical parts or metal skins and deterioration to insulation used to protect heating elements.

Where it is known that the water table can rise to within 6 inches (152 mm) of the outside ground level, or where there is evidence that surface water cannot readily drain from the site, then the finished ground surface in underfloor spaces is to be set at an elevation equal to the outside ground level around the perimeter of the building unless an approved drainage system is provided. In order for the drainage system to be approved, it must be demonstrated to be adequate to prevent the infiltration of water into the underfloor space. This is done by determining the maximum possible flow of water near the foundation wall and footing and designing the drainage system to remove that flow of water as it occurs, without permitting the buildup of water at the foundation wall.

To prevent the ponding of water in the underfloor space from a rise in the ground-water table, or from storm water runoff, the finished ground level of an underfloor space is not to be located below the bottom of the foundation footings.

Dampproofing (see Section 1805.2) the foundation walls, waterproofing (see Section 1805.3) and providing subsoil drainage (see Section 1805.4) is not necessary if the ground level of the underfloor space is as high as the ground level at the outside of the building perimeter, as the foundation walls do not enclose an interior space below grade. Compliance with Sections 1805.2, 1805.3 and 1805.4 would still be required where the finished ground surface of the underfloor space is below the outside ground level.

1805.1.2.1 Flood hazard areas. For buildings and structures in *flood hazard areas* as established in Section 1612.3, the finished ground level of an under-floor space such as a crawl space shall be equal to or higher than the outside finished ground level on at least one side.

Exception: Under-floor spaces of Group R-3 buildings that meet the requirements of FEMA TB 11.

❖ The definition of "Basement" for buildings and structures located in flood hazard areas is "the portion of a building having its floor subgrade (below grade) on all sides." This definition also pertains to enclosed areas such as crawl spaces below elevated buildings and structures, if the interior grade is below the exterior grade on all sides. Whether there is enough clearance for such areas to be occupied is irrelevant. Neither the use of the enclosed space nor the clearance height is the controlling factor as to whether an enclosed area below an elevated building is a basement under Section 1612.2. The controlling factor is whether the interior grade is below the exterior grade on all sides, even if the interior grade is established by the footing excavation that was not backfilled. To avoid questions of interpretation, interior grade should be at or above the exterior grade along one entire side.

Enclosed areas below elevated buildings or structures must meet the requirements of Section 1612.4, which references ASCE 24. In the event that a building or structure is not built in accordance with these requirements, particularly if it is determined to have a basement that is subgrade on all sides, NFIP flood insurance premium rates may be significantly higher.

In recognition of common construction practices in some parts of the country, the exception permits crawl spaces to be as much as 2 feet (610 mm) below the lowest adjacent exterior grade in accordance with FEMA TB #11, *Crawlspace Construction for Buildings Located in Special Flood Hazard Areas*, provided the additional requirements of that document are met [specifically, the maximum depth below grade is limited to 2 feet (210 mm) and maximum depth of floodwater above grade is limited to 2 feet (210 mm)]. Communities that choose to allow this

INTERNATIONAL CODE COUNCIL®
Copyright © 2015 ICC. ALL RIGHTS RESERVED. Accessed by David Dammon on Jun 21, 2017 12:30:52 PM pursuant to License Agreement with ICC. No further reproduction or distribution authorized. ANY UNAUTHORIZED REPRODUCTION OR DISTRIBUTION IS A VIOLATION OF THE FEDERAL COPYRIGHT ACT AND THE LICENSE AGREEMENT, AND SUBJECT TO CIVIL AND CRIMINAL PENALTIES THEREUNDER.

practice must amend their ordinances to include these additional requirements.

1805.1.3 Ground-water control. Where the ground-water table is lowered and maintained at an elevation not less than 6 inches (152 mm) below the bottom of the lowest floor, the floor and walls shall be dampproofed in accordance with Section 1805.2. The design of the system to lower the ground-water table shall be based on accepted principles of engineering that shall consider, but not necessarily be limited to, permeability of the soil, rate at which water enters the drainage system, rated capacity of pumps, head against which pumps are to operate and the rated capacity of the disposal area of the system.

❖ After completion of building construction, it is often necessary to maintain the water table at a level that is at least 6 inches (152 mm) below the bottom of the lowest floor in order to prevent the flow or seepage of water into the basement. Where the site consists of well-draining soil and the highest point of the water table occurs naturally at or lower than the required level stated above, there is no need to provide a site drainage system specifically designated to control the ground-water level. Where the soil characteristics and site topography are such that the water table can rise to a level that will produce a hydrostatic pressure against the basement structure, then a site drainage system may be installed to reduce the water level if there is sufficient land area to accomplish the purpose. When ground-water control in accordance with this section is provided, waterproofing in accordance with Section 1805.3 is not required.

There are many types of site drainage systems that can be employed to control ground-water levels. The most commonly used systems may involve the installation of drainage ditches or trenches filled with pervious materials, sump pits and discharge pumps, well point systems, drainage wells with deep-well pumps, sand-drain installations, etc. This section requires that all such systems be designed and constructed using accepted engineering principles and practices based upon considerations that include the permeability of the soil, amount and rate at which water enters the system, pump capacity, capacity of the disposal area and other such factors that are necessary for the complete design of an operable drainage system.

1805.2 Dampproofing. Where hydrostatic pressure will not occur as determined by Section 1803.5.4, floors and walls for other than wood foundation systems shall be dampproofed in accordance with this section. Wood foundation systems shall be constructed in accordance with AWC PWF.

❖ For a general definition of "Dampproofing," see the commentary to Section 1805.1. Where a ground-water table investigation made in accordance with the requirements of Section 1803.5.4 (see commentary) has established that the high water table will occur at such a level that the building substructure will not be subjected to hydrostatic pressure, then dampproofing in accordance with this section and a subsoil drain in accordance with Section 1805.4 are sufficient to control moisture in the floor below grade. Since the wall will not be subject to water under pressure, the more restrictive provisions of waterproofing, as outlined in Section 1805.3, are not required. Wood foundation systems specified in Section 1807.1.4 (see commentary) are to be dampproofed as required by the American Wood Council (AWC) *Permanent Wood Foundation Design Specification* (PWF). Dampproofing products having ICC Evaluation Service reports can be viewed at www.icc-es.org.

1805.2.1 Floors. Dampproofing materials for floors shall be installed between the floor and the base course required by Section 1805.4.1, except where a separate floor is provided above a concrete slab.

Where installed beneath the slab, dampproofing shall consist of not less than 6-mil (0.006 inch; 0.152 mm) polyethylene with joints lapped not less than 6 inches (152 mm), or other *approved* methods or materials. Where permitted to be installed on top of the slab, dampproofing shall consist of mopped-on bitumen, not less than 4-mil (0.004 inch; 0.102 mm) polyethylene, or other *approved* methods or materials. Joints in the membrane shall be lapped and sealed in accordance with the manufacturer's installation instructions.

❖ Floors requiring dampproofing in accordance with Section 1805.2 are to employ materials as specified in Section 1805.2.1. The dampproofing materials must be placed between the floor construction and the supporting gravel or stone base as shown in Commentary Figure 1805.4.2. Even if a floor base in accordance with Section 1805.4.1 is not required, dampproofing is still to be placed under the slab unless otherwise specified in Section 1805.2.1.

The installation is intended to provide a moisture barrier against the passage of water vapor or seepage into below-ground spaces.

The dampproofing material most commonly used for underslab installations consists of a polyethylene film no less than 6 mil [0.006 inch; (0.152 mm)] in thickness, which is applied over the gravel or stone base required in Section 1805.4.1. Care must be used in the installation of the material over the rough surface of the base and during the concreting operations so as not to puncture the polyethylene. Joints must be lapped at least 6 inches (152 mm). Other materials used in a similar way are made of neoprene or butyl rubber. Dampproofing materials can also be applied on top of the base concrete slab if a separate floor is provided above the base slab, since dampproofing is provided to prevent moisture infiltration of the interior space, not the concrete slab.

Materials commonly used for dampproofing floors are listed in Commentary Figure 1805.2.2.

1805.2.2 Walls. Dampproofing materials for walls shall be installed on the exterior surface of the wall, and shall extend from the top of the footing to above ground level.

Dampproofing shall consist of a bituminous material, 3 pounds per square *yard* (16 N/m^2) of acrylic modified

INTERNATIONAL CODE COUNCIL®
Copyright © 2015 ICC. ALL RIGHTS RESERVED. Accessed by David Dammon on Jun 21, 2017 12:30:52 PM pursuant to License Agreement with ICC. No further reproduction or distribution authorized. ANY UNAUTHORIZED REPRODUCTION OR DISTRIBUTION IS A VIOLATION OF THE FEDERAL COPYRIGHT ACT AND THE LICENSE AGREEMENT, AND SUBJECT TO CIVIL AND CRIMINAL PENALTIES THEREUNDER.

cement, $^1/_8$ inch (3.2 mm) coat of surface-bonding mortar complying with ASTM C887, any of the materials permitted for waterproofing by Section 1805.3.2 or other *approved* methods or materials.

❖ Walls requiring dampproofing in accordance with Section 1805.2 are first to be prepared as required in Section 1805.2.2.1 and then coated with a bituminous material, cement or mortar as specified in Section 1805.2.2 or other approved materials and methods of application. Approved materials are those that will prevent moisture from penetrating the foundation wall when water is present but not under pressure.

Coatings are applied to cover prepared exterior wall surfaces extending from the top of the wall footings to slightly above ground level so that the entire wall that contacts the ground is protected. Surfaces are usually primed to provide a bond coat and then dampproofed with a protective coat of asphalt or tar pitch. Emulsion-type coatings may be applied directly on "green" concrete or unit masonry walls; however, because they are water-soluble materials, their use is not generally recommended. Installation should comply with the manufacturer's instructions.

Any of the materials specified in Section 1805.3.2 for waterproofing are also allowed to be used for dampproofing. Commentary Figure 1805.2.2 provides a list of bituminous materials that can be used, including the applicable standards that may be used as the basis of acceptance of such materials. Included in Commentary Figure 1805.2.2 is ASTM D1668 for glass fabric that is treated with asphalt (Type I), coal-tar pitch (Type II) or organic resin (Type III).

Surface-bonding mortar complying with ASTM C887 may be utilized. This specification covers the materials, properties and packaging of dry, combined materials for use as surface-bonding mortar with concrete masonry units that have not been prefaced, coated or painted. Since this specification does not address design or application, manufacturers' recommendations should be followed. This standard covers proportioning, physical requirements, sampling and testing. The minimum thickness of the coating is $^1/_8$ inch (3.2 mm).

Acrylic-modified cement coatings may be utilized at the rate of 3 pounds per square yard (16 N/m^2). These types of materials have been used, performing successfully, as dampproofing materials for foundation walls. Surface-bonding mortar and acrylic-modified cement are limited in use to dampproofing. The ability of these two types of products to bridge nonstructural cracks, as required in Section 1805.3.2 for waterproofing materials, is not known; therefore, their use is limited to dampproofing and they are not permitted to be used as waterproofing. Dampproofing may also include other materials and methods of installation acceptable to the building official.

MATERIAL	CONSTRUCTION
Asphalt	ASTM D449
Asphalt primer	ASTM D41
Coal-tar	ASTM D450
Concrete and masonry oil primer (for coal-tar applications only)	ASTM D43
Treated glass fabric	ASTM D1668

Figure 1805.2.2
MATERIALS FOR WATERPROOFING AND DAMPROOFING INSTALLATIONS

1805.2.2.1 Surface preparation of walls. Prior to application of dampproofing materials on concrete walls, holes and recesses resulting from the removal of form ties shall be sealed with a bituminous material or other *approved* methods or materials. Unit masonry walls shall be parged on the exterior surface below ground level with not less than $^3/_8$ inch (9.5 mm) of Portland cement mortar. The parging shall be coved at the footing.

Exception: Parging of unit masonry walls is not required where a material is *approved* for direct application to the masonry.

❖ Before applying dampproofing materials, the concrete must be free of any holes or recesses that could affect the proper sealing of the wall surfaces. Air trapped beneath a dampproofing coating or membranes can cause blistering, while rocks and other sharp objects can puncture membranes. Irregular surfaces can also create uneven layering of coatings, which can result in vulnerable areas of dampproofing. Surface irregularities commonly associated with concrete wall construction can be sealed with bituminous materials or filled with portland cement grout or other approved methods.

Unit masonry walls are usually parged (plastered) with a $^1/_2$-inch-thick (12.7 mm) layer of Portland cement and sand mix (1:2$^1/_2$ by volume) or with Type M mortar proportioned in accordance with the requirements of ASTMC 270, and applied in two $^1/_4$-inch-thick (6.4 mm) layers. In no case is parging to result in a final thickness of less than $^3/_8$ inch (9.5 mm). The parging is to be coved at the joint formed by the base of the wall and the top of the wall footing to prevent the accumulation of water at that location.

The moisture protection of unit masonry walls provided by the parging method may not be required where approved dampproofing materials, such as grout coatings, cement-based paints or bituminous coatings, can be applied directly to masonry surfaces.

1805.3 Waterproofing. Where the ground-water investigation required by Section 1803.5.4 indicates that a hydrostatic pressure condition exists, and the design does not include a

INTERNATIONAL CODE COUNCIL®
Copyright © 2015 ICC. ALL RIGHTS RESERVED. Accessed by David Dammon on Jun 21, 2017 12:30:52 PM pursuant to License Agreement with ICC. No further reproduction or distribution authorized. ANY UNAUTHORIZED REPRODUCTION OR DISTRIBUTION IS A VIOLATION OF THE FEDERAL COPYRIGHT ACT AND THE LICENSE AGREEMENT, AND SUBJECT TO CIVIL AND CRIMINAL PENALTIES THEREUNDER.

ground-water control system as described in Section 1805.1.3, walls and floors shall be waterproofed in accordance with this section.

❖ For a general definition of "Waterproofing," and the distinction between dampproofing and waterproofing, see the commentary to Section 1805.1.

The significance of waterproofing installations is that they are intended to provide moisture barriers against water seepage that may be forced into below-ground spaces by hydrostatic pressure.

Where a ground-water table investigation made in accordance with the requirements of Section 1803.5.4 (see commentary) has established that the high water table will occur at such a level that the building substructure will be subjected to hydrostatic pressure, and where the water table is not lowered by a water control system, as prescribed in the commentary to Section 1805.1.3, all floors and walls below ground level are to be waterproofed in accordance with Sections 1805.3.1, 1805.3.2 and 1805.3.3. Waterproofing products having ICC Evaluation Service reports can be viewed at www.icc-es.org.

1805.3.1 Floors. Floors required to be waterproofed shall be of concrete and designed and constructed to withstand the hydrostatic pressures to which the floors will be subjected.

Waterproofing shall be accomplished by placing a membrane of rubberized asphalt, butyl rubber, fully adhered/fully bonded HDPE or polyolefin composite membrane or not less than 6-mil [0.006 inch (0.152 mm)] polyvinyl chloride with joints lapped not less than 6 inches (152 mm) or other *approved* materials under the slab. Joints in the membrane shall be lapped and sealed in accordance with the manufacturer's installation instructions.

❖ Since floors that are required to be waterproofed are subjected to hydrostatic uplift pressures, such floors must, for all practical purposes, be made of concrete and designed and constructed to resist the maximum hydrostatic pressures possible. It is particularly important that the floor slab be properly designed, since severe cracking or movement of the concrete would allow water seepage into below-ground spaces because the ability of the waterproofing materials to bridge small cracks would be exceeded. Concrete floor construction is to comply with the applicable provisions of Chapter 19.

Below-ground floors subjected to hydrostatic uplift pressures are to be waterproofed with membrane materials placed as underslab or split-slab installations, including such materials as rubberized asphalt, butyl rubber, fully bonded High Density Polyethylene (HDPE), fully bonded polyolefin and neoprene, or polyvinyl chloride (PVC) not less than 6 mil [0.006 inch (0.152 mm)] in thickness, lapped at least 6 inches (152 mm). There are many proprietary membrane products available in the marketplace that are specifically made for waterproofing floors and walls (i.e., polyethylene sheets sandwiched between layers of asphalt), which may be used for that purpose when approved by the building official.

All membrane joints are to be lapped and sealed in accordance with the manufacturer's instructions to form a continuous, impermeable moisture barrier.

1805.3.2 Walls. Walls required to be waterproofed shall be of concrete or masonry and shall be designed and constructed to withstand the hydrostatic pressures and other lateral loads to which the walls will be subjected.

Waterproofing shall be applied from the bottom of the wall to not less than 12 inches (305 mm) above the maximum elevation of the ground-water table. The remainder of the wall shall be dampproofed in accordance with Section 1805.2.2. Waterproofing shall consist of two-ply hot-mopped felts, not less than 6-mil (0.006 inch; 0.152 mm) polyvinyl chloride, 40-mil (0.040 inch; 1.02 mm) polymer-modified asphalt, 6-mil (0.006 inch; 0.152 mm) polyethylene or other *approved* methods or materials capable of bridging nonstructural cracks. Joints in the membrane shall be lapped and sealed in accordance with the manufacturer's installation instructions.

❖ Walls that are required to be waterproofed in accordance with Section 1805.3 must first be prepared as required in Section 1805.3.2.1.

The walls must be designed to resist the hydrostatic pressure anticipated at the site, as well as any other lateral loads to which the wall will be subjected, such as soil pressures or seismic loads. As with floors required to be waterproofed, it is particularly important that walls required to be waterproofed be properly designed to resist all loads present, since cracking and other damage would allow water seepage into below-ground spaces. Water seepage can lead to deterioration of the foundation as wood rots, concrete and masonry erode and steel rusts. Such deterioration can cause structural failure of the foundation. More importantly, failure of the foundation wall can lead to structural failure of the building, since the foundation supports the building structure. Masonry or concrete construction must comply with the applicable provisions of Chapters 21 and 19, respectively.

Commentary Figures 1805.2.2 and 1805.3.2 list materials commonly used for the installation of moisture barriers in wall construction and the related standard that may be used as a basis for acceptance of such materials. Asphalt and coal-tar products are not compatible and should not be used together.

Waterproofing installations are to extend from the bottom of the wall to a height no less than 12 inches (305 mm) above the maximum elevation of the ground-water table determined in accordance with the requirements of Section 1803.5.4 (see commentary). The remainder of the wall below ground level (if the height is small) may be waterproofed as a continuation of the installation or must be dampproofed in accordance with the requirements of Section 1805.2.2. If the ground-water table investigation is not conducted on the basis of the exception to Section 1803.5.4, then waterproofing should be provided from a point below the footing to above the ground level.

INTERNATIONAL CODE COUNCIL®
Copyright © 2015 ICC. ALL RIGHTS RESERVED. Accessed by David Dammon on Jun 21, 2017 12:30:52 PM pursuant to License Agreement with ICC. No further reproduction or distribution authorized. ANY UNAUTHORIZED REPRODUCTION OR DISTRIBUTION IS A VIOLATION OF THE FEDERAL COPYRIGHT ACT AND THE LICENSE AGREEMENT, AND SUBJECT TO CIVIL AND CRIMINAL PENALTIES THEREUNDER.

This section requires that waterproofing must consist of two-ply hot-mopped felts. The practice of the waterproofing industry is to select the number of plies of membrane material based on the hydrostatic head (height of water pressure against the wall). As a general practice, if the head of water is between 1 foot (305 mm) and 3 feet (914 mm), two plies of felt or fabric membrane are used; between 4 feet (1219 mm) and 10 feet (3048 mm), three-ply construction is needed; and between 11 feet (3353 mm) and 25 feet (7620 mm), four-ply construction is necessary.

Waterproofing installations may also use polyvinyl chloride materials of no less than 6-mil [0.006 inch (0.152 mm)] thick, 40-mil [0.040 inch (1.02 mm)] polymer-modified asphalt or 6-mil [0.006 inch (0.152 mm)] polyethylene. These materials have been widely recognized for their effectiveness in bridging nonstructural cracks. Other approved materials and methods may be used provided that the same performance standards are met. All membrane joints must be lapped and sealed in accordance with the manufacturer's instructions.

MATERIAL	CONSTRUCTION
Asphalt-saturated asbestos felt	ASTM D250
Asphalt-saturated burlap fabric	ASTM D1327
Asphalt-saturated cotton fabric	ASTM D173
Asphalt-saturated organic felt	ASTM D226
Coal-tar-saturated burlap fabric	ASTM D1327
Coal-tar-saturated cotton fabric	ASTM D173
Coal-tar-saturated organic felt	ASTM D227

Figure 1805.3.2
MATERIALS FOR
WATERPROOFING INSTALLATIONS

1805.3.2.1 Surface preparation of walls. Prior to the application of waterproofing materials on concrete or masonry walls, the walls shall be prepared in accordance with Section 1805.2.2.1.

❖ Before applying waterproofing materials to concrete or masonry walls, the surfaces must be prepared in accordance with the requirements of Section 1805.2.2.1, which requires the sealing of all holes and recesses. Surfaces to be waterproofed must also be free of any projections that might puncture or tear membrane materials that are applied over the surfaces.

1805.3.3 Joints and penetrations. Joints in walls and floors, joints between the wall and floor and penetrations of the wall and floor shall be made water tight utilizing *approved* methods and materials.

❖ This section requires that all joints occurring in floors and walls and at locations where floors and walls meet, as well as all penetrations in floors and walls, be made water tight by approved methods. Sealing joints and penetrations is of primary importance to ensuring the effectiveness of the waterproofing. If the joints or penetrations are not sealed properly, they can develop leaks, which become a passageway for water to enter the building. Since the remainder of the foundation is wrapped in waterproofing, moisture can actually become trapped in the foundation walls or floor slab, and serious damage to these structural components can occur. Such methods may involve the use of construction keys (e.g., between the base of the wall and the top of the footing) or, if there is hydrostatic pressure, floor and wall joints may require the use of manufactured waterstops made of metal, rubber, plastic or mastic materials. Commentary Figures 1805.3.3(1) and 1805.3.3(2) illustrate examples of joint treatment and penetration treatment of waterproofing. Floor edges along walls and floor expansion joints may employ the use of any number of preformed expansion joint materials, such as asphalt, polyurethane, sponge rubber, self-expanding cork, cellular fibers bonded with bituminous materials, etc., which all comply with applicable ASTM International (ASTM) or American Association of State Highway and Transportation Officials (AASHTO) standards or other federal specifications. A variety of sealants may be used together with the preformed joint materials. Gaskets made of neoprene and other materials are also available for use in concrete and masonry joints. The National Roofing Contractors Association's (NRCA's) *Roofing and Waterproofing Manual* provides details for the reinforcement of membrane terminations, corners, intersections of slabs and walls, through-wall and slab penetrations and other locations.

Penetrations in walls and floors may be made water-tight with grout or manufactured fill materials and sealants made for that purpose.

1805.4 Subsoil drainage system. Where a hydrostatic pressure condition does not exist, dampproofing shall be provided and a base shall be installed under the floor and a drain installed around the foundation perimeter. A subsoil drainage system designed and constructed in accordance with Section 1805.1.3 shall be deemed adequate for lowering the groundwater table.

❖ This section covers subsoil drainage systems in conjunction with dampproofing (see Section 1805.2) to protect below-ground spaces from water seepage. Such systems are not used where basements or other below-ground spaces are subject to hydrostatic pressure because they would not be effective in disposing of the amount of water anticipated if a hydrostatic pressure condition exists. Ground-water tables may be reduced to acceptable levels by methods described in the commentary to Section 1805.1.3.

The details of subsoil drainage systems are covered in the requirements of Sections 1805.4.1 through 1805.4.3.

INTERNATIONAL CODE COUNCIL®
Copyright © 2015 ICC. ALL RIGHTS RESERVED. Accessed by David Dammon on Jun 21, 2017 12:30:52 PM pursuant to License Agreement with ICC. No further reproduction or distribution authorized. ANY UNAUTHORIZED REPRODUCTION OR DISTRIBUTION IS A VIOLATION OF THE FEDERAL COPYRIGHT ACT AND THE LICENSE AGREEMENT, AND SUBJECT TO CIVIL AND CRIMINAL PENALTIES THEREUNDER.

1805.4.1 Floor base course. Floors of basements, except as provided for in Section 1805.1.1, shall be placed over a floor base course not less than 4 inches (102 mm) in thickness that consists of gravel or crushed stone containing not more than 10 percent of material that passes through a No. 4 (4.75 mm) sieve.

Exception: Where a site is located in well-drained gravel or sand/gravel mixture soils, a floor base course is not required.

❖ This section requires that basement floors, except for story-above-grade construction, must be placed on a gravel or stone base no less than 4 inches (102 mm) thick. Not more than 10 percent of the material is to pass a No. 4 sieve so as to provide a porous installation. Material that passes a No. 4 sieve would be fine silt or clay that would not permit the free movement of water through the floor base. This requirement serves three purposes. The first is to provide an adjustment to the irregularities of a compacted subgrade so as to produce a level surface upon which to cast a concrete slab. The second is to provide a capillary break so that moisture from the soil below will not rise to the underside of the floor. Finally, where required, the porous base can act as a drainage system to expel underslab water by means of gravity or the use of a sump pump or other approved methods.

The exception allows for the omission of the floor base when the natural soils beneath the floor slab consist of well-draining granular materials, such as sand, stone or mixtures of these materials. The exception is consistent with the requirements of Sec-

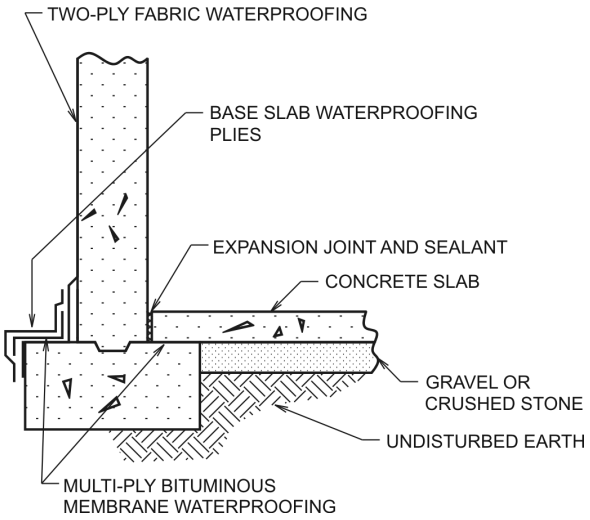

Figure 1805.3.3(1)
DETAIL—MEMBRANE PLACEMENT THROUGH A KEY JOINT

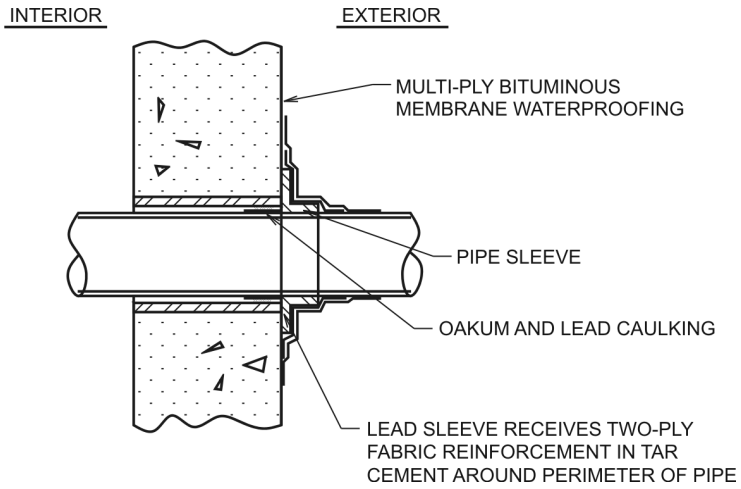

Figure 1805.3.3(2)
PIPE DETAIL—PROPER PLACEMENT OF WATERPROOFING ELEMENTS

INTERNATIONAL CODE COUNCIL®
Copyright © 2015 ICC. ALL RIGHTS RESERVED. Accessed by David Dammon on Jun 21, 2017 12:30:52 PM pursuant to License Agreement with ICC. No further reproduction or distribution authorized. ANY UNAUTHORIZED REPRODUCTION OR DISTRIBUTION IS A VIOLATION OF THE FEDERAL COPYRIGHT ACT AND THE LICENSE AGREEMENT, AND SUBJECT TO CIVIL AND CRIMINAL PENALTIES THEREUNDER.

tion 1805.4.3. Some caution, however, is justified in the use of this exception. If the granular soils contain an excessive percentage of fine materials, the porosity and the ability of the soil to provide a capillary break may be considerably diminished. The exception is only to be applied if the natural base is equivalent to the floor base otherwise required by this section.

1805.4.2 Foundation drain. A drain shall be placed around the perimeter of a foundation that consists of gravel or crushed stone containing not more than 10-percent material that passes through a No. 4 (4.75 mm) sieve. The drain shall extend a minimum of 12 inches (305 mm) beyond the outside edge of the footing. The thickness shall be such that the bottom of the drain is not higher than the bottom of the base under the floor, and that the top of the drain is not less than 6 inches (152 mm) above the top of the footing. The top of the drain shall be covered with an *approved* filter membrane material. Where a drain tile or perforated pipe is used, the invert of the pipe or tile shall not be higher than the floor elevation. The top of joints or the top of perforations shall be protected with an *approved* filter membrane material. The pipe or tile shall be placed on not less than 2 inches (51 mm) of gravel or crushed stone complying with Section 1805.4.1, and shall be covered with not less than 6 inches (152 mm) of the same material.

❖ This section describes the materials and features of construction required for the installation of foundation drain systems. Perimeter foundation drains provide a means to remove free ground water and prevent leakage into habitable below-grade spaces. The first part of this provision describes a foundation drain of gravel or crushed stone. The balance of the provision describes the installation of drain tile or perforated pipe where either of those is provided. The use of drain tiles is important in areas having moderate to heavy rainfall as well as in soils that have low percolation rates. The requirements of this section are illustrated in Commentary Figure 1805.4.2.

This type of drain system is suitable where the water table occurs at such elevation that there is no hydrostatic pressure exerted against the basement floor and walls, and where the amount of seepage from the surrounding soil is so small that the water can be readily discharged by gravity or mechanical means into sewers or ditches. The objective is to combine the protection afforded by dampproofing walls and floors (see Section 1805.2) and by perimeter drains so as to maintain below-ground spaces in a dry condition.

Gravel or crushed stone drain material is to be placed in the excavation so that it will extend out from the edge of the wall footing a distance of at least 12 inches (305 mm), with the bottom of the fill being no higher than the bottom of the base under the floor (see Section 1805.4.1), and the top of the filter material being no less than 6 inches (152 mm) above the top of

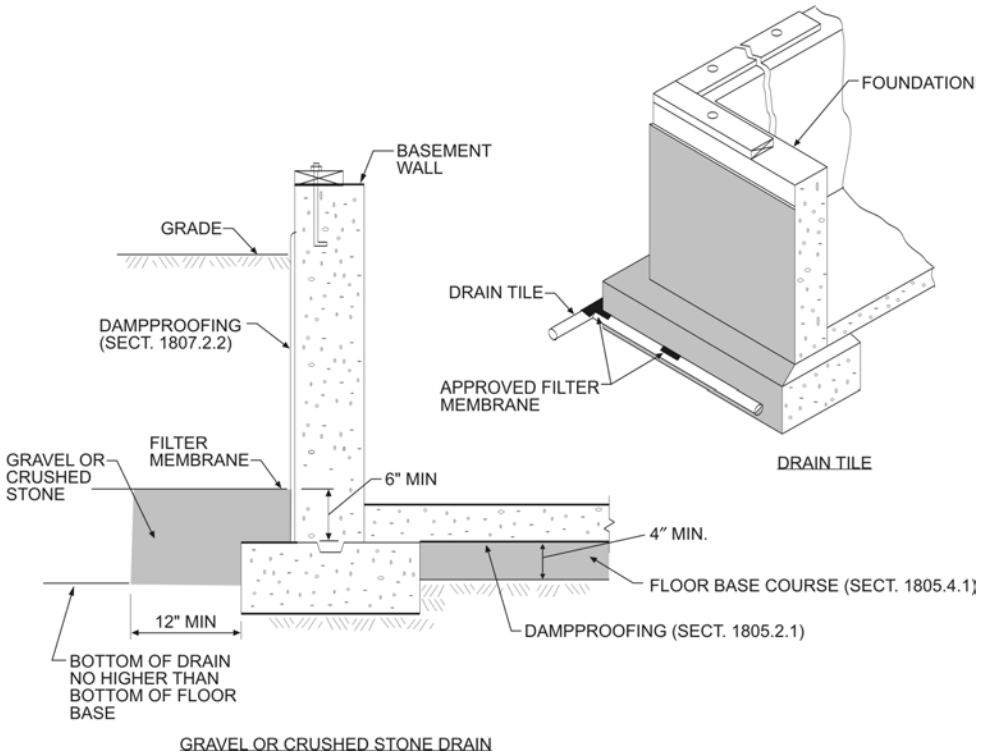

For SI: 1 inch = 25.4 mm.

Figure 1805.4.2
FOUNDATION DRAINAGE SYSTEM

INTERNATIONAL CODE COUNCIL®
Copyright © 2015 ICC. ALL RIGHTS RESERVED. Accessed by David Dammon on Jun 21, 2017 12:30:52 PM pursuant to License Agreement with ICC. No further reproduction or distribution authorized. ANY UNAUTHORIZED REPRODUCTION OR DISTRIBUTION IS A VIOLATION OF THE FEDERAL COPYRIGHT ACT AND THE LICENSE AGREEMENT, AND SUBJECT TO CIVIL AND CRIMINAL PENALTIES THEREUNDER.

the wall footing so that water will not collect along the top of the footing. Requiring the bottom of the gravel or crushed rock drain to be no higher than the bottom of the floor base is necessary so that if the water table rises into the floor base, it will also be able to rise unobstructed into the foundation drain. The foundation drain will then drain the water away from the building, as required by Section 1805.4.3. The top of the drain must be covered with an approved filter membrane to allow water to pass through without allowing, or at least greatly reducing, the possibility of fine soil materials entering the drainage system.

Where drain tile or perforated drain pipe is utilized, the drain system consists of clay or concrete drain tiles or corrugated metal or nonmetallic pipes installed in a filter bed with at least 2 inches (51 mm) of filter material and covered with at least 6 inches (152 mm) of filter material to maintain good water flow into the drain tile or pipe. The foundation drain is set adjacent to the wall footing and extends around the perimeter of the building. Drain tiles are placed end to end with open joints to permit water to enter the system. Metallic and nonmetallic drains are made with perforations at the invert (bottom) section of the pipe and are installed with connected ends. The drain pipe invert is not to be set higher than the basement floor line such that water conveyed by the drain does not seep into the filter material and create a hydrostatic pressure condition against the foundation wall and footing. The inverts should not be placed below the bottom of the adjacent wall footings so as to avoid carrying away fine soil particles that, in time, could undermine the footing and settlement of the foundation walls.

Tile joints or pipe perforations should be covered with an approved filter membrane material to prevent them from becoming clogged and prevent fine particles that may be contained in the surrounding soil from entering the system and being carried away by water. The filter material around the drain tiles or pipes (not to be confused with filter membrane material) is to consist of selected gravel and crushed stone containing no more than 10 percent of material that passes through a No. 4 sieve. The filter materials should be selected to prevent the movement of particles from the protected soil surrounding the drain installation into the drain.

1805.4.3 Drainage discharge. The floor base and foundation perimeter drain shall discharge by gravity or mechanical means into an *approved* drainage system that complies with the *International Plumbing Code*.

Exception: Where a site is located in well-drained gravel or sand/gravel mixture soils, a dedicated drainage system is not required.

❖ This section references the *International Plumbing Code*® (IPC®) for the requirements of installing piping systems for the disposal of water from the floor base (see Section 1805.4.1) and the foundation drains (see Section 1805.4.2). Chapter 11 of the IPC deals with the piping materials, applicable standards and methods of installation of subsurface storm drains to facilitate water discharge either by gravity or mechanical means.

Where the soil at the site consists of well-drained granular materials (i.e., gravel or sand-gravel mixtures) to prevent the occurrence of hydrostatic pressure against the foundation walls and under the floor slab, the use of a dedicated drainage system as prescribed in the IPC is not required, since the site soils would permit natural drainage.

SECTION 1806
PRESUMPTIVE LOAD-BEARING VALUES OF SOILS

1806.1 Load combinations. The presumptive load-bearing values provided in Table 1806.2 shall be used with the *allowable stress design* load combinations specified in Section 1605.3. The values of vertical foundation pressure and lateral bearing pressure given in Table 1806.2 shall be permitted to be increased by one-third where used with the alternative basic load combinations of Section 1605.3.2 that include wind or earthquake loads.

❖ This section clarifies the use of the presumptive load-bearing values relating to foundations and footing design. Foundation design is based on the ASD approach. Since Chapter 16 includes provisions and load combinations for strength design [load and resistance factor design (LRFD)], it is necessary to clarify that these values are to be used with the ASD load combinations.

1806.2 Presumptive load-bearing values. The load-bearing values used in design for supporting soils near the surface shall not exceed the values specified in Table 1806.2 unless data to substantiate the use of higher values are submitted and *approved*. Where the *building official* has reason to doubt the classification, strength or compressibility of the soil, the requirements of Section 1803.5.2 shall be satisfied.

Presumptive load-bearing values shall apply to materials with similar physical characteristics and dispositions. Mud, organic silt, organic clays, peat or unprepared fill shall not be assumed to have a presumptive load-bearing capacity unless data to substantiate the use of such a value are submitted.

Exception: A presumptive load-bearing capacity shall be permitted to be used where the *building official* deems the load-bearing capacity of mud, organic silt or unprepared fill is adequate for the support of lightweight or temporary structures.

❖ Where the load-bearing capacity of the soil has not been determined by borings, as specified in Section 1803, the presumptive load-bearing values listed in Table 1806.2 are intended to apply in the design of shallow foundation systems.

While unprepared fill materials such as mud, muck, peat, organic silt and soft clay are considered to have no presumptive load-bearing value, soil tests may show that they do have some limited load-bearing capacity and, based on this type of evidence, the

INTERNATIONAL CODE COUNCIL®
Copyright © 2015 ICC. ALL RIGHTS RESERVED. Accessed by David Dammon on Jun 21, 2017 12:30:52 PM pursuant to License Agreement with ICC. No further reproduction or distribution authorized. ANY UNAUTHORIZED REPRODUCTION OR DISTRIBUTION IS A VIOLATION OF THE FEDERAL COPYRIGHT ACT AND THE LICENSE AGREEMENT, AND SUBJECT TO CIVIL AND CRIMINAL PENALTIES THEREUNDER.

building official may approve the construction of lightweight structures upon such soils.

The presumption is that the building official possesses sufficient technical knowledge on the character and behavior of subsurface materials to render a valid judgment on the adequacy of the soil to support satisfactorily the lightweight or temporary structure, or he or she has sought and gained specific advice through consultation with professionals who are competent in the field of foundation engineering. It would be an unwise practice to authorize construction on exceptionally weak soils without the benefit of technical knowledge to make judgmental decisions.

TABLE 1806.2. See below.

❖ The values in Table 1806.2 are intended to be lower-bound allowable pressures to be used where the bearing value is not determined by borings as specified in Section 1803. The classes of soil and rock listed in Table 1806.2 are those materials most commonly found at construction sites around the country. The allowable foundation pressures expressed in terms of pounds per square foot (psf) for each class of subsurface materials listed in Table 1806.2 are based on experience with the behavior of these materials under loaded conditions.

Should local soil conditions be significantly different than those listed in Table 1806.2, then, with the approval of the building official, local experience can be employed in the design of foundations, particularly where actual load-bearing values are less than the allowable unit pressures given in the table.

Whether the allowable load-bearing values of Table 1806.2 are used or local conditions on soil capacity prevail, many precautions must be taken in the design of foundation systems that are not regulatory functions of the code, but rather are the professional considerations and design applications of those who are engaged in foundation engineering. The building official needs to pay particular attention to proper selection of the allowable load-bearing capacity of the soil because it is the source of many foundation failures. The problem arises when the load-bearing material directly under a foundation overlies a stratum (or strata) of weaker material having a smaller allowable load-bearing capacity. The selection of the load-bearing value to be used in the design of the foundation should take into account the load distribution at the weaker stratum (or strata) so that the pressure on the soil does not exceed its allowable load-bearing capacity. In this respect, it is important to have a soil profile showing the classes of material at the construction site or at properties in the near vicinity of the site. Such information can be a part of the records or other data required by Section 1803.6 or the results of a soil investigation.

With this information, the building official can consult with the registered design professional in charge of the foundation design to ascertain that due care was exercised in adopting proper soil load-bearing values.

1806.3 Lateral load resistance. Where the presumptive values of Table 1806.2 are used to determine resistance to lateral loads, the calculations shall be in accordance with Sections 1806.3.1 through 1806.3.4.

❖ When the tabulated values for lateral load resistance of soils are utilized, certain limitations must be considered. They are contained in the following subsections.

1806.3.1 Combined resistance. The total resistance to lateral loads shall be permitted to be determined by combining the values derived from the lateral bearing pressure and the lateral sliding resistance specified in Table 1806.2.

❖ This section permits a foundation's lateral resistance to be determined by combining the lateral bearing and lateral sliding values from Table 1806.2.

1806.3.2 Lateral sliding resistance limit. For clay, sandy clay, silty clay, clayey silt, silt and sandy silt, in no case shall the lateral sliding resistance exceed one-half the dead load.

❖ For cohesive soils, the tabulated lateral sliding value is set at 130 psf (6.23 kPa). However, this section

TABLE 1806.2
PRESUMPTIVE LOAD-BEARING VALUES

CLASS OF MATERIALS	VERTICAL FOUNDATION PRESSURE (psf)	LATERAL BEARING PRESSURE (psf/ft below natural grade)	LATERAL SLIDING RESISTANCE	
			Coefficient of friction[a]	Cohesion (psf)[b]
1. Crystalline bedrock	12,000	1,200	0.70	—
2. Sedimentary and foliated rock	4,000	400	0.35	—
3. Sandy gravel and/or gravel (GW and GP)	3,000	200	0.35	—
4. Sand, silty sand, clayey sand, silty gravel and clayey gravel (SW, SP, SM, SC, GM and GC)	2,000	150	0.25	—
5. Clay, sandy clay, silty clay, clayey silt, silt and sandy silt (CL, ML, MH and CH)	1,500	100	—	130

For SI: 1 pound per square foot = 0.0479kPa, 1 pound per square foot per foot = 0.157 kPa/m.

a. Coefficient to be multiplied by the dead load.

b. Cohesion value to be multiplied by the contact area, as limited by Section 1806.3.2.

INTERNATIONAL CODE COUNCIL®
Copyright © 2015 ICC. ALL RIGHTS RESERVED. Accessed by David Dammon on Jun 21, 2017 12:30:52 PM pursuant to License Agreement with ICC. No further reproduction or distribution authorized. ANY UNAUTHORIZED REPRODUCTION OR DISTRIBUTION IS A VIOLATION OF THE FEDERAL COPYRIGHT ACT AND THE LICENSE AGREEMENT, AND SUBJECT TO CIVIL AND CRIMINAL PENALTIES THEREUNDER.

also stipulates that for clay, sandy clay, silty clay and clayey silt, the lateral sliding resistance cannot exceed one-half the dead load.

1806.3.3 Increase for depth. The lateral bearing pressures specified in Table 1806.2 shall be permitted to be increased by the tabular value for each additional foot (305 mm) of depth to a maximum of 15 times the tabular value.

❖ The lateral sliding resistance is calculated as the sum of the lateral bearing and lateral sliding values from Table 1806.2. The lateral bearing values are determined as the product of the tabular value and the depth below natural grade. This section essentially limits the foundation depth for which the lateral bearing values can be increased to 15 feet (4572 mm).

1806.3.4 Increase for poles. Isolated poles for uses such as flagpoles or signs and poles used to support buildings that are not adversely affected by a $^1/_2$-inch (12.7 mm) motion at the ground surface due to short-term lateral loads shall be permitted to be designed using lateral bearing pressures equal to two times the tabular values.

❖ For isolated poles used as supports for flagpoles or signs, and poles used to support buildings that are not adversely affected by a $^1/_2$-inch (12.7 mm) motion at the ground surface due to short-term lateral loads, the tabulated lateral bearing values are permitted to be doubled.

SECTION 1807
FOUNDATION WALLS, RETAINING WALLS AND EMBEDDED POSTS AND POLES

1807.1 Foundation walls. Foundation walls shall be designed and constructed in accordance with Sections 1807.1.1 through 1807.1.6. Foundation walls shall be supported by foundations designed in accordance with Section 1808.

❖ Foundation walls typically serve as the enclosure for a basement or crawl space as well as a below-grade load-bearing foundation component. Where applicable, they are designed to resist lateral soil pressures as well as dead, live, snow, wind, and seismic loads. This section contains the provisions applicable to the design and construction of foundation walls.

1807.1.1 Design lateral soil loads. Foundation walls shall be designed for the lateral soil loads set forth in Section 1610.

❖ This section requires that foundation and retaining walls be designed to resist the lateral soil loads in accordance with Section 1610. The code provides lateral soil loads in Table 1610.1 for use where a specific geotechnical investigation has not been performed. Consideration must be also be given to hydrostatic loads in addition to lateral pressures resulting from surcharge loads, such as a sloping backfill.

1807.1.2 Unbalanced backfill height. Unbalanced backfill height is the difference in height between the exterior finish ground level and the lower of the top of the concrete footing that supports the foundation wall or the interior finish ground level. Where an interior concrete slab on grade is provided and is in contact with the interior surface of the foundation wall, the unbalanced backfill height shall be permitted to be measured from the exterior finish ground level to the top of the interior concrete slab.

❖ This provision establishes unbalanced backfill height as the difference in height of the exterior and interior finished ground levels. The height of unbalanced backfill quantifies the magnitude of the lateral soil load for the different classifications of soils presented in the prescriptive foundation wall tables. For an illustration of unbalanced backfill height where an interior slab on grade is in contact with the foundation wall, see Commentary Figure 1807.1.2.

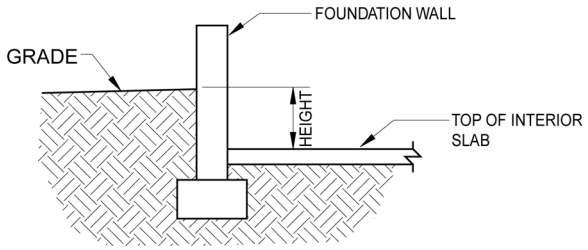

Figure 1807.1.2
UNBALANCED BACKFILL HEIGHT

1807.1.3 Rubble stone foundation walls. Foundation walls of rough or random rubble stone shall not be less than 16 inches (406 mm) thick. Rubble stone shall not be used for foundation walls of structures assigned to *Seismic Design Category* C, D, E or F.

❖ Foundation walls of rough or random rubble stone are limited to a thickness of 16 inches (406 mm). Because of the use of rough stones of irregular size and shape, a larger thickness is required (as compared to concrete or masonry walls) for adequate bonding of the stone and mortar to provide structural stability against soil pressures, as well as protection from water penetration.

1807.1.4 Permanent wood foundation systems. Permanent wood foundation systems shall be designed and installed in accordance with AWC PWF. Lumber and plywood shall be treated in accordance with AWPA U1 (Commodity Specification A, Use Category 4B and Section 5.2) and shall be identified in accordance with Section 2303.1.9.1.

❖ This section covers the design and installation of a multicomponent wood foundation system complying with the specifications of AWC PWF. The construction is essentially a below-grade, load-bearing, wood-frame system that serves as an enclosure for basements and crawl spaces as well as the structural foundation for the support of light-frame structures. According to AWC PWF, such systems are "engineered to support lateral soil pressures as well as

INTERNATIONAL CODE COUNCIL®
Copyright © 2015 ICC. ALL RIGHTS RESERVED. Accessed by David Dammon on Jun 21, 2017 12:30:52 PM pursuant to License Agreement with ICC. No further reproduction or distribution authorized. ANY UNAUTHORIZED REPRODUCTION OR DISTRIBUTION IS A VIOLATION OF THE FEDERAL COPYRIGHT ACT AND THE LICENSE AGREEMENT, AND SUBJECT TO CIVIL AND CRIMINAL PENALTIES THEREUNDER.

dead, live, snow, wind, and seismic loads," where the foundation wall behavior is primary, and vertical load behavior is secondary.

This foundation system consists of several principal components:

1. Walls that consist of plywood panels attached to a wood stud framing system;
2. A composite footing consisting of a continuous wood plate set on a bed of granular materials, such as sand, gravel or crushed stone, which supports the foundation walls and transmits their loads to the bearing soil below;
3. Polyethylene film that serves as a vapor barrier and covers the exterior side of the plywood foundation walls from grade down to the footing plate;
4. Caulking compounds used for sealing joints in plywood walls as well as bonding agents for attaching the polyethylene film to the plywood and for sealing the film joints;
5. Metal fasteners made of silicon, bronze, copper or stainless steel or hot-dipped, zinc-coated steel nails or staples; and
6. Pressure-treated plywood and lumber to protect the foundation material against decay, termites and other insects.

A typical cross section of a wood foundation basement wall is shown in Commentary Figure 1807.1.4.

All plywood and lumber used in the foundation system are required to receive a preservative treatment to protect the material against decay, termites and other insects in accordance with American Wood Preserver's Association (AWPA U1), Specification A, Use Category 4B and Section 5.2. Specification A of AWPA U1 pertains to sawn wood products, while Use Category 4B refers to wood that is in contact with the ground. The additional reference to Section 5.2 incorporates requirements under Specification A that are unique to permanent wood foundations. This section also requires the treated wood to be identified in accordance with Section 2303.1.9.1. See the commentary to that section for a discussion of identification requirements.

Ordinary metal fasteners in contact with preservatives used in the treatment of wood products will corrode over time and can cause serious structural problems. For this reason, AWC PWF prescribes that only fasteners made of silicon bronze, copper or Type

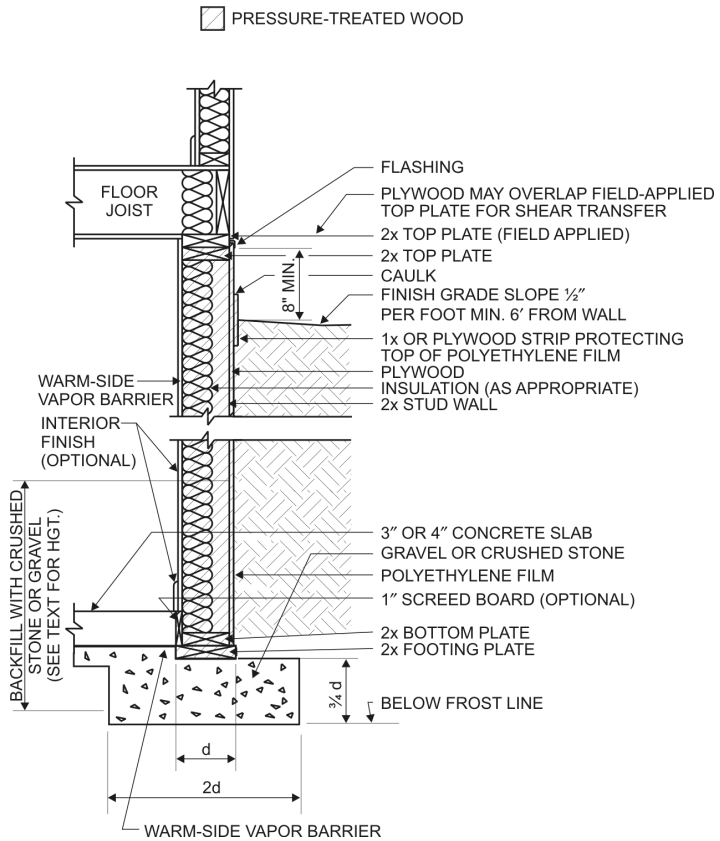

For SI: 1 inch = 25.4 mm, 1 foot = 304.8 mm.

Figure 1807.1.4
WOOD FOUNDATION

INTERNATIONAL CODE COUNCIL®
Copyright © 2015 ICC. ALL RIGHTS RESERVED. Accessed by David Dammon on Jun 21, 2017 12:30:52 PM pursuant to License Agreement with ICC. No further reproduction or distribution authorized. ANY UNAUTHORIZED REPRODUCTION OR DISTRIBUTION IS A VIOLATION OF THE FEDERAL COPYRIGHT ACT AND THE LICENSE AGREEMENT, AND SUBJECT TO CIVIL AND CRIMINAL PENALTIES THEREUNDER.

304 or 316 stainless steel, as defined by the American Iron and Steel Institute (AISI), are permitted to be used in a wood foundation system. Hot-dipped, zinc-coated steel nails are permitted to be used in a wood foundation system when installed in accordance with the specific conditions contained in AWC PWF for the surface treatment of nails and moisture protection of the foundation.

Certain cold-weather precautions should be taken when installing a wood foundation system. The composite footing consisting of a wood plate supported on a bed of stone or sand fill should not be placed on frozen ground. While the bottom of the wood plate footing would normally be placed below the frost line (i.e., basement construction), under certain drainage conditions AWC PWF permits the wood plate to be set above the frost line level. The building official should ascertain that such an alternative design satisfies the intent of the code. Most important is the use of proper sealants during very cold weather. All manufacturers of sealants and bonding agents impose temperature restrictions on the use of their products. Only sealants and bonding agents specifically produced for cold-weather conditions should be used. This is an important consideration since sealants are a factor in verifying the water-tight integrity of the foundation installation.

The wood foundation system is an innovative design consisting of many parts and several kinds of materials. It can be expected to perform satisfactorily as a foundation for light construction only if the comprehensive provisions and recommendations of AWC PWF are strictly followed.

1807.1.5 Concrete and masonry foundation walls. Concrete and masonry foundation walls shall be designed in accordance with Chapter 19 or 21, as applicable.

Exception: Concrete and masonry foundation walls shall be permitted to be designed and constructed in accordance with Section 1807.1.6.

❖ Foundation walls are usually designed and constructed in accordance with accepted engineering practices to carry vertical loads from the structure above, resist wind and any lateral forces transmitted to the foundations and sustain earth pressures exerted against the walls, including any forces that may be imposed by frost action. For reinforced and plain concrete, the physical properties and design criteria are provided in Chapter 19. For masonry construction, the physical properties and design criteria are provided in Chapter 21. An exception permits the use of prescriptive foundation walls when the applicable limitations are met.

1807.1.6 Prescriptive design of concrete and masonry foundation walls. Concrete and masonry foundation walls that are laterally supported at the top and bottom shall be permitted to be designed and constructed in accordance with this section.

❖ This section allows prescriptive design of concrete or masonry foundation walls that are primarily intended for, but not necessarily limited to, basement construction in residential and light commercial buildings or other light structures. For the actual load limit on these prescriptive concrete and masonry foundation walls, see Section 1807.1.6.2, Item 7, and Section 1807.1.6.3, Item 8, respectively. Since the designs in the tables are only applicable to foundation walls that are laterally supported at the top and bottom, foundation walls that are not laterally supported at the top and bottom must be designed as described in Section 1807.1.5.

1807.1.6.1 Foundation wall thickness. The thickness of prescriptively designed foundation walls shall not be less than the thickness of the wall supported, except that foundation walls of at least 8-inch (203 mm) nominal width shall be permitted to support brick-veneered frame walls and 10-inch-wide (254 mm) cavity walls provided the requirements of Section 1807.1.6.2 or 1807.1.6.3 are met.

❖ The minimum thicknesses in this section are to facilitate the support of the wall above grade. The thickness requirements in this section are empirical and have been used successfully for many years.

1807.1.6.2 Concrete foundation walls. Concrete foundation walls shall comply with the following:

1. The thickness shall comply with the requirements of Table 1807.1.6.2.
2. The size and spacing of vertical reinforcement shown in Table 1807.1.6.2 are based on the use of reinforcement with a minimum yield strength of 60,000 pounds per square inch (psi) (414 MPa).Vertical reinforcement with a minimum yield strength of 40,000 psi (276 MPa) or 50,000 psi (345 MPa) shall be permitted, provided the same size bar is used and the spacing shown in the table is reduced by multiplying the spacing by 0.67 or 0.83, respectively.
3. Vertical reinforcement, when required, shall be placed nearest the inside face of the wall a distance, d, from the outside face (soil face) of the wall. The distance, d, is equal to the wall thickness, t, minus 1.25 inches (32 mm) plus one-half the bar diameter, d_b, [$d = t - (1.25 + d_b / 2)$]. The reinforcement shall be placed within a tolerance of $\pm\ ^3/_8$ inch (9.5 mm) where d is less than or equal to 8 inches (203 mm) or $\pm\ ^1/_2$ inch (12.7 mm) where d is greater than 8 inches (203 mm).
4. In lieu of the reinforcement shown in Table 1807.1.6.2, smaller reinforcing bar sizes with closer spacings that provide an equivalent cross-sectional area of reinforcement per unit length shall be permitted.
5. Concrete cover for reinforcement measured from the inside face of the wall shall not be less than $^3/_4$ inch (19.1 mm). Concrete cover for reinforcement measured from the outside face of the wall shall not be less than $1^1/_2$ inches (38 mm) for No. 5 bars and smaller, and not less than 2 inches (51 mm) for larger bars.
6. Concrete shall have a specified compressive strength, f'_c, of not less than 2,500 psi (17.2 MPa).

INTERNATIONAL CODE COUNCIL®
Copyright © 2015 ICC. ALL RIGHTS RESERVED. Accessed by David Dammon on Jun 21, 2017 12:30:52 PM pursuant to License Agreement with ICC. No further reproduction or distribution authorized. ANY UNAUTHORIZED REPRODUCTION OR DISTRIBUTION IS A VIOLATION OF THE FEDERAL COPYRIGHT ACT AND THE LICENSE AGREEMENT, AND SUBJECT TO CIVIL AND CRIMINAL PENALTIES THEREUNDER.

7. The unfactored axial load per linear foot of wall shall not exceed $1.2\,t\,f'_c$ where t is the specified wall thickness in inches.

❖ The section contains the limitations on construction details and material properties that are needed to utilize the prescriptive designs of Table 1807.1.6.2 for concrete foundation walls. The concrete wall thickness and reinforcing (if any) must be as shown in Table 1807.1.6.2, based on the wall's height and depth of any supported backfill as well as the applicable lateral soil pressure.

The minimum required concrete strength is given as well as the yield strength of reinforcement steel that was used as the basis for the tabulated vertical reinforcement. The use of other grades of reinforcing steel is permitted provided the appropriate adjustment is made to the spacing of the vertical bars.

TABLE 1807.1.6.2. See below.

❖ The wall thickness and, where required, the size and spacing of reinforcing bars in the table are based on the design requirements from ACI 318.

Design lateral soil pressures correspond to those for some, but not all, of the soils that are tabulated in Table 1610.1. Section 1610.1 requires that the Table 1610.1 lateral pressures be used unless other values are substantiated by a geotechnical investigation. Note d coordinates with requirements in Section 1610.1. Generally, foundation walls that are restrained at the top must be designed for at-rest lateral soil loads. An exception permits the use of active pressures for designing walls that are no more than 8 feet (2438 mm) in height and are supported at the top by a flexible diaphragm. Note that in Table 1610.1, the minimum at-rest design lateral load is 60 psf per foot (2873 Pa/mm) of depth. Depending on the soil's classification (see Table 1610.1), the prescriptive foundation wall table does not apply to soils with design lateral pressures exceeding 60 psf per foot (2873 Pa/mm) of depth.

Footnote c explains that "PC" as used in this table means "plain concrete," but it actually indicates that no vertical reinforcing is required. The term is not to

TABLE 1807.1.6.2
CONCRETE FOUNDATION WALLS[b, c]

MAXIMUM WALL HEIGHT (feet)	MAXIMUM UNBALANCED BACKFILL HEIGHT[e] (feet)	MINIMUM VERTICAL REINFORCEMENT-BAR SIZE AND SPACING (inches)								
		Design lateral soil load[a] (psf per foot of depth)								
		30[d]			45[d]			60		
		Minimum wall thickness (inches)								
		7.5	9.5	11.5	7.5	9.5	11.5	7.5	9.5	11.5
5	4	PC	PC	PC	PC	PC	PC	PC	PC	PC
	5	PC	PC	PC	PC	PC	PC	PC	PC	PC
6	4	PC	PC	PC	PC	PC	PC	PC	PC	PC
	5	PC	PC	PC	PC	PC	PC	PC	PC	PC
	6	PC	PC	PC	PC	PC	PC	PC	PC	PC
7	4	PC	PC	PC	PC	PC	PC	PC	PC	PC
	5	PC	PC	PC	PC	PC	PC	PC	PC	PC
	6	PC	PC	PC	PC	PC	PC	#5 at 48	PC	PC
	7	PC	PC	PC	#5 at 46	PC	PC	#6 at 48	PC	PC
8	4	PC	PC	PC	PC	PC	PC	PC	PC	PC
	5	PC	PC	PC	PC	PC	PC	PC	PC	PC
	6	PC	PC	PC	PC	PC	PC	#5 at 43	PC	PC
	7	PC	PC	PC	#5 at 41	PC	PC	#6 at 43	PC	PC
	8	#5 at 47	PC	PC	#6 at 43	PC	PC	#6 at 32	#6 at 44	PC
9	4	PC	PC	PC	PC	PC	PC	PC	PC	PC
	5	PC	PC	PC	PC	PC	PC	PC	PC	PC
	6	PC	PC	PC	PC	PC	PC	#5 at 39	PC	PC
	7	PC	PC	PC	#5 at 37	PC	PC	#6 at 38	#5 at 37	PC
	8	#5 at 41	PC	PC	#6 at 38	#5 at 37	PC	#7 at 39	#6 at 39	#4 at 48
	9[d]	#6 at 46	PC	PC	#7 at 41	#6 at 41	PC	#7 at 31	#7 at 41	#6 at 39
10	4	PC	PC	PC	PC	PC	PC	PC	PC	PC
	5	PC	PC	PC	PC	PC	PC	PC	PC	PC
	6	PC	PC	PC	PC	PC	PC	#5 at 37	PC	PC
	7	PC	PC	PC	#6 at 48	PC	PC	#6 at 35	#6 at 48	PC
	8	#5 at 38	PC	PC	#7 at 47	#6 at 47	PC	#7 at 35	#7 at 47	#6 at 45
	9[d]	#6 at 41	#4 at 48	PC	#7 at 37	#7 at 48	#4 at 48	#6 at 22	#7 at 37	#7 at 47
	10[d]	#7 at 45	#6 at 45	PC	#7 at 31	#7 at 40	#6 at 38	#6 at 22	#7 at 30	#7 at 38

For SI: 1 inch = 25.4 mm, 1 foot = 304.8 mm, 1 pound per square foot per foot = 0.157 kPa/m.

a. For design lateral soil loads, see Section 1610.

b. Provisions for this table are based on design and construction requirements specified in Section 1807.1.6.2.

c. "PC" means plain concrete.

d. Where unbalanced backfill height exceeds 8 feet and design lateral soil loads from Table 1610.1 are used, the requirements for 30 and 45 psf per foot of depth are not applicable (see Section 1610).

e. For height of unbalanced backfill, see Section 1807.1.2.

INTERNATIONAL CODE COUNCIL®
Copyright © 2015 ICC. ALL RIGHTS RESERVED. Accessed by David Dammon on Jun 21, 2017 12:30:52 PM pursuant to License Agreement with ICC. No further reproduction or distribution authorized. ANY UNAUTHORIZED REPRODUCTION OR DISTRIBUTION IS A VIOLATION OF THE FEDERAL COPYRIGHT ACT AND THE LICENSE AGREEMENT, AND SUBJECT TO CIVIL AND CRIMINAL PENALTIES THEREUNDER.

be misconstrued with the more general use of the term "plain concrete" in ACI 318, Chapter 19, as well as Section 1807.1.6.2.1.

1807.1.6.2.1 Seismic requirements. Based on the *seismic design category* assigned to the structure in accordance with Section 1613, concrete foundation walls designed using Table 1807.1.6.2 shall be subject to the following limitations:

1. *Seismic Design Categories* A and B. Not less than one No. 5 bar shall be provided around window, door and similar sized openings. The bar shall be anchored to develop f_y in tension at the corners of openings.
2. *Seismic Design Categories* C, D, E and F. Tables shall not be used except as allowed for plain concrete members in Section 1905.1.7.

❖ For structures classified as either Seismic Design Category A or B, the prescriptive concrete foundation wall Table 1807.1.6.2 applies along with the provisions stated in Item 1 of this section. For other seismic design categories, the use of the prescriptive concrete foundation wall Table 1807.1.6.2 is limited by Section 1905.1.8. That section allows the use of plain concrete foundation walls (i.e., walls that do not comply with the ACI 318 definition of "reinforced concrete") in one- and two-family dwellings.

1807.1.6.3 Masonry foundation walls. Masonry foundation walls shall comply with the following:

1. The thickness shall comply with the requirements of Table 1807.1.6.3(1) for plain masonry walls or Table 1807.1.6.3(2), 1807.1.6.3(3) or 1807.1.6.3(4) for masonry walls with reinforcement.
2. Vertical reinforcement shall have a minimum yield strength of 60,000 psi (414 MPa).
3. The specified location of the reinforcement shall equal or exceed the effective depth distance, *d*, noted in Tables 1807.1.6.3(2), 1807.1.6.3(3) and 1807.1.6.3(4) and shall be measured from the face of the exterior (soil) side of the wall to the center of the vertical reinforcement. The reinforcement shall be placed within the tolerances specified in TMS 602/ ACI 530.1/ASCE 6, Article 3.4.B.11, of the specified location.
4. Grout shall comply with Section 2103.3.
5. Concrete masonry units shall comply with ASTM C90.
6. Clay masonry units shall comply with ASTM C652 for hollow brick, except compliance with ASTM C62 or ASTM C216 shall be permitted where solid masonry units are installed in accordance with Table 1807.1.6.3(1) for plain masonry.
7. Masonry units shall be laid in running bond and installed with Type M or S mortar in accordance with Section 2103.2.1.
8. The unfactored axial load per linear foot of wall shall not exceed $1.2\,t\,f'_m$ where t is the specified wall thickness in inches and f'_m is the specified compressive strength of masonry in pounds per square inch.
9. At least 4 inches (102 mm) of solid masonry shall be provided at girder supports at the top of hollow masonry unit foundation walls.
10. Corbeling of masonry shall be in accordance with Section 2104.1. Where an 8-inch (203 mm) wall is corbeled, the top corbel shall not extend higher than the bottom of the floor framing and shall be a full course of headers at least 6 inches (152 mm) in length or the top course bed joint shall be tied to the vertical wall projection. The tie shall be W2.8 (4.8 mm) and spaced at a maximum horizontal distance of 36 inches (914 mm). The hollow space behind the corbelled masonry shall be filled with mortar or grout.

❖ This section contains the limitations on construction details and material properties that are needed to utilize the prescriptive designs of Tables 1807.1.6.3(1) through 1807.1.6.3(4) for masonry foundation walls.

Item 3 provides specific placement requirements regarding the location of reinforcement in connection with Tables 1807.1.6.3(2) through 1807.1.6.3(4). This dimension is necessary so that the wall is capable of developing the required bending capacity to resist the lateral soil loads.

Where corbeling is utilized to match the width of a masonry cavity wall above, Item 10 directs the reader to the appropriate requirements in Chapter 21. A header course is provided at the corbel to transfer the load deeper into the supporting wall. An alternative to the header utilizes a filled collar joint and ties to accomplish this load transfer. This option is illustrated in Commentary Figure 1807.1.6.3.

TABLE 1807.1.6.3(1). See page 18-26.

❖ This table provides wall thickness designs for various wall heights and unbalanced backfill depths. The thicknesses in the table are proportional to the lateral soil loads for each classification of soils. The lateral soil loads in the table are consistent with some of the soil loads in Table 1610.1.

The thicknesses in the table for plain masonry are based on research by the National Concrete Masonry Association (NCMA) in the report *Research Evaluation of the Flexural Strength of Concrete Masonry*, Project No. 93-172, December 7, 1993.

Footnote f provides a caution related to the applicability of 30 and 45 psf (1.43 and 2.156 kPa) design lateral soil loads. Section 1610.1 requires that foundation walls be designed for at-rest pressures, except foundation walls up to 8 feet (2438 mm) in height that are supported at the top by a flexible diaphragm. Where lateral soil loads from Table 1610.1 are used, the values of 30 and 45 psf (1.43 and 2.156 kPa) occur only for active pressure. Therefore, where both of these conditions apply, the prescriptive design table entries for 30 and 45 psf (1.43 and 2.156 kPa) cannot be used.

INTERNATIONAL CODE COUNCIL®
Copyright © 2015 ICC. ALL RIGHTS RESERVED. Accessed by David Dammon on Jun 21, 2017 12:30:52 PM pursuant to License Agreement with ICC. No further reproduction or distribution authorized. ANY UNAUTHORIZED REPRODUCTION OR DISTRIBUTION IS A VIOLATION OF THE FEDERAL COPYRIGHT ACT AND THE LICENSE AGREEMENT, AND SUBJECT TO CIVIL AND CRIMINAL PENALTIES THEREUNDER.

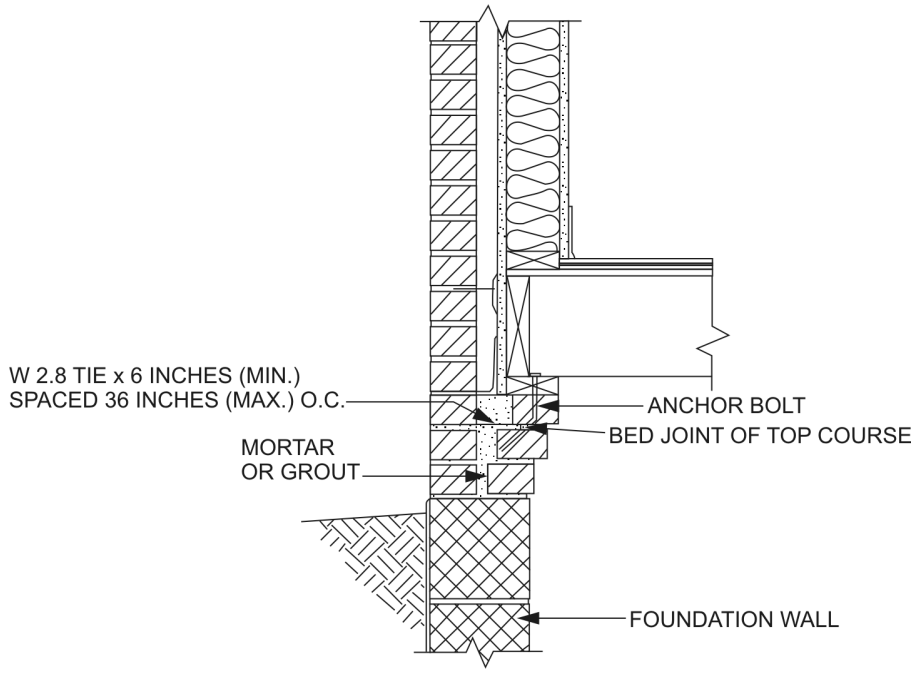

For SI: 1 inch = 25.4 mm.

Figure 1807.1.6.3
TIE AT TOP COURSE BED JOINT

TABLE 1807.1.6.3(1)
PLAIN MASONRY FOUNDATION WALLS[a, b, c]

MAXIMUM WALL HEIGHT (feet)	MAXIMUM UNBALANCED BACKFILL HEIGHT[e] (feet)	MINIMUM NOMINAL WALL THICKNESS (inches)		
		Design lateral soil load[a] (psf per foot of depth)		
		30[f]	45[f]	60
7	4 (or less) 5 6 7	8 8 10 12	8 10 12 10 (solid[c])	8 10 10 (solid[c]) 10 (solid[c])
8	4 (or less) 5 6 7 8	8 8 10 12 10 (solid[c])	8 10 12 12 (solid[c]) 12 (solid[c])	8 12 12 (solid[c]) Note d Note d
9	4 (or less) 5 6 7 8 9[f]	8 8 12 12 (solid[c]) 12 (solid[c]) Note d	8 10 12 12 (solid[c]) Note d Note d	8 12 12 (solid[c]) Note d Note d Note d

For SI: 1 inch = 25.4 mm, 1 foot = 304.8 mm, 1 pound per square foot per foot = 0.157 kPa/m.

a. For design lateral soil loads, see Section 1610.
b. Provisions for this table are based on design and construction requirements specified in Section 1807.1.6.3.
c. Solid grouted hollow units or solid masonry units.
d. A design in compliance with Chapter 21 or reinforcement in accordance with Table 1807.1.6.3(2) is required.
e. For height of unbalanced backfill, see Section 1807.1.2.
f. Where unbalanced backfill height exceeds 8 feet and design lateral soil loads from Table 1610.1 are used, the requirements for 30 and 45 psf per foot of depth are not applicable (see Section 1610).

INTERNATIONAL CODE COUNCIL®
Copyright © 2015 ICC. ALL RIGHTS RESERVED. Accessed by David Dammon on Jun 21, 2017 12:30:52 PM pursuant to License Agreement with ICC. No further reproduction or distribution authorized. ANY UNAUTHORIZED REPRODUCTION OR DISTRIBUTION IS A VIOLATION OF THE FEDERAL COPYRIGHT ACT AND THE LICENSE AGREEMENT, AND SUBJECT TO CIVIL AND CRIMINAL PENALTIES THEREUNDER.

TABLE 1807.1.6.3(2). See below.

❖ For general comments regarding this table, see the commentary to Table 1807.1.6.3(1). The reinforcement size and spacing in the table are based on the design requirements from TMS 402/ACI 530/ASCE 5.

Three different tables are provided for three distinct values of effective depth, d. For an explanation of the effective depth, see the commentary to Section 1807.1.6.3.

TABLE 1807.1.6.3(3). See page 18-28.

❖ See the commentary to Table 1807.1.6.3(2).

TABLE 1807.1.6.3(4). See page 18-29.

❖ See the commentary to Table 1807.1.6.3(2).

1807.1.6.3.1 Alternative foundation wall reinforcement. In lieu of the reinforcement provisions for masonry foundation walls in Table 1807.1.6.3(2), 1807.1.6.3(3) or 1807.1.6.3(4), alternative reinforcing bar sizes and spacings having an equivalent cross-sectional area of reinforcement per linear foot (mm) of wall shall be permitted to be used, provided the spacing of reinforcement does not exceed 72 inches (1829 mm) and reinforcing bar sizes do not exceed No. 11.

❖ The purpose of this section is to provide an alternative for the reinforcement requirements in Tables 1807.1.6.3(2), 1807.1.6.3(3) and 1807.1.6.3(4) that would result in the same capacity for lateral soil load resistance. For example, if No. 5 reinforcement bars were installed where the table indicates No. 4 at 48 inches (1219 mm) on center (o.c.), the spacing of the No. 5 bars for equivalent reinforcement area per foot of wall would be 72 inches (1829 mm) o.c. The increase in spacing would be allowed, since the cross-sectional area of a No. 5 bar is approximately 50 percent higher than a No. 4 reinforcement bar.

TABLE 1807.1.6.3(2)
8-INCH MASONRY FOUNDATION WALLS WITH REINFORCEMENT WHERE d ≥ 5 INCHES[a, b, c]

MAXIMUM WALL HEIGHT (feet-inches)	MAXIMUM UNBALANCED BACKFILL HEIGHT[d] (feet-inches)	MINIMUM VERTICAL REINFORCEMENT-BAR SIZE AND SPACING (inches)		
		Design lateral soil load[a] (psf per foot of depth)		
		30[e]	45[e]	60
7-4	4-0 (or less)	#4 at 48	#4 at 48	#4 at 48
	5-0	#4 at 48	#4 at 48	#4 at 48
	6-0	#4 at 48	#5 at 48	#5 at 48
	7-4	#5 at 48	#6 at 48	#7 at 48
8-0	4-0 (or less)	#4 at 48	#4 at 48	#4 at 48
	5-0	#4 at 48	#4 at 48	#4 at 48
	6-0	#4 at 48	#5 at 48	#5 at 48
	7-0	#5 at 48	#6 at 48	#7 at 48
	8-0	#5 at 48	#6 at 48	#7 at 48
8-8	4-0 (or less)	#4 at 48	#4 at 48	#4 at 48
	5-0	#4 at 48	#4 at 48	#5 at 48
	6-0	#4 at 48	#5 at 48	#6 at 48
	7-0	#5 at 48	#6 at 48	#7 at 48
	8-8[e]	#6 at 48	#7 at 48	#8 at 48
9-4	4-0 (or less)	#4 at 48	#4 at 48	#4 at 48
	5-0	#4 at 48	#4 at 48	#5 at 48
	6-0	#4 at 48	#5 at 48	#6 at 48
	7-0	#5 at 48	#6 at 48	#7 at 48
	8-0	#6 at 48	#7 at 48	#8 at 48
	9-4[e]	#7 at 48	#8 at 48	#9 at 48
10-0	4-0 (or less)	#4 at 48	#4 at 48	#4 at 48
	5-0	#4 at 48	#4 at 48	#5 at 48
	6-0	#4 at 48	#5 at 48	#6 at 48
	7-0	#5 at 48	#6 at 48	#7 at 48
	8-0	#6 at 48	#7 at 48	#8 at 48
	9-0[e]	#7 at 48	#8 at 48	#9 at 48
	10-0[e]	#7 at 48	#9 at 48	#9 at 48

For SI: 1 inch = 25.4 mm, 1 foot = 304.8 mm, 1 pound per square foot per foot = 0.157 kPa/m.

a. For design lateral soil loads, see Section 1610.

b. Provisions for this table are based on design and construction requirements specified in Section 1807.1.6.3.

c. For alternative reinforcement, see Section 1807.1.6.3.1.

d. For height of unbalanced backfill, see Section 1807.1.2.

e. Where unbalanced backfill height exceeds 8 feet and design lateral soil loads from Table 1610.1 are used, the requirements for 30 and 45 psf per foot of depth are not applicable. See Section 1610.

INTERNATIONAL CODE COUNCIL®
Copyright © 2015 ICC. ALL RIGHTS RESERVED. Accessed by David Dammon on Jun 21, 2017 12:30:52 PM pursuant to License Agreement with ICC. No further reproduction or distribution authorized. ANY UNAUTHORIZED REPRODUCTION OR DISTRIBUTION IS A VIOLATION OF THE FEDERAL COPYRIGHT ACT AND THE LICENSE AGREEMENT, AND SUBJECT TO CIVIL AND CRIMINAL PENALTIES THEREUNDER.

TABLE 1807.1.6.3(3)
10-INCH MASONRY FOUNDATION WALLS WITH REINFORCEMENT WHERE d ≥ 6.75 INCHES [a, b, c]

MAXIMUM WALL HEIGHT (feet-inches)	MAXIMUM UNBALANCED BACKFILL HEIGHT[d] (feet-inches)	MINIMUM VERTICAL REINFORCEMENT-BAR SIZE AND SPACING (inches)		
		Design lateral soil load[a] (psf per foot of depth)		
		30[e]	45[e]	60
7-4	4-0 (or less)	#4 at 56	#4 at 56	#4 at 56
	5-0	#4 at 56	#4 at 56	#4 at 56
	6-0	#4 at 56	#4 at 56	#5 at 56
	7-4	#4 at 56	#5 at 56	#6 at 56
8-0	4-0 (or less)	#4 at 56	#4 at 56	#4 at 56
	5-0	#4 at 56	#4 at 56	#4 at 56
	6-0	#4 at 56	#4 at 56	#5 at 56
	7-0	#4 at 56	#5 at 56	#6 at 56
	8-0	#5 at 56	#6 at 56	#7 at 56
8-8	4-0 (or less)	#4 at 56	#4 at 56	#4 at 56
	5-0	#4 at 56	#4 at 56	#4 at 56
	6-0	#4 at 56	#4 at 56	#5 at 56
	7-0	#4 at 56	#5 at 56	#6 at 56
	8-8[e]	#5 at 56	#7 at 56	#8 at 56
9-4	4-0 (or less)	#4 at 56	#4 at 56	#4 at 56
	5-0	#4 at 56	#4 at 56	#4 at 56
	6-0	#4 at 56	#5 at 56	#5 at 56
	7-0	#4 at 56	#5 at 56	#6 at 56
	8-0	#5 at 56	#6 at 56	#7 at 56
	9-4[e]	#6 at 56	#7 at 56	#7 at 56
10-0	4-0 (or less)	#4 at 56	#4 at 56	#4 at 56
	5-0	#4 at 56	#4 at 56	#4 at 56
	6-0	#4 at 56	#5 at 56	#5 at 56
	7-0	#5 at 56	#6 at 56	#7 at 56
	8-0	#5 at 56	#7 at 56	#8 at 56
	9-0[e]	#6 at 56	#7 at 56	#9 at 56
	10-0[e]	#7 at 56	#8 at 56	#9 at 56

For SI: 1 inch = 25.4 mm, 1 foot = 304.8 mm, 1 pound per square foot per foot = 1.157 kPa/m.

a. For design lateral soil loads, see Section 1610.

b. Provisions for this table are based on design and construction requirements specified in Section 1807.1.6.3.

c. For alternative reinforcement, see Section 1807.1.6.3.1.

d. For height of unbalanced backfill, see Section 1807.1.2.

e. Where unbalanced backfill height exceeds 8 feet and design lateral soil loads from Table 1610.1 are used, the requirements for 30 and 45 psf per foot of depth are not applicable. See Section 1610.

INTERNATIONAL CODE COUNCIL®
Copyright © 2015 ICC. ALL RIGHTS RESERVED. Accessed by David Dammon on Jun 21, 2017 12:30:52 PM pursuant to License Agreement with ICC. No further reproduction or distribution authorized. ANY UNAUTHORIZED REPRODUCTION OR DISTRIBUTION IS A VIOLATION OF THE FEDERAL COPYRIGHT ACT AND THE LICENSE AGREEMENT, AND SUBJECT TO CIVIL AND CRIMINAL PENALTIES THEREUNDER.

TABLE 1807.1.6.3(4)
12-INCH MASONRY FOUNDATION WALLS WITH REINFORCEMENT WHERE d ≥ 8.75 INCHES[a, b, c]

MAXIMUM WALL HEIGHT (feet-inches)	MAXIMUM UNBALANCED BACKFILL HEIGHT[d] (feet-inches)	MINIMUM VERTICAL REINFORCEMENT-BAR SIZE AND SPACING (inches)		
		Design lateral soil load[a] (psf per foot of depth)		
		30[e]	45[e]	60
7-4	4 (or less)	#4 at 72	#4 at 72	#4 at 72
	5-0	#4 at 72	#4 at 72	#4 at 72
	6-0	#4 at 72	#4 at 72	#5 at 72
	7-4	#4 at 72	#5 at 72	#6 at 72
8-0	4 (or less)	#4 at 72	#4 at 72	#4 at 72
	5-0	#4 at 72	#4 at 72	#4 at 72
	6-0	#4 at 72	#4 at 72	#5 at 72
	7-0	#4 at 72	#5 at 72	#6 at 72
	8-0	#5 at 72	#6 at 72	#8 at 72
8-8	4 (or less)	#4 at 72	#4 at 72	#4 at 72
	5-0	#4 at 72	#4 at 72	#4 at 72
	6-0	#4 at 72	#4 at 72	#5 at 72
	7-0	#4 at 72	#5 at 72	#6 at 72
	8-8[e]	#5 at 72	#7 at 72	#8 at 72
9-4	4 (or less)	#4 at 72	#4 at 72	#4 at 72
	5-0	#4 at 72	#4 at 72	#4 at 72
	6-0	#4 at 72	#5 at 72	#5 at 72
	7-0	#4 at 72	#5 at 72	#6 at 72
	8-0	#5 at 72	#6 at 72	#7 at 72
	9-4[e]	#6 at 72	#7 at 72	#8 at 72
10-0	4 (or less)	#4 at 72	#4 at 72	#4 at 72
	5-0	#4 at 72	#4 at 72	#4 at 72
	6-0	#4 at 72	#5 at 72	#5 at 72
	7-0	#4 at 72	#6 at 72	#6 at 72
	8-0	#5 at 72	#6 at 72	#7 at 72
	9-0[e]	#6 at 72	#7 at 72	#8 at 72
	10-0[e]	#7 at 72	#8 at 72	#9 at 72

For SI: 1 inch = 25.4 mm, 1 foot = 304.8 mm, 1 pound per square foot per foot = 0.157 kPa/m.

a. For design lateral soil loads, see Section 1610.

b. Provisions for this table are based on design and construction requirements specified in Section 1807.1.6.3.

c. For alternative reinforcement, see Section 1807.1.6.3.1.

d. For height of unbalanced backfill, see Section 1807.1.2.

e Where unbalanced backfill height exceeds 8 feet and design lateral soil loads from Table 1610.1 are used, the requirements for 30 and 45 psf per foot of depth are not applicable. See Section 1610.

INTERNATIONAL CODE COUNCIL®
Copyright © 2015 ICC. ALL RIGHTS RESERVED. Accessed by David Dammon on Jun 21, 2017 12:30:52 PM pursuant to License Agreement with ICC. No further reproduction or distribution authorized. ANY UNAUTHORIZED REPRODUCTION OR DISTRIBUTION IS A VIOLATION OF THE FEDERAL COPYRIGHT ACT AND THE LICENSE AGREEMENT, AND SUBJECT TO CIVIL AND CRIMINAL PENALTIES THEREUNDER.

1807.1.6.3.2 Seismic requirements. Based on the *seismic design category* assigned to the structure in accordance with Section 1613, masonry foundation walls designed using Tables 1807.1.6.3(1) through 1807.1.6.3(4) shall be subject to the following limitations:

1. *Seismic Design Categories* A and B. No additional seismic requirements.
2. *Seismic Design Category* C. A design using Tables 1807.1.6.3(1) through 1807.1.6.3(4) is subject to the seismic requirements of Section 7.4.3 of TMS 402/ACI 530/ASCE 5.
3. *Seismic Design Category* D. A design using Tables 1807.1.6.3(2) through 1807.1.6.3(4) is subject to the seismic requirements of Section 7.4.4 of TMS 402/ACI 530/ASCE 5.
4. *Seismic Design Categories* E and F. A design using Tables 1807.1.6.3(2) through 1807.1.6.3(4) is subject to the seismic requirements of Section 7.4.5 of TMS 402/ACI 530/ASCE 5.

❖ For structures classified as either Seismic Design Category A or B, the prescriptive masonry foundation wall tables apply without further requirements. For all other seismic design categories, the use of these prescriptive tables is limited by the referenced code sections. For structures classified as Seismic Design Categories D or higher, only the tables that require reinforcement can be used.

1807.2 Retaining walls. Retaining walls shall be designed in accordance with Sections 1807.2.1 through 1807.2.3.

❖ This section provides design considerations for a retaining wall.

1807.2.1 General. Retaining walls shall be designed to ensure stability against overturning, sliding, excessive foundation pressure and water uplift. Where a keyway is extended below the wall base with the intent to engage passive pressure and enhance sliding stability, lateral soil pressures on both sides of the keyway shall be considered in the sliding analysis.

❖ This provision for retaining wall analyses is intended to provide guidance on the considerations that are appropriate for retaining wall design. Designs for retaining walls with keyways should account for the driving pressures acting on the keyway. Since there are indications that these are at times overlooked, this provision clarifies that such forces must be considered.

1807.2.2 Design lateral soil loads. Retaining walls shall be designed for the lateral soil loads set forth in Section 1610.

❖ Section 1610.1 requires that the Table 1610.1 lateral pressures be used unless other values are substantiated by a geotechnical investigation. The lateral pressure of the soil against the retaining wall is greatly influenced by soil moisture. Backfill is usually kept from being saturated for an extended length of time by placing drains near the base of the retaining wall to remove the water in the soil behind it.

1807.2.3 Safety factor. Retaining walls shall be designed to resist the lateral action of soil to produce sliding and overturning with a minimum safety factor of 1.5 in each case. The load combinations of Section 1605 shall not apply to this requirement. Instead, design shall be based on 0.7 times nominal earthquake loads, 1.0 times other *nominal loads*, and investigation with one or more of the variable loads set to zero. The safety factor against lateral sliding shall be taken as the available soil resistance at the base of the retaining wall foundation divided by the net lateral force applied to the retaining wall.

Exception: Where earthquake loads are included, the minimum safety factor for retaining wall sliding and overturning shall be 1.1.

❖ The safety factor for stability of retaining walls predates the development of load combinations. This section clarifies that load combinations do not apply when evaluating the stability of retaining walls under sliding and overturning.

1807.3 Embedded posts and poles. Designs to resist both axial and lateral loads employing posts or poles as columns embedded in earth or in concrete footings in earth shall be in accordance with Sections 1807.3.1 through 1807.3.3.

❖ The criteria in this section apply to the lateral resistance of posts or poles embedded either directly in earth or in a concrete footing. They were originally developed to reduce the complexity of analyzing the soil-structure interaction, thereby facilitating the design of cantilevered poles used to support outdoor advertising. While more accurate methods are available for determining the resistance of posts or poles to axial and lateral loads, the other methods are much more complex, and the results do not differ significantly from this method.

1807.3.1 Limitations. The design procedures outlined in this section are subject to the following limitations:

1. The frictional resistance for structural walls and slabs on silts and clays shall be limited to one-half of the normal force imposed on the soil by the weight of the footing or slab.
2. Posts embedded in earth shall not be used to provide lateral support for structural or nonstructural materials such as plaster, masonry or concrete unless bracing is provided that develops the limited deflection required.

Wood poles shall be treated in accordance with AWPA U1 for sawn timber posts (Commodity Specification A, Use Category 4B) and for round timber posts (Commodity Specification B, Use Category 4B).

❖ The limitations imposed by this section are intended to address both structural stability and serviceability. The limitation of the frictional resistance for structural walls and slabs on silts and clays is consistent with Section 1806.3 and Table 1806.2, which also limit the sliding resistance to one-half the dead load. The limitations on the types of construction materials that utilize lateral support of poles are based on the brittle nature of the materials. In order to prevent excessive

INTERNATIONAL CODE COUNCIL®
Copyright © 2015 ICC. ALL RIGHTS RESERVED. Accessed by David Dammon on Jun 21, 2017 12:30:52 PM pursuant to License Agreement with ICC. No further reproduction or distribution authorized. ANY UNAUTHORIZED REPRODUCTION OR DISTRIBUTION IS A VIOLATION OF THE FEDERAL COPYRIGHT ACT AND THE LICENSE AGREEMENT, AND SUBJECT TO CIVIL AND CRIMINAL PENALTIES THEREUNDER.

distortions, which would produce cracking of these brittle materials, this section limits the use of poles unless some type of rigid cross bracing is provided to limit the deflections to those that can be tolerated by the materials.

1807.3.2 Design criteria. The depth to resist lateral loads shall be determined using the design criteria established in Sections 1807.3.2.1 through 1807.3.2.3, or by other methods *approved* by the *building official*.

❖ The design criteria for the use of poles embedded in the ground or in concrete footings in the ground were originally developed in the 1940s. The design criteria address conditions where constraint is provided at the ground surface, such as a rigid floor, and where no constraint is provided. The original design criteria established a $^1/_2$-inch (12.7 mm) lateral pole deformation at the surface of the ground. [Note that where $^1/_2$-inch (12.7 mm) movement can be tolerated, Section 1806.3.4 allows the lateral bearing pressure to be increased.] These criteria were also based on field tests conducted in a range of sandy and gravelly soils and of silts and clays.

1807.3.2.1 Nonconstrained. The following formula shall be used in determining the depth of embedment required to resist lateral loads where no lateral constraint is provided at the ground surface, such as by a rigid floor or rigid ground surface pavement, and where no lateral constraint is provided above the ground surface, such as by a structural diaphragm.

$$d = 0.5A\{1 + [1 + (4.36h/A)]^{1/2}\} \quad \textbf{(Equation 18-1)}$$

where:

A = $2.34P/(S_1b)$.

b = Diameter of round post or footing or diagonal dimension of square post or footing, feet (m).

d = Depth of embedment in earth in feet (m) but not over 12 feet (3658 mm) for purpose of computing lateral pressure.

h = Distance in feet (m) from ground surface to point of application of "P."

P = Applied lateral force in pounds (kN).

S_1 = Allowable lateral soil-bearing pressure as set forth in Section 1806.2 based on a depth of one-third the depth of embedment in pounds per square foot (psf) (kPa).

❖ The required embedment depth for posts or poles that are not restrained at or above the ground surface is determined by Equation 18-1. Nonconstrained conditions include flexible pavements, such as asphalt. The code further restricts the use of this equation to structures that have no lateral support, such as from a floor diaphragm, provided above the ground level. From an analysis standpoint, the embedded pole is free to rotate and translate at the point of load application. The pole rotates about a point below the soil surface, which is where the direction of the passive pressure on the embedded pole changes direction.

Determining the minimum embedment depth of a vertical member resisting lateral loads requires two steps:

1. Assuming an embedment depth, calculate the soil pressure that the embedded member imposes on the soil; and
2. Compare the calculated pressure to an allowable lateral soil bearing pressure.

This two-step process is expressed as a single trial and-error equation, which requires an iterative process to arrive at a satisfactory depth of embedment.

Note that the allowable lateral soil bearing pressure is in accordance with Section 1806.2. This includes increases permitted in Section 1806.3.4. In particular, the allowable lateral bearing values can be doubled for poles supporting structures that can tolerate 0.5 inches (12.7 mm) of movement at the ground surface—generally considered applicable to isolated poles.

1807.3.2.2 Constrained. The following formula shall be used to determine the depth of embedment required to resist lateral loads where lateral constraint is provided at the ground surface, such as by a rigid floor or pavement.

$$d = \sqrt{\frac{4.25Ph}{S_3b}} \quad \textbf{(Equation 18-2)}$$

or alternatively

$$d = \sqrt{\frac{4.25M_g}{S_3b}} \quad \textbf{(Equation 18-3)}$$

where:

M_g = Moment in the post at grade, in foot-pounds (kN-m).

S_3 = Allowable lateral soil-bearing pressure as set forth in Section 1806.2 based on a depth equal to the depth of embedment in pounds per square foot (kPa).

❖ The required embedment depth for posts or poles that are restrained at the ground surface is determined by Equation 18-2 or 18-3. A constrained post has stiff resistance at grade, compared to the stiffness of the soil. This point of support acts as a fulcrum for the lateral load. The pole is free to rotate about this point rather than being fixed.

1807.3.2.3 Vertical load. The resistance to vertical loads shall be determined using the vertical foundation pressure set forth in Table 1806.2.

❖ While no specific limit is provided with respect to vertical loading, this methodology was originally developed for cantilevered posts where the primary concern is lateral resistance (see commentary, Section 1807.3). The above determination of embedment length is independent of the vertical load (see the commentary, Section 1806.2 and Table 1806.2).

INTERNATIONAL CODE COUNCIL®
Copyright © 2015 ICC. ALL RIGHTS RESERVED. Accessed by David Dammon on Jun 21, 2017 12:30:52 PM pursuant to License Agreement with ICC. No further reproduction or distribution authorized. ANY UNAUTHORIZED REPRODUCTION OR DISTRIBUTION IS A VIOLATION OF THE FEDERAL COPYRIGHT ACT AND THE LICENSE AGREEMENT, AND SUBJECT TO CIVIL AND CRIMINAL PENALTIES THEREUNDER.

1807.3.3 Backfill. The backfill in the annular space around columns not embedded in poured footings shall be by one of the following methods:

1. Backfill shall be of concrete with a specified compressive strength of not less than 2,000 psi (13.8 MPa). The hole shall not be less than 4 inches (102 mm) larger than the diameter of the column at its bottom or 4 inches (102 mm) larger than the diagonal dimension of a square or rectangular column.
2. Backfill shall be of clean sand. The sand shall be thoroughly compacted by tamping in layers not more than 8 inches (203 mm) in depth.
3. Backfill shall be of controlled low-strength material (CLSM).

❖ In order for the post or pole to meet the conditions and limitations of research for which the above criteria was established, backfill in the annular space around a column not embedded in a concrete footing must be either 2,000 psi (13.8 MPa) concrete, CLSM (see commentary, Section 1804.6) or clean sand thoroughly compacted by tamping in layers not more than 8 inches (203 mm) in depth.

SECTION 1808
FOUNDATIONS

1808.1 General. Foundations shall be designed and constructed in accordance with Sections 1808.2 through 1808.9. Shallow foundations shall also satisfy the requirements of Section 1809. Deep foundations shall also satisfy the requirements of Section 1810.

❖ Section 1808 contains the provisions that apply to all foundation types. Then specific requirements for shallow and deep foundations are given in Sections 1809 and 1810, respectively.

1808.2 Design for capacity and settlement. Foundations shall be so designed that the allowable bearing capacity of the soil is not exceeded, and that differential settlement is minimized. Foundations in areas with expansive soils shall be designed in accordance with the provisions of Section 1808.6.

❖ Regardless of the type of shallow foundation used, the allowable bearing capacity of soil must not be exceeded. There are two premises by which allowable soil-bearing pressures are established. The first premise requires that the safety factor against ultimate shear failure of the soil be adequate. The second premise requires that settlements under allowable bearing pressures not exceed tolerable values. In most cases, settlement governs the value established for allowable soil-bearing capacity. Bearing capacity is usually determined from a soils investigation and engineering analysis.

When the soils profile of a construction site is established by a sufficient number of test borings, and it indicates that a nonuniform soil condition exists where the strata of suitable bearing materials occurs at varying thicknesses or different depths, the foundation design must be adjusted to the subsurface condition to provide for the proper and safe performance of the foundation system.

Under such circumstances, it becomes necessary in the design of shallow foundations to determine the different depths at which isolated or continuous stepped footings need to be placed in order to obtain equal bearing pressures and avoid serious structural damage caused by differential (unequal) settlement of the different parts of the foundation system.

Another design method for obtaining equal bearing pressures and keeping the footings at a common elevation is to size the footings in accordance with the allowable bearing capacity of the soil at each location, thus producing a balanced design of the foundation system and preventing differential settlement.

Section 1808.6 stipulates required methods and design of foundations on expansive soils.

1808.3 Design loads. Foundations shall be designed for the most unfavorable effects due to the combinations of loads specified in Section 1605.2 or 1605.3. The dead load is permitted to include the weight of foundations and overlying fill. Reduced live loads, as specified in Sections 1607.10 and 1607.12, shall be permitted to be used in the design of foundations.

❖ Foundations are permitted to be designed using either ASD or strength design. The appropriate load combinations are investigated to determine the most severe structural effects. Live load reductions permitted in Section 1607 apply equally to the foundation design loads. This section also clarifies what portions of the foundation construction are considered dead loads. See the commentary to Section 1606 for a discussion of dead load estimates.

1808.3.1 Seismic overturning. Where foundations are proportioned using the load combinations of Section 1605.2 or 1605.3.1, and the computation of seismic overturning effects is by equivalent lateral force analysis or modal analysis, the proportioning shall be in accordance with Section 12.13.4 of ASCE 7.

❖ This provision correlates with ASCE 7 earthquake load requirements that are based on the NEHRP *Recommended Provisions for Seismic Regulations for New Buildings* (FEMA 450). When using LRFD load combinations to size foundations, the seismic overturning computed by the equivalent lateral force method or the modal analysis method is permitted to be reduced.

ASCE 7 permits the reduction of seismic overturning for foundation design where either strength design or ASD load combinations are used. This provision refers to Sections 1605.2 and 1605.3.1, which correspond to the ASCE 7 load combinations. Because the load combinations in Section 1605.3.2 include 0.9D, where overturning is assessed (rather than 0.6D as in Section 1605.3.1), reduction of seismic overturning would be unconservative where those load combinations are used.

INTERNATIONAL CODE COUNCIL®
Copyright © 2015 ICC. ALL RIGHTS RESERVED. Accessed by David Dammon on Jun 21, 2017 12:30:52 PM pursuant to License Agreement with ICC. No further reproduction or distribution authorized. ANY UNAUTHORIZED REPRODUCTION OR DISTRIBUTION IS A VIOLATION OF THE FEDERAL COPYRIGHT ACT AND THE LICENSE AGREEMENT, AND SUBJECT TO CIVIL AND CRIMINAL PENALTIES THEREUNDER.

1808.3.2 Surcharge. No fill or other surcharge loads shall be placed adjacent to any building or structure unless such building or structure is capable of withstanding the additional loads caused by the fill or the surcharge. Existing footings or foundations that will be affected by any excavation shall be underpinned or otherwise protected against settlement and shall be protected against detrimental lateral or vertical movement or both.

Exception: Minor grading for landscaping purposes shall be permitted where done with walk-behind equipment, where the grade is not increased more than 1 foot (305 mm) from original design grade or where *approved* by the *building official*.

❖ This provision prohibits the addition of surcharge loading on any foundation unless it has been designed to withstand such loading. The intent is to address significant grading and compaction work that would require heavy construction equipment. The exception allows minor grading that may occur during landscaping or other maintenance work.

1808.4 Vibratory loads. Where machinery operations or other vibrations are transmitted through the foundation, consideration shall be given in the foundation design to prevent detrimental disturbances of the soil.

❖ Vibrations emanating from machinery operations and transmitted to the soil through the foundation may cause serious settlement to occur, particularly to foundations bearing on granular materials. While granular soils generally have a considerable volume of voids, the foundation pressure is usually carried and distributed by the bearing of grain on grain without detrimental deformations. Granular materials subjected to strong vibrations, however, may result in the particles readjusting and slipping into the void spaces. Essentially, the soil mass is consolidated and reduced in volume, causing vertical settlement.

Vibratory loads that cause a disturbance of the soil will flush water out of the material. In saturated granular soils, such as sand, the flushing action may cause a "quick" condition that allows sudden flow beneath the foundation, sometimes resulting in serious structural damage.

In soils that are rather impermeable, such as clays, vibration may also cause water to flush out, but it will take a very long time. Also, foundation settlement will occur over a prolonged period.

Care should be taken in the design of foundations to eliminate completely or minimize the transmission of vibratory loads to load-bearing soils.

1808.5 Shifting or moving soils. Where it is known that the shallow subsoils are of a shifting or moving character, foundations shall be carried to a sufficient depth to ensure stability.

❖ Shallow foundations placed on or within a mass of shifting or moving soils must be designed with great rigidity and strength in order to adequately resist soil movement and avoid damage. This section requires foundations to be carried to a sufficient depth for adequate stability. Adequate stability implies, among other things, the consideration of uplift and perpendicular forces exerted on the footings because of soil movement.

1808.6 Design for expansive soils. Foundations for buildings and structures founded on expansive soils shall be designed in accordance with Section 1808.6.1 or 1808.6.2.

Exception: Foundation design need not comply with Section 1808.6.1 or 1808.6.2 where one of the following conditions is satisfied:

1. The soil is removed in accordance with Section 1808.6.3.
2. The *building official* approves stabilization of the soil in accordance with Section 1808.6.4.

❖ Expansive soils, often referred to as "swelling soils," contain montmorillonite minerals and have the characteristics of absorbing water and swelling, or shrinking and cracking when drying. Significant volume changes can cause serious damage to buildings and other structures as well as to pavements and sidewalks. Swelling soils are found throughout the nation, but are more prevalent in regions with dry or moderately arid climates. In areas where these soils experience large fluctuations in water content, the swelling is more likely to affect structures. Heavy rains will cause the soil to expand and push upward on a foundation. Movement is most noticeable at the perimeter of the foundation where the increase in water content is greatest.

There is a general relationship between the PI of a soil as determined by the ASTM D4318 standard test method and the potential for expansion. This relationship is shown in Commentary Figure 1803.5.3.

Section 1803.5.3 defines "Expansive soil" as any plastic material with a plasticity index of 15 or greater with more than 10 percent of the soil particles passing a No. 200 sieve and less than 5 micrometers in size. As an alternative, tests in accordance with ASTM D4829 can be used to determine if a soil is expansive. The expansion index is a measure of the swelling potential of the soil.

The amount and depth of potential swelling that can occur in a clay material are, to some extent, functions of the cyclical moisture content in the soil. In dryer climates where the moisture content in the soil near the ground surface is low because of evaporation, there is a greater potential for extensive swelling than the same soil in wetter climates where the variations of moisture content are not as severe.

Volume changes in highly expansive soils typically range between 7 and 10 percent, but experience has shown that occasionally, under abnormal conditions, they can reach as high as 25 percent.

The exception refers to the provisions that govern removal or stabilization of the expansive soil (see the commentary to Section 1803.5.3 for a discussion regarding expansive soils).

INTERNATIONAL CODE COUNCIL®
Copyright © 2015 ICC. ALL RIGHTS RESERVED. Accessed by David Dammon on Jun 21, 2017 12:30:52 PM pursuant to License Agreement with ICC. No further reproduction or distribution authorized. ANY UNAUTHORIZED REPRODUCTION OR DISTRIBUTION IS A VIOLATION OF THE FEDERAL COPYRIGHT ACT AND THE LICENSE AGREEMENT, AND SUBJECT TO CIVIL AND CRIMINAL PENALTIES THEREUNDER.

1808.6.1 Foundations. Foundations placed on or within the active zone of expansive soils shall be designed to resist differential volume changes and to prevent structural damage to the supported structure. Deflection and racking of the supported structure shall be limited to that which will not interfere with the usability and serviceability of the structure.

Foundations placed below where volume change occurs or below expansive soil shall comply with the following provisions:

1. Foundations extending into or penetrating expansive soils shall be designed to prevent uplift of the supported structure.
2. Foundations penetrating expansive soils shall be designed to resist forces exerted on the foundation due to soil volume changes or shall be isolated from the expansive soil.

❖ Shallow foundation systems placed on or within a mass of expansive soil must be designed with great rigidity and strength in order to adequately resist swelling pressures and avoid serious structural damage. Sometimes footings and piers, as well as foundation walls and grade beams, are isolated from the swelling soils by intervening fills or granular materials. While this type of insulation serves to cushion or diminish lateral pressures, it will not prevent structure heaving, except for grade beams constructed on collapsible forms.

One method of foundation construction in expansive soils is the use of drilled piers with belled footings extending below the zone of swelling activity, or at least to a soil stratum where the seasonal moisture content of the expansive soil will remain within a tolerable range. This type of construction is made possible in swelling soils because the material usually consists of stiff clays that do not contain free water, providing excellent conditions for drilling holes in the ground.

Piers with belled footings have been widely used for foundations in expansive soils, even in the construction of single-family dwellings.

The concrete shaft must be reinforced for its entire length because the swelling soil is apt to exert high uplift forces and subject the drilled pier construction to tensile stresses. This condition can be prevented or sufficiently mitigated by isolating the concrete from the swelling soil by surrounding the shaft with a vertical layer of granular soil or other suitable materials that possess little or no shearing strength (e.g., vermiculite).

1808.6.2 Slab-on-ground foundations. Moments, shears and deflections for use in designing slab-on-ground, mat or raft foundations on expansive soils shall be determined in accordance with *WRI/CRSI Design of Slab-on-Ground Foundations* or *PTI DC 10.5*. Using the moments, shears and deflections determined above, nonprestressed slabs-on-ground, mat or raft foundations on expansive soils shall be designed in accordance with *WRI/CRSI Design of Slab-on-Ground Foundations* and post-tensioned slab-on-ground, mat or raft foundations on expansive soils shall be designed in accordance with *PTI DC 10.5*. It shall be permitted to analyze and design such slabs by other methods that account for soil-structure interaction, the deformed shape of the soil support, the plate or stiffened plate action of the slab as well as both center lift and edge lift conditions. Such alternative methods shall be rational and the basis for all aspects and parameters of the method shall be available for peer review.

❖ It is not uncommon for concrete slabs on ground to be reinforced (prestressed) with post-tensioned strands so that the flexural stresses induced in the slab from uplift of the soil are reduced, thus avoiding cracking of the concrete at its top surface. All things being equal, a post-tensioned slab on ground can be more economical than a conventionally reinforced slab because the precompression reduces the flexural stresses, making it unnecessary to increase the thickness of the slab or use a higher strength concrete. It has also been a practice to cast the slab on cellular forms made of cardboard or other collapsible materials that will support wet concrete, but will yield when subjected to swelling pressures. Since there is no rebound of the form material after subsidence of the soil, floors must be designed as structural slabs.

This section recognizes the analytical procedures in the Wire Reinforcing Institute/Concrete Reinforcing Steel Institute (WRI/CRSI) *Design of Slab-on-Ground Foundations* and the Post-tensioning Institute (PTI) DCI 10.5 for slab-on-ground foundations located on expansive soils. The WRI/CRSI document also provides design requirements for reinforced concrete slabs. The PTI DCI 10.5 standard addresses design requirements for post-tensioned concrete slabs on expansive soils.

1808.6.3 Removal of expansive soil. Where expansive soil is removed in lieu of designing foundations in accordance with Section 1808.6.1 or 1808.6.2, the soil shall be removed to a depth sufficient to ensure a constant moisture content in the remaining soil. Fill material shall not contain expansive soils and shall comply with Section 1804.5 or 1804.6.

Exception: Expansive soil need not be removed to the depth of constant moisture, provided the confining pressure in the expansive soil created by the fill and supported structure exceeds the swell pressure.

❖ The best way to avoid the problems associated with expansive soils is to remove such soil from the construction site and, where necessary, replace it with suitable compacted fill material. Expansive soil shrinks when the water content decreases and swells when the water content increases. To minimize the chances of swelling and shrinking, the code requires removal to a depth that provides a constant moisture content in the soil that is left in place. The exception to removing to this depth alludes to an alternative method of stabilization that is discussed in the commentary to Section 1808.6.4.

INTERNATIONAL CODE COUNCIL®
Copyright © 2015 ICC. ALL RIGHTS RESERVED. Accessed by David Dammon on Jun 21, 2017 12:30:52 PM pursuant to License Agreement with ICC. No further reproduction or distribution authorized. ANY UNAUTHORIZED REPRODUCTION OR DISTRIBUTION IS A VIOLATION OF THE FEDERAL COPYRIGHT ACT AND THE LICENSE AGREEMENT, AND SUBJECT TO CIVIL AND CRIMINAL PENALTIES THEREUNDER.

1808.6.4 Stabilization. Where the active zone of expansive soils is stabilized in lieu of designing foundations in accordance with Section 1808.6.1 or 1808.6.2, the soil shall be stabilized by chemical, dewatering, presaturation or equivalent techniques.

❖ This section allows expansive soils to be stabilized by either chemical, presaturation or dewatering methods or by other equivalent techniques. These methods, however, have limited use.

Chemical stabilization may be effectively accomplished by the use of lime thoroughly mixed with the soil and compacted at approximately the optimum moisture content. The purpose of using lime is to reduce the plasticity of the soil, which will reduce the swelling potential (see commentary, Section 1808.6). Since this method requires a uniform mix of lime and soil, however, it is generally limited to compacted fills. There is a method of pressure injecting lime slurry into heavily fissured clay materials, but the method is not appropriate for all site conditions.

Presaturation by flooding the site is rarely a totally effective way to stabilize expansive soils, since it takes a very long time for the water to penetrate to any great depth. Dewatering of expansive soils that consist generally of dense clays without free water is not an effective way to control moisture content. One good method of stabilization is to place sufficient fill material on the site so that the downward pressures of the fill will, to the extent possible, balance the upward swelling pressures of the soil. The effectiveness of this balancing concept depends on the pressures developed by the expansive soil as a function of estimated volume change and the depth of compacted fill material necessary to counteract these pressures. The application of this stabilization method is usually economically feasible when the soil pressures are low, around 500 psf (23.9 kPa); however, pressures occasionally have reached as high as 20 tons per square foot (1915 kPa).

1808.7 Foundations on or adjacent to slopes. The placement of buildings and structures on or adjacent to slopes steeper than one unit vertical in three units horizontal (33.3-percent slope) shall comply with Sections 1808.7.1 through 1808.7.5.

❖ The provisions of this section apply to buildings placed on or adjacent to slopes steeper than 1 unit vertical in 3 units horizontal (33.3-percent slope).

1808.7.1 Building clearance from ascending slopes. In general, buildings below slopes shall be set a sufficient distance from the slope to provide protection from slope drainage, erosion and shallow failures. Except as provided in Section 1808.7.5 and Figure 1808.7.1, the following criteria will be assumed to provide this protection. Where the existing slope is steeper than one unit vertical in one unit horizontal (100-percent slope), the toe of the slope shall be assumed to be at the intersection of a horizontal plane drawn from the top of the foundation and a plane drawn tangent to the slope at an angle of 45 degrees (0.79 rad) to the horizontal. Where a retaining wall is constructed at the toe of the slope, the height of the slope shall be measured from the top of the wall to the top of the slope.

❖ Code Figure 1808.7.1 depicts criteria for locating buildings adjacent to slopes. The setback is intended to provide protection to the structure not only from shallow slope failures (sometimes referred to as "sloughing") but also from erosion and slope drainage. At ascending slopes, the setback also provides access around the building and helps create a light and open-air environment. Where an existing slope is steeper than 1:1, the toe of the slope is assumed to be at a distance determined by the intersection of a horizontal line at the top of the foundation and a line drawn at a 45-degree (0.79 rad) angle to the horizontal line, and terminating at the top of the slope. This determination of slope height and measurement of the setback is illustrated in Commentary Figure 1808.7.1.

FIGURE 1808.7.1. See below.

❖ This figure illustrates required setbacks at slopes. The setback is a function of the height of the slope (see commentary, Sections 1808.7.1 and 1808.7.2).

1808.7.2 Foundation setback from descending slope surface. Foundations on or adjacent to slope surfaces shall be

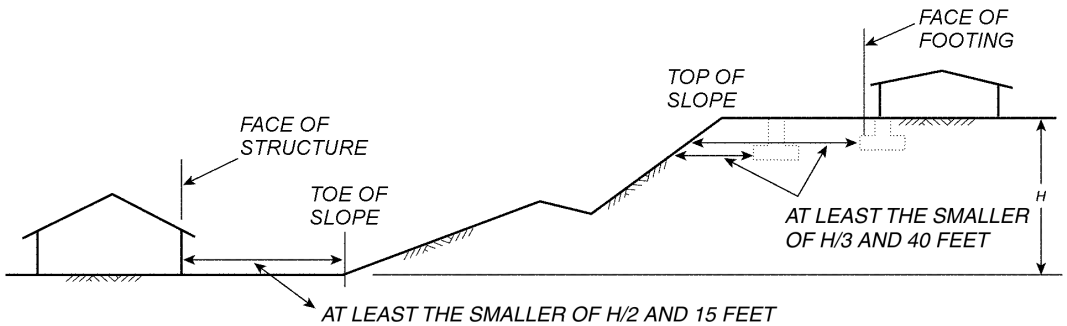

For SI: 1 foot = 304.8 mm.

FIGURE 1808.7.1
FOUNDATION CLEARANCES FROM SLOPES

INTERNATIONAL CODE COUNCIL®
Copyright © 2015 ICC. ALL RIGHTS RESERVED. Accessed by David Dammon on Jun 21, 2017 12:30:52 PM pursuant to License Agreement with ICC. No further reproduction or distribution authorized. ANY UNAUTHORIZED REPRODUCTION OR DISTRIBUTION IS A VIOLATION OF THE FEDERAL COPYRIGHT ACT AND THE LICENSE AGREEMENT, AND SUBJECT TO CIVIL AND CRIMINAL PENALTIES THEREUNDER.

founded in firm material with an embedment and set back from the slope surface sufficient to provide vertical and lateral support for the foundation without detrimental settlement. Except as provided for in Section 1808.7.5 and Figure 1808.7.1, the following setback is deemed adequate to meet the criteria. Where the slope is steeper than 1 unit vertical in 1 unit horizontal (100-percent slope), the required setback shall be measured from an imaginary plane 45 degrees (0.79 rad) to the horizontal, projected upward from the toe of the slope.

❖ The provisions of this section restrict the placement of footings at the top of slopes so that vertical and lateral support for the footing is provided. This setback is shown in Code Figure 1808.7.1. When the slope is greater than one unit vertical in one unit horizontal (100-percent slope), the setback is measured from a top of the slope that is established as the intersection of the ground surface and an imaginary plane at 45 degrees (0.79 rad) to the horizontal, projected from the toe of the slope. This requirement is illustrated in Commentary Figure 1808.7.2. For most conditions, the required setbacks will provide adequate lateral support for the foundations.

1808.7.3 Pools. The setback between pools regulated by this code and slopes shall be equal to one-half the building footing setback distance required by this section. That portion of the pool wall within a horizontal distance of 7 feet (2134 mm) from the top of the slope shall be capable of supporting the water in the pool without soil support.

❖ This section specifies the required setback distances for pools located near ascending or descending slopes. The minimum setback distance is established as one-half the required building setback from Section 1808.7.2. The pool wall that is within 7 feet (2134 mm) of the top slope is required to be self-supporting without support from the soil, and is intended to provide additional safety measures should localized minor sliding and sloughing occur.

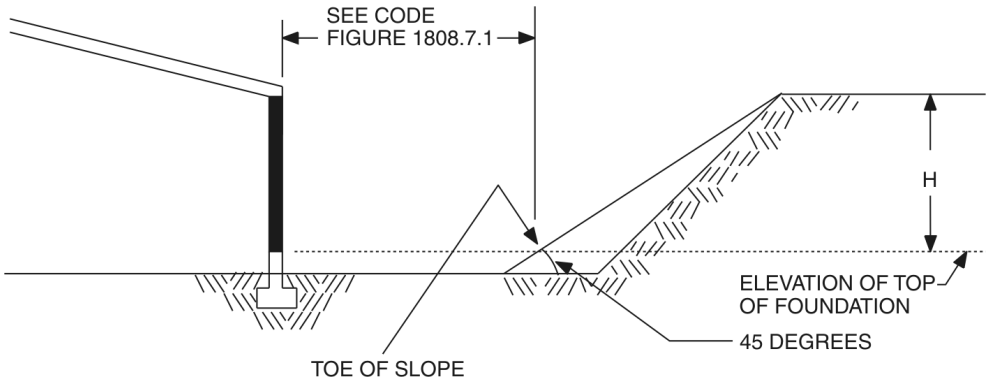

For SI: 1 degree = 0.01745 rad.

Figure 1808.7.1
BUILDINGS ADJACENT TO ASCENDING SLOPE EXCEEDING 1 TO 1

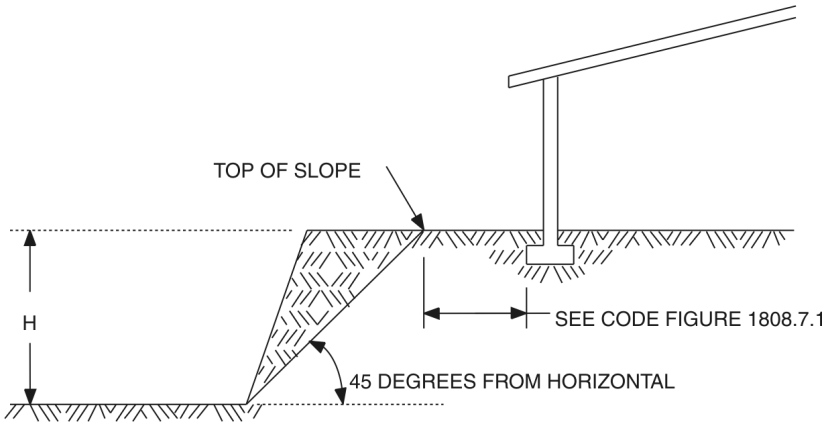

For SI: 1 degree = 0.01745 rad.

Figure 1808.7.2
BUILDINGS ADJACENT TO DESCENDING SLOPE EXCEEDING 1 TO 1

INTERNATIONAL CODE COUNCIL®
Copyright © 2015 ICC. ALL RIGHTS RESERVED. Accessed by David Dammon on Jun 21, 2017 12:30:52 PM pursuant to License Agreement with ICC. No further reproduction or distribution authorized. ANY UNAUTHORIZED REPRODUCTION OR DISTRIBUTION IS A VIOLATION OF THE FEDERAL COPYRIGHT ACT AND THE LICENSE AGREEMENT, AND SUBJECT TO CIVIL AND CRIMINAL PENALTIES THEREUNDER.

1808.7.4 Foundation elevation. On graded sites, the top of any exterior foundation shall extend above the elevation of the street gutter at point of discharge or the inlet of an *approved* drainage device a minimum of 12 inches (305 mm) plus 2 percent. Alternate elevations are permitted subject to the approval of the *building official*, provided it can be demonstrated that required drainage to the point of discharge and away from the structure is provided at all locations on the site.

❖ Commentary Figure 1808.7.4 depicts the requirements of this section regarding elevation for exterior foundations with respect to the street, gutter or point of inlet of a drainage device. The elevation of the street or gutter shown is that point at which drainage from the site reaches the street or gutter.

This requirement is intended to protect the building from water encroachment in case of heavy or unprecedented rain and may be modified on the approval of the building official if he or she finds that positive drainage slopes are provided to drain water away from the building and that the drainage pattern is not subject to temporary flooding due to landscaping or other impediments to drainage. This section is related more directly to the provisions for site grading in Section 1804.3 than it is to Section 1808.7 requirements for footings adjacent to slopes.

1808.7.5 Alternate setback and clearance. Alternate setbacks and clearances are permitted, subject to the approval of the *building official*. The *building official* shall be permitted to require a geotechnical investigation as set forth in Section 1803.5.10.

❖ This section provides the building official the authority to approve alternative setbacks and clearances from slopes, provided he or she is satisfied that the intent of this section has been met. The building official has the authority to require a foundation investigation by a registered design professional to show that the intent of the code has been met. This item also specifies the parameters that must be considered by the registered design professional in the investigation.

1808.8 Concrete foundations. The design, materials and construction of concrete foundations shall comply with Sections 1808.8.1 through 1808.8.6 and the provisions of Chapter 19.

Exception: Where concrete footings supporting walls of light-frame construction are designed in accordance with Table 1809.7, a specific design in accordance with Chapter 19 is not required.

❖ The design, construction and materials used for concrete foundations are to comply with Chapter 19, which references ACI 318, and also the provisions of this section that are specific to concrete foundations.

The exception applies to concrete footings supporting walls of light-frame construction when a specific footing design is not provided. The purpose of Table 1809.7 is to specify footing sizes that can be used to safely support walls of light-frame construction. The table is based on anticipated loads on foundations due to wall, floor and roof systems.

1808.8.1 Concrete or grout strength and mix proportioning. Concrete or grout in foundations shall have a specified compressive strength (f'_c) not less than the largest applicable value indicated in Table 1808.8.1.

Where concrete is placed through a funnel hopper at the top of a deep foundation element, the concrete mix shall be designed and proportioned so as to produce a cohesive workable mix having a slump of not less than 4 inches (102 mm) and not more than 8 inches (204 mm). Where concrete or grout is to be pumped, the mix design including slump shall be adjusted to produce a pumpable mixture.

❖ This section of the code establishes a minimum compressive strength for concrete and grout that is used in foundations. The code's intent is that concrete or grout used as structural material for foundation construction will be of sufficient strength and durability to satisfy safety requirements.

This section also requires that the concrete mix for deep foundation elements be designed and proportioned to produce a cohesive workable mix with a

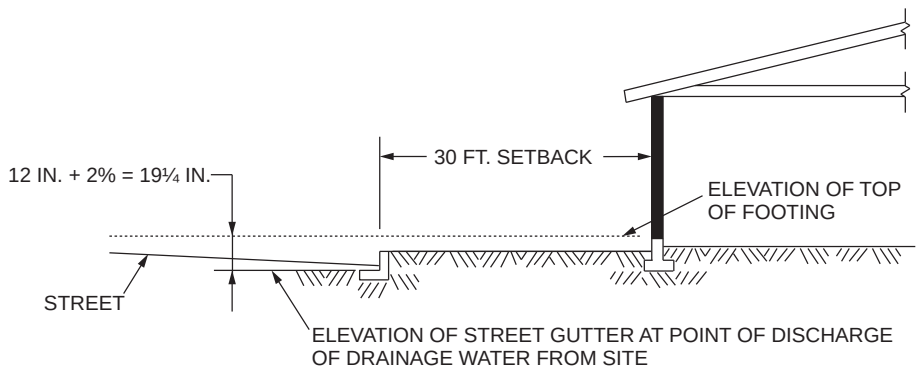

For SI: 1 inch = 25.4 mm, 1 foot = 304.8 mm.

Figure 1808.7.4
FOOTING ELEVATION ON GRADED SITES

INTERNATIONAL CODE COUNCIL®
Copyright © 2015 ICC. ALL RIGHTS RESERVED. Accessed by David Dammon on Jun 21, 2017 12:30:52 PM pursuant to License Agreement with ICC. No further reproduction or distribution authorized. ANY UNAUTHORIZED REPRODUCTION OR DISTRIBUTION IS A VIOLATION OF THE FEDERAL COPYRIGHT ACT AND THE LICENSE AGREEMENT, AND SUBJECT TO CIVIL AND CRIMINAL PENALTIES THEREUNDER.

consistency (slump) ranging between 4 inches (102 mm) and 8 inches (203 mm) where it is placed using a funnel hopper. This provision is within the bounds required for the proper placement of conventional structural concrete for cased cast-in-place elements. The slump requirements stated here, however, should not be considered so absolute that, with the use of engineering judgement, the consistency of the concrete cannot be adjusted to satisfy prevailing conditions of construction. For example, concrete placement conducted under difficult conditions—such as for elements containing heavy reinforcement, for very long cased elements, for element shells driven on steep batters or for other demanding situations—may require the employment of special concrete mixes using reduced quantities of coarse aggregates with corresponding increases in sand and cement content. Under such conditions, slumps of 4 inches (102 mm) with a tolerance of plus 2 inches (51 mm) or minus 1 inch (25 mm) are in order.

The consistency of concrete required for uncased cast-in-place concrete elements may be altogether different than the slumps specified and used for cased construction. For example, concrete placed in drilled holes should have a slump of at least 6 inches (152 mm) so that the concrete flows properly and full bond is attained with the reinforcement.

Furthermore, high-slump concrete is used so that the complete volume of the hole is filled, including natural soil crevices and pockets and surface irregularities caused by the drilling operations. High slumps are also used where the concrete must displace drilling slurry.

Concrete slumps as high as 8 inches (203 mm) are sometimes needed where temporary casings are used to facilitate pile construction and are subsequently extracted as the concrete is placed.

Concrete is usually placed through a funnel hopper at the top of the element opening, but other approved methods, such as pumping or tremie, may also be used.

TABLE 1808.8.1. See below.

❖ This table lists the minimum compressive strength for concrete and grout based on the type of foundation.

1808.8.2 Concrete cover. The concrete cover provided for prestressed and nonprestressed reinforcement in foundations shall be no less than the largest applicable value specified in Table 1808.8.2. Longitudinal bars spaced less than $1^1/_2$ inches (38 mm) clear distance apart shall be considered bundled bars for which the concrete cover provided shall also be no less than that required by Section 20.8.1.3.4 of ACI 318. Concrete cover shall be measured from the concrete surface to the outermost surface of the steel to which the cover requirement applies. Where concrete is placed in a temporary or permanent casing or a mandrel, the inside face of the casing or mandrel shall be considered the concrete surface.

❖ A minimum thickness of concrete cover must be provided to protect reinforcement against corrosion from the moisture or severe environments, such as salt water.

TABLE 1808.8.2. See page 18-39.

❖ This table lists the minimum concrete cover based on the type of foundation and the type of exposure.

1808.8.3 Placement of concrete. Concrete shall be placed in such a manner as to ensure the exclusion of any foreign matter and to secure a full-size foundation. Concrete shall not be placed through water unless a tremie or other method *approved* by the *building official* is used. Where placed under or in the presence of water, the concrete shall be deposited by *approved* means to ensure minimum segregation of the mix and negligible turbulence of the water. Where depositing concrete from the top of a deep foundation element, the concrete shall be chuted directly into smooth-sided pipes or tubes or placed in a rapid and continuous operation through a funnel hopper centered at the top of the element.

❖ Placing concrete under water should be avoided wherever possible. The risk of segregation of the concrete mixture is much greater when depositing under water as opposed to air; however, when concrete must be placed under water, it should be done by any one of several accepted methods used for such construction, including tremie. Due care must be exercised in the concreting operations so as to avoid or minimize segregation of the mix and turbulence of the water.

Generally, when concrete is to be placed under water, the mixture should be proportioned to provide

TABLE 1808.8.1
MINIMUM SPECIFIED COMPRESSIVE STRENGTH f'_c OF CONCRETE OR GROUT

FOUNDATION ELEMENT OR CONDITION	SPECIFIED COMPRESSIVE STRENGTH, f'_c
1. Foundations for structures assigned to Seismic Design Category A, B or C	2,500 psi
2a. Foundations for Group R or U occupancies of light-frame construction, two stories or less in height, assigned to Seismic Design Category D, E or F	2,500 psi
2b. Foundations for other structures assigned to Seismic Design Category D, E or F	3,000 psi
3. Precast nonprestressed driven piles	4,000 psi
4. Socketed drilled shafts	4,000 psi
5. Micropiles	4,000 psi
6. Precast prestressed driven piles	5,000 psi

For SI: 1 pound per square inch = 0.00689 MPa.

INTERNATIONAL CODE COUNCIL®
Copyright © 2015 ICC. ALL RIGHTS RESERVED. Accessed by David Dammon on Jun 21, 2017 12:30:52 PM pursuant to License Agreement with ICC. No further reproduction or distribution authorized. ANY UNAUTHORIZED REPRODUCTION OR DISTRIBUTION IS A VIOLATION OF THE FEDERAL COPYRIGHT ACT AND THE LICENSE AGREEMENT, AND SUBJECT TO CIVIL AND CRIMINAL PENALTIES THEREUNDER.

a good plastic mix and high workability so that it will flow without segregation. The slump of the concrete should be 5 inches (127 mm) or greater. This desired consistency can be obtained by the use of rounded aggregates, a higher percentage of fines and entrained air. Cement content should be increased by 10 to 15 percent above the quantities required for similar mixtures placed in air to compensate for increases in water-cement ratios (see Chapter 19). In no case should the cement content be less than 600 pounds per cubic yard (355 kg/m^3) of concrete.

1808.8.4 Protection of concrete. Concrete foundations shall be protected from freezing during depositing and for a period of not less than five days thereafter. Water shall not be allowed to flow through the deposited concrete.

❖ Concrete for foundations should not be placed during rain, sleet or snow or in freezing weather unless adequate protection, as approved by the building official, is provided. Such protection, when required, is to be provided during the concreting operations and for a period of not less than five days thereafter. Rainwater or water from other sources must not be allowed to flow through freshly deposited concrete so as to increase the mixing water content or to damage the surface finish. For detailed information on materials, methods and procedures used in cold-weather operations, refer to ACI 306R, ACI 306.1 and Chapter 19.

1808.8.5 Forming of concrete. Concrete foundations are permitted to be cast against the earth where, in the opinion of the *building official*, soil conditions do not require formwork. Where formwork is required, it shall be in accordance with Section 26.10 of ACI 318.

❖ Where earth cuts are used as the concrete form in foundation construction, the soil must have sufficient stiffness to maintain the desired shape and dimensions before and during concreting operations. In the event that the soil is deemed to be unstable for such purpose, the building official is to require that formwork be built in accordance with the provisions of ACI 318.

1808.8.6 Seismic requirements. See Section 1905 for additional requirements for foundations of structures assigned to *Seismic Design Category* C, D, E or F.

For structures assigned to *Seismic Design Category* D, E or F, provisions of Section 18.13 of ACI 318 shall apply where not in conflict with the provisions of Sections 1808 through 1810.

Exceptions:

1. Detached one- and two-family dwellings of light-frame construction and two stories or less above *grade plane* are not required to comply with the provisions of Section 18.13 of ACI 318.
2. Section 18.13.4.3(a) of ACI 318 shall not apply.

❖ This section first provides an important reference to Section 1908 for additional requirements concerning footings and foundations of buildings assigned to Seismic Design Category C, D, E or F. As specified in Section 1908.1.8, all footings and foundations in these structures require reinforcement except for footings supporting walls in detached one- and two-family dwellings three stories or less in height and constructed with stud-bearing walls. The concern is that plain concrete footings may be susceptible to damage, which can be reduced or avoided if reinforcement is provided. Foundation damage is obviously very expensive to repair and is better avoided.

The second paragraph of this section refers to provisions in ACI 318 concerning the design and construction of foundations of buildings assigned to high seismic design categories. Chapter 18 of ACI 318 is titled "Earthquake-resistant Structures," and Section 18.13 contains the requirements pertaining to foundations. Additionally, relatively small, detached dwellings classified as Seismic Design Category D or E are exempted from the referenced ACI 318 provisions. These structures would only need to comply with requirements for Seismic Design Category C.

1808.9 Vertical masonry foundation elements. Vertical masonry foundation elements that are not foundation piers as

TABLE 1808.8.2
MINIMUM CONCRETE COVER

FOUNDATION ELEMENT OR CONDITION	MINIMUM COVER
1. Shallow foundations	In accordance with Section 20.8 of ACI 318
2. Precast nonprestressed deep foundation elements Exposed to seawater Not manufactured under plant conditions Manufactured under plant control conditions	 3 inches 2 inches In accordance with Section 20.8.1.3.3 of ACI 318
3. Precast prestressed deep foundation elements Exposed to seawater Other	 2.5 inches In accordance with Section 20.8.1.3.3 of ACI 318
4. Cast-in-place deep foundation elements not enclosed by a steel pipe, tube or permanent casing	2.5 inches
5. Cast-in-place deep foundation elements enclosed by a steel pipe, tube or permanent casing	1 inch
6. Structural steel core within a steel pipe, tube or permanent casing	2 inches
7. Cast-in-place drilled shafts enclosed by a stable rock socket	1.5 inches

INTERNATIONAL CODE COUNCIL®
Copyright © 2015 ICC. ALL RIGHTS RESERVED. Accessed by David Dammon on Jun 21, 2017 12:30:52 PM pursuant to License Agreement with ICC. No further reproduction or distribution authorized. ANY UNAUTHORIZED REPRODUCTION OR DISTRIBUTION IS A VIOLATION OF THE FEDERAL COPYRIGHT ACT AND THE LICENSE AGREEMENT, AND SUBJECT TO CIVIL AND CRIMINAL PENALTIES THEREUNDER.

defined in Section 202 shall be designed as piers, walls or columns, as applicable, in accordance with TMS 402/ACI 530/ASCE 5.

❖ This provision directs the code user to the definition of "Masonry foundation pier," which states that it has a height less than or equal to four times its thickness. Furthermore, the code user is referred to TMS 402/ ACI 530/ASCE5 for the appropriate design requirements where the definition limits are exceeded. A vertical masonry element will be designed as a foundation pier, a pier, a wall or a column, depending on the dimensions.

SECTION 1809
SHALLOW FOUNDATIONS

1809.1 General. Shallow foundations shall be designed and constructed in accordance with Sections 1809.2 through 1809.13.

❖ Sections 1809.2 through 1809.13 address requirements related to proper design and installation of shallow foundations.

1809.2 Supporting soils. Shallow foundations shall be built on undisturbed soil, compacted fill material or controlled low-strength material (CLSM). Compacted fill material shall be placed in accordance with Section 1804.5. CLSM shall be placed in accordance with Section 1804.6.

❖ It is important that shallow foundations be built on undisturbed soil of known bearing value or properly compacted fill, with known bearing capacity. As an alternative to compacted fill, the code permits the use of CLSM (see commentary, Section 1804.6).

1809.3 Stepped footings. The top surface of footings shall be level. The bottom surface of footings shall be permitted to have a slope not exceeding one unit vertical in 10 units horizontal (10-percent slope). Footings shall be stepped where it is necessary to change the elevation of the top surface of the footing or where the surface of the ground slopes more than one unit vertical in 10 units horizontal (10-percent slope).

❖ The tops and bottoms of footings are required to be essentially level, with a slope of 1 unit vertical in 10 units horizontal (10-percent slope) permitted for the bottom of footings. Where the slope of the surface of the ground exceeds one unit vertical in 10 units horizontal (10-percent slope), footings are required to be stepped. Although not specifically mentioned, crack propagation at the joints should be considered when determining the overlapping and vertical dimensions of the steps.

1809.4 Depth and width of footings. The minimum depth of footings below the undisturbed ground surface shall be 12 inches (305 mm). Where applicable, the requirements of Section 1809.5 shall also be satisfied. The minimum width of footings shall be 12 inches (305 mm).

❖ Footings are required to extend below the ground surface a minimum of 12 inches (305 mm). This is considered a minimum depth to protect the footing from movement of the soil caused by freezing and thawing in mild climate areas (see Section 1809.5 for general frost protection requirements).

1809.5 Frost protection. Except where otherwise protected from frost, foundations and other permanent supports of buildings and structures shall be protected from frost by one or more of the following methods:

1. Extending below the frost line of the locality.
2. Constructing in accordance with ASCE 32.
3. Erecting on solid rock.

   Exception: Free-standing buildings meeting all of the following conditions shall not be required to be protected:

   1. Assigned to *Risk Category* I.
   2. Area of 600 square feet (56 m^2) or less for light-frame construction or 400 square feet (37 m^2) or less for other than light-frame construction.
   3. Eave height of 10 feet (3048 mm) or less.

Shallow foundations shall not bear on frozen soil unless such frozen condition is of a permanent character.

❖ Shallow foundations must be placed on soil strata with adequate load-bearing capacity and at depths to which freezing cannot penetrate. In winter, frost action can raise the ground level (frost heave), whereas in springtime the same area will soften and settle back to its previous state. If foundations are built in soil strata that can freeze, then the heave or vertical movement of the ground, which is rarely uniform, can cause serious damage to buildings and other structures. Frost heave can become particularly aggravated in clay soils. Well-drained soils, such as sand and gravel, are not as susceptible to extensive movements.

Unless the exception applies, the foundation is to be protected from frost in accordance with this section. A common method of accomplishing this is by placing the footing bottom below the frost line. The "Frost line" is defined as the lowest level below the ground surface to which a temperature of 32°F (0°C) extends. The factors determining the depth of the frost line are air temperature and the length of time the temperature is below freezing [32°F (0°C)], as well as the ability of the soil to conduct heat and its level of thermal conductivity. Frost lines vary significantly throughout the country, ranging from 5 inches (127 mm) in the deep south to 100 inches (2540 mm) in the uppermost northern regions. The frost-free depth for shallow foundations is dependent on the frost line set for the particular locality of construction.

Another form of protection is the use of frost-protected shallow foundations (FPSF) in accordance with ASCE 32. This type of frost protection utilizes slab edge insulation to minimize heat loss at the slab edge. By retaining heat from the building in the ground, it has the effect of raising the frost line around the perimeter of the building.

Foundations are not to be placed on frozen soil

INTERNATIONAL CODE COUNCIL®
Copyright © 2015 ICC. ALL RIGHTS RESERVED. Accessed by David Dammon on Jun 21, 2017 12:30:52 PM pursuant to License Agreement with ICC. No further reproduction or distribution authorized. ANY UNAUTHORIZED REPRODUCTION OR DISTRIBUTION IS A VIOLATION OF THE FEDERAL COPYRIGHT ACT AND THE LICENSE AGREEMENT, AND SUBJECT TO CIVIL AND CRIMINAL PENALTIES THEREUNDER.

because when the ground thaws, uneven settlement of the structure is apt to occur, thereby causing structural damage. This section does, however, permit footings to be constructed on permanently frozen soil. In permafrost areas, special precautions are necessary to prevent heat from the structure from thawing the soil beneath the foundation.

The exception to frost protection applies to low-risk structures, such as a detached garage. The permitted areas are intended to accommodate garage sizes that are commonly constructed. Note that the minimum footing depth of Section 1809.4 would apply where this exception is invoked.

1809.6 Location of footings. Footings on granular soil shall be so located that the line drawn between the lower edges of adjoining footings shall not have a slope steeper than 30 degrees (0.52 rad) with the horizontal, unless the material supporting the higher footing is braced or retained or otherwise laterally supported in an *approved* manner or a greater slope has been properly established by engineering analysis.

❖ The bottoms of adjacent footings bearing on granular soil are to be located so that a line drawn between their closest edges would not be steeper than 30 degrees (0.52 rad) from the horizontal. The exceptions are where the soil surrounding the higher footing is laterally braced or retained as approved by the building official or where engineering analysis shows that a greater slope can be tolerated. The purpose of this restriction is to provide conditions of safety against the possible influence of lateral and vertical soil pressures transmitted to the lower footing(s) by the loads of higher adjacent foundations (see Commentary Figure 1809.6).

1809.7 Prescriptive footings for light-frame construction. Where a specific design is not provided, concrete or masonry-unit footings supporting walls of light-frame construction shall be permitted to be designed in accordance with Table 1809.7.

❖ This section allows prescriptive designs for concrete and masonry-unit footings supporting walls of light-frame construction when a specific design is not provided.

TABLE 1809.7
PRESCRIPTIVE FOOTINGS SUPPORTING WALLS OF LIGHT-FRAME CONSTRUCTION[a, b, c, d, e]

NUMBER OF FLOORS SUPPORTED BY THE FOOTING[f]	WIDTH OF FOOTING (inches)	THICKNESS OF FOOTING (inches)
1	12	6
2	15	6
3	18	8[g]

For SI: 1 inch = 25.4 mm, 1 foot = 304.8 mm.

a. Depth of footings shall be in accordance with Section 1809.4.
b. The ground under the floor shall be permitted to be excavated to the elevation of the top of the footing.
c. Interior stud-bearing walls shall be permitted to be supported by isolated footings. The footing width and length shall be twice the width shown in this table, and footings shall be spaced not more than 6 feet on center.
d. See Section 1905 for additional requirements for concrete footings of structures assigned to Seismic Design Category C, D, E or F.
e. For thickness of foundation walls, see Section 1807.1.6.
f. Footings shall be permitted to support a roof in addition to the stipulated number of floors. Footings supporting roof only shall be as required for supporting one floor.
g. Plain concrete footings for Group R-3 occupancies shall be permitted to be 6 inches thick.

❖ Table 1809.7 provides prescriptive designs for footings supporting walls of light-frame construction when a specific design is not provided. The first column of the table is specifically intended to apply to the number of floors supported by the footing, not necessarily the number of stories of a building. This table pro-

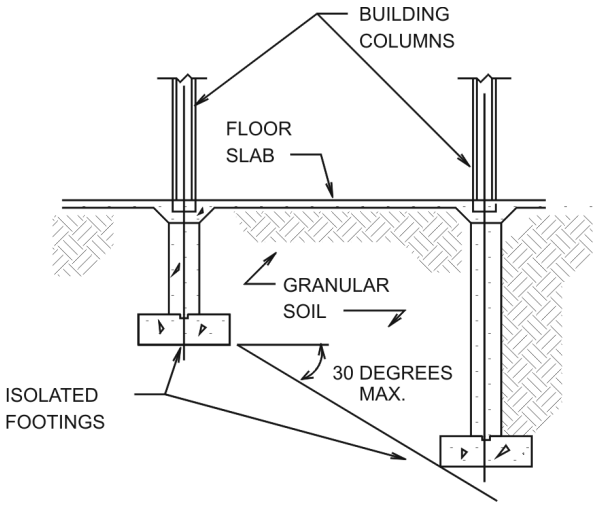

For SI: 1 degree = 0.01745 rad.

Figure 1809.6
ISOLATED FOOTINGS

INTERNATIONAL CODE COUNCIL®
Copyright © 2015 ICC. ALL RIGHTS RESERVED. Accessed by David Dammon on Jun 21, 2017 12:30:52 PM pursuant to License Agreement with ICC. No further reproduction or distribution authorized. ANY UNAUTHORIZED REPRODUCTION OR DISTRIBUTION IS A VIOLATION OF THE FEDERAL COPYRIGHT ACT AND THE LICENSE AGREEMENT, AND SUBJECT TO CIVIL AND CRIMINAL PENALTIES THEREUNDER.

vides for the minimum width and thickness of footings.

1809.8 Plain concrete footings. The edge thickness of plain concrete footings supporting walls of other than light-frame construction shall not be less than 8 inches (203 mm) where placed on soil or rock.

Exception: For plain concrete footings supporting Group R-3 occupancies, the edge thickness is permitted to be 6 inches (152 mm), provided that the footing does not extend beyond a distance greater than the thickness of the footing on either side of the supported wall.

❖ An isolated spread footing of square or rectangular shape is the most common type of shallow foundation used in building construction. Basically, the footing is a slab of concrete supporting a column or other concentrated load. The footing thickness or depth is generally a function of shear strength and is established by the more severe of two structural conditions. The thickness of a footing determined by one-way shear action may be compared to the shear in a beam where the vertical shear plane extends across the entire structural section. Thickness established by two-way shear action (punching shear) is based on the consideration that the column (or column pedestal) tends to punch through the footing and failure occurs as a fracture in the form of a truncated pyramid concentrated under the load (see Commentary Figure 1809.8). Foundation designs will normally result in concrete footing thicknesses that are greater than the minimum thicknesses prescribed in the code. The minimum thickness requirements for plain concrete footings are intended to provide adequate construction based on experience.

In compliance with the requirements of ACI 318, the edge thickness for plain concrete footings is not to be less than 8 inches (203 mm). In computing footing stresses (flexure, combined flexure, axial load and shear), however, the overall depth is to be 2 inches (51 mm) less than the actual thickness of the footing for all foundations on soil (see ACI 318 for design of plain concrete members) to allow for the irregularities of excavated earth surfaces and for possible contamination of the concrete by the soil in contact with the construction.

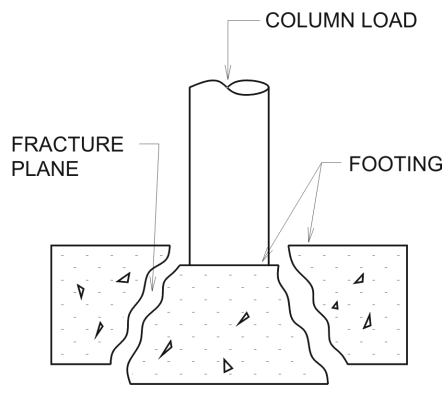

Figure 1809.8
PUNCHING SHEAR
(EXAGGERATED ILLUSTRATION)

The exception permits the edge thickness of plain concrete footings to be reduced to 6 inches (152 mm) for occupancies in Group R-3 of light-frame construction where the footing does not extend beyond a distance greater than the thickness of the footing on either side of the supported wall. For lightweight construction with the dimensional limitations given, shear stresses in the concrete will not usually govern the design thicknesses of such foundations. Plain concrete is not to be used for footings on piles.

1809.9 Masonry-unit footings. The design, materials and construction of masonry-unit footings shall comply with Sections 1809.9.1 and 1809.9.2, and the provisions of Chapter 21.

Exception: Where a specific design is not provided, masonry-unit footings supporting walls of light-frame construction shall be permitted to be designed in accordance with Table 1809.7.

❖ Sections 1809.9.1 and 1809.9.2 provide general requirements for the construction of solid masonry footings. This type of foundation was widely used until the middle of the last century when it was replaced by steel or wood grillage and eventually by more economical plain and reinforced concrete foundations. At that time, masonry foundations were built of either stone cut to specific sizes or of rubble stone of random sizes bonded together with mortar. Masonry footings under columns were usually constructed as high piers in the shape of truncated pyramids. While stone footings may still exist in very old structures, they are extinct in modern construction. Today, although scarcely used, masonry footings may be constructed of hard-burned brick in cement mortar to support the walls of lightweight construction, such as for low residential buildings. Brick footings are usually set on a full bed of mortar spread upon the earth or a grout sill. Stepped footing courses are recommended to be built with the brick units laid on edge, which are capable of resisting a greater transverse stress than flat courses.

The exception applies to footings supporting walls of light-frame construction when a specific footing design is not provided. The purpose of Table 1809.7 is to specify footing sizes and depths that can be used to safely support walls of light-frame construction. The table is based on anticipated loads on foundations due to wall, floor and roof systems.

1809.9.1 Dimensions. Masonry-unit footings shall be laid in Type M or S mortar complying with Section 2103.2.1 and the depth shall not be less than twice the projection beyond the wall, pier or column. The width shall not be less than 8 inches (203 mm) wider than the wall supported thereon.

❖ Footings made of masonry units are to be laid in Type M or S mortar complying with the requirements of

INTERNATIONAL CODE COUNCIL®
Copyright © 2015 ICC. ALL RIGHTS RESERVED. Accessed by David Dammon on Jun 21, 2017 12:30:52 PM pursuant to License Agreement with ICC. No further reproduction or distribution authorized. ANY UNAUTHORIZED REPRODUCTION OR DISTRIBUTION IS A VIOLATION OF THE FEDERAL COPYRIGHT ACT AND THE LICENSE AGREEMENT, AND SUBJECT TO CIVIL AND CRIMINAL PENALTIES THEREUNDER.

Section 2103.8. Type M is a high-strength mortar suitable for general use and, in particular, where maximum masonry compressive strength is required. It is also suitable for unreinforced masonry below grade and in construction that is in contact with earth. Type S is a general-use mortar where high lateral strength of masonry is required. It is specifically recommended for use in reinforced masonry.

Projections of footings beyond a wall, pier or column base are not to exceed dimensions by more than one-half the depth of the foundation. For example, a footing supporting a wall and consisting of three courses of brick with a depth of about 8 inches (203 mm) is not to project more than 4 inches (102 mm) ($^1/_2$ by 8 inches) beyond the base of the wall. This is to keep the shearing stresses in the footing within a safe limitation.

Masonry footings are not to be less than 8 inches (203 mm) wider than the thickness of the supported wall so as to provide adequate distribution of the wall load to the load-bearing soil.

1809.9.2 Offsets. The maximum offset of each course in brick foundation walls stepped up from the footings shall be $1^1/_2$ inches (38 mm) where laid in single courses, and 3 inches (76 mm) where laid in double courses.

❖ Foundation walls that entail stepping back successive courses of brick (called racking) are not to have horizontal offsets exceeding $1^1/_2$ inches (38 mm) from the face of the course below. If the steps are made in double course increments, then the offsets must not exceed 3 inches (76 mm).

Sometimes, wide footings are required so as not to exceed the safe load-bearing capacity of the supporting soil. Since footing projections beyond a wall are limited in dimension (see Section 1809.9.1), the wall must inevitably be stepped out to provide the proper base on the footing (see Commentary Figure 1809.9.2).

1809.10 Pier and curtain wall foundations. Except in *Seismic Design Categories* D, E and F, pier and curtain wall foundations shall be permitted to be used to support light-frame construction not more than two *stories above grade plane*, provided the following requirements are met:

1. All load-bearing walls shall be placed on continuous concrete footings bonded integrally with the *exterior wall* footings.
2. The minimum actual thickness of a load-bearing masonry wall shall not be less than 4 inches (102 mm) nominal or $3^5/_8$ inches (92 mm) actual thickness, and shall be bonded integrally with piers spaced 6 feet (1829 mm) on center (o.c.).
3. Piers shall be constructed in accordance with Chapter 21 and the following:
   - 3.1. The unsupported height of the masonry piers shall not exceed 10 times their least dimension.
   - 3.2. Where structural clay tile or hollow concrete masonry units are used for piers supporting beams and girders, the cellular spaces shall be filled solidly with concrete or Type M or S mortar.

     Exception: Unfilled hollow piers shall be permitted where the unsupported height of the pier is not more than four times its least dimension.
   - 3.3. Hollow piers shall be capped with 4 inches (102 mm) of solid masonry or concrete or the cavities of the top course shall be filled with concrete or grout.
4. The maximum height of a 4-inch (102 mm) load-bearing masonry foundation wall supporting wood frame walls and floors shall not be more than 4 feet (1219 mm) in height.

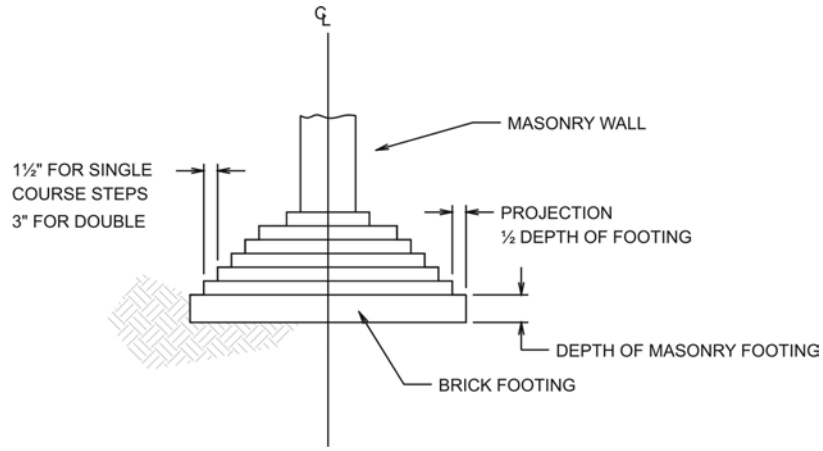

For SI: 1 inch = 25.4 mm.

Figure 1809.9.2
BRICK FOOTING OFFSET

INTERNATIONAL CODE COUNCIL®
Copyright © 2015 ICC. ALL RIGHTS RESERVED. Accessed by David Dammon on Jun 21, 2017 12:30:52 PM pursuant to License Agreement with ICC. No further reproduction or distribution authorized. ANY UNAUTHORIZED REPRODUCTION OR DISTRIBUTION IS A VIOLATION OF THE FEDERAL COPYRIGHT ACT AND THE LICENSE AGREEMENT, AND SUBJECT TO CIVIL AND CRIMINAL PENALTIES THEREUNDER.

5. The unbalanced fill for 4-inch (102 mm) foundation walls shall not exceed 24 inches (610 mm) for solid masonry, nor 12 inches (305 mm) for hollow masonry.

❖ Pier and curtain wall foundation systems are now and have been a very popular method of construction for many years, particularly throughout the eastern United States. The origin of the design is seen in many precolonial wood-frame buildings. Pier and curtain wall foundations are only permitted to support structures of light-frame construction (wood or light-gage steel framing members) not more than two stories in height and assigned to Seismic Design Category A, B or C. Seismic detailing requirements for higher seismic design categories have not yet been developed. The term "pier" used in this application means "pilaster" rather than a type of foundation. The term "curtain wall" refers to minimum 4-inch-thick (102 mm) masonry load-bearing walls. The provisions apply to simple wood-frame buildings where the combined loads are minimal.

This type of foundation system is also addressed in Section R404.1.5.3 of the *International Residential Code*® (IRC®), which includes an accompanying figure illustrating the code requirements. This IRC figure is reproduced here as Commentary Figure 1809.10.

1809.11 Steel grillage footings. Grillage footings of *structural steel elements* shall be separated with *approved* steel spacers and be entirely encased in concrete with at least 6

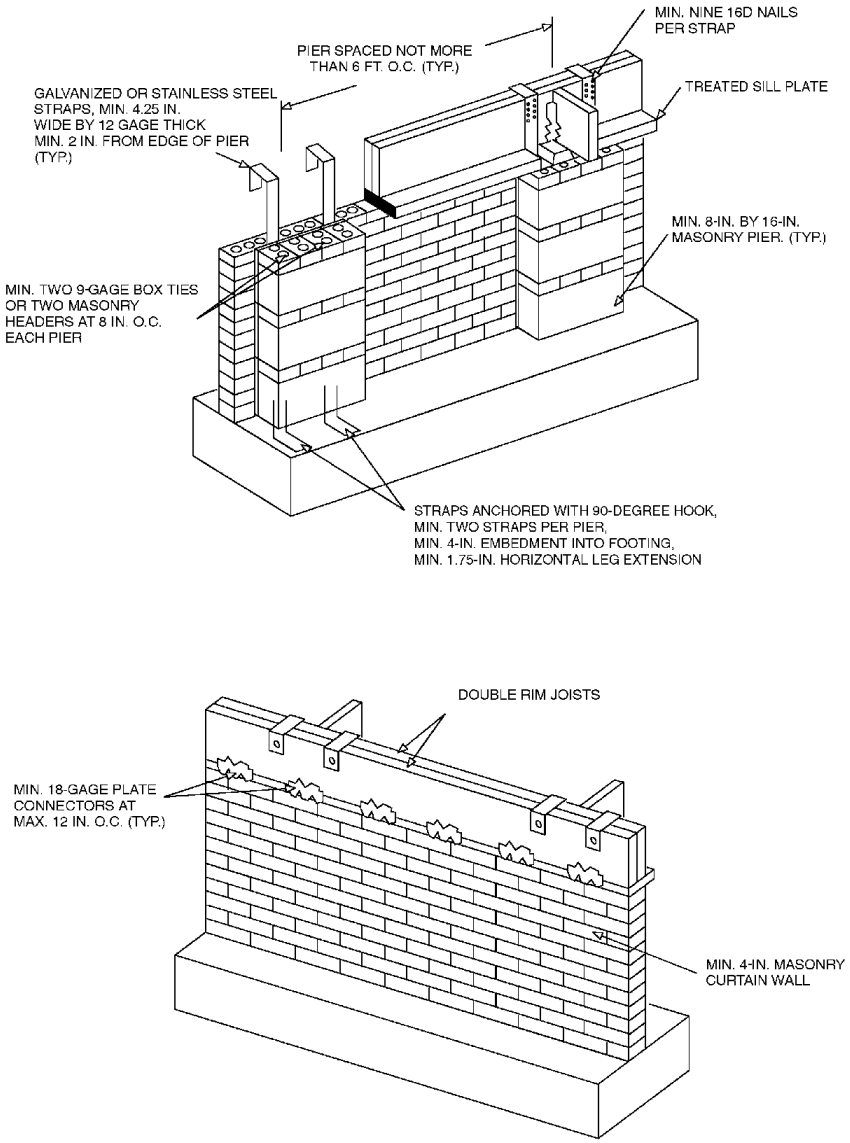

For SI: 1 inch = 25.4 mm, 1 foot = 304.8 mm.

Figure 1809.10
FOUNDATION WALL CLAY MASONRY CURTAIN WALL WITH CONCRETE MASONRY PIERS

INTERNATIONAL CODE COUNCIL®
Copyright © 2015 ICC. ALL RIGHTS RESERVED. Accessed by David Dammon on Jun 21, 2017 12:30:52 PM pursuant to License Agreement with ICC. No further reproduction or distribution authorized. ANY UNAUTHORIZED REPRODUCTION OR DISTRIBUTION IS A VIOLATION OF THE FEDERAL COPYRIGHT ACT AND THE LICENSE AGREEMENT, AND SUBJECT TO CIVIL AND CRIMINAL PENALTIES THEREUNDER.

inches (152 mm) on the bottom and at least 4 inches (102 mm) at all other points. The spaces between the shapes shall be completely filled with concrete or cement grout.

❖ Steel grillage footings were extensively used during the latter part of the 19th century, but the development and use of reinforced concrete foundations have made this type of construction all but obsolete. They are, however, still used for underpinning purposes. There are many steel grillage footings in existence in old buildings.

A typical grillage footing consists of two or more tiers of steel beams (usually I-sections) with each tier placed at right angles to the one below it. The beams in each tier are usually held together by a system of bolts and pipe spacers. The beams should be clean and unpainted, and the whole system completely filled and encased in concrete with at least 6 inches (152 mm) of cover on the bottom and 4 inches (102 mm) at all other points. In lieu of concrete (other than the encasement), the spaces between the steel beams may be filled with cement grout.

1809.12 Timber footings. Timber footings shall be permitted for buildings of Type V construction and as otherwise *approved* by the *building official*. Such footings shall be treated in accordance with AWPA U1 (Commodity Specification A, Use Category 4B). Treated timbers are not required where placed entirely below permanent water level, or where used as capping for wood piles that project above the water level over submerged or marsh lands. The compressive stresses perpendicular to grain in untreated timber footings supported upon treated piles shall not exceed 70 percent of the allowable stresses for the species and grade of timber as specified in the ANSI/AWC NDS.

❖ The use of timber footings is allowed only in Type V construction, or as otherwise approved by the building official. Such footings are commonly built as grillages of heavy timbers, using large sections, such as railroad ties.

If the footings are to be constructed at depths above the water table, they are to be given a preservative treatment by pressure processes to protect the materials from decay, fungi and harmful insects. Pressure treatment is to be in accordance with the requirements of the U1 standard of the American Wood Protection Association (AWPA). AWPA U1, Specification A, Use Category 4B, refers to sawn wood products that are used in contact with the ground. Except for use on cut surfaces, brush or spray applications of preservatives are not acceptable methods of treatment.

Preservative treatment by the pressure process within the limitations specified in AWPA U1 should not significantly affect the strength of the wood. Part of the process, however, involves the conditioning of timbers before treatment. Timbers conditioned by steaming or boiling under vacuum can suffer significant reductions in strength. This condition is recognized in the American Wood Council *National Design Specification*® (AWC NDS) by the use of the untreated factor C_u.

The design values for treated round timber piles given in this specification are adjusted to compensate for strength reductions because of conditioning prior to treatment. It is recommended that the values given for the several species of wood be used in the design of treated timber footings. Design values given in other tables contained in the AWC referenced standard are for general structural purposes using untreated lumber. While the section of this specification for pressure-preservative treatment stipulates that the design values apply to wood products that are pressure impregnated by an approved process, it is not apparent that reductions have been made to allow for possible strength loss in the wood because of the treatment process.

Untreated timber may be used when the footings are completely embedded in soil below the water level. Experience has shown that timber foundations permanently confined in water will stay sound and durable indefinitely. Wood submerged in fresh water cannot decay because the necessary air is excluded. It is not uncommon, however, to have changing ground-water levels because of changes in adjacent drainage systems and a variety of other subterranean conditions. Precautions should be taken so that untreated timber footings are placed at depths sufficiently below the groundwater level such that small drops in the water level will not expose the footings to air. Otherwise, decay will set in, causing settlements and possible structural failures.

The code also prescribes that compressive stresses perpendicular to grain in untreated timber footings supported upon piles are not to exceed 70 percent of the allowable stresses specified for the species and grade of timber given in the AWC referenced standard.

1809.13 Footing seismic ties. Where a structure is assigned to *Seismic Design Category* D, E or F, individual spread footings founded on soil defined in Section 1613.3.2 as *Site Class* E or F shall be interconnected by ties. Unless it is demonstrated that equivalent restraint is provided by reinforced concrete beams within slabs on grade or reinforced concrete slabs on grade, ties shall be capable of carrying, in tension or compression, a force equal to the lesser of the product of the larger footing design gravity load times the seismic coefficient, S_{DS}, divided by 10 and 25 percent of the smaller footing design gravity load.

❖ This section requires that spread footings on soft soil profiles be interconnected by ties when they support structures assigned to Seismic Design Categories D and higher. The purpose of this section is to preclude excessive movement of one column or wall with respect to another. One of the prerequisites of adequate structural performance during an earthquake is that the foundation of the structure acts as a unit. This is typically accomplished by tying together the individual footings with ties capable of carrying, in tension or compression, the smaller of 10 percent of the larger

INTERNATIONAL CODE COUNCIL®
Copyright © 2015 ICC. ALL RIGHTS RESERVED. Accessed by David Dammon on Jun 21, 2017 12:30:52 PM pursuant to License Agreement with ICC. No further reproduction or distribution authorized. ANY UNAUTHORIZED REPRODUCTION OR DISTRIBUTION IS A VIOLATION OF THE FEDERAL COPYRIGHT ACT AND THE LICENSE AGREEMENT, AND SUBJECT TO CIVIL AND CRIMINAL PENALTIES THEREUNDER.

footing gravity load multiplied by S_{DS} or 25 percent of the smaller footing design gravity load. S_{DS} is the design spectral response acceleration at short periods, as determined in Section 1613.3.4. This tie can be provided by concrete floor slabs or tie beams. The differential movement of the foundation should not exceed that included in the design of the seismic-force-resisting system.

SECTION 1810
DEEP FOUNDATIONS

1810.1 General. Deep foundations shall be analyzed, designed, detailed and installed in accordance with Sections 1810.1 through 1810.4.

❖ This section sets forth the general rules for analyzing, designing, detailing and installing deep foundations.

1810.1.1 Geotechnical investigation. Deep foundations shall be designed and installed on the basis of a geotechnical investigation as set forth in Section 1803.

❖ A foundations investigation is mandatory when deep foundations are used. Such investigations are needed to define as accurately as possible the subsurface conditions of soil and rock materials, establish the soil and rock profiles across the construction site and locate the ground-water table. Sometimes it may also be necessary to determine specific soil properties, such as shear strength, relative density, compressibility and other such technical data required for analyzing subsurface conditions. Foundation investigations may also be used to render such valuable data as information on existing construction at the site or on neighboring properties (including boring and test records), the type and condition of the existing structures, their ages, the type of foundations used and performance over the years. Knowledge of existing deleterious substances in the soils that could affect the durability (as well as the performance) of foundation elements, data on geologic conditions at the site as well as a history of seismic activity are also important.

1810.1.2 Use of existing deep foundation elements. Deep foundation elements left in place where a structure has been demolished shall not be used for the support of new construction unless satisfactory evidence is submitted to the *building official*, which indicates that the elements are sound and meet the requirements of this code. Such elements shall be load tested or redriven to verify their capacities. The design load applied to such elements shall be the lowest allowable load as determined by tests or redriving data.

❖ After the demolition of an existing building, any deep foundation elements remaining in place cannot be reused to support a new structure unless sufficient and reliable information is provided to the building official showing that the new loads to be imposed will be adequately supported by the existing deep foundation elements. This requirement is necessary because of the lack of adequate soil data and technical information on the material used and the unavailability of pile-driving records made during the construction of the existing deep foundation. The current condition of the deep foundation element is not known, since it may have deteriorated over time, possibly reducing its load capacity. Deep foundation capacities may be determined by load tests, or the elements may be retracted and redriven to verify their load capacities.

1810.1.3 Deep foundation elements classified as columns. Deep foundation elements standing unbraced in air, water or fluid soils shall be classified as columns and designed as such in accordance with the provisions of this code from their top down to the point where adequate lateral support is provided in accordance with Section 1810.2.1.

Exception: Where the unsupported height to least horizontal dimension of a cast-in-place deep foundation element does not exceed three, it shall be permitted to design and construct such an element as a pedestal in accordance with ACI 318.

❖ The section addresses the condition where deep foundation elements are not laterally supported by soil and, therefore, must be designed as columns. This design condition applies from the top of the element to a point at which the soil can be assumed to provide lateral support as described in Section 1810.2.1. The exception addresses concrete foundation elements with a height no greater than three times the least horizontal dimension, recognizing that these elements can be designed as pedestals under ACI 318.

1810.1.4 Special types of deep foundations. The use of types of deep foundation elements not specifically mentioned herein is permitted, subject to the approval of the *building official*, upon the submission of acceptable test data, calculations and other information relating to the structural properties and load capacity of such elements. The allowable stresses for materials shall not in any case exceed the limitations specified herein.

❖ Deep foundations are generally identified according to the materials used (concrete, steel or wood) or the methods of construction or installation. While the most commonly used types of deep foundations are addressed in this section, there are many variations of deep foundation types used in construction, including some special or proprietary types that are beyond the scope of the code.

However, while it is not the intent to preclude the use of such special or proprietary types of deep foundations, it is necessary to substantiate their structural performance by submitting test data, calculations, and information on structural properties, load capacity and installation procedures to the building official for approval.

INTERNATIONAL CODE COUNCIL®
Copyright © 2015 ICC. ALL RIGHTS RESERVED. Accessed by David Dammon on Jun 21, 2017 12:30:52 PM pursuant to License Agreement with ICC. No further reproduction or distribution authorized. ANY UNAUTHORIZED REPRODUCTION OR DISTRIBUTION IS A VIOLATION OF THE FEDERAL COPYRIGHT ACT AND THE LICENSE AGREEMENT, AND SUBJECT TO CIVIL AND CRIMINAL PENALTIES THEREUNDER.

1810.2 Analysis. The analysis of deep foundations for design shall be in accordance with Sections 1810.2.1 through 1810.2.5.

❖ This section provides requirements applicable to the analysis of deep foundations, such as lateral support, stability, settlement, lateral loads and group effects.

1810.2.1 Lateral support. Any soil other than fluid soil shall be deemed to afford sufficient lateral support to prevent buckling of deep foundation elements and to permit the design of the elements in accordance with accepted engineering practice and the applicable provisions of this code.

Where deep foundation elements stand unbraced in air, water or fluid soils, it shall be permitted to consider them laterally supported at a point 5 feet (1524 mm) into stiff soil or 10 feet (3048 mm) into soft soil unless otherwise *approved* by the *building official* on the basis of a geotechnical investigation by a *registered design professional*.

❖ The primary concern addressed in this section is the consideration of slenderness effects in the design of a compression element. Experience with deep foundation performance under loaded conditions has shown that elements embedded in earth, including even relatively soft and compressible clays, exhibit lateral restraint that is sufficient to prevent buckling.

Deep foundation elements that are driven into fluid soils, such as saturated silts, as well as portions of deep foundation elements that project above the supporting soil are not laterally supported and, therefore, may be susceptible to buckling. Under such conditions, these elements must be designed as columns in accordance with the applicable provisions of the code.

This section allows the assumption of lateral support at a prescribed embedment without requiring confirmation by a soils investigation. The embedment required is the distance into either stiff soil or soft soil (not necessarily the distance below the ground surface). Note that, while the terms “stiff soil” and “soft soil” are not defined, they are generally consistent with the terms used in Section 1613.3.2 for Site Classes D and E. This provision essentially provides a starting point for analyzing the fixity of the deep foundation element.

1810.2.2 Stability. Deep foundation elements shall be braced to provide lateral stability in all directions. Three or more elements connected by a rigid cap shall be considered braced, provided that the elements are located in radial directions from the centroid of the group not less than 60 degrees (1 rad) apart. A two-element group in a rigid cap shall be considered to be braced along the axis connecting the two elements. Methods used to brace deep foundation elements shall be subject to the approval of the *building official*.

Deep foundation elements supporting walls shall be placed alternately in lines spaced at least 1 foot (305 mm) apart and located symmetrically under the center of gravity of the wall load carried, unless effective measures are taken to provide for eccentricity and lateral forces, or the foundation elements are adequately braced to provide for lateral stability.

Exceptions:

1. Isolated cast-in-place deep foundation elements without lateral bracing shall be permitted where the least horizontal dimension is no less than 2 feet (610 mm), adequate lateral support in accordance with Section 1810.2.1 is provided for the entire height and the height does not exceed 12 times the least horizontal dimension.
2. A single row of deep foundation elements without lateral bracing is permitted for one- and two-family dwellings and lightweight construction not exceeding two *stories above grade plane* or 35 feet (10 668 mm) in *building height*, provided the centers of the elements are located within the width of the supported wall.

❖ A group of deep foundation elements designed to support a common load and, as may be required, to resist horizontal forces, must be braced or rigidly tied together to act as a single structural unit that will provide lateral stability in all directions. Deep foundation elements that are connected by a rigid, reinforced concrete pile cap are deemed to be braced construction that serves the intent of this provision.

Three or more deep foundation elements are generally used to support a building column load or other isolated concentrated load. In a three-pile group, lateral stability is provided by requiring that the elements are located such that they will not be less than 60 degrees (1.0 rad) apart as measured from the centroid of the group in a radial direction. For stability of deep foundation elements supporting a wall structure, the elements are braced by a continuous rigid footing and are alternately staggered in two lines that are at least 1 foot (305 mm) apart and symmetrically located on each side of the center of gravity of the wall. Other approved deep foundation arrangements may be used to support walls, provided that the elements are adequately braced and the lateral stability of the foundation construction is ensured.

Exception 1 addresses the use of isolated elements without lateral bracing. To qualify, elements must have widths (or diameters) of at least 2 feet (610 mm) and be proportioned so that the height (length) of the element is no more than 12 times the least lateral dimension. This is an empirical requirement that is intended to offset the concerns that typically require consideration in more slender elements.

For one- and two-family dwellings as well as lightweight construction that does not exceed two stories above grade plane or 35 feet (10 668 mm) in height, Exception 2 permits a single row of elements, rather than the minimum 1 foot (305 mm) offset, provided the deep foundation elements are located within the width of the supported wall. In this case, stability of the group is theoretically afforded only in the direction

INTERNATIONAL CODE COUNCIL®
Copyright © 2015 ICC. ALL RIGHTS RESERVED. Accessed by David Dammon on Jun 21, 2017 12:30:52 PM pursuant to License Agreement with ICC. No further reproduction or distribution authorized. ANY UNAUTHORIZED REPRODUCTION OR DISTRIBUTION IS A VIOLATION OF THE FEDERAL COPYRIGHT ACT AND THE LICENSE AGREEMENT, AND SUBJECT TO CIVIL AND CRIMINAL PENALTIES THEREUNDER.

of the line of the deep foundation elements. However, in this limited group of relatively lighter buildings, the cross walls, floor slabs and other structural components are assumed to provide some degree of lateral stability to the deep foundation system.

1810.2.3 Settlement. The settlement of a single deep foundation element or group thereof shall be estimated based on *approved* methods of analysis. The predicted settlement shall cause neither harmful distortion of, nor instability in, the structure, nor cause any element to be loaded beyond its capacity.

❖ A settlement analysis is performed to design a deep foundation system that will maintain the stability and structural integrity of the supported building or structure. Foundation systems that suffer serious settlements, particularly differential settlements, can cause structural damage to the supported structure as well as to the foundation itself.

The settlement analysis of an individual element is a complex procedure. In comparison, the analysis of a group of elements is even more complex because of the overlapping soil stresses caused by closely spaced piles. Analytical procedures vary with the type of elements and especially with the type of soil.

Settlements are of two basic types: immediate settlements are those that occur as soon as the load is applied and usually take place within a period of less than seven days; consolidation settlements are time dependent and take place over a long period of time. All cohesionless soils, such as granular materials consisting of sand, gravel or a mixture of both, which have a large coefficient of permeability (rapid draining properties), undergo immediate settlements. All fine-grained, saturated, cohesive soils, such as clays, undergo time-dependent consolidation settlements. Settlement analysis would generally include cases involving piers and end-bearing piles on rock or hard soils as well as friction-type piles in both granular and cohesive soils. Load tests are often performed to provide data that will aid the settlement analysis.

The code places no specific limitation on the amount of settlement. Instead, it states that the effects of any settlement, particularly differential settlements, should not be harmful to the structure. Thus, the tolerable settlement is largely dependent on the type of structure being considered. Guidance on tolerable settlements can be found in engineering textbooks such as *Soil Mechanics in Engineering Practice*, *Foundation Analysis and Design* and *Foundation Engineering*. As a rule, these references indicate that a total settlement of 1 inch (25 mm) is acceptable for the majority of structures, while other structures can tolerate even greater settlements without distress. On the other hand, a more restrictive settlement criterion may be necessary based on the needs of a specific structure. Current engineering practice is often based on an allowable total settlement of 1 inch (25 mm) with the objective of controlling the differential settlements to $^3/_4$ inch (19 mm) or less. The effects of differential settlements need to be considered in the structural design as a self-straining force, *T*, when designing for the load combinations of Section 1605.

1810.2.4 Lateral loads. The moments, shears and lateral deflections used for design of deep foundation elements shall be established considering the nonlinear interaction of the shaft and soil, as determined by a *registered design professional*. Where the ratio of the depth of embedment of the element to its least horizontal dimension is less than or equal to six, it shall be permitted to assume the element is rigid.

❖ This section addresses miscellaneous issues unique to the seismic design of deep foundations. If the length is less than or equal to six times the least horizontal dimension of the element, it can be assumed to be rigid. Then moments, shears and lateral deflections can be calculated accordingly. Where the length exceeds six times the least horizontal dimension, the nonlinear interaction of the element and soil effects are to be included in the analysis. The effect of abrupt changes in soil deposits, such as changes from soft to firm or loose to dense soils, should be included in the analysis.

1810.2.4.1 Seismic Design Categories D through F. For structures assigned to *Seismic Design Category* D, E or F, deep foundation elements on *Site Class* E or F sites, as determined in Section 1613.3.2, shall be designed and constructed to withstand maximum imposed curvatures from earthquake ground motions and structure response. Curvatures shall include free-field soil strains modified for soil-foundation-structure interaction coupled with foundation element deformations associated with earthquake loads imparted to the foundation by the structure.

Exception: Deep foundation elements that satisfy the following additional detailing requirements shall be deemed to comply with the curvature capacity requirements of this section.

1. Precast prestressed concrete piles detailed in accordance with Section 1810.3.8.3.3.
2. Cast-in-place deep foundation elements with a minimum longitudinal reinforcement ratio of 0.005 extending the full length of the element and detailed in accordance with Sections 18.7.5.2, 18.7.5.3 and 18.7.5.4 of ACI 318 as required by Section 1810.3.9.4.2.2.

❖ The first paragraph of this section requires special consideration of flexural loads on deep foundation elements due to earthquake motions. The following discussion taken from the NEHRP Provisions commentary, Section 7.5.4, provides justification for these requirements:

"Special consideration is required in the design of concrete piles subject to significant bending during

INTERNATIONAL CODE COUNCIL®
Copyright © 2015 ICC. ALL RIGHTS RESERVED. Accessed by David Dammon on Jun 21, 2017 12:30:52 PM pursuant to License Agreement with ICC. No further reproduction or distribution authorized. ANY UNAUTHORIZED REPRODUCTION OR DISTRIBUTION IS A VIOLATION OF THE FEDERAL COPYRIGHT ACT AND THE LICENSE AGREEMENT, AND SUBJECT TO CIVIL AND CRIMINAL PENALTIES THEREUNDER.

earthquake shaking. Bending can become crucial to element design where portions of the foundation piles are supported in soils such as loose granular materials and/or soft soils that are susceptible to large deformations and/or strength degradation. Severe pile bending problems can result from various combinations of soil conditions during strong ground shaking, for example:

1. Soil settlement at the pile-cap interface either from consolidation of soft soil prior to the earthquake or from soil compaction during the earthquake can create a free-standing short column adjacent to the pile cap.
2. Large deformations and/or reduction in strength resulting from liquefaction of loose, granular materials, can cause bending or conditions of free-standing columns.
3. Large deformations in soft soils can cause varying degrees of pile bending. The degree of bending will depend upon thickness and strength of the soft soil layer(s) and/or the properties of the soft/stiff soil interface(s).

"The designer needs to consider the variation in soil conditions and driven pile lengths in providing for pile ductility at potential high curvature interfaces. Interaction between the geotechnical and structural engineers is essential.

"It is prudent to design piles to remain functional during and following earthquakes in view of the fact that it is difficult to repair foundation damage. The desired foundation performance can be accomplished by proper selection and detailing of the pile foundation system. Such design should accommodate bending from both reaction to the building's inertial loads and those induced by the motions of the soils themselves."

1810.2.5 Group effects. The analysis shall include group effects on lateral behavior where the center-to-center spacing of deep foundation elements in the direction of lateral force is less than eight times the least horizontal dimension of an element. The analysis shall include group effects on axial behavior where the center-to-center spacing of deep foundation elements is less than three times the least horizontal dimension of an element. Group effects shall be evaluated using a generally accepted method of analysis; the analysis for uplift of grouped elements with center-to-center spacing less than three times the least horizontal dimension of an element shall be evaluated in accordance with Section 1810.3.3.1.6.

❖ This section also prescribes conditions under which group effects on the nominal pile strength, lateral as well as vertical, need to be considered in the analysis. In addition, it clarifies the conditions under which group effects for uplift must be considered.

1810.3 Design and detailing. Deep foundations shall be designed and detailed in accordance with Sections 1810.3.1 through 1810.3.12.

❖ This section provides requirements and guidance for the design and detailing of deep foundation elements. This includes material-specific criteria, allowable loads, dimensions, splices, pile caps, grade beams and seismic ties.

1810.3.1 Design conditions. Design of deep foundations shall include the design conditions specified in Sections 1810.3.1.1 through 1810.3.1.6, as applicable.

❖ This section covers design methods for concrete elements, guidance for composite elements, effects of mislocation, driven piles, helical piles and casings.

1810.3.1.1 Design methods for concrete elements. Where concrete deep foundations are laterally supported in accordance with Section 1810.2.1 for the entire height and applied forces cause bending moments no greater than those resulting from accidental eccentricities, structural design of the element using the load combinations of Section 1605.3 and the allowable stresses specified in this chapter shall be permitted. Otherwise, the structural design of concrete deep foundation elements shall use the load combinations of Section 1605.2 and *approved* strength design methods.

❖ This provision states what is typical in current practice for foundation design. For decades, structural concrete design has primarily been based on the strength design method. However, there is also a long tradition of using simple allowable stress design approaches for the proportioning of deep foundation elements (for both soil-foundation behavior and structural design). This section recognizes allowable stress design for elements that are concentrically loaded and laterally supported.

1810.3.1.2 Composite elements. Where a single deep foundation element comprises two or more sections of different materials or different types spliced together, each section of the composite assembly shall satisfy the applicable requirements of this code, and the maximum allowable load in each section shall be limited by the structural capacity of that section.

❖ Composite elements are made of two or more sections of different materials or different types that are spliced together to form a single deep foundation element. These elements are typically used when significant lengths are needed. Due to economic considerations and problems with splicing, composite elements are now used less frequently. An illustration of typical composite elements is shown in Commentary Figure 1810.3.1.2.

This section gives the general requirement that each section of a composite element must comply with the applicable provisions for that element type as

INTERNATIONAL CODE COUNCIL®
Copyright © 2015 ICC. ALL RIGHTS RESERVED. Accessed by David Dammon on Jun 21, 2017 12:30:52 PM pursuant to License Agreement with ICC. No further reproduction or distribution authorized. ANY UNAUTHORIZED REPRODUCTION OR DISTRIBUTION IS A VIOLATION OF THE FEDERAL COPYRIGHT ACT AND THE LICENSE AGREEMENT, AND SUBJECT TO CIVIL AND CRIMINAL PENALTIES THEREUNDER.

well as the material comprising that section. Furthermore, the element's overall load capacity must be based on the most restrictive permitted value for all of the sections.

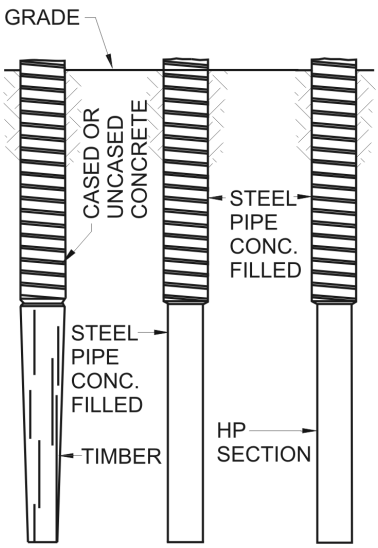

Figure 1810.3.1.2
COMPOSITE ELEMENTS

1810.3.1.3 Mislocation. The foundation or superstructure shall be designed to resist the effects of the mislocation of any deep foundation element by no less than 3 inches (76 mm). To resist the effects of mislocation, compressive overload of deep foundation elements to 110 percent of the allowable design load shall be permitted.

❖ Because of subsurface obstructions or other reasons, it is sometimes necessary to offset deep foundation elements a small distance from their intended locations or they may be driven out of position. In such cases, the load distribution in a group of elements may be changed from the design requirements and cause some of the elements to be overloaded. This section requires that the maximum compressive load on any deep foundation element caused by mislocation should not exceed 110 percent of the allowable design load. Elements exceeding this limitation must be extracted and installed in the proper location or other approved remedies must be applied, such as installing additional elements to balance the group.

1810.3.1.4 Driven piles. Driven piles shall be designed and manufactured in accordance with accepted engineering practice to resist all stresses induced by handling, driving and service loads.

❖ Precast elements must be properly designed to resist the stresses induced both by handling and driving operations, and later imposed by service loads. Care must be given during handling and installation to minimize or avoid possible damage to these elements, such as cracking, crushing or spalling.

1810.3.1.5 Helical piles. Helical piles shall be designed and manufactured in accordance with accepted engineering practice to resist all stresses induced by installation into the ground and service loads.

❖ See the definition of "Helical pile" in Section 1802.1. This section gives only general guidance to design in accordance with accepted engineering practice. Helical pile systems having ICC Evaluation Service reports can be viewed at www.icc-es.org (also see ICC Evaluation Service Acceptance Criteria 358).

1810.3.1.6 Casings. Temporary and permanent casings shall be of steel and shall be sufficiently strong to resist collapse and sufficiently water tight to exclude any foreign materials during the placing of concrete. Where a permanent casing is considered reinforcing steel, the steel shall be protected under the conditions specified in Section 1810.3.2.5. Horizontal joints in the casing shall be spliced in accordance with Section 1810.3.6.

❖ Because a casing is exposed to earth and water pressures, this section requires that casings are of adequate strength to resist serious damage or collapse and to maintain sufficient water tightness so as to prevent any foreign materials from entering during concrete placement (see Commentary Figure 1810.3.1.6 for an illustration of steel casings). Steel pipe casings driven with a mandrel can be torn or otherwise damaged because of underground obstructions, such as rock crevices. If this happens, the water tightness and structural integrity of the deep foundation element may be affected. Sometimes the buildup of ground pressures during driving may cause pile casings to squeeze or even collapse after the mandrel has been withdrawn.

1810.3.2 Materials. The materials used in deep foundation elements shall satisfy the requirements of Sections 1810.3.2.1 through 1810.3.2.8, as applicable.

❖ This section specifies minimum requirements for concrete, prestressing steel, structural steel timber, etc., for use in deep foundations.

1810.3.2.1 Concrete. Where concrete is cast in a steel pipe or where an enlarged base is formed by compacting concrete, the maximum size for coarse aggregate shall be $^3/_4$ inch (19.1 mm). Concrete to be compacted shall have a zero slump.

❖ This section limits the aggregate size in cased elements and enlarged base elements (see Section 1810.4.7). Concrete materials generally are to comply with the applicable requirements of Chapter 19. Coarse aggregate materials used in the concrete mix are not to exceed $^3/_4$ inch (19.1 mm) in size. Concrete that will be compacted must have a zero slump in order to provide a stiff mix capable of being compacted by a heavy drop weight.

INTERNATIONAL CODE COUNCIL®
Copyright © 2015 ICC. ALL RIGHTS RESERVED. Accessed by David Dammon on Jun 21, 2017 12:30:52 PM pursuant to License Agreement with ICC. No further reproduction or distribution authorized. ANY UNAUTHORIZED REPRODUCTION OR DISTRIBUTION IS A VIOLATION OF THE FEDERAL COPYRIGHT ACT AND THE LICENSE AGREEMENT, AND SUBJECT TO CIVIL AND CRIMINAL PENALTIES THEREUNDER.

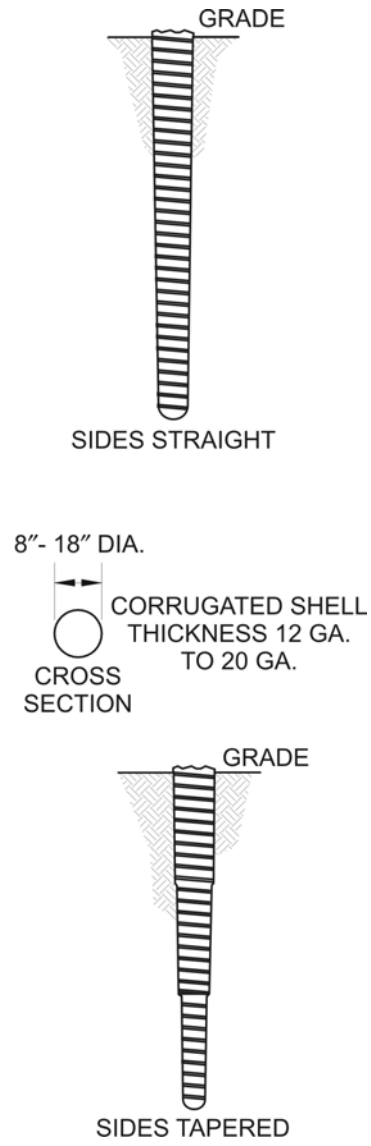

For SI: 1 inch = 25.4 mm.

Figure 1810.3.1.6
STEEL CASINGS

1810.3.2.1.1 Seismic hooks. For structures assigned to *Seismic Design Category* C, D, E or F, the ends of hoops, spirals and ties used in concrete deep foundation elements shall be terminated with seismic hooks, as defined in ACI 318, and shall be turned into the confined concrete core.

❖ In structures that have moderate or high seismic risk, transverse reinforcement confines the concrete core of deep foundation elements and provides lateral supports for longitudinal bars. The requirement to terminate hoops, spirals and ties with seismic hooks parallels requirements in Chapter 18 of ACI 318.

1810.3.2.1.2 ACI 318 Equation (25.8.3.3). Where this chapter requires detailing of concrete deep foundation elements in accordance with Section 18.7.5.4 of ACI 318, compliance with Equation (25.8.3.3) of ACI 318 shall not be required.

❖ In deep foundation elements, the axial compression is limited by the capacity of the soil-foundation interface. This is also reflected by the allowable stresses for these elements, which are limited to a smaller percentage of the concrete compressive strength. The purpose of ACI 318 Equation (25.8.3.3) is to provide significant residual compressive strength for concentrically loaded spiral columns subjected to very large axial compression. The amount of spiral reinforcement required by Equation (25.8.3.3) is intended to provide additional load-carrying strength for concentrically loaded columns equal to or slightly greater than the strength lost when the shell spalls off. The concrete cover required for uncased deep foundation elements is much greater than that for columns. As a result, application of Equation (25.8.3.3) to deep foundation elements results in amounts of transverse reinforcement that are unwarranted and often unplaceable. The primary concern in providing transverse confinement reinforcement for deep foundations is flexural ductility. Because proper design for deep foundation elements differs from that for columns in several respects, this provision relaxes an overly restrictive code requirement.

1810.3.2.2 Prestressing steel. Prestressing steel shall conform to ASTMA 416.

❖ Rods, strands or wires conforming to the requirements of ASTM A416 are used as prestressing steel in the manufacture of precast, prestressed concrete elements of both the pretensioned and the post-tensioned type. The most commonly used prestressing steel is the seven wire, uncoated, stress-relieved strand.

1810.3.2.3 Steel. Structural steel H-piles and structural steel sheet piling shall conform to the material requirements in ASTM A6. Steel pipe piles shall conform to the material requirements in ASTM A252. Fully welded steel piles shall be fabricated from plates that conform to the material requirements in ASTM A36, ASTM A283, ASTM A572, ASTM A588 or ASTM A690.

❖ The materials used in the manufacture of various types of steel piles must comply with the requirements of the listed ASTM standards.

1810.3.2.4 Timber. Timber deep foundation elements shall be designed as piles or poles in accordance with ANSI/AWC NDS. Round timber elements shall conform to ASTM D25. Sawn timber elements shall conform to DOC PS-20.

❖ Round timber elements are best suited as friction-type piles. They are not recommended to be driven through dense gravel, boulders or till, or for end-bearing piles on rock. While timber elements do not have load capacities of structural steel or concrete ele-

INTERNATIONAL CODE COUNCIL®
Copyright © 2015 ICC. ALL RIGHTS RESERVED. Accessed by David Dammon on Jun 21, 2017 12:30:52 PM pursuant to License Agreement with ICC. No further reproduction or distribution authorized. ANY UNAUTHORIZED REPRODUCTION OR DISTRIBUTION IS A VIOLATION OF THE FEDERAL COPYRIGHT ACT AND THE LICENSE AGREEMENT, AND SUBJECT TO CIVIL AND CRIMINAL PENALTIES THEREUNDER.

ments, they are probably the most commonly used type of deep foundation element throughout the United States, mainly because of their availability, ease of handling and, sometimes, for economic reasons.

Timber elements are shaped from tree trunks. Their lengths are dependent on the heights that the various species of trees used for making piles will grow. Timber piles are made as tapered sections because of the natural taper of tree trunks.

Round timber piles are usually made from Southern pine in lengths up to about 80 feet (24 384 mm) and from Pacific Coast Douglas fir in lengths up to about 125 feet (38 100 mm). Other species commonly used for piles are red oak and red pine. Timber piles that are 40 feet (12 192 mm) to 60 feet (18 288 mm) in length are common, but longer lengths cannot be obtained economically in all areas of the country. Untreated timber piles that are embedded below the permanent ground-water level (fresh water only) may last indefinitely. Under conditions where piles are required to extend above ground-water level but still remain totally embedded in the ground, the untreated wood material may be subject to decay. In cases where untreated timber piles extend above the ground surface into the air, they are exposed to decay and insect attack. The durability of timber piles is best served by applying treatment with an approved preservative.

This section requires timber deep foundation elements to be designed in accordance with the AWC NDS. Section 6 of AWC NDS provides the appropriate design values, different species of timber piles and the applicable adjustment factors. While timber piles have to be designed in accordance with the AWC NDS, they are usually only considered for design loads of 10 (89 kN) to 50 tons (445 kN).

One of the significant problems associated with timber pile installations is the possibility of damage caused by overdriving. Overdriving of wood piles may cause failure by bending, brooming at the tip, crushing or brooming at the butt end or splitting or breaking along the pile section (see Commentary Figure 1810.4.1.5). Another problem is the difficulties encountered when splicing timber piles to achieve greater lengths.

The ASTM D25 standard referenced in this section covers the physical characteristics of treated and untreated round timber piles. Essentially, the standard divides timber piles into two classifications: friction and end-bearing piles. The dimensional requirements for each classification are tabulated, giving the minimum circumference requirements for pile heads and the corresponding smaller tip circumference based on pile taper and lengths between 20 (6096 mm) and 120 feet (36 576 mm), measured in increments of 10 feet (3048 mm). The ASTM D25 standard also includes requirements for the quality of wood, tolerances on pile straightness, twist of grain, knots, holes, scars, wood checks, shakes, splits and other necessary information. However, the requirements stated in the standard do not relate to the several species of wood used for making timber piles, nor to their relative strengths. A timber pile with typical dimensions from ASTM D25 is shown in Commentary Figure 1810.3.2.4.

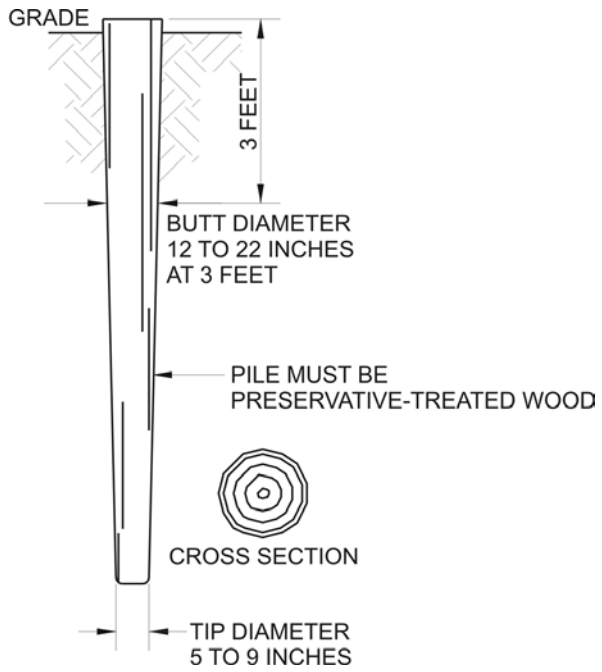

For SI: 1 inch = 25.4 mm, 1 foot = 304.8 mm.

Figure 1810.3.2.4
TIMBER PILES

1810.3.2.4.1 Preservative treatment. Timber deep foundation elements used to support permanent structures shall be treated in accordance with this section unless it is established that the tops of the untreated timber elements will be below the lowest ground-water level assumed to exist during the life of the structure. Preservative and minimum final retention shall be in accordance with AWPA U1 (Commodity Specification E, Use Category 4C) for round timber elements and AWPA U1 (Commodity Specification A, Use Category 4B) for sawn timber elements. Preservative-treated timber elements shall be subject to a quality control program administered by an *approved agency*. Element cutoffs shall be treated in accordance with AWPA M4.

❖ For a general discussion on the need for treating wood with preservatives, see the commentaries to Sections 1809.12, 1810.3.2.4 and 1810.3.2.5. This section of the code specifically requires that the preservative treatment of round timber piles and sawn timber piles by pressure processes conforms to the applicable requirements of AWPA U1. Round timber pile requirements are covered in Commodity Specifi-

INTERNATIONAL CODE COUNCIL®
Copyright © 2015 ICC. ALL RIGHTS RESERVED. Accessed by David Dammon on Jun 21, 2017 12:30:52 PM pursuant to License Agreement with ICC. No further reproduction or distribution authorized. ANY UNAUTHORIZED REPRODUCTION OR DISTRIBUTION IS A VIOLATION OF THE FEDERAL COPYRIGHT ACT AND THE LICENSE AGREEMENT, AND SUBJECT TO CIVIL AND CRIMINAL PENALTIES THEREUNDER.

cation E. Use Category 4C refers to conditions of very severe ground contact. Sawn timber piles are covered under Commodity Specification A and Use Category 4B, which refer to ground contact in severe environments. Note that round timber piles conform to ASTM D25, while sawn timber piles comply with the grading rules of the species for strength.

This section also requires that, for timber piles subjected to saltwater exposure, the treatment of piles with water-borne preservatives and creosote complies with quality control procedures administered by an approved agency. Guides used in establishing these procedures include American Wood Preservers' Bureau (AWPB) publications such as:

- MP1, *Quality Control and Inspection Procedures for Dual Treatment of Marine Piling Pressure Treated with Waterborne Preservatives and Creosote for Use in Marine Waters*;
- MP2, *Quality Control and Inspection Procedures for Marine Piling Pressure Treated with Creosote for Use in Marine Waters*; and
- MP4, *Quality Control and Inspection Procedures for Marine Piling Pressure Treated with Waterborne Preservatives for Use in Marine Waters*.

The field treatment of cuts and injuries to timber piles, including the treatment at pile cutoffs, with preservatives made for applications of creosote and creosote mixtures or with water-borne preservatives is covered by AWPA M4.

1810.3.2.5 Protection of materials. Where boring records or site conditions indicate possible deleterious action on the materials used in deep foundation elements because of soil constituents, changing water levels or other factors, the elements shall be adequately protected by materials, methods or processes *approved* by the *building official*. Protective materials shall be applied to the elements so as not to be rendered ineffective by installation. The effectiveness of such protective measures for the particular purpose shall have been thoroughly established by satisfactory service records or other evidence.

❖ Deep foundation elements are often exposed to the deteriorating effects of biological, chemical and physical actions caused by a hostile underground environment that may exist at the time of their installation or later develop at the site. Under such conditions, deep foundation element materials must be properly protected to ensure their expected durability.

The problems associated with element durability relate directly to the type of pile materials used. For example, concrete elements that are entirely embedded in undisturbed soil are deemed to be permanent installations. The level of the ground-water table is generally not a factor affecting the durability of concrete elements. Ground water that contains deleterious substances and readily flows through disturbed or granular soils, such as sand and gravel (regardless of the level of the water table), can have a deteriorating effect on concrete piles. Concrete elements embedded in fine-grained, impervious soils, such as clay, generally are not adversely affected by ground water containing harmful substances. Concrete can also be affected by exposure to soils having a high sulfate content, unless Type II or V portland cement is used in making the concrete mixture.

Concrete piles installed in saltwater, such as for buildings or other structures in waterfront construction, are subject to chemical action from polluted waters, frost action on porous concrete, spalling and rusting of steel reinforcement. Spalling action may become particularly critical under tidal conditions where alternate wetting and drying of the concrete occurs in conjunction with cycles of freezing and thawing. Generally, concrete can be protected from damage by such adverse conditions with the use of special cements, dense concrete mixtures rich in cement content, adequate concrete cover over the reinforcement, air entrainment, suitable concrete admixtures or special surface coatings.

Elements made of steel materials and embedded entirely in undisturbed soil (regardless of its type) are not significantly affected by corrosion due to oxidation, mainly because undisturbed soil is so deficient in oxygen that progressive corrosion is repressed. However, steel may be subject to serious corrosion and structural deterioration where ground water contains deleterious substances from coal piles, alkali soils, active cinder fills, chemical waste from manufacturing operations, etc. Under such conditions, steel piles may be protected by encasement in concrete or by applying protective coatings, such as coal-tar or other suitable materials. Steel piles installed in saltwater or exposed to a saltwater environment can corrode severely and should be protected by encasement in concrete or by the application of approved coatings. Elements that extend above ground level and are exposed to air should be painted in the same way as any type of structural steel construction to prevent rusting. Corrosion of load-bearing steel can also occur because of electrolytic action, and in such cases, cathodic protection may be required.

Timber piles totally embedded in the earth below the low point of ground-water level or entirely submerged in fresh water will last indefinitely without preservative treatment. However, timber piles that extend above the ground-water level or are exposed to air or saltwater are subject to decay as well as attacks by insects and marine borers. The piles may also be subjected to damage by the percolation of ground water heavily charged with alkali and acids. Under such conditions, timber piles must be pressure treated with preservatives in accordance with AWPA U1 listed in Chapter 35.

Generally, at any site where piles are to be installed and where the soil is suspect or there is sufficient evidence of an adverse underground environment, a soils investigation should be conducted to determine the need and method to protect the piles against possible deterioration.

INTERNATIONAL CODE COUNCIL®
Copyright © 2015 ICC. ALL RIGHTS RESERVED. Accessed by David Dammon on Jun 21, 2017 12:30:52 PM pursuant to License Agreement with ICC. No further reproduction or distribution authorized. ANY UNAUTHORIZED REPRODUCTION OR DISTRIBUTION IS A VIOLATION OF THE FEDERAL COPYRIGHT ACT AND THE LICENSE AGREEMENT, AND SUBJECT TO CIVIL AND CRIMINAL PENALTIES THEREUNDER.

1810.3.2.6 Allowable stresses. The allowable stresses for materials used in deep foundation elements shall not exceed those specified in Table 1810.3.2.6.

❖ This section refers the code user to the table of allowable stresses in order to identify the correct values that apply to various types of deep foundations. Note that Section 1810.1.4 allows "special types of piles" using the allowable stresses for materials that are specified herein.

TABLE 1810.3.2.6. See below.

❖ This table provides a complete list of the relevant allowable stresses for deep foundation element materials including concrete, reinforcing steel and structural steel.

1810.3.2.7 Increased allowable compressive stress for cased cast-in-place elements. The allowable compressive stress in the concrete shall be permitted to be increased as specified in Table 1810.3.2.6 for those portions of permanently cased cast-in-place elements that satisfy all of the following conditions:

1. The design shall not use the casing to resist any portion of the axial load imposed.
2. The casing shall have a sealed tip and be mandrel driven.
3. The thickness of the casing shall not be less than manufacturer's standard gage No.14 (0.068 inch) (1.75 mm).
4. The casing shall be seamless or provided with seams of strength equal to the basic material and be of a configuration that will provide confinement to the cast-in-place concrete.
5. The ratio of steel yield strength (F_y) to specified compressive strength (f'_c) shall not be less than six.
6. The nominal diameter of the element shall not be greater than 16 inches (406 mm).

❖ For cased cast-in-place concrete elements formed by driving permanent steel casings, the allowable design compressive stress in Table 1810.3.2.6 is generally not to exceed $0.33f'_c$. When the permanent casing complies with the requirements of this section, the allowable concrete compressive stress may be increased to $0.40f'_c$. The basis for this increase in allowable concrete stress is the added strength given to the concrete by the confining action of the steel casing. The general formula for increased allowable stress caused by confinement is:

$$f_c 0.33 f'_c \left(\frac{1 + 7.5 t f_y}{D f'_c} \right)$$

where:

f_c = Allowable concrete stress.

f'_c = Specified concrete strength.

TABLE 1810.3.2.6
ALLOWABLE STRESSES FOR MATERIALS USED IN DEEP FOUNDATION ELEMENTS

MATERIAL TYPE AND CONDITION	MAXIMUM ALLOWABLE STRESS[a]
1. Concrete or grout in compression[b]	
Cast-in-place with a permanent casing in accordance with Section 1810.3.2.7	$0.4 f'_c$
Cast-in-place in a pipe, tube, other permanent casing or rock	$0.33 f'_c$
Cast-in-place without a permanent casing	$0.3 f'_c$
Precast nonprestressed	$0.33 f'_c$
Precast prestressed	$0.33 f'_c - 0.27 f_{pc}$
2. Nonprestressed reinforcement in compression	$0.4 f_y \le 30{,}000$ psi
3. Steel in compression	
Cores within concrete-filled pipes or tubes	$0.5 F_y \le 32{,}000$ psi
Pipes, tubes or H-piles, where justified in accordance with Section 1810.3.2.8	$0.5 F_y \le 32{,}000$ psi
Pipes or tubes for micropiles	$0.4 F_y \le 32{,}000$ psi
Other pipes, tubes or H-piles	$0.35 F_y \le 16{,}000$ psi
Helical piles	$0.6 F_y \le 0.5 F_u$
4. Nonprestressed reinforcement in tension	
Within micropiles	$0.6 f_y$
Other conditions	$0.5 f_y \le 24{,}000$ psi
5. Steel in tension	
Pipes, tubes or H-piles, where justified in accordance with Section 1810.3.2.8	$0.5 F_y \le 32{,}000$ psi
Other pipes, tubes or H-piles	$0.35 F_y \le 16{,}000$ psi
Helical piles	$0.6 F_y \le 0.5 F_u$
6. Timber	In accordance with the AWC NDS

a. f'_c is the specified compressive strength of the concrete or grout; f_{pc} is the compressive stress on the gross concrete section due to effective prestress forces only; f_y is the specified yield strength of reinforcement; F_y is the specified minimum yield stress of steel; F_u is the specified minimum tensile stress of structural steel.

b. The stresses specified apply to the gross cross-sectional area within the concrete surface. Where a temporary or permanent casing is used, the inside face of the casing shall be considered the concrete surface.

INTERNATIONAL CODE COUNCIL®
Copyright © 2015 ICC. ALL RIGHTS RESERVED. Accessed by David Dammon on Jun 21, 2017 12:30:52 PM pursuant to License Agreement with ICC. No further reproduction or distribution authorized. ANY UNAUTHORIZED REPRODUCTION OR DISTRIBUTION IS A VIOLATION OF THE FEDERAL COPYRIGHT ACT AND THE LICENSE AGREEMENT, AND SUBJECT TO CIVIL AND CRIMINAL PENALTIES THEREUNDER.

t = Thickness of steel shell.

f_y = Yield strength of steel.

D = Diameter of steel shell.

This formula is from the Portland Cement Association's (PCA) *Report on Allowable Stresses in Concrete Piles*.

When values for the various terms required by Items 3 through 6 are inserted in the given formula, the resulting allowable stress is $0.40f'_c$. Higher allowable stresses would result if, for example, the shell thickness was increased or the shell diameter was decreased. This increased allowable stress caused by confinement applies only to nonaxial load-bearing steel where the stress in the steel is taken in hoop tension instead of axial compression.

Steel pile shells are to be No. 14 gage (U.S. standard) or thicker, but are not to be considered in the design of the pile to carry a portion of the pile load. The equivalent thickness for No. 14 gage material is approximately 0.068 inches (1.7 mm).

The shell for this type of pile must be seamless or have spirally welded seams and be of the strength and configuration required to provide structural confinement of the concrete fill. "Confinement" is the technical qualification that permits the use of increased allowable compressive stresses. Simply stated, the pile casing restrains the concrete in directions perpendicular to the applied stresses.

Item 5 requires that the ratio of the yield strength (f_y) of the steel used in pile casings to the design compressive strength of concrete (f'_c) is not to be less than six. The yield strength of the steel used for pile casings of the type specified in this section is normally 30,000 psi (207 MPa) or greater. For example, in selecting a casing with a yield strength (f_y) of 30,000 psi (207 MPa) and a concrete compressive strength of 3,000 psi (21 MPa), the resulting ratio (f_y / f'_c) would be 10, which is greater than the minimum required ratio of six. Therefore, the strengths of the pile materials are acceptable. For comparison, use the same steel casing and a specified concrete compressive strength (f'_c) of 5,000 psi (34 MPa). The resulting ratio would be exactly six. It can readily be seen that for concrete strengths greater than 5,000 psi (34 MPa), the type of steel used for the casing material would need to yield strengths greater than 30,000 psi (207 MPa). For example, in order to meet the minimum ratio of six as required by this section, if the concrete compressive strength (f'_c) was specified at 6,000 psi (41 MPa), the material to be used for the casing would require a steel yield strength of at least 36,000 psi (248 MPa) conforming to ASTM A36

Item 6 limits the nominal diameter of the element to 16 inches (406 mm) in order to qualify for an increase in the allowable design compressive stress.

Item 1 is consistent with current practice as well as the requirements of ACI 543R. Item 2 requires a sealed tip that produces a displacement pile with increased capacity.

1810.3.2.8 Justification of higher allowable stresses. Use of allowable stresses greater than those specified in Section 1810.3.2.6 shall be permitted where supporting data justifying such higher stresses is filed with the *building official*. Such substantiating data shall include the following:

1. A geotechnical investigation in accordance with Section 1803.
2. Load tests in accordance with Section 1810.3.3.1.2, regardless of the load supported by the element.

The design and installation of the deep foundation elements shall be under the direct supervision of a *registered design professional* knowledgeable in the field of soil mechanics and deep foundations who shall submit a report to the *building official* stating that the elements as installed satisfy the design criteria.

❖ In other parts of this chapter, limitations are specified for the stress values used for design purposes. These allowable stresses are stated as a percentage of some limiting strength property of the element's material. For example, allowable design stresses for deep foundation elements made of steel are stated as a percentage of the yield strengths of the several grades of steel typically used for pile construction. For concrete, the allowable design stress is prescribed as a percentage of the specified compression strength. The allowable design stresses permitted for timber elements are based on the natural strengths of the different species of wood used for deep foundations. The values have been developed and tabulated by AWC and include reductions in element strengths because of preservative treatment.

The allowable design stresses stipulated in the code for the different types of elements provide an adequate factor of safety against the dynamic forces of pile driving that may cause damage to the elements and prevent overstresses because of loading and subsoil conditions.

This section allows the use of higher allowable stresses when evidence supporting the values is submitted and approved by the building official. The data submitted to the building official should include analytical evaluations and findings from a foundation investigation as specified in Section 1803.5.5, and the results of load tests performed in accordance with the requirements of Section 1810.3.3.1.2. The technical data and the recommendation for the use of higher stress values must come from a registered engineer who is knowledgeable in soil mechanics and experienced in the design of pile foundations. This engineer is to supervise the deep foundation design work and witness the installation of the deep foundation so as to certify to the building official that the construction satisfies the design criteria. In any case, the use of greater design stresses is not to result in permitting design loads that are larger than one-half of the test loads (see Section 1810.3.3.1.2).

1810.3.3 Determination of allowable loads. The allowable axial and lateral loads on deep foundation elements shall be

INTERNATIONAL CODE COUNCIL®
Copyright © 2015 ICC. ALL RIGHTS RESERVED. Accessed by David Dammon on Jun 21, 2017 12:30:52 PM pursuant to License Agreement with ICC. No further reproduction or distribution authorized. ANY UNAUTHORIZED REPRODUCTION OR DISTRIBUTION IS A VIOLATION OF THE FEDERAL COPYRIGHT ACT AND THE LICENSE AGREEMENT, AND SUBJECT TO CIVIL AND CRIMINAL PENALTIES THEREUNDER.

determined by an *approved* formula, load tests or method of analysis.

❖ There are two general considerations for determining capacity as required for the design and installation of deep foundations. The first consideration involves the determination of the underlying soil or rock characteristics. The second is the application of approved driving formulas, load tests or accepted methods of analysis to determine the element capacities required to resist the axial and lateral loads they will be subjected to, as well as to provide the basis for the proper selection of driving equipment.

1810.3.3.1 Allowable axial load. The allowable axial load on a deep foundation element shall be determined in accordance with Sections 1810.3.3.1.1 through 1810.3.3.1.9.

❖ This section states the criteria for determining the capacity of deep foundation elements.

1810.3.3.1.1 Driving criteria. The allowable compressive load on any driven deep foundation element where determined by the application of an *approved* driving formula shall not exceed 40 tons (356 kN). For allowable loads above 40 tons (356 kN), the wave equation method of analysis shall be used to estimate driveability for both driving stresses and net displacement per blow at the ultimate load. Allowable loads shall be verified by load tests in accordance with Section 1810.3.3.1.2. The formula or wave equation load shall be determined for gravity-drop or power-actuated hammers and the hammer energy used shall be the maximum consistent with the size, strength and weight of the driven elements. The use of a follower is permitted only with the approval of the *building official*. The introduction of fresh hammer cushion or pile cushion material just prior to final penetration is not permitted.

❖ It has been accepted practice for many decades to predict the load capacity of an element by its resistance to driving as determined by a pile-driving formula. The simple premise upon which a pile-driving formula is founded is that as the resistance of a pile to driving increases, the pile's capacity to support loads also increases. While several pile formulas have been developed over the years, none have been completely dependable.

The Engineering News formula is the simplest and probably the most widely used in the United States. This calculation method, as well as other formulas in common use today, have generally shown poor correlations with load test results. However, the comparative differences between pile capacities as determined by driving formulas and the results of load tests are much smaller for soils consisting of free-draining, coarse-grained materials, such as sand and gravel, than for soils consisting of silt, clay or fine, dense sand.

The use of pile-driving formulas to determine pile capacities should generally be avoided, except on small jobs where the piles are to be driven in well-drained granular soils, and the cost of load testing cannot be justified.

1810.3.3.1.2 Load tests. Where design compressive loads are greater than those determined using the allowable stresses specified in Section 1810.3.2.6, where the design load for any deep foundation element is in doubt, or where cast-in-place deep foundation elements have an enlarged base formed either by compacting concrete or by driving a precast base, control test elements shall be tested in accordance with ASTM D1143 or ASTM D4945. At least one element shall be load tested in each area of uniform subsoil conditions. Where required by the *building official*, additional elements shall be load tested where necessary to establish the safe design capacity. The resulting allowable loads shall not be more than one-half of the ultimate axial load capacity of the test element as assessed by one of the published methods listed in Section 1810.3.3.1.3 with consideration for the test type, duration and subsoil. The ultimate axial load capacity shall be determined by a *registered design professional* with consideration given to tolerable total and differential settlements at design load in accordance with Section 1810.2.3. In subsequent installation of the balance of deep foundation elements, all elements shall be deemed to have a supporting capacity equal to that of the control element where such elements are of the same type, size and relative length as the test element; are installed using the same or comparable methods and equipment as the test element; are installed in similar subsoil conditions as the test element; and, for driven elements, where the rate of penetration (e.g., net displacement per blow) of such elements is equal to or less than that of the test element driven with the same hammer through a comparable driving distance.

❖ The most reliable method for determining pile capacity is by a load test. A load test should be conducted wherever feasible and used where the pile capacity is intended to exceed 40 tons (356 kN) per pile (see Section 1810.3.3.1.1). Test piles are to be of the same type and size intended for use in the permanent foundation and installed with the same equipment, by the same procedure and in the same soils intended or specified for the work. Load tests are to be conducted in accordance with the requirements of ASTM D1143 or D4945, which covers procedures for testing vertical or batter foundation piles, individually or in groups, to determine the ultimate pile load (pile capacity) and whether the pile or pile group is capable of supporting the load(s) without excessive or continuous settlement. Recognition, however, must be given to the fact that load-settlement characteristics and pile capacity determinations are based on data derived at the time and under conditions of the test. The long-term performance of a pile or group of piles supporting actual loads may produce behaviors that are different than those indicated by load test results. Judgement based on experience must be used to predict pile capacity and expected behavior.

The load-bearing capacity of all piles, except those seated on rock, does not reach the ultimate load until after a period of rest. The results of load tests cannot be deemed accurate or reliable unless there is an allowance for a period of adjustment. For piles driven in permeable soils, such as coarse-grained sand and

INTERNATIONAL CODE COUNCIL®
Copyright © 2015 ICC. ALL RIGHTS RESERVED. Accessed by David Dammon on Jun 21, 2017 12:30:52 PM pursuant to License Agreement with ICC. No further reproduction or distribution authorized. ANY UNAUTHORIZED REPRODUCTION OR DISTRIBUTION IS A VIOLATION OF THE FEDERAL COPYRIGHT ACT AND THE LICENSE AGREEMENT, AND SUBJECT TO CIVIL AND CRIMINAL PENALTIES THEREUNDER.

gravel, the waiting period may be as little as two or three days. For test piles driven in silt, clay or fine sand, the waiting period may be 30 days or longer. The waiting period may be determined by testing (i.e., by redriving piles) or from previous experience.

This section requires that at least one pile be tested in each area of uniform subsoil conditions. The statement should not be misconstrued to mean that the tested area is to have only one uniform stratum of subsurface material, but rather that the soil profile, which may consist of several layers (strata) of different materials, must represent a substantially unchanging cross section in each area to be tested.

The allowable pile load to be used for design purposes is not to be more than one-half of the test pile's ultimate axial load capacity, as determined in Section 1810.3.3.1.3. In establishing the pile capacity, the registered design professional must consider the tolerable settlement that can be structure dependent (see Section 1810.2.3).

The rate of penetration of production piles must be equal to or less than that of the test pile(s). All production piles should be of the same type, size and approximate length as the prototype test pile, as well as installed with comparable equipment and methods. Driven pile capacities are only valid when the same hammer is used, because different hammers of the same model, though comparable, can actually have different efficiencies. Production piles should also be installed in soils similar to those for the test pile.

1810.3.3.1.3 Load test evaluation methods. It shall be permitted to evaluate load tests of deep foundation elements using any of the following methods:

1. Davisson Offset Limit.
2. Brinch-Hansen 90-percent Criterion.
3. Butler-Hoy Criterion.
4. Other methods *approved* by the *building official*.

❖ This section lists generally accepted methods that can be used to determine the ultimate axial load capacity of test elements. Since no single method applies to all situations that are encountered, this list provides the necessary latitude to select a method of load test evaluation that is appropriate for the type of element being tested, the test procedure and the subsurface conditions. The Davisson Offset Limit is perhaps the most widely used method of test load evaluation. It has proven to provide capacities that are conservative, yet reasonable. The Brinch-Hansen 90-percent Criterion and Butler-Hoy Criterion are considered a little less conservative than Davisson, but are viable methods of evaluating test elements.

1810.3.3.1.4 Allowable frictional resistance. The assumed frictional resistance developed by any uncased cast-in-place deep foundation element shall not exceed one-sixth of the bearing value of the soil material at minimum depth as set forth in Table 1806.2, up to a maximum of 500 psf (24 kPa), unless a greater value is allowed by the *building official* on the basis of a geotechnical investigation as specified in Section 1803 or a greater value is substantiated by a load test in accordance with Section 1810.3.3.1.2. Frictional resistance and bearing resistance shall not be assumed to act simultaneously unless determined by a geotechnical investigation in accordance with Section 1803.

❖ Under certain circumstances, such as when a deep foundation element extends through cohesive soils, like clays, to a bearing stratum of compact sand and gravels, skin friction and end bearing act together to support the pile. However, the nature of load sharing between the two and whether both act simultaneously can be determined only by a soils investigation. Thus, the code requires that, in order to allow the design to be based on both skin friction and end bearing acting simultaneously, the assumption must be justified by a geotechnical investigation.

1810.3.3.1.5 Uplift capacity of a single deep foundation element. Where required by the design, the uplift capacity of a single deep foundation element shall be determined by an *approved* method of analysis based on a minimum factor of safety of three or by load tests conducted in accordance with ASTM D3689. The maximum allowable uplift load shall not exceed the ultimate load capacity as determined in Section 1810.3.3.1.2, using the results of load tests conducted in accordance with ASTM D3689, divided by a factor of safety of two.

Exception: Where uplift is due to wind or seismic loading, the minimum factor of safety shall be two where capacity is determined by an analysis and one and one-half where capacity is determined by load tests.

❖ Deep foundation elements subjected to uplift forces act in tension and are actually friction piles. The amount of tension that can be sustained by an element depends on the strength of the element material and the frictional or cohesive properties of the soil. Tensile resistance is not necessarily correlated with the bearing capacity of a deep foundation element under compressive load. For example, the tensile resistance of a friction pile in clay will usually be about the same value as its bearing capacity because the skin friction developed in cohesive soils is very large. In comparison, a friction pile installed in granular materials (noncohesive), such as sand, will develop a tensile resistance that is considerably less than its bearing capacity.

Analytical methods can be used to determine the ultimate uplift resistance of a deep foundation element, provided that the properties of the soil are well known. When the ultimate uplift resistance is established by analysis, a safety factor of three must be applied to determine the allowable uplift load of the element.

The response of a vertical or battered element to an axially applied uplift force is best determined by an extraction test performed in accordance with the requirements of ASTM D3689 and the provisions of this section.

Deep foundation elements must be well anchored

INTERNATIONAL CODE COUNCIL®
Copyright © 2015 ICC. ALL RIGHTS RESERVED. Accessed by David Dammon on Jun 21, 2017 12:30:52 PM pursuant to License Agreement with ICC. No further reproduction or distribution authorized. ANY UNAUTHORIZED REPRODUCTION OR DISTRIBUTION IS A VIOLATION OF THE FEDERAL COPYRIGHT ACT AND THE LICENSE AGREEMENT, AND SUBJECT TO CIVIL AND CRIMINAL PENALTIES THEREUNDER.

into the pile cap by adequate connection devices in order to be effective in resisting uplift forces. In turn, the pile cap must also be designed to resist uplift stresses. Sometimes, it is necessary to give special consideration in the design of the element itself to take the tensile stresses imposed by uplift conditions. For example, a cast-in-place or precast concrete element must be designed so that the tensile reinforcement will extend the full length of the element. Special consideration should also be given to the design of splices that must resist tension.

The exception reduces the required factor of safety for uplift due to wind or seismic loading. This is analogous to the long-standing practice of allowing stress increases for earthquake and wind loads.

1810.3.3.1.6 Uplift capacity of grouped deep foundation elements. For grouped deep foundation elements subjected to uplift, the allowable working uplift load for the group shall be calculated by a generally accepted method of analysis. Where the deep foundation elements in the group are placed at a center-to-center spacing less than three times the least horizontal dimension of the largest single element, the allowable working uplift load for the group is permitted to be calculated as the lesser of:

1. The proposed individual allowable working uplift load times the number of elements in the group.
2. Two-thirds of the effective weight of the group and the soil contained within a block defined by the perimeter of the group and the length of the element, plus two-thirds of the ultimate shear resistance along the soil block.

❖ The general requirement for grouped deep foundation elements is to determine the allowable uplift load by an approved method of analysis. However, if the spacing criteria for the deep foundation elements is satisfied, the code provides two options for determining the capacity of grouped deep foundation elements. The lesser of the two can be used as the allowable uplift. The first limitation is the single-element capacity as determined in the previous section multiplied by the number of elements in the group. The second is limited by the weight of the group plus the weight of the soil within the perimeter of the group, and the soil's shear resistance that will be developed during an uplift loading event.

1810.3.3.1.7 Load-bearing capacity. Deep foundation elements shall develop ultimate load capacities of at least twice the design working loads in the designated load-bearing layers. Analysis shall show that no soil layer underlying the designated load-bearing layers causes the load-bearing capacity safety factor to be less than two.

❖ The bearing capacity of a deep foundation element, whether it is a single acting element or part of a group, is determined as a deep foundation soil system. In this respect, element bearing capacity is a function of either the strength properties of the deep foundation element or the supporting strength of the soil. Obviously, the bearing capacity is controlled by the smaller value obtained in the two considerations.

In most cases, the supporting strength of the soil governs the bearing capacity of a deep foundation element. This section requires that the bearing capacity of an individual element or group of elements must not be more than one-half of the ultimate load capacities of the elements as a function of the bearing capacity of the soil.

Sometimes, soils investigations show that weaker layers of soil underlie the intended bearing strata. To avoid damaging settlements, the weaker soils must have a safety factor of 2 or more as determined by analytical methods. Where the safety factor is less than 2, elements must either be driven to deeper bearing soils to obtain adequate and safe support or the design capacity of the elements must be reduced, thus increasing the total number of elements in the foundation system.

1810.3.3.1.8 Bent deep foundation elements. The load-bearing capacity of deep foundation elements discovered to have a sharp or sweeping bend shall be determined by an *approved* method of analysis or by load testing a representative element.

❖ This section requires that deep foundation elements discovered to have sharp or sweeping bends, usually occurring because of obstructions encountered during driving operations, must be analyzed by an approved method or load tested by a representative element to determine their load-carrying capacity. Where acceptable, such deep foundation elements may be used at a reduced capacity. Otherwise, they should be abandoned and replaced.

1810.3.3.1.9 Helical piles. The allowable axial design load, P_a, of helical piles shall be determined as follows:

$$P_a = 0.5\, P_u \qquad \textbf{(Equation 18-4)}$$

where P_u is the least value of:

1. Sum of the areas of the helical bearing plates times the ultimate bearing capacity of the soil or rock comprising the bearing stratum.
2. Ultimate capacity determined from well-documented correlations with installation torque.
3. Ultimate capacity determined from load tests.
4. Ultimate axial capacity of pile shaft.
5. Ultimate axial capacity of pile shaft couplings.
6. Sum of the ultimate axial capacity of helical bearing plates affixed to pile.

❖ The allowable load on a helical pile is limited to one-half of the ultimate load. The ultimate load is taken as the least of the six criteria that are listed. Helical pile systems having ICC Evaluation Service reports can be viewed at www.icc-es.org (also see ICC Evaluation Service Acceptance Criteria 358).

INTERNATIONAL CODE COUNCIL®
Copyright © 2015 ICC. ALL RIGHTS RESERVED. Accessed by David Dammon on Jun 21, 2017 12:30:52 PM pursuant to License Agreement with ICC. No further reproduction or distribution authorized. ANY UNAUTHORIZED REPRODUCTION OR DISTRIBUTION IS A VIOLATION OF THE FEDERAL COPYRIGHT ACT AND THE LICENSE AGREEMENT, AND SUBJECT TO CIVIL AND CRIMINAL PENALTIES THEREUNDER.

1810.3.3.2 Allowable lateral load. Where required by the design, the lateral load capacity of a single deep foundation element or a group thereof shall be determined by an *approved* method of analysis or by lateral load tests to at least twice the proposed design working load. The resulting allowable load shall not be more than one-half of the load that produces a gross lateral movement of 1 inch (25 mm) at the lower of the top of foundation element and the ground surface, unless it can be shown that the predicted lateral movement shall cause neither harmful distortion of, nor instability in, the structure, nor cause any element to be loaded beyond its capacity.

❖ Because of wind loads, unbalanced building loads, earth pressures and the like, it is inevitable that piers, individual elements or groups of elements supporting buildings or other structures will be subjected to lateral forces. The distribution of these lateral forces to deep foundation elements largely depends on how the loads are carried down through the structural framing system and transferred through the supporting foundation to the deep foundation elements. The amount of lateral load that can be taken by the deep foundation is a function of the type of element used; the soil characteristics, particularly in the upper 10 feet (3048 mm) of the elements; the embedment of the element head (fixity); the magnitude of the axial compressive load on the deep foundation element; the nature of the lateral forces and the amount of horizontal element movement deemed acceptable.

The degree of fixity of the deep foundation element head is an important design consideration under very high lateral loading unless some other method, such as the use of batter piles, is employed to resist lateral loads. The fixing of the deep foundation element head against rotation reduces the lateral deflection. In general, pile butts are embedded 3 inches (76 mm) to 4 inches (102 mm) into the pile cap (see Section 1810.3.11) with no ties to the cap. These pile heads are neither fixed nor free, but somewhere in the middle. Such construction is satisfactory for most loading conditions.

The magnitude of friction developed between the surfaces of two structural elements in contact with each other is a function of the weight of loads applied. The larger the weight, the greater the frictional resistance developed. In the design of pile foundations, frictional resistance between the soil and the bottom of the pile caps (footings) should not be relied on to provide lateral restraint, since the vertical loads are transmitted through the elements to the supporting soil below and not to the ground immediately under the pile caps. Only the weights of the pile caps can supply some frictional resistance because such footings are constructed by placing fresh concrete on the soil, thus providing a positive contact. The weights of the pile caps in comparison to the magnitude of loads and lateral forces transmitted to the piles is nominal, however, and not too significant from a structural design standpoint. Also, in rare occurrences, soil has been known to settle under pile caps, leaving open spaces and thus eliminating the development of any frictional restraint.

Generally, about $^1/_4$-inch (6.4 mm) horizontal movement of a deep foundation element is considered acceptable without tests. Deep foundation elements with their upper sections embedded in deep strata of very soft or soft clays and silts should not be relied on to resist lateral forces of more than 1,000 pounds (4.45 kN) per element.

Where vertical elements are subjected to lateral forces exceeding acceptable limitations, the use of batter piles may be required. Lateral forces on many structures are also resisted by the embedded foundation walls and the sides of the pile caps.

The allowable lateral load capacity of a pier, single element or group of elements is to be determined either by approved analytical methods or load tests. Load tests are to be conducted to produce lateral forces that are twice the proposed design load. However, in no case is the allowable deep foundation element load to exceed one-half of the test load, which produces a gross lateral deep foundation element movement of 1 inch (25 mm) as measured at the ground surface.

1810.3.4 Subsiding soils. Where deep foundation elements are installed through subsiding fills or other subsiding strata and derive support from underlying firmer materials, consideration shall be given to the downward frictional forces that may be imposed on the elements by the subsiding upper strata.

Where the influence of subsiding fills is considered as imposing loads on the element, the allowable stresses specified in this chapter shall be permitted to be increased where satisfactory substantiating data are submitted.

❖ Where compacted fill or other surcharge loads are placed over compressible soils, the underlying material will consolidate because of the added load. The depth to suitable bearing material will, over a period of time, be shifted downward by the forces of the subsiding soil. Such forces caused by the weight of the fill are transmitted to the elements by skin friction and, in effect, serve as added loads on the elements. The magnitude of such loads must be determined by accepted analytical methods and be taken into account in the design of foundations.

1810.3.5 Dimensions of deep foundation elements. The dimensions of deep foundation elements shall be in accordance with Sections 1810.3.5.1 through 1810.3.5.3, as applicable.

❖ This section groups together any dimensional limitations that apply to various types of elements.

1810.3.5.1 Precast. The minimum lateral dimension of precast concrete deep foundation elements shall be 8 inches (203 mm). Corners of square elements shall be chamfered.

❖ This section prescribes the minimum dimension for precast concrete elements based on the size

INTERNATIONAL CODE COUNCIL®
Copyright © 2015 ICC. ALL RIGHTS RESERVED. Accessed by David Dammon on Jun 21, 2017 12:30:52 PM pursuant to License Agreement with ICC. No further reproduction or distribution authorized. ANY UNAUTHORIZED REPRODUCTION OR DISTRIBUTION IS A VIOLATION OF THE FEDERAL COPYRIGHT ACT AND THE LICENSE AGREEMENT, AND SUBJECT TO CIVIL AND CRIMINAL PENALTIES THEREUNDER.

required to withstand the driving operation. Chamfered corners consist of rounding off or smoothing the corners of a square pile. The triangular portions of the corners are typically weak spots and chamfering them reduces the risk of concrete spalling, cracking or breakage during driving.

1810.3.5.2 Cast-in-place or grouted-in-place. Cast-in-place and grouted-in-place deep foundation elements shall satisfy the requirements of this section.

❖ Dimensional limitations applicable to deep foundation elements that are cast-in-place are dependent on whether the element is cased or uncased.

1810.3.5.2.1 Cased. Cast-in-place deep foundation elements with a permanent casing shall have a nominal outside diameter of not less than 8 inches (203 mm).

❖ Steel-cased piles are the most widely used type of cast-in-place concrete deep foundation element. Essentially, they consist of mandrel-driven, light-gage steel shells or thin-walled pipes that are left permanently in place, reinforced as required by the design and filled with concrete. The shell is either a constant section for the full length of the element or a step-tapered shape. The presence of the casing permits a higher allowable stress in the concrete than for an uncased pile (see Table 1810.3.2.6).

1810.3.5.2.2 Uncased. Cast-in-place deep foundation elements without a permanent casing shall have a diameter of not less than 12 inches (305 mm). The element length shall not exceed 30 times the average diameter.

Exception: The length of the element is permitted to exceed 30 times the diameter, provided the design and installation of the deep foundations are under the direct supervision of a *registered design professional* knowledgeable in the field of soil mechanics and deep foundations. The *registered design professional* shall submit a report to the *building official* stating that the elements were installed in compliance with the *approved construction documents*.

❖ The dimensional relationship between the diameter and length of a deep foundation element has been utilized for many decades and is based on the premise that an element under axial load behaves somewhat as a column that could be susceptible to buckling. On the other hand, it has also been established through technological advancements, research and experience that deep foundation elements embedded in soils, even in soft materials, do not behave as free-standing columns and the risk of buckling is extremely low. Notwithstanding this kind of evidence, the code limitations placed on dimensional requirements based on diameter-to-length ratios have become accepted practices.

1810.3.5.2.3 Micropiles. Micropiles shall have an outside diameter of 12 inches (305 mm) or less. The minimum diameter set forth elsewhere in Section 1810.3.5 shall not apply to micropiles.

❖ The micropile does not have a minimum required size. Only the maximum diameter is specified.

1810.3.5.3 Steel. Steel deep foundation elements shall satisfy the requirements of this section.

❖ These dimensional limits are established for steel H-piles, pipes and tubes.

1810.3.5.3.1 Structural steel H-piles. Sections of structural steel H-piles shall comply with the requirements for HP shapes in ASTM A6, or the following:

1. The flange projections shall not exceed 14 times the minimum thickness of metal in either the flange or the web and the flange widths shall not be less than 80 percent of the depth of the section.
2. The nominal depth in the direction of the web shall not be less than 8 inches (203 mm).
3. Flanges and web shall have a minimum nominal thickness of $^3/_8$ inch (9.5 mm).

❖ Structural steel H-piles that conform to the ASTM A6 requirements for HP shapes meet the stated dimensional criteria in this section and for that reason do not need further verification. Otherwise, the dimensional requirements for manufacturing structural steel H-piles stated in this section must be satisfied. H-piles are proportioned to withstand the large impact stresses imposed on piles during hard driving. The thicknesses of the flanges and the web of a rolled-steel H-pile section are made equal in order to avoid damage that could occur during hard driving if the piles were proportioned with a mixture of thick and thinner parts. Flange widths are proportioned in relation to the depth of the pile section to provide rigidity in the weak axis.

It would seem unnecessary to repeat the dimensioning requirements for H-piles in the code, since they were originally created by the steel industry and have for decades been the industry standard used in the manufacture of hot-rolled steel shapes. The main purpose is to provide the dimensional basis for the fabrication of similar pile products made principally of welded steel plates and other necessary steel parts.

While it is the general preference and practice to use rolled-steel piles, occasionally it becomes necessary to fabricate special pile sections because of time problems imposed by mill scheduling and delivery; a special need for heavier H-pile sections than are customarily available; an immediate need for replacement piles; or for any other reason. The dimensional requirements contained in this section regulate the fabrication of such special piles and provide the building official with a basis for approval. Fabricated pile materials are to comply with the requirements of Section 1810.3.2.3.

INTERNATIONAL CODE COUNCIL®
Copyright © 2015 ICC. ALL RIGHTS RESERVED. Accessed by David Dammon on Jun 21, 2017 12:30:52 PM pursuant to License Agreement with ICC. No further reproduction or distribution authorized. ANY UNAUTHORIZED REPRODUCTION OR DISTRIBUTION IS A VIOLATION OF THE FEDERAL COPYRIGHT ACT AND THE LICENSE AGREEMENT, AND SUBJECT TO CIVIL AND CRIMINAL PENALTIES THEREUNDER.

This section requires that the flange projection not exceed 14 times the minimum thickness of metal in either the flange or the web. The measurement of the flange projection is shown in Commentary Figure 1810.3.5.3.1 and can be calculated by the indicated formula:

$$P = \frac{W - t_w}{2} \text{ or } \frac{W - t_f}{2}$$

where W is the flange width, t_w is the web thickness, tf is the flange thickness and P is the flange projection.

For example, the dimensions of an HP 14 x 73 pile section are as follows:

The width of flange, W = 14.585 inches.
The thickness of the flange, t_f = 0.505 inch.
The thickness of the web, t_w = .505 inch.
Therefore, the actual flange projection is:

$$P = \frac{14.585 - 0.505}{2} = 7.04 \text{ inches } (179\text{mm})$$

The maximum allowable flange projection is 14 × t_f or 14 × t_w (whichever is smaller).

Allowable flange projection: 14 × 0.505 = 7.07 inches (179.5 mm), which is greater than the actual flange projection of 7.04 inches (178.8 mm); therefore, an HP 14 × 73 pile is acceptable.

This section also specifies that flange widths are not to be less than 80 percent of the depth of the pile section. In actuality, practically all H-piles are manufactured so that their flanges are slightly greater in width (by fractions of an inch) than the depths of the sections. In fact, piles are squared so that their flange widths are about equal to their depth.

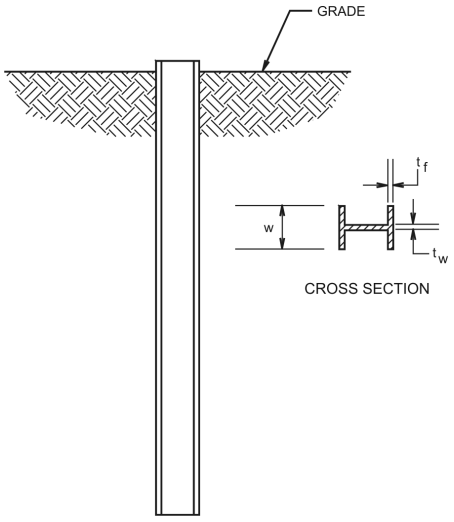

Figure 1810.3.5.3.1
STEEL H-PILE SECTIONS

Flange and web thickness is not to be less than $^3/_8$ inch (9.5 mm). In H-piles, the flange thicknesses are equal to the web thickness.

1810.3.5.3.2 Fully welded steel piles fabricated from plates. Sections of fully welded steel piles fabricated from plates shall comply with the following:

1. The flange projections shall not exceed 14 times the minimum thickness of metal in either the flange or the web and the flange widths shall not be less than 80 percent of the depth of the section.
2. The nominal depth in the direction of the web shall not be less than 8 inches (203 mm).
3. Flanges and web shall have a minimum nominal thickness of $^3/_8$ inch (9.5 mm).

❖ The three dimensional limitations for H piles in Section 1810.3.5.3.1 are also applicable to fully welded steel piles that are fabricated from plates.

1810.3.5.3.3 Structural steel sheet piling. Individual sections of structural steel sheet piling shall conform to the profile indicated by the manufacturer, and shall conform to the general requirements specified by ASTM A6.

❖ Structural steel sheet piles must conform to ASTM A6 general requirements. Manufacturers provide the necessary profile data for such elements.

1810.3.5.3.4 Steel pipes and tubes. Steel pipes and tubes used as deep foundation elements shall have a nominal outside diameter of not less than 8 inches (203 mm). Where steel pipes or tubes are driven open ended, they shall have a minimum of 0.34 square inch (219 mm^2) of steel in cross section to resist each 1,000 foot-pounds (1356 Nm) of pile hammer energy, or shall have the equivalent strength for steels having a yield strength greater than 35,000 psi (241 MPa) or the wave equation analysis shall be permitted to be used to assess compression stresses induced by driving to evaluate if the pile section is appropriate for the selected hammer. Where a pipe or tube with wall thickness less than 0.179 inch (4.6 mm) is driven open ended, a suitable cutting shoe shall be provided. Concrete-filled steel pipes or tubes in structures assigned to *Seismic Design Category* C, D, E or F shall have a wall thickness of not less than $^3/_{16}$ inch (5 mm). The pipe or tube casing for socketed drilled shafts shall have a nominal outside diameter of not less than 18 inches (457 mm), a wall thickness of not less than $^3/_8$ inch (9.5 mm) and a suitable steel driving shoe welded to the bottom; the diameter of the rock socket shall be approximately equal to the inside diameter of the casing.

Exceptions:

1. There is no minimum diameter for steel pipes or tubes used in micropiles.
2. For mandrel-driven pipes or tubes, the minimum wall thickness shall be $^1/_{10}$ inch (2.5 mm).

❖ Because of their uniform cross section from butt to tip, steel pipe elements provide unvarying resistance

INTERNATIONAL CODE COUNCIL®
Copyright © 2015 ICC. ALL RIGHTS RESERVED. Accessed by David Dammon on Jun 21, 2017 12:30:52 PM pursuant to License Agreement with ICC. No further reproduction or distribution authorized. ANY UNAUTHORIZED REPRODUCTION OR DISTRIBUTION IS A VIOLATION OF THE FEDERAL COPYRIGHT ACT AND THE LICENSE AGREEMENT, AND SUBJECT TO CIVIL AND CRIMINAL PENALTIES THEREUNDER.

to bending and lateral forces applied in any direction.

This section requires that seamless or welded-steel pipe and tube elements have a nominal outside diameter of no less than 8 inches (203 mm). The 8-inch (203 mm) minimum diameter is necessary in order to inspect the inside of the pile to observe any damage that may have occurred during the driving process. Smaller diameter pipes could allow soil to bridge the sides and cause plugging at their tips. The minimum diameter also provides stiffness for driving purposes.

A pipe to be driven open ended must be a minimum cross-sectional area which can be determined by one of two methods. The first is a long-standing rule of thumb that relates pile area to the hammer energy. The second approach recognizes the more up-to-date wave equation. The latter approach is commonly used to evaluate the induced driving stresses in piles.

Exception 1 clarifies that the minimum diameter is not applicable to micropiles. Exception 2 permits a thinner pipe thickness when it is mandrel-driven.

1810.3.5.3.5 Helical piles. Dimensions of the central shaft and the number, size and thickness of helical bearing plates shall be sufficient to support the design loads.

❖ The dimensions of the helical pile component are not explicitly limited. The code merely requires that the dimensions are established by the required capacity. Helical pile systems having ICC Evaluation Service reports can be viewed at www.icc-es.org (also see ICC Evaluation Service Acceptance Criteria 358).

1810.3.6 Splices. Splices shall be constructed so as to provide and maintain true alignment and position of the component parts of the deep foundation element during installation and subsequent thereto and shall be designed to resist the axial and shear forces and moments occurring at the location of the splice during driving and for design load combinations. Where deep foundation elements of the same type are being spliced, splices shall develop not less than 50 percent of the bending strength of the weaker section. Where deep foundation elements of different materials or different types are being spliced, splices shall develop the full compressive strength and not less than 50 percent of the tension and bending strength of the weaker section. Where structural steel cores are to be spliced, the ends shall be milled or ground to provide full contact and shall be full-depth welded.

Splices occurring in the upper 10 feet (3048 mm) of the embedded portion of an element shall be designed to resist at allowable stresses the moment and shear that would result from an assumed eccentricity of the axial load of 3 inches (76 mm), or the element shall be braced in accordance with Section 1810.2.2 to other deep foundation elements that do not have splices in the upper 10 feet (3048 mm) of embedment.

❖ While it is physically and economically better to drive deep foundation elements in one piece, site conditions sometimes necessitate that elements be driven in spliced sections. For example, when the soil- or rock-bearing stratum is located so deep below the ground that the leads on the driving equipment will not receive full-length elements, it becomes necessary to install the elements sectionally or, where possible, to take up the extra length by setting the tip in a preexcavated hole (see commentary, Section 1810.4.4). When elements are installed in areas such as existing buildings with restricted headroom, they are also required to be placed in spliced sections. There are a number of other reasons for field-splicing elements, such as restrictions on shipping lengths, the use of composite elements, etc.

This provision requires that splices be constructed so as to provide and maintain true alignment and position of the element sections during installation. Furthermore, splices must be of sufficient strength to transmit safely the vertical and lateral loads on the elements, as well as to resist the bending stresses that may occur at splice locations during the driving operations and under long-term service loads. Where the sections being spliced are the same type of element, splices are to develop at least 50 percent of the bending strength of the weaker section.

There are different methods employed in splicing elements based on the different materials used in pile construction. For example, timber piles are spliced by one of two commonly used methods. The first method uses a pipe sleeve with a length of about four to five times the diameter of the pile. The butting ends of the pile are sawn square for full contact of the two pile sections, and the spliced portions of the timber pile are trimmed smoothly around their periphery so as to fit tightly into the pipe sleeve. The other splicing method involves the use of steel straps and bolts. The butting ends of the pile sections are sawn square for full contact and proper alignment, and the four sides are planed flat to receive the splicing straps. This type of splicing can resist some uplift forces.

Splicing of precast concrete piles usually occurs at the head portions of the piles where, after the piles are driven to their required depth, pile heads are cut off or spliced to the desired elevation for proper embedment in the concrete pile caps. Any portion of the pile that is cracked or shattered by the driving operations or cutting off of pile heads should be removed and spliced with fresh concrete. To cut off a precast concrete pile section, a deep groove is chiseled around the pile exposing the reinforcing bars, which are then cut off (by torch) to desired heights or extensions. The pile section above the groove is snapped off (by crane) and a new pile section is freshly cast to tie in with the precast pile.

Steel H-piles are spliced in the same manner as steel columns, normally by welding the sections together. Welded splices may be welded-plate, welded-bar, or butt-welded splices, special welded splice fittings or a combination of these. Spliced materials should be kept on the inner faces of the H-pile sections to avoid forcing a hole in the ground larger than the pile, causing at least a temporary loss in frictional value and lateral support that might result in excessive bending stresses.

INTERNATIONAL CODE COUNCIL®
Copyright © 2015 ICC. ALL RIGHTS RESERVED. Accessed by David Dammon on Jun 21, 2017 12:30:52 PM pursuant to License Agreement with ICC. No further reproduction or distribution authorized. ANY UNAUTHORIZED REPRODUCTION OR DISTRIBUTION IS A VIOLATION OF THE FEDERAL COPYRIGHT ACT AND THE LICENSE AGREEMENT, AND SUBJECT TO CIVIL AND CRIMINAL PENALTIES THEREUNDER.

Steel pipe piles may be spliced by butt welding, sometimes using straps to guide the sections and provide more strength to the welded joint. Another method is to use inside sleeves having a driving fit, with a flange extending between the pipe sections. By applying bituminous cement or compound on the outside of the ring before driving, a water-tight joint is obtained.

The strength of a composite pile is governed not only by the weaker section, but also by the strength and details of the splice that joins and holds the pile sections together.

Guidance is also provided for splicing sections of different element types—i.e., a composite element. There are several problems associated with the splicing of sections comprising a composite pile. For example, if the length of a composite pile is of such dimension that it will fit in the leaders of the driving equipment, then the full length of the spliced pile can be driven as a continuous operation. However, if the pile is too long to fit in the leaders as a single unit, the pile must be installed in sections, and the driving would have to be interrupted in order to make the splice in the leaders.

It is most important that splicing devices be made in such a way that their installation will be simple and quick. When pile driving must be stopped to make a splice in the leaders, the time expended should not be of a duration that would allow the soil to set up (soil freeze) so that continued driving would produce excessive stresses in the pile.

Sometimes when the predetermined length of a composite pile is too long to fit in the leaders, but not overly long, the difference in length between the pile and the leaders may be made up by inserting the lower end of the spliced unit in a preexcavated hole, thus allowing for continuous driving of the pile (see Section 1810.4.4).

Another problem related to splicing occurs in trying to accurately align the pile sections. When the lower section of a composite pile is driven nearly full length into the ground, it is very difficult to determine its true direction, particularly if the pile has drifted off line because of soil pressures, subsurface obstructions, improper driving or for any other reason. When a pile section is connected to a section already driven in the ground, the upper section should be installed in the same direction as the longitudinal axis of the lower section, even though the direction may not be vertical. It is better to maintain a misdirection rather than to try to correct a situation and create a bend at the pile joint.

The selection of the splicing method to be used for assembling a composite pile should be based on the driving and service load stresses that must be resisted by the pile. Splices should be designed to prevent separation of the pile sections during construction and thereafter. Special consideration must be given to the design of splices to resist uplift forces, whether the piles are subject to heaving or specifically designed as tension piles. Designing the splice strong enough to develop about one and one-half to two times the design uplift force is proper engineering practice. Pile splices must also be designed to resist compressive, bending and shear stresses imposed by construction and service loads.

Additionally, splices that occur in the upper 10 feet (3048 mm) of element embedment are to be designed to resist the bending moments and shears at the allowable stress levels of the element material, based on an assumed element load eccentricity of 3 inches (76 mm), unless the element is properly braced. Proper bracing of a spliced element is deemed to exist if stability of the element group is present in accordance with Section 1810.2.2, provided that the other elements in the group do not have splices in the upper 10 feet (3048 mm) of their embedded length.

1810.3.6.1 Seismic Design Categories C through F. For structures assigned to *Seismic Design Category* C, D, E or F splices of deep foundation elements shall develop the lesser of the following:

1. The nominal strength of the deep foundation element.
2. The axial and shear forces and moments from the seismic load effects including overstrength factor in accordance with Section 12.4.3 or 12.14.3.2 of ASCE 7.

❖ More stringent minimum strength requirements are stated in this section and apply to structures with moderate to high seismic risk.

1810.3.7 Top of element detailing at cutoffs. Where a minimum length for reinforcement or the extent of closely spaced confinement reinforcement is specified at the top of a deep foundation element, provisions shall be made so that those specified lengths or extents are maintained after cutoff.

❖ This section accounts for the condition where an element encounters refusal at a shallower depth than intended and an unanticipated portion of the element is cut off. It is imperative that the required reinforcement be provided at the top of the element even when excess length is cut off.

1810.3.8 Precast concrete piles. Precast concrete piles shall be designed and detailed in accordance with Sections 1810.3.8.1 through 1810.3.8.3.

❖ Precast concrete piles are manufactured as nonprestressed (conventionally reinforced) or prestressed. Both types can be formed by bedcasting, spinning (centrifugal casting), vertical casting, slip forming or extrusion methods. They are usually made in square, octagonal or round shapes (see Commentary Figure 1810.3.8). Precast piles are manufactured as solid units or may be made with a hollow core. They can also be made with internal jet pipes or inspection ducts.

Precast piles are generally ordered in predetermined lengths based on the findings and analysis of soil exploratory work conducted at the project site.

This type of element is a displacement pile that is

INTERNATIONAL CODE COUNCIL®
Copyright © 2015 ICC. ALL RIGHTS RESERVED. Accessed by David Dammon on Jun 21, 2017 12:30:52 PM pursuant to License Agreement with ICC. No further reproduction or distribution authorized. ANY UNAUTHORIZED REPRODUCTION OR DISTRIBUTION IS A VIOLATION OF THE FEDERAL COPYRIGHT ACT AND THE LICENSE AGREEMENT, AND SUBJECT TO CIVIL AND CRIMINAL PENALTIES THEREUNDER.

normally installed with pile-driving equipment.

Precast concrete piles are to be designed in accordance with ACI 318. Nonprestressed concrete piles are usually considered for lengths of 40 to 50 feet (12 192 to 15 240 mm), while prestressed concrete piles are usually considered for lengths of 60 to 100 feet (18 288 to 30 480 mm). The general loading range for precast concrete piles is 40 to 400 tons (355 to 3558 kN).

Advantages of using precast concrete piles include their high load capacities and corrosion resistance. Disadvantages include their vulnerability to damage associated with handling, high breakage rates (particularly when spliced), and the considerable displacement of soil.

1810.3.8.1 Reinforcement. Longitudinal steel shall be arranged in a symmetrical pattern and be laterally tied with steel ties or wire spiral spaced center to center as follows:

1. At not more than 1 inch (25 mm) for the first five ties or spirals at each end; then
2. At not more than 4 inches (102 mm), for the remainder of the first 2 feet (610 mm) from each end; and then
3. At not more than 6 inches (152 mm) elsewhere.

The size of ties and spirals shall be as follows:

1. For piles having a least horizontal dimension of 16 inches (406 mm) or less, wire shall not be smaller than 0.22 inch (5.6 mm) (No. 5 gage).
2. For piles having a least horizontal dimension of more than 16 inches (406 mm) and less than 20 inches (508 mm), wire shall not be smaller than 0.238 inch (6 mm) (No. 4 gage).
3. For piles having a least horizontal dimension of 20 inches (508 mm) and larger, wire shall not be smaller than $^1/_4$ inch (6.4 mm) round or 0.259 inch (6.6 mm) (No. 3 gage).

❖ For precast piles, the longitudinal steel must be set in a symmetrical arrangement in the pile. To resist high-impact stresses, lateral steel ties used for confining the longitudinal reinforcement are to be provided at each end of the pile for a distance of 2 feet (610 mm) or more and be closely spaced at 4 inches (102 mm) on center, except that the first five ties from each end are to be spaced at 1-inch (25 mm) centers. Between these two closely tied ends, the longitudinal steel must be similarly tied at spacings not to exceed 6 inches (152 mm) o.c. so as to provide a reinforcing cage that will keep the pile from buckling or cracking during handling.

1810.3.8.2 Precast nonprestressed piles. Precast nonprestressed concrete piles shall comply with the requirements of Sections 1810.3.8.2.1 through 1810.3.8.2.3.

❖ Precast nonprestressed (conventionally reinforced) concrete piles are manufactured from concrete and have reinforcement consisting of a steel reinforcing cage made up of several longitudinal bars or tie steel in the form of individual hoops or spirals.

1810.3.8.2.1 Minimum reinforcement. Longitudinal reinforcement shall consist of at least four bars with a minimum longitudinal reinforcement ratio of 0.008.

❖ This section specifies the minimum amount of longitudinal reinforcement where seismic effects are minimal or low. See Sections 1810.3.8.2.2 and

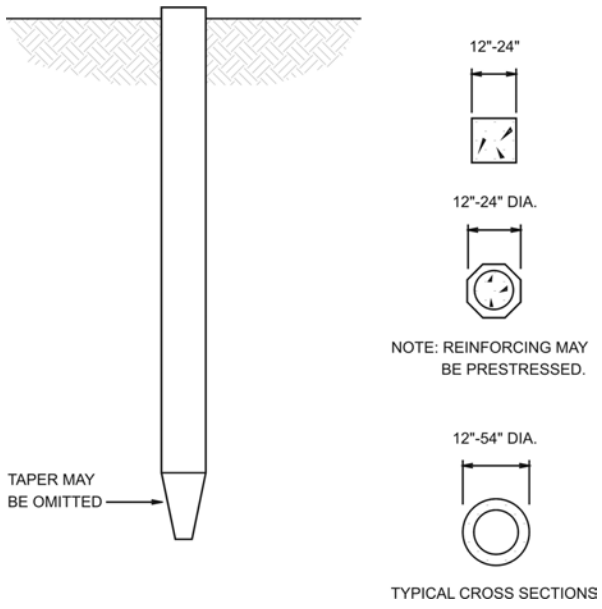

For SI: 1 inch = 25.4 mm.

Figure 1810.3.8
PRECAST NONPRESTRESSED AND PRESTRESSED CONCRETE PILES

INTERNATIONAL CODE COUNCIL®
Copyright © 2015 ICC. ALL RIGHTS RESERVED. Accessed by David Dammon on Jun 21, 2017 12:30:52 PM pursuant to License Agreement with ICC. No further reproduction or distribution authorized. ANY UNAUTHORIZED REPRODUCTION OR DISTRIBUTION IS A VIOLATION OF THE FEDERAL COPYRIGHT ACT AND THE LICENSE AGREEMENT, AND SUBJECT TO CIVIL AND CRIMINAL PENALTIES THEREUNDER.

1810.3.8.2.3 for reinforcement requirements for moderate and high seismic regions.

1810.3.8.2.2 Seismic reinforcement in Seismic Design Categories C through F. For structures assigned to *Seismic Design Category* C, D, E or F, precast nonprestressed piles shall be reinforced as specified in this section. The minimum longitudinal reinforcement ratio shall be 0.01 throughout the length. Transverse reinforcement shall consist of closed ties or spirals with a minimum $^3/_8$ inch (9.5 mm) diameter. Spacing of transverse reinforcement shall not exceed the smaller of eight times the diameter of the smallest longitudinal bar or 6 inches (152 mm) within a distance of three times the least pile dimension from the bottom of the pile cap. Spacing of transverse reinforcement shall not exceed 6 inches (152 mm) throughout the remainder of the pile.

❖ This section includes moderately ductile detailing requirements for precast nonprestressed piles in buildings assigned to Seismic Design Categories C and higher. The minimum longitudinal and transverse reinforcement requirements are so that piles will be able to accommodate seismically induced ground deformations. The 1-percent minimum longitudinal reinforcement is a standard requirement for reinforced concrete columns. A 6-bar-diameter or 6-inch (152 mm) spacing of transverse reinforcement is a fairly common requirement to prevent buckling of longitudinal compression reinforcement. The transverse reinforcement spacing requirement of this section for the confinement region of the element adjacent to the pile cap is somewhat less stringent than that, allowing an 8-bar-diameter or 6-inch (152 mm) spacing. Outside of this region, only the 6-inch (152 mm) spacing applies as already required by Section 1810.3.8.1.

1810.3.8.2.3 Additional seismic reinforcement in Seismic Design Categories D through F. For structures assigned to *Seismic Design Category* D, E or F, transverse reinforcement shall be in accordance with Section 1810.3.9.4.2.

❖ The confinement region of the element requires the more stringent and demanding detailing provided in the referenced sections of ACI 318, which are the requirements for special moment frames. These increased transverse reinforcement requirements are intended to provide a high degree of ductility in the upper portion (confinement region) of the element. Experience has shown that concrete elements tend to hinge or sustain damage immediately below the pile cap; therefore, tie spacing is reduced in this area to better confine the concrete.

1810.3.8.3 Precast prestressed piles. Precast prestressed concrete piles shall comply with the requirements of Sections 1810.3.8.3.1 through 1810.3.8.3.3.

❖ Precast prestressed concrete piles are either of the pretensioned or post-tensioned type. Pretensioned piles are normally cast in a plant in their full lengths, as predetermined by soils investigations and engineering analyses. The reinforcement in the concrete pile consists of tendons (stressing steel) that are tensioned before the concrete is placed. After casting and when the concrete has attained sufficient strength, the stretched tendons are released from their anchorage, thus placing the pile in continuous compression. In comparison, post-tensioned piles are made in a plant or on the job site, and the tendons are released after the concrete has hardened. In addition to the tendons, this type of pile also contains mild reinforcing steel to resist the handling stresses before the stressing steel is tensioned.

One of the primary advantages of prestressed over nonprestressed concrete piles is durability. Since the concrete is under continuous compression, hairline cracks are kept tightly closed and, thus, are more durable. Another advantage is that the tensile stresses that can develop in the concrete under certain driving conditions are less critical. Prestressed concrete piles are best suited for friction piles in sand, gravel and clays.

The purpose for prestressing concrete piles is to place the concrete under continuous compression so that any hairline cracks that may develop will be kept tightly closed and to prevent possible injury to the pile from tensile stresses that may occur during installation operations. The handling and driving of prestressed piles do not require the same degree of care as needed to install conventionally reinforced concrete piles. As a general rule, prestressed piles are more durable than precast reinforced piles.

1810.3.8.3.1 Effective prestress. The effective prestress in the pile shall not be less than 400 psi (2.76 MPa) for piles up to 30 feet (9144 mm) in length, 550 psi (3.79 MPa) for piles up to 50 feet (15 240 mm) in length and 700 psi (4.83 MPa) for piles greater than 50 feet (15 240 mm) in length.

Effective prestress shall be based on an assumed loss of 30,000 psi (207 MPa) in the prestressing steel. The tensile stress in the prestressing steel shall not exceed the values specified in ACI 318.

❖ For prestressed concrete piles, the effective prestress (the stress remaining in the pile after all losses have occurred—excluding the effect of superimposed loads and the weight of the pile) is not to be less than the specified values for the various lengths. Experience has shown that an effective prestress less than the minimum value prescribed herein is sometimes inadequate in preventing or controlling cracking of the concrete during the handling and installation operations. This section also requires the effective prestress to be based on an assumed loss of 30,000 psi (207 MPa) in the prestressing steel and the tensile stresses in the steel not to exceed the values set forth in ACI 318.

1810.3.8.3.2 Seismic reinforcement in Seismic Design Category C. For structures assigned to *Seismic Design Category* C, precast prestressed piles shall have transverse reinforcement in accordance with this section. The volumetric ratio of spiral reinforcement shall not be less than the amount

INTERNATIONAL CODE COUNCIL®
Copyright © 2015 ICC. ALL RIGHTS RESERVED. Accessed by David Dammon on Jun 21, 2017 12:30:52 PM pursuant to License Agreement with ICC. No further reproduction or distribution authorized. ANY UNAUTHORIZED REPRODUCTION OR DISTRIBUTION IS A VIOLATION OF THE FEDERAL COPYRIGHT ACT AND THE LICENSE AGREEMENT, AND SUBJECT TO CIVIL AND CRIMINAL PENALTIES THEREUNDER.

required by the following formula for the upper 20 feet (6096 mm) of the pile.

$$\rho_s = 0.12 f'_c / f_{yh} \quad \textbf{(Equation 18-5)}$$

where:

f'_c = Specified compressive strength of concrete, psi (MPa).

f_{yh} = Yield strength of spiral reinforcement ≤ 85,000 psi (586 MPa).

ρ_s = Spiral reinforcement index (vol. spiral/vol. core).

At least one-half the volumetric ratio required by Equation 18-5 shall be provided below the upper 20 feet (6096 mm) of the pile.

❖ This section gives requirements for precast prestressed piles supporting structures assigned to Seismic Design Category C. The minimum spiral reinforcement requirement that results in ductile prestressed concrete piles is based on Precast/Prestressed Concrete Institute's (PCI) *Recommended Practice for Design, Manufacture and Installation of Prestressed Concrete Piling*. This document incorporates work done on piles in the United States and New Zealand.

These piles exhibit larger curvatures in the top 20 feet (6096 mm). This section requires spiral confinement reinforcement as determined by Equation 18-5. Based on ACI 318, this formula is deemed to provide for moderate ductility. In the lower portion of the element, the required reinforcing is reduced by one-half.

1810.3.8.3.3 Seismic reinforcement in Seismic Design Categories D through F. For structures assigned to *Seismic Design Category* D, E or F, precast prestressed piles shall have transverse reinforcement in accordance with the following:

1. Requirements in ACI 318, Chapter 18, need not apply, unless specifically referenced.
2. Where the total pile length in the soil is 35 feet (10 668 mm) or less, the lateral transverse reinforcement in the ductile region shall occur through the length of the pile. Where the pile length exceeds 35 feet (10 668 mm), the ductile pile region shall be taken as the greater of 35 feet (10 668 mm) or the distance from the underside of the pile cap to the point of zero curvature plus three times the least pile dimension.
3. In the ductile region, the center-to-center spacing of the spirals or hoop reinforcement shall not exceed one-fifth of the least pile dimension, six times the diameter of the longitudinal strand or 8 inches (203 mm), whichever is smallest.
4. Circular spiral reinforcement shall be spliced by lapping one full turn and bending the end of each spiral to a 90-degree hook or by use of a mechanical or welded splice complying with Section 25.5.7 of ACI 318.
5. Where the transverse reinforcement consists of circular spirals, the volumetric ratio of spiral transverse reinforcement in the ductile region shall comply with the following:

$$\rho_s = 0.25(f'_c / f_{yh})(A_g / A_{ch} - 1.0) [0.5 + 1.4P/(f'_c A_g)] \quad \textbf{(Equation 18-6)}$$

but not less than

$$\rho_s = 0.12(f'_c / f_{yh}) [0.5 + 1.4P/(f'_c A_g)] \geq 0.12 f'_c / f_{yh} \quad \textbf{(Equation 18-7)}$$

and need not exceed:

$$\rho_s = 0.021 \quad \textbf{(Equation 18-8)}$$

where:

A_g = Pile cross-sectional area, square inches (mm^2).

A_{ch} = Core area defined by spiral outside diameter, square inches (mm^2).

f'_c = Specified compressive strength of concrete, psi (MPa).

f_{yh} = Yield strength of spiral reinforcement ≤ 85,000 psi (586 MPa).

P = Axial load on pile, pounds (kN), as determined from Equations 16-5 and 16-7.

ρ_s = Volumetric ratio (vol. spiral/vol. core).

This required amount of spiral reinforcement is permitted to be obtained by providing an inner and outer spiral.

6. Where transverse reinforcement consists of rectangular hoops and cross ties, the total cross-sectional area of lateral transverse reinforcement in the ductile region with spacing, s, and perpendicular dimension, h_c, shall conform to:

$$A_{sh} = 0.3 s\, h_c\, (f'_c / f_{yh})(A_g / A_{ch} - 1.0) [0.5 + 1.4P/(f'_c A_g)] \quad \textbf{(Equation 18-9)}$$

but not less than:

$$A_{sh} = 0.12 s\, h_c\, (f'_c / f_{yh}) [0.5 + 1.4P/(f'_c A_g)] \quad \textbf{(Equation 18-10)}$$

where:

f_{yh} = yield strength of transverse reinforcement ≤ 70,000 psi (483 MPa).

h_c = Cross-sectional dimension of pile core measured center to center of hoop reinforcement, inch (mm).

s = Spacing of transverse reinforcement measured along length of pile, inch (mm).

A_{sh} = Cross-sectional area of tranverse reinforcement, square inches (mm^2).

f'_c = Specified compressive strength of concrete, psi (MPa).

The hoops and cross ties shall be equivalent to deformed bars not less than No. 3 in size. Rectangular

INTERNATIONAL CODE COUNCIL®
Copyright © 2015 ICC. ALL RIGHTS RESERVED. Accessed by David Dammon on Jun 21, 2017 12:30:52 PM pursuant to License Agreement with ICC. No further reproduction or distribution authorized. ANY UNAUTHORIZED REPRODUCTION OR DISTRIBUTION IS A VIOLATION OF THE FEDERAL COPYRIGHT ACT AND THE LICENSE AGREEMENT, AND SUBJECT TO CIVIL AND CRIMINAL PENALTIES THEREUNDER.

hoop ends shall terminate at a corner with seismic hooks.

Outside of the length of the pile requiring transverse confinement reinforcing, the spiral or hoop reinforcing with a volumetric ratio not less than one-half of that required for transverse confinement reinforcing shall be provided.

❖ This section clarifies that Chapter 18 of ACI 318 does not generally apply to precast prestressed concrete elements unless it is explicitly referenced. That ACI 318 chapter was never intended for deep foundation elements.

The provisions found in this section are based on PCI's *Recommended Practice for Design, Manufacture and Installation of Prestressed Concrete Piling*. This document incorporates work done on piles in the United States and New Zealand.

The maximum volumetric ratio set forth in Equation 18-8 is based on testing that has shown the 0.021 maximum is sufficient for the smaller square precast prestressed concrete elements to perform in a ductile manner.

1810.3.9 Cast-in-place deep foundations. Cast-in-place deep foundation elements shall be designed and detailed in accordance with Sections 1810.3.9.1 through 1810.3.9.6.

❖ This section sets forth the design and detailing requirements for cast-in-place concrete deep foundation elements.

1810.3.9.1 Design cracking moment. The design cracking moment (ϕM_n) for a cast-in-place deep foundation element not enclosed by a structural steel pipe or tube shall be determined using the following equation:

$$\phi M_n = 3\sqrt{f'_c}S_m \qquad \textbf{(Equation 18-11)}$$

For SI: $\phi M_n = 0.25\sqrt{f'_c}S_m$

where:

f'_c = Specified compressive strength of concrete or grout, psi (MPa).

S_m = Elastic section modulus, neglecting reinforcement and casing, cubic inches (mm^3).

❖ For both uncased and cased cast-in-place deep foundation elements (but not concrete-filled pipes and tubes), reinforcement must be provided where moments exceed a reasonable lower boundary for the capacity of the plain concrete section. This criterion is consistent with ACI 318.

1810.3.9.2 Required reinforcement. Where subject to uplift or where the required moment strength determined using the load combinations of Section 1605.2 exceeds the design cracking moment determined in accordance with Section 1810.3.9.1, cast-in-place deep foundations not enclosed by a structural steel pipe or tube shall be reinforced.

❖ This section lists two conditions under which reinforcing must be provided in cast-in-place elements. Note the cracking moment is checked using the strength level load effects.

1810.3.9.3 Placement of reinforcement. Reinforcement where required shall be assembled and tied together and shall be placed in the deep foundation element as a unit before the reinforced portion of the element is filled with concrete.

Exceptions:

1. Steel dowels embedded 5 feet (1524 mm) or less shall be permitted to be placed after concreting, while the concrete is still in a semifluid state.
2. For deep foundation elements installed with a hollow-stem auger, tied reinforcement shall be placed after elements are concreted, while the concrete is still in a semifluid state. Longitudinal reinforcement without lateral ties shall be placed either through the hollow stem of the auger prior to concreting or after concreting, while the concrete is still in a semifluid state.
3. For Group R-3 and U occupancies not exceeding two stories of light-frame construction, reinforcement is permitted to be placed after concreting, while the concrete is still in a semifluid state, and the concrete cover requirement is permitted to be reduced to 2 inches (51 mm), provided the construction method can be demonstrated to the satisfaction of the *building official*.

❖ Main reinforcement consisting of a cage of longitudinal deformed reinforcing bars tied together with individual steel hoops or a spiral must be placed and securely held in position in the pile opening (cased or uncased) prior to the placement of concrete. Reinforcement required for resisting tensile stresses imposed by uplift forces may consist of a single bar or other structural steel unit or a cluster of bars placed at the center for the full length of the element.

Exception 1 recognizes the typical procedure for constructing cast-in-place concrete elements is to tie the head of the pile with the pile cap, inserting dowels in the freshly placed concrete pile to obtain an embedment of about 5 feet (1524 mm).

Exception 2 recognizes this restriction is not applicable to auger-injected concrete piles. Unlike drilled cast-in-place concrete piles, caged reinforcement for auger-placed piles cannot be installed prior to filling the pile hole with concrete because the hollow-stem auger must be positioned in the hole at all times during drilling and concreting operations. To facilitate this, the cage must be pushed through the concrete in fluid form after the auger has been withdrawn. The problem associated with the placement of caged reinforcement in this way, particularly where it involves long cages, is that it cannot be determined if the assembly has been positioned appropriately within the filled hole such that the reinforcement will have the required minimum cover at all places.

Exception 3 exempts up to two stories of light-frame construction in Group R-3 and U occupancies.

INTERNATIONAL CODE COUNCIL®
Copyright © 2015 ICC. ALL RIGHTS RESERVED. Accessed by David Dammon on Jun 21, 2017 12:30:52 PM pursuant to License Agreement with ICC. No further reproduction or distribution authorized. ANY UNAUTHORIZED REPRODUCTION OR DISTRIBUTION IS A VIOLATION OF THE FEDERAL COPYRIGHT ACT AND THE LICENSE AGREEMENT, AND SUBJECT TO CIVIL AND CRIMINAL PENALTIES THEREUNDER.

1810.3.9.4 Seismic reinforcement. Where a structure is assigned to *Seismic Design Category* C, reinforcement shall be provided in accordance with Section 1810.3.9.4.1. Where a structure is assigned to *Seismic Design Category* D, E or F, reinforcement shall be provided in accordance with Section 1810.3.9.4.2.

Exceptions:

1. Isolated deep foundation elements supporting posts of Group R-3 and U occupancies not exceeding two stories of light-frame construction shall be permitted to be reinforced as required by rational analysis but with not less than one No. 4 bar, without ties or spirals, where detailed so the element is not subject to lateral loads and the soil provides adequate lateral support in accordance with Section 1810.2.1.
2. Isolated deep foundation elements supporting posts and bracing from decks and patios appurtenant to Group R-3 and U occupancies not exceeding two stories of light-frame construction shall be permitted to be reinforced as required by rational analysis but with not less than one No. 4 bar, without ties or spirals, where the lateral load, *E*, to the top of the element does not exceed 200 pounds (890 N) and the soil provides adequate lateral support in accordance with Section 1810.2.1.
3. Deep foundation elements supporting the concrete foundation wall of Group R-3 and U occupancies not exceeding two stories of light-frame construction shall be permitted to be reinforced as required by rational analysis but with not less than two No. 4 bars, without ties or spirals, where the design cracking moment determined in accordance with Section 1810.3.9.1 exceeds the required moment strength determined using the load combinations with overstrength factor in Section 12.4.3.2 or 12.14.3.2 of ASCE 7 and the soil provides adequate lateral support in accordance with Section 1810.2.1.
4. Closed ties or spirals where required by Section 1810.3.9.4.2 shall be permitted to be limited to the top 3 feet (914 mm) of deep foundation elements 10 feet (3048 mm) or less in depth supporting Group R-3 and U occupancies of *Seismic Design Category* D, not exceeding two stories of light-frame construction.

❖ This section prescribes the necessary seismic reinforcement for cast-in-place deep foundation elements. Exception 1 exempts isolated deep foundation elements from the transverse reinforcement requirements of this section. Exceptions 2 through 4 allow lesser reinforcement than what is required by this section for residential structures, given certain conditions.

1810.3.9.4.1 Seismic reinforcement in Seismic Design Category C. For structures assigned to *Seismic Design Category* C, cast-in-place deep foundation elements shall be reinforced as specified in this section. Reinforcement shall be provided where required by analysis.

A minimum of four longitudinal bars, with a minimum longitudinal reinforcement ratio of 0.0025, shall be provided throughout the minimum reinforced length of the element as defined below starting at the top of the element. The minimum reinforced length of the element shall be taken as the greatest of the following:

1. One-third of the element length.
2. A distance of 10 feet (3048 mm).
3. Three times the least element dimension.
4. The distance from the top of the element to the point where the design cracking moment determined in accordance with Section 1810.3.9.1 exceeds the required moment strength determined using the load combinations of Section 1605.2.

Transverse reinforcement shall consist of closed ties or spirals with a minimum $^3/_8$ inch (9.5 mm) diameter. Spacing of transverse reinforcement shall not exceed the smaller of 6 inches (152 mm) or 8-longitudinal-bar diameters, within a distance of three times the least element dimension from the bottom of the pile cap. Spacing of transverse reinforcement shall not exceed 16 longitudinal bar diameters throughout the remainder of the reinforced length.

Exceptions:

1. The requirements of this section shall not apply to concrete cast in structural steel pipes or tubes.
2. A spiral-welded metal casing of a thickness not less than the manufacturer's standard No. 14 gage (0.068 inch) is permitted to provide concrete confinement in lieu of the closed ties or spirals. Where used as such, the metal casing shall be protected against possible deleterious action due to soil constituents, changing water levels or other factors indicated by boring records of site conditions.

❖ Longitudinal and transverse reinforcement requirements prescribed by this section result in moderate ductility in buildings assigned to Seismic Design Category C to withstand seismically induced ground deformations that they can encounter. Separate transverse reinforcement is specified for the portions of the element within and outside of the potential plastic hinge zone.

The purpose of this section is to include element bending, which is a result of ground horizontal movement during an earthquake, in the structural design. The reinforcement in the element, required to resist the tension caused by element bending, increases the ductility of the foundation such that bending or shear failure is precluded.

1810.3.9.4.2 Seismic reinforcement in Seismic Design Categories D through F. For structures assigned to *Seismic Design Category* D, E or F, cast-in-place deep foundation elements shall be reinforced as specified in this section. Reinforcement shall be provided where required by analysis.

A minimum of four longitudinal bars, with a minimum longitudinal reinforcement ratio of 0.005, shall be provided throughout the minimum reinforced length of the element as

INTERNATIONAL CODE COUNCIL®
Copyright © 2015 ICC. ALL RIGHTS RESERVED. Accessed by David Dammon on Jun 21, 2017 12:30:52 PM pursuant to License Agreement with ICC. No further reproduction or distribution authorized. ANY UNAUTHORIZED REPRODUCTION OR DISTRIBUTION IS A VIOLATION OF THE FEDERAL COPYRIGHT ACT AND THE LICENSE AGREEMENT, AND SUBJECT TO CIVIL AND CRIMINAL PENALTIES THEREUNDER.

defined below starting at the top of the element. The minimum reinforced length of the element shall be taken as the greatest of the following:

1. One-half of the element length.
2. A distance of 10 feet (3048 mm).
3. Three times the least element dimension.
4. The distance from the top of the element to the point where the design cracking moment determined in accordance with Section 1810.3.9.1 exceeds the required moment strength determined using the load combinations of Section 1605.2.

Transverse reinforcement shall consist of closed ties or spirals no smaller than No. 3 bars for elements with a least dimension up to 20 inches (508 mm), and No. 4 bars for larger elements. Throughout the remainder of the reinforced length outside the regions with transverse confinement reinforcement, as specified in Section 1810.3.9.4.2.1 or 1810.3.9.4.2.2, the spacing of transverse reinforcement shall not exceed the least of the following:

1. 12 longitudinal bar diameters;
2. One-half the least dimension of the element; and
3. 12 inches (305 mm).

Exceptions:

1. The requirements of this section shall not apply to concrete cast in structural steel pipes or tubes.
2. A spiral-welded metal casing of a thickness not less than manufacturer's standard No. 14 gage (0.068 inch) is permitted to provide concrete confinement in lieu of the closed ties or spirals. Where used as such, the metal casing shall be protected against possible deleterious action due to soil constituents, changing water levels or other factors indicated by boring records of site conditions.

❖ This section is similar in intent to Section 1810.3.9.4.1, with increased minimum reinforcement requirements for ductility during earthquake ground motion that may be experienced by buildings assigned to Seismic Design Category D or higher. Separate transverse reinforcement requirements are given for portions of an element within and beyond the potential plastic hinge zone.

The purpose of this section is to include pile bending, which is a result of ground horizontal movement during an earthquake, in the structural design. The reinforcement in the pile, required to resist tension caused by pile bending, increases the ductility of the foundation such that bending or shear failure is precluded. The shear strength and confining ability of spiral-welded metal casing eliminates the need for special pile ties, a circumstance recognized in Exception 2.

1810.3.9.4.2.1 Site Classes A through D. For *Site Class* A, B, C or D sites, transverse confinement reinforcement shall be provided in the element in accordance with Sections 18.7.5.2, 18.7.5.3 and 18.7.5.4 of ACI 318 within three times the least element dimension of the bottom of the pile cap. A transverse spiral reinforcement ratio of not less than one-half of that required in Section 18.7.5.4(a) of ACI 318 shall be permitted.

❖ The specified confinement reinforcing similar to ACI 318 requirements for special moment frames is reduced in competent soils in recognition of the confinement attributed to those soils.

1810.3.9.4.2.2 Site Classes E and F. For *Site Class* E or F sites, transverse confinement reinforcement shall be provided in the element in accordance with Sections 18.7.5.2, 18.7.5.3 and 18.7.5.4 of ACI 318 within seven times the least element dimension of the pile cap and within seven times the least element dimension of the interfaces of strata that are hard or stiff and strata that are liquefiable or are composed of soft- to medium-stiff clay.

❖ The specified confinement reinforcing is similar to ACI 318 requirements for special moment frames.

1810.3.9.5 Belled drilled shafts. Where drilled shafts are belled at the bottom, the edge thickness of the bell shall not be less than that required for the edge of footings. Where the sides of the bell slope at an angle less than 60 degrees (1 rad) from the horizontal, the effects of vertical shear shall be considered.

❖ Deep foundation elements are sometimes belled out at their bottoms to increase bearing areas. Belled bottoms can be made by either hand excavation or a mechanical method involving underreaming with a belling bucket, as is commonly used in the construction of drilled elements.

The soil should be sufficiently cohesive so the roof of the bell will not collapse during excavation, cleanout operations and the placement of fresh concrete. Where the character of the soil is such that attempts at belling out the shaft at the bottom might not produce acceptable results, it would be preferable to continue the shaft into soil strata with better load-bearing values, allowing the loads to be carried by the smaller belled bottoms or to such depths that would permit the soils to carry the loads by side friction. The building official should ascertain the suitability of the soil for bell construction through geotechnical investigations and reports and by the recommendations of the design professional.

Bells must have vertical edges at their bottoms that are equal to the thickness requirements for concrete footings. The purpose of this specification is to prevent shear breaks in angled edges caused by soil pressures. Bell slopes (sides) are not to be less than 60 degrees (1 rad) from the horizontal, unless the effects of vertical shear are considered in the design. Commentary Figure 1810.3.9.5 illustrates these requirements.

1810.3.9.6 Socketed drilled shafts. Socketed drilled shafts shall have a permanent pipe or tube casing that extends down to bedrock and an uncased socket drilled into the bedrock, both filled with concrete. Socketed drilled shafts shall have

INTERNATIONAL CODE COUNCIL®
Copyright © 2015 ICC. ALL RIGHTS RESERVED. Accessed by David Dammon on Jun 21, 2017 12:30:52 PM pursuant to License Agreement with ICC. No further reproduction or distribution authorized. ANY UNAUTHORIZED REPRODUCTION OR DISTRIBUTION IS A VIOLATION OF THE FEDERAL COPYRIGHT ACT AND THE LICENSE AGREEMENT, AND SUBJECT TO CIVIL AND CRIMINAL PENALTIES THEREUNDER.

reinforcement or a structural steel core for the length as indicated by an *approved* method of analysis.

The depth of the rock socket shall be sufficient to develop the full load-bearing capacity of the element with a minimum safety factor of two, but the depth shall not be less than the outside diameter of the pipe or tube casing. The design of the rock socket is permitted to be predicated on the sum of the allowable load-bearing pressure on the bottom of the socket plus bond along the sides of the socket.

Where a structural steel core is used, the gross cross-sectional area of the core shall not exceed 25 percent of the gross area of the drilled shaft.

❖ The socketed drilled shaft is a high-load capacity, end-bearing type of deep foundation element. Essentially, it is constructed as a cased, cast-in-place concrete element formed by driving a thick-walled, open-ended steel pipe down to suitable rock material, cleaning out the soil materials within the pipe, drilling a socket into the rock, inserting a structural steel core or reinforcement into the pipe and then filling the pipe and drilled socket with concrete. The core material used in the pipe casing is a structural steel shape such as a wide flange section. Steel rails are also used. Core material is installed to extend from the bottom of the rock socket up to the head of the pile or part of the way up the casing, as determined by analysis. Commentary Figure 1810.3.9.6 depicts a socketed drilled shaft with a full-length structural core.

The principal structural feature of the socketed drilled shaft is the rock socket, which is filled with concrete and designed to take the full load of the element by end bearing and the frictional resistance offered by the rough walls of the socket.

The relationship between the depth of the socket and the bearing capacity of the rock cannot be determined with any great accuracy because of the natural joints, bedding planes and fissures generally found in rock formations. Experience has shown, however, that the frictional resistance in hard rock is often sufficient to carry the load. In the case of soft rock, the shear strength of the socket walls should be determined by testing rock samples. The purpose of the steel core is to bond with the concrete fill to act as a composite section and provide additional load-bearing capacity.

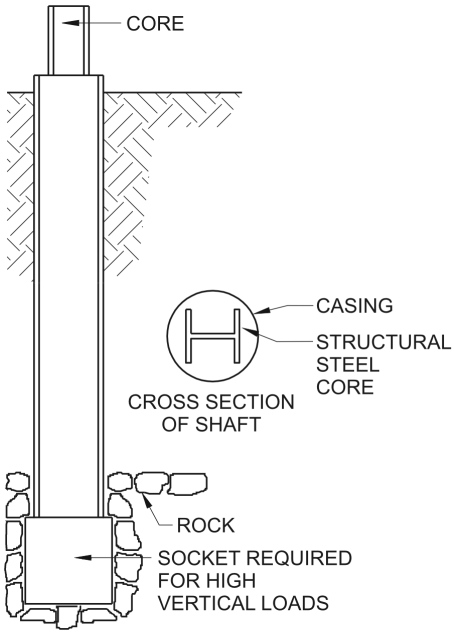

For SI: 1 inch = 25.4 mm.

Figure 1810.3.9.6
SOCKETED DRILLED SHAFTS

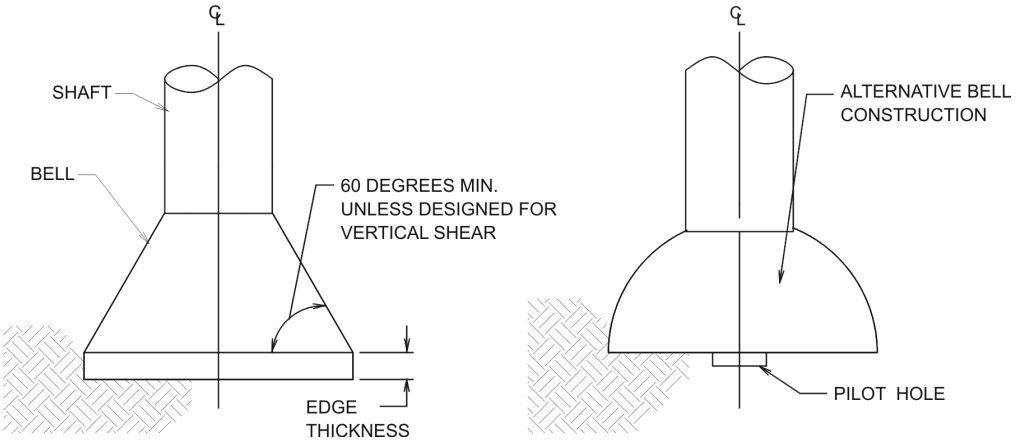

For SI: 1 degree = 0.01745 rad.

Figure 1810.3.9.5
BELLED DRILLED SHAFTS

INTERNATIONAL CODE COUNCIL®
Copyright © 2015 ICC. ALL RIGHTS RESERVED. Accessed by David Dammon on Jun 21, 2017 12:30:52 PM pursuant to License Agreement with ICC. No further reproduction or distribution authorized. ANY UNAUTHORIZED REPRODUCTION OR DISTRIBUTION IS A VIOLATION OF THE FEDERAL COPYRIGHT ACT AND THE LICENSE AGREEMENT, AND SUBJECT TO CIVIL AND CRIMINAL PENALTIES THEREUNDER.

1810.3.10 Micropiles. Micropiles shall be designed and detailed in accordance with Sections 1810.3.10.1 through 1810.3.10.4.

❖ This section provides minimum requirements for the design and installation of micropiles. This type of pile has been a popular alternative to more conventional pile types where headroom or equipment access is otherwise limited.

1810.3.10.1 Construction. Micropiles shall develop their load-carrying capacity by means of a bond zone in soil, bedrock or a combination of soil and bedrock. Micropiles shall be grouted and have either a steel pipe or tube or steel reinforcement at every section along the length. It shall be permitted to transition from deformed reinforcing bars to steel pipe or tube reinforcement by extending the bars into the pipe or tube section by at least their development length in tension in accordance with ACI 318.

❖ Section 1802.1 defines "Micropiles" as bored or grouted in-place elements. This section provides a description of micropile construction. It requires incorporating, over the full length of the pile, either steel pipe casing or steel reinforcement. Note the further requirement in Section 1810.3.10.4 for a permanent steel casing in structures that are classified as Seismic Design Category C. Steel pipe casings are typically manufactured in segments with threaded ends.

This section clarifies the intent to permit the pipe or tube casing to terminate above the bond zone, with deformed bar reinforcement continuing below. It also specifies a splice condition for that transition.

1810.3.10.2 Materials. Reinforcement shall consist of deformed reinforcing bars in accordance with ASTM A615 Grade 60 or 75 or ASTM A722 Grade 150.

The steel pipe or tube shall have a minimum wall thickness of $^{3}/_{16}$ inch (4.8 mm). Splices shall comply with Section 1810.3.6. The steel pipe or tube shall have a minimum yield strength of 45,000 psi (310 MPa) and a minimum elongation of 15 percent as shown by mill certifications or two coupon test samples per 40,000 pounds (18 160 kg) of pipe or tube.

❖ This section provides the minimum specifications for the component materials of the micropile, such as reinforcing steel and steel pipe casing. It also establishes a minimum wall thickness for the steel pipe that is virtually identical to the limits for other steel pipe piles.

1810.3.10.3 Reinforcement. For micropiles or portions thereof grouted inside a temporary or permanent casing or inside a hole drilled into bedrock or a hole drilled with grout, the steel pipe or tube or steel reinforcement shall be designed to carry at least 40 percent of the design compression load. Micropiles or portions thereof grouted in an open hole in soil without temporary or permanent casing and without suitable means of verifying the hole diameter during grouting shall be designed to carry the entire compression load in the reinforcing steel. Where a steel pipe or tube is used for reinforcement, the portion of the grout enclosed within the pipe is permitted to be included in the determination of the allowable stress in the grout.

❖ Micropiles with steel pile casing in place at the time grout is placed are designed with 40 percent of the compression load carried by the steel casing or steel reinforcing. Micropiles with grout that is placed without a casing must be designed so that 100 percent of the compression load is carried by the reinforcing steel.

1810.3.10.4 Seismic reinforcement. For structures assigned to *Seismic Design Category* C, a permanent steel casing shall be provided from the top of the micropile down to the point of zero curvature. For structures assigned to *Seismic Design Category* D, E or F, the micropile shall be considered as an alternative system in accordance with Section 104.11. The alternative system design, supporting documentation and test data shall be submitted to the *building official* for review and approval.

❖ In structures that are classified as Seismic Design Category A or B, there are no additional micropile requirements. In structures that are classified as Seismic Design Category C, permanent steel pipe casing must be provided for the length of the micropile noted. In structures that are classified as Seismic Design Category D, or higher, these micropile provisions are not applicable; approval of micropiles can only be as an alternative method of design and construction.

1810.3.11 Pile caps. Pile caps shall be of reinforced concrete, and shall include all elements to which vertical deep foundation elements are connected, including grade beams and mats. The soil immediately below the pile cap shall not be considered as carrying any vertical load. The tops of vertical deep foundation elements shall be embedded not less than 3 inches (76 mm) into pile caps and the caps shall extend at least 4 inches (102 mm) beyond the edges of the elements. The tops of elements shall be cut or chipped back to sound material before capping.

❖ Pile caps include all elements to which the piles are connected and are to be of reinforced concrete and designed in accordance with the requirements of ACI 318. For footings (pile caps) on piles, computations for moments and shears may be based on the assumption that the load reaction from any pile is concentrated at the pile center (see ACI 318 for loads and reactions of footings on piles).

The soil immediately under the pile cap is not considered to provide any support for vertical loads. The heads of all piles are to be embedded no less than 3 inches (76 mm) into pile caps and the edges of the pile caps are to extend at least 4 inches (102 mm) beyond the closest sides of all piles. The degree of fixity between a pile head and the concrete cap depends on the method of connection required to satisfy design considerations.

1810.3.11.1 Seismic Design Categories C through F. For structures assigned to *Seismic Design Category* C, D, E or F,

INTERNATIONAL CODE COUNCIL®
Copyright © 2015 ICC. ALL RIGHTS RESERVED. Accessed by David Dammon on Jun 21, 2017 12:30:52 PM pursuant to License Agreement with ICC. No further reproduction or distribution authorized. ANY UNAUTHORIZED REPRODUCTION OR DISTRIBUTION IS A VIOLATION OF THE FEDERAL COPYRIGHT ACT AND THE LICENSE AGREEMENT, AND SUBJECT TO CIVIL AND CRIMINAL PENALTIES THEREUNDER.

concrete deep foundation elements shall be connected to the pile cap by embedding the element reinforcement or field-placed dowels anchored in the element into the pile cap for a distance equal to their development length in accordance with ACI 318. It shall be permitted to connect precast prestressed piles to the pile cap by developing the element prestressing strands into the pile cap provided the connection is ductile. For deformed bars, the development length is the full development length for compression, or tension in the case of uplift, without reduction for excess reinforcement in accordance with Section 25.4.10 of ACI 318. Alternative measures for laterally confining concrete and maintaining toughness and ductile-like behavior at the top of the element shall be permitted provided the design is such that any hinging occurs in the confined region.

The minimum transverse steel ratio for confinement shall not be less than one-half of that required for columns.

For resistance to uplift forces, anchorage of steel pipes, tubes or H-piles to the pile cap shall be made by means other than concrete bond to the bare steel section. Concrete-filled steel pipes or tubes shall have reinforcement of not less than 0.01 times the cross-sectional area of the concrete fill developed into the cap and extending into the fill a length equal to two times the required cap embedment, but not less than the development length in tension of the reinforcement.

❖ This section prescribes special detailing requirements between the deep foundation element and pile cap, including required development of the longitudinal pile reinforcement in the cap and associated transverse reinforcement. This reinforcement is required to extend into the pile cap to tie the elements together and to assist in load transfer at the top of the element to the pile cap. The connection must consist of embedment of the element reinforcement in the pile cap for a distance equal to the development length, as specified in ACI 318. Field-placed dowels anchored in the plastic concrete elements are acceptable. The development length to be provided is that for compression or, where uplift is indicated by analysis, tension without reduction in length for excess area. Where seismic confinement reinforcement at the top of the pile is required, alternative measures for laterally confining concrete and maintaining toughness and ductile-like behavior at the top of the pile are permitted, provided the design would force the hinge to occur in the confined region.

1810.3.11.2 Seismic Design Categories D through F. For structures assigned to *Seismic Design Category* D, E or F, deep foundation element resistance to uplift forces or rotational restraint shall be provided by anchorage into the pile cap, designed considering the combined effect of axial forces due to uplift and bending moments due to fixity to the pile cap. Anchorage shall develop a minimum of 25 percent of the strength of the element in tension. Anchorage into the pile cap shall comply with the following:

1. In the case of uplift, the anchorage shall be capable of developing the least of the following:
   1.1. The nominal tensile strength of the longitudinal reinforcement in a concrete element.
   1.2. The nominal tensile strength of a steel element.
   1.3. The frictional force developed between the element and the soil multiplied by 1.3.

   Exception: The anchorage is permitted to be designed to resist the axial tension force resulting from the seismic load effects including overstrength factor in accordance with Section 12.4.3 or 12.14.3.2 of ASCE 7.
2. In the case of rotational restraint, the anchorage shall be designed to resist the axial and shear forces, and moments resulting from the seismic load effects including overstrength factor in accordance with Section 12.4.3 or 12.14.3.2 of ASCE 7 or the anchorage shall be capable of developing the full axial, bending and shear nominal strength of the element.

Where the vertical lateral-force-resisting elements are columns, the pile cap flexural strengths shall exceed the column flexural strength. The connection between batter piles and pile caps shall be designed to resist the nominal strength of the pile acting as a short column. Batter piles and their connection shall be designed to resist forces and moments that result from the application of seismic load effects including overstrength factor in accordance with Section 12.4.3 or 12.14.3.2 of ASCE 7.

❖ The requirements of this section address the need for conservatism in the design of connections between deep foundation elements and pile caps. They are intended to allow energy dissipating mechanisms, such as rocking, to occur in the soil without failure of the element.

This section requires that the pile cap flexural strength exceed that of the supported column flexural strength if the column is a part of the lateral-force-resisting system.

Additional requirements are specified in this section for batter piles in order to limit earthquake damage to these systems. By their nature, batter pile systems have limited ductility and have performed poorly under strong ground motions. They are required to be designed using the overstrength load combinations, which consider the maximum force expected to be developed in these elements during a seismic event.

1810.3.12 Grade beams. For structures assigned to *Seismic Design Category* D, E or F, grade beams shall comply with the provisions in Section 18.13.3 of ACI 318 for grade beams, except where they are designed to resist the seismic load effects including overstrength factor in accordance with Section 12.4.3 or 12.14.3.2 of ASCE 7.

❖ This section references Chapter 18 of ACI 318 for designing the grade beams. It also allows grade beams to be designed to have the strength required by the overstrength load combinations instead of designing the grade beams as beams in accordance

INTERNATIONAL CODE COUNCIL®
Copyright © 2015 ICC. ALL RIGHTS RESERVED. Accessed by David Dammon on Jun 21, 2017 12:30:52 PM pursuant to License Agreement with ICC. No further reproduction or distribution authorized. ANY UNAUTHORIZED REPRODUCTION OR DISTRIBUTION IS A VIOLATION OF THE FEDERAL COPYRIGHT ACT AND THE LICENSE AGREEMENT, AND SUBJECT TO CIVIL AND CRIMINAL PENALTIES THEREUNDER.

with Chapter 18 of ACI 318. The overstrength load combinations estimate the maximum forces that can realistically develop in the grade beam in an earthquake situation.

1810.3.13 Seismic ties. For structures assigned to *Seismic Design Category* C, D, E or F, individual deep foundations shall be interconnected by ties. Unless it can be demonstrated that equivalent restraint is provided by reinforced concrete beams within slabs on grade or reinforced concrete slabs on grade or confinement by competent rock, hard cohesive soils or very dense granular soils, ties shall be capable of carrying, in tension or compression, a force equal to the lesser of the product of the larger pile cap or column design gravity load times the seismic coefficient, S_{DS}, divided by 10, and 25 percent of the smaller pile or column design gravity load.

Exception: In Group R-3 and U occupancies of light-frame construction, deep foundation elements supporting foundation walls, isolated interior posts detailed so the element is not subject to lateral loads or exterior decks and patios are not subject to interconnection where the soils are of adequate stiffness, subject to the approval of the *building official*.

❖ The purpose of this section is to preclude excessive movement of one group of deep foundation elements with respect to another. The section is similar to Section 1809.13. One of the prerequisites of adequate structural performance during an earthquake is that the foundation of the structure must act as a unit. This is typically accomplished by tying together the pile caps of deep foundation elements with ties capable of carrying, both in tension and compression, a force equal to the lesser of 10 percent of the larger pile cap or column load multiplied by S_{DS}, or 25 percent of the smaller pile cap or column load. This can be accomplished through the use of equivalent types of restraint, such as a concrete floor slab, where restraint can be substantiated. Reliance upon passive soil pressure is limited to competent rock, dense granular soil or hard cohesive soil.

If soils are shown to be of adequate stiffness, the building official may allow the use of the exception for the following elements in Group R-3 and U occupancies not exceeding two stories of light-frame construction:

1. Elements supporting foundation walls.
2. Elements supporting isolated interior posts detailed so the pier is not subject to lateral loads.
3. Elements supporting lightly loaded exterior decks and patios.

1810.4 Installation. Deep foundations shall be installed in accordance with Section 1810.4. Where a single deep foundation element comprises two or more sections of different materials or different types spliced together, each section shall satisfy the applicable conditions of installation.

❖ These provisions establish minimum requirements for the installation of deep foundation elements.

1810.4.1 Structural integrity. Deep foundation elements shall be installed in such a manner and sequence as to prevent distortion or damage that may adversely affect the structural integrity of adjacent structures or of foundation elements being installed or already in place and as to avoid compacting the surrounding soil to the extent that other foundation elements cannot be installed properly.

❖ The placement of deep foundation elements is often by driving, vibrating, jacking, jetting, direct weight or a combination of these methods. Because of the generally harsh nature of deep foundation installation operations, elements can experience some degree of damage during placement. However, damage can be prevented or minimized by selecting the proper type of deep foundation placement methods and techniques, as well as the right equipment to accomplish the work, all based on adequate knowledge of the soil conditions obtained from a foundation investigation (see Section 1803.5.5).

Piles must be placed in a manner that maintains their structural integrity and installed to such depths as determined by foundation investigation and engineering analysis to safely resist the design loads that are to be imposed upon them. Care must be exercised during deep foundation placement operations to provide for the safety of adjacent piles or other structures—leaving their strength and load capacity unimpaired. Any pile damaged during installation to the extent that its structural integrity is affected must be satisfactorily repaired or rejected.

1810.4.1.1 Compressive strength of precast concrete piles. A precast concrete pile shall not be driven before the concrete has attained a compressive strength of at least 75 percent of the specified compressive strength (f'_c), but not less than the strength sufficient to withstand handling and driving forces.

❖ This section requires that precast reinforced concrete piles must not be driven until the concrete has acquired at least three-quarters of its specified compressive strength. For example, if a pile is manufactured at the minimum compressive strength of 4,000 psi (27.6 MPa), it must not be driven until it has obtained a strength of at least 3,000 psi (20.68 MPa) ($^3/_4$ x 4,000). In all cases, however, concrete strength must have developed to the point that it is sufficient to sustain the stresses imposed on the pile by handling and driving operations.

1810.4.1.2 Casing. Where cast-in-place deep foundation elements are formed through unstable soils and concrete is placed in an open-drilled hole, a casing shall be inserted in the hole prior to placing the concrete. Where the casing is withdrawn during concreting, the level of concrete shall be maintained above the bottom of the casing at a sufficient height to offset any hydrostatic or lateral soil pressure. Driven casings shall be mandrel driven their full length in contact with the surrounding soil.

❖ This section requires a casing where a a cast-in-place deep foundation element is formed through unstable soil.

INTERNATIONAL CODE COUNCIL®
Copyright © 2015 ICC. ALL RIGHTS RESERVED. Accessed by David Dammon on Jun 21, 2017 12:30:52 PM pursuant to License Agreement with ICC. No further reproduction or distribution authorized. ANY UNAUTHORIZED REPRODUCTION OR DISTRIBUTION IS A VIOLATION OF THE FEDERAL COPYRIGHT ACT AND THE LICENSE AGREEMENT, AND SUBJECT TO CIVIL AND CRIMINAL PENALTIES THEREUNDER.

1810.4.1.3 Driving near uncased concrete. Deep foundation elements shall not be driven within six element diameters center to center in granular soils or within one-half the element length in cohesive soils of an uncased element filled with concrete less than 48 hours old unless *approved* by the *building official*. If the concrete surface in any completed element rises or drops, the element shall be replaced. Driven uncased deep foundation elements shall not be installed in soils that could cause heave.

❖ Casings driven in granular soils are to be spaced at least six times the diameter of the element. Casings driven in cohesive soils are not to be spaced less than one-half of the element length when the concrete (in adjacent elements) is less than 48 hours old. This latter requirement reflects the fact that deep foundation elements driven in cohesive materials can cause significant soil displacement that can induce high lateral pressures on adjacent elements. Unless the concrete in these adjacent elements has had sufficient time to set (48 hours or more) and acquire some of its ultimate strength, considerable damage can be caused by the earth pressures. Because of the voids between the particles in granular soils, the effects of soil displacement are not as serious as for cohesive soils, such as clay.

The 48-hour concrete elapsed time requirement stated in this section should not be confused with the 12-hour requirement referred to in Section 1810.4.8 for drilled or augered elements. While both types are cast-in-place concrete elements, unlike the driven uncased elements, drilled or augered elements are not of the displacement type, which essentially compacts the soil and may cause great lateral pressures and earth movement. The soil in the drilled method of installation is removed rather than displaced, and the subsurface influence on adjacent deep foundation elements is far less than on the driven element, particularly in cohesive soils.

Driven uncased elements are exposed to various types of potential damage. Besides the possibility of concrete contamination by the surrounding soil and surface water at the top of the element, its cross section may be subjected to squeezing or necking from lateral soil pressures and intrusions of displaced soils or other obstructions. Also, the concrete may be damaged by loss of support caused by removal of adjacent element casings from the soil surrounding the element. Driven uncased deep foundation elements are not recommended under conditions where significant ground heave could occur or where highly unstable soils exist.

Subsurface investigations and load testing may be required to establish capacity of deep foundation elements, since there can be no correlation between the driving resistance of the element casing and element capacity. This is because the casing is eventually removed.

1810.4.1.4 Driving near cased concrete. Deep foundation elements shall not be driven within four and one-half average diameters of a cased element filled with concrete less than 24 hours old unless *approved* by the *building official*. Concrete shall not be placed in casings within heave range of driving.

❖ One advantage to this type of pile is that after the driving and removal of the mandrel before the concrete is placed, the steel casing can be inspected internally along its full length. Therefore, any damage that has resulted from the pile-driving operation can be readily discovered and corrected.

Steel casings are not to be driven closer than four and one-half pile diameters of any adjacent piles filled with concrete until the concrete in the shells has cured for at least 24 hours and achieved an early strength. The basic reason for requiring four and one-half pile diameters between driving and concreting is a general reluctance to expose fresh concrete to vibrations as it sets. Several independent tests have shown, however, that there is no detrimental effect caused by vibrations on setting concrete. In some cases, there was a strength gain. The code requirement of four and one-half diameters is considered reasonable. It is often impractical to place concrete in element shells right next to deep foundation elements being driven. Casings can be driven earlier than the minimum 24-hour period when approved by the building official.

Driven light-gage steel shells that are left open can also be damaged by earth pressures when driving other piles in the close vicinity. Under such circumstances, the shells are sometimes protected by inserting dummy mandrels.

Shells that are in place, adjacent to and within heave range of a deep foundation element being driven are normally left open if the soil condition is such that it can cause heave. This condition is particularly critical in cohesive soils, such as clay. Heaved elements must be redriven before filling with concrete. If a concreted element has heaved; however, it can be safely redriven if proper techniques and a suitably designed cushion are used.

For a general description of steel-cased cast-in-place concrete piles, refer to the commentary to Section 1810.3.1.6.

1810.4.1.5 Defective timber piles. Any substantial sudden increase in rate of penetration of a timber pile shall be investigated for possible damage. If the sudden increase in rate of penetration cannot be correlated to soil strata, the pile shall be removed for inspection or rejected.

❖ A small drop in blow count is not usually a cause for concern and is not uncommon in layered soils. It is only a substantial change in the rate of pile penetration that is not related to soil properties, which indicates a potential problem. If the penetration resistance suddenly decreases, serious damage to the pile could have occurred (including breaking), and the condition must be investigated. The pile can be withdrawn and inspected, and, if required, abandoned and replaced.

INTERNATIONAL CODE COUNCIL®
Copyright © 2015 ICC. ALL RIGHTS RESERVED. Accessed by David Dammon on Jun 21, 2017 12:30:52 PM pursuant to License Agreement with ICC. No further reproduction or distribution authorized. ANY UNAUTHORIZED REPRODUCTION OR DISTRIBUTION IS A VIOLATION OF THE FEDERAL COPYRIGHT ACT AND THE LICENSE AGREEMENT, AND SUBJECT TO CIVIL AND CRIMINAL PENALTIES THEREUNDER.

Another significant problem associated with the use of timber piles is the possibility of structural damage caused by overdriving. Overdriving usually occurs upon reaching rock or hard soil stratas and may result in pile bending, brooming at the tip, crushing or brooming at the head or splitting or breaking along the pile section (see Commentary Figure 1810.4.1.5). To avoid such damage, if the penetration resistance suddenly increases, pile driving should be stopped immediately.

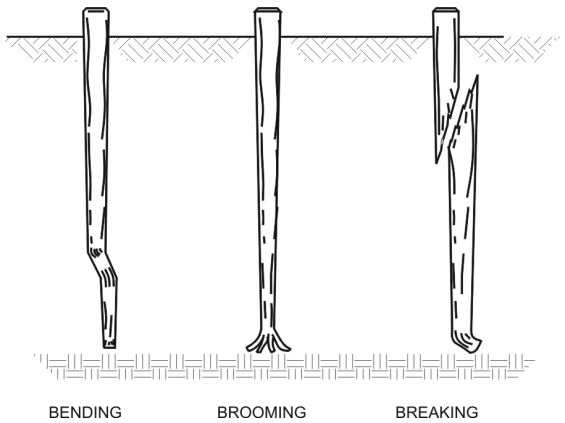

Figure 1810.4.1.5
TYPICAL EFFECTS OF OVERDRIVING TIMBER PILES

1810.4.2 Identification. Deep foundation materials shall be identified for conformity to the specified grade with this identity maintained continuously from the point of manufacture to the point of installation or shall be tested by an *approved agency* to determine conformity to the specified grade. The *approved agency* shall furnish an affidavit of compliance to the *building official*.

❖ All deep foundation element materials must be identified for conformity to construction specifications, providing information such as strength (species and grade for timber piles) and dimensions, and other pertinent information as may be required. Such identification must be provided for all piers and piles, whether they are taken from the manufacturer's stock or made for a particular project. Identification is to be maintained from the place of manufacture to the shipment, on-site handling, storage and installation of the deep foundation elements. Manufacturers, upon request, usually furnish certificates of compliance with construction specifications. In the absence of adequate data, piers and piles are to be tested to prove conformity to the specified grade.

In addition to mill certificates (steel piles), identification is made through plant manufacturing or inspection reports (precast concrete deep foundation elements and timber piles) and delivery tickets (concrete). Timber piles are stamped (branded) with information, such as producer, species, treatment and length.

Identification is essential when high-yield strength steel is specified. Frequently, pile cutoff lengths are reused and pile material may come from a jobber, a contractor's yard or a material supplier. In such cases, mill certificates are not available and the steel should be tested to see if it complies with the specifications.

1810.4.3 Location plan. A plan showing the location and designation of deep foundation elements by an identification system shall be filed with the *building official* prior to installation of such elements. Detailed records for elements shall bear an identification corresponding to that shown on the plan.

❖ This section requires that a deep foundation element location plan clearly showing the designation of all piers or piles in the foundation system be submitted to the building official prior to installation of piles. Preferably, such plans should be submitted before delivery of the piers or piles to the construction site and prior to staking the deep foundation element locations.

The deep foundation element location plan is not only an important tool for the installation of piers or piles, but also serves to communicate information between the owner, engineer, contractor, manufacturer, special inspector, building official and other interested persons. The special inspector (see commentary, Section 1810.4.12) must keep piling logs, records and reports based on this identification system. The use of the deep foundation element plan is particularly important at sites where the variations in soil profiles are so extensive that it becomes necessary to manufacture piers or piles of different lengths to reach proper bearing levels. The building official should receive revised copies of the deep foundation element location plan whenever field changes are made that add, delete or relocate piles.

1810.4.4 Preexcavation. The use of jetting, augering or other methods of preexcavation shall be subject to the approval of the *building official*. Where permitted, preexcavation shall be carried out in the same manner as used for deep foundation elements subject to load tests and in such a manner that will not impair the carrying capacity of the elements already in place or damage adjacent structures. Element tips shall be driven below the preexcavated depth until the required resistance or penetration is obtained.

❖ The use of preexcavation methods to facilitate the installation of deep foundation elements is often necessary for a number of reasons, including:

1. To drive elements through upper layers of hard soil;
2. To penetrate through subsurface obstructions;
3. To eliminate or reduce the possibility of ground heave that could result in lifting adjacent elements already driven;

INTERNATIONAL CODE COUNCIL®
Copyright © 2015 ICC. ALL RIGHTS RESERVED. Accessed by David Dammon on Jun 21, 2017 12:30:52 PM pursuant to License Agreement with ICC. No further reproduction or distribution authorized. ANY UNAUTHORIZED REPRODUCTION OR DISTRIBUTION IS A VIOLATION OF THE FEDERAL COPYRIGHT ACT AND THE LICENSE AGREEMENT, AND SUBJECT TO CIVIL AND CRIMINAL PENALTIES THEREUNDER.

4. To reduce ground pressures that could result in the lateral movement of adjacent piles or structures;
5. To reduce the amount of driving necessary to seat the elements in the required bearing stratum;
6. To reduce the possibility of damaging vibrations;
7. To reduce the amount of noise associated with pile-driving operations; and
8. To accommodate the placement of elements that are longer than the leads of the driving equipment.

❖ Methods commonly used for preexcavation are jetting and predrilling. The jetting method has been found to be more effective in granular soils, such as sand and fine gravel, than in cohesive materials, such as clay. However, jetting should not be done in granular soils containing very coarse gravel, cobbles and small boulders because such material cannot be removed by the jet stream and will result in a collection of stones at the bottom of the hole, making it very difficult, if not impossible, to drive a pile through the mass of stone material. The jetting operations must be controlled to avoid excessive losses of soil that could affect the stability of adjacent structures or the required bearing capacity of previously installed piles.

Deep foundation elements should be driven below the depth of the jetted hole until the required resistance or penetration is obtained. Before this preexcavation method is used, consideration should be given to the possibility that jetting, unless strictly controlled, can adversely affect load transfer, particularly as it involves the placement of nontapered piles.

In comparison to the jetting method described, a more controllable form of preexcavation is by predrilling or coring. This method greatly reduces the possibility of detrimental effects on adjacent piles or structures and can be performed as a dry operation or a wet rotary process. Dry drilling can be done by the use of a continuous-flight auger or a short-flight auger attached to the end of a drill stem or kelly bar. Wet drilling requires a hollow-stem, continuous-flight auger or a hollow drill stem employing the use of spade bits. When the wet rotary process of predrilling is used, bentonite slurry or plain water is circulated to keep the hole open. As in the case of jetting, deep foundation elements should be driven with tips below the predrilled hole. This is necessary to prevent any voids or very loose or soft soils from occurring below the element tip.

There are other methods used for preexcavation purposes, such as the dry tube method and spudding, but such procedures are seldom used. The methods to be employed for preexcavation are subject to the approval of the building official.

1810.4.5 Vibratory driving. Vibratory drivers shall only be used to install deep foundation elements where the element load capacity is verified by load tests in accordance with Section 1810.3.3.1.2. The installation of production elements shall be controlled according to power consumption, rate of penetration or other *approved* means that ensure element capacities equal or exceed those of the test elements.

❖ The use of vibratory drivers for the installation of piles is not applicable to all types of soil conditions. They are most effective in granular soils with the use of nondisplacement piles, such as steel H-piles and pipe piles driven open ended. Vibratory drivers are also used for extracting piles or temporary casings employed in the construction of cast-in-place concrete piles.

Vibratory drivers, either low or high frequency, cause the pile to penetrate the soil by longitudinal vibrations. While this type of pile driver can produce remarkable results in the installation of nondisplacement piles under favorable soil conditions, the greatest difficulty is the lack of a reliable method of estimating the load- bearing capacity. After the pile has been installed with a vibratory driver, pile capacity can best be determined by using an impact-type hammer to set the pile in its final position.

An acceptable means of controlling pile capacity is by determining the power consumption in relation to the rate of penetration. Nonetheless, the use of a vibratory driver is only permitted where the pile load capacity is established by load tests in accordance with the requirements of Section 1810.3.3.1.2.

1810.4.6 Heaved elements. Deep foundation elements that have heaved during the driving of adjacent elements shall be redriven as necessary to develop the required capacity and penetration, or the capacity of the element shall be verified by load tests in accordance with Section 1810.3.3.1.2.

❖ When deep foundation elements are driven into cohesive soils, particularly saturated plastic clay materials, they often displace a volume of soil equal to that of the elements themselves. Such soil displacement usually occurs as ground heaves and may cause adjacent elements already driven to lift up and become unseated, causing a loss of load capacity. When this happens, heaved piles must be redriven to firm bearing in order to regain their required capacity. If heaved elements are not redriven, their capacities must be verified by means of load tests.

It should be noted that not all types of elements can be redriven. For example, heaved uncased cast-in-place concrete elements, or sectional elements whose splices cannot take tension, should be abandoned and replaced.

In redriving heaved elements, the same or comparable driving equipment should be employed as used in the original installation; however, there are exceptions to this rule. For example, during the installation of concrete-filled pipe elements, only the empty pipes

INTERNATIONAL CODE COUNCIL®
Copyright © 2015 ICC. ALL RIGHTS RESERVED. Accessed by David Dammon on Jun 21, 2017 12:30:52 PM pursuant to License Agreement with ICC. No further reproduction or distribution authorized. ANY UNAUTHORIZED REPRODUCTION OR DISTRIBUTION IS A VIOLATION OF THE FEDERAL COPYRIGHT ACT AND THE LICENSE AGREEMENT, AND SUBJECT TO CIVIL AND CRIMINAL PENALTIES THEREUNDER.

were first driven. In redriving this type of element, the pipes may now be filled with concrete resulting in much stiffer and heavier sections than were driven initially. In such cases, the driving technique must be adjusted to accommodate a considerably lesser driving resistance.

One method commonly used to prevent or reduce objectionable displacements caused by deep foundation installations in soils subject to heaving is to preexcavate element holes in accordance with the requirements of Section 1810.4.4.

1810.4.7 Enlarged base cast-in-place elements. Enlarged bases for cast-in-place deep foundation elements formed by compacting concrete or by driving a precast base shall be formed in or driven into granular soils. Such elements shall be constructed in the same manner as successful prototype test elements driven for the project. Shafts extending through peat or other organic soil shall be encased in a permanent steel casing. Where a cased shaft is used, the shaft shall be adequately reinforced to resist column action or the annular space around the shaft shall be filled sufficiently to reestablish lateral support by the soil. Where heave occurs, the element shall be replaced unless it is demonstrated that the element is undamaged and capable of carrying twice its design load.

❖ An enlarged base cast-in-place deep foundation element is often installed by first driving a steel casing into the ground. The casing can either be temporary or permanent. After the required depth has been reached, the enlarged base is formed in the granular bearing soil by progressively adding and driving out small batches of zero-slump concrete using a drop weight.

Another method of installing an enlarged base element is by use of an enlarged precast concrete base at the end of a mandrel-driven steel casing. A major problem associated with this type of installation is that, in driving the permanent casing into the ground, the precast base creates a hole that is larger than the diameter of the shaft, leaving an open space around the element and thus losing the lateral support usually provided by the surrounding soil. In such cases, the annular space around the shaft must be filled to provide the necessary lateral support. The customary practice is to fill the annular space by pumping grout or washing in granular material. An illustration of these enlarged base elements is provided in Commentary Figure 1810.4.7.

The spacings of enlarged base piles are normally greater than most other types of conventional piles in order to avoid base interferences and the close overlapping of soil-bearing areas that would serve to reduce pile capacity.

1810.4.8 Hollow-stem augered, cast-in-place elements. Where concrete or grout is placed by pumping through a hollow-stem auger, the auger shall be permitted to rotate in a clockwise direction during withdrawal. As the auger is withdrawn at a steady rate or in increments not to exceed 1 foot (305 mm), concreting or grouting pumping pressures shall be measured and maintained high enough at all times to offset hydrostatic and lateral earth pressures. Concrete or grout volumes shall be measured to ensure that the volume of concrete or grout placed in each element is equal to or greater than the theoretical volume of the hole created by the auger. Where the installation process of any element is interrupted or a loss of concreting or grouting pressure occurs, the element shall be redrilled to 5 feet (1524 mm) below the elevation of the tip of the auger when the installation was interrupted or concrete or grout pressure was lost and reformed. Augered cast-in-place elements shall not be installed within six diameters center to center of an element filled with concrete or grout less than 12 hours old, unless *approved* by the *building official*. If the concrete or grout level in any completed element drops due to installation of an adjacent element, the element shall be replaced.

❖ There are many potential problems associated with drilled-hole piles. Most of these problems are related to soil conditions, including soil or rock debris accumulating at the base of the pile or occurring in the pile shaft; reductions in the shaft cross section caused by the necking of soil walls because of soft materials or earth pressures; discontinuities in the pile shaft; hollows on the surface of the shaft and other problems linked to drilling operations. Such problems are usu-

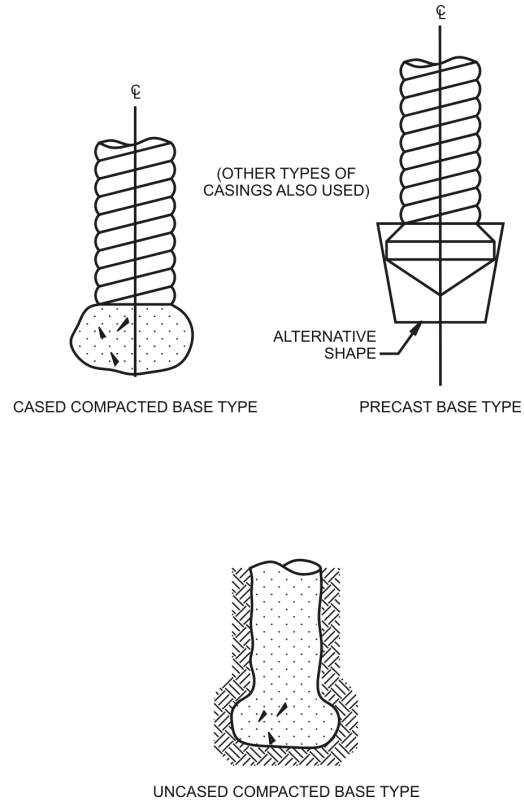

Figure 1810.4.7
ENLARGED BASE PILES—
UNCASED OR CASED SHAFTS

INTERNATIONAL CODE COUNCIL®
Copyright © 2015 ICC. ALL RIGHTS RESERVED. Accessed by David Dammon on Jun 21, 2017 12:30:52 PM pursuant to License Agreement with ICC. No further reproduction or distribution authorized. ANY UNAUTHORIZED REPRODUCTION OR DISTRIBUTION IS A VIOLATION OF THE FEDERAL COPYRIGHT ACT AND THE LICENSE AGREEMENT, AND SUBJECT TO CIVIL AND CRIMINAL PENALTIES THEREUNDER.

ally addressed by the use of proper installation techniques.

Whenever unstable soils are encountered in drilling operations, such as loose granular soils, organic soils, very soft silts or clays and water-bearing subsurface materials, a temporary steel liner is to be placed in the hole to prevent the collapse of the earth walls or sloughing off of the soil during concrete placement.

In placing concrete in temporarily lined holes, the top of the concrete should be kept well above the bottom edge of the steel liner as it is withdrawn in order to offset any hydrostatic or lateral soil pressures. Stiff (low slump) concrete should not be used, so as to avoid the potential problem of concrete arching in the liner tube and causing discontinuities or voids in the pile shaft as the liner is withdrawn. For a discussion on concrete consistency (slump values), see the commentary to Section 1808.8.1.

While many of the problems associated with auger-placed concrete piles are similar to those described above for drilled-hole piles, other problems may also be introduced because of the particular installation technique. The pile installation procedure using a hollow stem continuous-flight auger, both for drilling and concrete placement purposes, does not permit the use of temporary steel liners. Damage to this type of pile, because of improper installation procedures, can result in the incomplete filling of the pile hole, concrete discontinuities along the pile shaft, reductions in the cross-sectional area of the shaft (necking) and soil inclusions. Also, the loss of side support of the drilled hole or vertical displacement caused by ground pressures or soil movement may cause serious damage to the pile shaft.

In drilling the pile hole, the hollow-stem auger should be rotated and advanced continuously until the required tip elevation is reached. At that point in the drilling operation, rotation of the auger should be stopped to avoid removing excess soils that could result in damaging adjacent piles and to keep the auger flights full of soil as a means of retaining the hole walls. Concrete is then pumped through the hollow stem, filling the hole from the bottom up as the auger is withdrawn.

The volume of placed concrete must be monitored and it should equal or exceed the theoretical volume of the augered hole. An excess concrete volume of 10 percent is not uncommon, but even larger excesses can be expected where the soils are more porous. If the amount of the concrete pumped into the hole is considerably more than the anticipated volume, then the cause should be investigated. It could mean, for instance, that concrete (grout) is being pumped into soft soil strata, solution cavities, underground pipelines or other underground structures.

Concrete should be pumped under continuous pressure and the rate of withdrawal of the auger should be carefully controlled for a continuous and full-sized shaft. Discontinuities in the concrete shaft can develop if the auger is improperly withdrawn. A smooth, continuous auger withdrawal should help to prevent the surrounding soil from squeezing into the hole (necking) and possibly contaminating the concrete.

Concrete pumping pressures at the auger outlet should be greater than any hydrostatic or lateral pressures occurring in the hole. Excessively high pumping pressures, however, should be avoided while placing concrete surrounded by soft soils because it could cause upward or lateral movement of adjacent piles.

If the pile-concreting operation is interrupted, a pressure drop occurs while pumping the concrete, the auger is improperly handled and is raised too fast or anything else happens that could damage the pile or cause a reduction in the required size of the pile section, then the hollow-stem auger must be redrilled to the required tip elevation and the pile reformed from the bottom up.

Unless approved by the building official, no new pile holes are to be drilled or injected with concrete if they are located within a center-to-center distance of six pile diameters from other adjacent piles containing fresh concrete that has not been allowed to set for a period of 12 hours or more. This is to reduce the possibility of damage to adjacent piles. If the concrete surface of a completed pile is observed to drop below its cast elevation as a result of the drilling of adjacent piles, then the completed pile should be rejected and replaced. Such an occurrence could indicate some deformation along the pile shaft that could affect its structural integrity.

1810.4.9 Socketed drilled shafts. The rock socket and pipe or tube casing of socketed drilled shafts shall be thoroughly cleaned of foreign materials before filling with concrete. Steel cores shall be bedded in cement grout at the base of the rock socket.

❖ A brief description of the installation sequence of caisson piles is given in the commentary to Section 1810.3.9.6. One of the problems in the construction of caisson piles is that some water will seep into the bottom of the pile opening through the rock joints or fissures in the socket. Sometimes water may seep into the opening at the end of the pipe casing because of incomplete seating of the pipe into the rock material. If the water in the hole cannot be controlled by ejection or other methods rendering the placement of concrete under reasonably dry conditions, the concrete may be placed by a tremie or other methods when approved by the building official.

1810.4.10 Micropiles. Micropile deep foundation elements shall be permitted to be formed in holes advanced by rotary or percussive drilling methods, with or without casing. The elements shall be grouted with a fluid cement grout. The grout shall be pumped through a tremie pipe extending to the bottom of the element until grout of suitable quality returns at

INTERNATIONAL CODE COUNCIL®
Copyright © 2015 ICC. ALL RIGHTS RESERVED. Accessed by David Dammon on Jun 21, 2017 12:30:52 PM pursuant to License Agreement with ICC. No further reproduction or distribution authorized. ANY UNAUTHORIZED REPRODUCTION OR DISTRIBUTION IS A VIOLATION OF THE FEDERAL COPYRIGHT ACT AND THE LICENSE AGREEMENT, AND SUBJECT TO CIVIL AND CRIMINAL PENALTIES THEREUNDER.

the top of the element. The following requirements apply to specific installation methods:

1. For micropiles grouted inside a temporary casing, the reinforcing bars shall be inserted prior to withdrawal of the casing.The casing shall be withdrawn in a controlled manner with the grout level maintained at the top of the element to ensure that the grout completely fills the drill hole. During withdrawal of the casing, the grout level inside the casing shall be monitored to verify that the flow of grout inside the casing is not obstructed.
2. For a micropile or portion thereof grouted in an open drill hole in soil without temporary casing, the minimum design diameter of the drill hole shall be verified by a suitable device during grouting.
3. For micropiles designed for end bearing, a suitable means shall be employed to verify that the bearing surface is properly cleaned prior to grouting.
4. Subsequent micropiles shall not be drilled near elements that have been grouted until the grout has had sufficient time to harden.
5. Micropiles shall be grouted as soon as possible after drilling is completed.
6. For micropiles designed with a full-length casing, the casing shall be pulled back to the top of the bond zone and reinserted or some other suitable means employed to assure grout coverage outside the casing.

❖ This section provides the basic micropile installation requirements. Micropile boreholes are typically advanced by either of the listed methods, rotary drilling or rotary percussive drilling. Installation requirements differ based on whether a steel casing is permanent or temporary or not provided (Item 6, 1 or 2, respectively).

1810.4.11 Helical piles. Helical piles shall be installed to specified embedment depth and torsional resistance criteria as determined by a *registered design professional*. The torque applied during installation shall not exceed the maximum allowable installation torque of the helical pile.

❖ Helical pile shafts are screwed into the ground by application of torsion (also see ICC Evaluation Service AC 358).

1810.4.12 Special inspection. *Special inspections* in accordance with Sections 1705.7 and 1705.8 shall be provided for driven and cast-in-place deep foundation elements, respectively. *Special inspections* in accordance with Section 1705.9 shall be provided for helical piles.

❖ This section requires special inspections (see definition, Section 1702) in accordance with Sections 1705.7 and 1705.8 to verify proper and safe installations. To be approved by the building official, an inspector should be experienced in deep foundation element installation work. An inspector must be able to read and understand foundation plans and specifications, maintain accurate records, have a thorough understanding of the scope of the pile work to be performed, give concise and timely reports to the owner or engineer and submit in writing to the building official whatever field information is required.

The duties of the deep foundation element inspector include the inspection and approval of pile-driving equipment; the inspection and acceptance of piles furnished for the work; the verification of all pile location stakes and spacings; the observation and recording of required information relating to the installation of the deep foundation element foundation, as well as keeping a log for each pile showing either the number of hammer blows for each foot of penetration and the final penetration in blows per inch or the driving record for only the last few feet of penetration. The driving log should also include information on the duration and cause of any delays, such as splicing time, equipment breakdown, changing cushions, etc. The record should also show the final tip and butt (cutoff) elevations, as well as the depths of preexcavation holes (see Section 1810.4.4). Finally, there should also be a record of any pile damage and repair work; pile extractions and replacements; observations on pile heaving and depth of redriving; and information on pile alignment.

Bibliography

The following resource materials were used in the preparation of the commentary for this chapter of the code.

ACI 229R-99, *Controlled Low-strength Materials*. Farmington Hills, MI: American Concrete Institute, 1999.

ACI 306R-88, *Cold Weather Concreting*. Farmington Hills, MI: American Concrete Institute, 1988.

ACI 306.1-90, *Standard Specification for Cold Weather Concrete*. Farmington Hills, MI: American Concrete Institute, 1990.

ACI 318-14, *Building Code Requirements for Structural Concrete*. Farmington Hills, MI: American Concrete Institute, 2014.

ACI 543R-74 (1980), *Recommendations for Design, Manufacture and Installation of Concrete Piles*. Farmington Hills, MI: American Concrete Institute, 1980.

AWC NDS-12, *National Design Specification for Wood Construction—with 2012 Supplement*. Washington, DC: American Forest and Paper Association, 2012.

AWC PWF-07, *Permanent Wood Foundation Design Specification*. Washington, DC: American Forest and Paper Association, 2007.

ASCE 7-10, *Minimum Design Loads for Buildings and Other Structures* with Supplement No. 1. New York: American Society of Civil Engineers, 2010.

INTERNATIONAL CODE COUNCIL®
Copyright © 2015 ICC. ALL RIGHTS RESERVED. Accessed by David Dammon on Jun 21, 2017 12:30:52 PM pursuant to License Agreement with ICC. No further reproduction or distribution authorized. ANY UNAUTHORIZED REPRODUCTION OR DISTRIBUTION IS A VIOLATION OF THE FEDERAL COPYRIGHT ACT AND THE LICENSE AGREEMENT, AND SUBJECT TO CIVIL AND CRIMINAL PENALTIES THEREUNDER.

ASCE 24-13, *Flood Resistant Design and Construction Standard*. Reston, VA: American Society of Civil Engineers, 2013.

ASTM C270-12a, *Specification for Mortar for Unit Masonry*. West Conshohocken, PA: ASTM International, 2012.

ASTM C887-05(2010), *Specification for Packaged, Dry, Combined Materials for Surface Bonding Mortar*. West Conshohocken, PA: ASTM International, 2010.

ASTM D25-12, *Specification for Round Timber Piles*. West Conshohocken, PA: ASTM International, 2012.

ASTM D1668-97a, *Standard Specification for Glass Fabrics (Woven and Treated) for Roofing and Waterproofing*. West Conshohocken, PA: ASTM International, 1997.

ASTM D2487-11, *Standard Practice for Classification of Soils for Engineering Purposes*. West Conshohocken, PA: ASTM International, 2011.

ASTM D4832-02, *Standard Test Method for Preparation and Testing of Controlled Low-strength Material (CLSM) Test Cylinders*. West Conshohocken, PA: ASTM International, 2002.

ASTM D5971-01, *Standard Practice for Sampling Freshly Mixed Controlled Low-strength Materia*l. West Conshohocken, PA: ASTM International, 2001.

ASTM D6023-02, *Standard Test Method for Unit Weight, Yield, Cement Content, and Air Content (Gravimetric) of Controlled Low-strength Material (CLSM)*. West Conshohocken, PA: ASTM International, 2002.

ASTM D6024-02, *Standard Test Method for Ball Drop on Controlled Low-strength Material (CLSM) to Determine Suitability for Load Application*. West Conshohocken, PA: ASTM International, 2002.

ASTM D6103-97, *Standard Test Method for Flow Consistency of Controlled Low-strength Material (CLSM)*. West Conshohocken, PA: ASTM International, 1997.

AWPA U1-14, *Use Category System: User Specification for Treated Wood*. Birmingham, AL: American Wood Preservers' Association, 2014.

AWPB MP1, *Quality Control and Inspection Procedures for Dual Treatment of Marine Piling Pressure Treated with Waterborne Preservatives and Creosote for Use in Marine Waters*. American Wood Preservers Bureau.

AWPB MP2, *Quality Control and Inspection Procedures for Dual Treatment of Marine Piling Pressure Treated with Waterborne Preservatives and Creosote for Use in Marine Waters*. American Wood Preservers' Bureau.

AWPB MP4, *Quality Control and Inspection Procedures for Dual Treatment of Marine Piling Pressure Treated with Waterborne Preservatives and Creosote for Use in Marine Waters*. American Wood Preservers Bureau.

Bowles, J. E. *Foundation Analysis and Design, 5th edition*. New York: McGraw Hill, 1996.

FEMA 450-1, *NEHRP Recommended Provisions for Seismic Regulations for New Buildings and Other Structures, Part 1: Provisions*. Washington, DC: Prepared by the Building Seismic Safety Council for the Federal Emergency Management Agency, 2004.

FEMA 450-2, *NEHRP Recommended Provisions for Seismic Regulations for New Buildings and Other Structures, Part 2: Commentary*. Washington, DC: Prepared by the Building Seismic Safety Council for the Federal Emergency Management Agency, 2004.

Hanson, W.E., R.B. Peck and T. H. Thornburn, *Foundation Engineering*, 2nd Edition. New York: John Wiley & Sons, 1974.

ICC-ES AC 358, *Acceptance Criteria for Helical Foundation Systems and Devices*. Whittier, CA: International Code Council Evaluation Service, Inc. 2007.

NCMA Report, *Research Evaluation of the Flexural Strength of Concrete Masonry, Project No. 93-172, Dec. 7, 1993*. Herndon VA: National Concrete Masonry Association, 1993.

PTI DCI 10.5, *Standard Requirements for Design and Analysis of Shallow Post-tensioned Concrete Foundations on Expansive Soils*. Farmington Hills, MI: Post-tensioning Institute.

Terzaghi, Karl and R. B. Peck. *Soil Mechanics in Engineering Practice, 2nd edition*. New York: John Wiley & Sons, 1967.

WRI/CRSI-81, *Design of Slab-on-ground Foundations*-with 1996 Update. Hartford, CT: Wire Reinforcing Institute, 1996.

INTERNATIONAL CODE COUNCIL®

Copyright © 2015 ICC. ALL RIGHTS RESERVED. Accessed by David Dammon on Jun 21, 2017 12:30:52 PM pursuant to License Agreement with ICC. No further reproduction or distribution authorized. ANY UNAUTHORIZED REPRODUCTION OR DISTRIBUTION IS A VIOLATION OF THE FEDERAL COPYRIGHT ACT AND THE LICENSE AGREEMENT, AND SUBJECT TO CIVIL AND CRIMINAL PENALTIES THEREUNDER.

Chapter 19: Concrete

General Comments

The words “cement” and “concrete” are used in several sections in this chapter. At the outset of this commentary, the distinction between cement and concrete should be made. Often, one may hear of references to cement floors, cement sidewalks and driveways, or of cement walls in describing walls made of cast-in-place or precast concrete or of concrete masonry, and the like. Cement and concrete are not interchangeable words. Cement is only one of four basic ingredients (cement, water, sand and stone) that make up the concrete material used in construction. In the end, there are only concrete structures and concrete building components. Structures of cement alone simply do not exist.

While concrete is the most versatile of the structural materials, it is also one of the most variable and complex materials used in building construction. Concrete is used in a number of different ways. It is used for building substructures, spread footings, mats, piles and foundation walls. Above-ground concrete is used for building walls and enclosures, for floors and roof construction, and for structural framework. Concrete also has a number of ancillary uses in building facilities: the construction of sidewalks, patios and driveways; for sewers and basins; for equipment bases; for fire protection purposes; as an insulating material; and so on. Concrete can be cast into any desired shape that can be structurally formed in the field or in a precasting plant with a variety of architectural finishes and surface configurations to satisfy aesthetic requirements. Mixtures can be varied to achieve strengths [2,500 to 20,000 pounds per square inch (psi) (17 238 to 137 908 kPa)] that meet the structural needs of the design. Concrete mixes can also be made to achieve good workability of the fresh material, and to provide durability of the hardened product exposed to adverse environmental conditions and wear imposed by the use of the facilities.

Because of the variable properties of the material and the numerous design and construction options available in the uses of concrete, due care and control throughout the entire construction process is necessary. This process includes: selection of materials and design of the mixture; mixing and transport of the concrete; proper construction and use of formwork; setting of the reinforcement and, in prestressed construction, the tensioning of the tendons; and finally, the placement, finishing, curing and testing of the concrete material.

Purpose

The provisions of this chapter are intended to set the minimum accepted practices that apply to the design and construction of buildings or structural components using concrete.

Italics are used for text within Sections 1903 through 1905 of this code to indicate provisions that differ from ACI 318.

SECTION 1901 GENERAL

1901.1 Scope. The provisions of this chapter shall govern the materials, quality control, design and construction of concrete used in structures.

❖ Section 1901 provides information on the application and organization of the concrete provisions of Chapter 19. For additional background information on the provisions of this chapter, particularly as they relate to the inspection of concrete construction, consult PCA-EB115, *Concrete Inspection Handbook*, listed in the bibliography. Section 1901.1 provides a definitive statement on the important aspects of concrete construction covered by Chapter 19. If proper attention is given to these aspects, it will improve the chances of a quality concrete structure that is code compliant.

1901.2 Plain and reinforced concrete. Structural concrete shall be designed and constructed in accordance with the requirements of this chapter and ACI 318 as amended in Section 1905 of this code. Except for the provisions of Sections 1904 and 1907, the design and construction of slabs on grade shall not be governed by this chapter unless they transmit vertical loads or lateral forces from other parts of the structure to the soil.

❖ The structural concrete provisions of the code comply strictly with the provisions of ACI 318/318R, except for the modifications contained in Section 1905. Slabs on grade are another important exception. Slabs on grade typically only convey the gravity dead load of the slab and the gravity live load superimposed on the slab directly to the soil; thus, slabs are not considered to be the “structural concrete” that

INTERNATIONAL CODE COUNCIL®
Copyright © 2015 ICC. ALL RIGHTS RESERVED. Accessed by David Dammon on Jun 21, 2017 12:30:52 PM pursuant to License Agreement with ICC. No further reproduction or distribution authorized. ANY UNAUTHORIZED REPRODUCTION OR DISTRIBUTION IS A VIOLATION OF THE FEDERAL COPYRIGHT ACT AND THE LICENSE AGREEMENT, AND SUBJECT TO CIVIL AND CRIMINAL PENALTIES THEREUNDER.

must comply with the design provisions of ACI 318. Slabs on grade, however, must comply with the durability provisions of Section 1904 and the minimum thickness and vapor retarder provisions of Section 1907.

The last sentence of Section 1901.2 clarifies that slabs on grade used to transmit "vertical loads," "lateral forces" or both from other parts of the structure to the soil must comply with all the applicable portions of this chapter and ACI 318. In many cases, slabs on grade are used to transmit lateral forces due to wind or earthquakes into the ground. A common example is a typical preengineered metal building in which the shear at the bottom of the columns is resisted by placing "hairpins" around the column anchor bolts in the footing and extending the hairpins into the slab on grade.

1901.3 Anchoring to concrete. Anchoring to concrete shall be in accordance with ACI 318 as amended in Section 1905, and applies to cast-in (headed bolts, headed studs and hooked J- or L-bolts), post-installed expansion (torque-controlled and displacement-controlled), undercut and adhesive anchors.

❖ The 2000 edition of the code included provisions for the strength design of anchorage to concrete. At that time, the provisions were being developed for inclusion in ACI 318 but were not yet available for reference by the code. With the publication of the 2002 edition of ACI 318, requirements for the strength design of concrete anchorage were included in Appendix D of the standard. The code provisions were then replaced with a reference to Appendix D of ACI 318, since it was the most up-to-date version of the same requirements. Based on the content of the anchorage requirements that are now in Chapter 17 of ACI 318, the scope of this section includes post-installed anchors, such as expansion anchors and undercut anchors.

1901.4 Composite structural steel and concrete structures. Systems of structural steel acting compositely with reinforced concrete shall be designed in accordance with Section 2206 of this code.

❖ This section provides a cross reference to requirements for composite steel and concrete structures in Chapter 22. Composite construction consists of steel and concrete members that act in unison to resist the effects of applied loads.

1901.5 Construction documents. The *construction documents* for structural concrete construction shall include:

1. The specified compressive strength of concrete at the stated ages or stages of construction for which each concrete element is designed.
2. The specified strength or grade of reinforcement.
3. The size and location of structural elements, reinforcement and anchors.
4. Provision for dimensional changes resulting from creep, shrinkage and temperature.
5. The magnitude and location of prestressing forces.
6. Anchorage length of reinforcement and location and length of lap splices.
7. Type and location of mechanical and welded splices of reinforcement.
8. Details and location of contraction or isolation joints specified for plain concrete.
9. Minimum concrete compressive strength at time of posttensioning.
10. Stressing sequence for posttensioning tendons.
11. For structures assigned to *Seismic Design Category* D, E or F, a statement if slab on grade is designed as a structural diaphragm.

❖ This section provides a list of important information that must be included in construction documents. These items are specifically related to concrete construction and are in addition to the structural design information required by Section 1603 and additional requirements of Section 107. The list is not necessarily all-inclusive and may be expanded at the discretion of the building official.

1901.6 Special inspections and tests. *Special inspections* and tests of concrete elements of buildings and structures and concreting operations shall be as required by Chapter 17.

❖ This section provides a cross reference to the code's special inspection and testing provisions for concrete that are found in Chapter 17. The code requires that most structural concrete, with the exception of some foundations, requires special inspection. ACI 318 does not contain provisions for special inspection of concrete, but does require continuous inspection of the placement of reinforcement and concrete in special-moment frames that resist seismic forces in regions of high seismic risk, which translates into buildings that are classified as Seismic Design Category D, E or F.

SECTION 1902
DEFINITIONS

1902.1 General. The words and terms defined in ACI 318 shall, for the purposes of this chapter and as used elsewhere in this code for concrete construction, have the meanings shown in ACI 318 as modified by Section 1905.1.1.

❖ Section 1902 refers to the definitions of terms in ACI 318 that are associated with concrete construction. See Section 1905.1.1 for several ACI 318 definitions that are modified under the code.

INTERNATIONAL CODE COUNCIL®
Copyright © 2015 ICC. ALL RIGHTS RESERVED. Accessed by David Dammon on Jun 21, 2017 12:30:52 PM pursuant to License Agreement with ICC. No further reproduction or distribution authorized. ANY UNAUTHORIZED REPRODUCTION OR DISTRIBUTION IS A VIOLATION OF THE FEDERAL COPYRIGHT ACT AND THE LICENSE AGREEMENT, AND SUBJECT TO CIVIL AND CRIMINAL PENALTIES THEREUNDER.

SECTION 1903
SPECIFICATIONS FOR TESTS AND MATERIALS

1903.1 General. Materials used to produce concrete, concrete itself and testing thereof shall comply with the applicable standards listed in ACI 318.

Exception: *The following standards as referenced in Chapter 35 shall be permitted to be used.*

1. *ASTM C150*
2. *ASTM C595*
3. *ASTM C1157*

❖ Section 1903 regulates the materials commonly used for both reinforced and plain concrete construction and requires the selection and acceptance of such materials to conform to the provisions of ACI 318, which establishes the basis for the selection, specification and acceptance of materials used in concrete construction, including cement, aggregate, water, steel reinforcement and admixtures.

Cement: The words "cement" and "concrete" are used in several sections of this chapter. It is important to understand the distinction between cement and concrete. Often, one may hear of references to cement floors, sidewalks and driveways, and, in describing walls made of cast-in-place or precast concrete or of concrete masonry, cement walls. Cement and concrete are not interchangeable words. Cement is only one of three basic ingredients (cement, water and aggregate) that make up the concrete material used in construction. In the end use, there are only concrete structures and building components. Structures of cement alone simply do not exist. The code permits the use of cements that meet ASTM C150, ASTM C595, ASTM C845 and ASTM C1157. General information on each of these cements is provided below.

Portland Cement—ASTM C150:

ASTM C150 specifies the chemical composition, physical properties and test methods for producing eight types of Portland cement as follows:

1. Type I Portland cement is for general use where the special properties of other types of cement are not required. While Type I is the most widely used type of Portland cement produced, it should not be used in concrete structures that will be subject to sulfate attack, such as from soil or ground water, or in large concrete placements where the temperature rises from the heat of hydration produced by the chemical reaction of cement and water and can adversely affect the construction process.
2. Type IA Portland cement is an air-entraining cement for general use, as is Type I Portland cement, but it is used specifically where the benefits of air entrainment are desired. The purpose of air entrainment is discussed in other parts of this commentary.
3. Type II Portland cement is for general use when moderate sulfate resistance or moderate heat of hydration is desired.
4. Type IIA Portland cement is for general use, as is Type II Portland cement, but is used where the benefits of air entrainment are also desired.
5. Type III Portland cement is a high early strength cement especially used to accelerate the hardening of wet concrete to facilitate construction scheduling.
6. Type IIIA Portland cement has the same properties and is used for the same purposes as Type III Portland cement, but is also used where the benefits of air entrainment are desired.
7. Type IV Portland cement is used especially where a low heat of hydration is required. It is used principally in mass concrete construction such as dams, bridge abutments, heavy foundations, etc. It is seldom used for building construction.
8. Type V Portland cement is for special use where high sulfate resistance is desired, and is principally used in areas where the soils or ground waters have high concentrations of sulfate.

Blended Hydraulic Cement—ASTM C595:

ASTM C595 specifies five types of blended cements as follows:

1. Portland blast-furnace slag cement, Type IS, is for use in general concrete construction. Portland cement (ASTM C150) may be modified by blending fine-granulated blast-furnace slag to provide moderate sulfate resistance, Type IS (MS); air entrainment, Type IS (A); moderate heat of hydration, Type IS (MH); or any combination, as indicated by adding the appropriate suffixes.
2. Portland-pozzolan cement, Type IP, is for general use and will perform similar to Type I Portland cement, except that it can have slightly lower 28-day concrete compressive strength and can be less resistant to deicer scaling. The cement can be modified to provide moderate sulfate resistance, Type IP (MS); air entrainment, Type IP (A); moderate heat of hydration, Type IP (MH); or any combination as indicated by adding the appropriate suffixes.
3. Slag cement, Type S, is used in combination with Portland cement in making concrete or in combination with hydrated lime in making masonry mortar. It can be modified to provide air entrainment.

INTERNATIONAL CODE COUNCIL®
Copyright © 2015 ICC. ALL RIGHTS RESERVED. Accessed by David Dammon on Jun 21, 2017 12:30:52 PM pursuant to License Agreement with ICC. No further reproduction or distribution authorized. ANY UNAUTHORIZED REPRODUCTION OR DISTRIBUTION IS A VIOLATION OF THE FEDERAL COPYRIGHT ACT AND THE LICENSE AGREEMENT, AND SUBJECT TO CIVIL AND CRIMINAL PENALTIES THEREUNDER.

4. Pozzolan-modified Portland cement, Type I (PM), is used in general concrete construction and can be modified to provide moderate sulfate resistance, Type I (PM)(MS); air entrainment, Type I (PM)(A); or moderate heat of hydration, Type I (PM)(MH), respectively.
5. Slag-modified Portland cement, Type I (SM), is used for general concrete construction and may be modified to provide moderate sulfate resistance, air entrainment or moderate heat of hydration, as indicated by adding the suffixes (MS), (A) or (MH), respectively.

Expansive Hydraulic Cements—ASTM C845:

Expansive hydraulic cements expand during the early hardening period after the concrete has set. The cements are essentially composed of hydraulic calcium aluminates and calcium sulfates. These cements are used on projects where shrinkage-compensating concrete is specified. When restrained, the expansion of shrinkage-compensating concrete induces compressive stresses that can offset tensile stresses caused by drying shrinkage in the concrete member. Typically, this type of concrete is used for floor slabs and pavements to minimize or eliminate drying-shrinkage cracking. The cement is classified as Type E-1 and will include the letter-designating suffix (K), (M) or (S), depending on the chemical composition of the cement.

Performance Blended Hydraulic Cement—ASTM C1157:

ASTM C1157 differs from ASTM C150 and ASTM C595 in that it does not establish the chemical composition of the different types of cements; however, individual constituents used to manufacture ASTM C1157 cements must comply with the requirements specified in the standard. The standard also provides for several optional requirements, including one for cement with low reactivity to alkali-reactive aggregates.

Aggregates: ACI 318 requires that concrete aggregates conform to ASTM C33 or ASTM C330. All fine and coarse aggregates used in producing normal-weight concrete [135 to 160 pounds per square foot (psf) (6.5 to 7.6 kNm^2)] must comply with the provisions of ASTM C33. All aggregates used in making lightweight structural concrete [85 to 115 psf (4 to 5.5 kNm^2)] must comply with the requirements of ASTM C330. Both ASTM C33 and ASTM C330 specify physical property requirements and provide for sampling and testing of aggregate materials.

Fine aggregates used in normal-weight concrete consist of natural sand, manufactured sand or a combination of both materials. Coarse aggregates consist of gravel, crushed gravel, crushed stone, air-cooled blast-furnace slag, crushed hydraulic-cement concrete or combinations of any of these materials. Aggregates used for making lightweight structural concrete are expanded shale, clay, slate and slag. Lightweight aggregates, such as pumice, perlite and vermiculite, are generally used in making insulating concrete, but their use is prohibited in structural concrete.

The performance characteristics of concrete are greatly affected by the selection and proportioning of aggregates in the concrete mixture. Aggregates not only affect the workability of fresh concrete, but in the hardened state they are a factor in providing adequate resistance to abrasion, freezing and thawing, drying shrinkage and fire exposure. They also affect the strength of concrete.

Harmful substances may be present in aggregates in such quantities that the performance of the concrete could be seriously affected. ASTM C33 and ASTM C330 set content limitations for such deleterious materials.

Sometimes the practicalities of construction necessitate deviations from normal practices. Aggregates that conform to ASTM International (ASTM) material standards are not always economically or readily available, and local, nonconforming aggregates may be successfully used in concrete. In such cases, ACI 318 permits evidence of a long history of satisfactory performance or special tests conducted to show adequate strength and durability of the concrete to serve as the basis for acceptance of nonconforming aggregate materials.

Water: The water used in concrete mixtures is required to be clear and clean. It must not contain injurious amounts of oils, acids, alkalis, salts, organic materials or other substances that are harmful to concrete or concrete reinforcement.

Potable water obtained from municipal water supply systems is normally suitable for use as mixing water for concrete; however, this does not mean that nonpotable water cannot be used in making concrete. ACI 318 permits the use of nonpotable water under specific conditions of acceptance. Water that appears discolored or has an unusual or repulsive taste or odor must undergo an analysis using applicable ASTM test methods. Evidence of its acceptability can be provided by checking service records of concrete made with such water or from other information that demonstrates the water will not be detrimental to the concrete. In the absence of such evidence, water suspected of being of questionable quality can be subject to the acceptance criteria for concrete strength and the set time contained in ASTM C94.

Environmental concerns have caused many ready-mixed producers to reuse washout water (i.e., water used to reclaim aggregate or clean out returning trucks) as mix water. This is permitted by ASTM C94, provided the water meets the criteria outlined in the standard. In addition, the standard permits the concrete purchaser to require optional testing to determine if chloride ion, sulfate, alkali and total solids

INTERNATIONAL CODE COUNCIL®
Copyright © 2015 ICC. ALL RIGHTS RESERVED. Accessed by David Dammon on Jun 21, 2017 12:30:52 PM pursuant to License Agreement with ICC. No further reproduction or distribution authorized. ANY UNAUTHORIZED REPRODUCTION OR DISTRIBUTION IS A VIOLATION OF THE FEDERAL COPYRIGHT ACT AND THE LICENSE AGREEMENT, AND SUBJECT TO CIVIL AND CRIMINAL PENALTIES THEREUNDER.

are in the water. This is particularly important when the chloride ion content of the concrete must be limited for corrosion protection, when aggregate susceptible to alkali reactivity will be used, or both.

Steel reinforcement: Steel reinforcement conforming to the requirements of ACI 318 must be of the deformed type (with lugs or protrusions), except that plain steel reinforcement can be used for spirals and prestressing tendons. Under certain conditions, reinforcement can also consist of structural steel, steel pipe or steel tubing.

Reinforcement for concrete must comply with one of the following ASTM material standards:

- Deformed reinforcement:
    1. Deformed and plain billet-steel bars, ASTM A615;
    2. Deformed and plain low-alloy steel bars, ASTM A706 (this special reinforcement is used primarily in structures assigned to Seismic Design Category D, E or F and is not readily available in all parts of the country);
    3. Stainless steel bars, ASTM A955; or
    4. Rail-steel and axle-steel deformed bars, ASTM A996.

Bar mats for concrete reinforcement must conform to ASTM A184 and be fabricated from reinforcing bars that conform to either ASTM A615 or ASTM A706.

Deformed wire must conform to ASTM A1064 but the wire must not be smaller than Size D-4 and welded deformed wire fabric for concrete reinforcement must conform to ASTM A1064. Welded intersections must not be spaced farther apart than 16 inches (406 mm) in the direction of the principal reinforcement, except when used as stirrups.

Welded plain wire fabric for concrete reinforcement must conform to ASTM A1064. The code considers welded plain fabric to be deformed reinforcement.

Reinforcing bars may be zinc coated (galvanized) or epoxy coated to provide corrosion resistance.

Galvanized bars must conform to ASTM A767. Epoxy coated bars must conform to ASTM A775 or to ASTM A934. Zinc and epoxy dual-coated reinforcing bars shall conform to ASTM A1055.

Steel wire and welded wire fabric may be epoxy coated in accordance with ASTM A884 to provide corrosion resistance.

ASTM A996 is a replacement for ASTM A616 and ASTM A617. Unlike its predecessors, ASTM A996 does not provide for plain bars. Although manufacturers will be producing bars in accordance with the new standard, there are no additional changes that will affect those involved in the design, construction and inspection of reinforced concrete structures.

- Plain reinforcement:

  Plain bars for spiral reinforcement must conform to either ASTM A615 or ASTM A706. Smooth wire for spiral reinforcement must conform to ASTM A1064.

- Prestressing steel:

  Steel used for prestressed concrete must conform to one of the following ASTM standards:

    1. Wire, including low-relaxation wire, must be uncoated, stress-relieved steel wire, ASTM A421;
    2. Strand, including low-relaxation wire, must be uncoated, seven-wire, stress-relieved steel, ASTM A416;
    3. High-strength steel bars, ASTM A722; or
    4. Wire, strands and bars that are not specifically listed in ASTM A421, ASTM A416 or ASTM A722 can be used, provided they conform to the minimum requirements of these specifications and do not have properties that make the materials less satisfactory than intended by these standard specifications.

- Structural steel:

  Structural steel used with reinforcing bars in composite compression members must conform to one of the following ASTM standards:

    1. Carbon steel shapes of structural quality, ASTM A36;
    2. High-strength, low-alloy structural steel shapes, ASTM A242;
    3. High-strength, low-alloy columbium-vanadium steels of structural quality, ASTM A572; or
    4. High-strength, low-alloy structural steel with 50,000 pounds per square inch (psi) (344 750 kPa) minimum yield point to 4 inches (102 mm) thick, ASTM A588.

- Steel pipe or tubing:

  Steel pipe or tubing for composite compression members consisting of a steel-encased concrete core must comply with one of the following ASTM standards:

    1. Grade B seamless and welded black and hot-dipped galvanized steel pipe, ASTM A53;
    2. Cold-formed welded and seamless carbon steel structural tubing of round, square, rectangular or special shape, ASTM A500; or
    3. Hot-formed welded and seamless carbon steel structural tubing of round, square, rectangular or special shape, ASTM A501.

INTERNATIONAL CODE COUNCIL®
Copyright © 2015 ICC. ALL RIGHTS RESERVED. Accessed by David Dammon on Jun 21, 2017 12:30:52 PM pursuant to License Agreement with ICC. No further reproduction or distribution authorized. ANY UNAUTHORIZED REPRODUCTION OR DISTRIBUTION IS A VIOLATION OF THE FEDERAL COPYRIGHT ACT AND THE LICENSE AGREEMENT, AND SUBJECT TO CIVIL AND CRIMINAL PENALTIES THEREUNDER.

The most important considerations before welding reinforcing bars are the weldability of the steel and the compatibility of the welding process. The American Welding Society (AWS) specifies the proper welding practices in the AWS D1.4 standard.

The ASTM standards for concrete reinforcement permitted in the code each contain the material properties of the specific types of metal. The steel chemistry set forth in any of these standards must be restricted to a given range to provide compatibility with the welding requirements of AWS D1.4. Therefore, to provide the weldability of the steel and conformance to AWS requirements, this section stipulates that the ASTM reinforcing bar specifications must be supplemented with a report addressing the material properties of the particular type of steel to be used in the welding process. However, the steel produced using ASTM A706 is exempt from the requirement for a supplemental report because it was purposely developed for welding and already has a restricted chemistry.

Where there is a need to weld existing reinforcing bars in making alterations to existing buildings, and mill reports of the steel are not available, AWS D1.4 requires that a chemical analysis be made to determine the composition of the steel. As a practical alternative, an assumption can be made that the carbon equivalent is above 0.75 percent for the reinforcement and the steel can be welded after a preheat temperature of 500°F (260°C) is applied. While this procedure solves the welding problem, consideration must be given to the possible effects of heat damage to the concrete and the stress levels in the reinforcing steel.

Admixtures: By definition, an admixture is a material other than water, aggregates or hydraulic cement, used as an ingredient in concrete (or mortar) and added to the concrete immediately before or during mixing. There are four reasons for using admixtures:

1. To achieve certain desired properties in concrete more readily and effectively than can be obtained by other means;
2. To ensure the quality of concrete during the mixing, transporting, placing and curing operations under adverse weather conditions;
3. To overcome certain adverse conditions during concreting operations; and
4. To reduce the cost of concrete construction.

While each of the several different types of admixtures used in concrete is intended to have a beneficial effect on certain properties of concrete, at the same time that admixture can have an adverse effect on other properties. Therefore, to make sure the overall quality of concrete intended by the design engineer and the code is met, the use of admixtures must have prior approval of the engineer.

The effectiveness of an admixture in concrete is dependent on such factors as the type and the amount of cement; the shape, gradation and proportions of the aggregate used in the concrete mixture; water content; mixing time; slump; and temperatures of the surrounding air and concrete. To verify proper proportioning of the concrete in accordance with the requirements of ACI 318, trial mixtures should be made with the admixture and the job materials at temperatures and humidities anticipated at the job site. Trial mixtures will establish the compatibility of the admixture with the other admixtures that may be used in the concrete, as well as determine the effects of the admixture on the properties of fresh and hardened concrete. The amount of admixture used in concrete should not exceed the amount recommended by the manufacturer or the optimum amount determined by laboratory tests.

Because concentrations of chloride ions can cause severe corrosive effects on metallic materials, admixtures containing chloride as part of the formulation, including the use of calcium chloride as an antifreeze admixture during cold weather, are not allowed in prestressed concrete, concrete with aluminum embedment or concrete that is in contact with permanent installations of galvanized formwork.

Admixtures used in concrete must comply with the applicable ASTM material specifications referenced in ACI 318. There are several classes of admixtures covered by the ASTM specifications. Each class of admixture, as well as each type of admixture within a class, serve different purposes and affect the properties of concrete in different ways.

Air-entraining Admixtures—ASTM C260:

Air-entraining admixtures incorporate microscopic air bubbles in the concrete mixture. Air entrainment serves three main purposes:

1. It improves the resistance of moist concrete to the effects of freezing and thawing cycles;
2. It improves the resistance of concrete to the actions of deicing chemicals; and
3. It improves the workability of fresh concrete.

Entrained air can be introduced in concrete by means of air-entraining cements, or as a separate ingredient (i.e., an admixture) in the concrete mixture (ASTM C260) introduced before or during the mixture operations. If desired, both methods can be used together, but difficulties may arise in controlling the amount of air entrainment.

Water-reducing, Retarding and Accelerating Admixtures—ASTM C494 and ASTM C1017:

The ASTM C494 material specification for chemical admixtures gives the physical requirements for each of seven types of admixtures—Types A through G listed below—and prescribes the applicable test

INTERNATIONAL CODE COUNCIL®
Copyright © 2015 ICC. ALL RIGHTS RESERVED. Accessed by David Dammon on Jun 21, 2017 12:30:52 PM pursuant to License Agreement with ICC. No further reproduction or distribution authorized. ANY UNAUTHORIZED REPRODUCTION OR DISTRIBUTION IS A VIOLATION OF THE FEDERAL COPYRIGHT ACT AND THE LICENSE AGREEMENT, AND SUBJECT TO CIVIL AND CRIMINAL PENALTIES THEREUNDER.

methods and other information necessary for the acceptance of admixture materials:

Type A—Water-reducing admixtures
Type B—Retarding admixtures
Type C—Accelerating admixtures
Type D—Water-reducing and retarding admixtures
Type E—Water-reducing and accelerating admixtures
Type F—Water-reducing and high-range admixtures
Type G—Water-reducing, high-range and retarding admixtures

Type A water-reducing (and set-controlling) admixtures can be used in several ways in proportioning concrete mixtures to achieve certain desired results:

1. The cement content can be maintained while reducing the amount of water, thus lowering the water-cementitious materials (w/cm) ratio and increasing the strength of concrete, as well as its durability.
2. The w/cm ratio can be maintained by reducing both the water and cement contents of the concrete resulting in a cost savings (less cement used); and
3. The slump of the concrete can be increased without increasing the w/cm ratio, thus maintaining the same strength level while improving the workability of the concrete.

The purpose of Type B chemical admixtures is to retard the rate of the setting of concrete. Such admixtures are normally used in hot weather when an accelerated rate of hardening of concrete occurs, making placing and finishing operations very difficult. On the negative side, the use of retarding admixtures will cause reductions in concrete strength at very early ages. More important, the effects of retarding admixtures on other properties of concrete, particularly shrinkage, are unpredictable.

Type C accelerating admixtures are used mainly in cold-weather operations to shorten the setting time of concrete and accelerate the strength development at early ages. The problem is that calcium chloride is the prevalent ingredient used in producing these admixtures. Calcium chloride can cause an increase in drying shrinkage, reinforcement corrosion, discoloration (darkening) of concrete, loss of strength at later ages and scaling. This type of admixture is prohibited in prestressed concrete construction.

Type D chemical admixtures perform as a combination of the properties of Types A and B. They are used to reduce the quantity of mixing water required to produce concrete of a given consistency (slump) and to retard the setting time of the concrete.

Type E chemical admixtures perform as a combination of the properties of Type A and C admixtures. They serve to reduce the quantity of mixing water required to produce concrete of a given consistency (slump) and accelerate the setting time and early strength development of the concrete.

Type F chemical admixtures are water-reducing admixtures similar to Type A, except that they can reduce the quantity of mixing water by 12 percent or more to produce concrete of a given consistency. Up to 30-percent water reduction can be achieved with these admixtures.

Type G chemical admixtures are high-range, water-reducing and retarding admixtures similar in function to Types F and B, except they can reduce the quantity of mixing water by 12 percent or more to produce concrete of a given consistency and retard the setting time of the concrete.

ASTM C1017 regulates admixtures that are similar to a high-range water reducer, but are used in a different manner. These admixtures are typically referred to as "superplasticizers." Instead of being used to reduce the amount of mix water and maintain the same consistency (i.e., as a water reducer), the superplasticizer is used with the same amount of mix water that would be necessary to produce relatively low-slump concrete [e.g., $3^1/_2$ inches (89 mm)]. The superplasticizer causes an increase in the slump, which makes the concrete flowable. Two types of admixtures are provided for under ASTM C1017: Type I, plasticizing; and Type II, plasticizing and retarding. The requirements of ASTM C1017 are similar to those of ASTM C494 (Types F and G); however, in order to comply with ASTM C1017, the admixture must increase the slump at least $3^1/_2$ inches (89 mm) compared to the control specimen.

Pozzolans—ASTM C618:

Admixtures made of raw or natural pozzolans and fly ash are covered by ASTM C618 material specifications. While these mineral admixtures can benefit or adversely affect the properties of concrete, they are widely used as partial replacements for portland cement and often result in more economical concrete construction.

By definition, a pozzolan is a siliceous or aluminosiliceous material that in itself possesses little or no cementitious value, but will, in finely divided form and in the presence of water, chemically react with the calcium hydroxide released by the hydration of portland cement to form compounds possessing cementitious properties. Pozzolanic materials used for making admixtures come from a number of natural sources, such as diatomaceous earth, opaline cherts, clays, shales, volcanic tuffs and pumicites. The ASTM C618 standard designates these materials as Class N pozzolans.

Fly ash is the most widely used of all the mineral admixtures in concrete. Essentially, it is a finely divided residue (a powder) that results from the combustion of pulverized coal. Large quantities of fly ash are produced in coal-burning electric power-generating plants. Fly ash is primarily silicate glass containing silica, aluminum, iron and calcium. It also contains small amounts of magnesium, sulfur, sodium, potassium and carbon. ASTM C618

INTERNATIONAL CODE COUNCIL®
Copyright © 2015 ICC. ALL RIGHTS RESERVED. Accessed by David Dammon on Jun 21, 2017 12:30:52 PM pursuant to License Agreement with ICC. No further reproduction or distribution authorized. ANY UNAUTHORIZED REPRODUCTION OR DISTRIBUTION IS A VIOLATION OF THE FEDERAL COPYRIGHT ACT AND THE LICENSE AGREEMENT, AND SUBJECT TO CIVIL AND CRIMINAL PENALTIES THEREUNDER.

designates these materials as Class F or C fly ash, depending on the percentages of calcium and carbon contents. Each class of fly ash affects the properties of concrete in different ways. It is a complex subject, and for more information on fly ash and other mineral admixtures, refer to the Portland Cement Association publications cited in the bibliography.

Aside from economic reasons, pozzolan and fly ash admixtures are used in concrete for any one or more of the following purposes: increase sulfate resistance, reduce expansions in concrete due to alkali-silica reactions, reduce the permeability of concrete, decrease heat generation or improve the workability and finishing qualities of the concrete. The properties of pozzolans and fly ash may vary widely. Fly ash, in particular, can have varying amounts of carbon, silica, sulfur, alkalis and other ingredients that can adversely affect the strength, air content and durability of concrete. Because it is a residue and not a controlled product, the properties of fly ash can vary widely, not only between productions coming from different electric power-generating plants, but also between batches coming from the same plant.

Slag—ASTM C989:

Ground-granulated blast-furnace slag complying with the requirements of ASTM C989 provides characteristics similar to those exhibited by pozzolan admixtures. Ground-granulated blast-furnace slag and fly ash are often used in combination as admixtures in Portland cement (ASTM C150) concrete. The practice has been growing in recent years because of energy conservation considerations, but mainly because of savings in the cost of concrete when fly ash or slag or both fly ash and slag are used to partially replace cement.

Silica Fume—ASTM C1240:

Silica fume is a byproduct of the manufacture of elemental silicon or ferro-silicon alloys in electric arc furnaces. When used in conjunction with a high-range water-reducing admixture, it is possible to produce concrete with compressive strengths of 20,000 psi (138 MPa) or higher. It is also used to achieve a very dense cement paste matrix to reduce the permeability of concrete, thus providing better corrosion protection to reinforcing steel in concrete subjected to deicing chemicals (e.g., parking garages). Tests have shown that silica fume greatly improves the sulfate resistance of concrete. For this reason, the code requires that concrete to be subjected to very severe sulfate exposure be made with Type V ASTM C150 cement plus a pozzolan, such as silica fume, that has shown through tests or service records to improve sulfate resistance.

Storage of materials: ACI 318 regulates the storage of concrete materials and prohibits the use of materials that have deteriorated or been contaminated. Cement that is stored in contact with damp air or moisture sets more slowly and has less strength than cement that is maintained in a dry condition. Bulk cement can be stored in weather-tight containers, such as steel bins or concrete silos.

Bags of cement are typically stored in warehouses or sheds where the relative humidity is kept as low as possible. Bags of cement must not be stored on damp floors or on earth (job-site conditions; dirt), but should rest on pallets and be stacked close together to reduce air circulation. Bags should be covered with a waterproof covering to prevent deterioration when exposed to weather.

Aggregates are normally stockpiled on the ground in areas that have been stripped of all vegetation and debris and have been leveled to facilitate handling operations. When two or more types or sizes of aggregates are involved, the stockpiles must be so arranged as to avoid crowding or overlapping with other materials or other sizes of like aggregates. In removing material from a stockpile, a layer of aggregate of sufficient thickness must be left on the ground to keep the handling equipment, such as a front-end loader or clamshell, from picking up earth along with the aggregate. Stockpiles typically are built up in centric uniform layers to prevent coarse aggregates from rolling down the sides and segregating the material.

Ordinarily, cement does not remain in storage long, but it can be stored for long periods without deterioration. At the time of use, however, cement is required to be free flowing and relatively free of lumps. If the lumps do not readily break up or there is other reason to doubt the quality of the cement, the material can be tested for strength or loss on ignition in accordance with the ASTM standard under which it was manufactured before it is used in concrete.

If there is reason to doubt that any aggregate taken from a stockpile is not clean or appears to be contaminated, any of the applicable standard ASTM tests that would detect impurities should be made before the material is used for making concrete.

The exception provides code users access to updated standards for Portland cement, blended hydraulic cement, and hydraulic cement referenced for use in concrete. Modifications included in the referenced editions of these cement standards provide improvements as follows:

ASTM C150-12: Compared to ASTM C150-09 referenced in ACI 318-11, ASTM C150-12 includes revisions that:

1. Make the air permeability test the default method for determining compliance with specific surface fineness requirements and moves determination by the turbidimetric method to the optional table. This reflects industry practice.
2. Clarification on Type II (MH) moderate heat- and moderate sulfate-resistant cement heat index requirements, clarification on proce-

INTERNATIONAL CODE COUNCIL®
Copyright © 2015 ICC. ALL RIGHTS RESERVED. Accessed by David Dammon on Jun 21, 2017 12:30:52 PM pursuant to License Agreement with ICC. No further reproduction or distribution authorized. ANY UNAUTHORIZED REPRODUCTION OR DISTRIBUTION IS A VIOLATION OF THE FEDERAL COPYRIGHT ACT AND THE LICENSE AGREEMENT, AND SUBJECT TO CIVIL AND CRIMINAL PENALTIES THEREUNDER.

dure for determining potential phase (Bogue) composition, and some additional minor improvements. No changes are made to the physical or chemical requirements of C150.

ASTM C595-12: Compared to C595-09 referenced in ACI 318-11, ASTM C595-12 includes revisions to:

1. Include provisions for a new Type IL Portland-limestone blended cement designation for cement containing from 5- to 15-percent limestone. C595 Type IL has the same physical requirements as Types IP and IS (<70), which are also comparable to ASTM C150 physical requirements. Portland-limestone cement provides an alternative for improving the sustainability of concrete.
2. Several clarifications and improvements to the C595 provisions for Type IT ternary blended cements.
3. Clarifications and improvements to C595 naming practices used to identify the amount of slag, pozzolan or limestone contained in blended cements.

ASTM C1157-12: Compared to C1157-09 referenced in ACI 318-11, ASTM C1157-12 includes revisions to:

1. Include provisions for distinguishing between air-entraining and nonair-entraining ASTM C1157 cements with appropriate designations and limits consistent with those of ASTM C150 and C595 for air-entraining and nonair-entraining cements.
2. A minor modification to correct the significant figures for minimum strength limits for SI unit values listed in Table 1.

The variations in product that will result from the use of ASTM C1157-12 versus C1157-09 will not adversely impact the performance of concrete with regard to compliance with ACI 318 or the provisions of the code.

1903.2 Special inspections. *Where required, special inspections and tests shall be in accordance with Chapter 17.*

❖ In Chapter 17, the code requires that most structural concrete requires special inspection with the exception of some foundations.

1903.3 Glass fiber-reinforced concrete. *Glass fiber-reinforced concrete (GFRC) and the materials used in such concrete shall be in accordance with the PCI MNL 128 standard.*

❖ This section references a document that addresses the quality of materials used in glass fiber-reinforced concrete panels. Glass fiber-reinforced concrete is utilized in the prescriptive fire-resistance ratings for wall assemblies [see Table 721.1(2), Item 15].

1903.4 Flat wall insulating concrete form (ICF) systems. *Insulating concrete form material used for forming flat concrete walls shall conform to ASTM E 2634.*

❖ This section references ASTM E2634 for the material used to make forms for insulating concrete form (ICF) systems using molded expanded polystyrene (EPS) insulation panels. ICFs are rigid plastic foam forms used in the construction of cast-in-place concrete structural members. The ICFs remain in place as permanent building insulation for energy-efficient, cast-in-place, reinforced concrete walls, floors, roofs, beams and columns. The forms are interlocking modular units that are dry stacked (without mortar) and filled with concrete. ICF are generally manufactured from polystyrene or polyurethane. Reinforcing steel is placed in the forms and then concrete is pumped into the cavity to form the structural portion of the walls. The forms provide thermal and acoustic insulation, space to run electrical conduit and plumbing and backing for interior and exterior finishes.

ASTM E2634 applies to ICF systems that consist of molded EPS insulation panels that are connected by cross ties and act as permanent formwork for cast-in-place reinforced concrete structural members such as reinforced concrete beams; lintels; exterior and interior bearing and nonbearing walls; foundations and retaining walls. ASTM E2634 lists test methods appropriate for establishing ICF system performance as a permanent concrete forming system.

SECTION 1904
DURABILITY REQUIREMENTS

1904.1 Structural concrete. Structural concrete shall conform to the durability requirements of ACI 318.

Exception: *For Group R-2 and R-3 occupancies not more than three stories above grade plane, the specified compressive strength, f'_c, for concrete in basement walls, foundation walls, exterior walls and other vertical surfaces exposed to the weather shall be not less than 3,000 psi (20.7 MPa).*

❖ Durability requirements of ACI 318 require the designer to classify concrete into one of the freezing and thawing classes as follows:

F0 – Concrete not exposed to freezing-and-thawing cycles.

F1 – Concrete exposed to freezing-and-thawing cycles and occasional exposure to moisture.

F2 – Concrete exposed to freezing-and-thawing cycles and in continuous contact with moisture.

F3 – Concrete exposed to freezing-and-thawing cycles and in continuous contact with moisture and exposed to deicing chemicals.

The concrete classes must be applied by the designer, regardless of geographic location. The

INTERNATIONAL CODE COUNCIL®
Copyright © 2015 ICC. ALL RIGHTS RESERVED. Accessed by David Dammon on Jun 21, 2017 12:30:52 PM pursuant to License Agreement with ICC. No further reproduction or distribution authorized. ANY UNAUTHORIZED REPRODUCTION OR DISTRIBUTION IS A VIOLATION OF THE FEDERAL COPYRIGHT ACT AND THE LICENSE AGREEMENT, AND SUBJECT TO CIVIL AND CRIMINAL PENALTIES THEREUNDER.

commentary to ACI 318 provides further discussion and examples to help the designer determine the appropriate class.

The exception provides an exemption from the ACI 318 durability requirements for Group R-2 and R-3 occupancies. This will maintain consistency between dwellings constructed to the IRC and those designed using the IBC, as well as between Group R-3 structures and similar Group R-2 structures. Otherwise, the reference to ACI 318 would require 4,500 psi (31.0 MPa) for concrete exposed to freeze/thaw action or deicing chemicals in Group R-3 structures, where such concrete has traditionally been designed using 3,000 psi (20.7 MPa) concrete.

Group R-3 occupancies are typically one- and two-family dwellings and townhouses either constructed in jurisdictions that have not adopted the IRC, or that are outside the scope of the IRC limits for the purposes of the structural design. These dwellings often are designed without the involvement of an engineer, using the provisions of Section 2308 or prescriptive engineering-based standards such as ICC 600 or the AWC *Wood Frame Construction Manual*. Group R-2 covers a range of residential buildings where dwelling units or sleeping units are occupied for more than a month. Structures covered under this group include fraternity and sorority houses, back-to-back rows of townhouses, and low-rise "garden style" condominium and apartment buildings. These structures are very similar in construction and loading to Group R-3 structures and often are also designed using Section 2308 or other prescriptive standards.

1904.2 Nonstructural concrete. *The registered design professional shall assign nonstructural concrete a freeze-thaw exposure class, as defined in ACI 318, based on the anticipated exposure of nonstructural concrete. Nonstructural concrete shall have a minimum specified compressive strength, f'_c, of 2,500 psi (17.2 MPa) for Class F0; 3,000 psi (20.7 MPa) for Class F1; and 3,500 psi (24.1 MPa) for Classes F2 and F3. Nonstructural concrete shall be air entrained in accordance with ACI 318.*

❖ ACI 318 does not have durability requirements for nonstructural concrete. Therefore, these limits are not exceptions to ACI 318 but rather a distinct set of requirements. The limits given are simply restated versions of the requirements from prior editions of the IBC.

SECTION 1905
MODIFICATIONS TO ACI 318

1905.1 General. The text of ACI 318 shall be modified as indicated in Sections 1905.1.1 through 1905.1.8.

❖ Section 1905 contains modifications to ACI 318, the standard adopted by reference in Section 1901.2. Many of the modifications are related to the seismic design of concrete structures. Text that differs from or is not found in ACI 318 is printed in italics to identify those differences.

1905.1.1 ACI 318, Section 2.3. Modify existing definitions and add the following definitions to ACI 318, Section 2.3.

DESIGN DISPLACEMENT. Total lateral displacement expected for the design-basis earthquake, *as specified by Section 12.8.6 of ASCE 7.*

❖ This *International Building Code*® (IBC®) modification to the definition given in ACI 318 provides a more specific code reference. Design displacement is defined to be the same as δ_x (or interstory drift based on δ_x) as given in Section 12.8.6 of ASCE 7.

DETAILED PLAIN CONCRETE STRUCTURAL WALL. A wall complying with the requirements of Chapter 14, including 14.6.2.

❖ The classification of shear wall systems is indicative of the amount of reinforcement and the type of detailing to be provided. Shear wall system classifications are also used to identify the appropriate earthquake design coefficients and system limitations in ASCE 7. This definition describes a type of shear wall system permitted in the earthquake load requirements of ASCE 7, but not defined under ACI 318. The definition provides a specific reference to requirements added to ACI 318 by Section 1905.1.6. This supplements ACI 318 provisions for plain concrete by providing additional requirements for "detailed plain concrete structural walls." Note that ACI 318 refers to a "shear wall" as a "structural wall."

ORDINARY PRECAST STRUCTURAL WALL. A precast wall complying with the requirements of Chapters 1 through 13, 15, 16 and 19 through 26.

❖ The classification of shear wall systems is indicative of the amount of reinforcement and the type of detailing to be provided. Shear wall system classifications are also used to identify the appropriate earthquake design coefficients and system limitations in ASCE 7. This definition describes a type of shear wall system permitted in the earthquake load requirements of ASCE 7, but not defined under ACI 318. The definition provides a specific reference to requirements added to ACI 318 by Section 1905.1.6. This supplements ACI 318 provisions for plain concrete by providing additional requirements for "detailed plain concrete structural walls." Note that ACI 318 refers to a "shear wall" as a "structural wall."

ORDINARY REINFORCED CONCRETE STRUCTURAL WALL. A *cast-in-place* wall complying with the requirements of Chapters 1 through 13, 15, 16 and 19 through 26.

❖ This definition adds an explanation of a shear wall system that is not explicitly defined in ACI 318. The classification of shear wall systems reflects the amount of reinforcement and the type of detailing to be provided. Shear wall system classifications are also used to identify the appropriate earthquake design coefficients and limitations in ASCE 7. The ACI 318 definition of "Ordinary reinforced concrete structural wall" includes both cast-in-place and pre-

INTERNATIONAL CODE COUNCIL®
Copyright © 2015 ICC. ALL RIGHTS RESERVED. Accessed by David Dammon on Jun 21, 2017 12:30:52 PM pursuant to License Agreement with ICC. No further reproduction or distribution authorized. ANY UNAUTHORIZED REPRODUCTION OR DISTRIBUTION IS A VIOLATION OF THE FEDERAL COPYRIGHT ACT AND THE LICENSE AGREEMENT, AND SUBJECT TO CIVIL AND CRIMINAL PENALTIES THEREUNDER.

cast walls. Because ordinary reinforced concrete structural walls constructed of precast elements are not expected to perform as well as a cast-in-place wall when subjected to the same earthquake ground motion, a precast ordinary reinforced concrete structural wall does not warrant the same response modification coefficient, *R*, as a comparable cast-in-place wall. In order to assign distinct design coefficients to precast shear wall systems, they must be defined separately. Note that ACI 318 refers to a "shear wall" as a "structural wall."

ORDINARY STRUCTURAL PLAIN CONCRETE WALL. A wall complying with the requirements of Chapter 14, *excluding 14.6.2*.

❖ The classification of shear wall systems reflects the amount of reinforcement and the type of detailing to be provided. Shear wall system classifications are also used to identify the appropriate earthquake design coefficients and limitations in ASCE 7. This modification clarifies that the additional code requirements intended for detailed plain concrete shear walls do not apply to ordinary plain concrete shear walls. Note that ACI 318 refers to a "shear wall" as a "structural wall."

SPECIAL STRUCTURAL WALL. A cast-in-place or precast wall complying with the requirements of 18.2.4 through 18.2.8, 18.10 and 18.11, as applicable, in addition to the requirements for ordinary reinforced concrete structural walls *or ordinary precast structural walls, as applicable. Where ASCE 7 refers to a "special reinforced concrete structural wall," it shall be deemed to mean a "special structural wall."*

❖ This modified definition coordinates terminology used in ACI 318 with that used in ASCE 7. Under ACI 318-05, a "special reinforced concrete structural wall" referred to a cast-in-place wall, while a separate definition was used for a "Special precast structural wall." In ACI 318-08, the separate definition for "Special precast structural wall" was removed and the former definition of "Special reinforced concrete structural wall" was revised to "Special structural wall." The current definition includes both cast-in-place and precast walls. This modification to the ACI 318 definition of "Special structural wall" was necessary since Table 12.2-1 of ASCE 7 uses the former term "Special reinforced concrete structural wall." In addition, the ASCE 7 table does not refer to "special structural wall."

1905.1.2 ACI 318, Section 18.2.1. Modify ACI 318 Sections 18.2.1.2 and 18.2.1.6 to read as follows:

18.2.1.2 – Structures assigned to Seismic Design Category A shall satisfy requirements of Chapters 1 through 17 and 19 through 26*; Chapter 18 does not apply*. Structures assigned to *Seismic Design Category* B, C, D, E or F also shall satisfy 18.2.1.3 through 18.2.1.7, as applicable. *Except for structural elements of plain concrete complying with Section 1905.1.7 of the International Building Code, structural elements of plain concrete are prohibited in structures assigned to Seismic Design Category C, D, E or F.*

18.2.1.6 – Structural systems designated as part of the seismic force-resisting system shall be restricted to those *permitted by ASCE 7*. Except for *Seismic Design Category* A, for which Chapter 18 does not apply, the following provisions shall be satisfied for each structural system designated as part of the seismic force-resisting system, regardless of the *seismic design category*:

(a) Ordinary moment frames shall satisfy 18.3.

(b) Ordinary reinforced concrete structural walls *and ordinary precast structural walls* need not satisfy any provisions in Chapter 18.

(c) Intermediate moment frames shall satisfy 18.4.

(d) Intermediate precast *structural* walls shall satisfy 18.5.

(e) Special moment frames shall satisfy 18.6 through 18.9.

(f) Special structural walls shall satisfy 18.10.

(g) Special structural walls constructed using precast concrete shall satisfy 18.11.

All special moment frames and special structural walls shall also satisfy 18.2.4 through 18.2.8.

❖ This modification provides clarifications that are necessary for correct application of the earthquake design provisions.

1905.1.3 ACI 318, Section 18.5. Modify ACI 318, Section 18.5, by adding new Section 18.5.2.2 and renumbering existing Sections 18.5.2.2 and 18.5.2.3 to become 18.5.2.3 and 18.5.2.4, respectively.

18.5.2.2 – Connections that are designed to yield shall be capable of maintaining 80 percent of their design strength at the deformation induced by the design displacement or shall use Type 2 mechanical splices.

18.5.2.3 – Elements of the connection that are not designed to yield shall develop at least 1.5 S_y.

18.5.2.4 – In structures assigned to SDC D, E or F, wall piers shall be designed in accordance with 18.10.8 or 18.14 in ACI 318.

❖ This modification to ACI 318 affects connections between precast concrete wall panels in intermediate precast structural walls. Section 18.5.2 of ACI 318 restricts yielding to steel elements or reinforcement in connections between wall panels, or between wall panels and the foundation of intermediate precast structural walls. This restriction is also made applicable by Section 18.11.2.1 to special structural walls of precast concrete (see Section 1905.1.4).

The modification to Section 18.5.2.2 of ACI 318 is consistent with a clarification of ductile elements that is made in the 2003 National Earthquake Hazards Reduction Program (NEHRP) provisions. Connection elements that are designed to yield must be capable of maintaining 80 percent of their design strength up to the stage where a structure is subjected to the design displacement as defined in ACI 318 (see Section 1905.1.1).

INTERNATIONAL CODE COUNCIL®
Copyright © 2015 ICC. ALL RIGHTS RESERVED. Accessed by David Dammon on Jun 21, 2017 12:30:52 PM pursuant to License Agreement with ICC. No further reproduction or distribution authorized. ANY UNAUTHORIZED REPRODUCTION OR DISTRIBUTION IS A VIOLATION OF THE FEDERAL COPYRIGHT ACT AND THE LICENSE AGREEMENT, AND SUBJECT TO CIVIL AND CRIMINAL PENALTIES THEREUNDER.

1905.1.4 ACI 318, Section 18.11. Modify ACI 318, Section 18.11.2.1, to read as follows:

18.11.2.1 – Special structural walls constructed using precast concrete shall satisfy all the requirements of 18.10 *for cast-in-place special structural walls* in addition to 18.5.2.

❖ The modification made to ACI 318 in this section coordinates with the sections that are referenced—and are themselves modified in Section 1905.1.3.

1905.1.5 ACI 318, Section 18.13.1.1. Modify ACI 318, Section 18.13.1.1, to read as follows:

18.13.1.1 – Foundations resisting earthquake-induced forces or transferring earthquake-induced forces between a structure and ground shall comply with the requirements of 18.13 and other applicable provisions of ACI 318 *unless modified by Chapter 18 of the International Building Code.*

❖ This ACI 318 modification points out that there are foundation requirements in the code that, in accordance with Section 102.4 of the IBC, would take precedence over those of ACI 318.

1905.1.6 ACI 318, Section 14.6. Modify ACI 318, Section 14.6, by adding new Section 14.6.2 to read as follows:

14.6.2 – Detailed plain concrete structural walls.

14.6.2.1 – Detailed plain concrete structural walls are walls conforming to the requirements of ordinary structural plain concrete walls and 14.6.2.2.

14.6.2.2 – Reinforcement shall be provided as follows:

(a) Vertical reinforcement of at least 0.20 square inch (129 mm^2) in cross-sectional area shall be provided continuously from support to support at each corner, at each side of each opening and at the ends of walls. The continuous vertical bar required beside an opening is permitted to substitute for one of the two No. 5 bars required by 14.6.1.

(b) Horizontal reinforcement at least 0.20 square inch (129 mm^2) in cross-sectional area shall be provided:

1. Continuously at structurally connected roof and floor levels and at the top of walls;

2. At the bottom of load-bearing walls or in the top of foundations where doweled to the wall; and

3. At a maximum spacing of 120 inches (3048 mm).

Reinforcement at the top and bottom of openings, where used in determining the maximum spacing specified in Item 3 above, shall be continuous in the wall.

❖ This ACI 318 modification provides requirements for detailed plain concrete structural walls that are based on the 2003 NEHRP provisions (see definition in Section 1905.1.1). In addition to conforming to the requirements for ordinary plain concrete shear walls, detailed plain concrete shear walls must have some reinforcement to provide limited ductility and to keep the concrete from disintegrating should cracking occur before or during a seismic event. Detailed plain concrete shear walls may only be used in structures assigned to Seismic Design Category A or B. The area of vertical reinforcement of 0.20 square inch (129 mm^2) corresponds to the area of a No. 4 reinforcing bar. The provision requiring vertical reinforcement at the "ends of walls" is intended to also require a bar on each side of a contraction (i.e., control) joint.

Item 1 requires that a bar be located at the top of a wall. Where the provisions of Item 1 require a closer spacing of horizontal reinforcement than Item 3 [i.e., 120 inches or 10 feet (3048 mm)], then the closer spacing applies.

1905.1.7 ACI 318, Section 14.1.4. Delete ACI 318, Section 14.1.4, and replace with the following:

14.1.4 – Plain concrete in structures assigned to Seismic Design Category C, D, E or F.

14.1.4.1 – Structures assigned to Seismic Design Category C, D, E or F shall not have elements of structural plain concrete, except as follows:

(a) Structural plain concrete basement, foundation or other walls below the base as defined in ASCE 7 are permitted in detached one- and two-family dwellings three stories or less in height constructed with stud-bearing walls. In dwellings assigned to Seismic Design Category D or E, the height of the wall shall not exceed 8 feet (2438 mm), the thickness shall be not less than 7$^1/_2$ inches (190 mm), and the wall shall retain no more than 4 feet (1219 mm) of unbalanced fill. Walls shall have reinforcement in accordance with 14.6.1.

(b) Isolated footings of plain concrete supporting pedestals or columns are permitted, provided the projection of the footing beyond the face of the supported member does not exceed the footing thickness.

***Exception:** In detached one- and two-family dwellings three stories or less in height, the projection of the footing beyond the face of the supported member is permitted to exceed the footing thickness.*

(c) Plain concrete footings supporting walls are permitted, provided the footings have at least two continuous longitudinal reinforcing bars. Bars shall not be smaller than No. 4 and shall have a total area of not less than 0.002 times the gross cross-sectional area of the footing. For footings that exceed 8 inches (203 mm) in thickness, a minimum of one bar shall be provided at the top and bottom of the footing. Continuity of reinforcement shall be provided at corners and intersections.

Exceptions:

1. In Seismic Design Categories A, B and C, detached one- and two-family dwellings three stories or less in height con-

INTERNATIONAL CODE COUNCIL®
Copyright © 2015 ICC. ALL RIGHTS RESERVED. Accessed by David Dammon on Jun 21, 2017 12:30:52 PM pursuant to License Agreement with ICC. No further reproduction or distribution authorized. ANY UNAUTHORIZED REPRODUCTION OR DISTRIBUTION IS A VIOLATION OF THE FEDERAL COPYRIGHT ACT AND THE LICENSE AGREEMENT, AND SUBJECT TO CIVIL AND CRIMINAL PENALTIES THEREUNDER.

structed with stud-bearing walls are permitted to have plain concrete footings without longitudinal reinforcement.

2. *For foundation systems consisting of a plain concrete footing and a plain concrete stemwall, a minimum of one bar shall be provided at the top of the stemwall and at the bottom of the footing.*

3. *Where a slab on ground is cast monolithically with the footing, one No. 5 bar is permitted to be located at either the top of the slab or bottom of the footing.*

❖ Structural plain concrete walls are prohibited in structures assigned to Seismic Design Category C due to their inability to respond inelastically, which is considered to be essential if they are to provide satisfactory performance during the design earthquake. Item (a) permits this in one- and two-family dwellings where the stated conditions are met.

Plain concrete footings supporting columns or pedestals are permitted if the projection of the footing beyond the face of the column or pedestal does not exceed the footing thickness. The limitation on the projection was judged to be prudent because of the empirical manner in which the vertical component of earthquake ground motion is considered. With the limitation on the projection, a flexural or shear failure in the footing is virtually impossible.

Wall footings of structural plain concrete are permitted in all structures assigned to Seismic Design Category C. Some longitudinal reinforcement is specified in order to keep the footing together should it crack before or during an earthquake. The reinforcement will also allow the footing to act as a "reinforced" concrete member should the earthquake-induced ground motion cause the supported structure to be subjected to differential vertical movement. For footings 8 inches (203 mm) or less in thickness, the bars will typically be located with 3 inches (76 mm) of concrete cover to the bottom of the footing as required by ACI 318. For footings thicker than 8 inches (203 mm), one bar will be located with respect to the bottom as noted previously, and the other with $1^1/_2$ or 2 inches (38 or 51 mm) of cover from the top of the footing as required under ACI 318. Typically, two No. 4 [total of 0.40 square inches (258 mm^2)] or two No. 5 [total of 0.62 square inches (400 mm^2)] bars will suffice. The former is adequate for footings up to 200 square inches (0.129 m^2) in cross-sectional area [0.40 $in.^2$/0.002 = 200 $in.^2$ (258 mm^2/.002 × 106 = 0.129 m^2)], and the latter for footings up to 310 square inches (0.200 m^2) in cross-sectional area [0.62 $in.^2$/0.002 = 310 $in.^2$ (400 mm^2/.002 × 106 = 0.200 m^2)]. Where one bar will be placed in the bottom of the footing and the other will be placed in the top of the stem wall, the concrete surface of the top of the footing should be intentionally roughened so that a good bond develops between the two concrete placements.

Exception 1 permits structural plain concrete footings without longitudinal reinforcement in buildings assigned to Seismic Design Categories A, B and C for certain detached one- and two-family dwellings. Where a slab on ground is cast monolithically with the footing, typically referred to as a "turned-down slab," Exception 3 allows one No. 5 bar (versus two No. 4 bars) to be located in either the top or bottom of the footing. In this case, the top of the footing is the top of the slab.

1905.1.8 ACI 318, Section 17.2.3. Modify ACI 318 Sections 17.2.3.4.2, 17.2.3.4.3(d) and 17.2.3.5.2 to read as follows:

17.2.3.4.2 – Where the tensile component of the strength-level earthquake force applied to anchors exceeds 20 percent of the total factored anchor tensile force associated with the same load combination, anchors and their attachments shall be designed in accordance with 17.2.3.4.3. The anchor design tensile strength shall be determined in accordance with 17.2.3.4.4.

Exception: *Anchors designed to resist wall out-of-plane forces with design strengths equal to or greater than the force determined in accordance with ASCE 7 Equation 12.11-1 or 12.14-10 shall be deemed to satisfy Section 17.2.3.4.3(d).*

17.2.3.4.3(d) – The anchor or group of anchors shall be designed for the maximum tension obtained from design load combinations that include E, with E increased by Ω_0. The anchor design tensile strength shall *be calculated from 17.2.3.4.4.*

17.2.3.5.2 – Where the shear component of the strength-level earthquake force applied to anchors exceeds 20 percent of the total factored anchor shear force associated with the same load combination, anchors and their attachments shall be designed in accordance with 17.2.3.5.3. The anchor design shear strength for resisting earthquake forces shall be determined in accordance with 17.5.

Exceptions:

1. *For the calculation of the in-plane shear strength of anchor bolts attaching wood sill plates of bearing or nonbearing walls of light-frame wood structures to foundations or foundation stem walls, the in-plane shear strength in accordance with 17.5.2 and 17.5.3 need not be computed and 17.2.3.5.3 shall be deemed to be satisfied provided all of the following are met:*

   1.1. *The allowable in-plane shear strength of the anchor is determined in accordance with ANSI/AWC NDS Table 11E for lateral design values parallel to grain.*

   1.2. *The maximum anchor nominal diameter is $^5/_8$ inch (16 mm).*

   1.3. *Anchor bolts are embedded into concrete a minimum of 7 inches (178 mm).*

   1.4. *Anchor bolts are located a minimum of $1^3/_4$ inches (45 mm) from the edge of the*

INTERNATIONAL CODE COUNCIL®
Copyright © 2015 ICC. ALL RIGHTS RESERVED. Accessed by David Dammon on Jun 21, 2017 12:30:52 PM pursuant to License Agreement with ICC. No further reproduction or distribution authorized. ANY UNAUTHORIZED REPRODUCTION OR DISTRIBUTION IS A VIOLATION OF THE FEDERAL COPYRIGHT ACT AND THE LICENSE AGREEMENT, AND SUBJECT TO CIVIL AND CRIMINAL PENALTIES THEREUNDER.

concrete parallel to the length of the wood sill plate.

1.5. Anchor bolts are located a minimum of 15 anchor diameters from the edge of the concrete perpendicular to the length of the wood sill plate.

1.6. The sill plate is 2-inch (51 mm) or 3-inch (76 mm) nominal thickness.

2. For the calculation of the in-plane shear strength of anchor bolts attaching cold-formed steel track of bearing or nonbearing walls of light-frame construction to foundations or foundation stem walls, the in-plane shear strength in accordance with 17.5.2 and 17.5.3 need not be computed and 17.2.3.5.3 shall be deemed to be satisfied provided all of the following are met:

2.1. The maximum anchor nominal diameter is $^5/_8$ inch (16 mm).

2.2. Anchors are embedded into concrete a minimum of 7 inches (178 mm).

2.3. Anchors are located a minimum of $1^3/_4$ inches (45 mm) from the edge of the concrete parallel to the length of the track.

2.4. Anchors are located a minimum of 15 anchor diameters from the edge of the concrete perpendicular to the length of the track.

2.5. The track is 33 to 68 mil (0.84 mm to 1.73 mm) designation thickness.

Allowable in-plane shear strength of exempt anchors, parallel to the edge of concrete, shall be permitted to be determined in accordance with AISI S100 Section E3.3.1.

3. In light-frame construction bearing or nonbearing walls, shear strength of concrete anchors less than or equal to 1 inch [25 mm] in diameter attaching sill plate or track to foundation or foundation stem wall need not satisfy 17.2.3.5.3(a) through (c) when the design strength of the anchors is determined in accordance with 17.5.2.1(c).

❖ This modification clarifies the applicability of the requirements for designing anchors for earthquake forces by adding exceptions. The basic premise of Section 17.2.3 is that anchorage design is controlled by the strength of a "ductile steel element," which is defined in the ACI 318 appendix commentary.

Section 17.2.3.5.2 has three exceptions. Exception 1 applies to the anchorage of wood sill plates to concrete foundations in light-frame construction. Based on light-frame shear wall testing, the wood sill plate controls the ductile behavior of the anchorage assembly. If the anchor meets the requirements of the exception, then the anchor need not meet the requirements of Section 17.2.3.5.3. Allowable in-plane shear capacity of the anchor bolt is determined in accordance with AWC National Design Specification (NDS) Table 11E rather than Chapter 17 of ACI 318.

Exception 2 applies to the anchorage of cold-formed steel track to concrete foundations in light-frame construction. Based on light-frame shear wall testing, the cold-formed steel track controls the ductile behavior of the anchorage assembly. If the anchor meets the requirements of the exception, then the anchor need not meet the requirements of Section 17.2.3.5.3. Allowable in-plane shear capacity of the anchor bolt is determined from Section E3.3.1 of AISI S100 rather than Chapter 17 of ACI 318.

There are five criteria to meet in order to use Exception 1 or 2 for design of anchor bolts connecting wood sill plates of shear walls of light-frame structures. The maximum nominal diameter of the anchor is $^5/_8$ inch (15.9 mm); anchors must be embedded a minimum of 7 inches (178 mm) into the footing and located a minimum of $1^3/_4$ inches (44 mm) from the edge of the concrete parallel to the wood sill plate or steel track and a minimum of 15 diameters from the edge of the concrete perpendicular to the wood sill plate or steel track; the wood sill plate must be 2-inch (51 mm) or 3-inch (76 mm) nominal thickness and the track must be within a thickness range of 33 mil to 68 mil (0.84 mm to 173 mm).

For light-frame construction, Exception 3 allows use of the provision in Section 17.5.2.1(c) rather than Section 17.2.3.5.3. Section 202 defines "Light-frame construction" as a system where vertical and horizontal structural elements are primarily formed by repetitive wood or cold-formed steel framing members.

SECTION 1906
STRUCTURAL PLAIN CONCRETE

1906.1 Scope. The design and construction of structural plain concrete, both cast-in-place and precast, shall comply with the minimum requirements of ACI 318, as modified in Section 1905.

Exception: For Group R-3 occupancies and buildings of other occupancies less than two stories above grade plane of light-frame construction, the required footing thickness of ACI 318 is permitted to be reduced to 6 inches (152 mm), provided that the footing does not extend more than 4 inches (102 mm) on either side of the supported wall.

❖ Section 1906 references the provisions of ACI 318 for the minimum requirements for plain concrete used for structural purposes. By definition, plain concrete contains no reinforcement, or has less reinforcement than necessary to meet the requirements for reinforced concrete in ACI 318.

The exception applies to the ACI 318 requirement for the thickness of a structural plain concrete footing to be a minimum of 8 inches (203 mm). This exception permits the thickness of the footing to be reduced to 6 inches (152 mm). The reduced footing thickness applies to any Group R-3 occupancy and to buildings

INTERNATIONAL CODE COUNCIL®
Copyright © 2015 ICC. ALL RIGHTS RESERVED. Accessed by David Dammon on Jun 21, 2017 12:30:52 PM pursuant to License Agreement with ICC. No further reproduction or distribution authorized. ANY UNAUTHORIZED REPRODUCTION OR DISTRIBUTION IS A VIOLATION OF THE FEDERAL COPYRIGHT ACT AND THE LICENSE AGREEMENT, AND SUBJECT TO CIVIL AND CRIMINAL PENALTIES THEREUNDER.

of any other occupancy that are one story in height and of light-frame construction. An additional limitation is that the footing cannot extend more than 4 inches (102 mm) beyond the face of the supported wall. The 4-inch (102 mm) limitation is to reduce the likelihood that the footing will experience a flexural failure at the junction of the footing and the wall supported above.

SECTION 1907
MINIMUM SLAB PROVISIONS

1907.1 General. The thickness of concrete floor slabs supported directly on the ground shall not be less than $3^1/_2$ inches (89 mm). A 6-mil (0.006 inch; 0.15 mm) polyethylene vapor retarder with joints lapped not less than 6 inches (152 mm) shall be placed between the base course or subgrade and the concrete floor slab, or other *approved* equivalent methods or materials shall be used to retard vapor transmission through the floor slab.

Exception: A vapor retarder is not required:

1. For detached structures accessory to occupancies in Group R-3, such as garages, utility buildings or other unheated facilities.
2. For unheated storage rooms having an area of less than 70 square feet (6.5 m^2) and carports attached to occupancies in Group R-3.
3. For buildings of other occupancies where migration of moisture through the slab from below will not be detrimental to the intended occupancy of the building.
4. For driveways, walks, patios and other flatwork that will not be enclosed at a later date.
5. Where *approved* based on local site conditions.

❖ Section 1907 requires that slabs on grade be a minimum thickness so superimposed loads are transmitted to the subgrade without causing structural distress of the slab. Additionally, slabs must be protected on the underside with material that will retard the transmission of water vapor through the floor slab into the enclosed space so moisture levels are not excessive.

The coarse aggregate most commonly used in concrete slabs supported directly on the ground is allowed up to 5 percent (by weight) of the stone larger than 1 inch (25 mm) in size, with all coarse aggregates in this grading classification passing a $1^1/_2$-inch (38 mm) sieve. ACI 318 requires that the nominal maximum size of coarse aggregate be no larger than one-third the depth of the slab, thus making it necessary that slabs be a minimum thickness of $3^1/_2$ inches (89 mm) to accommodate coarse aggregate stones between 1 and $1^1/_2$ inches (25 and 38 mm) in size. Also, as a matter of experience, a $3^1/_2$-inch (89 mm) minimum slab thickness is needed to support typical concentrated loads without damage to the concrete, particularly at locations where small voids or pockets in the subgrade may develop because of improper compaction during construction or from other causes.

An approved 6-mil vapor retarder (see Section 202 for definition) placed between the concrete slab and the supporting ground is required to prevent the migration of water vapor through the slab into the space above. The five exceptions acknowledge conditions where the migration of limited moisture through the slab will not adversely affect the occupancy of the structure. Exception 3 is intended to give relief to occupancies in which additional moisture will not be detrimental, such as indoor swimming pools, industrial processes generating large amounts of moisture and certain storage facilities. Exception 5 is intended to give relief based on environmental or geological conditions, such as locations either with arid climates where the relative humidity is typically low or with well-drained soils and low water tables. Vapor retarders, while preventing moisture from migrating through the slab from below, can adversely affect the construction and performance of concrete slabs on grade. Finishing operations may be delayed since it will normally take longer for the bleed water to evaporate from the surface. Additionally, the tendency for concrete to develop both plastic and drying shrinkage cracking may be exacerbated. Another problem that occurs is the tendency for the slab to curl or warp upward at the edges. Curling occurs because the bottom of the slab remains moist longer than the top portion due to the vapor retarder; therefore, the top shortens more than the bottom, causing curling.

SECTION 1908
SHOTCRETE

1908.1 General. Shotcrete is mortar or concrete that is pneumatically projected at high velocity onto a surface. Except as specified in this section, shotcrete shall conform to the requirements of this chapter for plain or reinforced concrete.

❖ Section 1908 regulates the materials and test procedures for shotcrete construction. Shotcrete is the commonly accepted and generic name for pneumatically projected mortar or concrete. Terms such as gunite, sprayed concrete, spraycrete, pneumatically applied mortar and concrete are often used to refer to shotcrete.

ACI 506R, the guide for shotcreting, defines "Shotcrete" as mortar or concrete conveyed through a hose and pneumatically projected at a high velocity onto a surface. The force of the jet impacting on the shotcrete surface compacts the material and, when applied properly, the shotcrete surface will support itself without sagging or sloughing, even for vertical and overhead applications. Shotcrete must conform to the requirements for structural concrete specified in this chapter and ACI 318 unless modified by Section 1908.

INTERNATIONAL CODE COUNCIL®
Copyright © 2015 ICC. ALL RIGHTS RESERVED. Accessed by David Dammon on Jun 21, 2017 12:30:52 PM pursuant to License Agreement with ICC. No further reproduction or distribution authorized. ANY UNAUTHORIZED REPRODUCTION OR DISTRIBUTION IS A VIOLATION OF THE FEDERAL COPYRIGHT ACT AND THE LICENSE AGREEMENT, AND SUBJECT TO CIVIL AND CRIMINAL PENALTIES THEREUNDER.

1908.2 Proportions and materials. Shotcrete proportions shall be selected that allow suitable placement procedures using the delivery equipment selected and shall result in finished in-place hardened shotcrete meeting the strength requirements of this code.

❖ Although the compressive strength of shotcrete must be verified prior to beginning work, its resulting strength and acceptability relies more on the suitability of placement procedures and the delivery equipment. Prior to construction, strength is established by the submittal of a mix design that is supported by test results. Mix designs from previous jobs can be used. Product data sheets for any admixtures and graduations for the sand and aggregate need to be included in the submittal. Verification of in-place hardened shotcrete strength is determined by testing in accordance with Section 1908.10.

1908.3 Aggregate. Coarse aggregate, if used, shall not exceed $^3/_4$ inch (19.1 mm).

❖ For construction sections that are several inches thick and where adequate gunning equipment is available, the use of shotcrete mixtures containing coarse aggregates may be advantageous. Coarse aggregate must not exceed $^3/_4$ inch (19.1 mm) in size and the gradation limitations for a combination of fine (sand) and coarse aggregates should be in accordance with the requirements of ACI 506.2. Normal-weight coarse aggregate for concrete must comply with the requirements of ASTM C33. Lightweight coarse aggregate for concrete must comply with the requirements of ASTM C330 (see commentary, Section 1903).

1908.4 Reinforcement. Reinforcement used in shotcrete construction shall comply with the provisions of Sections 1908.4.1 through 1908.4.4.

❖ The best results will be obtained when the reinforcing steel is designed and placed to cause the least interference with the high-velocity placement of shotcrete. When proper techniques are used, shotcrete can be successfully placed through two or three layers of reinforcing steel. The size, spacing and splicing of reinforcement is specified in Sections 1908.4.1, 1908.4.2 and 1908.4.3, respectively.

1908.4.1 Size. The maximum size of reinforcement shall be No. 5 bars unless it is demonstrated by preconstruction tests that adequate encasement of larger bars will be achieved.

❖ Depending on the thickness and nature of the work, reinforcement will consist of either deformed bars or welded wire fabric. Bar sizes are limited to a No. 5 (16) bar. Larger bar sizes can be used if it can be shown that adequate bonding with and encasement in the concrete can be accomplished. Preconstruction tests may be required by the building official to provide verification that proper bonding can be achieved (see Section 1908.5).

1908.4.2 Clearance. When No. 5 or smaller bars are used, there shall be a minimum clearance between parallel reinforcement bars of $2^1/_2$ inches (64 mm). When bars larger than No. 5 are permitted, there shall be a minimum clearance between parallel bars equal to six diameters of the bars used. When two curtains of steel are provided, the curtain nearer the nozzle shall have a minimum spacing equal to 12 bar diameters and the remaining curtain shall have a minimum spacing of six bar diameters.

Exception: Subject to the approval of the *building official*, required clearances shall be reduced where it is demonstrated by preconstruction tests that adequate encasement of the bars used in the design will be achieved.

❖ Experience has shown that a $2^1/_2$-inch (64 mm) space between No. 5 (16) bars, and a six-bar diameter space between larger bars, is sufficient clearance for placement of shotcrete where there is one layer of reinforcement. Experience has also shown that shotcrete application can be effective when the spacing between bars in the closer of two layers (nearer to nozzle) of steel is 12 bar diameters, and in the remaining layer the bars have a spacing of six bar diameters. The exception clarifies that lesser clearance dimensions are permitted if they can be verified by preconstruction tests.

For welded wire fabric, ACI 506R recommends a minimum spacing of 2 inches (51 mm) between wires in both directions. The minimum clearance between the reinforcement and the form or other backup surface may vary depending on whether a mortar mix (fine aggregate only) or concrete (fine and coarse aggregate) is used for shotcrete and whether conventional reinforcing steel or welded wire fabric is used. This spacing should be specified or shown on the construction documents. ACI 506R recommends that no less than a 2-inch (51 mm) clearance should be used for No. 5 (16) reinforcing bars. The minimum cover for reinforcement must comply with the requirements of ACI 318.

1908.4.3 Splices. Lap splices of reinforcing bars shall utilize the noncontact lap splice method with a minimum clearance of 2 inches (51 mm) between bars. The use of contact lap splices necessary for support of the reinforcing is permitted when *approved* by the *building official*, based on satisfactory preconstruction tests that show that adequate encasement of the bars will be achieved, and provided that the splice is oriented so that a plane through the center of the spliced bars is perpendicular to the surface of the shotcrete.

❖ Bars and welded wire fabric must be lapped in such a manner so as not to create weak sections in the shotcrete. Lapped reinforcing bars should not be tied together, but rather be separated by at least 2 inches (51 mm) wherever possible. The building official should only permit contact lap splices when it can be shown by preconstruction tests that the reinforcement will be completely encased. Welded wire fabric must be lapped $1^1/_2$ squares in all directions. Continuous chair support should not be placed parallel and directly underneath bars because chairs may prevent full shotcrete encasement or cause sand pockets.

INTERNATIONAL CODE COUNCIL®
Copyright © 2015 ICC. ALL RIGHTS RESERVED. Accessed by David Dammon on Jun 21, 2017 12:30:52 PM pursuant to License Agreement with ICC. No further reproduction or distribution authorized. ANY UNAUTHORIZED REPRODUCTION OR DISTRIBUTION IS A VIOLATION OF THE FEDERAL COPYRIGHT ACT AND THE LICENSE AGREEMENT, AND SUBJECT TO CIVIL AND CRIMINAL PENALTIES THEREUNDER.

Individual chairs should also be offset to prevent a line of weakness in the shotcrete.

1908.4.4 Spirally tied columns. Shotcrete shall not be applied to spirally tied columns.

❖ Typically, plain reinforcement (i.e., no surface deformations) is used for spiral reinforcement in columns. Shotcrete is not permitted to be applied to spirally tied columns because of the lack of these deformations. Additionally, ACI 318 requires that the clear spacing between spirals must not exceed 3 inches (76 mm). These conditions make it difficult to achieve adequate bond between the concrete and the reinforcement.

1908.5 Preconstruction tests. Where preconstruction tests are required by Section 1908.4, a test panel shall be shot, cured, cored or sawn, examined and tested prior to commencement of the project. The sample panel shall be representative of the project and simulate job conditions as closely as possible. The panel thickness and reinforcing shall reproduce the thickest and most congested area specified in the structural design. It shall be shot at the same angle, using the same nozzleman and with the same concrete mix design that will be used on the project. The equipment used in preconstruction testing shall be the same equipment used in the work requiring such testing, unless substitute equipment is *approved* by the *building official*. Reports of preconstruction tests shall be submitted to the *building official* as specified in Section 1704.5.

❖ When required by the building official, preconstruction test specimens must be made for each type of construction application (flat, vertical or overhead) using the materials, mix proportions, equipment and the nozzle operator proposed for the project. Test panels should be at least 30 inches (762 mm) square and must have the same reinforcement and thickness [but not less than 3 inches (76 mm)] as specified and shown on the construction documents for permanent construction. Drilled cores should be taken from the panels and tested in accordance with ASTM C42 procedures for compliance with strength requirements. Preconstruction testing may not be necessary if it can be shown to the satisfaction of the building official that mix, materials, equipment and construction personnel have produced satisfactory results on similar work.

1908.6 Rebound. Any rebound or accumulated loose aggregate shall be removed from the surfaces to be covered prior to placing the initial or any succeeding layers of shotcrete. Rebound shall not be used as aggregate.

❖ Rebound is loose aggregate and cement paste that bounces off application surfaces after colliding with formwork, reinforcement or the shotcrete surface itself. Factors that affect the amount of rebound include the position of the work (flat, vertical or overhead applications); air pressure; cement content; water content; maximum size and grading of aggregates; amount of reinforcement; and thickness of the layer. Rebound must not be reused as aggregate or in any way worked back into the construction. If rebound does not fall clear of the work, it must be removed.

1908.7 Joints. Except where permitted herein, unfinished work shall not be allowed to stand for more than 30 minutes unless edges are sloped to a thin edge. For structural elements that will be under compression and for construction joints shown on the *approved construction documents*, square joints are permitted. Before placing additional material adjacent to previously applied work, sloping and square edges shall be cleaned and wetted.

❖ Construction joints are generally tapered to a thin edge over a width of approximately 12 inches (305 mm). Square construction joints (nontapered) should be avoided wherever possible in shotcrete construction because they form a trap for rebound. Where the joint will be subjected to compressive stresses, however, square joints are frequently used and, in such cases, care must be taken to avoid or remove trapped rebound at the joint. All joints, tapered or square, must be thoroughly cleaned of loose material and wetted prior to the application of additional shotcrete.

1908.8 Damage. In-place shotcrete that exhibits sags, sloughs, segregation, honeycombing, sand pockets or other obvious defects shall be removed and replaced. Shotcrete above sags and sloughs shall be removed and replaced while still plastic.

❖ After placement, any shotcrete that lacks uniformity or exhibits segregation, honeycombing or delamination; contains dry patches, slugs, voids or sand pockets (porous areas low in cement content); or sags or sloughs should be removed and replaced. As a practical matter, small holes created by cores taken for testing purposes cannot be filled solidly by shooting mortar at a high velocity. The patching mixture to be applied by hand should be made of the same materials and approximately of the same proportions as used for the shotcrete, except that coarse aggregate, if used, should be omitted. ACI 506.4R provides additional recommendations for repairing shotcrete, including filling of holes created where cores were obtained for testing.

1908.9 Curing. During the curing periods specified herein, shotcrete shall be maintained above 40°F (4°C) and in moist condition.

❖ Like cast-in-place concrete, shotcrete must be cured in a moist condition to achieve its potential strength and durability. Good curing practice for shotcrete construction generally requires that surfaces be kept continuously moist for a period of at least seven days. During curing, the air that is in contact with shotcrete surfaces must be maintained at temperatures above freezing, with the temperature of the shotcrete maintained above 40°F (4°C). For recommendations on winter protection, see ACI 318 or refer to ACI 506R.

INTERNATIONAL CODE COUNCIL®
Copyright © 2015 ICC. ALL RIGHTS RESERVED. Accessed by David Dammon on Jun 21, 2017 12:30:52 PM pursuant to License Agreement with ICC. No further reproduction or distribution authorized. ANY UNAUTHORIZED REPRODUCTION OR DISTRIBUTION IS A VIOLATION OF THE FEDERAL COPYRIGHT ACT AND THE LICENSE AGREEMENT, AND SUBJECT TO CIVIL AND CRIMINAL PENALTIES THEREUNDER.

1908.9.1 Initial curing. Shotcrete shall be kept continuously moist for 24 hours after shotcreting is complete or shall be sealed with an *approved* curing compound.

❖ Immediately after finishing operations are complete, shotcrete must be kept continuously moist for a period of 24 hours by one of the following methods:

1. Ponding or continuous sprinkling;
2. Use of absorptive mat or fabric, sand or other protective covering kept continuously moist;
3. Continuous steam not exceeding 150°F (66°C) or vapor mist bath; or
4. Membrane-forming curing compounds and application conforming to ASTM C309.

1908.9.2 Final curing. Final curing shall continue for seven days after shotcreting, or for three days if high-early-strength cement is used, or until the specified strength is obtained. Final curing shall consist of the initial curing process or the shotcrete shall be covered with an *approved* moisture-retaining cover.

❖ Immediately following the initial curing specified in Section 1908.9.1, additional curing must be provided using one of the following materials or methods:

1. Continue the method used in the initial curing process (see commentary, Section 1908.9.1);
2. Use sheet materials conforming to ASTM C171; or
3. Use other moisture-retaining covers acceptable to the registered design professional and approved by the building official.

Curing must be continued for at least the first seven days after shotcreting, or for the first three days if high-early-strength cement is used (Type III or IIIA Portland cement), or until the specified strength is obtained. During the curing period, shotcrete must be maintained at a temperature above 40°F (4°C) and in a moist condition.

1908.9.3 Natural curing. Natural curing shall not be used in lieu of that specified in this section unless the relative humidity remains at or above 85 percent, and is authorized by the *registered design professional* and *approved* by the *building official*.

❖ Natural curing is exposure to the atmosphere without any cover or water spray. If the atmospheric conditions surrounding the shotcrete construction are satisfactory, such as when the relative humidity is at or above 85 percent, the registered design professional, with the approval of the building official, may authorize natural curing. Where natural curing is used, the shotcrete must be maintained above 40°F (4°C) for the period specified in Section 1908.9.2.

1908.10 Strength tests. Strength tests for shotcrete shall be made by an *approved agency* on specimens that are representative of the work and which have been water soaked for at least 24 hours prior to testing. When the maximum-size aggregate is larger than $^3/_8$ inch (9.5 mm), specimens shall consist of not less than three 3-inch-diameter (76 mm) cores or 3-inch (76 mm) cubes. When the maximum-size aggregate is $^3/_8$ inch (9.5 mm) or smaller, specimens shall consist of not less than 2-inch-diameter (51 mm) cores or 2-inch (51 mm) cubes.

❖ This section provides basic strength test criteria for shotcrete. Experience has shown that aggregate size has a direct bearing on the accuracy of compressive tests. Therefore, core and cube specimens containing aggregates that are larger than $^3/_8$ inch (9.5 mm) must be a minimum of 3 inches (76 mm) in diameter (or cross section). Test specimens are required to be soaked in water for at least 24 hours prior to testing to maintain a common environmental condition for all specimens and to ensure uniformity between test results. Cores should be obtained and tested in accordance with ASTM C42.

1908.10.1 Sampling. Specimens shall be taken from the in-place work or from test panels, and shall be taken at least once each shift, but not less than one for each 50 cubic yards (38.2 m^3) of shotcrete.

❖ Frequency of testing is a significant factor in the effectiveness of quality control of concrete. To ensure that test results will be representative of the concrete in the structure, specimens must be taken at the minimum frequency required by this section.

1908.10.2 Panel criteria. When the maximum-size aggregate is larger than $^3/_8$ inch (9.5 mm), the test panels shall have minimum dimensions of 18 inches by 18 inches (457 mm by 457 mm). When the maximum-size aggregate is $^3/_8$ inch (9.5 mm) or smaller, the test panels shall have minimum dimensions of 12 inches by 12 inches (305 mm by 305 mm). Panels shall be shot in the same position as the work, during the course of the work and by the nozzlemen doing the work. The conditions under which the panels are cured shall be the same as the work.

❖ When test panels are used, they are required to meet the criteria in this section. Experience has shown that aggregate size has a direct bearing on the ability to produce test panels that accurately portray the condition of in-place shotcrete. Evidence suggests that test panels containing aggregates larger than $^3/_8$ inch (9.5 mm) must be a minimum of 18 inches (457 mm) square, and that test panels with aggregate $^3/_8$ inch (9.5 mm) or smaller must be a minimum 12 inches (305 mm) square. The ability of the nozzle operator is a significant factor in achieving quality shotcrete. Therefore, it is critical that the nozzle operator doing the work also prepares the test panels. Since the position of the work (flat, vertical or overhead) and the method of curing have an impact on the quality of work, they must also be accounted for when making test panels.

1908.10.3 Acceptance criteria. The average compressive strength of three cores from the in-place work or a single test panel shall equal or exceed 0.85 f'_c with no single core less than 0.75 f'_c. The average compressive strength of three

INTERNATIONAL CODE COUNCIL®
Copyright © 2015 ICC. ALL RIGHTS RESERVED. Accessed by David Dammon on Jun 21, 2017 12:30:52 PM pursuant to License Agreement with ICC. No further reproduction or distribution authorized. ANY UNAUTHORIZED REPRODUCTION OR DISTRIBUTION IS A VIOLATION OF THE FEDERAL COPYRIGHT ACT AND THE LICENSE AGREEMENT, AND SUBJECT TO CIVIL AND CRIMINAL PENALTIES THEREUNDER.

cubes taken from the in-place work or a single test panel shall equal or exceed f'_c with no individual cube less than 0.88 f'_c. To check accuracy, locations represented by erratic core or cube strengths shall be retested.

❖ In evaluating core test results, the fact that core strengths may not equal the specified compressive strength of concrete, f'_c, should not be a cause for concern, provided they are within the limits specified. It is realistic to expect the compressive strength of cores to be less than f'_c because the size of the core differs from that of a standard concrete test cylinder, and procedures for obtaining and curing the cores are different. Therefore, the shotcrete can be considered acceptable from the standpoint of strength if test results from the cores are at least 85 percent of f'_c for the average of three cores and 75 percent of f'_c for a single core. Cores should be obtained and tested in accordance with ASTM C42. Cores for compressive strength testing must have a length-to-diameter ratio between 1.0 and 2.10. For ratios less than 1.94, the compressive strength is multiplied by a correction factor (less than 1) given in ASTM C42 to correlate the strength of the core to that of a standard concrete test cylinder that has a length-to-diameter ratio of 2. Experience has shown that test results from cubes can be held to a higher standard, thus requiring the average of three cubes to equal or exceed f'_c with no individual cube less than 0.88 f'_c. Since the height-to-least-lateral dimension of a cube is 1, ACI 506R indicates that the compressive strength of a cube can be correlated to that of a standard test cylinder by multiplying the test results by 0.85. Either correlated or uncorrelated results for cubes can be used to determine if the specified acceptance criteria are met. Because of the less than delicate nature of the coring and sawing process, this section also permits erratic core and cube strengths to be discarded from the sample under consideration.

Bibliography

The following resource materials were used in the preparation of the commentary for this chapter of the code.

ACI 318-14, *Building Code Requirements for Structural Concrete and Commentary*. Farmington Hills, MI: American Concrete Institute, 2014.

ACI 506R-05, *Guide to Shotcrete*. Farmington Hills, MI: American Concrete Institute, 2005.

ASCE 7-10, *Minimum Design Loads for Buildings and Other Structures*, with Supplement No. 1 (also ASCE 7-88, ASCE 7-93, ASCE 7-95). New York: American Society of Civil Engineers, 1990, 1993, 1995; Reston, VA: American Society of Civil Engineers, 2010.

ASTM C33-13, *Specification for Concrete Aggregates*. West Conshohocken, PA: ASTM International, 2013.

ASTM C42/C42M-04, *Standard Test Method for Obtaining and Testing Drilled Cores and Sawed Beams of Concrete*. West Conshohocken, PA: ASTM International, 2004.

ASTM C94/C94M-13, *Specification for Ready-mixed Concrete*. West Conshohocken, PA: ASTM International, 2013.

ASTM C150-12, *Specification for Portland Cement*. West Conshohocken, PA: ASTM International, 2012.

ASTM C260-06, *Standard Specification for Air-entraining Admixtures for Concrete*. West Conshohocken, PA: ASTM International, 2006.

ASTM C330/C330M-09, *Specification for Lightweight Aggregates for Structural Concrete*. West Conshohocken, PA: ASTM International, 2009.

ASTM C494/C494M-05a, *Standard Specification for Chemical Admixtures for Concrete*. West Conshohocken, PA: ASTM International, 2005.

ASTM C595/C595M-13, *Specification for Blended Hydraulic Cements*. West Conshohocken, PA: ASTM International, 2013.

ASTM C618-05, *Standard Specification for Coal Fly Ash and Raw or Calcined Natural Pozzolan for Use in Concrete*. West Conshohocken, PA: ASTM International, 2005.

ASTM C845-04, *Standard Specification for Expansive Hydraulic Cement*. West Conshohocken, PA: ASTM International, 2004.

ASTM C989-06, *Standard Specification for Ground Granulated Blast-furnace Slag for Use in Concrete and Mortars*. West Conshohocken, PA: ASTM International, 2006.

ASTM C1017/C1017M-03, *Standard Specification for Chemical Admixtures for Use in Producing Flowing Concrete*. West Conshohocken, PA: ASTM International, 2003.

ASTM C1157-11, *Standard Performance Specification for Blended Hydraulic Cement*. West Conshohocken, PA: ASTM International, 2011.

ASTM E2634-11, *Standard Specification for Flat Wall Insulating Concrete Form (ICF) Systems*. West Conshohocken, PA: ASTM International, 2011.

AWS D1.4/D1.4M-11, *Structural Welding Code—Reinforcing Steel, Including Metal Inserts and Connection in Reinforced Concrete Construction*. Miami: American Welding Society, 2011.

FEMA 450-1, NEHRP *Recommended Provisions for Seismic Regulations for New Buildings and Other*

INTERNATIONAL CODE COUNCIL®
Copyright © 2015 ICC. ALL RIGHTS RESERVED. Accessed by David Dammon on Jun 21, 2017 12:30:52 PM pursuant to License Agreement with ICC. No further reproduction or distribution authorized. ANY UNAUTHORIZED REPRODUCTION OR DISTRIBUTION IS A VIOLATION OF THE FEDERAL COPYRIGHT ACT AND THE LICENSE AGREEMENT, AND SUBJECT TO CIVIL AND CRIMINAL PENALTIES THEREUNDER.

Structures, Part 1. Washington, DC: Prepared by the Building Seismic Safety Council for the Federal Emergency Management Agency, 2004.

FEMA 450-2, NEHRP *Recommended Provisions for Seismic Regulations for New Buildings and Other Structures, Part 2 Commentary*. Washington, DC: Prepared by the Building Seismic Safety Council for the Federal Emergency Management Agency, 2004.

PCA-EB115, *Concrete Inspection Handbook*. Skokie, IL: Portland Cement Association, 2000.

INTERNATIONAL CODE COUNCIL®

Copyright © 2015 ICC. ALL RIGHTS RESERVED. Accessed by David Dammon on Jun 21, 2017 12:30:52 PM pursuant to License Agreement with ICC. No further reproduction or distribution authorized. ANY UNAUTHORIZED REPRODUCTION OR DISTRIBUTION IS A VIOLATION OF THE FEDERAL COPYRIGHT ACT AND THE LICENSE AGREEMENT, AND SUBJECT TO CIVIL AND CRIMINAL PENALTIES THEREUNDER.

Chapter 20: Aluminum

General Comments

Chapter 20 contains standards for the use of aluminum in building construction. Only provisions for structural applications of these materials are included.

This chapter does not seek to establish standards for aluminum specialty products, such as storefront framing, architectural hardware, etc. The use of aluminum in heating, ventilating and air-conditioning (HVAC) and plumbing systems is addressed in the *International Mechanical Code*® (IMC®) and the *International Plumbing Code*® (IPC®), respectively. This chapter applies to the structural requirements.

Purpose

Aluminum has certain physical properties, structural characteristics and nonstructural characteristics that set it apart as a building material. By utilizing the standards set forth in this chapter, a proper application of this material can be obtained.

SECTION 2001 GENERAL

2001.1 Scope. This chapter shall govern the quality, design, fabrication and erection of aluminum.

❖ The scope for Chapter 20 is provided in this section.

SECTION 2002 MATERIALS

2002.1 General. Aluminum used for structural purposes in buildings and structures shall comply with AA ASM 35 and AA ADM 1. The *nominal loads* shall be the minimum design loads required by Chapter 16.

❖ The referenced standards to be applied in the utilization of aluminum in buildings and other structures are established. Parts 1-A and 1-B of the Aluminum Association's (AA) *Aluminum Design Manual* apply to the design of aluminum building-type structural load-carrying members and elements according to allowable stress design (ASD) and load and resistance factor design (LRFD) criteria, respectively. ASM 35 sets criteria for the use and installation of flashings, sheet roofing and similar applications.

Bibliography

The following resource materials were used in the preparation of the commentary for this chapter of the code.

AA ADM1-15, *Aluminum Design Manual*; "Part 1-A: Specifications for Aluminum Structures, Allowable Stress Design" and "Part 1-B: Specifications for Aluminum Structures, Load and Resistance Factor Design of Buildings and Similar Type Structures." Washington, DC: The Aluminum Association, 2015.

AA ASM 35-00, *Specification for Aluminum Sheet Metal Work in Building Construction*. Washington, DC: The Aluminum Association, 2000.

INTERNATIONAL CODE COUNCIL®
Copyright © 2015 ICC. ALL RIGHTS RESERVED. Accessed by David Dammon on Jun 21, 2017 12:30:52 PM pursuant to License Agreement with ICC. No further reproduction or distribution authorized. ANY UNAUTHORIZED REPRODUCTION OR DISTRIBUTION IS A VIOLATION OF THE FEDERAL COPYRIGHT ACT AND THE LICENSE AGREEMENT, AND SUBJECT TO CIVIL AND CRIMINAL PENALTIES THEREUNDER.

INTERNATIONAL CODE COUNCIL®
Copyright © 2015 ICC. ALL RIGHTS RESERVED. Accessed by David Dammon on Jun 21, 2017 12:30:52 PM pursuant to License Agreement with ICC. No further reproduction or distribution authorized. ANY UNAUTHORIZED REPRODUCTION OR DISTRIBUTION IS A VIOLATION OF THE FEDERAL COPYRIGHT ACT AND THE LICENSE AGREEMENT, AND SUBJECT TO CIVIL AND CRIMINAL PENALTIES THEREUNDER.

Chapter 21: Masonry

General Comments

Masonry construction has been used for at least 10,000 years in a variety of structures—homes, private and public buildings and historical monuments. The masonry of ancient times involved two major materials: brick manufactured from sun-dried mud or burned clay and shale; and natural stone.

The first masonry structures were unreinforced and intended to support mainly gravity loads. The weight of these structures stabilized them against lateral loads from wind and earthquakes.

Masonry construction has progressed through several stages of development. Fired clay brick became the principal building material in the United States during the middle 1800s. Concrete masonry was introduced to construction during the early 1900s and, along with clay masonry, expanded in use to all types of structures.

Historically, "rules of thumb" (now termed "empirical design") were the only available methods of masonry design. Only in recent times have masonry structures been engineered using structural calculations. In the last 45 years, the introduction of engineered reinforced masonry has resulted in structures that are stronger and more stable against lateral loads, such as wind pressure and seismic ground motion.

Masonry consists of a variety of materials. Raw materials are made into masonry units of different sizes and shapes, each having specific physical and mechanical properties. Both the raw materials and the method of manufacture affect masonry unit properties.

The word "masonry" is a general term that applies to construction using hand-placed units of clay, concrete, structural clay tile, glass block, natural stones and the like. One or more types of masonry units are bonded together with mortar, metal ties, reinforcement and accessories to form walls and other structural elements.

Proper masonry construction depends on correct design, materials, handling, installation and workmanship.

With a fundamental understanding of the functions and properties of the materials that comprise masonry construction, and with proper design and construction, quality masonry structures are not difficult to obtain.

During the pioneer era of U.S. history, the fireplace was the central focus of residential cooking and heating.

Today, the fireplace is essentially a decorative feature of residential construction. For energy conservation, existing fireplaces are sometimes converted and new fireplaces are designed to provide supplemental heat.

Of the many types of fireplaces, the most common are single face. Multifaced fireplaces, such as a corner fireplace with two adjacent open sides, fireplaces with two opposite faces open (common exposure to two rooms) or fireplaces with three or all faces open also occur, but are less common.

While the provisions of this chapter are for single-faced fireplaces, almost all types of masonry fireplaces include the same basic construction features: the base assembly, which consists of a foundation and hearth support; the firebox assembly, which consists of a fireplace opening, a hearth, a firebox or combustion chamber; and the throat and the smoke chamber, which supports the chimney liner.

Masonry fireplaces are made primarily of clay brick or natural stones, but also of concrete masonry or cast-in-place concrete. Chimneys for medium- and high-heat appliances require special attention for fire safety.

Purpose

Chapter 21 provides comprehensive and practical requirements for masonry construction, based on the latest state of technical knowledge. The provisions of Chapter 21 require minimum accepted practices and the use of standards for the design and construction of masonry structures and elements of structures. The provisions address: material specifications and test methods; types of wall construction; criteria for engineered design (by the working stress and strength design methods, prestressed masonry and direct design method); criteria for empirical design; required details of construction and other aspects of masonry, including execution of construction. The provisions are intended to result in safe and durable masonry. The provisions of Chapter 21 are also intended to prescribe minimum accepted practices for the design and construction of glass unit masonry, masonry fireplaces, masonry heaters and masonry chimneys.

INTERNATIONAL CODE COUNCIL®
Copyright © 2015 ICC. ALL RIGHTS RESERVED. Accessed by David Dammon on Jun 21, 2017 12:30:52 PM pursuant to License Agreement with ICC. No further reproduction or distribution authorized. ANY UNAUTHORIZED REPRODUCTION OR DISTRIBUTION IS A VIOLATION OF THE FEDERAL COPYRIGHT ACT AND THE LICENSE AGREEMENT, AND SUBJECT TO CIVIL AND CRIMINAL PENALTIES THEREUNDER.

SECTION 2101
GENERAL

2101.1 Scope. This chapter shall govern the materials, design, construction and quality of masonry.

❖ Section 2101 prescribes general requirements for masonry designed in accordance with Chapter 21 of the code. It identifies masonry design methods and the conditions required for the use of each method. The methods are intended as a practical means for safety under a variety of potential service conditions.

Chapter 21 contains the minimum code requirements for acceptance of masonry design and construction by the building official. Compliance with these requirements is intended to result in masonry construction with the minimum required structural adequacy and durability. Requirements more stringent than these are appropriate where mandated by sound engineering and judgment. Less restrictive requirements, however, are not permitted.

2101.2 Design methods. Masonry shall comply with the provisions of TMS 402/ACI 530/ASCE 5 or TMS 403 as well as applicable requirements of this chapter.

❖ This section requires masonry to comply with one of seven design approaches and the requirements contained in Sections 2101 through 2104 for construction documents, materials and construction.

Other provisions of the code may also impact the design of masonry construction. For example, fire-resistant construction using masonry must be in accordance with Chapter 7. Design loads and related requirements, including seismic forces and detailing, are in accordance with Chapter 16 and ASCE 7. Masonry foundations are required to comply with the provisions of Chapter 18. Special inspections of masonry construction are required in Chapter 17, which references the quality assurance program requirements in TMS 402/ACI 530/ASCE 5 and TMS 602/ACI 530.1/ASCE 6. Masonry veneer is addressed in Chapter 14.

TMS 402/ACI 530/ASCE 5 and TMS 602/ACI 530.1/ASCE 6 are referenced throughout Chapter 21. A description of the standard and specification is warranted here. Both are joint publications of the MSJC, which includes The Masonry Society (TMS), the American Concrete Institute (ACI) and the Structural Engineering Institute of the American Society of Civil Engineers (ASCE). These standards are typically referred to as the MSJC Code and MSJC Specification, respectively, to reflect their joint authorship and sponsorship of the committee that oversees standard development. The standards are developed through an ANSI-accredited consensus process and reflect the current state of technical knowledge on masonry design and construction.

The MSJC Code (TMS 402/ACI 530/ASCE 5) contains minimum design requirements for masonry elements of structures. Topics include: construction documents; quality assurance; materials; analysis and design; strength and serviceability; flexural and axial stresses; shear; reinforcement; walls; columns; pilasters; beams and lintels; and empirical design.

The MSJC Specification (TMS 602/ACI 530.1/ASCE 6) establishes minimum acceptable levels of construction. It includes minimum requirements for composition; preparation and placement of materials; quality assurance for materials and masonry; execution of masonry construction and inspection; and verification of quality. The MSJC Specification contains both mandatory requirements and optional requirements that may be project specific. The mandatory requirements are enforceable code requirements; the optional requirements may be invoked by the design professional. The specification is meant to be modified for use with the particular project under design.

The Allowable Stress Design (ASD) method in the MSJC Code assumes linearly elastic material behavior and properties, and uses nominal loads (see Chapter 16). The standard also includes provisions for strength design, prestressed masonry design, empirical design, veneer, glass unit masonry and design of autoclaved aerated concrete (AAC) masonry. This section also references TMS 403, *Direct Design Handbook for Masonry Structures*. TMS 403 was developed by TMS's Design Practices Committee to provide a direct procedure for the structural design of single-story, concrete masonry structures using both reinforced and unreinforced masonry. The handbook was written so that architects, engineers, contractors, building officials, researchers, educators, suppliers, manufacturers and others can readily use the standard for both residential and commercial structures. The procedure is based on the strength design provisions of the MSJC Code and ASCE 7 and can be used as an alternative design method for masonry structures that meet the same scope and limitations of TMS 403. TMS 403 can be used to design typical masonry structures in the U.S. with mapped ground snow loads up to 60 lb/ft^2, nominal design wind speeds (V_{asd}) up to 150 mph, mapped seismic 0.2 second spectral response accelerations up to 3.0 g and mapped seismic 1.0-second spectral response accelerations up to 1.25 g.

2101.2.1 Masonry veneer. Masonry veneer shall comply with the provisions of Chapter 14.

❖ This section requires masonry veneer to comply with the provisions of Chapter 14; specifically, Sections 1405.5 for anchored masonry veneer and 1405.9 for adhered masonry veneer. These sections reference the appropriate provisions in Chapter 12 of the MSJC Code. Additional information on these provisions is given in the commentaries to Chapter 14 as well as the MSJC Code.

2101.3 Special inspection. The *special inspection* of masonry shall be as defined in Chapter 17, or an itemized

INTERNATIONAL CODE COUNCIL®
Copyright © 2015 ICC. ALL RIGHTS RESERVED. Accessed by David Dammon on Jun 21, 2017 12:30:52 PM pursuant to License Agreement with ICC. No further reproduction or distribution authorized. ANY UNAUTHORIZED REPRODUCTION OR DISTRIBUTION IS A VIOLATION OF THE FEDERAL COPYRIGHT ACT AND THE LICENSE AGREEMENT, AND SUBJECT TO CIVIL AND CRIMINAL PENALTIES THEREUNDER.

testing and inspection program shall be provided that meets or exceeds the requirements of Chapter 17.

❖ This section provides a cross reference to the code's special inspection and testing provisions for masonry that are found in Chapter 17.

SECTION 2102
DEFINITIONS AND NOTATIONS

2102.1 General. The following terms are defined in Chapter 2:

❖ Definitions facilitate the understanding of code provisions and minimize potential confusion. To that end, this section lists definitions of terms associated with roof assemblies, roof coverings and rooftop structures. Note that these definitions are found in Chapter 2. The use and application of defined terms, as well as undefined terms, are set forth in Section 201.

AAC MASONRY.

ADOBE CONSTRUCTION.

Adobe, stabilized.

Adobe, unstabilized.

AREA.

Gross cross-sectional.

Net cross-sectional.

AUTOCLAVED AERATED CONCRETE (AAC).

BED JOINT.

BRICK.

Calcium silicate (sand lime brick).

Clay or shale.

Concrete.

CAST STONE.

CELL.

CHIMNEY.

CHIMNEY TYPES.

High-heat appliance type.

Low-heat appliance type.

Masonry type.

Medium-heat appliance type.

COLLAR JOINT.

DIMENSIONS.

Nominal.

Specified.

FIREPLACE.

FIREPLACE THROAT.

FOUNDATION PIER.

HEAD JOINT.

MASONRY.

Glass unit masonry.

Plain masonry.

Reinforced masonry.

Solid masonry.

Unreinforced (plain) masonry.

MASONRY UNIT.

Hollow.

Solid.

MORTAR.

MORTAR, SURFACE-BONDING.

PRESTRESSED MASONRY.

RUNNING BOND.

SPECIFIED COMPRESSIVE STRENGTH OF MASONRY, f'_m.

STONE MASONRY.

STRENGTH.

Design strength.

Nominal strength.

Required strength.

TIE, WALL.

TILE, STRUCTURAL CLAY.

WALL.

Cavity wall.

Dry-stacked, surface-bonded wall.

Parapet wall.

WYTHE.

NOTATIONS.

d_b = Diameter of reinforcement, inches (mm).

F_s = Allowable tensile or compressive stress in reinforcement, psi (MPa).

f_r = Modulus of rupture, psi (MPa).

f'_{AAC} = Specified compressive strength of AAC masonry, the minimum compressive strength for a class of AAC masonry as specified in ASTM C1386, psi (MPa).

f'_m = Specified compressive strength of masonry at age of 28 days, psi (MPa).

f'_{mi} = Specified compressive strength of masonry at the time of prestress transfer, psi (MPa).

K = The lesser of the masonry cover, clear spacing between adjacent reinforcement, or five times d_b, inches (mm).

L_s = Distance between supports, inches (mm).

l_d = Required development length or lap length of reinforcement, inches (mm).

INTERNATIONAL CODE COUNCIL®
Copyright © 2015 ICC. ALL RIGHTS RESERVED. Accessed by David Dammon on Jun 21, 2017 12:30:52 PM pursuant to License Agreement with ICC. No further reproduction or distribution authorized. ANY UNAUTHORIZED REPRODUCTION OR DISTRIBUTION IS A VIOLATION OF THE FEDERAL COPYRIGHT ACT AND THE LICENSE AGREEMENT, AND SUBJECT TO CIVIL AND CRIMINAL PENALTIES THEREUNDER.

P = The applied load at failure, pounds (N).

S_t = Thickness of the test specimen measured parallel to the direction of load, inches (mm).

S_w = Width of the test specimen measured parallel to the loading cylinder, inches (mm).

❖ Explanations of the notations used in Chapter 21 that are listed above clarify the meaning of these terms and the appropriate units, if any, that apply to them.

SECTION 2103
MASONRY CONSTRUCTION MATERIALS

2103.1 Masonry units. Concrete masonry units, clay or shale masonry units, stone masonry units, glass unit masonry and AAC masonry units shall comply with Article 2.3 of TMS 602/ACI 503.1/ASCE 6. Architectural cast stone shall conform to ASTM C1364.

Exception: Structural clay tile for nonstructural use in fireproofing of structural members and in wall furring shall not be required to meet the compressive strength specifications. The fire-resistance rating shall be determined in accordance with ASTM E119 or UL 263 and shall comply with the requirements of Table 602.

❖ Proper selection of materials is essential to produce masonry with adequate strength and durability. The referenced material specifications set forth prescriptive and performance-based requirements (referenced standards) for masonry materials. Test procedures and criteria for establishing and verifying quality are included. Concrete masonry refers to solid and hollow concrete units, including concrete brick, concrete block, split-face block, slump block and other special units. This section requires conformance to ASTM International standards for each specific type of concrete masonry unit. The standards include requirements for materials; manufacture; physical properties; strength; absorption; minimum dimensions and permissible variations; inspection; testing; and rejection.

Concrete masonry units are selected based on the desired use and appearance. Units are typically specified by density class and compressive strength.

Hollow load-bearing concrete masonry units are manufactured in accordance with the requirements of ASTM C90 using Portland cement, water and mineral aggregates. Other suitable materials, such as approved admixtures, are permitted in accordance with ASTM C90.

Hollow load-bearing concrete masonry units have three weight classifications: normal-weight units of 125 pounds per cubic foot (pcf) (2000 kg/m^3) or more; medium-weight units of between 105 pcf and 125 pcf (1680 and 2000 kg/m^3); and lightweight units of less than 105 pcf (1680 kg/m^3). Lightweight aggregates generally are expanded blast-furnace slag or similar suitable materials. Normal-weight units are made from sand, gravel, crushed stone or air-cooled, blast-furnace-slag aggregates.

Concrete brick is required to comply with ASTM C55. Concrete building brick and other solid concrete veneer and facing units are typically smaller than concrete masonry units conforming to ASTM C90. They are made from Portland cement, water and mineral aggregates, with or without inclusion of other approved materials.

Concrete brick is manufactured as lightweight, medium-weight and normal-weight units as described above for hollow concrete masonry units. Concrete brick is manufactured in two grades: Grade N and Grade S. Grade N units are used as architectural veneer and facing units in exterior walls, where high strength and resistance to moisture penetration and freeze-thaw cycling are required. Grade S units are used when moderate strength and resistance to freeze-thaw action and moisture penetration are required.

Calcium silicate face brick is a solid masonry unit complying with ASTM C73. These units are manufactured principally from silica sand, hydrated lime and water.

Calcium silicate face brick is manufactured in two grades: Grade SW and Grade MW. Grade SW is required where exposure to moisture in the presence of freezing temperatures is anticipated. Grade MW is permitted where the anticipated exposure has freezing temperatures, but without water saturation.

Grade SW units have a minimum permitted compressive strength on the gross area of 4,500 psi (31.0 MPa) (average of three units), but not less than 3,500 psi (24.1 MPa) for any individual unit. Grade MW units have a minimum permitted compressive strength on the gross area of 2,500 psi (17.2 MPa) (average of three units), but not less than 2,000 psi (13.8 MPa) for any individual unit.

ASTM C744 is referenced for the manufacture of prefaced concrete and calcium silicate masonry units, commonly referred to as “glazed” concrete masonry units. The specified exposed surfaces of these units are covered during their manufacture with resin, resin and inert filler, or cement and inert filler to produce a smooth resinous tile-like facing.

Facing requirements of that standard address resistance to chemicals; failure of adhesion of the facing material; abrasion; surface-burning characteristics; color and color change; soiling; and cleansability. The standard also covers dimensional tolerances, including face dimensions and distortions.

The MSJC specification that is referenced in this section requires conformance to ASTM standards for masonry units manufactured from clay or shale. The various standards also include requirements for materials; manufacture; physical properties; minimum dimensions and permissible variations; inspections; and testing.

Clay or shale masonry units are manufactured from clay and shale, which are compounds of silica or alumina. Shale is simply a hardened clay. The raw materials are formed into the desired shape by extrusion

INTERNATIONAL CODE COUNCIL®
Copyright © 2015 ICC. ALL RIGHTS RESERVED. Accessed by David Dammon on Jun 21, 2017 12:30:52 PM pursuant to License Agreement with ICC. No further reproduction or distribution authorized. ANY UNAUTHORIZED REPRODUCTION OR DISTRIBUTION IS A VIOLATION OF THE FEDERAL COPYRIGHT ACT AND THE LICENSE AGREEMENT, AND SUBJECT TO CIVIL AND CRIMINAL PENALTIES THEREUNDER.

and cutting, molding or pressing while in the plastic state. The units are then fired in a kiln. The raw materials and the manufacturing process influence the physical properties of the manufactured unit.

Clay or shale masonry units are selected for their intended use from a variety of shapes, sizes and strengths. Units are specified based on grades and type.

Solid face brick units are required to conform to ASTM C216. This standard covers clay brick intended to be used in masonry and supplying structural or facing components, or both, to the structure. These units are available in a variety of sizes, textures, colors and shapes.

ASTM C216 contains requirements for two grades of durability: Grade SW and Grade MW. Grade SW brick is intended for use where high and uniform resistance to damage caused by freeze-thaw cycling is desired and where the brick may be subjected to such cycling while saturated with water. Grade MW brick is intended for use where moderate resistance to cyclic freeze-thaw damage is permissible or where the brick may be damp, but not saturated with water, when such cycling occurs. ASTM C216 further classifies face brick into three types of appearance: Types FBS, FBX and FBA. Type FBS (face brick standard) units are permitted for general use in masonry. Type FBX (face brick select) units are also for general use, but have a higher degree of precision and lower permissible variation in size than Type FBS units. Type FBA (face brick architectural) units are also for general use, but are intentionally manufactured to produce characteristic architectural effects resulting from nonuniformity in size and texture of the units.

Solid units of building brick are required to conform to ASTM C62. This specification covers brick intended for use in both structural and nonstructural masonry where external appearance is not critical. This brick was formerly called “common brick,” and the standard does not contain appearance requirements.

ASTM C62 contains requirements for three grades of durability: Grade SW, Grade MW and Grade NW. Grade SW brick is intended for use where high and uniform resistance to freeze-thaw damage is desired and where the brick may be subjected to such cycling while saturated with water. Grade MW brick is intended for use where moderate resistance to cyclic freeze-thaw damage is permissible or where the brick may be damp but not saturated with water when such cycling occurs. Grade NW, used where little resistance to cyclic freeze-thaw damage is required, is acceptable for applications protected from water absorption and freezing.

Hollow brick is required to conform to ASTM C652, which regulates hollow building and hollow facing brick. Hollow brick differs from structural clay tile in that it has more stringent physical property requirements, such as thicker shell and web dimensions, and higher minimum compressive strengths.

Hollow brick has two grades of durability: Grade SW and Grade MW. Grade SW is used where a high and uniform degree of resistance to freeze-thaw degradation and disintegration by weathering is desired and when the brick may be saturated while frozen. Grade MW is intended for use where a moderate and somewhat nonuniform degree of resistance to freeze-thaw degradation is permissible.

ASTM C652 also classifies hollow brick into four types of appearance: Types HBS, HBX, HBA and HBB. Type HBS (hollow brick standard) units are permitted for general use. Type HBX (hollow brick select) units are also for general use, but have a higher degree of dimensional precision than Type HBS units. Type HBA (hollow brick architectural) units are also for general use, but are intentionally manufactured to produce characteristic architectural effects resulting from nonuniformity in size and texture of the units. Type HBB (hollow building brick) units are for general use in masonry where a particular color, texture, finish, uniformity or limits on cracks, warpage or other imperfections detracting from their appearance are not a consideration.

ASTM C1088 regulates thin brick used in adhered veneer having a maximum actual thickness of $1^3/_4$ inches (44 mm). Thin veneer brick units are specified in three types of appearance and two grades of durability.

Exterior-grade units are for exposure to weather; interior-grade units are not. Type TBS (standard) units are permitted for general use. Type TBX (select) units are also for general use, but have a higher degree of precision and lower permissible variation in size than Type TBS units. Type TBA (architectural) units are also for general use, but are intentionally manufactured to produce characteristic effects in variations of size, color and texture.

ASTM C34 is referenced for the manufacture of structural clay load-bearing wall tile. This type of tile has two grades: Grade LBX and LB. Grade LBX is suitable for general use in masonry construction and can be used in masonry exposed to weathering, provided that the units meet durability requirements for Grade SW of ASTM C216. This tile grade is also suitable for the direct application of stucco.

Grade LB is suitable for general use in masonry not exposed to freeze-thaw action, or for exposed masonry where protected with a minimum 3-inch (76 mm) facing of stone, brick or other masonry materials.

Fire-resistant tile intended for use in load-bearing masonry is required to conform to ASTM C34. Tile intended for use in fireproofing structural members is required to be of such sizes and shapes as to cover completely the exposed surfaces of the members.

ASTM C212, the referenced standard regulating structural clay facing tile, covers two types of structural clay load-bearing facing tile: Types FTX and FTS.

Type FTX clay facing tile is a smooth-face tile suit-

INTERNATIONAL CODE COUNCIL®
Copyright © 2015 ICC. ALL RIGHTS RESERVED. Accessed by David Dammon on Jun 21, 2017 12:30:52 PM pursuant to License Agreement with ICC. No further reproduction or distribution authorized. ANY UNAUTHORIZED REPRODUCTION OR DISTRIBUTION IS A VIOLATION OF THE FEDERAL COPYRIGHT ACT AND THE LICENSE AGREEMENT, AND SUBJECT TO CIVIL AND CRIMINAL PENALTIES THEREUNDER.

able for use in exposed exterior and interior masonry walls, and partitions where low absorption, easy cleaning and resistance to staining are required. The physical characteristics of this tile require a high degree of mechanical perfection, narrow color range and minimum variation in face dimensions.

Type FTS clay facing tile is a smooth- or rough-textured face tile suitable for general use in exposed exterior and interior masonry walls and partitions where moderate absorption, variation in face dimensions, minor defects in surface finish and moderate color variations are permissible.

There are two classes of tile for the types stated above: standard (for general use) and special duty (having superior resistance to impact and moisture transmission and supporting greater lateral and vertical loads).

ASTM C56 is the standard regulating the manufacture of nonload-bearing tile, which is made from the same materials as other types of tile previously mentioned and is used for partitions, fireproofing and furring.

ASTM C126 prescribes requirements for ceramic-glazed structural clay load-bearing facing tile and brick and other solid masonry units made from clay, shale, fire clay or combinations thereof. The standard specifies two grades and two types of ceramic-glazed masonry: Grade S is used with comparatively narrow mortar joints, while Grade SS is used where variations in face dimensions are very small; Type I units are used where only one finished face is to be exposed, while Type II units are used where both finished faces are to be exposed.

The finish of glazed units is important. Requirements and test methods are prescribed for imperviousness, opacity, resistance to fading and crazing, hardness, abrasion resistance and flame spread smoke density. Compressive strength requirements, dimensional tolerances and permissible distortions are also prescribed by the standard.

Many types of natural stone, including marble, granite, slate, limestone and sandstone, are used in building construction. This section covers natural stones that are sawed, cut, split or otherwise shaped for masonry purposes. Natural stones for building purposes are specified in various grades, textures and finishes, and are required to have physical properties appropriate to their intended use.

Where applicable to specific kinds of natural stone, the finished units are required to be sound and free from spalls, cracks, open seams, pits and other defects that would impair structural strength and durability and, when applicable, fire resistance.

This section requires conformance to the following ASTM standards for natural stone masonry: ASTM C503 for marble building stone (exterior); ASTM C 568 for limestone building stone; ASTM C615 for granite building stone; ASTM C616 for sandstone building stone; or ASTM C629 for slate building stone. The standards contain requirements for absorption, density (except for slate), compressive strength (except for slate), modulus of rupture, abrasion resistance (except for granite) and acid resistance (slate only). The exception to this section allows structural clay tile that does not meet the compressive strength specifications to be used as nonstructural fireproofing for structural members. The fire-resistance rating must be determined in accordance with ASTM E119.

2103.1.1 Second-hand units. Second-hand masonry units shall not be reused unless they conform to the requirements of new units. The units shall be of whole, sound materials and free from cracks and other defects that will interfere with proper laying or use. Old mortar shall be cleaned from the unit before reuse.

❖ This section allows for the use of salvaged brick and other used masonry units, provided that their quality and condition meet the requirements for new masonry units. Second-hand units must be whole, of sound material, and clean and free from defects that would interfere with proper laying or use.

Most second-hand masonry units come from the demolition of old buildings. Masonry units manufactured in the past do not generally compare with the quality of masonry made by modern manufacturing methods under controlled conditions. Therefore, designers should expect salvaged masonry units to have lower strength and durability than new units.

Generally, the difference between walls laid up with new masonry units and second-hand units of the same type is the adhesion of the mortar to the masonry surfaces. When new masonry units are laid in fresh mortar, water and fine cementitious particles are absorbed into the masonry, thereby improving bond strength. In contrast, pores in the bed faces of second-hand masonry units, regardless of cleaning, are filled with particles of cement, lime and deleterious substances that impede adequate absorption, thereby adversely affecting bond between the mortar and the masonry.

2103.2 Mortar. Mortar for masonry construction shall comply with Section 2103.2.1, 2103.2.2, 2103.2.3 or 2103.2.4.

❖ This section requires mortar to comply with the applicable sections for masonry mortar, surface bonding mortar, ceramic tile mortar and mortar for adhered masonry veneer.

2103.2.1 Masonry mortar. Mortar for use in masonry construction shall conform to Articles 2.1 and 2.6 A of TMS 602/ACI 530.1/ASCE 6.

❖ Masonry mortar bonds masonry units to form an integral structure. Mortar provides a tight and weather-resistant seal between units; bonds with steel joint reinforcement, ties and other metal accessories; and compensates for dimensional variations in masonry units. It can also serve aesthetic purposes through contrasts of color, texture and shadow lines created by different types of tooled joints.

The code recognizes ASTM C270 as the standard

INTERNATIONAL CODE COUNCIL®
Copyright © 2015 ICC. ALL RIGHTS RESERVED. Accessed by David Dammon on Jun 21, 2017 12:30:52 PM pursuant to License Agreement with ICC. No further reproduction or distribution authorized. ANY UNAUTHORIZED REPRODUCTION OR DISTRIBUTION IS A VIOLATION OF THE FEDERAL COPYRIGHT ACT AND THE LICENSE AGREEMENT, AND SUBJECT TO CIVIL AND CRIMINAL PENALTIES THEREUNDER.

regulating mortar to be used in masonry construction. The standard covers mortars for use in the construction of nonreinforced and reinforced unit masonry structures. It specifies types of mortar and two alternative specifications—the proportion specification and the property specification.

Type M mortar has the highest compressive and tensile bond strength. Its use should be limited only to those conditions where it is needed, such as high compressive loads or extreme environments.

Type S mortar is a general-purpose mortar with high compressive and tensile bond strengths. It is often used in reinforced masonry and in unreinforced masonry that requires high strength to resist out-of-plane lateral loads.

Type N mortar is a general-purpose mortar with medium compressive and tensile bond strengths. It is used where high vertical and lateral loads are not expected.

Type O is a low-strength mortar suitable for use in nonload-bearing construction and where the masonry will not be subject to severe weathering or freeze-thaw cycling.

The materials used in mortar are required to conform to the following standard specifications referenced in ASTM C5, ASTM C91, ASTM C150, ASTM C207, ASTM C270 and ASTM C595.

In addition to type, mortar for masonry is further classified according to its primary cementitious materials. In Portland cement-lime mortar, the cementitious materials are Portland cement and hydrated mason's lime. In masonry-cement mortar and mortar-cement mortar, the principal cementitious material is Portland cement, which is contained in the masonry cement and the mortar cement.

Regardless of a masonry mortar's principal cementitious constituents, each ingredient—cement, lime (when used), sand and water—contributes to the mortar's overall performance. Portland cement, mortar cement, masonry cement or blended hydraulic cement makes the hardened mortar strong and durable. Lime contributes to the workability and water retention of fresh mortar and to the flexibility, compressive strength and tensile bond strength of hardened mortar. Sand serves as a filler material, increases strength and reduces shrinkage. Water determines the consistency of fresh mortar and also hydrates the cementitious materials, resulting in hardening of the mortar.

Tables 1 and 2 of ASTM C270 provide requirements for the production of mortar by the proportion method (by volume) and by the property method (by compressive strength and other properties), respectively. Whether the proportion or property specification governs depends on the contract documents. When neither proportion nor property specification is prescribed, the proportion specification governs, unless data are presented to and accepted by the specifier to show that mortar meets the requirements of the property specification.

ASTM C270 also covers materials and testing requirements for water retention, compressive strength and air content.

The types of mortar recommended for use in various types of masonry construction are shown in the appendix to ASTM C270. The performance of masonry is influenced by mortar workability, water retentivity, bond strength, compressive strength and long-term deformability (creep). Each mortar type has corresponding use limitations.

Glass-block units are required to be laid in Type S or N mortar. Admixtures containing set accelerators or antifreeze compounds are not permitted in mortars for glass-block masonry.

2103.2.2 Surface-bonding mortar. Surface-bonding mortar shall comply with ASTM C887. Surface bonding of concrete masonry units shall comply with ASTM C946.

❖ Specifications for materials to be used in premixed surface-bonding mortar and for the properties of the mortar are contained in ASTM C887. Requirements for masonry units and other materials used in constructing dry-stacked, surface-bonded masonry for walls and for the construction itself are contained in ASTM C946.

In addition to its primary function of bonding masonry units, surface-bonding mortar can provide resistance to penetration by wind-driven rain.

2103.2.3 Mortars for ceramic wall and floor tile. Portland cement mortars for installing ceramic wall and floor tile shall comply with ANSI A108.1A and ANSI A108.1B and be of the compositions indicated in Table 2103.2.3.

❖ This section pertains to cement mortars and organic adhesives used for setting ceramic wall and floor tiles. Each mortar type has certain qualities that make it suitable for installing tile over different kinds of backing materials or under a certain set of conditions.

Cement mortars are "thick-bed" mortars applied in thicknesses of $^3/_4$ to $1^1/_4$ inches (19.1 to 32 mm) on floors and $^3/_4$ to 1 inch (19.1 to 25 mm) on walls to achieve the specified slopes and flatness in the finished tile work. Portland cement mortars are suitable for setting ceramic tile in most installations. They can be applied over properly prepared backings of clay or concrete masonry; concrete; wood frame; rough wood floors and plywood floors; foam insulation board; gypsum wallboard; and Portland cement or gypsum plaster. Cement mortars can be reinforced with metal lath or wire mesh. In such cases, however, additional mortar thickness may be required. Cement mortars have good structural strength and are not affected by prolonged contact with water.

Complete material and installation specifications are contained in ANSI A108.1A and A108.1B, which include required specifications for: installation of wire lath and scratch coats; mortar mixes, bond coat mixes and mortar application; installation methods on floors, walls and countertops; grouting of tile; and general requirements for tile installations.

INTERNATIONAL CODE COUNCIL®
Copyright © 2015 ICC. ALL RIGHTS RESERVED. Accessed by David Dammon on Jun 21, 2017 12:30:52 PM pursuant to License Agreement with ICC. No further reproduction or distribution authorized. ANY UNAUTHORIZED REPRODUCTION OR DISTRIBUTION IS A VIOLATION OF THE FEDERAL COPYRIGHT ACT AND THE LICENSE AGREEMENT, AND SUBJECT TO CIVIL AND CRIMINAL PENALTIES THEREUNDER.

TABLE 2103.2.3
CERAMIC TILE MORTAR COMPOSITIONS

LOCATION	MORTAR	COMPOSITION
Walls	Scratchcoat	1 cement; $^1/_5$ hydrated lime; 4 dry or 5 damp sand
	Setting bed and leveling coat	1 cement; $^1/_2$ hydrated lime; 5 damp sand to 1 cement 1 hydrated lime, 7 damp sand
Floors	Setting bed	1 cement; $^1/_{10}$ hydrated lime; 5 dry or 6 damp sand; or 1 cement; 5 dry or 6 damp sand
Ceilings	Scratchcoat and sand bed	1 cement; $^1/_2$ hydrated lime; $2^1/_2$ dry sand or 3 damp sand

❖ Portland cement-lime mortars are a mixture of Portland cement (ASTM C150), hydrated lime (ASTM C207) and damp mason's sand. Proportions of these ingredients are given in Table 2103.2.3, dealing with the Portland cement-lime mortars most commonly used for setting ceramic tile on wall, floor and ceiling construction and measured in parts by volume. Complete material and installation specifications are contained in ANSI A108.1A and A108.1B.

2103.2.3.1 Dry-set Portland cement mortars. Premixed prepared Portland cement mortars, which require only the addition of water and are used in the installation of ceramic tile, shall comply with ANSI A118.1. The shear bond strength for tile set in such mortar shall be as required in accordance with ANSI A118.1. Tile set in dry-set Portland cement mortar shall be installed in accordance with ANSI A108.5.

❖ Dry-set Portland cement mortar for ceramic tile is required to comply with ANSI A118.1, which describes test methods and minimum requirements for dry-set mortar, including sampling, free water content, setting characteristics, shrinkage, shear strength and staining.

Dry-set mortar is a mixture of Portland cement, sand and perhaps water-retention admixtures. Dry-set mortars are suitable for use over properly prepared backings of clay or concrete masonry; concrete; cut-cell expanded polystyrene or rigid closed-cell urethane insulation board; gypsum wallboard; lean Portland cement mortar; and hardened wall and floor setting beds.

Installation must comply with ANSI A108.5. The "thin-bed" mortars are applied in a single layer as thin as $^3/_{32}$ inch (2.4 mm), but usually in thicknesses of $^1/_8$ to $^1/_4$ inch (3.2 to 6.4 mm). The use of dry-set mortar for leveling work is limited to a maximum thickness of $^1/_4$ inch (6.4 mm).

This material has excellent water and impact resistance. It is also water-cleanable, nonflammable, good for exterior use and requires no presoaking of the tile. Dry-set mortar is intended for use with glazed wall tile, ceramic mosaics, pavers and quarry tile.

Shear bond strength (of tile set in mortar) is required to be tested in accordance with standards applicable to the mortar used. Tile set with dry-set mortar must be installed in accordance with ANSI A108.5.

2103.2.3.2 Latex-modified Portland cement mortar. Latex-modified Portland cement thin-set mortars in which latex is added to dry-set mortar as a replacement for all or part of the gauging water that are used for the installation of ceramic tile shall comply with ANSI A118.4. Tile set in latex-modified Portland cement shall be installed in accordance with ANSI A108.5.

❖ Latex-modified Portland cement mortar is a mixture of Portland cement, sand and special latex admixtures. It is applied as a thin-bed material, like dry-set Portland cement mortar (see commentary, Section 2103.11.1). Since the latex used in these mortars varies among manufacturers, instructions for mixing and use must be followed carefully. Applicable material and installation standards are ANSI A108.5 and A118.4.

2103.2.3.3 Epoxy mortar. Ceramic tile set and grouted with chemical-resistant epoxy shall comply with ANSI A118.3. Tile set and grouted with epoxy shall be installed in accordance with ANSI A108.6.

❖ Epoxy mortar is a two-part system consisting of an epoxy resin and hardener. It is applied as a layer of $^1/_{16}$ to $^1/_8$ inch (1.6 to 3.2 mm) in thickness and is suitable for use on properly prepared floors of concrete, wood, plywood, steel plate or ceramic tile. It is particularly suitable where chemical resistance or high bond strength is required. Deflection control is critical for the successful use of this material, and floor systems should not deflect more than $^1/_{360}$ of their span. Epoxy mortar is recommended for setting ceramic mosaics, quarry tile and paver tile. Applicable material and installation standards are ANSI A108.6 and A118.3.

2103.2.3.4 Furan mortar and grout. Chemical-resistant furan mortar and grout that are used to install ceramic tile shall comply with ANSI A118.5. Tile set and grouted with furan shall be installed in accordance with ANSI A108.8.

❖ Furan mortar is a two-part system consisting of a furan resin and hardener. It is suitable where chemical resistance is critical. It is used primarily on floors in laboratories and industrial plants. Acceptable subfloors include concrete, steel plate and ceramic tile. Furan grout is intended for quarry tile and pavers, mainly in industrial areas requiring maximum chemical resistance.

ANSI A118.5 is the standard regulating both furan mortar and grout. Installation must comply with ANSI A108.8.

2103.2.3.5 Modified epoxy-emulsion mortar and grout. Modified epoxy-emulsion mortar and grout that are used to install ceramic tile shall comply with ANSI A118.8. Tile set and grouted with modified epoxy-emulsion mortar and grout shall be installed in accordance with ANSI A108.9.

❖ Modified epoxy-emulsion mortar and grout used to install ceramic tile are required to comply with ANSI

INTERNATIONAL CODE COUNCIL®
Copyright © 2015 ICC. ALL RIGHTS RESERVED. Accessed by David Dammon on Jun 21, 2017 12:30:52 PM pursuant to License Agreement with ICC. No further reproduction or distribution authorized. ANY UNAUTHORIZED REPRODUCTION OR DISTRIBUTION IS A VIOLATION OF THE FEDERAL COPYRIGHT ACT AND THE LICENSE AGREEMENT, AND SUBJECT TO CIVIL AND CRIMINAL PENALTIES THEREUNDER.

A118.8 and to be installed in accordance with ANSI A108.9.

ANSI A118.8 describes the test methods and the minimum requirements for modified epoxy-emulsion mortar and grout. The chemical and solvent resistance of these mortars and grouts tends to exceed those of organic adhesives and equal those of latex-modified Portland cement mortars. They are not, however, designed to meet the requirements of ANSI A108.6 or A118.3.

These types of mortars and grouts are three-part systems that include emulsified epoxy resins and hardeners, preblended Portland cement and silica sand. They are used as a bond-coat setting mortar or grout, and can be cleaned from wall and floor surfaces using a wet sponge prior to initial set.

ANSI A118.8 regulates water absorption, flexural strength, thermal expansion, linear shrinkage, tensile strength and compressive strength.

2103.2.3.6 Organic adhesives. Water-resistant organic adhesives used for the installation of ceramic tile shall comply with ANSI A136.1. The shear bond strength after water immersion shall be not less than 40 psi (275 kPa) for Type I adhesive and not less than 20 psi (138 kPa) for Type II adhesive when tested in accordance with ANSI A136.1. Tile set in organic adhesives shall be installed in accordance with ANSI A108.4.

❖ Organic adhesives are prepared materials that cure or set by evaporation and that are ready to use without adding liquid or powder. Adhesives are suitable for installing tiles on prepared wall and floor surfaces, including: brick and concrete masonry; concrete; gypsum wallboard; Portland cement or gypsum plaster; and wood-flooring systems.

Organic adhesives (mastics) are applied as a thin layer approximately $^{1}/_{16}$ inch (1.6 mm) thick. An underlayment is used to level and true surfaces. Organic adhesive does not permit the soaking of tiles and is not suitable for exterior use. Bond strength varies greatly among the numerous brands of organic adhesives available for use in construction. Adhesives must meet minimum bond-strength requirements of this section of ANSI A136.1 for Type I and II adhesives. The installation of tile with organic adhesives is required to conform to ANSI A108.4.

2103.2.3.7 Portland cement grouts. Portland cement grouts used for the installation of ceramic tile shall comply with ANSI A118.6. Portland cement grouts for tile work shall be installed in accordance with ANSI A108.10.

❖ Portland cement grouts are the most commonly used grouts for tile walls. The mixture of Portland cement and other ingredients is water resistant and uniform in color. The water in the grout is essential to promote a good bond and to develop full grout strength. This type of grout is required to comply with ANSI A118.6 and to be installed in accordance with ANSI A108.10.

2103.2.4 Mortar for adhered masonry veneer. Mortar for use with adhered masonry veneer shall conform to ASTM C270 for Type N or S, or shall comply with ANSI A118.4 for latex-modified Portland cement mortar.

❖ This section lists the types of mortars that can be used for adhered masonry veneer. The general requirements for adhered masonry veneer can be found in Chapter 14.

2103.3 Grout. Grout shall comply with Article 2.2 of TMS 602/ACI 530.1/ASCE 6.

❖ Grout intended for use in the construction of engineered and empirically designed masonry structures is required to comply with ASTM C476, which regulates materials, measurement, mixing and storage of materials.

Two types of grout are used in masonry: fine and coarse. Fine grout is made of cement, sand and water, with optional small quantities of lime. Coarse grout includes the same ingredients, plus pea gravel, which is limited to $^{3}/_{8}$ inch (9.5 mm) in size.

Whether fine or coarse grout is used depends on the size of the grout space to be filled and the height of the grout pour to be used in construction. MSJC Code places limits on cavity and cell sizes for a given grout pour height for both fine and coarse grouts.

The materials used in masonry grout are required to be listed in ASTM C476 and must conform to the following standard specifications: ASTM C5, ASTM C150, ASTM C207 and ASTM C595.

2103.4 Metal reinforcement and accessories. Metal reinforcement and accessories shall conform to Article 2.4 of TMS 602/ACI 530.1/ASCE 6. Where unidentified reinforcement is *approved* for use, not less than three tension and three bending tests shall be made on representative specimens of the reinforcement from each shipment and grade of reinforcing steel proposed for use in the work.

❖ This section contains standards and material requirements for anchors, joint reinforcement, wire accessories, ties and wire fabric, and for required corrosion protection of these items.

SECTION 2104
CONSTRUCTION

2104.1 Masonry construction. Masonry construction shall comply with the requirements of Sections 2104.1.1 and 2104.1.2 and with TMS 602/ACI 530.1/ASCE 6.

❖ This section establishes the requirements, based on accepted practice and referenced standards, regulating materials and construction methods used in engineered and empirically designed masonry construction.

The MSJC Specification (TMS 602/ACI 530.1/ASCE 6) prescribes tolerances for placement of reinforcement and masonry units. Specific tolerances listed include cross sections of elements; thicknesses of mortar joints; widths of grout spaces; variation from level; variation from plumb; trueness to a line; alignment of columns and walls; location of elements; and

INTERNATIONAL CODE COUNCIL®
Copyright © 2015 ICC. ALL RIGHTS RESERVED. Accessed by David Dammon on Jun 21, 2017 12:30:52 PM pursuant to License Agreement with ICC. No further reproduction or distribution authorized. ANY UNAUTHORIZED REPRODUCTION OR DISTRIBUTION IS A VIOLATION OF THE FEDERAL COPYRIGHT ACT AND THE LICENSE AGREEMENT, AND SUBJECT TO CIVIL AND CRIMINAL PENALTIES THEREUNDER.

placement of reinforcement and accessories. These required tolerances are intended to inhibit corrosion; provide placement locations reflecting those assumed in design; provide clearance for mortar and grout; and maintain compatible lateral deflections of parallel wythes. Tolerances are relatively strict since masonry is a structural material and is also exposed to weather. Aesthetics are not a factor in these requirements. Installation of wall ties requires adequate embedment in mortar, and adequate strength and durability of ties. Wall ties are not permitted to be bent after being embedded in grout or mortar, since movement of the ties will reduce the effectiveness of the embedment and subsequent bonding.

Workmanship is of primary importance in providing strong and durable masonry construction. This is especially true for the placement of mortar and masonry units. Water penetration can often be traced to bond breaks at the mortar-unit interface. Additionally, masonry strength relies on the mortar-bedded areas required in the MSJC Specification. Chases and recesses must be designed so that they do not reduce the required strength of the walls or affect the required fire-resistance rating of the wall. Any required chases must be formed during construction of the masonry wall and not by cutting out a section of the finished wall, which could create a weak point and jeopardize the wall strength.

The MSJC Specification also covers masonry construction in hot or cold weather. When masonry construction is conducted in temperatures below 40°F (4°C), both the masonry components and the structure are required to be protected. One of the main concerns of these provisions is to prevent fresh mortar from freezing. During cold-weather construction, particularly in temperatures below freezing, the curing and subsequent performance of masonry are influenced by the temperature and properties of the mortar and the masonry units, as well as the severity of the exposure (temperature and wind). During hot-weather conditions, special precautions must be taken for adequate strength gain of the masonry. Temperature, solar radiation, humidity and wind affect the rate of absorption of masonry units and the rate of mortar set.

2104.1.1 Support on wood. Masonry shall not be supported on wood girders or other forms of wood construction except as permitted in Section 2304.12.

❖ Masonry is only permitted to be supported on wood construction in accordance with Section 2304.13 because of the serviceability considerations noted below.

Masonry is brittle and relatively weak in tension. It can crack when subjected to deformations. Wood is flexible and usually exhibits elastic deformation and creep (additional deflection from long-term loads). Because of this, masonry supported on wood tends to crack. Therefore, masonry that is permanently supported by wood members must consider long-term deflection effects in accordance with Section 2304.13, which references the American Wood Council (AWC) *National Design Specification* (NDS). The exception permits concrete nonstructural floor or roof surfacing not more than 4 inches (102 mm) thick to be used without being checked for long-term deflection.

2104.1.2 Molded cornices. Unless structural support and anchorage are provided to resist the overturning moment, the center of gravity of projecting masonry or molded cornices shall lie within the middle one-third of the supporting wall. Terra cotta and metal cornices shall be provided with a structural frame of *approved* noncombustible material anchored in an *approved* manner.

❖ Unless cornices or other projections are specifically designed to be supported and anchored to the wall or other adequate structural supports, such as columns, beams, spandrels or floor slabs, the center of gravity of the projecting element is required to fall within the middle third (kern) of the supporting wall. Commentary Figure 2104.1.2 illustrates this requirement.

Cornices are usually ornamental and may or may not support other loads. They can be made of cast-in-place or precast concrete; cast or natural stone; terra cotta; brick or even metal.

Metal and terra-cotta cornices are commonly furnished with a structural frame of noncombustible material that can be anchored to the masonry wall or to other building supports as approved by the building official.

SECTION 2105
QUALITY ASSURANCE

2105.1 General. A quality assurance program shall be used to ensure that the constructed masonry is in compliance with the *approved construction documents*.

The quality assurance program shall comply with the inspection and testing requirements of Chapter 17 and TMS 602/ACI 530.1/ASCE 6.

❖ This section requires a quality assurance program to be used so that the masonry is constructed according to the construction documents. The quality assurance program must comply with the inspection and testing requirements of Chapter 17 as well as the MSJC Code and Specification.

The quality assurance provisions emphasize verification of masonry compressive strengths. This is accomplished by comparing conservatively estimated strengths (based on unit strength and mortar type) or tested prism strengths to the specified compressive strength of the masonry, f'_m, and, when required, by mortar, grout or both to verify that they are in compliance.

These quality assurance methods are for general consistency of the constructed masonry. Masonry is relatively strong in compression and thus rarely fails in that manner, but rather in flexural tension. Compression tests are required, however, because they are simple ways of assessing quality.

INTERNATIONAL CODE COUNCIL®
Copyright © 2015 ICC. ALL RIGHTS RESERVED. Accessed by David Dammon on Jun 21, 2017 12:30:52 PM pursuant to License Agreement with ICC. No further reproduction or distribution authorized. ANY UNAUTHORIZED REPRODUCTION OR DISTRIBUTION IS A VIOLATION OF THE FEDERAL COPYRIGHT ACT AND THE LICENSE AGREEMENT, AND SUBJECT TO CIVIL AND CRIMINAL PENALTIES THEREUNDER.

SECTION 2106
SEISMIC DESIGN

2106.1 Seismic design requirements for masonry. Masonry structures and components shall comply with the requirements in Chapter 7 of TMS 402/ACI 530/ASCE 5 depending on the structure's *seismic design category*.

❖ Section 2106 references Chapter 7 of the MSJC Code for minimum seismic design requirements for masonry structures based on their seismic design category. This section requires the use of the MSJC Code for specific seismic design criteria. Requirements established for various seismic risk categories are cumulative from lower to higher categories. These prescriptive and design-oriented provisions have been established to improve the performance of masonry structures during seismic events by providing additional structural strength, ductility and stability against the dynamic effects of earthquake ground motion. As the seismic demand increases, the provisions require more seismic detailing, increased ductility and greater material reliability.

To comply with the provisions in Section 2106, the seismic design category must be determined for the building or structure under consideration. Section 1613 contains criteria for determining a structure's seismic design category and references ASCE 7 for calculating seismic load effects. The requirements for seismic resistance (for example, design forces and detailing) remain applicable and are discussed in the commentary for Chapter 16. Compliance with Chapter 21 is not a substitute for compliance with the seismic provisions required by Section 1613. More information on seismic design is contained in the commentaries to ASCE 7 and the 2009 National Earthquake Hazards Reduction Program (NEHRP) *Recommended Provisions for Seismic Regulations for New Buildings and Other Structures* (FEMA P-750). The reader is also referred to the commentary to the MSJC Code for additional background on seismic design requirements for masonry structures.

SECTION 2107
ALLOWABLE STRESS DESIGN

2107.1 General. The design of masonry structures using *allowable stress design* shall comply with Section 2106 and the requirements of Chapters 1 through 8 of TMS 402/ACI 530/ASCE 5 except as modified by Sections 2107.2 through 2107.4.

❖ Section 2107 adopts the ASD method of the MSJC Code with modifications deemed necessary by the International Building Code Structural Committee. This method of engineered masonry design has been used successfully for years and remains a popular method for designing masonry structures.

Refer to the commentary of the MSJC Code for additional information on the allowable stress design method for masonry. This section also requires con-

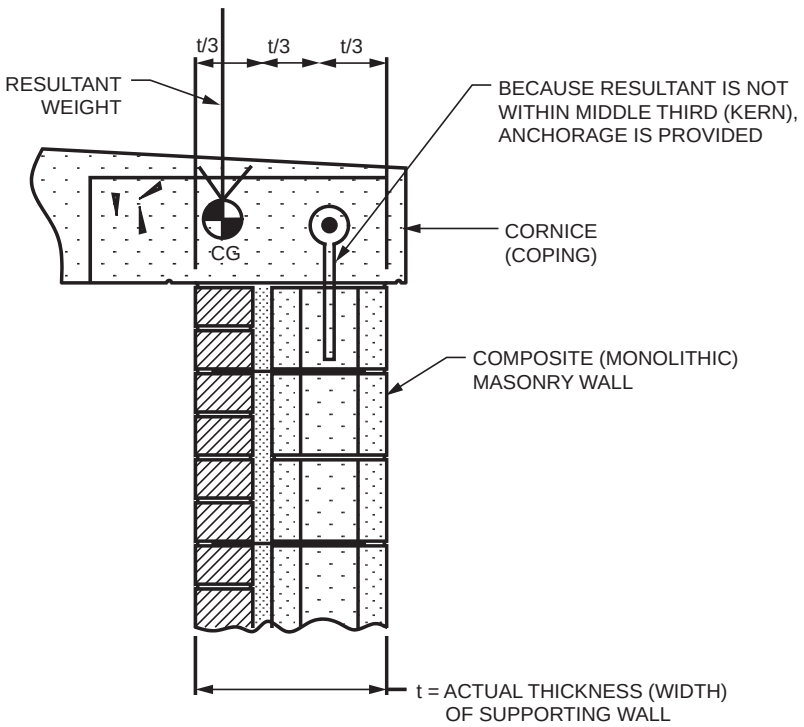

Figure 2104.1.2
MOLDED CORNICE

INTERNATIONAL CODE COUNCIL®
Copyright © 2015 ICC. ALL RIGHTS RESERVED. Accessed by David Dammon on Jun 21, 2017 12:30:52 PM pursuant to License Agreement with ICC. No further reproduction or distribution authorized. ANY UNAUTHORIZED REPRODUCTION OR DISTRIBUTION IS A VIOLATION OF THE FEDERAL COPYRIGHT ACT AND THE LICENSE AGREEMENT, AND SUBJECT TO CIVIL AND CRIMINAL PENALTIES THEREUNDER.

formance to the seismic design provisions of Section 2106.

2107.2 TMS 402/ACI 530/ASCE 5, Section 8.1.6.7.1.1, lap splices. As an alternative to Section 8.1.6.7.1.1, it shall be permitted to design lap splices in accordance with Section 2107.2.1.

❖ The section provides an alternative to the MSJC lap splice requirement.

2107.2.1 Lap splices. The minimum length of lap splices for reinforcing bars in tension or compression, l_d, shall be

$l_d = 0.002 d_b f_s$ **(Equation 21-1)**

For SI: $l_d = 0.29 d_b f_s$

but not less than 12 inches (305 mm). In no case shall the length of the lapped splice be less than 40 bar diameters.

where:

d_b = Diameter of reinforcement, inches (mm).

f_s = Computed stress in reinforcement due to design loads, psi (MPa).

In regions of moment where the design tensile stresses in the reinforcement are greater than 80 percent of the allowable steel tension stress, F_s, the lap length of splices shall be increased not less than 50 percent of the minimum required length. Other equivalent means of stress transfer to accomplish the same 50 percent increase shall be permitted. Where epoxy coated bars are used, lap length shall be increased by 50 percent.

❖ This alternative provision is based on allowable stress detailing requirements that were used in the *Uniform Building Code*. Lap splice and development length requirements for allowable stress and strength design of masonry differ, due in part to the slightly more conservative nature of the ASD requirements. Note that Section 2107.3 prohibits the lap splicing of reinforcement larger than No. 9 (32 mm) bars.

2107.3 TMS 402/ACI 530/ASCE 5, Section 8.1.6.7, splices of reinforcement. Modify Section 8.1.6.7 as follows:

8.1.6.7 – Splices of reinforcement. Lap splices, welded splices or mechanical splices are permitted in accordance with the provisions of this section. All welding shall conform to AWS D1.4. Welded splices shall be of ASTM A706 steel reinforcement. Reinforcement larger than No. 9 (M #29) shall be spliced using mechanical connections in accordance with Section 8.1.6.7.3.

❖ Research has shown that effectively lap splicing large reinforcing bars in masonry is difficult and impractical because of the excessive lap lengths required. This section adds a provision not in the MSJC Code requiring mechanical splices for all bars larger than No. 9 (32 mm) in diameter. If splices are welded, the use of ASTM A706 reinforcing steel is mandatory, because this steel specification has controlled chemistry and can, therefore, be more reliably welded than steel produced without such controls (see commentary, Section 2108.3 for additional information).

2107.4 TMS 402/ACI 530/ASCE 5, Section 8.3.6, maximum bar size. Add the following to Chapter 8:

8.3.6 – Maximum bar size. The bar diameter shall not exceed one-eighth of the nominal wall thickness and shall not exceed one-quarter of the least dimension of the cell, course or collar joint in which it is placed.

❖ Allowing large bars in masonry walls can result in an over-reinforced section that increases the risk of a brittle (nonductile) failure. This section specifies limits on the diameter of reinforcement that are not in the MSJC Code in order to prevent potential problems with over reinforcement and congestion of reinforcement. These requirements are based on practical guidelines and empirical judgment rather than research.

SECTION 2108
STRENGTH DESIGN OF MASONRY

2108.1 General. The design of masonry structures using strength design shall comply with Section 2106 and the requirements of Chapters 1 through 7 and Chapter 9 of TMS 402/ACI 530/ASCE 5, except as modified by Sections 2108.2 through 2108.3.

Exception: AAC masonry shall comply with the requirements of Chapters 1 through 7 and Chapter 11 of TMS 402/ACI 530/ASCE 5.

❖ The 2000 edition of the code contained extensive strength design requirements for masonry structures because at that time a consensus standard for strength design of masonry did not yet exist. Starting with the 2003 edition of the code, this section has required that strength design be in accordance with the MSJC Code with some modifications to specific sections. Like ASD, this section also invokes the minimum seismic requirements of Section 2106 for all masonry designed by the strength method. Additionally, masonry designed by this method (as with any engineered masonry construction) must be inspected during construction in accordance with the special inspection provisions of Section 1705.4, which in turn references the quality assurance provisions of the MSJC Code and Specification.

2108.2 TMS 402/ACI 530/ASCE 5, Section 9.3.3.3, development. Modify the second paragraph of Section 9.3.3.3 as follows:

The required development length of reinforcement shall be determined by Equation (9-16), but shall not be less than 12 inches (305 mm) and need not be greater than 72 d_b.

❖ This section modifies the MSJC Code by placing a limit on the calculated development length, which in turn limits the maximum required splice length. The limit is based upon historical limits used in the UBC. It is intended to address concerns that the MSJC Code, at times, requires excessive lap splice lengths.

INTERNATIONAL CODE COUNCIL®
Copyright © 2015 ICC. ALL RIGHTS RESERVED. Accessed by David Dammon on Jun 21, 2017 12:30:52 PM pursuant to License Agreement with ICC. No further reproduction or distribution authorized. ANY UNAUTHORIZED REPRODUCTION OR DISTRIBUTION IS A VIOLATION OF THE FEDERAL COPYRIGHT ACT AND THE LICENSE AGREEMENT, AND SUBJECT TO CIVIL AND CRIMINAL PENALTIES THEREUNDER.

2108.3 TMS 402/ACI 530/ASCE 5, Section 9.3.3.4, splices. Modify items (c) and (d) of Section 9.3.3.4 as follows:

9.3.3.4 (c) – A welded splice shall have the bars butted and welded to develop at least 125 percent of the yield strength, f_y, of the bar in tension or compression, as required. Welded splices shall be of ASTM A706 steel reinforcement. Welded splices shall not be permitted in plastic hinge zones of intermediate or special reinforced walls.

9.3.3.4 (d) – Mechanical splices shall be classified as Type 1 or 2 in accordance with Section 18.2.7.1 of ACI 318. Type 1 mechanical splices shall not be used within a plastic hinge zone or within a beam-column joint of intermediate or special reinforced masonry shear walls. Type 2 mechanical splices are permitted in any location within a member.

❖ This section modifies the strength design splice requirements for consistency with the NEHRP Recommended Provisions. Splices for reinforcement can be achieved by lapping the reinforcement, welding the reinforcement or mechanical splicing.

Two modifications are made to welded splice requirements [Item (c)]. Splices in reinforcing steel used in the lateral force-resisting system subjected to high-seismic strains must be able to develop the strength of the steel in order to achieve the required performance. To be successfully welded, the chemistry of the steel must be controlled to limit carbon content, as well as other elements, such as sulfur and phosphorus. Since the chemistry of reinforcing steel conforming to ASTM A615, for example, is not controlled and is likely to be unknown, a weld that develops the strength of the steel is not guaranteed. ASTM A706 steel, on the other hand, has controlled chemistry and can be more reliably welded. Therefore, if splices are to be accomplished by welding, the use of ASTM A706 reinforcing steel becomes mandatory.

Welded splices are required to be able to develop at least 125 percent of the yield strength of the spliced rebars. However, reinforcing steel conforming to ASTM A615, ASTM A706 or A996 can have an actual yield strength greater than 125 percent of the minimum required yield strength. This means a code-conforming welded splice may conceivably fail before the spliced bars have yielded, thereby limiting the inelastic deformability of that structural member. The use of welded splices is, therefore, prohibited at locations of where there is the potential for plastic hinging of members in structural systems that are expected to undergo significant inelastic response in resisting forces caused by earthquake ground motion.

The modification to mechanical splices in Item (d) requires that the splice be classified in accordance with ACI 318 as Class 1 or Class 2. This is because reinforcing steel is predominantly produced from remelted steel scrap, making it difficult to control the strength. The resulting products tend to have strengths considerably higher than the specified yield strength. This is similar to the situation that has occurred in structural steel where the actual yield strength can be much greater than the specified yield strength. Since there is no upper limit on the yield strength (except for ASTM A706) and only a minimum required yield strength, most reinforcing steel will have a higher yield point than that specified.

Testing by the California Department of Transportation (CALTRANS) indicates the overstrength can be as much as 60 percent over the specified strength. Cyclic tests of splices meeting only the 125-percent criterion (i.e., Class 1) show that, in many cases, they cannot survive several excursions in the post yield range as imposed by cyclic testing. Splices in reinforcing steel used in the seismic force-resisting system in plastic-hinge zones and beam-column joints are subjected to high-seismic strains so they must be able to develop the strength of the steel in order to achieve the required performance; hence, the requirement for a Type 2 splice that develops the specified tensile strength of the bar.

SECTION 2109
EMPIRICAL DESIGN OF MASONRY

2109.1 General. Empirically designed masonry shall conform to the requirements of Appendix A of TMS 402/ACI 530/ASCE 5, except where otherwise noted in this section.

❖ This section permits empirical design of masonry utilizing Appendix A of the MSJC Code. The only exceptions are surface-bonded walls in accordance with Section 2109.2 and adobe construction in accordance with Section 2109.3. Additional information can be found in the commentary to the MSJC Code.

Empirical provisions are design rules developed by experience rather than engineering analysis. The empirical rules in these provisions are based on records dating back as far as 1889, in *A Treatise on Masonry Construction* by Ira Baker, and, more recently, ANSI A41.1, first published in 1944.

This empirical design method is based on several premises: gravity loads are reasonably centered on bearing walls; effects of reinforcement are neglected; buildings have limited height, seismic risk and wind loading. The requirements of and limitations regarding the use of empirical design reflect these assumptions.

2109.1.1 Limitations. The use of empirical design of masonry shall be limited as noted in Section A.1.2 of TMS 402/ACI 530/ASCE 5. The use of dry-stacked, surface-bonded masonry shall be prohibited in *Risk Category* IV structures. In buildings that exceed one or more of the limitations of Section A.1.2 of TMS 402/ACI 530/ASCE 5, masonry shall be designed in accordance with the engineered design provisions of Section 2101.2 or the foundation wall provisions of Section 1807.1.5.

Section A.1.2.2 of TMS 402/ACI 530/ASCE 5 shall be modified as follows:

A.1.2.2 – *Wind*. Empirical requirements shall not apply to the design or construction of masonry for buildings, parts

INTERNATIONAL CODE COUNCIL®
Copyright © 2015 ICC. ALL RIGHTS RESERVED. Accessed by David Dammon on Jun 21, 2017 12:30:52 PM pursuant to License Agreement with ICC. No further reproduction or distribution authorized. ANY UNAUTHORIZED REPRODUCTION OR DISTRIBUTION IS A VIOLATION OF THE FEDERAL COPYRIGHT ACT AND THE LICENSE AGREEMENT, AND SUBJECT TO CIVIL AND CRIMINAL PENALTIES THEREUNDER.

of buildings, or other structures to be located in areas where V_{asd} as determined in accordance with Section 1609.3.1 of the *International Building Code* exceeds 110 mph.

❖ Empirical design is permitted for structures having limited seismic risk, wind loading and height. These limitations are justified, since buildings that were representative of the historically based empirical provisions are uncommon today. For example, buildings of the past were smaller, had more interior masonry walls and typically had different floor construction than modem buildings.

Where any one of the limitations in Appendix A of the MSJC Code is exceeded, the masonry structure is not permitted to be empirically designed. Engineered design in accordance with Section 2107 or 2108 or TMS 403 is required in such instances. Masonry foundation walls complying with Section 1807.1.5 are also acceptable.

The empirical provisions are adequate for the level of risk associated with the seismic force-resisting systems of buildings located in Seismic Design Category A. Where masonry is used for purposes other than the seismic force-resisting system, the empirical design method may be used in buildings assigned to Seismic Design Category A, B or C. Engineered design is required for buildings in higher seismic design categories.

In addition, empirical design of the lateral load-resisting system is limited to locations where the nominal design wind speed, V_{asd}, determined in accordance with Section 1609.3.1, does not exceed 110 mph (145 km/hr). Other limits on various building elements are based on the type of element, its location and the building height, as well as the basic wind speed.

The use of empirical design for AAC masonry is not permitted. Additional discussion of the empirical design method can be found in the commentary for the MSJC Code.

2109.2 Surface-bonded walls. Dry-stacked, surface-bonded concrete masonry walls shall comply with the requirements of Appendix A of TMS 402/ACI 530/ASCE 5, except where otherwise noted in this section.

❖ Dry-stacked, surface-bonded masonry walls consist of courses of concrete masonry units without mortar joints assembled to form unreinforced walls. Both sides of the walls are coated with a $^1/_{16}$- to $^1/_8$-inch-thick layer (1.6 to 3.2 mm) of cementitious mortar reinforced with glass fibers capable of increasing the tensile strength of the masonry and unifying the construction.

2109.2.1 Strength. Dry-stacked, surface-bonded concrete masonry walls shall be of adequate strength and proportions to support all superimposed loads without exceeding the allowable stresses listed in Table 2109.2.1. Allowable stresses not specified in Table 2109.2.1 shall comply with the requirements of TMS 402/ACI 530/ASCE 5.

❖ In surface-bonded masonry construction, strength is lower than conventional masonry construction because of the lack of solid contact between the units.

Where stresses are not specified in Table 2109.2.1, engineered design in accordance with Section 2107 or 2108 is required.

TABLE 2109.2.1
ALLOWABLE STRESS GROSS CROSS-SECTIONAL AREA FOR DRY-STACKED, SURFACE-BONDED CONCRETE MASONRY WALLS

DESCRIPTION	MAXIMUM ALLOWABLE STRESS (psi)
Compression standard block	45
Flexural tension	
Horizontal span	30
Vertical span	18
Shear	10

For SI: 1 pound per square inch = 0.006895 MPa.

❖ The values for allowable stresses based on the gross cross-sectional area of masonry units are given in this table. The gross cross-sectional area is the actual area of a section perpendicular to the direction of the load, without subtraction of the core areas of hollow masonry units.

The flexural strength of surface-bonded walls is about the same as conventional masonry with mortar joints. In the vertical direction, where walls are supported top and bottom, Table 2109.2.1 allows a maximum flexural tensile stress of 18 psi (0.12 MPa) based on the gross area. In the horizontal direction, where walls span laterally between supports, a maximum flexural stress of 30 psi (0.21 MPa) is permitted based on the gross area when units are dry stacked in running bond. The shear strength of surface-bonded walls is less than that of conventional, mortar-jointed walls. This table allows a shear strength of 10 psi (0.069 MPa) based on the gross area.

2109.2.2 Construction. Construction of dry-stacked, surface-bonded masonry walls, including stacking and leveling of units, mixing and application of mortar and curing and protection shall comply with ASTM C946.

❖ The construction of dry-stacked, surface-bonded walls must conform to the requirements of ASTM C946.

It is not practical to construct the horizontal surface of a wall footing or foundation level enough to receive the base (first) course of masonry without additional leveling. Therefore, it is customary to lay the base course of masonry on a mortar bed so that the remainder of the dry-stacked units will be erected level. As the units are erected, their ends should be butted together as tightly as possible.

If the bearing surfaces of the concrete units are not

INTERNATIONAL CODE COUNCIL®
Copyright © 2015 ICC. ALL RIGHTS RESERVED. Accessed by David Dammon on Jun 21, 2017 12:30:52 PM pursuant to License Agreement with ICC. No further reproduction or distribution authorized. ANY UNAUTHORIZED REPRODUCTION OR DISTRIBUTION IS A VIOLATION OF THE FEDERAL COPYRIGHT ACT AND THE LICENSE AGREEMENT, AND SUBJECT TO CIVIL AND CRIMINAL PENALTIES THEREUNDER.

ground smooth and flat, shims may be required between the units to erect the wall plumb and level. Such shims should be of metal, mortar or plastic.

Because dry-stacked walls have no mortar joints, it is not possible to use horizontal steel joint reinforcement to reduce the size of cracks associated with temperature and moisture movements. Reinforced bond beams and sufficient control joints in surface-bonded masonry can be used to reduce the widths of such cracks.

The joints of dry-stacked units are tight, with no space for connectors to be embedded in the wall. The face shells or cross webs of such concrete masonry units, therefore, should be notched or depressed to accommodate ties and anchors that must be embedded in grout.

Packaged dry-bonding mortar should be mixed with water at the job site in accordance with ASTM C946 or the manufacturer's recommendations, including curing and protection procedures after application of the material. Surface-bonding mortars are usually applied by hand troweling to thicknesses between $^1/_{16}$ and $^1/_8$ inch (1.6 to 3.2 mm). While they may also be sprayed on, this is usually followed by hand or mechanical troweling to obtain the desired finish.

2109.3 Adobe construction. Adobe construction shall comply with this section and shall be subject to the requirements of this code for Type V construction, Appendix A of TMS 402/ACI 530/ASCE 5, and this section.

❖ Adobe masonry was popular in the southwest United States due to the availability of soil for units, the limited rainfall and low humidity to dry the units, the thermal mass provided by the completed adobe structure and the low cost of this form of construction. Requirements for adobe construction are a combination of empirical provisions and rudimentary engineering. Since there are no ASTM standards for adobe materials, test methods have been included in the code. Design is based on gross cross-sectional dimensions.

Requirements for unstabilized adobe are contained in Section 2109.3.1. Requirements for stabilized adobe are contained in Section 2109.3.2. Requirements in Sections 2109.3.3 and 2109.3.4 apply to both unstabilized and stabilized adobe. This is one of the few sources for such design information.

2109.3.1 Unstabilized adobe. Unstabilized adobe shall comply with Sections 2109.3.1.1 through 2109.3.1.4.

❖ Unstabilized adobe is generally not as durable or dimensionally stable as stabilized adobe.

2109.3.1.1 Compressive strength. Adobe units shall have an average compressive strength of 300 psi (2068 kPa) when tested in accordance with ASTM C67. Five samples shall be tested and no individual unit is permitted to have a compressive strength of less than 250 psi (1724 kPa).

❖ Average compressive strength, based on five specimens tested in accordance with ASTM C67, must be at least 300 psi (2068 kPa).

2109.3.1.2 Modulus of rupture. Adobe units shall have an average modulus of rupture of 50 psi (345 kPa) when tested in accordance with the following procedure. Five samples shall be tested and no individual unit shall have a modulus of rupture of less than 35 psi (241 kPa).

❖ Average modulus of rupture, based on five specimens tested in accordance with Sections 2109.3.1.2.1 through 2109.3.2.1.4, must be at least 50 psi (345 kPa).

2109.3.1.2.1 Support conditions. A cured unit shall be simply supported by 2-inch-diameter (51 mm) cylindrical supports located 2 inches (51 mm) in from each end and extending the full width of the unit.

❖ These required support conditions are typical for modulus of rupture tests.

2109.3.1.2.2 Loading conditions. A 2-inch-diameter (51 mm) cylinder shall be placed at midspan parallel to the supports.

❖ Loading through a hydraulic cylinder at midspan is common for these tests.

2109.3.1.2.3 Testing procedure. A vertical load shall be applied to the cylinder at the rate of 500 pounds per minute (37 N/s) until failure occurs.

❖ The required application of vertical load is easily controlled in testing laboratories.

2109.3.1.2.4 Modulus of rupture determination. The modulus of rupture shall be determined by the equation:

$$f_r = 3\,PL_s\,/2\,S_w(S_t^2) \qquad \textbf{(Equation 21-2)}$$

where, for the purposes of this section only:

S_w = Width of the test specimen measured parallel to the loading cylinder, inches (mm).

f_r = Modulus of rupture, psi (MPa).

L_s = Distance between supports, inches (mm).

S_t = Thickness of the test specimen measured parallel to the direction of load, inches (mm).

P = The applied load at failure, pounds (N).

❖ Equation 21-2 is based on basic engineering mechanics and is valid for all rectangular specimens tested in this fashion.

2109.3.1.3 Moisture content requirements. Adobe units shall have a moisture content not exceeding 4 percent by weight.

❖ This section limits the moisture content of unstabilized adobe units to acceptable levels.

INTERNATIONAL CODE COUNCIL®
Copyright © 2015 ICC. ALL RIGHTS RESERVED. Accessed by David Dammon on Jun 21, 2017 12:30:52 PM pursuant to License Agreement with ICC. No further reproduction or distribution authorized. ANY UNAUTHORIZED REPRODUCTION OR DISTRIBUTION IS A VIOLATION OF THE FEDERAL COPYRIGHT ACT AND THE LICENSE AGREEMENT, AND SUBJECT TO CIVIL AND CRIMINAL PENALTIES THEREUNDER.

2109.3.1.4 Shrinkage cracks. Adobe units shall not contain more than three shrinkage cracks and any single shrinkage crack shall not exceed 3 inches (76 mm) in length or $^1/_8$ inch (3.2 mm) in width.

❖ As adobe units dry, they shrink and can crack. This section places limits on those potential cracks to keep the masonry structurally sound and reasonably water resistant.

2109.3.2 Stabilized adobe. Stabilized adobe shall comply with Section 2109.3.1 for unstabilized adobe in addition to Sections 2109.3.2.1 and 2109.3.2.2.

❖ This type of adobe is manufactured with stabilizers to increase its durability and decrease its water absorption. Stabilized adobe must also meet the requirements for unstabilized adobe prescribed in Section 2109.3.1.

2109.3.2.1 Soil requirements. Soil used for stabilized adobe units shall be chemically compatible with the stabilizing material.

❖ The soil and stabilizing materials must be chemically compatible, so that the stabilized units will be durable.

2109.3.2.2 Absorption requirements. A 4-inch (102 mm) cube, cut from a stabilized adobe unit dried to a constant weight in a ventilated oven at 212°F to 239°F (100°C to 115°C), shall not absorb more than $2^1/_2$ percent moisture by weight when placed upon a constantly water-saturated, porous surface for seven days. A minimum of five specimens shall be tested and each specimen shall be cut from a separate unit.

❖ This section prescribes a test method to verify that stabilized adobe units meet absorption limits.

2109.3.3 Allowable stress. The allowable compressive stress based on gross cross-sectional area of adobe shall not exceed 30 psi (207 kPa).

❖ This section prescribes the allowable compressive stress of adobe based on its gross cross-sectional area.

2109.3.3.1 Bolts. Bolt values shall not exceed those set forth in Table 2109.3.3.1.

❖ This section requires the capacity of bolts to be based on Table 2109.3.3.1. Specific types of bolts are not identified, but headed, bent-bar and plate anchors should all be acceptable.

Table 2109.3.3.1. See next column.

❖ The allowable shear values in this table are based on the capacity of the adobe masonry. The capacity of the anchor-bolt steel is much higher, so the lower strength of the adobe controls.

2109.3.4 Detailed requirements. Adobe construction shall comply with Sections 2109.3.4.1 through 2109.3.4.9.

❖ This section contains detailed construction requirements including height restrictions, mortar restrictions, mortar joint construction and water-resistance requirements for parapet walls, wall thickness, foundations, isolated piers and columns, tie beams, exterior finish and lintels.

2109.3.4.1 Number of stories. Adobe construction shall be limited to buildings not exceeding one *story*, except that two-*story* construction is allowed when designed by a *registered design professional*.

❖ Because of the low strength of adobe masonry, it is limited to use in single-story buildings, unless designed by a registered design professional, in which case two-story buildings are permitted.

2109.3.4.2 Mortar. Mortar for adobe construction shall comply with Sections 2109.3.4.2.1 and 2109.3.4.2.2.

❖ A variety of mortars are acceptable for stabilized adobe, as noted in Section 2109.3.4.2.1.

2109.3.4.2.1 General. Mortar for stabilized adobe units shall comply with this chapter or adobe soil. Adobe soil used as mortar shall comply with material requirements for stabilized adobe. Mortar for unstabilized adobe shall be Portland cement mortar.

❖ A variety of mortars are acceptable for stabilized adobe as noted; however, Portland cement-lime mortars are required for unstabilized adobe. Selection of a relatively weak mortar that is compatible with the units is appropriate.

2109.3.4.2.2 Mortar joints. Adobe units shall be laid with full head and bed joints and in full running bond.

❖ Full mortar joints, the same as for other solid units, are required for adobe construction. Units are required to be laid in running bond.

2109.3.4.3 Parapet walls. Parapet walls constructed of adobe units shall be waterproofed.

❖ Waterproofing parapets reduces moisture infiltration into the adobe.

2109.3.4.4 Wall thickness. The minimum thickness of *exterior walls* in one-story buildings shall be 10 inches (254 mm). The walls shall be laterally supported at intervals not exceeding 24 feet (7315 mm). The minimum thickness of interior *load-bearing walls* shall be 8 inches (203 mm). In no case shall the unsupported height of any wall constructed of adobe units exceed 10 times the thickness of such wall.

❖ Because of the low strength of adobe masonry walls, thicker walls with more closely spaced supports are required.

TABLE 2109.3.3.1
ALLOWABLE SHEAR ON BOLTS IN ADOBE MASONRY

DIAMETER OF BOLTS (inches)	MINIMUM EMBEDMENT (inches)	SHEAR (pounds)
$^1/_2$	—	—
$^5/_8$	12	200
$^3/_4$	15	300
$^7/_8$	18	400
1	21	500
$1^1/_8$	24	600

For SI: 1 inch = 25.4 mm, 1 pound = 4.448 N.

INTERNATIONAL CODE COUNCIL®
Copyright © 2015 ICC. ALL RIGHTS RESERVED. Accessed by David Dammon on Jun 21, 2017 12:30:52 PM pursuant to License Agreement with ICC. No further reproduction or distribution authorized. ANY UNAUTHORIZED REPRODUCTION OR DISTRIBUTION IS A VIOLATION OF THE FEDERAL COPYRIGHT ACT AND THE LICENSE AGREEMENT, AND SUBJECT TO CIVIL AND CRIMINAL PENALTIES THEREUNDER.

2109.3.4.5 Foundations. Foundations for adobe construction shall be in accordance with Sections 2109.3.4.5.1 and 2109.3.4.5.2.

❖ This section prescribes foundation requirements for adobe masonry.

2109.3.4.5.1 Foundation support. Walls and partitions constructed of adobe units shall be supported by foundations or footings that extend not less than 6 inches (152 mm) above adjacent ground surfaces and are constructed of solid masonry (excluding adobe) or concrete. Footings and foundations shall comply with Chapter 18.

❖ So that adobe masonry is properly supported, solid masonry or concrete foundations are required.

2109.3.4.5.2 Lower course requirements. Stabilized adobe units shall be used in adobe walls for the first 4 inches (102 mm) above the finished first-floor elevation.

❖ Because of their greater durability, stabilized adobe units are required at the base of adobe walls. Conventional masonry units can also be used to satisfy this requirement.

2109.3.4.6 Isolated piers or columns. Adobe units shall not be used for isolated piers or columns in a load-bearing capacity. Walls less than 24 inches (610 mm) in length shall be considered isolated piers or columns.

❖ Adobe units are not strong enough to carry significant loads and are, therefore, not permitted to be used as isolated piers or columns.

2109.3.4.7 Tie beams. *Exterior walls* and interior *load-bearing walls* constructed of adobe units shall have a continuous tie beam at the level of the floor or roof bearing and meeting the following requirements.

❖ To distribute loads more evenly into the adobe, tie beams are required at the floor or roof levels. Tie beams can be constructed of concrete or wood, as described in Sections 2109.3.4.7.1 and 2109.3.4.7.2, respectively.

2109.3.4.7.1 Concrete tie beams. Concrete tie beams shall be a minimum depth of 6 inches (152 mm) and a minimum width of 10 inches (254 mm). Concrete tie beams shall be continuously reinforced with a minimum of two No. 4 reinforcing bars. The specified compressive strength of concrete shall be at least 2,500 psi (17.2 MPa).

❖ This section provides requirements for concrete tie beams to be cast above adobe masonry walls to distribute loads from floors and roofs.

2109.3.4.7.2 Wood tie beams. Wood tie beams shall be solid or built up of lumber having a minimum nominal thickness of 1 inch (25 mm), and shall have a minimum depth of 6 inches (152 mm) and a minimum width of 10 inches (254 mm). Joints in wood tie beams shall be spliced a minimum of 6 inches (152 mm). No splices shall be allowed within 12 inches (305 mm) of an opening. Wood used in tie beams shall be *approved* naturally decay-resistant or preservative-treated wood.

❖ This section provides requirements for wood tie beams to be constructed above adobe masonry walls to distribute loads from floors and roofs.

2109.3.4.8 Exterior finish. *Exterior walls* constructed of unstabilized adobe units shall have their exterior surface covered with a minimum of two coats of Portland cement plaster having a minimum thickness of $^3/_4$ inch (19.1 mm) and conforming to ASTM C926. Lathing shall comply with ASTM C1063. Fasteners shall be spaced at 16 inches (406 mm) on center maximum. Exposed wood surfaces shall be treated with an *approved* wood preservative or other protective coating prior to lath application.

❖ Unstabilized adobe must be coated with plaster to increase its durability.

2109.3.4.9 Lintels. Lintels shall be considered structural members and shall be designed in accordance with the applicable provisions of Chapter 16.

❖ Lintels over door and window openings are required to be structurally designed to carry imposed loads and to distribute those loads into the supporting adobe.

SECTION 2110
GLASS UNIT MASONRY

2110.1 General. Glass unit masonry construction shall comply with Chapter 13 of TMS 402/ACI 530/ASCE 5 and this section.

❖ Section 2110 contains provisions for glass unit masonry walls, which are nearly identical to the glass unit masonry provisions in Chapter 13 of the MSJC Code. Glass unit masonry panels are permitted to be used in interior or exterior walls, provided that they are nonload bearing and comply with the requirements of Section 2110, which are partly empirical and partly based on tests.

2110.1.1 Limitations. Solid or hollow *approved* glass block shall not be used in fire walls, party walls, fire barriers, fire partitions or smoke barriers, or for load-bearing construction. Such blocks shall be erected with mortar and reinforcement in metal channel-type frames, structural frames, masonry or concrete recesses, embedded panel anchors as provided for both exterior and interior walls or other *approved* joint materials. Wood strip framing shall not be used in walls required to have a fire-resistance rating by other provisions of this code.

Exceptions:

1. Glass-block assemblies having a fire protection rating of not less than $^3/_4$ hour shall be permitted as opening protectives in accordance with Section 716 in fire barriers, fire partitions and smoke barriers

INTERNATIONAL CODE COUNCIL®
Copyright © 2015 ICC. ALL RIGHTS RESERVED. Accessed by David Dammon on Jun 21, 2017 12:30:52 PM pursuant to License Agreement with ICC. No further reproduction or distribution authorized. ANY UNAUTHORIZED REPRODUCTION OR DISTRIBUTION IS A VIOLATION OF THE FEDERAL COPYRIGHT ACT AND THE LICENSE AGREEMENT, AND SUBJECT TO CIVIL AND CRIMINAL PENALTIES THEREUNDER.

that have a required fire-resistance rating of 1 hour or less and do not enclose exit stairways and ramps or exit passageways.

2. Glass-block assemblies as permitted in Section 404.6, Exception 2.

❖ Structural glass blocks are not permitted in fire walls, party walls, fire barrier walls or fire partitions, with two exceptions. Exception 1 permits glass blocks that have been tested and classified for a $^3/_4$-hour fire protection rating in openings to be used in smoke barriers, fire barrier walls or fire partitions with a required fire-resistance rating of 1 hour or less. Since 1-hour fire barrier walls can be utilized to enclose interior exit stairways and exit ramps (see Section 1023.1), as well as exit passageways (see Section 1024.3), the exception does not apply to those locations. This is consistent with Sections 1023.4 and 1024.5, which limit openings in these exit components to those that are necessary for egress purposes. Exception 2 permits glass blocks to be installed in accordance with the requirements in Section 404.6, Exception 2, as the fire barrier enclosure of atriums. The two exceptions differ in that Exception 1 addresses the use of glass block for opening protectives (fire windows) while Exception 2 permits the acceptance of complying glass block assemblies as 1-hour fire barriers.

SECTION 2111
MASONRY FIREPLACES

2111.1 General. The construction of masonry fireplaces, consisting of concrete or masonry, shall be in accordance with this section.

❖ The provisions of this section apply to the design and construction of concrete and masonry fireplaces, which for simplicity are referred to as "masonry fireplaces." Commentary Figure 2111.1 shows a cross section of a typical masonry fireplace. In accordance with the definition in Section 202, a fireplace consists of a hearth and fire chamber and it is built in conjunction with a chimney.

2111.2 Fireplace drawings. The *construction documents* shall describe in sufficient detail the location, size and construction of masonry fireplaces. The thickness and characteristics of materials and the clearances from walls, partitions and ceilings shall be indicated.

❖ This section requires the submission of construction documents for all fireplaces so that compliance with appropriate code sections can be properly determined during plan review. The type of information and its format for plan review are established in this section. Construction documents, showing relationships of components and details related to the spe-

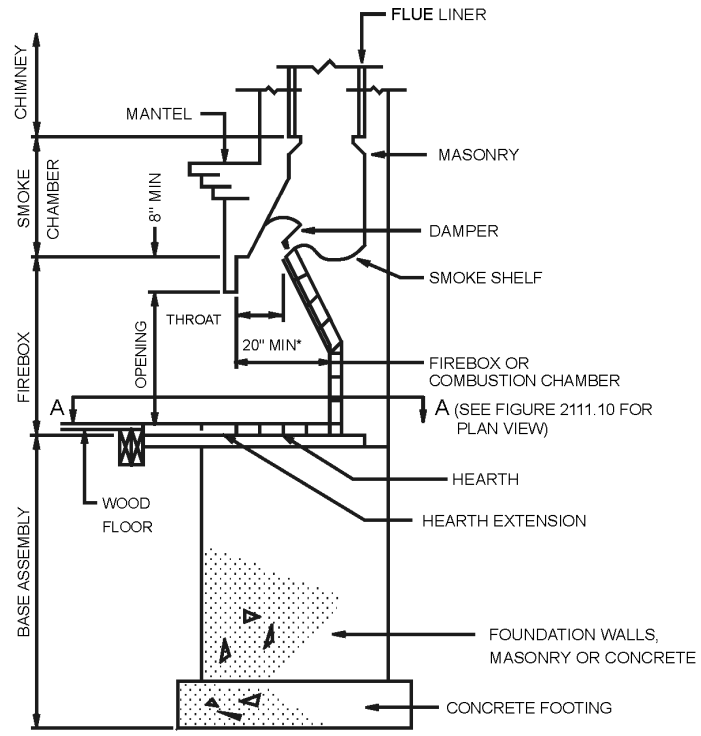

*EXCEPT AS PERMITTED FOR RUMFORD FIREPLACES [SEE FIGURE 2111.6]

For SI: 1 inch = 25.4 mm.

Figure 2111.1
SECTION THROUGH FIREPLACE

INTERNATIONAL CODE COUNCIL®
Copyright © 2015 ICC. ALL RIGHTS RESERVED. Accessed by David Dammon on Jun 21, 2017 12:30:52 PM pursuant to License Agreement with ICC. No further reproduction or distribution authorized. ANY UNAUTHORIZED REPRODUCTION OR DISTRIBUTION IS A VIOLATION OF THE FEDERAL COPYRIGHT ACT AND THE LICENSE AGREEMENT, AND SUBJECT TO CIVIL AND CRIMINAL PENALTIES THEREUNDER.

cific characteristics of the materials and techniques to be used when erecting the fireplace and chimney system, are required. Details are to include the type of brick or stone; refractory brick; concrete masonry; mortar requirements; wall thicknesses; clearances; dimensions of openings; and dimensions of the firebox and hearth extension.

2111.3 Footings and foundations. Footings for masonry fireplaces and their chimneys shall be constructed of concrete or solid masonry at least 12 inches (305 mm) thick and shall extend at least 6 inches (153 mm) beyond the face of the fireplace or foundation wall on all sides. Footings shall be founded on natural undisturbed earth or engineered fill below frost depth. In areas not subjected to freezing, footings shall be at least 12 inches (305 mm) below finished grade.

❖ Masonry fireplaces and chimneys must be supported on adequate footings due to their weight and the forces imposed on them by wind, earthquakes and other effects. This section prescribes minimum footing requirements that are typically adequate for standard fireplaces and chimneys. Extremely large, tall or heavy fireplaces and chimneys, however, may need more substantial foundations (see Commentary Figure 2111.1).

2111.3.1 Ash dump cleanout. Cleanout openings, located within foundation walls below fireboxes, when provided, shall be equipped with ferrous metal or masonry doors and frames constructed to remain tightly closed, except when in use. Cleanouts shall be accessible and located so that ash removal will not create a hazard to combustible materials.

❖ Noncombustible, tightly sealed cleanout doors are required to reduce the danger of fire spread through the cleanout openings. Cleanout openings are required to be easily accessible to allow ash to be readily removed.

2111.4 Seismic reinforcement. In structures assigned to *Seismic Design Category* A or B, seismic reinforcement is not required. In structures assigned to *Seismic Design Category* C or D, masonry fireplaces shall be reinforced and anchored in accordance with Sections 2111.4.1, 2111.4.2 and 2111.5. In structures assigned to *Seismic Design Category* E or F, masonry fireplaces shall be reinforced in accordance with the requirements of Sections 2101 through 2108.

❖ Unreinforced masonry fireplaces and chimneys subjected to moderate ground motion have sustained damage in past earthquakes. The requirements in this section provide minimum reinforcement in an effort to increase structural integrity in structures classified as Seismic Design Category C or D. More substantial reinforcement may be indicated in structures having a higher seismic risk or for atypical fireplaces and chimneys. The section requires masonry fireplaces to be engineered in structures assigned to Seismic Design Category E or F.

2111.4.1 Vertical reinforcing. For fireplaces with chimneys up to 40 inches (1016 mm) wide, four No. 4 continuous vertical bars, anchored in the foundation, shall be placed in the concrete between wythes of solid masonry or within the cells of hollow unit masonry and grouted in accordance with Section 2103.3. For fireplaces with chimneys greater than 40 inches (1016 mm) wide, two additional No. 4 vertical bars shall be provided for each additional 40 inches (1016 mm) in width or fraction thereof.

❖ These requirements are traditional minimum prescriptive provisions to help maintain the integrity of fireplaces and chimneys during earthquakes. To resist strong earthquakes, however, more substantial reinforcement may be required.

2111.4.2 Horizontal reinforcing. Vertical reinforcement shall be placed enclosed within $^1/_4$-inch (6.4 mm) ties or other reinforcing of equivalent net cross-sectional area, spaced not to exceed 18 inches (457 mm) on center in concrete; or placed in the bed joints of unit masonry at a minimum of every 18 inches (457 mm) of vertical height. Two such ties shall be provided at each bend in the vertical bars.

❖ These requirements are traditional minimum prescriptive provisions to help maintain the integrity of fireplaces and chimneys during earthquakes. The vertical reinforcement required by Section 2111.3.1 must be enclosed within the horizontal reinforcement required by this section. To resist strong earthquakes, however, more substantial reinforcement may be required.

2111.5 Seismic anchorage. Masonry fireplaces and foundations shall be anchored at each floor, ceiling or roof line more than 6 feet (1829 mm) above grade with two $^3/_{16}$-inch by 1-inch (4.8 mm by 25 mm) straps embedded a minimum of 12 inches (305 mm) into the chimney. Straps shall be hooked around the outer bars and extend 6 inches (152 mm) beyond the bend. Each strap shall be fastened to a minimum of four floor joists with two $^1/_2$-inch (12.7 mm) bolts.

Exception: Seismic anchorage is not required for the following:

1. In structures assigned to *Seismic Design Category* A or B.
2. Where the masonry fireplace is constructed completely within the exterior walls.

❖ Fireplace chimneys can fail by overturning during earthquakes. This section duplicates the chimney anchorage requirements in Section 2113.4. The prescriptive requirements in this section are traditional for typical chimney construction. More substantial anchorage may be required in structures having an elevated seismic risk or for chimneys where the distance between floor and roof diaphragms is large. Seismic anchorage to floors and roof diaphragms is required for exterior chimneys in order to prevent detachment from the structure. While it is not required for a chimney that is enclosed within the exterior walls, anchorage could be utilized to minimize the risk of damage to floor or roof framing caused by pounding.

2111.6 Firebox walls. Masonry fireboxes shall be constructed of solid masonry units, hollow masonry units grouted

INTERNATIONAL CODE COUNCIL®
Copyright © 2015 ICC. ALL RIGHTS RESERVED. Accessed by David Dammon on Jun 21, 2017 12:30:52 PM pursuant to License Agreement with ICC. No further reproduction or distribution authorized. ANY UNAUTHORIZED REPRODUCTION OR DISTRIBUTION IS A VIOLATION OF THE FEDERAL COPYRIGHT ACT AND THE LICENSE AGREEMENT, AND SUBJECT TO CIVIL AND CRIMINAL PENALTIES THEREUNDER.

solid, stone or concrete. When a lining of firebrick at least 2 inches (51 mm) in thickness or other *approved* lining is provided, the minimum thickness of back and sidewalls shall each be 8 inches (203 mm) of solid masonry, including the lining. The width of joints between firebricks shall be not greater than $^1/_4$ inch (6.4 mm). When no lining is provided, the total minimum thickness of back and sidewalls shall be 10 inches (254 mm) of solid masonry. Firebrick shall conform to ASTM C27 or ASTM C1261 and shall be laid with medium-duty refractory mortar conforming to ASTM C199.

❖ This section specifies the minimum thicknesses of refractory brick or solid masonry necessary to contain the generated heat.

Solid masonry walls forming the firebox are required to have a minimum total thickness of 8 inches (204 mm), including the refractory lining.

The refractory lining is to consist of a low-duty, fireclay refractory brick with a minimum thickness of 2 inches (52 mm), laid with medium-duty refractory mortar. Mortar joints are generally $^1/_{16}$ to $^3/_{16}$ inch (1.6 to 4.8 mm) thick, but not thicker than $^1/_4$ inch (6.4 mm), to reduce thermal movements and prevent joint deterioration.

Where a firebrick lining is not used in firebox construction, the wall thickness is not to be less than 10 inches (254 mm) of solid masonry. Firebrick is required to conform to ASTM C27 or ASTM C1261. Firebrick must be laid with medium-duty refractory mortar conforming to ASTM C199.

2111.6.1 Steel fireplace units. Steel fireplace units are permitted to be installed with solid masonry to form a masonry fireplace provided they are installed according to either the requirements of their listing or the requirements of this section. Steel fireplace units incorporating a steel firebox lining shall be constructed with steel not less than $^1/_4$ inch (6.4 mm) in thickness, and an air-circulating chamber which is ducted to the interior of the building. The firebox lining shall be encased with solid masonry to provide a total thickness at the back and sides of not less than 8 inches (203 mm), of which not less than 4 inches (102 mm) shall be of solid masonry or concrete. Circulating air ducts employed with steel fireplace units shall be constructed of metal or masonry.

❖ This section provides minimum requirements for steel linings used in masonry fireplaces to improve heat flow.

2111.7 Firebox dimensions. The firebox of a concrete or masonry fireplace shall have a minimum depth of 20 inches (508 mm). The throat shall be not less than 8 inches (203 mm) above the fireplace opening. The throat opening shall not be less than 4 inches (102 mm) in depth. The cross-sectional area of the passageway above the firebox, including the throat, damper and smoke chamber, shall be not less than the cross-sectional area of the flue.

Exception: Rumford fireplaces shall be permitted provided that the depth of the fireplace is not less than 12 inches (305 mm) and at least one-third of the width of the fireplace opening, and the throat is not less than 12 inches (305 mm) above the lintel, and at least $^1/_{20}$ the cross-sectional area of the fireplace opening.

❖ The proper functioning of the fireplace depends on the size of the face opening and the chimney dimensions, which in turn are related to the room size (see Commentary Figure 2111.1). This section specifies a minimum depth of 20 inches (508 mm) for the combustion chamber because that depth influences the draft requirement. The dimensions of the firebox (depth, opening size and shape) are usually based on two considerations: aesthetics and the need to prevent the room from over-heating. Suggested dimensions for single-opening fireboxes are given in technical publications of the Brick Institute of America (BIA) and the National Concrete Masonry Association (NCMA).

This section also provides additional criteria for the throat's location and minimum cross-sectional area. Those criteria are based on many years of construction of successfully functioning fireplaces.

The exception permits the use of Rumford-style fireplaces and the dimensions associated with this design style. Rumford fireplaces are tall and shallow to reflect more heat, and they have streamlined throats to eliminate turbulence and to carry away the smoke with little loss of heated room air.

The code reference to the depth of the fireplace is interpreted as the depth of the firebox (see Commentary Figure 2111.7). The throat is required to be made

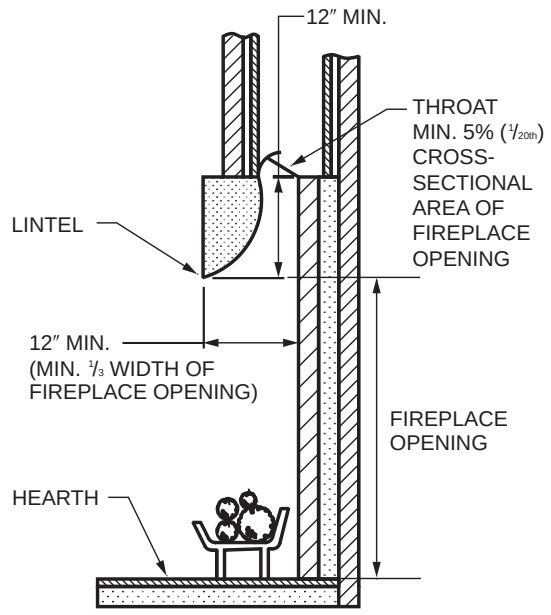

For SI: 1 inch = 25.4 mm.

Figure 2111.7
RUMFORD FIREPLACE

INTERNATIONAL CODE COUNCIL®
Copyright © 2015 ICC. ALL RIGHTS RESERVED. Accessed by David Dammon on Jun 21, 2017 12:30:52 PM pursuant to License Agreement with ICC. No further reproduction or distribution authorized. ANY UNAUTHORIZED REPRODUCTION OR DISTRIBUTION IS A VIOLATION OF THE FEDERAL COPYRIGHT ACT AND THE LICENSE AGREEMENT, AND SUBJECT TO CIVIL AND CRIMINAL PENALTIES THEREUNDER.

at least 12 inches (305 mm) above the lintel and at least one-twentieth of the cross-sectional area of the fireplace opening. Smoke chambers and flues for Rumford fireplaces should be sized and built like other masonry fireplaces. While those who build Rumford fireplaces do not completely agree about how they work, many books and guides address their construction.

2111.8 Lintel and throat. Masonry over a fireplace opening shall be supported by a lintel of noncombustible material. The minimum required bearing length on each end of the fireplace opening shall be 4 inches (102 mm). The fireplace throat or damper shall be located not less than 8 inches (203 mm) above the top of the fireplace opening.

❖ Permanent support for the masonry above the fireplace opening is provided by noncombustible lintels of steel, masonry or concrete. Combustible lintels (for example, those made from wood) are not appropriate because of the risk of fire damage and the probable collapse of the masonry above the opening.

The minimum bearing requirement of 4 inches (102 mm) is empirical, based on typical masonry fireplace openings. Lintels that support more than the typical weight of masonry above the fireplace opening may require a larger bearing area.

The throat of a fireplace is the slot-like opening above the firebox through which flames, smoke and hot combustion gases pass into the smoke chamber. The throat is as wide as the combustion chamber and is required to be located at least 8 inches (204 mm) above the lintel for conventional fireplaces. The back wall of the combustion chamber extends up to the throat, which is provided with a metal damper.

2111.8.1 Damper. Masonry fireplaces shall be equipped with a ferrous metal damper located not less than 8 inches (203 mm) above the top of the fireplace opening. Dampers shall be installed in the fireplace or at the top of the flue venting the fireplace, and shall be operable from the room containing the fireplace. Damper controls shall be permitted to be located in the fireplace.

❖ A damper is used to close the chimney flue when the fireplace is not in use. This section provides guidance on its location and construction.

2111.9 Smoke chamber walls. Smoke chamber walls shall be constructed of solid masonry units, hollow masonry units grouted solid, stone or concrete. The total minimum thickness of front, back and sidewalls shall be 8 inches (203 mm) of solid masonry. The inside surface shall be parged smooth with refractory mortar conforming to ASTM C199. When a lining of firebrick not less than 2 inches (51 mm) thick, or a lining of vitrified clay not less than $^5/_8$ inch (15.9 mm) thick, is provided, the total minimum thickness of front, back and sidewalls shall be 6 inches (152 mm) of solid masonry, including the lining. Firebrick shall conform to ASTM C1261 and shall be laid with refractory mortar conforming to ASTM C199. Vitrified clay linings shall conform to ASTM C315.

❖ The minimum wall thickness specified for the throat and smoke chamber is required to provide support for the flue construction, as well as adequate thermal insulation for the adjacent combustible construction.

In conventional fireplace construction, the smoke chamber is a tapering section whose vertical dimension is measured from the damper or throat to the bottom of the chimney flue. The actual height is a function of the fireplace opening.

2111.9.1 Smoke chamber dimensions. The inside height of the smoke chamber from the fireplace throat to the beginning of the flue shall be not greater than the inside width of the fireplace opening. The inside surface of the smoke chamber shall not be inclined more than 45 degrees (0.76 rad) from vertical when prefabricated smoke chamber linings are used or when the smoke chamber walls are rolled or sloped rather than corbeled. When the inside surface of the smoke chamber is formed by corbeled masonry, the walls shall not be corbeled more than 30 degrees (0.52 rad) from vertical.

❖ This section specifies the smoke chamber configuration that is needed for the proper function of the masonry chimney (see Commentary Figure 2111.1).

2111.10 Hearth and hearth extension. Masonry fireplace hearths and hearth extensions shall be constructed of concrete or masonry, supported by noncombustible materials, and reinforced to carry their own weight and all imposed loads. No combustible material shall remain against the underside of hearths or hearth extensions after construction.

❖ The fireplace hearth consists of two parts. The hearth, commonly called the “inner hearth,” is the floor of the combustion chamber and is obviously constructed of noncombustible material. The outer hearth, commonly known as the “hearth extension,” projects beyond the face of the fireplace into the room and also consists of noncombustible materials, such as brick or concrete masonry, concrete, floor tile or stone (see Commentary Figure 2111.1). The hearth extension may continue out from the inner hearth at the same level or be stepped down to a lower level. Minimum dimensions for the hearth extension are prescribed in Section 2111.10 and are discussed in the commentary to that section.

Combustible forms and centers could ignite from exposure to heat from the adjacent fireplace and from burning embers that escape the firebox. These and other similar concealed, combustible components must be removed.

2111.10.1 Hearth thickness. The minimum thickness of fireplace hearths shall be 4 inches (102 mm).

❖ The required minimum thickness of 4 inches (102 mm) is an empirical requirement that has historically been successful.

INTERNATIONAL CODE COUNCIL®
Copyright © 2015 ICC. ALL RIGHTS RESERVED. Accessed by David Dammon on Jun 21, 2017 12:30:52 PM pursuant to License Agreement with ICC. No further reproduction or distribution authorized. ANY UNAUTHORIZED REPRODUCTION OR DISTRIBUTION IS A VIOLATION OF THE FEDERAL COPYRIGHT ACT AND THE LICENSE AGREEMENT, AND SUBJECT TO CIVIL AND CRIMINAL PENALTIES THEREUNDER.

2111.10.2 Hearth extension thickness. The minimum thickness of hearth extensions shall be 2 inches (51 mm).

Exception: When the bottom of the firebox opening is raised not less than 8 inches (203 mm) above the top of the hearth extension, a hearth extension of not less than $^3/_8$-inch-thick (9.5 mm) brick, concrete, stone, tile or other *approved* noncombustible material is permitted.

❖ These requirements are empirical and have historically been successful.

2111.11 Hearth extension dimensions. Hearth extensions shall extend not less than 16 inches (406 mm) in front of, and not less than 8 inches (203 mm) beyond, each side of the fireplace opening. Where the fireplace opening is 6 square feet (0.557 m^2) or larger, the hearth extension shall extend not less than 20 inches (508 mm) in front of, and not less than 12 inches (305 mm) beyond, each side of the fireplace opening.

❖ The hearth extension is required to extend the full width of the fireplace opening and at least 8 inches (203 mm) beyond each side of the opening. It is also required to extend at least 16 inches (406 mm) out from the face of the fireplace. For fireplace openings larger than 6 square feet (0.557 m^2) in area, the hearth extension is required to extend at least 20 inches (508 mm) beyond the face of the fireplace and at least 12 inches (305 mm) beyond each side of the fireplace opening (see Commentary Figure 2111.11).

The hearth extension is intended to serve as a fire-protective separation between the firebox and adjacent combustible flooring or furnishings and to prevent accidental spills of hot embers or logs from the fire.

2111.12 Fireplace clearance. Any portion of a masonry fireplace located in the interior of a building or within the *exterior wall* of a building shall have a clearance to combustibles of not less than 2 inches (51 mm) from the front faces and sides of masonry fireplaces and not less than 4 inches (102 mm) from the back faces of masonry fireplaces. The airspace shall not be filled, except to provide fireblocking in accordance with Section 2111.13.

Exceptions:

1. Masonry fireplaces *listed* and *labeled* for use in contact with combustibles in accordance with UL 127 and installed in accordance with the manufacturer's instructions are permitted to have combustible material in contact with their exterior surfaces.
2. When masonry fireplaces are constructed as part of masonry or concrete walls, combustible materials shall not be in contact with the masonry or concrete walls less than 12 inches (306 mm) from the inside surface of the nearest firebox lining.
3. Exposed combustible *trim* and the edges of sheathing materials, such as wood siding, flooring and drywall, are permitted to abut the masonry fireplace sidewalls and hearth extension, in accordance with Figure 2111.12, provided such combustible *trim* or sheathing is not less than 12 inches (306 mm) from the inside surface of the nearest firebox lining.
4. Exposed combustible mantels or *trim* is permitted to be placed directly on the masonry fireplace front surrounding the fireplace opening, provided such combustible materials shall not be placed within 6 inches (153 mm) of a fireplace opening. Combustible material directly above and within 12 inches (305 mm) of the fireplace opening shall not project more than $^1/_8$ inch (3.2 mm) for each 1-inch (25 mm) distance from such opening. Combustible materials located along the sides of the fireplace opening that project more than $1^1/_2$ inches (38 mm) from the face of the fireplace shall have an additional clearance equal to the projection.

❖ Combustible materials, such as framing studs and joists, must not be installed closer than 2 inches (51 mm) from the front or side surfaces of fireplace walls

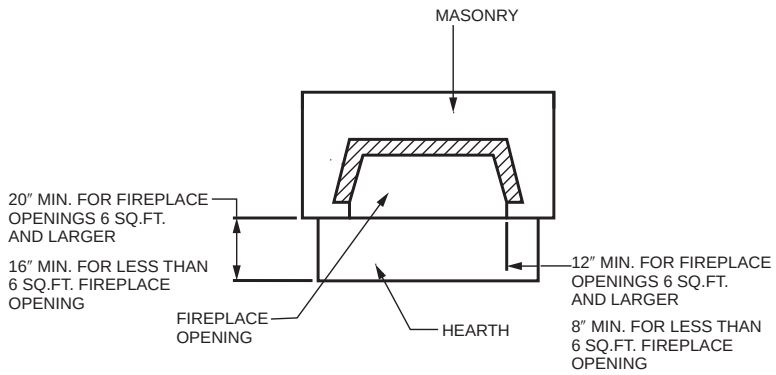

For SI: 1 inch = 25.4 mm,
1 square foot =0.0929 m^2.

Figure 2111.11
HEARTH EXTENSION

INTERNATIONAL CODE COUNCIL®
Copyright © 2015 ICC. ALL RIGHTS RESERVED. Accessed by David Dammon on Jun 21, 2017 12:30:52 PM pursuant to License Agreement with ICC. No further reproduction or distribution authorized. ANY UNAUTHORIZED REPRODUCTION OR DISTRIBUTION IS A VIOLATION OF THE FEDERAL COPYRIGHT ACT AND THE LICENSE AGREEMENT, AND SUBJECT TO CIVIL AND CRIMINAL PENALTIES THEREUNDER.

because of the fire hazard to materials in this location. Heat transmitted through fireplace walls can ignite combustible structural materials in contact with the walls. For this reason, a minimum required clearance has been established from the fireplace to combustibles.

The exceptions cover specific instances where the clearance requirements vary. For a discussion and illustration of Exception 3, see Code Figure 2111.12 and commentary.

Exception 4 regulates the location of mantels and trim adjacent to fireplace openings. Commentary Figure 2111.12(1) illustrates the limits above the opening. A less restrictive projection limit is applicable to combustible materials along the side of the fireplace opening, because radiant heat and convection heat are greater problems for combustible material above the fireplace opening than for combustible material at the side of the fireplace opening.

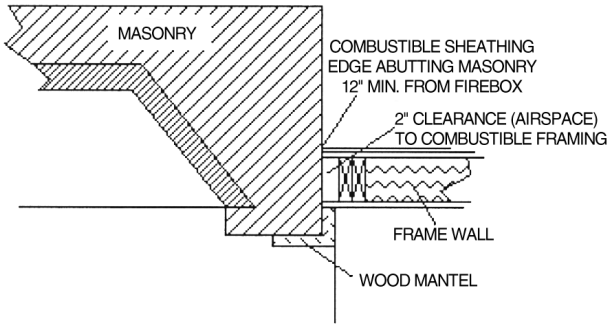

For SI: 1 inch = 25.4 mm

FIGURE 2111.12
ILLUSTRATION OF EXCEPTION TO FIREPLACE CLEARANCE PROVISION

❖ This figure depicts the provisions of Exception 3 to Section 2111.12 for combustible trim and sheathing adjacent to masonry fireplaces and hearth extensions.

2111.13 Fireplace fireblocking. All spaces between fireplaces and floors and ceilings through which fireplaces pass shall be fireblocked with noncombustible material securely fastened in place. The fireblocking of spaces between wood joists, beams or headers shall be to a depth of 1 inch (25 mm) and shall only be placed on strips of metal or metal lath laid across the spaces between combustible material and the chimney.

❖ Fireblocking is required to prevent the travel of flames, smoke or hot gases to other areas of the building through gaps between the chimney and the floor or ceiling assemblies. The 1-inch (25 mm) depth requirement is intended to be both a minimum and a maximum.

2111.14 Exterior air. Factory-built or masonry fireplaces covered in this section shall be equipped with an exterior air supply to ensure proper fuel combustion unless the room is mechanically ventilated and controlled so that the indoor pressure is neutral or positive.

❖ Adequate airflow is needed to provide exterior oxygen for the fire and to maintain draft through the chimney so that toxic combustion gases can be exhausted. Adequate airflow is especially important in modern, tightly sealed buildings. Note that this requirement applies to factory-built fireplaces, as well as masonry fireplaces.

2111.14.1 Factory-built fireplaces. Exterior combustion air ducts for factory-built fireplaces shall be *listed* components of the fireplace, and installed according to the fireplace manufacturer's instructions.

❖ Factory-built fireplaces are required to include exterior combustion air ducts (see Commentary Figure 2111.14.1). To function properly, these units need to be installed according to the manufacturer's recommendations.

2111.14.2 Masonry fireplaces. *Listed* combustion air ducts for masonry fireplaces shall be installed according to the terms of their listing and manufacturer's instructions.

❖ For proper functioning and airflow, air ducts for masonry fireplaces must be installed according to the

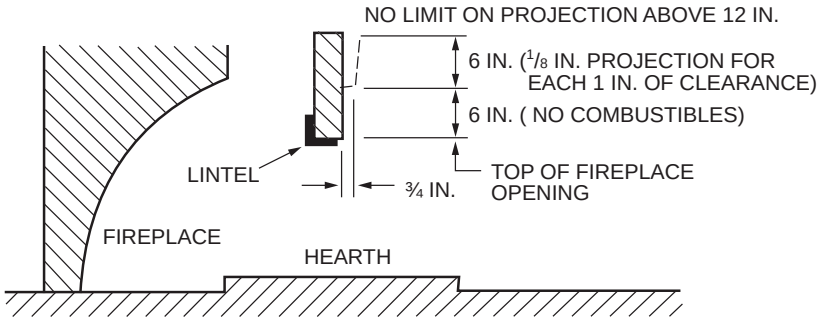

For SI: 1 inch = 25.4 mm.

Figure 2111.12(1)
COMBUSTIBLE MATERIALS PROJECTION ABOVE FIREPLACE OPENING

INTERNATIONAL CODE COUNCIL®
Copyright © 2015 ICC. ALL RIGHTS RESERVED. Accessed by David Dammon on Jun 21, 2017 12:30:52 PM pursuant to License Agreement with ICC. No further reproduction or distribution authorized. ANY UNAUTHORIZED REPRODUCTION OR DISTRIBUTION IS A VIOLATION OF THE FEDERAL COPYRIGHT ACT AND THE LICENSE AGREEMENT, AND SUBJECT TO CIVIL AND CRIMINAL PENALTIES THEREUNDER.

manufacturer's recommendations (also see commentary, Section 2111.13).

2111.14.3 Exterior air intake. The exterior air intake shall be capable of providing all combustion air from the exterior of the *dwelling*. The exterior air intake shall not be located within a garage, *attic*, basement or crawl space of the *dwelling* nor shall the air intake be located at an elevation higher than the firebox. The exterior air intake shall be covered with a corrosion-resistant screen of $^1/_4$-inch (6.4 mm) mesh.

❖ Air intakes are required to provide air from outside of the building. The air intakes are not permitted to be placed in garages, basements, crawl spaces or other areas where gases from the exhaust of automobiles, furnaces and other sources could be brought into the building.

Air intakes should be covered with screens to prevent pests from entering the building when the fireplace is not functioning.

2111.14.4 Clearance. Unlisted combustion air ducts shall be installed with a minimum 1-inch (25 mm) clearance to combustibles for all parts of the duct within 5 feet (1524 mm) of the duct outlet.

❖ The 1-inch (25 mm) clearance is required to reduce the risk of fire through the air intakes.

2111.14.5 Passageway. The combustion air passageway shall be not less than 6 square inches (3870 mm^2) and not more than 55 square inches (0.035 m^2), except that combustion air systems for *listed* fireplaces or for fireplaces tested for emissions shall be constructed according to the fireplace manufacturer's instructions.

❖ These minimum requirements are intended to provide adequate airflow through the fireplace.

2111.14.6 Outlet. The exterior air outlet is permitted to be located in the back or sides of the firebox chamber or within 24 inches (610 mm) of the firebox opening on or near the floor. The outlet shall be closable and designed to prevent burning material from dropping into concealed combustible spaces.

❖ The requirements on the location of the outlet in the firebox chamber are needed to ensure that adequate airflow to the fire is provided, while avoiding the direct flow of air into the adjacent room. Such openings must not become clogged with ash, which would restrict airflow. Even more important, burning material must not drop into concealed combustible spaces because of the risk of fire damage to the building. Outlets must therefore be both closable and adequately designed to prevent this.

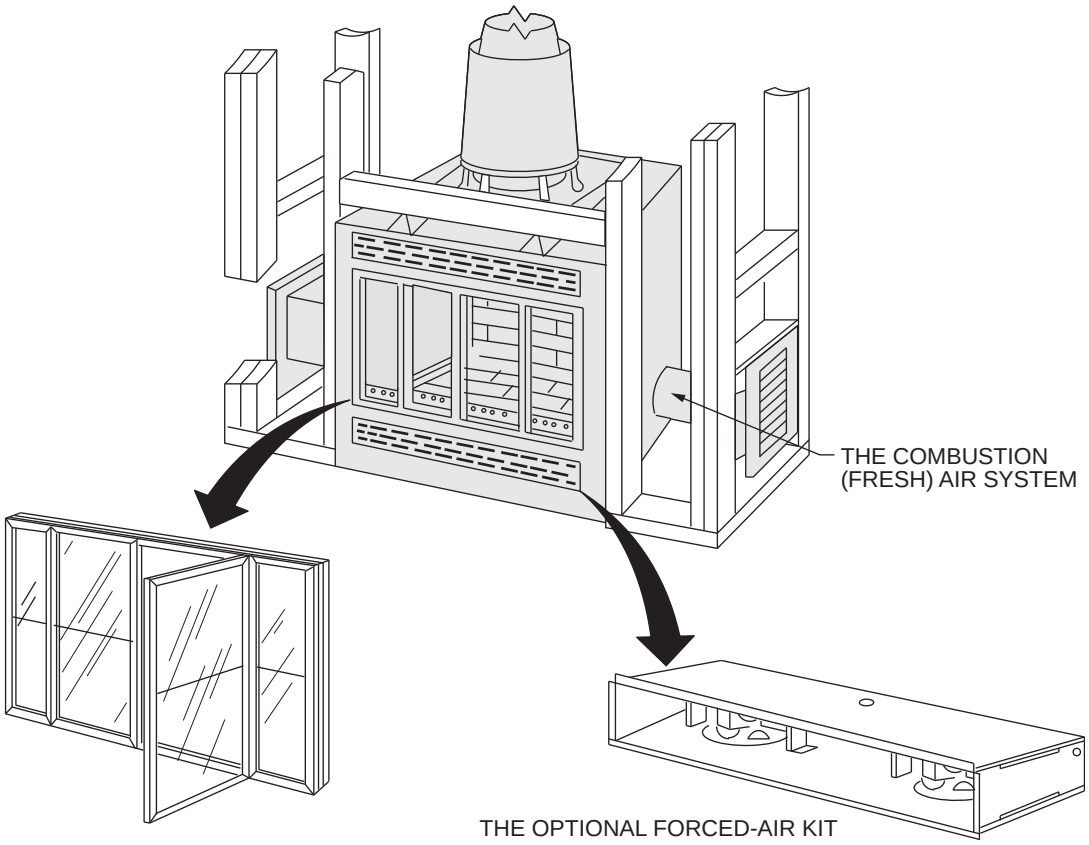

Figure 2111.14.1
FACTORY-BUILT FIREPLACE EXTERIOR COMBUSTION AIR DUCT

INTERNATIONAL CODE COUNCIL®
Copyright © 2015 ICC. ALL RIGHTS RESERVED. Accessed by David Dammon on Jun 21, 2017 12:30:52 PM pursuant to License Agreement with ICC. No further reproduction or distribution authorized. ANY UNAUTHORIZED REPRODUCTION OR DISTRIBUTION IS A VIOLATION OF THE FEDERAL COPYRIGHT ACT AND THE LICENSE AGREEMENT, AND SUBJECT TO CIVIL AND CRIMINAL PENALTIES THEREUNDER.

SECTION 2112
MASONRY HEATERS

2112.1 Definition. A masonry heater is a heating appliance constructed of concrete or solid masonry, hereinafter referred to as "masonry," which is designed to absorb and store heat from a solid fuel fire built in the firebox by routing the exhaust gases through internal heat exchange channels in which the flow path downstream of the firebox may include flow in a horizontal or downward direction before entering the chimney and which delivers heat by radiation from the masonry surface of the heater.

❖ Masonry heaters are appliances designed to absorb and store heat from a relatively small fire and to radiate that heat into the building interior. They are thermally more efficient than traditional fireplaces because of their design. Interior passageways through the heater allow hot exhaust gases from the fire to transfer heat into the masonry, which then radiates into the building.

2112.2 Installation. Masonry heaters shall be installed in accordance with this section and comply with one of the following:

1. Masonry heaters shall comply with the requirements of ASTM E1602.
2. Masonry heaters shall be *listed* and *labeled* in accordance with UL 1482 or EN 15250 and installed in accordance with the manufacturer's instructions.

❖ The listed referenced standards provide guidelines for installing masonry heaters.

2112.3 Footings and foundation. The firebox floor of a masonry heater shall be a minimum thickness of 4 inches (102 mm) of noncombustible material and be supported on a noncombustible footing and foundation in accordance with Section 2113.2.

❖ This section refers the user to the foundation requirements for masonry chimneys.

2112.4 Seismic reinforcing. In structures assigned to *Seismic Design Category* D, E or F, masonry heaters shall be anchored to the masonry foundation in accordance with Section 2113.3. Seismic reinforcing shall not be required within the body of a masonry heater with a height that is equal to or less than 3.5 times its body width and where the masonry chimney serving the heater is not supported by the body of the heater. Where the masonry chimney shares a common wall with the facing of the masonry heater, the chimney portion of the structure shall be reinforced in accordance with Section 2113.

❖ Because of the large bulk and squat geometry of these heaters, seismic reinforcement is not typically required. Flexural tensile stresses, which typically cause damage to unreinforced masonry, rarely occur. Where chimneys extend above these heaters, however, seismic reinforcement is required by Section 2113. See the commentary to that section for additional information on this requirement.

2112.5 Masonry heater clearance. Combustible materials shall not be placed within 36 inches (914 mm) or the distance of the allowed reduction method from the outside surface of a masonry heater in accordance with NFPA 211, Section 12.6, and the required space between the heater and combustible material shall be fully vented to permit the free flow of air around all heater surfaces.

Exceptions:

1. Where the masonry heater wall thickness is at least 8 inches (203 mm) of solid masonry and the wall thickness of the heat exchange channels is not less than 5 inches (127 mm) of solid masonry, combustible materials shall not be placed within 4 inches (102 mm) of the outside surface of a masonry heater. A clearance of not less than 8 inches (203 mm) shall be provided between the gas-tight capping slab of the heater and a combustible ceiling.
2. Masonry heaters *listed* and *labeled* in accordance with UL 1482 or EN 15250 and installed in accordance with the manufacturer's instructions.

❖ Heat conducted through masonry heater walls can ignite combustible structural materials in contact with these walls. For this reason, a minimum required clearance to combustibles from masonry heaters has been established. Because masonry heaters typically generate more heat for a longer period of time than traditional fireplaces, greater clearances to combustible materials are needed to reduce the risk of fire.

Note that NFPA 211 allows reductions to the prescribed clearance when certain conditions are met. Similarly, the exceptions address conditions that may warrant a reduction from the prescribed clearance.

SECTION 2113
MASONRY CHIMNEYS

2113.1 General. The construction of masonry chimneys consisting of solid masonry units, hollow masonry units grouted solid, stone or concrete shall be in accordance with this section.

❖ A masonry chimney is a field-constructed assembly that can consist of masonry units, grout, reinforced concrete, rubble stone, fire-clay liners and mortars. The *International Fuel Gas Code*® (IFGC®) and the *International Mechanical Code*® (IMC®) address the installation of chimneys and venting systems that are required to convey products of combustion from fuel-burning appliances to the outdoors so that the operation of the appliance does not adversely affect building occupants. A masonry chimney is permitted to serve residential (low-heat), medium- and high-heat appliances. A masonry chimney is required for masonry fireplaces constructed in accordance with Section 2111. This section provides the construction requirements for all masonry chimneys.

INTERNATIONAL CODE COUNCIL®
Copyright © 2015 ICC. ALL RIGHTS RESERVED. Accessed by David Dammon on Jun 21, 2017 12:30:52 PM pursuant to License Agreement with ICC. No further reproduction or distribution authorized. ANY UNAUTHORIZED REPRODUCTION OR DISTRIBUTION IS A VIOLATION OF THE FEDERAL COPYRIGHT ACT AND THE LICENSE AGREEMENT, AND SUBJECT TO CIVIL AND CRIMINAL PENALTIES THEREUNDER.

2113.2 Footings and foundations. Footings for masonry chimneys shall be constructed of concrete or solid masonry not less than 12 inches (305 mm) thick and shall extend at least 6 inches (152 mm) beyond the face of the foundation or support wall on all sides. Footings shall be founded on natural undisturbed earth or engineered fill below frost depth. In areas not subjected to freezing, footings shall be not less than 12 inches (305 mm) below finished grade.

❖ Masonry chimneys must be supported on adequate foundations due to their weight and the forces imposed on them by wind, earthquakes and other effects. This section prescribes minimum foundation requirements that are typically adequate for standard chimneys.

Extremely large, tall or heavy chimneys, however, may need more substantial foundations. Also, a chimney foundation probably will support a larger load than the adjacent building foundations. For this reason, chimney footings and foundations are often separated from the building foundation. A chimney foundation monolithic with the building foundation is permitted, provided the soil pressure and anticipated settlement are approximately uniform.

2113.3 Seismic reinforcement. In structures assigned to *Seismic Design Category* A or B, seismic reinforcement is not required. In structures assigned to *Seismic Design Category* C or D, masonry chimneys shall be reinforced and anchored in accordance with Sections 2113.3.1, 2113.3.2 and 2113.4. In structures assigned to *Seismic Design Category* E or F, masonry chimneys shall be reinforced in accordance with the requirements of Sections 2101 through 2108 and anchored in accordance with Section 2113.4.

❖ Unreinforced masonry fireplaces and chimneys subjected to moderate ground motion have been severely damaged in past earthquakes. The requirements in this section provide minimum reinforcement in an effort to keep these structures intact during such events. More substantial reinforcement, however, may be required in areas of high seismicity or for atypical chimneys. The section requires masonry chimneys to be engineered in structures assigned to Seismic Design Category E or F.

2113.3.1 Vertical reinforcement. For chimneys up to 40 inches (1016 mm) wide, four No. 4 continuous vertical bars anchored in the foundation shall be placed in the concrete between wythes of solid masonry or within the cells of hollow unit masonry and grouted in accordance with Section 2103.3. Grout shall be prevented from bonding with the flue liner so that the flue liner is free to move with thermal expansion. For chimneys greater than 40 inches (1016 mm) wide, two additional No. 4 vertical bars shall be provided for each additional 40 inches (1016 mm) in width or fraction thereof.

❖ These requirements are traditional minimum prescriptive provisions to help maintain the structural integrity of fireplaces and chimneys during earthquakes. More reinforcement may be required in areas of high seismicity or for atypical chimneys.

2113.3.2 Horizontal reinforcement. Vertical reinforcement shall be placed enclosed within $^1/_4$-inch (6.4 mm) ties, or other reinforcing of equivalent net cross-sectional area, spaced not to exceed 18 inches (457 mm) on center in concrete, or placed in the bed joints of unit masonry, at not less than every 18 inches (457 mm) of vertical height. Two such ties shall be provided at each bend in the vertical bars.

❖ These requirements are traditional minimum prescriptive provisions intended to help maintain the integrity of fireplaces and chimneys during earthquakes. The vertical reinforcement required by Section 2113.3.1 must be enclosed within the horizontal reinforcement required by this section. More reinforcement may be required in areas of high seismicity or for atypical chimneys.

2113.4 Seismic anchorage. Masonry chimneys and foundations shall be anchored at each floor, ceiling or roof line more than 6 feet (1829 mm) above grade with two $^3/_{16}$-inch by 1-inch (4.8 mm by 25 mm) straps embedded not less than 12 inches (305 mm) into the chimney. Straps shall be hooked around the outer bars and extend 6 inches (152 mm) beyond the bend. Each strap shall be fastened to not less than four floor joists with two $^1/_2$-inch (12.7 mm) bolts.

Exception: Seismic anchorage is not required for the following:

1. In structures assigned to *Seismic Design Category* A or B.
2. Where the masonry fireplace is constructed completely within the exterior walls.

❖ Chimneys must be connected to floor and roof diaphragms to prevent overturning during earthquakes. Chimneys must be anchored at the ceiling line of roof or ceiling assemblies and at floor levels below the roof. Such anchorage is of lesser importance where the floor assembly is 6 feet (1829 mm) or less above grade. The prescriptive requirements in this section are traditional for typical fireplaces and chimneys. More substantial anchorage may be required in areas of high seismicity, for large fireplaces or where the distance between floor and roof diaphragms is large.

2113.5 Corbeling. Masonry chimneys shall not be corbeled more than half of the chimney's wall thickness from a wall or foundation, nor shall a chimney be corbeled from a wall or foundation that is less than 12 inches (305 mm) in thickness unless it projects equally on each side of the wall, except that on the second *story* of a two-story *dwelling*, corbeling of chimneys on the exterior of the enclosing walls is permitted to equal the wall thickness. The projection of a single course shall not exceed one-half the unit height or one-third of the unit bed depth, whichever is less.

❖ A corbel is formed by projecting courses of masonry with the first or lowest course projecting out from the face of the wall and each successive course projecting out from the supporting course below. The angle of a corbel is limited so that the structural capacities of the masonry are not exceeded.

INTERNATIONAL CODE COUNCIL®
Copyright © 2015 ICC. ALL RIGHTS RESERVED. Accessed by David Dammon on Jun 21, 2017 12:30:52 PM pursuant to License Agreement with ICC. No further reproduction or distribution authorized. ANY UNAUTHORIZED REPRODUCTION OR DISTRIBUTION IS A VIOLATION OF THE FEDERAL COPYRIGHT ACT AND THE LICENSE AGREEMENT, AND SUBJECT TO CIVIL AND CRIMINAL PENALTIES THEREUNDER.

Commentary Figure 2113.5 illustrates the limitations of corbeling in an eccentrically loaded masonry chimney. The total corbeled projection cannot exceed 6 inches (152 mm). Where corbeling projects from the wall on one side only, the minimum allowable thickness of the wall is 12 inches (305 mm). The maximum allowable horizontal projection of an individual course of brick cannot exceed one-half the height and one-third the thickness of the masonry unit.

A chimney that projects equally on each side of the wall loads the wall concentrically. The requirement for a minimum wall thickness of 12 inches (305 mm) does not apply to this chimney configuration.

This section contains an exception to the limitations on corbel projection. In single-family homes, traditional chimneys originated in the second story and commonly served heating appliances in bedrooms, studies and sewing rooms. The exception allows corbeling to project from the exterior masonry wall a distance equivalent to the masonry wall thickness. This exception, however, does not affect the limitation on minimum wall thickness stated in the second sentence of this section. For example, a chimney in the second story of a two-story building cannot be corbeled at all if the wall is less than 12 inches (305 mm) thick and the corbeling is to project from one side only. If the corbeling is to project equally from both sides of the wall, the minimum wall thickness does not apply.

2113.6 Changes in dimension. The chimney wall or chimney flue lining shall not change in size or shape within 6 inches (152 mm) above or below where the chimney passes through floor components, ceiling components or roof components.

❖ At changes in shape or direction, masonry chimneys can have thinner walls, making them susceptible to leakage of water from the outside, and to hot spots and leakage of combustion gases from the inside. This is a fire hazard. The intent of this provision is to prohibit changes in shape and size near combustible construction. This section prohibits any change in dimension or direction of a masonry chimney from 6 inches (152 mm) below the combustible construction to 6 inches (152 mm) above it (see Commentary Figure 2113.6).

2113.7 Offsets. Where a masonry chimney is constructed with a fireclay flue liner surrounded by one wythe of masonry, the maximum offset shall be such that the centerline of the flue above the offset does not extend beyond the center of the chimney wall below the offset. Where the chimney offset is supported by masonry below the offset in an *approved* manner, the maximum offset limitations shall not apply. Each individual corbeled masonry course of the offset shall not exceed the projection limitations specified in Section 2113.5.

❖ An offset requires two changes in direction and causes two vertical sections of a chimney to be misaligned (offset) from each other. The intent of this section is to provide an upper portion of an offset that is structurally stable with respect to the lower portion.

The offset limitation does not apply when the inclined portion of the chimney and the portion above the offset are supported in an approved manner by underlying masonry construction.

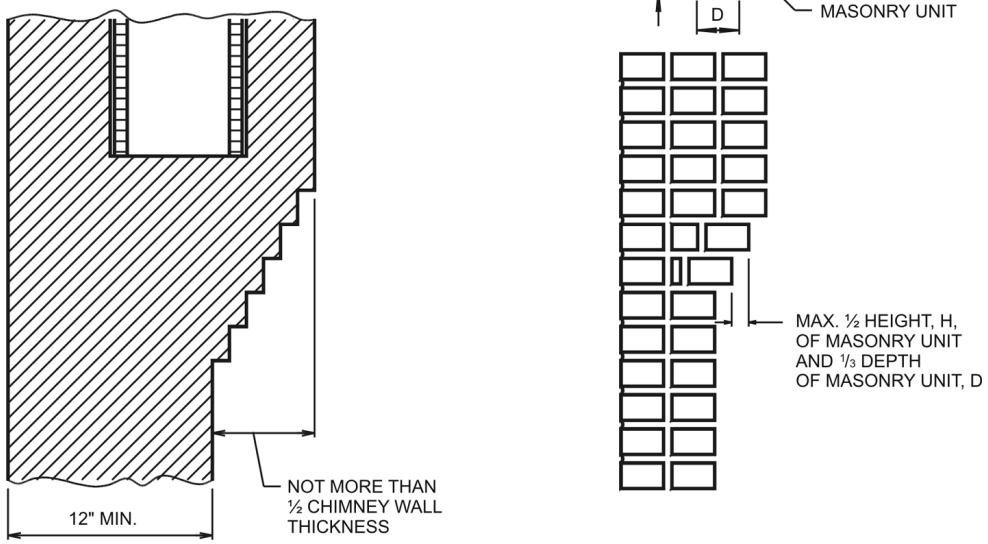

For SI: 1 inch = 25.4 mm.

Figure 2113.5
CORBELING LIMITATIONS

INTERNATIONAL CODE COUNCIL®
Copyright © 2015 ICC. ALL RIGHTS RESERVED. Accessed by David Dammon on Jun 21, 2017 12:30:52 PM pursuant to License Agreement with ICC. No further reproduction or distribution authorized. ANY UNAUTHORIZED REPRODUCTION OR DISTRIBUTION IS A VIOLATION OF THE FEDERAL COPYRIGHT ACT AND THE LICENSE AGREEMENT, AND SUBJECT TO CIVIL AND CRIMINAL PENALTIES THEREUNDER.

2113.8 Additional load. Chimneys shall not support loads other than their own weight unless they are designed and constructed to support the additional load. Masonry chimneys are permitted to be constructed as part of the masonry walls or concrete walls of the building.

❖ Because the requirements for chimneys in Section 2113 are based on past performance, chimneys should not be used to support other loads unless they are specifically designed to do so.

2113.9 Termination. Chimneys shall extend not less than 2 feet (610 mm) higher than any portion of the building within 10 feet (3048 mm), but shall not be less than 3 feet (914 mm) above the highest point where the chimney passes through the roof.

❖ Chimneys must be terminated well above adjacent portions of the building so that flue gases are exhausted away from combustible materials and for proper airflow through the chimney. The termination requirements are illustrated in Commentary Figure 2113.9. These requirements are applicable to chimneys serving masonry fireplaces or residential-type appliances. More restrictive termination requirements are specified for medium- and high-heat appliances.

2113.9.1 Chimney caps. Masonry chimneys shall have a concrete, metal or stone cap, sloped to shed water, a drip edge and a caulked bond break around any flue liners in accordance with ASTM C1283.

❖ The section requires masonry chimneys to have caps and references ASTM C1283, which covers the minimum requirements for installing a clay flue lining for residential concrete or masonry chimneys. A chimney cap protects the top of the masonry surrounding the flue. Although masonry chimneys typically have some type of weatherproof cap, this section specifically requires a chimney cap and prescribes the minimum criteria for its construction. The cap must be sloped to the outside, overhang the face of the masonry chimney and provide a drip edge. The prescribed caulking of the joint between the masonry and the flue serves as both a sealant and a bond break for any differential movement. The requirements for chimney caps are consistent with the referenced standard ASTM C1283, *Standard Practice for Installing Clay Flue Lining,* and consistent with ASTM C315, *Standard Specification for Clay Flue Liners and Chimney Pots* (see Commentary Figure 2113.9.1). See also Section 2113.9.3 for requirements for rain caps.

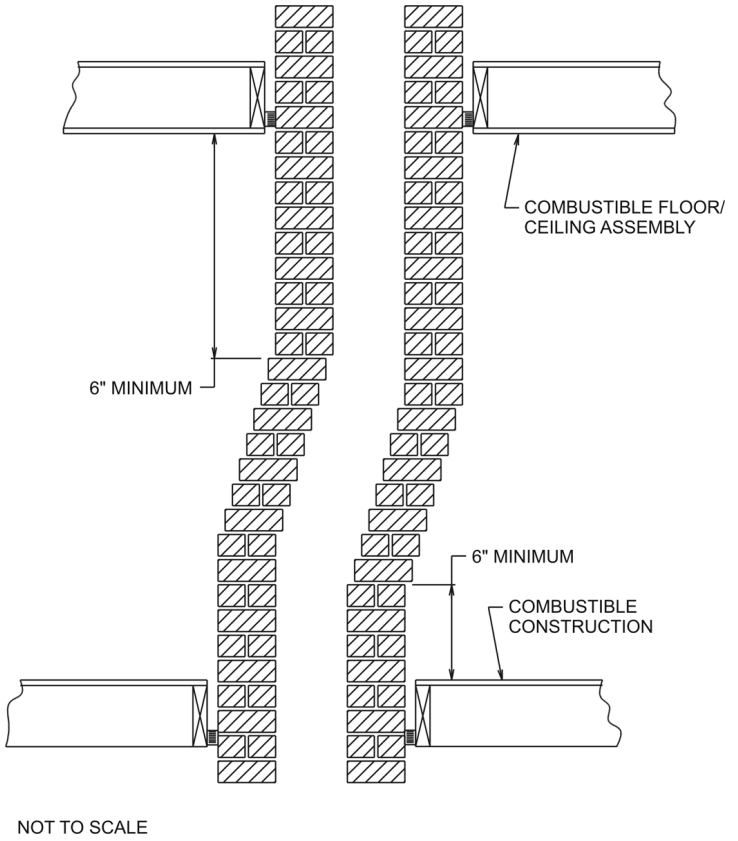

For SI: 1 inch = 25.4 mm.

Figure 2113.6
MASONRY CHIMNEY CHANGE IN SHAPE (OFFSET)

INTERNATIONAL CODE COUNCIL®
Copyright © 2015 ICC. ALL RIGHTS RESERVED. Accessed by David Dammon on Jun 21, 2017 12:30:52 PM pursuant to License Agreement with ICC. No further reproduction or distribution authorized. ANY UNAUTHORIZED REPRODUCTION OR DISTRIBUTION IS A VIOLATION OF THE FEDERAL COPYRIGHT ACT AND THE LICENSE AGREEMENT, AND SUBJECT TO CIVIL AND CRIMINAL PENALTIES THEREUNDER.

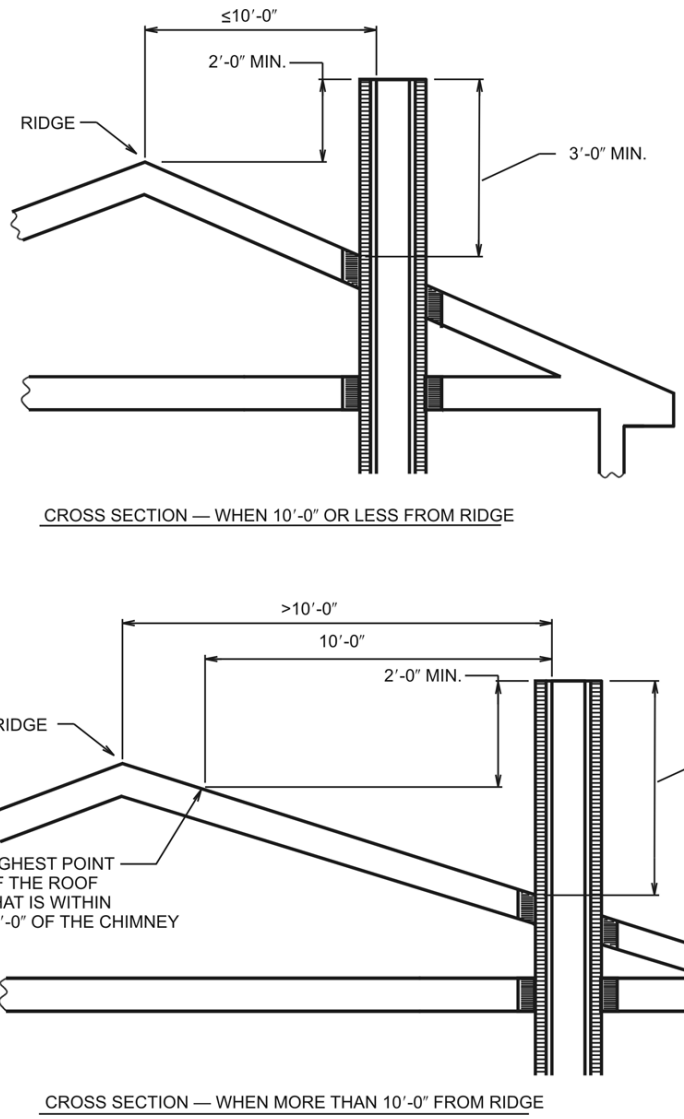

For SI: 1 foot = 304.8 mm.

Figure 2113.9
MINIMUM TERMINATION OF CHIMNEYS

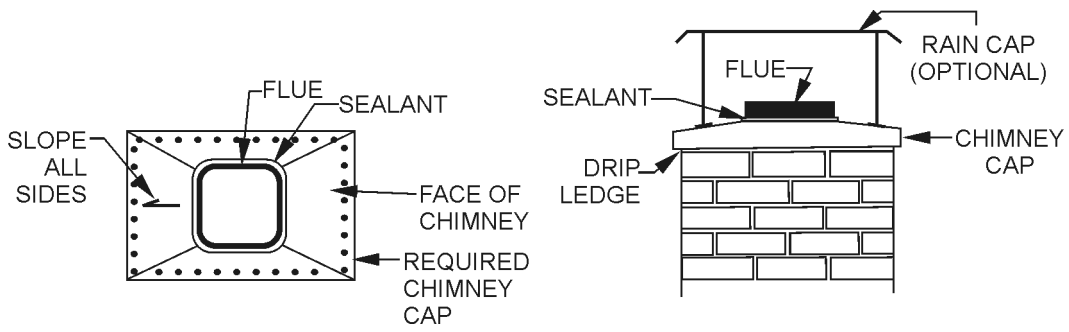

Figure 2113.9.1
MASONRY CHIMNEY CAP AND RAIN CAP

INTERNATIONAL CODE COUNCIL®
Copyright © 2015 ICC. ALL RIGHTS RESERVED. Accessed by David Dammon on Jun 21, 2017 12:30:52 PM pursuant to License Agreement with ICC. No further reproduction or distribution authorized. ANY UNAUTHORIZED REPRODUCTION OR DISTRIBUTION IS A VIOLATION OF THE FEDERAL COPYRIGHT ACT AND THE LICENSE AGREEMENT, AND SUBJECT TO CIVIL AND CRIMINAL PENALTIES THEREUNDER.

2113.9.2 Spark arrestors. Where a spark arrestor is installed on a masonry chimney, the spark arrestor shall meet all of the following requirements:

1. The net free area of the arrestor shall be not less than four times the net free area of the outlet of the chimney flue it serves.
2. The arrestor screen shall have heat and corrosion resistance equivalent to 19-gage galvanized steel or 24-gage stainless steel.
3. Openings shall not permit the passage of spheres having a diameter greater than $^1/_2$ inch (12.7 mm) nor block the passage of spheres having a diameter less than $^3/_8$ inch (9.5 mm).
4. The spark arrestor shall be accessible for cleaning and the screen or chimney cap shall be removable to allow for cleaning of the chimney flue.

❖ This section provides specifications for spark arrestors, if they are provided. Their use is not mandated by the model code, but they may be required by local regulations and owners or builders often install them.

2113.9.3 Rain caps. Where a masonry or metal rain cap is installed on a masonry chimney, the net free area under the cap shall be not less than four times the net free area of the outlet of the chimney flue it serves.

❖ Rain caps are installed a prescribed distance above a chimney flue termination to limit the amount of rain entering the flue. Because an improperly designed chimney rain cap can reduce the draft of a chimney, the section requires the net free area under the rain cap to be at least four times the area of the outlet of the flue opening. Rain caps are also used to keep animals such as rodents and birds from nesting in the chimney or fireplace. As the language indicates, rain caps are not required by the code, but when they are installed they must have the minimum clearance above the flue termination to provide the minimum net free area required by the section (see Commentary Figure 2113.9.1).

2113.10 Wall thickness. Masonry chimney walls shall be constructed of concrete, solid masonry units or hollow masonry units grouted solid with not less than 4 inches (102 mm) nominal thickness.

❖ The minimum chimney wall thickness is necessary to achieve a thermal mass that will predictably control heat transmission through the walls of the chimney. This thickness is applicable to chimneys serving masonry fireplaces or residential-type appliances. More restrictive thicknesses are specified for medium- and high-heat appliances.

2113.10.1 Masonry veneer chimneys. Where masonry is used as veneer for a framed chimney, through flashing and weep holes shall be provided as required by Chapter 14.

❖ While the definition of "Masonry chimney" would not necessarily include a framed chimney with masonry veneer, this cross reference to Chapter 14 is provided as a precaution.

2113.11 Flue lining (material). Masonry chimneys shall be lined. The lining material shall be appropriate for the type of appliance connected, according to the terms of the appliance listing and the manufacturer's instructions.

❖ The liner forms the flue passageway and is the actual conduit for all products of combustion. The temperature and composition of flue gases will vary based on the type of appliance being vented. The flue lining is required to withstand exposure to high temperatures and corrosive chemicals. It protects the masonry construction of the chimney walls and allows the chimney to be gas tight. A mismatch between an appliance and the type of chimney can result in a hazardous operating condition.

2113.11.1 Residential-type appliances (general). Flue lining systems shall comply with one of the following:

1. Clay flue lining complying with the requirements of ASTM C315.
2. *Listed* chimney lining systems complying with UL 1777.
3. Factory-built chimneys or chimney units *listed* for installation within masonry chimneys.
4. Other *approved* materials that will resist corrosion, erosion, softening or cracking from flue gases and condensate at temperatures up to 1,800°F (982°C).

❖ This section requires that the lining systems for residential-type appliances comply with ASTM C315 or other approved materials that are capable of resisting degradation from flue gas. Chimney liner systems that are tested and labeled by an approved agency in accordance with UL 1777 are also permitted.

2113.11.1.1 Flue linings for specific appliances. Flue linings other than those covered in Section 2113.11.1 intended for use with specific appliances shall comply with Sections 2113.11.1.2 through 2113.11.1.4 and Sections 2113.11.2 and 2113.11.3.

❖ This section identifies flue lining materials to be used for specific appliances.

2113.11.1.2 Gas appliances. Flue lining systems for gas appliances shall be in accordance with the *International Fuel Gas Code*.

❖ The IFGC must be used to determine appropriate flue-lining systems for gas appliances.

2113.11.1.3 Pellet fuel-burning appliances. Flue lining and vent systems for use in masonry chimneys with pellet fuel-burning appliances shall be limited to flue lining systems complying with Section 2113.11.1 and pellet vents *listed* for installation within masonry chimneys (see Section 2113.11.1.5 for marking).

❖ Flue lining and vent systems in masonry chimneys of pellet fuel-burning appliances can either conform to Section 2113.11.1 or be an approved listed system.

2113.11.1.4 Oil-fired appliances approved for use with L-vent. Flue lining and vent systems for use in masonry chimneys with oil-fired appliances *approved* for use with Type L

INTERNATIONAL CODE COUNCIL®
Copyright © 2015 ICC. ALL RIGHTS RESERVED. Accessed by David Dammon on Jun 21, 2017 12:30:52 PM pursuant to License Agreement with ICC. No further reproduction or distribution authorized. ANY UNAUTHORIZED REPRODUCTION OR DISTRIBUTION IS A VIOLATION OF THE FEDERAL COPYRIGHT ACT AND THE LICENSE AGREEMENT, AND SUBJECT TO CIVIL AND CRIMINAL PENALTIES THEREUNDER.

vent shall be limited to flue lining systems complying with Section 2113.11.1 and *listed* chimney liners complying with UL 641 (see Section 2113.11.1.5 for marking).

❖ Flue lining and vent systems in masonry chimneys of oil-fired appliances with Type L vents can either conform to Section 2113.11.1 or be an approved listed system (UL 641).

2113.11.1.5 Notice of usage. When a flue is relined with a material not complying with Section 2113.11.1, the chimney shall be plainly and permanently identified by a *label* attached to a wall, ceiling or other conspicuous location adjacent to where the connector enters the chimney. The *label* shall include the following message or equivalent language: "This chimney is for use only with (type or category of appliance) that burns (type of fuel). Do not connect other types of appliances."

❖ Clearly displayed information on the appropriate use and fuel for appliances is required to protect against the use of improper types of fuel that could cause fire.

2113.11.2 Concrete and masonry chimneys for medium-heat appliances.

❖ This section establishes requirements for masonry chimneys serving medium-heat appliances, including the chimney materials, lining, termination height and proper clearances to combustibles.

2113.11.2.1 General. Concrete and masonry chimneys for medium-heat appliances shall comply with Sections 2113.1 through 2113.5.

❖ Chimneys serving a medium-heat appliance must comply with the general chimney requirements in Sections 2113.1 through 2113.5. These include minimum requirements for footings and foundations; seismic reinforcement; and anchorage and corbeling.

2113.11.2.2 Construction. Chimneys for medium-heat appliances shall be constructed of solid masonry units or of concrete with walls not less than 8 inches (203 mm) thick, or with stone masonry not less than 12 inches (305 mm) thick.

❖ Masonry chimneys for medium-heat appliances must be constructed of concrete in accordance with Chapter 19, or of solid masonry units in accordance with this chapter. Chimneys constructed of solid masonry units or reinforced concrete are required to have a minimum wall thickness of 8 inches (203 mm). The minimum thickness requirement is necessary to achieve a thermal mass that will predictably control heat transmission through the walls of the chimney. Chimneys constructed of rubble stone masonry (irregular or roughly shaped stones) are required to have a wall thickness of no less than 12 inches (305 mm). The rate of heat transmission through stone walls is not predictable because of the varying thickness of the individual stones and the nonuniform mortar joints between the stones. For these reasons, stone wall chimneys are required to be thicker to provide a reasonable margin of safety.

2113.11.2.3 Lining. Concrete and masonry chimneys shall be lined with an *approved* medium-duty refractory brick not less than $4^1/_2$ inches (114 mm) thick laid on the $4^1/_2$-inch bed (114 mm) in an *approved* medium-duty refractory mortar. The lining shall start 2 feet (610 mm) or more below the lowest chimney connector entrance. Chimneys terminating 25 feet (7620 mm) or less above a chimney connector entrance shall be lined to the top.

❖ A medium-heat appliance produces flue-gas temperatures up to 2,000°F (1093°C). The chimney lining reduces heat transmission to the walls of the chimney and contains flue gases within a continuous duct until they are away from the building. This section requires at least a medium-duty refractory brick. A $4^1/_2$-inch (114 mm) medium-duty refractory brick lining tested and classified in accordance with ASTM C27 meets this criterion. Each course of the refractory brick liner is required to be installed on a full bed of refractory mortar to form a structurally stable, continuous, gas-tight liner.

Commentary Figure 2113.11.2.3 depicts a masonry chimney serving a medium-heat appliance. The liner extends from 2 feet (610 mm) below the lowest inlet to the top of the chimney, which is located less than 25 feet (7620 mm) above the highest inlet.

A chimney liner is required in all portions of the chimney that are exposed to flue gases. The liner is required to extend below the lowest inlet to provide protection to the masonry from flue gases, which can deteriorate the masonry and the mortar joints.

2113.11.2.4 Multiple passageway. Concrete and masonry chimneys containing more than one passageway shall have the liners separated by a minimum 4-inch-thick (102 mm) concrete or solid masonry wall.

❖ When a chimney requires multiple passageways, a 4-inch (102 mm) partition of solid masonry is required between them to act as a barrier and to enhance structural integrity.

2113.11.2.5 Termination height. Concrete and masonry chimneys for medium-heat appliances shall extend not less than 10 feet (3048 mm) higher than any portion of any building within 25 feet (7620 mm).

❖ Chimneys for medium-heat appliances are required to extend at least 10 feet (3048 mm) above the highest portion of the building within 25 feet (7620 mm) horizontally. This is intended to provide an acceptable height to carry away the flue gases safely and to provide adequate clearance to the roof and surrounding structures to allow any burning embers to extinguish before landing.

2113.11.2.6 Clearance. A minimum clearance of 4 inches (102 mm) shall be provided between the exterior surfaces of a concrete or masonry chimney for medium-heat appliances and combustible material.

❖ A 4-inch (102 mm) minimum airspace clearance to combustibles is required for a medium-heat masonry chimney. This large clearance is needed because of the higher temperatures produced by medium-heat appliances.

INTERNATIONAL CODE COUNCIL®
Copyright © 2015 ICC. ALL RIGHTS RESERVED. Accessed by David Dammon on Jun 21, 2017 12:30:52 PM pursuant to License Agreement with ICC. No further reproduction or distribution authorized. ANY UNAUTHORIZED REPRODUCTION OR DISTRIBUTION IS A VIOLATION OF THE FEDERAL COPYRIGHT ACT AND THE LICENSE AGREEMENT, AND SUBJECT TO CIVIL AND CRIMINAL PENALTIES THEREUNDER.

2113.11.3 Concrete and masonry chimneys for high-heat appliances.

❖ This section establishes the requirements for concrete and masonry chimneys serving high-heat appliances, including chimney materials, lining, termination height and proper clearances to combustibles.

2113.11.3.1 General. Concrete and masonry chimneys for high-heat appliances shall comply with Sections 2113.1 through 2113.5.

❖ Chimneys serving high-heat appliances are required to comply with the general chimney requirements in Sections 2113.1 through 2113.5, including minimum provisions for footings and foundations; seismic reinforcement; and anchorage and corbeling.

2113.11.3.2 Construction. Chimneys for high-heat appliances shall be constructed with double walls of solid masonry units or of concrete, each wall to be not less than 8 inches (203 mm) thick with a minimum airspace of 2 inches (51 mm) between the walls.

❖ The flue gases produced by a high-heat appliance can have temperatures above 2,000°F (1,093°C). To prevent fire, such chimneys must be enclosed by two wythes of masonry with an airspace between them. Thus, the chimney liner is required to be protected by two solid masonry unit walls or reinforced concrete walls, each a minimum of 8 inches (204 mm) thick with an airspace between them of at least 2 inches (51 mm). The airspace is intended to provide thermal insulation and to allow for thermal expansion of the chimney components.

2113.11.3.3 Lining. The inside of the interior wall shall be lined with an *approved* high-duty refractory brick, not less than $4^1/_2$ inches (114 mm) thick laid on the $4^1/_2$-inch bed (114 mm) in an *approved* high-duty refractory mortar. The lining

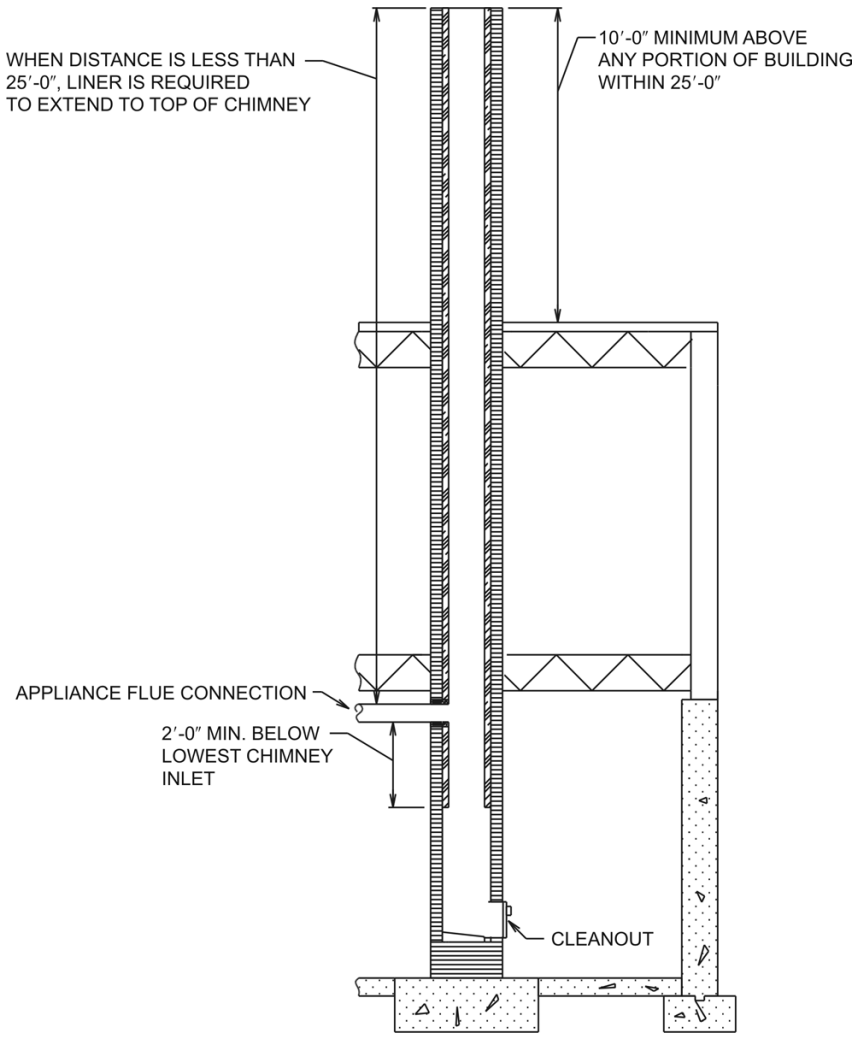

For SI: 1 foot = 304.8 mm.

Figure 2113.11.2.3
MASONRY CHIMNEY FOR MEDIUM-HEAT APPLIANCE

INTERNATIONAL CODE COUNCIL®
Copyright © 2015 ICC. ALL RIGHTS RESERVED. Accessed by David Dammon on Jun 21, 2017 12:30:52 PM pursuant to License Agreement with ICC. No further reproduction or distribution authorized. ANY UNAUTHORIZED REPRODUCTION OR DISTRIBUTION IS A VIOLATION OF THE FEDERAL COPYRIGHT ACT AND THE LICENSE AGREEMENT, AND SUBJECT TO CIVIL AND CRIMINAL PENALTIES THEREUNDER.

shall start at the base of the chimney and extend continuously to the top.

❖ High-heat appliances can produce flue gases with temperatures exceeding 2,000°F (1,093°C). The chimney lining reduces heat transmission to the walls of the chimney and contains flue gases within a continuous passageway until they are outside the building. This section permits only a high-duty refractory brick having a minimum thickness of $4^1/_2$ inches (114 mm) to be used in a masonry chimney serving a high-heat appliance. An approved high-duty refractory lining usually consists of brick tested and is classified in accordance with ASTM C27. To provide a structurally stable and continuous gas-tight liner, each course of the refractory brick liner must be laid on a full bed of refractory mortar approved for high-heat appliances.

2113.11.3.4 Termination height. Concrete and masonry chimneys for high-heat appliances shall extend not less than 20 feet (6096 mm) higher than any portion of any building within 50 feet (15 240 mm).

❖ Chimneys for high-heat appliances must terminate at least 20 feet (6096 mm) above the highest portion of the building within 50 feet (15 240 mm) horizontally. This allows flue gases to be safely carried away and provides enough clearance to allow any burning embers to extinguish before landing on combustibles.

2113.11.3.5 Clearance. Concrete and masonry chimneys for high-heat appliances shall have *approved* clearance from buildings and structures to prevent overheating combustible materials, permit inspection and maintenance operations on the chimney and prevent danger of burns to persons.

❖ The extremely high-temperature flue gas produced by a high-heat appliance is a major fire safety concern, and requiring sufficient clearance from buildings protects nearby combustible material, permits inspection and maintenance of the chimney and minimizes danger to persons.

2113.12 Clay flue lining (installation). Clay flue liners shall be installed in accordance with ASTM C1283 and extend from a point not less than 8 inches (203 mm) below the lowest inlet or, in the case of fireplaces, from the top of the smoke chamber to a point above the enclosing walls. The lining shall be carried up vertically, with a maximum slope no greater than 30 degrees (0.52 rad) from the vertical.

Clay flue liners shall be laid in medium-duty nonwater-soluble refractory mortar conforming to ASTM C199 with tight mortar joints left smooth on the inside and installed to maintain an airspace or insulation not to exceed the thickness of the flue liner separating the flue liners from the interior face of the chimney masonry walls. Flue lining shall be supported on all sides. Only enough mortar shall be placed to make the joint and hold the liners in position.

❖ Section 2113.11.1 lists clay flue liners as an acceptable flue-lining system for masonry chimneys serving residential-type appliances, as well as masonry fireplaces. This section provides the installation requirements for clay flue liners. The liner forms the flue passageway and is the actual conduit of all products of combustion. It must withstand exposure to high temperatures and corrosive chemicals from the flue gases. The chimney lining protects the masonry construction of the chimney walls and allows the chimney to be constructed gas tight.

Installation must comply with ASTM C1283. The liner is required to extend below the lowest inlet to provide protection to the masonry from flue gases, which can deteriorate the masonry and mortar joints.

Refractory mortar must comply with ASTM C199. Since they are exposed to the weather, nonwater-soluble mortar must be used in the joints of chimneys so that it does not wash out of the joints.

2113.13 Additional requirements.

❖ This section contains requirements for listed materials to be used as flue linings and for spaces surrounding chimney lining systems.

2113.13.1 Listed materials. *Listed* materials used as flue linings shall be installed in accordance with the terms of their listings and the manufacturer's instructions.

❖ Listed materials for flue linings must be installed in accordance with the manufacturer's instructions. Such instructions are not listed in the code since they vary with each system.

2113.13.2 Space around lining. The space surrounding a chimney lining system or vent installed within a masonry chimney shall not be used to vent any other appliance.

Exception: This shall not prevent the installation of a separate flue lining in accordance with the manufacturer's instructions.

❖ Where a listed flue lining system, such as a flexible metallic pipe, is installed in a chimney flue, an annular space can be created. This annular space will have an irregular shape that is not conducive to the flow of flue gas. In addition, the annular space surrounding a chimney lining system provides a thermal buffer between the flue and the surrounding masonry. Using it for another purpose is prohibited.

2113.14 Multiple flues. When two or more flues are located in the same chimney, masonry wythes shall be built between adjacent flue linings. The masonry wythes shall be at least 4 inches (102 mm) thick and bonded into the walls of the chimney.

Exception: When venting only one appliance, two flues are permitted to adjoin each other in the same chimney with only the flue lining separation between them. The joints of the adjacent flue linings shall be staggered not less than 4 inches (102 mm).

❖ A single masonry chimney can contain any number of flue-gas passageways. When more than two flues are contained in the same chimney, the flue liners are required to be subdivided by masonry wythes into groups of not more than two (see Commentary Figure

INTERNATIONAL CODE COUNCIL®
Copyright © 2015 ICC. ALL RIGHTS RESERVED. Accessed by David Dammon on Jun 21, 2017 12:30:52 PM pursuant to License Agreement with ICC. No further reproduction or distribution authorized. ANY UNAUTHORIZED REPRODUCTION OR DISTRIBUTION IS A VIOLATION OF THE FEDERAL COPYRIGHT ACT AND THE LICENSE AGREEMENT, AND SUBJECT TO CIVIL AND CRIMINAL PENALTIES THEREUNDER.

2113.14). The purpose of the masonry wythes is to unify the chimney structurally and to isolate pairs of flues serving dissimilar appliances.

2113.15 Flue area (appliance). Chimney flues shall not be smaller in area than the area of the connector from the appliance. Chimney flues connected to more than one appliance shall be not less than the area of the largest connector plus 50 percent of the areas of additional chimney connectors.

Exceptions:

1. Chimney flues serving oil-fired appliances sized in accordance with NFPA 31.
2. Chimney flues serving gas-fired appliances sized in accordance with the *International Fuel Gas Code*.

❖ Flues are sized to match the opening at the top of the appliance so that appliances function properly. Smaller flues are not permitted since they may constrict the passage of gases out from the appliance.

2113.16 Flue area (masonry fireplace). Flue sizing for chimneys serving fireplaces shall be in accordance with Section 2113.16.1 or 2113.16.2.

❖ This section provides requirements for the net cross-sectional area of the flue and throat between the firebox and the smoke chamber. Airflow through the fireplace is affected by the dimensions of the firebox opening, the shape and cross-sectional area of the flue and the height of the chimney (see Code Figure 2113.16). For proper fireplace operation, the required cross-sectional area is about one-tenth that of the fireplace opening. This ratio may vary somewhat with the height of the chimney and the configuration (round or rectangular) of the chimney flue.

This section states that either of the two options may be used to determine the flue area. Section 2113.16.1 prescribes the minimum flue area based on the fireplace opening alone, while Section 2113.16.2 prescribes it based on the height of the fireplace, the fireplace opening area and flue type.

FIGURE 2113.16. See page 21-35.

❖ This figure prescribes minimum flue sizes as a function of chimney height and the fireplace opening area. For example, for a 20-foot-high (6096 mm) chimney and a fireplace opening area of 2,000 square inches (1.3 m^2), the minimum cross-sectional area is 164 square inches (1.05 m^2) for a round flue or 190 square inches (0.12 m^2) for a square or rectangular flue. Using Table 2113.16(1), that minimum required

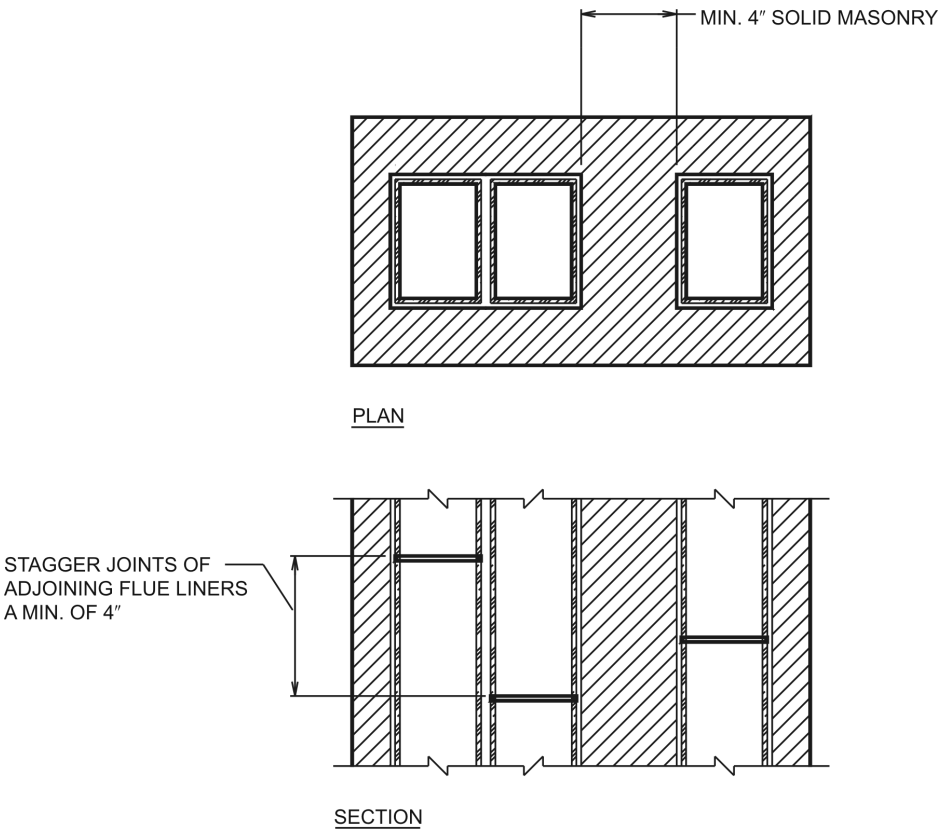

For SI: 1 inch = 25.4 mm.

Figure 2113.14
LOW-HEAT CHIMNEY WITH MORE THAN TWO FLUES

INTERNATIONAL CODE COUNCIL®
Copyright © 2015 ICC. ALL RIGHTS RESERVED. Accessed by David Dammon on Jun 21, 2017 12:30:52 PM pursuant to License Agreement with ICC. No further reproduction or distribution authorized. ANY UNAUTHORIZED REPRODUCTION OR DISTRIBUTION IS A VIOLATION OF THE FEDERAL COPYRIGHT ACT AND THE LICENSE AGREEMENT, AND SUBJECT TO CIVIL AND CRIMINAL PENALTIES THEREUNDER.

cross-sectional area can be met by a circular flue with a diameter of 15 inches (381 mm). Using Table 2113.16(2), the minimum cross-sectional area would require a rectangular flue with a nominal outside dimension of 16 by 20 inches (405 by 508 mm).

2113.16.1 Minimum area. Round chimney flues shall have a minimum net cross-sectional area of not less than $^1/_{12}$ of the fireplace opening. Square chimney flues shall have a minimum net cross-sectional area of not less than $^1/_{10}$ of the fireplace opening. Rectangular chimney flues with an aspect ratio less than 2 to 1 shall have a minimum net cross-sectional area of not less than $^1/_{10}$ of the fireplace opening. Rectangular chimney flues with an aspect ratio of 2 to 1 or more shall have a minimum net cross-sectional area of not less than $^1/_8$ of the fireplace opening.

❖ This section prescribes the minimum flue area based on the fireplace opening and the shape of the flue. For a given size fireplace opening, circular chimney flues are permitted to have a smaller area than rectangular flues. Wide, narrow flues require a larger area for adequate airflow.

2113.16.2 Determination of minimum area. The minimum net cross-sectional area of the flue shall be determined in accordance with Figure 2113.16. A flue size providing not less than the equivalent net cross-sectional area shall be used. Cross-sectional areas of clay flue linings are as provided in Tables 2113.16(1) and 2113.16(2) or as provided by the manufacturer or as measured in the field. The height of the chimney shall be measured from the firebox floor to the top of the chimney flue.

❖ This section provides an alternative method to determine flue size based on the height of the chimney, the fireplace opening area and the flue type [see commentary, Tables 2113.16(1) and 2113.16(2), and Code Figure 2113.16].

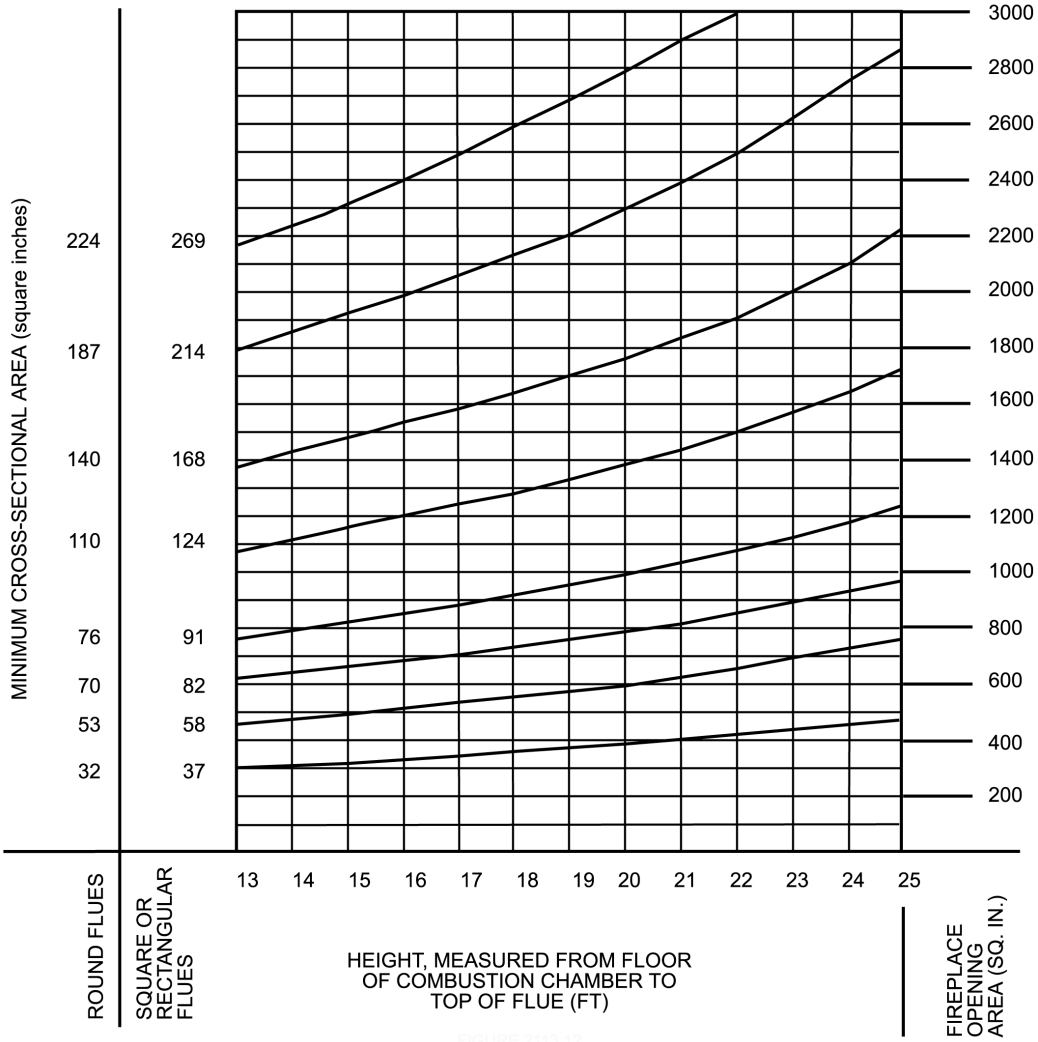

For SI: 1 inch = 25.4 mm, 1 square inch = 645 mm^2.

FIGURE 2113.16
FLUE SIZES FOR MASONRY CHIMNEYS

INTERNATIONAL CODE COUNCIL®
Copyright © 2015 ICC. ALL RIGHTS RESERVED. Accessed by David Dammon on Jun 21, 2017 12:30:52 PM pursuant to License Agreement with ICC. No further reproduction or distribution authorized. ANY UNAUTHORIZED REPRODUCTION OR DISTRIBUTION IS A VIOLATION OF THE FEDERAL COPYRIGHT ACT AND THE LICENSE AGREEMENT, AND SUBJECT TO CIVIL AND CRIMINAL PENALTIES THEREUNDER.

TABLE 2113.16(1)
NET CROSS-SECTIONAL AREA OF ROUND FLUE SIZES[a]

FLUE SIZE, INSIDE DIAMETER (inches)	CROSS-SECTIONAL AREA (square inches)
6	28
7	38
8	50
10	78
$10^{3}/_{4}$	90
12	113
15	176
18	254

For SI: 1 inch = 25.4 mm, 1 square inch = 645.16 mm^2.
a. Flue sizes are based on ASTM C315.

❖ This table gives the areas of circular flues of standard sizes so that users of the code can easily determine a flue size complying with Code Figure 2113.16. The flue areas shown in this table are determined by the equation $A = \pi \times (d/2)^2$, where A is the cross-sectional area, d is the inside diameter of the flue and π is approximated as 3.14. Alternatively, a minimum diameter can be calculated as $d = [(A/\pi)^{1/2}]/4$.

TABLE 2113.16(2)
NET CROSS-SECTIONAL AREA OF SQUARE AND RECTANGULAR FLUE SIZES

FLUE SIZE, OUTSIDE NOMINAL DIMENSIONS (inches)	CROSS-SECTIONAL AREA (square inches)
4.5 × 8.5	23
4.5 × 13	34
8 × 8	42
8.5 × 8.5	49
8 × 12	67
8.5 × 13	76
12 × 12	102
8.5 × 18	101
13 ×13	127
12 × 16	131
13 × 18	173
16 × 16	181
16 × 20	222
18 × 18	233
20 × 20	298
20 × 24	335
24 × 24	431

For SI: 1 inch = 25.4 mm, 1 square inch = 645.16 mm^2.

❖ Clay flue liners are designated according to their nominal outside dimensions. This table gives the net cross-sectional area of standard size square and rectangular flues so code users can readily determine a flue size that provides the minimum required area.

2113.17 Inlet. Inlets to masonry chimneys shall enter from the side. Inlets shall have a thimble of fireclay, rigid refractory material or metal that will prevent the connector from pulling out of the inlet or from extending beyond the wall of the liner.

❖ The inlet must be noncombustible and strong enough not to be pulled out.

2113.18 Masonry chimney cleanout openings. Cleanout openings shall be provided within 6 inches (152 mm) of the base of each flue within every masonry chimney. The upper edge of the cleanout shall be located not less than 6 inches (152 mm) below the lowest chimney inlet opening. The height of the opening shall be not less than 6 inches (152 mm). The cleanout shall be provided with a noncombustible cover.

Exception: Chimney flues serving masonry fireplaces, where cleaning is possible through the fireplace opening.

❖ This section requires a cleanout to be installed in a chimney to facilitate cleaning and inspection. A fireplace inherently provides access to its chimney through the firebox, throat and smoke chamber. The cleanout cover and opening frame are to be of an approved noncombustible material, such as cast iron or precast concrete, and must be arranged to remain tightly closed. The requirement for placing the cleanout at least 6 inches (152 mm) below the lowest connection to the chimney is intended to minimize the possibility of combustion products exiting the chimney through the cleanout.

2113.19 Chimney clearances. Any portion of a masonry chimney located in the interior of the building or within the *exterior wall* of the building shall have a minimum airspace clearance to combustibles of 2 inches (51 mm). Chimneys located entirely outside the *exterior walls* of the building, including chimneys that pass through the soffit or cornice, shall have a minimum airspace clearance of 1 inch (25 mm). The airspace shall not be filled, except to provide fireblocking in accordance with Section 2113.20.

Exceptions:

1. Masonry chimneys equipped with a chimney lining system *listed* and *labeled* for use in chimneys in contact with combustibles in accordance with UL 1777, and installed in accordance with the manufacturer's instructions, are permitted to have combustible material in contact with their exterior surfaces.
2. Where masonry chimneys are constructed as part of masonry or concrete walls, combustible materials shall not be in contact with the masonry or concrete wall less than 12 inches (305 mm) from the inside surface of the nearest flue lining.
3. Exposed combustible *trim* and the edges of sheathing materials, such as wood siding, are permitted to abut the masonry chimney sidewalls, in accordance with Figure 2113.19, provided such combustible *trim* or sheathing is not less than 12 inches (305 mm) from the inside surface of the nearest flue lin-

INTERNATIONAL CODE COUNCIL®
Copyright © 2015 ICC. ALL RIGHTS RESERVED. Accessed by David Dammon on Jun 21, 2017 12:30:52 PM pursuant to License Agreement with ICC. No further reproduction or distribution authorized. ANY UNAUTHORIZED REPRODUCTION OR DISTRIBUTION IS A VIOLATION OF THE FEDERAL COPYRIGHT ACT AND THE LICENSE AGREEMENT, AND SUBJECT TO CIVIL AND CRIMINAL PENALTIES THEREUNDER.

ing. Combustible material and *trim* shall not overlap the corners of the chimney by more than 1 inch (25 mm).

❖ Clearance between the external surfaces of the masonry chimney and all combustible materials must be maintained. The intent of this section is to require a 2-inch (51 mm) minimum airspace clearance between combustibles and surfaces of all chimneys located in the interior of a building or within an exterior wall assembly. A 1-inch (25 mm) airspace clearance is allowed only where the chimney is located entirely outside of the building.

If any portion of a chimney is located in an exterior wall, that chimney must be considered as an interior chimney and must have a 2-inch (51 mm) minimum airspace clearance. The 1-inch (25 mm) clearance is allowed because the exterior surface of an outdoor chimney can dissipate heat. An outdoor chimney is exposed to outdoor ambient temperatures, allowing it to operate with cooler surface temperatures. Like all airspace clearances, the 1-inch (25 mm) airspace clearance is not permitted to be filled with any material except the noncombustible material necessary for fireblocking. The required clearance for exterior chimneys applies to all combustible materials, including sheathing, siding, insulation, framing and trim.

The exception recognizes a variety of chimney liners that are tested and labeled in accordance with UL 1777.

UL 1777 covers metallic and nonmetallic chimney liners intended for field installation into new and existing masonry chimneys used for natural draft venting of gas, oil and solid fuel-burning appliances having maximum continuous flue-gas temperatures not exceeding 1,000°F (538°C). Some lining systems are labeled for reduced clearance applications and could allow for the construction or rehabilitation of chimneys in contact with combustibles, without compromising the safety normally provided by the code-prescribed airspace clearances.

Chimney liner systems are typically metal or poured-in-place concrete and incorporate insulation to retard the transfer of heat to the surrounding masonry walls of the chimney.

This figure clarifies Exception 3 to the clearance requirements for masonry chimneys. The edge abutment of combustible sheathing or trim where there is an adequate thickness of masonry is a long-standing practice that is considered safe, provided the minimum clearance to the flue lining is maintained. See Code Figure 2113.19.

2113.20 Chimney fireblocking. All spaces between chimneys and floors and ceilings through which chimneys pass shall be fireblocked with noncombustible material securely fastened in place. The fireblocking of spaces between wood joists, beams or headers shall be self-supporting or be placed on strips of metal or metal lath laid across the spaces between combustible material and the chimney.

❖ Fireblocking is required to prevent the travel of flames, smoke and hot gases to other areas of the building through the gaps between the chimney and the floor or ceiling assemblies [see Commentary Figures 2113.20(1) and (2)].

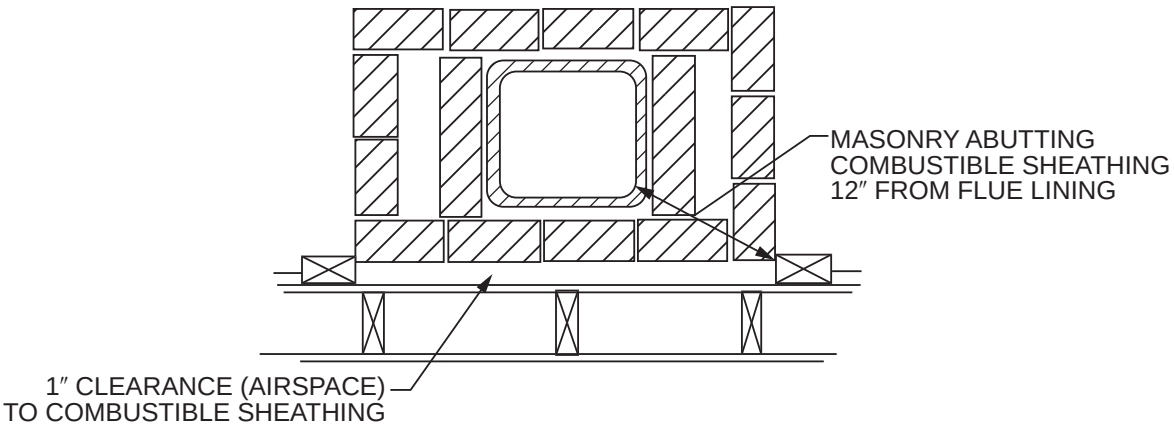

FIGURE 2113.19
ILLUSTRATION OF EXCEPTION THREE CHIMNEY CLEARANCE PROVISION

INTERNATIONAL CODE COUNCIL®
Copyright © 2015 ICC. ALL RIGHTS RESERVED. Accessed by David Dammon on Jun 21, 2017 12:30:52 PM pursuant to License Agreement with ICC. No further reproduction or distribution authorized. ANY UNAUTHORIZED REPRODUCTION OR DISTRIBUTION IS A VIOLATION OF THE FEDERAL COPYRIGHT ACT AND THE LICENSE AGREEMENT, AND SUBJECT TO CIVIL AND CRIMINAL PENALTIES THEREUNDER.

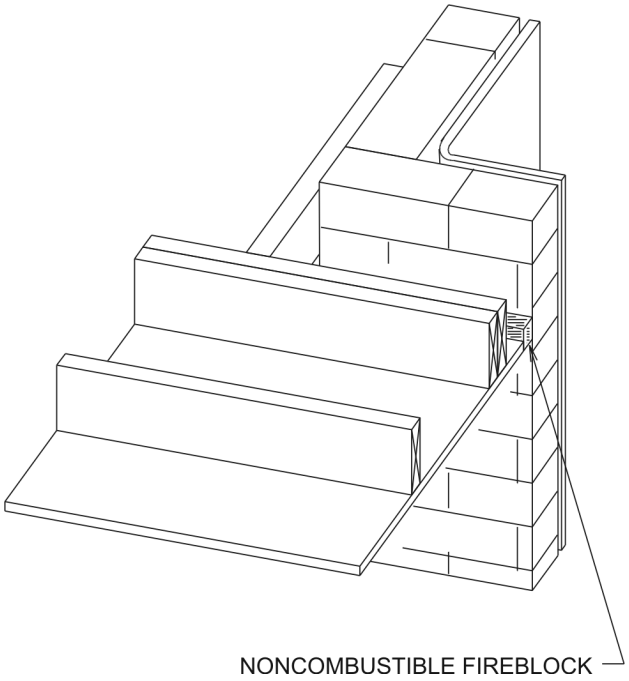

Figure 2113.20(1)
FIREBLOCKING

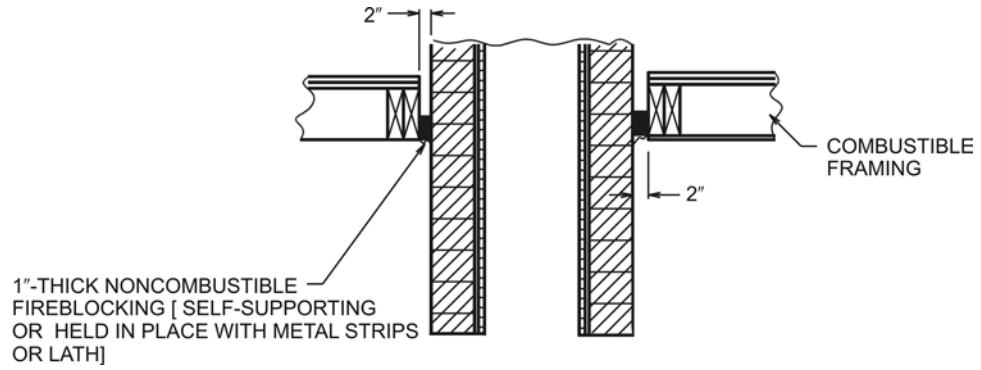

For SI: 1 inch = 25.4 mm.

Figure 2113.20(2)
FIREBLOCKING (SECTION)

Bibliography

The following resource materials were used in the preparation of the commentary for this chapter of the code.

ACI 318-14, *Building Code Requirements for Structural Concrete*. Farmington Hills, MI: American Concrete Institute, 2014.

ANSI A41.1-53, *American Standard Building Code Requirements for Masonry*. New York: American National Standards Institute, 1953.

ASCE 7-10, *Minimum Design Loads for Buildings and Other Structures*, Including Supplement No. 1. Reston, VA: American Society of Civil Engineers, 2010.

ASTM A615-*12*, *Specification for Deformed and Plain Billet-steel Bars for Concrete Reinforcement*. West Conshohocken, PA: ASTM International, 2012.

ASTM A706/A706M-09a, *Specification for Low-alloy Steel Deformed Bars for Concrete Reinforcement*. West Conshohocken, PA: ASTM International, 2009.

INTERNATIONAL CODE COUNCIL®
Copyright © 2015 ICC. ALL RIGHTS RESERVED. Accessed by David Dammon on Jun 21, 2017 12:30:52 PM pursuant to License Agreement with ICC. No further reproduction or distribution authorized. ANY UNAUTHORIZED REPRODUCTION OR DISTRIBUTION IS A VIOLATION OF THE FEDERAL COPYRIGHT ACT AND THE LICENSE AGREEMENT, AND SUBJECT TO CIVIL AND CRIMINAL PENALTIES THEREUNDER.

ASTM A996-09, *Specification for Rail Steel and Axel-steel Deformed Bars for Concrete Reinforcement*. West Conshohocken, PA: ASTM International, 2006.

ASTM C62-13, *Specification for Building Brick (Solid Masonry Units Made from Clay or Shale)*. West Conshohocken, PA: ASTM International, 2013.

ASTM C126-99 (2005), *Specification for Ceramic Glazed Structural Clay Facing Tile, Facing Brick and Solid Masonry Units*. West Conshohocken, PA: ASTM International, 2005.

ASTM C212-00 (2006), *Specification for Structural Clay Facing Tile*. West Conshohocken, PA: ASTM International, 2006.

ASTM C216-13, *Specification for Facing Brick (Solid Masonry Units Made from Clay or Shale)*. West Conshohocken, PA: ASTM International, 2013.

ASTM C270-12, *Specification for Mortar for Unit Masonry*. West Conshohocken, PA: ASTM International, 2012.

ASTM C652-13, *Specification for Hollow Brick (Hollow Masonry Units Made from Clay or Shale)*. West Conshohocken, PA: ASTM International, 2013.

ASTM C1088-09, *Specification for Thin Veneer Brick Units Made from Clay or Shale*. West Conshohocken, PA: ASTM International, 2009.

Baker, Ira. *A Treatise on Masonry Construction*. Chicago: University of Illinois, 1889.

FEMA P750, *NEHRP Recommended Provisions for Seismic Regulations for New Buildings and Other Structures Part 1*. Washington, DC: Federal Emergency Management Agency, 2009.

FEMA P750, *NEHRP Recommended Provisions for Seismic Regulations for New Buildings and Other Structures Part 2: Commentary*. Washington, DC: Federal Emergency Management Agency, 2009.

TMS 402-13/ACI 530-13/ASCE 5-13, *Building Code Requirements for Masonry Structures*. Farmington Hills, MI: American Concrete Institute; Reston, VA: Structural Engineering Institute of the American Society of Civil Engineers; Boulder, CO: The Masonry Society, 2013.

TMS 602-13/ACI 530.1-13/ASCE 6-13, *Specifications for Masonry Structures*. Farmington Hills, MI: American Concrete Institute; Reston, VA: Structural Engineering Institute of the American Society of Civil Engineers; Boulder, CO: The Masonry Society, 2013.

UBC-97, *Uniform Building Code*. Whittier, CA: International Conference of Building Officials, 1997.

UL 1777-07, *Chimney Liners* with revisions through July 2009. Northbrook, IL: Underwriters Laboratories Inc., 2009.

INTERNATIONAL CODE COUNCIL®
Copyright © 2015 ICC. ALL RIGHTS RESERVED. Accessed by David Dammon on Jun 21, 2017 12:30:52 PM pursuant to License Agreement with ICC. No further reproduction or distribution authorized. ANY UNAUTHORIZED REPRODUCTION OR DISTRIBUTION IS A VIOLATION OF THE FEDERAL COPYRIGHT ACT AND THE LICENSE AGREEMENT, AND SUBJECT TO CIVIL AND CRIMINAL PENALTIES THEREUNDER.

INTERNATIONAL CODE COUNCIL®
Copyright © 2015 ICC. ALL RIGHTS RESERVED. Accessed by David Dammon on Jun 21, 2017 12:30:52 PM pursuant to License Agreement with ICC. No further reproduction or distribution authorized. ANY UNAUTHORIZED REPRODUCTION OR DISTRIBUTION IS A VIOLATION OF THE FEDERAL COPYRIGHT ACT AND THE LICENSE AGREEMENT, AND SUBJECT TO CIVIL AND CRIMINAL PENALTIES THEREUNDER.

Chapter 22: Steel

General Comments

Chapter 22 contains provisions governing the materials, design, construction and quality of steel structural members.

Section 2201 contains the general requirements.

Section 2202 lists the definitions that are related to steel construction.

Section 2203 includes provisions for the identification and protection of steel for structures.

Section 2204 addresses requirements for welded and bolted connections.

Section 2205 references the design standards for structural steel construction.

Section 2206 covers requirements for composite structural steel and concrete structures in a manner similar to Section 2205 for structural steel.

Section 2207 addresses steel joists.

Section 2208 specifies the design standard for steel cable structures.

Section 2209 references the specification for the design and installation of steel storage racks.

Section 2210 specifies the appropriate referenced standard for cold-formed steel.

Section 2211 references standards for light-frame construction utilizing cold-formed steel.

Steel is a noncombustible material commonly associated with Type I and II construction; however, it is permitted to be used and commonly found in all types of construction. There are two main families of steel members: the first is hot-rolled structural shapes and members that are made up of a combination of rolled shapes and plates, and the second is composed of sections that are cold formed from steel sheets, strips, plates or flat bars in roll-forming machines, or by bending in brake-press operations.

The code requires that materials used in the design of structural steel members conform to designated national standards. Chapter 22 is involved largely with the design and use of steel materials using the specifications and standards of the American Institute of Steel Construction (AISC), the American Iron and Steel Institute (AISI) and the Steel Joist Institute (SJI).

Purpose

The purpose of Chapter 22 is to provide the requirements necessary for the design and construction of structural steel, cold-formed steel, steel joists, steel cable structures, steel storage racks and composite construction. This chapter specifies the appropriate design and construction standards for these types of structures. It also provides a road map of the applicable technical requirements for steel structures.

SECTION 2201 GENERAL

2201.1 Scope. The provisions of this chapter govern the quality, design, fabrication and erection of steel construction.

❖ Chapter 22 is formatted in a very similar fashion to the legacy model codes, since the code is essentially a road map for the use of design standards appropriate for various types of steel construction.

While this section indicates that Chapter 22 governs "quality, design, fabrication and erection," this is a general statement and the code user should take note of the scope of reference used to adopt specific standards since it may be different. Each section is intended to reflect the scope of the adopted standard and it is this specific scope of reference that establishes how each standard must be applied. The following text will discuss the background of each section.

SECTION 2202 DEFINITIONS

2202.1 Definitions. The following terms are defined in Chapter 2:

STEEL CONSTRUCTION, COLD-FORMED.

STEEL JOIST.

STEEL ELEMENT, STRUCTURAL.

❖ Definitions facilitate the understanding of code provisions and minimize potential confusion. To that end, this section lists definitions of terms associated with steel construction. Note that these definitions are found in Chapter 2. The use and application of defined terms, as well as undefined terms, are set forth in Section 201.

INTERNATIONAL CODE COUNCIL®
Copyright © 2015 ICC. ALL RIGHTS RESERVED. Accessed by David Dammon on Jun 21, 2017 12:30:52 PM pursuant to License Agreement with ICC. No further reproduction or distribution authorized. ANY UNAUTHORIZED REPRODUCTION OR DISTRIBUTION IS A VIOLATION OF THE FEDERAL COPYRIGHT ACT AND THE LICENSE AGREEMENT, AND SUBJECT TO CIVIL AND CRIMINAL PENALTIES THEREUNDER.

SECTION 2203
IDENTIFICATION AND PROTECTION OF STEEL FOR STRUCTURAL PURPOSES

2203.1 Identification. Identification of *structural steel elements* shall be in accordance with AISC 360. Identification of cold-formed steel members shall be in accordance with AISI S100. Identification of cold-formed steel light-frame construction shall also comply with the requirements contained in AISI S200 or AISI S220, as applicable. Other steel furnished for structural load-carrying purposes shall be properly identified for conformity to the ordered grade in accordance with the specified ASTM standard or other specification and the provisions of this chapter. Steel that is not readily identifiable as to grade from marking and test records shall be tested to determine conformity to such standards.

❖ A wide variety of steel types and grades are available and important properties, such as tensile strength and weldability, vary accordingly. For that reason, it is imperative that the properties of the steel furnished are verified. This section clarifies which standards govern the identification of steel construction. The identification of structural steel elements should be in accordance with the requirements of AISC 360, *Specification for Structural Steel Buildings*, Section M5.5. The identification of cold-formed steel members should be in accordance with the requirements of AISI S100, Section A. It also clarifies that cold-formed steel light-frame construction should be identified in accordance with the additional requirements of AISI S200, Section A5, or AISI S220. Steel must be identified so that both the engineer and inspector can verify compliance with the approved plans, as well as the code. Any steel that is not marked for these identification purposes shall be tested to verify compliance.

2203.2 Protection. Painting of *structural steel elements* shall be in accordance with AISC 360. Painting of open-web steel joists and joist girders shall be in accordance with SJI CJ, SJI JG, SJI K and SJI LH/DLH. Individual structural members and assembled panels of cold-formed steel construction shall be protected against corrosion in accordance with the requirements contained in AISI S100. Protection of cold-formed steel light-frame construction shall be in accordance with AISI S200 or AISI S220, as applicable.

❖ The intent of this provision is to clarify which standards govern the protection of the various types of steel construction. This section clarifies that structural steel elements are to be protected in accordance with AISC 360. This section further clarifies that the protection of cold-formed steel members should be in accordance with the general requirements of AISI S100, Section A. The code also clarifies that cold-formed steel light-frame construction should be protected in accordance with the additional requirements of AISI S200, Section A4, or AISI S220. This section also addresses the protection of joists and joist girders, referring to SJI specifications, which cover this subject for each type of joist and joist girder.

This section cautions the user that protection of steel members is a consideration. The need to provide protection, however, is dependent upon the potential for corrosion in a given installation. Typically, unprotected carbon steel can perform adequately in a dry, interior exposure, while weathering steel can tolerate atmospheric exposure without the need for additional protection. Therefore, the AISC provisions require consideration of corrosion where the strength or serviceability of structural steel could be impaired. A design that can tolerate the anticipated corrosion is permitted as an alternative to providing protection against corrosion. Many types of coating systems are available, yet painting remains the most common type of corrosion protection. Where painting of structural steel is called for, it must be in accordance with the AISC specification.

SECTION 2204
CONNECTIONS

2204.1 Welding. The details of design, workmanship and technique for welding and qualification of welding personnel shall be in accordance with the specifications listed in Sections 2205, 2206, 2207, 2208, 2210 and 2211. For *special inspection* of welding, see Section 1705.2.

❖ This section does not directly adopt specifications for the design and details of welding; rather, it requires that welding be accomplished in accordance with the requirements of the appropriate design specification. This is done because, in the case of structural steel and cold-formed steel, the referenced standards adopt different American Welding Society (AWS) specifications, while in the case of steel joists, welding requirements are contained within the SJI specifications. The SJI welding criteria are, for the most part, consistent with AWS specifications, but there are some differences that are specific to the manufacture of steel joists.

The processes and techniques for welding heavy structural steel are different from those necessary for welding thinner cold-formed steel. Therefore, the AISC specification for structural steel construction requires welding to be in accordance with AWS D1.1, *Structural Welding Code—Steel*, which has a thickness limitation of not less than 0.125 inch (3.2 mm). The AISI standards on cold-formed steel refer to AWS D1.3, *Structural Welding Code—Sheet Steel*, which is limited to thicknesses of not more than 0.188 inch (4.8 mm). The overlapping thickness limitations provide the flexibility to allow the sole use of AWS D1.1 or D1.3 on projects where all the welded steel meets the corresponding thickness limitations.

Reference is made to the special inspection requirements in Section 1705. These include special inspections of structural steel and cold-formed steel that are triggered by the requirements for seismic resistance.

INTERNATIONAL CODE COUNCIL®
Copyright © 2015 ICC. ALL RIGHTS RESERVED. Accessed by David Dammon on Jun 21, 2017 12:30:52 PM pursuant to License Agreement with ICC. No further reproduction or distribution authorized. ANY UNAUTHORIZED REPRODUCTION OR DISTRIBUTION IS A VIOLATION OF THE FEDERAL COPYRIGHT ACT AND THE LICENSE AGREEMENT, AND SUBJECT TO CIVIL AND CRIMINAL PENALTIES THEREUNDER.

2204.2 Bolting. The design, installation and inspection of bolts shall be in accordance with the requirements of Sections 2205, 2206, 2207, 2210 and 2211. For *special inspection* of the installation of high-strength bolts, see Section 1705.2.

❖ This section is very similar to the section on welding in that it does not directly reference bolt installation standards. The requirements for the design, installation and inspection for bolting are found in standards referenced in the sections noted.

2204.3 Anchor rods. Anchor rods shall be set in accordance with the *approved construction documents*. The protrusion of the threaded ends through the connected material shall fully engage the threads of the nuts but shall not be greater than the length of the threads on the bolts.

❖ This section provides the requirements for the setting and projection of anchor rods. Guidance is provided on the length of threads so that the anchor is effective.

SECTION 2205
STRUCTURAL STEEL

2205.1 General. The design, fabrication and erection of *structural steel elements* in buildings, structures and portions thereof shall be in accordance with AISC 360.

❖ This section requires that structural steel be designed in accordance with AISC 360. It is the successor to the separate AISC specifications previously published and combines design provisions for both allowable stress design (ASD) and load and resistance factor design (LRFD) in what is referred to as a "unified format." AISC 360 also incorporates requirements that were previously published in a separate standard for the design of round, square and rectangular tubular structural sections.

2205.2 Seismic design. Where required, the seismic design, fabrication and erection of buildings, structures and portions thereof shall be in accordance with Section 2205.2.1 or 2205.2.2, as applicable.

❖ These provisions state the requirements for seismic design that are based on a structure's seismic design category.

2205.2.1 Structural steel seismic force-resisting systems. The design, detailing, fabrication and erection of structural steel seismic force-resisting systems shall be in accordance with the provisions of Section 2205.2.1.1 or 2205.2.1.2, as applicable.

❖ The code references state-of-the-art seismic detailing requirements based on AISC 341, *Seismic Provisions for Structural Steel Buildings*. It incorporates significant research results from the Structural Engineers Association of California (SEAC) Research Program, which began as a result of the damage to steel moment frames that was caused by the Northridge earthquake.

2205.2.1.1 Seismic Design Category B or C. Structures assigned to *Seismic Design Category* B or C shall be of any construction permitted in Section 2205. Where a response modification coefficient, *R*, in accordance with ASCE 7, Table 12.2-1, is used for the design of structures assigned to *Seismic Design Category* B or C, the structures shall be designed and detailed in accordance with the requirements of AISC 341.

Exception: The response modification coefficient, *R*, designated for "Steel systems not specifically detailed for seismic resistance, excluding cantilever column systems" in ASCE 7, Table 12.2-1, shall be permitted for systems designed and detailed in accordance with AISC 360, and need not be designed and detailed in accordance with AISC 341.

❖ The earthquake provisions in Section 1613 require all structures to be assigned to a seismic design category, which is a function of the building's risk category, as well as the design earthquake ground motions. Seismic design category is an indicator of the seismic risk and it is used to establish, among other things, the complexity of the seismic analysis and the types of structural systems that may be utilized to resist the effects of earthquakes. Structures classified as Seismic Design Category B or C are considered to have a low to moderate seismic risk and this section of the code clarifies the options that are available in designing a seismic force-resisting system for these structures utilizing structural steel.

The base requirement makes the AISC 341 seismic detailing provisions mandatory. If a steel special concentrically braced frame (SCBF) is utilized, for example, Table 12.2-1 of ASCE 7 specifies an *R* coefficient of 6 for this system, and the detailing requirements for SCBF members and connections in Section 13 of AISC 341 must be satisfied. The only exception to this is for systems that fall under Line H of ASCE 7, Table 12.2-1, which is for "steel systems not specifically detailed for seismic resistance, excluding cantilever column systems." Such systems are assigned a response modification coefficient, *R*, of 3 in Table 12.2-1 of ASCE 7. The system is then designed for the resulting earthquake load effects using only AISC 360. Under AISC 360, the assumption is elastic behavior as opposed to AISC 341, which requires a level of detailing that assumes inelastic response.

While this section gives minimum requirements for structural steel systems in buildings that are assigned to Seismic Design Category B or C, it is worth noting that for structures classified as Seismic Design Category A (i.e., low earthquake risk), compliance with this section is not necessary. The ASCE 7 standard requires design for a minimum lateral load for structural integrity in any structure and that the minimum requirement provides sufficient lateral resistance for buildings that are classified as Seismic Design Category A.

INTERNATIONAL CODE COUNCIL®
Copyright © 2015 ICC. ALL RIGHTS RESERVED. Accessed by David Dammon on Jun 21, 2017 12:30:52 PM pursuant to License Agreement with ICC. No further reproduction or distribution authorized. ANY UNAUTHORIZED REPRODUCTION OR DISTRIBUTION IS A VIOLATION OF THE FEDERAL COPYRIGHT ACT AND THE LICENSE AGREEMENT, AND SUBJECT TO CIVIL AND CRIMINAL PENALTIES THEREUNDER.

2205.2.1.2 Seismic Design Category D, E or F. Structures assigned to *Seismic Design Category* D, E or F shall be designed and detailed in accordance with AISC 341, except as permitted in ASCE 7, Table 15.4-1.

❖ In buildings classified as Seismic Design Categories D, E and F, the provisions of AISC 341 are mandatory for seismic force-resisting systems of structural steel. Where the seismic risk is considered high, the earthquake load requirements that are referenced in Section 1613 limit the permitted seismic force-resisting systems to those considered to be capable of inelastic response. The design earthquake forces are a function of the response modification coefficient, *R*, for the seismic force-resisting system that is utilized. The design of the steel members and connections, in accordance with AISC 341 requirements for the selected seismic force-resisting system, provides the appropriate level of energy dissipation by inelastic response.

The only exception to the above provisions recognizes ASCE 7, Table 15.4-1 requirements for nonbuilding structures. It permits certain steel seismic systems that utilize a lower response modification coefficient, *R*, to be designed and detailed using AISC 360 alone (see commentary, Section 2205.2.1.1).

2205.2.2 Structural steel elements. The design, detailing, fabrication and erection of *structural steel elements* in seismic force-resisting systems other than those covered in Section 2205.2.1, including struts, collectors, chords and foundation elements, shall be in accordance with AISC 341 where either of the following applies:

1. The structure is assigned to *Seismic Design Category* D, E or F, except as permitted in ASCE 7, Table 15.4-1.
2. A response modification coefficient, *R*, greater than 3 in accordance with ASCE 7, Table 12.2-1, is used for the design of the structure assigned to *Seismic Design Category* B or C.

❖ Section 2205.2.1 addresses seismic force-resisting systems. This section covers structural steel elements that resist seismic forces, but are not part of the seismic force-resisting system, such as a collector element.

SECTION 2206
COMPOSITE STRUCTURAL STEEL AND CONCRETE STRUCTURES

2206.1 General. Systems of *structural steel elements* acting compositely with reinforced concrete shall be designed in accordance with AISC 360 and ACI 318, excluding ACI 318 Chapter 14.

❖ This section provides requirements for composite structural steel and concrete structures similar to the requirements in Section 2205 for structural steel. Composite construction consists of steel and concrete members that act in unison to resist the effects of applied loads. The use of composite action in gravity load applications has been well established and the referenced standards for steel and concrete are sufficient.

2206.2 Seismic design. Where required, the seismic design, fabrication and erection of composite steel and concrete systems shall be in accordance with Section 2206.2.1.

❖ This provision clarifies that the seismic design, fabrication and erection of composite structures is governed by this section.

2206.2.1 Seismic requirements for composite structural steel and concrete construction. Where a response modification coefficient, *R*, in accordance with ASCE 7, Table 12.2-1, is used for the design of systems of structural steel acting compositely with reinforced concrete, the structures shall be designed and detailed in accordance with the requirements of AISC 341.

❖ Unlike structural steel, no distinction is made between seismic design categories: no matter what category a composite structure is assigned to, it must be designed and detailed in accordance with AISC 341. Only composite structures classified as Seismic Design Category A are permitted to be designed in accordance with ACI 318 and AISC 360 (see commentary, Section 2205.2.1.1).

In structures classified as Seismic Design Category B or above, a composite seismic force-resisting system is required to be one of the types listed in Table 12.2-1 of ASCE 7. The corresponding response modification coefficient, *R*, is used to determine the seismic base shear and the system is designed in accordance with AISC 341. AISC 341 provides detailed requirements for testing where appropriate, specifically in Section G3.6b (Composite Special Moment Frames), Section G4.6b (Composite Partially Restrained Moment Frames) and Section H3 (Composite Eccentrically Braced Frames).

SECTION 2207
STEEL JOISTS

2207.1 General. The design, manufacture and use of open-web steel joists and joist girders shall be in accordance with one of the following Steel Joist Institute (SJI) specifications:

1. SJI CJ
2. SJI K
3. SJI LH/DLH
4. SJI JG

❖ Steel joists are required to be designed and manufactured in accordance with the specifications published by the SJI.

2207.1.1 Seismic design. Where required, the seismic design of buildings shall be in accordance with the additional provisions of Section 2205.2 or 2211.6.

❖ Seismic loading must always be evaluated. The code user is referred to sections governing the design of steel seismic force-resisting systems. Open-web

INTERNATIONAL CODE COUNCIL®
Copyright © 2015 ICC. ALL RIGHTS RESERVED. Accessed by David Dammon on Jun 21, 2017 12:30:52 PM pursuant to License Agreement with ICC. No further reproduction or distribution authorized. ANY UNAUTHORIZED REPRODUCTION OR DISTRIBUTION IS A VIOLATION OF THE FEDERAL COPYRIGHT ACT AND THE LICENSE AGREEMENT, AND SUBJECT TO CIVIL AND CRIMINAL PENALTIES THEREUNDER.

steel joists are primarily used as gravity-load-carrying members, and where a steel joist transfers earthquake loads or carries other unique loads, this information must be provided to the joist manufacturer.

2207.2 Design. The *registered design professional* shall indicate on the *construction documents* the steel joist and steel joist girder designations from the specifications listed in Section 2207.1; and shall indicate the requirements for joist and joist girder design, layout, end supports, anchorage, bridging design that differs from the SJI specifications listed in Section 2207.1, bridging termination connections and bearing connection design to resist uplift and lateral loads. These documents shall indicate special requirements as follows:

1. Special loads including:
    1.1. Concentrated loads.
    1.2. Nonuniform loads.
    1.3. Net uplift loads.
    1.4. Axial loads.
    1.5. End moments.
    1.6. Connection forces.
2. Special considerations including:
    2.1. Profiles for joist and joist girder configurations that differ from those defined by the SJI specifications listed in Section 2207.1.
    2.2. Oversized or other nonstandard web openings.
    2.3. Extended ends.
3. Live and total load deflection criteria for joists and joist girder configurations that differ from those defined by the SJI specifications listed in Section 2207.1.

❖ Sections 2207.2 through 2207.5 are meant to delineate the responsibilities of the steel joist manufacturer and the registered design professional who performs the overall structural design. Like precast concrete components and wood I-joists, on any given project the design of steel joists is typically relegated to the component manufacturer by contractual arrangements. Since the steel joist manufacturer designs the joists, this section lists the necessary design criteria that the registered design professional must furnish in the construction documents.

2207.3 Calculations. The steel joist and joist girder manufacturer shall design the steel joists and steel joist girders in accordance with the SJI specifications listed in Section 2207.1 to support the load requirements of Section 2207.2. The *registered design professional* shall be permitted to require submission of the steel joist and joist girder calculations as prepared by a *registered design professional* responsible for the product design. Where requested by the *registered design professional*, the steel joist manufacturer shall submit design calculations with a cover letter bearing the seal and signature of the joist manufacturer's *registered design professional*. In addition to the design calculations submitted under seal and signature, the following shall be included:

1. Bridging design that differs from the SJI specifications listed in Section 2207.1, such as cantilevered conditions and net uplift.
2. Connection design for:
    2.1. Connections that differ from the SJI specifications listed in Section 2207.1, such as flush-framed or framed connections.
    2.2. Field splices.
    2.3. Joist headers.

❖ This section requires the steel joist manufacturer to design the joists in accordance with the criteria provided by the registered design professional and applicable SJI specification(s). Where a more complete accounting of the steel joist design is desired, the registered design professional is permitted to request sealed design calculations from the steel joist manufacturer. The list of nonstandard items that are required for submittal is intended to minimize the chance that key details could be overlooked.

2207.4 Steel joist drawings. Steel joist placement plans shall be provided to show the steel joist products as specified on the *approved construction documents* and are to be utilized for field installation in accordance with specific project requirements as stated in Section 2207.2. Steel joist placement plans shall include, at a minimum, the following:

1. Listing of applicable loads as stated in Section 2207.2 and used in the design of the steel joists and joist girders as specified in the *approved construction documents*.
2. Profiles for joist and joist girder configurations that differ from those defined by the SJI specifications listed in Section 2207.1.
3. Connection requirements for:
    3.1. Joist supports.
    3.2. Joist girder supports.
    3.3. Field splices.
    3.4. Bridging attachments.
4. Live and total load deflection criteria for joists and joist girder configurations that differ from those defined by the SJI specifications listed in Section 2207.1.
5. Size, location and connections for bridging.
6. Joist headers.

Steel joist placement plans do not require the seal and signature of the joist manufacturer's *registered design professional*.

❖ The steel joist placement plans are provided by the steel joist manufacturer and illustrate how the joists are to be installed in more detail than the project's construction documents, which are prepared by the registered design professional. The list of information

INTERNATIONAL CODE COUNCIL®
Copyright © 2015 ICC. ALL RIGHTS RESERVED. Accessed by David Dammon on Jun 21, 2017 12:30:52 PM pursuant to License Agreement with ICC. No further reproduction or distribution authorized. ANY UNAUTHORIZED REPRODUCTION OR DISTRIBUTION IS A VIOLATION OF THE FEDERAL COPYRIGHT ACT AND THE LICENSE AGREEMENT, AND SUBJECT TO CIVIL AND CRIMINAL PENALTIES THEREUNDER.

that must be included is intended to minimize the possibility of overlooking critical details. The steel joist placement plan is considered to be a type of shop drawing that does not require the seal of a registered design professional.

2207.5 Certification. At completion of manufacture, the steel joist manufacturer shall submit a *certificate of compliance* to the owner or the owner's authorized agent for submittal to the *building official* as specified in Section 1704.5 stating that work was performed in accordance with *approved construction documents* and with SJI specifications listed in Section 2207.1.

❖ The certificate of compliance provides a written declaration from the steel joist manufacturer affirming compliance with SJI specifications, and construction documents.

SECTION 2208
STEEL CABLE STRUCTURES

2208.1 General. The design, fabrication and erection including related connections, and protective coatings of steel cables for buildings shall be in accordance with ASCE 19.

❖ The code references ASCE 19 for the design of steel cable structures. This standard addresses the use of carbon steel or stainless steel cables formed from coated or uncoated helically twisted wire strand, wire rope or a parallel wire strand.

2208.2 Seismic requirements for steel cable. The design strength of steel cables shall be determined by the provisions of ASCE 19 except as modified by these provisions.

1. A load factor of 1.1 shall be applied to the prestress force included in T_3 and T_4 as defined in Section 3.12.
2. In Section 3.2.1, Item (c) shall be replaced with "1.5 T_3" and Item (d) shall be replaced with "1.5 T_4."

❖ This section provides the user with appropriate modifications for structural cables that are intended for use in seismic applications. These modifications were first developed by the Building Seismic Safety Council for incorporation into the first edition of the National Earthquake Hazard Reduction Program (NEHRP) *Recommended Provisions for Seismic Regulations for New Buildings and Other Structures*.

SECTION 2209
STEEL STORAGE RACKS

2209.1 Storage racks. The design, testing and utilization of *storage racks* made of cold-formed or hot-rolled steel structural members shall be in accordance with RMI/ANSI MH 16.1. Where required by ASCE 7, the seismic design of *storage racks* shall be in accordance with Section 15.5.3 of ASCE 7.

❖ The code references ANSI/MH16 for the design of steel storage racks and the additional requirements in Section 15.5.3 of ASCE 7 for seismic design of steel storage.

The design of steel storage racks in accordance with the Rack Manufacturers Institute (RMI) standard is limited to the types of racks that are actually included within the scope of that standard. Rack types that are beyond the scope of the standard include drive-in or drive-through racks, cantilever racks, portable racks or rack buildings. These rack structures should be designed in accordance with other applicable referenced specifications, such as AISC 360 or AISI S100. Also see the definition in Section 202.

SECTION 2210
COLD-FORMED STEEL

2210.1 General. The design of cold-formed carbon and low-alloy steel structural members shall be in accordance with AISI S100. The design of cold-formed stainless-steel structural members shall be in accordance with ASCE 8. Cold-formed steel light-frame construction shall also comply with Section 2211. Where required, the seismic design of cold-formed steel structures shall be in accordance with the additional provisions of Section 2210.2.

❖ This section references AISI S100, which has been developed by AISI in cooperation with the Canadian Standards Association (CSA) and Camara Nacional de la Industria del Hierro y del Acero (CANACERO). It supercedes the standards previously published individually by AISI and CSA, and is intended for use throughout North America. The latter is accomplished by including three appendix chapters with the country-specific provisions applicable in the United States, Canada or Mexico. It incorporates LRFD and ASD into a single document.

Cold-formed stainless steel is required to comply with ASCE 8. This standard applies to structural members that are cold formed from annealed and cold-rolled stainless steels. ASCE 8 includes both the LRFD and ASD methods.

2210.1.1 Steel decks. The design and construction of cold-formed steel decks shall be in accordance with this section.

❖ This section references the appropriate standards for steel decks based on their application.

2210.1.1.1 Noncomposite steel floor decks. Noncomposite steel floor decks shall be permitted to be designed and constructed in accordance with ANSI/SDI-NC1.0.

❖ This section references the appropriate Steel Deck Institute (SDI) standard that governs the materials and design of cold-formed steel deck used in noncomposite floor construction. The deck can serve as a form for the structural concrete floor slab.

2210.1.1.2 Steel roof deck. Steel roof decks shall be permitted to be designed and constructed in accordance with ANSI/SDI-RD1.0.

❖ This section references the appropriate SDI standard that governs the materials and design of cold-formed steel decks used in roof construction.

INTERNATIONAL CODE COUNCIL®
Copyright © 2015 ICC. ALL RIGHTS RESERVED. Accessed by David Dammon on Jun 21, 2017 12:30:52 PM pursuant to License Agreement with ICC. No further reproduction or distribution authorized. ANY UNAUTHORIZED REPRODUCTION OR DISTRIBUTION IS A VIOLATION OF THE FEDERAL COPYRIGHT ACT AND THE LICENSE AGREEMENT, AND SUBJECT TO CIVIL AND CRIMINAL PENALTIES THEREUNDER.

2210.1.1.3 Composite slabs on steel decks. Composite slabs of concrete and steel deck shall be permitted to be designed and constructed in accordance with SDI-C.

❖ This section references the appropriate Steel Deck Institute (SDI) standard that governs the materials and design of cold-formed steel deck used in composite floor construction.

2210.2 Seismic requirements for cold-formed steel structures. Where a response modification coefficient, *R*, in accordance with ASCE 7, Table 12.2-1, is used for the design of cold-formed steel structures, the structures shall be designed and detailed in accordance with the requirements of AISI S100, ASCE 8, or, for cold-formed steel special-bolted moment frames, AISI S110.

❖ This section references AISI S110, *Standard For Seismic Design Of Cold-Formed Steel Structural Systems – Special Bolted Moment Frames*. The "Cold-formed steel – special bolted moment frame," or CFS-SBMF, is expected to experience substantial inelastic deformation during significant seismic events. It is intended that most of the inelastic deformation will take place at the bolted connections, due to slip and bearing. In order to develop the designated mechanism, requirements based on the capacity design principles are provided for the design of the beams, columns and associated connections. The system design coefficients and limits are provided in ASCE 7. The height is limited to 35 feet (10.67 m) for all seismic design categories, based primarily on practical considerations rather than any limits on the system strength. As an alternative to the conventional computation of the seismic load effect with overstrength, E_{mh}, ASCE 7 permits the expected strength to be in accordance with AISI S110, which allows the designer to explicitly calculate E_{mh} at the design story drift level.

SECTION 2211
COLD-FORMED STEEL LIGHT-FRAME CONSTRUCTION

2211.1 General. The design and installation of structural and nonstructural members utilized in cold-formed steel light-frame construction where the specified minimum base steel thickness is not greater than 0.1180 inches (2.997 mm) shall be in accordance with AISI S200 and Sections 2211.2 through 2211.7, or AISI S220, as applicable.

❖ Section 2211 applies to light-frame construction utilizing cold-formed steel. Light-frame construction is characterized by vertical (i.e., walls) and horizontal (i.e., floors and roofs) structural elements formed by a system of repetitive members (see Chapter 2 definition). This section references AISI S200, which covers general requirements for the design and installation of cold-formed steel framing members in walls, floors and roof assemblies, and it is intended to be a supplement to AISI S100. For specific design information, AISI S200 refers the reader to AISI S100.

2211.2 Header design. Headers, including box and back-to-back headers, and double and single L-headers shall be designed in accordance with AISI S212 or AISI S100.

❖ The code references AISI S212, which has design and installation requirements for the commonly used header cross sections depicted in Commentary Figure 2211.2. Box and back-to-back headers consist of two cold-formed steel C sections. Single and double L-headers consist of cold-formed steel angle sections connected to the top track.

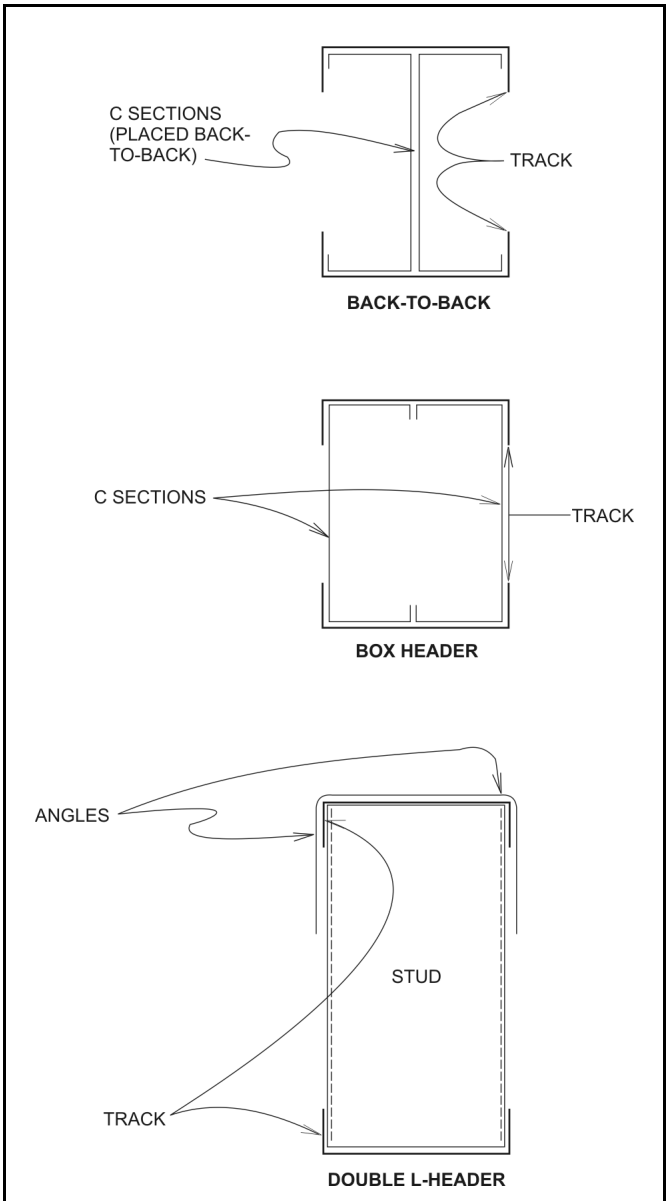

Figure 2211.2
HEADER TYPES

INTERNATIONAL CODE COUNCIL®
Copyright © 2015 ICC. ALL RIGHTS RESERVED. Accessed by David Dammon on Jun 21, 2017 12:30:52 PM pursuant to License Agreement with ICC. No further reproduction or distribution authorized. ANY UNAUTHORIZED REPRODUCTION OR DISTRIBUTION IS A VIOLATION OF THE FEDERAL COPYRIGHT ACT AND THE LICENSE AGREEMENT, AND SUBJECT TO CIVIL AND CRIMINAL PENALTIES THEREUNDER.

2211.3 Truss design. Cold-formed steel trusses shall be designed in accordance with AISI S214, Sections 2211.3.1 through 2211.3.4 and accepted engineering practice.

❖ The code references AISI S214, which covers truss design, quality criteria, installation and bracing (note that the version of the standard referenced in Chapter 35 includes Supplement Number 2). Cold-formed steel trusses are engineered components and the complete design of cold-formed steel trusses can be a complex process. The designer must keep the entire system in mind, as cold-formed steel trusses are not typically installed as single members in light-frame construction, but rather work together to form a complete structural system. Cold-formed steel truss designs should address connections, including the truss-to-wall plate.

2211.3.1 Truss design drawings. The truss design drawings shall conform to the requirements of Section B2.3 of AISI S214 and shall be provided with the shipment of trusses delivered to the job site. The truss design drawings shall include the details of permanent individual truss member restraint/bracing in accordance with Section B6(a) or B 6(c) of AISI S214 where these methods are utilized to provide restraint/bracing.

❖ The code references the section of AISI S214 that specifies the information required on the truss design drawings, and clarifies that the bracing details must be included. This section also makes it clear that the design drawings must be delivered to the project location.

2211.3.2 Deferred submittals. AISI S214 Section B4.2 shall be deleted.

❖ This section excludes a provision in the referenced standard that deals with deferred submittals.

2211.3.3 Trusses spanning 60 feet or greater. The owner or the owner's authorized agent shall contract with a *registered design professional* for the design of the temporary installation restraint/bracing and the permanent individual truss member restraint/bracing for trusses with clear spans 60 feet (18 288 mm) or greater. *Special inspection* of trusses over 60 feet (18 288 mm) in length shall be in accordance with Section 1705.2.

❖ This provision addresses the need for temporary bracing during the installation of trusses having longer spans. AISI S214 only covers permanent truss bracing. Due to their size and weight, these longer span trusses pose greater stability concerns, making the proper design of the bracing, both temporary and permanent, a key safety measure.

2211.3.4 Truss quality assurance. Trusses not part of a manufacturing process that provides requirements for quality control done under the supervision of a third-party quality control agency, shall be manufactured in compliance with Sections 1704.2.5 and 1705.2, as applicable.

❖ Chapter E of AISI S214 addresses the quality assurance of trusses produced under a manufacturing process. This section applies to any truss that is not covered under the standard.

2211.4 Structural wall stud design. Structural wall studs shall be designed in accordance with either AISI S211 or AISI S100.

❖ AISI S211 provides design and installation requirements for cold-formed steel studs. The more formal design approach of AISI S100 is also an option.

2211.5 Floor and roof system design. Framing for floor and roof systems in buildings shall be designed in accordance with either AISI S210 or AISI S100.

❖ The section refers to AISI S210 for the design of cold-formed steel framing in floors and roofs, but also allows a more formal design approach in accordance with AISI S100 as an alternative. AISI S210 contains criteria specific to designing floor joists, ceiling joists and roof rafters.

2211.6 Lateral design. Light-frame shear walls, diagonal strap bracing that is part of a structural wall and diaphragms used to resist wind, seismic and other in-plane lateral loads shall be designed in accordance with AISI S213.

❖ Where shear walls, diagonal strap bracing or diaphragms of light-frame cold-formed steel provide resistance to the effects of earthquakes and wind loads, AISI S213 provides the design requirements for the lateral-force-resisting system. Shear wall design provisions include both segmented shear walls (Type I) and perforated shear walls (Type II).

2211.7 Prescriptive framing. Detached one- and two-family *dwellings* and *townhouses*, less than or equal to three *stories above grade plane*, shall be permitted to be constructed in accordance with AISI S230 subject to the limitations therein.

❖ AISI S230 contains prescriptive requirements for light-frame cold-formed steel construction that can be applied in one- and two-family dwellings as well as townhouses not more than three stories.

Bibliography

The following resource materials were used in the preparation of the commentary for this chapter of the code.

AISC 341-10, *Seismic Provisions for Structural Steel Buildings*. Chicago, IL: American Institute of Steel Construction, 2010.

AISC 360-10, *Specification for Structural Steel Buildings*. Chicago, IL: American Institute of Steel Construction, 2010.

AISI S100-12, *North American Specification for the Design of Cold-formed Steel Structural Members*. Washington, DC: American Iron and Steel Institute, 2012.

AISI S200-12, *North American Standard for Cold-formed Steel Framing—General Provisions*.

INTERNATIONAL CODE COUNCIL®

Copyright © 2015 ICC. ALL RIGHTS RESERVED. Accessed by David Dammon on Jun 21, 2017 12:30:52 PM pursuant to License Agreement with ICC. No further reproduction or distribution authorized. ANY UNAUTHORIZED REPRODUCTION OR DISTRIBUTION IS A VIOLATION OF THE FEDERAL COPYRIGHT ACT AND THE LICENSE AGREEMENT, AND SUBJECT TO CIVIL AND CRIMINAL PENALTIES THEREUNDER.

Washington, DC: American Iron and Steel Institute, 2012.

AISI S214-12, *North American Standard for Cold-formed Steel Framing—Truss Design*. Washington, DC: American Iron and Steel Institute, 2012.

ASCE 7-10, *Minimum Design Loads for Buildings and Other Structures* with Supplement No. 1. New York: American Society of Civil Engineers, 2010.

AWS D1.1-04, *Structural Welding Code—Steel*. Miami, FL: American Welding Society, 2004.

AWS D1.3-98, *Structural Welding Code—Sheet Steel*. Miami, FL: American Welding Society, 1998.

FEMA 450, *NEHRP Recommended Provisions for Seismic Regulations for New Buildings and Other Structures*. Washington, DC: Federal Emergency Management Agency, 2004.

Williams, Alan. *Structural Steel Design LRFD*. Falls Church, VA: International Code Council, 2005.

INTERNATIONAL CODE COUNCIL®
Copyright © 2015 ICC. ALL RIGHTS RESERVED. Accessed by David Dammon on Jun 21, 2017 12:30:52 PM pursuant to License Agreement with ICC. No further reproduction or distribution authorized. ANY UNAUTHORIZED REPRODUCTION OR DISTRIBUTION IS A VIOLATION OF THE FEDERAL COPYRIGHT ACT AND THE LICENSE AGREEMENT, AND SUBJECT TO CIVIL AND CRIMINAL PENALTIES THEREUNDER.

INTERNATIONAL CODE COUNCIL®
Copyright © 2015 ICC. ALL RIGHTS RESERVED. Accessed by David Dammon on Jun 21, 2017 12:30:52 PM pursuant to License Agreement with ICC. No further reproduction or distribution authorized. ANY UNAUTHORIZED REPRODUCTION OR DISTRIBUTION IS A VIOLATION OF THE FEDERAL COPYRIGHT ACT AND THE LICENSE AGREEMENT, AND SUBJECT TO CIVIL AND CRIMINAL PENALTIES THEREUNDER.

Chapter 23: Wood

General Comments

This chapter contains information required to design and construct buildings or structures that include wood or wood-based structural elements, and is organized around the application of three design methodologies: allowable stress design (ASD), load and resistance factor design (LRFD) and conventional construction. Included are references to design and manufacturing standards for various wood and wood-based products; general construction requirements; design criteria for lateral-force-resisting systems and specific requirements for the application of the three design methods (ASD, LRFD and conventional construction). Chapter 23 includes elements of all three previous regional model codes—the *BOCA® National Building Code* (BNBC), the *Standard Building Code* (SBC) and the *Uniform Building Code®* (UBC™). It most closely follows the format of the UBC.

Acceptable standards for the manufacture of wood or wood-based products include provisions for sizes, grades (labels), quality control and certification programs, or similar methods of identification. Specific requirements and tables have been developed using referenced design methods to provide a minimum level of safety. This chapter also contains requirements both for the use of products in conjunction with wood and wood-based structural elements, and for prevention of decay.

In general, only Type III, IV or V buildings may be constructed of wood. Accordingly, Chapter 23 is referenced when the combination of the occupancy (determined in Chapter 3) and the height and area of the building or structure (determined in Chapter 5) indicate that the construction (specified in Chapter 6) can be Type III, IV or V. Another basis for referencing Chapter 23 is when wood elements are used in Type I or II structures as permitted in Section 603. This chapter gives information on the application of fire-retardant-treated wood, interior wood elements and trim in these structures. All structural criteria for application of referenced standards and procedures included in Chapter 23 are based on the loading requirements of Chapter 16 or on historical performance.

Chapter 23 is not a textbook on construction. It is assumed that the reader has both the training and experience needed to understand the principles and practices of wood design and construction. Without such understanding, some sections may be misunderstood and misapplied. This commentary should help to promote better understanding of the structure and application of the methods specified in Chapter 23.

Section 2301 identifies three methods of design. Compliance with one or more is required.

Section 2302 contains a list of the most commonly used terms to describe wood and wood-based products. Some engineering terms are also included. Refer to Chapter 2 for the definitions of the terms listed.

Section 2303 provides reference to manufacturing standards, necessary specification criteria and use and application provisions.

Section 2304 contains general provisions for the proper design and construction of all wood structures and the use of all wood products. Note that the general provisions in Section 2304 apply to all design methods. This section also includes the typical fastening schedule, which is the minimum requirement for fastening various wood members.

Section 2305 references the American Wood Council's (AWC) *Special Design Provisions for Wind and Seismic* for design of lateral-force-resisting systems. It also contains provisions not found in the standard, such as design values for staples. Whether the structure is engineered using ASD or LRFD, the provisions of this section apply to the design of the lateral-force-resisting system.

Section 2306 contains provisions for the design of structures using ASD and references applicable standards. The two primary design standards are the AWC *National Design Specification for Wood Construction* (NDS) and SDPWS. Historically, all of the industry publications have been developed for ASD. More recently, LRFD has been introduced, making it necessary to distinguish clearly which provisions are appropriate for ASD or LRFD. As the section title implies, the provisions of this section only apply to ASD and are not appropriate for LRFD.

Because the ANSI/AWC NDS and SDPWS are dual format standards permitting both ASD and LRFD design procedures, Section 2307 also references these consensus standards for the design of structures using the LRFD methodology.

Although fairly limited in application, Section 2308 contains the prescriptive provisions for conventional construction that may be used to construct certain wood-frame structures that conform to the restrictions and limitations. Limitations on the use of the conventional construction provisions in this section are provided in Section 2308.2 for a quick determination. Note that structures of otherwise conventional construction are allowed to contain portions or elements that are designed by the engineering provisions of Chapter 23 (see commentary, Sections 2308.1.1 and 2308.8).

Section 2309 permits designs utilizing the AWC *Wood Frame Construction Manual* (WFCM) for buildings that fit within the WFCM's applicability limits for building size, configuration and loads as set out in that standard.

INTERNATIONAL CODE COUNCIL®
Copyright © 2015 ICC. ALL RIGHTS RESERVED. Accessed by David Dammon on Jun 21, 2017 12:30:52 PM pursuant to License Agreement with ICC. No further reproduction or distribution authorized. ANY UNAUTHORIZED REPRODUCTION OR DISTRIBUTION IS A VIOLATION OF THE FEDERAL COPYRIGHT ACT AND THE LICENSE AGREEMENT, AND SUBJECT TO CIVIL AND CRIMINAL PENALTIES THEREUNDER.

Purpose

This chapter provides minimum guidance for the design of buildings and structures that use wood and wood-based products in their framing and fabrication. Alternative methods and materials can be used where justified by engineering analysis and testing. In all cases, the provisions of Section 2304 apply to all elements of wood-frame construction.

SECTION 2301
GENERAL

2301.1 Scope. The provisions of this chapter shall govern the materials, design, construction and quality of wood members and their fasteners.

❖ Section 2301 includes specifications for use of and standards for production of wood and wood-based products such as boards, dimensional lumber and engineered wood products, such as I-joists, glued-laminated timber, structural panels, trusses, particleboard, fiberboard and hardboard. Also included are criteria and specifications for the use of other materials, such as connectors used in conjunction with wood or wood-based products. Other chapters of the code also affect the use of wood materials in buildings and should be referenced prior to making final decisions on the use of any product.

The scope of this chapter is established in Section 2301.1, and broadly encompasses wood products and the limitations placed on them and their various applications within the code.

2301.2 General design requirements. The design of structural elements or systems, constructed partially or wholly of wood or wood-based products, shall be in accordance with one of the following methods:

1. *Allowable stress design* in accordance with Sections 2304, 2305 and 2306.
2. *Load and resistance factor design* in accordance with Sections 2304, 2305 and 2307.
3. *Conventional light-frame construction* in accordance with Sections 2304 and 2308.
4. AWC WFCM in accordance with Section 2309.
5. The design and construction of log structures in accordance with the provisions of ICC 400.

❖ This chapter includes three methods of designing with wood or wood-based products. This section limits designs to one of these three methods unless an alternative method has been proven to be acceptable as permitted in Section 104.11. It is not uncommon for only one element of a structure to require engineered design. This section recognizes "partial" design.

2301.3 Nominal sizes. For the purposes of this chapter, where dimensions of lumber are specified, they shall be deemed to be nominal dimensions unless specifically designated as actual dimensions (see Section 2304.2).

❖ The use of nominal sizes for lumber is part of the traditional nomenclature for grading and identification of manufactured pieces. "Nominal" simply refers to the short-hand term such as "2 × 4" when the actual piece of lumber has a real dimension of $1^1/_2$ inches by $3^1/_2$ inches (38 mm by 89 mm)—not 2 inches by 4 inches (51 mm by 102 mm). Section 2304.2, however, prescribes that in determining the required size for design purposes, computations must be based on the actual size, rather than the nominal size, of the lumber.

SECTION 2302
DEFINITIONS

2302.1 Definitions. The following terms are defined in Chapter 2:

ACCREDITATION BODY.

BRACED WALL LINE.

BRACED WALL PANEL.

COLLECTOR.

CONVENTIONAL LIGHT-FRAME CONSTRUCTION.

CRIPPLE WALL.

CROSS-LAMINATED TIMBER.

DIAPHRAGM, UNBLOCKED.

DRAG STRUT.

ENGINEERED WOOD RIM BOARD.

FIBERBOARD.

GABLE.

GRADE (LUMBER).

HARDBOARD.

NAILING, BOUNDARY.

NAILING, EDGE.

NAILING, FIELD.

NOMINAL SIZE (LUMBER).

PARTICLEBOARD.

PERFORMANCE CATEGORY.

INTERNATIONAL CODE COUNCIL®
Copyright © 2015 ICC. ALL RIGHTS RESERVED. Accessed by David Dammon on Jun 21, 2017 12:30:52 PM pursuant to License Agreement with ICC. No further reproduction or distribution authorized. ANY UNAUTHORIZED REPRODUCTION OR DISTRIBUTION IS A VIOLATION OF THE FEDERAL COPYRIGHT ACT AND THE LICENSE AGREEMENT, AND SUBJECT TO CIVIL AND CRIMINAL PENALTIES THEREUNDER.

PREFABRICATED WOOD I-JOIST.

SHEAR WALL.

Shear wall, perforated.

Shear wall segment, perforated.

STRUCTURAL COMPOSITE LUMBER.

Laminated strand lumber (LSL).

Laminated veneer lumber (LVL).

Oriented strand lumber (OSL).

Parallel strand lumber (PSL).

STRUCTURAL GLUED-LAMINATED TIMBER.

TIE-DOWN (HOLD-DOWN).

TREATED WOOD.

Fire-retardant-treated wood.

Preservative-treated wood.

WOOD SHEAR PANEL.

WOOD STRUCTURAL PANEL.

Composite panels.

Oriented strand board (OSB).

Plywood.

❖ Definitions facilitate the understanding of code provisions and minimize potential confusion. To that end, this section lists definitions of terms associated with wood construction. Note that these definitions are found in Chapter 2. The use and application of defined terms, as well as undefined terms, are set forth in Section 201. In addition to the terms listed in this chapter, other notations and definitions related to wood construction can be found in the various referenced standards, such as the ANSI/AWC NDS and SDPWS.

SECTION 2303
MINIMUM STANDARDS AND QUALITY

2303.1 General. Structural sawn lumber; end-jointed lumber; prefabricated wood I-joists; structural glued-laminated timber; wood structural panels; fiberboard sheathing (when used structurally); hardboard siding (when used structurally); particleboard; *preservative-treated wood*; structural log members; structural composite lumber; round timber poles and piles; *fire-retardant-treated wood*; hardwood plywood; wood trusses; joist hangers; nails; and staples shall conform to the applicable provisions of this section.

❖ When the components of a wood structure comply with the various standards listed in Section 2303, a building or structure is deemed to comply with the minimum standards of quality prescribed by the code. When combined with the construction requirements of Section 2304 and the design standards referenced in Sections 2305 and 2306, these standards contain most of the information needed to adequately design a structure. For engineered structures, it is necessary for the designer to have a working knowledge of engineering principles and experience with construction to properly interpret the recommendations and meet the provisions of other applicable sections of the code. For conventional wood-frame structures, the standards in Section 2303 combined with the construction requirements of Section 2304 and the prescriptive construction provisions in Section 2308 can be used to construct code-complying wood-frame buildings.

Section 2303.1 lists the various materials that have production and quality control standards. The section covers minimum standards of quality for sawn lumber; end-jointed lumber; wood I-joists; glued-laminated timber; wood structural panels; fiberboard sheathing; hardboard siding; particleboard; preservative-treated wood; log members; composite lumber; round timber poles and piles; fire-retardant-treated wood; hardwood plywood; wood trusses; joist hangers; and nails and staples. The use of these standards is fundamental for manufacturers in producing products and maintaining quality control procedures. Designers, owners and building officials must understand these standards and the methods prescribed in them to be able to properly identify products that have been produced in accordance with their criteria. Without the knowledge that the various products and components meet the applicable standards, there is little assurance that a safe and efficient building or structure will be constructed.

2303.1.1 Sawn lumber. Sawn lumber used for load-supporting purposes, including end-jointed or edge-glued lumber, machine stress-rated or machine-evaluated lumber, shall be identified by the grade *mark* of a lumber grading or inspection agency that has been approved by an accreditation body that complies with DOC PS 20 or equivalent. Grading practices and identification shall comply with rules published by an agency approved in accordance with the procedures of DOC PS 20 or equivalent procedures.

❖ All lumber used to support loads in a building or structure is required to be properly identified. Every species and grade of lumber has a unique inherent strength value. These values are further modified in sawn timber by the presence of growth characteristics that vary from piece to piece, such as knots, slope of grain, checks, etc. Without adequate identification, it would be impossible to verify that the proper material is being used in the field. The required grade mark must identify the species or species grouping; grade and moisture content at the time of surfacing; the grading agency; and the mill name or grader's number. Commentary Figure 2303.1.1 illustrates typical grade mark labels.

INTERNATIONAL CODE COUNCIL®
Copyright © 2015 ICC. ALL RIGHTS RESERVED. Accessed by David Dammon on Jun 21, 2017 12:30:52 PM pursuant to License Agreement with ICC. No further reproduction or distribution authorized. ANY UNAUTHORIZED REPRODUCTION OR DISTRIBUTION IS A VIOLATION OF THE FEDERAL COPYRIGHT ACT AND THE LICENSE AGREEMENT, AND SUBJECT TO CIVIL AND CRIMINAL PENALTIES THEREUNDER.



Figure 2303.1.1
TYPICAL LABELS
(Grade Marks)
American Lumber Standards Committee, U.S.D.C.

2303.1.1.1 Certificate of inspection. In lieu of a grade *mark* on the material, a certificate of inspection as to species and grade issued by a lumber grading or inspection agency meeting the requirements of this section is permitted to be accepted for precut, remanufactured or rough-sawn lumber and for sizes larger than 3 inches (76 mm) nominal thickness.

❖ Certification is an acceptable alternative to a grade mark from both United States and Canadian grading agencies. Grading agencies are certified by the American Lumber Standards Committee (ALSC).

Design values are published by lumber grade rules-writing agencies for both individual and grouped species. A grouped species is lumber that is cut and marketed in lots containing two or more species, such as Spruce-Pine-Fir. These species grow together in large areas. It is more economical to market the lumber as a species group than attempt segregation. The assigned strength values include those applicable to the weaker species in the group.

The code also allows certain types of structural lumber to have a certificate of inspection instead of a grade mark. A certificate of inspection is acceptable for precut, remanufactured or rough-sawn lumber and for sizes larger than 3 inches (76 mm) nominal in thickness. It is industry practice to place only one label (grade mark) on a piece of lumber, which may be removed on precut and remanufactured lumber. Each piece of lumber is graded after it has been cut to a standard size. The grade of the piece is determined based on its size, number and location of strength-reducing characteristics; therefore, one log may produce lumber of two or more different grades.

It is also industry practice not to label lumber having a nominal thickness larger than 3 inches (76 mm), or rough-sawn material where the label may be illegible. A certificate of inspection from an approved agency is acceptable instead of the label for these types of lumber. The certificate should be filed with the permanent records of the building or structure.

If defects exceeding those permitted for the allegedly installed grade are visible, then a grader would be able to determine that the wood is definitely not of a suitable grade. To determine if the wood in question is definitely of a suitable grade, the grader must inspect all four faces of the piece. This cannot happen once the lumber is installed in the building, as other components of the building will be covering up some of the faces of the pieces.

2303.1.1.2 End-jointed lumber. *Approved* end-jointed lumber is permitted to be used interchangeably with solid-sawn members of the same species and grade. End-jointed lumber used in an assembly required to have a fire-resistance rating shall have the designation "Heat Resistant Adhesive" or "HRA" included in its grade mark.

❖ End-joined or edge-glued lumber is acceptable when identified by an appropriate grade mark. Section 4.1.6 of the ANSI/AWC NDS permits the use of such lumber for light framing, studs, joists, planks and decking. Where finger-jointed lumber is marked "Stud Use Only," then it is limited to applications where bending or tension stresses are subjected to short-term loading only. Where end-jointed lumber is used in fire-resistant-rated assemblies, it must be joined with heat-resistant adhesive and must be indicated on the grade stamp.

2303.1.2 Prefabricated wood I-joists. Structural capacities and design provisions for prefabricated wood I-joists shall be established and monitored in accordance with ASTM D5055.

❖ This section specifies that the shear, moment and stiffness capacities of prefabricated wood I-joists be established and monitored by ASTM D5055. This standard also specifies that application details, such as bearing length and web openings, are to be considered in determining structural capacity. Wood I-joists are structural members, typically used in floor and roof construction, manufactured out of sawn or structural composite lumber flanges and structural panel webs, bonded together with exterior adhesives forming an "I" cross section (see definition of "Prefabricated wood I-joist" in Section 202). The standard requires I-joist manufacturers to employ an independent inspection agency to monitor the procedures for quality assurance. Finally, the standard specifies that proper installation instructions accompany the product to the job site. The instructions are required to address weather protection, handling requirements and, where required, web reinforcement, connection details, lateral support, bearing details, web hole-cutting limitations and any special situation.

2303.1.3 Structural glued-laminated timber. Glued-laminated timbers shall be manufactured and identified as required in ANSI/AITC A 190.1 and ASTM D3737.

❖ Glued-laminated timbers are required by this section to be manufactured following ANSI/AITC 190.1 and ASTM D3737 for procedures to establish allowable structural properties. Knowing the standards these products must meet makes it easier to determine that the product found in the field will meet the design requirements.

INTERNATIONAL CODE COUNCIL®
Copyright © 2015 ICC. ALL RIGHTS RESERVED. Accessed by David Dammon on Jun 21, 2017 12:30:52 PM pursuant to License Agreement with ICC. No further reproduction or distribution authorized. ANY UNAUTHORIZED REPRODUCTION OR DISTRIBUTION IS A VIOLATION OF THE FEDERAL COPYRIGHT ACT AND THE LICENSE AGREEMENT, AND SUBJECT TO CIVIL AND CRIMINAL PENALTIES THEREUNDER.

2303.1.4 Structural glued cross-laminated timber. Cross-laminated timbers shall be manufactured and identified in accordance with ANSI/APA PRG 320.

❖ Cross-laminated timber was first developed in Europe nearly 20 years ago, where it has been used extensively. As a new product in North America, ANSI/APA PRG 320 provides a consensus manufacturing standard for cross-laminated timber.

2303.1.5 Wood structural panels. Wood structural panels, when used structurally (including those used for siding, roof and wall sheathing, subflooring, diaphragms and built-up members), shall conform to the requirements for their type in DOC PS 1, DOC PS 2 or ANSI/APA PRP 210. Each panel or member shall be identified for grade, bond classification, and Performance Category by the trademarks of an *approved* testing and grading agency. The Performance Category value shall be used as the "nominal panel thickness" or "panel thickness" whenever referenced in this code. Wood structural panel components shall be designed and fabricated in accordance with the applicable standards listed in Section 2306.1 and identified by the trademarks of an *approved* testing and inspection agency indicating conformance to the applicable standard. In addition, wood structural panels when permanently exposed in outdoor applications shall be of Exterior type, except that wood structural panel roof sheathing exposed to the outdoors on the underside is permitted to be Exposure 1 type.

❖ "Wood structural panels" is a collective term referring to plywood, oriented strand board (OSB) and other composite panels of wood-based materials (see definition of "Wood structural panel" in Chapter 2). As noted in this section, wood structural panels must conform to the specific requirements of Department of Commerce (DOC) PS 1, PS 2 or ANSI/APA PRP 210. An American National Standards Institute (ANSI) standard for engineered wood panel siding, ANSI/APA PRP-210, *Standard for Performance-Rated Engineered Wood Siding*, was included in the 2012 *International Building Code*® (IBC®) and *International Residential Code*® (IRC®). The standard was developed by American Plywood Association (APA) under the ANSI consensus process based on APA's PRP-108, *Performance Standards and Policies for Structural-Use Panels*. ANSI/APA PRP-210 provides requirements and test methods for qualification and quality assurance for performance-rated engineered wood siding intended for use in construction applications as exterior siding.

Identification of grade for plywood includes N, A, B, C Plugged, C and D (from no knots or patches to large knots and knotholes).

Plywood is manufactured with an odd number of layers that have their grain direction placed perpendicular to each other and are bonded together with a strong adhesive. Each individual layer may consist of an assembly of several different plies laminated together with their grains running in the same direction. Alternating the grain direction in successive layers gives a plywood panel dimensional stability across its width. Stamped on top of most panels is a span rating that indicates the maximum roof and floor joist spacings that can be accommodated. Additionally, an exposure rating is assigned as Exterior (designed for applications subject to permanent exposure to the weather or moisture), Exposure 1 (designed for applications where long construction delays may be expected prior to providing protection against moisture or weather extremes) or Exposure 2 (intended solely for protected construction applications where only moderate delays in providing protection from moisture are expected).

APA-rated Stud-I-floor panels are commonly used for thicker sheathing applications where added stiffness is desired. This type of panel has a single span rating, indicating that it is specifically engineered for floors, as the name would suggest. Adjoining panel edges may be blocked or may be ordered as tongue-and-groove, which provides added stability in an unblocked diaphragm. If a diaphragm has the necessary load capacity without the addition of blocking at all panel edges, such a specification can lower installation costs and decrease framing mistakes.

2303.1.6 Fiberboard. Fiberboard for its various uses shall conform to ASTM C208. Fiberboard sheathing, when used structurally, shall be identified by an *approved* agency as conforming to ASTM C208.

❖ All fiberboard must meet the requirements of ASTM C208, as well as being verminproof, resistant to rot-producing fungi and water repellent. This standard gives physical requirements for construction grades of fiberboard, including sheathing grade and roof-insulating grade. The sheathing grade of fiberboard is further broken down into regular and intermediate densities.

2303.1.6.1 Jointing. To ensure tight-fitting assemblies, edges shall be manufactured with square, shiplapped, beveled, tongue-and-groove or U-shaped joints.

❖ Tight-fitting joints in the fiberboard are required for all applications, including insulation, siding and wall sheathing.

2303.1.6.2 Roof insulation. Where used as roof insulation in all types of construction, fiberboard shall be protected with an *approved* roof covering.

❖ Fiberboard is not intended for prolonged exposure to sunlight, wind, rain or snow. Where fiberboard is used as roof insulation, it must be protected with an approved roof covering to prevent water saturation and subsequent delamination and to avoid decay and destruction of the glue bond by moisture.

2303.1.6.3 Wall insulation. Where installed and fireblocked to comply with Chapter 7, fiberboards are permitted as wall insulation in all types of construction. In fire walls and fire barriers, unless treated to comply with Section 803.1 for Class A materials, the boards shall be cemented directly to the concrete, masonry or other noncombustible base and shall

INTERNATIONAL CODE COUNCIL®
Copyright © 2015 ICC. ALL RIGHTS RESERVED. Accessed by David Dammon on Jun 21, 2017 12:30:52 PM pursuant to License Agreement with ICC. No further reproduction or distribution authorized. ANY UNAUTHORIZED REPRODUCTION OR DISTRIBUTION IS A VIOLATION OF THE FEDERAL COPYRIGHT ACT AND THE LICENSE AGREEMENT, AND SUBJECT TO CIVIL AND CRIMINAL PENALTIES THEREUNDER.

be protected with an *approved* noncombustible veneer anchored to the base without intervening airspaces.

❖ Fiberboard is permitted without any fire-resistance treatment in the walls of all types of construction (see Section 603.1). When used in fire walls and fire barrier walls, fiberboard must be either treated to comply with Class A flame spread or adhered directly to a noncombustible base and protected by a tight-fitting, noncombustible veneer that is fastened through the fiberboard to the base. This is intended to prevent the fiberboard from contributing to the spread of fire.

2303.1.6.3.1 Protection. Fiberboard wall insulation applied on the exterior of foundation walls shall be protected below ground level with a bituminous coating.

❖ Fiberboard insulation applied to the exterior side of foundation walls is required to be protected from the weather to improve its service life and maintain its performance characteristics. Of particular concern is foundation insulation that is in close proximity to grade and has the risk of being damaged by a lawn mower; rocks or soil kicked up against it; water from a garden hose; rainwater splash back; etc. Protection is required for all fiberboard insulation on the exterior face of foundation walls.

2303.1.7 Hardboard. Hardboard siding used structurally shall be identified by an *approved agency* conforming to CPA/ANSI A135.6. Hardboard underlayment shall meet the strength requirements of $^{7}/_{32}$-inch (5.6 mm) or $^{1}/_{4}$-inch (6.4 mm) service class hardboard planed or sanded on one side to a uniform thickness of not less than 0.200 inch (5.1 mm). Prefinished hardboard paneling shall meet the requirements of CPA/ANSI A135.5. Other basic hardboard products shall meet the requirements of CPA/ANSI A135.4. Hardboard products shall be installed in accordance with manufacturer's recommendations.

❖ Hardboard siding that is to be used structurally must be manufactured in accordance with CPA/ANSI A135.6 and marked to indicate conformance with the standard, whether primed or unprimed, and to identify the producer and the type, either lap or panel. Hardboard products are produced primarily from interfelted lignocellulosic fibers. There are five classes based on strength values. Underlayments are limited to $^{7}/_{32}$-inch (5.6 mm) or $^{1}/_{4}$-inch (6.4 mm) service class.

Prefinished hardboard is required to be manufactured to the CPA/ANSI A135.5 standard, and must be marked to indicate the standard and to identify the producer, flame spread index, finish class, type of gloss and type of substrate, or must be accompanied by written certification of the same information.

2303.1.8 Particleboard. Particleboard shall conform to ANSI A208.1. Particleboard shall be identified by the grade *mark* or certificate of inspection issued by an *approved agency*. Particleboard shall not be utilized for applications other than indicated in this section unless the particleboard complies with the provisions of Section 2306.3.

❖ Sponsored by the Composite Panel Association (CPA), ANSI A208.1 is the basic specification for the manufacture of particleboard, which establishes a system of marks for the boards' grade, density, and strength.

Particleboard used in construction is medium density and is first designated by an "M." The second digit or letter in the designation is related to grade. The designations range from 1 to 3, with higher designations being the strongest. Grade M-S refers to medium density, "special grade" particleboard. This grade was added to ANSI A208.1 after the M-1, M-2 and M-3 grades had been established. Grade M-S falls between M-1 and M-2 in physical properties.

An optional third part of the grade designation indicates that the particleboard has a special characteristic. The grades of particleboard specified in Table 2306.5, M-S and M-2 "Exterior Glue," are manufactured with exterior glue to increase their durability characteristics.

While ANSI A208.1 has provisions for Grade M-3 particleboard, panels that meet the requirements of this higher grade are more commonly evaluated and used as wood structural panels, commonly referred to as oriented strand board, in accordance with DOC PS-2. Therefore, Grade M-3 material is not addressed in Table 2306.5.

2303.1.8.1 Floor underlayment. Particleboard floor underlayment shall conform to Type PBU of ANSI A208.1. Type PBU underlayment shall not be less than 1/4-inch (6.4 mm) thick and shall be installed in accordance with the instructions of the Composite Panel Association.

❖ Although similar to medium density, Grade 1 particleboard—particleboard intended for use as floor underlayment—is designated "PBU" and has stricter limits on levels of formaldehyde emission permitted than those placed on Grade "M" particleboard. Particleboard intended for use as floor underlayment is not commonly manufactured with exterior glue, which could emit higher levels of formaldehyde than that permitted by ANSI A208.1 for Grade "PBU" floor underlayment.

Particleboard underlayment is often applied over a structural subfloor to provide a smooth surface for resilient-finish or textile floor coverings. The minimum $^{1}/_{4}$-inch (6.4 mm) thickness is applicable over panel-type subflooring. Particleboard underlayment installed over board or deck subflooring that has multiple joints should have a thickness of $^{3}/_{8}$ inch (9.5 mm). Joints in the underlayment should not be over joints in the subflooring.

All particleboard underlayment with thicknesses of $^{1}/_{4}$ through $^{3}/_{4}$ inch (6.4 through 19.1 mm) should be attached with a minimum of 6d annular threaded nails

INTERNATIONAL CODE COUNCIL®
Copyright © 2015 ICC. ALL RIGHTS RESERVED. Accessed by David Dammon on Jun 21, 2017 12:30:52 PM pursuant to License Agreement with ICC. No further reproduction or distribution authorized. ANY UNAUTHORIZED REPRODUCTION OR DISTRIBUTION IS A VIOLATION OF THE FEDERAL COPYRIGHT ACT AND THE LICENSE AGREEMENT, AND SUBJECT TO CIVIL AND CRIMINAL PENALTIES THEREUNDER.

spaced 6 inches (152 mm) o.c. on the edges and 10 inches (254 mm) o.c. for intermediate supports.

2303.1.9 Preservative-treated wood. Lumber, timber, plywood, piles and poles supporting permanent structures required by Section 2304.12 to be preservative treated shall conform to the requirements of the applicable AWPA Standard U1 and M4 for the species, product, preservative and end use. Preservatives shall be listed in Section 4 of AWPA U1. Lumber and plywood used in wood foundation systems shall conform to Chapter 18.

❖ Wood is able to absorb chemicals because of its cellular characteristics. Preservative treatment procedures that will repel termites and destroy decay-causing fungus utilize this capability. The process includes placing wood in a large cylinder and applying a vacuum to remove as much air as possible from the wood. The chemical solution is then introduced and pressure is applied to force the solution into the wood. The pressure is maintained until the desired absorption is obtained. A final vacuum is often applied to remove as much excess preservative as possible.

There are several variations of this basic process, all of which must provide the required retention of preservatives. AWPA U1, Section 4, prescribes the requirements for the preservatives that are used, while AWPA U1 specifies the minimum results of the treatment process based on a commodity specification and use category. These requirements include the depth of penetration of the chemical into the wood, and the amount of chemical retained by the wood once the process is completed. Additional requirements for wood used in foundation systems are given in Section 1807.1.4.

2303.1.9.1 Identification. Wood required by Section 2304.12 to be preservative treated shall bear the quality *mark* of an inspection agency that maintains continuing supervision, testing and inspection over the quality of the *preservative-treated wood*. Inspection agencies for *preservative-treated wood* shall be *listed* by an accreditation body that complies with the requirements of the American Lumber Standards Treated Wood Program, or equivalent. The quality *mark* shall be on a stamp or *label* affixed to the *preservative-treated wood*, and shall include the following information:

1. Identification of treating manufacturer.
2. Type of preservative used.
3. Minimum preservative retention (pcf).
4. End use for which the product is treated.
5. AWPA standard to which the product was treated.
6. Identity of the accredited inspection agency.

❖ Quality marks are necessary to determine that preservative-treated wood conforms to applicable standards. The identifying mark must be by an approved inspection agency that has continuous follow-up services. Additionally, the inspection agency must be listed and certified as being competent by an approved organization. The American Lumber Standards Committee (ALSC) provides certification of treating agencies. Facsimiles of its quality marks are available by contacting the ALSC. The required quality mark is not a substitute for a grade mark. When wood or wood-based materials are being used structurally, both the quality mark and grade mark must be displayed on the piece.

2303.1.9.2 Moisture content. Where *preservative-treated wood* is used in enclosed locations where drying in service cannot readily occur, such wood shall be at a moisture content of 19 percent or less before being covered with insulation, interior wall finish, floor covering or other materials.

❖ Water-borne preservatives are subject to leaching unless properly dried and protected. The requirement for reducing the moisture content to 19 percent or less is intended to aid in preventing such leaching. Also, all structural members are presumed to have a moisture content of 19 percent or less.

Preservative treatment does not require any adjustment of design values. Some species have a high surface tension, which means that it is difficult to penetrate the surface of the lumber. These species are often incised to break the surface tension and allow the chemicals to penetrate the member. Incising requires a reduction in the design values for the member.

2303.1.10 Structural composite lumber. Structural capacities for structural composite lumber shall be established and monitored in accordance with ASTM D5456.

❖ The purpose of this section is to specify the appropriate standard for establishing structural capacities of structural composite lumber. Included within the standard are criteria for laminated veneer lumber and parallel strand lumber. The ASTM International (ASTM) standard includes requirements for testing, criteria for determining allowable stresses, requirements for independent inspection and quality assurance procedures (also see definition of "Structural composite lumber" in Chapter 2).

2303.1.11 Structural log members. Stress grading of structural log members of nonrectangular shape, as typically used in log buildings, shall be in accordance with ASTM D3957. Such structural log members shall be identified by the grade *mark* of an *approved* lumber grading or inspection agency. In lieu of a grade *mark* on the material, a certificate of inspection as to species and grade issued by a lumber grading or inspection agency meeting the requirements of this section shall be permitted.

❖ This section addresses grading requirements for logs used as structural members by referencing ASTM D3957 methods for establishing structural capacities of logs. It also specifies the requirement for a grading stamp or an alternative certification on structural logs.

INTERNATIONAL CODE COUNCIL®
Copyright © 2015 ICC. ALL RIGHTS RESERVED. Accessed by David Dammon on Jun 21, 2017 12:30:52 PM pursuant to License Agreement with ICC. No further reproduction or distribution authorized. ANY UNAUTHORIZED REPRODUCTION OR DISTRIBUTION IS A VIOLATION OF THE FEDERAL COPYRIGHT ACT AND THE LICENSE AGREEMENT, AND SUBJECT TO CIVIL AND CRIMINAL PENALTIES THEREUNDER.

2303.1.12 Round timber poles and piles. Round timber poles and piles shall comply with ASTM D3200 and ASTM D25, respectively.

❖ This section provides references to the appropriate material standards for round timber poles and piles.

2303.1.13 Engineered wood rim board. Engineered wood rim boards shall conform to ANSI/APA PRR 410 or shall be evaluated in accordance with ASTM D7672. Structural capacities shall be in accordance with ANSI/APA PRR 410 or established in accordance with ASTM D7672. Rim boards conforming to ANSI/APA PRR 410 shall be marked in accordance with that standard.

❖ Engineered rim board serves as a key structural element in wood floor construction where structural load path through the perimeter member and dimensional change compatibility are design considerations. Both ANSI/APA PRR 410 and ASTM D7672 address the fundamental requirements for testing and evaluation of engineered rim board. PRR 410 also includes performance categories for engineered wood products used in engineered rim board applications. Under PRR 410, products are assigned a grade based on performance category (i.e., categories based on structural capacity) and will bear a mark in accordance with the grade. In contrast, ASTM D7672 is applicable for determination of product-specific rim board performance (i.e., structural capacities) for engineered wood products that may be recognized in manufacturer's literature or product evaluation reports.

2303.2 Fire-retardant-treated wood. *Fire-retardant-treated wood* is any wood product which, when impregnated with chemicals by a pressure process or other means during manufacture, shall have, when tested in accordance with ASTM E84 or UL 723, a *listed* flame spread index of 25 or less and show no evidence of significant progressive combustion when the test is continued for an additional 20-minute period. Additionally, the flame front shall not progress more than $10^1/_2$ feet (3200 mm) beyond the centerline of the burners at any time during the test.

❖ Fire-retardant-treated wood is plywood and lumber that has been pressure impregnated with chemicals to improve its flame spread characteristics beyond that of untreated wood. Since fire-retardant-treated wood is allowed in some applications where noncombustible materials are otherwise required, it is important that these products meet rigorous requirements. The effectiveness of the pressure-impregnated fire-retardant treatment is determined by subjecting the material to tests conducted in accordance with ASTM E84, with the modification that the test is extended to 30 minutes rather than 15 minutes. Using this procedure, a flame spread index is established during the standard 10-minute test period. The test is continued for an additional 20 minutes. During this added time period, there must not be any significant flame spread. At no time must the flame spread more than $10^1/_2$ feet (3200 mm) past the centerline of the burners.

The result of impregnating wood with fire-retardant chemicals is a chemical reaction at certain temperature ranges. This reaction reduces the release of certain intermediate products that contribute to the flaming of wood, and also results in the formation of a greater percentage of charcoal and water. Some chemicals are also effective in reducing the oxidation rate for charcoal residue. Fire-retardant chemicals also reduce the heat release rate of fire-retardant-treated wood when burning over a wide range of temperatures. This section gives provisions for the treatment and use of fire-retardant-treated wood.

2303.2.1 Pressure process. For wood products impregnated with chemicals by a pressure process, the process shall be performed in closed vessels under pressures not less than 50 pounds per square inch gauge (psig) (345 kPa).

❖ This section elaborates on the requirements of treatment using a pressure process and specifies a minimum pressure of 50 pounds per square inch gauge (psig) (345 kPa).

2303.2.2 Other means during manufacture. For wood products produced by other means during manufacture, the treatment shall be an integral part of the manufacturing process of the wood product. The treatment shall provide permanent protection to all surfaces of the wood product.

❖ This section elaborates on the requirements of treatment using other means during manufacture and requires treatment to be an integral part of the manufacturing process.

2303.2.3 Testing. For wood products produced by other means during manufacture, other than a pressure process, all sides of the wood product shall be tested in accordance with and produce the results required in Section 2303.2. Wood structural panels shall be permitted to test only the front and back faces.

❖ This section provides for added testing of treatments not impregnated by a pressure process. Requiring equivalent performance from all sides of the wood product eliminates any concern over the orientation when it is installed. Only the front and back faces of wood structural panels need to be tested.

2303.2.4 Labeling. Fire-retardant-treated lumber and wood structural panels shall be labeled. The *label* shall contain the following items:

1. The identification *mark* of an *approved agency* in accordance with Section 1703.5.
2. Identification of the treating manufacturer.
3. The name of the fire-retardant treatment.
4. The species of wood treated.
5. Flame spread and smoke-developed index.
6. Method of drying after treatment.

INTERNATIONAL CODE COUNCIL®
Copyright © 2015 ICC. ALL RIGHTS RESERVED. Accessed by David Dammon on Jun 21, 2017 12:30:52 PM pursuant to License Agreement with ICC. No further reproduction or distribution authorized. ANY UNAUTHORIZED REPRODUCTION OR DISTRIBUTION IS A VIOLATION OF THE FEDERAL COPYRIGHT ACT AND THE LICENSE AGREEMENT, AND SUBJECT TO CIVIL AND CRIMINAL PENALTIES THEREUNDER.

7. Conformance with appropriate standards in accordance with Sections 2303.2.5 through 2303.2.8.
8. For *fire-retardant-treated wood* exposed to weather, damp or wet locations, include the words "No increase in the *listed* classification when subjected to the Standard Rain Test" (ASTM D2898).

❖ For continued quality, each piece of fire-retardant-treated wood must be identified by an approved agency having a reinspection service. The identification must show the performance rating of the material, including the 30-minute ASTM E84 test results determined in Section 2303.2, and the design adjustment values determined in Section 2303.2.5. The third-party agency that provides the fire-retardant-treated wood label is also required to state on the label that the fire-retardant-treated wood complies with the requirements of Section 2303.2, and that design adjustment values have been determined for the fire-retardant-treated wood in compliance with the provisions of Section 2303.2.5. The fire-retardant-treated wood label must be distinct from the grading label to avoid confusing the two. The grading label provides information about the properties of wood before it is pressure treated with fire-retardant chemicals. The label provides properties of the wood after fire-retardant-treated wood treatment. It is imperative that the fire-retardant-treated wood label be presented in such a manner that it complements the grading label, and does not create confusion over which label takes precedence.

2303.2.5 Strength adjustments. Design values for untreated lumber and wood structural panels, as specified in Section 2303.1, shall be adjusted for *fire-retardant-treated wood*. Adjustments to design values shall be based on an *approved* method of investigation that takes into consideration the effects of the anticipated temperature and humidity to which the *fire-retardant-treated wood* will be subjected, the type of treatment and redrying procedures.

❖ Experience has shown that certain factors can affect the physical properties of fire-retardant-treated wood. Among these factors are the pressure treatment and redrying process and the extremes of temperature and humidity that the fire-retardant-treated wood will be subjected to once it is installed. The design values for all fire-retardant-treated wood must be adjusted for the effects of the treatment and environmental conditions, such as high temperature and humidity in attic installations. This section requires the determination of these design adjustment values, based on an investigation procedure that includes subjecting the fire-retardant-treated wood to similar temperatures and humidities and approval by the building official. The tested fire-retardant-treated wood must be identical to that which is produced. Items to be considered by the building official reviewing the test procedure include species and grade of the untreated wood and conditioning of wood, such as drying before the fire-retardant treatment process. A fire-retardant wood treater may choose to have its treatment process evaluated by model code evaluation services.

The fire-retardant-treated wood is required by Section 2303.2.1 to be labeled with the design adjustment values. These can take the form of factors that are multiplied by the original design values of the untreated wood to determine its allowable stresses, or new allowable stresses can be used that have already been factored down in consideration of the fire-retardant treatment.

2303.2.5.1 Wood structural panels. The effect of treatment and the method of redrying after treatment, and exposure to high temperatures and high humidities on the flexure properties of fire-retardant-treated softwood plywood shall be determined in accordance with ASTM D5516. The test data developed by ASTM D5516 shall be used to develop adjustment factors, maximum loads and spans, or both, for untreated plywood design values in accordance with ASTM D 6305. Each manufacturer shall publish the allowable maximum loads and spans for service as floor and roof sheathing for its treatment.

❖ This section references the test standard developed to evaluate the flexural properties of fire-retardant-treated plywood that is exposed to high temperatures. Note that while the section title refers to wood structural panels, the referenced standard is limited to softwood plywood. Therefore, judgment is required in determining the effects of elevated temperature and humidity on other types of wood structural panels. Each product manufacturer is required to publish the allowable maximum loads and spans for floor and roof sheathing for the particular type of treatment.

2303.2.5.2 Lumber. For each species of wood that is treated, the effects of the treatment, the method of redrying after treatment and exposure to high temperatures and high humidities on the allowable design properties of fire-retardant-treated lumber shall be determined in accordance with ASTM D5664. The test data developed by ASTM D 5664 shall be used to develop modification factors for use at or near room temperature and at elevated temperatures and humidity in accordance with ASTM D6841. Each manufacturer shall publish the modification factors for service at temperatures of not less than 80°F (27°C) and for roof framing. The roof framing modification factors shall take into consideration the climatological location.

❖ This section references the test standard developed to determine the necessary adjustments to design values for lumber that has been fire-retardant treated and includes the effects of elevated temperatures. Each lumber manufacturer is required to publish the modification factors to design values.

2303.2.6 Exposure to weather, damp or wet locations. Where *fire-retardant-treated wood* is exposed to weather, or damp or wet locations, it shall be identified as "Exterior" to indicate there is no increase in the *listed* flame spread index

INTERNATIONAL CODE COUNCIL®
Copyright © 2015 ICC. ALL RIGHTS RESERVED. Accessed by David Dammon on Jun 21, 2017 12:30:52 PM pursuant to License Agreement with ICC. No further reproduction or distribution authorized. ANY UNAUTHORIZED REPRODUCTION OR DISTRIBUTION IS A VIOLATION OF THE FEDERAL COPYRIGHT ACT AND THE LICENSE AGREEMENT, AND SUBJECT TO CIVIL AND CRIMINAL PENALTIES THEREUNDER.

as defined in Section 2303.2 when subjected to ASTM D2898.

❖ Some fire-retardant treatments are soluble when exposed to the weather or used under high-humidity conditions. Note that the humidity threshold established for interior applications in Section 2303.2.7 is 92 percent. Therefore, fire-retardant-treated wood used in an interior location that will exceed this threshold should comply with this section. When a fire-retardant-treated wood product is to be exposed to any of the conditions noted in this section, it must be further tested in accordance with ASTM D2898. Testing requires the material to meet the performance criteria listed in Section 2303.2. The material is then subjected to the ASTM weathering test and retested after drying. There must not be any significant differences in the performance recorded before and after the weathering test.

2303.2.7 Interior applications. Interior *fire-retardant-treated wood* shall have moisture content of not over 28 percent when tested in accordance with ASTM D3201 procedures at 92-percent relative humidity. Interior *fire-retardant-treated wood* shall be tested in accordance with Section 2303.2.5.1 or 2303.2.5.2. Interior *fire-retardant-treated wood* designated as Type A shall be tested in accordance with the provisions of this section.

❖ The environment in which the fire-retardant-treated wood is used can affect its performance. In order to make sure that the performance will be adequate in a humid interior condition, testing in accordance with ASTM D3201 as well as that specified in Section 2303.2.5.1 or 2303.2.5.2 is required for all interior wood. Requiring all interior wood to be tested for the effects of high temperature and humidity reduces the chance of premature failure due to improper use of fire-retardant-treated wood.

2303.2.8 Moisture content. *Fire-retardant-treated wood* shall be dried to a moisture content of 19 percent or less for lumber and 15 percent or less for wood structural panels before use. For wood kiln-dried after treatment (KDAT), the kiln temperatures shall not exceed those used in kiln drying the lumber and plywood submitted for the tests described in Section 2303.2.5.1 for plywood and 2303.2.5.2 for lumber.

❖ These moisture-content thresholds are necessary to prevent leaching of the fire retardant from the wood. Section 2303.2.5 requires that the strength adjustments consider the redrying procedure, and this section clarifies that the drying temperatures for wood kiln dried after treatment must be consistent with those on which the adjustment factors were based.

2303.2.9 Type I and II construction applications. See Section 603.1 for limitations on the use of *fire-retardant-treated wood* in buildings of Type I or II construction.

❖ Although Type I and II construction typically would only allow noncombustible materials, Section 603.1 allows various parts of a building to be combustible. Specifically, there are 22 items listed that are exceptions to the strict limits on Type I and II construction. There are three conditions listed in that section that will allow fire-retardant-treated wood to be used: in nonbearing partitions where their fire resistance is 2 hours or less; in nonbearing exteriors that do not require a fire-resistance rating; and in roof construction of buildings not over two stories high.

2303.3 Hardwood and plywood. Hardwood and decorative plywood shall be manufactured and identified as required in HPVA HP-1.

❖ Hardwood and decorative plywood, like any other product that undergoes a change in the process of being configured for use in construction, has standard criteria for the manufacturing process and the quality of the materials that are to be used. HPVA HP-1 is the standard for hardwood and decorative plywood, and is one of the family of standards for this type of product.

2303.4 Trusses. Wood trusses shall comply with Sections 2303.4.1 through 2303.4.7.

❖ Trusses are engineered components. They can also be incorporated into a building of otherwise conventional light-frame construction in accordance with Section 2308.4. All types of trusses are included within these provisions, including those with parallel, pitched or curved chords; bowstring, sawtooth or camelback profiles; heavy-bolted timber or light-gage metal-plate-connected elements. Other trusses that are somewhat common in the industry include those with wood chords and metal tubular webs connected with bolts or pins.

2303.4.1 Design. Wood trusses shall be designed in accordance with the provisions of this code and accepted engineering practice. Members are permitted to be joined by nails, glue, bolts, timber connectors, metal connector plates or other *approved* framing devices.

❖ Trusses generally consist of top chord, web members and bottom chord. Under normal loading conditions the top chord is in compression and bending, the bottom chord is in tension and bending and the web members are in tension or compression. The complete design of trusses can be a complex process involving a variety of load combinations. The truss designer must keep the entire system in mind, as trusses do not typically exist as single members, but rather components that must work together to form a complete structural system. Truss designs should address required connections such as truss-to-truss (see Item 1 of Table 2304.10.1) and truss-to-wall plate (see Item 6 of Table 2304.10.1) since they are not covered in the fastening schedule provided by Table 2304.10.1. A variety of references are available to assist in the design of wood trusses, including the American Institute of Timber Construction (AITC) *Timber Construction Manual and Structural Design in Wood*. Helpful design resources are also available from industry associations such as the Structural Building Components Association/Wood Truss Coun-

INTERNATIONAL CODE COUNCIL®
Copyright © 2015 ICC. ALL RIGHTS RESERVED. Accessed by David Dammon on Jun 21, 2017 12:30:52 PM pursuant to License Agreement with ICC. No further reproduction or distribution authorized. ANY UNAUTHORIZED REPRODUCTION OR DISTRIBUTION IS A VIOLATION OF THE FEDERAL COPYRIGHT ACT AND THE LICENSE AGREEMENT, AND SUBJECT TO CIVIL AND CRIMINAL PENALTIES THEREUNDER.

cil of America (WTCA) and truss manufacturers, such as Mitek Industries and Alpine Engineered Products.

2303.4.1.1 Truss design drawings. The written, graphic and pictorial depiction of each individual truss shall be provided to the *building official* for approval prior to installation. Truss design drawings shall also be provided with the shipment of trusses delivered to the job site. Truss design drawings shall include, at a minimum, the information specified below:

1. Slope or depth, span and spacing;
2. Location of all joints and support locations;
3. Number of plies if greater than one;
4. Required bearing widths;
5. Design loads as applicable, including;
   - 5.1. Top chord live load;
   - 5.2. Top chord dead load;
   - 5.3. Bottom chord live load;
   - 5.4. Bottom chord dead load;
   - 5.5. Additional loads and locations; and
   - 5.6. Environmental design criteria and loads (wind, rain, snow, seismic, etc.).
6. Other lateral loads, including drag strut loads;
7. Adjustments to wood member and metal connector plate design value for conditions of use;
8. Maximum reaction force and direction, including maximum uplift reaction forces where applicable;
9. Metal-connector-plate type, size and thickness or gage, and the dimensioned location of each metal connector plate except where symmetrically located relative to the joint interface;
10. Size, species and grade for each wood member;
11. Truss-to-truss connections and truss field assembly requirements;
12. Calculated span-to-deflection ratio and maximum vertical and horizontal deflection for live and total load as applicable;
13. Maximum axial tension and compression forces in the truss members;
14. Required permanent individual truss member restraint location and the method and details of restraint/bracing to be used in accordance with Section 2303.4.1.2.

❖ Because engineered trusses are essential structural components of the building, the code requires truss drawings to be submitted to the building official for review and approval prior to installation. To be consistent regarding the specific information that is required to be included on truss drawings, the code lists 14 items that are to be included in order to effectively review and approve truss submittals. Engineers and contractors frequently depend on the fabricator to design the truss. Sometimes special supports or connections for trusses to the structure below may be required, such as at girder trusses or those necessary to resist high uplift forces, and the truss designer must coordinate these with the building designer. The truss engineer knows and understands how connectors can be applied to resist imposed forces and that knowledge is critical to providing an adequate design to transfer the forces to the supporting structure below. The building engineer can then use that information to properly complete the connection and provide a continuous load path to the foundation.

The majority of the items listed in this section are readily available from any truss designer. Since the documentation is required to be included with the submitted plans and the trusses delivered to the job site, the inspector should be able to readily verify that the field installation meets the intent of the truss engineer.

2303.4.1.2 Permanent individual truss member restraint. Where permanent restraint of truss members is required on the truss design drawings, it shall be accomplished by one of the following methods:

1. Permanent individual truss member restraint/bracing shall be installed using standard industry lateral restraint/bracing details in accordance with generally accepted engineering practice. Locations for lateral restraint shall be identified on the truss design drawing.
2. The trusses shall be designed so that the buckling of any individual truss member is resisted internally by the individual truss through suitable means (i.e., buckling reinforcement by T-reinforcement or L-reinforcement, proprietary reinforcement, etc.). The buckling reinforcement of individual members of the trusses shall be installed as shown on the truss design drawing or on supplemental truss member buckling reinforcement details provided by the truss designer.
3. A project-specific permanent individual truss member restraint/bracing design shall be permitted to be specified by any *registered design professional*.

❖ This section emphasizes the need for permanent truss bracing to be installed and lists the options for permanent truss member bracing. There are two different types of lateral bracing for trusses and their systems: temporary and permanent bracing. Temporary lateral bracing is typically required for safe installation before the sheathing is applied and nailed to the top and bottom chords. All forms of lateral bracing are critical and are well described within common truss publications, such as BCSI 1-08, *Guide to Good Practice for Handling, Installing, Restraining & Bracing of Metal Plate Connected Wood Trusses*. Permanent lateral bracing will remain in place for the life of the structure and is intended to stabilize entire trusses so that they can function as the truss designer intends. Item 14 of Section 2303.4.1.1 requires that permanent individual truss member bracing be provided on the truss design drawings.

The truss designer provides engineering for the entire truss system, which includes the design of individual trusses, girder trusses, truss-to-truss connections

INTERNATIONAL CODE COUNCIL®
Copyright © 2015 ICC. ALL RIGHTS RESERVED. Accessed by David Dammon on Jun 21, 2017 12:30:52 PM pursuant to License Agreement with ICC. No further reproduction or distribution authorized. ANY UNAUTHORIZED REPRODUCTION OR DISTRIBUTION IS A VIOLATION OF THE FEDERAL COPYRIGHT ACT AND THE LICENSE AGREEMENT, AND SUBJECT TO CIVIL AND CRIMINAL PENALTIES THEREUNDER.

and both temporary and permanent lateral bracing. In some cases, permanent lateral bracing applied to the webs or the bottom chord may require a connection to the building, such as at a balloon-framed wall, which would then require the involvement of the building designer. In these special cases, the truss designer and building engineers must work together to arrive at acceptable details that will fulfill the truss bracing requirements and also be compatible with both the truss system and the building system.

A type of permanent bracing commonly recognized is the plywood sheathing applied to the top chords or the gypsum wallboard that may be applied to the bottom chords (provided the stiffness of the gypsum wallboard is adequate enough to meet the needs of the truss designer). Since the truss designer is thoroughly familiar with the lateral bracing forces and capabilities of the system that he or she has designed, that engineer is typically the one who must specify whether the sheathing can be used for permanent lateral bracing.

BCSI 1-08, *Guide to Good Practice for Handling, Installing and Bracing Metal Plate Connected Wood Trusses*, jointly published by the WTCA and the Truss Plate Institute (TPI), describes different methods that may be used to provide permanent lateral bracing for web members, including continuous lateral bracing, T-reinforcement, L-reinforcement, scab reinforcement, stacked web reinforcement and proprietary metal reinforcement products. BCSI 1-08 is available from TPI.

2303.4.1.3 Trusses spanning 60 feet or greater. The owner or the owner's authorized agent shall contract with any qualified *registered design professional* for the design of the temporary installation restraint/bracing and the permanent individual truss member restraint/bracing for all trusses with clear spans 60 feet (18 288 mm) or greater.

❖ Due to their size, weight and potentially large support reactions, these longer span trusses pose greater stability concerns, making the proper design of the bracing, both temporary and permanent, a key safety measure.

2303.4.1.4 Truss designer. The individual or organization responsible for the design of trusses.

❖ This section defines a term unique to this section, "truss designer." Truss design is a specialty and the designer should be thoroughly familiar with member forces, connection capabilities and behavior as well as what is necessary to cause the entire truss system to function in a structurally sound fashion. Engineers and contractors often depend on the fabricator to design the truss. Sometimes special connections for trusses to the supporting structure may be required, such as those necessary to resist high uplift forces, and the truss designer must coordinate these with the building designer. The truss designer is familiar with the manner in which those connectors can be applied to the truss (i.e., to engage the whole section, attach only to the chord or attach only to the web). In some cases, the truss designer must work under the responsible charge of a registered design professional and the truss drawings must be stamped by such person (see Section 2304.1.4.1).

2303.4.1.4.1 Truss design drawings. Where required by the *registered design professional*, the *building official* or the statutes of the jurisdiction in which the project is to be constructed, each individual truss design drawing shall bear the seal and signature of the truss designer.

Exceptions:

1. Where a cover sheet and truss index sheet are combined into a single sheet and attached to the set of truss design drawings, the single cover/truss index sheet is the only document required to be signed and sealed by the truss designer.
2. When a cover sheet and a truss index sheet are separately provided and attached to the set of truss design drawings, the cover sheet and the truss index sheet are the only documents required to be signed and sealed by the truss designer.

❖ In some cases the truss drawings must be stamped by the registered design professional. The requirement for signing and sealing each truss design drawing, versus signing and sealing only a cover sheet or index sheet, is the recognized approach since it is often used in current construction practice.

2303.4.2 Truss placement diagram. The truss manufacturer shall provide a truss placement diagram that identifies the proposed location for each individually designated truss and references the corresponding truss design drawing. The truss placement diagram shall be provided as part of the truss submittal package, and with the shipment of trusses delivered to the job site. Truss placement diagrams that serve only as a guide for installation and do not deviate from the *permit* submittal drawings shall not be required to bear the seal or signature of the truss designer.

❖ This section describes and defines the term "truss placement diagram." It is intended to minimize the confusion that exists in the construction industry between a variety of terms that are often used interchangeably, such as "installation documents," "construction documents," "shop drawings," etc. The term "truss placement diagram" is preferred by the truss industry and is very specific. The section requires a truss placement diagram to identify the location of each truss and references the corresponding truss design drawing to facilitate inspection and proper installation.

2303.4.3 Truss submittal package. The truss submittal package provided by the truss manufacturer shall consist of each individual truss design drawing, the truss placement diagram, the permanent individual truss member restraint/bracing method and details and any other structural details

INTERNATIONAL CODE COUNCIL®
Copyright © 2015 ICC. ALL RIGHTS RESERVED. Accessed by David Dammon on Jun 21, 2017 12:30:52 PM pursuant to License Agreement with ICC. No further reproduction or distribution authorized. ANY UNAUTHORIZED REPRODUCTION OR DISTRIBUTION IS A VIOLATION OF THE FEDERAL COPYRIGHT ACT AND THE LICENSE AGREEMENT, AND SUBJECT TO CIVIL AND CRIMINAL PENALTIES THEREUNDER.

germane to the trusses; and, as applicable, the cover/truss index sheet.

❖ This section lists the minimum information that must be submitted to the building official by the truss manufacturer.

2303.4.4 Anchorage. The design for the transfer of loads and anchorage of each truss to the supporting structure is the responsibility of the *registered design professional*.

❖ This section clarifies that the registered design professional is responsible for a design addressing load transfer and truss anchorage to the supporting structure.

2303.4.5 Alterations to trusses. Truss members and components shall not be cut, notched, drilled, spliced or otherwise altered in any way without written concurrence and approval of a *registered design professional*. Alterations resulting in the addition of loads to any member (e.g., HVAC equipment, piping, additional roofing or insulation, etc.) shall not be permitted without verification that the truss is capable of supporting such additional loading.

❖ In any structural member, the existence of holes or notches can affect its ability to resist design loads. The effects of any alterations on the capacity of truss members must be assessed by a registered design professional. This requirement applies not only to the truss chords and webs, but also to permanent lateral bracing components. Additionally, trusses are designed to carry a specific load and any loads that are added must be assessed by a registered design professional. The roof live load must also be considered in any review of existing trusses, as that live load also covers reroofing operations that may take place in the future.

2303.4.6 TPI 1 specifications. In addition to Sections 2303.4.1 through 2303.4.5, the design, manufacture and quality assurance of metal-plate-connected wood trusses shall be in accordance with TPI 1. Job-site inspections shall be in compliance with Section 110.4, as applicable.

❖ Metal-plate-connected wood trusses have been a popular product for the construction of wood-frame buildings for many years. There are significant benefits to building with these engineered systems of wood and metal connectors; however, there are also criteria associated with the design, manufacturing, transportation and placement of trusses that are critical to their proper use in a structure. TPI 1, *National Design Standard for Metal-plate-connected Wood Truss Construction*, is the industry-developed standard for managing this process. The standard establishes minimum requirements for the design and construction of metal-plate-connected wood trusses and describes the lumber and steel materials used and design procedures for truss members and joints. Responsibilities, methods for evaluating metal connector plates and truss manufacturing quality assurance are also contained in the standard.

The section also requires a truss manufacturer to have an agency review its operations to determine compliance with this standard. This type of evaluation by a qualified person is necessary to verify the quality of the product and its ability to perform as designed.

2303.4.7 Truss quality assurance. Trusses not part of a manufacturing process in accordance with either Section 2303.4.6 or a referenced standard, which provides requirements for quality control done under the supervision of a third-party quality control agency, shall be manufactured in compliance with Sections 1704.2.5 and 1705.5, as applicable.

❖ Trusses fabricated under the TPI 1 standard are subject to third-party supervision for quality assurance purposes. Likewise, trusses fabricated under other standards that are referenced in the code are generally subject to quality assurance by third-party supervision. Trusses that are not manufactured under such quality assurance processes require special inspection as required by Chapter 17. In this case, the section references Section 1704.2.5 for the inspection of fabricators and Section 1705.5 for special inspection of wood fabrication processes.

2303.5 Test standard for joist hangers. Joist hangers shall be in accordance with ASTM D7147.

❖ Metal joist hangers are very common in modern wood-frame construction. Testing requirements for joist hangers are included in ASTM D7147.

2303.6 Nails and staples. Nails and staples shall conform to requirements of ASTM F1667. Nails used for framing and sheathing connections shall have minimum average bending yield strengths as follows: 80 kips per square inch (ksi) (551 MPa) for shank diameters larger than 0.177 inch (4.50 mm) but not larger than 0.254 inch (6.45 mm), 90 ksi (620 MPa) for shank diameters larger than 0.142 inch (3.61 mm) but not larger than 0.177 inch (4.50 mm) and 100 ksi (689 MPa) for shank diameters of at least 0.099 inch (2.51 mm) but not larger than 0.142 inch (3.61 mm).

❖ The code specifies the material standard for driven nails and staples by reference to ASTM F1667, *Specification for Driven Fasteners: Nails, Spikes and Staples*. ASTM F1667 specifies dimensions, etc., for nails, spikes and staples. Minimum nail strengths are specified based upon the stiffness of the nail shank. Minimum fastening is provided in the nailing schedule in Table 2304.10.1.

Just as the capacity of nailed connections is dependent upon the stiffness of the nail shank, the capacity of stapled connections is dependent upon the stiffness of the staple legs. Research was performed at Virginia Tech on stapled connections paralleling the research that was performed there on nailed connections. The research on nailed connections was incorporated into the ANSI/AWC NDS. The research on stapled connections has been incorporated into the ICC Evaluation Service (ICC-ES) *Acceptance Criteria 201* for steel wire staples used to connect wood or metal elements into wood and wood-based materials. The determination of staple-

INTERNATIONAL CODE COUNCIL®
Copyright © 2015 ICC. ALL RIGHTS RESERVED. Accessed by David Dammon on Jun 21, 2017 12:30:52 PM pursuant to License Agreement with ICC. No further reproduction or distribution authorized. ANY UNAUTHORIZED REPRODUCTION OR DISTRIBUTION IS A VIOLATION OF THE FEDERAL COPYRIGHT ACT AND THE LICENSE AGREEMENT, AND SUBJECT TO CIVIL AND CRIMINAL PENALTIES THEREUNDER.

bending moments is in accordance with ASTM F1575 as well as the modifications of that standard that were made in Sections 3.5.1 through 3.5.4 of ICC ES *Acceptance Criteria 201*.

2303.7 Shrinkage. Consideration shall be given in design to the possible effect of cross-grain dimensional changes considered vertically which may occur in lumber fabricated in a green condition.

❖ Lumber in a "green condition" has a moisture content higher than that used to define a "dry condition" under the applicable grading rules, which is reflected on the grade mark (see Commentary Figure 2303.1.1). Because it will shrink more than dry lumber, use of lumber that is fabricated in a green condition requires consideration of the effects of cross-grain shrinkage. The extent of cross-grain shrinkage is a function of the lumber's moisture at the time of construction, the amount of drying that occurs after construction and the in-service moisture content.

SECTION 2304
GENERAL CONSTRUCTION REQUIREMENTS

2304.1 General. The provisions of this section apply to design methods specified in Section 2301.2.

❖ This section is intended to provide some of the more important details of wood-framed construction and, as a result, provide consistency in building inspections. The methods of design are noted in Section 2301.2 and in the industry documents specified therein. Regardless of the design method chosen, the construction requirements of this section must be followed and enforced. In general, Section 2304 is related more to construction requirements than it is to design requirements.

Wood-framed construction has not changed much over the years, which is beneficial for a variety of reasons. First of all, many framers prefer doing things the way they've always done them in the past, most of which are detailed in carpentry manuals or architectural detailing books. To the extent such practices do not violate the need to support or transfer loads, it is preferable to allow them. Further, it is important to reach some type of agreement with these framers to help maintain a consistent product that a building inspector would be familiar with from building to building. This section helps to achieve this goal by having a consistent set of rules that apply to all wood-frame design methods.

2304.2 Size of structural members. Computations to determine the required sizes of members shall be based on the net dimensions (actual sizes) and not nominal sizes.

❖ ASD and LRFD methods require the use of the actual lumber dimensions that occur after the wood has been surfaced and dried. Typically, dimension lumber will shrink $^1/_2$ inch (12.7 mm) in thickness and $^1/_2$ inch to $^3/_4$ inch (12.7 mm to 19 mm) in face width as noted in the American Softwood Lumber (ASL) standard DOC PS 20. This provision is an attempt to make sure that if design principles are applied to a specific element, the designer uses values consistent with the actual net section properties and load-carrying capacity of the member, as reflected in the referenced design standards. Nominal sizes, standard dressed dimensions and section properties of (S4S) lumber and glued-laminated timber are given in the ANSI/AWC NDS Supplement.

2304.3 Wall framing. The framing of exterior and interior walls shall be in accordance with the provisions specified in Section 2308 unless a specific design is furnished.

❖ The conventional construction criteria in Section 2308 provide great detail and specifications for the construction of typical stud-framed walls. Under the majority of circumstances, the methods and procedures for framing stud walls in accordance with Section 2308.5 will provide the necessary resistance to conventional-level loads for a typical stud wall. Although special loading conditions would need to be considered in the design of nonconventional walls, as indicated by Section 2308.8, the completed product will likely be similar in shape and form to an otherwise conventionally framed wall.

2304.3.1 Bottom plates. Studs shall have full bearing on a 2-inch-thick (actual $1^1/_2$-inch, 38 mm) or larger plate or sill having a width at least equal to the width of the studs.

❖ It is necessary to provide a continuous wood plate at the bottom of the wall with a minimum nominal thickness of 2 inches (51 mm), so that the loads supported by the studs in a wood-framed wall are adequately transferred to the supporting structural members or foundation below. The plate is required to be at least the same width as the studs to achieve full bearing to ensure that the capacity of each stud is realized. This requirement is commonly known in the wood construction industry and will typically be met unless there is some type of problem in the field or such a condition occurs in existing construction. If the bottom plate of the wall is found to be narrower than the width of the studs for some reason, the structural issue that needs to be checked is the perpendicular-to-grain bearing stress in that plate and axial load capacity of the stud. The ANSI/AWC NDS provides guidelines for calculating and checking these stresses.

2304.3.2 Framing over openings. Headers, double joists, trusses or other *approved* assemblies that are of adequate size to transfer loads to the vertical members shall be provided over window and door openings in load-bearing walls and partitions.

❖ Stress in stud-framed walls needs to be continuous in order to carry the imposed loads from the top plate to the bottom plate and eventually to the foundation. When there is an opening in the framed wall, this continuity is interrupted. It is necessary to transfer the loads from above the opening to adjacent structural members, which could be a single stud, multiple

INTERNATIONAL CODE COUNCIL®
Copyright © 2015 ICC. ALL RIGHTS RESERVED. Accessed by David Dammon on Jun 21, 2017 12:30:52 PM pursuant to License Agreement with ICC. No further reproduction or distribution authorized. ANY UNAUTHORIZED REPRODUCTION OR DISTRIBUTION IS A VIOLATION OF THE FEDERAL COPYRIGHT ACT AND THE LICENSE AGREEMENT, AND SUBJECT TO CIVIL AND CRIMINAL PENALTIES THEREUNDER.

studs or a solid post. The loads above the opening are typically carried by a solid wood beam or header, a combination of cripple studs and plates or some other combination of members that provides the needed capacity to adequately span between the supporting studs on each side of the opening.

An important structural consideration is the connection between the member spanning the opening and the supporting member. Whether that connection is a simple direct bearing support, a hanger or some other type, it is necessary to provide a mechanism that will transfer not only the vertical loads but also forces that occur perpendicular to the wall plane where such a consideration is warranted.

2304.3.3 Shrinkage. Wood walls and bearing partitions shall not support more than two floors and a roof unless an analysis satisfactory to the *building official* shows that shrinkage of the wood framing will not have adverse effects on the structure or any plumbing, electrical or mechanical systems or other equipment installed therein due to excessive shrinkage or differential movements caused by shrinkage. The analysis shall also show that the roof drainage system and the foregoing systems or equipment will not be adversely affected or, as an alternate, such systems shall be designed to accommodate the differential shrinkage or movements.

❖ The adverse effects of wood shrinkage are greatest in multistory buildings having nonstructural components and supported equipment that may not be able to tolerate significant differential movements caused by shrinkage. This section states conditions under which shrinkage of the wood framing must be considered in the construction of wood-framed wall systems. An analysis of this phenomenon is required in order to determine the effect of shrinkage on the building system that is supported by the wall below. A typical wood-framed building will be constructed of mostly dry lumber, which has a moisture content of 19 percent or less. When the supply of dry lumber is limited, the contractor may need to use green lumber, which has a moisture content greater than 19 percent. The overall effect of lumber shrinkage on a multistory wood-framed building is described in AWC, *Allowable Stress Design Manual for Wood Construction Design of Wood Structures–ASD*.

Another example of the adverse effects of shrinkage is the impact it can have on shear wall performance. Shrinkage has been recognized as a factor in loose hold-down anchor bolt nuts in earthquake-damaged buildings. In this situation, the hold-down cannot resist tension until the slack is taken up, resulting in excessive movement of the shear wall under lateral loading. Since in most cases the shear wall sheathing conceals the hold-downs, this problem often goes undetected. Additional slippage or looseness due to wood shrinkage can also contribute to the overall wall lateral displacement, which results in more story drift than expected. This is especially the case for narrow shear walls (i.e., shear walls with a height-to-width ratio more than 1:1), since the variable d_a in Equation 23-2 plays a larger role in the lateral displacement of such walls based upon wall geometry.

2304.4 Floor and roof framing. The framing of wood-joisted floors and wood-framed roofs shall be in accordance with the provisions specified in Section 2308 unless a specific design is furnished.

❖ Similar to the criteria for stud wall construction, floors may be constructed using the conventional construction methods prescribed in Section 2308, subject to the limitations described therein. One such limitation is a restriction on the magnitude of the dead, live and snow loads that may be applied to the members described in the rafter span tables. Span Tables 2308.4.2.1(1) and (2); 2308.4.1.1(1) and (2); 2308.7.1(1) and (2); and 2308.7.2(1), (2), (3), (4), (5) and (6) each describe a different loading condition for joists, rafters, headers and girders at the ceiling, floor and roof. The maximum floor load covered by Table 2308.8 is 40 pounds per square foot (psf) (1.9 kN/m^2) live load. Table 2308.7.1 covers only dead loads of 5 psf (0.24 kN/m^2) for ceiling rafters and Table 2308.7.2 only provides for up to a 50 psf (2.4 kN/m^2) ground snow load. The range of required loading is much larger, as demonstrated in Table 1607.1. The only structures for which a 40 psf (1.9 kN/m^2) live load on the floor is allowed are catwalks; fire escapes on single-family dwellings; private rooms and wards in a hospital; cell blocks; school classrooms and all areas of residential occupancies other than public areas. All other uses require a higher design floor load, in which case these tables do not apply and an engineered solution in accordance with Section 2308.8 is required.

2304.5 Framing around flues and chimneys. Combustible framing shall be a minimum of 2 inches (51 mm), but shall not be less than the distance specified in Sections 2111 and 2113 and the *International Mechanical Code*, from flues, chimneys and fireplaces, and 6 inches (152 mm) away from flue openings.

❖ This provision is duplicated in the *International Mechanical Code*® (IMC®), but must be included in both places in order to alert the framer, installer and inspector to the requirement. When exposed to heat for a prolonged period of time, the characteristics of wood may change. In particular, the temperature at which wood will ignite can be lowered. Repeated exposure to temperature extremes has a cumulative effect on the mechanical properties of wood, whereby sustained heating at temperatures above 212ºF (100ºC) may cause negative nonreversible effects on these properties. In order to help mitigate this phenomenon, a separation is provided so that the wood will not be directly exposed or noncombustible fire-stopping material is placed between the wood and the heat source. Some type of separation has been required in legacy model codes and is detailed in commonly used construction manuals.

INTERNATIONAL CODE COUNCIL®
Copyright © 2015 ICC. ALL RIGHTS RESERVED. Accessed by David Dammon on Jun 21, 2017 12:30:52 PM pursuant to License Agreement with ICC. No further reproduction or distribution authorized. ANY UNAUTHORIZED REPRODUCTION OR DISTRIBUTION IS A VIOLATION OF THE FEDERAL COPYRIGHT ACT AND THE LICENSE AGREEMENT, AND SUBJECT TO CIVIL AND CRIMINAL PENALTIES THEREUNDER.

2304.6 Exterior wall sheathing. Wall sheathing on the outside of exterior walls, including gables, and the connection of the sheathing to framing shall be designed in accordance with the general provisions of this code and shall be capable of resisting wind pressures in accordance with Section 1609.

❖ This section establishes structural performance requirements and clarifies that wall sheathing that is on the outside of exterior walls, as well as the connection of the sheathing to the framing, must be capable of resisting wind pressures that are determined in Section 1609. It also calls attention to the fact that the required wind resistance applies to the gable.

2304.6.1 Wood structural panel sheathing. Where wood structural panel sheathing is used as the exposed finish on the outside of exterior walls, it shall have an exterior exposure durability classification. Where wood structural panel sheathing is used elsewhere, but not as the exposed finish, it shall be of a type manufactured with exterior glue (Exposure 1 or Exterior). Wood structural panel sheathing, connections and framing spacing shall be in accordance with Table 2304.6.1 for the applicable wind speed and exposure category where used in enclosed buildings with a mean roof height not greater than 30 feet (9144 mm) and a topographic factor (K_{zt}) of 1.0.

❖ Wood structural panels are defined in Chapter 2 as being plywood, OSB and composite panels. Each of these types of panel products has identical structural characteristics when manufactured to meet the DOC PS1 or PS 2 standards in accordance with Section 2303.1.4. This section requires equivalent exposure durability performance. It requires the classification to be Exposure 1 or Exterior when the material is likely to be exposed to the weather. According to the APA, "Exterior"-type panels are suitable for applications permanently exposed to weather, "Exposure 1" panels may be used for extended temporary exposure to weather (such as during construction when long delays are expected prior to providing permanent protection), "Exposure 2" panels apply to protected applications not exposed to high humidity and may be briefly subjected to the weather, while "Interior" panels are to be used only where permanent protection against the weather is provided.

Assessment of high-wind events has shown that failure of wall sheathing, in winds as low as 60 mph (27 m/s), has led to damage due to breaching of the wall envelope. This section provides guidance for using wood structural panels to resist wind pressures. Table 2304.6.1 provides the required fastening, span rating, panel thickness and stud spacing for wood structural panel cladding based on wind speed and exposure category.

TABLE 2304.6.1. See below.

❖ This table provides guidelines for using wood structural panel wall sheathing to resist component and cladding wind pressures normal to the wall. The table clearly specifies the maximum wind speed and exposure category permitted for wood structural panel wall sheathing. It was developed using the component and cladding wind pressures (wind speed) given in Figure 30.5-1 of ASCE 7 with the wood structural panel capacities based on the DOC PS 2 standard, engineering calculations as well as the APA panel design specification that is referenced in Section 2306.1. Nail head pull through and withdrawal were also considered in addition to panel stiffness and bending strength. The panel-fastener capacity was based on the area tributary to a single critical nail.

TABLE 2304.6.1
MAXIMUM NOMINAL DESIGN WIND SPEED, V_{asd} PERMITTED FOR WOOD STRUCTURAL PANEL WALL SHEATHING USED TO RESIST WIND PRESSURES[a, b, c]

MINIMUM NAIL		MINIMUM WOOD STRUCTURAL PANEL SPAN RATING	MINIMUM NOMINAL PANEL THICKNESS (inches)	MAXIMUM WALL STUD SPACING (inches)	PANEL NAIL SPACING		MAXIMUM NOMINAL DESIGN WIND SPEED, V_{asd}[d] (MPH)		
Size	Penetration (inches)				Edges (inches o.c.)	Field (inches o.c.)	Wind exposure category		
							B	C	D
6d common (2.0″ × 0.113″)	1.5	24/0	3/8	16	6	12	110	90	85
		24/16	7/16	16	6	12	110	100	90
						6	150	125	110
8d common (2.5″ × 0.131″)	1.75	24/16	7/16	16	6	12	130	110	105
						6	150	125	110
				24	6	12	110	90	85
						6	110	90	85

For SI: 1 inch = 25.4 mm, 1 mile per hour = 0.447 m/s.

a. Panel strength axis shall be parallel or perpendicular to supports. Three-ply plywood sheathing with studs spaced more than 16 inches on center shall be applied with panel strength axis perpendicular to supports.

b. The table is based on wind pressures acting toward and away from building surfaces in accordance with Section 30.7 of ASCE 7. Lateral requirements shall be in accordance with Section 2305 or 2308.

c. Wood structural panels with span ratings of wall-16 or wall-24 shall be permitted as an alternative to panels with a 24/0 span rating. Plywood siding rated 16 on center or 24 on center shall be permitted as an alternative to panels with a 24/16 span rating. Wall-16 and plywood siding 16 on center shall be used with studs spaced a maximum of 16 inches on center.

d. V_{asd} shall be determined in accordance with Section 1609.3.1.

INTERNATIONAL CODE COUNCIL®
Copyright © 2015 ICC. ALL RIGHTS RESERVED. Accessed by David Dammon on Jun 21, 2017 12:30:52 PM pursuant to License Agreement with ICC. No further reproduction or distribution authorized. ANY UNAUTHORIZED REPRODUCTION OR DISTRIBUTION IS A VIOLATION OF THE FEDERAL COPYRIGHT ACT AND THE LICENSE AGREEMENT, AND SUBJECT TO CIVIL AND CRIMINAL PENALTIES THEREUNDER.

2304.7 Interior paneling. Softwood wood structural panels used for interior paneling shall conform to the provisions of Chapter 8 and shall be installed in accordance with Table 2304.10.1. Panels shall comply with DOC PS 1, DOC PS 2 or ANSI/APA PRP 210. Prefinished hardboard paneling shall meet the requirements of CPA/ANSI A135.5. Hardwood plywood shall conform to HPVA HP-1.

❖ Interior paneling, similar to exterior paneling, must meet minimum standards of acceptance. DOC PS 1 and PS 2 establish the general standards for all softwood veneer panel products. CPA/ANSI A135.5 and HPVA HP-1 address the criteria for hardboard paneling and hardwood veneered plywood, respectively.

2304.8 Floor and roof sheathing. Structural floor sheathing and structural roof sheathing shall comply with Sections 2304.8.1 and 2304.8.2, respectively.

❖ Floor and roof sheathing perform several functions. They are the primary base for both the walking surface for the floor and the main support of the roofing materials. Additionally, the sheathing transfers horizontally applied lateral forces to the vertical lateral-force-resisting elements. Floor sheathing is the structural element in a wood floor that transfers live loads to the floor joists.

Roof sheathing is typically covered by the roofing material. The sheathing typically provides the only means by which loads from wind and snow are transferred to the structural framing members, so the fastening that completes this load path is critical. Panels are typically "span rated," which provides the designer guidance as to the maximum spacing that the framing members can be placed to adequately support imposed loads. The tables are for both lumber and wood structural panel floor and roof sheathing.

2304.8.1 Structural floor sheathing. Structural floor sheathing shall be designed in accordance with the general provisions of this code and the special provisions in this section.

Floor sheathing conforming to the provisions of Table 2304.8(1), 2304.8(2), 2304.8(3) or 2304.8(4) shall be deemed to meet the requirements of this section.

❖ The tables referenced are used for both floor and roof applications (see commentary, Section 2304.8.2). In a two-layer floor sheathing system, the structural panels are placed at the bottom ("subfloor") and fastened directly to the framing members, and the top layer ("underlayment") is typically a different grade of material, occasionally specified to resist indentations depending on what floor finish material is to be installed.

2304.8.2 Structural roof sheathing. Structural roof sheathing shall be designed in accordance with the general provisions of this code and the special provisions in this section.

Roof sheathing conforming to the provisions of Table 2304.8(1), 2304.8(2), 2304.8(3) or 2304.8(5) shall be deemed to meet the requirements of this section. Wood structural panel roof sheathing shall be bonded by exterior glue.

❖ There are four tables referenced in this section that establish either allowable load or allowable span of structural sheathing typically produced by mills in North America. Use of the tables is straightforward. Simply locate with the span between structural framing members, and, depending on the direction of the framing, determine the minimum thickness required by the code. It may be necessary to install thicker material if the loads require additional support.

Lumber and wood structural panel sheathing are required to be marked with grade stamps indicating the lumber grade, panel span rating or panel grade required by the appropriate table based on the conditions of use.

TABLE 2304.8 (1). See below.

❖ Table 2304.8(1) applies to "surfaced dry" or "surfaced unseasoned" lumber used for floor or roof sheathing. These terms refer to the condition of the lumber at the time it was surfaced, or finished. Surfaced dry indicates a maximum moisture content of 19 percent at the time of surfacing. This is critical when determining the actual dimension of the lumber. A piece that is surfaced dry is narrower than a piece that is surfaced unseasoned (often referred to as surfaced green). The grade stamp will indicate whether the lumber was surfaced dry or surfaced green.

TABLE 2304.8 (2). See page 23-18.

❖ The different agencies that publish grading rules are listed and are an important part of the criteria used in

TABLE 2304.8(1)
ALLOWABLE SPANS FOR LUMBER FLOOR AND ROOF SHEATHING[a, b]

SPAN (inches)	MINIMUM NET THICKNESS (inches) OF LUMBER PLACED			
	Perpendicular to supports		Diagonally to supports	
	Surfaced dry[c]	Surfaced unseasoned	Surfaced dry[c]	Surfaced unseasoned
Floors				
24	3/4	25/32	3/4	25/32
16	5/8	11/16	5/8	11/16
Roofs				
24	5/8	11/16	3/4	25/32

For SI: 1 inch = 25.4 mm.

a. Installation details shall conform to Sections 2304.8.1 and 2304.8.2 for floor and roof sheathing, respectively.

b. Floor or roof sheathing complying with this table shall be deemed to meet the design criteria of Section 2304.7.

c. Maximum 19-percent moisture content.

INTERNATIONAL CODE COUNCIL®
Copyright © 2015 ICC. ALL RIGHTS RESERVED. Accessed by David Dammon on Jun 21, 2017 12:30:52 PM pursuant to License Agreement with ICC. No further reproduction or distribution authorized. ANY UNAUTHORIZED REPRODUCTION OR DISTRIBUTION IS A VIOLATION OF THE FEDERAL COPYRIGHT ACT AND THE LICENSE AGREEMENT, AND SUBJECT TO CIVIL AND CRIMINAL PENALTIES THEREUNDER.

determining the adequacy of structural lumber sheathing. All of these agencies are regulated by the U.S. DOC through the ALSC in order to maintain some type of standard by which stress-grading principles are used to create grading rules. These requirements are outlined in ALSC standard DOC PS 20. The rules-writing agencies included in this table are the National Lumber Grades Authority (NLGA), West Coast Lumber Inspection Bureau (WCLIB), Western Wood Products Association (WWPA), Northern Softwood Lumber Bureau (NSLB), Northeastern Lumber Manufacturers Association (NELMA), Southern Pine Inspection Bureau (SPIB) and Redwood Inspection Service (RIS).

TABLE 2304.8 (3). See below.

❖ Wood structural panels are also graded, but the type of grade stamp used identifies the thickness and the span capabilities of the piece. The panel span rating (first column of the table), also known as a "panel index," will appear on the grade stamp. The first number on the panel span rating indicates the allowable spacing of support members (rafters or trusses) in a roof application. The second number indicates the

TABLE 2304.8(2)
SHEATHING LUMBER, MINIMUM GRADE REQUIREMENTS: BOARD GRADE

SOLID FLOOR OR ROOF SHEATHING	SPACED ROOF SHEATHING	GRADING RULES
Utility	Standard	NLGA, WCLIB, WWPA
4 common or utility	3 common or standard	NLGA, WCLIB, WWPA, NSLB or NELMA
No. 3	No. 2	SPIB
Merchantable	Construction common	RIS

TABLE 2304.8(3)
ALLOWABLE SPANS AND LOADS FOR WOOD STRUCTURAL PANEL SHEATHING AND SINGLE-FLOOR GRADES CONTINUOUS OVER TWO OR MORE SPANS WITH STRENGTH AXIS PERPENDICULAR TO SUPPORTS[a, b]

SHEATHING GRADES		ROOF[c]				FLOOR[d]
Panel span rating roof/ floor span	Panel thickness (inches)	Maximum span (inches)		Load[e](psf)		Maximum span (inches)
		With edge support[f]	Without edge support	Total load	Live load	
16/0	3/8	16	16	40	30	0
20/0	3/8	20	20	40	30	0
24/0	3/8, 7/16, 1/2	24	20[g]	40	30	0
24/16	7/16, 1/2	24	24	50	40	16
32/16	15/32, 1/2, 5/8	32	28	40	30	16[h]
40/20	19/32, 5/8, 3/4, 7/8	40	32	40	30	20[h,i]
48/24	23/32, 3/4, 7/8	48	36	45	35	24
54/32	7/8, 1	54	40	45	35	32
60/32	7/8, 1 1/8	60	48	45	35	32
SINGLE FLOOR GRADES		**ROOF[c]**				**FLOOR[d]**
Panel span rating	Panel thickness (inches)	Maximum span (inches)		Load[e](psf)		Maximum span (inches)
		With edge support[f]	Without edge support	Total load	Live load	
16 o.c.	1/2, 19/32, 5/8	24	24	50	40	16[h]
20 o.c.	19/32, 5/8, 3/4	32	32	40	30	20[h,i]
24 o.c.	23/32, 3/4	48	36	35	25	24
32 o.c.	7/8, 1	48	40	50	40	32
48 o.c.	1 3/32, 1 1/8	60	48	50	40	48

For SI: 1 inch = 25.4 mm, 1 pound per square foot = 0.0479 kN/m^2.

a. Applies to panels 24 inches or wider.

b. Floor and roof sheathing complying with this table shall be deemed to meet the design criteria of Section 2304.8.

c. Uniform load deflection limitations 1/180 of span under live load plus dead load, 1/240 under live load only.

d. Panel edges shall have approved tongue-and-groove joints or shall be supported with blocking unless 1/4-inch minimum thickness underlayment or 1 1/2 inches of approved cellular or lightweight concrete is placed over the subfloor, or finish floor is 3/4-inch wood strip. Allowable uniform load based on deflection of 1/360 of span is 100 pounds per square foot except the span rating of 48 inches on center is based on a total load of 65 pounds per square foot.

e. Allowable load at maximum span.

f. Tongue-and-groove edges, panel edge clips (one midway between each support, except two equally spaced between supports 48 inches on center), lumber blocking or other. Only lumber blocking shall satisfy blocked diaphragm requirements.

g. For 1/2-inch panel, maximum span shall be 24 inches.

h. Span is permitted to be 24 inches on center where 3/4-inch wood strip flooring is installed at right angles to joist.

i. Span is permitted to be 24 inches on center for floors where 1 1/2 inches of cellular or lightweight concrete is applied over the panels.

INTERNATIONAL CODE COUNCIL®
Copyright © 2015 ICC. ALL RIGHTS RESERVED. Accessed by David Dammon on Jun 21, 2017 12:30:52 PM pursuant to License Agreement with ICC. No further reproduction or distribution authorized. ANY UNAUTHORIZED REPRODUCTION OR DISTRIBUTION IS A VIOLATION OF THE FEDERAL COPYRIGHT ACT AND THE LICENSE AGREEMENT, AND SUBJECT TO CIVIL AND CRIMINAL PENALTIES THEREUNDER.

allowable spacing of floor joists or trusses in a floor application. For instance, if the span rating is 24/16, the panel may be used on roof joists spaced 24 inches (610 mm) on center (o.c.) and on floor joists spaced 16 inches (406 mm) o.c. Span ratings were developed for easy identification and to assist in verifying the correct use of panels in the field. According to *Design of Wood Structures—ASD/LRFD*, typical wood structural panel applications are not controlled so much by the uniform load requirements, but depend more on the basis of panel deflection under concentrated loads and judged by the panel's performance under passing traffic.

For the panel span rating to be applicable, other conditions of the table for loading and use must be met. For instance, for sheathing with a panel index of 24/16 to be used on roof rafters spaced 16 inches (406 mm) o.c., the snow load for the roof cannot exceed 40 psf (1.92 MPa) (listed in the sixth column of the table). The allowable spacing of support members is also dependent on the type of edge support provided for the panels (see Note f). The table is applicable only when the strength axis of the panel is perpendicular to the supports, in other words, when the long edge of the panel is perpendicular to the joists or rafters.

TABLE 2304.8 (4). See below.

❖ The subfloor is the structural element that supports the floor loads and is the substrate (supporting layer) for the underlayment. Underlayment is the smooth surface used as the substrate for the floor covering. Combination subfloor-underlayment is a single layer of sheathing that meets the structural requirements for subfloor and has a smooth surface suitable as underlayment for the floor covering. Wood species are grouped on the basis of their mechanical properties in DOC PS 1. Because bending stiffness and bending strength are the most important properties for many plywood uses, the species groups are based on bending stiffness and bending strength. Single-layer combined subfloor and underlayment is currently the most common method used for wood floor construction.

TABLE 2304.8 (5). See page 23-20.

❖ The table provides criteria for panels that may be used on roofs with significant live loads, the maximum live load being listed at 90 psf (4.31 MPa). That being the case, it is clear that the live loads in excess of 20 psf (0.958 MPa) (which is generally the maximum roof live loading determined in Section 1607.12.2) is primarily referring to the roof snow load rather than a live load, strictly speaking. For further discussion on required snow loads, see the commentary to Section 1608. Required panel grade and thickness is based on the spacing of rafters or trusses and the maximum allowable load at that span. Note that the table is based on five-ply plywood. In some cases, the allowable loads for four-ply plywood and composite panels must be reduced by 15 percent.

2304.9 Lumber decking. Lumber decking shall be designed and installed in accordance with the general provisions of this code and Sections 2304.9.1 through 2304.9.5.3.

❖ Section 2304.9 has provisions for lumber decking that were previously contained in the AITC 112 standard, which has been discontinued.

2304.9.1 General. Each piece of lumber decking shall be square-end trimmed. When random lengths are furnished, each piece shall be square end trimmed across the face so that at least 90 percent of the pieces are within 0.5 degrees (0.00873 rad) of square. The ends of the pieces shall be permitted to be beveled up to 2 degrees (0.0349 rad) from the vertical with the exposed face of the piece slightly longer than the opposite face of the piece. Tongue-and-groove decking shall be installed with the tongues up on sloped or pitched roofs with pattern faces down.

❖ Along with design requirements in Section 2306.1.4, this section provides design and installation requirements for lumber decking, including tongue-and-groove as well as mechanically laminated decking.

TABLE 2304.8(4)
ALLOWABLE SPAN FOR WOOD STRUCTURAL PANEL COMBINATION SUBFLOOR-UNDERLAYMENT (SINGLE FLOOR)[a, b]
(Panels Continuous Over Two or More Spans and Strength Axis Perpendicular to Supports)

IDENTIFICATION	MAXIMUM SPACING OF JOISTS (inches)				
	16	20	24	32	48
Species group[c]	Thickness (inches)				
1	1/2	5/8	3/4	—	—
2, 3	5/8	3/4	7/8	—	—
4	3/4	7/8	1	—	—
Single floor span rating[d]	16 o.c.	20 o.c.	24 o.c.	32 o.c.	48 o.c.

For SI: 1 inch = 25.4 mm, 1 pound per square foot = 0.0479 kN/m^2.

a. Spans limited to value shown because of possible effects of concentrated loads. Allowable uniform loads based on deflection of $^1/_{360}$ of span is 100 pounds per square foot except allowable total uniform load for $1^1/_8$-inch wood structural panels over joists spaced 48 inches on center is 65 pounds per square foot. Panel edges shall have approved tongue-and-groove joints or shall be supported with blocking, unless $^1/_4$-inch minimum thickness underlayment or $1^1/_2$ inches of approved cellular or lightweight concrete is placed over the subfloor, or finish floor is $^3/_4$-inch wood strip.

b. Floor panels complying with this table shall be deemed to meet the design criteria of Section 2304.8.

c. Applicable to all grades of sanded exterior-type plywood. See DOC PS 1 for plywood species groups.

d. Applicable to Underlayment grade, C-C (Plugged) plywood, and Single Floor grade wood structural panels.

INTERNATIONAL CODE COUNCIL®
Copyright © 2015 ICC. ALL RIGHTS RESERVED. Accessed by David Dammon on Jun 21, 2017 12:30:52 PM pursuant to License Agreement with ICC. No further reproduction or distribution authorized. ANY UNAUTHORIZED REPRODUCTION OR DISTRIBUTION IS A VIOLATION OF THE FEDERAL COPYRIGHT ACT AND THE LICENSE AGREEMENT, AND SUBJECT TO CIVIL AND CRIMINAL PENALTIES THEREUNDER.

2304.9.2 Layup patterns. Lumber decking is permitted to be laid up following one of five standard patterns as defined in Sections 2304.9.2.1 through 2304.9.2.5. Other patterns are permitted to be used provided they are substantiated through engineering analysis.

❖ This section describes typically used layup patterns for lumber decking. It also allows other patterns to be used where the engineer provides substantiation. These layup patterns are determined, in part, by the location of end joints and the pattern is the basis for determining the allowable deck load in Section 2306.1.4.

2304.9.2.1 Simple span pattern. All pieces shall be supported on their ends (i.e., by two supports).

❖ See the commentary to Section 2304.9.2 and Commentary Figure 2304.9.2.1.

2304.9.2.2 Two-span continuous pattern. All pieces shall be supported by three supports, and all end joints shall occur in line on alternating supports. Supporting members shall be designed to accommodate the load redistribution caused by this pattern.

❖ See the commentary to Section 2304.9.2 and Commentary Figure 2304.9.2.2.

2304.9.2.3 Combination simple and two-span continuous pattern. Courses in end spans shall be alternating simple-span pattern and two-span continuous pattern. End joints shall be staggered in adjacent courses and shall bear on supports.

❖ See the commentary to Section 2304.9.2 and Commentary Figure 2304.9.2.3.

TABLE 2304.8(5)
ALLOWABLE LOAD (PSF) FOR WOOD STRUCTURAL PANEL ROOF SHEATHING CONTINUOUS OVER TWO OR MORE SPANS AND STRENGTH AXIS PARALLEL TO SUPPORTS (Plywood Structural Panels Are Five-Ply, Five-Layer Unless Otherwise Noted)[a, b]

PANEL GRADE	THICKNESS (inch)	MAXIMUM SPAN (inches)	LOAD AT MAXIMUM SPAN (psf)	
			Live	Total
Structural I sheathing	7/16	24	20	30
	15/32	24	35[c]	45[c]
	1/2	24	40[c]	50[c]
	19/32, 5/8	24	70	80
	23/32, 3/4	24	90	100
Sheathing, other grades covered in DOC PS 1 or DOC PS 2	7/16	16	40	50
	15/32	24	20	25
	1/2	24	25	30
	19/32	24	40[c]	50[c]
	5/8	24	45[c]	55[c]
	23/32, 3/4	24	60[c]	65[c]

For SI: 1 inch = 25.4 mm, 1 pound per square foot = 0.0479 kN/m^2.

a. Roof sheathing complying with this table shall be deemed to meet the design criteria of Section 2304.8.

b. Uniform load deflection limitations 1/180 of span under live load plus dead load, 1/240 under live load only. Edges shall be blocked with lumber or other approved type of edge supports.

c. For composite and four-ply plywood structural panel, load shall be reduced by 15 pounds per square foot.

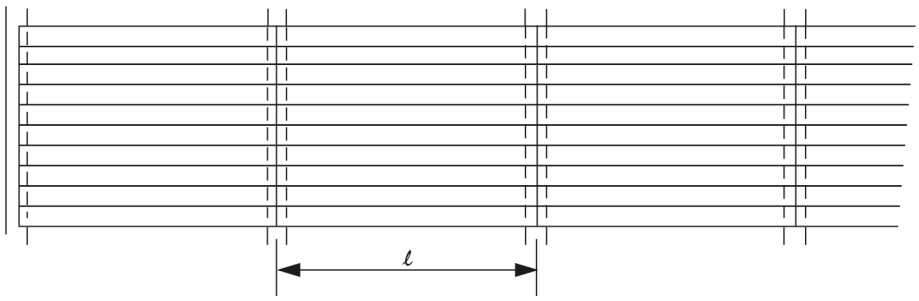

Figure 2304.9.2.1
SIMPLE SPAN PATTERN

INTERNATIONAL CODE COUNCIL®
Copyright © 2015 ICC. ALL RIGHTS RESERVED. Accessed by David Dammon on Jun 21, 2017 12:30:52 PM pursuant to License Agreement with ICC. No further reproduction or distribution authorized. ANY UNAUTHORIZED REPRODUCTION OR DISTRIBUTION IS A VIOLATION OF THE FEDERAL COPYRIGHT ACT AND THE LICENSE AGREEMENT, AND SUBJECT TO CIVIL AND CRIMINAL PENALTIES THEREUNDER.

2304.9.2.4 Cantilevered pieces intermixed pattern. The decking shall extend across a minimum of three spans. Pieces in each starter course and every third course shall be simple span pattern. Pieces in other courses shall be cantilevered over the supports with end joints at alternating quarter or third points of the spans. Each piece shall bear on at least one support.

❖ See the commentary to Section 2304.9.2 and Commentary Figure 2304.9.2.4.

2304.9.2.5 Controlled random pattern. The decking shall extend across a minimum of three spans. End joints of pieces within 6 inches (152 mm) of the end joints of the adjacent pieces in either direction shall be separated by at least two intervening courses. In the end bays, each piece shall bear on at least one support. Where an end joint occurs in an end bay, the next piece in the same course shall continue over the first inner support for at least 24 inches (610 mm). The details of the controlled random pattern shall be as specified for each decking material in Section 2304.9.3.3, 2304.9.4.3 or 2304.9.5.3.

Decking that cantilevers beyond a support for a horizontal distance greater than 18 inches (457 mm), 24 inches (610 mm) or 36 inches (914 mm) for 2-inch (51 mm), 3-inch (76 mm) and 4-inch (102 mm) nominal thickness decking, respectively, shall comply with the following:

1. The maximum cantilevered length shall be 30 percent of the length of the first adjacent interior span.
2. A structural fascia shall be fastened to each decking piece to maintain a continuous, straight line.

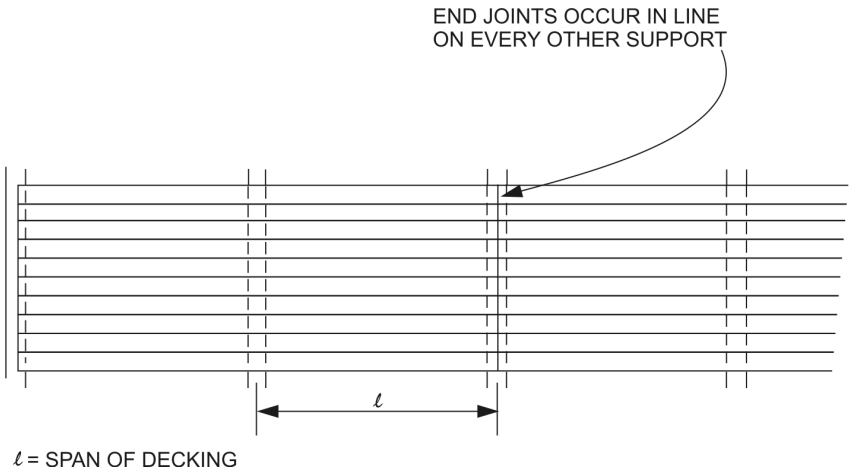

Figure 2304.9.2.2
TWO-SPAN CONTINUOUS PATTERN

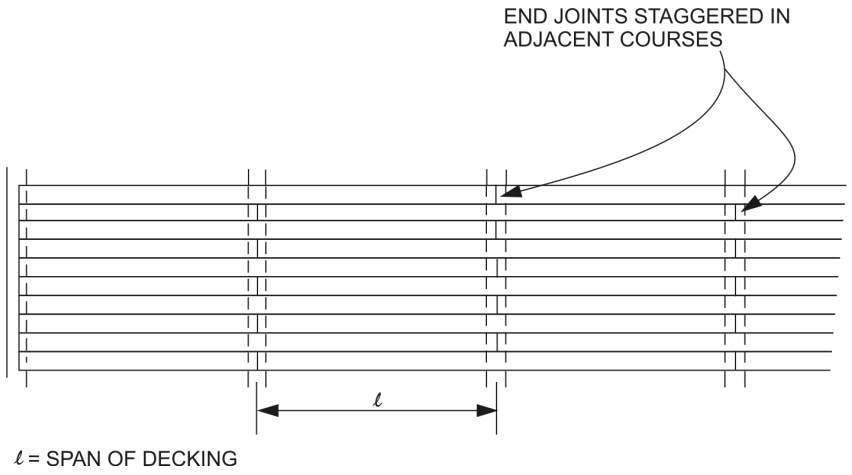

Figure 2304.9.2.3
COMBINATION SIMPLE AND TWO-SPAN CONTINUOUS PATTERN

INTERNATIONAL CODE COUNCIL®
Copyright © 2015 ICC. ALL RIGHTS RESERVED. Accessed by David Dammon on Jun 21, 2017 12:30:52 PM pursuant to License Agreement with ICC. No further reproduction or distribution authorized. ANY UNAUTHORIZED REPRODUCTION OR DISTRIBUTION IS A VIOLATION OF THE FEDERAL COPYRIGHT ACT AND THE LICENSE AGREEMENT, AND SUBJECT TO CIVIL AND CRIMINAL PENALTIES THEREUNDER.

3. There shall be no end joints in the decking between the cantilevered end of the decking and the centerline of the first adjacent interior span.

❖ General requirements for controlled random layup are stated in this section. They apply along with the additional specific layup requirements subsequently given under mechanically laminated and tongue-and-groove decking. The second paragraph states requirements where there is a cantilevered span such as at a roof overhang (also see commentary, Section 2304.9.2).

2304.9.3 Mechanically laminated decking. Mechanically laminated decking shall comply with Sections 2304.9.3.1 through 2304.9.3.3.

❖ This section provides construction requirements for square-edged lumber that is set on edge and mechanically fastened together with nails to produce a solid flooring.

2304.9.3.1 General. Mechanically laminated decking consists of square-edged dimension lumber laminations set on edge and nailed to the adjacent pieces and to the supports.

❖ One method of constructing floor decking is the use of individual wood members set on edge, connected with nails and mechanically laminated together to produce a solid monolithic surface.

This section gives the fastening requirements for floors that are constructed of individual wood members set on edge and mechanically laminated to produce a continuous surface. For the floor to act as a unit, fastening is critical, and therefore it is prescribed in this section. If the floor is constructed in accordance with these fastening requirements, then for purposes of design it can be considered a solid wood floor acting as one element.

2304.9.3.2 Nailing. The length of nails connecting laminations shall be not less than two and one-half times the net thickness of each lamination. Where decking supports are 48 inches (1219 mm) on center or less, side nails shall be installed not more than 30 inches (762 mm) on center alternating between top and bottom edges, and staggered one-third of the spacing in adjacent laminations. Where supports are spaced more than 48 inches (1219 mm) on center, side nails shall be installed not more than 18 inches (457 mm) on center alternating between top and bottom edges and staggered one-third of the spacing in adjacent laminations. Two side nails shall be installed at each end of butt-jointed pieces.

Laminations shall be toenailed to supports with 20d or larger common nails. Where the supports are 48 inches (1219 mm) on center or less, alternate laminations shall be toenailed to alternate supports; where supports are spaced more than 48 inches (1219 mm) on center, alternate laminations shall be toenailed to every support.

❖ This section provides requirements for nailing the deck laminations together (see commentary, Section 2304.9.3.1).

2304.9.3.3 Controlled random pattern. There shall be a minimum distance of 24 inches (610 mm) between end joints in adjacent courses. The pieces in the first and second courses shall bear on at least two supports with end joints in these two courses occurring on alternate supports. A maximum of seven intervening courses shall be permitted before this pattern is repeated.

❖ These requirements are specific to the layup of tongue-and-groove decking and are in addition to the general limitations stated in Section 2304.9.2.5 (see Commentary Figure 2304.9.4.3).

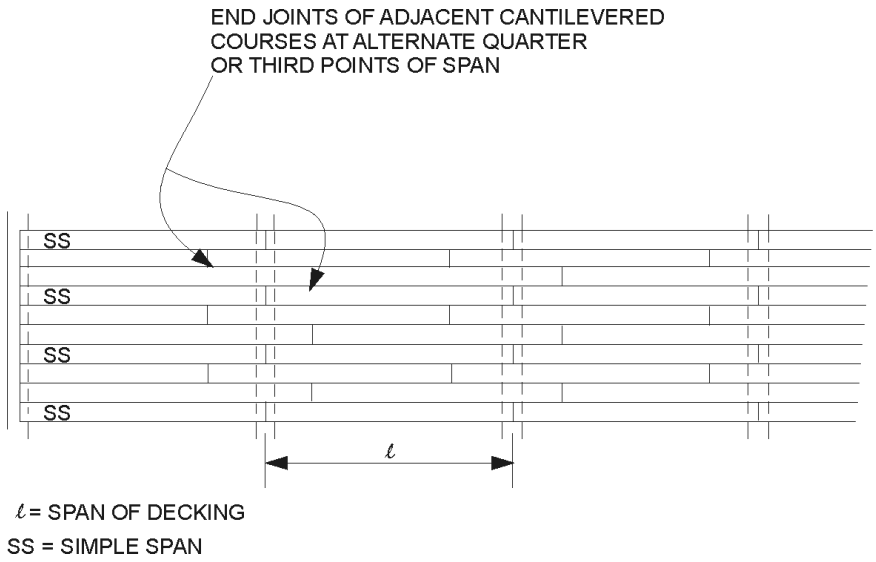

Figure 2304.9.2.4
CANTILEVERED PIECES INTERMIXED PATTERN

INTERNATIONAL CODE COUNCIL®
Copyright © 2015 ICC. ALL RIGHTS RESERVED. Accessed by David Dammon on Jun 21, 2017 12:30:52 PM pursuant to License Agreement with ICC. No further reproduction or distribution authorized. ANY UNAUTHORIZED REPRODUCTION OR DISTRIBUTION IS A VIOLATION OF THE FEDERAL COPYRIGHT ACT AND THE LICENSE AGREEMENT, AND SUBJECT TO CIVIL AND CRIMINAL PENALTIES THEREUNDER.

2304.9.4 Two-inch sawn tongue-and-groove decking. Two-inch (51 mm) sawn tongue-and-groove decking shall comply with Sections 2304.9.4.1 through 2304.9.4.3.

❖ The section covers 2-inch-thick (51 mm) tongue-and-groove boards used for decking.

2304.9.4.1 General. Two-inch (51 mm) decking shall have a maximum moisture content of 15 percent. Decking shall be machined with a single tongue-and-groove pattern. Each decking piece shall be nailed to each support.

❖ Another method of floor construction is the use of sawn lumber tongue-and-groove decking. The projecting tongue on one side fits into the matching groove of the adjacent board, causing these two elements to deflect as a unit when subjected to loads. As Commentary Figure 2304.9.4.1 illustrates, 2-inch-thick (51 mm) tongue-and-groove boards have one tongue and one groove per board.

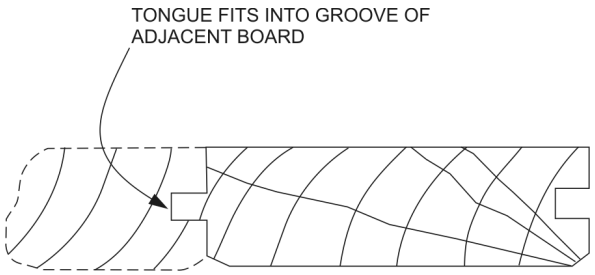

For SI: 1 inch = 25.4 mm.

Figure 2304.9.4.1
TWO-INCH TONGUE-AND-GROOVE DECKING

2304.9.4.2 Nailing. Each piece of decking shall be toenailed at each support with one 16d common nail through the tongue and face-nailed with one 16d common nail.

❖ For the floor to distribute loads and act as a unit, fastening is critical; therefore, it is prescribed in this section.

2304.9.4.3 Controlled random pattern. There shall be a minimum distance of 24 inches (610 mm) between end joints in adjacent courses. The pieces in the first and second courses shall bear on at least two supports with end joints in these two courses occurring on alternate supports. A maximum of seven intervening courses shall be permitted before this pattern is repeated.

❖ These requirements are specific to the layup of tongue-and-groove decking and are in addition to the general limitations stated in Section 2304.9.2.5 (see Commentary Figure 2304.9.4.3).

2304.9.5 Three- and four-inch sawn tongue-and-groove decking. Three- and four-inch (76 mm and 102 mm) sawn tongue-and-groove decking shall comply with Sections 2304.9.5.1 through 2304.9.5.3.

❖ The section covers 3- and 4-inch-thick (76 and 102 mm) tongue-and-groove boards used for decking (see Commentary Figure 2304.9.5.1).

2304.9.5.1 General. Three-inch (76 mm) and four-inch (102 mm) decking shall have a maximum moisture content of 19 percent. Decking shall be machined with a double tongue-and-groove pattern. Decking pieces shall be interconnected and nailed to the supports.

❖ As Commentary Figure 2304.9.5.1 illustrates, 3- and 4-inch-thick (76 and 102 mm) tongue-and-groove boards have a pair of tongues and a pair of grooves in each board.

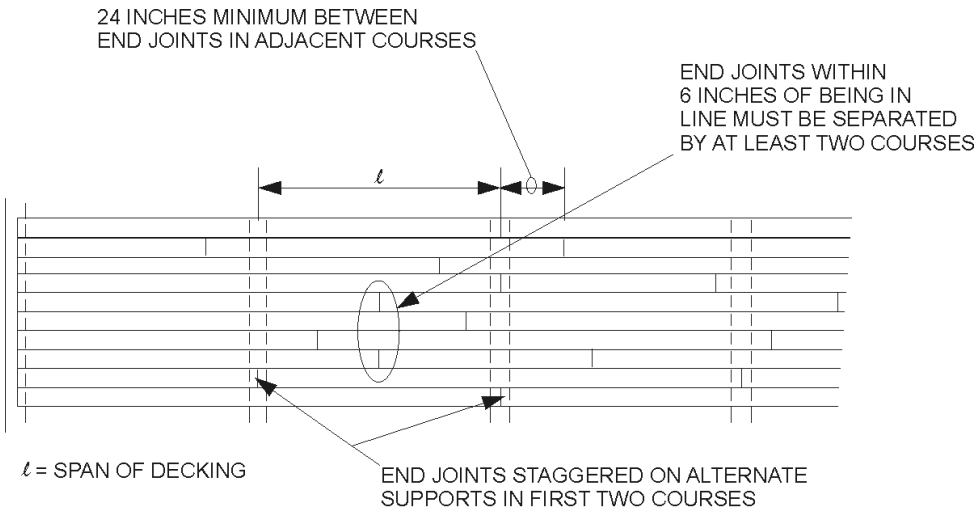

For SI: 1 inch = 25.4 mm.

Figure 2304.9.4.3
CONTROLLED RANDOM PATTERN TWO-INCH TONGUE-AND-GROOVE DECKING

INTERNATIONAL CODE COUNCIL®
Copyright © 2015 ICC. ALL RIGHTS RESERVED. Accessed by David Dammon on Jun 21, 2017 12:30:52 PM pursuant to License Agreement with ICC. No further reproduction or distribution authorized. ANY UNAUTHORIZED REPRODUCTION OR DISTRIBUTION IS A VIOLATION OF THE FEDERAL COPYRIGHT ACT AND THE LICENSE AGREEMENT, AND SUBJECT TO CIVIL AND CRIMINAL PENALTIES THEREUNDER.

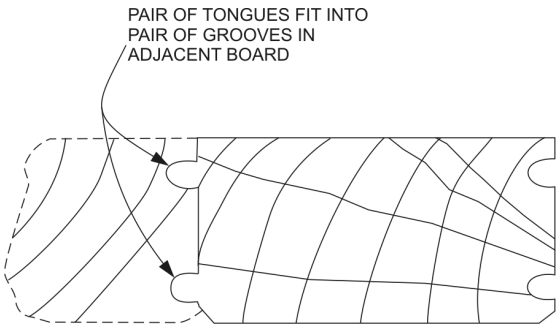

For SI: 1 inch = 25.4 mm.

Figure 2304.9.5.1
THREE- AND FOUR-INCH
TONGUE-AND-GROOVE DECKING

2304.9.5.2 Nailing. Each piece shall be toenailed at each support with one 40d common nail and face-nailed with one 60d common nail. Courses shall be spiked to each other with 8-inch (203 mm) spikes at maximum intervals of 30 inches (762 mm) through predrilled edge holes penetrating to a depth of approximately 4 inches (102 mm). One spike shall be installed at a distance not exceeding 10 inches (254 mm) from the end of each piece.

❖ For the floor to distribute loads and act as a unit, fastening is critical; therefore, it is prescribed in this section.

2304.9.5.3 Controlled random pattern. There shall be a minimum distance of 48 inches (1219 mm) between end joints in adjacent courses. Pieces not bearing on a support are permitted to be located in interior bays provided the adjacent pieces in the same course continue over the support for at least 24 inches (610 mm). This condition shall not occur more than once in every six courses in each interior bay.

❖ These requirements are specific to the layup of tongue-and-groove decking and are in addition to the general limitations stated in Section 2304.9.2.5.

2304.10 Connectors and fasteners. Connectors and fasteners shall comply with the applicable provisions of Sections 2304.10.1 through 2304.10.7.

❖ The section contains requirements for connectors and fasteners used to connect wood members, including nails, staples, joist hangers, clips and framing anchors.

Section 2301.2 gives alternative design methodologies for wood construction: 1. The ASD method; 2. The LRFD method; and 3. Conventional light-frame methodologies that are embodied in Section 2308 of the code. Both ASD and LRFD are covered in the ANSI/AWC NDS and SDPWS. If conventional construction provisions are used and there is no design provided by means of the ASD or LRFD methodologies, then the prescriptive fastening of Table 2304.10.1 is typically all that is required. However, when the structure is designed by the ASD or LRFD methods, fastening must comply with the applicable design standard as well as the minimum prescriptive fastenings specified in Table 2304.10.1.

2304.10.1 Fastener requirements. Connections for wood members shall be designed in accordance with the appropriate methodology in Section 2301.2. The number and size of fasteners connecting wood members shall not be less than that set forth in Table 2304.10.1.

❖ Section 2301.2 gives alternative design methodologies for wood construction: 1. The ASD method; 2. The LRFD method; and 3. Conventional light-frame methodologies that are embodied in Section 2308 of the code. If conventional provisions are used and there is no design being conducted by means of the ASD or LRFD methodologies, then the prescriptive fastening of Table 2304.10.1 is all that is required. However, when the ASD or LRFD methods are used, fastening must comply with the associated design standard as well as the prescriptive fastenings specified in Table 2304.10.1.

TABLE 2304.10.1. See page 23-25.

❖ This table provides the minimum fastening requirements for all light wood-framed construction, regardless of the design method used. Familiarity with the terms and configurations of conventional frame construction is necessary to apply this table. All members identified within this table are commonly described in any available wood design or construction manual. See Commentary Figure 2304.10.1 for an illustration of certain nail types.

INTERNATIONAL CODE COUNCIL®
Copyright © 2015 ICC. ALL RIGHTS RESERVED. Accessed by David Dammon on Jun 21, 2017 12:30:52 PM pursuant to License Agreement with ICC. No further reproduction or distribution authorized. ANY UNAUTHORIZED REPRODUCTION OR DISTRIBUTION IS A VIOLATION OF THE FEDERAL COPYRIGHT ACT AND THE LICENSE AGREEMENT, AND SUBJECT TO CIVIL AND CRIMINAL PENALTIES THEREUNDER.

TABLE 2304.10.1
FASTENING SCHEDULE

DESCRIPTION OF BUILDING ELEMENTS	NUMBER AND TYPE OF FASTENER	SPACING AND LOCATION
Roof		
1. Blocking between ceiling joists, rafters or trusses to top plate or other framing below	3-8d common ($2^1/_2$″ × 0.131″); or 3-10d box (3″ × 0.128″); or 3-3″ × 0.131″ nails; or 3-3″ 14 gage staples, $^7/_{16}$″ crown	Each end, toenail
Blocking between rafters or truss not at the wall top plate, to rafter or truss	2-8d common ($2^1/_2$″ × 0.131″) 2-3″ × 0.131″ nails 2-3″ 14 gage staples	Each end, toenail
	2-16 d common ($3^1/_2$″ × 0.162″) 3-3″ × 0.131″ nails 3-3″ 14 gage staples	End nail
Flat blocking to truss and web filler	16d common ($3^1/_2$″ × 0.162″) @ 6″ o.c. 3″ × 0.131″ nails @ 6″ o.c. 3″ × 14 gage staples @ 6″ o.c	Face nail
2. Ceiling joists to top plate	3-8d common ($2^1/_2$″ × 0.131″); or 3-10d box (3″ × 0.128″); or 3-3″ × 0.131″ nails; or 3-3″ 14 gage staples, $^7/_{16}$″ crown	Each joist, toenail
3. Ceiling joist not attached to parallel rafter, laps over partitions (no thrust) (see Section 2308.7.3.1, Table 2308.7.3.1)	3-16d common ($3^1/_2$″ × 0.162″); or 4-10d box (3″ × 0.128″); or 4-3″ × 0.131" nails; or 4-3″ 14 gage staples, $^7/_{16}$″ crown	Face nail
4. Ceiling joist attached to parallel rafter (heel joint) (see Section 2308.7.3.1, Table 2308.7.3.1)	Per Table 2308.7.3.1	Face nail
5. Collar tie to rafter	3-10d common (3″ × 0.148″); or 4-10d box (3″ × 0.128″); or 4-3″ × 0.131″ nails; or 4-3″ 14 gage staples, $^7/_{16}$″ crown	Face nail
6. Rafter or roof truss to top plate (See Section 2308.7.5, Table 2308.7.5)	3-10 common (3″ × 0.148″); or 3-16d box ($3^1/_2$″ × 0.135″); or 4-10d box (3" × 0.128″); or 4-3″ × 0.131 nails; or 4-3″ 14 gage staples, $^7/_{16}$″ crown	Toenail[c]
7. Roof rafters to ridge valley or hip rafters; or roof rafter to 2-inch ridge beam	2-16d common ($3^1/_2$″ × 0.162″); or 3-10d box (3″ × 0.128″); or 3-3″ × 0.131″ nails; or 3-3″ 14 gage staples, $^7/_{16}$″ crown; or	End nail
	3-10d common ($3^1/_2$″ × 0.148″); or 3-16d box ($3^1/_2$″ × 0.135″); or 4-10d box (3″ × 0.128″); or 4-3″ × 0.131″ nails; or 4-3″ 14 gage staples, $^7/_{16}$″ crown	Toenail

(continued)

INTERNATIONAL CODE COUNCIL®
Copyright © 2015 ICC. ALL RIGHTS RESERVED. Accessed by David Dammon on Jun 21, 2017 12:30:52 PM pursuant to License Agreement with ICC. No further reproduction or distribution authorized. ANY UNAUTHORIZED REPRODUCTION OR DISTRIBUTION IS A VIOLATION OF THE FEDERAL COPYRIGHT ACT AND THE LICENSE AGREEMENT, AND SUBJECT TO CIVIL AND CRIMINAL PENALTIES THEREUNDER.

TABLE 2304.10.1—continued
FASTENING SCHEDULE

DESCRIPTION OF BUILDING ELEMENTS	NUMBER AND TYPE OF FASTENER	SPACING AND LOCATION
Wall		
8. Stud to stud (not at braced wall panels)	16d common ($3^1/_2$″ × 0.162″);	24″ o.c. face nail
	10d box (3″ × 0.128″); or 3″ × 0.131″ nails; or 3-3″ 14 gage staples, $^7/_{16}$″ crown	16″ o.c. face nail
9. Stud to stud and abutting studs at intersecting wall corners (at braced wall panels)	16d common ($3^1/_2$″ × 0.162″); or	16″ o.c. face nail
	16d box ($3^1/_2$″ × 0.135″); or	12″ o.c. face nail
	3″ × 0.131″ nails; or 3-3″ 14 gage staples, $^7/_{16}$″ crown	12″ o.c. face nail
10. Built-up header (2″ to 2″ header)	16d common ($3^1/_2$″ × 0.162″); or	16″ o.c. each edge, face nail
	16d box ($3^1/_2$″ × 0.135″)	12″ o.c. each edge, face nail
11. Continuous header to stud	4-8d common ($2^1/_2$″ × 0.131″); or 4-10d box (3″ × 0.128″)	Toenail
12. Top plate to top plate	16d common ($3^1/_2$″ × 0.162″); or	16″ o.c. face nail
	10d box (3″ × 0.128″); or 3″ × 0.131″ nails; or 3″ 14 gage staples, $^7/_{16}$″ crown	12″ o.c. face nail
13. Top plate to top plate, at end joints	8-16d common ($3^1/_2$″ × 0.162″); or 12-10d box (3″ × 0.128″); or 12-3″ × 0.131″ nails; or 12-3″ 14 gage staples, $^7/_{16}$″ crown	Each side of end joint, face nail (minimum 24″ lap splice length each side of end joint)
14. Bottom plate to joist, rim joist, band joist or blocking (not at braced wall panels)	16d common ($3^1/_2$″ × 0.162″); or	16″ o.c. face nail
	16d box ($3^1/_2$″ × 0.135″); or 3″ × 0.131″ nails; or 3″ 14 gage staples, $^7/_{16}$″ crown	12″ o.c. face nail
15. Bottom plate to joist, rim joist, band joist or blocking at braced wall panels	2-16d common ($3^1/_2$″ × 0.162″); or 3-16d box ($3^1/_2$″ × 0.135″); or 4-3″ × 0.131″ nails; or 4-3″ 14 gage staples, $^7/_{16}$″ crown	16″ o.c. face nail
16. Stud to top or bottom plate	4-8d common ($2^1/_2$″ × 0.131″); or 4-10d box (3″ × 0.128″); or 4-3″ × 0.131″ nails; or 4-3″ 14 gage staples, $^7/_{16}$″ crown; or	Toenail
	2-16d common ($3^1/_2$″ × 0.162″); or 3-10d box (3″ × 0.128″); or 3-3″ × 0.131″ nails; or 3-3″ 14 gage staples, $^7/_{16}$″ crown	End nail
17. Top or bottom plate to stud	2-16d common ($3^1/_2$″ × 0.162″); or 3-10d box (3″ × 0.128″); or 3-3″ × 0.131″ nails; or 3-3″ 14 gage staples, $^7/_{16}$″ crown	End nail
18. Top plates, laps at corners and intersections	2-16d common ($3^1/_2$″ × 0.162″); or 3-10d box (3″ × 0.128″); or 3-3″ × 0.131″ nails; or 3-3″ 14 gage staples, $^7/_{16}$″ crown	Face nail

(continued)

INTERNATIONAL CODE COUNCIL®
Copyright © 2015 ICC. ALL RIGHTS RESERVED. Accessed by David Dammon on Jun 21, 2017 12:30:52 PM pursuant to License Agreement with ICC. No further reproduction or distribution authorized. ANY UNAUTHORIZED REPRODUCTION OR DISTRIBUTION IS A VIOLATION OF THE FEDERAL COPYRIGHT ACT AND THE LICENSE AGREEMENT, AND SUBJECT TO CIVIL AND CRIMINAL PENALTIES THEREUNDER.

TABLE 2304.10.1—continued
FASTENING SCHEDULE

DESCRIPTION OF BUILDING ELEMENTS	NUMBER AND TYPE OF FASTENER	SPACING AND LOCATION
Wall		
19. 1″ brace to each stud and plate	2-8d common ($2^1/_2$″ × 0.131″); or 2-10d box (3″ × 0.128″); or 2-3″ × 0.131″ nails; or 2-3″ 14 gage staples, $^7/_{16}$″ crown	Face nail
20. 1″ × 6″ sheathing to each bearing	2-8d common ($2^1/_2$″ × 0.131″); or 2-10d box (3″ × 0.128″)	Face nail
21. 1″ × 8″ and wider sheathing to each bearing	3-8d common ($2^1/_2$″ × 0.131″); or 3-10d box (3″ × 0.128″)	Face nail
Floor		
22. Joist to sill, top plate, or girder	3-8d common ($2^1/_2$″ × 0.131″); or floor 3-10d box (3″ × 0.128″); or 3-3″ × 0.131″ nails; or 3-3″ 14 gage staples, $^7/_{16}$″ crown	Toenail
23. Rim joist, band joist, or blocking to top plate, sill or other framing below	8d common ($2^1/_2$″ × 0.131″); or 10d box (3″ × 0.128″); or 3″ × 0.131″ nails; or 3″ 14 gage staples, $^7/_{16}$″ crown	6″ o.c., toenail
24. 1″ × 6″ subfloor or less to each joist	2-8d common ($2^1/_2$″ × 0.131″); or 2-10d box (3″ × 0.128″)	Face nail
25. 2″ subfloor to joist or girder	2-16d common ($3^1/_2$″ × 0.162″)	Face nail
26. 2″ planks (plank & beam – floor & roof)	2-16d common ($3^1/_2$″ × 0.162″)	Each bearing, face nail
27. Built-up girders and beams, 2″ lumber layers	20d common (4″ × 0.192″)	32″ o.c., face nail at top and bottom staggered on opposite sides
	10d box (3″ × 0.128″); or 3″ × 0.131″ nails; or 3″ 14 gage staples, $^7/_{16}$″ crown	24″ o.c. face nail at top and bottom staggered on opposite sides
	And: 2-20d common (4″ × 0.192″); or 3-10d box (3″ × 0.128″); or 3-3″ × 0.131″ nails; or 3-3″ 14 gage staples, $^7/_{16}$″ crown	Ends and at each splice, face nail
28. Ledger strip supporting joists or rafters	3-16d common ($3^1/_2$″ × 0.162″); or 4-10d box (3″ × 0.128″); or 4-3″ × 0.131″ nails; or 4-3″ 14 gage staples, $^7/_{16}$″ crown	Each joist or rafter, face nail
29. Joist to band joist or rim joist	3-16d common ($3^1/_2$″ × 0.162″); or 4-10d box (3″ × 0.128″); or 4-3″ × 0.131″ nails; or 4-3″ 14 gage staples, $^7/_{16}$″ crown	End nail
30. Bridging or blocking to joist, rafter or truss	2-8d common ($2^1/_2$″ × 0.131″); or 2-10d box (3″ × 0.128″); or 2-3″ × 0.131″ nails; or 2-3″ 14 gage staples, $^7/_{16}$″ crown	Each end, toenail

(continued)

INTERNATIONAL CODE COUNCIL®
Copyright © 2015 ICC. ALL RIGHTS RESERVED. Accessed by David Dammon on Jun 21, 2017 12:30:52 PM pursuant to License Agreement with ICC. No further reproduction or distribution authorized. ANY UNAUTHORIZED REPRODUCTION OR DISTRIBUTION IS A VIOLATION OF THE FEDERAL COPYRIGHT ACT AND THE LICENSE AGREEMENT, AND SUBJECT TO CIVIL AND CRIMINAL PENALTIES THEREUNDER.

TABLE 2304.10.1—continued
FASTENING SCHEDULE

DESCRIPTION OF BUILDING ELEMENTS	NUMBER AND TYPE OF FASTENER	SPACING AND LOCATION	
Wood structural panels (WSP), subfloor, roof and interior wall sheathing to framing and particleboard wall sheathing to framing[a]			
		Edges (inches)	**Intermediate supports (inches)**
31. $^3/_8$″ – $^1/_2$″	6d common or deformed (2″ × 0.113″) (subfloor and wall)	6	12
	8d box or deformed ($2^1/_2$″ × 0.113″) (roof)	6	12
	$2^3/_8$″ × 0.113″ nail (subfloor and wall)	6	12
	$1^3/_4$″ 16 gage staple, $^7/_{16}$″ crown (subfloor and wall)	4	8
	$2^3/_8$″ × 0.113″ nail (roof)	4	8
	$1^3/_4$″ 16 gage staple, $^7/_{16}$″ crown (roof)	3	6
32. $^{19}/_{32}$″ – $^3/_4$″	8d common ($2^1/_2$″ × 0.131″); or 6d deformed (2″ × 0.113″)	6	12
	$2^3/_8$″ × 0.113″ nail; or 2″ 16 gage staple, $^7/_{16}$″ crown	4	8
33. $^7/_8$″ – $1^1/_4$″	10d common (3″ × 0.148″); or 8d deformed ($2^1/_2$″ × 0.131″)	6	12
Other exterior wall sheathing			
34. $^1/_2$″ fiberboard sheathing[b]	$1^1/_2$″ galvanized roofing nail ($^7/_{16}$″ head diameter); or $1^1/_4$″ 16 gage staple with $^7/_{16}$″ or 1″ crown	3	6
35. $^{25}/_{32}$″ fiberboard sheathing[b]	$1^3/_4$″ galvanized roofing nail ($^7/_{16}$″ diameter head); or $1^1/_2$″ 16 gage staple with $^7/_{16}$″ or 1″ crown	3	6
Wood structural panels, combination subfloor underlayment to framing			
36. $^3/_4$″ and less	8d common ($2^1/_2$″ × 0.131″); or 6d deformed (2″ × 0.113″)	6	12
37. $^7/_8$″ – 1″	8d common ($2^1/_2$″ × 0.131″); or 8d deformed ($2^1/_2$″ × 0.131″)	6	12
38. $1^1/_8$″ – $1^1/_4$″	10d common (3″ × 0.148″); or 8d deformed ($2^1/_2$″ × 0.131″)	6	12
Panel siding to framing			
39. $^1/_2$″ or less	6d corrosion-resistant siding ($1^7/_8$″ × 0.106″); or 6d corrosion-resistant casing (2″ × 0.099″)	6	12
40. $^5/_8$″	8d corrosion-resistant siding ($2^3/_8$″ × 0.128″); or 8d corrosion-resistant casing ($2^1/_2$″ × 0.113″)	6	12

(continued)

INTERNATIONAL CODE COUNCIL®
Copyright © 2015 ICC. ALL RIGHTS RESERVED. Accessed by David Dammon on Jun 21, 2017 12:30:52 PM pursuant to License Agreement with ICC. No further reproduction or distribution authorized. ANY UNAUTHORIZED REPRODUCTION OR DISTRIBUTION IS A VIOLATION OF THE FEDERAL COPYRIGHT ACT AND THE LICENSE AGREEMENT, AND SUBJECT TO CIVIL AND CRIMINAL PENALTIES THEREUNDER.

TABLE 2304.10.1—continued
FASTENING SCHEDULE

DESCRIPTION OF BUILDING ELEMENTS	NUMBER AND TYPE OF FASTENER	SPACING AND LOCATION	
Wood structural panels (WSP), subfloor, roof and interior wall sheathing to framing and particleboard wall sheathing to framing[a]			
		Edges (inches)	**Intermediate supports (inches)**
Interior paneling			
41. $^1/_4$″	4d casing ($1^1/_2$″ × 0.080″); or 4d finish ($1^1/_2$″ × 0.072″)	6	12
42. $^3/_8$″	6d casing (2″ × 0.099″); or 6d finish (Panel supports at 24 inches)	6	12

For SI: 1 inch = 25.4 mm.

a. Nails spaced at 6 inches at intermediate supports where spans are 48 inches or more. For nailing of wood structural panel and particleboard diaphragms and shear walls, refer to Section 2305. Nails for wall sheathing are permitted to be common, box or casing.

b. Spacing shall be 6 inches on center on the edges and 12 inches on center at intermediate supports for nonstructural applications. Panel supports at 16 inches (20 inches if strength axis in the long direction of the panel, unless otherwise marked).

c. Where a rafter is fastened to an adjacent parallel ceiling joist in accordance with this schedule and the ceiling joist is fastened to the top plate in accordance with this schedule, the number of toenails in the rafter shall be permitted to be reduced by one nail.

INTERNATIONAL CODE COUNCIL®
Copyright © 2015 ICC. ALL RIGHTS RESERVED. Accessed by David Dammon on Jun 21, 2017 12:30:52 PM pursuant to License Agreement with ICC. No further reproduction or distribution authorized. ANY UNAUTHORIZED REPRODUCTION OR DISTRIBUTION IS A VIOLATION OF THE FEDERAL COPYRIGHT ACT AND THE LICENSE AGREEMENT, AND SUBJECT TO CIVIL AND CRIMINAL PENALTIES THEREUNDER.

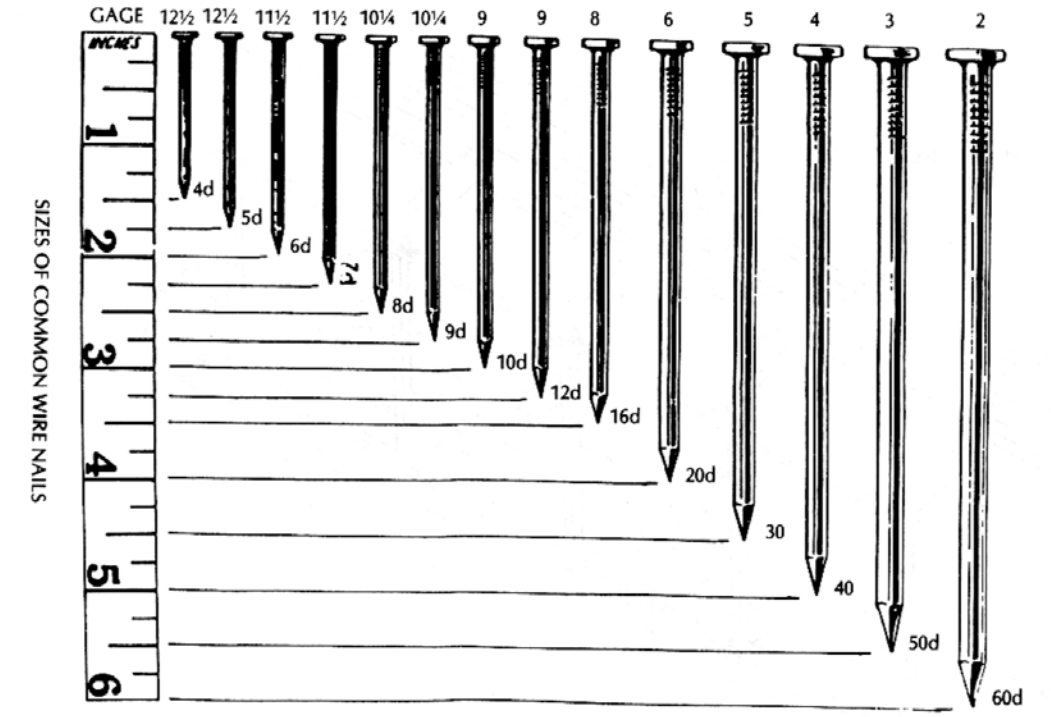

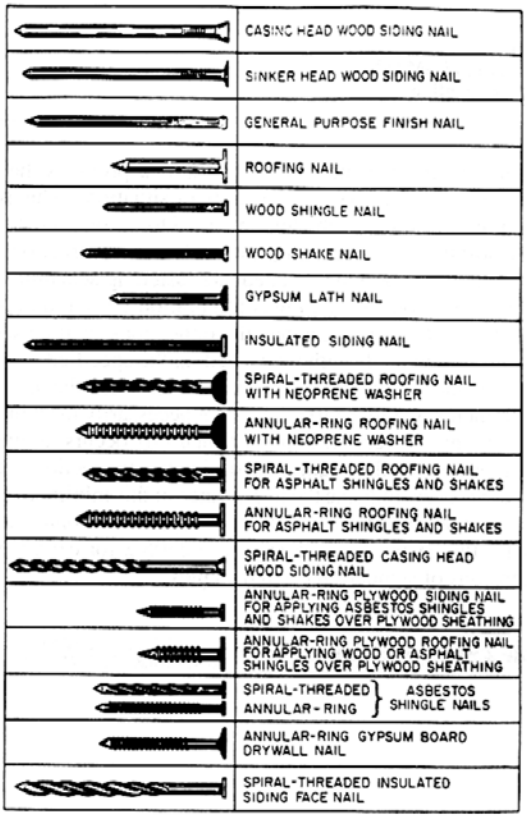

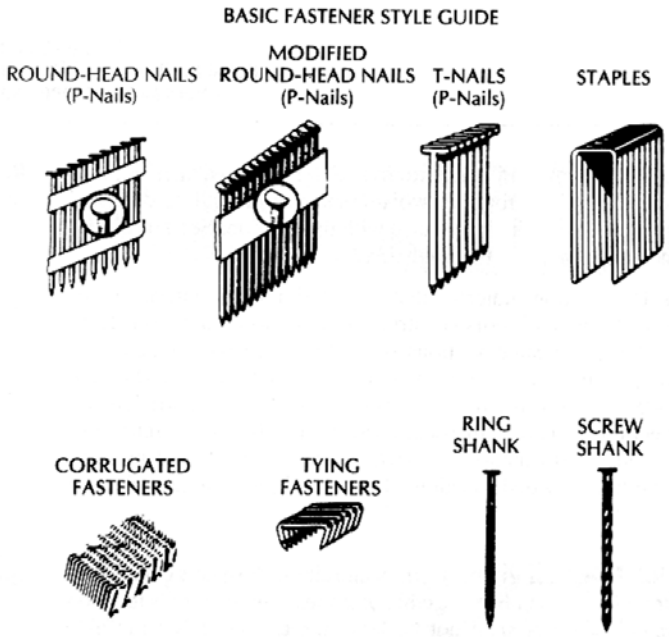

Figure 2304.10.1
STANDARD NAILS AND STAPLES
Independent Nail Packing Co., Bridgewater, MA

INTERNATIONAL CODE COUNCIL®
Copyright © 2015 ICC. ALL RIGHTS RESERVED. Accessed by David Dammon on Jun 21, 2017 12:30:52 PM pursuant to License Agreement with ICC. No further reproduction or distribution authorized. ANY UNAUTHORIZED REPRODUCTION OR DISTRIBUTION IS A VIOLATION OF THE FEDERAL COPYRIGHT ACT AND THE LICENSE AGREEMENT, AND SUBJECT TO CIVIL AND CRIMINAL PENALTIES THEREUNDER.

2304.10.2 Sheathing fasteners. Sheathing nails or other *approved* sheathing connectors shall be driven so that their head or crown is flush with the surface of the sheathing.

❖ This requirement is a matter of workmanship (see Commentary Figure 2304.10.2 for an illustration of a nail driven to fasten sheathing properly). Protruding nails that are not fully driven do not provide the intended connecting capacity and could be hazardous. Likewise, nails that are overdriven into structural sheathing may not perform as expected. Framing installation in the field is often less than perfect and fasteners can be overdriven to a point where the top layer of sheathing is fractured and crushed beneath the nail head. An occasional overdriven nail is common and may not be significant. However, as the percentage of overdriven fasteners increases, the issue becomes judging the point at which this adversely affects the stiffness and shear capacity of a diaphragm or shear wall elements. The APA has recognized that this is a common occurrence and has made a guideline available at no cost on its website (www.apawood.org). Another condition to be aware of in sheathing nailing is where the depth of the supporting member is less than the length of a commonly used fastener, such as in a case where sheathing will be applied over the top of flat decking. Shorter nails are available for these situations, but the holding and shear capacities are typically reduced.

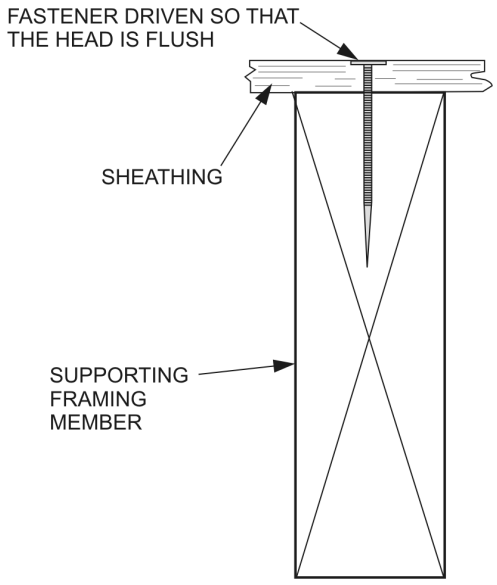

Figure 2304.10.2
SHEATHING FASTENERS

2304.10.3 Joist hangers and framing anchors. Connections depending on joist hangers or framing anchors, ties and other mechanical fastenings not otherwise covered are permitted where *approved*. The vertical load-bearing capacity, torsional moment capacity and deflection characteristics of joist hangers shall be determined in accordance with ASTM D7147.

❖ This section recognizes the use of premanufactured joist and framing anchors as an alternative to conventional fastening. These items are engineered components and must be used in accordance with the manufacturer's instructions and design specifications. Hangers and framing anchors specified by the manufacturer must have load capacities and torsional requirements developed in accordance with the referenced standard. All fasteners required to make the framing anchor or hanger adequately support the design load are specified by the manufacturer, who also must describe any limitations that the designer or contractor needs to consider when using the product. In order to facilitate approval of these products, many hardware manufacturers have ICC Evaluation Service Reports (ESRs) that provide design values and other detailed information for properly installing their framing anchors.

2304.10.4 Other fasteners. Clips, staples, glues and other *approved* methods of fastening are permitted where *approved*.

❖ Clips, staples, glues and other methods of fastening are permitted where approved. In addition to joist hangers and typical fastening in accordance with Table 2304.10.1, there are other fastening methods that can be approved by the building official, provided there is sufficient evidence to demonstrate their adequacy. This section is included in the code to address the fact that new fasteners and connection methods are continually being developed, which necessitates that the building official give consideration to viable alternatives. In general, other fasteners or fastening systems that are not specifically covered by the code can be approved under the alternative materials, design and methods of construction specified in Section 104.11. In order to facilitate approval of alternative products that are not specified in the code, many product manufacturers work with ICC Evaluation Service to develop acceptance criteria and, ultimately, ESRs. These include detailed information to assist the building official in determining code compliance and help the inspector verify proper installation in the field.

2304.10.5 Fasteners and connectors in contact with preservative-treated and fire-retardant-treated wood. Fasteners, including nuts and washers, and connectors in contact with *preservative-treated* and *fire-retardant-treated wood* shall be in accordance with Sections 2304.10.5.1 through 2304.10.5.4. The coating weights for zinc-coated fasteners shall be in accordance with ASTM A153

❖ Corrosion-resistant fasteners are typically required for use in treated wood. This applies to fire-retardant-treated wood as well as preservative-treated wood. Some chemicals used to preservative-treat or fire-retardant-treat wood can have a corrosive effect on

INTERNATIONAL CODE COUNCIL®
Copyright © 2015 ICC. ALL RIGHTS RESERVED. Accessed by David Dammon on Jun 21, 2017 12:30:52 PM pursuant to License Agreement with ICC. No further reproduction or distribution authorized. ANY UNAUTHORIZED REPRODUCTION OR DISTRIBUTION IS A VIOLATION OF THE FEDERAL COPYRIGHT ACT AND THE LICENSE AGREEMENT, AND SUBJECT TO CIVIL AND CRIMINAL PENALTIES THEREUNDER.

fasteners. This is a concern since significant corrosion will adversely affect the fastener's strength.

2304.10.5.1 Fasteners and connectors for preservative-treated wood. Fasteners, including nuts and washers, in contact with *preservative-treated wood* shall be of hot-dipped zinc-coated galvanized steel, stainless steel, silicon bronze or copper. Fasteners other than nails, timber rivets, wood screws and lag screws shall be permitted to be of mechanically deposited zinc-coated steel with coating weights in accordance with ASTM B695, Class 55 minimum. Connectors that are used in exterior applications and in contact with *preservative-treated wood* shall have coating types and weights in accordance with the treated wood or connector manufacturer's recommendations. In the absence of manufacturer's recommendations, a minimum of ASTM A653, Type G185 zinc-coated galvanized steel, or equivalent, shall be used.

Exception: Plain carbon steel fasteners, including nuts and washers, in SBX/DOT and zinc borate *preservative-treated wood* in an interior, dry environment shall be permitted.

❖ Where there are concerns with decay or potential termite damage, the code requires either a naturally durable species of wood or wood that is treated with a preservative. Since the discontinuation of chromated copper arsenate for preservative-treated wood in residential or general consumer products, alternative preservative treatments have been necessary. Studies show that some of these are more corrosive to steel anchors and connectors. Corrosion-resistant fasteners are typically required for use in preservative-treated wood. This includes materials such as stainless steel or copper. Carbon steel typically must be galvanized. The exception is based on reports that show sodium borate disodium octaborate tetrahydrate (SBX/DOT) and zinc borate to be somewhat less corrosive than other alternative preservative treatments. In an interior location where moisture is not a concern, wood treated with these preservatives allows the use of plain carbon steel fasteners.

The base requirements limit galvanized steel to the hot-dipped process. The hot-dip galvanizing process has the relative advantage of being very insensitive to process variables. Though mechanically galvanized fasteners can perform equally to hot-dipped galvanized fasteners, the mechanical galvanizing process, if not performed properly, may produce fasteners whose corrosion resistance does not equal that of hot-dipped galvanized fasteners. Mechanical galvanizing is very common for screws, and in fact is possibly the only way to deposit a thick zinc coating on them. Wood screws and lag screws are frequently installed in predrilled holes, so abrasion of the finish is not the same problem as for nails. Because mechanical galvanizing is a preferred method for certain fastener types, the code recognizes this process where it is appropriate.

Guidance is given for connectors that are in contact with preservative-treated wood and used in exterior applications. The primary requirement is to follow the manufacturer's recommendations. Where none are given, the minimum coating, in accordance with ASTM A653, must be G185, which is the minimum coating currently recommended by many manufacturers.

2304.10.5.2 Fastenings for wood foundations. Fastenings, including nuts and washers, for wood foundations shall be as required in AWC PWF.

❖ AWC *Permanent Wood Foundation (PWF) Design Specification* requires specific types of corrosion-resistant nails for locations below grade and above grade in wood foundations, based on the increased exposure to moisture in below-grade applications as well as the corrosive nature of preservative treatments.

2304.10.5.3 Fasteners for fire-retardant-treated wood used in exterior applications or wet or damp locations. Fasteners, including nuts and washers, for *fire-retardant-treated wood* used in exterior applications or wet or damp locations shall be of hot-dipped zinc-coated galvanized steel, stainless steel, silicon bronze or copper. Fasteners other than nails, timber rivets, wood screws and lag screws shall be permitted to be of mechanically deposited zinc-coated steel with coating weights in accordance with ASTM B695, Class 55 minimum.

❖ Corrosion-resistant fasteners are required for fire-retardant-treated wood in exterior applications or other locations subject to moisture. The base requirements limit galvanized steel to the hot-dipped process. Because mechanical galvanizing is a preferred method for certain fastener types, the code recognizes this process where it is deemed appropriate.

2304.10.5.4 Fasteners for fire-retardant-treated wood used in interior applications. Fasteners, including nuts and washers, for *fire-retardant-treated wood* used in interior locations shall be in accordance with the manufacturer's recommendations. In the absence of manufacturer's recommendations, Section 2304.10.5.3 shall apply.

❖ The primary requirement for fasteners in fire-retardant-treated wood used on the interior is to follow the manufacturer's recommendations. Where none are given, the requirements for exterior applications apply.

2304.10.6 Load path. Where wall framing members are not continuous from the foundation sill to the roof, the members shall be secured to ensure a continuous load path. Where required, sheet metal clamps, ties or clips shall be formed of galvanized steel or other *approved* corrosion-resistant material not less than 0.0329-inch (0.836 mm) base metal thickness.

❖ In conventional construction, the minimum fastening required by Table 2304.10.1 is intended to provide a continuous connection between framing elements as required by this section. If the loads on the building exceed the parameters established in Section 2308.2, the building, in total or in part, must be designed in accordance with the ASD or LRFD meth-

INTERNATIONAL CODE COUNCIL®
Copyright © 2015 ICC. ALL RIGHTS RESERVED. Accessed by David Dammon on Jun 21, 2017 12:30:52 PM pursuant to License Agreement with ICC. No further reproduction or distribution authorized. ANY UNAUTHORIZED REPRODUCTION OR DISTRIBUTION IS A VIOLATION OF THE FEDERAL COPYRIGHT ACT AND THE LICENSE AGREEMENT, AND SUBJECT TO CIVIL AND CRIMINAL PENALTIES THEREUNDER.

odologies and the connections must be designed in accordance with those standards, providing continuity of load support throughout the structure. The designed connections may incorporate engineered tie or strap components with capacities specified by the manufacturer. This section specifies the minimum thickness of sheet metal for fabricated straps or ties to 0.0329-inch (0.0.838 mm) base metal thickness, which is common among manufacturers. Designers and contractors must keep in mind that a wood-framed building is simply a huge assembly of multiple independent parts all connected together to form a complete structural system. When a building is subject to external forces, each independent part has a tendency to move into a different position and this tendency must be controlled by having a complete path to deliver the imposed forces into the ground. This load path may consist of hangers from a beam to a column, metal straps from an upper-level stud to a lower-level stud or from hold-down anchors into the concrete, etc. There are countless applications and load path possibilities, but the overall concept is that every individual piece must be adequately fastened to some adjacent piece to form the complete structure.

2304.10.7 Framing requirements. Wood columns and posts shall be framed to provide full end bearing. Alternatively, column-and-post end connections shall be designed to resist the full compressive loads, neglecting end-bearing capacity. Column-and-post end connections shall be fastened to resist lateral and net induced uplift forces.

❖ This section requires the framing workmanship to be such that the ends of wood columns and posts, including studs, bear completely atop the supporting member, whether it be a wood sill plate or a metal base connector. If it does not bear fully on the entire cross section, then design calculations are necessary in order to show that the bearing method provided will be capable of supporting the loads without using end bearing capacity. It also requires a positive connection (not merely a friction connection) to resist incidental lateral forces and any anticipated uplift forces. For instance, a wood column supporting beams in the basement of a structure could not simply bear on the concrete pad beneath it without some means of positive anchorage to the concrete in order to prevent it from accidently being displaced on impact by a person or an object. If the combination of loads on the structure could result in uplift forces, then an adequate connection designed to resist uplift would also be required. This section is a further extension of the philosophy outlined in Section 2304.10.6.

2304.11 Heavy timber construction. Where a structure or portion thereof is required to be of Type IV construction by other provisions of this code, the building elements therein shall comply with the applicable provisions of Sections 2304.11.1 through 2304.11.5.

❖ Heavy timber construction is classified as Type IV construction in Chapter 6. It is described in Section 602.4 as that type of construction where the exterior walls are of noncombustible materials and the interior building elements are of solid or laminated wood without concealed spaces. It originated in New England to serve the needs of the growing textile industry. As the industry modernized, the need for larger open space, unobstructed by columns, gradually reduced the demand for this type of construction.

Today, due primarily to its architectural aesthetic value, heavy timber construction is used in many other occupancies. It is commonly used for assembly and mercantile buildings, such as schools, churches, auditoriums, gymnasiums and supermarkets.

The provisions of this section must be used in conjunction with the minimum dimensional requirements specified in Section 602.4. A structural analysis must be performed to verify that the minimum dimensions are adequate. These final dimensions will always be based on a shrunken section since timbers are ordinarily supplied in a green condition, unless they are special products manufactured to specific tolerances.

2304.11.1 Columns. Columns shall be continuous or superimposed throughout all stories by means of reinforced concrete or metal caps with brackets, or shall be connected by properly designed steel or iron caps, with pintles and base plates, or by timber splice plates affixed to the columns by metal connectors housed within the contact faces, or by other *approved* methods.

❖ The AWC publication, WCD 5, *Heavy Timber Construction*, provides details for the proper connection of heavy timber columns and beams. Traditionally, heavy timber structures were designed and constructed using a prescriptive approach, much like today's conventional construction provisions for light-frame buildings. The number and size of bolts, lag screws or connectors should be determined through analysis of the loads to be supported.

Pintles provide a method to fasten the butt ends of beams or columns. A pintle acts like a short column, connecting the ends of the structural elements.

2304.11.1.1 Column connections. Girders and beams shall be closely fitted around columns and adjoining ends shall be cross tied to each other, or intertied by caps or ties, to transfer horizontal loads across joints. Wood bolsters shall not be placed on tops of columns unless the columns support roof loads only.

❖ Where columns and girders or beams intersect, care must be taken for load transfer. Proper detailing at the intersection of columns and girders will limit the effects of shrinkage. Elements that are not continuous must be properly fastened together to transfer design forces. Today's engineered wood products are available in multiple depths and widths, and in lengths up to 60 feet (18 288 mm), so continuous-span structural elements are readily available. Bolster blocks are used to reduce the compression perpendicular to grain stresses where roof beams bear on columns. The shrinkage of the bolster block must be

INTERNATIONAL CODE COUNCIL®
Copyright © 2015 ICC. ALL RIGHTS RESERVED. Accessed by David Dammon on Jun 21, 2017 12:30:52 PM pursuant to License Agreement with ICC. No further reproduction or distribution authorized. ANY UNAUTHORIZED REPRODUCTION OR DISTRIBUTION IS A VIOLATION OF THE FEDERAL COPYRIGHT ACT AND THE LICENSE AGREEMENT, AND SUBJECT TO CIVIL AND CRIMINAL PENALTIES THEREUNDER.

considered in the roof design. Roof beams must have a positive connection to the column to resist uplift.

2304.11.2 Floor framing. *Approved* wall plate boxes or hangers shall be provided where wood beams, girders or trusses rest on masonry or concrete walls. Where intermediate beams are used to support a floor, they shall rest on top of girders, or shall be supported by ledgers or blocks securely fastened to the sides of the girders, or they shall be supported by an *approved* metal hanger into which the ends of the beams shall be closely fitted.

❖ Wood members must not bear directly on masonry or concrete, otherwise they will absorb moisture from these elements and lose strength in bearing due to decay. Typically, a steel-bearing plate or custom steel hanger is used to support heavy timber elements. Bearing plates provide an even distribution of load on the wall. Wall plate boxes should be designed and detailed to provide a positive connection to the masonry. Where direct bearing on top of the girders is not possible or desirable, a metal hanger designed to transfer all induced loads is permitted. An additional advantage to using a hanger is less shrinkage. Beams consisting of green lumber should be installed so their top edge is slightly above the top edge of the girder to allow for shrinkage.

2304.11.3 Roof framing. Every roof girder and at least every alternate roof beam shall be anchored to its supporting member; and every monitor and every sawtooth construction shall be anchored to the main roof construction. Such anchors shall consist of steel or iron bolts of sufficient strength to resist vertical uplift of the roof.

❖ Anchorage of roof beams and girders should be in accordance with the engineered design. This section provides minimum acceptable anchorage practices that are especially important in unusual or discontinuous types of roof framing, such as the "sawtooth" arrangement. Sawtooth roof construction is used to provide large amounts of daylight into the floor area of the building. The roof line looks much like the cutting edge of a saw, with regularly spaced peaks and valleys. The vertical or near vertical line connecting the peaks and valleys is filled with glazing. When this unique framing pattern is used, the framing members must be adequately anchored to the main roof supports.

2304.11.4 Floor decks. Floor decks and covering shall not extend closer than $^1/_2$ inch (12.7 mm) to walls. Such $^1/_2$-inch (12.7 mm) spaces shall be covered by a molding fastened to the wall either above or below the floor and arranged such that the molding will not obstruct the expansion or contraction movements of the floor. Corbeling of masonry walls under floors is permitted in place of such molding.

❖ Flooring will expand and contract as the relative humidity in the building changes. To accommodate expansion, a $^1/_2$-inch (12.7 mm) gap is required at the wall. The gap will also prevent moisture in the walls from migrating into the floor boards. The fire integrity of the floor assembly must be maintained, so either molding or corbeling of the wall below the floor is required to prevent the passage of smoke and hot gases.

2304.11.5 Roof decks. Where supported by a wall, roof decks shall be anchored to walls to resist uplift forces determined in accordance with Chapter 16. Such anchors shall consist of steel or iron bolts of sufficient strength to resist vertical uplift of the roof.

❖ The roof deck must be anchored frequently enough to resist uplift forces as prescribed in Chapter 16. This type of anchorage is not covered by the conventional construction provisions of the code; therefore, engineering is required in accordance with the approved methods, ASD or LRFD.

2304.12 Protection against decay and termites. Wood shall be protected from decay and termites in accordance with the applicable provisions of Sections 2304.12.1 through 2304.12.7.

❖ This section requires protection against decay and termites where the stated conditions apply.

2304.12.1 Locations requiring water-borne preservatives or naturally durable wood. Wood used above ground in the locations specified in Sections 2304.12.1.1 through 2304.12.1.5, 2304.12.3 and 2304.12.5 shall be naturally durable wood or *preservative-treated wood* using water-borne preservatives, in accordance with AWPA U1 for above-ground use.

❖ The AWPA is the principal standards-developing organization for the wood-preserving industry in the United States. AWPA U1 covers aspects of treated wood from the treating process to appropriate treatment retention levels for specific applications. Wood products used in locations identified in this section are particularly susceptible to deterioration, which can result from continuous or intermittent contact with moisture or termites.

Decay is caused by fungi, which are low forms of plant life that attack the cell walls of wood in order to feed on the contents of the cells. For fungi to attack wood in service, the following conditions must be present: (1) temperature in the range of 35ºF to 100ºF (1ºC to 38ºC); (2) adequate supply of oxygen and (3) wood-moisture content in excess of 20 percent. A properly constructed and maintained building will typically remain at a moisture content of less than 15 percent throughout its life, but some special conditions might cause fluctuations leading to problems (see Section 2304.12.1.2).

2304.12.1.1 Joists, girders and subfloor. Wood joists or wood structural floors that are closer than 18 inches (457 mm) or wood girders that are closer than 12 inches (305 mm) to the exposed ground in crawl spaces or unexcavated areas located within the perimeter of the building foundation shall be of naturally durable or *preservative-treated wood*.

❖ This section establishes the need to protect floor elements that are in close proximity to exposed ground.The clearances specified in this section are

INTERNATIONAL CODE COUNCIL®
Copyright © 2015 ICC. ALL RIGHTS RESERVED. Accessed by David Dammon on Jun 21, 2017 12:30:52 PM pursuant to License Agreement with ICC. No further reproduction or distribution authorized. ANY UNAUTHORIZED REPRODUCTION OR DISTRIBUTION IS A VIOLATION OF THE FEDERAL COPYRIGHT ACT AND THE LICENSE AGREEMENT, AND SUBJECT TO CIVIL AND CRIMINAL PENALTIES THEREUNDER.

recommended for all buildings and are considered necessary to: 1. Maintain wood elements in permanent structures at a safe moisture content by promoting air circulation and ventilation of the crawl space; 2. Provide a termite barrier; and 3. Facilitate periodic inspections (see Commentary Figure 2304.12.1.1). When it is not possible or practical to comply with the clearance specified, the use of naturally durable or pressure-preservative-treated wood is necessary. However, when termites are known to exist, space must be provided for periodic inspections. Often termite infestations are the result of poor construction or improper clearance between wood framing and the surrounding soil. Unfortunately, termites are very determined insects and will often build small, moisture-controlled tubes or tunnels from the ground surface to the source of food, bypassing inedible barriers, which is one of the reasons it is important to provide adequate space below floor framing for periodic visual inspections of wood framing.

2304.12.1.2 Wood supported by exterior foundation walls. Wood framing members, including wood sheathing, that are in contact with exterior foundation walls and are less than 8 inches (203 mm) from exposed earth shall be of naturally durable or *preservative-treated wood*.

❖ Experience has shown that foundation walls can absorb moisture from the ground and convey moisture to wood framing in contact with the foundation. This section requires a clearance (see Commentary Figure 2304.12.1.1) that minimizes the chances of moisture being drawn to the framing. The clearance also provides an exposed foundation surface that allows for a visual inspection for termite tubes.

2304.12.1.3 Exterior walls below grade. Wood framing members and furring strips in direct contact with the interior of exterior masonry or concrete walls below grade shall be of naturally durable or *preservative-treated wood*.

❖ Wood attached directly to masonry or concrete will draw moisture from these materials, and may reach a moisture content greater than 20 percent, depending on the relative humidity of the basement.

2304.12.1.4 Sleepers and sills. Sleepers and sills on a concrete or masonry slab that is in direct contact with earth shall be of naturally durable or *preservative-treated wood*.

❖ Wood in contact with either the earth or material that retains moisture must be naturally durable or preservative treated. The moisture content of wood will change based on the relative humidity of the air and the moisture of materials with which it is in contact. Interior slabs that are protected from the earth by an impervious moisture barrier should not be considered in direct contact with the earth for purposes of this requirement. Sometimes this moisture barrier becomes damaged in the course of construction, but will remain intact for the most part. Moisture-sensitive flooring materials typically require special measures or care to be taken during placement of the concrete slab and preparation of the subbase, but interior wall sill plates will typically maintain an acceptable moisture content even if special drying measures are not taken for the slab.

2304.12.1.5 Wood siding. Clearance between wood siding and earth on the exterior of a building shall not be less than 6 inches (152 mm) or less than 2 inches (51 mm) vertical from concrete steps, porch slabs, patio slabs and similar horizontal surfaces exposed to the weather except where siding, sheathing and wall framing are of naturally durable or *preservative-treated wood*.

❖ Exterior siding is required to have a minimum 6-inch (152 mm) clearance above exposed earth and a 2-

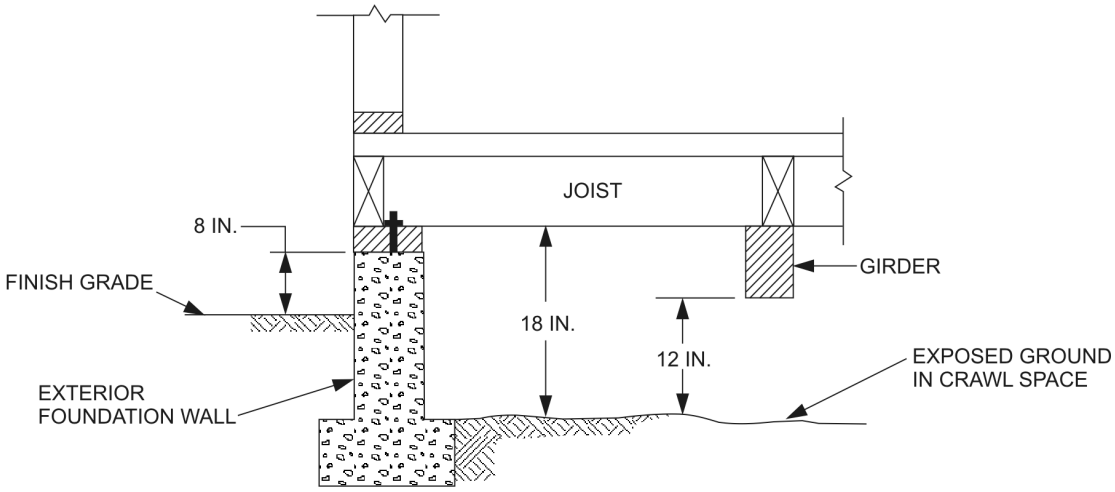

For SI: 1 inch = 25.4 mm.

Figure 2304.12.1.1
WOOD FRAMING CLEARANCES

INTERNATIONAL CODE COUNCIL®
Copyright © 2015 ICC. ALL RIGHTS RESERVED. Accessed by David Dammon on Jun 21, 2017 12:30:52 PM pursuant to License Agreement with ICC. No further reproduction or distribution authorized. ANY UNAUTHORIZED REPRODUCTION OR DISTRIBUTION IS A VIOLATION OF THE FEDERAL COPYRIGHT ACT AND THE LICENSE AGREEMENT, AND SUBJECT TO CIVIL AND CRIMINAL PENALTIES THEREUNDER.

inch (51 mm) clearance above concrete such as slabs and steps. Exterior wood siding should extend at least 1 inch (25 mm) below the top of the foundation to provide a drip line protecting the sill from rainwater. The siding is typically held away from the foundation with a starter strip attached to the sheathing that ends at the bottom of the plate. The 1-inch (25 mm) overhang causes the rainwater to drip off the bottom edge of the siding, rather than being absorbed by the underlying sheathing. A minimum clearance illustrated in Commentary Figure 2304.12.1.5(1) must be provided for wood siding that is neither naturally durable nor preservative treated. A reduced clearance of 2 inches (51 mm) is permitted at horizontal surfaces such as concrete patios or steps [see Commentary Figure 2304.12.1.5(2)].

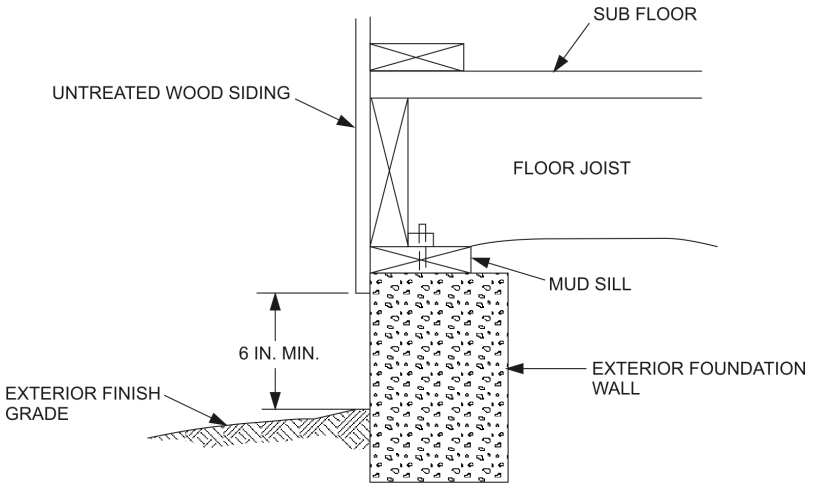

For SI: 1 inch = 25.4 mm.

Figure 2304.12.1.5(1)
SIDING CLEARANCES

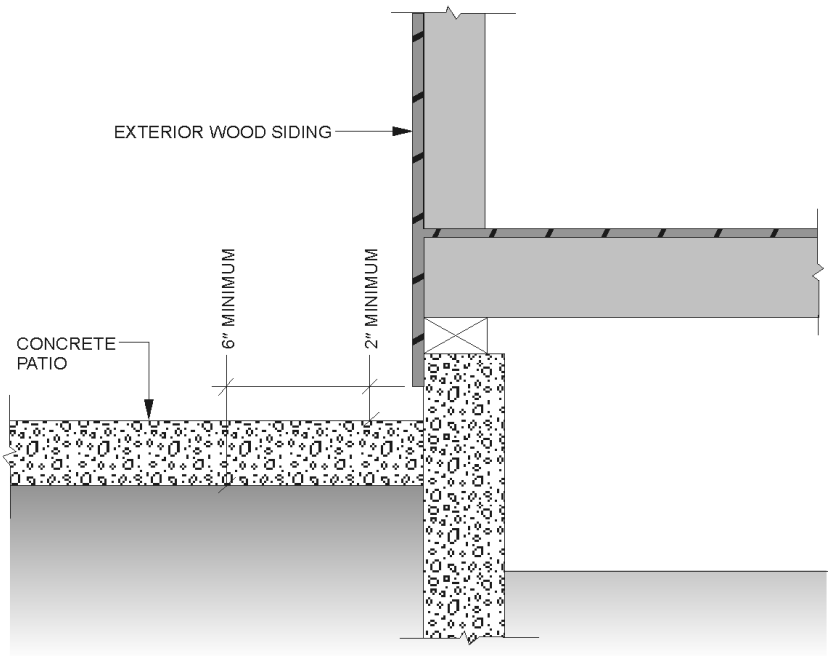

For SI: 1 inch = 25.4 mm.

Figure 2304.12.1.5(2)
SIDING CLEARANCE AT CONCRETE PATIO

INTERNATIONAL CODE COUNCIL®
Copyright © 2015 ICC. ALL RIGHTS RESERVED. Accessed by David Dammon on Jun 21, 2017 12:30:52 PM pursuant to License Agreement with ICC. No further reproduction or distribution authorized. ANY UNAUTHORIZED REPRODUCTION OR DISTRIBUTION IS A VIOLATION OF THE FEDERAL COPYRIGHT ACT AND THE LICENSE AGREEMENT, AND SUBJECT TO CIVIL AND CRIMINAL PENALTIES THEREUNDER.

2304.12.2 Other locations. Wood used in the locations specified in Sections 2304.12.2.1 through 2304.12.2.5 shall be naturally durable wood or *preservative-treated* wood in accordance with AWPA U1. *Preservative-treated* wood used in interior locations shall be protected with two coats of urethane, shellac, latex epoxy or varnish unless water-borne preservatives are used. Prior to application of the protective finish, the wood shall be dried in accordance with the manufacturer's recommendations.

❖ This section introduces the subsections dealing with locations where wood (other than that treated with waterborne preservatives) is permitted under certain circumstances, as long as treatment is in accordance with the AWPA U1 standard. As a precaution, there is a requirement for the drying of treated wood and its sealing where it is used on the interior of a building.

2304.12.2.1 Girder ends. The ends of wood girders entering exterior masonry or concrete walls shall be provided with a $^{1}/_{2}$-inch (12.7 mm) airspace on top, sides and end, unless naturally durable or *preservative-treated wood* is used.

❖ Clearance around the ends of girders prevents moisture from migrating from the concrete into the wood. The minimum clearance that is shown in Commentary Figure 2304.12.2.1 allows for air circulation and periodic inspection for termites. This requirement has been in the model codes for many years, proving it to be an effective step in controlling wood deterioration.

2304.12.2.2 Posts or columns. Posts or columns supporting permanent structures and supported by a concrete or masonry slab or footing that is in direct contact with the earth shall be of naturally durable or *preservative-treated wood.*

Exception: Posts or columns that are not exposed to the weather, are supported by concrete piers or metal pedestals projected at least 1 inch (25 mm) above the slab or deck and 8 inches (152 mm) above exposed earth and are separated by an impervious moisture barrier.

❖ When a post or column is directly in concrete that is in direct contact with earth, it must be naturally durable or preservative treated. The exception illustrated in Commentary Figure 2304.12.2.2 permits the use of common, untreated lumber when the post or column is isolated from the earth or concrete. Generally, structural elements in basements or cellars are easier to inspect. Posts or columns in crawl spaces are required to have an 8-inch (203 mm) clearance to safeguard against termites between inspections and the clearance is identical to Section 2304.12.1.2. Requiring an impervious moisture barrier is intended to restrict the absorption of water from the earth or concrete pier.

2304.12.2.3 Supporting member for permanent appurtenances. Naturally durable or *preservative-treated wood* shall be utilized for those portions of wood members that form the structural supports of buildings, balconies, porches or similar permanent building appurtenances where such members are exposed to the weather without adequate protection from a roof, eave, overhang or other covering to prevent moisture or water accumulation on the surface or at joints between members.

Exception: When a building is located in a geographical region where experience has demonstrated that climatic conditions preclude the need to use durable materials where the structure is exposed to the weather.

❖ Decks and porches exposed to rain and snow are subject to deterioration. In desert areas where rainfall is slight, there may not be enough moisture to cause any deterioration; therefore, the exception is provided. It is important to confirm climatic conditions with the weather bureau or the building official to

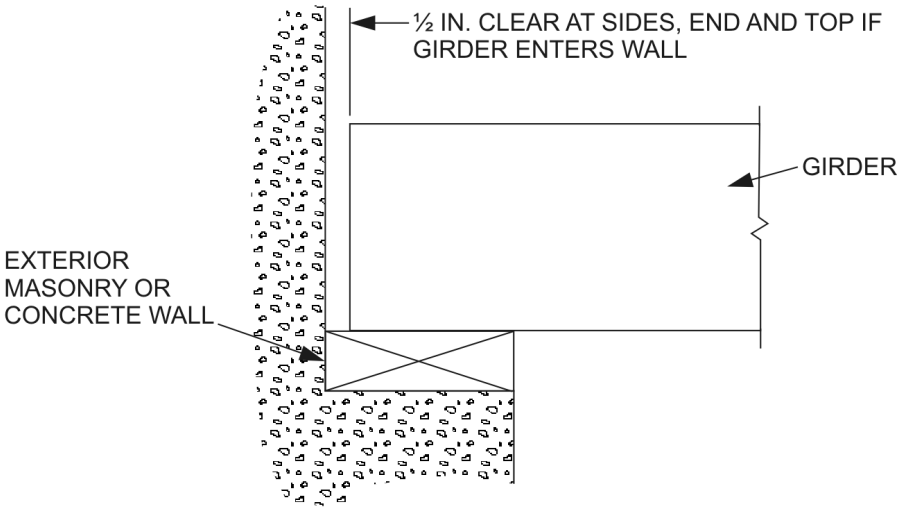

For SI: 1 inch = 25.4 mm.

Figure 2304.12.2.1
GIRDER END CLEARANCE

INTERNATIONAL CODE COUNCIL®
Copyright © 2015 ICC. ALL RIGHTS RESERVED. Accessed by David Dammon on Jun 21, 2017 12:30:52 PM pursuant to License Agreement with ICC. No further reproduction or distribution authorized. ANY UNAUTHORIZED REPRODUCTION OR DISTRIBUTION IS A VIOLATION OF THE FEDERAL COPYRIGHT ACT AND THE LICENSE AGREEMENT, AND SUBJECT TO CIVIL AND CRIMINAL PENALTIES THEREUNDER.

determine the proper course of action in protecting these appurtenant structures.

2304.12.2.4 Laminated timbers. The portions of glued-laminated timbers that form the structural supports of a building or other structure and are exposed to weather and not fully protected from moisture by a roof, eave or similar covering shall be pressure treated with preservative or be manufactured from naturally durable or *preservative-treated wood*.

❖ It is common practice to design large glued-laminated arches that "spring" or are connected to foundations near ground level. Exterior walls are built inside the span of these arches, leaving the initial few feet of the wood arches exposed to the weather. Experience has shown that covering the tops of these arches with metal or other water seals is not sufficient to prevent decay. Therefore, arches and other exposed wood members not protected by roofs or similar covers must be laminated of naturally durable or pressure-treated wood. Creosote solutions are typically used for the most severe outdoor exposures, but they are quite dark, oily and pungent and are, therefore, typically restricted to uses where direct human contact is avoided. Oil-borne and water-borne treatments are slightly friendlier, but they have different effects depending on the timing of the application, either before or after laminating the timbers together.

2304.12.2.5 Supporting members for permeable floors and roofs. Wood structural members that support moisture-permeable floors or roofs that are exposed to the weather, such as concrete or masonry slabs, shall be of naturally durable or *preservative-treated wood* unless separated from such floors or roofs by an impervious moisture barrier.

❖ The framing condition described is uncommon, but the requirement for naturally durable or preservative-treated wood is appropriate. Concrete or masonry can contain sufficient moisture to raise the moisture content in supporting wood structural elements above 20 percent. Therefore, an impervious moisture barrier or naturally durable or preservative-treated wood is required.

2304.12.3 Wood in contact with the ground or fresh water. Wood used in contact with exposed earth shall be naturally durable for both decay and termite resistance or preservative treated in accordance with AWPA U1 for soil or fresh water use.

Exception: Untreated wood is permitted where such wood is continuously and entirely below the ground-water level or submerged in fresh water.

❖ Wood that has been completely submerged below the ground-water table or in fresh water has been known to remain in good condition for many years. This method of preservation is the only exception to requiring naturally durable or preservative treated wood where it is in contact with or embedded in the ground.

2304.12.3.1 Posts or columns. Posts and columns that are supporting permanent structures and embedded in concrete that is exposed to the weather or in direct contact with the earth shall be of *preservative-treated wood*.

❖ This requirement is similar to Section 2304.12.2.2, but emphasizes that posts and columns encased or embedded in concrete must be of preservative-treated wood. The condition is generally more severe than wood placed directly on concrete or embedded in the earth. The embedded portion of the column will most likely be at a moisture content in excess of 20 percent. At some point very near where the concrete ends, the conditions will be ideal for decay—having both a high moisture content and the presence of air. Unless treated wood is used, decay will occur very near where the encasing begins.

2304.12.4 Termite protection. In geographical areas where hazard of termite damage is known to be very heavy, wood floor framing in the locations specified in Section 2304.12.2.1 and exposed framing of exterior decks or balco-

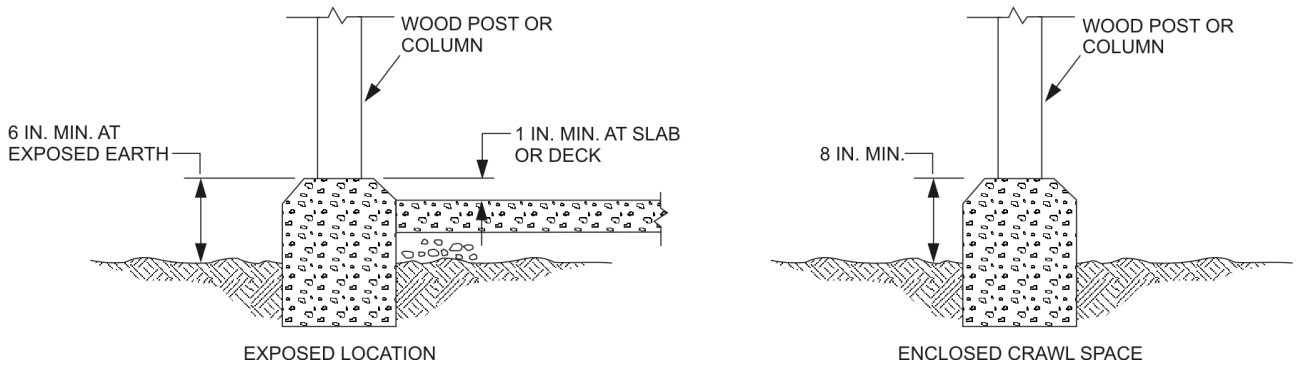

For SI: 1 inch = 25.4 mm.

Figure 2304.12.2.2
POST AND COLUMN PROTECTION

INTERNATIONAL CODE COUNCIL®
Copyright © 2015 ICC. ALL RIGHTS RESERVED. Accessed by David Dammon on Jun 21, 2017 12:30:52 PM pursuant to License Agreement with ICC. No further reproduction or distribution authorized. ANY UNAUTHORIZED REPRODUCTION OR DISTRIBUTION IS A VIOLATION OF THE FEDERAL COPYRIGHT ACT AND THE LICENSE AGREEMENT, AND SUBJECT TO CIVIL AND CRIMINAL PENALTIES THEREUNDER.

nies shall be of naturally durable species (termite resistant) or preservative treated in accordance with AWPA U1 for the species, product preservative and end use or provided with *approved* methods of termite protection.

❖ This provision applies to floor framing such as posts, girders, joists and subfloor, and exposed framing of exterior decks or balconies where termite damage has been determined to be very heavy.

The termite infestation probability map used in the IRC is included as Commentary Figure 2304.12.4. This map provides guidance, but the local jurisdiction should be consulted as it will be more familiar with the threat posed by termites. Most termites found in the United States are classified as subterranean termites, which indicates their need to live in the ground. For many years, metal termite shields were considered the best method of preventing infestation. When properly installed, such shields are still a good defense.

Soil poisoning is considered to be a more efficient method of controlling termites; however, there are obvious negative environmental implications and some regions may forbid this method altogether. Additionally, all possible locations of infestation must be poisoned; therefore, the work should be carefully monitored and performed by professionals who are competent and understand applicable standards, laws and procedures. Under no circumstances should soil poisoning be attempted by those unfamiliar with toxic products and their application.

2304.12.5 Wood used in retaining walls and cribs. Wood installed in retaining or crib walls shall be preservative treated in accordance with AWPA U1 for soil and fresh water use.

❖ Where the structure is regulated by the code, wood used to retain soil is to be preservative treated. Presumably, where the failure of the retaining wall or crib may threaten life safety or result in property damage, the durability provided by preservative-treated wood is necessary.

2304.12.6 Attic ventilation. For *attic* ventilation, see Section 1203.2.

❖ Adequate ventilation allows moisture-laden air to readily escape from the attic space in order to avoid exposure of the framing to excessive moisture (see Section 1203.2 for further discussion).

2304.12.7 Under-floor ventilation (crawl space). For under-floor ventilation (crawl space), see Section 1203.4.

❖ Enclosed spaces under floors of buildings are referred to as crawl spaces when not designed and constructed as basements. The earth is usually exposed or covered with a vapor retarder. Regardless, there is always the potential for a large amount of moisture vapor that comes from the ground to be present. This moisture must be removed to prevent wetting and drying cycles that can cause decay and fungus attack in wood members. Experience has shown that crawl spaces constructed in conformance

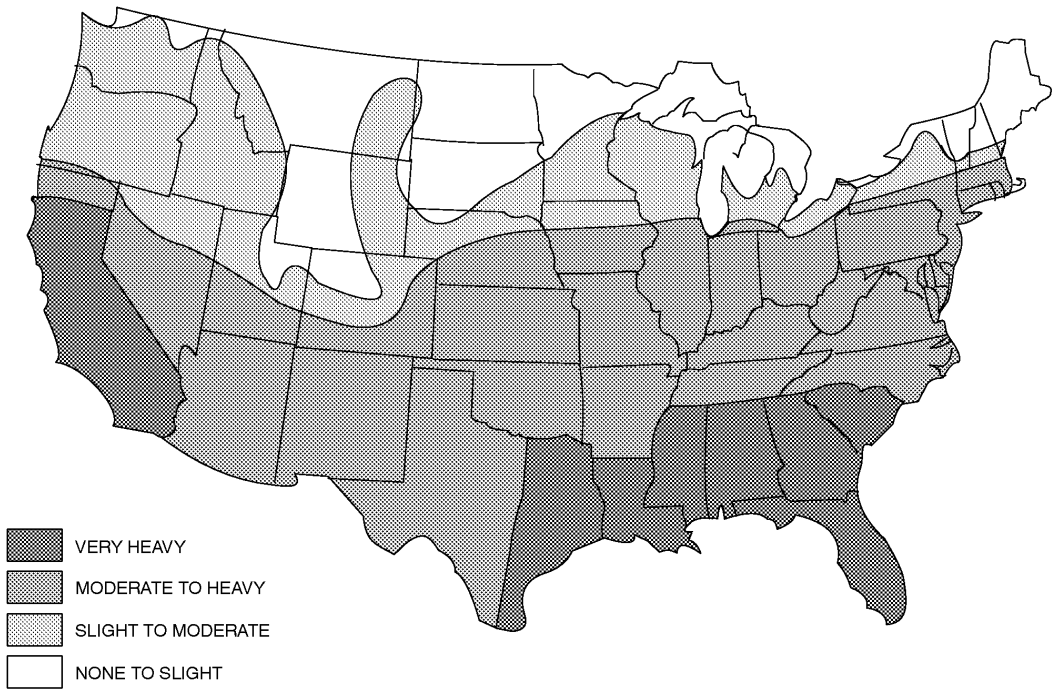

Figure 2304.12.4
TERMITE INFESTATION PROBABILITY MAP

INTERNATIONAL CODE COUNCIL®
Copyright © 2015 ICC. ALL RIGHTS RESERVED. Accessed by David Dammon on Jun 21, 2017 12:30:52 PM pursuant to License Agreement with ICC. No further reproduction or distribution authorized. ANY UNAUTHORIZED REPRODUCTION OR DISTRIBUTION IS A VIOLATION OF THE FEDERAL COPYRIGHT ACT AND THE LICENSE AGREEMENT, AND SUBJECT TO CIVIL AND CRIMINAL PENALTIES THEREUNDER.

to this section and ventilated to the exterior as required by Section 1203.4 do not develop problems of decay.

Where a high ground-water table exists or moisture is abnormally high, the crawl space must be adequately drained in accordance with Section 1805.1.2. It should be recognized that the moisture problem may be exaggerated in colder months; therefore, operable vents should be used with caution. Once insulation in such spaces becomes wet, it seldom dries out, thus negating its performance.

2304.13 Long-term loading. Wood members supporting concrete, masonry or similar materials shall be checked for the effects of long-term loading using the provisions of the ANSI/AWC NDS. The total deflection, including the effects of long-term loading, shall be limited in accordance with Section 1604.3.1 for these supported materials.

Exception: Horizontal wood members supporting masonry or concrete nonstructural floor or roof surfacing not more than 4 inches (102 mm) thick need not be checked for long-term loading.

❖ It is common for wood structural elements to support masonry and concrete construction. When properly designed, taking into consideration long-term deflection, wood members can adequately support permanent dead loads of concrete and masonry. The deflection limitations on wood supporting masonry and concrete are recommended by that industry (see Section 3.5.2 and Appendix F, ANSI/AWC NDS). Masonry and concrete are brittle materials, which do not tolerate movement. Wood is hygroscopic, meaning it changes dimensions as a result of absorbing or releasing (drying) water. Dimensional changes in wood due to improper detailing can result in damage to the supported masonry and concrete.

The exception provides some relief. Flooring and roof coverings meeting specific thickness criteria may be supported by wood. The wood must be designed to carry the weight of the supported material, but it is not necessary to consider the effect of long-term loading.

Tabulated modulus of elasticity design values in the ANSI/AWC NDS are intended for the calculation of immediate deformation under load. Under sustained loading, wood members exhibit additional time-dependent formation (creep), which develops at a steady rate over time. Where dead loads or sustained live loads represent a relatively high percentage of total design load, creep is a design consideration and is handled by these provisions in the ANSI/AWC NDS. In such situations, the total deflection under long-term loading is estimated by increasing the initial deflection associated with the long-term load component by the time-dependent creep factor of 1.5 for seasoned or 2.0 for unseasoned or wet lumber or glued-laminated timber (see Section 3.5.2, ANSI/AWC NDS).

SECTION 2305
GENERAL DESIGN REQUIREMENTS FOR LATERAL FORCE-RESISTING SYSTEMS

2305.1 General. Structures using wood-frame shear walls or wood-frame diaphragms to resist wind, seismic or other lateral loads shall be designed and constructed in accordance with AF&PA SDPWS and the applicable provisions of Sections 2305, 2306 and 2307.

❖ General design requirements for wood-framed lateral-force-resisting systems applicable to engineered structures are described in this section. Elements discussed in this section are designed using either ASD or LRFD methodologies. Section 2305 references the AWC SDPWS for lateral design of wood structures. Since the referenced standard does not explicitly recognize the use of staples in diaphragms and shear walls, Sections 2305.2 and 2305.3 provide guidance on calculating the deflection-blocked wood structural panel diaphragms and shear walls fastened with staples.

When portions of or elements within structures constructed according to Section 2308 need to be engineered, provisions of Section 2305 can be applied without engineering the entire structure. The extent of engineering design to be provided must be determined by the registered design professional (RDP) and accepted by the building official. However, the minimum acceptable extent is often taken to be force transfer into the element, design of the element and force transfer out of the element. When more than one braced wall line or diaphragm in any area of conventional structures requires engineering analysis, the assumptions used to develop Section 2308 may be affected, and a complete lateral analysis and design may be appropriate for the entire lateral-force-resisting system. For example, the absence of a ceiling may create a nonconventional configuration because conventional construction assumes there is a ceiling diaphragm that contributes some degree of lateral strength and stiffness.

2305.1.1 Openings in shear panels. Openings in shear panels that materially affect their strength shall be detailed on the plans and shall have their edges adequately reinforced to transfer all shearing stresses.

❖ Openings often occur in shear walls and diaphragms to accommodate stairs, windows, doors, shafts and other purposes. The transfer of shear forces around openings must be effectively addressed in the design to ensure that adequate capacity exists around the perimeter of the opening to effectively transfer shear forces.

If one considers the various approaches to shear wall design, this provision is significant since the framing and connections around the openings are specifically designed and detailed for force transfer. In this approach, design force transfer around the

INTERNATIONAL CODE COUNCIL®
Copyright © 2015 ICC. ALL RIGHTS RESERVED. Accessed by David Dammon on Jun 21, 2017 12:30:52 PM pursuant to License Agreement with ICC. No further reproduction or distribution authorized. ANY UNAUTHORIZED REPRODUCTION OR DISTRIBUTION IS A VIOLATION OF THE FEDERAL COPYRIGHT ACT AND THE LICENSE AGREEMENT, AND SUBJECT TO CIVIL AND CRIMINAL PENALTIES THEREUNDER.

openings involves developing a system of piers and coupling beams within the shear wall. Load paths for the shear and flexure developed in the piers and coupling beams generally require blocking and strapping extending from each corner of the opening to some distance beyond. This design approach is often utilized in highly loaded walls when limited amounts of sheathing are present around openings, often resulting in shear wall detailing that involves many metal tension straps around the openings. The benefit of this additional design and detailing is that the permitted height-to-width ratio of wall piers potentially allows a narrower width pier than would otherwise be required. These are referred to as "force transfer shear walls" in the AWC SDPWS.

2305.2 Diaphragm deflection. The deflection of wood-frame diaphragms shall be determined in accordance with AF&PA SDPWS. The deflection (Δ) of a blocked wood structural panel diaphragm uniformly fastened throughout with staples is permitted to be calculated in accordance with Equation 23-1. If not uniformly fastened, the constant 0.188 (For SI: 1/1627) in the third term shall be modified by an approved method.

$$\Delta = \frac{5vL^3}{8EAb} + \frac{vL}{4Gt} + 0.188Le_n + \frac{\Sigma(\Delta_c X)}{2b} \qquad \textbf{(Equation 23-1)}$$

$$\text{For SI: } \Delta = \frac{0.052vL^3}{EAb} + \frac{vL}{4Gt} + \frac{Le_n}{1627} + \frac{\Sigma(\Delta_c X)}{2b}$$

where:

A = Area of chord cross section, in square inches (mm^2).

b = Diaphragm width, in feet (mm).

E = Elastic modulus of chords, in pounds per square inch (N/mm^2).

e_n = Staple deformation, in inches (mm) [see Table 2305.2(1)].

Gt = Panel rigidity through the thickness, in pounds per inch (N/mm) of panel width or depth [see Table 2305.2(2)].

L = Diaphragm length, in feet (mm).

v = Maximum shear due to design loads in the direction under consideration, in pounds per linear foot (plf) (N/mm).

Δ = The calculated deflection, in inches (mm).

$\Sigma(\Delta_c X)$ = Sum of individual chord-splice slip values on both sides of the diaphragm, each multiplied by its distance to the nearest support.

❖ Equation 23-1 provides the estimate of the deflection of a blocked wood structural panel diaphragm that is uniformly fastened using staples. Total deflection represents the sum of four components contributing to the overall deflection: bending deflection, shear deflection, fastener slip and chord splice slip. Guidance on the selection of various equation inputs, such as fastener deformation, effective panel thickness and sum of individual chord-splice values, is provided in Tables 2305.2(1) and 2305.2(2). These tables provide the required parameters needed in the four-part equation. For ease of calculation, the "modulus of rigidity" term (G) is combined with the "effective thickness" term (t) to form a "panel rigidity capacity" term (Gt). Capacity terms, such as Gt, are used by the panel industry in lieu of section properties and allowable stresses as it makes it easier to tabulate and compare different panel types.

As noted above, the deflection computation is applicable only to blocked diaphragms. For unblocked diaphragms, *SEAOC Blue Book*, 1999, Section 805.3.2, provides the following guidance:

> "Limited testing of diaphragms (APA, 1952, 1954, 1955, 1967) suggests that the deflection of an unblocked diaphragm at its tabulated allowable shear capacity will be about 2.5 times the calculated deflection of a blocked diaphragm of similar construction and dimensions, at the same shear capacity. If diaphragm framing is spaced more than 24 inches (610 mm) o.c., testing indicates a further increase in deflection of about 20 percent for unblocked diaphragms (e.g., to three times the deflection on a comparable blocked diaphragm). This relationship can be used to develop an estimate of the deflection of unblocked diaphragms."

Note that the unblocked diaphragm testing conducted by the APA mentioned above was conducted on diaphragms with aspect ratios in the 2:1 to 3:1 range. As the aspect ratio decreases, it is reasonable to expect the adjustment factor to similarly decrease.

As noted above, the equation for diaphragm deflection is intended for uniform fastening. The 0.188 constant in the "fastener-slip deflection-contribution" term was derived based on the panel-edge fastener being the same for the entire length of the diaphragm. When fastener spacing becomes less dense near the center of the diaphragm span, ATC 7 recommends that the 0.188 constant should be increased in proportion to the average load on each fastener with a nonuniform fastener spacing, compared to the average load that would be present if a uniform fastener spacing had been maintained. The adjusted constant can be expressed as follows:

$0.188 \times (V_n'/V_n)$

where

V_n' = The average nonuniform load per fastener.

V_n = The average uniform load per fastener.

INTERNATIONAL CODE COUNCIL®
Copyright © 2015 ICC. ALL RIGHTS RESERVED. Accessed by David Dammon on Jun 21, 2017 12:30:52 PM pursuant to License Agreement with ICC. No further reproduction or distribution authorized. ANY UNAUTHORIZED REPRODUCTION OR DISTRIBUTION IS A VIOLATION OF THE FEDERAL COPYRIGHT ACT AND THE LICENSE AGREEMENT, AND SUBJECT TO CIVIL AND CRIMINAL PENALTIES THEREUNDER.

TABLE 2305.2(1)
e_n VALUES (inches) FOR USE IN CALCULATING DIAPHRAGM AND SHEAR WALL DEFLECTION DUE TO FASTENER SLIP (Structural I)[a, c]

LOAD PER FASTENER[b] (pounds)	FASTENER DESIGNATIONS
	14-Ga staple x 2 inches long
60	0.011
80	0.018
100	0.028
120	0.04
140	0.053
160	0.068

For SI: 1 inch = 25.4 mm, 1 foot = 304.8 mm, 1 pound = 4.448 N.

a. Increase e_n values 20 percent for plywood grades other than Structural I.

b. Load per fastener = maximum shear per foot divided by the number of fasteners per foot at interior panel edges.

c. Decrease e_n values 50 percent for seasoned lumber (moisture content < 19 percent).

❖ Tables 2305.2(1) and 2305.2(2) contain values for the terms e_n, G, and t for use in Equations 23-1 and 23-2. The source of these tabulated values is the 1997 UBC, Volume 3, which is the source for Equations 23-1 and 23-2 as well.

G and *t* are combined into a single table that gives the panel rigidity-through-the-thickness capacity, *Gt*, which allows the use of similar values for wood structural panels other than plywood. These values are recognized by the industry for all products meeting the criteria of either DOC PS 1 or PS 2, both of which are referenced standards in the code.

TABLE 2305.2(2) See page 23-43.

❖ See the commentary for Table 2305.2(1).

2305.3 Shear wall deflection. The deflection of wood-frame shear walls shall be determined in accordance with AWC SDPWS. The deflection (Δ) of a blocked wood structural panel shear wall uniformly fastened throughout with staples is permitted to be calculated in accordance with Equation 23-2.

$$\Delta = \frac{8vh^3}{EAb} + \frac{vh}{Gt} + 0.75he_n + d_a\frac{h}{b} \qquad \textbf{(Equation 23-2)}$$

For SI: $\Delta = \frac{vh^3}{3EAb} + \frac{vh}{Gt} + \frac{he_n}{407.6} + d_a\frac{h}{b}$

where:

A = Area of boundary element cross section in square inches (mm^2) (vertical member at shear wall boundary).

b = Wall width, in feet (mm).

da = Vertical elongation of overturning anchorage (including fastener slip, device elongation, anchor rod elongation, etc.) at the design shear load (v).

E = Elastic modulus of boundary element (vertical member at shear wall boundary), in pounds per square inch (N/mm^2).

e_n = Staple deformation, in inches (mm) [see Table 2305.2(1)].

G_t = Panel rigidity through the thickness, in pounds per inch (N/mm) of panel width or depth [see Table 2305.2(2)].

h = Wall height, in feet (mm).

v = Maximum shear due to design loads at the top of the wall, in pounds per linear foot (N/mm).

Δ = The calculated deflection, in inches (mm).

❖ The equation in this section provides an estimate of the deflection of a blocked wood structural panel shear wall. Total deflection represents the sum of four components contributing to overall deflection: bending deflection, shear deflection, fastener slip and anchorage deformation. Guidance is provided in Tables 2305.2(1) and 2305.2(2), which provide the required parameters needed for the four-part equation. For ease of calculation, the "modulus of rigidity" term (*G*) was combined with the "effective thickness" term (*t*) to form a "panel rigidity capacity" term (*Gt*). Capacity terms such as *Gt* are used by the panel industry in lieu of section properties and allowable stresses as it makes it easier to tabulate and compare different panel types.

SECTION 2306
ALLOWABLE STRESS DESIGN

2306.1 Allowable stress design. The design and construction of wood elements in structures using *allowable stress design* shall be in accordance with the following applicable standards:

❖ This section contains a number of specifications intended to provide guidance to nonprofessional as well as professional users of the code. These specifications, based on accepted engineering practices and experiences, are considered to be the minimum acceptable methods for design and construction of wood elements in structures. When designed and built in accordance with the standards referenced in this section, a building or structure is deemed to comply with the code. These standards contain most of the information needed to adequately design a structure in accordance with the Allowable Stress Design (ASD) method. It is necessary for the designer to have a working knowledge of wood engineering principles to properly interpret these recommendations and meet the provisions of other applicable sections of the code.

The most common and applicable practices are summarized in the standards listed in Section 2306.1. These standards contain references to additional technical publications that address special problems and design criteria for wood structures. The users of these standards should have training and expertise in engineering and construction in order to properly interpret the standards' requirements. These standards employ ASD—the traditional format for presenting safety checking equations in structural design standards. The basis of ASD is that actual working stresses resulting from specified service loads are compared to allowable stresses. Members and connections are selected so that actual stresses do not exceed allowable stresses.

INTERNATIONAL CODE COUNCIL®
Copyright © 2015 ICC. ALL RIGHTS RESERVED. Accessed by David Dammon on Jun 21, 2017 12:30:52 PM pursuant to License Agreement with ICC. No further reproduction or distribution authorized. ANY UNAUTHORIZED REPRODUCTION OR DISTRIBUTION IS A VIOLATION OF THE FEDERAL COPYRIGHT ACT AND THE LICENSE AGREEMENT, AND SUBJECT TO CIVIL AND CRIMINAL PENALTIES THEREUNDER.

While providing life safety by preventing structural failure or collapse remains the primary purpose of structural design, the designer must also consider how the design will perform from the perspectives of serviceability, durability and fire safety. Serviceability limit states are those that restrict the normal use and occupancy of the structure, such as excessive deflection and vibration. The code establishes deflection limits as a ratio of the member span; for example, *L*/360 computed under live load or *L*/240 under total load (dead plus live) for floor members (see Section 1604.3).

American Wood Council.

NDS	National Design Specification for Wood Construction
SDPWS	Special Design Provisions for Wind and Seismic

❖ The ANSI/AWC NDS is promulgated and distributed by the AWC. The ANSI/AWC NDS was first adopted in 1944 and has been updated periodically to reflect new knowledge under the auspices of AWC and its predecessor organizations, the National Lumber Manufacturers Association (NLMA) and the National Forest Products Association. The ANSI/AWC NDS is now published in a dual format, meaning it allows both ASD and LRFD methods.

AWC also publishes *Wood Construction Data (WCD) No. 5, Heavy Timber Construction Details*. It is written in code language for easy reference. WCD No. 5 contains detailed specifications for sizes of members required and other provisions that collectively provide a definition of "Heavy timber construction." Recommendations are also included for the fabrication and erection of this unique construction. It should be used in conjunction with the NDS and the American Institute of Timber Construction (AITC) specifications when the members are glued laminated.

The *Supplement to the National Design Specification* NDS supplement is a collation of the reference

TABLE 2305.2(2)
VALUES OF *Gt* FOR USE IN CALCULATING DEFLECTION OF WOOD STRUCTURAL PANEL SHEAR WALLS AND DIAPHRAGMS

PANEL TYPE	SPAN RATING	VALUES OF *Gt* (lb/in. panel depth or width)							
		Other				Structural I			
		3-ply plywood	4-ply plywood	5-ply plywood[a]	OSB	3-ply plywood	4-ply plywood	5-ply plywood[a]	OSB
Sheathing	24/0	25,000	32,500	37,500	77,500	32,500	42,500	41,500	77,500
	24/16	27,000	35,000	40,500	83,500	35,000	45,500	44,500	83,500
	32/16	27,000	35,000	40,500	83,500	35,000	45,500	44,500	83,500
	40/20	28,500	37,000	43,000	88,500	37,000	48,000	47,500	88,500
	48/24	31,000	40,500	46,500	96,000	40,500	52,500	51,000	96,000
Single Floor	16 o.c.	27,000	35,000	40,500	83,500	35,000	45,500	44,500	83,500
	20 o.c.	28,000	36,500	42,000	87,000	36,500	47,500	46,000	87,000
	24 o.c.	30,000	39,000	45,000	93,000	39,000	50,500	49,500	93,000
	32 o.c.	36,000	47,000	54,000	110,000	47,000	61,000	59,500	110,000
	48 o.c.	50,500	65,500	76,000	155,000	65,500	85,000	83,500	155,000

		Other			Structural I		
	Thickness (in.)	A-A, A-C	Marine	All Other Grades	A-A, A-C	Marine	All Other Grades
Sanded Plywood	1/4	24,000	31,000	24,000	31,000	31,000	31,000
	11/32	25,500	33,000	25,500	33,000	33,000	33,000
	3/8	26,000	34,000	26,000	34,000	34,000	34,000
	15/32	38,000	49,500	38,000	49,500	49,500	49,500
	1/2	38,500	50,000	38,500	50,000	50,000	50,000
	19/32	49,000	63,500	49,000	63,500	63,500	63,500
	5/8	49,500	64,500	49,500	64,500	64,500	64,500
	23/32	50,500	65,500	50,500	65,500	65,500	65,500
	3/4	51,000	66,500	51,000	66,500	66,500	66,500
	7/8	52,500	68,500	52,500	68,500	68,500	68,500
	1	73,500	95,500	73,500	95,500	95,500	95,500
	1 1/8	75,000	97,500	75,000	97,500	97,500	97,500

For SI: 1 inch = 25.4 mm, 1 pound/inch = 0.1751 N/mm.

a. Applies to plywood with five or more layers; for five-ply/three-layer plywood, use values for four ply.

INTERNATIONAL CODE COUNCIL®
Copyright © 2015 ICC. ALL RIGHTS RESERVED. Accessed by David Dammon on Jun 21, 2017 12:30:52 PM pursuant to License Agreement with ICC. No further reproduction or distribution authorized. ANY UNAUTHORIZED REPRODUCTION OR DISTRIBUTION IS A VIOLATION OF THE FEDERAL COPYRIGHT ACT AND THE LICENSE AGREEMENT, AND SUBJECT TO CIVIL AND CRIMINAL PENALTIES THEREUNDER.

design values for wood construction. The reference design values for sawn lumber are as published by seven grade-rules-writing agencies: National Lumber Grades Authority (Canada), Northern Softwood Lumber Bureau, Northeastern Lumber Manufacturers Association, Redwood Inspection Bureau, Southern Pine Inspection Bureau, West Coast Lumber Inspection Bureau and Western Wood Products Association.

These reference design values have been approved by the Board of Review of the ALSC with advice from the U.S. Forest Products Laboratory of the U.S. Department of Agriculture. They have been certified for conformance with the U.S. DOC PS 20. Regional grading agencies formulate and publish grading rules, and ALSC approves these rules as conforming with DOC PS 20.

DOC PS 20 requires that design values for visually graded lumber be developed in accordance with appropriate ASTM standards or other technically sound criteria. The design values reflected in the NDS Supplement are derived from ASTM D1990, which is utilized to derive strength values from full-sized samples of lumber.

Design values for visually graded timbers, decking and some species and grades of dimension lumber are based on the provisions of ASTM D245. The methods in ASTM D245 involve adjusting the strength properties of small clear specimens of wood for the effects of knots, slope of grain, splits, checks, size, duration of load, moisture content and other influencing factors to obtain design values applicable to normal conditions of service. The NDS Supplement also contains reference design values for structural glued-laminated timber from AITC and APA – The Engineered Wood Association in accordance with principles established by the U.S. Forest Products Laboratory standards. These involve adjustment of strength properties to account for specific factors such as knots, grain slope, density, member size and the number of laminations.

The design values given in the supplement are for normal loading conditions and under dry service conditions in a covered building. If other conditions of loadings or wet end-use conditions exist, these values must be adjusted in accordance with the recommendations of the NDS.

American Institute of Timber Construction.

AITC 104	Typical Construction Details
AITC 110	Standard Appearance Grades for Structural Glued Laminated Timber
AITC 113	Standard for Dimensions of Structural Glued Laminated Timber
AITC 117	Standard Specifications for Structural Glued Laminated Timber of Softwood Species
AITC 119	Standard Specifications for Structural Glued Laminated Timber of Hardwood Species
ANSI/AITC A190.1	Structural Glued Laminated Timber
AITC 200	Inspection Manual

❖ The AITC standards listed are primarily intended for glued-laminated structural members, but also include recommendations for sawn timber members. These standards supplement the provisions of the ANSI/AWC NDS and WCD No. 5 with no conflicting provisions. All the standards should be used collectively.

ANSI/AITC A190.1 is intended to provide nationally recognized requirements for the production, inspection, testing and certification of structural glued-laminated timber. Section 6 of the standard provides detailed requirements for in-plant quality control and the qualification of third-party inspection and testing agencies. These specifications include provisions for required testing during and after fabrication. Section 7 outlines the requirements for marking, which must be distinctive and must identify the edition of ANSI/AITC A190.1 used, the inspection and testing agency and the laminating plant.

The marking on other than custom members meeting specific job specifications must also include information on: species or species group of lumber; design values used (if not standard); intended use of member (simple beam, tension or compression member, etc.); type of adhesive (dry-wet-use); appearance grade (industrial-architectural-premium); treatment (if any); and proofloading (if applicable). Many specifiers require a Certificate of Conformance for glued-laminated beams showing compliance with APA/EWS or AITC/ANSI A190.1. Commentary Figure 2306.1 shows an example of an AITC certificate of conformance for a glue laminated timber.

American Society of Agricultural and Biological Engineers.

ASABE EP 484.2	Diaphragm Design of Metal-clad, Post-Frame Rectangular Buildings
ASABE EP 486.1	Shallow Post Foundation Design
ASABE 559	Design Requirements and Bending Properties for Mechanically Laminated Columns

❖ The American Society of Agricultural Engineers (ASAE) develops standards for design and construction of agricultural and utility buildings.

APA—The Engineered Wood Association.

Panel Design Specification

Plywood Design Specification Supplement 1—
Design & Fabrication of Plywood Curved Panel

Plywood Design Specification Supplement 2—
Design & Fabrication of Glued Plywood-lumber Beams

Plywood Design Specification Supplement 3—
Design & Fabrication of Plywood Stressed-skin Panels

Plywood Design Specification Supplement 4—
Design & Fabrication of Plywood Sandwich Panels

INTERNATIONAL CODE COUNCIL®
Copyright © 2015 ICC. ALL RIGHTS RESERVED. Accessed by David Dammon on Jun 21, 2017 12:30:52 PM pursuant to License Agreement with ICC. No further reproduction or distribution authorized. ANY UNAUTHORIZED REPRODUCTION OR DISTRIBUTION IS A VIOLATION OF THE FEDERAL COPYRIGHT ACT AND THE LICENSE AGREEMENT, AND SUBJECT TO CIVIL AND CRIMINAL PENALTIES THEREUNDER.

Plywood Design Specification Supplement 5—
Design & Fabrication of All-plywood Beams

EWS T300	Glulam Connection Details
EWS S560	Field Notching and Drilling of Glued Laminated Timber Beams
EWS S475	Glued Laminated Beam Design Tables
EWS X450	Glulam in Residential Construction
EWS X440	Product and Application Guide: Glulam
EWS R540	Builders Tips: Proper Storage and Handling of Glulam Beams

❖ APA—The Engineered Wood Association's recommendations and design standards are considered to provide the best criteria for the design and construction of structures incorporating plywood and other wood structural panel products.

Truss Plate Institute, Inc.

TPI 1	National Design Standard for Metal Plate Connected Wood Truss Construction

❖ TPI 1 is the standard for the design, fabrication, quality control and erection of light-frame metal-plate-connected wood trusses. The standard was prepared through a joint effort by the American National Standards Institute (ANSI) and TPI. This standard should be used in conjunction with other standards for wood construction.

2306.1.1 Joists and rafters. The design of rafter spans is permitted to be in accordance with the AWC STJR.

❖ Spans for joists and rafters may be designed in accordance with the AWC *Span Tables for Joists and Rafters* or approved engineering standards. When sizes of joists or rafters are other than standard sizes conforming to DOC PS 20, they must be designed in accordance with the ANSI/AWC NDS. When approved, other span tables may be used, such as those from the IRC, Southern Forest Products Association, Western Wood Products Association and Canadian Wood Council. The spans given in these tables are the same as those published in AWC *Span Tables for Joists and Rafters*. The AWC span tables were developed to provide uniformity in use of wood joists and rafters for light wood-framed structures where the live and dead loads do not exceed those for which the tables were designed. The tables for joists and rafters were designed with the live load, dead load and deflection criteria shown in Chapter 16.

2306.1.2 Plank and beam flooring. The design of plank and beam flooring is permitted to be in accordance with the AWC *Wood Construction Data No. 4*.

❖ The plank-and-beam method for framing floors and roofs has been used in buildings for many years. The adaptation of this system to residential construction has raised technical issues concerning details of application. AWC's *Plank and Beam Framing for Residential Buildings, Wood Construction Data No. 4* contains information pertaining to design principles, advantages and limitations, construction details and structural requirements for the plank-and-beam method of framing.

2306.1.3 Treated wood stress adjustments. The allowable unit stresses for *preservative-treated wood* need no adjustment for treatment, but are subject to other adjustments.

The allowable unit stresses for *fire-retardant-treated wood*, including fastener values, shall be developed from an *approved* method of investigation that considers the effects of anticipated temperature and humidity to which the *fire-retardant-treated wood* will be subjected, the type of treatment and the redrying process. Other adjustments are applicable except that the impact load duration shall not apply.

❖ Allowable unit stresses for preservative-treated wood do not need to be adjusted for treatment, but they are subject to other adjustments as required by the ANSI/AWC NDS. The allowable stresses for fire-retardant-treated wood products must be determined by testing that takes into account anticipated temperatures and humidity levels that will be encountered during service. The allowable stresses for untreated products are not applicable to fire-retardant-treated products because the treatment chemicals can reduce the strength of the materials. This is particularly true for products, such as roof sheathing, that can be subjected to conditions of high temperature and humidity.

Before approving the use of fire-retardant-treated wood products, the building official should require the manufacturer of each subject product to submit its recommended allowable stresses and provide documentation on how those values were determined. This documentation should be required for each chemical that is to be used because performance will vary between formulations. Some manufacturers maintain ICC Evaluation Service Reports for their products that can be used by the engineer and building official to design and approve these products.

Additionally, the building official should enforce any restriction on the use and location of any such treated product recommended by the manufacturer or justified based on the nature of the testing performed. For example, when these products are proposed for use in attics, the building official should make sure that they have been tested under conditions of high temperature and humidity comparable to the actual conditions that can occur in attics.

The building official should also be alerted to the fact that the ventilation requirement in the code takes on added importance when such products are used in attics. Ventilation requirements should be strictly enforced, and the building official should consult the manufacturer to determine if any additional ventilation above the code requirements might be necessary. Ventilation is needed to control temperature and humidity levels to which the products will be subjected. A lack of adequate ventilation can change the service conditions to which the products are subjected and, as a result, reduce the strength of the products below the values published by the manufacturer.

INTERNATIONAL CODE COUNCIL®
Copyright © 2015 ICC. ALL RIGHTS RESERVED. Accessed by David Dammon on Jun 21, 2017 12:30:52 PM pursuant to License Agreement with ICC. No further reproduction or distribution authorized. ANY UNAUTHORIZED REPRODUCTION OR DISTRIBUTION IS A VIOLATION OF THE FEDERAL COPYRIGHT ACT AND THE LICENSE AGREEMENT, AND SUBJECT TO CIVIL AND CRIMINAL PENALTIES THEREUNDER.

CERTIFICATE OF CONFORMANCE

THE UNDERSIGNED MANUFACTURER HEREBY CERTIFIES that the products identified below and on attached sheets are marked with the Collective Mark of the AMERICAN INSTITUTE OF TIMBER CONSTRUCTION (AITC) and were manufactured in conformance with applicable provisions of the latest revision of American National Standard for wood products – Structural Glued Laminated Timber, ANSI/AITC A190.1, and that such manufacture occurred at our plant in , which plant has a quality control system approved by the INSPECTION BUREAU OF THE AMERICAN INSTITUTE OF TIMBER CONSTRUCTION, and is audited periodically by such Bureau.

Job Name: _____

Job Location: _____

Customer's Order No. _____ Date: _____ Mfgr's Order No. _____

Order Description:

Signature: _____ Company: _____

Title: _____ Address: _____ Date: _____

AITC HEREBY CERTIFIES that the said company at its said plant is licensed by the AMERICAN INSTITUTE OF TIMBER CONSTRUCTION to use the AITC Collective Mark in respect of products which comply with applicable provisions of said Standard, that the adequacy of the quality control system in effect at said plant is periodically audited and verified by the AITC INSPECTION BUREAU, and that in the judgment of such Bureau, said company is capable of complying with applicable manufacturing and testing provisions of said Standard in respect of products manufactured in said plant. Conformance with the Standard in respect of any specific or particular product is the sole responsibility of the manufacturer; AITC's guarantee hereunder being only that the said company is qualified to produce a product meeting the said Standard and that its plant is periodically audited and verified by the AITC INSPECTION BUREAU.

AMERICAN INSTITUTION OF TIMBER CONSTRUCTION CORPORATE SEAL 1952 DELAWARE

AITC Certificate No. Void without Label

AMERICAN INSTITUTE OF TIMBER CONSTRUCTION

© 2010 AMERICAN INSTITUTE OF TIMBER CONSTRUCTION

Figure 2306.1
CERTIFICATE OF CONFORMANCE

INTERNATIONAL CODE COUNCIL®
Copyright © 2015 ICC. ALL RIGHTS RESERVED. Accessed by David Dammon on Jun 21, 2017 12:30:52 PM pursuant to License Agreement with ICC. No further reproduction or distribution authorized. ANY UNAUTHORIZED REPRODUCTION OR DISTRIBUTION IS A VIOLATION OF THE FEDERAL COPYRIGHT ACT AND THE LICENSE AGREEMENT, AND SUBJECT TO CIVIL AND CRIMINAL PENALTIES THEREUNDER.

2306.1.4 Lumber decking. The capacity of lumber decking arranged according to the patterns described in Section 2304.9.2 shall be the lesser of the capacities determined for flexure and deflection according to the formulas in Table 2306.1.4.

❖ Along with the installation requirements specified in Section 2304.9, this section incorporates allowable load provisions for design of lumber decking.

TABLE 2306.1.4
ALLOWABLE LOADS FOR LUMBER DECKING

PATTERN	ALLOWABLE AREA LOAD[a, b]	
	Flexure	Deflection
Simple span	$\sigma_b = \frac{8F_b'd^2}{l^2 6}$	$\sigma_\Delta = \frac{384\Delta E'd^3}{5l^4 12}$
Two-span continuous	$\sigma_b = \frac{8F_b'd^2}{l^2 6}$	$\sigma_\Delta = \frac{185\Delta E'd^3}{l^4 12}$
Combination simple- and two-span continuous	$\sigma_b = \frac{8F_b'd^2}{l^2 6}$	$\sigma_\Delta = \frac{131\Delta E'd^3}{l^4 12}$
Cantilevered pieces intermixed	$\sigma_b = \frac{20F_b'd^2}{3l^2 6}$	$\sigma_\Delta = \frac{105\Delta E'd^3}{l^4 12}$
Controlled random layup		
Mechanically laminated decking	$\sigma_b = \frac{20F_b'd^2}{3l^2 6}$	$\sigma_\Delta = \frac{100\Delta E'd^3}{l^4 12}$
2-inch decking	$\sigma_b = \frac{20F_b'd^2}{3l^2 6}$	$\sigma_\Delta = \frac{100\Delta E'd^3}{l^4 12}$
3-inch and 4-inch decking	$\sigma_b = \frac{20F_b'd^2}{3l^2 6}$	$\sigma_\Delta = \frac{116\Delta E'd^3}{l^4 12}$

For SI: 1 inch = 25.4 mm.

a. σ_b = Allowable total uniform load limited by bending.
σ_Δ = Allowable total uniform load limited by deflection.

b. d = Actual decking thickness.
l = Span of decking.
F_b' = Allowable bending stress adjusted by applicable factors.
E' = Modulus of elasticity adjusted by applicable factors.

❖ Based on the decking layup patterns in Section 2304.9.2, the applicable equations for computing allowable uniform loads limited by flexural bending and deflection are selected from this table. Note that the allowable loading will be the most restrictive value based on bending stresses and deflection limits. The units are not specified in the equation but do need to be consistent when carrying out the load computation.

2306.2 Wood-frame diaphragms. Wood-frame diaphragms shall be designed and constructed in accordance with AWC SDPWS. Where panels are fastened to framing members with staples, requirements and limitations of AWC SDPWS shall be met and the allowable shear values set forth in Table 2306.2(1) or 2306.2(2) shall be permitted. The allowable shear values in Tables 2306.2(1) and 2306.2(2) are permitted to be increased 40 percent for wind design.

❖ Diaphragms constructed of wood structural panels or diagonal lumber sheathing must be designed in accordance with the AWC SDPWS. Wood structural panel diaphragms fastened with staples may be designed using the values given in Tables 2306.2(1) and 2306.2(2). A diaphragm is a relatively thin structural element (e.g., floor or roof assembly), usually rectangular in plan and capable of resisting shear in its plane and parallel to its edges. The three major elements of a diaphragm are the sheathing (wood structural panels), web members (joists/rafters), the chords (boundary members) and the fasteners (such as nails).

Most floors, roofs and walls can function as diaphragms in distributing lateral (wind or seismic) forces to the vertical resisting elements, such as shear walls. Full diaphragm action can be obtained by detailing the sheathing fasteners and framing connections. Diaphragm construction is used extensively to resist horizontal forces of wind and earthquakes. Diaphragms may be either vertical (often referred to as “shear walls”) or horizontal. In special designs, they may be oriented in any direction. A diaphragm acts in a similar manner as an I-beam. The wood structural panel skin acts as the web and the boundary members act as the flanges, which are called diaphragm chords. However, due to the relatively greater depth of a diaphragm, the reactions to stress are somewhat different. The diaphragm design assumes that stresses are uniformly distributed across the panel and the web does not contribute to the resistance of tension and compression stresses as it does in a shallow beam.

A series of diaphragms may be tied together to develop a very rigid structure. Their ability to resist large shear stresses has led to their use in innovative construction methods, such as folded plate roof elements, geodesic domes and space frames.

Diaphragms must be securely connected to supporting members and to foundations that are capable of resisting all design forces. Anchorage for floors and roofs should be detailed, but generally presents no special problems. It is required that the stresses be transferred to the chords, which should be adequately supported. Shear walls, however, often require special attention to their anchorage at the foundation. The foundation and the connections thereto must be designed to resist the uplift, compression and shear forces applied.

Openings in diaphragms such as skylights, doors and windows disrupt the uniform distribution of shear

INTERNATIONAL CODE COUNCIL®
Copyright © 2015 ICC. ALL RIGHTS RESERVED. Accessed by David Dammon on Jun 21, 2017 12:30:52 PM pursuant to License Agreement with ICC. No further reproduction or distribution authorized. ANY UNAUTHORIZED REPRODUCTION OR DISTRIBUTION IS A VIOLATION OF THE FEDERAL COPYRIGHT ACT AND THE LICENSE AGREEMENT, AND SUBJECT TO CIVIL AND CRIMINAL PENALTIES THEREUNDER.

stresses across the diaphragm. Provisions must be made for continuity and compensation for this disruption. For instance, reinforcement may be necessary at windows.

As noted, wood structural panel diaphragms should be in accordance with the AWC SDPWS or may be designed using the information in Table 2306.2(1) or 2306.2(2). Note that the panel thickness and joist spacings must also comply with the requirements for sheathing of floors and roofs. The AWC SDPWS allows wood structural panel diaphragms to be designed using accepted engineering principles. ANSI/AWC NDS provides information on shear resistance of mechanical fasteners and chord design. Working stresses for wood structural panels and other materials are contained in other references in the code.

The design of horizontal diaphragms to resist shear stresses is also dependent on the orientation of continuous panel joints relative to the direction of load and not on the direction of the long dimension of the panel or framing. Six cases of panel orientation are illustrated in Table 2306.2(1). The fastening schedule and the resultant shear resistance will be affected by the panel layout (relative to load) selected. A diaphragm usually must resist loads in both transverse and longitudinal directions. Each direction must be considered separately with a different case of panel orientation; thus, the allowable load will be applicable to each direction.

Blocked diaphragms have all panel edges, including the continuous panel joint, supported by and fastened to framing members. Blocking is used at the edges of panels that are not over joists to provide for connecting units and to assist in the transfer of shear forces to the adjacent panel. Unblocked diaphragms may be used, provided the applicable fastening schedule in Table 2304.9.1 is used and the design shear does not exceed that allowed for unblocked diaphragms in Table 2306.2(1). Unblocked diaphragms are often controlled by the buckling of the panel (skin). With the same fastener spacing, allowable design loads for blocked diaphragms are one and one-half to two times the design loads for unblocked diaphragms. In addition, the maximum loads for which blocked diaphragms may be designed are many times greater. The lateral forces and design shear that must be resisted by the diaphragm usually serve as the basis for choosing whether to use blocked or unblocked diaphragm construction.

The values given in the tables are for seismic and may be increased 40 percent for wind loads. The original diaphragm and shear wall tables were developed in the 1960s when code-prescribed wind and seismic loads were quite different than they are today. In recent reevaluation of the tabulated values, it was determined that they were too low for wind design purposes because code-prescribed wind loads have been refined over the years and the confidence level in their accuracy is high. Because the tables use a 2.8 factor of safety, it was determined that a 2 factor of safety is adequate for wind design, which resulted in a 40-percent increase in the tabulated values. In the diaphragm tables in the AWC SDPWS, the nominal unit shear capacities for wind loads are shown in a different column than seismic loads and the wind capacities are 40 percent higher than the seismic capacities.

TABLE 2306.2(1). See page 23-50.

❖ Design values for nailed diaphragms are given in the AWC SDPWS. Table 2306.2(1) gives allowable shear values for wood structural panel diaphragms fastened with staples. The table's fifth column specifies the minimum nominal width of framing members at adjoining panel edges and boundaries. Note that 3-inch (76 mm) framing has higher shear capacities than the 2-inch (51 mm) framing. The intent is to provide thicker framing where the fastener size, spacing or number of rows at adjoining panel edges, or boundaries, is dictated. The purpose of using larger framing at these locations is to allow the specified connection details to transfer the higher shear forces from one panel to the next without splitting the framing members. No matter what the edge or boundary fastening requirement is for a specific panel, the minimum fastening requirement at intermediate framing (framing that does not support a panel edge) is always a single row of fasteners at 6 or 12 inches (152 or 305 mm) o.c., as this "field nailing" connection is not part of the shear transfer system between panels. As such, from a shear-transfer perspective, there is no reason to use the "at adjoining panel edges" framing requirements at intermediate framing locations. The normal (usually 2x) framing specified for the vertical load or other engineering considerations is sufficient at the intermediate framing locations.

Because the table values are based on Douglas Fir-Larch or Southern Pine, Note a specifies the adjustment factors to be applied where other species of framing lumber is used.

Note f clarifies the calculation method required to convert table values for applications other than seismic or wind loading. These adjustments reflect the fact that the values in the tables have a built-in load durtion factor (LDF) of 1.6. As such, to convert to a normal load duration (LDF = 1.0), the tabular value must be multiplied by 0.63 (1.0/1.6 = 0.63), and to convert to a permanent load duration (LDF = 0.90), a factor of 0.56 must be used (0.9/1.6 = 0.56).

Note d requires staples to be installed with the crowns of the staple parallel to the long dimension of the framing members. This makes the installation requirement for staples consistent with past practice for staples used in wood-framed diaphragms as required by the National Evaluation Report (NER-272) issued by the National Evaluation Service, Inc.

As Commentary Figure 2306.2(1) illustrates, split-

INTERNATIONAL CODE COUNCIL®
Copyright © 2015 ICC. ALL RIGHTS RESERVED. Accessed by David Dammon on Jun 21, 2017 12:30:52 PM pursuant to License Agreement with ICC. No further reproduction or distribution authorized. ANY UNAUTHORIZED REPRODUCTION OR DISTRIBUTION IS A VIOLATION OF THE FEDERAL COPYRIGHT ACT AND THE LICENSE AGREEMENT, AND SUBJECT TO CIVIL AND CRIMINAL PENALTIES THEREUNDER.

ting occurs parallel to the grain, so staggering the fasteners helps alleviate this problem. Notes c and d address the concern of splitting of framing members where tighter fastener spacing is specified. Commentary Figure 2306.2(2) illustrates staggered nailing that meets the intent of these footnotes (see commentary, Section 2306.2).

TABLE 2306.2(2). See page 23-52.

❖ This table contains values for stapled wood structural panel diaphragm assemblies that have higher capacities compared to those of Table 2306.2.1(1). These high-load diaphragms can be useful for larger flat-roofed structures subjected to high wind or seismic loads. The figures that accompany the table illustrate typical nailing patterns at panel joints. Note g requires high-load diaphragms to have special inspection in accordance with Section 1705. The capacities reflected in this table are based upon calculations using the European Yield Method and were also confirmed by testing [also see commentary, Table 2306.2(1)].

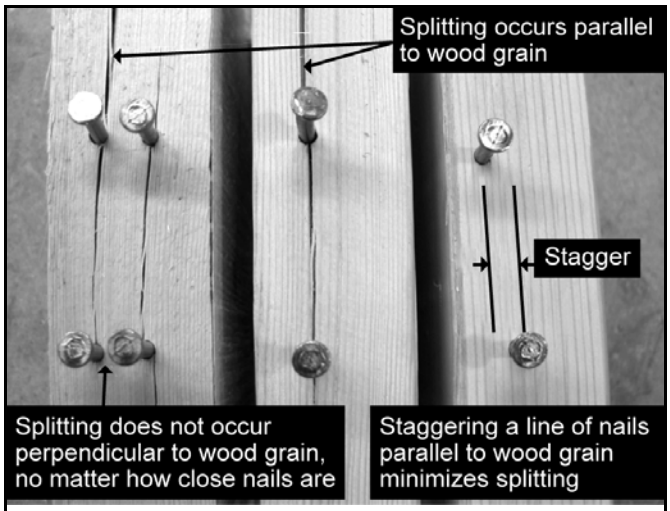

Figure 2306.2(1)
HOW WOOD SPLITS AND HOW STAGGERING MINIMIZES SPLITTING

2306.2.1 Gypsum board diaphragm ceilings. Gypsum board diaphragm ceilings shall be in accordance with Section 2508.5.

❖ See the commentary to Section 2508.5.

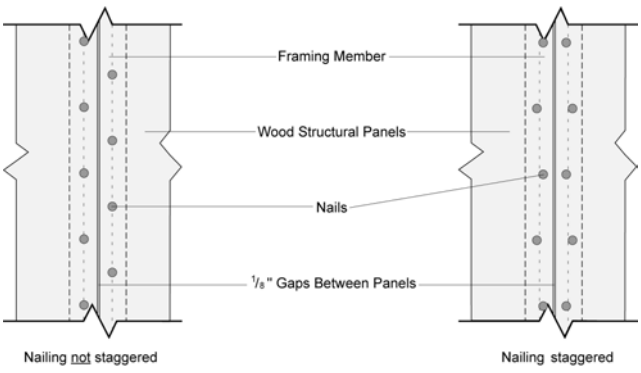

For Si: 1 inch = 25.4 mm.

Figure 2306.2(2)
STAGGERED NAILING

INTERNATIONAL CODE COUNCIL®
Copyright © 2015 ICC. ALL RIGHTS RESERVED. Accessed by David Dammon on Jun 21, 2017 12:30:52 PM pursuant to License Agreement with ICC. No further reproduction or distribution authorized. ANY UNAUTHORIZED REPRODUCTION OR DISTRIBUTION IS A VIOLATION OF THE FEDERAL COPYRIGHT ACT AND THE LICENSE AGREEMENT, AND SUBJECT TO CIVIL AND CRIMINAL PENALTIES THEREUNDER.

TABLE 2306.2(1)
ALLOWABLE SHEAR VALUES (POUNDS PER FOOT) FOR WOOD STRUCTURAL PANEL DIAPHRAGMS UTILIZING STAPLES WITH FRAMING OF DOUGLAS FIR-LARCH, OR SOUTHERN PINE[a] FOR WIND OR SEISMIC LOADING[f]

PANEL GRADE	STAPLE LENGTH AND GAGE[d]	MINIMUM FASTENER PENETRATION IN FRAMING (inches)	MINIMUM NOMINAL PANEL THICKNESS (inch)	MINIMUM NOMINAL WIDTH OF FRAMING MEMBERS AT ADJOINING PANEL EDGES AND BOUNDARIES[e] (inches)	BLOCKED DIAPHRAGMS				UNBLOCKED DIAPHRAGMS	
					Fastener spacing (inches) at diaphragm boundaries (all cases) at continuous panel edges parallel to load (Cases 3, 4), and at all panel edges (Cases 5, 6)[b]				Fasteners spaced 6 max. at supported edges[b]	
					6	4	$2^1/_2$[c]	2[c]	Case 1 (No unblocked edges or continuous joints parallel to load)	All other configurations (Cases 2, 3, 4, 5 and 6)
					Fastener spacing (inches) at other panel edges (Cases 1, 2, 3 and 4)[b]					
					6	6	4	3		
Structural I grades	$1^1/_2$ 16 gage	1	$^3/_8$	2	175	235	350	400	155	115
				3	200	265	395	450	175	130
			$^{15}/_{32}$	2	175	235	350	400	155	120
				3	200	265	395	450	175	130
Sheathing, single floor and other grades covered in DOC PS 1 and PS 2	$1^1/_2$ 16 gage	1	$^3/_8$	2	160	210	315	360	140	105
				3	180	235	355	400	160	120
			$^7/_{16}$	2	165	225	335	380	150	110
				3	190	250	375	425	165	125
			$^{15}/_{32}$	2	160	210	315	360	140	105
				3	180	235	355	405	160	120
			$^{19}/_{32}$	2	175	235	350	400	155	115
				3	200	265	395	450	175	130

(continued)

Copyright © 2015 ICC. ALL RIGHTS RESERVED. Accessed by David Dammon on Jun 21, 2017 12:30:52 PM pursuant to License Agreement with ICC. No further reproduction or distribution authorized. ANY UNAUTHORIZED REPRODUCTION OR DISTRIBUTION IS A VIOLATION OF THE FEDERAL COPYRIGHT ACT AND THE LICENSE AGREEMENT, AND SUBJECT TO CIVIL AND CRIMINAL PENALTIES THEREUNDER.

TABLE 2306.2(1)—continued
ALLOWABLE SHEAR VALUES (POUNDS PER FOOT) FOR WOOD STRUCTURAL PANEL DIAPHRAGMS UTILIZING STAPLES WITH FRAMING OF DOUGLAS FIR-LARCH, OR SOUTHERN PINE[a] FOR WIND OR SEISMIC LOADING[f]

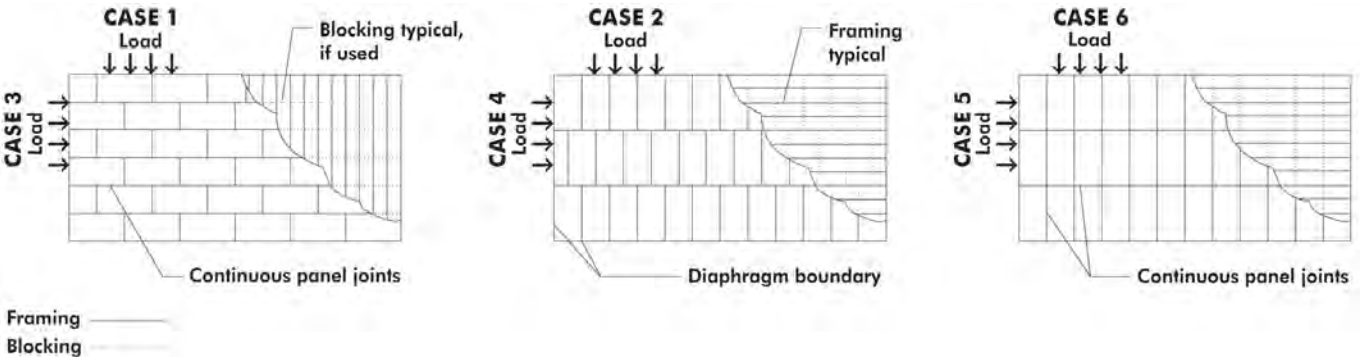

For SI: 1 inch = 25.4 mm, 1 pound per foot = 14.5939 N/m.

a. For framing of other species: (1) Find specific gravity for species of lumber in ANSI/AWC NDS. (2) For staples find shear value from table above for Structural I panels (regardless of actual grade) and multiply value by 0.82 for species with specific gravity of 0.42 or greater, or 0.65 for all other species.
b. Space fasteners maximum 12 inches on center along intermediate framing members (6 inches on center where supports are spaced 48 inches on center).
c. Framing at adjoining panel edges shall be 3 inches nominal or wider.
d. Staples shall have a minimum crown width of $^{7}/_{16}$ inch and shall be installed with their crowns parallel to the long dimension of the framing members.
e. The minimum nominal width of framing members not located at boundaries or adjoining panel edges shall be 2 inches.
f. For shear loads of normal or permanent load duration as defined by the ANSI/AWC NDS, the values in the table above shall be multiplied by 0.63 or 0.56, respectively.

INTERNATIONAL CODE COUNCIL®
Copyright © 2015 ICC. ALL RIGHTS RESERVED. Accessed by David Dammon on Jun 21, 2017 12:30:52 PM pursuant to License Agreement with ICC. No further reproduction or distribution authorized. ANY UNAUTHORIZED REPRODUCTION OR DISTRIBUTION IS A VIOLATION OF THE FEDERAL COPYRIGHT ACT AND THE LICENSE AGREEMENT, AND SUBJECT TO CIVIL AND CRIMINAL PENALTIES THEREUNDER.

TABLE 2306.2(2)
ALLOWABLE SHEAR VALUES (POUNDS PER FOOT) FOR WOOD STRUCTURAL PANEL BLOCKED DIAPHRAGMS UTILIZING MULTIPLE ROWS OF STAPLES (HIGH-LOAD DIAPHRAGMS) WITH FRAMING OF DOUGLAS FIR-LARCH OR SOUTHERN PINE[a] FOR WIND OR SEISMIC LOADING[b, g, h]

PANEL GRADE[c]	STAPLE GAGE[f]	MINIMUM FASTENER PENETRATION IN FRAMING (inches)	MINIMUM NOMINAL PANEL THICKNESS (inch)	MINIMUM NOMINAL WIDTH OF FRAMING MEMBER AT ADJOINING PANEL EDGES AND BOUNDARIES[e]	LINES OF FASTENERS	BLOCKED DIAPHRAGMS					
						Cases 1 and 2[d]					
						Fastener Spacing Per Line at Boundaries (inches)					
						4		$2^1/_2$		2	
						Fastener Spacing Per Line at Other Panel Edges (inches)					
						6	4	4	3	3	2
Structural I grades	14 gage staples	2	$^{15}/_{32}$	3	2	600	600	860	960	1,060	1,200
				4	3	860	900	1,160	1,295	1,295	1,400
			$^{19}/_{32}$	3	2	600	600	875	960	1,075	1,200
				4	3	875	900	1,175	1,440	1,475	1,795
Sheathing single floor and other grades covered in DOC PS 1 and PS 2	14 gage staples	2	$^{15}/_{32}$	3	2	540	540	735	865	915	1,080
				4	3	735	810	1,005	1,105	1,105	1,195
			$^{19}/_{32}$	3	2	600	600	865	960	1,065	1,200
				4	3	865	900	1,130	1,430	1,370	1,485
			$^{23}/_{32}$	4	3	865	900	1,130	1,490	1,430	1,545

For SI: 1 inch = 25.4 mm, 1 pound per foot = 14.5939 N/m.

a. For framing of other species: (1) Find specific gravity for species of framing lumber in ANSI/AWC NDS. (2) For staples, find shear value from table above for Structural I panels (regardless of actual grade) and multiply value by 0.82 for species with specific gravity of 0.42 or greater, or 0.65 for all other species.

b. Fastening along intermediate framing members: Space fasteners a maximum of 12 inches on center, except 6 inches on center for spans greater than 32 inches.

c. Panels conforming to PS 1 or PS 2.

d. This table gives shear values for Cases 1 and 2 as shown in Table 2306.2(1). The values shown are applicable to Cases 3, 4, 5 and 6 as shown in Table 2306.2(1), providing fasteners at all continuous panel edges are spaced in accordance with the boundary fastener spacing.

e. The minimum nominal depth of framing members shall be 3 inches nominal. The minimum nominal width of framing members not located at boundaries or adjoining panel edges shall be 2 inches.

f. Staples shall have a minimum crown width of $^{7}/_{16}$ inch, and shall be installed with their crowns parallel to the long dimension of the framing members.

g. High-load diaphragms shall be subject to special inspection in accordance with Section 1705.5.1.

h. For shear loads of normal or permanent load duration as defined by the ANSI/AWC NDS, the values in the table above shall be multiplied by 0.63 or 0.56, respectively.

(continued)

INTERNATIONAL CODE COUNCIL®
Copyright © 2015 ICC. ALL RIGHTS RESERVED. Accessed by David Dammon on Jun 21, 2017 12:30:52 PM pursuant to License Agreement with ICC. No further reproduction or distribution authorized. ANY UNAUTHORIZED REPRODUCTION OR DISTRIBUTION IS A VIOLATION OF THE FEDERAL COPYRIGHT ACT AND THE LICENSE AGREEMENT, AND SUBJECT TO CIVIL AND CRIMINAL PENALTIES THEREUNDER.

TABLE 2306.2(2)—continued
ALLOWABLE SHEAR VALUES (POUNDS PER FOOT) FOR WOOD STRUCTURAL PANEL BLOCKED DIAPHRAGMS UTILIZING MULTIPLE ROWS OF STAPLES (HIGH-LOAD DIAPHRAGMS) WITH FRAMING OF DOUGLAS FIR-LARCH OR SOUTHERN PINE FOR WIND OR SEISMIC LOADING

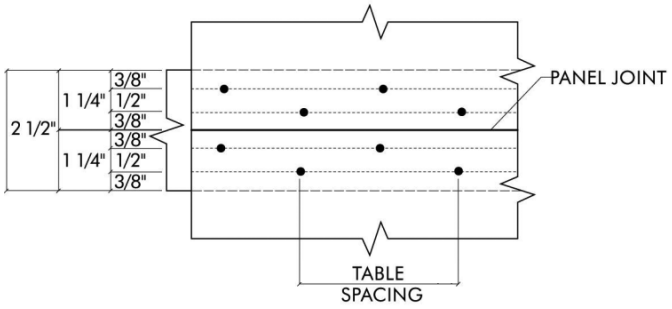

3" NOMINAL—TWO LINES

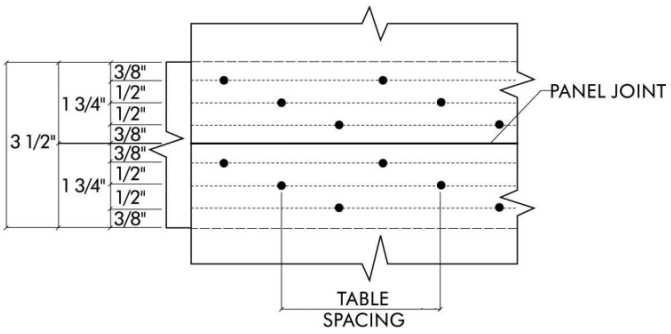

4" NOMINAL—THREE LINES

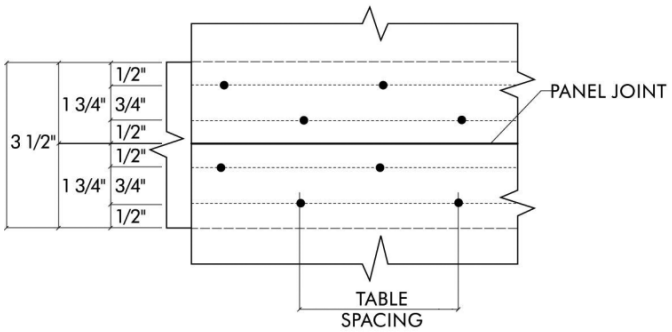

4" NOMINAL—TWO LINES

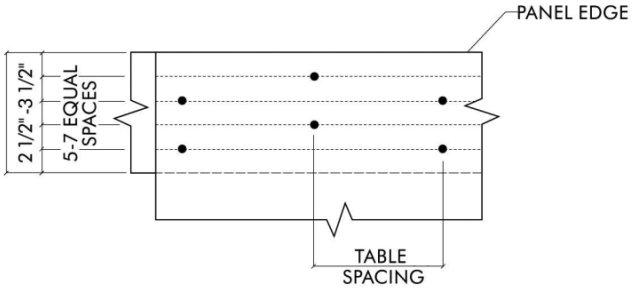

TYPICAL BOUNDARY FASTENING
(Shown is two lines staggered.)

NOTE: SPACE PANEL END AND EDGE JOINT 1/8-INCH. REDUCE SPACING BETWEEN LINES OF NAILS AS NECESSARY TO MAINTAIN MINIMUM 3/8-INCH FASTENER EDGE MARGINS, MINIMUM SPACING BETWEEN LINES IS 3/8-INCH

INTERNATIONAL CODE COUNCIL®
Copyright © 2015 ICC. ALL RIGHTS RESERVED. Accessed by David Dammon on Jun 21, 2017 12:30:52 PM pursuant to License Agreement with ICC. No further reproduction or distribution authorized. ANY UNAUTHORIZED REPRODUCTION OR DISTRIBUTION IS A VIOLATION OF THE FEDERAL COPYRIGHT ACT AND THE LICENSE AGREEMENT, AND SUBJECT TO CIVIL AND CRIMINAL PENALTIES THEREUNDER.

2306.3 Wood-frame shear walls. Wood-frame shear walls shall be designed and constructed in accordance with AWC SDPWS. Where panels are fastened to framing members with staples, requirements and limitations of AWC SDPWS shall be met and the allowable shear values set forth in Table 2306.3(1), 2306.3(2) or 2306.3(3) shall be permitted. The allowable shear values in Tables 2306.3(1) and 2306.3(2) are permitted to be increased 40 percent for wind design. Panels complying with ANSI/APA PRP-210 shall be permitted to use design values for Plywood Siding in the AWC SDPWS.

❖ Shear walls constructed of wood framing must be designed in accordance with the AWC SDPWS. The AWC SDPWS contains provisions for design of shear walls using wood structural panels, particleboard, structural fiberboard, gypsum wall board, Portland cement plaster (stucco) and lumber sheathing. Although wood structural panel sheathed shear walls are most prevalently used today, diagonally sheathed lumber shear walls are still used for new construction in some regions and are encountered in the alteration of existing structures. Wood structural panel, structural fiberboard, gypsum board and Portland cement plaster shear walls fastened with staples may be designed using the values given in Tables 2306.3(1), 2306.3(2) and 2306.3(3). As with diaphragms, the allowable shear values for wood structural panel and fiberboard sheathed shear walls may be increased by 40 percent for wind loads (see commentary, Section 2306.2).

TABLE 2306.3(1). See below.

❖ The allowable shear capacities for wood structural panel shear walls in Table 2306.3(1) were developed based on engineering principles and monotonic testing.

The AWC SDPWS allows shear walls to be designed without limitations by a rational method using either the values for nail strength in the ANSI/AWC NDS or wood structural panel design properties in APA's *Panel Design Specification*. For shear walls utilizing wood framing subjected to seismic loading, energy dissipation is almost entirely due to nail bending.

Where shear design values exceed 350 pounds per linear foot, Note g requires that all framing members receiving edge fastening from abutting panels must be a single 3-inch (76 mm) nominal member in Seismic Design Category D, E or F. A pair of nominal

TABLE 2306.3(1)
ALLOWABLE SHEAR VALUES (POUNDS PER FOOT) FOR WOOD STRUCTURAL PANEL SHEAR WALLS UTILIZING STAPLES WITH FRAMING OF DOUGLAS FIR-LARCH OR SOUTHERN PINE[a] FOR WIND OR SEISMIC LOADING[b, f, g, i]

PANEL GRADE	MINIMUM NOMINAL PANEL THICKNESS (inch)	MINIMUM FASTENER PENETRATION IN FRAMING (inches)	PANELS APPLIED DIRECT TO FRAMING					PANELS APPLIED OVER $^1/_2$" OR $^5/_8$" GYPSUM SHEATHING				
			Staple size[h]	Fastener spacing at panel edges (inches)				Staple size[h]	Fastener spacing at panel edges (inches)			
				6	4	3	2[d]		6	4	3	2[d]
Structural I sheathing	$^3/_8$	1	$1^1/_2$ 16 Gage	155	235	315	400	2 16 Gage	155	235	310	400
	$^7/_{16}$			170	260	345	440		155	235	310	400
	$^{15}/_{32}$			185	280	375	475		155	235	300	400
Sheathing, plywood siding[e] except Group 5 Species, ANSI/APA PRP 210 siding	$^5/_{16}$[c] or $^1/_4$[c]	1	$1^1/_2$ 16 Gage	145	220	295	375	2 16 Gage	110	165	220	285
	$^3/_8$			140	210	280	360		140	210	280	360
	$^7/_{16}$			155	230	310	395		140	210	280	360
	$^{15}/_{32}$			170	255	335	430		140	210	280	360
	$^{19}/_{32}$		$1^3/_4$ 16 Gage	185	280	375	475	—	—	—	—	—

For SI: 1 inch = 25.4 mm, 1 pound per foot = 14.5939 N/m.

a. For framing of other species: (1) Find specific gravity for species of lumber in ANSI/AWC NDS. (2) For staples find shear value from table above for Structural I panels (regardless of actual grade) and multiply value by 0.82 for species with specific gravity of 0.42 or greater, or 0.65 for all other species.

b. Panel edges backed with 2-inch nominal or wider framing. Install panels either horizontally or vertically. Space fasteners maximum 6 inches on center along intermediate framing members for $^3/_8$-inch and $^7/_{16}$-inch panels installed on studs spaced 24 inches on center. For other conditions and panel thickness, space fasteners maximum 12 inches on center on intermediate supports.

c. $^3/_8$-inch panel thickness or siding with a span rating of 16 inches on center is the minimum recommended where applied directly to framing as exterior siding. For grooved panel siding, the nominal panel thickness is the thickness of the panel measured at the point of fastening.

d. Framing at adjoining panel edges shall be 3 inches nominal or wider.

e. Values apply to all-veneer plywood. Thickness at point of fastening on panel edges governs shear values.

f. Where panels are applied on both faces of a wall and fastener spacing is less than 6 inches on center on either side, panel joints shall be offset to fall on different framing members, or framing shall be 3 inches nominal or thicker at adjoining panel edges.

g. In Seismic Design Category D, E or F, where shear design values exceed 350 pounds per linear foot, all framing members receiving edge fastening from abutting panels shall be not less than a single 3-inch nominal member, or two 2-inch nominal members fastened together in accordance with Section 2306.1 to transfer the design shear value between framing members. Wood structural panel joint and sill plate nailing shall be staggered at all panel edges. See AWC SDPWS for sill plate size and anchorage requirements.

h. Staples shall have a minimum crown width of $^7/_{16}$ inch and shall be installed with their crowns parallel to the long dimension of the framing members.

i. For shear loads of normal or permanent load duration as defined by the ANSI/AWC NDS, the values in the table above shall be multiplied by 0.63 or 0.56, respectively.

INTERNATIONAL CODE COUNCIL®
Copyright © 2015 ICC. ALL RIGHTS RESERVED. Accessed by David Dammon on Jun 21, 2017 12:30:52 PM pursuant to License Agreement with ICC. No further reproduction or distribution authorized. ANY UNAUTHORIZED REPRODUCTION OR DISTRIBUTION IS A VIOLATION OF THE FEDERAL COPYRIGHT ACT AND THE LICENSE AGREEMENT, AND SUBJECT TO CIVIL AND CRIMINAL PENALTIES THEREUNDER.

2-inch (51 mm) members can be used in lieu of a single 3-inch (76 mm) nominal member, provided the two 2-inch (51 mm) members are fastened together to transfer the design shear. This provision is based on testing by APA, which showed that two 2-inch (51 mm) members fastened to transfer the shear performed as well as shear walls with a single 3-inch (76 mm) nominal member. See the commentary to Table 2306.2(1) for additional discussion of the footnotes.

TABLE 2306.3(2). See below.

❖ Fiberboard sheathed shear walls fastened with staples may be designed using Table 2306.3(2). The table is restricted to Type V buildings as defined in Chapter 6. Note e limits the use of fiberboard shear walls to buildings in Seismic Design Categories A, B and C.

TABLE 2306.3(3). See page 23-56.

❖ This table provides the shear capacities of gypsum board sheathing, expanded metal or woven wire lath and Portland cement plaster in shear walls fastened with staples. Because of the brittleness of these materials, they are not permitted to resist seismic forces imposed by masonry or concrete walls and their use is limited to structures classified as Seismic Design Category D. They are prohibited in structures classified as Seismic Design Category E or F (see Table 12.2-1 ASCE 7). In wind design, the shear capacities of these materials can be added to the shear capacity of the wood structural panel or wood sheathing to determine the total shear capacity of the shear wall to resist wind forces (see AWC SDPWS).

Note f requires staples to be installed with the crown of the staple parallel to the long dimension of the framing members. This makes the installation requirement for staples consistent with what has been required for staples used in wood-framed diaphragms and shear walls.

SECTION 2307
LOAD AND RESISTANCE FACTOR DESIGN

2307.1 Load and resistance factor design. The design and construction of wood elements and structures using *load and resistance factor design* shall be in accordance with ANSI/AWC NDS and AWC SDPWS.

❖ The LRFD methodology that was originally developed for ASCE 16-95 was subsequently incorporated into the ANSI/AWC NDS and SDPWS. The current edition of the ANSI/AWC NDS is a dual format specification that contains provisions for both ASD and LRFD.

Theoretical reliability-based analysis has been used for many years in the electronics and aerospace industries with great success. LRFD has evolved to become the preferred format for converting structural design standards to a so-called limit states approach.

SECTION 2308
CONVENTIONAL LIGHT-FRAME CONSTRUCTION

2308.1 General. The requirements of this section are intended for *conventional light-frame construction*. Other construction methods are permitted to be used, provided a satisfactory design is submitted showing compliance with other provisions of this code. Interior nonload-bearing partitions, ceilings and curtain walls of *conventional light-frame construction* are not subject to the limitations of Section 2308.2. Detached one- and two-family dwellings and multiple single-family dwellings (townhouses) not more than three *stories above grade plane* in height with a separate means of egress and their accessory structures shall comply with the *International Residential Code*.

❖ The provisions of Section 2308 recognize that light-frame wood construction for a limited range of buildings will perform to the extent required by the code based on many years of experience and good historical performance. The stated intent of the code is to provide minimum requirements necessary to protect

TABLE 2306.3(2)
ALLOWABLE SHEAR VALUES (plf) FOR WIND OR SEISMIC LOADING ON SHEAR WALLS OF FIBERBOARD SHEATHING BOARD CONSTRUCTION UTILIZING STAPLES FOR TYPE V CONSTRUCTION ONLY[a, b, c, d, e]

THICKNESS AND GRADE	FASTENER SIZE	ALLOWABLE SHEAR VALUE (pounds per linear foot) STAPLE SPACING AT PANEL EDGES (inches)[a]		
		4	3	2
$^1/_2$″ or $^{25}/_{32}$″ Structural	No. 11 gage galvanized staple, $^7/_{16}$″ crown[f]	150	200	225
	No. 11 gage galvanized staple, 1″ crown[f]	220	290	325

For SI: 1 inch = 25.4 mm, 1 pound per foot = 14.5939 N/m.

a. Fiberboard sheathing shall not be used to brace concrete or masonry walls.

b. Panel edges shall be backed with 2-inch or wider framing of Douglas Fir-larch or Southern Pine. For framing of other species: (1) Find specific gravity for species of framing lumber in ANSI/AWC NDS. (2) For staples, multiply the shear value from the table above by 0.82 for species with specific gravity of 0.42 or greater, or 0.65 for all other species.

c. Values shown are for fiberboard sheathing on one side only with long panel dimension either parallel or perpendicular to studs.

d. Fastener shall be spaced 6 inches on center along intermediate framing members.

e. Values are not permitted in Seismic Design Category D, E or F.

f. Staple length shall be not less than $1^1/_2$ inches for $^{25}/_{32}$-inch sheathing or $1^1/_4$ inches for $^1/_2$-inch sheathing.

INTERNATIONAL CODE COUNCIL®
Copyright © 2015 ICC. ALL RIGHTS RESERVED. Accessed by David Dammon on Jun 21, 2017 12:30:52 PM pursuant to License Agreement with ICC. No further reproduction or distribution authorized. ANY UNAUTHORIZED REPRODUCTION OR DISTRIBUTION IS A VIOLATION OF THE FEDERAL COPYRIGHT ACT AND THE LICENSE AGREEMENT, AND SUBJECT TO CIVIL AND CRIMINAL PENALTIES THEREUNDER.

TABLE 2306.3(3)
ALLOWABLE SHEAR VALUES FOR WIND OR SEISMIC FORCES FOR SHEAR WALLS OF LATH AND PLASTER OR GYPSUM BOARD WOOD FRAMED WALL ASSEMBLIES UTILIZING STAPLES

TYPE OF MATERIAL	THICKNESS OF MATERIAL	WALL CONSTRUCTION	STAPLE SPACING[b] MAXIMUM (inches)	SHEAR VALUE[a, c] (plf)	MINIMUM STAPLE SIZE [f, g]
1. Expanded metal or woven wire lath and Portland cement plaster	$^7/_8$″	Unblocked	6	180	No. 16 gage galv. staple, $^7/_8$″ legs
2. Gypsum lath, plain or perforated	$^3/_8$″ lath and $^1/_2$″ plaster	Unblocked	5	100	No. 16 gage galv. staple, $1^1/_8$″ long
3. Gypsum sheating	$^1/_2$″ × 2′ × 8′	Unblocked	4	75	No. 16 gage galv. staple, $1^3/_4$″ long
	$^1/_2$″ × 4′	Blocked[d] Unblocked	4 7	175 100	
4. Gypsum board, gypsum veneer base or water-resistant gypsum backing board	$^1/_2$″	Unblocked[d]	7	75	No. 16 gage galv. staple, $1^1/_2$″ long
		Unblocked[d]	4	110	
		Unblocked	7	100	
		Unblocked	4	125	
		Blocked[e]	7	125	
		Blocked[e]	4	150	
	$^5/_8$″	Unblocked[d]	7	115	No. 16 gage galv. staple, $1^1/_2$″ legs, $1^5/_8$″ long
			4	145	
		Blocked[e]	7	145	
			4	175	
		Blocked[e] Two-ply	Base ply: 9 Face ply: 7	250	No. 16 gage galv. staple $1^5/_8$″ long No. 15 gage galv. staple, $2^1/_4$″ long

For SI: 1 inch = 25.4 mm, 1 foot = 304.8 mm, 1 pound per foot = 14.5939 N/m.

a. These shear walls shall not be used to resist loads imposed by masonry or concrete walls (see AWC SDPWS). Values shown are for short-term loading due to wind or seismic loading. Walls resisting seismic loads shall be subject to the limitations in Section 12.2.1 of ASCE 7. Values shown shall be reduced 25 percent for normal loading.

b. Applies to fastening at studs, top and bottom plates and blocking.

c. Except as noted, shear values are based on a maximum framing spacing of 16 inches on center.

d. Maximum framing spacing of 24 inches on center.

e. All edges are blocked, and edge fastening is provided at all supports and all panel edges.

f. Staples shall have a minimum crown width of $^7/_{16}$ inch, measured outside the legs, and shall be installed with their crowns parallel to the long dimension of the framing members.

g. Staples for the attachment of gypsum lath and woven-wire lath shall have a minimum crown width of $^3/_4$ inch, measured outside the legs.

the health, safety and general welfare of the public (see the preface and Section 101.3), not to ensure a complete lack of structural damage after a major wind or seismic event. A structure should not collapse, but may require extensive repairs following a major disaster such as an earthquake or high-wind event. The prescriptive details and specifications for conventional construction are deemed to meet these standards. The development of conventional means of construction is not new. The construction of wood-framed structures supported by concrete and masonry foundations came long before engineering design and analysis, which has resulted in a large residual body of building methods and techniques that have withstood the test of time, satisfying standards of structural stability without additional substantiating data. These traditional modes of construction are called "conventional" and are acceptable, within the prescribed limits, without further substantiation. The prescriptive conventional construction provisions in early editions of U.S. codes described the use of repetitive light-frame wood construction, which is typically referred to as "light-frame construction." The conventional construction provisions have always been entirely prescriptive and were intended to apply to repetitive light-wood framing, such as the stud walls, joists and rafters, along with the foundations that support the structure.

Although prescriptive methods have been followed ever since wood has been used as a building material, in 1990 the Conventional Construction Task Force of the Structural Engineers Association of California (SEAOC) was formed for the purpose of reviewing existing code provisions and construction practices in order to develop better and more uniformly enforceable provisions. This work was integrated into the 1994 UBC and much of it remains in the code today.

These provisions are generally only applicable to light wood-framed building construction having closely spaced repetitive framing, using studs up to 2 inches

INTERNATIONAL CODE COUNCIL®
Copyright © 2015 ICC. ALL RIGHTS RESERVED. Accessed by David Dammon on Jun 21, 2017 12:30:52 PM pursuant to License Agreement with ICC. No further reproduction or distribution authorized. ANY UNAUTHORIZED REPRODUCTION OR DISTRIBUTION IS A VIOLATION OF THE FEDERAL COPYRIGHT ACT AND THE LICENSE AGREEMENT, AND SUBJECT TO CIVIL AND CRIMINAL PENALTIES THEREUNDER.

by 6 inches (51 mm by 152 mm) in size and joists and rafters up to 2 inches by 12 inches (51 mm by 305 mm) in size. With a few exceptions, modern conventional structures are framed in the "platform" style. Repetitive, closely spaced framing is not specifically defined by the code; however, it is usually assumed to include framing that does not exceed a spacing of 24 inches (610 mm) o.c. This is the greatest spacing commonly found in these types of structures, the greatest spacing covered by AWC *Span Tables for Joists and Rafters* and the maximum spacing for which referenced standards allow increases in bending stresses for repetitive member use.

Given that these provisions are prescriptive, they do not typically require a structural design to comply with the code. However, structures, portions of structures or elements not within the scope of conventional construction are permitted, provided that they are designed to comply with either ASD or LRFD methodology, as discussed in the commentary to Section 2301.2. Methods other than those prescribed by the section are allowed where a design is submitted and approved by the building official. Structures must either comply with the restrictions, limitations and requirements prescribed in the conventional construction provisions or documentation is to be provided that demonstrates compliance with other provisions of the code and accepted engineering practice. Generally, accepted engineering practice means an engineered analysis has been done based on well-established principles of mechanics and the analysis conforms to accepted principles, tests or nationally recognized standards. In the case of unusual configurations, weight or loading conditions that exceed the prescriptive limitations, the code requires a structural design.

Some interior nonbearing applications are permitted to use the provisions of Section 2308, even though the remainder of the building does not fall within the limitations of Section 2308.2. These buildings would be of light wood-frame construction as well as other types of construction in which wood framing is permitted under other portions of the code.

2308.1.1 Portions exceeding limitations of conventional light-frame construction. When portions of a building of otherwise *conventional light-frame construction* exceed the limits of Section 2308.2, those portions and the supporting load path shall be designed in accordance with accepted engineering practice and the provisions of this code. For the purposes of this section, the term "portions" shall mean parts of buildings containing volume and area such as a room or a series of rooms. The extent of such design need only demonstrate compliance of the nonconventional light-framed elements with other applicable provisions of this code and shall be compatible with the performance of the conventional light-framed system.

❖ In recognition of the complexity of many wood-framed structures, this section of the code allows for a combined use of prescriptive provisions and engineered systems where the necessary limitations of conventional construction are exceeded in portions of a structure. It is the intention that engineered portions within an otherwise conventionally framed building will be integrated in such a way that a complete load path is provided for the engineered system and the forces carried will be properly delivered to resisting elements, possibly even across an area of the building that is not engineered. For example, an engineered shear wall line requires collectors that might extend over the top of conventional beams, studs and columns, which is perfectly acceptable, provided the lateral forces that this engineered line of shear wall is to resist are properly transferred into the shear wall through an engineered load path and ultimately carried to the foundation and ground. The applicable code requirements in terms of design loads, shear walls, collector elements, diaphragm limitations etc., form the basis for design of engineered portions (see also a discussion of engineered elements under Section 2308.8).

2308.1.2 Connections and fasteners. Connectors and fasteners used in conventional construction shall comply with the requirements of Section 2304.10.

❖ As discussed in the commentary to Section 2304.10, the section on fasteners and connectors applies to all types of wood construction addressed in Chapter 23, and the number of fasteners stipulated in Table 2304.10.1 is the minimum to be used. This section emphasizes that the minimum connection and fastener requirements specified in Section 2304.10 also apply to conventional construction.

2308.2 Limitations. Buildings are permitted to be constructed in accordance with the provisions of *conventional light-frame construction*, subject to the limitations in Sections 2308.2.1 through 2308.2.6.

❖ It is acknowledged that conventional construction provisions concerning framing members and sheathing that carry gravity loads are adequate due to historical performance and the fact that the tables for selecting members have been developed from engineering calculations. For resistance to lateral loads (wind and seismic), however, experience has shown that additional requirements or limits are needed.

2308.2.1 Stories. Structures of *conventional light-frame construction* shall be limited in *story* height in accordance with Table 2308.2.1.

❖ The requirements of conventional construction are based on anticipated loads, both gravity and lateral. Buildings greater than three stories could load the lower stories to a level higher than what is safely addressed by these provisions. This section further limits conventional construction to two stories in Seismic Design Category C because of amplified dynamic effects in taller structures.

Similar to buildings classified as Seismic Design Category C, conventional wood-framed structures in areas having a higher seismic risk need to be limited

INTERNATIONAL CODE COUNCIL®
Copyright © 2015 ICC. ALL RIGHTS RESERVED. Accessed by David Dammon on Jun 21, 2017 12:30:52 PM pursuant to License Agreement with ICC. No further reproduction or distribution authorized. ANY UNAUTHORIZED REPRODUCTION OR DISTRIBUTION IS A VIOLATION OF THE FEDERAL COPYRIGHT ACT AND THE LICENSE AGREEMENT, AND SUBJECT TO CIVIL AND CRIMINAL PENALTIES THEREUNDER.

in height due to historic observations of the effects of severe earthquakes. The section limits the height of conventional wood-framed structures to one story in Seismic Design Categories D and E. In the aftermath of the 1994 Northridge, California, earthquake, structural failures were observed in multistory residential buildings that were sheathed with the weakest of materials allowed under the prescriptive methods. As a result of these observations, newer regulations for conventional construction have included more restrictive height limits and a more restrictive placement of braced wall lines and braced wall panels.

TABLE 2308.2.1
ALLOWABLE STORY HEIGHT

SEISMIC DESIGN CATEGORY	ALLOWABLE STORY ABOVE GRADE PLANE
A and B	Three stories
C	Two stories
D and E[a]	One story

For SI: 1 inch = 25.4 mm.

a. For the purposes of this section, for buildings assigned to *Seismic Design Category* D or E, cripple walls shall be considered to be a *story* unless cripple walls are solid blocked and do not exceed 14 inches in height.

❖ See Section 2308.2.1.

2308.2.2 Allowable floor-to-floor height. Maximum floor-to-floor height shall not exceed 11 feet, 7 inches (3531 mm). Exterior bearing wall and interior braced wall heights shall not exceed a stud height of 10 feet (3048 mm).

❖ Tall studs in bearing walls can have a tendency to bow (buckle) laterally out of the plane of the wall. Although this tendency to buckle can be restrained or otherwise accounted for by design of the stud as a column, the prescriptive provisions of Section 2308 do not attempt to address the problem for studs that are taller than 10 feet (3048 mm). This height is assumed to be the maximum stable height using the typical size, grades and species (type) of wood studs in general use in conventional construction (refer to Table 2308.5.1). The code specifies a maximum floor-to-floor height that accommodates typical floor trusses or I-joists.

2308.2.3 Allowable loads. Loads shall be in accordance with Chapter 16 and shall not exceed the following:

1. Average dead loads shall not exceed 15 psf (718 N/m2) for combined roof and ceiling, exterior walls, floors and partitions.

   Exceptions:

   1. Subject to the limitations of Section 2308.6.10, stone or masonry veneer up to the lesser of 5 inches (127 mm) thick or 50 psf (2395 N/m^2) and installed in accordance with Chapter 14 is permitted to a height of 30 feet (9144 mm) above a noncombustible foundation, with an additional 8 feet (2438 mm) permitted for gable ends.
   2. Concrete or masonry fireplaces, heaters and chimneys shall be permitted in accordance with the provisions of this code.

2. Live loads shall not exceed 40 psf (1916 N/m^2) for floors.
3. Ground snow loads shall not exceed 50 psf (2395 N/m^2).

❖ Because the requirements of Section 2308 are based on anticipated loads, this item limits both the dead and live loads in the structure. The prescriptive provisions of conventional construction are based on relatively light dead loads and do not address support of masonry or concrete other than veneer not more than 5 inches (127 mm) thick and with a total weight of not greater than 50 psf (2395 N/m^2). Additionally, the span tables for joists are primarily based on live loads for residential uses, and other elements that support floor loads assume residential loading of 40 psf (1916 N/m^2). The maximum ground snow load of 50 psf (2395 N/m^2) corresponds to the maximum load in the rafter span tables.

2308.2.4 Ultimate wind speed. V_{ult} shall not exceed 130 miles per hour (57 m/s) (3-second gust).

Exceptions:

1. V_{ult} shall not exceed 140 mph (61.6 m/s) (3-second gust) for buildings in Exposure Category B that are not located in a *hurricane-prone region*.
2. Where V_{ult} exceeds 130 mph (3-second gust), the provisions of either AWC WFCM or ICC 600 are permitted to be used.

❖ While some elements of conventional construction are acceptable for use in buildings in high-wind areas, the general framing, sheathing and connection requirements are considered to be insufficient. Buildings in Exposure Category B, as defined in Section 1609.4, are somewhat sheltered by other buildings as well as by trees and other obstructions. For that reason, Exception 1 recognizes that conventional construction will provide acceptable lateral resistance for higher basic wind speeds in buildings in those areas when outside of the hurricane prone region (see Section 202 for definition of "Hurricane-prone region").

Where the ultimate wind speed exceeds the limitations, Section 2308 cannot be used to construct the building. The second exception allows the alternative prescriptive provisions of AWC's *Wood Frame Construction Manual for One- and Two-Family Dwellings* (WFCM) and ICC 600 to design buildings that are within the scope of those documents.

2308.2.5 Allowable roof span. Ceiling joist and rafter framing constructed in accordance with Section 2308.7 and trusses shall not span more than 40 feet (12 192 mm) between points of vertical support. A ridge board in accordance with

INTERNATIONAL CODE COUNCIL®
Copyright © 2015 ICC. ALL RIGHTS RESERVED. Accessed by David Dammon on Jun 21, 2017 12:30:52 PM pursuant to License Agreement with ICC. No further reproduction or distribution authorized. ANY UNAUTHORIZED REPRODUCTION OR DISTRIBUTION IS A VIOLATION OF THE FEDERAL COPYRIGHT ACT AND THE LICENSE AGREEMENT, AND SUBJECT TO CIVIL AND CRIMINAL PENALTIES THEREUNDER.

Section 2308.7 or 2308.7.3.1 shall not be considered a vertical support.

❖ In buildings with roof framing spans in excess of 40 feet (12 192 mm), the horizontal thrust on the top plate on which the framing rests is greater than can be resisted by the conventional ceiling joist and rafter connections specified in Section 2308.7.3.1. In addition, restricting the span limits the loads on supporting components, such as the studs in bearing walls. Note that the limitation is on the span of the truss or rafter and not on the width of the building. The building width could exceed 40 feet (12 192 mm) as long as the actual span of the roof framing is no more than 40 feet (12 192 mm).

2308.2.6 Risk category limitation. The use of the provisions for *conventional light-frame construction* in this sec-tion shall not be permitted for *Risk Category* IV buildings assigned to *Seismic Design Category* B, C, D or F.

❖ .In order to use conventional construction provisions for a building in Risk Category IV, the building must also be assigned to Seismic Design Category A. Risk Category IV structures that are not classified as Seismic Design Category A would therefore require an engineered design. Because of this restriction on seismic design category, this exclusion applies to essential facilities that are classified as Seismic Design Category C, D or F in accordance with Section 1613.3.5. These buildings are considered essential facilities and the design seismic forces in such structures are likely to be greater than what is expected to be resisted by conventional construction. Because of their role in emergency preparedness, essential facility building plans and calculations are often reviewed more extensively by state and local agencies before a building permit is issued, and other required design requirements may apply.

2308.3 Foundations and footings. Foundations and footings shall be designed and constructed in accordance with Chapter 18. Connections to foundations and footings shall comply with this section.

❖ This section refers to requirements pertaining to foundations and footings that are found in Chapter 18. The following provisions provide the prescriptive requirements for connecting to the foundation or footing.

2308.3.1 Foundation plates or sills. Foundation plates or sills resting on concrete or masonry foundations shall comply with Section 2304.3.1. Foundation plates or sills shall be bolted or anchored to the foundation with not less than $^1/_2$-inch-diameter (12.7 mm) steel bolts or *approved* anchors spaced to provide equivalent anchorage as the steel bolts. Bolts shall be embedded at least 7 inches (178 mm) into concrete or masonry. Bolts shall be spaced not more than 6 feet (1829 mm) on center and there shall be not less than two bolts or anchor straps per piece with one bolt or anchor strap located not more than 12 inches (305 mm) or less than 4 inches (102 mm) from each end of each piece. A properly sized nut and washer shall be tightened on each bolt to the plate.

Exceptions:

1. Along *braced wall lines* in structures assigned to *Seismic Design Category* E, steel bolts with a minimum nominal diameter of $^5/_8$ inch (15.9 mm) or approved anchor straps load-rated in accordance with Section 2304.10.3 and spaced to provide equivalent anchorage shall be used.
2. Bolts in *braced wall lines* in structures over two stories above grade shall be spaced not more than 4 feet (1219 mm) on center.

❖ This section prescribes the minimum size and spacing of foundation bolts or anchors in structures that comply with conventional construction, but the minimum anchorage requirements indicated would also apply to engineered wood structures unless a design is provided. A very important requirement regarding in-plane shear is that one bolt is to be located not more than 12 inches (305 mm) and not less than 4 inches (102 mm) from each end of each piece of plate. The 4 inches (102 mm) correspond to the minimum seven-diameter end distance required by the ANSI/AWC NDS for parallel-to-grain loading. If the bolt is closer than seven diameters to the end, the bolt will not develop its full capacity when loaded parallel to grain.

Anchor types other than bolts, such as anchor straps, are also permitted when approved. Anchor straps come in different shapes and sizes and the allowable load values that can be used with them are specified by the respective manufacturer. The furnished capacity of other types of anchors must be no less than the resistance provided by the anchor bolts specified in this section.

Two exceptions address structures that are subjected to higher levels of loading. Exception 1 requires a larger bolt size for a structure that is classified as Seismic Design Category E. Exception 2 requires a reduced bolt spacing for any structure that is more than two stories above grade.

2308.3.2 Braced wall line sill plate anchorage in Seismic Design Categories D and E. Sill plates along *braced wall lines* in buildings assigned to *Seismic Design Category* D or E shall be anchored with anchor bolts with steel plate washers between the foundation sill plate and the nut, or approved anchor straps load-rated in accordance with Section 2304.10.3. Such washers shall be a minimum of 0.229 inch by 3 inches by 3 inches (5.82 mm by 76 mm by 76 mm) in size. The hole in the plate washer is permitted to be diagonally slotted with a width of up to $^3/_{16}$ inch (4.76 mm) larger than the bolt diameter and a slot length not to exceed $1^3/_4$ inches (44 mm), provided a standard cut washer is placed between the plate washer and the nut.

❖ In the aftermath of recent California earthquakes, many resulting cases of shear wall sill plate splitting were attributed to cross-grain bending and cross-

INTERNATIONAL CODE COUNCIL®
Copyright © 2015 ICC. ALL RIGHTS RESERVED. Accessed by David Dammon on Jun 21, 2017 12:30:52 PM pursuant to License Agreement with ICC. No further reproduction or distribution authorized. ANY UNAUTHORIZED REPRODUCTION OR DISTRIBUTION IS A VIOLATION OF THE FEDERAL COPYRIGHT ACT AND THE LICENSE AGREEMENT, AND SUBJECT TO CIVIL AND CRIMINAL PENALTIES THEREUNDER.

grain tension in the sills due to uplift in the sheathing on the tension side of the shear wall. To mitigate the potential for sill splitting, 3-inch by 3-inch (76 mm by 76 mm) steel plate washers are used to restrain the sill plate and prevent splitting before the shear wall experiences inelastic deformation. For engineered shear walls, the AWC SDPWS specifies a minimum 3-inch (76 mm) square by 0.229-inch (5.82 mm) thick plate washer for anchor bolts in all seismic design categories. To account for different bottom plate widths and to mitigate the potential for cross-grain bending, the AWC SDPWS requires the edge of the square plate washer to extend to within $^1/_2$ inch (12.7 mm) of the sheathed edge of the sill plate. The $^1/_2$-inch (12.7 mm) distance from the washer edge to the sheathed edge, in effect, limits the potential for cross-grain bending by limiting the moment arm. The requirement for square plate washers in conventional wood-framed structures in Seismic Design Categories D and E has the same intent as the requirement for engineered shear walls.

2308.4 Floor framing. Floor framing shall comply with this section.

❖ This section provides prescriptive criteria for floor joists and girders.

2308.4.1 Girders. Girders for single-story construction or girders supporting loads from a single floor shall be not less than 4 inches by 6 inches (102 mm by 152 mm) for spans 6 feet (1829 mm) or less, provided that girders are spaced not more than 8 feet (2438 mm) on center. Other girders shall be designed to support the loads specified in this code. Girder end joints shall occur over supports.

Where a girder is spliced over a support, an adequate tie shall be provided. The ends of beams or girders supported on masonry or concrete shall not have less than 3 inches (76 mm) of bearing.

❖ Girders constructed of a single piece of wood must meet the size requirement of this section. Those that are built up—constructed of two or more pieces of 2-inch (51 mm) nominal wide lumber—must comply with the specified tables. All of the span lengths listed in Tables 2308.4.1.1(1) and 2308.4.1.1(2) are short enough to allow individual pieces of lumber to be continuous between supports (i.e., no splices). Splicing of individual pieces together would require an engineering analysis to design the connectors for shear flow. Other girders are permitted, if properly designed.

The minimum bearing length for girders supported by concrete or masonry walls is 3 inches (76 mm). This is based on the anticipated loads for the construction typical in this chapter, the allowable compressive stresses perpendicular to the grain for beam sizes and grades typical of the requirements in this chapter and the consideration of shear failure of the masonry.

2308.4.1.1 Allowable girder spans. The allowable spans of girders that are fabricated of dimension lumber shall not exceed the values set forth in Table 2308.4.1.1(1) or 2308.4.1.1(2).

❖ Tabulated prescriptive requirements for framing openings for doors and windows are referenced in this section. They include minimum headers and trimmer (jack) studs.

TABLE 2308.4.1.1(1). See page 23-62.

❖ The header support conditions utilized in this table are shown in Commentary Figure 2308.4.1.1(1). Headers over openings are required to carry loads from the wall, floors and roof above. Header spans for exterior bearing walls of one- and two-family dwellings may be sized and supported in accordance with Table 2308.4.1.1(1). Headers for other structures must be designed.

Tables 2308.4.1.1(1) and 2308.4.1.1(2) provide an empirical approach for determining header sizes in exterior walls. The tables give the header size, allowable span and number of jack studs required for various ground snow loads and building widths. The 30 psf ground snow load is used for sizing headers with a roof live load of 20 psf (0.96 kN/m^2) (see Note e). The tables were developed using the following design load criteria:

Roof LL = 20 psf (0.96 kN/m^2)
Roof DL = 10 psf (0.48 kN/m^2)
Ceiling LL = 5 psf (0.24 kN/m^2)
Ceiling DL = 5 psf (0.24 kN/m^2)
Floor LL = 40 psf (1.92 kN/m^2)
Floor DL = 10 psf (0.48 kN/m^2)
Wall DL = 11 psf (0.53 kN/m^2)

The spans were developed by using the given loads and performing bending moment and deflection calculations to determine the maximum span length for the specific size headers shown in the tables. The span length calculations also included a load combination reduction factor. The load combination reduction factors were developed in accordance with LRFD load combinations: the smaller of $1.6L + 0.5S$ or $1.6S + 0.5L$, where S is the snow load and L is the live load. The appropriate factor is then divided by 1.6 to adjust from LRFD to ASD.

The header span in the tables is determined based on the ground snow load in accordance with Figure 1608.2, the building width, the supporting conditions and the size of the header to be used. The header must be composed of the required lumber sizes shown in the tables or single solid lumber member of equivalent size and capacity could be utilized.

INTERNATIONAL CODE COUNCIL®
Copyright © 2015 ICC. ALL RIGHTS RESERVED. Accessed by David Dammon on Jun 21, 2017 12:30:52 PM pursuant to License Agreement with ICC. No further reproduction or distribution authorized. ANY UNAUTHORIZED REPRODUCTION OR DISTRIBUTION IS A VIOLATION OF THE FEDERAL COPYRIGHT ACT AND THE LICENSE AGREEMENT, AND SUBJECT TO CIVIL AND CRIMINAL PENALTIES THEREUNDER.

TABLE 2308.4.1.1(2). See page 23-63.

❖ The header support conditions that are used in this table are illustrated in Commentary Figure 2308.4.1.1(2) [see commentary, Table 2308.4.1.1(1)].

2308.4.2 Floor joists. Floor joists shall comply with this section.

❖ See the commentaries to Tables 2308.4.2.1(1) and (2).

2308.4.2.1 Span. Spans for floor joists shall be in accordance with Table 2308.4.2.1(1) or 2308.4.2.1(2) or the AWC STJR.

❖ See the commentaries to Tables 2308.4.2.1(1) and (2).

TABLES 2308.4.2.1(1) & (2). See pages 23-64 through 23-67.

❖ The spans shown in Tables 2308.4.2.1(1) and (2) were derived from the AWC *Span Tables for Joists and Rafters*. For simplicity, spans of only the most common species and grades of wood are provided in the code. When other species or grades of wood are used, the AWC tables should be used to determine the proper span. Additionally, span tables published by the Southern Forest Products Association, the Western Wood Products Association and the Canadian Wood Council can be consulted. The spans published in those tables were derived in the same manner as those published in the AWC tables.

2308.4.2.2 Bearing. The ends of each joist shall have not less than $1^1/_2$ inches (38 mm) of bearing on wood or metal, or not less than 3 inches (76 mm) on masonry, except where supported on a 1-inch by 4-inch (25 mm by 102 mm) ribbon strip and nailed to the adjoining stud.

❖ This section is needed so that floor joists have adequate bearing at each end. A minimum bearing distance is stipulated for bearing on wood or steel. The 3 inches (76 mm) on masonry, which should also apply to bearing on concrete, is to minimize the potential for shear failure of the masonry or concrete. As an exception to the minimum $1^1/_2$-inch (38 mm) bearing surface on wood, joists are permitted to bear on a ribbon strip nailed to the narrow face of the studs, as long as the ends of the joists are also nailed to the adjoining studs.



Figure 2308.4.1.1(1)
HEADER SUPPORT CONDITIONS FOR EXTERIOR LOAD-BEARING WALLS

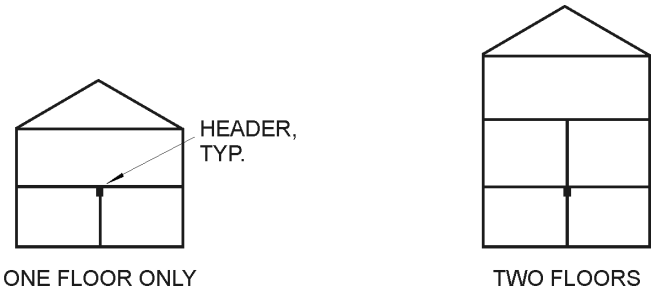

Figure 2308.4.1.1(2)
HEADER SUPPORT CONDITIONS FOR INTERIOR LOAD-BEARING WALLS
(Source: AF&PA *Wood-frame Construction Manual*)

INTERNATIONAL CODE COUNCIL®
Copyright © 2015 ICC. ALL RIGHTS RESERVED. Accessed by David Dammon on Jun 21, 2017 12:30:52 PM pursuant to License Agreement with ICC. No further reproduction or distribution authorized. ANY UNAUTHORIZED REPRODUCTION OR DISTRIBUTION IS A VIOLATION OF THE FEDERAL COPYRIGHT ACT AND THE LICENSE AGREEMENT, AND SUBJECT TO CIVIL AND CRIMINAL PENALTIES THEREUNDER.

TABLE 2308.4.1.1(1)
HEADER AND GIRDER SPANS[a, b] FOR EXTERIOR BEARING WALLS
(Maximum spans for Douglas Fir-Larch, Hem-Fir, Southern Pine and Spruce-Pine-Fir[b] and required number of jack studs)

GIRDERS AND HEADERS SUPPORTING	SIZE	GROUND SNOW LOAD (psf)[e]											
		30						50					
		Building width[c] (feet)											
		20		28		36		20		28		36	
		Span	NJ[d]	Span	NJ[d]	Span	NJ[d]	Span	NJ[d]	Span	NJ[d]	Span	NJ[d]
Roof and ceiling	2-2 × 4	3-6	1	3-2	1	2-10	1	3-2	1	2-9	1	2-6	1
	2-2 × 6	5-5	1	4-8	1	4-2	1	4-8	1	4-1	1	3-8	2
	2-2 × 8	6-10	1	5-11	2	5-4	2	5-11	2	5-2	2	4-7	2
	2-2 × 10	8-5	2	7-3	2	6-6	2	7-3	2	6-3	2	5-7	2
	2-2 × 12	9-9	2	8-5	2	7-6	2	8-5	2	7-3	2	6-6	2
	3-2 × 8	8-4	1	7-5	1	6-8	1	7-5	1	6-5	2	5-9	2
	3-2 × 10	10-6	1	9-1	2	8-2	2	9-1	2	7-10	2	7-0	2
	3-2 × 12	12-2	2	10-7	2	9-5	2	10-7	2	9-2	2	8-2	2
	4-2 × 8	9-2	1	8-4	1	7-8	1	8-4	1	7-5	1	6-8	1
	4-2 × 10	11-8	1	10-6	1	9-5	2	10-6	1	9-1	2	8-2	2
	4-2 × 12	14-1	1	12-2	2	10-11	2	12-2	2	10-7	2	9-5	2
Roof, ceiling and one center-bearing floor	2-2 × 4	3-1	1	2-9	1	2-5	1	2-9	1	2-5	1	2-2	1
	2-2 × 6	4-6	1	4-0	1	3-7	2	4-1	1	3-7	2	3-3	2
	2-2 × 8	5-9	2	5-0	2	4-6	2	5-2	2	4-6	2	4-1	2
	2-2 × 10	7-0	2	6-2	2	5-6	2	6-4	2	5-6	2	5-0	2
	2-2 × 12	8-1	2	7-1	2	6-5	2	7-4	2	6-5	2	5-9	3
	3-2 × 8	7-2	1	6-3	2	5-8	2	6-5	2	5-8	2	5-1	2
	3-2 × 10	8-9	2	7-8	2	6-11	2	7-11	2	6-11	2	6-3	2
	3-2 × 12	10-2	2	8-11	2	8-0	2	9-2	2	8-0	2	7-3	2
	4-2 × 8	8-1	1	7-3	1	6-7	1	7-5	1	6-6	1	5-11	2
	4-2 × 10	10-1	1	8-10	2	8-0	2	9-1	2	8-0	2	7-2	2
	4-2 × 12	11-9	2	10-3	2	9-3	2	10-7	2	9-3	2	8-4	2
Roof, ceiling and one clear span floor	2-2 × 4	2-8	1	2-4	1	2-1	1	2-7	1	2-3	1	2-0	1
	2-2 × 6	3-11	1	3-5	2	3-0	2	3-10	2	3-4	2	3-0	2
	2-2 × 8	5-0	2	4-4	2	3-10	2	4-10	2	4-2	2	3-9	2
	2-2 × 10	6-1	2	5-3	2	4-8	2	5-11	2	5-1	2	4-7	3
	2-2 × 12	7-1	2	6-1	3	5-5	3	6-10	2	5-11	3	5-4	3
	3-2 × 8	6-3	2	5-5	2	4-10	2	6-1	2	5-3	2	4-8	2
	3-2 × 10	7-7	2	6-7	2	5-11	2	7-5	2	6-5	2	5-9	2
	3-2 × 12	8-10	2	7-8	2	6-10	2	8-7	2	7-5	2	6-8	2
	4-2 × 8	7-2	1	6-3	2	5-7	2	7-0	1	6-1	2	5-5	2
	4-2 × 10	8-9	2	7-7	2	6-10	2	8-7	2	7-5	2	6-7	2
	4-2 × 12	10-2	2	8-10	2	7-11	2	9-11	2	8-7	2	7-8	2
Roof, ceiling and two center-bearing floors	2-2 × 4	2-7	1	2-3	1	2-0	1	2-6	1	2-2	1	1-11	1
	2-2 × 6	3-9	2	3-3	2	2-11	2	3-8	2	3-2	2	2-10	2
	2-2 × 8	4-9	2	4-2	2	3-9	2	4-7	2	4-0	2	3-8	2
	2-2 × 10	5-9	2	5-1	2	4-7	3	5-8	2	4-11	2	4-5	3
	2-2 × 12	6-8	2	5-10	3	5-3	3	6-6	2	5-9	3	5-2	3
	3-2 × 8	5-11	2	5-2	2	4-8	2	5-9	2	5-1	2	4-7	2
	3-2 × 10	7-3	2	6-4	2	5-8	2	7-1	2	6-2	2	5-7	2
	3-2 × 12	8-5	2	7-4	2	6-7	2	8-2	2	7-2	2	6-5	3
	4-2 × 8	6-10	1	6-0	2	5-5	2	6-8	1	5-10	2	5-3	2
	4-2 × 10	8-4	2	7-4	2	6-7	2	8-2	2	7-2	2	6-5	2
	4-2 × 12	9-8	2	8-6	2	7-8	2	9-5	2	8-3	2	7-5	2
Roof, ceiling, and two clear span floors	2-2 × 4	2-1	1	1-8	1	1-6	2	2-0	1	1-8	1	1-5	2
	2-2 × 6	3-1	2	2-8	2	2-4	2	3-0	2	2-7	2	2-3	2
	2-2 × 8	3-10	2	3-4	2	3-0	3	3-10	2	3-4	2	2-11	3

(continued)

INTERNATIONAL CODE COUNCIL®
Copyright © 2015 ICC. ALL RIGHTS RESERVED. Accessed by David Dammon on Jun 21, 2017 12:30:52 PM pursuant to License Agreement with ICC. No further reproduction or distribution authorized. ANY UNAUTHORIZED REPRODUCTION OR DISTRIBUTION IS A VIOLATION OF THE FEDERAL COPYRIGHT ACT AND THE LICENSE AGREEMENT, AND SUBJECT TO CIVIL AND CRIMINAL PENALTIES THEREUNDER.

TABLE 2308.4.1.1(1)—continued
HEADER AND GIRDER SPANS[a, b] FOR EXTERIOR BEARING WALLS
(Maximum spans for Douglas Fir-Larch, Hem-Fir, Southern Pine and Spruce-Pine-Fir[b] and required number of jack studs)

GIRDERS AND HEADERS SUPPORTING	SIZE	GROUND SNOW LOAD (psf)[e]											
		30						50					
		Building width[c] (feet)											
		20		28		36		20		28		36	
		Span	NJ[d]	Span	NJ[d]	Span	NJ[d]	Span	NJ[d]	Span	NJ[d]	Span	NJ[d]
Roof, ceiling, and two clear span floors	2-2 × 10	4-9	2	4-1	3	3-8	3	4-8	2	4-0	3	3-7	3
	2-2 × 12	5-6	3	4-9	3	4-3	3	5-5	3	4-8	3	4-2	3
	3-2 × 8	4-10	2	4-2	2	3-9	2	4-9	2	4-1	2	3-8	2
	3-2 × 10	5-11	2	5-1	2	4-7	3	5-10	2	5-0	2	4-6	3
	3-2 × 12	6-10	2	5-11	3	5-4	3	6-9	2	5-10	3	5-3	3
	4-2 × 8	5-7	2	4-10	2	4-4	2	5-6	2	4-9	2	4-3	2
	4-2 × 10	6-10	2	5-11	2	5-3	2	6-9	2	5-10	2	5-2	2
	4-2 × 12	7-11	2	6-10	2	6-2	3	7-9	2	6-9	2	6-0	3

For SI: 1 inch = 25.4 mm, 1 pound per square foot = 0.0479 kPa.

a. Spans are given in feet and inches.

b. Spans are based on minimum design properties for No. 2 grade lumber of Douglas Fir-Larch, Hem-Fir and Spruce-Pine Fir. No. 1 or better grade lumber shall be used for Southern Pine.

c. Building width is measured perpendicular to the ridge. For widths between those shown, spans are permitted to be interpolated.

d. NJ - Number of jack studs required to support each end. Where the number of required jack studs equals one, the header is permitted to be supported by an approved framing anchor attached to the full-height wall stud and to the header.

e. Use 30 psf ground snow load for cases in which ground snow load is less than 30 psf and the roof live load is equal to or less than 20 psf.

TABLE 2308.4.1.1(2)
HEADER AND GIRDER SPANS[a, b] FOR INTERIOR BEARING WALLS
(Maximum spans for Douglas Fir-Larch, Hem-Fir, Southern Pine and Spruce-Pine-Fir[b] and required number of jack studs)

HEADERS AND GIRDERS SUPPORTING	SIZE	BUILDING WIDTH[c] (feet)					
		20		28		36	
		Span	NJ[d]	Span	NJ[d]	Span	NJ[d]
One floor only	2-2 × 4	3-1	1	2-8	1	2-5	1
	2-2 × 6	4-6	1	3-11	1	3-6	1
	2-2 × 8	5-9	1	5-0	2	4-5	2
	2-2 × 10	7-0	2	6-1	2	5-5	2
	2-2 × 12	8-1	2	7-0	2	6-3	2
	3-2 × 8	7-2	1	6-3	1	5-7	2
	3-2 × 10	8-9	1	7-7	2	6-9	2
	3-2 × 12	10-2	2	8-10	2	7-10	2
	4-2 × 8	9-0	1	7-8	1	6-9	1
	4-2 × 10	10-1	1	8-9	1	7-10	2
	4-2 × 12	11-9	1	10-2	2	9-1	2
Two floors	2-2 × 4	2-2	1	1-10	1	1-7	1
	2-2 × 6	3-2	2	2-9	2	2-5	2
	2-2 × 8	4-1	2	3-6	2	3-2	2
	2-2 × 10	4-11	2	4-3	2	3-10	3
	2-2 × 12	5-9	2	5-0	3	4-5	3
	3-2 × 8	5-1	2	4-5	2	3-11	2
	3-2 × 10	6-2	2	5-4	2	4-10	2
	3-2 × 12	7-2	2	6-3	2	5-7	3
	4-2 × 8	6-1	1	5-3	2	4-8	2
	4-2 × 10	7-2	2	6-2	2	5-6	2
	4-2 × 12	8-4	2	7-2	2	6-5	2

For SI: 1 inch = 25.4 mm, 1 foot = 304.8 mm.

a. Spans are given in feet and inches.

b. Spans are based on minimum design properties for No. 2 grade lumber of Douglas Fir-Larch, Hem-Fir and Spruce-Pine Fir. No. 1 or better grade lumber shall be used for Southern Pine.

c. Building width is measured perpendicular to the ridge. For widths between those shown, spans are permitted to be interpolated.

d. NJ - Number of jack studs required to support each end. Where the number of required jack studs equals one, the header is permitted to be supported by an approved framing anchor attached to the full-height wall stud and to the header.

INTERNATIONAL CODE COUNCIL®
Copyright © 2015 ICC. ALL RIGHTS RESERVED. Accessed by David Dammon on Jun 21, 2017 12:30:52 PM pursuant to License Agreement with ICC. No further reproduction or distribution authorized. ANY UNAUTHORIZED REPRODUCTION OR DISTRIBUTION IS A VIOLATION OF THE FEDERAL COPYRIGHT ACT AND THE LICENSE AGREEMENT, AND SUBJECT TO CIVIL AND CRIMINAL PENALTIES THEREUNDER.

TABLE 2308.4.2.1(1)
FLOOR JOIST SPANS FOR COMMON LUMBER SPECIES
(Residential sleeping areas, live load = 30 psf, L/Δ = 360)

JOIST SPACING (inches)	SPECIES AND GRADE		DEAD LOAD = 10 psf				DEAD LOAD = 20 psf			
			2 × 6	2 × 8	2 × 10	2 × 12	2 × 6	2 × 8	2 × 10	2 × 12
			Maximum floor joist spans							
			(ft. - in.)	(ft. - in.)	(ft. - in.)	(ft. - in.)	(ft. - in.)	(ft. - in.)	(ft. - in.)	(ft. - in.)
12	Douglas Fir-Larch	SS	12-6	16-6	21-0	25-7	12-6	16-6	21-0	25-7
	Douglas Fir-Larch	#1	12-0	15-10	20-3	24-8	12-0	15-7	19-0	22-0
	Douglas Fir-Larch	#2	11-10	15-7	19-10	23-0	11-6	14-7	17-9	20-7
	Douglas Fir-Larch	#3	9-8	12-4	15-0	17-5	8-8	11-0	13-5	15-7
	Hem-Fir	SS	11-10	15-7	19-10	24-2	11-10	15-7	19-10	24-2
	Hem-Fir	#1	11-7	15-3	19-5	23-7	11-7	15-2	18-6	21-6
	Hem-Fir	#2	11-0	14-6	18-6	22-6	11-0	14-4	17-6	20-4
	Hem-Fir	#3	9-8	12-4	15-0	17-5	8-8	11-0	13-5	15-7
	Southern Pine	SS	12-3	16-2	20-8	25-1	12-3	16-2	20-8	25-1
	Southern Pine	#1	11-10	15-7	19-10	24-2	11-10	15-7	18-7	22-0
	Southern Pine	#2	11-3	14-11	18-1	21-4	10-9	13-8	16-2	19-1
	Southern Pine	#3	9-2	11-6	14-0	16-6	8-2	10-3	12-6	14-9
	Spruce-Pine-Fir	SS	11-7	15-3	19-5	23-7	11-7	15-3	19-5	23-7
	Spruce-Pine-Fir	#1	11-3	14-11	19-0	23-0	11-3	14-7	17-9	20-7
	Spruce-Pine-Fir	#2	11-3	14-11	19-0	23-0	11-3	14-7	17-9	20-7
	Spruce-Pine-Fir	#3	9-8	12-4	15-0	17-5	8-8	11-0	13-5	15-7
16	Douglas Fir-Larch	SS	11-4	15-0	19-1	23-3	11-4	15-0	19-1	23-0
	Douglas Fir-Larch	#1	10-11	14-5	18-5	21-4	10-8	13-6	16-5	19-1
	Douglas Fir-Larch	#2	10-9	14-1	17-2	19-11	9-11	12-7	15-5	17-10
	Douglas Fir-Larch	#3	8-5	10-8	13-0	15-1	7-6	9-6	11-8	13-6
	Hem-Fir	SS	10-9	14-2	18-0	21-11	10-9	14-2	18-0	21-11
	Hem-Fir	#1	10-6	13-10	17-8	20-9	10-4	13-1	16-0	18-7
	Hem-Fir	#2	10-0	13-2	16-10	19-8	9-10	12-5	15-2	17-7
	Hem-Fir	#3	8-5	10-8	13-0	15-1	7-6	9-6	11-8	13-6
	Southern Pine	SS	11-2	14-8	18-9	22-10	11-2	14-8	18-9	22-10
	Southern Pine	#1	10-9	14-2	18-0	21-4	10-9	13-9	16-1	19-1
	Southern Pine	#2	10-3	13-3	15-8	18-6	9-4	11-10	14-0	16-6
	Southern Pine	#3	7-11	10-10	12-1	14-4	7-1	8-11	10-10	12-10
	Spruce-Pine-Fir	SS	10-6	13-10	17-8	21-6	10-6	13-10	17-8	21-4
	Spruce-Pine-Fir	#1	10-3	13-6	17-2	19-11	9-11	12-7	15-5	17-10
	Spruce-Pine-Fir	#2	10-3	13-6	17-2	19-11	9-11	12-7	15-5	17-10
	Spruce-Pine-Fir	#3	8-5	10-8	13-0	15-1	7-6	9-6	11-8	13-6

(continued)

INTERNATIONAL CODE COUNCIL®
Copyright © 2015 ICC. ALL RIGHTS RESERVED. Accessed by David Dammon on Jun 21, 2017 12:30:52 PM pursuant to License Agreement with ICC. No further reproduction or distribution authorized. ANY UNAUTHORIZED REPRODUCTION OR DISTRIBUTION IS A VIOLATION OF THE FEDERAL COPYRIGHT ACT AND THE LICENSE AGREEMENT, AND SUBJECT TO CIVIL AND CRIMINAL PENALTIES THEREUNDER.

TABLE 2308.4.2.1(1)—continued
FLOOR JOIST SPANS FOR COMMON LUMBER SPECIES
(Residential sleeping areas, live load = 30 psf, L/Δ = 360)

JOIST SPACING (inches)	SPECIES AND GRADE		DEAD LOAD = 10 psf				DEAD LOAD = 20 psf			
			2 × 6	2 × 8	2 × 10	2 × 12	2 × 6	2 × 8	2 × 10	2 × 12
			Maximum floor joist spans							
			(ft. - in.)	(ft. - in.)	(ft. - in.)	(ft. - in.)	(ft. - in.)	(ft. - in.)	(ft. - in.)	(ft. - in.)
19.2	Douglas Fir-Larch	SS	10-8	14-1	18-0	21-10	10-8	14-1	18-0	21-0
	Douglas Fir-Larch	#1	10-4	13-7	16-9	19-6	9-8	12-4	15-0	17-5
	Douglas Fir-Larch	#2	10-1	12-10	15-8	18-3	9-1	11-6	14-1	16-3
	Douglas Fir-Larch	#3	7-8	9-9	11-10	13-9	6-10	8-8	10-7	12-4
	Hem-Fir	SS	10-1	13-4	17-0	20-8	10-1	13-4	17-0	20-7
	Hem-Fir	#1	9-10	13-0	16-4	19-0	9-6	12-0	14-8	17-0
	Hem-Fir	#2	9-5	12-5	15-6	17-1	8-11	11-4	13-10	16-1
	Hem-Fir	#3	7-8	9-9	11-10	13-9	6-10	8-8	10-7	12-4
	Southern Pine	SS	10-6	13-10	17-8	21-6	10-6	13-10	17-8	21-6
	Southern Pine	#1	10-1	13-4	16-5	19-6	9-11	12-7	14-8	17-5
	Southern Pine	#2	9-6	12-1	14-4	16-10	8-6	10-10	12-10	15-1
	Southern Pine	#3	7-3	9-1	11-0	13-1	6-5	8-2	9-10	11-8
	Spruce-Pine-Fir	SS	9-10	13-0	16-7	20-2	9-10	13-0	16-7	19-6
	Spruce-Pine-Fir	#1	9-8	12-9	15-8	18-3	9-1	11-6	14-1	16-3
	Spruce-Pine-Fir	#2	9-8	12-9	15-8	18-3	9-1	11-6	14-1	16-3
	Spruce-Pine-Fir	#3	7-8	9-9	11-10	13-9	6-10	8-8	10-7	12-4
24	Douglas Fir-Larch	SS	9-11	13-1	16-8	20-3	9-11	13-1	16-2	18-9
	Douglas Fir-Larch	#1	9-7	12-4	15-0	17-5	8-8	11-0	13-5	15-7
	Douglas Fir-Larch	#2	9-1	11-6	14-1	16-3	8-1	10-3	12-7	14-7
	Douglas Fir-Larch	#3	6-10	8-8	10-7	12-4	6-2	7-9	9-6	11-0
	Hem-Fir	SS	9-4	12-4	15-9	19-2	9-4	12-4	15-9	18-5
	Hem-Fir	#1	9-2	12-0	14-8	17-0	8-6	10-9	13-1	15-2
	Hem-Fir	#2	8-9	11-4	13-10	16-1	8-0	10-2	12-5	14-4
	Hem-Fir	#3	6-10	8-8	10-7	12-4	6-2	7-9	9-6	11-0
	Southern Pine	SS	9-9	12-10	16-5	19-11	9-9	12-10	16-5	19-8
	Southern Pine	#1	9-4	12-4	14-8	17-5	8-10	11-3	13-1	15-7
	Southern Pine	#2	8-6	10-10	12-10	15-1	7-7	9-8	11-5	13-6
	Southern Pine	#3	6-5	8-2	9-10	11-8	5-9	7-3	8-10	10-5
	Spruce-Pine-Fir	SS	9-2	12-1	15-5	18-9	9-2	12-1	15-0	17-5
	Spruce-Pine-Fir	#1	8-11	11-6	14-1	16-3	8-1	10-3	12-7	14-7
	Spruce-Pine-Fir	#2	8-11	11-6	14-1	16-3	8-1	10-3	12-7	14-7
	Spruce-Pine-Fir	#3	6-10	8-8	10-7	12-4	6-2	7-9	9-6	11-0

For SI: 1 inch = 25.4 mm, 1 foot = 304.8 mm, 1 pound per square foot = 0.0479 kPa.
Note: Check sources for availability of lumber in lengths greater than 20 feet.

INTERNATIONAL CODE COUNCIL®
Copyright © 2015 ICC. ALL RIGHTS RESERVED. Accessed by David Dammon on Jun 21, 2017 12:30:52 PM pursuant to License Agreement with ICC. No further reproduction or distribution authorized. ANY UNAUTHORIZED REPRODUCTION OR DISTRIBUTION IS A VIOLATION OF THE FEDERAL COPYRIGHT ACT AND THE LICENSE AGREEMENT, AND SUBJECT TO CIVIL AND CRIMINAL PENALTIES THEREUNDER.

TABLE 2308.4.2.1(2)
FLOOR JOIST SPANS FOR COMMON LUMBER SPECIES
(Residential living areas, live load = 40 psf, L/Δ = 360)

JOIST SPACING (inches)	SPECIES AND GRADE		DEAD LOAD = 10 psf				DEAD LOAD = 20 psf			
			2 × 6	2 × 8	2 × 10	2 × 12	2 × 6	2 × 8	2 × 10	2 × 12
			Maximum floor joist spans							
			(ft. - in.)	(ft. - in.)	(ft. - in.)	(ft. - in.)	(ft. - in.)	(ft. - in.)	(ft. - in.)	(ft. - in.)
12	Douglas Fir-Larch	SS	11-4	15-0	19-1	23-3	11-4	15-0	19-1	23-3
	Douglas Fir-Larch	#1	10-11	14-5	18-5	22-0	10-11	14-2	17-4	20-1
	Douglas Fir-Larch	#2	10-9	14-2	17-9	20-7	10-6	13-3	16-3	18-10
	Douglas Fir-Larch	#3	8-8	11-0	13-5	15-7	7-11	10-0	12-3	14-3
	Hem-Fir	SS	10-9	14-2	18-0	21-11	10-9	14-2	18-0	21-11
	Hem-Fir	#1	10-6	13-10	17-8	21-6	10-6	13-10	16-11	19-7
	Hem-Fir	#2	10-0	13-2	16-10	20-4	10-0	13-1	16-0	18-6
	Hem-Fir	#3	8-8	11-0	13-5	15-7	7-11	10-0	12-3	14-3
	Southern Pine	SS	11-2	14-8	18-9	22-10	11-2	14-8	18-9	22-10
	Southern Pine	#1	10-9	14-2	18-0	21-11	10-9	14-2	16-11	20-1
	Southern Pine	#2	10-3	13-6	16-2	19-1	9-10	12-6	14-9	17-5
	Southern Pine	#3	8-2	10-3	12-6	14-9	7-5	9-5	11-5	13-6
	Spruce-Pine-Fir	SS	10-6	13-10	17-8	21-6	10-6	13-10	17-8	21-6
	Spruce-Pine-Fir	#1	10-3	13-6	17-3	20-7	10-3	13-3	16-3	18-10
	Spruce-Pine-Fir	#2	10-3	13-6	17-3	20-7	10-3	13-3	16-3	18-10
	Spruce-Pine-Fir	#3	8-8	11-0	13-5	15-7	7-11	10-0	12-3	14-3
16	Douglas Fir-Larch	SS	10-4	13-7	17-4	21-1	10-4	13-7	17-4	21-0
	Douglas Fir-Larch	#1	9-11	13-1	16-5	19-1	9-8	12-4	15-0	17-5
	Douglas Fir-Larch	#2	9-9	12-7	15-5	17-10	9-1	11-6	14-1	16-3
	Douglas Fir-Larch	#3	7-6	9-6	11-8	13-6	6-10	8-8	10-7	12-4
	Hem-Fir	SS	9-9	12-10	16-5	19-11	9-9	12-10	16-5	19-11
	Hem-Fir	#1	9-6	12-7	16-0	18-7	9-6	12-0	14-8	17-0
	Hem-Fir	#2	9-1	12-0	15-2	17-7	8-11	11-4	13-10	16-1
	Hem-Fir	#3	7-6	9-6	11-8	13-6	6-10	8-8	10-7	12-4
	Southern Pine	SS	10-2	13-4	17-0	20-9	10-2	13-4	17-0	20-9
	Southern Pine	#1	9-9	12-10	16-1	19-1	9-9	12-7	14-8	17-5
	Southern Pine	#2	9-4	11-10	14-0	16-6	8-6	10-10	12-10	15-1
	Southern Pine	#3	7-1	8-11	10-10	12-10	6-5	8-2	9-10	11-8
	Spruce-Pine-Fir	SS	9-6	12-7	16-0	19-6	9-6	12-7	16-0	19-6
	Spruce-Pine-Fir	#1	9-4	12-3	15-5	17-10	9-1	11-6	14-1	16-3
	Spruce-Pine-Fir	#2	9-4	12-3	15-5	17-10	9-1	11-6	14-1	16-3
	Spruce-Pine-Fir	#3	7-6	9-6	11-8	13-6	6-10	8-8	10-7	12-4

(continued)

INTERNATIONAL CODE COUNCIL®
Copyright © 2015 ICC. ALL RIGHTS RESERVED. Accessed by David Dammon on Jun 21, 2017 12:30:52 PM pursuant to License Agreement with ICC. No further reproduction or distribution authorized. ANY UNAUTHORIZED REPRODUCTION OR DISTRIBUTION IS A VIOLATION OF THE FEDERAL COPYRIGHT ACT AND THE LICENSE AGREEMENT, AND SUBJECT TO CIVIL AND CRIMINAL PENALTIES THEREUNDER.

TABLE 2308.4.2.1(2)—continued
FLOOR JOIST SPANS FOR COMMON LUMBER SPECIES
(Residential living areas, live load = 40 psf, L/Δ = 360)

JOIST SPACING (inches)	SPECIES AND GRADE		DEAD LOAD = 10 psf				DEAD LOAD = 20 psf			
			2 × 6	2 × 8	2 × 10	2 × 12	2 × 6	2 × 8	2 × 10	2 × 12
			Maximum floor joist spans							
			(ft. - in.)	(ft. - in.)	(ft. - in.)	(ft. - in.)	(ft. - in.)	(ft. - in.)	(ft. - in.)	(ft. - in.)
19.2	Douglas Fir-Larch	SS	9-8	12-10	16-4	19-10	9-8	12-10	16-4	19-2
	Douglas Fir-Larch	#1	9-4	12-4	15-0	17-5	8-10	11-3	13-8	15-11
	Douglas Fir-Larch	#2	9-1	11-6	14-1	16-3	8-3	10-6	12-10	14-10
	Douglas Fir-Larch	#3	6-10	8-8	10-7	12-4	6-3	7-11	9-8	11-3
	Hem-Fir	SS	9-2	12-1	15-5	18-9	9-2	12-1	15-5	18-9
	Hem-Fir	#1	9-0	11-10	14-8	17-0	8-8	10-11	13-4	15-6
	Hem-Fir	#2	8-7	11-3	13-10	16-1	8-2	10-4	12-8	14-8
	Hem-Fir	#3	6-10	8-8	10-7	12-4	6-3	7-11	9-8	11-3
	Southern Pine	SS	9-6	12-7	16-0	19-6	9-6	12-7	16-0	19-6
	Southern Pine	#1	9-2	12-1	14-8	17-5	9-0	11-5	13-5	15-11
	Southern Pine	#2	8-6	10-10	12-10	15-1	7-9	9-10	11-8	13-9
	Southern Pine	#3	6-5	8-2	9-10	11-8	5-11	7-5	9-0	10-8
	Spruce-Pine-Fir	SS	9-0	11-10	15-1	18-4	9-0	11-10	15-1	17-9
	Spruce-Pine-Fir	#	8-9	11-6	14-1	16-3	8-3	10-6	12-10	14-10
	Spruce-Pine-Fir	#2	8-9	11-6	14-1	16-3	8-3	10-6	12-10	14-10
	Spruce-Pine-Fir	#3	6-10	8-8	10-7	12-4	6-3	7-11	9-8	11-3
24	Douglas Fir-Larch	SS	9-0	11-11	15-2	18-5	9-0	11-11	14-9	17-1
	Douglas Fir-Larch	#1	8-8	11-0	13-5	15-7	7-11	10-0	12-3	14-3
	Douglas Fir-Larch	#2	8-1	10-3	12-7	14-7	7-5	9-5	11-6	13-4
	Douglas Fir-Larch	#3	6-2	7-9	9-6	11-0	5-7	7-1	8-8	10-1
	Hem-Fir	SS	8-6	11-3	14-4	17-5	8-6	11-3	14-4	16-10[a]
	Hem-Fir	#1	8-4	10-9	13-1	15-2	7-9	9-9	11-11	13-10
	Hem-Fir	#2	7-11	10-2	12-5	14-4	7-4	9-3	11-4	13-1
	Hem-Fir	#3	6-2	7-9	9-6	11-0	5-7	7-1	8-8	10-1
	Southern Pine	SS	8-10	11-8	14-11	18-1	8-10	11-8	14-11	18-0
	Southern Pine	#1	8-6	11-3	13-1	15-7	8-1	10-3	12-0	14-3
	Southern Pine	#2	7-7	9-8	11-5	13-6	7-0	8-10	10-5	12-4
	Southern Pine	#3	5-9	7-3	8-10	10-5	5-3	6-8	8-1	9-6
	Spruce-Pine-Fir	SS	8-4	11-0	14-0	17-0	8-4	11-0	13-8	15-11
	Spruce-Pine-Fir	#1	8-1	10-3	12-7	14-7	7-5	9-5	11-6	13-4
	Spruce-Pine-Fir	#2	8-1	10-3	12-7	14-7	7-5	9-5	11-6	13-4
	Spruce-Pine-Fir	#3	6-2	7-9	9-6	11-0	5-7	7-1	8-8	10-1

For SI: 1 inch = 25.4 mm, 1 foot = 304.8 mm, 1 pound per square foot = 0.0479 kPa.
Note: Check sources for availability of lumber in lengths greater than 20 feet.
a. End bearing length shall be increased to 2 inches.

INTERNATIONAL CODE COUNCIL®
Copyright © 2015 ICC. ALL RIGHTS RESERVED. Accessed by David Dammon on Jun 21, 2017 12:30:52 PM pursuant to License Agreement with ICC. No further reproduction or distribution authorized. ANY UNAUTHORIZED REPRODUCTION OR DISTRIBUTION IS A VIOLATION OF THE FEDERAL COPYRIGHT ACT AND THE LICENSE AGREEMENT, AND SUBJECT TO CIVIL AND CRIMINAL PENALTIES THEREUNDER.

2308.4.2.3 Framing details. Joists shall be supported laterally at the ends and at each support by solid blocking except where the ends of the joists are nailed to a header, band or rim joist or to an adjoining stud or by other means. Solid blocking shall be not less than 2 inches (51 mm) in thickness and the full depth of the joist. Joist framing from opposite sides of a beam, girder or partition shall be lapped at least 3 inches (76 mm) or the opposing joists shall be tied together in an approved manner. Joists framing into the side of a wood girder shall be supported by framing anchors or on ledger strips not less than 2 inches by 2 inches (51 mm by 51 mm).

❖ The general requirement of this section is that joists be laterally supported by solid blocking at each end and at any intermediate support. The blocking is intended to prevent the joists from rolling over at the supports. The blocking may be omitted where the ends of the joists are restrained either by nailing or by the use of some other means, such as a joist hanger, to accomplish the same action. Most blocking is 2 inches (51 mm) nominal in thickness.

Joists must be adequately tied together in order to provide continuity and adequately supported by framing anchors or ledgers when not bearing on the top of girders.

2308.4.2.4 Notches and holes. Notches on the ends of joists shall not exceed one-fourth the joist depth. Notches in the top or bottom of joists shall not exceed one-sixth the depth and shall not be located in the middle third of the span. Holes bored in joists shall not be within 2 inches (51 mm) of the top or bottom of the joist and the diameter of any such hole shall not exceed one-third the depth of the joist.

❖ Wood is composed of relatively small elongated cells oriented parallel to each other and bound together physically and chemically by lignin. The cells are continuous from end to end of a piece of lumber. When a beam or joist is notched or cut, the cell strands are interrupted. In notched beams, the effective depth is reduced by the depth of the notch (see Commentary Figure 2308.4.2.3).

Some designs and installation practices require that limited notching and cutting occur. Notching should be avoided when possible. Holes bored in beams and joists create the same problems as notches. When holes are necessary, the holes should be located in areas with the least stress concentration, generally along the neutral axis of the joist and, ideally, at a minimum distance away from the supports.

2308.4.3 Engineered wood products. Engineered wood products shall be installed in accordance with manufacturer's recommendations. Cuts, notches and holes bored in trusses, structural composite lumber, structural glued-laminated members or I-joists are not permitted except where permitted by the manufacturer's recommendations or where the effects of such alterations are specifically considered in the design of the member by a *registered design professional*.

❖ Notching and boring allowances for solid sawn joist framing cannot be applied to engineered wood products. Because these types of products are commonly incorporated into conventional construction, this section points out that they must be treated differently. However, it does permit notching and boring of engineered wood products when it is considered in the design of the member. Each manufacturer typically publishes guidelines to establish safe notching and boring limitations.

2308.4.4 Framing around openings. Trimmer and header joists shall be doubled, or of lumber of equivalent cross section, where the span of the header exceeds 4 feet (1219 mm). The ends of header joists more than 6 feet (1829 mm) in length shall be supported by framing anchors or joist hangers unless bearing on a beam, partition or wall. Tail joists over 12 feet (3658 mm) in length shall be supported at the header by framing anchors or on ledger strips not less than 2 inches by 2 inches (51 mm by 51 mm).

❖ Commentary Figure 2308.4.4 illustrates the criteria for framing around openings.

2308.4.4.1 Openings in floor diaphragms in Seismic Design Categories B, C, D and E. Openings in horizontal diaphragms in *Seismic Design Categories* B, C, D and E with a dimension that is greater than 4 feet (1219 mm) shall be constructed with metal ties and blocking in accordance with this section and Figure 2308.4.4.1(1). Metal ties shall be not less than 0.058 inch [1.47 mm (16 galvanized gage)] in thickness by $1^1/_2$ inches (38 mm) in width and shall have a yield stress not less than 33,000 psi (227 Mpa). Blocking shall extend not less than the dimension of the opening in the

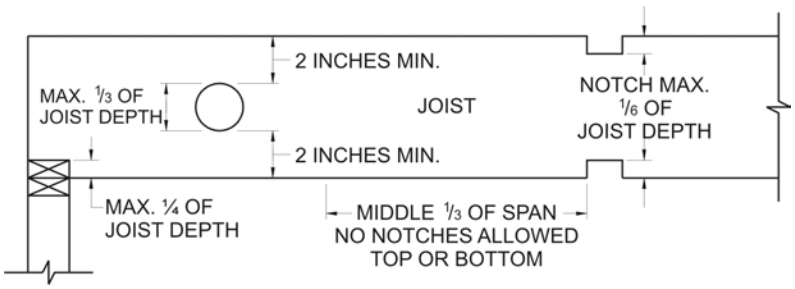

For SI: 1 inch = 25.4 mm.

Figure 2308.4.2.3
CUTTING, NOTCHING AND BORING JOISTS

INTERNATIONAL CODE COUNCIL®
Copyright © 2015 ICC. ALL RIGHTS RESERVED. Accessed by David Dammon on Jun 21, 2017 12:30:52 PM pursuant to License Agreement with ICC. No further reproduction or distribution authorized. ANY UNAUTHORIZED REPRODUCTION OR DISTRIBUTION IS A VIOLATION OF THE FEDERAL COPYRIGHT ACT AND THE LICENSE AGREEMENT, AND SUBJECT TO CIVIL AND CRIMINAL PENALTIES THEREUNDER.

direction of the tie and blocking. Ties shall be attached to blocking in accordance with the manufacturer's instructions but with not less than eight 16d common nails on each side of the header-joist intersection.

Openings in floor diaphragms in *Seismic Design Categories* D and E shall not have any dimension exceeding 50 percent of the distance between braced wall lines or an area greater than 25 percent of the area between orthogonal pairs of braced wall lines [see Figure 2308.4.4.1(2)]; or the portion of the structure containing the opening shall be designed in accordance with accepted engineering practice to resist the forces specified in Chapter 16, to the extent such irregular opening affects the performance of the conventional framing system.

❖ Horizontal diaphragms are floor and roof assemblies that are usually clad with wood structural panel sheathing, such as plywood or OSB. Diaphragms support out-of-plane walls and distribute lateral forces to the braced wall lines or shear walls. Though more complicated and difficult to visualize, lateral forces that are applied to a building from wind or seismic ground motion events follow a load path that distributes and transfers shear and overturning forces from the lateral loads. When openings are built into the diaphragm, they disrupt the continuity of load across the diaphragm, requiring the opening to be reinforced to compensate. Another concern is the stiffness of the diaphragm with an opening in it. These provisions are a prescriptive solution to strengthen openings greater than 4 feet (1219 mm) in dimension perpendicular to the joists and provide a general means for a load path in these specific cases in lieu of requiring an engineered design.

FIGURE 2308.4.4.1(1). See page 23-70.

❖ See the commentary to Section 2308.4.4.1.

FIGURE 2308.4.4.1(2). See page 23-70.

❖ This limitation places a practical limit on the size of openings in floors. Because stair openings are essential in building construction and have long been used without any report of life-safety hazards after a large earthquake, the limited openings described herein have been found to be acceptable in conventional construction without the need for engineering.

2308.4.4.2 Vertical offsets in floor diaphragms in Seismic Design Categories D and E. In *Seismic Design Categories* D and E, portions of a floor level shall not be vertically offset such that the framing members on either side of the offset cannot be lapped or tied together in an *approved* manner in accordance with Figure 2308.4.4.2 unless the portion of the structure containing the irregular offset is designed in accordance with accepted engineering practice.

Exception: Framing supported directly by foundations need not be lapped or tied directly together.

❖ This limitation results from observation of damage that is somewhat unique to split-level wood-framed construction. If floors on either side of an offset move

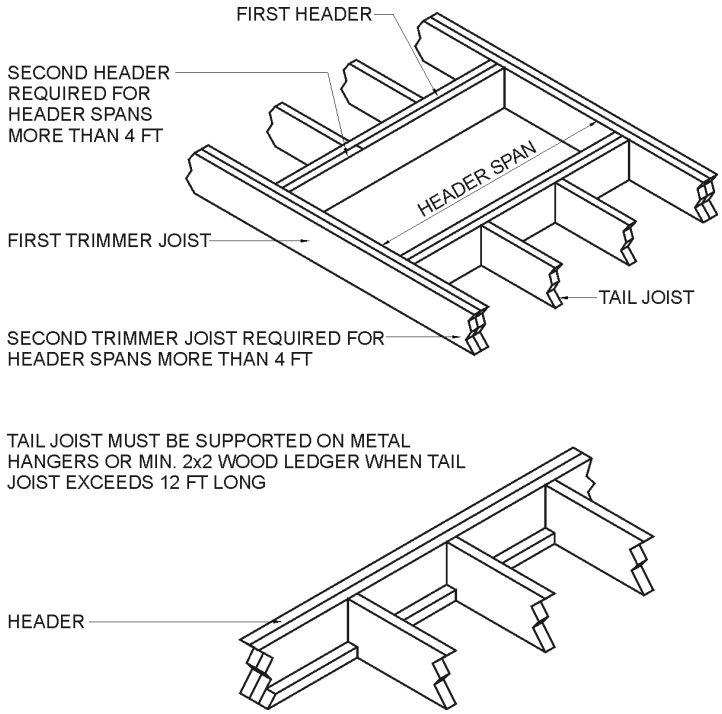

For SI: 1 foot = 304.8 mm.

Figure 2308.4.4
FRAMING AROUND OPENING

INTERNATIONAL CODE COUNCIL®
Copyright © 2015 ICC. ALL RIGHTS RESERVED. Accessed by David Dammon on Jun 21, 2017 12:30:52 PM pursuant to License Agreement with ICC. No further reproduction or distribution authorized. ANY UNAUTHORIZED REPRODUCTION OR DISTRIBUTION IS A VIOLATION OF THE FEDERAL COPYRIGHT ACT AND THE LICENSE AGREEMENT, AND SUBJECT TO CIVIL AND CRIMINAL PENALTIES THEREUNDER.

in opposite directions due to an earthquake or wind loading, the short bearing wall in the middle becomes unstable and vertical support for the upper joists can be lost, resulting in a collapse. If the vertical offset is limited to a dimension equal to or less than the joist depth, then a simple strap tie directly connecting joists on different levels can be provided, making the irregularity manageable without engineering.

FIGURE 2308.4.4.2. See page 23-71.

❖ See the commentary to Section 2308.4.4.2.

2308.4.5 Joists supporting bearing partitions. Bearing partitions parallel to joists shall be supported on beams, girders, doubled joists, walls or other bearing partitions. Bearing partitions perpendicular to joists shall not be offset from supporting girders, walls or partitions more than the joist depth unless such joists are of sufficient size to carry the additional load.

❖ The floor joist spans provided in Tables 2308.4.2.1 (1) and (2) assume uniform loading conditions and will support only limited concentrated loads. Unless the floor joists are designed using an engineering analysis which considers these loads, bearing partitions must be supported by other bearing partitions, beams or girders.

A major problem that frequently occurs is the orientation of heavy loads, such as special types of bathtubs, parallel with the floor joists. Additional joists should be installed to support these loads (see Commentary Figure 2308.4.5), which brings the design of this portion into an engineering analysis.

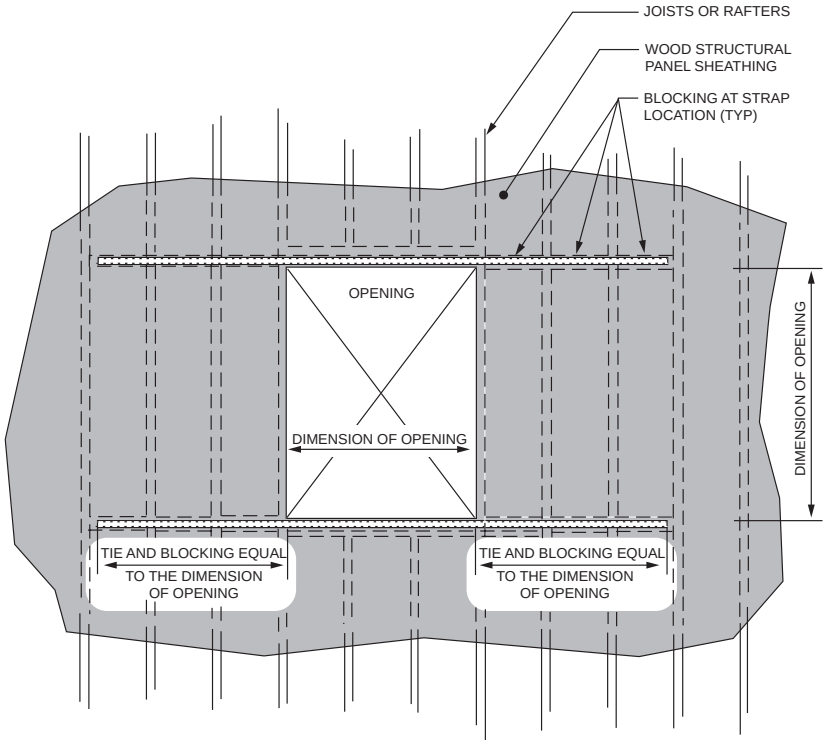

FIGURE 2308.4.4.1(1)
OPENINGS IN FLOOR AND ROOF DIAPHRAGMS

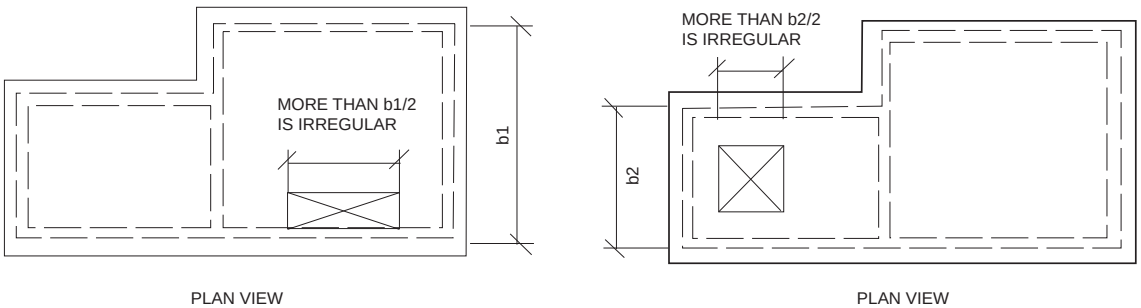

FIGURE 2308.4.4.1(2)
OPENING LIMITATIONS FOR FLOOR AND ROOF DIAPHRAGMS

INTERNATIONAL CODE COUNCIL®
Copyright © 2015 ICC. ALL RIGHTS RESERVED. Accessed by David Dammon on Jun 21, 2017 12:30:52 PM pursuant to License Agreement with ICC. No further reproduction or distribution authorized. ANY UNAUTHORIZED REPRODUCTION OR DISTRIBUTION IS A VIOLATION OF THE FEDERAL COPYRIGHT ACT AND THE LICENSE AGREEMENT, AND SUBJECT TO CIVIL AND CRIMINAL PENALTIES THEREUNDER.

Bearing partitions oriented perpendicular to joists cannot be offset from supporting girders, walls or partitions more than the depth of the joists, unless the joists are designed to be of sufficient size to carry the additional load (see Commentary Figure 2308.4.5).

Although not specifically required by the code, it is typically advantageous to double up floor joists supporting nonload-bearing partitions oriented parallel to the joists or to provide solid blocking between the joists to transfer the wall load to the supporting joists (see Commentary Figure 2308.4.5), unless the floor sheathing is of sufficient strength to carry the load. APA literature addresses common framing issues such as these that can be integrated into a conventionally framed floor without an engineering analysis.

2308.4.6 Lateral support. Floor and ceiling framing with a nominal depth-to-thickness ratio not less than 5 to 1 shall have one edge held in line for the entire span. Where the nominal depth-to-thickness ratio of the framing member exceeds 6 to 1, there shall be one line of bridging for each 8 feet (2438 mm) of span, unless both edges of the member are held in line. The bridging shall consist of not less than 1-inch by 3-inch (25 mm by 76 mm) lumber, double nailed at each end, or equivalent metal bracing of equal rigidity, full-depth solid blocking or other *approved* means. A line of bridging shall also be required at supports where equivalent lateral support is not otherwise provided.

❖ When the depth-to-thickness ratio (based on nominal dimensions) of joists and rafters is 5:1 or greater, as

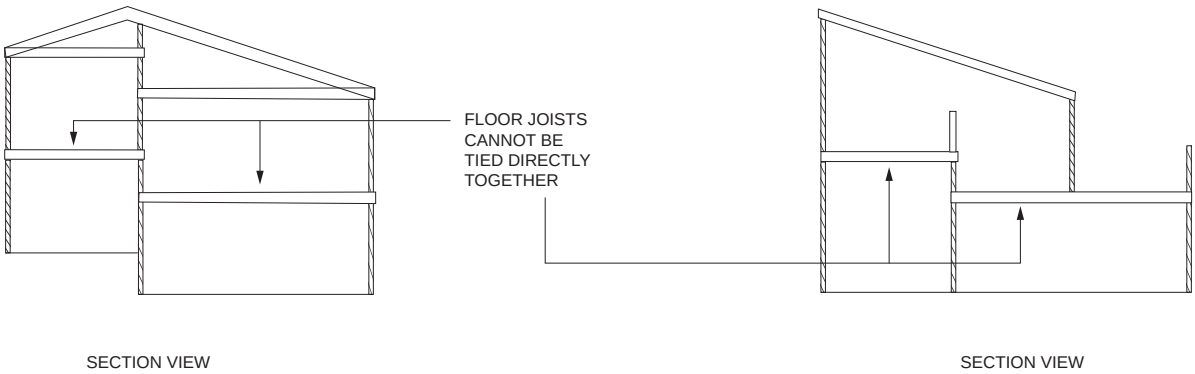

FIGURE 2308.4.4.2
PORTIONS OF FLOOR LEVEL OFFSET VERTICALLY

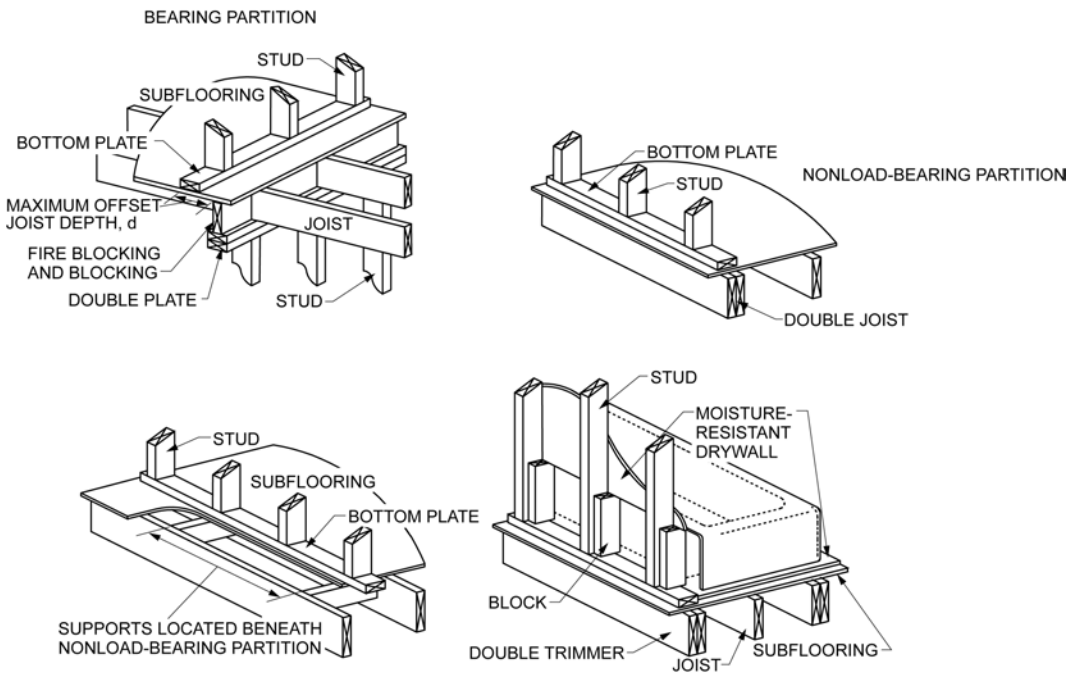

Figure 2308.4.5
JOISTS SUPPORTING PARTITIONS AND HEAVY LOADS

INTERNATIONAL CODE COUNCIL®
Copyright © 2015 ICC. ALL RIGHTS RESERVED. Accessed by David Dammon on Jun 21, 2017 12:30:52 PM pursuant to License Agreement with ICC. No further reproduction or distribution authorized. ANY UNAUTHORIZED REPRODUCTION OR DISTRIBUTION IS A VIOLATION OF THE FEDERAL COPYRIGHT ACT AND THE LICENSE AGREEMENT, AND SUBJECT TO CIVIL AND CRIMINAL PENALTIES THEREUNDER.

would be the case in members equal to or greater than 2 inches by 10 inches (51 mm by 254 mm), the minimum lateral support required by Section 2308.4.2.3 is not sufficient to prevent lateral buckling between supports. Additional restraint is required. Sheathing, subflooring, decking and similar materials attached to each joist or rafter are considered to provide edge restraint.

These requirements are cumulative. The lateral support required by Section 2308.4.2.3 applies to all joists. Additionally, members equal to or greater than 2 inches by 10 inches (51 mm by 254 mm) must have one edge held in line, and members greater than 2 inches by 12 inches (51 mm by 305 mm) must have one edge held in line as well as a line of bridging at each 8 feet (2438 mm) of span (which may be omitted if both edges are held in line). The section also prescribes acceptable bridging methods.

2308.4.7 Structural floor sheathing. Structural floor sheathing shall comply with the provisions of Section 2304.8.1.

❖ Subflooring is considered to be the structural element that supports floor loads and distributes the loads to the joists. Underlayment is related to serviceability in that it provides a suitable surface for the floor-covering material. Both must comply with the appropriate tables for the maximum span referenced in Section 2304.8.1 (see commentary, Section 2304.8).

2308.4.8 Under-floor ventilation. For under-floor ventilation, see Section 1203.4.

❖ Enclosed spaces under floors of buildings with raised floor construction are referred to as crawl spaces when not designed and constructed as basements. The earth is usually exposed or covered with a vapor retarder. Regardless, there is always the potential for a large amount of moisture vapor from the ground. This moisture must be removed to prevent wetting and drying cycles that can cause decay and fungus attack in wood members. Experience has shown that crawl spaces constructed in compliance with Section 2308 and ventilated to the exterior as required by Section 1203.3 do not develop problems. Access to crawl spaces is required as specified in Section 1209.1.

It should be recognized that moisture problems may be exaggerated in colder months; therefore, operable vents should be used with caution.

2308.4.9 Floor framing supporting braced wall panels. Where braced wall panels are supported by cantilevered floors or are set back from the floor joist support, the floor framing shall comply with Section 2308.6.7.

❖ A cross reference directs the reader to the requirements for supporting braced wall panels.

2308.4.10 Anchorage of exterior means of egress components in Seismic Design Categories D and E. Exterior egress balconies, exterior stairways and ramps and similar means of egress components in structures assigned to *Seismic Design Category* D or E shall be positively anchored to the primary structure at not more than 8 feet (2438 mm) on center or shall be designed for lateral forces. Such attachment shall not be accomplished by use of toenails or nails subject to withdrawal.

❖ Because of the importance of being able to safely get people out of a building after a design seismic event, the exterior means of egress components identified in this section must be positively anchored to the main structure in buildings assigned to Seismic Design Category D or E to provide adequate resistance to lateral forces. The required connection cannot rely on toe-nails or nails in withdrawal because they are not reliable when subjected to cyclic loading demands.

2308.5 Wall construction. Walls of *conventional light-frame* construction shall be in accordance with this section.

❖ Section 2308.5 contains extensive provisions for conventional wall framing including: size, height and spacing of studs; notching and boring of studs; plates and sills; wall bracing; cripple walls; headers; and framing at openings.

2308.5.1 Stud size, height and spacing. The size, height and spacing of studs shall be in accordance with Table 2308.5.1.

Studs shall be continuous from a support at the sole plate to a support at the top plate to resist loads perpendicular to the wall. The support shall be a foundation or floor, ceiling or roof diaphragm or shall be designed in accordance with accepted engineering practice.

Exception: Jack studs, trimmer studs and cripple studs at openings in walls that comply with Table 2308.4.1.1(1) or 2308.4.1.1(2).

❖ The specifications in these sections are empirical interpretations of accepted engineering design practices and traditional designs for light wood-framed buildings. When bearing wall stud heights exceed 10 feet (3048 mm) or the structure is outside the scope of conventional construction requirements, studs must be designed in accordance with accepted engineering practice using the forces prescribed in the code. The section requires studs to be continuous from a support at the sole plate to a support at the top plate to resist wind loads perpendicular to the wall. The support for the studs must be a foundation or floor, a ceiling or roof diaphragm or must be designed. The requirement is intended to address conditions where a top plate may not be laterally supported. For example, where scissor trusses are used to create a vaulted ceiling, the top plate is not laterally supported because the ceiling follows the profile of the bottom chord of the truss. This section clarifies that studs are required to be laterally supported at the sole plate and top plate to resist out-of-plane loads perpendicular to the wall. Where scissor trusses are used at the gable end wall, the wall studs should be framed up to the bottom chord of the truss or the gable end wall should be balloon framed up to the roof sheathing. In either case, the studs are supported at the top and bottom as required by this section. If the studs are not supported at the top by a ceiling or roof deck in accordance with the prescrip-

INTERNATIONAL CODE COUNCIL®
Copyright © 2015 ICC. ALL RIGHTS RESERVED. Accessed by David Dammon on Jun 21, 2017 12:30:52 PM pursuant to License Agreement with ICC. No further reproduction or distribution authorized. ANY UNAUTHORIZED REPRODUCTION OR DISTRIBUTION IS A VIOLATION OF THE FEDERAL COPYRIGHT ACT AND THE LICENSE AGREEMENT, AND SUBJECT TO CIVIL AND CRIMINAL PENALTIES THEREUNDER.

tive provisions, then an engineered design should be provided for the gable end-wall studs to provide support and for combined axial compression and bending. The exception excludes jack studs, trimmer studs and cripple studs at openings in walls that comply with Table 2308.4.1.1(1).

TABLE 2308.5.1. See below.

❖ Wood studs in conventional construction are limited to the maximum height and spacing as indicated in this table to prevent buckling. It should be noted that the laterally unsupported stud height refers to the distance between points of lateral support perpendicular to the plane of the wall (see Note a). This is to prevent bucking out of the plane of the wall. In general, the sheathing is considered to provide support in the plane of the wall. The height and spacing limits are based on the dead and live loads associated with conventional construction specified in Section 2308.2.3, along with a nominal lateral load, to account for wind or earthquakes acting perpendicular to the wall.

2308.5.2 Framing details. Studs shall be placed with their wide dimension perpendicular to the wall. Not less than three studs shall be installed at each corner of an *exterior wall*.

Exceptions:

1. In interior nonbearing walls and partitions, studs are permitted to be set with the long dimension parallel to the wall.
2. At corners, two studs are permitted, provided that wood spacers or backup cleats of $^3/_8$-inch-thick (9.5 mm) wood structural panel, $^3/_8$-inch (9.5 mm) Type M "Exterior Glue" particleboard, 1-inch-thick (25 mm) lumber or other approved devices that will serve as an adequate backing for the attachment of facing materials are used. Where *fire-resistance ratings* or shear values are involved, wood spacers, backup cleats or other devices shall not be used unless specifically *approved* for such use.

❖ Wood-framed exterior walls support all vertical loads and also must act as braced walls to resist lateral loads in the plane of the wall, such as from wind and earthquakes. Adequately secured and sufficient corner posts are required to assist in this function, in addition to providing a degree of continuity in the exterior walls. Traditionally, three studs were installed in corners. Experience has shown that two studs will adequately perform this function, provided other means are employed to support any interior finish that may be installed. Note that these other means may not be acceptable if they adversely affect the fire resistance or shear-resisting capacity of the walls. Most books on architectural standards contain common corner framing details. One issue with corner framing that becomes sensitive for engineered construction is when the designer chooses to attach one hold-down in such a way that it will provide uplift resistance for both of the perpendicular walls at that corner. A continuous load path is necessary to deliver uplift forces to the foundation, and there is an eccentricity for one of the walls that should be considered. In this case the engineer should detail the corner hold down installation so the builder and inspector understand it.

2308.5.3 Plates and sills. Studs shall have plates and sills in accordance with this section.

❖ The following sections provide minimum requirements for top and bottom wall plates.

2308.5.3.1 Bottom plate or sill. Studs shall have full bearing on a plate or sill. Plates or sills shall be not less than 2 inches (51 mm) nominal in thickness and have a width not less than the width of the wall studs.

❖ Studs must have full bearing on minimum 2-inch (51 mm) nominal sole or sill plates and the plate must be at least as wide as the supported studs. The single bottom plate serves to anchor the wall to the floor. Studs are attached to the sill by end nailing or toe nailing specified in Table 2304.10.1.

2308.5.3.2 Top plates. Bearing and exterior wall studs shall be capped with double top plates installed to provide overlapping at corners and at intersections with other partitions. End joints in double top plates shall be offset not less than 48

TABLE 2308.5.1
SIZE, HEIGHT AND SPACING OF WOOD STUDS[c]

STUD SIZE (inches)	BEARING WALLS				NONBEARING WALLS	
	Laterally unsupported stud height[a] (feet)	Supporting roof and ceiling only	Supporting one floor, roof and ceiling	Supporting two floors, roof and ceiling	Laterally unsupported stud height[a] (feet)	Spacing (inches)
		Spacing (inches)				
2 × 3[b]	—	—	—	—	10	16
2 × 4	10	24	16	—	14	24
3 × 4	10	24	24	16	14	24
2 × 5	10	24	24	—	16	24
2 × 6	10	24	24	16	20	24

For SI: 1 inch = 25.4 mm, 1 foot = 304.8 mm.

a. Listed heights are distances between points of lateral support placed perpendicular to the plane of the wall. Increases in unsupported height are permitted where justified by an analysis.

b. Shall not be used in exterior walls.

c. Utility-grade studs shall not be spaced more than 16 inches on center or support more than a roof and ceiling, or exceed 8 feet in height for exterior walls and load-bearing walls or 10 feet for interior nonload-bearing walls.

INTERNATIONAL CODE COUNCIL®
Copyright © 2015 ICC. ALL RIGHTS RESERVED. Accessed by David Dammon on Jun 21, 2017 12:30:52 PM pursuant to License Agreement with ICC. No further reproduction or distribution authorized. ANY UNAUTHORIZED REPRODUCTION OR DISTRIBUTION IS A VIOLATION OF THE FEDERAL COPYRIGHT ACT AND THE LICENSE AGREEMENT, AND SUBJECT TO CIVIL AND CRIMINAL PENALTIES THEREUNDER.

inches (1219 mm), and shall be nailed in accordance with Table 2304.10.1. Plates shall be a nominal 2 inches (51 mm) in depth and have a width not less than the width of the studs.

Exception: A single top plate is permitted, provided that the plate is adequately tied at corners and intersecting walls by not less than the equivalent of 3-inch by 6-inch (76 mm by 152 mm) by 0.036-inch-thick (0.914 mm) galvanized steel plate that is nailed to each wall or segment of wall by six 8d [$2^1/_2$" × 0.113" (64-mm by 2.87 mm)] box nails or equivalent on each side of the joint. For the butt-joint splice between adjacent single top plates, not less than the equivalent of a 3-inch by 12-inch (76 mm by 304 mm) by 0.036-inch-thick (0.914 mm) galvanized steel plate that is nailed to each wall or segment of wall by 12 8d [$2^1/_2$-inch × 0.113-inch (64 mm by 2.87 mm)] box nails on each side of the joint shall be required, provided that the rafters, joists or trusses are centered over the studs with a tolerance of not more than 1 inch (25 mm). The top plate shall not be required over headers that are in the same plane and in line with the upper surface of the adjacent top plates and are tied to adjacent wall sections as required for the butt joint splice between adjacent single top plates.

Where bearing studs are spaced at 24-inch (610 mm) intervals, top plates are less than two 2-inch by 6-inch (51 mm by 152 mm) or two 3-inch by 4-inch (76 mm by 102 mm) members and the floor joists, floor trusses or roof trusses that they support are spaced at more than 16-inch (406 mm) intervals, such joists or trusses shall bear within 5 inches (127 mm) of the studs beneath or a third plate shall be installed.

❖ Double top plates are necessary at exterior walls and bearing walls. The plates are required to be overlapped at corners and intersecting partitions. The joints in the top plate are to be offset 48 inches (1219 mm) from each other and fastened with 8-16d nails on each side of the joint. Minimum nominal 2-inch-thick (51 mm) plates are required and, to achieve full bearing, the plate should be as wide as the studs. The exception permits a single top plate to be used, provided the joints in the plate are strapped and the joists, rafters or trusses are centered within 1 inch (25 mm) over the studs. The tolerance of 1 inch (25 mm) with which the rafters or joists are to be centered over the studs is required to prevent overstress or excessive deflection in the single top plate. The steel strap at the joints provides a minimum level of continuity in the plate.

This section also has specific plate requirements where studs are spaced 24 inches (610 mm) on center. Ideally, joists, rafters or trusses should be located directly over bearing studs to avoid excessive bending or deflection of the plate. This is typically not planned for unless the drawings clearly state that it is required. The empirical provisions of this section allow joists or trusses to bear within 5 inches (127 mm) of the stud below when the joists or trusses are spaced more than 16 inches (406 mm) o.c. and the studs are spaced 24 inches (610 mm) o.c. This provision assumes there are double top (bearing) plates that have all joints located over the studs. Additional support, such as the addition of a third plate, is required if the offset is more than 5 inches (127 mm).

2308.5.4 Nonload-bearing walls and partitions. In nonload-bearing walls and partitions, that are not part of a braced wall panel, studs shall be spaced not more than 24 inches (610 mm) on center. In interior nonload-bearing walls and partitions, studs are permitted to be set with the long dimension parallel to the wall. Where studs are set with the long dimensions parallel to the wall, use of utility grade lumber or studs exceeding 10 feet (3048 mm) is not permitted. Interior nonload-bearing partitions shall be capped with not less than a single top plate installed to provide overlapping at corners and at intersections with other walls and partitions. The plate shall be continuously tied at joints by solid blocking not less than 16 inches (406 mm) in length and equal in size to the plate or by $^1/_2$-inch by $1^1/_2$-inch (12.7 mm by 38 mm) metal ties with spliced sections fastened with two 16d nails on each side of the joint.

❖ A nonbearing wall is any wall that is not a bearing wall (see definition of "Nonload-bearing wall" in Chapter 2). Nonbearing walls do not support any portion of the building or structure except the weight of the wall itself. The term "partition," although not defined in the code, implies an interior wall. Thus, a nonbearing partition is a nonload-bearing interior wall. Nonbearing partitions can have the studs placed flat and parallel to the wall and have a single top plate, provided the requirements of this section are met. In general, nonbearing partitions are not intended to add to the rigidity or structural performance of the building. They are, however, expected to stay in place and have the ability to support applied finished membranes. The code limits stud spacing to 28 inches (711 mm) o.c., but allows the stud to be oriented with the wide dimension parallel to the wall length. Partitions must be able to support the lateral loads to which they are subjected, but not less than 5 psf (0.240 kN/m^2) lateral load, in accordance with Section 1607.14. These walls are often deflection controlled because of their very low loading (see Table 1604.3, Note b). It should be noted that this section is not intended to apply to interior nonbearing walls that are serving as braced wall lines.

Lateral support of partitions can also be achieved by the use of light-gage metal clips produced by wood connector manufacturers. Allowable loads per clip are published in their respective literature and ICC Evaluation Service Reports. These clips typically require a minimum and maximum gap between the top of the wall and the bottom of the framing to avoid loading the partition.

2308.5.5 Openings in walls and partitions. Openings in exterior and interior walls and partitions shall comply with Sections 2308.5.5.1 through 2308.5.5.3.

❖ Prescriptive requirements for framing openings at doors and windows are given in this section, including minimum headers and trimmer (jack) studs.

2308.5.5.1 Openings in exterior bearing walls. Headers shall be provided over each opening in exterior bearing walls.

INTERNATIONAL CODE COUNCIL®
Copyright © 2015 ICC. ALL RIGHTS RESERVED. Accessed by David Dammon on Jun 21, 2017 12:30:52 PM pursuant to License Agreement with ICC. No further reproduction or distribution authorized. ANY UNAUTHORIZED REPRODUCTION OR DISTRIBUTION IS A VIOLATION OF THE FEDERAL COPYRIGHT ACT AND THE LICENSE AGREEMENT, AND SUBJECT TO CIVIL AND CRIMINAL PENALTIES THEREUNDER.

The size and spans in Table 2308.4.1.1(1) are permitted to be used for one- and two-family *dwellings*. Headers for other buildings shall be designed in accordance with Section 2301.2, Item 1 or 2. Headers shall be of two pieces of nominal 2-inch (51 mm) framing lumber set on edge as permitted by Table 2308.4.1.1(1) and nailed together in accordance with Table 2304.10.1 or of solid lumber of equivalent size.

Wall studs shall support the ends of the header in accordance with Table 2308.4.1.1(1). Each end of a lintel or header shall have a bearing length of not less than $1^1/_2$ inches (38 mm) for the full width of the lintel.

❖ Headers over openings are required to carry loads from the wall, floors and roof above. Header spans for exterior bearing walls of one- and two-family dwellings may be sized and supported in accordance with Table 2308.4.1.1(1). Headers for other structures must be designed.

Trimmer or jack studs that support the header at each end should be continuous from the header to the bottom plate (or sill plate). Cutting the trimmers to support a sill is not allowed. Headers should be adequately nailed together and to the wall studs. Minimum required nailing is specified in Table 2304.10.1 [see Commentary Figures 2308.5.5.1(1) and (2)].

2308.5.5.2 Openings in interior bearing partitions. Headers shall be provided over each opening in interior bearing partitions as required in Section 2308.5.5.1. The spans in Table 2308.4.1.1(2) are permitted to be used. Wall studs shall support the ends of the header in accordance with Table 2308.4.1.1(1) or 2308.4.1.1(2), as applicable.

❖ It may not be immediately clear that interior bearing walls will require headers to carry loads over open-

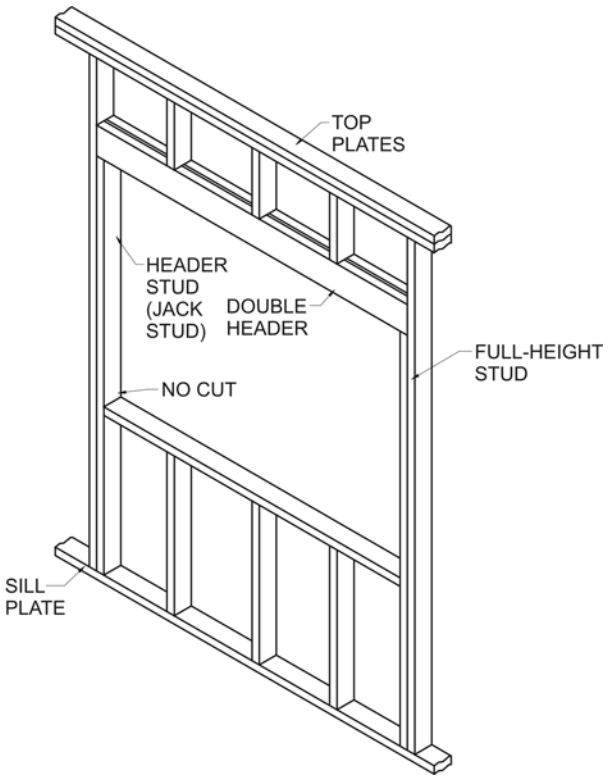

Figure 2308.5.5.1(1)
STUDS AND HEADERS AROUND WALL OPENINGS

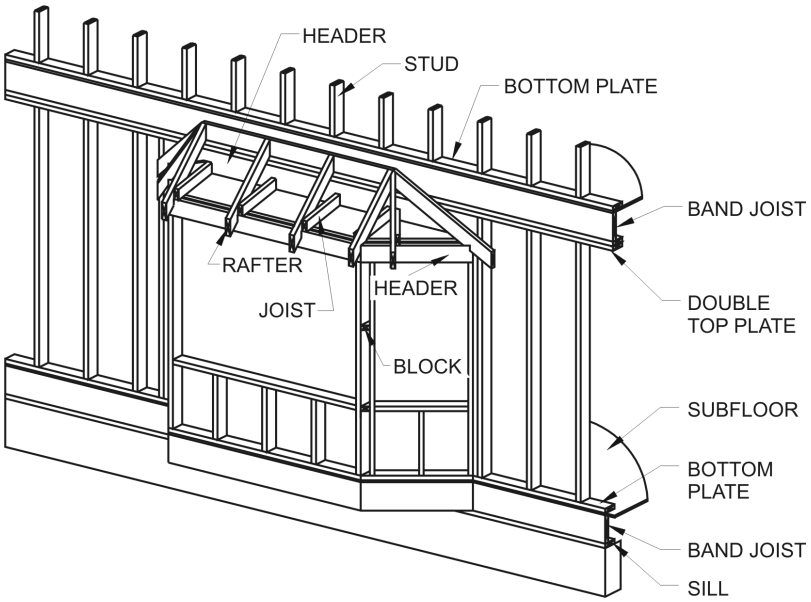

Figure 2308.5.5.1(2)
STUDS AND HEADERS AROUND WALL OPENINGS—BAY WINDOWS
(Source: AF&PA *Wood Frame Construction Manual for One- and Two-Family Dwellings, SBC High Wind Edition*, 1995.)

INTERNATIONAL CODE COUNCIL®
Copyright © 2015 ICC. ALL RIGHTS RESERVED. Accessed by David Dammon on Jun 21, 2017 12:30:52 PM pursuant to License Agreement with ICC. No further reproduction or distribution authorized. ANY UNAUTHORIZED REPRODUCTION OR DISTRIBUTION IS A VIOLATION OF THE FEDERAL COPYRIGHT ACT AND THE LICENSE AGREEMENT, AND SUBJECT TO CIVIL AND CRIMINAL PENALTIES THEREUNDER.

ings in the same fashion as headers within exterior bearing walls must; therefore, this section has been included in the code. At interior bearing walls, the tributary width of loading carried from above extends to both sides of the wall instead of just one side, so care is needed to determine whether an interior header meets conventional restrictions or if it requires engineering in accordance with Section 2308.8.

2308.5.5.3 Openings in interior nonbearing partitions. Openings in nonbearing partitions are permitted to be framed with single studs and headers. Each end of a lintel or header shall have a bearing length of not less than $1^1/_2$ inches (38 mm) for the full width of the lintel.

❖ Because interior nonbearing partitions do not carry gravity loads other than their own weight, the prescriptive header requirements over openings are greatly reduced. However, a minimum of $1^1/_2$ inches (38 mm) bearing the width of the header is required at each support.

2308.5.6 Cripple walls. Foundation cripple walls shall be framed of studs that are not less than the size of the studding above and not less than 14 inches (356 mm) in length, or shall be framed of solid blocking. Where exceeding 4 feet (1219 mm) in height, such walls shall be framed of studs having the size required for an additional *story*. See Section 2308.6.6 for cripple wall bracing.

❖ Cripple walls (sometimes referred to as "foundation stud walls" or "knee walls") are stud walls usually less than 8 feet (2438 mm) in height that rest on the foundation plate and support the first (lowest) immediate floor above. Cripple walls are often used on sloped lots to frame up to the floor level. Cripple studs should be at least the same size as the supported studs above. The minimum stud length of 14 inches (356 mm) (unless solid blocking is used) is based on the minimum length necessary to properly fasten the studs to the foundation wall plate and the double plate above. Where the cripple studs would be less than 14 inches (356 mm) in length, solid blocking should be used or the studs should be installed with wall plates and with the solid blocking tightly fitted between each stud. This blocking performs two purposes: it provides a level, uniform bearing surface for the support of the floor above and transfers lateral forces from the floor to the foundation.

2308.5.7 Bridging. Unless covered by interior or *exterior wall coverings* or sheathing meeting the minimum requirements of this code, stud partitions or walls with studs having a height-to-least-thickness ratio exceeding 50 shall have bridging that is not less than 2 inches (51 mm) in thickness and of the same width as the studs fitted snugly and nailed thereto to provide adequate lateral support. Bridging shall be placed in every stud cavity and at a frequency such that no stud so braced shall have a height-to-least-thickness ratio exceeding 50 with the height of the stud measured between horizontal framing and bridging or between bridging, whichever is greater.

❖ In the rare cases where a stud wall will not be covered with a sheathing material specified in the code, solid blocking (bridging) is required at certain intervals. This will enable the studs to act together as a system to maintain stability and prevent buckling. The maximum height-to-least-thickness ratio of 50 is the limit required by the ANSI/AWC NDS for compression members.

The code requires fire-blocking in other sections, which may also be used to meet the bridging requirement stated here.

2308.5.8 Pipes in walls. Stud partitions containing plumbing, heating or other pipes shall be framed and the joists underneath spaced to provide proper clearance for the piping. Where a partition containing piping runs parallel to the floor joists, the joists underneath such partitions shall be doubled and spaced to permit the passage of pipes and shall be bridged. Where plumbing, heating or other pipes are placed in, or partly in, a partition, necessitating the cutting of the soles or plates, a metal tie not less than 0.058 inch (1.47 mm) (16 galvanized gage) and 11/2 inches (38 mm) in width shall be fastened to each plate across and to each side of the opening with not less than six 16d nails.

❖ This section requires that the installation of piping in partitions and through floors does not compromise the strength or serviceability of the wall framing. This section recognizes that the plumbing trades are not always coordinated with the work of the carpenters so some form of regulation is necessary to guide the installation of plumbing so that it does not adversely affect the performance of a conventionally framed system. If there are piping installations proposed that are different from what is prescribed in this section, an engineering analysis and design will be required.

2308.5.9 Cutting and notching. In exterior walls and bearing partitions, wood studs are permitted to be cut or notched to a depth not exceeding 25 percent of the width of the stud. Cutting or notching of studs to a depth not greater than 40 percent of the width of the stud is permitted in nonbearing partitions supporting no loads other than the weight of the partition.

❖ Studs should not be cut, notched or bored whenever possible to maintain the cross-sectional bearing area. When cuts or notches exceed that specified in Section 2308.5.9, the studs should be doubled or otherwise reinforced to provide the required strength (see Commentary Figure 2308.5.9). If overcut, special reinforcing will require an engineered design.

2308.5.10 Bored holes. Bored holes not greater than 40 percent of the stud width are permitted to be bored in any wood stud. Bored holes not greater than 60 percent of the stud width are permitted in nonbearing partitions or in any wall where each bored stud is doubled, provided not more than

INTERNATIONAL CODE COUNCIL®
Copyright © 2015 ICC. ALL RIGHTS RESERVED. Accessed by David Dammon on Jun 21, 2017 12:30:52 PM pursuant to License Agreement with ICC. No further reproduction or distribution authorized. ANY UNAUTHORIZED REPRODUCTION OR DISTRIBUTION IS A VIOLATION OF THE FEDERAL COPYRIGHT ACT AND THE LICENSE AGREEMENT, AND SUBJECT TO CIVIL AND CRIMINAL PENALTIES THEREUNDER.

two such successive doubled studs are so bored. In no case shall the edge of a bored hole be nearer than $^5/_8$ inch (15.9 mm) to the edge of the stud. Bored holes shall not be located at the same section of stud as a cut or notch.

❖ Due to the redundancy of this type of construction, limited notching and hole boring are allowed (see commentary, Section 2308.5.9). Bored holes must be at least $^5/_8$ inch (15.9 mm) from the edge of the stud and cannot be located at a notch.

2308.5.11 Exterior wall sheathing. Except where stucco construction that complies with Section 2510 is installed, the outside of exterior walls, including gables, of enclosed buildings shall be sheathed with one of the materials of the nominal thickness specified in Table 2308.5.11 with fasteners in accordance with the requirements of Section 2304.10 or fasteners designed in accordance with accepted engineering practice. Alternatively, sheathing materials and fasteners complying with Section 2304.6 shall be permitted.

❖ Wall sheathing material can be any of those listed in Table 2308.5.11. There are two main reasons for providing sheathing to at least one face of wood-framed walls: 1. To stabilize the studs against buckling when the wall carries vertical loads; and 2. To provide a nominal ability to transfer lateral forces from the roof or floor deck to the sill plate and anchor bolts. Studs nailed to the top and bottom plate are stable to a degree, but will collapse with significant force placed on them unless there is some type of stabilizing membrane or brace in the plane of the wall. Sheathing, whether it is a heavy structural membrane found on exterior bearing walls or a light one that would be used for nonbearing interior partitions, provides necessary in-plane stability for the walls. Some sheathing may also serve as insulation for the building, in addition to providing lateral bracing. Other sheathing may provide a finish for the wall. Sheathing is not the only means of bracing a wall.

This section establishes that only the sheathing types that are listed in the table, which include board and various panel products (structural panels, boards, gypsum and reinforced cement mortar) are to be used for walls. There is an allowance that other materials may be used if it is shown they are capable of providing equivalent strength and durability. Let-in braces are common for temporary bracing of the wall against in-plane racking forces, but they provide only minimal resistance to lateral forces. Since many let-in braces failed in tension or at the bottom plate connection during the 1971 San Fernando earthquake, their use as braced wall panels is limited to structures with low seismic risk.

TABLE 2308.5.11. See page 23-78.

❖ Table 2308.5.11 reinforces Section 2308.5.11, which requires all wall sheathing to meet a minimum set of requirements, including minimum material thickness and maximum wall stud spacing, depending on the type of sheathing material chosen for a particular project. Because of loading conditions or the design of the assembly to which the wall sheathing is attached, the sheathing may have to be thicker or the wall studs may need to be placed closer together.

2308.6 Wall bracing. Buildings shall be provided with exterior and interior braced wall lines as described in Sections 2308.6.1 through 2308.6.10.2.

❖ Braced wall lines and braced wall panels serve the same purpose as shear wall lines and shear walls, but are prescriptive in nature. Braced wall lines consist of a series of braced wall panels. Buildings that do not require a seismic analysis in accordance with Section 1613.1 and are located in regions where hurricane winds are not anticipated (see Section 2308.2.4) should be braced in accordance with this section. In addition, if the spacing between the braced exterior walls exceeds 35 feet (10 668 mm) (see Table 2308.6.1), then interior braced wall lines are also required.

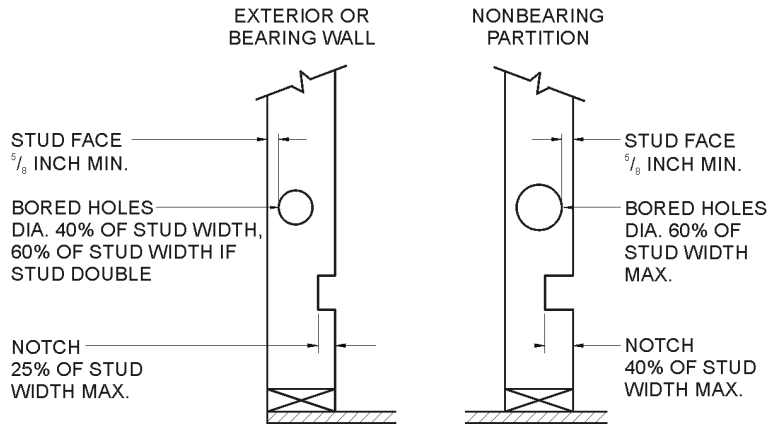

For SI: 1 inch = 25.4 mm.

Figure 2308.5.9
CUTTING, NOTCHING AND BORED HOLES IN STUDS

INTERNATIONAL CODE COUNCIL®
Copyright © 2015 ICC. ALL RIGHTS RESERVED. Accessed by David Dammon on Jun 21, 2017 12:30:52 PM pursuant to License Agreement with ICC. No further reproduction or distribution authorized. ANY UNAUTHORIZED REPRODUCTION OR DISTRIBUTION IS A VIOLATION OF THE FEDERAL COPYRIGHT ACT AND THE LICENSE AGREEMENT, AND SUBJECT TO CIVIL AND CRIMINAL PENALTIES THEREUNDER.

2308.6.1 Braced wall lines. For the purpose of determining the amount and location of bracing required along each *story* level of a building, *braced wall lines* shall be designated as straight lines through the building plan in both the longitudinal and transverse direction and placed in accordance with Table 2308.6.1 and Figure 2308.6.1. Braced wall line spacing shall not exceed the distance specified in Table 2308.6.1. In structures assigned to *Seismic Design Category* D or E, braced wall lines shall intersect perpendicularly to each other.

❖ The requirements for wall bracing vary depending on the seismic design category of the building under consideration and whether the story in question is supporting other stories above. The wall bracing requirements increase for higher seismic design categories and for walls that support the weight of additional stories above. Various types of structural sheathing materials are permitted, although not every material is permitted in every instance. For example, the let-in brace is not typically permitted in high-seismic-risk buildings, but may still be used to prevent temporary racking of the wall during construction.

Fastening requirements are critical to the performance of wall bracing. In order for the bracing material to be effective in resisting racking of the wall, it must be installed in the manner prescribed by the code.

FIGURE 2308.6.1. See page 23-80.

❖ See the commentary to Sections 2308.6 and 2308.6.1.

TABLE 2308.6.1. See page 23-81.

❖ This table establishes the maximum spacing of 35 feet (10 668 mm) between braced wall lines and thereby limits the lateral force acting on individual vertical elements within that line. For buildings in Seismic Design Category D and E, the maximum spacing between braced wall lines is restricted to 25 feet (7620 mm) (refer to Figure 2308.6.1 for further understanding of this principle). The philosophy of conventional construction regarding the resistance of lateral forces is to: 1. Limit the magnitude of forces that individual elements must resist; 2. Streamline the effects of force on the entire structure by restricting the type and extent of irregularities; and 3. Strengthen resisting elements beyond what might otherwise be installed without such requirements.

2308.6.2 Braced wall panels. *Braced wall panels* shall be placed along *braced wall lines* in accordance with Table 2308.6.1 and Figure 2308.6.1 and as specified in Table 2308.6.3(1). A *braced wall panel* shall be located at each end of the *braced wall line* and at the corners of intersecting *braced wall lines* or shall begin within the maximum distance from the end of the *braced wall line* in accordance with Table 2308.6.1. *Braced wall panels* in a *braced wall line* shall not be offset from each other by more than 4 feet (1219 mm). *Braced wall panels* shall be clearly indicated on the plans.

❖ See the commentary to Sections 2308.6 and 2308.6.1.

2308.6.3 Braced wall panel methods. Construction of *braced wall panels* shall be by one or a combination of the methods in Table 2308.6.3(1). *Braced wall panel* length shall be in accordance with Section 2308.6.4 or 2308.6.5.

❖ Braced wall panels are portions of braced wall lines, as required by Table 2308.6.1, composed of the types of bracing materials listed in Table 2308.6.3(1). Portions of braced wall lines are permitted to be offset from each other and braced wall panels are not required to extend to the end of the braced wall line (see Figure 2308.6.1). The philosophy of this prescriptive lateral-force-resisting system is to divide a building into smaller "boxes," similar to the use of stiffening baffles within a storage tank. The roof system delivers the lateral forces to the braced wall system below. Historical analysis has shown that the more regularly constructed these "boxes" are, the better the building will perform even though there may not be a complete and continuous load path connecting every single line together.

TABLE 2308.6.3(1). See page 23-82.

❖ See the commentaries to Sections 2308.6.1 and 2308.6.3.

TABLES 2308.6.3 (2) through 2308.6.3(5). See pages 23-83 and 23-84.

❖ Tables 2308.6.3(2) through 2308.6.3(5) are for the materials that are prescriptively permitted to be used to construct the braced wall panels in braced wall

TABLE 2308.5.11
MINIMUM THICKNESS OF WALL SHEATHING

SHEATHING TYPE	MINIMUM THICKNESS	MAXIMUM WALL STUD SPACING
Diagonal wood boards	$^5/_8$ inch	24 inches on center
Structural fiberboard	$^1/_2$ inch	16 inches on center
Wood structural panel	In accordance with Tables 2308.6.3(2) and 2308.6.3(3)	—
M-S "Exterior Glue" and M-2 "Exterior Glue" particleboard	In accordance with Section 2306.3 and Table 2308.6.3(4)	—
Gypsum sheathing	$^1/_2$ inch	16 inches on center
Reinforced cement mortar	1 inch	24 inches on center
Hardboard panel siding	In accordance with Table 2308.6.3(5)	—

For SI: 1 inch = 25.4 mm.

INTERNATIONAL CODE COUNCIL®
Copyright © 2015 ICC. ALL RIGHTS RESERVED. Accessed by David Dammon on Jun 21, 2017 12:30:52 PM pursuant to License Agreement with ICC. No further reproduction or distribution authorized. ANY UNAUTHORIZED REPRODUCTION OR DISTRIBUTION IS A VIOLATION OF THE FEDERAL COPYRIGHT ACT AND THE LICENSE AGREEMENT, AND SUBJECT TO CIVIL AND CRIMINAL PENALTIES THEREUNDER.

lines. The location and minimum acceptable length of braced wall panels are specified in Table 2308.6.3 (1). Detailed requirements for various materials—grades, thickness, nailing schedule, stud spacing and similar requirements—are also contained in the tables referenced for each material. See the commentary to Section 2303 concerning the minimum standards and quality of these materials.

2308.6.4 Braced wall panel construction. For Methods DWB, WSP, SFB, PBS, PCP and HPS, each panel must be not less than 48 inches (1219 mm) in length, covering three stud spaces where studs are spaced 16 inches (406 mm) on center and covering two stud spaces where studs are spaced 24 inches (610 mm) on center. *Braced wall panels* less than 48 inches (1219 mm) in length shall not contribute toward the amount of required bracing. *Braced wall panels* that are longer than the required length shall be credited for their actual length. For Method GB, each panel must be not less than 96 inches (2438 mm) in length where applied to one side of the studs or 48 inches (1219 mm) in length where applied to both sides.

Vertical joints of panel sheathing shall occur over studs and adjacent panel joints shall be nailed to common framing members. Horizontal joints shall occur over blocking or other framing equal in size to the studding except where waived by the installation requirements for the specific sheathing materials. Sole plates shall be nailed to the floor framing in accordance with Section 2308.6.7 and top plates shall be connected to the framing above in accordance with Section 2308.6.7.2. Where joists are perpendicular to braced wall lines above, blocking shall be provided under and in line with the braced *wall panels*.

❖ Each braced wall line must contain the amount of bracing that is required in Table 2308.6.1. The minimum length of individual braced wall panels stated herein is key to satisfying this requirement.

2308.6.5 Alternative bracing. An alternate braced wall (ABW) or a portal frame with hold-downs (PFH) de-scribed in this section is permitted to substitute for a 48-inch (1219 mm) *braced wall panel* of Method DWB, WSP, SFB, PBS, PCP or HPS. For Method GB, each 96-inch (2438 mm) section (applied to one face) or 48-inch (1219 mm) section (applied to both faces) or portion thereof required by Table 2308.6.1 is permitted to be replaced by one panel constructed in accordance with Method ABW or PFH.

❖ This section states that typical braced wall panels required by Sections 2308.6.2 and 2308.6.4 may be replaced by an alternate braced wall panel that is considered equivalent when constructed in accordance with the following sections.

2308.6.5.1. Alternate braced wall (ABW). An ABW shall be constructed in accordance with this section and Figure 2308.6.5.1. In one-story buildings, each panel shall have a length of not less than 2 feet 8 inches (813 mm) and a height of not more than 10 feet (3048 mm). Each panel shall be sheathed on one face with $^3/_8$-inch (3.2 mm) minimum-thickness wood structural panel sheathing nailed with 8d common or galvanized box nails in accordance with Table 2304.10.1 and blocked at wood structural panel edges. Two anchor bolts installed in accordance with Section 2308.3.1 shall be provided in each panel. Anchor bolts shall be placed at each panel outside quarter points. Each panel end stud shall have a hold-down device fastened to the foundation, capable of providing an *approved* uplift capacity of not less than 1,800 pounds (8006 N). The hold-down device shall be installed in accordance with the manufacturer's recommendations. The ABW shall be supported directly on a foundation or on floor framing supported directly on a foundation that is continuous across the entire length of the *braced wall line*. This foundation shall be reinforced with not less than one No. 4 bar top and bottom. Where the continuous foundation is required to have a depth greater than 12 inches (305 mm), a minimum 12-inch by 12-inch (305 mm by 305 mm) continuous footing or turned-down slab edge is permitted at door openings in the *braced wall line*. This continuous footing or turned-down slab edge shall be reinforced with not less than one No. 4 bar top and bottom. This reinforcement shall be lapped 15 inches (381 mm) with the reinforcement required in the continuous foundation located directly under the *braced wall line*.

Where the ABW is installed at the first *story* of two-story buildings, the wood structural panel sheathing shall be provided on both faces, three anchor bolts shall be placed at one-quarter points and tie-down device uplift capacity shall be not less than 3,000 pounds (13 344 N).

❖ The alternate braced wall panel (ABW) provisions allow a minimum 32-inch (813 mm) wall bracing length in lieu of the 48-inch (1219 mm) length required elsewhere. This bracing detail allows more flexibility in constructing braced wall panels adjacent to garage doors and other similar openings. This detail was developed by APA and is supported in APA Research Report No. 157. Item 1 describes the requirements for a one-story building (see Figure 2308.6.5.1).

An alternative panel is allowed on the ground level of a two-story structure as well, but the requirements are more stringent—almost double the resistance required for the single-story panel. One important issue is the specific requirement for a continuous foundation for the length of the entire braced wall line that contains the alternate braced wall panels, which would even include those interior lines at a spacing less than 50 feet (15 240 mm) from an adjacent braced wall line as described in Section 2308.6.8.1. Note that the alternate braced wall panel has a maximum height of 10 feet (3048 mm).

FIGURE 2308.6.5.1. See page 23-85.

❖ See the commentary to Section 2308.6.5.1.

INTERNATIONAL CODE COUNCIL®
Copyright © 2015 ICC. ALL RIGHTS RESERVED. Accessed by David Dammon on Jun 21, 2017 12:30:52 PM pursuant to License Agreement with ICC. No further reproduction or distribution authorized. ANY UNAUTHORIZED REPRODUCTION OR DISTRIBUTION IS A VIOLATION OF THE FEDERAL COPYRIGHT ACT AND THE LICENSE AGREEMENT, AND SUBJECT TO CIVIL AND CRIMINAL PENALTIES THEREUNDER.

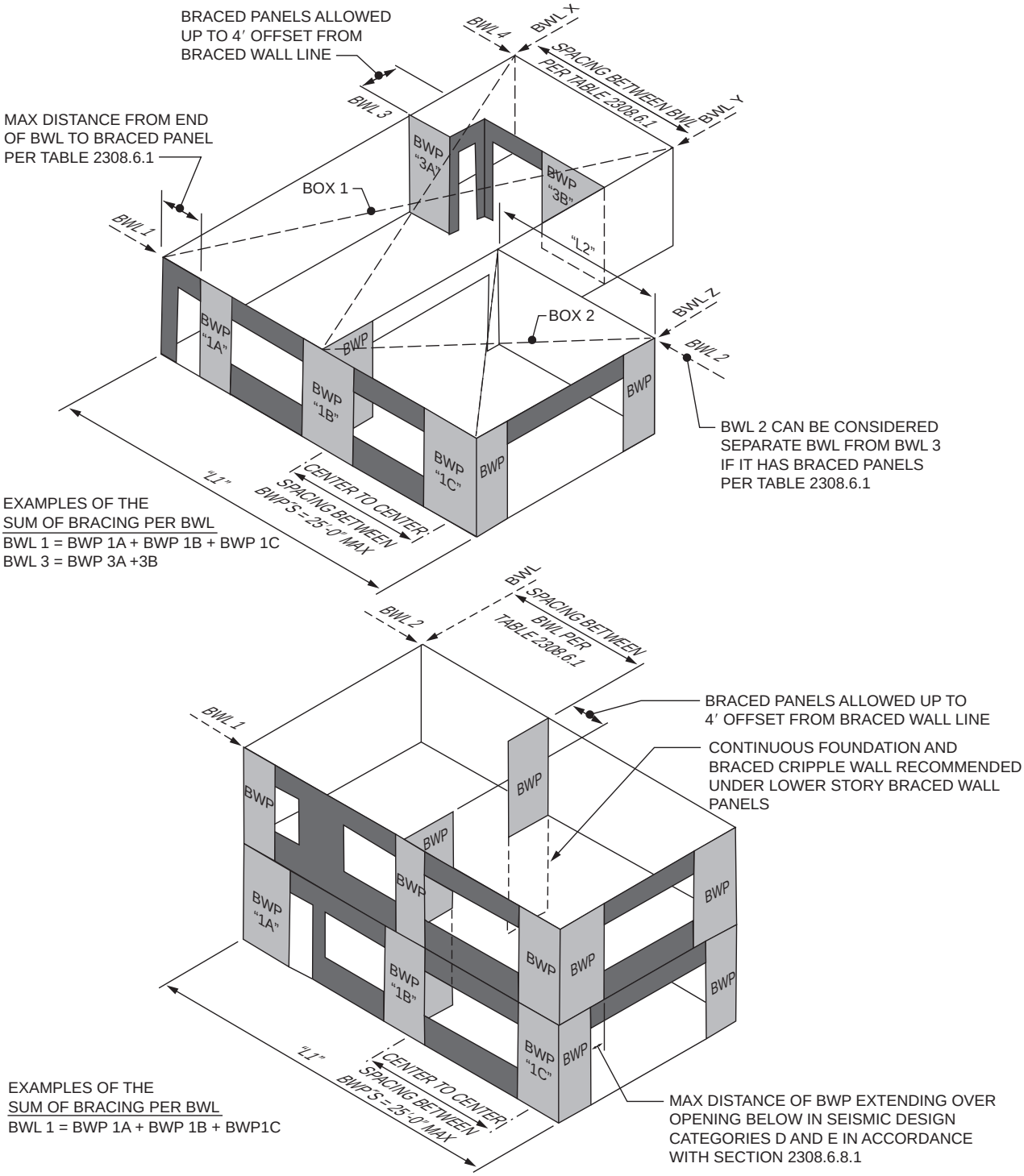

For SI: 1 foot = 304.8 mm.

FIGURE 2308.6.1
BASIC COMPONENTS OF THE LATERAL BRACING SYSTEM

INTERNATIONAL CODE COUNCIL®
Copyright © 2015 ICC. ALL RIGHTS RESERVED. Accessed by David Dammon on Jun 21, 2017 12:30:52 PM pursuant to License Agreement with ICC. No further reproduction or distribution authorized. ANY UNAUTHORIZED REPRODUCTION OR DISTRIBUTION IS A VIOLATION OF THE FEDERAL COPYRIGHT ACT AND THE LICENSE AGREEMENT, AND SUBJECT TO CIVIL AND CRIMINAL PENALTIES THEREUNDER.

TABLE 2308.6.1[a]
WALL BRACING REQUIREMENTS

SEISMIC DESIGN CATEGORY	STORY CONDITION (SEE SECTION 2308.2)	MAXIMUM SPACING OF BRACED WALL LINES	BRACED PANEL LOCATION, SPACING (O.C.) AND MINIMUM PERCENTAGE (X)			MAXIMUM DISTANCE OF BRACED WALL PANELS FROM EACH END OF BRACED WALL LINE
			Bracing method[b]			
			LIB	DWB, WSP	SFB, PBS, PCP, HPS, GB[c, d]	
A and B	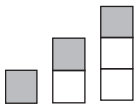	35′- 0″	Each end and ≤ 25′- 0″ o.c.	Each end and ≤ 25′- 0″ o.c.	Each end and ≤ 25′- 0″ o.c.	12′- 6″
	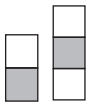	35′- 0″	Each end and ≤ 25′- 0″ o.c.	Each end and ≤ 25′- 0″ o.c.	Each end and ≤ 25′- 0″ o.c.	12′- 6″
		35′- 0″	NP	Each end and ≤ 25′- 0″ o.c.	Each end and ≤ 25′- 0″ o.c.	12′- 6″
C		35′- 0″	NP	Each end and ≤ 25′- 0″ o.c.	Each end and ≤ 25′- 0″ o.c.	12′- 6″
		35′- 0″	NP	Each end and ≤ 25′- 0″ o.c. (minimum 25% of wall length)[e]	Each end and ≤ 25′- 0″ o.c. (minimum 25% of wall length)[e]	12′- 6″
D and E		25′- 0″	NP	S_{DS} < 0.50: Each end and ≤ 25′- 0″ o.c. (minimum 21% of wall length)[e]	S_{DS} < 0.50: Each end and ≤ 25′- 0″ o.c. (minimum 43% of wall length)[e]	8′- 0″
				0.5 ≤ S_{DS} < 0.75: Each end and ≤ 25′- 0″ o.c. (minimum 32% of wall length)[e]	0.5 ≤ S_{DS} < 0.75: Each end and ≤ 25′- 0″ o.c. (minimum 59% of wall length)[e]	
				0.75 ≤ S_{DS} ≤ 1.00: Each end and ≤ 25′- 0″ o.c. (minimum 37% of wall length)[e]	0.75 ≤ S_{DS} ≤ 1.00: Each end and ≤ 25′- 0″ o.c. (minimum 75% of wall length)	
				S_{DS} > 1.00: Each end and ≤ 25′- 0″ o.c. (minimum 48% of wall length)[e]	S_{DS} > 1.00: Each end and ≤ 25′- 0″ o.c. (minimum 100% of wall length)[e]	

For SI: 1 inch = 25.4 mm, 1 foot = 304.8 mm.

NP = Not Permitted.

a. This table specifies minimum requirements for braced wall panels along interior or exterior braced wall lines.

b. See Section 2308.6.3 for full description of bracing methods.

c. For Method GB, gypsum wallboard applied to framing supports that are spaced at 16 inches on center.

d. The required lengths shall be doubled for gypsum board applied to only one face of a braced wall panel.

e. Percentage shown represents the minimum amount of bracing required along the building length (or wall length if the structure has an irregular shape).

INTERNATIONAL CODE COUNCIL®
Copyright © 2015 ICC. ALL RIGHTS RESERVED. Accessed by David Dammon on Jun 21, 2017 12:30:52 PM pursuant to License Agreement with ICC. No further reproduction or distribution authorized. ANY UNAUTHORIZED REPRODUCTION OR DISTRIBUTION IS A VIOLATION OF THE FEDERAL COPYRIGHT ACT AND THE LICENSE AGREEMENT, AND SUBJECT TO CIVIL AND CRIMINAL PENALTIES THEREUNDER.

TABLE 2308.6.3(1)
BRACING METHODS

METHODS, MATERIAL	MINIMUM THICKNESS	FIGURE	CONNECTION CRITERIA[a]	
			Fasteners	Spacing
LIB[a] Let-in-bracing	1″ × 4″ wood or approved metal straps attached at 45° to 60° angles to studs at maximum of 16″ o.c.	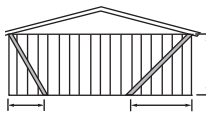	Table 2304.10.1	Wood: per stud plus top and bottom plates
			Metal strap: installed in accordance with manufacturer's recommendations	Metal strap: installed in accordance with manufacturer's recommendations
DWB Diagonal wood boards	3/4″ thick (1″ nominal) × 6″ minimum width to studs at maximum of 24″ o.c.	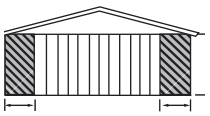	Table 2304.10.1	Per stud
WSP Wood structural panel	3/8″ in accordance with Table 2308.6.3(2) or 2308.6.3(3)		Table 2304.10.1	6″ edges 12″ field
SFB Structural fiberboard sheathing	1/2″ in accordance with Table 2304.10.1 to studs at maximum 16″ o.c.	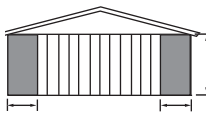	Table 2304.10.1	3″ edges 6″ field

(continued)

INTERNATIONAL CODE COUNCIL®
Copyright © 2015 ICC. ALL RIGHTS RESERVED. Accessed by David Dammon on Jun 21, 2017 12:30:52 PM pursuant to License Agreement with ICC. No further reproduction or distribution authorized. ANY UNAUTHORIZED REPRODUCTION OR DISTRIBUTION IS A VIOLATION OF THE FEDERAL COPYRIGHT ACT AND THE LICENSE AGREEMENT, AND SUBJECT TO CIVIL AND CRIMINAL PENALTIES THEREUNDER.

TABLE 2308.6.3(1)—continued
BRACING METHODS

METHODS, MATERIAL	MINIMUM THICKNESS	FIGURE	CONNECTION CRITERIA[a]	
			Fasteners	Spacing
GB Gypsum board (Double sided)	1/2″ or 5/8″ by a minimum of 4′ wide to studs at maximum of 24″ o.c.	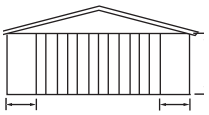	Section 2506.2 for exterior and interior sheathing: 5d annular ringed cooler nails (1 5/8″ × 0.086″) or 1 1/4″ screws (Type W or S) for 1/2″ gypsum board or 1 5/8″ screws (Type W or S) for 5/8″ gypsum board	For all braced wall panel locations: 7″ o.c. along panel edges (including top and bottom plates) and 7″ o.c. in the field
PBS Particleboard sheathing	3/8″ or 1/2″ in accordance with Table 2308.6.3(4) to studs at maximum of 16″ o.c.		6d common (2″ long × 0.113″ dia.) nails for 3/8″ thick sheathing or 8d common (2 1/2″ long × 0.131″ dia.) nails for 1/2″ thick sheathing	3″ edges 6″ field
PCP Portland cement plaster	Section 2510 to studs at maximum of 16″ o.c.	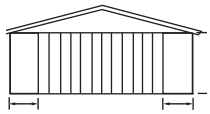	1 1/2″ long, 11 gage, 7/16″ dia. head nails or 7/8″ long, 16 gage staples	6″ o.c. on all framing members
HPS Hardboard panel siding	7/16″ in accordance with Table 2308.6.3(5)		Table 2304.10.1	4″ edges 8″ field
ABW Alternate braced wall	3/8″	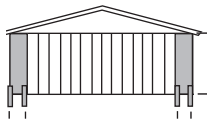	Figure 2308.6.5.1 and Section 2308.6.5.1	Figure 2308.6.5.1
PFH Portal frame with hold-downs	3/8″	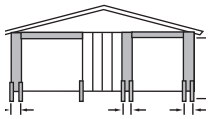	Figure 2308.6.5.2 and Section 2308.6.5.2	Figure 2308.6.5.2

For SI: 1 inch = 25.4 mm, 1 degree = 0.01745 rad.
a. Method LIB shall have gypsum board fastened to at least one side with nails or screws.

TABLE 2308.6.3(2)
EXPOSED PLYWOOD PANEL SIDING

MINIMUM THICKNESS[a] (inch)	MINIMUM NUMBER OF PLIES	STUD SPACING (inches) Plywood siding applied directly to studs or over sheathing
3/8	3	16[b]
1/2	4	24

For SI: 1 inch = 25.4 mm.
a. Thickness of grooved panels is measured at bottom of grooves.
b. Spans are permitted to be 24 inches if plywood siding applied with face grain perpendicular to studs or over one of the following: (1) 1-inch board sheathing, (2) 7/16-inch wood structural panel sheathing or (3) 3/8-inch wood structural panel sheathing with strength axis (which is the long direction of the panel unless otherwise marked) of sheathing perpendicular to studs.

INTERNATIONAL CODE COUNCIL®
Copyright © 2015 ICC. ALL RIGHTS RESERVED. Accessed by David Dammon on Jun 21, 2017 12:30:52 PM pursuant to License Agreement with ICC. No further reproduction or distribution authorized. ANY UNAUTHORIZED REPRODUCTION OR DISTRIBUTION IS A VIOLATION OF THE FEDERAL COPYRIGHT ACT AND THE LICENSE AGREEMENT, AND SUBJECT TO CIVIL AND CRIMINAL PENALTIES THEREUNDER.

TABLE 2308.6.3(3)
WOOD STRUCTURAL PANEL WALL SHEATHING[b]
(Not Exposed to the Weather, Strength Axis Parallel or Perpendicular to Studs Except as Indicated Below)

MINIMUM THICKNESS (inch)	PANEL SPAN RATING	STUD SPACING (inches)		
		Siding nailed to studs	Nailable sheathing	
			Sheathing parallel to studs	Sheathing perpendicular to studs
3/8, 15/32, 1/2	16/0, 20/0, 24/0, 32/16 Wall—24″ o.c.	24	16	24
7/16, 15/32, 1/2	24/0, 24/16, 32/16 Wall—24″ o.c.	24	24[a]	24

For SI: 1 inch = 25.4 mm.

a. Plywood shall consist of four or more plies.

b. Blocking of horizontal joints shall not be required except as specified in Section 2308.6.4.

TABLE 2308.6.3(4)
ALLOWABLE SPANS FOR PARTICLEBOARD WALL SHEATHING
(Not Exposed to the Weather, Long Dimension of the Panel Parallel or Perpendicular to Studs)

GRADE	THICKNESS (inch)	STUD SPACING (inches)	
		Siding nailed to studs	Sheathing under coverings specified in Section 2308.6.3 parallel or perpendicular to studs
M-S "Exterior Glue" and M-2 "Exterior Glue"	3/8	16	—
	1/2	16	16

For SI: 1 inch = 25.4 mm.

TABLE 2308.6.3(5)
HARDBOARD SIDING

SIDING	MINIMUM NOMINAL THICKNESS (inch)	2 × 4 FRAMING MAXIMUM SPACING	NAIL SIZE[a, b, d]	NAIL SPACING	
				General	Bracing panels[c]
1. Lap siding					
Direct to studs	3/8	16″ o.c.	8d	16″ o.c.	Not applicable
Over sheathing	3/8	16″ o.c.	10d	16″ o.c.	Not applicable
2. Square edge panel siding					
Direct to studs	3/8	24″ o.c.	6d	6″ o.c. edges; 12″ o.c. at intermediate supports	4″ o.c. edges; 8″ o.c. at intermediate supports
Over sheathing	3/8	24″ o.c.	8d	6″ o.c. edges; 12″ o.c. at intermediate supports	4″ o.c. edges; 8″ o.c. at intermediate supports
3. Shiplap edge panel siding					
Direct to studs	3/8	16″ o.c.	6d	6″ o.c. edges; 12″ o.c. at intermediate supports	4″ o.c. edges; 8″ o.c. at intermediate supports
Over sheathing	3/8	16″ o.c.	8d	6″ o.c. edges; 12″ o.c. at intermediate supports	4″ o.c. edges; 8″ o.c. at intermediate supports

For SI: 1 inch = 25.4 mm.

a. Nails shall be corrosion resistant.

b. Minimum acceptable nail dimensions:

	Panel Siding (inch)	Lap Siding (inch)
Shank diameter	0.092	0.099
Head diameter	0.225	0.240

c. Where used to comply with Section 2308.6.

d. Nail length must accommodate the sheathing and penetrate framing 1 1/2 inches.

INTERNATIONAL CODE COUNCIL®
Copyright © 2015 ICC. ALL RIGHTS RESERVED. Accessed by David Dammon on Jun 21, 2017 12:30:52 PM pursuant to License Agreement with ICC. No further reproduction or distribution authorized. ANY UNAUTHORIZED REPRODUCTION OR DISTRIBUTION IS A VIOLATION OF THE FEDERAL COPYRIGHT ACT AND THE LICENSE AGREEMENT, AND SUBJECT TO CIVIL AND CRIMINAL PENALTIES THEREUNDER.

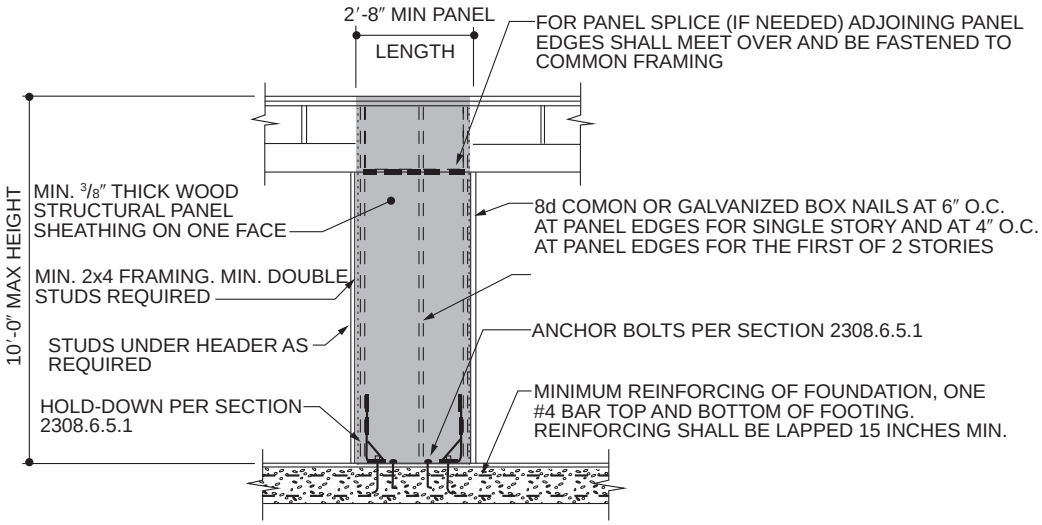

For SI: 1 inch = 25.4 mm, 1 foot = 304.8 mm.

FIGURE 2308.6.5.1
ALTERNATE BRACED WALL PANEL (ABW)

2308.6.5.2 Portal frame with hold-downs (PFH). A PFH shall be constructed in accordance with this section and Figure 2308.6.5.2. The adjacent door or window opening shall have a full-length header.

In one-story buildings, each panel shall have a length of not less than 16 inches (406 mm) and a height of not more than 10 feet (3048 mm). Each panel shall be sheathed on one face with a single layer of $^{3}/_{8}$-inch (9.5 mm) minimum-thickness wood structural panel sheathing nailed with 8d common or galvanized box nails in accordance with Figure 2308.6.5.2. The wood structural panel sheathing shall extend up over the solid sawn or glued-laminated header and shall be nailed in accordance with Figure 2308.6.5.2. A built-up header consisting of at least two 2-inch by 12-inch (51 mm by 305 mm) boards, fastened in accordance with Item 24 of Table 2304.10.1 shall be permitted to be used. A spacer, if used, shall be placed on the side of the built-up beam opposite the wood structural panel sheathing. The header shall extend between the inside faces of the first full-length outer studs of each panel. The clear span of the header between the inner studs of each panel shall be not less than 6 feet (1829 mm) and not more than 18 feet (5486 mm) in length. A strap with an uplift capacity of not less than 1,000 pounds (4,400 N) shall fasten the header to the inner studs opposite the sheathing. One anchor bolt not less than $^{5}/_{8}$ inch (15.9 mm) diameter and installed in accordance with Section 2308.3.1 shall be provided in the center of each sill plate. The studs at each end of the panel shall have a hold-down device fastened to the foundation with an uplift capacity of not less than 3,500 pounds (15 570 N).

Where a panel is located on one side of the opening, the header shall extend between the inside face of the first full-length stud of the panel and the bearing studs at the other end of the opening. A strap with an uplift capacity of not less than 1,000 pounds (4400 N) shall fasten the header to the bearing studs. The bearing studs shall also have a hold-down device fastened to the foundation with an uplift capacity of not less than 1,000 pounds (4400 N). The hold-down devices shall be an embedded strap type, installed in accordance with the manufacturer's recommendations. The PFH panels shall be supported directly on a foundation that is continuous across the entire length of the braced wall line. This foundation shall be reinforced with not less than one No. 4 bar top and bottom. Where the continuous foundation is required to have a depth greater than 12 inches (305 mm), a minimum 12-inch by 12-inch (305 mm by 305 mm) continuous footing or turned-down slab edge is permitted at door openings in the braced wall line. This continuous footing or turned-down slab edge shall be reinforced with not less than one No. 4 bar top and bottom. This reinforcement shall be lapped not less than 15 inches (381 mm) with the reinforcement required in the continuous foundation located directly under the braced wall line.

Where a PFH is installed at the first *story* of two-story buildings, each panel shall have a length of not less than 24 inches (610 mm).

❖ This provision allows an additional alternative bracing method for use adjacent to a window or door opening. It includes specifications for creating a type of portal frame system with built-up "columns" at each end that are fastened to the header with a nominal amount of rigidity. In this alternative, the header runs the length of the sheathed bracing panel—up to the first full-length stud—and is attached to the full-height sheathing with a grid pattern of nails where the sheathing and header overlap. This provides a partially rigid moment-resisting connection. At the base of the embedded sheathed section, tie-down anchors are nailed to the framing, which provide a more conventional moment-resisting connection. These framing anchors are sized to provide uplift in addition to

INTERNATIONAL CODE COUNCIL®
Copyright © 2015 ICC. ALL RIGHTS RESERVED. Accessed by David Dammon on Jun 21, 2017 12:30:52 PM pursuant to License Agreement with ICC. No further reproduction or distribution authorized. ANY UNAUTHORIZED REPRODUCTION OR DISTRIBUTION IS A VIOLATION OF THE FEDERAL COPYRIGHT ACT AND THE LICENSE AGREEMENT, AND SUBJECT TO CIVIL AND CRIMINAL PENALTIES THEREUNDER.

shear capacity, reducing the plate anchoring requirements. Additional strap anchors, as shown in code Figure 2308.6.5.2, are required. The result of these provisions is a reduced width of the full height segment of the assembly from 32 to 16 inches (813 to 406 mm) for a one-story building, and to 24 inches (610 mm) for the first floor of a two-story building compared to the alternate braced wall panel option permitted in Section 2308.6.5.1. The maximum allowable garage (or other room) size for this application would have to comply with the restrictions for braced wall line spacing and framing member spans noted elsewhere in Section 2308. As stated in the beginning of the section, any of the braced wall panel methods required by Table 2308.6.3(1) are permitted to be replaced by a portal frame system and be considered equivalent to 4 feet (1219 mm) of bracing. Like the alternate braced wall panel, it has a maximum height of 10 feet (3048 mm).

FIGURE 2308.6.5.2. See below.

❖ Narrow "portal frame" details such as these have been used successfully in the Pacific Northwest for almost two decades. This alternative was first developed in 1988 and was based on monotonic testing. The popularity of this detail grew until it was used in a number of different jurisdictions in the Pacific Northwest. During a series of cyclic tests conducted by the APA, the single-sided/single-story 32-inch-wide (813 mm) alternative bracing in Section 2308.6.5.1 was tested along with the 16-inch-wide (406 mm) alternative. Similarly, the double-sided/two-story 32-inch-wide (813 mm) assembly was compared with the 24-inch-wide (610 mm) alternative. In both cases, testing demonstrated that alternative bracing in Section 2308.6.5.2 performed significantly better in both strength and stiffness than the 32-inch-wide (813 mm) bracing in Section 2308.6.5.1.

2308.6.6 Cripple wall bracing. Cripple walls shall be braced in accordance with Section 2308.6.6.1 or 2308.6.6.2.

❖ The requirements to brace cripple walls are based on the seismic risk as characterized by the structure's seismic design category.

2308.6.6.1 Cripple wall bracing in Seismic Design Categories A, B and C. For the purposes of this section, cripple walls in *Seismic Design Categories* A, B and C having a stud height exceeding 14 inches (356 mm) shall be considered a *story* and shall be braced in accordance with Table 2308.6.1. Spacing of edge nailing for required cripple wall bracing shall not exceed 6 inches (152 mm) on center along the foundation plate and the top plate of the cripple wall. Nail size, nail spacing for field nailing and more restrictive boundary nailing requirements shall be as required elsewhere in the code for the specific bracing material used.

❖ When a cripple wall stud height is more than 14 inches (356 mm), the cripple wall is considered to be the first story and the bracing requirements of Table 2308.6.3(1) will apply for buildings in lower seismic design categories. Cripple wall bracing and 6-inch (152 mm) edge nailing are important in order to avoid the creation of a soft story and to provide a continuous load path to transfer lateral forces from the structure above to the foundation. The minimum edge nailing specified in this section provides a level of shear resistance at the bottom of the structure that is at least equivalent to that provided elsewhere.

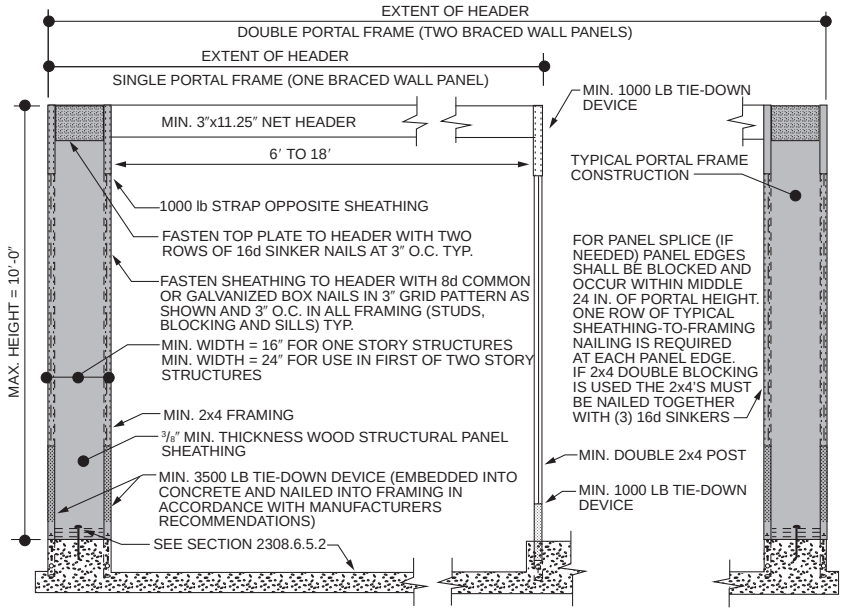

For SI: 1 inch = 25.4 mm, 1 foot = 304.8 mm, 1 pound = 4.448 N.

FIGURE 2308.6.5.2
PORTAL FRAME WITH HOLD-DOWNS (PFH)

INTERNATIONAL CODE COUNCIL®
Copyright © 2015 ICC. ALL RIGHTS RESERVED. Accessed by David Dammon on Jun 21, 2017 12:30:52 PM pursuant to License Agreement with ICC. No further reproduction or distribution authorized. ANY UNAUTHORIZED REPRODUCTION OR DISTRIBUTION IS A VIOLATION OF THE FEDERAL COPYRIGHT ACT AND THE LICENSE AGREEMENT, AND SUBJECT TO CIVIL AND CRIMINAL PENALTIES THEREUNDER.

2308.6.6.2 Cripple wall bracing in Seismic Design Categories D and E. For the purposes of this section, cripple walls in *Seismic Design Categories* D and E having a stud height exceeding 14 inches (356 mm) shall be considered a *story* and shall be braced in accordance with Table 2308.6.1. Where interior braced wall lines occur without a continuous foundation below, the length of parallel exterior cripple wall bracing shall be one and one-half times the lengths required by Table 2308.6.1. Where the cripple wall sheathing type used is Method WSP or DWB and this additional length of bracing cannot be provided, the capacity of WSP or DWB sheathing shall be increased by reducing the spacing of fasteners along the perimeter of each piece of sheathing to 4 inches (102 mm) on center.

❖ When a cripple wall stud height is more than 14 inches (356 mm), the wall is considered to be the first-story similar to Section 2308.6.6.1. Because Section 2308.2.1 limits structures that are classified as Seismic Design Category D or E to one story, such structures with a cripple wall exceeding 14 inches (356 mm) would not meet the story limits and therefore cannot be constructed in accordance with Section 2308.

2308.6.7 Connections of braced wall panels. *Braced wall panel* joints shall occur over studs or blocking. *Braced wall panels* shall be fastened to studs, top and bottom plates and at panel edges. *Braced wall panels* shall be applied to nominal 2-inch-wide [actual $1^1/_2$-inch (38 mm)] or larger stud framing.

❖ The section provides prescriptive connection requirements intended to transfer lateral forces from the roof and floor diaphragm to the braced wall lines, as well as from upper stories to stories below and ultimately to the foundation. The requirements provide some continuity in the load path for the braced wall lines and braced wall panels that serve as the lateral-force-resisting system in conventionally constructed wood-framed buildings.

2308.6.7.1 Bottom plate connection. *Braced wall line* bottom plates shall be connected to joists or full-depth blocking below in accordance with Table 2304.10.1, or to foundations in accordance with Section 2308.6.7.3.

❖ The bottom plate at braced wall lines must be fastened to joists, blocking between joists or directly to the foundation, such as a sill plate supported by a slab-on-grade footing.

2308.6.7.2 Top plate connection. Where joists or rafters are used, *braced wall line* top plates shall be fastened over the full length of the braced wall line to joists, rafters, rim boards or full-depth blocking above in accordance with Table 2304.10.1, as applicable, based on the orientation of the joists or rafters to the *braced wall line*. Blocking shall be not less than 2 inches (51 mm) in nominal thickness and shall be fastened to the *braced wall line* top plate as specified in Table 2304.10.1. Notching or drilling of holes in blocking in accordance with the requirements of Section 2308.4.2.4 or 2308.7.4 shall be permitted.

At exterior gable end walls, *braced wall panel* sheathing in the top *story* shall be extended and fastened to the roof framing where the spacing between parallel exterior braced wall lines is greater than 50 feet (15 240 mm).

Where roof trusses are used and are installed perpendicular to an exterior *braced wall line*, lateral forces shall be transferred from the roof diaphragm to the braced wall over the full length of the *braced wall line* by blocking of the ends of the trusses or by other *approved* methods providing equivalent lateral force transfer. Blocking shall be not less than 2 inches (51 mm) in nominal thickness and equal to the depth of the truss at the wall line and shall be fastened to the braced wall line top plate as specified in Table 2304.10.1. Notching or drilling of holes in blocking in accordance with the requirements of Section 2308.4.2.4 or 2308.7.4 shall be permitted.

Exception: Where the roof sheathing is greater than $9^1/_4$ inches (235 mm) above the top plate, solid blocking is not required where the framing members are connected using one of the following methods:

1. In accordance with Figure 2308.6.7.2(1).
2. In accordance with Figure 2308.6.7.2(2).
3. Full-height engineered blocking panels de-signed for values listed in AWC WFCM.
4. A design in accordance with accepted engineering methods.

❖ Braced wall line top plates are required to be fastened to rafters, joists or blocking, depending on the orientation of the braced wall line to the framing. Where joists support braced wall lines above, full-depth blocking must be used. Where blocking is used at rafters, the blocking need not be the full depth but is required to extend to within 2 inches (51 mm) of the roof sheathing. Where blocking is used at the top plate connection, it must be a minimum 2 inch (51 mm) nominal thickness.

Where the spacing between exterior braced walls is more than 50 feet (15 240 mm), the braced wall panel sheathing at the gable ends must be extended up to and fastened to the roof framing. Note that because the maximum spacing between braced wall lines is 35 feet (10 668 mm) [25 feet (7620 mm) in Seismic Design Category D and E], this requirement applies to the spacing between the exterior braced wall lines.

Where roof trusses are used, the roof diaphragm must be connected the full length of the braced wall line along the eave by 2-inch (51 mm) nominal blocking or other approved means. As noted for rafters, the eave blocking at trusses need not be the full depth of the truss heel but is required to extend to within 2 inches (51 mm) of the roof sheathing.

Where blocking at the top plate connection is notched or drilled, the section refers to the requirements for notching and boring holes in joists and rafters. The provision essentially limits notches to one-fourth of the depth of the block, the diameter of drilled holes are limited to one-third of the depth of the block and drilled holes cannot be within 2 inches (51 mm) of the top or bottom of the block.

INTERNATIONAL CODE COUNCIL®
Copyright © 2015 ICC. ALL RIGHTS RESERVED. Accessed by David Dammon on Jun 21, 2017 12:30:52 PM pursuant to License Agreement with ICC. No further reproduction or distribution authorized. ANY UNAUTHORIZED REPRODUCTION OR DISTRIBUTION IS A VIOLATION OF THE FEDERAL COPYRIGHT ACT AND THE LICENSE AGREEMENT, AND SUBJECT TO CIVIL AND CRIMINAL PENALTIES THEREUNDER.

The exception permits options to solid blocking in order to address conditions that have become more common due to the increased use of cantilevered and high-heel trusses. Cantilevered trusses may be used to create a covered entry, while high heel trusses may be necessary to accommodate deeper attic insulation.

FIGURE 2308.6.7.2(1). See below.

❖ This figure provides an option to solid blocking as allowed by the exception in Section 2308.6.7.2. It provides for a complete load path by installing horizontal sheathing between the roof sheathing and the top plate of the braced wall line.

FIGURE 2308.6.7.2(2). See page 23-89.

❖ This figure provides an option to solid blocking as allowed by the exception in Section 2308.6.7.2. It provides for a complete load path by extending the wall sheathing vertically to the underside of the roof sheathing.

2308.6.7.3 Sill anchorage. Where foundations are required by Section 2308.6.8, braced wall line sills shall be anchored to concrete or masonry foundations. Such anchorage shall conform to the requirements of Section 2308.3. The anchors shall be distributed along the length of the braced wall line. Other anchorage devices having equivalent capacity are permitted.

❖ The typical sill plate anchorage of $^1/_2$ inch (12.7 mm) diameter bolts spaced not more than 6 feet (1826 mm) o.c. is specified in Section 2308.3. Section 2308.3.1 requires a more restrictive anchor spacing of not more than 4 feet (1219 mm) o.c. for braced wall line sills in buildings greater than two stories above grade plane. This addresses the greater earthquake load effects at the foundation of three-story buildings. Interior braced wall lines in a building with plan dimensions less than or equal to 50 feet (15 240 mm) do not require support on a continuous foundation. Such interior braced wall lines would be fastened to supporting framing in accordance with Table 2304.10.1. This section clarifies that something more substantial is needed where foundations are required below these braced wall lines and allows other types of anchorage devices having "equivalent capacity" to be substituted for this anchorage.

2308.6.7.4 Anchorage to all-wood foundations. Where all-wood foundations are used, the force transfer from the *braced wall lines* shall be determined based on calculation and shall have a capacity that is not less than the connections required by Section 2308.3.

❖ There are no prescriptive provisions currently in the code for anchorage of braced wall lines to wood foundations; therefore, transfer of the forces from the wall line to the foundation equivalent to the required sill anchorage must be provided. Connections must be designed to provide capacity equivalent to that of the bolts described in Section 2308.3: $^1/_2$-inch-diameter (12.7 mm) bolts embedded into concrete, spaced at 6 feet (1829 mm) o.c. maximum (two stories or less) or 4 feet (1219 mm) o.c. maximum (over two stories in height).

2308.6.8 Braced wall line and diaphragm support. *Braced wall lines* and floor and roof diaphragms shall be supported in accordance with this section.

❖ The following sections address braced wall line support and the need for providing a foundation.

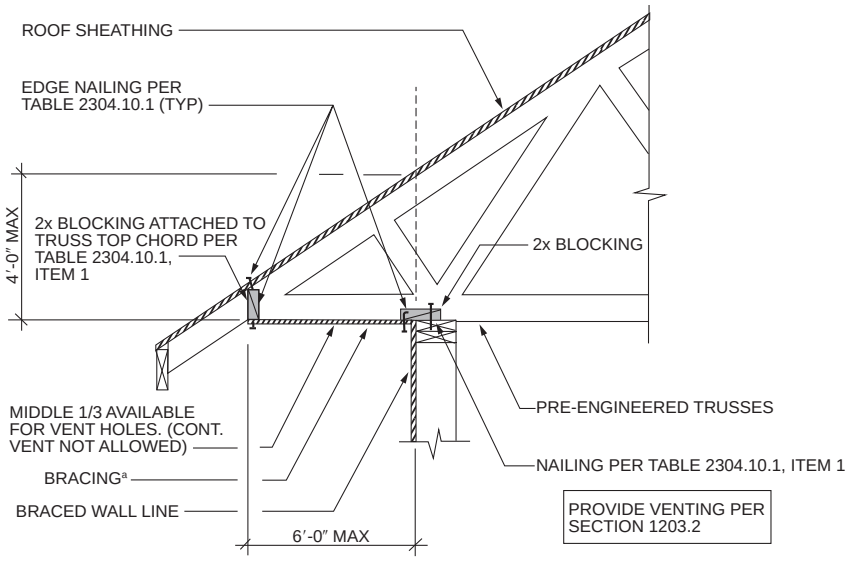

a. Methods of bracing shall be as described in Table 2308.6.3(1) DWB, WSP, SFB, GB, PBS, PCP or HPS.

For SI: 1 foot = 304.8 mm.

FIGURE 2308.6.7.2(1)
BRACED WALL LINE TOP PLATE CONNECTION

INTERNATIONAL CODE COUNCIL®
Copyright © 2015 ICC. ALL RIGHTS RESERVED. Accessed by David Dammon on Jun 21, 2017 12:30:52 PM pursuant to License Agreement with ICC. No further reproduction or distribution authorized. ANY UNAUTHORIZED REPRODUCTION OR DISTRIBUTION IS A VIOLATION OF THE FEDERAL COPYRIGHT ACT AND THE LICENSE AGREEMENT, AND SUBJECT TO CIVIL AND CRIMINAL PENALTIES THEREUNDER.

2308.6.8.1 Foundation requirements. *Braced wall lines* shall be supported by continuous foundations.

Exception: For structures with a maximum plan dimension not more than 50 feet (15 240 mm), continuous foundations are required at exterior walls only.

For structures in *Seismic Design Categories* D and E, exterior *braced wall panels* shall be in the same plane vertically with the foundation or the portion of the structure containing the offset shall be designed in accordance with accepted engineering practice and Section 2308.1.1.

Exceptions:

1. Exterior *braced wall panels* shall be permitted to be located not more than 4 feet (1219 mm) from the foundation below where supported by a floor constructed in accordance with all of the following:
   1.1. Cantilevers or setbacks shall not exceed four times the nominal depth of the floor joists.
   1.2. Floor joists shall be 2 inches by 10 inches (51 mm by 254 mm) or larger and spaced not more than 16 inches (406 mm) on center.
   1.3. The ratio of the back span to the cantilever shall be not less than 2 to 1.
   1.4. Floor joists at ends of *braced wall panels* shall be doubled.
   1.5. A continuous rim joist shall be connected to the ends of cantilevered joists. The rim joist is permitted to be spliced using a metal tie not less than 0.058 inch (1.47 mm) (16 galvanized gage) and $1^1/_2$ inches (38 mm) in width fastened with six 16d common nails on each side. The metal tie shall have a yield stress not less than 33,000 psi (227 MPa).
   1.6. Joists at setbacks or the end of cantilevered joists shall not carry gravity loads from more than a single *story* having uniform wall and roof loads nor carry the reactions from headers having a span of 8 feet (2438 mm) or more.
2. The end of a required *braced wall panel* shall be allowed to extend not more than 1 foot (305 mm) over an opening in the wall below. This requirement is applicable to *braced wall panels* offset in plane and *braced wall panels* offset out of plane as permitted by Exception 1. *Braced wall panels* are permitted to extend over an opening not more than 8 feet (2438 mm) in width where the header is a 4-inch by 12-inch (102 mm by 305 mm) or larger member.

❖ In general, braced wall lines should be supported on continuous foundations except as noted in the exception. Buildings with a maximum plan dimension of 50 feet (15 240 mm) have limited lateral forces so that continuous foundations are only required at exterior braced wall lines. The exception allows horizontal dimensions of up to 50 feet (15 240 mm) between continuous foundations. This is intended to permit residential cripple walls to be braced at exterior walls only, within the limitations described, but applies to other conditions as well. At one time in the development of the conventional construction provisions, this requirement was only necessary in the highest seismic regions, but has now become a general requirement.

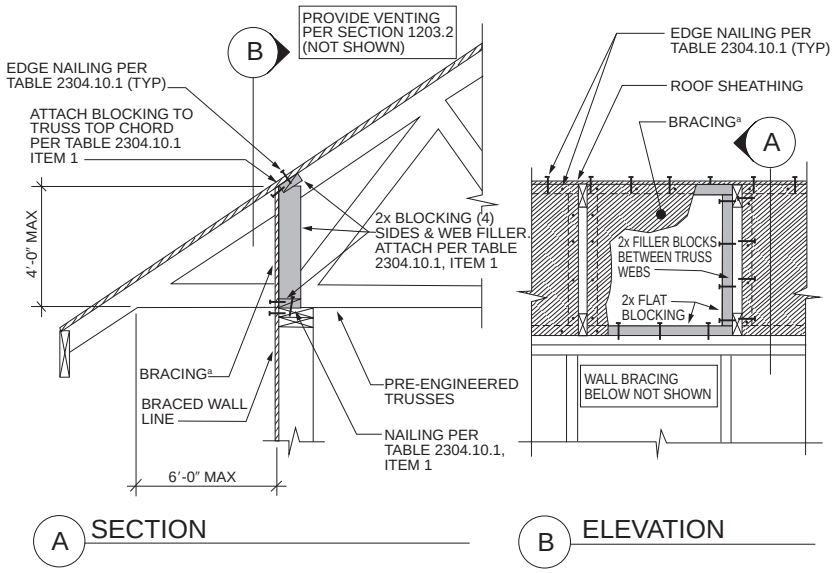

a. Methods of bracing shall be as described in Table 2308.6.3(1) DWB, WSP, SFB, GB, PBS, PCP or HPS.

For SI: 1 foot = 304.8 mm.

FIGURE 2308.6.7.2(2)
BRACED WALL PANEL TOP PLATE CONNECTION

INTERNATIONAL CODE COUNCIL®
Copyright © 2015 ICC. ALL RIGHTS RESERVED. Accessed by David Dammon on Jun 21, 2017 12:30:52 PM pursuant to License Agreement with ICC. No further reproduction or distribution authorized. ANY UNAUTHORIZED REPRODUCTION OR DISTRIBUTION IS A VIOLATION OF THE FEDERAL COPYRIGHT ACT AND THE LICENSE AGREEMENT, AND SUBJECT TO CIVIL AND CRIMINAL PENALTIES THEREUNDER.

Ideally, braced wall panels should always stack above each other from floor to floor. Exception 1 allows braced wall panels to be offset out of plane from floor to floor. Because cantilevers and setbacks are often incorporated into structures, the exception limits cantilever length and set-back distance in order to maintain somewhat regular structural behavior.

Exception 2 allows braced wall panels to be offset in plane. Ends of braced wall panels supported on window or door headers can transfer large vertical reactions to the header below, which may not be of adequate size to resist these reactions. The exception restricts the portion of an upper braced wall panel that may extend over an opening below where a conventional header of limited size may exist. This is allowed based on the assumption that the vertical reaction is within an approximate 45-degree (0.78 rad) line of the header support and, therefore, will not result in critical shear or flexure. Where a 4-inch by 12-inch nominal (102 mm by 305 mm) header is framed over the opening below a braced wall panel, the panel may extend completely over this header, provided the opening is not greater than 8 feet (2438 mm) in length. Other header conditions require an engineered design.

2308.6.8.2 Floor and roof diaphragm support in Seismic Design Categories D and E. In structures assigned to *Seismic Design Categories* D or E, floor and roof diaphragms shall be laterally supported by *braced wall lines* on all edges and connected in accordance with Section 2308.6.7 [see Figure 2308.6.8.2(1)].

Exception: Portions of roofs or floors that do not support *braced wall panels* above are permitted to extend up to 6 feet (1829 mm) beyond a *braced wall line* [see Figure 2308.6.8.2(2)] provided that the framing members are connected to the *braced wall line* below in accordance with Section 2308.6.7.

❖ This section deals with the condition where a portion of the roof or floor (diaphragm) is not laterally supported by a braced wall line. The conventional construction bracing concept is based on using braced wall lines to divide a structure into a series of "boxes" of limited dimension, with the seismic force to each box being limited by the size. The intent is that each box is supported by braced wall lines on all four sides, limiting the amount of torsion that can occur. The exception, which permits portions of roofs or floors to extend past the braced wall line, allows commonly constructed features such as porch roofs and bay windows.

2308.6.8.3 Stepped footings in Seismic Design Categories B, C, D and E. In *Seismic Design Categories* B, C, D and E, where the height of a required *braced wall panel* extending from foundation to floor above varies more than 4 feet (1219 mm), the following construction shall be used:

1. Where the bottom of the footing is stepped and the lowest floor framing rests directly on a sill bolted to the footings, the sill shall be anchored as required in Section 2308.3.
2. Where the lowest floor framing rests directly on a sill bolted to a footing not less than 8 feet (2438 mm) in length along a line of bracing, the line shall be considered to be braced. The double plate of the cripple stud wall beyond the segment of footing extending to the lowest framed floor shall be spliced to the sill plate with metal ties, one on each side of the sill and plate. The metal ties shall be not less than 0.058 inch [1.47 mm (16 galvanized gage)] by $1^1/_2$ inches (38 mm) in width by 48 inches (1219 mm) with eight 16d common nails on each side of the splice location (see Figure 2308.6.8.3). The metal tie shall have a yield stress not less than 33,000 pounds per square inch (psi) (227 MPa).
3. Where cripple walls occur between the top of the footing and the lowest floor framing, the bracing requirements for a *story* shall apply.

❖ The primary objectives of footing design are to provide: a level surface for construction of the foundation wall; adequate transfer and distribution of the building

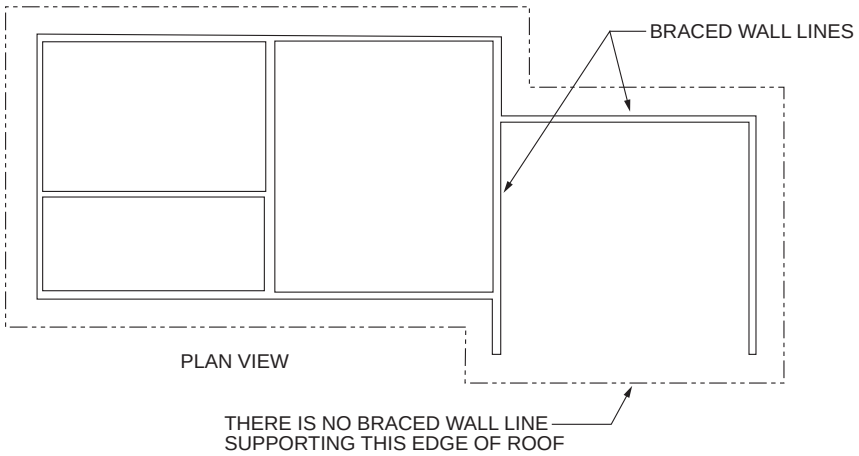

FIGURE 2308.6.8.2(1)
ROOF IN SDC D OR E NOT SUPPORTED ON ALL EDGES

INTERNATIONAL CODE COUNCIL®
Copyright © 2015 ICC. ALL RIGHTS RESERVED. Accessed by David Dammon on Jun 21, 2017 12:30:52 PM pursuant to License Agreement with ICC. No further reproduction or distribution authorized. ANY UNAUTHORIZED REPRODUCTION OR DISTRIBUTION IS A VIOLATION OF THE FEDERAL COPYRIGHT ACT AND THE LICENSE AGREEMENT, AND SUBJECT TO CIVIL AND CRIMINAL PENALTIES THEREUNDER.

loads to the underlying soil; adequate strength to prevent differential settlement of the building; and adequate anchorage or mass to resist potential uplift and overturning forces from lateral loads imposed on the structure. The most common footing type in residential construction is a continuous concrete spread footing. These concrete footings are recognized in prescriptive footing size tables for most typical conditions. In contrast, special conditions such as stepped footings, which might be required in steeply sloped sites, require special consideration and possibly an engineered design. This section provides prescriptive requirements for constructing stepped foundations where the height of a braced wall panel extending from the foundation to the floor above varies by more than 4 feet (1219 mm).

FIGURE 2308.6.8.3. See below.

❖ This figure illustrates the code requirements for stepped footing connection details required by Section 2308.6.8.3 (see Section 2308.6.8.3 for further discussion). Care should be taken to install the metal strap shown so that the nailing does not interfere with anchor bolts at the sill plate. Additionally, nails used to fasten the strap to pressure-treated plates must be galvanized or otherwise protected as described in Section 2304.10.5.

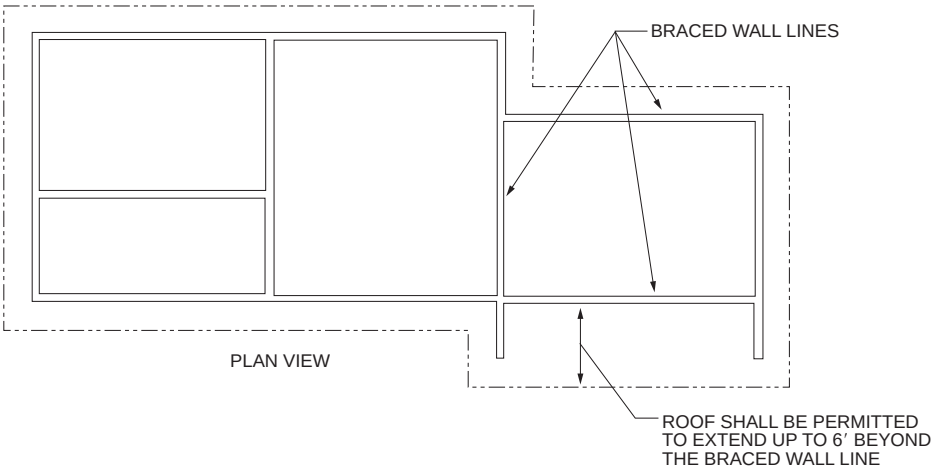

For SI: 1 foot = 304.8 mm.

FIGURE 2308.6.8.2(2)
ROOF EXTENSION IN SDC D OR E BEYOND BRACED WALL LINE

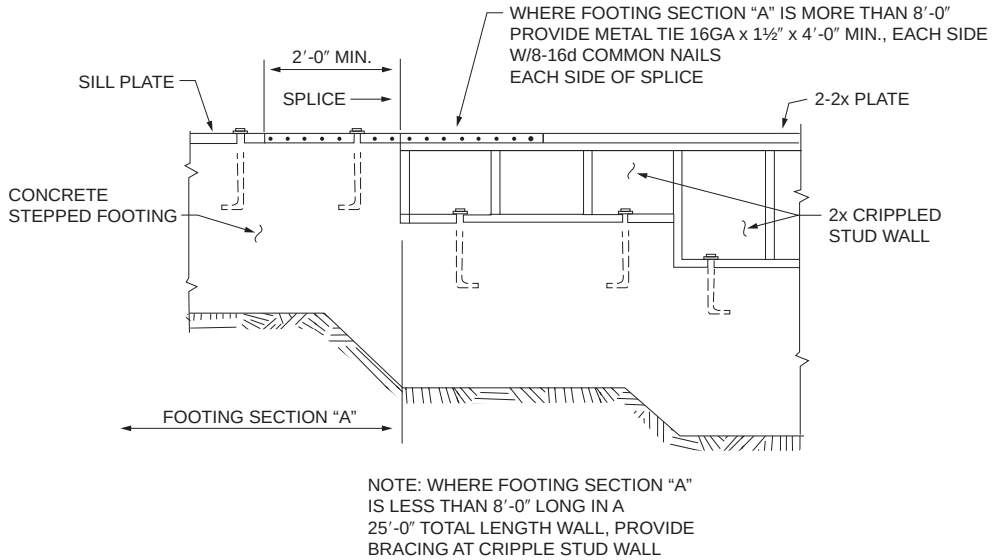

For SI: 1 inch = 25.4 mm, 1 foot = 304.8 mm.

FIGURE 2308.6.8.3
STEPPED FOOTING CONNECTION DETAILS

INTERNATIONAL CODE COUNCIL®
Copyright © 2015 ICC. ALL RIGHTS RESERVED. Accessed by David Dammon on Jun 21, 2017 12:30:52 PM pursuant to License Agreement with ICC. No further reproduction or distribution authorized. ANY UNAUTHORIZED REPRODUCTION OR DISTRIBUTION IS A VIOLATION OF THE FEDERAL COPYRIGHT ACT AND THE LICENSE AGREEMENT, AND SUBJECT TO CIVIL AND CRIMINAL PENALTIES THEREUNDER.

2308.6.9 Attachment of sheathing. Fastening of *braced wall panel* sheathing shall be not less than that prescribed in Tables 2308.6.1 and 2304.10.1. Wall sheathing shall not be attached to framing members by adhesives.

❖ The connections in Table 2304.10.1 are the minimum allowed for conventional construction. Adhesives are not ordinarily used to fasten panels to wall studs and plates and, therefore, have not been cyclically tested for such installations in order to establish their seismic resistance. Floor sheathing panels are often glued down to the framing members prior to final nailing in order to increase stiffness and help prevent squeaks, but that need does not currently exist for wall panels.

2308.6.10 Limitations of concrete or masonry veneer. Concrete or masonry veneer shall comply with Chapter 14 and this section.

❖ Because of their weight, concrete walls, masonry walls and stone or masonry veneer can impose earthquake loads that are beyond the typical loading considered for conventional light-frame construction. The code requires an engineered design for concrete or masonry walls above the basement except as described within this section.

2308.6.10.1 Limitations of concrete or masonry veneer in Seismic Design Category B or C. In *Seismic Design Categories* B and C, concrete or masonry walls and stone or masonry veneer shall not extend above a basement.

Exceptions:

1. In structures assigned to *Seismic Design Category* B, stone and masonry veneer is permitted to be used in the first two *stories above grade plane* or the first three *stories above grade plane* where the lowest *story* has concrete or masonry walls, provided that wood structural panel wall bracing is used and the length of bracing provided is one and one-half times the required length specified in Table 2308.6.1.
2. Stone and masonry veneer is permitted to be used in the first *story above grade plane* or the first two *stories above grade plane* where the lowest *story* has concrete or masonry walls.
3. Stone and masonry veneer is permitted to be used in both *stories* of buildings with two *stories above grade plane*, provided the following criteria are met:
   - 3.1. Type of brace in accordance with Section 2308.6.1 shall be WSP and the allowable shear capacity in accordance with Section 2306.3 shall be not less than 350 plf (5108 N/m).
   - 3.2. *Braced wall panels* in the second *story* shall be located in accordance with Section 2308.6.1 and not more than 25 feet (7620 mm) on center, and the total length of *braced wall panels* shall be not less than 25 percent of the *braced wall line* length. *Braced wall panels* in the first *story* shall be located in accordance with Section 2308.6.1 and not more than 25 feet (7620 mm) on center, and the total length of *braced wall panels* shall be not less than 45 percent of the *braced wall line* length.
   - 3.3. Hold-down connectors with an allowable capacity of 2,000 pounds (8896 N) shall be provided at the ends of each *braced wall panel* for the second *story* to the first *story* connection. Hold-down connectors with an allowable capacity of 3,900 pounds (17 347 N) shall be provided at the ends of each *braced wall panel* for the first *story* to the foundation connection. In all cases, the hold-down connector force shall be transferred to the foundation.
   - 3.4. Cripple walls shall not be permitted.

❖ In Seismic Design Categories B and C, the code requires an engineered design for concrete or masonry walls above the basement with three exceptions. Exception 1 allows masonry veneer either two or three stories above grade plane in structures classified as Seismic Design Category B under certain conditions, such as increasing the amount of wall bracing. It would not be necessary to meet these conditions for veneer on the first story only, since Exception 2 permits this. Exception 2 allows one story of stone or masonry veneer above grade plane or two stories above grade plane if the lower story walls are constructed of concrete or masonry, which are engineered for seismic effects. Exception 3 allows up to two stories of stone or masonry veneer above grade plane, provided the added requirements for wall bracing and hold-downs are complied with in order to increase the resistance of the lateral-force-resisting system.

2308.6.10.2 Limitations of concrete or masonry in Seismic Design Categories D and E. In *Seismic Design Categories* D and E, concrete or masonry walls and stone or masonry veneer shall not extend above a basement.

Exception: In structures assigned to *Seismic Design Category* D, stone and masonry veneer is permitted to be used in the first *story above grade plane*, provided the following criteria are met:

1. Type of brace in accordance with Section 2308.6.1 shall be WSP and the allowable shear capacity in accordance with Section 2306.3 shall be not less than 350 plf (5108 N/m).
2. The *braced wall panels* in the first *story* shall be located at each end of the *braced wall line* and not more than 25 feet (7620 mm) on center, and the total length of *braced wall panels* shall be not less than 45 percent of the *braced wall line* length.

INTERNATIONAL CODE COUNCIL®
Copyright © 2015 ICC. ALL RIGHTS RESERVED. Accessed by David Dammon on Jun 21, 2017 12:30:52 PM pursuant to License Agreement with ICC. No further reproduction or distribution authorized. ANY UNAUTHORIZED REPRODUCTION OR DISTRIBUTION IS A VIOLATION OF THE FEDERAL COPYRIGHT ACT AND THE LICENSE AGREEMENT, AND SUBJECT TO CIVIL AND CRIMINAL PENALTIES THEREUNDER.

3. Hold-down connectors shall be provided at the ends of braced walls for the first floor to foundation with an allowable capacity of 2,100 pounds (9341 N).
4. Cripple walls shall not be permitted.

❖ In Seismic Design Categories D and E, the code requires an engineered design for concrete or masonry walls above the basement with three exceptions. The use of stone or masonry veneer one story above grade plane is permitted where the requirements for increased wall bracing and hold-downs at braced wall panels are met.

2308.7 Roof and ceiling framing. The framing details required in this section apply to roofs having a slope of not less than three units vertical in 12 units horizontal (25-percent slope). Where the roof slope is less than three units vertical in 12 units horizontal (25-percent slope), members supporting rafters and ceiling joists such as ridge board, hips and valleys shall be designed as beams.

❖ The code intends that the framing details for roofs in Section 2308.7 apply only to roofs having a minimum slope of three units vertical in 12 units horizontal (3:12 or 25-percent slope). For roofs flatter than 3:12, the side thrust at the wall becomes large enough to exceed the capabilities of conventional construction. In that situation, members that support the rafters and ceiling joists, such as the ridge, hips and valleys, must be designed as beams and be supported by exterior or interior bearing walls or posts.

2308.7.1 Ceiling joist spans. Spans for ceiling joists shall be in accordance with Table 2308.7.1(1) or 2308.7.1(2). For other grades and species, and other loading conditions, refer to the AWC STJR.

❖ Allowable spans for ceiling joists are to be in accordance with Table 2308.7.1(1) or 2308.7.1(2) for common species. The tables are for uninhabitable attics without storage (L = 10 psf) and uninhabitable attics with limited storage (L = 20 psf) with a deflection criterion of $L/240$. For other grades and species, refer to the AWC *Span Tables for Joists and Rafters* (see commentary, Section 2308.7.2).

TABLES 2308.7.1 (1) and (2). See pages 23-96 through 23-99.

❖ For Tables 2308.7.1 (1) and (2), see the commentaries to Sections 2308.7.1 and 2304.4.

2308.7.2 Rafter spans. Spans for rafters shall be in accordance with Table 2308.7.2(1), 2308.7.2(2), 2308.7.2(3), 2308.7.2(4), 2308.7.2(5) or 2308.7.2(6). For other grades and species and other loading conditions, refer to the AWC STJR. The span of each rafter shall be measured along the horizontal projection of the rafter.

❖ The spans shown in the referenced tables were derived from the AWC *Span Tables for Joists and Rafters*. For simplicity, spans of only the most common species, or types, and grades of wood are shown. When other species or grades of wood are used, the AWC tables should be consulted to determine the proper span. Additionally, span tables published by the Southern Forest Products Association (SFPA), the WWPA and the Canadian Wood Council can be consulted. The spans in those tables were derived in the same manner as those published in the AWC tables.

Spans are based on species of wood, grade, roof live load or ground snow load, dead load and deflection criteria. With respect to the indicated ground snow loads, the spans shown reflect consideration of unbalanced snow loads, in accordance with established roof snow load criteria. Other considerations such as drifting snow loads are not accounted for in these tables. Where conditions such as a low roof adjacent to a higher roof, projections or roof-mounted equipment are encountered, the need to consider drifting must be assessed in accordance with the snow load criteria in ASCE 7.

TABLES 2308.7.2 (1) through (6). See page 23-100.

❖ For Tables 2308.7.2(1) through (6), see the commentary to Sections 2308.7.2 and 2304.4.

2308.7.3 Ceiling joist and rafter framing. Rafters shall be framed directly opposite each other at the ridge. There shall be a ridge board not less than 1-inch (25 mm) nominal thickness at ridges and not less in depth than the cut end of the rafter. At valleys and hips, there shall be a single valley or hip rafter not less than 2-inch (51 mm) nominal thickness and not less in depth than the cut end of the rafter.

❖ Traditional industry practice is to provide a ridge board between opposite rafters to serve as a nailing base and to provide full bearing for the rafter. Rafters must be placed directly opposite each other and the ridge board must have a depth equal to or greater than the cut end of the rafter. The rafter ends must be flush against the ridge board to avoid excessive horizontal shear in the rafters (see Commentary Figure 2308.7.3). The ridge board does not act as a beam, but only works in conjunction with thrust-resisting elements to maintain rafter support, which is handled by the ceiling joists and connections thereto (see commentary, Section 2308.7.3.1). Additionally, a prescriptively framed roof system will have a series of purlins and struts that are braced to interior bearing walls that serve to reduce the span of the rafters to the tabulated values.

2308.7.3.1 Ceiling joist and rafter connections. Ceiling joists and rafters shall be nailed to each other and the assembly shall be nailed to the top wall plate in accordance with Tables 2304.10.1 and 2308.7.5. Ceiling joists shall be continuous or securely joined where they meet over interior partitions and be fastened to adjacent rafters in accordance with Tables 2304.10.1 and 2308.7.3.1 to provide a continuous rafter tie across the building where such joists are parallel to the rafters. Ceiling joists shall have a bearing surface of not less than $1^1/_2$ inches (38 mm) on the top plate at each end.

Where ceiling joists are not parallel to rafters, an equivalent rafter tie shall be installed in a manner to provide a continuous tie across the building, at a spacing of not more than 4 feet (1219 mm) on center. The connections shall be in accor-

INTERNATIONAL CODE COUNCIL®
Copyright © 2015 ICC. ALL RIGHTS RESERVED. Accessed by David Dammon on Jun 21, 2017 12:30:52 PM pursuant to License Agreement with ICC. No further reproduction or distribution authorized. ANY UNAUTHORIZED REPRODUCTION OR DISTRIBUTION IS A VIOLATION OF THE FEDERAL COPYRIGHT ACT AND THE LICENSE AGREEMENT, AND SUBJECT TO CIVIL AND CRIMINAL PENALTIES THEREUNDER.

dance with Tables 2308.7.3.1 and 2304.10.1, or connections of equivalent capacities shall be provided. Where ceiling joists or rafter ties are not provided at the top of the rafter support walls, the ridge formed by these rafters shall also be supported by a girder conforming to Section 2308.8. Rafter ties shall be spaced not more than 4 feet (1219 mm) on center.

Rafter tie connections shall be based on the equivalent rafter spacing in Table 2308.7.3.1. Rafter-to-ceiling joist connections and rafter tie connections shall be of sufficient size and number to prevent splitting from nailing.

Roof framing member connection to braced wall lines shall be in accordance with Section 2308.6.7.2.

❖ Upon review of a simple free body diagram, it should be apparent that sloped rafters exert a thrusting force on the walls of buildings in a system that is supported by a ridge board. Therefore, unless the ridge is otherwise supported and designed as a beam, as in post and beam framing, the building must provide horizontal ties to prevent spreading of walls (see Commentary Figure 2308.7.3.1). When ceiling joists are parallel to the rafters and adequately connected to the top plate and rafters, the continuous tie requirements of this section are met. If ceiling joists are placed perpendicular to the span of the rafters, the continuity cannot be established as described, so the code simply requires an "equivalent rafter tie" to be installed. Some publications include details or descriptions of acceptable systems that make use of blocking, straps and adequate sheathing to resist these thrusting forces from the rafters. It could be argued that this condition requires an engineered design in order to establish what is an "equivalent" rafter tie.

Ceiling joists are sometimes raised above the wall support of the rafters to provide additional headroom in the space below. Only when such design is accompanied by engineering analysis should this be allowed.

Structural problems are sometimes found in

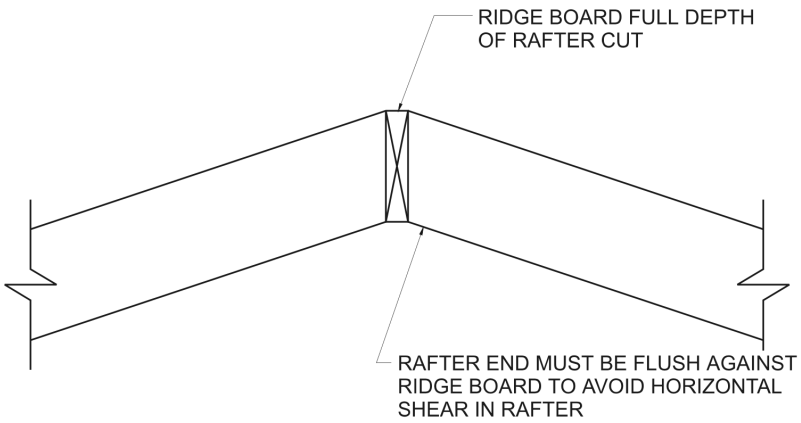

Figure 2308.7.3
RAFTER END CUT AT RIDGE

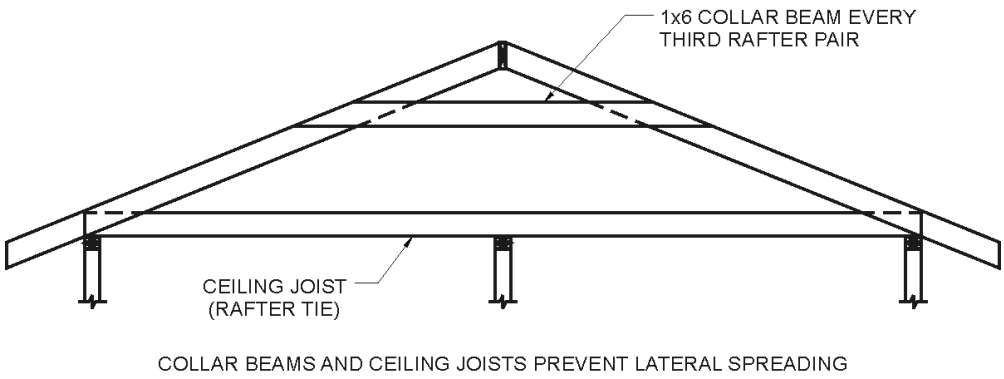

Figure 2308.7.3.1
RAFTER TIES

INTERNATIONAL CODE COUNCIL®
Copyright © 2015 ICC. ALL RIGHTS RESERVED. Accessed by David Dammon on Jun 21, 2017 12:30:52 PM pursuant to License Agreement with ICC. No further reproduction or distribution authorized. ANY UNAUTHORIZED REPRODUCTION OR DISTRIBUTION IS A VIOLATION OF THE FEDERAL COPYRIGHT ACT AND THE LICENSE AGREEMENT, AND SUBJECT TO CIVIL AND CRIMINAL PENALTIES THEREUNDER.

houses having cathedral ceilings. Since no ceiling joists are present to tie the walls together across the building, properly designed beams and posts must be used to support the rafters to satisfy code requirements.

Wind blowing across the roof develops a negative pressure on the rafters. Rafter ties are intended to prevent separation of the rafters at the ridge under such conditions in addition to being used as continuous ties, as explained in this section. Rafter ties are not considered a means of reducing the span of rafters. Purlins and struts braced to bearing walls, as described in Section 2308.7.7, are used to reduce the span of rafters.

TABLE 2308.7.3.1. See page 23-112.

❖ See the commentary to Section 2308.7.3.1.

2308.7.4 Notches and holes. Notching at the ends of rafters or ceiling joists shall not exceed one-fourth the depth. Notches in the top or bottom of the rafter or ceiling joist shall not exceed one-sixth the depth and shall not be located in the middle one-third of the span, except that a notch not more than one-third of the depth is permitted in the top of the rafter or ceiling joist not further from the face of the support than the depth of the member. Holes bored in rafters or ceiling joists shall not be within 2 inches (51 mm) of the top and bottom and their diameter shall not exceed one-third the depth of the member.

❖ Wood is composed of relatively small elongated cells oriented parallel to each other and bound together physically and chemically by lignin. When a rafter is notched or cut, the cell strands are interrupted and the loss in strength needs to be accounted for. This section of the code defines where notches and holes may occur in rafters and ceiling joists without having to perform an engineering analysis on the wood member.

Some designs and installation practices require that limited notching and cutting occur. Although it is permissible to engineer notches into wood framing, notching should be avoided whenever possible. Holes bored in rafters create the same problems as notches and have a more significant effect on the strength of the member if they are located near the top or bottom edge. When necessary, the holes should be located in areas with the least stress concentration, generally along the neutral axis of the rafter. Beams subject to high horizontal shear stress (short span/heavy load) should not be cut. Wood members having a thickness of over 4 inches (102 mm) should not be notched, except at the ends of the members.

2308.7.5 Wind uplift. The roof construction shall have rafter and truss ties to the wall below. Resultant uplift loads shall be transferred to the foundation using a continuous load path. The rafter or truss to wall connection shall comply with Tables 2304.10.1 and 2308.7.5.

❖ The subject of resisting wind uplift on roofs in locations other than high-wind areas was not addressed in previous legacy model building codes; however, in developing the provisions of Section 2308, it was believed that there was justification for addressing this situation since significant uplift may occur in other areas as well.

This section requires compliance with both Table 2304.10.1, which is the typical fastening schedule, and Table 2308.7.5, which specifies the minimum uplift resistance to be provided between the roof framing and the wall below. Although the toe-nail connections required by Table 2304.10.1 could conceivably provide enough uplift resistance to satisfy Table 2308.7.5 for short roof spans in the lower wind speed areas, in almost all instances, additional uplift resistance is required in the form of approved connectors. When uplift connectors are required by the table, one is required on every rafter or truss to the stud below, assuming the roof framing is spaced 24 inches (610 mm) o.c. in accordance with Note b. Because the table values are based on specific criteria, all of the footnotes should be consulted in order to apply the appropriate adjustments. The intent is to provide a complete and continuous load path from the roof to the foundation.

TABLE 2308.7.5. See page 23-113.

❖ See the commentary to Section 2308.7.5.

2308.7.6 Framing around openings. Trimmer and header rafters shall be doubled, or of lumber of equivalent cross section, where the span of the header exceeds 4 feet (1219 mm). The ends of header rafters that are more than 6 feet (1829 mm) in length shall be supported by framing anchors or rafter hangers unless bearing on a beam, partition or wall.

❖ The requirements for framing openings in roofs are similar to the requirements for openings in floors. See the commentary to Figure 2308.4.4.1(1) for an illustration of the criteria for framing around openings.

2308.7.6.1 Openings in roof diaphragms in Seismic Design Categories B, C, D and E. In buildings classified as *Seismic Design Category* B, C, D or E. openings in horizontal diaphragms with a dimension that is greater than 4 feet (1219 mm) shall be constructed with metal ties and blocking in accordance with this section and Figure 2308.4.4.1(1). Metal ties shall be not less than 0.058 inch [1.47 mm (16 galvanized gage)] in thickness by $1^1/_2$ inches (38 mm) in width and shall have a yield stress not less than 33,000 psi (227 Mpa). Blocking shall extend not less than the dimension of the opening in the direction of the tie and blocking. Ties shall be attached to blocking in accordance with the manufacturer's instructions but with not less than eight 16d common nails on each side of the header-joist intersection.

❖ See the commentary to Figure 2308.4.4.1(1)

INTERNATIONAL CODE COUNCIL®
Copyright © 2015 ICC. ALL RIGHTS RESERVED. Accessed by David Dammon on Jun 21, 2017 12:30:52 PM pursuant to License Agreement with ICC. No further reproduction or distribution authorized. ANY UNAUTHORIZED REPRODUCTION OR DISTRIBUTION IS A VIOLATION OF THE FEDERAL COPYRIGHT ACT AND THE LICENSE AGREEMENT, AND SUBJECT TO CIVIL AND CRIMINAL PENALTIES THEREUNDER.

TABLE 2308.7.1(1)
CEILING JOIST SPANS FOR COMMON LUMBER SPECIES
(Uninhabitable Attics Without Storage, Live Load = 10 psf, L/Δ = 240)

CEILING JOIST SPACING (inches)	SPECIES AND GRADE		DEAD LOAD = 5 psf			
			2 × 4	2 × 6	2 × 8	2 × 10
			Maximum ceiling joist spans			
			(ft. - in.)	(ft. - in.)	(ft. - in.)	(ft. - in.)
12	Douglas Fir-Larch	SS	13-2	20-8	Note a	Note a
	Douglas Fir-Larch	#1	12-8	19-11	Note a	Note a
	Douglas Fir-Larch	#2	12-5	19-6	25-8	Note a
	Douglas Fir-Larch	#3	10-10	15-10	20-1	24-6
	Hem-Fir	SS	12-5	19-6	25-8	Note a
	Hem-Fir	#1	12-2	19-1	25-2	Note a
	Hem-Fir	#2	11-7	18-2	24-0	Note a
	Hem-Fir	#3	10-10	15-10	20-1	24-6
	Southern Pine	SS	12-11	20-3	Note a	Note a
	Southern Pine	#1	12-5	19-6	25-8	Note a
	Southern Pine	#2	11-10	18-8	24-7	Note a
	Southern Pine	#3	10-1	14-11	18-9	22-9
	Spruce-Pine-Fir	SS	12-2	19-1	25-2	Note a
	Spruce-Pine-Fir	#1	11-10	18-8	24-7	Note a
	Spruce-Pine-Fir	#2	11-10	18-8	24-7	Note a
	Spruce-Pine-Fir	#3	10-10	15-10	20-1	24-6
16	Douglas Fir-Larch	SS	11-11	18-9	24-8	Note a
	Douglas Fir-Larch	#1	11-6	18-1	23-10	Note a
	Douglas Fir-Larch	#2	11-3	17-8	23-0	Note a
	Douglas Fir-Larch	#3	9-5	13-9	17-5	21-3
	Hem-Fir	SS	11-3	17-8	23-4	Note a
	Hem-Fir	#1	11-0	17-4	22-10	Note a
	Hem-Fir	#2	10-6	16-6	21-9	Note a
	Hem-Fir	#3	9-5	13-9	17-5	21-3
	Southern Pine	SS	11-9	18-5	24-3	Note a
	Southern Pine	#1	11-3	17-8	23-4	Note a
	Southern Pine	#2	10-9	16-11	21-7	25-7
	Southern Pine	#3	8-9	12-11	16-3	19-9
	Spruce-Pine-Fir	SS	11-0	17-4	22-10	Note a
	Spruce-Pine-Fir	#1	10-9	16-11	22-4	Note a
	Spruce-Pine-Fir	#2	10-9	16-11	22-4	Note a
	Spruce-Pine-Fir	#3	9-5	13-9	17-5	21-3

(continued)

INTERNATIONAL CODE COUNCIL®
Copyright © 2015 ICC. ALL RIGHTS RESERVED. Accessed by David Dammon on Jun 21, 2017 12:30:52 PM pursuant to License Agreement with ICC. No further reproduction or distribution authorized. ANY UNAUTHORIZED REPRODUCTION OR DISTRIBUTION IS A VIOLATION OF THE FEDERAL COPYRIGHT ACT AND THE LICENSE AGREEMENT, AND SUBJECT TO CIVIL AND CRIMINAL PENALTIES THEREUNDER.

TABLE 2308.7.1(1)—continued
CEILING JOIST SPANS FOR COMMON LUMBER SPECIES
(Uninhabitable Attics Without Storage, Live Load = 10 psf, L/Δ = 240)

CEILING JOIST SPACING (inches)	SPECIES AND GRADE		DEAD LOAD = 5 psf			
			2 × 4	2 × 6	2 × 8	2 × 10
			Maximum ceiling joist spans			
			(ft. - in.)	(ft. - in.)	(ft. - in.)	(ft. - in.)
19.2	Douglas Fir-Larch	SS	11-3	17-8	23-3	Note a
	Douglas Fir-Larch	#1	10-10	17-0	22-5	Note a
	Douglas Fir-Larch	#2	10-7	16-7	21-0	25-8
	Douglas Fir-Larch	#3	8-7	12-6	15-10	19-5
	Hem-Fir	SS	10-7	16-8	21-11	Note a
	Hem-Fir	#1	10-4	16-4	21-6	Note a
	Hem-Fir	#2	9-11	15-7	20-6	25-3
	Hem-Fir	#3	8-7	12-6	15-10	19-5
	Southern Pine	SS	11-0	17-4	22-10	Note a
	Southern Pine	#1	10-7	16-8	22-0	Note a
	Southern Pine	#2	10-2	15-7	19-8	23-5
	Southern Pine	#3	8-0	11-9	14-10	18-0
	Spruce-Pine-Fir	SS	10-4	16-4	21-6	Note a
	Spruce-Pine-Fir	#1	10-2	15-11	21-0	25-8
	Spruce-Pine-Fir	#2	10-2	15-11	21-0	25-8
	Spruce-Pine-Fir	#3	8-7	12-6	15-10	19-5
24	Douglas Fir-Larch	SS	10-5	16-4	21-7	Note a
	Douglas Fir-Larch	#1	10-0	15-9	20-1	24-6
	Douglas Fir-Larch	#2	9-10	14-10	18-9	22-11
	Douglas Fir-Larch	#3	7-8	11-2	14-2	17-4
	Hem-Fir	SS	9-10	15-6	20-5	Note a
	Hem-Fir	#1	9-8	15-2	19-7	23-11
	Hem-Fir	#2	9-2	14-5	18-6	22-7
	Hem-Fir	#3	7-8	11-2	14-2	17-4
	Southern Pine	SS	10-3	16-1	21-2	Note a
	Southern Pine	#1	9-10	15-6	20-5	24-0
	Southern Pine	#2	9-3	13-11	17-7	20-11
	Southern Pine	#3	7-2	10-6	13-3	16-1
	Spruce-Pine-Fir	SS	9-8	15-2	19-11	25-5
	Spruce-Pine-Fir	#1	9-5	14-9	18-9	22-11
	Spruce-Pine-Fir	#2	9-5	14-9	18-9	22-11
	Spruce-Pine-Fir	#3	7-8	11-2	14-2	17-4

Check sources for availability of lumber in lengths greater than 20 feet.

For SI: 1 inch = 25.4 mm, 1 foot = 304.8 mm, 1 pound per square foot = 0.0479 kPa.

a. Span exceeds 26 feet in length.

INTERNATIONAL CODE COUNCIL®
Copyright © 2015 ICC. ALL RIGHTS RESERVED. Accessed by David Dammon on Jun 21, 2017 12:30:52 PM pursuant to License Agreement with ICC. No further reproduction or distribution authorized. ANY UNAUTHORIZED REPRODUCTION OR DISTRIBUTION IS A VIOLATION OF THE FEDERAL COPYRIGHT ACT AND THE LICENSE AGREEMENT, AND SUBJECT TO CIVIL AND CRIMINAL PENALTIES THEREUNDER.

TABLE 2308.7.1(2)
CEILING JOIST SPANS FOR COMMON LUMBER SPECIES
(Uninhabitable Attics With Limited Storage, Live Load = 20 psf, L/Δ = 240)

CEILING JOIST SPACING (inches)	SPECIES AND GRADE		DEAD LOAD = 10 psf			
			2 × 4	2 × 6	2 × 8	2 × 10
			Maximum ceiling joist spans			
			(ft. - in.)	(ft. - in.)	(ft. - in.)	(ft. - in.)
12	Douglas Fir-Larch	SS	10-5	16-4	21-7	Note a
	Douglas Fir-Larch	#1	10-0	15-9	20-1	24-6
	Douglas Fir-Larch	#2	9-10	14-10	18-9	22-11
	Douglas Fir-Larch	#3	7-8	11-2	14-2	17-4
	Hem-Fir	SS	9-10	15-6	20-5	Note a
	Hem-Fir	#1	9-8	15-2	19-7	23-11
	Hem-Fir	#2	9-2	14-5	18-6	22-7
	Hem-Fir	#3	7-8	11-2	14-2	17-4
	Southern Pine	SS	10-3	16-1	21-2	Note a
	Southern Pine	#1	9-10	15-6	20-5	24-0
	Southern Pine	#2	9-3	13-11	17-7	20-11
	Southern Pine	#3	7-2	10-6	13-3	16-1
	Spruce-Pine-Fir	SS	9-8	15-2	19-11	25-5
	Spruce-Pine-Fir	#1	9-5	14-9	18-9	22-11
	Spruce-Pine-Fir	#2	9-5	14-9	18-9	22-11
	Spruce-Pine-Fir	#3	7-8	11-2	14-2	17-4
16	Douglas Fir-Larch	SS	9-6	14-11	19-7	25-0
	Douglas Fir-Larch	#1	9-1	13-9	17-5	21-3
	Douglas Fir-Larch	#2	8-9	12-10	16-3	19-10
	Douglas Fir-Larch	#3	6-8	9-8	12-4	15-0
	Hem-Fir	SS	8-11	14-1	18-6	23-8
	Hem-Fir	#1	8-9	13-5	16-10	20-8
	Hem-Fir	#2	8-4	12-8	16-0	19-7
	Hem-Fir	#3	6-8	9-8	12-4	15-0
	Southern Pine	SS	9-4	14-7	19-3	24-7
	Southern Pine	#1	8-11	14-0	17-9	20-9
	Southern Pine	#2	8-0	12-0	15-3	18-1
	Southern Pine	#3	6-2	9-2	11-6	14-0
	Spruce-Pine-Fir	SS	8-9	13-9	18-1	23-1
	Spruce-Pine-Fir	#1	8-7	12-10	16-3	19-10
	Spruce-Pine-Fir	#2	8-7	12-10	16-3	19-10
	Spruce-Pine-Fir	#3	6-8	9-8	12-4	15-0

(continued)

INTERNATIONAL CODE COUNCIL®
Copyright © 2015 ICC. ALL RIGHTS RESERVED. Accessed by David Dammon on Jun 21, 2017 12:30:52 PM pursuant to License Agreement with ICC. No further reproduction or distribution authorized. ANY UNAUTHORIZED REPRODUCTION OR DISTRIBUTION IS A VIOLATION OF THE FEDERAL COPYRIGHT ACT AND THE LICENSE AGREEMENT, AND SUBJECT TO CIVIL AND CRIMINAL PENALTIES THEREUNDER.

TABLE 2308.7.1(2)—continued
CEILING JOIST SPANS FOR COMMON LUMBER SPECIES
(Uninhabitable Attics With Limited Storage, Live Load = 20 psf, L/Δ = 240)

CEILING JOIST SPACING (inches)	SPECIES AND GRADE		DEAD LOAD = 10 psf			
			2 × 4	2 × 6	2 × 8	2 × 10
			Maximum ceiling joist spans			
			(ft. - in.)	(ft. - in.)	(ft. - in.)	(ft. - in.)
19.2	Douglas Fir-Larch	SS	8-11	14-0	18-5	23-4
	Douglas Fir-Larch	#1	8-7	12-6	15-10	19-5
	Douglas Fir-Larch	#2	8-0	11-9	14-10	18-2
	Douglas Fir-Larch	#3	6-1	8-10	11-3	13-8
	Hem-Fir	SS	8-5	13-3	17-5	22-3
	Hem-Fir	#1	8-3	12-3	15-6	18-11
	Hem-Fir	#2	7-10	11-7	14-8	17-10
	Hem-Fir	#3	6-1	8-10	11-3	13-8
	Southern Pine	SS	8-9	13-9	18-2	23-1
	Southern Pine	#1	8-5	12-9	16-2	18-11
	Southern Pine	#2	7-4	11-0	13-11	16-6
	Southern Pine	#3	5-8	8-4	10-6	12-9
	Spruce-Pine-Fir	SS	8-3	12-11	17-1	21-8
	Spruce-Pine-Fir	#1	8-0	11-9	14-10	18-2
	Spruce-Pine-Fir	#2	8-0	11-9	14-10	18-2
	Spruce-Pine-Fir	#3	6-1	8-10	11-3	13-8
24	Douglas Fir-Larch	SS	8-3	13-0	17-1	20-11
	Douglas Fir-Larch	#1	7-8	11-2	14-2	17-4
	Douglas Fir-Larch	#2	7-2	10-6	13-3	16-3
	Douglas Fir-Larch	#3	5-5	7-11	10-0	12-3
	Hem-Fir	SS	7-10	12-3	16-2	20-6
	Hem-Fir	#1	7-6	10-11	13-10	16-11
	Hem-Fir	#2	7-1	10-4	13-1	16-0
	Hem-Fir	#3	5-5	7-11	10-0	12-3
	Southern Pine	SS	8-1	12-9	16-10	21-6
	Southern Pine	#1	7-8	11-5	14-6	16-11
	Southern Pine	#2	6-7	9-10	12-6	14-9
	Southern Pine	#3	5-1	7-5	9-5	11-5
	Spruce-Pine-Fir	SS	7-8	12-0	15-10	19-5
	Spruce-Pine-Fir	#1	7-2	10-6	13-3	16-3
	Spruce-Pine-Fir	#2	7-2	10-6	13-3	16-3
	Spruce-Pine-Fir	#3	5-5	7-11	10-0	12-3

Check sources for availability of lumber in lengths greater than 20 feet.
For SI: 1 inch = 25.4 mm, 1 foot = 304.8 mm, 1 pound per square foot = 0.0479 kPa.
a. Span exceeds 26 feet in length.

INTERNATIONAL CODE COUNCIL®
Copyright © 2015 ICC. ALL RIGHTS RESERVED. Accessed by David Dammon on Jun 21, 2017 12:30:52 PM pursuant to License Agreement with ICC. No further reproduction or distribution authorized. ANY UNAUTHORIZED REPRODUCTION OR DISTRIBUTION IS A VIOLATION OF THE FEDERAL COPYRIGHT ACT AND THE LICENSE AGREEMENT, AND SUBJECT TO CIVIL AND CRIMINAL PENALTIES THEREUNDER.

TABLE 2308.7.2(1)
RAFTER SPANS FOR COMMON LUMBER SPECIES
(Roof Live Load = 20 psf, Ceiling Not Attached to Rafters, L/Δ = 180)

RAFTER SPACING (inches)	SPECIES AND GRADE		DEAD LOAD = 10 psf					DEAD LOAD = 20 psf				
			2 × 4	2 × 6	2 × 8	2 × 10	2 × 12	2 × 4	2 × 6	2 × 8	2 × 10	2 × 12
			Maximum rafter spans[a]									
			(ft. - in.)	(ft. - in.)	(ft. - in.)	(ft. - in.)	(ft. - in.)	(ft. - in.)	(ft. - in.)	(ft. - in.)	(ft. - in.)	(ft. - in.)
12	Douglas Fir-Larch	SS	11-6	18-0	23-9	Note b	Note b	11-6	18-0	23-5	Note b	Note b
	Douglas Fir-Larch	#1	11-1	17-4	22-5	Note b	Note b	10-6	15-4	19-5	23-9	Note b
	Douglas Fir-Larch	#2	10-10	16-7	21-0	25-8	Note b	9-10	14-4	18-2	22-3	25-9
	Douglas Fir-Larch	#3	8-7	12-6	15-10	19-5	22-6	7-5	10-10	13-9	16-9	19-6
	Hem-Fir	SS	10-10	17-0	22-5	Note b	Note b	10-10	17-0	22-5	Note b	Note b
	Hem-Fir	#1	10 -7	16-8	21-10	Note b	Note b	10-3	14-11	18-11	23-2	Note b
	Hem-Fir	#2	10-1	15-11	20-8	25-3	Note b	9-8	14-2	17-11	21-11	25-5
	Hem-Fir	#3	8-7	12-6	15-10	19-5	22-6	7-5	10-10	13-9	16-9	19-6
	Southern Pine	SS	11-3	17-8	23-4	Note b	Note b	11-3	17-8	23-4	Note b	Note b
	Southern Pine	#1	10-10	17-0	22-5	26-0	26-0	10-6	15-8	19-10	23-2	Note b
	Southern Pine	#2	10-4	15-7	19-8	23-5	26-0	9-0	13-6	17-1	20-3	23-10
	Southern Pine	#3	8-0	11-9	14-10	18-0	21-4	6-11	10-2	12-10	15-7	18-6
	Spruce-Pine-Fir	SS	10-7	16-8	21-11	Note b	Note b	10-7	16-8	21-9	Note b	Note b
	Spruce-Pine-Fir	#1	10-4	16-3	21-0	25-8	Note b	9-10	14-4	18-2	22-3	25-9
	Spruce-Pine-Fir	#2	10-4	16-3	21-0	25-8	Note b	9-10	14-4	18-2	22-3	25-9
	Spruce-Pine-Fir	#3	8-7	12-6	15-10	19-5	22-6	7-5	10-10	13-9	16-9	19-6
16	Douglas Fir-Larch	SS	10-5	16-4	21-7	Note b	Note b	10-5	16-0	20-3	24-9	Note b
	Douglas Fir-Larch	#1	10-0	15-4	19-5	23-9	Note b	9-1	13-3	16-10	20-7	23-10
	Douglas Fir-Larch	#2	9-10	14-4	18-2	22-3	25-9	8-6	12-5	15-9	19-3	22-4
	Douglas Fir-Larch	#3	7-5	10-10	13-9	16-9	19-6	6-5	9-5	11-11	14-6	16-10
	Hem-Fir	SS	9-10	15-6	20-5	Note b	Note b	9-10	15-6	19-11	24-4	Note b
	Hem-Fir	#1	9-8	14-11	18-11	23-2	Note b	8-10	12-11	16-5	20-0	23-3
	Hem-Fir	#2	9-2	14-2	17-11	21-11	25-5	8-5	12-3	15-6	18-11	22-0
	Hem-Fir	#3	7-5	10-10	13-9	16-9	19-6	6-5	9-5	11-11	14-6	16-10
	Southern Pine	SS	10-3	16-1	21-2	Note b	Note b	10-3	16-1	21-2	25-7	Note b
	Southern Pine	#1	9-10	15-6	19-10	23-2	26-0	9-1	13-7	17-2	20-1	23-10
	Southern Pine	#2	9-0	13-6	17-1	20-3	23-10	7-9	11-8	14-9	17-6	20-8
	Southern Pine	#3	6-11	10-2	12-10	15-7	18-6	6-0	8-10	11-2	13-6	16-0
	Spruce-Pine-Fir	SS	9-8	15-2	19-11	25-5	Note b	9-8	14-10	18-10	23-0	Note b
	Spruce-Pine-Fir	#1	9-5	14-4	18-2	22-3	25-9	8-6	12-5	15-9	19-3	22-4
	Spruce-Pine-Fir	#2	9-5	14-4	18-2	22-3	25-9	8-6	12-5	15-9	19-3	22-4
	Spruce-Pine-Fir	#3	7-5	10-10	13-9	16-9	19-6	6-5	9-5	11-11	14-6	16-10
19.2	Douglas Fir-Larch	SS	9-10	15-5	20-4	25-11	Note b	9-10	14-7	18-6	22-7	Note b
	Douglas Fir-Larch	#1	9-5	14-0	17-9	21-8	25-2	8-4	12-2	15-4	18-9	21-9
	Douglas Fir-Larch	#2	8-11	13-1	16-7	20-3	23-6	7-9	11-4	14-4	17-7	20-4
	Douglas Fir-Larch	#3	6-9	9-11	12-7	15-4	17-9	5-10	8-7	10-10	13-3	15-5
	Hem-Fir	SS	9-3	14-7	19-2	24-6	Note b	9-3	14-4	18-2	22-3	25-9
	Hem-Fir	#1	9-1	13-8	17-4	21-1	24-6	8-1	11-10	15-0	18-4	21-3
	Hem-Fir	#2	8-8	12-11	16-4	20-0	23-2	7-8	11-2	14-2	17-4	20-1
	Hem-Fir	#3	6-9	9-11	12-7	15-4	17-9	5-10	8-7	10-10	13-3	15-5
	Southern Pine	SS	9-8	15-2	19-11	25-5	Note b	9-8	15-2	19-7	23-4	Note b
	Southern Pine	#1	9-3	14-3	18-1	21-2	25-2	8-4	12-4	15-8	18-4	21-9
	Southern Pine	#2	8-2	12-3	15-7	18-6	21-9	7-1	10-8	13-6	16-0	18-10
	Southern Pine	#3	6-4	9-4	11-9	14-3	16-10	5-6	8-1	10-2	12-4	14-7
	Spruce-Pine-Fir	SS	9-1	14-3	18-9	23-11	Note b	9-1	13-7	17-2	21-0	24-4
	Spruce-Pine-Fir	#1	8-10	13-1	16-7	20-3	23-6	7-9	11-4	14-4	17-7	20-4
	Spruce-Pine-Fir	#2	8-10	13-1	16-7	20-3	23-6	7-9	11-4	14-4	17-7	20-4
	Spruce-Pine-Fir	#3	6-9	9-11	12-7	15-4	17-9	5-10	8-7	10-10	13-3	15-5

(continued)

INTERNATIONAL CODE COUNCIL®
Copyright © 2015 ICC. ALL RIGHTS RESERVED. Accessed by David Dammon on Jun 21, 2017 12:30:52 PM pursuant to License Agreement with ICC. No further reproduction or distribution authorized. ANY UNAUTHORIZED REPRODUCTION OR DISTRIBUTION IS A VIOLATION OF THE FEDERAL COPYRIGHT ACT AND THE LICENSE AGREEMENT, AND SUBJECT TO CIVIL AND CRIMINAL PENALTIES THEREUNDER.

TABLE 2308.7.2(1)—continued
RAFTER SPANS FOR COMMON LUMBER SPECIES
(Roof Live Load = 20 psf, Ceiling Not Attached to Rafters, L/Δ = 180)

RAFTER SPACING (inches)	SPECIES AND GRADE		DEAD LOAD = 10 psf					DEAD LOAD = 20 psf				
			2 × 4	2 × 6	2 × 8	2 × 10	2 × 12	2 × 4	2 × 6	2 × 8	2 × 10	2 × 12
			Maximum rafter spans[a]									
			(ft. - in.)	(ft. - in.)	(ft. - in.)	(ft. - in.)	(ft. - in.)	(ft. - in.)	(ft. - in.)	(ft. - in.)	(ft. - in.)	(ft. - in.)
24	Douglas Fir-Larch	SS	9-1	14-4	18-10	23-4	Note b	8-11	13-1	16-7	20-3	23-5
	Douglas Fir-Larch	#1	8-7	12-6	15-10	19-5	22-6	7-5	10-10	13-9	16-9	19-6
	Douglas Fir-Larch	#2	8-0	11-9	14-10	18-2	21-0	6-11	10-2	12-10	15-8	18-3
	Douglas Fir-Larch	#3	6-1	8-10	11-3	13-8	15-11	5-3	7-8	9-9	11-10	13-9
	Hem-Fir	SS	8-7	13-6	17-10	22-9	Note b	8-7	12-10	16-3	19-10	23-0
	Hem-Fir	#1	8-4	12-3	15-6	18-11	21-11	7-3	10-7	13-5	16-4	19-0
	Hem-Fir	#2	7-11	11-7	14-8	17-10	20-9	6-10	10-0	12-8	15-6	17-11
	Hem-Fir	#3	6-1	8-10	11-3	13-8	15-11	5-3	7-8	9-9	11-10	13-9
	Southern Pine	SS	8-11	14-1	18-6	23-8	Note b	8-11	13-10	17-6	20-10	24-8
	Southern Pine	#1	8-7	12-9	16-2	18-11	22-6	7-5	11-1	14-0	16-5	19-6
	Southern Pine	#2	7-4	11-0	13-11	16-6	19-6	6-4	9-6	12-1	14-4	16-10
	Southern Pine	#3	5-8	8-4	10-6	12-9	15-1	4-11	7-3	9-1	11-0	13-1
	Spruce-Pine-Fir	SS	8-5	13-3	17-5	21-8	25-2	8-4	12-2	15-4	18-9	21-9
	Spruce-Pine-Fir	#1	8-0	11-9	14-10	18-2	21-0	6-11	10-2	12-10	15-8	18-3
	Spruce-Pine-Fir	#2	8-0	11-9	14-10	18-2	21-0	6-11	10-2	12-10	15-8	18-3
	Spruce-Pine-Fir	#3	6-1	8-10	11-3	13-8	15-11	5-3	7-8	9-9	11-10	13-9

Check sources for availability of lumber in lengths greater than 20 feet.

For SI: 1 inch = 25.4 mm, 1 foot = 304.8 mm, 1 pound per square foot = 0.0479 kPa.

a. The tabulated rafter spans assume that ceiling joists are located at the bottom of the attic space or that some other method of resisting the outward push of the rafters on the bearing walls, such as rafter ties, is provided at that location. When ceiling joists or rafter ties are located higher in the attic space, the rafter spans shall be multiplied by the factors given below:

H_C/H_R	Rafter Span Adjustment Factor
1/3	0.67
1/4	0.76
1/5	0.83
1/6	0.90
1/7.5 or less	1.00

where:

H_C = Height of ceiling joists or rafter ties measured vertically above the top of the rafter support walls.

H_R = Height of roof ridge measured vertically above the top of the rafter support walls.

b. Span exceeds 26 feet in length.

INTERNATIONAL CODE COUNCIL®
Copyright © 2015 ICC. ALL RIGHTS RESERVED. Accessed by David Dammon on Jun 21, 2017 12:30:52 PM pursuant to License Agreement with ICC. No further reproduction or distribution authorized. ANY UNAUTHORIZED REPRODUCTION OR DISTRIBUTION IS A VIOLATION OF THE FEDERAL COPYRIGHT ACT AND THE LICENSE AGREEMENT, AND SUBJECT TO CIVIL AND CRIMINAL PENALTIES THEREUNDER.

TABLE 2308.7.2(2)
RAFTER SPANS FOR COMMON LUMBER SPECIES
(Roof Live Load = 20 psf, Ceiling Attached to Rafters, L/Δ = 240)

RAFTER SPACING (inches)	SPECIES AND GRADE		DEAD LOAD = 10 psf					DEAD LOAD = 20 psf				
			2 × 4	2 × 6	2 × 8	2 × 10	2 × 12	2 × 4	2 × 6	2 × 8	2 × 10	2 × 12
			Maximum rafter spans[a]									
			(ft. - in.)	(ft. - in.)	(ft. - in.)	(ft. - in.)	(ft. - in.)	(ft. - in.)	(ft. - in.)	(ft. - in.)	(ft. - in.)	(ft. - in.)
12	Douglas Fir-Larch	SS	10-5	16-4	21-7	Note b	Note b	10-5	16-4	21-7	Note b	Note b
	Douglas Fir-Larch	#1	10-0	15-9	20-10	Note b	Note b	10-0	15-4	19-5	23-9	Note b
	Douglas Fir-Larch	#2	9-10	15-6	20-5	25-8	Note b	9-10	14-4	18-2	22-3	25-9
	Douglas Fir-Larch	#3	8-7	12-6	15-10	19-5	22-6	7-5	10-10	13-9	16-9	19-6
	Hem-Fir	SS	9-10	15-6	20-5	Note b	Note b	9-10	15-6	20-5	Note b	Note b
	Hem-Fir	#1	9-8	15-2	19-11	25-5	Note b	9-8	14-11	18-11	23-2	Note b
	Hem-Fir	#2	9-2	14-5	19-0	24-3	Note b	9-2	14-2	17-11	21-11	25-5
	Hem-Fir	#3	8-7	12-6	15-10	19-5	22-6	7-5	10-10	13-9	16-9	19-6
	Southern Pine	SS	10-3	16-1	21-2	Note b	Note b	10-3	16-1	21-2	Note b	Note b
	Southern Pine	#1	9-10	15-6	20-5	26-0	26-0	9-10	15-6	19-10	23-2	26-0
	Southern Pine	#2	9-5	14-9	19-6	23-5	26-0	9-0	13-6	17-1	20-3	23-10
	Southern Pine	#3	8-0	11-9	14-10	18-0	21-4	6-11	10-2	12-10	15-7	18-6
	Spruce-Pine-Fir	SS	9-8	15-2	19-11	25-5	Note b	9-8	15-2	19-11	25-5	Note b
	Spruce-Pine-Fir	#1	9-5	14-9	19-6	24-10	Note b	9-5	14-4	18-2	22-3	25-9
	Spruce-Pine-Fir	#2	9-5	14-9	19-6	24-10	Note b	9-5	14-4	18-2	22-3	25-9
	Spruce-Pine-Fir	#3	8-7	12-6	15-10	19-5	22-6	7-5	10-10	13-9	16-9	19-6
16	Douglas Fir-Larch	SS	9-6	14-11	19-7	25-0	Note b	9-6	14-11	19-7	24-9	Note b
	Douglas Fir-Larch	#1	9-1	14-4	18-11	23-9	Note b	9-1	13-3	16-10	20-7	23-10
	Douglas Fir-Larch	#2	8-11	14-1	18-2	22-3	25-9	8-6	12-5	15-9	19-3	22-4
	Douglas Fir-Larch	#3	7-5	10-10	13-9	16-9	19-6	6-5	9-5	11-11	14-6	16-10
	Hem-Fir	SS	8-11	14-1	18-6	23-8	Note b	8-11	14-1	18-6	23-8	Note b
	Hem-Fir	#1	8-9	13-9	18-1	23-1	Note b	8-9	12-11	16-5	20-0	23-3
	Hem-Fir	#2	8-4	13-1	17-3	21-11	25-5	8-4	12-3	15-6	18-11	22-0
	Hem-Fir	#3	7-5	10-10	13-9	16-9	19-6	6-5	9-5	11-11	14-6	16-10
	Southern Pine	SS	9-4	14-7	19-3	24-7	Note b	9-4	14-7	19-3	24-7	Note b
	Southern Pine	#1	8-11	14-1	18-6	23-2	26-0	8-11	13-7	17-2	20-1	23-10
	Southern Pine	#2	8-7	13-5	17-1	20-3	23-10	7-9	11-8	14-9	17-6	20-8
	Southern Pine	#3	6-11	10-2	12-10	15-7	18-6	6-0	8-10	11-2	13-6	16-0
	Spruce-Pine-Fir	SS	8-9	13-9	18-1	23-1	Note b	8-9	13-9	18-1	23-0	Note b
	Spruce-Pine-Fir	#1	8-7	13-5	17-9	22-3	25-9	8-6	12-5	15-9	19-3	22-4
	Spruce-Pine-Fir	#2	8-7	13-5	17-9	22-3	25-9	8-6	12-5	15-9	19-3	22-4
	Spruce-Pine-Fir	#3	7-5	10-10	13-9	16-9	19-6	6-5	9-5	11-11	14-6	16-10
19.2	Douglas Fir-Larch	SS	8-11	14-0	18-5	23-7	Note b	8-11	14-0	18-5	22-7	Note b
	Douglas Fir-Larch	#1	8-7	13-6	17-9	21-8	25-2	8-4	12-2	15-4	18-9	21-9
	Douglas Fir-Larch	#2	8-5	13-1	16-7	20-3	23-6	7-9	11-4	14-4	17-7	20-4
	Douglas Fir-Larch	#3	6-9	9-11	12-7	15-4	17-9	5-10	8-7	10-10	13-3	15-5
	Hem-Fir	SS	8-5	13-3	17-5	22-3	Note b	8-5	13-3	17-5	22-3	25-9
	Hem-Fir	#1	8-3	12-11	17-1	21-1	24-6	8-1	11-10	15-0	18-4	21-3
	Hem-Fir	#2	7-10	12-4	16-3	20-0	23-2	7-8	11-2	14-2	17-4	20-1
	Hem-Fir	#3	6-9	9-11	12-7	15-4	17-9	5-10	8-7	10-10	13-3	15-5

(continued)

INTERNATIONAL CODE COUNCIL®
Copyright © 2015 ICC. ALL RIGHTS RESERVED. Accessed by David Dammon on Jun 21, 2017 12:30:52 PM pursuant to License Agreement with ICC. No further reproduction or distribution authorized. ANY UNAUTHORIZED REPRODUCTION OR DISTRIBUTION IS A VIOLATION OF THE FEDERAL COPYRIGHT ACT AND THE LICENSE AGREEMENT, AND SUBJECT TO CIVIL AND CRIMINAL PENALTIES THEREUNDER.

TABLE 2308.7.2(2)—continued
RAFTER SPANS FOR COMMON LUMBER SPECIES
(Roof Live Load = 20 psf, Ceiling Attached to Rafters, L/Δ = 240)

RAFTER SPACING (inches)	SPECIES AND GRADE		DEAD LOAD = 10 psf					DEAD LOAD = 20 psf				
			2 × 4	2 × 6	2 × 8	2 × 10	2 × 12	2 × 4	2 × 6	2 × 8	2 × 10	2 × 12
			Maximum rafter spans[a]									
			(ft. - in.)	(ft. - in.)	(ft. - in.)	(ft. - in.)	(ft. - in.)	(ft. - in.)	(ft. - in.)	(ft. - in.)	(ft. - in.)	(ft. - in.)
19.2	Southern Pine	SS	8-9	13-9	18-2	23-1	Note b	8-9	13-9	18-2	23-1	Note b
	Southern Pine	#1	8-5	13-3	17-5	21-2	25-2	8-4	12-4	15-8	18-4	21-9
	Southern Pine	#2	8-1	12-3	15-7	18-6	21-9	7-1	10-8	13-6	16-0	18-10
	Southern Pine	#3	6-4	9-4	11-9	14-3	16-10	5-6	8-1	10-2	12-4	14-7
	Spruce-Pine-Fir	SS	8-3	12-11	17-1	21-9	Note b	8-3	12-11	17-1	21-0	24-4
	Spruce-Pine-Fir	#1	8-1	12-8	16-7	20-3	23-6	7-9	11-4	14-4	17-7	20-4
	Spruce-Pine-Fir	#2	8-1	12-8	16-7	20-3	23-6	7-9	11-4	14-4	17-7	20-4
	Spruce-Pine-Fir	#3	6-9	9-11	12-7	15-4	17-9	5-10	8-7	10-10	13-3	15-5
24	Douglas Fir-Larch	SS	8-3	13-0	17-2	21-10	Note b	8-3	13-0	16-7	20-3	23-5
	Douglas Fir-Larch	#1	8-0	12-6	15-10	19-5	22-6	7-5	10-10	13-9	16-9	19-6
	Douglas Fir-Larch	#2	7-10	11-9	14-10	18-2	21-0	6-11	10-2	12-10	15-8	18-3
	Douglas Fir-Larch	#3	6-1	8-10	11-3	13-8	15-11	5-3	7-8	9-9	11-10	13-9
	Hem-Fir	SS	7-10	12-3	16-2	20-8	25-1	7-10	12-3	16-2	19-10	23-0
	Hem-Fir	#1	7-8	12-0	15-6	18-11	21-11	7-3	10-7	13-5	16-4	19-0
	Hem-Fir	#2	7-3	11-5	14-8	17-10	20-9	6-10	10-0	12-8	15-6	17-11
	Hem-Fir	#3	6-1	8-10	11-3	13-8	15-11	5-3	7-8	9-9	11-10	13-9
	Southern Pine	SS	8-1	12-9	16-10	21-6	Note b	8-1	12-9	16-10	20-10	24-8
	Southern Pine	#1	7-10	12-3	16-2	18-11	22-6	7-5	11-1	14-0	16-5	19-6
	Southern Pine	#2	7-4	11-0	13-11	16-6	19-6	6-4	9-6	12-1	14-4	16-10
	Southern Pine	#3	5-8	8-4	10-6	12-9	15-1	4-11	7-3	9-1	11-0	13-1
	Spruce-Pine-Fir	SS	7-8	12-0	15-10	20-2	24-7	7-8	12-0	15-4	18-9	21-9
	Spruce-Pine-Fir	#1	7-6	11-9	14-10	18-2	21-0	6-11	10-2	12-10	15-8	18-3
	Spruce-Pine-Fir	#2	7-6	11-9	14-10	18-2	21-0	6-11	10-2	12-10	15-8	18-3
	Spruce-Pine-Fir	#3	6-1	8-10	11-3	13-8	15-11	5-3	7-8	9-9	11-10	13-9

Check sources for availability of lumber in lengths greater than 20 feet.

For SI: 1 inch = 25.4 mm, 1 foot = 304.8 mm, 1 pound per square foot = 0.0479 kPa.

a. The tabulated rafter spans assume that ceiling joists are located at the bottom of the attic space or that some other method of resisting the outward push of the rafters on the bearing walls, such as rafter ties, is provided at that location. When ceiling joists or rafter ties are located higher in the attic space, the rafter spans shall be multiplied by the factors given below:

H_C/H_R	Rafter Span Adjustment Factor
1/3	0.67
1/4	0.76
1/5	0.83
1/6	0.90
1/7.5 or less	1.00

where:

H_C = Height of ceiling joists or rafter ties measured vertically above the top of the rafter support walls.

H_R = Height of roof ridge measured vertically above the top of the rafter support walls.

b. Span exceeds 26 feet in length.

INTERNATIONAL CODE COUNCIL®
Copyright © 2015 ICC. ALL RIGHTS RESERVED. Accessed by David Dammon on Jun 21, 2017 12:30:52 PM pursuant to License Agreement with ICC. No further reproduction or distribution authorized. ANY UNAUTHORIZED REPRODUCTION OR DISTRIBUTION IS A VIOLATION OF THE FEDERAL COPYRIGHT ACT AND THE LICENSE AGREEMENT, AND SUBJECT TO CIVIL AND CRIMINAL PENALTIES THEREUNDER.

TABLE 2308.7.2(3)
RAFTER SPANS FOR COMMON LUMBER SPECIES
(Ground Snow Load = 30 psf, Ceiling Not Attached to Rafters, L/Δ = 180)

RAFTER SPACING (inches)	SPECIES AND GRADE		DEAD LOAD = 10 psf					DEAD LOAD = 20 psf				
			2 × 4	2 × 6	2 × 8	2 × 10	2 × 12	2 × 4	2 × 6	2 × 8	2 × 10	2 × 12
			Maximum rafter spans[a]									
			(ft. - in.)	(ft. - in.)	(ft. - in.)	(ft. - in.)	(ft. - in.)	(ft. - in.)	(ft. - in.)	(ft. - in.)	(ft. - in.)	(ft. - in.)
12	Douglas Fir-Larch	SS	10-0	15-9	20-9	Note b	Note b	10-0	15-9	20-1	24-6	Note b
	Douglas Fir-Larch	#1	9-8	14-9	18-8	22-9	Note b	9-0	13-2	16-8	20-4	23-7
	Douglas Fir-Larch	#2	9-5	13-9	17-5	21-4	24-8	8-5	12-4	15-7	19-1	22-1
	Douglas Fir-Larch	#3	7-1	10-5	13-2	16-1	18-8	6-4	9-4	11-9	14-5	16-8
	Hem-Fir	SS	9-6	14-10	19-7	25-0	Note b	9-6	14-10	19-7	24-1	Note b
	Hem-Fir	#1	9-3	14-4	18-2	22-2	25-9	8-9	12-10	16-3	19-10	23-0
	Hem-Fir	#2	8-10	13-7	17-2	21-0	24-4	8-4	12-2	15-4	18-9	21-9
	Hem-Fir	#3	7-1	10-5	13-2	16-1	18-8	6-4	9-4	11-9	14-5	16-8
	Southern Pine	SS	9-10	15-6	20-5	Note b	Note b	9-10	15-6	20-5	25-4	Note b
	Southern Pine	#1	9-6	14-10	19-0	22-3	26-0	9-0	13-5	17-0	19-11	23-7
	Southern Pine	#2	8-7	12-11	16-4	19-5	22-10	7-8	11-7	14-8	17-4	20-5
	Southern Pine	#3	6-7	9-9	12-4	15-0	17-9	5-11	8-9	11-0	13-5	15-10
	Spruce-Pine-Fir	SS	9-3	14-7	19-2	24-6	Note b	9-3	14-7	18-8	22-9	Note b
	Spruce-Pine-Fir	#1	9-1	13-9	17-5	21-4	24-8	8-5	12-4	15-7	19-1	22-1
	Spruce-Pine-Fir	#2	9-1	13-9	17-5	21-4	24-8	8-5	12-4	15-7	19-1	22-1
	Spruce-Pine-Fir	#3	7-1	10-5	13-2	16-1	18-8	6-4	9-4	11-9	14-5	16-8
16	Douglas Fir-Larch	SS	9-1	14-4	18-10	23-9	Note b	9-1	13-9	17-5	21-3	24-8
	Douglas Fir-Larch	#1	8-9	12-9	16-2	19-9	22-10	7-10	11-5	14-5	17-8	20-5
	Douglas Fir-Larch	#2	8-2	11-11	15-1	18-5	21-5	7-3	10-8	13-6	16-6	19-2
	Douglas Fir-Larch	#3	6-2	9-0	11-5	13-11	16-2	5-6	8-1	10-3	12-6	14-6
	Hem-Fir	SS	8-7	13-6	17-10	22-9	Note b	8-7	13-6	17-1	20-10	24-2
	Hem-Fir	#1	8-5	12-5	15-9	19-3	22-3	7-7	11-1	14-1	17-2	19-11
	Hem-Fir	#2	8-0	11-9	14-11	18-2	21-1	7-2	10-6	13-4	16-3	18-10
	Hem-Fir	#3	6-2	9-0	11-5	13-11	16-2	5-6	8-1	10-3	12-6	14-6
	Southern Pine	SS	8-11	14-1	18-6	23-8	Note b	8-11	14-1	18-5	21-11	25-11
	Southern Pine	#1	8-7	13-0	16-6	19-3	22-10	7-10	11-7	14-9	17-3	20-5
	Southern Pine	#2	7-6	11-2	14-2	16-10	19-10	6-8	10-0	12-8	15-1	17-9
	Southern Pine	#3	5-9	8-6	10-8	13-0	15-4	5-2	7-7	9-7	11-7	13-9
	Spruce-Pine-Fir	SS	8-5	13-3	17-5	22-1	25-7	8-5	12-9	16-2	19-9	22-10
	Spruce-Pine-Fir	#1	8-2	11-11	15-1	18-5	21-5	7-3	10-8	13-6	16-6	19-2
	Spruce-Pine-Fir	#2	8-2	11-11	15-1	18-5	21-5	7-3	10-8	13-6	16-6	19-2
	Spruce-Pine-Fir	#3	6-2	9-0	11-5	13-11	16-2	5-6	8-1	10-3	12-6	14-6
19.2	Douglas Fir-Larch	SS	8-7	13-6	17-9	21-8	25-2	8-7	12-6	15-10	19-5	22-6
	Douglas Fir-Larch	#1	7-11	11-8	14-9	18-0	20-11	7-1	10-5	13-2	16-1	18-8
	Douglas Fir-Larch	#2	7-5	10-11	13-9	16-10	19-6	6-8	9-9	12-4	15-1	17-6
	Douglas Fir-Larch	#3	5-7	8-3	10-5	12-9	14-9	5-0	7-4	9-4	11-5	13-2
	Hem-Fir	SS	8-1	12-9	16-9	21-4	24-8	8-1	12-4	15-7	19-1	22-1
	Hem-Fir	#1	7-9	11-4	14-4	17-7	20-4	6-11	10-2	12-10	15-8	18-2
	Hem-Fir	#2	7-4	10-9	13-7	16-7	19-3	6-7	9-7	12-2	14-10	17-3
	Hem-Fir	#3	5-7	8-3	10-5	12-9	14-9	5-0	7-4	9-4	11-5	13-2

(continued)

INTERNATIONAL CODE COUNCIL®
Copyright © 2015 ICC. ALL RIGHTS RESERVED. Accessed by David Dammon on Jun 21, 2017 12:30:52 PM pursuant to License Agreement with ICC. No further reproduction or distribution authorized. ANY UNAUTHORIZED REPRODUCTION OR DISTRIBUTION IS A VIOLATION OF THE FEDERAL COPYRIGHT ACT AND THE LICENSE AGREEMENT, AND SUBJECT TO CIVIL AND CRIMINAL PENALTIES THEREUNDER.

TABLE 2308.7.2(3)—continued
RAFTER SPANS FOR COMMON LUMBER SPECIES
(Ground Snow Load = 30 psf, Ceiling Not Attached to Rafters, L/Δ = 180)

RAFTER SPACING (inches)	SPECIES AND GRADE		DEAD LOAD = 10 psf					DEAD LOAD = 20 psf				
			2 × 4	2 × 6	2 × 8	2 × 10	2 × 12	2 × 4	2 × 6	2 × 8	2 × 10	2 × 12
			Maximum rafter spans[a]									
			(ft. - in.)	(ft. - in.)	(ft. - in.)	(ft. - in.)	(ft. - in.)	(ft. - in.)	(ft. - in.)	(ft. - in.)	(ft. - in.)	(ft. - in.)
19.2	Southern Pine	SS	8-5	13-3	17-5	22-3	Note b	8-5	13-3	16-10	20-0	23-7
	Southern Pine	#1	8-0	11-10	15-1	17-7	20-11	7-1	10-7	13-5	15-9	18-8
	Southern Pine	#2	6-10	10-2	12-11	15-4	18-1	6-1	9-2	11-7	13-9	16-2
	Southern Pine	#3	5-3	7-9	9-9	11-10	14-0	4-8	6-11	8-9	10-7	12-6
	Spruce-Pine-Fir	SS	7-11	12-5	16-5	20-2	23-4	7-11	11-8	14-9	18-0	20-11
	Spruce-Pine-Fir	#1	7-5	10-11	13-9	16-10	19-6	6-8	9-9	12-4	15-1	17-6
	Spruce-Pine-Fir	#2	7-5	10-11	13-9	16-10	19-6	6-8	9-9	12-4	15-1	17-6
	Spruce-Pine-Fir	#3	5-7	8-3	10-5	12-9	14-9	5-0	7-4	9-4	11-5	13-2
24	Douglas Fir-Larch	SS	7-11	12-6	15-10	19-5	22-6	7-8	11-3	14-2	17-4	20-1
	Douglas Fir-Larch	#1	7-1	10-5	13-2	16-1	18-8	6-4	9-4	11-9	14-5	16-8
	Douglas Fir-Larch	#2	6-8	9-9	12-4	15-1	17-6	5-11	8-8	11-0	13-6	15-7
	Douglas Fir-Larch	#3	5-0	7-4	9-4	11-5	13-2	4-6	6-7	8-4	10-2	11-10
	Hem-Fir	SS	7-6	11-10	15-7	19-1	22-1	7-6	11-0	13-11	17-0	19-9
	Hem-Fir	#1	6-11	10-2	12-10	15-8	18-2	6-2	9-1	11-6	14-0	16-3
	Hem-Fir	#2	6-7	9-7	12-2	14-10	17-3	5-10	8-7	10-10	13-3	15-5
	Hem-Fir	#3	5-0	7-4	9-4	11-5	13-2	4-6	6-7	8-4	10-2	11-10
	Southern Pine	SS	7-10	12-3	16-2	20-0	23-7	7-10	11-10	15-0	17-11	21-2
	Southern Pine	#1	7-1	10-7	13-5	15-9	18-8	6-4	9-6	12-0	14-1	16-8
	Southern Pine	#2	6-1	9-2	11-7	13-9	16-2	5-5	8-2	10-4	12-3	14-6
	Southern Pine	#3	4-8	6-11	8-9	10-7	12-6	4-2	6-2	7-10	9-6	11-2
	Spruce-Pine-Fir	SS	7-4	11-7	14-9	18-0	20-11	7-1	10-5	13-2	16-1	18-8
	Spruce-Pine-Fir	#1	6-8	9-9	12-4	15-1	17-6	5-11	8-8	11-0	13-6	15-7
	Spruce-Pine-Fir	#2	6-8	9-9	12-4	15-1	17-6	5-11	8-8	11-0	13-6	15-7
	Spruce-Pine-Fir	#3	5-0	7-4	9-4	11-5	13-2	4-6	6-7	8-4	10-2	11-10

Check sources for availability of lumber in lengths greater than 20 feet.

For SI: 1 inch = 25.4 mm, 1 foot = 304.8 mm, 1 pound per square foot = 0.0479 kPa.

a. The tabulated rafter spans assume that ceiling joists are located at the bottom of the attic space or that some other method of resisting the outward push of the rafters on the bearing walls, such as rafter ties, is provided at that location. When ceiling joists or rafter ties are located higher in the attic space, the rafter spans shall be multiplied by the factors given below:

H_C/H_R	Rafter Span Adjustment Factor
1/3	0.67
1/4	0.76
1/5	0.83
1/6	0.90
1/7.5 or less	1.00

where:

H_C = Height of ceiling joists or rafter ties measured vertically above the top of the rafter support walls.

H_R = Height of roof ridge measured vertically above the top of the rafter support walls.

b. Span exceeds 26 feet in length.

INTERNATIONAL CODE COUNCIL®
Copyright © 2015 ICC. ALL RIGHTS RESERVED. Accessed by David Dammon on Jun 21, 2017 12:30:52 PM pursuant to License Agreement with ICC. No further reproduction or distribution authorized. ANY UNAUTHORIZED REPRODUCTION OR DISTRIBUTION IS A VIOLATION OF THE FEDERAL COPYRIGHT ACT AND THE LICENSE AGREEMENT, AND SUBJECT TO CIVIL AND CRIMINAL PENALTIES THEREUNDER.

TABLE 2308.7.2(4)
RAFTER SPANS FOR COMMON LUMBER SPECIES
(Ground Snow Load = 50 psf, Ceiling Not Attached to Rafters, L/Δ = 180)

RAFTER SPACING (inches)	SPECIES AND GRADE		DEAD LOAD = 10 psf					DEAD LOAD = 20 psf				
			2 × 4	2 × 6	2 × 8	2 × 10	2 × 12	2 × 4	2 × 6	2 × 8	2 × 10	2 × 12
			Maximum rafter spans[a]									
			(ft. - in.)	(ft. - in.)	(ft. - in.)	(ft. - in.)	(ft. - in.)	(ft. - in.)	(ft. - in.)	(ft. - in.)	(ft. - in.)	(ft. - in.)
12	Douglas Fir-Larch	SS	8-5	13-3	17-6	22-4	26-0	8-5	13-3	17-0	20-9	24-0
	Douglas Fir-larch	#1	8-2	12-0	15-3	18-7	21-7	7-7	11-2	14-1	17-3	20-0
	Douglas Fir-larch	#2	7-8	11-3	14-3	17-5	20-2	7-1	10-5	13-2	16-1	18-8
	Douglas Fir-larch	#3	5-10	8-6	10-9	13-2	15-3	5-5	7-10	10-0	12-2	14-1
	Hem-Fir	SS	8-0	12-6	16-6	21-1	25-6	8-0	12-6	16-6	20-4	23-7
	Hem-Fir	#1	7-10	11-9	14-10	18-1	21-0	7-5	10-10	13-9	16-9	19-5
	Hem-Fir	#2	7-5	11-1	14-0	17-2	19-11	7-0	10-3	13-0	15-10	18-5
	Hem-Fir	#3	5-10	8-6	10-9	13-2	15-3	5-5	7-10	10-0	12-2	14-1
	Southern Pine	SS	8-4	13-1	17-2	21-11	Note b	8-4	13-1	17-2	21-5	25-3
	Southern Pine	#1	8-0	12-3	15-6	18-2	21-7	7-7	11-4	14-5	16-10	20-0
	Southern Pine	#2	7-0	10-6	13-4	15-10	18-8	6-6	9-9	12-4	14-8	17-3
	Southern Pine	#3	5-5	8-0	10-1	12-3	14-6	5-0	7-5	9-4	11-4	13-5
	Spruce-Pine-Fir	SS	7-10	12-3	16-2	20-8	24-1	7-10	12-3	15-9	19-3	22-4
	Spruce-Pine-Fir	#1	7-8	11-3	14-3	17-5	20-2	7-1	10-5	13-2	16-1	18-8
	Spruce-Pine-Fir	#2	7-8	11-3	14-3	17-5	20-2	7-1	10-5	13-2	16-1	18-8
	Spruce-Pine-Fir	#3	5-10	8-6	10-9	13-2	15-3	5-5	7-10	10-0	12-2	14-1
16	Douglas Fir-Larch	SS	7-8	12-1	15-10	19-5	22-6	7-8	11-7	14-8	17-11	20-10
	Douglas Fir-Larch	#1	7-1	10-5	13-2	16-1	18-8	6-7	9-8	12-2	14-11	17-3
	Douglas Fir-Larch	#2	6-8	9-9	12-4	15-1	17-6	6-2	9-0	11-5	13-11	16-2
	Douglas Fir-Larch	#3	5-0	7-4	9-4	11-5	13-2	4-8	6-10	8-8	10-6	12-3
	Hem-Fir	SS	7-3	11-5	15-0	19-1	22-1	7-3	11-5	14-5	17-8	20-5
	Hem-Fir	#1	6-11	10-2	12-10	15-8	18-2	6-5	9-5	11-11	14-6	16-10
	Hem-Fir	#2	6-7	9-7	12-2	14-10	17-3	6-1	8-11	11-3	13-9	15-11
	Hem-Fir	#3	5-0	7-4	9-4	11-5	13-2	4-8	6-10	8-8	10-6	12-3
	Southern Pine	SS	7-6	11-10	15-7	19-11	23-7	7-6	11-10	15-7	18-6	21-10
	Southern Pine	#1	7-1	10-7	13-5	15-9	18-8	6-7	9-10	12-5	14-7	17-3
	Southern Pine	#2	6-1	9-2	11-7	13-9	16-2	5-8	8-5	10-9	12-9	15-0
	Southern Pine	#3	4-8	6-11	8-9	10-7	12-6	4-4	6-5	8-1	9-10	11-7
	Spruce-Pine-Fir	SS	7-1	11-2	14-8	18-0	20-11	7-1	10-9	13-8	15-11	19-4
	Spruce-Pine-Fir	#1	6-8	9-9	12-4	15-1	17-6	6-2	9-0	11-5	13-11	16-2
	Spruce-Pine-Fir	#2	6-8	9-9	12-4	15-1	17-6	6-2	9-0	11-5	13-11	16-2
	Spruce-Pine-Fir	#3	5-0	7-4	9-4	11-5	13-2	4-8	6-10	8-8	10-6	12-3
19.2	Douglas Fir-Larch	SS	7-3	11-4	14-6	17-8	20-6	7-3	10-7	13-5	16-5	19-0
	Douglas Fir-Larch	#1	6-6	9-6	12-0	14-8	17-1	6-0	8-10	11-2	13-7	15-9
	Douglas Fir-Larch	#2	6-1	8-11	11-3	13-9	15-11	5-7	8-3	10-5	12-9	14-9
	Douglas Fir-Larch	#3	4-7	6-9	8-6	10-5	12-1	4-3	6-3	7-11	9-7	11-2
	Hem-Fir	SS	6-10	10-9	14-2	17-5	20-2	6-10	10-5	13-2	16-1	18-8
	Hem-Fir	#1	6-4	9-3	11-9	14-4	16-7	5-10	8-7	10-10	13-3	15-5
	Hem-Fir	#2	6-0	8-9	11-1	13-7	15-9	5-7	8-1	10-3	12-7	14-7
	Hem-Fir	#3	4-7	6-9	8-6	10-5	12-1	4-3	6-3	7-11	9-7	11-2

(continued)

INTERNATIONAL CODE COUNCIL®
Copyright © 2015 ICC. ALL RIGHTS RESERVED. Accessed by David Dammon on Jun 21, 2017 12:30:52 PM pursuant to License Agreement with ICC. No further reproduction or distribution authorized. ANY UNAUTHORIZED REPRODUCTION OR DISTRIBUTION IS A VIOLATION OF THE FEDERAL COPYRIGHT ACT AND THE LICENSE AGREEMENT, AND SUBJECT TO CIVIL AND CRIMINAL PENALTIES THEREUNDER.

TABLE 2308.7.2(4)
RAFTER SPANS FOR COMMON LUMBER SPECIES
(Ground Snow Load = 50 psf, Ceiling Not Attached to Rafters, L/Δ = 180)

RAFTER SPACING (inches)	SPECIES AND GRADE		DEAD LOAD = 10 psf					DEAD LOAD = 20 psf				
			2 × 4	2 × 6	2 × 8	2 × 10	2 × 12	2 × 4	2 × 6	2 × 8	2 × 10	2 × 12
			Maximum rafter spans[a]									
			(ft. - in.)	(ft. - in.)	(ft. - in.)	(ft. - in.)	(ft. - in.)	(ft. - in.)	(ft. - in.)	(ft. - in.)	(ft. - in.)	(ft. - in.)
19.2	Southern Pine	SS	7-1	11-2	14-8	18-3	21-7	7-1	11-2	14-2	16-11	20-0
	Southern Pine	#1	6-6	9-8	12-3	14-4	17-1	6-0	9-0	11-4	13-4	15-9
	Southern Pine	#2	5-7	8-4	10-7	12-6	14-9	5-2	7-9	9-9	11-7	13-8
	Southern Pine	#3	4-3	6-4	8-0	9-8	11-5	4-0	5-10	7-4	8-11	10-7
	Spruce-Pine-Fir	SS	6-8	10-6	13-5	16-5	19-1	6-8	9-10	12-5	15-3	17-8
	Spruce-Pine-Fir	#1	6-1	8-11	11-3	13-9	15-11	5-7	8-3	10-5	12-9	14-9
	Spruce-Pine-Fir	#2	6-1	8-11	11-3	13-9	15-11	5-7	8-3	10-5	12-9	14-9
	Spruce-Pine-Fir	#3	4-7	6-9	8-6	10-5	12-1	4-3	6-3	7-11	9-7	11-2
24	Douglas Fir-Larch	SS	6-8	10-3	13-0	15-10	18-4	6-6	9-6	12-0	14-8	17-0
	Douglas Fir-Larch	#1	5-10	8-6	10-9	13-2	15-3	5-5	7-10	10-0	12-2	14-1
	Douglas Fir-Larch	#2	5-5	7-11	10-1	12-4	14-3	5-0	7-4	9-4	11-5	13-2
	Douglas Fir-Larch	#3	4-1	6-0	7-7	9-4	10-9	3-10	5-7	7-1	8-7	10-0
	Hem-Fir	SS	6-4	9-11	12-9	15-7	18-0	6-4	9-4	11-9	14-5	16-8
	Hem-Fir	#1	5-8	8-3	10-6	12-10	14-10	5-3	7-8	9-9	11-10	13-9
	Hem-Fir	#2	5-4	7-10	9-11	12-1	14-1	4-11	7-3	9-2	11-3	13-0
	Hem-Fir	#3	4-1	6-0	7-7	9-4	10-9	3-10	5-7	7-1	8-7	10-0
	Southern Pine	SS	6-7	10-4	13-8	16-4	19-3	6-7	10-0	12-8	15-2	17-10
	Southern Pine	#1	5-10	8-8	11-0	12-10	15-3	5-5	8-0	10-2	11-11	14-1
	Southern Pine	#2	5-0	7-5	9-5	11-3	13-2	4-7	6-11	8-9	10-5	12-3
	Southern Pine	#3	3-10	5-8	7-1	8-8	10-3	3-6	5-3	6-7	8-0	9-6
	Spruce-Pine-Fir	SS	6-2	9-6	12-0	14-8	17-1	6-0	8-10	11-2	13-7	15-9
	Spruce-Pine-Fir	#1	5-5	7-11	10-1	12-4	14-3	5-0	7-4	9-4	11-5	13-2
	Spruce-Pine-Fir	#2	5-5	7-11	10-1	12-4	14-3	5-0	7-4	9-4	11-5	13-2
	Spruce-Pine-Fir	#3	4-1	6-0	7-7	9-4	10-9	3-10	5-7	7-1	8-7	10-0

Check sources for availability of lumber in lengths greater than 20 feet.

For SI: 1 inch = 25.4 mm, 1 foot = 304.8 mm, 1 pound per square foot = 0.0479 kPa.

a. The tabulated rafter spans assume that ceiling joists are located at the bottom of the attic space or that some other method of resisting the outward push of the rafters on the bearing walls, such as rafter ties, is provided at that location. When ceiling joists or rafter ties are located higher in the attic space, the rafter spans shall be multiplied by the factors given below:

H_C/H_R	Rafter Span Adjustment Factor
1/3	0.67
1/4	0.76
1/5	0.83
1/6	0.90
1/7.5 or less	1.00

where:

H_C = Height of ceiling joists or rafter ties measured vertically above the top of the rafter support walls.

H_R = Height of roof ridge measured vertically above the top of the rafter support walls.

b. Span exceeds 26 feet in length.

INTERNATIONAL CODE COUNCIL®
Copyright © 2015 ICC. ALL RIGHTS RESERVED. Accessed by David Dammon on Jun 21, 2017 12:30:52 PM pursuant to License Agreement with ICC. No further reproduction or distribution authorized. ANY UNAUTHORIZED REPRODUCTION OR DISTRIBUTION IS A VIOLATION OF THE FEDERAL COPYRIGHT ACT AND THE LICENSE AGREEMENT, AND SUBJECT TO CIVIL AND CRIMINAL PENALTIES THEREUNDER.

TABLE 2308.7.2(5)
RAFTER SPANS FOR COMMON LUMBER SPECIES
(Ground Snow Load = 30 psf, Ceiling Attached to Rafters, L/Δ = 240)

RAFTER SPACING (inches)	SPECIES AND GRADE		DEAD LOAD = 10 psf					DEAD LOAD = 20 psf				
			2 × 4	2 × 6	2 × 8	2 × 10	2 × 12	2 × 4	2 × 6	2 × 8	2 × 10	2 × 12
			Maximum rafter spans[a]									
			(ft. - in.)	(ft. - in.)	(ft. - in.)	(ft. - in.)	(ft. - in.)	(ft. - in.)	(ft. - in.)	(ft. - in.)	(ft. - in.)	(ft. - in.)
12	Douglas Fir-Larch	SS	9-1	14-4	18-10	24-1	Note b	9-1	14-4	18-10	24-1	Note b
	Douglas Fir-Larch	#1	8-9	13-9	18-2	22-9	Note b	8-9	13-2	16-8	20-4	23-7
	Douglas Fir-Larch	#2	8-7	13-6	17-5	21-4	24-8	8-5	12-4	15-7	19-1	22-1
	Douglas Fir-Larch	#3	7-1	10-5	13-2	16-1	18-8	6-4	9-4	11-9	14-5	16-8
	Hem-Fir	SS	8-7	13-6	17-10	22-9	Note b	8-7	13-6	17-10	22-9	Note b
	Hem-Fir	#1	8-5	13-3	17-5	22-2	25-9	8-5	12-10	16-3	19-10	23-0
	Hem-Fir	#2	8-0	12-7	16-7	21-0	24-4	8-0	12-2	15-4	18-9	21-9
	Hem-Fir	#3	7-1	10-5	13-2	16-1	18-8	6-4	9-4	11-9	14-5	16-8
	Southern Pine	SS	8-11	14-1	18-6	23-8	Note b	8-11	14-1	18-6	23-8	Note b
	Southern Pine	#1	8-7	13-6	17-10	22-3	Note b	8-7	13-5	17-0	19-11	23-7
	Southern Pine	#2	8-3	12-11	16-4	19-5	22-10	7-8	11-7	14-8	17-4	20-5
	Southern Pine	#3	6-7	9-9	12-4	15-0	17-9	5-11	8-9	11-0	13-5	15-10
	Spruce-Pine-Fir	SS	8-5	13-3	17-5	22-3	Note b	8-5	13-3	17-5	22-3	Note b
	Spruce-Pine-Fir	#1	8-3	12-11	17-0	21-4	24-8	8-3	12-4	15-7	19-1	22-1
	Spruce-Pine-Fir	#2	8-3	12-11	17-0	21-4	24-8	8-3	12-4	15-7	19-1	22-1
	Spruce-Pine-Fir	#3	7-1	10-5	13-2	16-1	18-8	6-4	9-4	11-9	14-5	16-8
16	Douglas Fir-Larch	SS	8-3	13-0	17-2	21-10	Note b	8-3	13-0	17-2	21-3	24-8
	Douglas Fir-Larch	#1	8-0	12-6	16-2	19-9	22-10	7-10	11-5	14-5	17-8	20-5
	Douglas Fir-Larch	#2	7-10	11-11	15-1	18-5	21-5	7-3	10-8	13-6	16-6	19-2
	Douglas Fir-Larch	#3	6-2	9-0	11-5	13-11	16-2	5-6	8-1	10-3	12-6	14-6
	Hem-Fir	SS	7-10	12-3	16-2	20-8	25-1	7-10	12-3	16-2	20-8	24-2
	Hem-Fir	#1	7-8	12-0	15-9	19-3	22-3	7-7	11-1	14-1	17-2	19-11
	Hem-Fir	#2	7-3	11-5	14-11	18-2	21-1	7-2	10-6	13-4	16-3	18-10
	Hem-Fir	#3	6-2	9-0	11-5	13-11	16-2	5-6	8-1	10-3	12-6	14-6
	Southern Pine	SS	8-1	12-9	16-10	21-6	Note b	8-1	12-9	16-10	21-6	25-11
	Southern Pine	#1	7-10	12-3	16-2	19-3	22-10	7-10	11-7	14-9	17-3	20-5
	Southern Pine	#2	7-6	11-2	14-2	16-10	19-10	6-8	10-0	12-8	15-1	17-9
	Southern Pine	#3	5-9	8-6	10-8	13-0	15-4	5-2	7-7	9-7	11-7	13-9
	Spruce-Pine-Fir	SS	7-8	12-0	15-10	20-2	24-7	7-8	12-0	15-10	19-9	22-10
	Spruce-Pine-Fir	#1	7-6	11-9	15-1	18-5	21-5	7-3	10-8	13-6	16-6	19-2
	Spruce-Pine-Fir	#2	7-6	11-9	15-1	18-5	21-5	7-3	10-8	13-6	16-6	19-2
	Spruce-Pine-Fir	#3	6-2	9-0	11-5	13-11	16-2	5-6	8-1	10-3	12-6	14-6
19.2	Douglas Fir-Larch	SS	7-9	12-3	16-1	20-7	25-0	7-9	12-3	15-10	19-5	22-6
	Douglas Fir-Larch	#1	7-6	11-8	14-9	18-0	20-11	7-1	10-5	13-2	16-1	18-8
	Douglas Fir-Larch	#2	7-4	10-11	13-9	16-10	19-6	6-8	9-9	12-4	15-1	17-6
	Douglas Fir-Larch	#3	5-7	8-3	10-5	12-9	14-9	5-0	7-4	9-4	11-5	13-2
	Hem-Fir	SS	7-4	11-7	15-3	19-5	23-7	7-4	11-7	15-3	19-1	22-1
	Hem-Fir	#1	7-2	11-4	14-4	17-7	20-4	6-11	10-2	12-10	15-8	18-2
	Hem-Fir	#2	6-10	10-9	13-7	16-7	19-3	6-7	9-7	12-2	14-10	17-3
	Hem-Fir	#3	5-7	8-3	10-5	12-9	14-9	5-0	7-4	9-4	11-5	13-2

(continued)

INTERNATIONAL CODE COUNCIL®
Copyright © 2015 ICC. ALL RIGHTS RESERVED. Accessed by David Dammon on Jun 21, 2017 12:30:52 PM pursuant to License Agreement with ICC. No further reproduction or distribution authorized. ANY UNAUTHORIZED REPRODUCTION OR DISTRIBUTION IS A VIOLATION OF THE FEDERAL COPYRIGHT ACT AND THE LICENSE AGREEMENT, AND SUBJECT TO CIVIL AND CRIMINAL PENALTIES THEREUNDER.

TABLE 2308.7.2(5)—continued
RAFTER SPANS FOR COMMON LUMBER SPECIES
(Ground Snow Load = 30 psf, Ceiling Attached to Rafters, L/Δ = 240)

RAFTER SPACING (inches)	SPECIES AND GRADE		DEAD LOAD = 10 psf					DEAD LOAD = 20 psf				
			2 × 4	2 × 6	2 × 8	2 × 10	2 × 12	2 × 4	2 × 6	2 × 8	2 × 10	2 × 12
			Maximum rafter spans[a]									
			(ft. - in.)	(ft. - in.)	(ft. - in.)	(ft. - in.)	(ft. - in.)	(ft. - in.)	(ft. - in.)	(ft. - in.)	(ft. - in.)	(ft. - in.)
19.2	Southern Pine	SS	7-8	12-0	15-10	20-2	24-7	7-8	12-0	15-10	20-0	23-7
	Southern Pine	#1	7-4	11-7	15-1	17-7	20-11	7-1	10-7	13-5	15-9	18-8
	Southern Pine	#2	6-10	10-2	12-11	15-4	18-1	6-1	9-2	11-7	13-9	16-2
	Southern Pine	#3	5-3	7-9	9-9	11-10	14-0	4-8	6-11	8-9	10-7	12-6
	Spruce-Pine-Fir	SS	7-2	11-4	14-11	19-0	23-1	7-2	11-4	14-9	18-0	20-11
	Spruce-Pine-Fir	#1	7-0	10-11	13-9	16-10	19-6	6-8	9-9	12-4	15-1	17-6
	Spruce-Pine-Fir	#2	7-0	10-11	13-9	16-10	19-6	6-8	9-9	12-4	15-1	17-6
	Spruce-Pine-Fir	#3	5-7	8-3	10-5	12-9	14-9	5-0	7-4	9-4	11-5	13-2
24	Douglas Fir-Larch	SS	7-3	11-4	15-0	19-1	22-6	7-3	11-3	14-2	17-4	20-1
	Douglas Fir-Larch	#1	7-0	10-5	13-2	16-1	18-8	6-4	9-4	11-9	14-5	16-8
	Douglas Fir-Larch	#2	6-8	9-9	12-4	15-1	17-6	5-11	8-8	11-0	13-6	15-7
	Douglas Fir-Larch	#3	5-0	7-4	9-4	11-5	13-2	4-6	6-7	8-4	10-2	11-10
	Hem-Fir	SS	6-10	10-9	14-2	18-0	21-11	6-10	10-9	13-11	17-0	19-9
	Hem-Fir	#1	6-8	10-2	12-10	15-8	18-2	6-2	9-1	11-6	14-0	16-3
	Hem-Fir	#2	6-4	9-7	12-2	14-10	17-3	5-10	8-7	10-10	13-3	15-5
	Hem-Fir	#3	5-0	7-4	9-4	11-5	13-2	4-6	6-7	8-4	10-2	11-10
	Southern Pine	SS	7-1	11-2	14-8	18-9	22-10	7-1	11-2	14-8	17-11	21-2
	Southern Pine	#1	6-10	10-7	13-5	15-9	18-8	6-4	9-6	12-0	14-1	16-8
	Southern Pine	#2	6-1	9-2	11-7	13-9	16-2	5-5	8-2	10-4	12-3	14-6
	Southern Pine	#3	4-8	6-11	8-9	10-7	12-6	4-2	6-2	7-10	9-6	11-2
	Spruce-Pine-Fir	SS	6-8	10-6	13-10	17-8	20-11	6-8	10-5	13-2	16-1	18-8
	Spruce-Pine-Fir	#1	6-6	9-9	12-4	15-1	17-6	5-11	8-8	11-0	13-6	15-7
	Spruce-Pine-Fir	#2	6-6	9-9	12-4	15-1	17-6	5-11	8-8	11-0	13-6	15-7
	Spruce-Pine-Fir	#3	5-0	7-4	9-4	11-5	13-2	4-6	6-7	8-4	10-2	11-10

Check sources for availability of lumber in lengths greater than 20 feet.

For SI: 1 inch = 25.4 mm, 1 foot = 304.8 mm, 1 pound per square foot = 0.0479 kPa.

a. The tabulated rafter spans assume that ceiling joists are located at the bottom of the attic space or that some other method of resisting the outward push of the rafters on the bearing walls, such as rafter ties, is provided at that location. When ceiling joists or rafter ties are located higher in the attic space, the rafter spans shall be multiplied by the factors given below:

H_C/H_R	Rafter Span Adjustment Factor
1/3	0.67
1/4	0.76
1/5	0.83
1/6	0.90
1/7.5 or less	1.00

where:

H_C = Height of ceiling joists or rafter ties measured vertically above the top of the rafter support walls.

H_R = Height of roof ridge measured vertically above the top of the rafter support walls.

b. Span exceeds 26 feet in length.

INTERNATIONAL CODE COUNCIL®
Copyright © 2015 ICC. ALL RIGHTS RESERVED. Accessed by David Dammon on Jun 21, 2017 12:30:52 PM pursuant to License Agreement with ICC. No further reproduction or distribution authorized. ANY UNAUTHORIZED REPRODUCTION OR DISTRIBUTION IS A VIOLATION OF THE FEDERAL COPYRIGHT ACT AND THE LICENSE AGREEMENT, AND SUBJECT TO CIVIL AND CRIMINAL PENALTIES THEREUNDER.

TABLE 2308.7.2(6)
RAFTER SPANS FOR COMMON LUMBER SPECIES
(Ground Snow Load = 50 psf, Ceiling Attached to Rafters, L/Δ = 240)

RAFTER SPACING (inches)	SPECIES AND GRADE		DEAD LOAD = 10 psf					DEAD LOAD = 20 psf				
			2 × 4	2 × 6	2 × 8	2 × 10	2 × 12	2 × 4	2 × 6	2 × 8	2 × 10	2 × 12
			Maximum rafter spans[a]									
			(ft. - in.)	(ft. - in.)	(ft. - in.)	(ft. - in.)	(ft. - in.)	(ft. - in.)	(ft. - in.)	(ft. - in.)	(ft. - in.)	(ft. - in.)
12	Douglas Fir-Larch	SS	7-8	12-1	15-11	20-3	24-8	7-8	12-1	15-11	20-3	24-0
	Douglas Fir-Larch	#1	7-5	11-7	15-3	18-7	21-7	7-5	11-2	14-1	17-3	20-0
	Douglas Fir-Larch	#2	7-3	11-3	14-3	17-5	20-2	7-1	10-5	13-2	16-1	18-8
	Douglas Fir-Larch	#3	5-10	8-6	10-9	13-2	15-3	5-5	7-10	10-0	12-2	14-1
	Hem-Fir	SS	7-3	11-5	15-0	19-2	23-4	7-3	11-5	15-0	19-2	23-4
	Hem-Fir	#1	7-1	11-2	14-8	18-1	21-0	7-1	10-10	13-9	16-9	19-5
	Hem-Fir	#2	6-9	10-8	14-0	17-2	19-11	6-9	10-3	13-0	15-10	18-5
	Hem-Fir	#3	5-10	8-6	10-9	13-2	15-3	5-5	7-10	10-0	12-2	14-1
	Southern Pine	SS	7-6	11-10	15-7	19-11	24-3	7-6	11-10	15-7	19-11	24-3
	Southern Pine	#1	7-3	11-5	15-0	18-2	21-7	7-3	11-4	14-5	16-10	20-0
	Southern Pine	#2	6-11	10-6	13-4	15-10	18-8	6-6	9-9	12-4	14-8	17-3
	Southern Pine	#3	5-5	8-0	10-1	12-3	14-6	5-0	7-5	9-4	11-4	13-5
	Spruce-Pine-Fir	SS	7-1	11-2	14-8	18-9	22-10	7-1	11-2	14-8	18-9	22-4
	Spruce-Pine-Fir	#1	6-11	10-11	14-3	17-5	20-2	6-11	10-5	13-2	16-1	18-8
	Spruce-Pine-Fir	#2	6-11	10-11	14-3	17-5	20-2	6-11	10-5	13-2	16-1	18-8
	Spruce-Pine-Fir	#3	5-10	8-6	10-9	13-2	15-3	5-5	7-10	10-0	12-2	14-1
16	Douglas Fir-Larch	SS	7-0	11-0	14-5	18-5	22-5	7-0	11-0	14-5	17-11	20-10
	Douglas Fir-Larch	#1	6-9	10-5	13-2	16-1	18-8	6-7	9-8	12-2	14-11	17-3
	Douglas Fir-Larch	#2	6-7	9-9	12-4	15-1	17-6	6-2	9-0	11-5	13-11	16-2
	Douglas Fir-Larch	#3	5-0	7-4	9-4	11-5	13-2	4-8	6-10	8-8	10-6	12-3
	Hem-Fir	SS	6-7	10-4	13-8	17-5	21-2	6-7	10-4	13-8	17-5	20-5
	Hem-Fir	#1	6-5	10-2	12-10	15-8	18-2	6-5	9-5	11-11	14-6	16-10
	Hem-Fir	#2	6-2	9-7	12-2	14-10	17-3	6-1	8-11	11-3	13-9	15-11
	Hem-Fir	#3	5-0	7-4	9-4	11-5	13-2	4-8	6-10	8-8	10-6	12-3
	Southern Pine	SS	6-10	10-9	14-2	18-1	22-0	6-10	10-9	14-2	18-1	21-10
	Southern Pine	#1	6-7	10-4	13-5	15-9	18-8	6-7	9-10	12-5	14-7	17-3
	Southern Pine	#2	6-1	9-2	11-7	13-9	16-2	5-8	8-5	10-9	12-9	15-0
	Southern Pine	#3	4-8	6-11	8-9	10-7	12-6	4-4	6-5	8-1	9-10	11-7
	Spruce-Pine-Fir	SS	6-5	10-2	13-4	17-0	20-9	6-5	10-2	13-4	16-8	19-4
	Spruce-Pine-Fir	#1	6-4	9-9	12-4	15-1	17-6	6-2	9-0	11-5	13-11	16-2
	Spruce-Pine-Fir	#2	6-4	9-9	12-4	15-1	17-6	6-2	9-0	11-5	13-11	16-2
	Spruce-Pine-Fir	#3	5-0	7-4	9-4	11-5	13-2	4-8	6-10	8-8	10-6	12-3
19.2	Douglas Fir-Larch	SS	6-7	10-4	13-7	17-4	20-6	6-7	10-4	13-5	16-5	19-0
	Douglas Fir-Larch	#1	6-4	9-6	12-0	14-8	17-1	6-0	8-10	11-2	13-7	15-9
	Douglas Fir-Larch	#2	6-1	8-11	11-3	13-9	15-11	5-7	8-3	10-5	12-9	14-9
	Douglas Fir-Larch	#3	4-7	6-9	8-6	10-5	12-1	4-3	6-3	7-11	9-7	11-2
	Hem-Fir	SS	6-2	9-9	12-10	16-5	19-11	6-2	9-9	12-10	16-1	18-8
	Hem-Fir	#1	6-1	9-3	11-9	14-4	16-7	5-10	8-7	10-10	13-3	15-5
	Hem-Fir	#2	5-9	8-9	11-1	13-7	15-9	5-7	8-1	10-3	12-7	14-7
	Hem-Fir	#3	4-7	6-9	8-6	10-5	12-1	4-3	6-3	7-11	9-7	11-2

(continued)

INTERNATIONAL CODE COUNCIL®
Copyright © 2015 ICC. ALL RIGHTS RESERVED. Accessed by David Dammon on Jun 21, 2017 12:30:52 PM pursuant to License Agreement with ICC. No further reproduction or distribution authorized. ANY UNAUTHORIZED REPRODUCTION OR DISTRIBUTION IS A VIOLATION OF THE FEDERAL COPYRIGHT ACT AND THE LICENSE AGREEMENT, AND SUBJECT TO CIVIL AND CRIMINAL PENALTIES THEREUNDER.

TABLE 2308.7.2(6)—continued
RAFTER SPANS FOR COMMON LUMBER SPECIES
(Ground Snow Load = 50 psf, Ceiling Attached to Rafters, L/Δ = 240)

RAFTER SPACING (inches)	SPECIES AND GRADE		DEAD LOAD = 10 psf					DEAD LOAD = 20 psf				
			2 × 4	2 × 6	2 × 8	2 × 10	2 × 12	2 × 4	2 × 6	2 × 8	2 × 10	2 × 12
			Maximum rafter spans[a]									
			(ft. - in.)	(ft. - in.)	(ft. - in.)	(ft. - in.)	(ft. - in.)	(ft. - in.)	(ft. - in.)	(ft. - in.)	(ft. - in.)	(ft. - in.)
19.2	Southern Pine	SS	6-5	10-2	13-4	17-0	20-9	6-5	10-2	13-4	16-11	20-0
	Southern Pine	#1	6-2	9-8	12-3	14-4	17-1	6-0	9-0	11-4	13-4	15-9
	Southern Pine	#2	5-7	8-4	10-7	12-6	14-9	5-2	7-9	9-9	11-7	13-8
	Southern Pine	#3	4-3	6-4	8-0	9-8	11-5	4-0	5-10	7-4	8-11	10-7
	Spruce-Pine-Fir	SS	6-1	9-6	12-7	16-0	19-1	6-1	9-6	12-5	15-3	17-8
	Spruce-Pine-Fir	#1	5-11	8-11	11-3	13-9	15-11	5-7	8-3	10-5	12-9	14-9
	Spruce-Pine-Fir	#2	5-11	8-11	11-3	13-9	15-11	5-7	8-3	10-5	12-9	14-9
	Spruce-Pine-Fir	#3	4-7	6-9	8-6	10-5	12-1	4-3	6-3	7-11	9-7	11-2
24	Douglas Fir-Larch	SS	6-1	9-7	12-7	15-10	18-4	6-1	9-6	12-0	14-8	17-0
	Douglas Fir-Larch	#1	5-10	8-6	10-9	13-2	15-3	5-5	7-10	10-0	12-2	14-1
	Douglas Fir-Larch	#2	5-5	7-11	10-1	12-4	14-3	5-0	7-4	9-4	11-5	13-2
	Douglas Fir-Larch	#3	4-1	6-0	7-7	9-4	10-9	3-10	5-7	7-1	8-7	10-0
	Hem-Fir	SS	5-9	9-1	11-11	15-2	18-0	5-9	9-1	11-9	14-5	15-11
	Hem-Fir	#1	5-8	8-3	10-6	12-10	14-10	5-3	7-8	9-9	11-10	13-9
	Hem-Fir	#2	5-4	7-10	9-11	12-1	14-1	4-11	7-3	9-2	11-3	13-0
	Hem-Fir	#3	4-1	6-0	7-7	9-4	10-9	3-10	5-7	7-1	8-7	10-0
	Southern Pine	SS	6-0	9-5	12-5	15-10	19-3	6-0	9-5	12-5	15-2	17-10
	Southern Pine	#1	5-9	8-8	11-0	12-10	15-3	5-5	8-0	10-2	11-11	14-1
	Southern Pine	#2	5-0	7-5	9-5	11-3	13-2	4-7	6-11	8-9	10-5	12-3
	Southern Pine	#3	3-10	5-8	7-1	8-8	10-3	3-6	5-3	6-7	8-0	9-6
	Spruce-Pine-Fir	SS	5-8	8-10	11-8	14-8	17-1	5-8	8-10	11-2	13-7	15-9
	Spruce-Pine-Fir	#1	5-5	7-11	10-1	12-4	14-3	5-0	7-4	9-4	11-5	13-2
	Spruce-Pine-Fir	#2	5-5	7-11	10-1	12-4	14-3	5-0	7-4	9-4	11-5	13-2
	Spruce-Pine-Fir	#3	4-1	6-0	7-7	9-4	10-9	3-10	5-7	7-1	8-7	10-0

Check sources for availability of lumber in lengths greater than 20 feet.

For SI: 1 inch = 25.4 mm, 1 foot = 304.8 mm, 1 pound per square foot = 0.0479 kPa.

a. The tabulated rafter spans assume that ceiling joists are located at the bottom of the attic space or that some other method of resisting the outward push of the rafters on the bearing walls, such as rafter ties, is provided at that location. When ceiling joists or rafter ties are located higher in the attic space, the rafter spans shall be multiplied by the factors given below:

H_C/H_R	Rafter Span Adjustment Factor
1/3	0.67
1/4	0.76
1/5	0.83
1/6	0.90
1/7.5 or less	1.00

where:

H_C = Height of ceiling joists or rafter ties measured vertically above the top of the rafter support walls.

H_R = Height of roof ridge measured vertically above the top of the rafter support walls.

INTERNATIONAL CODE COUNCIL®
Copyright © 2015 ICC. ALL RIGHTS RESERVED. Accessed by David Dammon on Jun 21, 2017 12:30:52 PM pursuant to License Agreement with ICC. No further reproduction or distribution authorized. ANY UNAUTHORIZED REPRODUCTION OR DISTRIBUTION IS A VIOLATION OF THE FEDERAL COPYRIGHT ACT AND THE LICENSE AGREEMENT, AND SUBJECT TO CIVIL AND CRIMINAL PENALTIES THEREUNDER.

TABLE 2308.7.3.1
RAFTER TIE CONNECTIONS[g]

RAFTER SLOPE	TIE SPACING (inches)	NO SNOW LOAD				GROUND SNOW LOAD (pound per square foot)							
						30 pounds per square foot				50 pounds per square foot			
		Roof span (feet)											
		12	20	28	36	12	20	28	36	12	20	28	36
		Required number of 16d common ($3^1/_2$″ x 0.162″) nails[a, b] per connection[c, d, e, f]											
3:12	12	4	6	8	10	4	6	8	11	5	8	12	15
	16	5	7	10	13	5	8	11	14	6	11	15	20
	24	7	11	15	19	7	11	16	21	9	16	23	30
	32	10	14	19	25	10	16	22	28	12	27	30	40
	48	14	21	29	37	14	32	36	42	18	32	46	60
4:12	12	3	4	5	6	3	5	6	8	4	6	9	11
	16	3	5	7	8	4	6	8	11	5	8	12	15
	24	4	7	10	12	5	9	12	16	7	12	17	22
	32	6	9	13	16	8	12	16	22	10	16	24	30
	48	8	14	19	24	10	18	24	32	14	24	34	44
5:12	12	3	3	4	5	3	4	5	7	3	5	7	9
	16	3	4	5	7	3	5	7	9	4	7	9	12
	24	4	6	8	10	4	7	10	13	6	10	14	18
	32	5	8	10	13	6	10	14	18	8	14	18	24
	48	7	11	15	20	8	14	20	26	12	20	28	36
7:12	12	3	3	3	4	3	3	4	5	3	4	5	7
	16	3	3	4	5	3	4	5	6	3	5	7	9
	24	3	4	6	7	3	5	7	9	4	7	10	13
	32	4	6	8	10	4	8	10	12	6	10	14	18
	48	5	8	11	14	6	10	14	18	9	14	20	26
9:12	12	3	3	3	3	3	3	3	4	3	3	4	5
	16	3	3	3	4	3	3	4	5	3	4	5	7
	24	3	3	5	6	3	4	6	7	3	6	8	10
	32	3	4	6	8	4	6	8	10	5	8	10	14
	48	4	6	9	11	5	8	12	14	7	12	16	20
12:12	12	3	3	3	3	3	3	3	3	3	3	3	4
	16	3	3	3	3	3	3	3	4	3	3	4	5
	24	3	3	3	4	3	3	4	6	3	4	6	8
	32	3	3	4	5	3	5	6	8	4	6	8	10
	48	3	4	6	7	4	7	8	12	6	8	12	16

For SI: 1 inch = 25.4 mm, 1 foot = 304.8 mm, 1 pound per square foot = 47.8 N/m^2.

a. 40d box (5″ × 0.162″) or 16d sinker ($3^1/_4$″ × 0.148″) nails are permitted to be substituted for 16d common ($3^1/_2$″ × 0.16″) nails.

b. Nailing requirements are permitted to be reduced 25 percent if nails are clinched.

c. Rafter tie heel joint connections are not required where the ridge is supported by a load-bearing wall, header or ridge beam.

d. When intermediate support of the rafter is provided by vertical struts or purlins to a load-bearing wall, the tabulated heel joint connection requirements are permitted to be reduced proportionally to the reduction in span.

e. Equivalent nailing patterns are required for ceiling joist to ceiling joist lap splices.

f. Connected members shall be of sufficient size to prevent splitting due to nailing.

g. For snow loads less than 30 pounds per square foot, the required number of nails is permitted to be reduced by multiplying by the ratio of actual snow load plus 10 divided by 40, but not less than the number required for no snow load.

INTERNATIONAL CODE COUNCIL®
Copyright © 2015 ICC. ALL RIGHTS RESERVED. Accessed by David Dammon on Jun 21, 2017 12:30:52 PM pursuant to License Agreement with ICC. No further reproduction or distribution authorized. ANY UNAUTHORIZED REPRODUCTION OR DISTRIBUTION IS A VIOLATION OF THE FEDERAL COPYRIGHT ACT AND THE LICENSE AGREEMENT, AND SUBJECT TO CIVIL AND CRIMINAL PENALTIES THEREUNDER.

TABLE 2308.7.5
REQUIRED RATING OF APPROVED UPLIFT CONNECTORS (pounds)[a, b, c, e, f, g, h]

NOMINAL DESIGN WIND SPEED, V_{asd} [i]	ROOF SPAN (feet)							OVERHANGS (pounds/feet)[d]
	12	20	24	28	32	36	40	
85	-72	-120	-145	-169	-193	-217	-241	-38.55
90	-91	-151	-181	-212	-242	-272	-302	-43.22
100	-131	-281	-262	-305	-349	-393	-436	-53.36
110	-175	-292	-351	-409	-467	-526	-584	-64.56

For SI: 1 inch = 25.4 mm, 1 foot = 304.8 mm, 1 mile per hour = 1.61 km/hr, 1 pound = 0.454 Kg, 1 pound/foot = 14.5939 N/m.

a. The uplift connection requirements are based on a 30-foot mean roof height located in Exposure B. For Exposure C or D and for other mean roof heights, multiply the above loads by the adjustment coefficients below.

	Mean Roof Height (feet)									
EXPOSURE	15	20	25	30	35	40	45	50	55	60
B	1.00	1.00	1.00	1.00	1.05	1.09	1.12	1.16	1.19	1.22
C	1.21	1.29	1.35	1.40	1.45	1.49	1.53	1.56	1.59	1.62
D	1.47	1.55	1.61	1.66	1.70	1.74	1.78	1.81	1.84	1.87

b. The uplift connection requirements are based on the framing being spaced 24 inches on center. Multiply by 0.67 for framing spaced 16 inches on center and multiply by 0.5 for framing spaced 12 inches on center.

c. The uplift connection requirements include an allowance for 10 pounds of dead load.

d. The uplift connection requirements do not account for the effects of overhangs. The magnitude of the above loads shall be increased by adding the overhang loads found in the table. The overhang loads are also based on framing spaced 24 inches on center. The overhang loads given shall be multiplied by the overhang projection and added to the roof uplift value in the table.

e. The uplift connection requirements are based upon wind loading on end zones as defined in Figure 28.6.3 of ASCE 7. Connection loads for connections located a distance of 20 percent of the least horizontal dimension of the building from the corner of the building are permitted to be reduced by multiplying the table connection value by 0.7 and multiplying the overhang load by 0.8.

f. For wall-to-wall and wall-to-foundation connections, the capacity of the uplift connector is permitted to be reduced by 100 pounds for each full wall above. (For example, if a 500-pound rated connector is used on the roof framing, a 400-pound rated connector is permitted at the next floor level down).

g. Interpolation is permitted for intermediate values of V_{asd} and roof spans.

h. The rated capacity of approved tie-down devices is permitted to include up to a 60-percent increase for wind effects where allowed by material specifications.

i. V_{asd} shall be determined in accordance with Section 1609.3.1.

2308.7.7 Purlins. Purlins to support roof loads are permitted to be installed to reduce the span of rafters within allowable limits and shall be supported by struts to bearing walls. The maximum span of 2-inch by 4-inch (51 mm by 102 mm) purlins shall be 4 feet (1219 mm). The maximum span of the 2-inch by 6-inch (51 mm by 152 mm) purlin shall be 6 feet (1829 mm), but in no case shall the purlin be smaller than the supported rafter. Struts shall be not less than 2-inch by 4-inch (51 mm by 102 mm) members. The unbraced length of struts shall not exceed 8 feet (2438 mm) and the slope of the struts shall be not less than 45 degrees (0.79 rad) from the horizontal.

❖ This section permits the use of purlins and struts braced to bearing walls to reduce the span of rafters. Where the roof slope is less than three units vertical in 12 units horizontal (3:12 or 25-percent slope), the code requires that members supporting rafters and ceiling joists, such as the ridge, hips and valleys be designed as beams. The section provides prescriptive rules for minimum size and maximum span of purlins and the minimum size and maximum unbraced lengths of struts. The minimum slope of struts is 45 degrees (0.79 rad) from the horizontal (see Commentary Figure 2308.7.7).

2308.7.8 Blocking. Roof rafters and ceiling joists shall be supported laterally to prevent rotation and lateral displacement in accordance with Section 2308.4.6 and connected to braced wall lines in accordance with Section 2308.6.7.2.

❖ Solid blocking must be provided at the ends of rafters to prevent twisting or rolling over, as required by Section 2308.4.6. There are other common ways of providing resistance to this type of action, but solid blocking is always preferred since it also can be used to provide a nominal amount of lateral force transfer from the roof sheathing to the wall or beam below.

2308.7.9 Engineered wood products. Prefabricated wood I-joists, structural glued-laminated timber and structural composite lumber shall not be notched or drilled except where permitted by the manufacturer's recommendations or where the effects of such alterations are specifically considered in the design of the member by a *registered design professional*.

❖ The notching and boring allowances that are permitted for solid-sawn joist framing cannot be applied to engineered wood products. Because these types of products are commonly incorporated into conventional construction, this section (as does Section 2308.4.3) points out that they must be treated differently. Engineered wood products should not be cut, notched or bored unless those alterations are considered in the design of the member. This section makes it clear that any alterations to an engineered wood product must be considered in the design of the

INTERNATIONAL CODE COUNCIL®
Copyright © 2015 ICC. ALL RIGHTS RESERVED. Accessed by David Dammon on Jun 21, 2017 12:30:52 PM pursuant to License Agreement with ICC. No further reproduction or distribution authorized. ANY UNAUTHORIZED REPRODUCTION OR DISTRIBUTION IS A VIOLATION OF THE FEDERAL COPYRIGHT ACT AND THE LICENSE AGREEMENT, AND SUBJECT TO CIVIL AND CRIMINAL PENALTIES THEREUNDER.

member. The consideration is to be made either by the manufacturer and reflected in use recommendations (which is common in I-joists, permitting some limited openings in webs) or by a registered design professional.

2308.7.10 Roof sheathing. Roof sheathing shall be in accordance with Tables 2304.8(3) and 2304.8(5) for wood structural panels, and Tables 2304.8(1) and 2304.8(2) for lumber and shall comply with Section 2304.8.2.

❖ See the commentary to Section 2304.8.2.

2308.7.11 Joints. Joints in lumber sheathing shall occur over supports unless *approved* end-matched lumber is used, in which case each piece shall bear on at least two supports.

❖ When lumber sheathing is used, the ends of the boards must be located over the joists or rafters. Such support is not required when end-matched tongue-and-groove lumber is used or when the ends are otherwise prevented from moving relative to each other.

2308.7.12 Roof planking. Planking shall be designed in accordance with the general provisions of this code.

In lieu of such design, 2-inch (51 mm) tongue-and groove planking is permitted in accordance with Table 2308.7.12. Joints in such planking are permitted to be randomly spaced, provided the system is applied to not less than three continuous spans, planks are center matched and end matched or splined, each plank bears on at least one support, and joints are separated by not less than 24 inches (610 mm) in adjacent pieces.

❖ Lumber planking on roofs must conform to the requirements of Section 2304.8.2 and Table 2304.8(1) for typical lumber roof sheathing. This section provides an alternative using 2-inch (51 mm) tongue-and-groove planking.

TABLE 2308.7.12. See page 23-115.

❖ Table 2308.7.12 gives allowable span (spacing of roof supports) based on the live load and deflection limits (from the code) and the design values for the planking used.

2308.7.13 Wood trusses. Wood trusses shall be designed in accordance with Section 2303.4. Connection to braced wall lines shall be in accordance with Section 2308.6.7.2.

❖ Engineered wood trusses are to be designed in accordance with Section 2303.4 (see the commentary to that section). Most modern trusses are gang-nailed metal plate trusses, but they could also be custom designed with bolted members. They are engineered elements that can be incorporated into a building of otherwise conventional light-frame construction in accordance with Section 2308.8.

2308.7.14 Attic ventilation. For *attic* ventilation, see Section 1203.2.

❖ Large amounts of water vapor migrate by movement of air carrying water or by diffusion through the build-

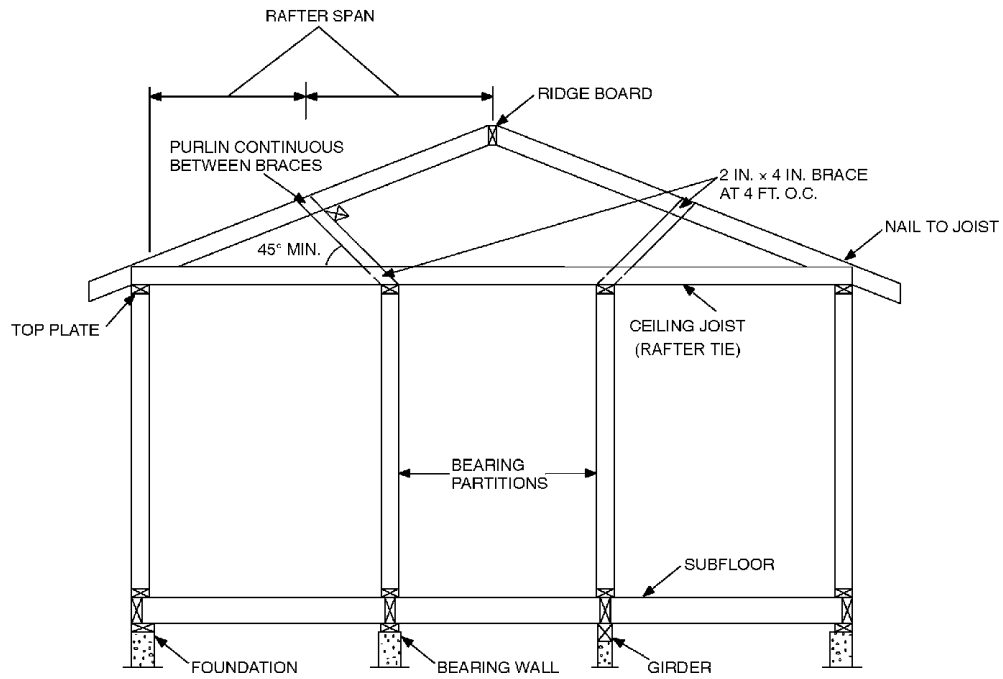

For SI: 1 inch = 25.4 mm, 1 foot = 304.8 mm, 45 degrees = 0.79 rad.

Figure 2308.7.7
BRACED RAFTER CONSTRUCTION

INTERNATIONAL CODE COUNCIL®
Copyright © 2015 ICC. ALL RIGHTS RESERVED. Accessed by David Dammon on Jun 21, 2017 12:30:52 PM pursuant to License Agreement with ICC. No further reproduction or distribution authorized. ANY UNAUTHORIZED REPRODUCTION OR DISTRIBUTION IS A VIOLATION OF THE FEDERAL COPYRIGHT ACT AND THE LICENSE AGREEMENT, AND SUBJECT TO CIVIL AND CRIMINAL PENALTIES THEREUNDER.

ing envelope materials because of a vapor pressure difference. The sources of water vapor include cooking, laundering, bathing, and breathing and perspiration of persons. These can account for an average daily production of 25 pounds (11.3 kg) of water vapor for a family of four in a typical dwelling. This average can be much higher where appliances, such as humidifiers, washers and dryers, are used.

As the vapor moves into the attic, it may reach its dew point, thus condensing on wood roof components. This wetting and drying action will cause rotting and decay. To avoid this, the attic must be ventilated to prevent the accumulation of water on building components. The installation of a vapor retarder acts to prevent the passage of moisture to the attic. An effective vapor retarder allows for a decrease in ventilation requirements. Vapor retarders are ineffective when openings in the barrier are allowed where moisture can be carried by air into the attic. Care should be exercised so that attic vent openings remain unobstructed. Attic ventilation is also required for the removal of excess heat. Access to attic spaces is required by Section 1208.2.

Truss manufacturers may provide special blocking that contains openings along the centerline and a galvanized screen to be shipped with their product that will effectively meet the attic ventilation requirements at the eaves. Structural calculations have shown that the strength of this blocking with openings is not reduced significantly but allows it to effectively transfer forces from the roof diaphragm to the wall below.

2308.8 Design of elements. Combining of engineered elements or systems and conventionally specified elements or systems shall be permitted subject to the limits of Sections 2308.8.1 and 2308.8.2.

❖ The conventional construction provisions are intended not only to control the amount of irregularity within a building, but also to make things easier for plans examiners, builders, inspectors and designers. Buildings can be very complex. Simple, “box-like” buildings are no longer the norm. Most modern con-

TABLE 2308.7.12
ALLOWABLE SPANS FOR 2-INCH TONGUE-AND-GROOVE DECKING

SPAN[a] (feet)	LIVE LOAD (pounds per square foot)	DEFLECTION LIMIT	BENDING STRESS (f) (pounds per square inch)	MODULUS OF ELASTICITY (E) (pounds per square inch)
Roofs				
4	20	1/240 1/360	160	170,000 256,000
	30	1/240 1/360	210	256,000 384,000
	40	1/240 1/360	270	340,000 512,000
4.5	20	1/240 1/360	200	242,000 305,000
	30	1/240 1/360	270	363,000 405,000
	40	1/240 1/360	350	484,000 725,000
5.0	20	1/240 1/360	250	332,000 500,000
	30	1/240 1/360	330	495,000 742,000
	40	1/240 1/360	420	660,000 1,000,000
5.5	20	1/240 1/360	300	442,000 660,000
	30	1/240 1/360	400	662,000 998,000
	40	1/240 1/360	500	884,000 1,330,000
6.0	20	1/240 1/360	360	575,000 862,000
	30	1/240 1/360	480	862,000 1,295,000
	40	1/240 1/360	600	1,150,000 1,730,000

(continued)

INTERNATIONAL CODE COUNCIL®
Copyright © 2015 ICC. ALL RIGHTS RESERVED. Accessed by David Dammon on Jun 21, 2017 12:30:52 PM pursuant to License Agreement with ICC. No further reproduction or distribution authorized. ANY UNAUTHORIZED REPRODUCTION OR DISTRIBUTION IS A VIOLATION OF THE FEDERAL COPYRIGHT ACT AND THE LICENSE AGREEMENT, AND SUBJECT TO CIVIL AND CRIMINAL PENALTIES THEREUNDER.

TABLE 2308.7.12—continued
ALLOWABLE SPANS FOR 2-INCH TONGUE-AND-GROOVE DECKING

SPAN[a] (feet)	LIVE LOAD (pounds per square foot)	DEFLECTION LIMIT	BENDING STRESS (f) (pounds per square inch)	MODULUS OF ELASTICITY (E) (pounds per square inch)
Roofs				
6.5	20	1/240 1/360	420	595,000 892,000
	30	1/240 1/360	560	892,000 1,340,000
	40	1/240 1/360	700	1,190,000 1,730,000
7.0	20	1/240 1/360	490	910,000 1,360,000
	30	1/240 1/360	650	1,370,000 2,000,000
	40	1/240 1/360	810	1,820,000 2,725,000
7.5	20	1/240 1/360	560	1,125,000 1,685,000
	30	1/240 1/360	750	1,685,000 2,530,000
	40	1/240 1/360	930	2,250,000 3,380,000
8.0	20	1/240 1/360	640	1,360,000 2,040,000
	30	1/240 1/360	850	2,040,000 3,060,000
Floors				
4 4.5 5.0	40	1/360	840 950 1,060	1,000,000 1,300,000 1,600,000

For SI: 1 inch = 25.4 mm, 1 foot = 304.8 mm, 1 pound per square foot = 0.0479 kN/m^2, 1 pound per square inch = 0.00689 N/mm^2.

a. Spans are based on simple beam action with 10 pounds per square foot dead load and provisions for a 300-pound concentrated load on a 12-inch width of decking. Random layup is permitted in accordance with the provisions of Section 2308.7.12. Lumber thickness is $1^1/_2$ inches nominal.

ventional wood-framed buildings have some elements that are not strictly conventional, such as engineered trusses or Laminated Veneer Lumber (LVL) beams. This section makes it possible to design a "hybrid" building that is a mixture of conventional and engineered elements, provided appropriate attention is given to each.

2308.8.1 Elements exceeding limitations of conventional construction. Where a building of otherwise conventional construction contains structural elements exceeding the limits of Section 2308.2, these elements and the supporting load path shall be designed in accordance with accepted engineering practice and the provisions of this code.

❖ The intent of this section is to permit individual framing members that exceed the limitations of Section 2308 (load, span, etc.) to be engineered and placed within an otherwise conventional system without requiring the entire structural system to be engineered. Methods that must be used for all elements or systems that require an engineered design are to comply with other requirements of the code. The code also requires that the load path supporting these elements must be engineered. It should be noted that it is not the intent of this section to allow situations that result in load transfer beyond the underlying assumptions of the tables for other conventional members.

2308.8.2 Structural elements or systems not described herein. Where a building of otherwise conventional construction contains structural elements or systems not described in Section 2308, these elements or systems shall be designed in accordance with accepted engineering practice and the provisions of this code. The extent of such design need only demonstrate compliance of the nonconventional elements with other applicable provisions of this code and shall be compatible with the performance of the conventionally framed system.

❖ This section permits individual framing members that are not specifically covered in Section 2308 (new or proprietary products) to be engineered and placed within an otherwise conventional construction system without requiring the entire structural system to be engineered. The intent of this section is to recognize that there are many preengineered products on the market that might fit into a conventionally framed building, but not necessarily follow this section for their individual designs. Typical examples of elements used in conventional wood-framed buildings

INTERNATIONAL CODE COUNCIL®
Copyright © 2015 ICC. ALL RIGHTS RESERVED. Accessed by David Dammon on Jun 21, 2017 12:30:52 PM pursuant to License Agreement with ICC. No further reproduction or distribution authorized. ANY UNAUTHORIZED REPRODUCTION OR DISTRIBUTION IS A VIOLATION OF THE FEDERAL COPYRIGHT ACT AND THE LICENSE AGREEMENT, AND SUBJECT TO CIVIL AND CRIMINAL PENALTIES THEREUNDER.

that are not conventional are engineered trusses, I-joists, LVL headers, glued laminated beams, etc. Most elements that have an approval report have published design values based on laboratory testing and are approved as alternative materials or methods of construction, provided it is demonstrated that they are compatible with and adequately fit into the building system without violating other requirements of Section 2308. The extent of the design is limited to the element itself, but it also must be compatible with the conventional framing system. An example would be an LVL header in a conventionally framed stud wall. The LVL header itself would be designed, but obviously the adequacy of the trimmers to support the loads from the LVL header must also be confirmed. Another example would be an engineered truss system where the trusses would be designed, but the truss reactions must be adequately supported by the conventionally framed wall.

SECTION 2309
WOOD FRAME CONSTRUCTION MANUAL

2309.1 Wood Frame Construction Manual. Structural design in accordance with the AWC WFCM shall be permitted for buildings assigned to Risk Category I or II subject to the limitations of Section 1.1.3 of the AWC WFCM and the load assumptions contained therein. Structural elements beyond these limitations shall be designed in accordance with accepted engineering practice.

❖ The AWC Wood Framed Construction Manual (WFCM) is an ANSI consensus standard that contains both engineering criteria and engineered prescriptive provisions for wood frame construction. It is developed by technical committees organized by the American Wood Council. This section states that the AWC WFCM may be used for buildings that fit within the WFCM's applicability limits for building size, configuration and loads as set out in Section 1.1.3 of the standard. While WFCM provisions are intended primarily for detached one- and two-family dwellings due to the floor live load assumption associated with those occupancies, many of the WFCM provisions for specific geographic wind, seismic and snow loads may remain applicable for other buildings. For example, wind provisions for sizing of roof sheathing, wall sheathing, fastening schedule, uplift straps, shear anchorage, shear wall lengths and wall studs for out of plane wind loads are included in WFCM and are applicable for other use groups within the load limitations of the WFCM tables. Similarly, roof rafter size and spacing for heavy snow, and shear wall lengths and anchorage for seismic are applicable within the load limitations of the WFCM tables. Applications outside the scope of the WFCM tabulated requirements must be designed in accordance with accepted engineering practice.

Bibliography

The following resource materials were used in the preparation of the commentary for this chapter of the code.

AWC, ASD/LRFD *Manual for Engineered Wood Construction (ASD/LRFD Manual)*. Leesburg, VA: American Wood Council, 2005.

AWC *Heavy Timber Construction—Wood Construction Data 5*. Leesburg, VA: American Wood Council, 2003.

ANSI/AWC NDS-15, *National Design Specification for Wood Construction with 2015 Supplement*. Leesburg, VA: American Wood Council, 2015.

AWC SDPWS-15, *Special Design Provisions for Wind and Seismic*. Leesburg, VA: American Wood Council, 2015.

AWC STJR-15 *Span Tables for Joists and Rafters*. Leesburg, VA: American Wood Council, 2015.

AWC WCD 5-04, *Heavy Timber Construction Details*. Leesburg, VA: American Wood Council, 2004.

AWC WFCM-15, *Wood Frame Construction Manual for One- and Two-family Dwellings (WFCM)*. Leesburg, VA: American Wood Council, 2015.

ANSI/AITC A 190.1-12, *Structural Glued-laminated Timber*. Englewood, CO: American Institute of Timber Construction, 2012.

ANSI/A 190.1-12, *Structural Glued-laminated Timber*. Tacoma, WA: APA—Engineered Wood Association, 2012.

APA Report 157-96, *Wood Structural Panel Shear Walls with Gypsum Wallboard and Window/Door Openings*. Tacoma, WA: APA—The Engineered Wood Association, 1996.

APA Research Report 138, *Plywood Diaphragms*. Tacoma, WA: APA—Engineered Wood Association.

APA Research Report 154, *Wood Structural Panel Shear Wall*. Tacoma, WA: APA—Engineered Wood Association.

ASCE 7-10, *Minimum Design Loads for Buildings and Other Structures* with Supplement No. 1. Reston, VA: American Society of Civil Engineers, 2010.

ASTM C208-12, *Specification for Cellulose Fiber Insulating Board*. West Conshohocken, PA: ASTM International, 2012.

INTERNATIONAL CODE COUNCIL®
Copyright © 2015 ICC. ALL RIGHTS RESERVED. Accessed by David Dammon on Jun 21, 2017 12:30:52 PM pursuant to License Agreement with ICC. No further reproduction or distribution authorized. ANY UNAUTHORIZED REPRODUCTION OR DISTRIBUTION IS A VIOLATION OF THE FEDERAL COPYRIGHT ACT AND THE LICENSE AGREEMENT, AND SUBJECT TO CIVIL AND CRIMINAL PENALTIES THEREUNDER.

ASTM D245-06, *Standard Practice for Establishing Structural Grades and Related Allowable Properties for Visually Graded Lumber*. West Conshohocken, PA: ASTM International, 2006.

ASTM D5055-13, *Specification for Establishing and Monitoring Structural Capacities of Prefabricated Wood I-Joists*. West Conshohocken, PA: ASTM International, 2013.

ASTM F1667-11AE1, *Specification for Drive Fasteners: Nails, Spikes and Staples*. West Conshohocken, PA: ASTM International, 2011.

ATC 7, *Guidelines for the Design of Horizontal Wood Diaphragms*. Redwood City, CA: Applied Technology Council, 1981.

BCSI 1-08, *Guide to Good Practice for Handling, Installing and Bracing of Metal Plate Connected Wood Trusses*. Madison, WI: Wood Truss Council of America (WTCA) & Truss Plate Institute (TPI), 2008.

FEMA 450, Part 1, NEHRP *Recommended Provisions for Seismic Regulations for New Buildings and Other Structures*. Washington, DC: Federal Emergency Management Agency, 2004.

FEMA 450, Part 2, NEHRP *Recommended Provisions for Seismic Regulations for New Buildings and Other Structures Part 2: Commentary*. Washington, DC: Federal Emergency Management Agency, 2004.

ICC-ES, *Acceptance Criteria for Staples (AC 201)*. Whittier, CA: ICC Evaluation Service, Inc., 2005, 2008.

Recommended Lateral Force Requirements and Commentary (SEAOC Blue Book). Sacramento, CA: Structural Engineers Association of California, 1999.

SEAOC Blue Book: *Seismic Design Recommendations of the SEAOC Seismology Committee*. Sacramento, CA: Structural Engineers Association of California, 2006.

TPI 1-14, *National Design Standard for Metal Plate Connected Wood Trusses Construction*. Alexandria, VA: Truss Plate Institute, 2014.

INTERNATIONAL CODE COUNCIL®

Copyright © 2015 ICC. ALL RIGHTS RESERVED. Accessed by David Dammon on Jun 21, 2017 12:30:52 PM pursuant to License Agreement with ICC. No further reproduction or distribution authorized. ANY UNAUTHORIZED REPRODUCTION OR DISTRIBUTION IS A VIOLATION OF THE FEDERAL COPYRIGHT ACT AND THE LICENSE AGREEMENT, AND SUBJECT TO CIVIL AND CRIMINAL PENALTIES THEREUNDER.

Chapter 24: Glass and Glazing

General Comments

Chapter 24 includes design provisions and quality requirements for glazing consisting of glass and, to a limited extent, light-transmitting plastics.

Section 2401 contains the general contents and scope of this chapter.

Section 2402 lists definitions of words and phrases that are necessary for a better understanding of the requirements of this chapter.

Section 2403 establishes the identification requirements for safety and nonsafety glazing, glass support and framing systems, glass thicknesses and requirements for glass at interior locations. This section also addresses special provisions for louvered and jalousie windows.

Section 2404 provides the design requirements and limitations for vertical glass exposed to wind loads, and sloped glass exposed to wind, snow and dead loads. Design factors for the more common types of glass are included in the design tables.

Section 2405 defines the allowable glazing types and related requirements for sloped glazing and skylights.

Section 2406 provides a detailed listing of the applications where safety glazing is required. Test standard category classification requirements are also included in this section.

Section 2407 considers glass used as either structural balustrades or in-fill panels in handrail and guardrail systems.

Section 2408 clarifies the special requirements for glass areas exposed to extraordinary impact from people. These are applicable to walls and doors in certain athletic facilities.

Section 2409 covers glass in walkways, elevator cars and hoistway enclosures.

As is true with other chapters in the code that deal with building materials and components, this chapter evolved from the considerations of safety, public welfare and the integrity of a building's construction. There is an ever-growing demand from building owners and architects to incorporate larger quantities of glass in buildings. This in turn increases the concerns for such things as safety and energy conservation. The glass industry is being called on to meet these demands. Model building codes are changing almost daily to stay abreast of the ever-changing technology being employed in the glass industry. Recognizing the risks should sloped glass fail, the model code groups and the glass and glazing industry have developed changes that only allow safety glazing materials over occupiable areas. Complying materials include laminated, fully tempered and wired glasses, and acrylic and polycarbonate plastics. Except in residential occupancies, fully tempered glass is required to have a screen below the glass. In addition to the concern for overhead glazing, a need developed to codify and address glazing materials in locations that are exposed to human impact, including but not necessarily limited to: sliding patio doors; side-swinging storm and primary use doors; tub and shower enclosures; and doors and certain fixed and operable glass panels. Building officials and the glass industry joined together to develop and enact safety glazing requirements to fill this need. As a result, safety glazing laws have been adopted in many states. Based on the recommendation of the Consumer Product Safety Commission (CPSC), a federal law was enacted in 1977 mandating safety glazing in all areas that might reasonably be exposed to impact from people. The requirements of this federal law were similar to the laws adopted by these various states. This chapter also addresses the design and selection of glass to withstand wind loads, snow loads, dead loads and other imposed loads.

The code uses the terms "glass" and "glazing" interchangeably as if there is no difference between the two. This can cause confusion when talking about "safety glazing" or "safety glass."

Glass is a hard, brittle, inorganic material that is manufactured from a mixture of silica, flux and a stabilizer to form a transparent, translucent or opaque material. While in its molten (semiliquid) form, it can be blown, drawn, rolled, pressed or cast into a variety of shapes. Most of the glass referenced in the code is in sheet form. Glass, safety or not, as well as other materials can be used as glazing.

On the other hand, to "glaze" means to furnish or fit with glass, such as to install glass in an opening in a door. Glass installed in an exterior wall would be properly identified as a glazed opening, or more commonly, a window. An enclosure around a shower can be constructed of many materials, but it is considered to be a glazed enclosure if the enclosing material is glass. The code does permit the limited use of some plastics as glazing materials.

To assist in evaluating the requirements for glass in buildings, properties of the various types are listed below:

Annealed glass—has been subjected to the annealing process, which consists of controlled cooling in a cooling or annealing oven. Types of annealed glass include float, plate and sheet.

Float glass—is produced by floating a continuous ribbon of molten glass on molten tin. As the glass flows downstream, the temperature of the glass and tin is reduced. When the glass ribbon solidifies, it is lifted from the tin onto rollers and slowly cooled in a controlled cooling oven or annealing lehr. There is no further treat-

INTERNATIONAL CODE COUNCIL®
Copyright © 2015 ICC. ALL RIGHTS RESERVED. Accessed by David Dammon on Jun 21, 2017 12:30:52 PM pursuant to License Agreement with ICC. No further reproduction or distribution authorized. ANY UNAUTHORIZED REPRODUCTION OR DISTRIBUTION IS A VIOLATION OF THE FEDERAL COPYRIGHT ACT AND THE LICENSE AGREEMENT, AND SUBJECT TO CIVIL AND CRIMINAL PENALTIES THEREUNDER.

ment of the glass. Most clear, gray, bronze and green-tinted glass for architectural use is presently produced by the float process.

Plate glass—is produced by grinding and polishing rough glass blanks. The glass blanks are formed by drawing semimolten glass through textured rollers, which are then fed through an annealing lehr prior to grinding and polishing. It should be noted that there is limited domestic production of plate glass material.

Sheet glass—is manufactured by continuously drawing molten glass from a bath, horizontally or vertically over rollers, through an annealing lehr. Because of the manufacturing process, sheet glass has an inherent waviness characteristic, and is, therefore, not typically used in applications where good optical quality is desired, such as architectural glazing, reflective glazing or show windows. The most common use of sheet glass is in residential applications.

Tempered or fully tempered glass—is annealed glass that has been heated and quenched in a controlled operation to provide a high level of surface compression. For most types of loading conditions, it has approximately four times the strength of regular annealed glass. Tempered glass breaks into small, relatively harmless fragments, and is used as safety glazing material. After tempering, this glass cannot be cut, drilled or otherwise altered without breaking.

Heat-strengthened glass—is produced in much the same way as tempered glass, except the level of surface compression is less. Heat-strengthened glass has approximately twice the strength of regular annealed glass and breaks into relatively large pieces. It is not a safety glazing material.

Laminated glass—is a sandwich of two or more plies of glass bonded together with resilient plastic interlayers, usually polyvinyl butyral. The glass plies may be regular, tempered or heat-strengthened glass. The plastic interlayer thickness is generally 0.030 inch (0.76 mm), but may range up to 0.090 inch (2.3 mm) for some applications. When this glass breaks, the fragments are held together by the plastic interlayer.

Wired glass—is a monolithic glass with wire mesh embedded in approximately the center of the glass thickness. Coupled with a suitable framing system, some wire glass is fire resistant. The surface of wire glass may be smooth or textured. Wire glass cannot be tempered or heat strengthened.

Insulating glass—is a factory-assembled glazing unit consisting of two or more panes of glass separated by airspaces. The edges of the finished glazing unit, including the airspaces, are hermetically sealed. The entrapped air is removed, creating a vacuum, which is necessary to prevent condensation within the sealed airspaces. The airspaces between the glass can be filled with specialized gas to add to the energy efficiency of the glazing unit. The panes of glass may be any type, except for patterned glasses with deep patterns.

Patterned glass—has a texture or pattern embossed on one or both surfaces during the manufacturing process. Some glass with shallow patterns can be tempered and heat strengthened.

Spandrel glass—is manufactured from either float glass or plate glass that has an opaque coating of fired-on ceramic glaze on the interior surface (or room side). This glass is typically heat strengthened or tempered to resist the thermal stresses (movement) caused by the high absorption of solar radiation by the opaque coating.

Purpose

The primary purpose of this chapter is to provide information to establish the adequacy of glazing from the standpoint of life safety and performance. The sections on glass in handrails and guards, glazing in athletic facilities and safety glazing dictate a performance standard that will minimize risks to a level consistent with other provisions of the code.

SECTION 2401
GENERAL

2401.1 Scope. The provisions of this chapter shall govern the materials, design, construction and quality of glass, light-transmitting ceramic and light-transmitting plastic panels for exterior and interior use in both vertical and sloped applications in buildings and structures.

❖ This chapter establishes regulations for glass and glazing used in buildings and structures that, when installed, are subjected to wind, snow and dead loads. Engineering and design requirements in the form of tables, formulas and design loads are contained in this chapter. Additional structural requirements are found in Chapter 16.

A second concern of this chapter is glass and glazing used in locations where it is likely to be impacted by building occupants. Requirements for identification of safety glass, human impact loads, identification of hazardous locations and the types of glass that are allowed in railings and walls are included in this chapter.

This chapter details certain prescriptive and performance requirements for glazing used in buildings, including thickness limitations, design of glass supports and allowable sizes based on wind, snow and dead loads. The limitations on glass used in sloped glazing and areas exposed to human impact are also included. The information contained in this chapter on light-transmitting plastics is limited. For additional

INTERNATIONAL CODE COUNCIL®
Copyright © 2015 ICC. ALL RIGHTS RESERVED. Accessed by David Dammon on Jun 21, 2017 12:30:52 PM pursuant to License Agreement with ICC. No further reproduction or distribution authorized. ANY UNAUTHORIZED REPRODUCTION OR DISTRIBUTION IS A VIOLATION OF THE FEDERAL COPYRIGHT ACT AND THE LICENSE AGREEMENT, AND SUBJECT TO CIVIL AND CRIMINAL PENALTIES THEREUNDER.

information on plastic materials, referenced standards and other code requirements for plastics, refer to Chapter 26.

2401.2 Glazing replacement. The installation of replacement glass shall be as required for new installations.

❖ Any glazing installed in existing construction is required to meet all the requirements and standards of the code. This includes installing new glass in an existing window, door or other type of opening, even where the glass being replaced did not comply with the standards of the code.

Relocating any type of manufactured unit containing glass, such as a door or window, from one location in an existing building or structure to another location in the same building or structure, or even a different building or structure, is to be considered new glazing, even though the unit containing the glass is existing.

SECTION 2402
DEFINITIONS

2402.1 Definitions. The following terms are defined in Chapter 2:

DALLE GLASS.

DECORATIVE GLASS.

❖ Some terms are used in the code to describe something very specific to the related subject matter while other terms may have multiple meanings that vary based on the subject matter and context. Definitions facilitate the understanding of code provisions and minimize potential confusion. To that end, this section lists definitions of terms associated with glazing. Note that these definitions are found in Chapter 2. The use and application of defined terms, as well as undefined terms, are set forth in Section 201.

SECTION 2403
GENERAL REQUIREMENTS FOR GLASS

2403.1 Identification. Each pane shall bear the manufacturer's *mark* designating the type and thickness of the glass or glazing material. The identification shall not be omitted unless *approved* and an affidavit is furnished by the glazing contractor certifying that each light is glazed in accordance with *approved construction documents* that comply with the provisions of this chapter. Safety glazing shall be identified in accordance with Section 2406.3.

Each pane of tempered glass, except tempered spandrel glass, shall be permanently identified by the manufacturer. The identification *mark* shall be acid etched, sand blasted, ceramic fired, laser etched, embossed or of a type that, once applied, cannot be removed without being destroyed.

Tempered spandrel glass shall be provided with a removable paper marking by the manufacturer.

❖ Basic marking for identifying type and thickness of glass, as well as requirements and precautionary statements regarding the glass support system, are prescribed in this section. Detailed performance requirements are addressed in other sections.

Glass is a product that is manufactured and fabricated as assemblies at locations other than the building site. Identification of glass and glazing with a mark bearing the type and thickness is needed by the building inspector to perform a visual inspection (see Commentary Figure 2403.1). The inspection is needed to verify that the glazing is installed in the proper location in the building in compliance with this chapter for hazardous locations and structural loads. Other than verifying compliance with wind load requirements for glazing exposed to such loading, the glass thickness itself is not necessarily an indication of code compliance. For example, where a specific performance is required, such as for safety glazing in

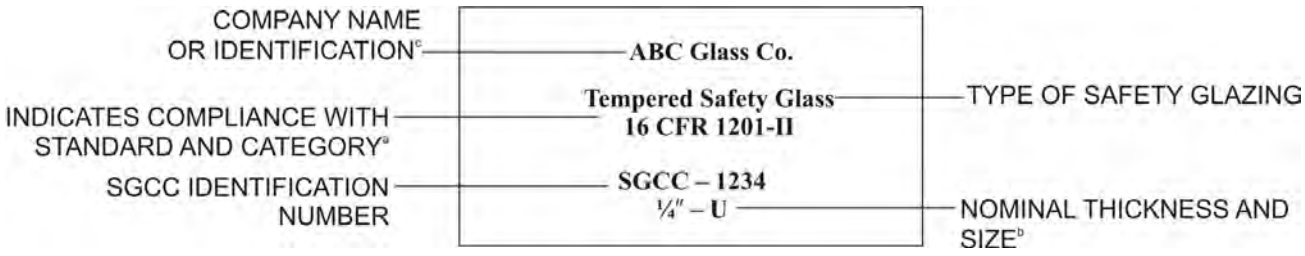

For SI: 1 inch = 25.4 mm, 1 square foot = 0.0929 m^2.

a. "I" after "16 CFR 1201" indicates sizes 9 square feet and less are covered; "II" indicates all sizes are covered.
b. "U" indicates all sizes are covered; "L" indicates only sizes listed by the Safety Glazing Certification Council (SGCC) are covered.
c. Numbers or letters for date coding and plant identification may also be included.

Figure 2403.1
EXAMPLE IDENTIFYING MARK

INTERNATIONAL CODE COUNCIL®
Copyright © 2015 ICC. ALL RIGHTS RESERVED. Accessed by David Dammon on Jun 21, 2017 12:30:52 PM pursuant to License Agreement with ICC. No further reproduction or distribution authorized. ANY UNAUTHORIZED REPRODUCTION OR DISTRIBUTION IS A VIOLATION OF THE FEDERAL COPYRIGHT ACT AND THE LICENSE AGREEMENT, AND SUBJECT TO CIVIL AND CRIMINAL PENALTIES THEREUNDER.

Section 2406, the manufacturer's mark must identify the standard to which the glass has been tested (see Section 2406.3), which is sufficient to determine compliance with the standard. Note that CPS 16 CFR, Part 1201, does not require the glass thickness to be part of the marking while in accordance with ANSI Z97.1 the glass thickness is an optional marking.

The code requires that each light, which is an individual pane of glass, be marked. Only tempered glass is required by the code to be permanently identified. The identification is to be visible after installation. Tempered glass, both heat strengthened and fully tempered, is produced by reheating and rapidly cooling annealed glass. Heat-strengthened glass and fully tempered glass have increased mechanical strength and resistance to thermal stresses. Fully tempered glass is twice as strong as heat-strengthened glass. Fully tempered glass will pulverize into numerous small, cube-like fragments when broken at any point. Heat-strengthened glass breaks similarly to annealed glass. Heat-strengthened and fully tempered glass cannot be altered after fabrication. Tempered glass cannot be cut, drilled, ground or polished without fracture. The manufacturer of tempered glass must furnish the exact size and shape.

Laminated, annealed, float and spandrel glass, unlike tempered glass, can be cut and fabricated without fracturing. Laminated glass is stockpiled in standard-size sheets by its manufacturers. It consists of two or more sheets of glass held together by an intervening layer of plastic material. The stock sheets are marked by the manufacturer in one corner, which is cut off in the fabrication process. A permanent mark is therefore impractical, so the building official has to rely on an affidavit from the installer of the glazing.

Permanent identification of spandrel glass is not required by the code, since a permanent label may alter the performance of the glass and cause breakage. Spandrel glass is an opaque glass that is heat strengthened through the process of fire fusing an opaque ceramic color to the interior surface of the glass. Spandrel glass is used as exterior windows and curtain walls to conceal internal construction and to provide solar control and energy conservation. An exposed permanent mark on tinted and reflective spandrel glass could change the coefficient of expansion of the glass. The label reacts differently to the heating and cooling effects of the atmosphere than the coated glass surface, which can cause increased incidence of glass breakage. The code, therefore, permits a removable paper mark for identification of spandrel glass.

The glazing contractor is responsible for the final installation of glass and glazing in the building and, with the approval of the building official, may provide an affidavit as an alternative to marking. The affidavit must certify that each light is glazed under the approved plans and specifications. The affidavit relieves the building inspector of the responsibility for inspecting the glass and glazing for type and thickness; however, it does not relieve the plans examiner from the responsibility of reviewing the plans and specifications for compliance with the code. An affidavit may not be submitted for tempered glass that must be permanently identified in compliance with the requirements of this section.

2403.2 Glass supports. Where one or more sides of any pane of glass are not firmly supported, or are subjected to unusual load conditions, detailed *construction documents*, detailed shop drawings and analysis or test data ensuring safe performance for the specific installation shall be prepared by a *registered design professional*.

❖ Most glass in buildings is firmly supported on all four edges. With many contemporary designs, glass is installed with support at the top and bottom edges only and, in some cases, with support on three edges. The free edges usually abut adjacent glass panels. When one or more edges of the glass are unsupported, the resistance to wind load is reduced. In this case, or in other cases where glass is subjected to unusual loading conditions, the code requires special engineering analysis and detailed construction documents to demonstrate compliance.

2403.3 Framing. To be considered firmly supported, the framing members for each individual pane of glass shall be designed so the deflection of the edge of the glass perpendicular to the glass pane shall not exceed $^{1}/_{175}$ of the glass edge length or $^{3}/_{4}$ inch (19.1 mm), whichever is less, when subjected to the larger of the positive or negative load where loads are combined as specified in Section 1605.

❖ Framing for glazing systems includes, but is not necessarily limited to: aluminum storefront framing; hollow metal framing; job-fabricated custom wood framing; and factory-manufactured window units constructed of wood, metal, vinyl or a combination of these materials, most of which are industry standards recognized by the code. Regardless of the framing system, it is necessary to comply with the structural requirements of Chapter 16.

It is important to note that "all edges" of each piece of glass must be supported within the parameters described in this section and elsewhere in the code. If not, detailed engineering analysis must be done as indicated in Section 2403.2.

2403.4 Interior glazed areas. Where interior glazing is installed adjacent to a walking surface, the differential deflection of two adjacent unsupported edges shall be not greater than the thickness of the panels when a force of 50 pounds per linear foot (plf) (730 N/m) is applied horizontally to one panel at any point up to 42 inches (1067 mm) above the walking surface.

❖ This provision addresses the installation of glass panels in interior locations adjacent to walking surfaces, such as storefronts within covered mall buildings. Unlike exterior locations, interior installations do not

INTERNATIONAL CODE COUNCIL®
Copyright © 2015 ICC. ALL RIGHTS RESERVED. Accessed by David Dammon on Jun 21, 2017 12:30:52 PM pursuant to License Agreement with ICC. No further reproduction or distribution authorized. ANY UNAUTHORIZED REPRODUCTION OR DISTRIBUTION IS A VIOLATION OF THE FEDERAL COPYRIGHT ACT AND THE LICENSE AGREEMENT, AND SUBJECT TO CIVIL AND CRIMINAL PENALTIES THEREUNDER.

require the placement of mullions between adjacent panels to provide weather resistance. Without intermediate mullions, individual glass panels are free to move independently of each other. When only one panel is subjected to horizontal pressure, the deflection of the panel may cause gaps between adjacent panels. These gaps pose a potential pinching hazard to anyone who may contact the glass panels and cause the differential deflection. This hazard is greater when the glass panels are not mounted in the same plane and the meeting edges form an angle.

The design criteria provided in this section limit the use of glass panels to those that will not deflect more than the thickness of the glass panel itself when the specified force is applied at a height up to 42 inches (1067 mm) above the walking surface. This limitation protects against the occurrence of gaps between adjacent panels that would otherwise create a pinching hazard. The 42-inch (1067 mm) dimension represents the height range in which a person's body will likely contact the glass. The load must be assumed to occur at the point anywhere within the 42-inch (1067 mm) range that will cause the greatest differential deflection between the glass panels.

2403.5 Louvered windows or jalousies. Float, wired and patterned glass in louvered windows and jalousies shall be no thinner than nominal $^3/_{16}$ inch (4.8 mm) and no longer than 48 inches (1219 mm). Exposed glass edges shall be smooth.

Wired glass with wire exposed on longitudinal edges shall not be used in louvered windows or jalousies.

Where other glass types are used, the design shall be submitted to the *building official* for approval.

❖ Louvered and jalousie windows consist of a series of overlapping horizontal glass louvers that pivot simultaneously in the window frame. During opening, the bottom edge of each louver swings toward the exterior and the top edge swings toward the interior. The glass panels are supported on two vertical sides with the horizontal edges of the glass exposed.

For safety reasons, the exposed edges of the louvered panels are required to be smooth. Thus, wire glass panels, if used, must have no exposed projecting wire. To provide structural strength, the panels are limited to a minimum thickness of $^3/_{16}$ inch (4.8 mm) and a maximum length of 48 inches (1219 mm).

Louvered and jalousie windows are exempt from safety glazing requirements in all applications, including those where a flat pane of glass is otherwise required to be safety glass. This exemption is based on records that show the injuries associated with this use of glass are primarily from persons impacting the glass edge with no cutting or piercing injuries resulting from glass breakage. Safety glass would not have an effect on this type of injury. There are also practical production reasons associated with fabricating safety glazing for the relatively long, thin slats.

SECTION 2404
WIND, SNOW, SEISMIC AND DEAD LOADS ON GLASS

2404.1 Vertical glass. Glass sloped 15 degrees (0.26 rad) or less from vertical in windows, curtain and window walls, doors and other exterior applications shall be designed to resist the wind loads due to ultimate design wind speed, *Vult*, in Section 1609 for components and cladding. Glass in glazed curtain walls, glazed storefronts and glazed partitions shall meet the seismic requirements of ASCE 7, Section 13.5.9. The load resistance of glass under uniform load shall be determined in accordance with ASTM E1300.

The design of vertical glazing shall be based on Equation 24-1.

$$0.6F_{gw} \le F_{ga} \qquad \textbf{(Equation 24-1)}$$

where:

F_{gw} = Wind load on the glass due to ultimate design wind speed, V_{ult}, computed in accordance with Section 1609.

F_{ga} = Short duration load on the glass as determined in accordance with ASTM E1300.

❖ The procedures for determining compliance of the more common types of glass used in vertical applications are stated in this section. For a given glass type, thickness, plate length and plate width, allowable loads are determined in accordance with ASTM E1300 using nonfactored loads and established factors that are based on glass type. ASTM E1300 also considers the influence of width-to-height ratios, effects of weathering and exposure, and statistical influence of glass size. The standard contains more than 40 nonfactored charts covering one-, two-, three- and four-sided support conditions. The application of ASTM E1300 results in an allowable uniform wind load for a specified glass type, thickness and size. The allowable wind load must equal or exceed the required wind loads determined from Section 1609 for components and cladding. If the allowable wind load is less than the required wind load from Section 1609, thicker glass must be provided.

In buildings having an elevated seismic risk, glazed partitions, glazed storefronts and glazed curtain walls must be capable of withstanding the relative seismic displacements between the points of attachment to the supporting structure(s). The objective of the referenced ASCE 7 earthquake load provision is to limit the hazard of falling glass during and immediately after an earthquake.

2404.2 Sloped glass. Glass sloped more than 15 degrees (0.26 rad) from vertical in skylights, sunrooms, sloped roofs and other exterior applications shall be designed to resist the most critical combinations of loads determined by Equations 24-2, 24-3 and 24-4.

$$F_g = 0.6W_o - D \qquad \textbf{(Equation 24-2)}$$

$$F_g = 0.6W_i + D + 0.5\,S \qquad \textbf{(Equation 24-3)}$$

INTERNATIONAL CODE COUNCIL®
Copyright © 2015 ICC. ALL RIGHTS RESERVED. Accessed by David Dammon on Jun 21, 2017 12:30:52 PM pursuant to License Agreement with ICC. No further reproduction or distribution authorized. ANY UNAUTHORIZED REPRODUCTION OR DISTRIBUTION IS A VIOLATION OF THE FEDERAL COPYRIGHT ACT AND THE LICENSE AGREEMENT, AND SUBJECT TO CIVIL AND CRIMINAL PENALTIES THEREUNDER.

$F_g = 0.3\ W_i + D + S$ **(Equation 24-4)**

where:

D = Glass dead load psf (kN/m^2).

For glass sloped 30 degrees (0.52 rad) or less from horizontal,

= 13 t_g (For SI: 0.0245 t_g).

For glass sloped more than 30 degrees (0.52 rad) from horizontal,

= 13 t_g cos θ (For SI: 0.0245 t_g cos θ).

F_g = Total load, psf (kN/m^2) on glass.

S = Snow load, psf (kN/m^2) as determined in Section 1608.

t_g = Total glass thickness, inches (mm) of glass panes and plies.

W_i = Inward wind force, psf (kN/m^2) due to ultimate design wind speed, V_{ult}, as calculated in Section 1609.

W_o = Outward wind force, psf (kN/m^2) due to ultimate design wind speed, V_{ult}, as calculated in Section 1609.

θ = Angle of slope from horizontal.

Exception: The performance grade rating of unit skylights and tubular daylighting devices shall be determined in accordance with Section 2405.5.

The design of sloped glazing shall be based on Equation 24-5.

$F_g \le F_{ga}$ **(Equation 24-5)**

where:

F_g = Total load on the glass as determined by Equations 24-2, 24-3 and 24-4.

F_{ga} = Short duration load resistance of the glass as determined in accordance with ASTM E1300 for Equations 24-2 and 24-3; or the long duration load resistance of the glass as determined in accordance with ASTM E1300 for Equation 24-4.

❖ This section provides the procedure for determining the maximum allowable load that may be supported by a sloped glazing system. The maximum allowable load must be greater than the required design loads. The required design loads are first determined from the three load combinations listed as Equations 24-2, 24-3 and 24-4. The applicable wind loads from the components and cladding requirements of Section 1609 and the snow loads from Section 1608 are used to determine the required design loads from the three load combinations.

After the required design loads are determined, the maximum allowable load resistance of the specified glass is determined in accordance with ASTM E1300. See the commentary to Section 2404.1 for a discussion of ASTM E1300.

If the determined maximum allowable load resistance of the glass is not greater than that required from the load combinations, an option would be to choose a greater glass thickness and determine the maximum allowable load resistance of the glass in accordance with ASTM E1300.

For load combinations given by Equations 24-2 and 24-3, wind is the primary loading, and the short-term load resistance from ASTM E1300 applies. In Equation 24-4, however, snow is a primary load and wind becomes a "companion load" (factor of 0.5 is applied to wind) requiring use of the long duration load resistance in satisfying Equation 24-5. In the latter case, the nominal snow loads should consider drifts, partial snow load, etc., in accordance with the requirements under Section 1608.

The exception refers to design provisions that are specific to unit skylights (i.e., single-panel, factory-assembled units) and tubular daylighting devices.

2404.3 Wired, patterned and sandblasted glass.

2404.3.1 Vertical wired glass. Wired glass sloped 15 degrees (0.26 rad) or less from vertical in windows, curtain and window walls, doors and other exterior applications shall be designed to resist the wind loads in Section 1609 for components and cladding according to the following equation:

$0.6F_{gw} < 0.5\ F_{ge}$ **(Equation 24-6)**

where:

F_{gw} = Wind load on the glass due to ultimate design wind speed, V_{ult}, computed in accordance with Section 1609.

F_{ge} = Nonfactored load from ASTM E1300 using a thickness designation for monolithic glass that is not greater than the thickness of wired glass.

❖ Wired glass is not within the scope of ASTM E1300 and the requirements for vertical wired glass are therefore specified in the code. As with other vertical glazing, the wind loading on the glass is required to be determined in accordance with Section 1609 of the code. The allowable load on vertical wired glass is based on requirements for monolithic glass, as contained in ASTM E1300, of a thickness less than or equal to that specified for the wired glass. ASTM E1300 provides the method for determining values of short-duration and long-duration load resistance for specific glazing types by taking a nonfactored load from the load chart and adjusting that value for the glass type, as well as the load duration. For wired glass, patterned glass or sandblasted glass, the nonfactored load from ASTM E1300 is utilized. The factors in the corresponding code equations adjust the nonfactored load to establish a resistance value for these glass types. Note that a factor of 0.5 is used with the nonfactored load determined in accordance with ASTM E1300.

2404.3.2 Sloped wired glass. Wired glass sloped more than 15 degrees (0.26 rad) from vertical in skylights, sun-spaces, sloped roofs and other exterior applications shall be designed to resist the most critical of the combinations of loads from Section 2404.2.

For Equations 24-2 and 24-3:

$F_g < 0.5\ F_{ge}$ **(Equation 24-7)**

INTERNATIONAL CODE COUNCIL®
Copyright © 2015 ICC. ALL RIGHTS RESERVED. Accessed by David Dammon on Jun 21, 2017 12:30:52 PM pursuant to License Agreement with ICC. No further reproduction or distribution authorized. ANY UNAUTHORIZED REPRODUCTION OR DISTRIBUTION IS A VIOLATION OF THE FEDERAL COPYRIGHT ACT AND THE LICENSE AGREEMENT, AND SUBJECT TO CIVIL AND CRIMINAL PENALTIES THEREUNDER.

For Equation 24-4:

$F_g < 0.3\ F_{ge}$ **(Equation 24-8)**

where:

F_g = Total load on the glass as determined by Equations 24-2, 24-3 and 24-4.

F_{ge} = Nonfactored load in accordance with ASTM E1300.

❖ Wired glass is not within the scope of ASTM E1300 and the requirements for sloped wired glass are therefore specified in the code. As with other sloped glazing, the maximum allowable load must be greater than the required loads. The required design loads are first determined from the three load combinations listed as Equations 24-2, 24-3 and 24-4. The applicable wind loads from the components and cladding requirements of Section 1609 and the snow loads from Section 1608 are used to determine the required design loads from the three load combinations.

After the required design loads are determined, the maximum allowable load resistance of the specified glass is determined in accordance with ASTM E1300. ASTM E1300 provides the method for determining values of short-duration and long-duration load resistance for specific glazing types by taking a nonfactored load from the load chart and adjusting that value for the glass type and load duration. For wired glass, patterned glass or sandblasted glass, the nonfactored load from ASTM E1300 is utilized. The factors in the corresponding code equations adjust the nonfactored load to establish a corresponding resistance value for these glass types. Note that factors of either 0.5 or 0.3 are used with the nonfactored load determined in accordance with ASTM E1300. This equates to a factor of 2 or 3.33 on the loads determined in the corresponding load combination. The resistance for sloped wired glass, patterned glass or sandblasted glass is to be determined using the nonfactored load from ASTM E1300. The code fails to specify which type of glazing is appropriate to establish this resistance, but Section 2404.3.1 uses the values for monolithic glass; therefore, it is likely that the intent is to use the nonfactored load for monolithic glass in this section as well.

2404.3.3 Vertical patterned glass. Patterned glass sloped 15 degrees (0.26 rad) or less from vertical in windows, curtain and window walls, doors and other exterior applications shall be designed to resist the wind loads in Section 1609 for components and cladding according to Equation 24-9.

$F_{gw} < 1.0\ F_{ge}$ **(Equation 24-9)**

where:

F_{gw} = Wind load on the glass due to ultimate design wind speed, V_{ult}, computed in accordance with Section 1609.

F_{ge} = Nonfactored load in accordance with ASTM E1300. The value for patterned glass shall be based on the thinnest part of the glass. Interpolation between nonfactored load charts in ASTM E1300 shall be permitted.

❖ Patterned glass is not within the scope of ASTM E1300 and the requirements for vertical patterned glass are, therefore, specified in the code. As with other vertical glazing, the wind loading on the glass is required to be determined in accordance with Section 1609 of the code. The allowable load on vertical patterned glass is to be as contained in ASTM E1300 for a thickness less than or equal to the thinnest portion specified for the patterned glass. ASTM E1300 provides the method for determining values of short-duration and long-duration load resistance for specific glazing types by taking a nonfactored load from the load chart and adjusting that value for the glass type, as well as the load duration. For wired glass, patterned glass or sandblasted glass, the nonfactored load from ASTM E1300 is utilized. The factors in the corresponding code equations adjust the nonfactored load to establish a corresponding resistance value for these glass types. The resistance for sloped wired glass, patterned glass or sandblasted glass is to be determined using the nonfactored load from ASTM E1300. The code fails to specify which type of glazing is appropriate to establish this resistance, but Section 2404.3.1 uses the values for monolithic glass; therefore, it is likely that the intent is to use the nonfactored load for monolithic glass in this section as well.

2404.3.4 Sloped patterned glass. Patterned glass sloped more than 15 degrees (0.26 rad) from vertical in skylights, sunspaces, sloped roofs and other exterior applications shall be designed to resist the most critical of the combinations of loads from Section 2404.2.

For Equations 24-2 and 24-3:

$F_g < 1.0\ F_{ge}$ **(Equation 24-10)**

For Equation 24-4:

$F_g < 0.6 F_{ge}$ **(Equation 24-11)**

where:

F_g = Total load on the glass as determined by Equations 24-2, 24-3 and 24-4.

F_{ge} = Nonfactored load in accordance with ASTM E1300. The value for patterned glass shall be based on the thinnest part of the glass. Interpolation between the nonfactored load charts in ASTM E1300 shall be permitted.

❖ Patterned glass is not within the scope of ASTM E1300 and the requirements for sloped patterned glass are therefore specified in the code. As with other sloped glazing, the maximum allowable load must be greater than the required loads. The required design loads are first determined from the three load combinations listed as Equations 24-2, 24-3 and 24-4. The applicable wind loads from the components and cladding requirements of Section 1609 and the

INTERNATIONAL CODE COUNCIL®
Copyright © 2015 ICC. ALL RIGHTS RESERVED. Accessed by David Dammon on Jun 21, 2017 12:30:52 PM pursuant to License Agreement with ICC. No further reproduction or distribution authorized. ANY UNAUTHORIZED REPRODUCTION OR DISTRIBUTION IS A VIOLATION OF THE FEDERAL COPYRIGHT ACT AND THE LICENSE AGREEMENT, AND SUBJECT TO CIVIL AND CRIMINAL PENALTIES THEREUNDER.

snow loads from Section 1608 are used to determine the required design loads from the three load combinations.

The allowable load on vertical patterned glass is to be as contained in ASTM E1300 for a thickness less than or equal to the thinnest portion specified for the patterned glass. ASTM E1300 provides the method for determining values of short-duration and long-duration load resistance for specific glazing types by taking a nonfactored load from the load chart and adjusting that value for the glass type as well as the load duration. For wired glass, patterned glass or sandblasted glass, the nonfactored load from ASTM E1300 is utilized. The factors in the corresponding code equations adjust the nonfactored load to establish a corresponding resistance value for these glass types. Note that factors of either 1.0 or 0.6 are used with the nonfactored load determined in accordance with ASTM E1300. This equates to a factor of 1 or 1.66 on the loads determined in the corresponding load combinations. The resistance for sloped wired glass, patterned glass or sandblasted glass is to be determined using the nonfactored load from ASTM E1300. The code fails to specify which type of glazing is appropriate to establish this resistance, but Section 2404.3.1 uses the values for monolithic glass; therefore, it is likely that the intent is to use the nonfactored load for monolithic glass in this section as well.

2404.3.5 Vertical sandblasted glass. Sandblasted glass sloped 15 degrees (0.26 rad) or less from vertical in windows, curtain and window walls, doors, and other exterior applications shall be designed to resist the wind loads in Section 1609 for components and cladding according to Equation 24-12.

$$0.6F_{gw} < 0.5\,F_{ge} \qquad \textbf{(Equation 24-12)}$$

where:

F_g = Wind load on the glass due to ultimate design wind speed, V_{ult}, computed in accordance with Section 1609.

F_{ge} = Nonfactored load in accordance with ASTM E1300. The value for sandblasted glass is for moderate levels of sandblasting.

❖ Sandblasted glass is not within the scope of ASTM E1300 and the requirements for vertical sandblasted glass are, therefore, specified in the code. As with other vertical glazing, the wind loading on the glass is required to be determined in accordance with Section 1609 of the code. The allowable load on vertical patterned glass is to be as contained in ASTM E1300. ASTM E1300 provides the method for determining values of short-duration and long-duration load resistance for specific glazing types by taking a nonfactored load from the load chart and adjusting that value for the glass type as well as the load duration. For wired glass, patterned glass or sandblasted glass, the nonfactored load from ASTM E1300 is utilized. The factors in the corresponding code equations adjust the nonfactored load to establish a corresponding resistance value for these glass types. Note that a factor of 0.5 is used with the nonfactored load determined in accordance with ASTM E1300. This equates to a factor of 2 on the wind loads determined in Section 1609. The resistance for sloped wired glass, patterned glass or sandblasted glass is to be determined using the nonfactored load from ASTM E1300. The code fails to specify which type of glazing is appropriate to establish this resistance, but Section 2404.3.1 uses the values for monolithic glass; therefore, it is likely that the intent is to use the nonfactored load for monolithic glass in this section as well.

2404.4 Other designs. For designs outside the scope of this section, an analysis or test data for the specific installation shall be prepared by a *registered design professional*.

❖ This section recognizes that neither the code nor the referenced standard includes all types of glass and all support conditions. Therefore, if a designer proposes an installation that falls outside the scope of the code and referenced standard, this section requires an analysis to be prepared and submitted to the building official for specific approval.

SECTION 2405
SLOPED GLAZING AND SKYLIGHTS

2405.1 Scope. This section applies to the installation of glass and other transparent, translucent or opaque glazing material installed at a slope more than 15 degrees (0.26 rad) from the vertical plane, including glazing materials in skylights, roofs and sloped walls.

❖ This section covers all applications of glazing and light-transmitting plastics installed on a slope more than 15 degrees (0.26 rad) from vertical. The provisions for determining the combination of wind, snow and dead loads that sloped glazing must resist are found in Section 2404. For additional information on the design of sloped glazing and skylights, refer to *Glass Design for Sloped Glazing*, available from the American Architectural Manufacturers Association (AAMA).

"Sloped glazing" is defined as any glazing system or material installed on a slope more than 15 degrees (0.26 rad) from vertical. Where glass is installed within 15 degrees (0.26 rad) of vertical, the component of the weight (dead load) that acts normal to the plane of the glass is relatively small and does not contribute materially to the total load. From an engineering standpoint, glass within 15 degrees (0.26 rad) of vertical will perform essentially the same as glass installed vertically.

Sloped glazing is not intended to specifically exclude any type of glass or glazing system from the requirements of Chapter 24. Opaque glass such as spandrel glass; transparent and translucent glass; opaque and light-transmitting plastics; decorative glass and glazing; and any other glazing-type material contained in the chapter are subject to the design

INTERNATIONAL CODE COUNCIL®
Copyright © 2015 ICC. ALL RIGHTS RESERVED. Accessed by David Dammon on Jun 21, 2017 12:30:52 PM pursuant to License Agreement with ICC. No further reproduction or distribution authorized. ANY UNAUTHORIZED REPRODUCTION OR DISTRIBUTION IS A VIOLATION OF THE FEDERAL COPYRIGHT ACT AND THE LICENSE AGREEMENT, AND SUBJECT TO CIVIL AND CRIMINAL PENALTIES THEREUNDER.

and structural requirements of this chapter, Chapter 16 and related chapters elsewhere in the code.

2405.2 Allowable glazing materials and limitations. Sloped glazing shall be any of the following materials, subject to the listed limitations.

1. For monolithic glazing systems, the glazing material of the single light or layer shall be laminated glass with a minimum 30-mil (0.76 mm) polyvinyl butyral (or equivalent) interlayer, wired glass, light-transmitting plastic materials meeting the requirements of Section 2607, heat-strengthened glass or fully tempered glass.
2. For multiple-layer glazing systems, each light or layer shall consist of any of the glazing materials specified in Item 1 above.

Annealed glass is permitted to be used as specified in Exceptions 2 and 3 of Section 2405.3.

For additional requirements for plastic skylights, see Section 2610. Glass-block construction shall conform to the requirements of Section 2110.1.

❖ All configurations of glazing and plastic are covered in this section. This includes single (monolithic) glass and plastic, insulating glass units consisting of any number of glass panes (but usually two), double-walled plastic skylights and any combination of glass or plastic panels separately framed and inserted into a single opening (such as a prime window and a storm window).

Laminated glass is required to have a minimum 30-mil-thick (0.76 mm) plastic interlayer. Approved plastic materials are those that comply with the provisions of the code for strength, durability, sanitation and fire performance required for installation. Acrylics (e.g., Plexiglas) and polycarbonates (e.g., Lexan) are examples of plastics that are commonly found in sloped glazing installations.

2405.3 Screening. Where used in monolithic glazing systems, heat-strengthened and fully tempered glass shall have screens installed below the glazing material. The screens and their fastenings shall: (1) be capable of supporting twice the weight of the glazing; (2) be firmly and substantially fastened to the framing members and (3) be installed within 4 inches (102 mm) of the glass. The screens shall be constructed of a noncombustible material not thinner than No. 12 B&S gage (0.0808 inch) with mesh not larger than 1 inch by 1 inch (25 mm by 25 mm). In a corrosive atmosphere, structurally equivalent noncorrosive screen materials shall be used. Heat-strengthened glass, fully tempered glass and wired glass, when used in multiple-layer glazing systems as the bottom glass layer over the walking surface, shall be equipped with screening that conforms to the requirements for monolithic glazing systems.

Exception: In monolithic and multiple-layer sloped glazing systems, the following applies:

1. Fully tempered glass installed without protective screens where glazed between intervening floors at a slope of 30 degrees (0.52 rad) or less from the vertical plane shall have the highest point of the glass 10 feet (3048 mm) or less above the walking surface.
2. Screens are not required below any glazing material, including annealed glass, where the walking surface below the glazing material is permanently protected from the risk of falling glass or the area below the glazing material is not a walking surface.
3. Any glazing material, including annealed glass, is permitted to be installed without screens in the sloped glazing systems of commercial or detached noncombustible greenhouses used exclusively for growing plants and not open to the public, provided that the height of the greenhouse at the ridge does not exceed 30 feet (9144 mm) above grade.
4. Screens shall not be required in individual *dwelling units* in Groups R-2, R-3 and R-4 where fully tempered glass is used as single glazing or as both panes in an insulating glass unit, and the following conditions are met:
   4.1. Each pane of the glass is 16 square feet (1.5 m^2) or less in area.
   4.2. The highest point of the glass is 12 feet (3658 mm) or less above any walking surface or other accessible area.
   4.3. The glass thickness is $^3/_{16}$ inch (4.8 mm) or less.
5. Screens shall not be required for laminated glass with a 15-mil (0.38 mm) polyvinyl butyral (or equivalent) interlayer used in individual *dwelling units* in Groups R-2, R-3 and R-4 within the following limits:
   5.1. Each pane of glass is 16 square feet (1.5 m^2) or less in area.
   5.2. The highest point of the glass is 12 feet (3658 mm) or less above a walking surface or other accessible area.

❖ In sloped applications, certain glass types have a tendency to fall from the opening when broken. As a result, a retaining net or screening is required in specific locations. Regular (annealed) glass may not be used in sloped glazing installations, except as defined in Section 2405.3. Heat-strengthened and fully tempered glazing are two types of glass that may fall from an opening when broken by wind or snow loads. For these glasses, a retaining screen is required on the interior side of the glazing unit. This would apply to single glazing or when the glass is the inboard pane in an insulating glass unit. Other exceptions for fully tempered glass are listed in Section 2405.3.

Wired glass, when used as the inboard pane in an insulating glass unit, has a tendency to crack from thermal stresses. This is due to weakening at the edges where the wire protrudes. Where fire-resistance-rated glazing material is needed, wired glass is

INTERNATIONAL CODE COUNCIL®
Copyright © 2015 ICC. ALL RIGHTS RESERVED. Accessed by David Dammon on Jun 21, 2017 12:30:52 PM pursuant to License Agreement with ICC. No further reproduction or distribution authorized. ANY UNAUTHORIZED REPRODUCTION OR DISTRIBUTION IS A VIOLATION OF THE FEDERAL COPYRIGHT ACT AND THE LICENSE AGREEMENT, AND SUBJECT TO CIVIL AND CRIMINAL PENALTIES THEREUNDER.

commonly used. In this case, because of the increased likelihood of breakage, a retaining screen is also required.

There are both performance and prescriptive requirements for the retaining screen. Any screen that meets the performance requirements is acceptable.

Five exceptions to the requirements for a retaining screen are listed. For the purposes of this section, patterned glass that is annealed is to be considered regular (annealed) glass:

1. Fully tempered glass does not require a protective screen when the glass is sloped 30 degrees (0.52 rad) or less from vertical, and the top edge is less than 10 feet (3048 mm) above a walking surface. The sloped walls in many commercial buildings are within these limitations. The glass has been satisfactory with no known risks. When broken, fully tempered glass will break into small fragmented pieces, which are unlikely to cause harm upon impact [see Commentary Figure 2405.3(1)].
2. In cases where the area below the glass is either permanently protected or inaccessible, falling glass does not present a risk. When these conditions are met, screens are not required below the sloped glazing [see Commentary Figure 2405.3(2)].
3. Glass in greenhouses does not pose a serious risk to the general public. The failure of a sloped glazing system in a private greenhouse is not considered a high risk, as the majority of floor space is taken up by plants and the building is not occupied on a regular basis by a large number of people. Where a greenhouse is not attached to any other structure, has restricted access and meets the specified height limitation, screens are not required below the sloped glazing.
4. Sloped glazing installations using fully tempered glass are not required to have screens installed below the glass when the glazing units or skylights are installed within individual dwelling units of Group R-2, R-3 and R-4 occupancies, and the glazing complies with the size, thickness and location requirements specified in Items 4.1, 4.2 and 4.3. This exception is applicable only to glazing installations that are located within a dwelling unit. It does not apply to any public or common areas. It is also not applicable to areas in buildings containing two-family and multiple-family dwellings that are common to all occupants (e.g., entry foyers, main corridors, community storage and laundry rooms).

   This exception is based on a survey

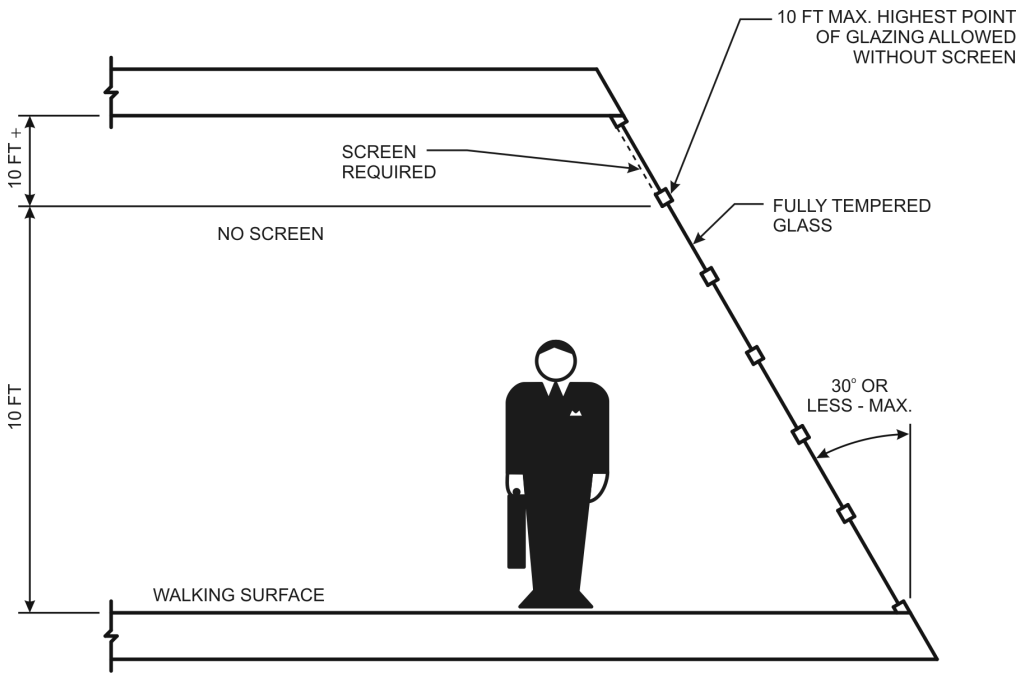

For SI: 1 foot = 304.8 mm, 1 degree = 0.01745 rad.

Figure 2405.3(1)
FULLY TEMPERED GLAZING—30° MAXIMUM SLOPE

INTERNATIONAL CODE COUNCIL®
Copyright © 2015 ICC. ALL RIGHTS RESERVED. Accessed by David Dammon on Jun 21, 2017 12:30:52 PM pursuant to License Agreement with ICC. No further reproduction or distribution authorized. ANY UNAUTHORIZED REPRODUCTION OR DISTRIBUTION IS A VIOLATION OF THE FEDERAL COPYRIGHT ACT AND THE LICENSE AGREEMENT, AND SUBJECT TO CIVIL AND CRIMINAL PENALTIES THEREUNDER.

conducted by the glass and glazing industry. The information produced from the survey indicated a 0.081-percent incidence of breakage among fully tempered sun spaces and skylights. More importantly, the survey found no incidences of injury were reported when the glazing was fully tempered glass installed within the limitations specified in the exception.

5. This exception is permitted because of the protection afforded by the polyvinyl butyral interlayer located within the laminated glass panel. The interlayer serves to keep the broken pieces of glass in place so that little or no glass falls when broken by impact. This exception applies only to individual dwelling units within Group R-2, R-3 and R-4 occupancies when sized and located as prescribed in Items 5.1 and 5.2.

2405.4 Framing. In Type I and II construction, sloped glazing and skylight frames shall be constructed of noncombustible materials. In structures where acid fumes deleterious to metal are incidental to the use of the buildings, *approved* pressure-treated wood or other *approved* noncorrosive materials are permitted to be used for sash and frames. Framing supporting sloped glazing and skylights shall be designed to resist the tributary roof loads in Chapter 16. Skylights set at an angle of less than 45 degrees (0.79 rad) from the horizontal plane shall be mounted at least 4 inches (102 mm) above the plane of the roof on a curb constructed as required for the frame. Skylights shall not be installed in the plane of the roof where the roof pitch is less than 45 degrees (0.79 rad) from the horizontal.

Exception: Installation of a skylight without a curb shall be permitted on roofs with a minimum slope of 14 degrees (three units vertical in 12 units horizontal) in Group R-3 occupancies. All unit skylights installed in a roof with a pitch flatter than 14 degrees (0.25 rad) shall be mounted at least 4 inches (102 mm) above the plane of the roof on a curb constructed as required for the frame unless otherwise specified in the manufacturer's installation instructions.

❖ The requirement for noncombustible (metal) framing for glazing systems in Type I and II construction must be consistent with the requirements for the remainder of the structure. In cases where acidic fumes harmful to metal framing may occur, pressure-treated wood or noncorrosive material may be used.

Regardless of the type of construction, when installed on surfaces having a slope of less than 45 degrees (0.79 rad) from the horizontal, all sloped glazing and skylights are required to be mounted on curbs at least 4 inches (102 mm) high. The raised curb will provide additional protection to the skylight from burnt or burning debris in the event of a fire. Burnt or burning pieces of wood are known technically as "brands." When air borne, they are known as "flying brands." For slopes 45 degrees (0.79 rad) and greater, the protection provided by the curbs is not necessary. In these cases, the glass may be installed flush with the surrounding roof.

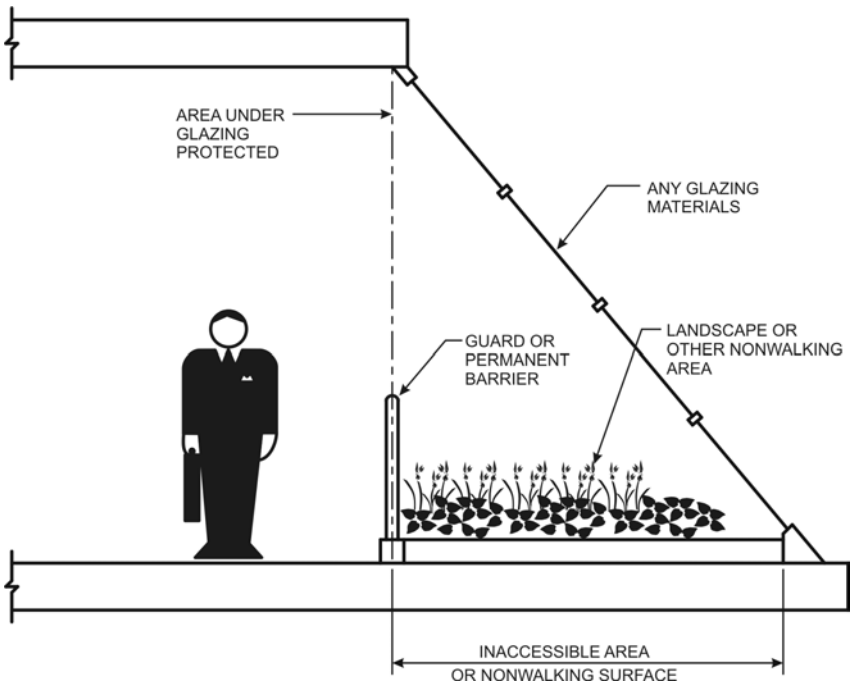

Figure 2405.3(2)
INACCESSIBLE AREA UNDER SLOPED GLAZING

INTERNATIONAL CODE COUNCIL®
Copyright © 2015 ICC. ALL RIGHTS RESERVED. Accessed by David Dammon on Jun 21, 2017 12:30:52 PM pursuant to License Agreement with ICC. No further reproduction or distribution authorized. ANY UNAUTHORIZED REPRODUCTION OR DISTRIBUTION IS A VIOLATION OF THE FEDERAL COPYRIGHT ACT AND THE LICENSE AGREEMENT, AND SUBJECT TO CIVIL AND CRIMINAL PENALTIES THEREUNDER.

The exception for Group R-3 occupancies is based on field experience and general practice for one- and two-family dwellings. For the 3:12 slope typical for Group R-3 occupancies, neither flying brands nor water runoff has been a problem.

2405.5 Unit skylights and tubular daylighting devices. Unit skylights and tubular daylighting devices shall be tested and labeled as complying with AAMA/WDMA/CSA 101/ I.S./A440. The *label* shall state the name of the manufacturer, the *approved* labeling agency, the product designation and the performance grade rating as specified in AAMA/WDMA/ CSA 101/I.S.2/A440. Where the product manufacturer has chosen to have the performance grade of the skylight rated separately for positive and negative design pressure, then the *label* shall state both performance grade ratings as specified in AAMA/WDMA/CSA 101/I.S.2/A440 and the skylight shall comply with Section 2405.5.2. Where the skylight is not rated separately for positive and negative pressure, then the performance grade rating shown on the *label* shall be the performance grade rating determined in accordance with AAMA/WDMA/CSA 101/I.S.2/A440 for both positive and negative design pressure and the skylight shall conform to Section 2405.5.1.

❖ This section establishes design provisions for unit skylights (single-panel, factory-assembled units) and tubular daylighting devices that are consistent with those provided for sloped glazing in Section 2404.2, but permit these items to be designed separately for maximum positive and negative pressure. The most critical load on a skylight is determined by the climate in which it is installed. In a colder climate with heavier snow loads and moderate design wind speeds, the positive load on a skylight from the combined snow and dead loads will be more critical than the negative load from wind uplift. The opposite will be the case in warmer, coastal climates with higher design wind speeds and little or no snow load.

This method of rating skylights and tubular daylighting devices is addressed in the referenced standard AAMA/WMDA/CSA 101/I.S.2/ A440, *Specification for Windows, Doors and Unit Skylights*. The separate rating system for positive and negative pressure on skylights allows the manufacturer to design and fabricate products that are best suited for the climate in which they will be used. AAMA/ WDMA/ CSA 101/I.S.2/A440 establishes the performance requirements for units based on the desired performance grade rating, which includes minimum requirements for resistance to air leakage, water infiltration and design load pressures. The resulting performance grade rating states the design load pressure used to rate the product, but also includes consideration of these additional performance characteristics. For units certified for only one performance grade, the rating is based on the minimum requirements met for both positive and negative design pressure. Units certified for two performance grades are rated separately for positive and negative design pressure.

2405.5.1 Skylights rated for the same performance grade for both positive and negative design pressure. The design of skylights shall be based on Equation 24-13.

$$F_g \le PG \qquad \textbf{(Equation 24-13)}$$

where:

F_g = Maximum load on the skylight determined from Equations 24-2 through 24-4 in Section 2404.2.

PG = Performance grade rating of the skylight.

❖ For skylights that are not rated separately for positive and negative design pressure, this section requires that the minimum performance grade rating of the skylight must not be exceeded by any of the load combinations given in Section 2404.2.

2405.5.2 Skylights rated for separate performance grades for positive and negative design pressure. The design of skylights rated for performance grade for both positive and negative design pressures shall be based on Equations 24-14 and 24-15.

$$F_{gi} \le PG_{Po} \qquad \textbf{(Equation 24-14)}$$

$$F_{go} \le PG_{Ne} \qquad \textbf{(Equation 24-15)}$$

where:

PG_{Pos} = Performance grade rating of the skylight under positive design pressure;

PG_{Neg} = Performance grade rating of the skylight under negative design pressure; and

F_{gi} and F_{go} are determined in accordance with the following:

For $0.6W_o \ge D$,

where:

W_o = Outward wind force, psf (kN/m^2) due to ultimate design wind speed, V_{ult}, as calculated in Section 1609.

D = The dead weight of the glazing, psf (kN/m^2) as determined in Section 2404.2 for glass, or by the weight of the plastic, psf (kN/m^2) for plastic glazing.

F_{gi} = Maximum load on the skylight determined from Equations 24-3 and 24-4 in Section 2404.2.

F_{go} = Maximum load on the skylight determined from Equation 24-2.

For $0.6\ W_o < D$,

where:

W_o = The outward wind force, psf (kN/m^2) due to ultimate design wind speed, V_{ult}. as calculated in Section 1609.

D = The dead weight of the glazing, psf (kN/m^2) as determined in Section 2404.2 for glass, or by the weight of the plastic for plastic glazing.

F_{gi} = Maximum load on the skylight determined from Equations 24-2 through 24-4 in Section 2404.2.

F_{go} = 0.

❖ This section establishes requirements for skylights that are rated separately for positive and negative design pressure. The performance grade rating for

INTERNATIONAL CODE COUNCIL®
Copyright © 2015 ICC. ALL RIGHTS RESERVED. Accessed by David Dammon on Jun 21, 2017 12:30:52 PM pursuant to License Agreement with ICC. No further reproduction or distribution authorized. ANY UNAUTHORIZED REPRODUCTION OR DISTRIBUTION IS A VIOLATION OF THE FEDERAL COPYRIGHT ACT AND THE LICENSE AGREEMENT, AND SUBJECT TO CIVIL AND CRIMINAL PENALTIES THEREUNDER.

positive design pressure is not to be exceeded by load combinations that include dead loads, snow and wind acting toward the face of the skylight, and the performance grade rating for negative design pressure is not to be exceeded by the load combination that considers wind acting away from the face of the skylight.

SECTION 2406
SAFETY GLAZING

2406.1 Human impact loads. Individual glazed areas, including glass mirrors, in hazardous locations as defined in Section 2406.4 shall comply with Sections 2406.1.1 through 2406.1.4.

Exception: Mirrors and other glass panels mounted or hung on a surface that provides a continuous backing support.

❖ With the increased use of sliding patio doors, glass tub and shower enclosures and similar applications where large pieces of glass are used, cutting and piercing injuries from contact with broken glass have become a safety concern. In recognition of a lack of code provisions controlling these risks, codes included limited requirements that regulated the use of glass. It was recognized that safety glazing materials must be required for glazed areas that would reasonably be exposed to human impact. Some questions arose as to the proper definition of these areas (Section 2406.4 identifies these "hazardous locations"). In response, Section 2406 provides comprehensive regulations for the use of safety glazing materials and installation parameters.

Safety glazing requirements apply to both replacement glass and new construction. Replacement glass includes windows, doors and other assemblies containing glass that are moved, partially or intact, from one location in a building to another location in the same building, or to another building on the same site or a different site.

While glass mirrors are included within the scope of glazing, mirrors with a continuous backing support are not required to be safety glazed according to the exception. This exception recognizes the potential for minimizing cutting or piercing injuries when the glass or glazing material is completely supported by a solid, continuous backing material, as is often the case for mounted mirrors or other glass panels. When glazing is fully supported with a solid backing material, it still may be susceptible to breakage by human impact; however, a person's limb or other body part would be protected because the backing material would prevent it from being in the path of falling glass.

2406.1.1 Impact test. Except as provided in Sections 2406.1.2 through 2406.1.4, all glazing shall pass the impact test requirements of Section 2406.2.

❖ Sections 2406.1.2 through 2406.1.4 are essentially exceptions to the performance standards for safety glazing that are given in Section 2406.2.

2406.1.2 Plastic glazing. Plastic glazing shall meet the weathering requirements of ANSI Z97.1.

❖ This section has requirements for weather testing plastic safety glazing that have been eliminated from CPSC 16 CFR, Part 1201, necessitating the use of ANSI Z97.1 for plastic glazing. Requirements for plastic glazing are in Chapter 26.

2406.1.3 Glass block. Glass-block walls shall comply with Section 2101.2.5.

❖ The design and installation requirements for glass-block walls are covered in Chapter 21. Glass-block walls and panels are also not required to meet the impact test requirements; however, that does not mean there are no safety requirements placed on the installation of glass block. Structural limitations to prevent failure caused by excessive loading, size limitations of panels, location and extent of panels in fire-resistance-rated assemblies and other safety issues are defined elsewhere in the code.

2406.1.4 Louvered windows and jalousies. Louvered windows and jalousies shall comply with Section 2403.5.

❖ Louvered and jalousie windows are discussed in detail in Section 2403.5. Jalousie and louvered windows are not classified as hazardous locations and are not required to be glazed with safety glass or other approved safety glazing material.

2406.2 Impact test. Where required by other sections of this code, glazing shall be tested in accordance with CPSC 16 CFR Part 1201. Glazing shall comply with the test criteria for Category II, unless otherwise indicated in Table 2406.2(1).

Exception: Glazing not in doors or enclosures for hot tubs, whirlpools, saunas, steam rooms, bathtubs and showers shall be permitted to be tested in accordance with ANSI Z97.1. Glazing shall comply with the test criteria for Class A, unless otherwise indicated in Table 2406.2(2).

❖ In 1977, the CPSC adopted as a mandatory federal safety regulation CPSC 16 CFR, Part 1201, *Safety Standard for Architectural Glazing Materials*. The standard is not only a test method and a procedure for determining the safety performance of architectural glazing, but also a federal standard that mandates where safety glazing must be used in architectural applications. The code specifically requires the installation of safety glazing materials meeting CPSC 16 CFR, Part 1201 in storm doors, combination doors, entrance-exit doors, sliding patio doors, closet doors and shower and tub doors and enclosures (see Section 2406.4.1).

The exception permits glazing complying with ANSI Z97.1 at locations where the code does not mandate compliance solely with CPSC 16 CFR, Part 1201 (see Sections 2406.4.2 through 2406.4.7). The primary difference between the CPSC 16 CFR, Part 1201 standard and the ANSI Z97.1 standard relates to their scope and function. ANSI Z97.1 is a voluntary safety performance specification and test method that does not dictate where safety glazing materials must

INTERNATIONAL CODE COUNCIL®
Copyright © 2015 ICC. ALL RIGHTS RESERVED. Accessed by David Dammon on Jun 21, 2017 12:30:52 PM pursuant to License Agreement with ICC. No further reproduction or distribution authorized. ANY UNAUTHORIZED REPRODUCTION OR DISTRIBUTION IS A VIOLATION OF THE FEDERAL COPYRIGHT ACT AND THE LICENSE AGREEMENT, AND SUBJECT TO CIVIL AND CRIMINAL PENALTIES THEREUNDER.

be used, leaving that determination up to the code.

Not all of the hazardous locations are indicated in Tables 2406.2(1) and 2406.2(2). The code uses the more stringent test criteria as the default classification and the tables relax the requirement by permitting a lower classification for specific applications.

TABLE 2406.2(1). See below.

❖ The classifications in this table are according to the CPSC 16 CFR, Part 1201, regulation. The tests in the federal regulation vary with the category classification. Category I glass is impacted from a drop height of 18 inches (457 mm) and Category II is impacted from a drop height of 48 inches (1219 mm). The higher drop height for Category II results in a higher impact test load, making Category II the more stringent classification.

TABLE 2406.2(2). See below.

❖ ANSI Z97.1 identifies three separate classes that are based upon impact performance. Class A glazing materials are comparable to the CPSC's Category II glazing materials, passing a 48-inch (1219 mm) drop height test, and Class B glazing materials are comparable to the CPSC's Category I glazing materials, passing the 18-inch (457 mm) drop height test. ANSI Z97.1 also has a product-specific Class C impact test, which uses a 12-inch (303 mm) drop height test and is applicable only for fire-resistant glazing materials; however, Section 2406.2 does not recognize Class C as an acceptable product for use in locations requiring safety glazing.

2406.3 Identification of safety glazing. Except as indicated in Section 2406.3.1, each pane of safety glazing installed in hazardous locations shall be identified by a manufacturer's designation specifying who applied the designation, the manufacturer or installer and the safety glazing standard with which it complies, as well as the information specified in Section 2403.1. The designation shall be acid etched, sand blasted, ceramic fired, laser etched, embossed or of a type that once applied, cannot be removed without being destroyed. A *label* meeting the requirements of this section shall be permitted in lieu of the manufacturer's designation.

Exceptions:

1. For other than tempered glass, manufacturer's designations are not required, provided the *building official* approves the use of a certificate, affidavit or other evidence confirming compliance with this code.
2. Tempered spandrel glass is permitted to be identified by the manufacturer with a removable paper designation.

❖ This section requires that each individual piece of safety glazing must be permanently marked with the manufacturer's or installer's designation. The designation is applied directly to the glass by the manufacturer or installer and states that the product or material complies with the specified standards or requirements as defined in Section 2406.2.

Many manufacturers of safety glazing materials have their products certified by the Safety Glazing Certification Council (SGCC) to meet CPSC 16 CFR, Part 1201. This standard provides the basis for the marking of safety glazing materials.

2406.3.1 Multipane assemblies. Multipane glazed assemblies having individual panes not exceeding 1 square foot (0.09 m^2) in exposed areas shall have at least one pane in the assembly marked as indicated in Section 2406.3. Other panes in the assembly shall be marked "CPSC 16 CFR Part 1201" or "ANSI Z97.1," as appropriate.

❖ In the case of glass material, many times the glass is purchased by the fabricator/installer in large sheets from the manufacturer and cut into many pieces to fit various openings. This is particularly true with laminated or plastic glazing material. In this instance, it is

TABLE 2406.2(1)
MINIMUM CATEGORY CLASSIFICATION OF GLAZING USING CPSC 16 CFR PART 1201

EXPOSED SURFACE AREA OF ONE SIDE OF ONE LITE	GLAZING IN STORM OR COMBINATION DOORS (Category class)	GLAZING IN DOORS (Category class)	GLAZED PANELS REGULATED BY SECTION 2406.4.3 (Category class)	GLAZED PANELS REGULATED BY SECTION 2406.4.2 (Category class)	DOORS AND ENCLOSURES REGULATED BY SECTION 2406.4.5 (Category class)	SLIDING GLASS DOORS PATIO TYPE (Category class)
9 square feet or less	I	I	No requirement	I	II	II
More than 9 square feet	II	II	II	II	II	II

For SI: 1 square foot = 0.0929 m^2.

TABLE 2406.2(2)
MINIMUM CATEGORY CLASSIFICATION OF GLAZING USING ANSI Z97.1

EXPOSED SURFACE AREA OF ONE SIDE OF ONE LITE	GLAZED PANELS REGULATED BY SECTION 2406.4.3 (Category class)	GLAZED PANELS REGULATED BY SECTION 2406.4.2 (Category class)	DOORS AND ENCLOSURES REGULATED BY SECTION 2406.4.5[a] (Category class)
9 square feet or less	No requirement	B	A
More than 9 square feet	A	A	A

For SI: square foot = 0.0929 m^2.

a. Use is only permitted by the exception to Section 2406.2.

INTERNATIONAL CODE COUNCIL®
Copyright © 2015 ICC. ALL RIGHTS RESERVED. Accessed by David Dammon on Jun 21, 2017 12:30:52 PM pursuant to License Agreement with ICC. No further reproduction or distribution authorized. ANY UNAUTHORIZED REPRODUCTION OR DISTRIBUTION IS A VIOLATION OF THE FEDERAL COPYRIGHT ACT AND THE LICENSE AGREEMENT, AND SUBJECT TO CIVIL AND CRIMINAL PENALTIES THEREUNDER.

impracticable to apply the designation label in such a manner that each cut piece will have a manufacturer's permanent designation. Where this occurs, the code permits multilight glazed assemblies to have only one light marked with the required information.

2406.4 Hazardous locations. The locations specified in Sections 2406.4.1 through 2406.4.7 shall be considered specific hazardous locations requiring safety glazing materials.

❖ The provisions of this section apply to all occupancies and building types, except as specifically excluded in this chapter. This section identifies locations that are considered to be hazardous and require the use of safety glass for glazed openings or partitioning. Several Commentary Figures [(2406.4.1, 2406.4.2(1), 2406.4.2(2), 2406.4.2(3), 2406.4.3(1), 2406.4.3(2), 2406.4.3(3), 2406.4.5(1) and 2406.4.5(2)] are included to help illustrate how and where safety glazing must be used.

2406.4.1 Glazing in doors. Glazing in all fixed and operable panels of swinging, sliding and bifold doors shall be considered a hazardous location.

Exceptions:

1. Glazed openings of a size through which a 3-inch-diameter (76 mm) sphere is unable to pass.
2. Decorative glazing.
3. Glazing materials used as curved glazed panels in revolving doors.
4. Commercial refrigerated cabinet glazed doors.

❖ This section makes it clear that any door containing glazing must be glazed with safety glass or other safety glazing material recognized by the code for that intended purpose. The requirement for safety glazing in not limited to egress or exit doors (see Commentary Figure 2406.4.1). Jalousie assemblies in doors, as described in Section 2403.5, are not required to have safety glazing.

There are four exceptions to this section:

1. Glass view panels 3 inches (76 mm) or less in diameter installed in doors are not likely to create a safety hazard if the glass is broken.
2. Decorative glass assemblies in doors are readily visible and easily identified; therefore, they are less likely to be inadvertently impacted. As a rule, stained glass assemblies are made from small pieces of glass that would cause little or no damage if broken.
3. The reason for not classifying revolving doors, which are generally made from curved glass panels, as a hazardous location is that the two

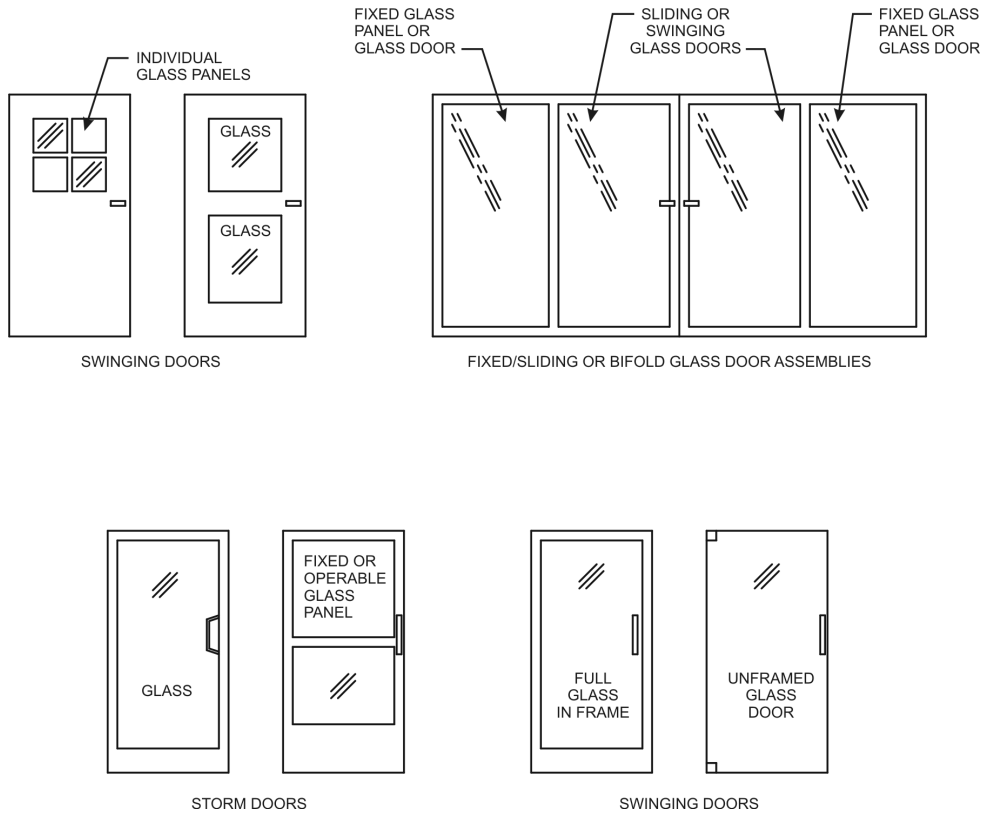

Figure 2406.4.1
EXAMPLES OF DOORS REQUIRING SAFETY GLAZING

INTERNATIONAL CODE COUNCIL®
Copyright © 2015 ICC. ALL RIGHTS RESERVED. Accessed by David Dammon on Jun 21, 2017 12:30:52 PM pursuant to License Agreement with ICC. No further reproduction or distribution authorized. ANY UNAUTHORIZED REPRODUCTION OR DISTRIBUTION IS A VIOLATION OF THE FEDERAL COPYRIGHT ACT AND THE LICENSE AGREEMENT, AND SUBJECT TO CIVIL AND CRIMINAL PENALTIES THEREUNDER.

primary safety concerns are either not present or pose minimal or no unsafe condition in the case of human impact.

Several factors must be considered when classifying revolving doors. The first thing to be considered is that they cannot be used as part of the required means of egress. Another thing to consider is that revolving doors are not fixed glass panels that can be mistaken for a passageway or clear opening. In addition, the individual pieces of glass to make the large door panels, by necessity, are required to be very thick. The extra thickness of glass, coupled with the added strength of the curved form and the movable panel, make it highly unlikely that injury could result from glass breakage caused by human impact.

4. This exception is based on CPSC 16 CFR, Part 1201. Technically, glass in doors of refrigerator cabinets should comply with the standard when the door is open. The intent, however, was not to cover doors a person would not ordinarily use for egress. Refrigerated cabinets in food markets would be in this category and are, therefore, exempt. There are also no records of injuries from glass in this application.

2406.4.2 Glazing adjacent to doors. Glazing in an individual fixed or operable panel adjacent to a door where the nearest vertical edge of the glazing is within a 24-inch (610 mm) arc of either vertical edge of the door in a closed position and where the bottom exposed edge of the glazing is less than 60 inches (1524 mm) above the walking surface shall be considered a hazardous location.

Exceptions:

1. Decorative glazing.
2. Where there is an intervening wall or other permanent barrier between the door and glazing.
3. Where access through the door is to a closet or storage area 3 feet (914 mm) or less in depth. Glazing in this application shall comply with Section 2406.4.3.
4. Glazing in walls on the latch side of and perpendicular to the plane of the door in a closed position in one- and two-family dwellings or within dwelling units in Group R-2.

❖ The purpose for identifying the area adjacent to a door as a hazardous location is to provide protection in cases where a person may slip or mistake a glass panel adjacent to a door for a passageway and walk into the glass or where a person may push against the sidelight with one hand for support while opening the door with the other hand. There are reported accidents where a person's hand has slipped from the doorknob, impacting and breaking the glass adjacent to the door, thereby causing injury. This item is applicable to glass adjacent to both exterior and interior doors used for passage for all occupancies and types of buildings.

It is not necessary for an entire piece of glass in a glazed wall or opening to be within the 24-inch (610 mm) arc to require it to be safety glass. If any portion of an individual piece of glass is within the arc, that piece of glass must be safety glass [see Commentary Figure 2406.4.2(1)].

There are four exceptions that eliminate the need for safety glazing adjacent or in close proximity to glass doors. These exceptions are included because they eliminate or greatly reduce the possibility of human impact with fixed glazing:

1. Decorative glass and decorative glass assemblies are readily visible and easily identified; therefore, they are not likely to be mistaken for an open passageway when they are adjacent to a door. As a rule, stained glass assemblies are made from small pieces of glass that would cause little or no damage if broken.
2. An intervening wall provides a permanent barrier that prevents people from having physical contact with any glass that is beyond the intervening wall, but is still within the 24-inch (610 mm) arc. This barrier eliminates many of the safety issues addressed in this section. This exception may be applied to an interior or exterior wall/glazing condition [see Commentary Figure 2406.4.2(2)]. The code does not specify a minimum height requirement for the intervening wall; therefore, where the wall does not extend to the full height of the rooms or spaces where the door/wall is located, the 60-inch (1524 mm) requirement must be applied. If, for example, the top of the wall is 60 inches (1524 mm) above the floor, any individual piece of glass that extends below the top of the wall must be safety glass or the top of the wall must be extended to provide a barrier for any piece of nonsafety glazing within 60 inches (1524 mm) of the floor. The same must be applied to the 24-inch (610 mm) arc in the plan dimension. Any glazing within the arc must be safety glazing, or the wall must be extended to include glazing not protected by the wall [see Commentary Figure 2406.4.2(3)].
3. This exception addresses closets and other storage areas that are not considered "walk-ins." The assumption is that at such locations a building occupant would not need to pass through the door opening to access the storage area, thus reducing the risk of impact with any adjacent glazing.
4. Because the occupants of one- and two-family dwellings are presumed to be familiar with their

INTERNATIONAL CODE COUNCIL®
Copyright © 2015 ICC. ALL RIGHTS RESERVED. Accessed by David Dammon on Jun 21, 2017 12:30:52 PM pursuant to License Agreement with ICC. No further reproduction or distribution authorized. ANY UNAUTHORIZED REPRODUCTION OR DISTRIBUTION IS A VIOLATION OF THE FEDERAL COPYRIGHT ACT AND THE LICENSE AGREEMENT, AND SUBJECT TO CIVIL AND CRIMINAL PENALTIES THEREUNDER.

environment, and walls that are perpendicular to the plane of a door are, by definition, parallel to the direction of travel of an occupant using the door, the risk of impact with glazing is considered to be low. This decreased risk is recognized by Exception 4. Since there is a chance that an opening door could push a person into the wall toward which the door opens, the exception does not apply and safety glazing would be required at that location.

Individual dwelling units within Group R-2 occupancies are allowed the same exemption; however, it does not extend to the use of glazing in close proximity to doors in public-use areas.

2406.4.3 Glazing in windows. Glazing in an individual fixed or operable panel that meets all of the following conditions shall be considered a hazardous location:

1. The exposed area of an individual pane is greater than 9 square feet (0.84 m^2).
2. The bottom edge of the glazing is less than 18 inches (457 mm) above the floor.
3. The top edge of the glazing is greater than 36 inches (914 mm) above the floor.
4. One or more walking surface(s) are within 36 inches (914 mm), measured horizontally and in a straight line, of the plane of the glazing.

Exceptions:

1. Decorative glazing.
2. Where a horizontal rail is installed on the accessible side(s) of the glazing 34 to 38 inches (864 to 965 mm) above the walking surface. The rail shall be capable of withstanding a horizontal load of 50 pounds per linear foot (730 N/m) without contacting the glass and be a minimum of $1^1/_2$ inches (38 mm) in cross-sectional height.
3. Outboard panes in insulating glass units or multiple glazing where the bottom exposed edge of the glass is 25 feet (7620 mm) or more above any grade, roof, walking surface or other horizontal or sloped (within 45 degrees of horizontal) (0.79 rad) surface adjacent to the glass exterior.

❖ The reason for including this type of glazed opening as a hazardous location is to provide protection where the glazed opening could be mistaken for a passageway or a clear opening that someone might be able to walk through, fall into or otherwise be accidentally forced into. In the case of a child, the open-

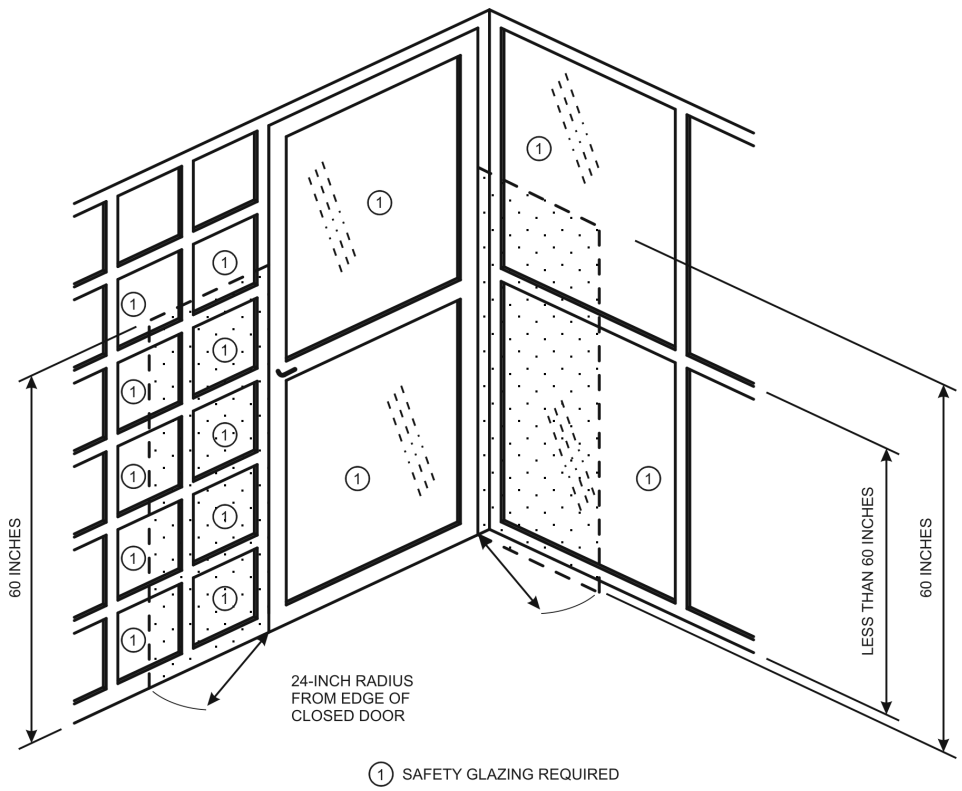

For SI: 1 inch = 25.4 mm.

Figure 2406.4.2(1)
SAFETY GLAZING IN CLOSE PROXIMITY TO DOORS

INTERNATIONAL CODE COUNCIL®
Copyright © 2015 ICC. ALL RIGHTS RESERVED. Accessed by David Dammon on Jun 21, 2017 12:30:52 PM pursuant to License Agreement with ICC. No further reproduction or distribution authorized. ANY UNAUTHORIZED REPRODUCTION OR DISTRIBUTION IS A VIOLATION OF THE FEDERAL COPYRIGHT ACT AND THE LICENSE AGREEMENT, AND SUBJECT TO CIVIL AND CRIMINAL PENALTIES THEREUNDER.

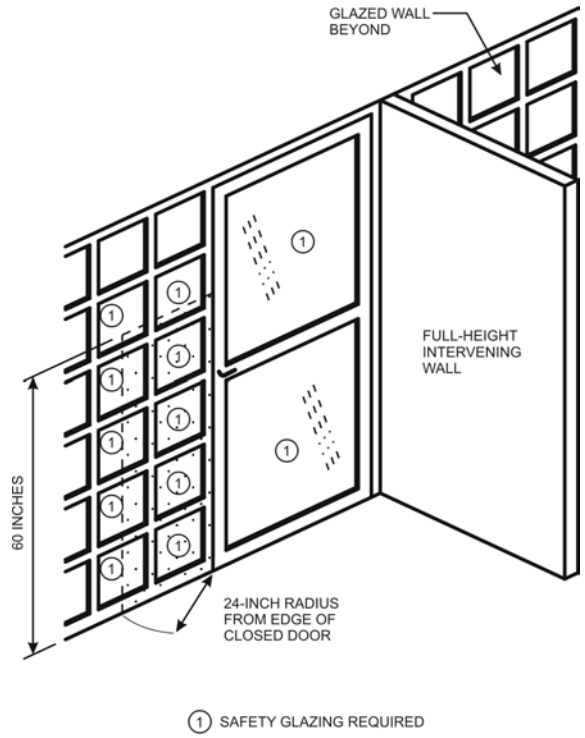

For SI: 1 inch = 25.4 mm.

Figure 2406.4.2(2)
SAFETY GLAZING AT FULL-HEIGHT INTERVENING WALL

ing would not need to be very large to provide the necessary setting to encourage an accident. A glazed opening sized and located within the four listed criteria and not protected with safety glazing presents an unsafe condition [see Commentary Figure 2406.4.3(1)].

The requirements in this section are modeled after the criteria established in CPSC 16 CFR, Part 1201, which requires the use of safety glazing where all four of the listed conditions occur.

In Item 1, the 9-square-foot (0.84 m^2) requirement refers to an individual piece or pane of glass. It is not intended to limit the number of panes that can be placed next to each other within a single glazed opening. It just requires that every individual piece exceeding the size specified be safety glass.

Item 2 applies when the bottom edge of a glazed opening is less than 18 inches (457 mm) above a floor or walking surface. This type of glazed opening does not present enough of a visual barrier to provide ample warning to prevent someone from mistaking the glazed opening for a passageway or clear opening. People have a natural tendency to look forward while walking rather than looking down; therefore, a more substantial visual barrier is needed at the floor level.

Where Item 2 addresses the sill height of glazed openings with no regard to how high the head of the opening may be, it assumes the opening is high enough for an adult to walk through. Item 3 addresses the head height of the glazed opening with the assumption that the sill is at the floor level. Item 3 is aimed at the same basic set of safety concerns; however, It is directing the focus at a different group of people: children. Just as adults can mistake a tall glazed opening for a passageway or clear opening, a small child can do the same for a glazed opening with a low head height. Other examples of potential accidents from impacting glass at this type of opening might include: people in wheelchairs, shopping carts, baby strollers (with or without baby inside) and children on tricycles or other small riding toys. The accident potential for this type of glazed opening is high; therefore, safety glass or other approved safety glazing material is demanded accordingly.

The focus of Item 4 for requiring safety glass is no different than it has been throughout this section, which is preventing unsafe glazed openings that people can mistake for passageways or clear openings. In Items 1 through 3, it states that where a walking surface is adjacent to the wall where the glazed opening is located, human contact with the glass in the opening is inevitable. Item 4 states that if there is not a walking surface within 36 inches (914 mm) hori-

INTERNATIONAL CODE COUNCIL®
Copyright © 2015 ICC. ALL RIGHTS RESERVED. Accessed by David Dammon on Jun 21, 2017 12:30:52 PM pursuant to License Agreement with ICC. No further reproduction or distribution authorized. ANY UNAUTHORIZED REPRODUCTION OR DISTRIBUTION IS A VIOLATION OF THE FEDERAL COPYRIGHT ACT AND THE LICENSE AGREEMENT, AND SUBJECT TO CIVIL AND CRIMINAL PENALTIES THEREUNDER.

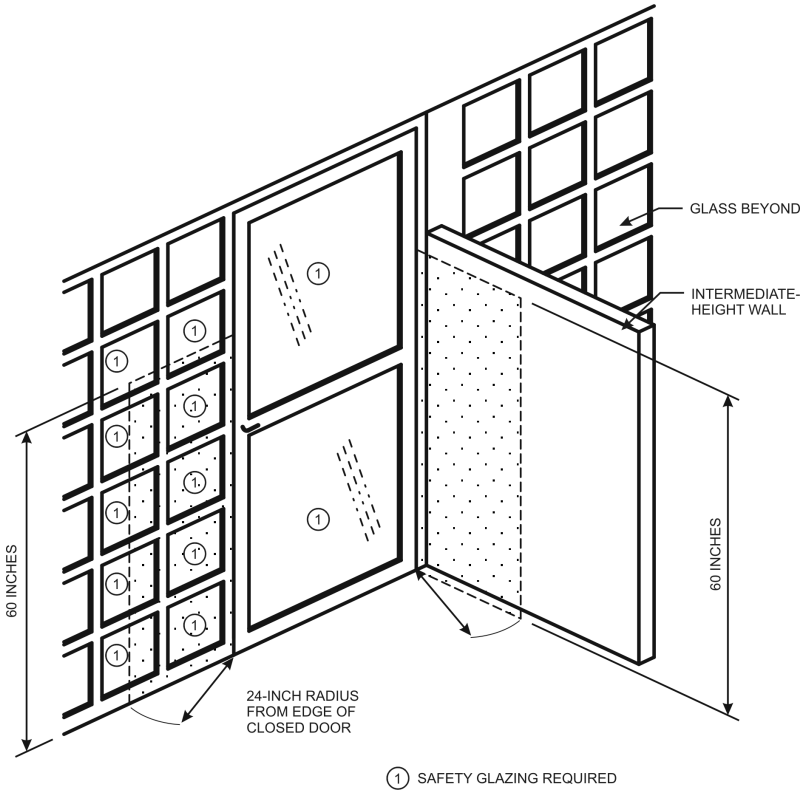

For SI: 1 inch = 25.4 mm.

Figure 2406.4.2(3)
SAFETY GLAZING AT INTERMEDIATE-HEIGHT INTERVENING WALL

zontally, in conjunction with the other requirements, the risks described throughout this section are minimal, so safety glass is not needed. It is only when walking surfaces are within 36 inches (914 mm) that human contact becomes a safety concern that must be addressed.

The three exceptions are allowed because the concerns of this section are resolved or they do not exist. When these exceptions are met, there is no need for the use of safety glass or other approved safety glazing:

1. Decorative glass window assemblies are readily visible and easily identified, so they are much less likely to be mistaken for an open passageway. As a rule, stained glass assemblies are made from small pieces of glass that would cause little or no damage if broken.
2. The horizontal rail described in this exception will provide a visual and physical barrier, both of which will prevent someone from attempting to walk through a glazed opening [see Commentary Figure 2406.4.3(2)].
3. The outboard pane of insulating glass as described in this exception is well outside the area that any person could possibly come into contact with and certainly would not be mistaken for a passageway or clear opening. It should be noted that this exception applies only to the outboard pane. The criteria for requiring the inboard pane to be safety glass would be as prescribed in this section as well as elsewhere in this chapter [see Commentary Figure 2406.4.3(3)].

2406.4.4 Glazing in guards and railings. Glazing in *guards* and railings, including structural baluster panels and nonstructural in-fill panels, regardless of area or height above a walking surface shall be considered a hazardous location.

❖ Regardless of any provision for safety glazing or exemption from requiring safety glazing contained in the code, where glass or other approved glazing material is used in guards or railings—whether structural or nonstructural and regardless of size, location, type or any other circumstances not specifically mentioned herein—it must be safety glass or other approved safety glazing material. As there are no exceptions listed, any glazing material that is not available as an approved safety glazing material is not permitted in guards or railings.

INTERNATIONAL CODE COUNCIL®
Copyright © 2015 ICC. ALL RIGHTS RESERVED. Accessed by David Dammon on Jun 21, 2017 12:30:52 PM pursuant to License Agreement with ICC. No further reproduction or distribution authorized. ANY UNAUTHORIZED REPRODUCTION OR DISTRIBUTION IS A VIOLATION OF THE FEDERAL COPYRIGHT ACT AND THE LICENSE AGREEMENT, AND SUBJECT TO CIVIL AND CRIMINAL PENALTIES THEREUNDER.

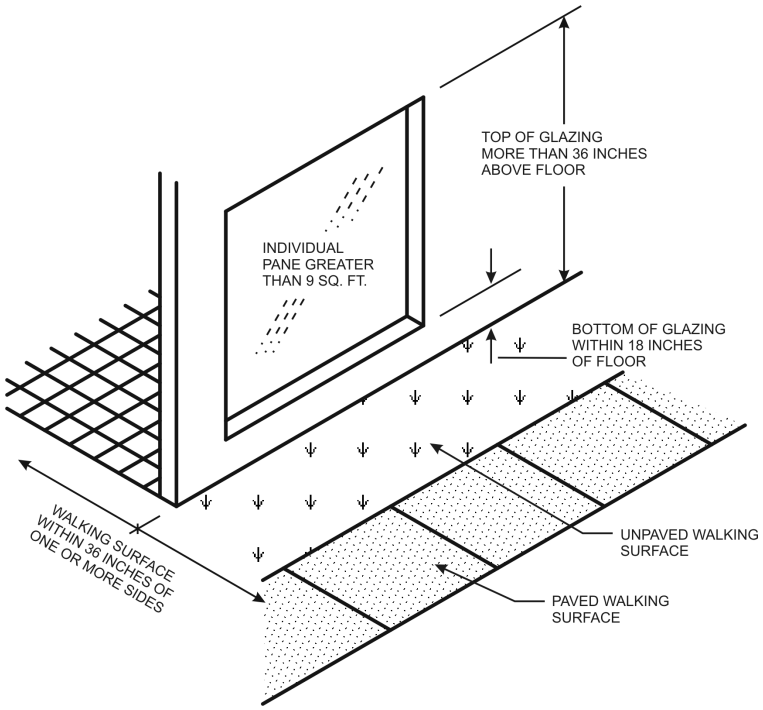

For SI: 1 inch = 25.4 mm, 1 square foot = 0.0929 m^2.

Figure 2406.4.3(1)
FIXED OR OPERABLE GLAZED OPENING

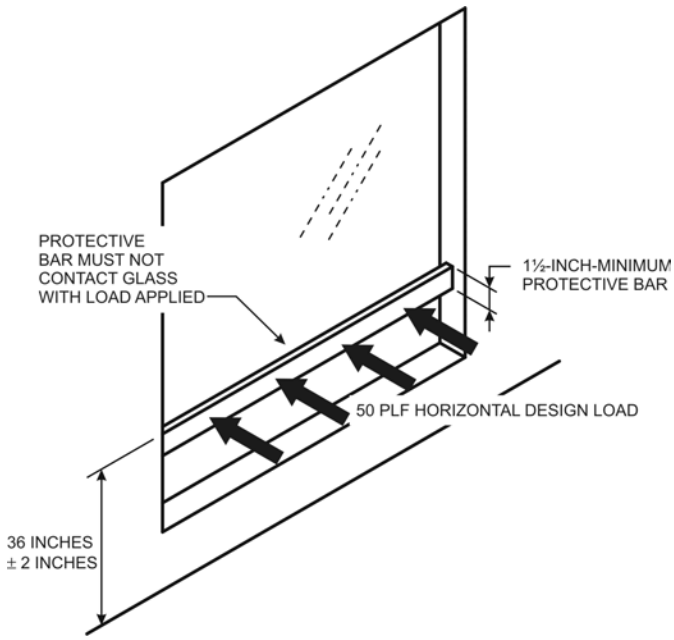

For SI: 1 inch = 25.4 mm, 1 pound per lineal foot = 14.5 N/m.

Figure 2406.4.3(2)
HORIZONTAL RAIL AT GLAZED OPENINGS

INTERNATIONAL CODE COUNCIL®
Copyright © 2015 ICC. ALL RIGHTS RESERVED. Accessed by David Dammon on Jun 21, 2017 12:30:52 PM pursuant to License Agreement with ICC. No further reproduction or distribution authorized. ANY UNAUTHORIZED REPRODUCTION OR DISTRIBUTION IS A VIOLATION OF THE FEDERAL COPYRIGHT ACT AND THE LICENSE AGREEMENT, AND SUBJECT TO CIVIL AND CRIMINAL PENALTIES THEREUNDER.

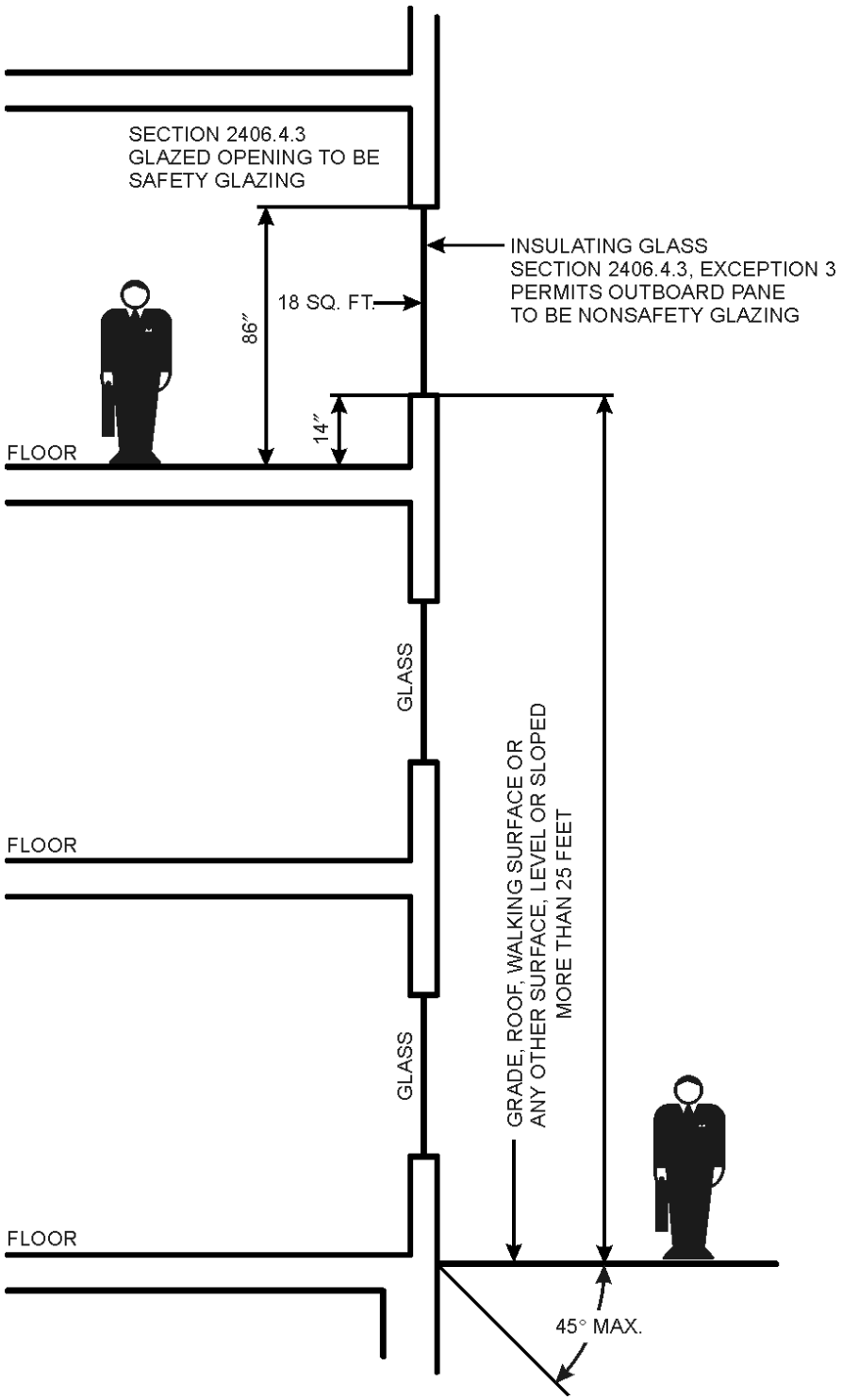

For SI: 1 inch = 25.4 mm, 1 foot = 304.8 mm,
1 square foot = 0.0929 m^2,
1 degree = 0.01745 rad.

Figure 2406.4.3(3)
ELEVATED GLAZED OPENINGS

INTERNATIONAL CODE COUNCIL®
Copyright © 2015 ICC. ALL RIGHTS RESERVED. Accessed by David Dammon on Jun 21, 2017 12:30:52 PM pursuant to License Agreement with ICC. No further reproduction or distribution authorized. ANY UNAUTHORIZED REPRODUCTION OR DISTRIBUTION IS A VIOLATION OF THE FEDERAL COPYRIGHT ACT AND THE LICENSE AGREEMENT, AND SUBJECT TO CIVIL AND CRIMINAL PENALTIES THEREUNDER.

2406.4.5 Glazing and wet surfaces. Glazing in walls, enclosures or fences containing or facing hot tubs, spas, whirlpools, saunas, steam rooms, bathtubs, showers and indoor or outdoor swimming pools where the bottom exposed edge of the glazing is less than 60 inches (1524 mm) measured vertically above any standing or walking surface shall be considered a hazardous location. This shall apply to single glazing and all panes in multiple glazing.

Exception: Glazing that is more than 60 inches (1524 mm), measured horizontally and in a straight line, from the water's edge of a bathtub, hot tub, spa, whirlpool or swimming pool.

❖ The reason for requiring safety glazing at walls or fencing used for enclosing swimming pools, hot tubs and spas is the high amount of activity coupled with the wet walking surface conditions that are typically present in these types of facilities or spaces. The conditions presented in this section are focused on glazing in openings as viewed from the pool or spa side of the wall, fence or enclosure. Glazed openings in pool or spa walls viewed from the side of the wall away from the pool or spa are discussed elsewhere in this section. As a point of clarification, a wall, fence or enclosure refers to any wall that encloses a pool or spa area. It can be a wall constructed specifically to enclose an outdoor pool or spa; an existing or new exterior building wall; a residential garage wall; a dressing cabana or a shed for pool equipment. It can also be an interior or exterior wall. It applies to any wall that can support a glazed opening.

Glass wall partitions and glass doors that are not part of the primary building wall construction, interior or exterior, used to enclose these areas must be constructed from safety glass or other safety glazing material allowed by the code. Glazed openings in interior or exterior primary building walls located within the enclosed compartment areas identified in this section, where the bottom edge of the glass is within 60 inches (1524 mm) of the standing or walking surface, must be glazed with safety glass or other safety glazing material allowed by the code [see Commentary Figure 2406.4.5(1)]. Glazed openings (i.e., windows) located outside the identified enclosures are not required to be glazed with safety glass, unless required by other sections in this chapter or elsewhere in the code.

When comparing the 18-inch (457 mm) bottom edge height threshold in Section 2406.4.3 to the 60 inches (1524 mm) required herein, one will find that the 18-inch (457 mm) height is intended to serve as a visual warning in order to avoid contact with glass, whereas the 60-inch (1524 mm) threshold is based on an impact consideration [see Commentary Figure 2406.4.5(2)].

The exception states that any glazing that is more than 60 inches (1524 mm) from the edge of the pool, tub or spa is exempt from the requirements in this section. Beyond this distance, any glazing should be evaluated against the hazardous location criteria stated in other sections (for example, for windows or doors).

2406.4.6 Glazing adjacent to stairways and ramps. Glazing where the bottom exposed edge of the glazing is less than

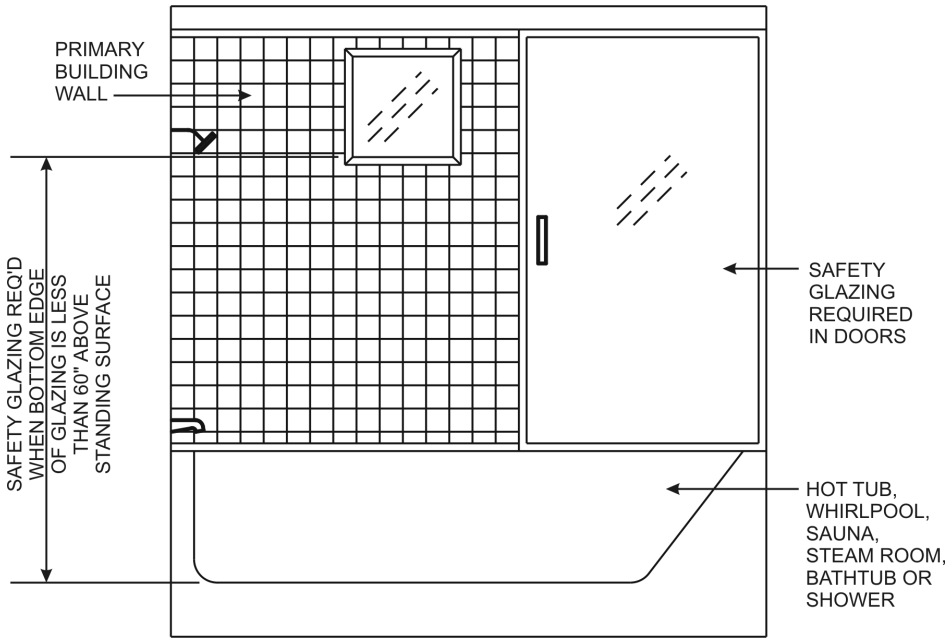

For SI: 1 inch = 25.4 mm.

Figure 2406.4.5(1)
SAFETY GLAZING AT WET SURFACES

INTERNATIONAL CODE COUNCIL®
Copyright © 2015 ICC. ALL RIGHTS RESERVED. Accessed by David Dammon on Jun 21, 2017 12:30:52 PM pursuant to License Agreement with ICC. No further reproduction or distribution authorized. ANY UNAUTHORIZED REPRODUCTION OR DISTRIBUTION IS A VIOLATION OF THE FEDERAL COPYRIGHT ACT AND THE LICENSE AGREEMENT, AND SUBJECT TO CIVIL AND CRIMINAL PENALTIES THEREUNDER.

60 inches (1524 mm) above the plane of the adjacent walking surface of stairways, landings between flights of stairs and ramps shall be considered a hazardous location.

Exceptions:

1. The side of a stairway, landing or ramp that has a guard complying with the provisions of Sections 1015 and 1607.8, and the plane of the glass is greater than 18 inches (457 mm) from the railing.
2. Glazing 36 inches (914 mm) or more measured horizontally from the walking surface.

❖ Stairways and ramps pose a greater risk for injury caused by falling than a flat surface. Further, when using a stairway, the injuries are potentially more severe. Unlike falling on a flat surface where the floor will, for the most part, break a person's fall, there is nothing to stop someone from continuing to fall until he or she reaches the bottom of the stairway. The increased risks inherent in stairways, as well as attempting to be consistent with other chapters in the code that mandate more restrictive requirements when addressing safety issues involving stairways and ramps, account for the more restrictive requirements for glazing adjacent to stairways or ramps.

Exception 1 relieves the requirement for safety glazing because the risk of a cutting or piercing injury caused by broken glass upon human contact is effectively eliminated. Guards and railings that comply with the means of egress requirements prescribed in Chapter 10 as well as the structural requirements of Chapter 16 will effectively serve to prevent someone from impacting glazed walls or glazed openings in walls located in close vertical proximity to stairways or ramps, provided the glazing is more than 18 inches (457 mm) from the guards or railings.

Exception 2 excludes any glazing that is at least 36 inches (914 mm) horizontally from any walking surface. The walking surface in question would be part of a stairway or ramp itself, including top, bottom and intermediate landings. It does not include adjacent floors or other walking surfaces.

2406.4.7 Glazing adjacent to the bottom stairway landing. Glazing adjacent to the landing at the bottom of a stairway where the glazing is less than 60 inches (1524 mm) above the landing and within a 60-inch (1524 mm) horizontal arc that is less than 180 degrees (3.14 rad) from the bottom tread nosing shall be considered a hazardous location.

Exception: Glazing that is protected by a guard complying with Sections 1015 and 1607.8 where the plane of the glass is greater than 18 inches (457 mm) from the guard.

❖ This section addresses glass that is located within 60 inches (1524 mm) from the bottom tread in a run of stairs and within 60 inches (1524 mm) vertically of the landing surface. The code does not distinguish between a bottom tread at a floor level or at an intermediate landing between floors. The last tread in a

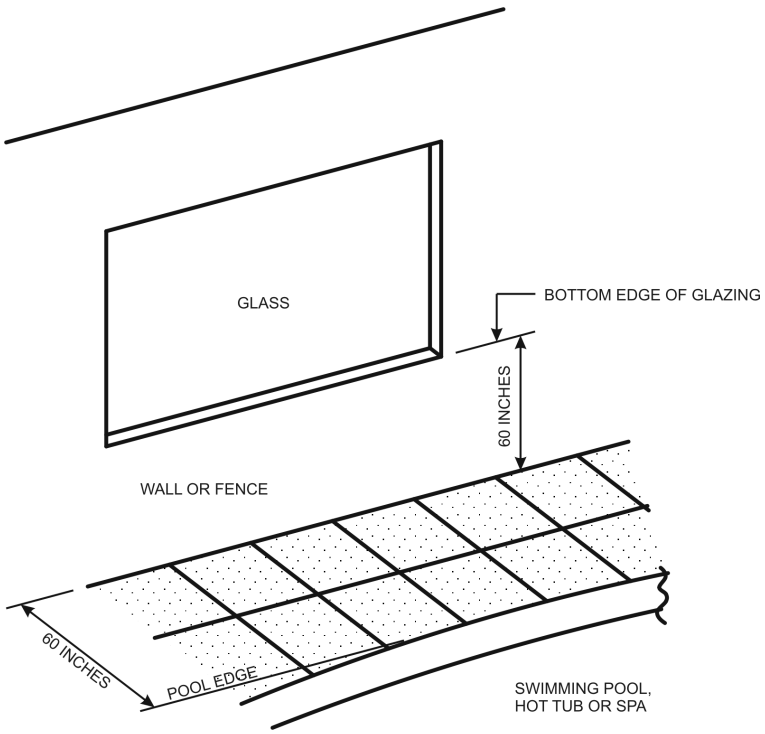

For SI: 1 inch = 25.4 mm.

Figure 2406.4.5(2)
GLAZING IN POOL ENCLOSURE

INTERNATIONAL CODE COUNCIL®
Copyright © 2015 ICC. ALL RIGHTS RESERVED. Accessed by David Dammon on Jun 21, 2017 12:30:52 PM pursuant to License Agreement with ICC. No further reproduction or distribution authorized. ANY UNAUTHORIZED REPRODUCTION OR DISTRIBUTION IS A VIOLATION OF THE FEDERAL COPYRIGHT ACT AND THE LICENSE AGREEMENT, AND SUBJECT TO CIVIL AND CRIMINAL PENALTIES THEREUNDER.

run of steps is the bottom tread. The 60-inch (1524 mm) dimension is from any point on the bottom tread, horizontally in any direction to the surface of any glazing within that range.

The exception relieves the requirement for safety glazing because a guard minimizes the risk of a cutting or piercing injury caused by broken glass upon human contact. Guards that comply with the means of egress requirements prescribed in Chapter 10 and the structural requirements of Chapter 16 effectively prevent someone from falling or stumbling into glazed walls or glazed openings in walls located in close vertical proximity to stairways or ramps, provided the glazing is more than 18 inches (457 mm) from the guard.

2406.5 Fire department access panels. Fire department glass access panels shall be of tempered glass. For insulating glass units, all panes shall be tempered glass.

❖ Because of the need to provide safety for fire-fighting access, this section requires that all glass be safety glazing. When fire-fighting operations include breaking through openings, all glass will obviously be broken, which will subject fire fighters to the hazards of broken glass from all panes.

SECTION 2407
GLASS IN HANDRAILS AND GUARDS

2407.1 Materials. Glass used in a handrail, guardrail or a *guard* section shall be laminated glass constructed of fully tempered or heat-strengthened glass and shall comply with Category II or CPSC 16 CFR Part 1201 or Class A of ANSI Z97.1. Glazing in railing in-fill panels shall be of an *approved* safety glazing material that conforms to the provisions of Section 2406.1.1. For all glazing types, the minimum nominal thickness shall be $^1/_4$ inch (6.4 mm).

Exception: Single fully tempered glass complying with Category II of CPSC 16 CFR Part 1201 or Class A of ANSI Z97.1 shall be permitted to be used in handrails and guardrails where there is no walking surface beneath them or the walking surface is permanently protected from the risk of falling glass.

❖ This section provides requirements for glass applications in handrail and guard assemblies.

Glass in handrail and guard applications is often exposed to impact from people, carried objects and other items. Early code requirements were vague regarding the appropriate types of glass for these installations.

Glass used as structural balustrade panels must resist the design loads applied to the handrail component of the guard system with an adequate factor of safety (see Commentary Figure 2407.1). On a practical basis, the only glass types that are structurally adequate and provide the necessary retentive characteristics are laminated tempered glass and laminated heat-strengthened glass. Other glass types and all safety plastics would need to be excessively thick to resist the design loads on the railing. The exception covers locations where there is no exposed walking surface below, in which case single fully tempered glass can be used.

Glass guard in-fill panels are typically installed in a hard-setting expanding cement. This is to provide a rigid, secure support for the glass. Large compressive stresses, transferred from the handrail component above, are exerted on the glass at the bottom edge. Only the glass types listed in the previous paragraph will routinely resist these forces without breakage. This is another reason why only laminated tempered glass and laminated heat-strengthened glass are allowed.

In-fill panels that do not support the railing have less stringent requirements. All approved safety glazing materials are allowed. A minimum thickness of $^1/_4$ inch (6.4 mm) is required to provide reasonable penetration and breakage resistance. All types must meet the requirements of Category II in CPSC 16 CFR, Part 1201 or Class A in accordance with ANSI Z97.1.

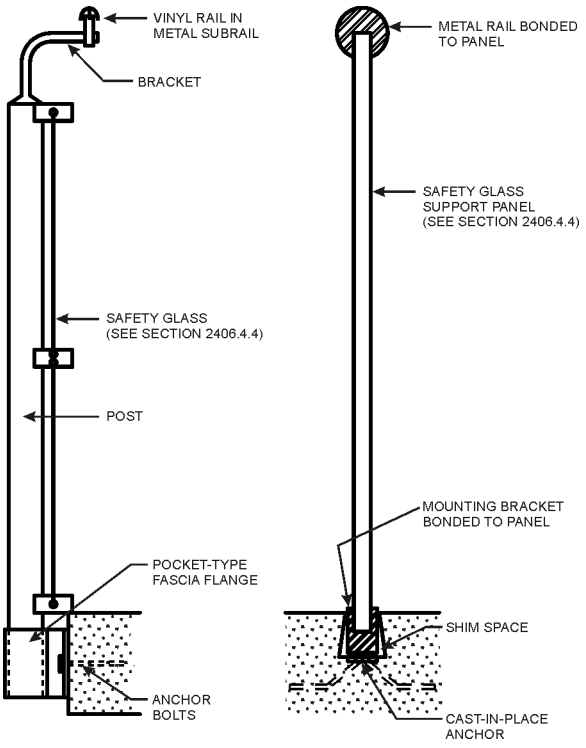

Figure 2407.1
GLASS GUARDS

2407.1.1 Loads. The panels and their support system shall be designed to withstand the loads specified in Section 1607.8. A design factor of four shall be used for safety.

❖ This section requires that the support system for glass guard or handrail assemblies be designed based on a safety factor of four. Nominally identical panes of glass inherently have a wide variation in strength. The safety factor of four is used in the

INTERNATIONAL CODE COUNCIL®
Copyright © 2015 ICC. ALL RIGHTS RESERVED. Accessed by David Dammon on Jun 21, 2017 12:30:52 PM pursuant to License Agreement with ICC. No further reproduction or distribution authorized. ANY UNAUTHORIZED REPRODUCTION OR DISTRIBUTION IS A VIOLATION OF THE FEDERAL COPYRIGHT ACT AND THE LICENSE AGREEMENT, AND SUBJECT TO CIVIL AND CRIMINAL PENALTIES THEREUNDER.

design to minimize the likelihood that breakage will occur below the design loads. It is not intended that an in-place glass guard or handrail system be tested for or capable of withstanding four times the design load.

2407.1.2 Support. Each handrail or *guard* section shall be supported by a minimum of three glass balusters or shall be otherwise supported to remain in place should one baluster panel fail. Glass balusters shall not be installed without an attached handrail or *guard*.

Exception: A top rail shall not be required where the glass balusters are laminated glass with two or more glass plies of equal thickness and the same glass type when *approved* by the *building official*. The panels shall be designed to withstand the loads specified in Section 1607.8.

❖ Glass balustrade panels have been used for many decades without a significant history of problems. Glass of any type may break, however, if exposed to severe impact or other unusual or unexpected loads. A guard or handrail system should be designed so that the failure of a single glass panel does not cause the collapse of the assembly. Accordingly, the code does not allow glass balusters to be used without a guard or handrail. It also requires that guards or handrails be fastened to a minimum of three glass balustrade panels or supported such that the guard or handrail remains in place if one panel fails.

The exception allows an option where a top rail is an undesirable visual barrier. An example is the guard at the front of the spectator levels of sport arenas and theaters. The balusters must be laminated glass complying with the live load requirements for guards and handrails.

2407.1.3 Parking garages. Glazing materials shall not be installed in handrails or *guards* in parking garages except for pedestrian areas not exposed to impact from vehicles.

❖ This section is included to remove any ambiguity. The large impact loads from vehicles cannot be resisted by glass balustrades. As a result, they are not allowed under any circumstances where the guard or handrail might reasonably be impacted by vehicles. Glass and plastic in-fill panels are also not allowed because of the high likelihood of failure if impacted by vehicles.

2407.1.4 Glazing in wind-borne debris regions. Glazing installed in in-fill panels or balusters in *wind-borne debris regions* shall comply with the following:

❖ This section intends to minimize the glass debris in a windstorm. Reportedly, a dangerous situation occurred during hurricanes in South Florida where top handrails fell off the buildings. It was noted that rails located in portions of the building requiring the small missile test disengaged from the building and became large missile debris in those areas. This provision intends the glass railing system to provide retention and structural integrity and to continue to support the rail in the event the glass is impacted.

2407.1.4.1 Balusters and in-fill panels. Glass installed in exterior railing in-fill panels or balusters shall be laminated glass complying with Category II of CPSC 16 CFR Part 1201 or Class A of ANSI Z97.1.

❖ Laminated glass installed in in-fill panels or balusters of exterior railings tends to remain integral after breakage occurs.

2407.1.4.2 Glass supporting top rail. When the top rail is supported by glass, the assembly shall be tested according to the impact requirements of Section 1609.1.2. The top rail shall remain in place after impact.

❖ In the case of all-glass-type railings, structural integrity can be maintained by incorporating impact-resistant glass. It is the intent to require only the missile impact test and not the cycling test requirements contained in the test standard referenced in Section 1609.1.2.

SECTION 2408
GLAZING IN ATHLETIC FACILITIES

2408.1 General. Glazing in athletic facilities and similar uses subject to impact loads, which forms whole or partial wall sections or which is used as a door or part of a door, shall comply with this section.

❖ In most applications of safety glazing materials, human impact into glass is an unexpected and infrequent occurrence. Safety glazing is required to minimize injury associated with the unintentional impact and subsequent breakage of fixed glass or glazing. Glass in walls or doors of enclosures for athletic activity can be exposed to frequent and intentional impact. For proper performance, the glass not only must break in a relatively safe manner, but must also resist breakage under normal use. A further requirement is that the glass be sufficiently rigid to provide a resilient playing surface. Therefore, safety glazing must be used in any athletic facility, as well as similar areas where the glass is subject to frequent human impact in the opinion of the building official. This section includes the performance requirements for glass in these specialized applications.

2408.2 Racquetball and squash courts.

❖ The primary focus of this section is the walls and doors of racquetball, handball, squash and volleyball courts. In these applications, the glass is intentionally and frequently impacted in the normal course of its use.

2408.2.1 Testing. Test methods and loads for individual glazed areas in racquetball and squash courts subject to impact loads shall conform to those of CPSC 16 CFR Part 1201 or ANSI Z97.1 with impacts being applied at a height of 59 inches (1499 mm) above the playing surface to an actual

INTERNATIONAL CODE COUNCIL®
Copyright © 2015 ICC. ALL RIGHTS RESERVED. Accessed by David Dammon on Jun 21, 2017 12:30:52 PM pursuant to License Agreement with ICC. No further reproduction or distribution authorized. ANY UNAUTHORIZED REPRODUCTION OR DISTRIBUTION IS A VIOLATION OF THE FEDERAL COPYRIGHT ACT AND THE LICENSE AGREEMENT, AND SUBJECT TO CIVIL AND CRIMINAL PENALTIES THEREUNDER.

or simulated glass wall installation with fixtures, fittings and methods of assembly identical to those used in practice.

Glass walls shall comply with the following conditions:

1. A glass wall in a racquetball or squash court, or similar use subject to impact loads, shall remain intact following a test impact.
2. The deflection of such walls shall be not greater than $1^1/_2$ inches (38 mm) at the point of impact for a drop height of 48 inches (1219 mm).

Glass doors shall comply with the following conditions:

1. Glass doors shall remain intact following a test impact at the prescribed height in the center of the door.
2. The relative deflection between the edge of a glass door and the adjacent wall shall not exceed the thickness of the wall plus $^1/_2$ inch (12.7 mm) for a drop height of 48 inches (1219 mm).

❖ The acceptance testing for the glass walls is similar in some respects to that included in CPSC 16 CFR, Part 1201, and ANSI Z97.1. There are some significant variations in the impact testing and end-point criteria. There are two major differences in the testing: the glass is impacted at a height of 59 inches (1499 mm) and the actual (or simulated) construction, complete with fixtures and attachments, is tested. The impact level of 59 inches (1499 mm) is the average shoulder height for an adult male as listed in handbooks for architectural design.

The end-point criteria require that the glass assembly not fail upon impact and the maximum deflection not exceed $1^1/_2$ inches (38 mm). Although the latter is not related to safety, it is included to provide a reasonable playing surface. Both are unique and are not ordinary requirements for safety glazing materials.

Glass doors in the applications cited have been particularly hazardous in some designs. A player may impact and deflect the access door, while the adjacent wall remains in its original position. Occasionally, a player's fingers have become trapped between the door and the wall when the force on the door is released. This section of the code is directed at reducing this hazard.

Though not stated, the intent is that the impact for the glass panels be at the midpoint of the horizontal dimension.

2408.3 Gymnasiums and basketball courts. Glazing in multipurpose gymnasiums, basketball courts and similar athletic facilities subject to human impact loads shall comply with Category II of CPSC 16 CFR Part 1201 or Class A of ANSI Z97.1.

❖ Unlike racquetball and squash courts, the intentional impacting of gymnasium and basketball court enclosures is not anticipated. Nevertheless, due to the nature of their use, these facilities have a higher incidence of unintentional glazing impacts. This section requires any glazing that is subject to human impact loads in gymnasiums, basketball courts and similar athletic facilities to be CPSC 16 CFR, Part 1201, Category II, or Class A in accordance with ANSI Z97.1 [see commentary, Tables 2406.2(1) and 2406.2(2)].

SECTION 2409
GLASS IN WALKWAYS, ELEVATOR HOISTWAYS AND ELEVATOR CARS

2409.1 Glass walkways. Glass installed as a part of a floor/ceiling assembly as a walking surface and constructed with laminated glass shall comply with ASTM E2751 or with the load requirements specified in Chapter 16. Such assemblies shall comply with the *fire-resistance rating* requirements of this code where applicable.

❖ Because ASTM E2751 addresses load-bearing glass walkways constructed of laminated glass, this section applies specifically to glass walkways constructed of laminated glass. An engineered design utilizing the applicable load requirements of Chapter 16 is necessary for glass walkways that are constructed of other types of glass, such as a walkway constructed of glass block.

2409.2 Glass in elevator hoistway enclosures. Glass in elevator hoistway enclosures and hoistway doors shall be laminated glass conforming to ANSI Z97.1 or CPSC 16 CFR Part 1201.

❖ The purpose of this section is to provide requirements for glass in elevator cars and elevator hoistways comparable to those in ASME A17.1. This section provides a level of protection to building occupants from the hazards associated with broken glass as it relates to glass in elevator enclosures. This glazing is susceptible to impact from components during elevator operation or servicing.

2409.2.1 Fire-resistance-rated hoistways. Glass installed in hoistways and hoistway doors where the hoistway is required to have a fire-resistance rating shall also comply with Section 716.

❖ This section provides a cross reference to the Chapter 7 requirements for a hoistway that must be fire-resistance rated.

2409.2.2 Glass hoistway doors. The glass in glass hoistway doors shall be not less than 60 percent of the total visible door panel surface area as seen from the landing side.

❖ This section establishes a minimum area threshold for glass hoistway doors.

2409.3 Visions panels in elevator hoistway doors. Glass in vision panels in elevator hoistway doors shall be permitted to be any transparent glazing material not less than $^1/_4$ inch (6.4 mm) in thickness conforming to Class A in accordance with ANSI Z97.1 or Category II in accordance with CPSC 16 CFR Part 1201. The area of any single vision panel shall be not

INTERNATIONAL CODE COUNCIL®
Copyright © 2015 ICC. ALL RIGHTS RESERVED. Accessed by David Dammon on Jun 21, 2017 12:30:52 PM pursuant to License Agreement with ICC. No further reproduction or distribution authorized. ANY UNAUTHORIZED REPRODUCTION OR DISTRIBUTION IS A VIOLATION OF THE FEDERAL COPYRIGHT ACT AND THE LICENSE AGREEMENT, AND SUBJECT TO CIVIL AND CRIMINAL PENALTIES THEREUNDER.

less than 24 square inches (15 484 mm^2) and the total area of one or more vision panels in any hoistway door shall be not more than 85 square inches (54 839 mm^2).

❖ This section requires CPSC 16 CFR, Part 1201, Category II safety glazing or Class A in accordance with ANSI Z97.1 in vision panels in hoistway doors in a manner that is consistent with similar hazardous locations.

2409.4 Glass in elevator cars. Glass in elevator cars shall be in accordance with this section.

❖ This section establishes the permitted glazing type for glass elevator cars and sets a minimum area of glazing in glass doors of elevator cars.

2409.4.1 Glass types. Glass in elevator car enclosures, glass elevator car doors and glass used for lining walls and ceilings of elevator cars shall be laminated glass conforming to Class A in accordance with ANSI Z97.1 or Category II in accordance with CPSC 16 CFR Part 1201.

Exception: Tempered glass shall be permitted to be used for lining walls and ceilings of elevator cars provided:

1. The glass is bonded to a nonpolymeric coating, sheeting or film backing having a physical integrity to hold the fragments when the glass breaks.
2. The glass is not subjected to further treatment such as sandblasting; etching; heat treatment or painting that could alter the original properties of the glass.
3. The glass is tested to the acceptance criteria for laminated glass as specified for Class A in accordance with ANSI Z97.l or Category II in accordance with CPSC 16 CFR Part 1201.

❖ The requirement for laminated glass is consistent with the requirements of ASME A17.1.

2409.4.2 Surface area. The glass in glass elevator car doors shall be not less than 60 percent of the total visible door panel surface area as seen from the car side of the doors.

❖ This section establishes a minimum area threshold for glass doors in elevator cars.

2409.4.2 Surface area. The glass in glass elevator car doors shall be not less than 60 percent of the total visible door panel surface area as seen from the car side of the doors.

❖ This section establishes a minimum area threshold for glass doors in elevator cars.

Bibliography

The following resource materials were used in the preparation of the commentary for this chapter of the code.

AAMA/WDMA/CSA 101/I.S.2/A440-11, *North American Fenestration Standard/Specifications for Windows, Doors and Skylights*. Schaumburg, IL: American Architectural Manufacturers Association, 2011.

ANSI Z97.1-14, *Safety Glazing Materials Used in Buildings—Safety Performance Specifications and Methods of Test*. New York: American National Standards Institute, 2014.

ASTM E1300-12AE1, *Standard Practice for Determining Load Resistance of Glass in Buildings*. West Conshohocken, PA: ASTM International, 2012.

CPSC 16 CFR, Part 1201 (2002), *Safety Standard for Architectural Glazing*. Washington, DC: Consumer Product Safety Commission, 2002.

Glass Design for Sloped Glazing. Des Plaines, IL: American Architectural Manufacturers Association, 1987.

INTERNATIONAL CODE COUNCIL®
Copyright © 2015 ICC. ALL RIGHTS RESERVED. Accessed by David Dammon on Jun 21, 2017 12:30:52 PM pursuant to License Agreement with ICC. No further reproduction or distribution authorized. ANY UNAUTHORIZED REPRODUCTION OR DISTRIBUTION IS A VIOLATION OF THE FEDERAL COPYRIGHT ACT AND THE LICENSE AGREEMENT, AND SUBJECT TO CIVIL AND CRIMINAL PENALTIES THEREUNDER.

INTERNATIONAL CODE COUNCIL®
Copyright © 2015 ICC. ALL RIGHTS RESERVED. Accessed by David Dammon on Jun 21, 2017 12:30:52 PM pursuant to License Agreement with ICC. No further reproduction or distribution authorized. ANY UNAUTHORIZED REPRODUCTION OR DISTRIBUTION IS A VIOLATION OF THE FEDERAL COPYRIGHT ACT AND THE LICENSE AGREEMENT, AND SUBJECT TO CIVIL AND CRIMINAL PENALTIES THEREUNDER.

Chapter 25: Gypsum Board, Gypsum Panel Products and Plaster

General Comments

Chapter 25 contains the provisions and referenced standards that regulate the design, construction and quality of gypsum board and plaster. These represent the most common interior and exterior finish materials in the building industry, and the provisions dealing with them are contained within this single chapter. This chapter deals primarily with quality-control-related issues with regard to material specifications and installation requirements. This chapter addresses weather ratings and provides cross references to the requirements for shear walls constructed of either wood stud or light-gage steel stud framing. In addition, provisions for constructing horizontal gypsum board ceiling diaphragms are included.

Where materials described in this chapter are used or required for fire-resistant construction, the code requires that they also comply with the provisions of Chapter 7.

Section 2501 addresses the scope of this chapter.

Section 2502 provides a list of defined terms that are used throughout this chapter.

Section 2503 explains the responsibility of the contractor to have work inspected by the building official.

Section 2504 defines the construction and application requirements for gypsum board and plaster for use on walls and ceilings.

Section 2505 allows for the use of lightweight shear walls that are sheathed with gypsum board or lath and plaster.

Section 2506 outlines the quality standards for gypsum board and related materials and accessories.

Section 2507 outlines the quality standards for lath, plaster and related materials and accessories.

Section 2508 includes material and construction standards for the use of gypsum board and gypsum plaster materials with reference to fire-resistance-rated assemblies. It also provides requirements for constructing gypsum board ceiling diaphragms using wood joists.

Section 2509 establishes requirements for the use of gypsum board in wet areas.

Section 2510 describes material standards and construction requirements for cement plaster and related accessories.

Section 2511 defines material standards, construction requirements and limitations for plaster and related accessories when applied to an interior surface.

Section 2512 defines material standards, construction requirements and limitations for plaster and related accessories when applied to exterior and weather-exposed surfaces.

Section 2513 addresses the use of applied aggregate finishes to interior and exterior plaster.

Section 2514 addresses reinforced gypsum concrete.

Gypsum board and plaster products represent a line of building products that are, for the most part, manufactured under the control of industry standards. The building official or inspector only needs to verify that the appropriate product has been used and properly installed for the intended use and location. Several key points of installation have been addressed in this chapter where these practices have been known to create problems or when not addressed by other gypsum or plaster product standards.

Purpose

Chapter 25 provides the minimum design requirements through referenced and industry standards for the use of gypsum board, gypsum plaster and cement plaster materials in construction.

SECTION 2501 GENERAL

2501.1 Scope. Provisions of this chapter shall govern the materials, design, construction and quality of gypsum board, gypsum panel products, lath, gypsum plaster, cement plaster and reinforced gypsum concrete.

❖ Chapter 25 includes the requirements that govern the materials, design, construction, quality and application for interior and exterior gypsum board, gypsum panel products, plaster products and reinforced gypsum concrete. Although these products are most commonly used as interior or exterior finished wall and ceiling coverings, proper design and application are necessary to provide weather resistance and required fire protection for structural and nonstructural building components, and meet structural requirements for gypsum board and plaster products and assemblies.

Provisions for the quality, construction and labeling of all gypsum panel products and plaster materials used in the construction of wall and ceiling coverings

INTERNATIONAL CODE COUNCIL®
Copyright © 2015 ICC. ALL RIGHTS RESERVED. Accessed by David Dammon on Jun 21, 2017 12:30:52 PM pursuant to License Agreement with ICC. No further reproduction or distribution authorized. ANY UNAUTHORIZED REPRODUCTION OR DISTRIBUTION IS A VIOLATION OF THE FEDERAL COPYRIGHT ACT AND THE LICENSE AGREEMENT, AND SUBJECT TO CIVIL AND CRIMINAL PENALTIES THEREUNDER.

are included in this chapter. Methods of fastening and, in the case of plaster, the permitted materials for lath, plaster and aggregate in all buildings and structures are also addressed. In general, all gypsum board and plaster materials are required to conform to the applicable standards as referenced in this chapter.

2501.2 Performance. Lathing, plastering, gypsum board and gypsum panel product construction shall be done in the manner and with the materials specified in this chapter and, when required for fire protection, shall also comply with the provisions of Chapter 7.

❖ The extensive use of gypsum panel products and plaster throughout the construction industry for many years has led to the development of a comprehensive index of tested and proven performance standards. This chapter is directed at identifying the performance standards required to ensure a quality of construction that will provide a safe, habitable environment for the life of the building or structure. The standards contained and referenced in this chapter and elsewhere in the code establish the minimum performance standards and requirements for all methods and materials contained in this chapter.

Gypsum plaster, cement plaster and gypsum panel products and materials have inherent fire-resistant qualities that provide outstanding passive fire protection of building components and assemblies. When these materials are used in the construction of fire-resistant assemblies, the details of construction are to comply with the requirements established by the official fire test reports conducted by recognized testing laboratories in accordance with Chapter 7 and the referenced standards listed in Chapter 35.

2501.3 Other materials. Other *approved* wall or ceiling coverings shall be permitted to be installed in accordance with the recommendations of the manufacturer and the conditions of approval.

❖ Gypsum board and plaster are currently the primary building materials being used for wall and ceiling covering, but there are many other materials in use today for covering interior and exterior walls, ceilings and soffits. This chapter makes no attempt to address the use of any other building materials, such as wood, concrete, concrete masonry, brick, metal or vinyl, nor is it intended to limit the use of these or any other materials for similar installations. The material standards and construction regulations for other approved building materials are addressed elsewhere in the code.

SECTION 2502
DEFINITIONS

2502.1 Definitions. The following terms are defined in Chapter 2:

CEMENT PLASTER.

EXTERIOR SURFACES.

GYPSUM BOARD.

GYPSUM PANEL PRODUCTS.

GYPSUM PLASTER.

GYPSUM VENEER PLASTER.

INTERIOR SURFACES.

WEATHER-EXPOSED SURFACES.

WIRE BACKING.

❖ Definitions facilitate the understanding of code provisions and minimize potential confusion. To that end, this section lists definitions of terms associated with gypsum board and plaster. Note that these definitions are found in Chapter 2. The use and application of defined terms, as well as undefined terms, are set forth in Section 201.

SECTION 2503
INSPECTION

2503.1 Inspection. Lath, gypsum board and gypsum panel products shall be inspected in accordance with Section 110.3.5.

❖ This section establishes guidelines and requirements for the inspection of all components of gypsum board, gypsum panel products, plaster products, assemblies and installations as outlined in the code and as required or requested by the building official. The building official is allowed to inspect the installation of all plaster lathing system components prior to being concealed from view by the application of a plaster base coat or finished coats. It is essential not only that the lath be the proper type for the plaster system being used, but also that the components of the system are installed properly.

Plaster wall and ceiling assemblies as well as gypsum board wall and ceiling assemblies are quite often, by design, part of a building's passive fire protection system, as they provide not only the fire-resistant construction necessary for the proper separation of defined areas within a structure, but also fire-protected components of the structure. The building official is to be given the opportunity by the permit holder to verify that the assemblies will serve the purpose for which they are designed. This can only be done by allowing the building official to visually inspect the components of the various systems while they are still accessible.

SECTION 2504
VERTICAL AND HORIZONTAL ASSEMBLIES

2504.1 Scope. The following requirements shall be met where construction involves gypsum board, gypsum panel products or lath and plaster in vertical and horizontal assemblies.

❖ Section 2504 and the referenced standards, structural limitations and requirements addressed else-

INTERNATIONAL CODE COUNCIL®
Copyright © 2015 ICC. ALL RIGHTS RESERVED. Accessed by David Dammon on Jun 21, 2017 12:30:52 PM pursuant to License Agreement with ICC. No further reproduction or distribution authorized. ANY UNAUTHORIZED REPRODUCTION OR DISTRIBUTION IS A VIOLATION OF THE FEDERAL COPYRIGHT ACT AND THE LICENSE AGREEMENT, AND SUBJECT TO CIVIL AND CRIMINAL PENALTIES THEREUNDER.

where define the minimum requirements for the structural members supporting the weight of gypsum board, gypsum panel products and plaster where used in the construction of walls and ceilings.

Vertical assemblies (walls and partitions) must be designed in accordance with the engineering chapters of the code for proper structural support of gypsum board or plaster wall covering. If the wall or partition construction and assembly are not designed to resist the loads prescribed in the code, the wall covering materials will perform inadequately. The general design provisions of Chapter 16 and the deflection limitations are particularly important in this regard.

The code requirements for the design and framing of horizontal assemblies (ceilings) are intended to achieve the same results as described for vertical assemblies. Gypsum board and plaster ceilings are generally supported by a suspended metal grid framing system of metal channels or T-bars suspended by steel wires tied to the structure above. The ceiling covering may also be fastened directly to the structural framing member or furring, which is fastened to the structural frame. All ceiling support systems must comply with the structural load requirements of Chapter 16.

2504.1.1 Wood framing. Wood supports for lath, gypsum board or gypsum panel products, as well as wood stripping or furring, shall be not less than 2 inches (51 mm) nominal thickness in the least dimension.

Exception: The minimum nominal dimension of wood furring strips installed over solid backing shall be not less than 1 inch by 2 inches (25 mm by 51 mm).

❖ The minimum dimensions required by this section for wood supports for gypsum panel products, gypsum board or lath and plaster are intended to provide adequate support and reduce surface distortion due to warping of wood supports.

Wood furring strips attached to a solid backing may be used to support wall or ceiling covering. The furring must be installed with the wide face against the solid backing. This will provide a nominal 2-inch-wide (51 mm) nailing surface equal to the nailing surface of a standard wood stud, joist or rafter.

2504.1.2 Studless partitions. The minimum thickness of vertically erected studless solid plaster partitions of $^3/_8$-inch (9.5 mm) and $^3/_4$-inch (19.1 mm) rib metal lath, $^1/_2$-inch-thick (12.7 mm) gypsum lath, gypsum board or gypsum panel product shall be 2 inches (51 mm).

❖ As the name implies, a studless partition is constructed of gypsum board, gypsum panel products lath or ribbed metal lath with plaster applied to each face, without the stud frame wall that typically provides support for the wall covering [see Commentary Figures 2504.1.2(1) and 2504.1.2(2)]. The lath and plaster form the structural elements of the partition that must resist the lateral loads applied to the wall. Studless partitions may only be used as nonload-bearing partitions. They must comply with the deflection and general design requirements specified in Chapter 16.

SECTION 2505
SHEAR WALL CONSTRUCTION

2505.1 Resistance to shear (wood framing). Wood-frame shear walls sheathed with gypsum board, gypsum panel products or lath and plaster shall be designed and constructed in accordance with Section 2306.3 and are permitted to resist wind and seismic loads. Walls resisting seismic loads shall be subject to the limitations in Section 12.2.1 of ASCE 7.

❖ Shear walls designed to resist wind and seismic loads, constructed of wood-framing members and sheathed with gypsum wallboard, gypsum panel products or lath and plaster are permitted by the code. Section 2306.3 includes seismic application limitations for wood-framed shear walls using gypsum board or lath and plaster as the finished wall surface and the limitations for such basic seismic-force-resisting systems are found in Section 12.2.1 of ASCE 7.

Care must be taken when selecting gypsum board, gypsum panel products or plaster materials if they are being used as part of an exterior wall that will be exposed to the weather. Gypsum board, gypsum panel products, gypsum board lath, gypsum plaster and gypsum veneer plaster are not water resistant and are intended for interior applications only. Specific gypsum board materials covered with an appropriate exposed finish material or metal lath with cement plaster base coats and finish coat (stucco) are appropriate for exterior applications exposed to the weather.

2505.2 Resistance to shear (steel framing). Cold-formed steel-frame shear walls sheathed with gypsum board or gypsum panel products and constructed in accordance with the materials and provisions of Section 2211.6 are permitted to resist wind and seismic loads. Walls resisting seismic loads shall be subject to the limitations in Section 12.2.1 of ASCE 7.

❖ Shear walls designed to resist wind and seismic loads, constructed of light-gage steel stud framing members and sheathed with gypsum board or gypsum panel product are permitted by the code. Structural design guidelines and construction requirements for these shear walls are provided in Section 2211.6.

INTERNATIONAL CODE COUNCIL®
Copyright © 2015 ICC. ALL RIGHTS RESERVED. Accessed by David Dammon on Jun 21, 2017 12:30:52 PM pursuant to License Agreement with ICC. No further reproduction or distribution authorized. ANY UNAUTHORIZED REPRODUCTION OR DISTRIBUTION IS A VIOLATION OF THE FEDERAL COPYRIGHT ACT AND THE LICENSE AGREEMENT, AND SUBJECT TO CIVIL AND CRIMINAL PENALTIES THEREUNDER.

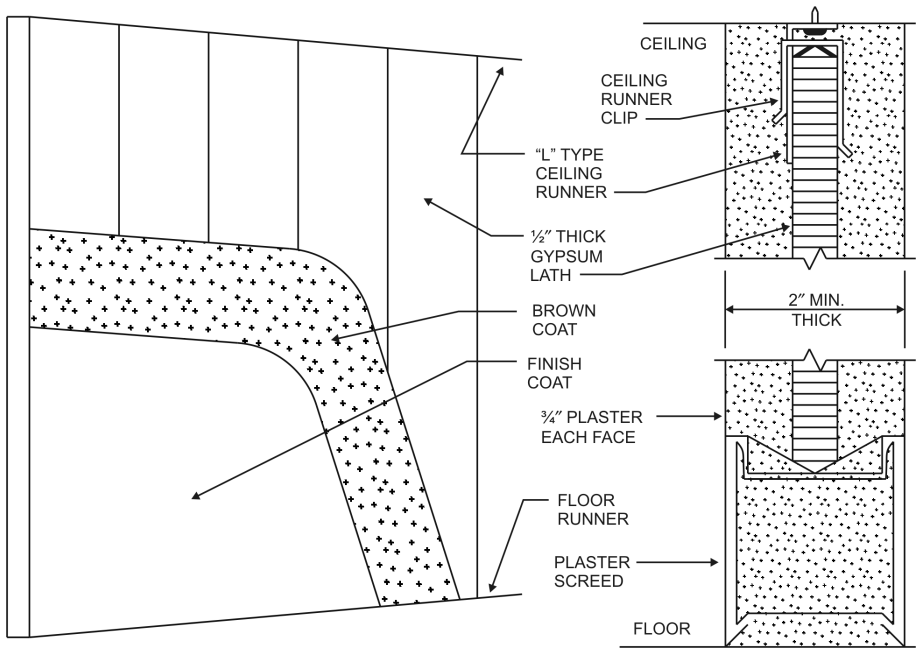

For SI: 1 inch = 25.4 mm.

Figure 2504.1.2(1)
STUDLESS PLASTER PARTITION WITH GYPSUM BOARD LATH

Limitations for basic seismic force-resisting systems are found in Section 12.2.1 of ASCE 7.

SECTION 2506
GYPSUM BOARD AND GYPSUM PANEL PRODUCT MATERIALS

2506.1 General. Gypsum board, gypsum panel products and accessories shall be identified by the manufacturer's designation to indicate compliance with the appropriate standards referenced in this section and stored to protect such materials from the weather.

❖ This section contains the appropriate referenced standards for the proper use and quality of gypsum board and gypsum panel product materials and accessories. Gypsum board and gypsum panel products are the most commonly used interior wall coverings. Gypsum board and gypsum panel products are also used for exterior sheathing, plaster lath and ceiling covering. Because they are installed in sheet form, they are less labor intensive and generally considered more cost effective than other wall and ceiling materials, such as plaster. Gypsum board and gypsum panel products require a minimal amount of finishing and will readily accept paint, wallpaper, vinyl fabric, special textured paint and similar surface-finish materials.

All gypsum products, including gypsum board materials, are required to be identified with the manufacturer's designation. The manufacturer is required to certify that its product complies with the applicable standard for the gypsum product. This enables the installer and inspector to verify that the product is being properly installed and utilized.

Generally, all gypsum products and accessories are delivered to the job site in their original packages, containers or bundles. These products will be identified with the manufacturer's name, trademark and any applicable standard designations. For example, for gypsum board products, the thickness and type are shown on the end-bundling tapes or the board panel. The premixed paste products are identified on their container and bag products are appropriately identified on the face of the bag. With regard to weather protection, all gypsum products must be kept dry because of the deleterious effect of moisture. If properly stored above ground and fully protected from the weather and exposure to direct sunlight, gypsum products and accessories may be stored outside; however, the storage of gypsum board and gypsum panel product is not recommended in exterior locations. Exposure to the elements may result in water stain, light discoloration, mildew, loss of strength or sagging, all of which could hinder the structural and fire performance of the product, as well as the ability to be finished in the intended fashion. Gypsum board and gypsum panel product should be stored flat—never on edge or end.

2506.2 Standards. Gypsum board and gypsum panel products shall conform to the appropriate standards listed in Table

INTERNATIONAL CODE COUNCIL®
Copyright © 2015 ICC. ALL RIGHTS RESERVED. Accessed by David Dammon on Jun 21, 2017 12:30:52 PM pursuant to License Agreement with ICC. No further reproduction or distribution authorized. ANY UNAUTHORIZED REPRODUCTION OR DISTRIBUTION IS A VIOLATION OF THE FEDERAL COPYRIGHT ACT AND THE LICENSE AGREEMENT, AND SUBJECT TO CIVIL AND CRIMINAL PENALTIES THEREUNDER.

2506.2 and Chapter 35 and, where required for fire protection, shall conform to the provisions of Chapter 7.

❖ Table 2506.2 lists the appropriate material standards for gypsum board and gypsum panel product materials and accessories. The most common building material used in Table 2506.2 is gypsum wallboard (also referred to as "gypsum board," "gyp. board" or "sheetrock"). ASTM C1396 provides the design specifications for gypsum board used for walls and ceilings. Gypsum board consists of a noncombustible core, which is primarily gypsum, and is surfaced with paper firmly bonded to the core. The paper surfacing material is less than 0.125-inch (3.18 mm) thick and has a flame spread index less than 25 when tested in accordance with ASTM E84. This requirement is in accordance with the fire-resistance requirements of Chapter 7 for composite materials classified as "noncombustible." Gypsum materials that are required to have a fire-resistance rating in accordance with the code must also comply with the applicable provisions of Chapter 7. In addition, Chapter 7 establishes and defines the requirements for the fire-resistance ratings of building assemblies and structural components. Such assemblies are to be constructed in accordance with the test procedures as prescribed in the appropriate referenced standards listed in Chapter 35.

TABLE 2506.2. See page 25-6.

❖ Table 2506.2 provides a list of the materials and accessories recognized by the code for use in gypsum board construction, and makes reference to the appropriate ASTM standard for each. The installation of each of these materials must conform to all the requirements of the referenced standard. It is not the intent of the code, however, by way of this table, to limit or restrict alternative materials or accessories in the use of gypsum board and its associated incidentals as a building material acknowledged and approved by the code. Any and all materials not specifically mentioned, described or referenced, however, are subject to the requirements of the code, as well as the entire family of *International Codes*®.

In recent years, the gypsum industry has replaced several individual gypsum board product standards

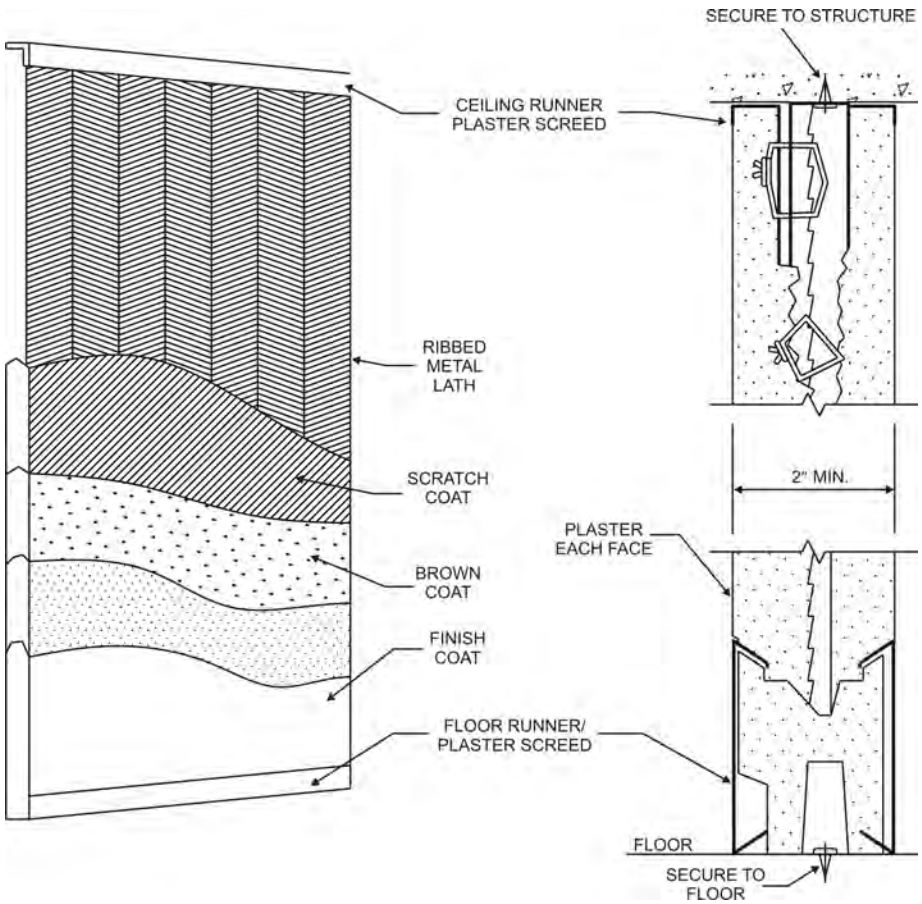

For SI: 1 inch = 25.4 mm.

Figure 2504.1.2(2)
STUDLESS PLASTER PARTITION WITH RIBBED METAL LATH

INTERNATIONAL CODE COUNCIL®
Copyright © 2015 ICC. ALL RIGHTS RESERVED. Accessed by David Dammon on Jun 21, 2017 12:30:52 PM pursuant to License Agreement with ICC. No further reproduction or distribution authorized. ANY UNAUTHORIZED REPRODUCTION OR DISTRIBUTION IS A VIOLATION OF THE FEDERAL COPYRIGHT ACT AND THE LICENSE AGREEMENT, AND SUBJECT TO CIVIL AND CRIMINAL PENALTIES THEREUNDER.

with the "umbrella" standard, ASTM C1396, *Specification for Gypsum Board*.

By including ASTM C920, the code recognizes elastomeric joint sealants as an acceptable alternative to the traditional joint tape and compound. Some fire-resistance-rated assemblies have been successfully tested utilizing joints sealed with the elastomeric joint sealant material. The use of these materials must also comply with all applicable requirements in other parts of the code.

2506.2.1 Other materials. Metal suspension systems for acoustical and lay-in panel ceilings shall comply with ASTM C635 listed in Chapter 35 and Section 13.5.6 of ASCE 7 for installation in high seismic areas.

❖ Suspended ceiling systems are widely used in building construction of all types, as they provide for a cost-effective finished ceiling system that is versatile and adaptable to other building systems, such as heating, ventilating and air-conditioning systems (HVAC), fire suppression systems, lighting systems, etc. The standard developed for the manufacture and installation of suspended ceiling systems is ASTM C635. This standard contains minimum specifications for the metal suspension system, including system types (direct hung, indirect hung and furring bar type), structural classification (light-duty, intermediate-duty and heavy-duty), dimensional tolerances, coatings and physical testing for structural capacities.

Additional installation requirements are applicable for high seismic areas. These requirements include installation requirements for Seismic Design Categories C through F and are found in Section 13.5.6 of ASCE 7.

SECTION 2507
LATHING AND PLASTERING

2507.1 General. Lathing and plastering materials and accessories shall be marked by the manufacturer's designation to indicate compliance with the appropriate standards referenced in this section and stored in such a manner to protect them from the weather.

❖ These basic requirements apply to lathing and plastering materials, products and accessories referenced in this chapter. This section requires that all lath and plaster materials be identified with the manufacturer's designation and indicate compliance with the appropriate standards. This enables the installer and the inspector to verify that a product is being installed in a manner that is consistent with its intended use. All accessories must also be marked with a reference to the appropriate standard. The manufacturer is required to certify that its product complies with the applicable standard for lathing and plastering material. Lath and plaster products and accessories are delivered to the job site in their original packages, containers or bundles. These products must be identified with the manufacturer's name, trademark and any applicable standard designations. With regard to weather protection, plaster products must be kept dry because of the deleterious effect of moisture. If properly stored above ground, fully protected from the weather and exposure to direct sunlight and away from condensation and damp surfaces, lath and plaster products and accessories may be stored outside; however, it is not recommended.

2507.2 Standards. Lathing and plastering materials shall conform to the standards listed in Table 2507.2 and Chapter 35 and, where required for fire protection, shall also conform to the provisions of Chapter 7.

❖ The appropriate referenced standards that regulate all lath and plastering materials are contained in this section. It also addresses the proper marking of materials, protection from weather and installation requirements. Additionally, provisions of Chapter 7 are referenced for building assemblies utilizing lath and plastering materials that require a fire-resistance rating; therefore, the assemblies must comply with the provisions of Chapter 7.

TABLE 2506.2
GYPSUM BOARD AND GYPSUM PANEL PRODUCTS MATERIALS AND ACCESSORIES

MATERIAL	STANDARD
Cold-formed steel studs and track, structural	AISI S200 and ASTM C955, Section 8
Cold-formed steel studs and track, nonstructural	AISI S220 and ASTM C645, Section 10
Elastomeric joint sealants	ASTM C920
Fiber-reinforced gypsum panels	ASTM C1278
Glass mat gypsum backing panel	ASTM C1178
Glass mat gypsum panel 5	ASTM C1658
Glass mat gypsum substrate	ASTM C1177
Joint reinforcing tape and compound	ASTM C474; C475
Nails for gypsum boards	ASTM C514, F547, F1667
Steel screws	ASTM C954; C1002
Standard specification for gypsum board	ASTM C1396
Testing gypsum and gypsum products	ASTM C22; C472; C473

INTERNATIONAL CODE COUNCIL®
Copyright © 2015 ICC. ALL RIGHTS RESERVED. Accessed by David Dammon on Jun 21, 2017 12:30:52 PM pursuant to License Agreement with ICC. No further reproduction or distribution authorized. ANY UNAUTHORIZED REPRODUCTION OR DISTRIBUTION IS A VIOLATION OF THE FEDERAL COPYRIGHT ACT AND THE LICENSE AGREEMENT, AND SUBJECT TO CIVIL AND CRIMINAL PENALTIES THEREUNDER.

TABLE 2507.2. See below.

❖ Table 2507.2 provides a listing of the materials and accessories that are recognized in the code for use in plaster construction, along with the appropriate ASTM standard for each. The installation of each of these materials must conform to all requirements of the referenced standard. It is not the intent of the code to prevent alternative materials or accessories in the use of plaster and its associated incidentals as a building material acknowledged and approved by the code. Any materials not specifically mentioned, described or referenced herein are subject to the requirements of the code, as well as the entire family of *International Codes*.

SECTION 2508
GYPSUM CONSTRUCTION

2508.1 General. Gypsum board, gypsum panel products and gypsum plaster construction shall be of the materials listed in Tables 2506.2 and 2507.2. These materials shall be assembled and installed in compliance with the appropriate standards listed in Tables 2508.1 and 2511.1.1 and Chapter 35.

❖ This section contains the referenced standards and requirements for the proper installation of gypsum construction.

This section references Table 2506.2 for the appropriate materials required in gypsum board, gypsum panel product and gypsum plaster construction, as well as the corresponding material standard. Table 2508.1 addresses the appropriate installation standards required for use in gypsum construction. Gypsum board or gypsum panel product in fire-resistance-rated assemblies is to be installed in accordance with the fastening schedule utilized in the tested assembly. The type and spacing of the fasteners are reflected in the fire test reports of various assemblies, including the summary of fire tests contained in various resource documents that compile summaries of fire test results, such as Underwriters Laboratories' *Fire Resistance Directory* or the Gypsum Association's *Fire Resistance Design Manual*. Refer to Chapter 7 and its commentary for additional information related to fire-resistance-rated assemblies.

Gypsum plaster is available in several forms and is designed for a variety of applications, including those where fire protection of building components, construction of fire-resistance-rated assemblies within the building or control of sound transmission is needed. Gypsum plaster can be applied using a two- or three-coat method, depending on the backing or lathing system. Gypsum plaster provides a hard, smooth finish surface that will readily receive most decorative finishes, such as paint, vinyl wall fabric, wallpaper and textured paint. Various aggregates can be added to the plaster composition to achieve different surface textures, from a smooth troweled to a heavily textured finish.

TABLE 2507.2
LATH, PLASTERING MATERIALS AND ACCESSORIES

MATERIAL	STANDARD
Cold-formed steel studs and track, structural	AISI S200 and ASTM C955, Section 8
Cold-formed steel studs and track, nonstructural	AISI S220 and ASTM C645, Section 10
Hydraulic cement	ASTM C1157; C1600
Gypsum casting and molding plaster	ASTM C59
Gypsum Keene's cement	ASTM C61
Gypsum plaster	ASTM C28
Gypsum veneer plaster	ASTM C587
Interior bonding compounds, gypsum	ASTM C631
Lime plasters	ASTM C5; C206
Masonry cement	ASTM C91
Metal lath	ASTM C847
Plaster aggregates Sand Perlite Vermiculite	 ASTM C35; C897 ASTM C35 ASTM C35
Plastic cement	ASTM C1328
Portland cement	ASTM C150
Steel screws	ASTM C954; C1002
Welded wire lath	ASTM C933
Woven wire plaster base	ASTM C1032

INTERNATIONAL CODE COUNCIL®
Copyright © 2015 ICC. ALL RIGHTS RESERVED. Accessed by David Dammon on Jun 21, 2017 12:30:52 PM pursuant to License Agreement with ICC. No further reproduction or distribution authorized. ANY UNAUTHORIZED REPRODUCTION OR DISTRIBUTION IS A VIOLATION OF THE FEDERAL COPYRIGHT ACT AND THE LICENSE AGREEMENT, AND SUBJECT TO CIVIL AND CRIMINAL PENALTIES THEREUNDER.

TABLE 2508.1
INSTALLATION OF GYPSUM CONSTRUCTION

MATERIAL	STANDARD
Gypsum board and gypsum panel products	GA-216; ASTM C840
Gypsum sheathing and gypsum panel products	ASTM C1280
Gypsum veneer base	ASTM C844
Interior lathing and furring	ASTM C841
Steel framing for gypsum board and gypsum panel products	ASTM C754; C1007

❖ Table 2508.1 lists the installation requirements for the use of gypsum and gypsum-related construction products, along with the appropriate referenced standard for each. The installation of each of these materials must conform to all requirements of the referenced standard. There is no intent to limit or restrict alternative methods of construction acknowledged and approved by the code. Any methods not specifically mentioned, described or referenced herein are subject to the requirements of the code, as well as the entire family of *International Codes*.

2508.2 Limitations. Gypsum wallboard or gypsum plaster shall not be used in any exterior surface where such gypsum construction will be exposed directly to the weather. Gypsum wallboard shall not be used where there will be direct exposure to water or continuous high humidity conditions. Gypsum sheathing shall be installed on exterior surfaces in accordance with ASTM C1280.

❖ Because of the detrimental effect of moisture on gypsum products, gypsum-based materials and construction must be protected from the weather. See Section 202 for the definition of "Weather-exposed surfaces," which includes some limited conditions where gypsum board is permitted to be used on the outside of a building or structure.

2508.2.1 Weather protection. Gypsum wallboard, gypsum lath or gypsum plaster shall not be installed until weather protection for the installation is provided.

❖ This section relates to the necessary environmental conditions for proper plaster application and hydration. Temperature limitations are needed to provide a uniform heating condition for a minimum of one week prior to the start of plastering, and are the same as the requirements stated in ASTM C842. This minimizes the movements or stresses caused by thermal changes, which in turn lower the chances of plaster cracking.

2508.3 Single-ply application. Edges and ends of gypsum board and gypsum panel products shall occur on the framing members, except those edges and ends that are perpendicular to the framing members. Edges and ends of gypsum board and gypsum panel products shall be in moderate contact except in concealed spaces where fire-resistance-rated construction, shear resistance or diaphragm action is not required.

❖ The application of gypsum board and gypsum panel products is specified in this chapter for nonfire-resistant construction or construction where diaphragm (shear wall) action is not required. Chapter 7 and fire test reports will establish the means of fastening and supporting the ends and edges of gypsum board for nonfire-resistant assemblies. In the case of stud walls required for diaphragm action, Chapters 22 and 23 establish structural requirements such as sizes and spacing fasteners, allowable loads and the conditions of end and edge supports. Gypsum board is the generic name for a family of sheet products consisting of a noncombustible core, primarily composed of gypsum, with a paper surfacing on each face. The installation and finishing of gypsum board materials must comply with the referenced standards in Table 2508.1. GA 216, *Application and Finishing of Gypsum Panel Products*, published by the Gypsum Association, is the most commonly recommended specification for the installation and finishing of gypsum board and gypsum panel product.

- **Framing:** As with any gypsum board or gypsum sheet product, it is critical to inspect the framing on which the gypsum material is to be attached. Finishing of gypsum board will be made extremely difficult when installed over unlevel, unplumb, out-of-square or structurally inadequate framing. All of these concerns must be satisfied before the installation of any gypsum board product can begin. Gypsum board can be attached to a variety of framing members, including but not necessarily limited to, wood or metal studs; joists and rafters; suspended metal-frame ceiling systems and wood or metal furring on concrete or masonry walls. Framing systems that are not installed square, level and plumb will create stress points where the gypsum board is attached to the framing. Stress points can cause the gypsum board to crack, shear or delaminate. This can become a significant issue when fire-resistance-rated assemblies are compromised.
- **Fastening:** The type of fastening devices and methods for attaching gypsum board to framing are dependent upon the type of framing system being used and the type of assembly being constructed. Screws, nails and construction adhesives are approved types of fasteners. Fasteners are to be selected and installed as required by the specifications referenced in GA 216, except as required elsewhere in the code for fire-resistance-rated assemblies, shear wall construction or where more restrictive requirements are provided by the referenced standards listed in Chapter 35.

INTERNATIONAL CODE COUNCIL®
Copyright © 2015 ICC. ALL RIGHTS RESERVED. Accessed by David Dammon on Jun 21, 2017 12:30:52 PM pursuant to License Agreement with ICC. No further reproduction or distribution authorized. ANY UNAUTHORIZED REPRODUCTION OR DISTRIBUTION IS A VIOLATION OF THE FEDERAL COPYRIGHT ACT AND THE LICENSE AGREEMENT, AND SUBJECT TO CIVIL AND CRIMINAL PENALTIES THEREUNDER.

- **Finishing:** Gypsum must be finished with materials and accessories designed and approved for the application for which they are being used. Joint tape, joint compound and all accessories are to be approved and installed as recommended by the manufacturer and as required by the referenced standards.
- **Multiple-ply application:** This application of gypsum board is generally utilized to increase the fire-resistance rating of an assembly, the resistance of a shear wall assembly or the sound transmission class for an assembly. The construction and technical requirements for these and similar types of specialized assemblies are covered elsewhere in the International Codes. The requirements for gypsum board itself are as defined in this chapter, except where more restrictive requirements are mandated for a specialized assembly.

2508.3.1 Floating angles. Fasteners at the top and bottom plates of vertical assemblies, or the edges and ends of horizontal assemblies perpendicular to supports, and at the wall line are permitted to be omitted except on shear resisting elements or fire-resistance-rated assemblies. Fasteners shall be applied in such a manner as not to fracture the face paper with the fastener head.

❖ Floating angles are the edges of gypsum board that are not directly fastened to a framing member where a change in the plane of the gypsum board occurs. Gypsum board used as part of a shear wall assembly or as a component part of any fire-resistance-rated assembly must have all edges fastened to a framing member. It is given that gypsum board used as part of a vertical assembly (wall) is fastened to the wall studs along the edges and in the field of the gypsum board as defined in GA 216. Adequate support for the weight of the gypsum board itself will be provided, therefore eliminating the need for additional fastening at the top and bottom plates of the wall framing. Fastening is not to be omitted at any inside or outside corner of a wall assembly.

Fasteners may be omitted at the edges of horizontal assemblies (ceiling and soffits) when the edge of the gypsum board is perpendicular to the framing member. As with wall assemblies, it is given that fasteners located along the edges and in the field of the gypsum board in accordance with GA 216 will provide adequate support for the weight of the gypsum board itself. Edges of horizontal gypsum board assemblies that are parallel to framing members must be fastened to the framing member except where the parallel edge is at the intersection of the wall and ceiling. Typically, the gypsum board will be installed on the ceiling before it is installed on the wall. The edge of the gypsum board on the wall will be butted against the underside edge of the ceiling board, providing additional edge support for the ceiling.

This section permits the elimination of unnecessary fastening of gypsum board in specific locations and conditions without compromising the integrity of the gypsum board support or fastening system. Gypsum board must always be fastened to prevent sagging, warping, waviness or any visual defects.

2508.4 Joint treatment. Gypsum board and gypsum panel product fire-resistance-rated assemblies shall have joints and fasteners treated.

Exception: Joint and fastener treatment need not be provided where any of the following conditions occur:

1. Where the gypsum board or the gypsum panel product is to receive a decorative finish such as wood paneling, battens, acoustical finishes or any similar application that would be equivalent to joint treatment.
2. On single-layer systems where joints occur over wood framing members.
3. Square edge or tongue-and-groove edge gypsum board (V-edge), gypsum panel products, gypsum backing board or gypsum sheathing.
4. On multilayer systems where the joints of adjacent layers are offset.
5. Assemblies tested without joint treatment.

❖ This section requires joint and fastener treatment for all gypsum board and gypsum panel product fire-resistance-rated assemblies. The code also identifies and permits exceptions where the gypsum board or gypsum panel product is to receive a decorative finish or any similar application that is considered to be equivalent to the joint or fastener treatment.

These exceptions indicate that joint treatment is not required for assemblies tested without it:

1. Where the finish layer of gypsum board is to receive a decorative covering or similar type of applied material that will cover exposed joints, finishing of joints is not required; however, the applied material must provide the same fire-resistance rating as the assembly to which it is being applied.
2. Joint treatment is not required in single-layer applications where joints occur directly over wood-framing members. In effect, the additional joint treatment does not materially increase the fire-resistance rating of the assembly, and many partitions have been tested and passed the fire test without the added protection of joint and fastener treatment as part of the tested design.
3. Gypsum board with factory-designed edges that will prevent the penetration of smoke or fire into a rated assembly does not have to be finished. The factory edges listed will minimize gaps at joints and maintain the integrity of the assembly.

INTERNATIONAL CODE COUNCIL®
Copyright © 2015 ICC. ALL RIGHTS RESERVED. Accessed by David Dammon on Jun 21, 2017 12:30:52 PM pursuant to License Agreement with ICC. No further reproduction or distribution authorized. ANY UNAUTHORIZED REPRODUCTION OR DISTRIBUTION IS A VIOLATION OF THE FEDERAL COPYRIGHT ACT AND THE LICENSE AGREEMENT, AND SUBJECT TO CIVIL AND CRIMINAL PENALTIES THEREUNDER.

4. Multilayer assemblies with offset joints will eliminate any gaps in the system; therefore, fire smoke and harmful gases cannot readily penetrate the fire-resistance-rated assembly. This makes joint treatment unnecessary.
5. Where approved fire tests indicate that joint and fastener treatment is included as a part of the tested assembly, the code requires that joint and fastener treatment be applied in the same manner and extent as the approved test assembly. Where the approved test assembly does not specifically state whether joint or fastener treatment is part of the test assembly, the code requires that joint and fastener treatment is to be applied to any fire-resistance-rated assembly. Assemblies tested without joint treatment need not be finished.

As indicated elsewhere in this section, with regard to gypsum board and gypsum panel product application, joint and fastener treatment is primarily applied for aesthetic reasons and to provide a satisfactory finish surface for the application of decorative finishes, such as paint, wallpaper, vinyl wall fabric, textured paint or a number of other finishes used for the appearance of a rated or nonrated assembly.

2508.5 Horizontal gypsum board or gypsum panel product diaphragm ceilings. Gypsum board or gypsum panel products shall be permitted to be used on wood joists to create a horizontal diaphragm ceiling in accordance with Table 2508.5.

❖ Generally, a gypsum board or gypsum panel product ceiling does not serve as a load-carrying structural element for other than its own weight. This section provides installation requirements [refer to Commentary Figure 2508.5(1)] that allow the use of a horizontal gypsum board or gypsum panel product ceiling diaphragm. This permits a wood-framed ceiling to carry limited lateral loads, such as a portion of the component earthquake force on a partition as shown in Commentary Figure 2508.5(2).

TABLE 2508.5. See below.

❖ Table 2508.5 provides the shear capacity that is to be used in designing a horizontal gypsum board or gypsum panel product ceiling diaphragm. Since the material thickness and fastener size do not vary, the capacity is strictly a function of the framing member spacing. Further qualifications on the tabulated shear capacities that are stated in the footnotes include: ceiling diaphragm capacities are not cumulative with other diaphragm capacities; the capacities given are applicable to short-term loads caused by wind and earthquakes; and, in structures classified as Seismic Design Category D, E or F, the capacities must be reduced by 50 percent.

2508.5.1 Diaphragm proportions. The maximum allowable diaphragm proportions shall be $1^1/_2$:1 between shear resisting elements. Rotation or cantilever conditions shall not be permitted.

❖ Limiting the diaphragm proportions and prohibiting cantilevers and rotation serves to limit the deflection and distortion of the ceiling diaphragm [see Commentary Figure 2508.5(1)].

2508.5.2 Installation. Gypsum board or gypsum panel products used in a horizontal diaphragm ceiling shall be installed perpendicular to ceiling framing members. End joints of adjacent courses of gypsum board shall not occur on the same joist.

❖ The installation requirements of this section are necessary to obtain the shear capacities indicated in Table 2508.5.

2508.5.3 Blocking of perimeter edges. Perimeter edges shall be blocked using a wood member not less than 2-inch by 6-inch (51 mm by 152 mm) nominal dimension. Blocking material shall be installed flat over the top plate of the wall to provide a nailing surface not less than 2 inches (51 mm) in width for the attachment of the gypsum board or gypsum panel product.

❖ This section states the minimum required edge blocking that is illustrated in Commentary Figure 2508.5.3.

TABLE 2508.5
SHEAR CAPACITY FOR HORIZONTAL WOOD-FRAME GYPSUM BOARD DIAPHRAGM CEILING ASSEMBLIES

MATERIAL	THICKNESS OF MATERIAL (MINIMUM) (inches)	SPACING OF FRAMING MEMBERS (inches)	SHEAR VALUE[a, b] (PLF OF CEILING)	MIMIMUM FASTENER SIZE
Gypsum board or gypsum panel product	$^1/_2$	16 o.c.	90	5d cooler or wallboard nail; $1^5/_8$-inch long; 0.086-inch shank; $^{15}/_{64}$-inch head[c]
Gypsum board or gypsum panel product	$^1/_2$	24 o.c.	70	5d cooler or wallboard nail; $1^5/_8$-inch long; 0.086-inch shank; $^{15}/_{64}$-inch head[c]

For SI: 1 inch = 25.4 mm, 1 pound per foot = 14.59 N/m.

a. Values are not cumulative with other horizontal diaphragm values and are for short-term wind or seismic loading. Values shall be reduced 25 percent for normal loading.

b. Values shall be reduced 50 percent in Seismic Design Categories D, E and F.

c. $1^1/_4$-inch, No. 6 Type S or W screws are permitted to be substituted for the listed nails.

INTERNATIONAL CODE COUNCIL®
Copyright © 2015 ICC. ALL RIGHTS RESERVED. Accessed by David Dammon on Jun 21, 2017 12:30:52 PM pursuant to License Agreement with ICC. No further reproduction or distribution authorized. ANY UNAUTHORIZED REPRODUCTION OR DISTRIBUTION IS A VIOLATION OF THE FEDERAL COPYRIGHT ACT AND THE LICENSE AGREEMENT, AND SUBJECT TO CIVIL AND CRIMINAL PENALTIES THEREUNDER.

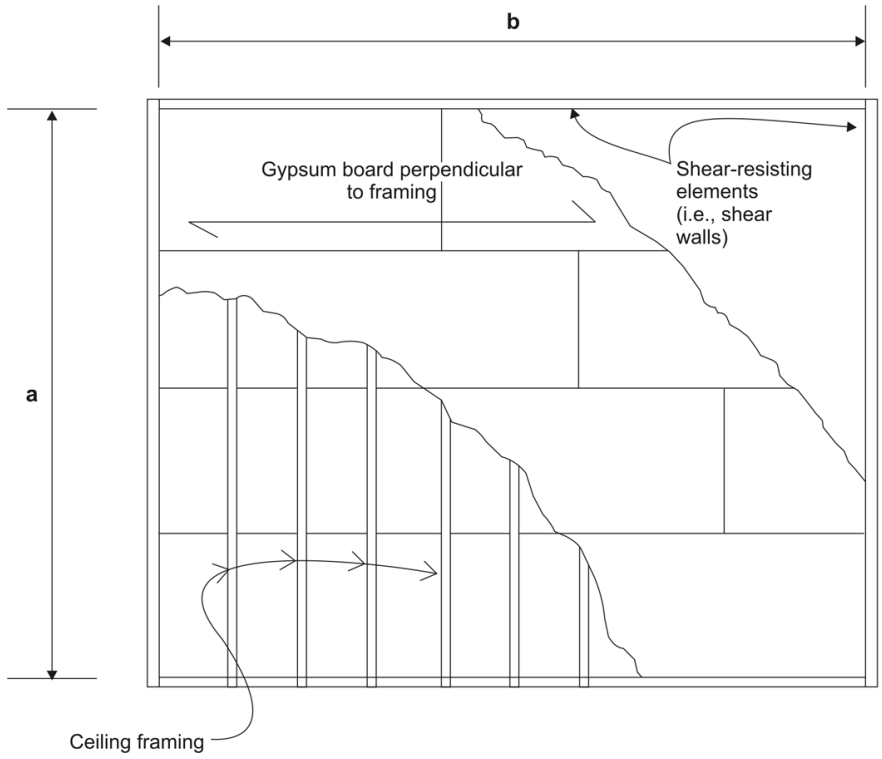

Figure 2508.5(1)
HORIZONTAL GYPSUM BOARD CEILING DIAPHRAGM CONSTRUCTION

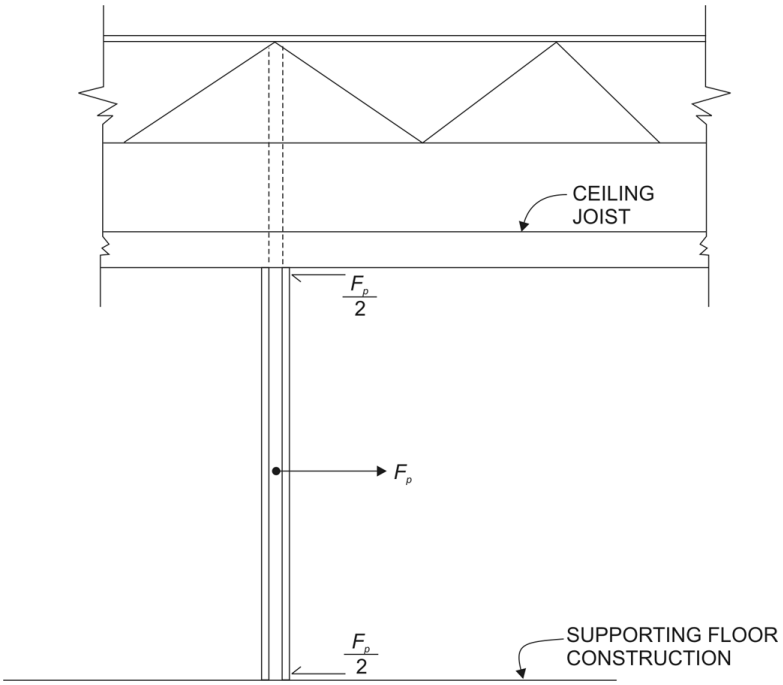

Figure 2508.5(2)
PARTITION SUPPORTED LATERALLY BY GYPSUM BOARD CEILING DIAPHRAGM

INTERNATIONAL CODE COUNCIL®
Copyright © 2015 ICC. ALL RIGHTS RESERVED. Accessed by David Dammon on Jun 21, 2017 12:30:52 PM pursuant to License Agreement with ICC. No further reproduction or distribution authorized. ANY UNAUTHORIZED REPRODUCTION OR DISTRIBUTION IS A VIOLATION OF THE FEDERAL COPYRIGHT ACT AND THE LICENSE AGREEMENT, AND SUBJECT TO CIVIL AND CRIMINAL PENALTIES THEREUNDER.

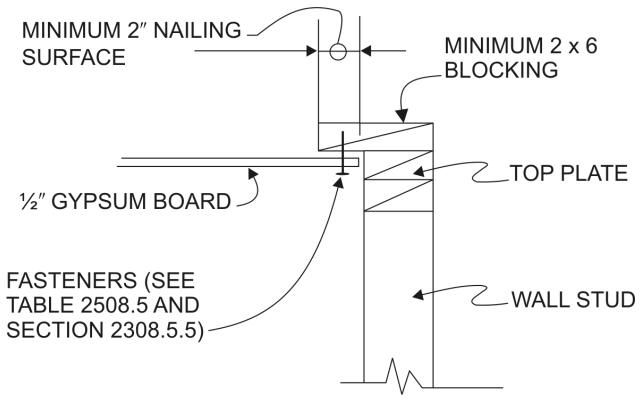

For SI: 1 inch = 25.4 mm.

Figure 2508.5.3
PERIMETER BLOCKING

2508.5.4 Fasteners. Fasteners used for the attachment of gypsum board or gypsum panel products to a horizontal diaphragm ceiling shall be as defined in Table 2508.5. Fasteners shall be spaced not more than 7 inches (178 mm) on center at all supports, including perimeter blocking, and not more than $^{3}/_{8}$ inch (9.5 mm) from the edges and ends of the gypsum board or gypsum panel product.

❖ This provision establishes maximum fastener spacing and minimum edge distances for gypsum board and gypsum panel product ceiling diaphragms.

2508.5.5 Lateral force restrictions. Gypsum board or gypsum panel products shall not be used in diaphragm ceilings to resist lateral forces imposed by masonry or concrete construction.

❖ This section prohibits the use of a gypsum board or gypsum panel product ceiling diaphragms in resisting lateral loads caused by masonry or concrete.

SECTION 2509
SHOWERS AND WATER CLOSETS

2509.1 Wet areas. Showers and public toilet walls shall conform to Section 1210.2.

❖ Special caution must be taken when gypsum board is used in applications where it will be exposed to moisture, because gypsum is not naturally resistant to water, humidity or other forms of moisture. Failure of gypsum board can be caused by direct or indirect exposure to all forms of moisture. Moisture-resistant gypsum board, which is faced with moisture-resistant paper, must be used in high moisture areas, and additional protection such as paint must be applied to prevent gypsum board from being exposed to moisture. Moisture-resistant gypsum board is known and referred to as "green board," because of the distinctive green moisture-resistant paper that is applied to it, which also makes it readily identifiable as moisture resistant.

Wet areas at interior locations, such as those identified in Section 1210.2, must be protected from moisture by a nonabsorbent wall or ceiling material. Cement plaster (gypsum plaster is not permitted in wet areas) and tile or other like finish materials will provide moisture protection for the wall surface. An additional waterproofing membrane must be provided where the wall is constructed of wood framing (see related commentary, Section 2511.5).

2509.2 Base for tile. Materials used as a base for wall tile in tub and shower areas and wall and ceiling panels in shower areas shall be of materials listed in Table 2509.2 and installed in accordance with the manufacturer's recommendations. Water-resistant gypsum backing board shall be used as a base for tile in water closet compartment walls when installed in accordance with GA-216 or ASTM C840 and the manufacturer's recommendations. Regular gypsum wallboard is permitted under tile or wall panels in other wall and ceiling areas when installed in accordance with GA-216 or ASTM C840.

❖ In areas that have routine exposure to heavy concentrations of water, it is necessary to use materials that are resistant to moisture as a backing for tile. Table 2509.2 lists materials for use as a base for wall tile in tub and shower areas and wall and ceiling panels in shower areas. The code also requires that moisture-resistant gypsum board (green board) is to be used as a base for ceramic and other hard tiles for water-closet compartment walls. It can be used in these locations because of its resistance to incidental moisture exposure. All joints in gypsum board that will be covered by tile or wall panels must be taped and finished even though they will be unexposed to view when the installation of the wall-covering material is complete. This is necessary to prevent moisture from migrating through the unfinished joints and causing damage to the gypsum board and the wall-framing system. Corrosion-resistant fasteners must be used in wet areas.

INTERNATIONAL CODE COUNCIL®
Copyright © 2015 ICC. ALL RIGHTS RESERVED. Accessed by David Dammon on Jun 21, 2017 12:30:52 PM pursuant to License Agreement with ICC. No further reproduction or distribution authorized. ANY UNAUTHORIZED REPRODUCTION OR DISTRIBUTION IS A VIOLATION OF THE FEDERAL COPYRIGHT ACT AND THE LICENSE AGREEMENT, AND SUBJECT TO CIVIL AND CRIMINAL PENALTIES THEREUNDER.

TABLE 2509.2
BACKERBOARD MATERIALS

MATERIAL	STANDARD
Glass mat gypsum backing panel	ASTM C1178
Nonasbestos fiber-cement backer board	ASTM C1288 or ISO 8336, Category C
Nonasbestos fiber-mat reinforced cementitious backer unit	ASTM C1325

❖ This table lists the materials, and the applicable referenced standard for each, that are recognized for use as a base for wall tile in tub and shower areas and wall and ceiling panels in shower areas.

2509.3 Limitations. Water-resistant gypsum backing board shall not be used in the following locations:

1. Over a vapor retarder in shower or bathtub compartments.
2. Where there will be direct exposure to water or in areas subject to continuous high humidity.

❖ Although there are many gypsum board sheet products that are manufactured and approved for use in wet areas or areas exposed to moisture or humidity, there are still some extreme conditions where even water-resistant gypsum board will not provide the level of moisture protection necessary:

1. Gypsum board installed on the walls and ceilings at shower and bathtub areas must be finished to prevent moisture from penetrating the wall or ceiling finish and contacting the gypsum board. The finish applied to the exposed face of the gypsum board, in effect, creates a water-resistant barrier that not only stops water from getting to the gypsum board, but also prevents the release of moisture from within the wall or the gypsum board itself. For this reason, gypsum board must not be installed over the outboard side of any vapor barrier or retarder. This will create a waterproof membrane on both faces of the gypsum board, causing moisture to be trapped in the gypsum board that will ultimately cause it to decompose and fail.
2. Water-resistant gypsum board is not to be used in areas that will be subject to direct exposure to water or continuous exposure to high humidity at locations such as saunas, steam rooms, gang showers or indoor pools. Gypsum board products, including the water-resistant type, are not intended for these extreme conditions and will provide unsatisfactory performance. Non-gypsum wall and ceiling materials such as concrete masonry, ceramic tile on cement backer board, cement plaster (stucco) or other materials designed and recommended for high moisture exposure must be used in these locations.

SECTION 2510
LATHING AND FURRING FOR CEMENT PLASTER (STUCCO)

2510.1 General. Exterior and interior cement plaster and lathing shall be done with the appropriate materials listed in Table 2507.2 and Chapter 35.

❖ This section contains the appropriate referenced standards for materials and proper application and protection of interior and exterior lath and furring for the installation of cement plaster (often referred to as "stucco"). Cement plaster is a cementitious-based plaster material with excellent water-resistant properties. It is the only type of plaster that the code recognizes as an exterior wall covering. Cement plaster can also be used as an interior finish wall covering.

Table 2507.2 lists the appropriate material standards for Portland cement, metal lath and plastering materials. These referenced standards are the minimum material specifications required by this section, as well as related requirements elsewhere in the code for the proper application and procedures for lath and furring for cement plaster.

2510.2 Weather protection. Materials shall be stored in such a manner as to protect them from the weather.

❖ Like gypsum products, cement stucco lathing and plastering materials must be stored to prevent the deleterious effect of the weather.

2510.3 Installation. Installation of these materials shall be in compliance with ASTM C926 and ASTM C1063.

❖ Table 2511.1.1 refers to ASTM C1063 as the standard specification for interior and exterior lathing and furring for cement-based plastering, as specified in ASTM C926. Where a fire-resistance rating is required for plastered assemblies and construction, details of the construction must be in accordance with the reports for the fire test assemblies that have met the requirements of the fire-resistance rating imposed. Where a specific degree of sound control is required for plastered assemblies and construction, details of construction must be in accordance with official test reports conducted in recognized testing laboratories in accordance with the applicable requirements of ASTM E90.

Table 2511.1.1 also refers to ASTM C1063 as the standard specification for the installation of Portland cement-based plaster. For exterior (stucco) and interior work, ASTM C1063 provides the requirements for proportioning various plaster mixes and thicknesses (refer to Section 2512 for additional requirements for cement plaster).

2510.4 Corrosion resistance. Metal lath and lath attachments shall be of corrosion-resistant material.

❖ Because of the amount of water that is present in plaster when it is mixed and applied to a surface, all metal components and accessories, such as metal lath; screws; screeds; grounds; metal runners at the edges of the plaster; expansion and control joint

INTERNATIONAL CODE COUNCIL®
Copyright © 2015 ICC. ALL RIGHTS RESERVED. Accessed by David Dammon on Jun 21, 2017 12:30:52 PM pursuant to License Agreement with ICC. No further reproduction or distribution authorized. ANY UNAUTHORIZED REPRODUCTION OR DISTRIBUTION IS A VIOLATION OF THE FEDERAL COPYRIGHT ACT AND THE LICENSE AGREEMENT, AND SUBJECT TO CIVIL AND CRIMINAL PENALTIES THEREUNDER.

molding; or any other metal component that will be in contact with the plaster, must be protected from corrosion and rusting from prolonged contact with wet plaster. Corrosion of metal components will cause failure and create voids in the plaster that will allow moisture to get into the wall and cause damage to the structural and nonstructural elements of the building. For these reasons, the code requires metal components made of corrosion-resistant materials. Table 2507.2 provides a listing of the required material standards for lath and related accessories.

2510.5 Backing. Backing or a lath shall provide sufficient rigidity to permit plaster applications.

❖ Proper application of exterior plaster requires that the base coat is thoroughly pushed through the lath to provide the required mechanical bond. For this reason, it is required by the code that the lath and its backing provide sufficient rigidity to permit the proper application of the plaster. A common method of providing a rigid backing for the lath for exterior plaster over open wood or metal stud framing is to fasten 18-gage wire backing (see Commentary Figure 2510.5) to the studs at 6 inches (152 mm) on center horizontally. It is critical to stretch the wire tightly across the face of the studs to provide the desired rigidity for the backing. The wire backing must be attached to each stud to prevent slippage or movement of the wire.

2510.5.1 Support of lath. Where lath on vertical surfaces extends between rafters or other similar projecting members, solid backing shall be installed to provide support for lath and attachments.

❖ It is important for the lath to be supported continuously along all edges. Continuous edge support is necessary to prevent excessive movement of the finished plaster, which can result in unwanted cracking. This is particularly critical on exterior vertical surfaces of cement plaster because cracking provides an entry point for water into the building. At locations where the wall plane is interrupted at regular intervals, such as eaves and soffits where rafter ends project beyond the face of the wall, the code requires that the lath be supported by solid backing at all edges. In addition to supporting the edges of the lath, the code requires that all plaster trim, edging, screeds, grounds and other accessories be rigidly supported with solid backing at all edges.

The damage to finished plaster on an exterior vertical surface due to unsupported edges is much more obvious than damage that would be expected on an interior surface; however, failure of interior wall surfaces is also a concern. For this reason, the code makes no distinction between interior and exterior surfaces. Solid backing is required for lath at all locations, whether interior or exterior.

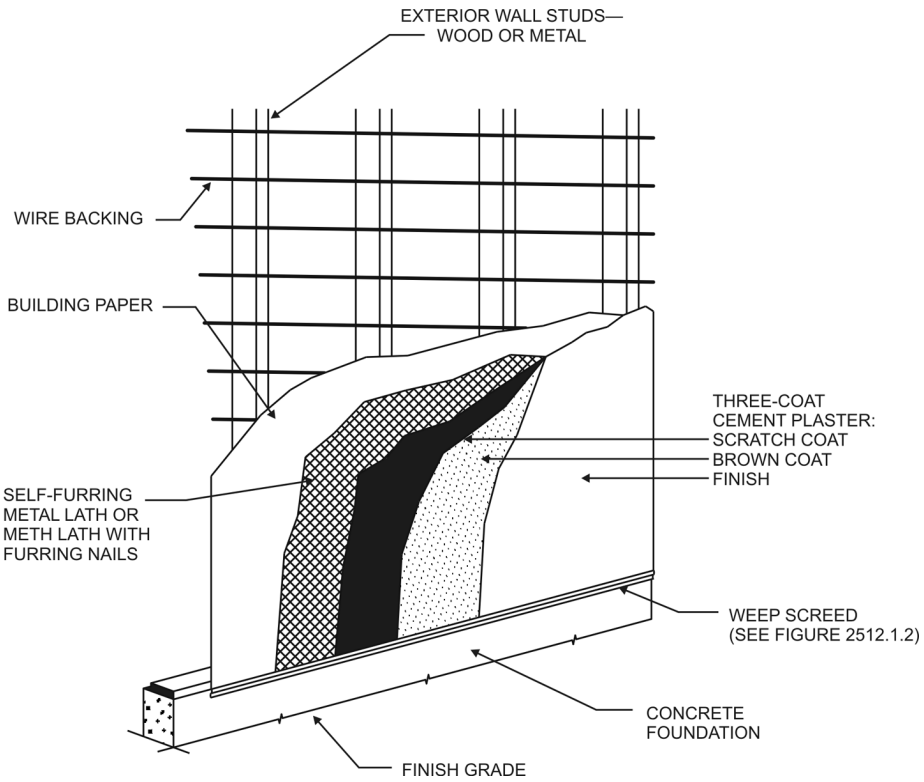

Figure 2510.5
THREE-COAT PLASTER ON UNSHEATHED EXTERIOR STUD WALL

INTERNATIONAL CODE COUNCIL®
Copyright © 2015 ICC. ALL RIGHTS RESERVED. Accessed by David Dammon on Jun 21, 2017 12:30:52 PM pursuant to License Agreement with ICC. No further reproduction or distribution authorized. ANY UNAUTHORIZED REPRODUCTION OR DISTRIBUTION IS A VIOLATION OF THE FEDERAL COPYRIGHT ACT AND THE LICENSE AGREEMENT, AND SUBJECT TO CIVIL AND CRIMINAL PENALTIES THEREUNDER.

2510.5.2 Use of gypsum backing board. Gypsum backing for cement plaster shall be in accordance with Section 2510.5.2.1 or 2510.5.2.2.

❖ The code does not permit the use of gypsum board or gypsum lath as a backing for cement plaster, except as noted in Section 2510.5.2.1.

2510.5.2.1 Gypsum board as a backing board. Gypsum lath or gypsum wallboard shall not be used as a backing for cement plaster.

Exception: Gypsum lath or gypsum wallboard is permitted, with a *water-resistive barrier*, as a backing for self-furred metal lath or self-furred wire fabric lath and cement plaster where either of the following conditions occur:

1. On horizontal supports of ceilings or roof soffits.
2. On interior walls.

❖ Because of its excellent water-resistant properties, cement plaster is the only type permitted by the code for use as a finished exterior surface exposed to the weather, or at an interior location subject to excessive moisture. Gypsum has none of the water-resistant properties possessed by cement-based plasters or cementitious backer boards, which are designed specifically for use in high moisture areas. Because of the inability of gypsum-based materials to resist moisture, the code does not permit the use of gypsum board or gypsum lath as an interior or exterior backing in direct contact with cement plaster. Gypsum board lath subjected to moisture will decompose and cause failure to the entire plaster system, including the outer or finished coats. Exceptions to this restriction are permitted when gypsum is protected from contact with cement plaster as allowed in specific locations described below.

Gypsum lath and gypsum wallboard are permitted to be used as a backing for cement plaster when a water-resistive barrier, such as Grade D building paper, is installed at the back of the lath or to the face of the gypsum board to prevent the cement plaster from contacting the gypsum backing. The building paper must be securely attached to the face of the gypsum board before installing the self-furring metal lath or self-furring wire fabric to create a water-resistive barrier. Items 1 and 2 of the exception indicate locations where this may be applied.

2510.5.2.2 Gypsum sheathing backing. Gypsum sheathing is permitted as a backing for metal or wire fabric lath and cement plaster on walls. A *water-resistive barrier* shall be provided in accordance with Section 2510.6.

❖ Gypsum board sheathing is permitted to be used as a backer for cement plaster when installed with a water-resistive barrier as described in Section 2510.5.2.1 and as required in Section 2510.6.

2510.5.3 Backing not required. Wire backing is not required under expanded metal lath or paperbacked wire fabric lath.

❖ Because metal lath or paper-backed wire fabric lath has reinforcing ribs to provide necessary rigidity, the code requires no additional backing for these materials.

2510.6 Water-resistive barriers. *Water-resistive barriers* shall be installed as required in Section 1404.2 and, where applied over wood-based sheathing, shall include a water-resistive vapor-permeable barrier with a performance at least equivalent to two layers of *water-resistive barrier* complying with ASTM E2556, Type I. The individual layers shall be installed independently such that each layer provides a separate continuous plane and any flashing (installed in accordance with Section 1405.4) intended to drain to the *water-resistive barrier* is directed between the layers.

Exception: Where the *water-resistive barrier* that is applied over wood-based sheathing has a water resistance equal to or greater than that of a *water-resistive barrier* complying with ASTM E2556, Type II and is separated from the stucco by an intervening, substantially nonwater-absorbing layer or drainage space.

❖ The code requires that a water-resistive barrier be installed behind exterior plaster, as it does for any exterior wall veneer, in Section 1404.2. The code also requires that when the barrier is applied over wood-based sheathing, such as plywood, the barrier performance must be equivalent to two layers of a water-resistive barrier that conforms to ASTM E2556, Type I.

The requirement for equivalency to a two-layer water-resistive barrier is based on the problems that have been observed when only one layer is applied over wood sheathing. The wood sheathing eventually exhibits dry rot caused by the penetration of moisture. Cracking is then created in the plaster because of movement of the sheathing caused by expansion and contraction. Field experience has shown that where two layers of a water-resistive barrier are used, the penetration of moisture is considerably decreased, as is the cracking of the plaster due to movement of the sheathing caused by cycles of wetting and drying.

The code also requires each layer of the water-resistive barrier to be independently installed in a manner that provides a continuous drainage plane. The primary function of the inboard layer is to keep water away from the sheathing and also from penetrating into the stud cavity. This layer should be integrated with window and door flashings, the weep screed at the bottom of the wall as well as any through-wall flashings or expansion joints. The primary function of the outboard layer which comes in contact with the stucco is to separate the stucco from the inboard layer of the water-resistive barrier. This layer is at times referred to as a "sacrificial layer," an "intervening layer" or a "bond break layer."

The exception permits the application of alternative standard practices by recognizing stucco systems in which one of the two layers of the water-resistive barrier is replaced by a layer that provides separation from the wet stucco application and provides a barrier to moisture from the stucco to the sheathing.

2510.7 Preparation of masonry and concrete. Surfaces shall be clean, free from efflorescence, sufficiently damp and

INTERNATIONAL CODE COUNCIL®
Copyright © 2015 ICC. ALL RIGHTS RESERVED. Accessed by David Dammon on Jun 21, 2017 12:30:52 PM pursuant to License Agreement with ICC. No further reproduction or distribution authorized. ANY UNAUTHORIZED REPRODUCTION OR DISTRIBUTION IS A VIOLATION OF THE FEDERAL COPYRIGHT ACT AND THE LICENSE AGREEMENT, AND SUBJECT TO CIVIL AND CRIMINAL PENALTIES THEREUNDER.

rough for proper bond. If the surface is insufficiently rough, *approved* bonding agents or a Portland cement dash bond coat mixed in proportions of not more than two parts volume of sand to one part volume of Portland cement or plastic cement shall be applied. The dash bond coat shall be left undisturbed and shall be moist cured not less than 24 hours.

❖ The masonry surface must be properly prepared to receive the cement plaster base coat to ensure proper bond between the masonry base and the plaster. Masonry surfaces must be clean, damp, free of dust and efflorescence and reasonably flat, without excessive protrusions or indentations. These irregularities will affect the evenness and uniform thickness of the finished plaster. Mortar joints should be struck flush to help minimize any surface irregularities.

Masonry bases for plaster have varying degrees of suction (water absorption rate) but generally provide a good adhesive as well as mechanical bond. Most masonry bases have enough suction so that special bonding agents will not be required to achieve the adequate bond between the plaster and the base. Where denser and harder masonry materials that have very low suction characteristics are used, preparation of the surface, similar to that of concrete, may be necessary. Such preparation can include mechanical scoring or the use of chemical bonding agents.

Concrete generally has a denser and tighter finished surface than masonry. Concrete does not have the same suction properties as masonry; therefore, the bond between concrete and plaster must be completely mechanical. Like masonry, the concrete surface must be clean, rough, damp and free of efflorescence and form-releasing agents. If the surface of the concrete is not adequately rough to provide the required mechanical bond, it may be prepared as follows:

- If preparation of the surface is to begin before the concrete is completely set, the surface can be roughened with a metal tool or by using a stiff, heavy-duty wire brush.
- If preparation of the concrete surface must be done after the concrete has hardened, the surface may be bush hammered or roughened with chisels or tools designed for that purpose.
- Another common method, which is specified in this section, is to apply a rich mixture of Portland cement, sand and water as a dash coat. This application, in which the material is "dashed" onto the concrete surface with a course brush, may only be used where Portland cement plaster is going to be applied to the concrete surface.
- A liquid bonding agent is applied.

SECTION 2511
INTERIOR PLASTER

2511.1 General. Plastering gypsum plaster or cement plaster shall be not less than three coats where applied over metal lath or wire fabric lath and not less than two coats where applied over other bases permitted by this chapter.

Exception: Gypsum veneer plaster and cement plaster specifically designed and *approved* for one-coat applications.

❖ This section is intended to define the standards and guidelines for the materials and installation of interior plaster. The requirements of this section cover gypsum plaster, gypsum veneer plaster and cement plaster. This section also addresses plaster applied to nonlath surfaces and the environmental conditions for which interior plaster is stored and installed.

Interior surfaces are all surfaces, exposed and unexposed to view, on the inside of a building or structure that are not subject to damage or failure due to the effects of uncontrollable weather conditions, such as rain, sleet, snow and wind. Interior surfaces are generally exposed to mechanically controlled climatic conditions through air-conditioning, heating and humidity control. Because of these controls, interior surfaces require far less restrictions than exterior surfaces; therefore, the quantities and types of materials and finishes permitted for use on interior surfaces are greatly increased.

It is the consensus of the industry that multicoat work is necessary for control of plaster thickness and density, particularly where plaster application is done by hand because most of the materials used for plaster compact under hand application as a result of pressure applied to the trowel. Experience has proven that this change in density is more controllable and will be more uniform when the plaster is applied in thin, successive layers. For this reason, the code requires three-coat plastering over metal lath or wire fabric lath and two-coat work applied over other plaster bases [see Commentary Figures 2511.1(1) and 2511.1(2)]. Reducing the requirements for plaster bases other than metal or wire lath depends on the rigidity of the plaster base itself. More rigid plaster bases are not as susceptible to variations in thickness and flatness of the surface. The first coat in three-coat work on a flexible base, such as wire lath, is used to stiffen that base to provide the rigidity necessary to attain uniform thickness and surface flatness.

Gypsum veneer plaster, as specified in ASTM C843, is specifically designed to be applied as a one-coat plaster and is recognized by the code for that application. Gypsum veneer plaster must be applied over a solid base such as gypsum board lath, gypsum base for veneer plaster, concrete or concrete

INTERNATIONAL CODE COUNCIL®
Copyright © 2015 ICC. ALL RIGHTS RESERVED. Accessed by David Dammon on Jun 21, 2017 12:30:52 PM pursuant to License Agreement with ICC. No further reproduction or distribution authorized. ANY UNAUTHORIZED REPRODUCTION OR DISTRIBUTION IS A VIOLATION OF THE FEDERAL COPYRIGHT ACT AND THE LICENSE AGREEMENT, AND SUBJECT TO CIVIL AND CRIMINAL PENALTIES THEREUNDER.

unit masonry. Although gypsum veneer plaster is designed to be applied in one coat, it can be applied in two coats, as long as the maximum thickness does not exceed $^1/_4$ inch (6.4 mm). Gypsum veneer plaster provides a hard, smooth finish surface, much like three-coat gypsum plaster, that will readily receive a variety of decorative finishes.

Any one-coat system must be applied over a solid base in accordance with the code, a referenced standard or the product manufacturer's instructions.

2511.1.1 Installation. Installation of lathing and plaster materials shall conform to Table 2511.1.1 and Section 2507.

❖ This section refers to Section 2507 for the standards to regulate the installation of gypsum lath and related gypsum board materials and accessories. The expected performance of a product or material is dependent on proper installation. Table 2511.1.1 lists the installation standards for plaster construction.

TABLE 2511.1.1
INSTALLATION OF PLASTER CONSTRUCTION

MATERIAL	STANDARD
Cement plaster	ASTM C926
Gypsum plaster	ASTM C842
Gypsum veneer plaster	ASTM C843
Interior lathing and furring (gypsum plaster)	ASTM C841
Lathing and furring (cement plaster)	ASTM C1063
Steel framing	ASTM C754; C1007

❖ Table 2511.1.1 provides the installation standards required by the code for plaster construction. This table also includes installation standards for related construction materials.

2511.2 Limitations. Plaster shall not be applied directly to fiber insulation board. Cement plaster shall not be applied directly to gypsum lath or gypsum plaster except as specified in Sections 2510.5.1 and 2510.5.2.

❖ Fiber insulation board does not have the qualities necessary to provide an acceptable base for the application of plaster. It absorbs excessive moisture from the plaster mix that creates problems of workmanship, and it does not have the structural properties to provide the stability and rigidity required for a proper functioning plaster base. In colder and damper climates, fiberboard insulation retains the moisture absorbed from the plaster for a relatively longer period of time than other more dense bases. This lack of density and excessive retention of moisture will cause the premature failure of the plaster. For these reasons, the code prohibits the use of fiber insulation as a plaster base.

Cement plaster will not bond properly to gypsum plaster bases; therefore, the code prohibits the use of cement plaster on this material. The code does, however, permit the use of exterior plaster to be applied on horizontal surfaces, such as ceilings and soffits, over gypsum lath and gypsum board when used as a backing for metal lath.

2511.3 Grounds. Where installed, grounds shall ensure the minimum thickness of plaster as set forth in ASTM C842 and ASTM C926. Plaster thickness shall be measured from the face of lath and other bases.

❖ Plaster grounds are utilized to establish and maintain the required thickness of plaster. Grounds are usually wood or metal strips of a known thickness attached to the plaster base. The intent is that plaster grounds are used as a guide for the straightedge in determin-

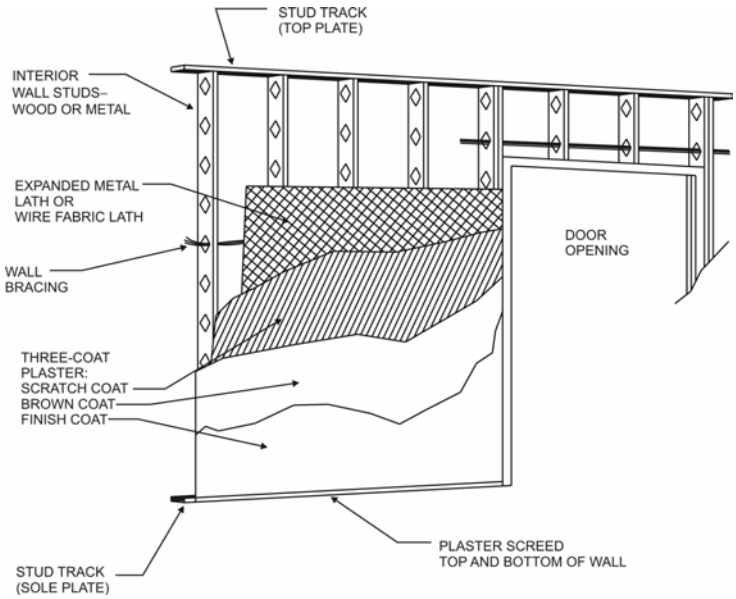

Figure 2511.1(1)
THREE-COAT PLASTER ON INTERIOR STUD WALL

INTERNATIONAL CODE COUNCIL®
Copyright © 2015 ICC. ALL RIGHTS RESERVED. Accessed by David Dammon on Jun 21, 2017 12:30:52 PM pursuant to License Agreement with ICC. No further reproduction or distribution authorized. ANY UNAUTHORIZED REPRODUCTION OR DISTRIBUTION IS A VIOLATION OF THE FEDERAL COPYRIGHT ACT AND THE LICENSE AGREEMENT, AND SUBJECT TO CIVIL AND CRIMINAL PENALTIES THEREUNDER.

ing the thickness of the plaster. Door or window frames are used as plaster grounds. Dollops of plaster of the desired thickness may also be used as grounds.

2511.4 Interior masonry or concrete. Condition of surfaces shall be as specified in Section 2510.7. *Approved* specially prepared gypsum plaster designed for application to concrete surfaces or *approved* acoustical plaster is permitted. The total thickness of base coat plaster applied to concrete ceilings shall be as set forth in ASTM C842 or ASTM C926. Should ceiling surfaces require more than the maximum thickness permitted in ASTM C842 or ASTM C926, metal lath or wire fabric lath shall be installed on such surfaces before plastering.

❖ Special gypsum plaster and acoustical plaster that is specifically designed and manufactured for direct application to concrete masonry unit walls, concrete walls and ceilings without a gypsum board or metal lath base are permitted by the code. Special care must be taken to properly prepare the masonry or concrete surfaces that are to receive a plaster finish to ensure both proper bond of the plaster and the desired or required levelness of the finished surface. Preparation of masonry and concrete surfaces is discussed in Section 2510.7.

Where a concrete ceiling is to receive a plaster finish, the code requires a total thickness of the base coat plaster as required by the referenced standards in this section. For applications of plaster on concrete ceiling surfaces, a thinner coat is required than for other applications. This is due primarily to the difficulty of achieving an adequate bond between the plaster and the concrete surface. Because of the horizontal application, the weight of the plaster base coat must be kept to a minimum. If it becomes necessary to increase the thickness of the plaster beyond the maximum allowed—due, for example, to the unevenness of the concrete surface—metal lath or wire fabric lath must be attached to the concrete ceiling surface to provide anchorage for the weight of the additional plaster.

2511.5 Wet areas. Showers and public toilet walls shall conform to Sections 1210.2 and 1210.3. When wood frame walls and partitions are covered on the interior with cement plaster or tile of similar material and are subject to water splash, the framing shall be protected with an *approved* moisture barrier.

❖ Wet areas at interior locations such as those identified in Sections 1210.2 and 1210.3 must be protected from moisture by nonabsorbent wall or ceiling material. Cement plaster (gypsum plaster is not permitted in wet areas) and tile or other like materials will provide moisture protection for the wall surface, provided an additional waterproofing membrane is installed where the wall is constructed of wood framing.

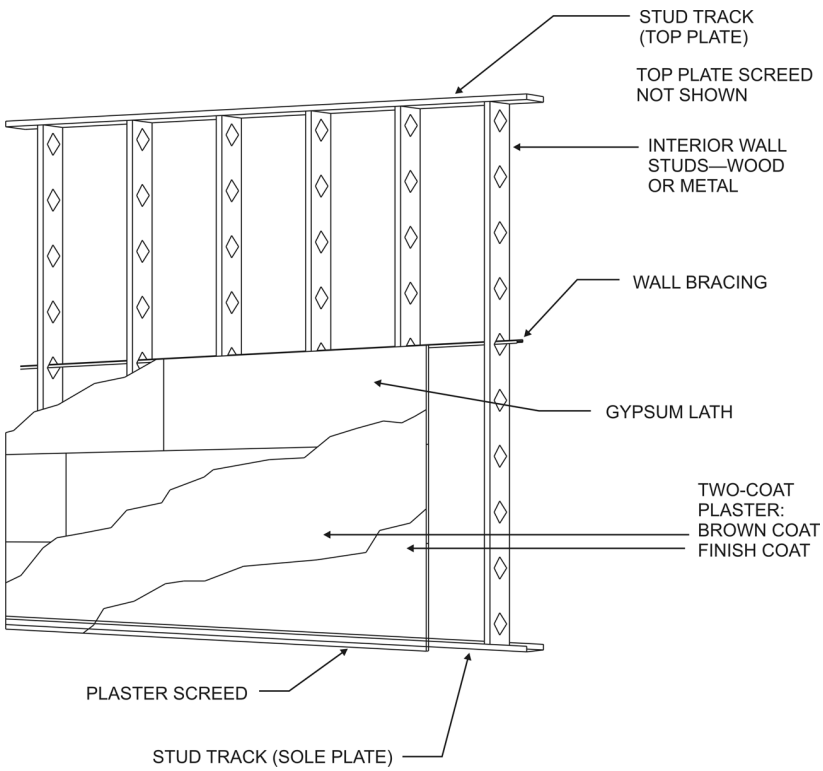

Figure 2511.1(2)
TWO-COAT PLASTER ON INTERIOR STUD WALL

INTERNATIONAL CODE COUNCIL®
Copyright © 2015 ICC. ALL RIGHTS RESERVED. Accessed by David Dammon on Jun 21, 2017 12:30:52 PM pursuant to License Agreement with ICC. No further reproduction or distribution authorized. ANY UNAUTHORIZED REPRODUCTION OR DISTRIBUTION IS A VIOLATION OF THE FEDERAL COPYRIGHT ACT AND THE LICENSE AGREEMENT, AND SUBJECT TO CIVIL AND CRIMINAL PENALTIES THEREUNDER.

SECTION 2512
EXTERIOR PLASTER

2512.1 General. Plastering with cement plaster shall be not less than three coats when applied over metal lath or wire fabric lath or gypsum board backing as specified in Section 2510.5 and shall be not less than two coats when applied over masonry or concrete. If the plaster surface is to be completely covered by veneer or other facing material, or is completely concealed by another wall, plaster application need only be two coats, provided the total thickness is as set forth in ASTM C926.

❖ This section is intended to define the standards and guidelines for the type of materials and installation of exterior plaster. The requirements of this section include the limitations of gypsum plaster and gypsum veneer plaster. This section will also address plaster applied to solid backings, alternative application methods, curing and plaster additives. Guidelines and requirements for preventing water infiltration into the building are discussed in this section.

Exterior surfaces are the vertical and horizontal surfaces located on the outside of a building or structure that are subject to weather conditions such as wind, changes in temperature, humidity, moisture and dampness. The most common way to protect exterior surfaces from damage caused by rain, sleet, wind, ice, snow or weather from other sources is by the use of building materials that are designed, manufactured and installed to resist or withstand these extreme weather conditions. There are isolated surfaces located on the exterior of a building or structure that are not directly exposed to or in contact with the damaging effects of the weather (see definition of "Weather exposed surfaces").

Cement plaster (stucco) is the only type approved by the code for the use of exterior plaster finish. Exterior cement plasters are required by the code to be applied in no less than three coats when applied over expanded metal, gypsum board backing or wire fabric lath for the same reasons discussed for interior plaster (see commentary, Section 2511.1.1 and Commentary Figure 2512.1). When cement plaster is applied over solid bases that are rigid, the code permits the application of a two-coat plaster system. The code also allows plaster work that is going to be completely concealed to be applied as a two-coat system, provided the total thickness meets the requirements of ASTM C926, because the finish coat (second coat) of plaster will be the surface that will receive the exterior finish, such as paint, and it is critical for the finish coat to provide a clean, smooth and visually acceptable surface. Where the plaster surface is to be completely concealed, it is not necessary to provide a finish coat.

2512.1.1 On-grade floor slab. On wood frame or steel stud construction with an on-grade concrete floor slab system, exterior plaster shall be applied in such a manner as to cover, but not to extend below, the lath and paper. The application of lath, paper and flashing or drip screeds shall comply with ASTM C1063.

❖ The code requires that the exterior plaster be installed to completely cover, but not extend below, the lath and paper (moisture barrier membrane) on wood or metal stud exterior wall construction supported by a concrete slab-on-grade floor. This requirement, combined with the requirement for a

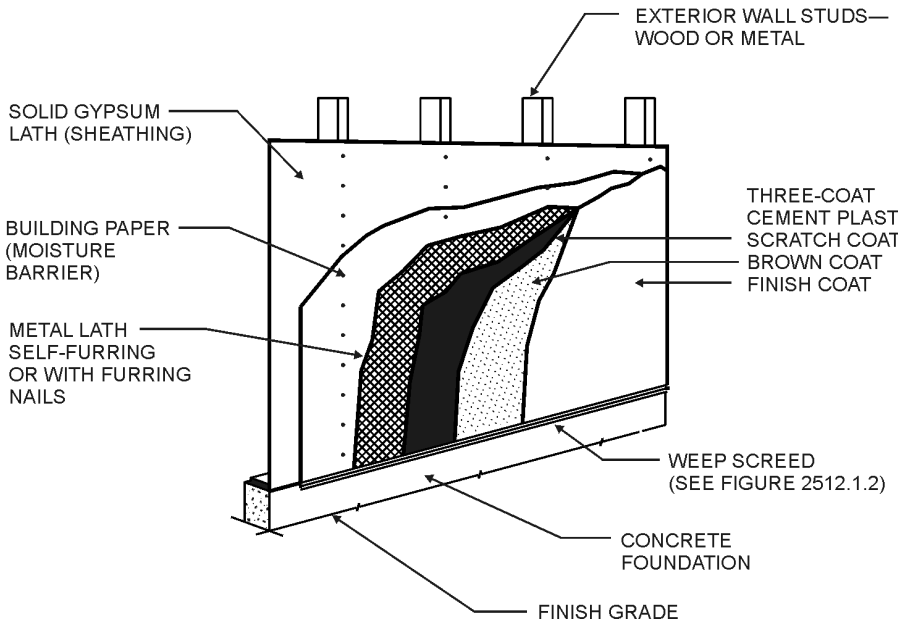

Figure 2512.1
THREE-COAT PLASTER ON EXTERIOR STUD WALL

INTERNATIONAL CODE COUNCIL®
Copyright © 2015 ICC. ALL RIGHTS RESERVED. Accessed by David Dammon on Jun 21, 2017 12:30:52 PM pursuant to License Agreement with ICC. No further reproduction or distribution authorized. ANY UNAUTHORIZED REPRODUCTION OR DISTRIBUTION IS A VIOLATION OF THE FEDERAL COPYRIGHT ACT AND THE LICENSE AGREEMENT, AND SUBJECT TO CIVIL AND CRIMINAL PENALTIES THEREUNDER.

continuous weep screed as described in Section 2512.1.2, is intended to prevent the entrapment and subsequent channeling of free moisture to the interior of the building.

2512.1.2 Weep screeds. A minimum 0.019-inch (0.48 mm) (No. 26 galvanized sheet gage), corrosion-resistant weep screed with a minimum vertical attachment flange of $3^1/_2$ inches (89 mm) shall be provided at or below the foundation plate line on exterior stud walls in accordance with ASTM C926. The weep screed shall be placed a minimum of 4 inches (102 mm) above the earth or 2 inches (51 mm) above paved areas and be of a type that will allow trapped water to drain to the exterior of the building. The *water-resistive barrier* shall lap the attachment flange. The exterior lath shall cover and terminate on the attachment flange of the weep screed.

❖ Water and moisture can penetrate an exterior plaster wall for a variety of reasons and in a number of ways. It is expected that some moisture will penetrate the plaster in an exterior wall; therefore, the design of the wall should include a weep screed, which will provide a way to release the moisture (see Commentary Figure 2512.1.2). Once water or moisture penetrates the plaster, it will migrate down the exterior wall face of the water-resistive barrier until it reaches the sill plate or mud sill. At this point, the water will seek a way out of the wall. If the exterior plaster system is not detailed and constructed with provisions to allow the moisture to escape to the exterior, it will find its own way out. This exit will almost certainly be through the interior of the wall and cause leaking and damage to the interior of the building. For this reason, the code requires a continuous weep screed at the bottom of exterior walls to permit the moisture to escape to the exterior of the building.

2512.2 Plasticity agents. Only *approved* plasticity agents and *approved* amounts thereof shall be added to Portland cement or blended cements. When plastic cement or masonry cement is used, no additional lime or plasticizers shall be added. Hydrated lime or the equivalent amount of lime putty used as a plasticizer is permitted to be added to cement plaster or cement and lime plaster in an amount not to exceed that set forth in ASTM C926.

❖ Admixtures, such as plasticizers, should not be added to Portland cement or blended cement unless approved by the building official. Some admixtures can create harmful effects that more than offset the desired improvement in plasticity. It is preferable that plasticizers be added during the manufacturing of the cement for product uniformity and proper proportions. When plastic cement is used, the code does not allow any further additions of plasticizers because the amount added during the manufacturing process is adequate and is the maximum amount permitted. Hydrated lime and lime putty are time-tested plasticizers used with cement plaster, and their use is permitted by the code in the amounts specified in ASTM C926 as referenced herein.

2512.3 Limitations. Gypsum plaster shall not be used on exterior surfaces.

❖ Gypsum veneer plaster, gypsum plaster or any other similar gypsum-based plaster materials are not per-

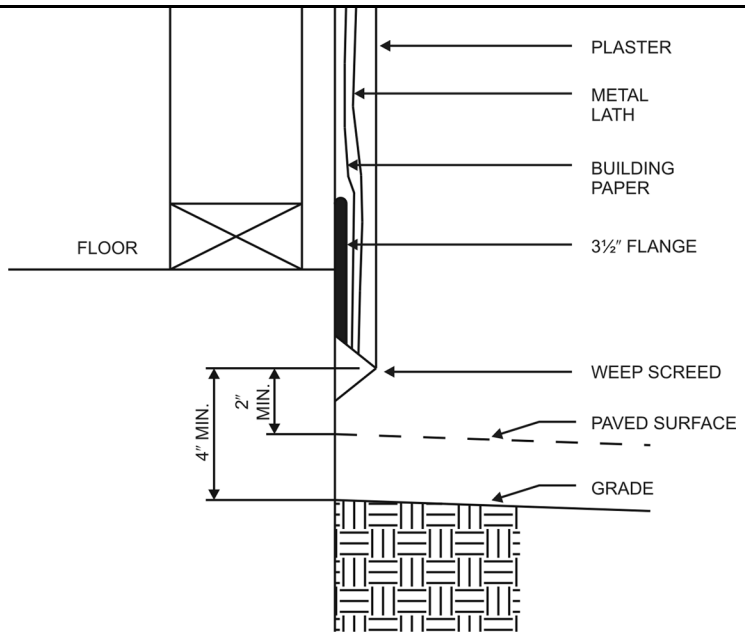

For SI: 1 inch = 25.4 mm.

Figure 2512.1.2
WEEP SCREED FOR EXTERIOR PLASTER ON STUD WALL AT SLAB ON GRADE

INTERNATIONAL CODE COUNCIL®
Copyright © 2015 ICC. ALL RIGHTS RESERVED. Accessed by David Dammon on Jun 21, 2017 12:30:52 PM pursuant to License Agreement with ICC. No further reproduction or distribution authorized. ANY UNAUTHORIZED REPRODUCTION OR DISTRIBUTION IS A VIOLATION OF THE FEDERAL COPYRIGHT ACT AND THE LICENSE AGREEMENT, AND SUBJECT TO CIVIL AND CRIMINAL PENALTIES THEREUNDER.

mitted for use as an exterior finish material. Gypsum-based plaster is subject to deterioration and ultimate failure when it is exposed to exterior weather conditions such as excessive heat, humidity and moisture, which are unavoidable on exterior surfaces of a building.

2512.4 Cement plaster. Plaster coats shall be protected from freezing for a period of not less than 24 hours after set has occurred. Plaster shall be applied when the ambient temperature is higher than 40°F (4°C), unless provisions are made to keep cement plaster work above 40°F (4°C) during application and 48 hours thereafter.

❖ Cement plaster contains a high percentage of water when it is mixed and applied, and before the process of curing is complete. For this reason, it is adversely affected by cold weather and freezing in much the same way that cement mortar and concrete are affected. The application of cement plaster to a frozen base or to a base covered with ice or frost will not only weaken the bond of the plaster to its base, but also cause the plaster itself to freeze.

When cement plaster is applied in freezing weather, to a frozen base or is mixed with frozen ingredients, it loses a high proportion of its strength and, therefore, does not comply with the requirements of the code. Plaster materials must be stored to protect them from adverse weather conditions and should only be installed when weather conditions are within the requirements of the code and will remain so for the duration of the curing process.

2512.5 Second-coat application. The second coat shall be brought out to proper thickness, rodded and floated sufficiently rough to provide adequate bond for the finish coat. The second coat shall have no variation greater than $^1/_4$ inch (6.4 mm) in any direction under a 5-foot (1524 mm) straight edge.

❖ In plaster work, a base coat is any coat beneath the finish coat. This is true whether the plaster is a two-coat or three-coat application. In a three-coat application, the first coat is usually referred to as the "scratch" coat. It is usually applied over a flexible base, such as expanded metal or wire fabric lath, and is intended to stiffen the base and provide a mechanical bond to the base. As the name implies, the first coat is scratched with a scarifying tool to provide a series of horizontal ridges or scratches that are intended to provide mechanical keys for the application of the second coat (or brown coat). The brown coat usually constitutes the major bulk of the plaster and, consequently, materially affects the membrane strength. As a result, proportioning and workability are critical, and the mix should have high plasticity for proper application. The term "brown coat" is utilized by the trade to differentiate the color of the second coat from the finish coat. The finish coat is usually much lighter in color than the second coat.

2512.6 Curing and interval. First and second coats of cement plaster shall be applied and moist cured as set forth in ASTM C926 and Table 2512.6.

❖ Sufficient time between coats is to be allowed to permit each coat to cure or develop enough rigidity to resist cracking or other physical damage when the next coat is applied. The proper amount of moisture must be provided to the plaster mix to allow for the proper curing time for each coat. The most effective procedure for curing and the time required between each coat will depend on the climate and job conditions. Moist or fog curing will permit and control the continuous hydration of cementitious materials.

TABLE 2512.6
CEMENT PLASTERS

COAT	MINIMUM PERIOD MOIST CURING	MINIMUM INTERVAL BETWEEN COATS
First	48 hours[a]	48 hours[b]
Second	48 hours	7 days[c]
Finish	—	Note c

a. The first two coats shall be as required for the first coats of exterior plaster, except that the moist-curing time period between the first and second coats shall be not less than 24 hours. Moist curing shall not be required where job and weather conditions are favorable to the retention of moisture in the cement plaster for the required time period.

b. Twenty-four-hour minimum interval between coats of interior cement plaster. For alternative method of application, see Section 2512.8.

c. Finish coat plaster is permitted to be applied to interior cement plaster base coats after a 48-hour period.

❖ The timing between coats will vary with climate conditions and the type of plaster base being used. Table 2512.6 specifies the minimum curing times between coats; however, temperature and relative humidity will extend or reduce the curing time required between consecutive coats. Cold or wet weather will increase the required curing time, while hot or dry weather will shorten it. Moderate changes in temperature and humidity can be controlled by providing additional heating during cold and damp weather, and by reducing the loss of moisture by prewetting during hot or dry weather.

All the conditions mentioned above must be taken into consideration when selecting the most appropriate method of curing based on the application being considered and the job conditions present during the curing process. Any of the three curing methods listed below, or any combination of the three, are permitted by the code:

1. Moist curing is accomplished by applying a fine fog spray of water as often as required to retain moisture and control the rate of curing. Moisture is generally applied two times a day—once in the morning and again in the late afternoon or evening—although job conditions are more of a factor than a predetermined time schedule. Care must be taken to avoid erosion

INTERNATIONAL CODE COUNCIL®
Copyright © 2015 ICC. ALL RIGHTS RESERVED. Accessed by David Dammon on Jun 21, 2017 12:30:52 PM pursuant to License Agreement with ICC. No further reproduction or distribution authorized. ANY UNAUTHORIZED REPRODUCTION OR DISTRIBUTION IS A VIOLATION OF THE FEDERAL COPYRIGHT ACT AND THE LICENSE AGREEMENT, AND SUBJECT TO CIVIL AND CRIMINAL PENALTIES THEREUNDER.

damage to cement plaster surfaces due to excessive amounts of water running down vertical surfaces. Except in extreme or severe drying conditions, the wetting of the finish coat should be avoided.

2. Plastic film, when taped or weighted down around the perimeter of the plastered work area, will provide a vapor barrier to retain the moisture between the membrane and the plaster. Care must be taken when placing the plastic film around the work area. If the film is placed too soon before the plaster is allowed to stiffen, the film can come into contact with the wet plaster and damage the surface texture. If too much time is allowed before placing the film, an excessive amount of moisture will have escaped causing premature curing, which can cause cracking to the finished plaster.
3. Canvas, cloth or sheet material barriers can be erected to deflect sunlight and wind, both of which will affect the rate of evaporation. If the humidity is very low, this method alone may not provide adequate protection.

2512.7 Application to solid backings. Where applied over gypsum backing as specified in Section 2510.5 or directly to unit masonry surfaces, the second coat is permitted to be applied as soon as the first coat has attained sufficient hardness.

❖ When plaster is applied directly to a solid backing such as gypsum board lath, concrete or concrete masonry, the minimum time intervals listed in Table 2512.6 are not required between the first (scratch) coat and the second (brown) coat. The brown coat may be applied as soon as the scratch coat has reached sufficient hardness to support the weight of the additional plaster without causing damage to the scratch coat.

2512.8 Alternate method of application. The second coat is permitted to be applied as soon as the first coat has attained sufficient rigidity to receive the second coat.

❖ While the majority of experts on the application of plaster generally agree that the first two coats of cement plaster should be cured as required by Section 2512.8.2, there is an increasingly large number who believe that the brown coat can be applied without requiring moist curing of the scratch coat, as long as the scratch coat has hardened to a condition of sufficient rigidity to accept the second coat. This alternative method of application is also considered by its proponents to be stronger than when the scratch coat has been cured as required by the code. This is because of a manufacturer's claim that a superior bond is produced between the two coats of plaster when the second coat is applied to a set, but uncured, coat.

2512.8.1 Admixtures. When using this method of application, calcium aluminate cement up to 15 percent of the weight of the Portland cement is permitted to be added to the mix.

❖ In order to develop a quicker set, the code permits the addition of calcium aluminate cement up to 15 percent of the weight of the Portland cement. These high-alumina cements are characterized by a faster set time than Portland cement. Because high-alumina cements do not possess the same high strength and qualities as Portland cement in plaster mixes, the code limits their proportion of the total mix.

2512.8.2 Curing. Curing of the first coat is permitted to be omitted and the second coat shall be cured as set forth in ASTM C926 and Table 2512.6.

❖ When applied as specified in ASTM C926, the complete curing of the first (scratch) coat may be omitted. The second (brown) coat may be applied as soon as the scratch coat achieves sufficient rigidity; however, the second coat must be fully cured as indicated in Table 2512.6 prior to the application of the finish coat (for additional commentary on curing, see Section 2512.6).

2512.9 Finish coats. Cement plaster finish coats shall be applied over base coats that have been in place for the time periods set forth in ASTM C926. The third or finish coat shall be applied with sufficient material and pressure to bond and to cover the brown coat and shall be of sufficient thickness to conceal the brown coat.

❖ The base coats in plaster work provide the strength for the plaster membrane but generally do not provide a proper texture for a finished surface. Therefore, a thin, veneer-like coat of plaster or stucco is applied to the base coats as a finish coat. The finish coat can be applied as a textured, ornamental or decorative finish, or it can be applied as a smooth, flat surface appropriate to receive paint, wallpaper, applied textured finishes or a variety of architectural finishes. Finish plaster coats must be allowed to properly cure before applying any adhered or wet finishes.

SECTION 2513
EXPOSED AGGREGATE PLASTER

2513.1 General. Exposed natural or integrally colored aggregate is permitted to be partially embedded in a natural or colored bedding coat of cement plaster or gypsum plaster, subject to the provisions of this section.

❖ This section is provided in the code to establish the requirements for the use of exposed aggregate cement plaster and gypsum plaster. Exposed aggregate plaster is approved by the code for both interior and exterior applications, although it is more commonly used with cement plaster as an exterior wall finish surface. The plaster systems, accessories, materials, assemblies, installation procedures and

INTERNATIONAL CODE COUNCIL®
Copyright © 2015 ICC. ALL RIGHTS RESERVED. Accessed by David Dammon on Jun 21, 2017 12:30:52 PM pursuant to License Agreement with ICC. No further reproduction or distribution authorized. ANY UNAUTHORIZED REPRODUCTION OR DISTRIBUTION IS A VIOLATION OF THE FEDERAL COPYRIGHT ACT AND THE LICENSE AGREEMENT, AND SUBJECT TO CIVIL AND CRIMINAL PENALTIES THEREUNDER.

installation applications are essentially the same as other plastering systems with the exception of the bedding coat that is prepared to receive the exposed aggregate material.

Exposed aggregate plaster is a plaster finish, which as the name implies, has small chips of exposed aggregate embedded in its finish surface. Exposed aggregate finish is used most commonly on exterior cement plaster walls, although its use is not limited to exterior applications or cement plaster. Exposed aggregate finishes may also be applied to gypsum plaster, but like all other forms of gypsum plaster, it is limited to interior and nonwet areas. The purpose of using an exposed aggregate plaster is to provide a variety of textured and colored surfaces.

2513.2 Aggregate. The aggregate shall be applied manually or mechanically and shall consist of marble chips, pebbles or similar durable, moderately hard (three or more on the Mohs hardness scale), nonreactive materials.

❖ Two of the more common exposed aggregate finishes are a washed pebble finish and a marble chip finish. There are other aggregates available, but the material requirements and application procedures are the same as those contained in this section. The mention of these two aggregates is not meant to exclude other materials from being acceptable.

The code requires that the materials used for the aggregate be nonreactive and moderately hard (three or harder on the Mohs hardness scale for minerals). The mineral that is used as the identifier for the hardness of three is calcite, which in its common form is represented by limestone and marble, to name only two. By requiring at least this hardness, the intent of the code is to approximate ordinary sand aggregate plaster in durability.

The aggregate is applied by rubbing or dashing it into or against the bedding coat and then using a trowel or other suitable tool to embed the aggregate firmly into the bedding coat. The aggregate often requires a light tamping to ensure the proper bedding.

2513.3 Bedding coat proportions. The bedding coat for interior or exterior surfaces shall be composed of one part Portland cement and one part Type S lime; or one part blended cement and one part Type S lime; or masonry cement; or plastic cement and a maximum of three parts of graded white or natural sand by volume. The bedding coat for interior surfaces shall be composed of 100 pounds (45.4 kg) of neat gypsum plaster and a maximum of 200 pounds (90.8 kg) of graded white sand. A factory-prepared bedding coat for interior or exterior use is permitted. The bedding coat for exterior surfaces shall have a minimum compressive strength of 1,000 pounds per square inch (psi) (6895 kPa).

❖ The plaster mix proportions for the exposed aggregate bedding coat are to be as defined in this section.

For the same reason the code establishes the hardness requirements for the aggregate used in exposed aggregate plaster, it also establishes durability requirements for the bedding coat. The minimum compressive strength of the exterior bedding coat is to be 1,000 pounds per square inch (psi) (6895 kPa).

Type S lime is a special hydrated lime for masonry purposes, and is required in the exterior bedding coat to increase high early plasticity and water retention.

For the increased plasticity required of the bedding coat on an interior application, the code requires the use of a relatively richer gypsum plaster.

2513.4 Application. The bedding coat is permitted to be applied directly over the first (scratch) coat of plaster, provided the ultimate overall thickness is a minimum of $^{7}/_{8}$ inch (22 mm), including lath. Over concrete or masonry surfaces, the overall thickness shall be a minimum of $^{1}/_{2}$ inch (12.7 mm).

❖ The requirements for the scratch coat used as part of the exposed aggregate plaster are the same as those for other scratch coats described and specified elsewhere in the code. The bedding coat may be used as the second coat, provided the total plaster thicknesses required in this section are maintained through the entire system.

2513.5 Bases. Exposed aggregate plaster is permitted to be applied over concrete, masonry, cement plaster base coats or gypsum plaster base coats installed in accordance with Section 2511 or 2512.

❖ The requirements for the base coat used as part of the exposed aggregate plaster are the same as those for other base coats described and specified elsewhere in the code.

2513.6 Preparation of masonry and concrete. Masonry and concrete surfaces shall be prepared in accordance with the provisions of Section 2510.7.

❖ See the commentary for Section 2510.7 for the preparation of masonry and concrete.

2513.7 Curing of base coats. Cement plaster base coats shall be cured in accordance with ASTM C926. Cement plaster bedding coats shall retain sufficient moisture for hydration (hardening) for 24 hours minimum or, where necessary, shall be kept damp for 24 hours by light water spraying.

❖ The curing requirements for cement plaster base coats are required to be the same as that shown in Table 2512.6 and as described in the related commentary, except that moist curing is only necessary for 24 hours in lieu of the 48 hours shown in Table 2512.6.

SECTION 2514
REINFORCED GYPSUM CONCRETE

2514.1 General. Reinforced gypsum concrete shall comply with the requirements of ASTM C317 and ASTM C956.

❖ The provisions of Section 2514 apply to poured-in-place reinforced gypsum concrete that is used to construct structural roof decks (when placed over permanent formboards). Gypsum concrete is a manufactured product consisting of calcined gypsum

INTERNATIONAL CODE COUNCIL®
Copyright © 2015 ICC. ALL RIGHTS RESERVED. Accessed by David Dammon on Jun 21, 2017 12:30:52 PM pursuant to License Agreement with ICC. No further reproduction or distribution authorized. ANY UNAUTHORIZED REPRODUCTION OR DISTRIBUTION IS A VIOLATION OF THE FEDERAL COPYRIGHT ACT AND THE LICENSE AGREEMENT, AND SUBJECT TO CIVIL AND CRIMINAL PENALTIES THEREUNDER.

to which the producer may add aggregates complying with ASTM C35, wood chips or wood shavings. Only water is added at the job site.

Similar proprietary products manufactured under various trade names are intended to be used in nonstructural applications such as floor toppings, where increased sound resistance is desired. These products can also be used as floor levers, and this application is prevalent in rehabilitation of existing structures. This section is not intended to govern the use of these materials where used in nonstructural applications.

Gypsum concrete (the product) used in reinforced gypsum concrete construction must conform to the requirements of ASTM C317. This standard provides for two classes, A and B, of gypsum concrete based on minimum compressive strength. Class A must achieve a minimum compressive strength of 500 psi (3.5 MPa) and have a density not exceeding 60 pounds per cubic foot (960 kg/m^3). Class B must achieve a compressive strength of 1,000 psi (6.9 MPa) with no restriction on density. Before the development of newer insulating materials suitable for installation on roof decks, reinforced gypsum concrete roof decks were used where energy efficiency was a concern. To increase the energy efficiency of the material, an aggregate complying with ASTM C35, such as perlite or vermiculite, is used to reduce the density of the gypsum concrete, thus increasing its *R*-value.

The design and installation of reinforced gypsum concrete roof decks must comply with the requirements of ASTM C956. Gypsum concrete roof decks must be reinforced with zinc-coated (galvanized) welded or woven wire mesh or fabric and must be designed to support anticipated loads without exceeding the allowable stresses specified in Appendix Section X2 of ASTM C956. ASTM C956 indicates that "methods of design (of reinforced gypsum concrete) shall follow established principles of mechanics and principles of design for reinforced concrete in accordance with ACI 318." Requirements of ACI 318 for shrinkage and temperature reinforcement in reinforced concrete do not apply to reinforced gypsum concrete.

2514.2 Minimum thickness. The minimum thickness of reinforced gypsum concrete shall be 2 inches (51 mm) except the minimum required thickness shall be reduced to $1^1/_2$ inches (38 mm), provided the following conditions are satisfied:

1. The overall thickness, including the formboard, is not less than 2 inches (51 mm).
2. The clear span of the gypsum concrete between supports does not exceed 33 inches (838 mm).
3. Diaphragm action is not required.
4. The design live load does not exceed 40 pounds per square foot (psf) (1915 Pa).

❖ This section provides an exception to the ASTM C956 minimum 2-inch (51 mm) thickness requirement for reinforced gypsum concrete roof decks. The design live load mentioned in Item 4 should be interpreted to mean the larger of the design roof live load and the design snow load.

Bibliography

The following resource materials were used in the preparation of the commentary for this chapter of the code.

ASCE 7-10, *Minimum Design Loads for Building's and Other Structures*, with Supplement No. 1. New York: American Society of Civil Engineers, 2010.

ASTM C317/C317M-00 (2010), *Specification for Gypsum Concrete*. West Conshohocken, PA: ASTM International, 2010.

ASTM C635/C635M-13, *Specification for the Manufacture, Performance, and Testing of Metal Suspension Systems for Acoustical Tile and Lay-in Panel Ceilings*. West Conshohocken, PA: ASTM International, 2013.

ASTM C926-13, *Specification for Application of Portland Cement-Based Plaster*. West Conshohocken, PA: ASTM International, 2013.

ASTM C956-04(2010), *Specification for Installation of Cast-in-Place Reinforced Gypsum Concrete*. West Conshohocken, PA: ASTM International, 2010.

ASTM C 1063-12D, *Specification for Installation of Lathing and Furring to Receive Interior and Exterior Portland Cement-based Plaster*. West Conshohocken, PA: ASTM International, 2012.

GA 216-13, *Application and Finishing of Gypsum Panel Products*. Hyatteville, MD: Gypsum Association, 2013.

INTERNATIONAL CODE COUNCIL®

Copyright © 2015 ICC. ALL RIGHTS RESERVED. Accessed by David Dammon on Jun 21, 2017 12:30:52 PM pursuant to License Agreement with ICC. No further reproduction or distribution authorized. ANY UNAUTHORIZED REPRODUCTION OR DISTRIBUTION IS A VIOLATION OF THE FEDERAL COPYRIGHT ACT AND THE LICENSE AGREEMENT, AND SUBJECT TO CIVIL AND CRIMINAL PENALTIES THEREUNDER.

Chapter 26: Plastic

General Comments

Plastics are a very large group of synthetic materials with structures that are based on the chemistry of carbon. Plastics are also called polymers because they are made of extremely long chains of carbon atoms. Since plastics can be readily molded, extruded, cast into various shapes and forms, or drawn into filaments and fibers, they are increasingly being used in the construction of buildings and structures. While progress in polymer technology makes it increasingly difficult to make general statements about these materials, the following properties are characteristic of many plastics:

- Low strength (in comparison to steel and other metals commonly used in construction);
- Low stiffness (modulus of elasticity) as compared to metals (except for reinforced plastics);
- Tendency to creep (increase in length under tensile stress);
- Low hardness (except for formaldehyde plastics);
- Low density (varies, plastics can be expanded or unexpanded);
- Brittleness at low temperatures, and loss of strength and hardness at moderately elevated temperatures;
- Flammability (although many plastics do not burn);
- Outstanding electrical characteristics, such as electrical resistance; and
- Degradation of some plastics, due to environmental agents, such as ultraviolet radiation (although most plastics are highly resistant to chemical attack).

When plastics and foam plastics were first proposed to be included in the code, consideration was given to several factors.

The following is the evolution of plastics being introduced into the model codes.

It was recognized that most buildings classified as noncombustible construction contained combustible elements. These elements were not primary structural members, but included materials such as: asphalt and pitch (in roof coverings); wood (in flooring systems, as wall and ceiling interior finish and trim, and as furring and lath in walls); paper products (as slip sheets and vapor retarders); and cork (as insulation).

There was a sensitivity to the burning characteristics of all plastic materials based on the history of fires involving plastics in warehouses and building applications not covered by any of the model codes. It was agreed, therefore, that plastic materials should be required to meet minimum fire performance properties and each application would have appropriate requirements related to characteristics, such as rate of burning, surface flammability or smoke-development index.

This position is somewhat different from the regulation of traditional materials, such as wood, paper and asphalt, which frequently are not required to be separately fire tested when used within an assembly.

Plastic materials to be left exposed on the interior or exterior of buildings would have to meet the existing requirements for other finish materials, as well as be limited in area and subject to separation requirements between adjoining areas. The primary concern was that plastic materials would be used in applications in which glass had traditionally been used, such as skylights and light-diffusing ceilings. Since little experience was available at the time, a conservative approach was taken.

Foam plastics used as thermal insulation would be separated from the interior of buildings by a thermal barrier equivalent to $^1/_2$-inch-thick (12.7 mm) gypsum wallboard. This position was supported by the industry because most of the applications at that time included plaster or wallboard finishes of $^1/_2$-inch (12.7 mm) or greater thickness, and the fire record for such applications was good.

Specific examples of commonly used acceptable applications would be included in the code, such as the use of foam plastics within wood frame and masonry walls.

Finally, the code would include a statement that "diversified tests" would be necessary for approval of any application or material not meeting the prescriptive requirements of the code. The reason for including diversified tests was because it was clear that it would not be possible or even desirable to include all applications specifically in the code. Diversified tests were intended to mean tests related to the end use, and usually were full-scale assemblies exposed to fire conditions representative of actual fires that might be expected to occur.

Purpose

This chapter establishes minimum requirements for all light-transmitting and foam plastics in all applications regulated by the code. Some plastics exhibit rapid flame spread and heavy smoke density characteristics when exposed to fire. Additionally, exposure to the heat generated by a fire can cause some plastics to deform and undergo a change in their structural stability. The requirements and limitations of this chapter are necessary to control the use of these combustible products such that they do not compromise the safety of building occupants.

INTERNATIONAL CODE COUNCIL®
Copyright © 2015 ICC. ALL RIGHTS RESERVED. Accessed by David Dammon on Jun 21, 2017 12:30:52 PM pursuant to License Agreement with ICC. No further reproduction or distribution authorized. ANY UNAUTHORIZED REPRODUCTION OR DISTRIBUTION IS A VIOLATION OF THE FEDERAL COPYRIGHT ACT AND THE LICENSE AGREEMENT, AND SUBJECT TO CIVIL AND CRIMINAL PENALTIES THEREUNDER.

SECTION 2601
GENERAL

2601.1 Scope. These provisions shall govern the materials, design, application, construction and installation of foam plastic, foam plastic insulation, plastic veneer, interior plastic finish and *trim*, light-transmitting plastics and plastic composites, including plastic lumber. See Chapter 14 for requirements for *exterior wall* finish and *trim*.

❖ Chapter 26 governs foam plastics, plastic veneers and light-transmitting plastic materials regardless of their use. Requirements for foam plastic insulation are found in Section 2603. Requirements for interior finish and trim are found in Section 2604. Requirements for plastic veneer are found in Section 2605. The main requirements for light-transmitting plastics are found in Section 2606. Sections 2607 through 2611 cover a variety of applications of light-transmitting plastics. Requirements for fiber and fiberglass reinforced polymer are found in Section 2612. Lastly, requirements for reflective plastic core insulation are found in Section 2613. Essentially, this chapter details how such combustible materials can be used in building construction. This includes wall panels, glazing, roof panels, skylights and interior signs.

SECTION 2602
DEFINITIONS

2602.1 Definitions. The following terms are defined in Chapter 2:

FIBER-REINFORCED POLYMER.

FOAM PLASTIC INSULATION.

LIGHT-DIFFUSING SYSTEM.

LIGHT-TRANSMITTING PLASTIC ROOF PANELS.

LIGHT-TRANSMITTING PLASTIC WALL PANELS.

PLASTIC, APPROVED.

PLASTIC COMPOSITE.

PLASTIC GLAZING.

PLASTIC LUMBER.

THERMOPLASTIC MATERIAL.

THERMOSETTING MATERIAL.

WOOD/PLASTIC COMPOSITE.

❖ Definitions facilitate the understanding of code provisions and minimize potential confusion. To that end, this section lists definitions of terms associated with roof assemblies, roof coverings and rooftop structures. Note that these definitions are found in Chapter 2. The use and application of defined terms, as well as undefined terms, are set forth in Section 201.

SECTION 2603
FOAM PLASTIC INSULATION

2603.1 General. The provisions of this section shall govern the requirements and uses of foam plastic insulation in buildings and structures.

❖ Section 2603 contains all of the life-safety provisions for foam plastic insulation products, such as rigid insulation board, spray-foam insulation and pour-in-place insulation. "Foam plastic" is a general term given to insulating products that have been manufactured by intentionally expanding plastic by the use of a foaming agent. Extruded polystyrene (XPS), expanded polystyrene (EPS), polyisocyanurate (PIR or ISO), open-cell polyisocyanurate, phenolic, polyurethane and polypropylene foam are among the many types of foam plastic insulation products subject to the requirements found in this section. In addition to technical requirements listed in the following paragraph, all packages and containers of foam plastic insulation must bear a label of an approved agency listing the manufacturer's name, the product listing, product identification and information sufficient to determine that the end use will comply with the code requirements.

Compliance with this section shall be achieved through either the prescriptive method or the performance method. The prescriptive method requires compliance with Sections 2603.4 through 2603.7. The performance method requires compliance with Section 2603.9. Note that both methods require compliance with Section 2603.3, which covers surface-burning characteristics and Section 2603.8, which covers protection against termites.

Commentary Figure 2603.1 documents code compliance when foam plastic is used.

2603.2 Labeling and identification. Packages and containers of foam plastic insulation and foam plastic insulation components delivered to the job site shall bear the *label* of an *approved agency* showing the manufacturer's name, product listing, product identification and information sufficient to determine that the end use will comply with the code requirements.

❖ All foam plastics or packages of foam plastics delivered to the construction site must be labeled. Also, labels are required on containers [usually two components in 55-gallon (208 L) drums] of ingredients delivered for the production of foam plastic at the construction site. The label must include identification of the approved agency and detailed product identification or information describing the performance characteristics of the product. It is intended that labeling printed on board stock or on packaging be acceptable. It is also intended that the label information include the name of the manufacturer or distribu-

INTERNATIONAL CODE COUNCIL®
Copyright © 2015 ICC. ALL RIGHTS RESERVED. Accessed by David Dammon on Jun 21, 2017 12:30:52 PM pursuant to License Agreement with ICC. No further reproduction or distribution authorized. ANY UNAUTHORIZED REPRODUCTION OR DISTRIBUTION IS A VIOLATION OF THE FEDERAL COPYRIGHT ACT AND THE LICENSE AGREEMENT, AND SUBJECT TO CIVIL AND CRIMINAL PENALTIES THEREUNDER.

tor, type of foam plastic, performance characteristics required and name of the approved testing agency.

2603.3 Surface-burning characteristics. Unless otherwise indicated in this section, foam plastic insulation and foam plastic cores of manufactured assemblies shall have a flame spread index of not more than 75 and a smoke-developed index of not more than 450 where tested in the maximum thickness intended for use in accordance with ASTM E84 or UL 723. Loose fill-type foam plastic insulation shall be tested as board stock for the flame spread and smoke-developed indexes.

Exceptions:

1. Smoke-developed index for interior *trim* as provided for in Section 2604.2.
2. In cold storage buildings, ice plants, food plants, food processing rooms and similar areas, foam plastic insulation where tested in a thickness of 4 inches

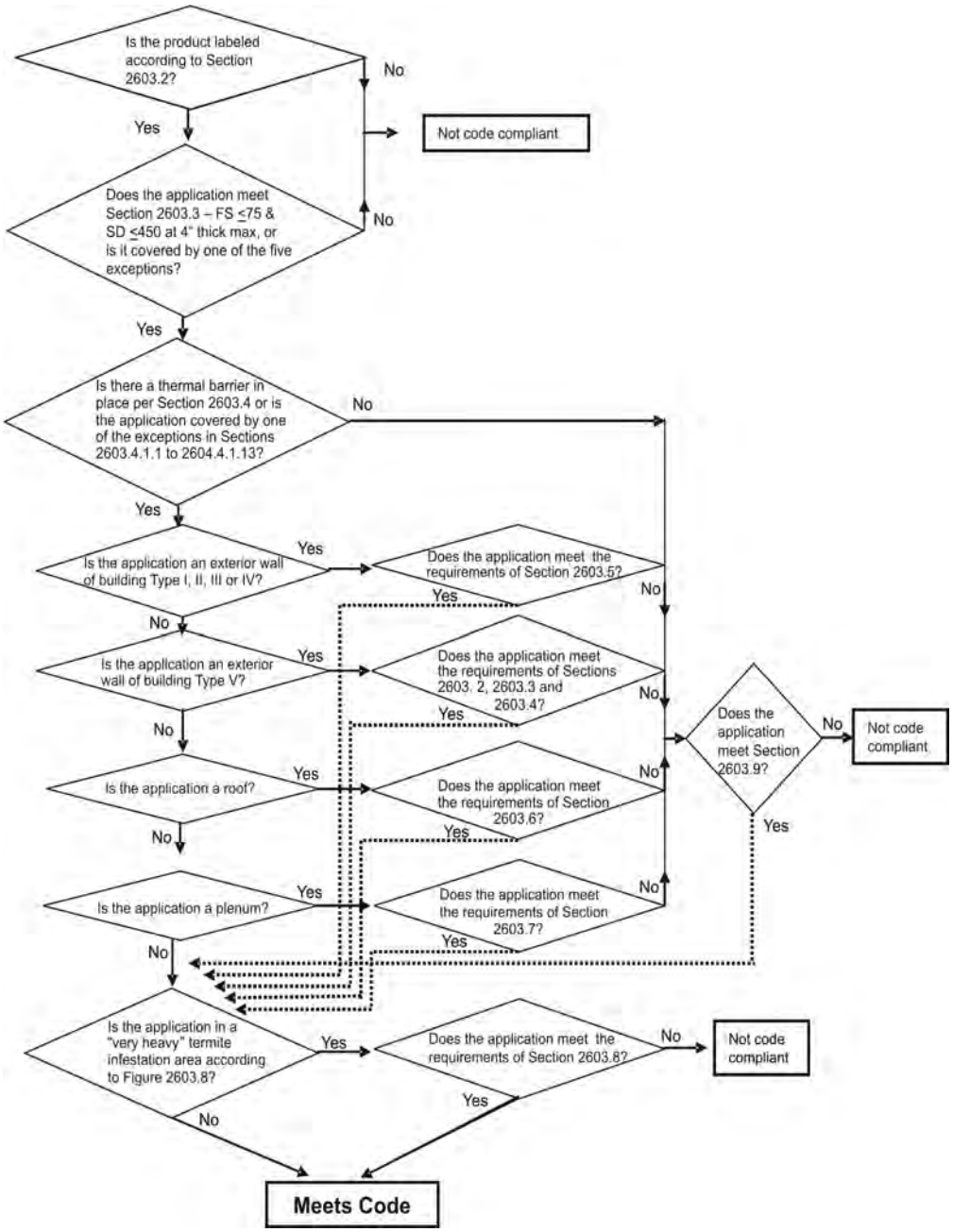

For SI: 1 inch = 25.4 mm.

Figure 2603.1
FOAM PLASTIC COMPLIANCE

INTERNATIONAL CODE COUNCIL®
Copyright © 2015 ICC. ALL RIGHTS RESERVED. Accessed by David Dammon on Jun 21, 2017 12:30:52 PM pursuant to License Agreement with ICC. No further reproduction or distribution authorized. ANY UNAUTHORIZED REPRODUCTION OR DISTRIBUTION IS A VIOLATION OF THE FEDERAL COPYRIGHT ACT AND THE LICENSE AGREEMENT, AND SUBJECT TO CIVIL AND CRIMINAL PENALTIES THEREUNDER.

(102 mm) shall be permitted in a thickness up to 10 inches (254 mm) where the building is equipped throughout with an automatic fire sprinkler system in accordance with Section 903.3.1.1. The approved *automatic sprinkler system* shall be provided in both the room and that part of the building in which the room is located.

3. Foam plastic insulation that is a part of a Class A, B or C roof-covering assembly provided the assembly with the foam plastic insulation satisfactorily passes NFPA 276 or UL 1256. The smoke-developed index shall not be limited for roof applications.
4. Foam plastic insulation greater than 4 inches (102 mm) in thickness shall have a maximum flame spread index of 75 and a smoke-developed index of 450 where tested at a minimum thickness of 4 inches (102 mm), provided the end use is approved in accordance with Section 2603.9 using the thickness and density intended for use.
5. Flame spread and smoke-developed indexes for foam plastic interior signs in *covered and open mall buildings* provided the signs comply with Section 402.6.4.

❖ Foam plastic insulation or foam plastic cores used as a component in a manufactured assembly are combustible and must be assessed for flame spread index and smoke-developed index. Testing in accordance with ASTM E84 or UL 263 is required. The foam plastic must be tested in the maximum thickness to be used [up to 4-inch (102 mm) thickness; see Exception 4 for foam thicker than 4 inches (102 mm)] and limited to a flame spread index of 75 or less and a smoke-developed index of 450 or less. The 4-inch (102 mm) thickness for testing is specifically related to the limitation on testing thickness in ASTM E84 or UL 263. All foam plastic materials are required to be tested in accordance with ASTM E84 or UL 263, unless specifically exempted or modified by one of the listed exceptions.

Five exceptions relate to whether the limitations—flame spread index of 75 and smoke-developed index of 450—apply or if the thickness of material is allowed to exceed 4 inches (102 mm) as limited by ASTM E84 or UL 263:

1. Use as interior trim is not required to meet the smoke-developed index limitation of 450, but must still meet the flame spread index requirement of less than or equal to 75.
2. In fully sprinklered buildings, cold storage construction using foam plastic is allowed to exceed the thickness of 4 inches (102 mm) up to 10 inches (254 mm) even when the material has only been tested at 4 inches (102 mm) with ASTM E84 or UL 263.
3. When used as part of a Class A, B or C roof-covering assembly in which the assembly has successfully passed NFPA 276 or UL 1256 testing, foam plastic insulation is not required to meet the flame spread index rating of 75. Also, smoke-developed index ratings are not required or limited for any foam plastic insulation used in roof assemblies. The intent is to recognize that the overall hazards of roofing have already been addressed and additional testing requirements for flame spread would be unnecessary. The NFPA 276 standard is a consensus standard that is identical to and replaces the previously referenced FM 4450 standard.
4. Foam plastic insulation thicker than 4 inches (102 mm) is allowed if tested in accordance with Section 2603.9. This provision would require the full as-installed thickness of the foam plastic to be tested. The tests referenced in Section 2603.9 are generally full-scale room-corner tests. Such material would also still be required to be tested to ASTM E84 or UL 263 at a 4-inch (102 mm) thickness and result in a flame spread index no greater than 75 and a smoke-developed index of 450.
5. Use as interior signs in covered mall buildings is required to comply with Section 402.6.4. Section 402.6.4 requires compliance with UL 1975, which measures the rate of heat release of burning materials used in the manufacture of such signs. Section 402.6.4 sets the pass/fail criteria at a maximum heat release rate of 150 kW. Although this test method assesses heat release rate rather than surface-burning characteristics, the testing and criteria specified provide material characteristics that address the goal of limiting the spread of fire.

The maximum flame spread index value of 75 was chosen on the basis that it is lower than untreated wood (which usually is 100 to 165). The maximum smoke-developed index rating of 450 was selected because, at the time, the code permitted interior finish materials that gave off “smoke no more dense than that given off by untreated wood.” In selecting the maximum flame spread and smoke-developed index values, it was believed that a conservative approach was being taken by requiring an insulation material to meet the same requirements as interior finish, even though the insulation was intended to be covered with an interior finish material. The requirements for surface-burning characteristics of foam plastic apply to foam plastics used as cores of manufactured assemblies. The intent is that, while the finished assemblies are not required to be tested for surface-burning characteristics, the foam plastic core is not exempt from the general requirement; therefore, foam plastic is regulated in factory-manufactured assemblies the same as it is in field-fabricated applications.

INTERNATIONAL CODE COUNCIL®
Copyright © 2015 ICC. ALL RIGHTS RESERVED. Accessed by David Dammon on Jun 21, 2017 12:30:52 PM pursuant to License Agreement with ICC. No further reproduction or distribution authorized. ANY UNAUTHORIZED REPRODUCTION OR DISTRIBUTION IS A VIOLATION OF THE FEDERAL COPYRIGHT ACT AND THE LICENSE AGREEMENT, AND SUBJECT TO CIVIL AND CRIMINAL PENALTIES THEREUNDER.

2603.4 Thermal barrier. Except as provided for in Sections 2603.4.1 and 2603.9, foam plastic shall be separated from the interior of a building by an approved thermal barrier of $^1/_2$-inch (12.7 mm) gypsum wallboard or a material that is tested in accordance with and meets the acceptance criteria of both the Temperature Transmission Fire Test and the Integrity Fire Test of NFPA 275. Combustible concealed spaces shall comply with Section 718.

❖ The use of an approved thermal barrier to separate foam plastics from the interior of a building is a basic requirement for the use of foam plastics as shown in this section. Sections 2603.4.1 and 2603.7 describe circumstances where the thermal barrier is modified or eliminated for specific uses. The job of a thermal barrier is to limit the temperature rise that the foam plastic will be exposed to. An approved thermal barrier is defined as 1/2-inch (12.7 mm) gypsum wallboard or the equivalent. This section sets forth the test method by which alternative thermal barriers are to be qualified.

Before 1975, experience had shown that foam plastics covered with plaster or $^1/_2$-inch (12.7 mm) gypsum wallboard had performed satisfactorily in building fires. For this reason, $^1/_2$-inch (12.7 mm) gypsum wallboard was included in the code as a minimum requirement. It was then recognized that specifying a single material would not be desirable in a performance code; therefore, testing in accordance with NFPA 275 is allowed to qualify other materials. This test method was developed to specifically address the testing of materials to qualify as a thermal barrier. The test method provides specific sample construction, fire exposures and acceptance criteria to qualify a material to be a 15-minute thermal barrier. The test method addresses both the capability of the material to retard heat transfer via a fire-resistance test and to remain in place via a full-scale fire test.

Gypsum wallboard is still the most commonly used thermal barrier, but other materials are permitted when qualified using NFPA 275.

2603.4.1 Thermal barrier not required. The thermal barrier specified in Section 2603.4 is not required under the conditions set forth in Sections 2603.4.1.1 through 2603.4.1.14.

❖ A thermal barrier is not required for applications described in Sections 2603.4.1.1 through 2603.4.1.13. The prescriptive installation methods described in these sections must be strictly followed in order to serve as an alternative to the thermal barrier. Furthermore, installations of foam plastics in accordance with these sections do not have to be tested via the alternative approval testing requirements of Section 2603.9.

2603.4.1.1 Masonry or concrete construction. A thermal barrier is not required for foam plastic installed in a masonry or concrete wall, floor or roof system where the foam plastic insulation is covered on each face by not less than 1-inch (25 mm) thickness of masonry or concrete.

❖ No thermal barrier is required when 1 inch (25 mm) or more of masonry or concrete is placed between the foam plastic and interior of the building. The intent is to accept 1 inch (25 mm) of masonry or concrete as equal to (or better than) $^1/_2$-inch (12.7 mm) gypsum wallboard. This condition can arise when foam plastics are installed either within a wall or on the exterior side of a masonry wall. Some common examples are when foam plastics are installed:

- In the cavity of a hollow masonry wall;
- As the core of a concrete-faced panel;
- On the exterior face of a masonry wall and covered with an exterior finish;
- Within the cores of hollow masonry units; or
- Encapsulated within a minimum of 1-inch (25 mm) concrete or masonry wall, floor or roof system, such as in insulated tilt-up or pour-in-place concrete panels.

Note that the exterior surface would be required to comply with Section 2603.5.

2603.4.1.2 Cooler and freezer walls. Foam plastic installed in a maximum thickness of 10 inches (254 mm) in cooler and freezer walls shall:

1. Have a flame spread index of 25 or less and a smoke-developed index of not more than 450, where tested in a minimum 4-inch (102 mm) thickness.
2. Have flash ignition and self-ignition temperatures of not less than 600°F and 800°F (316°C and 427°C), respectively.
3. Have a covering of not less than 0.032-inch (0.8 mm) aluminum or corrosion-resistant steel having a base metal thickness not less than 0.0160 inch (0.4 mm) at any point.
4. Be protected by an *automatic sprinkler system* in accordance with Section 903.3.1.1. Where the cooler or freezer is within a building, both the cooler or freezer and that part of the building in which it is located shall be sprinklered.

❖ A thermal barrier is not required in cooler and freezer walls insulated with 10 inches (254 mm) or less of foam plastic when all four criteria in Section 2603.4.1.2 are met.

2603.4.1.3 Walk-in coolers. In nonsprinklered buildings, foam plastic having a thickness that does not exceed 4 inches (102 mm) and a maximum flame spread index of 75 is permitted in walk-in coolers or freezer units where the aggregate floor area does not exceed 400 square feet (37 m^2) and the foam plastic is covered by a metal facing not less than 0.032-inch-thick (0.81 mm) aluminum or corrosion-resistant steel having a minimum base metal thickness of 0.016 inch (0.41

INTERNATIONAL CODE COUNCIL®
Copyright © 2015 ICC. ALL RIGHTS RESERVED. Accessed by David Dammon on Jun 21, 2017 12:30:52 PM pursuant to License Agreement with ICC. No further reproduction or distribution authorized. ANY UNAUTHORIZED REPRODUCTION OR DISTRIBUTION IS A VIOLATION OF THE FEDERAL COPYRIGHT ACT AND THE LICENSE AGREEMENT, AND SUBJECT TO CIVIL AND CRIMINAL PENALTIES THEREUNDER.

mm). A thickness of up to 10 inches (254 mm) is permitted where protected by a thermal barrier.

❖ A thermal barrier is not required for foam plastics up to 4 inches (102 mm) thick when the minimum thickness metal facings are used in coolers or freezers no greater than 400 square feet (37 m^2) in floor area. The required metal facing is intended to act as a barrier against ignition of the foam plastic. It is not intended to serve as a thermal barrier. This section recognizes the relatively small size of walk-in coolers and the accompanying lower hazard. Foam plastic up to 10 inches thick (254 mm) is permitted when protected by a thermal barrier.

2603.4.1.4 Exterior walls-one-story buildings. For one-*story* buildings, foam plastic having a flame spread index of 25 or less, and a smoke-developed index of not more than 450, shall be permitted without thermal barriers in or on *exterior walls* in a thickness not more than 4 inches (102 mm) where the foam plastic is covered by a thickness of not less than 0.032-inch-thick (0.81 mm) aluminum or corrosion-resistant steel having a base metal thickness of 0.0160 inch (0.41 mm) and the building is equipped throughout with an *automatic sprinkler system* in accordance with Section 903.3.1.1.

❖ Foam plastics may be used without a thermal barrier in one-story buildings provided that:

- The material is not more than 4 inches (102 mm) thick;
- It has a flame spread index not greater than 25;
- It has a smoke-developed index of not more than 450;
- It is covered with specified metal facings; and
- The building is equipped throughout with an automatic sprinkler system.

This provision is intended to permit the use of metal-faced panels, primarily in storage buildings other than cold storage construction. Cold storage construction was also covered in this section (see also Sections 2603.4.1.2 and 2603.4.1.3, and Section 2603.3, Exception 2). The limitations are based on the results of large-scale tests performed by independent laboratories and sponsored by the plastics industry.

2603.4.1.5 Roofing. A thermal barrier is not required for foam plastic insulation that is a part of a Class A, B or C roof-covering assembly that is installed in accordance with the code and the manufacturer's instructions and is either constructed as described in Item 1 or tested as described in Item 2.

1. The roof assembly is separated from the interior of the building by wood structural panel sheathing not less than 0.47 inch (11.9 mm) in thickness bonded with exterior glue, with edges supported by blocking, tongue-and-groove joints, other approved type of edge support or an equivalent material.
2. The assembly with the foam plastic insulation satisfactorily passes NFPA 276 or UL 1256.

❖ No thermal barrier is required when foam plastic is used in a Class A, B or C roof assembly over wood structural panel sheathing, if the wood product is:

- At least 0.47 inch (11.9 mm) thick;
- Manufactured utilizing exterior-grade glue; and
- Properly installed to provide adequate edge support.

Equivalent materials to the wood structural panel sheathing described above are specifically allowed by this section. In any situation, the material must be compatible with the type of construction.

Also, no thermal barrier is required when foam plastic is used with a Class A, B or C roof assembly (as prescribed in Section 1505) when the assembly complies with NFPA 276 or UL 1256. The NFPA 276 standard is a consensus standard that is identical to and replaces the previously referenced FM 4450 standard. Roof assemblies tested to the criteria of the referenced standards have adequately demonstrated a resistance to fire from the underside of the roof deck; therefore, no additional testing is necessary, nor is an additional thermal barrier needed. It is important to note that this section applies to a specific roof assembly (i.e., specific roof deck, specific foam insulation, fasteners and specific roof membrane). Passing the prescribed tests with one specific roof assembly does not cover all combinations of roof systems where foam plastic insulation is used. Users must confirm that the specific roof assembly has achieved a Class A, B or C rating. This coordinates with Section 2603.3, Exception 4, for surface-burning characteristics

2603.4.1.6 Attics and crawl spaces. Within an attic or crawl space where entry is made only for service of utilities, foam plastic insulation shall be protected against ignition by $1^1/_2$-inch-thick (38 mm) mineral fiber insulation; $^1/_4$-inch-thick (6.4 mm) wood structural panel, particleboard or hardboard; $^3/_8$-inch (9.5 mm) gypsum wallboard, corrosion-resistant steel having a base metal thickness of 0.016 inch (0.4 mm); $1^1/_2$-inch-thick (38 mm) self-supported spray-applied cellulose insulation in attic spaces only or other approved material installed in such a manner that the foam plastic insulation is not exposed. The protective covering shall be consistent with the requirements for the type of construction.

❖ In an attic or crawl space where entry is made only for service of utilities, and when foam plastics are used, an ignition barrier may be used in place of a thermal barrier to cover the foam plastic. Multiple materials are listed, any of which can be used as the ignition barrier:

- $1^1/_2$-inch-thick (38 mm) mineral fiber insulation.
- $^1/_4$-inch-thick (6.4 mm) wood structural panels.
- $^3/_8$-inch (9.5 mm) particleboard.
- $^1/_4$-inch (6.4 mm) hardboard.

INTERNATIONAL CODE COUNCIL®
Copyright © 2015 ICC. ALL RIGHTS RESERVED. Accessed by David Dammon on Jun 21, 2017 12:30:52 PM pursuant to License Agreement with ICC. No further reproduction or distribution authorized. ANY UNAUTHORIZED REPRODUCTION OR DISTRIBUTION IS A VIOLATION OF THE FEDERAL COPYRIGHT ACT AND THE LICENSE AGREEMENT, AND SUBJECT TO CIVIL AND CRIMINAL PENALTIES THEREUNDER.

- $^3/_8$-inch (9.5 mm) gypsum board.
- Corrosion-resistant steel having a base metal thickness of 0.016 inch (0.406 mm).
- $1^1/_2$-inch-thick (38 mm) self-supported spray applied cellulose insulation in attic spaces only.

Note that the ignition barrier must be consistent with the type of construction, which means that combustible coverings are permitted only where combustible materials are otherwise allowed.

The foam plastic material covered with the ignition barrier can be on the floor, wall or the ceiling of the attic or crawl space. The phrase "where entry is made only for service of utilities" applies to attics or crawl spaces that only contain mechanical equipment, electrical wiring, fans, plumbing, gas or electric hot water heaters, gas or electric furnaces, etc. Such provisions would not be allowed for such spaces used for storage or general occupancy. The reduced provision (from a thermal barrier to an ignition barrier) provides a protective cover that was the sole purpose to prevent the direct impingement of flame on the foam plastic insulation (see Commentary Figure 2603.4.1.6). Note that Section 2603.4 would still require a thermal barrier between the interior space above (crawl space) or below (attic) in a structure and the foam plastic.

If the foam plastic insulation has passed large-scale testing in the thickness and density intended for use, in accordance with Section 2603.9, no thermal barrier or ignition barrier is required over the foam plastic insulation in an attic or crawl space and this section of the code does not apply. However, it is important to note that the actual configuration must be tested. For example, foam insulation applied to the ceiling of the attic or crawl space must be tested. During the test, the foam must be applied to the ceiling in a room corner test or in an assembly that reflects end use. The same restrictions would apply to those insulations applied to the walls, floors or a combination of surfaces.

2603.4.1.7 Doors not required to have a fire protection rating. Where pivoted or side-hinged doors are permitted without a fire protection rating, foam plastic insulation, having a flame spread index of 75 or less and a smoke-developed index of not more than 450, shall be permitted as a core material where the door facing is of metal having a minimum thickness of 0.032-inch (0.8 mm) aluminum or steel having a base metal thickness of not less than 0.016 inch (0.4 mm) at any point.

❖ A thermal barrier is not required when foam plastic is used as a core material for doors, provided that a specified metal facing is used and the door is not required to have a fire-resistance rating. The intent is that doors required to have a fire protection rating must be tested with the foam plastic cores in place in order to qualify. This section recognizes the limited area of doors compared to the walls in which they are located and regulates foam plastics similar to other materials used in doors.

2603.4.1.8 Exterior doors in buildings of Group R-2 or R-3. In occupancies classified as Group R-2 or R-3, foam-filled exterior entrance doors to individual *dwelling units* that do not require a fire-resistance rating shall be faced with aluminum, steel, fiberglass, wood or other approved materials.

❖ Aluminum, steel, fiberglass, wood or other approved facings on foam-filled exterior entrance doors of Group R-2 and R-3 buildings are permitted when the doors are not required to have a fire-resistance rat-

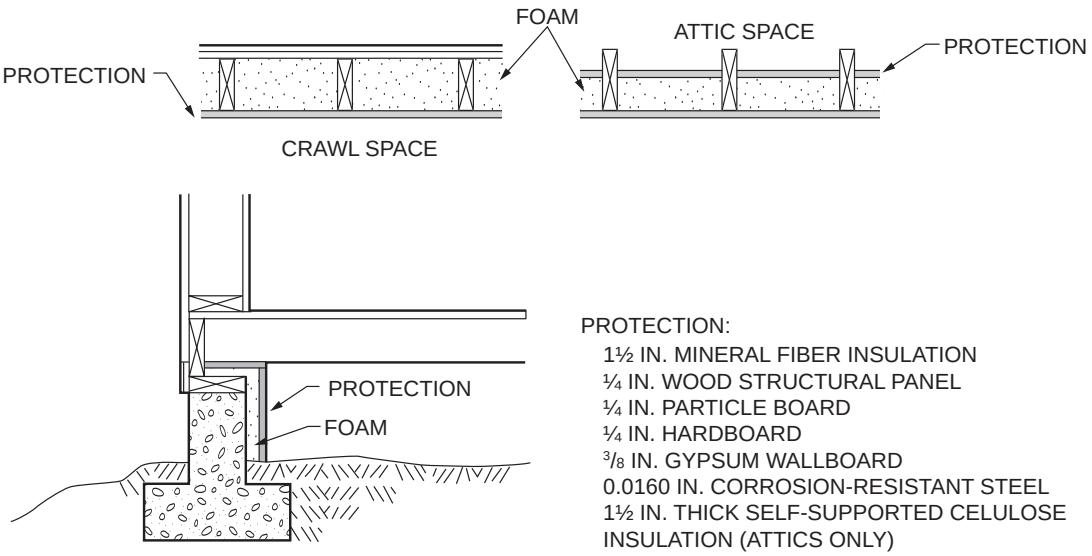

For SI: 1 inch = 25.4 mm.

Figure 2603.4.1.6
FOAM PLASTIC, ATTIC AND CRAWL SPACES

INTERNATIONAL CODE COUNCIL®
Copyright © 2015 ICC. ALL RIGHTS RESERVED. Accessed by David Dammon on Jun 21, 2017 12:30:52 PM pursuant to License Agreement with ICC. No further reproduction or distribution authorized. ANY UNAUTHORIZED REPRODUCTION OR DISTRIBUTION IS A VIOLATION OF THE FEDERAL COPYRIGHT ACT AND THE LICENSE AGREEMENT, AND SUBJECT TO CIVIL AND CRIMINAL PENALTIES THEREUNDER.

ing. Such doors do not need to comply with Section 2603.4.1.7.

2603.4.1.9 Garage doors. Where garage doors are permitted without a fire-resistance rating and foam plastic is used as a core material, the door facing shall be metal having a minimum thickness of 0.032-inch (0.8 mm) aluminum or 0.010-inch (0.25 mm) steel or the facing shall be minimum 0.125-inch-thick (3.2 mm) wood. Garage doors having facings other than those described above shall be tested in accordance with, and meet the acceptance criteria of, DASMA 107.

Exception: Garage doors using foam plastic insulation complying with Section 2603.3 in detached and attached garages associated with one- and two-family dwellings need not be provided with a thermal barrier.

❖ The prescriptive requirements of this section regulate garage doors with foam plastic cores used in nonfire-resistance-rated applications. The requirements in Section 2603.4.1.9, which governs overhead sectional, coiling or vertical lift-type garage doors, are slightly different from the requirements of Sections 2603.4.1.7 and 2603.4.1.8, which govern means of egress doors, such as side-swinging doors. These garage doors are not limited to such doors used in conjunction with a private or public garage occupancy but refer to doors for vehicles in any occupancies.

The minimum door-facing material and thickness requirements for garage doors with foam plastic cores stated in this section were determined based on the results of a fire testing program sponsored by the National Association of Garage Door Manufacturers (NAGDM). This program exposed a variety of commercially manufactured garage doors to a room corner fire test. The results of the testing indicated that garage doors having facings in the minimum thicknesses stated did not spread fire to the edge of the specimen and did not cause flashover in the test room. Other garage door constructions using foam plastics that do not meet minimum code requirements can be brought into compliance by meeting the requirements of testing the complete garage door assembly to ANSI/DASMA 107, *Room Fire Test Standard for Garage Doors Using Foam Plastic Insulation*. This standard includes a description of the test method, performance data to be obtained and the acceptance criteria to use in evaluating the performance data.

This section exempts exterior garage doors used in garages attached to one- and two-family dwellings and detached garages (Group R-3) from the thermal barrier requirements of Section 2603.4. This exemption is similar to that of Section 2603.4.1.8 for exterior egress doors in Group R-2 and R-3 occupancies.

As noted within the section, such doors are not intended for installation in fire-rated exterior walls. There are other products, such as rolling steel fire doors, manufactured for this purpose.

2603.4.1.10 Siding backer board. Foam plastic insulation of not more than 2,000 British thermal units per square feet (Btu/sq. ft.) (22.7 mJ/m^2) as determined by NFPA 259 shall be permitted as a siding backer board with a maximum thickness of $^1/_2$ inch (12.7 mm), provided it is separated from the interior of the building by not less than 2 inches (51 mm) of mineral fiber insulation or equivalent or where applied as insulation with residing over existing wall construction.

❖ Foam plastic is frequently used in residing applications to provide a leveling surface for new siding, while also bringing additional insulation value to the wall assembly. Also available in the marketplace are products that combine exterior siding material and foam plastic. If these siding/residing products are used on the exterior of a wall and the requirements of Sections 2603.3 and 2603.4 are met, this section of the code does not apply. If a thermal barrier is not used on the interior of the building, then there are limitations placed on the products and their use. In addition to the flame spread index limitations of Section 2603.3, other property limitations of the foam plastic or foam plastic portion of the product include a maximum thickness of $^1/_2$ inch (12.7mm) and potential heat of less than 2,000 Btu [1 square foot (22.7 mJ/m^2)] when tested using NFPA 259. Limitations in foam and siding/foam combination product use include separation from the interior of the building by 2 inches (51 mm) of mineral fiber insulation, installation over an existing wall finish as part of residing or when the foam plastic insulation is tested in accordance with Section 2603.9. The removal of the thermal barrier requirement in this section is reasonable considering the separation provided by the existing construction and limitation of the potential heat of the foam plastic imposed by the code. Also, the code requires fire-resistance ratings from the exterior side of walls only when the fire separation distance is 10 feet (1524 mm) or less (see Section 705.5).

2603.4.1.11 Interior trim. Foam plastic used as interior *trim* in accordance with Section 2604 shall be permitted without a thermal barrier.

❖ This section specifies that a thermal barrier is not needed for interior trim that meets the limitations of Section 2604 and related subsections, which place limitations on foam plastic density, thickness, wall and ceiling area coverage and flame spread.

2603.4.1.12 Interior signs. Foam plastic used for interior signs in *covered mall buildings* in accordance with Section 402.6.4 shall be permitted without a thermal barrier. Foam plastic signs that are not affixed to interior building surfaces shall comply with Chapter 8 of the *International Fire Code*.

❖ A thermal barrier is not required for interior signs that meet the limits stated in Section 402.6.4, since the hazard from the interior signs is appropriately addressed by test standard UL1975 (see commentary, Section 402.6.4). If the foam plastic sign is not affixed to an interior surface of the building, then the requirements of Chapter 8 of the *International Fire Code*® (IFC®) must be met. More specifically, Section 808.3 of the IFC requires compliance with UL 1975

INTERNATIONAL CODE COUNCIL®
Copyright © 2015 ICC. ALL RIGHTS RESERVED. Accessed by David Dammon on Jun 21, 2017 12:30:52 PM pursuant to License Agreement with ICC. No further reproduction or distribution authorized. ANY UNAUTHORIZED REPRODUCTION OR DISTRIBUTION IS A VIOLATION OF THE FEDERAL COPYRIGHT ACT AND THE LICENSE AGREEMENT, AND SUBJECT TO CIVIL AND CRIMINAL PENALTIES THEREUNDER.

when such signs exceed 10 percent of the wall or ceiling area, whichever is less.

2603.4.1.13 Type V construction. Foam plastic spray applied to a sill plate, joist header and rim joist in Type V construction is subject to all of the following:

1. The maximum thickness of the foam plastic shall be $3^1/_4$ inches (82.6 mm).
2. The density of the foam plastic shall be in the range of 1.5 to 2.0 pcf (24 to 32 kg/m^3).
3. The foam plastic shall have a flame spread index of 25 or less and an accompanying smoke-developed index of 450 or less when tested in accordance with ASTM E84 or UL 723.

❖ A thermal barrier is not required when foam plastic is spray applied to the sill plate, joist header and rim joist in Type V construction when all of the conditions listed in Section 2603.4.1.13 are met. Because foam plastic insulation in this application is left exposed, the four conditions listed limit the hazards of the spray-applied foam plastic used in this application:

- Thickness greater than or equal to $3^1/_4$ inches (82.6 mm);
- Density is between 1.5 to 2.0 pounds per cubic foot (pcf) (24 to 32 kg/m^3);
- Flame spread index is less than or equal to 25; and
- Smoke-developed index is less than or equal to 450.

This particular allowance was based upon testing in a room corner fire test that compared the performance of an all-wood floor system to that of a wood floor system with foam plastic sprayed on sill plates and headers (see Commentary Figure 2603.4.1.13).

2603.4.1.14 Floors. The thermal barrier specified in Section 2603.4 is not required to be installed on the walking surface of a structural floor system that contains foam plastic insulation when the foam plastic is covered by a minimum nominal $^1/_2$-inch-thick (12.7 mm) wood structural panel or approved equivalent. The thermal barrier specified in Section 2603.4 is required on the underside of the structural floor system that contains foam plastic insulation when the underside of the structural floor system is exposed to the interior of the building.

Exception: Foam plastic used as part of an interior floor finish.

❖ In construction, many types of products are being used that incorporate foam plastic insulation for energy reasons. One example is structural insulated panels (SIPs) where the foam plastic is laminated between two structural wood facings. This type of panel can be used as a wall, floor or roof.

Foam plastic is required to be protected by a thermal barrier that typically is $^1/_2$-inch (12.7 mm) gypsum wallboard. In the case of flooring, gypsum wallboard or other common thermal barrier materials cannot be used on the walking surfaces due to their friability to load, etc.

This section allows for the $^1/_2$-inch-thick plywood or equivalent to provide thermal protection to the foam plastic insulation. While $^1/_2$-inch plywood is not by itself a thermal barrier, in the case of a floor, the plywood provides sufficient protection since in the event of an interior fire, the floor is typically the last building element to be significantly exposed by the fire.

If the floor is used in multistory construction, then the underside of the floor system (ceiling of the room below) must be covered by the required thermal barrier.

The exception addresses items such as carpet padding, etc., that have not and do not need to be covered by a thermal barrier.

2603.5 Exterior walls of buildings of any height. *Exterior walls* of buildings of Type I, II, III or IV construction of any height shall comply with Sections 2603.5.1 through 2603.5.7. *Exterior walls* of cold storage buildings required to be constructed of noncombustible materials, where the building is more than one *story* in height, shall comply with the provisions of Sections 2603.5.1 through 2603.5.7. *Exterior walls* of buildings of Type V construction shall comply with Sections 2603.2, 2603.3 and 2603.4.

❖ All foam plastics used on exterior walls of all types of buildings, except wood frame, are to be installed in accordance with Sections 2603.5.1 through 2603.5.7. Installations on one-story, noncombustible walls of cold storage buildings are required to also comply with the provisions of Sections 2603.5.1 through 2603.5.7. Foam plastics used on exterior walls of Type V buildings are required to comply with Sections 2603.2, 2603.3 and 2603.4. The intent is to regulate the use of an insulating envelope over the exterior of a structure when the envelope provides no structural support other than the transfer of wind loads. It is recognized that some envelopes will be constructed in place by installing a rigid foam plastic and covering it with an exterior finish while others will be installed as prefabricated panels complete with exterior finish.

2603.5.1 Fire-resistance-rated walls. Where the wall is required to have a fire-resistance rating, data based on tests conducted in accordance with ASTM E119 or UL 263 shall be provided to substantiate that the fire-resistance rating is maintained.

❖ Foam plastics are permitted in walls that are required to have fire-resistance ratings. Such assemblies must be fire tested with the foam plastic (at the intended maximum thickness and density) in place.

2603.5.2 Thermal barrier. Any foam plastic insulation shall be separated from the building interior by a thermal barrier

INTERNATIONAL CODE COUNCIL®
Copyright © 2015 ICC. ALL RIGHTS RESERVED. Accessed by David Dammon on Jun 21, 2017 12:30:52 PM pursuant to License Agreement with ICC. No further reproduction or distribution authorized. ANY UNAUTHORIZED REPRODUCTION OR DISTRIBUTION IS A VIOLATION OF THE FEDERAL COPYRIGHT ACT AND THE LICENSE AGREEMENT, AND SUBJECT TO CIVIL AND CRIMINAL PENALTIES THEREUNDER.

meeting the provisions of Section 2603.4, unless special approval is obtained on the basis of Section 2603.9.

Exception: One-story buildings complying with Section 2603.4.1.4.

❖ A thermal barrier is required unless an alternative approval is obtained in accordance with Section 2603.9. The intent is to make it clear that the thermal barrier requirement of Section 2603.4 is applicable. The focus of this section is upon external exposure. The exception provides for the reduced requirements of Section 2603.4.1.4 for one-story buildings.

2603.5.3 Potential heat. The potential heat of foam plastic insulation in any portion of the wall or panel shall not exceed the potential heat expressed in Btu per square feet (mJ/m^2) of the foam plastic insulation contained in the wall assembly tested in accordance with Section 2603.5.5. The potential heat of the foam plastic insulation shall be determined by tests conducted in accordance with NFPA 259 and the results shall be expressed in Btu per square feet (mJ/m^2).

Exception: One-story buildings complying with Section 2603.4.1.4.

❖ This section limits the combustible content of exterior walls based on the potential heat of the foam plastic insulation. Potential heat is essentially the amount of energy potential a particular material contains in terms of its ability to burn. Generally, the higher the potential heat, the higher the fire hazard. The potential heat must not exceed that as found in the tested wall assembly as required in Section 2603.5.5. It is important to note that NFPA 268 addresses flammability, not fire resistance as addressed by Chapter 7.

2603.5.4 Flame spread and smoke-developed indexes. Foam plastic insulation, exterior coatings and facings shall be tested separately in the thickness intended for use, but not to exceed 4 inches (102 mm), and shall each have a flame spread index of 25 or less and a smoke-developed index of 450 or less as determined in accordance with ASTM E84 or UL 723.

Exception: Prefabricated or factory-manufactured panels having minimum 0.020-inch (0.51 mm) aluminum facings and a total thickness of $^1/_4$ inch (6.4 mm) or less are permitted to be tested as an assembly where the foam plastic core is not exposed in the course of construction.

❖ Each component, including the foam plastic core, must be tested and have a maximum flame spread index of 25 and a maximum smoke-developed index of 450 when tested in accordance with ASTM E84 or UL 263. The material should be tested with the same thickness for use, but is not to exceed a 4-inch (102 mm) thickness for testing. Full-scale testing can address the actual thickness and is required by Section 2603.5.5. Materials should not be restricted by the testing limitations of the referenced standards when they perform well at a higher thickness in the full-scale test. The exception applies to prefabricated panels that can be installed without exposing the foam plastic.

2603.5.5 Vertical and lateral fire propagation. The exterior wall assembly shall be tested in accordance with and comply with the acceptance criteria of NFPA 285.

Exceptions:

1. One-story buildings complying with Section 2603.4.1.4.
2. Wall assemblies where the foam plastic insulation is covered on each face by not less than 1-inch (25 mm) thickness of masonry or concrete and meeting one of the following:
   2.1. There is no airspace between the insulation and the concrete or masonry.
   2.2. The insulation has a flame spread index of not more than 25 as determined in accordance with ASTM E84 or UL 723 and the maximum airspace between the insulation and the concrete or masonry is not more than 1 inch (25 mm).

❖ This section is the only provision dealing with the propagation of fire due to exposure from an exterior source. Other combustibles are not allowed as components of noncombustible building exterior walls. The focus is flammability versus fire resistance.

There are 2 exceptions to the testing requirements of this section. Exception 1 exempts one-story buildings with approved coverings over the foam plastic as described in Section 2603.4.1.4. Exception 2 exempts wall assemblies where the foam plastic is protected on each face with a minimum thickness of masonry or concrete. The wall assembly is further limited such that there can be no air space between the foam plastic and the masonry or concrete. Limiting this air space reduces the area of the foam plastic that is exposed to a fire condition. Lastly, there is an option for a maximum 1 inch air space between the foam plastic and the masonry or concrete if the insulation has a very low flame spread index (25).

2603.5.6 Label required. The edge or face of each piece, package or container of foam plastic insulation shall bear the *label* of an *approved agency*. The *label* shall contain the manufacturer's or distributor's identification, model number, serial number or definitive information describing the product or materials' performance characteristics and *approved agency*'s identification.

❖ Each piece, package or container of foam plastic is required to be labeled. This requirement is somewhat different than the general marking requirement of Section 2603.2, which only requires a manufacturer's identifying mark on either the product or the packaging. The reason for this is that properties other than fire performance of the foam plastic, such as bond strength to the exterior finish, are of significance in this type of application. Different types of foam plastic

INTERNATIONAL CODE COUNCIL®
Copyright © 2015 ICC. ALL RIGHTS RESERVED. Accessed by David Dammon on Jun 21, 2017 12:30:52 PM pursuant to License Agreement with ICC. No further reproduction or distribution authorized. ANY UNAUTHORIZED REPRODUCTION OR DISTRIBUTION IS A VIOLATION OF THE FEDERAL COPYRIGHT ACT AND THE LICENSE AGREEMENT, AND SUBJECT TO CIVIL AND CRIMINAL PENALTIES THEREUNDER.

insulations are being used in building construction. These foam plastics include manufactured foam boards and spray polyurethane foam. Spray foam products are delivered to the job site in drums, which contain the components of the foam plastic insulation. Typically, materials from two drums are mixed as they are sprayed and the resultant foam plastic insulation is applied to the wall surfaces. The component (drums or packaging) bears a label with the information required in the section.

2603.5.7 Ignition. *Exterior walls* shall not exhibit sustained flaming where tested in accordance with NFPA 268. Where a material is intended to be installed in more than one thickness, tests of the minimum and maximum thickness intended for use shall be performed.

Exception: Assemblies protected on the outside with one of the following:

1. A thermal barrier complying with Section 2603.4.
2. A minimum 1-inch (25 mm) thickness of concrete or masonry.
3. Glass-fiber-reinforced concrete panels of a minimum thickness of $^3/_8$ inch (9.5 mm).
4. Metal-faced panels having minimum 0.019-inch-thick (0.48 mm) aluminum or 0.016-inch-thick (0.41 mm) corrosion-resistant steel outer facings.
5. A minimum $^7/_8$-inch (22.2 mm) thickness of stucco complying with Section 2510.
6. A minimum $^1/_4$-inch (6.4 mm) thickness of fiber-cement lap, panel or shingle siding complying with Sections 1405.16 and 1405.16.1 or 1405.16.2.

❖ The foam plastic is not to support continued flaming when tested in accordance with NFPA 268, which looks at ignitability when exposed to a radiant heat source. Where the foam plastic is to be used in more than one thickness, the test is to be performed on minimum and maximum thickness. If the assembly is protected on the outside with one of the specified materials, the test is not required.

2603.6 Roofing. Foam plastic insulation meeting the requirements of Sections 2603.2, 2603.3 and 2603.4 shall be permitted as part of a roof-covering assembly, provided the assembly with the foam plastic insulation is a Class A, B or C roofing assembly where tested in accordance with ASTM E108 or UL 790.

❖ Foam plastic insulation that meets the labeling and identification, surface-burning characteristics and thermal barrier criteria are permitted as part of a Class A, B or C roof-covering assembly that has been tested in accordance with ASTM E108 or UL 790. Both ASTM E108 and UL 790 cover exterior spread of flame.

2603.7 Foam plastic insulation used as interior finish or interior trim in plenums. Foam plastic insulation used as interior wall or ceiling finish or as interior trim in plenums shall exhibit a flame spread index of 75 or less and a smoke-developed index of 450 or less when tested in accordance with ASTM E84 or UL 723 and shall comply with one or more of Sections 2603.7.1, 2603.7.2 and 2607.3.

❖ Foam plastic insulation and foam plastic trim are combustible. If used in a plenum space, the flame and smoke of combusting foam plastic could spread to other parts of the building. If these materials are used as a component of the interior walls or ceiling of a plenum space, the materials must be specially manufactured to provide for limited flame spread and smoke-developed indexes. At a minimum, all foam plastic insulation and trim must exhibit smoke and flame characteristics equal to those specified in this section. Where used as an interior component of a wall or ceiling surface in a plenum, the foam plastic material must be completely covered by a noncombustible material (see Section 2603.7.1 or 2603.7.3), or the exposed foam plastic material must meet more stringent flame spread and smoke-developed indexes and the testing requirements of Section 2603.7.2. The provisions in this section have been revised to be consistent with the related provisions in Chapter 6 of the *International Mechanical Code*.

2603.7.1 Separation required. The foam plastic insulation shall be separated from the plenum by a thermal barrier complying with Section 2603.4 and shall exhibit a flame spread index of 75 or less and a smoke-developed index of 450 or less when tested in accordance with ASTM E84 or UL 723 at the thickness and density intended for use.

❖ Section 2603.4 requires all foam plastic to be separated from the interior of the building by a thermal barrier such as $^1/_2$-inch-thick (12.7 mm) gypsum board or an approved equivalent material (see commentary, IBC Section 2603.4). This section is concerned only with separating the foam plastic insulation from the plenum space.

This code sets forth test methods and criteria by which alternative thermal barriers are to be qualified to limit the average temperature rise of the unexposed face to 250°F (121°C) for 15 minutes of fire exposure while complying with the time-temperature conditions of ASTM E119.

2603.7.2 Approval. The foam plastic insulation shall exhibit a flame spread index of 25 or less and a smoke-developed index of 50 or less when tested in accordance with ASTM E84 or UL 723 at the thickness and density intended for use and shall meet the acceptance criteria of Section 803.1.2 when tested in accordance with NFPA 286. The foam plastic insulation shall be approved based on tests conducted in accordance with Section 2603.9.

❖ This section refers to Section 2603.9 for large-scale testing criteria for approval of foam plastic insulation products. That section lists such tests as NFPA 286, UL 1040 and UL 1715. The intent is to require testing based on the proposed end-use configuration of the foam-plastic assembly and on an exposing fire that is appropriate in size and location for the proposed application.

INTERNATIONAL CODE COUNCIL®
Copyright © 2015 ICC. ALL RIGHTS RESERVED. Accessed by David Dammon on Jun 21, 2017 12:30:52 PM pursuant to License Agreement with ICC. No further reproduction or distribution authorized. ANY UNAUTHORIZED REPRODUCTION OR DISTRIBUTION IS A VIOLATION OF THE FEDERAL COPYRIGHT ACT AND THE LICENSE AGREEMENT, AND SUBJECT TO CIVIL AND CRIMINAL PENALTIES THEREUNDER.

2603.7.3 Covering. The foam plastic insulation shall be covered by corrosion-resistant steel having a base metal thickness of not less than 0.0160 inch (0.4 mm) and shall exhibit a flame spread index of 75 or less and a smoke-developed index of 450 or less when tested in accordance with ASTM E84 or UL 723 at the thickness and density intended for use.

❖ The required metal covering is intended to act as a barrier against ignition of the foam plastic. It is not intended, however, to serve as a thermal barrier.

2603.8 Protection against termites. In areas where the probability of termite infestation is very heavy in accordance with Figure 2603.8, extruded and expanded polystyrene, polyisocyanurate and other foam plastics shall not be installed on the exterior face or under interior or exterior foundation walls or slab foundations located below grade. The clearance between foam plastics installed above grade and exposed earth shall be not less than 6 inches (152 mm).

Exceptions:

1. Buildings where the structural members of walls, floors, ceilings and roofs are entirely of noncombustible materials or preservative-treated wood.
2. An approved method of protecting the foam plastic and structure from subterranean termite damage is provided.
3. On the interior side of basement walls.

❖ This section of the code addresses the use of foam plastics in areas of "very heavy" termite infestation. Termites have been reported to cause damage to foam insulation in very heavy termite infestation areas. These probabilities are referenced in Figure 2603.8 of this code. Foam plastic used in the "very heavy" infestation area is prohibited on the exterior face of below-grade foundation walls or slab foundations; under exterior or interior foundation walls; or under slab foundations below grade or where located within 6 inches (152 mm) of exposed earth, unless the requirement of one of the three specific exceptions is met. Foam plastics are permitted on the interior side of basement walls, where the structural members of the building are either noncombustible or pressure preservative-treated wood or where the foam plastic is adequately protected from subterranean termite damage.

FIGURE 2603.8. See next page.

❖ Figure 2603.8 establishes the probabilities of termite infestation for use in applying the requirements of Section 2603.8 (see also commentary, Section 2603.8).

2603.9 Special approval. Foam plastic shall not be required to comply with the requirements of Section 2603.4 or those of Section 2603.6 where specifically approved based on large-scale tests such as, but not limited to, NFPA 286 (with the acceptance criteria of Section 803.1.2.1), FM 4880, UL 1040 or UL 1715. Such testing shall be related to the actual end-use configuration and be performed on the finished manufactured foam plastic assembly in the maximum thickness intended for use. Foam plastics that are used as interior finish on the basis of special tests shall also conform to the flame spread and smoke-developed requirements of Chapter 8. Assemblies tested shall include seams, joints and other typical details used in the installation of the assembly and shall be tested in the manner intended for use.

❖ Foam plastic does not have to comply with the installation and use requirements of Sections 2603.4 and 2603.6 when specific approval is obtained in accordance with this section. This section lists examples of specific large-scale tests, such as FM 4880, NFPA 286, UL 1040 or UL 1715. Also, other large-scale fire tests related to actual end-use configurations can be used. The intent is to require testing based on the proposed end-use configuration of the foam plastic assembly with a fire exposure that is appropriate in size and location for the proposed application. These tests are to be performed on full-scale assemblies. The tested assemblies must include typical seams, joints and other details that will occur in the finished installation. The foam plastic must be tested in the maximum thickness and density intended for use. Thorough testing provides an accurate depiction of the in-place fire performance of assemblies and systems using foam plastics.

There are two ways to show code compliance under Section 2603.9. One method is to provide the actual test report that contains a description of the assembly and results showing that the foam plastic, in the end-use application, has passed the test. The second method is to obtain, from an evaluation agency such as ICC-ES, an evaluation report that covers the end-use application. Materials that are being used as interior finish would still need to additionally pass the flame spread index and smoke-

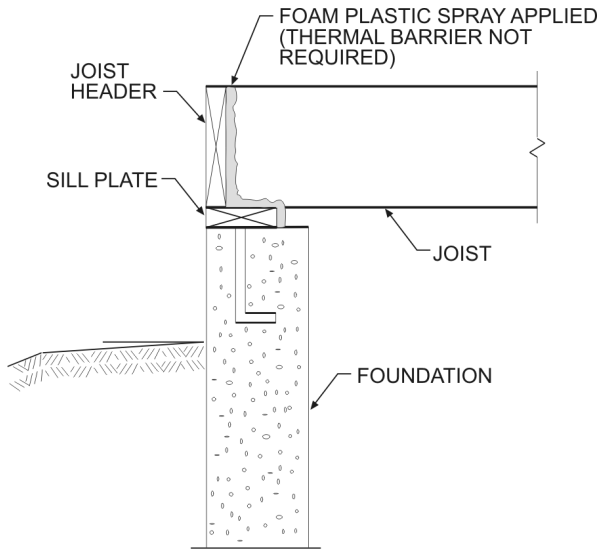

Figure 2603.4.1.13
FOAM PLASTIC SPRAY APPLIED TO SILL PLATE AND HEADER

INTERNATIONAL CODE COUNCIL®
Copyright © 2015 ICC. ALL RIGHTS RESERVED. Accessed by David Dammon on Jun 21, 2017 12:30:52 PM pursuant to License Agreement with ICC. No further reproduction or distribution authorized. ANY UNAUTHORIZED REPRODUCTION OR DISTRIBUTION IS A VIOLATION OF THE FEDERAL COPYRIGHT ACT AND THE LICENSE AGREEMENT, AND SUBJECT TO CIVIL AND CRIMINAL PENALTIES THEREUNDER.

developed index requirements of Chapter 8. It should be noted that NFPA 286 is one way of demonstrating compliance with the interior finish requirements of Chapter 8 and with this section. Note that the other requirements within Section 2603 other than Sections 2603.4 and 2603.6 are still applicable, such as the testing required in accordance with Section 2603.5 for exterior walls.

2603.10 Wind resistance. Foam plastic insulation complying with ASTM C578 and ASTM C1289 and used as exterior wall sheathing on framed wall assemblies shall comply with ANSI/FS 100 for wind pressure resistance.

❖ The ANSI standard (FS 100-12) referenced in this section addresses the use of foam plastic insulating sheathing in exterior wall covering assemblies where resistance to wind pressure is required. This standard provides a methodology by which a manufacturer can qualify their product, through testing, to meet the requirements of the I-codes in establishing the wind pressure resistance of the product. It also provides for ongoing quality control procedures to ensure that the product continues to meet its qualified wind pressure resistance. The ANSI standard supplements the applicable ASTM materials standards also referenced in this section.

2603.11 Cladding attachment over foam sheathing to masonry or concrete wall construction. Cladding shall be specified and installed in accordance with Chapter 14 and the cladding manufacturer's installation instructions or an approved design. Foam sheathing shall be attached to masonry or concrete construction in accordance with the insulation manufacturer's installation instructions or an approved design. Furring and furring attachments through foam sheathing shall be designed to resist design loads determined in accordance with Chapter 16, including support of cladding weight as applicable. Fasteners used to attach cladding or furring through foam sheathing to masonry or concrete substrates shall be approved for application into masonry or concrete material and shall be installed in accordance with the fastener manufacturer's installation instructions.

Exceptions:

1. Where the cladding manufacturer has provided approved installation instructions for application over foam sheathing and connection to a masonry or concrete substrate, those requirements shall apply.
2. For exterior insulation and finish systems, refer to Section 1408.
3. For anchored masonry or stone veneer installed over foam sheathing, refer to Section 1405.

❖ This section addresses attachment of cladding through foam sheathing to masonry and concrete wall construction. Guidance for attachment of cladding to masonry/concrete walls through foam sheathing is needed as it is becoming a standard practice to install foam sheathing on the exterior side of the building's exterior envelope. Research is not yet

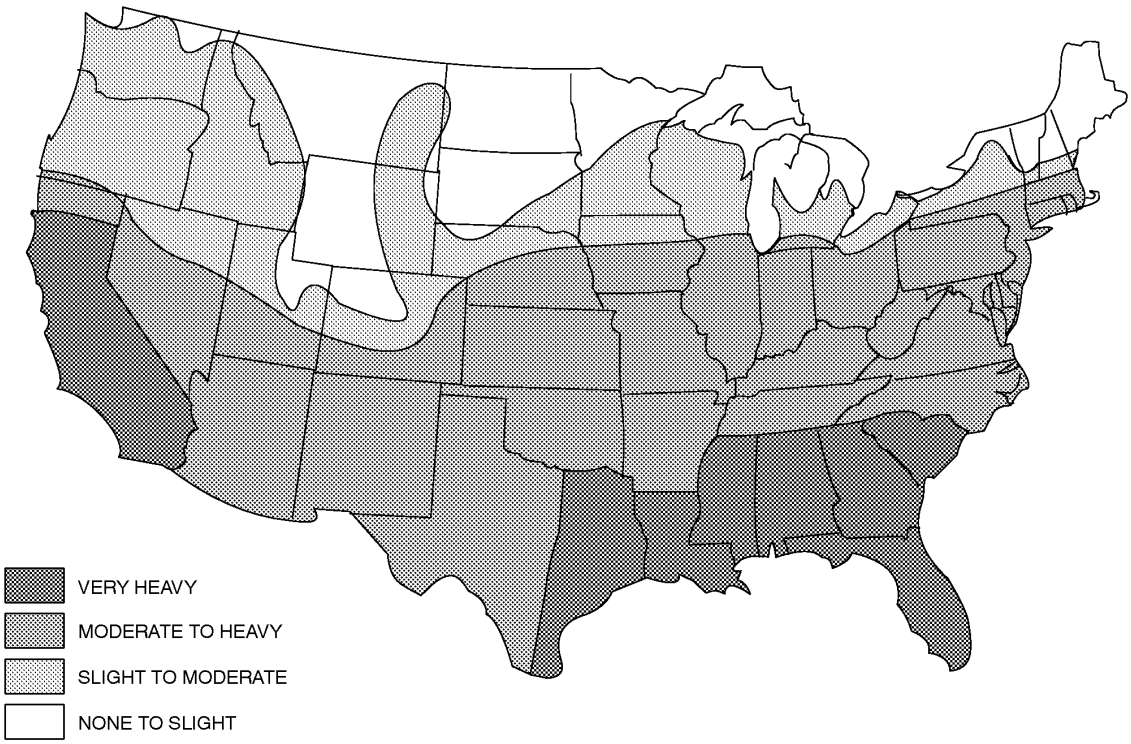

FIGURE 2603.8
TERMITE INFESTATION PROBABILITY MAP

INTERNATIONAL CODE COUNCIL®
Copyright © 2015 ICC. ALL RIGHTS RESERVED. Accessed by David Dammon on Jun 21, 2017 12:30:52 PM pursuant to License Agreement with ICC. No further reproduction or distribution authorized. ANY UNAUTHORIZED REPRODUCTION OR DISTRIBUTION IS A VIOLATION OF THE FEDERAL COPYRIGHT ACT AND THE LICENSE AGREEMENT, AND SUBJECT TO CIVIL AND CRIMINAL PENALTIES THEREUNDER.

available to justify prescriptive "off-the-shelf" solutions with standardized types of concrete/masonry fasteners. Also, many fasteners best suited for this application are proprietary and approved data and design is the best approach. Therefore, this section requires engineered design of cladding connections through foam sheathing to masonry/concrete. The exceptions recognize cases where appropriate attachment solutions may already exist.

2603.12 Cladding attachment over foam sheathing to cold-formed steel framing. Cladding shall be specified and installed in accordance with Chapter 14 and the cladding manufacturer's approved installation instructions, including any limitations for use over foam plastic sheathing, or an approved design. Where used, furring and furring attachments shall be designed to resist design loads determined in accordance with Chapter 16. In addition, the cladding or furring attachments through foam sheathing to framing shall meet or exceed the minimum fastening requirements of Sections 2603.12.1 and 2603.12.2, or an approved design for support of cladding weight.

Exceptions:

1. Where the cladding manufacturer has provided approved installation instructions for application over foam sheathing, those requirements shall apply.
2. For exterior insulation and finish systems, refer to Section 1408.
3. For anchored masonry or stone veneer installed over foam sheathing, refer to Section 1405.

❖ This section addresses attachment of cladding through foam sheathing to wall construction of cold-formed steel framing. The requirements are based on a project sponsored by the New York State Energy Research and Development Agency (NYSERDA) and the Steel Framing Alliance.

The purpose of the NYSERDA project was to develop prescriptive fastening requirements for cladding materials installed over foam sheathing to ensure adequate performance. The project included testing of cladding attachments through various thicknesses of foam sheathing using various fastener types on steel frame wall assemblies. Supplemental testing also was sponsored by the Foam Sheathing Coalition (lab report available at www.foamsheathing.org) to address attachments to wood framing. The resulting data are included in the data set analyzed and presented in the NYSERDA project report. The proposed cladding attachment requirements and foam sheathing thickness limits are based on rational analysis verified by the extensive test data to control cladding connection movement to no more than 0.015-inch slip under cladding weight or dead load. This deflection-controlled approach resulted in safety factors commonly in the range of 5 to 8 relative to average shear capacity.

2603.12.1 Direct attachment. Where cladding is installed directly over foam sheathing without the use of furring, cladding minimum fastening requirements to support the cladding weight shall be as specified in Table 2603.12.1.

❖ This section prescribes fastening requirements for cladding installed without furring directly over a foam sheathing. See the commentary to Section 2603.12 for a discussion of the derivation of these fasteners and values.

TABLE 2603.12.1
CLADDING MINIMUM FASTENING REQUIREMENTS FOR DIRECT ATTACHMENT OVER FOAM PLASTIC SHEATHING TO SUPPORT CLADDING WEIGHT[a]

CLADDING FASTENER THROUGH FOAM SHEATHING INTO	CLADDING FASTENER TYPE AND MINIMUM SIZE[b]	CLADDING FASTENER VERTICAL SPACING (inches)	MAXIMUM THICKNESS OF FOAM SHEATHING[c] (inches)					
			16″ o.c. fastener horizontal spacing			24″o.c. fastener horizontal spacing		
			Cladding weight			Cladding weight		
			3 psf	11 psf	25 psf	3 psf	11 psf	25 psf
Steel framing (minimum penetration of steel thickness plus 3 threads)	#8 screw into 33-mil steel or thicker	6	3	3	1.5	3	2	DR
		8	3	2	0.5	3	1.5	DR
		12	3	1.5	DR	3	0.75	DR
	#10 screw into 33-mil steel	6	4	3	2	4	3	0.5
		8	4	3	1	4	2	DR
		12	4	2	DR	3	1	DR
	#10 screw into 43-mil steel or thicker	6	4	4	3	4	4	2
		8	4	4	2	4	3	1.5
		12	4	3	1.5	4	3	DR

For SI: 1 inch = 25.4 mm; 1 pound per square foot (psf) = 0.0479 kPa, 1 pound per square inch = 0.00689 MPa, 1 ksi = 6.9 MPa.
DR = design required; o.c. = on center.
a. Steel framing shall be minimum 33-ksi steel for 33-mil and 43-mil steel and 50-ksi steel for 54-mil steel or thicker.
b. Screws shall comply with the requirements of AISI S200.
c. Foam sheathing shall have a minimum compressive strength of 15 pounds per square inch in accordance with ASTM C578 or ASTM C1289.

INTERNATIONAL CODE COUNCIL®
Copyright © 2015 ICC. ALL RIGHTS RESERVED. Accessed by David Dammon on Jun 21, 2017 12:30:52 PM pursuant to License Agreement with ICC. No further reproduction or distribution authorized. ANY UNAUTHORIZED REPRODUCTION OR DISTRIBUTION IS A VIOLATION OF THE FEDERAL COPYRIGHT ACT AND THE LICENSE AGREEMENT, AND SUBJECT TO CIVIL AND CRIMINAL PENALTIES THEREUNDER.

2603.12.2 Furred cladding attachment. Where steel or wood furring is used to attach cladding over foam sheathing, furring minimum fastening requirements to support the cladding weight shall be as specified in Table 2603.12.2. Where placed horizontally, wood furring shall be preservative-treated wood in accordance with Section 2303.1.9 or naturally durable wood and fasteners shall be corrosion resistant in accordance Section 2304.10.5. Steel furring shall have a minimum G60 galvanized coating.

❖ This section prescribes fastening requirements for cladding installed over steel or wood furring that is installed over foam sheathing. See commentary to Section 2603.12 for a discussion of the derivation of these fasteners and values. This section also prescribes minimum specifications for wood and steel framing.

SECTION 2604
INTERIOR FINISH AND TRIM

2604.1 General. Plastic materials installed as interior finish or *trim* shall comply with Chapter 8. Foam plastics shall only be installed as interior finish where approved in accordance with the special provisions of Section 2603.9. Foam plastics that are used as interior finish shall also meet the flame spread and smoke-developed index requirements for interior finish in accordance with Chapter 8. Foam plastics installed as interior *trim* shall comply with Section 2604.2.

❖ Plastic materials used as interior finish that are neither light transmitting nor foam are required to comply with Chapter 8. Foam plastic used as interior finish is to be in accordance with the special approval provisions of Section 2603.10 and meet the flame spread and smoke developed index requirements of Chapter 8 for interior finish. Foam plastics installed as interior trim are required to comply with Section 2604.2. It should be noted that the IFC addresses foam plastic trim in existing buildings in the same manner.

[F] 2604.2 Interior trim. Foam plastic used as interior *trim* shall comply with Sections 2604.2.1 through 2604.2.4.

❖ This section identifies the subsections that apply to interior trim requirements.

[F] 2604.2.1 Density. The minimum density of the interior *trim* shall be 20 pcf (320 kg/m^3).

❖ In order to qualify as interior trim, the density of materials must be at least 20 pcf (320 kg/m^3). The intent was to separate those materials used for trim from those intended for use as insulation. The 20-pcf (320 kg/m^3)

TABLE 2603.12.2
FURRING MINIMUM FASTENING REQUIREMENTS FOR APPLICATION OVER FOAM PLASTIC SHEATHING TO SUPPORT CLADDING WEIGHT[a]

FURRING MATERIAL	FRAMING MEMBER	FASTENER TYPE AND MINIMUM SIZE[b]	MINIMUM PENETRATION INTO WALL FRAMING (inches)	FASTENER SPACING IN FURRING (inches)	MAXIMUM THICKNESS OF FOAM SHEATHING[d] (inches)					
					16″ o.c. furring[e]			24″ o.c. furring[e]		
					Cladding weight			Cladding weight		
					3 psf	11 psf	25 psf	3 psf	11 psf	25 psf
Minimum 33-mil steel furring or minimum 1x wood furring[c]	33-mil steel stud	#8 screw	Steel thickness plus 3 threads	12	3	1.5	DR	3	0.5	DR
				16	3	1	DR	2	DR	DR
				24	2	DR	DR	2	DR	DR
		#10 screw	Steel thickness plus 3 threads	12	4	2	DR	4	1	DR
				16	4	1.5	DR	3	DR	DR
				24	3	DR	DR	2	DR	DR
	43-mil or thicker steel stud	#8 screw	Steel thickness plus 3 threads	12	3	1.5	DR	3	0.5	DR
				16	3	1	DR	2	DR	DR
				24	2	DR	DR	2	DR	DR
		#10 screw	Steel thickness plus 3 threads	12	4	3	1.5	4	3	DR
				16	4	3	0.5	4	2	DR
				24	4	2	DR	4	0.5	DR

For SI: 1 inch = 25.4 mm; 1 pound per square foot (psf) = 0.0479 kPa, 1 pound per square inch = 0.00689 MPa, 1 ksi = 6.9 MPa.
DR = design required; o.c. = on center.

a. Wood furring shall be Spruce-Pine fir or any softwood species with a specific gravity of 0.42 or greater. Steel furring shall be minimum 33-ksi steel. Steel studs shall be minimum 33-ksi steel for 33-mil and 43-mil thickness and 50-ksi steel for 54-mil steel or thicker.

b. Screws shall comply with the requirements of AISI S200.

c. Where the required cladding fastener penetration into wood material exceeds $^3/_4$ inch and is not more than $1^1/_2$ inches, a minimum 2-inch nominal wood furring shall be used or an approved design.

d. Foam sheathing shall have a minimum compressive strength of 15 pounds per square inch in accordance with ASTM C578 or ASTM C1289.

e. Furring shall be spaced not more than 24 inches on center, in a vertical or horizontal orientation. In a vertical orientation, furring shall be located over wall studs and attached with the required fastener spacing. In a horizontal orientation, the indicated 8-inch and 12-inch fastener spacing in furring shall be achieved by use of two fasteners into studs at 16 inches and 24 inches on center, respectively.

INTERNATIONAL CODE COUNCIL®
Copyright © 2015 ICC. ALL RIGHTS RESERVED. Accessed by David Dammon on Jun 21, 2017 12:30:52 PM pursuant to License Agreement with ICC. No further reproduction or distribution authorized. ANY UNAUTHORIZED REPRODUCTION OR DISTRIBUTION IS A VIOLATION OF THE FEDERAL COPYRIGHT ACT AND THE LICENSE AGREEMENT, AND SUBJECT TO CIVIL AND CRIMINAL PENALTIES THEREUNDER.

value was selected because it was approximately midway between the densities commonly used for insulations and for trim when this provision was added to the code. Most foam plastic insulation was, and still is, in the range of 1 to $2^1/_2$ pcf (16.02 to 40 kg/m^3), with very few materials over 5 pcf (81 kg/m^3). Foam plastic trim was manufactured in a density range of 30 to 45 pcf (481 to 721 kg/m^3) when the density provision was originally incorporated in the code.

[F] 2604.2.2 Thickness. The maximum thickness of the interior *trim* shall be $^1/_2$ inch (12.7 mm) and the maximum width shall be 8 inches (204 mm).

❖ Even though other trim materials are not limited in dimension, the maximum thickness and width of foam plastic trim is limited to $^1/_2$ inch (12.7 mm) and 8 inches (203 mm), respectively. These dimensions were selected because they were typical of the maximums being produced at the time this provision was included in the code.

[F] 2604.2.3 Area limitation. The interior *trim* shall not constitute more than 10 percent of the specific wall or ceiling areas to which it is attached.

❖ Trim cannot constitute more than 10 percent of the of the wall or ceiling area of a room. This limitation is simply a restatement of the general requirement for all combustible trim, which appears in Section 806.5.

[F] 2604.2.4 Flame spread. The flame spread index shall not exceed 75 where tested in accordance with ASTM E84 or UL 723. The smoke-developed index shall not be limited.

Exception: When the interior *trim* material has been tested as an interior finish in accordance with NFPA 286 and complies with the acceptance criteria in Section 803.1.2.1, it shall not be required to be tested for flame spread index in accordance with ASTM E84 or UL 723.

❖ The flame spread index must not be greater than 75 when tested in accordance with ASTM E84 or UL 263. The value of 75 was selected to be consistent with the requirement for foam plastic insulation, even though other materials used as trim are permitted to have flame spread indexes of up to 200 in many locations. The smoke-developed index is not regulated.

The exception allows for foam plastic to be used as an interior trim under the same conditions that other materials are allowed as interior finishes. This is based on the fact that, historically, the codes have required less-stringent flame spread and smoke-development index criteria for interior trim as compared to those for interior finish, based on the area restrictions on interior trim. The conditions for acceptance are based on several acceptance criteria applied after testing of the foam plastic in accordance with NFPA 286 (see commentary, Section 803.1.2.1 for more information).

SECTION 2605
PLASTIC VENEER

2605.1 Interior use. Where used within a building, plastic veneer shall comply with the interior finish requirements of Chapter 8.

❖ Plastic veneer may be used inside a building if it meets the finish requirements of Chapter 8.

2605.2 Exterior use. Exterior plastic veneer, other than plastic siding, shall be permitted to be installed on the *exterior walls* of buildings of any type of construction in accordance with all of the following requirements:

1. Plastic veneer shall comply with Section 2606.4.
2. Plastic veneer shall not be attached to any exterior wall to a height greater than 50 feet (15 240 mm) above grade.
3. Sections of plastic veneer shall not exceed 300 square feet (27.9 m^2) in area and shall be separated by not less than 4 feet (1219 mm) vertically.

Exception: The area and separation requirements and the smoke-density limitation are not applicable to plastic veneer applied to buildings constructed of Type VB construction, provided the walls are not required to have a fire-resistance rating.

❖ Exterior plastic veneer, not including plastic siding, must be an approved Class CC1 or CC2 plastic material in accordance with the specifications in Section 2606.4, and meet all three of the requirements in this section for height, area and separation. The classifications within Section 2606.4 are combustibility classifications. Note that plastic siding requirements are contained in Section 2605.3.

2605.3 Plastic siding. Plastic siding shall comply with the requirements of Sections 1404 and 1405.

❖ Plastic siding is used as an exterior veneer finish material. The purpose of this section is to refer the code user back to Chapter 14, specifically Sections 1404 and 1405, for the requirements related to plastic siding used on the exterior side of exterior walls.

SECTION 2606
LIGHT-TRANSMITTING PLASTICS

2606.1 General. The provisions of this section and Sections 2607 through 2611 shall govern the quality and methods of application of light-transmitting plastics for use as light-transmitting materials in buildings and structures. Foam plastics shall comply with Section 2603. Light-transmitting plastic materials that meet the other code requirements for walls and roofs shall be permitted to be used in accordance with the other applicable chapters of the code.

❖ Section 2606 contains the provisions for light-transmitting plastics. It specifies both the requirements for

INTERNATIONAL CODE COUNCIL®
Copyright © 2015 ICC. ALL RIGHTS RESERVED. Accessed by David Dammon on Jun 21, 2017 12:30:52 PM pursuant to License Agreement with ICC. No further reproduction or distribution authorized. ANY UNAUTHORIZED REPRODUCTION OR DISTRIBUTION IS A VIOLATION OF THE FEDERAL COPYRIGHT ACT AND THE LICENSE AGREEMENT, AND SUBJECT TO CIVIL AND CRIMINAL PENALTIES THEREUNDER.

an approved light-transmitting plastic and the fire properties of materials. It also requires adequate structural properties of materials and assemblies, and specific installation methods for various applications.

2606.2 Approval for use. Sufficient technical data shall be submitted to substantiate the proposed use of any light-transmitting material, as approved by the *building official* and subject to the requirements of this section.

❖ Before the material can be used, sufficient data is to be submitted to the building official for approval.

2606.3 Identification. Each unit or package of light-transmitting plastic shall be identified with a *mark* or decal satisfactory to the *building official*, which includes identification as to the material classification.

❖ The material or its packaging must be marked Class CC1 or CC2 plastic.

2606.4 Specifications. Light-transmitting plastics, including thermoplastic, thermosetting or reinforced thermosetting plastic material, shall have a self-ignition temperature of 650°F (343°C) or greater where tested in accordance with ASTM D1929; a smoke-developed index not greater than 450 where tested in the manner intended for use in accordance with ASTM E84 or UL 723, or a maximum average smoke density rating not greater than 75 where tested in the thickness intended for use in accordance with ASTM D2843 and shall conform to one of the following combustibility classifications:

Class CC1: Plastic materials that have a burning extent of 1 inch (25 mm) or less where tested at a nominal thickness of 0.060 inch (1.5 mm), or in the thickness intended for use, in accordance with ASTM D635.

Class CC2: Plastic materials that have a burning rate of $2^1/_2$ inches per minute (1.06 mm/s) or less where tested at a nominal thickness of 0.060 inch (1.5 mm), or in the thickness intended for use, in accordance with ASTM D635.

❖ An approved material may be either thermoplastic, thermosetting or reinforced thermosetting. Approved plastics require a minimum self-ignition temperature of 650°F (343°C) when tested in accordance with ASTM D1929. This temperature excludes the use of easily ignited plastic materials such as cellulose nitrate, which ignites at a temperature of about 300°F (149°C). For comparative purposes, untreated wood and paper ignite at about 500°F (260°C).

In order for a plastic to be approved, its smoke-development index or smoke density rating is limited and must be evaluated by one of two test methods prescribed (smoke-developed index limited to 450 by ASTM E84 or UL 263, or a maximum average smoke density rating of 75 by ASTM D2843). For comparative purposes, these smoke-developed values are the maximum that can be expected from some wood products tested under similar conditions; however, there is no intent to indicate a correlation between the results from the two test methods.

Approved light-transmitting plastics are to be tested in accordance with ASTM D635 and be of combustibility Class CC1 or CC2. Class CC1 plastic materials burn at a slower rate than Class CC2 plastics. Class CC1 plastics generally consist of polycarbonate materials whereas Class CC2 plastics consist of acrylics.

Thermoplastic materials are those plastics that will melt when heated and are formed into their final shape utilizing this property. Most light-transmitting plastic products are flat or formed sheets.

Thermosetting materials are those plastics that cure with heat and may generate heat during curing but will not melt by heating after curing. They are formed into their final product shape before or during curing, except for possible machining.

2606.5 Structural requirements. Light-transmitting plastic materials in their assembly shall be of adequate strength and durability to withstand the loads indicated in Chapter 16. Technical data shall be submitted to establish stresses, maximum unsupported spans and such other information for the various thicknesses and forms used as deemed necessary by the *building official*.

❖ Light-transmitting plastic applications must meet the necessary structural load requirements. For example, glazing assemblies must be able to withstand the imposed wind loads, and skylight assemblies must be able to support expected snow loads. It is the intent of this section that durability includes weatherability for those applications subjected to outdoor exposure. Technical information to support the structural integrity is to be submitted to the building official as he or she deems necessary.

2606.6 Fastening. Fastening shall be adequate to withstand the loads in Chapter 16. Proper allowance shall be made for expansion and contraction of light-transmitting plastic materials in accordance with accepted data on the coefficient of expansion of the material and other material in conjunction with which it is employed.

❖ The design loads for the assembly, members and fasteners are specified in Chapter 16. Adequate provision must be made for movement caused by the differential expansion expected from the different types of materials connected. This is especially important with plastics since they usually have coefficients of expansion that are greater than the materials to which they are connected.

2606.7 Light-diffusing systems. Unless the building is equipped throughout with an *automatic sprinkler system* in accordance with Section 903.3.1.1, light-diffusing systems shall not be installed in the following occupancies and locations:

1. Group A with an *occupant load* of 1,000 or more.
2. Theaters with a stage and proscenium opening and an *occupant load* of 700 or more.
3. Group I-2.
4. Group I-3.

INTERNATIONAL CODE COUNCIL®
Copyright © 2015 ICC. ALL RIGHTS RESERVED. Accessed by David Dammon on Jun 21, 2017 12:30:52 PM pursuant to License Agreement with ICC. No further reproduction or distribution authorized. ANY UNAUTHORIZED REPRODUCTION OR DISTRIBUTION IS A VIOLATION OF THE FEDERAL COPYRIGHT ACT AND THE LICENSE AGREEMENT, AND SUBJECT TO CIVIL AND CRIMINAL PENALTIES THEREUNDER.

5. Interior exit stairways and ramps and *exit* passageways.

❖ Light-diffusing systems are not permitted in the four occupancies listed in Items 1 through 4 in this section, nor in exits in any group, unless the building is protected by an automatic sprinkler system in accordance with NFPA 13. The intent is to limit the use of combustible materials in occupancies without sprinkler protection. These occupancies are generally recognized as being potentially more hazardous for the building occupants in the event of fire. The specific restriction for nonsprinklered buildings of Groups I-2 and I-3 is based on the physical restraint or incapacitation of the occupants.

2606.7.1 Support. Light-transmitting plastic diffusers shall be supported directly or indirectly from ceiling or roof construction by use of noncombustible hangers. Hangers shall be not less than No. 12 steel-wire gage (0.106 inch) galvanized wire or equivalent.

❖ This section specifies that all hangers supporting the plastic diffusers must be of steel wire at least 0.106 inch (2.7 mm) in diameter or equivalent. It is important that noncombustible supports be used because the original test data were generated on these types of assemblies.

2606.7.2 Installation. Light-transmitting plastic diffusers shall comply with Chapter 8 unless the light-transmitting plastic diffusers will fall from the mountings before igniting, at an ambient temperature of not less than 200°F (111°C) below the ignition temperature of the panels. The panels shall remain in place at an ambient room temperature of 175°F (79°C) for a period of not less than 15 minutes.

❖ Diffusers must also comply with Chapter 8 unless the plastic panels will fall from their mountings at an ambient temperature of at least 200°F (93°C) below their ignition temperature. The intent is to regulate panels that remain in place in the same manner as interior finish and to eliminate surface flame spread requirements for materials that will not burn while remaining in place.

The code requires that all panels must remain in place for at least 15 minutes at an ambient room temperature of 175°F (79°C). The intent of this requirement is to avoid a panic situation that could arise from the premature dropping of ceiling panels.

2606.7.3 Size limitations. Individual panels or units shall not exceed 10 feet (3048 mm) in length nor 30 square feet (2.79 m^2) in area.

❖ This section states the maximum length [10 feet (3048 mm)] and area [30 square feet (2.8 m^2)] of any single panel. The intent is to limit the size of panels expected to fall from place if the ambient room temperature at the ceiling were to reach 175°F (79°C), in order to avoid possible obstructions and injury caused by the fallen panels.

2606.7.4 Fire suppression system. In buildings that are equipped throughout with an *automatic sprinkler system* in accordance with Section 903.3.1.1, plastic light-diffusing systems shall be protected both above and below unless the sprinkler system has been specifically approved for installation only above the light-diffusing system. Areas of light-diffusing systems that are protected in accordance with this section shall not be limited.

❖ When buildings are required to have approved automatic sprinkler systems throughout, sprinkler protection must be provided both above and below the light-diffusing system. A sprinkler system is permitted to be installed above the light-diffusing system only when the assembly is designed for this use and specifically approved by the building official. The intent is that when specific approval is granted, it is based on appropriate test results related to end use. When sprinkler protection is provided, the area of the light-diffusing system is not subject to the area limitations of Section 2606.7.3 since the likelihood of such panels dropping is decreased.

2606.7.5 Electrical luminaires. Light-transmitting plastic panels and light-diffuser panels that are installed in approved electrical luminaires shall comply with the requirements of Chapter 8 unless the light-transmitting plastic panels conform to the requirements of Section 2606.7.2. The area of approved light-transmitting plastic materials that is used in required *exits* or *corridors* shall not exceed 30 percent of the aggregate area of the ceiling in which such panels are installed, unless the building is equipped throughout with an *automatic sprinkler system* in accordance with Section 903.3.1.1.

❖ Plastic light-transmitting and diffuser panels in electrical luminaires are required to comply with Chapter 8 or the installation requirements of Section 2606.7.2. Additionally, the aggregate ceiling area of such panels is limited to 30 percent in required exits and corridors, unless the building is equipped throughout with an automatic sprinkler system in accordance with NFPA 13. The intent of this section is to regulate luminaires the same as other ceiling finish panels. It also restricts the use of combustible materials in required exits and corridors while giving recognition to the benefit of automatic sprinkler systems.

2606.8 Partitions. Light-transmitting plastics used in or as partitions shall comply with the requirements of Chapters 6 and 8.

❖ When light-transmitting plastics are used in or as partitions, they must comply with the requirements of Chapters 6 and 8. The intent is to regulate light-transmitting plastics with the same requirements as other materials used within a building.

2606.9 Bathroom accessories. Light-transmitting plastics shall be permitted as glazing in shower stalls, shower doors, bathtub enclosures and similar accessory units. Safety glazing shall be provided in accordance with Chapter 24.

❖ Approved plastics are permitted as glazing in a variety of uses in bathrooms. When an approved Class CC1 or CC2 plastic material is used for glazing shower stalls, shower doors, bathtub enclosures or other bathroom accessories, it must meet the human

INTERNATIONAL CODE COUNCIL®
Copyright © 2015 ICC. ALL RIGHTS RESERVED. Accessed by David Dammon on Jun 21, 2017 12:30:52 PM pursuant to License Agreement with ICC. No further reproduction or distribution authorized. ANY UNAUTHORIZED REPRODUCTION OR DISTRIBUTION IS A VIOLATION OF THE FEDERAL COPYRIGHT ACT AND THE LICENSE AGREEMENT, AND SUBJECT TO CIVIL AND CRIMINAL PENALTIES THEREUNDER.

impact requirements of ANSI Z97.1 under Section 2406.1.2.

2606.10 Awnings, patio covers and similar structures. *Awnings* constructed of light-transmitting plastics shall be constructed in accordance with the provisions specified in Section 3105 and Chapter 32 for projections. Patio covers constructed of light-transmitting plastics shall comply with Section 2606. Light-transmitting plastics used in canopies at motor fuel-dispensing facilities shall comply with Section 2606, except as modified by Section 406.7.2.

❖ Light-transmitting plastics used as awnings and similar structures must meet the general performance requirements of other appropriate sections of the code in addition to the requirements found in Chapter 26.

2606.11 Greenhouses. Light-transmitting plastics shall be permitted in lieu of plain glass in greenhouses.

❖ Greenhouses may be constructed of any type of approved plastic material that meets the requirements of Section 2606.

2606.12 Solar collectors. Light-transmitting plastic covers on solar collectors having noncombustible sides and bottoms shall be permitted on buildings not over three *stories above grade plane* or 9,000 square feet (836.1 m^2) in total floor area, provided the light-transmitting plastic cover does not exceed 33.33 percent of the roof area for CC1 materials or 25 percent of the roof area for CC2 materials.

Exception: Light-transmitting plastic covers having a thickness of 0.010 inch (0.3 mm) or less shall be permitted to be of any plastic material provided the area of the solar collectors does not exceed 33.33 percent of the roof area.

❖ Approved light-transmitting plastics can be used for solar collector covers that meet the requirements of Section 2606.12. Basically, the size and height of the building is limited and, depending on the combustibility, two different maximums are provided. Any plastic material may be used as solar collector covers provided that the cover thickness does not exceed 0.010 inch (0.254 mm) and the collector does not exceed 33.33 percent of the roof area.

Essentially the fire hazard only exists on the roof, which poses a minimal threat to occupants, initially.

SECTION 2607
LIGHT-TRANSMITTING PLASTIC WALL PANELS

2607.1 General. Light-transmitting plastics shall not be used as wall panels in *exterior walls* in occupancies in Groups A-l, A-2, H, I-2 and I-3. In other groups, light-transmitting plastics shall be permitted to be used as wall panels in *exterior walls*, provided that the walls are not required to have a fire-resistance rating and the installation conforms to the requirements of this section. Such panels shall be erected and anchored on a foundation, waterproofed or otherwise protected from moisture absorption and sealed with a coat of mastic or other approved waterproof coating. Light-transmitting plastic wall panels shall comply with Section 2606.

❖ Section 2607 establishes requirements for the use of plastic panels as exterior walls. Plastic wall panels are permitted to be used in most occupancies except those with dense occupant loads or where the occupants are confined or otherwise impaired. The size and quantity of plastic wall panels are also regulated by this section. These panels must also comply with the applicable provisions of Section 2606, which governs all light-transmitting plastics.

Plastic wall panels are permitted to be used in occupancies classified as Groups A-3, A-4, A-5, B, E, F-1, F-2, I-1, M, R-1, R-2, R-3, R-4, S-1, S-2 and U. They may not be used in occupancies where the generated products of combustion would significantly impair the egress of the impaired, confined or crowded occupants.

As with any exterior covering, plastic wall panels must be adequately fastened in a permanent manner. To reduce the chance of water infiltration into the plastic wall panels, they must be erected and anchored on a base that is protected from water absorption. Additionally, the plastic wall panel itself must be sealed with a waterproof coating. These types of combustible wall panels are not permitted where the exterior walls are required to be fire-resistance rated.

2607.2 Installation. *Exterior wall* panels installed as provided for herein shall not alter the type of construction classification of the building.

❖ Plastic is a combustible material. The use of light-transmitting plastic wall panels is permitted, however, without downgrading the type of construction. This exception is also clarified in Section 603.1, Item 14, for Type I and II construction; therefore, the use of light-transmitting plastic wall panels is permitted in all types of construction. These types of combustible wall panels, however, are not permitted where the exterior walls are required to be fire-resistance rated (see Section 2607.1).

2607.3 Height limitation. Light-transmitting plastics shall not be installed more than 75 feet (22 860 mm) above *grade plane*, except as allowed by Section 2607.5.

❖ Plastic wall panels are not permitted to be installed greater than 75 feet (22 860 mm) above grade plane in an unsprinklered building. The 75-foot (22 860 mm) threshold is the highest elevation that can be reached by hose lines on the ground. In structures sprinklered throughout, however, Section 2607.5 permits the maximum height to be unlimited. Be aware that Table 503 also places height limitations on structures. In some cases, the limitations of Table 503 may be more restrictive than those of Sections 2607.3 and 2607.5. At all times, the most restrictive requirement prevails.

INTERNATIONAL CODE COUNCIL®
Copyright © 2015 ICC. ALL RIGHTS RESERVED. Accessed by David Dammon on Jun 21, 2017 12:30:52 PM pursuant to License Agreement with ICC. No further reproduction or distribution authorized. ANY UNAUTHORIZED REPRODUCTION OR DISTRIBUTION IS A VIOLATION OF THE FEDERAL COPYRIGHT ACT AND THE LICENSE AGREEMENT, AND SUBJECT TO CIVIL AND CRIMINAL PENALTIES THEREUNDER.

2607.4 Area limitation and separation. The maximum area of a single wall panel and minimum vertical and horizontal separation requirements for exterior light-transmitting plastic wall panels shall be as provided for in Table 2607.4. The maximum percentage of wall area of any *story* in light-transmitting plastic wall panels shall not exceed that indicated in Table 2607.4 or the percentage of unprotected openings permitted by Section 705.8, whichever is smaller.

Exceptions:

1. In structures provided with approved flame barriers extending 30 inches (760 mm) beyond the *exterior wall* in the plane of the floor, a vertical separation is not required at the floor except that provided by the vertical thickness of the flame barrier projection.
2. Veneers of approved weather-resistant light-transmitting plastics used as exterior siding in buildings of Type V construction in compliance with Section 1406.
3. The area of light-transmitting plastic wall panels in *exterior walls* of greenhouses shall be exempt from the area limitations of Table 2607.4 but shall be limited as required for unprotected openings in accordance with Section 704.8.

❖ Refer to Table 2607.4 for area limitations of single wall panels and the minimum separation requirements between adjacent panels. The maximum percentage of wall area faced with plastic panels is limited by Table 2607.4, as well as by Section 705.8. At all times, the most restrictive requirement prevails.

Vertical separation of panels (see Table 2607.4) is not required where continuous architectural projections create at least a 30-inch (762 mm) barrier (called a flame barrier) between adjacent panels. Under most conditions, this flame barrier will delay or prevent vertical fire spread from one story to the next. This horizontal barrier is seen as protection equivalent to the vertical separation typically required by Table 2607.4 (see Commentary Figure 2607.4).

Veneers of approved exterior light-transmitting plastic siding, installed in compliance with Section 1406, of Type V construction are exempt from the area limitations and separation requirements.

Greenhouse walls can have an unlimited area of approved light-transmitting wall panels, unless limited by the unprotected opening requirements of Section 705.8.

TABLE 2607.4. See below.

❖ This table establishes size and separation limitations for exterior plastic wall panels. The requirements of this table are not applicable to plastic exterior siding meeting the exception to Section 2607.4. The requirements are determined by the type of plastic material (Class CC1 or CC2) and fire separation distance. Plastic wall panels are only permitted where a minimum fire separation distance of 6 feet (1829 mm) is provided. The vertical separation requirements can be modified by Section 2607.4 (see Table 2607.4, Note b). The maximum area limitations of a single panel and the maximum percentage area of an exterior wall can be doubled when the structure is completely sprinklered in accordance with NFPA 13 (see Section 2607.5).

2607.5 Automatic sprinkler system. Where the building is equipped throughout with an *automatic sprinkler system* in accordance with Section 903.3.1.1, the maximum percentage area of *exterior wall* in any *story* in light-transmitting plastic wall panels and the maximum square footage of a single area given in Table 2607.4 shall be increased 100 percent, but the area of light-transmitting plastic wall panels shall not exceed 50 percent of the wall area in any story, or the area permitted by Section 705.8 for unprotected openings, whichever is smaller. These installations shall be exempt from height limitations.

❖ The extra protection provided by a complete NFPA 13 automatic fire sprinkler system enables the limitations placed on light-transmitting plastic wall panels to be reduced. In order for these modifications to apply, the structure must be sprinklered throughout.

TABLE 2607.4
AREA LIMITATION AND SEPARATION REQUIREMENTS FOR LIGHT-TRANSMITTING PLASTIC WALL PANELS[a]

FIRE SEPARATION DISTANCE (feet)	CLASS OF PLASTIC	MAXIMUM PERCENTAGE AREA OF EXTERIOR WALL IN PLASTIC WALL PANELS	MAXIMUM SINGLE AREA OF PLASTIC WALL PANELS (square feet)	MINIMUM SEPARATION OF PLASTIC WALL PANELS (feet)	
				Vertical	Horizontal
Less than 6	—	Not Permitted	Not Permitted	—	—
6 or more but less than 11	CC1	10	50	8	4
	CC2	Not Permitted	Not Permitted	—	—
11 or more but less than or equal to 30	CC1	25	90	6	4
	CC2	15	70	8	4
Over 30	CC1	50	Not Limited	3[b]	0
	CC2	50	100	6[b]	3

For SI: 1 foot = 304.8 mm, 1 square foot = 0.0929 m^2.

a. For combinations of plastic glazing and plastic wall panel areas permitted, see Section 2607.6.

b. For reductions in vertical separation allowed, see Section 2607.4.

INTERNATIONAL CODE COUNCIL®
Copyright © 2015 ICC. ALL RIGHTS RESERVED. Accessed by David Dammon on Jun 21, 2017 12:30:52 PM pursuant to License Agreement with ICC. No further reproduction or distribution authorized. ANY UNAUTHORIZED REPRODUCTION OR DISTRIBUTION IS A VIOLATION OF THE FEDERAL COPYRIGHT ACT AND THE LICENSE AGREEMENT, AND SUBJECT TO CIVIL AND CRIMINAL PENALTIES THEREUNDER.

When this protection is achieved, the height to which plastic wall panels can be installed is not limited. Furthermore, the single panel size and exterior wall area limitations can be doubled. At no time, however, can the area of wall panels per story exceed 50 percent of the wall area of that story. The percentage limitation of Section 705.8 for unprotected openings is also applicable.

2607.6 Combinations of glazing and wall panels. Combinations of light-transmitting plastic glazing and light-transmitting plastic wall panels shall be subject to the area, height and percentage limitations and the separation requirements applicable to the class of light-transmitting plastic as prescribed for light-transmitting plastic wall panel installations.

❖ Plastic glazing and plastic wall panels display equivalent fire characteristics. Therefore, where plastic glazing (regulated by Section 2608) and plastic wall panels are both used, the aggregate area of plastics must be in compliance with the limitations and requirements of Table 2607.4.

SECTION 2608
LIGHT-TRANSMITTING PLASTIC GLAZING

2608.1 Buildings of Type VB construction. Openings in the *exterior walls* of buildings of Type VB construction, where not required to be protected by Section 705, shall be permitted to be glazed or equipped with light-transmitting plastic. Light-transmitting plastic glazing shall comply with Section 2606.

❖ This section restricts the use of plastics to openings that are not required to have a fire protection rating. The requirement for walls, and their openings, to be protected is dependent on their fire separation distance (see Section 705).

2608.2 Buildings of other types of construction. Openings in the *exterior walls* of buildings of types of construction other than Type VB, where not required to be protected by Section 705, shall be permitted to be glazed or equipped with light-transmitting plastic in accordance with Section 2606 and all of the following:

1. The aggregate area of light-transmitting plastic glazing shall not exceed 25 percent of the area of any wall face

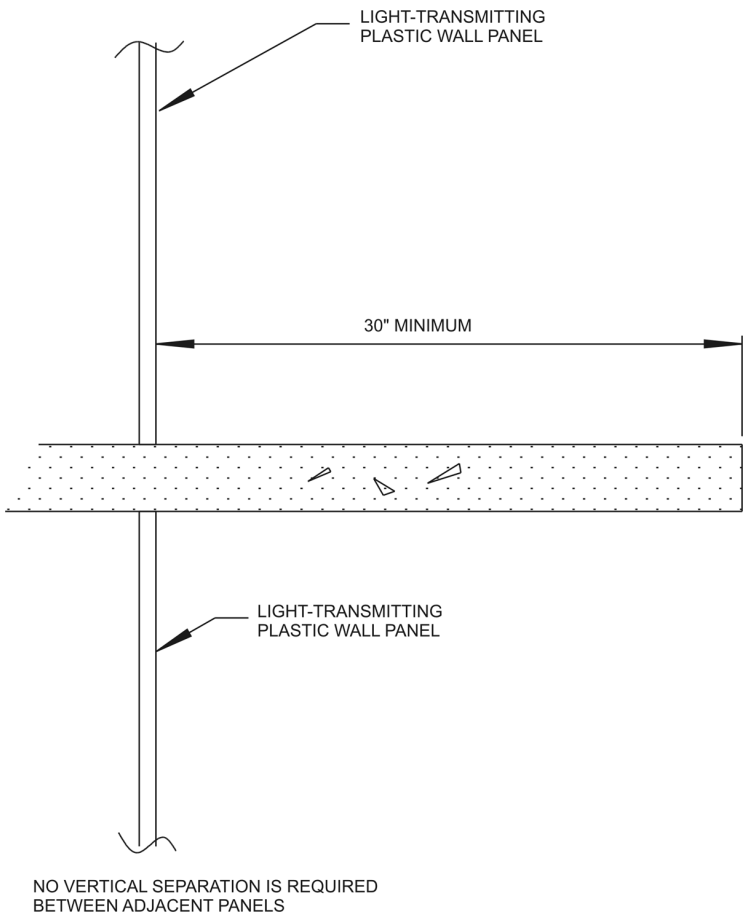

For SI: 1 inch = 25.4 mm.

Figure 2607.4
FLAME BARRIER—EXCEPTION 1 SECTION 2607.4

INTERNATIONAL CODE COUNCIL®
Copyright © 2015 ICC. ALL RIGHTS RESERVED. Accessed by David Dammon on Jun 21, 2017 12:30:52 PM pursuant to License Agreement with ICC. No further reproduction or distribution authorized. ANY UNAUTHORIZED REPRODUCTION OR DISTRIBUTION IS A VIOLATION OF THE FEDERAL COPYRIGHT ACT AND THE LICENSE AGREEMENT, AND SUBJECT TO CIVIL AND CRIMINAL PENALTIES THEREUNDER.

of the *story* in which it is installed. The area of a single pane of glazing installed above the first *story above grade plane* shall not exceed 16 square feet (1.5 m^2) and the vertical dimension of a single pane shall not exceed 4 feet (1219 mm).

Exception: Where an *automatic sprinkler system* is provided throughout in accordance with Section 903.3.1.1, the area of allowable glazing shall be increased to not more than 50 percent of the wall face of the *story* in which it is installed with no limit on the maximum dimension or area of a single pane of glazing.

2. Approved flame barriers extending 30 inches (762 mm) beyond the *exterior wall* in the plane of the floor, or vertical panels not less than 4 feet (1219 mm) in height, shall be installed between glazed units located in adjacent stories.

   Exception: Buildings equipped throughout with an *automatic sprinkler system* in accordance with Section 903.3.1.1.

3. Light-transmitting plastics shall not be installed more than 75 feet (22 860 mm) above grade level.

   Exception: Buildings equipped throughout with an *automatic sprinkler system* in accordance with Section 903.3.1.1.

❖ In addition to restricting the use of plastic glazing to exterior wall openings that are not required to have a fire protection rating, this section specifies the maximum area within a wall that openings can occupy. An opening that has plastic as the glazing material is essentially treated the same as an unprotected glass opening.

To limit the spread of fire, the allowable area of plastic glazing is limited to the smaller area determined when applying conditions. The first condition restricts the area of plastic glazing to 25 percent of the wall area of the story. The second condition restricts the area of plastics to that of the unprotected openings permitted in Section 705.

The exception doubles the amount of wall area that is allowed to be glazed with plastic when an approved automatic sprinkler system is installed. The allowable areas are increased to 50 percent of the wall area of the story with no limit on the maximum dimension or area of a single pane of glazing.

Consistent with other provisions to limit fire spread, this section places restrictions on the size and vertical separation of plastic glazing. The 4-foot (1219 mm) vertical separation is widely accepted as adequate for spandrels and other intervening construction between floors.

The 75-foot (22 860 mm) height limitation is generally accepted as the maximum height attainable by fire-fighting apparatus. If sprinklers are provided, the need for such height restrictions is lessened.

SECTION 2609
LIGHT-TRANSMITTING PLASTIC ROOF PANELS

2609.1 General. Light-transmitting plastic roof panels shall comply with this section and Section 2606. Light-transmitting plastic roof panels shall not be installed in Groups H, I-2 and I-3. In all other groups, light-transmitting plastic roof panels shall comply with any one of the following conditions:

1. The building is equipped throughout with an *automatic sprinkler system* in accordance with Section 903.3.1.1.
2. The roof construction is not required to have a fire-resistance rating by Table 601.
3. The roof panels meet the requirements for roof coverings in accordance with Chapter 15.

❖ This section establishes general requirements for light-transmitting plastic roof panels. These requirements are similar in nature to the other light-transmitting plastic provisions of this chapter. The requirements are intended to control the use of combustible construction material (i.e., light-transmitting plastics). These provisions specifically detail where roof panels may be used and any accompanying conditions that are required. Occupancies in Groups H, I-2 and I-3 may not use light-transmitting plastic roof panels. Buildings or structures containing all other groups may use the roof panels, but at least one of the three conditions listed must be present. The first condition requires the structure under consideration to be equipped with an automatic sprinkler system installed in accordance with NFPA 13. The second condition allows a structure that is not sprinklered to contain plastic roof panels if Table 601 of the code does not require any fire-resistance ratings for the roof construction, including beams, trusses, framing, arches and roof decks (based on the type of construction and the distance between the floor and lowest roof member). The final condition that allows plastic roof panels in certain structures is that panels meet the requirements for roof coverings in Chapter 15.

2609.2 Separation. Individual roof panels shall be separated from each other by a distance of not less than 4 feet (1219 mm) measured in a horizontal plane.

Exceptions:

1. The separation between roof panels is not required in a building equipped throughout with an *automatic sprinkler system* in accordance with Section 903.3.1.1.
2. The separation between roof panels is not required in low-hazard occupancy buildings complying with the conditions of Section 2609.4, Exception 2 or 3.

❖ The separation requirements for plastic roof panels are established herein. Individual light-transmitting plastic roof panels are limited in area by the provisions of Section 2609.4. This section provides the

INTERNATIONAL CODE COUNCIL®
Copyright © 2015 ICC. ALL RIGHTS RESERVED. Accessed by David Dammon on Jun 21, 2017 12:30:52 PM pursuant to License Agreement with ICC. No further reproduction or distribution authorized. ANY UNAUTHORIZED REPRODUCTION OR DISTRIBUTION IS A VIOLATION OF THE FEDERAL COPYRIGHT ACT AND THE LICENSE AGREEMENT, AND SUBJECT TO CIVIL AND CRIMINAL PENALTIES THEREUNDER.

separation distances necessary between the individual roof panels to isolate the fire hazard associated with this combustible material.

The 4-foot (1219 mm) minimum separation distance required between each individual roof panel must be measured in a horizontal plane (see Commentary Figure 2609.2).

There are two exceptions in the code pertaining to the separation requirements. Any structure that is equipped with an automatic sprinkler system installed in accordance with NFPA 13, or low-hazard occupancy buildings complying with Exception 2 or 3 of Section 2609.4, are exempt from the separation requirements.

2609.3 Location. Where *exterior wall* openings are required to be protected by Section 705.8, a roof panel shall not be installed within 6 feet (1829 mm) of such *exterior wall*.

❖ This section provides requirements as to where light-transmitting plastic roof panels may be located in relation to the exterior walls of buildings or structures. Again, limitations are included as to where these panels of combustible construction can be located in relation to adjacent fire hazards. These provisions are determined to be applicable from the requirements for fire-resistance-rated exterior walls and their exterior opening protectives found in Section 705.8. When certain openings in the exterior walls are required to be protected, these location requirements must be followed.

When an exterior wall contains required exterior opening protectives, the code text requires plastic roof panels to be installed at least 6 feet (1829 mm) from the wall. There is no exception to this requirement for structures equipped throughout with an approved automatic sprinkler system (see Commentary Figure 2609.3).

2609.4 Area limitations. Roof panels shall be limited in area and the aggregate area of panels shall be limited by a percentage of the floor area of the room or space sheltered in accordance with Table 2609.4.

Exceptions:

1. The area limitations of Table 2609.4 shall be permitted to be increased by 100 percent in buildings equipped throughout with an *automatic sprinkler system* in accordance with Section 903.3.1.1.
2. Low-hazard occupancy buildings, such as swimming pool shelters, shall be exempt from the area limitations of Table 2609.4, provided that the buildings do not exceed 5,000 square feet (465 m^2) in area and have a minimum fire separation distance of 10 feet (3048 mm).
3. Greenhouses that are occupied for growing plants on a production or research basis, without public

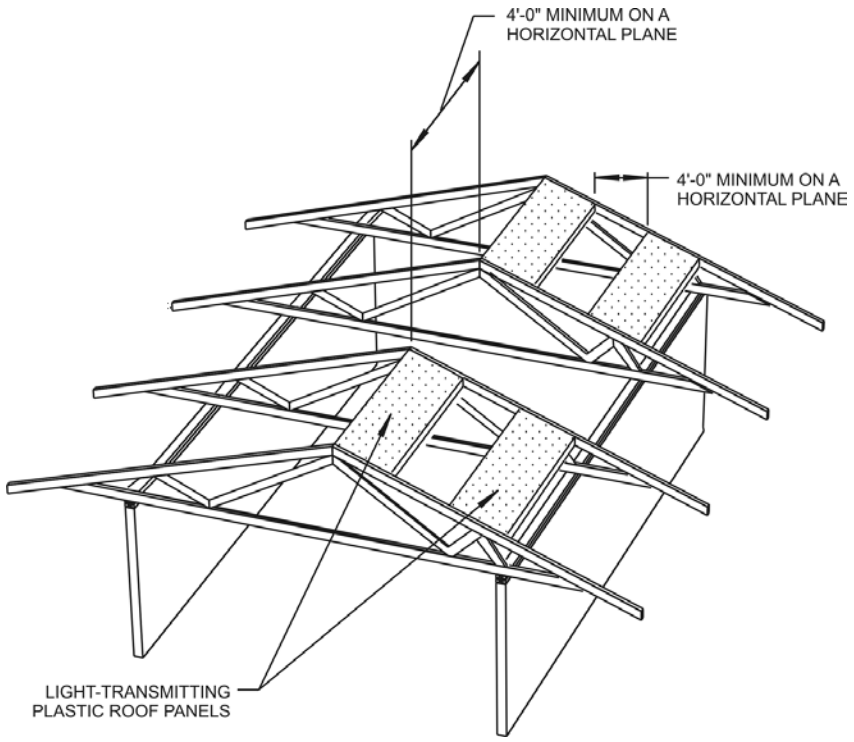

For SI: 1 inch = 25.4 mm, 1 foot = 304.8 mm.

Figure 2609.2
PLASTIC ROOF PANEL SEPARATION FROM OTHER PANELS

INTERNATIONAL CODE COUNCIL®
Copyright © 2015 ICC. ALL RIGHTS RESERVED. Accessed by David Dammon on Jun 21, 2017 12:30:52 PM pursuant to License Agreement with ICC. No further reproduction or distribution authorized. ANY UNAUTHORIZED REPRODUCTION OR DISTRIBUTION IS A VIOLATION OF THE FEDERAL COPYRIGHT ACT AND THE LICENSE AGREEMENT, AND SUBJECT TO CIVIL AND CRIMINAL PENALTIES THEREUNDER.

access, shall be exempt from the area limitations of Table 2609.4 provided they have a minimum fire separation distance of 4 feet (1220 mm).

4. Roof coverings over terraces and patios in occupancies in Group R-3 shall be exempt from the area limitations of Table 2609.4 and shall be permitted with light-transmitting plastics.

❖ This section provides certain area limitations for plastic roof panels. Plastic roof panels of combustible plastic construction exhibit high fire-hazard properties and must be limited in terms of the area of the structure. These requirements not only list the area limitations for individual panels, but also limit the aggregate or sum total of all roof panels located in the structure's roof. The aggregate area limitations are based on a floor area percentage of the room or space enclosed by the roof.

The area limitations, which are based on the class of plastic roof panels, are detailed in Table 2609.4.

There are four exceptions to these area limitations. When certain additional protection is provided or the panels are located in structures of limited hazard, the area limitations can be altered. In some cases, these exceptions increase the limitations or, in other cases, exempt certain structures from the limitations. Exception 1 increases the area limitations by 100 percent for those structures equipped throughout with an automatic sprinkler system installed in accordance with NFPA 13. Exception 2 allows certain low-hazard buildings to be exempt from the roof panel limitations. These buildings must not exceed 5,000 square feet (465 m^2) in area and they must have at least 10 feet (3048 mm) of fire separation distance in order for the exception to apply. Exception 3 is for greenhouses that have at least a 4-foot (1219 mm) fire separation distance. Exception 4 allows occupancies in Group R-3 that have roofed-over terraces and patios to be exempt from the area limitations for roof panels. Such roof panels must be constructed with approved plastic meeting the requirements of Section 2606.

TABLE 2609.4
AREA LIMITATIONS FOR
LIGHT-TRANSMITTING PLASTIC ROOF PANELS

CLASS OF PLASTIC	MAXIMUM AREA OF INDIVIDUAL ROOF PANELS (square feet)	MAXIMUM AGGREGATE AREA OF ROOF PANELS (percent of floor area)
CC1	300	30
CC2	100	25

For SI: 1 square foot = 0.0929 m^2.

❖ The maximum area limitations for both individual panels and aggregate areas are based on the class of plastic. These limitations are needed to restrict the use of light-transmitting plastic in roofs and roof coverings of buildings and structures. Section 2609.4 provides text that describes when these limitations are to be used. Table 2609.4 contains three different headings and only two lines of entry. The first head-

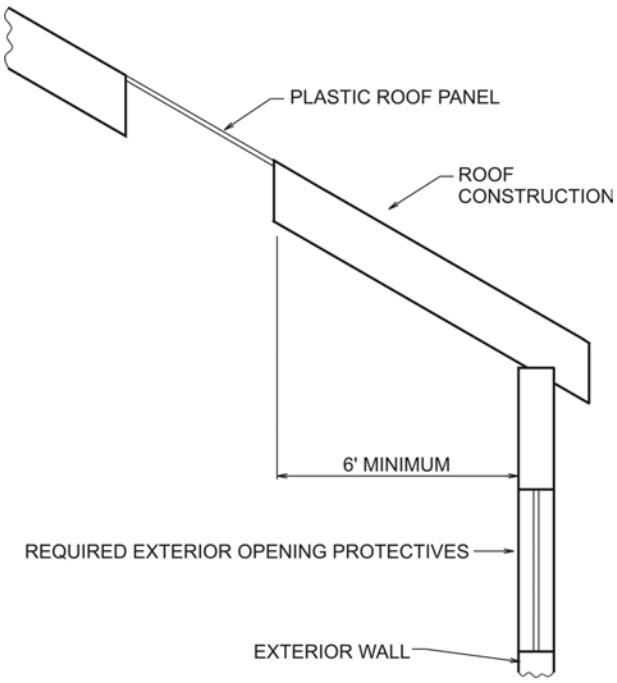

For SI: 1 foot = 304.8 mm.

Figure 2609.3
PLASTIC ROOF PANEL SEPARATION FROM EXTERIOR WALL

INTERNATIONAL CODE COUNCIL®
Copyright © 2015 ICC. ALL RIGHTS RESERVED. Accessed by David Dammon on Jun 21, 2017 12:30:52 PM pursuant to License Agreement with ICC. No further reproduction or distribution authorized. ANY UNAUTHORIZED REPRODUCTION OR DISTRIBUTION IS A VIOLATION OF THE FEDERAL COPYRIGHT ACT AND THE LICENSE AGREEMENT, AND SUBJECT TO CIVIL AND CRIMINAL PENALTIES THEREUNDER.

ing is labeled "Class of plastic" and is to be used in conjunction with Section 2606.4 for determining whether the plastic used in roof panels is either Class CC1 such as a polycarbonate or CC2 such as an acrylic. Once the class of plastic of the roof panels in question has been determined, the table is to be used to determine the area limitations for such panels.

The second heading in the table is identified as "Maximum area of individual roof panels (square feet)." These values provide the maximum area limitations for each individual roof panel based on the class of plastic used to manufacture the panel. These limitations are given in units of square feet.

The last heading, labeled "Maximum aggregate area of roof panels (percent of floor area)," provides the aggregate amount of area that can be occupied by plastic panels located in a roof. This limitation is based on a percentage of the floor area of the room or space that is sheltered by the roof in question. The floor area in units of square feet is multiplied by the appropriate percentage for the class of plastic used. This product provides the maximum area for all plastic panels used in the roof.

SECTION 2610
LIGHT-TRANSMITTING PLASTIC SKYLIGHT GLAZING

2610.1 Light-transmitting plastic glazing of skylight assemblies. Skylight assemblies glazed with light-transmitting plastic shall conform to the provisions of this section and Section 2606. Unit skylights glazed with light-transmitting plastic shall comply with Section 2405.5.

Exception: Skylights in which the light-transmitting plastic conforms to the required roof-covering class in accordance with Section 1505.

❖ This section covers horizontal and sloped applications of light-transmitting plastic skylights. This section contains mounting, size and spacing limitations for these combustible assemblies. Plastic skylights sloped more than 15 degrees (0.26 rad) from vertical are also required to comply with Section 2405.

Acrylic and polycarbonate plastics are commonly used glazing materials in skylight assemblies. The use of combustible skylights is permitted subject to the requirements of Section 2606. The reference to Section 2405.5 is intended to highlight the specific structural considerations for unit skylights, regardless of construction materials.

The exception eliminates any added requirements for plastic skylights that meet the roofing classification for the surrounding roof covering as described in Chapter 15.

2610.2 Mounting. The light-transmitting plastic shall be mounted above the plane of the roof on a curb constructed in accordance with the requirements for the type of construction classification, but not less than 4 inches (102 mm) above the plane of the roof. Edges of the light-transmitting plastic skylights or domes shall be protected by metal or other approved noncombustible material, or the light transmitting plastic dome or skylight shall be shown to be able to resist ignition where exposed at the edge to a flame from a Class B brand as described in ASTM E108 or UL 790. The Class B brand test shall be conducted on a skylight that is elevated to a height as specified in the manufacturer's installation instructions, but not less than 4 inches (102 mm).

Exceptions:

1. Curbs shall not be required for skylights used on roofs having a minimum slope of three units vertical in 12 units horizontal (25-percent slope) in occupancies in Group R-3 and on buildings with a nonclassified roof covering.
2. The metal or noncombustible edge material is not required where nonclassified roof coverings are permitted.

❖ The mounting requirements for plastic skylights are similar to those established in Section 2405.4 for glass skylights. The 4-inch (102 mm) curb requirement protects the skylight from flying brands, provides a wash for water running down the slope and provides a noticeable barrier to caution a person on the roof from stepping on the skylight; however, the skylight must be designed for the structural requirements of Section 2606.5. Since the edge of the plastic is more susceptible to ignition than the surface, noncombustible edge protection is required to reduce the chances of edge ignition. This requirement is only applicable when the plastic is of a type and design that does not resist the flying brand exposure as described in ASTM E108 or UL 790. This flying brand exposure test is required to be performed on the representative skylight, including mounting at a curb height specified in the manufacturer's installation instructions or 4 inches (102 mm), whichever is greater.

Exception 1 is based on general field experience with plastic skylights used in one- and two-family dwellings with slopes equal to or greater than three units vertical in 12 units horizontal (3:12). Additionally, skylights in unclassified roofs are not required to be mounted on curbs. Such a skylight need not provide fire performance beyond that required for the surrounding roof covering.

The basis for Exception 2 is similar to that for Exception 1. There is no need to require edge protection for the plastic when the adjacent area is an unclassified roof permitted by Section 1505.5.

2610.3 Slope. Flat or corrugated light-transmitting plastic skylights shall slope not less than four units vertical in 12 units horizontal (4:12). Dome-shaped skylights shall rise above the mounting flange a minimum distance equal to 10 percent of the maximum width of the dome but not less than 3 inches (76 mm).

Exception: Skylights that pass the Class B Burning Brand Test specified in ASTM E108 or UL 790.

❖ As are most of the restrictions for plastic skylights, the minimum slope requirements are based on limit-

INTERNATIONAL CODE COUNCIL®
Copyright © 2015 ICC. ALL RIGHTS RESERVED. Accessed by David Dammon on Jun 21, 2017 12:30:52 PM pursuant to License Agreement with ICC. No further reproduction or distribution authorized. ANY UNAUTHORIZED REPRODUCTION OR DISTRIBUTION IS A VIOLATION OF THE FEDERAL COPYRIGHT ACT AND THE LICENSE AGREEMENT, AND SUBJECT TO CIVIL AND CRIMINAL PENALTIES THEREUNDER.

ing the risks involved with combustible roof components. Both the slope for flat and corrugated plastic skylights and the rise for domed skylights are selected to shed flying brands. Consistent with other sections, the slope requirements are not applicable when the skylight complies with the specified requirements of ASTM E108 or UL 790.

2610.4 Maximum area of skylights. Each skylight shall have a maximum area within the curb of 100 square feet (9.3 m^2).

Exception: The area limitation shall not apply where the building is equipped throughout with an *automatic sprinkler system* in accordance with Section 903.3.1.1 or the building is equipped with smoke and heat vents in accordance with Section 910.

❖ The area limitation for unsprinklered buildings minimizes the fire risks for plastic skylights. The 100-square-foot (9 m^2) limitation does not apply to buildings provided throughout with an NFPA 13 automatic sprinkler system or equipped with smoke and heat vents in accordance with Section 910. This exception is largely academic, since contemporary plastic skylights do not normally exceed this area limitation.

2610.5 Aggregate area of skylights. The aggregate area of skylights shall not exceed $33^1/_3$ percent of the floor area of the room or space sheltered by the roof in which such skylights are installed where Class CC1 materials are utilized, and 25 percent where Class CC2 materials are utilized.

Exception: The aggregate area limitations of light-transmitting plastic skylights shall be increased 100 percent beyond the limitations set forth in this section where the building is equipped throughout with an *automatic sprinkler system* in accordance with Section 903.3.1.1 or the building is equipped with smoke and heat vents in accordance with Section 910.

❖ This section includes limitations directed to minimize the risks of fire spread. The $33^1/_3$- and 25-percent limitations based on floor area for Class CC1 (polycarbonate) and CC2 (acrylic) materials, respectively, are judged to inhibit sufficiently the spread of fire. An exception allows the percentage to be increased to $66^2/_3$ percent (Class CC1) and 50 percent (Class CC2) when an approved automatic sprinkler system is installed throughout the building or is equipped with smoke and heat vents in accordance with Section 910. To comply with the intent of this provision, the skylights should be distributed over the entire area of the roof and not concentrated in one area.

2610.6 Separation. Skylights shall be separated from each other by a distance of not less than 4 feet (1219 mm) measured in a horizontal plane.

Exceptions:

1. Buildings equipped throughout with an *automatic sprinkler system* in accordance with Section 903.3.1.1.
2. In Group R-3, multiple skylights located above the same room or space with a combined area not exceeding the limits set forth in Section 2610.4.

❖ As with the other items cited, the minimum 4-foot (1219 mm) spacing minimizes the risk of fire spread for buildings without automatic sprinklers (also see Commentary Figure 2609.2). The separation is not necessary when complete fire suppression is provided in accordance with NFPA 13 or in Group R-3, as applicable in Section 2610.4, where the skylights are located above the same room or space with a combined area not to exceed the limits of Section 2610.4.

2610.7 Location. Where *exterior wall* openings are required to be protected in accordance with Section 705, a skylight shall not be installed within 6 feet (1829 mm) of such *exterior wall*.

❖ The minimum 6-foot (1829 mm) spacing to a fire-resistance-rated wall is to minimize the risk of fire spread (also see Section 2609.3).

2610.8 Combinations of roof panels and skylights. Combinations of light-transmitting plastic roof panels and skylights shall be subject to the area and percentage limitations and separation requirements applicable to roof panel installations.

❖ This is a precautionary statement to clarify that skylights and roof panels must be considered together when establishing size and separation limitations. When combinations of plastic skylights and roof panels occur, the area limitations of Section 2609.4 govern. As with wall panels and glazing, roof panels and skylights represent a similar combustible aspect of construction and should be addressed together.

SECTION 2611
LIGHT-TRANSMITTING PLASTIC INTERIOR SIGNS

2611.1 General. Light-transmitting plastic interior wall signs shall be limited as specified in Sections 2611.2 through 2611.4. Light-transmitting plastic interior wall signs in *covered and open mall buildings* shall comply with Section 402.6.4. Light-transmitting plastic interior signs shall also comply with Section 2606.

❖ This section contains the scoping statement that requires all light-transmitting plastic materials used for interior wall signage applications to comply with the requirements of Sections 2611.2, 2611.3 and 2611.4. These requirements include the maximum allowable aggregate area of signs, maximum individual area of signs and encasement requirements. The only exceptions to these requirements are light-transmitting plastics that are used for interior wall signage in covered mall buildings, since they are regulated by Section 402.6.4. These provisions help clarify the requirements for plastic signs in all occupancies other than covered mall buildings and exterior applications.

INTERNATIONAL CODE COUNCIL®
Copyright © 2015 ICC. ALL RIGHTS RESERVED. Accessed by David Dammon on Jun 21, 2017 12:30:52 PM pursuant to License Agreement with ICC. No further reproduction or distribution authorized. ANY UNAUTHORIZED REPRODUCTION OR DISTRIBUTION IS A VIOLATION OF THE FEDERAL COPYRIGHT ACT AND THE LICENSE AGREEMENT, AND SUBJECT TO CIVIL AND CRIMINAL PENALTIES THEREUNDER.

One of the most common uses of light-transmitting plastic in interior signage applications is as the facing of internally illuminated or nonilluminated wall signs (sometimes referred to as "box" or "can" signs). Typical interior applications include tenant signage, building directories, promotional or advertising sign boxes and directional signage (other than exit signage).

2611.2 Aggregate area. The sign shall not exceed 20 percent of the wall area.

❖ The provisions of this section limit the maximum amount of wall area that may be covered by all plastic signs located on that wall, whereas Section 2611.3 governs the maximum permitted size of any individual sign. This limitation on the amount of wall area that can be covered by plastic signs is intended to minimize the potential for the spread of fire along a wall surface through involvement of the plastic signage.

2611.3 Maximum area. The sign shall not exceed 24 square feet (2.23 m^2).

❖ When applying the provisions of Sections 2611.2 and 2611.3, the most restrictive of each section must be applied. For example, if a single sign with the maximum area of 24 square feet (2 m^2) exceeds 20 percent of the wall area on which it is located, the area of the sign must be reduced to a size where the 20-percent limitation is not exceeded. Commentary Figures 2611.3(1) and 2611.3(2) give two examples of these provisions.

2611.4 Encasement. Edges and backs of the sign shall be fully encased in metal.

❖ The provisions of this section are intended to minimize the amount of surface that could be exposed to direct impingement by fire, and thus reduce the potential for ignition of the plastic.

SECTION 2612
PLASTIC COMPOSITES

2612.1 General. Plastic composites shall consist of either wood/plastic composites or plastic lumber. Plastic composites shall comply with the provisions of this code and with the additional requirements of Section 2612.

❖ This section contains minimum requirements for the use of plastic composites for exterior applications such as deck boards, stair treads, handrails and guardrail systems in buildings of Type VB construction.

Plastic composites can be plastic lumber or wood plastic composites. Both types of products are made of plastic materials with added fibrous materials to provide stiffness. There are some differences between the two, but they are relatively subtle. Wood plastic composites contain wood materials or cellulosic materials (normally over 50 percent) as the primary fiber that provides the stiffness. Plastic lumber materials contain primarily plastic (normally over 50 percent) and use a variety of materials to provide

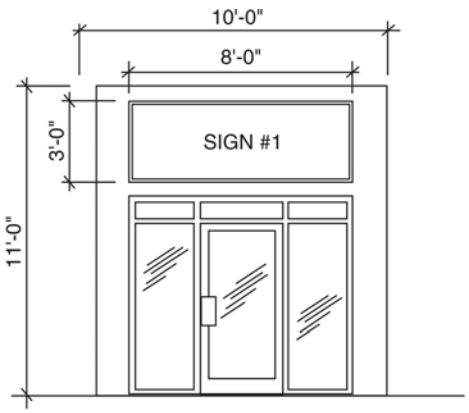

AREA OF SIGN #1 = 24 SQ. FT. (MAX. AREA PER SECTION 2611.3)
AGGREGATE AREA = 24 SQ. FT.

AREA OF WALL = 110 SQ. FT.
20% OF 110 SQ. FT. = 22 SQ. FT. (MAX. AREA PER SECTION 2611.2)
24 SQ. FT. ≤ 22 SQ. FT. ∴ AGGREGATE AREA OF SIGNS EXCEEDS AREA PERMITTED BY SECTION 2611.2

For SI: 1 inch = 25.4 mm, 1 foot = 304.8 mm,
1 square foot = 0.0929 m^2.

Figure 2611.3(1)
MAXIMUM AREA OF LIGHT-TRANSMITTING PLASTIC SIGNS—EXAMPLE 1

INTERNATIONAL CODE COUNCIL®
Copyright © 2015 ICC. ALL RIGHTS RESERVED. Accessed by David Dammon on Jun 21, 2017 12:30:52 PM pursuant to License Agreement with ICC. No further reproduction or distribution authorized. ANY UNAUTHORIZED REPRODUCTION OR DISTRIBUTION IS A VIOLATION OF THE FEDERAL COPYRIGHT ACT AND THE LICENSE AGREEMENT, AND SUBJECT TO CIVIL AND CRIMINAL PENALTIES THEREUNDER.

stiffness, often fiberglass. Specifications have been issued by ASTM for both types of plastic composite. The materials (and the specifications) fall under the jurisdictions of different technical committees. Committee D07 (on wood) issued ASTM D7032, Standard Specification for Establishing Performance Ratings for Wood-Plastic Composite Deck Boards and Guardrail Systems (Guards or Handrails), presently referenced both in the IRC and in the IWUIC.

Numerous plastic lumber decks are used throughout the country. The ICC Evaluation Services recognizes both types of materials under Acceptance Criteria AC 174, Acceptance Criteria for Deck Board Span Ratings and Guardrail Systems (Guards and Handrails).

2612.2 Labeling and identification. Packages and containers of plastic composites used in exterior applications shall bear a *label* showing the manufacturer's name, product identification and information sufficient to determine that the end use will comply with code requirements.

❖ A label is required on the packaging and containers of these products. Among other things, the label is required to identify the independent third-party agency (approved agency) that is responsible for inspecting the manufacture of the product to verify that it is being manufactured to meet minimum specifications.

2612.2.1 Performance levels. The label for plastic composites used in exterior applications as deck boards, stair treads, handrails and guards shall indicate the required performance levels and demonstrate compliance with the provisions of ASTM D7032.

❖ Specification ASTM D7032 requires the material to comply with several properties, which are considered essential for these types of products. They include flexural properties (ASTM D6109), Xenon-arc exposure (ASTM D2565), structural lumber grade classifications (ASTM D2915) and UV resistance in accordance with ASTM D6662.

2612.2.2 Loading. The label for plastic composites used in exterior applications as deck boards, stair treads, handrails and guards shall indicate the type and magnitude of the load determined in accordance with ASTM D7032.

❖ Specification ASTM D7032 requires the structural lumber grade classifications (ASTM D2915) to be determined. Information specific to the type and magnitude of the load determined shall be included on the product label.

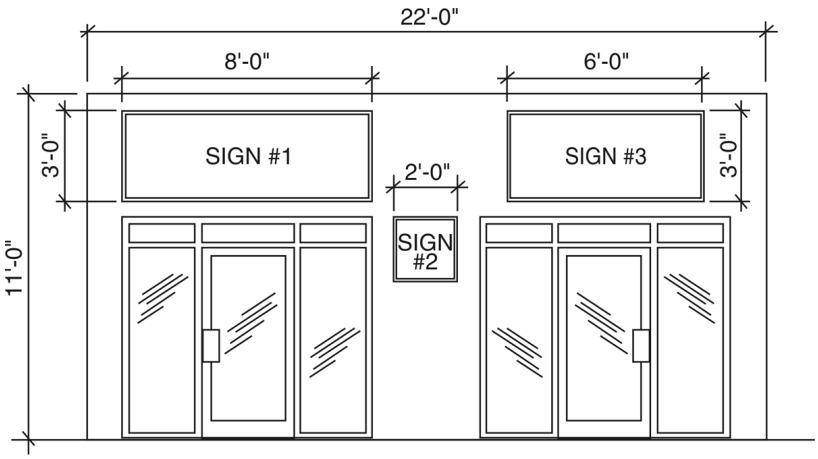

AREA OF SIGN #1 = 24 SQ. FT. (MAX. AREA PER SECTION 2611.3)
AREA OF SIGN #2 = 4 SQ. FT.
AREA OF SIGN #3 = 18 SQ. FT.
AGGREGATE AREA = 46 SQ. FT.

AREA OF WALL = 242 SQ. FT.
20% OF 242 SQ. FT. = 48.4 SQ. FT. (MAX. AREA PER SECTION 2611.2)
46 SQ. FT. $\leq$ 48.4 SQ. FT. $\therefore$ AGGREGATE AREA OF SIGNS COMPLIES WITH SECTION 2611.2

For SI: 1 inch = 25.4 mm, 1 foot = 304.8 mm,
1 square foot = 0.0929 m^2.

Figure 2611.3(2)
MAXIMUM AREA OF LIGHT-TRANSMITTING PLASTIC SIGNS—EXAMPLE 2

INTERNATIONAL CODE COUNCIL®
Copyright © 2015 ICC. ALL RIGHTS RESERVED. Accessed by David Dammon on Jun 21, 2017 12:30:52 PM pursuant to License Agreement with ICC. No further reproduction or distribution authorized. ANY UNAUTHORIZED REPRODUCTION OR DISTRIBUTION IS A VIOLATION OF THE FEDERAL COPYRIGHT ACT AND THE LICENSE AGREEMENT, AND SUBJECT TO CIVIL AND CRIMINAL PENALTIES THEREUNDER.

2612.3 Flame spread index. Plastic composites shall exhibit a flame spread index not exceeding 200 when tested in accordance with ASTM E84 or UL 723 with the test specimen remaining in place during the test.

Exception: Materials determined to be noncombustible in accordance with Section 703.5.

❖ As with other combustible materials addressed in this code, the spread of flame is a concern. This section limits the flame spread to a maximum of 200 when tested in accordance with the referenced test methods. The exception appropriately allows for noncombustible materials without flame spread testing.

2612.4 Termite and decay resistance. Plastic composites containing wood, cellulosic or any other biodegradable materials shall be termite and decay resistant as determined in accordance with ASTM D7032.

❖ Specification ASTM D7032 requires the material to comply with bio deterioration tests (decay, fungi and termite resistance) if the material contains wood, cellulosic or other biodegradable materials. Resistance to termites is assessed via ASTM D3345 or AWPA E1 and resistance to fungal decay is in accordance with ASTM D1413, ASTM D2017 or AWPA E10.

2612.5 Construction requirements. Plastic composites shall be permitted to be used as exterior deck boards, stair treads, handrails and guards in buildings of Type VB construction.

❖ Plastic composites are limited to use on buildings of Type VB construction. This construction type allows for the use of many combustible elements of building construction.

2612.5.1 Span rating. Plastic composites used as exterior deck boards shall have a span rating determined in accordance with ASTM D7032.

❖ Span ratings for deck boards must be part of the product label that is required by Section 2612.2. Typical spans for these types of deck boards range from 12 to 24 inches.

2612.6 Plastic composite decking, handrails and guards. Plastic composite decking, handrails and guards shall be installed in accordance with this code and the manufacturer's instructions.

❖ Installation of these products is typically contained in the manufacturer's instructions, whether printed or electronically available. The installation usually reflects the tested assemblies that determined the allowable loading conditions of the specific application, such as a simple deck span and typical guard and handrail segment.

SECTION 2613
FIBER-REINFORCED POLYMER

2613.1 General. The provisions of this section shall govern the requirements and uses of fiber-reinforced polymer in and on buildings and structures.

❖ Fiber-reinforced polymer (FRP) composites are materials consisting of reinforcing fibers (natural or man-made) impregnated with a polymer (thermoset or thermoplastic) and are then molded and hardened into the intended shape. The reinforcement fibers (such as boron, glass, carbon, aramid) impart strength and stiffness to the composite, while the polymer resin matrix binds the fibers, providing bulk stiffness and protecting them from environmental exposure. Common terms associated with FRP composites include fiberglass or fiber-reinforced plastic, GFRP (glass fiber) or CFRP (carbon fiber).

Since the mid-1950s, FRP has been adapted to building and construction uses as opaque and translucent (light-transmitting) sheet panels; space frame skin structures; structural forms for concrete; sandwich panel structures; and, most recently, a variety of load-bearing and nonload-bearing components. Since the early 1990s, FRP composites have been used to externally strengthen concrete and masonry buildings, as well as to provide seismic strengthening to beams,columns, slabs and walls.

Typical FRP architectural products are manufactured in an open mold. Additives and various fillers incorporated in the composites enable fabricators to provide finished products with special properties, such as resistance to ultraviolet radiation, enhanced fire performance, corrosion resistance and color.

Principal markets served by the composites industry are architectural/construction, such as replication of historic building ornamentation; bathware; marine; automotive/transportation; corrosion-resistant products (tanks and piping); and many others. These products are increasingly being used as building materials and responsible code guidance is imperative.

2613.2 Labeling and identification. Packages and containers of fiber-reinforced polymer and their components delivered to the job site shall bear the *label* of an *approved agency* showing the manufacturer's name, product listing, product identification and information sufficient to determine that the end use will comply with the code requirements.

❖ FRP is required to be labeled and identified in a manner similar to the existing requirements for foam plastic insulation. This requirement will provide assurance to the building official that the product in the field is the same as that tested for compliance.

INTERNATIONAL CODE COUNCIL®
Copyright © 2015 ICC. ALL RIGHTS RESERVED. Accessed by David Dammon on Jun 21, 2017 12:30:52 PM pursuant to License Agreement with ICC. No further reproduction or distribution authorized. ANY UNAUTHORIZED REPRODUCTION OR DISTRIBUTION IS A VIOLATION OF THE FEDERAL COPYRIGHT ACT AND THE LICENSE AGREEMENT, AND SUBJECT TO CIVIL AND CRIMINAL PENALTIES THEREUNDER.

2613.3 Interior finishes. Fiber-reinforced polymer used as *interior finishes, decorative materials or trim* shall comply with Chapter 8.

❖ This section is intended to point the user to Chapter 8 for additional requirements for use of FRP as an interior finish. Section 2612 is not intended to be the sole location in the code for requirements for FRP. FRP must meet the requirements of the code for specific applications.

2613.3.1 Foam plastic cores. Fiber-reinforced polymer used as interior finish and which contains foam plastic cores shall comply with Chapter 8 and this chapter.

❖ Some FRPs may be constructed as sandwich panels. These panels would have FRP on both sides of a core material. The core material provides additional support to the FRP system. Typical core materials can be, but are not limited to, balsa wood, plywood or even foam-plastic materials. The definitions for "Fiber-reinforced polymer" addresses these types of materials.

When foam plastic is used as a core material and the resultant FRP is used as interior finish, the resultant FRP must comply with the requirements of Chapters 8 and 26.

Since foam plastic is regulated by this chapter, it is appropriate that FRP containing foam plastic cores also be regulated by this chapter.

2613.4 Light-transmitting materials. Fiber-reinforced polymer used as light-transmitting materials shall comply with Sections 2606 through 2611 as required for the specific application.

❖ This section is intended to point the user to Section 2606 for additional requirements for use of FRP as a light-transmitting plastic element. Section 2612 is not intended to be the sole location in the code for requirements for FRP. FRP must meet the requirements of the code for specific applications.

2613.5 Exterior use. Fiber-reinforced polymer shall be permitted to be installed on the *exterior walls* of buildings of any type of construction when such polymers meet the requirements of Section 2603.5. Fireblocking shall be installed in accordance with Section 718.

Exceptions:

1. Compliance with Section 2603.5 is not required when all of the following conditions are met:
   1.1. The fiber-reinforced polymer shall not exceed an aggregate total of 20 percent of the area of the specific wall to which it is attached, and no single architectural element shall exceed 10 percent of the area of the specific wall to which it is attached, and no contiguous set of architectural elements shall exceed 10 percent of the area of the specific wall to which they are attached.
   1.2. The fiber-reinforced polymer shall have a flame spread index of 25 or less. The flame spread index requirement shall not be required for coatings or paints having a thickness of less than 0.036 inch (0.9 mm) that are applied directly to the surface of the fiber-reinforced polymer.
   1.3. Fireblocking complying with Section 718.2.6 shall be installed.
   1.4. The fiber-reinforced polymer shall be installed directly to a noncombustible substrate or be separated from the exterior wall by one of the following materials: corrosion-resistant steel having a minimum base metal thickness of 0.016 inch (0.41 mm) at any point, aluminum having a minimum thickness of 0.019 inch (0.5 mm) or other approved noncombustible material.
2. Compliance with Section 2603.5 is not required when the fiber-reinforced polymer is installed on buildings that are 40 feet (12 190 mm) or less above grade when all of the following conditions are met:
   2.1. The fiber-reinforced polymer shall meet the requirements of Section 1406.2.
   2.2. Where the fire separation distance is 5 feet (1524 mm) or less, the area of the fiber-reinforced polymer shall not exceed 10 percent of the wall area. Where the fire separation distance is greater than 5 feet (1524 mm), there shall be no limit on the area of the *exterior wall* coverage using fiber-reinforced polymer.
   2.3. The fiber-reinforced polymer shall have a flame spread index of 200 or less. The flame spread index requirements do not apply to coatings or paints having a thickness of less than 0.036 inch (0.9 mm) that are applied directly to the surface of the fiber-reinforced polymer.
   2.4. Fireblocking complying with Section 718.2.6 shall be installed.

❖ Section 2613.5 provides requirements that specifically address the use of FRP on the exterior of buildings. This section allows FRP to be used on the exterior of buildings of all types of construction when it meets specific requirements.

The general charging requirements are that FRP meets the requirements of Section 2603.5 and the requirements for fireblocking in accordance with Section 717. Section 2603.5 addresses the use of foam plastics on exterior walls of all types of construction. By using the requirements in this section, FRP must meet tests such as NFPA 285 (multistory fire test), NFPA 268 (radiant heat test) and have Class A flame spread and smoke-developed indexes, as well as

INTERNATIONAL CODE COUNCIL®
Copyright © 2015 ICC. ALL RIGHTS RESERVED. Accessed by David Dammon on Jun 21, 2017 12:30:52 PM pursuant to License Agreement with ICC. No further reproduction or distribution authorized. ANY UNAUTHORIZED REPRODUCTION OR DISTRIBUTION IS A VIOLATION OF THE FEDERAL COPYRIGHT ACT AND THE LICENSE AGREEMENT, AND SUBJECT TO CIVIL AND CRIMINAL PENALTIES THEREUNDER.

meeting other requirements specified in Section 2603.5. As with foam plastics, if a material can meet these requirements, it can be used as an exterior wall covering on buildings of any type of construction.

There are two exceptions to the general requirements. Exception 1 is for when FRP is used as building ornamentation, such as cornices. This set of requirements limits the area of the FRP and its flame spread index based on the percentage of the material on the wall. The area restrictions are based on potential applications and the philosophy that when larger amounts of materials are installed, the fire properties shall be more restrictive. Requirements are also provided whereby FRP shall be installed over noncombustible surfaces where fireblocking is required. This set of requirements provides ensurances that the materials to be used in this application are appropriate for use and do not create any undue hazard.

Exception 2 recognizes that FRP can be used on buildings up to a height of 40 feet (12 190 mm) in a manner consistent with other combustible exterior wall coverings. This is primarily because of the difficulties associated with fire-fighter access to higher portions of a building and to minimize potential injury from flying brands at high elevation. Combustible architectural trim and exterior veneers are permitted below the 40-foot (12 192 mm) height even when the overall building height exceeds 40 feet (12 192 mm). Combustible trim and veneers are also permitted on buildings of Type V construction. It should be noted that although Table 503 limits buildings of Type V construction to 40 feet (12 192 mm) in height, such buildings may be increased in height when protected with an automatic sprinkler system in accordance with Section 504.2.

Additionally, limits with respect to fire-separation distance are also provided in a manner similar to that for metal composite material panels. Further requirements for fireblocking have also been included.

SECTION 2614
REFLECTIVE PLASTIC CORE INSULATION

2614.1 General. The provisions of this section shall govern the requirements and uses of reflective plastic core insulation in buildings and structures. Reflective plastic core insulation shall comply with the requirements of Section 2614 and of one of the following: Section 2614.3 or 2614.4.

❖ The definition of "Reflective plastic core insulation" is given in Section 202. As stated, it is: "An insulation material less than 0.5-inch (12.7 mm) thick with at least one exterior low emittance surface and a core material containing voids or cells."

There are a number of reflective insulation materials made using "bubble pack" plastic as the core. This is the same material that is used as a packing material for fragile items.

The current definition of "Foam plastic" does not include bubble pack type materials because the "bubbles" in the materials are not formed with a foaming agent, but are mechanically formed using a stamping process. From a fire performance standpoint, these materials are predominantly plastic containing voids filled with air that support combustion.

2614.2 Identification. Packages and containers of reflective plastic core insulation delivered to the job site shall show the manufacturer's or supplier's name, product identification and information sufficient to determine that the end use will comply with the code requirements.

❖ Unlike foam plastics, the identification required on reflective plastic core insulation is a manufacturer's self-certification and not a third-party label.

2614.3 Surface-burning characteristics. Reflective plastic core insulation shall have a flame spread index of not more than 25 and a smoke-developed index of not more than 450 when tested in accordance with ASTM E84 or UL 723. The reflective plastic core insulation shall be tested at the maximum thickness intended for use. Test specimen preparation and mounting shall be in accordance with ASTM E2599.

❖ As with other plastic materials, reflective plastic core insulation is required to be tested for flame spread and smoke-developed indexes. However, the traditional method of testing reflective plastic core foil insulation in the ASTM E84 test (using chicken wire or poultry netting and rods) produces misleading results, with the serious potential for leading to severe fires. Testing reflective plastic core foil insulation with the ASTM E84 test using chicken wire and rods suggests that the reflective plastic core foil insulation is safe and meets a flame spread index of 25 or less. In fact, when reflective plastic core foil insulation is tested in a more realistic way, with fasteners, the flame spread index of some materials can far exceed 25. The referenced test standard, ASTM E2599, was specifically developed as the test specimen preparation and mounting method for reflective insulation materials when using ASTM E84 or UL 723.

2614.4 Room corner test heat release. Reflective plastic core insulation shall comply with the acceptance criteria of Section 803.1.2.1 when tested in accordance with NFPA 286 or UL 1715 in the manner intended for use and at the maximum thickness intended for use.

❖ To properly evaluate the flaming, flashover, heat release rate and smoke release characteristics of the reflective plastic core insulation, testing in accordance with NFPA 286 or UL 1715 is required.

Bibliography

The following resource materials were used in the preparation of the commentary for this chapter of the code.

ANSI/DASMA 107-97(R 2012), *Room Fire Test Standard for Garage Doors Using Foam Plastic Insulation*. Cleveland, OH: Door and Access Systems Manufacturers Association, 2012.

INTERNATIONAL CODE COUNCIL®
Copyright © 2015 ICC. ALL RIGHTS RESERVED. Accessed by David Dammon on Jun 21, 2017 12:30:52 PM pursuant to License Agreement with ICC. No further reproduction or distribution authorized. ANY UNAUTHORIZED REPRODUCTION OR DISTRIBUTION IS A VIOLATION OF THE FEDERAL COPYRIGHT ACT AND THE LICENSE AGREEMENT, AND SUBJECT TO CIVIL AND CRIMINAL PENALTIES THEREUNDER.

ASTM D635-10, *Standard Test Method for Rate of Burning and/or Extent and Time of Burning of Plastics in a Horizontal Position*. West Conshohocken, PA: ASTM International, 2010.

ASTM E84-2013A, *Test Methods for Surface-burning Characteristics of Building Materials*. West Conshohocken, PA: ASTM International, 2013.

ASTM E108-2011, *Test Methods for Fire Tests of Roof Coverings*. West Conshohocken, PA: ASTM International, 2011.

ASTM E119-2012A, *Test Methods for Fire Tests of Building Construction and Materials*. West Conshohocken, PA: ASTM International, 2012.

NFPA 268-12, *Standard Test Method for Determining Ignitability of Exterior Wall Assemblies Using a Radiant Heat Energy Source*. Quincy, MA: National Fire Protection Association, 2012.

UL 263-11, *Standard for Fire Test of Building Construction and Materials*. Northbrook, IL: Underwriters Laboratories, Inc., 2011.

UL 790-04, *Standard Test Methods for Fire Tests of Roof Coverings*. Northbrook, IL: Underwriters Laboratories, Inc., 2004.

INTERNATIONAL CODE COUNCIL®

Copyright © 2015 ICC. ALL RIGHTS RESERVED. Accessed by David Dammon on Jun 21, 2017 12:30:52 PM pursuant to License Agreement with ICC. No further reproduction or distribution authorized. ANY UNAUTHORIZED REPRODUCTION OR DISTRIBUTION IS A VIOLATION OF THE FEDERAL COPYRIGHT ACT AND THE LICENSE AGREEMENT, AND SUBJECT TO CIVIL AND CRIMINAL PENALTIES THEREUNDER.

Chapter 27: Electrical

General Comments

This chapter references National Fire Protection Association (NFPA) 70 for all requirements pertaining to electrical installations and contains specific provisions for emergency and standby power. NFPA 70 regulates the design, construction, installation, operation, maintenance and use of electrical systems and equipment. Except for the scope section, this chapter is devoted to establishing where emergency and standby power systems are required.

Purpose

Since electrical systems and components are an integral part of almost all structures, it is necessary for the code to address them to protect life, limb, health and property. In addition to general lighting and power needs, structures depend on electricity for operation of many of the life safety systems required by the code, including fire alarm, smoke control, exhaust, fire suppression, communication and fire command systems. Electricity is also depended upon for elements of egress systems, including elevators, exit signage, egress path illumination, power doors, stair pressurization and smokeproof enclosures.

SECTION 2701 GENERAL

2701.1 Scope. This chapter governs the electrical components, equipment and systems used in buildings and structures covered by this code. Electrical components, equipment and systems shall be designed and constructed in accordance with the provisions of NFPA 70.

❖ Chapter 27 regulates the electrical portions of buildings and structures that are included in the scope of the code. Regulation is accomplished by referencing NFPA 70.

SECTION 2702 EMERGENCY AND STANDBY POWER SYSTEMS

[F] 2702.1 Installation. Emergency power systems and standby power systems shall comply with Sections 2702.1.1 through 2702.1.7.

❖ This section states that all required emergency and standby power comply with various subsections. These subsections provide more detailed direction on how such systems are required to be installed. These provisions are consistent with the standards referenced by this code and provide the basic information to the code official.

[F] 2702.1.1 Stationary generators. Stationary emergency and standby power generators required by this code shall be listed in accordance with UL 2200.

❖ UL 2200 was developed at the request of building officials to provide a standard to evaluate the safety and reliability of stationary engine generators. UL 2200 establishes a basis for this evaluation.

[F] 2702.1.2 Electrical. Emergency power systems and standby power systems required by this code or the *International Fire Code* shall be installed in accordance with the *International Fire Code*, NFPA 70, NFPA 110 and NFPA 111.

❖ Emergency power systems are intended to provide electrical power for life safety systems, such as egress illumination, emergency communications and processes involving the handling and use of hazardous materials. In other words, emergency power is required where the loss of normal power would endanger occupants. Such systems are covered in Article 700 of NFPA 70 and one of their key features is the required response time of 10 seconds or less. The time between loss of normal power and the provision of emergency power must be kept very short to prevent putting occupants at risk. This is especially important during an emergency event, such as a building fire, but is important at all times to prevent occupant panic, which could happen if a crowded building is suddenly plunged into darkness.

Standby power systems are covered in Article 701 of NFPA 70 and are intended to provide electrical power for loads not as critical (in terms of transfer time) as those requiring emergency power. Standby power loads include smoke control systems; certain elevators; certain hazardous material operations; smokeproof enclosure systems; illumination; heating, ventilating and air-conditioning (HVAC) systems; refrigeration; and sewage pumps. Standby power systems must provide power within 60 seconds of failure of primary power.

Sources of power for emergency power systems (NFPA 70, Section 701-11) include storage batteries, generators, uninterruptible power supplies and separate services. Sources of power for standby systems include those allowed for emergency systems plus a source that is taken from a point of connection ahead

INTERNATIONAL CODE COUNCIL®
Copyright © 2015 ICC. ALL RIGHTS RESERVED. Accessed by David Dammon on Jun 21, 2017 12:30:52 PM pursuant to License Agreement with ICC. No further reproduction or distribution authorized. ANY UNAUTHORIZED REPRODUCTION OR DISTRIBUTION IS A VIOLATION OF THE FEDERAL COPYRIGHT ACT AND THE LICENSE AGREEMENT, AND SUBJECT TO CIVIL AND CRIMINAL PENALTIES THEREUNDER.

of the normal service disconnecting means.

NFPA 110 addresses the performance criteria and "nuts and bolts" of emergency and standby power systems and separates them into types, classes and levels relative to maximum response time, minimum required operation time and life safety importance factor, respectively. NFPA 111 addresses stored emergency power supply systems and is similar in coverage to NFPA 110. Stored energy systems typically rely on batteries that store chemical energy.

[F] 2702.1.3 Load transfer. Emergency power systems shall automatically provide secondary power within 10 seconds after primary power is lost, unless specified otherwise in this code. Standby power systems shall automatically provide secondary power within 60 seconds after primary power is lost, unless specified otherwise in this code.

❖ These provisions are consistent with NFPA 70 and provide clarity to the code official regarding one of the key differences between standby and emergency power. This was discussed in more detail in the commentary to Section 2702.1.2.

[F] 2702.1.4 Load duration. Emergency power systems and standby power systems shall be designed to provide the required power for a minimum duration of 2 hours without being refueled or recharged, unless specified otherwise in this code.

❖ To design emergency and standby power systems properly, the minimum load duration must be known. This section provides a default minimum 2-hour duration for systems unless another load duration is specified. For instance, emergency responder radio coverage systems are required to provide standby power for 24 hours.

[F] 2702.1.5 Uninterruptable power source. An uninterrupted source of power shall be provided for equipment when required by the manufacturer's instructions, the listing, this code or applicable referenced standards.

❖ In some cases, an uninterruptable power supply is required. Uninterruptible power supplies differ from emergency and standby in that there is no transfer time allowed. This is necessary for equipment with volatile memories or for equipment that is generally sensitive to any loss of power. Uninterruptible power sources must be provided if required by the manufacturer's instructions, the listing, the code, or applicable referenced standards, such as NFPA 72.

[F] 2702.1.6 Interchangeability. Emergency power systems shall be an acceptable alternative for installations that require standby power systems.

❖ An emergency power system is more restrictive than a standby power system primarily due to the faster transfer time. This section simply provides the code language that would specifically permit such a substitution. It will simply result in a faster-reacting system, which will only improve performance.

[F] 2702.1.7 Group I-2 occupancies. In Group I-2 occupancies, in new construction or where the building is substantially damaged, where an essential electrical system is located in flood hazard areas established in Section 1612.3, the system shall be located and installed in accordance with ASCE 24.

❖ This provision makes a necessary link to ASCE 24 for Group I-2 essential electrical systems. There have been losses of such systems due to flooding where the standard was not properly addressed. These types of facilities need to have continued operation during such events. Hurricane Katrina was a good example of such power loss during flooding. This will ensure that new Group I-2 systems, and replacement systems for those that have been substantially damaged by flood, will be installed correctly.

[F] 2702.2 Where required. Emergency and standby power systems shall be provided where required by Sections 2702.2.1 through 2702.2.16.

❖ Fires can cause the loss of utility power as a result of damage to equipment and wiring or fire-fighter action to shut off power to eliminate sources of ignition and danger to personnel.

Sections 2702.2.1 through 2702.2.16 dictate where emergency and standby power systems are required based upon the nature of the electrical loads. Note that emergency and standby power systems have different characteristics, and subsequent sections will require one or the other (see commentary, Section 2702.1).

[F] 2702.2.1 Emergency alarm systems. Emergency power shall be provided for emergency alarm systems as required by Section 415.5.

❖ Emergency alarm systems are systems that need to be available at all times and require the use of an emergency power system. See commentary for Section 414.5.2.

[F] 2702.2.2 Elevators and platform lifts. Standby power shall be provided for elevators and platform lifts as required in Sections 1009.4, 1009.5, 3003.1, 3007.8 and 3008.8.

❖ Elevators can be a component of an accessible means of egress in accordance with Section 1009.4 and must, therefore, be dependable at all times. Without backup power, an elevator could be a dead end for someone with physical disabilities who is trying to egress a building (see commentary, Section 1009.4).

Platform lifts are allowed to be used as part of an accessible means of egress only when they are allowed as part of an accessible route, in accordance with Section 1109.8, Items 1 through 10. When this is the case, the platform lift could be a dead end for someone with physical disabilities if power to the platform lift has been lost; therefore, standby power is required, in accordance with Section 2702 or ASME A18.1.

In addition to accessible means of egress, eleva-

INTERNATIONAL CODE COUNCIL®
Copyright © 2015 ICC. ALL RIGHTS RESERVED. Accessed by David Dammon on Jun 21, 2017 12:30:52 PM pursuant to License Agreement with ICC. No further reproduction or distribution authorized. ANY UNAUTHORIZED REPRODUCTION OR DISTRIBUTION IS A VIOLATION OF THE FEDERAL COPYRIGHT ACT AND THE LICENSE AGREEMENT, AND SUBJECT TO CIVIL AND CRIMINAL PENALTIES THEREUNDER.

tors require standby power for several other reasons. Section 403.4.8.3 related to high-rise buildings requires basic standby power in accordance with Section 3003.1 for elevators. Section 3003.1 provides requirements for standby power that allows the elevators to transfer standby power to the various elevators to bring occupants to the lobby as a result of a loss of power. Further, Section 403.4.8.3 references Sections 3007.8 and 3008.8 for additional standby power requirements. The standby power requirements for fire service access elevators and occupant evacuation elevators are more restrictive as those elevators need to be available for evacuation or use by the fire department (see commentary, Sections 3003.1, 3007.8 and 3008.8).

[F] 2702.2.3 Emergency responder radio coverage systems. Standby power shall be provided for emergency responder radio coverage systems required in Section 915 and the *International Fire Code*. The standby power supply shall be capable of operating the emergency responder radio coverage system for a duration of not less than 24 hours.

❖ Loss of power during an emergency is likely and the fire department and emergency responders will require the use of the radios for an extended amount of time in many cases. This section along with Section 510.4.2.3 of the IFC require that the power be available for 24 hours.

[F] 2702.2.4 Emergency voice/alarm communication systems. Emergency power shall be provided for emergency voice/alarm communication systems as required in Section 907.5.2.2.5. The system shall be capable of powering the required load for a duration of not less than 24 hours, as required in NFPA 72.

❖ Emergency voice/alarm communication systems are required to include an emergency power source in Section 907.5.2.2.5. Group A occupancies and covered malls are two of the many occupancies and building types that require emergency voice/alarm communication systems.

[F] 2702.2.5 Exit signs. Emergency power shall be provided for exit signs as required in Section 1013.6.3. The system shall be capable of powering the required load for a duration of not less than 90 minutes.

❖ Emergency power is warranted for exit signage illumination since guiding occupants to the exits is certainly a life safety function (see commentary, Section 1013.6.3).

[F] 2702.2.6 Group I-2 occupancies. Essential electrical systems for Group I-2 occupancies shall be in accordance with Section 407.10.

❖ Emergency power systems are required to comply with NFPA 99 by the Center for Medicare/Medicaid Services (CMS) in order for a facility to receive federal reimbursement funds. This requirement provides compliance with NFPA 99 and will ensure the required power systems are provided in Group I-2 occupancies.

[F] 2702.2.7 Group I-3 occupancies. Emergency power shall be provided for power-operated doors and locks in Group I-3 occupancies as required in Section 408.4.2.

❖ In an emergency, occupants in detention and correctional facilities are at the mercy of door-locking mechanisms and those who control such locks; thus, emergency power is warranted (see commentary, Section 408.4.2).

[F] 2702.2.8 Hazardous materials. Emergency or standby power shall be provided in occupancies with hazardous materials where required by the *International Fire Code*.

❖ Where hazardous materials and processes are housed, occupant safety could be dependent upon one or more ventilation, treatment, temperature control, alarm and detection system(s). Thus, emergency or standby power is required, depending upon the load (see commentary, Section 414.5.2).

[F] 2702.2.9 High-rise buildings. Emergency and standby power shall be provided in high-rise buildings as required in Sections 403.4.8.

❖ Occupants of high-rise buildings are at greater risk due to longer egress travel times, lack of fire-fighter access and the danger of vertical spread of fire and upward smoke migration. In accordance with this chapter and Section 403.4.8, some loads in a high-rise building will require standby power and some will require emergency power (see commentary, Section 403.4.8).

[F] 2702.2.10 Horizontal sliding doors. Standby power shall be provided for horizontal sliding doors as required in Section 1010.1.4.3. The standby power supply shall have a capacity to operate not fewer than 50 closing cycles of the door.

❖ Power-operated doors could be an obstruction to egress if the primary power supply fails. Therefore, standby power is required to maintain door operation (see commentary, Section 1010.1.4.3).

[F] 2702.2.11 Means of egress illumination. Emergency power shall be provided for means of egress illumination as required in Section 1008.3. The system shall be capable of powering the required load for a duration of not less than 90 minutes.

❖ The path of travel to all exits must be illuminated to guide occupants and allow for safe egress. Therefore, emergency power for illumination is warranted (see commentary, Section 1008.3).

[F] 2702.2.12 Membrane structures. Standby power shall be provided for auxiliary inflation systems in permanent membrane structures as required in Section 3102.8.2. Standby power shall be provided for a duration of not less than 4 hours. Auxiliary inflation systems in temporary air-supported and air-inflated membrane structures shall be provided in accordance with Section 3103.10.4 of the *International Fire Code.*

❖ Air-supported and air-inflated structures could collapse on occupants if inflation systems fail. Section

INTERNATIONAL CODE COUNCIL®
Copyright © 2015 ICC. ALL RIGHTS RESERVED. Accessed by David Dammon on Jun 21, 2017 12:30:52 PM pursuant to License Agreement with ICC. No further reproduction or distribution authorized. ANY UNAUTHORIZED REPRODUCTION OR DISTRIBUTION IS A VIOLATION OF THE FEDERAL COPYRIGHT ACT AND THE LICENSE AGREEMENT, AND SUBJECT TO CIVIL AND CRIMINAL PENALTIES THEREUNDER.

3102.8.1.1 requires redundant inflation equipment that would be as worthless as the primary system in the event of power failure; therefore, standby power is required. Emergency power is required for all exit signs in temporary tents and membrane structures (see commentary, Section 3102.8.2).

[F] 2702.2.13 Pyrophoric materials. Emergency power shall be provided for occupancies with silane gas in accordance with the *International Fire Code*.

❖ See the commentary to Section 2702.2.14 and Chapter 64 of the IFC for additional information.

[F] 2702.2.14 Semiconductor fabrication facilities. Emergency power shall be provided for semiconductor fabrication facilities as required in Section 415.11.10.

❖ Where hazardous materials are utilized, such as in hazardous production materials (HPM) facilities, many systems are depended upon to protect the occupants from exposure to hazardous materials, including exhaust/ventilation systems, gas cabinet exhaust systems, gas detection systems, alarm systems and suppression systems. Loss of power would endanger the occupants; thus, emergency power is essential for these occupancies (see commentary, Sections 415.11.10 and 415.11.10.1).

[F] 2702.2.15 Smoke control systems. Standby power shall be provided for smoke control systems as required in Sections 404.7, 909.11, 909.20.6.2 and 909.21.5.

❖ Smoke control systems are intended to maintain a tenable environment in a building to allow the occupants ample time to evacuate or relocate to protected areas. As such, smoke control systems are life safety systems and must be dependable (see commentary, Section 909.11). Such systems are more likely to be needed during a power loss than typical building systems such as HVAC.

[F] 2702.2.16 Underground buildings. Emergency and standby power shall be provided in underground buildings as required in Section 405.

❖ In the event of power failure, occupants could be underground without light, ventilation and the numerous required life safety systems. These structures are analogous to inverted high-rise buildings. Section 405.8.1 requires standby power for specified loads while Section 405.8.2 requires emergency power for specified loads (see commentary, Sections 405.8.1 and 405.8.2).

[F] 2702.3 Critical circuits. Cables used for survivability of required critical circuits shall be listed in accordance with UL 2196. Electrical circuit protective systems shall be installed in accordance with their listing requirements.

❖ The standard referenced, UL 2196, is the ANSI-approved standard for tests of fire-resistive cables. NFPA 20 (fire pumps) and NFPA 72 (fire alarm) include selective survivability requirements to ensure integrity of certain critical circuits. NFPA 70 does not specify the applicable standard within the mandatory provisions of the code, but recognizes electrical circuit protective systems as an alternate to listed cables. An electrical circuit protective system is a field assembly of components that must be installed according to the listing requirements and manufacturer's instructions in order to maintain the listing for the system. There are more than two dozen electrical circuit protective systems listed in the UL *Fire Resistance Directory*.

[F] 2702.4 Maintenance. Emergency and standby power systems shall be maintained and tested in accordance with the *International Fire Code*.

❖ Emergency and standby power systems must be maintained, serviced and tested to ensure dependability (see commentary, Section 604 of the IFC).

INTERNATIONAL CODE COUNCIL®
Copyright © 2015 ICC. ALL RIGHTS RESERVED. Accessed by David Dammon on Jun 21, 2017 12:30:52 PM pursuant to License Agreement with ICC. No further reproduction or distribution authorized. ANY UNAUTHORIZED REPRODUCTION OR DISTRIBUTION IS A VIOLATION OF THE FEDERAL COPYRIGHT ACT AND THE LICENSE AGREEMENT, AND SUBJECT TO CIVIL AND CRIMINAL PENALTIES THEREUNDER.

Chapter 28: Mechanical Systems

General Comments

Chapter 28 provides for the approval, installation, construction, inspection, operation and maintenance of all mechanical appliances, equipment and systems by direct reference to the *International Mechanical Code*® (IMC®) and the *International Fuel Gas Code*® (IFGC®). All mechanical equipment and appliances, other than gas-fired equipment and appliances, must comply with the provisions of the IMC. Fuel-gas piping, gas-fired appliances and gas-fired appliance venting must comply with the IFGC.

Purpose

The purpose of Chapter 28 is to verify that mechanical equipment, appliances and mechanical systems are regulated with respect to design, construction, installation, inspection and maintenance. This chapter references the IMC and IFGC. This eliminates the need to duplicate the text of those codes and utilizes the performance and specification criteria of those codes as the basis for regulation of the construction, inspection and maintenance of all mechanical and fuel gas equipment, appliances and systems.

While this chapter only consists of references to other chapters and codes, it is necessary since almost all newly constructed buildings and structures contain mechanical equipment, appliances and systems. Without this chapter, a necessary link between the code and the IMC and IFGC would not exist.

SECTION 2801 GENERAL

[M] 2801.1 Scope. Mechanical appliances, equipment and systems shall be constructed, installed and maintained in accordance with the *International Mechanical Code* and the *International Fuel Gas Code*. Masonry chimneys, fireplaces and barbecues shall comply with the *International Mechanical Code* and Chapter 21 of this code.

❖ The requirements for all mechanical systems are governed by this chapter. This chapter does not contain any requirements for mechanical equipment, appliances and systems; instead it references the IMC and IFGC. Those two codes, along with 12 others including the *International Building Code*® (IBC®), constitute the 2015 editions of the *International Codes*® (I-Codes®).

In the process of producing the code, it was considered unnecessary to include mechanical equipment, appliances and system provisions, since such provisions would duplicate and possibly conflict with those of the IMC or IFGC. Since most newly constructed buildings contain mechanical equipment, appliances and systems, this chapter is necessary to reference the IMC and IFGC and tie them together with the code.

The IMC and IFGC work together to regulate all mechanical systems. Therefore, whether designing the mechanical system for a building or enforcing the provisions of the code that deal with mechanical systems, both the IMC and IFGC will be required.

The IMC and IFGC are complete codes in themselves, and set forth necessary administrative and enforcement requirements, as well as the requirements for installation, construction, inspection and maintenance of mechanical equipment, appliances and systems. The IMC regulates all aspects of mechanical systems, including: air distribution systems and ductwork; boilers and hydronic systems; exhaust systems; fuel-oil piping systems; combustion air requirements; chimneys and vents; ventilation air requirements; refrigeration systems; solar-powered systems; and specific appliances and equipment. The IFGC regulates all aspects of fuel-gas piping systems, fuel-gas utilization equipment and related accessories, including: combustion air requirements for gas appliances; chimneys and vents for gas appliances; fuel-gas piping; and specific gas appliances and gas equipment.

A key component of the IMC and IFGC is Chapter 3 of both codes, which requires all mechanical equipment and appliances to be listed and labeled to the standard or standards relevant to that equipment or appliance (see Commentary Figure 2801.1).

Another important element of the IMC and IFGC is a set of unique definitions found in Chapter 2 of both codes. These definitions supersede any others with respect to mechanical and gas systems. Especially noteworthy is the definition of "Noncombustible material" in the IMC, which does not include composite materials as provided for in Section 703.5.2 of this code. In the context of the IMC, such composite materials are considered to be combustible.

INTERNATIONAL CODE COUNCIL®
Copyright © 2015 ICC. ALL RIGHTS RESERVED. Accessed by David Dammon on Jun 21, 2017 12:30:52 PM pursuant to License Agreement with ICC. No further reproduction or distribution authorized. ANY UNAUTHORIZED REPRODUCTION OR DISTRIBUTION IS A VIOLATION OF THE FEDERAL COPYRIGHT ACT AND THE LICENSE AGREEMENT, AND SUBJECT TO CIVIL AND CRIMINAL PENALTIES THEREUNDER.

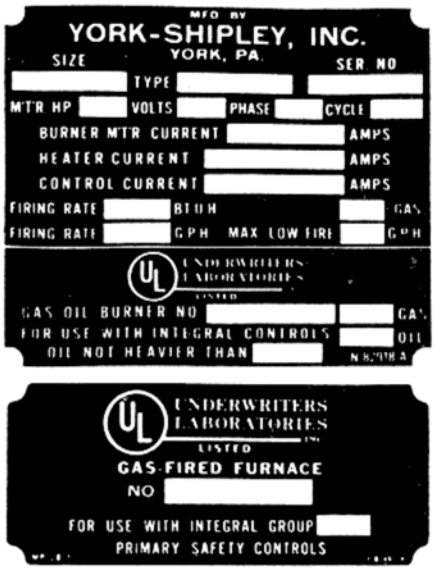



Figure 2801.1
EXAMPLE LABELS

INTERNATIONAL CODE COUNCIL®
Copyright © 2015 ICC. ALL RIGHTS RESERVED. Accessed by David Dammon on Jun 21, 2017 12:30:52 PM pursuant to License Agreement with ICC. No further reproduction or distribution authorized. ANY UNAUTHORIZED REPRODUCTION OR DISTRIBUTION IS A VIOLATION OF THE FEDERAL COPYRIGHT ACT AND THE LICENSE AGREEMENT, AND SUBJECT TO CIVIL AND CRIMINAL PENALTIES THEREUNDER.

Chapter 29: Plumbing Systems

General Comments

Determining the exact number of plumbing fixtures needed by the maximum number of possible users in any given building continues to be a challenging problem for the plumbing industry. Various methods have been used to evaluate the number and type of plumbing fixtures needed for an occupancy. Studies of office buildings have produced design guidelines based on occupancy times, arrival rates and patterns of fixture use that offer insight into the number of required plumbing fixtures for a desired level of service. The Building Technology Research Laboratory at the Stevens Institute of Technology conducted a study based on the Queueing Theory, which involves probabilities for waiting times and fixture use times based upon a preferred level of service. The study resulted in design guidelines for the quantities of fixtures needed in public toilet facilities. For residential-type buildings and health care facilities, plumbing fixture numbers are based on the minimum need, resulting in at least one water closet and one lavatory for each dwelling unit, guestroom or hospital room.

Studies completed by the U.S. military have been used for dormitories and prisons to determine the number of fixtures required based on a simultaneous need in a regimented society. This assumes that everyone rises at approximately the same time and has a limited amount of time to shower and use the water closet and lavatory.

The National Restaurant Association conducted a study based on the difference in use between a restaurant and a nightclub. It should be noted that the study did not take into account today's fast-food-style restaurant, nor did it allow for restaurants located along heavily traveled routes, such as those at highway rest stops or oases.

Fixture requirements for factory and industrial uses are based on the same requirements as for storage facilities. This method establishes a realistic minimum requirement for factory occupancies. The reasonableness in the number of plumbing fixtures was established through a limited study of factory projects in Henrico County, Virginia.

The fixture needs for the remaining occupancies were determined based on empirical data, experience and tradition. There are no exact studies providing values that are definitively supportable; the values have been modified periodically based on general observations. Various studies will most likely continue to be performed in order to develop a completely rational method for determining the minimum number of plumbing fixtures for any occupancy.

Purpose

The purpose of Chapter 29 is to provide a building with the necessary number of plumbing fixtures of a specific type and quality. The fixtures must be properly installed to be usable by the individuals occupying the building. The quality and design of every fixture must be in accordance with the *International Plumbing Code*® (IPC®).

SECTION 2901 GENERAL

[P] 2901.1 Scope. The provisions of this chapter and the *International Plumbing Code* shall govern the erection, installation, *alteration*, repairs, relocation, replacement, addition to, use or maintenance of plumbing equipment and systems. Toilet and bathing rooms shall be constructed in accordance with Section 1210. Plumbing systems and equipment shall be constructed, installed and maintained in accordance with the *International Plumbing Code*. Private sewage disposal systems shall conform to the *International Private Sewage Disposal Code*.

❖ This section contains the scoping requirements for Chapter 29. Compliance with this chapter will result in a building or structure having adequate plumbing fixtures for the sanitary, hygienic, cleaning, washing and food preparation needs of the occupants. This section also refers the reader to Section 1210 of the code, which covers specific requirements about surface finishes within toilet and bathing rooms. The requirements of this chapter are duplicated from the requirements of the IPC, Chapter 4, for the convenience of the architect, who is often responsible for the layout and number of plumbing fixtures when creating the floor plan of a building. All sections of Chapter 29 of the code are under complete control by the IPC Development Committee, thus the "[P]" before each section number.

SECTION 2902 MINIMUM PLUMBING FACILITIES

[P] 2902.1 Minimum number of fixtures. Plumbing fixtures shall be provided in the minimum number as shown in Table 2902.1 based on the actual use of the building or space. Uses

INTERNATIONAL CODE COUNCIL®
Copyright © 2015 ICC. ALL RIGHTS RESERVED. Accessed by David Dammon on Jun 21, 2017 12:30:52 PM pursuant to License Agreement with ICC. No further reproduction or distribution authorized. ANY UNAUTHORIZED REPRODUCTION OR DISTRIBUTION IS A VIOLATION OF THE FEDERAL COPYRIGHT ACT AND THE LICENSE AGREEMENT, AND SUBJECT TO CIVIL AND CRIMINAL PENALTIES THEREUNDER.

not shown in Table 2902.1 shall be considered individually by the code official. The number of occupants shall be determined by this code.

❖ This section requires that the type and number of plumbing fixtures be based on the actual use of an occupancy and the occupant load as determined for the means of egress for a building or space. Occupancy loads are from Section 1004 of the IBC. Table 403.1 has ratios for the maximum number of occupants that can be served by one fixture of each type. For example, "1 per 75" means one fixture will serve up to 75 occupants. These "ratios" are applied to the occupant load of the building or space in order to determine the total number of each required fixture type.

The "description" of plumbing fixture use determines which set of fixture ratios is used for calculating plumbing fixture requirements. In most cases, the description of plumbing fixture use will match the IBC occupancy classification. However, there are situations where a description of fixture use is different than the IBC occupancy classification.

Educational Facilities

Consider an educational facility (Grades 1-12) with a gymnasium with a stage. The code states that assembly areas that are accessory to Group E occupancies are not to be considered as a separate occupancy. Therefore, the number of water closets should be determined from Section 3 of Table 2902.1, which requires one water closet per 50 occupants. Because this gymnasium has a stage, a greater occupant density than for a gymnasium-only space must be chosen, as nonfixed chairs will most likely be set up for viewing on-stage activities. Therefore, for egress purposes, the gymnasium is considered to be an assembly area with an occupant density of 7 square feet (0.65 m^2) per person. The resulting occupant load number applied with a Group E occupancy plumbing fixture ratio would result in an excessive number of plumbing fixtures for the building. The correct approach is to consider the plumbing fixture ratios in the fourth row of Table 2902.1 for the gymnasium space, since these ratios reflect how the space is intended to be used with respect to the chosen occupancy density. In other words, fixture ratios must be chosen to "agree" with the actual use of the space.

A question that is often asked about Group E occupancies is whether the concept of nonsimultaneous occupancy could be considered in order to further reduce the number of required plumbing fixtures. For example, where a school auditorium is occupied by only the students within the school, the students are in either the classroom or the auditorium, but not in both places at the same time. Therefore, why should each area require a number of fixtures as if both areas were occupied simultaneously? The code does not recognize a nonsimultaneous use concept for any building, as simultaneous use could easily occur. For example, while students are in the classrooms, a school auditorium could be used temporarily for blood drives, regional science fairs and town meetings. However, this is not to say that in some circumstances, a nonsimultaneous use could, in some way, be completely guaranteed such that the local code official might entertain a proposed reduction in the required number of plumbing fixtures for the building.

Business Facilities

Consider a barber college where the code classifies the entire building as a Group B occupancy. The building has several large assembly rooms where the intent is to have training sessions for large groups of students. Clearly, these areas are used for assembly and, therefore, the use of the fixture ratios in Section 1, Row 4 of Table 2902.1 should be used.

The choice of an occupancy use for the purposes of determining plumbing fixtures does not affect the occupancy group chosen for egress purposes. In other words, using a previous example, the school gymnasium with stage space should be chosen to be "assembly use" for plumbing fixture requirements, but the entire building is still a Group B occupancy for the purposes of egress.

Note that Section 1004.1.2 has an exception, which allows the designer to present an "actual" occupancy load number to the code official for approval instead of the calculated load for the occupancy square footage. While this exception would allow a smaller occupancy load to be chosen for the purposes of determining the required number of plumbing fixtures, code officials must carefully consider and appropriately justify the reduction. The code official should consider the potential for the space to be loaded with more persons than stated by the designer, future use by different tenants of the same occupancy classification and the difficulty of enforcement of the maximum occupancy load based upon the limited number of fixtures provided.

[P] TABLE 2902.1. See page 29-4.

❖ In Table 2902.1, the brief wording in the "Description" column is not intended to be complete or all inclusive of all uses for a particular building or space. However, the descriptions do identify a majority of the types of uses encountered in the design of most buildings. Because the descriptions narrow in on what row of ratios to use, it is logical to enter the table at the description column. The number, classification and occupancy columns are intended only for reference purposes. The requirements for type and number of plumbing fixtures are driven by the actual use of a building or space, which is usually consistent with the occupancy group classification but not always.

Some use description rows have a different ratio for male and female water closets and, in some cases, lavatories. The larger ratio for female fixtures provides an "equality of fixture availability" in those particular occupancies. The occupancies described by these use descriptions have historically had long

INTERNATIONAL CODE COUNCIL®
Copyright © 2015 ICC. ALL RIGHTS RESERVED. Accessed by David Dammon on Jun 21, 2017 12:30:52 PM pursuant to License Agreement with ICC. No further reproduction or distribution authorized. ANY UNAUTHORIZED REPRODUCTION OR DISTRIBUTION IS A VIOLATION OF THE FEDERAL COPYRIGHT ACT AND THE LICENSE AGREEMENT, AND SUBJECT TO CIVIL AND CRIMINAL PENALTIES THEREUNDER.

lines of females waiting to use toilet facilities while male facilities had no lines. The reasons for this include the following:

1. For a variety of social and physical reasons, women generally take a longer period of time to use the facilities;
2. Women outnumber men in the general population and this becomes especially evident in large groups of people; and
3. Women, in general, tend to use the facilities more frequently.

❖ The term "potty parity" was coined in a general sense to mean that a sufficient number of female plumbing fixtures were available such that women did not have to wait any longer than men (in a queue or line) to use an equivalent type of fixture as men. In a specific sense, "potty parity" also indicates the ratio of the number of male to the number of female fixtures of the same type. For example, if 24 male and 48 female water closets are installed in a building, then the potty parity is stated to be "1 to 2."

The code is silent concerning a requirement for child-size water closets. In a child care facility having children age 6 years old and under, the provision of child-size water closets (and sinks mounted at child height) could be beneficial to a facility's operation. Generally, for children over 6 years old, standard-size fixtures are suitable because most children have learned to use the same size fixtures in a home setting. Note that the accessibility standard, ICC/ANSI A117.1, as referenced by Chapter 11, has specific dimensional requirements for accessible child-size water closets.

Some school facilities are designed to have a single-occupant toilet room that can be accessed only from within the classroom. The code is silent on whether the fixtures in this limited-access toilet room can be counted toward the required number of plumbing fixtures for the building.

The intent of table Note d concerning outdoor seating and entertainment areas is to require that outdoor patios, decks, balconies, beer gardens and similar areas, whether those areas have seating or not, be included when calculating the number of plumbing fixtures. While seating does provide a definitive occupant load for these types of areas, there are many situations where these areas are not provided with seating in order to accommodate as many customers as possible. Therefore, the occupant load should be based on standing space density. This occupant load number must be applied to the ratios for the appropriate use description row in Table 2902.1. For example, a restaurant has a fixed seating area with fixed booths and an outdoor entertainment area that has no seating or tables. The fixed seating area load is simply a count of the number of seats according to Section 1004.7. The restaurant fixture ratios (Section 1, Row 3 of Table 2902.1) are then applied to this load to determine the number of plumbing fixtures for the fixed seating area. The outdoor area requires a different approach as it is a standing space area, not fixed seating. The occupant load is calculated from the area using Table 1004.1.2. Even though the building is a restaurant, this outdoor entertainment area might be used, not as a restaurant, but as a night-club/dance floor. Therefore, the fixture ratios in Row 2 of Table 2902.1 (for nightclubs/dance halls) are applied to the standing occupant load. Using Row 3 fixture ratios for this area would be inappropriate. The use of proper occupant loads and use ratios will ensure that an adequate number of plumbing fixtures are provided where the occupant load is substantially increased by the addition of outdoor seating or standing areas.

Choosing the proper use description for a restaurant having a bar or for a nightclub serving food can be challenging. Some restaurant operations evolve into a nightclub/dance hall in the late evening. Bars with dance floors often have kitchens for preparing food to serve to patrons at the bar. The code is silent on how to determine which use description (restaurant or night club) is the best "fit" for the demand on the toilet facilities. The answer to this question lies in determining what use is primary. Is the bar's main purpose to support the restaurant operation? Or is the serving of food in support of the bar operation? In situations where there is no clear answer, perhaps considering the occupancy as a mixed-use arrangement is a practical answer.

The drinking fountain ratio indicated for a use description does not necessarily imply that every tenant space must have a drinking fountain within that building. Just as toilet facilities are only required to be provided when a building or space is in use, the provision of a drinking fountain follows similar logic. For example, consider a strip center with multiple-tenant spaces, each tenant space having the required number of plumbing fixtures for and within each space. The drinking fountain for that space (and all the adjacent spaces) could be located exterior to all the tenant spaces in a common area. The calculation for the required number of drinking fountains to be used by multiple occupancies is performed in the same manner as for other plumbing fixtures. See the Sample Problems in this commentary section.

The "service sinks" required by Table 2902.1 are intended to be of a type suitable for janitorial and building maintenance purposes. Service sinks include mop sinks/basins, utility tub/sinks, janitor sinks, slop sinks and laundry trays. In all occupancy classifications, except Groups 1-2, R-2 and R-3, only one service sink is required for the entire building, except that hospitals are required to have a service sink on each floor. The one service sink per building must be available from all portions of the building. The intent of the code is that employees and tenants of the building be able to access the required sink. This does not mean that the service sink is required

INTERNATIONAL CODE COUNCIL®
Copyright © 2015 ICC. ALL RIGHTS RESERVED. Accessed by David Dammon on Jun 21, 2017 12:30:52 PM pursuant to License Agreement with ICC. No further reproduction or distribution authorized. ANY UNAUTHORIZED REPRODUCTION OR DISTRIBUTION IS A VIOLATION OF THE FEDERAL COPYRIGHT ACT AND THE LICENSE AGREEMENT, AND SUBJECT TO CIVIL AND CRIMINAL PENALTIES THEREUNDER.

to be in an open area of the building for use by any occupant (e.g., visitors). The service sink can be located in a locked janitor's closet for which all employees have access by key or door lock code to gain entry. However, the required service sink cannot be located in areas that are access-controlled by a single tenant. For example, if the service sink is located on floor one within a tenant's space, it would be possible for the tenant of floor one to lock out (exclude) other tenants from accessing the required service sink. Therefore, that service sink within one tenant-controlled space cannot be the required service sink for the building. For the 2012 edition, Note g was added to the table, which does not require service sinks in business and mercantile occupancies with an occupant load of 15 or fewer persons. Service sinks in these small occupancies are rarely used. Note e to the table allows business and mercantile occupancies of 15 or fewer persons to not require a service sink. Service sinks in these small occupancies are rarely used.

Although the code classifies parking garages as a Group S occupancy, there is no entry in Table 2902.1 for parking structures. It is not the intent of the code to require public toilet facilities in parking garages. A parking garage is similar to a parking lot in that it is not normally the final destination of a person parking a car. The only reason a person is in a parking garage is to park his or her car and then leave. A parking lot, having no enclosing structure, is not required to be provided with toilet facilities for the occupants who are parking their vehicles, so it stands to reason that a parking garage would not be required to be provided with toilet facilities. When people drive into a parking garage, their normal expectation is that the toilet facilities will be located in the building or buildings served by the parking garage. If public toilet facilities were provided in a parking garage, significant maintenance, vandalism and security issues would probably result in the eventual closure of such facilities. Not requiring public toilet facilities in a parking garage does not provide justification for not providing toilet facilities for parking garage employees (such as ticket kiosk at-tendants). These employees must be provided with toilet facilities in accordance with Section 2902.3. However, these facilities are not required to be located in the parking garage but only within the travel limitations of Section 2902.3.2.

[P] TABLE 2902.1
MINIMUM NUMBER OF REQUIRED PLUMBING FIXTURES[a]
(See Sections 2902.1.1 and 2902.2)

No.	CLASSIFICATION	OCCUPANCY	DESCRIPTION	WATER CLOSETS (URINALS SEE SECTION 419.2 OF THE *INTERNATIONAL PLUMBING CODE*)		LAVATORIES		BATHTUBS/ SHOWERS	DRINKING FOUNTAINS (SEE SECTION 410 OF THE *INTERNATIONAL PLUMBING CODE)*	OTHER
				Male	Female	Male	Female			
1	Assembly (continued)	A-1[d]	Theaters and other buildings for the performing arts and motion pictures	1 per 125	1 per 65	1 per 200		—	1 per 500	1 service sink
		A-2[d]	Nightclubs, bars, taverns, dance halls and buildings for similar purposes	1 per 40	1 per 40	1 per 75		—	1 per 500	1 service sink
			Restaurants, banquet halls and food courts	1 per 75	1 per 75	1 per 200		—	1 per 500	1 service sink
		A-3[d]	Auditoriums without permanent seating, art galleries, exhibition halls, museums, lecture halls, libraries, arcades and gymnasiums	1 per 125	1 per 65	1 per 200		—	1 per 500	1 service sink
			Passenger terminals and transportation facilities	1 per 500	1 per 500	1 per 750		—	1 per 1,000	1 service sink
			Places of worship and other religious services	1 per 150	1 per 75	1 per 200		—	1 per 1,000	1 service sink

(continued)

INTERNATIONAL CODE COUNCIL®
Copyright © 2015 ICC. ALL RIGHTS RESERVED. Accessed by David Dammon on Jun 21, 2017 12:30:52 PM pursuant to License Agreement with ICC. No further reproduction or distribution authorized. ANY UNAUTHORIZED REPRODUCTION OR DISTRIBUTION IS A VIOLATION OF THE FEDERAL COPYRIGHT ACT AND THE LICENSE AGREEMENT, AND SUBJECT TO CIVIL AND CRIMINAL PENALTIES THEREUNDER.

[P] TABLE 2902.1—(continued)
MINIMUM NUMBER OF REQUIRED PLUMBING FIXTURES[a]
(See Sections 2902.1.1 and 2902.2)

No.	CLASSIFICATION	OCCUPANCY	DESCRIPTION	WATER CLOSETS (URINALS SEE SECTION 419.2 OF THE *INTERNATIONAL PLUMBING CODE*)		LAVATORIES		BATHTUBS/ SHOWERS	DRINKING FOUNTAINS (SEE SECTION 410 OF THE *INTERNATIONAL PLUMBING CODE)*	OTHER
				Male	Female	Male	Female			
1	Assembly	A-4	Coliseums, arenas, skating rinks, pools and tennis courts for indoor sporting events and activities	1 per 75 for the first 1,500 and 1 per 120 for the remainder exceeding 1,500	1 per 40 for the first 1,520 and 1 per 60 for the remainder exceeding 1,520	1 per 200	1 per 150	—	1 per 1,000	1 service sink
		A-5	Stadiums, amusement parks, bleachers and grandstands for outdoor sporting events and activities	1 per 75 for the first 1,500 and 1 per 120 for the remainder exceeding 1,500	1 per 40 for the first 1,520 and 1 per 60 for the remainder exceeding 1,520	1 per 200	1 per 150	—	1 per 1,000	1 service sink
2	Business	B	Buildings for the transaction of business, professional services, other services involving merchandise, office buildings, banks, light industrial and similar uses	1 per 25 for the first 50 and 1 per 50 for the remainder exceeding 50		1 per 40 for the first 80 and 1 per 80 for the remainder exceeding 80		—	1 per 100	1 service sink[e]
3	Educational	E	Educational facilities	1 per 50		1 per 50		—	1 per 100	1 service sink
4	Factory and industrial	F-1 and F-2	Structures in which occupants are engaged in work fabricating, assembly or processing of products or materials	1 per 100		1 per 100		See Section 411 of the *International Plumbing Code*	1 per 400	1 service sink
5	Institutional	I-1	Residential care	1 per 10		1 per 10		1 per 8	1 per 100	1 service sink
		I-2	Hospitals, ambulatory nursing home care recipient[b]	1 per room[c]		1 per room[c]		1 per 15	1 per 100	1 service sink
			Employees, other than residential care[b]	1 per 25		1 per 35		—	1 per 100	—
			Visitors, other than residential care	1 per 75		1 per 100		—	1 per 500	—
		I-3	Prisons[b]	1 per cell		1 per cell		1 per 15	1 per 100	1 service sink
		I-3	Reformatories, detention centers and correctional centers[b]	1 per 15		1 per 15		1 per 15	1 per 100	1 service sink
			Employees[b]	1 per 25		1 per 35		—	1 per 100	—
		I-4	Adult day care and child day care	1 per 15		1 per 15		1	1 per 100	1 service sink

(continued)

INTERNATIONAL CODE COUNCIL®
Copyright © 2015 ICC. ALL RIGHTS RESERVED. Accessed by David Dammon on Jun 21, 2017 12:30:52 PM pursuant to License Agreement with ICC. No further reproduction or distribution authorized. ANY UNAUTHORIZED REPRODUCTION OR DISTRIBUTION IS A VIOLATION OF THE FEDERAL COPYRIGHT ACT AND THE LICENSE AGREEMENT, AND SUBJECT TO CIVIL AND CRIMINAL PENALTIES THEREUNDER.

[P] TABLE 2902.1—continued
MINIMUM NUMBER OF REQUIRED PLUMBING FIXTURES[a]
(See Sections 2902.1.1 and 2902.2)

No.	CLASSIFICATION	OCCUPANCY	DESCRIPTION	WATER CLOSETS (URINALS SEE SECTION 419.2 OF THE *INTERNATIONAL PLUMBING CODE*)		LAVATORIES		BATHTUBS OR SHOWERS	DRINKING FOUNTAINS (SEE SECTION 410 OF THE *INTERNATIONAL PLUMBING CODE)*	OTHER
				Male	Female	Male	Female			
6	Mercantile	M	Retail stores, service stations, shops, salesrooms, markets and shopping centers	1 per 500		1 per 750		—	1 per 1,000	1 service sink[e]
7	Residential	R-1	Hotels, motels, boarding houses (transient)	1 per sleeping unit		1 per sleeping unit		1 per sleeping unit	—	1 service sink
		R-2	Dormitories, fraternities, sororities and boarding houses (not transient)	1 per 10		1 per 10		1 per 8	1 per 100	1 service sink
		R-2	Apartment house	1 per dwelling unit		1 per dwelling unit		1 per dwelling unit	—	1 kitchen sink per dwelling unit; 1 automatic clothes washer connection per 20 dwelling units
		R-3	One- and two-family dwellings and lodging houses with five or fewer guest rooms	1 per dwelling unit		1 per 10		1 per dwelling unit	—	1 kitchen sink per dwelling unit; 1 automatic clothes washer connection per dwelling unit
		R-3	Congregate living facilities with 16 or fewer persons	1 per 10		1 per 10		1 per 8	1 per 100	1 service sink
		R-4	Congregate living facilities with 16 or fewer persons	1 per 10		1 per 10		1 per 8	1 per 100	1 service sink
8	Storage	S-1 S-2	Structures for the storage of goods, warehouses, storehouses and freight depots, low and moderate hazard	1 per 100		1 per 100		See Section 411 of the *International Plumbing Code*	1 per 1,000	1 service sink

a. The fixtures shown are based on one fixture being the minimum required for the number of persons indicated or any fraction of the number of persons indicated. The number of occupants shall be determined by this code.
b. Toilet facilities for employees shall be separate from facilities for inmates or care recipients.
c. A single-occupant toilet room with one water closet and one lavatory serving not more than two adjacent patient *sleeping units* shall be permitted, provided that each patient *sleeping unit* has direct access to the toilet room and provisions for privacy for the toilet room user are provided.
d. The occupant load for seasonal outdoor seating and entertainment areas shall be included when determining the minimum number of facilities required.
e. For business and mercantile occupancies with an occupant load of 15 or fewer, service sinks shall not be required.

INTERNATIONAL CODE COUNCIL®
Copyright © 2015 ICC. ALL RIGHTS RESERVED. Accessed by David Dammon on Jun 21, 2017 12:30:52 PM pursuant to License Agreement with ICC. No further reproduction or distribution authorized. ANY UNAUTHORIZED REPRODUCTION OR DISTRIBUTION IS A VIOLATION OF THE FEDERAL COPYRIGHT ACT AND THE LICENSE AGREEMENT, AND SUBJECT TO CIVIL AND CRIMINAL PENALTIES THEREUNDER.

[P] 2902.1.1 Fixture calculations. To determine the *occupant load* of each sex, the total *occupant load* shall be divided in half. To determine the required number of fixtures, the fixture ratio or ratios for each fixture type shall be applied to the *occupant load* of each sex in accordance with Table 2902.1. Fractional numbers resulting from applying the fixture ratios of Table 2902.1 shall be rounded up to the next whole number. For calculations involving multiple occupancies, such fractional numbers for each occupancy shall first be summed and then rounded up to the next whole number.

Exception: The total *occupant load* shall not be required to be divided in half where *approved* statistical data indicate a distribution of the sexes of other than 50 percent of each sex.

❖ This section requires that the occupant load be divided by 2 in order to determine the quantities of males and females. This is known as a 50-50 gender distribution, meaning that 50 percent of the occupants are male and 50 percent of occupants are female. While a 50-50 gender distribution is used most of the time, there might be situations where this assumption is inaccurate. The exception to this section allows for a different gender distribution if statistical data are submitted and approved by the code official for a building or space. An example that might require a modified distribution would be an all-women's health club, a males-only boarding school, a convent or a monastery.

Once the appropriate use description row in Table 2902.1 is chosen, the ratios for each fixture type and for each gender are used to determine the minimum number of plumbing fixtures for a building or space.

Although not specifically indicated in this code section, prior to performing any plumbing fixture calculations for a building or space, the exceptions of Section 2902.2 must be reviewed for applicability. For example, a small restaurant could have two employees and 12 seats. If the fixture calculations were performed without consideration of Section 2902.2, this restaurant would be required to have a toilet facility for each gender. However, because the occupancy load is less than 15, a single toilet facility is all that is required.

The following sample problems illustrate calculation methods for various situations.

Sample Problem 1: A mixed-use building has a business-use occupant load of 538, a library-use occupant load of 115 and a storage-use occupant load of 82. The occupancies are not separate tenant spaces. Determine the total number of required plumbing fixtures for the building.

Problem Approach

Check Section 2902.2 for applicability and if not applicable, proceed with calculations.

Apply the gender distribution for each space use, calculate the number of fixtures required by each gender, sum the gender totals for each type of fixture from all spaces and round up the number of each type of fixture for each gender to a whole number. Note that drinking fountains are not gender specific. Therefore, the total number of occupants for the building is applied to the drinking fountain fixture ratio.

Solution—Part I

For the business-use spaces, find the required ratios in Table 2902.1, Section 2. Because a gender distribution was not specified, the number of occupants must be divided by 2 to obtain the number of occupants for each gender (refer to Section 2902.1.1). Therefore, in this business-use space, there will be:

538/2 = 269 occupants of each gender

1. Calculate the number of water closets for 269 males:

   For the first 50 males, the ratio of 1 per 25 is applied:

   50 × 1/25 = 2 water closets

   For the remaining number of males, the ratio of 1 per 50 is applied:

   (269 - 50) × 1/50 = 219 × 1/50 = 4.38 water closets

   The required number of water closets for males is:

   2 + 4.38 = 6.38 water closets for males

   Because the gender distribution is equal and the water closet ratio for females is the same as for males, the number of water closets for females is also 6.38.

2. Calculate the number of lavatories for 269 males:

   For the first 80 males, the ratio of 1 per 40 is applied:

   80 × 1/40 = 2 lavatories

   For the remaining males, the ratio of 1 per 80 is applied:

   (269 - 80) × 1/80 = 189 × 1/80 = 2.36 lavatories.

   The required number of lavatories for males is:

   2 + 2.36 = 4.36 lavatories for males

   Because the gender distribution is equal and the lavatory ratio for females is the same as for males, the number of lavatories for females is also 4.36.

3. Calculate the number of drinking fountains for 538 occupants:

   The ratio of 1 per 100 is applied:

   538 × 1/100 = 5.38 drinking fountains for male and female use

INTERNATIONAL CODE COUNCIL®
Copyright © 2015 ICC. ALL RIGHTS RESERVED. Accessed by David Dammon on Jun 21, 2017 12:30:52 PM pursuant to License Agreement with ICC. No further reproduction or distribution authorized. ANY UNAUTHORIZED REPRODUCTION OR DISTRIBUTION IS A VIOLATION OF THE FEDERAL COPYRIGHT ACT AND THE LICENSE AGREEMENT, AND SUBJECT TO CIVIL AND CRIMINAL PENALTIES THEREUNDER.

Solution—Part II

For the library-use spaces, find the required ratios in Table 2902.1, Section 1. Because a gender distribution was not specified, the number of occupants must be divided by 2 to obtain the number of occupants for each gender (refer to Section 2902.1.1). Therefore, in this library-use space, there will be:

115/2 = 57.5 occupants of each gender

1. Calculate the number of water closets for males: The ratio of 1 per 125 is applied:

   57.5 × 1/125 = 0.46 water closet for males

2. Calculate the number of water closets for females:

   The ratio of 1 per 65 is applied:

   57.5 × 1/65 = 0.88 water closet for females

3. Calculate the number of lavatories for 57.5 males:

   The ratio of 1 per 200 is applied:

   57.5 × 1/200 = 0.29 lavatory for males

   Because the gender distribution is equal and the lavatory ratio for females is the same as for males, the number of lavatories for females is also 0.29.

4. Calculate the number of drinking fountains for 115 occupants:

   The ratio of 1 per 500 is applied:

   115 × 1/500 = 0.23 drinking fountain for both males and females.

Solution—Part III

For the storage-use space, find the required ratios in Table 2902.1, Section 8. Because a gender distribution was not specified, the number of occupants must be divided by 2 to obtain the number of occupants for each gender (refer to Section 2902.1.1). Therefore, in this storage-use space, there will be:

82/2 = 41 occupants of each gender

1. Calculate the number of water closets for 41 males:

   The ratio of 1 per 100 is applied:

   41 × 1/100 = 0.41 water closet for males

   Because the gender distribution is equal and the water closet ratio for females is the same as for males, the number of water closets for females is also 0.41.

2. Calculate the number of lavatories for 41 males:

   The ratio of 1 per 100 is applied:

   41 × 1/100 = 0.41 lavatory for males

   Because the gender distribution is equal and the lavatory ratio for females is the same as for males, the number of lavatories for females is also 0.41.

3. Calculate the number of drinking fountains for 82 occupants:

   The ratio of 1 per 1000 is applied:

   82 × 1/1000 = 0.082 drinking fountains for males and females.

Solution—Summary

See Commentary Figure 2902.1.1(1) for the solution summary for Sample Problem 1. Note that if the raw fixture numbers were rounded up prior to summation for the building, the calculated minimum fixture requirements would have been increased by one water closet for each gender, one lavatory for each gender and two drinking fountains.

Sample Problem 2: A mixed-use building has a business-use occupant load of 940 and a restaurant-use occupant load of 360. The occupancies are separate tenant spaces. The toilet facilities are to be located in each tenant space. For the business occupancy, bottled water coolers are to be substituted for drinking fountains to the maximum allowable extent. Determine the total number of required plumbing fixtures for the building.

Problem Approach

Check Section 2902.2 for applicability and if not applicable, proceed with calculations.

Note that the plumbing fixtures required by each occupancy will be located in each tenant space. Thus, the required number of plumbing fixtures for each tenant space is calculated as if the space stood alone, in other words, in its own building.

Solution—Part I

For the business-use space, find the required ratios in Table 2902.1, Section 2. Because a gender distribution was not specified, the number of occupants must be divided by 2 to obtain the number of occupants for each gender (refer to Section 2902.1.1). Therefore, in this business-use space, there will be:

940/2 = 470 occupants of each gender

1. Calculate the number of water closets for 470 males:

   For the first 50 males, the ratio of 1 per 25 is applied:

   50 × 1/25 = 2 water closets

   For the remaining number of males, the ratio of 1 per 50 is applied:

   (470 - 50) × 1/50 = 420 × 1/50 = 8.4 water closets

   The required number of water closets for males is:

   2 + 8.4 = 10.4 water closets for males

INTERNATIONAL CODE COUNCIL®
Copyright © 2015 ICC. ALL RIGHTS RESERVED. Accessed by David Dammon on Jun 21, 2017 12:30:52 PM pursuant to License Agreement with ICC. No further reproduction or distribution authorized. ANY UNAUTHORIZED REPRODUCTION OR DISTRIBUTION IS A VIOLATION OF THE FEDERAL COPYRIGHT ACT AND THE LICENSE AGREEMENT, AND SUBJECT TO CIVIL AND CRIMINAL PENALTIES THEREUNDER.

Because the gender distribution is equal and the water closet ratio for females is the same as for males, the number of water closets for females is also 10.4.

2. Calculate the number of lavatories for 470 males:

   For the first 80 males, the ratio of 1 per 40 is applied:

   80 × 1/40 = 2 lavatories

   For the remaining males, the ratio of 1 per 80 is applied:

   (470 - 80) × 1/80 = 390 × 1/80 = 4.88 lavatories.

   The required number of lavatories for males is:

   2 + 4.88= 6.88 lavatories for males

   Because the gender distribution is equal and the lavatory ratio for females is the same as for males, the number of lavatories for females is also 6.88.

3. Calculate the number of drinking fountains for 940 occupants:

   The ratio of 1 per 100 is applied:

   940 × 1/100 = 9.4 drinking fountains for males and females

Solution—Part II

For the restaurant-use space, find the required ratios in Table 2902.1, Section 1. Because a gender distribution was not specified, the number of occupants must be divided by 2 to obtain the number of occupants for each gender (refer to Section 2902.1.1). Therefore, in this restaurant-use space, there will be:

360/2 = 180 occupants of each gender

1. Calculate the number of water closets for males:

   The ratio of 1 per 75 is applied:

   180 × 1/75 = 2.4 water closets for males

   Therefore, 2.4 male water closets are needed.

   Because the gender distribution is equal and the water closet ratio for females is the same as for males, the number of water closets for females is also 2.4.

2. Calculate the number of lavatories for 180 males:

   The ratio of 1 per 200 is applied:

   180 × 1/200 = 0.9 lavatory for males is required

   Therefore, 0.9 male lavatory is needed.

   Because the gender distribution is equal and the lavatory ratio for females is the same as for males, the number of lavatories for females is also 0.9.

3. Calculate the number of drinking fountains for 360 occupants:

   The ratio of 1 per 500 is applied:

   360 × 1/500 = 0.72 drinking fountain for both males and females.

SPACE		WATER CLOSETS				LAVATORIES			DRINKING FOUNTAIN RATIO	DRINKING FOUNTAINS	SERVICE SINK
USE	LOAD	RATIO	MALE	RATIO	FEMALE	RATIO	MALE	FEMALE			
Business	538	1 per 25 for the first 50 and 1 per 50 for the remainder exceeding 50	6.38	1 per 25 for the first 50 and 1 per 50 for the remainder exceeding 50	6.38	1 per 40 for the first 80 and 1 per 80 for the remainder exceeding 80	4.36	4.36	1 per 100	5.38	Note a
Libraries, halls, museums, etc.	115	1/125	0.46	1/65	0.88	1/200	0.29	0.29	1 per 500	0.23	
Storage	82	1/100	0.41	1/100	0.41	1/100	0.41	0.41	1/1000	0.082	
Subtotals			7.25		7.67		5.06	5.06		5.69	
Required totals			8		8		6	6		6	

Note:
a. The code requires only one service sink per building if all occupancies have access to the service sink at all times.

Figure 2902.1.1(1)
SOLUTION SUMMARY FOR SAMPLE PROBLEM 1

INTERNATIONAL CODE COUNCIL®
Copyright © 2015 ICC. ALL RIGHTS RESERVED. Accessed by David Dammon on Jun 21, 2017 12:30:52 PM pursuant to License Agreement with ICC. No further reproduction or distribution authorized. ANY UNAUTHORIZED REPRODUCTION OR DISTRIBUTION IS A VIOLATION OF THE FEDERAL COPYRIGHT ACT AND THE LICENSE AGREEMENT, AND SUBJECT TO CIVIL AND CRIMINAL PENALTIES THEREUNDER.

Solution—Part III

The number of required drinking fountains is allowed to be reduced by up to 50 percent by substitution with bottled water coolers or bottled water dispensers (see IPC Section 410.1 and related commentary). In restaurants, drinking fountains are not required if drinking water is served. Chapter 11 requires that any drinking fountains that are provided must be accessible. Where only one drinking fountain is being provided, either two installed at different heights or one combination unit with two bowls (each with a spout) at different heights must be installed. (The spout height requirements are specified in ICC/ANSI A117.1-2009.)

Bottled water cooler (or dispenser) substitution might not be appropriate for applications where located in areas that are completely open to the public. For example, a bottled water cooler to substitute for one of three required drinking fountains that are to be placed outdoors at a large strip center would most likely be subject to vandalism. However, a bottled water cooler substituted for one of three required drinking fountains in a large office building (a more controlled environment) would not be inappropriate. Where this chapter requires two drinking fountains, the accessibility regulations of Chapter 11 require two drinking fountains, one with a high spout and one with a low spout. The following example illustrates how the accessibility requirements for drinking fountains relate to the plumbing code requirements for drinking fountains and bottled water cooler substitution.

Consider an occupancy requiring 10 drinking fountains. Bottled water dispensers can substitute for five of the 10 required drinking fountains. Of the five drinking fountains to be installed, two are mounted at the high spout level, two are mounted at the low spout level and the third can be mounted at either the high or low spout level. A bottled water cooler is not a drinking fountain. While the code provides accessibility requirements for drinking fountains, it does not address bottled water coolers.

Solution—Summary

See Commentary Figure 2902.1.1(2) for the solution summary for Sample Problem 2. Note that if the raw fixture numbers were rounded prior to summation for the building, the calculated minimum fixture requirements would have increased by one water closet for each gender, one lavatory for each gender and two drinking fountains.

Sample Problem 3: A stadium has an occupant load of 5,200. Urinals are to be substituted for male water closets to the maximum extent allowed. Determine the total number of required plumbing fixtures for the stadium.

Problem Approach

Check Section 2902.2 for applicability and if not applicable, proceed with calculations.

Apply the gender distribution, calculate the number

SPACE		WATER CLOSETS				LAVATORIES			DRINKING FOUNTAIN RATIO	DRINKING FOUNTAINS	SERVICE SINK
USE	LOAD	RATIO	MALE	RATIO	FEMALE	RATIO	MALE	FEMALE			
Business	940	1 per 25 for the first 50 and 1 per 50 for the remainder exceeding 50	10.4	1 per 25 for the first 50 and 1 per 50 for the remainder exceeding 50	10.4	1 per 40 for the first 80 and 1 per 80 for the remainder exceeding 80	6.88	6.88	1 per 100	9.4	Note a
Business required totals			11		11		7	7		10	
Restaurants, banquet halls and food courts	360	1 per 75	2.4	1 per 75	2.4	1 per 200	0.9	0.9	1 per 500	0.72	
Restaurant required totals			3		3		1	1		1	
Building required totals			14		14		8	8		11	

Note:

a. The code only requires one service sink per building if all occupancies have access at all times. If this building has a central area (such as a janitorial closet for the building) that both tenants can access at all times, only one service sink is required for the building. But if the service sink is located in either one of the tenant spaces, one tenant would not have access; therefore, the building would require two service sinks—one for each tenant.

Figure 2902.1.1(2)
SOLUTION SUMMARY FOR SAMPLE PROBLEM 2

INTERNATIONAL CODE COUNCIL®
Copyright © 2015 ICC. ALL RIGHTS RESERVED. Accessed by David Dammon on Jun 21, 2017 12:30:52 PM pursuant to License Agreement with ICC. No further reproduction or distribution authorized. ANY UNAUTHORIZED REPRODUCTION OR DISTRIBUTION IS A VIOLATION OF THE FEDERAL COPYRIGHT ACT AND THE LICENSE AGREEMENT, AND SUBJECT TO CIVIL AND CRIMINAL PENALTIES THEREUNDER.

of fixtures required by each gender, sum the gender totals for each type of fixture and round up the number of each type of fixture for each gender to a whole number. Apply the urinal substitution (see Section 419.2 of the IPC) to reduce the number of male water closets.

Solution

For the stadium-use occupancy, find the required ratios in Table 2902.1, Row 8. Because a gender distribution was not specified, the number of occupants must be divided by 2 to obtain the number of occupants for each gender (refer to Section 2902.1.1). Therefore, in this stadium-use building, there will be:

5,200/2 = 2,600 occupants of each gender

1. Calculate the number of water closets for 2,600 males:

   For the first 1,500 males, the ratio of 1 per 75 is applied:

   1,500 × 1/75 = 20 water closets

   For the remaining number of males, the ratio of 1 per 120 is applied:

   (2,600 - 1,500) × 1/120 = 1,100 × 1/120 = 9.17 water closets

   The required number of water closets for males is:

   20 + 9.17 = 29.17 → Round to 30 water closets for males

2. Calculate the number of water closets for 2,600 females:

   For the first 1,520 females, the ratio of 1 per 40 is applied:

   1,520 × 1/40 = 38 water closets

   For the remaining number of females, the ratio of 1 per 60 is applied:

   (2,600 - 1,520) × 1/60 = 1,080 × 1/60 = 18 water closets.

   The required number of water closets for females is:

   38 + 18 = 56 water closets for females.

3. Calculate the number of lavatories for 2,600 males:

   The ratio of 1 per 200 is applied:

   2,600 × 1/ 200 = 13 lavatories for males

4. Calculate the number of lavatories for 2,600 females:

   The ratio of 1 per 150 is applied:

   2,600 × 1/150 = 17.3 lavatories → Round to 18 lavatories for females

5. Calculate the number of drinking fountains for 5,200 occupants:

   The ratio of 1 per 1,000 is applied:

   5,200 × 1/1,000 = 5.2 → Round to 6 drinking fountains for males and females

6. Calculate the number of urinals to be substituted for male water closets. Because a stadium is in the assembly classification, 67 percent of the water closets can be replaced with urinals.

   The ratio of 67/100 is applied:

   30 × 67/100 = 20.1 urinals → Round down to 20 urinals because rounding up would result in the number of urinals being in excess of 67 percent of the required number of water closets.

Solution—Summary

See Commentary Figure 2902.1.1(3) for the solution summary for Sample Problem 3.

[P] 2902.1.2 Family or assisted-use toilet and bath fixtures. Fixtures located within family or assisted-use toilet and bathing rooms required by Section 1109.2.1 are permitted to be included in the number of required fixtures for either the male or female occupants in assembly and mercantile occupancies.

❖ A family or assisted-use toilet room is required by the code in assembly or mercantile occupancies having an aggregate total of six or more required male and female water closets for the assembly or mercantile occupancy. The term “aggregate total” means the combined number of required male and female water closets before any urinal substitutions. A family or assisted-use bathing room is required by the code in recreational facilities having separate sex bathing rooms except where the separate sex bathing rooms only have one shower or fixture. Family or assisted-use toilet (and bathing room) facilities are intended for use by individuals who need the assistance of a family member or care provider to properly use plumbing fixtures in a private and dignified manner. Fixtures located in family or assisted-use toilet or bathing rooms are allowed to reduce the number of required fixtures for the building or space in either the male or female standard toilet rooms, but not both.

Sample Problem 4: A theater has an occupant load of 520. Urinals are to be substituted for male water closets to the maximum extent allowed. Determine the total number of plumbing fixtures that will be in the building.

Problem Approach

Apply the gender distribution, calculate the number of fixtures required by each gender, sum the gender totals for each type of fixture and round up the number of each type of fixture for each gender to a whole number. Consider the code requirement for a family or assisted-use toilet room. Apply the urinal

INTERNATIONAL CODE COUNCIL®
Copyright © 2015 ICC. ALL RIGHTS RESERVED. Accessed by David Dammon on Jun 21, 2017 12:30:52 PM pursuant to License Agreement with ICC. No further reproduction or distribution authorized. ANY UNAUTHORIZED REPRODUCTION OR DISTRIBUTION IS A VIOLATION OF THE FEDERAL COPYRIGHT ACT AND THE LICENSE AGREEMENT, AND SUBJECT TO CIVIL AND CRIMINAL PENALTIES THEREUNDER.

substitution (IPC Section 419.2) to reduce the number of male water closets to the maximum extent possible.

Solution

Calculation method is similar to Sample Problem 1—Part II.

Solution—Summary

See Commentary Figures 2902.1.1(4) and 2902.1.1(5) for the solution summary for Sample Problem 4.

Because a theater is a use description of Assembly and the aggregate total of required water closets is seven, one family or assisted-use toilet facility is required. The designer has the choice of reducing the number of fixtures in either the male or female toilet rooms by one lavatory and one water closet. In this case, the designer chose to reduce the number of required male fixtures. It may be more logical to reduce the male fixture count because of the greater need for fixtures in the female facilities.

The code is silent as to whether the fixtures in a voluntarily added family or assisted-use toilet facility

OCCUPANCY		WATER CLOSETS				LAVATORIES				DRINKING FOUNTAINS	
USE	LOAD	MALE RATIO	MALE	FEMALE RATIO	FEMALE	MALE RATIO	MALE	FEMALE RATIO	FEMALE	RATIO	ALL GENDERS
Stadiums	5,200	1 per 75 for the first 1,500 and 1 per 120 for the remainder exceeding 1,500	29.17	1 per 40 for the first 1,520 and 1 per 60 for the remainder exceeding 1,520	56	1 per 200	13	1 per 150	17.3	1 per 1,000	5.3
Required totals			30		56		13		18		6

Required totals with urinal substitution	URINALS	MALE W/C	FEMALE W/C	MALE LAV	FEMALE LAV	DRINKING FOUNTAINS	SERVICE SINK
	20	10	56	13	18	6	1

Figure 2902.1.1(3)
SOLUTION SUMMARY FOR SAMPLE PROBLEM 3

SPACE		WATER CLOSETS				LAVATORIES				DRINKING FOUNTAINS	
USE	LOAD	MALE RATIO	MALE	FEMALE RATIO	FEMALE	MALE RATIO	MALE	FEMALE RATIO	FEMALE	RATIO	ALL GENDERS
Theater	520	1 per 125	2.08	1 per 65	4	1 per 200	1.3	1 per 200	1.3	1 per 500	1.04
Required totals			3		4		2		2		2

Figure 2902.1.1(4)
SOLUTION SUMMARY FOR SAMPLE PROBLEM 4

Theater building totals with urinal substitution	MALE TOILET FACILITY			FEMALE TOILET FACILITY		DRINKING FOUNTAINS	SERVICE SINK	FAMILY OR ASSISTED-USE	
	URINAL	W/C	LAV	W/C	LAV			W/C	LAV
	1	1	1	4	2	2	1	1	1

Figure 2902.1.1(5)
BUILDING PLUMBING FIXTURE TOTALS FOR SAMPLE PROBLEM 4

INTERNATIONAL CODE COUNCIL®
Copyright © 2015 ICC. ALL RIGHTS RESERVED. Accessed by David Dammon on Jun 21, 2017 12:30:52 PM pursuant to License Agreement with ICC. No further reproduction or distribution authorized. ANY UNAUTHORIZED REPRODUCTION OR DISTRIBUTION IS A VIOLATION OF THE FEDERAL COPYRIGHT ACT AND THE LICENSE AGREEMENT, AND SUBJECT TO CIVIL AND CRIMINAL PENALTIES THEREUNDER.

can be counted toward the required number of fixtures in any occupancy. For example, in Sample Problem 3, perhaps the building owner chooses to have three family or assisted-use toilet facilities in addition to the required number of fixtures in the public toilet facilities. If the fixtures in these "extra" family or assisted-use toilet facilities are allowed to count toward the required number of fixtures, which gender toilet facility should have fixture counts reduced? Note that voluntarily added family or assisted-use toilet facilities should not count toward the required number of fixtures, no matter the occupancy, because the code does not specify a maximum reduction, and any reductions seem to go against the intent of the code to provide ample gender-specific toilet facilities.

Where the calculations require multiple fixtures for a gender, the code is silent as to whether those required fixtures can be provided in multiple single-occupant toilet rooms. For example, if two water closets for each gender are required, could four single-occupant toilet facilities (two labeled male, two labeled female) be provided? While the arrangement of multiple fixtures in one toilet room is cost-efficient and space saving, some business owners might perceive a "marketing advantage" for their business by having all single-occupant toilet facilities. For example, families with young children and elderly customers might be more attracted to a restaurant that has all single-occupant toilet facilities so that a family member can privately assist another family member using the facility. Or simply, some customers might prefer the extra privacy that a single-occupant toilet room offers.

The provision of the required number of plumbing fixtures in single-occupant toilet facilities should be discouraged because the ratios provided in Table 2902.1 never anticipated such arrangements. Users of single-occupant toilet rooms will generally take longer as they have the security of a locking door. Users in multiple-user toilet facility environments are "encouraged" to be quick due to the bustle of activity in the more open environment (people waiting outside stalls or standing in line at urinals). In other words, (four) single-use toilet facilities (marked two male and two female) do not provide the level of use efficiency as does a multiple-user public toilet facility. Even though the code doesn't discuss efficiency with regard to toilet facilities, the desired outcome of Table 2902.1 is to prevent long waiting lines and, thus, use efficiency is a significant factor.

Note that where multiple single-occupancy toilet rooms are provided, Chapter 11 requires that at least 50 percent of the single-occupancy toilet rooms within a cluster of toilet rooms must be of accessible design. If the single-occupant toilet rooms are not clustered but are located individually throughout a building or tenant space, all toilet rooms are required to be of accessible design. For example, four single-occupant toilet rooms, two labeled "men" and two labeled "women" are clustered together. Only one of each gender of those toilet rooms must be of accessible design. However, if the single-occupant toilet rooms are not grouped together in the building, all of those single-occupant toilet rooms must be of accessible design.

[P] 2902.2 Separate facilities. Where plumbing fixtures are required, separate facilities shall be provided for each sex.

Exceptions:

1. Separate facilities shall not be required for *dwelling units* and *sleeping units*.
2. Separate facilities shall not be required in structures or tenant spaces with a total *occupant load*, including both employees and customers, of 15 or fewer.
3. Separate facilities shall not be required in mercantile occupancies in which the maximum occupant load is 100 or less.

❖ Separate facilities are required for males and females. Exception 1 is redundant as Table 2902.1 already indicates the types of occupancies where one single-occupancy toilet room is sufficient. Exception 2 allows one single-occupant toilet room to be provided in small establishments because the space requirement and installation cost is considered to be a significant hardship for the minimal floor area that results in a 15-person occupant load. Exception 3 allows one single-occupant toilet room to be provided in what are considered to be small floor area mercantile establishments so as to not create a significant hardship in both space and installation cost. There is no specific documentation as to why the 15-person threshold was chosen for Exception 2 other than it was perceived to be reasonable for such small spaces. The 100-person threshold for Exception 3 was justified because small mercantile occupancies [1,500 to 3,000 square feet (139 to 279 m^2)] were unduly burdened by the requirement for two accessible toilet rooms. For a 1,500-square-foot (139 m^2) tenant space, two accessible toilet rooms occupy more than 5 percent of the total square footage. In that it is rare that these small establishments will ever experience the full design occupant load, there is no need to burden the tenant with two toilet rooms.

The separate facilities requirement for males and females addresses two main concerns: privacy and safety. Users of toilet facilities often experience embarrassment if members of the opposite sex are in the same room. This increased embarrassment can lead to difficulty or prevention of waste elimination for many users. While some of these inhibitions are often temporarily "given up" under special conditions such as in co-ed college dormitories or where one gender's facilities are inadequate under demand situations, these inhibitions quickly return for most people as it is innate to the human species to desire privacy during waste elimination. In a public environment, safety for female users of toilet facilities is of paramount concern. While a female restroom placard is no barrier to

INTERNATIONAL CODE COUNCIL®
Copyright © 2015 ICC. ALL RIGHTS RESERVED. Accessed by David Dammon on Jun 21, 2017 12:30:52 PM pursuant to License Agreement with ICC. No further reproduction or distribution authorized. ANY UNAUTHORIZED REPRODUCTION OR DISTRIBUTION IS A VIOLATION OF THE FEDERAL COPYRIGHT ACT AND THE LICENSE AGREEMENT, AND SUBJECT TO CIVIL AND CRIMINAL PENALTIES THEREUNDER.

those intent on harming female occupants, a female user confronted by (or even hearing) a male in the female-only toilet facility will immediately recognize the potential threat and take action. A toilet facility intended to be used by both sexes simultaneously does not offer the same level of immediate situational awareness for females and, therefore, it is not perceived to be as safe as a facility intended for one gender only. Also, some individuals may be inhibited to use a facility that is used by the opposite sex because of notions of cleanliness and perceived appropriateness.

[P] 2902.2.1 Family or assisted-use toilet facilities serving as separate facilities. Where a building or tenant space requires a separate toilet facility for each sex and each toilet facility is required to have only one water closet, two family or assisted-use toilet facilities shall be permitted to serve as the required separate facilities. Family or assisted-use toilet facilities shall not be required to be identified for exclusive use by either sex as required by Section 2902.4.

❖ For a building or space having only one male water closet and one female water closet, two-family/ assisted-use toilet rooms increase the overall availability of a toilet room when needed. A single gender-based toilet can be unavailable for periods of up to 15 minutes when, for example, the current occupant is using it for companion care, to change diapers or to change a colostomy bag. Also, there is less impact to availability when one toilet room is being cleaned or serviced. For decades, males and females have used the same toilet facility on airliners.

[P] 2902.3 Employee and public toilet facilities. Customers, patrons and visitors shall be provided with public toilet facilities in structures and tenant spaces intended for public utilization. The number of plumbing fixtures located within the required toilet facilities shall be provided in accordance with Section 2902.1 for all users. Employees shall be provided with toilet facilities in all occupancies. Employee toilet facilities shall be either separate or combined employee and public toilet facilities.

Exception: Public toilet facilities shall not be required in:

1. Open or enclosed parking garages where there are no parking attendants.
2. Structures and tenant spaces intended for quick transactions, including takeout, pickup and drop-off, having a public access area less than or equal to 300 square feet (28 m^2).

❖ Toilet facilities must be available for all public establishments that are used by persons engaged in activities involved with the purpose of the establishment. Public establishments include, but are not limited to restaurants, nightclubs, theaters, offices, retail shops, stadiums, libraries and churches. Persons engaged in the activities of the establishment include, but are not limited to, buyers of merchandise, recipients of services, viewers of displays, receivers of information materials, employees and those persons in attendance with those engaging in the activities. The code is silent about whether the toilet facilities are for use by persons not engaged in the activities involved with the purpose of the establishment, such as passers-by, street maintenance workers or vagrants. However, because the number of plumbing fixtures for any establishment is based only upon either the square footage or number of seats of the establishment's space, the intent of the code is to serve only the people involved with the activities of the establishment. The photo of the front door of the restaurant shown in Commentary Figure 2902.3(1) might first appear to be in conflict with the requirements of this section; however, this sign actually captures the intent of this code section: "If you are engaged with the activities involved with the purpose of this establishment, toilet facilities are available for you."

The quantities of plumbing fixtures required for an establishment are specified in Section 2902 of the code. Employees of the establishment must also have access to the toilet facilities for the establishment whether those facilities are separate from or combined with the facilities for the other users. Except for the specific requirements of Group I-2 occupancies, Group I-3 occupancies and Note b of Table 2902.1, employee toilet facilities are not required to be separate from other toilet facilities.

Exception 1 clarifies that even though a parking structure is classified as a Group S occupancy (storage structure) and Table 2902.1 requires storage occupancies to have toilet facilities, parking structures are exempt from this requirement. Note that if a parking structure has attendants, they must be provided with toilet facilities within the travel limitations of the code.

Exception 2 allows for small public-access areas in buildings and tenant spaces used for quick transactions, such as automated teller machine lobbies, shoe repair drop-off/pickup, dry cleaners, takeout only counters at restaurants (such as delicatessens,



Figure 2902.3(1)
RESTAURANT ENTRY SIGN

INTERNATIONAL CODE COUNCIL®
Copyright © 2015 ICC. ALL RIGHTS RESERVED. Accessed by David Dammon on Jun 21, 2017 12:30:52 PM pursuant to License Agreement with ICC. No further reproduction or distribution authorized. ANY UNAUTHORIZED REPRODUCTION OR DISTRIBUTION IS A VIOLATION OF THE FEDERAL COPYRIGHT ACT AND THE LICENSE AGREEMENT, AND SUBJECT TO CIVIL AND CRIMINAL PENALTIES THEREUNDER.

pizza and other takeout food) and entertainment ticket purchase/pickup lobbies, to not have public toilet facilities.

The intent is that the exception is for establishments where customers walk in, make a relatively fast transaction and walk out. In other words, the customer does not spend any time waiting, such as for food orders to be prepared, extensive forms to be filled out, an order to be pulled or loaded (such as for parts and material supply houses), a fuel tank to be filled, things to be repaired ("while-u-wait" services), estimates for repairs to be determined or shopping for merchandise on racks or shelves within the public access area of 300 square feet (28 m^2) or less. These small public-access areas typically would not have chairs, stools, benches, bars, merchandise shelving, catalog viewing/ordering desks or racks for products. The presence of these items might cause the customer to be inclined to spend more time than needed to make a simple and quick transaction [see Commentary Figure 2902.3(2)].

[P] 2902.3.1 Access. The route to the public toilet facilities required by Section 2902.3 shall not pass through kitchens, storage rooms or closets. Access to the required facilities shall be from within the building or from the exterior of the building. Routes shall comply with the accessibility requirements of this code. The public shall have access to the required toilet facilities at all times that the building is occupied.

❖ It is inappropriate and dangerous to locate toilet facilities intended for use by persons who are not employees of the establishment such that the path of travel is through kitchens, storage rooms or closets. This provision avoids placing occupants from the general public in an unfamiliar area of the building where they could be confused about the path of egress. Especially during an emergency situation, public users of the toilet facility will instinctively want to try to exit the building along the same path of travel used to access the toilet facilities which could be through an area where the emergency condition exists, such as a kitchen [see Commentary Figure 2902.3.1(1)]. Note that Section 1210.5 prohibits toilet rooms from directly opening into a room used for the preparation of food to be served to the public.

It has been common practice in many areas that the required toilet facilities were located on the outside of a building such as sometimes found in automotive service stations and convenience store buildings. Outlet mall complexes sometimes elect to have a central toilet facility building separate from the tenant spaces. While the code is silent as to whether the required toilet facilities are allowed to be in another building not under the direct control of the owner or tenant of the building from where the toilet user travels to the toilet facilities, the intent of the code is that public toilet facilities will be available (and open for use) when anyone is using a building or tenant space. However, it is unreasonable for toilet facilities in a building under different ownership or in a tenant space under different control to serve as the required toilet facilities for a building or tenant space.

Walk-up and drive-through service windows are unique applications with regard to the requirement for toilet facilities. Where these establishments do not

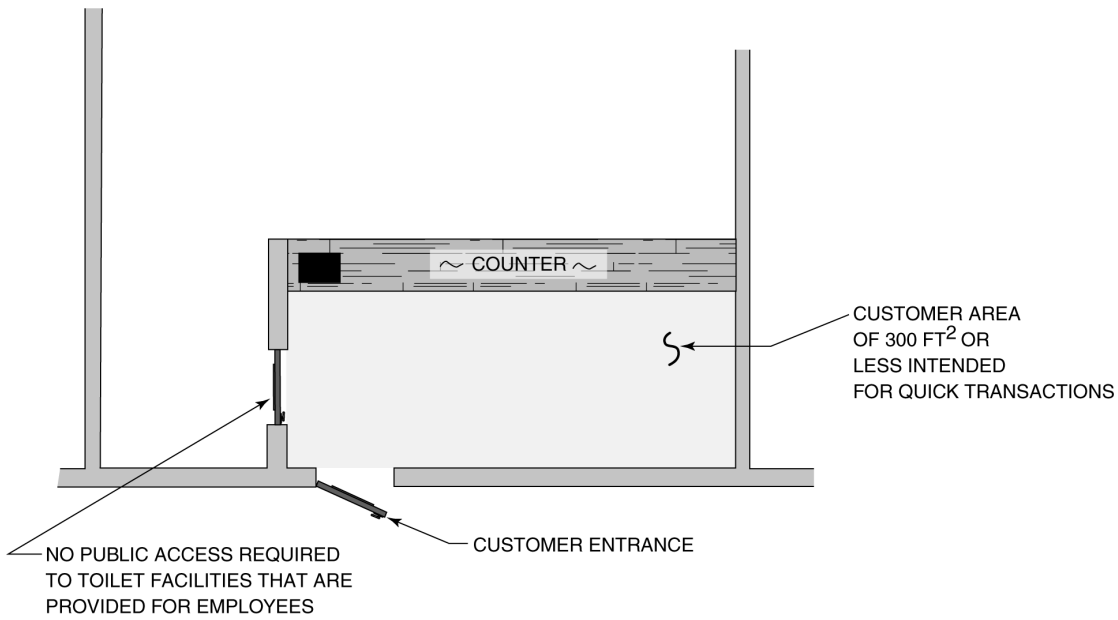

For SI: 1 square foot = .0929 m^2.

Figure 2902.3(2)
QUICK TRANSACTION CUSTOMER AREA

INTERNATIONAL CODE COUNCIL®
Copyright © 2015 ICC. ALL RIGHTS RESERVED. Accessed by David Dammon on Jun 21, 2017 12:30:52 PM pursuant to License Agreement with ICC. No further reproduction or distribution authorized. ANY UNAUTHORIZED REPRODUCTION OR DISTRIBUTION IS A VIOLATION OF THE FEDERAL COPYRIGHT ACT AND THE LICENSE AGREEMENT, AND SUBJECT TO CIVIL AND CRIMINAL PENALTIES THEREUNDER.

allow customers to enter the building, the code is silent on whether toilet facilities for the public are required. However, if facilities were required, how would one calculate the occupant loading to determine the required number of fixtures? Examples are ice cream shops with only a walk-up window, coffee shops with only a drive-up window and 24-hour fast food drive-throughs that close the building entrances to walk-in customers during late night/early morning hours. Where outdoor seating for customers is made available by these types of businesses, public toilet facilities for these walk-up/drive-through establishments should be available [see Commentary Figure 2902.3.1(2)]. If such outdoor seating areas can be "closed for public use" such as by a perimeter fence and locked entry gates, the seating area is not available for use and no requirement would exist to provide public toilet facilities.

Variations of the above service window applications are dry cleaners, pizza pickups and banks that provide service or products to customers from indoor counters or kiosks. Because the public must walk into these buildings for service, public toilet facilities are required. Obviously, these establishments are required to have toilet facilities for the employees; however, those facilities might not be properly located for public access. For example, if the location of the toilet facilities in a dry cleaning establishment requires that the public walk a convoluted path around machinery and hanging clothes racks, the user could become confused about how to safely exit the toilet facilities and return to where he or she started. Public toilet facilities must be provided along an obvious and safe path of travel. Note that this path of travel must also meet the accessible route requirements for disabled persons. In the pizza pickup situation, because the public is not allowed to pass through a kitchen, the toilet facilities would have to be located on the customer side of the pickup counter. Banks (as well as check cashing establishments) do not have code restrictions for the areas that the public cannot pass through; however, the operators of these establishments might wish to restrict public access to backroom areas for security reasons. These self-imposed restrictions do not justify denying the public access to the toilet facilities located in restricted areas. If the toilet facilities are located in restricted areas, public toilet facilities must be provided outside of those self-imposed restricted areas.

[P] 2902.3.2 Location of toilet facilities in occupancies other than malls. In occupancies other than covered and open mall buildings, the required public and employee toilet facilities shall be located not more than one *story* above or below the space required to be provided with toilet facilities, and the path of travel to such facilities shall not exceed a distance of 500 feet (152 m).

Exception: The location and maximum distances of travel to required employee facilities in factory and industrial occupancies are permitted to exceed that required by this section, provided that the location and maximum distance of travel are *approved*.

❖ To prevent health problems for building occupants related to difficulty in accessing a needed toilet facility in a timely fashion, the code clearly provides two conditions that must be met: 1) the required toilet facilities must be located within a certain travel distance and 2) the building occupant must not be required to travel beyond the next adjacent story above or below his or her location.

The distribution of plumbing fixtures within a build-

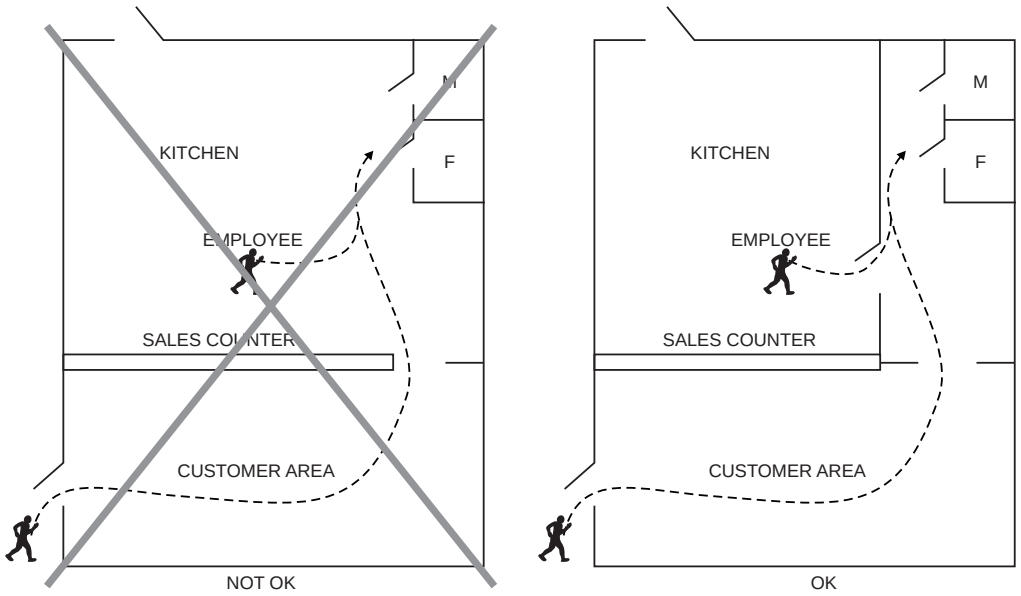

Figure 2902.3.1(1)
CUSTOMER TOILET ACCESS

INTERNATIONAL CODE COUNCIL®
Copyright © 2015 ICC. ALL RIGHTS RESERVED. Accessed by David Dammon on Jun 21, 2017 12:30:52 PM pursuant to License Agreement with ICC. No further reproduction or distribution authorized. ANY UNAUTHORIZED REPRODUCTION OR DISTRIBUTION IS A VIOLATION OF THE FEDERAL COPYRIGHT ACT AND THE LICENSE AGREEMENT, AND SUBJECT TO CIVIL AND CRIMINAL PENALTIES THEREUNDER.

ing must satisfy the maximum travel limitations for occupants in the building. Sections 2902.3.2 and 2902.3.3 limit the horizontal and vertical distances that an occupant has to travel to use a toilet facility. A 20-story high-rise office building cannot have all of the required plumbing fixtures located on the 10th floor, as the path of travel must neither exceed a travel distance of 500 feet (152 m) nor require travel beyond the adjacent story above or below. While this travel path limitation can result in toilet facilities not being located on every floor of a multistory building, the intent of the code is for a proportional number of fixtures to be available for the intended occupant use. For example, occupants on the 20th, 19th and 18th floors could reasonably be expected to utilize toilet facilities located only on the 19th floor (as long as the 500-foot (152 m) travel distance limitation is not exceeded). However, that toilet facility cannot have just one fixture of each type to serve three floors of occupants. The distribution of fixtures must be proportioned according to the number of occupants that will be using the toilet facility. To illustrate, assume that each of the 20 floors in this high-rise business occupancy building has an occupant load of 100. Applying the business occupancy water closet fixture ratio to the occupant load for the entire building results in 40 male water closets required for the building. Three floors of occupants will require (150 floor occupants/1,000 total occupants) x 21 w/c = 3.15 or 4 male water closets on the 19th floor.

The exception in this section provides for the unique nature of the workplace factory and industrial occupancies where the designer is better equipped to determine the location of the employee toilet facilities.

[P] 2902.3.3 Location of toilet facilities in malls. In covered and open mall buildings, the required public and employee toilet facilities shall be located not more than one story above or below the space required to be provided with toilet facilities, and the path of travel to such facilities shall not exceed a distance of 300 feet (91 mm). In mall buildings, the required facilities shall be based on total square footage (m^2) within a covered mall building or within the perimeter line of an open mall building, and facilities shall be installed in each individual store or in a central toilet area located in accordance with this section. The maximum distance of travel to central toilet facilities in mall buildings shall be measured from the main entrance of any store or tenant space. In mall buildings, where employees' toilet facilities are not provided in the individual store, the maximum distance of travel shall be mea-



Figure 2902.3.1(2)
WALK-UP ICE CREAM SHOP WITH OUTDOOR SEATING

INTERNATIONAL CODE COUNCIL®
Copyright © 2015 ICC. ALL RIGHTS RESERVED. Accessed by David Dammon on Jun 21, 2017 12:30:52 PM pursuant to License Agreement with ICC. No further reproduction or distribution authorized. ANY UNAUTHORIZED REPRODUCTION OR DISTRIBUTION IS A VIOLATION OF THE FEDERAL COPYRIGHT ACT AND THE LICENSE AGREEMENT, AND SUBJECT TO CIVIL AND CRIMINAL PENALTIES THEREUNDER.

sured from the employees' work area of the store or tenant space.

❖ In covered and open malls, the path of travel to required toilet facilities must not exceed a distance of 300 feet (91 m) and is measured from the main entrance of any store or tenant space. Note, however, that if the tenant space does not have toilets for the employees, the starting point for measuring the travel path is the employee's work area. As for other occupancies, the facilities must be located no more than one story above or below the occupant's location. This shorter travel distance addresses the fact that covered malls are frequently very congested and occupants are unfamiliar with their surroundings. It is also logical to reduce the travel time for employees for security reasons. The minimum number of required plumbing facilities is based on total square footage of the mall, including tenant spaces. This section does not prohibit the installation of separate employee toilet facilities in individual tenant spaces; however, such facilities are not deductible from the total number of common facilities required (see commentary, Section 2902.3).

[P] 2902.3.4 Pay facilities. Where pay facilities are installed, such facilities shall be in excess of the required minimum facilities. Required facilities shall be free of charge.

❖ Pay facilities have been included in some public areas to prevent vagrants from loitering in the public bathrooms. They may also be installed to offer customers greater amenities where the customer desires such upgrades. This section does not prevent pay facilities from being installed; rather, it requires that such facilities be in excess of those required by Section 2902.

[P] 2902.3.5 Door locking. Where a toilet room is provided for the use of multiple occupants, the egress door for the room shall not be lockable from the inside of the room. This section does not apply to family or assisted-use toilet rooms.

❖ Some multiple-occupant toilet rooms have a locking door to facilitate closure of the toilet facility for maintenance or for security when the toilet room is closed after a building's occupancy hours. However, this section prohibits this type of lock or any other lock from being engaged on the inside of the door so that persons cannot lock themselves in the toilet room for whatever reason. This requirement is to prevent multiple occupant toilet rooms from becoming safe havens for illicit activities. Because family/assisted-use toilet rooms are provided to offer privacy to a user and a family member or caretaker, the lock prohibition does not apply to those types of toilet rooms.

[P] 2902.3.6 Prohibited toilet room location. Toilet rooms shall not open directly into a room used for the preparation of food for service to the public.

❖ This section provides a safeguard against a toilet room being used for food preparation functions, such as dumping of waste liquids and food scraps in a water closet.

[P] 2902.4 Signage. Required public facilities shall be provided with signs that designate the sex as required by Section 2902.2. Signs shall be readily visible and located near the entrance to each toilet facility. Signs for accessible toilet facilities shall comply with Section 1111.

❖ Public facilities must be designated by a legible sign for each sex and located at the entrance to such facilities. The code is silent on the specifics of how gender designation is displayed or stated. Where a toilet or bathing room is accessible, the signage must comply with Section 1111 of the code, which requires the International Symbol of Accessibility to be displayed at any accessible toilet or bathing room, including a family/assisted-use toilet or bathing room. In addition, Section 1111.2 requires directional signage (with the International Symbol of Accessibility) at inaccessible toilet and bathing rooms indicating the direction of accessible toilet or bathing facilities, and at separate sex toilet and bathing facilities indicating the direction of family or assisted-use toilet and bathing facilities, if provided.

[P] 2902.4.1 Directional signage. Directional signage indicating the route to the required public toilet facilities shall be posted in a lobby, corridor, aisle or similar space, such that the sign can be readily seen from the main entrance to the building or tenant space.

❖ This section reinforces the intent of Section 2902.3, which is to ensure that public toilet facilities are provided for spaces intended for public use. Where the public facilities are not clearly visible from within the public areas or the facilities are locked, patrons and visitors are sometimes told that public toilet facilities are not available or are for employee use only. Mandated directional signs will inform the public that public restrooms do exist and where they are located. It is difficult to tell a customer or patron that there are no public facilities when there is an obvious sign advertising their existence. This code requirement provides to the building official the means for issuing a citation to the building owner if the signs are found to be removed in an attempt by the building owner or tenant to limit public access to toilet facilities. The location of the sign is to be near the entrance to the facilities in either an aisle or corridor where it will be readily seen. The code is silent on specific details of the signage such as wording, size, color or mounting height. Note that Section 1110 covering signage for accessibility requires that directional signage must be provided at the location of separate-sex toilet facilities indicating the location of family or assisted-use toilet facilities, if such facilities are required. The location of the sign must be near the main entrance to the building or tenant space. The code is silent on specific details of the signage such as wording, size, color or mounting height.

Note that Section 1110 covering signage for acces-

INTERNATIONAL CODE COUNCIL®
Copyright © 2015 ICC. ALL RIGHTS RESERVED. Accessed by David Dammon on Jun 21, 2017 12:30:52 PM pursuant to License Agreement with ICC. No further reproduction or distribution authorized. ANY UNAUTHORIZED REPRODUCTION OR DISTRIBUTION IS A VIOLATION OF THE FEDERAL COPYRIGHT ACT AND THE LICENSE AGREEMENT, AND SUBJECT TO CIVIL AND CRIMINAL PENALTIES THEREUNDER.

sibility requires that directional signage be provided at the location of separate-sex toilet facilities indicating the location of family or assisted-use toilet facilities, if such separate-sex facilities are required.

[P] 2902.5 Drinking fountain location. Drinking fountains shall not be required to be located in individual tenant spaces provided that public drinking fountains are located within a distance of travel of 500 feet (152 m) of the most remote location in the tenant space and not more than one story above or below the tenant space. Where the tenant space is in a covered or open mall, such distance shall not exceed 300 feet (91 440 mm). Drinking fountains shall be located on an accessible route.

❖ This section clarifies the required location for drinking fountains with respect to the spaces that require access to drinking fountains. Drinking fountains are not required to be near toilet facilities, but because of the similar travel distance limitations, they might be in the same area as the toilet facility. Because all installed drinking fountains are required to be of accessible design (either for standing or wheelchair-seated persons), they must be on an accessible route (see Chapter 11).

Previous to the addition of this section to the code, the designer of the building had the choice as to whether drinking fountains were to be installed in individual tenant spaces or in a common public area outside of the tenant space. Because the code did not specify a travel distance limitation, drinking fountains located in the common area for serving the tenant spaces could be located at any distance away from a tenant space. It was, therefore, acceptable to put all of the common area drinking fountains in a single location instead of spread around in the common area to better serve the demand for drinking water. Now, if common area drinking fountains are to be installed, they must be apportioned such that they serve the demands of the tenants within the travel distance limitations.

[P] 2902.6 Small occupancies. Drinking fountains shall not be required for an occupant load of 15 or fewer.

❖ The requirement for drinking fountains in all occupancies puts an undue hardship on small establishments where the floor space is usually limited.

Bibliography

The following resource material was used in the preparation of the commentary for this chapter of the code.

ICC/ANSI 117.1-2009, *Accessible and Usable Buildings and Facilities*. Washington, DC: International Code Council, 2009.

INTERNATIONAL CODE COUNCIL®
Copyright © 2015 ICC. ALL RIGHTS RESERVED. Accessed by David Dammon on Jun 21, 2017 12:30:52 PM pursuant to License Agreement with ICC. No further reproduction or distribution authorized. ANY UNAUTHORIZED REPRODUCTION OR DISTRIBUTION IS A VIOLATION OF THE FEDERAL COPYRIGHT ACT AND THE LICENSE AGREEMENT, AND SUBJECT TO CIVIL AND CRIMINAL PENALTIES THEREUNDER.

INTERNATIONAL CODE COUNCIL®
Copyright © 2015 ICC. ALL RIGHTS RESERVED. Accessed by David Dammon on Jun 21, 2017 12:30:52 PM pursuant to License Agreement with ICC. No further reproduction or distribution authorized. ANY UNAUTHORIZED REPRODUCTION OR DISTRIBUTION IS A VIOLATION OF THE FEDERAL COPYRIGHT ACT AND THE LICENSE AGREEMENT, AND SUBJECT TO CIVIL AND CRIMINAL PENALTIES THEREUNDER.

Chapter 30: Elevators and Conveying Systems

General Comments

Chapter 30 contains the provisions that regulate vertical and horizontal transportation and material-handling systems installed in buildings. The installation must comply with the requirements in this chapter and the standards referenced herein.

Section 3001.1 contains the scope of the chapter.

Section 3001.2 identifies the standards to which elevators and conveying systems must comply.

Section 3001.3 contains requirements for accessible elevators.

Sections 3002.1 through 3002.7 contain requirements for elevator hoistway enclosures such as emergency doors in blind hoistways.

Sections 3003.1 through 3003.3 include requirements for emergency operation of elevators.

Sections 3004.1 through 3004.4 address requirements for conveying systems and personnel and material hoists.

Sections 3005.1 through 3005.6 address machine room requirements.

Sections 3006.1 through 3006.4 address the need and requirements for hoistway opening protection.

Sections 3007.1 through 3007.9 provide the requirements for fire service access elevators.

Sections 3008.1 through 3008.10 provide the requirements for occupant evacuation elevators.

Purpose

The purpose of this chapter is to regulate the installation, testing, inspection, maintenance, alteration and repair of vertical and horizontal transportation and material-handling systems installed in buildings. Compliance with the requirements in this chapter provides for life safety and promotes public welfare. The chapter is also intended to be used as a minimum safety standard by architects, engineers, insurance companies, manufacturers and contractors and as standard safety practice for owners and managers of buildings where equipment covered by this chapter is installed and used.

The chapter provides several elements that protect occupants and assist emergency responders during fires, including Section 3003, Emergency Operations; Section 3006, Elevator Lobbies and Hoistway Opening Protection; Section 3007, Fire Service Access Elevators; and Section 3008, Occupant Evacuation Elevators.

The provisions found in Chapter 30 of the code and associated standards are specifically coordinated to work together.

SECTION 3001 GENERAL

3001.1 Scope. This chapter governs the design, construction, installation, *alteration* and repair of elevators and conveying systems and their components.

❖ This chapter provides requirements for building features associated with elevators and hoistway enclosures such as elevator lobbies and hoistway opening protection requirements. The actual design, construction and installation requirements of the elevators and conveying systems are addressed by the referenced standards in Section 3001.2. Therefore, the focus of this chapter is only on the building elements associated with elevators and conveying systems. The equipment itself is addressed by the standards.

3001.2 Referenced standards. Except as otherwise provided for in this code, the design, construction, installation, *alteration*, repair and maintenance of elevators and conveying systems and their components shall conform to ASME A17.1/CSA B44, ASME A17.7/CSA B44.7, ASME A90.1, ASME B20.1, ANSI MH29.1, ALI ALCTV and ASCE 24 for construction in flood hazard areas established in Section 1612.3.

❖ The enforceability of a standard is established in this section, and applies wherever the provisions of this chapter do not otherwise indicate a requirement. Therefore, even if a standard is not referenced anywhere else within this chapter it will be applicable to such systems and equipment. For example, automotive lifts are addressed by the reference to ALI ALCTV but no further requirements are found in Chapter 30. This standard is fully applicable to such automotive lifts. In general, the applications of the referenced standards are as follows

- ASME A17.1/CSA B44 applies to building transportation equipment that is permanently installed to transport people and freight.
- ASME A17.7/CSA B44.7 is a performance-based standard that applies to building transportation equipment that is permanently installed to transport people and freight. Compliance with

INTERNATIONAL CODE COUNCIL®
Copyright © 2015 ICC. ALL RIGHTS RESERVED. Accessed by David Dammon on Jun 21, 2017 12:30:52 PM pursuant to License Agreement with ICC. No further reproduction or distribution authorized. ANY UNAUTHORIZED REPRODUCTION OR DISTRIBUTION IS A VIOLATION OF THE FEDERAL COPYRIGHT ACT AND THE LICENSE AGREEMENT, AND SUBJECT TO CIVIL AND CRIMINAL PENALTIES THEREUNDER.

ASME A17.7/CSA B44.7 is verified by a Certificate of Conformance issued by an Accredited Elevator/Escalator Certification Organization (AECO).

- ASME A90.1 applies specifically to belt-type manlifts.
- ASME B20.1 applies to equipment that is permanently installed to transport freight. People are prohibited from riding this equipment.
- ALI ALCTV applies specifically to automotive lifts such as those used in service garages. Currently the standard does not address lifts used for automated parking structures.
- ASCE 24 as applicable for flood hazard areas.

Elevators installed in buildings and structures located in designated flood hazard areas may be subject to additional flood-resistant design and construction requirements. The application of these additional requirements depends on whether the elevator or components of the elevator equipment are to be located below the design flood elevation. Those not familiar with the subtle differences that make a standard applicable to a specific equipment design should review both the standard's scope and definitions. ASCE 24 applies to the construction of elevators and conveying systems located in flood hazard areas, as established by application of Section 1612.3 of the code. Section 7.5 of ASCE 24-05 and FEMA FIA-TB #4, *Elevator Installation for Buildings Located in Special Flood Hazard Areas,* provide extensive guidance on the proper method of installing elevators in buildings and structures located in designated flood hazard areas. In addition to raising elevator service equipment above the design flood elevation, a concern would be determining if the fire fighters' emergency operation requirements of Section 3003 do not require the elevator car to descend automatically to a level below the design flood elevation during conditions of flooding. The safety of occupants may be jeopardized and the elevator car may be damaged if it descends below the design flood elevation during flooding.

Referenced standards have a long history of providing minimum safety requirements for the equipment covered by their scope. As an example, ASME A17.1 was first published in 1921 and 18 subsequent editions have been published.

Interpretations of the referenced standards can be obtained through the committee responsible for developing and maintaining the standard. The ASME A17.1/CSA B44, ASME A90.1 and ASME B20.1 standards committees have also published interpretations and include copies of all recent interpretations for purchasers of these documents. The publisher of ASME A17.1/CSA B44 also has available a handbook that explains and augments the requirements. While every effort has been made to eliminate conflicts between the code and the referenced standards, such conflicts may occasionally occur. Where differences occur, the requirements of the code take precedence (see Section 102.4).

In terms of the maintenance of elevators, it should be noted that ASME A17.1/CSA B44 contains Appendix N, which specifies frequency of maintenance. This appendix must be specifically adopted by a jurisdiction to become effective. Note that Section 606.1 of the *International Property Maintenance Code®* (IPMC®) references Appendix N.

3001.3 Accessibility. Passenger elevators required to be accessible or to serve as part of an *accessible means of egress* shall comply with Sections 1009 and 1109.7.

❖ Section 1109.7 requires elevators that form part of an accessible route to be accessible. Section 1009 provides that elevators may be required to be part of an accessible means of egress from a building. The ICC A117.1 standard addresses the accessibility requirements for elevators, including elevator location and access; operation and leveling; door operation; door size; door protective and reopening devices; door delay (dwell time) from hall and car calls; car inside dimensions, controls and position indicators and signals; telephone or intercom systems; floor coverings; minimum illumination; hall buttons; hall lanterns; door jamb markings; and clearance between sills. This standard provides acceptable and appropriate service for all users and makes multistory buildings accessible and usable by people with physical disabilities. The standard provides requirements for destination-oriented elevators, limited use/limited application elevators (LU/LA), private residential elevators as well as standard passenger elevators. Each type can be used to provide an accessible route. The choice of which type of elevator may be used depends on the limits of their use established in ASME A17.1/CSA B44. For example, private residence elevators may only be used to or in a private dwelling.

3001.4 Change in use. A change in use of an elevator from freight to passenger, passenger to freight, or from one freight class to another freight class shall comply with Section 8.7 of ASME A17.1/CSA B44.

❖ This section intends to require enforcement of Section 8.7 of ASME A17.1/CSA B44 whenever the elevator changes in use or freight class. The application of these requirements results in an elevator that will operate safely and comply with requirements that are unique to and necessary for the new use or freight class.

SECTION 3002
HOISTWAY ENCLOSURES

3002.1 Hoistway enclosure protection. Elevator, dumbwaiter and other hoistway enclosures shall be *shaft enclosures* complying with Section 713.

❖ Reference is made to Section 713 of the code for the required fire resistance and construction of the hoist-

INTERNATIONAL CODE COUNCIL®
Copyright © 2015 ICC. ALL RIGHTS RESERVED. Accessed by David Dammon on Jun 21, 2017 12:30:52 PM pursuant to License Agreement with ICC. No further reproduction or distribution authorized. ANY UNAUTHORIZED REPRODUCTION OR DISTRIBUTION IS A VIOLATION OF THE FEDERAL COPYRIGHT ACT AND THE LICENSE AGREEMENT, AND SUBJECT TO CIVIL AND CRIMINAL PENALTIES THEREUNDER.

way enclosure. Section 713 contains fire-resistance rating requirements, as well as construction requirements for shafts, which are typically the methods used to satisfy the requirements for a hoistway enclosure. It should be noted that this section of the code does not require hoistway enclosures for all elevators and dumbwaiters. See Section 2.1.1.3 of ASME A17.1 for the protection requirements for partially enclosed hoistways.

3002.1.1 Opening protectives. Openings in hoistway enclosures shall be protected as required in Chapter 7.

Exception: The elevator car doors and the associated hoistway enclosure doors at the floor level designated for recall in accordance with Section 3003.2 shall be permitted to remain open during Phase I Emergency Recall Operation.

❖ Reference is made to Chapter 7 for protection of openings in hoistway enclosures. Chapter 7 contains minimum hourly rating requirements for openings based on the fire-resistance rating required for the enclosure. For example, if a hoistway enclosure was required to be 2-hour fire-resistance rated, a $1^1/_2$-hour fire door assembly would be required in accordance with Table 716.5. It should be noted that additional requirements are found in Sections 3006, 3007 and 3008 for elevator lobbies and protection of hoistway openings.

When an elevator opens into a corridor that is required to be of fire-resistance-rated construction, the opening between the elevator shaft and the corridor must be protected to meet not only the shaft's fire protection rating but also the additional smoke and draft protection requirements necessary to limit the spread of smoke into the corridor. This additional smoke and draft control requirement is found in Section 716.5.3.1. The elevator hoistway shaft doors opening into such rated corridors must either be separated in accordance with Section 3006.3 or provide a shaft door meeting both the smoke and draft protection requirements for corridor doors in Section 716.5.3.1 and the appropriate fire protection rating of Table 716.5 for the shaft.

It should be noted that Section 3006.2 requires protection of hoistway openings in buildings once three or more stories are connected by a hoistway. This is not the case if the building is a low- to mid-rise sprinklered building, but the corridor ratings may no longer be required in sprinklered buildings. Taller sprinklered buildings (see Section 3006.2) would require this protection regardless of whether rated corridors are provided. Therefore, the applicability of this requirement is likely limited as the subject is primarily addressed by the elevator lobby and hoistway opening protection requirements found in Section 3006 for most buildings.

While many elevator hoistway shaft doors are tested and labeled for the 1-hour or $1^1/_2$-hour fire-resistance rating (Section 716.5), very few, if any, of the doors typically sold in the U.S. will also meet the smoke and draft requirements (Section 716.5.3.1) that would allow them to open directly into a fire-resistance-rated corridor. Section 3006.3 provides several methods to protect these hoistway openings.

3002.1.2 Hardware. Hardware on opening protectives shall be of an *approved* type installed as tested, except that *approved* interlocks, mechanical locks and electric contacts, door and gate electric contacts and door-operating mechanisms shall be exempt from the fire test requirements.

❖ In order to verify that hardware used with elevator doors will not affect their fire-resistance rating, door hardware not specifically exempt by this section is required to be part of the door assembly during the fire test. The devices that are exempt from the fire test have minimum fire and physical requirements contained in ASME A17.1/CSA B44. Passenger elevator door hardware consists of a header, track hangers, pendant bolts, floor sill with guides, sill support plates, sill brackets, retaining angles and closer assemblies. Each component may bear a separate label, or the assembly may have one label to cover all components. The label should clearly identify the assembly or component to which it applies. Typically, labels are viewed from inside the hoistway.

3002.2 Number of elevator cars in a hoistway. Where four or more elevator cars serve all or the same portion of a building, the elevators shall be located in not fewer than two separate hoistways. Not more than four elevator cars shall be located in any single hoistway enclosure.

❖ The number of elevators provided in a building is not mandated by the code, but is a design decision. The code does limit the maximum number of elevator cars in a single hoistway to four. This limits the potential of a single hoistway fire incident causing the removal of all elevators from service, particularly in larger structures, such as high-rise buildings.

3002.3 Emergency signs. An *approved* pictorial sign of a standardized design shall be posted adjacent to each elevator call station on all floors instructing occupants to use the *exit stairways* and not to use the elevators in case of fire. The sign shall read: IN CASE OF FIRE, ELEVATORS ARE OUT OF SERVICE. USE EXIT STAIRS.

Exceptions:

1. The emergency sign shall not be required for elevators that are part of an *accessible means of egress* complying with Section 1009.4.
2. The emergency sign shall not be required for elevators that are used for occupant self-evacuation in accordance with Section 3008.

❖ Elevators may be unsafe during a fire because:

- Persons may push a corridor button and then wait for an elevator that may never respond. Note that the button will not illuminate if the elevator is in fire fighter emergency operation. Valuable time in which to leave the building safely is lost.

INTERNATIONAL CODE COUNCIL®
Copyright © 2015 ICC. ALL RIGHTS RESERVED. Accessed by David Dammon on Jun 21, 2017 12:30:52 PM pursuant to License Agreement with ICC. No further reproduction or distribution authorized. ANY UNAUTHORIZED REPRODUCTION OR DISTRIBUTION IS A VIOLATION OF THE FEDERAL COPYRIGHT ACT AND THE LICENSE AGREEMENT, AND SUBJECT TO CIVIL AND CRIMINAL PENALTIES THEREUNDER.

- Elevators cannot start until the car and hoistway doors are closed. A panic could lead to overcrowding of an elevator and blockage of the doors, thus preventing closing.
- Power failure during a fire can happen at any time and thus lead to entrapment.
- Elevators respond to car and corridor calls. One of these calls may be at the fire floor.

Dangerous delivery of the elevator to the fire floor can be caused by:

- An elevator passenger pressing the car button for the fire floor.
- One or both of the corridor call buttons being pushed on the fire floor.
- Heat melting or deforming the corridor push button or its wiring at the fire floor.

It should be noted that if the conditions on the fire floor or any floor have become dangerous within the lobby, the elevator will automatically recall to the lobby as the smoke detectors in the lobby would have activated.

In a fire emergency, an occupant will normally try to exit the building by the route he or she entered (elevators). The pictorial sign will indicate that the occupants not use the elevators, but rather use the exit stairways to exit the building.

There are two exceptions to this requirement. Exception 1 recognizes that elevators may be used as part of the accessible means of egress in accordance with Section 1009.4. Exception 2 recognizes that passenger elevators may be used for occupant self-evacuation during fire emergencies in accordance with Section 3008. In either case, the sign required by this section would not be appropriate since it would be communicating a contradictory message. Section 1009.4 dictates specific methods to permit the use of elevators as an element of an accessible means of egress.

Section 1009.4 does not anticipate the unassisted use of an elevator by a person with disabilities but instead anticipates assisted rescue during Phase II operations. At that point, the fire department has control of the elevator and will provide the needed assistance. Section 3008, specifically, permits the use of an elevator by the general public for unassisted evacuation prior to a Phase I recall. Elevators serving floors or elevators served by different lobbies where smoke detection has not activated the Phase I recall will continue to operate normally and are permitted to be used by the public.

See Commentary Figure 3002.3 for an example of an emergency pictorial sign. Note that when occupant evacuation elevators in accordance with Section 3008 are used, ASME A17.1/CSA B44 Section 2.27.11.2 notes that this sign is not to be installed. Instead, a variable message sign (Defined in A117.1) is required.

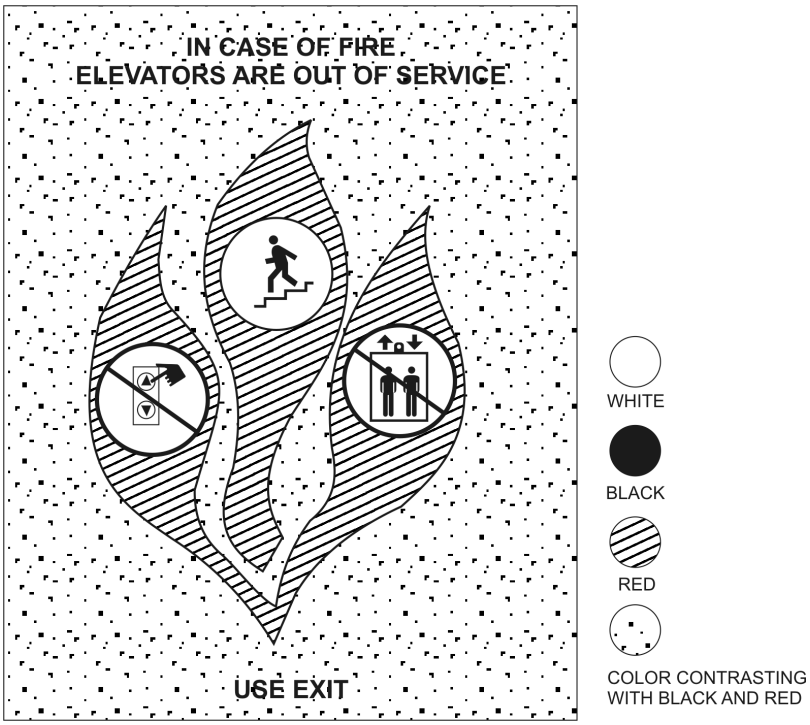

Figure 3002.3
ELEVATOR CORRIDOR CALL STATION PICTOGRAPH

INTERNATIONAL CODE COUNCIL®
Copyright © 2015 ICC. ALL RIGHTS RESERVED. Accessed by David Dammon on Jun 21, 2017 12:30:52 PM pursuant to License Agreement with ICC. No further reproduction or distribution authorized. ANY UNAUTHORIZED REPRODUCTION OR DISTRIBUTION IS A VIOLATION OF THE FEDERAL COPYRIGHT ACT AND THE LICENSE AGREEMENT, AND SUBJECT TO CIVIL AND CRIMINAL PENALTIES THEREUNDER.

3002.4 Elevator car to accommodate ambulance stretcher. Where elevators are provided in buildings four or more *stories* above, or four or more *stories* below, *grade plane*, not fewer than one elevator shall be provided for fire department emergency access to all floors. The elevator car shall be of such a size and arrangement to accommodate an ambulance stretcher 24 inches by 84 inches (610 mm by 2134 mm) with not less than 5-inch (127 mm) radius corners, in the horizontal, open position and shall be identified by the international symbol for emergency medical services (star of life). The symbol shall be not less than 3 inches (76 mm) in height and shall be placed inside on both sides of the hoistway door frame.

❖ A key aspect of the applicability of this section is limited to situations where elevators are already being provided. This section does not require elevators to be installed but simply specifies size requirements when elevators are provided. This particular section is intended to aid rescue efforts in taller buildings (greater than three stories above or below grade plane). One of the provided elevators must be sized to accommodate a typical ambulance stretcher and emergency personnel. The elevator meeting this requirement does not need to be the same elevator throughout the entire building, but each floor must be served by such an elevator. This becomes more of an issue in very tall buildings that generally do not have any elevators that extend the entire height of the building, or that serve all floors. Often, there are transfer floors to connect different banks of elevators. Additionally, to aid the emergency personnel in identifying which elevator is sized to accommodate a stretcher, the international symbol (star of life) is required to be located on each side of the hoistway door frame.

The size of the ambulance stretcher is based on the typical size of a stretcher commonly used by fire departments in North America. It is necessary to have the patient in a horizontal position on the elevator to avoid further injury to the patient and to facilitate many of the medical tasks being performed by the paramedics while on the elevator.

This section also recognizes that stretchers do not have right-angle corners but are rounded and thus an allowance for the recognition of 5-inch (127 mm) radius corners is provided. This gives more flexibility in elevator car sizing. For example, 3,500-pound (1585 kg) cars with a 42-inch (1066 mm) side slide door or a 4,000 pound car with a center slide door can comply with this requirement. Commentary Figures 3002.4(a) and 3002.4(b) demonstrate the application of the radius corners when determining elevator car size.

It is also important to note that fire service access elevators (FSAE) required in Section 403.6.1 will also be required to comply with this section. The FSAE are those being used by the fire department and should be able to accommodate a stretcher.

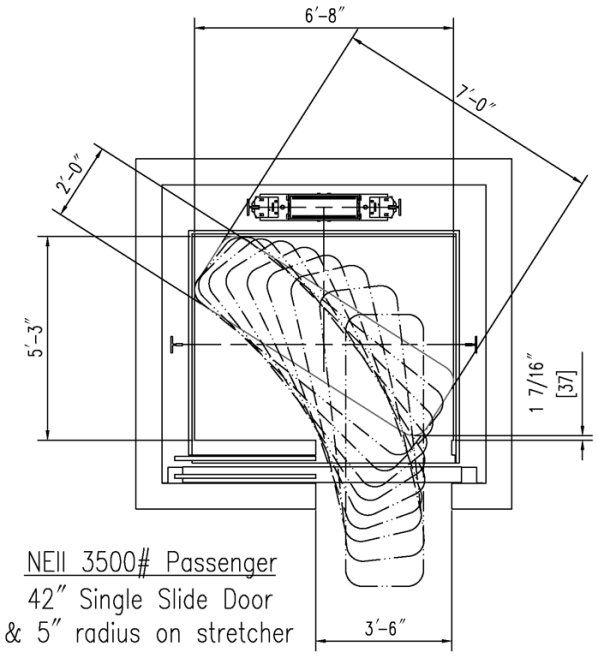

For SI: 1 inch = 25.4 mm, 1 foot = 304.8 mm,
1 pound = 0.454 kg.

Figure 3002.4(a)
EXAMPLES: ELEVATOR CAR SIZING—3,500 lb PASSENGER ELEVATOR

INTERNATIONAL CODE COUNCIL®
Copyright © 2015 ICC. ALL RIGHTS RESERVED. Accessed by David Dammon on Jun 21, 2017 12:30:52 PM pursuant to License Agreement with ICC. No further reproduction or distribution authorized. ANY UNAUTHORIZED REPRODUCTION OR DISTRIBUTION IS A VIOLATION OF THE FEDERAL COPYRIGHT ACT AND THE LICENSE AGREEMENT, AND SUBJECT TO CIVIL AND CRIMINAL PENALTIES THEREUNDER.

3002.5 Emergency doors. Where an elevator is installed in a single blind hoistway or on the outside of a building, there shall be installed in the blind portion of the hoistway or blank face of the building, an emergency door in accordance with ASME A17.1/CSA B44.

❖ To allow emergency personnel reasonable access to a single blind elevator hoistway, emergency doors are required to be provided. A single blind hoistway is a hoistway for one elevator without openings. For example, an express elevator that opens at the lobby and serves only floors 10 through 20 is a blind hoistway from floors two through nine. Therefore, emergency doors are required in accordance with ASME A17.1/CSA B44, which contains requirements for opening sizes, opening access, door operation and door location. This requirement does not apply to blind hoistways that have multiple elevators.

3002.6 Prohibited doors. Doors, other than hoistway doors and the elevator car door, shall be prohibited at the point of access to an elevator car unless such doors are readily openable from the car side without a key, tool, special knowledge or effort.

❖ Where a door is installed in front of the hoistway door to meet the hoistway opening protection requirements in Section 3006.3, Item 3, or for security purposes this section requires that occupants be able to open the door. Inappropriate installation of these doors could lead to occupants becoming trapped in the area between the elevator doors and the additional set of doors. See Commentary Figure 3002.6 for a picture of an additional door located at the hoistway opening.



Figure 3002.6
ADDITIONAL DOOR IN FRONT OF HOISTWAY

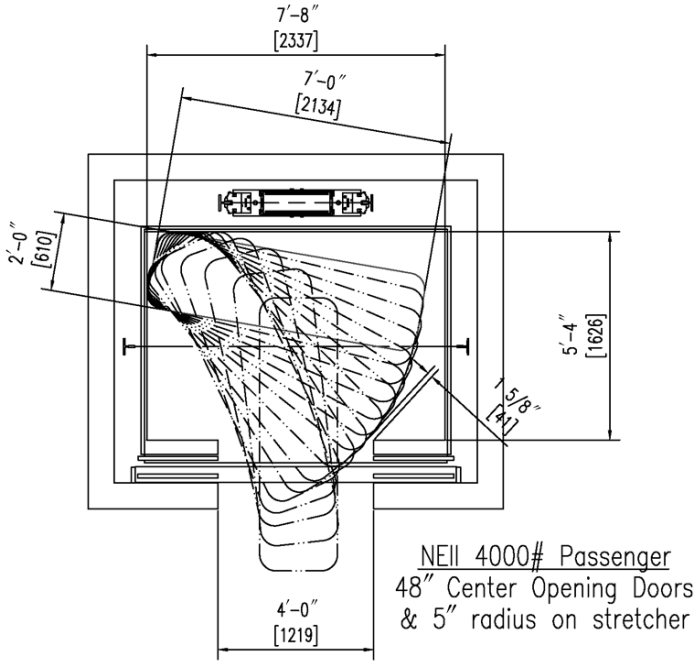

For SI: 1 inch = 25.4 mm, 1 foot = 304.8 mm,
1 pound = 0.454 kg.

Figure 3002.4(b)
EXAMPLES: ELEVATOR CAR SIZING—4,000 lb PASSENGER ELEVATOR

INTERNATIONAL CODE COUNCIL®
Copyright © 2015 ICC. ALL RIGHTS RESERVED. Accessed by David Dammon on Jun 21, 2017 12:30:52 PM pursuant to License Agreement with ICC. No further reproduction or distribution authorized. ANY UNAUTHORIZED REPRODUCTION OR DISTRIBUTION IS A VIOLATION OF THE FEDERAL COPYRIGHT ACT AND THE LICENSE AGREEMENT, AND SUBJECT TO CIVIL AND CRIMINAL PENALTIES THEREUNDER.

3002.7 Common enclosure with stairway. Elevators shall not be in a common *shaft enclosure* with a *stairway*.

Exception: Elevators within o*pen parking garages need not be separated from stairway enclosures*.

❖ To avoid the potential of a fire spreading from the elevator or elevator hoistway and affecting an exit stairway, separate protective enclosures are required for each. There is an exception to this section that acknowledges that a separate shaft enclosure is not required when in an open parking garage. This correlates with Section 712.1.10 and Exception 1 of Section 1006.3. More specifically, Section 712.1.10.2 allows elevators in open parking garages without a shaft enclosure. Also, Exception 2 of Section 1006.3 allows exit stairways in open parking structures to not be enclosed within a shaft enclosure. Therefore, the intent is that elevators need not be separated from exit stairways in open parking structures as the stairways and elevators would not require a shaft enclosure.

3002.8 Glass in elevator enclosures. Glass in elevator enclosures shall comply with Section 2409.2.

❖ The purpose of this section is simply to remind the code user that Section 2409.2 contains provisions regarding glass in elevator enclosures. Please see the commentary to Section 2409.2. It should be noted that other provisions of the code may also be applicable to the glass, such as Section 2406, when human impact loads are possible. Note that Section 2409.3 deals with vision panels in elevator hoistway doors and Section 2409.4 deals with glass in elevator cars.

3002.9 Plumbing and mechanical systems. Plumbing and mechanical systems shall not be located in an elevator hoistway enclosure.

Exception: Floor drains, sumps and sump pumps shall be permitted at the base of the hoistway enclosure provided they are indirectly connected to the plumbing system.

❖ If a pipe or duct that conveys gases, vapors or liquids and passes through a hoistway were to fail, operation of the elevator equipment could be affected in such a manner as to make it unsafe. Water could cause the malfunctioning of hoistway door interlocks, thereby allowing an elevator to leave a floor with the hoistway door open. A wet brake would also cause an extremely hazardous condition. The exception allows for a floor drain, sump or sump pump to be installed at the base of the shaft. However, the discharge is required to indirectly connect to the plumbing system and not be connected directly to any drain. The intent of this requirement is to eliminate the possibility of sewer gases entering into the hoistway, which could cause an explosion hazard.

This section is not intended to prohibit mechanical systems associated with hoistway pressurization or cooling or elevator equipment from being located within the hoistway enclosure.

SECTION 3003
EMERGENCY OPERATIONS

[F] 3003.1 Standby power. In buildings and structures where standby power is required or furnished to operate an elevator, the operation shall be in accordance with Sections 3003.1.1 through 3003.1.4.

❖ The purpose of this section is not to require standby power but to provide the specifics as to how standby power is provided for elevators when required by other sections of the code. The applicable sections that require standby power include:

- High-rise buildings, Section 403.4.8.2.
- Accessible egress via elevators, Section 1009.4.
- Fire service access elevators, Section 3007.8.
- Occupant evacuation elevators, Section 3008.8.

Generally, standby power provides both a means to bring all elevators to the designated level and operate elevators during a loss of power.

Once standby power is provided, ASME A17.1/CSA B44 also has specific requirements for standby power operation of elevators, such as absorption of regenerative power (see Section 2.26.10, ASME A17.1/CSA B44) and selection of elevator(s) that are provided standby power (see Section 2.27.2, ASME A17.1/CSA B44).

Note that the requirement of standby power for fire service access elevators and occupant evacuation elevators may be considered more specific and restrictive. In other words, for occupant evacuation, all elevators technically need to be available. Section 3003 allows the transfer of power from one elevator to another. This is not appropriate for occupant evacuation. Section 3008 requires all elevators used for occupant evacuation to be available and on standby power. Approaches using fewer elevators on standby power for egress or a reduced capacity or duration of standby power availability would be considered an alternative that would need to be addressed through the application of Section 104.11. Traditionally, evacuation in high-rise buildings involves the fire floor and two above and two below.

[F] 3003.1.1 Manual transfer. Standby power shall be manually transferable to all elevators in each bank.

❖ To allow emergency personnel to provide standby power to any elevator(s) at any time, this section requires a manual means of transferring standby power to all elevators in each bank. This does not mean that all elevators need to be running on standby power at the same time but instead that all elevators are capable of being switched to standby power individually. This manual transfer system could assist emergency personnel in evacuating building occupants (see also the requirements in ASME A17.1/CSA B44, Section 2.27.2).

INTERNATIONAL CODE COUNCIL®
Copyright © 2015 ICC. ALL RIGHTS RESERVED. Accessed by David Dammon on Jun 21, 2017 12:30:52 PM pursuant to License Agreement with ICC. No further reproduction or distribution authorized. ANY UNAUTHORIZED REPRODUCTION OR DISTRIBUTION IS A VIOLATION OF THE FEDERAL COPYRIGHT ACT AND THE LICENSE AGREEMENT, AND SUBJECT TO CIVIL AND CRIMINAL PENALTIES THEREUNDER.

[F] 3003.1.2 One elevator. Where only one elevator is installed, the elevator shall automatically transfer to standby power within 60 seconds after failure of normal power.

❖ In the case where a building is equipped only with one elevator, a standby power system must automatically restore power to the elevator within 60 seconds after failure of the primary power supply.

[F] 3003.1.3 Two or more elevators. Where two or more elevators are controlled by a common operating system, all elevators shall automatically transfer to standby power within 60 seconds after failure of normal power where the standby power source is of sufficient capacity to operate all elevators at the same time. Where the standby power source is not of sufficient capacity to operate all elevators at the same time, all elevators shall transfer to standby power in sequence, return to the designated landing and disconnect from the standby power source. After all elevators have been returned to the designated level, at least one elevator shall remain operable from the standby power source.

❖ Where a building is equipped with two or more elevators, this section provides alternative methods of standby power operation. When the standby power system is sized to accommodate all of the elevators, then all are required to automatically switch to standby power 60 seconds after failure of the primary power supply. If a standby power system is sized smaller and is only capable of providing standby power to the elevators in sequence, it must return all elevators to their designated landings by standby power and at least one must remain operable through standby power. This section is not requiring a building to place all elevators on standby power simultaneously. This is only required where the standby power is designed with sufficient capacity to do so. See also the requirements in ASME A17.1/CSA B44, Section 2.27.2 (see also the commentary to Sections 3007.8 and 3008.8).

[F] 3003.1.4 Venting. Where standby power is connected to elevators, the machine room *ventilation* or air conditioning shall be connected to the standby power source.

❖ To allow elevator equipment in the machine room to operate normally, the venting system serving the machine room must be connected to the standby power system that serves the elevators.

[F] 3003.2 Fire fighters' emergency operation. Elevators shall be provided with Phase I emergency recall operation and Phase II emergency in-car operation in accordance with ASME A17.1/CSA B44.

❖ Two key fire fighter features are required for essentially all elevators. There are two objectives of these fire fighter features required by ASME A17.1/CSA B44:

- Phase I emergency recall operation encompasses either an elevator being automatically recalled to the designated level due to detection of smoke in the lobby, hoistway or machine room, or being manually recalled and removed from normal service by fire fighters; and
- Phase II emergency in-car operation is the capability of the elevator to be controlled by fire fighters during a fire or other emergency.

Such features are not required by ASME A17.1/CSA B44 in certain cases where the hoistway or a portion thereof is not required to be of fire-resistant-rated construction (see Section 2.1.1.1 of the standard), the rise of the elevator does not exceed 6.6 feet (2000 mm), and the hoistway does not penetrate a floor.

Additionally, elevators such as LU/LA elevators would not require Phase I or Phase II emergency operation in accordance with ASME A17.1/CSA B44. More specifically, Sections 5.2.1.27 and 5.2.2.14 of ASME A17.1/CSA B44 exempts LU/LA elevators from such requirements. However, if emergency operation features are installed, they are required to be installed in accordance with ASME A17.1/CSA B44.

Elevators are required to have recall capability to reduce the possibility of taking passengers to the fire floor or trapping them during a fire, and to allow the fire fighters to capture the elevators to use them on Phase II for fire-fighting and rescue operations. Also, Phase II emergency operation allows fire fighters to access the building much faster than depending solely on the stairways. This is especially necessary in high-rise buildings to allow faster access to a fire or other emergencies or to offer aid in rescue or evacuation of injured persons and persons with disabilities.

[F] 3003.3 Standardized fire service elevator keys. All elevators shall be equipped to operate with a standardized fire service elevator key in accordance with the *International Fire Code*.

❖ When fire departments and other emergency response agencies respond to emergencies, their ability to quickly access the location of the emergency can be the deciding factor of a successful response. Elevators are increasingly being relied upon for emergency operations, and their importance has been highlighted by the addition to the code of Section 3007, which requires the installation of fire service access elevators. One of the difficulties fire service and other emergency response agencies have when accessing facilities and attempting to use elevators is the number of nonstandardized keys that may not be available at the time of response. Even when emergency responders are provided the necessary keys, the correct key may have to be identified from a large collection of keys for any one building. In larger jurisdictions, the sheer number of keys makes possession of the keys unwieldy for the emergency responders. An elevator key is an important tool to fire fighters. The key allows fire fighters to access the interior of the shaft housing an elevator cabin to initiate rescue in case of a malfunction or the loss of building power.

INTERNATIONAL CODE COUNCIL®
Copyright © 2015 ICC. ALL RIGHTS RESERVED. Accessed by David Dammon on Jun 21, 2017 12:30:52 PM pursuant to License Agreement with ICC. No further reproduction or distribution authorized. ANY UNAUTHORIZED REPRODUCTION OR DISTRIBUTION IS A VIOLATION OF THE FEDERAL COPYRIGHT ACT AND THE LICENSE AGREEMENT, AND SUBJECT TO CIVIL AND CRIMINAL PENALTIES THEREUNDER.

More often, an elevator key is used to capture and control an elevator in emergencies. This section establishes requirements for elevator keys used by the fire service that will only apply to those buildings that have elevators with Phase I or II emergency service or to those buildings equipped with a fire service access elevator.

It should be noted that in some jurisdictions the building code and the elevator code are adopted under separate legislation such that one does not take precedence over the other. In these cases the jurisdiction's elevator inspector may be required to enforce the ASME A17.1/CSA B44 requirements for fire fighter keys that are different than those specified in the *International Fire Code*® (IFC®).

SECTION 3004
CONVEYING SYSTEMS

3004.1 General. Escalators, moving walks, conveyors, personnel hoists and material hoists shall comply with the provisions of Sections 3004.2 through 3004.4.

❖ Conveying systems include escalators, moving walks, conveyors and personnel and material hoists. Section 3004 contains requirements specific to these types of conveying systems.

3004.2 Escalators and moving walks. Escalators and moving walks shall be constructed of *approved* noncombustible and fire-retardant materials. This requirement shall not apply to electrical equipment, wiring, wheels, handrails and the use of $^{1}/_{28}$-inch (0.9 mm) wood veneers on balustrades backed up with noncombustible materials.

❖ The intent of this requirement is to limit fire fuel loading. The presence of large amounts of combustible material would create a large fuel load, and result in an increased migration of fire and smoke from floor to floor, or from space to space.

3004.2.1 Enclosure. Escalator floor openings shall be enclosed with *shaft enclosures* complying with Section 713.

❖ Escalator floor openings are required to be enclosed in shaft enclosures unless they are constructed in accordance with Section 712.1.3. Section 712.1.3 provides two methods of protection that would allow the floor opening without a shaft enclosure.

The first method is to provide draft curtains and sprinklers. The area of the floor opening is also limited to twice the area of the escalator. This is necessary since the protection method is not adequate for every size opening, especially when the floor area within the perimeter of the opening is used for stock storage, displays and similar uses (the atrium provisions of Section 404 are more appropriate for those use conditions). The use of this method is acceptable for connecting an unlimited number of stories in buildings with occupancies of Groups B and M. In buildings other than Groups B and M, the alternative can only be utilized to connect four stories. This provision acknowledges the current uses of this concept but also limits its use in buildings with higher fuel load and more hazardous occupancy characteristics, such as those occupancies where people sleep (Groups I and R).

The sprinkler draft curtain method is detailed in NFPA 13. The method consists of surrounding the escalator opening, in an otherwise fully sprinklered building, with an 18-inch-deep (457 mm) draft curtain located on the underside of the floor to which the escalator or moving walk ascends. This serves to delay the heat, smoke and combustion gases (developed in the early stages of a fire) on that floor from entering into the escalator or moving walk well. A row of closely spaced automatic sprinklers located outside of the draftstop also surrounds the opening. When activated by heat, the sprinklers provide a water curtain. A typical installation is shown in Commentary Figure 3004.2.1. In combination with the sprinkler system in the building, this system delays fire spread to allow time for evacuation.

The second method is to provide power-operated automatic fire shutters at all floor openings. The rolling shutter completely closes off the opening between floors in the event of a fire. When the shutter is actuated, power to the escalator or moving walk must be automatically disconnected. To provide protection against entrapment of an occupant, the shutter is required to have a sensitive leading edge such that it stops closing when it comes in contact with an obstacle. Once the obstacle is removed, the shutter continues to close. ASME A17.1/CSA B44 does not have requirements for protection against falls at escalator floor openings; rather, it specifies compliance with the provisions of the applicable building code.

3004.2.2 Escalators. Where provided in below-grade transportation stations, escalators shall have a clear width of not less than 32 inches (815 mm).

Exception: The clear width is not required in existing facilities undergoing *alterations*.

❖ A minimum 32-inch (864 mm) width for escalators servicing below-grade transportation systems, such as subways, is based on minimum accessibility requirements to permit carrying a person in a wheelchair up a stopped escalator in an emergency.

3004.3 Conveyors. Conveyors and conveying systems shall comply with ASME B20.1.

❖ ASME B20.1 applies to the design, construction, installation, maintenance, inspection and operation of conveyors and conveying systems in relation to hazards. The conveyors may be of bulk material, package or unit-handling types where the installation is designed for permanent, temporary or portable operation. This standard must apply, along with the requirements noted below, to all conveyor installations.

This standard specifically excludes any conveyor designed, installed or used primarily for the move-

INTERNATIONAL CODE COUNCIL®
Copyright © 2015 ICC. ALL RIGHTS RESERVED. Accessed by David Dammon on Jun 21, 2017 12:30:52 PM pursuant to License Agreement with ICC. No further reproduction or distribution authorized. ANY UNAUTHORIZED REPRODUCTION OR DISTRIBUTION IS A VIOLATION OF THE FEDERAL COPYRIGHT ACT AND THE LICENSE AGREEMENT, AND SUBJECT TO CIVIL AND CRIMINAL PENALTIES THEREUNDER.

ment of human beings. It does, however, apply to certain conveying devices that have incorporated platforms or control rooms specifically designed for authorized operating personnel within their supporting structure.

This standard does not apply to equipment, such as industrial trucks, tractors and trailers, tiering machines (except pallet load tiers), cranes, hoists, power shovels, power scoops, bucket drag lines, trenchers, elevators, manlifts, moving walks, escalators, highway or rail vehicles, cableways, tramways or pneumatic conveyors.

3004.3.1 Enclosure. Conveyors and related equipment connecting successive floors or levels shall be enclosed with *shaft enclosures* complying with Section 713.

❖ Protection against the migration of smoke and fire must be maintained whenever a conveyor penetrates a floor/ceiling assembly, and thus connects floor levels. This section references Section 713 for the requirements for shaft enclosures.

3004.3.2 Conveyor safeties. Power-operated conveyors, belts and other material-moving devices shall be equipped with automatic limit switches that will shut off the power in an emergency and automatically stop all operation of the device.

❖ Conveyor controls must be arranged such that in an emergency, the conveyor will stop all operation. All safety devices, including wiring of electrical safety devices, are required to be arranged to operate in a "fail-safe" manner. That is, if power failure or failure of the device itself occurs, a hazardous condition must not result.

3004.4 Personnel and material hoists. Personnel and material hoists shall be designed utilizing an *approved* method that accounts for the conditions imposed during the intended operation of the hoist device. The design shall include, but is not limited to, anticipated loads, structural stability, impact, vibration, stresses and seismic restraint. The design shall account for the construction, installation, operation and inspection of the hoist tower, car, machinery and control equipment, guide members and hoisting mechanism. Additionally, the design of personnel hoists shall include provisions for field testing and maintenance that will demonstrate that the hoist device functions in accordance with the design. Field tests shall be conducted upon the completion of an installation or following a major *alteration* of a personnel hoist.

❖ In lieu of a referenced standard, personnel and material hoists are to be designed and installed using a method that includes structural stability, anticipated loads, impact vibration, stresses and seismic restraint. The building official should examine aspects of the hoists, such as construction, installation and operation of the hoist tower, before final approval.

Personnel hoist design must also include field tests upon completion of installation or major alteration and maintenance, which demonstrate that hoist device functions are in accordance with the design.

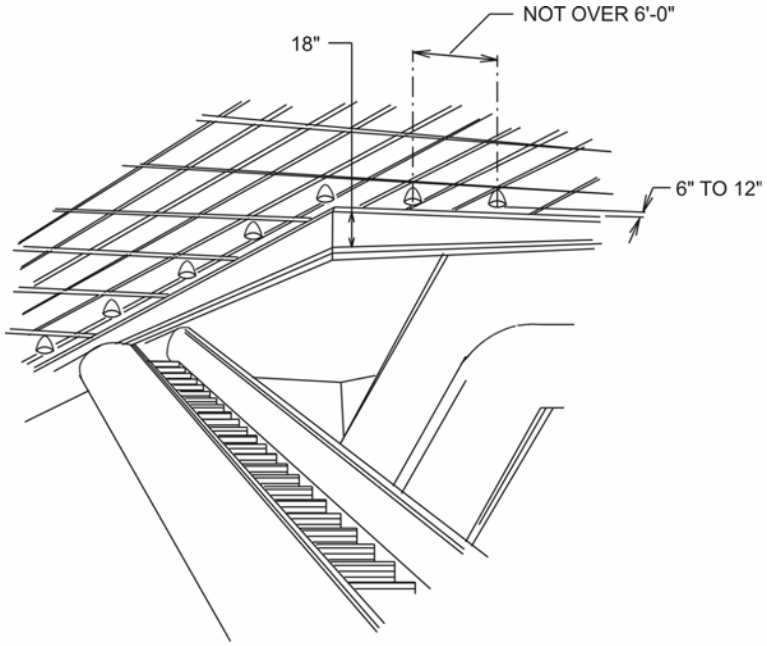

For SI: 1 inch = 25.4 mm, 1 foot = 304.8 mm.

Figure 3004.2.1
DRAFT AND SPRINKLER WATER CURTAIN

INTERNATIONAL CODE COUNCIL®
Copyright © 2015 ICC. ALL RIGHTS RESERVED. Accessed by David Dammon on Jun 21, 2017 12:30:52 PM pursuant to License Agreement with ICC. No further reproduction or distribution authorized. ANY UNAUTHORIZED REPRODUCTION OR DISTRIBUTION IS A VIOLATION OF THE FEDERAL COPYRIGHT ACT AND THE LICENSE AGREEMENT, AND SUBJECT TO CIVIL AND CRIMINAL PENALTIES THEREUNDER.

SECTION 3005
MACHINE ROOMS

3005.1 Access. An *approved* means of access shall be provided to elevator machine rooms, control rooms, control spaces and machinery spaces.

❖ A means of access to the elevator machine room, control room, control spaces and machinery spaces is required by this section and must be specifically approved by the building official. Things to consider in providing for this access are the maintenance and replacement of the equipment, and the necessary inspections to be performed. Note that Section 1009.14 requires a stairway to the roof to access elevator equipment and would not allow ladders or alternating tread devices.

3005.2 Venting. Elevator machine rooms, machinery spaces that contain the driving machine, and control rooms or spaces that contain the operation or motion controller for elevator operation shall be provided with an independent *ventilation* or air-conditioning system to protect against the overheating of the electrical equipment. The system shall be capable of maintaining temperatures within the range established for the elevator equipment.

❖ Elevator machine rooms, machinery spaces that contain the driving machine, and control rooms or spaces that contain the operation or motion controller for elevator operation sometimes contain equipment that is temperature sensitive. If this equipment is not kept within its safe-temperature range, the possibility exists for a malfunction, which could trap occupants within the elevator. Additionally, if this malfunction occurred during an emergency condition, it could impede emergency personnel in their efforts to perform fire-fighting or rescue duties. ASME A17.1/CSA B44, Section 2.7.9.2, requires a tag in the machine room that specifies the temperature and humidity range required to be maintained for operation of the elevator equipment.

Elevator technology has, in some cases, eliminated machine rooms (machine room less elevators or MRLs), but equipment still exists that may be temperature sensitive. Therefore the language contains several other locations where this venting is required.

3005.3 Pressurization. The elevator machine room, control rooms or control space with openings into a pressurized elevator hoistway shall be pressurized upon activation of a *heat or smoke detector* located in the elevator machine room, control room or control space.

❖ To prevent the migration of smoke and heat into machine rooms, control rooms and control spaces from pressurized hoistway enclosures, the machine rooms, control rooms and control spaces are required to be pressurized as well. However, the machine rooms, control rooms and control spaces only need to be pressurized when heat or smoke is present. The pressurization is required to occur upon activation of smoke or heat detectors located in the machine rooms, control rooms and control spaces. This is only a requirement when the hoistway is pressurized.

3005.4 Machine rooms, control rooms, machinery spaces, and control spaces. Elevator machine rooms, control rooms, control spaces and machinery spaces outside of but attached to a hoistway that have openings into the hoistway shall be enclosed with *fire barriers* constructed in accordance with Section 707 or *horizontal assemblies* constructed in accordance with Section 711, or both. The *fire-resistance rating* shall be not less than the required rating of the hoistway enclosure served by the machinery. Openings in the *fire barriers* shall be protected with assemblies having a *fire protection rating* not less than that required for the hoistway enclosure doors.

Exceptions:

1. For other than fire service access elevators and occupant evacuation elevators, where machine rooms, machinery spaces, control rooms and control spaces do not abut and have no openings to the hoistway enclosure they serve, the *fire barriers* constructed in accordance with Section 707 or *horizontal assemblies* constructed in accordance with Section 711, or both, shall be permitted to be reduced to a 1-hour *fire-resistance rating*.
2. For other than fire service access elevators and occupant evacuation elevators, in buildings four *stories* or less above *grade plane* where machine room, machinery spaces, control rooms and control spaces do not abut and have no openings to the hoistway enclosure they serve, the machine room, machinery spaces, control rooms and control spaces are not required to be fire-resistance rated.

❖ This section acknowledges that there will inherently be openings between hoistways and machine rooms, control rooms, control spaces and machinery spaces. This protection is required to be both vertical and horizontal. Therefore, to maintain the fire-resistance rating required for the hoistways, the machine rooms, control rooms, control spaces and machinery spaces must be protected with a fire barrier and horizontal assemblies, both with opening protectives. There are two exceptions to this requirement (see Commentary Figure 3005.4).

Exception 1 allows the reduction of the fire-resistance-rated enclosure to 1 hour where the machine rooms, control rooms, control spaces or machinery spaces do not abut the hoistway. Generally, this reduction would only be applicable when hoistways connect four stories or more. This is related to the fact that Section 713.4 requires 1-hour fire-resistance shafts for buildings connecting three stories or less and 2-hour shaft construction where the shaft extends more than three stories.

Exception 2 provides that, for buildings four stories or less above grade plane, no fire-resistance rating is required for machine rooms, control rooms, control spaces or machinery spaces not abutting and having no openings into the hoistway.

INTERNATIONAL CODE COUNCIL®
Copyright © 2015 ICC. ALL RIGHTS RESERVED. Accessed by David Dammon on Jun 21, 2017 12:30:52 PM pursuant to License Agreement with ICC. No further reproduction or distribution authorized. ANY UNAUTHORIZED REPRODUCTION OR DISTRIBUTION IS A VIOLATION OF THE FEDERAL COPYRIGHT ACT AND THE LICENSE AGREEMENT, AND SUBJECT TO CIVIL AND CRIMINAL PENALTIES THEREUNDER.

3005.5 Shunt trip. Where elevator hoistways, elevator machine rooms, control rooms and control spaces containing elevator control equipment are protected with automatic sprinklers, a means installed in accordance with Section 21.4 of NFPA 72 shall be provided to disconnect automatically the main line power supply to the affected elevator prior to the application of water. This means shall not be self-resetting. The activation of automatic sprinklers outside the hoistway, machine room, machinery space, control room or control space shall not disconnect the main line power supply.

❖ This section acknowledges the hazards of a sprinkler system to an operating elevator and elevator equipment contained in the machine room, control room, control space or machinery space. Therefore, the main power supply line to the affected elevator(s) is required to automatically disconnect, and not be reset, before the suppression system is activated.

3005.6 Plumbing systems. Plumbing systems shall not be located in elevator equipment rooms.

❖ If a pipe or duct that conveys gases, vapors or liquids and passes through a machine room or machinery space were to fail, the operation of the equipment could be affected in such a manner as to make it unsafe. Water could cause the malfunctioning of a safety circuit, such as hoistway door interlocks, thereby allowing an elevator to leave a floor with the hoistway door open.

SECTION 3006
ELEVATOR LOBBIES AND HOISTWAY OPENING PROTECTION

3006.1 General. Elevator hoistway openings and enclosed elevator lobbies shall be provided in accordance with the following:

1. Where hoistway opening protection is required by Section 3006.2, such protection shall be in accordance with Section 3006.3.
2. Where enclosed elevator lobbies are required for underground buildings, such lobbies shall comply with Section 405.4.3.

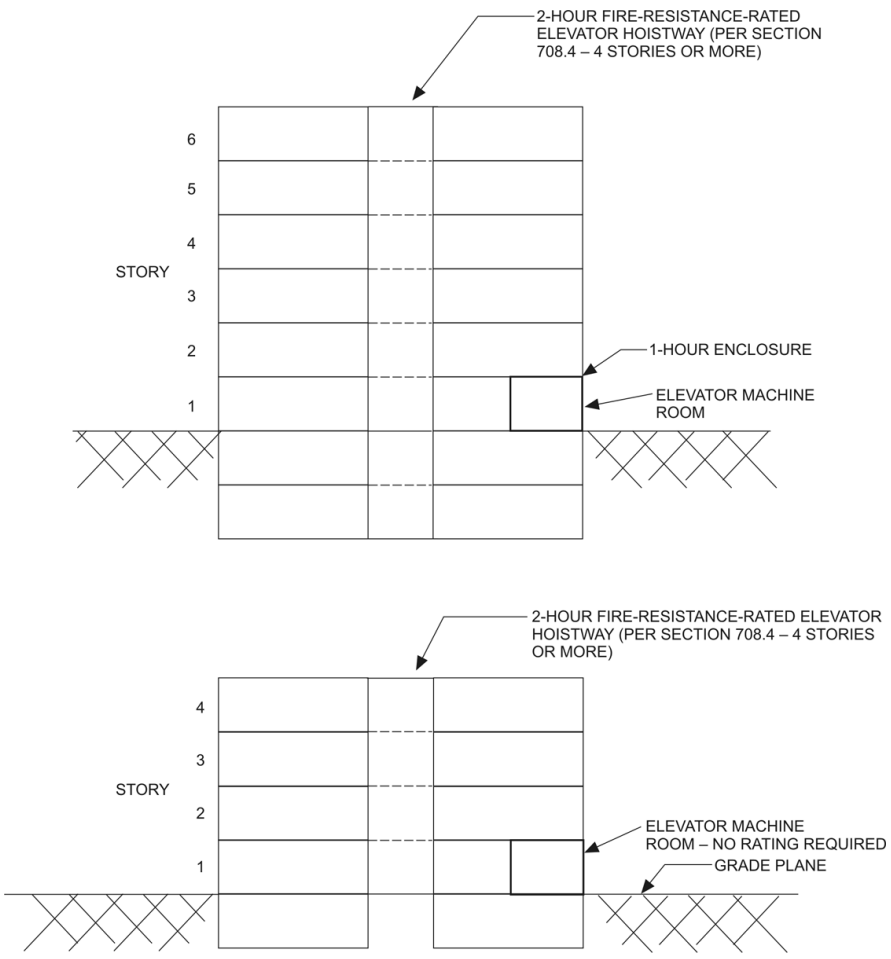

Figure 3005.4
EXCEPTIONS, MACHINE ROOM FIRE RESISTANCE

INTERNATIONAL CODE COUNCIL®
Copyright © 2015 ICC. ALL RIGHTS RESERVED. Accessed by David Dammon on Jun 21, 2017 12:30:52 PM pursuant to License Agreement with ICC. No further reproduction or distribution authorized. ANY UNAUTHORIZED REPRODUCTION OR DISTRIBUTION IS A VIOLATION OF THE FEDERAL COPYRIGHT ACT AND THE LICENSE AGREEMENT, AND SUBJECT TO CIVIL AND CRIMINAL PENALTIES THEREUNDER.

3. Where an area of refuge is required and an enclosed elevator lobby is provided to serve as an area of refuge, the enclosed elevator lobby shall comply with Section 1009.6.
4. Where fire service access elevators are provided, enclosed elevator lobbies shall comply with Section 3007.6.
5. Where occupant evacuation elevators are provided, enclosed elevator lobbies shall comply with Section 3008.6.

❖ There are various requirements throughout the code for the protection of hoistway openings. In some cases this protection will specifically require an enclosed lobby, and in others it will provide options as to how the hoistway openings are to be protected. The different sections referenced also have different purposes as to why a hoistway opening needs protection.

Item 1 deals with what is sometimes termed "traditional elevator lobby requirements." In other words, elevators used for building circulation that have the potential to spread smoke through the building need some level of protection in certain cases.

Item 2 deals with the specific requirement for underground buildings and the hazards associated with being far below grade. This section specifically requires a lobby enclosure.

Item 3 is related to the choice to use an elevator lobby enclosure for an area of refuge. It is not mandatory but is a design option.

Item 4 references the requirements for fire service access elevators. When one is required, Section 3007 provides the package of requirements. This would specifically require an elevator lobby enclosure. When a fire service access elevator (FSAE) is used, the lobby requirements would be more specific and restrictive than those required in Sections 3006.2 and 3006.3.

Item 5 references the requirements for lobbies as they relate to occupant evacuation elevators. If this design option is applied in the building then a physical elevator lobby enclosure is required in accordance with Section 3008.6.2. Similar to the requirements of Section 3007, these requirements would be more specific and restrictive than those required in Sections 3006.2 and 3006.3.

3006.2 Hoistway opening protection required. Elevator hoistway door openings shall be protected in accordance with Section 3006.3 where an elevator hoistway connects more than three stories, is required to be enclosed within a shaft enclosure in accordance with Section 712.1.1 and any of the following conditions apply:

1. The building is not protected throughout with an *automatic sprinkler system* in accordance with Section 903.3.1.1 or 903.3.1.2.
2. The building contains a Group I-1 Condition 2 occupancy.
3. The building contains a Group I-2 occupancy.
4. The building contains a Group I-3 occupancy.
5. The building is a high rise and the elevator hoistway is more than 75 feet (22 860 mm) in height. The height of the hoistway shall be measured from the lowest floor to the highest floor of the floors served by the hoistway.

Exceptions:

1. Protection of elevator hoistway door openings is not required where the elevator serves only open parking garages in accordance with Section 406.5.
2. Protection of elevator hoistway door openings is not required at the level(s) of exit discharge, provided the level(s) of exit discharge is equipped with an *automatic sprinkler system* in accordance with Section 903.3.1.1.
3. Enclosed elevator lobbies and protection of elevator hoistway door openings are not required on levels where the elevator hoistway opens to the exterior.

❖ The hoistway enclosure is the fixed structure, consisting of vertical walls or partitions, that isolates the enclosure from all other building areas or from an adjacent enclosure in which the hoistway doors and door assemblies are installed. With the exception of observation elevators (usually in atriums), the hoistway is normally enclosed with fire barriers (see Sections 707.3.1 and 713.2). Elevator hoistways in all parking structures that serve only the parking structure are exempt from enclosures by Section 712.1.10.2. In addition, shaft enclosures are not required for elevators located in an atrium since the hoistways are not concealed and there is no penetration of floor assemblies. Elevator hoistways are enclosed to ensure that flame, smoke and hot gases from a fire do not have an avenue of travel from one floor to another through a concealed space (see the discussion of stack effect in the commentary to Section 3006.2). Enclosures are also provided to restrict contact with moving equipment and to prevent people from falling.

Elevator shafts are one of the largest vertical shafts in multistory buildings. Hoistways have the potential for accumulating and spreading smoke and gases from a fire to other stories in a building. The chimney or stack effect helps with the upward spread of the products of combustion. It is recognized that smoke is a major factor in fire deaths and smoke often migrates to areas remote from the source of the fire. Due to the typical operation and movement of the hoistway doors, they generally cannot provide the level of reduced air leakage that is required to reduce the spread of smoke. The concern of smoke spread is less in sprinklered buildings where the fire is either controlled or suppressed. Even when a fire is controlled, smoke is generated and has the potential to spread. Note that smoke from a sprinklered fire is typically less abundant and hazardous than that from an unsprinklered fire.

Analyses of fires in multistory buildings have documented the movement of smoke to upper levels. In

INTERNATIONAL CODE COUNCIL®
Copyright © 2015 ICC. ALL RIGHTS RESERVED. Accessed by David Dammon on Jun 21, 2017 12:30:52 PM pursuant to License Agreement with ICC. No further reproduction or distribution authorized. ANY UNAUTHORIZED REPRODUCTION OR DISTRIBUTION IS A VIOLATION OF THE FEDERAL COPYRIGHT ACT AND THE LICENSE AGREEMENT, AND SUBJECT TO CIVIL AND CRIMINAL PENALTIES THEREUNDER.

the 1980 fire at the MGM Grand Hotel in Las Vegas, 70 of the 84 deaths occupied the 14th to 24th floors, although the fire was on the first level. A 1989 Christmas Eve fire at a high-rise retirement residence in Johnson City, Tennessee, also had a fire originating on the first level with all but two of the 16 fatalities occurring on the upper floors because of smoke movement via vertical shafts that included the elevator hoistway. Please note that in these two examples, the buildings were either protected only partially or not at all by an automatic sprinkler system.

The intention of these provisions is to prevent the infiltration of smoke into the hoistway enclosure. As noted in Section 3006.1, there are other provisions in the IBC that have elevator lobby enclosure requirements or hoistway protection requirements. The provisions have several conditions where such protection is required.

The primary condition, where "traditional hoistway opening protection" is required, is whenever an elevator shaft connects more than three stories. In addition, this will apply to any building that is not sprinklered throughout in accordance with NFPA 13 or NFPA 13R. Other vulnerable occupancies regardless of being protected by sprinklers must also provide hoistway opening protection. This includes Groups I-1, I-2 and I-3. Finally, because of the added concern of height as it affects stack effect, hoistways in high-rise buildings where the height of the hoistway exceeds 75 feet (22 860 mm) must be protected in accordance with Section 3006.3. Note the importance of the measurement of the hoistway height. This provides some relief to elevators that only travel a couple of stories, where the concern for smoke spread is similar to that of a low- or mid-rise building protected throughout with sprinklers.

There are several exceptions. The first does not require hoistway opening protection where the elevator is located in an open parking garage. This is consistent with Section 712.1.10.2. The concept is that an open parking garage has plenty of ventilation and various components therein, such as ramps and duct systems, do not need shaft protection.

Exception 2 does not require hoistway opening protection at the level of exit discharge. This is only permitted where the level of exit discharge is protected with sprinklers. It should be noted that there can be multiple levels of exit discharge. As currently written, this can be applicable for any of those levels. The exception is notable in that it is conditioned on only the level of exit discharge, not the entire building being sprinklered. Fully sprinklered buildings would be relieved of the elevator lobby requirements on the floor of exit discharge.

Exception 3 allows hoistway openings that open to the exterior. Such locations will not allow smoke to build up, thus reducing the chances of smoke entering the hoistway. A large stadium may have conditions where the elevator opens to the exterior.

Although a specific exception for atriums is not provided, Section 712.1.7 is often considered to allow elevator hoistways located entirely within the atrium to be unenclosed. If an elevator is not required to have a fire-resistance-rated enclosure, it serves no purpose to require a fire-resistance-rated elevator lobby enclosure or hoistway protection.

3006.3 Hoistway opening protection. Where Section 3006.2 requires protection of the elevator hoistway door opening, the protection shall be provided by one of the following:

1. An enclosed elevator lobby shall be provided at each floor to separate the elevator hoistway shaft enclosure doors from each floor by fire partitions in accordance with Section 708. In addition, doors protecting openings in the elevator lobby enclosure walls shall comply with Section 716.5.3 as required for corridor walls. Penetrations of the enclosed elevator lobby by ducts and air transfer openings shall be protected as required for corridors in accordance with Section 717.5.4.1.
2. An enclosed elevator lobby shall be provided at each floor to separate the elevator hoistway shaft enclosure doors from each floor by smoke partitions in accordance with Section 710 where the building is equipped throughout with an *automatic sprinkler system* installed in accordance with Section 903.3.1.1 or 903.3.1.2. In addition, doors protecting openings in the smoke partitions shall comply with Sections 710.5.2.2, 710.5.2.3 and 716.5.9. Penetrations of the enclosed elevator lobby by ducts and air transfer openings shall be protected as required for corridors in accordance with Section 717.5.4.1.
3. Additional doors shall be provided at each elevator hoistway door opening in accordance with Section 3002.6. Such door shall comply with the smoke and draft control door assembly requirements in Section 716.5.3.1 when tested in accordance with UL 1784 without an artificial bottom seal.
4. The elevator hoistway shall be pressurized in accordance with Section 909.21.

❖ Section 3006.2 sets out when hoistway opening protection is required. From there, Section 3006.3 provides the various ways this can be accomplished.

The first option is to provide a lobby enclosure that separates the hoistway opening from the rest of the building by 1-hour fire-resistance-rated partitions constructed as fire partitions. As a point of difference, the chute access rooms require fire barrier construction, whereas the elevator lobby requirements are for fire partition construction. Unlike a chute access room, an elevator lobby enclosure does not require a horizontal assembly for the floor/ceiling assembly. This section references Sections 716.5.3 and 717.5.4.1 for door openings and duct openings. Therefore, the elevator lobby separation requires the 20-minute doors to be smoke- and draft-control doors (Section 716.5.3) and also requires duct penetrations to have smoke and fire dampers (Section 717.5.4.1) unless exempted by those sections. The purpose of the special opening protectives in the elevator lobby enclo-

INTERNATIONAL CODE COUNCIL®
Copyright © 2015 ICC. ALL RIGHTS RESERVED. Accessed by David Dammon on Jun 21, 2017 12:30:52 PM pursuant to License Agreement with ICC. No further reproduction or distribution authorized. ANY UNAUTHORIZED REPRODUCTION OR DISTRIBUTION IS A VIOLATION OF THE FEDERAL COPYRIGHT ACT AND THE LICENSE AGREEMENT, AND SUBJECT TO CIVIL AND CRIMINAL PENALTIES THEREUNDER.

sures is to delay or prevent the vertical spread of smoke to other floors through the hoistway doors and the shaft.

The second option is also an enclosed elevator lobby. However, unlike Option 1, it allows nonfire-resistance-rated smoke partitions in accordance with Section 710 to enclose the elevator lobby. This option requires either an NFPA 13 or 13R sprinkler system. The door openings in the lobby enclosure must also meet the air leakage rate in Section 716.5.3.1 and must be self- or automatic closing (Section 716.5.9). Any duct penetrations through the smoke partitions must also be provided with smoke dampers in accordance with Section 717.5.4.1.

Option 3 eliminates the need for an enclosed lobby, but still requires the additional layer of fire resistance and smoke control. Doors in addition to the normal hoistway door are provided in front of the hoistway opening. These doors must meet two requirements. First, they must be easily opened in accordance with Section 3002.6. This ensures that if the doors do close, they can be opened by someone who arrives at that level on the elevator, such as fire department personnel. This is very important if the doors are horizontal power-operated doors, such as those in Section 1010.1.4.3 of the code. Section 3002.6 states that the doors shall be readily openable from the car side without a key, tool, special knowledge or effort. The second requirement is the testing of the additional door or doors. They must be tested in accordance with UL 1784. This test is titled "Air Leakage Tests of Door Assemblies." This test does not provide a fire-resistance rating for the door. It also has no failure criteria as it only measures the leakage rate. The leakage rate for smoke and draft control doors in Section 716.5.3.1 is a maximum of 3.0 cubic feet per minute per square foot of door opening at 0.10 inch of water column pressure. It is assumed that they must meet the leakage rate requirements in Section 716.5.3.1 and they must be identified as smoke and draft control doors in accordance with Section 716.5.7.3.

Option 4 allows elevator hoistway pressurization to be used in lieu of enclosed elevator lobbies in all buildings, regardless of height. This is similar to pressurization of interior exit stairways, which is used in lieu of smokeproof enclosures for interior exit stairways in Section 909.20.5. The hoistway pressurization requirements are found in Section 909.21.

3006.4 Means of egress. Elevator lobbies shall be provided with at least one means of egress complying with Chapter 10 and other provisions in this code. Egress through an elevator lobby shall be permitted in accordance with Item 1 of Section 1016.2.

❖ This section requires at least one means of egress from the elevator lobby enclosure. Multistory buildings have increasing security concerns that have often resulted in controlled access from elevator lobbies to the remainder of the floor. Section 713.14.1 clearly establishes that every elevator lobby shall have at least one means of egress, ensuring that no occupant in a lobby is restricted from leaving the lobby to access the exits on the floor. Although elevators are not considered required exits, elevators are not intended to be available in a fire situation since they are recalled during Phase I elevator recall as required by Chapter 30. ASME A17.1, *Safety Code for Elevators and Escalators*, details the recall requirements, which are adopted by reference in Chapter 30. While this section requires one door from the elevator lobby, every room or space on the floor, including the lobby, must have access to the required number of exits (usually two) on that story without traveling through tenant spaces. In other words, once an occupant leaves the elevator lobby, he or she must have access to two exits. Egress through elevator lobbies from corridors on both sides is also allowed.

Two questions often arise. First, can a space have its only exit access path through an elevator lobby? Note that Section 1016.2, Item 5 would require that all paths of exit access cannot be through an enclosed elevator lobby. This eliminates the allowance for a single tenant to send all occupants through the lobby to exit the building. Second, can an interior exit stairway open into an elevator lobby? Yes, an elevator lobby is a normally occupied space in the same manner that a corridor is a normally occupied space. Elevator hoistway doors are not permitted to open into an interior exit stairway.

SECTION 3007
FIRE SERVICE ACCESS ELEVATOR

3007.1 General. Where required by Section 403.6.1, every floor of the building shall be served by fire service access elevators complying with Sections 3007.1 through 3007.9. Except as modified in this section, fire service access elevators shall be installed in accordance with this chapter and ASME A17.1/CSA B44.

❖ Section 3007 provides a package of requirements for what is termed a fire service access elevator (FSAE). A minimum of two such elevators are required in buildings with an occupied floor more than 120 feet (36 576 mm) above the lowest level of fire department vehicle access in accordance with Section 403.6.1. These requirements were developed based on a research initiative by the U.S. General Services Administration (GSA) and the National Institute of Standards and Technology (NIST), which focused on the development of performance requirements for the use of elevators for occupant egress and fire service access in buildings. Section 3007 is a byproduct of this research as well as preliminary information provided by a task group of ASME A17.1/CSA B44 for determining the required system features necessary for safe operation by trained fire fighters during a fire emergency.

The requirements in Section 3007 are intended to provide a reasonable degree of safety for fire fighters

INTERNATIONAL CODE COUNCIL®
Copyright © 2015 ICC. ALL RIGHTS RESERVED. Accessed by David Dammon on Jun 21, 2017 12:30:52 PM pursuant to License Agreement with ICC. No further reproduction or distribution authorized. ANY UNAUTHORIZED REPRODUCTION OR DISTRIBUTION IS A VIOLATION OF THE FEDERAL COPYRIGHT ACT AND THE LICENSE AGREEMENT, AND SUBJECT TO CIVIL AND CRIMINAL PENALTIES THEREUNDER.

operating the fire service access elevator to a location for staging fire fighters and equipment. In a typical situation, the staging area will be set up one or two floors below the fire. The staging location already will have access to an exit stairway and standpipe that will allow for fire-fighting operations to be conducted from just above the staging area.

It is important to note that these requirements are in addition to the requirements for Phase I Recall and Phase II Emergency Operation. Therefore, these elevators would also have these standard features plus the additional package of requirements.

It should also be noted that, unlike Occupant Evacuation Operation, ASME A17.1/CSA B44 has no specific requirements for fire service access elevators beyond the Phase I/Phase II requirements that apply to all elevators.

A fire service access elevator may be an elevator typically used as a service elevator, or a passenger elevator for general public use. Every floor within a building must be served by at least two fire service access elevators.

The fire service access elevator requirements are intended to work in conjunction with requirements in other codes and standards, especially those that will appear in the elevator code, ASME A17.1/CSA B44. A key part of these requirements is the operation protocol for the fire service access elevator.

It is important to stress that this elevator can be any elevator in the building, whether a passenger or service elevator. In addition, this elevator can also be the same elevator used for accessible egress in accordance with Section 1109.4. There are no restrictions on using the FSAE for this purpose. In fact, some fire departments may prefer this arrangement.

As similarly discussed in the commentary for Section 3008.1 for occupant evacuation elevators, parking garages that are limited to the enclosed or open parking garage and the main lobby were not discussed when these provisions were developed. The code technically does not address this situation and requires all floors to be accessed by an FSAE. It is suggested that the specific use of such elevators should be discussed with the fire department.

3007.2 Automatic sprinkler system. The building shall be equipped throughout with an *automatic sprinkler system* in accordance with Section 903.3.1.1, except as otherwise permitted by Section 903.3.1.1.1 and as prohibited by Section 3007.2.1.

❖ This section is intended to provide for specific requirements regarding automatic sprinkler systems associated with fire service access elevators.

3007.2.1 Prohibited locations. Automatic sprinklers shall not be installed in machine rooms, elevator machinery spaces, control rooms, control spaces and elevator hoistways of fire service access elevators.

❖ The intent of this section is to further clarify the original intent of Section 3007 regarding prohibiting the installation of automatic sprinklers in elevator machine rooms, elevator machine spaces, control rooms and control spaces associated with fire service access elevators. Specifically, there are a few key locations where sprinklers may be a detriment to the use of elevators. If sprinklers are located in a machine room, elevator machine spaces, control rooms or control spaces and they activate, damage to the elevators may occur and threaten the safety of fire fighters. Additionally, such spaces should be protected by smoke detection that would initiate Phase I recall prior to sprinkler activation (see also commentary, Section 903.3.1.1.1, Exception 6).

3007.2.2 Sprinkler system monitoring. The sprinkler system shall have a sprinkler control valve supervisory switch and water-flow-initiating device provided for each floor that is monitored by the building's *fire alarm system.*

❖ This section allows the origin of the fire to be better determined and will assist in managing a fire emergency. In the future it is anticipated that such monitoring will assist in determining the priority for elevator locations in order to evacuate buildings more efficiently.

3007.3 Water protection. An *approved* method to prevent water from infiltrating into the hoistway enclosure from the operation of the *automatic sprinkler system* outside the enclosed fire service access elevator lobby shall be provided.

❖ This section provides performance-based language to prevent water from the discharge of automatic sprinklers located outside the elevator lobby from infiltrating the hoistway opening. It is important to stress that this requirement is only for protection from sprinkler system water and not water from fire fighter hoses. Also, the language is performance oriented, as there are several strategies that could be used to address this problem and a single solution may not fit in all situations. Solutions include concepts such as a door sweep, trench drains, sloped floors, curbs and gasketed openings, which may be used individually or in combination. Other methods may also be available to meet this intent. It should be stressed that the intent of this section is focused on the actual hoistway opening versus the walls surrounding the hoistway. The most water-sensitive aspects of the elevator are located at the hoistway opening. Further, this section does not necessarily require that the hoistway opening itself be protected. This protection could come at the entrance to the lobby.

3007.4 Shunt trip. Means for elevator shutdown in accordance with Section 3005.5 shall not be installed on elevator systems used for fire service access elevators.

❖ The intent of this section is to further clarify the original intent of Section 3007 regarding prohibiting the installation of shunt trip for fire service access elevators. The subject language is similar to the language in Section 3008.4 for occupant evacuation elevators.

INTERNATIONAL CODE COUNCIL®
Copyright © 2015 ICC. ALL RIGHTS RESERVED. Accessed by David Dammon on Jun 21, 2017 12:30:52 PM pursuant to License Agreement with ICC. No further reproduction or distribution authorized. ANY UNAUTHORIZED REPRODUCTION OR DISTRIBUTION IS A VIOLATION OF THE FEDERAL COPYRIGHT ACT AND THE LICENSE AGREEMENT, AND SUBJECT TO CIVIL AND CRIMINAL PENALTIES THEREUNDER.

3007.5 Hoistway enclosures. The fire service access elevator hoistway shall be located in a *shaft enclosure* complying with Section 713.

❖ Reference is made to Section 713 of the code for the required fire resistance and construction of the hoistway enclosure. Section 713 contains fire-resistance-rating requirements, as well as construction requirements for shafts, which is typically the method used to satisfy the requirements for a hoistway enclosure. Section 403.2.1.2 provides additional standards, and some exceptions, for hoistway construction in high-rise buildings, but the exceptions do not apply to elevator hoistway enclosures.

3007.5.1 Structural integrity of hoistway enclosures. The fire service access elevator hoistway enclosure shall comply with Sections 403.2.3.1 through 403.2.3.4.

❖ This section requires additional structural integrity for fire service access elevator hoistway enclosures. See the commentary to Sections 403.2.3.1 through 403.2.3.4.

3007.5.2 Hoistway lighting. When fire-fighters' emergency operation is active, the entire height of the hoistway shall be illuminated at not less than 1 footcandle (11 lux) as measured from the top of the car of each fire service access elevator.

❖ The focus of this section is to provide illumination to assist fire fighters as they ascend in a building. The prescribed procedure without hoistway illumination before leaving the designated level (DL) is to shine a light up into the hoistway to try and detect smoke, flame or water above them. They will repeat this step every five floors until they safely arrive at their staging floor, which is two floors below the lowest reported floor in alarm. If fire fighters become trapped in a stopped elevator and need to self-rescue through the top of the car's emergency exit, they need adequate light to safely escape. Hoistway lighting will make their life-safety maneuver much more effective. The illumination level is the same as that used in Section 1006.

3007.6 Fire service access elevator lobby. The fire service access elevator shall open into a fire service access elevator lobby in accordance with Sections 3007.6.1 through 3007.6.5. Egress is permitted through the elevator lobby in accordance with Item 1 of Section 1016.2.

Exception: Where a fire service access elevator has two entrances onto a floor, the second entrance shall be permitted to open into an elevator lobby in accordance with Section 3006.3.

❖ All fire service access elevators must open into an elevator lobby having specific requirements (e.g., direct access to exit enclosure and minimum fire-resistance rating for lobby enclosure and door assemblies) providing a reasonable degree of safety for fire fighters operating the fire service access elevator and a location for staging fire fighters and equipment one or two floors below the fire.

The exception clarifies that if the fire service access elevator has two entrances, the second entrance is permitted to open into an enclosed or otherwise protected hoistway opening meeting the requirements in Section 3006.3.

The code would not prohibit fire service access elevators and occupant evacuation elevators from sharing the same elevator lobby. See also Commentary Figure 3007.6 for a comparison of lobby requirements between fire service access elevators and elevators used for occupant self-evacuation.

As noted in the commentary to Section 3006.1, this particular requirement for an elevator lobby is more specific and more restrictive than that required in Sections 3006.2 and 3006.3. These requirements would be applied regardless of what options were chosen in Section 3006.3. The same is true of the application of the occupant evacuation elevator allowance. If that allowance is chosen, the requirements for an enclosed elevator lobby would need to be in accordance with Section 3008.6.

3007.6.1 Access to interior exit stairway or ramp. The fire service access elevator lobby shall have direct access from

LOBBY REQUIREMENT COMPARISON

Element of Lobby	Fire Service Access Elevator (3007)	Occupant Evacuation Elevators (3008)
Lobby Size	150-sq-ft minimum with 8-foot minimum dimension	3 square feet per person for 25% of occupants and 30-inch by 48-inch wheelchair for each 50 occupants
Lobby Enclosure	Not required at level(s) of exit discharge	Not required at level(s) of exit discharge
Door	$^3/_4$-hour door tested without bottom seal	Automatic closing $^3/_4$-hour door with a vision panel tested without bottom seal
Wall	1-hour smoke barrier	1-hour smoke barrier
Access	Direct acccess to exit enclosure	Direct acccess to exit enclosure

For SI: 1 inch = 25.4 mm, 1 foot = 304.8 mm, 1 square foot = 0.0929 m^2.

Figure 3007.6
LOBBY COMPARISON TABLE—FIRE SERVICES ACCESS ELEVATORS AND OCCUPANT EVACUATION ELEVATORS

INTERNATIONAL CODE COUNCIL®
Copyright © 2015 ICC. ALL RIGHTS RESERVED. Accessed by David Dammon on Jun 21, 2017 12:30:52 PM pursuant to License Agreement with ICC. No further reproduction or distribution authorized. ANY UNAUTHORIZED REPRODUCTION OR DISTRIBUTION IS A VIOLATION OF THE FEDERAL COPYRIGHT ACT AND THE LICENSE AGREEMENT, AND SUBJECT TO CIVIL AND CRIMINAL PENALTIES THEREUNDER.

the enclosed elevator lobby to an enclosure for an *interior exit stairway* or *ramp*.

Exception: Access to an *interior exit stairway* or *ramp* shall be permitted to be through a protected path of travel that has a level of fire protection not less than the elevator lobby enclosure. The protected path shall be separated from the enclosed elevator lobby through an opening protected by a smoke and draft control assembly in accordance Section 716.5.3.

❖ As part of the package of requirements, fire service access elevators need to have direct access to an exit enclosure. This relates to the fire fighters' staging requirements during a fire. The exit stairways are critical to bringing water hoses to the fire floor. Keeping the elevators protected by a lobby and then locating an interior exit stairway that the fire fighters can directly access will assist in the fire-fighting activities. See also the commentary to Section 3008.6.1 for a discussion regarding using the same interior exit stairway for both the fire service access elevator and occupant evacuation elevators.

There is an exception that provides flexibility for direct access to an exit stairway. Essentially, it allows a protected path equivalent to that of the enclosed elevator lobby. The opening between the lobby and protected path still requires separation with a smoke and draft control door. This helps to keep the lobby protected from smoke that could infiltrate the lobby from the protected path. Note that there is no restriction on what type of doors (office, bathroom, supply closet, etc.) can open onto this protected path as long as the opening is properly protected.

3007.6.2 Lobby enclosure. The fire service access elevator lobby shall be enclosed with a *smoke barrier* having a *fire-resistance rating* of not less than 1 hour, except that lobby doorways shall comply with Section 3007.6.3.

Exception: Enclosed fire service access elevator lobbies are not required at the *levels of exit discharge*.

❖ The fire service access elevator lobby is required to be enclosed by a smoke barrier having a minimum 1-hour fire-resistance rating which provides both protection from smoke and a level of fire resistance. This smoke barrier is specifically protecting the fire service access elevator lobby and would not be required to be constructed from outside wall to outside wall. See Section 709.4.2, which specifically addresses smoke barriers and elevator lobbies. Note that the elevator lobby located on the street floor entrance to a building does not require an enclosed lobby. In many cases, such a lobby would be impractical to construct. In the event of a fire on the street level, the elevator would be directed to the alternate level once smoke is detected on that level.

It should be additionally noted that the enclosure created by smoke barriers protects the elevator and the associated lobby from the building. Therefore, protection between the elevator lobby and the elevator is not required.

3007.6.3 Lobby doorways. Other than doors to the hoistway, elevator control room or elevator control space, each doorway to a fire service access elevator lobby shall be provided with a $^{3}/_{4}$-hour *fire door assembly* complying with Section 716.5. The *fire door assembly* shall comply with the smoke and draft control door assembly requirements of Section 716.5.3.1 with the UL 1784 test conducted without the artificial bottom seal.

❖ The requirement for a $^{3}/_{4}$-hour door is more restrictive than what is required for smoke barriers in Section 716.5. Section 716.5 and Table 716.5 require a 20-minute rating for doors located in smoke barriers. The reference back to Section 716.5 is primarily related to how the door is to be tested and the criteria for acceptance. More specifically, Section 716.5.3.1 requires doors used in smoke and draft control to be tested in accordance with UL 1784 and installed in accordance with NFPA 105. Additionally, a provision is included requiring the test be performed without an artificial bottom seal installed across the full width of the bottom of the door assembly in order to measure the complete leakage rate for the door assembly on the assumption that leakage could occur under the bottom of the door in this application. This will ensure that the doorways not only have an adequate fire protection rating for protecting the fire service access elevator lobbies, but also protect against smoke intrusion into the lobby where the fire service may be staging its operations before attacking a fire on the fire floor. This is a very important component of the overall protection package for fire service access elevators.

3007.6.4 Lobby size. Regardless of the number of fire service access elevators served by the same elevator lobby, the enclosed fire service access elevator lobby shall be not less than 150 square feet (14 m^2) in an area with a dimension of not less than 8 feet (2440 mm).

❖ A minimum lobby size of 150 square feet (14 m^2) with a minimum dimension of 8 feet (2440 mm) has been included to ensure that the lobby is of adequate size for conducting necessary fire fighter operations. This size was intended for one or more FSAE. In other words, where there are two FSAE required, the lobby is only required to be 150 square feet in area. A majority of fire departments operate with high-rise fire attack teams composed of either three or four fire fighters. The lobby should be large enough to accommodate one team preparing to enter the fire area (floor) and one team needing to withdraw from the fire area, while leaving access to the hoistway and exit enclosure doors clear. A minimum lobby size of 150 square feet (14 m^2) was intended to meet the above criteria. The minimum dimension of 8 feet (2440 mm) is included to avoid a long, narrow lobby.

3007.6.5 Fire service access elevator symbol. A pictorial symbol of a standardized design designating which elevators are fire service access elevators shall be installed on each side of the hoistway door frame on the portion of the frame at

INTERNATIONAL CODE COUNCIL®
Copyright © 2015 ICC. ALL RIGHTS RESERVED. Accessed by David Dammon on Jun 21, 2017 12:30:52 PM pursuant to License Agreement with ICC. No further reproduction or distribution authorized. ANY UNAUTHORIZED REPRODUCTION OR DISTRIBUTION IS A VIOLATION OF THE FEDERAL COPYRIGHT ACT AND THE LICENSE AGREEMENT, AND SUBJECT TO CIVIL AND CRIMINAL PENALTIES THEREUNDER.

right angles to the fire service access elevator lobby. The fire service access elevator symbol shall be designed as shown in Figure 3007.6.5 and shall comply with the following:

1. The fire service access elevator symbol shall be not less than 3 inches (76 mm) in height.
2. The helmet shall contrast with the background, with either a light helmet on a dark background or a dark helmet on a light background.
3. The vertical center line of the fire service access elevator symbol shall be centered on the hoistway door frame. Each symbol shall be not less than 78 inches (1981 mm), and not more than 84 inches (2134 mm) above the finished floor at the threshold.

❖ The "fire hat" symbol is already used inside the elevator cab and is, therefore, instantly recognizable by the fire service. This provision is intended to aid in the quick identification of fire service access elevators and will assist the fire service in quickly identifying these elevators and beginning to use them.

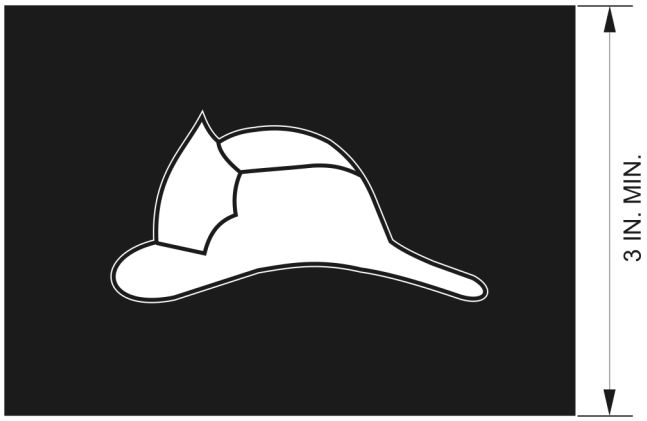

For SI: 1 inch = 25.4 mm.

FIGURE 3007.6.5
FIRE SERVICE ACCESS ELEVATOR SYMBOL

3007.7 Elevator system monitoring. The fire service access elevator shall be continuously monitored at the *fire command center* by a standard emergency service interface system meeting the requirements of NFPA 72.

❖ As an added layer of protection, these critical elevators must be specifically monitored in the fire command center by a standard emergency service interface system in accordance with NFPA 72. More specifically, Section 7.11 of NFPA 72 addresses this interface. Basically, it is requiring that the interface, such as annunciators, information display systems and controls, work with the needs of the fire department in terms of design, arrangement and location. The requirements are fairly general and depend on the jurisdiction regarding how they will be met. It should be noted that Annex F of NFPA 72 contains NEMA Standards Publication SB 30–2005, *Fire Service Annunciator and Interface*, which provides more detailed information about the design and layout of such systems. This document is written more as a guide and is not directly referenced within NFPA 72.

3007.8 Electrical power. The following features serving each fire service access elevator shall be supplied by both normal power and Type 60/Class 2/Level 1 standby power:

1. Elevator equipment.
2. Elevator hoistway lighting.
3. *Ventilation* and cooling equipment for elevator machine rooms, control rooms, machine spaces and control spaces.
4. Elevator car lighting.

❖ This section provides specific requirements for normal and standby power for fire service access elevators. The standby power would additionally include the power supply for the ventilation equipment for the machine room, machine spaces, control rooms or control spaces associated with the fire service access elevator and hoistway lighting as required in Section 3007.5.2.

3007.8.1 Protection of wiring or cables. Wires or cables that are located outside of the elevator hoistway and machine room and that provide normal or standby power, control signals, communication with the car, lighting, heating, air conditioning, *ventilation* and fire-detecting systems to fire service access elevators shall be protected by construction having a *fire-resistance rating* of not less than 2 hours, shall be a circuit integrity cable having a *fire-resistance rating* of not less than 2 hours or shall be protected by a listed electrical protective system having a *fire-resistance rating* of not less than 2 hours.

Exception: Wiring and cables to control signals are not required to be protected provided that wiring and cables do not serve Phase II emergency in-car operations.

❖ This section provides additional requirements for the protection of specific wiring and cables for each fire service access elevator. Typical building elevators do not require this level of protection for these wires and cables. Several options are provided. The first is protection in 2-hour fire-resistance-rated construction. The second is circuit integrity cable having a fire-resistance rating of 2 hours. The third alternative is a listed electrical protective system with a 2-hour rating. Such protection is not required where the wiring or cable serves no purpose during the use of such elevators during Phase II operations. Phase II is the key fire-fighting and rescue aspect of elevator operation.

3007.9 Standpipe hose connection. A Class I standpipe hose connection in accordance with Section 905 shall be provided in the *interior exit stairway* and *ramp* having direct access from the fire service access elevator lobby.

❖ Locating the hose connection in the exit enclosure having direct access to the elevator lobby relates directly to the needs of fire fighters when fighting a fire.

Fire fighters typically attack a fire from the floor

INTERNATIONAL CODE COUNCIL®
Copyright © 2015 ICC. ALL RIGHTS RESERVED. Accessed by David Dammon on Jun 21, 2017 12:30:52 PM pursuant to License Agreement with ICC. No further reproduction or distribution authorized. ANY UNAUTHORIZED REPRODUCTION OR DISTRIBUTION IS A VIOLATION OF THE FEDERAL COPYRIGHT ACT AND THE LICENSE AGREEMENT, AND SUBJECT TO CIVIL AND CRIMINAL PENALTIES THEREUNDER.

below, and this allows the shortest path for the fire hose to be laid. If the standpipe were located in the lobby itself, it would simply mean that the exit enclosure door would be propped open on the floor below the fire floor.

Keeping the standpipe within the exit enclosure also provides a protected location for the fire department to gain access to the hose while keeping the lobby, and thus the elevator, more protected. This particular issue has also been reviewed extensively by the ASME task group looking at the use of elevators for fire fighting and similar conclusions in terms of placement within the exit enclosure were made.

3007.9.1 Access. The *exit* enclosure containing the standpipe shall have access to the floor without passing through the fire service access elevator lobby.

❖ Access from the exit enclosure containing the standpipe to the floor is necessary so that the fire department can advance its attack hose onto the fire floor without opening the door between the lobby and the floor, which could permit smoke contamination of the lobby and cause recall of the elevator(s). This access to the floor could be direct or through an access corridor or vestibule between the elevator lobby and the exit enclosure, as long as there is a smoke barrier enclosing the elevator lobby. An access corridor is consistent with the exception to Section 3007.6.1.

SECTION 3008
OCCUPANT EVACUATION ELEVATORS

3008.1 General. Where elevators are to be used for occupant self-evacuation during fires, all passenger elevators for general public use shall comply with Sections 3008.1 through 3008.10. Where other elevators are used for occupant self-evacuation, those elevators shall comply with these sections.

❖ This section introduces new provisions in the code that are options for architects to consider, particularly in designing tall buildings. More specifically, Section 403.6.2 permits the use of all passenger elevators for general public use to be designated as occupant evacuation elevators in accordance with the provisions in this section. It should be noted that these provisions could be used in buildings other than high-rise buildings as long as all the requirements in Section 3008 are met. The use of these elevators is intended for all building occupants prior to Phase I recall activation of the elevators.

Based on GSA/NIST research and the efforts of the ASME A17/CSA B44, *Task Groups on Elevators and Fire*, the use of these elevators by building occupants will improve overall building evacuation time compared to only utilizing the required exit stairways. Additionally, using elevators will also provide improved evacuation capability for persons with mobility impairments. The requirements provide the necessary safeguards to ensure a reasonable degree of safety for the use of elevators by occupants during building evacuations in normal elevator operating mode prior to Phase I emergency recall.

The minimum lobby size is based on what is needed to accommodate 25 percent of the occupant load of the floor at 3 square feet (0.27 m^2) per person, plus one wheelchair space [30 inches by 48 inches (762 mm by 1219 mm)] for each 50 people (or fraction). See Section 3008.6.4 for more information on sizing lobbies.

It should be noted that this section implies that only passenger elevators designed for general public use and not elevators designated as private elevators or freight elevators are required to meet all of the provisions in this section. However, elevators that are not for general public use could be used for occupant self-evacuation but would need to meet the requirements of Section 3008.

There are also some instances where elevators were not intended to be included, such as those that simply travel between the parking garage and the main lobby that are technically passenger elevators. The code does not specifically address this case, but due to the limited use of such elevators, use for evacuation would not provide much benefit in a high-rise building.

Although elevators are specifically being used for evacuation, that would not prohibit building occupants from taking the exit stairways during a fire. Occupant evacuation elevators are an option that will decrease the time needed for evacuation and reduce the likelihood of interfering with the fire-fighting and rescue operations.

Note that ASME A17.1/CSA B44 has specific provisions related to occupant evacuation elevators that must also be met. These provisions, which are focused on the operations of the elevators, are found in Section 2.27.11, Occupant Evacuation Operation. This includes provisions such as status indicators and how the elevator operations need to be prioritized.

3008.1.1 Additional exit stairway. Where an additional *means of egress* is required in accordance with Section 403.5.2, an additional *exit stairway* shall not be required to be installed in buildings provided with occupant evacuation elevators complying with Section 3008.1.

❖ This section simply explains that occupant self-evacuation with elevators is an alternative to the additional exit stairway required for high-rise buildings over 420 feet (128 016 mm) in building height.

3008.1.2 Fire safety and evacuation plan. The building shall have an *approved* fire safety and evacuation plan in accordance with the applicable requirements of Section 404 of the *International Fire Code*. The fire safety and evacuation plan shall incorporate specific procedures for the occupants using evacuation elevators.

❖ This section requires a fire safety and evacuation plan in accordance with Section 404 of the *International Fire Code*® (IFC®). In high-rise buildings, occupant evacuation elevators are specifically required to be addressed. Occupant evacuation elevators are not

INTERNATIONAL CODE COUNCIL®
Copyright © 2015 ICC. ALL RIGHTS RESERVED. Accessed by David Dammon on Jun 21, 2017 12:30:52 PM pursuant to License Agreement with ICC. No further reproduction or distribution authorized. ANY UNAUTHORIZED REPRODUCTION OR DISTRIBUTION IS A VIOLATION OF THE FEDERAL COPYRIGHT ACT AND THE LICENSE AGREEMENT, AND SUBJECT TO CIVIL AND CRIMINAL PENALTIES THEREUNDER.

necessarily limited to high-rise buildings and are individually addressed in Section 404. Two resources for discussions on high-rise building evacuation strategies can be found in *Egress Design Solutions* (Tubbs and Meacham 2007) and SFPE Engineering Guide, *Fire Safety for Tall Buildings* (SFPE/ICC 2013).

Though this concept has been espoused for several editions of the code, most building occupants are currently unfamiliar with the concept of using elevators for evacuation. Also, in very tall buildings the application of this concept has great benefits but the implementation can be complex. The IBC and the IFC do not mandate how a building is to be evacuated, but instead provide the elements to assist in evacuation, including proper exit width; limitations on travel distance; life safety features such as sprinklers; and many other elements that assist occupants in exiting a building safely. Therefore, the way in which the elevators are used for evacuation must be tailored to the individual building and occupants. In most cases, when a fire occurs in a high-rise building, the protocol is not to evacuate the entire building but to phase the evacuation and possibly limit it only to the fire floor and the two floors above and below. Therefore, the use of elevators for evacuation needs to be coordinated with that procedure. An example of how such an operation would work is as follows:

A phased evacuation of the fire zone (fire floor and two floors above and below the fire floor) is initiated with appropriate voice announcements and the elevators take occupants of these five floors to the level of exit discharge. While in evacuation operation, the elevators operate in shuttle mode between the five affected floors and the level of exit discharge, with the car buttons disabled and the hall call buttons arranged to tell the controller that there are occupants waiting on the other floors but not controlling the elevator operation. It should be noted that ASME A17.1/CSA B44 has specific requirements for occupant evacuation elevators, termed occupant evacuation operation (OEO), that are consistent with the five initial floors strategy.

In most cases, evacuation of the fire zone should be completed at about the time of fire department arrival. Once complete, the occupant evacuation elevators can be taken out of service [Fire-Fighter Emergency Operation (FEO) Phase I] until or if a decision for full evacuation is made by the fire department. Once a full evacuation decision is made, the occupant egress elevators are placed in evacuation mode [Emergency Evacuation Operation (EEO)] and announcements are made on the affected floors. The elevators then begin to move occupants from their floor to the level of exit discharge in shuttle mode, from the highest floors downward, so that occupants with the greatest distance to travel are moved first. Should any occupants left arrive in the lobby on a floor already evacuated and push the hall call button, a single elevator would be dispatched to that floor to pick them up. Alternatively, evacuation assistance can be provided by the fire service using the access elevator under manual (FEO Phase II) operation.

It is important to note that elevators can be individually recalled by the fire department versus having to require all elevators to recall simultaneously. Individual switches are now required by ASME A17.1/CSA B44 that would allow egress to continue via the elevators while the fire department is conducting operations with one or two of the elevators.

3008.1.3 Operation. The occupant evacuation elevators shall be used for occupant self-evacuation in accordance with the occupant evacuation operation requirements in ASME A17.1/CSA B44 and the building's fire safety and evacuation plan.

❖ The use of an occupant self-evacuation elevator is only allowed until the elevator is recalled on Phase I. Once Phase I has been activated either automatically or manually, the continued use of the elevators for self-evacuation would be considered unsafe and they would no longer be available for such use. After the elevator is recalled, the building occupants served by those elevators would then need to take the exit stairways (and persons with mobility impairments would need to be evacuated by fire fighters using FEO Phase II). In some buildings, there may be multiple banks of elevators. Depending on the fire safety and evacuation plan and the particular building design, occupants could seek other elevators that have not been recalled. As discussed in the commentary to Section 3008.1.2, the way in which a building is to be evacuated prior to Phase I using the elevators is dependent on the specific building and its associated fire safety and evacuation plan.

3008.2 Automatic sprinkler system. The building shall be equipped throughout with an *approved*, electrically supervised *automatic sprinkler system* in accordance with Section 903.3.1.1, except as otherwise permitted by Section 903.3.1.1.1 and as prohibited by Section 3008.2.1.

❖ All high-rise buildings will be required to have a supervised sprinkler system. However, Section 3008 can apply to buildings that may or may not require such systems. This section simply ensures that all buildings using this option contain supervised sprinklered systems.

3008.2.1 Prohibited locations. Automatic sprinklers shall not be installed in elevator machine rooms, machinery spaces, control rooms, control spaces and elevator hoistways of occupant evacuation elevators.

❖ There are a few locations wherein sprinklers may be a detriment to the use of elevators for evacuation. If sprinklers are located in a machine room, machine space, control room or control space and they activate, damage to the elevators may occur and threaten the safety of building occupants. Additionally, such spaces should be protected by smoke detection, which would initiate Phase I recall prior to sprinkler activation. See also the commentary to Section 903.3.1.1.1, Exception 6.

INTERNATIONAL CODE COUNCIL®
Copyright © 2015 ICC. ALL RIGHTS RESERVED. Accessed by David Dammon on Jun 21, 2017 12:30:52 PM pursuant to License Agreement with ICC. No further reproduction or distribution authorized. ANY UNAUTHORIZED REPRODUCTION OR DISTRIBUTION IS A VIOLATION OF THE FEDERAL COPYRIGHT ACT AND THE LICENSE AGREEMENT, AND SUBJECT TO CIVIL AND CRIMINAL PENALTIES THEREUNDER.

3008.2.2 Sprinkler system monitoring. The automatic sprinkler system shall have a sprinkler control valve supervisory switch and water-flow-initiating device provided for each floor that is monitored by the building's *fire alarm system*.

❖ This allows the origin of the fire to be better determined and will assist in managing a fire emergency. Many of the provisions of this section are in place, since using elevators for evacuation is a new concept and many safety factors were deemed necessary. In the future it is anticipated that such monitoring will assist in determining the priority for elevator location when evacuating buildings using elevators.

3008.3 Water protection. An *approved* method to prevent water from infiltrating into the hoistway enclosure from the operation of the *automatic sprinkler system* outside the enclosed occupant evacuation elevator lobby shall be provided.

❖ This section provides performance-based language to prevent water from the discharge of automatic sprinklers located outside the elevator lobby from infiltrating the hoistway opening. It is important to stress that this requirement is only for protection from sprinkler system water and not water from fire fighter hoses. Also, the language is performance oriented as there are several strategies that could be used to address this problem and a single solution may not fit in all situations. Solutions include concepts such as a door sweep, trench drains, sloped floors, curbs and gasketed openings, which may be used individually or in combination. Other methods may also be available to meet this intent. It should be stressed that the intent of this section is focused on the actual hoistway opening versus the walls surrounding the hoistway. The most water-sensitive aspects of the elevator are located at the hoistway opening. Further, this section does not necessarily require that the hoistway opening itself be protected. This protection could come at the entrance to the lobby.

3008.4 Shunt trip. Means for elevator shutdown in accordance with Section 3005.5 shall not be installed on elevator systems used for occupant evacuation elevators.

❖ A shunt trip has the possibility of inappropriately shutting down elevators that are removing people from a hazardous situation. Section 3008.3.1 prohibits sprinklers in machine rooms and machine spaces to prevent the shutdown of elevators due to water damage (see commentary, Section 3008.2.1).

3008.5 Hoistway enclosure protection. Occupant evacuation elevator hoistways shall be located in *shaft enclosures* complying with Section 713.

❖ Reference is made to Section 713 of the code for the required fire resistance and construction of the hoistway enclosure. Section 713 contains fire-resistance rating requirements as well as construction requirements for shafts, which are typically the method used to satisfy the requirements for a hoistway enclosure. Section 403.2 provides additional standards, and some exceptions, for hoistway construction in high-rise buildings, but the exceptions do not apply to elevator hoistway enclosures. Also note that Section 403.2.3 would require additional structural integrity for elevator hoistway enclosures in buildings more than 420 feet (128 016 mm) in building height.

3008.5.1 Structural integrity of hoistway enclosures. Occupant evacuation elevator hoistway enclosures shall comply with Sections 403.2.3.1 through 403.2.3.4.

❖ The code requires special structural provisions for exit stairways and elevator shaft enclosures in super high-rise buildings [greater than 420 feet (128 016 mm) in height]. It follows that the structural integrity requirements for super high-rise building exit stairway and elevator hoistway shaft enclosures should also apply to elevator hoistway shaft enclosures provided for occupant evacuation elevators, which are just as critical for life-safety protection. This new technology for evacuation of occupants must be provided with the highest level of fire protection that is reasonably possible in order to ensure that the elevators will be available during a fire emergency to serve their intended purpose of evacuating the occupants. This section requires that the structural integrity of the elevator hoistway shaft enclosures be required to have some reasonable degree of physical protection to ensure that the hoistway shaft enclosures will remain in place when needed during a fire or other emergency.

3008.6 Occupant evacuation elevator lobby. Occupant evacuation elevators shall open into an elevator lobby in accordance with Sections 3008.6.1 through 3008.6.6. Egress is permitted through the elevator lobby in accordance with Item 1 of Section 1016.2.

❖ One of the concerns when using elevators for evacuation is the protection of occupants while they wait for elevators. Therefore, a more protected elevator lobby is offered to occupants. As will be seen, these requirements have some similarities to the lobbies required for fire service access elevators. A major difference, however, is that lobbies be provided for all passenger elevators for general public use, not simply for one elevator designated as a fire service access elevator.

Since elevators used for occupant evacuation will be at a minimum all passenger elevators for general public use in buildings, it is very likely that one of these elevators will also be the fire service access elevator. Therefore, they will likely share the same lobby and the most restrictive provisions will apply. See Table 3007.4 for a comparison of lobby requirements.

3008.6.1 Access to interior exit stairway or ramp. The occupant evacuation elevator lobby shall have direct access from the enclosed elevator lobby to an *interior exit stairway* or *ramp*.

Exception: Access to an *interior exit stairway* or *ramp* shall be permitted to be through a protected path of travel

INTERNATIONAL CODE COUNCIL®
Copyright © 2015 ICC. ALL RIGHTS RESERVED. Accessed by David Dammon on Jun 21, 2017 12:30:52 PM pursuant to License Agreement with ICC. No further reproduction or distribution authorized. ANY UNAUTHORIZED REPRODUCTION OR DISTRIBUTION IS A VIOLATION OF THE FEDERAL COPYRIGHT ACT AND THE LICENSE AGREEMENT, AND SUBJECT TO CIVIL AND CRIMINAL PENALTIES THEREUNDER.

that has a level of fire protection not less than the elevator lobby enclosure. The protected path shall be separated from the enclosed elevator lobby through an opening protected by a smoke and draft control assembly in accordance Section 716.5.3.

❖ As with the fire service access elevators, there must be direct access to an exit enclosure from the lobby. However, the purpose is slightly different. The reason is not to facilitate fire fighting activities but instead provide an exit in close proximity if the elevators are no longer available, thus facilitating a quick evacuation. This also allows those who no longer want to wait to leave via the exit stairways without having to leave the protected environment provided by the lobby enclosure.

Neither Section 3007 nor 3008 prohibits the interior exit stairway directly accessed by the lobbies for occupant evacuation from being the same lobby that is for the fire service access elevator. Note that occupant evacuation using elevators will be much faster than using the exit stairways and will also greatly reduce the load on the exit stairways. This decrease in evacuation time will, therefore, reduce the likelihood that the occupants and fire fighters will interfere with one another. This is especially true if the building is only being partially evacuated.

There is an exception that provides flexibility for direct access to an exit stairway. Essentially, it allows a protected path equivalent to that of the enclosed elevator lobby. The opening between the lobby and protected path does still require separation with a smoke and draft control door. This helps to keep the lobby protected from smoke that could infiltrate the lobby from the protected path. Note that there is no restriction on what type of doors can open onto this protected path as long as the opening is properly protected. Such doors could include offices, bathrooms and supply closets.

3008.6.2 Lobby enclosure. The occupant evacuation elevator lobby shall be enclosed with a *smoke barrier* having a *fire-resistance rating* of not less than 1 hour, except that lobby doorways shall comply with Section 3008.6.3.

Exception: Enclosed occupant evacuation elevator lobbies are not required at the *levels of exit discharge*.

❖ The enclosure rating is the same as that required for the fire service access elevator lobby, which is a 1-hour smoke barrier. A smoke barrier provides both a fire-resistance rating and an increased level of protection from smoke. This is more specific and restrictive than the hoistway opening protection requirements found in Section 3006.3. Again, the use of elevators for evacuation makes lobbies more critical, as they are now part of the life safety systems of a building.

Similar to the fire service access elevators, there is a single exception to the enclosure requirement. In the case of occupant evacuation elevators, this exception is at the level of exit discharge.

3008.6.3 Lobby doorways. Other than the doors to the hoistway, elevator machine rooms, machinery spaces, control rooms and control spaces within the lobby enclosure smoke barrier, each doorway to an occupant evacuation elevator lobby shall be provided with a $^3/_4$-hour *fire door assembly* complying with Section 716.5. The *fire door assembly* shall comply with the smoke and draft control assembly requirements of Section 716.5.3.1 with the UL 1784 test conducted without the artificial bottom seal.

❖ The lobby doorways are required to be $^3/_4$-hour protected in accordance with Section 716.5. The requirement for a $^3/_4$-hour door is more restrictive than what is required for smoke barriers in Section 716.5. Section 716.5 and Table 716.5 require a 20-minute rating for doors located in smoke barriers. The reference back to Section 716.5 in this section is primarily related to how the door is to be tested and the criteria for acceptance. More specifically, Section 716.5.3.1 requires doors used in smoke and draft control to be tested in accordance with UL 1784 and installed in accordance with NFPA 105.

3008.6.3.1 Vision panel. A vision panel shall be installed in each *fire door assembly* protecting the lobby doorway. The vision panel shall consist of fire-protection-rated glazing and shall be located to furnish clear vision of the occupant evacuation elevator lobby.

❖ The vision panel allows occupants located in the elevator lobby to be aware of the conditions outside the lobby and also allows the building occupants outside the lobby to see how crowded the lobby is during a fire. If the lobby is crowded, the occupants can choose to return to the exit stairways for egress. This is not a requirement for fire service access elevators.

3008.6.3.2 Door closing. Each *fire door assembly* protecting the lobby doorway shall be automatic-closing upon receipt of any fire alarm signal from the *emergency voice/alarm communication system* serving the building.

❖ In addition to providing tenability for the lobby, the automatic door closing requirement will provide a longer period of elevator use before Phase I Recall occurs. Essentially, it will delay smoke infiltrating the lobbies and the activation of the smoke detectors in the lobby. Such detectors or other fire alarm-initiating devices are among the mechanisms for the activation of Phase I Recall.

3008.6.4 Lobby size. Each occupant evacuation elevator lobby shall have minimum floor area as follows:

1. The occupant evacuation elevator lobby floor area shall accommodate, at 3 square feet (0.28 m^2) per person, not less than 25 percent of the *occupant load* of the floor area served by the lobby.
2. The occupant evacuation elevator lobby floor area shall accommodate one *wheelchair space* of 30 inches by 48

INTERNATIONAL CODE COUNCIL®
Copyright © 2015 ICC. ALL RIGHTS RESERVED. Accessed by David Dammon on Jun 21, 2017 12:30:52 PM pursuant to License Agreement with ICC. No further reproduction or distribution authorized. ANY UNAUTHORIZED REPRODUCTION OR DISTRIBUTION IS A VIOLATION OF THE FEDERAL COPYRIGHT ACT AND THE LICENSE AGREEMENT, AND SUBJECT TO CIVIL AND CRIMINAL PENALTIES THEREUNDER.

inches (760 mm by 1220 mm) for each 50 persons, or portion thereof, of the *occupant load* of the floor area served by the lobby.

Exception: The size of lobbies serving multiple banks of elevators shall have the minimum floor area *approved* on an individual basis and shall be consistent with the building's fire safety and evacuation plan.

❖ This section provides the basic criteria for a minimum amount of lobby floor space. The lobby needs to provide space for all occupants, not just for those with a disability. Therefore, there is wheelchair space provided and also 3 square feet (0.27 m^2) per person for 25 percent of the occupant load. Some percentage of occupants may take the exit stairways, and, because of the speed of the elevator egress, the need to house the entire occupant load is unnecessary.

The following is an example of how large a lobby in a story containing 200 occupants would need to be:

- 200 occupants/4 (25% of occupants) = 50 occupants
- 50 occupants × 3 square feet per occupant = 150 square feet

In addition, wheelchair space is required as follows:

- 200 occupants/1 wheelchair space for each 50 occupants = 4 wheelchair spaces
- 4 chair spaces × 30 inches × 48 inches = 5,760/144 square inches = 40 square feet
- Total square feet of lobby space = 150 square feet + 40 square feet = 190 square feet

3008.6.5 Signage. An *approved* sign indicating elevators are suitable for occupant self-evacuation shall be posted on all floors adjacent to each elevator call station serving occupant evacuation elevators.

❖ Since this is such a departure from what the general public has been trained to do during a fire emergency, signage is imperative to let occupants know that elevators are available for evacuation during a fire. Occupants have been historically told to take the exit stairways during a fire. Additionally, only some buildings will have this feature, so signage needs to differentiate from buildings that do not anticipate this type of evacuation procedure.

3008.6.6 Two-way communication system. A two-way communication system shall be provided in each occupant evacuation elevator lobby for the purpose of initiating communication with the *fire command center* or an alternate location *approved* by the fire department. The two-way communication system shall be designed and installed in accordance with Sections 1009.8.1 and 1009.8.2.

❖ In addition to informing occupants of whether they can use the elevator in normal service or for evacuation, there needs to be a means of communication between building occupants and emergency responders. This is especially important if all people have not been able to evacuate prior to Phase I emergency recall operation. This communication system will assist in prioritizing rescue by the fire department once the elevators are no longer available for those who cannot take the exit stairways. The communication system required is the same as for an area of refuge. This provides consistency with the accessible means of egress requirements and with ICC A117.1.

3008.7 Elevator system monitoring. The occupant evacuation elevators shall be continuously monitored at the *fire command center* or a central control point *approved* by the fire department and arranged to display all of the following information:

1. Floor location of each elevator car.
2. Direction of travel of each elevator car.
3. Status of each elevator car with respect to whether it is occupied.
4. Status of normal power to the elevator equipment, elevator machinery and electrical apparatus cooling equipment where provided, elevator machine room, control room and control space *ventilation* and cooling equipment.
5. Status of standby or emergency power system that provides backup power to the elevator equipment, elevator machinery and electrical cooling equipment where provided, elevator machine room, control room and control space *ventilation* and cooling equipment.
6. Activation of any fire alarm initiating device in any elevator lobby, elevator machine room, machine space containing a motor controller or electric driving machine, control space, control room or elevator hoistway.

❖ The monitoring is intended for emergency responders so they can determine if there are any problems occurring where a rescue may be necessary, or when they may determine that the elevators must be recalled and removed from egress service. This monitoring helps determine how many people are evacuating and at what locations, through the use of load-weighing capabilities currently found in elevators. Understanding how the people are moving will assist in prioritizing fire-fighting and rescue operations.

3008.7.1 Elevator recall. The *fire command center* or an alternate location *approved* by the fire department shall be provided with the means to manually initiate a Phase I Emergency Recall of the occupant evacuation elevators in accordance with ASME A17.1/CSA B44.

❖ Buildings with occupant self-evacuation elevators must have elevator recall capability available at the fire command center or similar location in addition to the automatic recall by smoke detection and manual recall ability at the elevator itself. This gives the emergency responders the ability to recall the elevators in the location where they are closely monitoring the elevator movement and associated attributes required to be monitored by Section 3008.8.

INTERNATIONAL CODE COUNCIL®
Copyright © 2015 ICC. ALL RIGHTS RESERVED. Accessed by David Dammon on Jun 21, 2017 12:30:52 PM pursuant to License Agreement with ICC. No further reproduction or distribution authorized. ANY UNAUTHORIZED REPRODUCTION OR DISTRIBUTION IS A VIOLATION OF THE FEDERAL COPYRIGHT ACT AND THE LICENSE AGREEMENT, AND SUBJECT TO CIVIL AND CRIMINAL PENALTIES THEREUNDER.

3008.8 Electrical power. The following features serving each occupant evacuation elevator shall be supplied by both normal power and Type 60/Class 2/Level 1 standby power:

1. Elevator equipment.
2. *Ventilation* and cooling equipment for elevator machine rooms, control rooms, machinery spaces and control spaces.
3. Elevator car lighting.

❖ All passenger elevators used for occupant self-evacuation must be equipped with standby power. This differs from Section 3003.1.3, which does not require all elevators to run simultaneously on standby power.

These requirements are almost identical to those for fire service access elevators. The only difference is that fire service access elevators also require standby power for the hoistway lighting required by Section 3007.5.2.

3008.8.1 Protection of wiring or cables. Wires or cables that are located outside of the elevator hoistway, machine room, control room and control space and that provide normal or standby power, control signals, communication with the car, lighting, heating, air conditioning, *ventilation* and fire-detecting systems to fire service access elevators shall be protected by construction having a *fire-resistance rating* of not less than 2 hours, shall be circuit integrity cable having a fire-resistance rating of not less than 2 hours or shall be protected by a listed electrical circuit protective system having a *fire-resistance rating* of not less than 2 hours.

Exception: Wiring and cables to control signals are not required to be protected provided that wiring and cables do not serve Phase II emergency in-car operation.

❖ This section is the same as Section 3007.8.1, except that it is focused on occupant evacuation elevators (see commentary, Section 3007.8.1). Wiring or cables for all passenger elevators and other elevators that are part of the occupant evacuation system require protection. Typical buildings without occupant evacuation elevators would only provide the protection to the fire service access elevators.

3008.9 Emergency voice/alarm communication system. The building shall be provided with an *emergency voice/alarm communication system*. The *emergency voice/alarm communication system* shall be accessible to the fire department. The system shall be provided in accordance with Section 907.5.2.2.

❖ Emergency voice/alarm communication systems are required in all high-rise buildings, but the application of Section 3008 is not limited to high-rise buildings. Therefore, this would be an additional requirement in some instances. Using elevators for evacuation makes such systems critical in providing appropriate information to building occupants. The actual requirements are located Chapter 9 of this code.

3008.9.1 Notification appliances. Not fewer than one audible and one visible notification appliance shall be installed within each occupant evacuation elevator lobby.

❖ In addition to the normal requirements associated with emergency voice/alarm communication systems, notification appliances must also be placed within elevator lobbies. There are likely to be many people waiting in such lobbies, and it is critical that the occupants receive proper instructions and up-to-date information during an emergency.

3008.10 Hazardous material areas. No building areas shall contain hazardous materials exceeding the maximum allowable quantities per *control area* as addressed in Section 414.2.

❖ This section prohibits any Group H occupancies in buildings that allow the use of elevators for evacuation. This is an added precaution in buildings allowing elevators for evacuation. It simply reduces the risk of fire and other hazardous conditions that could occur in a building.

Bibliography

The following resource materials were used in the preparation of the commentary for this chapter of the code.

FEMA FIA-TB #4, *Elevator Installation for Buildings Located in Special Flood Hazard Areas*. Washington, DC: Federal Emergency Management Agency, 2010.

NEMA Standards Publication SB 30–2005, *Fire Service Annunciator and Interface*. National Electrical Manufacturers Association, 2005.

NFIP Technical Bulletin Series. Washington, DC: National Flood Insurance Program. [Online]. Available: http://www.fema.gov/MITItechbul.htm.

SFPE Engineering Guide, *Fire Safety for Tall Buildings* (SFPE/ICC 2013).

Tubbs, J. and B. Meacham. *Egress Design Solutions, A Guide to Evacuation and Crowd Management Planning*. Hoboken, NJ: John Wiley and Sons, 2007.

INTERNATIONAL CODE COUNCIL®
Copyright © 2015 ICC. ALL RIGHTS RESERVED. Accessed by David Dammon on Jun 21, 2017 12:30:52 PM pursuant to License Agreement with ICC. No further reproduction or distribution authorized. ANY UNAUTHORIZED REPRODUCTION OR DISTRIBUTION IS A VIOLATION OF THE FEDERAL COPYRIGHT ACT AND THE LICENSE AGREEMENT, AND SUBJECT TO CIVIL AND CRIMINAL PENALTIES THEREUNDER.

INTERNATIONAL CODE COUNCIL®
Copyright © 2015 ICC. ALL RIGHTS RESERVED. Accessed by David Dammon on Jun 21, 2017 12:30:52 PM pursuant to License Agreement with ICC. No further reproduction or distribution authorized. ANY UNAUTHORIZED REPRODUCTION OR DISTRIBUTION IS A VIOLATION OF THE FEDERAL COPYRIGHT ACT AND THE LICENSE AGREEMENT, AND SUBJECT TO CIVIL AND CRIMINAL PENALTIES THEREUNDER.

Chapter 31: Special Construction

General Comments

Chapter 31 contains provisions that govern the construction and protection of structures with unique characteristics not addressed by other sections of the code and that require special consideration. This chapter includes requirements for signs; membrane structures; temporary structures; pedestrian walkways; telecommunication and broadcast towers; canopies and awnings; marquees, automatic vehicular gates and swimming pool enclosures.

Section 3101 addresses the scope of the chapter.

Section 3102 regulates membrane structures.

Section 3103 regulates structures that are erected for a period of less than 180 days.

Section 3104 regulates pedestrian walkways between buildings.

Section 3105 regulates the construction of awnings and canopies.

Section 3106 regulates the construction of marquees.

Section 3107 addresses the design, construction and maintenance of signs.

Section 3108 regulates the construction of towers and antennas that are used for radio, telephone and television transmission.

Section 3109 regulates swimming pool enclosures by referencing the *International Swimming Pool and Spa Code*® (ISPSC®).

Section 3110 regulates automatic vehicular gates.

Section 3111 regulates photovoltaic panels and modules.

The provisions of Chapter 31 are to be considered as additional requirements to those contained elsewhere in the code. These provisions may alter the general requirements found in other locations, but are only applicable to the specific element regulated therein. For example, the provisions for temporary construction regulate how the structure is to be built, but do not address means of egress. As such, the provisions of Chapter 10 are applicable.

The criteria in this chapter are straightforward and, in turn, lend themselves to straightforward enforcement.

Purpose

The purpose of Chapter 31 is to locate in one place the provisions that regulate construction or protection requirements for structures having unique characteristics, such as structures that are unusually tall and not used for human occupancy, structures occupied for short periods of time or recreational structures (swimming pools).

SECTION 3101 GENERAL

3101.1 Scope. The provisions of this chapter shall govern special building construction including membrane structures, temporary structures, *pedestrian walkways* and tunnels, automatic *vehicular gates*, *awnings* and *canopies*, *marquees*, signs, and towers and antennas.

❖ This section makes it clear that the requirements of this chapter are to be used in conjunction with the general requirements of the code. When a specific provision is contained in Chapter 31, it will take precedence over the general requirement.

SECTION 3102 MEMBRANE STRUCTURES

3102.1 General. The provisions of Sections 3102.1 through 3102.8 shall apply to air-supported, air-inflated, membrane-covered cable, membrane-covered frame and *tensile membrane structures*, collectively known as membrane structures, erected for a period of 180 days or longer. Those erected for a shorter period of time shall comply with the *International Fire Code*. Membrane structures covering water storage facilities, water clarifiers, water treatment plants, sewage treatment plants, greenhouses and similar facilities not used for human occupancy are required to meet only the requirements of Sections 3102.3.1 and 3102.7. Membrane structures erected on a building, balcony, deck or other structure for any period of time shall comply with this section.

❖ This section applies to membrane structures that are erected for a period of 180 days or longer or, in the case of membrane structures erected on buildings, balconies, decks or similar structures, for any amount of time. Some membrane structures are of the inflated type, where the air pressure is within a series of tubes, which then form the structure and keep it upright. In other structures, the interior atmosphere is pressurized and cables may be used to restrain the fabric membrane. Other types include cable-supported membrane structures in which the roof element is supported by cables and air pressure may or may not be provided. These are commonly used in

INTERNATIONAL CODE COUNCIL®
Copyright © 2015 ICC. ALL RIGHTS RESERVED. Accessed by David Dammon on Jun 21, 2017 12:30:52 PM pursuant to License Agreement with ICC. No further reproduction or distribution authorized. ANY UNAUTHORIZED REPRODUCTION OR DISTRIBUTION IS A VIOLATION OF THE FEDERAL COPYRIGHT ACT AND THE LICENSE AGREEMENT, AND SUBJECT TO CIVIL AND CRIMINAL PENALTIES THEREUNDER.

sports stadiums. Membrane structures may also be framework-type structures in which the membrane is stretched over the frame to form the enclosing walls and the roof. Finally, membrane structures may consist of a membrane tensioned to provide weather protection without enclosing walls. These structures are termed tensile membrane structures and are defined in Chapter 2 of this code.

The history of regulating membrane structures dates back to 1944, when efforts were first made to control circus tent flammability after a circus fire in Hartford, Connecticut, claimed 168 lives. Early regulations required that the tent fabric be flame resistant, that adequate exiting from both the grandstands and the tent be provided and that sufficient clear space around the tent be provided to control potential ignition sources and to permit rapid emergency exiting.

Large permanent membrane structures began to see significant use in the United States in the early 1960s. Prior to that time, the only membrane structures in common usage were air-inflated and air-supported covers for participant sports facilities such as tennis courts and swimming pools. Because of fire prevention code requirements, such structures were often restricted to temporary use, which at that time was defined as less than 90 days. As noted in Section 3102.1, the criterion of 180 days is used to define what is permanent and what is temporary. It should be noted that Section 3102.1.1 deals with both temporary and permanent tensile membrane structures.

The reference to 180 days in Section 3102.1 is intended to establish membrane structures complying with this section as being outside the scope and provisions for temporary structures.

This section includes provisions for construction types, height and area limitations, and structural support. Otherwise, the other applicable sections of the code apply. So that a membrane structure will continue to provide its intended function, it must undergo continuous maintenance. Fire safety of such structures and the premises is regulated by the *International Fire Code*® (IFC®).

In general, this section applies to all membrane structures, regardless of the supporting mechanisms or structures, which are erected for a period of 180 days or more. Membrane structures erected for a period of less than 180 days are instead required to comply with the provisions of the IFC. However, there are certain membrane structures that need to be regulated as permanent regardless of how long they are erected. These include membrane structures located on buildings, balconies, decks and similar structures. When a temporary membrane structure is placed in a field or parking lot, several safety features are afforded including fire separation distance from other hazards (buildings, vehicles), separation from other tents, and an unobstructed means of egress path for the uniformly located exits. When a membrane structure is placed upon a building or deck, the temporary membrane structure requirements do not provide regulations for key issues associated with permanent structures, such as the means of egress or the limitation of hazardous materials. Therefore, compliance with permanent structure standards is needed. Furthermore, the temporary membrane structure section does not contain requirements on the regulation of the loads that the temporary membrane structures would impose on a structure below.

It is also important to note that the provisions of Section 3102 apply regardless of the use or occupant load of such structures. If the structure is not intended for human occupancy, some relief is provided and compliance with only Sections 3102.3.1 and 3102.7 is required.

3102.1.1 Tensile membrane structures. Tensile membrane structures, including permanent and temporary structures, shall be designed and constructed in accordance with ASCE 55. The provisions in Sections 3102.3 through 3102.6 shall apply.

❖ This section references ASCE 55, *Tensile Membrane Structures.* This standard provides minimum criteria for the design and performance of tensile membrane cable and rigid member structures, including frame structures, collectively known as tensile membrane structures. This would include permanent and temporary structures as noted in the text. The requirements of this section and the associated standard shall apply whether the tensile membrane structure is independent of or attached to another structure. This section does not apply to air-supported or air-inflated structures.

In addition to the scope and definitions, ASCE 55 includes chapters on membrane materials, connections, design, fabrication and erection, as well as appendices for special provisions and a procedure for determining modulus of elasticity.

3102.2 Definitions. The following terms are defined in Chapter 2:

AIR-INFLATED STRUCTURE.

AIR-SUPPORTED STRUCTURE.

Double skin.

Single skin.

CABLE-RESTRAINED, AIR-SUPPORTED STRUCTURE.

MEMBRANE-COVERED CABLE STRUCTURE.

MEMBRANE-COVERED FRAME STRUCTURE.

NONCOMBUSTIBLE MEMBRANE STRUCTURE.

TENSILE MEMBRANE STRUCTURE.

❖ Definitions of terms can help in the understanding and application of code requirements. This section directs the code user to Chapter 2 for the proper application of the indicated terms used in this chapter. Terms may be defined in Chapter 2, in another International Code® as indicated in Section 201.3 or the dictionary meaning may be all that is needed (see also commentary, Sections 201 through 201.4).

INTERNATIONAL CODE COUNCIL®
Copyright © 2015 ICC. ALL RIGHTS RESERVED. Accessed by David Dammon on Jun 21, 2017 12:30:52 PM pursuant to License Agreement with ICC. No further reproduction or distribution authorized. ANY UNAUTHORIZED REPRODUCTION OR DISTRIBUTION IS A VIOLATION OF THE FEDERAL COPYRIGHT ACT AND THE LICENSE AGREEMENT, AND SUBJECT TO CIVIL AND CRIMINAL PENALTIES THEREUNDER.

3102.3 Type of construction. Noncombustible membrane structures shall be classified as Type IIB construction. Noncombustible frame or cable-supported structures covered by an approved membrane in accordance with Section 3102.3.1 shall be classified as Type IIB construction. Heavy timber frame-supported structures covered by an *approved* membrane in accordance with Section 3102.3.1 shall be classified as Type IV construction. Other membrane structures shall be classified as Type V construction.

Exception: Plastic less than 30 feet (9144 mm) above any floor used in greenhouses, where occupancy by the general public is not authorized, and for aquaculture pond covers is not required to meet the fire propagation performance criteria of Test Method 1 or Test Method 2, as appropriate, of NFPA 701.

❖ Because of the limited fire-resistance capabilities of the membrane, membrane structures are usually classified as Type IIB, IV or V. These are defined as follows:

Type IIB—Membrane structures in which the membrane is noncombustible as defined by Section 703.5; or membrane-covered structures in which the frame or cable is noncombustible and the membrane is either noncombustible or flame resistant.

Type IV—Membrane-covered structures in which the frame is made from heavy timber and the membrane is noncombustible or flame resistant.

Type V—Membrane structures in which the membrane is flame resistant and combustible; or membrane-covered structures in which the frame or cable is combustible and the membrane is noncombustible or flame resistant.

In accordance with Section 602.2, a membrane-covered structure is to be considered as Type I or II construction, provided that the frame or cable complies with the provisions for Type I or II construction and the membrane structure is noncombustible, used exclusively as a roof and located more than 20 feet (6096 mm) above any floor, balcony or gallery floor level. This is similar to the provisions in Table 601 that do not require fire-resistance-rated roof construction under similar conditions.

The exception indicates that in recent years it has been common practice to build greenhouses with higher ridge lines. Since this increase in height, there has been no record of related property loss.

3102.3.1 Membrane and interior liner material. Membranes and interior liners shall be either noncombustible as set forth in Section 703.5 or meet the fire propagation performance criteria of Test Method 1 or Test Method 2, as appropriate, of NFPA 701 and the manufacturer's test protocol.

Exception: Plastic less than 20 mil (0.5 mm) in thickness used in greenhouses, where occupancy by the general public is not authorized, and for aquaculture pond covers is not required to meet the fire propagation performance criteria of Test Method 1 or Test Method 2, as appropriate, of NFPA 701.

❖ The membrane is a thin, flexible, impervious material capable of being supported by an air pressure of $1^1/_2$ inches (38 mm) of water column. Membranes may be noncombustible. Except for limited applications of plastic greenhouses and pond covers, combustible membranes are required to be flame resistant.

Noncombustible membranes and liner materials must meet the criteria of Section 703.5, which references ASTM E136. This test is used in the determination of noncombustibility. See the commentary for Section 703.5.1 for more information on this test.

Materials that are not noncombustible are required to be flame resistant. Flame resistance is determined by testing the membrane in accordance with NFPA 701. The materials when tested in accordance with NFPA 701 must comply with the performance criteria of one of the two identified test methods. The historic "small-scale test" is no longer accepted.

Although typically not applicable to membrane structures, it should be noted that recent tests have indicated a problem with combining two fabrics that individually passed the test procedure, but in combination would not be acceptable. Therefore, if multiple layers are used, testing should demonstrate acceptable performance for the combination of materials.

Both greenhouses that are not open to the public and aquaculture pond covers may be of plastic that is less than 20 mil (500 mm) thick and need not be flame resistant or tested to demonstrate compliance with NFPA 701. This provision for greenhouses is based on the limited number of occupants.

3102.4 Allowable floor areas. The area of a membrane structure shall not exceed the limitations specified in Section 506.

❖ The allowable area per floor of a membrane structure is determined using Section 506, based on the construction types established in Section 3102.3.

3102.5 Maximum height. Membrane structures shall not exceed one story nor shall such structures exceed the height limitations in feet specified in Section 504.3.

Exception: Noncombustible membrane structures serving as roofs only.

❖ Membrane structures are most commonly used to enclose large, open areas without intermediate structural supports such as columns. For this reason, as well as the engineering difficulties associated with multistory buildings, membrane structures are limited to one story and the maximum height permitted in accordance with Table 504.3. The height is not limited, however, if a noncombustible membrane is used as a roof.

3102.6 Mixed construction. Membrane structures shall be permitted to be utilized as specified in this section as a portion of buildings of other types of construction. Height and

INTERNATIONAL CODE COUNCIL®
Copyright © 2015 ICC. ALL RIGHTS RESERVED. Accessed by David Dammon on Jun 21, 2017 12:30:52 PM pursuant to License Agreement with ICC. No further reproduction or distribution authorized. ANY UNAUTHORIZED REPRODUCTION OR DISTRIBUTION IS A VIOLATION OF THE FEDERAL COPYRIGHT ACT AND THE LICENSE AGREEMENT, AND SUBJECT TO CIVIL AND CRIMINAL PENALTIES THEREUNDER.

area limits shall be as specified for the type of construction and occupancy of the building.

❖ Section 3102.6 applies where the membrane structure is only a portion of a larger structure built of typical "rigid" materials. If a membrane structure is completely created by the membranes, or membranes supported by a rigid frame or a cable system, then Sections 3102.3 through 3102.5 apply. Where there are additional parts of the building constructed of rigid materials, such as walls, a second story, a mezzanine or something other than a membrane and its supporting structure, then it is a mixed construction membrane structure subject to Section 3102.6. Commentary Figure 3102.6.1 illustrates a mixed construction building where a membrane is used as the roof of an otherwise rigid construction building.

For a mixed construction membrane structure, the supporting structure of the membrane must be equal to or better than that of the building to which it is attached. Where air-supported or air-inflated structures are attached as an element of a building, their area limitations are based on the building to which they are attached. For example, an air-supported membrane building for a Group A-1 occupancy of Type VB construction with an allowable area of 22,000 square feet (2045 m^2) would limit the area of the membrane structure to 22,000 square feet (2045 m^2) as well even if a noncombustible membrane structure was used.

3102.6.1 Noncombustible membrane. A noncombustible membrane shall be permitted for use as the roof or as a skylight of any building or atrium of a building of any type of construction provided the membrane is not less than 20 feet (6096 mm) above any floor, balcony or gallery.

❖ See Commentary Figure 3102.6.1 for an example of the application of this section. See the commentary for Section 3102.3.1 regarding the determination of a noncombustible membrane versus one complying with NFPA 701.

3102.6.1.1 Membrane. A membrane meeting the fire propagation performance criteria of Test Method 1 or Test Method 2, as appropriate, of NFPA 701 shall be permitted to be used as the roof or as a skylight on buildings of Type IIB, III, IV and V construction, provided the membrane is not less than 20 feet (6096 mm) above any floor, balcony or gallery.

❖ See Commentary Figure 3102.6.1 for an example of the application of this section. See the commentary for Section 3102.3.1 regarding the determination of a noncombustible membrane versus one complying with NFPA 701. Note that the materials when tested in accordance with NFPA 701 must comply with the performance criteria of one of the two identified test methods. The historic "small-scale test" is no longer accepted.

3102.7 Engineering design. The structure shall be designed and constructed to sustain dead loads; loads due to tension or inflation; live loads including wind, snow or flood and seismic loads and in accordance with Chapter 16.

❖ The structure must be designed and constructed to sustain all dead loads, loads caused by tensioning or inflation and live loads, including wind, snow, flood and seismic. Chapter 16 provides criteria for design loads, except those associated with tensioning or inflation.

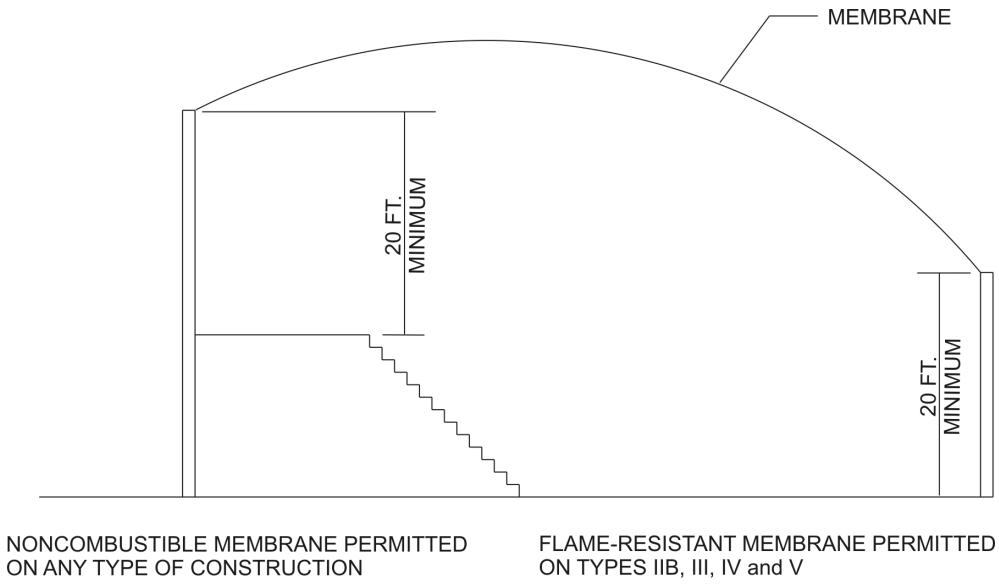

For SI: 1 foot = 304.8 mm.

Figure 3102.6.1
NONCOMBUSTIBLE AND FLAME-RESISTANT MEMBRANE CONSTRUCTION

INTERNATIONAL CODE COUNCIL®
Copyright © 2015 ICC. ALL RIGHTS RESERVED. Accessed by David Dammon on Jun 21, 2017 12:30:52 PM pursuant to License Agreement with ICC. No further reproduction or distribution authorized. ANY UNAUTHORIZED REPRODUCTION OR DISTRIBUTION IS A VIOLATION OF THE FEDERAL COPYRIGHT ACT AND THE LICENSE AGREEMENT, AND SUBJECT TO CIVIL AND CRIMINAL PENALTIES THEREUNDER.

3102.7.1 Lateral restraint. For membrane-covered frame structures, the membrane shall not be considered to provide lateral restraint in the calculation of the capacities of the frame members.

❖ This section is a result of a study of the collapse of the Dallas Cowboys' indoor practice facility on May 2, 2009, conducted by the National Institute of Standards and Technology (NIST) (Gross et al., 2010).

In its study of the collapse of the facility, a membrane-covered frame structure, NIST found that the facility was designed assuming that the tensioned exterior membrane provided lateral bracing for the frames. Had the building been designed assuming that the membrane would not provide lateral restraint, the design capacity for some frame members would have been 46 percent of the capacity required based on the assumption that the membrane provides full lateral restraint (see Table 5-5 of Gross et al., 2010).

A review of the state of the practice indicated that there is some disparity among designers of membrane-covered frame structures regarding the contribution of the membrane to the stability of the frame members. Some designers rely on the membrane to provide lateral support to the frames, while others do not. The amount of lateral restraint provided by the membrane depends on the stiffness and strength of the membrane, which are not well quantified over the lifespan of the membrane. The degree of lateral restraint also depends on the level of tension in the membrane, which is uncertain since it is a function of the initial tensioning and maintenance procedures over the life of the membrane. A particular concern is the susceptibility of the fabric material to tearing due to reasons such as wind-borne debris during windstorms, accidental cuts during installation or maintenance, or degradation of the fabric tear strength due to environmental conditions, including ultraviolet exposure. In such cases, tearing of the fabric would compromise the stability of the structural frames, which would in turn threaten the integrity of the entire structural system. In addition, tears in the fabric could introduce unbalanced lateral loads on the frame members. As a result, this section does not allow the membrane to be considered to provide lateral restraint.

3102.8 Inflation systems. Air-supported and air-inflated structures shall be provided with primary and auxiliary inflation systems to meet the minimum requirements of Sections 3102.8.1 through 3102.8.3.

❖ While the primary inflation system is essential to the integrity of air-supported and air-inflated buildings, a secondary or auxiliary inflation system is required for all such membrane structures to prevent deflation and to allow the occupants to egress. A backup structural support system is also required for air-supported and air-inflated structures with an occupant load of more than 50 or that cover a swimming pool because of life safety considerations.

3102.8.1 Equipment requirements. This inflation system shall consist of one or more blowers and shall include provisions for automatic control to maintain the required inflation pressures. The system shall be so designed as to prevent overpressurization of the system.

❖ The structural integrity of air-supported and air-inflated structures depends on a reliable inflation system.

3102.8.1.1 Auxiliary inflation system. In addition to the primary inflation system, in buildings larger than 1,500 square feet (140 m^2) in area, an auxiliary inflation system shall be provided with sufficient capacity to maintain the inflation of the structure in case of primary system failure. The auxiliary inflation system shall operate automatically when there is a loss of internal pressure and when the primary blower system becomes inoperative.

❖ As a safety precaution, such structures that exceed 1,500 square feet (139 m^2) must also be provided with an auxiliary inflation system. The auxiliary system is required to operate automatically upon loss of internal pressure or if the primary system becomes inoperative. In accordance with Section 3102.8.2, when an auxiliary system is required, standby power is also to be provided for at least 4 hours.

3102.8.1.2 Blower equipment. Blower equipment shall meet all of the following requirements:

1. Blowers shall be powered by continuous-rated motors at the maximum power required for any flow condition as required by the structural design.
2. Blowers shall be provided with inlet screens, belt guards and other protective devices as required by the *building official* to provide protection from injury.
3. Blowers shall be housed within a weather-protecting structure.
4. Blowers shall be equipped with backdraft check dampers to minimize air loss when inoperative.
5. Blower inlets shall be located to provide protection from air contamination. The location of inlets shall be *approved*.

❖ Safety features of the blower system for the purposes of reliability, prevention of overpressurization and personal safety include:

- Blowers with motors rated for continuous operation at maximum power;
- Inlet screens, belt guards and other protective devices;
- Weather-protected housing for blowers;
- Backdraft check dampers to minimize air loss; and
- Inlets located to prevent air contamination.

The *International Mechanical Code*® (IMC®) requires makeup air inlets to be at least 10 feet (3048 mm) from any potential source of contamination.

INTERNATIONAL CODE COUNCIL®
Copyright © 2015 ICC. ALL RIGHTS RESERVED. Accessed by David Dammon on Jun 21, 2017 12:30:52 PM pursuant to License Agreement with ICC. No further reproduction or distribution authorized. ANY UNAUTHORIZED REPRODUCTION OR DISTRIBUTION IS A VIOLATION OF THE FEDERAL COPYRIGHT ACT AND THE LICENSE AGREEMENT, AND SUBJECT TO CIVIL AND CRIMINAL PENALTIES THEREUNDER.

3102.8.2 Standby power. Wherever an auxiliary inflation system is required, an *approved* standby power-generating system shall be provided. The system shall be equipped with a suitable means for automatically starting the generator set upon failure of the normal electrical service and for automatic transfer and operation of all of the required electrical functions at full power within 60 seconds of such service failure. Standby power shall be capable of operating independently for not less than 4 hours.

❖ Air-supported and air-inflated structures exceeding 1,500 square feet (139 m^2) are to be provided with standby power for the auxiliary inflation system. The standby power system must comply with the provisions of Section 2702 and be capable of operating for a minimum of 4 hours.

3102.8.3 Support provisions. A system capable of supporting the membrane in the event of deflation shall be provided for in air-supported and air-inflated structures having an *occupant load* of 50 or more or where covering a swimming pool regardless of *occupant load*. The support system shall be capable of maintaining membrane structures used as a roof for Type I construction not less than 20 feet (6096 mm) above floor or seating areas. The support system shall be capable of maintaining other membranes not less than 7 feet (2134 mm) above the floor, seating area or surface of the water.

❖ To allow safe occupant egress and access for fire fighting, air-supported and air-inflated structures that have an occupant load of more than 50 or cover a swimming pool are required to have a standby support system. Regardless of the occupant load, swimming pools are included because of the additional time necessary to egress when in a pool and because of the hazard that would exist if a membrane collapsed on a pool in which a person was swimming.

The support system is to be capable of maintaining all membrane structures at least 7 feet (2134 mm) above the floor, seating area or surface water, whichever is highest, to permit upright egress travel by the occupants, as well as to aid occupants who may be unable to egress. When the membrane structure is used as a roof on a Type I or II building, the support system must be capable of maintaining the membrane structure at least 20 feet (6096 mm) above the floor or seating area so that the risk of contribution of the roof structure to a fire is minimized.

SECTION 3103
TEMPORARY STRUCTURES

3103.1 General. The provisions of Sections 3103.1 through 3103.4 shall apply to structures erected for a period of less than 180 days. Tents and other membrane structures erected for a period of less than 180 days shall comply with the *International Fire Code*. Those erected for a longer period of time shall comply with applicable sections of this code.

❖ The purpose of Section 3103 is to provide public safety requirements in relation to fire, storm, collapse and crowd behavior in temporary structures. "Temporary use" is defined as a period of less than 180 days. Section 1029 of the code and ICC 300 are applicable to the means of egress and the use of bleachers, grandstands and folding or telescopic seating within the temporary structure. Temporary structures may also include temporary wiring and other fire hazards, which are different from those expected in permanent structures. These items are to be identified in the construction documents.

Any structure that is erected for a period of 180 days or more must comply with other sections of the code applicable to permanent structures. It should be noted that "temporary" refers to the structure being erected, not the use of the structure; therefore, if a structure is erected for 365 days a year, but is used on a seasonal basis for less than 180 days, this section does not apply. Such structures are considered permanent. It should also be noted that membrane structures, even those erected for less than 180 days, are subject to standards applicable to permanent buildings when they are attached to such buildings (see Section 3102.1).

A temporary structure can be placed on a permanent foundation without being considered as a permanent structure.

Section 107 addresses permitting of such structures. In particular it does give some leeway to the building official to allow extensions of the 180-day criteria.

3103.1.1 Conformance. Temporary structures and uses shall conform to the structural strength, fire safety, *means of egress*, accessibility, light, ventilation and sanitary requirements of this code as necessary to ensure public health, safety and general welfare.

❖ This section prescribes those categories of the code that must be complied with, despite the fact that the structure will be removed or the use discontinued. These criteria are essential for measuring the safety of any structure or use, temporary or permanent; therefore, the application of these criteria to a temporary structure cannot be waived.

"Structural strength" refers to the ability of the temporary structure to resist anticipated live, environmental and dead loads (see Chapter 16). It also applies to anticipated live and dead loads imposed by a temporary use in an existing structure.

"Fire safety" provisions are those required by Chapters 7, 8 and 9, invoked by virtue of the structure's size, use or location on the property.

"Means of egress" refers to full compliance with Chapter 10.

"Accessibility" refers to full compliance with Chapter 11 for making buildings accessible to physically disabled persons, a requirement that is repeated in Section 1103.1.

"Light, ventilation and sanitary" requirements are those imposed by Chapter 12 of the code or applicable sections of the IPC or IMC.

If temporary structures are permitted in flood haz-

INTERNATIONAL CODE COUNCIL®
Copyright © 2015 ICC. ALL RIGHTS RESERVED. Accessed by David Dammon on Jun 21, 2017 12:30:52 PM pursuant to License Agreement with ICC. No further reproduction or distribution authorized. ANY UNAUTHORIZED REPRODUCTION OR DISTRIBUTION IS A VIOLATION OF THE FEDERAL COPYRIGHT ACT AND THE LICENSE AGREEMENT, AND SUBJECT TO CIVIL AND CRIMINAL PENALTIES THEREUNDER.

ard areas established by Section 1612, a certain level of conformance is appropriate in order to minimize the likelihood of increasing flood heights or flood damage. Communities that participate in the NFIP must take the following measures into consideration: 1. Anchoring should be required to prevent flotation and movement during conditions of the base flood; 2. In A Zones, walled and roofed structures with floors below the elevation required by Section 1612 should have flood openings to minimize hydrostatic loads (see ASCE 24); 3. Portions of structures that are below the elevation required by Section 1612 must be constructed of flood damage-resistant materials; 4. If the structures have utility service or contain equipment, those elements should be elevated above the DFE; and 5. Placement in floodways and flood hazard areas subject to high-velocity wave action (V Zones) should be avoided.

3103.1.2 Permit required. Temporary structures that cover an area greater than 120 square feet (11.16 m^2), including connecting areas or spaces with a common *means of egress* or entrance that are used or intended to be used for the gathering together of 10 or more persons, shall not be erected, operated or maintained for any purpose without obtaining a *permit* from the *building official*.

❖ Permits are required for temporary structures that are greater than 120 square feet (11 m^2) and are used for the gathering of 10 or more people. This provides notice to the building department for larger temporary structures that pose a higher fire and life safety risk related to their size and presence of occupants as well as relief to the smaller temporary structures that pose a low risk.

3103.2 Construction documents. A *permit* application and *construction documents* shall be submitted for each installation of a temporary structure. The *construction documents* shall include a site plan indicating the location of the temporary structure and information delineating the *means of egress* and the *occupant load*.

❖ Before the installation of any temporary structure, a permit application and construction documents are required to be submitted.

Construction documents, as defined in Chapter 2, include written, graphic and pictorial documents. These documents are to clearly provide pertinent information about the project, including the location, seating capacity, construction and all mechanical and electrical equipment, as a minimum. The code references means of egress and occupant load as items of particular interest for temporary structures because such structures are commonly tents used for special gatherings such as weddings or parties, and therefore the occupant load and clear path of egress are of particular concern. However, it should be noted that these provisions are not intended to remove the need for submittals that are necessary for all new construction, including structural details, calculations, soil tests and any other construction documents that are pertinent. These documents would need to be signed and sealed by a registered design professional as required for new construction.

3103.3 Location. Temporary structures shall be located in accordance with the requirements of Table 602 based on the *fire-resistance rating* of the *exterior walls* for the proposed type of construction.

❖ With respect to exposure hazards, temporary structures are no different from permanent structures. Therefore, the fire-resistance rating of the temporary structure's exterior walls will depend on the occupancy and the fire separation distance.

3103.4 Means of egress. Temporary structures shall conform to the *means of egress* requirements of Chapter 10 and shall have an *exit access* travel distance of 100 feet (30 480 mm) or less.

❖ The means of egress in temporary structures is to comply with the requirements of Chapter 10, except the maximum exit access travel distance is limited to 100 feet (30 480 mm). The reduced travel distance applies to all temporary uses and is based on concerns associated with the nature of temporary structure construction, which may accelerate fire spread or rapidly decrease the stability of the structure during a fire.

SECTION 3104
PEDESTRIAN WALKWAYS AND TUNNELS

3104.1 General. This section shall apply to connections between buildings such as *pedestrian walkways* or tunnels, located at, above or below grade level, that are used as a means of travel by persons. The *pedestrian walkway* shall not contribute to the *building area* or the number of *stories* or height of connected buildings.

❖ Pedestrian walkways are normally seen as bridges connecting adjacent buildings (see Commentary Figure 3104). This section addresses the practical application of pedestrian walkways and tunnels, including walkways between buildings, grade-level connections between buildings or corridors around the perimeter of one building. The area of the walkway itself is not to be considered a part of any building it serves, nor is it considered to add to the number of stories or



Figure 3104
EXAMPLE—PEDESTRIAN WALKWAY

INTERNATIONAL CODE COUNCIL®
Copyright © 2015 ICC. ALL RIGHTS RESERVED. Accessed by David Dammon on Jun 21, 2017 12:30:52 PM pursuant to License Agreement with ICC. No further reproduction or distribution authorized. ANY UNAUTHORIZED REPRODUCTION OR DISTRIBUTION IS A VIOLATION OF THE FEDERAL COPYRIGHT ACT AND THE LICENSE AGREEMENT, AND SUBJECT TO CIVIL AND CRIMINAL PENALTIES THEREUNDER.

height of any building it serves, provided that the walkway and its construction comply with this section. In order to not be considered part of the building or require that buildings be evaluated as a single building, Sections 3104.2 through 3104.9 provide specific design conditions and options that are required to be met.

3104.1.1 Application. Pedestrian walkways shall be designed and constructed in accordance with Sections 3104.2 through 3104.9. Tunnels shall be designed and constructed in accordance with Sections 3104.2 and 3104.10.

❖ This section makes it clear that Sections 3104.2 through 3104.9 apply to pedestrian walkways and only Sections 3104.2 and 3104.10 apply to tunnels. Both pedestrian walkways and tunnels must address whether the buildings are considered separately or as one.

3104.2 Separate structures. Buildings connected by *pedestrian walkways* or tunnels shall be considered to be separate structures.

Exceptions:

1. Buildings that are on the same lot and considered as portions of a single building in accordance with Section 503.1.2.
2. For purposes of calculating the number of Type B units required by Chapter 11, structurally connected buildings and buildings with multiple wings shall be considered one structure.

❖ This section clarifies that buildings are considered separate even if connected by a pedestrian walkway. The exceptions go on to state when and under what conditions such buildings are to be considered a single building.

Exception 1 states that, in accordance with Section 503.1.2, the designer chooses to have separate buildings on the same lot considered as one building. Exception 1 also applies to a connected building that may be of unlimited area as addressed in Section 507.

Exception 2 establishes that, for purposes of evaluation of a building complex for the required number of Type B dwelling units, buildings connected by pedestrian walkways must be evaluated as a single building. This provision was incorporated to coordinate with the *Fair Housing Accessibility Guidelines*.

3104.3 Construction. The *pedestrian walkway* shall be of noncombustible construction.

Exceptions:

1. Combustible construction shall be permitted where connected buildings are of combustible construction.
2. *Fire-retardant-treated wood*, in accordance with Section 603.1, Item 1.3, shall be permitted for the roof construction of the *pedestrian walkway* where connected buildings are a minimum of Type I or II construction.

❖ The walkway must be of noncombustible construction, unless all of the buildings it connects are of combustible construction. It is intended that the construction materials of the walkway be consistent with the type of construction classification of the buildings connected by the walkway. Also note that this section does not require structural members of the walkway to have a fire-resistance rating, even if the connected buildings are of a protected construction type. Exception 2 simply allows fire-retardant-treated wood (FRTW) where it is already allowed for Type I or II construction, because this section does not depend on Table 601 for determination of the construction requirements for pedestrian walkways. Note that Exception 1 would allow the use of FRTW in all cases, since combustible construction is allowed.

3104.4 Contents. Only materials and decorations *approved* by the *building official* shall be located in the *pedestrian walkway*.

❖ This restriction on the use of the floor area is similar to the restriction on the use of the floor of an atrium, except there is no relaxation of requirements if an automatic sprinkler system is installed. The limitations on materials that the building official makes will likely be related to combustibility and also affects the width of the means of egress.

3104.5 Connections of pedestrian walkways to buildings. The connection of a *pedestrian walkway* to a building shall comply with Section 3104.5.1, 3104.5.2, 3104.5.3 or 3104.5.4.

Exception: Buildings that are on the same lot and considered as portions of a single building in accordance with Section 503.1.2.

❖ There are essentially four compliance methods for pedestrian walkways that connect buildings. These methods of compliance are not necessary when the buildings are simply considered as one building. In this case, issues such as fire separations and other considerations will no longer be relevant and will be worked into the overall building design.

3104.5.1 Fire barriers. *Pedestrian walkways* shall be separated from the interior of the building by not less than 2-hour *fire barriers* constructed in accordance with Section 707 and Sections 3104.5.1.1 through 3104.5.1.3.

❖ This section requires that where the pedestrian walkway enters the building, the wall on the interior of the pedestrian walkway is required to be a 2-hour fire barrier. The exterior walls on the outside of the pedestrian walkway on the building to which it connects are addressed by Section 3104.5.1.1 (see Commentary Figure 3104.5.1).

INTERNATIONAL CODE COUNCIL®
Copyright © 2015 ICC. ALL RIGHTS RESERVED. Accessed by David Dammon on Jun 21, 2017 12:30:52 PM pursuant to License Agreement with ICC. No further reproduction or distribution authorized. ANY UNAUTHORIZED REPRODUCTION OR DISTRIBUTION IS A VIOLATION OF THE FEDERAL COPYRIGHT ACT AND THE LICENSE AGREEMENT, AND SUBJECT TO CIVIL AND CRIMINAL PENALTIES THEREUNDER.

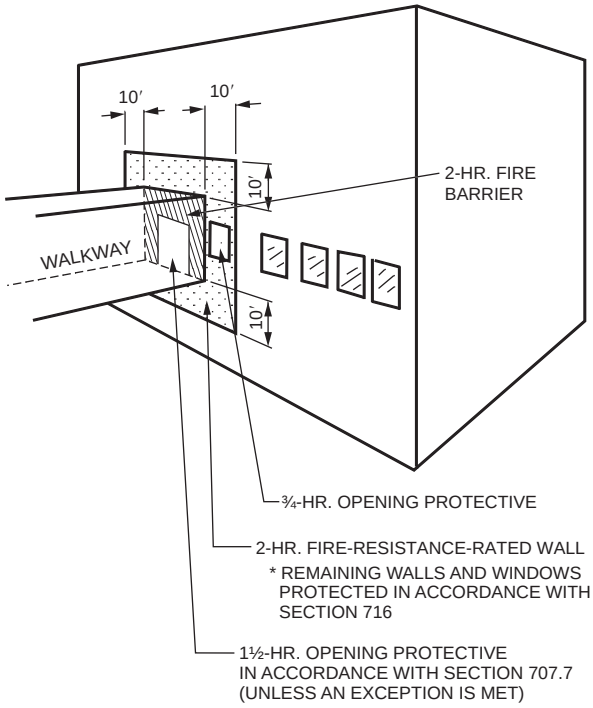

For SI: 1 foot = 304.8 mm.

Figure 3104.5.1
PEDESTRIAN WALKWAY—BUILDING INTERFACE

3104.5.1.1 Exterior walls. Exterior walls of buildings connected to *pedestrian walkways* shall be 2-hour fire-resistance rated. This protection shall extend not less than 10 feet (3048 mm) in every direction surrounding the perimeter of the pedestrian walkway.

❖ This section provides the ratings required on exterior walls of buildings where pedestrian walkways are located. In this case, as it is an exterior wall, it could not be a fire barrier. This requires a 10-foot surround of the perimeter of the pedestrian walkway. If the wall of the connected building would not normally extend 10 feet (3048 mm) above the walkway roof, there is no requirement in this section to extend it (see Commentary Figure 3104.5.1).

3104.5.1.2 Openings in exterior walls of connected buildings. Openings in exterior walls required to be fire-resistance rated in accordance with Section 3104.5.1.1 shall be equipped with opening protectives providing a not less than $^{3}/_{4}$-hour *fire protection rating* in accordance with Section 716.

❖ This section is simply noting what is required for protection of the openings found in the 10-foot surround required to be constructed of 2-hour fire-resistance-rated construction. A minimum $^{3}/_{4}$-hour opening protective is required (see Commentary Figure 3104.5.1).

3104.5.1.3 Supporting construction. The fire barrier shall be supported by construction as required by Section 707.5.1.

❖ This section is simply clarifying that Section 707.5 requires that the 2-hour fire barrier be supported by construction that has, as a minimum, the same fire-resistance rating.

3104.5.2 Alternative separation. The wall separating the *pedestrian walkway* and the building shall comply with Section 3104.5.2.1 or 3104.5.2.2 where:

1. The distance between the connected buildings is more than 10 feet (3048 mm).
2. The *pedestrian walkway* and connected buildings are equipped throughout with an *automatic sprinkler system* in accordance with Section 903.3.1.1, and the roof of the walkway is not more than 55 feet (16 764 mm) above grade connecting to the fifth, or lower, story above grade plane, of each building.

   Exception: Open parking garages need not be equipped with an automatic sprinkler system.

❖ This is one of the options for pedestrian walkways that essentially eliminates the need for fire-resistance-rated construction based on several aspects, including sprinklers, separation and location of the pedestrian walkway in terms of height.

Item 1 addresses the minimum separation that is required to allow this option. Essentially, a distance of greater than 10 feet (3048 mm) is required. This distance is similar to that required in Section 3104.5.1.1 for surrounding construction.

Item 2 requires both the buildings and the pedestrian walkway to be equipped throughout with an automatic sprinkler system. This item also limits the height of the pedestrian walkway to less than 55 feet (16 764 mm) (see Commentary Figure 3104.5.2).

3104.5.2.1 Passage of smoke. The wall shall be capable of resisting the passage of smoke.

❖ Fire-resistance-rated construction is not required. However, the construction of the wall must be such that it can resist the passage of smoke. Similar language is used in Section 509.4.2 for incidental uses.

3104.5.2.2 Glass. The wall shall be constructed of a tempered, wired or laminated glass wall and doors or glass separating the interior of the building from the *pedestrian walkway*. The glass shall be protected by an *automatic sprinkler system* in accordance with Section 903.3.1.1 that, when actuated, shall completely wet the entire surface of interior sides of the wall or glass. Obstructions shall not be installed between the sprinkler heads and the wall or glass. The glass shall be in a gasketed frame and installed in such a manner that the framing system will deflect without breaking (loading) the glass before the sprinkler operates.

❖ This section gives specific details on the design of the wall between the pedestrian walkway and building. Part of this detailing is the protection of the wall with a sprinkler system designed to wet the entire surface of the glass when activated. This involves designing the wall so that prior to sprinkler activation it will not deflect such that it breaks.

INTERNATIONAL CODE COUNCIL®
Copyright © 2015 ICC. ALL RIGHTS RESERVED. Accessed by David Dammon on Jun 21, 2017 12:30:52 PM pursuant to License Agreement with ICC. No further reproduction or distribution authorized. ANY UNAUTHORIZED REPRODUCTION OR DISTRIBUTION IS A VIOLATION OF THE FEDERAL COPYRIGHT ACT AND THE LICENSE AGREEMENT, AND SUBJECT TO CIVIL AND CRIMINAL PENALTIES THEREUNDER.

3104.5.3 Open sides on walkway. Where the distance between the connected buildings is more than 10 feet (3048 mm), the walls at the intersection of the *pedestrian walkway* and each building need not be fire-resistance rated provided both sidewalls of the pedestrian walkway are not less than 50 percent open with the open area uniformly distributed to prevent the accumulation of smoke and *toxic* gases. The roof of the walkway shall be located not more than 40 feet (12 160 mm) above grade plane, and the walkway shall only be permitted to connect to the third or lower story of each building.

Exception: Where the *pedestrian walkway* is protected with a sprinkler system in accordance with Section 903.3.1.1, the roof of the walkway shall be located not more than 55 feet (16 764 mm) above grade plane and the walkway shall only be permitted to connect to the fifth or lower story of each building.

❖ This option focuses on allowing an open design of the pedestrian walkway under certain conditions without requiring the walls of the building connecting the pedestrian walkway to provide fire-resistance-rated construction. The openings allow the smoke to dissipate outside the building, thus reducing the risk to building occupants. Note that the openings must be 50 percent or greater of the pedestrian walkway walls on both sides. As with Section 3104.5.2, the distance between buildings must be greater than 10 feet (3048 mm) [see Commentary Figure 3104.5.3(1)].

The exception provides some flexibility in allowing the pedestrian walkway to be as high as that allowed by Section 3104.5.2, but the walkway must be equipped with an automatic sprinkler system. Note that Section 3104.5.2 requires the connected buildings and the walkway to be equipped throughout with an automatic sprinkler system [see Commentary Figure 3104.5.3(2)].

3104.5.4 Exterior walls greater than 2 hours. Where *exterior walls* of connected buildings are required by Section 705 to have a *fire-resistance rating* greater than 2 hours, the walls at the intersection of the pedestrian walkway and each building need not be fire-resistance rated provided:

1. The *pedestrian walkway* is equipped throughout with an *automatic sprinkler system* installed in accordance with Section 903.3.1.1.
2. The roof of the walkway is not located more than 55 feet (16 764 mm) above grade plane and the walkway

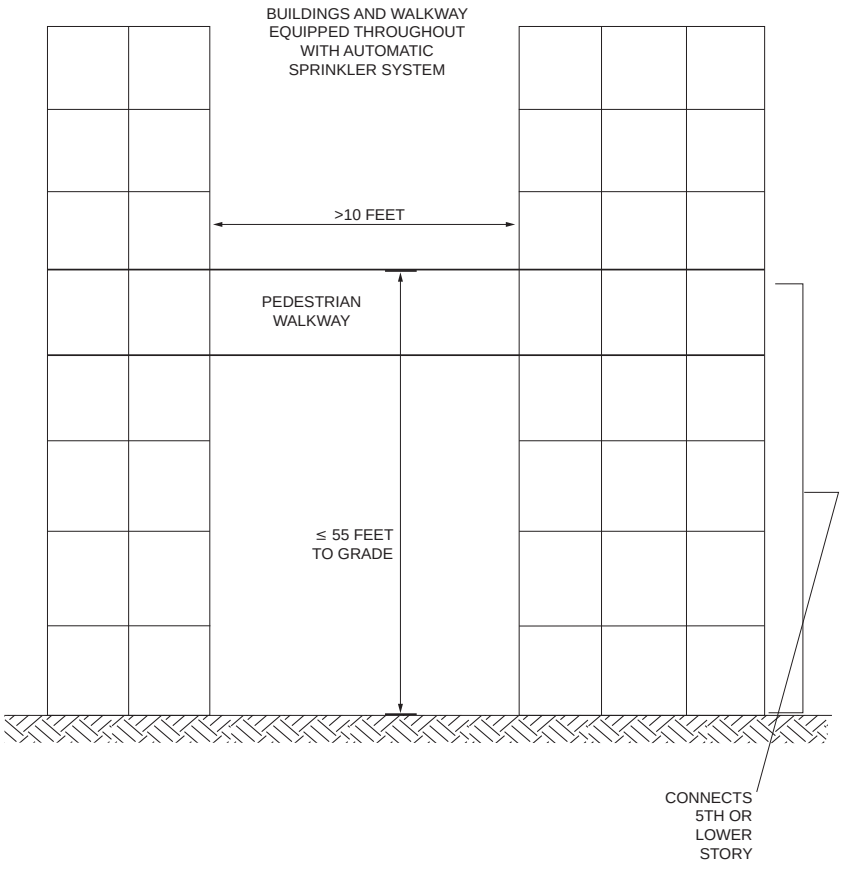

For SI: 1 foot = 304.8 mm.

Figure 3104.5.2
ALTERNATIVE SEPARATION

INTERNATIONAL CODE COUNCIL®
Copyright © 2015 ICC. ALL RIGHTS RESERVED. Accessed by David Dammon on Jun 21, 2017 12:30:52 PM pursuant to License Agreement with ICC. No further reproduction or distribution authorized. ANY UNAUTHORIZED REPRODUCTION OR DISTRIBUTION IS A VIOLATION OF THE FEDERAL COPYRIGHT ACT AND THE LICENSE AGREEMENT, AND SUBJECT TO CIVIL AND CRIMINAL PENALTIES THEREUNDER.

connects to the fifth, or lower, story above grade plane of each building.

❖ This section provides an additional design option for pedestrian walkways. More specifically, if the buildings that are connected to the pedestrian walkways are required to have greater than a 2-hour fire-resistance rating, then the walls where the pedestrian walkway and building meet do not require 2-hour separation. This allowance comes with several conditions.

The first condition is that the pedestrian walkway be equipped throughout with an automatic sprinkler system.

The second condition is the same as that for Section 3104.5.2 and the exception to Section 3105.5.3, which restricts the height measured to the roof of the walkway to 55 feet (16 764 mm) above grade plane, connecting at no higher than the fifth story (see Commentary Figure 3104.5.4).

3104.6 Public way. *Pedestrian walkways* over a *public way* shall comply with Chapter 32.

❖ The acceptance of a pedestrian walkway over a public street by the use of a bridge or any other means is required to comply with Chapter 32.

3104.7 Egress. Access shall be provided at all times to a *pedestrian walkway* that serves as a required *exit*.

❖ Pedestrian walkways may be used to provide a portion of the means of egress for one or both of the buildings at either end of the walkway. If the walkway is at grade, it may be that the door from the building is an exterior exit door and the walkway (if just a covering but with open walls) could be treated as exit discharge. Elevated pedestrian walkways could be used as an exit from one building to the other. In this case, one end of the walkway would have to comply with the standards for horizontal exits found in Section 1026. If the two buildings are being treated as one building, the pedestrian walkway might be part of the exit access portion of the means of egress. As such, its length would be included in determining travel distance for areas served by the walkway. Where a walkway is included in the means of egress, it needs to be available at all times the building is occupied. It could not be locked off if one building was closed and the other still open. Finally, any doors included in the pedestrian walkway would need to meet the appropriate requirements of Section 1010, including the direction of swing and the use of appropriate hardware that will allow the doors to function as required by the code.

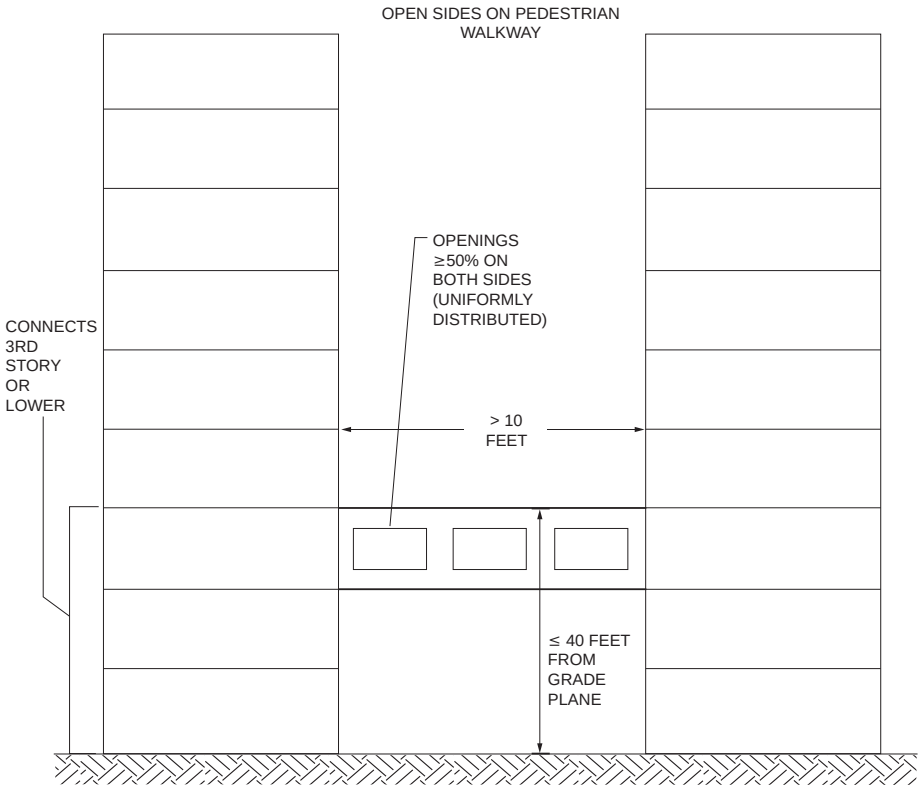

For SI: 1 foot = 304.8 mm.

Figure 3104.5.3(1)
OPEN SIDES ON PEDESTRIAN WALKWAY (NONSPRINKLERED)

INTERNATIONAL CODE COUNCIL®
Copyright © 2015 ICC. ALL RIGHTS RESERVED. Accessed by David Dammon on Jun 21, 2017 12:30:52 PM pursuant to License Agreement with ICC. No further reproduction or distribution authorized. ANY UNAUTHORIZED REPRODUCTION OR DISTRIBUTION IS A VIOLATION OF THE FEDERAL COPYRIGHT ACT AND THE LICENSE AGREEMENT, AND SUBJECT TO CIVIL AND CRIMINAL PENALTIES THEREUNDER.

3104.8 Width. The unobstructed width of *pedestrian walkways* shall be not less than 36 inches (914 mm). The total width shall be not greater than 30 feet (9144 mm).

❖ A maximum width has been set to prevent entire floors from being extended to adjacent buildings, and thus from being called walkways. This section is intended to encompass bridge-type structures, not full-floor extensions.

The minimum width is also subject to other code requirements. For example, if the walkway provides a means of egress component, it would be sized in accordance with Section 1005.1.

3104.9 Exit access travel. The length of *exit access* travel shall be 200 feet (60 960 mm) or less.

Exceptions:

1. *Exit access* travel distance on a *pedestrian walkway* equipped throughout with an *automatic sprinkler system* in accordance with Section 903.3.1.1 shall be 250 feet (76 200 mm) or less.
2. *Exit access* travel distance on a *pedestrian walkway* constructed with both sides not less than 50 percent open shall be 300 feet (91 440 mm) or less.
3. *Exit access* travel distance on a *pedestrian walkway* constructed with both sides not less than 50 percent open, and equipped throughout with an *automatic sprinkler system* in accordance with Section 903.3.1.1, shall be 400 feet (122 m) or less.

❖ The maximum length of exit access travel distance within the pedestrian walkway has been set as a means of controlling the size of walkways. A 200-foot (60 960 mm) maximum length is consistent with the maximum length of exit access travel distance allowed in unsprinklered buildings for most occupancy classifications (see Table 1016.1). This section gives three means by which the exit access travel distance within the pedestrian walkway can be increased. Exception 1 allows the exit access travel distance to be increased to 250 feet (76 200 mm) if the walkway is equipped with an automatic sprinkler system. This increase in travel distance correlates with that allowed in Table 1016.1. Exception 2 allows the exit access travel distance to be increased to 300 feet (91 440 mm) if both sides of the walkway have openings to the exterior for at least 50 percent of the wall area, with the open area uniformly distributed to

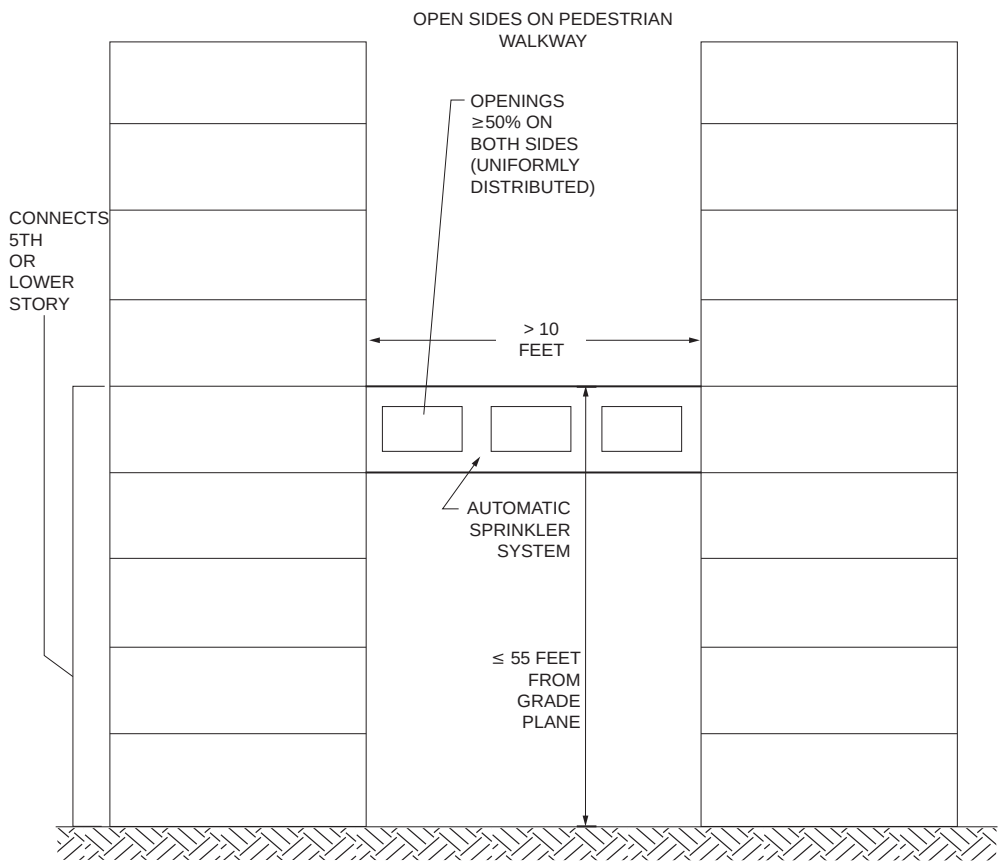

For SI: 1 foot = 304.8 mm.

Figure 3104.5.3(2)
OPEN SIDES ON PEDESTRIAN WALKWAY (SPRINKLERED)

INTERNATIONAL CODE COUNCIL®
Copyright © 2015 ICC. ALL RIGHTS RESERVED. Accessed by David Dammon on Jun 21, 2017 12:30:52 PM pursuant to License Agreement with ICC. No further reproduction or distribution authorized. ANY UNAUTHORIZED REPRODUCTION OR DISTRIBUTION IS A VIOLATION OF THE FEDERAL COPYRIGHT ACT AND THE LICENSE AGREEMENT, AND SUBJECT TO CIVIL AND CRIMINAL PENALTIES THEREUNDER.

prevent the accumulation of smoke and toxic gases. This increase in travel distance correlates to that allowed in Table 1016.1 for an open parking structure (Group S-2). Exception 3 expands on Exception 2 by including the use of an automatic sprinkler system. The exit access travel distance is then increased to 400 feet (122 m^2). This increase in travel distance correlates to the allowances in Table 1016.1.

3104.10 Tunneled walkway. Separation between the tunneled walkway and the building to which it is connected shall be not less than 2-hour fire-resistant construction and openings therein shall be protected in accordance with Table 716.5.

❖ Tunnels present a greater hazard than other walkways. The concern is greater than for enclosed walkways because a tunnel's underground location makes it less accessible to fire-fighting efforts and it relies on a mechanical ventilation system. To prevent the spread of fire, 2-hour fire-resistant construction with $1^1/_2$-hour opening protectives are required at the tunnel and building interface (see Commentary Figure 3104.10).

SECTION 3105
AWNINGS AND CANOPIES

3105.1 General. *Awnings* and *canopies* shall comply with the requirements of Sections 3105.2 through 3105.4 and other applicable sections of this code.

❖ This section addresses the variety of special structures that are defined as canopies and awnings. The intent of this section is that if a canopy or awning is used, it should be soundly designed so as not to present a hazard to its users or the public.

Commentary Figure 3105.1(1) shows a typical canopy supported by posts to the ground and a fabric cover. Commentary Figure 3105.1(2) shows the underside of a different canopy, highlighting the rigid frame. Commentary Figure 3105.1(3) shows an awning that projects from the facade of the building and has no support directly to the ground.

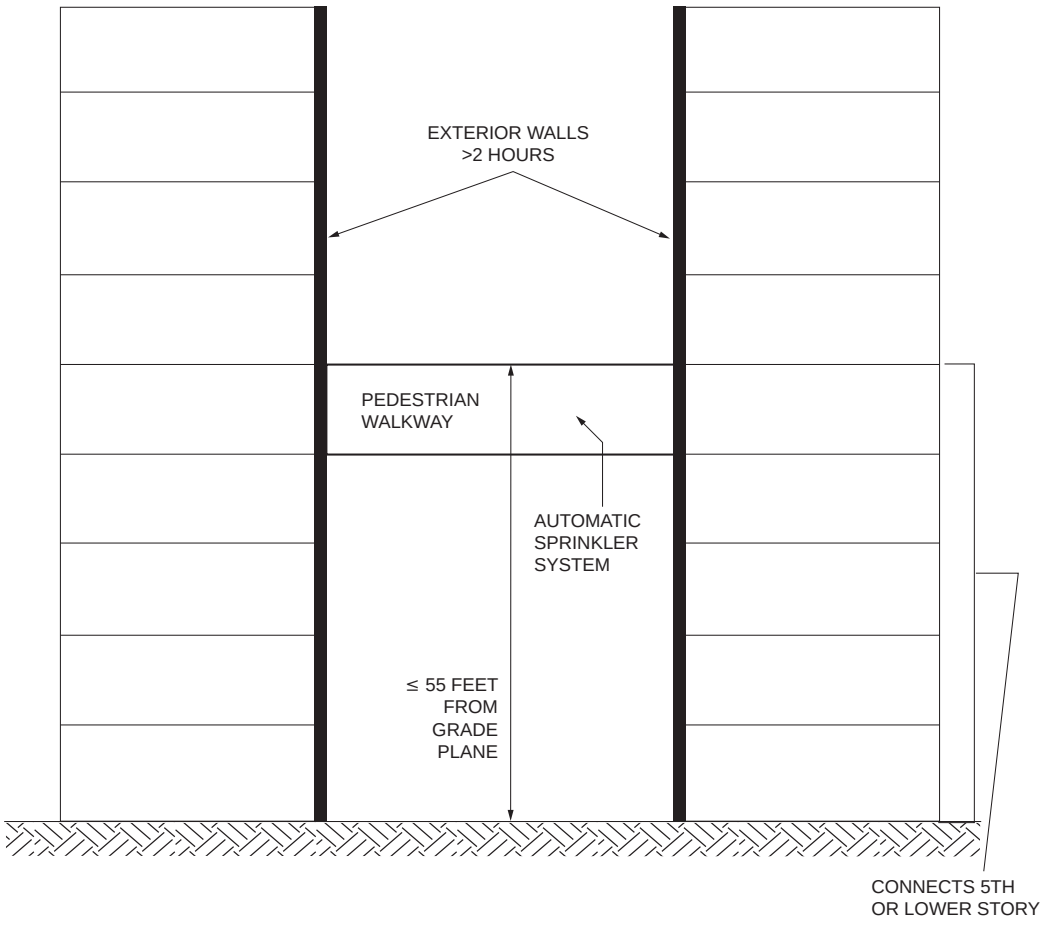

For SI: 1 foot = 304.8 mm.

Figure 3104.5.4
EXTERIOR WALLS GREATER THAN 2 HOURS

INTERNATIONAL CODE COUNCIL®
Copyright © 2015 ICC. ALL RIGHTS RESERVED. Accessed by David Dammon on Jun 21, 2017 12:30:52 PM pursuant to License Agreement with ICC. No further reproduction or distribution authorized. ANY UNAUTHORIZED REPRODUCTION OR DISTRIBUTION IS A VIOLATION OF THE FEDERAL COPYRIGHT ACT AND THE LICENSE AGREEMENT, AND SUBJECT TO CIVIL AND CRIMINAL PENALTIES THEREUNDER.

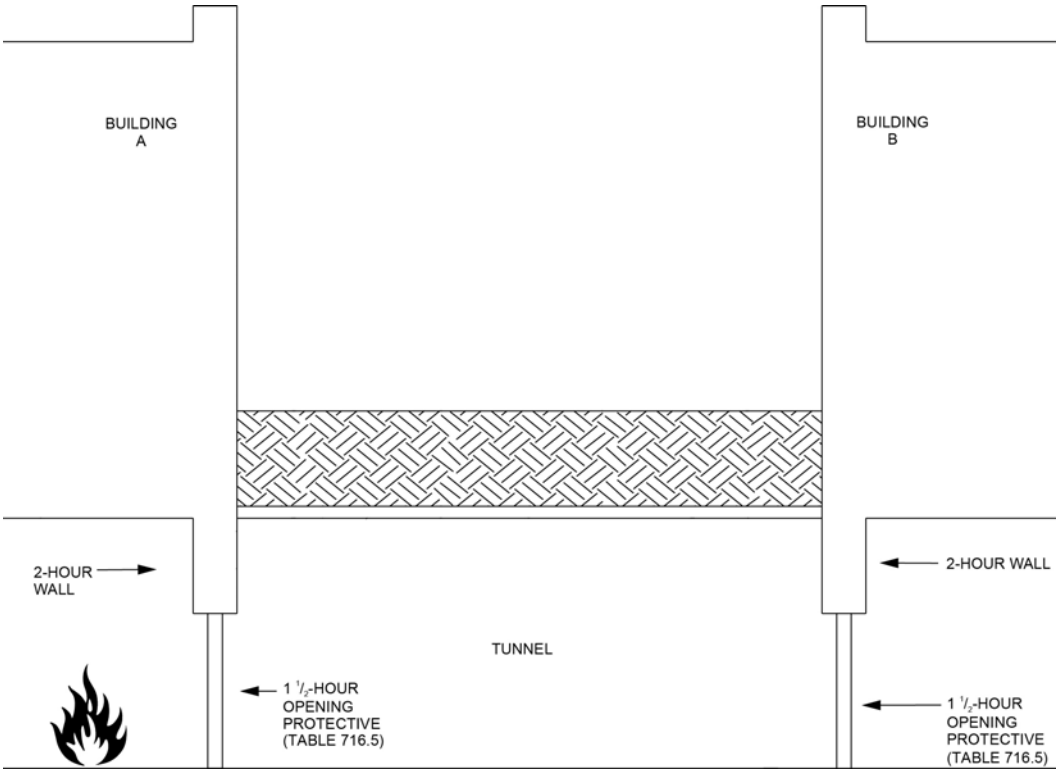

Figure 3104.10
TUNNELED WALKWAY



Figure 3105.1(1)
EXAMPLE—CANOPY



Figure 3105.1(2)
EXAMPLE—CANOPY STRUCTURE
(Photo courtesy of Edie Industries Inc.)

INTERNATIONAL CODE COUNCIL®
Copyright © 2015 ICC. ALL RIGHTS RESERVED. Accessed by David Dammon on Jun 21, 2017 12:30:52 PM pursuant to License Agreement with ICC. No further reproduction or distribution authorized. ANY UNAUTHORIZED REPRODUCTION OR DISTRIBUTION IS A VIOLATION OF THE FEDERAL COPYRIGHT ACT AND THE LICENSE AGREEMENT, AND SUBJECT TO CIVIL AND CRIMINAL PENALTIES THEREUNDER.



Figure 3105.1(3)
EXAMPLE—AWNING
(Photo Courtesy of Edie Industries Inc.)

3105.2 Definition. The following term is defined in Chapter 2:

RETRACTABLE AWNING.

❖ Definitions of terms can help in the understanding and application of code requirements. This section directs the code user to Chapter 2 for the proper application of the indicated terms used in this chapter. Terms may be defined in Chapter 2, in another International Code® as indicated in Section 201.3 or the dictionary meaning may be all that is needed (see also commentary, Sections 201 through 201.4).

3105.3 Design and construction. *Awnings* and *canopies* shall be designed and constructed to withstand wind or other lateral loads and live loads as required by Chapter 16 with due allowance for shape, open construction and similar features that relieve the pressures or loads. Structural members shall be protected to prevent deterioration. *Awnings* shall have frames of noncombustible material, *fire-retardant-treated wood*, wood of Type IV size, or 1-hour construction with combustible or noncombustible covers and shall be either fixed, retractable, folding or collapsible.

❖ Any of the structures addressed in Section 3105 are subject to wind and live load considerations under the provisions of Chapter 16. When Chapter 16 is applied, care should be taken to consider the shape of the awning or canopy in question with regard to snow buildup and wind effects.

Structural members of an awning or canopy should be of materials that will resist rust or decay. Chapter 23 should be referenced for wood members that are required to comply with the decay-resistance provision. Steel or aluminum structural members are to be protected to resist rust.

3105.4 Awnings and canopy materials. Awnings and *canopies* shall be provided with an *approved* covering that meets the fire propagation performance criteria of Test Method 1 or Test Method 2, as appropriate, of NFPA 701 or has a *flame spread index* not greater than 25 when tested in accordance with ASTM E84 or UL 723.

Exception: The fire propagation performance and flame spread index requirements shall not apply to awnings installed on detached one- and two-family dwellings.

❖ This section specifically states the types of materials that are to be used and how an awning or canopy is to be constructed. It limits the coverings to only those that are deemed flame resistant when tested in accordance with NFPA 701, or those having a flame spread of 25 or less when tested in accordance with ASTM E84 or UL 723. The purpose of these provisions is to limit the spread of fire on the exterior of the building due to fire from the interior or from an exterior source on the street or public way.

Note that the materials when tested in accordance with NFPA 701 must comply with the performance criteria of one of the two identified test methods. The historic "small-scale test" is no longer accepted.

SECTION 3106
MARQUEES

3106.1 General. Marquees shall comply with Sections 3106.2 through 3106.5 and other applicable sections of this code.

❖ The intent of this section is that if a marquee is used, it should be soundly designed so as not to present a hazard to its users or the public. A "Marquee" is defined in Chapter 2.

Compliance with Chapter 32, "Encroachments into the Public Right-of-Way," is also important for marquees as by definition they project into the public right-of-way. Commentary Figures 3106.1(1) and (2) provide an example of a marquee over a public right-of-way.

3106.2 Thickness. The height or thickness of a marquee measured vertically from its lowest to its highest point shall be not greater than 3 feet (914 mm) where the marquee projects more than two-thirds of the distance from the *lot line* to the curb line, and shall be not greater than 9 feet (2743 mm) where the marquee is less than two-thirds of the distance from the lot line to the curb line.

❖ The restrictions placed on the size, projection and clearances (see Commentary Figure 3106.2) for marquees are intended to:

1. Prevent interference with the free movement of pedestrians.
2. Prevent interference with trucks and other tall vehicles using the public street.
3. Prevent interference with fire-fighting operations at a building.
4. Prevent interference with utilities.

INTERNATIONAL CODE COUNCIL®
Copyright © 2015 ICC. ALL RIGHTS RESERVED. Accessed by David Dammon on Jun 21, 2017 12:30:52 PM pursuant to License Agreement with ICC. No further reproduction or distribution authorized. ANY UNAUTHORIZED REPRODUCTION OR DISTRIBUTION IS A VIOLATION OF THE FEDERAL COPYRIGHT ACT AND THE LICENSE AGREEMENT, AND SUBJECT TO CIVIL AND CRIMINAL PENALTIES THEREUNDER.

3106.3 Roof construction. Where the roof or any part thereof is a skylight, the skylight shall comply with the requirements of Chapter 24. Every roof and skylight of a marquee shall be sloped to downspouts that shall conduct any drainage from the marquee in such a manner so as not to spill over the sidewalk.

❖ The purpose of this section is to require proper drainage to prevent buildup on the roof due to a marquee or skylight and also to reduce the nuisance of such drainage to those using the sidewalk.

3106.4 Location prohibited. Every marquee shall be so located as not to interfere with the operation of any exterior standpipe, and such that the marquee does not obstruct the clear passage of *stairways* or *exit discharge* from the building or the installation or maintenance of street lighting.

❖ Marquees are an acceptable building feature but they must not interfere or obstruct fire protection features and egress. In addition, such marquees also need to be placed such that street lights can be maintained.

3106.5 Construction. A marquee shall be supported entirely from the building and constructed of noncombustible materials. Marquees shall be designed as required in Chapter 16. Structural members shall be protected to prevent deterioration.

❖ Damage to both life and property can occur from improperly constructed marquees. Proper design of a marquee involves a structural analysis by qualified persons. Wind and seismic loads must be considered in the design process, as outlined in Chapter 16. Additionally, all material must be noncombustible regardless of the construction type of the building supporting the marquee.

SECTION 3107
SIGNS

3107.1 General. Signs shall be designed, constructed and maintained in accordance with this code.

❖ The design of signs is to be in accordance with the code. If the design is inadequate, no amount of expert construction, repair or maintenance will result in a safe sign. The primary requirements for such signs will be related to structural stability as addressed in Chapter 16. Signs projecting over the public right-of-way will also be subject to the requirements of Chapter 32.

Signs within a covered mall building are specifically addressed by Section 402.6.4.

Note that Appendix H, when adopted by a jurisdiction, provides more specific requirements related to signs.

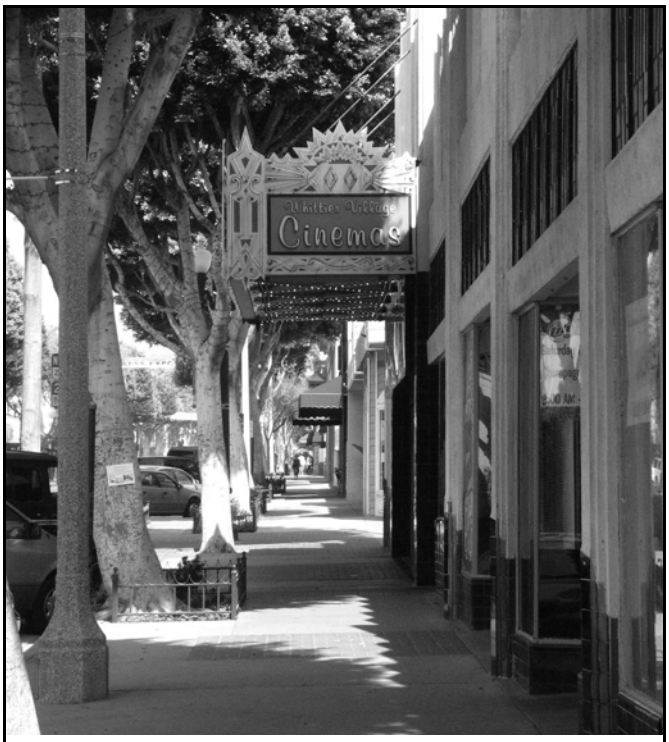

Figure 3106.1(1)
EXAMPLE—MARQUEE



Figure 3106.1(2)
EXAMPLE—MARQUEE

INTERNATIONAL CODE COUNCIL®
Copyright © 2015 ICC. ALL RIGHTS RESERVED. Accessed by David Dammon on Jun 21, 2017 12:30:52 PM pursuant to License Agreement with ICC. No further reproduction or distribution authorized. ANY UNAUTHORIZED REPRODUCTION OR DISTRIBUTION IS A VIOLATION OF THE FEDERAL COPYRIGHT ACT AND THE LICENSE AGREEMENT, AND SUBJECT TO CIVIL AND CRIMINAL PENALTIES THEREUNDER.

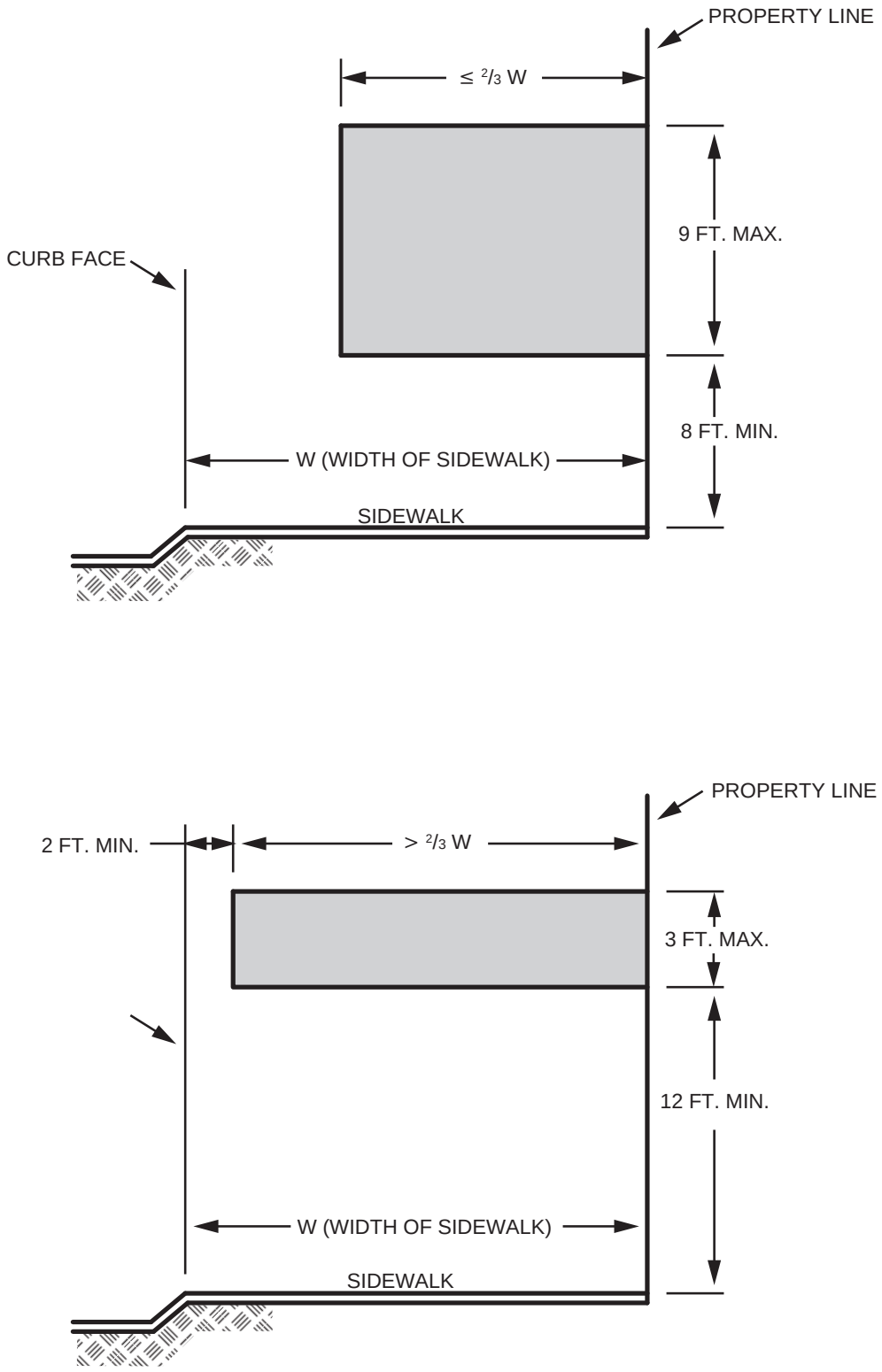

For SI: 1 foot = 304.8 mm.

Figure 3106.2
PERMISSIBLE PROJECTION, HEIGHT AND CLEARANCES FOR MARQUEES

INTERNATIONAL CODE COUNCIL®
Copyright © 2015 ICC. ALL RIGHTS RESERVED. Accessed by David Dammon on Jun 21, 2017 12:30:52 PM pursuant to License Agreement with ICC. No further reproduction or distribution authorized. ANY UNAUTHORIZED REPRODUCTION OR DISTRIBUTION IS A VIOLATION OF THE FEDERAL COPYRIGHT ACT AND THE LICENSE AGREEMENT, AND SUBJECT TO CIVIL AND CRIMINAL PENALTIES THEREUNDER.

SECTION 3108
TELECOMMUNICATION AND BROADCAST TOWERS

[BS] 3108.1 General. Towers shall be designed and constructed in accordance with the provisions of TIA-222. Towers shall be designed for seismic loads; exceptions related to seismic design listed in Section 2.7.3 of TIA-222 shall not apply. In Section 2.6.6.2 of TIA 222, the horizontal extent of Topographic Category 2, escarpments, shall be 16 times the height of the escarpment.

Exception: Single free-standing poles used to support antennas not greater than 75 feet (22 860 mm), measured from the top of the pole to grade, shall not be required to be noncombustible.

❖ Telecommunication and broadcast towers, which include media such as radio, television and cell phones, are special structures in that they are not normally occupied and are open structures containing little, if any, fuel load. This section references TIA-222, which provides the necessary structural requirements for such telecommunication and broadcast towers. The seismic design exceptions given in TIA-222, Section 2.7.3, do not apply because these exceptions bring TIA 222-G below the minimum standard of care for design established by the code and ASCE 7.

Chapter 15 gives specific requirements for design of communications towers. No exemptions are provided. TIA-222 is not listed as a referenced standard within the *International Codes*® for seismic design, so seismic design requirements must be governed by ASCE 7. TIA 222-G, because of exemptions to seismic design requirements, does not meet the minimum standard of care for design established by the code and ASCE 7.

The exception to this section will allow combustible poles used to support antennas not greater than 75 feet (1905 mm). Such poles are often used for the support of lightweight electrical equipment such as cell phone antennas and have had many years of good performance.

[BS] 3108.2 Location and access. Towers shall be located such that guy wires and other accessories shall not cross or encroach upon any street or other public space, or over above-ground electric utility lines, or encroach upon any privately owned property without the written consent of the owner of the encroached-upon property, space or above-ground electric utility lines. Towers shall be equipped with climbing and working facilities in compliance with TIA-222. Access to the tower sites shall be limited as required by applicable OSHA, FCC and EPA regulations.

❖ Access must be provided to the tower so that its condition can be surveyed. The features required to access such towers are located in TIA-222. Occupational Safety & Health Administration (OSHA), the Environmental Protection Agency (EPA) and the Federal Communications Commission (FCC) are the regulatory bodies that limit who may access such towers and how.

Guy wires are to be arranged so as not to represent a hazard to the public, and, therefore, they shall not cross or encroach a street, public space or electric power line. This is because of both the damage that could occur if a guy wire were suddenly released and the need to prohibit the wire from becoming an obstruction. Guy wires are not to encroach on any other property without previous written consent by the owner of the affected property.

SECTION 3109
SWIMMING POOL ENCLOSURES AND SAFETY DEVICES

3109.1 General. The design and construction of swimming pools, spas and hot tubs shall comply with the *International Swimming Pool and Spa Code*® (ISPSC®).

❖ This section now simply refers to the code that addresses swimming pools and all related enclosures and safety devices. The reference is more comprehensive than what was previously provided in this section.

SECTION 3110
AUTOMATIC VEHICULAR GATES

3110.1 General. *Automatic vehicular gates* shall comply with the requirements of Sections 3110.2 through 3110.4 and other applicable sections of this code.

❖ These provisions are aimed at preventing hazards that could result from improper operation of vehicular gates. Protection is needed to prevent entrapment of individuals between an automatic gate and a stationary object or surface. Gates intended for automation require specific design construction and installation including entrapment protection to minimize or eliminate certain excessive gate gaps, openings and protrusions. As defined, the gates regulated by this section are not those used by pedestrians but instead are intended only for vehicles.

3110.2 Definition. The following term is defined in Chapter 2:

VEHICULAR GATE.

❖ Definitions of terms can help in the understanding and application of code requirements. This section directs the code user to Chapter 2 for the proper application of the indicated terms used in this chapter. Terms may be defined in Chapter 2, in another International Code® as indicated in Section 201.3 or the dictionary meaning may be all that is needed (see also commentary, Sections 201 through 201.4).

3110.3 Vehicular gates intended for automation. *Vehicular gates* intended for automation shall be designed, constructed and installed to comply with the requirements of ASTM F2200.

❖ This section cites the design standard to which such gates must be designed and installed. The standard

INTERNATIONAL CODE COUNCIL®
Copyright © 2015 ICC. ALL RIGHTS RESERVED. Accessed by David Dammon on Jun 21, 2017 12:30:52 PM pursuant to License Agreement with ICC. No further reproduction or distribution authorized. ANY UNAUTHORIZED REPRODUCTION OR DISTRIBUTION IS A VIOLATION OF THE FEDERAL COPYRIGHT ACT AND THE LICENSE AGREEMENT, AND SUBJECT TO CIVIL AND CRIMINAL PENALTIES THEREUNDER.

is fairly specific to this application for automated vehicular gates and has been harmonized with the applicable provisions of UL 325 as referenced in Section 3110.4.

3110.4 Vehicular gate openers. *Vehicular gate* openers, where provided, shall be *listed* in accordance with UL 325.

❖ This section cites the appropriate standards for vehicular gate openers. The standard is UL 325, which is an ANSI-recognized safety standard containing provisions governing gate openers. Note that the *International Residential Code*® (IRC®) also references this particular standard.

SECTION 3111
PHOTOVOLTAIC PANELS AND MODULES

3111.1 General. Photovoltaic panels and modules shall comply with the requirements of this code and the *International Fire Code*.

❖ Photovoltaic arrays are increasing in popularity as an alternative energy source. These arrays, which cannot be shut down and retain electrical charges, pose unique hazards to fire fighters operating on roofs with arrays or nearby circuits. This section references the IFC, which provides general requirements to allow for increased safety of fire fighters working near the arrays.

3111.1.1 Rooftop-mounted photovoltaic panels and modules. Photovoltaic panels and modules installed on a roof or as an integral part of a roof assembly shall comply with the requirements of Chapter 15 and the *International Fire Code*.

❖ This section notes that the requirements for rooftop-mounted solar photovoltaic panels are found in Chapter 15. More specifically, Section 1505.8, Building-integrated photovoltaic products, Section 1509.9, Photovoltaic panels and modules, Section 1507.17, Photovoltaic shingles and Section 1512, Photovoltaic panels and modules, must be addressed.

Bibliography

The following resource materials were used in the preparation of the commentary for this chapter of the code.

24 CFR, *Fair Housing Accessibility Guidelines* (FHAG). Washington, DC: Department of Housing and Urban Development, 1991.

Gross, J.L., Main, J.A., Phan, L.T., Sadek, F., Cauffman, S.A., and Jorgensen, D.P. Final Report on the Collapse of the Dallas Cowboys Indoor Practice Facility, May 2, 2009, NISTIR 7661. Gaithersburg, MD: January, 2010.

INTERNATIONAL CODE COUNCIL®
Copyright © 2015 ICC. ALL RIGHTS RESERVED. Accessed by David Dammon on Jun 21, 2017 12:30:52 PM pursuant to License Agreement with ICC. No further reproduction or distribution authorized. ANY UNAUTHORIZED REPRODUCTION OR DISTRIBUTION IS A VIOLATION OF THE FEDERAL COPYRIGHT ACT AND THE LICENSE AGREEMENT, AND SUBJECT TO CIVIL AND CRIMINAL PENALTIES THEREUNDER.

INTERNATIONAL CODE COUNCIL®
Copyright © 2015 ICC. ALL RIGHTS RESERVED. Accessed by David Dammon on Jun 21, 2017 12:30:52 PM pursuant to License Agreement with ICC. No further reproduction or distribution authorized. ANY UNAUTHORIZED REPRODUCTION OR DISTRIBUTION IS A VIOLATION OF THE FEDERAL COPYRIGHT ACT AND THE LICENSE AGREEMENT, AND SUBJECT TO CIVIL AND CRIMINAL PENALTIES THEREUNDER.

Chapter 32: Encroachments Into the Public Right-of-way

General Comments

Chapter 32 contains provisions that regulate a variety of structure encroachments and projections into the public right-of-way, such as a sidewalk, parking lot or street.

Section 3202 addresses encroachments on street lot lines below grade, above grade, below 8 feet (2438 mm) in height and 8 feet (2438 mm) or more above grade.

Encroachments and projections have to be taken into consideration in addition to means of egress, fire resistance, fire protection and structural and material considerations.

Purpose

The purpose of Chapter 32 is to regulate projections and encroachments of structures into the public right-of-way.

SECTION 3201 GENERAL

3201.1 Scope. The provisions of this chapter shall govern the encroachment of structures into the public right-of-way.

❖ These provisions apply only to encroachments on the public right-of-way, not on interior lot lines. The location of the street lot line (public right-of-way) is determined through a variety of methods based on the regulations of local jurisdictions and, often, the state. The location and width of streets are often established when an area is platted and the land is subdivided into a series of blocks, lots and streets. While subdivision and zoning laws may provide for standard street and right-of-way width, many areas of a jurisdiction may predate those standards. Streets and highways are often established by state and local government transportation agencies. Such agencies can create new streets or widen existing streets by either purchasing or condemning land of sufficient width. In other circumstances, public streets are not owned by a city, but they are easements across privately owned lands. Because of the wide variety of ways in which a public right-of-way can be established, it is important for the building official to know how rights-of-way were established within the jurisdiction and to be able to provide this information to permit applicants.

3201.2 Measurement. The projection of any structure or portion thereof shall be the distance measured horizontally from the *lot line* to the outermost point of the projection.

❖ This section defines how the extent of encroachment is determined. The extent of encroachment of any structure or appendage is to be measured from the established street lot line to the outermost (furthest) point of the projection.

3201.3 Other laws. The provisions of this chapter shall not be construed to permit the violation of other laws or ordinances regulating the use and occupancy of public property.

❖ The projections permitted in this chapter are also subject to other limitations identified in applicable laws and ordinances. Other applicable laws, for example, are those established by the governing authority in regulating right-of-way for highways, streets or public areas adjacent to the structure in question.

The street lot line occurs on each side of a structure that faces or fronts on a street. Many property descriptions have the centerline of the public way as the property line. A lot line differs in that it separates a lot from a public place such as a street or a park. In these cases, the lot line is defined not by the centerline of the public way, but by the line that identifies where the public way exists. This chapter only applies to encroachment across lot lines, established between a lot and any adjoining public right-of-way (street, alley, highway) (see commentary, Section 3201.1). Local zoning codes often establish setbacks or yards on a property, which under the zoning code must be kept open or substantially open. Often, the yard or setback requirements are minimal in commercial or industrial zones and are more substantial in residential zones. This chapter does not address encroachments into yards or setbacks established by zoning codes unless that setback is actually establishing the public right-of-way. This chapter does not apply to interior lot lines—those separating one lot from another. Encroachments across interior lot lines are not permitted.

INTERNATIONAL CODE COUNCIL®
Copyright © 2015 ICC. ALL RIGHTS RESERVED. Accessed by David Dammon on Jun 21, 2017 12:30:52 PM pursuant to License Agreement with ICC. No further reproduction or distribution authorized. ANY UNAUTHORIZED REPRODUCTION OR DISTRIBUTION IS A VIOLATION OF THE FEDERAL COPYRIGHT ACT AND THE LICENSE AGREEMENT, AND SUBJECT TO CIVIL AND CRIMINAL PENALTIES THEREUNDER.

3201.4 Drainage. Drainage water collected from a roof, *awning*, canopy or marquee, and condensate from mechanical equipment shall not flow over a public walking surface.

❖ A great number of street projections are canopies or mansard roofs. They have the potential to create a hazardous condition due to improper drainage on the walkways they cover. It is very important that all street projections have proper drainage systems.

SECTION 3202
ENCROACHMENTS

3202.1 Encroachments below grade. Encroachments below grade shall comply with Sections 3202.1.1 through 3202.1.3.

❖ Allowable projections of below-grade structural components are described in Sections 3202.1.1 through 3202.1.3. The term "grade" as used in this chapter should be considered the finished ground level of the site. "Grade" should not be confused with "grade plane," which is used for determining other code standards such as building height and number of stories.

3202.1.1 Structural support. A part of a building erected below grade that is necessary for structural support of the building or structure shall not project beyond the *lot lines*, except that the footings of street walls or their supports that are located not less than 8 feet (2438 mm) below grade shall not project more than 12 inches (305 mm) beyond the street *lot line*.

❖ One of the permissible street lot line encroachments (footings) is defined in this section. Where a structure is built immediately adjacent to the street lot line, the footing is permitted to project across that line (see Commentary Figure 3202.1.1). Projection of footings across side (interior) lot lines and onto adjacent property is not permitted.

3202.1.2 Vaults and other enclosed spaces. The construction and utilization of vaults and other enclosed spaces below grade shall be subject to the terms and conditions of the applicable governing authority.

❖ Below-grade vaults and other enclosed spaces that open at the sidewalk level are usually covered with solid structural caps (e.g., concrete slabs) and are permitted to project beyond the building line or street lot line. However, since these structures occur in the public right-of-way, they are subject to local laws governing private use of the public right-of-way as well as the approval of the applicable governing authority.

3202.1.3 Areaways. Areaways shall be protected by grates, *guards* or other *approved* means.

❖ Areaways, which provide natural light or ventilation to below-grade spaces, are required to be protected by grates, guards or other approved means of protection (see Commentary Figure 3202.1.3). Local regulations allowing the private use of the public right-of-way may prescribe how areaways are covered and protected. Some jurisdictions allow material lifts to be located in these areaways and open to the public street.

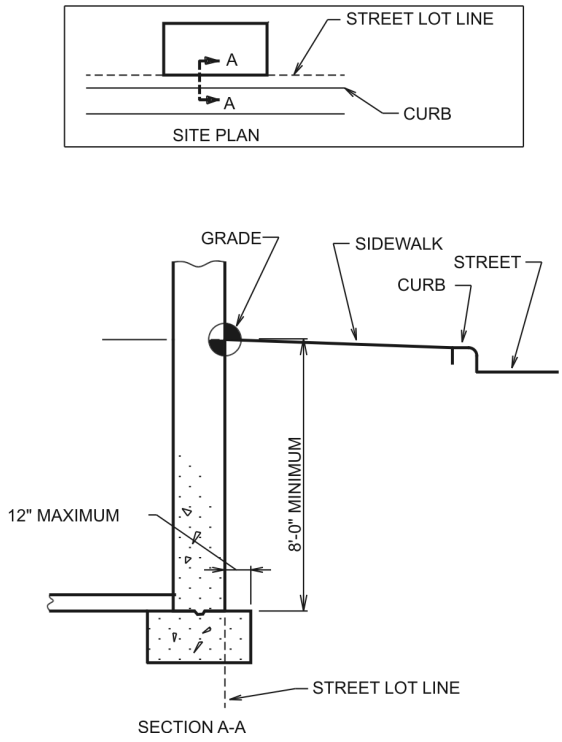

For SI: 1 inch = 25.4 mm, 1 foot = 304.8 mm.

Figure 3202.1.1
ENCROACHMENT BELOW GRADE

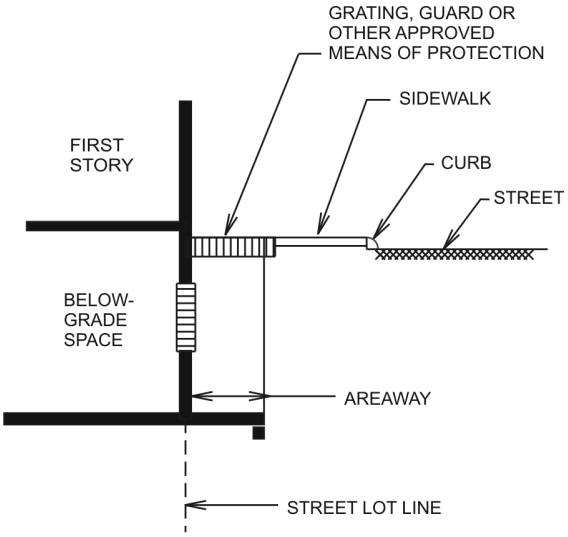

Figure 3202.1.3
AREAWAYS

INTERNATIONAL CODE COUNCIL®
Copyright © 2015 ICC. ALL RIGHTS RESERVED. Accessed by David Dammon on Jun 21, 2017 12:30:52 PM pursuant to License Agreement with ICC. No further reproduction or distribution authorized. ANY UNAUTHORIZED REPRODUCTION OR DISTRIBUTION IS A VIOLATION OF THE FEDERAL COPYRIGHT ACT AND THE LICENSE AGREEMENT, AND SUBJECT TO CIVIL AND CRIMINAL PENALTIES THEREUNDER.

3202.2 Encroachments above grade and below 8 feet in height. Encroachments into the public right-of-way above grade and below 8 feet (2438 mm) in height shall be prohibited except as provided for in Sections 3202.2.1 through 3202.2.3. Doors and windows shall not open or project into the public right-of-way.

❖ This section prohibits all projections into the public right-of-way that are above grade and below 8 feet (2438 mm), except those specifically allowed by Sections 3202.2.1 through 3202.2.3 and 3202.4 (e.g., steps, architectural features such as columns or pilasters, awnings, temporary vestibules and storm enclosures). The maximum permitted encroachments and minimum clearances, as well as additional protection requirements, for the specified allowed components are detailed in their respective sections. See the commentary to Section 3202.1 regarding the term "grade."

3202.2.1 Steps. Steps shall not project more than 12 inches (305 mm) and shall be guarded by *approved* devices not less than 3 feet (914 mm) in height, or shall be located between columns or pilasters.

❖ Steps are permitted to project a maximum of 12 inches (305 mm) into the public right-of-way by this section. However, since steps may pose a tripping hazard, an approved device (guard), ornamental column or pilaster must be provided at a minimum height of 3 feet (914 mm) to minimize this hazard. Commentary Figure 3202.2.1 illustrates compliance with this provision. Where such steps are part of the building's means of egress system, Sections 1011.11 and 1014 may require the placement of handrails and handrail extensions such that the 12-inch (305 mm) encroachment into a right-of-way may not be achievable.

3202.2.2 Architectural features. Columns or pilasters, including bases and moldings, shall not project more than 12 inches (305 mm). Belt courses, lintels, sills, architraves, pediments and similar architectural features shall not project more than 4 inches (102 mm).

❖ This section addresses the variety of architectural appurtenances that are part of a structure's exterior wall or roof. Consistent with the projection limitations given for steps in Section 3202.2.1, the maximum encroachment into the public way is 12 inches (305 mm) for columns and pilasters (see Commentary Figure 3202.2.1). Other noted architectural features are limited to maximum encroachments of 4 inches (102 mm).

3202.2.3 Awnings. The vertical clearance from the public right-of-way to the lowest part of any *awning*, including valances, shall be not less than 7 feet (2134 mm).

❖ Awnings, including retractable awnings, are permitted to project into the public right-of-way. However, the clearance to any part of an awning, including its valance, is required to be a minimum of 7 feet (2134 mm) above grade (see Commentary Figure 3202.2.3).

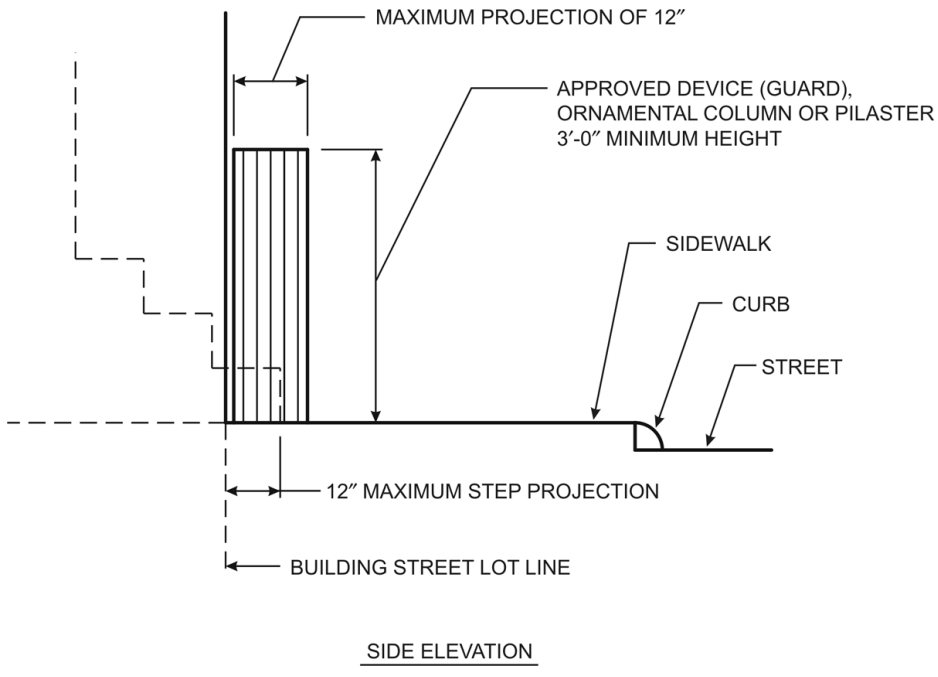

For SI: 1 inch = 25.4 mm, 1 foot = 304.8 mm.

Figure 3202.2.1
STEPS

INTERNATIONAL CODE COUNCIL®
Copyright © 2015 ICC. ALL RIGHTS RESERVED. Accessed by David Dammon on Jun 21, 2017 12:30:52 PM pursuant to License Agreement with ICC. No further reproduction or distribution authorized. ANY UNAUTHORIZED REPRODUCTION OR DISTRIBUTION IS A VIOLATION OF THE FEDERAL COPYRIGHT ACT AND THE LICENSE AGREEMENT, AND SUBJECT TO CIVIL AND CRIMINAL PENALTIES THEREUNDER.

3202.3 Encroachments 8 feet or more above grade. Encroachments 8 feet (2438 mm) or more above grade shall comply with Sections 3202.3.1 through 3202.3.4.

❖ This section prohibits all projections into the public right-of-way that are 8 feet (2438 mm) or more above grade, except those specifically allowed by Sections 3202.3.1 through 3202.3.4. The maximum permitted encroachments and minimum clearances, as well as additional approval requirements, for the specified allowed components are detailed in their respective sections.

3202.3.1 Awnings, canopies, marquees and signs. *Awnings*, canopies, marquees and signs shall be constructed so as to support applicable loads as specified in Chapter 16. *Awnings*, canopies, marquees and signs with less than 15 feet (4572 mm) clearance above the sidewalk shall not extend into or occupy more than two-thirds the width of the sidewalk measured from the building. Stanchions or columns that support *awnings*, canopies, marquees and signs shall be located not less than 2 feet (610 mm) in from the curb line.

❖ This section contains three distinct requirements. First, awnings, canopies, marquees and signs must be designed in accordance with the provisions of Chapter 16, with regard to the live loads that may be imposed on such structures.

Second, the allowable projection of awnings, canopies, marquees and signs with less than 15 feet (4572 mm) of clearance above the sidewalk is limited to two-thirds of the width of the sidewalk measured from the building. The standards of these sections apply to retractable awnings (defined in Section 202).

Finally, the location of vertical structural components used for supporting awnings, canopies, marquees and signs (stanchions or columns) is also regulated. A minimum of 2 feet (610 mm) of clearance is required between the curb line and the vertical structural support for awnings, canopies, marquees and signs (see Commentary Figure 3202.3.1).

3202.3.2 Windows, balconies, architectural features and mechanical equipment. Where the vertical clearance above grade to projecting windows, balconies, architectural features or mechanical equipment is more than 8 feet (2438 mm), 1 inch (25 mm) of encroachment is permitted for each additional 1 inch (25 mm) of clearance above 8 feet (2438 mm), but the maximum encroachment shall be 4 feet (1219 mm).

❖ Projections into the public right-of-way for appurtenances such as windows, balconies, architectural features or mechanical equipment more than 8 feet (2438 mm) above grade are allowed by this section. Such projections are limited to 1 inch (25 mm) of encroachment for each additional inch of clearance above the minimum 8-foot (2438 mm) clearance required. However, the maximum allowable projection is limited to 4 feet (1219 mm) (see Commentary Figure 3202.3.2).

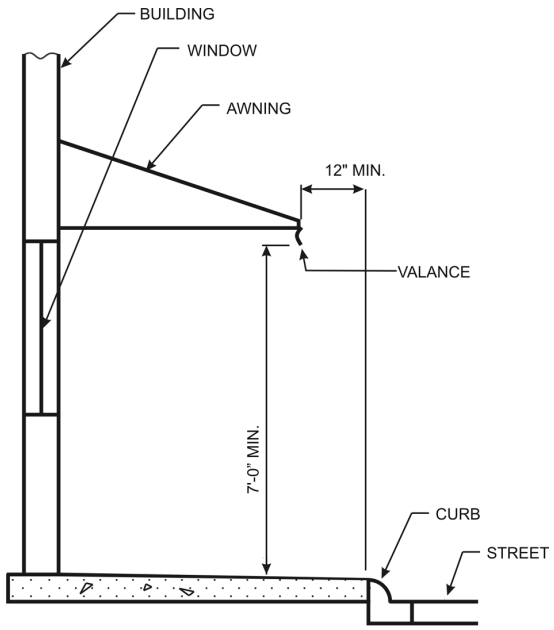

For SI: 1 inch = 25.4 mm, 1 foot = 304.8 mm.

Figure 3202.2.3
AWNINGS

INTERNATIONAL CODE COUNCIL®
Copyright © 2015 ICC. ALL RIGHTS RESERVED. Accessed by David Dammon on Jun 21, 2017 12:30:52 PM pursuant to License Agreement with ICC. No further reproduction or distribution authorized. ANY UNAUTHORIZED REPRODUCTION OR DISTRIBUTION IS A VIOLATION OF THE FEDERAL COPYRIGHT ACT AND THE LICENSE AGREEMENT, AND SUBJECT TO CIVIL AND CRIMINAL PENALTIES THEREUNDER.

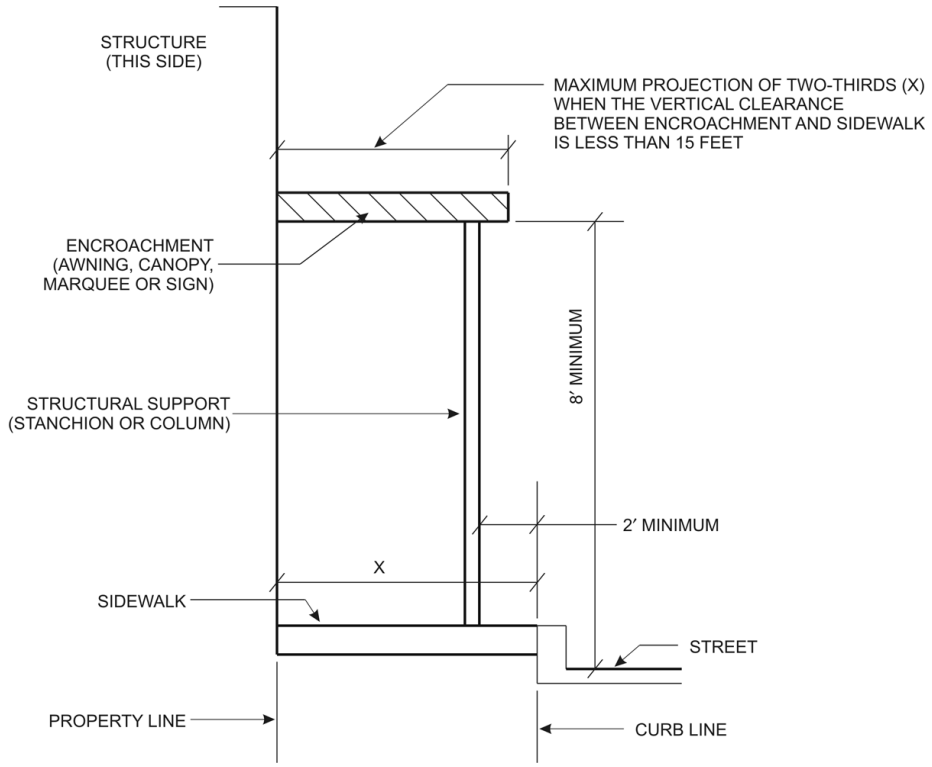

For SI: 1 foot = 304.8 mm.

Figure 3202.3.1
AWNINGS, CANOPIES, MARQUEES AND SIGNS 8 FEET OR MORE ABOVE GRADE

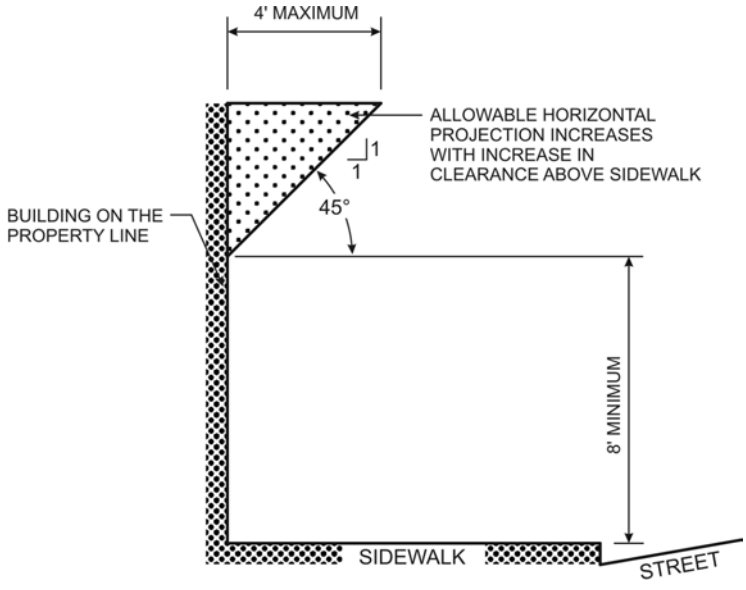

For SI: 1 foot = 304.8 mm, 1 degree = 0.01745 rad.

Figure 3202.3.2
WINDOWS, BALCONIES, ARCHITECTURAL FEATURES AND MECHANICAL EQUIPMENT

INTERNATIONAL CODE COUNCIL®
Copyright © 2015 ICC. ALL RIGHTS RESERVED. Accessed by David Dammon on Jun 21, 2017 12:30:52 PM pursuant to License Agreement with ICC. No further reproduction or distribution authorized. ANY UNAUTHORIZED REPRODUCTION OR DISTRIBUTION IS A VIOLATION OF THE FEDERAL COPYRIGHT ACT AND THE LICENSE AGREEMENT, AND SUBJECT TO CIVIL AND CRIMINAL PENALTIES THEREUNDER.

3202.3.3 Encroachments 15 feet or more above grade. Encroachments 15 feet (4572 mm) or more above grade shall not be limited.

❖ Because encroachments into the public right-of-way that are 15 feet (4572 mm) or more above grade do not interfere with or impede pedestrian or vehicular traffic, they are not regulated by the provisions of this chapter.

3202.3.4 Pedestrian walkways. The installation of a pedestrian walkway over a public right-of-way shall be subject to the approval of the applicable governing authority. The vertical clearance from the public right-of-way to the lowest part of a *pedestrian walkway* shall be not less than 15 feet (4572 mm).

❖ As in Section 3202.3.3, projections of pedestrian walkways that have a minimum clearance of 15 feet (4572 mm) above grade do not interfere or impede pedestrian or vehicular traffic and thus are not prohibited by this section. The installation of pedestrian walkways over a public right-of-way is required to be approved by the local governing authority. Detailed requirements for pedestrian walkways are provided in Section 3104.

3202.4 Temporary encroachments. Where allowed by the applicable governing authority, vestibules and storm enclosures shall not be erected for a period of time exceeding seven months in any one year and shall not encroach more than 3 feet (914 mm) nor more than one-fourth of the width of the sidewalk beyond the street *lot line*. Temporary entrance *awnings* shall be erected with a clearance of not less than 7 feet (2134 mm) to the lowest portion of the hood or *awning* where supported on removable steel or other *approved* noncombustible support.

❖ This section addresses a special situation in which temporary projections across the street lot line are erected for climatic reasons (e.g., during the winter months some building owners may erect vestibule enclosures or canopies over entrances). The purpose of this section is to allow these energy-saving procedures, yet place limitations on such projections.

Specifically, enclosures temporarily appended to an entranceway are permitted to project not more than 3 feet (914 mm) beyond the street lot line, or up to one-fourth the width of the sidewalk. Whichever dimension results in the lesser projection defines the maximum projection.

Additionally, when temporary awnings are erected, clearance between the sidewalk and the lowest part of the awning must be at least 7 feet (2134 mm), which is consistent with the requirements for permanent awnings in Section 3202.2.3. It is further required that the frame for the hood or awning is to be supported on removable steel or other approved noncombustible material. This last provision is necessitated by unforeseen changes in street lot lines, for example, that would result in the encroachment becoming an obstruction in the public right-of-way.

INTERNATIONAL CODE COUNCIL®
Copyright © 2015 ICC. ALL RIGHTS RESERVED. Accessed by David Dammon on Jun 21, 2017 12:30:52 PM pursuant to License Agreement with ICC. No further reproduction or distribution authorized. ANY UNAUTHORIZED REPRODUCTION OR DISTRIBUTION IS A VIOLATION OF THE FEDERAL COPYRIGHT ACT AND THE LICENSE AGREEMENT, AND SUBJECT TO CIVIL AND CRIMINAL PENALTIES THEREUNDER.

Chapter 33: Safeguards During Construction

General Comments

The building construction process involves a number of known and unanticipated hazards. Chapter 33 establishes specific regulations in order to minimize risk to the public and adjacent property. Some construction failures have resulted during the initial stages of grading, excavation and demolition. During these early stages, poorly designed and installed sheeting and shoring have resulted in ditch and embankment cave-ins. Also, inadequate underpinning of adjoining existing structures and careless removal of existing structures have resulted in construction failures.

The most critical period in building construction related to the safety of those on the job site is when all building components have not yet been completed. Compounding this incomplete state is the use of dangerous construction methods, materials and equipment.

The importance of reasonable precautions is evidenced by the federal Occupational Safety and Health Act and related state and local regulations (DOL 29 CFR; Part 1910-74).

Purpose

The purpose of Chapter 33 is to establish safety requirements during construction or demolition of buildings and structures. These requirements are intended to protect the public from injury and adjoining property from damage.

SECTION 3301 GENERAL

3301.1 Scope. The provisions of this chapter shall govern safety during construction and the protection of adjacent public and private properties.

❖ This chapter establishes that reasonable safety precautions are to be provided during construction or demolition to protect the public from injury and adjoining property from damage. This chapter does not address projects not associated with a building or structure. Section 101.2 of this code establishes the scope as applicable to buildings or structures. For example, widening or deepening an existing river for flood control purposes would not be regulated by this chapter.

3301.2 Storage and placement. Construction equipment and materials shall be stored and placed so as not to endanger the public, the workers or adjoining property for the duration of the construction project.

❖ This section requires that construction materials and equipment must be located and protected pursuant to the governing provisions of this chapter so that the public and adjoining property are safeguarded at all times during construction or demolition processes.

SECTION 3302 CONSTRUCTION SAFEGUARDS

3302.1 Alterations, repairs and additions. Required *exits*, existing structural elements, fire protection devices and sanitary safeguards shall be maintained at all times during *alterations*, *repairs* or *additions* to any building or structure.

Exceptions:

1. Where such required elements or devices are being altered or repaired, adequate substitute provisions shall be made.
2. Maintenance of such elements and devices is not required when the existing building is not occupied.

❖ Demolition and construction operations must not create a hazard for the occupants of a building during an alteration or addition. As such, the existing fire protection, means of egress elements and safety systems must remain in place and be functional. Two exceptions, however, are provided in this section that permit the fire protection, means of egress elements and safety systems to be changed, modified or removed. Exception 1 provides an alternative method that must be approved by the building official. Exception 2 is simply to have an unoccupied building, which means that residents of a dwelling unit or employees of a business are not to be present during the construction or demolition process.

3302.2 Manner of removal. Waste materials shall be removed in a manner that prevents injury or damage to persons, adjoining properties and public rights-of-way.

❖ Safe and sanitary procedures for the removal of building construction and demolition waste must be provided. The method of waste removal must not pose a hazard, eyesore or nuisance to the public and

INTERNATIONAL CODE COUNCIL®
Copyright © 2015 ICC. ALL RIGHTS RESERVED. Accessed by David Dammon on Jun 21, 2017 12:30:52 PM pursuant to License Agreement with ICC. No further reproduction or distribution authorized. ANY UNAUTHORIZED REPRODUCTION OR DISTRIBUTION IS A VIOLATION OF THE FEDERAL COPYRIGHT ACT AND THE LICENSE AGREEMENT, AND SUBJECT TO CIVIL AND CRIMINAL PENALTIES THEREUNDER.

neighboring properties. Examples of acceptable practices include: using a professional disposal service to haul away debris; limiting areas used for storing and handling demolished materials; enclosing storage areas so that only authorized personnel can gain access; establishing routes that waste removal vehicles are permitted to use; covering or tarping debris to prevent flying objects; and providing fully enclosed chutes to control falling objects and dust. Additionally, waste removal should be scheduled when adjoining property and the public will be least exposed to unusual and possibly dangerous situations caused by fumes, noise and dust, as well as unfamiliar events involved during a demolition process. Note that the accepted practice of waste removal is subject to the approval of the applicable governing authority. A growing number of local jurisdictions, as part of their sustainability (or green) programs, limit the amount of construction and demolition debris that can be sent to landfills.

3302.3 Fire safety during construction. Fire safety during construction shall comply with the applicable requirements of this code and the applicable provisions of Chapter 33 of the *International Fire Code.*

❖ The purpose of this section is to correlate Section 3302 and *International Fire Code*® (IFC®) requirements on fire safety during construction and demolition. Chapter 33 of the IFC has all of the fire safety requirements provided in one place for fire-safe operations during construction and demolition.

SECTION 3303
DEMOLITION

3303.1 Construction documents. *Construction documents* and a schedule for demolition shall be submitted where required by the *building official*. Where such information is required, no work shall be done until such *construction documents* or schedule, or both, are *approved*.

❖ Some processes, methods and materials used during demolition can cause damage to adjoining property and increase the risk of injury to the general public. As such, this section indicates that the building official can request: verification that structural stability of existing buildings on the same lot or adjacent properties is maintained and not compromised; to know the materials and equipment necessary to perform the demolition involved; the timetable in which certain demolition activities will be performed; details to establish if the general public and adjoining property are exposed to any unfamiliar or greater hazard than normal; special inspection reports made by qualified firms, agencies or individuals; qualifications of the laborers involved in the operation, handling and removal of demolition equipment and materials; and verification that any federal, state or local statute is followed. Note that the building official must grant approval for any additional information requested before demolition can be started.

3303.2 Pedestrian protection. The work of demolishing any building shall not be commenced until pedestrian protection is in place as required by this chapter.

❖ Demolition must not be started until all of the necessary precautions are taken to protect the general public as indicated throughout this chapter.

3303.3 Means of egress. A *horizontal exit* shall not be destroyed unless and until a substitute *means of egress* has been provided and *approved*.

❖ Exits through a party wall must be operational and usable during demolition. However, based upon the extent of work, an alternative means of egress through a party wall is only permitted when approved by the building official.

3303.4 Vacant lot. Where a structure has been demolished or removed, the vacant lot shall be filled and maintained to the existing grade or in accordance with the ordinances of the jurisdiction having authority.

❖ A demolition site must be restored if additional building construction or demolition operations are not scheduled to take place. The site must be filled and graded to the level of the surrounding site or maintained in accordance with local or state statutes, which may set forth other grading requirements, such as provisions for elevations, drainage and flood control.

The time frame stipulated to abate a hazard created by a vacant lot is at the discretion of the building official unless a time frame is established in other regulations. In addition, footings, foundations, basement walls and floors must be removed when the building official determines that a threat is posed to human life or the public welfare, or if any portion of the foundation system prevents proper grading from being done.

3303.5 Water accumulation. Provision shall be made to prevent the accumulation of water or damage to any foundations on the premises or the adjoining property.

❖ A vacant lot must be graded in accordance with Section 3303.4 in such a way that water is prevented from ponding and causing damage to structures on the premises or adjacent properties, particularly foundation systems and building elements in contact with the ground. Footings, foundations, basement walls or floors must be removed if this drainage is prevented.

3303.6 Utility connections. Service utility connections shall be discontinued and capped in accordance with the *approved* rules and the requirements of the applicable governing authority.

❖ The procedures for disconnecting and abandoning utility connections in a safe and satisfactory manner must be in accordance with local, state and federal statutes. Utility providers, such as electrical, telephone, water, gas or sewer, often recommend or require notification and have certain guidelines to follow.

Potential on-site underground obstructions, such

INTERNATIONAL CODE COUNCIL®
Copyright © 2015 ICC. ALL RIGHTS RESERVED. Accessed by David Dammon on Jun 21, 2017 12:30:52 PM pursuant to License Agreement with ICC. No further reproduction or distribution authorized. ANY UNAUTHORIZED REPRODUCTION OR DISTRIBUTION IS A VIOLATION OF THE FEDERAL COPYRIGHT ACT AND THE LICENSE AGREEMENT, AND SUBJECT TO CIVIL AND CRIMINAL PENALTIES THEREUNDER.

as utility service lines, and buried oil, gasoline or septic tanks, should be investigated. If the temporary use of some existing service, such as electricity or water, is requested during the demolition project, then temporary permits must be obtained with the appropriate stipulations, including any rerouting or protection requirements from the applicable governing authority.

3303.7 Fire safety during demolition. Fire safety during demolition shall comply with the applicable requirements of this code and the applicable provisions of Chapter 56 of the *International Fire Code*.

❖ The purpose of this section is to correlate Section 3303 and IFC requirements on fire safety during construction and demolition. IFC Chapter 56 provides requirements for blasting, while IFC Section 3307 addresses demolition.

SECTION 3304
SITE WORK

3304.1 Excavation and fill. Excavation and fill for buildings and structures shall be constructed or protected so as not to endanger life or property. Stumps and roots shall be removed from the soil to a depth of not less than 12 inches (305 mm) below the surface of the ground in the area to be occupied by the building. Wood forms that have been used in placing concrete, if within the ground or between foundation sills and the ground, shall be removed before a building is occupied or used for any purpose. Before completion, loose or casual wood shall be removed from direct contact with the ground under the building.

❖ A site that is to be excavated or filled in preparation for new construction must have dead and decaying foliage eliminated where it would be in contact with the new structure. As such, the base of trees, roots and limbs that protrude above the ground as well as 12 inches (305 mm) into the ground, must be taken out or separated from the earth where the building or structure will be erected. Additionally, any wood forms used for the concrete must be removed along with any wood product near the building that may decay or rot.

Appendix J provides a comprehensive set of grading standards which would also apply when the appendix is specifically adopted by the jurisdiction.

3304.1.1 Slope limits. Slopes for permanent fill shall be not steeper than one unit vertical in two units horizontal (50-percent slope). Cut slopes for permanent excavations shall be not steeper than one unit vertical in two units horizontal (50-percent slope). Deviation from the foregoing limitations for cut slopes shall be permitted only upon the presentation of a soil investigation report acceptable to the *building official*.

❖ The final grading around a foundation system must slope away from the building or structure, such that the ratio does not exceed 2:1. A trench or hole dug for a foundation system is required to have a stable embankment. As such, the embankment must not have a slope that exceeds a 2:1 ratio. However, because of the existing soil conditions or particular location, it may be impractical to achieve the required slope. This section indicates that an engineering analysis can be submitted with recommendations for alternative methodology and safeguards, subject to the approval of the building official.

3304.1.2 Surcharge. No fill or other surcharge loads shall be placed adjacent to any building or structure unless such building or structure is capable of withstanding the additional loads caused by the fill or surcharge. Existing footings or foundations that can be affected by any excavation shall be underpinned adequately or otherwise protected against settlement and shall be protected against lateral movement.

❖ Gradient stability must be maintained for existing buildings or structures during the excavation, construction or demolition processes. As such, earth, construction materials, debris and even construction equipment must not impose a load that will cause the ground to give way and collapse or damage the foundation system of adjacent buildings or structures. Therefore, components such as engineered bracing must be provided for protection if adjacent buildings or structures are to be exposed to loads that exceed those of the existing design.

3304.1.3 Footings on adjacent slopes. For footings on adjacent slopes, see Chapter 18.

❖ Any footings located on adjacent slopes must be designed and constructed pursuant to Chapter 18.

3304.1.4 Fill supporting foundations. Fill to be used to support the foundations of any building or structure shall comply with Section 1804.6. *Special inspections* of compacted fill shall be in accordance with Section 1705.6.

❖ Compliance with this section ensures that the fill installed to support a building or structure will be compacted and verified in accordance with Section 1804.6 and the special inspection regulations stated in Section 1705.6.

SECTION 3305
SANITARY

3305.1 Facilities required. Sanitary facilities shall be provided during construction, remodeling or demolition activities in accordance with the *International Plumbing Code*.

❖ Construction employees must have plumbing facilities available during the construction or demolition process of a building. The facilities must conform to the requirements set forth in the *International Plumbing Code*® (IPC®).

SECTION 3306
PROTECTION OF PEDESTRIANS

3306.1 Protection required. Pedestrians shall be protected during construction, remodeling and demolition activities as

INTERNATIONAL CODE COUNCIL®
Copyright © 2015 ICC. ALL RIGHTS RESERVED. Accessed by David Dammon on Jun 21, 2017 12:30:52 PM pursuant to License Agreement with ICC. No further reproduction or distribution authorized. ANY UNAUTHORIZED REPRODUCTION OR DISTRIBUTION IS A VIOLATION OF THE FEDERAL COPYRIGHT ACT AND THE LICENSE AGREEMENT, AND SUBJECT TO CIVIL AND CRIMINAL PENALTIES THEREUNDER.

required by this chapter and Table 3306.1. Signs shall be provided to direct pedestrian traffic.

❖ Safeguards are required to be in place during construction or demolition operations in accordance with Table 3306.1 and this chapter. In addition, since construction operations alter the familiar setting and path of travel, it is necessary to provide some form of visible directional sign to lead the public toward safety and away from potential hazards.

The table establishes the type of protection required based upon the location to overhead hazards and distance in relation to ground hazards. Once the type of protection is determined from the table, the applicable code section, such as Section 3306.4 for construction railings, Section 3306.5 for barriers and Section 3306.7 for covered walkways, must be complied with as regulated.

3306.2 Walkways. A walkway shall be provided for pedestrian travel in front of every construction and demolition site unless the applicable governing authority authorizes the sidewalk to be fenced or closed. Walkways shall be of sufficient width to accommodate the pedestrian traffic, but in no case shall they be less than 4 feet (1219 mm) in width. Walkways shall be provided with a durable walking surface. Walkways shall be *accessible* in accordance with Chapter 11 and shall be designed to support all imposed loads and in no case shall the design live load be less than 150 pounds per square foot (psf) (7.2 kN/m^2).

❖ Construction operations must not narrow or impede the normal flow of pedestrian traffic along a walkway by the placement of a fence or other enclosure. Note that the governing authority must approve any construction operations that will cause the narrowing or impedance of a walkway, such as the sidewalk. If a walkway is narrowed or enclosed, the construction of another or wider walkway is required for all pedestrians. The walkway must be able to handle the normal anticipated flow of pedestrian traffic and must not be less than the minimum 4-foot (1219 mm) width. Even though such walkways may be temporary installations, they may still need to be usable by persons with disabilities where such walkway provides an accessible route in accordance with Chapter 11. In addition, the walkway must be a stable surface that is capable of supporting all imposed loads. The minimum design load of the walkway must not be less than 150 pounds per square feet (psf) (7182 Pa).

3306.3 Directional barricades. Pedestrian traffic shall be protected by a directional barricade where the walkway extends into the street. The directional barricade shall be of sufficient size and construction to direct vehicular traffic away from the pedestrian path.

❖ Similar to local, state and federal guidelines that govern provisions to protect employees doing road work, this section establishes that a barrier must be erected. The barrier must be capable of redirecting and regulating the flow of vehicular traffic where constructed or projected into a street. An example of how to regulate traffic is to provide the necessary warnings, notice of caution and instructions to the operators of motor vehicles with signs and colors that are common to local, state and federal guidelines. The intent of this visual barrier is to keep pedestrians out of vehicular traffic and prevent vehicles from encroaching on or using the pedestrian walkway as a roadway.

3306.4 Construction railings. Construction railings shall be not less than 42 inches (1067 mm) in height and shall be sufficient to direct pedestrians around construction areas.

❖ A barrier consisting of a horizontal rail and supports must be constructed with a minimum height of 42 inches (1067 mm). In addition, this barrier must be capable of controlling the flow of pedestrian traffic by routing travel away from the hazards associated with a construction area. Where construction railings are placed such that there is a drop of more than 30 inches (762 mm) adjacent to the walking surface, such railings would also need to comply with Section 1015 for guards. Even where guards are not required, the standards for guards could be useful in the design of construction railings.

3306.5 Barriers. Barriers shall be not less than 8 feet (2438 mm) in height and shall be placed on the side of the walkway nearest the construction. Barriers shall extend the entire length of the construction site. Openings in such barriers shall be protected by doors that are normally kept closed.

❖ When a barrier is required by Table 3306.1, it must be constructed to impede, separate and obstruct passage of pedestrians onto a construction site. The

TABLE 3306.1
PROTECTION OF PEDESTRIANS

HEIGHT OF CONSTRUCTION	DISTANCE FROM CONSTRUCTION TO LOT LINE	TYPE OF PROTECTION REQUIRED
8 feet or less	Less than 5 feet	Construction railings
	5 feet or more	None
More than 8 feet	Less than 5 feet	Barrier and covered walkway
	5 feet or more, but not more than one-fourth the height of construction	Barrier and covered walkway
	5 feet or more, but between one-fourth and one-half the height of construction	Barrier
	5 feet or more, but exceeding one-half the height of construction	None

For SI: 1 foot = 304.8 mm.

INTERNATIONAL CODE COUNCIL®
Copyright © 2015 ICC. ALL RIGHTS RESERVED. Accessed by David Dammon on Jun 21, 2017 12:30:52 PM pursuant to License Agreement with ICC. No further reproduction or distribution authorized. ANY UNAUTHORIZED REPRODUCTION OR DISTRIBUTION IS A VIOLATION OF THE FEDERAL COPYRIGHT ACT AND THE LICENSE AGREEMENT, AND SUBJECT TO CIVIL AND CRIMINAL PENALTIES THEREUNDER.

structure must be a minimum 8 feet (2438 mm) in height and located continuously along the walkway on the side where construction activities are being done. Openings, such as doors or gates, are permitted as long as the only time they are open is during use by authorized personnel. As such, when the doors or gates are not being used, they must remain closed.

3306.6 Barrier design. Barriers shall be designed to resist loads required in Chapter 16 unless constructed as follows:

1. Barriers shall be provided with 2-inch by 4-inch (51 mm by 102 mm) top and bottom plates.
2. The barrier material shall be boards not less than $^{3}/_{4}$-inch (19.1 mm) thick or wood structural panels not less than $^{1}/_{4}$-inch (6.4 mm) thick.
3. Wood structural use panels shall be bonded with an adhesive identical to that for exterior wood structural use panels.
4. Wood structural use panels $^{1}/_{4}$ inch (6.4 mm) or $^{5}/_{16}$ inch (23.8 mm) in thickness shall have studs spaced not more than 2 feet (610 mm) on center.
5. Wood structural use panels $^{3}/_{8}$ inch (9.5 mm) or $^{1}/_{2}$ inch (12.7 mm) in thickness shall have studs spaced not more than 4 feet (1219 mm) on center provided a 2-inch by 4-inch (51 mm by 102 mm) stiffener is placed horizontally at mid-height where the stud spacing is greater than 2 feet (610 mm) on center.
6. Wood structural use panels $^{5}/_{8}$ inch (15.9 mm) or thicker shall not span over 8 feet (2438 mm).

❖ This section establishes two methods that can be used to design barriers. The first method establishes that the barrier can be designed using the same materials and assembly instructions as indicated in Items 1 through 6. The second method provides for a barrier that will resist the loads imposed on it in order to be part of a designed assembly. The loads, which need to be resisted, are the same as those established in Chapter 16.

3306.7 Covered walkways. Covered walkways shall have a clear height of not less than 8 feet (2438 mm) as measured from the floor surface to the canopy overhead. Adequate lighting shall be provided at all times. Covered walkways shall be designed to support all imposed loads. In no case shall the design live load be less than 150 psf (7.2 kN/m^2) for the entire structure.

Exception: Roofs and supporting structures of covered walkways for new, light-frame construction not exceeding two *stories* above *grade plane* are permitted to be designed for a live load of 75 psf (3.6kN/m^2) or the loads imposed on them, whichever is greater. In lieu of such designs, the roof and supporting structure of a covered walkway are permitted to be constructed as follows:

1. Footings shall be continuous 2-inch by 6-inch (51 mm by 152 mm) members.
2. Posts not less than 4 inches by 6 inches (102 mm by 152 mm) shall be provided on both sides of the roof and spaced not more than 12 feet (3658 mm) on center.
3. Stringers not less than 4 inches by 12 inches (102 mm by 305 mm) shall be placed on edge upon the posts.
4. Joists resting on the stringers shall be not less than 2 inches by 8 inches (51 mm by 203 mm) and shall be spaced not more than 2 feet (610 mm) on center.
5. The deck shall be planks not less than 2 inches (51 mm) thick or wood structural panels with an exterior exposure durability classification not less than $^{23}/_{32}$ inch (18.3 mm) thick nailed to the joists.
6. Each post shall be knee braced to joists and stringers by members not less than 2 inches by 4 inches (51 mm by 102 mm); 4 feet (1219 mm) in length.
7. A curb that is not less than 2 inches by 4 inches (51 mm by 102 mm) shall be set on edge along the outside edge of the deck.

❖ Walkways that are provided with a covering that extends over the pedestrian path of travel, pursuant to Table 3306.1, must be at least 8 feet (2438 mm) in height. The measurement must be taken from the top of the walking surface to the underside of the roof covering. The walkway must maintain a satisfactory level of light to the space, equal to or better than that provided prior to the installation of the protective covering. The covered walkway must also be structurally capable of resisting the design loads established in Chapter 16, but not less than 150 psf (7182 Pa) for the live load.

Note that this section provides two design options. One option permits the covered walkway to resist the design loads established in Chapter 16, but not less than the minimum 75 psf (3591 Pa) live load if nearby construction does not exceed two stories above grade plane and the construction materials are lightweight, such as light-frame construction. The second option is to construct the covered walkway in accordance with the seven criteria set forth in this section.

3306.8 Repair, maintenance and removal. Pedestrian protection required by this chapter shall be maintained in place and kept in good order for the entire length of time pedestrians are subject to being endangered. The *owner* or the *owner's* authorized agent, upon the completion of the construction activity, shall immediately remove walkways, debris and other obstructions and leave such public property in as good a condition as it was before such work was commenced.

❖ Any safeguards required by this chapter must be kept in good functional condition for the entire duration of the construction or demolition activity so that the public will not be placed in harm's way. Once a building or structure is occupiable and the site is properly graded, the protection must be removed. As such, public property that was affected by the construction activity must be restored to or left in the condition that existed prior to the work.

INTERNATIONAL CODE COUNCIL®
Copyright © 2015 ICC. ALL RIGHTS RESERVED. Accessed by David Dammon on Jun 21, 2017 12:30:52 PM pursuant to License Agreement with ICC. No further reproduction or distribution authorized. ANY UNAUTHORIZED REPRODUCTION OR DISTRIBUTION IS A VIOLATION OF THE FEDERAL COPYRIGHT ACT AND THE LICENSE AGREEMENT, AND SUBJECT TO CIVIL AND CRIMINAL PENALTIES THEREUNDER.

3306.9 Adjacent to excavations. Every excavation on a site located 5 feet (1524 mm) or less from the street *lot line* shall be enclosed with a barrier not less than 6 feet (1829 mm) in height. Where located more than 5 feet (1524 mm) from the street *lot line*, a barrier shall be erected where required by the *building official*. Barriers shall be of adequate strength to resist wind pressure as specified in Chapter 16.

❖ This section establishes that whenever excavation is to take place less than 5 feet (1524 mm) from the edge of a roadway, a barrier must be erected with a minimum height of 6 feet (1829 mm). If the excavation is located greater than 5 feet (1524 mm) from the edge of the roadway, the building official must evaluate the level of hazard for the public and the necessary precautions to take. As such, the building official has the authority to order the construction of a structural barrier. Any barrier erected must maintain other provisions of the code such that it is capable of handling and resisting design wind loads denoted in Chapter 16.

SECTION 3307
PROTECTION OF ADJOINING PROPERTY

3307.1 Protection required. Adjoining public and private property shall be protected from damage during construction, remodeling and demolition work. Protection shall be provided for footings, foundations, party walls, chimneys, skylights and roofs. Provisions shall be made to control water runoff and erosion during construction or demolition activities. The person making or causing an excavation to be made shall provide written notice to the *owners* of adjoining buildings advising them that the excavation is to be made and that the adjoining buildings should be protected. Said notification shall be delivered not less than 10 days prior to the scheduled starting date of the excavation.

❖ This section emphasizes the need to protect all existing public and private property bordering the proposed construction or demolition operations. The term "property" only alludes to existing buildings. As such, any building element or system must be provided with a safeguard that will limit the damage that could be caused from the processes involved to the equipment and materials used. Additionally, soil erosion and disbursement resulting from the construction or demolition operations must be controlled to prevent spillage and spread of disturbed soil debris. The site must be graded in accordance with Sections 3303.4 and 3303.5 for demolition and must be maintained in a similar manner while there is construction taking place. The owner or owner's agent has the responsibility to provide a written notice 10 days in advance for any demolition or construction activities that may warrant bordering lots to be protected from damage.

SECTION 3308
TEMPORARY USE OF STREETS, ALLEYS AND PUBLIC PROPERTY

3308.1 Storage and handling of materials. The temporary use of streets or public property for the storage or handling of materials or of equipment required for construction or demolition, and the protection provided to the public shall comply with the provisions of the applicable governing authority and this chapter.

❖ In order to protect access to public safety equipment, utilities and public transportation, this section provides standards for the temporary use of public property for construction processes and storage of materials. These are in addition to any local or state regulations.

3308.1.1 Obstructions. Construction materials and equipment shall not be placed or stored so as to obstruct access to fire hydrants, standpipes, fire or police alarm boxes, catch basins or manholes, nor shall such material or equipment be located within 20 feet (6096 mm) of a street intersection, or placed so as to obstruct normal observations of traffic signals or to hinder the use of public transit loading platforms.

❖ This section indicates that precautions for material and equipment storage and placement must be provided so as not to block or obstruct access to fire hydrants; standpipes (including fire department siamese connections for sprinklers and standpipes); fire or police alarm boxes; utility boxes and meters; catch basins or manholes; or any other vital facility whose function contributes to the health, safety and welfare of the public. Also, storage must not be placed within 20 feet (6096 mm) of a street intersection if it obstructs the normal observation of traffic signals or hinders the use of any mass-transit loading platforms, such as sidewalk bus stops, taxi waiting areas or light rail platforms.

3308.2 Utility fixtures. Building materials, fences, sheds or any obstruction of any kind shall not be placed so as to obstruct free approach to any fire hydrant, fire department connection, utility pole, manhole, fire alarm box or catch basin, or so as to interfere with the passage of water in the gutter. Protection against damage shall be provided to such utility fixtures during the progress of the work, but sight of them shall not be obstructed.

❖ Utility fixtures, such as those used by electrical, telephone, water, gas or sewer companies, as well as fire protection devices, must be hidden from view and not be blocked from access and use. When construction operations are near a utility fixture, precautions must be provided so as not to cause damage. The utility companies and the applicable governing authority, including the fire department, may have specific requirements and guidelines to follow to limit the possibility of damage and obstruction.

INTERNATIONAL CODE COUNCIL®
Copyright © 2015 ICC. ALL RIGHTS RESERVED. Accessed by David Dammon on Jun 21, 2017 12:30:52 PM pursuant to License Agreement with ICC. No further reproduction or distribution authorized. ANY UNAUTHORIZED REPRODUCTION OR DISTRIBUTION IS A VIOLATION OF THE FEDERAL COPYRIGHT ACT AND THE LICENSE AGREEMENT, AND SUBJECT TO CIVIL AND CRIMINAL PENALTIES THEREUNDER.

SECTION 3309
FIRE EXTINGUISHERS

[F] 3309.1 Where required. Structures under construction, *alteration* or demolition shall be provided with no fewer than one *approved* portable fire extinguisher in accordance with Section 906 and sized for not less than ordinary hazard as follows:

1. At each *stairway* on all floor levels where combustible materials have accumulated.
2. In every storage and construction shed.
3. Additional portable fire extinguishers shall be provided where special hazards exist, such as the storage and use of flammable and combustible liquids.

❖ A means to provide fire protection during the construction and demolition process is required. As such, this section indicates provisions for portable fire extinguishers. In addition to provisions of this section, the regulations of Section 906 and the IFC must be maintained.

[F] 3309.2 Fire hazards. The provisions of this code and the *International Fire Code* shall be strictly observed to safeguard against all fire hazards attendant upon construction operations.

❖ Methods, procedures and construction materials each contribute, in some way, to creating a fire hazard. Therefore, in addition to the provisions of the code, the IFC must be used to regulate the proper means of safety that must be provided for a building that is being demolished, altered or constructed.

SECTION 3310
MEANS OF EGRESS

3310.1 Stairways required. Where a building has been constructed to a *building height* of 50 feet (15 240 mm) or four *stories*, or where an existing building exceeding 50 feet (15 240 mm) in *building height* is altered, no fewer than one temporary lighted *stairway* shall be provided unless one or more of the permanent stairways are erected as the construction progresses.

❖ Buildings under construction that are determined to require more extensive time for evacuation due to height need to be provided with appropriate stairways for egress. Temporary stairways must be constructed in accordance with Section 1009, including riser, tread, guard and handrail requirements. This section does allow the use of a permanent stairway that has already been erected during construction instead of a temporary stairway.

3310.2 Maintenance of means of egress. Required *means of egress* shall be maintained at all times during construction, demolition, remodeling or *alterations* and *additions* to any building.

Exception: Existing means of egress need not be maintained where a*pproved* temporary *means of egress* systems and facilities are provided.

❖ While construction or demolition work is being done, the occupants of the existing building still need to have unobstructed access to the minimum number of usable means of egress required for that space, floor and building. Note that depending upon the extent of work, an exit may become obstructed; therefore, an alternative exit must be provided if the blocked exit is a required exit.

SECTION 3311
STANDPIPES

[F] 3311.1 Where required. In buildings required to have standpipes by Section 905.3.1, no fewer than one standpipe shall be provided for use during construction. Such standpipes shall be installed prior to construction exceeding 40 feet (12 192 mm) in height above the lowest level of fire department vehicle access. Such standpipes shall be provided with fire department hose connections at accessible locations adjacent to usable *stairways*. Such standpipes shall be extended as construction progresses to within one floor of the highest point of construction having secured decking or flooring.

❖ This section establishes fire safety procedures during construction operations in accordance with the code and the IFC. Standpipes that are required by Section 905 to be a permanent part of the building must be installed and remain functional as construction or demolition progresses. Functional standpipes are required so that fire-fighting capability is available at all times within a reasonable proximity to all potential fire locations. Standpipes must be installed when a building or structure under construction exceeds 40 feet (12 192 mm) in height above fire department vehicle access and thereafter as it progresses to its completed height. During demolition or construction, the standpipe must be operational no lower than one floor below the highest point of construction. Having a standpipe at least as high as the floor below the highest point of construction reflects typical fire department procedures when fighting a fire within a building, which is to attack the fire from the floor below.

[F] 3311.2 Buildings being demolished. Where a building is being demolished and a standpipe exists within such a building, such standpipe shall be maintained in an operable condition so as to be available for use by the fire department. Such standpipe shall be demolished with the building but shall not

INTERNATIONAL CODE COUNCIL®
Copyright © 2015 ICC. ALL RIGHTS RESERVED. Accessed by David Dammon on Jun 21, 2017 12:30:52 PM pursuant to License Agreement with ICC. No further reproduction or distribution authorized. ANY UNAUTHORIZED REPRODUCTION OR DISTRIBUTION IS A VIOLATION OF THE FEDERAL COPYRIGHT ACT AND THE LICENSE AGREEMENT, AND SUBJECT TO CIVIL AND CRIMINAL PENALTIES THEREUNDER.

be demolished more than one floor below the floor being demolished.

❖ Standpipes in buildings under demolition must remain in service during the demolition process so that fire-fighting capability is maintained. Similar to buildings under construction, the standpipe is to remain in operation up to one floor level below the floor being demolished. This section establishes the requirement for fire safety procedures during the demolition process in accordance with the code and the IFC.

[F] 3311.3 Detailed requirements. Standpipes shall be installed in accordance with the provisions of Chapter 9.

Exception: Standpipes shall be either temporary or permanent in nature, and with or without a water supply, provided that such standpipes conform to the requirements of Section 905 as to capacity, outlets and materials.

❖ During the construction or demolition process, standpipes complying with Section 3311.1 must be provided in a temporary or permanent location so that fire fighters will have sufficient means to supply water to their connection. These standpipes must either be connected to a permanent water supply source or have the capability to be connected to one in accordance with Section 3313.1. All standpipes must comply with Section 905 and must be installed and provided in a building pursuant to the regulations of Chapter 9.

SECTION 3312
AUTOMATIC SPRINKLER SYSTEM

[F] 3312.1 Completion before occupancy. In buildings where an *automatic sprinkler system* is required by this code, it shall be unlawful to occupy any portion of a building or structure until the *automatic sprinkler system* installation has been tested and *approved*, except as provided in Section 111.3.

❖ A certificate of occupancy must not be issued by the building official if a required automatic sprinkler system is not approved. However, a temporary occupancy may be granted at the discretion of the building official.

[F] 3312.2 Operation of valves. Operation of sprinkler control valves shall be permitted only by properly authorized personnel and shall be accompanied by notification of duly designated parties. When the sprinkler protection is being regularly turned off and on to facilitate connection of newly completed segments, the sprinkler control valves shall be checked at the end of each work period to ascertain that protection is in service.

❖ The scope of this section is to provide fire safety procedures during construction operations in accordance with the code and the IFC. A sprinkler system must remain operable unless work is being done on it. In such a case, the water must only be shut off by authorized personnel coupled with the notification of the proper authorities so that a form of check and balance is achieved to make certain the water is turned back on.

SECTION 3313
WATER SUPPLY FOR FIRE PROTECTION

[F] 3313.1 Where required. An *approved* water supply for fire protection, either temporary or permanent, shall be made available as soon as combustible material arrives on the site.

❖ This section is to provide a fire safety provision in accordance with the code and the IFC. As such, when a standpipe system is present during the construction process pursuant to Section 3311.1, a water source must be readily available to provide fire-fighting capabilities at all times.

Bibliography

The following resource material was used in the preparation of the commentary for this chapter of the code.

DOL 29 CFR; Part 1910-74, *Occupational Safety and Health Standards*. Washington, DC: U.S. Department of Labor-Occupational Safety and Health Administration, 1974.

INTERNATIONAL CODE COUNCIL®
Copyright © 2015 ICC. ALL RIGHTS RESERVED. Accessed by David Dammon on Jun 21, 2017 12:30:52 PM pursuant to License Agreement with ICC. No further reproduction or distribution authorized. ANY UNAUTHORIZED REPRODUCTION OR DISTRIBUTION IS A VIOLATION OF THE FEDERAL COPYRIGHT ACT AND THE LICENSE AGREEMENT, AND SUBJECT TO CIVIL AND CRIMINAL PENALTIES THEREUNDER.

CHAPTER 34

RESERVED

Action taken during the 2012 Code Development Process removed Chapter 34, Existing Structures, from the IBC. The provisions of this chapter are contained in the International Existing Building Code®. *See Section 101.4.7.*

INTERNATIONAL CODE COUNCIL®
Copyright © 2015 ICC. ALL RIGHTS RESERVED. Accessed by David Dammon on Jun 21, 2017 12:30:52 PM pursuant to License Agreement with ICC. No further reproduction or distribution authorized. ANY UNAUTHORIZED REPRODUCTION OR DISTRIBUTION IS A VIOLATION OF THE FEDERAL COPYRIGHT ACT AND THE LICENSE AGREEMENT, AND SUBJECT TO CIVIL AND CRIMINAL PENALTIES THEREUNDER.

INTERNATIONAL CODE COUNCIL®
Copyright © 2015 ICC. ALL RIGHTS RESERVED. Accessed by David Dammon on Jun 21, 2017 12:30:52 PM pursuant to License Agreement with ICC. No further reproduction or distribution authorized. ANY UNAUTHORIZED REPRODUCTION OR DISTRIBUTION IS A VIOLATION OF THE FEDERAL COPYRIGHT ACT AND THE LICENSE AGREEMENT, AND SUBJECT TO CIVIL AND CRIMINAL PENALTIES THEREUNDER.

Chapter 35: Referenced Standards

General Comments

Chapter 35 contains a comprehensive list of all standards that are referenced in the code. It is organized in a manner that makes it easy to locate specific document references.

This chapter lists the standards that are referenced in various sections of this document. The standards are listed herein by the agency that publishes the standard, the standard identification, the date and title, and the section or sections of this document that reference the standard. The application of the referenced standards shall be as specified in Section 102.4.

It is important to understand that not every document related to building design and construction is qualified to be a "referenced standard." The International Code Council® (ICC®) has adopted criteria that standards referenced in and intended for adoption into the *International Codes*® must meet in order to qualify as a referenced standard. The policy is summarized as follows:

- Code references: The scope and application of the standard must be clearly identified in the code text.
- Standard content: The standard must be written in mandatory language and appropriate for the subject covered. The standard shall not have the effect of requiring proprietary materials or prescribing a proprietary testing agency.
- Standard promulgation: The standard must be readily available, and developed and maintained in a consensus process, such as ASTM or ANSI.

It should be noted that the ICC Code Development Procedures, of which the standards policy is a part, are updated periodically. A copy of the latest version can be obtained from the ICC offices.

Once a standard is incorporated into the code through the code development process, it becomes an enforceable part of the code. When the code is adopted by a jurisdiction, the standard also is part of that jurisdiction's adopted code. It is for this reason that the criteria were developed. Compliance with this policy ensures that documents incorporated into the code are developed through the use of a consensus process, are written in mandatory language and do not mandate the use of proprietary materials or agencies. The requirement for a standard to be developed through a consensus process is vital, as it means that the standard will be representative of the most current body of available knowledge on the subject as determined by a broad spectrum of interested or affected parties without dominance by any single interest group. A true consensus process has many attributes, including but not limited to:

- An open process that has formal (published) procedures that allow for the consideration of all viewpoints;
- A definitive review period that allows for the standard to be updated or revised;
- A process of notification to all interested parties; and
- An appeals process.

Many available documents related to design, installation and construction, though useful, are not "standards" and are not appropriate for reference in the code. Often, these documents are developed or written with the intention of being used for regulatory purposes and are unsuitable for use as a regulation due to extensive use of recommendations, advisory comments and nonmandatory terms. Typical examples of such documents include installation instructions, guidelines and practices.

The objective of ICC's standards policy is to provide regulations that are clear, concise and enforceable; thus the requirement for standards to be written in mandatory language. This requirement is not intended to mean that a standard cannot contain informational or explanatory material that will aid the user of the standard in its application. When it is the desire of the standard's promulgating (i.e., publishing) agency for such material to be included, however, the information must appear in a nonmandatory location, such as an annex or appendix, and be clearly identified as not being part of the standard.

Overall, standards referenced by the code must be authoritative, relevant, up-to-date and, most important, reasonable and enforceable. Standards that comply with ICC's standards policy fulfill these expectations.

Purpose

As a performance-oriented code, the code contains numerous references to documents that are used to regulate materials and methods of construction. The references to these documents within the code text consist of the promulgating agency's acronym and its publication designation (e.g., ASTM B88) and a further indication that the document being referenced is the one that is listed in Chapter 35. Chapter 35 contains all of the information that is necessary to identify the spe-

INTERNATIONAL CODE COUNCIL®
Copyright © 2015 ICC. ALL RIGHTS RESERVED. Accessed by David Dammon on Jun 21, 2017 12:30:52 PM pursuant to License Agreement with ICC. No further reproduction or distribution authorized. ANY UNAUTHORIZED REPRODUCTION OR DISTRIBUTION IS A VIOLATION OF THE FEDERAL COPYRIGHT ACT AND THE LICENSE AGREEMENT, AND SUBJECT TO CIVIL AND CRIMINAL PENALTIES THEREUNDER.

cific referenced document. Included is the following information on a document's promulgating agency (see Commentary Figure 35):

- The promulgating agency (i.e., the agency's title);
- The promulgating agency's acronym; and
- The promulgating agency's address.

For example, a reference to an ASTM standard within the code indicates that the document is promulgated by ASTM International (ASTM), which is located in Pennsylvania. This chapter lists the standards agencies alphabetically for ease of identification.

This chapter also includes the following information on the referenced document itself (see Commentary Figure 35):

- The document's publication designation;
- The document's edition year;
- The document's title;
- Any addenda or revisions to the document that are applicable; and
- Every section of the code in which the document is referenced.

For example, a reference to ASTM B88 indicates that this document can be found in Chapter 35 under the heading ASTM. The specific standards designation is B88. For convenience, these designations are listed in alphanumeric order. This chapter identifies that ASTM B88 is titled *Specification for Seamless Copper Water Tube*, the applicable edition (i.e., its year of publication) is 2009 and it is referenced in Section 909.13.1 of the code.

This chapter will also indicate when a document has been discontinued or replaced by its promulgating agency. When a document is replaced by a different one, a note will appear to tell the user the designation and title of the new document.

The key aspect of the manner in which standards are referenced by the code is that a specific edition of a specific standard is clearly identified. In this manner, the requirements necessary for compliance can be readily determined. The basis for code compliance is, therefore, established and available on an equal basis to the building official, contractor, designer and owner.

This chapter lists the standards that are referenced in various sections of this document. The standards are listed herein by the promulgating agency of the standard, the standard identification, the effective date and title and the section or sections of this document that reference the standard. The application of the referenced standards shall be as specified in Section 102.4.

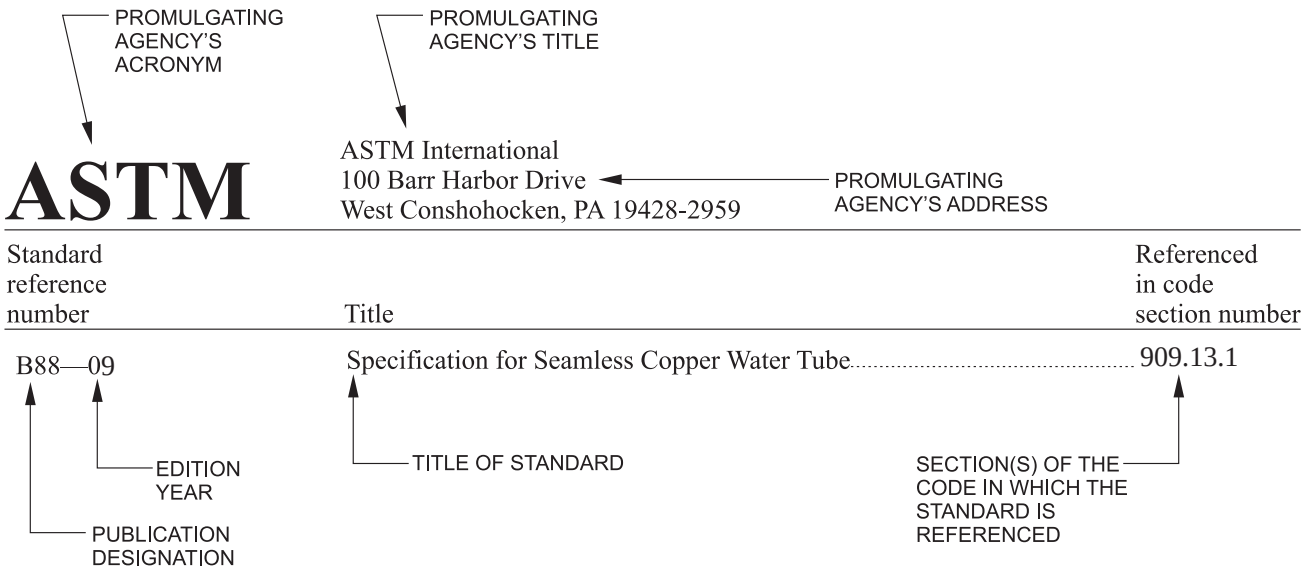

Figure 35
REFERENCED STANDARD

INTERNATIONAL CODE COUNCIL®
Copyright © 2015 ICC. ALL RIGHTS RESERVED. Accessed by David Dammon on Jun 21, 2017 12:30:52 PM pursuant to License Agreement with ICC. No further reproduction or distribution authorized. ANY UNAUTHORIZED REPRODUCTION OR DISTRIBUTION IS A VIOLATION OF THE FEDERAL COPYRIGHT ACT AND THE LICENSE AGREEMENT, AND SUBJECT TO CIVIL AND CRIMINAL PENALTIES THEREUNDER.

This chapter lists the standards that are referenced in various sections of this document. The standards are listed herein by the promulgating agency of the standard, the standard identification, the effective date and title, and the section or sections of this document that reference the standard. The application of the referenced standards shall be as specified in Section 102.4.

AA

Aluminum Association
1525 Wilson Boulevard, Suite 600
Arlington, VA 22209

Standard reference number	Title	Referenced in code section number
ADM1—2015	Aluminum Design Manual: Part 1—A Specification for Aluminum Structures	1604.3.5, 2002.1
ASM 35—00	Aluminum Sheet Metal Work in Building Construction (Fourth Edition)	2002.1

AAMA

American Architectural Manufacturers Association
1827 Waldon Office Square, Suite 550
Schaumburg, IL 60173

Standard reference number	Title	Referenced in code section number
1402—09	Standard Specifications for Aluminum Siding, Soffit and Fascia	1404.5.1
AAMA/WDMA/CSA 101/I.S.2/A440—11	North American Fenestration Standard/Specifications for Windows, Doors and Skylights	1709.5.1, 2405.5

ACI

American Concrete Institute
38800 Country Club Drive
Farmington Hills, MI 48331

Standard reference number	Title	Referenced in code section number
216.1—14	Code Requirements for Determining Fire Resistance of Concrete and Masonry Construction Assemblies	Table 721.1(2), 722.1
318—14	Building Code Requirements for Structural Concrete	1604.3.2, 1615.3.1, 1615.4.1, 1704.5, Table 1705.3, 1705.3.2, 1705.12.1, 1808.8.2, Table 1808.8.2, 1808.8.5, 1808.8.6, 1810.1.3, 1810.2.4.1, 1810.3.2.1.1, 1810.3.2.1.2, 1810.3.8.3.1, 1810.3.8.3.3, 1810.3.9.4.2.1, 1810.3.9.4.2.2, 1810.3.10.1, 1810.3.11.1, 1901.2, 1901.3, 1902.1, 1903.1, 1904.1, 1904.2, 1905.1, 1905.1.1, 1905.1.2, 1905.1.3, 1905.1.4, 1905.1.5, 1905.1.6, 1905.1.7, 1905.1.8 1906.1, 2108.3, 2206.1
530—13	Building Code Requirements for Masonry Structures	1405.6, 1405.6.1, 1405.6.2, 1405.10, 1604.3.4, 1705.4, 1705.4.1, 1807.1.6.3, 1807.1.6.3.2, 1808.9 2101.2, 2106.1, 2107.1, 2107.2, 2107.3, 2107.4, 2108.1, 2108.2, 2108.3, 2109.1, 2109.1.1, 2109.2, 2109.2.1, 2109.3, 2110.1
530.1—13	Specifications for Masonry Structures	1405.6.1, 1705.4, 1807.1.6.3, 2103.1, 2103. 2.1, 2103.3, 2103.4, 2105.1

INTERNATIONAL CODE COUNCIL®
Copyright © 2015 ICC. ALL RIGHTS RESERVED. Accessed by David Dammon on Jun 21, 2017 12:30:52 PM pursuant to License Agreement with ICC. No further reproduction or distribution authorized. ANY UNAUTHORIZED REPRODUCTION OR DISTRIBUTION IS A VIOLATION OF THE FEDERAL COPYRIGHT ACT AND THE LICENSE AGREEMENT, AND SUBJECT TO CIVIL AND CRIMINAL PENALTIES THEREUNDER.

AISC

American Institute of Steel
Construction One East Wacker Drive, Suite 700
Chicago, IL 60601-18021

Standard reference number	Title	Referenced in code section number
341—10	Seismic Provisions for Structural Steel Buildings	1613.4.1, 1705.12.1.1, 1705.12.1.2, 1705.13.1.1, 1705.13.1.2, 2205.2.1.1, 2205.2.1.2, 2205.2.2, 2206.2.1
360—10	Specification for Structural Steel Buildings	722.5.2.2.1, 1604.3.3, 1705.2.1, 2203.1, 2203.2, 2205.1, 2205.2.1.1, 2206.1

AISI

American Iron and Steel Institute
25 Massachusetts Avenue, NW Suite 800
Washington, DC 20001

Standard reference number	Title	Referenced in code section number
AISI S100—12	North American Specification for the Design of Cold-formed Steel Structural Members, 2012	1604.3.3, 1905.1.8, 2203.1, 2203.2, 2210.1, 2210.2, 2211.2, 2211.4, 2211.6
AISI S110—07/ S1-09 (2012)	Standard for Seismic Design of Cold-Formed Steel Structural Systems—Special Moment Frames, 2007 with Supplement 1, dated 2009 (Reaffirmed 2012)	2210.2
AISI S200—12	North American Standard for Cold-Formed Steel Framing-General Provisions	2203.1, 2203.2, 2211.1, Table 2603.12.1, Table 2603.12.2
AISI S210—07(2012)	North American Standard for Cold-Formed Steel Framing-Floor and Roof System Design (Reaffirmed 2012)	2211.5
AISI S211—07/ S1-12(2012)	North American Standard for Cold-Formed Steel Framing-Wall Stud Design, 2007 including Supplement 1, dated 2012 (Reaffirmed 2012)	2211.4
AISI S212—07(2012)	North American Standard for Cold-Formed Steel Framing-Header Design, 2007, (Reaffirmed 2012)	2211.2
AISI S213—07/ S1-09 (2012)	North American Standard for Cold-Formed Steel Framing-Lateral Design, with Supplement 1, dated 2009, (Reaffirmed 2012)	2211.6
S214—12	North American Standard for Cold-formed Steel Framing-Truss Design, 2012	2211.3, 2211.3.1, 2211.3.2
AISI S220—11	North American Standard for Cold-formed Steel Framing-Nonstructural Members	2203.1, 2203.2, 2211.1, Table 2506.2, Table 2507.2
AISI S230—07/ S3-12(2012)	Standard for Cold-formed Steel Framing-Prescriptive Method for One- and Two-family Dwellings, 2007, with Supplement 3, dated 2012 (Reaffirmed 2012)	1609.1.1, 1609.1.1.1, 2211.7

ALI

Automotive Lift Institute
P.O. Box 85
Courtland, NY 13045

Standard reference number	Title	Referenced in code section number
ALI ALCTV—2011	Standard for Automotive Lifts—Safety Requirements for Construction, Testing and Validation (ANSI)	3001.2

INTERNATIONAL CODE COUNCIL®
Copyright © 2015 ICC. ALL RIGHTS RESERVED. Accessed by David Dammon on Jun 21, 2017 12:30:52 PM pursuant to License Agreement with ICC. No further reproduction or distribution authorized. ANY UNAUTHORIZED REPRODUCTION OR DISTRIBUTION IS A VIOLATION OF THE FEDERAL COPYRIGHT ACT AND THE LICENSE AGREEMENT, AND SUBJECT TO CIVIL AND CRIMINAL PENALTIES THEREUNDER.

AMCA

Air Movement and Control Association International
30 West University Drive
Arlington Heights, IL 60004

Standard reference number	Title	Referenced in code section number
540—08	Test Method for Louvers Impacted by Wind Borne Debris	1609.1.2.1

ANSI

American National Standards Institute
25 West 43rd Street, Fourth Floor
New York, NY 10036

Standard reference number	Title	Referenced in code section number
A13.1—2007	Scheme for the Identification of Piping Systems	415.11.6.5
A108.1A—99	Installation of Ceramic Tile in the Wet-set Method, with Portland Cement Mortar	2103.2.3
A108.1B—99	Installation of Ceramic Tile, quarry Tile on a Cured Portland Cement Mortar Setting Bed with Dry-set or Latex-Portland Mortar	2103.2.3
A108.4—99	Installation of Ceramic Tile with Organic Adhesives or Water-cleanable Tile-setting Epoxy Adhesive	2103.2.3.6
A108.5—99	Installation of Ceramic Tile with Dry-set Portland Cement Mortar or Latex-Portland Cement Mortar	2103.2.3.1, 2103.2.3.2
A108.6—99	Installation of Ceramic Tile with Chemical-resistant, Water Cleanable Tile-setting and -grouting Epoxy	2103.2.3.3
A108.8—99	Installation of Ceramic Tile with Chemical-resistant Furan Resin Mortar and Grout	2103.2.3.4
A108.9—99	Installation of Ceramic Tile with Modified Epoxy Emulsion Mortar/Grout	2103.2.3.5
A108.10—99	Installation of Grout in Tilework	2103.2.3.7
A118.1—99	American National Standard Specifications for Dry-set Portland Cement Mortar	2103.2.3.1
A118.3—99	American National Standard Specifications for Chemical-resistant, Water-cleanable Tile-setting and -grouting Epoxy and Water Cleanable Tile-setting Epoxy Adhesive	2103.2.3.3
A118.4—99	American National Standard Specifications for Latex-Portland Cement Mortar	2103.2.3.2, 2103.3.2.4
A118.5—99	American National Standard Specifications for Chemical Resistant Furan Mortar and Grouts for Tile Installation..	2103.2.3.4
A118.6—99	American National Standard Specifications for Cement Grouts for Tile Installation	2103.2.3.7
A118.8—99	American National Standard Specifications for Modified Epoxy Emulsion Mortar/Grout	2103.2.3.5
A136.1—99	American National Standard Specifications for Organic Adhesives for Installation of Ceramic Tile	2103.2.3.6
A137.1—12	American National Standard Specifications for Ceramic Tile	202
ANSI/A 190.1—12	Structural Glued Laminated Timber	2303.1.3, 2306.1
Z 97.1—14	Safety Glazing Materials Used in Buildings—Safety Performance Specifications and Methods of Test	2406.1.2, 2406.2, Table 2406.2(2), 2406.3.1, 2407.1, 2407.1.4.1, 2408.2.1, 2408.3, 2409.2, 2409.3, 2409.4.1

APA

APA - Engineered Wood Association
7011 South 19th
Tacoma, WA 98466

Standard reference number	Title	Referenced in code section number
ANSI/A 190.1—12	Structural Glued Laminated Timber	2303.1.3, 2306.1
ANSI/APA PRP 210—08	Standard for Performance-Rated Engineered Wood Siding	2303.1.5, 2304.7, 2306.3, Table 2306.3(1)
ANSI/APA PRR 410—11	Standard for Performance-Rated Engineered Wood Rim Boards	2303.1.13
APA PDS—12	Panel Design Specification	2306.1
APA PDS Supplement 1—12	Design and Fabrication of Plywood Curved Panels (revised 2013)	2306.1
APA PDS Supplement 2—12	Design and Fabrication of Plywood-lumber Beams (revised 2013)	2306.1
APA PDS Supplement 3—12	Design and Fabrication of Plywood Stressed-skin Panels (revised 2013)	2306.1

INTERNATIONAL CODE COUNCIL®
Copyright © 2015 ICC. ALL RIGHTS RESERVED. Accessed by David Dammon on Jun 21, 2017 12:30:52 PM pursuant to License Agreement with ICC. No further reproduction or distribution authorized. ANY UNAUTHORIZED REPRODUCTION OR DISTRIBUTION IS A VIOLATION OF THE FEDERAL COPYRIGHT ACT AND THE LICENSE AGREEMENT, AND SUBJECT TO CIVIL AND CRIMINAL PENALTIES THEREUNDER.

APA—continued

APA PDS Supplement 4—12	Design and Fabrication of Plywood Sandwich Panels (revised 2013)	2306.1
APA PDS Supplement 5—12	Design and Fabrication of All-plywood Beams (revised 2013)	2306.1
APA PRG 320—11	Standard for Performance-Rated Cross-Laminated Timber	2303.1.4
EWS R540—12	Builders Tips: Proper Storage and Handling of Glulam Beams	2306.1
EWS S475—07	Glued Laminated Beam Design Tables	2306.1
EWS S560—10	Field Notching and Drilling of Glued Laminated Timber Beams	2306.1
EWS T300—07	Glulam Connection Details	2306.1
EWS X440—08	Product Guide-Glulam	2306.1
EWS X450—01	Glulam in Residential Construction-Western Edition	2306.1

APSP

The Association of Pool & Spa Professionals
2111 Eisenhower Avenue
Alexandria, VA 22314

Standard reference number	Title	Referenced in code section number
ANSI/APSP 7—2013	Standard for Suction Entrapment Avoidance in Swimming Pools, Wading Pools, Spas, Hot Tubs and Catch Basins	3109.5

ASABE

American Society of Agricultural and Biological Engineers
2950 Niles Road
St. Joseph, MI 49085

Standard reference number	Title	Referenced in code section number
EP 484.2 June 1998 (R2008)	Diaphragm Design of Metal-clad, Wood-frame Rectangular Buildings	2306.1
EP 486.2 OCT 2012	Shallow-post and Pier Foundation Design	2306.1
EP 559.1 W/Corr.1 AUG 2010	Design Requirements and Bending Properties for Mechanically Laminated Wood Assemblies	2306.1

ASCE/SEI

American Society of Civil Engineers
Structural Engineering Institute
1801 Alexander Bell Drive
Reston, VA 20191-4400

Standard reference number	Title	Referenced in code section number
5—13	Building Code Requirements for Masonry Structures	1405.6, 1405.6.1, 1405.6.2, 1405.10, 1604.3.4, 1705.4, 1705.4.1, 1807.1.6.3, 1807.1.6.3.2, 1808.9, 2101.2, 2106.1, 2107.1, 2107.2, 2107.3, 2107.4, 2108.1, 2108.2, 2108.3, 2109.1, 2109.1.1, 2109.2, 2109.2.1, 2109.3, 2110.1
6—13	Specification for Masonry Structures	1405.6.1, 1705.4, 1807.1.6.3, 2103.1, 2103.2.1, 2103.3, 2103.4, 2104.1, 2105.1

INTERNATIONAL CODE COUNCIL®
Copyright © 2015 ICC. ALL RIGHTS RESERVED. Accessed by David Dammon on Jun 21, 2017 12:30:52 PM pursuant to License Agreement with ICC. No further reproduction or distribution authorized. ANY UNAUTHORIZED REPRODUCTION OR DISTRIBUTION IS A VIOLATION OF THE FEDERAL COPYRIGHT ACT AND THE LICENSE AGREEMENT, AND SUBJECT TO CIVIL AND CRIMINAL PENALTIES THEREUNDER.

ASCE/SEI—continued

7—10	Minimum Design Loads for Buildings and Other Structures with Supplement No. 1	202, Table 1504.8, 1602.1, 1604.3, Table 1604.5, 1604.8.2, 1604.10, 1605.1, 1605.2.1, 1605.3.1, 1605.3.1.2, 1605.3.2, 1605.3.2.1, 1607.8.1, 1607.8.1.1, 1607.8.1.2, 1607.8.3, 1607.12.1, 1608.1, 1608.2, 1608.3, 1609.1.1, 1609.1.2, 1609.3, 1609.5.1, 1609.5.3, 1609.6, 1609.6.1, 1609.6.1.1, 1609.6.2, Table 1609.6.2, 1609.6.3, 1609.6.4.1, 1609.6.4.2, 1609.6.4.4.1, 1611.2, 1612.4, 1613.1, 1613.3.2, Table 1613.3.3(1), Table 1613.3.3(2), 1613.3.5, 1613.3.5.1, 1613.3.5.2, 1613.4, 1613.4.1, 1613.5.1, 1613.6, 1614.1, 1704.6.1, 1705.12, 1705.12.4, 1705.13.2, 1705.13.3, 1705.13.4, 1803.5.12, 1808.3.1, 1810.3.6.1, 1810.3.9.4, 1810.3.11.2, 1810.3.12, 1905.1.1, 1905.1.2, 1905.1.8, 2205.2.1.1, 2205.2.1.2, 2205.2.2, 2206.2.1, 2209.1, 2210.2, 2304.6.1, 2404.1, 2505.1, 2505.2, 2506.2.1
8—14	Standard Specification for the Design of Cold-formed Stainless Steel Structural Members	1604.3.3, 2210.1, 2210.2
19—09	Structural Applications of Steel Cables for Buildings	2208.1, 2208.2
24—13	Flood Resistant Design and Construction	1203.4.2, 1612.4, 1612.5, 2702.1.7, 3001.2
29—14	Standard Calculation Methods for Structural Fire Protection	722.1
32—01	Design and Construction of Frost Protected Shallow Foundations	1809.5
49—07	Wind Tunnel Testing for Buildings and Other Structures	1609.1.1
55—10	Tensile Membrane Structures	3102.1.1

ASME

American Society of Mechanical Engineers
Two Park Avenue
New York, NY 10016-5990

Standard reference number	Title	Referenced in code section number
ASME/A17.1—13 CSA B44—2013	Safety Code for Elevators and Escalators	907.3.3, 911.1.5, 1009.4, 1607.9.1, 3001.2, 3001.4, 3002.5, 3003.2, 3007.1, 3008.1.3, 3008.7.1
A17.7—2007/ CSA B44—07	Performance-Based Safety Code for Elevators and Escalators	3001.2
A18.1—2008	Safety Standard for Platform Lifts and Stairway Chairlifts	1109.8
A90.1—09	Safety Standard for Belt Manlifts	3001.2
B16.18—2012	Cast Copper Alloy Solder Joint Pressure Fittings	909.13.1
B16.22—2001(R2010)	Wrought Copper and Copper Alloy Solder Joint Pressure Fittings	909.13.1
B20.1—2009	Safety Standard for Conveyors and Related Equipment	3001.2, 3004.3
B31.3—2012	Process Piping	415.11.6

ASSE

American Society of Safety Engineers
1800 East Oakton Street
Des Plaines, IL 60018

Standard reference number	Title	Referenced in code section number
ANSI/ASSE Z359.1-2007	Safety Requirements for Personal Fall Arrest Systems, Subsystems and Components, Part of the Fall Protection Code	1015.6, 1015.7

ASTM

ASTM International
100 Barr Harbor Drive
West Conshohocken, PA 19428-2959

Standard reference number	Title	Referenced in code section number
A6/A6M—11	Standard Specification for General Requirements for Rolled Structural Steel Bars, Plates, Shapes and Sheet	1810.3.2.3, 1810.3.5.3.1, 1810.3.5.3.3
A36/A36M—08	Specification for Carbon Structural Steel	1810.3.2.3

INTERNATIONAL CODE COUNCIL®
Copyright © 2015 ICC. ALL RIGHTS RESERVED. Accessed by David Dammon on Jun 21, 2017 12:30:52 PM pursuant to License Agreement with ICC. No further reproduction or distribution authorized. ANY UNAUTHORIZED REPRODUCTION OR DISTRIBUTION IS A VIOLATION OF THE FEDERAL COPYRIGHT ACT AND THE LICENSE AGREEMENT, AND SUBJECT TO CIVIL AND CRIMINAL PENALTIES THEREUNDER.

ASTM—continued

A153/A153M—09	Specification for Zinc Coating (Hot-dip) on Iron and Steel Hardware. 2304.10.5
A240/A240M—13A	Standard Specification for Chromium and Chromium-nickel Stainless Steel Plate, Sheet and Strip for Pressure Vessels and for General Applications . . . . . Table 1507.4.3(1)
A252—10	Specification for Welded and Seamless Steel Pipe Piles 1810.3.2.3
A283/A283M—12A	Specification for Low and Intermediate Tensile Strength Carbon Steel Plates 1810.3.2.3
A416/A416M—12A	Specification for Steel Strand, Uncoated Seven-wire for Prestressed Concrete 1810.3.2.2
A463/A463M—10	Standard Specification for Steel Sheet, Aluminum-coated, by the Hot-dip Process . . . . . Table 1507.4.3(2)
A572/A572M—12A	Specification for High-strength Low-alloy Columbium-Vanadium Structural Steel 1810.3.2.3
A588/A588M—10	Specification for High-strength Low-alloy Structural Steel with 50 ksi (345 MPa) Minimum Yield Point with Atmospheric Corrosion Resistance 1810.3.2.3
A615/A615M—12	Specification for Deformed and Plain Billet-steel Bars for Concrete Reinforcement 1704.5, 1810.3.10.2
A653/A653M—11	Specification for Steel Sheet, Zinc-coated Galvanized or Zinc-iron Alloy-coated Galvannealed by the Hot-dip Process . . . . . Table 1507.4.3(1), Table 1507.4.3(2), 2304.10.5.1
A690/A690M—07(2012)	Standard Specification for High-strength Low-alloy Nickel, Copper, Phosphorus Steel H-piles and Sheet Piling with Atmospheric Corrosion Resistance for Use in Marine Environments. 1810.3.2.3
A706/A706M—09b	Specification for Low-alloy Steel Deformed and Plain Bars for Concrete Reinforcement 1704.5, 2107.4, 2108.3
A722/A722M—12	Specification for Uncoated High-strength Steel Bar for Prestressing Concrete 1810.3.10.2
A755/A755M—2011	Specification for Steel Sheet, Metallic-coated by the Hot-dip Process and Prepainted by the Coil-coating Process for Exterior Exposed Building Products. . . . . Table 1507.4.3(1), Table 1507.4.3(2)
A792/A792M—10	Specification for Steel Sheet, 55% Aluminum-zinc Alloy-coated by the Hot-dip Process . . . . . Table 1507.4.3(1), Table 1507.4.3(2)
A875/A875M—13	Standard Specification for Steel Sheet Zinc-5 percent, Aluminum Alloy-coated by the Hot-dip Process . . . . . Table 1507.4.3(2)
A924/A924M—13	Standard Specification for General Requirements for Steel Sheet, Metallic-coated by the Hot-dip Process . . . . . Table 1507.4.3(1)
B42—10	Specification for Seamless Copper Pipe, Standard Sizes 909.13.1
B43—09	Specification for Seamless Red Brass Pipe, Standard Sizes 909.13.1
B68—11	Specification for Seamless Copper Tube, Bright Annealed (Metric) 909.13.1
B88—09	Specification for Seamless Copper Water Tube 909.13.1
B101—12	Specification for Lead-coated Copper Sheet and Strip for Building Construction . . . . . 1404.5.3, Table 1507.2.9.2, Table 1507.4.3(1)
B209—10	Specification for Aluminum and Aluminum Alloy Steel and Plate . . . . . Table 1507.4.3(1)
B251—10	Specification for General Requirements for Wrought Seamless Copper and Copper-alloy Tube 909.13.1
B280—08	Specification for Seamless Copper Tube for Air Conditioning and Refrigeration Field Service 909.13.1
B370—12	Specification for Copper Sheet and Strip for Building Construction . . . . . 1404.5.2, Table 1507.2.9.2, Table 1507.4.3(1)
B695—04(2009)	Standard Specification for Coatings of Zinc Mechanically Deposited on Iron and Steel Strip for Building Construction 2304.10.5.1, 2304.10.5.3
C5—10	Specification for Quicklime for Structural Purposes . . . . . Table 2507.2
C22/C22M-00(2010)	Specification for Gypsum . . . . . Table 2506.2
C27—98(2008)	Specification for Classification of Fireclay and High-alumina Refractory Brick 2111.6
C28/C28M—10	Specification for Gypsum Plasters . . . . . Table 2507.2
C31/C31M—12	Practice for Making and Curing Concrete Test Specimens in the Field . . . . . Table 1705.3
C33/C33M—13	Specification for Concrete Aggregates 722.3.1.4, 722.4.1.1.3
C35/C35M-1995(2009)	Specification for Inorganic Aggregates for Use in Gypsum Plaster . . . . . Table 2507.2
C55—2011	Specification for Concrete Building Brick . . . . . Table 722.3.2
C59/C59M—00 (2011)	Specification for Gypsum Casting Plaster and Molding Plaster . . . . . Table 2507.2
C61/C61M—00 (2011)	Specification for Gypsum Keene's Cement . . . . . Table 2507.2
C62—13	Standard Specification for Building Brick (Solid Masonry Units Made from Clay or Shale) 1807.1.6.3
C67—13	Test Methods of Sampling and Testing Brick and Structural Clay Tile 721.4.1.1.1, 2109.3.1.1
C73—10	Specification for Calcium Silicate Brick (Sand-lime Brick) . . . . . Table 722.3.2
C90—13	Specification for Loadbearing Concrete Masonry Units . . . . . Table 722.3.2, 1807.1.6.3
C91—12	Specification for Masonry Cement . . . . . Table 2507.2
C94/C 94M—13	Specification for Ready-Mixed Concrete 110.3.1
C140—13	Test Method Sampling and Testing Concrete Masonry Units and Related Units 722.3.1.2
C150—12	Specification for Portland Cement . . . . . 1903.1, Table 2507.2
C172/C 172M—10	Practice for Sampling Freshly Mixed Concrete . . . . . Table 1705.3
C199—84 (2011)	Test Method for Pier Test for Refractory Mortars 2111.6, 2111.9, 2113.12
C206—13	Specification for Finishing Hydrated Lime . . . . . Table 2507.2

INTERNATIONAL CODE COUNCIL®
Copyright © 2015 ICC. ALL RIGHTS RESERVED. Accessed by David Dammon on Jun 21, 2017 12:30:52 PM pursuant to License Agreement with ICC. No further reproduction or distribution authorized. ANY UNAUTHORIZED REPRODUCTION OR DISTRIBUTION IS A VIOLATION OF THE FEDERAL COPYRIGHT ACT AND THE LICENSE AGREEMENT, AND SUBJECT TO CIVIL AND CRIMINAL PENALTIES THEREUNDER.

ASTM—continued

C208—12	Specification for Cellulosic Fiber Insulating Board . . . . . Table 1508.2, 2303.1.6
C216—13	Specification for Facing Brick (Solid Masonry Units Made from Clay or Shale) 1807.1.6.3
C270—12a	Specification for Mortar for Unit Masonry 2103.3.2.4
C315—07(2011)	Specification for Clay Flue Liners and Chimney Pots . . . . . 2111.9, 2113.11.1, Table 2113.16(1)
C317/C317M—00(2010)	Specification for Gypsum Concrete 2514.1
C330/C330M—2009	Specification for Lightweight Aggregates for Structural Concrete 202
C331/C331M—2010	Specification for Lightweight Aggregates for Concrete Masonry Units 722.3.1.4, 722.4.1.1.3
C406/C406M—2010	Specification for Roofing Slate 1507.7.5
C472—99 (2009)	Specification for Standard Test Methods for Physical Testing of Gypsum, Gypsum Plasters and Gypsum Concrete . . . . . Table 2506.2
C473—12	Test Method for Physical Testing of Gypsum Panel Products . . . . . Table 2506.2
C474—13	Test Methods for Joint Treatment Materials for Gypsum Board Construction . . . . . Table 2506.2
C475/C475M—12	Specification for Joint Compound and Joint Tape for Finishing Gypsum Board . . . . . Table 2506.2
C514—04(2009)e1	Specification for Nails for the Application of Gypsum Board . . . . . Table 721.1(2), Table 721.1(3), Table 2306.7, Table 2506.2
C516—08	Specifications for Vermiculite Loose Fill Thermal Insulation 722.3.1.4, 722.4.1.1.3
C547—12	Specification for Mineral Fiber Pipe Insulation . . . . . Table 721.1(2), Table 721.1(3)
C549—06(2012)	Specification for Perlite Loose Fill Insulation 722.3.1.4, 722.4.1.1.3
C552—12b	Standard Specification for Cellular Glass Thermal Insulation . . . . . Table 1508.2
C557—03(2009)e01	Specification for Adhesives for Fastening Gypsum Wallboard to Wood Framing . . . . . Table 2506.2
C578—12b	Standard Specification for Rigid, Cellular Polystyrene Thermal Insulation . . . . . Table 1508.2, 2603.10, Table 2603.12.1, Table 2603.12.2
C587—04(2009)	Specification for Gypsum Veneer Plaster . . . . . Table 2507.2
C595/C595—13	Specification for Blended Hydraulic Cements . . . . . 1903.1, Table 2507.2
C631—09	Specification for Bonding Compounds for Interior Gypsum Plastering . . . . . Table 2507.2
C635/C635M—13	Specification for the Manufacture, Performance and Testing of Metal Suspension Systems for Acoustical Tile and Lay-in Panel Ceilings 808.1.1, 2506.2.1
C636/C636M—08	Practice for Installation of Metal Ceiling Suspension Systems for Acoustical Tile and Lay-in Panels 808.1.1.1
C645—13	Specification for Nonstructural Steel Framing Members . . . . . Table 2506.2, Table 2507.2
C 652—13	Specification for Hollow Brick (Hollow Masonry Units Made from Clay or Shale) 1807.1.6.3
C726—12	Standard Specification for Mineral Roof Insulation Board . . . . . Table 1508.2
C728—05(2013)	Standard Specification for Perlite Thermal Insulation Board . . . . . Table 1508.2
C744—11	Specification for Prefaced Concrete and Calcium Silicate Masonry Units . . . . . Table 722.3.2
C754—11	Specification for Installation of Steel Framing Members to Receive Screw-attached Gypsum Panel Products . . . . . Table 2508.1, Table 2511.1.1
C836/C836M—12	Specification for High-solids Content, Cold Liquid-applied Elastomeric Waterproofing Membrane for Use with Separate Wearing Course 1507.15.2
C840—11	Specification for Application and Finishing of Gypsum Board . . . . . Table 2508.1, 2509.2
C841—03(2008)E1	Specification for Installation of Interior Lathing and Furring . . . . . Table 2508.1, Table 2511.1.1
C842—05(2010)E1	Specification for Application of Interior Gypsum Plaster . . . . . Table 2511.1.1, 2511.3, 2511.4
C843—99 (2012)	Specification for Application of Gypsum Veneer Plaster . . . . . Table 2511.1.1
C844—04(2010)	Specification for Application of Gypsum Base to Receive Gypsum Veneer Plaster . . . . . Table 2508.1
C847—12	Specification for Metal Lath . . . . . Table 2507.2
C887—05(2010)	Specification for Packaged, Dry Combined Materials for Surface Bonding Mortar 1805.2.2, 2103.2.2
C897—05(2009)	Specification for Aggregate for Job-Mixed Portland Cement-based Plaster . . . . . Table 2507.2
C920—11	Standard for Specification for Elastomeric Joint Sealants . . . . . Table 2506.2
C926—13	Specification for Application of Portland Cement-based Plaster . . . . . 2109.3.4.8, 2510.3, Table 2511.1.1, 2511.3, 2511.4, 2512.1, 2512.1.2, 2512.2, 2512.6, 2512.8.2, 2512.9, 2513.7
C932—06(2013)	Specification for Surface-applied Bonding Compounds for Exterior Plastering . . . . . Table 2507.2
C933—13	Specification for Welded Wire Lath . . . . . Table 2507.2
C946—10	Specification for Construction of Dry-stacked, Surface-bonded Walls 2103.2.2, 2109.2.2
C954—11	Specification for Steel Drill Screws for the Application of Gypsum Panel Products or Metal Plaster Bases to Steel Studs from 0.033 inch (0.84 mm) to 0.112 inch (2.84 mm) in Thickness . . . . . Table 2506.2, Table 2507.2
C955—11C	Standard Specification for Load-bearing Transverse and Axial Steel Studs, Runners Tracks, and Bracing or Bridging, for Screw Application of Gypsum Panel Products and Metal Plaster Bases . . . . . Table 2506.2, Table 2507.2
C956—04(2010)	Specification for Installation of Cast-in-place Reinforced Gypsum Concrete 2514.1
C957—10	Specification for High-solids Content, Cold Liquid-applied Elastomeric Waterproofing Membrane with Integral Wearing Surface 1507.15.2
C1002—07	Specification for Steel Self-piercing Tapping Screws for the Application of Gypsum Panel Products or Metal Plaster Bases to Wood Studs or Steel Studs . . . Table 2506.2, Table 2507.2
C1007—11a	Specification for Installation of Load Bearing (Transverse and Axial) Steel Studs and Related Accessories . . . . . Table 2508.1, Table 2511.1.1

INTERNATIONAL CODE COUNCIL®
Copyright © 2015 ICC. ALL RIGHTS RESERVED. Accessed by David Dammon on Jun 21, 2017 12:30:52 PM pursuant to License Agreement with ICC. No further reproduction or distribution authorized. ANY UNAUTHORIZED REPRODUCTION OR DISTRIBUTION IS A VIOLATION OF THE FEDERAL COPYRIGHT ACT AND THE LICENSE AGREEMENT, AND SUBJECT TO CIVIL AND CRIMINAL PENALTIES THEREUNDER.

ASTM—continued

C1029—13	Specification for Spray-applied Rigid Cellular Polyurethane Thermal Insulation 1507.14.2
C1032—06(2011)	Specification for Woven Wire Plaster Base . . . . . Table 2507.2
C1047—10A	Specification for Accessories for Gypsum Wallboard and Gypsum Veneer Base . . . . . Table 2506.2, Table 2507.2
C1063—12D	Specification for Installation of Lathing and Furring to Receive Interior and Exterior Portland Cement-based Plaster . . . . . 2109.3.4.8, 2510.3, Table 2511.1.1, 2512.1.1
C1088—13	Specification for Thin Veneer Brick Units Made from Clay or Shale . . . . . Table 721.1(2)
C1157/C1157M—11	Standard Performance Specification for Hydraulic Cement. . . . . 1903.1, Table 2507.2
C1167—11	Specification for Clay Roof Tiles 1507.3.4
C1177/C1177M—08	Specification for Glass Mat Gypsum Substrate for Use as Sheathing . . . . . Table 1508.2, Table 2506.2
C1178/C1178M—11	Specification for Coated Mat Water-resistant Gypsum Backing Panel . . . . . Table 2506.2, Table 2509.2
C1186—08(2012)	Specification for Flat Fiber Cement Sheets 1404.10, 1405.16.1, 1405.16.2
C1261—10	Specification for Firebox Brick for Residential Fireplaces 2111.6, 2111.9
C1278/ C1278M—07a(2011)	Specification for Fiber-reinforced Gypsum Panels . . . . . Table 1508.2, Table 2506.2
C1280—13	Specification for Application of Exterior Gypsum Panel Products for Use as Sheathing . . . Table 2508.1, 2508.2
C1283—11	Practice for Installing Clay Flue Lining 2113.9.1, 2113.12
C1288—99(2010)	Standard Specification for Discrete Nonasbestos Fiber-cement Interior Substrate Sheets . . . . . Table 2509.2
C1289—13E1	Standard Specification for Faced Rigid Cellular Polyisocyanurate Thermal Insulation Board . . . . Table 1508.2, 2603.0, Table 2603.12.1, Table 2603.12.2
C1313/C1313M—12	Standard Specification for Sheet Radiant Barriers for Building Construction Applications 1509.4
C1325—08b	Standard Specification for Nonasbestos Fiber-mat Reinforced Cement Backer Units . . . . . Table 2509.2
C1328/C1328M—12	Specification for Plastic (Stucco Cement) . . . . . Table 2507.2
C1364—10B	Standard Specification for Architectural Cast Stone 2103.1
C1386—07	Specification for Precast Autoclaved Aerated Concrete (AAC) Wall Construction Units 202
C1396M/C1396M—13	Specification for Gypsum Board . . . . . Figure 722.5.1(2), Figure 722.5.1(3)
C1492—03(2009)	Standard Specification for Concrete Roof Tile 1507.3.5
C1600/C1600M—11	Standard Specification for Rapid Hardening Hydraulic Cement . . . . . Table 2507.2
C1629/ C1629M—06(2011)	Standard Classification for Abuse-resistant Nondecorated Interior Gypsum Panel Products and Fiber-reinforced Cement Panels 403.2.3.1, 403.2.3.2, 403.2.3.4
C1658/C1658M—12	Standard Specification for Glass Mat Gypsum Panels . . . . . Table 2506.2
D25—12	Specification for Round Timber Piles 1810.3.2.4, 2303.1.12
D41—05	Specification for Asphalt Primer Used in Roofing, Dampproofing and Waterproofing . . . . . Table 1507.10.2
D43—00 (2006)	Specification for Coal Tar Primer Used in Roofing, Dampproofing and Waterproofing . . . . . Table 1507.10.2
D56—05(2010)	Test Method for Flash Point By Tag Closed Tester 202
D86—2012	Test Method for Distillation of Petroleum Products at Atmospheric Pressure 202
D93—2012	Test Method for Flash Point By Pensky-Martens Closed Cup Tester 202
D225—07	Specification for Asphalt Shingles (Organic Felt) Surfaced with Mineral Granules 1507.2.5
D226/D226M—09	Specification for Asphalt-saturated Organic Felt Used in Roofing and Waterproofing . . . . . 1404.2, 1505.2, 1507.2.3, 1507.2.8.1, 1507.3.3, 1507.4.5 1507.5.3, 1507.6.3, 1507.6.3.1, 1507.7.3, Table 1507.8, 1507.8.3, 1507.9.3, 1507.9.5, Table 1507.10.2, 1507.17.3, 1507.17.4.1
D227/D227M— 03(2011)E1	Specification for Coal-tar-saturated Organic Felt Used in Roofing and Waterproofing . . . . . Table 1507.10.2
D312—00 (2006)	Specification for Asphalt Used in Roofing . . . . . Table 1507.10.2
D422—63 (2007)	Test Method for Particle-size Analysis of Soils 1803.5.3
D448—08	Standard Classification for Sizes of Aggregate for Road and Bridge Construction 1507.12.3, 1507.13.3
D450—07	Specification for Coal-tar Pitch Used in Roofing, Dampproofing and Waterproofing . . . . . Table 1507.10.2
D635—10	Test Method for Rate of Burning and/or Extent and Time of Burning of Plastics in a Horizontal Position 2606.4
D1143/D1143M—07e1	Test Method for Piles Under Static Axial Compressive Load 1810.3.3.1.2
D1227—95 (2007)	Specification for Emulsified Asphalt Used as a Protective Coating for Roofing . . . . Table 1507.10.2, 1507.15.2
D1557—12	Test Method for Laboratory Compaction Characteristics of Soil Using Modified Effort [56,000 ft-lb/ft^3 (2,700 KN m/m^3)] 1705.6, 1804.5
D1863/D1863M— 05(2011)E1	Specification for Mineral Aggregate Used on Built-up Roofs . . . . . Table 1507.10.2
D1929—12	Test Method for Determining Ignition Temperature of Plastics 402.6.4.4, 406.7.2, 1407.11.2.1, 1407.11.3.3, 1407.11.4.2, 2606.4

INTERNATIONAL CODE COUNCIL®
Copyright © 2015 ICC. ALL RIGHTS RESERVED. Accessed by David Dammon on Jun 21, 2017 12:30:52 PM pursuant to License Agreement with ICC. No further reproduction or distribution authorized. ANY UNAUTHORIZED REPRODUCTION OR DISTRIBUTION IS A VIOLATION OF THE FEDERAL COPYRIGHT ACT AND THE LICENSE AGREEMENT, AND SUBJECT TO CIVIL AND CRIMINAL PENALTIES THEREUNDER.

ASTM—continued

D1970/D1970M—2013	Specification for Self-adhering Polymer Modified Bituminous Sheet Materials Used as Steep Roof Underlayment for Ice Dam Protection 1507.2.4, 1502.2.8.1, 1507.2.9.2, 1507.3.3.3 1507.3.9, 1507.4.5, 1507.5.3.1, 1507.5.7, 1507.6.3.1, 1507.7.3.1, 1507.8.3.1, 1507.8.8, 1507.9.3.1, 1507.9.9, 1507.17.4.1
D2178—04	Specification for Asphalt Glass Felt Used in Roofing and Waterproofing . . . . . Table 1507.10.2
D2487—2011	Practice for Classification of Soils for Engineering Purposes (Unified Soil Classification System) . . . . . Table 1610.1, 1803.5.1
D2626/D2626M—04(2012)E1	Specification for Asphalt Saturated and Coated Organic Felt Base Sheet Used in Roofing . . . . . 1507.3.3 Table 1507.10.2
D2822/D2822M-05(2011)E1	Specification for Asphalt Roof Cement, Asbestos Containing . . . . . Table 1507.10.2
D2823/D2823M—05(2011)E1	Specification for Asphalt Roof Coatings, Asbestos Containing . . . . . Table 1507.10.2
D2824—06(2012)E1	Standard Specification for Aluminum-Pigmented Asphalt Roof Coating, Nonfibered, Asbestos Fibered and Fibered without Asbestos . . . . . Table 1507.10.2
D2843—10	Test for Density of Smoke from the Burning or Decomposition of Plastics 2606.4
D2859—06(2011)	Standard Test Method for Ignition Characteristics of Finished Textile Floor Covering Materials 804.4.1
D2898—10	Test Methods for Accelerated Weathering of Fire-retardant-treated Wood for Fire Testing 1505.1, 2303.2.4, 2303.2.6
D3019—08	Specification for Lap Cement Used with Asphalt Roll Roofing, Nonfibered, Asbestos Fibered and Nonasbestos Fibered . . . . . Table 1507.10.2
D3161/D3161M—13	Test Method for a Wind Resistance of Asphalt Shingles (Fan Induced Method) . . . . . 1504.1.1, Table 1504.1.1, 1507.17.8
D3200—74 (2012)	Standard Specification and Test Method for Establishing Recommended Design Stresses for Round Timber Construction Poles 2303.1.12
D3201—2013	Test Method for Hygroscopic Properties of Fire-retardant-treated Wood and Wood-based Products 2303.2.7
D3278—1996 (2011)	Test Methods for Flash Point of Liquids by Small Scale Closed-cup Apparatus 202
D3462/D3462M—10A	Specification for Asphalt Shingles Made from Glass Felt and Surfaced with Mineral Granules 1507.2.5
D3468—99 (2006) e01	Specification for Liquid-applied Neoprene and Chlorosulfonated Polyethylene Used in Roofing and Waterproofing 1507.15.2
D3679—11	Specification for Rigid Poly (Vinyl Chloride) (PVC) Siding 1404.9, 1405.14
D3689—2013E1	Test Methods for Deep Foundations Under Static Axial Tensile Load 1810.3.3.1.5
D3737—2012	Practice for Establishing Allowable Properties for Structural Glued Laminated Timber (Glulam) 2303.1.3
D3746—85 (2008)	Test Method for Impact Resistance of Bituminous Roofing Systems 1504.7
D3747—79 (2007)	Specification for Emulsified Asphalt Adhesive for Adhering Roof Insulation . . . . . Table 1507.10.2
D3909/D3909M—97b (2012)e1	Specification for Asphalt Roll Roofing (Glass Felt) Surfaced with Mineral Granules . . . . 1507.2.9.2, 1507.6.5, Table 1507.10.2
D3957—09	Standard Practices for Establishing Stress Grades for Structural Members Used in Log Buildings 2303.1.11
D4022/D4022M—2007(2012)E1	Specification for Coal Tar Roof Cement, Asbestos Containing . . . . . Table 1507.10.2
D4272—09	Test Method for Total Energy Impact of Plastic Films by Dart Drop 1504.7
D4318—10	Test Methods for Liquid Limit, Plastic Limit and Plasticity Index of Soils 1803.5.3
D4434/D4434M—12	Specification for Poly (Vinyl Chloride) Sheet Roofing 1507.13.2
D4479/D4479M—07(2012)E1	Specification for Asphalt Roof Coatings-Asbestos-free . . . . . Table 1507.10.2
D4586/D4586M—07(2012)E1	Specification for Asphalt Roof Cement-Asbestos-free . . . . . Table 1507.10.2
D4601/D4601M—04(2012)E1	Specification for Asphalt-coated Glass Fiber Base Sheet Used in Roofing . . . . . Table 1507.10.2
D4637/D4637M—13	Specification for EPDM Sheet Used in Single-ply Roof Membrane 1507.12.2
D4829—11	Test Method for Expansion Index of Soils 1803.5.3
D4869/D4869M—05(2011)e01	Specification for Asphalt-saturated (Organic Felt) Underlayment Used in Steep Slope Roofing 1507.2.3, 1507.2.8.1, 1507.4.5, 1507.5.3, 1507.5.3.1, 1507.6.3, 1507.7.3, 1507.7.3.1, 1507.8.3, 1507.8.3.1, 1507.9.3, 1507.9.3.1, 1507.17.3, 1507.17.4.1
D4897/D4897M—01(2009)	Specification for Asphalt-coated Glass Fiber Venting Base Sheet Used in Roofing . . . . . Table 1507.10.2
D4945—12	Test Method for High-strain Dynamic Testing of Piles 1810.3.3.1.2
D4990—97a (2005) e01	Specification for Coal Tar Glass Felt Used in Roofing and Waterproofing . . . . . Table 1507.10.2
D5019—07a	Specification for Reinforced Nonvulcanized Polymeric Sheet Used in Roofing Membrane 1507.12.2

INTERNATIONAL CODE COUNCIL®
Copyright © 2015 ICC. ALL RIGHTS RESERVED. Accessed by David Dammon on Jun 21, 2017 12:30:52 PM pursuant to License Agreement with ICC. No further reproduction or distribution authorized. ANY UNAUTHORIZED REPRODUCTION OR DISTRIBUTION IS A VIOLATION OF THE FEDERAL COPYRIGHT ACT AND THE LICENSE AGREEMENT, AND SUBJECT TO CIVIL AND CRIMINAL PENALTIES THEREUNDER.

ASTM—continued

D5055—13	Specification for Establishing and Monitoring Structural Capacities of Prefabricated Wood I-joists 2303.1.2
D5456—13	Specification for Evaluation of Structural Composite Lumber Products 2303.1.10
D5516—09	Test Method of Evaluating the Flexural Properties of Fire-retardant-treated Softwood Plywood Exposed to the Elevated Temperatures 2303.2.5.1
D5643/D5643M—06(2012)E1	Specification for Coal Tar Roof Cement, Asbestos-free . . . . . Table 1507.10.2
D5664—10	Test Methods for Evaluating the Effects of Fire-retardant Treatment and Elevated Temperatures on Strength Properties of Fire-retardant-treated Lumber 2303.2.5.2
D5665—99a (2006)	Specification for Thermoplastic Fabrics Used in Cold-applied Roofing and Waterproofing . . . . . Table 1507.10.2
D5726—98 (2005)	Specification for Thermoplastic Fabrics Used in Hot-applied Roofing and Waterproofing . . . . . Table 1507.10.2
D6083—05e01	Specification for Liquid Applied Acrylic Coating Used in Roofing . . . . . Table 1507.10.2, Table 1507.14.3, 1507.15.2
D6162—2000A (2008)	Specification for Styrene-butadiene-styrene (SBS) Modified Bituminous Sheet Materials Using a Combination of Polyester and Glass Fiber Reinforcements 1507.11.2
D6163—00 (2008)	Specification for Styrene-butadiene-styrene (SBS) Modified Bituminous Sheet Materials Using Glass Fiber Reinforcements 1507.11.2
D6164/D6164M—11	Specification for Styrene-butadiene-styrene (SBS) Modified Bituminous Sheet Metal Materials Using Polyester Reinforcements 1507.11.2
D6222/D6222M—11	Specification for Atactic Polypropylene (APP) Modified Bituminous Sheet Materials Using Polyester Reinforcements 1507.11.2
D6223/D6223M—02(2011)E1	Specification for Atactic Polypropylene (APP) Modified Bituminous Sheet Materials Using a Combination of Polyester and Glass Fiber Reinforcements 1507.11.2
D6298—05e1	Specification for Fiberglass Reinforced Styrene-butadiene-styrene (SBS) Modified Bituminous Sheets with a Factory Applied Metal Surface 1507.11.2
D6305—08	Practice for Calculating Bending Strength Design Adjustment Factors for Fire-retardant-treated Plywood Roof Sheathing 2303.2.5.1
D6380—03 (2009)	Standard Specification for Asphalt Roll Roofing (Organic) Felt 1507.2.9.2, 1507.3.3, 1507.6.5
D6509/D6509M—09	Standard Specification for Atactic Polypropylene (APP) Modified Bituminous base Sheet Materials Using Glass Fiber Reinforcements 1507.11.2
D6694—08	Standard Specification for Liquid-applied Silicone Coating Used in Spray Polyurethane Foam Roofing Systems . . . . . Table 1507.14.3, 1507.15.2
D6754/D6745M—10	Standard Specification for Ketone Ethylene Ester Based Sheet Roofing 1507.13.2
D6757—2013	Standard Specification for Underlayment for Use with Steep Slope Roofing . . 1507.2.3, 1507.17.3, 1507.17.4.1
D6841—08	Standard Practice for Calculating Design Value Treatment Adjustment Factors for Fire-retardant-treated Lumber. 2303.2.5.2
D6878/D6878M—11a	Standard Specification for Thermoplastic Polyolefin Based Sheet Roofing 1507.13.2
D6947—07	Standard Specification for Liquid Applied Moisture Cured Polyurethane Coating Used in Spray Polyurethane Foam Roofing System . . . . . Table 1507.14.3, 1507.15.2
D7032—10a	Standard Specification for Establishing Performance Ratings for Wood, Plastic Composite Deck Boards and Guardrail Systems (Guards or Rails) 2612.2.1, 2612.4, 2612.5.1
D7147—05	Specification for Testing and Establishing Allowable Loads of Joist Hangers 2303.5, 2304.10.3
D7158/D7158M—11	Standard Test Method for Wind Resistance of Sealed Asphalt Shingles (Uplift Force/Uplift Resistance Method) . . . . . 1504.1.1, Table 1504.1.1
D7254—07	Standard Specification for polypropylene (PP) siding 1404.12
D7655—12	Standard Classification for Size of Aggregate Used as Ballast for Roof Membrane Systems1507.12.3, 1507.13.3
D7672—2012	Standard Specification for Evaluating Structural Capacities of Rim Board Products and Assemblies . . 2303.1.13
E84—2013A	Test Methods for Surface Burning Characteristics of Building Materials 202, 402.6.4.4, 406.7.2, 703.5.2, 720.1, 720.4, 803.1.1, 803.1.4, 803.10, 803.11, 806.7, 1404.12.1, 1407.9, 1407.10.1, 1409.9, 1409.10.1, 1510.6.2, 1510.6.3, 2303.2, 2603.3, 2603.4.1.13, 2606.3.5.4, 2603.7.1, 2603.7.2, 2603.7.3, 2604.2.4, 2606.4, 2612.3, 2614.3, 3105.4
E90—09	Test Method for Laboratory Measurement of Airborne Sound Transmission Loss of Building Partitions and Elements 1207.2, 1207.2.1
E96/E96M—2013	Test Method for Water Vapor Transmission of Materials 202
E108—2011	Test Methods for Fire Tests of Roof Coverings 1505.1, 2603.6, 2610.2, 2610.3
E119—2012A	Standard Test Methods for Fire Tests of Building Construction and Materials . . . . . 703.2, 703.2.1, 703.2.3, 703.3, 703.4, 703.6, 704.12, 705.7, 705.8.5, 711.3.2, 714.3.1, 714.4.1, 715.1, 716.2, Table 716.3, 716.5.6, 716.5.8.1.1, Table 716.6, 716.6.7.1, 717.5.2, 717.5.3, 717.6.1, 716.6.2.1, Table 721.1(1), 1409.10.2, 2103.1, 2603.5.1
E136—2012	Test Method for Behavior of Materials in a Vertical Tube Furnace at 750°C 703.5.1

INTERNATIONAL CODE COUNCIL®
Copyright © 2015 ICC. ALL RIGHTS RESERVED. Accessed by David Dammon on Jun 21, 2017 12:30:52 PM pursuant to License Agreement with ICC. No further reproduction or distribution authorized. ANY UNAUTHORIZED REPRODUCTION OR DISTRIBUTION IS A VIOLATION OF THE FEDERAL COPYRIGHT ACT AND THE LICENSE AGREEMENT, AND SUBJECT TO CIVIL AND CRIMINAL PENALTIES THEREUNDER.

ASTM—continued

E283—04	Standard Test Method for Determining Rate of Air Leakage Through Exterior Windows Curtain Walls, and Doors Under Specified Pressure Difference Across the Specimen 202
E330—02	Test Method for Structural Performance of Exterior Windows, Curtain Walls and Doors by Uniform Static Air Pressure Difference 1409.10.2, 1709.5.2
E331—00 (2009)	Test Method for Water Penetration of Exterior Windows, Skylights, Doors and Curtain Walls by Uniform Static Air Pressure Difference 1403.2
E492—09	Test Method for Laboratory Measurement of Impact Sound Transmission Through Floor-ceiling Assemblies Using the Tapping Machine 1207.3
E605—93 (2011)	Test Method for Thickness and Density of Sprayed Fire-resistive Material (SFRM) Applied to Structural Members. 1705.14.4.1, 1705.14.4.2, 1705.14.4.5, 1705.14.5
E681—2009	Test Methods for Concentration Limits of Flammability of Chemical Vapors and Gases 202
E736—00 (2011)	Test Method for Cohesion/Adhesion of Sprayed Fire-resistive Materials Applied to Structural Members 704.13.2, 1705.14.6
E814—2013	Test Method of Fire Tests of Through-penetration Firestops 202, 714.3.1.2, 714.3.2, 7143.4.1.1.2
E970—2010	Test Method for Critical Radiant Flux of Exposed Attic Floor Insulation Using a Radiant Heat Energy Source 720.3.1
E1300—12AE1	Practice for Determining Load Resistance of Glass in Buildings 2404.1, 2404.2, 2404.3.1, 2404.3.2, 2404.3.3, 2404.3.4, 2404.3.5
E1354—2013	Standard Test Method for Heat and Visible Smoke Release Rates for Materials and Products Using an Oxygen Consumption Calorimeter 424.2
E1592—05(2012)	Test Method for Structural Performance of Sheet Metal Roof and Siding Systems by Uniform Static Air Pressure Difference 1504.3.2
E1602—02(2010)E1	Guide for Construction of Solid Fuel-burning Masonry Heaters 2112.2
E1886—05	Test Method for Performance of Exterior Windows, Curtain Walls, Doors and Storm Shutters Impacted by Missiles and Exposed to Cyclic Pressure Differentials 1609.1.2
E1966—07A(2011)	Test Method for Fire-resistant Joint Systems 202, 715.3
E1996—2012A	Specification for Performance of Exterior Windows, Curtain Walls, Doors and Impact Protective Systems Impacted by Windborne Debris in Hurricanes . . .1609.1.2, 1609.1.2.2
E2072—10	Standard Specification for Photoluminescent (Phosphorescent) Safety Markings 1025.3
E2174—10AE1	Standard Practice for On-Site Inspection of Installed Fire Stops 1705.17.1
E2178—13	Standard Test Method for Air Permeance of Building Materials 202
E2273—03(2011)	Standard Test Method for Determining the Drainage Efficiency of Exterior Insulation and Finish Systems (EIFS) Clad Wall Assemblies 1408.4.1
E2307—2010	Standard Test Method for Determining Fire Resistance of a Perimeter Joint System Between an Exterior Wall Assembly and Floor Assembly Using the Intermediate-scale, Multistory Test Apparatus 715.4
E2393—10A	Standard Practice for On-Site Inspection of Installed Fire Resistive Joint Systems and Perimeter Fire Barrier 1705.17.2
E2397—11	Standard Practice for Determination of Dead Loads and Live Loads Associated with Green Roof Systems. 1607.12.3.1
E2404—2013E1	Standard Practice for Specimen Preparation and Mounting of Textile, Paper or Vinyl Wall or Ceiling Coverings to Assess Surface Burning Characteristics 803.1.4
E2556—10	Standard Specification for Vapor Permeable Flexible Sheet Water-Resistive Barriers Intended for Mechanical Attachment. 1404.2, 2510.6
E2568—09e1	Standard Specification for PB Exterior Insulation and Finish Systems. 1408.2
E2570—07	Standard Test Method for Evaluating Water-resistive Barrier (WRB) Coatings Used Under Exterior Insulation and Finish Systems (EIFS) for EIFS with Drainage 1408.4.1.1, 1705.16.1
E2573—12	Standard Practice for Specimen Preparation and Mounting of Site-fabricated Stretch Systems to Assess Surface Burning Characteristics 803.13
E2599—11	Standard Practice for Specimen Preparation and Mounting of Reflective Insulation Materials and Vinyl Stretch Ceiling Materials for Building Applications to Assess Surface Burning Characteristics. 2614.3
E2634—11	Standard Specification for Flat Wall Insulating Concrete Form (ICF) Systems 1903.4
E2751—11	Standard Practice for Design and Performance of Supported Glass Walkways 2409.1
F547—(2012)	Terminology of Nails for Use with Wood and Wood-based Materials . . . . . .Table 2506.2
F1346—91 (2010)	Performance Specification for Safety Covers and Labeling Requirements for All Covers for Swimming Pools, Spas and Hot Tubs 3109.4, 3109.4.1.8
F1667—11AE1	Specification for Driven Fasteners: Nails, Spikes and Staples . . . . . .Table 721.1(2), Table 721.1(3), 1507.2.6, 1507.17.5, 2303.6, Table 2506.2
F2006—00 (2005) 10	Standard/Safety Specification for Window Fall Prevention Devices for Nonemergency Escape (Egress) and Rescue (Ingress) Windows 1015.8
F2090—10	Specification for Window Fall Prevention Devices with Emergency Escape (Egress) Release Mechanisms 1015.8, 1015.8.1
F2200—2013	Standard Specification for Automated Vehicular Gate Construction 3110.3

INTERNATIONAL CODE COUNCIL®
Copyright © 2015 ICC. ALL RIGHTS RESERVED. Accessed by David Dammon on Jun 21, 2017 12:30:52 PM pursuant to License Agreement with ICC. No further reproduction or distribution authorized. ANY UNAUTHORIZED REPRODUCTION OR DISTRIBUTION IS A VIOLATION OF THE FEDERAL COPYRIGHT ACT AND THE LICENSE AGREEMENT, AND SUBJECT TO CIVIL AND CRIMINAL PENALTIES THEREUNDER.

ASTM—continued

G152—06	Practice for Operating Open Flame Carbon Arc Light Apparatus for Exposure of Nonmetallic Materials	1504.6
G154—06	Practice for Operating Fluorescent Light Apparatus for UV Exposure of Nonmetallic Materials	1504.6
G155—05a	Practice for Operating Xenon Arc Light Apparatus for Exposure of Nonmetallic Materials	1504.6

AWC

American Wood Council
222 Catoctin SE, Suite 201
Leesburg, VA 20175

Standard reference number	Title	Referenced in code section number
AWC WCD No. 4—2003	Wood Construction Data—Plank and Beam Framing for Residential Buildings	2306.1.2
AWC WFCM—2015	Wood Frame Construction Manual for One- and Two-Family Dwellings	1609.1.1, 1609.1.1.1, 2301.2, 2308.2.4, 2309.1
ANSI/AWC NDS—2015	National Design Specification (NDS) for Wood Construction with 2012 Supplement	202, 722.1, 722.6.3.2, Table 1604.3, 1711.1.1, 1711.1.2.1, 1809.12, 1810.3.2.4, Table 1810.3.2.6, 1905.1.8, 2302.1, 2304.13, 2306.1, 2306.2, Table 2306.2(1), Table 2306.2(2), Table 2306.3(1), Table 2306.3(2), 2307.1
AWC STJR—2015	Span Tables for Joists and Rafters	2306.1.1, 2308.4.2.1, 2308.7.1, 2308.7.2
ANSI/AWC PWF—2015	Permanent Wood Foundation Design Specification	1805.2, 1807.1.4, 2304.10.5.2
AWC SDPWS—2015	Special Design Provisions for Wind and Seismic	202, 2305.1, 2305.2, 2305.3, 2306.2, 2306.3, Table 2306.3(1), Table 2306.3(3), 2307.1

AWCI

Association of the Wall and Ceiling Industry
513 West Broad Street, Suite 210
Falls Church, VA 22046

Standard reference number	Title	Referenced in code section number
12-B—04	Technical Manual 12-B Standard Practice for the Testing and Inspection of Field Applied Thin Film Intumescent Fire-resistive Materials; an Annotated Guide, Second Edition	1705.15

AWPA

American Wood Protection Association
P.O. Box 361784
Birmingham, AL 35236-1784

Standard reference number	Title	Referenced in code section number
C1—03	All Timber Products-Preservative Treatment by Pressure Processes	1505.6
M4—11	Standard for the Care of Preservative-treated Wood Products	1810.3.2.4.1, 2303.1.9
U1—14	USE CATEGORY SYSTEM: User Specification for Treated Wood Except Section 6, Commodity Specification H	1403.6, Table 1507.9.6, 1807.1.4, 1807.3.1, 1809.12, 1810.3.2.4.1, 2303.1.9, 2304.12.1, 2304.12.2, 2304.12.3, 2304.2.4, 2304.12.5

INTERNATIONAL CODE COUNCIL®
Copyright © 2015 ICC. ALL RIGHTS RESERVED. Accessed by David Dammon on Jun 21, 2017 12:30:52 PM pursuant to License Agreement with ICC. No further reproduction or distribution authorized. ANY UNAUTHORIZED REPRODUCTION OR DISTRIBUTION IS A VIOLATION OF THE FEDERAL COPYRIGHT ACT AND THE LICENSE AGREEMENT, AND SUBJECT TO CIVIL AND CRIMINAL PENALTIES THEREUNDER.

AWS

American Welding Society
8669 NW 36 Street, #130
Doral, FL 33166

Standard reference number	Title	Referenced in code section number
D1.4/D1.4M—2011	Structural Welding Code-Reinforcing Steel Including Metal Inserts and Connections In Reinforced Concrete Construction	1704.5, 1705.3.1, Table 1705.3, 2107.4

BHMA

Builders Hardware Manufacturers' Association
355 Lexington Avenue, 17th Floor
New York, NY 10017-6603

Standard reference number	Title	Referenced in code section number
A 156.10—2011	Power Operated Pedestrian Doors	1010.1.4.2
A 156.19—2013	Standard for Power Assist and Low Energy Operated Doors	1010.1.4.2
A 156.27—11	Power and Manual Operated Revolving Pedestrian Doors	1010.1.4.1

CEN

European Committee for Standardization (CEN)
Central Secretariat
Rue de Stassart 36
B-10 50 Brussels

Standard reference number	Title	Referenced in code section number
EN 1081—98	Resilient Floor Coverings—Determination of the Electrical Resistance	406.7.1
BS EN 15250—2007	Slow Heat Release Appliances Fired By Solid Fuel Requirements and Test Methods	2112.2, 2112.5

CGSB

Canadian General Standards Board
Place du Portage 111, 6B1
11 Laurier Street
Gatineau, Quebec, Canada KIA 1G6

Standard reference number	Title	Referenced in code section number
37-GP-52M (1984)	Roofing and Waterproofing Membrane, Sheet Applied, Elastomeric	1504.7, 1507.12.2
37-GP-56M (1980)	Membrane, Modified, Bituminous, Prefabricated and Reinforced for Roofing—with December 1985 Amendment	1507.11.2
CAN/CGSB 37.54—95	Polyvinyl Chloride Roofing and Waterproofing Membrane	1507.13.2

CPA

Composite Panel Association
19465 Deerfield Avenue, Suite 306
Leesburg, VA 20176

Standard reference number	Title	Referenced in code section number
ANSI A135.4—2012	Basic Hardboard	1404.3.1, 2303.1.7
ANSI A135.5—2012	Prefinished Hardboard Paneling	2303.1.7, 2304.7
ANSI A135.6—2012	Engineered Wood Siding	1404.3.2, 2303.1.7
A208.1—09	Particleboard	2303.1 8, 2303.1. 8.1

INTERNATIONAL CODE COUNCIL®
Copyright © 2015 ICC. ALL RIGHTS RESERVED. Accessed by David Dammon on Jun 21, 2017 12:30:52 PM pursuant to License Agreement with ICC. No further reproduction or distribution authorized. ANY UNAUTHORIZED REPRODUCTION OR DISTRIBUTION IS A VIOLATION OF THE FEDERAL COPYRIGHT ACT AND THE LICENSE AGREEMENT, AND SUBJECT TO CIVIL AND CRIMINAL PENALTIES THEREUNDER.

CPSC

Consumer Product Safety Commission
4330 East West Highway
Bethesda, MD 20814-4408

Standard reference number	Title	Referenced in code section number
16 CFR Part 1201 (2002)	Safety Standard for Architectural Glazing Material	2406.2, Table 2406.2(1), 2406.3.1, 2407.1, 2407.1.4.1, 2408.2.1, 2408.3, 2409.2, 2409.3.1, 2409.4.1
16 CFR Part 1209 (2002)	Interim Safety Standard for Cellulose Insulation	720.6
16 CFR Part 1404 (2002)	Cellulose Insulation	720.6
16 CFR Part 1500 (2009)	Hazardous Substances and Articles; Administration and Enforcement Regulations	202
16 CFR Part 1500.44(2009)	Method for Determining Extremely Flammable and Flammable Solids	202
16 CFR Part 1507 (2002)	Fireworks Devices	202
16 CFR Part 1630 (2007)	Standard for the Surface Flammability of Carpets and Rugs	804.4.1

CSA

Canadian Standards Association
8501 East Pleasant Valley
Cleveland, OH 44131-5516

Standard reference number	Title	Referenced in code section number
AAMA/WDMA/CSA 101/I.S.2/A440—11	Specifications for Windows, Doors and Unit Skylights	1709.5.1, 2405.5

CSSB

Cedar Shake and Shingle Bureau
P. O. Box 1178
Sumas, WA 98295-1178

Standard reference number	Title	Referenced in code section number
CSSB—97	Grading and Packing Rules for Western Red Cedar Shakes and Western Red Shingles of the Cedar Shake and Shingle Bureau	Table 1507.8.5, Table 1507.9.6

DASMA

Door and Access Systems Manufacturers Association International
1300 Summer Avenue
Cleveland, OH 44115-2851

Standard reference number	Title	Referenced in code section number
ANSI/DASMA 107—1997 (R2012)	Room Fire Test Standard for Garage Doors Using Foam Plastic Insulation	2603.4.1.9
108—12	Standard Method for Testing Sectional Garage Doors and Rolling Doors: Determination of Structural Performance Under Uniform Static Air Pressure Difference	1709.5.2
115—12	Standard Method for Testing Sectional Garage Doors and Rolling Doors: Determination of Structural Performance Under Missile Impact and Cyclic Wind Pressure	1609.1.2.3

INTERNATIONAL CODE COUNCIL®
Copyright © 2015 ICC. ALL RIGHTS RESERVED. Accessed by David Dammon on Jun 21, 2017 12:30:52 PM pursuant to License Agreement with ICC. No further reproduction or distribution authorized. ANY UNAUTHORIZED REPRODUCTION OR DISTRIBUTION IS A VIOLATION OF THE FEDERAL COPYRIGHT ACT AND THE LICENSE AGREEMENT, AND SUBJECT TO CIVIL AND CRIMINAL PENALTIES THEREUNDER.

DOC

U.S. Department of Commerce
National Institute of Standards and Technology
1401 Constitution Avenue NW
Washington, DC 20230

Standard reference number	Title	Referenced in code section number
PS-1—09	Structural Plywood	2303.1.5, 2304.7, Table 2304.7(4), Table 2304.7(5), Table 2306.2(1), Table 2306.2(2)
PS-2—10	Performance Standard for Wood-based Structural-use Panels	2303.1.5, 2304.7, Table 2304.7(5), Table 2306.2(1), Table 2306.2(2)
PS 20—05	American Softwood Lumber Standard	202, 1810.3.2.4, 2303.1.1

DOL

U.S. Department of Labor
Frances Perkins Building
200 Constitution Avenue NW
Washington, DC 20210

Standard reference number	Title	Referenced in code section number
29 CFR Part 1910.1000 (2009)	Air Contaminants	202

DOTn

U.S. Department of Transportation
c/o Superintendent of Documents
East Building, 2nd floor
Washington, DC 20590

Standard reference number	Title	Referenced in code section number
49 CFR Parts 100—185 2005	Hazardous Materials Regulations	202
49 CFR Parts 173.137 (2009)	Shippers—General Requirements for Shipments and Packaging—Class 8—Assignment of Packing Group	202
49 CFR—1998	Specification of Transportation of Explosive and Other Dangerous Articles, UN 0335, UN 0336 Shipping Containers	202

FEMA

Federal Emergency Management Agency
Federal Center Plaza
500 C Street S.W.
Washington, DC 20472

Standard reference number	Title	Referenced in code section number
FEMA-TB-11—01	Crawlspace Construction for Buildings Located in Special Flood Hazard Areas	1805.1.2.1

INTERNATIONAL CODE COUNCIL®
Copyright © 2015 ICC. ALL RIGHTS RESERVED. Accessed by David Dammon on Jun 21, 2017 12:30:52 PM pursuant to License Agreement with ICC. No further reproduction or distribution authorized. ANY UNAUTHORIZED REPRODUCTION OR DISTRIBUTION IS A VIOLATION OF THE FEDERAL COPYRIGHT ACT AND THE LICENSE AGREEMENT, AND SUBJECT TO CIVIL AND CRIMINAL PENALTIES THEREUNDER.

FM

Factory Mutual Global Research
Standards Laboratories Department
1301 Atwood Avenue, P.O. Box 7500
Johnston, RI 02919

Standard reference number	Title	Referenced in code section number
4430 (2012)	Approval Standard for Heat and Smoke Vents	910.3.1
4470 (2012)	Approval Standard for Single-Ply Polymer-Modified Bitumen Sheet, Built-Up Roof (BUR) And Liquid Applied Roof Assemblies for use in Class 1 and Noncombustible Roof Deck Construction	1504.7
4474 (2011)	American National Standard for Evaluating the Simulated Wind Uplift Resistance of Roof Assemblies Using Static Positive and/or Negative Differential Pressures	1504.3.1, 1504.3.2
4880-2010	Approval Standard for Class 1 Fire Rating of Insulated Wall or Wall and Roof/Ceiling Panels, Interior Finish Materials or Coatings and Exterior Wall Systems	2603.4, 2603.9

GA

Gypsum Association
6525 Belcrest Road, Suite 480
Hyattsville, MD 20782

Standard reference number	Title	Referenced in code section number
GA 216—13	Application and Finishing of Gypsum Panel Products	Table 2508.1, 2509.2
GA 600—09	Fire-Resistance Design Manual, 20th Edition	Table 721.1(1), Table 721.1(2), Table 721.1(3)

HPVA

Hardwood Plywood Veneer Association
1825 Michael Faraday Drive
Reston, VA 20190

Standard reference number	Title	Referenced in code section number
HP-1—2013	Standard for Hardwood and Decorative Plywood	2303.3, 2304.7

ICC

International Code Council, Inc.
500 New Jersey Ave, NW
6th Floor
Washington, DC 20001

Standard reference number	Title	Referenced in code section number
ICC A117.1—09	Accessible and Usable Buildings and Facilities	202, 907.5.2.3.3, 1009.8.2, 1009.9, 1009.11, 1010.1.9.7, 1012.1, 1012.6.5, 1012.10, 1013.4, 1023.9, 1101.2, 1111.2, 1111.3, 1111.4, 1111.4.2
ICC 300—12	ICC Standard on Bleachers, Folding and Telescopic Seating and Grandstands	1029.1.1 Table 1607.1
ICC 400—12	Standard on Design and Construction of Log Structures	2301.2
ICC 500—14	ICC/NSSA Standard on the Design and Construction of Storm Shelters	202, 423.1, 423.3, 423.4
ICC 600—14	Standard for Residential Construction in High-wind Regions	1609.1.1, 1609.1.1.1, 2308.2.1
IEBC—15	International Existing Building Code®	101.4.7, 116.5, 201.3
IECC—15	International Energy Conservation Code®	101.4.6, 201.3, 202, 1203.1, 1301.1.1, 1405.3

INTERNATIONAL CODE COUNCIL®
Copyright © 2015 ICC. ALL RIGHTS RESERVED. Accessed by David Dammon on Jun 21, 2017 12:30:52 PM pursuant to License Agreement with ICC. No further reproduction or distribution authorized. ANY UNAUTHORIZED REPRODUCTION OR DISTRIBUTION IS A VIOLATION OF THE FEDERAL COPYRIGHT ACT AND THE LICENSE AGREEMENT, AND SUBJECT TO CIVIL AND CRIMINAL PENALTIES THEREUNDER.

ICC—continued

IFC—15	International Fire Code®	101.4.5, 102.6, 201.3, 202, 307.1, Table 307.1(1), Table 307.1(2), 307.1.1, 307.1.2, 403.4.5, 404.2, 406.7, 406.8, 407.2.6, 407.4, 410.3.6, 411.1, 412.1, 412.6.1, 413.1, 414.1.1, 414.1.2, 414.1.2.1, 414.2, 414.2.5, Table 414.2.5(1), Table 414.2.5(2), 414.3, 414.5, 414.5.1, Table 414.5.1, 414.5.2, 414.5.3, 414.5.4, 414.6, 415.1, 415.6, 415.6.1, 415.6.1.1, 415.6.1.4, Table 415.6.2, 415.7.3, 415.8.2, 415.9, 415.9.1, 415.9.1.3, 415.9.1.4, 415.9.1.6, 415.9.1.7, 415.9.1.8, 415.9.2, 415.9.3, 415.10, 415.11, 415.11.1.7, 415.11.4, 415.11.7.2, 415.11.9.3, 415.11.10.1, 416.1, 416.4, 421.1, 422.3.1, 426.1.4, Table 504.3, Table 504.4, Table 506.2, 507.4, 507.8.1.1.1, 507.8.1.1.2, 507.8.1.1.3, 705.8.1, 707.1, 901.2, 901.3, 901.5, 901.6.2, 901.6.3, 903.1.1, 903.2.7.1, 903.2.11.6, 903.2.12, 903.5, 904.2.1, 904.12.3, 905.1, 905.3.6, 906.1, 907.1.8, 907.2.5, 907.2.13.2, 907.2.15, 907.2.16, 907.6.5, 907.8, 909.20, 910.2.2, 1001.3, 1001.4, 1010.1.9.6, 1203.5.2, 1203.6, 1507.16, 1512.1, Table 1604.5, 2603.4.1.12, 2702.1, 2702.1.2, 2702.2.3, 2702.2.8, 2702.2.9, 2702.2.11, 2702.2.12, 2702.2.13, 2702.4, 3003.3, 3008.1.2, 3102.1, 3103.1, 3111.1, 3111.1.1, 3302.3, 3303.7, 3309.2
IFGC—15	International Fuel Gas Code®	101.4.1, 201.3, Table 307.1(1), 415.9.2, 2113.11.1.2, 2113.15, 2801.1
IMC—15	International Mechanical Code®	101.4.2, 201.3, 307.1.1, Table 307.1(1), 406.6.2, 406.8.2, 406.8.4, 409.3, 412.6.6, 414.1.2, 414.3, 415.8.1.4, 415.8.2, 415.8.2.7, 415.8.3, 415.8.4, 415.10.11, 415.10.11.1, 416.2.2, 413.3, 416.3, 417.1, 419.8, 421.5, 603.1, 603.1.1, 603.1.2, 712.1.6, 717.2.2, 717.5.3, 717.5.4, 717.6.1, 717.6.2, 717.6.3, 718.5, 720.1, 720.7, 903.2.11.4, 904.2.1, 904.11, 907.3.1, 908.6, 909.1, 909.10.2, 909.13.1, 1006.2.2.3, 1011.6, 1020.5.1, 1203.1, 1203.2.1, 1203.5.2, 1203.5.2.1, 1203.6, 1209.3, 2801.1
IPC—15	International Plumbing Code®	101.4.3, 201.3, 415.9.3, 603.1.2, 718.5, 903.3.5, 904.12.1.3, 912.6, 1206.3.3, 1503.4, 1503.4.1, 1805.4.3, 2901.1, Table 2902.1, 3305.1, A101.2
IPMC—15	International Property Maintenance Code®	101.4.4, 102.6, 103.3
IPSDC—15	International Private Sewage Disposal Code®	101.4.3, 2901.1
IRC—15	International Residential Code®	101.2, 305.2.3, 308.3.4, 308.4.2, 308.6.4, 310.1, 310.5.1, 310.5.2, 2308.1
IWUIC—15	International Wildland-Urban Interface Code®	Table 1505.1
SBCCI SSTD 11—97	Test Standard for Determining Wind Resistance of Concrete or Clay Roof Tiles	1504.2.1.1, 1504.2.1.2

ISO

International Organization for Standardization
ISO Central Secretariat
1 ch, de la Voie-Creuse, Case Postale 56
CH-1211 Geneva 20, Switzerland

Standard reference number	Title	Referenced in code section number
ISO 8115—86	Cotton Bales—Dimensions and Density	Table 307.1(1), Table 415.11.1.1.1
ISO 8336—09	Fiber-Cement Flat Sheets - Product Specification and Test Methods	1404.10, 1405.16.1, 1405.16.2, Table 2509.2

MHI

Material Handling Institute
8720 Red Oak Blvd. Suite 201
Charlotte, NC 28217

Standard reference number	Title	Referenced in code section number
ANSI MH29.1—08	Safety Requirements for Industrial Scissors Lifts	3001.2

INTERNATIONAL CODE COUNCIL®
Copyright © 2015 ICC. ALL RIGHTS RESERVED. Accessed by David Dammon on Jun 21, 2017 12:30:52 PM pursuant to License Agreement with ICC. No further reproduction or distribution authorized. ANY UNAUTHORIZED REPRODUCTION OR DISTRIBUTION IS A VIOLATION OF THE FEDERAL COPYRIGHT ACT AND THE LICENSE AGREEMENT, AND SUBJECT TO CIVIL AND CRIMINAL PENALTIES THEREUNDER.

NAAMM

National Association of Architectural Metal Manufacturers
800 Roosevelt Road, Bldg. C, Suite 312
Glen Ellyn, IL 60137

Standard reference number	Title	Referenced in code section number
FP 1001—07	Guide Specifications for Design of Metal Flag Poles	1609.1.1

NCMA

National Concrete Masonry Association
13750 Sunrise Valley
Herndon, VA 22071-4662

Standard reference number	Title	Referenced in code section number
TEK 5—84 (1996)	Details for Concrete Masonry Fire Walls	Table 721.1(2)

NFPA

National Fire Protection Association
1 Batterymarch Park
Quincy, MA 02169-7471

Standard reference number	Title	Referenced in code section number
10—13	Standard for Portable Fire Extinguishers	906.2, 906.3.2, 906.3.4, Table 906.3(1), Table 906.3(2)
11—10	Standard for Low Expansion Foam	904.7
12—11	Standard on Carbon Dioxide Extinguishing Systems	904.8, 904.11
12A—09	Standard on Halon 1301 Fire Extinguishing Systems	904.9
13—13	Installation of Sprinkler Systems	708.2, 903.3.1.1, 903.3.2, 903.3.8.2, 903.3.8.5 904.11, 905.3.4, 907.6.4, 1019.3
13D—13	Standard for the Installation of Sprinkler Systems in One- and Two-family Dwellings and Manufactured Homes	903.3.1.3
13R—13	Standard for the Installation of Sprinkler Systems in Low Rise Residential Occupancies	903.3.1.2, 903.3.5.2, 903.4
14—13	Standard for the Installation of Standpipe and Hose System	905.2, 905.3.4, 905.4.2, 905.6.2, 905.8
16—15	Standard for the Installation of Foam-water Sprinkler and Foam-water Spray Systems	904.7, 904.11
17—13	Standard for Dry Chemical Extinguishing Systems	904.6, 904.11
17A—13	Standard for Wet Chemical Extinguishing Systems	904.5, 904.11
20—13	Standard for the Installation of Stationary Pumps for Fire Protection	913.1, 913.2.1, 913.5
30—12	Flammable and Combustible Liquids Code	415.6, 507.8.1.1.1, 507.8.1.1.2
31—11	Standard for the Installation of Oil-burning Equipment	2113.15
32—11	Standard for Dry Cleaning Plants	415.9.3
40—11	Standard for the Storage and Handling of Cellulose Nitrate Film	409.1
58—14	Liquefied Petroleum Gas Code	415.9.2
61—13	Standard for the Prevention of Fires and Dust Explosions in Agricultural and Food Product Facilities	426.1
70—14	National Electrical Code	108.3, 415.11.1.8, 904.3.1, 907.6.1, 909.12.2, 909.16.3, 1205.4.1, 2701.1, 2702.1.2, G501.4, G1001.6, H106.1, H106.2, K101, K111.1
72—13	National Fire Alarm and Signaling Code	407.4.4.3, 407.4.4.5, 407.4.4.5.1, 901.6, 903.4.1, 904.3.5, 907.2, 907.2.6, 907.2.11, 907.2.13.2, 907.3, 907.3.3, 907.3.4, 907.5.2.1.2, 907.5.2.2, 907.5.2.2.5, 907.6, 907.6.1, 907.6.2, 907.6.6, 907.7, 907.7.1, 907.7.2, 907.2.9.3, 911.1.5, 2702.2.4, 3005.5, 3007.7
80—13	Standard for Fire Doors and Other Opening Protectives	410.3.5, 509.4.2, 716.5, 716.5.7, 716.5.8.1, 716.5.9.2, 716.6, 716.6.4, 1010.1.4.3
82—14	Standard on Incinerators and Waste and Linen Handling Systems and Equipment	713.13
85—11	Boiler and Combustion System Hazards Code	415.8.1
92—15	Standard for Smoke Control Systems	909.7, 909.8
99—15	Health Care Facilities Code	407.10, 425.1
101—15	Life Safety Code	1028.6.2

INTERNATIONAL CODE COUNCIL®
Copyright © 2015 ICC. ALL RIGHTS RESERVED. Accessed by David Dammon on Jun 21, 2017 12:30:52 PM pursuant to License Agreement with ICC. No further reproduction or distribution authorized. ANY UNAUTHORIZED REPRODUCTION OR DISTRIBUTION IS A VIOLATION OF THE FEDERAL COPYRIGHT ACT AND THE LICENSE AGREEMENT, AND SUBJECT TO CIVIL AND CRIMINAL PENALTIES THEREUNDER.

NFPA—continued

105—13	Standard for Smoke Door Assemblies and Other Opening Protectives 405.4.2, 710.5.2.2, 716.5.3.1, 909.20.4.1
110—13	Standard for Emergency and Standby Power Systems 2702.1.2
111—13	Standard on Stored Electrical Energy Emergency and Standby Power Systems 2702.1.2
120—15	Standard for Fire Prevention and Control in Coal Mines 426.1
170—15	Standard for Fire Safety and Emergency Symbols 1025.2.6.1
211—13	Standard for Chimneys, Fireplaces, Vents and Solid Fuel-burning Appliances 2112.5
221—15	Standard for High Challenge Fire Walls, Fire Walls, and Fire Barrier Walls 706.2
252—12	Standard Methods of Fire Tests of Door Assemblies . . . . . 715.4.2, 715.4.3, 715.4.7.3.1, Table 716.3, 716.3.1, 716.4, 716.5.1, 716.5.3, 716.5.8, 716.5.8.1.1
253—15	Standard Method of Test for Critical Radiant Flux of Floor Covering Systems Using a Radiant Heat Energy Source 406.8.3, 424.2, 804.2, 804.3
257—12	Standard for Fire Test for Window and Glass Block Assemblies . . . . . .Table 716.3, 716.4, 716.5.3.2, 716.6, 716.6.1, 716.6.2, 716.6.7.3
259—13	Standard Test Method for Potential Heat of Building Materials 2603.4.1.10, 2603.5.3
265—11	Standard Methods of Fire Tests for Evaluating Room Fire Growth Contribution of Textile Wall Coverings on Full Height Panels and Walls 803.1.3, 803.1.3.1
268—12	Standard Test Method for Determining Ignitability of Exterior Wall Assemblies Using a Radiant Heat Energy Source 1406.2.1.1, 1406.2.1.1.1, 1406.2.1.1.2, 2603.5.7, D105.1
275—13	Standard Method of Fire Tests for the Evaluation of Thermal Barriers 1407.10.2, 2603.4
276—11	Standard Method of Fire Tests for Determining the Heat Release Rate of Roofing Assemblies With Combustible Above-Deck Roofing Components 1508.1, 2603.3, 2603.4.1.5
285—12	Standard Fire Test Method for the Evaluation of Fire Propagation Characteristics of Exterior Nonload-bearing Wall Assemblies Containing Combustible Components 718.2.6, 1403.5, 1407.10.4, 1409.10.4, 1510.6.2, 2603.5.5
286—15	Standard Methods of Fire Test for Evaluating Contribution of Wall and Ceiling Interior Finish to Room Fire Growth 402.6.4.4, 803.1.2, 803.1.2.1, 803.11, 2603.4, 2603.7.2, 2603.9, 2604.2.4, 2614.4
288—12	Standard Methods of Fire Tests of Horizontal Fire Door Assemblies Installed in Horizontal in Fire-resistance-rated Floor Systems 712.1.13.1
289—13	Standard Method of Fire Test for Individual Fuel Packages 402.6.2, 424.2
409—11	Standard for Aircraft Hangars . . . . . .412.4.6, Table 412.4.6, 412.4.6.1, 412.6.5
418—11	Standard for Heliports 412.8.4
484—15	Standard for Combustible Metals 426.1
654—13	Standard for the Prevention of Fire & Dust Explosions from the Manufacturing, Processing and Handling of Combustible Particulate Solids 426.1
655—12	Standard for the Prevention of Sulfur Fires and Explosions 426.1
664—12	Standard for the Prevention of Fires and Explosions in Wood Processing and Woodworking Facilities 426.1
701—10	Standard Method of Fire Tests for Flame-Propagation of Textiles and Films 410.3.6, 424.2, 801.4, 806.1, 806.3, 806.4, 3102.3, 3102.3.1, 3102.6.1.1, 3105.4, D102.2.8, H106.1.1
704—12	Standard System for the Identification of the Hazards of Materials for Emergency Response 202, 415.5.2
720—15	Standard for the Installation of Carbon Monoxide (CO) Detection and Warning Equipment 9151.6.1, 915.1.6.2
750—14	Standard on Water Mist Fire Protection Systems 904.12.1.1
1124—06	Code for the Manufacture, Transportation and Storage of Fireworks and Pyrotechnic Articles 415.6.1.1
2001—15	Standard on Clean Agent Fire Extinguishing Systems 904.10

PCI

Precast Prestressed Concrete Institute
200 West Adams Street, Suite 2100
Chicago, IL 60606-6938

Standard reference number	Title	Referenced in code section number
MNL 124—11	Design for Fire Resistance of Precast Prestressed Concrete 722.2.3.1	
MNL 128—01	Recommended Practice for Glass Fiber Reinforced Concrete Panels 1903.3	

INTERNATIONAL CODE COUNCIL®
Copyright © 2015 ICC. ALL RIGHTS RESERVED. Accessed by David Dammon on Jun 21, 2017 12:30:52 PM pursuant to License Agreement with ICC. No further reproduction or distribution authorized. ANY UNAUTHORIZED REPRODUCTION OR DISTRIBUTION IS A VIOLATION OF THE FEDERAL COPYRIGHT ACT AND THE LICENSE AGREEMENT, AND SUBJECT TO CIVIL AND CRIMINAL PENALTIES THEREUNDER.

PTI

Post-Tensioning Institute
38800 Country Club Drive
Farmington Hills, MI 48331

Standard reference number	Title	Referenced in code section number
PTI DC—10.5-12	Standard Requirements for Design and Analysis of Shallow Concrete Foundations on Expansive Soils	1808.6.2

RMI

Rack Manufacturers Institute
8720 Red Oak Boulevard, Suite 201
Charlotte, NC 28217

Standard reference number	Title	Referenced in code section number
ANSI/MH16.1—12	Specification for Design, Testing and Utilization of Industrial Steel Storage Racks	2209.1

SBCA

Structural Building Components Association
6300 Enterprise Lane
Madison, WI 53719

Standard reference number	Title	Referenced in code section number
ANSI/FS 100-12	Standard Requirements for Wind Pressure Resistance of Foam Plastic Insulating Sheathing Used in Exterior Wall Covering Assemblies	2603.10

SDI

Steel Deck Institute
P. O. Box 426
Glenshaw, PA 15116

Standard reference number	Title	Referenced in code section number
ANSI/NC1.0—10	Standard for Noncomposite Steel Floor Deck	2210.1.1.1
ANSI/RD1.0—10	Standard for Steel Roof Deck	2210.1.1.2
SDI-C—2011	Standard for Composite Steel Floor Deck Slabs	2210.1.1.3
SDI-QA/QC—2011	Standard for Quality Control and Quality Assurance for Installation of Steel Deck	1705.2.2

SJI

Steel Joist Institute
1173B London Links Drive
Forest, VA 24551

Standard reference number	Title	Referenced in code section number
CJ—10	Standard Specification for Composite Steel Joists, CJ-series	1604.3.3, 2203.2, 2207.1
JG—10	Standard Specification for Joist Girders	1604.3.3, 2203.2, 2207.1
K—10	Standard Specification for Open Web Steel Joists, K-series	1604.3.3, 2203.2, 2207.1
LH/DLH—10	Standard Specification for Longspan Steel Joists, LH-series and Deep Longspan Steel Joists, DLH-series	1604.3.3, 2203.2, 2207.1

INTERNATIONAL CODE COUNCIL®
Copyright © 2015 ICC. ALL RIGHTS RESERVED. Accessed by David Dammon on Jun 21, 2017 12:30:52 PM pursuant to License Agreement with ICC. No further reproduction or distribution authorized. ANY UNAUTHORIZED REPRODUCTION OR DISTRIBUTION IS A VIOLATION OF THE FEDERAL COPYRIGHT ACT AND THE LICENSE AGREEMENT, AND SUBJECT TO CIVIL AND CRIMINAL PENALTIES THEREUNDER.

SPRI

Single-Ply Roofing Institute
411 Waverly Oaks Road, Suite 331B
Waltham, MA 02452

Standard reference number	Title	Referenced in code section number
ANSI/SPRI/ FM4435-ES-1—11	Wind Design Standard for Edge Systems Used with Low Slope Roofing Systems	1504.5
ANSI/SPRI RP-4—13	Wind Design Guide for Ballasted Single-ply Roofing Systems	1504.4
ANSI/SPRI VF1—10	External Fire Design Standard for Vegetative Roofs	1505.10

TIA

Telecommunications Industry Association
1320 N. Courthouse Road
Arlington, VA 22201-3834

Standard reference number	Title	Referenced in code section number
222-G—05	Structural Standards for Antenna Supporting Structures and Antennas, including—Addendum 1, 222-G-1, Dated 2007, Addendum 2, 222-G-2 Dated 2009 Addendum 3, 222-3 dated 2013 and Addendum 4, 222-G-4 dated 2014	1609.1.1, 3108.1, 3108.2

TMS

The Masonry Society
105 South Sunset Street, Suite Q
Longmont, CO 80501

Standard reference number	Title	Referenced in code section number
216—2013	Standard Method for Determining Fire Resistance of Concrete and Masonry Construction Assemblies	Table 721.1(2), 722.1
302—2012	Standard Method for Determining the Sound Transmission Class Rating for Masonry Walls	1207.2.1
402—2013	Building Code for Masonry Structures	1405.6, 1405.6.1, 1405.6.2, 1405.10, 1604.3.4, 1705.4, 1705.4.1, 1807.1.6.3, 1807.1.6.3.2, 1808.9 2101.2, 2106.1, 2107.1, 2107.2, 2107.3, 2107.4, 2108.1, 2108.2, 2108.3, 2109.1, 2109.1.1, 2109.2, 2109.2.1, 2109.3, 2110.1
602—2013	Specification for Masonry Structures	1405.6.1, 1705.4, 1807.1.6.3, 2103.1, 2103.2.1, 2103.3, 2103.4, 2104.1, 2105.1

TPI

Truss Plate Institute
218 N. Lee Street, Suite 312
Alexandria, VA 22314

Standard reference number	Title	Referenced in code section number
TPI 1—2014	National Design Standard for Metal-plate-connected Wood Truss Construction	2303.4.6, 2306.1

UL

UL LLC
333 Pfingsten Road
Northbrook, IL 60062-2096

Standard reference number	Title	Referenced in code section number
9—2009	Fire Tests of Window Assemblies	715.5.2, 716.3.2, 716.4, 716.5.3.2, 716.6, 716.6.1, 716.6.2, 716.6.8.1

INTERNATIONAL CODE COUNCIL®
Copyright © 2015 ICC. ALL RIGHTS RESERVED. Accessed by David Dammon on Jun 21, 2017 12:30:52 PM pursuant to License Agreement with ICC. No further reproduction or distribution authorized. ANY UNAUTHORIZED REPRODUCTION OR DISTRIBUTION IS A VIOLATION OF THE FEDERAL COPYRIGHT ACT AND THE LICENSE AGREEMENT, AND SUBJECT TO CIVIL AND CRIMINAL PENALTIES THEREUNDER.

UL—continued

10A—2009	Tin Clad Fire Doors 716.5
10B—2008	Fire Tests of Door Assemblies—with Revisions through April 2009 . . . . . 716.5.2
10C—2009	Positive Pressure Fire Tests of Door Assemblies 716.5.1, 716.5.3, 1010.1.10.1
14B—2008	Sliding Hardware for Standard Horizontally mounted Tin Clad Fire Doors—with Revisions Through May 3, 2013 . . . . . 716.5
14C—06	Swinging Hardware for Standard Tin Clad Fire Doors Mounted Singly and in Pairs—with Revisions through May 2013 . . . . . 716.5
55A—04	Materials for Built-Up Roof Coverings 1507.10.2
103—2010	Factory-built Chimneys, for Residential Type and Building Heating Appliances—with Revisions through July 2012. . . . . 718.2.5.1
127—2011	Factory-built Fireplaces 718.2.5.1, 2111.11
199E—04	Outline of Investigation for Fire Testing of Sprinklers and Water Spray Nozzles for Protection of Deep Fat Fryers 904.11.4.1
217—06	Single and Multiple Station Smoke Alarms—with Revisions through April 2012 . . . . . 907.2.11
263—11	Standard for Fire Tests of Building Construction and Materials . . . . . 703.2, 703.2.1, 703.2.3, 703.3, 703.4, 703.6, 704.12, 705.7, 705.8.5, 707.7, 711.3.2, 714.3.1, 714.4.1.1, 715.1, 716.2, Table 716.3, 716.5.6, 716.5.8.1.1, 716.7.1, 717.5.2, 717.5.3, 717.6.2.1, Table 721.1(1), 1407.10.2, 2103.1, 2603.4, 2603.5.1
268—09	Smoke Detectors for Fire Alarm Systems. 407.8, 907.2.6.2, 907.2.11.7
294—1999	Access Control System Units—with Revisions through September 2010 . . . . 1010.1.9.6, 1010.1.9.8, 1010.1.9.9
300—05(R2010)	Fire Testing of Fire Extinguishing Systems for Protection of Commercial Cooking Equipment—with Revisions through July 16, 2010 . . . . . 904.11
300A—06	Outline of Investigation for Extinguishing System Units for Residential Range Top Cooking Surfaces 407.2.6, 904.13
305—2012	Panic Hardware. 1010.1.10.1
325—02	Door, Drapery, Gate, Louver and Window Operations and Systems—with Revisions through June 2013 . . . . . 406.3.6, 3110.4
555—2006	Fire Dampers—with Revisions through May 2012 . . . . . 717.3
555C—2006	Ceiling Dampers—with Revisions through May 2010 . . . . . 717.3
555S—99	Smoke Dampers—with Revisions through May 2012 . . . . . 717.3, 717.3.1
580—2006	Test for Uplift Resistance of Roof Assemblies—with Revisions through July 2009. . . . . 1504.3.1, 1504.3.2
641—2010	Type L Low-temperature Venting Systems—with Revisions through May 2013 . . . . . 2113.11.1.4
710B—2011	Recirculating Systems 904.11
723—2008	Standard for Test for Surface Burning Characteristics of Building Materials—with Revisions through September 2010 . . . . . 202, 402.6.4.4, 406.7.2, 703.5.2, 720.1, 720.4, 803.1.1, 803.1.4, 803.10, 803.11, 806.7, 1404.12.1, 1407.9, 1407.10.1, 1409.9, 1409.10.1, 1510.6.2, 1510.6.3, 2303.2, 2603.3, 2603.4.1.13, 2606.3.5.4, 2603.7.1, 2603.7.2, 2603.7.3, 2604.2.4, 2606.4, 2612.3, 2614.3, 3105.4
790—04	Standard Test Methods for Fire Tests of Roof Coverings—with Revisions through October 2008 . . . . . 1505.1, 2603.6, 2610.2, 2610.3
793—08	Standards for Automatically Operated Roof Vents for Smoke and Heat—with Revisions through September 2011 . . . . . 406.8.5.1.1, 910.3.1
864—03	Standards for Control Units and Accessories for Fire Alarm Systems—with Revisions through August 2012 . . . . . 421.6.2, 909.12
924—06	Standard for Safety Emergency Lighting and Power Equipment—with Revisions through February 2011. . . . . 1013.5
1040—96	Fire Test of Insulated Wall Construction—with Revisions through October 2012 . . . . . 1407.10.3, 1409.10.3, 2603.4, 2603.9
1256—02	Fire Test of Roof Deck Construction—with Revisions through January 2007 . . . . . 1508.1, 2603.3, 2603.4.1.5
1479—03	Fire Tests of Through-penetration Firestops—with Revisions through October 2012 . . . . . 202, 714.3.1.2, 714.3.2, 714.4.1.2, 714.4.4
1482—2011	Solid-Fuel-type Room Heaters 2112.2, 2112.5
1703—02	Flat-Plate Photovoltaic Modules and Panels—with Revisions through November 2014 . . . . . 1505.9, 1507.17.1, 1507.17.6, 1509.7.4
1715—97	Fire Test of Interior Finish Material—with Revisions through January 2013 . . . . . 1407.10.3, 1409.10.2, 1409.10.3, 2603.4, 2603.9, 2614.4
1777—2007	Chimney Liners—with Revisions through July 2009 . . . . . 2113.11.1, 2113.19
1784—01	Air Leakage Tests of Door Assemblies—with Revisions through July 2009. . . . . 710.5.2.2, 710.5.2.2.1, 716.5.3.1, 716.5.7.1, 716.5.7.3, 3006.3, 3007.6.3, 3008.6.3
1897—12	Uplift Tests for Roof Covering Systems. 1504.3.1
1975—06	Fire Test of Foamed Plastics Used for Decorative Purposes 402.6.2, 402.6.4.5, 424.2

INTERNATIONAL CODE COUNCIL®
Copyright © 2015 ICC. ALL RIGHTS RESERVED. Accessed by David Dammon on Jun 21, 2017 12:30:52 PM pursuant to License Agreement with ICC. No further reproduction or distribution authorized. ANY UNAUTHORIZED REPRODUCTION OR DISTRIBUTION IS A VIOLATION OF THE FEDERAL COPYRIGHT ACT AND THE LICENSE AGREEMENT, AND SUBJECT TO CIVIL AND CRIMINAL PENALTIES THEREUNDER.

UL—continued

1994—04	Luminous Egress Path Marking Systems—with Revisions through November 2010	411.7, 1025.2.1, 1025.2.3, 1025.2.4, 1025.4
2017—2008	Standards for General-purpose Signaling Devices and Systems—with Revisions through May 2011	406.8.5.1.1, 3109.4.1.8
2034—2008	Standard for Single- and Multiple-Station Carbon Monoxide Alarm—with Revisions through February 2009	915.4.2, 915.4.3
2075—2013	Standard for Gas and Vapor Detectors and Sensors	421.6.2, 406.8.5.1.1, 915.5.1, 915.5.3
2079—04	Tests for Fire Resistance of Building Joint Systems—with Revisions through December 2012	202, 715.3, 715.6
2196—2001	Tests for Fire Resistive Cables—with Revisions through March 2012	913.2.2, 2702.3
2200—2012	Stationary Engine Generator Assemblies—with Revisions through June 2013	2702.1.1

ULC

Underwriters Laboratories of Canada
7 Underwriters Road
Toronto, Ontario, Canada M1R3B4

Standard reference number	Title	Referenced in code section number
CAN/ULC S 102.2—2010	Standard Method of Test for Surface Burning Characteristics of Flooring, Floor Coverings and Miscellaneous Materials and Assemblies—with 2000 Revisions	720.4

USC

United States Code
c/o Superintendent of Documents
U.S. Government Printing Office
732 North Capitol Street NW
Washington, DC 20401

Standard reference number	Title	Referenced in code section number
18 USC Part 1, Ch.40	Importation, Manufacture, Distribution and Storage of Explosive Materials	202

WCLIB

West Coast Lumber Inspection Bureau
P. O. Box 23145
Portland, OR 97281

Standard reference number	Title	Referenced in code section number
AITC Technical Note 7—96	Calculation of Fire Resistance of Glued Laminated Timbers	722.6.3.3
AITC 104—03	Typical Construction Details	2306.1
AITC 110—01	Standard Appearance Grades for Structural Glued Laminated Timber	2306.1
AITC 113—10	Standard for Dimensions of Structural Glued Laminated Timber	2306.1
AITC 117—10	Standard Specifications for Structural Glued Laminated Timber of Softwood Species	2306.1
AITC 119—96	Standard Specifications for Structural Glued Laminated Timber of Hardwood Species	2306.1
AITC 200—09	Manufacturing Quality Control Systems Manual for Structural Glued Laminated Timber	2306.1

INTERNATIONAL CODE COUNCIL®
Copyright © 2015 ICC. ALL RIGHTS RESERVED. Accessed by David Dammon on Jun 21, 2017 12:30:52 PM pursuant to License Agreement with ICC. No further reproduction or distribution authorized. ANY UNAUTHORIZED REPRODUCTION OR DISTRIBUTION IS A VIOLATION OF THE FEDERAL COPYRIGHT ACT AND THE LICENSE AGREEMENT, AND SUBJECT TO CIVIL AND CRIMINAL PENALTIES THEREUNDER.

WDMA

Window and Door Manufacturers Association
2025 M Street, NW Suite 800
Washington, DC 20036-3309

Standard reference number	Title	Referenced in code section number
AAMA/WDMA/CSA 101/I.S.2/A440—11	Specifications for Windows, Doors and Unit Skylights	1709.5.1, 2405.5

WRI

Wire Reinforcement Institute, Inc.
942 Main Street, Suite 300
Hartford, CT 06103

Standard reference number	Title	Referenced in code section number
WRI/CRSI—81	Design of Slab-on-ground Foundations—with 1996 Update	1808.6.2

INTERNATIONAL CODE COUNCIL®
Copyright © 2015 ICC. ALL RIGHTS RESERVED. Accessed by David Dammon on Jun 21, 2017 12:30:52 PM pursuant to License Agreement with ICC. No further reproduction or distribution authorized. ANY UNAUTHORIZED REPRODUCTION OR DISTRIBUTION IS A VIOLATION OF THE FEDERAL COPYRIGHT ACT AND THE LICENSE AGREEMENT, AND SUBJECT TO CIVIL AND CRIMINAL PENALTIES THEREUNDER.

Appendix A: Employee Qualifications

The provisions contained in this appendix are not mandatory unless specifically referenced in the adopting ordinance.

General Comments

When adopted (see Section 101.2.1), this appendix provides jurisdictions with training, experience and certification requirements for those employees of the department of building safety responsible for enforcing the provisions of the building code, including the codes referenced in Section 101.4. The authorization to create these positions is found in Section 103 of the code. Note that jurisdictions may also be mandated by applicable state laws to employ only persons licensed by the state to perform certain duties, and may or may not be able to impose additional requirements.

Purpose

The purpose of this appendix is to provide optional criteria for qualifications for employees who enforce the code. A jurisdiction that wants to make this appendix a mandatory part of the code needs to specifically list this appendix in its adoption ordinance (see page xxi of the code for a sample legislation for adoption).

SECTION A101
BUILDING OFFICIAL QUALIFICATIONS

A101.1 Building official. The *building official* shall have at least 10 years' experience or equivalent as an architect, engineer, inspector, contractor or superintendent of construction, or any combination of these, 5 years of which shall have been supervisory experience. The *building official* should be certified as a *building official* through a recognized certification program. The building official shall be appointed or hired by the applicable governing authority.

❖ As the executive official in charge of administering the code enforcement program of the jurisdiction, the building official is required to possess significant experience in the construction industry, including at least 5 years as a supervisor. Although not mandated, it is recommended that the person hold certification as a building official, such as the Certified Building Official® (C.B.O.®) issued by the International Code Council® (ICC®). People with this certification have passed examinations that measure knowledge of legal and management principles, as well as code technology. This position may have a different title, as described in the commentary to Section 103.1.

A101.2 Chief inspector. The *building official* can designate supervisors to administer the provisions of this code and the *International Mechanical*, *Plumbing* and *Fuel Gas Codes*. Each supervisor shall have at least 10 years' experience or equivalent as an architect, engineer, inspector, contractor or superintendent of construction, or any combination of these, 5 years of which shall have been in a supervisory capacity. They shall be certified through a recognized certification program for the appropriate trade.

❖ People who supervise inspectors and plans examiners who review construction for conformance to the building and referenced codes are expected to have considerable experience in their area of expertise, since they are responsible for overseeing the day-to-day operation of their divisions within the department. Large departments may have a separate division for each of the codes, while those of lesser size may group two or more together. Because of the responsibility placed on these persons, it is required that they have demonstrated knowledge of the codes they administer by being certified in the appropriate category. ICC provides certification programs that cover the range of categories involved.

A101.3 Inspector and plans examiner. The *building official* shall appoint or hire such number of officers, inspectors, assistants and other employees as shall be authorized by the jurisdiction. A person shall not be appointed or hired as inspector of construction or plans examiner who has not had at least 5 years' experience as a contractor, engineer, architect, or as a superintendent, foreman or competent mechanic in charge of construction. The inspector or plans examiner shall be certified through a recognized certification program for the appropriate trade.

❖ People who supervise inspectors and plans examiners who review construction for conformance to the building and referenced codes are expected to have considerable experience in their area of expertise, since they are responsible for overseeing the day-to-day operation of their divisions within the department. Large departments may have a separate division for each of the codes, while those of lesser size may group two or more together. Because of the responsibility placed on these persons, it is required that they have demonstrated knowledge of the codes they administer by being certified in the appropriate category. ICC provides certification programs that cover the range of categories involved.

INTERNATIONAL CODE COUNCIL®
Copyright © 2015 ICC. ALL RIGHTS RESERVED. Accessed by David Dammon on Jun 21, 2017 12:30:52 PM pursuant to License Agreement with ICC. No further reproduction or distribution authorized. ANY UNAUTHORIZED REPRODUCTION OR DISTRIBUTION IS A VIOLATION OF THE FEDERAL COPYRIGHT ACT AND THE LICENSE AGREEMENT, AND SUBJECT TO CIVIL AND CRIMINAL PENALTIES THEREUNDER.

A101.4 Termination of employment. Employees in the position of *building official*, chief inspector or inspector shall not be removed from office except for cause after full opportunity has been given to be heard on specific charges before such applicable governing authority.

❖ This section establishes that, once employed, the building official and other technical employees of the department cannot be removed, except for cause, subject to a due process review of the specific charges.

SECTION A102
REFERENCED STANDARDS

IBC—15	International Building Code	A101.2
IMC—15	International Mechanical Code	A101.2
IPC—15	International Plumbing Code	A101.2
IFGC—15	International Fuel Gas Code	A101.2

INTERNATIONAL CODE COUNCIL®
Copyright © 2015 ICC. ALL RIGHTS RESERVED. Accessed by David Dammon on Jun 21, 2017 12:30:52 PM pursuant to License Agreement with ICC. No further reproduction or distribution authorized. ANY UNAUTHORIZED REPRODUCTION OR DISTRIBUTION IS A VIOLATION OF THE FEDERAL COPYRIGHT ACT AND THE LICENSE AGREEMENT, AND SUBJECT TO CIVIL AND CRIMINAL PENALTIES THEREUNDER.

Appendix B: Board of Appeals

The provisions contained in this appendix are not mandatory unless specifically referenced in the adopting ordinance.

General Comments

When adopted (see Section 101.2.1), this appendix provides jurisdictions with detailed appeals board member qualifications and administrative procedures to supplement the basic requirements found in Section 113.

Purpose

The purpose of this appendix is to provide optional criteria for administrative procedures of the board of appeals and board member qualifications. A jurisdiction that wants to make this appendix a mandatory part of the code needs to specifically list this appendix in its adoption ordinance (see page xix of the code for sample legislation for adoption).

SECTION B101 GENERAL

B101.1 Application. The application for appeal shall be filed on a form obtained from the *building official* within 20 days after the notice was served.

❖ A party aggrieved by a decision of the building official and desiring to appeal that decision must file a written request for a hearing in a timely manner, in this case 20 days from the date of the decision. The building official's decision also needs to be in writing, as specified in Sections 105.3.1 for a permit application, 110.6 for an inspection and 114.2 for a violation, or in a letter written regarding a request for an approval, depending on the action being appealed. The request must be on the jurisdiction's standard appeals form, which requires the appellant to provide the information needed by the board members to make a decision. This is often supplemented by whatever additional information the appellant wants to provide to support his or her case.

B101.2 Membership of board. The board of appeals shall consist of persons appointed by the chief appointing authority as follows:

1. One for 5 years; one for 4 years; one for 3 years; one for 2 years; and one for 1 year.
2. Thereafter, each new member shall serve for 5 years or until a successor has been appointed.

The *building official* shall be an ex officio member of said board but shall have no vote on any matter before the board.

❖ The board of appeals is to consist of five members appointed by the "chief appointing authority," typically the mayor or city manager. One member must be appointed for 5 years, one for 4, one for 3, one for 2 and one for 1 year. This method of appointment allows for a smooth transition of board of appeals members, providing continuity of action over the years. The building official also sits as a member of the board, but cannot vote on matters regarding his or her own decisions.

B101.2.1 Alternate members. The chief appointing authority shall appoint two alternate members who shall be called by the board chairperson to hear appeals during the absence or disqualification of a member. Alternate members shall possess the qualifications required for board membership and shall be appointed for 5 years, or until a successor has been appointed.

❖ This section authorizes the chief appointing authority to appoint two alternate members who must be available if the principal members of the board are absent or disqualified. Alternate members must possess the same qualifications as the principal members and are appointed for terms of 5 years, or until such time that a successor is appointed.

B101.2.2 Qualifications. The board of appeals shall consist of five individuals, one from each of the following professions or disciplines:

1. Registered design professional with architectural experience or a builder or superintendent of building construction with at least 10 years' experience, 5 of which shall have been in responsible charge of work.
2. Registered design professional with structural engineering experience.
3. Registered design professional with mechanical and plumbing engineering experience or a mechanical contractor with at least 10 years' experience, 5 of which shall have been in responsible charge of work.
4. Registered design professional with electrical engineering experience or an electrical contractor with at least 10 years' experience, 5 of which shall have been in responsible charge of work.

INTERNATIONAL CODE COUNCIL®
Copyright © 2015 ICC. ALL RIGHTS RESERVED. Accessed by David Dammon on Jun 21, 2017 12:30:52 PM pursuant to License Agreement with ICC. No further reproduction or distribution authorized. ANY UNAUTHORIZED REPRODUCTION OR DISTRIBUTION IS A VIOLATION OF THE FEDERAL COPYRIGHT ACT AND THE LICENSE AGREEMENT, AND SUBJECT TO CIVIL AND CRIMINAL PENALTIES THEREUNDER.

5. Registered design professional with fire protection engineering experience or a fire protection contractor with at least 10 years' experience, 5 of which shall have been in responsible charge of work.

❖ The board of appeals consists of five persons with the qualifications and experience indicated in this section. One must be a registered design professional (see Item 2) with structural experience. The others must be registered design professionals, construction superintendents or contractors with experience in the various areas of building construction. This is necessary because the board will be hearing appeals regarding the codes referenced in Section 101.4 as well as the building code. These requirements are important in that technical people rule on technical matters. The board of appeals is not the place for policy or political deliberations. It is intended that these matters be decided purely on their technical merits, with due regard for state-of-the-art construction technology.

B101.2.3 Rules and procedures. The board is authorized to establish policies and procedures necessary to carry out its duties.

❖ The board can set forth the detailed procedures by which it operates, supplementing those required by Section B101.3.2.

B101.2.4 Chairperson. The board shall annually select one of its members to serve as chairperson.

❖ It is customary to determine a chairperson annually, so that a regular opportunity is available to evaluate and either reappoint the current chairperson or appoint a new one.

B101.2.5 Disqualification of member. A member shall not hear an appeal in which that member has a personal, professional or financial interest.

❖ All members must disqualify themselves regarding any appeal in which they have a personal, professional or financial interest.

B101.2.6 Secretary. The chief administrative officer shall designate a qualified clerk to serve as secretary to the board. The secretary shall file a detailed record of all proceedings in the office of the chief administrative officer.

❖ The chief administrative officer is to designate a qualified clerk, typically an employee in the department, to serve as secretary to the board. The secretary is required to keep detailed records of the proceedings. These may be needed for any future review of the board's decision.

B101.2.7 Compensation of members. Compensation of members shall be determined by law.

❖ Members of the board of appeals are not required to be compensated unless required by state or local law.

B101.3 Notice of meeting. The board shall meet upon notice from the chairperson, within 10 days of the filing of an appeal or at stated periodic meetings.

❖ In order that an appellant's request be heard in a timely manner, the board must meet within 10 days of the filing of an appeal. In large jurisdictions, where there are likely to be more appeals, the board will often set a regular schedule of meeting dates, such as monthly, and the 10-day rule would not apply.

B101.3.1 Open hearing. All hearings before the board shall be open to the public. The appellant, the appellant's representative, the building official and any person whose interests are affected shall be given an opportunity to be heard.

❖ All hearings before the board must be open to the public. The appellant, the appellant's representative, the building official and any person whose interests are affected must be heard.

B101.3.2 Procedure. The board shall adopt and make available to the public through the secretary procedures under which a hearing will be conducted. The procedures shall not require compliance with strict rules of evidence, but shall mandate that only relevant information be received.

❖ The board is required to establish and make available to the public written procedures detailing how hearings are to be conducted. Additionally, this section provides that although strict rules of evidence are not applicable, the information presented must be deemed relevant so the hearings are not unnecessarily long.

B101.3.3 Postponed hearing. When five members are not present to hear an appeal, either the appellant or the appellant's representative shall have the right to request a postponement of the hearing.

❖ When fewer than five members of the board are present, either the appellant or the appellant's representative may request that the hearing be postponed. Note that this is not a requirement, and that the appellant can elect to have the case heard before the smaller board.

B101.4 Board decision. The board shall modify or reverse the decision of the *building official* by a concurring vote of two-thirds of its members.

❖ A concurring vote of two-thirds of the board is needed to modify or reverse the decision of the building official. This means that at least four members must vote to modify or reverse the building official, even if less than the full board is present in accordance with Section B101.3.3.

B101.4.1 Resolution. The decision of the board shall be by resolution. Certified copies shall be furnished to the appellant and to the *building official*.

❖ The building official is to be bound by the action of the board of appeals, unless it is the opinion of the build-

INTERNATIONAL CODE COUNCIL®
Copyright © 2015 ICC. ALL RIGHTS RESERVED. Accessed by David Dammon on Jun 21, 2017 12:30:52 PM pursuant to License Agreement with ICC. No further reproduction or distribution authorized. ANY UNAUTHORIZED REPRODUCTION OR DISTRIBUTION IS A VIOLATION OF THE FEDERAL COPYRIGHT ACT AND THE LICENSE AGREEMENT, AND SUBJECT TO CIVIL AND CRIMINAL PENALTIES THEREUNDER.

ing official that the board of appeals has acted improperly. In such cases, relief through the court having jurisdiction may be sought by the jurisdiction's counsel.

B101.4.2 Administration. The *building official* shall take immediate action in accordance with the decision of the board.

❖ To avoid any undue hindrance in the progress of construction, the building official is required to act without delay based on the board's decision. This action may be to enforce the decision or to seek judicial relief if the board's action can be demonstrated to be inappropriate.

INTERNATIONAL CODE COUNCIL®
Copyright © 2015 ICC. ALL RIGHTS RESERVED. Accessed by David Dammon on Jun 21, 2017 12:30:52 PM pursuant to License Agreement with ICC. No further reproduction or distribution authorized. ANY UNAUTHORIZED REPRODUCTION OR DISTRIBUTION IS A VIOLATION OF THE FEDERAL COPYRIGHT ACT AND THE LICENSE AGREEMENT, AND SUBJECT TO CIVIL AND CRIMINAL PENALTIES THEREUNDER.

INTERNATIONAL CODE COUNCIL®

Copyright © 2015 ICC. ALL RIGHTS RESERVED. Accessed by David Dammon on Jun 21, 2017 12:30:52 PM pursuant to License Agreement with ICC. No further reproduction or distribution authorized. ANY UNAUTHORIZED REPRODUCTION OR DISTRIBUTION IS A VIOLATION OF THE FEDERAL COPYRIGHT ACT AND THE LICENSE AGREEMENT, AND SUBJECT TO CIVIL AND CRIMINAL PENALTIES THEREUNDER.

Appendix C: Group U—Agricultural Buildings

The provisions contained in this appendix are not mandatory unless specifically referenced in the adopting ordinance.

General Comments

The provisions of this appendix are supplemental to the remainder of the code's requirements for agricultural buildings and are only applicable when specifically adopted, as stated in Section 101.2.1. This appendix contains provisions that may alter requirements found elsewhere in the code; however, the general requirements of the code still apply unless modified within this appendix. For example, the height and area limitations established in Chapter 5 apply to all Group U buildings and structures unless this appendix is specifically adopted by the jurisdiction. In such a case, the allowable height and area limitations in Table C102.1 would supersede those in Table 503.

As with all of the appendices to the code, the provisions of this appendix are not applicable unless the appendix is explicitly included in an adopting ordinance by the jurisdiction. Section 101.2.1 establishes the relationship of all appendices (see the commentary to that section for further discussion).

Section 312.1 of the code already contains a use and occupancy classification for buildings and structures considered as utility or miscellaneous in nature. Included in the Group U classification are agricultural buildings, barns, grain silos, greenhouses, livestock shelters, sheds and stables. Complete and detailed requirements are contained in the code for Group U buildings and structures. In most cases these provisions are more restrictive than a Group S-1 occupancy containing moderate-hazard contents that are likely to burn with moderate rapidity. This appendix provides alternative provisions that can be adopted by a jurisdiction to realistically match safeguards with the actual hazards associated with buildings and structures that are minimally occupied by persons and pose a limited fire risk.

Purpose

This appendix contains the requirements for protecting agricultural buildings. The provisions in this appendix reflect those occupancies and uses that deserve special consideration based on their limited occupant load. The code's foundation is the equivalent risk theory. Type of construction, fire-resistance ratings and means of egress requirements are balanced with the risks associated with agricultural buildings. This appendix contains general requirements, allowable heights and areas, mixed use provisions and exit requirements. The purpose of these provisions is to modify or supersede the basic code requirements for agricultural buildings. This approach allows the jurisdiction an alternative method that is more liberal and to address just the requirements for agricultural buildings that are included in this appendix.

SECTION C101 GENERAL

C101.1 Scope. The provisions of this appendix shall apply exclusively to agricultural buildings. Such buildings shall be classified as Group U and shall include the following uses:

1. Livestock shelters or buildings, including shade structures and milking barns.
2. Poultry buildings or shelters.
3. Barns.
4. Storage of equipment and machinery used exclusively in agriculture.
5. Horticultural structures, including detached production greenhouses and crop protection shelters.
6. Sheds.
7. Grain silos.
8. Stables.

❖ This section contains the scope and applicability requirements for agricultural buildings. A specific list is provided to identify which agricultural buildings are intended to be controlled by the alternative requirements of the appendix. This list expands and clarifies agricultural buildings as stated in Section 312.1.

This section of the code contains an explicit list of those types of agricultural buildings that are eligible for the alternative requirements of this appendix. Section 312.1 contains a similar list of utility and miscellaneous uses classified as Group U. Livestock shelters, barns, greenhouses, sheds, grain silos and stables are contained in both lists. Additionally, the term "live-

INTERNATIONAL CODE COUNCIL®
Copyright © 2015 ICC. ALL RIGHTS RESERVED. Accessed by David Dammon on Jun 21, 2017 12:30:52 PM pursuant to License Agreement with ICC. No further reproduction or distribution authorized. ANY UNAUTHORIZED REPRODUCTION OR DISTRIBUTION IS A VIOLATION OF THE FEDERAL COPYRIGHT ACT AND THE LICENSE AGREEMENT, AND SUBJECT TO CIVIL AND CRIMINAL PENALTIES THEREUNDER.

stock shelters" has been expanded to include weather-protection structures and those used as milking barns. All of these buildings and structures are united in that they are used exclusively for agricultural purposes. As such, the occupant load for a Group U building is minimal. Although some of these structures may contain a considerable fuel load associated with their contents and uses, they would pose little fire hazard to persons or other occupiable buildings. The intent of the code is to match minimal requirements with these buildings based on the minimal fire and life hazards they pose.

SECTION C102
ALLOWABLE HEIGHT AND AREA

C102.1 General. Buildings classified as Group U Agricultural shall not exceed the area or height limits specified in Table C102.1.

❖ This section provides general building height and area limitations for Group U occupancies, as does Chapter 5 of the code. The height limitations in Section 504, in terms of number of stories, and the area limitations in Table 506.2 for Group U buildings are in all cases the same or significantly less than those established for a Group S-1 structure. Those types of buildings are characterized by significant fuel loads that usually mandate the presence of an on-site automatic fire sprinkler system to reduce the hazards to acceptable levels. A Group U building typically contains a lesser fire hazard and therefore, the allowable heights and areas should be greater than what is permitted for Group S-1 occupancies.

Revised entries for Table 506.2 are provided in this section for Group U buildings. Additionally, there are two modifications provided that supplement the requirements of Sections 507.1 and 507.4 for unlimited area buildings.

The provisions for governing the heights and areas of agricultural buildings are established in this section and are based on the Group U occupancy classification and the building's type of construction. Table C102.1 is referenced here as the primary determinant for the minimum type of construction required for Group U buildings.

TABLE C102.1. See below.

❖ This table is configured similar to Table 506.2. The nine types of construction are listed across the top of the table. Included are separate lines for the allowable area, allowable height in terms of the number of stories and allowable height in terms of feet. The values listed for height in terms of feet are the same values listed in Table 504.3. Only the allowable areas and heights in terms of number of stories have been increased above that allowed by Table 504.4. Although not specifically stated here, the rest of the provisions of Chapter 5 are still applicable in terms of the affect that automatic sprinkler systems have on potential increases in height and area. (See Sections 504 and 506).

C102.2 One-story unlimited area. The area of a one-story Group U agricultural building shall not be limited if the building is surrounded and adjoined by *public ways* or yards not less than 60 feet (18 288 mm) in width.

❖ Just as additional allowances are made for unlimited area buildings in Section 507, there are similar provisions for agricultural buildings. A single-story building without a basement level containing agricultural uses represents a low fire hazard due to the limited number of occupants that may be present. If such a building is further isolated with sufficient clear open space around it, the building area is not limited. No other structures may be located within the 60 feet (18 288 mm) of clear open space required around the building. The open space must be located on the same lot as the agricultural building to allow access for firefighting operations. The type of construction is not restricted with this option.

C102.3 Two-story unlimited area. The area of a two-story Group U agricultural building shall not be limited if the building is surrounded and adjoined by *public ways* or *yards* not less than 60 feet (18 288 mm) in width and is provided with an *approved automatic sprinkler system* throughout in accordance with Section 903.3.1.1.

❖ This provision of the appendix, in effect, expands the allowance of Section 507.5. A two-story unlimited area agricultural building is permitted with the same open space requirement of Section C102.2 when it is equipped throughout with an automatic NFPA 13 fire

TABLE C102.1
BASIC ALLOWABLE AREA FOR A GROUP U, ONE STORY IN HEIGHT AND MAXIMUM HEIGHT OF SUCH OCCUPANCY

I		II		III and IV		V	
A	B	A	B	III A and IV	III B	A	B
ALLOWABLE AREA (square feet)[a]							
Unlimited	60,000	27,100	18,000	27,100	18,000	21,100	12,000
MAXIMUM HEIGHT IN STORIES							
Unlimited	12	4	2	4	2	3	2
MAXIMUM HEIGHT IN FEET							
Unlimited	160	65	55	65	55	50	40

For SI: 1 square foot = 0.0929 m^2.

a. See Section C102 for unlimited area under certain conditions.

INTERNATIONAL CODE COUNCIL®
Copyright © 2015 ICC. ALL RIGHTS RESERVED. Accessed by David Dammon on Jun 21, 2017 12:30:52 PM pursuant to License Agreement with ICC. No further reproduction or distribution authorized. ANY UNAUTHORIZED REPRODUCTION OR DISTRIBUTION IS A VIOLATION OF THE FEDERAL COPYRIGHT ACT AND THE LICENSE AGREEMENT, AND SUBJECT TO CIVIL AND CRIMINAL PENALTIES THEREUNDER.

sprinkler system. An agricultural building represents a lesser hazard than a Group B, F, M or S building. Therefore, a two-story, fully suppressed agricultural building can also be of unlimited area as long as it is isolated. Once again, the type of construction is not restricted in these buildings.

SECTION C103
MIXED OCCUPANCIES

C103.1 Mixed occupancies. Mixed occupancies shall be protected in accordance with Section 508.

❖ The appendix includes a reference for any mixed occupancies that may exist within the agricultural building, for example, a large milking barn with integral offices and lab areas used for the transaction of farm business and testing of milk products. Since these areas are occupiable spaces, they are not classified as part of the Group U portions. Most likely these areas are classified as Group B. As such, the building must be protected in accordance with Chapter 3. Another example would be a barn with sleeping accommodations for migrant farm workers. The sleeping rooms would be considered as guestrooms and would need to be classified as Group R.

Any of the options listed in Section 508 are available to the building designer to address the mixed uses and occupancies that may be present within an agricultural building. This would include accessory use areas in Section 508.2, nonseparated uses in Section 508.3 or separated uses in Section 508.4.

SECTION C104
EXITS

C104.1 Exit facilities. Exits shall be provided in accordance with Chapters 10 and 11.

Exceptions:

1. The maximum travel distance from any point in the building to an approved exit shall not exceed 300 feet (91 440 mm).
2. One exit is required for each 15,000 square feet (1393.5 m^2) of area or fraction thereof.

❖ The last section of the appendix provides a reminder to the permit applicant that the means of egress requirements of the code are still applicable to agricultural buildings. Although these buildings have a minimal number of occupants, provisions must still be made for their egress. This section includes two modifications to the Chapter 10 requirements that acknowledge the low occupant load and the limited hazards to which occupants are exposed.

The means of egress for agricultural buildings must comply with the applicable provisions of Chapter 10. For example, Table 1004.1.2 specifies an occupant load for agricultural buildings based on a rate of one person for every 300 square feet (28 m^2) of gross floor area. Typically, Group U buildings are exempt from the requirements of Chapter 11 for accessibility to buildings by physically disabled persons. Section 1103.2.4 only mandates that access is required to paved work areas and those areas within a building or structure that are open to the general public.

The two exceptions modify or reinforce certain requirements of Chapter 10. Table 1017.2 limits the exit access travel distance for Group U buildings to 300 feet (91 440 mm). Exception 1 restates this 300-foot (91 440 mm) limit.

Exception 2 refines Table 1021.1 in determining the number of exits required for agricultural buildings. An exit is required for every 15,000 square feet (1393 m^2) of floor area. This works out to the same 50 occupants specified in Table 1006.3.2(2); however, the 75-foot (22 860 mm) travel distance limitation is not applicable.

INTERNATIONAL CODE COUNCIL®
Copyright © 2015 ICC. ALL RIGHTS RESERVED. Accessed by David Dammon on Jun 21, 2017 12:30:52 PM pursuant to License Agreement with ICC. No further reproduction or distribution authorized. ANY UNAUTHORIZED REPRODUCTION OR DISTRIBUTION IS A VIOLATION OF THE FEDERAL COPYRIGHT ACT AND THE LICENSE AGREEMENT, AND SUBJECT TO CIVIL AND CRIMINAL PENALTIES THEREUNDER.

INTERNATIONAL CODE COUNCIL®
Copyright © 2015 ICC. ALL RIGHTS RESERVED. Accessed by David Dammon on Jun 21, 2017 12:30:52 PM pursuant to License Agreement with ICC. No further reproduction or distribution authorized. ANY UNAUTHORIZED REPRODUCTION OR DISTRIBUTION IS A VIOLATION OF THE FEDERAL COPYRIGHT ACT AND THE LICENSE AGREEMENT, AND SUBJECT TO CIVIL AND CRIMINAL PENALTIES THEREUNDER.

Appendix D: Fire Districts

The provisions contained in this appendix are not mandatory unless specifically referenced in the adopting ordinance.

General Comments

The provisions contained in this appendix are not mandatory unless specifically referenced in the adopting ordinance, as stated in Section 101.2.1.

Purpose

Fire districts, in one form or another, have been in the model codes for years. Over time, they have been revised, and in some cases deleted, as the codes have evolved to address the conflagration hazards that the fire district concept was intended to abate. However, there are jurisdictions that continue to utilize the provisions for fire districts. It is for this reason, in order to transition from the previously adopted model code to the *International Building Code*® (IBC®), that the provisions have been incorporated into the appendix.

SECTION D101 GENERAL

D101.1 Scope. The fire district shall include such territory or portion as outlined in an ordinance or law entitled "An Ordinance (Resolution) Creating and Establishing a Fire District." Wherever, in such ordinance creating and establishing a fire district, reference is made to the fire district, it shall be construed to mean the fire district designated and referred to in this appendix.

❖ The establishment of fire districts is among the oldest recognized means of controlling the threat of urban conflagrations. (The term "conflagration" is used to describe a fire that involves three or more buildings and spreads across a natural or constructed barrier, such as a stream, street or other open space.) In fact, the use of fire district ordinances by local governments could be considered an early form of land use control similar to zoning as it is now practiced. Establishment of fire districts became popular at the beginning of the 20th century as a means of preventing the destruction of entire cities by fire. Massive urban conflagrations struck Chicago (1871), Baltimore (1872 and 1904) and San Francisco (1906), destroying all or most of the urbanized areas as they then existed just as these cities were experiencing perhaps their greatest development. Fire districts usually include areas, designated by ordinance or resolution by the local governing body, which are considered susceptible to mass fires involving multiple buildings or groups of buildings. While it may be true that fire district ordinances and building code adoption have significantly reduced the incidence of conflagrations in densely built or populated urbanized areas, continuing development of suburban and rural communities in areas where nearby wildlands are preserved or protected has spurred the increased incidence and severity of fires in urban/wildland interface and intermix areas, which often lie outside designated fire districts. This appendix is currently not designed to address this hazard. This appendix establishes regulatory guidelines for controlling construction, use and occupancy of buildings and conduct of dangerous operations or processes in urbanized areas that may be especially prone to the danger of fires spreading from one building to another. This appendix may be particularly useful in managing fire danger in areas built prior to the adoption and enforcement of a building code but, as stated, may not be suitable for managing the threat of urban/wildland interface and intermix area fire hazards. See the *International Wildland-Urban Interface Code*® (IWUIC®) for guidance on managing fire hazards in urban/wildland interface and intermix areas.

D101.1.1 Mapping. The fire district complying with the provisions of Section D101.1 shall be shown on a map that shall be available to the public.

❖ The requirement to prepare a map facilitates communication to the public of the additional controls found in these guidelines. In effect, establishing a fire district is a form of land use regulation, and many communities include fire district controls in their zoning ordinance or establish fire districts through overlay zoning. Zoning maps are frequently prepared and used to communicate land use controls to the public and to illustrate the relationships between land uses, infrastructure and other features of the community.

INTERNATIONAL CODE COUNCIL®
Copyright © 2015 ICC. ALL RIGHTS RESERVED. Accessed by David Dammon on Jun 21, 2017 12:30:52 PM pursuant to License Agreement with ICC. No further reproduction or distribution authorized. ANY UNAUTHORIZED REPRODUCTION OR DISTRIBUTION IS A VIOLATION OF THE FEDERAL COPYRIGHT ACT AND THE LICENSE AGREEMENT, AND SUBJECT TO CIVIL AND CRIMINAL PENALTIES THEREUNDER.

D101.2 Establishment of area. For the purpose of this code, the fire district shall include that territory or area as described in Sections D101.2.1 through D101.2.3.

❖ The following sections describe the conditions typical of fire districts established by ordinances that reference this appendix. Note that these sections are not customarily intended to include an entire jurisdiction. In fact, this is contrary to the fundamental purpose of a fire district—protection from catastrophic fires that could destroy an entire town. By dividing all jurisdictions into at least two separate fire districts, a city presumably reduces its risk to destruction of just a portion of the city or town. In newer communities developed largely after the adoption of local land use regulations and building codes, fire districts provide little added protection against conflagrations.

If a community is so compact and densely developed that designation of separate areas is not possible or practical, an entire jurisdiction could be designated a fire district as a means of controlling hazardous occupancies and regulating combustible construction.

When adopted for use in areas developed prior to the adoption of a building code, fire districts may serve as an effective means of abating the hazard posed when no single building constitutes a public nuisance, but taken in aggregate, the hazard of groups of similarly noncode-conforming buildings is considered unreasonable. By preventing new construction and new occupancies from contributing to the nonconformity of existing hazards and isolating these nonconforming districts from new development, a city may gain a measure of security from a mass fire.

D101.2.1 Adjoining blocks. Two or more adjoining blocks, exclusive of intervening streets, where at least 50 percent of the ground area is built upon and more than 50 percent of the built-on area is devoted to hotels and motels of Group R-1; Group B occupancies; theaters, nightclubs, restaurants of Group A-1 and A-2 occupancies; garages, express and freight depots, warehouses and storage buildings used for the storage of finished products (not located with and forming a part of a manufactured or industrial plant); or Group S occupancy. Where the average height of a building is two and one-half *stories* or more, a block should be considered if the ground area built upon is at least 40 percent.

❖ The fire district should include areas densely developed with light and moderate fire hazard occupancies that have either significant fuel loads or significant transient occupant loads (see Commentary Figure D101.2.1). Nightclubs; theaters; restaurants; hotels and motels; certain types of Group B occupancies and warehouses not associated with industrial operations have been the sites of some of the nation's largest conflagrations. Intentionally set fires and delayed detection or notification of fire-fighting forces have contributed significantly to these losses. Occupancies and occupants typical of those listed in this section may be particularly prone to both of these factors.

Although Group F and M occupancies and Group S warehouses containing raw or waste materials are not listed, they are typically found in these areas as well. One- and two-family dwellings; multiple-family housing; schools or day care centers and institutional occupancies are not included in the description because they are typically found in less densely developed areas.

Local officials should recognize that redevelopment of industrial and warehouse buildings in existing fire districts for new residential and mercantile uses is increasingly common (see Section D103.2). These activities typically do not pose the same degree of mass fire danger in such buildings, despite the greater frequency of fires in residential occupancies. This may be due to reduced fuel loading and increased occupant activity, which aids in early detection and notification of a fire.

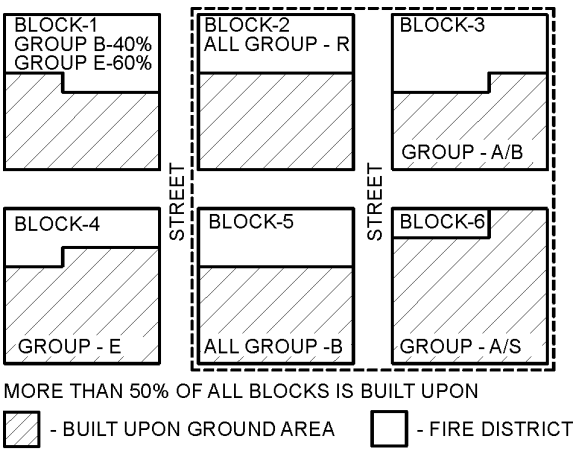

Figure D101.2.1
EXAMPLE OF FIRE DISTRICTS

INTERNATIONAL CODE COUNCIL®
Copyright © 2015 ICC. ALL RIGHTS RESERVED. Accessed by David Dammon on Jun 21, 2017 12:30:52 PM pursuant to License Agreement with ICC. No further reproduction or distribution authorized. ANY UNAUTHORIZED REPRODUCTION OR DISTRIBUTION IS A VIOLATION OF THE FEDERAL COPYRIGHT ACT AND THE LICENSE AGREEMENT, AND SUBJECT TO CIVIL AND CRIMINAL PENALTIES THEREUNDER.

D101.2.2 Buffer zone. Where four contiguous blocks or more comprise a fire district, there shall be a buffer zone of 200 feet (60 960 mm) around the perimeter of such district. Streets, rights-of-way and other open spaces not subject to building construction can be included in the 200-foot (60 960 mm) buffer zone.

❖ The buffer areas described by this section serve as fire or (preferably) fuel breaks by prohibiting the construction of buildings or structures that could become involved, allowing the fire to spread (see Commentary Figure D101.2.2). The green space or buffer zones may include the width of streets, streams or other dedicated rights-of-way that ensure segregation between adjacent fire district zones.

D101.2.3 Developed blocks. Where blocks adjacent to the fire district have developed to the extent that at least 25 percent of the ground area is built upon and 40 percent or more of the built-on area is devoted to the occupancies specified in Section D101.2.1, they can be considered for inclusion in the fire district, and can form all or a portion of the 200-foot (60 960 mm) buffer zone required in Section D101.2.2.

❖ Adjacent blocks may be added to the fire district as development of buffer spaces progresses (see Commentary Figure D101.2.3). However, care should be taken to ensure that the densities of buffer spaces do not increase to such an extent as to provide an avenue of fire spread between adjacent fire districts. If building densities remain between 25 and 50 percent of the land area, danger of fire spread between buildings in separate fire districts remains relatively low, as long as building separations required by Section D102.2 for the construction type are provided and maintained and combustible building features, such as roofing, sheathing, trim, canopies and signs, are similarly controlled.

SECTION D102
BUILDING RESTRICTIONS

D102.1 Types of construction permitted. Within the fire district every building hereafter erected shall be either Type I, II, III or IV, except as permitted in Section D104.

❖ The construction of Type V buildings is prohibited within a fire district. All other construction types are permitted, including unprotected Type IIB and IIIB structures with the further restrictions of Section D102.2 below.

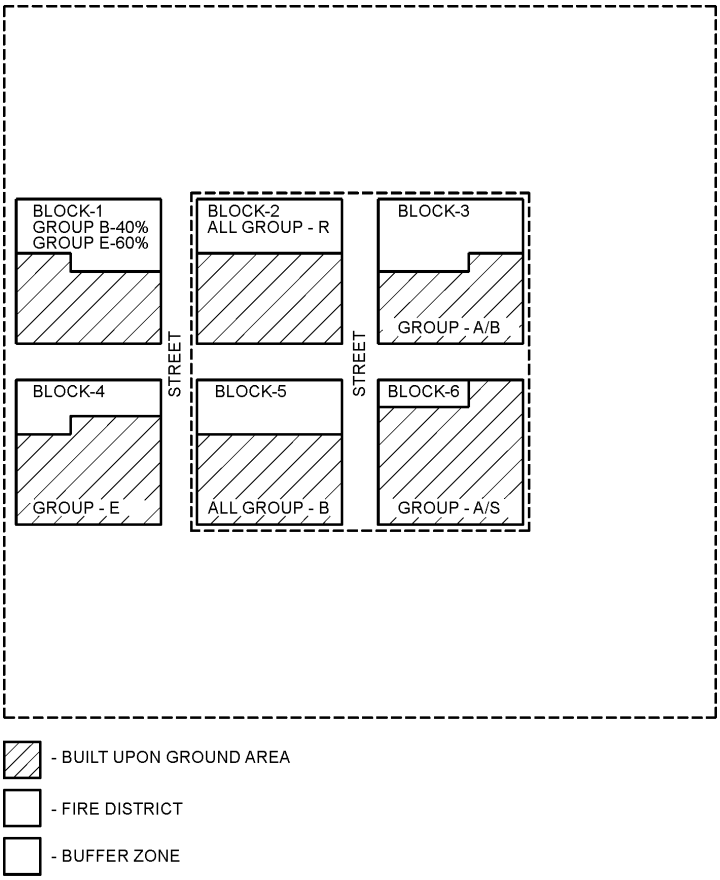

Figure D101.2.2
BUFFER ZONES

INTERNATIONAL CODE COUNCIL®
Copyright © 2015 ICC. ALL RIGHTS RESERVED. Accessed by David Dammon on Jun 21, 2017 12:30:52 PM pursuant to License Agreement with ICC. No further reproduction or distribution authorized. ANY UNAUTHORIZED REPRODUCTION OR DISTRIBUTION IS A VIOLATION OF THE FEDERAL COPYRIGHT ACT AND THE LICENSE AGREEMENT, AND SUBJECT TO CIVIL AND CRIMINAL PENALTIES THEREUNDER.

D102.2 Other specific requirements.

D102.2.1 Exterior walls. Exterior walls of buildings located in the fire district shall comply with the requirements in Table 601 except as required in Section D102.2.6.

❖ Fire-resistant separations between buildings, either by distance or barriers, as described by Table 601, provide protection against fire spread by radiant and convective heat transfer and, to a limited extent, from small flying brands.

D102.2.2 Group H prohibited. Group H occupancies shall be prohibited from location within the fire district.

❖ Group H-1, H-2, H-3 and H-5 hazardous occupancies are prohibited within the fire district because of the fire hazard posed by these occupancies themselves. Group H-4 occupancies are prohibited due to the inherent danger of release and contamination posed by fire should occupancies containing highly toxic, toxic, radioactive or other health-hazard materials be exposed.

D102.2.3 Construction type. Every building shall be constructed as required based on the type of construction indicated in Chapter 6.

❖ This section reinforces the need for new buildings to be constructed as required based on height and area and type of construction considerations in the body of the code.

D102.2.4 Roof covering. Roof covering in the fire district shall conform to the requirements of Class A or B roof coverings as defined in Section 1505.

❖ Class C and wood-shake shingle roofs are prohibited within the fire district due to the danger of fire spread and involvement through production of or exposure to burning brands.

D102.2.5 Structural fire rating. Walls, floors, roofs and their supporting structural members shall be a minimum of 1-hour fire-resistance-rated construction.

Exceptions:

1. Buildings of Type IV construction.

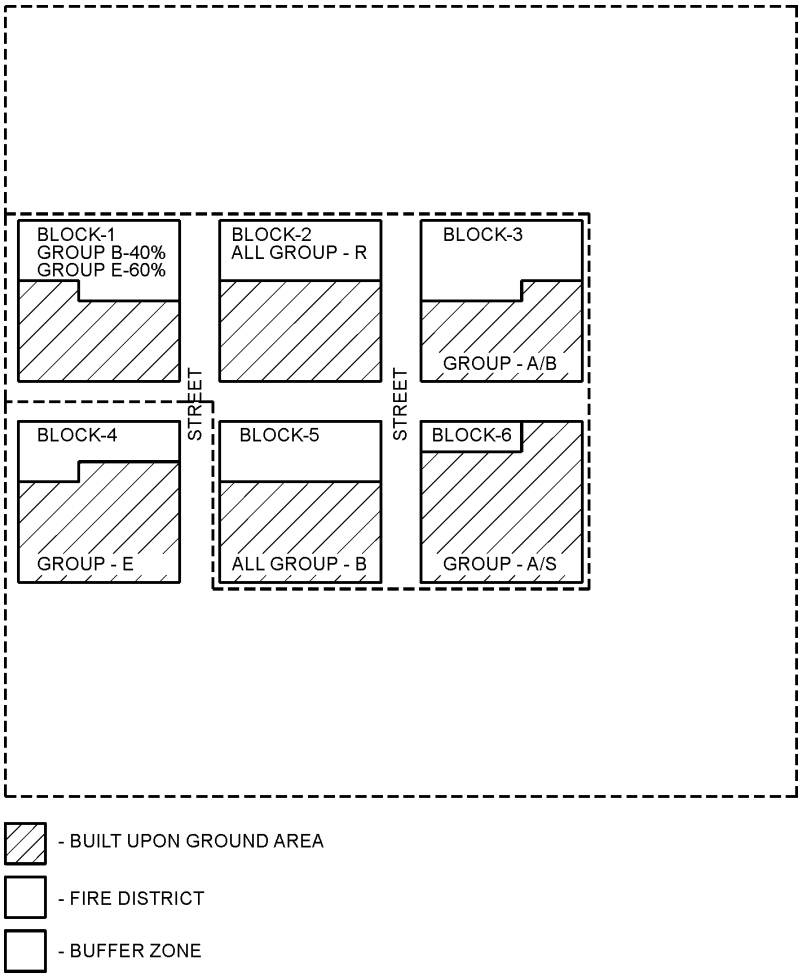

Figure D101.2.3
ADDING ADJACENT BLOCKS

INTERNATIONAL CODE COUNCIL®
Copyright © 2015 ICC. ALL RIGHTS RESERVED. Accessed by David Dammon on Jun 21, 2017 12:30:52 PM pursuant to License Agreement with ICC. No further reproduction or distribution authorized. ANY UNAUTHORIZED REPRODUCTION OR DISTRIBUTION IS A VIOLATION OF THE FEDERAL COPYRIGHT ACT AND THE LICENSE AGREEMENT, AND SUBJECT TO CIVIL AND CRIMINAL PENALTIES THEREUNDER.

2. Buildings equipped throughout with an *automatic sprinkler system* in accordance with Section 903.3.1.1.
3. Automobile parking structures.
4. Buildings surrounded on all sides by a permanently open space of not less than 30 feet (9144 mm).
5. Partitions complying with Section 603.1, Item 11.

❖ Unprotected Type IIB and IIIB construction is permitted within the fire district only for fully sprinklered buildings, automobile parking garages and buildings with 30 feet (9144 mm) of open space on all sides. All other buildings, except those of Type IV construction, must be of fire-resistance-rated construction.

D102.2.6 Exterior walls. Exterior load-bearing walls of Type II buildings shall have a *fire-resistance rating* of 2 hours or more where such walls are located within 30 feet (9144 mm) of a common property line or an assumed property line. Exterior nonload-bearing walls of Type II buildings located within 30 feet (9144 mm) of a common property line or an assumed property line shall have fire-resistance ratings as required by Table 601, but not less than 1 hour. Exterior walls located more than 30 feet (9144 mm) from a common property line or an assumed property line shall comply with Table 601.

Exception: In the case of one-story buildings that are 2,000 square feet (186 m^2) or less in area, exterior walls located more than 15 feet (4572 mm) from a common property line or an assumed property line need only comply with Table 601.

❖ Although Type II buildings may be capable of resisting ignition because their components are generally noncombustible, their structural integrity could be threatened or contents ignited by radiant heat exposure from a fire in an adjacent building. Moreover, since Section 603.1, Item 1, permits the use of fire-retardant-treated wood for nonbearing partitions and roof systems of Type II buildings, these structures should not be assumed to be of noncombustible construction.

Small accessory buildings [less than 2,000 square feet (186 m^2)] are exempt from the exterior wall fireresistance requirements of this section, provided they comply with Table 601 and are located at least 15 feet (4572 mm) from an adjacent or assumed property line. Bear in mind that, except as provided in Section D105, such structures may not be of Type V construction. Such buildings present little danger of contributing to a mass fire, provided they comply with the requirements of the code.

D102.2.7 Architectural trim. Architectural *trim* on buildings located in the fire district shall be constructed of *approved* noncombustible materials or *fire-retardant-treated wood*.

❖ The ignition of architectural trim on the exterior of buildings from radiant heat transfer may pilot the ignition of other building components or contents of the building, providing an avenue for further fire spread. Many types of architectural trim may also catch flying brands from a fire, sparking the ignition of the exposed building.

D102.2.8 Permanent canopies. Permanent canopies are permitted to extend over adjacent open spaces provided all of the following are met:

1. The canopy and its supports shall be of noncombustible material, *fire-retardant-treated wood*, Type IV construction or of 1-hour fire-resistance-rated construction.

   Exception: Any textile covering for the canopy shall be flame resistant as determined by tests conducted in accordance with NFPA 701 after both accelerated water leaching and accelerated weathering.
2. Any canopy covering, other than textiles, shall have a *flame spread index* not greater than 25 when tested in accordance with ASTM E84 or UL 723 in the form intended for use.
3. The canopy shall have at least one long side open.
4. The maximum horizontal width of the canopy shall not exceed 15 feet (4572 mm).
5. The *fire resistance* of *exterior walls* shall not be reduced.

❖ Although combustible exterior canopies may become involved in fire from radiant heat transfer, their relatively low mass and method of support and attachment to the building should minimize the risk that they will pilot the ignition of exterior walls or building contents. The requirements of this section restrict certain features of exterior canopies to ensure that their construction contributes little to fire growth or spread in the fire district.

D102.2.9 Roof structures. Structures, except aerial supports 12 feet (3658 mm) high or less, flagpoles, water tanks and cooling towers, placed above the roof of any building within the fire district shall be of noncombustible material and shall be supported by construction of noncombustible material.

❖ Vertical structures with little combustible mass, or which will be cooled by their contents, are permitted, provided their failure in a fire does not pose a significant secondary hazard. Of course, rooftop water tanks supplying fire protection systems should not be of combustible construction because their failure may undermine the effectiveness of required fire protection systems.

D102.2.10 Plastic signs. The use of plastics complying with Section 2611 for signs is permitted provided the structure of the sign in which the plastic is mounted or installed is noncombustible.

❖ Free-standing and projecting signs are unlikely to contribute to fire spread between buildings, provided their structural supports are noncombustible and

INTERNATIONAL CODE COUNCIL®
Copyright © 2015 ICC. ALL RIGHTS RESERVED. Accessed by David Dammon on Jun 21, 2017 12:30:52 PM pursuant to License Agreement with ICC. No further reproduction or distribution authorized. ANY UNAUTHORIZED REPRODUCTION OR DISTRIBUTION IS A VIOLATION OF THE FEDERAL COPYRIGHT ACT AND THE LICENSE AGREEMENT, AND SUBJECT TO CIVIL AND CRIMINAL PENALTIES THEREUNDER.

structural collapse of the sign supports will not directly expose a building or its contents. Although rooftop, marquee and wall-mounted signs may present a more direct hazard to buildings, Sections 2611.2 and 2611.3 limit the area of any plastic components and require all plastic materials to meet specified combustibility criteria (see Section 2606.4).

D102.2.11 Plastic veneer. Exterior plastic veneer is not permitted in the fire district.

❖ All plastic veneers, including vinyl siding, are prohibited in the fire district. Most plastics deform under high radiant heat conditions, some melt and drip and all will burn. Plastics represent a wide range of fire hazard conditions, generally all of which are unfavorable.

This prohibition is consistent with restrictions on other combustible exterior elements, such as roof and architectural trim. Although this appendix does not explicitly prohibit other combustible exterior veneers, Section D105.1, Item 11, excludes wood veneer from these provisions, and the use of such combustible cladding materials remains severely restricted.

SECTION D103
CHANGES TO BUILDINGS

D103.1 Existing buildings within the fire district. An existing building shall not hereafter be increased in height or area unless it is of a type of construction permitted for new buildings within the fire district or is altered to comply with the requirements for such type of construction. Nor shall any existing building be hereafter extended on any side, nor square footage or floors added within the existing building unless such modifications are of a type of construction permitted for new buildings within the fire district.

❖ Bearing in mind that the principal purpose of Section D103 is to control the fire hazard posed by existing nonconforming construction by isolating areas where such buildings are located, it would be imprudent to allow any increase in the hazard within the fire district once it is established. Therefore, any new construction must comply with the requirements of the code, including limits on construction, area and height and fire protection (see Section D102.2.3).

D103.2 Other alterations. Nothing in Section D103.1 shall prohibit other alterations within the fire district provided there is no change of occupancy that is otherwise prohibited and the fire hazard is not increased by such *alteration*.

❖ All construction and any alteration of existing buildings must comply with the provisions of the code (see Section 101.2). Assuming all new work complies with the relevant requirements of the code and all applicable referenced standards, the hazard of any building in the fire district should not be increased.

Change of occupancy from one group to another is allowed within the fire district, provided that the new occupancy is permitted by the code for the type of construction, fire protection, means of egress and other requirements and is not a hazardous (Group H) occupancy (see Section D102.2.2).

D103.3 Moving buildings. Buildings shall not hereafter be moved into the fire district or to another lot in the fire district unless the building is of a type of construction permitted in the fire district.

❖ Relocated buildings, like new construction, must be of a type of construction permitted within the fire district. The type of construction will be determined by the area, height and occupancy of the building after its relocation. However, certain structural components and systems may require higher fire-resistance ratings than specified in Table 601, in accordance with Section D102.2.5.

SECTION D104
BUILDINGS LOCATED PARTIALLY IN THE FIRE DISTRICT

D104.1 General. Any building located partially in the fire district shall be of a type of construction required for the fire district, unless the major portion of such building lies outside of the fire district and no part is more than 10 feet (3048 mm) inside the boundaries of the fire district.

❖ Buildings that lie principally outside the fire district and project no more than 10 feet (3048 mm) within a fire district boundary are exempt from the fire district requirements and should be considered part of the buffer zone described in Sections D101.2.2 and D101.2.3.

In Commentary Figure D104, Example (A), the building does not need to meet the provisions of Appendix D, since the majority of the building is outside and no more than 10 feet (3048 mm) of the building lies within the boundaries of the fire district.

In Commentary Figure D104, Example (B), the building shall comply with the provisions of Appendix D, since more than 10 feet (3048 mm) of the building is within the boundaries of the fire district.

SECTION D105
EXCEPTIONS TO RESTRICTIONS IN FIRE DISTRICT

D105.1 General. The preceding provisions of this appendix shall not apply in the following instances:

1. Temporary buildings used in connection with duly authorized construction.
2. A private garage used exclusively as such, not more than one *story* in height, nor more than 650 square feet (60 m^2) in area, located on the same lot with a *dwelling*.
3. Fences not over 8 feet (2438 mm) high.
4. Coal tipples, material bins and trestles of Type IV construction.
5. Water tanks and cooling towers conforming to Sections 1509.3 and 1509.4.

INTERNATIONAL CODE COUNCIL®
Copyright © 2015 ICC. ALL RIGHTS RESERVED. Accessed by David Dammon on Jun 21, 2017 12:30:52 PM pursuant to License Agreement with ICC. No further reproduction or distribution authorized. ANY UNAUTHORIZED REPRODUCTION OR DISTRIBUTION IS A VIOLATION OF THE FEDERAL COPYRIGHT ACT AND THE LICENSE AGREEMENT, AND SUBJECT TO CIVIL AND CRIMINAL PENALTIES THEREUNDER.

6. Greenhouses less than 15 feet (4572 mm) high.
7. Porches on dwellings not over one *story* in height, and not over 10 feet (3048 mm) wide from the face of the building, provided such porch does not come within 5 feet (1524 mm) of any property line.
8. Sheds open on a long side not over 15 feet (4572 mm) high and 500 square feet (46 m^2) in area.
9. One- and two-family *dwellings* where of a type of construction not permitted in the fire district can be extended 25 percent of the floor area existing at the time of inclusion in the fire district by any type of construction permitted by this code.
10. Wood decks less than 600 square feet (56 m^2) where constructed of 2-inch (51 mm) nominal wood, pressure treated for exterior use.
11. Wood veneers on *exterior walls* conforming to Section 1405.5.
12. Exterior plastic veneer complying with Section 2605.2 where installed on exterior walls required to have a *fire-resistance rating* not less than 1 hour, provided the exterior plastic veneer does not exhibit sustained flaming as defined in NFPA 268.

❖ With the exception of Items 11 and 12, excluded structures are generally accessory to other buildings and pose little hazard of contributing to fire spreading from one building to another or between buildings in adjacent fire districts. Excluding these structures from the provisions of this appendix does not exempt any new structures of the types or uses listed from complying with the requirements of the code.

Water tanks for fire protection located within the fire district may not be governed by the requirements of this appendix.

Wood veneer applied to the exterior of structures must comply with the restrictions of Section 1405.5. The referenced provisions restrict the use of wood veneer to installation on noncombustible exterior walls of the fire resistance required by Table 601, and not exceeding two stories in height.

SECTION D106
REFERENCED STANDARDS

ASTM E84—	Test Method for Surface Burning Characteristics of Building Materials	D102.2.8
NFPA 268—12	Test Method for Determining Ignitability of Exterior Wall Assemblies Using a Radiant Heat Energy Source	D105.1
NFPA 701—10	Methods of Fire Tests for Flame-Propagation of Textiles and Films	D102.2.8
UL 723—08	Standard for Test for Surface Burning Characteristics of Building Materials, with Revisions through September 2010	D102.2.8

Bibliography

The following resource material was used in the preparation of the commentary for this appendix chapter of the code.

IWUIC-15, *International Wildland-Urban Interface Code*. Washington, DC: International Code Council, 2014.

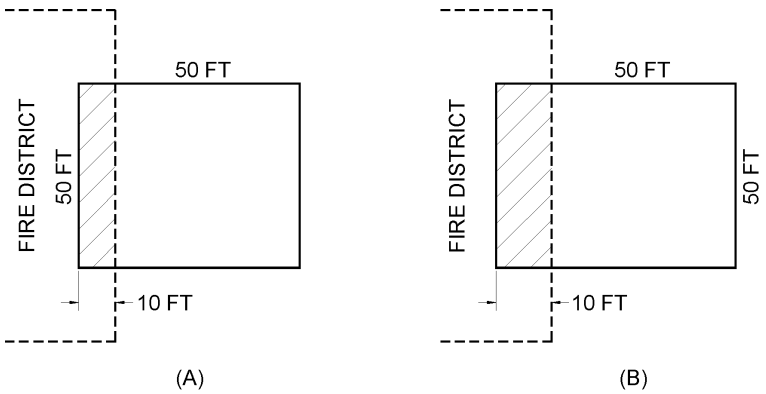

For SI: 1 foot = 304.8 mm.

Figure D104
BUILDINGS PARTIALLY WITHIN FIRE DISTRICTS

INTERNATIONAL CODE COUNCIL®
Copyright © 2015 ICC. ALL RIGHTS RESERVED. Accessed by David Dammon on Jun 21, 2017 12:30:52 PM pursuant to License Agreement with ICC. No further reproduction or distribution authorized. ANY UNAUTHORIZED REPRODUCTION OR DISTRIBUTION IS A VIOLATION OF THE FEDERAL COPYRIGHT ACT AND THE LICENSE AGREEMENT, AND SUBJECT TO CIVIL AND CRIMINAL PENALTIES THEREUNDER.

INTERNATIONAL CODE COUNCIL®
Copyright © 2015 ICC. ALL RIGHTS RESERVED. Accessed by David Dammon on Jun 21, 2017 12:30:52 PM pursuant to License Agreement with ICC. No further reproduction or distribution authorized. ANY UNAUTHORIZED REPRODUCTION OR DISTRIBUTION IS A VIOLATION OF THE FEDERAL COPYRIGHT ACT AND THE LICENSE AGREEMENT, AND SUBJECT TO CIVIL AND CRIMINAL PENALTIES THEREUNDER.

Appendix E: Supplementary Accessibility Requirements

The provisions contained in this appendix are not mandatory unless specifically referenced in the adopting ordinance.

General Comments

As stated in Section 101.2.1, the provisions of the appendices do not apply unless specifically adopted.

Chapter 11 sets forth requirements for accessibility to buildings and their associated sites and facilities for people with physical disabilities. This appendix was added to address accessibility in construction for items that were not typically enforceable through the traditional code enforcement process but were in the drafts for the 2004 Americans with Disabilities Act/Architectural Barriers Act (ADA/ABA) *Accessibility Guidelines*, now also called the *2010 ADA Standard for Accessible Design*.

Section E101 contains the broad scope statement of the appendix and identifies the baseline criteria for accessibility as being in compliance with this appendix and ICC A117.1-2009, *Accessible and Usable Buildings and Facilities* (ICC A117.1). ICC A117.1 is the consensus national standard that sets forth the details, dimensions and construction specifications for accessibility.

Section El02 contains definitions of terms that are associated with accessibility used in this appendix that are not found in Chapter 2.

Section E103 contains additional requirements for interior accessible routes. An accessible route is a key component of the built environment that provides a person with a disability access to spaces, elements, facilities and buildings.

Section E104 contains various accessibility requirements that are unique to specific occupancies and are applicable in addition to other general requirements of this chapter. Specific provisions unique to transient lodging and Group I-3 facilities are included.

Section E105 contains various requirements that are applicable to special equipment provided for public use, including requirements for portable toilet and bathing rooms; laundry equipment; gaming and vending machines; mailboxes; automatic teller machines (ATMs) and fare machines; and two-way communication systems.

Section E106 contains special criteria for public telephones, including TTY requirements.

Section E107 sets forth requirements for signage identifying permanent designations, such as room numbers in a hospital, directional and informational signs, and signage specifically related to the transportation facilities identified in Sections E108, E109 and E110.

Section E108 lists criteria specific to bus stops and terminals.

Section E109 lists criteria specific to fixed transportation facilities and stations, such as train stations.

Section E110 lists criteria specific to airports.

Section E111 enumerates the standards referenced in this appendix.

Purpose

The Architectural and Transportation Barriers Compliance Board (Access Board) has revised and updated its accessibility guidelines for buildings and facilities covered by the Americans with Disabilities Act of 1990 (ADA) and the Architectural Barriers Act of 1968 (ABA). The final ADA/ABA Guidelines, published by the Access Board in September 2004, will serve as the basis for the minimum standards when adopted by other federal agencies responsible for issuing enforceable standards. The guidelines have been adopted by the Government Service Administration (GSA), the Post Office, the Department of Defense, the Department of Transportation and the Department of Justice (DOJ). When the DOJ officially adopted the guidelines, it renamed them the *2010 ADA Standard for Accessible Design* (2010 ADA Standard). The plan is to eventually use this document in place of the Uniform Federal Accessibility Standard (UFAS) and the Americans with Disabilities Act *Accessibility Guidelines* (ADAAG). Refer to the Access Board website (www.access-board.gov) for the current status of this adoption process. The 2010 ADA Standard is mandatory as of March 15, 2013, for all alterations and new construction.

Appendix E includes scoping requirements from the 2010 ADA Standard that are not in Chapter 11 or otherwise mentioned or mainstreamed throughout the code. Items in the appendix deal with topics not typically addressed in building codes. For example, items in Sections E102 through E107 are not part of the "built" environment, as they can be added, modified or removed without a building permit and without notifying the building official. Sections E108 through E110 deal specifically with transportation facilities. While there has been an attempt to include all provisions in the 2010 ADA Standard that are not in the *International Building Code*® (IBC®), at this time, the efforts are ongoing. Code users should refer to the DOJ website for the revised ADA regulations at www.ada.gov.

This appendix is being included in the code for the convenience of building owners and designers who are required to comply with the 2010 ADA Standard and for the benefit of jurisdictions that may wish to go beyond the traditional boundary of the code and formally adopt these additional 2010 ADA Standard requirements. The requirements within the code indicate what is required and enforceable by the building official. The appendix includes items that are outside the scope of code enforcement, but must be complied with in addition to the code requirements to satisfy the 2010 ADA Standard.

INTERNATIONAL CODE COUNCIL®
Copyright © 2015 ICC. ALL RIGHTS RESERVED. Accessed by David Dammon on Jun 21, 2017 12:30:52 PM pursuant to License Agreement with ICC. No further reproduction or distribution authorized. ANY UNAUTHORIZED REPRODUCTION OR DISTRIBUTION IS A VIOLATION OF THE FEDERAL COPYRIGHT ACT AND THE LICENSE AGREEMENT, AND SUBJECT TO CIVIL AND CRIMINAL PENALTIES THEREUNDER.

SECTION E101
GENERAL

E101.1 Scope. The provisions of this appendix shall control the supplementary requirements for the design and construction of facilities for *accessibility* for individuals with disabilities.

❖ This section establishes the scope of the appendix as providing for design and construction of facilities for accessibility to individuals with disabilities other than items covered under Chapter 11. Items in the appendix are not enforceable under the typical code review process because these items can be altered or removed without notification to the building official. Items in this appendix are included in the 2010 ADA Standard.

E101.2 Design. Technical requirements for items herein shall comply with this code and ICC A117.1.

❖ This section establishes the primary and fundamental relationship of ICC A117.1 to the code. The code text is intended to "scope," or provide thresholds, for application of required accessibility features. The referenced standard contains technical provisions indicating how compliance with the code is achieved. In short, this appendix specifies what, when and how many accessible features are required; the referenced standard ICC A117.1 indicates how to make these features accessible. Compliance with both the scoping and technical standard is necessary for accessibility.

SECTION E102
DEFINITIONS

E102.1 General. The following words and terms shall, for the purposes of this appendix, have the meanings shown herein. Refer to Chapter 2 of this code for general definitions.

❖ This section contains definitions of terms that are associated with the subject matter of this appendix.

Definitions of terms can help in the understanding and application of the code requirements. The purpose for including these definitions within this appendix is because appendices are not considered part of the code requirements unless specifically referenced in the adopting ordinance.

CLOSED-CIRCUIT TELEPHONE. A telephone with a dedicated line such as a house phone, courtesy phone or phone that must be used to gain entrance to a facility.

❖ Telephones described in this definition are utilized in hotels, apartments, airports, hospitals and similar facilities. Access to these systems is important to provide communication throughout a facility.

MAILBOXES. Receptacles for the receipt of documents, packages or other deliverable matter. *Mailboxes* include, but are not limited to, post office boxes and receptacles provided by commercial mail-receiving agencies, apartment houses and schools.

❖ The definition for "Mailboxes" clarifies that the scope of this provision is meant to address all types of facilities where a person could receive correspondence, packages or written notifications. The description includes post office boxes, mailboxes in the lobby of an apartment building or mailboxes in the lobby of a college dorm.

TRANSIENT LODGING. A building, facility or portion thereof, excluding inpatient medical care facilities and long-term care facilities, that contains one or more *dwelling units* or *sleeping units.* Examples of *transient lodging* include, but are not limited to, resorts, group homes, hotels, motels, dormitories, homeless shelters, halfway houses and social service lodging.

❖ Transient lodging facilities, such as hotels, typically provide short-term stays; however, this definition also includes facilities that provide longer-term stays, such as dormitories. The 30-day or less stay typically associated with transient lodging is not applicable in this definition. The key is whether sleeping or dwelling units are provided. The exclusions are for inpatient and long-term care facilities, such as hospitals and nursing homes. Additionally, this would not be applicable to permanent lodging facilities with dwelling units, such as apartments, condominiums or townhouses.

SECTION E103
ACCESSIBLE ROUTE

E103.1 Raised platforms. In banquet rooms or spaces where a head table or speaker's lectern is located on a raised platform, an *accessible* route shall be provided to the platform.

❖ An accessible route is required to a temporary raised platform utilized for a speaker or head table. An accessible route would not be required to a raised platform used for other purposes, such as a band. Access to permanently raised platforms or stages is addressed in Chapter 11.

SECTION E104
SPECIAL OCCUPANCIES

E104.1 General. *Transient lodging* facilities shall be provided with *accessible* features in accordance with Section E104.2. Group I-3 occupancies shall be provided with *accessible* features in accordance with Section E104.2.

❖ The following sections address communication feature requirements for transient lodging facilities and jails (Group I-3).

INTERNATIONAL CODE COUNCIL®
Copyright © 2015 ICC. ALL RIGHTS RESERVED. Accessed by David Dammon on Jun 21, 2017 12:30:52 PM pursuant to License Agreement with ICC. No further reproduction or distribution authorized. ANY UNAUTHORIZED REPRODUCTION OR DISTRIBUTION IS A VIOLATION OF THE FEDERAL COPYRIGHT ACT AND THE LICENSE AGREEMENT, AND SUBJECT TO CIVIL AND CRIMINAL PENALTIES THEREUNDER.

E104.2 Communication features. *Accessible* communication features shall be provided in accordance with Sections E104.2.1 through E104.2.4.

❖ Rooms with communication features are intended for persons with hearing impairments. The communication features offer an alternative means for communication, either through a phone system or to know when someone is at the door and to check who they are. Examples of communication features are telephones, doorbells and peepholes (see ICC A117.1 Section 1006). In units required to have accessible communication features, the designer should consider compatibility with different types of adaptive equipment used by people with hearing impairments. Telephone interface jacks should be compatible with both digital and analog signal use. If an audio headphone jack is provided on a speaker phone, a cutoff switch can be included in the jack so that insertion of the jack cuts off the speaker. If a telephone-like handset is used, the external speakers can be turned off when the handset is removed from the cradle. For headset or external amplification system compatibility, a standard subminiature jack installed in the telephone will provide the most flexibility. Peepholes in doors should be installed at heights for standing persons.

ICC A117.1 Section 1006 also includes information on visible notification for fire alarms. Since that is part of the building alarm system, requirements are scoped in the code in Section 907.5.2.3 and its subsections.

E104.2.1 Transient lodging. In *transient lodging* facilities, *sleeping units* with *accessible* communication features shall be provided in accordance with Table E104.2.1. Units required to comply with Table E104.2.1 shall be dispersed among the various classes of units.

❖ In transient lodging facilities, an alternative notification system for persons with hearing impairments must be offered in the number of dwelling and sleeping units specified in Table E104.2.1 (see the definition for "Dwelling units" and "Sleeping units" in Chapter 2). The number of dwelling or sleeping units that are required to have accessible communication features depends on the number of units provided. The number of accessible communication features is based on the number of units, not the number of beds. The rooms with accessible communication features are not required to be the same rooms that contain features to make them accessible to persons using wheelchairs, since the features serve different needs. Requirements for communication features within dwelling and sleeping units are found in Section 1006 of ICC A117.1.

Table E104.2.1. See below.

❖ See the commentary to Section 104.2.1.

E104.2.2 Group I-3. In Group I-3 occupancies at least 2 percent, but no fewer than one of the total number of general holding cells and general housing cells equipped with audible *emergency alarm systems* and permanently installed telephones within the cell, shall comply with Section E104.2.4.

❖ Jails are required to have a fire alarm system in accordance with Section 907.2.6. When inmates or detainees are allowed independent means of egress, a minimum of 2 percent of the cells must have visible of as well as audible alarm notification. The code and Section 702.1of ICC A117.1 both reference NFPA 72 for installation requirements. If cells also have permanently installed telephones, 2 percent of the telephones shall have a visible notification device as well as volume control and a place to plug in a TTY. The visual notification device for the phone cannot be connected to the visual alarms for the fire alarm system.

E104.2.3 Dwelling units and sleeping units. Where *dwelling units* and *sleeping units* are altered or added, the requirements of Section E104.2 shall apply only to the units being altered or added until the number of units with *accessible*

TABLE E104.2.1
DWELLING OR SLEEPING UNITS WITH ACCESSIBLE COMMUNICATION FEATURES

TOTAL NUMBER OF DWELLING OR SLEEPING UNITS PROVIDED	MINIMUM REQUIRED NUMBER OF DWELLING OR SLEEPING UNITS WITH ACCESSIBLE COMMUNICATION FEATURES
1	1
2 to 25	2
26 to 50	4
51 to 75	7
76 to 100	9
101 to 150	12
151 to 200	14
201 to 300	17
301 to 400	20
401 to 500	22
501 to 1,000	5% of total
1,001 and over	50 plus 3 for each 100 over 1,000

INTERNATIONAL CODE COUNCIL®
Copyright © 2015 ICC. ALL RIGHTS RESERVED. Accessed by David Dammon on Jun 21, 2017 12:30:52 PM pursuant to License Agreement with ICC. No further reproduction or distribution authorized. ANY UNAUTHORIZED REPRODUCTION OR DISTRIBUTION IS A VIOLATION OF THE FEDERAL COPYRIGHT ACT AND THE LICENSE AGREEMENT, AND SUBJECT TO CIVIL AND CRIMINAL PENALTIES THEREUNDER.

communication features complies with the minimum number required for new construction.

❖ When transient lodging dwelling and sleeping units are altered or added, only these units are counted to determine the number of units that will require accessible communication features. Once the entire building meets the number required for new construction, no additional accessible communication features are required. This is consistent with the intent in the *International Existing Building Code*® (IEBC®) expressed for when Accessible and Type A units are required in existing buildings.

E104.2.4 Notification devices. Visual notification devices shall be provided to alert room occupants of incoming telephone calls and a door knock or bell. Notification devices shall not be connected to visual alarm signal appliances. Permanently installed telephones shall have volume controls and an electrical outlet complying with ICC A117.1 located within 48 inches (1219 mm) of the telephone to facilitate the use of a TTY.

❖ A type of visual notification, such as a flashing light, must be provided in the hotel rooms specified in Table E104.2.1. The purpose of the visual notification is to alert a person with a hearing impairment to incoming phone calls or someone knocking at the door. The notification cannot be connected to any type of visual alarm system.

ICC A117.1 also requires a peephole, so that once the visible doorbell flashes, the person in the room can visually verify who is on the other side of the door. The doorbell height should be based on a standing person.

If phones are provided within the dwelling or sleeping unit, they must be equipped with a volume control and be located within 48 inches (1219 mm) of an electrical outlet to accommodate a TTY. Specific requirements for telephones are provided in Section 704 of ICC A117.1.

SECTION E105
OTHER FEATURES AND FACILITIES

E105.1 Portable toilets and bathing rooms. Where multiple single-user portable toilet or bathing units are clustered at a single location, at least 5 percent, but not less than one toilet unit or bathing unit at each cluster, shall be *accessible*. Signs containing the International Symbol of Accessibility shall identify *accessible* portable toilets and bathing units.

Exception: Portable toilet units provided for use exclusively by construction personnel on a construction site.

❖ When portable toilets are provided for special events, at least 5 percent must be accessible. A "cluster" is a group of toilets adjacent or in close proximity to one another. This is consistent with the requirements for sinks in Section 1109.3. Appropriate signage is also required. If portable toilets are provided for personnel on a construction site, they are not required to be accessible. This is consistent with Section 1103.2.5. Technical requirements for bathroom and signage are found in Sections 602 and 703 of ICC A117.1, respectively.

E105.2 Laundry equipment. Where provided in spaces required to be *accessible*, washing machines and clothes dryers shall comply with this section.

❖ When laundry facilities are provided that are open to the general public, or are associated with Accessible, Type A or B units, the washers and dryers must be accessible in accordance with Sections E105.2.1 and E105.2.2. This is consistent with Section 1107.3. The requirements are based on the washers or dryers provided in each space, not the total within the building. For example, a dorm with a single washer and dryer on each floor of a building should provide an accessible washer and dryer in each location.

E105.2.1 Washing machines. Where three or fewer washing machines are provided, at least one shall be *accessible*. Where more than three washing machines are provided, at least two shall be *accessible*.

❖ When three or fewer washing machines are provided in a laundry room, at least one must meet the requirements for accessibility in Section 611 in ICC A117.1 for clear floor space, operable parts and height. In larger facilities, at least two washers must be accessible. Requirements include criteria for clear floor space to access the unit; operable parts that meet height, graspability and force requirements; and the location of doors to access the interior of the appliance. There are different requirements for equipment based on if the machines are top loaders or front loaders.

E105.2.2 Clothes dryers. Where three or fewer clothes dryers are provided, at least one shall be *accessible*. Where more than three clothes dryers are provided, at least two shall be *accessible*.

❖ The same criteria for washers is expected for dryers (see commentary, Section E105.2.1).

E105.3 Gaming machines, depositories, vending machines, change machines and similar equipment. At least one of each type of depository, vending machine, change machine and similar equipment shall be *accessible*. Two percent of gaming machines shall be *accessible* and provided with a front approach. *Accessible* gaming machines shall be distributed throughout the different types of gaming machines provided.

Exception: Drive-up-only depositories are not required to comply with this section.

❖ All types of self-service machinery must be accessible. Examples include the book return at a library, a change machine at a laundry mat or a soda machine. A drive-up-only depository, such as a drive-up night deposit at a bank, is not required to be accessible. To be accessible, the equipment must meet the provisions for clear floor space and height and have operable parts within reach ranges in accordance with Section 309 of ICC A117.1.

INTERNATIONAL CODE COUNCIL®
Copyright © 2015 ICC. ALL RIGHTS RESERVED. Accessed by David Dammon on Jun 21, 2017 12:30:52 PM pursuant to License Agreement with ICC. No further reproduction or distribution authorized. ANY UNAUTHORIZED REPRODUCTION OR DISTRIBUTION IS A VIOLATION OF THE FEDERAL COPYRIGHT ACT AND THE LICENSE AGREEMENT, AND SUBJECT TO CIVIL AND CRIMINAL PENALTIES THEREUNDER.

While not addressed in the 2010 ADA Standard, gaming machines were added as consistent with other types of self-service machines to allow equal access. See the commentary to Section 1109.15 for further information on gaming machines.

E105.4 Mailboxes. Where *mailboxes* are provided in an interior location, at least 5 percent, but not less than one, of each type shall be *accessible*. In residential and institutional facilities, where *mailboxes* are provided for each *dwelling unit* or *sleeping unit*, *accessible mailboxes* shall be provided for each unit required to be an *Accessible unit*.

❖ Whenever mailboxes are provided, such as in an office building lobby, at least 5 percent are required to be accessible. In residential and institutional facilities, if mailboxes are provided for each unit, the mailboxes for the Accessible units must have adequate clear floor space and meet operable parts provisions. Examples of such types of facilities would be dorms, hotels, assisted living facilities or nursing homes. The number of Accessible units depends on the type of facility (see Section 1107 for requirements). To be accessible, the mailbox must meet the provisions for clear floor space, height and have operable parts within reach ranges in accordance with Section 309 of ICC A117.1.

E105.5 Automatic teller machines and fare machines. Where automatic teller machines or self-service fare vending, collection or adjustment machines are provided, at least one machine of each type at each location where such machines are provided shall be *accessible*. Where bins are provided for envelopes, wastepaper or other purposes, at least one of each type shall be *accessible*.

❖ When such machines are provided, such as at banks and in bus or train stations, at least one of each type of machine must be accessible. If a site provides both interior and exterior ATMs, each such installation is considered a separate location. Accessible ATMs, including those with speech and those that are within reach of people who use wheelchairs, must provide all the functions provided to customers at that location at all times. For example, it is unacceptable for the accessible ATM only to provide cash withdrawals while inaccessible ATMs in that area also sell theater tickets or postage stamps. Specific criteria are provided in Section 707 of ICC A117.1.

E105.6 Two-way communication systems. Where two-way communication systems are provided to gain admittance to a building or facility or to restricted areas within a building or facility, the system shall be *accessible*.

❖ Apartments or condominiums with secured entrances often have some type of two-way communication system at the entry so residents can screen persons entering the building. Specific criteria for systems connected with dwelling or sleeping units are provided in Sections 1006.6 and 1006.7 of ICC A117.1. Similar provisions would be applicable to two-way communication systems provided at other locations, such as office buildings, courthouses and other facilities where access to the building or restricted spaces are dependent on two-way communication systems.

This two-way communication system is different than the two-way communication systems that are required as part of accessible means of egress (see Sections 1009.6.5 and 1009.8) or occupant evacuation elevators (see Section 3008.6.6); or the two-way system within a high-rise exit stairway (see Section 403.5.3.1).

SECTION E106
TELEPHONES

E106.1 General. Where coin-operated public pay telephones, coinless public pay telephones, public *closed-circuit telephones*, courtesy phones or other types of public telephones are provided, *accessible* public telephones shall be provided in accordance with Sections E106.2 through E106.5 for each type of public telephone provided. For purposes of this section, a bank of telephones shall be considered two or more adjacent telephones.

❖ Many types of public phones are provided, such as pay telephones, courtesy phones throughout airports, house phones in hotels, entrance phones in apartment complexes, etc. Wherever such phones are provided, at least one of each type must comply with Sections E106.2 through E106.5. A bank of telephones is defined as two or more telephones in one location.

It is not the intent of these provisions to require telephones. This is applicable only where telephones are provided.

E106.2 Wheelchair-accessible telephones. Where public telephones are provided, wheelchair-accessible telephones shall be provided in accordance with Table E106.2.

Exception: Drive-up-only public telephones are not required to be *accessible*.

❖ For each type of public telephone provided, the number of phones specified in Table E106.2 must be accessible. Specific criteria are provided in Section 704.2 of ICC A117.1.

TABLE E106.2
WHEELCHAIR-ACCESSIBLE TELEPHONES

NUMBER OF TELEPHONES PROVIDED ON A FLOOR, LEVEL OR EXTERIOR SITE	MINIMUM REQUIRED NUMBER OF WHEELCHAIR-ACCESSIBLE TELEPHONES
1 or more single unit	1 per floor, level and exterior site
1 bank	1 per floor, level and exterior site
2 or more banks	1 per bank

❖ If single telephones are provided in several locations or one bank of telephones is provided on a floor level or over a site, then at least one of each type must be accessible. The accessible telephone can be accessed using a parallel approach or a forward

INTERNATIONAL CODE COUNCIL®
Copyright © 2015 ICC. ALL RIGHTS RESERVED. Accessed by David Dammon on Jun 21, 2017 12:30:52 PM pursuant to License Agreement with ICC. No further reproduction or distribution authorized. ANY UNAUTHORIZED REPRODUCTION OR DISTRIBUTION IS A VIOLATION OF THE FEDERAL COPYRIGHT ACT AND THE LICENSE AGREEMENT, AND SUBJECT TO CIVIL AND CRIMINAL PENALTIES THEREUNDER.

approach. If two or more banks are provided on a floor level or over a site, at least one telephone at each location must be accessible.

E106.3 Volume controls. All public telephones provided shall have *accessible* volume control.

❖ Every public telephone must have volume controls and be identified with appropriate signage. Amplifiers on pay phones are located in the base of the handset or are built into the telephone. Most are operated by pressing a button or key. If the microphone in the handset is not being used, a mute button that temporarily turns off the microphone can also reduce the amount of background noise that the person can hear in the earpiece. Consider compatibility issues when matching an amplified handset with a phone or phone system. Amplified handsets that can be switched with pay telephone handsets are available. Specific criteria are found in Section 704.3 of ICC A117.1.

E106.4 TTYs. TTYs shall be provided in accordance with Sections E106.4.1 through E106.4.9.

❖ TTYs are defined in ICC A117.1 as "machinery or equipment that employs interactive, graphic communications through the transmission of coded signals across the standard telephone network." The term "TTY" also refers to devices known as text telephones and TDDs. Text telephones enable a person with a hearing impairment to utilize a telephone to send and receive text messages. Consideration should be given to phone systems that can accommodate both digital and analog transmissions for compatibility with digital and analog TTYs. Sections E106.4.1 through E106.4.4 indicate when TTYs are required within a bank of telephones, on a floor, within a building or on a site (see Commentary Figure E106.4). More than one section could apply. Sections E106.4.5 through E106.4.8 are special requirements to specific types of sites. Section E106.4.9 deals with appropriate signage.



Figure E106.4
EXAMPLE OF TELEPHONE WITH TTY

E106.4.1 Bank requirement. Where four or more public pay telephones are provided at a bank of telephones, at least one public TTY shall be provided at that bank.

Exception: TTYs are not required at banks of telephones located within 200 feet (60 960 mm) of, and on the same floor as, a bank containing a public TTY.

❖ A TTY is required wherever four or more telephones are located together. If another bank is located both on the same floor and within 200 feet (60 960 mm) of the TTY, that bank is not required to contain a TTY.

E106.4.2 Floor requirement. Where four or more public pay telephones are provided on a floor of a privately owned building, at least one public TTY shall be provided on that floor. Where at least one public pay telephone is provided on a floor of a publicly owned building, at least one public TTY shall be provided on that floor.

❖ This section is similar to Section E106.4.1; however, the number of phones on the floor is counted, instead of within a bank. The term "publicly owned building" is intended to apply to facilities such as government buildings, courthouses, libraries, schools, police stations, fire stations, park district buildings, etc.

E106.4.3 Building requirement. Where four or more public pay telephones are provided in a privately owned building, at least one public TTY shall be provided in the building. Where at least one public pay telephone is provided in a publicly owned building, at least one public TTY shall be provided in the building.

❖ This section is similar to Sections E106.4.1 and E106.4.2; however, the number of phones in a building is counted, instead of within a bank or on a floor. In some situations, one TTY can satisfy more than one requirement. For example, the TTY required for a bank of phones could also satisfy the requirement for the TTY for the building. The term "publicly owned building" is intended to apply to facilities such as government buildings, courthouses, libraries, schools, police stations, fire stations, park district buildings, etc.

E106.4.4 Site requirement. Where four or more public pay telephones are provided on a site, at least one public TTY shall be provided on the site.

❖ This section is similar to Sections E106.4.1, E106.4.2 and E106.4.3; however, the number of phones on a site is counted. In some situations, one TTY can satisfy more than one requirement. For example, the TTY required for a bank of phones could also satisfy the requirement for the TTY for the building. However, the requirement for a TTY on an exterior site cannot be met by installing a TTY inside the building due to the phones in the building typically not being available 24 hours a day.

E106.4.5 Rest stops, emergency road stops and service plazas. Where a public pay telephone is provided at a public

INTERNATIONAL CODE COUNCIL®
Copyright © 2015 ICC. ALL RIGHTS RESERVED. Accessed by David Dammon on Jun 21, 2017 12:30:52 PM pursuant to License Agreement with ICC. No further reproduction or distribution authorized. ANY UNAUTHORIZED REPRODUCTION OR DISTRIBUTION IS A VIOLATION OF THE FEDERAL COPYRIGHT ACT AND THE LICENSE AGREEMENT, AND SUBJECT TO CIVIL AND CRIMINAL PENALTIES THEREUNDER.

rest stop, emergency road stop or service plaza, at least one public TTY shall be provided.

❖ A TTY is required at these types of facilities regardless of the number of phones provided. The possibility of emergencies or a need for assistance at these locations increases the need for someone to be able to make a telephone call.

E106.4.6 Hospitals. Where a public pay telephone is provided in or adjacent to a hospital emergency room, hospital recovery room or hospital waiting room, at least one public TTY shall be provided at each such location.

❖ In hospitals, when phones are located for public use in an emergency room, recovery room or waiting room, a TTY is required at each location. The possibility of emergencies or a need for assistance at these locations increases the need for someone to be able to make a telephone call.

E106.4.7 Transportation facilities. Transportation facilities shall be provided with TTYs in accordance with Sections E109.2.5 and E110.2 in addition to the TTYs required by Sections E106.4.1 through E106.4.4.

❖ Transportation facilities, such as bus stations, train stations and airports, have specific requirements as stated in Sections E109.2.5 and E110.2. Additionally, they must comply with the requirements based on the number of telephones in a bank, on a floor, within a building or on a site.

E106.4.8 Detention and correctional facilities. In detention and correctional facilities, where a public pay telephone is provided in a secured area used only by detainees or inmates and security personnel, then at least one TTY shall be provided in at least one secured area.

❖ Specific criteria are provided for the detainee side of detention and correctional facilities. Phones available on the public side should comply with Sections E106.4.1 through E106.4.4.

E106.4.9 Signs. Public TTYs shall be identified by the International Symbol of TTY complying with ICC A117.1. Directional signs indicating the location of the nearest public TTY shall be provided at banks of public pay telephones not containing a public TTY. Additionally, where signs provide direction to public pay telephones, they shall also provide direction to public TTYs. Such signs shall comply with visual signage requirements in ICC A117.1 and shall include the International Symbol of TTY.

❖ Signage must be provided indicating the location of TTYs. Technical requirements for signage can be found in Sections 703.2 and 703.6 of ICC A117.1. See Commentary Figure 1110.1 for an example of the TTY/TDD symbol.

E106.5 Shelves for portable TTYs. Where a bank of telephones in the interior of a building consists of three or more public pay telephones, at least one public pay telephone at the bank shall be provided with a shelf and an electrical outlet.

Exceptions:

1. In secured areas of detention and correctional facilities, if shelves and outlets are prohibited for purposes of security or safety shelves and outlets for TTYs are not required to be provided.
2. The shelf and electrical outlet shall not be required at a bank of telephones with a TTY.

❖ If a bank of telephones has three or more public telephones, a shelf and electrical outlet must be provided to allow a person with a hearing impairment to utilize his or her own portable TTY. In a bank of four or more phones, a public TTY is required (see Section E106.4.1); therefore, a shelf and outlet for a portable TTY are not required within the same bank. Due to security concerns, there may be situations in jails where the shelf and outlet for a portable TTY is not required. Technical requirements for the shelf can be found in Section 704.6 of ICC A117.1.

SECTION E107
SIGNAGE

E107.1 Signs. Required *accessible* portable toilets and bathing facilities shall be identified by the International Symbol of Accessibility.

❖ Accessible portable toilets must be identified (see Section E105.2).

E107.2 Designations. Interior and exterior signs identifying permanent rooms and spaces shall be visual characters, raised characters and braille complying with ICC A117.1. Where pictograms are provided as designations of interior rooms and spaces, the pictograms shall have visual characters, raised characters and braille complying with ICC A117.1.

Exceptions:

1. Exterior signs that are not located at the door to the space they serve are not required to comply.
2. Building directories, menus, seat and row designations in assembly areas, occupant names, building addresses and company names and logos are not required to comply.
3. Signs in parking facilities are not required to comply.
4. Temporary (seven days or less) signs are not required to comply.
5. In detention and correctional facilities, signs not located in public areas are not required to comply.

❖ This section applies to signs that provide designations, labels or names for interior rooms or spaces where the sign is not likely to change over time.

INTERNATIONAL CODE COUNCIL®
Copyright © 2015 ICC. ALL RIGHTS RESERVED. Accessed by David Dammon on Jun 21, 2017 12:30:52 PM pursuant to License Agreement with ICC. No further reproduction or distribution authorized. ANY UNAUTHORIZED REPRODUCTION OR DISTRIBUTION IS A VIOLATION OF THE FEDERAL COPYRIGHT ACT AND THE LICENSE AGREEMENT, AND SUBJECT TO CIVIL AND CRIMINAL PENALTIES THEREUNDER.

Examples include room numbers in hospitals or hotels, restrooms, room names in conference centers, etc. Where permanent signage is provided, signage consisting of letters that meet both the visual and raised letter requirements and braille must also be provided (see Commentary Figure E107.2). While most of the time this is one sign, the visual signage could be provided on a different sign where being located higher might make it more visible.

When pictograms are utilized to identify a space, such as the women's restroom, they must also have braille. Pictograms that provide information about a space, such as "no smoking" or the International Symbol of Accessibility, are not required to have text descriptors. For signage requirements, reference Section 703 of ICC A117.1. Exceptions are provided for types of signs where it may not be effective or practical to provide signage that needs to be felt to be read. Examples would be the remote sign at the street indicating the name or occupant of the building, the menu above a take-out counter, temporary signage or building directories.



Figure E107.2
EXAMPLE OF ROOM DESIGNATION SIGNAGE

E107.3 Directional and informational signs. Signs that provide direction to, or information about, permanent interior spaces of the site and facilities shall contain visual characters complying with ICC A117.1.

Exception: Building directories, personnel names, company or occupant names and logos, menus and temporary (seven days or less) signs are not required to comply with ICC A117.1.

❖ Directional information must meet requirements for font style, location, finish and contrast in order for signage to be readable by persons with limited vision (see Commentary Figure E107.3). The characters should contrast as much as possible with their background. Additional factors affecting the readability of signage include lighting, surface glare and text uniformity. When making color choices, remember that a percentage of the population is color blind; therefore, some color combinations may not have adequate contrast for these individuals (for example, red and blue). Color blindness is typically a genetic condition, and it is much more common in men than in women. Approximately one in 12 men has at least some color perception problems. Less common are acquired deficiencies that stem from injury, disease or the aging process. Also, although not called "color blindness," when people age, their corneas typically turn yellowish, severely hampering their ability to see violet and blue colors. The exception is for signage that may be changeable, such as building directories, personnel names, etc. For requirements for this signage, reference Section 703.2 of ICC A117.1.



Figure E107.3
EXAMPLE OF DIRECTIONAL SIGNAGE

E107.4 Other signs. Signage indicating special accessibility provisions shall be provided as follows:

1. At bus stops and terminals, signage must be provided in accordance with Section E108.4.

INTERNATIONAL CODE COUNCIL®
Copyright © 2015 ICC. ALL RIGHTS RESERVED. Accessed by David Dammon on Jun 21, 2017 12:30:52 PM pursuant to License Agreement with ICC. No further reproduction or distribution authorized. ANY UNAUTHORIZED REPRODUCTION OR DISTRIBUTION IS A VIOLATION OF THE FEDERAL COPYRIGHT ACT AND THE LICENSE AGREEMENT, AND SUBJECT TO CIVIL AND CRIMINAL PENALTIES THEREUNDER.

2. At fixed facilities and stations, signage must be provided in accordance with Sections E109.2.2 through E109.2.2.3.
3. At airports, terminal information systems must be provided in accordance with Section E110.3.

❖ This section is a reference to additional signage requirements found in subsequent sections. This was done in an effort to include all signage requirements in one section.

SECTION E108
BUS STOPS

E108.1 General. Bus stops shall comply with Sections E108.2 through E108.5.

❖ Bus stops and terminals provide access to public transportation and are considered an essential service; therefore, access in these facilities is of special concern. Technical requirements for transportation facilities are found in Section 805 of ICC A117.1.

E108.2 Bus boarding and alighting areas. Bus boarding and alighting areas shall comply with Sections E108.2.1 through E108.2.4.

❖ "Kneeling" buses (those with a lift) deploy a ramp to allow access by persons with physical disabilities. When new bus stop pads are constructed to allow use of these buses, the requirements in Sections E108.2.1 through E108.2.4 are applicable. At bus stops where a shelter is provided, the bus stop pad can be located either within or outside the shelter.

E108.2.1 Surface. Bus boarding and alighting areas shall have a firm, stable surface.

❖ To allow proper deployment of the ramp and approach by a person in a wheelchair, a firm, stable surface must be used for the pad. Typically, this will be some form of concrete or asphalt.

E108.2.2 Dimensions. Bus boarding and alighting areas shall have a clear length of 96 inches (2440 mm) minimum, measured perpendicular to the curb or vehicle roadway edge, and a clear width of 60 inches (1525 mm) minimum, measured parallel to the vehicle roadway.

❖ To allow maneuvering for both the ramp and the person using the wheelchair, a bus stop pad should be a minimum of 96 inches (2438 mm) deep and 60 inches (1524 mm) wide.

E108.2.3 Connection. Bus boarding and alighting areas shall be connected to streets, sidewalks or pedestrian paths by an *accessible route* complying with Section 1104.

❖ All bus stop pads must have an accessible route leading from public access points, such as the sidewalk, to the bus stop pad. A pad allowing for kneeling buses is not beneficial if the pad itself is not accessible.

This is not intended to require a curb cut immediately adjacent to the bus stop since most kneeling buses pick up on the side and directly from the sidewalk. However, if the type of kneeling bus that serves this route provides access through the rear of the bus instead of the side, a curb cut in the immediate area may be needed.

E108.2.4 Slope. Parallel to the roadway, the slope of the bus boarding and alighting area shall be the same as the roadway, to the maximum extent practicable. For water drainage, a maximum slope of 1:48 perpendicular to the roadway is allowed.

❖ The bus stop pad should be as flat as possible to allow a wheelchair user to wait at this location comfortably. A maximum slope of one unit vertical in 48 units horizontal (1:48) is allowed for drainage of rainwater to the curb and gutter drainage system provided along the edge of the road.

E108.3 Bus shelters. Where provided, new or replaced bus shelters shall provide a minimum clear floor or ground space complying with ICC A117.1, Section 305, entirely within the shelter. Such shelters shall be connected by an *accessible route* to the boarding area required by Section E108.2.

❖ A wheelchair parking space [30 inches by 48 inches (762 mm by 1219 mm)] must be provided within the bus shelter. If the shelter is small enough to meet the alcove requirements in Section 305.7 of ICC A117.1, additional space is required for maneuvering. In addition, an accessible route is required from the bus shelter to the bus stop (see Section E108.2).

E108.4 Signs. New bus route identification signs shall have finish and contrast complying with ICC A117.1. Additionally, to the maximum extent practicable, new bus route identification signs shall provide visual characters complying with ICC A117.1.

Exception: Bus schedules, timetables and maps that are posted at the bus stop or bus bay are not required to meet this requirement.

❖ The bus routes must be identified with visual characters that have light/dark contrast and a nonglare surface so they are easily readable. As much as practicable, the signage must also meet the requirements in Section 703.2 of ICC A117.1, for character form and spacing, line spacing and mounting height. There is an exception for schedules, timetables and maps due to the amount of information provided.

E108.5 Bus stop siting. Bus stop sites shall be chosen such that, to the maximum extent practicable, the areas where lifts or ramps are to be deployed comply with Sections E108.2 and E108.3.

❖ Whenever possible, bus stop sites should be chosen based on efforts to comply with the previous requirements for bus stop pads and bus shelters. Site constraints, such as a steeply inclined street, may not always make this practical.

INTERNATIONAL CODE COUNCIL®
Copyright © 2015 ICC. ALL RIGHTS RESERVED. Accessed by David Dammon on Jun 21, 2017 12:30:52 PM pursuant to License Agreement with ICC. No further reproduction or distribution authorized. ANY UNAUTHORIZED REPRODUCTION OR DISTRIBUTION IS A VIOLATION OF THE FEDERAL COPYRIGHT ACT AND THE LICENSE AGREEMENT, AND SUBJECT TO CIVIL AND CRIMINAL PENALTIES THEREUNDER.

SECTION E109
TRANSPORTATION FACILITIES AND STATIONS

E109.1 General. Fixed transportation facilities and stations shall comply with the applicable provisions of Section E109.2.

❖ Fixed transportation facilities and stations, such as train or light rail stations, provide access to public transportation and are considered an essential service; therefore, access in these facilities is of special concern. Technical requirements for transportation facilities can be found in Section 805 of ICC A117.1.

E109.2 New construction. New stations in rapid rail, light rail, commuter rail, intercity rail, high speed rail and other fixed guideway systems shall comply with Sections E109.2.1 through E109.2.8.

❖ All new construction involved with fixed guideway systems, including stations and terminals, is required to comply with this section.

E109.2.1 Station entrances. Where different entrances to a station serve different transportation fixed routes or groups of fixed routes, at least one entrance serving each group or route shall comply with Section 1104.

❖ A fixed guideway system, such as a commuter train system, may have separate platforms or entrances for a group of routes. When this is the case, at least one accessible route leading from public access points (e.g., public sidewalk, public parking, etc.) to the transit platform utilized for each group must be provided. When transit systems are underground, an accessible route must provide access to each subway station. As much as possible, the accessible entrance should be the same as the main entrance to the facility.

E109.2.2 Signs. Signage in fixed transportation facilities and stations shall comply with Sections E109.2.2.1 through E109.2.2.3.

❖ Specific requirements are listed for visual signage, or signs that have visual and raised lettering and braille identification, and informational signs.

E109.2.2.1 Raised character and braille signs. Where signs are provided at entrances to stations identifying the station or the entrance, or both, at least one sign at each entrance shall be raised characters and braille. A minimum of one raised character and braille sign identifying the specific station shall be provided on each platform or boarding area. Such signs shall be placed in uniform locations at entrances and on platforms or boarding areas within the transit system to the maximum extent practicable.

Exceptions:

1. Where the station has no defined entrance but signs are provided, the raised characters and braille signs shall be placed in a central location.
2. Signs are not required to be raised characters and braille where audible signs are remotely transmitted to hand-held receivers, or are user or proximity actuated.

❖ When identification signs are provided at a facility entrance, a sign with raised letters and braille for the visually impaired must also be provided. A raised letter and braille sign must also be provided at each platform or boarding area. The location of such signage should be consistent throughout the rail system. Signage must include both raised letters and braille and meet the requirements of Section 703 of ICC A117.1. Raised letter and braille signage is not required when information is provided by alternative audible means. The purpose of Exception 2 is to allow for emerging technologies such as an audible sign system using infrared transmitters and receivers. These new systems may provide greater accessibility in the transit environment than traditional braille and raised letter signs. The transmitters are placed on or next to print signs and transmit their information to an infrared receiver that is held by a person. By scanning an area, the person will hear the sign. This means that signs can be placed well out of reach of braille readers, even on parapet walls and on walls beyond barriers. Additionally, such signs can be used to provide wayfinding information that cannot be efficiently conveyed on braille signs. This entrance signage can also be a visual sign, or the visual information may be located higher in order for more people to be able to see it.

E109.2.2.2 Identification signs. Stations covered by this section shall have identification signs containing visual characters complying with ICC A117.1. Signs shall be clearly visible and within the sightlines of a standing or sitting passenger from within the train on both sides when not obstructed by another train.

❖ When identification signs are provided so that persons on the trains can identify the station, the signs must meet the requirements of Section 703.2 of ICC A117.1 for visual characters including font style, finish and contrast.

E109.2.2.3 Informational signs. Lists of stations, routes and destinations served by the station that are located on boarding areas, *platforms* or *mezzanines* shall provide visual characters complying with ICC A117.1. Signs covered by this provision shall, to the maximum extent practicable, be placed in uniform locations within the transit system.

❖ Signs indicating stations, routes and destinations served by the train system accessed from that platform must comply with Section 703.2 of ICC A117.1 for visual characters including font style, finish and contrast. The location of such signage should be consistent throughout the system. Route maps are not required to comply with the informational sign requirements.

E109.2.3 Fare machines. Self-service fare vending, collection and adjustment machines shall comply with ICC A117.1,

INTERNATIONAL CODE COUNCIL®
Copyright © 2015 ICC. ALL RIGHTS RESERVED. Accessed by David Dammon on Jun 21, 2017 12:30:52 PM pursuant to License Agreement with ICC. No further reproduction or distribution authorized. ANY UNAUTHORIZED REPRODUCTION OR DISTRIBUTION IS A VIOLATION OF THE FEDERAL COPYRIGHT ACT AND THE LICENSE AGREEMENT, AND SUBJECT TO CIVIL AND CRIMINAL PENALTIES THEREUNDER.

Section 707. Where self-service fare vending, collection or adjustment machines are provided for the use of the general public, at least one *accessible* machine of each type provided shall be provided at each *accessible* point of entry and *exit*.

❖ Self-service fare machines must be accessible in accordance with Section 707 of ICC A117.1. The requirements are the same as for ATM machines. If self-service machines are provided, at least one accessible machine must be provided along the accessible route between the entrance and the platform.

E109.2.4 Rail-to-platform height. Station platforms shall be positioned to coordinate with vehicles in accordance with the applicable provisions of 36 CFR, Part 1192. Low-level platforms shall be 8 inches (250 mm) minimum above top of rail.

Exception: Where vehicles are boarded from sidewalks or street level, low-level platforms shall be permitted to be less than 8 inches (250 mm).

❖ The height and position of a platform must be coordinated with the floor of the vehicles it serves to minimize the vertical and horizontal gaps, in accordance with the *ADA Accessibility Guidelines for Transportation Vehicles* (36 CFR Part 1192). The vehicle guidelines, categorized by bus, van, light rail, rapid rail, commuter rail and intercity rail are available at www.access-board.gov. The preferred alignment is a high platform, level with the vehicle floor. In some cases, the vehicle guidelines permit use of a low platform in conjunction with a lift or ramp. Most such low platforms must have a minimum height of 8 inches (203 mm) above the top of the rail. Some vehicles are designed to be boarded from a street or the sidewalk along the street and the exception permits such boarding areas to be less than 8 inches (203 mm) high.

E109.2.5 TTYs. Where a public pay telephone is provided in a transit facility (as defined by the Department of Transportation), at least one public TTY complying with ICC A117.1, Section 704.4, shall be provided in the station. In addition, where one or more public pay telephones serve a particular entrance to a transportation facility, at least one TTY telephone complying with ICC A117.1, Section 704.4, shall be provided to serve that entrance.

❖ Due to the essential nature of the facility, at least one public telephone in a transit facility is required to have a permanent TTY in accordance with Section 704.4 of ICC A117.1. When a bank of four or more is provided at an entrance, at least one is required to have a permanent TTY in accordance with Section 704.4 of ICC A117.1 (see also commentary, Section E106.4.7).

E109.2.6 Track crossings. Where a circulation path serving boarding platforms crosses tracks, an *accessible* route shall be provided.

Exception: Openings for wheel flanges shall be permitted to be $2^1/_2$ inches (64 mm) maximum.

❖ If people utilizing the train station must cross tracks to access the platform, it is necessary to provide an accessible route that takes into account the changes in elevation and gaps associated with such a route. Front wheels of wheelchairs are small, and if a person in a wheelchair got stuck while crossing the tracks, the consequences could be severe. If it is not possible to meet the criteria specified, an alternative accessible route must be provided. This requirement is not a requirement for track crossings remote from the boarding platform.

E109.2.7 Public address systems. Where public address systems convey audible information to the public, the same or equivalent information shall be provided in a visual format.

❖ If a public address system is utilized within a facility to provide information to passengers, there must be an alternative means for providing the same information to persons with a hearing impairment.

E109.2.8 Clocks. Where clocks are provided for use by the general public, the clock face shall be uncluttered so that its elements are clearly visible. Hands, numerals and digits shall contrast with the background either light-on-dark or dark-on-light. Where clocks are mounted overhead, numerals and digits shall comply with visual character requirements.

❖ Clocks provided in transportation facilities must be readily distinguishable. When clocks are provided overhead, the numerals must comply with Section 703.2 of ICC A117.1 for visual characters.

SECTION E110
AIRPORTS

E110.1 New construction. New construction of airports shall comply with Sections E110.2 through E110.4.

❖ Airports provide access to public transportation and are considered an essential service; therefore, access in these facilities is of special concern. Technical requirements for transportation facilities can be found in Section 805 of ICC A117.1.

E110.2 TTYs. Where public pay telephones are provided, at least one TTY shall be provided in compliance with ICC A117.1, Section 704.4. Additionally, if four or more public pay telephones are located in a main terminal outside the security areas, a concourse within the security areas or a baggage claim area in a terminal, at least one public TTY com-

INTERNATIONAL CODE COUNCIL®
Copyright © 2015 ICC. ALL RIGHTS RESERVED. Accessed by David Dammon on Jun 21, 2017 12:30:52 PM pursuant to License Agreement with ICC. No further reproduction or distribution authorized. ANY UNAUTHORIZED REPRODUCTION OR DISTRIBUTION IS A VIOLATION OF THE FEDERAL COPYRIGHT ACT AND THE LICENSE AGREEMENT, AND SUBJECT TO CIVIL AND CRIMINAL PENALTIES THEREUNDER.

plying with ICC A117.1, Section 704.4, shall also be provided in each such location.

❖ Due to the essential nature of the facility, at least one public telephone in an airport facility is required to have a permanent TTY in accordance with Section 704.4 of ICC A117.1. Given the restricted areas in an airport, when a bank of four or more phones is provided at either side of security checkpoints or in a baggage claim area, at least one phone in each bank is required to have a permanent TTY in accordance with Section 704.4 of ICC A117.1 (see also commentary, Section E106.4.7).

E110.3 Terminal information systems. Where terminal information systems convey audible information to the public, the same or equivalent information shall be provided in a visual format.

❖ If a public address system is utilized within a facility to provide information to passengers, there must be an alternative means for providing the same information to persons with a hearing impairment. ICC A117.1 now provides information for variable message signage that could be utilized to provide criteria for size, contrast, fonts, etc.

E110.4 Clocks. Where clocks are provided for use by the general public, the clock face shall be uncluttered so that its elements are clearly visible. Hands, numerals and digits shall contrast with the background either light-on-dark or dark-on-light. Where clocks are mounted overhead, numerals and digits shall comply with visual character requirements.

❖ Clocks provided in transportation facilities must be readily distinguishable. When clocks are provided overhead, the numerals must comply with Section 703.2 of ICC A117.1 for visual characters.

SECTION E111
REFERENCED STANDARDS

DOJ 36 CFR Part 1192	Americans with Disabilities Act (ADA) Accessibility Guidelines for Transportation Vehicles (ADAAG). Washington, DC: Department of Justice, 1991	E109.2.4
IBC-15	International Building Code	E102.1
ICC A117.1-09	Accessible and Usable Buildings and Facilities	E101.2, E104.2.4, E106.4.9, E107.2, E107.3, E108.3, E108.4, E109.2.2.2, E109.2.2.3, E109.2.3, E109.2.5, E110.2

❖ This section lists the standards that are referenced in Appendix E. They are listed here and not in Chapter 35 of the code, since appendices are not considered part of the code unless specifically referenced in the adopting ordinance.

Bibliography

The following resource materials were used in the preparation of the commentary for this appendix chapter of the code.

2010 *ADA Standard for Accessible Design*. Washington, DC: Department of Justice, Sept. 15, 2010.

"Accessibility and Egress for People with Physical Disabilities." CABO Board for the Coordination of the Model Codes Report: October 5, 1993.

Architectural and Transportation Barriers Compliance Board, 36 CFR, Parts 1190 and 1191 Final Rule, *The Americans with Disabilities Act (ADA) Accessibility Guidelines)*; *Architectural Barriers Act (ABA) Accessibility Guidelines*. Washington, DC: July 23, 2004.

DOJ 28 CFR, Part 36-91, *Americans with Disabilities Act* (ADA). Washington, DC: Department of Justice, 1991.

DOJ 28 CFR, Part 36-91 (Appendix A), *ADA Accessibility Guidelines for Buildings and Facilities* (ADAAG). Washington, DC: Department of Justice, 1991.

DOJ 36 CFR, Part 1192/DOT 49 CFR, Part 38, *ADA Accessibility Guidelines for Transportation Vehicles* (ADAAG). Washington, DC: Department of Justice, 1991.

DOT 49 CFR, Part 37, *Transportation Services for Individuals with Disabilities* (ADA). Washington, DC: Department of Transportation, 1999.

FED-STD-795-88, *Uniform Federal Accessibility Standards*. Washington, DC: General Services Administration; Department of Defense; Department of Housing and Urban Development; U.S. Postal Service, 1988.

ICC A117.1-2009, *Accessible and Usable Buildings and Facilities*. Washington, DC: International Code Council, 2003.

NFPA 72, *National Fire Alarm Code*. Quincy, MA: National Fire Protection Association, 2007.

INTERNATIONAL CODE COUNCIL®

Copyright © 2015 ICC. ALL RIGHTS RESERVED. Accessed by David Dammon on Jun 21, 2017 12:30:52 PM pursuant to License Agreement with ICC. No further reproduction or distribution authorized. ANY UNAUTHORIZED REPRODUCTION OR DISTRIBUTION IS A VIOLATION OF THE FEDERAL COPYRIGHT ACT AND THE LICENSE AGREEMENT, AND SUBJECT TO CIVIL AND CRIMINAL PENALTIES THEREUNDER.

Appendix F: Rodentproofing

The provisions contained in this appendix are not mandatory unless specifically referenced in the adopting ordinance.

General Comments

The requirements of this appendix apply only where it has been specifically adopted by the governing jurisdiction, as stated in Section 101.2.1.

The provisions of this appendix are minimum mechanical methods to prevent the entry of rodents. If a food supply is available, a rodent problem cannot be eliminated solely by these methods. However, removal of the food supply and general cleanliness and maintenance of the premises will have a significant impact.

Purpose

The purpose of this appendix is to provide regulations for rodentproofing for health purposes.

SECTION F101 GENERAL

F101.1 General. Buildings or structures and the walls enclosing habitable or occupiable rooms and spaces in which persons live, sleep or work, or in which feed, food or foodstuffs are stored, prepared, processed, served or sold, shall be constructed in accordance with the provisions of this section.

❖ In an effort to protect the public health and welfare and to prevent the spread of disease, this section requires all rooms and spaces used for living, sleeping or working and all spaces used for the storage, preparation or serving of food to be protected from rodents in the manner described in the code. Note that a building used for the storage of materials other than foodstuffs is not required to comply with the requirements of this section.

F101.2 Foundation wall ventilation openings. Foundation wall ventilation openings shall be covered for their height and width with perforated sheet metal plates no less than 0.070 inch (1.8 mm) thick, expanded sheet metal plates not less than 0.047 inch (1.2 mm) thick, cast-iron grills or grating, extruded aluminum load-bearing vents or with hardware cloth of 0.035 inch (0.89 mm) wire or heavier. The openings therein shall not exceed $^1/_4$ inch (6.4 mm).

❖ The purpose of this section is to protect ventilation openings in foundation walls from the entry of rodents. The thickness of metal shields and the maximum openings specified in this section are necessary for the shields to be effective.

F101.3 Foundation and exterior wall sealing. Annular spaces around pipes, electric cables, conduits or other openings in the walls shall be protected against the passage of rodents by closing such openings with cement mortar, concrete masonry or noncorrosive metal.

❖ During construction, the openings in foundation and exterior walls that are made for pipes, electrical cables, conduits and the like are significantly larger than the component that passes through the wall. These openings around the component are required to be closed for rodentproofing.

F101.4 Doors. Doors on which metal protection has been applied shall be hinged so as to be free swinging. When closed, the maximum clearance between any door, door jambs and sills shall be not greater than $^3/_8$ inch (9.5 mm).

❖ This section addresses wood doors located at ground or basement floor levels. Solid sheet metal protection is needed to stop rodents from gnawing their way through the wood into areas where food is located. The limitation on the clearance between the door and the adjacent door jamb and sill is to deter rodent entry.

F101.5 Windows and other openings. Windows and other openings for the purpose of light or ventilation located in exterior walls within 2 feet (610 mm) above the existing ground level immediately below such opening shall be covered for their entire height and width, including frame, with hardware cloth of at least 0.035-inch (0.89 mm) wire or heavier.

❖ The requirement for wire screens or "hardware cloth" for rodent protection applies only to openings 2 feet (610 mm) or less from the ground. This is a minimum requirement and will not keep all rodents out of the building.

F101.5.1 Rodent-accessible openings. Windows and other openings for the purpose of light and ventilation in the exterior walls not covered in this chapter, accessible to rodents by way of exposed pipes, wires, conduits and other appurtenances, shall be covered with wire cloth of at least 0.035-inch (0.89 mm) wire. In lieu of wire cloth covering, said pipes, wires, conduits and other appurtenances shall be blocked from rodent usage by installing solid sheet metal guards 0.024 inch (0.61 mm) thick or heavier. Guards shall be fitted

INTERNATIONAL CODE COUNCIL®
Copyright © 2015 ICC. ALL RIGHTS RESERVED. Accessed by David Dammon on Jun 21, 2017 12:30:52 PM pursuant to License Agreement with ICC. No further reproduction or distribution authorized. ANY UNAUTHORIZED REPRODUCTION OR DISTRIBUTION IS A VIOLATION OF THE FEDERAL COPYRIGHT ACT AND THE LICENSE AGREEMENT, AND SUBJECT TO CIVIL AND CRIMINAL PENALTIES THEREUNDER.

around pipes, wires, conduits or other appurtenances. In addition, they shall be fastened securely to and shall extend perpendicularly from the exterior wall for a minimum distance of 12 inches (305 mm) beyond and on either side of pipes, wires, conduits or appurtenances.

❖ This section addresses screen requirements for windows or other openings that are higher than 2 feet (610 mm) from grade and are made rodent accessible by pipes, wires, conduits and the like. The window or other opening is required to be screened or rodent guards are to be installed on the pipes, wires or conduits so that the window or other opening is not accessible to rodents.

F101.6 Pier and wood construction.

❖ The requirements of Sections F101.6.1 and F101.6.2 apply only if the building does not have a continuous foundation wall of treated wood, concrete or coated metal. An example of such a building is a post and beam wood-frame building with a slab on grade. Also note that these requirements apply if the building contains habitable or occupiable rooms in which persons live, sleep or work, or in which foodstuffs are stored, prepared, processed, served or sold. Thus, a storage or utility building used for storage of materials other than foodstuffs is not required to meet this section, even though it does not have a continuous foundation wall.

F101.6.1 Sill less than 12 inches above ground. Buildings not provided with a continuous foundation shall be provided with protection against rodents at grade by providing either an apron in accordance with Section F101.6.1.1 or a floor slab in accordance with Section F101.6.1.2.

❖ See the commentary to Section F101.6 for an explanation of when the requirements of this section apply. This section cites two alternative methods that meet the requirements: an apron or a concrete grade floor. Either of these methods provides effective rodent protection.

F101.6.1.1 Apron. Where an apron is provided, the apron shall be not less than 8 inches (203 mm) above, nor less than 24 inches (610 mm) below, grade. The apron shall not terminate below the lower edge of the siding material. The apron shall be constructed of an approved nondecayable, water-resistant rodentproofing material of required strength and shall be installed around the entire perimeter of the building. Where constructed of masonry or concrete materials, the apron shall be not less than 4 inches (102 mm) in thickness.

❖ The apron is usually a concrete, masonry or treated wood wall. Each material meets the requirement of this section. The extension into the ground is to prevent rodents from burrowing underground into the building. Note that a concrete floor slab is not required where the apron is used for rodent protection in accordance with Section F101.6.2.

F101.6.1.2 Grade floors. Where continuous concrete-grade floor slabs are provided, open spaces shall not be left between the slab and walls, and openings in the slab shall be protected.

❖ This is the second option for rodent protection in Section F101.6.1. When a grade floor that meets the requirements of this section is installed, the apron described in Section F101.6.1.1 is not required.

The grade floor is required to have any openings protected from rodents. For example, if the floor slab has an opening where drain pipes go through it, the area around the pipe is to be sealed with material that will keep rodents out of the building.

F101.6.2 Sill at or above 12 inches above ground. Buildings not provided with a continuous foundation and that have sills 12 inches (305 mm) or more above ground level shall be provided with protection against rodents at grade in accordance with any of the following:

1. Section F101.6.1.1 or F101.6.1.2.
2. By installing solid sheet metal collars at least 0.024 inch (0.6 mm) thick at the top of each pier or pile and around each pipe, cable, conduit, wire or other item that provides a continuous pathway from the ground to the floor.
3. By encasing the pipes, cables, conduits or wires in an enclosure constructed in accordance with Section F101.6.1.1.

❖ See the commentary to Section F101.6 for an explanation of when the requirements of this section apply. Where the sill height is 12 inches (305 mm) or more above the ground, this section provides two additional acceptable methods for rodent protection versus methods for instances where the sill height is less than 12 inches (305 mm).

Methods 2 and 3 described in this section provide the rodent barrier directly around the pipes, cables, conduits or wires that would otherwise be a continuous pathway from the ground to the raised floor.

INTERNATIONAL CODE COUNCIL®
Copyright © 2015 ICC. ALL RIGHTS RESERVED. Accessed by David Dammon on Jun 21, 2017 12:30:52 PM pursuant to License Agreement with ICC. No further reproduction or distribution authorized. ANY UNAUTHORIZED REPRODUCTION OR DISTRIBUTION IS A VIOLATION OF THE FEDERAL COPYRIGHT ACT AND THE LICENSE AGREEMENT, AND SUBJECT TO CIVIL AND CRIMINAL PENALTIES THEREUNDER.

Appendix G: Flood-resistant Construction

The provisions contained in this appendix are not mandatory unless specifically referenced in the adopting ordinance.

General Comments

The provisions contained in this appendix are not mandatory unless specifically referenced in the adopting ordinance, as stated in Section 101.2.1. This appendix is intended to fulfill the floodplain management and administrative requirements of the National Flood Insurance Program (NFIP) that are not included in the code. The flood provisions of the IBC (by reference to ASCE 24), IRC, IEBC and other codes are consistent with the minimum requirements of the NFIP for buildings and structures. Communities that adopt the code and this appendix, without modifications that remove or weaken the flood provisions, will meet the minimum requirements of the NFIP as set forth in Title 44 of the Code of Federal Regulations (CFR). An alternative to use of Appendix G is adoption of a "companion" ordinance that is written to coordinate with the flood provisions of the International Codes. For more information, see *Reducing Flood Losses Through the International Codes: Coordinating Building Codes and Floodplain Management Regulations* and contact NFIP state coordinators or Federal Emergency Management Agency (FEMA) regional offices.

This appendix includes administrative requirements of the NFIP and requirements concerning modifications to watercourses; permits for flood hazard area development; conditions for the issuance of variances from floodplain management requirements and site improvements; subdivision planning and installation of manufactured homes; recreational vehicles; tanks; temporary structures and temporary storage; and utility and miscellaneous Group U structures. The authority to regulate development other than buildings may be specified in state or local laws and should be cited in Appendix G or the adopting ordinance. Many states and communities regulate floodplain development to higher standards than the minimum requirements of the code and this appendix. Prior to adopting the code or this appendix, communities are advised to consult their state NFIP coordinator or FEMA regional office to determine additional actions that may be necessary to provide for continued participation in the NFIP.

Purpose

The purpose of this appendix is to provide administrative procedures and criteria for flood-resistant construction and development activities that are not within the scope of the codes. A jurisdiction that wants to make this appendix mandatory needs to include it in its adoption ordinance. See page xix of the code for a sample ordinance for adoption.

SECTION G101 ADMINISTRATION

G101.1 Purpose. The purpose of this appendix is to promote the public health, safety and general welfare and to minimize public and private losses due to flood conditions in specific *flood hazard areas* through the establishment of comprehensive regulations for management of *flood hazard areas* designed to:

1. Prevent unnecessary disruption of commerce, access and public service during times of flooding.
2. Manage the alteration of natural flood plains, stream channels and shorelines.
3. Manage filling, grading, dredging and other development that may increase flood damage or erosion potential.
4. Prevent or regulate the construction of flood barriers that will divert floodwaters or that can increase flood hazards.
5. Contribute to improved construction techniques in the flood plain.

❖ This section sets forth the purposes of this appendix. Communities that administer floodplain management regulations such as in this appendix achieve multiple objectives beyond reducing physical damage to buildings.

G101.2 Objectives. The objectives of this appendix are to protect human life, minimize the expenditure of public money for flood control projects, minimize the need for rescue and relief efforts associated with flooding, minimize prolonged business interruption, minimize damage to public facilities and utilities, help maintain a stable tax base by providing for the sound use and development of flood-prone areas, contribute to improved construction techniques in the flood plain and ensure that potential owners and occupants are notified that property is within *flood hazard areas*.

❖ This appendix, combined with the provisions in the code, achieves several objectives intended to reduce

INTERNATIONAL CODE COUNCIL®
Copyright © 2015 ICC. ALL RIGHTS RESERVED. Accessed by David Dammon on Jun 21, 2017 12:30:52 PM pursuant to License Agreement with ICC. No further reproduction or distribution authorized. ANY UNAUTHORIZED REPRODUCTION OR DISTRIBUTION IS A VIOLATION OF THE FEDERAL COPYRIGHT ACT AND THE LICENSE AGREEMENT, AND SUBJECT TO CIVIL AND CRIMINAL PENALTIES THEREUNDER.

the impacts of flooding. Management of flood hazard areas in ways that reduce exposure to damage also protects health, safety, and economic viability. Additionally, the provisions of this appendix promote sustainable development in communities subject to flooding. Flooding has both short-term and long-term impacts. Some impacts are obvious, such as damaged homes and businesses. Others are less apparent, including increases in flood levels due to changes in the floodplain; scour and erosion; impaired public and private water and sewage systems; and reductions in the natural and beneficial functions of floodplains, including wetland areas.

G101.3 Scope. The provisions of this appendix shall apply to all proposed development in a *flood hazard area* established in Section 1612 of this code, including certain building work exempt from permit under Section 105.2.

❖ Communities that participate in the NFIP must adopt the program's minimum requirements that must be applied to all development in flood hazard areas. The definition of "Development," as stated in Section G201.2, is inclusive. This broad definition captures all activities that take place in flood hazard areas that are subject to the requirements of the code or this appendix. Because the NFIP requires regulation of all development within special flood hazard areas that could have an impact on flooding, a code that applies only to buildings and structures does not fulfill the minimum requirements for participation in the program. Work that is exempt from the requirement to obtain a permit, listed in Section 105.2, is subject to the requirements of this appendix in order to satisfy the NFIP definition of "Development," described in the commentary for Sections G102.1 and G201.2.

G101.4 Violations. Any violation of a provision of this appendix, or failure to comply with a *permit* or variance issued pursuant to this appendix or any requirement of this appendix, shall be handled in accordance with Section 114.

❖ Violations of the provisions of this appendix are to be corrected or adjudicated under the provisions of Section 114. Communities participating in the NFIP enter into an agreement with FEMA. In exchange for the availability of federally backed flood insurance and many forms of federal disaster assistance, communities agree to adopt and effectively enforce the floodplain management and administrative provisions of the NFIP. A significant part of community responsibility takes the form of enforcing floodplain management and other flood damage reduction ordinances and laws. The procedures set forth in Section 114 are to be followed if activities take place in a flood hazard area without a permit, or if a permit applicant fails to comply with a condition of a permit or variance. If reasonable enforcement actions do not result in compliance, the community is encouraged to contact its state NFIP coordinator or appropriate FEMA regional office for further guidance.

SECTION G102
APPLICABILITY

G102.1 General. This appendix, in conjunction with this code, provides minimum requirements for development located in flood hazard areas, including:

1. The subdivision of land.
2. Site improvements and installation of utilities.
3. Placement and replacement of manufactured homes.
4. Placement of recreational vehicles.
5. New construction and repair, reconstruction, rehabilitation or additions to new construction.
6. Substantial improvement of existing buildings and structures, including restoration after damage.
7. Installation of tanks.
8. Temporary structures.
9. Temporary or permanent storage, utility and miscellaneous Group U buildings and structures.
10. Certain building work exempt from permit under Section 105.2 and other buildings and development activities.

❖ The definition of "Development" in Section G201.2 encompasses a wide array of activities that are to be regulated if they are proposed to take place within a flood hazard area. Some activities have the potential to increase flooding on other properties. Other activities, if planned in a way that recognizes flood hazards, have the potential to allow reasonable use of land without placing people, site improvements and other development at significant risk.

G102.2 Establishment of flood hazard areas. *Flood hazard areas* are established in Section 1612.3 of this code, adopted by the applicable governing authority on **[INSERT DATE]**.

❖ The flood hazard areas established in Section 1612.3 are subject to the additional provisions of this appendix. The flood hazard map to be adopted is, at a minimum, the flood insurance rate map (FIRM), supported by the flood insurance study prepared by FEMA. A community participating in the NFIP may specify another map, provided it designates flood hazard areas that are the same or more extensive, and regulatory flood elevations that are the same or higher than those shown on the FIRM. Regardless of which map is specified, flood elevations are the design flood elevations [i.e., if the FIRM is adopted, then the Base Flood Elevation (BFE) is the Design Flood Elevation (DFE)]. From time to time, FEMA revises and republishes FIRMs. A formal review process is followed, including community and public comment. When new FIRMs are published, communities are required to adopt them.

The flood hazard areas shown on maps prepared by FEMA are determined using the base flood, which is defined as having a 1-percent chance (one chance

INTERNATIONAL CODE COUNCIL®
Copyright © 2015 ICC. ALL RIGHTS RESERVED. Accessed by David Dammon on Jun 21, 2017 12:30:52 PM pursuant to License Agreement with ICC. No further reproduction or distribution authorized. ANY UNAUTHORIZED REPRODUCTION OR DISTRIBUTION IS A VIOLATION OF THE FEDERAL COPYRIGHT ACT AND THE LICENSE AGREEMENT, AND SUBJECT TO CIVIL AND CRIMINAL PENALTIES THEREUNDER.

in 100) of occurring in any given year. The maps are not intended to show the worst-case flood, or the "flood of record," which usually refers to the most severe flood in the history of the community. Although a 1-percent annual chance seems fairly remote, larger floods occur regularly throughout the United States. Application of the provisions of this appendix is not intended to prevent or eliminate all future flood damage. These provisions are intended to represent a reasonable balance of the knowledge and awareness of flood hazards, methods to guide development to less hazard-prone locations, methods of design and construction intended to resist flood damage and each community's and landowner's reasonable expectations to use the land.

Some coastal communities have FIRMs that show areas designated as units of the Coastal Barrier Resources System (CBRS) established by the Coastal Barrier Resources Act (COBRA) of 1982 and subsequent amendments. Within these designated areas, the NFIP is prohibited from offering flood insurance on new or substantially improved buildings. The community is responsible for application of the flood-resistant provisions of the code and this appendix in all flood hazard areas, whether or not flood insurance is made available.

SECTION G103
POWERS AND DUTIES

G103.1 Permit applications. All applications for permits must comply with the following:

1. The *building official* shall review all *permit* applications to determine whether proposed development is located in *flood hazard areas* established in Section G102.2.
2. Where a proposed development site is in a *flood hazard area*, all development to which this appendix is applicable as specified in Section G102.1 shall be designed and constructed with methods, practices and materials that minimize *flood* damage and that are in accordance with this code and ASCE 24.

❖ Many communities designate an official other than the building official as responsible for the administrative provisions of this appendix and to enforce the requirements of this appendix for development other than buildings. Those communities may elect to modify the appendix to replace references to the building official with the title of appropriate official. The building official is empowered to examine all permit applications to determine if the proposed activities will take place in flood hazard areas on the community's flood hazard map. Such activities are to be designed and constructed in accordance with both the code and this appendix, as applicable.

G103.2 Other permits. It shall be the responsibility of the *building official* to ensure that approval of a proposed development shall not be given until proof that necessary permits have been granted by federal or state agencies having jurisdiction over such development.

❖ Other federal, state and local regulatory authorities may have jurisdiction over activities within flood hazard areas. Examples at the federal level include permitting under Section 404 of the Clean Water Act of 1977 and Section 10 of the Rivers and Harbors Act of 1899 and consultation or permitting under the Endangered Species Act of 1973. State and regional agencies may also regulate activities in flood hazard areas, including activities that impact wetlands, forestry resources, dunes, the coastal zone, subaquatic vegetation, threatened and endangered species, navigation and waterways. The intent is to provide coordination among various levels of government and to avoid added costs to applicants in situations where multiple permits are required. Building officials may satisfy this requirement by either withholding the permit until other permits have been obtained or by issuing the permit contingent on the applicant obtaining other specified permits.

G103.3 Determination of design flood elevations. If design flood elevations are not specified, the *building official* is authorized to require the applicant to:

1. Obtain, review and reasonably utilize data available from a federal, state or other source; or
2. Determine the design flood elevation in accordance with accepted hydrologic and hydraulic engineering techniques. Such analyses shall be performed and sealed by a *registered design professional*. Studies, analyses and computations shall be submitted in sufficient detail to allow review and approval by the *building official*. The accuracy of data submitted for such determination shall be the responsibility of the applicant.

❖ Many FIRMs show flood hazard areas without specifying the BFE. These areas are identified as Zone A on the FIRM and are often referred to as "approximate" or "unnumbered" Zones A without BFEs. These Zone A areas are subject to the floodplain management requirements of the code and the appendix, although the minimum elevation or height to which buildings and structures are to be elevated has not been determined by FEMA. An important step in regulating these flood hazard areas is a determination of the DFE. As defined in the code, at a minimum the DFE is the BFE shown on a community's FIRM. In some instances, flood elevation information may have been developed by sources other than FEMA, including other federal or state agencies. The building official must obtain the information or require the permit applicant to do so. Some communities develop flood hazard information for Zone A areas without BFEs and provide it to applicants so that all development in an area is conducted based on the same level of risk. If flood elevation information is not available, the building official may require the applicant to develop the DFE in accordance with accepted

INTERNATIONAL CODE COUNCIL®
Copyright © 2015 ICC. ALL RIGHTS RESERVED. Accessed by David Dammon on Jun 21, 2017 12:30:52 PM pursuant to License Agreement with ICC. No further reproduction or distribution authorized. ANY UNAUTHORIZED REPRODUCTION OR DISTRIBUTION IS A VIOLATION OF THE FEDERAL COPYRIGHT ACT AND THE LICENSE AGREEMENT, AND SUBJECT TO CIVIL AND CRIMINAL PENALTIES THEREUNDER.

engineering practices. Local officials unfamiliar with establishing DFEs in Zone A areas without BFEs are encouraged to contact the state NFIP coordinator or appropriate FEMA regional office. For additional guidance, refer to FEMA 265, *Managing Floodplain Development in Approximate Zone A Areas: A Guide for Obtaining and Developing Base (100-Year) Flood Elevations*.

G103.4 Activities in riverine flood hazard areas. In riverine *flood hazard areas* where design flood elevations are specified but *floodways* have not been designated, the *building official* shall not permit any new construction, substantial improvement or other development, including fill, unless the applicant submits an engineering analysis prepared by a *registered design professional*, demonstrating that the cumulative effect of the proposed development, when combined with all other existing and anticipated *flood hazard area* encroachment, will not increase the design flood elevation more than 1 foot (305 mm) at any point within the community.

❖ Although FEMA has designated floodways along many rivers and streams, many other riverine flood hazard areas have BFEs but do not have floodways. In these areas, the potential effects that floodplain activities may have on flood elevations have not been evaluated. If FEMA has not designated a regulatory floodway, the community is responsible for regulating development so as not to increase flood elevations by more than 1 foot (305 mm) at any point in the community. In effect, this means a community must either prepare a hydraulic analysis for proposed activities or require permit applicants to do so. Several states have more restrictive requirements, which can be determined by contacting the state NFIP coordinator. See Section G103.5 for additional information regarding the required certification.

G103.5 Floodway encroachment. Prior to issuing a permit for any floodway encroachment, including fill, new construction, substantial improvements and other development or land-disturbing activity, the building official shall require submission of a certification, prepared by a registered design professional, along with supporting technical data, demonstrating that such development will not cause any increase of the base flood level.

❖ The floodway is that part of the riverine floodplain that must be reserved in order to convey the base flood without cumulatively increasing the water surface elevation more than a designated height that is specified in the flood insurance study provided by FEMA. Generally, this designated height is 1 foot (305 mm), although some states and communities have a more restrictive requirement. Development in the floodway could obstruct flood flows and increase flood levels, causing additional damage. Usually, the floodway is where the water will be deepest and move the fastest. This section requires communities to prohibit any floodway encroachment, including fill, new construction and substantial improvement, if such activities will cause any increase in flood levels. Permit applications for development in floodways are to include a certification supported with engineering analyses to demonstrate the anticipated impacts. To be acceptable, the certification must demonstrate that the proposed development will not impact BFEs, floodway elevations or floodway widths and it must be signed and sealed by a qualified professional. The building official must review the certification and determine that it meets accepted engineering practices. If necessary to make this determination, the building official is advised to seek technical assistance from the community's engineer, the state NFIP coordinator or the FEMA regional office.

In limited situations, a community may decide to issue a permit for development in the floodway that causes an increase in flood elevations. This may be appropriate for dams or other water resource structures and for bridges and culverts where the most cost-effective alternative results in an increase in flood elevations. Section G103.5.1 allows for these activities, provided the community or applicant requests and obtains a Conditional Letter of Map Revision (CLOMR) and a floodway revision from FEMA. The proposed development may not increase flooding of existing buildings and all impacted property owners must be notified. A permit for the development may be issued after the CLOMR is approved by FEMA and after the community adopts the increased flood elevations. Then, when the project is completed, the community is required to submit as-built certifications to FEMA so that a final map revision can be issued. For guidance on preparing and certifying revisions to NFIP map products, see the guidance and forms available online at http://www.fema.gov/national-flood-insurance-program-flood-hazard-mapping. Specifically, see FEMA Form 81-87, *MT-1, Application for Conditional and Final Letters of Map Amendment and Letters of Map Revision Based on Fill*, and FEMA Form 81-89, MT-2, *Application for Conditional Letters of Map Revision and Letters of Map Revision*.

Although each floodway proposal must be reviewed carefully and some states have specific and more restrictive regulations that apply within floodways, there are some activities and uses that may be permitted without extensive engineering analysis. The most important factor is that any associated filling and grading do not change the shape of the land. Some projects are too small to warrant an engineering analysis and certification such as:

- Agricultural activities such as such as plowing, tilling, planting, cultivating and nonwoven wire fencing, which are not considered development;
- At-grade uses such as driveways, at-grade parking lots, and other applications of asphalt or concrete that are at grade and not attached to buildings, such as loading dock areas and small airport landing strips;

INTERNATIONAL CODE COUNCIL®
Copyright © 2015 ICC. ALL RIGHTS RESERVED. Accessed by David Dammon on Jun 21, 2017 12:30:52 PM pursuant to License Agreement with ICC. No further reproduction or distribution authorized. ANY UNAUTHORIZED REPRODUCTION OR DISTRIBUTION IS A VIOLATION OF THE FEDERAL COPYRIGHT ACT AND THE LICENSE AGREEMENT, AND SUBJECT TO CIVIL AND CRIMINAL PENALTIES THEREUNDER.

- Passive recreational uses, such as hiking, biking, horse trails, wildlife and nature preserves and hunting and fishing areas;
- Active recreational uses (where improvements are anchored to prevent flotation), such as picnic and playground areas, ball fields, boat launch ramps, swimming areas, target shooting ranges and similar uses;
- Uses incidental to residential buildings, such as lawns, gardens, parking areas, playgrounds and tot lots; and
- Sign posts and utility poles.

G103.5.1 Floodway revisions. A *floodway* encroachment that increases the level of the base flood is authorized if the applicant has applied for a conditional Flood Insurance Rate Map (FIRM) revision and has received the approval of the Federal Emergency Management Agency (FEMA).

❖ Under certain circumstances, a permit may be issued for a proposed floodway encroachment that, based on analysis and supporting technical data, will cause an increase in the level of the base flood. The community must require that the analysis be submitted to FEMA in accordance with the guidance described in the commentary for Section G103.5 (FEMA Form 81-89). The permit may be issued if FEMA approves the proposal by issuance of a CLOMR. Prior to issuance of a final FIRM revision, FEMA will require that the applicant submit post-construction documentation to demonstrate that the work was conducted as proposed.

G103.6 Watercourse alteration. Prior to issuing a *permit* for any alteration or relocation of any watercourse, the *building official* shall require the applicant to provide notification of the proposal to the appropriate authorities of all affected adjacent government jurisdictions, as well as appropriate state agencies. A copy of the notification shall be maintained in the permit records and submitted to FEMA.

❖ Altering or relocating portions of any watercourse can significantly and adversely impact the floodplain. Because such impacts may extend well beyond the proposed relocation or alteration site, the NFIP requires notification of adjacent communities, the NFIP State Coordinating Office and FEMA.

G103.6.1 Engineering analysis. The *building official* shall require submission of an engineering analysis, prepared by a *registered design professional*, demonstrating that the flood-carrying capacity of the altered or relocated portion of the watercourse will not be decreased. Such watercourses shall be maintained in a manner that preserves the channel's flood-carrying capacity.

❖ Prior to issuing a permit that allows modification of a waterway, the applicant must submit a hydraulic analysis that demonstrates that the ability of the altered or relocated watercourse to carry flood discharges is not diminished. An important condition of a permit, if issued, is that the applicant or other designated entity must maintain the altered or relocated watercourse order to preserve its flood-carrying capacity and to avoid increasing future flood risks.

G103.7 Alterations in coastal areas. Prior to issuing a *permit* for any alteration of sand dunes and mangrove stands in coastal high-hazard areas and coastal A zones, the *building official* shall require submission of an engineering analysis, prepared by a *registered design professional*, demonstrating that the proposed alteration will not increase the potential for flood damage.

❖ The presence of sand dunes or mangrove stands can mitigate some effects of coastal flooding. As part of the review of proposed site work in coastal areas, a community must examine proposals for possible impacts to sand dunes or mangrove stands. If a proposal in a coastal high-hazard area involves alteration of a sand dune or mangrove stand, an engineering analysis of the effect on flood damage is required as part of the documentation submitted with the application. If the engineering analysis indicates that the potential for flood damage will be increased due to the proposed alteration, the building official must require the permit applicant to make necessary modifications to the proposed site work to avoid such increases.

G103.8 Records. The *building official* shall maintain a permanent record of all *permits* issued in *flood hazard areas*, including copies of inspection reports and certifications required in Section 1612.

❖ The building official's responsibility to maintain department records is established in Section 104.7. This section extends that responsibility to require records for permits in flood hazard areas to be maintained permanently. Specifically identified for retention are the inspection reports and certifications required to be submitted in Section 1612. Documentation of decisions, analyses and certifications required in this appendix should also be retained in permanent records. As a condition for participation in the NFIP, a community agrees that FEMA or its designee may examine records relating to administration of the community's floodplain management regulations.

G103.9 Inspections. Development for which a *permit* under this appendix is required shall be subject to inspection. The *building official* or the *building official's* designee shall make, or cause to be made, inspections of all development in *flood hazard areas* authorized by issuance of a *permit* under this appendix.

❖ Just as the code requires inspection of permitted buildings, this appendix directs inspection of all other development in flood hazard areas for which permits are issued.

INTERNATIONAL CODE COUNCIL®
Copyright © 2015 ICC. ALL RIGHTS RESERVED. Accessed by David Dammon on Jun 21, 2017 12:30:52 PM pursuant to License Agreement with ICC. No further reproduction or distribution authorized. ANY UNAUTHORIZED REPRODUCTION OR DISTRIBUTION IS A VIOLATION OF THE FEDERAL COPYRIGHT ACT AND THE LICENSE AGREEMENT, AND SUBJECT TO CIVIL AND CRIMINAL PENALTIES THEREUNDER.

SECTION G104
PERMITS

G104.1 Required. Any person, owner or owner's authorized agent who intends to conduct any development in a *flood hazard area* shall first make application to the *building official* and shall obtain the required *permit*.

❖ The definition of "Development" in Section G201 encompasses a wide array of human activities that may be proposed within flood hazard areas. Communities are to require that all such activities are authorized by permits issued in compliance with the applicable floodplain management requirements of the code and this appendix.

G104.2 Application for permit. The applicant shall file an application in writing on a form furnished by the *building official*. Such application shall:

1. Identify and describe the development to be covered by the *permit*.
2. Describe the land on which the proposed development is to be conducted by legal description, street address or similar description that will readily identify and definitely locate the site.
3. Include a site plan showing the delineation of *flood hazard areas*, *floodway* boundaries, flood zones, design flood elevations, ground elevations, proposed fill and excavation and drainage patterns and facilities.
4. Include in subdivision proposals and other proposed developments with more than 50 lots or larger than 5 acres (20 234 m^2), base flood elevation data in accordance with Section 1612.3.1 if such data are not identified for the *flood hazard areas* established in Section G102.2.
5. Indicate the use and occupancy for which the proposed development is intended.
6. Be accompanied by construction documents, grading and filling plans and other information deemed appropriate by the *building official*.
7. State the valuation of the proposed work.
8. Be signed by the applicant or the applicant's authorized agent.

❖ This section details the information to be included in an application for a permit to conduct activities within a flood hazard area. The site plan must show sufficient detail and information about the flood hazard area, including floodway, to allow for a complete review of the proposed activities. The horizontal boundary of the flood hazard area shown on the community's flood hazard map is an approximate boundary based on topographic information that was available when the map was prepared. The actual boundary of the flood hazard must be determined based on the best topographic information available at the time of the application. All land area below the DFE is subject to regulation even if it is not shown on the community's flood hazard map as being within the flood hazard area. It is important to note that insurance agents and mortgage lenders rely solely on the maps published by FEMA. If a ground survey shows the development site is above the DFE, the building official can record the elevation data and issue the permit. Thus, building officials may advise property owners and permittees to submit topographic information to FEMA if surveyed elevation data indicate a site is above the BFE (see Section G103.5 for reference to the FEMA form used for this purpose). In these cases, FEMA may issue a Letter of Map Amendment (LOMA) to the owner and copy the community.

Appendix G includes requirements for subdivisions that are consistent with the NFIP requirements in federal regulation [44 CFR 60.3(b)(3)]. If proposals for larger developments and subdivisions are proposed in flood hazard areas shown on FIRMs, and if the areas do not have base flood elevations, BFEs have to be developed. Section 1612.3.1 allows use of data available from other sources, or authorizes the building official to require such information to be developed by the applicant if the subdivision is below the 50-lot or five-acre threshold.

G104.3 Validity of permit. The issuance of a *permit* under this appendix shall not be construed to be a *permit* for, or approval of, any violation of this appendix or any other ordinance of the jurisdiction. The issuance of a *permit* based on submitted documents and information shall not prevent the *building official* from requiring the correction of errors. The *building official* is authorized to prevent occupancy or use of a structure or site that is in violation of this appendix or other ordinances of this jurisdiction.

❖ This section clarifies that it is the owner's responsibility to comply with the code. Permits are approved based on a review of the materials submitted and a determination that the proposed activities are in accordance with the provisions of the code. If errors or deviations are made during construction, or it is discovered that the information and documentation submitted to obtain the permit were in error, the code official has the authority to require correction and compliance.

G104.4 Expiration. A *permit* shall become invalid if the proposed development is not commenced within 180 days after its issuance, or if the work authorized is suspended or abandoned for a period of 180 days after the work commences. Extensions shall be requested in writing and justifiable cause demonstrated. The *building official* is authorized to grant, in writing, one or more extensions of time, for periods not more than 180 days each.

❖ Permits issued for activities in a flood hazard area are to expire after 180 days if work either has not commenced during that period of time or is abandoned for any 180-day period after it commences. The building official may grant extensions to the permit for up to 180 days at a time.

Building officials may not grant permit extensions in situations where the work has not begun during the 180-day period if during that period FEMA has issued

INTERNATIONAL CODE COUNCIL®
Copyright © 2015 ICC. ALL RIGHTS RESERVED. Accessed by David Dammon on Jun 21, 2017 12:30:52 PM pursuant to License Agreement with ICC. No further reproduction or distribution authorized. ANY UNAUTHORIZED REPRODUCTION OR DISTRIBUTION IS A VIOLATION OF THE FEDERAL COPYRIGHT ACT AND THE LICENSE AGREEMENT, AND SUBJECT TO CIVIL AND CRIMINAL PENALTIES THEREUNDER.

a revised FIRM that shows increases in flood hazard areas or DFEs at the location of the permitted activity. A new permit is required if the revised FIRM changes the flood-risk information at the site of the permit. The new application must be reviewed based on the revised flood-risk information.

G104.5 Suspension or revocation. The *building official* is authorized to suspend or revoke a *permit* issued under this appendix wherever the *permit* is issued in error or on the basis of incorrect, inaccurate or incomplete information, or in violation of any ordinance or code of this jurisdiction.

❖ A permit issued in error or based on incorrect, inaccurate or incomplete information must be suspended or revoked. This provision does not preclude issuance of a new or revised permit that is based on accurate information. Violation of a permit or permit condition may also prompt suspension or revocation.

SECTION G105
VARIANCES

G105.1 General. The *board of appeals* established pursuant to Section 113 shall hear and decide requests for variances. The *board of appeals* shall base its determination on technical justifications, and has the right to attach such conditions to variances as it deems necessary to further the purposes and objectives of this appendix and Section 1612.

❖ Section 104.10 of the code empowers the building official to grant modifications to the code in certain circumstances, provided such modifications do not lessen health, accessibility, life and fire safety or structural requirements. Section 104.10.1 limits that authority if the requested modification is for projects in flood hazard areas, specifying that certain determinations must be made. Modifications or variances from the flood-resistant construction requirements of the code and this appendix may place people and property at significant risk. Therefore, communities are cautioned to carefully evaluate the impacts of issuing a variance from the flood-resistant construction provisions of the code and this appendix, particularly the requirements to elevate or floodproof buildings to the DFE. The impacts that must be evaluated include impacts on the site, the permit applicant and other parties that may be affected, such as adjacent property owners and the community. Floodplain development that is not undertaken in accordance with the flood-resistant construction provisions of the code and this appendix will be exposed to increased flood damage. As a consequence, buildings that are granted variances to the elevation requirements will have significantly higher NFIP flood insurance premium rates. Variance decisions are to be based solely on technical justifications outlined in this section, not on the personal and economic circumstances of an owner or applicant.

Applicants sometimes request modifications or variances to the minimum elevation requirements for the lowest floor of buildings in flood hazard areas. Such requests may be based on the need to improve access for the disabled and elderly. Generally, variances of this nature are not to be granted since these are personal circumstances that will change as the property changes ownership. Not only would persons of limited mobility be at risk from flooding, but the building would continue to be exposed to flood damage long after the personal need for a variance changes. More appropriate alternatives should be considered to serve the needs of disabled or elderly persons, such as varying setbacks to allow construction on less flood-prone portions of sites or installing residential ramps or elevators that may extend below the DFE (see Section 3001.2).

G105.2 Records. The *building official* shall maintain a permanent record of all variance actions, including justification for their issuance.

❖ It is important to document and maintain records that explain reasons and justifications for variances in order to provide evidence that the floodplain management program in the community is being maintained. These records will be examined periodically by FEMA or its designee in an effort to determine if the community is administering its floodplain management provisions consistent with the minimum requirements of the NFIP.

G105.3 Historic structures. A variance is authorized to be issued for the repair or rehabilitation of a historic structure upon a determination that the proposed repair or rehabilitation will not preclude the structure's continued designation as a historic structure, and the variance is the minimum necessary to preserve the historic character and design of the structure.

Exception: Within *flood hazard areas*, *historic structures* that do not meet one or more of the following designations:

1. Listed or preliminarily determined to be eligible for listing in the National Register of Historic Places.
2. Determined by the Secretary of the U.S. Department of Interior as contributing to the historical significance of a registered historic district or a district preliminarily determined to qualify as an historic district.
3. Designated as *historic* under a state or local historic preservation program that is approved by the Department of Interior.

❖ This provision recognizes the importance and value of historic buildings and structures. If an owner proposes repair or restoration of a historic building or structure that would otherwise be determined to be a substantial improvement, a variance may be granted to perform the work without requiring full compliance with the flood-resistant provisions of the code and this appendix. This is not to say that work that improves the flood-resistance of historic buildings should be avoided. It is intended that historic buildings should be brought into compliance as much as possible with-

INTERNATIONAL CODE COUNCIL®
Copyright © 2015 ICC. ALL RIGHTS RESERVED. Accessed by David Dammon on Jun 21, 2017 12:30:52 PM pursuant to License Agreement with ICC. No further reproduction or distribution authorized. ANY UNAUTHORIZED REPRODUCTION OR DISTRIBUTION IS A VIOLATION OF THE FEDERAL COPYRIGHT ACT AND THE LICENSE AGREEMENT, AND SUBJECT TO CIVIL AND CRIMINAL PENALTIES THEREUNDER.

out adversely affecting the historic significance. To qualify for this treatment, the building or structure must be individually listed or eligible to be listed as a historic structure, or be certified as contributing to the historic significance of a historic district. A building that is merely located in a historic district, or a new structure proposed to be located in a historic district, is insufficient justification for a variance, as is merely being considered old or called "historic."

A variance is authorized to be issued, provided the proposed work does not change the historic designation of the building or structure. The building official should require that the permit applicant obtain a written review and determination to that effect from the appropriate state or local program responsible for the historic designation.

All variances should be the minimum necessary to afford relief [see Section G105.7(4)]. There are a number of actions that may be taken to reduce future flood damage to substantially damaged or substantially improved historic buildings and structures, while maintaining their historic and cultural value (refer to FEMA P-467-2, *Floodplain Management Bulletin: Historic Structures)*. For example, if elevation of a historic building or structure would negatively affect its character or cause a loss of its historic designation, a variance to allow a less intrusive method of elevation or partial elevation height may be appropriate. However, it may still be possible to require that building utility systems be elevated or otherwise protected from flood damage to the maximum extent possible. A condition of a variance may require that building materials, including interior finishes, be resistant to flood damage (refer to FEMA TB #2, *Flood Damage-Resistant Materials Requirements for Buildings Located in Special Flood Hazard Areas)*. Another condition may require that building contents be elevated to the DFE, or the maximum extent possible. For further information, contact the NFIP state coordinator, state historic preservation officer or appropriate FEMA regional office.

G105.4 Functionally dependent facilities. A variance is authorized to be issued for the construction or substantial improvement of a functionally dependent facility provided the criteria in Section 1612.1 are met and the variance is the minimum necessary to allow the construction or substantial improvement, and that all due consideration has been given to methods and materials that minimize flood damages during the design flood and create no additional threats to public safety.

❖ Functionally dependent facilities, defined in Section G201, include those that must be located in close proximity to water to fulfill their intended purpose, such as shipbuilding, ship or boat repair, as well as docks and port facilities for loading or unloading cargo or passengers. The definition specifically excludes such activities as long-term storage, related manufacturing facilities, and sales and service facilities, all of which can perform their functions even if located outside of flood hazard areas or designed to fully comply with the requirements of the code. Functionally dependent facilities represent a special case recognized by NFIP as warranting treatment under the variance provisions. Under some circumstances it may be impossible for a facility to perform its function unless one or more of the flood-resistant construction provisions of the code or this appendix are varied. In any case, the number of variances granted in any given request should be kept to a minimum.

At a minimum, functionally dependent facilities should be wet floodproofed. This type of flood protection reduces flood damage by allowing floodwaters to enter the building or structure. The keys to successful wet floodproofing are to design the building or structure, to the maximum extent possible, to resist flood and wind loads anticipated during conditions of the design flood; to use flood damage-resistant materials and to elevate or use flood damage-resistant building utility systems as required by the flood-resistant construction provisions of the code and this appendix. For further guidance, refer to ASCE 24, FEMA TB #1, *Openings in Foundation Walls and Walls of Enclosures Below Elevated Buildings Located in Special Flood Hazard Areas*; FEMA TB #2, *Flood Resistant Material Requirements for Buildings Located in Special Flood Hazard Areas* and FEMA FIA-TB #7, *Wet Floodproofing Requirements for Structures Located in Special Flood Hazard Areas*.

Within functionally dependent facilities, only those functions that must be carried out below the DFE are to be included within the scope of the variance. For example, a boat repair facility may have areas that are used for a variety of purposes. The actual boat repair activities may need to be conducted at an elevation below the DFE. Other areas that are not functionally dependent, such as employee locker rooms, bathrooms and offices, must either be elevated or dry floodproofed (A Zones only) to or above the DFE as required by the code.

G105.5 Restrictions. The *board of appeals* shall not issue a variance for any proposed development in a floodway if any increase in flood levels would result during the base flood discharge.

❖ The board of appeals (or the building official pursuant to Section 104.10.1 of the code) may not issue variances to the requirements in Section G103.5, which addresses activities in floodways that may increase flood elevations. The commentary to Section G103.5 describes submission of engineering analyses and approval by FEMA prior to approving activities that increase flood elevations in designated floodways.

G105.6 Considerations. In reviewing applications for variances, the *board of appeals* shall consider all technical evalu-

INTERNATIONAL CODE COUNCIL®
Copyright © 2015 ICC. ALL RIGHTS RESERVED. Accessed by David Dammon on Jun 21, 2017 12:30:52 PM pursuant to License Agreement with ICC. No further reproduction or distribution authorized. ANY UNAUTHORIZED REPRODUCTION OR DISTRIBUTION IS A VIOLATION OF THE FEDERAL COPYRIGHT ACT AND THE LICENSE AGREEMENT, AND SUBJECT TO CIVIL AND CRIMINAL PENALTIES THEREUNDER.

ations, all relevant factors, all other portions of this appendix and the following:

1. The danger that materials and debris may be swept onto other lands resulting in further injury or damage.
2. The danger to life and property due to flooding or erosion damage.
3. The susceptibility of the proposed development, including contents, to flood damage and the effect of such damage on current and future owners.
4. The importance of the services provided by the proposed development to the community.
5. The availability of alternate locations for the proposed development that are not subject to flooding or erosion.
6. The compatibility of the proposed development with existing and anticipated development.
7. The relationship of the proposed development to the comprehensive plan and flood plain management program for that area.
8. The safety of access to the property in times of flood for ordinary and emergency vehicles.
9. The expected heights, velocity, duration, rate of rise and debris and sediment transport of the floodwaters and the effects of wave action, if applicable, expected at the site.
10. The costs of providing governmental services during and after flood conditions including maintenance and repair of public utilities and facilities such as sewer, gas, electrical and water systems, streets and bridges.

❖ This section provides factors to be taken into account by the board of appeals (or the building official pursuant to Section 104.10.1 of the code) when it reviews requests for variances from the flood-resistant construction and floodplain management provisions of the code and this appendix. Section G105.2 requires that documentation be maintained as part of the permanent record to indicate how each consideration was addressed.

G105.7 Conditions for issuance. Variances shall only be issued by the *board of appeals* where all of the following criteria are met:

1. A technical showing of good and sufficient cause that the unique characteristics of the size, configuration or topography of the site renders the elevation standards inappropriate.
2. A determination that failure to grant the variance would result in exceptional hardship by rendering the lot undevelopable.
3. A determination that the granting of a variance will not result in increased flood heights, additional threats to public safety, extraordinary public expense, nor create nuisances, cause fraud on or victimization of the public or conflict with existing local laws or ordinances.
4. A determination that the variance is the minimum necessary, considering the flood hazard, to afford relief.
5. Notification to the applicant in writing over the signature of the building official that the issuance of a variance to construct a structure below the base flood level will result in increased premium rates for flood insurance up to amounts as high as $25 for $100 of insurance coverage, and that such construction below the base flood level increases risks to life and property.

❖ Each of the listed conditions for issuing variances must be addressed by the board of appeals (or the building official pursuant to Section 104.10.1 of the code), especially the requirement that it determine that failure to grant the variance would result in exceptional hardship by rendering the lot undevelopable. By itself, this determination may be insufficient to result in exceptional hardship if other conditions for issuance of a variance cannot be met. The determination of hardship must be based on the unique characteristics of the site and not the personal or financial circumstances of the applicant.

In guidance materials, FEMA cautions that economic hardship alone is not to be considered an exceptional hardship. Building officials and boards of appeals are cautioned that granting a variance does not affect how the building will be rated for the purposes of NFIP flood insurance policies. Even if circumstances justify granting a variance to build a floor that is below the design flood elevation, the rate used to calculate the cost of a flood insurance policy will be based on the risk to the building. Flood insurance, required by certain mortgage lenders, may be extremely expensive, costing as much as $25 annually for each $100 of insurance coverage. Although the applicant may not be required to purchase flood insurance, the requirement may be imposed on subsequent owners. The building official must provide the applicant a written notice to this effect, along with the other conditions listed in this section.

SECTION G201
DEFINITIONS

G201.1 General. The following words and terms shall, for the purposes of this appendix, have the meanings shown herein. Refer to Chapter 2 of this code for general definitions.

❖ Definitions of terms can help in the understanding and application of the code requirements. Terms specific to this appendix are defined herein. The use and application of the general definitions of the code are found in Section 202.

G201.2 Definitions.

DEVELOPMENT. Any man-made change to improved or unimproved real estate, including but not limited to, buildings or other structures, temporary structures, temporary or permanent storage of materials, mining, dredging, filling, grad-

INTERNATIONAL CODE COUNCIL®
Copyright © 2015 ICC. ALL RIGHTS RESERVED. Accessed by David Dammon on Jun 21, 2017 12:30:52 PM pursuant to License Agreement with ICC. No further reproduction or distribution authorized. ANY UNAUTHORIZED REPRODUCTION OR DISTRIBUTION IS A VIOLATION OF THE FEDERAL COPYRIGHT ACT AND THE LICENSE AGREEMENT, AND SUBJECT TO CIVIL AND CRIMINAL PENALTIES THEREUNDER.

ing, paving, excavations, operations and other land-disturbing activities.

❖ Any activity within a flood hazard area has the potential to alter the flood risk of the area. Some alterations may increase flood frequency or flood levels that in turn may adversely impact adjacent property owners. This term is broadly defined so that communities examine and regulate all activities for potential flood hazard area impacts. Land development activities that are not buildings and structures are also subject to the provisions of this appendix.

FUNCTIONALLY DEPENDENT FACILITY. A facility that cannot be used for its intended purpose unless it is located or carried out in close proximity to water, such as a docking or port facility necessary for the loading or unloading of cargo or passengers, shipbuilding or ship repair. The term does not include long-term storage, manufacture, sales or service facilities.

❖ By the very nature of their use, certain buildings and structures would not be able to fulfill their intended functions if located away from bodies of water. In addition, their functions may be hampered if they are elevated in full compliance with the code. Very specific facilities are defined as functionally dependent facilities and other facilities are specifically excluded from the definition even though they may be located near bodies of water.

MANUFACTURED HOME. A structure that is transportable in one or more sections, built on a permanent chassis, designed for use with or without a permanent foundation when attached to the required utilities, and constructed to the Federal Mobile Home Construction and Safety Standards and rules and regulations promulgated by the U.S. Department of Housing and Urban Development. The term also includes mobile homes, park trailers, travel trailers and similar transportable structures that are placed on a site for 180 consecutive days or longer.

❖ Manufactured homes are defined separately from buildings and many communities do not regulate them under the building or residential codes. This appendix requires permits for the installation of new manufactured homes, replacement manufactured homes, and improvement or repair of manufactured homes if located in flood hazard areas.

MANUFACTURED HOME PARK OR SUBDIVISION. A parcel (or contiguous parcels) of land divided into two or more manufactured home lots for rent or sale.

❖ Typically, manufactured home parks and subdivisions are developed by a single owner and, in most cases, the utilities, pads and foundations are installed before the lots are rented or sold. These development activities are included in this appendix (see Sections G301.1 and G301.2) so that manufactured homes subsequently placed or replaced in parks and subdivisions will comply with the requirements for flood hazard areas.

RECREATIONAL VEHICLE. A vehicle that is built on a single chassis, 400 square feet (37.16 m^2) or less when measured at the largest horizontal projection, designed to be self-propelled or permanently towable by a light-duty truck, and designed primarily not for use as a permanent dwelling but as temporary living quarters for recreational, camping, travel or seasonal use. A recreational vehicle is ready for highway use if it is on its wheels or jacking system, is attached to the site only by quick disconnect-type utilities and security devices and has no permanently attached additions.

❖ Recreational vehicles are intended to be used temporarily and, therefore, typically are not placed on permanent foundations that are designed and constructed to resist flood damage. Due to the nature of their placement and susceptibility to movement, this appendix (see Section G601.1) provides that they not be placed in coastal high-hazard areas (V Zones) and floodways.

VARIANCE. A grant of relief from the requirements of this section that permits construction in a manner otherwise prohibited by this section where specific enforcement would result in unnecessary hardship.

❖ Within flood hazard areas, a variance, especially to build below the design flood elevation, exposes people and property to higher risks and increased potential for flood damage. For the purpose of handling requests for variances to the flood-resistant design and construction provisions of the code, specific restrictions, considerations and conditions are set forth in this appendix (see Section G105). Note that repair or rehabilitation of historic structures, as well as construction or substantial improvements of functionally dependent facilities, may be handled by variance.

VIOLATION. A development that is not fully compliant with this appendix or Section 1612, as applicable.

❖ Work that is approved by issuance of a permit must be conducted in accordance with the code and conditions of the permit. If the actual work is not in compliance, then it is in violation. Violations should be handled in accordance with the procedures set forth in the code (see Section 114) and this appendix (see Sections G101.4, G104.3 and G104.5).

SECTION G301
SUBDIVISIONS

G301.1 General. Any subdivision proposal, including proposals for manufactured home parks and subdivisions, or other proposed new development in a flood hazard area shall be reviewed to verify all of the following:

1. All such proposals are consistent with the need to minimize flood damage.
2. All public utilities and facilities, such as sewer, gas, electric and water systems, are located and constructed to minimize or eliminate flood damage.

INTERNATIONAL CODE COUNCIL®
Copyright © 2015 ICC. ALL RIGHTS RESERVED. Accessed by David Dammon on Jun 21, 2017 12:30:52 PM pursuant to License Agreement with ICC. No further reproduction or distribution authorized. ANY UNAUTHORIZED REPRODUCTION OR DISTRIBUTION IS A VIOLATION OF THE FEDERAL COPYRIGHT ACT AND THE LICENSE AGREEMENT, AND SUBJECT TO CIVIL AND CRIMINAL PENALTIES THEREUNDER.

3. Adequate drainage is provided to reduce exposure to flood hazards.

❖ When land is subdivided, the opportunity arises to recognize flood hazard areas and design the lot layout to reduce future flood damage. It is during this process that many communities elect to guide development to less hazardous locations. At a minimum, public utilities should be designed and located to avoid or minimize impairment and damage. For additional guidance, refer to APA PAS #473.

G301.2 Subdivision requirements. The following requirements shall apply in the case of any proposed subdivision, including proposals for manufactured home parks and subdivisions, any portion of which lies within a *flood hazard area*:

1. The *flood hazard area*, including *floodways*, coastal high-hazard areas and coastal A zones, as appropriate, shall be delineated on tentative and final subdivision plats.
2. Design flood elevations shall be shown on tentative and final subdivision plats.
3. Residential building lots shall be provided with adequate buildable area outside the *floodway*.
4. The design criteria for utilities and facilities set forth in this appendix and appropriate International Codes shall be met.

❖ To facilitate the review of subdivision proposals with respect to flood hazards, tentative and final subdivision plats should include adequate information. Where the land to be subdivided includes areas that are not within the flood hazard area, lots may be laid out to avoid or minimize floodplain impacts. Residential lots should be laid out so that building footprints and fill or other obstructions are outside the floodway.

SECTION G401
SITE IMPROVEMENT

❖ The definition of "Development" in Section G201 includes site work necessary to place buildings or structures, as well as site improvements that do not involve buildings or structures. When buildings and structures cannot be located outside of flood hazard areas, they should be elevated so that the lowest floor is at or above the DFE. The most common ways to elevate buildings or structures are on fill, on solid foundation walls surrounding crawlspaces or on posts, pilings or columns. Compacted fill, placed in accordance with the code, may be placed to raise a building pad above the DFE. Note that fill is not allowed to be used to elevate buildings in coastal high-hazard areas (V Zones).

Before allowing fill or development in a flood hazard area, the building official must determine that the fill will not increase flooding or cause drainage problems on neighboring properties. In areas with known drainage and flooding problems, the building official has the authority to require submission of engineering analyses. Under Section G103.4, this analysis is required when a floodway has not been delineated and, under Sections G103.5 and G401.1, if fill or other development will encroach into a designated floodway. Some states and communities require encroachment analyses for all large fill proposals. In areas that are already developed, increased flood levels resulting from flood hazard area activities may be considered threats to public safety and should be mitigated to the maximum extent possible by the permit applicant.

Permit applicants may propose placing fill in flood hazard areas with the intent of later constructing buildings with excavated basements. The definition of "Basement" in Section 1612.2 is "the portion of a building having its floor subgrade (below ground level) on all sides." When excavated into fill, basements may be subject to damage, especially in flood hazard areas where waters remain high for more than a few hours. Fill materials can become saturated and may not provide adequate support or water pressure can collapse below-grade walls. Basements below residential buildings are not permitted to be constructed below the DFE, even if excavated into fill that is placed above the DFE. Basements beneath nonresidential buildings are similarly not permitted unless they are designed, constructed and certified to be dry floodproofed in accordance with flood-resistant construction provisions of the code and ASCE 24.

If elevated in flood hazard areas, buildings will be surrounded by water during general conditions of flooding. To address emergency management concerns about evacuation and public safety, it may be appropriate to consult with local emergency personnel responsible for evacuations. This could be more important when reviewing applications for large subdivisions or critical facilities such as hospitals and care facilities. Many states and communities have provisions that require uninterrupted access to all buildings during design flood conditions. These requirements may be administered by agencies responsible for permitting the construction of public rights-of-way.

G401.1 Development in floodways. Development or land-disturbing activity shall not be authorized in the *floodway* unless it has been demonstrated through hydrologic and hydraulic analyses performed in accordance with standard engineering practice, and prepared by a *registered design professional*, that the proposed encroachment will not result in any increase in the base flood level.

❖ See the commentary to Section G103.5 for more information.

G401.2 Coastal high-hazard areas and coastal A zones. In coastal high-hazard areas and coastal A zones:

1. New buildings and buildings that are substantially improved shall only be authorized landward of the reach of mean high tide.

INTERNATIONAL CODE COUNCIL®
Copyright © 2015 ICC. ALL RIGHTS RESERVED. Accessed by David Dammon on Jun 21, 2017 12:30:52 PM pursuant to License Agreement with ICC. No further reproduction or distribution authorized. ANY UNAUTHORIZED REPRODUCTION OR DISTRIBUTION IS A VIOLATION OF THE FEDERAL COPYRIGHT ACT AND THE LICENSE AGREEMENT, AND SUBJECT TO CIVIL AND CRIMINAL PENALTIES THEREUNDER.

2. The use of fill for structural support of buildings is prohibited.

❖ All new construction within coastal high-hazard areas (commonly called V Zones) and Coastal A Zones must be located landward of the reach of mean high tide. The use of fill to provide structural support is prohibited because areas subject to wave action are more likely to experience flood-related erosion, which may cause failure of foundations on fill. For additional guidance, refer to FEMA TB #5, *Free of Obstruction Requirements for Buildings Located in Coastal High-Hazard Areas* and FEMA P-55, *Coastal Construction Manual: Principles and Practices of Planning, Siting, Designing, Constructing, and Maintaining Residential Buildings in Coastal Areas*.

G401.3 Sewer facilities. All new or replaced sanitary sewer facilities, private sewage treatment plants (including all pumping stations and collector systems) and on-site waste disposal systems shall be designed in accordance with Chapter 7, ASCE 24, to minimize or eliminate infiltration of floodwaters into the facilities and discharge from the facilities into floodwaters, or impairment of the facilities and systems.

❖ New and replacement sewer facilities must be designed in accordance with Chapter 7 of ASCE 24. Adhering to these requirements will minimize damage to such facilities, as well as the likelihood of contamination from such facilities.

G401.4 Water facilities. All new or replacement water facilities shall be designed in accordance with the provisions of Chapter 7, ASCE 24, to minimize or eliminate infiltration of floodwaters into the systems.

❖ New and replacement water supply facilities must be designed in accordance with Chapter 7 of ASCE 24. Adhering to these requirements will minimize damage to water supply facilities and infiltration of contamination, which may be carried by floodwaters.

G401.5 Storm drainage. Storm drainage shall be designed to convey the flow of surface waters to minimize or eliminate damage to persons or property.

❖ In addition to designing a site to minimize damage from flood conditions, storm runoff must be addressed to minimize or eliminate related damage. Storm drainage conveyance patterns and facilities should be shown on the site plan described in Section G104.2.

G401.6 Streets and sidewalks. Streets and sidewalks shall be designed to minimize potential for increasing or aggravating flood levels.

❖ The layout of streets and sidewalks may impact both storm runoff and flood flows. The design and construction of streets and roadways, including bridges and culverts, should reduce or eliminate damage from both storm runoff and flooding. In addition to removing flood storage from flood hazard areas, the placement of fill associated with the construction of roads and sidewalks has the potential to alter the flow of both storm runoff and floodwater. Bridges and culverts should be sized to minimize their effects on flooding. Refer to Section G401.1 if such activities are proposed within floodways.

SECTION G501
MANUFACTURED HOMES

❖ This section requires all new and substantially improved manufactured homes to be elevated such that their lowest floors are at or above the DFE. Replacement of an existing manufactured home is considered "new construction" and must comply with the provisions of this section. In effect, manufactured homes should meet the same flood-resistant construction requirements as other buildings and structures. In part, this provision exceeds the minimum requirements of the NFIP, which, in some very limited situations in existing manufactured home parks and subdivisions, allows replacement manufactured homes to be located below the DFE. Manufactured homes must be anchored to permanent foundations to resist flotation, collapse and lateral movement. Foundations must be reinforced and elevated so that the lowest floor of the manufactured home is at or above the DFE. Foundations must meet all applicable requirements to resist wind, seismic and flood loads prescribed in the code.

Manufactured homes may be placed either on prepared sites in manufactured home parks or subdivisions or on individually owned parcels of land. Manufactured home parks have a separate owner, and the pads, foundations and utility hookups are rented to the manufactured home owners. As in a typical subdivision, a manufactured home subdivision normally is developed by a single developer and the lots are sold to individuals for use as manufactured home sites.

For additional guidance on installation, foundations, anchoring and ties for manufactured homes in flood hazard areas, refer to FEMA P-85, *Protecting Manufactured Homes from Floods and Other Hazards: A Multi-Hazard Foundation and Installation Guide.*

G501.1 Elevation. All new and replacement manufactured homes to be placed or substantially improved in a *flood hazard area* shall be elevated such that the lowest floor of the manufactured home is elevated to or above the design flood elevation.

❖ The elevation requirements set forth in Section 1612 and ASCE 24 apply to manufactured homes, thereby treating this type of construction the same as other buildings and structures. The certification of the lowest floor elevation, as required in Section 1612.5, also applies to manufactured homes that are placed in flood hazard areas. *The International Residential Code*® (IRC®) also has requirements for manufactured homes (see Section R322.1.9).

INTERNATIONAL CODE COUNCIL®
Copyright © 2015 ICC. ALL RIGHTS RESERVED. Accessed by David Dammon on Jun 21, 2017 12:30:52 PM pursuant to License Agreement with ICC. No further reproduction or distribution authorized. ANY UNAUTHORIZED REPRODUCTION OR DISTRIBUTION IS A VIOLATION OF THE FEDERAL COPYRIGHT ACT AND THE LICENSE AGREEMENT, AND SUBJECT TO CIVIL AND CRIMINAL PENALTIES THEREUNDER.

G501.2 Foundations. All new and replacement manufactured homes, including substantial improvement of existing manufactured homes, shall be placed on a permanent, reinforced foundation that is designed in accordance with Section R322 of the *International Residential Code*.

❖ Section R322 specifies both elevation requirements and foundation requirements, each depending on flood zone. Flood loads experienced in most flood hazard areas include hydrostatic and hydrodynamic components. Impacts from floating debris and waves can impart additional loads. Additionally, in coastal high-hazard areas (V Zones), flood and wind loads acting simultaneously, as required in Section 1603, should be addressed in foundation design. Permanent, reinforced foundations for manufactured homes are necessary to resist anticipated loads. A permanent foundation system for a manufactured home includes the following:

- A below-grade footing capable of providing resistance against overturning;
- Footing depth below the frost line;
- Reinforced piers, driven pilings, embedded posts, or poured concrete or reinforced block foundation walls; and
- Anchors and connections (see Section G501.3).

G501.3 Anchoring. All new and replacement manufactured homes to be placed or substantially improved in a *flood hazard area* shall be installed using methods and practices that minimize flood damage. Manufactured homes shall be securely anchored to an adequately anchored foundation system to resist flotation, collapse and lateral movement. Methods of anchoring are authorized to include, but are not limited to, use of over-the-top or frame ties to ground anchors. This requirement is in addition to applicable state and local anchoring requirements for resisting wind forces.

❖ The manufactured home anchoring requirement has two elements that are both addressed in FEMA P-85:

1. Manufactured homes must be anchored to a permanent, reinforced foundation to limit movement and resist uplift and overturning due to flood, wind and seismic forces; and
2. Manufactured homes must have ties firmly attached to ground anchors to transfer loads to the ground. Manufacturer specifications for ground anchor depths typically do not include flood loads. Steel strapping, cable, chain or other approved material may be used for ties, which should be fastened to ground anchors and drawn tight with turnbuckles or other adjustable tensioning devices. Manufacturer specifications for ties typically do not include flood loads. Ties may be over-the-top straps or frame ties, as appropriate to the manufactured home.

G501.4 Protection of mechanical equipment and outside appliances. Mechanical equipment and outside appliances shall be elevated to or above the *design flood elevation.*

Exception: Where such equipment and appliances are designed and installed to prevent water from entering or accumulating within their components and the systems are constructed to resist hydrostatic and hydrodynamic loads and stresses, including the effects of buoyancy, during the occurrence of flooding up to the elevation required by Section R322 of the *International Residential Code,* the systems and equipment shall be permitted to be located below the elevation required by Section R322 of the *International Residential Code.* Electrical wiring systems shall be permitted below the *design flood elevation* provided they conform to the provisions of NFPA 70.

❖ This section sets a broad requirement that electrical and mechanical system elements, including electrical, heating, ventilating, air-conditioning, plumbing fixtures, duct systems and other service equipment for manufactured homes should be located above the elevations specified depending on whether the location is in a flood hazard area (A Zones) or coastal high-hazard area (V Zones). The same requirement applies to the replacement of electrical and mechanical system elements that are included as part of substantial improvements to existing buildings. Attention should be paid to ductwork. Typical installation between floor joists, or joist spaces used as ducts, will not be in compliance unless the floor elevation is high enough to allow such installation above the required elevation. If a building is elevated to satisfy the minimum requirement, anything installed below that elevation is automatically not in compliance with this section unless it explicitly complies with the exception.

The exception to this section provides criteria for placing specific equipment below the required elevation. It is important that the equipment is designed to prevent the entry or accumulation of water. For example, typical exterior air-conditioning units are not designed to withstand the entry of water and would not meet the requirements of this exception.

G501.5 Enclosures. Fully enclosed areas below elevated manufactured homes shall comply with the requirements of Section R322 of the *International Residential Code*.

❖ The NFIP specifies that the same requirements for enclosed areas below elevated buildings also apply to enclosures under elevated manufactured homes. Section R322 of the IRC requires enclosures below elevated buildings to be constructed of flood-damage-resistant materials and be used solely for parking, storage, and building access. Enclosures in Zone A must have adequate flood openings. In Zone V, walls must be designed to break away under flood loads.

INTERNATIONAL CODE COUNCIL®
Copyright © 2015 ICC. ALL RIGHTS RESERVED. Accessed by David Dammon on Jun 21, 2017 12:30:52 PM pursuant to License Agreement with ICC. No further reproduction or distribution authorized. ANY UNAUTHORIZED REPRODUCTION OR DISTRIBUTION IS A VIOLATION OF THE FEDERAL COPYRIGHT ACT AND THE LICENSE AGREEMENT, AND SUBJECT TO CIVIL AND CRIMINAL PENALTIES THEREUNDER.

SECTION G601
RECREATIONAL VEHICLES

G601.1 Placement prohibited. The placement of recreational vehicles shall not be authorized in coastal high-hazard areas and in *floodways*.

❖ By their very nature, recreational vehicles are not normally elevated or permanently attached to a foundation and, therefore, may be very susceptible to flooding. This provision limits the placement of recreational vehicles in flood hazard areas where velocities may be high and flood loads may be significant, such as floodways and flood hazard areas subject to high-velocity wave action (coastal high-hazard areas).

G601.2 Temporary placement. Recreational vehicles in *flood hazard areas* shall be fully licensed and ready for highway use, and shall be placed on a site for less than 180 consecutive days.

❖ Unless otherwise prohibited under Section G601.1, recreational vehicles may be temporarily placed in flood hazard areas if they are fully licensed, remain highway ready and can be moved when flooding threatens. "Highway ready" means that a recreational vehicle is on its wheels or internal jacking system, is connected to the site only by quick disconnect-type utilities and security devices and has no permanently attached additions such as porches and decks.

G601.3 Permanent placement. Recreational vehicles that are not fully licensed and ready for highway use, or that are to be placed on a site for more than 180 consecutive days, shall meet the requirements of Section G501 for manufactured homes.

❖ Recreational vehicles that do not meet the requirements of Section G601.2 are considered permanent buildings and should be installed in accordance with the requirements for manufactured homes in Section G501.

SECTION G701
TANKS

❖ This section addresses requirements for tanks located in flood hazard areas. Physical damage as well as environment contamination and health risks result when above-ground and underground tanks are not adequately protected and restrained during conditions of flooding. Many hazardous materials, such as gas or oil, are lighter than water and, if released due to damage or unprotected vents and fill openings, contribute to contamination and risks to public health and safety. For additional guidance, reference FEMA 348 and ASCE 24.

G701.1 Tanks. Underground and above-ground tanks shall be designed, constructed, installed and anchored in accordance with ASCE 24.

❖ ASCE 24 specifies both performance requirements for tanks and limitations on above-ground tanks based on flood zone.

SECTION G801
OTHER BUILDING WORK

❖ Certain activities that are specified in Section 105.2 of the code are exempt from the requirement to obtain a permit, although the code does not authorize them to be conducted in any manner that violates the code or other laws or ordinances of the community. As explained in Section G101.3, this appendix addresses flood-resistant construction provisions that, in conjunction with provisions of the code that relate to flood-resistant design and construction of buildings and structures, can be used to satisfy the requirements of the NFIP. Under the NFIP, all development must meet the requirements for flood-resistant construction. In order to ensure that activities exempt from a permit meet specific flood-resistant provisions, those activities are specifically listed in this appendix.

G801.1 Garages and accessory structures. Garages and accessory structures shall be designed and constructed in accordance with ASCE 24.

❖ ASCE 24 contains requirements for garages and accessory structures that allow them to be constructed without meeting the elevation requirements, provided certain flood-resistant requirements are met.

G801.2 Fences. Fences in floodways that may block the passage of floodwaters, such as stockade fences and wire mesh fences, shall meet the requirement of Section G103.5.

❖ Fences that are solid or that may trap floating leaves and debris can alter the flow of water and may increase flooding on adjacent properties. Such fences in floodways should be avoided or, if unavoidable, their impact on flooding and flood heights must be examined as floodway encroachments.

G801.3 Oil derricks. Oil derricks located in *flood hazard areas* shall be designed in conformance with the flood loads in Sections 1603.1.7 and 1612.

❖ As permanent structures, if located in flood hazard areas, oil derricks should be designed to resist flood loads. If located in floodways, analyses are required to determine the impact on flood levels. Attendant equipment and utilities should meet the requirements

INTERNATIONAL CODE COUNCIL®
Copyright © 2015 ICC. ALL RIGHTS RESERVED. Accessed by David Dammon on Jun 21, 2017 12:30:52 PM pursuant to License Agreement with ICC. No further reproduction or distribution authorized. ANY UNAUTHORIZED REPRODUCTION OR DISTRIBUTION IS A VIOLATION OF THE FEDERAL COPYRIGHT ACT AND THE LICENSE AGREEMENT, AND SUBJECT TO CIVIL AND CRIMINAL PENALTIES THEREUNDER.

in ASCE 24, a referenced standard in Section 1612 of the code.

G801.4 Retaining walls, sidewalks and driveways. Retaining walls, sidewalks and driveways shall meet the requirements of Section 1804.4.

❖ Retaining walls, sidewalks and driveways may involve grading and fill. When constructed in flood hazard areas they may be subject to saturation or the erosive action of moving water and waves. If placed in floodways, they may contribute to increased flood levels and flooding of adjacent properties. Section 1804.4 outlines requirements, including engineering analyses, which are applicable depending on the nature of the flood hazard area. In coastal high-hazard areas, retaining walls, sidewalks and driveways that are not at grade should not obstruct the passage of waves or divert water and waves towards buildings.

G801.5 Swimming pools. Swimming pools shall be designed and constructed in accordance with ASCE 24. Above-ground swimming pools, on-ground swimming pools and in-ground swimming pools that involve placement of fill in *floodways* shall also meet the requirements of Section G103.5.

❖ ASCE 24 includes requirements for pools that vary by flood zone. If placed in a floodway, some pools constitute an encroachment that could increase flood levels and flood damage on adjacent properties.

G801.6 Decks, porches, and patios. Decks, porches and patios shall be designed and constructed in accordance with ASCE 24.

❖ ASCE 24 includes requirements for decks, porches, and patios that vary by flood zone. Decks, porches, and patios can become undermined and transfer load to primary structures under flood conditions, causing damage to the primary structure.

G801.7 Nonstructural concrete slabs in coastal high-hazard areas and coastal A zones. In coastal high-hazard areas and coastal A zones, nonstructural concrete slabs used as parking pads, enclosure floors, landings, decks, walkways, patios and similar nonstructural uses are permitted beneath or adjacent to buildings and structures provided that the concrete slabs shall be constructed in accordance with ASCE 24.

❖ ASCE 24 includes requirements for nonstructural slabs that vary by flood zone. Slabs constructed for parking and other nonstructural uses should be constructed so that the slabs will break up during a flood event, instead of remaining in one piece and being undermined by scour and erosion.

G801.8 Roads and watercourse crossings in regulated floodways. Roads and watercourse crossings that encroach into regulated *floodways*, including roads, bridges, culverts, low-water crossings and similar means for vehicles or pedestrians to travel from one side of a watercourse to the other, shall meet the requirement of Section G103.5.

❖ The NFIP requires communities to regulate all development. Roads and other crossings may encroach into floodways. Floodway encroachments may cause increases in flood elevations which can increase flooding on other properties and increase the extent of mapped special flood hazard areas.

SECTION G901
TEMPORARY STRUCTURES AND TEMPORARY STORAGE

G901.1 Temporary structures. Temporary structures shall be erected for a period of less than 180 days. Temporary structures shall be anchored to prevent flotation, collapse or lateral movement resulting from hydrostatic loads, including the effects of buoyancy, during conditions of the design flood. Fully enclosed temporary structures shall have flood openings that are in accordance with ASCE 24 to allow for the automatic entry and exit of floodwaters.

❖ The placement of temporary structures in flood hazard areas can subject those structures to flooding, or increase damage to buildings by contributing to flood-borne debris or block bridges and culverts which could prevent floodwaters from freely moving downstream.

G901.2 Temporary storage. Temporary storage includes storage of goods and materials for a period of less than 180 days. Stored materials shall not include hazardous materials.

❖ The temporary placement of stored goods and materials can subject those goods and materials to flooding; or increase damage to buildings by contributing to flood-borne debris or blocking bridges and culverts, which could prevent floodwaters from moving downstream. Temporary storage of hazardous materials exposes people to materials that may be released during flood conditions, thereby increasing the potential for serious health and safety risks and the complexity and cost of cleanup.

G901.3 Floodway encroachment. Temporary structures and temporary storage in floodways shall meet the requirements of G103.5.

❖ See the commentary to Section G103.5.

SECTION G1001
UTILITY AND MISCELLANEOUS GROUP U

G1001.1 Utility and miscellaneous Group U. Utility and miscellaneous Group U includes buildings that are accessory in character and miscellaneous structures not classified in any specific occupancy in this code, including, but not limited to, agricultural buildings, aircraft hangars (accessory to a one- or two-family residence), barns, carports, fences more than 6 feet (1829 mm) high, grain silos (accessory to a residential occupancy), greenhouses, livestock shelters, private garages, retaining walls, sheds, stables and towers.

❖ Utility and miscellaneous structures are included in Appendix G because the flood-resistant provisions must be applied to all buildings and structures that are listed in Section 312. Section 312 of the code

INTERNATIONAL CODE COUNCIL®
Copyright © 2015 ICC. ALL RIGHTS RESERVED. Accessed by David Dammon on Jun 21, 2017 12:30:52 PM pursuant to License Agreement with ICC. No further reproduction or distribution authorized. ANY UNAUTHORIZED REPRODUCTION OR DISTRIBUTION IS A VIOLATION OF THE FEDERAL COPYRIGHT ACT AND THE LICENSE AGREEMENT, AND SUBJECT TO CIVIL AND CRIMINAL PENALTIES THEREUNDER.

requires that "buildings and structures of an accessory character and miscellaneous structures not classified in any specific occupancy shall be constructed, equipped and maintained to conform to the requirements of this code commensurate with the fire and life hazard incidental to their occupancy." Flood resistance is appropriate, in addition to fire and life safety, and is required for consistency with the minimum requirements of the NFIP.

G1001.2 Flood loads. Utility and miscellaneous Group U buildings and structures, including substantial improvement of such buildings and structures, shall be anchored to prevent flotation, collapse or lateral movement resulting from flood loads, including the effects of buoyancy, during conditions of the design flood.

❖ This level of compliance with requirements of the code is appropriate in order to minimize increasing flood heights and flood damage and the likelihood that these structures can be dislodged and become debris that impacts permanent structures or blocks bridges and culverts.

G1001.3 Elevation. Utility and miscellaneous Group U buildings and structures, including substantial improvement of such buildings and structures, shall be elevated such that the lowest floor, including basement, is elevated to or above the design flood elevation in accordance with Section 1612 of this code.

❖ This requirement applies to utilities and miscellaneous Group U buildings that are walled and roofed, unless they otherwise comply with floodproofing requirements of the code, which references ASCE 24.

G1001.4 Enclosures below design flood elevation. Fully enclosed areas below the design flood elevation shall be constructed in accordance with ASCE 24.

❖ ASCE 24 requirements for enclosed areas vary based on the flood zone.

G1001.5 Flood-damage-resistant materials. Flood-damage-resistant materials shall be used below the design flood elevation.

❖ For guidance, refer to FEMA TB-2.

G1001.6 Protection of mechanical, plumbing and electrical systems. Mechanical, plumbing and electrical systems, including plumbing fixtures, shall be elevated to or above the design flood elevation.

Exception: Electrical systems, equipment and components; heating, ventilating, air conditioning and plumbing appliances; plumbing fixtures, duct systems and other service equipment shall be permitted to be located below the design flood elevation provided that they are designed and installed to prevent water from entering or accumulating within the components and to resist hydrostatic and hydrodynamic loads and stresses, including the effects of buoyancy, during the occurrence of flooding to the design flood elevation in compliance with the flood-resistant construction requirements of this code. Electrical wiring systems shall be permitted to be located below the design flood elevation provided they conform to the provisions of NFPA 70.

❖ Utility service for utility and miscellaneous Group U buildings must meet the same requirements as service in other buildings in flood hazard areas.

SECTION G1101
REFERENCED STANDARDS

ASCE 24—13	Flood-Resistant Design and Construction	G103.1, G401.3, G401.4, G701.1, G801.1, G801.5, G801.6, G801.7, G901.1, G1001.4
HUD 24 CFR Part 3280 (2008)	Manufactured Home Construction and Safety Standards	G201
IBC—15	International Building Code	G102.2, G1001.1, G1001.3
IRC—15	International Residential Code	G501.2, G501.4, G501.5
NFPA 70—11	National Electrical Code	G501.4, G1001.6

Bibliography

The following resource materials were used in the preparation of the commentary for this appendix chapter of the code. See the commentary to Chapter 16 for information on obtaining additional related publications from FEMA.

APA PAS #473, *Subdivision Design in Flood Hazard Areas*. Washington, DC: American Planning Association, 1997.

ASCE 24—14, *Flood-Resistant Design and Construction*. Reston, VA: American Society of Civil Engineers Structural Engineering Institute, 2014.

FEMA 44 CFR, Parts 59-73, *National Flood Insurance Program* (NFIP). Washington, DC: Federal Emergency Management Agency.

FEMA P-55, *Coastal Construction Manual: Principles and Practices of Planning, Siting, Designing, Constructing, and Maintaining Residential Buildings in Coastal Areas*. Washington, DC: Federal Emergency Management Agency, 2011.

FEMA P-85, *Protecting Manufactured Homes from Floods and Other Hazards: A Multi-Hazard Foundation and Installation Guide*. Washington, DC: Federal Emergency Management Agency, 2009

FEMA 265, *Managing Floodplain Development in Approximate Zone A Areas: A Guide for Obtaining and Developing Base (100-year) Flood Elevations*. Washington, DC: Federal Emergency Management Agency, 1995.

INTERNATIONAL CODE COUNCIL®

Copyright © 2015 ICC. ALL RIGHTS RESERVED. Accessed by David Dammon on Jun 21, 2017 12:30:52 PM pursuant to License Agreement with ICC. No further reproduction or distribution authorized. ANY UNAUTHORIZED REPRODUCTION OR DISTRIBUTION IS A VIOLATION OF THE FEDERAL COPYRIGHT ACT AND THE LICENSE AGREEMENT, AND SUBJECT TO CIVIL AND CRIMINAL PENALTIES THEREUNDER.

FEMA 348, *Protecting Building Utilities from Flood Damage: Principles and Practices for the Design and Construction of Flood-resistant Building Utility Systems*. Washington, DC: Federal Emergency Management Agency, 1999.

FEMA P-467-1, *Floodplain Management Bulletin on the Elevation Certificate*. Washington, DC: Federal Emergency Management Agency, 2004.

FEMA P-467-2, *Floodplain Management Bulletin on Historic Structures*. Washington, DC: Federal Emergency Management Agency, 2008.

FEMA P-758, *Substantial Improvement/Substantial Damage Desk Reference.* Washington, DC: Federal Emergency Management Agency, 2009.

FEMA P-784, *Substantial Damage Estimator*. Washington, DC: Federal Emergency Management Agency, 2012.

FEMA TB #1, *Openings in Foundation Walls and Walls of Enclosures Below Elevated Buildings Located in Special Flood Hazard Areas*. Washington, DC: Federal Emergency Management Agency, 2008.

FEMA TB #2, *Flood Damage-Resistant Materials Requirements for Buildings Located in Special Flood Hazard Areas*. Washington, DC: Federal Emergency Management Agency, 2008.

FEMA FIA-TB #3, *Nonresidential Floodproofing Requirements and Certification for Buildings Located in Special Flood Hazard Areas*. Washington, DC: Federal Emergency Management Agency,1993.

FEMA TB #4, *Elevator Installation for Buildings Located in Special Flood Hazard Areas*. Washington, DC: Federal Emergency Management Agency, 2010.

FEMA TB #5, *Free-of-Obstruction Requirements for Buildings Located in Coastal High-Hazard Areas*. Washington, DC: Federal Emergency Management Agency, 2008.

FEMA FIA-TB #6, *Below Grade Parking Requirements for Buildings Located in Special Flood Hazard Areas*. Washington, DC: Federal Emergency Management Agency, 1993.

FEMA FIA-TB #7, *Wet Floodproofing Requirements for Structures Located in Special Flood Hazard Areas*. Washington, DC: Federal Emergency Management Agency, 1993.

FEMA FIA-TB #8, *Corrosion Protection for Metal Connectors in Coastal Areas for Structures Located in Special Flood Hazard Areas*. Washington, DC: Federal Emergency Management Agency,1996.

FEMA TB #9, *Design and Construction Guidance for Breakaway Walls Below Elevated Coastal Buildings*. Washington, DC: Federal Emergency Management Agency, 2008.

FEMA FIA-TB #10, *Ensuring that Structures Built on Fill In or Near Special Flood Hazard Areas are Reasonably Safe from Flooding*. Washington, DC: Federal Emergency Management Agency, 2001.

FEMA FIA-TB #11, *Crawlspace Construction for Buildings Located in Special Flood Hazard Areas*. Washington, DC: Federal Emergency Management Agency, 2001.

FEMA Form 086-0-33. *NFIP Elevation Certificate*. Washington, DC: Federal Emergency Management Agency, 2012.

FEMA Form 086-0-34. *NFIP Floodproofing Certificate*. Washington, DC: Federal Emergency Management Agency, 2012.

FEMA Form 81-87. MT-1, *Application and Instructions for Conditional and Final Letters of Map Amendment and Letters of Map Revision Based on Fill*. Washington, DC: Federal Emergency Management Agency, 2012.

FEMA Form 81-89, MT-2, Application *for Conditional Letters of Map Revision* and *Letters of Map Revision*. Washington, DC: Federal Emergency Management Agency, 2012.

FEMA Form 86-0-22. MT-EZ Form, Application Form for Single Residential Lot or Structure Amendments to National Flood Insurance Program Maps. Washington, DC: Federal Emergency Management Agency, 2012.

Reducing Flood Losses Through the International Codes: Coordinating Building Codes and Floodplain Management Regulations. Washington, DC: International Code Council, 2014.

INTERNATIONAL CODE COUNCIL®
Copyright © 2015 ICC. ALL RIGHTS RESERVED. Accessed by David Dammon on Jun 21, 2017 12:30:52 PM pursuant to License Agreement with ICC. No further reproduction or distribution authorized. ANY UNAUTHORIZED REPRODUCTION OR DISTRIBUTION IS A VIOLATION OF THE FEDERAL COPYRIGHT ACT AND THE LICENSE AGREEMENT, AND SUBJECT TO CIVIL AND CRIMINAL PENALTIES THEREUNDER.

INTERNATIONAL CODE COUNCIL®

Copyright © 2015 ICC. ALL RIGHTS RESERVED. Accessed by David Dammon on Jun 21, 2017 12:30:52 PM pursuant to License Agreement with ICC. No further reproduction or distribution authorized. ANY UNAUTHORIZED REPRODUCTION OR DISTRIBUTION IS A VIOLATION OF THE FEDERAL COPYRIGHT ACT AND THE LICENSE AGREEMENT, AND SUBJECT TO CIVIL AND CRIMINAL PENALTIES THEREUNDER.

Appendix H: Signs

The provisions contained in this appendix are not mandatory unless specifically referenced in the adopting ordinance.

General Comments

The provisions contained in this appendix are not mandatory unless specifically referenced in the adopting ordinance, as stated in Section 101.2.1.

The regulations contained in this appendix were prompted by improper design, erection, placement, location and maintenance of outdoor signs. Improperly designed and installed signs pose a hazard to people and property. Improperly wired signs or improperly maintained electrical signs can cause fires. The criteria in this chapter are straightforward, which, in turn, facilitates straightforward enforcement. Section H102 contains definitions for nine distinct types of signs.

Purpose

The purpose of this appendix is to locate in one place the provisions that regulate construction or protection requirements for outdoor signs. This appendix also provides the owner, designer, installer and maintainer of outdoor signs with minimum safe practices presented in performance language whenever possible, thus allowing the widest possible application.

SECTION H101 GENERAL

H101.1 General. A sign shall not be erected in a manner that would confuse or obstruct the view of or interfere with exit signs required by Chapter 10 or with official traffic signs, signals or devices. Signs and sign support structures, together with their supports, braces, guys and anchors, shall be kept in repair and in proper state of preservation. The display surfaces of signs shall be kept neatly painted or posted at all times.

❖ The provisions of this appendix are confined to that which is displayed in any manner out of doors for recognized advertising purposes. An orderly procedure is to be followed in erecting and maintaining outdoor signs. Outdoor signs must not block the view of signs regulated in Section 1013 that identify the location and path of travel to exits or street signs regulated by the jurisdiction. Signs must be properly maintained in accordance with this section, including corrosion prevention on all parts of the sign and its supports. Corrosion of a structural member results in loss of cross section, which could render that member incapable of handling the load of the sign or loads (snow, wind, etc.) on the sign. The building official has the authority to order the removal of a sign that is not maintained properly, as it can represent a hazard to the public and, therefore, can be determined to be unsafe (see Section 116).

H101.2 Signs exempt from permits. The following signs are exempt from the requirements to obtain a *permit* before erection:

1. Painted nonilluminated signs.
2. Temporary signs announcing the sale or rent of property.
3. Signs erected by transportation authorities.
4. Projecting signs not exceeding 2.5 square feet (0.23 m^2).
5. The changing of moveable parts of an approved sign that is designed for such changes, or the repainting or repositioning of display matter shall not be deemed an alteration.

❖ The objective of this section is to describe when a permit is not required to regulate the erection, construction, alteration and maintenance of a new sign. Note that this section applies to new signs only, except for existing signs that are to be altered, and that the owner of an exempt sign is responsible for erecting and maintaining it in a safe manner (see Section H104.1 for a related issue).

A permit is not required for the erection of wall signs (commonly of limited area) without electrical service that, when not maintained, can be painted over or the surface repaired to its original state.

A sale or rental sign is temporary in nature, pertains to the premises on which it is placed and its installation is not likely to represent a hazard (for example, it is substantially fixed in place and without electrical service).

Regulation of street signs in the code would be redundant, since signs erected by the jurisdiction inevitably undergo one or more levels of regulatory review before installation. Directional (informational) signs in conjunction with transit lines, such as subways, trains, buses, ferries and airports, are exempt from permit requirements since it is generally not necessary for a jurisdiction to take out a permit for an activity it is performing.

Projecting signs that do not exceed an area of 2.5 square feet (0.23 m^2) do not require a permit, as the

INTERNATIONAL CODE COUNCIL®
Copyright © 2015 ICC. ALL RIGHTS RESERVED. Accessed by David Dammon on Jun 21, 2017 12:30:52 PM pursuant to License Agreement with ICC. No further reproduction or distribution authorized. ANY UNAUTHORIZED REPRODUCTION OR DISTRIBUTION IS A VIOLATION OF THE FEDERAL COPYRIGHT ACT AND THE LICENSE AGREEMENT, AND SUBJECT TO CIVIL AND CRIMINAL PENALTIES THEREUNDER.

size limitation allows access for maintenance. The sign will likely be constructed so as not to create a hazard (for example, lack of headroom for pedestrians, protrusions into a walking surface and electrical supply disrepair).

When an existing sign is altered (i.e., enlarged, relocated, etc.), the alterations must comply with the requirements for new signs. A permit is required for such alterations. The exceptions to the requirements for alterations apply to a sign that has been designed and previously authorized (through the permit process) to have changeable or movable parts. Repainting or reposting of display matter (lettering) is not considered an alteration. If a sign is enlarged or relocated without a permit and, in turn, without a field inspection, it could add excessive loads to a roof, interfere with the exhaust or intake ventilation facilities from a building or create a potential hazard to the public.

SECTION H102
DEFINITIONS

H102.1 General. The following words and terms shall, for the purposes of this appendix, have the meanings shown herein. Refer to Chapter 2 of this code for general definitions.

❖ Definitions of terms that are associated with the content of this section are contained herein. These definitions can help in the understanding and application of the code requirements. The use and application of all defined terms are set forth in Section 202 of the code.

COMBINATION SIGN. A sign incorporating any combination of the features of pole, projecting and roof signs.

❖ The purpose of this definition is to identify which combination of features constitutes a combination sign. These signs are characterized by being simultaneously supported partly by one or more poles, partly by the wall, partly by the roof of a structure or any combination thereof.

DISPLAY SIGN. The area made available by the sign structure for the purpose of displaying the advertising message.

❖ A display sign constitutes the surface of a sign where the contents of a message are arranged for display.

ELECTRIC SIGN. A sign containing electrical wiring, but not including signs illuminated by an exterior light source.

❖ This definition states that an electrical sign is any sign activated or illuminated internally by means of electrical energy. Electric signs are characterized by the use of artificial light projecting through, but not reflecting off, its surface(s).

GROUND SIGN. A billboard or similar type of sign that is supported by one or more uprights, poles or braces in or upon the ground other than a combination sign or pole sign, as defined by this code.

❖ This definition identifies those signs that are not part of other buildings or structures. The structural supports of these signs are such that the wind loading is directly transferred into its own foundation system rather than into other buildings or structures. Section H109.1 contains the specific material and height requirements of ground signs.

POLE SIGN. A sign wholly supported by a sign structure in the ground.

❖ Pole signs are those where the structural supports are constructed so that loads are directly transferred to the ground.

PORTABLE DISPLAY SURFACE. A display surface temporarily fixed to a standardized advertising structure that is regularly moved from structure to structure at periodic intervals.

❖ This definition identifies the surfaces available for displaying commercial or noncommercial advertising messages that are not permanently attached to a structure and are periodically placed at different locations by means of manual input.

PROJECTING SIGN. A sign other than a wall sign that projects from and is supported by a wall of a building or structure.

❖ A projecting sign differs from a wall sign in that it projects from the wall that provides its support. Section H112 contains requirements for projecting signs to regulate their materials, maximum projections, clearances and structural capabilities.

ROOF SIGN. A sign erected on or above a roof or parapet of a building or structure.

❖ This definition identifies that any exterior sign supported on the roof of a building or structure is considered a roof sign. Such a sign directly impacts the design of the roof because of increased wind and snow drifting loads. Section H110.1 contains explicit material and clearance requirements along with height limitations for the erection of roof signs.

SIGN. Any letter, figure, character, mark, plane, point, marquee sign, design, poster, pictorial, picture, stroke, stripe, line, trademark, reading matter or illuminated service, which shall be constructed, placed, attached, painted, erected, fastened or manufactured in any manner whatsoever, so that the same shall be used for the attraction of the public to any place, subject, person, firm, corporation, public performance, article, machine or merchandise, whatsoever, which is displayed in any manner outdoors. Every sign shall be classified and conform to the requirements of that classification as set forth in this chapter.

❖ This definition provides the basis for determining which building components are considered as signs, and thus must comply with the provisions of this appendix. For the purposes of the code, signs are always considered as exterior elements, since the code addresses the hazards associated with exterior exposure. Interior signs must meet the specific code requirements for the materials involved, along with the code provisions for interior finishes and trim (see

INTERNATIONAL CODE COUNCIL®
Copyright © 2015 ICC. ALL RIGHTS RESERVED. Accessed by David Dammon on Jun 21, 2017 12:30:52 PM pursuant to License Agreement with ICC. No further reproduction or distribution authorized. ANY UNAUTHORIZED REPRODUCTION OR DISTRIBUTION IS A VIOLATION OF THE FEDERAL COPYRIGHT ACT AND THE LICENSE AGREEMENT, AND SUBJECT TO CIVIL AND CRIMINAL PENALTIES THEREUNDER.

Chapter 8). The code further subdivides signs into different groups, with specific requirements for each group.

SIGN STRUCTURE. Any structure that supports or is capable of supporting a sign as defined in this code. A sign structure is permitted to be a single pole and is not required to be an integral part of the building.

❖ Structures supporting signs, which may be affixed to the ground and include one or more columns, poles or braces placed in or upon the ground, are not required to be part of the building structural system.

WALL SIGN. Any sign attached to or erected against the wall of a building or structure, with the exposed face of the sign in a plane parallel to the plane of said wall.

❖ This definition details those signs that are part of the wall surfaces of a building or structure, or which are separate signs and are then fastened to the wall surface. Wall signs are separately fastened signs of limited extension from the wall surface; otherwise, they become projecting signs. The code allows certain-sized wall signs to be exempt from permit requirements (see Section H101.2). Section H111.1 specifies the material requirements and extension limitations of wall signs.

SECTION H103
LOCATION

H103.1 Location restrictions. Signs shall not be erected, constructed or maintained so as to obstruct any fire escape or any window or door or opening used as a *means of egress* or so as to prevent free passage from one part of a roof to any other part thereof. A sign shall not be attached in any form, shape or manner to a fire escape, nor be placed in such manner as to interfere with any opening required for ventilation.

❖ The intent of this section is to prohibit the installation of signs at locations that may interfere with either the evacuation process during an emergency situation or free movement throughout the roof of a building. Fire escapes and openings that are part of the means of egress or required for ventilation are to be free from obstructions that may affect their intended use.

SECTION H104
IDENTIFICATION

H104.1 Identification. Every outdoor advertising display sign hereafter erected, constructed or maintained, for which a permit is required, shall be plainly marked with the name of the person, firm or corporation erecting and maintaining such sign and shall have affixed on the front thereof the permit number issued for said sign or other method of identification *approved* by the *building official*.

❖ All signs must bear the name of the owner to identify the party responsible for installation and maintenance. The construction documents on file must show where such identification is located on each sign. If the sign is erected improperly or becomes damaged, the field inspector will be able to identify the responsible person to whom any notification is to be directed.

SECTION H105
DESIGN AND CONSTRUCTION

H105.1 General requirements. Signs shall be designed and constructed to comply with the provisions of this code for use of materials, loads and stresses.

❖ This section addresses the general requirements pertaining to the construction, design loads and working stresses of signs. The design and construction of signs must be in accordance with all of the pertinent requirements of the code. In many instances, structural calculations and the resulting design must be submitted showing the type of materials used, their strength capabilities and the loads and resultant stresses placed on the sign and its supports (see Chapter 16).

H105.2 Permits, drawings and specifications. Where a permit is required, as provided in Chapter 1, construction documents shall be required. These documents shall show the dimensions, material and required details of construction, including loads, stresses and anchors.

❖ The intent of this section is to require construction documents when a permit is required for the erection of a sign. In order to grant a permit to the owner, the construction documents must contain plans and specifications in sufficient detail to allow the determination of code compliance. Section H104.1 affects this section in that it explains that the owner of a sign (new or altered) is not relieved from obtaining the necessary permit, even if he or she holds a building or other type of permit at the time the sign is under construction. The sign permit is usually a separate permit and may also require other related permits (e.g., electrical).

H105.3 Wind load. Signs shall be designed and constructed to withstand wind pressure as provided for in Chapter 16.

❖ A reference is made to Section 1609, which relates to wind loads. Although a reference is not made to snow loads (see Section 1608), consideration should also be given thereto, especially for signs with a significant horizontal surface that will have snow accumulation, such as marquee signs.

H105.4 Seismic load. Signs designed to withstand wind pressures shall be considered capable of withstanding earthquake loads, except as provided for in Chapter 16.

❖ The designer and plan reviewer are to consider the provisions set forth in Section 1613 before the sign and its construction can be considered in compliance with the code.

H105.5 Working stresses. In outdoor advertising display signs, the allowable working stresses shall conform to the requirements of Chapter 16. The working stresses of wire

INTERNATIONAL CODE COUNCIL®
Copyright © 2015 ICC. ALL RIGHTS RESERVED. Accessed by David Dammon on Jun 21, 2017 12:30:52 PM pursuant to License Agreement with ICC. No further reproduction or distribution authorized. ANY UNAUTHORIZED REPRODUCTION OR DISTRIBUTION IS A VIOLATION OF THE FEDERAL COPYRIGHT ACT AND THE LICENSE AGREEMENT, AND SUBJECT TO CIVIL AND CRIMINAL PENALTIES THEREUNDER.

rope and its fastenings shall not exceed 25 percent of the ultimate strength of the rope or fasteners.

Exceptions:

1. The allowable working stresses for steel and wood shall be in accordance with the provisions of Chapters 22 and 23.
2. The working strength of chains, cables, guys or steel rods shall not exceed one-fifth of the ultimate strength of such chains, cables, guys or steel.

❖ Consideration is to be given to the imposed loads and resultant working stresses in the design of signs. The allowable working stresses are to be evaluated in accordance with the provisions of Chapter 16. Structural members are to be of the appropriate size to support the loads applied to the sign (snow, wind, etc.) or the load of the sign itself. All members and connections are to be sufficient to carry all design loads of Chapter 16 without exceeding the specified design values set forth in the referenced chapter.

An exception to this requirement applies only to steel and wood allowable working stresses, which are to comply with the provisions of Chapters 22 and 23. A limitation is placed on wire rope and fastening utilized as structural members supporting signs, where the working stresses are to be below 25 percent of the ultimate strength of the member. An exception to this limitation applies to chains, cables, guys or steel rods where the working stresses of such members may not exceed one-fifth of the ultimate strength of the members.

H105.6 Attachment. Signs attached to masonry, concrete or steel shall be safely and securely fastened by means of metal anchors, bolts or approved expansion screws of sufficient size and anchorage to safely support the loads applied.

❖ In accordance with this section, metal connectors are the prescriptive requirement for the support and transfer of loads when signs are bearing on walls, floors and roofs of masonry, concrete or steel construction. Metal connectors provide points of anchorage at intersecting components and are also used as bonding elements. Section 2103.4 contains the standards and material requirements for joint reinforcement, wire fabric, wire accessories, metal anchors, ties and accessories, and the required corrosion protection of these components.

SECTION H106
ELECTRICAL

H106.1 Illumination. A sign shall not be illuminated by other than electrical means, and electrical devices and wiring shall be installed in accordance with the requirements of NFPA 70. Any open spark or flame shall not be used for display purposes unless specifically approved.

❖ The reference to NFPA 70, *National Electrical Code*, when dealing with electrical aspects is common throughout the *International Codes*® (see commentary, Chapter 27). Improperly installed lighting and wiring are potential fire or electrocution hazards. Other illumination, utilizing such means as flame or sparks, must be approved by the building official so that such an arrangement does not induce a fire hazard for which commensurate safety precautions are not considered.

H106.1.1 Internally illuminated signs. Except as provided for in Sections 402.16 and 2611, where internally illuminated signs have facings of wood or approved plastic, the area of such facing section shall be not more than 120 square feet (11.16 m^2) and the wiring for electric lighting shall be entirely enclosed in the sign cabinet with a clearance of not less than 2 inches (51 mm) from the facing material. The dimensional limitation of 120 square feet (11.16 m^2) shall not apply to sign facing sections made from flame-resistant-coated fabric (ordinarily known as "flexible sign face plastic") that weighs less than 20 ounces per square yard (678 g/m^2) and that, when tested in accordance with NFPA 701, meets the fire propagation performance requirements of both Test 1 and Test 2 or that, when tested in accordance with an approved test method, exhibits an average burn time of 2 seconds or less and a burning extent of 5.9 inches (150 mm) or less for 10 specimens.

❖ This section applies to outdoor signs that are internally illuminated. The exception is a reminder that the area limitations of this section are not applicable to internally illuminated signs located within a building. Wood and approved plastic are limited because of the need to control the amount of combustibles incorporated into the sign. Once the amount of combustibles is limited, maintenance of a 2-inch (51 mm) clearance is still necessary between this material and electrical wiring. Square-foot limitations are not imposed on flame-resistant controlled fabrics that weigh less than 20 ounces per square yard (678 g/m^2), provided that the material meets the specific criteria listed. This is because of the low fuel content of such fabrics and the resulting lower potential for fire propagation. One standard that is referenced, NFPA 701, deals with not only average flame time and average length of char, but also outdoor conditions and weathering.

H106.2 Electrical service. Signs that require electrical service shall comply with NFPA 70.

❖ This section is concerned with sign wiring being installed in a safe and protected manner so as not to create a potential tripping or electrical shock hazard. Electrical safety is as important as structural safety when dealing with illuminated signs. This section emphasizes the need for control by the building official so that the referenced NFPA 70 is utilized properly.

SECTION H107
COMBUSTIBLE MATERIALS

H107.1 Use of combustibles. Wood, approved plastic or plastic veneer panels as provided for in Chapter 26, or other materials of combustible characteristics similar to wood, used

INTERNATIONAL CODE COUNCIL®
Copyright © 2015 ICC. ALL RIGHTS RESERVED. Accessed by David Dammon on Jun 21, 2017 12:30:52 PM pursuant to License Agreement with ICC. No further reproduction or distribution authorized. ANY UNAUTHORIZED REPRODUCTION OR DISTRIBUTION IS A VIOLATION OF THE FEDERAL COPYRIGHT ACT AND THE LICENSE AGREEMENT, AND SUBJECT TO CIVIL AND CRIMINAL PENALTIES THEREUNDER.

for moldings, cappings, nailing blocks, letters and latticing, shall comply with Section H109.1 and shall not be used for other ornamental features of signs, unless approved.

❖ The use of combustibles for ornamentation and sign facings is addressed in Sections H107.1.1 and H107.1.2. The control of combustible signs and portions of signs is necessary to limit the fuel load that the combustible features add to a structure. The use of the term "approved" means approved by the building official in accordance with the provisions of Chapter 26 and other applicable code sections. The reference to Section H109.1 controls the height at which combustibles may be used (see Section H109.1 for details).

H107.1.1 Plastic materials. Notwithstanding any other provisions of this code, plastic materials that burn at a rate no faster than 2.5 inches per minute (64 mm/s) when tested in accordance with ASTM D635 shall be deemed approved plastics and can be used as the display surface material and for the letters, decorations and facings on signs and outdoor display structures.

❖ Plastic materials, mostly consisting of acrylics, that burn at a rate no faster than 2.5 inches per minute (64 mm/min) when tested in accordance with ASTM D635, are to be considered approved plastics for use as display surface materials, numbers, ornaments and coverings on signs. ASTM D635, measures the burning rate of a small sample held horizontally and exposed to a Bunsen burner flame to compare the relative linear rate of burning, the extent and time of burning, or both, of plastics in the horizontal position.

H107.1.2 Electric sign faces. Individual plastic facings of electric signs shall not exceed 200 square feet (18.6 m^2) in area.

❖ Consistent with other provisions of the code to limit the spread of fire, this section places restrictions on the size of plastic facings utilized in signs activated by electrical means. This limitation is intended to control the amount of combustible materials that potentially soften or melt when subject to heat.

H107.1.3 Area limitation. If the area of a display surface exceeds 200 square feet (18.6 m^2), the area occupied or covered by approved plastics shall be limited to 200 square feet (18.6 m^2) plus 50 percent of the difference between 200 square feet (18.6 m^2) and the area of display surface. The area of plastic on a display surface shall not in any case exceed 1,100 square feet (102 m^2).

❖ This section provides requirements for how to determine the permissible amount of combustible materials when the area of a display surface exceeds the 200-square-foot (18.6 m^2) threshold. As an additional safeguard against exterior fire spread, the aggregate area of combustible materials covering a display surface should not exceed the sum of 200 square feet (18.6 m^2) and 50 percent of the difference between the limitation and the area of the display surface. However, at no time can the aggregate area of plastic in display surfaces occupy more than 1,100 square feet (102 m^2).

H107.1.4 Plastic appurtenances. Letters and decorations mounted on an approved plastic facing or display surface can be made of approved plastics.

❖ Under the provisions of this section, combustible lettering and ornaments are permitted to be mounted on display surfaces constructed of approved plastic materials.

SECTION H108
ANIMATED DEVICES

H108.1 Fail-safe device. Signs that contain moving sections or ornaments shall have fail-safe provisions to prevent the section or ornament from releasing and falling or shifting its center of gravity more than 15 inches (381 mm). The fail-safe device shall be in addition to the mechanism and the mechanism's housing that operate the movable section or ornament. The fail-safe device shall be capable of supporting the full dead weight of the section or ornament when the moving mechanism releases.

❖ Animated signs may be operated for many hours at a time, perhaps even continuously. Thus, it is imperative that if the operating mechanism malfunctions, the animated part of the sign will not release or fall, creating a hazard or damaging property.

SECTION H109
GROUND SIGNS

H109.1 Height restrictions. The structural frame of ground signs shall not be erected of combustible materials to a height of more than 35 feet (10 668 mm) above the ground. Ground signs constructed entirely of noncombustible material shall not be erected to a height of greater than 100 feet (30 480 mm) above the ground. Greater heights are permitted where approved and located so as not to create a hazard or danger to the public.

❖ Combustible materials exceeding 35 feet (10 668 mm) in height are prohibited in a sign's structural frame. This somewhat correlates with the height limitation for structures of Type V construction in Table 504.3. The primary concern is the sign and its structure's potential involvement in a fire conflagration. The height of a noncombustible sign structure is limited to 100 feet (30 480 mm) so as to limit reasonably the area exposed to a sign or the sign's structural failure. The building official is permitted to approve signs that exceed 100 feet (30 480 mm) in height, provided that a public hazard is not created. An example of this is an area remote from other buildings and occupied areas, where structural failure would not jeopardize the public.

H109.2 Required clearance. The bottom coping of every ground sign shall be not less than 3 feet (914 mm) above the

INTERNATIONAL CODE COUNCIL®
Copyright © 2015 ICC. ALL RIGHTS RESERVED. Accessed by David Dammon on Jun 21, 2017 12:30:52 PM pursuant to License Agreement with ICC. No further reproduction or distribution authorized. ANY UNAUTHORIZED REPRODUCTION OR DISTRIBUTION IS A VIOLATION OF THE FEDERAL COPYRIGHT ACT AND THE LICENSE AGREEMENT, AND SUBJECT TO CIVIL AND CRIMINAL PENALTIES THEREUNDER.

ground or street level, which space can be filled with platform decorative trim or light wooden construction.

❖ This section regulates the bottom clearance of ground signs. This clear space of 3 feet (914 mm) is permitted to be decorated with nonstructural or decorative trim or light wooden construction, provided this arrangement will not create a hazard.

H109.3 Wood anchors and supports. Where wood anchors or supports are embedded in the soil, the wood shall be pressure treated with an approved preservative.

❖ The intent of this section is to require wood support members in direct contact with the earth to be preservative treated. This provision is consistent with the requirements of Section 2304.12.3. Typically, wood species that are untreated are susceptible to decay. However, when preservative treated with chemicals in accordance with standardized procedures, wood becomes less susceptible to failure due to decay and rot.

SECTION H110
ROOF SIGNS

H110.1 General. Roof signs shall be constructed entirely of metal or other approved noncombustible material except as provided for in Sections H106.1.1 and H107.1. Provisions shall be made for electric grounding of metallic parts. Where combustible materials are permitted in letters or other ornamental features, wiring and tubing shall be kept free and insulated therefrom. Roof signs shall be so constructed as to leave a clear space of not less than 6 feet (1829 mm) between the roof level and the lowest part of the sign and shall have at least 5 feet (1524 mm) clearance between the vertical supports thereof. No portion of any roof sign structure shall project beyond an exterior wall.

Exception: Signs on flat roofs with every part of the roof accessible.

❖ Section H110.1 controls the materials, bottom clearances and arrangements of roof signs (refer to definition of "Sign" in the Section H102.1 for special sign descriptions). Noncombustible materials are required for roof signs. This arrangement will not add to the fuel load present on the building (see Sections H106.1.1 and H107.1 for exceptions that deal with sign facings, electrical wiring and electrical clearances). Grounding of metal signs for lightning control and preventing electrical shock and fire is mandatory. A 6-foot (1829 mm) clear space is to be maintained between the bottom of the sign and the roof. This arrangement will enable wind to travel under the sign, thereby minimizing the collection of snow and debris. It will also facilitate roof repair. An exception to these requirements applies to signs constructed on flat roofs where every portion of the roof is available for access.

H110.2 Bearing plates. The bearing plates of roof signs shall distribute the load directly to or upon masonry walls, steel roof girders, columns or beams. The building shall be designed to avoid overstress of these members.

❖ The provisions of this section require bearing plates of roof signs to transfer the loads directly to masonry or steel structural members. The intent is to minimize the possibility of imposing additional loads on bearing plates not prepared to carry them, which may affect the structural stability of the roof sign. The structural design is to consider the load-carrying capability of the bearing plates to avoid distress of these elements.

H110.3 Height of solid signs. A roof sign having a solid surface shall not exceed, at any point, a height of 24 feet (7315 mm) measured from the roof surface.

❖ This section specifies a height limitation on roof signs of solid construction. The 24-foot (7315 mm) threshold provides a conservative criteria where solid signs are to remain stable against the forces of wind.

H110.4 Height of open signs. Open roof signs in which the uniform open area is not less than 40 percent of total gross area shall not exceed a height of 75 feet (22 860 mm) on buildings of Type 1 or Type 2 construction. On buildings of other construction types, the height shall not exceed 40 feet (12 192 mm). Such signs shall be thoroughly secured to the building upon which they are installed, erected or constructed by iron, metal anchors, bolts, supports, chains, stranded cables, steel rods or braces and they shall be maintained in good condition.

❖ An open sign is the opposite of a closed sign (see Section H110.5) in that the membranes and edges are substantially open, thus allowing wind loads to pass through without any significant structural effects. The code allows increased heights for open signs located on the roofs of buildings based on the type of construction. On buildings of combustible construction, the height is limited to 40 feet (12.2 m), whereas on buildings of noncombustible construction, the height is permitted to be 75 feet (22.9 m). Consistent with other provisions of the code, the use of noncombustible materials will not add to the fuel load present in the building. Open signs are to be properly anchored to their supporting structure and structural supports are to be kept in a proper state of preservation and free from rust to avoid failure of the members.

H110.5 Height of closed signs. A closed roof sign shall not be erected to a height greater than 50 feet (15 240 mm) above the roof of buildings of Type 1 or Type 2 construction or more than 35 feet (10 668 mm) above the roof of buildings of Type 3, 4 or 5 construction.

❖ As in the previous section, there are different height limitations for closed signs located on the roofs of buildings. A closed sign usually consists of membranes containing the lettering or design fastened to the structural framework with its edges also enclosed. The 50-foot (15 240 mm) threshold identifies the point at which wind loading on the sign becomes significant and a fire could go undetected for some time.

INTERNATIONAL CODE COUNCIL®
Copyright © 2015 ICC. ALL RIGHTS RESERVED. Accessed by David Dammon on Jun 21, 2017 12:30:52 PM pursuant to License Agreement with ICC. No further reproduction or distribution authorized. ANY UNAUTHORIZED REPRODUCTION OR DISTRIBUTION IS A VIOLATION OF THE FEDERAL COPYRIGHT ACT AND THE LICENSE AGREEMENT, AND SUBJECT TO CIVIL AND CRIMINAL PENALTIES THEREUNDER.

SECTION H111
WALL SIGNS

H111.1 Materials. Wall signs that have an area exceeding 40 square feet (3.72 m^2) shall be constructed of metal or other approved noncombustible material, except for nailing rails and as provided for in Sections H106.1.1 and H107.1.

❖ This section regulates the materials used and the arrangement of wall signs (see the definition of "Wall sign"). Signs in excess of 40 square feet (3.72 m^2) must be constructed of noncombustible materials. Nailing rails and the exceptions regarding sign facings, electrical wiring and clearances to electrical wires, as stipulated in Section H107.1, are permitted. Signs of less than 40 square feet (3.72 m^2) may be of combustible construction. To date, experience has shown that fire exposure from a combustible sign of this size is minimal.

H111.2 Exterior wall mounting details. Wall signs attached to *exterior walls* of solid masonry, concrete or stone shall be safely and securely attached by means of metal anchors, bolts or expansion screws of not less than $^3/_8$ inch (9.5 mm) diameter and shall be embedded at least 5 inches (127 mm). Wood blocks shall not be used for anchorage, except in the case of wall signs attached to buildings with walls of wood. A wall sign shall not be supported by anchorages secured to an unbraced parapet wall.

❖ This section indicates the size, type and location of masonry anchors intended to be used for the attachment of signs to exterior walls of masonry construction. Note that the anchorage required is a minimum $^3/_8$-inch-diameter (9.5 mm) metal anchor, bolt or expansion screw embedded a minimum of 5 inches (127 mm) in solid masonry, concrete or stone construction. The use of wood blocking for attachment of wall signs is prohibited except in buildings where the exterior walls are constructed of wood. The anchors of wall signs are not permitted to be supported by unbraced parapet walls that are not providing adequate structural support for load transfer.

H111.3 Extension. Wall signs shall not extend above the top of the wall or beyond the ends of the wall to which the signs are attached unless such signs conform to the requirements for roof signs, projecting signs or ground signs.

❖ Signs cannot extend above the top of the wall (access to the roof must be maintained for repair and fire fighting) or beyond the ends of the wall. The signs must be kept on the property, unless exceptions for other types of signs apply.

SECTION H112
PROJECTING SIGNS

H112.1 General. Projecting signs shall be constructed entirely of metal or other noncombustible material and securely attached to a building or structure by metal supports such as bolts, anchors, supports, chains, guys or steel rods. Staples or nails shall not be used to secure any projecting sign to any building or structure. The *dead load* of projecting signs not parallel to the building or structure and the load due to wind pressure shall be supported with chains, guys or steel rods having net cross-sectional dimension of not less than $^3/_8$ inch (9.5 mm) diameter. Such supports shall be erected or maintained at an angle of at least 45 percent (0.78 rad) with the horizontal to resist the *dead load* and at angle of 45 percent (0.78 rad) or more with the face of the sign to resist the specified wind pressure. If such projecting sign exceeds 30 square feet (2.8 m^2) in one facial area, there shall be provided at least two such supports on each side not more than 8 feet (2438 mm) apart to resist the wind pressure.

❖ This section establishes explicit provisions for the construction and anchorage of projecting signs (see the definition of "Projecting sign"). Projecting signs are required to be constructed of metal or approved noncombustible materials and are to be anchored to a building or structure only by metal bolts, anchors, supports, chains, guys or steel rods. Metal chains, guys or steel bolts with a minimum $^3/_8$-inch (9.5 mm) diameter are specifically prescribed to support the dead loads and wind pressures imposed on projecting signs perpendicular to the building or structure. These anchorage requirements are based on common construction techniques and are considered to provide a minimum resistance to pressures caused by wind loads. To resist the dead loads, these structural supports are to be located at a minimum angle of 45 degrees (0.78 rad). However, to resist wind pressures, these supports are to be at an angle of more than 45 degrees (0.78 rad) with the face of the sign. The use of staples or nails is prohibited for the attachment of projecting signs to buildings or structures. These limitations recognize that nails, when subjected to wind forces, may not provide adequate connection strength and structural resistance. Not less than two supports are to be provided with a space between them of at least 8 feet (2438 mm) when the facial area of projecting signs exceeds 30 square feet (2.8 m^2). The intent is to provide a minimum number of structural elements so that adequate load transfer is provided.

H112.2 Attachment of supports. Supports shall be secured to a bolt or expansion screw that will develop the strength of the supporting chains, guys or steel rods, with a minimum $^5/_8$-inch (15.9 mm) bolt or lag screw, by an expansion shield. Turnbuckles shall be placed in chains, guys or steel rods supporting projecting signs.

❖ This section stipulates that structural supports of projecting signs are to be secured to a bolt or lag screw with a diameter of at least $^3/_8$ inch (15.9 mm). The bolt or expansion screw is to develop the strength of the supporting members. Structural supports are to be provided with turnbuckles to adjust the tension of the members.

H112.3 Wall mounting details. Chains, cables, guys or steel rods used to support the live or dead load of projecting signs are permitted to be fastened to solid masonry walls with expansion bolts or by machine screws in iron supports, but such supports shall not be attached to an unbraced parapet

INTERNATIONAL CODE COUNCIL®
Copyright © 2015 ICC. ALL RIGHTS RESERVED. Accessed by David Dammon on Jun 21, 2017 12:30:52 PM pursuant to License Agreement with ICC. No further reproduction or distribution authorized. ANY UNAUTHORIZED REPRODUCTION OR DISTRIBUTION IS A VIOLATION OF THE FEDERAL COPYRIGHT ACT AND THE LICENSE AGREEMENT, AND SUBJECT TO CIVIL AND CRIMINAL PENALTIES THEREUNDER.

wall. Where the supports must be fastened to walls made of wood, the supporting anchor bolts must go through the wall and be plated or fastened on the inside in a secure manner.

❖ This section specifies the use of expansion bolts or machine screws in iron supports to fasten tension members required to support the live or dead loads of projecting signs at all locations of solid masonry walls, except on unbraced parapets. Where walls constructed of wood are provided for fastening the supports, anchor bolts are required to penetrate the wall and be securely plated or fastened on the inside face of the wall.

H112.4 Height limitation. A projecting sign shall not be erected on the wall of any building so as to project above the roof or cornice wall or above the roof level where there is no cornice wall; except that a sign erected at a right angle to the building, the horizontal width of which sign is perpendicular to such a wall and does not exceed 18 inches (457 mm), is permitted to be erected to a height not exceeding 2 feet (610 mm) above the roof or cornice wall or above the roof level where there is no cornice wall. A sign attached to a corner of a building and parallel to the vertical line of such corner shall be deemed to be erected at a right angle to the building wall.

❖ Consistent with other provisions of the code, projecting signs cannot extend beyond the ends of the wall or above the roof or cornice wall of a building. An exception to this limitation is projecting signs constructed perpendicular to the building, with a horizontal width of 18 inches (457 mm) and a height not exceeding 2 feet (610 mm) above the top of the roof or cornice wall or roof level without a cornice wall. In accordance with this section, signs attached to a corner of a building and parallel to the corner's vertical line are considered projecting signs constructed at a right angle to the building wall. Thus, their extension beyond the end of the wall is permitted within the limitations prescribed in this section.

H112.5 Additional loads. Projecting sign structures that will be used to support an individual on a ladder or other servicing device, whether or not specifically designed for the servicing device, shall be capable of supporting the anticipated additional load, but not less than a 100-pound (445 N) concentrated horizontal load and a 300-pound (1334 N) concentrated vertical load applied at the point of assumed or most eccentric loading. The building component to which the projecting sign is attached shall also be designed to support the additional loads.

❖ The intent of this section is to require additional structural capability in projecting signs that may be subjected to loads during maintenance procedures. The face of the sign and the supports, therefore, must be capable of withstanding not only an additional concentrated horizontal load anywhere on the face of the sign, but also a 300-pound (1334 N) concentrated load acting vertically down at the point most eccentric from the sign fasteners. The building or building component to which the sign is attached must be capable of withstanding the resultant load.

SECTION H113
MARQUEE SIGNS

H113.1 Materials. Marquee signs shall be constructed entirely of metal or other approved noncombustible material except as provided for in Sections H106.1.1 and H107.1.

❖ A marquee sign is always supported by the building or structure and projects from the building into surrounding spaces. Marquee signs are usually located on canopies or other extensions of the building or structure to obtain a greater visual effect. The code has specific provisions for marquee signs concerning allowable materials. Marquee signs must be of metal or approved noncombustible materials. Sections H113.2 through H113.4 regulate the attachment, dimensions and height limitations of a marquee sign. Section H107.1 describes exceptions regarding sign facings, electrical wiring and clearances to electrical wires.

H113.2 Attachment. Marquee signs shall be attached to approved marquees that are constructed in accordance with Section 3106.

❖ Marquee signs are attached to a structure called a "marquee." The marquee is to be designed and constructed in accordance with Section H113.1. A marquee sign should not be confused with a projecting sign (see Section H112.1).

H113.3 Dimensions. Marquee signs, whether on the front or side, shall not project beyond the perimeter of the marquee.

❖ Marquees accommodate a specially designed marquee sign arrangement. In other words, the sign fits into the marquee. A projecting sign cannot be placed on a marquee because the sign would project beyond the perimeter of the marquee.

H113.4 Height limitation. Marquee signs shall not extend more than 6 feet (1829 mm) above, nor 1 foot (305 mm) below such marquee, but under no circumstances shall the sign or signs have a vertical dimension greater than 8 feet (2438 mm).

❖ This section requires marquee signs to project less than 6 feet (1829 mm) above and not more than 1 foot (305 mm) below the marquee structure. The total vertical dimension of the marquee sign is limited to 8 feet (2438 mm). The intent of this section is to place a limitation on structures with a higher fuel load due to decorations incorporated on the sign that are subject to outdoor conditions and weathering.

SECTION H114
PORTABLE SIGNS

H114.1 General. Portable signs shall conform to requirements for ground, roof, projecting, flat and temporary signs where such signs are used in a similar capacity. The requirements of this section shall not be construed to require portable signs to have connections to surfaces, tie-downs or foundations where provisions are made by temporary means

INTERNATIONAL CODE COUNCIL®
Copyright © 2015 ICC. ALL RIGHTS RESERVED. Accessed by David Dammon on Jun 21, 2017 12:30:52 PM pursuant to License Agreement with ICC. No further reproduction or distribution authorized. ANY UNAUTHORIZED REPRODUCTION OR DISTRIBUTION IS A VIOLATION OF THE FEDERAL COPYRIGHT ACT AND THE LICENSE AGREEMENT, AND SUBJECT TO CIVIL AND CRIMINAL PENALTIES THEREUNDER.

or configuration of the structure to provide stability for the expected duration of the installation.

❖ Portable signs must conform to the general regulations as set forth in this appendix for all signs, except that temporary support or stability methods may be utilized when approved by the building official. Portable signs must also conform to the requirements of this section commensurate to the manner in which the sign is used. This section establishes criteria for those types of signs that are neither mounted on buildings nor provided with a permanent foundation support. A typical example of a portable sign is a trailer-mounted illuminated sign. Such signs are used temporarily at locations and do not require any permanent support to resist wind overturning loads because of their limited size. The code contains electrical supply requirements for portable signs.

TABLE 4-A
SIZE, THICKNESS AND TYPE OF GLASS PANELS IN SIGNS

MAXIMUM SIZE OF EXPOSED PANEL		MINIMUM THICKNESS OF GLASS (inches)	TYPE OF GLASS
Any dimension (inches)	Area (square inches)		
30	500	1/8	Plain, plate or wired
45	700	3/16	Plain, plate or wired
144	3,600	1/4	Plain, plate or wired
> 144	> 3,600	1/4	Wired glass

For SI: 1 inch = 25.4 mm, 1 square inch = 645.16 mm^2.

❖ Glazing materials installed in all types of signs are required to conform to the limitations of Table 4-A. This table details the maximum allowable size, thickness limitations and type of glass panels to be used in signs. Glass subject to unusual loading conditions may require special engineering analysis to determine its size.

TABLE 4-B
THICKNESS OF PROJECTION SIGN

PROJECTION (feet)	MAXIMUM THICKNESS (feet)
5	2
4	2.5
3	3
2	3.5
1	4

For SI: 1 foot = 304.8 mm.

❖ The requirements of Table 4-B are applicable only for projecting signs constructed in accordance with Section H112.

SECTION H115
REFERENCED STANDARDS

ASTM D635—10	Test Method for Rate of Burning and/or Extent and Time of Burning of Plastics in a Horizontal Position	H107.1.1
NFPA 70—11	National Electrical Code	H106.1, H106.2
NFPA 701—10	Methods of Fire Test for Flame Propagation of Textiles and Films	H106.1.1

INTERNATIONAL CODE COUNCIL®
Copyright © 2015 ICC. ALL RIGHTS RESERVED. Accessed by David Dammon on Jun 21, 2017 12:30:52 PM pursuant to License Agreement with ICC. No further reproduction or distribution authorized. ANY UNAUTHORIZED REPRODUCTION OR DISTRIBUTION IS A VIOLATION OF THE FEDERAL COPYRIGHT ACT AND THE LICENSE AGREEMENT, AND SUBJECT TO CIVIL AND CRIMINAL PENALTIES THEREUNDER.

INTERNATIONAL CODE COUNCIL®
Copyright © 2015 ICC. ALL RIGHTS RESERVED. Accessed by David Dammon on Jun 21, 2017 12:30:52 PM pursuant to License Agreement with ICC. No further reproduction or distribution authorized. ANY UNAUTHORIZED REPRODUCTION OR DISTRIBUTION IS A VIOLATION OF THE FEDERAL COPYRIGHT ACT AND THE LICENSE AGREEMENT, AND SUBJECT TO CIVIL AND CRIMINAL PENALTIES THEREUNDER.

Appendix I: Patio Covers

The provisions contained in this appendix are not mandatory unless specifically referenced in the adopting ordinance.

General Comments

These provisions are optional. They apply only if specifically adopted by the jurisdiction as stated in Section 101.2.1. The requirements are intended to apply only to patio covers associated with residential dwelling units.

Purpose

These provisions for patio covers are intended to simplify the requirements for residential patio installations.

SECTION I101 GENERAL

I101.1 General. Patio covers shall be permitted to be detached from or attached to *dwelling units*. Patio covers shall be used only for recreational, outdoor living purposes and not as carports, garages, storage rooms or habitable rooms.

❖ The provisions of this appendix are intended to be used in conjunction with Groups R-1, R-2, R-3 and U with attached or detached patio covers. Patio covers must be used for recreational or outdoor living purposes only and not for the uses generally ascribed to Group U and R occupancies. If used for storage or as a garage, an entire new fuel load is introduced, thereby qualifying the patio cover as a private garage governed by Sections 312 and 406.

SECTION I102 DEFINITION

I102.1 General. The following term shall, for the purposes of this appendix, have the meaning shown herein. Refer to Chapter 2 of this code for general definitions.

❖ The definition of the term that is associated with the content of this appendix is provided. This definition can help in the understanding and application of the code requirements. It is important to emphasize that this term is not exclusively related to this appendix, but is applicable everywhere the term is used throughout the code. The purpose for including this definition within this appendix is to provide more convenient access to it rather than referring back to Chapter 2.

PATIO COVER. A structure with open or glazed walls that is used for recreational, outdoor living purposes associated with a *dwelling unit*.

❖ A patio cover is defined in order to make a distinction between carports, garages and covered awnings. The code does not consider a patio a hazardous condition with a high fuel load; therefore, special construction or consideration is not necessary. Patio covers are distinct from sunrooms, which are addressed in Chapter 12 as well as in the *International Energy Conservation Code*® (IECC®).

SECTION I103 EXTERIOR WALLS AND OPENINGS

I103.1 Enclosure walls. Enclosure walls shall be permitted to be of any configuration, provided the open or glazed area of the longer wall and one additional wall is equal to at least 65 percent of the area below a minimum of 6 feet 8 inches (2032 mm) of each wall, measured from the floor. Openings shall be permitted to be enclosed with insect screening, approved translucent or transparent plastic not more than 0.125 inch (3.2 mm) in thickness, glass conforming to the provisions of Chapter 24 or any combination of the foregoing.

❖ Despite its name, a patio cover is not limited to being simply a cover. The walls of the patio cover may be enclosed, provided a minimum of 65 percent of the longest wall and one other wall are of a material that will let light come into the area beneath the cover. The code allows simple screening, plastic materials or glass; however, the code doesn't mandate any of these. The patio cover can simply be open to the surrounding yard. Finally, the code clearly allows a mixture of materials for providing the enclosure.

I103.2 Light, ventilation and emergency egress. Exterior openings of the *dwelling unit* required for light and ventilation shall be permitted to open into a patio structure. However, the patio structure shall be unenclosed if such openings are serving as emergency egress or rescue openings from sleeping rooms. Where such exterior openings serve as an exit from the dwelling unit, the patio structure, unless unenclosed, shall be provided with exits conforming to the provision of Chapter 10.

❖ A patio is allowed to be placed over an opening that is to be used as a means of natural light or ventilation

INTERNATIONAL CODE COUNCIL®
Copyright © 2015 ICC. ALL RIGHTS RESERVED. Accessed by David Dammon on Jun 21, 2017 12:30:52 PM pursuant to License Agreement with ICC. No further reproduction or distribution authorized. ANY UNAUTHORIZED REPRODUCTION OR DISTRIBUTION IS A VIOLATION OF THE FEDERAL COPYRIGHT ACT AND THE LICENSE AGREEMENT, AND SUBJECT TO CIVIL AND CRIMINAL PENALTIES THEREUNDER.

required by Chapter 12. Where openings of a building required for light and ventilation open to a patio cover, no further requirements are imposed on the patio cover other than the provisions of this appendix. However, if the patio covers an opening used for egress by the occupants of the building, the patio must provide an appropriate means of egress conforming with the provisions of Chapter 10.

SECTION I104
HEIGHT

I104.1 Height. Patio covers shall be limited to one-story structures not more than 12 feet (3657 mm) in height.

❖ The maximum height of a patio cover is 12 feet (3658 mm). A patio cover that is taller than 12 feet (3658 mm) should not be built under the provisions of this appendix, but would need to comply with provisions of the rest of the code.

SECTION I105
STRUCTURAL PROVISIONS

I105.1 Design loads. Patio covers shall be designed and constructed to sustain, within the stress limits of this code, all *dead loads* plus a minimum vertical live load of 10 pounds per square foot (0.48 kN/m^2) except that snow loads shall be used where such snow loads exceed this minimum. Such patio covers shall be designed to resist the minimum wind and seismic loads set forth in this code.

❖ This section provides a reduced roof live load from that stated in the code for typical roofs. The minimum value for the roof live load of the patio is 10 pounds per square foot (psf) (0.48 kN/m^2). Standard load combinations (as presented within the code) are still required to be considered when designing patio cover structures. Load combinations shall include dead, roof live, snow, wind and seismic forces.

I105.2 Footings. In areas with a frost depth of zero, a patio cover shall be permitted to be supported on a concrete slab on grade without footings, provided the slab conforms to the provisions of Chapter 19 of this code, is not less than $3^1/_2$ inches (89 mm) thick and further provided that the columns do not support loads in excess of 750 pounds (3.36 kN) per column.

❖ This section provides an allowance that permits foundations to be constructed without footings. The allowance takes into account the minor value of these structures and the lack of any substantive safety issues involved. This provision addresses the exemption of footings in regard to frost penetration; it does not address allowable load-bearing capacity of the soil. This provision addresses the required structural integrity of the slab, therefore eliminating the need to provide structural calculations for a slab complying with the provision when a column load is less than 750 pounds (3.36 kN).

INTERNATIONAL CODE COUNCIL®
Copyright © 2015 ICC. ALL RIGHTS RESERVED. Accessed by David Dammon on Jun 21, 2017 12:30:52 PM pursuant to License Agreement with ICC. No further reproduction or distribution authorized. ANY UNAUTHORIZED REPRODUCTION OR DISTRIBUTION IS A VIOLATION OF THE FEDERAL COPYRIGHT ACT AND THE LICENSE AGREEMENT, AND SUBJECT TO CIVIL AND CRIMINAL PENALTIES THEREUNDER.

Appendix J: Grading

The provisions contained in this appendix are not mandatory unless specifically referenced in the adopting ordinance.

General Comments

This appendix contains grading provisions that address soil-related hazards such as slope failure, landslides and erosion. Jurisdictions that include mountainous or hilly terrain often encounter grading work in connection with large commercial developments or the development of residential subdivisions that can pose grading problems that are not addressed by any other section of the code. Note that only excavation, grading and fill in connection with foundation construction is regulated by Section 1803.

In western states the *Uniform Building Code*® (UBC™) appendix chapter on excavating and grading has found very widespread usage in many areas where topography is an issue. While the need for this appendix is based on the extensive use of that UBC appendix, which was originally developed in the 1960s, suggestions from numerous individuals and groups involved in the code development process have been incorporated into this grading appendix to make it compatible for use with the code.

Purpose

This appendix provides a set of grading requirements that can be utilized in lieu of (or in addition to) developing local regulations. Where grading is an important consideration, a comprehensive code is available simply by adopting this appendix. It is intended to provide consistent and uniform code requirements anywhere grading is considered an issue.

SECTION J101 GENERAL

J101.1 Scope. The provisions of this chapter apply to grading, excavation and earthwork construction, including fills and embankments. Where conflicts occur between the technical requirements of this chapter and the geotechnical report, the geotechnical report shall govern.

❖ This section states the scope of the chapter and also states that the soils report, which is required by Section J104.3, would supercede the requirements of this chapter when a conflict exists. This gives the professional responsible for the report much latitude to provide recommendations that are appropriate for each individual site.

J101.2 Flood hazard areas. Unless the applicant has submitted an engineering analysis, prepared in accordance with standard engineering practice by a *registered design professional*, that demonstrates the proposed work will not result in any increase in the level of the base flood, grading, excavation and earthwork construction, including fills and embankments, shall not be permitted in *floodways* that are in *flood hazard areas* established in Section 1612.3 or in *flood hazard areas* where design flood elevations are specified but *floodways* have not been designated.

❖ See the commentaries to Sections G103.4 and G103.5.

SECTION J102 DEFINITIONS

J102.1 Definitions. The following words and terms shall, for the purposes of this appendix, have the meanings shown herein. Refer to Chapter 2 of this code for general definitions.

BENCH. A relatively level step excavated into earth material on which fill is to be placed.

❖ This term is used to identify the steps that are cut into an existing slope prior to placing fill over that slope (see Figure J107.3).

COMPACTION. The densification of a fill by mechanical means.

❖ This definition aides the application of Section J107.5, which is applicable to all fill material.

CUT. See "Excavation."

❖ Earthwork is typically referred to as "cut" and "fill." The term "cut" is synonymous with excavation.

DOWN DRAIN. A device for collecting water from a swale or ditch located on or above a slope, and safely delivering it to an approved drainage facility.

❖ The inclusion of a definition for "Down drain" helps to clarify the term and make the requirements of Section J109.2 enforceable.

INTERNATIONAL CODE COUNCIL®
Copyright © 2015 ICC. ALL RIGHTS RESERVED. Accessed by David Dammon on Jun 21, 2017 12:30:52 PM pursuant to License Agreement with ICC. No further reproduction or distribution authorized. ANY UNAUTHORIZED REPRODUCTION OR DISTRIBUTION IS A VIOLATION OF THE FEDERAL COPYRIGHT ACT AND THE LICENSE AGREEMENT, AND SUBJECT TO CIVIL AND CRIMINAL PENALTIES THEREUNDER.

EROSION. The wearing away of the ground surface as a result of the movement of wind, water or ice.

❖ This definition describes what is a naturally occurring process of wearing away the ground surface. The provisions of this chapter regulate grading with the intent to minimize the susceptibility to erosion of man-made slopes primarily due to surface water.

EXCAVATION. The removal of earth material by artificial means, also referred to as a cut.

❖ Excavations are regulated by Section J106.

FILL. Deposition of earth materials by artificial means.

❖ Earthwork is typically referred to as "cut" and "fill." Fill is regulated by Section J107.

GRADE. The vertical location of the ground surface.

❖ The elevation of the existing ground surface is usually established by topographic surveys. This must be done in order to methodically evaluate a site to determine the need for regrading. The process of developing an appropriate grading plan leads to the required finished grade that must be achieved either by excavating where the existing grade is above the desired finished grade or by filling where the existing grade is below the desired finished grade.

GRADE, EXISTING. The grade prior to grading.

❖ See the definition of "Grade."

GRADE, FINISHED. The grade of the site at the conclusion of all grading efforts.

❖ See the definition of "Grade."

GRADING. An excavation or fill or combination thereof.

❖ This definition clarifies that the term "grading" refers to all earthwork.

KEY. A compacted fill placed in a trench excavated in earth material beneath the toe of a slope.

❖ This term refers to the level area that creates a notch at the bottom of a slope requiring benching in accordance with Section J107.3 (see Figure J107.3).

All slope references in the chapter have been modified to show the horizontal/vertical relationship.

SLOPE. An inclined surface, the inclination of which is expressed as a ratio of horizontal distance to vertical distance.

❖ This definition establishes that slopes in this chapter are expressed in the form of the horizontal-to-vertical distance ratio.

TERRACE. A relatively level step constructed in the face of a graded slope for drainage and maintenance purposes.

❖ This definition helps to clarify the term "terrace" and makes the requirements of Section J109.2 enforceable.

SECTION J103
PERMITS REQUIRED

J103.1 Permits required. Except as exempted in Section J103.2, no grading shall be performed without first having obtained a *permit* therefor from the *building official*. A grading *permit* does not include the construction of retaining walls or other structures.

❖ A grading permit does not include the construction of retaining walls or other structures, since that is covered by Section 1803.

J103.2 Exemptions. A grading *permit* shall not be required for the following:

1. Grading in an isolated, self-contained area, provided there is no danger to the public and that such grading will not adversely affect adjoining properties.
2. Excavation for construction of a structure permitted under this code.
3. Cemetery graves.
4. Refuse disposal sites controlled by other regulations.
5. Excavations for wells, or trenches for utilities.
6. Mining, quarrying, excavating, processing or stockpiling rock, sand, gravel, aggregate or clay controlled by other regulations, provided such operations do not affect the lateral support of, or significantly increase stresses in, soil on adjoining properties.
7. Exploratory excavations performed under the direction of a *registered design professional.*

Exemption from the *permit* requirements of this appendix shall not be deemed to grant authorization for any work to be done in any manner in violation of the provisions of this code or any other laws or ordinances of this jurisdiction.

❖ The exemptions listed are for grading work that is relatively minor in nature (e.g., graves) or grading work that is normally regulated by other laws (e.g., utility trenching, mining, etc.).

SECTION J104
PERMIT APPLICATION AND SUBMITTALS

J104.1 Submittal requirements. In addition to the provisions of Section 105.3, the applicant shall state the estimated quantities of excavation and fill.

❖ Section 105.3 lists the information that is required for a building permit application, which also applies for a grading permit. Additionally, the quantities of earthwork, commonly referred to as "cut" and "fill," must be furnished.

J104.2 Site plan requirements. In addition to the provisions of Section 107, a grading plan shall show the existing grade and finished grade in contour intervals of sufficient clarity to

INTERNATIONAL CODE COUNCIL®
Copyright © 2015 ICC. ALL RIGHTS RESERVED. Accessed by David Dammon on Jun 21, 2017 12:30:52 PM pursuant to License Agreement with ICC. No further reproduction or distribution authorized. ANY UNAUTHORIZED REPRODUCTION OR DISTRIBUTION IS A VIOLATION OF THE FEDERAL COPYRIGHT ACT AND THE LICENSE AGREEMENT, AND SUBJECT TO CIVIL AND CRIMINAL PENALTIES THEREUNDER.

indicate the nature and extent of the work and show in detail that it complies with the requirements of this code. The plans shall show the existing grade on adjoining properties in sufficient detail to identify how grade changes will conform to the requirements of this code.

❖ It is necessary for the permit applicant to furnish all applicable construction documents that are required in Section 107. Additionally, grading plans must provide sufficient grading information so that compliance with these requirements is verifiable.

J104.3 Geotechnical report. A geotechnical report prepared by a *registered design professional* shall be provided. The report shall contain at least the following:

1. The nature and distribution of existing soils.
2. Conclusions and recommendations for grading procedures.
3. Soil design criteria for any structures or embankments required to accomplish the proposed grading.
4. Where necessary, slope stability studies, and recommendations and conclusions regarding site geology.

Exception: A geotechnical report is not required where the *building official* determines that the nature of the work applied for is such that a report is not necessary.

❖ This section requires the applicant to furnish a geotechnical report unless the building official determines that it is not necessary because the proposed grading is of relatively minor consequence. The intent is that the appropriate professional provides a report that assesses the hazards of a particular site and includes recommendations for accomplishing the proposed grading. Note that Section J101.1 states that the soils report would supercede the requirements of this chapter when a conflict exists, giving great weight to the professional's recommendations.

J104.4 Liquefaction study. For sites with mapped maximum considered earthquake spectral response accelerations at short periods (S_s) greater than 0.5g as determined by Section 1613, a study of the liquefaction potential of the site shall be provided and the recommendations incorporated in the plans.

Exception: A liquefaction study is not required where the *building official* determines from established local data that the liquefaction potential is low.

❖ This section provides a guideline for the building official to determine if a liquefaction study is necessary. The exception provides the latitude to waive this requirement where it is evidenced that liquefaction is a low risk.

The need for a liquefaction study is triggered by the mapped spectral acceleration at short periods (see Section 1613.5.6) rather than seismic design category (see Section 1613.1), which is based on the nature of an occupancy in addition to the mapped spectral accelerations modified for the site soil classification. While seismic design category is an entirely appropriate criteria for such a requirement in connection with a building foundation under Chapter 18, the mapped spectral acceleration is more direct and appropriate for the application of this grading appendix since occupancy is most likely not applicable. While the mapped acceleration is used as the trigger for a study, it is ultimately the soil profile that determines the susceptibility to liquefaction.

SECTION J105
INSPECTIONS

J105.1 General. Inspections shall be governed by Section 110 of this code.

❖ A general reference is made to the inspection requirements in Section 109 of the code. The type and frequency of inspections specific to grading are not enumerated and are, therefore, left to the judgment of the building official.

J105.2 Special inspections. The *special inspection* requirements of Section 1705.6 shall apply to work performed under a grading permit where required by the *building official*.

❖ The special inspection requirements of Section 1705.6 that are referred to in this section concern site preparation and fill placement.

SECTION J106
EXCAVATIONS

J106.1 Maximum slope. The slope of cut surfaces shall be no steeper than is safe for the intended use, and shall be not more than one unit vertical in two units horizontal (50-percent slope) unless the owner or the owner's authorized agent furnishes a geotechnical report justifying a steeper slope.

Exceptions:

1. A cut surface shall be permitted to be at a slope of 1.5 units horizontal to one unit vertical (67-percent slope) provided that all of the following are met:
   1.1. It is not intended to support structures or surcharges.
   1.2. It is adequately protected against erosion.
   1.3. It is no more than 8 feet (2438 mm) in height.
   1.4. It is approved by the building code official.
   1.5. Ground water is not encountered.
2. A cut surface in bedrock shall be permitted to be at a slope of one unit horizontal to one unit vertical (100-percent slope).

❖ The code establishes a maximum two units horizontal to one unit vertical (50 percent) slope even though many professionals experienced in hillside urban development are likely to consider a one and one-half units horizontal to one unit vertical (67 percent) slope to be adequate for stability and erosion control. The two units horizontal to one unit vertical (50 percent)

INTERNATIONAL CODE COUNCIL®
Copyright © 2015 ICC. ALL RIGHTS RESERVED. Accessed by David Dammon on Jun 21, 2017 12:30:52 PM pursuant to License Agreement with ICC. No further reproduction or distribution authorized. ANY UNAUTHORIZED REPRODUCTION OR DISTRIBUTION IS A VIOLATION OF THE FEDERAL COPYRIGHT ACT AND THE LICENSE AGREEMENT, AND SUBJECT TO CIVIL AND CRIMINAL PENALTIES THEREUNDER.

slope gradient is required to provide an extra margin of safety and easier maintenance capability, due to the fact that slope failures of cuts (as well as fills) with one and one-half units horizontal to one unit vertical (67 percent) slopes have been observed in the past. The cause of these failures was frequently traced to a lack of geotechnical inspection during grading or of proper maintenance after they were constructed.

The building official may allow steeper cut slopes if they are justified by the geotechnical report. Exception 1 allows the steeper cut surface slope (discussed above) of one and one-half units horizontal to one unit vertical (67 percent) where the listed conditions are met, indicating a lower slope failure hazard. A steeper cut surface slope in bedrock is permitted because it is inherently more stable.

SECTION J107
FILLS

J107.1 General. Unless otherwise recommended in the geotechnical report, fills shall comply with the provisions of this section.

❖ These provisions govern all fills. As is indicated in Section J101.1, the geotechnical report takes precedence in the event of conflicts with this chapter.

J107.2 Surface preparation. The ground surface shall be prepared to receive fill by removing vegetation, topsoil and other unsuitable materials, and scarifying the ground to provide a bond with the fill material.

❖ Fill must only be placed onto sound bedrock or other competent material to minimize subsidence or settlement; therefore, the removal of all unsuitable materials is necessary.

J107.3 Benching. Where existing grade is at a slope steeper than one unit vertical in five units horizontal (20-percent slope) and the depth of the fill exceeds 5 feet (1524 mm) benching shall be provided in accordance with Figure J107.3. A key shall be provided that is at least 10 feet (3048 mm) in width and 2 feet (610 mm) in depth.

❖ Benching requirements are illustrated in Figure J107.3. The fill over an existing slope is potentially unstable unless constructed properly. Benching creates a series of (temporary) level steps on which the fill can be reliably placed and compacted. It is required for fills over 5 feet (1524 mm) deep where the existing slope is steeper than five units horizontal to one unit vertical (20 percent). The toe-of-fill bench is referred to as a key and the code specifies a minimum depth and width. The area of ground surface left at the planned toe-of-fill slope should be graded to drain away from the fill (see Section J108.3).

This figure illustrates the intention of the benching requirements. It shows the key that is located at the toe-of-slope and the series of level benches that must be established in order to accomplish the proposed earthwork.

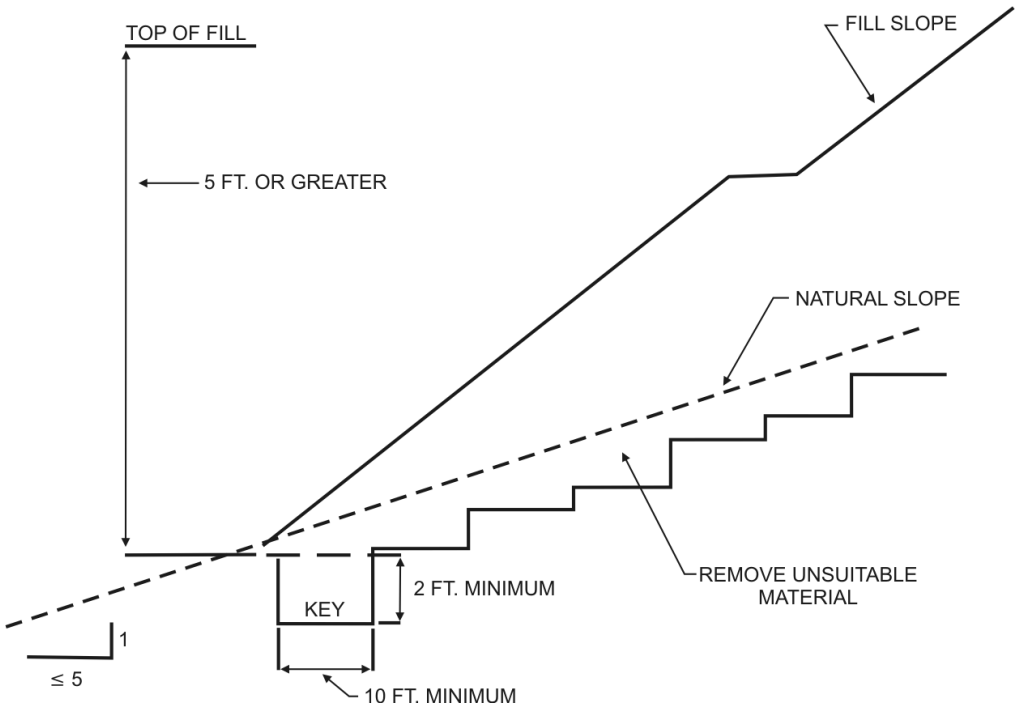

For SI: 1 foot = 304.8 mm.

FIGURE J107.3
BENCHING DETAILS

INTERNATIONAL CODE COUNCIL®
Copyright © 2015 ICC. ALL RIGHTS RESERVED. Accessed by David Dammon on Jun 21, 2017 12:30:52 PM pursuant to License Agreement with ICC. No further reproduction or distribution authorized. ANY UNAUTHORIZED REPRODUCTION OR DISTRIBUTION IS A VIOLATION OF THE FEDERAL COPYRIGHT ACT AND THE LICENSE AGREEMENT, AND SUBJECT TO CIVIL AND CRIMINAL PENALTIES THEREUNDER.

J107.4 Fill material. Fill material shall not include organic, frozen or other deleterious materials. No rock or similar irreducible material greater than 12 inches (305 mm) in any dimension shall be included in fills.

❖ Organic materials should not be allowed in fills because they decompose over time, causing settlement or creating planes of weakness. Rocks of limited size are permitted in fills. Where doing so, they should be placed to ensure that the fill material can be placed in the voids around the rocks and compacted as required.

J107.5 Compaction. All fill material shall be compacted to 90 percent of maximum density as determined by ASTM D1557, Modified Proctor, in lifts not exceeding 12 inches (305 mm) in depth.

❖ This section specifies a minimum soil density to be achieved uniformly throughout the fill as well as the test to be used. This sets minimum acceptable levels of fill quality to achieve performance that is consistent with the purpose of this chapter.

J107.6 Maximum slope. The slope of fill surfaces shall be no steeper than is safe for the intended use. Fill slopes steeper than one unit vertical in two units horizontal (50-percent slope) shall be justified by a geotechnical report or engineering data.

❖ The maximum gradient of two units horizontal to one unit vertical (50 percent) for fill slopes minimizes the risk of slope failures (see commentary, Section J106.1). Compaction of fill can be accomplished more readily on slopes of two units horizontal to one unit vertical (50 percent) or less. Also, such slopes are more accessible, increasing the likelihood they will be maintained. Greater slopes are only permitted if substantiated by the geotechnical report or other engineering data.

SECTION J108
SETBACKS

J108.1 General. Cut and fill slopes shall be set back from the property lines in accordance with this section. Setback dimensions shall be measured perpendicular to the property line and shall be as shown in Figure J108.1, unless substantiating data is submitted justifying reduced setbacks.

❖ This section establishes minimum setbacks from property lines between the property being graded and adjacent properties. It is intended to apply at the exterior boundary of a tract and should not be applied, for instance, at the interior lot lines of a proposed development.

The figure specifies the setback requirements at the top and bottom of graded slopes.

J108.2 Top of slope. The setback at the top of a cut slope shall be not less than that shown in Figure J108.1, or than is required to accommodate any required interceptor drains, whichever is greater.

❖ The intention of the top-of-slope setback is to protect the adjacent property. The setback allows for some

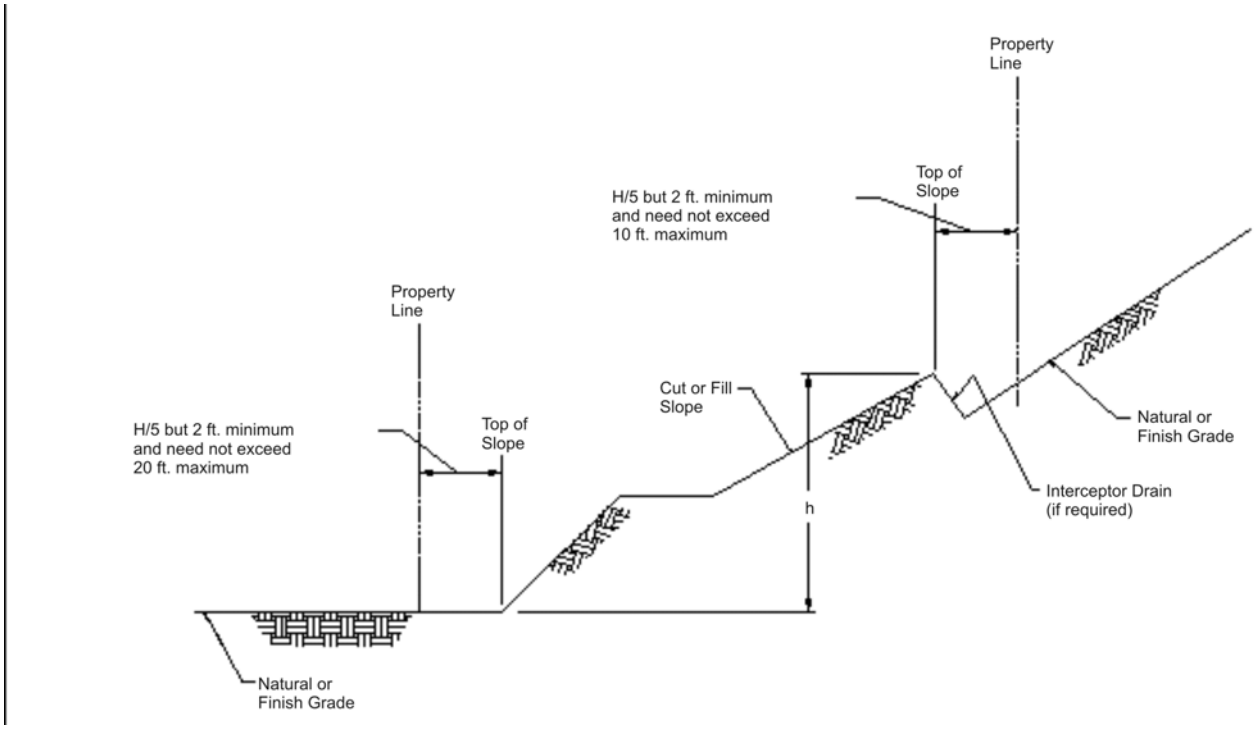

For SI: 1 foot = 304.8 mm.

FIGURE J108.1
DRAINAGE DIMENSIONS

INTERNATIONAL CODE COUNCIL®
Copyright © 2015 ICC. ALL RIGHTS RESERVED. Accessed by David Dammon on Jun 21, 2017 12:30:52 PM pursuant to License Agreement with ICC. No further reproduction or distribution authorized. ANY UNAUTHORIZED REPRODUCTION OR DISTRIBUTION IS A VIOLATION OF THE FEDERAL COPYRIGHT ACT AND THE LICENSE AGREEMENT, AND SUBJECT TO CIVIL AND CRIMINAL PENALTIES THEREUNDER.

soil erosion without losing lateral support of the adjacent property, thus protecting structures on that property. It also provides some space for an interceptor drain if needed (see Section J109.3). The top-of-slope setback requirements are illustrated in Figure J108.1.

J108.3 Slope protection. Where required to protect adjacent properties at the toe of a slope from adverse effects of the grading, additional protection, approved by the *building official*, shall be included. Such protection may include but shall not be limited to:

1. Setbacks greater than those required by Figure J108.1.
2. Provisions for retaining walls or similar construction.
3. Erosion protection of the fill slopes.
4. Provision for the control of surface waters.

❖ The minimum toe-of-fill setback from the adjacent property line is specified in Figure J108.1. Additional clearance must be provided as necessary, for example, to allow for the construction of retaining walls. For example, it may also be necessary to provide an area to collect slope runoff along the toe of slope and to construct a drain if needed.

SECTION J109
DRAINAGE AND TERRACING

J109.1 General. Unless otherwise recommended by a *registered design professional*, drainage facilities and terracing shall be provided in accordance with the requirements of this section.

Exception: Drainage facilities and terracing need not be provided where the ground slope is not steeper than one unit vertical in three units horizontal (33-percent slope).

❖ This section establishes minimum requirements for drainage that are largely based on past experience. They are minimum standards and the design professional should use them as such, evaluating each site based on its own merits. Consideration also should be given to long-term performance in addition to the likelihood of inadequate maintenance of slopes in residential developments. Controlling drainage onto and off the proposed site is one of the most important considerations in grading design, since even a well-compacted fill or graded cut slope can be compromised by inadequate drainage.

J109.2 Terraces. Terraces at least 6 feet (1829 mm) in width shall be established at not more than 30-foot (9144 mm) vertical intervals on all cut or fill slopes to control surface drainage and debris. Suitable access shall be provided to allow for cleaning and maintenance.

Where more than two terraces are required, one terrace, located at approximately mid-height, shall be at least 12 feet (3658 mm) in width.

Swales or ditches shall be provided on terraces. They shall have a minimum gradient of one unit vertical in 20 units horizontal (5-percent slope) and shall be paved with concrete not less than 3 inches (76 mm) in thickness, or with other materials suitable to the application. They shall have a depth not less than 12 inches (305 mm) and a width not less than 5 feet (1524 mm).

A single run of swale or ditch shall not collect runoff from a tributary area exceeding 13,500 square feet (1256 m^2) (projected) without discharging into a down drain.

❖ Terraces are required where a graded slope has a height over 30 feet (9144 mm). They provide level surfaces along the graded slope to allow access for slope maintenance and accommodate drainage.

The terrace ditch gradient of 5 percent helps make the drain more self-cleansing and recognizes a typical lack of maintenance, since most of the hillside dwellers will not climb up or down the slope to keep a drain clear of debris. Swales serving larger drainage areas must discharge into a down drain, which is defined in Section J102.1.

J109.3 Interceptor drains. Interceptor drains shall be installed along the top of cut slopes receiving drainage from a tributary width greater than 40 feet (12 192 mm), measured horizontally. They shall have a minimum depth of 1 foot (305 mm) and a minimum width of 3 feet (915 mm). The slope shall be approved by the *building official*, but shall be not less than one unit vertical in 50 units horizontal (2-percent slope). The drain shall be paved with concrete not less than 3 inches (76 mm) in thickness, or by other materials suitable to the application. Discharge from the drain shall be accomplished in a manner to prevent erosion and shall be approved by the *building official*.

❖ Interceptor drains are important in protecting the face of cut slopes from excessive erosion and are, therefore, required under certain conditions. The discharge of an interceptor drain must not contribute to erosion and requires the building official's approval.

J109.4 Drainage across property lines. Drainage across property lines shall not exceed that which existed prior to grading. Excess or concentrated drainage shall be contained on site or directed to an approved drainage facility. Erosion of the ground in the area of discharge shall be prevented by installation of nonerosive down drains or other devices.

❖ This section protects adjacent properties from exposure to added runoff as a result of the grading as well as any concentrated runoff created by the grading. It requires collection of any excess or concentrated drainage and allows it to be held on site or discharged by approved methods.

SECTION J110
EROSION CONTROL

J110.1 General. The faces of cut and fill slopes shall be prepared and maintained to control erosion. This control shall be permitted to consist of effective planting.

Exception: Erosion control measures need not be provided on cut slopes not subject to erosion due to the erosion-resistant character of the materials.

INTERNATIONAL CODE COUNCIL®
Copyright © 2015 ICC. ALL RIGHTS RESERVED. Accessed by David Dammon on Jun 21, 2017 12:30:52 PM pursuant to License Agreement with ICC. No further reproduction or distribution authorized. ANY UNAUTHORIZED REPRODUCTION OR DISTRIBUTION IS A VIOLATION OF THE FEDERAL COPYRIGHT ACT AND THE LICENSE AGREEMENT, AND SUBJECT TO CIVIL AND CRIMINAL PENALTIES THEREUNDER.

Erosion control for the slopes shall be installed as soon as practicable and prior to calling for final inspection.

❖ Adequate provisions should be made to prevent surface water from damaging the face of a graded slope. Effective planting is a lasting method of minimizing erosion. Other measures may include berms, interceptor drains and terrace drains.

J110.2 Other devices. Where necessary, check dams, cribbing, riprap or other devices or methods shall be employed to control erosion and provide safety.

❖ This requires use of alternative means of erosion control where necessary.

SECTION J111
REFERENCED STANDARDS

ASTM D1557-12	Test Method for Laboratory Compaction Characteristics of Soil Using Modified Effort [56,000 ft-lb/ft^3 (2,700kN-m/m^3)].	J107.5

❖ This section lists the standards referenced by this appendix chapter. Since appendices are not considered part of the code unless specifically referred to in the adopting ordinance, the standards that are referenced in this chapter are listed here rather than in Chapter 35.

Bibliography

The following resource materials were used in the preparation of the commentary for this appendix chapter of the code.

ASTM D1557-e01, *Test Method for Laboratory Compaction Characteristics of Soil Using Modified Effort (56,000ft-lb/ft^2)*. West Conshohocken, PA: ASTM International, 2001.

Scullin, C. Michael. *Excavation and Grading Code Administration, Inspection and Enforcement*. Englewood Cliffs, NJ: Prentice-Hall, Inc., 1983.

UBC-97, *Uniform Building Code*. Whittier, CA: International Conference of Building Officials, 1997.

INTERNATIONAL CODE COUNCIL®
Copyright © 2015 ICC. ALL RIGHTS RESERVED. Accessed by David Dammon on Jun 21, 2017 12:30:52 PM pursuant to License Agreement with ICC. No further reproduction or distribution authorized. ANY UNAUTHORIZED REPRODUCTION OR DISTRIBUTION IS A VIOLATION OF THE FEDERAL COPYRIGHT ACT AND THE LICENSE AGREEMENT, AND SUBJECT TO CIVIL AND CRIMINAL PENALTIES THEREUNDER.

INTERNATIONAL CODE COUNCIL®
Copyright © 2015 ICC. ALL RIGHTS RESERVED. Accessed by David Dammon on Jun 21, 2017 12:30:52 PM pursuant to License Agreement with ICC. No further reproduction or distribution authorized. ANY UNAUTHORIZED REPRODUCTION OR DISTRIBUTION IS A VIOLATION OF THE FEDERAL COPYRIGHT ACT AND THE LICENSE AGREEMENT, AND SUBJECT TO CIVIL AND CRIMINAL PENALTIES THEREUNDER.

Appendix K: Administrative Provisions

The provisions contained in this appendix are not mandatory unless specifically referenced in the adopting ordinance.

With the exception of Section K111, this appendix contains only administrative provisions that are intended to be used by a jurisdiction to implement and enforce NFPA 70, the National Electrical Code. Annex H of NFPA 70 also contains administrative and enforcement provisions, and these provisions may or may not be completely compatible with or consistent with Chapter 1 of the IBC, whereas the provisions in IBC Appendix K are compatible and consistent with Chapter 1 of the IBC and other ICC codes. Section K111 contains technical provisions that are unique to this appendix and are in addition to those of NFPA 70.

The provisions of Appendix K are specific to what might be designated as an Electrical Department of Inspection and Code Enforcement and could be implemented where other such provisions are not adopted.

SECTION K101 GENERAL

K101.1 Purpose. A purpose of this code is to establish minimum requirements to safeguard public health, safety and general welfare by regulating and controlling the design, construction, installation, quality of materials, location, operation and maintenance or use of electrical systems and equipment.

K101.2 Scope. This code applies to the design, construction, installation, *alteration*, repairs, relocation, replacement, *addition* to, use or maintenance of electrical systems and equipment.

SECTION K102 APPLICABILITY

K102.1 General. The provisions of this code apply to all matters affecting or relating to structures and premises, as set forth in Section K101.

K102.2 Existing installations. Except as otherwise provided for in this chapter, a provision in this code shall not require the removal, *alteration* or abandonment of, or prevent the continued utilization and maintenance of, existing electrical systems and equipment lawfully in existence at the time of the adoption of this code.

K102.3 Maintenance. Electrical systems, equipment, materials and appurtenances, both existing and new, and parts thereof shall be maintained in proper operating condition in accordance with the original design and in a safe, hazard-free condition. Devices or safeguards that are required by this code shall be maintained in compliance with the code edition under which installed. The *owner* or the *owner's* authorized agent shall be responsible for the maintenance of the electrical systems and equipment. To determine compliance with this provision, the *building official* shall have the authority to require that the electrical systems and equipment be reinspected.

K102.4 Additions, alterations and repairs. *Additions*, *alterations*, renovations and *repairs* to electrical systems and equipment shall conform to that required for new electrical systems and equipment without requiring that the existing electrical systems or equipment comply with all of the requirements of this code. *Additions*, *alterations* and *repairs* shall not cause existing electrical systems or equipment to become unsafe, hazardous or overloaded.

Minor *additions*, *alterations*, renovations and *repairs* to existing electrical systems and equipment shall meet the provisions for new construction, except where such work is performed in the same manner and arrangement as was in the existing system, is not hazardous and is *approved*.

K102.5 Subjects not regulated by this code. Where no applicable standards or requirements are set forth in this code, or are contained within other laws, codes, regulations, ordinances or bylaws adopted by the jurisdiction, compliance with applicable standards of nationally recognized standards as are *approved* shall be deemed as prima facie evidence of compliance with the intent of this code. Nothing herein shall derogate from the authority of the *building official* to determine compliance with codes or standards for those activities or installations within the building official's jurisdiction or responsibility.

SECTION K103 PERMITS

K103.1 Types of permits. An *owner*, authorized agent or contractor who desires to construct, enlarge, alter, *repair*, move, demolish or change the occupancy of a building or structure, or to erect, install, enlarge, alter, *repair*, remove, convert or replace electrical systems or equipment, the installation of which is regulated by this code, or to cause such work to be done, shall first make application to the *building official* and obtain the required *permit* for the work.

Exception: Where *repair* or replacement of electrical systems or equipment must be performed in an emergency sit-

INTERNATIONAL CODE COUNCIL®
Copyright © 2015 ICC. ALL RIGHTS RESERVED. Accessed by David Dammon on Jun 21, 2017 12:30:52 PM pursuant to License Agreement with ICC. No further reproduction or distribution authorized. ANY UNAUTHORIZED REPRODUCTION OR DISTRIBUTION IS A VIOLATION OF THE FEDERAL COPYRIGHT ACT AND THE LICENSE AGREEMENT, AND SUBJECT TO CIVIL AND CRIMINAL PENALTIES THEREUNDER.

uation, the *permit* application shall be submitted within the next working business day of the department of electrical inspection.

K103.2 Work exempt from permit. The following work shall be exempt from the requirement for a *permit*:

1. Listed cord- and plug-connected temporary decorative lighting.
2. Reinstallation of attachment plug receptacles, but not the outlets therefor.
3. Replacement of branch circuit overcurrent devices of the required capacity in the same location.
4. Temporary wiring for experimental purposes in suitable experimental laboratories.
5. Electrical wiring, devices, appliances, apparatus or equipment operating at less than 25 volts and not capable of supplying more than 50 watts of energy.

Exemption from the permit requirements of this code shall not be deemed to grant authorization for work to be done in violation of the provisions of this code or other laws or ordinances of this jurisdiction.

SECTION K104
CONSTRUCTION DOCUMENTS

K104.1 Information on construction documents. *Construction documents* shall be drawn to scale upon suitable material. Electronic media documents are permitted to be submitted where *approved* by the *building official*. *Construction documents* shall be of sufficient clarity to indicate the location, nature and extent of the work proposed and show in detail that such work will conform to the provisions of this code and relevant laws, ordinances, rules and regulations, as determined by the *building official*.

K104.2 Penetrations. *Construction documents* shall indicate where penetrations will be made for electrical systems and shall indicate the materials and methods for maintaining required structural safety, *fire-resistance rating* and *fireblocking*.

K104.3 Load calculations. Where an *addition* or *alteration* is made to an existing electrical system, an electrical load calculation shall be prepared to determine if the existing electrical service has the capacity to serve the added load.

SECTION K105
ALTERNATIVE ENGINEERED DESIGN

K105.1 General. The design, documentation, inspection, testing and approval of an alternative engineered design electrical system shall comply with this section.

K105.2 Design criteria. An alternative engineered design shall conform to the intent of the provisions of this code and shall provide an equivalent level of quality, strength, effectiveness, *fire resistance*, durability and safety. Materials, equipment or components shall be designed and installed in accordance with the manufacturer's instructions.

K105.3 Submittal. The *registered design professional* shall indicate on the *permit* application that the electrical system is an alternative engineered design. The *permit* and permanent *permit* records shall indicate that an alternative engineered design was part of the *approved* installation.

K105.4 Technical data. The *registered design professional* shall submit sufficient technical data to substantiate the proposed alternative engineered design and to prove that the performance meets the intent of this code.

K105.5 Construction documents. The *registered design professional* shall submit to the *building official* two complete sets of signed and sealed *construction documents* for the alternative engineered design. The *construction documents* shall include floor plans and a diagram of the work.

K105.6 Design approval. Where the *building official* determines that the alternative engineered design conforms to the intent of this code, the electrical system shall be *approved*. If the alternative engineered design is not *approved*, the *building official* shall notify the *registered design professional* in writing, stating the reasons therefor.

K105.7 Inspection and testing. The alternative engineered design shall be tested and inspected in accordance with the requirements of this code.

SECTION K106
REQUIRED INSPECTIONS

K106.1 General. The *building official*, upon notification, shall make the inspections set forth in this section.

K106.2 Underground. Underground inspection shall be made after trenches or ditches are excavated and bedded, piping and conductors installed, and before backfill is put in place. Where excavated soil contains rocks, broken concrete, frozen chunks and other rubble that would damage or break the raceway, cable or conductors, or where corrosive action will occur, protection shall be provided in the form of granular or selected material, *approved* running boards, sleeves or other means.

K106.3 Rough-in. Rough-in inspection shall be made after the roof, framing, *fireblocking* and bracing are in place and all wiring and other components to be concealed are complete, and prior to the installation of wall or ceiling membranes.

K106.4 Contractors' responsibilities. It shall be the responsibility of every contractor who enters into contracts for the installation or repair of electrical systems for which a *permit* is required to comply with adopted state and local rules and regulations concerning licensing.

SECTION K107
PREFABRICATED CONSTRUCTION

K107.1 Prefabricated construction. Prefabricated construction is subject to Sections K107.2 through K107.5.

K107.2 Evaluation and follow-up inspection services. Prior to the approval of a prefabricated construction assembly

INTERNATIONAL CODE COUNCIL®
Copyright © 2015 ICC. ALL RIGHTS RESERVED. Accessed by David Dammon on Jun 21, 2017 12:30:52 PM pursuant to License Agreement with ICC. No further reproduction or distribution authorized. ANY UNAUTHORIZED REPRODUCTION OR DISTRIBUTION IS A VIOLATION OF THE FEDERAL COPYRIGHT ACT AND THE LICENSE AGREEMENT, AND SUBJECT TO CIVIL AND CRIMINAL PENALTIES THEREUNDER.

having concealed electrical work and the issuance of an electrical *permit*, the *building official* shall require the submittal of an evaluation report on each prefabricated construction assembly, indicating the complete details of the electrical system, including a description of the system and its components, the basis upon which the system is being evaluated, test results and similar information, and other data as necessary for the *building official* to determine conformance to this code.

K107.3 Evaluation service. The *building official* shall designate the evaluation service of an *approved* agency as the evaluation agency and review such agency's evaluation report for adequacy and conformance to this code.

K107.4 Follow-up inspection. Except where ready access is provided to electrical systems, service equipment and accessories for complete inspection at the site without disassembly or dismantling, the *building official* shall conduct the in-plant inspections as frequently as necessary to ensure conformance to the *approved* evaluation report or shall designate an independent, *approved* inspection agency to conduct such inspections. The inspection agency shall furnish the *building official* with the follow-up inspection manual and a report of inspections upon request, and the electrical system shall have an identifying label permanently affixed to the system indicating that factory inspections have been performed.

K107.5 Test and inspection records. Required test and inspection records shall be available to the *building official* at all times during the fabrication of the electrical system and the erection of the building; or such records as the *building official* designates shall be filed.

SECTION K108
TESTING

K108.1 Testing. Electrical work shall be tested as required in this code. Tests shall be performed by the *permit* holder and observed by the *building official*.

K108.1.1 Apparatus, material and labor for tests. Apparatus, material and labor required for testing an electrical system or part thereof shall be furnished by the *permit* holder.

K108.1.2 Reinspection and testing. Where any work or installation does not pass an initial test or inspection, the necessary corrections shall be made so as to achieve compliance with this code. The work or installation shall then be resubmitted to the *building official* for inspection and testing.

SECTION K109
RECONNECTION

K109.1 Connection after order to disconnect. A person shall not make utility service or energy source connections to systems regulated by this code, which have been disconnected or ordered to be disconnected by the *building official*, or the use of which has been ordered to be discontinued by the *building official* until the *building official* authorizes the reconnection and use of such systems.

SECTION K110
CONDEMNING ELECTRICAL SYSTEMS

K110.1 Authority to condemn electrical systems. Wherever the *building official* determines that any electrical system, or portion thereof, regulated by this code has become hazardous to life, health or property, the *building official* shall order in writing that such electrical systems either be removed or restored to a safe condition. A time limit for compliance with such order shall be specified in the written notice. A person shall not use or maintain a defective electrical system or equipment after receiving such notice.

Where such electrical system is to be disconnected, written notice as prescribed in this code shall be given. In cases of immediate danger to life or property, such disconnection shall be made immediately without such notice.

SECTION K111
ELECTRICAL PROVISIONS

K111.1 Adoption. Electrical systems and equipment shall be designed, constructed and installed in accordance with the *International Residential Code* or NFPA 70 as applicable, except as otherwise provided in this code.

[F] K111.2 Abatement of electrical hazards. All identified electrical hazards shall be abated. All identified hazardous electrical conditions in permanent wiring shall be brought to the attention of the *building official* responsible for enforcement of this code. Electrical wiring, devices, appliances and other equipment that is modified or damaged and constitutes an electrical shock or fire hazard shall not be used.

[F] K111.3 Appliance and fixture listing. Electrical appliances and fixtures shall be tested and *listed* in published reports of inspected electrical equipment by an *approved* agency and installed in accordance with all instructions included as part of such listing.

K111.4 Nonmetallic-sheathed cable. The use of Type NM, NMC and NMS (nonmetallic sheathed) cable wiring methods shall not be limited based on height, number of stories or construction type of the building or structure.

K111.5 Cutting, notching and boring. The cutting, notching and boring of wood and steel framing members, structural members and engineered wood products shall be in accordance with this code.

K111.6 Smoke alarm circuits. Single- and multiple-station smoke alarms required by this code and installed within *dwelling* units shall not be connected as the only load on a branch circuit. Such alarms shall be supplied by branch circuits having lighting loads consisting of lighting outlets in habitable spaces.

K111.7 Equipment and door labeling. Doors into electrical control panel rooms shall be marked with a plainly visible and legible sign stating ELECTRICAL ROOM or similar *approved* wording. The disconnecting means for each service, feeder or branch circuit originating on a switchboard or panelboard shall be legibly and durably marked to indicate its purpose unless such purpose is clearly evident.

INTERNATIONAL CODE COUNCIL®
Copyright © 2015 ICC. ALL RIGHTS RESERVED. Accessed by David Dammon on Jun 21, 2017 12:30:52 PM pursuant to License Agreement with ICC. No further reproduction or distribution authorized. ANY UNAUTHORIZED REPRODUCTION OR DISTRIBUTION IS A VIOLATION OF THE FEDERAL COPYRIGHT ACT AND THE LICENSE AGREEMENT, AND SUBJECT TO CIVIL AND CRIMINAL PENALTIES THEREUNDER.

INTERNATIONAL CODE COUNCIL®

Copyright © 2015 ICC. ALL RIGHTS RESERVED. Accessed by David Dammon on Jun 21, 2017 12:30:52 PM pursuant to License Agreement with ICC. No further reproduction or distribution authorized. ANY UNAUTHORIZED REPRODUCTION OR DISTRIBUTION IS A VIOLATION OF THE FEDERAL COPYRIGHT ACT AND THE LICENSE AGREEMENT, AND SUBJECT TO CIVIL AND CRIMINAL PENALTIES THEREUNDER.

Appendix L: Earthquake Recording Instrumentation

The provisions contained in this appendix are not mandatory unless specifically referenced in the adopting ordinance.

General Comments

Data collected from earthquake recording instrumentation provide fundamental information that is needed to better understand structural behavior and ultimately to improve the seismic performance of buildings. These provisions are based on Appendix Chapter 16, Division II of the 1997 *Uniform Building Code*® (UBC™). Because this is an optional appendix, it will only affect construction in jurisdictions that specifically adopt it. Where jurisdictions do so, the impact will further depend on whether similar provisions, such as those of the UBC, have previously been in place. Where that is the case, the cost impact should be negligible.

Purpose

The purpose of this appendix is to foster the collection of data, particularly from strong-motion earthquakes. When these data are synthesized, they can be useful in developing future improvements to the earthquake provisions of the code.

SECTION L101 GENERAL

L101.1 General. Every structure located where the 1-second spectral response acceleration, S_1, in accordance with Section 1613.3 is greater than 0.40 that either 1 exceeds six stories in height with an aggregate floor area of 60,000 square feet (5574 m^2) or more, or 2 exceeds 10 *stories* in height regardless of floor area, shall be equipped with not less than three approved recording accelerographs. The accelerographs shall be interconnected for common start and common timing.

❖ The intent of this section is to require instrumentation in a sufficient number of multiple-story buildings, so that representative data on strong ground motion can be obtained during seismic events. As more and more seismic events are recorded and the data analyzed, the earthquake response of structures can be better understood and building code provisions can be improved accordingly. This section only requires instrumentation in newly constructed buildings. Because it only applies to very few structures in areas of higher seismic hazards, the overall cost impact on new construction is relatively small.

L101.2 Location. As a minimum, instruments shall be located at the lowest level, mid-height, and near the top of the structure. Each instrument shall be located so that access is maintained at all times and is unobstructed by room contents. A sign stating "MAINTAIN CLEAR ACCESS TO THIS INSTRUMENT" in 1-inch (25 mm) block letters shall be posted in a conspicuous location.

❖ This section requires at least three instruments to be located in a place where the recorded data covers the broadest range of structural response.

L101.3 Maintenance. Maintenance and service of the instrumentation shall be provided by the owner of the structure. Data produced by the instrument shall be made available to the *building official* on request.

Maintenance and service of the instruments shall be performed annually by an approved testing agency. The owner shall file with the *building official* a written report from an approved testing agency certifying that each instrument has been serviced and is in proper working condition. This report shall be submitted when the instruments are installed and annually thereafter. Each instrument shall have affixed to it an externally visible tag specifying the date of the last maintenance or service and the printed name and address of the testing agency.

❖ In order to ensure that the earthquake instrumentation remains in working order, annual maintenance and service must be performed by an approved testing agency. Maintenance is the responsibility of the owner of the structure and he or she must file a written report certifying that each instrument has been serviced and is in proper working condition. The recorded data must be made available to the building official on request.

INTERNATIONAL CODE COUNCIL®
Copyright © 2015 ICC. ALL RIGHTS RESERVED. Accessed by David Dammon on Jun 21, 2017 12:30:52 PM pursuant to License Agreement with ICC. No further reproduction or distribution authorized. ANY UNAUTHORIZED REPRODUCTION OR DISTRIBUTION IS A VIOLATION OF THE FEDERAL COPYRIGHT ACT AND THE LICENSE AGREEMENT, AND SUBJECT TO CIVIL AND CRIMINAL PENALTIES THEREUNDER.

INTERNATIONAL CODE COUNCIL®
Copyright © 2015 ICC. ALL RIGHTS RESERVED. Accessed by David Dammon on Jun 21, 2017 12:30:52 PM pursuant to License Agreement with ICC. No further reproduction or distribution authorized. ANY UNAUTHORIZED REPRODUCTION OR DISTRIBUTION IS A VIOLATION OF THE FEDERAL COPYRIGHT ACT AND THE LICENSE AGREEMENT, AND SUBJECT TO CIVIL AND CRIMINAL PENALTIES THEREUNDER.

Appendix M: Tsunami-generated Flood Hazard

The provisions contained in this appendix are not mandatory unless specifically referenced in the adopting ordinance.

General Comments

Tsunami is a Japanese word meaning "harbor" ("tsu") and "wave" ("nami"). It is a naturally occurring series of waves that can result when there is a rapid, large-scale disturbance of a body of water. The most common triggering events are earthquakes below or near the ocean floor, but a tsunami can also be created by volcanic activity, landslides, undersea slumps and impacts of extraterrestrial objects. In deep water, however, the waves are gentle sea-surface slopes that can be unnoticeable. As the waves approach the shallower waters of the coast, the velocity decreases while the height increases. Upon reaching the shoreline, the waves can have hazardous height and force, penetrating inland, damaging structures and flooding normally dry areas.

The combination of a great ocean seismic event with the right bathymetry can have devastating results, as was brought to the world's attention by the Indian Ocean tsunami of December 26, 2004. The tsunami created by the magnitude-9.3 underwater earthquake devastated coastal areas around the northern Indian Ocean. The tsunami took anywhere from 15 minutes to 7 hours to hit the various coastlines it affected. It is estimated that the tsunami took over 220,000 lives and displaced over 1.5 million people.

Wave propagation times from far-source-generated tsunamis can allow for advance warning to distant coastal communities. Near-source-generated tsunamis, however, can strike suddenly and with very little warning. The 1993 tsunami that hit Okushiri, Hokkaido, Japan, for example, reached the shoreline within 5 minutes after the earthquake and resulted in 202 fatalities as victims were trapped by debris from the earthquake and unable to flee toward higher ground and more secure places.

Although considered rare events, tsunamis occur on a regular basis around the world. Each year, on average, there are 20 tsunami-generating earthquake events, with five of these large enough to generate tsunami waves capable of causing damage and loss of life. In the period between 1990 and 1999 there were 82 tsunamis reported, 10 of which resulted in more than 4,000 fatalities. With the trend toward increased habitation of coastal areas, more populations will be exposed to tsunami hazards.

Alaska is considered to have the highest potential for tsunami-generating events in the United States. Earthquakes along the Alaska-Aleutian subduction zone, particularly in the vicinity of the Alaskan Peninsula, the Aleutian Islands and the Gulf of Alaska, have the capability of generating tsunamis that affect both local and distant sites. The 1964 earthquake in Prince William Sound resulted in 122 fatalities, including 12 in California and four in Oregon.

The Cascadia Subduction Zone along the Pacific Northwest coast poses a threat from northern California to British Columbia, Canada. An earthquake along the southern portion of the Cascadia Subduction Zone could create tsunami waves that would hit the coasts of Humboldt and Del Norte counties in California and Curry County in Oregon within a few minutes of the earthquake. Areas further north, along the Oregon and Washington coasts, could see tsunami waves within 20 to 40 minutes after a large earthquake. The last major earthquake on the Cascadia Subduction Zone occurred in January 1700 and generated a tsunami that struck Japan.

Communities along the entire United States Pacific coastline are at risk for both far-source-generated (trans-Pacific) tsunamis and locally triggered tsunamis. In southern California there is evidence that movement from local offshore strike-slip earthquakes and submarine landslides have generated tsunamis affecting areas extending from Santa Barbara to San Diego. The largest of these occurred in 1930, when a magnitude-5.2 earthquake reportedly generated a 20-foot-high (6096 mm) wave in Santa Monica, California.

Hawaii, located in the middle of the Pacific Ocean, has experienced both far-source-generated tsunamis and locally triggered tsunamis. The most recent damaging tsunami occurred in 1975, the result of a magnitude-7.2 earthquake off the southeast coast of the island of Hawaii. This earthquake resulted in tsunami wave heights more than 20 feet (6096 mm) and, in one area, more than 40 feet (12 192 mm). Two deaths and more than $1 million in property damage were attributed to this local Hawaiian tsunami.

Although the Atlantic and Gulf Coast regions of the United States are perceived to be at less risk, there are examples of deadly tsunamis that have occurred in the Atlantic Ocean. Since 1600, more than 40 tsunamis and tsunami-like waves have been cataloged in the eastern United States. In 1929, a tsunami generated in the Grand Banks region of Canada hit Nova Scotia, killing 51 people (Lockridge et al., 2002).

Puerto Rico and the U.S. Virgin Islands are at risk from earthquakes and underwater landslides that could occur in the Puerto Rico Trench subduction zone. Since 1530, more than 50 tsunamis of varying intensity have occurred in the Caribbean. In 1918, an earthquake in this zone generated a tsunami that caused an estimated

INTERNATIONAL CODE COUNCIL®
Copyright © 2015 ICC. ALL RIGHTS RESERVED. Accessed by David Dammon on Jun 21, 2017 12:30:52 PM pursuant to License Agreement with ICC. No further reproduction or distribution authorized. ANY UNAUTHORIZED REPRODUCTION OR DISTRIBUTION IS A VIOLATION OF THE FEDERAL COPYRIGHT ACT AND THE LICENSE AGREEMENT, AND SUBJECT TO CIVIL AND CRIMINAL PENALTIES THEREUNDER.

40 deaths in Puerto Rico. In 1867, an earthquake-generated tsunami caused damage and 12 deaths on the islands of St. Thomas and St. Croix. In 1692 a tsunami generated by massive landslides in the Puerto Rican Trench reached the coast of Jamaica, causing an estimated 2,000 deaths (Lander, 1999).

Information from historic tsunami events indicates that tsunami behaviors and characteristics are quite distinct from other coastal hazards, primarily because of the unique timescale associated with tsunami phenomena. Unlike typical wind-generated water waves with periods between 5 and 20 seconds, tsunamis can have wave periods ranging from a few minutes to over 1 hour (FEMA, 2005).

There is significant uncertainty in the prediction of characteristics of tsunamis because they are highly influenced by the tsunami waveform and the surrounding topography and bathymetry. Although there are exceptions, previous research and field surveys indicate that tsunamis have the following general characteristics:

- The magnitude of the triggering event determines the period of the resulting waves and, generally (but not always), the tsunami magnitude and damage potential (FEMA, 2005).
- A tsunami can propagate more than several thousand kilometers without losing energy.
- Tsunamis are highly reflective at the shore and capable of sustaining their motion for several hours without dissipating energy. Typically, several tsunami waves will attack a coastal area and the first wave is not necessarily the largest.
- Tsunami runup height varies significantly in neighboring areas. The configuration of the continental shelf and shoreline affect tsunami impacts at the shoreline. Variations in offshore bathymetry and shoreline irregularities can focus or disperse tsunami wave energy along certain shoreline reaches, increasing or decreasing tsunami impacts (FEMA, 2005).
- The majority of eyewitness accounts and visual records (videos and photos) indicate that an incident tsunami will break offshore, forming a bore or a series of bores as it approaches the shore. A "turbulent bore" is defined as a broken wave having a steep, violently foaming and turbulent wave front, propagating over still water of a finite depth. Such bore formations were often observed in video footage of the 2004 Indian Ocean tsunami.

Tsunamis are rare events often accompanied by advance warning. As such, strategies for protecting life safety from tsunami risk have generally involved evacuation to areas of naturally occurring high ground outside of the tsunami inundation zone. Most mitigation efforts to date have focused on the development of more effective warning systems, improved inundation maps for evacuation planning and greater tsunami awareness to improve evacuation efficiency. However, post-tsunami investigations have documented that the type of built environment in the tsunami inundation zone can play a significant role in the type and amount of losses.

Purpose

Tsunami-resistant construction is generally not practical at an individual building level, unless the building in question presents a significant risk in terms of occupant load; has a critical function in the communities' response and recovery; or contains a high-hazard occupancy that can significantly add to the damage. Therefore, addressing tsunami risk for all types of structures through normal building code requirements would normally not be cost effective. However, the adoption and enforcement of code requirements regulating the presence of high-risk or high-hazard structures may be a viable alternative for at-risk communities.

SECTION M101
TSUNAMI-GENERATED FLOOD HAZARD

M101.1 General. The purpose of this appendix is to provide tsunami regulatory criteria for those communities that have a tsunami hazard and have elected to develop and adopt a map of their tsunami hazard inundation zone.

❖ While the tsunami hazard generally has a return frequency that is too low to justify code requirements for all classes of structures and design values that are too high for normal construction to withstand, it may still be in a community's best interest in controlling the presence of certain structures that present a significant risk to the population. The goal of this appendix is to provide a community with the ability to use a map of its tsunami inundation zone to regulate the new construction of structures that would present a higher than usual risk, because of high occupancy loads, because the structure houses a critical facility necessary for the community's continued functionality or because the structure houses a hazardous function that could adversely impact the community if it was damaged or destroyed.

M101.2 Definitions. The following words and terms shall, for the purposes of this appendix, have the meanings shown herein. Refer to Chapter 2 of this code for general definitions.

INTERNATIONAL CODE COUNCIL®
Copyright © 2015 ICC. ALL RIGHTS RESERVED. Accessed by David Dammon on Jun 21, 2017 12:30:52 PM pursuant to License Agreement with ICC. No further reproduction or distribution authorized. ANY UNAUTHORIZED REPRODUCTION OR DISTRIBUTION IS A VIOLATION OF THE FEDERAL COPYRIGHT ACT AND THE LICENSE AGREEMENT, AND SUBJECT TO CIVIL AND CRIMINAL PENALTIES THEREUNDER.

TSUNAMI HAZARD ZONE. The area vulnerable to being flooded or inundated by a design event tsunami as identified on a community's Tsunami Hazard Zone Map.

❖ A "Tsunami Hazard Zone" is defined as the geographic area that is designated on a community's Tsunami Hazard Map as being capable of being inundated in a design tsunami event. This zone is the geographic area where this appendix would apply and would be enforced by a community to restrict new construction.

TSUNAMI HAZARD ZONE MAP. A map adopted by the community that designates the extent of inundation by a design event tsunami. This map shall be based on the tsunami inundation map that is developed and provided to a community by either the applicable state agency or the National Atmospheric and Oceanic Administration (NOAA) under the National Tsunami Hazard Mitigation Program, but shall be permitted to utilize a different probability or hazard level.

❖ This appendix is based on the adoption and use of a Tsunami Hazard Map. The selection and definition of such a map is intentionally left up to the community. Such maps may be tsunami inundation maps prepared for specific communities for evacuation planning under the National Tsunami Hazard Mitigation Program (NTHMP); however, in some cases, evacuation maps may have been prepared using too restrictive criteria to justify their use for code purposes. In those cases, a tsunami hazard map may be developed by the community using its own criteria. Since the NTHMP is not a regulatory program, there are no federal or state requirements for the selection of a Tsunami Hazard Map under this appendix.

Under the NTHMP, the National Oceanic and Atmospheric Administration (NOAA) either develops community-specific tsunami inundation mapping or establishes criteria for modeling that is then used by states to prepare such mapping. Tsunami inundation mapping performed under the NTHMP uses credible worst-case scenarios. Credible worst-case scenario maps are based on a tsunami source and modeling that can be scientifically defended as a worst-case scenario for a particular community. The simulation output becomes the basis for maps that typically display maximum inundation depth and maximum current speed or velocity. For more information on these mapping criteria, see Chapter 2 of FEMA P646.

M101.3 Establishment of tsunami hazard zone. Where applicable, if a community has adopted a Tsunami Hazard Zone Map, that map shall be used to establish a community's tsunami hazard zone.

❖ This section contains the charging language establishing that the Tsunami Hazard Zone, as designated on a community's adopted Tsunami Hazard Map, is the geographic area specified under this appendix.

M101.4 Construction within the tsunami hazard zone. Construction of structures designated Risk Categories III and IV as specified under Section 1604.5 shall be prohibited within a tsunami hazard zone.

Exceptions:

1. A vertical evacuation tsunami refuge shall be permitted to be located in a tsunami hazard zone provided it is constructed in accordance with FEMA P646.
2. Community critical facilities shall be permitted to be located within the tsunami hazard zone when such a location is necessary to fulfill their function, providing suitable structural and emergency evacuation measures have been incorporated.

❖ This section contains the primary requirement for new construction. That requirement prohibits the construction of structures designated Risk Categories III and IV under Section 1604.5 of the code within a community's Tsunami Hazard Zone. Risk Category III structures are high-occupancy buildings that represent a substantial hazard to human life in the event of failure, while Risk Category IV structures are designated as essential facilities, either because of their role in a community's response and recovery from a disaster or because they contain significant amounts of hazardous materials.

Exception 1 is for structures that have been designed and constructed to meet the vertical evacuation tsunami refuge criteria specified in FEMA P646. These structures provide a means to create areas of refuge for communities in which evacuation out of the inundation zone is not feasible. Such structures need to be designated by the community as a vertical evacuation tsunami refuge and be usable for that purpose. A community may determine and permit that such structures serve multiple uses in addition to that of a vertical evacuation tsunami refuge as described within FEMA P646. Such uses could include a parking garage, hotel or community center. When such structures are designed and constructed to the criteria specified within FEMA P646, they should be capable of withstanding the initial earthquake loads as well as any subsequent tsunami wave loads.

Exception 2 is for a community's critical facilities where such facilities are required by a community's code to be located in a Tsunami Hazard Zone. An example would be where a fire station is required by code to be located within a certain area to meet distance and response time requirements that also happens to place the station within a Tsunami Hazard Zone. In such cases, suitable structural and emergency evacuation requirements should be incorporated into the design.

INTERNATIONAL CODE COUNCIL®
Copyright © 2015 ICC. ALL RIGHTS RESERVED. Accessed by David Dammon on Jun 21, 2017 12:30:52 PM pursuant to License Agreement with ICC. No further reproduction or distribution authorized. ANY UNAUTHORIZED REPRODUCTION OR DISTRIBUTION IS A VIOLATION OF THE FEDERAL COPYRIGHT ACT AND THE LICENSE AGREEMENT, AND SUBJECT TO CIVIL AND CRIMINAL PENALTIES THEREUNDER.

SECTION M102
REFERENCED STANDARDS

FEMA P646—12	Guidelines for Design of Structures for Vertical Evacuation from Tsunamis	M101.4

❖ Vertical evacuation is a programmatic issue central to the National Tsunami Hazard Mitigation Program, driven by the fact that there are coastal communities along the West Coast of the United States that are vulnerable to tsunamis that could be generated within minutes of an earthquake on the Cascadia Subduction Zone. This guidance document includes the following information to assist in the planning and design of tsunami vertical evacuation structures: general information on the tsunami hazard and its history; guidance on determining the tsunami hazard, including tsunami depth and velocity; different options for tsunami vertical evacuation structures; guidance on siting, spacing, sizing and elevation considerations; determining tsunami and earthquake loads and related structural design criteria and structural design concepts; and other considerations. FEMA P646 is available for download at www.fema.gov/library/viewRecord.do?id=3463 or may be ordered free of charge from the Federal Emergency management Agency (FEMA) by calling 1-800-480-2520.

Bibliography

The following resource material was used in the preparation of the commentary for this appendix chapter of the code.

❖ FEMA P646, Guidelines for Design of Structures for Vertical Evacuation from Tsunamis. Washington, DC: Federal Emergency Management Agency, 2008.

INTERNATIONAL CODE COUNCIL®
Copyright © 2015 ICC. ALL RIGHTS RESERVED. Accessed by David Dammon on Jun 21, 2017 12:30:52 PM pursuant to License Agreement with ICC. No further reproduction or distribution authorized. ANY UNAUTHORIZED REPRODUCTION OR DISTRIBUTION IS A VIOLATION OF THE FEDERAL COPYRIGHT ACT AND THE LICENSE AGREEMENT, AND SUBJECT TO CIVIL AND CRIMINAL PENALTIES THEREUNDER.

INDEX

A

ACCESS OPENINGS
Attic 1209.2
Crawl space 1209.1
Doors 712.3.2
Fire damper 716.4
Fire department 402.7.5
Mechanical appliances 1209.3
Refuse/laundry chutes 708.13.3
ACCESSIBILITY . . . . . .1009, Chapter 11, Appendix E
Airports 412.3.5, E110
Assembly 1009.1, 1108.2, 1109.11, 1110
Bus stops E108
Construction sites 1103.2.5
Controls 1109.13
Detectable warnings 1109.10
Detention and correctional facilities 1103.2.13, 1107.5.5,1108.4.2, E104.1
Dining areas 1108.2.9, 1109.11
Dressing rooms 1109.12.1
Drinking fountains 1109.5
Dwelling units 1103.2.3, 1105.1.6, 1107
Egress (see ACCESSIBLE MEANS OF EGRESS) . . . 1009
Elevators 1009.2.1, 1009.4, 1009.7.3, 1109.7, 3001.3
Employee work areas 907.5.2.31, 1103.2.2, 1104.3.1
Entrances 1105
Exceptions 1103.2, 1104.4, 1107.7
Existing buildings 1009.1
Fuel dispensing 1109.14
Gaming tables and machines 1109.15, E105.3
Institutional 1103.2.12, 1103.2.13, 1107, 1109.11.2
Judicial facilities 1108.4, 1109.11.2
Kitchens 1109.4
Laundry E105.2
Lifts 1009.5, 1109.8
Live/work unit 419.7, 1107.6.2.1
Parking and passenger loading facilities 1106
Performance areas 1108.2.8
Platform 1108.2.8, E103.1
Press box 1104.3.2
Ramps 1012
Recreational facilities (see RECREATION FACILITIES) . . . 1104.2, 1110
Religious worship, places of 1103.2.8
Residential 1103.2.3, 1103.2.11, 1107
Route 1003.3.4, 1104, 1107.4
Saunas and steam rooms 1109.6
Scoping 1101, 1103.1, E101.1
Seating 1108.2, 1109.11
Service facility 1109.12
Signage . . . . . 1009.8 through 1009.11, 1110, E107
Sleeping units 1107, 1105.1.6
Storage 1108.3, 1109.9
Telephone E106
Toilet and bathing facilities 1107.6.1.1, 1109.2, 1109.3E105.1
Train and light-rail stations E109
Transient lodging 1103.2.11, 1107.6.1E104.2
Utility 1103.2.4
ACCESSIBLE MEANS OF EGRESS 1009
Areas of refuge (see AREA OF REFUGE)
Assembly 1009.1, 1029.8
Elevators 1009.2.1, 1009.4, 1009.8
Existing building 1009.1
Exterior area for assisted rescue (see EXTERIOR AREA FOR ASSISTED RESCUE)
Horizontal exit (see HORIZONTAL EXIT)
Mezzanine 1009.1
Platform lift 1009.5
Required 1009.1
Stairways 1009.3
Signage . . . . . 1009.8 through 1009.11, 3002.3
ACCESSORY OCCUPANCIES 303.1.2, 303.1.4, 305.1.1, 312.1, 419.1, 508.2
ADDITION 101.4.8, D103.1
Means of egress 3302.1, 3310
ADMINISTRATION . . . . . Chapter 1
ADOBE CONSTRUCTION 202, 2109.3
AEROSOLS 202, 307.1, 311.2, 414.1.2.1, 414.2.5, 907.2.16
AGGREGATE 202
Ballast 1504.8
AGRICULTURAL BUILDINGS (see GROUP U) . . . . . 312.1, 1103.2.4, Appendix C
AIR CONDITIONING (see MECHANICAL) 2801.1, 3005.2
AIR INTAKES (see YARDS OR COURTS) . . . 1206.3.2
AIRCRAFT HANGARS 412.4
Aircraft paint hangars 412.6, 507.10
Basements 412.4.2
Construction 412.4.1, 412.4.5, 412.6.2
Fire area 412.4.6.2
Fire suppression system 412.4.6, 412.6.5

INTERNATIONAL CODE COUNCIL®
Copyright © 2015 ICC. ALL RIGHTS RESERVED. Accessed by David Dammon on Jun 21, 2017 12:30:52 PM pursuant to License Agreement with ICC. No further reproduction or distribution authorized. ANY UNAUTHORIZED REPRODUCTION OR DISTRIBUTION IS A VIOLATION OF THE FEDERAL COPYRIGHT ACT AND THE LICENSE AGREEMENT, AND SUBJECT TO CIVIL AND CRIMINAL PENALTIES THEREUNDER.

Heliports and helistops 412.5, 905.3.6, 906.1, 1605.4
Residential 412.5, 907.2.21
Unlimited height and area 504.1, 507.10
AIRCRAFT MANUFACTURING FACILITIES . . . 412.7
AIRCRAFT-RELATED OCCUPANCIES . . . 412, E110
Airport traffic control towers 412.3, 907.2.22
Traffic control towers 412.3
Alarms and detection . . 412.3.4, 412.3.5, 907.2.22
Construction type 412.3.1, 412.3.2
Egress 412.3.2, 412.3.3, 412.3.4
AISLE 1018, 1029.9, 1029.13
Aisle accessways 1018.4, 1029.12
Assembly seating 1018.2, 1029.6
Bleachers 1029.1.1
Business 1018.3
Check-out 1109.12.2
Construction 1029.11
Converging 1029.9.3
Egress 1018, 1029
Folding and telescopic seating 1029.1.1
Grandstands 1029.1.1
Mercantile 1018.3, 1018.4
Obstructions 1029.9.6
Tables 1029.12.1
Tents 3103.4
Transitions 1029.10
Width 1029.9
ALARM SYSTEMS, EMERGENCY 908
ALARMS, FIRE (see FIRE ALARM AND SMOKE DETECTION SYSTEMS)
ALARMS, VISIBLE 907.5.2.3
Common areas 907.5.2.3.1
Employee work areas 907.5.2.3.1
Group I-1 . . . . . 907.5.2.3.2
Group R-1 . . . . . 907.5.2.3.2
Group R-2 . . . . . 907.5.2.3.3
Public areas 907.5.2.3.1
ALARMS, VOICE 907.5.2.2
Amusement buildings, special 411.6, 907.2.12.3
Covered and open mall buildings 402.7.4, 907.2.20,
Emergency power 2702.2.4
High-rise buildings 403.4.4, 907.2.13
Occupant evacuation elevators 3008.9
Underground buildings 405.8.2, 907.2.19
ALLOWABLE STRESS DESIGN 202
Load combinations 1605.3
Masonry design 2107
Wood design 2301.2, 2306
ALTERATIONS 101.4.8, D103.1
Means of egress 3302.1, 3310.2
ALTERNATING TREAD DEVICES 1011.14
Construction 1011.14.2
Equipment platform 505.5
Heliports 412.8.3
Technical production areas 410.6.3.4
ALTERNATIVE MATERIALS, DESIGN AND METHODS 104.11
ALUMINUM . . . . . 1404.5.1, 1604.3.5, Chapter 20
AMBULATORY CARE FACILITIES 422
Alarm and detection 907.2.2.1
Smoke compartment 422.2, 422.3
AMUSEMENT BUILDING, SPECIAL 411
Alarm and detection 411.3, 411.5, 907.2.12
Classification 411.1
Emergency voice/alarm communications system 411.6, 907.2.12.3
Exit marking 411.7, 411.7.1
Interior finish 411.8
Sprinklers protection 411.4
AMUSEMENT PARK STRUCTURES 303
Accessibility 1110.4.8
ANCHOR STORE (see COVERED MALL AND OPEN MALL BUILDINGS) 402
Construction type 402.4.12
Means of egress 402.8.4.1
Occupant load 402.8.2.3
Separation 402.4.2.2, 402.4.2.3
Sprinkler protection 402.5
ANCHORAGE 1604.8
Braced wall line sills 2308.6.7.3
Concrete 1901.3
Conventional light-frame construction 2308.3.1, 2308.3.2, 2308.4.10
Decks 1604.8.3
Seismic anchorage for masonry chimneys . . . 2113.4
Seismic anchorage for masonry fireplaces . . . 2111.5
Walls 1604.8.2
Wood sill plates 2308.3
APARTMENT HOUSES 310.4
APPEALS 113
APPROVED AGENCY 202, 1703.1
ARCHITECT (see definition for REGISTERED DESIGN PROFESSIONAL)
ARCHITECTURAL TRIM 603.1, 1406.2.2, D102.2.7
AREA, BUILDING . . . . . Chapter 5, 506
Accessory uses 508.2.3
Aircraft hangars, residential 412.5.5
Covered and open mall building 402.4.1
Enclosed parking garage 406.6.1, 510.3

INTERNATIONAL CODE COUNCIL®
Copyright © 2015 ICC. ALL RIGHTS RESERVED. Accessed by David Dammon on Jun 21, 2017 12:30:52 PM pursuant to License Agreement with ICC. No further reproduction or distribution authorized. ANY UNAUTHORIZED REPRODUCTION OR DISTRIBUTION IS A VIOLATION OF THE FEDERAL COPYRIGHT ACT AND THE LICENSE AGREEMENT, AND SUBJECT TO CIVIL AND CRIMINAL PENALTIES THEREUNDER.

Equipment platforms 505.3.1
Incidental uses 509.3
Limitations 503, 506
Membrane structures 3102.4
Mezzanines 505.2.1
Mixed construction types 3102.6
Mixed occupancy 508.2.3, 508.3.2, 508.4.2
Modifications 506, 510
Open mall building 402.4.1
Open parking garage 406.5.4, 406.5.4.1, 406.5.5, 510.2, 510.3, 510.4, 510.7, 510.8, 510.9
Private garages and carports 406.3.1
Unlimited area 503.1.1, 503.1.3, 506.1.1, 506.2, 507

AREA FOR ASSISTED RESCUE, EXTERIOR (see EXTERIOR AREAS FOR ASSISTED RESCUE)

AREA OF REFUGE (see ACCESSIBLE MEANS OF EGRESS)

Requirements 1009.6
Signage 1009.9, 1009.10, 1009.11
Two-way communication 1009.6.5
Where required 1009.2, 1009.3, 1009.4

ASSEMBLY OCCUPANCY (GROUP A) 303, 1029

Accessibility 1108.2, 1108.4, 1109.2.1, 1110
Alarms and detection 907.2.1
Area 503, 506, 507, 508
Bleachers (see BLEACHERS)
Folding and telescopic seating (see BLEACHERS)
Grandstands (see GRANDSTANDS)
Group-specific provisions
A-1 . . . . . 303.2
A-2 . . . . . 303.3
A-3 . . . . . 303.4
A-4 . . . . . 303.5
A-5 . . . . . 303.6
Motion picture theater 409, 507.12
Special amusement buildings 411
Stages and platforms 410
Height 503, 504, 505, 508, 510
Incidental uses 509
Interior finishes . . . . . Table 803.11, 804
Live load . . . . . Table 1607.1, 1607.12.3
Means of egress
Aisles 1018.2, 1029.9, 1029.10
Assembly spaces 1029
Exit signs 1013.1
Guards 1015.2, 1029.16
Main exit 1029.3
Outdoors 1005.3.1, 1005.3.2, 1006.3, 1009.6.4,1019.3, 1027, 1029.6.2
Panic hardware 1010.1.10, 1010.2.1
Stairway, exit access 1019
Travel distance 1016.2.1, 1017.2, 1006.3.1, 1006.3.2, 1029.7
Mixed occupancies 508.3, 508.4
Accessory 508.2
Education 303.1.3
Live/work units 419
Mall buildings 402
Other occupancies 303.1.1, 303.1.2, 303.1.3
Parking below/above 510.7, 510.9
Religious facilities 303.1.4
Special mixed 510.2
Motion picture theaters 409, 507.11
Occupancy exceptions 303.1.1, 303.1.2, 303.1.3, 303.1.4, 305.1.1, 305.2.1
Plumbing fixtures 2902
Risk category . . . . . Table 1604.5
Seating, fixed (see SEATING, FIXED)
Seating, smoke-protected 1029.6.2
Sprinkler protection 410, 504.3, 506.2, 507.3, 507.4, 507.6, 507.7, 507.12, 903.2.1
Stages and platforms 410, 905.3.4
Standpipes 905.3.2, 905.3.4, 905.5.1
Unlimited area 507.4, 507.4.1, 507.6, 507.7, 507.12

ASSISTED LIVING (see GROUP I-1) 308.3, 310.6

Sixteen or fewer residents (see Group R-4) 308.3.1, 308.3.2, 310.5.1

ATMOSPHERIC ICE LOADS 1614

ATRIUM 404

Alarms and detection 404.4, 907.2.14
Enclosure 404.6, 707.3.5
Interior finish 404.8
Smoke control 404.5, 909
Sprinkler protection 404.3
Standby power 404.7
Travel distance 404.9, 1016.2.1, 1017.2, 1006.3.2
Use 404.2

ATTIC

Access 1209.2
Combustible storage 413.2
Draftstopping 718.4
Insulation 719.3.1
Live load . . . . . Table 1607.1
Unusable space fire protection 711.3.3
Ventilation 1203.2

AUDITORIUM 303, 305.1.1

Accessibility 1108.2
Foyers and lobbies 1029.4
Interior balconies 1029.5

INTERNATIONAL CODE COUNCIL®
Copyright © 2015 ICC. ALL RIGHTS RESERVED. Accessed by David Dammon on Jun 21, 2017 12:30:52 PM pursuant to License Agreement with ICC. No further reproduction or distribution authorized. ANY UNAUTHORIZED REPRODUCTION OR DISTRIBUTION IS A VIOLATION OF THE FEDERAL COPYRIGHT ACT AND THE LICENSE AGREEMENT, AND SUBJECT TO CIVIL AND CRIMINAL PENALTIES THEREUNDER.

Motion picture projection rooms. 409
Stages and platforms. 410
AUTOMOBILE PARKING GARAGE (see GARAGE, AUTOMOBILE PARKING) 406
AWNINGS. 3105
Design and construction 3105.3
Drainage, water 3201.4
Encroachment, public right-of-way 3202.2.3, 3202.3.1, 3202.4
Fire district D102.2.8
Live load . . . . Table 1607.1, 1607.12.2.1, 1607.12.4
Materials 3105.4
Motor vehicle service stations 406.7.2
Permanent D102.2.8
Plastic 2606.10

B

BALCONIES
Accessibility 1108.2.4
Assembly 1029.5
Construction, exterior. 1406.3
Guards 1015.2
Live load . . . . . Table 1607.1
Means of egress 1021, 1029.5
Open mall building 402.4.3, 402.5
Projection. 705.2, 1406.3
Public right-of-way encroachments 3202.3.2, 3202.3.3
Travel distance 1017.2.1
BARBECUES 2801
BARRIERS
Fire (see FIRE BARRIER)
Pedestrian protection. 3306
Smoke (see SMOKE BARRIER)
Vehicle 406.4.3, 1602.1, 1607.8.3
BASEMENT
Aircraft hangars 412.4.2
Area modification 506.1.3
Considered a story. 202
Emergency escape 1030.1
Exits 106.3.2.2
Flood loads 1612.2, 1612.5
Height modifications for 510.5
Prohibited. 415.6, 415.7, 415.11.5.2, 418.1
Rodentproofing . . . . . Appendix F
Sprinkler protection 903.2.11.1
Waterproofing and dampproofing 1805
BASEMENT WALLS
Soil loads 1610.1
Waterproofing and dampproofing 1805
BATH AND BATHING ROOMS (see TOILET AND TOILET ROOMS) . . . . . 101.4.3, 105.2, Chapter 29
BAY AND ORIEL WINDOWS. 1406.4
Public right-of-way encroachments 3202.3.2, 3202.3.3
BLEACHERS 303.6, 1029.1.1
Accessibility 1108.2
Egress 1029.1.1
Live load. . . . . Table 1607.1
Occupant load 1004.7
Separation 1029.1.1.1
BLOCK (see CONCRETE BLOCK AND GLASS UNIT MASONRY)
BOARD OF APPEALS . . . . . 113, Appendix B
Alternate members. B101.2.1
Application for appeal. B101.1
Board decision B101.4
Limitations on authority 113.2
Membership of board B101.2
Notice of meeting B101.3
Qualifications 113.3, B101.2.2
BOILER ROOM
Exits 1006.2.2.1
BOLTS 2204.2
Anchor rods 1908, 1909, 2204.2.1
BONDING, MASONRY. 2204.3, 2109.2
BRACED WALL LINE 202
Bracing. 2308.6
Seismic requirements. 2308.6.10.2, 2308.6.2, 2308.6.8
Sill anchorage 2308.6.7.3
Spacing 2308.6.1
Support. 2308.6.8
BRACED WALL PANEL 202
Alternative bracing 2308.6.5.1, 2308.6.5.2
Connections 2308.6.7
Length 2308.6.4
Location 2308.6.2
Method 2308.6.3
BRICK (see MASONRY)
BUILDING
Area (see AREA, BUILDING). 502.1, 503, 505, 506, 507, 508, 510
Demolition 3303
Existing. 101.4.8
Fire walls 706.1
Height (see HEIGHT, BUILDING) 502.1, 503, 504, 505, 508, 510
Occupancy classification . . . . . Chapter 3
Party walls 706.1.1

INTERNATIONAL CODE COUNCIL®
Copyright © 2015 ICC. ALL RIGHTS RESERVED. Accessed by David Dammon on Jun 21, 2017 12:30:52 PM pursuant to License Agreement with ICC. No further reproduction or distribution authorized. ANY UNAUTHORIZED REPRODUCTION OR DISTRIBUTION IS A VIOLATION OF THE FEDERAL COPYRIGHT ACT AND THE LICENSE AGREEMENT, AND SUBJECT TO CIVIL AND CRIMINAL PENALTIES THEREUNDER.

BUILDING DEPARTMENT 103
BUILDING OFFICIAL
Approval 202
Duties and powers 103
Qualifications A101.1
Records 104.7
Termination. A101.4
BUILT-UP ROOFS 1507.10
BUSINESS OCCUPANCY (GROUP B) 303.1.1, 303.1.2, 304
Alarms and detection 907.2.2
Ambulatory care facilities 304, 422
Area 503, 505, 506, 507, 508
Height 503, 504, 505, 508, 510
Incidental uses 509
Interior finishes . . . . . Table 803.11, 804
Live load . . . . . Table 1607.1
Means of egress
Aisles 1018.3
Stairway, exit access 1019
Travel distance 1016.2.1, 1017.2, 1006.3.2
Mixed occupancies 508.2, 508.3, 508.4
Accessory 303.1.2, 508.2
Ambulatory care facilities 422
Assembly 303.1.2
Educational. 303.1, 304.1
Live/work units 419
Mall buildings 402
Parking below/above 510.7, 510.8, 510.9
Special mixed 510.2
Occupancy exceptions 303.1.1, 303.1.2
Plumbing fixtures 2902
Risk category . . . . . Table 1604.5
Sprinkler protection. 903.2.2
Unlimited area 507.4, 507.5

C

CABLES, STEEL STRUCTURAL 2208
CALCULATED FIRE RESISTANCE
(see FIRE RESISTANCE, CALCULATED)
CANOPIES 3105
Design and construction 3105.3
Drainage, water 3201.4
Encroachment, public right-of-way 3202.3.1
Fire district D102.2.8
Live load . . . . . Table 1607.1, 1607.12.2.1, 1607.12.4
Materials 3105.4
Motor vehicle service stations 406.7.2
Permanent D102.2.8
Plastic 2606.10
CARBON MONOXIDE
ALARMS AND DETECTION 915
CARE FACILITIES (see HEALTH CARE)
CARE PROVIDER STATIONS 407.2.2
CARE SUITES 202, 407.4.4
CARPET
Floor covering 804.2
Textile ceiling finish. 803.6
Textile wall coverings 803.5
CATWALKS
(see TECHNICAL PRODUCTION AREAS)
Construction 410.3.2
Live loads . . . . . Table 1607.1
Means of egress 410.6.3
Sprinkler protection. 410.7
CEILING
Acoustical 808
Height 406.4.1, 409.2, 909.20.4.3, 1003.2, 1011.3, 1010.5.2, 1205.2.2, 1208.2
Interior finish 803
Penetration of fire-resistant assemblies 713.4, 716.2, 716.6
Suspended acoustical. 808.1.1
CELLULOSE NITRATE FILM 409.1, 903.2.5.3
CERAMIC TILE
Mortar 2103.2.3
CERTIFICATE OF OCCUPANCY 106.2, 111
CHANGE OF OCCUPANCY 101.4.8, D103.2
CHILD CARE (see DAY CARE) 305.2, 308.6, 310.5.1
CHILDREN'S PLAY STRUCTURES 424
Accessibility 1110
Covered and open mall building 402.6.3
CHIMNEYS 202
Factory-built 718.2.5
Flashing 1503.6
Masonry 2111, 2112, 2113
Protection from adjacent construction. 3307.1
CHURCHES
(see RELIGIOUS WORSHIP, PLACES OF)
CIRCULAR STAIRWAYS
(see CURVED STAIRWAYS)
CLAY ROOF TILE 1507.3
Testing 1504.2
CLINIC
Hospital
[see INSTITUTIONAL (GROUP I-2)] 308.3
Outpatient
(see AMBULATORY CARE FACILITIES) 202, 304.1, 422
COAL POCKETS. 426.1.6
CODES 101.2, 101.4, 102.2, 102.4, 102.6, Chapter 35

INTERNATIONAL CODE COUNCIL®
Copyright © 2015 ICC. ALL RIGHTS RESERVED. Accessed by David Dammon on Jun 21, 2017 12:30:52 PM pursuant to License Agreement with ICC. No further reproduction or distribution authorized. ANY UNAUTHORIZED REPRODUCTION OR DISTRIBUTION IS A VIOLATION OF THE FEDERAL COPYRIGHT ACT AND THE LICENSE AGREEMENT, AND SUBJECT TO CIVIL AND CRIMINAL PENALTIES THEREUNDER.

COLD STORAGE
(see FOAM PLASTIC INSULATION)
COLD-FORMED STEEL 202, 2210
Light-frame construction 2211
Special inspection 1705.2.2, 1705.2.4, 1705.11.2, 1705.12.3
COMBUSTIBLE DUSTS 307.4, 414.5.1, 426.1
COMBUSTIBLE LIQUIDS 307.1, 307.4, 307.5, 414.2.5, 414.5.3, 415.9.2, 415.10.1, 418.6
COMBUSTIBLE MATERIAL
Concealed spaces 413.2, 718.5
Exterior side of exterior wall 1406
High-pile stock or rack storage 413.1, 910.2.2
Type I and Type II 603, 805
COMBUSTIBLE PROJECTIONS 705.2, 1406.3
COMBUSTIBLE STORAGE 413, 910.2.2
COMMON PATH OF EGRESS TRAVEL 1016.2.1
COMPARTMENTATION
Ambulatory care facilities 422.2, 422.3
Group I-2 . . . . . 407.5, 407.6
Group I-3 . . . . . 408.6
Underground buildings 405.4, 405.5.2
COMPLIANCE ALTERNATIVES 101.4.8
COMPRESSED GAS 307.2, 415.11.7
CONCEALED SPACES 413.2, 718
CONCRETE . . . . . Chapter 19
ACI 318 modifications 1901.2, 1903.1, 1905
Anchorage 1901.3
Calculated fire resistance 721.2
Construction documents 1901.5
Durability 1904
Footings 1809
Foundation walls 1807.1.5, 1808.8
Materials 1705.3.2, 1903
Plain, structural 1906
Reinforced gypsum concrete 2514
Rodentproofing . . . . . Appendix F
Roof tile 1507.3, 1504.2
Shotcrete 1908
Slab, minimum 1907
Special inspections . . . . . 1705.3, Table 1705.3
Specifications 1903
Strength testing 1705.3.2
Wood support 2304.13
CONCRETE MASONRY
Calculated fire resistance 721.3
Construction 2104
Design 2101.2, 2108, 2109
Materials 2103.1
Surface bonding 2109.2
Wood support 2304.13
CONCRETE ROOF TILE 1507.3
Wind resistance 1504.2, 1609.5.3
CONDOMINIUM (see APARTMENT HOUSES)
CONDUIT, PENETRATION PROTECTION 713.3, 1023.5
CONFLICTS IN CODE 102
CONGREGATE LIVING FACILITIES 202, 310
CONSTRUCTION
(see SAFEGUARDS DURING CONSTRUCTION)
CONSTRUCTION DOCUMENTS 107, 202, 1603
Alarms and detection 907.1.1
Concrete construction 1901.5
Design load-bearing capacity 1803.6
Fire-resistant joint systems 714
Flood 1603.1.7
Floor live load 1603.1.1
Geotechnical 1603.1.6
Means of egress 107.2.3
Penetrations 713
Permit application 105.1
Retention 107.5
Review 107.3
Roof assemblies 1503
Roof live load 1603.1.2
Roof snow load 1603.1.3
Seismic 1603.1.5,
Seismic certification 1705.13.2, 1705.13.3
Site plan 107.2.5
Special loads 1603.1.8
Temporary structures 3103.2
Wind load 1603.1.4
CONSTRUCTION JOINTS
Shotcrete 1908.7
CONSTRUCTION TYPES . . . . . Chapter 6
Aircraft paint hangers 412.6.2
Classification 602
Combustible material in Type I and Type II construction 603, 805
Covered and open mall buildings 402.4.1
Fire district D102.2.3
Fire resistance . . . . . Table 601, Table 602
High-rise 403.2
Type I . . . . . Table 601, 602.2, 603
Type II . . . . . Table 601, 602.2, 603
Type III . . . . . Table 601, 602.3
Type IV . . . . . Table 601, 602.4
Type V . . . . . Table 601, 602.5
Underground buildings 405.2
CONTRACTOR'S RESPONSIBILITIES 901.5, 1704.4

INTERNATIONAL CODE COUNCIL®
Copyright © 2015 ICC. ALL RIGHTS RESERVED. Accessed by David Dammon on Jun 21, 2017 12:30:52 PM pursuant to License Agreement with ICC. No further reproduction or distribution authorized. ANY UNAUTHORIZED REPRODUCTION OR DISTRIBUTION IS A VIOLATION OF THE FEDERAL COPYRIGHT ACT AND THE LICENSE AGREEMENT, AND SUBJECT TO CIVIL AND CRIMINAL PENALTIES THEREUNDER.

CONTROL AREA 414.2, 707.3.7
Fire-resistance rating 414.2.4
Maximum allowed quantities 414.2.2
Number 414.2.3
CONVENTIONAL LIGHT-FRAME CONSTRUCTION 202, 2301.2, 2308
Additional seismic requirements 2308.6.6, 2308.6.8, 2308.6.10
Braced wall lines 2308.6
Connections and fasteners 2308.1.2
Design of elements 2308.8
Floor joists 2308.4.2
Foundation plates or sills 2308.3
Girders 2308.7
Limitations 2308.2
Roof and ceiling framing 2308.7
Wall framing 2308.5
CONVEYING SYSTEMS 3004
CORNICES
Definition 202
Draftstopping 718.2.6
Live load . . . . . Table 1607.1
Masonry 2104.1.2
Projection 705.2, 1406.3
Public right-of-way encroachments 3202.3.2, 3202.3.3
CORRIDOR (see CORRIDOR PROTECTION, EXIT ACCESS, FIRE PARTITIONS and SERVICE CORRIDORS) 1020
Air movement 1020.5
Continuity 1020.6
Covered and open mall buildings . . . 402.8.1, 402.8.6
Dead end 1020.4
Encroachment 1020.3
Elevation change 1003.5
Group I-2 . . . . . 407.2, 407.3, 407.4.1, 407.4.3
Hazardous 415.11
Headroom 1003.2, 1003.3
HPM service 903.2.5.2
Live load . . . . . Table 1607.1
Walls 709.1, 1020.1
Width/capacity 1003.3.4, 1003.6, 1005.2, 1005.7, 1020.2, 1020.3
CORRIDOR PROTECTION, EXIT ACCESS
Construction, fire protection . . . . . 709.1, Table 1020.1, 1020.6
Doors 715.4
Glazing 715.5
Group I-2 . . . . . 407.3
Interior finish . . . . . Table 803.11, 804.4
Opening protection 715, 716.5.4.1
Ventilation 1020.5, 1020.5.1
CORROSIVES . . . . . 307.2, 307.6, Table 414.2.5(1), 414.3, 415.10.3, Table 415.11.1.1.1
COURTS (see YARDS OR COURTS) 1206
COVERED AND OPEN MALL BUILDINGS 402
Alarms and detection 402.7.4, 907.2.20, 2702.2.14
Children's play structures 402.6.3, 424
Construction type 402.4
Fire department 402.3, 402.7.5
Interior finish 402.6.1
Kiosk 402.6.2
Means of egress 402.8
Occupant load 402.8.3
Open mall construction 402.4.3
Perimeter line 402.1.2
Separation 402.4.2
Signs 402.6.4
Smoke control 402.7.2
Sprinkler protection 402.5
Standby power 402.7.3, 2702.2.14
Standpipe system 402.7.1, 905.3.3
Travel distance 402.8.5, 1016.2.1, 1017.2, 1006.3.2
COVERED WALKWAY (see PEDESTRIAN WALKWAY) 3104, 3306.7
CRAWL SPACE
Access 1209.1
Drainage 1805.1.2
Unusable space fire protection 711.3.3
Ventilation 1203.4
CRIPPLE WALL 202, 2308.6.6.2, 2308.9.4,
CROSS-LAMINATED TIMBER 602.4.2
CRYOGENIC . . . . . Table 307.1, Table 414.5.1, Table 415.11.1.1.1

D

DAMPERS (see FIRE DAMPERS AND SMOKE DAMPERS) . . . . . 716.2 through 716.5
DAMPPROOFING AND WATERPROOFING 1805
Required 1805.2, 1805.3
Subsoil drainage system 1805.4
DAY CARE 305.2, 308.6, 310.5
Accessibility 1103.2.12
Adult care 308.6
Child care 308.6, 310.5
Egress . . . . . 308.6, Table 1004.1.1, 1006.2.2.4
DAY SURGERY CENTER (see AMBULATORY CARE FACILITIES)
DEAD END 1020.4

INTERNATIONAL CODE COUNCIL®
Copyright © 2015 ICC. ALL RIGHTS RESERVED. Accessed by David Dammon on Jun 21, 2017 12:30:52 PM pursuant to License Agreement with ICC. No further reproduction or distribution authorized. ANY UNAUTHORIZED REPRODUCTION OR DISTRIBUTION IS A VIOLATION OF THE FEDERAL COPYRIGHT ACT AND THE LICENSE AGREEMENT, AND SUBJECT TO CIVIL AND CRIMINAL PENALTIES THEREUNDER.

DEAD LOAD. 202, 1606
Foundation design load 1808.3
DECK
Anchorage 1604.8.3
Live loads. . . . . Table 1607.1
DEFLECTIONS. 1604.3.1
Framing supporting glass 2403.3
Preconstruction load tests 1709.3.1
Wood diaphragms 2305
Wood shear walls 2305
DEMOLITION 3303
DESIGN STRENGTH 202
Conformance to standards 1706.1
New materials 1706.2
DESIGNATED SEISMIC SYSTEM. 202
Seismic certification 1705.13.3
Special inspection 1705.12.4
DIAPHRAGMS 202
Analysis 1604.4
Ceilings 2508.5
Special inspection 1705.5.1, 1705.11.1, 1705.12.2
Wood 2305, 2306.2
DOORS. 1010
Access-controlled 1010.1.9.8
Atrium enclosures 404.6
Configuration 1007
Dwelling unit separations. 406.3.4, 412.5.1
Emergency escape 1030.1
Fabrication (HPM) areas 415.11.1.2
Fire (see OPENING PROTECTIVES) . . . 715.4, 1023.4
Glazing. 715.4.7, 715.5, 1405.13
Hazardous storage 415.11.5.7
Hardware (see LOCKS AND LATCHES) 1005.7.1, 1010.1.9.8, 1010.1.9, 1010.1.10
Horizontal sliding 1010.1.4.3
I-2 occupancies 407.3.1
I-3 occupancies 408.3, 408.4, 408.8.4
Landings 1010.1.5, 1010.1.6
Operation. 1010.1.3, 1010.1.9, 1010.1.10
Panic and fire exit hardware 1010.1.10
Power-operated 1010.1.4.2
Revolving 1010.1.4.1
Security grilles 402.8.8, 1010.1.4.4
Side swinging. 1010.1.2
Smoke 710.5
Stairways 1010.1.9.11
Stairways, high-rise 403.5.3
Structural testing, exterior 1709.5
Thresholds 1003.5, 1010.1.5, 1010.1.7
Vestibule 1010.1.8
Width 1010.1.1, 1010.1.1.1
DRAFTSTOPPING
Attics 718.4
Floor-ceiling assemblies. 718.3
DRINKING FOUNTAINS. 1109.5, 2902.5, 2902.6
DRY CLEANING PLANTS 415.9.3
DRYING ROOMS 417
DUCTS AND AIR TRANSFER OPENINGS (see MECHANICAL)
DUMBWAITERS. 708.14
DWELLING UNITS 202
Accessibility 1103.2.3, 1103.2.12, 1105.1.6, 1106.2, 1107
Alarms and detection 420.6, 907.2.8, 907.2.9, 907.2.11
Area 1208.3, 1208.4
Group R 310
Live/work units (see LIVE/WORK UNITS)
Scoping 101.2
Separation 420.2, 420.3
Sound transmission 1207
Sprinkler protection 420.5, 903.2.8

E

EARTHQUAKE LOADS (see SEISMIC) 1613
EARTHQUAKE RECORDING EQUIPMENT. . . . . Appendix L
EAVES (see COMBUSTIBLE PROJECTIONS AND CORNICES)
EDUCATIONAL OCCUPANCY (GROUP E) 305
Accessibility 1108.2, 1109.5.1, 1109.5.2
Alarms and detection 907.2.3
Area 503, 505, 506, 507, 508
Height. 503, 504, 505, 508
Incidental uses 509
Interior finishes. . . . . Table 803.11, 804
Live load. . . . . Table 1607.1
Means of egress
Aisles 1018.5
Corridors 1020.1, 1020.2
Panic hardware 1010.1.10
Stairway, exit access 1019
Travel distance. 1016.2.1, 1017.2, 1006.3.2
Mixed occupancies. 508.3, 508.4
Accessory 303.1.3, 508.2
Assembly 303.1.3
Day care. 305.2, 308.5, 310.1
Education for students above the 12th grade 304

INTERNATIONAL CODE COUNCIL®
Copyright © 2015 ICC. ALL RIGHTS RESERVED. Accessed by David Dammon on Jun 21, 2017 12:30:52 PM pursuant to License Agreement with ICC. No further reproduction or distribution authorized. ANY UNAUTHORIZED REPRODUCTION OR DISTRIBUTION IS A VIOLATION OF THE FEDERAL COPYRIGHT ACT AND THE LICENSE AGREEMENT, AND SUBJECT TO CIVIL AND CRIMINAL PENALTIES THEREUNDER.

Gyms (see GYMNASIUMS) 303.1.3
Libraries (see LIBRARIES). 303.4
Religious facilities 305.2
Stages and platforms 410
Plumbing fixtures 2902
Risk category . . . . . Table 1604.5
Sprinkler protection. 903.2.3
Unlimited area 507.11
EGRESS (see MEANS OF EGRESS). . . . . Chapter 10
ELECTRICAL . . . 105.2, 112, Chapter 27, Appendix K
ELEVATOR . . . . . Chapter 30
Accessibility 1009.2.1, 1009.4, 1009.8, 1109.6, 3001.3
Car size 403.6.1, 3001.3, 3002.4
Construction 708.14, 1607.9.1
Conveying systems 3004
Emergency operations 3002.3, 3002.5, 3003, 3007.1, 3008.1.3
Fire service access. 403.6.1, 3007
Glass 2409, 3002.8
High-rise 403.2.3, 403.4.8, 403.6
Hoistway enclosures. 403.2.3, 708, 1023.4, 1024.5, 3002, 3007.5, 3008.5
Hoistway lighting. 3007.5.2
Hoistway pressurization 909.21
Keys 3003.3
Lobby 708.14.1, 709.1, 1009.4, 1009.8,3006, 3007.6, 3008.6
Machine rooms . . . . . Table 1607.1, 3005
Means of egress 403.6, 1003.7, 1009.2.1, 1009.4, 3008
Number of elevator cars in hoistway. 3002.2
Occupant evacuation elevators 403.6.2, 3008
Personnel and material hoists 3004.4
Roof access 1011.12.2
Shaft enclosure. 712, 3006
Signs. 914, 1009.10, 3002.3, 3007.6.5, 3008.6.5
Stairway to elevator equipment 1011.12.2.1
Standards 3001
Standby power 2702.2.2, 3007.8, 3008.8
System monitoring 3007.7, 3008.7
Underground. 405.4.3
EMERGENCY COMMUNICATIONS
Accessible means of egress. 1009.8
Alarms (see FIRE ALARMS)
Elevators, occupant evacuation 3008.6.6
Fire command center 403.4.6, 911, 3007.7, 3008.6.6, 3008.7
Radio coverage 403.4.5, 916
EMERGENCY EGRESS OPENINGS 1030
Required . . . . . Table 1006.3.2(2), 1030.1
Window wells 1030.5
EMERGENCY LIGHTING 1008.3, 1205.5
EMERGENCY POWER 2702.1, 2702.4
Exit signs. 1013.6.3, 2702.2.5, 2702.2.12
Group I-2. . . . . 2702.2.6
Group I-3. . . . . 408.4.2, 2702.2.7
Hazardous. 415.11.10, 2702.2.13, 2702.2.14
High-rise 403.4.8, 2702.2.9
Means of egress illumination 1008.3, 2702.2.11
Semiconductor fabrication 415.11.10, 2702.2.14
Underground buildings 405.9, 2702.2.16
EMERGENCY RESPONDERS
Additional exit stairway 403.5.2
Elevators. 403.6, 1009.2.1, 3002.4, 3003, 3007, 3008
Fire command center 403.4.6, 911, 3007.7, 3008.6.6, 3008.7
Mall access 402.7.5
Radio coverage. 403.4.4, 916
Roof access 1011.12
Safety features 914
EMPIRICAL DESIGN OF MASONRY 2109
Adobe construction 2109.3
General 2109.1
Special inspection 1705.4
Surface-bonded 2109.2
EMPLOYEE
Accessibility for work areas. 907.5.2.3.1, 1103.2.2, 1104.3.1
Deputies to building official 103.3
Liability 104.8
Qualifications A101
Termination of employment A101.4
ENCROACHMENTS INTO THE PUBLIC RIGHT-OF-WAY. . . . . Chapter 32
END-JOINTED LUMBER 2303.1.1.2
Relocated structures 101.4.8, D103.3
Rodentproofing . . . . . Appendix F
ENERGY EFFICIENCY . . . . . 101.4.6, 110.3.7, Chapter 13
ENGINEER (see definition for REGISTERED DESIGN PROFESSIONAL)
EQUIPMENT PLATFORM. 505.5
EQUIVALENT OPENING FACTOR . . . . . Figure 705.7
ESCALATORS 3004
Floor opening protection 708.2
Means of egress 1003.7
ESSENTIAL FACILITIES (see RISK CATEGORY). . . . . 202, Table 1604.5
EXCAVATION, GRADING AND FILL 1804, 3304
EXISTING BUILDING 101.4.8, 102.6
Additions D103.1
Alteration. D103.1

INTERNATIONAL CODE COUNCIL®
Copyright © 2015 ICC. ALL RIGHTS RESERVED. Accessed by David Dammon on Jun 21, 2017 12:30:52 PM pursuant to License Agreement with ICC. No further reproduction or distribution authorized. ANY UNAUTHORIZED REPRODUCTION OR DISTRIBUTION IS A VIOLATION OF THE FEDERAL COPYRIGHT ACT AND THE LICENSE AGREEMENT, AND SUBJECT TO CIVIL AND CRIMINAL PENALTIES THEREUNDER.

Change of occupancy D103.2
Flood-resistant . . . . . Appendix G
Historic 101.4.8
Relocated structures D103.3
Repairs 101.4.8
Rodentproofing . . . . . Appendix F

EXIT
(see MEANS OF EGRESS) . . . . 1022 through 1027
Basement 1006.3.2.2
Boiler rooms 1006.2.2.1
Configuration 1007
Construction 713.2, 1019, 1023.2
Doorways 1007
Dwellings 1006.3.2.1
Enclosure 707.3, 1023.2
Fire resistance 707.3, 1019, 1023.2
Furnace rooms 1006.2.2.1
Group H 415.11.3.3, 415.11.5.6
Group I-2 . . . . . 407.4
Group I-3 . . . . . 408.3
High rise 403.5, 403.6, 1025
Horizontal 707.3.5, 1026
Incinerator rooms 1006.2.2.1
Interior finish . . . . . Table 803.11, 804
Luminous 403.5.5, 411.7.1, 1025
Mall buildings 402.8
Mezzanines 505.3, 505.4, 1004.1.1.2
Number, minimum 402.8.3, 403.5, 1006.2, 1006
Occupant load 402.8.2, 1004.1.1
Passageway 1024
Ramps, exterior 1027
Ramp, interior 1023
Refrigerated rooms or spaces 1006.2.2.3
Refrigeration machinery rooms 1006.2.2.2
Signs 1013
Stairways, exterior 1027
Stairway, interior 1023
Stories 1004.1.1.3, 1006,3, 1017.3.1
Travel distance 402.8.3, 402.8.5, 402.8.6, 404.9, 407.4.2, 408.6.1, 408.8.1, 410.6.3.2, 411.4, 1006.3.2, 1016.2.1, 1017, 1029.7, 1029.8
Underground buildings 405.7

EXIT ACCESS (see MEANS OF EGRESS) . . . . . 1016 through 1021
Aisles 1018
Balconies 1017.2.1, 1021
Common path 1016.2.1
Corridors 1020
Doors 1005.7, 1006.2, 1007, 1010, 1022.2
Intervening space 1016.2
Path of egress travel, common 1016.2.1
Ramps 1019
Seating at tables 1029.12.1
Single exit 1006.2, 1006.3.2
Stages 410.6.2
Stairway 1019
Travel distance 402.8.3, 402.8.5, 402.8.6, 404.9, 408.6.1, 408.8.1, 410.6.3.2, 411.4, 1006.2, 1016.2.1, 1017, 1006.3.2, 1029.7

EXIT DISCHARGE
(see MEANS OF EGRESS) 1028
Atrium 404.10
Courts 1028.4
Horizontal exit 1028.1
Lobbies 1028.1
Marquees 3106.4
Public way 1028.5
Termination 1023.3
Vestibules 1028.1

EXIT PASSAGEWAY
(see MEANS OF EGRESS) 402.8.6.1, 707.3.4, 1024
Construction 1019, 1024.3
Discharge 1024.4, 1028.1
Elevators within 1024.5, 3002.7
Fire-resistant construction 1024.3
High-rise 403.5
Openings 1024.5
Penetrations 1024.6
Pressurization 909.6, 909.20.5
Smokeproof 403.5.4, 405.7.2, 909.20
Width 1024.2
Ventilation 1024.7

EXIT SIGNS 1013
Accessibility 1013.4
Floor level exit signs 1013.2
Group R-1 . . . . . 1013.2
Illumination 1013.3, 1013.5, 1013.6
Required 1013.1
Special amusement buildings` 411.7

EXPLOSIVES . . . . . 202, Table 414.5.1, Table 415.6.2
Detached building 415.6.2, 415.8
Explosion control 415.7

EXPOSURE CATEGORY
(see WIND LOAD) 1609.4

EXTERIOR AREAS FOR ASSISTED RESCUE
Requirements 1009.7
Signage 1009.9, 1009.10, 1009.11
Where required 1009.2

INTERNATIONAL CODE COUNCIL®
Copyright © 2015 ICC. ALL RIGHTS RESERVED. Accessed by David Dammon on Jun 21, 2017 12:30:52 PM pursuant to License Agreement with ICC. No further reproduction or distribution authorized. ANY UNAUTHORIZED REPRODUCTION OR DISTRIBUTION IS A VIOLATION OF THE FEDERAL COPYRIGHT ACT AND THE LICENSE AGREEMENT, AND SUBJECT TO CIVIL AND CRIMINAL PENALTIES THEREUNDER.

EXTERIOR INSULATION AND FINISH SYSTEMS (EIFS) 1408
Special inspection 1705.16
EXTERIOR WALLS (see WALLS, EXTERIOR) . . . . . Table 601, 602, 705, Chapter 14

F

FACTORY OCCUPANCY (GROUP F) 306
Alarm and detection 907.2.4
Area 503, 503.1.1, 505, 506, 507, 508
Equipment platforms 505.2
Groups
Low-hazard occupancy 306.3
Moderate-hazard occupancy 306.2
Height 503, 504, 505, 508
Incidental uses 509
Interior finishes . . . . . Table 803.11, 804
Live load . . . . . Table 1607.1
Means of Egress
Aisles 1018.5
Dead end corridor 1020.4
Stairway, exit access 1019
Travel distance 1006.2, 1016.2.1, 1017.2, 1017.2.2, 1006.3.2
Mixed occupancies 508.2, 508.3, 508.4
Plumbing fixtures 2902
Risk category . . . . . Table 1604.5
Sprinkler protection 903.2.4
Unlimited area 507.3, 507.4, 507.5
FARM BUILDINGS . . . . . Appendix C
FEES, PERMIT 109
Refunds 109.6
Related fees 109.5
Work commencing before issuance 109.4
FENCES 105.2, 312.1
FIBERBOARD 202, 2303.1.6
Shear wall . . . . . Table 2306.3(2)
FILL MATERIAL 1804, 3304
FINGER-JOINTED LUMBER (see END-JOINTED LUMBER)
FIRE ALARM AND SMOKE DETECTION SYSTEMS
Aerosol storage 907.2.16
Aircraft hangars, residential 412.5.3, 907.2.21
Airport traffic control towers 412.3.5, 907.2.22
Ambulatory care facilities 422.5, 907.2.2.1
Assembly 907.2.1
Atriums 404.4, 907.2.14
Audible alarm 907.5.2.1
Battery room 907.2.23
Children's play structure 424.3
Construction documents 907.1.1
Covered and open mall building 402.6.2, 402.7, 907.2.20
Education 907.2.3
Emergency alarm system 908
Factory 907.2.4
Group H 907.2.5
Group I 907.2.6, 907.5.2.3.2
Group M 907.2.7
Group R 420.6, 907.2.8, 907.2.9, 907.2.10, 907.2.11, 907.5.2.3.2, 907.5.2.3.3
High-rise 403.4.1, 403.4.2, 907.2.13
Live/work 419.5
Lumber mills 907.2.17
Occupancy requirements 907.2
Special amusement buildings 411.3, 411.5, 907.2.12
Underground buildings 405.6, 907.2.18, 907.2.19
Visible alarm 907.5.2.3
FIRE ALARM BOX, MANUAL 907.4.2
FIRE AREA 202, 901.7
Ambulatory care facilities 903.2.2, 907.2.2
Assembly 903.2.1
Education 903.2.3
Enclosed parking garages 903.2.10
Factory 903.2.4
Institutional 903.2.6
Mercantile 903.2.7
Residential 903.2.8
Storage 903.2.9, 903.2.10
FIRE BARRIERS 202, 707
Continuity 707.5, 713.5
Exterior walls . . . . . Table 602, 707.4, 713.6
Fire-resistance rating of walls . . . . . 603.1(1), 603.1(22), 603.1(23), 703, 707.3, 713.4
Glazing, rated 716.6
Incidental 509.4
Inspection 110.3.6
Joints 707.8, 713.9, 715, 2508.4
Marking 703.7
Materials 707.2, 713.3
Opening protection 707.6, 707.10, 713.7, 713.10, 714.3, 716, 717.5.2
Penetrations 707.7, 713.8
Shaft enclosure 713.1
Special provisions
Aircraft hangars 412.4.4
Atriums 404.3, 404.6

INTERNATIONAL CODE COUNCIL®
Copyright © 2015 ICC. ALL RIGHTS RESERVED. Accessed by David Dammon on Jun 21, 2017 12:30:52 PM pursuant to License Agreement with ICC. No further reproduction or distribution authorized. ANY UNAUTHORIZED REPRODUCTION OR DISTRIBUTION IS A VIOLATION OF THE FEDERAL COPYRIGHT ACT AND THE LICENSE AGREEMENT, AND SUBJECT TO CIVIL AND CRIMINAL PENALTIES THEREUNDER.

Covered and open mall buildings 402.4.2,
Fire pumps. 403.3.4, 901.8, 913.2.1
Flammable finishes 416.2
Group H-2 . . . . . 415.9.1.2, 426.1.2
Group H-3 and H-4 . . . . . 415.10
Group H-5 . . . . . 415.11.1.2, 415.11.1.5, 415.11.5.1, 415.11.6.4
Group I-3 . . . . . 408.5, 408.7
Hazardous materials 414.2
High-rise 403.2.1.2, 403.2.3, 403.3, 403.4.8.1
Organic coating 418.4, 418.5, 418.6
Stages and platforms. 410.5.1, 410.5.2

FIRE COMMAND CENTER 403.4.6, 911, 3007.7, 3008.6.6, 3008.7

FIRE DAMPERS. . . . . 717.2 through 717.5

FIRE DEPARTMENT (see EMERGENCY RESPONDERS)

FIRE DETECTION SYSTEM (see FIRE ALARM AND SMOKE DETECTION SYSTEMS)

FIRE DISTRICT . . . . . Appendix D

FIRE DOOR (see OPENING PROTECTIVES) 716, 1023.4

FIRE ESCAPE 412.8.3

FIRE EXTINGUISHERS, PORTABLE 906, 3309

FIRE EXTINGUISHING SYSTEMS 416.5, 417.4, 903, 904

FIRE PARTITION 202, 709
Continuity. 708.4
Elevator lobby 3006.3
Exterior walls . . . . . Table 602, 709.5
Fire-resistance rating . . . . . 603.1(1), 603.1(22), 603.1(23), 703, 708.3
Glazing, rated 716.6
Inspection 110.3.6
Joint treatment gypsum 2508.4
Joints 708.8, 715
Marking 703.6
Materials 708.2
Opening protection 709.6, 714.3, 716, 717.5.4
Penetrations. 708.7, 708.9, 714, 717
Special provisions
Covered and open mall buildings 402.4.2.1
Group I-3 . . . . . 408.7
Group I-1, R-1, R-2, R-3 . . . . . 420.2

FIRE PREVENTION 101.4.5

FIRE PROTECTION
Explosion control 414.5.1, 415.6, 421.7, 426.1.4
Fire extinguishers, portable 906
Glazing, rated 716.2
Smoke and heat removal. 910
Smoke control systems 909
Sprinkler systems, automatic. 903

FIRE PROTECTION SYSTEMS . . . . . Chapter 9

FIRE PUMPS 403.3.4, 901.8, 913, 914.2

FIRE RESISTANCE
Calculated 722
Conditions of restraint 703.2.3
Ducts and air transfer openings 717
Exterior walls . . . . . Table 602, 705.5, 708.5
Fire district D102.2.5
High-rise. 403.2
Joint systems 715
Multiple use fire assemblies. 701.2
Prescriptive 721
Ratings. . . . . Chapter 6, 703, 705.5, 707.3.10
Roof assemblies. 1505
Structural members 704
Tests 703
Thermal and sound insulating materials 720.1

FIRE RESISTANCE, CALCULATED 722
Clay brick and tile masonry 722.4
Concrete assemblies 722.2
Concrete masonry 722.3
Steel assemblies 722.5
Wood assemblies. 722.6

FIRE-RETARDANT-TREATED WOOD 202, 2303.2
Awnings 3105.3
Balconies 1406.3
Canopies 3105.3
Concealed spaces 718.5
Fastening 2304.10.5
Fire wall vertical continuity 706.6
Partitions . . . . . 603.1(1)
Platforms 410.4
Projections 705.2.3
Roof construction . . . . . Table 601, 705.11, 706.6, 1505
Shakes and shingles 1505.6
Type I and II construction. . . . . 603.1(1), 603.1(11)
Type III construction. 602.3
Type IV construction 602.4
Veneer 1405.5

FIRE SEPARATION DISTANCE . . . . . 202, Table 602, 702
Exterior walls 1406.2.1.1.1, 1406.2.1.1.2

FIRE SERVICE ACCESS ELEVATORS 403.6.1, 3007

FIRE SHUTTER (see OPENING PROTECTIVES). 716.5, 716.5.10, 716.5.11

FIRE WALLS 706
Aircraft 412.4.6.2
Combustible framing 706.7

INTERNATIONAL CODE COUNCIL®
Copyright © 2015 ICC. ALL RIGHTS RESERVED. Accessed by David Dammon on Jun 21, 2017 12:30:52 PM pursuant to License Agreement with ICC. No further reproduction or distribution authorized. ANY UNAUTHORIZED REPRODUCTION OR DISTRIBUTION IS A VIOLATION OF THE FEDERAL COPYRIGHT ACT AND THE LICENSE AGREEMENT, AND SUBJECT TO CIVIL AND CRIMINAL PENALTIES THEREUNDER.

Continuity 706.5, 706.6
Exterior walls . . . . . Table 602, 706.5.1
Fire-resistance rating 703, 706.4
Glazing, rated 716.6
Inspection 110.3.6
Joints 706.10, 715
Marking 703.6
Materials 706.3
Opening protection 706.8, 706.11, 714.3, 716, 717.5.1
Penetration 706.9, 714.3
Special provisions
Aircraft hangars 412.4.6.2
Covered and open mall buildings 402.4.2.2
Group H-5 . . . . . 415.11.1.6
Structural stability 706.2
FIRE WINDOWS (see OPENING PROTECTIVES)
FIREBLOCKING 718.2
Chimneys 718.2.5.1, 2113.20
Fireplaces 2111.13
Wood construction 718.2.1, 718.2.7, 1406.2.3
Wood stairways 718.2.4
FIREPLACES, FACTORY-BUILT 2111.14.1
FIREPLACES, MASONRY 202
Combustibles 2111.12
Drawings 2111.2
General provisions 2111
Hearth extension 2111.10, 2111.11
Steel units 2111.6.1
FIREWORKS 202, 307.2, 307.3, 307.5
FLAMESPREAD . . . . . 802, 803.1.1, Table 803.11
FLAMMABLE FINISHES 307.1, 416
FLAMMABLE LIQUIDS 307.4, 307.5, 406, 412, 414, 415
FLAMMABLE SOLIDS 307.5, 415
FLASHING
Roof 1503.2, 1503.6, 1507.2.9, 1507.3.9, 1507.5.7, 1507.7.7, 1507.8.8, 1507.9.9, 1511.6
Wall, veneer 1405.4, 1405.12.7
FLOOD HAZARD AREAS 202, 1612.3
Coastal A zone 202
Coastal high hazard area 202
Flood insurance rate map 202
FLOOD-RESISTANT CONSTRUCTION
Accessibility 1107.7.5
Administration . . . . . G101 through G105
Elevation certificate 110.3.3
Existing 101.4.8
Flood elevation 107.2.5.1, 1612
Flood loads 1603.1, 1603.1.7, 1612, 3001.2, 3102.7
Flood resistance 1403.6, 1403.7
Flood-resistant construction . . . . . Appendix G
Grading and fill 1804.5, 1805.1.2.1
Historic buildings G105.3
Interior finishes 801.1.3
Manufactured homes G501
Modifications 104.10.1
Recreational vehicles G601
Site improvements G401
Site plan 107.2.5
Subdivisions G301
Tank G701
Temporary G901
Utility G1001
Ventilation, under floor 1203.3.2
FLOOR/CEILING (see FLOOR CONSTRUCTION)
FLOOR CONSTRUCTION (see FLOOR CONSTRUCTION, WOOD)
Draftstopping 718.3
Finishes 804, 805, 1003.4, 1210.1
Fire resistance . . . . . Table 601, 711
Loads (see FLOOR LOADS)
Materials . . . . . Chapter 6
Penetration of fire-resistant assemblies 711, 714.4, 717.2, 717.6
FLOOR CONSTRUCTION, WOOD
Beams and girders 2304.12.1.1, 2308.4.1
Bridging/blocking 2308.4.6, 2308.7.8
Diaphragms 2305.1
Fastening schedule 2304.10.1
Framing . . . . . Table 602.4, 602.4.2, 602.4.4, 2304.4
Joists 2308.4.2
Sheathing 2304.8
FLOOR LEVEL 1003.5, 1010.1.5
FLOOR LOADS
Construction documents 107.2
Live 1603.1.1, 1607
Posting 106.1
FLOOR OPENING PROTECTION (see VERTICAL OPENING PROTECTION)
FOAM PLASTICS
Attics 720.1, 2603.4.1.6
Cladding attachment 2603.11, 2603.12
Cold storage 2603.3, 2603.4.1.2, 2603.5
Concealed 603
Covered mall and open mall buildings 402.6.2, 402.6.4.5
Crawl space 2603.4.1.6
Doors . . . . . 2603.4.1.7 through 2603.4.1.9
Exterior wall covering 806.5
Exterior walls of multistory buildings 1404.13, 2603.5

INTERNATIONAL CODE COUNCIL®
Copyright © 2015 ICC. ALL RIGHTS RESERVED. Accessed by David Dammon on Jun 21, 2017 12:30:52 PM pursuant to License Agreement with ICC. No further reproduction or distribution authorized. ANY UNAUTHORIZED REPRODUCTION OR DISTRIBUTION IS A VIOLATION OF THE FEDERAL COPYRIGHT ACT AND THE LICENSE AGREEMENT, AND SUBJECT TO CIVIL AND CRIMINAL PENALTIES THEREUNDER.

Interior finish 801.2.2, 2603.10, 2604
Label/identification 2603.2
Metal composite materials (MCM) 1407.13
Roofing 2603.4.1.5
Siding backer board 2603.4.1.10
Stages and platform scenery 410.3.6
Surface burning characteristics 2603.3
Termites, protection from 2603.9
Thermal barrier requirements 2603.5.2
Trim 806.5, 2604.2
Type I and II construction . . . . . 603.1(2), 603.1(3)
Walk-in coolers 2603.4.1.3
Wind resistance 2603.10
FOLDING AND TELESCOPIC SEATING . . . 1029.1.1
Accessibility 1108.2
Egress 1029.1.1
Live load . . . . . Table 1607.1
Occupant load 1004.7
Separation 1029.1.1.1
FOOD COURT 202
Occupant load 402.8.2.4
Separation 402.4.2
FOOTBOARDS 1029.16.2
FOUNDATION (see FOUNDATION, DEEP and FOUNDATION, SHALLOW) . . . . . Chapter 18
Basement 1610, 1805.1.1, 1806.3, 1807
Concrete 1808.8, 1809.8, 1810.3.2.1
Dampproofing 1805.2
Encroachment, public right-of-way 3202.1
Formwork 3304.1
Geotechnical investigation (see SOILS AND FOUNDATIONS) 1803
Inspection 110.3.1
Load-bearing value 1806, 1808, 1810
Masonry 1808.9
Pedestrian protection 3306.9
Pier (see FOUNDATION, SHALLOW)
Pile (see FOUNDATION, DEEP)
Plates or sills 2308.3
Protection from adjacent construction 3303.5, 3307.1
Rodentproofing . . . . . Appendix F
Special inspections 1705.3, 1705.4.2, 1705.7, 1705.8, 1705.9
Steel 1809.11, 1810.3.2.3, 1810.3.5.3
Timber 1809.12, 1810.3.2.4
Waterproofing 1805.3
FOUNDATION, DEEP 202, 1810
Drilled shaft 202
Existing 1810.10.1.2
Geotechnical investigation 1803.5.5
Grade beams 1810.3.12
Helical pile . . . . . 202, 1810.3.1.5, Table 1810.3.2.6, 1810.3.3.1.9, 1810.3.5.3.3, 1810.4.11, 1810.4.12
Micropile . . . . . 202, Table 1808.8.1, Table 1810.3.2.6, 1810.3.5.2.3, 1810.3.10, 1810.4.10
Piles . . . . Table 1808.8.1, 1809.12, 1810, 1810.3.1.4
FOUNDATION, SHALLOW 202, 1809
Pier and curtain wall 1809.10
Slab-on-grade 1808.6.2
Strip footing 1808.8, 1809
FOYERS
Assembly occupancy 1029.4, 1029.9.5
Corridors 1020.6
Covered and open mall building 402.1
FRAME INSPECTION 110.3.4
FRATERNITIES 310.4
FROST PROTECTION 1809.5
FURNACE ROOMS 1006.2.2.1

G

GALLERIES (see TECHNICAL PRODUCTION AREAS)
GARAGE, AUTOMOBILE PARKING (see PARKING GARAGES)
GARAGE, REPAIR 406.8
Floor surface 406.8.3
Gas detection system 406.8.5, 908.5
Sprinkler protection 406.8.6, 903.2.9.1
Ventilation 406.8.2
GARAGES, TRUCK AND BUS
Live load 1607.7
Sprinkler protection 903.2.10.1
GARAGES AND CARPORTS, PRIVATE
Area limitations 406.3.1
Classification 406.3.1
Parking surfaces 406.3.3, 406.3.5
Separation 406.3.4, 406.3.5.1
GAS 101.4.1, 105.2, 112
Accessibility 1109.14
Gas detection system 406.6.6, 406.8.5, 415.8.7, 415.11.7, 421.6, 908
Hydrogen cutoff room 421.6
Motor fuel-dispensing 406.7
GATES 1010.2
Vehicular 3110
GIFT SHOPS 407.2.4
GIRDERS
Fire resistance . . . . . Table 601

INTERNATIONAL CODE COUNCIL®
Copyright © 2015 ICC. ALL RIGHTS RESERVED. Accessed by David Dammon on Jun 21, 2017 12:30:52 PM pursuant to License Agreement with ICC. No further reproduction or distribution authorized. ANY UNAUTHORIZED REPRODUCTION OR DISTRIBUTION IS A VIOLATION OF THE FEDERAL COPYRIGHT ACT AND THE LICENSE AGREEMENT, AND SUBJECT TO CIVIL AND CRIMINAL PENALTIES THEREUNDER.

Materials . . . . . Chapter 6
Wood construction 2304.12.1.1, 2308.4.1
GLASS (see GLAZING)
GLASS BLOCK (see GLASS UNIT MASONRY)
GLASS UNIT MASONRY 202, 2110
Atrium enclosure 404.6
Fire resistance 2110.1.1
Hazardous locations 2406.1.3
GLAZING
Athletic facilities 2408
Atrium enclosure 404.6
Doors 705.8, 709.5, 710.5, 716.4.3.2, 1405.13, 1709.1
Elevator hoistway and car 2409
Fire doors 716.5.5.1, 716.5.8
Fire-resistant walls 716.5.3.2
Fire windows 703.5, 716.5
Group I-3 . . . . . 408.7
Guards 1015.2.1, 2406.4.4, 2407
Handrail 1011.11, 2407
Identification 2403.1, 2406.3
Impact loads 2406.1, 2407.1.4.2, 2408.2.1, 2408.3
Impact resistant 1609.1.2
Jalousies 2403.5
Label/identification 716.3.1, 716.3.2, 716.5.7.1, 716.5.8.3, 716.6.8
Loads 2404
Louvered windows 2403.5
Opening protection 716.2
Replacement 2401.2
Safety 716.5.8.4, 716.6.3, 2406
Security 408.7
Skylights 2405
Sloped 2404.2, 2405
Supports 2403.2
Swimming pools 2406.4
Testing 1709.5, 2406.1.1, 2408.2.1
Veneer 1405.12
Vertical 2404.1
Walkways 2409.1
GRADE, LUMBER (see LUMBER) 202
GRADE PLANE 202
GRAIN ELEVATORS 426.1.5
GRANDSTANDS 303.1, 1029.1.1
Accessibility 1108.2
Egress 1029.1.1
Exit sign 1013.1
Live load . . . . . Table 1607.1
Occupant load 1004.4
Separation 1029.1.1.1
GREENHOUSES 312.1
Area 503, 506, 507, 508
Deflections . . . . . Table 1604.3
Live load 1607.12.2.1
Membrane structure 3102.1
Plastic 2606.11
Sloped glazing 2405
Wind load 1609.1.2
GRIDIRON (see TECHNICAL PRODUCTION AREAS)
GRINDING ROOMS 426.1.2
GROSS LEASABLE AREA (see COVERED MALL AND OPEN MALL BUILDINGS) 202, 402.3, 402.8.2
GROUT 714.3.1.1, 714.4.1
GUARDS 1015
Assembly seating 1029.1.1, 1029.16
Equipment platform 505.3.3
Exceptions 1015.2
Glazing 1015.2.1, 2406.4.4, 2407
Height 1015.3
Loads 1607.8
Mechanical equipment 1015.6
Opening limitations 1015.4
Parking garage 406.4.2
Ramps 1012.9
Residential 1015.3
Roof access 1015.7
Screen porches 1015.5
Stairs 1015.2
Vehicle barrier 406.4.3, 1607.8.3
Windows 1015.8
GUTTERS 1503.4.3
GYMNASIUMS 303.1
Group E 303.1.3
Live load . . . . . Table 1607.1
Occupant load 1004.1
GYPSUM . . . . . Chapter 25
Aggregate, exposed 2513
Board . . . . . 202, Chapter 25
Ceiling diaphragms 2508.5
Concrete, reinforced 2514
Construction 2508
Draftstopping 718.3.1
Exterior soffit . . . . . Table 2506.2
Fastening . . . . . Table 2306.3(3), 2508.1
Fire resistance 719, 722.2.1.4, 722.6.2
Fire-resistant joint treatment 2508.4
Inspection 2503
Lath 2507, 2510
Lathing and furring for cement plaster 719, 2510

INTERNATIONAL CODE COUNCIL®
Copyright © 2015 ICC. ALL RIGHTS RESERVED. Accessed by David Dammon on Jun 21, 2017 12:30:52 PM pursuant to License Agreement with ICC. No further reproduction or distribution authorized. ANY UNAUTHORIZED REPRODUCTION OR DISTRIBUTION IS A VIOLATION OF THE FEDERAL COPYRIGHT ACT AND THE LICENSE AGREEMENT, AND SUBJECT TO CIVIL AND CRIMINAL PENALTIES THEREUNDER.

Lathing and plastering 2507
Materials 2506
Panel products . . . . . 202, Chapter 25
Plaster, exterior 2512
Plaster, interior 2511
Shear wall construction . . . . . Table 2306.3(3), 2308.9.3, 2505
Sheathing . . . . . Table 2308.5.11
Showers and water closets 2509
Stucco 2510
Veneer base 2507.2
Veneer plaster 2507.2
Vertical and horizontal assemblies 2504
Wallboard . . . . . Table 2506.2
Water-resistant backing board 2506.2, 2509.2

H

HANDRAILS 1014
Alternating tread devices 1011.14
Assembly aisles 1029.15
Construction 1014.4, 1014.5, 1014.6
Extensions 1014.6
Glazing 2407
Graspability 1014.3
Guards 1015.3
Height 1014.2
Loads 1607.8
Location 1014.1, 1014.7, 1014.8, 1014.9
Ramps 1012.8
Stairs 1011.11
HARDBOARD 202, 1404.3.2, 2303.1.7
HARDWARE
(see DOORS and LOCKS AND LATCHES)
HARDWOOD
Fastening 2304.10
Quality 2303.3
Veneer 1404.3.2
HAZARDOUS MATERIALS 307, 414, 415
Control areas 414.2
Explosion control . . . . . 414.5.1, Table 414.5.1, 415.8, 415.11.5.5, 426.1.4
Special provisions 415.7
Sprinkler protection . . . . . Table 414.2.5(1), Table 414.2.5(2), 415.4, 415.11.11, 903.2.5
Ventilation 414.3, 414.5.4, 415.8.11.3, 415.9.1.7, 415.11.1.6, 415.11.1.8.1, 415.11.3.2, 415.11.5.8, 415.11.6.4, 415.11.7, 415.11.10, 1203.6
Weather protection 414.6.1
HAZARDOUS OCCUPANCY (GROUP H),
(see HAZARDOUS MATERIALS) 307, 414, 415
Alarm and detection 415.3, 415.5, 415.11.2, 415.11.3.5, 415.11.5.9, 415.11.8, 901.6.3, 907.2.5, 908.1, 908.2
Area 503, 505, 506, 507, 508
Dispensing 414.5, 414.6, 414.7.2, 415.6
Gas detection systems 415.11.7
Group provisions
H-1 (detonation) 307.3, 415.6.1.1, 415.6.2 415.7, 415.7.1
H-2 (deflagration) 307.4, 415.8, 415.9
H-3 (physical hazard) 307.5, 415.8, 415.10
H-4 (health hazard) 307.6, 415.10
H-5 (semiconductor 307.7, 415.11
Height 415.7, 415.8.1, 415.9.1.1, 415.8.1.6, 426.1.1, 503, 504, 505, 508
Incidental uses 509
Interior finishes . . . . . 416.2.1, 416.3.1, Table 803.11, 804
Live load . . . . . Table 1607.1
Location on property 414.6.1.2, 415.6
Low hazard (See Factory – Group F-2 and Storage – Group S-2)
Means of egress
Aisles 107.5
Corridors 415.11.2
One means of egress . . . . . Table 1006.2.1, Table 1006.3.2
Panic hardware 1010.1.10
Stairway, exit access 1019
Travel distance . . Table 1017.2, 1016.2.1, 1006.3.2
Mixed occupancies 508.3, 508.4
Accessory 508.2
Moderate hazard (See Factory – Group F-1 and Storage – Group S-1)
Multiple hazards 307.8
Occupancy exceptions 307.1
Plumbing fixtures . . . . . Chapter 29
Prohibited locations 419.2
Risk category . . . . . Table 1604.5
Smoke and heat removal 910.2
Special provisions—General
Detached buildings 415.6.2, 415.8
Dry cleaning (see DRY CLEANING PLANTS)
Equipment platforms 505.3
Fire district D102.2.2
Fire separation distance 415.6
Grain elevators 426.1, 426.1.5
Grinding rooms 426.1.2

INTERNATIONAL CODE COUNCIL®
Copyright © 2015 ICC. ALL RIGHTS RESERVED. Accessed by David Dammon on Jun 21, 2017 12:30:52 PM pursuant to License Agreement with ICC. No further reproduction or distribution authorized. ANY UNAUTHORIZED REPRODUCTION OR DISTRIBUTION IS A VIOLATION OF THE FEDERAL COPYRIGHT ACT AND THE LICENSE AGREEMENT, AND SUBJECT TO CIVIL AND CRIMINAL PENALTIES THEREUNDER.

Separation from other occupancies 415.6.1, 508.2.4, 508.3.3, 508.4
Special provisions based on materials
Combustible liquids . . . . . Table 307.1(1), 307.4, 307.5, 414.2.5, 414.5.3, 415.9.2
Corrosives . . . . . 307.6, Table 414.2.5(1), 414.3, 415.10.3, Table 415.11.1.1.1
Cryogenic . . . . . Table 307.1(1), Table 414.5.1, Table 415.11.1.1.1
Explosives . . . 202, 307.3, 307.3.1, Table 415.6.2
Flammable liquids. 307.4, 307.5, 415.9.1
Flammable solids 307.5, 415.11.1.1.1
Health-hazard materials . . . . . 202, Table 414.2.5(1), 415.6, Table 415.11.1.1.1, 415.11.6.1, 415.11.7.2
Irritants . . . . . Table 414.2.5(1), Table 415.11.1.1.1
Liquid, highly toxic and toxic. . . . . 307.6, Table 414.2.5(1), 415.8.3, 415.9.3, Table 415.11.1.1.1, 908.3
Organic peroxides . . . . . Table 414.5.1, 415.6.1, 415.8.4, Table 415.11.1.1.1, 418
Oxidizers, liquid and solid. . . . . Table 414.2.5(1), Table 414.5.1, 415.8.4, Table 415.11.1.1.1,
Pyrophoric materials. . . . . 307.4, Table 307.1(1), Table 414.5.1, 415.7.1, 415.8.4, Table 415.11.1.1.1
Sensitizers . . . . . Table 415.11.1.1.1
Solids, highly toxic and toxic. . . . . 307.6, Table 414.2.5(1), 415.10.4, Table 415.11.1.1.1, 908.3
Unstable materials . . . . . 307.3, Table 414.2.5(1), Table 414.5.1, 415.5.4, Table 415.11.1.1.1
Water-reactive materials. . . . . Table 414.5.1, 415.8.3, 415.8.4, 415.8.5, 415.11, Table 415.11.1.1.1
Sprinkler protection. 415.2, 415.11.6.4, 415.11.9, 415.11.10.1, 415.11.11, 705.8.1, 903.2.5
Standby, emergency power 2702.2.8, 2702.2.13, 2702.2.14
Storage . . . . . 413, 414.1, 414.2.5, 414.5, 414.6, 414.7.1, 415.6, Table 415.6.2, 415.7.1, 415.9.1, 426.1
Unlimited area 507.8
HEAD JOINT, MASONRY. 202
HEADROOM 406.4.1, 505.1, 1003.2, 1003.3, 1010.1.1, 1010.1.1.1, 1011.3, 1012.5.2, 1208.2
HEALTH CARE (see INSTITUTIONAL I-1 AND INSTITUTIONAL I-2)
Ambulatory care facilities 202, 422
Clinics, outpatient 304.1
Hospitals 308.4
HEALTH-HAZARD MATERIALS . . . . . 307.2, Table 414.2.5(1), 415.2, 415.11.1.1.1, Table 415.11.6.1
HEAT VENTS 910
HEATING (see MECHANICAL) 101.4.2
Aircraft hangars. 412.4.4
Fire pump rooms. 913.3
Fireplace 2111
Masonry heaters 2112
Parking garages 406.4.7
Repair garages 406.8.4
HEIGHT, BUILDING 503, 504, 505, 508, 510
Limitations. 503
Mixed construction types 510
Modifications 504
Roof structures 504.3
HELIPORT
Definition 202
Live loads 1607.6
HIGH-PILED COMBUSTIBLE STORAGE 413, 907.2.15, 910.2.2
HIGH-RISE BUILDINGS 403
Alarms and detection 403.4.1, 403.4.2, 907.2.13
Application 403.1
Construction 403.2
Elevators. 403.6, 1009.2.1, 3007, 3008
Emergency power 403.4.8, 2702.2.9
Emergency systems 403.4
Fire command station 403.4.6
Fire department communication 403.4.3, 403.4.4
Fire service elevators 403.6.1, 3007
Occupant evacuation elevators. 403.6.2, 3008
Smoke removal 403.4.6
Smokeproof enclosure 403.5.4, 1023.11
Sprayed fire-resistant materials (SFRM). 403.2.4
Sprinkler protection 403.3, 903.2.11.3
Stairways 403.5
Standby power 403.4.7, 2702.2.2, 2702.2.9
Structural integrity 403.2.3, 1615
Super high-rise (over 420 feet) 403.2.1, 403.2.3, 403.2.4, 403.3.1, 403.5.2
Voice alarm 403.4.3, 907.2.13
Zones 907.6.3, 907.6.4
HISTORIC BUILDINGS 101.4.8
Flood provisions G105.3

INTERNATIONAL CODE COUNCIL®
Copyright © 2015 ICC. ALL RIGHTS RESERVED. Accessed by David Dammon on Jun 21, 2017 12:30:52 PM pursuant to License Agreement with ICC. No further reproduction or distribution authorized. ANY UNAUTHORIZED REPRODUCTION OR DISTRIBUTION IS A VIOLATION OF THE FEDERAL COPYRIGHT ACT AND THE LICENSE AGREEMENT, AND SUBJECT TO CIVIL AND CRIMINAL PENALTIES THEREUNDER.

HORIZONTAL ASSEMBLY 711
Continuity 508.2.5.1, 711.2.2, 711.2.3, 713.11, 713.12
Fire-resistance rating . . . . . 603.1(1), 603.1(22), 603.1(23), 703, 704.4.2, 707.3.10, 711.2.4
Glazing, rated 716.6
Group I-1 . . . . . 420.3
Group R 420.3
Incidental 509.4
Insulation 720, 807, 808
Joints 715, 2508.4
Non-fire-resistance rating 711.3
Opening protection . . . 712.1.13.1, 714.4, 716, 717.6
Shaft enclosure 713.1
Special provisions
Aircraft hangars 412.4.4
Atrium 404.3, 404.6
Covered and open mall buildings 402.4.2.3, 402.8.7
Fire pumps 913.2.1
Flammable finishes 416.2
Group H-2 . . . . . 415.9.1.1, 415.9.1.2
Groups H-3 and H-4 . . . . . 415.10.2
Group H-5 . . . . . 415.11.1.2, 415.11.5.1
Group I-2 . . . . . 407.5.3
Groups I-1, R-1, R-2 and R-3 . . . . . 420.3
Hazardous materials 414.2
High-rise 403.2.1, 403.3, 403.4.7.1
Hydrogen fuel gas 421.4
Organic coating 418.4, 418.5, 418.6
Stages and platforms 410.4, 410.5.1
HORIZONTAL EXIT 1026
Accessible means of egress 1009.2, 1009.2.1, 1009.3, 1009.4, 1009.6, 1009.6.2
Doors 1026.3
Exit discharge 1028.1
Fire resistance 1026.2
Institutional I-2 occupancy 407.4, 1026.1
Institutional I-3 occupancy 408.2, 1026.1
Refuge area (see REFUGE AREAS)
HORIZONTAL FIRE SEPARATION (see HORIZONTAL ASSEMBLY)
HOSE CONNECTIONS (see STANDPIPES, REQUIRED)
HOSPITAL (see INSTITUTIONAL GROUP I-2) 308.4, 407
HURRICANE-PRONE REGIONS (see WIND LOADS) 202
HURRICANE SHELTER (see STORM SHELTER)
HURRICANE SHUTTERS 1609.1.2
HYDROGEN FUEL GAS ROOMS . . . . 421, Table 509
HYPERBARIC FACILITIES 425

I

ICE-SENSITIVE STRUCTURE
Atmospheric ice loads 1614.1
Definition 202
IDENTIFICATION, REQUIREMENTS FOR
Fire barriers 703.6
Fire partitions 703.6
Fire wall 703.6
Glazing 2403.1, 2406.3
Inspection certificate 1702.1
Labeling 1703.5
Preservative-treated wood 2303.1.9.1
Smoke barrier 703.6
Smoke partition 703.6
Steel 2203.1
IMPACT LOAD 202, 1603.1.1, 1607.9
INCIDENTAL USES
Area 509.3
Occupancy classification 509.2
Separation and protection 509.4
INCINERATOR ROOMS . . . . . Table 509, 1006.2.2.2
INDUSTRIAL (see FACTORY OCCUPANCY)
INSPECTIONS 110, 1704, 1705
Alternative methods and materials 1705.1.1
Approval required 110.6
Concrete construction 110.3.1, 110.3.2, 110.3.9, 1705.3
Concrete slab 110.3.2
EIFS 110.3.9, 1705.16
Energy efficiency 110.3.7
Fabricators 1704.2.5
Fees 109
Final 110.3.10
Fire-extinguishing systems 904.4
Fire-resistant materials 110.3.9, 1705.14, 1705.15
Fire-resistant penetrations 110.3.6, 1705.17
Footing or foundation 110.3.1, 110.3.9, 1705.3, 1705.4, 1705.7, 1705.8, 1705.9
Flood hazard 110.3.3, 110.3.10.1
Frame 110.3.4
Lath or gypsum board 110.3.5, 2503
Liability 104.8
Masonry 110.3.9, 1705.4
Preliminary 110.2
Required 110.3
Right of entry 104.6
Seismic 1705.12
Smoke control 104.16, 909.18.8, 1705.18

INTERNATIONAL CODE COUNCIL®
Copyright © 2015 ICC. ALL RIGHTS RESERVED. Accessed by David Dammon on Jun 21, 2017 12:30:52 PM pursuant to License Agreement with ICC. No further reproduction or distribution authorized. ANY UNAUTHORIZED REPRODUCTION OR DISTRIBUTION IS A VIOLATION OF THE FEDERAL COPYRIGHT ACT AND THE LICENSE AGREEMENT, AND SUBJECT TO CIVIL AND CRIMINAL PENALTIES THEREUNDER.

Soils 110.3.9, 1705.6
Special (see SPECIAL INSPECTIONS AND TESTS) 110.3.9, 1704, 1705
Sprayed fire-resistant materials 1705.14
Sprinkler protection 903.5
Steel 110.3.4, 110.3.9, 1705.2
Third party 110.4
Welding 110.3.9, 1705.2, 2204.1
Wind 110.3.9, 1705.10
Wood 110.3.9, 1705.5

INSTITUTIONAL I-1
[see INSTITUTIONAL OCCUPANCY (GROUP I) and RESIDENTIAL (GROUP R-4)] 308.3, 420
Accessibility 1106.2, 1107.2, 1107.3, 1107.4, 1107.5.1
Alarm and detection 420.6, 907.2.6.1, 907.2.10, 907.2.11.2, 907.5.2.3.2
Combustible decorations 806.1
Emergency escape and rescue 1030
Means of egress
Aisles 1018.5
Corridors 1020.1
Stairway, exit access 1019
Travel distance 1017.2, 1006.3.2
Occupancy exceptions . . . . . 308.3.1 through 308.3.4
Separation, unit 420.2, 420.3
Sprinkler protection 420.4, 903.2.6, 903.3.2

INSTITUTIONAL I-2
[see INSTITUTIONAL OCCUPANCY (GROUP I)] 308.4, 407
Accessibility 1106.3, 1106.4, 1106.7.2, 1107.2, 1107.3, 1107.4, 1107.5.2, 1107.5.3, 1107.5.4, 1109.2, E106.4.6
Alarms and detection 407.7, 407.8, 907.2.6.2
Care suites 407.4.4
Combustible decorations 806.1
Electrical systems 407.10, 2702.1.7, 2702.2.6
Hyperbaric facilities 425
Means of egress 407.4
Aisles 1018.5
Corridors 407.2, 407.3, 407.4, 1020.2
Doors 407.3.1, 1010.1.9.6, 1010.1.9.8
Exterior exit stairway 1027.2
Hardware 1010.1.9.3, 1010.1.9.6
Stairway, exit access 1019.3
Travel distance 407.4
Occupancy exceptions . . . . . 308.4.1 through 308.4.4
Separation 410
Smoke barriers 407.5
Smoke compartment 407.2.1, 407.2.3, 407.5
Smoke partitions 407.3
Sprinkler protection 407.6, 903.2.6, 903.3.2
Yards 407.9

INSTITUTIONAL I-3
[see INSTITUTIONAL OCCUPANCY (GROUP I)] 308.5, 408
Accessibility 1103.2.13, 1105.4, 1107.2, 1107.3, 1107.4, 1107.5.5, 1108.4.2, 1109.11.2, E104.2.2, E106.4.8
Alarm and detection 408.10, 907.2.6.3
Combustible decorations 806.1
Means of egress 408.2, 408.3, 408.4
Aisles 1018.5
Doors 408.4, 1010.1.1, 1010.1.2
Exit discharge 408.3.6
Exit sign exemption 1013.1
Hardware 408.4, 1010.1.9.3, 1010.1.9.7, 1010.1.9.8
Stairway, exit access 1019.3
Travel distance 408.6.1, 408.8.1, 1017.2, 1006.3.2
Security glazing 408.7
Separation 408.5, 408.8
Smoke barrier 408.6
Smoke compartment 408.4.1, 408.6, 408.9
Sprinkler protection 408.11, 903.2.6
Standby/emergency power 2702.2.7

INSTITUTIONAL I-4
[see INSTITUTIONAL OCCUPANCY (GROUP I)] 308.6
Accessibility 1103.2.12
Alarms and detection 907.2.6
Corridor rating 1020.1
Educational 303.1.3, 305.1
Means of egress
Day care 1006.2.2.4
Stairway, exit access 1019
Travel distance 1016.2.1, 1017.2, 1006.3.2
Occupancy exceptions 308.6.1, 308.6.2, 308.6.3, 308.6.4
Sprinkler protection 903.2.6

INSTITUTIONAL OCCUPANCY (GROUP I) 308
Accessory 508.2
Adult care 308.6
Area 503, 505, 506, 507, 508
Child care 303.1.3, 308.6.4, 308.11, 310.1
Group specific provisions
Group I-1 (see INSTITUTIONAL I-1) 308.2
Group I-2 (see INSTITUTIONAL I-2) . . . 308.3, 407
Group I-3 (see INSTITUTIONAL I-3) . . . 308.4, 408
Group I-4 (see INSTITUTIONAL I-4) 308.1, 310.5.1
Height 503, 504, 505, 508

INTERNATIONAL CODE COUNCIL®
Copyright © 2015 ICC. ALL RIGHTS RESERVED. Accessed by David Dammon on Jun 21, 2017 12:30:52 PM pursuant to License Agreement with ICC. No further reproduction or distribution authorized. ANY UNAUTHORIZED REPRODUCTION OR DISTRIBUTION IS A VIOLATION OF THE FEDERAL COPYRIGHT ACT AND THE LICENSE AGREEMENT, AND SUBJECT TO CIVIL AND CRIMINAL PENALTIES THEREUNDER.

Incidental uses 509
Interior finishes . . . . . Table 803.11, 804
Live load . . . . . Table 1607.1
Means of egress
Corridors 1020.2
Stairway, exit access 1019
Travel distance 407, 1006.3.2, 1016.2.1, 1017.2,
Mixed occupancies 508.3, 508.4
Occupancy exceptions . . . . . 303.1.1, 303.1.2, 308.3.3, 308.3.4, 308.4.2, 308.6.1 through 308.6.4, 310.5.1
Plumbing fixtures 2902
Risk category . . . . . Table 1604.5
Standby, emergency power 2702.2
INSULATION
Concealed 720.2
Duct insulation 720.1
Exposed 720.3
Fiberboard 720.1, 1508.1.1, 2303.1.6.2, 2303.1.6.3
Foam plastic (see FOAM PLASTICS) 720.1
Loose fill 720.4, 720.6
Pipe insulation 720.1, 720.7
Reflective plastic core 2614
Roof 720.5, 1508
Sound 720, 807, 1207
Thermal 720, 807, 1508
INTERIOR ENVIRONMENT
Lighting 1205
Rodentproofing . . . . . 415.11.1.6, Appendix F
Sound transmission 1207
Space dimensions 1208
Temperature control 1204
Ventilation 409.3, 414.3, 415.9.1.7, 1203.5
Yards or courts 1206.2, 1206.3
INTERIOR FINISHES . . . . . Chapter 8
Acoustical ceiling systems 807, 808
Application 803.12, 804.4
Atriums 404.8
Children's play structures 424
Covered and open mall buildings 402.6
Decorative materials 801.1.2, 806
Floor finish 804, 805
Foam plastic insulation 2603.3, 2603.4
Foam plastic trim 806.5, 2604.2
Insulation 807
Light-transmitting plastics 2606
Signs 402.6.4, 2611
Trim 806.7, 806.8
Wall and ceiling finishes 803
Wet location 1210
INTERPRETATION, CODE 104.1

J

JAILS (see INSTITUTIONAL I-3) 308.5, 408
JOINT
Gypsum board 2508.4
Lumber sheathing 2308.7.11
Shotcrete 1908.7
Waterproofing 1805.3.3
JOINTS, FIRE-RESISTANT SYSTEMS 715
Special inspection 1705.17

K

KIOSKS 402.6.2
KITCHENS 303.3, 306.2
Accessibility 1109.4
Dimensions 1208
Means of egress 1016.2
Occupant load . . . . . Table 1004.1.1
Sinks 2902.1

L

LABORATORIES
Classification of 304.1
Hazardous materials 414, 415
Incidental uses . . . . . Table 509
LADDERS
Boiler, incinerator and furnace rooms 1006.2.2.1
Construction 1011.15, 1011.16, 1014.2, 1014.6, 1015.3, 1015.4
Emergency escape window wells 1030.5.2
Group I-3 . . . . . 408.3.5, 1011.15, 1011.16
Heliport 412.8.3
Refrigeration machinery room 1006.2.2.2
Ship's ladders 1011.14
Stage 410.6.3.4
LAMINATED TIMBER, STRUCTURAL GLUED 602.4, 2303.1, 2303.1.3, 2304.12.2.4, 2306.1, 2308.4.3, 2308.7.9
LANDINGS
Doors 1010.1.6
Ramp 1012.6
Stair 1011.6
LATH, METAL OR WIRE . . . . . Table 2507.2
LAUNDRIES . . . . . 304.1, 306.2, Table 509
LAUNDRY CHUTE 713.13, 903.2.11.2
LEGAL
Federal and state authority 102.2

INTERNATIONAL CODE COUNCIL®
Copyright © 2015 ICC. ALL RIGHTS RESERVED. Accessed by David Dammon on Jun 21, 2017 12:30:52 PM pursuant to License Agreement with ICC. No further reproduction or distribution authorized. ANY UNAUTHORIZED REPRODUCTION OR DISTRIBUTION IS A VIOLATION OF THE FEDERAL COPYRIGHT ACT AND THE LICENSE AGREEMENT, AND SUBJECT TO CIVIL AND CRIMINAL PENALTIES THEREUNDER.

Liability 104.8
Notice of violation 114.2, 116.3
Registered design professional 107.1, 107.3.4
Right of entry 104.6
Unsafe buildings or systems 116
Violation penalties 114.4
LIBRARIES
Classification, other than school 303.1.3, 303.4
Classification, school 303.1.3, 305.1
Live load . . . . . Table 1607.1
LIGHT, REQUIRED 1205
Artificial 1205.3
Emergency (see EMERGENCY LIGHTING)
Means of egress 1008.2
Natural 1205.2
Stairways 1205.4
Yards and courts 1206
LIGHT-FRAME CONSTRUCTION
Definition 202
Cold-formed steel 2211
Conventional (wood) 2308
LIGHTS, PLASTIC CEILING DIFFUSERS 2606.7
LINEN CHUTE 713.13, 903.2.11.2
LINTEL
Adobe 2109.3.4.9
Fire resistance 704.11
Masonry, wood support 2304.13
LIQUEFIED PETROLEUM GAS . . . . . Table 414.5.1, 415.9.2
LIVE LOADS 202, 1607
Construction documents 107.2, 1603.1.1
Posting of 106.1
LIVE/WORK UNITS 202, 310.4, 419
Accessibility 1107.6.2.1
Separation 508.1
LOAD AND RESISTANCE FACTOR DESIGN (LRFD) 1602.1
Factored load 202
Limit state 202
Load combinations 1605.2
Load factor 202
Resistance factor 202
Wood design 2301.2, 2307
LOAD COMBINATIONS 1605
Allowable stress design 1605.3
Load and resistance factor design 1605.2
Strength design 1605.2
LOADS 106, 202
Atmospheric ice 1614
Combinations 1605
Dead 202, 1606
Factored load 202, 1604.2
Flood 1603.1.7, 1612
Impact 202, 1607.9
Live 419.6, 1603.1.1, 1607
Load effects 202
Nominal load 202, 1604.2
Rain 1611
Seismic 1603.1.5, 1613
Snow 1603.1.3, 1608
Soil lateral 1610
Wind 1603.1.4, 1609
LOBBIES
Assembly occupancy 1029.4
Elevator 405.4.3, 1009.2.1, 1009.4, 3006, 3007.6, 3008.6
Exit discharge 1028.1
Underground buildings 405.4.3
LOCKS AND LATCHES 1010.1.9, 1010.1.10
Access-controlled egress 1010.1.9.8
Delayed egress locks 1010.1.9.7
Electromagnetically locked 1010.1.9.9
Group I-2 . . . . . 407.4.1.1, 1010.1.9.6
Group I-3 . . . . . 408.4, 1010.1.9.10
Group R-4 . . . . . 1010.1.9.5.1
High-rise 403.5.3
Toilet rooms 2902.3.5
LUMBER
General provisions . . . . . Chapter 23
Quality standards 2303

M

MAINTENANCE . . . . .
Means of egress 1001.3, 3310.2
Property 101.4.4
MALL
(see COVERED AND OPEN MALL BUILDINGS)
MANUAL FIRE ALARM BOX 907.4.2
MANUFACTURED HOMES
Flood resistant G501
MARQUEES 202, 3106, H113
Drainage, water 3201.4
Construction 3106.5
Live load . . . . . Table 1607.1, 1607.12
Prohibited location 3106.4
Roof construction 3106.3
MASONRY
Adhered veneer 1405.10
Adobe 2109.3
Anchorage 1604.8.2
Anchored veneer 1405.6

INTERNATIONAL CODE COUNCIL®
Copyright © 2015 ICC. ALL RIGHTS RESERVED. Accessed by David Dammon on Jun 21, 2017 12:30:52 PM pursuant to License Agreement with ICC. No further reproduction or distribution authorized. ANY UNAUTHORIZED REPRODUCTION OR DISTRIBUTION IS A VIOLATION OF THE FEDERAL COPYRIGHT ACT AND THE LICENSE AGREEMENT, AND SUBJECT TO CIVIL AND CRIMINAL PENALTIES THEREUNDER.

Architectural cast stone 2103.1
Ashlar stone 202
Autoclaved aerated concrete (AAC) 202
Calculated fire resistance 722.4
Chimneys 2113
Construction 2104, 2109.2.2
Corbelled 2104.1.2
Dampproofing 1805.2.2
Design, methods 2101.2, 2107, 2108, 2109
Fire resistance, calculated 722.3.2, 722.3.4
Fireplaces 2111
Floor anchorage 1604.8.2
Foundation walls 1807.1.5
Foundations, adobe 2109.3.4.5
Glass unit 2110
Grouted 202
Headers (see BONDING, MASONRY) 2109.2
Heaters 2112
Inspection, special 1705.4
Joint reinforcement 2103.4
Materials 2103
Penetrations 714
Quality assurance 2105
Rodentproofing . . . . . Appendix F
Roof anchorage 1604.8.1
Rubble stone 202
Seismic provisions 2106
Serviceability 1604.3.4
Stone 2109.2
Support 2304.13
Surface bonding 2103.2
Veneer 1405.6, 1405.10, 2101.2.1, 2308.6.10
Wall, composite 202
Wall, hollow 202
Wall anchorage 1604.8.2
Waterproofing 1805.3.2
Wythe 202

MATERIALS
Alternates 104.11
Aluminum . . . . . Chapter 20
Concrete . . . . . Chapter 19
Glass and glazing . . . . . Chapter 24
Gypsum . . . . . Chapter 25
Masonry . . . . . Chapter 21
Noncombustible 703.4
Plastic . . . . . Chapter 26
Steel . . . . . Chapter 22
Testing (see TESTING) 1707
Wood . . . . . Chapter 23

MEANS OF EGRESS . . . . . Chapter 10
Accessible 1009, 2702.2.2
Aircraft related 412.3.2, 412.3.3, 412.3.4, 412.5.2, 412.7.1
Alternating tread device 412.7.3, 505.3, 1006.2.1, 1006.2.2.2, 1011.14,
Ambulatory care facilities 422.3.1, 422.3.3
Assembly 1009.1, 1029
Atrium 404.9, 404.10, 707.3.6
Capacity 1005.3
Ceiling height 1003.2
Child care facilities (see Day care facilities)
Construction drawings 107.2.3
Configuration 1007
Convergence 1005.6
Covered and open mall buildings 402.8
Day care facilities . . . . . 308.6, 310.5.1, Table 1004.1.1, 1006.2.2.4
Distribution 1005.5
Doors 1005.7, 1006.2, 1010, 1022.2, 2702.2.10
During construction 3303.3, 3310
Elevation change 1003.5
Elevators 403.5.2, 403.6.1, 1003.7, 1009, 3008
Emergency escape and rescue 1030
Encroachment 1005.7
Equipment platform 505.3
Escalators 1003.7
Existing buildings 1009.1, 3310
Exit (see EXIT) . . . . . 1022 through 1027
Exit access (see EXIT ACCESS) . . . . . 1016 through 1021
Exit discharge (see EXIT DISCHARGE) 1028
Exit enclosures 1023.2
Exit passageway (see EXIT PASSAGWAY) 1024
Exit signs 1013, 2702.2.5,
Fire escapes 412.8.3
Floor surface 804, 1003.4
Gates 1010.2
Group I-2 . . . . . 407.2, 407.3, 407.4, 1019.3
Group I-3 . . . . . 408.2, 408.3, 408.4, 408.6, 408.8, 1019.3
Guards 1015
Handrails 1014
Hazardous materials 414.6.1.2, 415.11.2, 415.11.5.6
Headroom 1003.2, 1003.3
Heliports 412.8.3
High-hazard Group H 415.11.2
High-rise 403.5, 403.6
Illumination 1008, 2702.2.4
Interior finish 803.11, 804

INTERNATIONAL CODE COUNCIL®
Copyright © 2015 ICC. ALL RIGHTS RESERVED. Accessed by David Dammon on Jun 21, 2017 12:30:52 PM pursuant to License Agreement with ICC. No further reproduction or distribution authorized. ANY UNAUTHORIZED REPRODUCTION OR DISTRIBUTION IS A VIOLATION OF THE FEDERAL COPYRIGHT ACT AND THE LICENSE AGREEMENT, AND SUBJECT TO CIVIL AND CRIMINAL PENALTIES THEREUNDER.

Ladders (see LADDERS)
Live loads . . . . . Table 1607.1
Live/work units 419.3
Mezzanines 505.2.2, 505.2.3, 1004.1.1.2, 1009.1
Moving walk 1003.7
Number 1006
Occupant load 1004.1, 1004.1.2, 1004.2
Parking 406.5.7
Protruding objects 1003.3, 1005.7
Ramps 1012, 1027
Scoping 101.3, 105.2.2, 108.2, 1001.1
Seating, fixed 1009.1, 1029
Special amusement 411.7
Stages 410.3.3, 410.6
Stairways 403.5, 404.6, 1005.3.1, 1011, 1023.2, 1027
Temporary structures 3103.4
Travel distance (see TRAVEL DISTANCE) 1016.2.1, 1017
Turnstile 1010.3
Underground buildings 405.5.1, 405.7
Width 1005.1, 1005.2, 1005.4, 1011.2, 1012.5.1, 1020.2, 1029.6, 1029.8

MECHANICAL (see AIR CONDITIONING, HEATING, REFRIGERATION, AND VENTILATION) . . . 101.4.2
Access 1011.12, 1209.3
Air transfer openings 705.10, 706.11, 707.10, 708.9, 709.8, 711.7, 713.10, 714.1.1, 717
Chimneys (see CHIMNEYS)
Code . . . . . Chapter 28
Disconnected 3303.6
Ducts 704.8, 705.10, 706.11, 707.10, 712.1.6, 712.1.10.3, 713.10, 708.9, 709.8, 710.8, 711.7, 714.1.1, 717
Encroachment, public right-of-way 3202.3.2
Equipment on roof 1510, 1511.2
Equipment platforms 505.3
Factory-built fireplace 2111.14.1
Fireplaces 2111
Incidental use room . . . . . Table 509
Motion picture projection room 409.3
Permit required 105.1, 105.2
Roof access 1011.12
Seismic inspection and testing 1705.12.6, 1705.13.2
Smoke control systems 909
Systems . . . . . 202, Chapter 28

MECHANICALLY LAMINATED DECKING 2304.9.3

MEMBRANE ROOF COVERINGS 1507.11, 1507.12, 1507.13

MEMBRANE STRUCTURES 2702.2.12, 3102

MENTAL HOSPITALS (see INSTITUTIONAL I-2)

MERCANTILE OCCUPANCY (GROUP M) 309
Accessible 1109.12
Alarm and detection 907.2.7
Area 503, 505, 506, 507, 508
Covered and open mall buildings 402
Hazardous material display and storage 414.2.5
Height 503, 504, 505, 508
Incidental uses 509
Interior finishes . . . . . Table 803.11, 804
Live load . . . . . Table 1607.1
Means of egress
Aisles 1018.3, 1018.4
Stairway, exit access 1019
Travel distance 402.8, 1016.2.1, 1017.2, 1006.3.2
Mixed occupancies 508.3, 508.4
Accessory 508.2
Live/work units 419
Mall buildings 402
Parking below/above 510.7, 510.8, 510.9
Special mixed 510.2
Occupancy exceptions 307.1.1
Plumbing fixtures 2902
Sprinkler protection 903.2.7
Standpipes 905.3.3
Unlimited area 507.5, 507.4, 507.13

METAL
Aluminum . . . . . Chapter 20
Roof coverings 1504.3.2, 1507.5
Steel . . . . . Chapter 22
Veneer 1404.5

MEZZANINES 505
Accessibility 1104.4, 1108.2.4, 1108.2.9
Area limitations 505.2.1, 505.3.1
Egress 505.2.2, 505.2.3, 1004.6, 1009.1
Equipment platforms 505.3
Guards 505.3.3, 1015.1
Height 505.2, 1003.2
Occupant load 1004.1.1.2
Stairways 712.1.11, 1011.14, 1023.2

MIRRORS 1010.1, 2406.1

MIXED OCCUPANCY (see OCCUPANCY SEPARATION)

MODIFICATIONS 104.4, 104.10

MOISTURE PROTECTION 1210, 1403.2, 1503

MONASTERIES 310.4

INTERNATIONAL CODE COUNCIL®
Copyright © 2015 ICC. ALL RIGHTS RESERVED. Accessed by David Dammon on Jun 21, 2017 12:30:52 PM pursuant to License Agreement with ICC. No further reproduction or distribution authorized. ANY UNAUTHORIZED REPRODUCTION OR DISTRIBUTION IS A VIOLATION OF THE FEDERAL COPYRIGHT ACT AND THE LICENSE AGREEMENT, AND SUBJECT TO CIVIL AND CRIMINAL PENALTIES THEREUNDER.

MORTAR 202
Ceramic tile 2103.2.3
Dampproofing 1805.2.2
Fire resistance 714.3.1, 714.4.1
Glass unit masonry 2110.1.1
Masonry 2103.2
Rodentproofing . . . . . Appendix F
MOTELS 310.3, 310.4
MOTION PICTURE PROJECTION ROOMS 409
Construction 409.2
Exhaust air 409.3.2, 409.3.3
Lighting control 409.4
Projection room 409.3
Supply air 409.3.1
Ventilation 409.3
MOTOR FUEL-DISPENSING SYSTEM 406.5
Accessibility 1109.14
MOTOR VEHICLE FACILITIES 304, 311, 406.7
MOVING, BUILDINGS 101.4.8, D103.3
MOVING WALKS 3004.2
Means of egress 1003.7

N

NAILING 202, 2303.6, 2304, 2304.10
NONCOMBUSTIBLE BUILDING MATERIAL 703.4
NURSES STATIONS (See CARE PROVIDER STATIONS)
NURSING HOMES (see INSTITUTIONAL, GROUP I-2) 308.4, 407

O

OCCUPANCY
Accessory 508.2
Certificates (see CERTIFICATE OF OCCUPANCY)
Change (see CHANGE OF OCCUPANCY)
Floor loads . . . . . Table 1607.1
Special . . . . . Chapter 4
OCCUPANCY CLASSIFICATION 302
Covered and open mall buildings 402
HPM 415.11
Mixed 508, 510
Special . . . . . Chapter 4
OCCUPANCY SEPARATION
Accessory 508.2
Aircraft related 412.5.1
Covered mall and open mall building 402.4.2
Mixed occupancy 508, 510, 707.3.9
Private parking garages . . . . . 406.3.4, Table 508.4
Repair garages 406.8.1
Required fire resistance . . . . . Table 508.4, 510
OCCUPANT EVACUATION ELEVATORS 403.5.2, 403.6.2, 3008
OCCUPANT LOAD
Actual 1004.1.2
Certificate of occupancy 111
Covered and open mall building 402.8.2
Cumulative 1004.1.1
Determination of 1004.1, 1004.1.1, 1004.6
Increased 1004.2
Outdoors 1004.5
Seating, fixed 1004.4
Signs 1004.3
OFFICE BUILDINGS (See GROUP B OCCUPANCIES)
Classification 304
Live loads . . . . . Table 1607.1, 1607.5
OPEN MALL BUILDINGS (see COVERED AND OPEN MALL BUILDINGS)
OPENING PROTECTION, EXTERIOR WALLS 705.8
OPENING PROTECTION, FLOORS (see VERTICAL OPENING PROTECTION)
OPENING PROTECTIVES 705.8, 706.8, 707.6, 708.6, 709.5, 712.1.13.1, 713.7, 716
Automatic-closing devices 909.5.3
Fire door and shutter assemblies 705.8.2, 712.1.13.1, 716.5
Fire windows 716.6
Glass unit masonry (see GLASS UNIT MASONRY) 2110.1.1
Glazing 716.6
ORGANIC COATINGS 418
ORGANIC PEROXIDES 307.4, 307.5
OXIDIZERS, LIQUID AND SOLID 307.3, 307.4, 307.5

P

PANIC HARDWARE 1010.1.10
PARAPET, EXTERIOR WALL 705.11, 2109.3.4.3
Construction 705.11.1
Fire wall 706.6
Height 705.11.1
PARKING, ACCESSIBLE 1106, 1111.1
PARKING GARAGES 406.4, 406.5, 406.6
Accessibility 1105.1.1, 1106.1, 1106.7.4, 1111.1
Barriers, vehicle 202, 406.4.3, 1607.8.3
Classification 311, 406.3, 406.4

INTERNATIONAL CODE COUNCIL®
Copyright © 2015 ICC. ALL RIGHTS RESERVED. Accessed by David Dammon on Jun 21, 2017 12:30:52 PM pursuant to License Agreement with ICC. No further reproduction or distribution authorized. ANY UNAUTHORIZED REPRODUCTION OR DISTRIBUTION IS A VIOLATION OF THE FEDERAL COPYRIGHT ACT AND THE LICENSE AGREEMENT, AND SUBJECT TO CIVIL AND CRIMINAL PENALTIES THEREUNDER.

Construction type . . . . . 406.5.1, Table 601
Enclosed (see PARKING GARAGE, ENCLOSED) 406.6
Gates 3110
Guards 406.4.2, 2407.1.3
Height, clear 406.4.1
Live loads . . . . . Table 1607.1, 1607.10.1.3
Means of egress 1006.3.1, 1006.2.2.5, 1019
Occupancy separation 508, 510
Open (see PARKING GARAGE, OPEN) 406.5
Special provisions 510
Sprinkler protection 903.2.10
Underground 405
Vertical openings 712.1.10
PARKING GARAGES, ENCLOSED 406.6
Area and height [see STORAGE OCCUPANCY (GROUP S)] 406.6.1
Means of egress 1003.2, 1006.3.2, 1012.1
Ventilation 406.6.2
PARKING GARAGES, OPEN 202, 406.5
Area and height [see STORAGE OCCUPANCY (GROUP S)] . . . . . 406.5, 406.5.1, Table 406.5.4
Construction type 406.5.1
Means of egress . . . . . 406.5.7, 1003.2, Table 1006.2.1, 1006.3, 1009.3, 1009.4, 1012.1, 1017.3, 1019, 1020.1, 1028.1
Mixed occupancy 406.5.3
Standpipes 406.5.8
Ventilation 406.5.10
PARTICLEBOARD 202
Draftstopping 718.3.1
Moisture protection 1403.2, 1405.2
Quality 2303.1.8
Veneer 1405.5
Wall bracing 2308.6.3
PARTITIONS
Fabric partition 202, 1607.14.1
Fire (see FIRE PARTITION)
Live loads 1607.5, 1607.14
Materials . . . . . 602.4.6, 603.1(1), 603.1(11)
Occupancy, specific 708.1
Smoke (see SMOKE PARTITION)
Toilets 1210
PARTY WALLS (see FIRE WALLS) . . . . . 706.1.1, Table 716.6
PASSAGEWAY, EXIT (see EXIT) 1024.1
PASSENGER STATIONS 303.4
PATIO COVERS . . . . . 2606.10, Appendix I
PEDESTRIAN
Protection at construction site 3303.2, 3306
Walkways and tunnels 3104, 3202.3.4
PENALTIES 114.4
PENETRATION-FIRESTOP SYSTEM
Fire-rated walls 714.3.2
Fire-rated horizontal assemblies 714.4.2
PENETRATIONS 714, 717
Fire-resistant assemblies
Exterior wall 705.10
Fire barrier 707.7, 707.10
Fire partition 708.7, 708.9
Fire wall 706.9, 706.11
Horizontal assemblies 714.4
Shaft enclosures 712.1, 713.1, 713.8, 713.10
Smoke barriers 709.6, 709.8, 714.4.4
Smoke partitions 710.6, 710.7
Special inspection 1705.17
Walls 714.3
Nonfire-resistant assemblies 714.5
PERFORMANCE CATEGORY
Definition 202
Wood structural panels 2302.1.5
PERLITE . . . . . Table 721.1(1), Table 2507.2
PERMITS 105
Application for 104.2, 105.1, 105.3
Drawings and specifications 107.2.1
Expiration 105.5
Fees 109
Liability for issuing 104.8
Placement of permit 105.7
Plan review 104.2, 107.3
Suspension or revocation 105.6
Time limitations 105.3.2, 105.5
PHOTOVOLTAIC PANEL SYSTEMS 202
Fire classification 1505.8, 1505.9
Panels/modules 1512
Photovoltaic module 202
Photovoltaic panel 202
Roof live loads 1607.12.5
Rooftop mounted 1510.7
PIER FOUNDATIONS (see FOUNDATION, SHALLOW)
PILE FOUNDATIONS (see FOUNDATION, DEEP)
PIPES
Embedded in fire protection 704.8
Insulation covering 720.1, 720.7
Penetration protection 714, 1023.5
Under platform 410.4
PLAIN CONCRETE (see CONCRETE) 1906
PLAN REVIEW 107.3
PLASTER
Fire-resistance requirements 719

INTERNATIONAL CODE COUNCIL®
Copyright © 2015 ICC. ALL RIGHTS RESERVED. Accessed by David Dammon on Jun 21, 2017 12:30:52 PM pursuant to License Agreement with ICC. No further reproduction or distribution authorized. ANY UNAUTHORIZED REPRODUCTION OR DISTRIBUTION IS A VIOLATION OF THE FEDERAL COPYRIGHT ACT AND THE LICENSE AGREEMENT, AND SUBJECT TO CIVIL AND CRIMINAL PENALTIES THEREUNDER.

Gypsum 719.1, 719.2
Inspection 110.3.5
Portland cement. . . . . 719.5, Table 2507.2, Table 2511.1.1

PLASTIC. . . . . Chapter 26
Approval for use. 2606.2
Composites 2612
Core insulation, reflective plastic 2614
Decking 1410, 2612
Fiber-reinforced polymer 2613
Finish and trim, interior 2604
Light-transmitting panels 2401.1, 2607
Roof panels 2609
Signs 402.6.4, 2611, D102.2.10, H107.1.1
Thermal barrier 2603.4
Veneer 1404.8, 2605, D102.2.11
Walls, exterior 2603.4.1.4, 2603.5

PLASTIC, FOAM
Children's play structures 424.2
Insulation (see FOAM PLASTICS) 2603
Interior finish 803.4, 2603.9
Malls 402.6.2, 402.6.4.5
Stages and platforms. 410.3.6

PLASTIC, LIGHT-TRANSMITTING
Awnings and patio covers 2606.10
Bathroom accessories 2606.9
Exterior wall panels 2607
Fiber-reinforced polymer 2613.4
Fiberglass-reinforced polymer 2613.4
Glazing. 2608
Greenhouses 2606.11
Light-diffusing systems 2606.7
Roof panels 2609
Signs, interior. 2611
Skylight 2610
Solar collectors 2606.12
Structural requirements 2606.5
Unprotected openings 2608.1, 2608.2
Veneer, exterior . . . . . 603.1(15), 603.1(17), 2605
Wall panels 2607

PLATFORM
(see STAGES AND PLATFORMS) 410
Construction. 410.4
Temporary 410.4.1

PLATFORM, EQUIMENT
(see EQUIPMENT PLATFORM)

PLATFORM LIFTS, WHEELCHAIR
Accessible means of egress 1009.2, 1009.5, 1109.4, 2702.2.2
Accessibility 1109.8

PLUMBING
(see TOILET AND TOILET ROOMS) . . . . . 101.4.3, 105.2, Chapter 29
Aircraft hangars, residential 412.5.4
Facilities, minimum. 2902, 3305.1
Fixtures . . . . . Table 2902.1
Room requirements 1210, 2606.9

PLYWOOD
(see WOOD STRUCTURAL PANELS). 202
Preservative-treated. 2303.1.9.1

PRESCRIPTIVE FIRE RESISTANCE. 721

PRESERVATIVE-TREATED WOOD 202
Fastenings 2304.10.5
Quality 2303.1.9
Required. 1403.6, 2304.12
Shakes, roof covering 1507.9.6, 1507.9.8

PROJECTION ROOMS
Motion picture. 409

PROJECTIONS, COMBUSTIBLE 705.2.3, 1406.3

PROPERTY LINE
(see FIRE SEPARATION DISTANCE) 705.3

PROPERTY MAINTENANCE. 101.4.4

PROSCENIUM
Opening protection. 410.3.5
Wall 410.3.4

PSYCHIATRIC HOSPITALS
(see INSTITUTIONAL I-2) 308.4

PUBLIC ADDRESS SYSTEM
(see EMERGENCY COMMUNICATIONS)
Covered and open mall buildings. 402.7, 907.2.20, 2702.2.4
Special amusement buildings 411.6

PUBLIC PROPERTY . . . . . Chapter 32, Chapter 33

PUBLIC RIGHT-OF-WAY
Encroachments . . . . . Chapter 32

PYROPHORIC MATERIALS . . . Table 307.1(1), 307.4

R

RAILING (see GUARDS AND HANDRAILS)

RAMPS 1012
Assembly occupancy 1029.13
Construction. . . . . 1012.2 through 1012.5.3, 1012.7, 1012.10
Exit 1023
Exit access. 1019
Exterior. 1027
Guards 1012.9, 1015, 1607.8
Handrails 1012.8, 1014, 1607.8
Interior 1012.2
Landings. 1012.6

INTERNATIONAL CODE COUNCIL®
Copyright © 2015 ICC. ALL RIGHTS RESERVED. Accessed by David Dammon on Jun 21, 2017 12:30:52 PM pursuant to License Agreement with ICC. No further reproduction or distribution authorized. ANY UNAUTHORIZED REPRODUCTION OR DISTRIBUTION IS A VIOLATION OF THE FEDERAL COPYRIGHT ACT AND THE LICENSE AGREEMENT, AND SUBJECT TO CIVIL AND CRIMINAL PENALTIES THEREUNDER.

Parking garage 406.4.4
Slope 1012.2
RECREATIONAL FACILITIES
Accessibility 1110
Amusement rides 1110.4.8
Animal containment areas 1110.4.7
Areas of sports activity 202, 1110.4.1
Boat slips 1110.4.9
Boxing rings 1110.4.5
Bowling lanes 1110.4.3
Court sports 1110.4.4
Exercise equipment 1110.4.10
Fishing piers 1110.4.11
Hot tubs 1110.4.13
Miniature golf 1110.4.12
Referee stands 1110.4.6
Shooting facilities 1110.4.14
Swimming pools 1110.4.13
Team or player seating 1110.4.2
Children's play structure 402.6.3, 424
Special amusement buildings (see AMUSEMENT BUILDINGS, SPECIAL)
REFERENCED STANDARDS . . . . . Chapter 35
Applicability 102.3, 102.4
Fire resistance 703.2
List . . . . . Chapter 35
Organizations . . . . . Chapter 35
REFORMATORIES 308.4
REFRIGERATION (see MECHANICAL) 101.4.2
Machinery room 1006.2.2.2
REFUGE AREAS (see HORIZONTAL EXIT, SMOKE COMPARTMENTS, STORM SHELTERS) 407.5.1, 408.6.2, 420.4.1, 422.3.2, 423.1.1, 423.3, 423.4, 1026.4
REFUSE CHUTE 713.13
REINFORCED CONCRETE (see CONCRETE)
General 1901.2
Inspections 1705.3
REINFORCEMENT
Concrete 1908.4
Masonry 2103.4
RELIGIOUS WORSHIP, PLACES OF
Accessibility 1103.2.8, 1108.2.4
Alarms and detection 907.2.1
Balcony 1029.5, 1108.2.4
Classification 303.1.4, 303.4, 305.1.1, 305.2.1, 308.6.2
Door operations 1010.1.9.3
Egress 1029
Interior finishes . . . . . Table 803.11, 804
Unlimited area 507.6, 507.7
RELOCATING, BUILDING 101.4.8, D103.3
REPAIRS, BUILDING 101.4.8, 202
Flood 1612.1, 1612.2
Minor 105.2.2
Permit required 105.1
RESIDENTIAL OCCUPANCY (GROUP R) 310
Accessibility 1103.2.3, 1103.2.11, 1105.1.7, 1106.2, 1107.2, 1107.3, 1107.4, 1107.6, E104.2
Alarm and detection 907.5.2.3.2, 907.5.2.3.3, 907.2.8, 907.2.9, 907.2.10, 907.2.11
Area 503, 505, 506, 508, 510
Draftstopping 718.3.2, 718.4.2
Group provisions
Group R-1 (transient) 310.3
Group R-2 (apartment) 310.4
Group R-3 (two dwellings per building) 310.5
Group R-4 (group homes) 310.6, 1010.1.9.5.1
Height 503, 504, 505, 508, 510
Incidental uses 509
Interior finishes . . . . . Table 803.11, 804
Live load . . . . . Table 1607.1
Live/work units 419
Means of egress
Aisles 1018.5
Corridors 1020.1, 1020.2
Doors 1010.1.1, 1010.1.9.5.1
Emergency escape and rescue 1030.1
Exit signs 1013.1, 1013.2
Single exits 1006.3.2,
Stairway, exit access 1019
Travel distance 1016.2.1, 1017.2, 1006.3.2
Mixed occupancies 508.3, 508.4
Accessory 508.2, G801.1
Live/work units 419
Parking, private 406.3
Parking below/above 510.4, 510.7, 510.9
Special mixed 510.2
Plumbing fixtures 2902
Risk category . . . . . Table 1604.5.1
Special provisions 510.2, 510.5, 510.6
Separation 419, 420, 508.2.4, 508.3.3
Swimming pools 3109.4
Sprinkler protection 903.2.8, 903.3.2
RETAINING WALLS 1807.2, 2304.12.5
Flood provisions G801.4
Seismic 1803.5.12
REVIEWING STANDS (see BLEACHERS AND GRANDSTANDS)
RISERS, STAIR (see STAIRWAY CONSTRUCTION)
Alternating tread device 1011.14

INTERNATIONAL CODE COUNCIL®
Copyright © 2015 ICC. ALL RIGHTS RESERVED. Accessed by David Dammon on Jun 21, 2017 12:30:52 PM pursuant to License Agreement with ICC. No further reproduction or distribution authorized. ANY UNAUTHORIZED REPRODUCTION OR DISTRIBUTION IS A VIOLATION OF THE FEDERAL COPYRIGHT ACT AND THE LICENSE AGREEMENT, AND SUBJECT TO CIVIL AND CRIMINAL PENALTIES THEREUNDER.

Assembly 1011.5.2, 1029.6, 1029.7, 1029.9, 1029.13
Closed 1011.5.5.3
General 1011.5
Spiral 1011.10
Uniformity 1011.5.4
RISK CATEGORY (Structural Design) . . . 202, 1604.5
Multiple occupancies 1604.5.1
RODENTPROOFING . . . . . Appendix F
ROLL ROOFING 1507.6
ROOF ACCESS 1011.12
ROOF ASSEMBLIES AND ROOFTOP STRUCTURES 202
Cooling towers 1510.4
Drainage 1503.4, 3201.4
Fire classification 1505
Fire district D102.2.9
Height modifications 504.3
Impact resistance 1504.7
Insulation 1508
Materials 1506
Mechanical equipment screen 1510.6
Parapet walls 1503.3, 1503.6
Penthouses 1510.2
Photovoltaic panels and modules . . . 1510.7, 1512.1
Radiant barrier 202, 1509
Roof ventilation 202
Tanks 1510.3
Towers, spires, domes and cupolas 1510.5
Weather protection 1503
Wind resistance 1504.1, 1609.5
ROOF CONSTRUCTION
Construction walkways 3306.7
Coverings (see ROOF COVERINGS) 1609.5.2
Deck 1609.5.1
Draftstopping 718.4
Fire resistance . . . . . Table 601
Fireblocking 718.2
Live loads . . . . . Table 1607.1, 1607.12
Materials . . . . . Chapter 6
Penetration of fire-resistant assemblies 714
Protection from adjacent construction 3307.1
Rain loads 1611
Roof structures 504.3, 1509, D102.2.9
Signs, roof mounted H110
Slope, minimum . . . . . Chapter 15
Snow load 1608
Trusses 2211.3, 2303.4, 2308.7.13
Wood (see ROOF CONSTRUCTION, WOOD)
ROOF CONSTRUCTION, WOOD . . . 602.4.3, 602.4.5
Anchorage to walls 1604.8.2
Attic access 1209.2
Ceiling joists 2308.7.1
Diaphragms 2305.1, 2306.2
Fastening requirements 2304.10
Fire-retardant-treated . . . . . Table 601, 603.1(1)
Framing 2304.11.3, 2308.7
Rafters 2306.1.1
Sheathing 2304.7, 2308.7.10
Trusses 2303.4, 2308.7.13
Ventilation, attic 1203.2
Wind uplift 2308.7.5
ROOF COVERINGS 1507
Asphalt shingles 1507.2
Built up 1507.10
Clay tile 1507.3
Concrete tile 1507.3
Fire district D102.2.4
Fire resistance . . . . . 603.1(3), 1505
Flashing 1503.2, 1503.6, 1507.2.9, 1507.3.9, 1507.5.7, 1507.7.7, 1507.8.8, 1507.9.9, 1510.6
Impact resistance 1504.7
Insulation 1508
Liquid-applied coating 1507.15
Membrane 3102
Metal roof panels 1507.4
Metal roof shingles 1507.5
Modified bitumen 1507.11
Photovoltaic shingles 1507.17
Plastics, light-transmitting panels 2609
Roof replacement 202, 1511.3
Reroofing 202, 1511
Roll 1507.6
Roof recover 202, 1511.3.1
Single-ply 202, 1507.12
Slate shingles 1507.7
Sprayed polyurethane foam 1507.14
Thermoplastic single-ply 1507.13
Wind loads 1504.1, 1609.5
Wood shakes 1507.9
Wood shingles 1507.8
ROOF DECK 202
ROOF DRAINAGE 1503.4
Scuppers 202, 1503.4.2
ROOF REPLACEMENT/RECOVERING 1511.3
ROOF STRUCTURE (see ROOF ASSEMBLIES AND ROOFTOP STRUCTURES)
ROOM DIMENSIONS 1208
ROOMING HOUSE (see BOARDING HOUSE) . . . 310

INTERNATIONAL CODE COUNCIL®
Copyright © 2015 ICC. ALL RIGHTS RESERVED. Accessed by David Dammon on Jun 21, 2017 12:30:52 PM pursuant to License Agreement with ICC. No further reproduction or distribution authorized. ANY UNAUTHORIZED REPRODUCTION OR DISTRIBUTION IS A VIOLATION OF THE FEDERAL COPYRIGHT ACT AND THE LICENSE AGREEMENT, AND SUBJECT TO CIVIL AND CRIMINAL PENALTIES THEREUNDER.

S

SAFEGUARDS
DURING CONSTRUCTION . . . . . Chapter 33
Accessibility 1103.2.5
Adjoining property protection 3307
Construction 3302
Demolition. 3303
Excavations 1804.1
Fire extinguishers 3309
Means of egress 3310
Protection of pedestrians 3306
Sanitary facilities. 3305
Site work. 3304
Sprinkler protection. 3312
Standpipes 3308.1.1, 3311
Temporary use of streets, alleys and public property. 3308
SAFETY GLAZING 716.5.8.4, 2406
SCHOOLS (see EDUCATIONAL OCCUPANCY)
SEATING
Accessibility 1108.2, 1109.11
Tables. 1029.9, 1029.12.1
SEATING, FIXED 1029
Accessibility 1108.2, 1109.11
Aisles 1029.9, 1029.12
Bleachers (see BLEACHERS)
Grandstands (see GRANDSTANDS)
Guards 1029.16
Live load . . . . . Table 1607.1
Occupant load 1004.4
Stability. 1029.14
Temporary 108
SECURITY GLAZING 408.7
SECURITY GRILLES 402.8.8, 1010.1.4.4
SEISMIC 1613
Construction documents. . . . 107, 1603.1.5, 1603.1.9
Earthquake recording equipment . . . . . Appendix L
Fire resistance 704.12
Geotechnical investigation 1803.5.11, 1803.5.12
Glazing 2404
Loads 1613
Mapped acceleration parameters . . . . . 1613.3.1, Figures 1613.3.1(1) through1613.3.1(8)
Masonry 2106
Membrane structure 3102.7
Seismic design category. 202, 1613.5.6
Seismic detailing. 1604.10
Site class 202, 1613.5.2
Site coefficients 202, 1613.5.3
Special inspection. 1705.12
Statement of special inspections 1704.3
Steel 2205.2, 2206.2
Structural observations 1704.6.1
Structural testing. 1705.13
Wood. 2305, 2308.6.6, 2308.6.8, 2308.6.10
SERVICE SINKS . . . . . 1109.3, Table 2902.1
SERVICE STATION
(see MOTOR FUEL-DISPENSING FACILITIES)
SHAFT (see SHAFT ENCLOSURE
AND VERTICAL OPENING PROTECTION) 202
SHAFT ENCLOSURE
(see VERTICAL OPENING PROTECTION) 713
Continuity 713.5, 713.11, 713.12
Elevators. 713.14
Exceptions 713.2, 1019, 1023,
Exterior walls. 713.6
Fire-resistance rating 707.3.1, 713.4
Group I-3. . . . . 408.5
High-rise buildings 403.2.1.2, 403.2.3, 403.3.1.1, 403.5.1
Joints. 713.9, 715
Materials 713.3
Opening protection 713.8, 713.10, 714, 717.5.3
Penetrations 713.8
Refuse and laundry chutes 713.13
Required 713.1
SHEAR WALL
Gypsum board and plaster 2505
Masonry 202
Wood. 202, 2305.1, 2306.3
SHEATHING
Clearance from earth 2304.12.1.2
Fastening 2304.10
Fiberboard. . . . . Table 2306.3(2)
Floor 2304.8, 2308.4.7
Gypsum. . . . . Table 2506.2, 2508
Moisture protection 2304.12.1.2
Roof 2304.8
Roof sheathing 2308.7.10
Wall. 2304.6, 2308.5.11
Wood structural panels 2303.1.5, 2211.3
SHOPPING CENTERS
(see COVERED AND OPEN MALL BUILDINGS)
SHOTCRETE 1908
SHUTTERS, FIRE
(see OPENING PROTECTIVES) 716.5
SIDEWALKS . . . . . 105.2(6), G801.4
Live loads . . . . . Table 1607.1
SIGNS . . . . . 3107, Appendix H
Accessibility 1013.4, 1110, E106.4.9, E107, E109.2.2
Accessible means of egress . . . . . 1009.8.2, 1009.9 through 1009.11

INTERNATIONAL CODE COUNCIL®
Copyright © 2015 ICC. ALL RIGHTS RESERVED. Accessed by David Dammon on Jun 21, 2017 12:30:52 PM pursuant to License Agreement with ICC. No further reproduction or distribution authorized. ANY UNAUTHORIZED REPRODUCTION OR DISTRIBUTION IS A VIOLATION OF THE FEDERAL COPYRIGHT ACT AND THE LICENSE AGREEMENT, AND SUBJECT TO CIVIL AND CRIMINAL PENALTIES THEREUNDER.

Animated devices H108
Construction. H105, H107
Covered and open mall building 402.6.4
Doors 1010.1.9.3, 1010.1.9.7, 1010.1.9.8
Electrical H106
Elevators 1109.7, 1111.2, 3002.3, 3007.6.5, 3008.6.5
Encroachment, public right-of-way 3202.3.1
Exit. 1013, 2702.2.5
Floor loads 106.1
Ground. H109
Height limitation H109.1, H112.4
Illumination. H106.1
Luminous 403.5.5, 1013.5, 1025
Marquee. H113
Obstruction 1003.3.2, 1003.3.3, H103
Occupant load, assembly 1004.3
Parking spaces 1111.1
Plastic 2611, D102.2.10
Portable H114
Projecting. H112
Protruding objects 1003.3
Roof H110
Stairway identification 1023.8, 1023.9, 1111.2, 1111.3
Standpipe control valve 905.7.1
Toilet room. 1111.1, 1111.2, 2902.4, 2902.4.1
Variable message 1111.4
Walls 703.6, H111

SITE DRAWINGS. 107.2.5
SITE WORK 3304
SKYLIGHTS 2405, 3106.3
Light, required 1205.2
Loads. 2404
Plastic 2610
Protection from adjacent construction 3307.1
Vertical opening protective 712.1.15

SLAB ON GROUND, CONCRETE. 1907, 2304.12.1.4
SLATE SHINGLES. 1507.7
SLEEPING UNITS 202
Accessibility 1103.2.11, 1105.1.6, 1106.2, 1106.7.2, 1107
Group I. 308
Group R 310
Scoping 101.2
Separation 420.2, 420.3

SMOKE ALARMS
Bathrooms 907.2.11.4
Cooking appliances 907.2.11.3
Live/work unit. 419.5, 907.2.11.2
Multiple-station. 907.2.11
Residential aircraft hangars 412.5.3, 412.5.4, 907.2.21
Residential occupancies 420.5, 907.2.11.1, 907.2.11.2
Single-station 907.2.11

SMOKE BARRIERS 202
Construction. 407.4.3, 709.4, 909.5
Doors 709.5, 716.5.3, 909.5.3
Fire-resistance rating 703, 709.3
Glazing, rated. 716.6
Inspection. 110.3.6
Joints 709.7, 715
Marking 703.6
Materials. 709.2
Opening protection. 709.5, 714.3, 714.4.4, 716, 717.5.5, 909.5.3
Penetrations. 709.6, 714
Smoke control 909.5
Special provisions
Ambulatory care facilities. 422.2, 422.3, 709.5.1
Group I-1 . . . . . 420.4, 709.5.1
Group I-2 . . . . . 407.5
Group I-3 . . . . . 408.6, 408.7
Underground 405.4.2, 405.4.3

SMOKE COMPARTMENT 407, 408, 422
Refuge area (see REFUGE AREA)

SMOKE CONTROL 909
Amusement buildings, special 411.1
Atrium buildings 404.5
Covered and open mall building. 402.7.2
Group I-3 . . . . . 408.9
High-rise (smoke removal). 403.4.7, 1023.11
Special inspections 1705.18
Stages 410.3.7.2
Standby power systems. 909.11, 909.20.6.2, 2702.2.15
Underground buildings. 405.5

SMOKE DAMPERS . . . . . 717.2 through 717.5

SMOKE DETECTION SYSTEM (see FIRE ALARM AND SMOKE DETECTION SYSTEMS). 907

SMOKE DETECTORS
Covered and open mall building. 402.8.6.1, 907.2.20
High-rise buildings 403.4.1, 907.2.13
HPM 415.11.9.3
Institutional I-2 . . . . . 407.8
Smoke-activated doors 716.5.9.3
Special amusement buildings 411.5
Underground buildings. 907.2.18,

INTERNATIONAL CODE COUNCIL®
Copyright © 2015 ICC. ALL RIGHTS RESERVED. Accessed by David Dammon on Jun 21, 2017 12:30:52 PM pursuant to License Agreement with ICC. No further reproduction or distribution authorized. ANY UNAUTHORIZED REPRODUCTION OR DISTRIBUTION IS A VIOLATION OF THE FEDERAL COPYRIGHT ACT AND THE LICENSE AGREEMENT, AND SUBJECT TO CIVIL AND CRIMINAL PENALTIES THEREUNDER.

SMOKE DEVELOPMENT . . . . . 802, 803.1.1, Table 803.11
SMOKE EXHAUST SYSTEMS
Underground buildings 405.5, 907.2.18, 909.2
SMOKE PARTITIONS 202, 710
Continuity 710.4
Doors 710.5
Ducts and air transfer openings 710.8
Fire-resistance rating 710.3
Inspection 110.3.6
Joints 710.7
Marking 703.6
Materials 710.2
Opening protection 710.5, 717.5.7
Penetrations 710.6
Special provisions
Atriums 404.6
Group I-2 . . . . . 407.3
SMOKE REMOVAL (High rise) 403.4.7
SMOKE VENTS 410.3.7.1, 910
SMOKEPROOF ENCLOSURES 403.5.4, 1023.11
Design 909.20
SNOW LOAD 1608
Glazing 2404
SOILS AND FOUNDATIONS (see FOUNDATION) . . . . . Chapter 18
Depth of footings 1809.4
Excavation, grading and fill . . . 1804, 3304, J106, J107
Expansive 1803.5.3, 1808.6
Flood hazard 1808.4
Footings and foundations 1808
Footings on or adjacent to slopes . . 1808.7, 3304.1.3
Foundation walls 1807.1.5, 3304.1.4
Geotechnical investigation 1803
Grading . . . . . 1804.4, Appendix J
Load-bearing values 1806
Soil boring and sampling 1803.4
Soil lateral load 1610
Special inspection 1705.6
SORORITIES 310.4
SOUND-INSULATING MATERIALS (see INSULATION) 720
SOUND TRANSMISSION 1207
SPECIAL CONSTRUCTION . . . . . Chapter 31
Automatic vehicular gates 3110
Awnings and canopies (see AWNINGS and CANOPIES) 3105
Marquees (see MARQUEES) 3106
Membrane structures (see MEMBRANE STRUCTURES) 3102
Pedestrian walkways and tunnels (see WALKWAYS and TUNNELED WALKWAYS) 3104
Photovoltaic panels and modules 3111
Signs (see SIGNS) 3107
Swimming pool enclosures and safety devices (see SWIMMING POOL) 3109
Telecommunication and broadcast towers (see TOWERS) 3108
Temporary structures (see TEMPORARY STRUCTURES) 3103
SPECIAL INSPECTIONS AND TESTS (see INSPECTIONS) . . . . . 110.3.9, Chapter 17
Alternative test procedure 1707
Approvals 1703
Continuous special inspection 202
Contractor responsibilities 1704.4
Design strengths of materials 1706
General 1701
In-situ load tests 1708
Periodic special inspection 202
Preconstruction load tests 1709
Special inspections 1705
Statement of special inspections 1704.3
Structural observations 1704.6
Testing seismic resistance 1705.13
SPECIAL INSPECTOR 202
Qualifications 1704.2.1
SPIRAL STAIRWAYS 1011.10
Construction 1011.2, 1011.3, 1011.10
Exceptions 1011.5.2, 1011.5.3, 1011.5.5.3, 1011.10
Group I-3 . . . . . 408.3.4
Live/work 419.3.2
Stages 410.6.3.4
SPORTS ACTIVITY, AREA OF (see RECREATIONAL FACILITIES) 202, 1110.4.1
SPRAYED FIRE-RESISTANT MATERIALS 202, 1702.1
Application 704.13
Inspection 1705.14, 1705.15
Steel column calculated fire resistance 722.5.2.2
SPRINKLER SYSTEM, AUTOMATIC 903, 3312
Exempt locations 903.3.1.1.1, 903.3.1.1.2
Fire department location 912
Limited area sprinkler systems 903.3.8
Signs 914.2
Substitute for fire rating . . . . . Table 601(4)
SPRINKLER SYSTEM, REQUIRED 903
Aircraft related 412.4.6, 412.6.5
Ambulatory care facilities 422.4, 903.2.2
Amusement buildings, special 411.4
Assembly 903.2.1, 1029.6.2.3
Atrium 404.3

INTERNATIONAL CODE COUNCIL®
Copyright © 2015 ICC. ALL RIGHTS RESERVED. Accessed by David Dammon on Jun 21, 2017 12:30:52 PM pursuant to License Agreement with ICC. No further reproduction or distribution authorized. ANY UNAUTHORIZED REPRODUCTION OR DISTRIBUTION IS A VIOLATION OF THE FEDERAL COPYRIGHT ACT AND THE LICENSE AGREEMENT, AND SUBJECT TO CIVIL AND CRIMINAL PENALTIES THEREUNDER.

Basements 903.2.11.1
Building area 506.2
Children's play structures 424.3
Combustible storage 413
Commercial kitchen 903.2.11.5
Construction 903.2.12
Covered and open mall building 402.5
Drying rooms 417.4
Education 903.2.3
Exempt locations 903.3.1.1.1, 903.3.1.1.2
Factory 903.2.4
Fire areas 707.3.10
Hazardous materials . . . . . Table 414.2.5(1), Table 414.2.5(2), 903.2.11.4
Hazardous occupancies 415.4, 415.11.6.4, 415.11.11, 705.8.1, 903.2.5
Height increase . . . . . Table 504.3
High-rise buildings 403.3, 903.2.11.3
Incidental uses . . . . . Table 509
Institutional 407.6, 408.11, 420.5, 903.2.6, 903.3.2
Laundry chutes, refuse chutes, termination rooms and incinerator rooms 713.13, 903.2.11.2
Live/work units 419.5, 903.2.8
Mercantile 903.2.7
Mezzanines 505.2.1, 505.2.3, 505.3.2
Multistory buildings 903.2.11.3
Parking garages 406.6.3, 903.2.9.1, 903.2.10.1
Residential 420.5, 903.2.8, 903.3.2
Special amusement buildings 411.4
Spray finishing booth 416.5
Stages 410.7
Storage 903.2.9, 903.2.10
Supervision (see SPRINKLER SYSTEM, SUPERVISION) 903.4
Underground buildings 405.3, 903.2.11.1
Unlimited area 507

SPRINKLER SYSTEM, SUPERVISION 903.4
Service 901.6
Underground buildings 405.3

STAGES AND PLATFORMS 303, 410
Dressing rooms 410.5
Fire barrier wall 410.5.1, 410.5.2
Floor finish and floor covering 410.3, 410.4, 804.4, 805.1
Horizontal assembly 410.5.1, 410.5.2
Means of egress 410.6
Platform, temporary 410.4.1
Platform construction . . . . . 410.4, 603.1(12)
Proscenium curtain 410.3.5
Proscenium wall 410.3.4
Roof vents 410.3.7.1
Scenery 410.3.6
Smoke control 410.3.7.2
Sprinkler protection 410.7
Stage construction . . . . . 410.3, 603.1(12)
Standpipes 410.8, 905.3.4
Technical production areas 202, 410.3.2, 410.6.3
Ventilation 410.3.7

STAIRWAY
(see ALTERNATING TREAD DEVICES, SPIRAL STAIRWAYS, STAIRWAY CONSTRUCTION and STAIRWAY ENCLOSURE)

STAIRWAY CONSTRUCTION
Alternating tread 1011.14
Circular (see Curved)
Construction 1011.7
Curved 1011.4, 1011.9
Discharge barrier 1023.8
During construction 3310.1
Elevators 1011.12.1, 1023.4, 1023.10, 3002.7
Enclosure under 1011.7.3, 1011.7.4
Exit access 1019
Exterior exit 1027, 1028.1
Fireblocking 718.2.4
Guards 1015.2, 1015.3, 1607.7
Handrails 1011.11, 1014, 1607.7
Headroom 1011.3
Interior exit 1022
Illumination 1008.2, 1205.4, 1205.5
Ladders 408.3.5, 410.6.3.4, 1011.15, 1011.16
Landings 1011.6, 1011.8
Live load . . . . . Table 1607.1, 1607.8
Luminous 403.5.5, 411.7.1, 1025
Roof access 1011.12
Seismic anchorage 2308.4.7
Spiral (see SPIRAL STAIRWAYS) 408.3.4, 410.6.3.4, 419.3.2, 1011.10
Stepped aisles 1029.13.2
Transitions 1029.9.7, 1029.9.8, 1029.10
Travel distance 1017.3.1
Treads and risers 1011.4, 1011.5
Width/capacity 1005.3.1, 1011.2
Winders 1011.4, 1011.5, 1011.10

STAIRWAY ENCLOSURE 713.1, 1019, 1023
Accessibility 1009.3
Construction 1019, 1023.2
Discharge 1023.3.1, 1028.1
Doors 716.5.9, 1010.1.9.11
Elevators within 1023.4, 3002.7

INTERNATIONAL CODE COUNCIL®
Copyright © 2015 ICC. ALL RIGHTS RESERVED. Accessed by David Dammon on Jun 21, 2017 12:30:52 PM pursuant to License Agreement with ICC. No further reproduction or distribution authorized. ANY UNAUTHORIZED REPRODUCTION OR DISTRIBUTION IS A VIOLATION OF THE FEDERAL COPYRIGHT ACT AND THE LICENSE AGREEMENT, AND SUBJECT TO CIVIL AND CRIMINAL PENALTIES THEREUNDER.

Exit access 1019
Exterior walls 705.2, 707.4, 708.5, 713.6, 1009.3.1.8, 1023.2, 1027.6
Fire-resistant construction 1019.3, 1023.2
Group I-2 . . . . . 1019.4
Group I-3 . . . . . 408.3.8, 1019.4
High-rise 403.5
Penetrations 1023.5
Pressurization 909.6, 909.20.5, 1023.11
Smokeproof 403.5.4, 405.7.2, 909.20, 1023.11
Space below, use 1011.7.3, 1011.7.4
Ventilation 1023.6
STANDARDS (see REFERENCED STANDARDS)
STANDBY POWER 2702.1, 2702.2, 2702.4
Atriums 404.7, 2702.2.15
Covered and open mall buildings 402.7.3, 2702.2.4
Elevators 1009.4, 2702.2.2, 3003.1, 3007.8, 3008.8
Hazardous occupancy 414.5.2, 415.11.10, 421.8, 2702.2.8, 2702.2.13,
High-rise 403.4.5, 2702.2.9
Horizontal sliding doors 1010.1.4.3, 2702.2.10
Membrane structures 2702.2.12, 3102.8.2
Platform lifts 1009.5, 2702.2.2
Smoke control 909.11, 2702.2.15
Smokeproof enclosure 909.20.6.2, 2702.2.15
Special inspection 1705.12.6
Underground buildings 405.8, 2702.2.16
STANDPIPE AND HOSE SYSTEMS (see STANDPIPES, REQUIRED) 905, 3106.4, 3308.1.1, 3311
Cabinet locks 905.7.2
Dry 905.8
Hose connection location . . . . . 905.1, 905.4 through 905.6, 912
STANDPIPES, REQUIRED
Assembly 905.3.1, 905.3.2, 905.3.4
Covered and open mall buildings 402.7.1, 905.3.3
During construction 905.10, 3311
Elevators, fire service access 3007.9
Helistops 905.3.6
Marinas 905.3.7
Parking garages 406.5.8
Roof gardens and landscaped roofs 905.3.8
Stages 410.8, 905.3.4
Underground buildings 405.9, 905.3.5
STATE LAW 102.2
STEEL . . . . . Chapter 22
Bolting 2204.2
Cable structures 2208
Calculated fire resistance 722.5
Cold-formed 202, 2210, 2211
Composite structural steel and concrete 2206
Conditions of restraint 703.2.3
Decks 2210.1.1
Identification and protection 2203
Joists 202, 2207
Open web joist 2207
Parapet walls 1503.3, 1503.6
Seismic provisions 2205.2, 2206.2, 2207.1.1, 2210.2
Special inspections 1705.3
Storage racks 2209
Structural steel 2205
Welding 2204.1
STONE VENEER 1405.7
Slab-type 1405.8
STOP WORK ORDERS 115
STORAGE OCCUPANCY (GROUP S) 311
Accessibility 1108.3
Area 406.5.4, 406.5.5, 406.6.1, 503, 505, 506, 507, 508
Equipment platforms 505.2
Group provisions
Hazard storage, low, Group S-2 . . . . . 311.3
Hazard storage, moderate, Group S-1 . . . . . 311.2
Hazardous material display and storage 414.2.5
Height 406.5.4, 406.6.1, 503, 504, 505, 508, 510
Incidental uses 509
Interior finishes . . . . . Table 803.11, 804
Live loads . . . . . Table 1607.1
Means of egress
Aisles 1018.5
Stairway, exit access 1019
Travel distance 1016.2.1, 1017.2, 1017.2.2, 1006.3.2
Mixed occupancies 508.3, 508.4
Accessory 508.2
Parking above/below 510.3, 510.4, 510.7, 510.8, 510.9
Special mixed 510.2
Plumbing fixtures 2902
Special provisions
Aircraft related occupancies 412
High-piled combustible 413
Parking garages 406
Sprinkler protection 903.2.10
Unlimited area 507.3, 507.4, 507.5
STORM SHELTER 423
Emergency operation facilities 423.3

INTERNATIONAL CODE COUNCIL®
Copyright © 2015 ICC. ALL RIGHTS RESERVED. Accessed by David Dammon on Jun 21, 2017 12:30:52 PM pursuant to License Agreement with ICC. No further reproduction or distribution authorized. ANY UNAUTHORIZED REPRODUCTION OR DISTRIBUTION IS A VIOLATION OF THE FEDERAL COPYRIGHT ACT AND THE LICENSE AGREEMENT, AND SUBJECT TO CIVIL AND CRIMINAL PENALTIES THEREUNDER.

Education 423.4
Refuge area (see REFUGE AREA)
STRENGTH
Design requirements 1604.2
Masonry 202
Nominal 202
Required 202
STRENGTH DESIGN 202, 1604.1
Factored load 202
Limit state 202
Load combinations 1605.2
Load factor 202
Masonry 2108
STRUCTURAL DESIGN . . . . . Chapter 16
Aluminum . . . . . Chapter 20
Concrete . . . . . Chapter 19
Foundations . . . . . Chapter 18
Masonry . . . . . Chapter 21
Steel . . . . . Chapter 22
Wood . . . . . Chapter 23
STRUCTURAL OBSERVATION 202, 1704.6
STUCCO 2512
SUSCEPTIBLE BAY
Definition 202
Ponding instability 1611.2
SWIMMING POOL 3109
Accessibility 1110.2, 1110.3, 1110.4.13
Flood provisions G801.5
Gates, access 3109.4.1.7
Glass 2406.4
Indoor 3109.4.2
Public 3109.3
Residential 3109.4

T

TECHNICAL PRODUCTION AREAS 410.3.2, 410.6.3
TELEPHONE EXCHANGES 304
TELESCOPIC SEATING
(see FOLDING AND TELESCOPIC SEATING)
TEMPORARY STRUCTURES 3103
Certificate of occupancy 108.3
Conformance 108.2, 3103.1.1
Construction documents 3103.2
Encroachment, public rights-of-way 3202.3
Flood provisions G901
Means of egress 3103.4
Permit 108.1, 3103.1.2
Power, temporary 108.3
Termination of approval 108.4
TENANT SEPARATION
Covered and open mall building 402.4.2.1, 708.1
TENTS (see TEMPORARY STRUCTURES)
TERMITES, PROTECTION FROM 2304.12
TERRA COTTA 1405.9
TESTING
Automatic fire-extinguishing systems 904.4
Automatic water mist systems 904.11.3
Building official required 104.11.1
Carbon dioxide systems 904.8
Clean agent system 904.10
Dry chemical systems 904.6
Emergency and standby power 2702.4
Fire-resistant materials 703.2
Fire alarm systems 907.7, 907.8
Fire pumps 913.5
Foam systems 904.7
Glazing 2406, 2408.2.1
Halon systems 904.9
Personnel and material hoists 3004.4
Roof tile 1711.2
Seismic 1705.13
Sound transmission 1207
Smoke control 909.3, 909.5.2, 909.10.2, 909.12.1, 909.13.3, 909.18, 909.20.6.3, 909.21.7 1705.18
Soils 1803
Sprinkler protection 903.5
Structural
(see SPECIAL INSPECTIONS AND TESTS)
Wet chemical systems 904.5
THEATERS
[see ASSEMBLY OCCUPANCY (GROUP A, PROJECTION ROOMS and STAGES AND PLATFORMS)] 303.2
THERMAL BARRIER, FOAM PLASTIC INSULATION 2603.4, 2603.5.2
THERMAL-INSULATING MATERIALS (see INSULATION) 719
TILE 202
Ceramic (see CERAMIC TILE)
Fire resistance, clay or shale 721.1
TOILETS and TOILET ROOMS . . . . Chapter 29, 3305
Accessible 1109.2, 1109.3, 1607.8.2
Construction/finish materials 1210
Door locking 1010.1.9.5.1, 1109.2.1.7, 2902.3.5
Family or assisted-use 1109.2.1, 2902.1.2, 2902.2.1
Fixture count . . . . . Table 2902.1
Grab bar live loads 1607.8.2
Location 2902.3.1, 2902.3.2, 2902.3.3, 2903.3.6

INTERNATIONAL CODE COUNCIL®
Copyright © 2015 ICC. ALL RIGHTS RESERVED. Accessed by David Dammon on Jun 21, 2017 12:30:52 PM pursuant to License Agreement with ICC. No further reproduction or distribution authorized. ANY UNAUTHORIZED REPRODUCTION OR DISTRIBUTION IS A VIOLATION OF THE FEDERAL COPYRIGHT ACT AND THE LICENSE AGREEMENT, AND SUBJECT TO CIVIL AND CRIMINAL PENALTIES THEREUNDER.

Partitions 1210.3
Privacy 1210.3
Public facilities 2902.3
Signs 1111.1, 1111.2, 2902.4, 2902.4.1
Ventilation 1203.5.2.1

TORNADO SHELTER (see STORM SHELTER)

TOWERS
Airport traffic control 412.3
Cooling 1510.4
Location and access 3108.2
Radio 3108
Television 3108

TOXIC MATERIALS [see HIGH-HAZARD OCCUPANCY (GROUP H)]
Classification 307.6, 414, 415
Gas detection system 415.11.7, 421.6, 908.3

TRAVEL DISTANCE
Area of refuge 1009.6.1
Assembly seating 1029.7
Atrium 404.9
Balcony, exterior 1017.2.1
Care suites (Group I-2) 407.4.2, 407.4.4
Common path of travel 1016.2.1
Drinking fountains 2902.5
Exit access 1017.2
Mall 402.8.5, 402.8.6
Measurement 1017.3
Refrigeration machinery/ refrigerated rooms 1006.2.2.2, 1006.2.2.3
Smoke compartments (Group I-2 and I-3) 407.5, 408.6., 408.9
Special amusement building 411.4
Stories with one exit 1006.3.2
Toilet facilities 2902.3.2, 2902.3.3

TREADS, STAIR (see STAIRWAY CONSTRUCTION)
Concentrated live load . . . . . Table 1607.1

TREATED WOOD 202
Fire-retardant-treated wood 2303.2
Pressure-treated wood 2303.1.9
Stress adjustments 2306.1.3

TRUSSES
Cold-formed steel 2211.3
Fire resistance 704.5
Materials . . . . . Chapter 6
Metal-plate-connected wood 2303.4.6
Wood 2303.4

TSUNAMI-GENERATED FLOOD HAZARD . . . . . Appendix M

TUNNELED WALKWAY 3104, 3202.1

TURNSTILES 1010.3

U

UNDERGROUND BUILDINGS 405
Alarms and detection 405.6
Compartmentation 405.4
Construction type 405.2
Elevators 405.4.3
Emergency power loads 405.8, 2702.2.16
Means of egress 405.7
Smoke barrier 405.4.2, 405.4.3
Smoke exhaust/control 405.5
Smokeproof enclosure 405.7.2, 1023.11
Sprinkler protection 405.3
Standby power 405.8, 2702.2.16
Standpipe system 405.9, 905.3.5

UNDERLAYMENT . . . . . 202, 1707.2.3, 1507.3.3, 1507.5.3, 1507.6.3, 1507.7.3, Table 1507.8, 1507.8.3, 1507.9.3, 1507.17.3
Application 1507.2.8, 1507.3.3, 1507.4.5, 1507.5.3.1, 1507.6.3.1, 1507.7.3.1, 1507.8.3.1, 1507.9.3.1, 1507.17.4
Ice barrier 1507.2.8.2, 1507.5.4, 1507.6.4, 1507.7.4, 1507.8.4, 1507.9.4, 1507.17.4.2

UNLIMITED AREA BUILDINGS 507

UNSAFE STRUCTURES AND EQUIPMENT (see STRUCTURES, UNSAFE) 115
Appeals . . . . . 113, Appendix B
Restoration 115.5
Revocation of permit 105.6
Stop work orders 115
Utilities disconnection 112.3

UNSTABLE MATERIALS . . . . 307.3, Table 414.2.5(1), Table 414.5.1, Table 415.6.2, 415.7.1, 415.9

UNUSABLE SPACE 712.3.3

USE AND OCCUPANCY . . . . . Chapter 3
Accessory 508.2
Incidental uses . . . . . 509, Table 509
Mixed 508.3, 508.4
Special . . . . . Chapter 4

UTILITIES 112
Service connection 112.1
Service disconnection 112.3
Temporary connection 112.2

UTILITY AND MISCELLANEOUS OCCUPANCY (GROUP U) 312
Accessibility 1103.2.4, 1104.3.1
Agricultural buildings . . . . . Appendix C
Area 503, 505, 506, 507, 508
Flood provisions G1001

INTERNATIONAL CODE COUNCIL®
Copyright © 2015 ICC. ALL RIGHTS RESERVED. Accessed by David Dammon on Jun 21, 2017 12:30:52 PM pursuant to License Agreement with ICC. No further reproduction or distribution authorized. ANY UNAUTHORIZED REPRODUCTION OR DISTRIBUTION IS A VIOLATION OF THE FEDERAL COPYRIGHT ACT AND THE LICENSE AGREEMENT, AND SUBJECT TO CIVIL AND CRIMINAL PENALTIES THEREUNDER.

Height 503, 504, 508
Incidental uses 509
Live loads . . . . . Table 1607.1
Means of egress
Exit signs 1013.1
Stairway, exit access 1019
Mixed occupancies 508.3, 508.4
Special provisions
Private garages and carports 406.3
Residential aircraft hangers 412.5
Sprinkler protection 903.2.11
Travel distance 1016.2.1, 1017.1, 1006.3.2

V

VALUATION OR VALUE (see FEES, PERMIT) 109.3
VEHICLE BARRIER SYSTEMS 202, 406.4.3, 1607.8.3
VEHICLE SHOW ROOMS 304
VEHICULAR FUELING 406.7
VEHICULAR GATES 3110
VEHICULAR REPAIR 406.8
VENEER
Cement plaster 1405.15
Fastening 1405.17
Fiber-cement siding 1405.16
Glazing 1405.12
Masonry, adhered 1405.10, 2101.2.1, 2103.2.4
Masonry, anchored 1405.6, 2101.2.1
Metal 1405.11
Plastic 2605
Slab-type 1405.8
Stone 1405.7
Terra cotta 1405.9
Vinyl 1405.14
Wood 1405.5
VENTILATION (see MECHANICAL) 101.4.2
Attic 1203.2, 1503.5
Aircraft paint hangars 412.6.6
Bathrooms 1203.4.2.1
Crawl space 1203.3
Exhaust, hazardous 1203.6
Exhaust, HPM 415.11.10.2
Exit enclosure 1023.6
Fabrication areas, HPM 415.11.1.6
Hazardous 414.3, 415.9.1.7, 415.11.1.6, 415.11.5.8, 415.11.6.4, 415.11.7, 415.11.9.3
High-rise stairways 1022.10
HPM service corridors 415.11.3.2
Live/work unit 419.8
Mechanical 1203.1
Natural 1203.5
Parking 406.5.2, 406.5.5, 406.5.10, 406.6.2
Projection rooms 409.3
Repair garages 406.8.2
Roof 1203.2
Smoke exhaust 910
Smoke removal, high-rise buildings 403.4.7
Smokeproof enclosures 909.20.3, 909.20.4, 909.20.6, 1023.11
Spray rooms and spaces 416.2.2, 416.3
Stages 410.3.5, 410.3.7
Under-floor ventilation 1203.4
VENTS, PENETRATION PROTECTION 714
VERMICULITE, FIRE RESISTANT 721
VERTICAL OPENING PROTECTION
Atriums 404.6
Duct penetrations 717.1
Elevators 713.14, 3007.6.1, 3008.6.1
Exceptions 1022.1
Group I-3 . . . . . 408.5
High-rise 403.2.1.2, 403.2.3, 403.5.1
Live/work units 419.4
Open parking garages 406.5.9
Permitted vertical openings 712
Shaft enclosure 713, 1019, 1023.2
VESTIBULES, EXIT DISCHARGE 1028.1
VINYL
Expanded 802, 803.7, 803.8
Rigid 1405.14
VIOLATIONS 114
VOICE ALARM (see ALARMS, VOICE)

W

WALKWAY 3104
During construction 3306
Encroachment, public right-of-way 3202.3.4
Fire resistance . . . . . Table 601
Live load . . . . . Table 1607.1
Materials per construction type . . . . . Chapter 6
Opening protection 716, 717
WALL, EXTERIOR 705
Bearing . . . . . Chapter 6
Coverings 1405
Exterior Insulation and Finish Systems (EIFS) . . 1408
Exterior structural members 704.10
Fire district D102.1, D102.2.6
Fire-resistance ratings . . . . . Table 602, 703, 705.5, 706.5.1, 707.4, 1403.4
Flashing, veneered walls 1405.4, 1405.10.1
Foam plastic insulation 2603.4.1.4, 2603.5

INTERNATIONAL CODE COUNCIL®
Copyright © 2015 ICC. ALL RIGHTS RESERVED. Accessed by David Dammon on Jun 21, 2017 12:30:52 PM pursuant to License Agreement with ICC. No further reproduction or distribution authorized. ANY UNAUTHORIZED REPRODUCTION OR DISTRIBUTION IS A VIOLATION OF THE FEDERAL COPYRIGHT ACT AND THE LICENSE AGREEMENT, AND SUBJECT TO CIVIL AND CRIMINAL PENALTIES THEREUNDER.

Glazing, rated 715.5
Joints 705.9, 714
Light-transmitting plastic panels 2607
Materials 705.4, 1406
Metal Composite Materials (MCM) 1407
Nonbearing . . . . . Chapter 6
Opening protection 705.8, 705.10, 716.5.6
Parapets 705.11
Projections 705.2
Structural stability 705.6
Vapor retarders 1405.3
Veneer (see VENEER)
Weather resistance 1403.2, 1405.2, 1407.6, 1408.4
Weather-resistant barriers 1405.2

WALL, FIRE (see FIRE WALLS)
WALL, FOUNDATION (see FOUNDATION)
WALL, INTERIOR
Finishes 803, 1210.2
Opening protection 716, 717
WALL, INTERIOR NONBEARING (see PARTITIONS)
WALL, MASONRY 202
Wood contact 2304.12.1.3, 2304.12.1.5
WALL, PARAPET 705.11, 1503.3, 1503.6, 2109.3.4.3
WALL, PARTY (see FIRE WALLS)
WALL, PENETRATIONS 714.3
WALL, RETAINING (see RETAINING WALL)
WALL, VENEERED (see VENEER) . . . . . Chapter 14
WALL, WOOD CONSTRUCTION
Bracing 2308.6
Cutting, notching, boring 2308.5.9
Exterior framing 2308.5
Fastening schedule . . . . . Table 2304.10.1
Framing 2304.3, 2308.5
Interior bearing partition 2308.5.1
Interior nonbearing partition 2308.5.1
Openings 2308.5.5
Shear walls 2305.1, 2306.3
Sheathing (see SHEATHING)
Studs 2308.5.1
Top plates 2308.5.3.2

WATER-REACTIVE MATERIALS . . . . Table 307.1(1), 307.4, 307.5. 415.8.4

WEATHER PROTECTION
Exterior walls 1405.2
Roofs 1503

WELDING 2204.1
Materials, verification of steel reinforcement 1705.3.2
Special inspections 1705.2, 1705.3.1, 1705.12.3
Splices of reinforcement in masonry 2107.4

WIND LOAD 1609
Alternate all-heights method 1609.6
Construction documents 107, 1603.1.4
Exposure category 1609.4
Glazing 1609.1.2, 2404
Hurricane-prone regions 202
Masonry, empirical design 2109.1.1
Nominal design wind speed 1609.3.1
Roofs 1504.1, 1609.5, 2308.7.5
Seismic detailing required 1604.10
Special inspection 1705.11
Statement of special inspections 1704.3
Structural observation 1704.6.2
Ultimate design wind speed 1609.3
Wind-borne debris region 202
Wind tunnel testing 1504.2.1.2, 1609.1.1

WINDERS, STAIR (see STAIRWAY CONSTRUCTION)
WINDOW
Accessibility 1109.13.1
Emergency egress 1030
Exterior, structural testing 1709.5
Fire (see OPENING PROTECTIVES) 716.5.10, 716.5.11
Glass (see GLAZING) 1405.13
Guards 1015.8
Required light 1205.2
Wells 1030.5

WIRES, PENETRATION PROTECTION 714

WOOD . . . . . Chapter 23
Allowable stress design 2306
Bracing, walls 2308.6
Calculated fire resistance 722.6
Ceiling framing 2308.7
Connectors and fasteners 2304.10
Contacting concrete, masonry or earth 2304.1.4, 2304.12.1.3, 2304.12.2.1, 2304.12.2.2, 2304.12.3
Decay, protection against 2304.12
Diaphragms 2305.1, 2305.2, 2306.2
Draftstopping 718.3, 718.4
End-jointed lumber 2303.1.1.2
Fiberboard . . . . . 2303.1.5, Table 2306.3(2)
Fire-retardant treated 2303.2
Fireblocking 718.2
Floor and roof framing (see FLOOR CONSTRUCTION, WOOD) 2304.4
Floor sheathing 2304.8
Foundation 1807.1.4, 2308.6.7.4
Grade, lumber 2303.1.1
Hardboard 2303.1.7

INTERNATIONAL CODE COUNCIL®
Copyright © 2015 ICC. ALL RIGHTS RESERVED. Accessed by David Dammon on Jun 21, 2017 12:30:52 PM pursuant to License Agreement with ICC. No further reproduction or distribution authorized. ANY UNAUTHORIZED REPRODUCTION OR DISTRIBUTION IS A VIOLATION OF THE FEDERAL COPYRIGHT ACT AND THE LICENSE AGREEMENT, AND SUBJECT TO CIVIL AND CRIMINAL PENALTIES THEREUNDER.

Heavy timber construction 602.4, 2304.11
Hurricane shutters 1609.1.2
I-joist 2303.1.2
Inspection, special 1705.5, 1705.11.1, 1705.12.2
Lateral force-resisting systems 2305
Light-frame construction, conventional 2308
Load and resistance factor design 2307
Moisture content 2303.1.9.2, 2303.2.6
Nails and staples 2303.6
Plywood, hardwood 2303.3
Preservative treated 1403.5, 1403.6, 2303.1.9
Roof framing
(see ROOF CONSTRUCTION, WOOD) . . . 2304.4
Roof sheathing 2304.8
Seismic provisions 2305, 2306, 2308.6.6, 2308.6.8, 2308.6.10
Shear walls 2305, 2306.3
Standards and quality, minimum 2303
Structural panels 202, 2303.1.5
Supporting concrete or masonry 2304.13
Termite, protection against 2304.12
Trusses 2303.4
Veneer . . . . . Chapter 14
Wall framing
(see WALL, WOOD CONSTRUCTION) 2304.3
Wall sheathing, exterior 2304.6
WOOD SHINGLES AND SHAKES . . . 1507.8, 1507.9
WOOD STRUCTURAL PANELS
(see WOOD) 202, 2303.1.5
Bracing 2308.6
Decorative 2303.3
Diaphragms 2305.2, 2306.2
Fastening 2304.10
Fire-retardant-treated 2303.2
Performance category 202
Quality 2303.1.5
Roof sheathing 2304.8, 2308.7.10
Seismic shear panels 2305.1, 2308.6.6.2
Shear walls 2306.3
Sheathing 2304.6.1
Standards 2306.1
Subfloors 804.4
Veneer 1405.5

Y

YARDS OR COURTS 1206
Exit discharge 1028.4
Group I-2 . . . . . 407.9
Group I-3 . . . . . 408.3.6, 408.6.2
Light, natural 1205
Motor fuel-dispensing facilities 406.7.2
Occupant load 1004.5
Parking garage, open 406.5.5
Unlimited area building 507.2, 507.2.1

INTERNATIONAL CODE COUNCIL®
Copyright © 2015 ICC. ALL RIGHTS RESERVED. Accessed by David Dammon on Jun 21, 2017 12:30:52 PM pursuant to License Agreement with ICC. No further reproduction or distribution authorized. ANY UNAUTHORIZED REPRODUCTION OR DISTRIBUTION IS A VIOLATION OF THE FEDERAL COPYRIGHT ACT AND THE LICENSE AGREEMENT, AND SUBJECT TO CIVIL AND CRIMINAL PENALTIES THEREUNDER.

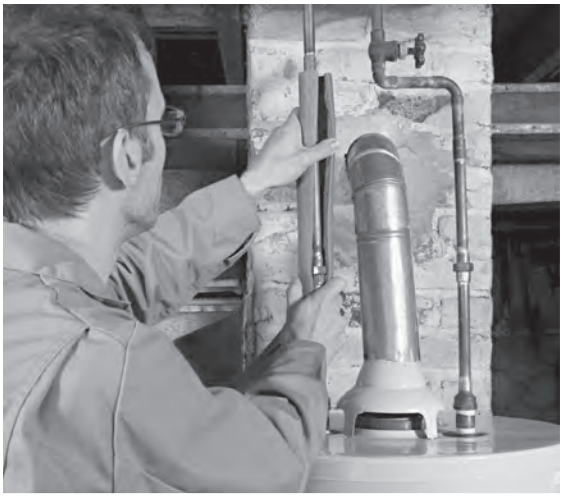




ICC INTERNATIONAL CODE COUNCIL®

People Helping People Build a Safer World®

Growing your career is what ICC Membership is all about

As your building career grows, so does the need to expand your code knowledge and job skills. Whether you're seeking a higher level of certification or professional quality training, Membership in ICC offers the best in I-Code resources and training for growing your building career today and for the future.

- **Learn** new job skills to prepare for a higher level of responsibility within your organization
- **Improve** your code knowledge to keep pace with the latest International Codes (I-Codes)
- **Achieve** additional ICC Certifications to open the door to better job opportunities

Plus, an affordable ICC Membership provides exclusive Member-only benefits including:

- Free code opinions from I-Code experts
- Free I-Code book(s) to new Members*
- Access to employment opportunities in the ICC Career Center
- Discounts on professional training & Certification renewal exams
- Savings of up to 25% off on code books & training materials
- Free benefits - Governmental Members: Your staff can receive free ICC benefits too*
- And much more!

Join the International Code Council (ICC) and start growing your building career now! Visit our Member page at www.iccsafe.org/membership for an application.

*Some restrictions apply. Speak with an ICC Member Services Representative for details.

14-09333






INTERNATIONAL CODE COUNCIL®

Copyright © 2015 ICC. ALL RIGHTS RESERVED. Accessed by David Dammon on Jun 21, 2017 12:30:52 PM pursuant to License Agreement with ICC. No further reproduction or distribution authorized. ANY UNAUTHORIZED REPRODUCTION OR DISTRIBUTION IS A VIOLATION OF THE FEDERAL COPYRIGHT ACT AND THE LICENSE AGREEMENT, AND SUBJECT TO CIVIL AND CRIMINAL PENALTIES THEREUNDER.

INTERNATIONAL CODE COUNCIL®

People Helping People Build a Safer World®



I-Codes expertise you can trust

Who do you trust to deliver the most accurate plan review code analysis in the industry? The answer is simple. Trust the I-Code experts at ICC's Plan Review Services.

No other plan review service has a better understanding of the International Codes (I-Codes) than our licensed and ICC-certified code experts. You can have confidence in ICC's Plan Review Services to deliver the most detailed and precise plan reviews in the industry.

For I-Codes expertise you can trust, visit the ICC Plan Review web page at **www.iccsafe.org/PLRF1** or call David Hunter at 888-422-7233, ext. 5577.

14-09331

INTERNATIONAL CODE COUNCIL®

Copyright © 2015 ICC. ALL RIGHTS RESERVED. Accessed by David Dammon on Jun 21, 2017 12:30:52 PM pursuant to License Agreement with ICC. No further reproduction or distribution authorized. ANY UNAUTHORIZED REPRODUCTION OR DISTRIBUTION IS A VIOLATION OF THE FEDERAL COPYRIGHT ACT AND THE LICENSE AGREEMENT, AND SUBJECT TO CIVIL AND CRIMINAL PENALTIES THEREUNDER.

INTERNATIONAL CODE COUNCIL®

People Helping People Build a Safer World®

2015 I-Code Essentials

This helpful series uses a straightforward, focused approach to explore code requirements with non-code language, allowing readers to gain confidence in their understanding of the material. Each book is an invaluable companion guide to the 2015 IBC, IRC, IFC or IECC for both new and experienced code users.

- **Detailed full-color illustrations enhance comprehension of code provisions**
- **A focused, concise approach facilitates understanding of the essential code provisions**
- **References to corresponding code sections provide added value as companion guides to the 2015 I-Codes**
- **Glossary of code and construction terms clarifies their meaning in the context of the code**



A

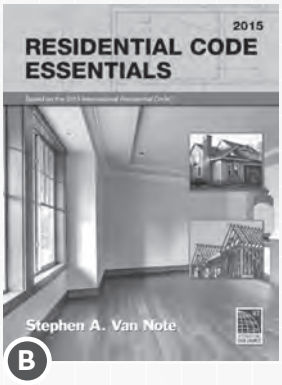

B

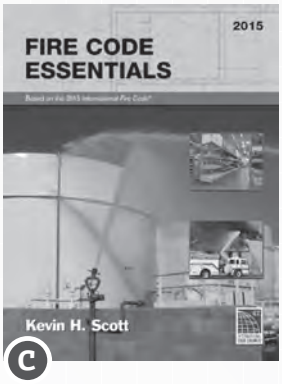

C

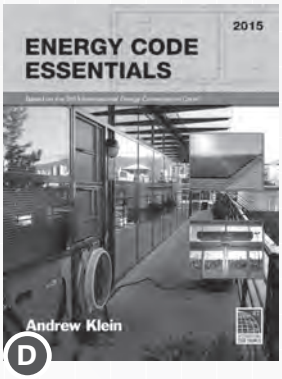

D

A. BUILDING CODE ESSENTIALS: BASED ON THE 2015 INTERNATIONAL BUILDING CODE

Explores those code provisions essential to understanding the application of the IBC in an easy-to-read format. The user-friendly approach of the text simplifies critical concepts so users can achieve a more complete understanding of the code's intent. Full-color illustrations, examples and simplified tables assist the reader in visualizing the code requirements. This up-to-date, step-by-step guide's topic organization reflects the intent of the IBC and facilitates understanding and application of the code provisions.

SOFT COVER #4031S15
PDF DOWNLOAD #8950P596

B. RESIDENTIAL CODE ESSENTIALS: BASED ON THE 2015 INTERNATIONAL RESIDENTIAL CODE

Explains those code provisions essential to understanding the application of the IRC to the most commonly encountered building practices. The information is presented in a user-friendly manner with an emphasis on technical accuracy and clear non-code language. Full-color illustrations, examples and simplified tables assist the reader in visualizing the code requirements.

SOFT COVER #4131S15
PDF DOWNLOAD #8950P59

C. FIRE CODE ESSENTIALS: BASED ON THE 2015 INTERNATIONAL FIRE CODE

Focuses on the essential provisions of the IFC for controlling ignition sources and fire hazards, fire department access to buildings, building uses and processes, fire protection and life safety systems, special processes and uses and hazardous materials.

SOFT COVER #4431S15
PDF DOWNLOAD #8950P59

D. ENERGY CODE ESSENTIALS: BASED ON THE 2015 INTERNATIONAL ENERGY CONSERVATION CODE®

Designed to provide a straightforward, easy-to-read companion guide to the IECC for both beginning and experienced code users. The text provides accurate information on critical energy code applications in the office and in the field for residential and commercial construction. The focused coverage examines those code provisions essential to understanding the application of the IECC to the most commonly encountered building practices and discusses the reasons behind the requirements.

SOFT COVER #4831S15
PDF DOWNLOAD #8950P651

ORDER YOUR I-CODE ESSENTIALS TODAY! 1-800-786-4452 | www.iccsafe.org/books

14-10387

INTERNATIONAL CODE COUNCIL®

Copyright © 2015 ICC. ALL RIGHTS RESERVED. Accessed by David Dammon on Jun 21, 2017 12:30:52 PM pursuant to License Agreement with ICC. No further reproduction or distribution authorized. ANY UNAUTHORIZED REPRODUCTION OR DISTRIBUTION IS A VIOLATION OF THE FEDERAL COPYRIGHT ACT AND THE LICENSE AGREEMENT, AND SUBJECT TO CIVIL AND CRIMINAL PENALTIES THEREUNDER.

INTERNATIONAL CODE COUNCIL®

People Helping People Build a Safer World®

GET IMMEDIATE DOWNLOADS OF THE STANDARDS YOU NEED

Browse hundreds of industry standards adopted by reference. Available to you 24/7!

Count on ICC for standards from a variety of publishers, including:

ACI	CPSC	GYPSUM
AISC	CSA	HUD
ANSI	DOC	ICC
APA	DOJ	ISO
APSP	DOL	NSF
ASHRAE	DOTn	SMACNA
ASTM	FEMA	USC
AWC	GBI	



DOWNLOAD YOUR STANDARDS TODAY!
WWW.ICCSAFE.ORG/BOOKS

14-09376

INTERNATIONAL CODE COUNCIL®

Copyright © 2015 ICC. ALL RIGHTS RESERVED. Accessed by David Dammon on Jun 21, 2017 12:30:52 PM pursuant to License Agreement with ICC. No further reproduction or distribution authorized. ANY UNAUTHORIZED REPRODUCTION OR DISTRIBUTION IS A VIOLATION OF THE FEDERAL COPYRIGHT ACT AND THE LICENSE AGREEMENT, AND SUBJECT TO CIVIL AND CRIMINAL PENALTIES THEREUNDER.

2015 IRC®

CODE AND COMMENTARY

VOLUME 1

The complete IRC with commentary after each section

INTERNATIONAL CODE COUNCIL®

Copyright © 2015 ICC. ALL RIGHTS RESERVED. Accessed by David Dammon on Jun 21, 2017 12:30:52 PM pursuant to License Agreement with ICC. No further reproduction or distribution authorized. ANY UNAUTHORIZED REPRODUCTION OR DISTRIBUTION IS A VIOLATION OF THE FEDERAL COPYRIGHT ACT AND THE LICENSE AGREEMENT, AND SUBJECT TO CIVIL AND CRIMINAL PENALTIES THEREUNDER.

2015 IRC®

CODE AND COMMENTARY

VOLUME 1

The complete IRC with commentary after each section

INTERNATIONAL CODE COUNCIL®

Copyright © 2015 ICC. ALL RIGHTS RESERVED. Accessed by David Dammon on Jun 21, 2017 12:30:52 PM pursuant to License Agreement with ICC. No further reproduction or distribution authorized. ANY UNAUTHORIZED REPRODUCTION OR DISTRIBUTION IS A VIOLATION OF THE FEDERAL COPYRIGHT ACT AND THE LICENSE AGREEMENT, AND SUBJECT TO CIVIL AND CRIMINAL PENALTIES THEREUNDER.

2015 International Residential Code® Commentary—Volume 1

First Printing: August 2015

ISBN: 978-1-60983-284-1 (soft-cover edition)

COPYRIGHT © 2015
by
INTERNATIONAL CODE COUNCIL, INC.

ALL RIGHTS RESERVED. This 2015 *International Residential Code® Commentary—Volume I* is a copyrighted work owned by the International Code Council, Inc. Without advance written permission from the copyright owner, no part of this book may be reproduced, distributed or transmitted in any form or by any means, including, without limitation, electronic, optical or mechanical means (by way of example, and not limitation, photocopying, or recording by or in an information storage retrieval system). For information on permission to copy material exceeding fair use, please contact: Publications, 4051 Flossmoor Road, Country Club Hills, IL 60478. Phone 1-888-ICC-SAFE (422-7233).

Trademarks: "International Code Council," the "International Code Council" logo and the "International Residential Code" are trademarks of the International Code Council, Inc.

PRINTED IN THE U.S.A.

INTERNATIONAL CODE COUNCIL®

Copyright © 2015 ICC. ALL RIGHTS RESERVED. Accessed by David Dammon on Jun 21, 2017 12:30:52 PM pursuant to License Agreement with ICC. No further reproduction or distribution authorized. ANY UNAUTHORIZED REPRODUCTION OR DISTRIBUTION IS A VIOLATION OF THE FEDERAL COPYRIGHT ACT AND THE LICENSE AGREEMENT, AND SUBJECT TO CIVIL AND CRIMINAL PENALTIES THEREUNDER.

PREFACE

The principal purpose of the Commentary is to provide a basic volume of knowledge and facts relating to building construction as it pertains to the regulations set forth in the 2015 *International Residential Code®*. The person who is serious about effectively designing, constructing and regulating buildings and structures will find the Commentary to be a reliable data source and reference to almost all components of the built environment.

As a follow-up to the *International Residential Code*, we offer a companion document, the *International Residential Code® Commentary—Volume I*. Volume I covers Chapters 1 through 11 of the 2015 *International Residential Code*. The basic appeal of the Commentary is thus: it provides, in a small package and at reasonable cost, thorough coverage of many issues likely to be dealt with when using the *International Residential Code* — and then supplements that coverage with historical and technical background. Reference lists, information sources and bibliographies are also included.

Throughout all of this, effort has been made to keep the vast quantity of material accessible and its method of presentation useful. With a comprehensive yet concise summary of each section, the Commentary provides a convenient reference for regulations applicable to the construction of buildings and structures. In the chapters that follow, discussions focus on the full meaning and implications of the code text. Guidelines suggest the most effective method of application, and the consequences of not adhering to the code text. Illustrations are provided to aid understanding; they do not necessarily illustrate the only methods of achieving code compliance.

The format of the Commentary includes the full text of each section, table and figure in the code, followed immediately by the commentary applicable to that text. At the time of printing, the Commentary reflects the most up-to-date text of the 2015 *International Residential Code*. Each section's narrative includes a statement of its objective and intent, and usually includes a discussion about why the requirement commands the conditions set forth. Code text and commentary text are easily distinguished from each other. All code text is shown as it appears in the *International Residential Code*, and all commentary is indented below the code text and begins with the symbol ❖. All code figures and tables are reproduced as they appear in the IRC. Commentary figures and tables are identified in the text by the word "Commentary" (as in "see Commentary Figure 704.3"), and each has a full border.

Readers should note that the Commentary is to be used in conjunction with the *International Residential Code* and not as a substitute for the code. **The Commentary is advisory only;** the code official alone possesses the authority and responsibility for interpreting the code.

Comments and recommendations are encouraged, for through your input, we can improve future editions. Please direct your comments to the Codes and Standards Development Department at the Central Regional Office.

INTERNATIONAL CODE COUNCIL®
Copyright © 2015 ICC. ALL RIGHTS RESERVED. Accessed by David Dammon on Jun 21, 2017 12:30:52 PM pursuant to License Agreement with ICC. No further reproduction or distribution authorized. ANY UNAUTHORIZED REPRODUCTION OR DISTRIBUTION IS A VIOLATION OF THE FEDERAL COPYRIGHT ACT AND THE LICENSE AGREEMENT, AND SUBJECT TO CIVIL AND CRIMINAL PENALTIES THEREUNDER.

INTERNATIONAL CODE COUNCIL®
Copyright © 2015 ICC. ALL RIGHTS RESERVED. Accessed by David Dammon on Jun 21, 2017 12:30:52 PM pursuant to License Agreement with ICC. No further reproduction or distribution authorized. ANY UNAUTHORIZED REPRODUCTION OR DISTRIBUTION IS A VIOLATION OF THE FEDERAL COPYRIGHT ACT AND THE LICENSE AGREEMENT, AND SUBJECT TO CIVIL AND CRIMINAL PENALTIES THEREUNDER.

TABLE OF CONTENTS

Part I—Administrative

CHAPTER 1 SCOPE AND ADMINISTRATION . . . . . 1-1 – 1-26

Part II—Definitions

CHAPTER 2 DEFINITIONS . . . . . 2-1 – 2-50

Part III—Building Planning and Construction

CHAPTER 3 BUILDING PLANNING . . . . . 3-1 – 3-146

CHAPTER 4 FOUNDATIONS . . . . . 4-1 – 4-68

CHAPTER 5 FLOORS . . . . . 5-1 – 5-58

CHAPTER 6 WALL CONSTRUCTION . . . . . 6-1 – 6-256

CHAPTER 7 WALL COVERING . . . . . 7-1 – 7-44

CHAPTER 8 ROOF-CEILING CONSTRUCTION . . . . . 8-1 – 8-62

CHAPTER 9 ROOF ASSEMBLIES . . . . . 9-1 – 9-40

CHAPTER 10 CHIMNEYS AND FIREPLACES . . . . . 10-1 – 10-22

Part IV—Energy Conservation

CHAPTER 11 ENERGY EFFICIENCY . . . . . 11-1 – 11-84

INDEX . . . . . INDEX-1 – INDEX-14

INTERNATIONAL CODE COUNCIL®

Copyright © 2015 ICC. ALL RIGHTS RESERVED. Accessed by David Dammon on Jun 21, 2017 12:30:52 PM pursuant to License Agreement with ICC. No further reproduction or distribution authorized. ANY UNAUTHORIZED REPRODUCTION OR DISTRIBUTION IS A VIOLATION OF THE FEDERAL COPYRIGHT ACT AND THE LICENSE AGREEMENT, AND SUBJECT TO CIVIL AND CRIMINAL PENALTIES THEREUNDER.

INTERNATIONAL CODE COUNCIL®
Copyright © 2015 ICC. ALL RIGHTS RESERVED. Accessed by David Dammon on Jun 21, 2017 12:30:52 PM pursuant to License Agreement with ICC. No further reproduction or distribution authorized. ANY UNAUTHORIZED REPRODUCTION OR DISTRIBUTION IS A VIOLATION OF THE FEDERAL COPYRIGHT ACT AND THE LICENSE AGREEMENT, AND SUBJECT TO CIVIL AND CRIMINAL PENALTIES THEREUNDER.

Part I—Administrative

Chapter 1: Scope and Administration

General Comments

This chapter contains provisions for the application, enforcement and administration of requirements of the code. In addition to establishing the scope of the code, Chapter 1 identifies which buildings and structures come under its purview.

Chapter 1 is subdivided into two parts. Part 1 includes scope and application, Sections R101 and R102. Part 2 covers administration and enforcement, Sections R103 through R114.

- Section R101 addresses the scope of the IRC.
- Section R102 establishes the applicability of the code and addresses existing structures.
- Section R103 establishes the department of building safety and the appointment of department personnel.
- Section R104 outlines the duties and authority of the building official with regard to permits, inspections and right of entry. It also establishes the authority of the building official to approve alternative materials, used materials and modifications.
- Section R105 states when permits are required and establishes procedures for the review of applications and the issuance of permits.
- Section R106 describes the information that must be included on construction documents submitted with the application.
- Section R107 authorizes the building official to issue permits for temporary structures and uses.
- Section R108 establishes requirements for a fee schedule.
- Section R109 includes inspection duties of the building official or an inspection agency that has been approved by the building official.
- Section 110 details provisions for the issuance of certificates of occupancy.
- Section R111 gives the building official the authority to approve utility connections.
- Section R112 establishes the board of appeals and the criteria for making applications for appeal.
- Section R113 addresses administrative provisions for violations, including provisions for unlawful acts, violation notices, prosecution and penalties.
- Section R114 describes procedures for stop work orders.

Each state's building code enabling legislation, which is grounded within the police power of the state, is the source of all authority to enact building codes. Police power is the power of the state to legislate for the general welfare of its citizens. This power enables passage of such laws as building codes. If the state legislature has limited this power in any way, the municipality may not exceed these limitations. While the municipality may not further delegate its police power (e.g., by delegating the burden of determining code compliance to the building owner, contractor or architect), it may turn over the administration of the building code to a municipal official, such as a building official, provided that sufficient criteria are given to establish clearly the basis for decisions as to whether a proposed building conforms to the code.

Chapter 1 is largely concerned with maintaining "due process of law" in enforcing the building performance criteria contained in the body of the code. Only through careful observation of the administrative provisions can the building official reasonably hope to demonstrate that "equal protection under the law" has been provided. While it is generally assumed that the administration and enforcement section of a code is geared toward a building official, this is not entirely true. The provisions also establish the rights and privileges of the design professional, contractor and building owner. The position of the building official is merely to review the proposed and completed work and to determine if the construction conforms to the code requirements. The design professional is responsible for the design of a safe structure. The contractor is responsible for constructing the structure in compliance with the plans.

During the course of construction, the building official reviews the activity to ascertain that the spirit and intent of the law are being met and that the safety, health and welfare of the public will be protected. As a public servant, the building official enforces the code in an unbiased, proper manner. Every individual is guaranteed equal enforcement of the provisions of the code. Furthermore, design professionals, contractors and building owners have the right of due process for any requirement in the code.

INTERNATIONAL CODE COUNCIL®
Copyright © 2015 ICC. ALL RIGHTS RESERVED. Accessed by David Dammon on Jun 21, 2017 12:30:52 PM pursuant to License Agreement with ICC. No further reproduction or distribution authorized. ANY UNAUTHORIZED REPRODUCTION OR DISTRIBUTION IS A VIOLATION OF THE FEDERAL COPYRIGHT ACT AND THE LICENSE AGREEMENT, AND SUBJECT TO CIVIL AND CRIMINAL PENALTIES THEREUNDER.

Purpose

A building code, as with any other code, is intended to be adopted as a legally enforceable document to provide a reasonable level of safety and protection of public health, general welfare and property. A building code cannot be effective without adequate provisions for its administration and enforcement. The official charged with the administration and enforcement of building regulations has a great responsibility, and with this responsibility goes authority. No matter how detailed the building code may be, the building official must, to some extent, exercise his or her own judgment in determining code compliance. The building official has the responsibility to establish that the homes in which the citizens of the community reside are designed and constructed to be structurally stable with adequate means of egress, light and ventilation, and to provide a minimum acceptable level of protection to life and property from fire.

Chapter 1 contains two parts. Part 1, Scope and Application, contains all issues related to the scope and intent of the code, as well as the applicability of this code relative to other standards and laws that might also be applicable on a given building project, such as federal or state. Part 2, Administration and Enforcement, contains all issues related to the duties and powers of the building official, the issuance of permits and certificates of occupancy, and other related operational items.

PART 1—SCOPE AND APPLICATION

SECTION R101
GENERAL

R101.1 Title. These provisions shall be known as the *Residential Code for One- and Two-family Dwellings* of **[NAME OF JURISDICTION]**, and shall be cited as such and will be referred to herein as "this code."

❖ The code is formally known as the *International Residential Code*® (IRC®) for *One- and Two-family Dwellings*, generally referred to as the *International Residential Code* or IRC for short. On adoption by the jurisdiction, it is known as the *Residential Code for One- and Two-family Dwellings* of the adopting jurisdiction, and in the document is often referred to as "the code." It is offered for adoption as a model document of prescriptive provisions to jurisdictions as a stand-alone residential code that establishes minimum regulations for one- and two-family dwellings and townhouses. The forum under which the code is developed encourages consistency of application of its provisions, and it is offered ready for adoption by all communities, large and small, internationally.

The purpose of this section is to identify the adopted regulations by inserting the name of the adopting jurisdiction into the code.

R101.2 Scope. The provisions of the *International Residential Code for One- and Two-family Dwellings* shall apply to the construction, *alteration*, movement, enlargement, replacement, repair, *equipment*, use and occupancy, location, removal and demolition of detached one- and two-family dwellings and *townhouses* not more than three stories above *grade plane* in height with a separate means of egress and their *accessory structures* not more than three stories above *grade plane* in height.

Exceptions:

1. Live/work units located in *townhouses* and complying with the requirements of Section 419 of the *International Building Code* shall be permitted to be constructed in accordance with the *International Residential Code for One- and Two-Family Dwellings*. Fire suppression required by Section 419.5 of the *International Building Code* where constructed under the *International Residential Code for One- and Two-family Dwellings* shall conform to Section P2904.
2. Owner-occupied lodging houses with five or fewer guestrooms shall be permitted to be constructed in accordance with the *International Residential Code for One- and Two-family Dwellings* where equipped with a fire sprinkler system in accordance with Section P2904.

❖ The provisions of the code apply to all aspects of construction for detached one- and two-family dwellings; multiple single-family dwellings, defined as townhouses; and all structures accessory to the dwellings and townhouses. This section sets a limitation in its scope of application to include only those townhouses, one- and two-family dwellings, as well as the accessory structures to such townhouses and dwellings, that are up to and including three stories above grade and where a separate means of egress system is provided for each of the dwelling units. The definition of townhouse covered in the code must meet four criteria: 1. It is not more than three stories in height; 2. It has a separate means of egress; 3. Each unit extends from foundation to roof; and 4. There is open space on at least two sides. Where a dwelling or townhouse exceeds the allowed height in stories, does not provide individual egress for each dwelling unit or does not conform to the prescriptive provisions of the code, the structures are then beyond the scope of the code and the provisions of the code cannot be applied. The building must then meet the provisions of the *International Building Code*® (IBC®) or other legally adopted building code of the jurisdiction. The actual height of the building, measured in feet and applied to the height of each story, is limited by the governing provisions for each specific material as found in Chapter 6 of the code. The user of the code will discover that, depending on which material is selected for the wall construction, the result may be buildings of different permitted heights. For

INTERNATIONAL CODE COUNCIL®
Copyright © 2015 ICC. ALL RIGHTS RESERVED. Accessed by David Dammon on Jun 21, 2017 12:30:52 PM pursuant to License Agreement with ICC. No further reproduction or distribution authorized. ANY UNAUTHORIZED REPRODUCTION OR DISTRIBUTION IS A VIOLATION OF THE FEDERAL COPYRIGHT ACT AND THE LICENSE AGREEMENT, AND SUBJECT TO CIVIL AND CRIMINAL PENALTIES THEREUNDER.

instance, where the wall system is of insulating concrete form construction as prescribed in Section R610, the building is limited to two stories above grade and each story is limited to 10 feet (3048 mm) in height. If wood stud wall framing is used pursuant to the requirements of Section R602, the allowable story height and overall building height will greatly exceed those permitted for the insulating concrete form wall construction method. The code does not limit the area of the building.

The provisions address all aspects of construction, alterations, repairs, maintenance, change of use, additions, relocation, or demolishing for any one-family dwelling, two-family dwelling, townhouse or accessory structure. The code regulates any and all activities that modify the buildings, as well as any structures that are of incidental use to the main buildings and that are also located on the same lot. The code regulates construction, plumbing, mechanical, electrical, equipment, fixture and gas piping installations that are done to the building and its operating systems, as well as to other structures incidental to the main building and on the same lot. Even work that is specifically exempted from permits must comply with the requirements of the code.

Exception 1 addresses live/work units that are designed to comply with Section 419 of the IBC and are equipped with an automatic sprinkler system complying with Section P2904. As stated in Section 419 of the IBC, a live/work unit is an option for a dwelling unit in which a significant portion (i.e., up to 50 percent) includes a nonresidential use such as an office, a hair styling shop or barbershop or small store. Section 419 of the IBC states that if the nonresidential portion of the building is an office that comprises less than 10 percent of the building area, the unit is not considered a live/work unit and does not need to be made to comply with the provisions of Section 419 of the IBC. Section 419 of the IBC places limitations on live/work units, including limitations on the nonresidential occupancies that can be included in a live/work unit, and addresses specific issues regarding means of egress, accessibility, ventilation, fire safety and structural requirements.

Exception 2 allows small bed and breakfasts to be constructed according to the code. A definition of "Lodging house" is included in Chapter 2 to generally encompass rental lodging within dwelling units, distinct from hotels and boarding houses that are "not occupied as a single-family unit."

R101.3 Intent. The purpose of this code is to establish minimum requirements to safeguard the public safety, health and general welfare through affordability, structural strength, means of egress facilities, stability, sanitation, light and ventilation, energy conservation and safety to life and property from fire and other hazards attributed to the built environment and to provide safety to fire fighters and emergency responders during emergency operations.

❖ The intent of the code is to establish regulations providing for safety, health and general welfare of building occupants, as well as for fire fighters and emergency responders during building emergencies. The intent becomes important in the application of such sections as Sections R102, R104.11 and R113, as well as any enforcement-oriented interpretive action or judgment. Like any code, the written text is subject to interpretation. Interpretations should not be affected by economics or the potential impact on any party. The only considerations should be occupants' safety, protection of occupants' health and welfare and emergency responder safety.

SECTION R102
APPLICABILITY

R102.1 General. Where there is a conflict between a general requirement and a specific requirement, the specific requirement shall be applicable. Where, in any specific case, different sections of this code specify different materials, methods of construction or other requirements, the most restrictive shall govern.

❖ In cases where the code establishes a specific requirement for a certain condition, that requirement is applicable even if it is less restrictive than a general requirement elsewhere in the code.

The following example illustrates the principle. Section R311.7 applies to all stairway types within the purview of the code. Section R311.7.5.1 limits the maximum height of risers to $7^3/_4$ inches (196 mm), thus providing a general requirement for stairway riser height. Section R311.7.10.1 limits risers within a spiral stairway to a maximum height of $9^1/_2$ inches (241 mm). This provision is specific to spiral stairways. In this case, the specific requirements of Section R311.7.10.1 take precedence over the general requirements of Section R311.7.5.1 in those applications specific to spiral stairways.

Where several code sections apply to the use of a material or a method of construction, the most restrictive requirements apply. An example would be in relating the requirements for foam plastics to the requirements for wall and ceiling finishes. The code might be interpreted to state that foam plastic boards meeting the requirements of Section R316.3, with a maximum flame-spread rating of 75, could be used as the final surface finish for walls and ceilings because Section R302.9 allows a flame spread classification for wall and ceiling finishes with a rating of up to 200. This, however, would be a mistake. The provisions of Section R316.4 require the foam plastic to be covered by a finish material equivalent to a thermal barrier that limits the average temperature rise of the unexposed surface to no less than 250°F (139°C) after 15 minutes of fire exposure in accordance with ASTM E119 standard time-temperature curve, or to be covered with minimum $^1/_2$-inch (12.7 mm) gypsum wallboard. In this case, the uncovered foam plastic must be covered to meet the requirements of Section R316.4 and have the thermal barrier installed. Additionally, the final surface finish material that is chosen must comply with Section R316.4, and it must also meet the required flame

INTERNATIONAL CODE COUNCIL®
Copyright © 2015 ICC. ALL RIGHTS RESERVED. Accessed by David Dammon on Jun 21, 2017 12:30:52 PM pursuant to License Agreement with ICC. No further reproduction or distribution authorized. ANY UNAUTHORIZED REPRODUCTION OR DISTRIBUTION IS A VIOLATION OF THE FEDERAL COPYRIGHT ACT AND THE LICENSE AGREEMENT, AND SUBJECT TO CIVIL AND CRIMINAL PENALTIES THEREUNDER.

spread rating of 200 or less, as specified in Section R302.9.

R102.2 Other laws. The provisions of this code shall not be deemed to nullify any provisions of local, state or federal law.

❖ Compliance with the requirements of the code does not entail authorization, approval or permission to violate the regulations of other local, state or federal laws. Other laws, ordinances and regulations not administered or enforced by the building official could be in existence and enforced by another authority having jurisdiction over those provisions. Although the requirements may have similar provisions to those of the code, the work must be in conformance to the other regulations.

R102.3 Application of references. References to chapter or section numbers, or to provisions not specifically identified by number, shall be construed to refer to such chapter, section or provision of this code.

❖ There are many instances in the code where a reference is merely a chapter number, section number or, in some cases, a provision not specified by number. In all such situations, these references are to the code and not some other code or publication.

R102.4 Referenced codes and standards. The codes and standards referenced in this code shall be considered part of the requirements of this code to the prescribed extent of each such reference and as further regulated in Sections R102.4.1 and R102.4.2.

Exception: Where enforcement of a code provision would violate the conditions of the *listing* of the *equipment* or *appliance*, the conditions of the *listing* and manufacturer's instructions shall apply.

❖ A referenced code, standard or portion thereof is an enforceable extension of the code as if the content of the standard were included in the body of the code. For example, Section R314.2 references NFPA 72 in its entirety for the installation of household fire alarms. In those cases when the code references only portions of a standard, the use and application of the referenced standard is limited to those portions that are specifically identified. If conflicts occur because of scope or purpose, the code text governs.

The intent of the exception is to allow for a tested product to be used effectively and safely in the manner it was approved. See the commentary to the definition of "Listed" in Chapter 2.

R102.4.1 Conflicts. Where conflicts occur between provisions of this code and referenced codes and standards, the provisions of this code shall apply.

❖ The use of referenced codes and standards to cover certain aspects of residential occupancy and operations, rather than write parallel or competing requirements into the code, is a long-standing code development principle. Questions and potential conflicts in the use of referenced codes and standards can arise, which can lead to inconsistent enforcement of the code. Where such conflicts occur, the provisions of the code should be applied.

R102.4.2 Provisions in referenced codes and standards. Where the extent of the reference to a referenced code or standard includes subject matter that is within the scope of this code, the provisions of this code, as applicable, shall take precedence over the provisions in the referenced code or standard.

❖ Section R102.4.2 expands on the provisions of Section R102.4.1 by making it clear that, even if a referenced standard contains requirements that parallel the code in the standard's own duly referenced section(s), the provisions of the code will always take precedence. This section does not intend to take the place of carefully scoped and referenced text for written standards for the code but, rather, provides the policy underpinnings on which sound code language should be based.

R102.5 Appendices. Provisions in the appendices shall not apply unless specifically referenced in the adopting ordinance.

❖ The provisions contained in Appendices A through U are not considered part of the code and are, therefore, not enforceable unless they are specifically included in the ordinance or other adopting law or regulation of the jurisdiction. See Section 1 of the sample legislation on page xvii of the code for where the appendices to be adopted are to be specified in the adoption ordinance.

R102.6 Partial invalidity. In the event any part or provision of this code is held to be illegal or void, this shall not have the effect of making void or illegal any of the other parts or provisions.

❖ There may be a situation where one or more specific provisions of the code are found to be void or illegal.

This may be because a local, state or federal ordinance, statute or law has precedence over the adopted construction provisions. Under such conditions, only those specific provisions found to be void or illegal are affected; the rest of the code remains in force.

R102.7 Existing structures. The legal occupancy of any structure existing on the date of adoption of this code shall be permitted to continue without change, except as is specifically covered in this code, the *International Property Maintenance Code* or the *International Fire Code*, or as is deemed necessary by the *building official* for the general safety and welfare of the occupants and the public.

❖ Buildings that exist legally at the time the code is adopted are allowed to have their existing use and occupancy continued if the use or occupancy of the structure was also legally in existence. This means that as long as a structure or building remains in a safe and sanitary condition it need not be upgraded to meet the more current standards. A specific level of safety in existing buildings is dictated by maintenance and hazard abatement provisions, as contained in this code, the IPMC and the IFC. However, any new construction, addition or remodeling will require such work to conform to the requirements of the new code. A change of

INTERNATIONAL CODE COUNCIL®
Copyright © 2015 ICC. ALL RIGHTS RESERVED. Accessed by David Dammon on Jun 21, 2017 12:30:52 PM pursuant to License Agreement with ICC. No further reproduction or distribution authorized. ANY UNAUTHORIZED REPRODUCTION OR DISTRIBUTION IS A VIOLATION OF THE FEDERAL COPYRIGHT ACT AND THE LICENSE AGREEMENT, AND SUBJECT TO CIVIL AND CRIMINAL PENALTIES THEREUNDER.

occupancy of the building also will force the building to conform to the new standards.

The existence of a building prior to the adoption of a new edition of the code does not grant it the status of a legal existence. A building is thought of as being "grandfathered" under prior rules and not needing to be brought up to current requirements when there are records to show that it was constructed to meet the regulations of the jurisdiction in force at the time it was built. The most common way to demonstrate legal compliance with the construction codes of a community is through the public records. Copies of past building permits can be researched at the jurisdictional archives. On discovery that a building does not have a legal existence, corrective actions will be needed to bring the structure into compliance with the regulations of the jurisdiction at the time the building was built.

R102.7.1 Additions, alterations or repairs. *Additions, alterations* or repairs to any structure shall conform to the requirements for a new structure without requiring the existing structure to comply with the requirements of this code, unless otherwise stated. *Additions, alterations,* repairs and relocations shall not cause an existing structure to become unsafe or adversely affect the performance of the building.

❖ An addition, alteration, repair or relocation is required to meet the provisions of this code for new materials, but the remainder of the building is not required to comply with the requirements of this code. However, another measure of the viability of the addition, alteration, repair or relocation is that it does not cause the existing structure to be adversely affected or made unsafe. The application of this provision can often be confusing regarding what code requirements apply to the addition, alteration, repair or relocation. For instance, removal and replacement of a fiberglass roof covering with the same type of roof covering would require that the new shingles, fasteners and underlayment meet the standards and methods specified in the code. However, this does not mean that the roof structure and decking would need to be designed to resist the snow loads in the code.

Another example is window replacement. Often, in very old homes, bedroom windows were not required to have the dimensions for emergency escape windows. If a window in a bedroom is being replaced by a new window, the new window would not need to meet the requirements for emergency escape. However, if the window installed was not as energy efficient, then the existing structure is adversely affected.

Where a building is located in a flood hazard area, a determination must be made regarding whether an addition, alteration or repairs constitute substantial improvement or repair of substantial damage (see commentary for Section R105.3.1.1). If the work is determined to be substantial improvement or repair of substantial damage, the existing building must be brought into compliance with the current requirements for flood-resistant construction. For guidance, see FEMA P-758.

PART 2—ADMINISTRATION AND ENFORCEMENT

SECTION R103
DEPARTMENT OF BUILDING SAFETY

R103.1 Creation of enforcement agency. The department of building safety is hereby created and the official in charge thereof shall be known as the *building official*.

❖ This section establishes a building department that provides plan review and inspections for buildings regulated by the code. It also establishes the position of the building official, who will be the administrator for the enforcement of the jurisdictional codes. The employees of the department may be given varying degrees of authority by the building official. The Department of Building Safety is charged with the responsibility for enforcing the provisions of the code.

The executive official in charge of the building department is named the "building official" by this section. In actuality, the person who is in charge of the department may hold a different title, such as building commissioner, building inspector or construction official. For the purpose of the code, that person is referred to as the "building official."

R103.2 Appointment. The *building official* shall be appointed by the *jurisdiction*.

❖ The building official is an appointed officer of the jurisdiction, charged with the administrative responsibilities of the Department of Building Safety. Typically, the appointment is made by the mayor, council or commission and carried out through the city manager or other administrative authority.

R103.3 Deputies. In accordance with the prescribed procedures of this *jurisdiction* and with the concurrence of the appointing authority, the *building official* shall have the authority to appoint a deputy *building official*, the related technical officers, inspectors, plan examiners and other employees. Such employees shall have powers as delegated by the *building official*.

❖ The building official has the authority, acting in conjunction and in agreement with the appointing authority of the jurisdiction, to appoint officers and employees of the department. The building official can delegate certain powers of his or her authority to a deputy building official, as well as to all technical officers and employees of the Department of Building Safety. This group of deputies typically includes inspectors and plans examiners.

INTERNATIONAL CODE COUNCIL®
Copyright © 2015 ICC. ALL RIGHTS RESERVED. Accessed by David Dammon on Jun 21, 2017 12:30:52 PM pursuant to License Agreement with ICC. No further reproduction or distribution authorized. ANY UNAUTHORIZED REPRODUCTION OR DISTRIBUTION IS A VIOLATION OF THE FEDERAL COPYRIGHT ACT AND THE LICENSE AGREEMENT, AND SUBJECT TO CIVIL AND CRIMINAL PENALTIES THEREUNDER.

SECTION R104
DUTIES AND POWERS OF THE BUILDING OFFICIAL

R104.1 General. The *building official* is hereby authorized and directed to enforce the provisions of this code. The *building official* shall have the authority to render interpretations of this code and to adopt policies and procedures in order to clarify the application of its provisions. Such interpretations, policies and procedures shall be in conformance with the intent and purpose of this code. Such policies and procedures shall not have the effect of waiving requirements specifically provided for in this code.

❖ The duty of the building official is to enforce the code. He or she is the "authority having jurisdiction" for all matters relating to the code and its enforcement. It is the duty of the building official to interpret the code and to determine compliance. Code compliance will not always be easy to determine and will require judgment and expertise, particularly when enforcing the provisions of Sections R104.10 and R104.11. In exercising this authority, however, the building official cannot set aside or ignore any provision of the code.

The building official establishes policies and procedures that will clarify the applications of the code. The development of those policies and procedures should not be simply for the convenience of the jurisdiction's employees, but should be viewed as a way to effectively communicate to all interested parties involved in the construction process how the department will process applications, review construction documents, make inspections, approve projects, and determine and clarify the application of the code provisions. Properly developed, these policies and procedures can make the code enforcement department more predictable for those who are regulated and will also establish improved code compliance and public relations.

When interpretation of the code is needed, the building official is the one individual of the jurisdiction with the legal authority to interpret the code and determine how the provisions should be applied, in both general and specific cases. Some departments formalize the interpretation process and require the person with a question to submit their question in writing. Departments are encouraged to develop policies for both formal (written) and informal (verbal) requests for code interpretations. Any such interpretations must be in conformance with the intent and letter of the code and may not waive any requirements. It may be necessary in some cases for the building official to write these code interpretations into the permit.

R104.2 Applications and permits. The *building official* shall receive applications, review *construction documents* and issue *permits* for the erection and *alteration* of buildings and structures, inspect the premises for which such permits have been issued and enforce compliance with the provisions of this code.

❖ This section states that the building official must receive applications, review construction documents, issue permits, conduct inspections and enforce the provisions of the code. She or he is to provide the services required to carry the project from application for the permit to final approval. The building official is to accept all properly completed applications and not refuse the receipt of an application that meets the policy requirements. This same principle holds for the review of the construction documents, issuance of permits, inspections and enforcement of the code's provisions. The requirements of the code must be met, and approval will be granted only when compliance is verified.

R104.3 Notices and orders. The *building official* shall issue necessary notices or orders to ensure compliance with this code.

❖ Building officials are to communicate, in writing, the disposition of their findings regarding code compliance. If an inspection shows that the work fails to comply with the code provisions, the building official or technical officer who conducted the inspection must issue a written report noting the corrections that are needed. A copy of the report is to be provided to the permit holders or their agent.

R104.4 Inspections. The *building official* shall make the required inspections, or the *building official* shall have the authority to accept reports of inspection by *approved agencies* or individuals. Reports of such inspections shall be in writing and be certified by a responsible officer of such *approved agency* or by the responsible individual. The *building official* is authorized to engage such expert opinion as deemed necessary to report upon unusual technical issues that arise, subject to the approval of the appointing authority.

❖ The building official is required to make inspections as necessary to determine compliance with the code, or to accept written reports of inspections by an approved agency. Inspection of the work in progress or accomplished is another significant element in determining code compliance. The building official also has the authority to accept reports from other inspection agencies or private inspectors who have been granted prior approval by the building official to conduct inspections and provide reports. The reports submitted by the approved inspection agencies or individuals must be in writing and must be certified by only those individuals who have been approved by the building official as being qualified to submit the reports. When unusual technical issues arise during the course of construction, the building official has the authority to hire an expert to report on the conditions and technical issues germane to the subject at hand. Prior to hiring the expert for consultation services, the building official must seek approval from the appointing authority.

R104.5 Identification. The *building official* shall carry proper identification when inspecting structures or premises in the performance of duties under this code.

❖ When the building official and other employees of the jurisdiction are performing their duties and inspecting structures or premises of construction, they are required to carry and display identification that will identify them as employees of the jurisdiction. Com-

INTERNATIONAL CODE COUNCIL®
Copyright © 2015 ICC. ALL RIGHTS RESERVED. Accessed by David Dammon on Jun 21, 2017 12:30:52 PM pursuant to License Agreement with ICC. No further reproduction or distribution authorized. ANY UNAUTHORIZED REPRODUCTION OR DISTRIBUTION IS A VIOLATION OF THE FEDERAL COPYRIGHT ACT AND THE LICENSE AGREEMENT, AND SUBJECT TO CIVIL AND CRIMINAL PENALTIES THEREUNDER.

mentary Figure R104.5 is an example of the proper identification.

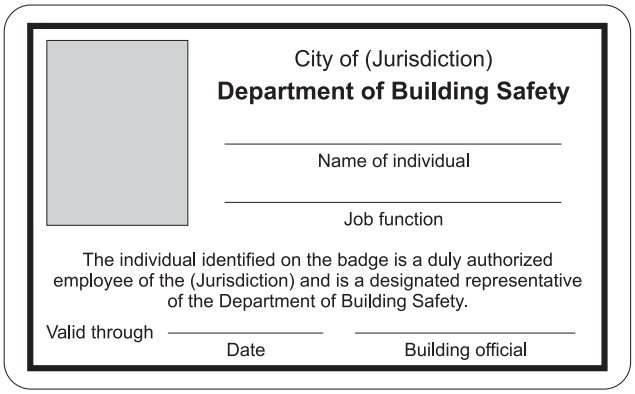

Figure R104.5
PERSONNEL IDENTIFICATION BADGE

R104.6 Right of entry. Where it is necessary to make an inspection to enforce the provisions of this code, or where the *building official* has reasonable cause to believe that there exists in a structure or upon a premises a condition that is contrary to or in violation of this code that makes the structure or premises unsafe, dangerous or hazardous, the *building official* or designee is authorized to enter the structure or premises at reasonable times to inspect or to perform the duties imposed by this code, provided that if such structure or premises be occupied that credentials be presented to the occupant and entry requested. If such structure or premises is unoccupied, the *building official* shall first make a reasonable effort to locate the owner, the owner's authorized agent, or other person having charge or control of the structure or premises and request entry. If entry is refused, the *building official* shall have recourse to the remedies provided by law to secure entry.

❖ The first part of this section establishes the right of the building official to enter the premises in order to make permit inspections required by Section R109. Section R109 identifies specific progress points (during intermediate phases and final approval) for inspections that must be conducted. Permit application forms typically include a statement in the certification signed by the applicant (who is the owner or owner's agent) granting the building official the authority to enter areas covered by the permit in order to enforce code provisions related to the permit. The right to enter other structures or premises is more limited. First, to protect the right of privacy, the owner or occupant must grant the building official permission before an interior inspection of the property can be conducted. Permission is not required for inspections that can be accomplished from within the public right-of-way. Second, such access may be denied by the owner or occupant. Unless the inspector has reasonable cause to believe that a violation of the code exists, access may be unattainable. Third, building officials must present proper identification (see Section 104.5) and request admittance during reasonable hours—usually the normal business hours of the establishment—to be admitted. Fourth, inspections must be aimed at securing or determining compliance with the provisions and intent of the regulations that are specifically within the established scope of the building official's authority.

Searches to gather information for the purpose of enforcing other codes, ordinances or regulations are considered unreasonable and are prohibited by the Fourth Amendment to the U.S. Constitution. "Reasonable cause" in the context of this section must be distinguished from "probable cause," which is required to gain access to property in criminal cases. The burden of proof establishing reasonable cause may vary among jurisdictions. Usually, an inspector must show that the property is subject to inspection under the provisions of the code; that the interests of the public health, safety and welfare outweigh the individual's right to maintain privacy; and that such an inspection is required solely to determine compliance with the provisions of the code.

Many jurisdictions do not recognize the concept of an administrative warrant and may require the building official to prove probable cause in order to gain access on refusal. This burden of proof is usually more substantial, often requiring the building official to stipulate in advance why access is needed (usually access is restricted to gathering evidence for seeking an indictment or making an arrest); what specific items or information is sought; its relevance to the case against the individual subject; how knowledge of the relevance of the information or items sought was obtained, and how the evidence sought will be used. In all such cases, the right to privacy must always be weighed against the right of the building official to conduct an inspection to verify that public health, safety and welfare are not in jeopardy. Such important and complex constitutional issues should be discussed with the jurisdiction's legal counsel. Jurisdictions should establish procedures for securing the necessary court orders when an inspection is deemed necessary following a refusal.

R104.7 Department records. The *building official* shall keep official records of applications received, *permits* and certificates issued, fees collected, reports of inspections, and notices and orders issued. Such records shall be retained in the official records for the period required for the retention of public records.

❖ In keeping with the need for efficient business practices, the building official must keep official records pertaining to permit applications, permits, fees collected, inspections, notices and orders issued. Such documentation provides a valuable resource of information if questions arise regarding the department's actions with respect to a building. The code does not require that construction documents be kept after the project is complete. It requires that other documents be kept for the length of time mandated by a jurisdiction's or its state's laws, or administrative rules for retaining public records.

INTERNATIONAL CODE COUNCIL®
Copyright © 2015 ICC. ALL RIGHTS RESERVED. Accessed by David Dammon on Jun 21, 2017 12:30:52 PM pursuant to License Agreement with ICC. No further reproduction or distribution authorized. ANY UNAUTHORIZED REPRODUCTION OR DISTRIBUTION IS A VIOLATION OF THE FEDERAL COPYRIGHT ACT AND THE LICENSE AGREEMENT, AND SUBJECT TO CIVIL AND CRIMINAL PENALTIES THEREUNDER.

Certain records related to buildings in flood hazard areas must be retained permanently in accordance with the community's agreement with the National Flood Insurance Program (NFIP), including the lowest floor elevation information collected (see Sections R109.1.3 and R109.1.6.1), determinations made when work on existing buildings is proposed to determine if the work constitutes substantial improvement or repair of substantial damage (see Section R105.3.1.1), and modifications granted (see Section R104.10.1). Communities agree to allow inspection of these records on request by the Federal Emergency Management Agency (FEMA) or the NFIP state coordinating agency.

R104.8 Liability. The *building official*, member of the board of appeals or employee charged with the enforcement of this code, while acting for the *jurisdiction* in good faith and without malice in the discharge of the duties required by this code or other pertinent law or ordinance, shall not thereby be rendered civilly or criminally liable personally and is hereby relieved from personal liability for any damage accruing to persons or property as a result of any act or by reason of an act or omission in the discharge of official duties.

❖ The building official, members of the appeals board and other employees charged with the duty to enforce the provisions of the code are relieved from personal liability, either civilly or criminally, by the jurisdiction when they are carrying out in good faith their official duties. This provision does not grant absolute immunity from all tort liability for employees of the jurisdiction in all cases; an employee acting maliciously is not relieved from his or her personal liability and will most likely not be defended by the jurisdiction. Building officials should not fear lawsuits even if their state does not guarantee them absolute immunity for their actions. Rather, the building official should understand those elements that a plaintiff must show in a lawsuit in order to prevail.

Public officials should familiarize themselves with the laws of their state regarding their exposure to tort liability. Only a few states grant absolute immunity from liability for any actions taken by public officials when those actions are within the scope of their employment.

R104.8.1 Legal defense. Any suit or criminal complaint instituted against an officer or employee because of an act performed by that officer or employee in the lawful discharge of duties and under the provisions of this code shall be defended by legal representatives of the *jurisdiction* until the final termination of the proceedings. The *building official* or any subordinate shall not be liable for cost in any action, suit or proceeding that is instituted in pursuance of the provisions of this code.

❖ This section establishes that building officials (or subordinates) must not be liable for costs in any legal action instituted in response to the performance of lawful duties. These costs are to be borne by the state, county or municipality. The best way to be certain that the building official's action is a "lawful duty" is always to cite the applicable code section on which the enforcement action is based.

R104.9 Approved materials and equipment. Materials, *equipment* and devices *approved* by the *building official* shall be constructed and installed in accordance with such approval.

❖ The code is a compilation of criteria with which materials, equipment, devices and systems must comply to be suitable for a particular application. Where the building official grants approval for the use of specific materials, equipment or devices as a part of the construction process, it is important that the approved items be constructed or installed in a manner consistent with the approval. For example, the manufacturer's instructions and recommendations are to be followed if the approval of the material was based, even in part, on those instructions and recommendations.

The approval authority given the building official is a significant responsibility and is a key to code compliance. The approval process is first technical and then administrative. For example, if data to determine code compliance are required, the data should be in the form of test reports or engineering analysis and not simply taken from a sales brochure.

R104.9.1 Used materials and equipment. Used materials, *equipment* and devices shall not be reused unless *approved* by the *building official.*

❖ Code criteria for materials and equipment have changed over the years. Evaluation of testing and materials technology has permitted the development of new criteria that old materials may not satisfy. As a result, used materials are required to be evaluated in the same manner as new materials. Used materials, equipment and devices must be equivalent to that required by the code if they are to be used again in a new installation.

R104.10 Modifications. Where there are practical difficulties involved in carrying out the provisions of this code, the *building official* shall have the authority to grant modifications for individual cases, provided the *building official* shall first find that special individual reason makes the strict letter of this code impractical and the modification is in compliance with the intent and purpose of this code and that such modification does not lessen health, life and fire safety or structural requirements. The details of action granting modifications shall be recorded and entered in the files of the department of building safety.

❖ The building official has the authority to accept modifications of code provisions in specific cases. For the building official to allow a modification, he or she must first determine that strict application of the code is impractical for a specific reason. When the building official grants a modification, it is not a waiver from the requirements. It should be thought of as fulfilling the requirements to the greatest extent possible, but deviating from the requirements slightly to satisfy the intent of the provisions. The modification must not lessen the health, fire safety, life safety or structural requirements of the code. All modification actions must be recorded in the files of the building department.

INTERNATIONAL CODE COUNCIL®
Copyright © 2015 ICC. ALL RIGHTS RESERVED. Accessed by David Dammon on Jun 21, 2017 12:30:52 PM pursuant to License Agreement with ICC. No further reproduction or distribution authorized. ANY UNAUTHORIZED REPRODUCTION OR DISTRIBUTION IS A VIOLATION OF THE FEDERAL COPYRIGHT ACT AND THE LICENSE AGREEMENT, AND SUBJECT TO CIVIL AND CRIMINAL PENALTIES THEREUNDER.

R104.10.1 Flood hazard areas. The *building official* shall not grant modifications to any provisions required in flood hazard areas as established by Table R301.2(1) unless a determination has been made that:

1. There is good and sufficient cause showing that the unique characteristics of the size, configuration or topography of the site render the elevation standards of Section R322 inappropriate.
2. Failure to grant the modification would result in exceptional hardship by rendering the lot undevelopable.
3. The granting of modification will not result in increased flood heights, additional threats to public safety, extraordinary public expense, cause fraud on or victimization of the public, or conflict with existing laws or ordinances.
4. The modification is the minimum necessary to afford relief, considering the flood hazard.
5. Written notice specifying the difference between the design flood elevation and the elevation to which the building is to be built, stating that the cost of flood insurance will be commensurate with the increased risk resulting from the reduced floor elevation and stating that construction below the design flood elevation increases risks to life and property, has been submitted to the applicant.

❖ Section R322 contains provisions for determining flood hazard areas. A modification cannot be granted by the building official for structures located in flood hazard areas without making a determination regarding five listed factors. The regulations of the NFIP 44 CFR 60.3 require that proposals for structures meet or exceed the minimum provisions of the program. Requests for modifications to any provision related to flood hazard areas are to be handled according to the NFIP requirements for variances [see 44 CFR 60.6(a)]. A record of each determination should be retained as part of the community's permanent records.

Each of the listed determinations must be made in order for the building official to: 1. Consider granting a modification of any requirement applicable in flood hazard areas; and 2. Provide relief from selected provisions for flood-resistant construction. Granting of the modification must not cause additional public safety concerns beyond those already present. Therefore, building officials are cautioned to carefully evaluate the impacts of granting a modification, particularly modifications of the requirements for elevating buildings. The elements that are to be evaluated include impacts on the site, the applicant and other parties who may be affected, such as adjacent property owners and the community as a whole. Development in flood hazard areas that is not undertaken in accordance with the flood-resistance provisions of the code will be exposed to increased flood damage. As a consequence, federal flood insurance premium rates may be significantly higher. Decisions to grant modifications must be based solely on technical justifications and not on the personal or financial circumstances of an owner or applicant.

Applicants sometimes request modification of the minimum elevation requirements to improve access for the disabled and elderly. Generally, modifications of this nature should not be granted because these are personal circumstances that will change as the property changes ownership. Not only would persons of limited mobility be at risk, but a building built below the base flood elevation (BFE) would continue to be exposed to flood damage long after the personal need for a variance ends. More appropriate alternatives are to be considered to serve the needs of disabled or elderly persons, such as varying setbacks to allow construction on higher portions of sites or the installation of personal elevators. Elevators may extend below the BFE; see FEMA TB #4.

All variances are to be the minimum necessary to afford relief. Thus, even if sufficient justification to warrant modification of one or more requirement is demonstrated, building officials should ensure that each modification is the minimum necessary rather than allow construction without any consideration of flood risk.

One determination to be made is whether failure to grant a modification would result in exceptional hardship by rendering the lot undevelopable. The determination of hardship is to be based on the unique characteristics of the site and not on the personal circumstances of the applicant. While small lots may have constraints if applicants propose to use fill to elevate buildings, other foundation types can be used even on small lots, thus lot size may be insufficient justification.

In guidance materials, FEMA cautions that financial hardship, inconvenience, aesthetic considerations, physical handicaps, personal preferences or the disapproval of one's neighbors do not qualify as exceptional hardships. Building officials are cautioned that granting a variance does not affect how the building will be rated for the purposes of federal flood insurance. Even if circumstances justify granting a variance to build a lowest floor that is below the required elevation, the rate used to calculate the cost of a flood insurance policy will be based on the risk to the building. Federal flood insurance, required by certain mortgage lenders, may be expensive. Although the permit applicant may not be required to purchase flood insurance, the requirement may be imposed on subsequent owners. The building official is to provide the applicant a written notice to this effect, along with the other cautions listed in this section.

R104.11 Alternative materials, design and methods of construction and equipment. The provisions of this code are not intended to prevent the installation of any material or to prohibit any design or method of construction not specifically prescribed by this code, provided that any such alternative has been *approved*. An alternative material, design or method of construction shall be *approved* where the *building official* finds that the proposed design is satisfactory and

INTERNATIONAL CODE COUNCIL®
Copyright © 2015 ICC. ALL RIGHTS RESERVED. Accessed by David Dammon on Jun 21, 2017 12:30:52 PM pursuant to License Agreement with ICC. No further reproduction or distribution authorized. ANY UNAUTHORIZED REPRODUCTION OR DISTRIBUTION IS A VIOLATION OF THE FEDERAL COPYRIGHT ACT AND THE LICENSE AGREEMENT, AND SUBJECT TO CIVIL AND CRIMINAL PENALTIES THEREUNDER.

complies with the intent of the provisions of this code, and that the material, method or work offered is, for the purpose intended, not less than the equivalent of that prescribed in this code. Compliance with the specific performance-based provisions of the International Codes shall be an alternative to the specific requirements of this code. Where the alternative material, design or method of construction is not *approved*, the *building official* shall respond in writing, stating the reasons why the alternative was not *approved*.

❖ Although the code reflects current technologies, it is impossible to foresee all potential applications of new materials, construction techniques or design methods. The fact that a material, product or method of construction is not addressed in the code is not an indication that such material, product or method is intended to be prohibited. The code encourages the use of new materials and technologies by allowing them to be presented to the building official for approval. The building official must approve a proposed alternative when it is found to be satisfactory and in compliance with the intent of the provisions of the code and is equivalent to that prescribed by the code. Approval may also be granted for the use of any alternative that is in compliance with the performance-based provisions of the *International Codes*®. The building official is responsible for determining if a requested alternative provides the equivalent level of protection of public health, safety and welfare, as required by the code. In order to ensure effective communication and due process of law, if an alternative is not approved, the building official should state in writing the reasons for the disapproval. This is similar to when a permit is rejected in Section R105.3.1.

R104.11.1 Tests. Where there is insufficient evidence of compliance with the provisions of this code, or evidence that a material or method does not conform to the requirements of this code, or in order to substantiate claims for alternative materials or methods, the *building official* shall have the authority to require tests as evidence of compliance to be made at no expense to the *jurisdiction*. Test methods shall be as specified in this code or by other recognized test standards. In the absence of recognized and accepted test methods, the *building official* shall approve the testing procedures. Tests shall be performed by an *approved* agency. Reports of such tests shall be retained by the *building official* for the period required for retention of public records.

❖ To provide the basis on which the building official can make a decision regarding an alternative material or method, sufficient technical data, test reports and documentation must be provided for evaluation. If evidence satisfactory to the building official indicates that the alternative material or construction method is equivalent to that required by the code, he or she may approve it. Any such approval cannot have the effect of waiving any requirements of the code. The burden of proof of equivalence lies with the applicant who proposes the use of alternative materials or methods.

The building official must require the submission of appropriate information and data to assist in the determination of equivalency. This information must be submitted before a permit can be issued. The type of information required includes test data in accordance with referenced standards, evidence of compliance with the referenced standard specifications and design calculations. A research report issued by an authoritative agency is particularly useful in providing the building official with the technical basis for evaluation and approval of new and innovative materials and methods of construction. The use of authoritative research reports can greatly assist the building official by reducing the time-consuming engineering analysis necessary to review these materials and methods. Failure to substantiate adequately a request for the use of an alternative is a valid reason for the building official to deny a request. Any tests submitted in support of an application must have been performed by an agency approved by the building official based on evidence that the agency has the technical expertise, test equipment and quality assurance to properly conduct and report the necessary testing. The test reports submitted to the building official must be retained in accordance with the requirements of Section R104.7.

SECTION R105
PERMITS

R105.1 Required. Any owner or owner's authorized agent who intends to construct, enlarge, alter, repair, move, demolish or change the occupancy of a building or structure, or to erect, install, enlarge, alter, repair, remove, convert or replace any electrical, gas, mechanical or plumbing system, the installation of which is regulated by this code, or to cause any such work to be performed, shall first make application to the *building official* and obtain the required *permit*.

❖ This section contains the administrative rules governing the issuance, suspension, revocation or modification of building permits. It also establishes how and by whom the application for a building permit is to be made, how it is to be processed, fees and what information it must contain or have attached to it.

In general, a permit is required for all activities that are regulated by the code and these activities cannot begin until the permit is issued, unless the activity is specifically exempted by Section R105.2. Only the owner or a person authorized by the owner can apply for the permit. Note that this section indicates a need for a permit for a change in occupancy, even if no work is contemplated. The purpose of the permit is to cause the work to be reviewed, approved and inspected to determine compliance with the code.

INTERNATIONAL CODE COUNCIL®
Copyright © 2015 ICC. ALL RIGHTS RESERVED. Accessed by David Dammon on Jun 21, 2017 12:30:52 PM pursuant to License Agreement with ICC. No further reproduction or distribution authorized. ANY UNAUTHORIZED REPRODUCTION OR DISTRIBUTION IS A VIOLATION OF THE FEDERAL COPYRIGHT ACT AND THE LICENSE AGREEMENT, AND SUBJECT TO CIVIL AND CRIMINAL PENALTIES THEREUNDER.

R105.2 Work exempt from permit. Exemption from *permit* requirements of this code shall not be deemed to grant authorization for any work to be done in any manner in violation of the provisions of this code or any other laws or ordinances of this *jurisdiction*. *Permits* shall not be required for the following:

Building:

1. One-*story* detached *accessory structures*, provided that the floor area does not exceed 200 square feet (18.58 m^2).
2. Fences not over 7 feet (2134 mm) high.
3. Retaining walls that are not over 4 feet (1219 mm) in height measured from the bottom of the footing to the top of the wall, unless supporting a surcharge.
4. Water tanks supported directly upon *grade* if the capacity does not exceed 5,000 gallons (18 927 L) and the ratio of height to diameter or width does not exceed 2 to 1.
5. Sidewalks and driveways.
6. Painting, papering, tiling, carpeting, cabinets, counter tops and similar finish work.
7. Prefabricated swimming pools that are less than 24 inches (610 mm) deep.
8. Swings and other playground equipment.
9. Window awnings supported by an exterior wall that do not project more than 54 inches (1372 mm) from the exterior wall and do not require additional support.
10. Decks not exceeding 200 square feet (18.58 m^2) in area, that are not more than 30 inches (762 mm) above *grade* at any point, are not attached to a dwelling do not serve the exit door required by Section R311.4.

Electrical:

1. *Listed* cord-and-plug connected temporary decorative lighting.
2. Reinstallation of attachment plug receptacles but not the outlets therefor.
3. Replacement of branch circuit overcurrent devices of the required capacity in the same location.
4. Electrical wiring, devices, *appliances*, apparatus or *equipment* operating at less than 25 volts and not capable of supplying more than 50 watts of energy.
5. Minor repair work, including the replacement of lamps or the connection of *approved* portable electrical *equipment* to *approved* permanently installed receptacles.

Gas:

1. Portable heating, cooking or clothes drying *appliances*.
2. Replacement of any minor part that does not alter approval of *equipment* or make such *equipment* unsafe.
3. Portable-fuel-cell *appliances* that are not connected to a fixed piping system and are not interconnected to a power grid.

Mechanical:

1. Portable heating *appliances*.
2. Portable ventilation *appliances*.
3. Portable cooling units.
4. Steam, hot- or chilled-water piping within any heating or cooling *equipment* regulated by this code.
5. Replacement of any minor part that does not alter approval of *equipment* or make such *equipment* unsafe.
6. Portable evaporative coolers.
7. Self-contained refrigeration systems containing 10 pounds (4.54 kg) or less of refrigerant or that are actuated by motors of 1 horsepower (746 W) or less.
8. Portable-fuel-cell *appliances* that are not connected to a fixed piping system and are not interconnected to a power grid.

Plumbing:

1. The stopping of leaks in drains, water, soil, waste or vent pipe; provided, however, that if any concealed trap, drainpipe, water, soil, waste or vent pipe becomes defective and it becomes necessary to remove and replace the same with new material, such work shall be considered as new work and a *permit* shall be obtained and inspection made as provided in this code.
2. The clearing of stoppages or the repairing of leaks in pipes, valves or fixtures, and the removal and reinstallation of water closets, provided such repairs do not involve or require the replacement or rearrangement of valves, pipes or fixtures.

❖ This section of the code lists the types of work in five categories—building, electrical, gas, mechanical and plumbing—that do not require permits. However, all work, even work that does not require a permit, must be done in a manner that will comply with the code requirements.

Communities that participate in the NFIP are required to issue permits even for some of the work listed under the building category if that work takes place in flood hazard areas, including work on accessory structures, retaining walls, water tanks, and sidewalks and driveways if fill is involved. This responsibility may be handled under a separate floodplain management regulation or IBC Appendix G. For guidance, the requirements for these activities, including floodway encroachment impacts, are described in IBC Appendix G.

INTERNATIONAL CODE COUNCIL®
Copyright © 2015 ICC. ALL RIGHTS RESERVED. Accessed by David Dammon on Jun 21, 2017 12:30:52 PM pursuant to License Agreement with ICC. No further reproduction or distribution authorized. ANY UNAUTHORIZED REPRODUCTION OR DISTRIBUTION IS A VIOLATION OF THE FEDERAL COPYRIGHT ACT AND THE LICENSE AGREEMENT, AND SUBJECT TO CIVIL AND CRIMINAL PENALTIES THEREUNDER.

R105.2.1 Emergency repairs. Where *equipment* replacements and repairs must be performed in an emergency situation, the *permit* application shall be submitted within the next working business day to the *building official*.

❖ This section recognizes that in some cases, emergency replacement and repair work must be done as quickly as possible, so it is not practical to take the necessary time to apply for and obtain approval. A permit for the work must be obtained the next day that the building department is open for business. Any work performed before the permit is issued must be done in accordance with the code and corrected if not approved by the building official. For example, if a concealed trap failed on a Sunday, the plumber could replace the trap at that time, but he would have to apply for a permit on Monday and have the repair pass an inspection.

R105.2.2 Repairs. Application or notice to the *building official* is not required for ordinary repairs to structures, replacement of lamps or the connection of *approved* portable electrical *equipment* to *approved* permanently installed receptacles. Such repairs shall not include the cutting away of any wall, partition or portion thereof, the removal or cutting of any structural beam or load-bearing support, or the removal or change of any required means of egress, or rearrangement of parts of a structure affecting the egress requirements; nor shall ordinary repairs include *addition* to, *alteration* of, replacement or relocation of any water supply, sewer, drainage, drain leader, gas, soil, waste, vent or similar piping, electric wiring or mechanical or other work affecting public health or general safety.

❖ There is a variety of ordinary repair, replacement or connection work that is exempt from the permit application process. This section identifies a number of general situations in which a permit is not required. The provisions then state the types of repairs for which a permit is required. Repair work done without a permit must still comply with the applicable provisions of the code.

R105.2.3 Public service agencies. A *permit* shall not be required for the installation, *alteration* or repair of generation, transmission, distribution, metering or other related *equipment* that is under the ownership and control of public service agencies by established right.

❖ When the ownership and control of equipment is held by a public service agency, such as a county water district, permits are not required for any work that might be done on that equipment. The scope of this provision includes not only repair activities, but also any installation or alteration work. It is clear from this section that public service agencies are self-regulating when it comes to work involving equipment used for generation, transmission, distribution and metering. Any equipment or appliances installed or serviced by such agencies that are not owned by them and under their full control are not exempt from a permit.

R105.3 Application for permit. To obtain a *permit*, the applicant shall first file an application therefor in writing on a form furnished by the department of building safety for that purpose. Such application shall:

1. Identify and describe the work to be covered by the *permit* for which application is made.
2. Describe the land on which the proposed work is to be done by legal description, street address or similar description that will readily identify and definitely locate the proposed building or work.
3. Indicate the use and occupancy for which the proposed work is intended.
4. Be accompanied by *construction documents* and other information as required in Section R106.1.
5. State the valuation of the proposed work.
6. Be signed by the applicant or the applicant's authorized agent.
7. Give such other data and information as required by the *building official*.

❖ The code lists the minimum information required in an application for a permit. The owner or owner's agent is to fully describe the location of the site, the type and nature of the work to be done and all other pertinent information regarding the job. This provides the jurisdiction with a clear understanding of what will actually be done under the permit. The applicant must sign the application, and permit forms typically include a statement that if the applicant is not the owner, he or she has permission from the owner to make the application.

It is a common belief by some owners that all that is required of them is to complete an application form, and then the permit will be issued over the counter. Although issuance of over-the-counter permits may be practical when a water heater is to be installed or for other minor work, this is not the case for more complex work. The general public is often surprised when they discover a complete application includes the requirements to provide construction drawings as required by Section R106, detailed information about the property, engineering data and other information as required by the building department. The department should develop informational fliers and packets that will assist the applicant with understanding the requirements for obtaining a permit. Recognizing that incomplete applications do not serve the applicant's best interest (and create unnecessary delays with processing applications), many building departments have personnel who specialize in providing assistance to customers to ease them through the process.

R105.3.1 Action on application. The *building official* shall examine or cause to be examined applications for *permits* and amendments thereto within a reasonable time after filing. If the application or the *construction documents* do not conform to the requirements of pertinent laws, the *building official*

INTERNATIONAL CODE COUNCIL®
Copyright © 2015 ICC. ALL RIGHTS RESERVED. Accessed by David Dammon on Jun 21, 2017 12:30:52 PM pursuant to License Agreement with ICC. No further reproduction or distribution authorized. ANY UNAUTHORIZED REPRODUCTION OR DISTRIBUTION IS A VIOLATION OF THE FEDERAL COPYRIGHT ACT AND THE LICENSE AGREEMENT, AND SUBJECT TO CIVIL AND CRIMINAL PENALTIES THEREUNDER.

shall reject such application in writing stating the reasons therefor. If the *building official* is satisfied that the proposed work conforms to the requirements of this code and laws and ordinances applicable thereto, the *building official* shall issue a *permit* therefor as soon as practicable.

❖ This section requires the building official to act with reasonable speed on a permit application. In some instances, this time period is set by state or local law. The building official must refuse to issue a permit when the application and accompanying documents do not conform to the code. In order to ensure effective communication and due process of law, the reasons for denial of an application for a permit are required to be in writing. Once the building official determines that the work described conforms with the code and other applicable laws, the permit must be issued on payment of the fees required by Section R108.

R105.3.1.1 Determination of substantially improved or substantially damaged existing buildings in flood hazard areas. For applications for reconstruction, rehabilitation, *addition*, alteration, repair or other improvement of existing buildings or structures located in a flood hazard area as established by Table R301.2(1), the *building official* shall examine or cause to be examined the *construction documents* and shall make a determination with regard to the value of the proposed work. For buildings that have sustained damage of any origin, the value of the proposed work shall include the cost to repair the building or structure to its predamaged condition. If the *building official* finds that the value of proposed work equals or exceeds 50 percent of the market value of the building or structure before the damage has occurred or the improvement is started, the proposed work is a substantial improvement or restoration of substantial damage and the building official shall require existing portions of the entire building or structure to meet the requirements of Section R322.

For the purpose of this determination, a substantial improvement shall mean any repair, reconstruction, rehabilitation, addition or improvement of a building or structure, the cost of which equals or exceeds 50 percent of the market value of the building or structure before the improvement or repair is started. Where the building or structure has sustained substantial damage, repairs necessary to restore the building or structure to its predamaged condition shall be considered substantial improvements regardless of the actual repair work performed. The term shall not include either of the following:

1. Improvements to a building or structure that are required to correct existing health, sanitary or safety code violations identified by the building official and that are the minimum necessary to ensure safe living conditions.
2. Any alteration of a historic building or structure, provided that the alteration will not preclude the continued designation as a historic building or structure. For the purposes of this exclusion, a historic building shall be any of the following:
   2.1. Listed or preliminarily determined to be eligible for listing in the National Register of Historic Places.
   2.2. Determined by the Secretary of the U.S. Department of Interior as contributing to the historical significance of a registered historic district or a district preliminarily determined to qualify as an historic district.
   2.3. Designated as historic under a state or local historic preservation program that is approved by the Department of Interior.

❖ The terms "Substantial damage" and "Substantial improvement" are defined in the IBC and the *International Existing Building Code*® (IEBC®).

Long-term reduction in exposure to flood hazards, including exposure of older buildings, is one of the purposes for regulating development in flood hazard areas. Existing buildings or structures located in flood hazard areas are to be brought into compliance with the flood-resistance provisions of Section R322 when the cost of improvements or the cost of repair of damage exceeds 50 percent of the market value before the improvement is started or before the damage occurred.

Section R105.3 requires the applicant to state the valuation of the proposed work as part of the information submitted to obtain a permit. If the proposed work will be performed on existing buildings or structures in flood hazard areas, including restoration of damage from any cause, the building official must compare the cost of the work to the market value of the building. For damaged buildings, the cost of the proposed work is the value of work necessary to restore the building to its predamage condition, even if the applicant is proposing less work. The cost of proposed work includes the value of the property owner's labor, as well as the value of donated labor and materials.

To make a determination about whether a proposed repair, reconstruction, rehabilitation, addition or improvement of a building or structure will constitute a substantial improvement or repair of substantial damage, the cost of the proposed work is to be compared to the market value of the building or structure before the work is started. To determine market value, the building official may require the applicant to provide such information as allowed under Section R105.3.

If the building official determines the work is substantial improvement or repair of substantial damage, the existing building is to be brought into compliance with the flood-resistance provisions of Section R322. For additional guidance, refer to FEMA P-758.

R105.3.2 Time limitation of application. An application for a *permit* for any proposed work shall be deemed to have been abandoned 180 days after the date of filing unless such application has been pursued in good faith or a *permit* has been issued; except that the *building official* is authorized to grant one or more extensions of time for additional periods not exceeding 180 days each. The extension shall be requested in writing and justifiable cause demonstrated.

❖ The intent of this section is to limit the time between the review process and the issuance of a permit. Applications for permits are considered valid for 180 days. The

INTERNATIONAL CODE COUNCIL®
Copyright © 2015 ICC. ALL RIGHTS RESERVED. Accessed by David Dammon on Jun 21, 2017 12:30:52 PM pursuant to License Agreement with ICC. No further reproduction or distribution authorized. ANY UNAUTHORIZED REPRODUCTION OR DISTRIBUTION IS A VIOLATION OF THE FEDERAL COPYRIGHT ACT AND THE LICENSE AGREEMENT, AND SUBJECT TO CIVIL AND CRIMINAL PENALTIES THEREUNDER.

permit application and review process must be done in a timely manner within that period. The applicant must be responsive to requests for additional information made by the building department. The 180-day limitation is not intended to penalize an applicant for lack of action on the part of the jurisdiction. It is merely a measure used to void an application when it is no longer reasonable to keep it active because the applicant is delaying the process and is not responding to legitimate requests for information. The building official can extend the time limit of an application in increments of 180 days, provided the applicant can show a valid reason for an extension. The applicant must make this request in writing.

R105.4 Validity of permit. The issuance or granting of a *permit* shall not be construed to be a *permit* for, or an *approval* of, any violation of any of the provisions of this code or of any other ordinance of the *jurisdiction*. *Permits* presuming to give authority to violate or cancel the provisions of this code or other ordinances of the *jurisdiction* shall not be valid. The issuance of a *permit* based on *construction documents* and other data shall not prevent the *building official* from requiring the correction of errors in the *construction documents* and other data. The *building official* is authorized to prevent occupancy or use of a structure where in violation of this code or of any other ordinances of this *jurisdiction*.

❖ This section states the fundamental premise that the permit is only a license to proceed with the work. It is not a license to violate, cancel or set aside any provisions of the code. This is significant because it means that, despite any errors or oversights in the approval process, the permit applicant, not the building official, is responsible for code compliance. Also, the permit can be suspended or revoked in accordance with Section R105.6.

R105.5 Expiration. Every *permit* issued shall become invalid unless the work authorized by such *permit* is commenced within 180 days after its issuance, or if the work authorized by such *permit* is suspended or abandoned for a period of 180 days after the time the work is commenced. The *building official* is authorized to grant, in writing, one or more extensions of time, for periods not more than 180 days each. The extension shall be requested in writing and justifiable cause demonstrated.

❖ The permit becomes invalid under two distinct situations—both based on a 180-day period. The first situation is when no work was initiated 180 days from issuance of a permit. The second situation is when the authorized work has stopped for 180 days. The person who was issued the permit should be notified, in writing, that the permit is invalid and what steps must be taken to reinstate it and restart the work. The building official has the authority to extend this time limitation (in increments of 180 days), provided the extension is requested in writing and there is reasonable cause, which typically includes events beyond the permit holder's control.

R105.6 Suspension or revocation. The *building official* is authorized to suspend or revoke a *permit* issued under the provisions of this code wherever the *permit* is issued in error or on the basis of incorrect, inaccurate or incomplete information, or in violation of any ordinance or regulation or any of the provisions of this code.

❖ A permit is a license to proceed with the work. The building official, however, can suspend or revoke permits shown to be based, all or in part, on any false statement or misrepresentation of fact. A permit can also be suspended or revoked if it was issued in error, such as an omitted prerequisite approval or code violation indicated on the construction documents. An applicant may subsequently apply for a reinstatement of the permit with the appropriate corrections or modifications made to the application and construction documents.

R105.7 Placement of permit. The building *permit* or a copy shall be kept on the site of the work until the completion of the project.

❖ The permit must be displayed at the work site until the certificate of occupancy has been issued. Because paperwork at a job site is sometimes lost, the code allows a copy of the permit to be kept at the site and the original to be retained in a more secure place. Keeping a record of permits at the project location satisfies the legal requirements set forth in the code, and any interested party can verify that a valid permit has been obtained.

R105.8 Responsibility. It shall be the duty of every person who performs work for the installation or repair of building, structure, electrical, gas, mechanical or plumbing systems, for which this code is applicable, to comply with this code.

❖ This is one of several code provisions that emphasize the required compliance for every aspect of the project. Although the permit holder is designated as having the primary responsibility for overall code compliance, it is the responsibility of each and every person working on the job to adhere to the requirements of the code.

R105.9 Preliminary inspection. Before issuing a *permit*, the *building official* is authorized to examine or cause to be examined buildings, structures and sites for which an application has been filed.

❖ This section provides the building official with a useful tool in the permit process, especially in cases of permits being issued for an existing building. While the construction documents may show the scope and nature of work to be done, there may be other existing conditions in the building that could affect the continued safety profile of the building and the approval of a permit, which could only be discovered by inspection.

SECTION R106
CONSTRUCTION DOCUMENTS

R106.1 Submittal documents. Submittal documents consisting of *construction documents*, and other data shall be submitted in two or more sets with each application for a *permit.* The *construction documents* shall be prepared by a registered *design professional* where required by the statutes of the *jurisdiction* in which the project is to be constructed. Where

INTERNATIONAL CODE COUNCIL®
Copyright © 2015 ICC. ALL RIGHTS RESERVED. Accessed by David Dammon on Jun 21, 2017 12:30:52 PM pursuant to License Agreement with ICC. No further reproduction or distribution authorized. ANY UNAUTHORIZED REPRODUCTION OR DISTRIBUTION IS A VIOLATION OF THE FEDERAL COPYRIGHT ACT AND THE LICENSE AGREEMENT, AND SUBJECT TO CIVIL AND CRIMINAL PENALTIES THEREUNDER.

special conditions exist, the *building official* is authorized to require additional *construction documents* to be prepared by a registered *design professional*.

Exception: The *building official* is authorized to waive the submission of *construction documents* and other data not required to be prepared by a registered *design professional* if it is found that the nature of the work applied for is such that reviewing of *construction documents* is not necessary to obtain compliance with this code.

❖ This section provides the minimum requirements for construction documents that an applicant must provide along with the permit application form for the application package to be considered complete. Construction documents are not just a set of drawings. Construction documents are the entire set of all submitted forms and information necessary to accurately communicate the scope of the construction. The submittals may include written special inspection and structural observation programs, construction drawings, and details, reports, calculations, specifications, shop drawings, manufacturer's installation instructions, site plans and other graphic and written forms that will describe the proposed work in detail. The building official can waive the submission of construction documents for types of work where the review of documents is not necessary to show compliance with the requirements of the code.

The code is prescriptive and makes possible the design of a dwelling or townhouse without the requirement for a licensed design professional. However, the construction documents must be prepared by a licensed design professional when required by the statutes of the state or jurisdiction. Additionally, the building official has the authority to require that plans be prepared by licensed design professionals when not otherwise required by the statutes of the jurisdiction if, in the opinion of the building official, special or unique conditions exist or if the design of a building does not meet the prescriptive provisions of the code.

R106.1.1 Information on construction documents. *Construction documents* shall be drawn upon suitable material. Electronic media documents are permitted to be submitted where *approved* by the *building official*. *Construction documents* shall be of sufficient clarity to indicate the location, nature and extent of the work proposed and show in detail that it will conform to the provisions of this code and relevant laws, ordinances, rules and regulations, as determined by the *building official*.

❖ The emphasis of this section is on the clarity, completeness and accuracy of the construction documents. A wide variety of individuals will be using the construction documents to perform their specific tasks. Therefore, it is critical that there be no confusion about the intent of the designer based on the information in the plans and other documents.

Electronic submittal of construction documents is rapidly gaining popularity. Where the Department of Public Safety has the means to review plans electronically, it may request such submittals. Many departments continue to use hard-copy documents for the plan review process, with a request for electronic media copies of documents for archival purposes.

R106.1.2 Manufacturer's installation instructions. Manufacturer's installation instructions, as required by this code, shall be available on the job site at the time of inspection.

❖ Throughout the code, it directs that materials or equipment be installed in accordance with the manufacturer's instructions. An example is the installation of modified bitumen roofing, as set forth in Section R905.11.3. The code recognizes that the manufacturer can best relate the specific installation requirements applicable to its specific product. Where the code mandates that the manufacturer's installation instructions be followed, those instructions must be available at the job site. In this way, both the installers and inspector are able to see that the directives of the manufacturer are being followed.

R106.1.3 Information on braced wall design. For buildings and structures utilizing braced wall design, and where required by the *building official*, braced wall lines shall be identified on the *construction documents*. Pertinent information including, but not limited to, bracing methods, location and length of *braced wall panels* and foundation requirements of braced wall panels at top and bottom shall be provided.

❖ This section mandates that the relevant wall bracing information required in Section R602.10 be clearly marked on the construction drawings. Those parts of the wall system that are designated bracing panels have potentially different panel attachment schedules, foundation requirements and specific connection requirements to other parts of the building than do other exterior and interior walls. Not only are braced walls often different from other walls, they are always required in every code-conforming structure. An extra burden is placed on building officials and plan checkers when they have to try to figure out which walls the designer has intended for use as bracing. Requiring such details on all submittals will ensure that bracing is being considered during the design process. It will further ensure that the building's structural detailing is being done by the person who draws the plans and not by the plan checker. It will also make it easier for the builder to properly construct the required bracing on the job site when the details are clearly spelled out on the drawings.

R106.1.4 Information for construction in flood hazard areas. For buildings and structures located in whole or in part in flood hazard areas as established by Table R301.2(1), *construction documents* shall include:

1. Delineation of flood hazard areas, floodway boundaries and flood zones and the design flood elevation, as appropriate.
2. The elevation of the proposed lowest floor, including *basement*; in areas of shallow flooding (AO Zones), the height of the proposed lowest floor, including *basement*, above the highest adjacent *grade*.

INTERNATIONAL CODE COUNCIL®
Copyright © 2015 ICC. ALL RIGHTS RESERVED. Accessed by David Dammon on Jun 21, 2017 12:30:52 PM pursuant to License Agreement with ICC. No further reproduction or distribution authorized. ANY UNAUTHORIZED REPRODUCTION OR DISTRIBUTION IS A VIOLATION OF THE FEDERAL COPYRIGHT ACT AND THE LICENSE AGREEMENT, AND SUBJECT TO CIVIL AND CRIMINAL PENALTIES THEREUNDER.

3. The elevation of the bottom of the lowest horizontal structural member in coastal high hazard areas (V Zone) and in Coastal A Zones where such zones are delineated on flood hazard maps identified in Table R301.2(1) or otherwise delineated by the jurisdiction.
4. If design flood elevations are not included on the community's Flood Insurance Rate Map (FIRM), the *building official* and the applicant shall obtain and reasonably utilize any design flood elevation and floodway data available from other sources.

❖ This section details the information to be included in an application for a permit to build within a flood hazard area. The site plan is to show sufficient detail and information about the designated flood hazard area, including floodway and flood zones, to allow for a complete review of the proposed activities. Flood Insurance Rate Maps (FIRMs) are flood hazard maps prepared by the Federal Emergency Management Agency (FEMA). FIRMs may show specific base flood elevations (BFE). If the community adopts a flood hazard map other than the FIRM, the design flood elevations (DFE) must be at least as high as the BFEs [see Table R301.2(1)].

Construction documents are to include the proposed elevation of the lowest floor (in all Zone A other than Coastal A Zone) and the elevation of the bottom of the lowest horizontal structural member (in all Zone V and Coastal A Zone), which must be at or above the minimum elevation required in Section R322.

Basements below residential buildings are not to be constructed below the DFE, even if excavated into fill that is placed above the DFE. In flood hazard areas except coastal high-hazard areas, applicants may propose placing fill with the intent of later constructing buildings with excavated basements. When excavated into fill, basements may be subject to damage, especially where waters remain high for more than a few hours. Fill materials can become saturated and provide inadequate support, or water pressure can collapse below-grade walls. To address these concerns, building officials may require applicants to submit documentation outlined in FEMA TB #10.

If elevated in flood hazard areas, buildings will be surrounded by water during general conditions of flooding. Local emergency personnel responsible for evacuations should be consulted during the subdivision or building permit approval process. Many states and communities have provisions that require uninterrupted access to all buildings during a flood. These requirements may be administered by agencies responsible for permitting the construction of public rights-of-way or may be imposed as part of subdivision approval.

Many FIRMs show flood hazard areas without specifying the BFEs, indicating that engineering analyses have not been prepared for those areas. These flood hazard areas are often referred to as unnumbered A Zones or approximate A Zones. An important step in regulating the development of these areas is the determination of the DFE. The building official and applicant are to search for, and use data from, other sources, which may include the U.S. Army Corps of Engineers, the Natural Resources Conservation Service, a state agency (transportation, water resources, environment), local planning or public works department, a flood control agency or district, or historical records. If flood elevation information is not available, the building official may require the applicant to develop the DFE in accordance with accepted engineering practices. Local officials unfamiliar with establishing DFEs are encouraged to contact the NFIP State Coordinator or the appropriate FEMA regional office. For additional guidance, refer to FEMA 265.

R106.2 Site plan or plot plan. The *construction documents* submitted with the application for *permit* shall be accompanied by a site plan showing the size and location of new construction and existing structures on the site and distances from *lot lines*. In the case of demolition, the site plan shall show construction to be demolished and the location and size of existing structures and construction that are to remain on the site or plot. The *building official* is authorized to waive or modify the requirement for a site plan where the application for *permit* is for *alteration* or repair or where otherwise warranted.

❖ One valuable part of the construction documents is the site plan. As a part of reviewing the building's location on the site for conformance to the code, the building official must know the size and location of any other structures on the lot, as well as their physical relationship to the new structure. The proximity of the new structure to lot lines and any public ways must also be shown. The distance between a building and the lot lines may trigger a variety of code requirements, the most notable being exterior wall fire-resistance rating and opening prohibition (see Section R302).

The code also requires that a site plan be submitted when a building or structure is to be demolished. The plan must identify the location of the building to be demolished, as well as any surrounding structures that will remain in place.

R106.3 Examination of documents. The *building official* shall examine or cause to be examined *construction documents* for code compliance.

❖ The requirements of this section are related to those found in Section R105.3.1 regarding the action of the building official in response to a permit application. The building official can delegate review of the construction documents to subordinates as provided for in Section R103.3.

R106.3.1 Approval of construction documents. Where the *building official* issues a *permit*, the *construction documents* shall be *approved* in writing or by a stamp that states "REVIEWED FOR CODE COMPLIANCE." One set of *construction documents* so reviewed shall be retained by the *building official*. The other set shall be returned to the applicant, shall be kept at the site of work and shall be open to

INTERNATIONAL CODE COUNCIL®
Copyright © 2015 ICC. ALL RIGHTS RESERVED. Accessed by David Dammon on Jun 21, 2017 12:30:52 PM pursuant to License Agreement with ICC. No further reproduction or distribution authorized. ANY UNAUTHORIZED REPRODUCTION OR DISTRIBUTION IS A VIOLATION OF THE FEDERAL COPYRIGHT ACT AND THE LICENSE AGREEMENT, AND SUBJECT TO CIVIL AND CRIMINAL PENALTIES THEREUNDER.

inspection by the *building official* or a duly authorized representative.

❖ Approval of the construction documents is the first in a series of reviews and approvals throughout the design and construction process. The building official or authorized representative must indicate that the construction documents are approved for construction, in writing or by a stamp that specifically states "REVIEWED FOR CODE COMPLIANCE," and must include any additional information that is necessary for the project. A set of the documents must be retained by the building department as its record for the life of the project. It is not uncommon throughout the job for questions to arise that require referencing the approved set of plans in the office. An efficient filing system should be developed to make the retrieval of construction documents a simple process.

In addition to the set of construction documents retained by the Department of Building Safety, at least one set of approved plans is to be returned to the permit holder. These construction documents must be maintained at the job site for reference purposes throughout the project. To avoid confusion, the construction documents on the site must be the documents that were approved and stamped. They must be available for review by building department personnel during the numerous inspections that may take place. Additionally, the contractor cannot determine compliance with approved construction documents unless those approved documents are available. Another reason to have the documents available is that these plans will generally indicate any special items or issues identified by the plans examiner that may not be shown on any other construction documents. If the approved construction documents are not available, the inspection may be postponed and work on the project may be halted.

R106.3.2 Previous approvals. This code shall not require changes in the *construction documents,* construction or designated occupancy of a structure for which a lawful *permit* has been heretofore issued or otherwise lawfully authorized, and the construction of which has been pursued in good faith within 180 days after the effective date of this code and has not been abandoned.

❖ If, after a permit is issued and construction proceeds at a normal pace, a new edition of the code is adopted by the legislative body, requiring that the building be constructed to conform to the new code is unreasonable. This section provides for the continuity of permits issued under previous codes, as long as such permits are being "actively prosecuted" subsequent to the effective date of the ordinance adopting this edition of the code.

If the work is abandoned for 180 days or more, and an extension of the permit is not granted, the original permit is no longer valid, and a new permit must be sought under the provisions of the latest edition of the code.

R106.3.3 Phased approval. The *building official* is authorized to issue a *permit* for the construction of foundations or any other part of a building or structure before the *construction documents* for the whole building or structure have been submitted, provided that adequate information and detailed statements have been filed complying with pertinent requirements of this code. The holder of such *permit* for the foundation or other parts of a building or structure shall proceed at the holder's own risk with the building operation and without assurance that a *permit* for the entire structure will be granted.

❖ Phased approval is needed for projects that use the "fast track" construction method, which allows construction to begin before completion of all of the plans and specifications. Although it is preferable to issue permits for projects in their entirety, the building official has the authority to issue, at his or her discretion, a permit for a portion of the construction. The building official must be satisfied that the information provided shows, in sufficient detail, that the partial construction will conform to the requirements of the code. In such a case, the permit holder proceeds at his or her own risk with the construction and has no assurance of the entire permit ever being issued.

R106.4 Amended construction documents. Work shall be installed in accordance with the *approved construction documents,* and any changes made during construction that are not in compliance with the *approved construction documents* shall be resubmitted for approval as an amended set of *construction documents*.

❖ Any amendments to the approved construction documents must be filed before constructing the amended item. In the broadest sense, amendments include all addenda, change orders, revised drawings and marked-up shop drawings. Building officials should maintain a policy that all amendments be submitted for review. Otherwise, a significant amendment may not be submitted because of misinterpretation, resulting in an activity that is not approved and that causes a needless delay in obtaining approval of the finished work.

R106.5 Retention of construction documents. One set of *approved construction documents* shall be retained by the *building official* for a period of not less than 180 days from date of completion of the permitted work, or as required by state or local laws.

❖ A set of the approved construction documents must be kept by the building official as may be required by state or local laws, but for a period of not less than 180 days after the work is complete. Questions regarding an item shown on the approved documents may arise in the period immediately following completion of the work and the documents should be available for review. See Section R104.7 for requirements to retain other records that are generated as a result of the work.

INTERNATIONAL CODE COUNCIL®
Copyright © 2015 ICC. ALL RIGHTS RESERVED. Accessed by David Dammon on Jun 21, 2017 12:30:52 PM pursuant to License Agreement with ICC. No further reproduction or distribution authorized. ANY UNAUTHORIZED REPRODUCTION OR DISTRIBUTION IS A VIOLATION OF THE FEDERAL COPYRIGHT ACT AND THE LICENSE AGREEMENT, AND SUBJECT TO CIVIL AND CRIMINAL PENALTIES THEREUNDER.

SECTION R107
TEMPORARY STRUCTURES AND USES

R107.1 General. The *building official* is authorized to issue a *permit* for temporary structures and temporary uses. Such *permits* shall be limited as to time of service, but shall not be permitted for more than 180 days. The *building official* is authorized to grant extensions for demonstrated cause.

❖ The building official can authorize temporary use permits when the applicant has met all regulations governing such use. Permits for temporary structures may also be granted subject to the provisions of this section. Although the permit is to be granted for a time period consistent with the temporary use, 180 days is the maximum period of time for which a temporary use or structure can be valid. This code section often applies to structures that are commonly used for a short duration of time at a specific location, then easily dismantled and removed, often to be reconstructed at a different site. It is common for this type of structure to be used at events such as street fairs, carnivals, circuses, parades, sporting events, weddings, concerts or revivals, or they may also be used to house construction offices. These structures range in size from small tents or shade structures, which may house a vendor at a street fair, to large tents for circuses or religious revivals. Because of the large size, large occupant load and complexity that can result from smaller structures being grouped together, the fire safety and life safety concerns as covered in Section R107.2 must be duly considered before a permit is issued.

R107.2 Conformance. Temporary structures and uses shall conform to the structural strength, fire safety, means of egress, light, ventilation and sanitary requirements of this code as necessary to ensure the public health, safety and general welfare.

❖ This section gives the building official discretion in determining the specific criteria for conformance. The issues of structural strength, fire safety, egress, light, ventilation and sanitation are mentioned in this section as the key areas of concern for temporary structures or uses. The levels of required conformance must be determined by the building official to achieve the jurisdiction's required level of safety, health and welfare. Full compliance with the code is not required for a temporary structure or temporary use, but it is clear that the level of performance set forth by the code must be considered in the development of the requirements.

A certain level of conformance is required if temporary structures are permitted in flood hazard areas established by Table R301.2(1) in order to minimize the likelihood of increasing flood heights or flood damage. Measures to consider include anchoring to prevent flotation during conditions of the base flood and avoiding placement in floodways and coastal high-hazard areas (V Zones) to avoid impacts to downstream and adjacent properties.

R107.3 Temporary power. The *building official* is authorized to give permission to temporarily supply and use power in part of an electric installation before such installation has been fully completed and the final certificate of completion has been issued. The part covered by the temporary certificate shall comply with the requirements specified for temporary lighting, heat or power in NFPA 70.

❖ Commonly, the electrical service on most construction sites is installed and energized long before all of the wiring is completed. This procedure allows the power supply to be increased as construction demands. However, temporary permission is not intended to waive the requirements set forth in NFPA 70. Construction power from the permanent wiring of the building does not require the installation of temporary ground-fault circuit interrupter (GFCI) protection or the Assured Equipment Grounding Conductor Program (AEGCP), because the building wiring installed as required by the code should be as safe for use during construction as it would be for use after completion of the building.

R107.4 Termination of approval. The *building official* is authorized to terminate such *permit* for a temporary structure or use and to order the temporary structure or use to be discontinued.

❖ This section provides the building official with the necessary authority to terminate the permit for a temporary structure or use. The building official can order that a temporary structure be removed or a temporary use be discontinued if conditions of the permit have been violated or the structure or use poses an imminent hazard to the public. This text is important because it allows the building official to act quickly when time is of the essence in order to protect public health, safety and welfare.

SECTION R108
FEES

R108.1 Payment of fees. A *permit* shall not be valid until the fees prescribed by law have been paid, nor shall an amendment to a *permit* be released until the additional fee, if any, has been paid.

❖ The code anticipates that jurisdictions will establish their own fee schedules. It is the intent that the fees collected by the department for building permit issuance, plan review and inspection be adequate to cover the costs to the department in these areas, including administration, plans examination and inspection. If the department has additional duties, then its budget will need to be supplemented from the general fund. This section requires that all fees be paid prior to permit issuance or release of an amendment to a permit. Since department operations are intended to be supported by fees paid by the user of department activities, it is important that these fees are received before incurring any expense. This philosophy has resulted in some

INTERNATIONAL CODE COUNCIL®
Copyright © 2015 ICC. ALL RIGHTS RESERVED. Accessed by David Dammon on Jun 21, 2017 12:30:52 PM pursuant to License Agreement with ICC. No further reproduction or distribution authorized. ANY UNAUTHORIZED REPRODUCTION OR DISTRIBUTION IS A VIOLATION OF THE FEDERAL COPYRIGHT ACT AND THE LICENSE AGREEMENT, AND SUBJECT TO CIVIL AND CRIMINAL PENALTIES THEREUNDER.

departments having fees paid prior to the performance of two areas of work: plan review and inspection.

R108.2 Schedule of permit fees. On buildings, structures, electrical, gas, mechanical and plumbing systems or *alterations* requiring a *permit*, a fee for each *permit* shall be paid as required, in accordance with the schedule as established by the applicable governing authority.

❖ The jurisdiction inserts its desired fee schedule at this location. The fees are established by law, such as in an ordinance adopting the code (see page xvii of the code for a sample), a separate ordinance or legally promulgated regulation, as required by state or local law. Fee schedules are often based on a valuation of the work to be performed. This concept is based on the proposition that the valuation of a project is related to the amount of work to be expended in plan review, inspections and administering the permit, plus an excess to cover the department overhead.

To assist jurisdictions in establishing uniformity in fees, building evaluation data are published twice each year in ICC's *Building Safety Journal Online*. An example of a building department fee schedule is shown in Appendix L.

R108.3 Building permit valuations. Building *permit* valuation shall include total value of the work for which a *permit* is being issued, such as electrical, gas, mechanical, plumbing *equipment* and other permanent systems, including materials and labor.

❖ Most jurisdictions develop a fee schedule based on the projected construction cost of the work to be done. Two methods are used to determine this cost valuation: 1. A "per-square-foot" factor based on the use or occupancy of the building and the type of construction involved; or 2. The "bid cost" factor based on the total accepted bid price for doing the work. The valuation is determined by including the value of the construction process, including both materials and labor. It is important that a realistic valuation be determined for every project so that permit fees are applied fairly and accurately. If the building official believes that the value provided by the applicant is underestimated, the permit should be denied unless the applicant can substantiate the value by providing detailed estimates of the work to the satisfaction of the building official.

R108.4 Related fees. The payment of the fee for the construction, *alteration*, removal or demolition for work done in connection to or concurrently with the work authorized by a building *permit* shall not relieve the applicant or holder of the *permit* from the payment of other fees that are prescribed by law.

❖ The fees for a building permit may be in addition to other fees required by the jurisdiction or others for related items, such as sewer connections, water service taps, driveways and signs. It cannot be construed that the building permit fee includes these other items. A building permit and the fees attached to that permit do not necessarily cover all aspects of the work to be performed. All fees of the jurisdiction, including those for additional permits, reinspections, investigations or other departmental functions, must be paid along with those for a building permit.

R108.5 Refunds. The *building official* is authorized to establish a refund policy.

❖ This section allows for a refund of fees, which may be full or partial, typically resulting from the revocation, abandonment or discontinuance of a building project for which a permit has been issued and fees have been collected. The refund of fees should be related to the cost of enforcement services not provided because of the termination of the project. The building official, when authorizing a fee refund, is authorizing the disbursement of public funds; therefore, the request for a refund must be in writing and for good cause.

R108.6 Work commencing before permit issuance. Any person who commences work requiring a *permit* on a building, structure, electrical, gas, mechanical or plumbing system before obtaining the necessary permits shall be subject to a fee established by the applicable governing authority that shall be in addition to the required *permit* fees.

❖ The building official will incur certain costs (e.g., inspection time and administrative) when investigating and citing a person who has commenced work without having obtained a permit. The building official is, therefore, entitled to recover these costs by establishing a fee, in addition to that collected when the required permit is issued, to be imposed on the responsible party.

SECTION R109
INSPECTIONS

R109.1 Types of inspections. For on-site construction, from time to time the *building official*, upon notification from the *permit* holder or his agent, shall make or cause to be made any necessary inspections and shall either approve that portion of the construction as completed or shall notify the *permit* holder or his or her agent wherein the same fails to comply with this code.

❖ Inspections are necessary to verify that the construction conforms to the code requirements, and this section outlines the minimum required inspections. Besides the minimum required inspections that are specifically listed, the building official has the authority to require additional inspections so that compliance with the code can be determined. It is the duty of the permit holder or an authorized agent of the permit holder to notify the building department that some or all of the work covered by the permit is ready and available for inspection. At that point, the appropriate jurisdictional inspector performs the necessary on-site inspection. The inspector then must inform the permit holder or agent that the work has been inspected. This may be by a telephone call, an electronic message or, in many cases, a written record of the inspection posted at the job site.

INTERNATIONAL CODE COUNCIL®
Copyright © 2015 ICC. ALL RIGHTS RESERVED. Accessed by David Dammon on Jun 21, 2017 12:30:52 PM pursuant to License Agreement with ICC. No further reproduction or distribution authorized. ANY UNAUTHORIZED REPRODUCTION OR DISTRIBUTION IS A VIOLATION OF THE FEDERAL COPYRIGHT ACT AND THE LICENSE AGREEMENT, AND SUBJECT TO CIVIL AND CRIMINAL PENALTIES THEREUNDER.

R109.1.1 Foundation inspection. Inspection of the foundation shall be made after poles or piers are set or trenches or *basement* areas are excavated and any required forms erected and any required reinforcing steel is in place and supported prior to the placing of concrete. The foundation inspection shall include excavations for thickened slabs intended for the support of bearing walls, partitions, structural supports, or *equipment* and special requirements for wood foundations.

❖ The foundation inspection is typically the first inspection of the job site by a representative of the Building Safety Department. At that time, the inspector will verify that the foundation is located as shown on the approved plans and in accordance with the jurisdictional requirements for building setbacks and easements. Where a footing system is to be used, the footing trenches must be excavated and any required reinforcing steel must be in place. For foundation walls, the wall forms must be completely erected with the appropriate steel reinforcement placed within the forms.

Column pads, thickened slabs and other foundation work must also be ready for inspection prior to concrete placement.

R109.1.2 Plumbing, mechanical, gas and electrical systems inspection. Rough inspection of plumbing, mechanical, gas and electrical systems shall be made prior to covering or concealment, before fixtures or *appliances* are set or installed, and prior to framing inspection.

Exception: Backfilling of ground-source heat pump loop systems tested in accordance with Section M2105.1 prior to inspection shall be permitted.

❖ The various trade rough-in inspections must be completed prior to the framing inspection. The electrical, gas, mechanical and plumbing systems that are to be concealed must be inspected and approved prior to their concealment. In addition, the effect of these systems on the structural integrity of the building must be reviewed after they are completed and ready to be covered. All of the trades inspections must be completed and approvals granted prior to the inspection of the framing system.

R109.1.3 Floodplain inspections. For construction in flood hazard areas as established by Table R301.2(1), upon placement of the lowest floor, including *basement*, and prior to further vertical construction, the *building official* shall require submission of documentation, prepared and sealed by a registered *design professional*, of the elevation of the lowest floor, including *basement*, required in Section R322.

❖ For any building constructed in a flood hazard area, the elevation of the lowest floor level must be established immediately after the placement of the floor. Documentation of this elevation is evidence of compliance (also see commentary, Section R322.3.6). If the documentation is submitted when the lowest floor level is established and before further vertical construction, errors in elevation may be corrected at the least cost. The elevation of the lowest floor is used by insurance agents to compute federal flood insurance premium costs. An error in the minimum required elevation may significantly increase the cost of flood insurance. If the elevation of the lowest floor goes uncorrected, all future owners will be exposed to flood hazards and incur the additional increase in recovery costs and insurance costs.

Documentation of elevations is also required by Section R109.1.6.1, prior to the final inspection. Most communities use the Elevation Certificate form developed by FEMA, FEMA Form 086-0-33. Insurance agents are required to use this form to write federal flood insurance policies. The Elevation Certificate is also used to record information that is useful during final inspections, including flood openings, garage floor elevations, and the elevation of equipment that serves buildings.

R109.1.4 Frame and masonry inspection. Inspection of framing and masonry construction shall be made after the roof, masonry, framing, firestopping, draftstopping and bracing are in place and after the plumbing, mechanical and electrical rough inspections are *approved*.

❖ The framing inspection is usually the final opportunity for the inspector to view all of the items that will be concealed within the structure. The inspection includes the structural frame work of the building, as well as any fireblocking or draftstopping that will be contained within concealed spaces. All of the electrical, mechanical, gas and plumbing inspections must be completed and approved prior to the framing inspection. This allows any framing members to be repaired while they are accessible.

R109.1.5 Other inspections. In addition to inspections in Sections R109.1.1 through R109.1.4, the *building official* shall have the authority to make or require any other inspections to ascertain compliance with this code and other laws enforced by the *building official*.

❖ Any item regulated by the code is subject to inspection by the building official to determine compliance with the applicable code provision, and no list can include all items in a given building. This section, therefore, gives the building official the authority to inspect any regulated items.

A variety of other inspections, such as those for gypsum board or insulation, may be mandated by the building department to verify compliance with the code or other city ordinances. These inspections are generally established as a result of local concern regarding a specific portion of the construction process. The procedure for these inspections should be consistent with the other provisions of this section.

R109.1.5.1 Fire-resistance-rated construction inspection. Where fire-resistance-rated construction is required between *dwelling units* or due to location on property, the *building official* shall require an inspection of such construction after

INTERNATIONAL CODE COUNCIL®
Copyright © 2015 ICC. ALL RIGHTS RESERVED. Accessed by David Dammon on Jun 21, 2017 12:30:52 PM pursuant to License Agreement with ICC. No further reproduction or distribution authorized. ANY UNAUTHORIZED REPRODUCTION OR DISTRIBUTION IS A VIOLATION OF THE FEDERAL COPYRIGHT ACT AND THE LICENSE AGREEMENT, AND SUBJECT TO CIVIL AND CRIMINAL PENALTIES THEREUNDER.

lathing or gypsum board or gypsum panel products are in place, but before any plaster is applied, or before board or panel joints and fasteners are taped and finished.

❖ There are a limited number of situations in which fire-resistance-rated construction is required by the code. For example, where two or more dwelling units are located within the same structure, they are required by Section R302 to be completely separated from each other by a specified level of fire resistance. This is the case for both two-family dwellings and townhouses. A second example would be the proximity of the building to an adjoining property line. Section R302 requires exterior walls located less than 3 feet (914 mm) from a property line (unless abutting a public way) to be of minimum 1-hour fire-resistance-rated construction. If either of these conditions should occur, an inspection of the fire-resistance-rated construction is required.

The inspection for compliance with the fire-resistance requirements of the code should be made at a point of construction when the membrane materials are in place, but the fasteners are still exposed. This allows the inspector to verify the appropriate fastener type and location based on the specific fire-resistance listing of the portion of the building under consideration.

R109.1.6 Final inspection. Final inspection shall be made after the permitted work is complete and prior to occupancy.

❖ The final inspection should occur after all of the work addressed by the code is complete, but prior to occupancy of the building. The issues addressed in the final inspection cover all aspects of construction, including fire safety, life safety and structural safety, as well as electrical, plumbing, gas and mechanical items. All violations of the approved construction documents and permit are to be noted and the holder of the permit is to be notified of the discrepancies. The final inspection must be approved before a certificate of occupancy can be issued.

R109.1.6.1 Elevation documentation. If located in a flood hazard area, the documentation of elevations required in Section R322.1.10 shall be submitted to the *building official* prior to the final inspection.

❖ Permittees must submit documentation of elevations before final inspection. Also see commentary for Sections R109.1.3 and R322.1.10.

R109.2 Inspection agencies. The *building official* is authorized to accept reports of *approved* agencies, provided such agencies satisfy the requirements as to qualifications and reliability.

❖ It is common for the building official to rely on other agencies for informational or inspection reports regarding various aspects covering methods of the construction process materials. This reliance should be based on the building official's approval of the qualifications and reliability of the third-party inspection or testing service.

R109.3 Inspection requests. It shall be the duty of the *permit* holder or their agent to notify the *building official* that such work is ready for inspection. It shall be the duty of the person requesting any inspections required by this code to provide access to and means for inspection of such work.

❖ It is the responsibility of the permit holder or other authorized person, such as the contractor performing the work, to arrange for the required inspections when completed work is ready and to allow for sufficient time for the building official to schedule a visit to the site to prevent work from being concealed prior to being inspected.

Each building department establishes its own procedures on how and when requests should be made. Once an inspection has been scheduled, access to the work to be inspected must be provided, including any special means such as a ladder.

R109.4 Approval required. Work shall not be done beyond the point indicated in each successive inspection without first obtaining the approval of the *building official*. The *building official* upon notification, shall make the requested inspections and shall either indicate the portion of the construction that is satisfactory as completed, or shall notify the *permit* holder or an agent of the *permit* holder wherein the same fails to comply with this code. Any portions that do not comply shall be corrected and such portion shall not be covered or concealed until authorized by the *building official*.

❖ Work must not continue past the point of a required inspection until that inspection has been approved by the building department. It is possible that if the work progresses beyond this point and is not in total compliance with the code, some of the work may have to be removed. It is critical that each individual stage of the project be approved prior to continuance of construction.

As indicated in Section R109.1, inspections must be performed when requested, and the inspector must indicate whether the construction is satisfactory or is not compliant. If the work is not approved, it must be corrected, and a reinspection must be requested. Any item not approved cannot be concealed until it has been corrected and approved by the building official.

SECTION R110
CERTIFICATE OF OCCUPANCY

R110.1 Use and occupancy. A building or structure shall not be used or occupied, and a change in the existing use or occupancy classification of a building or structure or portion thereof shall not be made, until the *building official* has issued a certificate of occupancy therefor as provided herein. Issuance of a certificate of occupancy shall not be construed as an approval of a violation of the provisions of this code or of other ordinances of the *jurisdiction*. Certificates presuming

INTERNATIONAL CODE COUNCIL®
Copyright © 2015 ICC. ALL RIGHTS RESERVED. Accessed by David Dammon on Jun 21, 2017 12:30:52 PM pursuant to License Agreement with ICC. No further reproduction or distribution authorized. ANY UNAUTHORIZED REPRODUCTION OR DISTRIBUTION IS A VIOLATION OF THE FEDERAL COPYRIGHT ACT AND THE LICENSE AGREEMENT, AND SUBJECT TO CIVIL AND CRIMINAL PENALTIES THEREUNDER.

to give authority to violate or cancel the provisions of this code or other ordinances of the *jurisdiction* shall not be valid.

Exceptions:

1. Certificates of occupancy are not required for work exempt from permits under Section R105.2.
2. Accessory buildings or structures.

❖ The tool the building official employs to control the uses and occupancies of the various buildings in a jurisdiction is the certificate of occupancy. This section establishes the conditions of a certificate of occupancy and identifies the information the certificate must contain. The building official must be satisfied that the structure meets the requirements of the code before a certificate of occupancy can be given, and the structure cannot be legally occupied until a certificate has been issued. If the occupancy classification of an existing building has changed, such as changing an old Victorian home to a small office building, a new certificate of occupancy must be issued. The certificate of occupancy is the legal notification from the Department of Building Safety that the building may be occupied for its intended purpose.

The granting of a certificate of occupancy does not necessarily indicate that no violations of the code or other jurisdictional laws exist. The building official should make every effort to determine compliance with all applicable code provisions and other ordinances of the jurisdiction. It is important that violations be corrected. It is possible that the certificate of occupancy will be revoked if it is found that the certificate was issued in error. Its issuance does not relieve the building owner from the responsibility for correcting any code violation that may exist.

The exceptions simply state that when work is not under the monitor of the building department, there is no need to deal with a certificate of occupancy.

R110.2 Change in use. Changes in the character or use of an existing structure shall not be made except as specified in Sections 3408 and 3409 of the *International Building Code*.

❖ When an existing building's character or use is modified, the provisions of Sections 407 and 408 of the IBC dealing with change of occupancy and historic buildings must be met. Because the code is limited in scope to specific residential occupancies, any change of occupancy to a use beyond the scope of Section R101.2 will be governed by the IBC.

R110.3 Certificate issued. After the *building official* inspects the building or structure and does not find violations of the provisions of this code or other laws that are enforced by the department of building safety, the *building official* shall issue a certificate of occupancy containing the following:

1. The building *permit* number.
2. The address of the structure.
3. The name and address of the owner or the owner's authorized agent.
4. A description of that portion of the structure for which the certificate is issued.
5. A statement that the described portion of the structure has been inspected for compliance with the requirements of this code.
6. The name of the *building official*.
7. The edition of the code under which the *permit* was issued.
8. If an automatic sprinkler system is provided and whether the sprinkler system is required.
9. Any special stipulations and conditions of the building *permit*.

❖ Prior to the use or occupancy of the building, the building official shall perform a final inspection as described in Section R109.1.6. The building official is required to issue a certificate of occupancy after a successful final inspection has been completed and all deficiencies and violations have been resolved. This section lists the information that must be included on the certificate. This information is useful to both the building official and the owner because it indicates the criteria under which the structure was evaluated and approved at the time the certificate was issued. Commentary Figure R110.3 illustrates the information that must be provided on the certificate of occupancy.

R110.4 Temporary occupancy. The *building official* is authorized to issue a temporary certificate of occupancy before the completion of the entire work covered by the *permit*, provided that such portion or portions shall be occupied safely. The *building official* shall set a time period during which the temporary certificate of occupancy is valid.

❖ The building official is permitted to issue a temporary certificate of occupancy for all or a portion of a building prior to the completion of all work. Such certification is to be issued only when the building or portion in question can be safely occupied prior to full completion. The certification is intended to acknowledge that some building features may not be completed even though the building is safe for occupancy, or that a portion of the building can be safely occupied while work continues in another area. This provision precludes the occupancy of a building or structure that does not contain all of the required fire protection systems and means of egress. Temporary certificates should be issued only when incidental construction remains, such as site work and interior work that is not regulated by the code and exterior decoration not necessary to the integrity of the building envelope. The building official should recognize that the issuance of a temporary certificate of occupancy is as substantial an act as the issuance of the final certificate. Indeed, the issuance of a temporary certificate of occupancy offers a greater potential for conflict because once the building or structure is occupied, it is very difficult to remove the occupants through legal means. The certificate must specify the time period for which it is valid.

INTERNATIONAL CODE COUNCIL®
Copyright © 2015 ICC. ALL RIGHTS RESERVED. Accessed by David Dammon on Jun 21, 2017 12:30:52 PM pursuant to License Agreement with ICC. No further reproduction or distribution authorized. ANY UNAUTHORIZED REPRODUCTION OR DISTRIBUTION IS A VIOLATION OF THE FEDERAL COPYRIGHT ACT AND THE LICENSE AGREEMENT, AND SUBJECT TO CIVIL AND CRIMINAL PENALTIES THEREUNDER.



Figure R110.3
CERTIFICATE OF OCCUPANCY

R110.5 Revocation. The *building official* shall, in writing, suspend or revoke a certificate of occupancy issued under the provisions of this code wherever the certificate is issued in error, or on the basis of incorrect information supplied, or where it is determined that the building or structure or portion thereof is in violation of any ordinance or regulation or any of the provisions of this code.

❖ In essence, the certificate of occupancy certifies that the described building or portion of that building complies with the requirements of the code for the intended use. However, any certificate of occupancy may be suspended or revoked by the building official under one of three conditions: 1. When the certificate is issued in error; 2. When incorrect information is supplied to the building official; or 3. When it is determined that the building or a portion of the building is shown to be in violation of the code or any other ordinance or regulation of the jurisdiction.

This section is needed to give the building official the authority to revoke a certificate of occupancy for the reasons indicated in the code text. The building official may also suspend the certificate of occupancy until all of the code violations are corrected.

SECTION R111
SERVICE UTILITIES

R111.1 Connection of service utilities. A person shall not make connections from a utility, source of energy, fuel or power to any building or system that is regulated by this code for which a *permit* is required, until *approved* by the *building official*.

❖ This section establishes the authority of the building official to approve utility connections to a building for items such as water, sewer, electricity, gas and steam, and to require their disconnection when hazardous conditions or emergencies exist.

The approval of the building official is required before a connection can be made from a utility to a building system that is regulated by the code. This includes utilities supplying water, sewer, electricity, gas and steam services. For the protection of building occupants, including workers, such systems must have had final inspection approvals, except as allowed by Section R111.2 for temporary connections.

R111.2 Temporary connection. The *building official* shall have the authority to authorize the temporary connection of the building or system to the utility, source of energy, fuel or power.

❖ The building official is permitted to issue temporary authorization to make connections to the public utility system prior to the completion of all work. This acknowledges that, because of seasonal limitations, time constraints or the need for testing or partial operation of equipment, some building systems may be safely connected even though the building is not suitable for final occupancy. The temporary connection and utilization of connected equipment should be approved when the requesting permit holder has demonstrated to the building official's satisfaction that public health, safety and welfare will not be endangered.

INTERNATIONAL CODE COUNCIL®
Copyright © 2015 ICC. ALL RIGHTS RESERVED. Accessed by David Dammon on Jun 21, 2017 12:30:52 PM pursuant to License Agreement with ICC. No further reproduction or distribution authorized. ANY UNAUTHORIZED REPRODUCTION OR DISTRIBUTION IS A VIOLATION OF THE FEDERAL COPYRIGHT ACT AND THE LICENSE AGREEMENT, AND SUBJECT TO CIVIL AND CRIMINAL PENALTIES THEREUNDER.

R111.3 Authority to disconnect service utilities. The *building official* shall have the authority to authorize disconnection of utility service to the building, structure or system regulated by this code and the referenced codes and standards set forth in Section R102.4 in case of emergency where necessary to eliminate an immediate hazard to life or property or where such utility connection has been made without the approval required by Section R111.1 or R111.2. The *building official* shall notify the serving utility and where possible the owner or the owner's authorized agent and occupant of the building, structure or service system of the decision to disconnect prior to taking such action. If not notified prior to disconnection, the owner, the owner's authorized agent or occupant of the building, structure or service system shall be notified in writing as soon as practical thereafter.

❖ Disconnection of one or more of a building's utility services is the most radical method of hazard abatement available to the building official and should be reserved for cases in which all other lesser remedies have proven ineffective. Such an action must be preceded by written notice to the utility and the owner and occupants of the building. Disconnection must be accomplished within the time frame established by the building official in the notice. When the hazard to the public health, safety or welfare is so imminent as to mandate immediate disconnection, the building official has the authority and even the obligation to cause disconnection without notice. In such cases, the owner or occupants must be given written notice as soon as possible.

SECTION R112
BOARD OF APPEALS

R112.1 General. In order to hear and decide appeals of orders, decisions or determinations made by the *building official* relative to the application and interpretation of this code, there shall be and is hereby created a board of appeals. The *building official* shall be an ex officio member of said board but shall not have a vote on any matter before the board. The board of appeals shall be appointed by the governing body and shall hold office at its pleasure. The board shall adopt rules of procedure for conducting its business, and shall render decisions and findings in writing to the appellant with a duplicate copy to the *building official*.

❖ This section holds that any aggrieved party with a material interest in the decision of the building official may appeal such a decision before a board of appeals. This provides a forum other than the court of the jurisdiction in which the building official's action can be reviewed.

A board of appeals is to be created by the jurisdiction. The primary functions of the board of appeals are hearing and acting on the appeal of orders or decisions the building official has made on the application or interpretation of the code. The building official is an ex officio member of the board of appeals, but he or she has no vote on any issue that comes before the board. The appellant is to be provided with a written copy of the board's findings and decisions, with a duplicate copy sent to the building official.

This section literally allows any person to appeal a decision of the building official. In practice, this section has been interpreted to permit appeals only by those aggrieved parties with a material or definitive interest in the decision of the building official. An aggrieved party may not appeal a code requirement per se. The intent of the appeal process is not to waive or set aside a code requirement; rather, it is intended to provide a means of reviewing a building official's decision on an interpretation or application of the code or to review the equivalency of protection to the code requirements. The members of the appeals board are appointed by the "governing body" of the jurisdiction, typically a council or administrator, such as a mayor or city manager, and remain members until removed from office. The board must establish procedures for electing a chairperson, scheduling and conducting meetings and administration. Note that Appendix B of the IBC contains complete, detailed requirements for creating an appeals board, including number of members, qualifications and administrative procedures.

R112.2 Limitations on authority. An application for appeal shall be based on a claim that the true intent of this code or the rules legally adopted thereunder have been incorrectly interpreted, the provisions of this code do not fully apply or an equally good or better form of construction is proposed. The board shall not have authority to waive requirements of this code.

❖ This section establishes the grounds for an appeal, which claims that the building official has misinterpreted or misapplied a code provision. The board is not allowed to set aside any of the technical requirements of the code; however, it is allowed to consider alternative methods of compliance with the technical requirements (see Section R104.11).

An appeal must be based on the claim that the provisions of the code have been misinterpreted, that the provisions do not apply to the appellant's circumstances, or that where an alternative method or technique of construction is used it has been shown to be at least equal to the code requirements.

R112.3 Qualifications. The board of appeals shall consist of members who are qualified by experience and training to pass judgement on matters pertaining to building construction and are not employees of the *jurisdiction*.

❖ It is important that the decisions of the appeals board are based purely on the technical merits involved in an appeal. It is not the place for policy or political deliberations. The members of the appeals board are, therefore, expected to have experience in building construction matters. The purpose of the board is to provide a review of the appeal independent from that of the building department, so no jurisdictional employee is permitted to be a member. Additional information on suggested qualifications of members of the board of appeals is contained in Appendix B of the IBC.

INTERNATIONAL CODE COUNCIL®
Copyright © 2015 ICC. ALL RIGHTS RESERVED. Accessed by David Dammon on Jun 21, 2017 12:30:52 PM pursuant to License Agreement with ICC. No further reproduction or distribution authorized. ANY UNAUTHORIZED REPRODUCTION OR DISTRIBUTION IS A VIOLATION OF THE FEDERAL COPYRIGHT ACT AND THE LICENSE AGREEMENT, AND SUBJECT TO CIVIL AND CRIMINAL PENALTIES THEREUNDER.

R112.4 Administration. The *building official* shall take immediate action in accordance with the decision of the board.

❖ Decisions made by the board of appeals must be enacted as quickly as possible. The building official is to take whatever action is necessary to see that the orders of the board are carried out.

SECTION R113
VIOLATIONS

R113.1 Unlawful acts. It shall be unlawful for any person, firm or corporation to erect, construct, alter, extend, repair, move, remove, demolish or occupy any building, structure or *equipment* regulated by this code, or cause same to be done, in conflict with or in violation of any of the provisions of this code.

❖ This section describes the citing, recording and subsequent actions to be taken when code violations are found.

R113.2 Notice of violation. The *building official* is authorized to serve a notice of violation or order on the person responsible for the erection, construction, *alteration*, extension, repair, moving, removal, demolition or occupancy of a building or structure in violation of the provisions of this code, or in violation of a detail statement or a plan *approved* thereunder, or in violation of a *permit* or certificate issued under the provisions of this code. Such order shall direct the discontinuance of the illegal action or condition and the abatement of the violation.

❖ The building official is required to notify the person responsible for the construction or use of a building found to be in violation of the code. The section of the code that is being violated must be cited so that the responsible party can respond to the notice.

R113.3 Prosecution of violation. If the notice of violation is not complied with in the time prescribed by such notice, the *building official* is authorized to request the legal counsel of the *jurisdiction* to institute the appropriate proceeding at law or in equity to restrain, correct or abate such violation, or to require the removal or termination of the unlawful occupancy of the building or structure in violation of the provisions of this code or of the order or direction made pursuant thereto.

❖ When the building owner, owner's agent or tenant does not correct the condition causing the violation as directed, the building official must pursue, through the use of legal counsel of the jurisdiction, legal means to correct the violation. This is not optional.

Any extensions that allow the violations to be corrected voluntarily must be for a reasonable, bona fide cause, or the building official may be subject to criticism for "arbitrary and capricious" actions. In general, it is better to have a standard time limitation for correction of violations. Departures from this standard must be for a clear and reasonable purpose, usually stated in writing by the violator.

R113.4 Violation penalties. Any person who violates a provision of this code or fails to comply with any of the requirements thereof or who erects, constructs, alters or repairs a building or structure in violation of the *approved construction documents* or directive of the *building official*, or of a *permit* or certificate issued under the provisions of this code, shall be subject to penalties as prescribed by law.

❖ The jurisdiction must establish penalties for a variety of violations that may occur. Violations specifically addressed by the code include failure to comply with the code, approved plans or directives of the building official.

Penalties for violating provisions of the code are typically contained in state law, particularly if the code is adopted at that level, and the building department must follow those procedures. If there is no such procedure already in effect, one must be established with the aid of legal counsel.

SECTION R114
STOP WORK ORDER

R114.1 Notice to owner or the owner's authorized agent. Upon notice from the *building official* that work on any building or structure is being executed contrary to the provisions of this code or in an unsafe and dangerous manner, such work shall be immediately stopped. The stop work order shall be in writing and shall be given to the owner of the property involved, or to the owner's authorized agent or to the person performing the work and shall state the conditions under which work will be permitted to resume.

❖ The stop work order is a tool authorized by the code that enables the building official to demand that work on a building or structure be temporarily suspended. Typically used under rare circumstances, this order may be issued where the work being performed is dangerous, unsafe or significantly contrary to the provisions of the code.

The stop work order is to be a written document indicating the reason or reasons for the suspension of work, identifying those conditions where compliance is necessary before work is allowed to resume. All work addressed by the order must cease immediately. The stop work order must be presented to either the owner of the subject property, the agent of the owner or the individual doing the work. Commentary Figure R114.1 is an example of a stop work order.

R114.2 Unlawful continuance. Any person who shall continue any work in or about the structure after having been served with a stop work order, except such work as that person is directed to perform to remove a violation or unsafe condition, shall be subject to penalties as prescribed by law.

❖ The only activity permitted in a building or a portion of a building subject to a stop work order is that work necessary to eliminate the violation or unsafe condition. Otherwise, penalties prescribed by laws of the jurisdiction must be imposed for illegal construction activity in defiance of a stop work order.

INTERNATIONAL CODE COUNCIL®
Copyright © 2015 ICC. ALL RIGHTS RESERVED. Accessed by David Dammon on Jun 21, 2017 12:30:52 PM pursuant to License Agreement with ICC. No further reproduction or distribution authorized. ANY UNAUTHORIZED REPRODUCTION OR DISTRIBUTION IS A VIOLATION OF THE FEDERAL COPYRIGHT ACT AND THE LICENSE AGREEMENT, AND SUBJECT TO CIVIL AND CRIMINAL PENALTIES THEREUNDER.

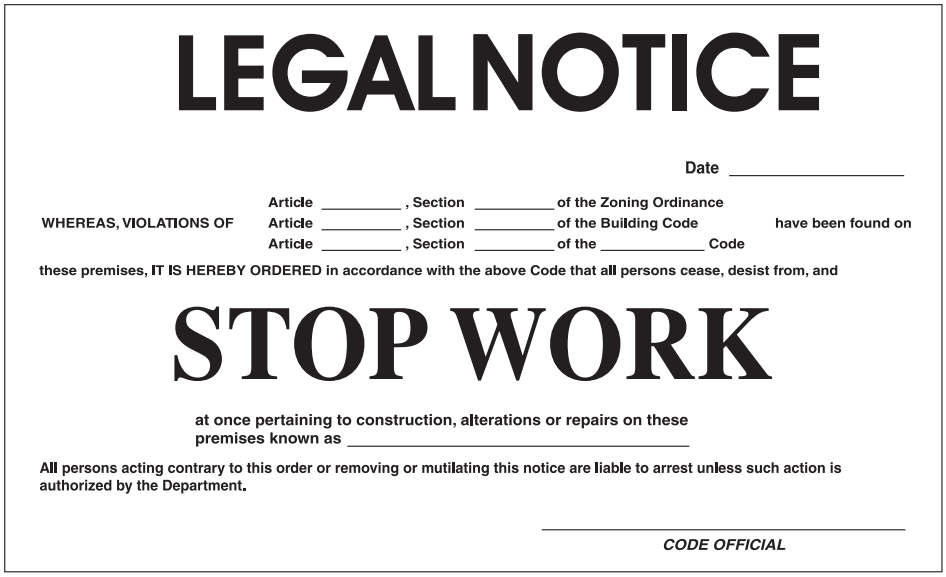

LEGAL NOTICE

Date _____

WHEREAS, VIOLATIONS OF Article _____, Section _____ of the Zoning Ordinance
Article _____, Section _____ of the Building Code have been found on
Article _____, Section _____ of the _____ Code

these premises, IT IS HEREBY ORDERED in accordance with the above Code that all persons cease, desist from, and

STOP WORK

at once pertaining to construction, alterations or repairs on these premises known as _____

All persons acting contrary to this order or removing or mutilating this notice are liable to arrest unless such action is authorized by the Department.

_____
CODE OFFICIAL

Figure R114.1
STOP WORK ORDER

Bibliography

The following resource materials were used in the preparation of the commentary for this chapter of the code:

FEMA 265, *Managing Floodplain Development in Approximate Zone A Areas*: *A Guide for Obtaining and Developing Base (100-year) Flood Elevations.* Washington, DC: Federal Emergency Management Agency, 1994.

FEMA 348, *Protecting Building Utilities from Flood Damage.* Washington, DC: Federal Emergency Management Agency, 1999.

Legal Aspects of Code Administration. Country Club Hills, IL: Building Officials and Code Administrators International, Inc.; Whittier, CA: International Conference of Building Officials; Birmingham, AL: Southern Building Code Congress International, 1984.

O'Bannon, Robert E. *Building Department Administration*. Whittier, CA: International Conference of Building Officials, 1973.

Readings in Code Administration, Volume 1: History/ Philosophy/Law. Country Club Hills, IL: Building Officials and Code Administrators International, Inc., 1974.

INTERNATIONAL CODE COUNCIL®
Copyright © 2015 ICC. ALL RIGHTS RESERVED. Accessed by David Dammon on Jun 21, 2017 12:30:52 PM pursuant to License Agreement with ICC. No further reproduction or distribution authorized. ANY UNAUTHORIZED REPRODUCTION OR DISTRIBUTION IS A VIOLATION OF THE FEDERAL COPYRIGHT ACT AND THE LICENSE AGREEMENT, AND SUBJECT TO CIVIL AND CRIMINAL PENALTIES THEREUNDER.

Part II—Definitions

Chapter 2: Definitions

Code change proposals to definitions in this chapter preceded by a bracketed letter are considered by the IRC-Building Code Development Committee [RB] or the IECC-Residential Code Development Committee [RE] during the Group B (2016) Code Development cycle.

General Comments

The code user should be familiar with the terms in this chapter because: 1. The definitions are essential to the correct interpretation of the *International Residential Code*® (IRC®); and 2. The user might not be aware that a particular term encountered in the text has the special definition found herein.

Section R201.1 contains the scope of the chapter. Section R201.2 establishes the inter-changeability of the terms in the code. Section R201.3 establishes the use of terms defined in other chapters. Section R201.4 establishes the use of undefined terms, and Section R202 lists terms and their definition according to this code.

Purpose

Codes are technical documents, so literally every word, term and punctuation mark can add to or change the meaning of the provision. Furthermore, the IRC, with its broad scope of applicability, includes terms inherent in a variety of construction disciplines. These terms can often have multiple meanings depending on the context or discipline being used at the time. For these reasons it is necessary to maintain a consensus on the specific meaning of terms contained in the IRC. Chapter 2 performs this function by stating clearly what specific terms mean for the purpose of this code.

SECTION R201 GENERAL

R201.1 Scope. Unless otherwise expressly stated, the following words and terms shall, for the purposes of this code, have the meanings indicated in this chapter.

❖ This section clarifies the terminology used in the IRC. The terms defined in the IRC often have very specific meanings, which can be different from their typical meanings. This section gives guidance to the use of the defined words relative to tense and gender and also provides the means to resolve those terms not defined.

R201.2 Interchangeability. Words used in the present tense include the future; words in the masculine gender include the feminine and neuter; the singular number includes the plural and the plural, the singular.

❖ Although the definitions contained in Chapter 2 are to be taken literally, gender and tense are considered to be interchangeable; thus, any gender and tense inconsistencies within the code text should not hinder the understanding or enforcement of the requirements.

R201.3 Terms defined in other codes. Where terms are not defined in this code such terms shall have the meanings ascribed in other code publications of the International Code Council.

❖ When a word or term appears in the code that is not defined in this chapter, other code publications of the *International Code Council*® (ICC®) may be used to find its definition. These code documents include the *International Building Code*® (IBC®), *International Mechanical Code*® (IMC®), *International Plumbing Code*® (IPC®), *International Fuel Gas Code*® (IFGC®), *International Fire Code*® (IFC®) and others. These codes contain additional definitions (some parallel and duplicated) which may be used in the enforcement of this code or in the enforcement of the other ICC codes by reference. When using a definition from another code, keep in mind the admonition from "Purpose": "These terms can often have multiple meanings depending on the context or discipline being used at the time."

R201.4 Terms not defined. Where terms are not defined through the methods authorized by this section, such terms shall have ordinarily accepted meanings such as the context implies.

❖ Another possible source for the definitions of words or terms not defined in this code or in other codes is their

INTERNATIONAL CODE COUNCIL®
Copyright © 2015 ICC. ALL RIGHTS RESERVED. Accessed by David Dammon on Jun 21, 2017 12:30:52 PM pursuant to License Agreement with ICC. No further reproduction or distribution authorized. ANY UNAUTHORIZED REPRODUCTION OR DISTRIBUTION IS A VIOLATION OF THE FEDERAL COPYRIGHT ACT AND THE LICENSE AGREEMENT, AND SUBJECT TO CIVIL AND CRIMINAL PENALTIES THEREUNDER.

"ordinarily accepted meanings." Dictionary definitions may suffice, provided that the definitions are in context.

Sometimes construction terms used throughout the code may not be defined in Chapter 2, in another code, or in a dictionary. In such cases, one would first turn to the definitions contained in the referenced standards (see Chapter 43) and then to textbooks on the subject in question.

SECTION R202
DEFINITIONS

ACCESSIBLE. Signifies access that requires the removal of an access panel or similar removable obstruction.

❖ In general, where immediate access is not required because of the low level of hazard involved, an accessible method is all that is mandated, such as the removal of an access panel. The electrical definitions found in Chapter 34 contain two additional definitions for accessible that apply specifically to electrical wiring methods and electrical equipment (see Section 1102 of the IBC for the meaning of "accessible" as it applies to the requirements for "accessible" dwelling units in Section R320).

ACCESSIBLE, READILY. Signifies access without the necessity for removing a panel or similar obstruction.

❖ Where this term is designated as a requirement by other sections of the code, it is intended that access to the device, controls, shut-off valves or other element be extremely easy. "Readily accessible" means that the device must be reachable directly without a panel, door or equipment needing to be moved to gain access. Chapter 24, "Fuel Gas," has a similar definition noted as "Ready access (to)."

[RB] ACCESSORY STRUCTURE. A structure that is accessory to and incidental to that of the *dwelling*(*s*) and that is located on the same *lot*.

❖ As it applies to the scope of the code in Section R101.2, this term describes structures that are designed for accessory use to one- or two-family dwellings and multiple single-family townhouses. These structures are commonly used as garages, carports, cabanas, storage sheds, tool sheds, playhouses and garden structures.

The structures all house uses that are incidental to the primary use, which is the dwelling unit, and the activities that take place in accessory structures occur as a result of the primary building. Their use is secondary or minor in importance to the primary residence.

[RB] ADDITION. An extension or increase in floor area or height of a building or structure.

❖ This term is used to describe the condition when the floor area or height of an existing building or structure is increased. This term is only applicable to existing buildings, never new ones. This would include additional floor area that is added within an existing building, such as adding a new mezzanine, or an increase in roof height (see also Section R102.7).

[RB] ADHERED STONE OR MASONRY VENEER. Stone or masonry veneer secured and supported through the adhesion of an *approved* bonding material applied to an *approved* backing.

❖ This is a common type of material used for a building façade. It is simply defined in order to allow use of the description to mean a specific type of material.

AIR ADMITTANCE VALVE. A one-way valve designed to allow air into the plumbing drainage system where a negative pressure develops in the piping. This device shall close by gravity and seal the terminal under conditions of zero differential pressure (no flow conditions) and under positive internal pressure.

❖ An air admittance valve is an alternative to traditional vent piping configurations. Such valves allow the venting of fixtures where conventional venting may be impractical. The valve is designed to open and admit air into the drainage system when negative pressures occur. The valve closes by gravity and seals the vent terminal when the internal drain pressure is equal to or exceeds atmospheric pressure. The seal prevents sewer gas from entering the building [see Commentary Figures R202(1) and R202(2)].

AIR BARRIER. See Section N1101.6 for definition applicable in Chapter 11.

❖ Air barriers are an integral part of the thermal envelope of a building for energy conservation.

AIR BREAK (DRAINAGE SYSTEM). An arrangement where a discharge pipe from a fixture, *appliance* or device drains indirectly into a receptor below the flood-level rim of the receptor and above the trap seal.

❖ An air break is an indirect drainage method by which waste discharges to the drainage system through piping that terminates below the flood level rim of an approved receptor. An air break is commonly used to protect mechanical equipment from sewage backup in the event that stoppage occurs. It also protects the drainage system from adverse pressure conditions caused by pumped discharge [see Commentary Figure R202(3)].

AIR CIRCULATION, FORCED. A means of providing space conditioning utilizing movement of air through ducts or plenums by mechanical means.

❖ Forced-air systems use a central heating or cooling unit equipped with a fan to return unconditioned air through return ducts and to deliver conditioned air through supply ducts or plenums to occupied spaces.

AIR-CONDITIONING SYSTEM. A system that consists of heat exchangers, blowers, filters, supply, exhaust and return-air systems, and shall include any apparatus installed in connection therewith.

❖ This definition is limited to the components commonly used in a mechanical air-conditioning system. Additional parts of the air-conditioning system include thermostats, humidistats, dampers and any other controls needed for the system to operate properly.

INTERNATIONAL CODE COUNCIL®
Copyright © 2015 ICC. ALL RIGHTS RESERVED. Accessed by David Dammon on Jun 21, 2017 12:30:52 PM pursuant to License Agreement with ICC. No further reproduction or distribution authorized. ANY UNAUTHORIZED REPRODUCTION OR DISTRIBUTION IS A VIOLATION OF THE FEDERAL COPYRIGHT ACT AND THE LICENSE AGREEMENT, AND SUBJECT TO CIVIL AND CRIMINAL PENALTIES THEREUNDER.

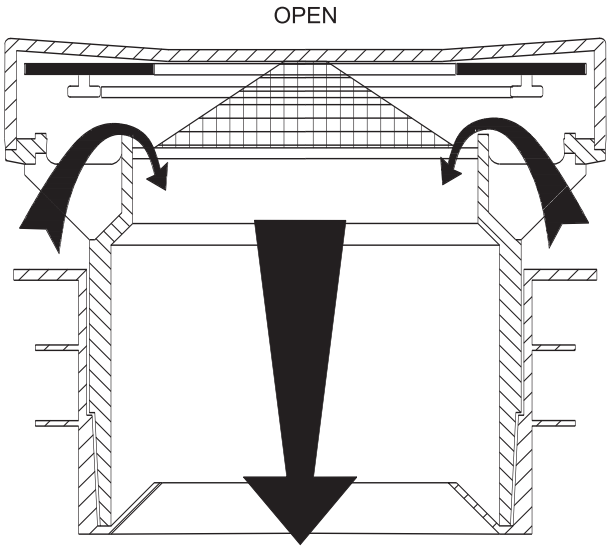

Figure R202(1)
AIR ADMITTANCE VALVE OPENS TO ADMIT AIR TO RELIEVE NEGATIVE PRESSURE

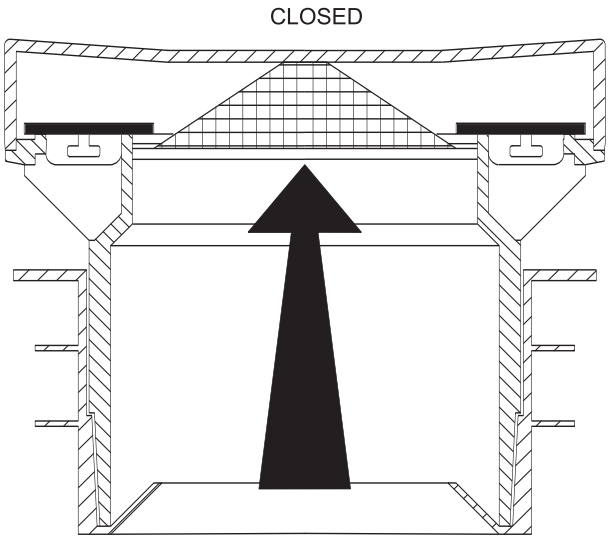

Figure R202(2)
AIR ADMITTANCE VALVE CLOSES AND SEALS VENT UNDER ZERO OR POSITIVE PRESSURE

AIR GAP, DRAINAGE SYSTEM. The unobstructed vertical distance through free atmosphere between the outlet of a waste pipe and the flood-level rim of the fixture or receptor into which it is discharging.

❖ In a drainage system air gap, waste is discharged to the drainage system through piping that terminates at a specified distance above the flood level rim of an approved receptor.

The air gap serves as an impossible barrier for sewage to overcome in the event that stoppage occurs in the receptor drain, because sewage backup would overflow in the receptor drain flood level before it comes in contact with the drain line above [see Commentary Figure R202(3)].

AIR GAP, WATER-DISTRIBUTION SYSTEM. The unobstructed vertical distance through free atmosphere between the lowest opening from a water supply discharge to the flood-level rim of a plumbing fixture.

❖ An air gap is the most reliable and effective means of backflow protection. It is simply the vertical airspace between the potable water supply outlet and the possible source of contamination. This air gap prevents possible contamination of the potable water supply by preventing the supply outlet, such as a faucet, from

INTERNATIONAL CODE COUNCIL®
Copyright © 2015 ICC. ALL RIGHTS RESERVED. Accessed by David Dammon on Jun 21, 2017 12:30:52 PM pursuant to License Agreement with ICC. No further reproduction or distribution authorized. ANY UNAUTHORIZED REPRODUCTION OR DISTRIBUTION IS A VIOLATION OF THE FEDERAL COPYRIGHT ACT AND THE LICENSE AGREEMENT, AND SUBJECT TO CIVIL AND CRIMINAL PENALTIES THEREUNDER.

backsiphoning waste water from a basin, for example. Many manufacturers have developed air gap fittings that provide a rigid connection to the drainage system while maintaining the minimum level of protection from contamination.

[RB] AIR-IMPERMEABLE INSULATION. An insulation having an air permanence equal to or less than 0.02 L/s-m^2 at 75 Pa pressure differential as tested in accordance with ASTM E2178 or E283.

❖ In all buildings, an air-impermeable layer is required to prevent air leakage into the building. In some cases, the insulation will serve that purpose, if it is insulation as defined here.

[RB] ALTERATION. Any construction, retrofit or renovation to an existing structure other than repair or addition that requires a permit. Also, a change in a building, electrical, gas, mechanical or plumbing system that involves an extension, addition or change to the arrangement, type or purpose of the original installation that requires a permit.

❖ The modification of an existing structure without adding any floor area or height to the structure is an alteration. Section R105 of the code specifies that a permit for the alteration work is required before work begins. The code utilizes this term to reflect construction operations intended for an existing building, but not within the scope of an addition or repair (see the definitions of "Addition" and "Repair"). The term "alteration" also applies to mechanical work where the original installation is altered in a manner requiring a permit. The repairs described in Section R105.2.2 are not alterations because a permit is not required.

[RB] ALTERNATING TREAD DEVICE. A device that has a series of steps between 50 and 70 degrees (0.87 and 1.22 rad) from horizontal, usually attached to a center support rail in an alternating manner so that the user does not have both feet on the same level at the same time.

❖ Alternating tread devices are regulated by Sections R311.7.11, R311.7.11.1 and R311.7.11.2.

[RB] ANCHORED STONE OR MASONRY VENEER. Stone or masonry veneer secured with *approved* mechanical fasteners to an *approved* backing.

❖ This is a common type of material used for a building façade. It is simply defined in order to allow use of the description to mean a specific type of material.

ANCHORS. See "Supports."

❖ Anchors are the same types of devices as supports. Any device, such as a hanger used to support or secure piping and fixtures, is an anchor.

ANTISIPHON. A term applied to valves or mechanical devices that eliminate siphonage.

❖ The term refers to the function of certain valves and devices used to break or prevent the siphon effect that can be created in plumbing systems.

APPLIANCE. A device or apparatus that is manufactured and designed to utilize energy and for which this code provides specific requirements.

❖ An appliance is a manufactured component or assembly of components that converts one form of energy into a different form of energy to serve a specific purpose. The term "appliance" generally refers to residential and commercial equipment that is manufactured in standardized sizes or types. The term is generally not associated with industrial equipment. For the application of the code provisions, the terms "appliance" and "equipment" are mutually exclusive.

Examples of appliances include furnaces; boilers; water heaters; room heaters; refrigeration units; cooking equipment; clothes dryers; wood stoves; pool, spa and hot tub heaters; unit heaters ovens; and similar fuel-fired or electrically operated appliances (see the definition of "Equipment").

[RB] APPROVED. Acceptable to the *building official*.

❖ Throughout the code, the term "approved" is used to describe a specific material or method of construction, such as the approved drainage system mentioned in

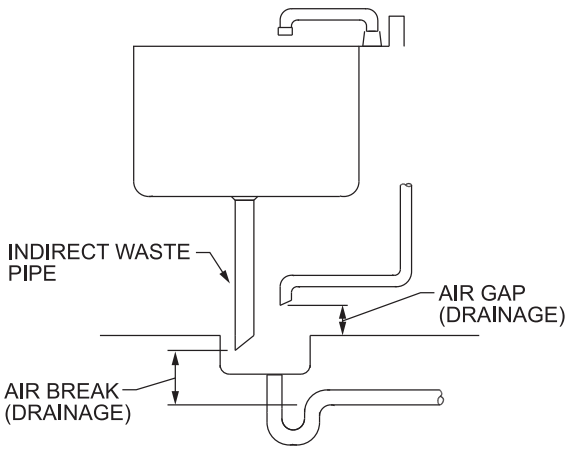

Figure R202(3)
AIR GAP, AIR BREAK

INTERNATIONAL CODE COUNCIL®
Copyright © 2015 ICC. ALL RIGHTS RESERVED. Accessed by David Dammon on Jun 21, 2017 12:30:52 PM pursuant to License Agreement with ICC. No further reproduction or distribution authorized. ANY UNAUTHORIZED REPRODUCTION OR DISTRIBUTION IS A VIOLATION OF THE FEDERAL COPYRIGHT ACT AND THE LICENSE AGREEMENT, AND SUBJECT TO CIVIL AND CRIMINAL PENALTIES THEREUNDER.

Section R405.1. Where "approved" is used, it means that the design, material or method of construction is acceptable to the building official. It is imperative that the building officials base their decision of approval on the result of investigations, tests or accepted principles or practices.

As related to the process of acceptance of building installations, including materials, equipment and construction systems, this definition identifies where the ultimate authority rests. Whenever this term is used, it intends that only the enforcing authority can accept a specific installation or component as complying with the code. The building official is identified as the person responsible for administering its provisions in this code. For the IFC, the fire code official is identified as the person responsible for administering IFC provisions. For the *International Property Maintenance Code*® (IPMC®), the code official is identified as the person responsible.

[RB] APPROVED AGENCY. An established and recognized agency that is regularly engaged in conducting tests or furnishing inspection services, where such agency has been *approved* by the building official.

❖ The building official will occasionally rely on the expertise of others to assist in plan review and inspection activities, or the owner will employ an individual or company to provide testing services for portions of the construction work. An agency qualified to perform such activities is an "approved agency." The building official will review an agency's qualifications, expertise and reliability to determine whether the agency should be granted approval for a specific activity.

The basis for the building official's approval of any agency for a particular activity may include, but is not necessarily limited to, the capacity and capability of the agency to perform the work in accordance with applicable sections of the code. This is typically done through a review of the résumés and references of the agency and its personnel. For the IRC the building official is identified as the person responsible for approval.

[RB] ASPECT RATIO. The ratio of longest to shortest perpendicular dimensions, or for wall sections, the ratio of height to length.

❖ The shear wall or braced wall panel height divided by the width or length of the shear wall or braced wall panel is defined as the aspect ratio. Generally, the code places limits on shear wall aspect ratios to limit shear wall deformation.

[RB] ATTIC. The unfinished space between the ceiling assembly and the roof assembly.

❖ The unfinished space between the ceiling joists of the top story and the roof rafters.

Several provisions apply to the attic area of a building, such as those relating to ventilation of the attic space. The code identifies an attic as the unfinished space between the ceiling joists of the top story and the roof assembly. Such a space would be the top story, rather than the attic, if it is finished and occupiable, except where it is in accordance with the definition for "Habitable attic."

[RB] ATTIC, HABITABLE. A finished or unfinished area, not considered a *story*, complying with all of the following requirements:

1. The occupiable floor area is not less than 70 square feet (17 m^2), in accordance with Section R304.
2. The occupiable floor area has a ceiling height in accordance with Section R305.
3. The occupiable space is enclosed by the roof assembly above, knee walls (if applicable) on the sides and the floor-ceiling assembly below.

❖ The code allows that an attic can contain habitable space. In such cases, the attic is not required to be considered as a story. Note that there is no limitation given for the area of the attic that contains habitable space.

BACKFLOW, DRAINAGE. A reversal of flow in the drainage system.

❖ Backflow is a condition found in plumbing systems where the contents of the piping flow in a direction opposite of the intended direction.

BACKFLOW PREVENTER. A backflow prevention assembly, a backflow prevention device or other means or method to prevent backflow into the potable water supply.

❖ There are three distinct classes of backflow equipment: assemblies, devices and other means or methods. This class distinction clarifies that an assembly is field testable, a device is not testable in the field and a mean or method is observable for their adequacy to protect the potable water supply from backflow. Table P2902.3 was reorganized to group backflow equipment into these three classes. This change should make the code user more aware of the suitability of particular backflow equipment after the initial installation. In other words, if a verification of the backflow protection is needed year after year, either an assembly would be chosen for its field testability or other means or methods would be chosen so that installation conditions can be observed.

BACKFLOW PREVENTER, REDUCED-PRESSURE-ZONE TYPE. A backflow-prevention device consisting of two independently acting check valves, internally force loaded to a normally closed position and separated by an intermediate chamber (or zone) in which there is an automatic relief means of venting to atmosphere internally loaded to a normally open position between two tightly closing shutoff valves and with means for testing for tightness of the checks and opening of relief means.

❖ This device is one of the most reliable mechanical devices (second only to an air gap) for the prevention of backflow. It uses two spring-loaded check valves with a relief valve in between that monitors the system pressure upstream and downstream of the device. The zone between the check valves is maintained at a pressure that is less than the water supply pressure.

INTERNATIONAL CODE COUNCIL®
Copyright © 2015 ICC. ALL RIGHTS RESERVED. Accessed by David Dammon on Jun 21, 2017 12:30:52 PM pursuant to License Agreement with ICC. No further reproduction or distribution authorized. ANY UNAUTHORIZED REPRODUCTION OR DISTRIBUTION IS A VIOLATION OF THE FEDERAL COPYRIGHT ACT AND THE LICENSE AGREEMENT, AND SUBJECT TO CIVIL AND CRIMINAL PENALTIES THEREUNDER.

BACKFLOW, WATER DISTRIBUTION. The flow of water or other liquids into the potable water-supply piping from any sources other than its intended source. Backsiphonage is one type of backflow.

❖ There are primarily three types of backflow conditions that could occur in a water distribution system: 1. Backpressure; 2. Backpressure, low-head; and 3. Backsiphonage.

1. Backpressure. Liquid in a pipe flows from a high-pressure condition to a low-pressure condition, such as when the pressure within the water distribution system is greater than that in the water service. The water will reverse its intended direction of flow and return to the water supply unless a device to prevent backflow has been installed in the line. Elevated pressure can be created through mechanical means, such as a pumping system, or it can be the result of a loss of pressure within the main water supply. Backpressure often occurs in a system or a portion of a system that is closed (not open to the atmosphere).
2. Backpressure, low-head. This is the backpressure created where the source of backpressure comes from a hose elevated to a level that produces 10 feet (3048 mm) or less of water column at the outlet. Low-head backpressure typically occurs at a hose connection, such as a wall hydrant or sillcock. Certain types of backflow assemblies and devices are designed specifically for either backpressure or low-head backpressure.
3. Backsiphonage. See "Backsiphonage."

BACKPRESSURE. Pressure created by any means in the water distribution system that by being in excess of the pressure in the water supply mains causes a potential backflow condition.

❖ Liquid in a pipe flows from a high-pressure condition to a low-pressure condition, such as when the pressure within the water distribution system is greater than that in the water service. The water will reverse its intended direction of flow and return to the water supply, unless a device to prevent backflow has been installed in the line. Elevated pressures can be created through mechanical means, such as a pumping system, or can be the result of a loss of pressure within the main water supply. Backpressure will often occur in a system or a portion of a system that is closed, i.e., it is not open to the atmosphere.

BACKPRESSURE, LOW HEAD. A pressure less than or equal to 4.33 psi (29.88 kPa) or the pressure exerted by a 10-foot (3048 mm) column of water.

❖ Low-head backpressure is created where the source of backpressure comes from a hose elevated to a level that produces 10 feet (3048 mm) or less of water column at the outlet. A hose connection, such as a wall hydrant or faucet, is where "low-head backpressure" is typically experienced. (see also the commentary to "Backpressure").

BACKSIPHONAGE. The flowing back of used or contaminated water from piping into a potable water-supply pipe due to a negative pressure in such pipe.

❖ Backsiphonage occurs when the pressure within a potable water distribution system drops below atmospheric pressure or negative gauge pressure. It, like backpressure, allows the normal direction of flow to reverse. A siphon can result in an unprotected cross connection, causing contamination or pollution of the potable water supply. The main difference between backsiphonage and backpressure is the pressure in the system. Water distribution systems having a pressure less than zero gauge have the potential to create a siphon, resulting in backsiphonage. Backpressure typically occurs in a closed system, and backsiphonage typically occurs in an open system (open to the atmosphere).

BACKWATER VALVE. A device installed in a drain or pipe to prevent backflow of sewage.

❖ A backwater valve is a type of check valve designed for installation in drainage piping. The valve has a lower invert downstream of the flapper than upstream to help prevent solids from interfering with valve closure.

[RB] BASEMENT. A *story* that is not a *story above grade plane*. (see "Story above grade plane").

❖ Defined as "a story that is not a story above grade," a basement is further identified in the provisions in Section R202 for a "story above grade." Specific provisions, including the requirement for emergency escape and rescue openings in Section R310.1, are applicable for those floor levels meeting the criteria for basements. The presence of occupiable space below grade level causes various concerns that are addressed by the code.

[RB] BASEMENT WALL. The opaque portion of a wall that encloses one side of a *basement* and has an average below *grade* wall area that is 50 percent or more of the total opaque and nonopaque area of that enclosing side.

❖ A basement wall is defined in respect to the energy efficiency provisions of Chapter 11. A wall that encloses a basement and does not qualify as an exterior wall is a basement wall.

[RB] BASIC WIND SPEED. Three-second gust speed at 33 feet (10 058 mm) above the ground in Exposure C (see Section R301.2.1) as given in Figure R301.2(4)A.

❖ Basic wind speed, the basis for a number of structural decisions in the IRC, is the 3-second gust speed measured at a point 33 feet (10058 mm) above the ground. The assumed exposure used in determining the basic wind speed is that for generally open terrain having scattered obstructions. Ultimate design wind speed has replaced basic wind speed in most of the structural requirements in the code that address wind loads.

INTERNATIONAL CODE COUNCIL®
Copyright © 2015 ICC. ALL RIGHTS RESERVED. Accessed by David Dammon on Jun 21, 2017 12:30:52 PM pursuant to License Agreement with ICC. No further reproduction or distribution authorized. ANY UNAUTHORIZED REPRODUCTION OR DISTRIBUTION IS A VIOLATION OF THE FEDERAL COPYRIGHT ACT AND THE LICENSE AGREEMENT, AND SUBJECT TO CIVIL AND CRIMINAL PENALTIES THEREUNDER.

BATHROOM GROUP. A group of fixtures, including or excluding a bidet, consisting of a water closet, lavatory, and bathtub or shower. Such fixtures are located together on the same floor level.

❖ Special consideration is given to a bathroom group when sizing water distribution systems and drain, waste and vent piping because of fixture usage. "Bathroom group" has historically referred to a single water closet, a lavatory and a bathtub or shower, all located within a single room. Such an arrangement would normally allow only one occupant in the room; therefore, the likelihood of simultaneous fixture discharge is remote. For the fixture-usage theory of the bathroom group to be valid, the fixtures in the group must be located within the same bathroom. A bidet has been added to the group of fixtures constituting a bathroom group.

BEND. A drainage fitting, designed to provide a change in direction of a drain pipe of less than the angle specified by the amount necessary to establish the desired slope of the line (see "Elbow" and "Sweep").

❖ This term denotes a one-way fitting (often referred to as an elbow) that is typically used in a drainage system to make a change in direction within a single run of pipe. Although bends (or elbows) are used in other plumbing and mechanical piping systems, in this instance the term refers to a drainage fitting that will meet the required radius of turn.

BOILER. A self-contained *appliance* from which hot water is circulated for heating purposes and then returned to the boiler, and that operates at water pressures not exceeding 160 pounds per square inch gage (psig) (1102 kPa gauge) and at water temperatures not exceeding 250°F (121°C).

❖ Boilers are usually manufactured of steel or cast iron, and are used to transfer heat (from the combustion of a fuel or from an electric-resistance element) to water for supplying steam or hot pressurized water for heating or other process or power purposes.

Boilers are usually installed in closed systems where the heat transfer medium is recirculated and retained within the system. Hot water supply boilers are normally part of open systems where the heated water is supplied and used externally to the boiler. Large domestic (potable) water heating systems often employ hot water supply boilers.

Boilers must be labeled and installed in accordance with the manufacturer's instructions and the applicable sections of the code. Boilers are rated in accordance with standards published by the American Society of Mechanical Engineers (ASME), the Hydronics Institute, the Steel Boiler Institute (SBI), the American Gas Association (AGA) and the American Boiler Manufacturers Association (ABMA). Boilers can be classified in accordance with the following: working temperature, working pressure, type of fuel used (or electric boilers), materials of construction and whether or not the heat transfer medium changes phase from a liquid to a vapor.

[RB] BOND BEAM. A horizontal grouted element within masonry in which reinforcement is embedded.

❖ Composed of masonry, grout and reinforcement, a bond beam is a horizontal structural member constructed to transfer loads while tying the wall together.

[RB] BRACED WALL LINE. A straight line through the building plan that represents the location of the lateral resistance provided by the wall bracing.

❖ Commonly referred to as shear wall, a braced wall line is used to resist the lateral racking forces created by seismic or wind loading. A number of braced wall panels work together to form a braced wall line. The code has specific requirements for the method of constructing a braced wall line. Where a building does not comply with the bracing requirements of Chapter 6, those portions of the building not meeting the requirements must be designed in accordance with accepted engineering practice.

[RB] BRACED WALL LINE, CONTINUOUSLY SHEATHED. A *braced wall line* with structural sheathing applied to all sheathable surfaces including the areas above and below openings.

❖ A series of braced wall panels in a single story constructed in accordance with Section R602.10 for wood framing or Section R603.3.3 or R301.1.1 for cold-formed steel framing to resist racking from seismic and wind forces.

Commonly referred to as a shear wall, a braced wall line is used to resist the lateral racking forces created by seismic or wind loading. A number of braced wall panels work together to form a braced wall line. The code has specific requirements for the method of constructing a braced wall line. Where a building does not comply with the bracing requirements of Chapter 6, those portions of the building not meeting the requirements must be designed in accordance with accepted engineering practice.

[RB] BRACED WALL PANEL. A full-height section of wall constructed to resist in-plane shear loads through interaction of framing members, sheathing material and anchors. The panel's length meets the requirements of its particular bracing method, and contributes toward the total amount of bracing required along its *braced wall line* in accordance with Section R602.10.1.

❖ A braced wall line is composed of a series of braced wall panels constructed in accordance with the provisions of Chapter 6. A braced wall panel must extend the full height of the wall.

BRANCH. Any part of the piping system other than a riser, main or stack.

❖ A branch refers to piping that connects to a riser, main or stack in a plumbing system. Branch piping is generalized as horizontal piping, can include vertical offsets and is smaller in size or capacity than the main artery or trunk from which it extends. It is analogous to branches of a tree.

INTERNATIONAL CODE COUNCIL®
Copyright © 2015 ICC. ALL RIGHTS RESERVED. Accessed by David Dammon on Jun 21, 2017 12:30:52 PM pursuant to License Agreement with ICC. No further reproduction or distribution authorized. ANY UNAUTHORIZED REPRODUCTION OR DISTRIBUTION IS A VIOLATION OF THE FEDERAL COPYRIGHT ACT AND THE LICENSE AGREEMENT, AND SUBJECT TO CIVIL AND CRIMINAL PENALTIES THEREUNDER.

BRANCH, FIXTURE. See "Fixture branch, drainage."

❖ See the commentary to "Fixture branch, drainage."

BRANCH, HORIZONTAL. See "Horizontal branch, drainage."

❖ See the commentary to "Horizontal branch, drainage."

BRANCH INTERVAL. A vertical measurement of distance, 8 feet (2438 mm) or more in *developed length*, between the connections of horizontal branches to a drainage stack. Measurements are taken down the stack from the highest horizontal branch connection.

❖ A branch interval is the vertical distance between a drainage stack's branch connections. In typical construction practice, the branch drain will connect to a stack near the floor level; therefore, the branch interval will correspond to the height of the story in which it is located. Depending on the design of the building, however, a branch interval may not correspond to the height of the story because stories are not limited in height. Therefore, the code requires a branch interval to be at least 8 feet (2438 mm) in developed length between the connections of the horizontal branches to the drainage stack.

Branch intervals are a design factor in drainage pipe sizing and venting design. Drain, waste and vent system design must consider the nature of waste and airflow in a stack and the effects that branch connections have on that flow.

BRANCH, MAIN. A water-distribution pipe that extends horizontally off a main or riser to convey water to branches or fixture groups.

❖ This applies to the primary water supply system piping that extends horizontally off a main or riser to supply water to branches or groups of fixtures.

BRANCH, VENT. A vent connecting two or more individual vents with a vent stack or stack vent.

❖ See Commentary Figure R202(4).

BTU/H. The *listed* maximum capacity of an *appliance*, absorption unit or burner expressed in British thermal units input per hour.

❖ This term stands for British thermal units per hour. Fuel-fired appliances and equipment are rated based on their Btu/h (W) input or output.

[RB] BUILDING. Building shall mean any one- and two-family dwelling or portion thereof, including *townhouses*, that is used, or designed or intended to be used for human habitation, for living, sleeping, cooking or eating purposes, or any combination thereof, and shall include *accessory structures* thereto.

❖ The code uses this term to identify those structures that provide shelter for a function or activity. More specifically, according to the code, a building is a single-family dwelling, a two-family dwelling, a townhouse or an accessory structure to such buildings. The use of a building, excluding an accessory structure, is human habitation, which specifically includes living, sleeping, cooking or eating.

BUILDING DRAIN. The lowest piping that collects the discharge from all other drainage piping inside the house and extends 30 inches (762 mm) in *developed length* of pipe, beyond the *exterior walls* and conveys the drainage to the *building sewer*.

❖ A building drain is usually the main drain of a system within a structure. Building drains are horizontal (including vertical offsets) and are the portion of the drainage system that is at the lowest elevation in the structure. All horizontal drains above the elevation of

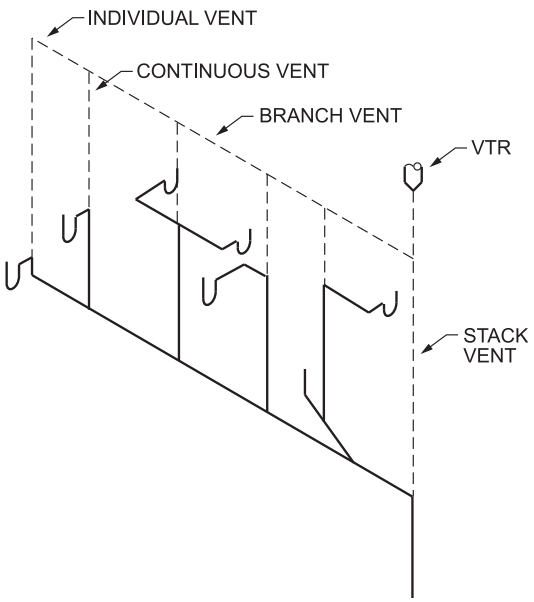

Figure R202(4)
BRANCH VENT

INTERNATIONAL CODE COUNCIL®
Copyright © 2015 ICC. ALL RIGHTS RESERVED. Accessed by David Dammon on Jun 21, 2017 12:30:52 PM pursuant to License Agreement with ICC. No further reproduction or distribution authorized. ANY UNAUTHORIZED REPRODUCTION OR DISTRIBUTION IS A VIOLATION OF THE FEDERAL COPYRIGHT ACT AND THE LICENSE AGREEMENT, AND SUBJECT TO CIVIL AND CRIMINAL PENALTIES THEREUNDER.

the building drain are horizontal branches. The building drain terminates at the point where it exits the building [see Commentary Figure R202(5)].

[RB] BUILDING, EXISTING. Existing building is a building erected prior to the adoption of this code, or one for which a legal building *permit* has been issued.

❖ There are two definitions for an existing building. The most general use of the term is for a building that has been constructed prior to the adoption of the 2000 IRC. In other words, any building that is in existence at the time the current code is adopted by the jurisdiction is "existing." A second definition relates to those buildings that have been issued a building permit. Once a building is under construction, it is an "existing building" and is regulated by the code under which the permit was issued.

[RB] BUILDING-INTEGRATED PHOTOVOLTAIC PRODUCT. A building product that incorporates photovoltaic modules and functions as a component of the building envelope.

❖ This term is used in Sections R324.5 and R902.3. This definition also appears in the IBC.

[RB] BUILDING LINE. The line established by law, beyond which a building shall not extend, except as specifically provided by law.

❖ The building line is not established by the code but rather by the jurisdiction as the point beyond which the construction of a building is not permitted. Often known as a setback line or a building setback, the building line is established to maintain order within the community's building stock. The code does not regulate construction with regard to any jurisdictional building line.

[RB] BUILDING OFFICIAL. The officer or other designated authority charged with the administration and enforcement of this code.

❖ Regardless of title, the individual designated by the jurisdiction as the person who administers and enforces the code and is responsible for issuing permits is the building official. In addition, the building official may appoint various other individuals to assist in the activities of the Department of Building Safety. In many jurisdictions, the authority of the building official is extended to plans examiners and inspectors to some degree. Section R104 sets forth the duties and respon-

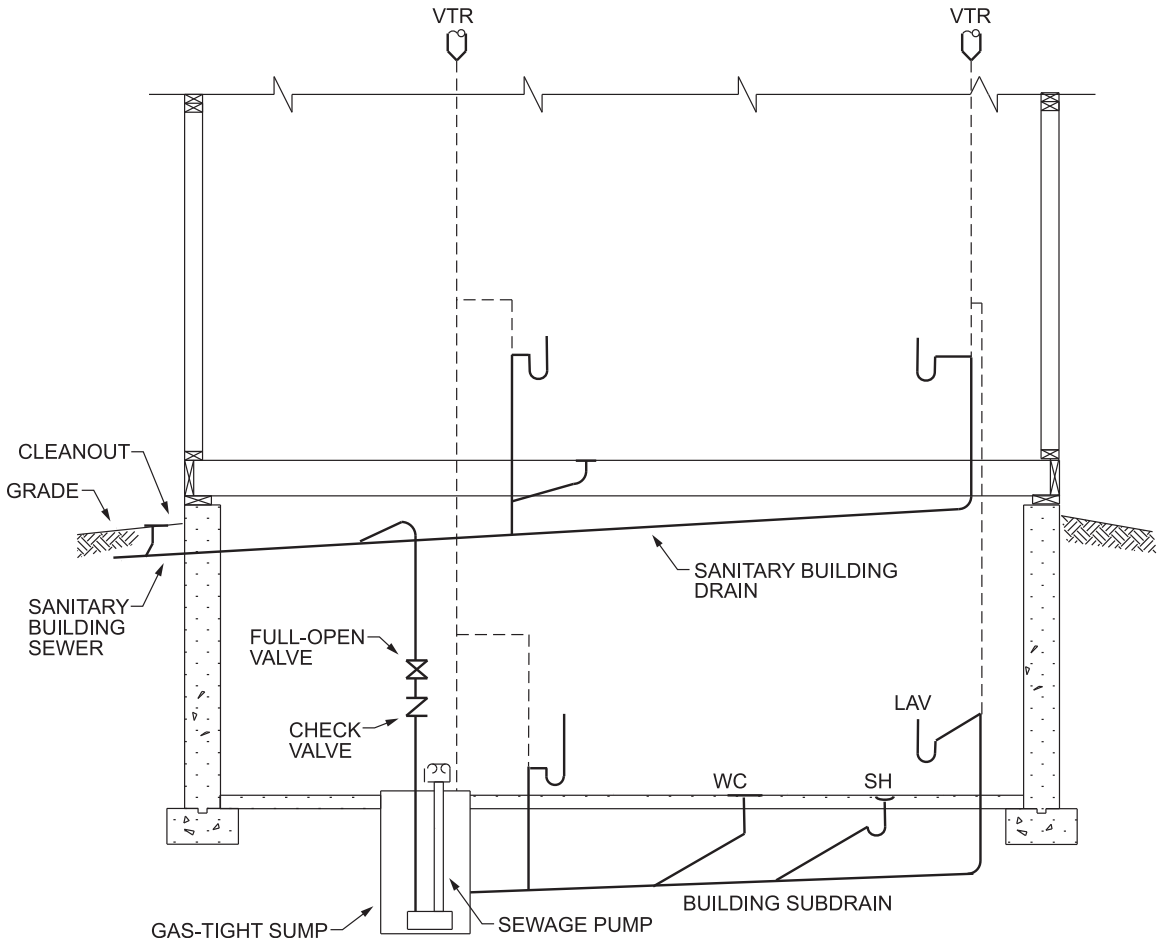

Figure R202(5)
DRAINAGE SYSTEM COMPONENTS

INTERNATIONAL CODE COUNCIL®
Copyright © 2015 ICC. ALL RIGHTS RESERVED. Accessed by David Dammon on Jun 21, 2017 12:30:52 PM pursuant to License Agreement with ICC. No further reproduction or distribution authorized. ANY UNAUTHORIZED REPRODUCTION OR DISTRIBUTION IS A VIOLATION OF THE FEDERAL COPYRIGHT ACT AND THE LICENSE AGREEMENT, AND SUBJECT TO CIVIL AND CRIMINAL PENALTIES THEREUNDER.

sibilities of the building official. The statutory power to enforce the code is normally vested in a building department of a state, county or municipality that has a designated enforcement officer termed the "building official" (see Section 103.1).

BUILDING SEWER. That part of the drainage system that extends from the end of the *building drain* and conveys its discharge to a public sewer, private sewer, individual sewage-disposal system or other point of disposal.

❖ The building sewer is the extension of the building drain and is located entirely outside the building exterior walls.

[RE] BUILDING THERMAL ENVELOPE. The *basement walls*, *exterior walls*, floor, roof and any other building element that enclose *conditioned spaces*.

❖ The building thermal envelope includes the roof/ceiling assembly, wall assemblies and floor assemblies that surround a conditioned area, which is the space that is being intentionally heated and/or cooled. The building envelope is the assembly that separates conditioned space from unconditioned space or the outdoors. For example, a wall between a conditioned dwelling and an unconditioned garage is part of the building thermal envelope. Other elements of the building envelope include attic kneewalls, the perimeter foundation walls of basements, the perimeter joist between two conditioned floors and skylight wells.

[RB] BUILT-UP ROOF COVERING. Two or more layers of felt cemented together and surfaced with a cap sheet, mineral aggregate, smooth coating or similar surfacing material.

❖ A common roof covering for buildings with relatively flat roofs, built-up roof covering uses two or more felt layers with a cap-sheet surfacing. A number of materials standards regulate the wide variety of built-up roofing materials that are available.

[RB] CAP PLATE. The top plate of the double top plates used in structural insulated panel (SIP) construction. The cap plate is cut to match the panel thickness such that it overlaps the wood structural panel facing on both sides.

❖ Structural insulated panels (SIPs) have been in use in building construction for some time, but are relatively new. This term is defined to facilitate requirements for SIPs.

[RB] CEILING HEIGHT. The clear vertical distance from the finished floor to the finished ceiling.

❖ Ceiling height as regulated by Section R305 is measured from the finished floor surface to the finished ceiling. Depending on the space under consideration, the minimum ceiling height required by the IRC can vary greatly.

[RB] CEMENT PLASTER. A mixture of portland or blended cement, portland cement or blended cement and hydrated lime, masonry cement or plastic cement and aggregate and other *approved* materials as specified in this code.

❖ Cement plaster (often referred to as "stucco") is a cementitious-based plaster material with excellent water-resistant properties. It is the only type of plaster that is permitted by the code to be used as an exterior wall covering and as a base coat and finish coat. Cement plaster can also be used as an interior finish wall covering, but is required by the code to be used in all interior wet areas, such as toilet rooms, showers, saunas, steam rooms, indoor swimming pools or any other area that will be exposed to excessive amounts of moisture or humidity for prolonged periods of time.

[RB] CHIMNEY. A primary vertical structure containing one or more flues, for the purpose of carrying gaseous products of combustion and air from a fuel-burning *appliance* to the outside atmosphere.

❖ Chimneys differ from vents in the materials they are made of and the type of appliance they are designed to serve. Chimneys are capable of venting flue gases of much higher temperatures than vents.

CHIMNEY CONNECTOR. A pipe that connects a fuel-burning *appliance* to a chimney.

❖ Chimney connectors are sections of pipe used to convey combustion products from an appliance flue outlet to a chimney inlet. Factory-built chimneys can connect directly to some appliances without the need for a connector; however, masonry chimneys cannot connect directly to an appliance because of the chimney's weight.

CHIMNEY TYPES.

Residential-type appliance. An *approved* chimney for removing the products of combustion from fuel-burning, residential-type *appliances* producing combustion gases not in excess of 1,000°F (538°C) under normal operating conditions, and capable of producing combustion gases of 1,400°F (760°C) during intermittent forces firing for periods up to 1 hour. All temperatures shall be measured at the *appliance* flue outlet. Residential-type *appliance* chimneys include masonry and factory-built types.

❖ The chimneys addressed in the IRC are generally for use with residential-type appliances. Such chimneys are limited in the temperature of the combustion gases they can exhaust. Both masonry and factory-built chimneys can be residential type.

CIRCUIT VENT. A vent that connects to a horizontal drainage branch and vents two traps to not more than eight traps or trapped fixtures connected into a battery.

❖ A circuit vent vents multiple fixtures using only one or two vents. The horizontal drainage branch actually serves as a wet vent for the fixtures located downstream of the circuit vent connection (see Section P3110).

CIRCULATING HOT WATER SYSTEM. A specifically designed water distribution system where one or more pumps are operated in the service hot water piping to circulate heated water from the water-heating equipment to fixtures and back to the water-heating equipment.

❖ This is a piping arrangement to provide hot (or tempered) water at plumbing fixtures in a manner that

INTERNATIONAL CODE COUNCIL®
Copyright © 2015 ICC. ALL RIGHTS RESERVED. Accessed by David Dammon on Jun 21, 2017 12:30:52 PM pursuant to License Agreement with ICC. No further reproduction or distribution authorized. ANY UNAUTHORIZED REPRODUCTION OR DISTRIBUTION IS A VIOLATION OF THE FEDERAL COPYRIGHT ACT AND THE LICENSE AGREEMENT, AND SUBJECT TO CIVIL AND CRIMINAL PENALTIES THEREUNDER.

does not require the user to wait any appreciable amount of time for the heated water to begin discharging from the water outlet. The hot (or tempered) water is circulated (by a pump) in a "loop" of piping that is routed in close proximity to each fixture and then back to the heated water source. Ideally, the fixture supply piping from this "loop" piping to the fixture is relatively short such that it only takes a few seconds for the heated water to arrive at the outlet when the faucet or mixing valve is opened. Large homes with centralized water heaters and hot water storage tanks are often piped in this manner so that the occupants do not have to wait for hot (or tempered) water to arrive. Wasting cool potable water down the drain (to get hot water to arrive) is costly and time consuming for the occupants. Generally, the hot (or tempered) water is only circulated in the piping "loop" for the hours that hot water is used in the home.

[RB] CLADDING. The exterior materials that cover the surface of the building envelope that is directly loaded by the wind.

❖ Sheathing, siding or other materials used on the exterior envelope of a building are "cladding" for the purpose of wind design.

CLEANOUT. An accessible opening in the drainage system used for the removal of possible obstruction.

❖ Cleanouts are broadly defined as any access point into the drainage system that allows the removal of a clog or other obstruction in the drain line. A cleanout provides convenient access to the piping interior without significant disassembly of the plumbing installation. A "P" trap with a removable U-bend is typically acceptable as a cleanout for the fixture drain or branch to which the trap discharges.

[RE] CLIMATE ZONE. A geographical region based on climatic criteria as specified in this code.

❖ Climate involves temperature, moisture, wind and sun and also includes both daily and seasonal patterns of variation of the parameters. To account for these variations, the code establishes climate zones that serve as the basis for the code provisions (see the commentary to Section N1101.7).

[RB] CLOSET. A small room or chamber used for storage.

❖ A closet is simply a small storage room. Closets are generally found throughout dwelling units but are not considered habitable spaces. The typical hazard related to closets is the probable storage of combustible materials.

COLLECTION PIPE. Unpressurized pipe used within the collection system that drains on-site nonpotable water or rainwater to a storage tank by gravity.

❖ A different term, other than drainage pipe, is used to describe piping that conveys, by gravity, on-site nonpotable water and rainwater to a storage tank to distinguish such piping from drainage piping that carries waste water.

COMBINATION WASTE AND VENT SYSTEM. A specially designed system of waste piping embodying the horizontal wet venting of one or more sinks, lavatories or floor drains by means of a common waste and vent pipe adequately sized to provide free movement of air above the flow line of the drain.

❖ This special system is employed when no other conventional system of separate waste and vent is practical. The combination waste and vent system is used only for venting floor drains, standpipes, sinks and lavatories. The drainage piping is larger than required for draining purposes only, and the drainage branch and stack should be provided with vent piping. The system is commonly used where floor drains are installed in large open areas that cannot accommodate vertical vent risers from the floor drains (see Section P3111).

[RB] COMBUSTIBLE MATERIAL. Any material not defined as noncombustible.

❖ Any material that (ASTM E136) does not qualify as a noncombustible material is considered combustible. The presence of sizable quantities of combustible material increases the potential fire hazard. Buildings containing or constructed of combustible materials are typically more highly regulated than those that are primarily noncombustible.

COMBUSTION AIR. The air provided to fuel-burning *equipment* including air for fuel combustion, draft hood dilution and ventilation of the *equipment* enclosure.

❖ The process of combustion requires a specific amount of oxygen to initiate and sustain the combustion reaction. Combustion air includes primary air, secondary air, draft hood dilution air and excess air. Combustion air is the amount of atmospheric air required for complete combustion of a fuel and is related to the molecular composition of the fuel being burned, the design of the fuel-burning equipment and the percentage of oxygen in the combustion air. Too little combustion air will result in incomplete combustion of a fuel and the possible formation of carbon deposits (soot), carbon monoxide, toxic alcohols, ketones, aldehydes, nitrous oxides and other byproducts. The required amount of combustion air is usually stated in terms of cubic feet per minute (m^3/s) or pounds per hour (kg/h).

[CE] COMMERCIAL, BUILDING. See Section N1101.6.

COMMON VENT. A single pipe venting two trap arms within the same *branch interval*, either back-to-back or one above the other.

❖ Where two or more fixtures are connected to the same drainage pipe, a common vent could be installed. This common vent is sized and classified as an individual vent. Any two fixtures may be common vented to either a vertical or horizontal drainage pipe.

A typical form of common venting connects two fixtures at the same level. Two fixtures connecting at different levels but within the same story are also common vented. When one of the fixtures connected is at a different level, the vertical drain between the fix-

INTERNATIONAL CODE COUNCIL®
Copyright © 2015 ICC. ALL RIGHTS RESERVED. Accessed by David Dammon on Jun 21, 2017 12:30:52 PM pursuant to License Agreement with ICC. No further reproduction or distribution authorized. ANY UNAUTHORIZED REPRODUCTION OR DISTRIBUTION IS A VIOLATION OF THE FEDERAL COPYRIGHT ACT AND THE LICENSE AGREEMENT, AND SUBJECT TO CIVIL AND CRIMINAL PENALTIES THEREUNDER.

tures is oversized because it functions as a drain for the upper fixture and a vent for the lower fixture.

CONDENSATE. The liquid that separates from a gas due to a reduction in temperature; for example, water that condenses from flue gases and water that condenses from air circulating through the cooling coil in air conditioning *equipment*.

❖ Condensate forms when the temperature of a vapor is lowered to its dew point temperature. Air conditioning systems produce condensate when an airstream contacts cooling coils. The moisture in the air condenses on the cold surface of the coils and the air is "dehumidified." Condensate also forms within improperly designed chimneys and vents when the products of combustion (which contain water vapor) contact the colder walls of the flue. If the temperature of the products of combustion is lowered to the dew point temperature of the water vapor, condensate will form on the inside walls of the flue. Condensed steam in hydronic systems is also referred to as "condensate."

CONDENSING APPLIANCE. An *appliance* that condenses water generated by the burning of fuels.

❖ Such units include compressors and condenser heat exchangers; they convert refrigerant vapor to liquid.

[RB] CONDITIONED AIR. Air treated to control its temperature, relative humidity or quality.

❖ Conditioned air is air that is heated, cooled, humidified, dehumidified or decontaminated.

[RE] CONDITIONED AREA. That area within a building provided with heating or cooling systems or *appliances* capable of maintaining, through design or heat loss or gain, 68°F (20°C) during the heating season or 80°F (27°C) during the cooling season, or has a fixed opening directly adjacent to a conditioned area.

❖ The conditioned area is the space within the building that receives conditioned air. The space can be directly conditioned or indirectly conditioned by an adjacent conditioned space.

[RE] CONDITIONED FLOOR AREA. The horizontal projection of the floors associated with the *conditioned space*.

❖ The conditioned floor area is the floor area in square feet (m^2) of a conditioned space.

[RE] CONDITIONED SPACE. An area, room or space that is enclosed within the building thermal envelope and that is directly heated or cooled or that is indirectly heated or cooled. Spaces are indirectly heated or cooled where they communicate thru openings with conditioned spaces, where they are separated from conditioned spaces by uninsulated walls, floors or ceilings or where they contain uninsulated ducts, piping or other sources of heating or cooling.

❖ If a space is directly and intentionally heated or cooled, it is obviously a conditioned space. A space that is indirectly heated or cooled, by intent or not, is also a conditioned space. A space is indirectly heated or cooled where it: connects to a directly or indirectly conditioned space through openings; is separated from a directly or indirectly conditioned space by one or more uninsulated walls, an uninsulated ceiling or an uninsulated floor; or contains uninsulated heating or cooling ductwork or piping. Unconditioned spaces become conditioned, whether by intent or not, where they are affected by adjacent conditioned spaces or HVAC system components.

[RB] CONSTRUCTION DOCUMENTS. Written, graphic and pictorial documents prepared or assembled for describing the design, location and physical characteristics of the elements of a project necessary for obtaining a building *permit*. Construction drawings shall be drawn to an appropriate scale.

❖ To determine whether or not proposed construction is in compliance with code requirements, it is necessary that sufficient information be submitted to the building official for review. This typically consists of the drawings (such as floor plans, elevations, sections and details), specifications and product information describing the proposed work. Addressed in Section R106, construction documents are required at the time of permit application unless the work is of such a minor nature that the documents are not necessary to provide compliance with the code. The construction documents must be drawn to an appropriate scale so they may be easily interpreted.

CONTAMINATION. A high hazard or health hazard impairment of the quality of the potable water that creates an actual hazard to the public health through poisoning or through the spread of disease by sewage, industrial fluids or waste.

❖ The Environmental Protection Agency (EPA) sets maximum levels for various chemicals and bacteria in drinking water. When an unacceptable level of one or more contaminants is present, the water is considered to be nonpotable. One of the primary purposes of the code is to protect potable water supplies from contamination. Contamination consists of either hazardous chemicals or raw sewage, and is considered by the code to represent a high hazard when present in the water supply. Refer to Table P2902.2 for the required potable protection requirements related to high-hazard situations.

The code and other related regulations, such as those from the EPA, are intended to reduce, if not totally eliminate, the risk to the general public of poisoning or health impairment through sewage, industrial fluids or waste entering the potable water supply. Note that these contaminants would have a harmful effect on the occupants of a building should the water be consumed. Contamination is quite different from pollution, which is a situation where the water supply is still considered to be nonpotable, but would not kill or harm if ingested. Refer to the definition of "Pollution" for additional information on that term.

INTERNATIONAL CODE COUNCIL®
Copyright © 2015 ICC. ALL RIGHTS RESERVED. Accessed by David Dammon on Jun 21, 2017 12:30:52 PM pursuant to License Agreement with ICC. No further reproduction or distribution authorized. ANY UNAUTHORIZED REPRODUCTION OR DISTRIBUTION IS A VIOLATION OF THE FEDERAL COPYRIGHT ACT AND THE LICENSE AGREEMENT, AND SUBJECT TO CIVIL AND CRIMINAL PENALTIES THEREUNDER.

[RE] CONTINUOUS INSULATION (ci). Insulating material that is continuous across all structural members without thermal bridges other than fasteners and service openings. It is installed on the interior or exterior or is integral to any opaque surface of the building envelope.

❖ The need for more insulation on exterior walls has created the need to specify continuous insulation on the exterior side of the wall, thus the need for this definition.

CONTINUOUS WASTE. A drain from two or more similar adjacent fixtures connected to a single trap.

❖ Continuous waste is the piping described and regulated in Section P3201.6. The most common occurrences are where multiple compartments of a kitchen sink or double lavatories are connected to a single trap.

CONTROL, LIMIT. An automatic control responsive to changes in liquid flow or level, pressure, or temperature for limiting the operation of an *appliance*.

❖ Limit controls are safety devices used to protect equipment, appliances, property, and persons. Such controls act at their set point to limit a condition such as temperature or pressure and include high and low limits. This definition applies to controls for all types of fuel: gas, liquid and solid.

CONTROL, PRIMARY SAFETY. A safety control responsive directly to flame properties that senses the presence or absence of flame and, in event of ignition failure or unintentional flame extinguishment, automatically causes shutdown of mechanical *equipment*.

❖ This is a device designed to shut down mechanical equipment in response to changes in liquid or gas flow rates that could extinguish a flame.

CONVECTOR. A system-incorporating heating element in an enclosure in which air enters an opening below the heating element, is heated and leaves the enclosure through an opening located above the heating element.

❖ See Commentary Figure R202(6) for an illustration of an electric hydronic convector.

CORE. The lightweight middle section of a structural insulated panel, composed of foam plastic insulation that provides the link between the two facing shells.

❖ Structural insulated panels (SIPs) have been in use in building construction for some time, but are relatively new. This term is defined to facilitate requirements for SIPs.

[RB] CORROSION RESISTANCE. The ability of a material to withstand deterioration of its surface or its properties where exposed to its environment.

❖ Under those conditions where corrosion of materials is detrimental to the integrity of the building's construction and use, the code mandates corrosion-resistant materials. Corrosion-resistant materials control or withstand the deterioration of their surfaces and retain their physical properties in their intended environment. Corrosion resistance can be provided by the material or by a process applied to the material.

[RB] COURT. A space, open and unobstructed to the sky, located at or above *grade* level on a *lot* and bounded on three or more sides by walls or a building.

❖ An exterior area is a court if it is enclosed on at least three sides by exterior walls of the building or other enclosing elements and is open and unobstructed to the sky above. By virtue of being substantially open to the exterior and to the sky, a court may be used to obtain natural light and ventilation for the building.

[RB] CRIPPLE WALL. A framed wall extending from the top of the foundation to the underside of the floor framing of the first *story above grade plane*.

❖ Cripple walls are built on the top of footings or foundation walls. They can typically be found along the top of stepped foundation walls where the grade adjoining the structure changes height. Cripple walls must be properly braced to resist lateral forces. They are often treated the same as a first-story wall. Provisions for the bracing of cripple walls are in Section R602.10.2.

CROSS CONNECTION. Any connection between two otherwise separate piping systems that allows a flow from one system to the other.

❖ Cross connections are the links through which it is possible for contaminated materials to enter a potable water supply. The contaminant enters the potable water supply when the pressure of the polluted source exceeds the pressure of the potable source. The action may be called backsiphonage or backpressure.

Many serious outbreaks of illnesses and disease have been traced to cross connections. The intent of the code is to eliminate cross connections or prevent backflow where cross connections cannot be eliminated. Refer to the definitions of and the commentary to "Backflow" and "Backsiphonage."

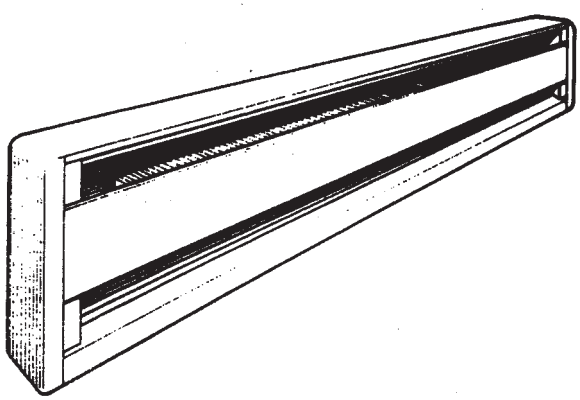

Figure R202(6)
ELECTRIC HYDRONIC CONVECTOR

INTERNATIONAL CODE COUNCIL®
Copyright © 2015 ICC. ALL RIGHTS RESERVED. Accessed by David Dammon on Jun 21, 2017 12:30:52 PM pursuant to License Agreement with ICC. No further reproduction or distribution authorized. ANY UNAUTHORIZED REPRODUCTION OR DISTRIBUTION IS A VIOLATION OF THE FEDERAL COPYRIGHT ACT AND THE LICENSE AGREEMENT, AND SUBJECT TO CIVIL AND CRIMINAL PENALTIES THEREUNDER.

[RB] CROSS-LAMINATED TIMBER. A prefabricated engineered wood product consisting of not less than three layers of solid-sawn lumber or *structural composite lumber* where the adjacent layers are cross-oriented and bonded with structural adhesive to form a solid wood element.

❖ Cross-laminated timber is a specific type of engineered wood product. The important thing to remember is that it must be manufactured in accordance with ANSI/APA PRG320 to be in compliance with this code. (see the commentary to Section 502.1.6).

[RE] CURTAIN WALL. See Section N1101.6 for definition applicable in Chapter 11.

[RB] DALLE GLASS. A decorative composite glazing material made of individual pieces of glass that are embedded in a cast matrix of concrete or epoxy.

❖ Various types of decorative glazing materials are exempt from the safety glazing provisions when installed in side-hinged doors, adjacent to doors, or in large glazed openings. Dalle glass is one such material. Made up of multiple individual pieces of glass, Dalle glass is exempt because of its decorative function.

DAMPER, VOLUME. A device that will restrict, retard or direct the flow of air in any duct, or the products of combustion of heat-producing *equipment*, vent connector, vent or chimney.

❖ A damper is used in an air distribution system as a restrictor to regulate airflow through duct work. When used in flues venting combustion gases, a damper is used to regulate draft.

[RB] DEAD LOADS. The weight of the materials of construction incorporated into the building, including but not limited to walls, floors, roofs, ceilings, stairways, built-in partitions, finishes, cladding, and other similarly incorporated architectural and structural items, and fixed service *equipment*.

❖ Dead loads are considered in the structural design of a building and are used in the span tables for sizing floor joists, ceiling joists and rafters. The weight of the materials of construction joists, sheathing, studs and gypsum board is counted as the dead load, as are stairways, cladding and fixed service equipment. The dead loads make up the fixed load placed in the building and are independent from the live loads.

[RB] DECORATIVE GLASS. A carved, leaded or Dalle glass or glazing material with a purpose that is decorative or artistic, not functional; with coloring, texture or other design qualities or components that cannot be removed without destroying the glazing material; and with a surface, or assembly into which it is incorporated, that is divided into segments.

❖ Decorative glass is not designed for functional purposes such as a vision panel, but rather is used for artistic reasons. Some types of decorative glass include carved, leaded, and Dalle glass. Decorative glass is typically made up of multiple pieces of glass arranged in some design or pattern. Fixed-in-place decorative glass is exempt from some of the requirements for glazing in hazardous locations.

[RE] DEMAND RECIRCULATION WATER SYSTEM. See Section N1101.6 for definition applicable in Chapter 11.

DESIGN PROFESSIONAL. See "*Registered design professional*."

❖ "Design professional" is another term for registered design professional (see the definition of "Registered design professional").

DEVELOPED LENGTH. The length of a pipeline measured along the center line of the pipe and fittings.

❖ This term identifies a concept necessary for computing the actual length of piping in a plumbing system. The developed length is measured along the actual flow path of piping and includes the piping lengths in all offsets and changes in direction. Several code requirements are dependent on the actual length of plumbing piping.

DIAMETER. Unless specifically stated, the term "diameter" is the nominal diameter as designated by the *approved* material standard.

❖ "Diameter" is the length of a line passing though the center of a pipe from one side to the other. Depending on the pipe standard, this distance can be measured to the inside portions (inside diameter, or ID) or the outside portions (outside diameter, or OD) of the pipe.

[RB] DIAPHRAGM. A horizontal or nearly horizontal system acting to transmit lateral forces to the vertical resisting elements. Where the term "*diaphragm*" is used, it includes horizontal bracing systems.

❖ In the load path for forces transmitted through a building or structure, the diaphragm is that horizontal portion of the path where lateral forces are transferred to the vertical resisting elements. Roof diaphragms and floor diaphragms carry lateral loads to the shear walls.

DILUTION AIR. Air that enters a draft hood or draft regulator and mixes with flue gases.

❖ Dilution air is associated with draft-hood-equipped Category I appliances. Fan-assisted Category I appliances do not use dilution air; all of the air brought in by the fan passes directly through the combustion chamber of the appliance. Dilution air causes lowering of the dew point and cooling of flue gases, but to a point that is still above the point when condensation will occur inside the vent.

DIRECT SYSTEM. A solar thermal system in which the gas or liquid in the solar collector loop is not separated from the load.

❖ Direct systems do not utilize a heat exchanger between the solar collectors and the load served. The heat transfer medium is not separated from the water or air that is being heated by the solar collector loop. For example, the most common type of direct system is a potable water heating system where the potable water passes through the collectors. The majority of solar systems use a heat transfer medium that is separated from what is ultimately being heated.

INTERNATIONAL CODE COUNCIL®
Copyright © 2015 ICC. ALL RIGHTS RESERVED. Accessed by David Dammon on Jun 21, 2017 12:30:52 PM pursuant to License Agreement with ICC. No further reproduction or distribution authorized. ANY UNAUTHORIZED REPRODUCTION OR DISTRIBUTION IS A VIOLATION OF THE FEDERAL COPYRIGHT ACT AND THE LICENSE AGREEMENT, AND SUBJECT TO CIVIL AND CRIMINAL PENALTIES THEREUNDER.

DIRECT-VENT APPLIANCE. A fuel-burning *appliance* with a sealed combustion system that draws all air for combustion from the outside atmosphere and discharges all flue gases to the outside atmosphere.

❖ Such appliances are equipped with independent exhaust and combustion air intake pipes, or they have concentric pipes that vent through the inner pipe and convey combustion air in the annular space between pipe walls (see the commentary to Sections G2427.2.1 and G2427.8).

DRAFT. The pressure difference existing between the *appliance* or any component part and the atmosphere, that causes a continuous flow of air and products of combustion through the gas passages of the *appliance* to the atmosphere.

Induced draft. The pressure difference created by the action of a fan, blower or ejector, that is located between the *appliance* and the chimney or vent termination.

Natural draft. The pressure difference created by a vent or chimney because of its height, and the temperature difference between the flue gases and the atmosphere.

❖ Draft is the negative static pressure measured relative to atmospheric pressure that is developed in chimneys and vents and in the flueways of fuel-burning appliances. Draft can be produced by hot flue-gas buoyancy ("stack effect"), mechanically by fans and exhausters or by a combination of both natural and mechanical means.

DRAFT HOOD. A device built into an *appliance*, or a part of the vent connector from an *appliance*, that is designed to provide for the ready escape of the flue gases from the *appliance* in the event of no draft, backdraft or stoppage beyond the draft hood; prevent a backdraft from entering the *appliance*; and neutralize the effect of stack action of the chimney or gas vent on the operation of the *appliance*.

❖ Draft hoods are integral to or supplied with natural-draft, atmospheric-burner gas-fired appliances. Appliances equipped with draft hoods are classified by the manufacturer as Category I appliances. Because of new minimum-efficiency standards and the popularity of mechanical and other special proprietary venting systems, draft-hood-equipped appliances are becoming rare in the marketplace.

DRAFT REGULATOR. A device that functions to maintain a desired draft in the *appliance* by automatically reducing the draft to the desired value.

❖ Excessive draft reduces the efficiency of an appliance because of energy loss in the form of heat loss out the vent. Draft regulators automatically adjust the draft by allowing cooler air to enter the vent at a preset flow rate, reducing the draft.

[RB] DRAFT STOP. A material, device or construction installed to restrict the movement of air within open spaces of concealed areas of building components such as crawl spaces, floor-ceiling assemblies, roof-ceiling assemblies and *attics*.

❖ Draft stops divide a large concealed space into smaller compartments in wood-frame floor construction. They limit the movement of air within the cavity, reducing the potential for rapid fire spread. Draftstopping materials include gypsum board, wood structural panels, particleboard or other substantial materials that are adequately supported.

DRAIN. Any pipe that carries soil and water-borne wastes in a building drainage system.

❖ A drain is any pipe in a plumbing system that carries sanitary waste, clear-water waste or storm water. In the case of wet vents, common vents, waste stack vents, circuit vents and combination drain and vents, the drain may also be conducting airflow.

DRAIN-BACK SYSTEM. A solar thermal system in which the fluid in the solar collector loop is drained from the collector into a holding tank under prescribed circumstances.

❖ Drain-back systems are a simple type of closed loop thermal solar energy system that automatically drains the heat transfer medium from the solar collector components of the system. The heat transfer medium is commonly water or a water/antifreeze solution and the medium is drained into a receiver or reservoir to prevent it from freezing or to stop the collection of energy when the system reaches a high limit temperature setting. Typically a pump draws the medium from the reservoir and lifts it up to the collectors and when the pump shuts off, the medium drains by gravity back into the reservoir.

DRAINAGE FITTING. A pipe fitting designed to provide connections in the drainage system that have provisions for establishing the desired slope in the system. These fittings are made from a variety of both metals and plastics. The methods of coupling provide for required slope in the system.

❖ These fittings will accommodate the necessary slope and sweep required for a drain line (see Section P3005.1).

DUCT SYSTEM. A continuous passageway for the transmission of air that, in addition to ducts, includes duct fittings, dampers, plenums, fans and accessory air-handling *equipment* and *appliances.*

For definition applicable in Chapter 11, see Section N1101.6.

❖ Duct systems are part of an air distribution system and include supply, return and relief/exhaust air systems.

INTERNATIONAL CODE COUNCIL®
Copyright © 2015 ICC. ALL RIGHTS RESERVED. Accessed by David Dammon on Jun 21, 2017 12:30:52 PM pursuant to License Agreement with ICC. No further reproduction or distribution authorized. ANY UNAUTHORIZED REPRODUCTION OR DISTRIBUTION IS A VIOLATION OF THE FEDERAL COPYRIGHT ACT AND THE LICENSE AGREEMENT, AND SUBJECT TO CIVIL AND CRIMINAL PENALTIES THEREUNDER.

[RB] DWELLING. Any building that contains one or two *dwelling units* used, intended, or designed to be built, used, rented, leased, let or hired out to be occupied, or that are occupied for living purposes.

❖ A dwelling is a building that contains either one or two dwelling units. The purpose of a dwelling is occupation for living purposes, regardless of the manner of ownership. Single-family houses and duplexes fall under the definition of dwelling (see also "Dwelling unit").

[RB] DWELLING UNIT. A single unit providing complete independent living facilities for one or more persons, including permanent provisions for living, sleeping, eating, cooking and sanitation.

❖ The specific purpose of a dwelling unit is to provide the essential amenities necessary for complete and independent facilities. Commonly, dwelling units are thought of as single-family houses or individual living units in duplexes or townhouses.

DWV. Abbreviated term for drain, waste and vent piping as used in common plumbing practice.

❖ This term is used extensively to identify systems and materials suitable for drain, waste and vent installations. It will often be labeled on specific materials approved for such use.

EFFECTIVE OPENING. The minimum cross-sectional area at the point of water-supply discharge, measured or expressed in terms of diameter of a circle and if the opening is not circular, the diameter of a circle of equivalent cross-sectional area. (This is applicable to air gap.)

❖ An effective opening is used to determine the minimum air gap required between a potable water supply outlet or opening and the flood level rim of a receptacle, fixture or other potential source of contamination.

ELBOW. A pressure pipe fitting designed to provide an exact change in direction of a pipe run. An elbow provides a sharp turn in the flow path (see "Bend" and "Sweep").

❖ See the definition of "Bend."

[RB] EMERGENCY ESCAPE AND RESCUE OPENING. An operable exterior window, door or similar device that provides for a means of escape and access for rescue in the event of an emergency.

❖ In the case of an emergency, particularly a fire, immediate action must be taken. Quick evacuation of the dwelling unit is often required. If occupants are sleeping at the time of the incident, the time for evacuation is extended, often to the point where normal egress is not possible. In such situations, a door or window to the exterior can be used. It is also possible to use such an exterior opening for rescue. See Section R310 for code requirements.

[RB] ENGINEERED WOOD RIM BOARD. A full-depth structural composite lumber, wood structural panel, structural glued laminated timber or prefabricated wood I-joist member designed to transfer horizontal (shear) and vertical (compression) loads, provide attachment for *diaphragm* sheathing, siding and exterior deck ledgers and provide lateral support at the ends of floor or roof joists or rafters.

❖ This is a specific type of engineered wood product designed and manufactured to serve a specific function in a building, as a rim board. Sections R502.1.7, R602.1.7 and R802.1.7 require that this product meet ANSI/APA PRR410. See the commentary to those sections.

EQUIPMENT. Piping, ducts, vents, control devices and other components of systems other than *appliances* that are permanently installed and integrated to provide control of environmental conditions for buildings. This definition shall also include other systems specifically regulated in this code.

❖ Throughout the code, the terms "equipment" and "appliance" have been used as necessary to match the terms with the intent and context of the code text. Appliances are not referred to as equipment and vice versa. Traditionally, the term "equipment" meant large machinery and specialized hardware not thought of as an "appliance" (see the definition of "Appliance").

EQUIVALENT LENGTH. For determining friction losses in a piping system, the effect of a particular fitting equal to the friction loss through a straight piping length of the same nominal diameter.

❖ Fluid flow through a round, straight conduit is resisted by friction of the fluid against the inside wall of the conduit. Turns (elbows) and junctures (tees) in the conduit resist flow of the fluid because of the energy that it takes to make the fluid change direction. A turn (elbow) or a juncture (tee) can be "equated" to a length of straight conduit. For example, one 90-degree bend (elbow) in a 1-inch pipe is equivalent to 2.5 feet of straight 1-inch pipe. Using equivalent lengths for fittings makes it easy to determine the friction loss for a piping system. Appendix P uses equivalent lengths of fittings for determination of pressure losses in a water distribution system.

[RE] ERI REFERENCE DESIGN. A version of the rated design that meets the minimum requirements of the 2006 *International Energy Conservation Code.*

❖ This is an index used in the Energy Rating Index Compliance Alternative for energy conservation design. (See Section N1106).

[RB] ESCARPMENT. With respect to topographic wind effects, a cliff or steep slope generally separating two levels or gently sloping areas.

❖ This is a term to describe a topographical area where wind speed-up can occur. In cases where there is known to be structural damage due to this type of wind speed-up, the code requires consideration of topographical wind effects (see Section 301.2.1.5).

INTERNATIONAL CODE COUNCIL®
Copyright © 2015 ICC. ALL RIGHTS RESERVED. Accessed by David Dammon on Jun 21, 2017 12:30:52 PM pursuant to License Agreement with ICC. No further reproduction or distribution authorized. ANY UNAUTHORIZED REPRODUCTION OR DISTRIBUTION IS A VIOLATION OF THE FEDERAL COPYRIGHT ACT AND THE LICENSE AGREEMENT, AND SUBJECT TO CIVIL AND CRIMINAL PENALTIES THEREUNDER.

ESSENTIALLY NONTOXIC TRANSFER FLUIDS. Fluids having a Gosselin rating of 1, including propylene glycol; mineral oil; polydimethy oil oxane; hydrochlorofluorocarbon, chlorofluorocarbon and hydrofluorocarbon refrigerants; and FDA-approved boiler water additives for steam boilers.

❖ Transfer fluids are liquids or gases that transfer heat to or remove heat from another fluid, such as water. The exchange of heat energy takes place through a heat exchange material, which separates the transfer fluid from the fluid being heated or cooled.

ESSENTIALLY TOXIC TRANSFER FLUIDS. Soil, water or gray water and fluids having a Gosselin rating of 2 or more including ethylene glycol, hydrocarbon oils, ammonia refrigerants and hydrazine.

❖ See the commentary to the definition of "Essentially nontoxic transfer fluids."

EVAPORATIVE COOLER. A device used for reducing air temperature by the process of evaporating water into an airstream.

❖ Also known as "swamp coolers," such units are used in arid climates and use water as a refrigerant. Such units substantially increase the humidity of the air being conditioned.

EXCESS AIR. Air that passes through the combustion chamber and the *appliance* flue in excess of what is theoretically required for complete combustion.

❖ The nature of natural-draft, fuel-fired appliances is such that the introduction and efficient intermixing of primary and secondary combustion air is not precise and is coupled with the induced air inflow caused by the internal draft. To achieve complete oxidation (combustion), there will always be more air (excess) introduced into the appliances than is theoretically necessary for the complete combustion of the fuel.

EXHAUST HOOD, FULL OPENING. An exhaust hood with an opening not less than the diameter of the connecting vent.

❖ See Commentary Figure R202(7) for an illustration of a full opening exhaust hood.

EXISTING INSTALLATIONS. Any plumbing system regulated by this code that was legally installed prior to the effective date of this code, or for which a *permit* to install has been issued.

❖ "Existing installations" is a term that applies to all plumbing work that has been legally installed prior to the effective date of the code, as well as to all plumbing work for which a permit to install has been issued prior to the effective date of the code. Plumbing that has been illegally installed prior to the effective date of the code is not "existing" and is subject to all of the code requirements for new installations.

[RB] EXTERIOR INSULATION AND FINISH SYSTEMS (EIFS). EIFS are nonstructural, nonload-bearing *exterior wall* cladding systems that consist of an insulation board attached either adhesively or mechanically, or both, to the substrate; an integrally reinforced base coat; and a textured protective finish coat.

❖ A variety of popular exterior finish systems have been developed, with the typical construction consisting of five layers of material. The code has relatively few provisions regulating EIFS; most of the requirements are those of the manufacturer.

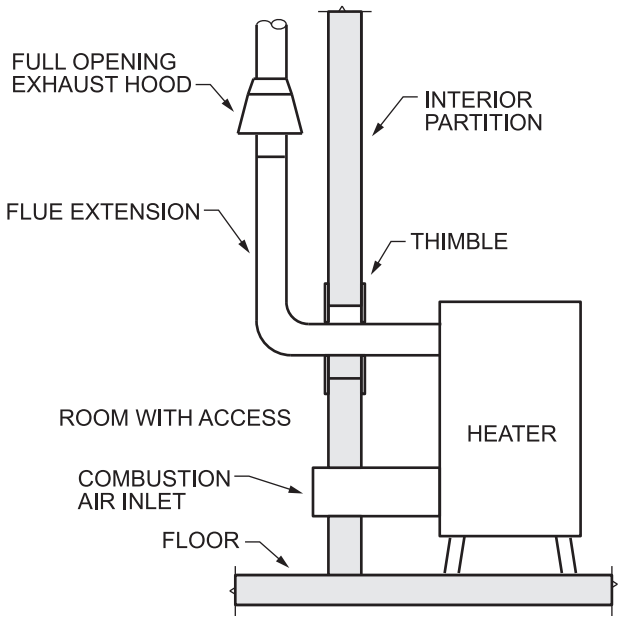

Figure R202(7)
FULL OPENING EXHAUST HOOD

INTERNATIONAL CODE COUNCIL®
Copyright © 2015 ICC. ALL RIGHTS RESERVED. Accessed by David Dammon on Jun 21, 2017 12:30:52 PM pursuant to License Agreement with ICC. No further reproduction or distribution authorized. ANY UNAUTHORIZED REPRODUCTION OR DISTRIBUTION IS A VIOLATION OF THE FEDERAL COPYRIGHT ACT AND THE LICENSE AGREEMENT, AND SUBJECT TO CIVIL AND CRIMINAL PENALTIES THEREUNDER.

[RB] EXTERIOR INSULATION AND FINISH SYSTEMS (EIFS) WITH DRAINAGE. An EIFS that incorporates a means of drainage applied over a water-resistive barrier.

❖ This type of EIFS system typically contains a water impermeable barrier underneath to prevent accumulation of water in the exterior façade.

[RB] EXTERIOR WALL. An above-*grade* wall that defines the exterior boundaries of a building. Includes between-floor spandrels, peripheral edges of floors, roof and *basement* knee walls, dormer walls, gable end walls, walls enclosing a mansard roof and *basement walls* with an average below-*grade* wall area that is less than 50 percent of the total opaque and nonopaque area of that enclosing side.

❖ An exterior wall is any wall located above grade level enclosing conditioned space. Regulated by this definition for the purpose of energy efficiency, a basement wall is exterior where less than 50 percent of its enclosing surface area is below grade.

[RB] EXTERIOR WALL COVERING. A material or assembly of materials applied on the exterior side of exterior walls for the purpose of providing a weather-resistive barrier, insulation or for aesthetics, including but not limited to, veneers, siding, exterior insulation and finish systems, architectural trim and embellishments such as cornices, soffits, and fascias.

❖ The definition of "Exterior wall covering" from Chapter 14 of the IBC is introduced to the IRC for appropriate and consistent usage.

Section R602.3 applies this definition to clarify requirements for sheathing installation on exterior walls. Wall sheathing that is used for structural purposes (e.g., bracing) is addressed in Chapter 6, "Wall Construction," while wall sheathing that is used solely for exterior wall covering purposes is appropriately addressed in Chapter 7, "Wall Covering." The special reference to wood structural panels at the exclusion of listing specific requirements for other sheathing types is deleted because the requirements for applicable wall sheathing materials, including wood structural panels, are adequately addressed by reference to Tables R602.3(1) through R602.3(4).

[RB] FACING. The wood structural panel facings that form the two outmost rigid layers of the structural insulated panel.

❖ Structural insulated panels are relatively new to the code. Terminology describing components of the panel are necessary to facilitate provisions to regulate the material.

FACTORY-BUILT CHIMNEY. A *listed* and *labeled* chimney composed of factory-made components assembled in the field in accordance with the manufacturer's instructions and the conditions of the *listing*.

❖ A factory-built chimney is a manufactured, listed and labeled chimney that has been tested by an approved agency to determine its performance characteristics. Factory-built chimneys are manufactured in two basic designs: a double-wall insulated design or a triple-wall air-cooled design. Both designs use stainless steel inner liners to resist the corrosive effects of combustion products.

FACTORY-MADE AIR DUCT. A *listed and labeled* duct manufactured in a factory and assembled in the field in accordance with the manufacturer's instructions and conditions of the *listing*.

❖ The definition is not material specific, but is normally associated with fibrous glass ducts and flexible ducts. Such ducts are typically round and are sold in standardized lengths that are field connected to duct system components and other ducts. Factory-made ducts are available in insulated and uninsulated types.

[RE] FENESTRATION. Skylights, roof windows, vertical windows (whether fixed or moveable); opaque doors; glazed doors; glass block; and combination opaque and glazed doors.

For definition applicable in Chapter 11, see Section N1101.6.

❖ Exterior windows and doors are fenestrations in the exterior wall. Skylights and other sloped glazing are also included in the definition, as are glass doors, opaque doors and opaque/glazed doors. Chapter 11 regulates fenestrations for energy efficiency.

FIBER-CEMENT (BACKERBOARD, SIDING, SOFFIT, TRIM AND UNDERLAYMENT) PRODUCTS. Manufactured thin section composites of hydraulic cementitious matrices and discrete nonasbestos fibers.

❖ Fiber cement products are used as backerboard, siding, soffit, trim and underlayment. They are produced from flat nonasbestos fiber cement sheets. Fiber cement sheets consist of fiber-reinforced cement which is formed either with or without pressure and cured either under natural or accelerated conditions. The surface of the sheet to be exposed is either smooth, granular or textured. Specific standards are applicable to this material depending upon its use. These standards are referenced in the corresponding location of the code.

FIREBLOCKING. Building materials or materials *approved* for use as fireblocking, installed to resist the free passage of flame to other areas of the building through concealed spaces.

❖ Fireblocking materials include lumber; wood structural panels, particleboard, gypsum board, cement-based millboard, batts or blankets of mineral wool or glass fiber, or any other approved material that will resist the passage of flame from one concealed area to another. Regulated by Sections R302.11 and R602.8 for wood-frame construction, fireblocking is often used to isolate vertical cavities such as stud spaces from horizontal concealed areas such as attics or floor-ceiling assemblies.

INTERNATIONAL CODE COUNCIL®
Copyright © 2015 ICC. ALL RIGHTS RESERVED. Accessed by David Dammon on Jun 21, 2017 12:30:52 PM pursuant to License Agreement with ICC. No further reproduction or distribution authorized. ANY UNAUTHORIZED REPRODUCTION OR DISTRIBUTION IS A VIOLATION OF THE FEDERAL COPYRIGHT ACT AND THE LICENSE AGREEMENT, AND SUBJECT TO CIVIL AND CRIMINAL PENALTIES THEREUNDER.

[RB] FIREPLACE. An assembly consisting of a hearth and fire chamber of noncombustible material and provided with a chimney, for use with solid fuels.

❖ Fireplaces burn solid fuels such as wood and coal and are not referred to as appliances in the code. Both masonry and factory-built fireplaces are regulated by the IRC.

Factory-built fireplace. A *listed* and *labeled* fireplace and chimney system composed of factory-made components, and assembled in the field in accordance with manufacturer's instructions and the conditions of the listing.

❖ Factory-built fireplaces are solid-fuel burning units having a fire chamber that is either open to the room or, if equipped with doors, operated with the doors either open or closed. The term "fireplace" describes a complete assembly, which includes the hearth, fire chamber and chimney. A factory-built fireplace is composed of factory-built components representative of the prototypes tested, and it is to be installed in accordance with the manufacturer's instructions to form a completed fireplace.

Masonry fireplace. A field-constructed fireplace composed of *solid masonry* units, bricks, stones or concrete.

❖ Masonry fireplaces must be constructed in accordance with the requirements found in Section R1001. These specific requirements are based on tradition and field experience and describe the conventional fireplace that has proven to be reliable where properly constructed, used and maintained.

FIREPLACE STOVE. A free-standing, chimney-connected solid-fuel-burning heater designed to be operated with the fire chamber doors in either the open or closed position.

❖ Fireplace stoves are generally of the free-standing type and heat a space by direct radiation. There are various types of fireplace stoves, and their installation must be in compliance with the listing of the stove.

[RB] FIREPLACE THROAT. The opening between the top of the firebox and the smoke chamber.

❖ The fireplace throat is the point where the combustion products from the fireplace pass into the chimney.

[RB] FIRE-RETARDANT-TREATED WOOD. Pressure-treated lumber and plywood that exhibit reduced surface burning characteristics and resist propagation of fire.

Other means during manufacture. A process where the wood raw material is treated with a fire-retardant formulation while undergoing creation as a finished product.

Pressure process. A process for treating wood using an initial vacuum followed by the introduction of pressure above atmospheric.

❖ Fire-retardant-treated wood (FRTW) is a specific type of material that is made to be fire retardant by the infusion of chemicals into the wood using a pressure process. It is important to apply the code provisions that allow FRTW to products that are pressure treated in accordance with referenced standards. Other products will not necessarily perform in the same manner.

[RB] FIRE SEPARATION DISTANCE. The distance measured from the building face to one of the following:

1. To the closest interior *lot line*.
2. To the centerline of a street, an alley or public way.
3. To an imaginary line between two buildings on the *lot*.

The distance shall be measured at a right angle from the face of the wall.

❖ This is the distance between the exterior surface of a building and one of the following three locations: the nearest interior lot line; the centerline of a street, alley, or public way; or an imaginary line placed between two buildings on the same lot. The measurement is perpendicular to the lot line [see Commentary Figure R202(8)]. The fire separation distance is important in determining exterior wall protection and the potential prohibition of exterior openings based on the proximity to the lot lines.

FIXTURE. See "Plumbing fixture."

FIXTURE BRANCH, DRAINAGE. A drain serving two or more fixtures that discharges into another portion of the drainage system.

❖ See Commentary Figure R202(9).

FIXTURE BRANCH, WATER-SUPPLY. A water-supply pipe between the fixture supply and a main water-distribution pipe or fixture group main.

❖ See the definition of "Branch."

FIXTURE DRAIN. The drain from the trap of a fixture to the junction of that drain with any other drain pipe.

❖ Commonly referred to as a trap arm, a fixture drain is the horizontal section of pipe connecting the outlet weir of a trap to a stack, fixture branch or any other drain [see Commentary Figures R202(9) and (10)].

FIXTURE FITTING.

Supply fitting. A fitting that controls the volume or directional flow or both of water and that is either attached to or accessible from a fixture or is used with an open or atmospheric discharge.

Waste fitting. A combination of components that conveys the sanitary waste from the outlet of a fixture to the connection of the sanitary drainage system.

❖ This includes the various portions of a faucet from its connecting supply lines to the termination point where water is delivered. When applied to waste components, it includes tubing, fittings and traps used for the connection to the drainage system.

INTERNATIONAL CODE COUNCIL®
Copyright © 2015 ICC. ALL RIGHTS RESERVED. Accessed by David Dammon on Jun 21, 2017 12:30:52 PM pursuant to License Agreement with ICC. No further reproduction or distribution authorized. ANY UNAUTHORIZED REPRODUCTION OR DISTRIBUTION IS A VIOLATION OF THE FEDERAL COPYRIGHT ACT AND THE LICENSE AGREEMENT, AND SUBJECT TO CIVIL AND CRIMINAL PENALTIES THEREUNDER.

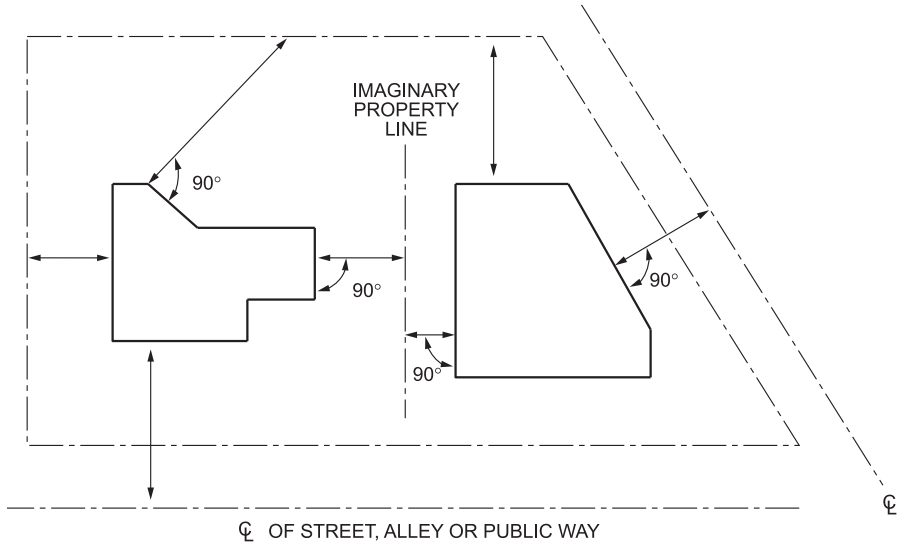

For SI: 90 degrees = 1.57 rad.

Figure R202(8)
FIRE-SEPARATION DISTANCE

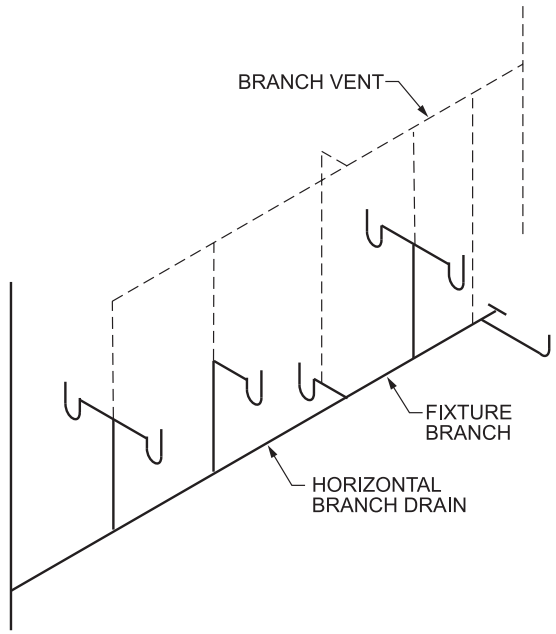

Figure R202(9)
FIXTURE AND HORIZONTAL BRANCH DRAIN

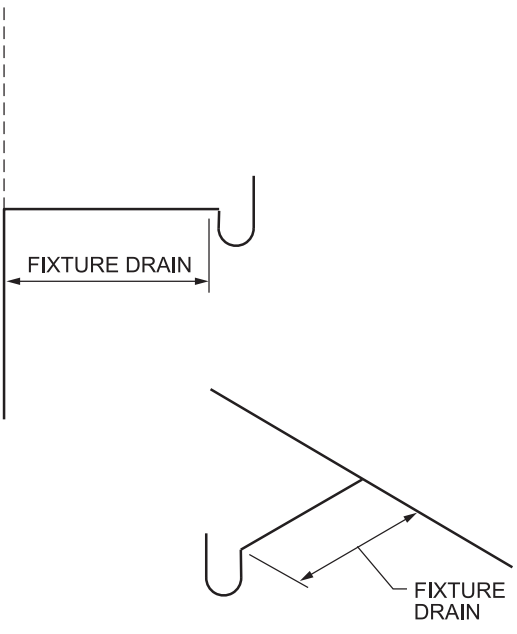

Figure R202(10)
FIXTURE DRAIN

FIXTURE GROUP, MAIN. The main water-distribution pipe (or secondary branch) serving a plumbing fixture grouping such as a bath, kitchen or laundry area to which two or more individual fixture branch pipes are connected.

❖ This is the main or branch water-distribution pipe that extends to a group of fixtures (i.e., bathroom, laundry or kitchen).

FIXTURE SUPPLY. The water-supply pipe connecting a fixture or fixture fitting to a fixture branch.

❖ A fixture supply is a water supply pipe serving a single fixture.

FIXTURE UNIT, DRAINAGE (d.f.u.). A measure of probable discharge into the drainage system by various types of plumbing fixtures, used to size DWV piping systems. The

INTERNATIONAL CODE COUNCIL®
Copyright © 2015 ICC. ALL RIGHTS RESERVED. Accessed by David Dammon on Jun 21, 2017 12:30:52 PM pursuant to License Agreement with ICC. No further reproduction or distribution authorized. ANY UNAUTHORIZED REPRODUCTION OR DISTRIBUTION IS A VIOLATION OF THE FEDERAL COPYRIGHT ACT AND THE LICENSE AGREEMENT, AND SUBJECT TO CIVIL AND CRIMINAL PENALTIES THEREUNDER.

drainage fixture-unit value for a particular fixture depends on its volume rate of drainage discharge, on the time duration of a single drainage operation and on the average time between successive operations.

❖ The conventional method of designing a sanitary drainage system is based on drainage fixture unit (d.f.u.) load values. The fixture-unit approach takes into consideration the probability of load on a drainage system. The d.f.u. is an arbitrary loading factor assigned to each fixture relative to its impact on the drainage system. Drainage fixture unit values are determined based on the average rate of water discharge by a fixture, the duration of a single operation, and the frequency of use or interval between each operation.

Because d.f.u. values have a built-in probability factor, they cannot be directly translated into flow rates or discharge rates.

A d.f.u. is not the same as the water supply fixture unit (w.s.f.u.) described in Chapter 29 and below.

FIXTURE UNIT, WATER-SUPPLY (w.s.f.u.). A measure of the probable hydraulic demand on the water supply by various types of plumbing fixtures used to size water-piping systems. The water-supply fixture-unit value for a particular fixture depends on its volume rate of supply, on the time duration of a single supply operation and on the average time between successive operations.

❖ When estimating peak demand for water supply systems, sizing methods use water-supply fixture units (w.s.f.u.). This is a numerical factor on an arbitrary scale assigned to intermittently used fixtures to calculate their load-producing effects on the water supply system.

The use of fixture units makes it possible to simplify the difficult task of calculating load-producing characteristics of any fixture to a common basis. The fixture units of different kinds of fixtures can be applied to a single basic probability curve found in various sizing methods.

[RB] FLAME SPREAD. The propagation of flame over a surface.

❖ During a fire, flames will travel across a building's interior surfaces in different forms and at different speeds. The movement of the flames along the surface material is the flame spread.

[RB] FLAME SPREAD INDEX. A comparative measure, expressed as a dimensionless number, derived from visual measurements of the spread of flame versus time for a material tested in accordance with ASTM E84 or UL723.

❖ To regulate the spread of fire over an interior surface material, limitations are imposed on the characteristics of the material. The standardized test procedure described in ASTM E84 or UL 723 measures the flame spread under specified conditions, and a numerical value is assigned to the material being tested. This value is the flame spread index.

FLEXIBLE AIR CONNECTOR. A conduit for transferring air between an air duct or plenum and an air terminal unit, an air inlet or an air outlet. Such conduit is limited in its use, length and location.

❖ Flexible air connectors are factory made and are very similar to flexible ducts to the point of being almost indistinguishable, other than the label. Such connectors are typically in standardized lengths and typically have termination collars attached on each end from the factory. Flexible connectors are listed to UL 181, but are not subjected to all of the testing required for flexible ducts. Unlike flexible ducts, flexible connectors are limited in length.

[RB] FLIGHT. A continuous run of rectangular treads or winders or combination thereof from one landing to another.

❖ Two points of clarification for stairways have been addressed by the definition of flight. For one, a flight is made up of the treads and risers that occur between landings. Therefore, a stairway connecting two stories that includes an intermediate landing consists of two flights. Secondly, the inclusion of winders within a stairway does not create multiple flights. Winders are simply treads within a flight and are often combined with rectangular treads within the same flight.

FLOOD-LEVEL RIM. The edge of the receptor or fixture from which water overflows.

❖ The flood-level rim is the highest elevation that liquid can be contained in a receptacle without spilling over the side of the fixture or receptor.

FLOOR DRAIN. A plumbing fixture for recess in the floor having a floor-level strainer intended for the purpose of the collection and disposal of waste water used in cleaning the floor and for the collection and disposal of accidental spillage to the floor.

❖ Floor drains are typically installed as emergency fixtures, preventing the flooding of a room or space.

FLOOR FURNACE. A self-contained furnace suspended from the floor of the space being heated, taking air for combustion from outside such space, and with means for lighting the *appliance* from such space.

❖ Such units supply heat through a floor grille placed directly over the unit's heat exchanger. Typically floor furnaces are classified as gravity-type furnaces. The circulation of air from a gravity-type floor furnace is accomplished by convection. Floor furnaces may be equipped with factory fans to circulate the air.

FLOW PRESSURE. The static pressure reading in the water-supply pipe near the faucet or water outlet while the faucet or water outlet is open and flowing at capacity.

❖ Each fixture requiring water has a minimum flow pressure necessary for the fixture to operate properly and to help protect the potable water supply from contamination. "Flow pressure" is a factor used in sizing the water supply system. The flow pressure of a plumbing

INTERNATIONAL CODE COUNCIL®
Copyright © 2015 ICC. ALL RIGHTS RESERVED. Accessed by David Dammon on Jun 21, 2017 12:30:52 PM pursuant to License Agreement with ICC. No further reproduction or distribution authorized. ANY UNAUTHORIZED REPRODUCTION OR DISTRIBUTION IS A VIOLATION OF THE FEDERAL COPYRIGHT ACT AND THE LICENSE AGREEMENT, AND SUBJECT TO CIVIL AND CRIMINAL PENALTIES THEREUNDER.

system is less than the static pressure because energy is lost in putting the fluid in motion.

FLUE. See "Vent."

FLUE, APPLIANCE. The passages within an *appliance* through which combustion products pass from the combustion chamber to the flue collar.

❖ This is the passage through an appliance used for the removal of combustion products.

FLUE COLLAR. The portion of a fuel-burning *appliance* designed for the attachment of a draft hood, vent connector or venting system.

❖ See the commentary to the definition of "Draft hood."

FLUE GASES. Products of combustion plus excess air in *appliance* flues or heat exchangers.

❖ The exact composition of flue gases depends on the materials being burned. The primary components of flue gases are nitrogen, carbon dioxide, water vapor, particulates, carbon monoxide and myriad compounds and trace elements that vary with the nature of the fuel.

FLUSH VALVE. A device located at the bottom of a flush tank that is operated to flush water closets.

❖ A flush valve consists of the flapper and the flush-valve seat in a flush-tank type water closet.

FLUSHOMETER TANK. A device integrated within an air accumulator vessel that is designed to discharge a predetermined quantity of water to fixtures for flushing purposes.

❖ This device is a hybrid between a flushometer valve and a gravity flush tank. A flushometer tank employs a compression tank that holds water under a pressure equivalent to the water-supply pressure. The flushing action created by the flushometer tank is similar to that of the flushometer valve, and the amount of water used is limited as it is with a gravity flush tank.

FLUSHOMETER VALVE. A flushometer valve is a device that discharges a predetermined quantity of water to fixtures for flushing purposes and is actuated by direct water pressure.

❖ This flushing device is a type of metering valve that is used primarily in public occupancy applications because of its powerful flushing action.

[RB] FOAM BACKER BOARD. Foam plastic used in siding applications where the foam plastic is a component of the siding.

❖ Products that combine an exterior siding material and foam plastic are available in the marketplace. The foam plastic component used in these products is referred to as a foam backer board. By using a foam layer in addition to the siding, the thermal properties can be enhanced.

[RB] FOAM PLASTIC INSULATION. A plastic that is intentionally expanded by the use of a foaming agent to produce a reduced-density plastic containing voids consisting of open or closed cells distributed throughout the plastic for thermal insulating or acoustic purposes and that has a density less than 20 pounds per cubic foot (320 kg/m^3) unless it is used as interior trim.

❖ An expanded plastic produced through use of a foaming agent that has a reduced density. This plastic contains voids consisting of open or closed cells distributed throughout the plastic, which provide thermal insulation and/or acoustic control. The density of the material is to be less than 20 pounds per cubic foot (320 kg/m^3) unless it is used as interior trim. Foam plastic used in siding applications where the foam plastic is a component of the siding.

[RB] FOAM PLASTIC INTERIOR TRIM. Exposed foam plastic used as picture molds, chair rails, crown moldings, baseboards, handrails, ceiling beams, door trim and window trim and similar decorative or protective materials used in fixed applications.

❖ An expanded plastic used as a decorative trim which is produced through use of a foaming agent. This foam plastic contains voids consisting of open or closed cells distributed throughout the material with a minimum density of at least 20 pounds (320 kg/m^3) per cubic foot (pcf). The foam plastic trim is left exposed in applications such as picture moldings, chair rails, crown moldings, baseboards, handrails, ceiling beams, door trim, window trim and similar decorative or protective applications.

FUEL-PIPING SYSTEM. All piping, tubing, valves and fittings used to connect fuel utilization *equipment* to the point of fuel delivery.

❖ As used in this code, this term includes the tubing and pipe used to convey fuel gas from the point of delivery to the appliance.

FULLWAY VALVE. A valve that in the full open position has an opening cross-sectional area that is not less than 85 percent of the cross-sectional area of the connecting pipe.

❖ Gate valves and ball valves are typical fullway (full-open) valves. Unlike a globe valve, a fullway valve will provide the most open and straight run for the contents to flow through because the closing portion is perpendicular to the run of pipe.

FURNACE. A vented heating *appliance* designed or arranged to discharge heated air into a *conditioned space* or through a duct or ducts.

❖ The single most distinguishing characteristic of furnaces is that they use air as the heat transfer medium. Furnaces can be fueled by gas, oil, solid fuel or electricity and can use fans, blowers and gravity (convection) to circulate the heated air to and from the unit. In the context of the code, the primary use of the term "furnace" refers to heating appliance units that combine a combustion chamber with related components, one or more heat exchangers and an air-handling system.

[RB] GLAZING AREA. The interior surface area of all glazed fenestration, including the area of sash, curbing or other framing elements, that enclose *conditioned space*.

INTERNATIONAL CODE COUNCIL®
Copyright © 2015 ICC. ALL RIGHTS RESERVED. Accessed by David Dammon on Jun 21, 2017 12:30:52 PM pursuant to License Agreement with ICC. No further reproduction or distribution authorized. ANY UNAUTHORIZED REPRODUCTION OR DISTRIBUTION IS A VIOLATION OF THE FEDERAL COPYRIGHT ACT AND THE LICENSE AGREEMENT, AND SUBJECT TO CIVIL AND CRIMINAL PENALTIES THEREUNDER.

Includes the area of glazed fenestration assemblies in walls bounding conditioned *basements*.

❖ The glazing area includes not only the surface area of the exposed glazing but also the framing elements, including the sash and curbing. The amount of glazing area is regulated for natural light by Section R303; however, this definition applies to the energy efficiency provisions of Chapter 11.

[RB] GRADE. The finished ground level adjoining the building at all *exterior walls*.

❖ This is the point at which the finished exterior ground level intersects the exterior wall of the building. The grade around a building may remain relatively constant, such as on a flat site, or may change dramatically from one point to the next if the site is steeply sloping.

[RB] GRADE FLOOR OPENING. A window or other opening located such that the sill height of the opening is not more than 44 inches (1118 mm) above or below the finished ground level adjacent to the opening.

❖ In the requirements for emergency escape and rescue openings found in Section R310, the size of the openings may be reduced if they are grade floor openings. These are windows or other openings that are located within close proximity to the finished ground level. The sill of a grade floor opening may be located either above or below the adjacent ground level, provided it is located no more than 44 inches (1118 mm) vertically from the level of the ground.

GRADE, PIPING. See "Slope."

[RB] GRADE PLANE. A reference plane representing the average of the finished ground level adjoining the building at all *exterior walls*. Where the finished ground level slopes away from the *exterior walls*, the reference plane shall be established by the lowest points within the area between the building and the *lot line* or, where the *lot line* is more than 6 feet (1829 mm) from the building between the structure and a point 6 feet (1829 mm) from the building.

❖ This definition can be important in determining the number of stories within a building as well as its height in feet. In some cases, the finished surface of the ground may be artificially raised with imported fill to create a higher grade plane around a building to decrease the number of stories or height. The definition requires that the lowest elevation within 6 feet (1829 mm) of the exterior wall be used to determine the grade plane.

GRAY WATER. Waste discharged from lavatories, bathtubs, showers, clothes washers and laundry trays.

❖ This definition was added for the 2012 edition to support the new Section 3009, "Gray Water Recycling Systems." The collection of gray water must be kept separate from blackwater (waste water from water closets, urinals and kitchen sinks), therefore requiring separate drainage and vent systems. Although the code does not require marking of gray-water collection piping, it may be prudent to mark such systems to avoid future cross connection to blackwater collection piping.

GRIDDED WATER DISTRIBUTION SYSTEM. A water distribution system where every water distribution pipe is interconnected so as to provide two or more paths to each fixture supply pipe.

❖ These systems offer the advantage of a simplistic design, typically smaller sized distribution lines and aid water conservation. In a traditional water distribution system, the water contained in the larger diameter piping is wasted when the line is opened and the user has to wait until the water reaches the desired temperature.

Parallel or gridded water distribution systems differ from branch systems which have individual supply pipes that extend to each fixture or outlet from a central supply point. The central supply point is a multiple-outlet manifold to which the distribution lines connect.

[RB] GROSS AREA OF EXTERIOR WALLS. The normal projection of all *exterior walls*, including the area of all windows and doors installed therein.

❖ The calculation for determining the gross area of exterior walls for energy efficiency purposes is based on the total area of the entire exterior surface, including openings such as windows and doors.

GROUND-SOURCE HEAT PUMP LOOP SYSTEM. Piping buried in horizontal or vertical excavations or placed in a body of water for the purpose of transporting heat transfer liquid to and from a heat pump. Included in this definition are closed loop systems in which the liquid is recirculated and open loop systems in which the liquid is drawn from a well or other source.

❖ This definition assists the user with a ready means of distinguishing ground-source heat pump loop systems from other hydronic systems.

[RB] GUARD. A building component or a system of building components located near the open sides of elevated walking surfaces that minimizes the possibility of a fall from the walking surface to the lower level.

❖ A guard is a component or system of components whose function is the prevention of falls from an elevated area. Placed adjacent to an elevation change, a guard must be of adequate height, strength and configuration to help prevent people, especially small children, from falling over or through the guard to the area below.

[RB] GUESTROOM. Any room or rooms used or intended to be used by one or more guests for living or sleeping purposes.

❖ Section 101.2 provides an exception to allow lodging houses to be built in accordance with the code. A common example of a lodging house is a bed and breakfast. To support this provision (Section 101.2, Exception 2), the code includes a definition of "Lodging house," which includes the term "guestroom." Therefore, it is necessary to define the term guestroom as well.

INTERNATIONAL CODE COUNCIL®
Copyright © 2015 ICC. ALL RIGHTS RESERVED. Accessed by David Dammon on Jun 21, 2017 12:30:52 PM pursuant to License Agreement with ICC. No further reproduction or distribution authorized. ANY UNAUTHORIZED REPRODUCTION OR DISTRIBUTION IS A VIOLATION OF THE FEDERAL COPYRIGHT ACT AND THE LICENSE AGREEMENT, AND SUBJECT TO CIVIL AND CRIMINAL PENALTIES THEREUNDER.

[RB] GYPSUM BOARD. The generic name for a family of sheet products consisting of a noncombustible core primarily of gypsum with paper surfacing. Gypsum wallboard, gypsum sheathing, gypsum base for gypsum *veneer* plaster, exterior gypsum soffit board, predecorated gypsum board and water-resistant gypsum backing board complying with the standards listed in Section R702.3 and Part IX of this code are types of gypsum board.

[RB] GYPSUM PANEL PRODUCT. The general name for a family of sheet products consisting essentially of gypsum.

[RB] HABITABLE SPACE. A space in a building for living, sleeping, eating or cooking. Bathrooms, toilet rooms, closets, halls, storage or utility spaces and similar areas are not considered *habitable spaces*.

❖ An area within a building used for living, sleeping, dining or cooking is a habitable space. Those areas not meeting this definition include bathrooms, closets, hallways and utility rooms. Habitable spaces are typically occupied, and as such they are more highly regulated than accessory use areas.

[RB] HANDRAIL. A horizontal or sloping rail intended for grasping by the hand for guidance or support.

❖ Typically used in conjunction with a ramp or stairway, a handrail provides support for the user along the travel path. Through its height, size, shape, continuity and structural stability, a handrail assists users at elevation changes inside and outside a building. A handrail may also be used as a guide to direct the user in a specified direction.

HANGERS. See "Supports."

HAZARDOUS LOCATION. Any location considered to be a fire hazard for flammable vapors, dust, combustible fibers or other highly combustible substances.

❖ The environment in which mechanical equipment and appliances operate plays a significant role in the safe performance of the equipment installation. Locations that may contain ignitable or explosive atmospheres are classified as hazardous locations with respect to the installation of mechanical equipment and appliances. For example, repair garages can be classified as hazardous locations because they can contain gasoline vapors from vehicles stored within them as well as other volatile chemicals. Public and private garages can be considered as hazardous locations because of the presence of motor vehicles and because of the owners' propensity for storing paint, varnish, thinners, lawn and home maintenance products and other chemicals within the space.

HEAT PUMP. An *appliance* having heating or heating and cooling capability and that uses refrigerants to extract heat from air, liquid or other sources.

❖ Heat pumps are referred to as reverse-cycle refrigeration systems. Special controls and valves allow the system to be used as a comfort heating system, comfort cooling system and potable water heating system. Auxiliary heat is often installed in heat pumps in the form of electric resistance heat or fuel-fired furnaces. In most cases, the design and installation of heat pumps is more critical than for other types of comfort air-conditioning systems because of the heat-transfer process and the amount of air that must be circulated. Heat-pump types include water source (hydronic), ground source (earth loop), water source (wells) and air source.

[RE] HEATING DEGREE DAYS (HDD). The sum, on an annual basis, of the difference between 65°F (18°C) and the mean temperature for each day as determined from "NOAA Annual Degree Days to Selected Bases Derived from the 1960-1990 Normals" or other weather data sources acceptable to the code official.

❖ Heating degree days (HDDS) are a measure of the heating requirements for buildings in a particular climate. The greater the number of HDD, the colder the climate. HDD is calculated by first determining the average temperature for each day of the year over a 24-hour period. The average temperature for each day is then subtracted from a base temperature of 65°F (18°C) to determine the HDD value for the day. For days on which the average temperature is over 65°F (18°C), the HDD is zero. The HDD for each day are then totaled to determine the HDD value for the particular area. The average temperatures are calculated over a number of years. These values are published in the *ASHRAE Handbook of Fundamentals*. They can also be found in the NOAA Annual Degree Days to Selected Bases Derived from the 1960-1990 Normals.

Climate Zone numbers listed in Table N1101.2 can also be used to approximate the HDD value for a particular county. Each climate zone is equal to 500 HDD. For example, Climate Zone 1 is equal to 0-499 HDD, and Climate Zone 2 is equal to 500-999 HDD.

[RB] HEIGHT, BUILDING. The vertical distance from *grade plane* to the average height of the highest roof surface.

❖ Once the elevation of the grade plane has been calculated, it is possible to determine a building's height, which is measured vertically from the grade plane to the average height of the highest roof surface. Commentary Figure R202(11) contains examples of this measurement.

If the building is stepped or terraced, it is logical that the height is the maximum height of any segment of the building. It may be appropriate under certain circumstances that the number of stories in a building be determined in the same manner. Each case should be judged individually based on the characteristics of the site and construction.

[RB] HEIGHT, STORY. The vertical distance from top to top of two successive tiers of beams or finished floor surfaces; and, for the topmost *story*, from the top of the floor finish to the top of the ceiling joists or, where there is not a ceiling, to the top of the roof rafters.

❖ Within the building itself, the height of an individual story is determined by measuring the vertical distance between two successive finished floor surfaces. In a single-story building or for the uppermost floor in a mul-

INTERNATIONAL CODE COUNCIL®
Copyright © 2015 ICC. ALL RIGHTS RESERVED. Accessed by David Dammon on Jun 21, 2017 12:30:52 PM pursuant to License Agreement with ICC. No further reproduction or distribution authorized. ANY UNAUTHORIZED REPRODUCTION OR DISTRIBUTION IS A VIOLATION OF THE FEDERAL COPYRIGHT ACT AND THE LICENSE AGREEMENT, AND SUBJECT TO CIVIL AND CRIMINAL PENALTIES THEREUNDER.

tistory structure, the measurement is taken from the finished floor surface to the top of the ceiling joists or to the underside of the roof deck (top of the roof rafters) where a ceiling is not provided [see Commentary Figure R202(12)].

[RE] HIGH-EFFICACY LAMPS. See Section N1101.6 for definition applicable in Chapter 11.

❖ The energy conservation requirements of this code now contain a requirement to use high-efficacy lamps in permanently installed lighting fixtures. These lamps are considerably more energy efficient than normal lamps.

HIGH-TEMPERATURE (H.T.) CHIMNEY. A high temperature chimney complying with the requirements of UL 103. A Type H.T. chimney is identifiable by the markings "Type H.T." on each chimney pipe section.

❖ This is a factory-built chimney used to vent solid-fuel-burning appliances when a masonry chimney is not available [see Commentary Figure R202(13) for an illustration of a Type H.T. chimney].

[RB] HILL. With respect to topographic wind effects, a land surface characterized by strong relief in any horizontal direction.

❖ This is a term to describe a topographical area where wind speed-up can occur. In cases where there is known to be structural damage due to this type of wind speed-up, the code requires consideration of topographical wind effects (see Section R301.2.1.5).

[RB] HISTORIC BUILDING. Buildings that are listed in or eligible for listing in the National Register of Historic Places, or designated as historic under an appropriate state or local law.

❖ This term is used in Sections R105.3.1.1, N1101.6 and N1107.6. The definitions for this term here and in Section N1101.6 are identical.

HORIZONTAL BRANCH, DRAINAGE. A drain pipe extending laterally from a soil or waste stack or *building drain*, that receives the discharge from one or more *fixture drains.*

❖ See Commentary Figure R202(9).

HORIZONTAL PIPE. Any pipe or fitting that makes an angle of less than 45 degrees (0.79 rad) with the horizontal.

❖ This definition is needed for the application of many code provisions that apply only to horizontal piping.

HOT WATER. Water at a temperature greater than or equal to 110°F (43°C).

❖ The code does not specify a maximum temperature for hot water; however, it should be limited to a tempera-

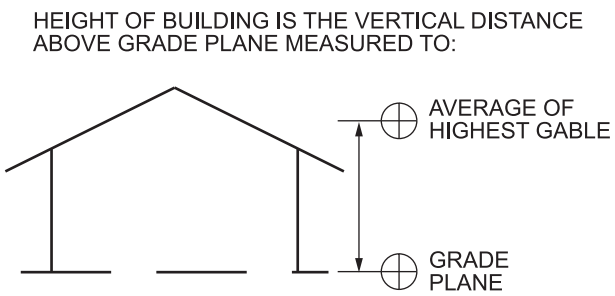

Figure R202(11)
HEIGHT OF BUILDING

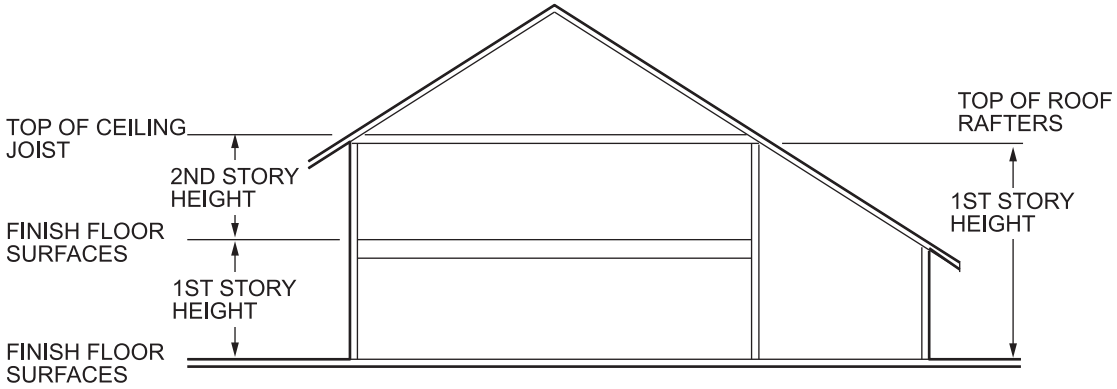

Figure R202(12)
STORY HEIGHT

INTERNATIONAL CODE COUNCIL®
Copyright © 2015 ICC. ALL RIGHTS RESERVED. Accessed by David Dammon on Jun 21, 2017 12:30:52 PM pursuant to License Agreement with ICC. No further reproduction or distribution authorized. ANY UNAUTHORIZED REPRODUCTION OR DISTRIBUTION IS A VIOLATION OF THE FEDERAL COPYRIGHT ACT AND THE LICENSE AGREEMENT, AND SUBJECT TO CIVIL AND CRIMINAL PENALTIES THEREUNDER.

ture that will minimize: 1. The risk of a user's burn; and 2. Thermal stress to plumbing system components. The designer, installer or owner has the choice of determining the temperature. Most water heaters are now shipped with a factory-set temperature of 120°F (49°C). The minimum temperature is established to determine what is considered as hot water. Water temperature below the minimum temperature is either tempered or cold. Care must be used when installing a system that has temperature capability of exceeding 120°F (49°C) because of the possibility of a user being scalded.

[RB] HURRICANE-PRONE REGIONS. Areas vulnerable to hurricanes, defined as the U.S. Atlantic Ocean and Gulf of Mexico coasts where the ultimate design wind speed, V_{ult}, is greater than 115 miles per hour (51 m/s), and Hawaii, Puerto Rico, Guam, Virgin Islands and America Samoa.

❖ Those geographical areas subject to hurricanes are "hurricane-prone regions." The specific areas include those having a minimum basic wind speed exceeding 110 miles per hour (177 km/h or 49 m/s) along the United States coastline of the Atlantic Ocean and the coasts bordering the Gulf of Mexico, as well as the indicated islands.

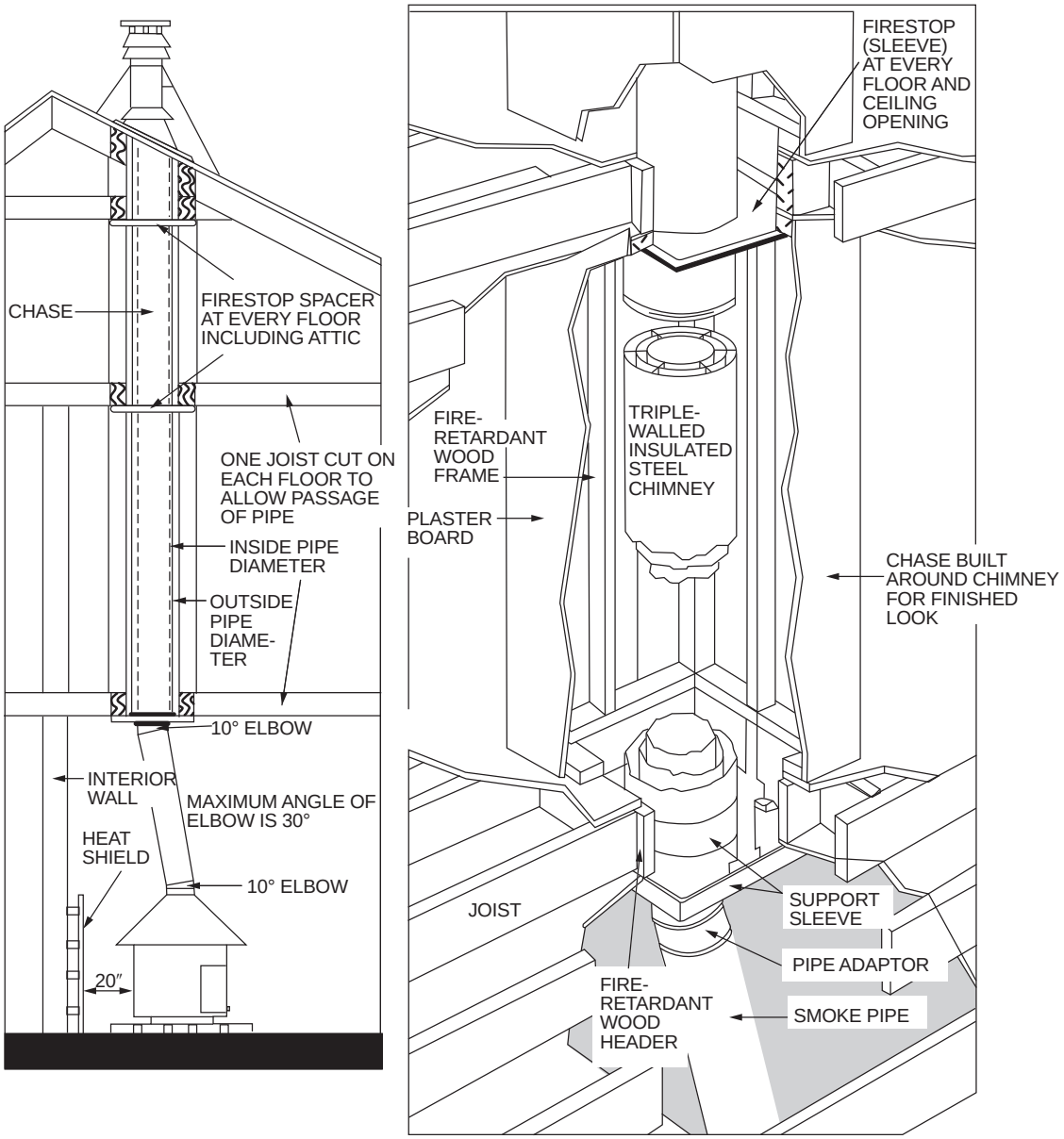

For SI: 1 inch = 25.4 mm, 1 degree = 0.01745 rad.

Figure R202(13)
HIGH-TEMPERATURE CHIMNEY

INTERNATIONAL CODE COUNCIL®
Copyright © 2015 ICC. ALL RIGHTS RESERVED. Accessed by David Dammon on Jun 21, 2017 12:30:52 PM pursuant to License Agreement with ICC. No further reproduction or distribution authorized. ANY UNAUTHORIZED REPRODUCTION OR DISTRIBUTION IS A VIOLATION OF THE FEDERAL COPYRIGHT ACT AND THE LICENSE AGREEMENT, AND SUBJECT TO CIVIL AND CRIMINAL PENALTIES THEREUNDER.

HYDROGEN-GENERATING APPLIANCE. A self-contained package or factory-matched packages of integrated systems for generating gaseous hydrogen. Hydrogen-generating *appliances* utilize electrolysis, reformation, chemical or other processes to generate hydrogen.

❖ Hydrogen is being generated to fuel a new line of developmental vehicles and to generate electric power in fuel cell power systems. Several different processes are being used to generate hydrogen. One such process removes hydrogen from tap water (H_2O) in an electrically powered appliance.

Installation requirements for these appliances are found in Chapter 7 of the IFGC and ventilation requirements for spaces containing the appliances are found in Section M1307.4 of this code.

IGNITION SOURCE. A flame, spark or hot surface capable of igniting flammable vapors or fumes. Such sources include *appliance* burners, burner ignitions and electrical switching devices.

❖ Any component of an appliance that can generate a spark or heat sufficient to ignite flammable gasses or vapors is an ignition source. Open flames (such as a pilot light) and appliance burners are also an ignition source.

INDIRECT SYSTEM. A solar thermal system in which the gas or liquid in the solar collector loop circulates between the solar collector and a heat exchanger and such gas or liquid is not drained from the system or supplied to the load during normal operation.

❖ Indirect systems do not directly heat the water or air that they are intended to heat. Rather, such systems heat a transfer medium such as an antifreeze solution and that solution is passed through a heat exchanger that separates the solar side (loop) of the system from the air or water intended to be heated. Indirect systems are commonly used to heat potable water.

INDIRECT WASTE PIPE. A waste pipe that discharges into the drainage system through an *air gap* into a trap, fixture or receptor.

❖ Often referred to as "open site" or "safe waste," indirect waste pipe installations protect fixtures, equipment and systems from the backflow or backsiphonage of waste.

INDIVIDUAL SEWAGE DISPOSAL SYSTEM. A system for disposal of sewage by means of a septic tank or mechanical treatment, designed for use apart from a public sewer to serve a single establishment or building.

❖ When installed in accordance with the *International Private Sewage Disposal Code*® (IPSDC®) and approved by the administrative authority, these systems are acceptable as a point of disposal for sewage when a public sewer system is not available.

INDIVIDUAL VENT. A pipe installed to vent a single *fixture drain* that connects with the vent system above or terminates independently outside the building.

❖ An individual vent is the simplest and most common method of venting a single plumbing fixture.

INDIVIDUAL WATER SUPPLY. A supply other than an approved public water supply that serves one or more families.

❖ This type of water supply includes wells, springs, streams and cisterns. Surface bodies of water and land cisterns can be used when properly treated and approved.

[RB] INSULATED SIDING. A type of continuous insulation, with manufacturer-installed insulating material as an integral part of the cladding product, having a minimum *R*-value of R-2.

[RB] INSULATED VINYL SIDING. A vinyl cladding product, with manufacturer-installed foam plastic insulating material as an integral part of the cladding product, having a thermal resistance of not less than R-2.

[RB] INSULATING CONCRETE FORM (ICF). A concrete forming system using stay-in-place forms of rigid foam plastic insulation, a hybrid of cement and foam insulation, a hybrid of cement and wood chips, or other insulating material for constructing cast-in-place concrete walls.

❖ This is a relatively new construction technique for foundation/basement walls and above-grade walls that uses stay-in-place insulation forms and concrete. A wide variety of systems are available, with several types of insulating materials used for the formwork. Sections R404.1.3 (foundation walls) and R610 (above-grade walls) address three different systems consisting of insulating concrete forms: flat, waffle grid, and screen grid.

[RE] INSULATING SHEATHING. An insulating board having a thermal resistance of not less than R-2 of the core material.

For definition applicable in Chapter 11, see Section N1101.6.

❖ A sheathing board having an insulating core material is insulating sheathing if its thermal resistance is at least R-2.

[RB] JURISDICTION. The governmental unit that has adopted this code under due legislative authority.

❖ The governmental entity that adopts and enforces the IRC is the "jurisdiction." A jurisdiction can take on a variety of forms such as a state, city, town, county, fire district, improvement district or federal department. The jurisdiction appoints a building official to administer and enforce the provisions of the code.

INTERNATIONAL CODE COUNCIL®
Copyright © 2015 ICC. ALL RIGHTS RESERVED. Accessed by David Dammon on Jun 21, 2017 12:30:52 PM pursuant to License Agreement with ICC. No further reproduction or distribution authorized. ANY UNAUTHORIZED REPRODUCTION OR DISTRIBUTION IS A VIOLATION OF THE FEDERAL COPYRIGHT ACT AND THE LICENSE AGREEMENT, AND SUBJECT TO CIVIL AND CRIMINAL PENALTIES THEREUNDER.

[RB] KITCHEN. Kitchen shall mean an area used, or designated to be used, for the preparation of food.

❖ This is an area designed to be used for the preparation of food. A kitchen is a habitable space and is subject to a number of requirements.

[RB] LABEL. An identification applied on a product by the manufacturer that contains the name of the manufacturer, the function and performance characteristics of the product or material, and the name and identification of an *approved agency* and that indicates that the representative sample of the product or material has been tested and evaluated by an *approved agency*. (See also "Manufacturer's designation" and "Mark.")

❖ A label provides verification of testing and inspection of materials, products or assemblies, identifies a product or material and provides other information that can be investigated if there is a question about the suitability of the product or material for a specific installation.

The applicable referenced standard often states the minimum identifying information required on a label. The information on a label as mandated by the code includes the name of the manufacturer, the product's function or performance characteristics, the name and identification of the approved labeling agency and the approval of the testing agency. The product name, serial number, installation specifications or applicable tests and standards might be additional information that is provided (see also the commentary for the definitions of "Listed," "Mark," "Labeled" and "Manufacturer's designation").

[RB] LABELED. *Equipment*, materials or products to which have been affixed a *label*, seal, symbol or other identifying *mark* of a nationally recognized testing laboratory, inspection agency or other organization concerned with product evaluation that maintains periodic inspection of the production of the *labeled* items and whose labeling indicates either that the *equipment*, material or product meets identified standards or has been tested and found suitable for a specified purpose.

❖ The term is an adjective applied to equipment, materials and products that have been tested or otherwise determined to meet the intended purpose or meet a standard. The label is that of a laboratory or other agency qualified to do the evaluations (see also the commentary for definitions of "Listed," "Mark," "Label" and "Manufacturer's designation").

When a product is labeled, the label indicates that the material has been tested for conformance to an applicable standard and that the component is subject to a third-party inspection that verifies that the minimum level of quality required by the appropriate standard is maintained. Labeling provides a readily available source of information that is useful for field inspection of installed products.

The labeling agency performing the third-party inspection must be approved by the building official, and the basis for this approval may include, but is not necessarily limited to, the capacity and capability of the agency to perform the specific testing and inspection.

[RB] LIGHT-FRAME CONSTRUCTION. A type of construction with vertical and horizontal structural elements that are primarily formed by a system of repetitive wood or cold-formed steel framing members.

❖ Light-frame construction is by far the predominant construction technique used for dwelling units. Consisting primarily of repetitive framing members such as studs, floor joists, ceiling joists and rafters, light-frame construction can use wood or light-gage steel as framing members. The repetitive members work together as a system to provide the structural integrity of the building. The IRC devotes most of its structural provisions to structures of light-frame construction.

[RB] LISTED. *Equipment*, materials, products or services included in a list published by an organization acceptable to the code official and concerned with evaluation of products or services that maintains periodic inspection of production of *listed equipment* or materials or periodic evaluation of services and whose listing states either that the *equipment*, material, product or service meets identified standards or has been tested and found suitable for a specified purpose.

❖ When a product is listed and labeled, it indicates that it has been tested for conformance to an applicable standard and is subject to a third-party inspection quality assurance (QA) program. The QA verifies that the minimum level of quality required by the appropriate standard is maintained. Labeling provides a readily available source of information that is useful for field inspection of installed products. The label identifies the product or material and provides other information that can be further investigated if there is any question as to its suitability for the specific installation. The labeling agency performing the third-party inspection must be approved by the building official, and the basis for this approval may include, but is not limited to, the capacity and capability of the agency to perform the specific testing and inspection (see also the commentary for definitions of "Mark," "Label," "Labeled" and "Manufacturer's designation").

The question is often asked whether the listing of a product can be voided or violated. The use of a listing mark applied to a product is authorized by the listing agency and is a "statement" by the product manufacturer that the product, as manufactured, met all appropriate requirements (such as the criteria contained in a test standard) at the time of manufacture and shipment to a point-of-use or point-of-sale. After that point in time, any alteration or modification makes it impossible for the building official or the listing agency to determine if the product continues to meet the criteria by which its listing was originally attained. Listed products are subject to the review and approval of the building official and, where the building official determines that a field modification or alteration to the product is significant enough to call its impact on the listing into question, an evaluation in the field by representatives of the listing agency may be required in order to verify the continued compliance of the product with the original listing criteria. Such field evaluations or tests would be

INTERNATIONAL CODE COUNCIL®
Copyright © 2015 ICC. ALL RIGHTS RESERVED. Accessed by David Dammon on Jun 21, 2017 12:30:52 PM pursuant to License Agreement with ICC. No further reproduction or distribution authorized. ANY UNAUTHORIZED REPRODUCTION OR DISTRIBUTION IS A VIOLATION OF THE FEDERAL COPYRIGHT ACT AND THE LICENSE AGREEMENT, AND SUBJECT TO CIVIL AND CRIMINAL PENALTIES THEREUNDER.

the responsibility of the permit holder and conducted at no cost to the jurisdiction (see Section R104.11.1).

[RB] LIVE LOADS. Those loads produced by the use and occupancy of the building or other structure and do not include construction or environmental loads such as wind load, snow load, rain load, earthquake load, flood load or dead load.

❖ A variety of loads are imposed on a structure that must be considered in the building design. One group is live loads, produced through the use of the building. Different types of uses or occupancies result in different live loads, due primarily to the number of people involved, the type of activity that takes place and the movable furnishings and equipment that are typically a part of the use.

Design loads that are not live loads include environmental loads such as wind loads, snow loads, rain loads, earthquake loads and flood loads, as well as construction loads. Fixed-in-place equipment is a dead load rather than a live load.

LIVING SPACE. Space within a *dwelling unit* utilized for living, sleeping, eating, cooking, bathing, washing and sanitation purposes.

❖ The living space within a dwelling extends beyond what is defined as habitable space. Living space includes not only those areas used for living, sleeping, eating and cooking but also includes bathing and washing areas such as bathrooms. Storage areas such as closets and garages are not a portion of the living space.

LOCAL EXHAUST. An exhaust system that uses one or more fans to exhaust air from a specific room or rooms within a dwelling.

❖ The most common example of local exhaust in a dwelling is the bathroom fan that exhausts air directly to the outside of the house. This definition was installed to clarify the intent of the exception to Section R303.3. The exception allows for a light and local exhaust to be used in lieu of the required amount of glazing to the exterior in a bathroom.

[RB] LODGING HOUSE. A one-family dwelling where one or more occupants are primarily permanent in nature, and rent is paid for guestrooms.

❖ Section 101.2 now provides an exception to allow lodging houses to be built in accordance with this code. A common example of a lodging house is a bed and breakfast. To support this new provision (Section 101.2, Exception 2), the code now includes this definition of "Lodging house." Note that this definition includes the term "guestroom," which is also a defined term in this code.

[RB] LOT. A portion or parcel of land considered as a unit.

❖ A lot is a legally recorded parcel of land, the boundaries of which are described in a deed. When code requirements are based on some element of a lot (such as yard area or lot line location), it is the physical attributes of the parcel of land that the code is addressing, not issues of ownership. Adjacent lots owned by the same party are treated as if they were owned by different parties because ownership can change at any time. However, a group of platted lots or subdivision lots could be joined together and "considered as a unit" for the purposes of the code. For example, a collection of platted lots could be used as a single building lot for the construction of a covered mall and its associated anchor buildings. Local jurisdictions may require for taxing or other purposes that the lots be legally joined, or merged, as well.

A condominium form of building ownership, whether a residential or commercial condominium, does not create separate lots (i.e., parcels of land) and such unit owners are treated as separate tenants, not separate lot owners. The lines separating one part of a condominium from another are not lot lines but lines indicating the limits of ownership. As such, walls constructed on lines separating condominium ownership would not need to be fire (or party) walls.

Legal property lines do not always constitute site boundaries (e.g., malls, condominiums, townhouses). A site could contain multiple legal "lot" divisions.

[RB] LOT LINE. A line dividing one *lot* from another, or from a street or any public place.

❖ The lot line defines the exterior perimeter of the lot. It is used in several provisions of the code as the basis for requirements dealing with the proximity of an exterior wall or opening to the lot line.

Lot lines are legally recorded divisions between two adjacent land parcels or lots. They are the reference point for the location of buildings for exterior separation and other code purposes (see also the definition of "Lot").

MACERATING TOILET SYSTEMS. A system comprised of a sump with macerating pump and with connections for a water closet and other plumbing fixtures, that is designed to accept, grind and pump wastes to an *approved* point of discharge.

❖ See Section P2723.

MAIN. The principal pipe artery to which branches may be connected.

❖ This generic term applies to the primary or principal pipe artery in either water-supply systems or drainage systems to which branches may be connected.

MAIN SEWER. See "Public sewer."

MANIFOLD WATER DISTRIBUTION SYSTEMS. A fabricated piping arrangement in which a large supply main is fitted with multiple branches in close proximity in which water is distributed separately to fixtures from each branch.

❖ A manifold is a multiple-opening header to which one or more branch lines connect (see Section P2903.8).

[RB] MANUFACTURED HOME. *Manufactured home* means a structure, transportable in one or more sections, that in the traveling mode is 8 body feet (2438 body mm) or more

INTERNATIONAL CODE COUNCIL®
Copyright © 2015 ICC. ALL RIGHTS RESERVED. Accessed by David Dammon on Jun 21, 2017 12:30:52 PM pursuant to License Agreement with ICC. No further reproduction or distribution authorized. ANY UNAUTHORIZED REPRODUCTION OR DISTRIBUTION IS A VIOLATION OF THE FEDERAL COPYRIGHT ACT AND THE LICENSE AGREEMENT, AND SUBJECT TO CIVIL AND CRIMINAL PENALTIES THEREUNDER.

in width or 40 body feet (12 192 body mm) or more in length, or, where erected on site, is 320 square feet (30 m^2) or more, and that is built on a permanent chassis and designed to be used as a *dwelling* with or without a permanent foundation where connected to the required utilities, and includes the plumbing, heating, air-conditioning and electrical systems contained therein; except that such term shall include any structure that meets all the requirements of this paragraph except the size requirements and with respect to which the manufacturer voluntarily files a certification required by the secretary (HUD) and complies with the standards established under this title. For mobile homes built prior to June 15, 1976, a *label* certifying compliance to the Standard for Mobile Homes, NFPA 501, in effect at the time of manufacture is required. For the purpose of these provisions, a mobile home shall be considered to be a *manufactured home.*

❖ Appendix E contains provisions for the use of manufactured housing as dwellings. Appendix E is applicable only if so specified in the adoption ordinance of the jurisdiction. The provisions of this appendix are limited to three areas: 1. The construction, alteration or repair of a foundation system used to support a manufactured home unit; 2. The construction, installation, addition, alteration, repair or maintenance of building services equipment necessary for connecting the manufactured home to water, fuel, power supplies or sewage systems; and 3. Alterations, additions or repairs to existing manufactured homes.

The code describes a manufactured home as being transportable in one or more sections, sets forth minimum dimensions for the home and indicates that a manufactured home is constructed on a permanent chassis. Under the provisions of the IRC, a mobile home is a manufactured home.

[RB] MANUFACTURER'S DESIGNATION. An identification applied on a product by the manufacturer indicating that a product or material complies with a specified standard or set of rules. (See also "Mark" and "Label.")

❖ Identification applied on a product by the manufacturer indicating that a product or material complies with a specified standard or set of rules (see also "Mark" and "Label").

[RB] MANUFACTURER'S INSTALLATION INSTRUCTIONS. Printed instructions included with *equipment* as part of the conditions of their *listing* and *labeling*.

❖ A set of instructions provided by the manufacturer of a product that guides the user or installer through the steps necessary to ensure a complying installation. These instructions help ensure that an installer does not violate the listing of a product.

[RB] MARK. An identification applied on a product by the manufacturer indicating the name of the manufacturer and the function of a product or material. (See also "Manufacturer's designation" and "Label.")

❖ A mark represents the manufacturer's identification placed on a product, stating who made the product and describing its function. There is, however, no certification of compliance to any particular standard and no third-party quality control (see also the commentary to definitions of "Listed," "Label," "Labeled" and "Manufacturer's designation").

[RB] MASONRY CHIMNEY. A field-constructed chimney composed of solid masonry units, bricks, stones or concrete.

❖ Masonry chimneys can have one or more flues within them and are field constructed of brick, stone, concrete, or fire-clay materials. Masonry chimneys can stand alone or be part of a masonry fireplace.

[RB] MASONRY HEATER. A masonry heater is a solid fuel burning heating *appliance* constructed predominantly of concrete or solid masonry having a mass of not less than 1,100 pounds (500 kg), excluding the chimney and foundation. It is designed to absorb and store a substantial portion of heat from a fire built in the firebox by routing exhaust gases through internal heat exchange channels in which the flow path downstream of the firebox includes not less than one 180-degree (3.14-rad) change in flow direction before entering the chimney and that deliver heat by radiation through the masonry surface of the heater.

❖ Masonry heaters are appliances designed to absorb and store heat from a relatively small fire and to radiate that heat into the building interior. They are thermally more efficient than traditional fireplaces because of their design. Interior passageways through the heater allow hot exhaust gases from the fire to transfer heat into the masonry, which then radiates into the building.

[RB] MASONRY, SOLID. Masonry consisting of solid masonry units laid contiguously with the joints between the units filled with mortar.

❖ In solid masonry construction, walls are made up of solid masonry units. The joints between the units are also solid because they must be filled with mortar. Solid masonry walls may be either single-wythe or multiple-wythe construction. Where multiple wythes are used, the space between the wythes is filled with mortar or grout.

[RB] MASONRY UNIT. Brick, tile, stone, architectural cast stone, glass block or concrete block conforming to the requirements specified in Section 2103 of the *International Building Code*.

❖ The IBC contains the material requirements for masonry units. Various materials are used to construct masonry units, including brick, tile, stone, architectural cast stone, glass and concrete.

Clay. A building unit larger in size than a brick, composed of burned clay, shale, fire clay or mixtures thereof.

❖ Clay masonry units are composed of burned clay, shale, fire clay or a combination of these materials. A clay masonry unit is somewhat larger than a brick.

Concrete. A building unit or block larger in size than 12 inches by 4 inches by 4 inches (305 mm by 102 mm by 102 mm) made of cement and suitable aggregates.

❖ Masonry units constructed of cement, aggregates, water and suitable admixtures are concrete masonry

INTERNATIONAL CODE COUNCIL®
Copyright © 2015 ICC. ALL RIGHTS RESERVED. Accessed by David Dammon on Jun 21, 2017 12:30:52 PM pursuant to License Agreement with ICC. No further reproduction or distribution authorized. ANY UNAUTHORIZED REPRODUCTION OR DISTRIBUTION IS A VIOLATION OF THE FEDERAL COPYRIGHT ACT AND THE LICENSE AGREEMENT, AND SUBJECT TO CIVIL AND CRIMINAL PENALTIES THEREUNDER.

units. The minimum size for a concrete masonry unit is 4 inches by 4 inches by 12 inches.

Glass. Nonload-bearing masonry composed of glass units bonded by mortar.

❖ Glass masonry units are unique in that they are permitted for use only in nonload-bearing conditions. The units, either solid or hollow, are connected with mortar in the manner described in Section R610.

Hollow. A masonry unit with a net cross-sectional area in any plane parallel to the loadbearing surface that is less than 75 percent of its gross cross-sectional area measured in the same plane.

❖ The net cross-sectional area of a hollow masonry unit is less than 75 percent of its gross cross-sectional area measured in the same plane and parallel to the loadbearing surface. A unit having a greater ratio of net area to gross area than a hollow masonry unit is considered a solid masonry unit.

Solid. A masonry unit with a net cross-sectional area in every plane parallel to the loadbearing surface that is 75 percent or more of its cross-sectional area measured in the same plane.

❖ The net cross-sectional area of a solid masonry unit is at least 75 percent of its gross cross-sectional area measured in the same plane and parallel to the loadbearing surface. A unit having a ratio of net area to gross area below 75 percent is a hollow masonry unit.

[RE] MASS WALL. Masonry or concrete walls having a mass greater than or equal to 30 pounds per square foot (146 kg/m^2), solid wood walls having a mass greater than or equal to 20 pounds per square foot (98 kg/m^2), and any other walls having a heat capacity greater than or equal to 6 Btu/ft^2 · °F [123 J/(m^2 · K)].

❖ A mass wall must have a heat capacity of 6 Btu/ft^2 · °F. In general terms, the heat capacity is a measure of how well a material stores heat. The higher the heat capacity the greater amount of heat stored. For example, a 6-inch, heavyweight concrete wall has a heat capacity of 14 Btu/ft^2 · °F (286 kJ/m^2 · K) compared to a conventional 2-inch by 4-inch wood framed wall with a heat capacity of approximately 3 Btu/ft^2 · °F (63 kJ/m^2 · K). The code defines a mass wall as a masonry or concrete wall having a mass greater than or equal to 30 lb/ft^2, a solid wood wall (e.g., a log house) having a mass of greater than 20 lb/ft^2, or any other walls having a heat capacity of greater than or equal to 6 Btu/ft^2 · °F (123 kJ/m^2 · K).

[RB] MEAN ROOF HEIGHT. The average of the roof eave height and the height to the highest point on the roof surface, except that eave height shall be used for roof angle of less than or equal to 10 degrees (0.18 rad).

❖ For a relatively flat roof (up to 10 degrees slope), the mean roof height is the height of the eave. For steeper roofs, the mean roof height is measured to the average point between the eave and the highest point on the roof surface, typically the highest ridge.

MECHANICAL DRAFT SYSTEM. A venting system designed to remove flue or vent gases by mechanical means, that consists of an induced draft portion under nonpositive static pressure or a forced draft portion under positive static pressure.

❖ Mechanical draft systems do not depend on draft; they use fans or blowers.

Forced-draft venting system. A portion of a venting system using a fan or other mechanical means to cause the removal of flue or vent gases under positive static pressure.

❖ Power exhausters and some power-burner systems are examples of forced-draft systems. Vents and chimneys must be listed for positive pressure applications where used with forced-draft systems.

Induced draft venting system. A portion of a venting system using a fan or other mechanical means to cause the removal of flue or vent gases under nonpositive static vent pressure.

❖ Induced-draft venting is commonly accomplished with field-installed inducer fans designed to supplement natural-draft chimneys or vents.

Power venting system. A portion of a venting system using a fan or other mechanical means to cause the removal of flue or vent gases under positive static vent pressure.

❖ See the commentary to "Forced-draft venting system" above.

MECHANICAL EXHAUST SYSTEM. A system for removing air from a room or space by mechanical means.

❖ A mechanical exhaust system uses a fan or other air-handling equipment to exhaust air to the outdoors. Mechanical exhaust systems include those used for hazardous exhaust and commercial kitchen exhaust. Mechanical exhaust systems may or may not use ductwork as part of the system and may include air-cleaning or air-filtering equipment and fire-suppression equipment.

MECHANICAL JOINT.

1. A connection between pipes, fittings or pipes and fittings that is not welded, brazed, caulked, soldered, solvent cemented or heat-fused.
2. A general form of gas- or liquid-tight connections obtained by the joining of parts through a positive holding mechanical construction such as, but not limited to, flanged, screwed, clamped or flared connections.

❖ Mechanical joints form a seal by compressing a ferrule or seal around the outside circumference of the pipe or tube or by compressing the tubing around a fitting inserted into the tubing. Mechanical joints are often proprietary and must be installed in accordance with the manufacturers' instructions. Heat-fused joints are not considered to be a mechanical joint.

INTERNATIONAL CODE COUNCIL®
Copyright © 2015 ICC. ALL RIGHTS RESERVED. Accessed by David Dammon on Jun 21, 2017 12:30:52 PM pursuant to License Agreement with ICC. No further reproduction or distribution authorized. ANY UNAUTHORIZED REPRODUCTION OR DISTRIBUTION IS A VIOLATION OF THE FEDERAL COPYRIGHT ACT AND THE LICENSE AGREEMENT, AND SUBJECT TO CIVIL AND CRIMINAL PENALTIES THEREUNDER.

MECHANICAL SYSTEM. A system specifically addressed and regulated in this code and composed of components, devices, *appliances* and *equipment*.

❖ Mechanical systems include, among others, refrigeration systems, air-conditioning systems, exhaust systems, piping systems, duct systems, venting systems, hydronic systems and ventilation systems. A mechanical system may be any of the above systems or incorporate one or more of the systems. The system includes all of the equipment and appliances required to perform the function for which the system is designed.

[RB] METAL ROOF PANEL. An interlocking metal sheet having an installed weather exposure of not less than 3 square feet (0.28 m^2) per sheet.

❖ A metal roof panel is specifically defined here in order to identify its difference from a metal roof shingle. Metal roof panels are each at least 3 square feet in surface area and interlock to provide a suitable roof covering. The provisions of Section R905.10 address roof coverings consisting of metal roof panels.

[RB] METAL ROOF SHINGLE. An interlocking metal sheet having an installed weather exposure less than 3 square feet (0.28 m^2) per sheet.

❖ Section R905.4 regulates roof coverings consisting of metal roof shingles, which are smaller than 3 square feet (0.28 m^2) per sheet.

[RB] MEZZANINE. An intermediate level or levels between the floor and ceiling of any *story*.

❖ Floor levels consisting of relatively small floor areas opening into larger rooms are mezzanines. Located at an intermediate level within a high-ceiling space, a mezzanine is limited to one-third of the area of the room in which it is located in accordance with Section R325.3. Because of its openness and relatively small size, a loft mezzanine is not considered an additional story (see Section R325 for further mezzanine requirements).

[RB] MODIFIED BITUMEN ROOF COVERING. One or more layers of polymer modified asphalt sheets. The sheet materials shall be fully adhered or mechanically attached to the substrate or held in place with an *approved* ballast layer.

❖ Polymer-modified asphalt sheets, applied in one or more layers, may be used as a roof covering when installed in accordance with Section R905.11. There are several approved methods for attaching the asphalt sheets, including: 1. Full adhesion to the substrate; 2. Mechanical attachment to the substrate; and 3. Use of a layer of ballast.

[RB] MULTIPLE STATION SMOKE ALARM. Two or more single station alarm devices that are capable of interconnection such that actuation of one causes all integral or separate audible alarms to operate.

❖ A multiple station smoke alarm consists of two or more interconnected single station smoke alarms. When one of the smoke alarms is actuated, all of the audible alarms sound. Most dwelling units will require several smoke alarms throughout the unit; Section R314.4 requires that they be interconnected.

[RB] NAILABLE SUBSTRATE. A product or material such as framing, sheathing or furring, composed of wood or wood-based materials, or other materials and fasteners providing equivalent fastener withdrawal resistance.

❖ Throughout this code, the integrity of a nail or fastener connection is dependent upon the product or material that a nail or fastener penetrates. This definition simply states that the nailable substrate must produce an equivalent withdrawal resistance as a wood substrate.

NATURAL DRAFT SYSTEM. A venting system designed to remove flue or vent gases under nonpositive static vent pressure entirely by natural draft.

❖ Natural-draft chimneys and vents do not rely on any mechanical means to convey combustion products to the outdoors. Draft is produced by the temperature difference between the combustion gases (flue gases) and the ambient atmosphere. Hot gases are less dense and more buoyant; therefore, they rise or produce a draft.

[RB] NATURALLY DURABLE WOOD. The heartwood of the following species with the exception that an occasional piece with corner sapwood is permitted if 90 percent or more of the width of each side on which it occurs is heartwood.

❖ Because of their natural ability to resist deterioration, the harder portions of some species of wood are considered to be naturally durable. The code specifies that "occasional" sapwood is permitted if heartwood constitutes 90 percent of each side.

Decay resistant. Redwood, cedar, black locust and black walnut.

❖ Redwood, cedar, black locust and black walnut lumber are known to resist deterioration caused by the action of microbes that enter the wood fibers. The code defines these species of lumber as being decay resistant.

Termite resistant. Alaska yellow cedar, redwood, Eastern red cedar and Western red cedar including all sapwood of Western red cedar.

❖ Redwood and eastern red cedar are considered to be resistant to infestation by termites and are thus listed as naturally durable. The Formosan Termite, however, is capable of destroying all naturally durable species of wood.

[RB] NONCOMBUSTIBLE MATERIAL. Materials that pass the test procedure for defining noncombustibility of elementary materials set forth in ASTM E136.

❖ A material that successfully passes the ASTM E136 test is considered to be noncombustible. The test determines whether a building material will act to aid combustion or add appreciable heat to a fire. A material may have a limited combustible content but not contribute appreciably to a fire; thus, it may still qualify as noncombustible.

INTERNATIONAL CODE COUNCIL®
Copyright © 2015 ICC. ALL RIGHTS RESERVED. Accessed by David Dammon on Jun 21, 2017 12:30:52 PM pursuant to License Agreement with ICC. No further reproduction or distribution authorized. ANY UNAUTHORIZED REPRODUCTION OR DISTRIBUTION IS A VIOLATION OF THE FEDERAL COPYRIGHT ACT AND THE LICENSE AGREEMENT, AND SUBJECT TO CIVIL AND CRIMINAL PENALTIES THEREUNDER.

[RB] NOSING. The leading edge of treads of stairs and of landings at the top of stairway flights.

❖ The code must limit the depth of stair tread nosing. Limiting the extent of the tread nosings results in a stair that is easy to use. If too large, they are a tripping hazard when walking up a stairway, and reduce the effective tread depth when walking down the stairway.

[RB] OCCUPIED SPACE. The total area of all buildings or structures on any *lot* or parcel of ground projected on a horizontal plane, excluding permitted projections as allowed by this code.

❖ The entire floor area of a building is generally the occupied space. It encompasses all floor levels, including basements. Any exterior space without exterior walls that is covered by a roof or floor above is occupied space. Only those areas beneath roof projections commonly known as eaves or overhangs, including, but not limited to those permitted by Section R302, do not contribute to the total occupied space.

OFFSET. A combination of fittings that makes two changes in direction, bringing one section of the pipe out of line and into a line parallel with the other section.

❖ Offsets are necessary to route piping around or through structural elements such as beams, joists, trusses and columns. An offset always involves at least two changes in direction; this is necessary to keep the piping heading in the same direction as the pipe before the offset. Any other arrangement would be considered a bend.

ON-SITE NONPOTABLE WATER REUSE SYSTEMS. Water systems for the collection, treatment, storage, distribution, and reuse of nonpotable water generated on site, including but not limited to graywater systems. This definition does not include rainwater harvesting systems.

❖ There are a number of water sources that can be generated by the operation or occupancy of a building. The first source that comes to mind is usually gray water (see definition for "Gray water"). But there could be many other sources such as heat exchanger cooling water and air-conditioning condensate. If it is water-based liquid and is not black water (that which contains fecal matter or urine), it could possibly be used for another purpose. Whether or not all sources can be used depends on how much the water needs to be treated to make it suitable for an end use, the feasibility of collecting the water and the jurisdiction's allowances for using such water for end uses.

[RB] OWNER. Any person, agent, firm or corporation having a legal or equitable interest in the property.

❖ This term defines the person or other legal entity who is responsible for a building and its compliance with code requirements. The code places certain responsibilities on the owner in the construction and maintenance of a building. The owner is considered the individual, firm or corporation who, under applicable laws, has a legal interest in the property.

[RB] PAN FLASHING. Corrosion-resistant flashing at the base of an opening that is integrated into the building exterior wall to direct water to the exterior and is premanufactured, fabricated, formed or applied at the job site.

❖ Pan flashing is the code-prescribed method of flashing for fenestration. It is required if there are no manufacturer's instructions for any other type of flashing (see Section R703.8.5).

[RB] PANEL THICKNESS. Thickness of core plus two layers of structural wood panel facings.

❖ Structural insulated panels (SIPs) have been in use in building construction for some time, but are relatively new. This term is defined to facilitate requirements for SIPs.

PELLET FUEL-BURNING APPLIANCE. A closed combustion, vented *appliance* equipped with a fuel feed mechanism for burning processed pellets of solid fuel of a specified size and composition.

❖ This is an appliance that uses solid fuel in the form of pellets in a closed combustion system. The pellets consist of a blend of wood waste products (sawdust and chips) mixed with resin (binders) and compressed into small pellets. The pellets are fed into the appliance in a regulated manner to provide consistent burning.

PELLET VENT. A vent *listed* and *labeled* for use with a *listed* pellet fuel-burning *appliance.*

❖ See the commentary to the definition for "Vent."

[RB] PERFORMANCE CATEGORY. A designation of wood structural panels as related to the panel performance used in Chapters 4, 5, 6 and 8.

❖ This is a nomenclature that reflects the newest versions of National Standards DOC PS 1 and PS 2 for wood structural panels. Wood structural panels are required to be in conformance to DOC PS 1 and PS 2 in the code. The DOC PS 1 and PS 2 consensus standards now include the terminology of "performance category" to reference the thicknesses tolerance consistent with the nominal panel thicknesses in the IBC.

[RB] PERMIT. An official document or certificate issued by the authority having jurisdiction that authorizes performance of a specified activity.

❖ The Department of Building Safety is authorized to require a permit according to Section R105. The permit constitutes a license issued by the building official to proceed with a specific activity, such as construction of a building, in accordance with all applicable laws.

For the IRC, the building official is identified as the person responsible for issuing the permit.

[RB] PERSON. An individual, heirs, executors, administrators or assigns, and a firm, partnership or corporation, its or their successors or assigns, or the agent of any of the aforesaid.

❖ As used in the IRC, a person is not only an individual but also any heirs, executors, administrators, firm, partnership or corporation, including its or their suc-

INTERNATIONAL CODE COUNCIL®
Copyright © 2015 ICC. ALL RIGHTS RESERVED. Accessed by David Dammon on Jun 21, 2017 12:30:52 PM pursuant to License Agreement with ICC. No further reproduction or distribution authorized. ANY UNAUTHORIZED REPRODUCTION OR DISTRIBUTION IS A VIOLATION OF THE FEDERAL COPYRIGHT ACT AND THE LICENSE AGREEMENT, AND SUBJECT TO CIVIL AND CRIMINAL PENALTIES THEREUNDER.

cessors or assigns. An agent for any person as described is also a "person." Corporations and other organizations listed in the definition are treated as persons under the law. Also, when the code provides for a penalty (see Section R113.4), the definition makes it clear that the individuals responsible for administering the activities of these various organizations are subject to these penalties.

[RB] PHOTOVOLTAIC MODULE. A complete, environmentally protected unit consisting of solar cells, optics and other components, exclusive of a tracker, designed to generate DC power where exposed to sunlight.

❖ Technologies for generation of electricity from solar power include photovoltaic modules or shingles (see Section R902.4).

[RB] PHOTOVOLTAIC PANEL. A collection of photovoltaic modules mechanically fastened together, wired, and designed to provide a field-installable unit.

❖ See the definition of "Photovoltaic panel system" and Sections R324, R902.4, R907 and R909.

[RB] PHOTOVOLTAIC PANEL SYSTEM. A system that incorporates discrete photovoltaic panels that convert solar radiation into electricity, including rack support systems.

❖ See the definition of "Photovoltaic panel" and Sections R324, R907 and R909.

[RB] PHOTOVOLTAIC SHINGLES. A *roof covering* that resembles shingles and that incorporates photovoltaic modules.

❖ See Sections R324.5.1 and R905.16.

PITCH. See "Slope."

❖ The pitch of a pipe run is the fall of the pipe in relationship to a horizontal plane. It is also known as the slope and is measured as a ratio between change in horizontal units and vertical units along a length of pipe.

[RB] PLASTIC COMPOSITE. A generic designation that refers to wood-plastic composites and plastic lumber.

[RB] PLATFORM CONSTRUCTION. A method of construction by which floor framing bears on load bearing walls that are not continuous through the *story* levels or floor framing.

❖ In light-frame construction, platform construction is the technique of stacking floor systems on load-bearing stud walls. As opposed to walls in balloon construction, the load-bearing walls in platform construction do not continue beyond each individual story level. Platform construction is by far the most popular framing method in use today.

PLENUM. A chamber that forms part of an air-circulation system other than the *occupied space* being conditioned.

❖ A plenum is part of an HVAC air circulation system and is typically a box built from ductwork material. Plenums commonly connect to the inlet and outlet side of furnaces and air handlers. Plenums can also be cavities in stud walls, spaces between solid joists and similar interstitial spaces (see Section M1601).

PLUMBING. For the purpose of this code, plumbing refers to those installations, repairs, maintenance and *alterations* regulated by Chapters 25 through 33.

❖ This term refers to the collective system of piping, fixtures, fittings, components, devices or appurtenances that transport potable water and liquid and solid wastes associated with cleaning, washing, bathing, food preparation, drinking and the elimination of bodily wastes. Plumbing also includes appliances, equipment and systems such as water conditioners, water heaters, storm drainage systems, water coolers, water filters and waste treatment systems.

The word "plumbing" comes from the Latin word for the element lead (plumbum), because lead was used extensively in the construction of piping systems. The practice of installing piping systems and the materials used in such systems became known as plumbing.

Piping systems such as fuel gas, fuel oil, heating, cooling, air conditioning, lawn irrigation and fire suppression systems are not plumbing, even though plumbers often perform the work necessary to install these systems. Chapters 25 to 32 regulate plumbing.

PLUMBING APPLIANCE. An energized household *appliance* with plumbing connections, such as a dishwasher, food waste disposer, clothes washer or water heater.

❖ Examples of plumbing appliances include water heaters, hot water dispensers, garbage disposals, dishwashers, clothes washers, water purifiers and water softeners. Typically, an appliance is dependent on a source of energy for its operation.

PLUMBING APPURTENANCE. A device or assembly that is an adjunct to the basic plumbing system and does not demand additional water supply or add any discharge load to the system. It is presumed that it performs some useful function in the operation, maintenance, servicing, economy or safety of the plumbing system. Examples include filters, relief valves and aerators.

❖ Examples of plumbing appurtenances include water closet seats, hand-held showers, manifolds, backflow preventers, water-hammer arrestors, strainers and filters. An appurtenance by default becomes part of the entire fixture.

PLUMBING FIXTURE. A receptacle or device that is connected to a water supply system or discharges to a drainage system or both. Such receptacles or devices require a supply of water; or discharge liquid waste or liquid-borne solid waste; or require a supply of water and discharge waste to a drainage system.

❖ This definition encompasses the variety of plumbing fixtures that could be installed in a building. The most common type of plumbing fixture has a supply of water connected to it and is connected to the drain system. Examples are water closets, lavatories and bathtubs. Nonwater-supplied (waterless) urinals, floor sinks and floor drains are fixtures that only require connection to the drain system. An outdoor shower discharging to the ground is an example of a plumbing fixture that is connected only to a supply of water.

INTERNATIONAL CODE COUNCIL®
Copyright © 2015 ICC. ALL RIGHTS RESERVED. Accessed by David Dammon on Jun 21, 2017 12:30:52 PM pursuant to License Agreement with ICC. No further reproduction or distribution authorized. ANY UNAUTHORIZED REPRODUCTION OR DISTRIBUTION IS A VIOLATION OF THE FEDERAL COPYRIGHT ACT AND THE LICENSE AGREEMENT, AND SUBJECT TO CIVIL AND CRIMINAL PENALTIES THEREUNDER.

PLUMBING SYSTEMS. Includes the water distribution pipes; plumbing fixtures and traps; water-treating or water-using *equipment*; soil, waste and vent pipes; and building drains; in addition to their respective connections, devices and appurtenances within a structure or premises; and the water service, building sewer and building storm sewer serving such structure or premises.

❖ The plumbing system includes all piping, fixtures and components that transport potable water and convey liquid and liquid-borne solid wastes (see "Plumbing"). Devices that treat the water prior to its use are also included.

POLLUTION. A low-hazard or non-health hazard impairment of the quality of the potable water to a degree that does not create a hazard to the public health and that does adversely and unreasonably affect the aesthetic qualities of such potable water for domestic use.

❖ Books have been written trying to define the term "pollution." For use in the code, pollution is anything that reduces the quality of the potable water supply so that it is undesirable for consumption or use. A pollutant in the water supply causes the water to look, smell or taste bad, but drinking the water would not be harmful. This does not change the fact that polluted water is still considered to be nonpotable. Pollutants are thus not considered potentially harmful, whereas a contaminant would be considered potentially harmful. Refer to the definition of the term "Contamination" to find additional information and the differences between pollution and contamination.

The methods for determining potable and nonpotable water supplies are very closely regulated by the EPA. For the purposes of protecting a water supply, the code considers a polluted source to represent a low hazard when selecting a backflow preventer.

[RB] POLYPROPYLENE SIDING. A shaped material, made principally from polypropylene homopolymer, or copolymer, that in some cases contains fillers or reinforcements, that is used to clad *exterior walls* or buildings.

❖ For information on the material standards and installation for this product (see the commentary to Section R703.14).

PORTABLE-FUEL-CELL APPLIANCE. A fuel cell generator of electricity that is not fixed in place. A portable-fuel-cell *appliance* utilizes a cord and plug connection to a grid-isolated load and has an integral fuel supply.

❖ These appliances are a smaller version of the stationary fuel cell power plants in Section M1903 of this code. Fuel cells generate electricity from hydrocarbon fuels and, when pure hydrogen is used, release water and heat as the only by-products. Portable fuel cell appliances are generally fueled by gas tanks or some other local source and are connected to the house current or are used only to charge the batteries of electric cars. Connecting the appliance to the local electrical power grid or hard-piping fuel to the appliance would constitute a permanent installation and require permitting in accordance with Section 105.

[RB] POSITIVE ROOF DRAINAGE. The drainage condition in which consideration has been made for the loading deflections of the roof deck, and additional slope has been provided to ensure drainage of the roof within 48 hours of precipitation.

❖ Unless a roof is designed to support a specified amount of water, adequate drainage must be provided to approved locations. In considering the appropriate drainage pattern, all of the possible roof deck deflections should be included. The code mandates that the water be removed from the roof within a period of 48 hours from the time of deposit.

POTABLE WATER. Water free from impurities present in amounts sufficient to cause disease or harmful physiological effects and conforming in bacteriological and chemical quality to the requirements of the public health authority having jurisdiction.

❖ In the United States, the EPA Clean Drinking Water Act defines the quality requirements for potable water. "Potable" means fit to drink.

[RB] PRECAST CONCRETE. A structural concrete element cast elsewhere than its final position in the structure.

❖ Precast concrete members may be cast on site and subsequently lifted into place (e.g., tilt-up wall construction) or cast off site, usually in a plant out of the outside weather and transported to the construction site when needed. Precast concrete which has been manufactured under plant conditions has closer controlled tolerances than cast-in-place concrete construction. This results in the need for lesser minimum concrete cover for reinforcement versus that needed for cast-in-place concrete (see ACI 318, Sections 7.7.1 and 7.7.2).

[RB] PRECAST CONCRETE FOUNDATION WALLS. Pre-engineered, precast concrete wall panels that are designed to withstand specified stresses and used to build below-*grade* foundations.

❖ Foundation walls are required to carry specific loads. Often, the foundation wall can be constructed of precast concrete. Precast concrete foundation walls therefore are addressed specifically in several areas of the code.

PRESSURE-RELIEF VALVE. A pressure-actuated valve held closed by a spring or other means and designed to automatically relieve pressure at the pressure at which it is set.

❖ This valve is designed to be actuated by excessive pressures for the purpose of preventing the rupture or explosion of tanks, vessels or piping. The degree of valve opening is directly proportional to the pressure acting on the valve disk.

INTERNATIONAL CODE COUNCIL®
Copyright © 2015 ICC. ALL RIGHTS RESERVED. Accessed by David Dammon on Jun 21, 2017 12:30:52 PM pursuant to License Agreement with ICC. No further reproduction or distribution authorized. ANY UNAUTHORIZED REPRODUCTION OR DISTRIBUTION IS A VIOLATION OF THE FEDERAL COPYRIGHT ACT AND THE LICENSE AGREEMENT, AND SUBJECT TO CIVIL AND CRIMINAL PENALTIES THEREUNDER.

PUBLIC SEWER. A common sewer directly controlled by public authority.

❖ A public sewer is the piping system that receives the discharge from building sewers and conveys it to treatment facilities.

PUBLIC WATER MAIN. A water-supply pipe for public use controlled by public authority.

❖ A water main is owned and operated by municipalities, rural water districts, privately owned water purveyors and other such entities.

[RB] PUBLIC WAY. Any street, alley or other parcel of land open to the outside air leading to a public street, that has been deeded, dedicated or otherwise permanently appropriated to the public for public use and that has a clear width and height of not less than 10 feet (3048 mm).

❖ A public way is essentially a street, alley or any parcel of land that is permanently appropriated to the public for public use. Therefore, the public's right to use such a parcel of land is guaranteed. A public way is open to the exterior and available for use as an egress path if necessary. To qualify as a public way, the space must be at least 10 feet (3048 mm) wide and must have a clear height of at least 10 feet (3048 mm).

PURGE. To clear of air, gas or other foreign substances.

❖ This term applies to a process used for clearing piping systems of impurities, making the system pure prior to the introduction of a desired substance. Although the practice of flushing a system to remove debris is sometimes referred to as purging the system, true purging involves a specific process of forcing a product into a system until impurities are completely removed. One such method would be the introduction of nitrous gas within a copper system serving a medical gas installation. Such a purge is required to clear the system of impurities that may have been left during installation.

QUICK-CLOSING VALVE. A valve or faucet that closes automatically where released manually or controlled by mechanical means for fast-action closing.

❖ A quick-closing valve is any type of solenoid-actuated valve; spring-loaded, self-closing faucets; or any other device capable of instantaneously reducing water flow from full flow to no flow. This rapid change from a full-flow to a no-flow condition can cause water-hammer-related damage. Although most faucets can be manually closed fast enough to produce water hammer, the code does not designate manually closed valves or faucets as "quick closing."

Typical quick-closing valves include electrically actuated valves such as those found in dishwashing machines, clothes washing machines and boiler makeup-water feeders. Some self-closing valves and faucets are not quick closing. For example, typical metering faucets and typical flushometer valves are slowly, automatically closed by a diaphragm/bleed orifice or pilot valve assembly. Also, a typical float-actuated valve is automatic yet slow in closing.

[RE] *R*-VALUE, THERMAL RESISTANCE. The inverse of the time rate of heat flow through a *building thermal envelope* element from one of its bounding surfaces to the other for a unit temperature difference between the two surfaces, under steady state conditions, per unit area ($h \cdot ft^2 \cdot °F/Btu$).

❖ The *R*-value is a unit of thermal resistance used for comparing insulating values of different materials. The higher the *R*-value of a material, the greater its insulating properties and the slower heat flows through it. *R*-values are used to rate roof/ceiling, wall and floor insulation.

[RB] RAMP. A walking surface that has a running slope steeper than 1 unit vertical in 20 units horizontal (5-percent slope).

❖ A pedestrian travel surface that has a slope of 1:20 (5 percent) or less is a walking surface. A surface that is steeper than 1 unit vertical in 20 units horizontal is a ramp. Because steeply sloping walking surfaces present a considerable hazard to users, ramps are regulated for maximum slope, handrails and landings by Section R311.8 and its subsections.

[RE] RATED DESIGN. A description of the proposed *building*, used to determine the energy rating index.

❖ This is the description of a proposed building in the application of the Energy Rating Index Compliance Alternative in Section N1106 (see the commentary to Section N1106).

RECEPTOR. A fixture or device that receives the discharge from indirect waste pipes.

❖ This term applies to a fixture used for collecting drainage from fixtures that are not directly connected to the drainage system. A floor sink is the most common type of receptor. However, a laundry sink that is used for collecting the drainage from a clothes washer could be defined as a receptor.

RECLAIMED WATER. Nonpotable water that has been derived from the treatment of waste water by a facility or system licensed or permitted to produce water meeting the *jurisdiction's* water requirements for its intended uses. Also known as "Recycled Water."

❖ For many decades, reclaimed water has been used for golf course irrigation in many jurisdictions. In the early days, those jurisdictions prohibited the use of reclaimed water for any purpose inside of buildings because of concerns about disinfection, the potential for the spread of what was thought to be "harmful" components in the water and the uncertainty about how to prevent such water from being inadvertently used for a potable water application. Many studies have been performed to allay the initial concerns and the color purple has been chosen to identify the piping and components that convey nonpotable water.

INTERNATIONAL CODE COUNCIL®
Copyright © 2015 ICC. ALL RIGHTS RESERVED. Accessed by David Dammon on Jun 21, 2017 12:30:52 PM pursuant to License Agreement with ICC. No further reproduction or distribution authorized. ANY UNAUTHORIZED REPRODUCTION OR DISTRIBUTION IS A VIOLATION OF THE FEDERAL COPYRIGHT ACT AND THE LICENSE AGREEMENT, AND SUBJECT TO CIVIL AND CRIMINAL PENALTIES THEREUNDER.

[RE] REFLECTIVE DUCT INSULATION. A thermal insulation assembly consisting of one or more surfaces that have an emittance of 0.1 or less, and that bound an enclosed air space or spaces.

❖ This type of insulation material is an assembly consisting of two membranes separated by a layer of closed cell plastic insulation. The two membranes are made of highly reflective metal foil or metalized plastic. The insulation value is created by the air trapped in the plastic bubbles of the center layer combined with the reflective nature of the outer membranes.

REFRIGERANT. A substance used to produce refrigeration by its expansion or evaporation.

❖ The refrigerant is the working fluid in refrigeration and air-conditioning systems. In vapor-refrigeration cycles, refrigerants absorb heat from the load side at the evaporator and reject heat at the condenser. The selection of a refrigerant must take into consideration suitable thermodynamic properties, chemical stability, flammability, toxicity and environmental compatibility. Refrigeration is a result of the physical laws of vaporization (evaporation) of liquids. Basically, evaporation of liquid refrigerant is an endothermic process, and condensing of vapors is an exothermic process.

REFRIGERANT COMPRESSOR. A specific machine, with or without accessories, for compressing a given refrigerant vapor.

❖ A compressor is the heart of mechanical refrigeration systems. It is used in a vapor-refrigeration cycle to raise the pressure and enthalpy of the refrigerant into the superheated vapor state, at which point the refrigerant vapor enters the condenser and transfers heat energy to a cooler medium.

REFRIGERATING SYSTEM. A combination of interconnected parts forming a closed circuit in which refrigerant is circulated for the purpose of extracting, then rejecting, heat. A direct refrigerating system is one in which the evaporator or condenser of the refrigerating system is in direct contact with the air or other substances to be cooled or heated. An indirect refrigerating system is one in which a secondary coolant cooled or heated by the refrigerating system is circulated to the air or other substance to be cooled or heated.

❖ Such systems include at minimum a pressure-imposing element or generator, an evaporator, a condenser and interconnecting piping. A single piece of equipment can contain multiple refrigeration systems (circuits).

[RB] REGISTERED DESIGN PROFESSIONAL. An individual who is registered or licensed to practice their respective design profession as defined by the statutory requirements of the professional registration laws of the state or *jurisdiction* in which the project is to be constructed.

❖ Legal qualifications for engineers and architects are established by the state having jurisdiction. Licensing and registration of engineers and architects are accomplished by written or oral examinations offered by states or by reciprocity (licensing in other states). An individual who meets the statutory requirements in the laws of the state, and possibly even an individual jurisdiction, is a registered design professional.

RELIEF VALVE, VACUUM. A device to prevent excessive buildup of vacuum in a pressure vessel.

❖ This device will automatically open to allow air into a vessel or system in the event of backsiphonage. Such a device is used where a water heater without an antisiphon drip tube is installed above the fixtures served. Where the water supply to the water heater is closed and the lower fixtures opened, the vacuum relief valve will open, thus breaking the siphoning effect.

[RB] REPAIR. The reconstruction or renewal of any part of an existing building for the purpose of its maintenance or to correct damage.

For definition applicable in Chapter 11, see Section N1101.6.

❖ When an existing building undergoes some form of remodel, reconstruction, renewal or maintenance to correct damage, the work is defined as a repair. A repair maintains a portion of the building in safe and sound working order, without reducing the intended level of protection or structural safety. Major repair work may be subject to a permit where required by Section R105.

As indicated in Section R105.2.2, the repair of an item typically does not require a permit. This definition makes it clear that repair is limited to work on the item, and does not include complete or substantial replacement or other new work.

[RB] REROOFING. The process of recovering or replacing an existing roof covering. See "Roof recover."

For definition applicable in Chapter 11, see Section N1101.6.

❖ The description of reroofing includes two different processes: 1. Recovering an existing roof covering; and 2. Replacing an existing roof covering. Recovering involves the installation of an additional roof covering over an existing roof covering without the removal of the existing roof covering. Replacement addresses those cases where the existing roof covering is completely removed prior to installation of the new roof covering.

RETURN AIR. Air removed from an *approved conditioned space* or location and recirculated or exhausted.

❖ Return air is air that is being returned to the air handler. Only air in excess of the required ventilation air can be recirculated.

[RB] RIDGE. With respect to topographic wind effects, an elongated crest of a hill characterized by strong relief in two directions.

❖ This is a term to describe a topographical area where wind speed-up can occur. In cases where there is known to be structural damage due to this type of wind speed-up, the code requires consideration of topographical wind effects (see Section R301.2.1.5).

INTERNATIONAL CODE COUNCIL®
Copyright © 2015 ICC. ALL RIGHTS RESERVED. Accessed by David Dammon on Jun 21, 2017 12:30:52 PM pursuant to License Agreement with ICC. No further reproduction or distribution authorized. ANY UNAUTHORIZED REPRODUCTION OR DISTRIBUTION IS A VIOLATION OF THE FEDERAL COPYRIGHT ACT AND THE LICENSE AGREEMENT, AND SUBJECT TO CIVIL AND CRIMINAL PENALTIES THEREUNDER.

[RB] RISER.

1. The vertical component of a step or stair.
2. A water pipe that extends vertically one full *story* or more to convey water to branches or to a group of fixtures.

[RB] ROOF ASSEMBLY. A system designed to provide weather protection and resistance to design loads. The system consists of a roof covering and roof deck or a single component serving as both the roof covering and the roof deck. A roof assembly includes the roof deck, vapor retarder, substrate or thermal barrier, insulation, vapor retarder, and roof covering.

❖ A roof assembly may be either a single component serving as both the roof covering and the deck or, as typically occurs, a combination of individual roof deck and roof covering components used together to form a complete assembly. A roof assembly may include the roof deck, vapor retarder, substrate, thermal barrier, insulation and roof covering.

[RB] ROOF COVERING. The covering applied to the roof deck for weather resistance, fire classification or appearance.

❖ Roof covering provides a building with weather protection, fire retardancy or decoration.

ROOF COVERING SYSTEM. See "Roof assembly."

❖ "Roof covering system" is another term for "Roof assembly."

[RB] ROOF DECK. The flat or sloped surface not including its supporting members or vertical supports.

❖ Often composed of wood structural panels, a roof deck is the flat or sloped surface on which roof covering is typically attached. Roof decks assist in both the weather protection and structural integrity of the building. The rafters and associated structural roof members are not a part of the roof deck, nor is the insulation or roof covering that is placed on the deck.

[RB] ROOF RECOVER. The process of installing an additional roof covering over a prepared existing roof covering without removing the existing roof covering.

For definition applicable in Chapter 11, see Section N1101.6.

❖ Under the provisions of Section R908, it is acceptable under specific conditions to install new roof covering over an existing roof without first removing the old roof covering. In a roof recover, the existing roof covering must be prepared in an approved manner prior to installation of the new roof covering.

[RB] ROOF REPAIR. Reconstruction or renewal of any part of an existing roof for the purposes of its maintenance.

For definition applicable in Chapter 11, see Section N1101.6.

❖ A roof repair occurs when only minor reconstruction or renewal work to an existing roof is necessary. The extent of a roof repair is limited by Section R908.1.

[RB] ROOF REPLACEMENT. The process of removing the existing *roof covering*, repairing any damaged substrate and installing a new *roof covering*.

❖ Roof replacement refers to the replacement of the roof covering.

[RB] ROOFTOP STRUCTURE. An enclosed structure on or above the roof of any part of a building.

❖ Often used to house mechanical equipment or installed for decorative purposes, a rooftop structure is any enclosed structure on or above the roof. A rooftop structure must be adequately supported and comply with the construction provisions applicable to the remainder of the building.

ROOM HEATER. A freestanding heating *appliance* installed in the space being heated and not connected to ducts.

❖ Room heaters are space-heating appliances that are not connected to ducts. They are also called "unvented room heaters."

ROUGH-IN. The installation of the parts of the plumbing system that must be completed prior to the installation of fixtures. This includes DWV, water supply and built-in fixture supports.

❖ Rough-in refers to that stage of construction prior to the installation of any building materials that would conceal plumbing installations in the building structure. This term generally refers to the installation of drain, waste, vent and water supply piping that will be concealed in floor, ceiling and wall cavities or concealed underground or under slab. At this stage of construction, the plumbing systems are tested for leaks and the entire plumbing "rough-in" is inspected for code compliance.

[RB] RUNNING BOND. The placement of masonry units such that head joints in successive courses are horizontally offset not less than one-quarter the unit length.

❖ A common method of placing masonry units, running bond describes the type of masonry construction where the units are horizontally offset on each successive course. The length of the offset must be at least one-fourth the length of the masonry unit, otherwise it is considered as stack bond. Commentary Figure R202(14) shows an example of running bond.

INTERNATIONAL CODE COUNCIL®
Copyright © 2015 ICC. ALL RIGHTS RESERVED. Accessed by David Dammon on Jun 21, 2017 12:30:52 PM pursuant to License Agreement with ICC. No further reproduction or distribution authorized. ANY UNAUTHORIZED REPRODUCTION OR DISTRIBUTION IS A VIOLATION OF THE FEDERAL COPYRIGHT ACT AND THE LICENSE AGREEMENT, AND SUBJECT TO CIVIL AND CRIMINAL PENALTIES THEREUNDER.

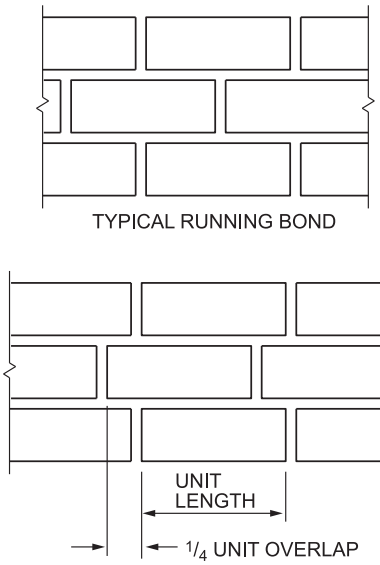

Figure R202(14)
RUNNING BOND MASONRY

SANITARY SEWER. A sewer that carries sewage and excludes storm, surface and groundwater.

❖ A sanitary sewer extends from the sanitary building drain to the public sewer system or to a private sewage disposal system. Most jurisdictions arbitrarily set a distance such as 3 or 5 feet (914 or 1524 mm) outside of the building foundation as the point at which the building drain becomes the building sewer.

SCUPPER. An opening in a wall or parapet that allows water to drain from a roof.

❖ Various design methods are used to drain water from a roof. A common approach is to slope the roof toward one or more exterior walls and provide drainage over the edge of the roof, often into a gutter and downspout system. Another method is the use of roof drains that capture water from numerous low points of the roof and use interior drain lines to remove the water. A third procedure is the use of scuppers, which are openings in the exterior wall surface that allow water to flow off the roof.

Where scuppers are used, the code specifies their size and height above the roof. Scuppers are often included as a portion of the overflow or emergency drain system, a system required by the code and designed to shed water when the primary roof drains are blocked.

[RB] SEISMIC DESIGN CATEGORY (SDC). A classification assigned to a structure based on its occupancy category and the severity of the design earthquake ground motion at the site.

❖ The structural provisions of the IRC vary based on several factors, one of which is the probability of an earthquake causing damage to the building. The term used by the code to assign a rating or level of seismic risk is "Seismic design category." Classification into one of the categories is based on two factors: 1. The Seismic Group; and 2. The severity of the ground motion at the site. The Seismic Group is the classification assigned based upon use of the structure. Residential construction is considered in Seismic Group I, with Groups II and III assigned to structures whose loss would create a substantial public hazard or those structures considered as essential facilities. The ground-motion criterion used in the IRC is based on Short Period Design Spectral Response Accelerations (0.2 second). Section 1613 of the IBC contains further explanation of the seismic considerations.

SEPTIC TANK. A water-tight receptor that receives the discharge of a building sanitary drainage system and is constructed so as to separate solids from the liquid, digest organic matter through a period of detention, and allow the liquids to discharge into the soil outside of the tank through a system of open joint or perforated piping or a seepage pit.

❖ This type of tank is typically used in private sewage disposal systems (see Appendix I).

SEWAGE. Any liquid waste containing animal matter, vegetable matter or other impurity in suspension or solution.

❖ This term refers to the discharge from all plumbing fixtures, which includes human bodily wastes and the wastes associated with cleaning, washing, bathing and food preparation.

SEWAGE PUMP. A permanently installed mechanical device for removing sewage or liquid waste from a sump.

❖ Sewage pumps are designed to transport liquid/solid mixtures without clogging and are typically equipped with large suction and discharging ports.

[RB] SHALL. The term, where used in the code, is construed as mandatory.

❖ The term "shall" means that the requirement is a mandatory provision. Where a provision is allowed but not required, the term "is permitted" generally appears in the code.

[RB] SHEAR WALL. A general term for walls that are designed and constructed to resist racking from seismic and wind by use of masonry, concrete, cold-formed steel or wood framing in accordance with Chapter 6 of this code and the associated limitations in Section R301.2 of this code.

❖ Shear walls are walls designed to carry lateral loads such as seismic or wind loads. Shear walls may be of a variety of materials; however, they must be designed in the specific manner required by the code. Shear walls are typically used in conjunction with diaphragms to provide a load path for transmitting lateral loads through the structure.

INTERNATIONAL CODE COUNCIL®
Copyright © 2015 ICC. ALL RIGHTS RESERVED. Accessed by David Dammon on Jun 21, 2017 12:30:52 PM pursuant to License Agreement with ICC. No further reproduction or distribution authorized. ANY UNAUTHORIZED REPRODUCTION OR DISTRIBUTION IS A VIOLATION OF THE FEDERAL COPYRIGHT ACT AND THE LICENSE AGREEMENT, AND SUBJECT TO CIVIL AND CRIMINAL PENALTIES THEREUNDER.

[RB] SINGLE PLY MEMBRANE. A roofing membrane that is field applied using one layer of membrane material (either homogeneous or composite) rather than multiple layers.

❖ In contrast to a built-up roof, a single-ply membrane roof system consists of one layer of membrane material. Chapter 9 addresses both thermoset and thermoplastic single-ply roofing systems.

[RB] SINGLE STATION SMOKE ALARM. An assembly incorporating the detector, control *equipment* and alarm sounding device in one unit that is operated from a power supply either in the unit or obtained at the point of installation.

❖ A single-station smoke alarm contains all components for operation of the device, including the power supply in battery-operated units. For a hard-wired unit, the power is available directly at the alarm device. Where two or more single-station smoke alarms are interconnected, they are multiple-station alarms.

[RB] SHINGLE FASHION. A method of installing roof or wall coverings, water-resistive barriers, flashing or other building components such that upper layers of material are placed overlapping lower layers of material to provide drainage and protect against water intrusion at unsealed penetrations and joints or in combination with sealed joints.

❖ This term and definition is also used in the IBC to describe the required method of applying moisture control layers such as roof underlayment and water-resistive barriers (WRBs) to the building. The intent is to direct the builder, contractor or installer to place upper layers of material lapping over lower layers of material, in the fashion of placing roof shingles, so moisture is provided with a clear path to drain down and away from the building. In field investigations of buildings with mold and moisture issues, it is frequently discovered that flashing, WRBs or underlayment have been placed in reverse shingle fashion, with the upper layer tucked behind the lower layer. This permits moisture to drain behind or below the intended protective layer or material where it can be trapped and lead to mold and decay of building components.

[RE] SKYLIGHT. See Section N1101.6 for definition applicable in Chapter 11.

[RB] SKYLIGHT AND SLOPED GLAZING. Glass or other transparent or translucent glazing material installed at a slope of 15 degrees (0.26 rad) or more from vertical. Glazing materials in skylights, including unit skylights, tubular daylighting devices, solariums, sunrooms, roofs and sloped walls are included in this definition.

❖ Any glass or other transparent or translucent glazing installed in the building construction at a slope greater than 15 degrees from the vertical is sloped glazing. Skylights are the most common type of sloped glazing, which may also include tubular daylighting devices, solariums, sun rooms, roofs and sloped walls.

[RB] SKYLIGHT, UNIT. A factory assembled, glazed fenestration unit, containing one panel of glazing material, that allows for natural daylighting through an opening in the roof assembly while preserving the weather-resistant barrier of the roof.

[RE] SLEEPING UNIT. See Section N1101.6 for definition applicable in Chapter 11.

SLIP JOINT. A mechanical-type joint used primarily on fixture traps. The joint tightness is obtained by compressing a friction-type washer such as rubber, nylon, neoprene, lead or special packing material against the pipe by the tightening of a (slip) nut.

❖ A slip joint is commonly found in fixture tailpieces and in "P" traps (see the commentary to Section P2704).

SLOPE. The fall (pitch) of a line of pipe in reference to a horizontal plane. In drainage, the slope is expressed as the fall in units vertical per units horizontal (percent) for a length of pipe.

❖ Commonly referred to as pitch, fall or grade, slope is the gradual change in elevation of horizontal piping. Slope is necessary to cause waste flow by gravity.

[RB] SMOKE-DEVELOPED INDEX. A comparative measure, expressed as a dimensionless number, derived from measurements of smoke obscuration versus time for a material tested in accordance with ASTM E84 or UL 723.

❖ The ASTM E84 (or UL 723) test standard for flame spread also addresses the potential for smoke development of specific materials. The numerical value assigned to the material being tested, based on the density of the smoke produced during the test, is the smoke-developed rating, which is typically regulated in conjunction with the flame spread index.

SOIL STACK OR PIPE. A pipe that conveys sewage containing fecal material.

❖ In the plumbing trade, "soil pipe" is a common name for cast-iron drainage pipe. The term, however, is not specific to cast-iron pipe and refers to any drainpipe that conveys the discharge of water closets, urinals or any other fixture that receives human waste.

[RE] SOLAR HEAT GAIN COEFFICIENT (SHGC). The solar heat gain through a fenestration or glazing assembly relative to the incident solar radiation (Btu/h · ft^2 · °F).

❖ The solar heat gain coefficient (SHGC) measures the ratio of the solar radiation that passes through the window to the total solar radiation that strikes the window. Sunlight, or solar radiation, striking a window contains visible light and heat. As the sunlight strikes the window, a portion of the visible light and heat passes through into the building. A portion of the heat is absorbed by the glass and window sash. Moreover, a portion of the visible light and heat is reflected to the outdoors. The lower the SHGC, the lower the solar radiation that is allowed to pass through the window. For example, a window with an SHGC value of 0.40 allows only 40 percent of the total solar radiation that strikes the window to pass through.

INTERNATIONAL CODE COUNCIL®
Copyright © 2015 ICC. ALL RIGHTS RESERVED. Accessed by David Dammon on Jun 21, 2017 12:30:52 PM pursuant to License Agreement with ICC. No further reproduction or distribution authorized. ANY UNAUTHORIZED REPRODUCTION OR DISTRIBUTION IS A VIOLATION OF THE FEDERAL COPYRIGHT ACT AND THE LICENSE AGREEMENT, AND SUBJECT TO CIVIL AND CRIMINAL PENALTIES THEREUNDER.

[RB] SOLID MASONRY. Load-bearing or nonload-bearing construction using masonry units where the net cross-sectional area of each unit in any plane parallel to the bearing surface is not less than 75 percent of its gross cross-sectional area. Solid masonry units shall conform to ASTM C55, C62, C73, C145 or C216.

❖ Solid masonry can consist of either load-bearing or nonload-bearing construction made up of masonry units. Although not required to be totally of solid material, solid masonry must have a net cross-sectional area equal to at least 75 percent of its gross cross-sectional area. The percentage must be maintained in any plane parallel to the bearing surface.

[RB] SPLINE. A strip of wood structural panel cut from the same material used for the panel facings, used to connect two structural insulated panels. The strip (spline) fits into a groove cut into the vertical edges of the two structural insulated panels to be joined. Splines are used behind each facing of the structural insulated panels being connected as shown in Figure R613.8.

❖ Structural insulated panels are relatively new to the code. Terminology describing components of the panel is necessary to facilitate provisions to regulate the material.

STACK. Any main vertical DWV line, including offsets, that extends one or more stories as directly as possible to its vent terminal.

❖ Traditionally, the term "stack" has been used to describe vertical piping [90 degrees (1.57 rad) from the horizontal] that extends through one or more stories of a building and that constitutes a main to which branch piping connects. Vertical vent branch piping that extends to the open air or through two or more stories is a stack.

[RB] STACK BOND. The placement of masonry units in a bond pattern is such that head joints in successive courses are vertically aligned. For the purpose of this code, requirements for stack bond shall apply to all masonry laid in other than running bond.

❖ Where the head joints in successive courses of masonry construction are not offset horizontally by at least one-fourth of the unit length, the method of placement is a stack bond. Vertical joints directly aligned on each course are typical in stack bond masonry.

STACK VENT. The extension of soil or waste stack above the highest horizontal drain connected.

❖ A stack vent is the dry extension of a soil or waste stack. Generally, a stack vent extends to the open air and can serve as a main vent to which branch vents connect.

[RB] STAIR. A change in elevation, consisting of one or more risers.

❖ All steps, even a single step, are defined as a stair. This makes the stair requirements applicable to all steps unless specifically exempt in the code.

[RB] STAIRWAY. One or more flights of stairs, either interior or exterior, with the necessary landings and connecting platforms to form a continuous and uninterrupted passage from one level to another within or attached to a building, porch or deck.

❖ It is important to note that this definition characterizes a stairway as connecting one level to another. The term "level" is not to be confused with "story." Steps that connect two levels, one of which is not considered a "story" of the structure, would be considered a stairway. For example, a set of steps between the basement level in an areaway and the outside ground level would be considered a stairway. A series of steps between the floor of a story and a mezzanine within that story would also be considered a stairway.

[RB] STAIRWAY, SPIRAL. A stairway with a plan view of closed circular form and uniform section-shaped treads radiating from a minimum-diameter circle.

❖ This definition determines the specific plan view geometry for the type of stairs that are to be regulated by Section R311.7.10.1. These space-saving stairs have a preferred walking path at the outside perimeter. This definition is not intended to restrict the use of a center column in spiral stairs.

[RB] STANDARD TRUSS. Any construction that does not permit the roof-ceiling insulation to achieve the required *R*-value over the *exterior walls*.

❖ The term "standard truss" describes typical roof truss construction where the insulation cannot achieve the necessary *R*-value mandated for the roof-ceiling assembly.

STATIONARY FUEL CELL POWER PLANT. A self-contained package or factory-matched packages that constitute an automatically-operated assembly of integrated systems for generating useful electrical energy and recoverable thermal energy that is permanently connected and fixed in place.

❖ Fuel cells generate electricity from hydrocarbon fuels and, when pure hydrogen is used, release water and heat as the only by-products (see commentary to Section M1903 for a description of the conversion process). Stationary fuel cell appliances cannot exceed 1000 kW of power output, listed and tested in accordance with ANSI Z21.83 and installed in accordance with NFPA 853 and the manufacturer's instructions. These appliances may be independent of or connected to the local electrical power grid and may be fueled by fuel tanks or permanent piping systems.

STORM SEWER, DRAIN. A pipe used for conveying rainwater, surface water, subsurface water and similar liquid waste.

❖ This is the general term used to describe the piping that conducts rainwater or surface-water waste from structures to the point of disposal.

INTERNATIONAL CODE COUNCIL®
Copyright © 2015 ICC. ALL RIGHTS RESERVED. Accessed by David Dammon on Jun 21, 2017 12:30:52 PM pursuant to License Agreement with ICC. No further reproduction or distribution authorized. ANY UNAUTHORIZED REPRODUCTION OR DISTRIBUTION IS A VIOLATION OF THE FEDERAL COPYRIGHT ACT AND THE LICENSE AGREEMENT, AND SUBJECT TO CIVIL AND CRIMINAL PENALTIES THEREUNDER.

[RB] STORY. That portion of a building included between the upper surface of a floor and the upper surface of the floor or roof next above.

❖ A story is that portion of a building from a floor surface to the floor surface or roof above. In the case of the topmost story, the height of the story is measured from the floor surface to the top of the ceiling joists of an attic. Where a ceiling does not create an attic, such as a cathedral ceiling, the story height is measured to the top of the roof rafters. (see the definition of "Story above grade plane").

[RB] STORY ABOVE GRADE PLANE. Any *story* having its finished floor surface entirely above *grade plane*, or in which the finished surface of the floor next above is either of the following:

1. More than 6 feet (1829 mm) *above grade plane*.
2. More than 12 feet (3658 mm) above the finished ground level at any point.

❖ The code defines a "Story above grade plane" as any story having its finished floor surface entirely above grade. However, the critical part of the definition involves whether or not a basement is a story above grade. A level that is a story above grade may be either an inhabited story or unused under-floor space. Two criteria are important to the determination of whether a given floor level is either a story above grade or a basement:

1. If the finished floor above the level under consideration or above the under-floor space is more than 6 feet (1829 mm) above the grade plane as defined in Section R202, the level under consideration is a story above grade.
2. If the finished floor level above the level under consideration or above the under-floor space is more than 12 feet (3658 mm) above the finished ground level at any point, the floor level under consideration or the under-floor space is a story above grade.

Conversely, if the finished floor level above the level under consideration is 6 feet (1829 mm) or less above the grade plane, and is 6 feet (1829 mm) or less above the finished ground level for more than 50 percent of the perimeter and does not exceed 12 feet (3658 mm) at any point, the floor level under consideration is a basement. Or, described a bit differently, a basement is a floor level that does not qualify as a story above grade. Commentary Figure R202(15) illustrates the definition of "Story above grade plane."

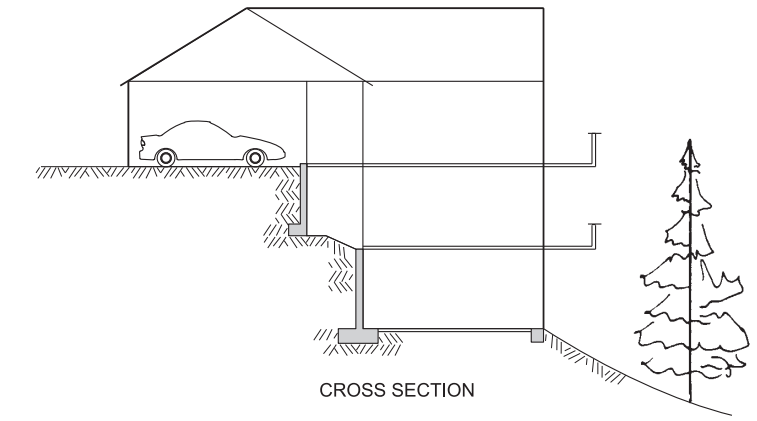

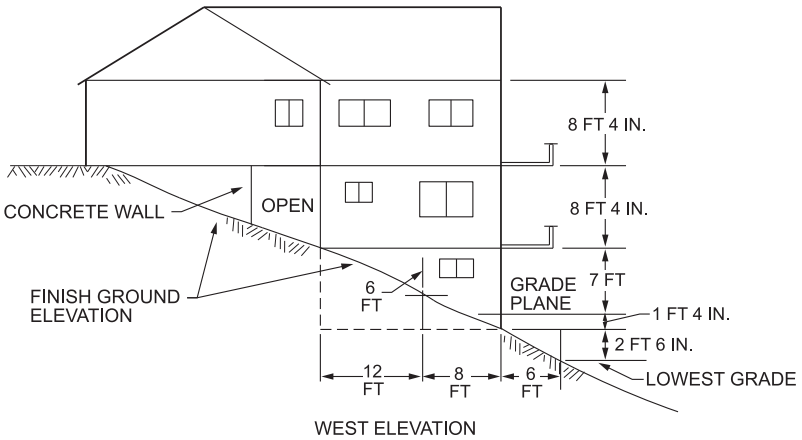

For SI: 1 inch = 25.4 mm, 1 foot = 304.8 mm.

Figure R202(15)
THREE-STORY BUILDING

INTERNATIONAL CODE COUNCIL®
Copyright © 2015 ICC. ALL RIGHTS RESERVED. Accessed by David Dammon on Jun 21, 2017 12:30:52 PM pursuant to License Agreement with ICC. No further reproduction or distribution authorized. ANY UNAUTHORIZED REPRODUCTION OR DISTRIBUTION IS A VIOLATION OF THE FEDERAL COPYRIGHT ACT AND THE LICENSE AGREEMENT, AND SUBJECT TO CIVIL AND CRIMINAL PENALTIES THEREUNDER.

[RB] STRUCTURAL COMPOSITE LUMBER. Structural members manufactured using wood elements bonded together with exterior adhesives.

Examples of structural composite lumber are:

Laminated veneer lumber (LVL). A composite of wood veneer elements with wood fibers primarily oriented along the length of the member, where the veneer element thicknesses are 0.25 inches (6.4 mm) or less.

Parallel strand lumber (PSL). A composite of wood strand elements with wood fibers primarily oriented along the length of the member, where the least dimension of the wood strand elements is 0.25 inch (6.4 mm) or less and their average lengths are not less than 300 times the least dimension of the wood strand elements.

Laminated strand lumber (LSL). A composite of wood strand elements with wood fibers primarily oriented along the length of the member, where the least dimension of the wood strand elements is 0.10 inch (2.54 mm) or less and their average lengths are not less than 150 times the least dimension of the wood strand elements.

Oriented strand lumber (OSL). A composite of wood strand elements with wood fibers primarily oriented along the length of the member, where the least dimension of the wood strand elements is 0.10 inch (2.54 mm) or less and their average lengths are not less than 75 times and less than 150 times the least dimension of the wood strand elements.

❖ ASTM D5456 is the standard by which structural composite lumber is evaluated. This definition is consistent with the types of structural composite lumber defined in ASTM D5456. These products are being used as beams, headers, long length studs, floor and roof framing and other applications where high strength, long length and/or dimensional stability make the use of structural composite lumber more desirable than sawn lumber.

[RB] STRUCTURAL INSULATED PANEL (SIP). A structural sandwich panel that consists of a light-weight foam plastic core securely laminated between two thin, rigid wood structural panel facings.

❖ Structural insulated panels are construction elements composed of solid-core insulation panels enclosed within structural wood-panel membranes. These panels are fabricated at the factory, then brought to the job site and installed.

[RB] STRUCTURE. That which is built or constructed.

❖ This definition is intentionally broad so as to include within its scope—and therefore the scope of the code (see Section R101.2)—everything that is built as an improvement to real property. See also the definition for "Building" for the difference between a building and structure.

[RB] SUBSOIL DRAIN. A drain that collects subsurface water or seepage water and conveys such water to a place of disposal.

❖ These drains are generally installed adjacent to the foundation footing of a building. They are intended to alleviate problems caused by subsurface (ground) water. Additionally, any other piping that collects either subsurface water or seepage would be termed a subsoil drain as well.

SUMP. A tank or pit that receives sewage or waste, located below the normal *grade* of the gravity system and that must be emptied by mechanical means.

❖ This is the receiving tank or vessel used to collect and store waste from drainage systems that are incapable of draining by gravity. A sump generally houses an ejector or pump used to evacuate the contents. A sump can refer to a receiver for either waste water or storm water.

SUMP PUMP. A pump installed to empty a sump. These pumps are used for removing storm water only. The pump is selected for the specific head and volume of the load and is usually operated by level controllers.

❖ A typical sump pump [see Commentary Figure R202(16)] receives its primary power from the building primary wiring system; however, some are models equipped with a battery or natural-gas-activated backup system. This backup system is helpful during electrical storms or any condition where there is an unexpected loss of power.

[RB] SUNROOM. A one-story structure attached to a *dwelling* with a *glazing area* in excess of 40 percent of the gross area of the structure's *exterior walls* and roof.

For definition applicable in Chapter 11, see Section N1101.6.

❖ Sunrooms are unique attached rooms that create a space which differs in character from that provided by conventional additions. Sunrooms and other highly glazed structures are sometimes called conservatories or solariums. This definition distinguishes a sunroom from other conventional structures because they are limited to one-story in height and the total glazing area needs to be at least 40 percent of the exterior wall and roof area. This definition is important because Section R303.2 permits a sunroom addition to be considered for light and ventilation. Sunroom additions are discussed in Section R303.9.1 (see the commentary to "Thermal isolation").

SUPPLY AIR. Air delivered to a *conditioned space* through ducts or plenums from the heat exchanger of a heating, cooling or ventilating system.

❖ As opposed to return air, supply air is delivered to the conditioned space by an air handler and may or may not be returned to the air handler. Supply air can include ventilation air.

SUPPORTS. Devices for supporting, hanging and securing pipes, fixtures and *equipment*.

❖ Types of supports include hangers, anchors, braces, brackets, strapping and any other material or device used to support plumbing piping and components.

INTERNATIONAL CODE COUNCIL®
Copyright © 2015 ICC. ALL RIGHTS RESERVED. Accessed by David Dammon on Jun 21, 2017 12:30:52 PM pursuant to License Agreement with ICC. No further reproduction or distribution authorized. ANY UNAUTHORIZED REPRODUCTION OR DISTRIBUTION IS A VIOLATION OF THE FEDERAL COPYRIGHT ACT AND THE LICENSE AGREEMENT, AND SUBJECT TO CIVIL AND CRIMINAL PENALTIES THEREUNDER.



Figure R202(16)
SUMP PUMP

SWEEP. A drainage fitting designed to provide a change in direction of a drain pipe of less than the angle specified by the amount necessary to establish the desired slope of the line. Sweeps provide a longer turning radius than bends and a less turbulent flow pattern (see "Bend" and "Elbow").

❖ See the definition of "Bend."

TEMPERATURE- AND PRESSURE-RELIEF (T AND P) VALVE. A combination relief valve designed to function as both a temperature-relief and pressure-relief valve.

❖ These devices combine the components of pressure-relief and temperature-relief valves and are designed to discharge automatically at excessive pressures or temperatures or both.

TEMPERATURE-RELIEF VALVE. A temperature-actuated valve designed to discharge automatically at the temperature at which it is set.

❖ This valve is designed to discharge at excessive temperatures to prevent dangerously high water temperatures that can cause tank, vessel or pipe explosions.

[RB] TERMITE-RESISTANT MATERIAL. Pressure-preservative treated wood in accordance with the AWPA standards in Section R318.1, naturally durable termite-resistant wood, steel, concrete, masonry or other *approved* material.

❖ Section R318.1 allows for termite-resistant materials as protection against termites. Typical materials include steel, concrete and masonry.

[RB] THERMAL ISOLATION. Physical and space conditioning separation from *conditioned space(s)* consisting of existing or new walls, doors or windows. The *conditioned space(s)* shall be controlled as separate zones for heating and cooling or conditioned by separate *equipment*.

For definition applicable in Chapter 11, see Section N1101.6.

❖ This term is conceptually somewhat similar to the separation provided by the "building envelope" but instead of being between conditioned space and the exterior or conditioned space and unconditioned space, this separation occurs between two conditioned spaces, the separation between the existing dwelling and the new sunroom addition. Unless a new wall is constructed, the existing "exterior wall" of the dwelling will generally provide the thermal isolation between the dwelling and the sunroom.

[RE] THERMAL RESISTANCE, *R*-VALUE. The inverse of the time rate of heat flow through a body from one of its bounding surfaces to the other for a unit temperature difference between the two surfaces, under steady state conditions, per unit area ($h \cdot ft^2 \cdot °F/Btu$) ($m^2 \cdot K$)/W.

❖ *R*-value is a unit of thermal resistance used for comparing insulating values of different materials. The greater the *R*-value of a material, the greater its insulating properties and the slower heat flows through it. *R*-values are used to rate roof/ceiling, wall and floor insulation.

[RE] THERMAL TRANSMITTANCE, *U*-FACTOR. The coefficient of heat transmission (air to air) through a building envelope component or assembly, equal to the time rate of heat flow per unit area and unit temperature difference between the warm side and cold side air films ($Btu/h \cdot ft^2 \cdot °F$) $W/(m^2 \cdot K)$.

❖ *U*-factor is the rate of heat transfer in Btu per hour through a square foot of a surface when the difference between the air temperatures on either side is one Fahrenheit degree. The *U*-factor is the reciprocal of the

INTERNATIONAL CODE COUNCIL®
Copyright © 2015 ICC. ALL RIGHTS RESERVED. Accessed by David Dammon on Jun 21, 2017 12:30:52 PM pursuant to License Agreement with ICC. No further reproduction or distribution authorized. ANY UNAUTHORIZED REPRODUCTION OR DISTRIBUTION IS A VIOLATION OF THE FEDERAL COPYRIGHT ACT AND THE LICENSE AGREEMENT, AND SUBJECT TO CIVIL AND CRIMINAL PENALTIES THEREUNDER.

R-value. Vertical windows, skylights and doors are rated with *U*-factors. The lower the *U*-factor, the more thermally efficient the material or assembly.

[RB] THIRD-PARTY CERTIFICATION AGENCY. An approved agency operating a product or material certification system that incorporates initial product testing, assessment and surveillance of a manufacturer's quality control system.

❖ The code contains requirements for materials such as pipe, fittings, mechanical equipment and structural items that require either testing by a third-party agency or certification by a third-party agency. A "third party" is an agency independent of the product manufacturer.

[RB] THIRD PARTY CERTIFIED. Certification obtained by the manufacturer indicating that the function and performance characteristics of a product or material have been determined by testing and ongoing surveillance by an approved third-party certification agency. Assertion of certification is in the form of identification in accordance with the requirements of the third-party certification agency.

❖ The code contains requirements for materials such as pipe, fittings, mechanical equipment and structural items that require either testing by a third-party agency or certification by a third-party agency. A "third party" is an agency independent of the product manufacturer.

[RB] THIRD-PARTY TESTED. Procedure by which an approved testing laboratory provides documentation that a product material or system conforms to specified requirements.

❖ The code contains requirements for materials such as pipe, fittings, mechanical equipment and structural items that require either testing by a third-party agency or certification by a third-party agency. A "third party" is an agency independent of the product manufacturer.

[RB] TOWNHOUSE. A single-family *dwelling unit* constructed in a group of three or more attached units in which each unit extends from foundation to roof and with a *yard* or public way on not less than two sides.

❖ A configuration of three or more single-family dwellings attached together in a single structure constitutes a townhouse if all of the following conditions exist:

1. Each unit extends vertically from the foundation to the roof (townhouses cannot be stacked, though two-family dwellings can be),
2. Each unit is open to the exterior on at least two sides, providing some degree of independence from other units.
3. Not more than three stories in height above grade plan, and
4. Each unit must have independent egress to the exterior.

A townhouse structure that does not meet all of the preceding four criteria is regulated by the IBC, not the IRC.

It should also be noted that townhouses within the IRC must be separated by a wall or walls meeting specific criteria. A townhouse structure could be built with any number of attached units on the same lot, or it could be developed such that a property line lies at each common wall separating dwelling units (see the definition for "Lot").

TRAP. A fitting, either separate or built into a fixture, that provides a liquid seal to prevent the emission of sewer gases without materially affecting the flow of sewage or waste water through it.

❖ The sole purpose of a trap is to isolate the interior of occupiable spaces from the sanitary drainage and vent system. It traps liquid waste and retains it to form a seal or barrier through which gases and vapors in the drainage and vent system cannot pass under normal operating conditions. Traps are either separate devices or are integral with fixtures. Other than a grease trap or a trap that is integral with a fixture, the only type of trap permitted by the code is the "P" type (see Commentary Figure R202(17) and "Fixture drain").

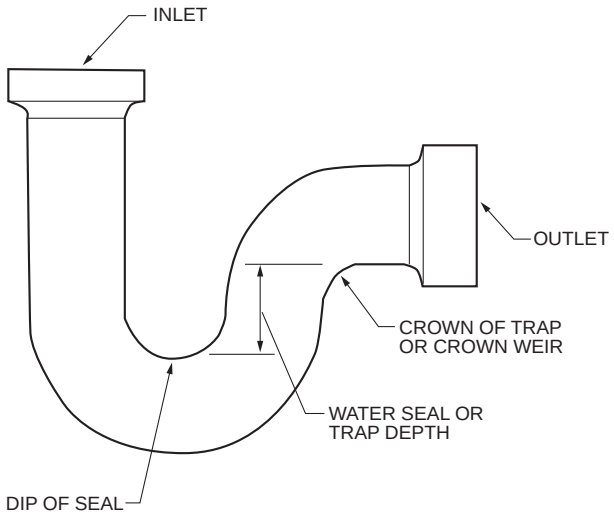

Figure R202(17)
DEPTH OF WATER SEAL

TRAP ARM. That portion of a *fixture drain* between a trap weir and the vent fitting.

❖ This is the common name for a "fixture drain."

TRAP PRIMER. A device or system of piping to maintain a water seal in a trap, typically installed where infrequent use of the trap would result in evaporation of the trap seal, such as floor drains.

❖ This is a device or system of piping that maintains a water seal in a trap (see Section P3201.2).

TRAP SEAL. The trap seal is the maximum vertical depth of liquid that a trap will retain, measured between the crown weir and the top of the dip of the trap.

❖ A trap seal is the vertical depth of liquid held in the dip of a trap. Trap seals are required to have a minimum depth.

INTERNATIONAL CODE COUNCIL®
Copyright © 2015 ICC. ALL RIGHTS RESERVED. Accessed by David Dammon on Jun 21, 2017 12:30:52 PM pursuant to License Agreement with ICC. No further reproduction or distribution authorized. ANY UNAUTHORIZED REPRODUCTION OR DISTRIBUTION IS A VIOLATION OF THE FEDERAL COPYRIGHT ACT AND THE LICENSE AGREEMENT, AND SUBJECT TO CIVIL AND CRIMINAL PENALTIES THEREUNDER.

[RB] TRIM. Picture molds, chair rails, baseboards, handrails, door and window frames, and similar decorative or protective materials used in fixed applications.

❖ Where limited amounts of decorative or protective materials are installed as a part of the building construction, they are regulated as trim. Examples include chair rails, door and window frames, handrails, baseboards and cove molding.

[RB] TRUSS DESIGN DRAWING. The graphic depiction of an individual truss, that describes the design and physical characteristics of the truss.

❖ If a floor or roof truss system is to be used in a building's construction, truss design drawings must be prepared and submitted to the building official prior to truss installation. The truss design drawings should graphically illustrate each specific type of truss to be installed and include a variety of other information as required in the code.

[RE] TUBULAR DAYLIGHTING DEVICE (TDD). A nonoperable fenestration unit primarily designed to transmit daylight from a roof surface to an interior ceiling via a tubular conduit. The basic unit consists of an exterior glazed weathering surface, a light-transmitting tube with a reflective interior surface, and an interior-sealing device such as a translucent ceiling panel. The unit may be factory assembled, or field assembled from a manufactured kit.

❖ This device functions just as a skylight does. The code includes this with skylights in specifying proper use and application.

TYPE L VENT. A *listed* and *labeled* vent conforming to UL 641 for venting oil-burning *appliances listed* for use with Type L vents or with gas *appliances listed* for use with Type B vents.

❖ See the commentary to the definition of "Vent."

[RE] *U*-FACTOR, THERMAL TRANSMITTANCE. See Section N1101.6 for definition applicable in Chapter 11.

❖ See "Thermal transmittance, *U*-factor."

[RB] UNDERLAYMENT. One or more layers of felt, sheathing paper, nonbituminous saturated felt, or other *approved* material over which a roof covering, with a slope of 2 to 12 (17-percent slope) or greater, is applied.

❖ Underlayment for roof covering is the initial layer of weather protection installed over a roof deck. The underlayment may consist of a single or multiple layers of material and is to be used on roofs having a minimum slope of 2 to 12. Examples of underlayment include felt, sheathing paper and nonbituminous saturated felt.

VACUUM BREAKER. A device that prevents back-siphonage of water by admitting atmospheric pressure through ports to the discharge side of the device.

❖ A vacuum breaker is a device used as a backflow preventer. The device neutralizes (breaks) the negative pressures (vacuum) in closed systems by allowing atmospheric pressure to enter the system.

[RB] VAPOR PERMEABLE. The property of having a moisture vapor permeance rating of 5 perms (2.9×10^{-10} kg/Pa · s · m^2) or greater, where tested in accordance with the desiccant method using Procedure A of ASTM E96. A vapor permeable material permits the passage of moisture vapor.

❖ A vapor permeable membrane can consist of breather paper or other materials that allow the passage of moisture vapor. An acceptable vapor permeable membrane can be any material that has a vapor permeance of no less than 5 perm ($2.9 \cdot 10^{-10}$ kg/Pa · s · m^2) when tested in accordance with the dessicant method using Procedure A of ASTM E96.

[RB] VAPOR RETARDER CLASS. A measure of the ability of a material or assembly to limit the amount of moisture that passes through that material or assembly. Vapor retarder class shall be defined using the desiccant method with Procedure A of ASTM E96 as follows:

Class I: 0.1 perm or less

Class II: 0.1 < perm ≤ 1.0 perm

Class III: 1.0 < perm ≤ 10 perm

❖ The code contains detail requirements for moisture control in Section R702.7. This section calls out requirements for vapor retarders with different levels of vapor permeance. This defines each class.

VENT. A passageway for conveying flue gases from fuel-fired *appliances*, or their vent connectors, to the outside atmosphere.

❖ In code terminology, vents are distinguished from chimneys and usually are constructed of factory-made listed and labeled components intended to function as a system. Type B and BW vents are constructed of galvanized steel and aluminum sheet metal and are double-wall and air insulated. Such vents are designed to vent gas-fired appliances and equipment that are equipped with draft hoods or specifically listed (labeled) for use with Type B or BW vents. Type L vents are typically constructed of sheet steel and stainless steel. They are double-wall, air insulated and designed to vent gas and oil-fired appliances and equipment. Mid- to high-efficiency appliances are designed for use with corrosion-resistant vents such as those made of plastic pipe and special alloys of stainless steel. Pellet vents (PL) are specialized vents similar in design and construction to Type L vents. Pellet vents must not be used with any appliances other than pellet-burning appliances.

VENT COLLAR. See "Flue collar."

VENT CONNECTOR. That portion of a venting system that connects the flue collar or draft hood of an *appliance* to a vent.

❖ In most cases, appliances are not located directly in line with the vertically rising chimney or vent; therefore, a vent connector is necessary to connect the appliance flue outlet with the vent. Vent connectors can be single- or double-wall pipes and are usually made from galvanized steel, stainless steel or aluminum sheet

INTERNATIONAL CODE COUNCIL®
Copyright © 2015 ICC. ALL RIGHTS RESERVED. Accessed by David Dammon on Jun 21, 2017 12:30:52 PM pursuant to License Agreement with ICC. No further reproduction or distribution authorized. ANY UNAUTHORIZED REPRODUCTION OR DISTRIBUTION IS A VIOLATION OF THE FEDERAL COPYRIGHT ACT AND THE LICENSE AGREEMENT, AND SUBJECT TO CIVIL AND CRIMINAL PENALTIES THEREUNDER.

metal. In many installations, the vent connectors must be constructed of the same material as the vent, as is typically done with Type B vent systems.

VENT DAMPER DEVICE, AUTOMATIC. A device intended for installation in the venting system, in the outlet of an individual, automatically operated fuel burning *appliance* and that is designed to open the venting system automatically where the *appliance* is in operation and to close off the venting system automatically where the *appliance* is in a standby or shutdown condition.

❖ The purpose of this device is the conservation of energy by preventing the cooling of the combustion chamber of the appliance and by preventing the loss of conditioned air through the venting system during the appliance off cycle. This is accomplished by preventing the flow of air (by means of venting system draft) through the combustion chamber when the appliance is not in operation.

VENT GASES. Products of combustion from fuel-burning *appliances*, plus excess air and dilution air, in the venting system above the draft hood or draft regulator.

❖ Vent gases are combustion products within the venting system, whereas flue gases are combustion products within the fuel-burning appliance. Vent gases are combustion products being conveyed to the outdoors by chimneys, vents and venting systems.

VENT STACK. A vertical vent pipe installed to provide circulation of air to and from the drainage system and that extends through one or more stories.

❖ This is a dry vent that extends from the base of a waste or soil stack and typically runs parallel and adjacent to the waste or soil stack it serves. The vent stack can connect to the horizontal drain downstream of the drain stack, or it can connect directly to the drainage stack.

VENT SYSTEM. Piping installed to equalize pneumatic pressure in a drainage system to prevent trap seal loss or blow-back due to siphonage or back pressure.

❖ This system is a piping arrangement designed to maintain pressure fluctuation at fixture traps to within plus or minus 2 inches of water column (249 Pa).

VENTILATION. The natural or mechanical process of supplying conditioned or unconditioned air to, or removing such air from, any space.

For definition applicable in Chapter 11, see Section N1101.6.

❖ Ventilation can be used for comfort cooling, the control of air contaminants, equipment cooling and replenishing oxygen levels.

VENTING. Removal of combustion products to the outdoors.

❖ This is the desired result of the venting system.

VENTING SYSTEM. A continuous open passageway from the flue collar of an *appliance* to the outside atmosphere for the purpose of removing flue or vent gases. A venting system is usually composed of a vent or a chimney and vent connector, if used, assembled to form the open passageway.

❖ Venting systems operate by gravity (natural draft) or mechanical means. Venting systems include both vents and chimneys.

VERTICAL PIPE. Any pipe or fitting that makes an angle of 45 degrees (0.79 rad) or more with the horizontal.

❖ Vertical pipes are angled 45 degrees (0.79 rad) or more above the horizontal.

[RB] VINYL SIDING. A shaped material, made principally from rigid polyvinyl chloride (PVC), that is used to cover exterior walls of buildings.

❖ Vinyl siding is a manufactured plastic product whose primary component is polyvinyl chloride (PVC). Vinyl siding is either coextruded in layers or thermoformed, depending on the style or profile of the product. Additives are used to improve weathering performance. Vinyl siding products are available in a wide range of sizes, shapes, colors and textures and are intended for exterior wall and related applications.

[RB] WALL, RETAINING. A wall not laterally supported at the top, that resists lateral soil load and other imposed loads.

❖ Retaining walls are discussed in Section R404.4 of this code. These walls retain soil that would otherwise slump or cave to a more natural slope. The lateral pressure of soil against a retaining wall is greatly influenced by soil moisture and it is this lateral pressure that constitutes the largest part of the load that the wall must withstand.

[RB] WALLS. Walls shall be defined as follows:

Load-bearing wall. A wall supporting any vertical load in addition to its own weight.

Nonbearing wall. A wall which does not support vertical loads other than its own weight.

❖ Walls are either load-bearing or nonbearing. A load-bearing wall supports not only its own weight but also an additional vertical load. An example is a wood stud wall supporting roof rafters and ceiling joists. A nonbearing wall does not support any vertical load other than its own weight.

WASTE. Liquid-borne waste that is free of fecal matter.

❖ Waste is any plumbing fixture discharge other than the discharge from a water closet or urinal. This material does not contain human fecal matter.

WASTE PIPE OR STACK. Piping that conveys only liquid sewage not containing fecal material.

❖ A waste pipe or stack is any waste-conducting pipe not falling under the definition of soil pipe. Waste pipes do not convey human fecal matter.

INTERNATIONAL CODE COUNCIL®
Copyright © 2015 ICC. ALL RIGHTS RESERVED. Accessed by David Dammon on Jun 21, 2017 12:30:52 PM pursuant to License Agreement with ICC. No further reproduction or distribution authorized. ANY UNAUTHORIZED REPRODUCTION OR DISTRIBUTION IS A VIOLATION OF THE FEDERAL COPYRIGHT ACT AND THE LICENSE AGREEMENT, AND SUBJECT TO CIVIL AND CRIMINAL PENALTIES THEREUNDER.

WASTE RECEPTOR. A floor sink, standpipe, hub drain or a floor drain that receives the discharge of one or more indirect waste pipes.

❖ A common assumption was that only floor sinks and hub drains were waste receptors. Standpipes and floor drains were rarely thought of as being waste receptors but they are commonly installed for capturing the flow from indirect waste pipes. A floor drain is only considered to be a waste receptor where it receives the discharge of one or more indirect waste pipes.

WATER DISTRIBUTION SYSTEM. Piping that conveys water from the service to the plumbing fixtures, *appliances*, appurtenances, *equipment*, devices or other systems served, including fittings and control valves.

❖ This is all the water piping within a building from the point of connection to the water service to the various connections of the fixture supplies or outlets.

WATER HEATER. Any heating *appliance* or *equipment* that heats potable water and supplies such water to the potable hot water distribution system.

❖ The types of water heaters include storage (tank), circulating and instantaneous. Point-of-use water heaters typically supply hot water to a single fixture or outlet and are located in close proximity to the fixture or outlet.

WATER MAIN. A water supply pipe for public use.

❖ Water mains are owned and operated by municipalities, rural water districts, privately owned water purveyors or other such entities.

WATER OUTLET. A valved discharge opening, including a hose bibb, through which water is removed from the potable water system supplying water to a plumbing fixture or plumbing *appliance* that requires either an *air gap* or backflow prevention device for protection of the supply system.

❖ A water outlet is a discharge opening through which water is supplied to a fixture, into the atmosphere (except into an open tank that is part of the water supply system), to a boiler or heating system or to any device or equipment requiring water to operate but which is not part of the plumbing system.

[RB] WATER-RESISTIVE BARRIER. A material behind an *exterior wall* covering that is intended to resist liquid water that has penetrated behind the exterior covering from further intruding into the *exterior wall* assembly.

❖ Protection of the building envelope is a primary concern. The ability of the water-resistive barrier to provide weather resistance and maintain the integrity of the building envelope is key to controlling water based issues like mold, decay and deterioration of a structure. Water-resistive barriers are discussed in Section R703.2 of the code and in Section 1404.2 of the IBC.

WATER SERVICE PIPE. The outside pipe from the water main or other source of potable water supply to the water distribution system inside the building, terminating at the service valve.

❖ Water service pipe is any acceptable piping that conveys potable water.

WATER SUPPLY SYSTEM. The water service pipe, the water-distributing pipes and the necessary connecting pipes, fittings, control valves and appurtenances in or adjacent to the building or premises.

❖ The water supply system includes all piping and components that convey potable water from the public main or other source to the points of water usage.

WET VENT. A vent that receives the discharge of wastes from other fixtures.

❖ Although Section P3108 describes "wet venting" systems, the term "wet vent" applies to any pipe that is used concurrently as both a drain and a vent. This arrangement can be found in the following systems: Common Vent (Section P3107), Wet Venting (Section P3108), Waste Stack Vent (Section P3109), Circuit Venting (Section P3110), and Combination Waste and Vent System (Section P3111).

WHOLE-HOUSE MECHANICAL VENTILATION SYSTEM. An exhaust system, supply system, or combination thereof that is designed to mechanically exchange indoor air for outdoor air where operating continuously or through a programmed intermittent schedule to satisfy the whole-house ventilation rate.

For definition applicable in Chapter 11, see Section N1101.6.

❖ See Section M1507.3.

[RB] WINDBORNE DEBRIS REGION. Areas within *hurricane-prone regions* located in accordance with one of the following:

1. Within 1 mile (1.61 km) of the coastal mean high water line where the ultimate design wind speed, V_{ult}, is 130 mph (58 m/s) or greater.
2. In areas where the ultimate design wind speed, V_{ult}, is 140 mph (63.6 m/s) or greater; or Hawaii.

❖ The code regulates the exterior openings of a building where there is a concern about the extensive damage that can be caused by debris carried through the air by extremely high winds. Wind-borne debris regions are those areas where the potential for such damage is high. The code identifies these areas by means of this definition and its application to Figures R301.2(4)A and R301.2(4)B.

[RB] WINDER. A tread with nonparallel edges.

❖ A winder is a tread in a winding stairway. Winder treads are used as components of stairs that change direc-

INTERNATIONAL CODE COUNCIL®
Copyright © 2015 ICC. ALL RIGHTS RESERVED. Accessed by David Dammon on Jun 21, 2017 12:30:52 PM pursuant to License Agreement with ICC. No further reproduction or distribution authorized. ANY UNAUTHORIZED REPRODUCTION OR DISTRIBUTION IS A VIOLATION OF THE FEDERAL COPYRIGHT ACT AND THE LICENSE AGREEMENT, AND SUBJECT TO CIVIL AND CRIMINAL PENALTIES THEREUNDER.

tion, just as straight treads are components in straight stairs. A winder serves as a tread but its shape allows the additional function of a gradual turning of the stairway direction. The tread depth of a winder at the walk line and the minimum tread depth at the narrow end can control the turn made by each winder.

[RB] WOOD STRUCTURAL PANEL. A panel manufactured from veneers; or wood strands or wafers; bonded together with waterproof synthetic resins or other suitable bonding systems. Examples of wood structural panels are plywood, OSB or composite panels.

❖ Wood structural panels are sheet products commonly known as plywood, wafer board, oriented strand board (OSB) or chip board manufactured to meet the United States Department of Commerce (DOC) standards for Construction and Industrial Plywood, PS 1, and Performance Standards for Wood-Based Structural-Use Panels, PS 2.

[RB] YARD. An open space, other than a court, unobstructed from the ground to the sky, except where specifically provided by this code, on the *lot* on which a building is situated.

❖ Used throughout the code to describe an open space at the exterior of a building, a yard must be unobstructed from the ground to the sky and located on the same lot on which the building is situated. The openness of a yard allows it to be used to supply buildings with natural light and ventilation. A court, which is bounded on three or more sides by the exterior walls of the building, is not a yard.

Bibliography

The following resource materials were used in the preparation of the commentary for this chapter of the code:

ANSI Z21.83–1998, *Fuel Cell Power Plants.* New York, NY: American National Standards Institute, 1998.

ASTM C55–03, *Standard Specification for Concrete Brick.* West Conshohocken, PA: ASTM International, 2003.

ASTM C62–03, *Standard Specification for Building Brick (Solid Masonry Units Made from Clay or Shale).* West Conshohocken, PA: ASTM International, 2003.

ASTM C73–99a, *Standard Specification for Calcium Silicate Face Brick (Sand Lime Brick).* West Conshohocken, PA: ASTM International, 1999.

ASTM C90–03, *Standard Specification for Load-bearing Concrete Masonry Units.* West Conshohocken, PA: ASTM International, 2003.

ASTM C216–04a, *Standard Specification for Facing Brick (Solid Masonry Units Made from Clay or Shale).* West Conshohocken, PA: ASTM International, 2004.

ASTM D7032–08, *Standard Specification for Establishing Performance Ratings for Wood-plastic Composite Deck Boards and Guardrail Systems (Guards or Handrails).* West Conshohocken, PA: ASTM International, 2008.

ASTM E84–04, *Standard Test Method for Surface Burning Characteristics of Building Materials.* West Conshohocken, PA: ASTM International, 2004.

ASTM E96–00e04, *Standard Test Method for Water Vapor Transmission of Materials.* West Conshohocken, PA: ASTM International, 2004.

ASTM E136–99e01, *Standard Test Method for Behavior of Materials in a Vertical Tube Furnace at 750°C.* West Conshohocken, PA: ASTM International, 2001.

DOC PS 1–95, *Construction and Industrial Plywood.* Gaithersburg, MD: U.S. Department of Commerce, 1995.

DOC PS 2–93, *Performance Standard for Wood-based Structural-use Panels.* Gaithersburg, MD: U.S. Department of Commerce, 1993.

NFPA 501–03, *Standard on Manufactured Housing.* Quincy, MA: National Fire Protection Association, 2003.

NFPA 853–03, *Installation of Stationary Fuel Power Power Plants.* Quincy, MA: National Fire Protection Association, 2003.

UL 103–2001, *Chimneys, Factory-built, Residential Type and Building Heating Appliance—with Revision through March 1999.* Northbrook, IL: Underwriters Laboratories Inc., 2001.

UL 641–99, *Type L, Low-temperature Venting Systems—with Revisions through April 1999.* Northbrook, IL: Underwriters Laboratories Inc., 1999.

INTERNATIONAL CODE COUNCIL®
Copyright © 2015 ICC. ALL RIGHTS RESERVED. Accessed by David Dammon on Jun 21, 2017 12:30:52 PM pursuant to License Agreement with ICC. No further reproduction or distribution authorized. ANY UNAUTHORIZED REPRODUCTION OR DISTRIBUTION IS A VIOLATION OF THE FEDERAL COPYRIGHT ACT AND THE LICENSE AGREEMENT, AND SUBJECT TO CIVIL AND CRIMINAL PENALTIES THEREUNDER.

INTERNATIONAL CODE COUNCIL®
Copyright © 2015 ICC. ALL RIGHTS RESERVED. Accessed by David Dammon on Jun 21, 2017 12:30:52 PM pursuant to License Agreement with ICC. No further reproduction or distribution authorized. ANY UNAUTHORIZED REPRODUCTION OR DISTRIBUTION IS A VIOLATION OF THE FEDERAL COPYRIGHT ACT AND THE LICENSE AGREEMENT, AND SUBJECT TO CIVIL AND CRIMINAL PENALTIES THEREUNDER.

Chapter 3: Building Planning

General Comments

Chapter 3 is a compilation of the code requirements specific to the building planning sector of the design and construction process. The provisions address a wide variety of issues important to designing a building that is both safe and usable. The limitations placed on the materials and methods of construction contribute to the development of a structurally sound building. Snow, wind and seismic design and flood-resistant construction are regulated, as are the live and dead loads, in Chapter 3.

Fire-resistance-rated assemblies are necessary under two different conditions: 1. Where a building is situated very close to a property line, the code addresses the concern for radiant heat exposure in a fire; and 2. Where two or more dwelling units are housed in a single structure, the code mandates a minimum level of fire separation between all units. Other concerns related to fires include the limitations on wall and ceiling finishes, the requirement for emergency escape and rescue openings, the required installation of smoke alarms throughout the dwelling unit and limitations on the use of foam plastics and other insulation materials. In addition, the specific construction requirements for the common wall between the house and garage and the ceiling assembly between the garage and habitable space are addressed in Chapter 3.

This chapter sets forth traditional code requirements dealing with light, ventilation, sanitation, room size, ceiling height and environmental comfort. Life-safety provisions include limitations on glazing used in hazardous areas, specifications on the use of guards at elevated surfaces, fall protection for open windows, and basic rules for the egress system. This chapter also contains most of the regulations found in the code that deal with the planning and design of dwelling units.

- Section R301 establishes the design criteria, including dead loads, live loads, roof loads, floor loads, snow loads, wind loads and seismic loads.
- Section R302 identifies the requirements for the fire-resistant construction for residential buildings.
- Section R303 establishes the light, ventilation and heating requirements for dwelling units.
- Section R304 establishes the minimum requirements for room areas in dwelling units.
- Section R305 establishes the ceiling height requirements for dwelling units.
- Section R306 contains requirements for sanitation.
- Section R307 contains requirements for toilets and bath and shower spaces.
- Section R308 contains requirements for glazing, hazardous locations of glazing, site-built windows and sky-lights.
- Section R309 contains provisions for garages and carports.
- Section R310 contains provisions for emergency escape and rescue openings.
- Section R311 establishes the means of egress requirements, including provisions for egress doors, hallways, stairways and ramps.
- Section R312 addresses guards and fall prevention for open windows.
- Section R313 provides requirements for an automatic sprinkler system with the option of complying with NFPA 13D or Section P2904.
- Section R314 contains the requirements for smoke alarms.
- Section R315 provides criteria for the installation and location of carbon monoxide (CO) alarms.
- Section R316 addresses the use of foam plastic.
- Section R317 contains requirements for decay protection for wood and wood-based products.
- Section R318 contains requirements for termite protection.
- Section R319 provides the requirements for premise identification (site address).
- Section R320 provides a reference to the *International Building Code*® (IBC®) for accessibility requirements.
- Section R321 addresses elevators and platform lifts.
- Section R322 establishes flood-resistant construction provisions.
- Section R323 references ICC/NSSA 500 for when someone chooses to construct a storm shelter within their home or building.
- Section R324 provides requirements for photovoltaic solar energy systems and references Chapter 23 and the *International Fire Code*® (IFC®) for solar thermal energy systems.
- Section R325 contains requirements for mezzanines.
- Section R326 references the *International Swimming Pool and Spa Code*® (ISPSC®) for the design and construction of pools and spas.

INTERNATIONAL CODE COUNCIL®
Copyright © 2015 ICC. ALL RIGHTS RESERVED. Accessed by David Dammon on Jun 21, 2017 12:30:52 PM pursuant to License Agreement with ICC. No further reproduction or distribution authorized. ANY UNAUTHORIZED REPRODUCTION OR DISTRIBUTION IS A VIOLATION OF THE FEDERAL COPYRIGHT ACT AND THE LICENSE AGREEMENT, AND SUBJECT TO CIVIL AND CRIMINAL PENALTIES THEREUNDER.

Purpose

Chapter 3 provides guidelines for a minimum level of structural integrity, life safety, fire safety and livability for inhabitants of dwelling units regulated by the code. The chapter sets forth the requirements that affect the most basic planning and design aspects of dwelling construction. It identifies the various structural loads that are imposed on a building, and it establishes criteria that address each of the imposed loads. In the design of residential structures scoped by the code, there are many climatic and geographical issues that must be considered. This chapter provides guidance in the determination of all appropriate design criteria. In addition, it sets forth the limiting conditions under which a building may be designed and constructed using the code.

Fundamental issues of livability and sanitation are satisfied through the regulation of minimum room sizes and ceiling heights, as well as basic requirements for toilet rooms, kitchens, swimming pools, spas and hot tubs. Life safety concerns are addressed in a number of areas, including provisions regulating emergency escape and rescue openings, glazing in areas subject to human impact and exiting. The chapter establishes minimum specifications for a number of different building components and systems, including stairways, ramps, landings, handrails, guards, mezzanines, solar energy systems and fall protection for open windows. It deals with fire-safety issues, such as automatic sprinkler systems, early fire detection by smoke alarms, exterior wall protection for proximity to property lines, separation of dwelling units in multiple-family buildings, and control of fire spread across wall and ceiling finishes. Other life safety concerns are dealt with by requirements for CO detectors and guidance for the design of storm shelters. Property protection is also a concern, with provisions established for protection against decay and termites.

SECTION R301
DESIGN CRITERIA

R301.1 Application. Buildings and structures, and parts thereof, shall be constructed to safely support all loads, including dead loads, live loads, roof loads, flood loads, snow loads, wind loads and seismic loads as prescribed by this code. The construction of buildings and structures in accordance with the provisions of this code shall result in a system that provides a complete load path that meets the requirements for the transfer of loads from their point of origin through the load-resisting elements to the foundation. Buildings and structures constructed as prescribed by this code are deemed to comply with the requirements of this section.

❖ This section specifies the minimum design loads required for structures built in accordance with the provisions of the code. In structural design, loads are generally divided into two categories: gravity loads, which act vertically; and lateral loads, which act horizontally. Lateral loads typically result from either wind (see Section R301.2.1), earthquakes (see Section R301.2.2) or flood loads (see Section R301.2.4). Although wind, flood and earthquake design are concerned with lateral loads, there are also vertical force components that must be considered.

All structures must be designed to support these loads and provide a complete load path capable of transferring these loads from their point of origin through the appropriate load-resisting elements and foundation and, ultimately, to the supporting soil. The charging statement specifically states that any building or structure that has been built in strict compliance with the code provides a complete load path that meets all requirements for load transfer from the point of origin to the foundation. A load path that is either incomplete or inadequate will expose the structure to damage just as surely as an undersized structural member will. The concept of a complete load path is a fundamental principle in structural engineering, and the code makes it clear that a complete load path must be provided.

R301.1.1 Alternative provisions. As an alternative to the requirements in Section R301.1, the following standards are permitted subject to the limitations of this code and the limitations therein. Where engineered design is used in conjunction with these standards, the design shall comply with the *International Building Code*.

1. AF&PA *Wood Frame Construction Manual* (WFCM).
2. AISI *Standard for Cold-Formed Steel Framing—Prescriptive Method for One- and Two-Family Dwellings* (AISI S230).
3. ICC *Standard on the Design and Construction of Log Structures* (ICC 400).

❖ This section permits the use of alternative prescriptive framing methods. Wood framing is permitted to comply with the provisions of the American Forest and Paper Association's (AF&PA) WFCM, *Wood Frame Construction Manual for One- and Two-family Dwellings*. Cold-formed steel framing is permitted to comply with American Iron and Steel Institute's (AISI) S230, *Standard for Cold-formed Steel Framing-prescriptive Method for One- and Two-family Dwellings*. Log homes can be constructed using ICC 400, *Standard on the Design and Construction of Log Structures*. Engineered design in accordance with the IBC is required when a building is beyond (or exceeds) the applicability limits of these standards.

R301.1.2 Construction systems. The requirements of this code are based on platform and balloon-frame construction for light-frame buildings. The requirements for concrete and masonry buildings are based on a balloon framing system. Other framing systems must have equivalent detailing to ensure force transfer, continuity and compatible deformations.

❖ The requirements of the code are based on platform or balloon-frame construction for light-frame buildings

INTERNATIONAL CODE COUNCIL®
Copyright © 2015 ICC. ALL RIGHTS RESERVED. Accessed by David Dammon on Jun 21, 2017 12:30:52 PM pursuant to License Agreement with ICC. No further reproduction or distribution authorized. ANY UNAUTHORIZED REPRODUCTION OR DISTRIBUTION IS A VIOLATION OF THE FEDERAL COPYRIGHT ACT AND THE LICENSE AGREEMENT, AND SUBJECT TO CIVIL AND CRIMINAL PENALTIES THEREUNDER.

(see the definitions of "Platform construction" and "Light-frame construction" in Chapter 2) and on a balloon-framing system for concrete and masonry buildings.

R301.1.3 Engineered design. Where a building of otherwise conventional construction contains structural elements exceeding the limits of Section R301 or otherwise not conforming to this code, these elements shall be designed in accordance with accepted engineering practice. The extent of such design need only demonstrate compliance of nonconventional elements with other applicable provisions and shall be compatible with the performance of the conventional framed system. Engineered design in accordance with the *International Building Code* is permitted for buildings and structures, and parts thereof, included in the scope of this code.

❖ Generally, proper application of the code requires a clear understanding of and adherence to its prescriptive limitations, which are based on conventional construction. However, a building may contain structural elements that are either unconventional or exceed the prescriptive limitations of the code. This is acceptable, if these elements are designed in accordance with accepted engineering practice by a design professional.

R301.2 Climatic and geographic design criteria. Buildings shall be constructed in accordance with the provisions of this code as limited by the provisions of this section. Additional criteria shall be established by the local *jurisdiction* and set forth in Table R301.2(1).

❖ This section establishes the design criteria that vary based on location and/or climate. Some of the criteria reflect loading, such as earthquake, flood and wind; others reflect susceptibility to damage from hazards, such as weather exposure or termites. Additional criteria may be established by local jurisdictions as necessary. These would include, for example, whether a site is within a wind-borne debris region as described in Section R301.2.1.2, of this commentary. Table R301.2(1) lists the criteria that must be established within each jurisdiction for any project constructed under the code. The table must be filled in by the jurisdiction adopting the code for their particular area. In reality, the information required to be inserted into the table is typically included in the adopting ordinance, and may not actually appear in the code. For this reason, it may be wise for designers, contractors, manufacturers and other code users to acquire a copy of the adopting ordinance for the code for each jurisdiction in which they do business.

Note that some of these criteria (e.g., wind exposure category or flood hazard) can vary within a given jurisdiction and may need to be established on a site-by-site (or project-by-project) basis. The table serves as a useful reminder for code enforcement personnel, builders, designers and owners. Verifying this information up front aids compliance with the code.

Table R301.2(1). See Page 3-6.

❖ Table R301.2(1) is designed so that jurisdictions recognize certain climatic and geographic design criteria that vary from location to location. Communities are directed to complete the table with a variety of factors. See the table footnotes for the sources of the information to be determined by the local jurisdiction to complete the table.

The required information includes the date of the jurisdictions entry into the National Flood Insurance Program (NFIP), which is typically the date of adoption of the first code or ordinance for management of flood hazard areas. With respect to the official map that shows flood hazard areas, the community inserts the date of the currently effective Flood Insurance Study and the panel numbers and dates of all currently effective Flood Insurance Rate Maps (FIRM) [and Flood Boundary and Floodway Maps (FBFM), if applicable] or the date of other maps that are adopted. Another flood hazard map may be specified if it shows flood hazard areas that are larger than those shown on the FIRM, as may be the case if a community elects to define its flood plains based on higher standards, such as the "flood of record," "ultimate development" of an upstream watershed, or "no-rise" rules to define the floodway.

From time to time, the Federal Emergency Management Agency (FEMA) may revise and republish Federal Insurance Studies (FISs) and FIRMs. In recent years, revised FIRMs have been produced in a digital format for some communities. Communities that prefer to cite the digital data should obtain a legal opinion whether such maps and data are acceptable. Digital map products are registered to the primary coordinate system of the state or community. FEMA advises that the horizontal location of flood hazard areas relative to specific sites should be determined using the coordinate grid, rather than planimetric base map features, such as streets.

When maps are revised and flood hazard areas are changed, FEMA involves the community and provides a formal opportunity to review the documents. Once the revisions are finalized, FEMA requires adoption of the new maps by the community. Communities may be able to minimize having to adopt each revision by referencing the date of the map and study, as amended. This is a method by which subsequent revisions to flood maps and studies may be automatically adopted administratively without requiring legislative action on the part of the community. Communities will need to determine whether this automatic adoption-by-reference approach is allowed under their state's enabling authority and due process requirements. If not allowed, communities are to follow their state's requirements, which normally require public notices, hearings and specific adoption of revised maps by the community's legislative body.

Table R301.2(1) requires the local municipality or code user to insert a frost line depth entry for the par-

INTERNATIONAL CODE COUNCIL®
Copyright © 2015 ICC. ALL RIGHTS RESERVED. Accessed by David Dammon on Jun 21, 2017 12:30:52 PM pursuant to License Agreement with ICC. No further reproduction or distribution authorized. ANY UNAUTHORIZED REPRODUCTION OR DISTRIBUTION IS A VIOLATION OF THE FEDERAL COPYRIGHT ACT AND THE LICENSE AGREEMENT, AND SUBJECT TO CIVIL AND CRIMINAL PENALTIES THEREUNDER.

ticular geographical area they are located in. Commentary Figure R301.2(8) provides some guidance to do this more accurately based on the US Weather Bureau information. Since elevation above sea level may increase frost depth, another local resource for frost depth is often the local graveyard owners.

In Table R301.2(1), under the title of Wind Design, Topographic effects, a jurisdiction must enter "yes" or "no." This is in consideration of historical information indicating unusually high wind speeds due to local topography (see commentary, Section R301.2.1.5).

R301.2.1 Wind design criteria. Buildings and portions thereof shall be constructed in accordance with the wind provisions of this code using the ultimate design wind speed in Table R301.2(1) as determined from Figure R301.2(4)A. The structural provisions of this code for wind loads are not permitted where wind design is required as specified in Section R301.2.1.1. Where different construction methods and structural materials are used for various portions of a building, the applicable requirements of this section for each portion shall apply. Where not otherwise specified, the wind loads listed in Table R301.2(2) adjusted for height and exposure using Table R301.2(3) shall be used to determine design load performance requirements for wall coverings, curtain walls, roof coverings, exterior windows, skylights, garage doors and exterior doors. Asphalt shingles shall be designed for wind speeds in accordance with Section R905.2.4. A continuous load path shall be provided to transmit the applicable uplift forces in Section R802.11.1 from the roof assembly to the foundation.

❖ Buildings must be capable of withstanding the wind loads based on the wind speed specified in Table R301.2(1). Jurisdictions determine the wind speeds used for entry in the table by the application of Figure R301.2(4)A. The structural provisions in the code are limited, however, and do not apply where wind design or structural engineering is required in accordance with Section R301.2.1.1. As buildings typically contain multiple construction methods and structural materials, the code's wind criteria that are applicable to each of the methods and materials that are incorporated in a building must be complied with. Wall coverings, curtain walls, roof coverings, exterior windows, skylights, garage doors and exterior doors must be capable of withstanding the component and cladding wind pressures of Table R301.2(2) adjusted by the height and exposure coefficients given in Table R301.2(3).

Section R905.2.6 addresses the attachment details for asphalt shingles. Roofs with higher slopes or in areas subject to higher wind speeds may require special methods of attachment (see commentary, Section R905.2.6).

Wind loads are a major consideration in designing a structure's lateral-force-resisting system. See Commentary Figure R301.2.1 for a schematic representation of the lateral component of wind loading on a building. Wind loads affect more than the lateral load system, as evidenced by provisions such as the roof tie-down requirements of Section R802.11. A continuous load path must be provided to transmit the roof uplift forces to the foundation.

For the 2015 edition, the wind design provisions of the *International Residential Code*® (IRC®) have been brought in line with the 2012 IBC and ASCE 7-10. New maps based on the ASCE 7-10 ultimate wind speed data, but converted back down to nominal (ASD) basis, were provided in previous editions of the IRC, which led to some confusion among those stakeholders who work with both the IRC and the IBC.

A working group of stakeholders including the National Association of Home Builders (NAHB), the major material associations, the American Society of Civil Engineers (ASCE), and the Insurance Institute for Business and Home Safety developed a new ultimate wind speed basis for design. Thus the Chapter 3 wind design criteria and the corresponding definitions (see the definitions for "Hurricane-prone regions" and "Windborne debris region" in Section R202) have been updated. Further updates include:

- A new ultimate wind speed map [Figure R301.2(4)A].
- A new map of the regions where special high-wind design is required [Figure R301.2(4)B].
- A revised table (Table R301.2.1.3) for conversion of ultimate design wind speeds to nominal design (ASD) wind speeds, for use with those standards that have not updated their provisions.
- A revised table [Table R301.2(2)] for component and cladding pressures.
- The addition of Section R301.2.1.2.1 for substitutions and modifications to ASTM E1886.
- Revisions to Table R301.2.1.5.1 to reflect the change to the ultimate design basis, including the addition of a footnote indicating that buildings must be considered as "wind design required" where the ultimate design wind speed, as modified by the table, is 140 mph or more, as also required by Section R301.2.1.1.

While the code does not provide any specific guidance on the topic, one should take note of the areas identified as "special wind regions" in the ultimate wind speed map [Figure R301.2(4)A], as well as other areas described in the footnotes to the figure where wind anomalies are observed. As the footnotes explain, these areas must be examined for unusual wind conditions. ASCE 7 discusses the use of regional climatic data in these areas. Section R301.2.1.5 provides greater detail for scenarios where topography causes a wind speed-up effect, which may overlap some of the special wind region considerations.

The region in Figure R301.2(4)B where the use of alternate prescriptive high-wind standards or engineered design is required is defined using the 130 mph contour along the Gulf Coast and along the southern portions of the Atlantic coast from Florida up

INTERNATIONAL CODE COUNCIL®
Copyright © 2015 ICC. ALL RIGHTS RESERVED. Accessed by David Dammon on Jun 21, 2017 12:30:52 PM pursuant to License Agreement with ICC. No further reproduction or distribution authorized. ANY UNAUTHORIZED REPRODUCTION OR DISTRIBUTION IS A VIOLATION OF THE FEDERAL COPYRIGHT ACT AND THE LICENSE AGREEMENT, AND SUBJECT TO CIVIL AND CRIMINAL PENALTIES THEREUNDER.

to North Carolina. The 140-mph contour is used for the northern portions of the Atlantic coast from Virginia up to Maine, and for Alaska. A 130-mph trigger is also used for the assorted Caribbean and Pacific islands that are also considered part of the "hurricane-prone" region. This creates a region that approximately equals the region defined by the 110-mph contour under the wind map used in the 2000 through 2009 IRC, maintains areas of Florida and the Gulf Coast traditionally outside of the prescriptive limits of the IRC, and maintains areas of New England traditionally included within the prescriptive limits of the IRC.

Code users desiring a more accurate determination in areas near or along a particular contour (or in general) can make use of the Applied Technology Council's (ATC) Windspeed by Location web site (http://www.atcouncil.org/windspeed/) to obtain site-specific wind speeds using latitude/longitude or site address. This site was developed by ATC using the same data used to develop the wind maps for ASCE 7, the IBC and the IRC.

Note that component and cladding pressure Table R301.2(2) uses ultimate design wind speed, but reports pressures at an ASD level. That is, the listed pressures incorporate the 0.6 multiplier on wind loads per the allowable stress design load combinations shown in Section 1605.3 of the IBC and Section 2.3.2 of ASCE 7-10. This is done here and throughout the updated code requirements to allow for easy adaptation of existing stock designs, construction documents and guidelines to the 2015 IRC, as the loads and pressures will be comparable to previous editions of the code for most sites.

R301.2.1.1 Wind limitations and wind design required. The wind provisions of this code shall not apply to the design of buildings where wind design is required in accordance with Figure R301.2(4)B.

Exceptions:

1. For concrete construction, the wind provisions of this code shall apply in accordance with the limitations of Sections R404 and R608.
2. For structural insulated panels, the wind provisions of this code shall apply in accordance with the limitations of Section R610.
3. For cold-formed steel light-frame construction, the wind provisions of this code shall apply in accordance with the limitations of Sections R505, R603 and R804.

In regions where wind design is required in accordance with Figure R301.2(4)B, the design of buildings for wind loads shall be in accordance with one or more of the following methods:

1. AF&PA *Wood Frame Construction Manual* (WFCM).
2. ICC *Standard for Residential Construction in High-Wind Regions* (ICC 600).
3. ASCE *Minimum Design Loads for Buildings and Other Structures* (ASCE 7).
4. AISI *Standard for Cold-Formed Steel Framing—Prescriptive Method For One- and Two-Family Dwellings* (AISI S230).
5. *International Building Code.*

The elements of design not addressed by the methods in Items 1 through 5 shall be in accordance with the provisions of this code.

Where ASCE 7 or the *International Building Code* is used for the design of the building, the wind speed map and exposure category requirements as specified in ASCE 7 and the *International Building Code* shall be used.

❖ With the exception of concrete construction, structural insulated panel (SIP) construction and cold-formed steel light-frame construction, the prescriptive structural provisions in the code do not apply where wind design is required in accordance with Figure R301.2(4)B. The prescriptive provisions for concrete exterior walls are applicable in regions with design wind speeds up to 160 mph (72 m/s), where the site is classified as Exposure B, 136 mph (61 m/s) for Exposure C and 125 mph (56 m/s) for Exposure D (see commentary, Section R608.2). The prescriptive SIP provisions are applicable in regions with ultimate design wind speeds of less than or equal to 155 mph (69 m/s), where the site is classified as Exposure B and 140 mph (63 m/s) where the site is classified as Exposure C (see commentary, Section R610.2).

Where the ultimate design wind speed exceeds the limitations given in the code, the prescriptive provisions of the code are not applicable. In such regions, structures must be designed or engineered for wind loads. For this purpose, the code expressly allows the use of AF&PA WFCM; ICC 600, *Standard for Residential Construction in High-wind Regions*; ASCE 7, *Minimum Design Loads for Buildings and Other Structures*; and AISI S230, *Standard for Cold-formed Steel Framing—Prescriptive Method for One- and Two-family Dwellings for International Building Code* (IBC). Some of these referenced standards have prescriptive provisions for regions that the code does not.

The building elements not addressed by Methods 1 through 5 must be in accordance with the provisions of the code. Only the structural design of the building to resist wind loads or seismic loads, and the selection of certain critical components such as window or roofing that is prone to wind damage, must be performed in accordance with Methods 1 through 5. The remaining provisions of the code including, but not limited to, architectural, mechanical, electrical and plumbing still apply to the building (see also the commentary to Section R301.2.1).

INTERNATIONAL CODE COUNCIL®
Copyright © 2015 ICC. ALL RIGHTS RESERVED. Accessed by David Dammon on Jun 21, 2017 12:30:52 PM pursuant to License Agreement with ICC. No further reproduction or distribution authorized. ANY UNAUTHORIZED REPRODUCTION OR DISTRIBUTION IS A VIOLATION OF THE FEDERAL COPYRIGHT ACT AND THE LICENSE AGREEMENT, AND SUBJECT TO CIVIL AND CRIMINAL PENALTIES THEREUNDER.

TABLE R301.2(1)
CLIMATIC AND GEOGRAPHIC DESIGN CRITERIA

GROUND SNOW LOAD	WIND DESIGN				SEISMIC DESIGN CATEGORY[f]	SUBJECT TO DAMAGE FROM			WINTER DESIGN TEMP[e]	ICE BARRIER UNDERLAYMENT REQUIRED[h]	FLOOD HAZARDS[g]	AIR FREEZING INDEX[i]	MEAN ANNUAL TEMP[j]
	Speed[d] (mph)	Topographic effects[k]	Special wind region[l]	Wind-borne debris zone[m]		Weathering[a]	Frost line depth[b]	Termite[c]					

For SI: 1 pound per square foot = 0.0479 kPa, 1 mile per hour = 0.447 m/s.

a. Weathering may require a higher strength concrete or *grade* of masonry than necessary to satisfy the structural requirements of this code. The weathering column shall be filled in with the weathering index, "negligible," "moderate" or "severe" for concrete as determined from Figure R301.2(3). The *grade* of masonry units shall be determined from ASTM C34, C55, C62, C73, C90, C129, C145, C216 or C652.

b. The frost line depth may require deeper footings than indicated in Figure R403.1(1). The *jurisdiction* shall fill in the frost line depth column with the minimum depth of footing below finish *grade*.

c. The *jurisdiction* shall fill in this part of the table to indicate the need for protection depending on whether there has been a history of local subterranean termite damage.

d. The *jurisdiction* shall fill in this part of the table with the wind speed from the basic wind speed map [Figure R301.2(4)A]. Wind exposure category shall be determined on a site-specific basis in accordance with Section R301.2.1.4.

e. The outdoor design dry-bulb temperature shall be selected from the columns of $97^1/_2$-percent values for winter from Appendix D of the *International Plumbing Code*. Deviations from the Appendix D temperatures shall be permitted to reflect local climates or local weather experience as determined by the *building official*.

f. The *jurisdiction* shall fill in this part of the table with the seismic design category determined from Section R301.2.2.1.

g. The *jurisdiction* shall fill in this part of the table with (a) the date of the *jurisdiction's* entry into the National Flood Insurance Program (date of adoption of the first code or ordinance for management of flood hazard areas), (b) the date(s) of the Flood Insurance Study and (c) the panel numbers and dates of the currently effective FIRMs and FBFMs or other flood hazard map adopted by the authority having *jurisdiction*, as amended.

h. In accordance with Sections R905.1.2, R905.4.3.1, R905.5.3.1, R905.6.3.1, R905.7.3.1 and R905.8.3.1, where there has been a history of local damage from the effects of ice damming, the *jurisdiction* shall fill in this part of the table with "YES." Otherwise, the *jurisdiction* shall fill in this part of the table with "NO."

i. The *jurisdiction* shall fill in this part of the table with the 100-year return period air freezing index (BF-days) from Figure R403.3(2) or from the 100-year (99 percent) value on the National Climatic Data Center data table "Air Freezing Index-USA Method (Base 32°F)."

j. The *jurisdiction* shall fill in this part of the table with the mean annual temperature from the National Climatic Data Center data table "Air Freezing Index-USA Method (Base 32°F)."

k. In accordance with Section R301.2.1.5, where there is local historical data documenting structural damage to buildings due to topographic wind speed-up effects, the *jurisdiction* shall fill in this part of the table with "YES." Otherwise, the *jurisdiction* shall indicate "NO" in this part of the table.

l. In accordance with Figure R301.2(4)A, where there is local historical data documenting unusual wind conditions, the *jurisdiction* shall fill in this part of the table with "YES" and identify any specific requirements. Otherwise, the *jurisdiction* shall indicate "NO" in this part of the table.

m. In accordance with Section R301.2.1.2.1, the *jurisdiction* shall indicate the wind-borne debris wind zone(s). Otherwise, the *jurisdiction* shall indicate "NO" in this part of the table.

Copyright © 2015 ICC. ALL RIGHTS RESERVED. Accessed by David Dammon on Jun 21, 2017 12:30:52 PM pursuant to License Agreement with ICC. No further reproduction or distribution authorized. ANY UNAUTHORIZED REPRODUCTION OR DISTRIBUTION IS A VIOLATION OF THE FEDERAL COPYRIGHT ACT AND THE LICENSE AGREEMENT, AND SUBJECT TO CIVIL AND CRIMINAL PENALTIES THEREUNDER.

TABLE R301.2(2)
COMPONENT AND CLADDING LOADS FOR A BUILDING WITH A MEAN ROOF HEIGHT OF 30 FEET LOCATED IN EXPOSURE B (ASD) (psf)[a, b, c, d, e]

	ZONE	EFFECTIVE WIND AREA (feet^2)	ULTIMATE DESIGN WIND SPEED, V_{ULT} (mph)																	
			110		115		120		130		140		150		160		170		180	
Roof 0 to 7 degrees	1	10	10.0	-13.0	10.0	-14.0	10.0	-15.0	10.0	-18.0	10.0	-21.0	9.9	-24.0	11.2	-27.0	12.6	-31.0	14.2	-35.0
	1	20	10.0	-12.0	10.0	-13.0	10.0	-15.0	10.0	-17.0	10.0	-20.0	9.2	-23.0	10.6	-26.0	11.9	-30.0	13.3	-34.1
	1	50	10.0	-12.0	10.0	-13.0	10.0	-14.0	10.0	-17.0	10.0	-19.0	8.5	-22.0	10.0	-26.0	10.8	-29.0	12.2	-32.9
	1	100	10.0	-11.0	10.0	-13.0	10.0	-14.0	10.0	-16.0	10.0	-19.0	7.8	-22.0	10.0	-25.0	10.0	-28.0	11.3	-32.0
	2	10	10.0	-21.0	10.0	-23.0	10.0	-26.0	10.0	-30.0	10.0	-35.0	9.9	-40.0	11.2	-46.0	12.6	-52.0	14.2	-58.7
	2	20	10.0	-19.0	10.0	-21.0	10.0	-23.0	10.0	-27.0	10.0	-31.0	9.2	-36.0	10.6	-41.0	11.9	-46.0	13.3	-52.4
	2	50	10.0	-16.0	10.0	-18.0	10.0	-19.0	10.0	-23.0	10.0	-26.0	8.5	-30.0	10.0	-34.0	10.8	-39.0	12.2	-44.1
	2	100	10.0	-14.0	10.0	-15.0	10.0	-16.0	10.0	-19.0	10.0	-22.0	7.8	-26.0	10.0	-30.0	10.0	-33.0	11.3	-37.9
	3	10	10.0	-33.0	10.0	-36.0	10.0	-39.0	10.0	-46.0	10.0	-53.0	9.9	-61.0	11.2	-69.0	12.6	-78.0	14.2	-88.3
	3	20	10.0	-27.0	10.0	-29.0	10.0	-32.0	10.0	-38.0	10.0	-44.0	9.2	-50.0	10.6	-57.0	11.9	-65.0	13.3	-73.1
	3	50	10.0	-19.0	10.0	-21.0	10.0	-23.0	10.0	-27.0	10.0	-32.0	8.5	-36.0	10.0	-41.0	10.8	-47.0	12.2	-53.1
	3	100	10.0	-14.0	10.0	-15.0	10.0	-16.0	10.0	-19.0	10.0	-22.0	7.8	-26.0	10.0	-30.0	10.0	-33.0	11.3	-37.9
Roof > 7 to 27 degrees	1	10	10.0	-11.0	10.0	-13.0	10.0	-14.0	10.5	-16.0	12.2	-19.0	14.0	-22.0	15.9	-25.0	17.9	-28.0	20.2	-32.0
	1	20	10.0	-11.0	10.0	-12.0	10.0	-13.0	10.0	-16.0	11.1	-18.0	12.8	-21.0	14.5	-24.0	16.4	-27.0	18.4	-31.1
	1	50	10.0	-11.0	10.0	-12.0	10.0	-13.0	10.0	-15.0	10.0	-18.0	11.1	-20.0	12.7	-23.0	14.3	-26.0	16.0	-29.9
	1	100	10.0	-10.0	10.0	-11.0	10.0	-12.0	10.0	-15.0	10.0	-17.0	9.9	-20.0	11.2	-22.0	12.6	-25.0	14.2	-29.0
	2	10	10.0	-20.0	10.0	-22.0	10.0	-24.0	10.5	-29.0	12.2	-33.0	14.0	-38.0	15.9	-44.0	17.9	-49.0	20.2	-55.8
	2	20	10.0	-19.0	10.0	-20.0	10.0	-22.0	10.0	-26.0	11.1	-31.0	12.8	-35.0	14.5	-40.0	16.4	-45.0	18.4	-51.2
	2	50	10.0	-16.0	10.0	-18.0	10.0	-20.0	10.0	-23.0	10.0	-27.0	11.1	-31.0	12.7	-35.0	14.3	-40.0	16.0	-45.4
	2	100	10.0	-15.0	10.0	-16.0	10.0	-18.0	10.0	-21.0	10.0	-24.0	9.9	-28.0	11.2	-32.0	12.6	-36.0	14.2	-40.9
	3	10	10.0	-30.0	10.0	-33.0	10.0	-36.0	10.5	-43.0	12.2	-49.0	14.0	-57.0	15.9	-65.0	17.9	-73.0	20.2	-82.4
	3	20	10.0	-28.0	10.0	-31.0	10.0	-34.0	10.0	-40.0	11.1	-46.0	12.8	-53.0	14.5	-60.0	16.4	-68.0	18.4	-77.0
	3	50	10.0	-26.0	10.0	-28.0	10.0	-31.0	10.0	-36.0	10.0	-42.0	11.1	-48.0	12.7	-55.0	14.3	-62.0	16.0	-69.9
	3	100	10.0	-24.0	10.0	-26.0	10.0	-28.0	10.0	-33.0	10.0	-39.0	9.9	-44.0	11.2	-51.0	12.6	-57.0	14.2	-64.6
Roof > 27 to 45 degrees	1	10	11.9	-13.0	13.1	-14.0	14.2	-15.0	16.7	-18.0	19.4	-21.0	22.2	-24.0	25.3	-27.0	28.5	-31.0	32.0	-35.0
	1	20	11.6	-12.0	12.7	-13.0	13.8	-14.0	16.2	-17.0	18.8	-20.0	21.6	-23.0	24.6	-26.0	27.7	-29.0	31.1	-33.2
	1	50	11.2	-11.0	12.2	-12.0	13.3	-13.0	15.6	-16.0	18.1	-18.0	20.8	-21.0	23.6	-24.0	26.7	-27.0	29.9	-30.8
	1	100	10.9	-10.0	11.9	-11.0	12.9	-12.0	15.1	-15.0	17.6	-17.0	20.2	-20.0	22.9	-22.0	25.9	-25.0	29.0	-29.0
	2	10	11.9	-15.0	13.1	-16.0	14.2	-18.0	16.7	-21.0	19.4	-24.0	22.2	-28.0	25.3	-32.0	28.5	-36.0	32.0	-40.9
	2	20	11.6	-14.0	12.7	-16.0	13.8	-17.0	16.2	-20.0	18.8	-23.0	21.6	-27.0	24.6	-30.0	27.7	-34.0	31.1	-39.1
	2	50	11.2	-13.0	12.2	-15.0	13.3	-16.0	15.6	-19.0	18.1	-22.0	20.8	-25.0	23.6	-29.0	26.7	-32.0	29.9	-36.8
	2	100	10.9	-13.0	11.9	-14.0	12.9	-15.0	15.1	-18.0	17.6	-21.0	20.2	-24.0	22.9	-27.0	25.9	-31.0	29.0	-35.0
	3	10	11.9	-15.0	13.1	-16.0	14.2	-18.0	16.7	-21.0	19.4	-24.0	22.2	-28.0	25.3	-32.0	28.5	-36.0	32.0	-40.9
	3	20	11.6	-14.0	12.7	-16.0	13.8	-17.0	16.2	-20.0	18.8	-23.0	21.6	-27.0	24.6	-30.0	27.7	-34.0	31.1	-39.1
	3	50	11.2	-13.0	12.2	-15.0	13.3	-16.0	15.6	-19.0	18.1	-22.0	20.8	-25.0	23.6	-29.0	26.7	-32.0	29.9	-36.8
	3	100	10.9	-13.0	11.9	-14.0	12.9	-15.0	15.1	-18.0	17.6	-21.0	20.2	-24.0	22.9	-27.0	25.9	-31.0	29.0	-35.0
Wall	4	10	13.1	-14.0	14.3	-15.0	15.5	-16.0	18.2	-19.0	21.2	-22.0	24.3	-26.0	27.7	-30.0	31.2	-33.0	35.0	-37.9
	4	20	12.5	-13.0	13.6	-14.0	14.8	-16.0	17.4	-19.0	20.2	-22.0	23.2	-25.0	26.4	-28.0	29.7	-32.0	33.4	-36.4
	4	50	11.7	-12.0	12.8	-14.0	13.9	-15.0	16.3	-17.0	19.0	-20.0	21.7	-23.0	24.7	-27.0	27.9	-30.0	31.3	-34.3
	4	100	11.1	-12.0	12.1	-13.0	13.2	-14.0	15.5	-17.0	18.0	-19.0	20.6	-22.0	23.5	-25.0	26.5	-29.0	29.8	32.7
	4	500	10.0	-10.0	10.6	-11.0	11.6	-12.0	13.6	-15.0	15.8	-17.0	18.1	-20.0	20.6	-22.0	23.2	-25.0	26.1	-29.0
	5	10	13.1	-17.0	14.3	-19.0	15.5	-20.0	18.2	-24.0	21.2	-28.0	24.3	-32.0	27.7	-37.0	31.2	-41.0	35.0	-46.8
	5	20	12.5	-16.0	13.6	-17.0	14.8	-19.0	17.4	-22.0	20.2	-26.0	23.2	-30.0	26.4	-34.0	29.7	-39.0	33.4	-43.7
	5	50	11.7	-14.0	12.8	-16.0	13.9	-17.0	16.3	-20.0	19.0	-23.0	21.7	-27.0	24.7	-31.0	27.9	-35.0	31.3	-39.5
	5	100	11.1	-13.0	12.1	-14.0	13.2	-16.0	15.5	-19.0	18.0	-22.0	20.6	-25.0	23.5	-28.0	26.5	-32.0	29.8	-36.4
	5	500	10.0	-10.0	10.6	-11.0	11.6	-12.0	13.6	-15.0	15.8	-17.0	18.1	-20.0	20.6	-22.0	23.2	-25.0	26.1	-29.0

For SI: 1 foot = 304.8 mm, 1 square foot = 0.0929 m^2, 1 mile per hour = 0.447 m/s, 1 pound per square foot = 0.0479 kPa.

a. The effective wind area shall be equal to the span length multiplied by an effective width. This width shall be permitted to be not less than one-third the span length. For cladding fasteners, the effective wind area shall not be greater than the area that is tributary to an individual fastener.

b. For effective areas between those given, the load shall be interpolated or the load associated with the lower effective area shall be used.

c. Table values shall be adjusted for height and exposure by multiplying by the adjustment coefficient in Table R301.2(3).

d. See Figure R301.2(7) for location of zones.

e. Plus and minus signs signify pressures acting toward and away from the building surfaces.

INTERNATIONAL CODE COUNCIL®
Copyright © 2015 ICC. ALL RIGHTS RESERVED. Accessed by David Dammon on Jun 21, 2017 12:30:52 PM pursuant to License Agreement with ICC. No further reproduction or distribution authorized. ANY UNAUTHORIZED REPRODUCTION OR DISTRIBUTION IS A VIOLATION OF THE FEDERAL COPYRIGHT ACT AND THE LICENSE AGREEMENT, AND SUBJECT TO CIVIL AND CRIMINAL PENALTIES THEREUNDER.

Table R301.2(2). See page 3-7.

❖ This table lists wind pressures for components or cladding building elements. For the 2015 edition, the table has been revised to reflect ultimate design wind speed basis, as opposed to the basic wind speed basis used in previous editions.

The term "Cladding" is defined in Section R202. Although the ultimate design wind speed from Figure R301.2(4)A is applicable to the structure as a whole, this table applies to elements of the building that typically are not part of the wind-force-resisting system. Wind pressures on these elements vary depending on the tributary area, the location/orientation (i.e., a wall that is typically vertical versus a roof and its slope), the region or zone, as well as the ultimate design wind speed.

"Zones" refer to various portions of a structure as illustrated in Figure R301.2(7). Some zones, such as at roof edges and the ends of a wall, represent discontinuities in the exterior building surfaces. Discontinuities interrupt the flow of wind and result in higher wind pressures at these locations. How to determine the appropriate "effective wind area" is defined in Note a. This approach is taken from ASCE 7 and modified editorially to fit the table.

For each combination of these various factors there are two entries in the table, one positive and one negative. The positive number denotes the pressure acting inward or toward the exterior surface of the building; the negative number denotes the pressure acting outward or away from the building surface. The latter is of interest in designing roof elements and their hold-downs that must resist wind uplift.

Unlike the IBC, the code does not elaborate on the distinctions between wind loads on the main wind-force-resisting system versus components and cladding wind loads. Instead, compliance with the components and cladding pressures is necessary only where code provisions explicitly refer to this table. This occurs in the establishment of design wind loads for skylights, exterior windows and doors (see Sections R301.2.1 and R612.2), and setting the threshold for requiring rafter ties (see Sections R608.9.3, R802.11 and R804.3.8).

TABLE R301.2(3)
HEIGHT AND EXPOSURE ADJUSTMENT COEFFICIENTS FOR TABLE R301.2(2)

MEAN ROOF HEIGHT	EXPOSURE		
	B	C	D
15	1.00	1.21	1.47
20	1.00	1.29	1.55
25	1.00	1.35	1.61
30	1.00	1.40	1.66
35	1.05	1.45	1.70
40	1.09	1.49	1.74
45	1.12	1.53	1.78
50	1.16	1.56	1.81
55	1.19	1.59	1.84
60	1.22	1.62	1.87

❖ This table provides adjustment factors for the components and cladding wind pressure of Table R301.2(2), which are based on a mean roof height of 30 feet (9144 mm) and wind Exposure Category B (see the commentary to Section R301.2.1.4 for a discussion of exposure). For mean roof heights and exposure categories that vary from those assumed in Table R301.2(2), the resulting pressure will change accordingly. Thus, adjustments to the pressures are required by the factors given in this table.

INTERNATIONAL CODE COUNCIL®
Copyright © 2015 ICC. ALL RIGHTS RESERVED. Accessed by David Dammon on Jun 21, 2017 12:30:52 PM pursuant to License Agreement with ICC. No further reproduction or distribution authorized. ANY UNAUTHORIZED REPRODUCTION OR DISTRIBUTION IS A VIOLATION OF THE FEDERAL COPYRIGHT ACT AND THE LICENSE AGREEMENT, AND SUBJECT TO CIVIL AND CRIMINAL PENALTIES THEREUNDER.

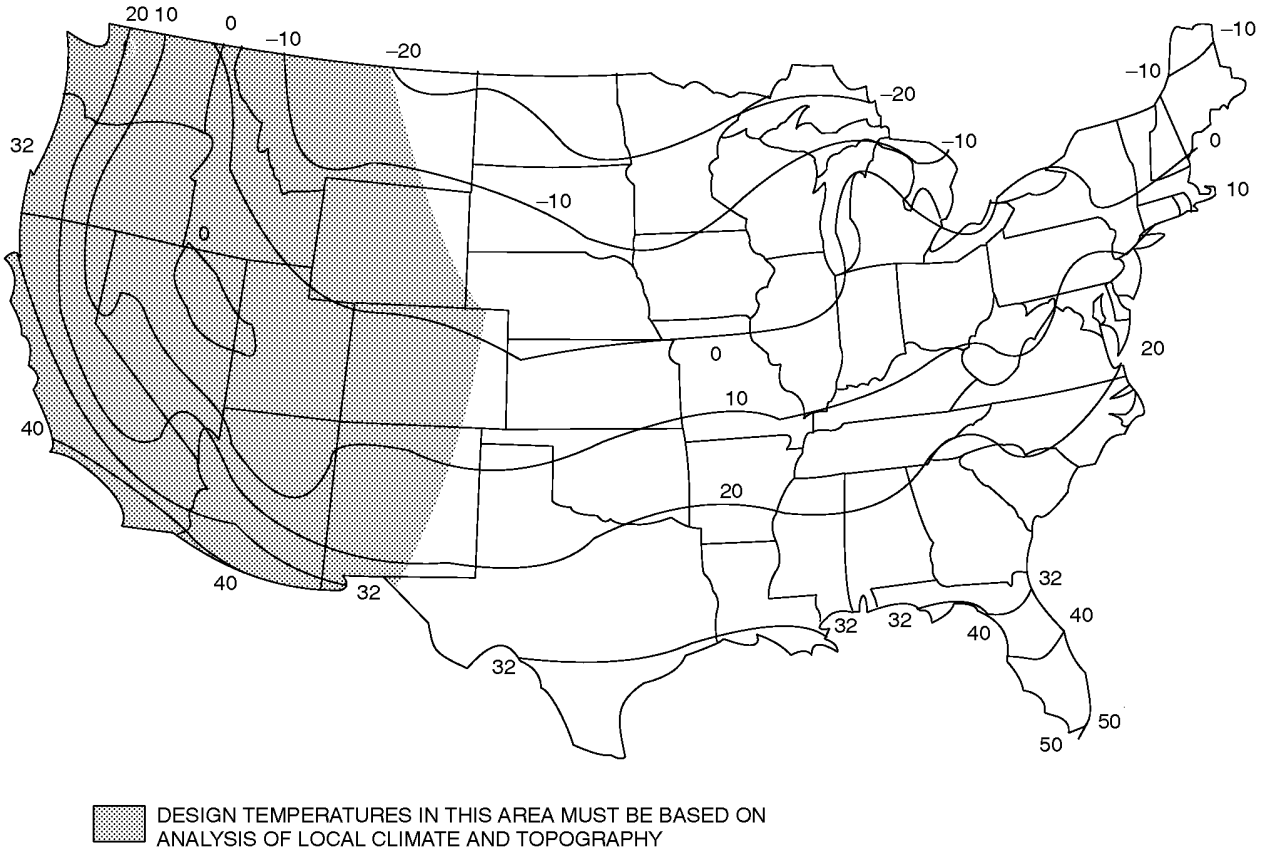

For SI: °C = [(°F)-32]/1.8.

FIGURE R301.2(1)
ISOLINES OF THE 97$^{1}/_{2}$-PERCENT WINTER (DECEMBER, JANUARY AND FEBRUARY) DESIGN TEMPERATURES (°F)

❖ This figure establishes the winter design temperature, which is a criteria for determining the need for dwelling unit heating (see Section R303.10), as well as determining the need for freeze protection of piping (see Sections M2301.2.6, P2603.5 and P3001.2).

INTERNATIONAL CODE COUNCIL®
Copyright © 2015 ICC. ALL RIGHTS RESERVED. Accessed by David Dammon on Jun 21, 2017 12:30:52 PM pursuant to License Agreement with ICC. No further reproduction or distribution authorized. ANY UNAUTHORIZED REPRODUCTION OR DISTRIBUTION IS A VIOLATION OF THE FEDERAL COPYRIGHT ACT AND THE LICENSE AGREEMENT, AND SUBJECT TO CIVIL AND CRIMINAL PENALTIES THEREUNDER.

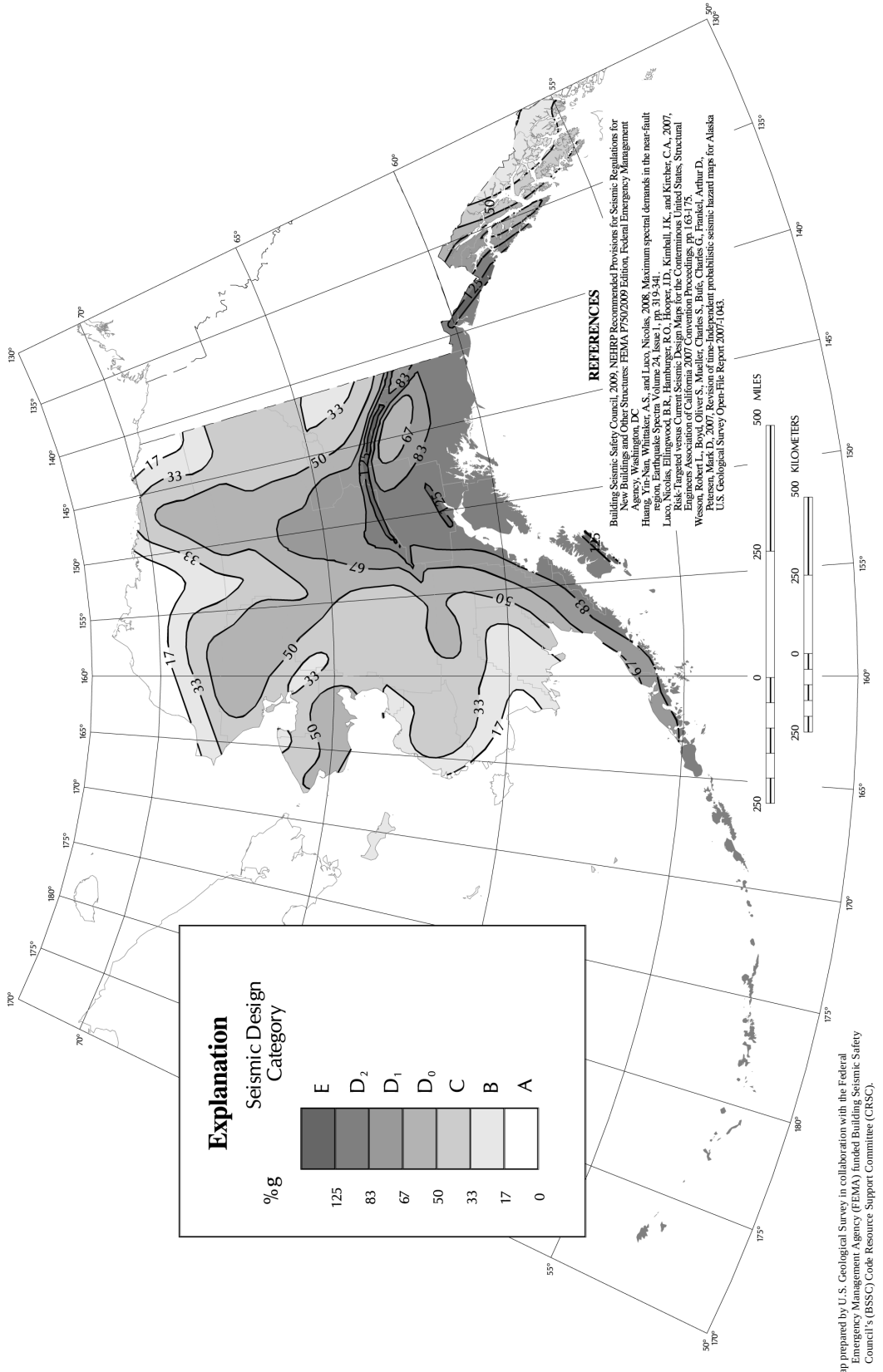

FIGURE R301.2(2)
SEISMIC DESIGN CATEGORIES—SITE CLASS D

(continued)

INTERNATIONAL CODE COUNCIL®
Copyright © 2015 ICC. ALL RIGHTS RESERVED. Accessed by David Dammon on Jun 21, 2017 12:30:52 PM pursuant to License Agreement with ICC. No further reproduction or distribution authorized. ANY UNAUTHORIZED REPRODUCTION OR DISTRIBUTION IS A VIOLATION OF THE FEDERAL COPYRIGHT ACT AND THE LICENSE AGREEMENT, AND SUBJECT TO CIVIL AND CRIMINAL PENALTIES THEREUNDER.

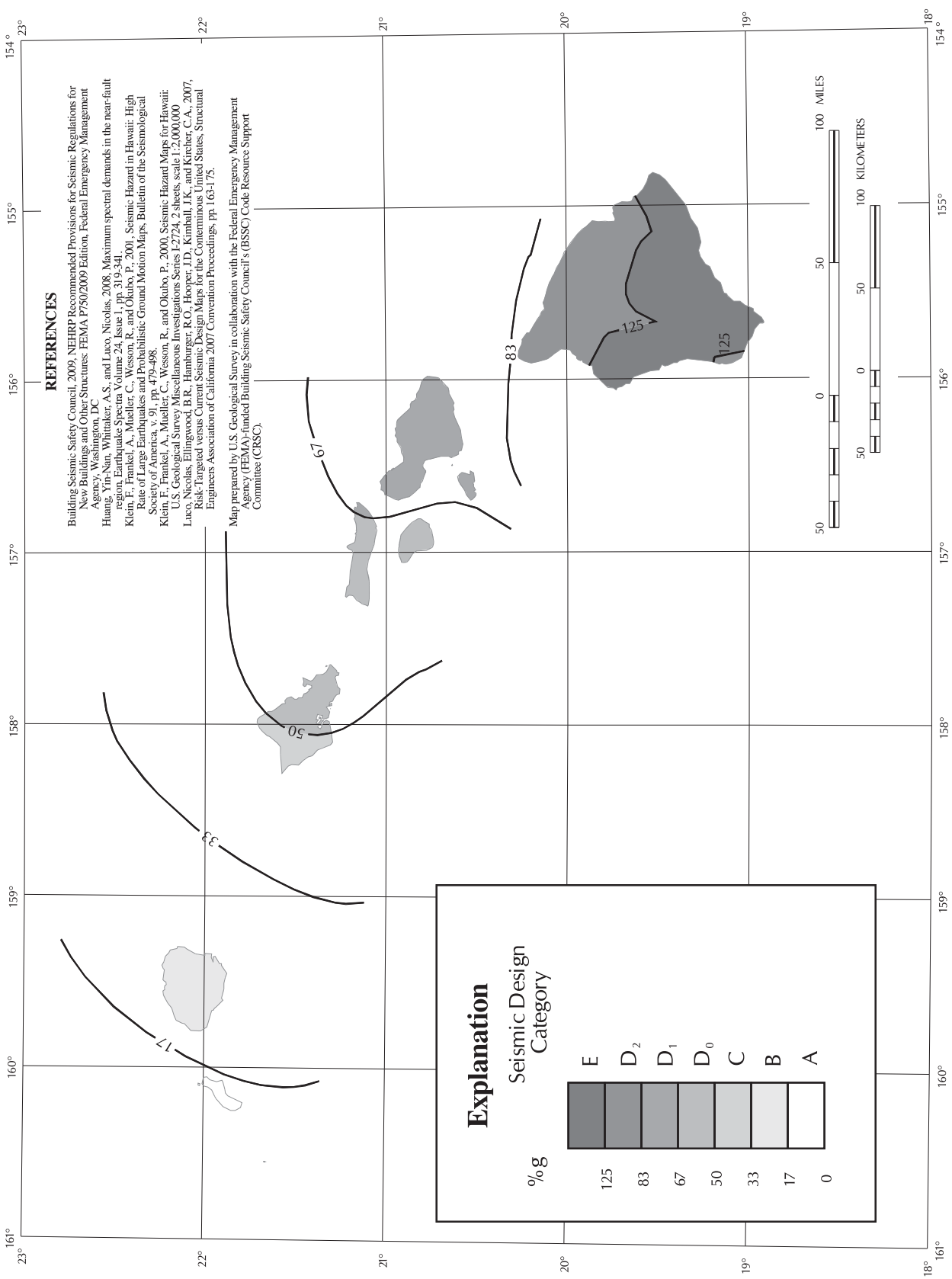

FIGURE R301.2(2)—continued
SEISMIC DESIGN CATEGORIES—SITE CLASS D

INTERNATIONAL CODE COUNCIL®
Copyright © 2015 ICC. ALL RIGHTS RESERVED. Accessed by David Dammon on Jun 21, 2017 12:30:52 PM pursuant to License Agreement with ICC. No further reproduction or distribution authorized. ANY UNAUTHORIZED REPRODUCTION OR DISTRIBUTION IS A VIOLATION OF THE FEDERAL COPYRIGHT ACT AND THE LICENSE AGREEMENT, AND SUBJECT TO CIVIL AND CRIMINAL PENALTIES THEREUNDER.

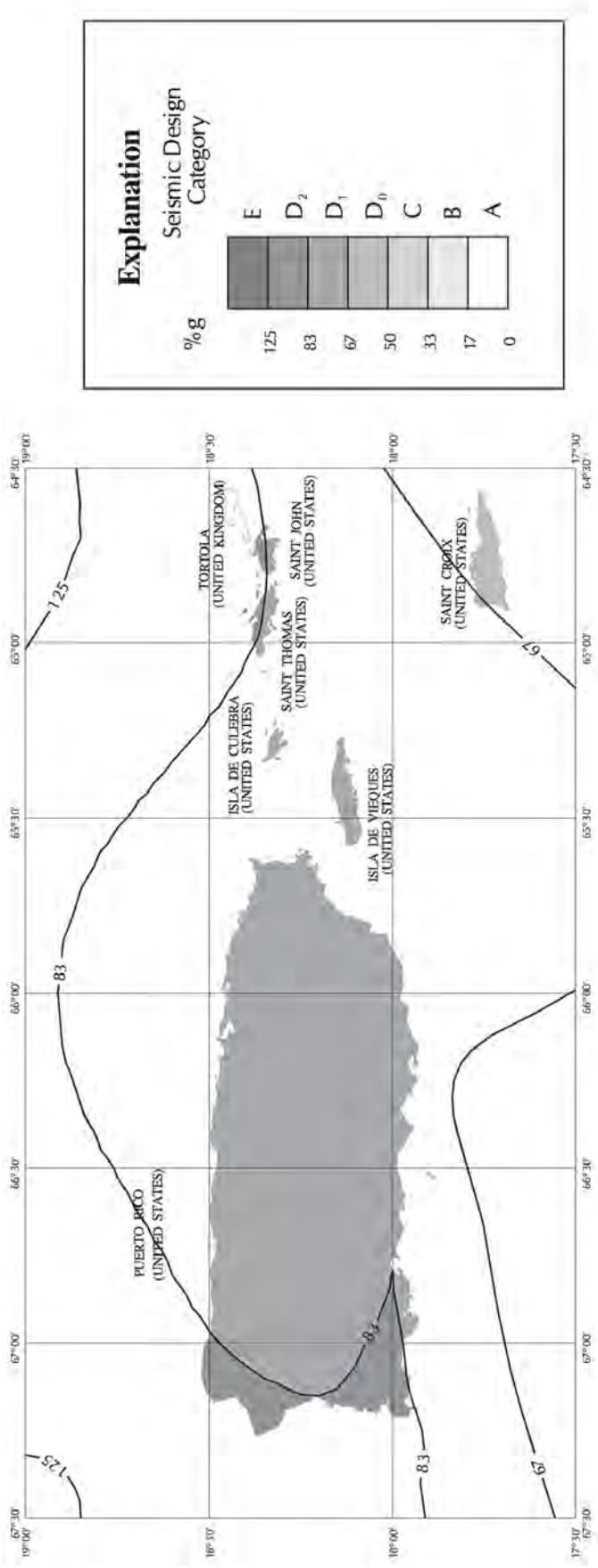

REFERENCES

Building Seismic Safety Council, 2009, NEHRP Recommended Provisions for Seismic Regulations for New Buildings and Other Structures: FEMA P750/2009 Edition, Federal Emergency Management Agency, Washington, DC

Huang, Yin-Nan, Whittaker, A.S., and Luco, Nicolas, 2008, Maximum spectral demands in the near-fault region, Earthquake Spectra Volume 24, Issue 1, pp. 319-341.

Luco, Nicolas, Ellingwood, B.R., Hamburger, R.O., Hooper, J.D., Kimball, J.K., and Kircher, C.A., 2007, Risk-Targeted versus Current Seismic Design Maps for the Conterminous United States, Structural Engineers Association of California 2007 Convention Proceedings, pp. 163-175.

Mueller, C., Frankel, A., Petersen, M., and Leyendecker, E., 2003, Documentation for 2003 USGS Seismic Hazard Maps for Puerto Rico and the U.S. Virgin Islands, U.S. Geological Survey Open-File Report 03-379.

Map prepared by U.S. Geological Survey in collaboration with the Federal Emergency Management Agency (FEMA)-funded Building Seismic Safety Council's (BSSC) Code Resource Support Committee (CRSC).

FIGURE R301.2(2)—continued
SEISMIC DESIGN CATEGORIES—SITE CLASS D

INTERNATIONAL CODE COUNCIL®

Copyright © 2015 ICC. ALL RIGHTS RESERVED. Accessed by David Dammon on Jun 21, 2017 12:30:52 PM pursuant to License Agreement with ICC. No further reproduction or distribution authorized. ANY UNAUTHORIZED REPRODUCTION OR DISTRIBUTION IS A VIOLATION OF THE FEDERAL COPYRIGHT ACT AND THE LICENSE AGREEMENT, AND SUBJECT TO CIVIL AND CRIMINAL PENALTIES THEREUNDER.

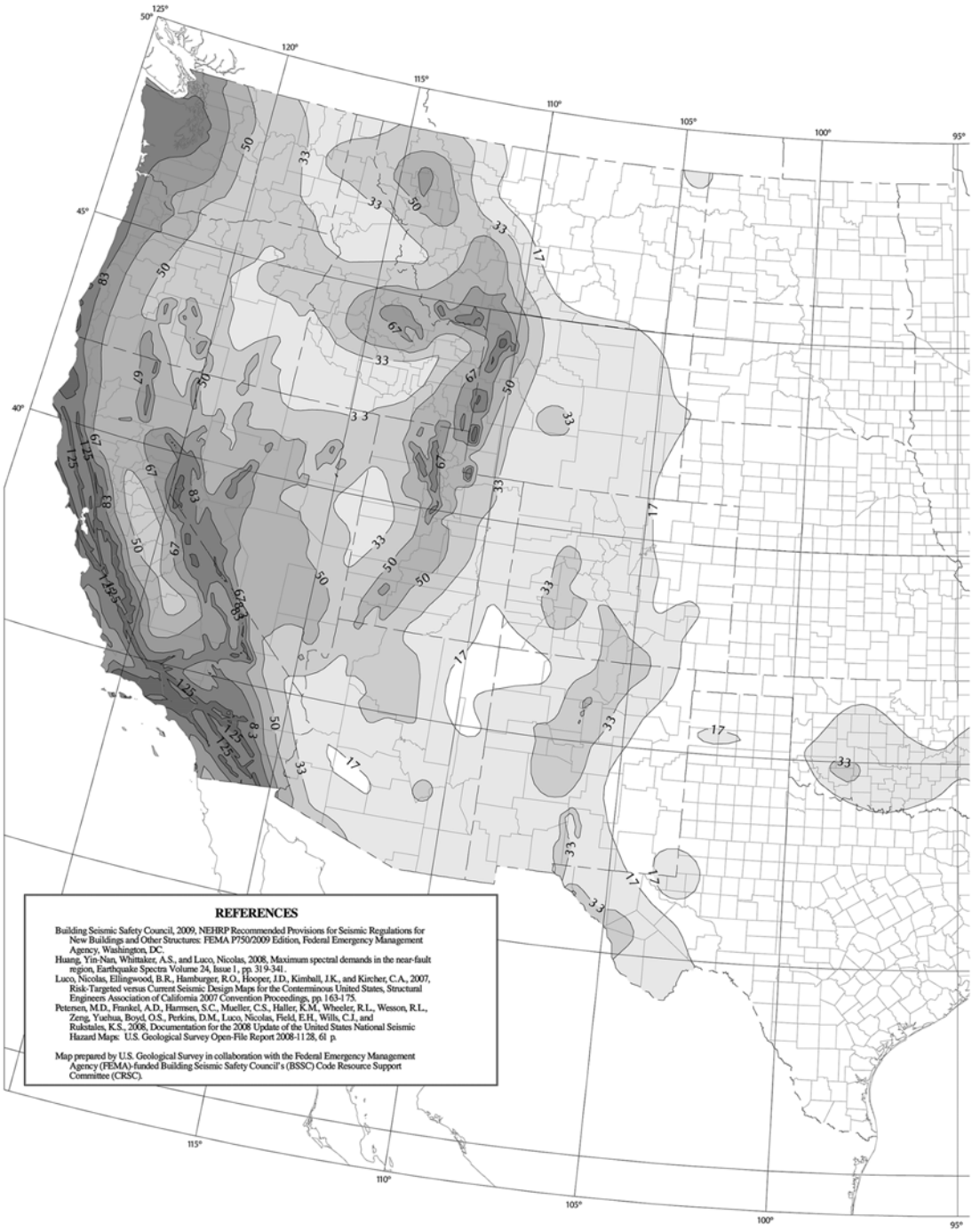

FIGURE R301.2(2)—continued
SEISMIC DESIGN CATEGORIES—SITE CLASS D

INTERNATIONAL CODE COUNCIL®
Copyright © 2015 ICC. ALL RIGHTS RESERVED. Accessed by David Dammon on Jun 21, 2017 12:30:52 PM pursuant to License Agreement with ICC. No further reproduction or distribution authorized. ANY UNAUTHORIZED REPRODUCTION OR DISTRIBUTION IS A VIOLATION OF THE FEDERAL COPYRIGHT ACT AND THE LICENSE AGREEMENT, AND SUBJECT TO CIVIL AND CRIMINAL PENALTIES THEREUNDER.

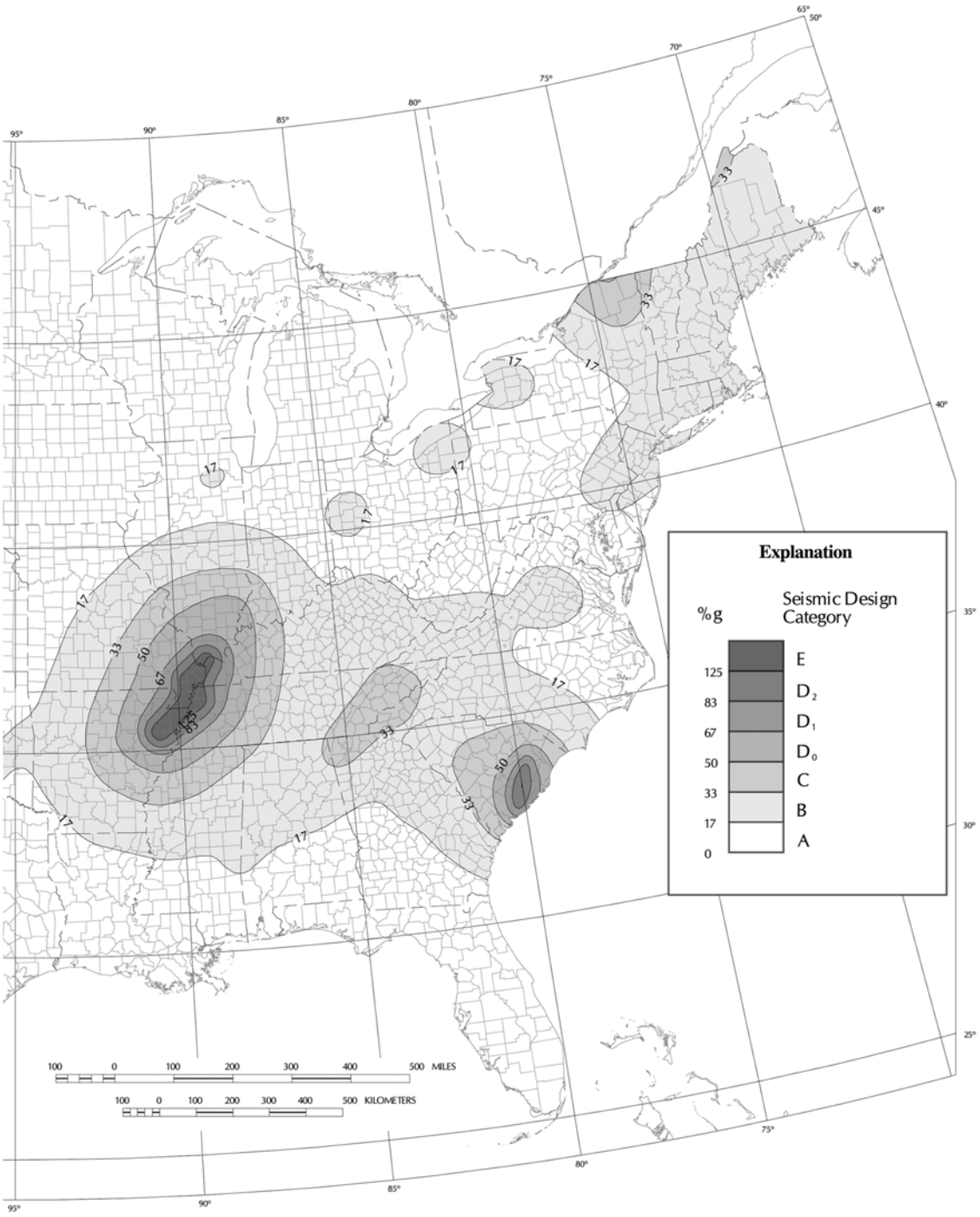

FIGURE R301.2(2)—continued
SEISMIC DESIGN CATEGORIES—SITE CLASS D

INTERNATIONAL CODE COUNCIL®
Copyright © 2015 ICC. ALL RIGHTS RESERVED. Accessed by David Dammon on Jun 21, 2017 12:30:52 PM pursuant to License Agreement with ICC. No further reproduction or distribution authorized. ANY UNAUTHORIZED REPRODUCTION OR DISTRIBUTION IS A VIOLATION OF THE FEDERAL COPYRIGHT ACT AND THE LICENSE AGREEMENT, AND SUBJECT TO CIVIL AND CRIMINAL PENALTIES THEREUNDER.

Figure R301.2(2). See pages 3-10 through 3-14.

❖ This figure establishes the seismic design category for a site as presented in Section R301.2.2.1. It provides the most direct determination of the seismic design category in the code. The earthquake-related provisions of the code state requirements as a function of the seismic design category.

This figure reflects seismic hazard data developed by the U.S. Geological Survey (USGS) as part of its National Seismic Hazard Mapping Project and related technical changes developed by the Building Seismic Safety Council's (BSSC) Seismic Design Procedures Reassessment Group (SDPRG) as part of its work for the Federal Emergency Management Agency (FEMA).

The USGS and the FEMA-funded SDPRG worked together to update the seismic design maps and procedures for the 2009 edition of the NEHRP (National Earthquake Hazards Reduction Program) *Recommended Seismic Provisions for New Buildings and Other Structures*. The design maps are based on USGS updates to their seismic hazard data and ground motion attenuation formulas as well as the SDPRG's use of risk-targeted ground motions, maximum direction ground motions, and near-source 84th percentile ground motions.

These IRC maps are different from earlier versions in that the division between Seismic Design Categories D_2 and E has been changed from 118 percent g to 125 percent g. The 125 percent g contour would have been used in earlier maps but the mapping technology then available for drawing the IRC maps did not permit this to be done. The result of this change and the improved seismic hazard data generated by the USGS over the years is that the geographic region affected by the Seismic Design Category E designation is smaller. This occurs primarily in the region around Charleston, South Carolina, but is also evident in Seismic Design Category E regions in other parts of the United States. Maps developed on the same basis have been incorporated into the IBC which will allow engineers to design components of the building that are outside of the scope of the IRC with compatible seismic loads.

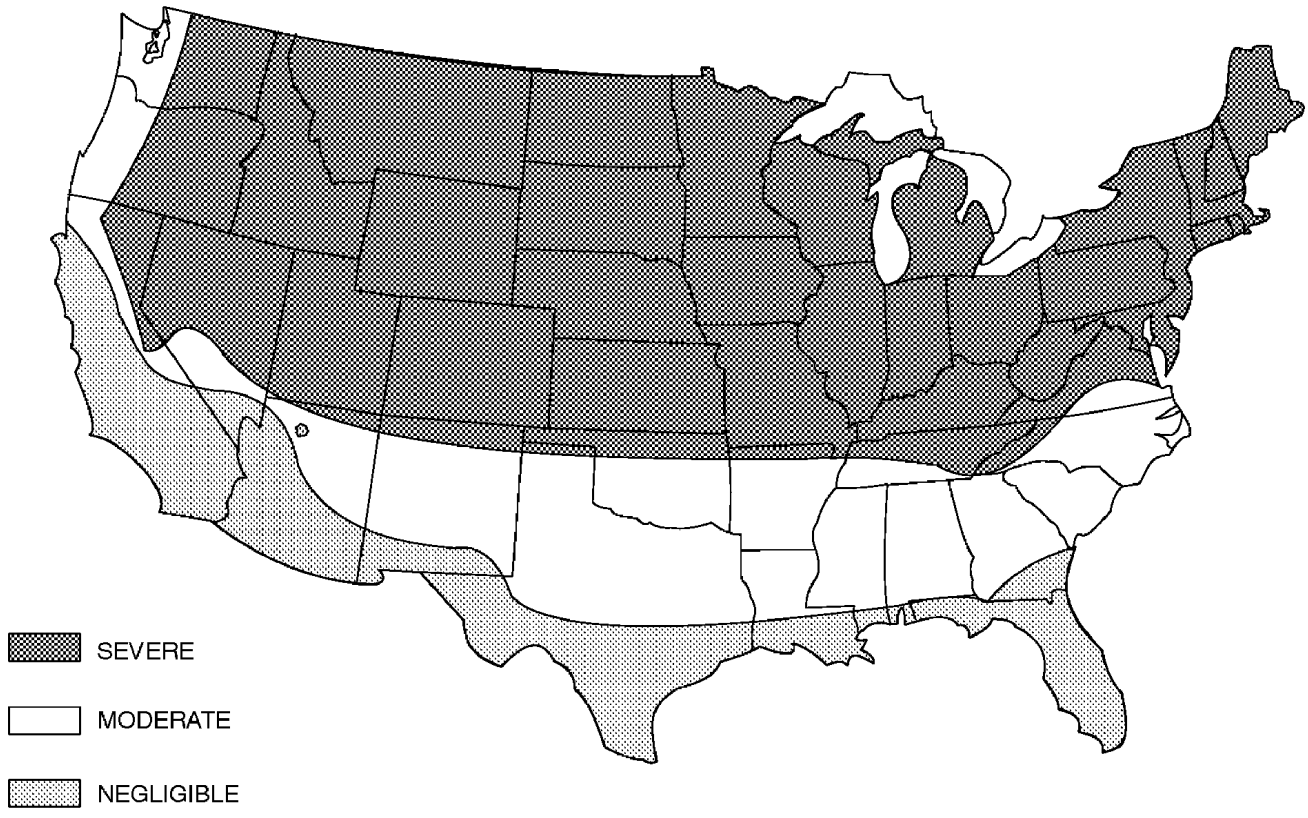

a. Alaska and Hawaii are classified as severe and negligible, respectively.

b. Lines defining areas are approximate only. Local conditions may be more or less severe than indicated by region classification. A severe classification is where weather conditions result in significant snowfall combined with extended periods during which there is little or no natural thawing causing deicing salts to be used extensively.

FIGURE R301.2(3)
WEATHERING PROBABILITY MAP FOR CONCRETE[a, b]

❖ See the commentary to Section R301.2.1.

INTERNATIONAL CODE COUNCIL®
Copyright © 2015 ICC. ALL RIGHTS RESERVED. Accessed by David Dammon on Jun 21, 2017 12:30:52 PM pursuant to License Agreement with ICC. No further reproduction or distribution authorized. ANY UNAUTHORIZED REPRODUCTION OR DISTRIBUTION IS A VIOLATION OF THE FEDERAL COPYRIGHT ACT AND THE LICENSE AGREEMENT, AND SUBJECT TO CIVIL AND CRIMINAL PENALTIES THEREUNDER.

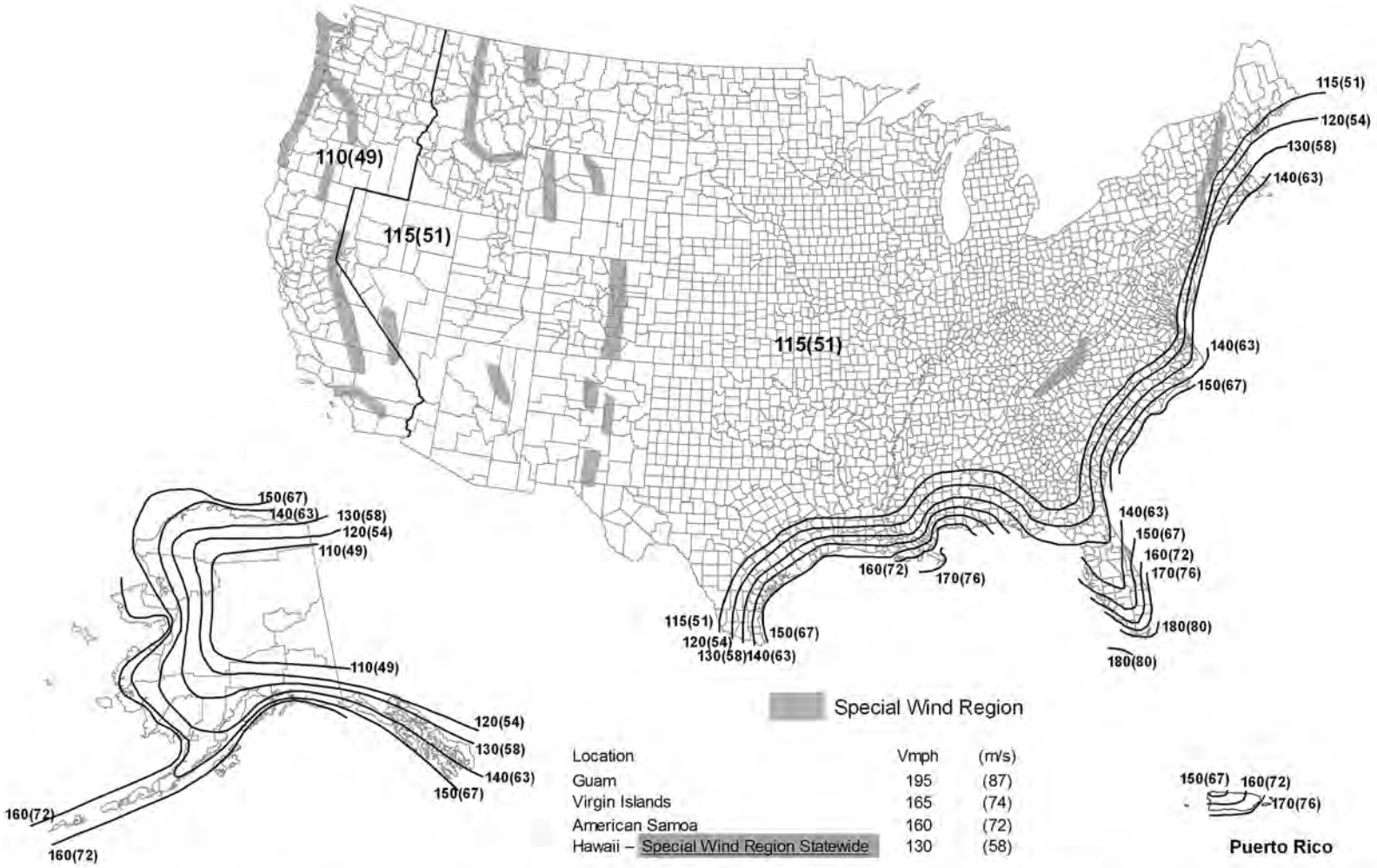

Notes:

1. Values are nominal design 3-second gust wind speeds in miles per hour (m/s) at 33 ft (10m) above ground for Exposure C category.
2. Linear interpolation between contours is permitted.
3. Islands and coastal areas outside the last contour shall use the last wind speed contour of the coastal area.
4. Mountainous terrain, gorges, ocean promontories, and special wind regions shall be examined for unusual wind conditions.
5. Wind speeds correspond to approximately a 7% probability of exceedance in 50 years (Annual Exceedance Probability = 0.00143, MRI = 700 Years).

FIGURE R301.2(4)A
ULTIMATE DESIGN WIND SPEEDS

❖ See the commentary to Section R301.2.1.

Copyright © 2015 ICC. ALL RIGHTS RESERVED. Accessed by David Dammon on Jun 21, 2017 12:30:52 PM pursuant to License Agreement with ICC. No further reproduction or distribution authorized. ANY UNAUTHORIZED REPRODUCTION OR DISTRIBUTION IS A VIOLATION OF THE FEDERAL COPYRIGHT ACT AND THE LICENSE AGREEMENT, AND SUBJECT TO CIVIL AND CRIMINAL PENALTIES THEREUNDER.

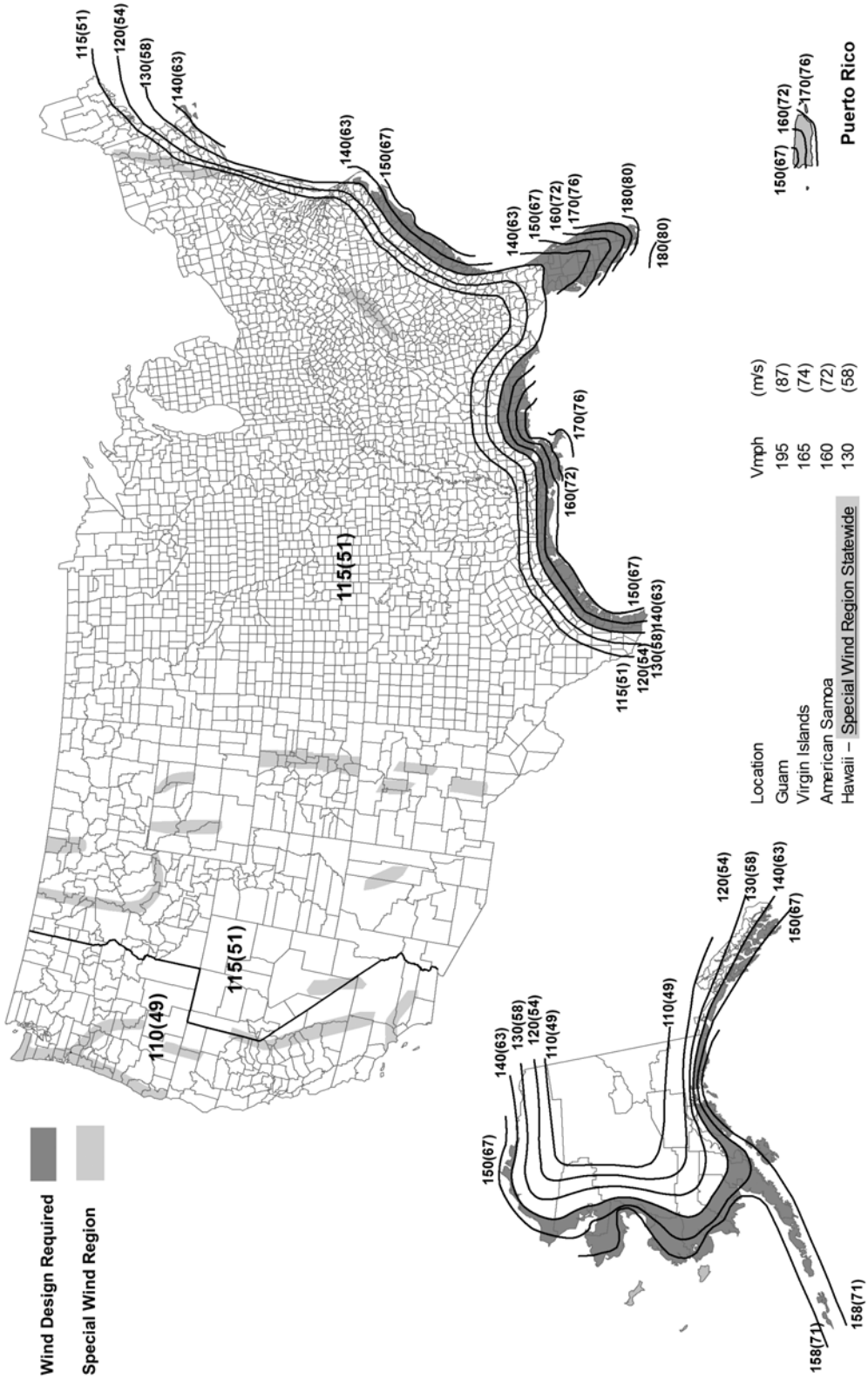

FIGURE R301.2(4)B
REGIONS WHERE WIND DESIGN IS REQUIRED

Notes:
1. Values are nominal design 3-second gust wind speeds in miles per hour (m/s) at 33 ft (10m) above ground for Exposure C category.
2. Linear interpolation between contours is permitted.
3. Islands and coastal areas outside the last contour shall use the last wind speed contour of the coastal area.
4. Mountainous terrain, gorges, ocean promontories, and special wind regions shall be examined for unusual wind conditions.
5. Wind speeds correspond to approximately a 7% probability of exceedance in 50 years (Annual Exceedance Probability = 0.00143, MRI = 700 Years).

❖ See the commentary to Section R301.2.1.

INTERNATIONAL CODE COUNCIL®
Copyright © 2015 ICC. ALL RIGHTS RESERVED. Accessed by David Dammon on Jun 21, 2017 12:30:52 PM pursuant to License Agreement with ICC. No further reproduction or distribution authorized. ANY UNAUTHORIZED REPRODUCTION OR DISTRIBUTION IS A VIOLATION OF THE FEDERAL COPYRIGHT ACT AND THE LICENSE AGREEMENT, AND SUBJECT TO CIVIL AND CRIMINAL PENALTIES THEREUNDER.



For SI: 1 foot = 304.8 mm, 1 pound per square foot = 0.0479 kPa, 1 mile = 1.61 km.

a. In CS areas, site-specific Case Studies are required to establish ground snow loads. Extreme local variations in ground snow loads in these areas preclude mapping at this scale.

b. Numbers in parentheses represent the upper elevation limits in feet for the ground snow load values presented below. Site-specific case studies are required to establish ground snow loads at elevations not covered.

FIGURE R301.2(5)
GROUND SNOW LOADS, P_g, FOR THE UNITED STATES (lb/ft^2)

(continued)

INTERNATIONAL CODE COUNCIL®
Copyright © 2015 ICC. ALL RIGHTS RESERVED. Accessed by David Dammon on Jun 21, 2017 12:30:52 PM pursuant to License Agreement with ICC. No further reproduction or distribution authorized. ANY UNAUTHORIZED REPRODUCTION OR DISTRIBUTION IS A VIOLATION OF THE FEDERAL COPYRIGHT ACT AND THE LICENSE AGREEMENT, AND SUBJECT TO CIVIL AND CRIMINAL PENALTIES THEREUNDER.



For SI: 1 foot = 304.8 mm, 1 pound per square foot = 0.0479 kPa.

a. In CS areas, site-specific Case Studies are required to establish ground snow loads. Extreme local variations in ground snow loads in these areas preclude mapping at this scale.

b. Numbers in parentheses represent the upper elevation limits in feet for the ground snow load values presented below. Site-specific case studies are required to establish ground snow loads at elevations not covered.

FIGURE R301.2(5)—continued
GROUND SNOW LOADS, P_g, FOR THE UNITED STATES (lb/ft^2)

❖ The ground snow-load map is taken from the ASCE 7 snow-load provisions and is based on statistical analysis of ground snow data. This map provides ground snow loads for direct use in the prescriptive provisions and tables of the code. Snow loads may increase due to lake effect or elevations. Check with local authorities for more refined snow-load maps.

INTERNATIONAL CODE COUNCIL®
Copyright © 2015 ICC. ALL RIGHTS RESERVED. Accessed by David Dammon on Jun 21, 2017 12:30:52 PM pursuant to License Agreement with ICC. No further reproduction or distribution authorized. ANY UNAUTHORIZED REPRODUCTION OR DISTRIBUTION IS A VIOLATION OF THE FEDERAL COPYRIGHT ACT AND THE LICENSE AGREEMENT, AND SUBJECT TO CIVIL AND CRIMINAL PENALTIES THEREUNDER.

Note: Lines defining areas are approximate only. Local conditions may be more or less severe than indicated by the region classification.

FIGURE R301.2(6)
TERMITE INFESTATION PROBABILITY MAP

❖ This figure establishes the potential for termite damage in areas of the continental United States. The boundaries for the various classifications are approximate, and local experience should be relied on either to affirm or to modify the classification determined from this map.

INTERNATIONAL CODE COUNCIL®
Copyright © 2015 ICC. ALL RIGHTS RESERVED. Accessed by David Dammon on Jun 21, 2017 12:30:52 PM pursuant to License Agreement with ICC. No further reproduction or distribution authorized. ANY UNAUTHORIZED REPRODUCTION OR DISTRIBUTION IS A VIOLATION OF THE FEDERAL COPYRIGHT ACT AND THE LICENSE AGREEMENT, AND SUBJECT TO CIVIL AND CRIMINAL PENALTIES THEREUNDER.

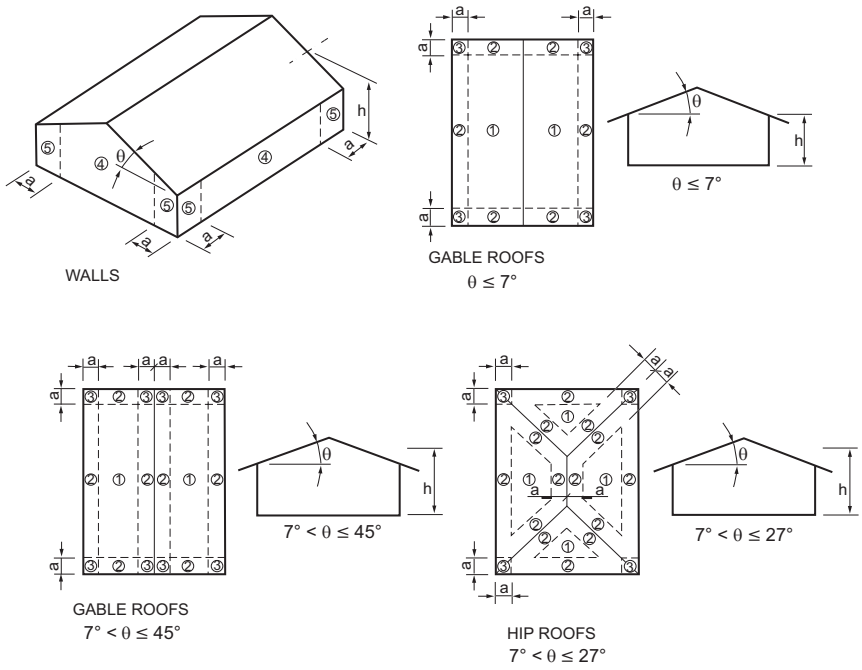

For SI: 1 foot = 304.8 mm, 1 degree = 0.0175 rad.
Note: a = 4 feet in all cases.

FIGURE R301.2(7)
COMPONENT AND CLADDING PRESSURE ZONES

❖ This figure depicts the zones for the components and cladding wind pressures that are given in Table R301.2(2). See the commentary to this table for a discussion of components and cladding.

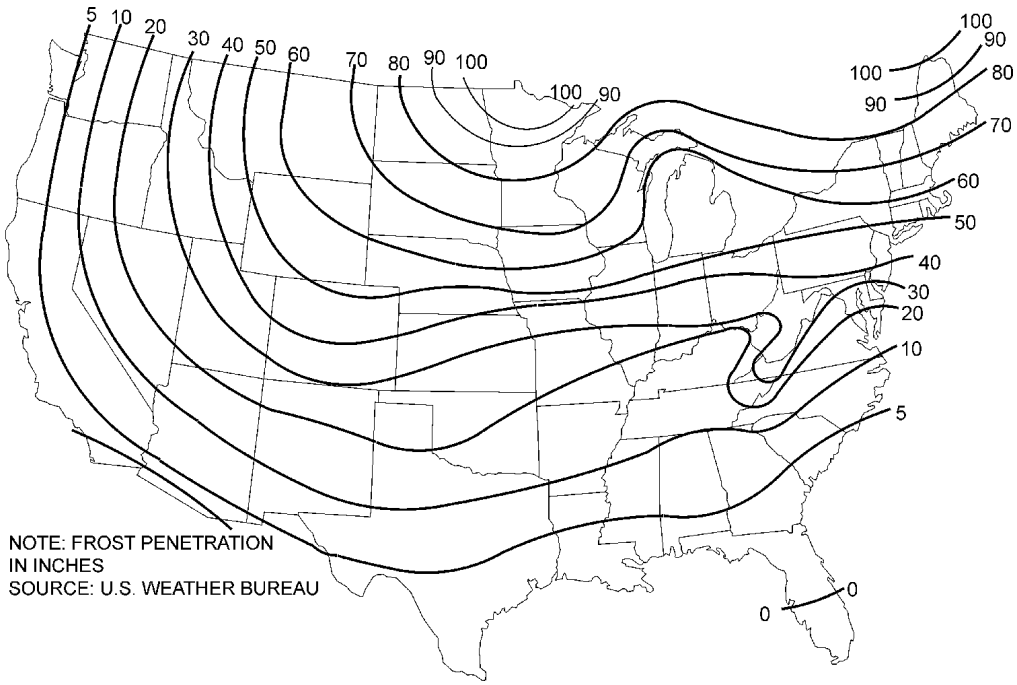

For SI: 1 inch = 25.4 mm.

Figure R301.2(8)
FROST LINE DEPTH

INTERNATIONAL CODE COUNCIL®
Copyright © 2015 ICC. ALL RIGHTS RESERVED. Accessed by David Dammon on Jun 21, 2017 12:30:52 PM pursuant to License Agreement with ICC. No further reproduction or distribution authorized. ANY UNAUTHORIZED REPRODUCTION OR DISTRIBUTION IS A VIOLATION OF THE FEDERAL COPYRIGHT ACT AND THE LICENSE AGREEMENT, AND SUBJECT TO CIVIL AND CRIMINAL PENALTIES THEREUNDER.

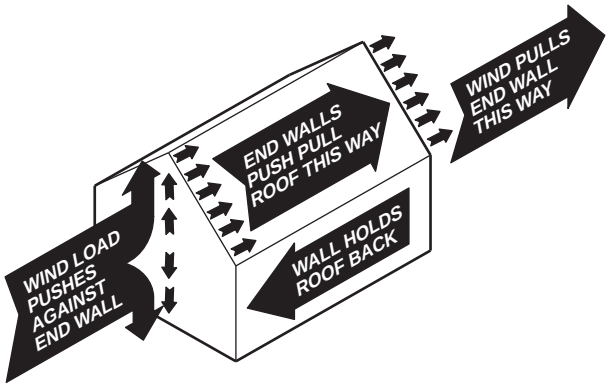

Figure R301.2.1
WIND FORCES ACTING ON AREA

R301.2.1.1.1 Sunrooms. Sunrooms shall comply with AAMA/NPEA/NSA 2100. For the purpose of applying the criteria of AAMA/NPEA/NSA 2100 based on the intended use, sunrooms shall be identified as one of the following categories by the permit applicant, design professional or the property owner or owner's agent in the construction documents. Component and cladding pressures shall be used for the design of elements that do not qualify as main windforce-resisting systems. Main windforce-resisting system pressures shall be used for the design of elements assigned to provide support and stability for the overall *sunroom*.

Category I: A thermally isolated sunroom with walls that are open or enclosed with insect screening or 0.5 mm (20 mil) maximum thickness plastic film. The space is nonhabitable and unconditioned.

Category II: A thermally isolated sunroom with enclosed walls. The openings are enclosed with translucent or transparent plastic or glass. The space is nonhabitable and unconditioned.

Category III: A thermally isolated sunroom with enclosed walls. The openings are enclosed with translucent or transparent plastic or glass. The sunroom fenestration complies with additional requirements for air infiltration resistance and water penetration resistance. The space is nonhabitable and unconditioned.

Category IV: A thermally isolated sunroom with enclosed walls. The sunroom is designed to be heated or cooled by a separate temperature control or system and is thermally isolated from the primary structure. The sunroom fenestration complies with additional requirements for water penetration resistance, air infiltration resistance and thermal performance. The space is nonhabitable and conditioned.

Category V: A sunroom with enclosed walls. The sunroom is designed to be heated or cooled and is open to the main structure. The sunroom fenestration complies with additional requirements for water penetration resistance, air infiltration resistance and thermal performance. The space is habitable and conditioned.

❖ The code defines a sunroom in Section R202 as "A one-story structure attached to a dwelling with a glaz-

MINIMUM REQUIREMENTS	CATEGORY I	CATEGORY II	CATEGORY III	CATEGORY IV	CATEGORY V
Structural design in accordance with the code.	X	X	X	X	X
Fenestration products must comply with AAMA/WDMA/CSA 101/I.S.2/A440 (includes resistance to air leakage, water penetration, forced entry, etc., as well as structural design pressure rating).		X	X	X	X
Comply with the *International Energy Conservation Code*® (IECC®) or IRC Chapter 11.				X	X
Comply with the foundation/footings, site location, and emergency escape and rescue openings requirements of the code.	X	X	X	X	X
Emergency escape and rescue openings are permitted to open onto a sunroom.	X				
Comply with the natural lighting requirements of the code.	X	X	X	X	X
Openings for natural lighting are permitted to open onto a sunroom.	X				
Comply with the requirements of the code for stairway and egress illumination.		X	X	X	X
Required to have exit lighting.		X	X	X	X
Receptacle outlets as required by NFPA 70, Article 314.				X	X

Figure R301.2.1.1.1
SUNROOM MINIMUM REQUIREMENTS

INTERNATIONAL CODE COUNCIL®
Copyright © 2015 ICC. ALL RIGHTS RESERVED. Accessed by David Dammon on Jun 21, 2017 12:30:52 PM pursuant to License Agreement with ICC. No further reproduction or distribution authorized. ANY UNAUTHORIZED REPRODUCTION OR DISTRIBUTION IS A VIOLATION OF THE FEDERAL COPYRIGHT ACT AND THE LICENSE AGREEMENT, AND SUBJECT TO CIVIL AND CRIMINAL PENALTIES THEREUNDER.

ing area in excess of 40 percent of the gross area of the structure's exterior walls and roof." These structures are typically constructed in one of two manners: 1. Using typical wood framing techniques; or 2. Using a stick system that consists of prefabricated framing of aluminum, fiberglass, wood or other materials, with glass or opaque wall or roof panels, and steel or aluminum connections.

The first technique can be done in accordance with the provisions of the IRC for wood-framed construction. This section addresses the second method of constructing a sunroom. The provisions clarify the requirements for such sunrooms by referencing the provisions of AAMA/NPEA/NSA 2100-12, *Specifications for Sunrooms*. Sunrooms designed and constructed in accordance with AAMA/NPEA/NSA 2100 are required within the standard to meet the structural provisions of the IRC or the IBC; therefore, the appropriate engineering analysis has already been conducted for these structures. In addition, the standard establishes the specific requirements for these unique structures based on one of five designated categories. The intended category must be indicated in the construction documents. Those portions of the sunroom that are not part of the main wind-force-resisting system must be designed using component and cladding pressures. Main wind-force-resisting-system pressures must be considered in the design of the structural elements of the sunroom.

In 2002 the American Architectural Manufacturers Association (AAMA), the National Sunroom Association (NSA) and the National Patio Enclosure Association (NPEA) published the first U.S. standard for the design and specification of sunrooms—AAMA/NPEA/NSA 2100–02. The standard established five categories of sunrooms based on the intended use of the space, and established specific design and performance criteria for them based on the end use.

As the document began to be used and referenced in various local codes (such as the *Florida Building Code*) the members of the AAMA Sunroom Council and NSA became aware that improvements and updates were needed. These improvements included revisions that would bring the document in line with the requirements of AAMA/WDMA/CSA 101/I.S.2/A440 for the design, testing and labeling of windows, glass doors and skylights, and revisions that would bring the foundation requirements more closely in line with the requirements of the IRC.

Commentary Figure R301.2.1.1.1 provides an overview of the requirements of AAMA/NPEA/NSA 2100 as they apply to the various categories of sunrooms.

R301.2.1.2 Protection of openings. Exterior glazing in buildings located in windborne debris regions shall be protected from windborne debris. Glazed opening protection for windborne debris shall meet the requirements of the Large Missile Test of ASTM E1996 and ASTM E1886 as modified in Section 301.2.1.2.1. Garage door glazed opening protection for windborne debris shall meet the requirements of an *approved* impact-resisting standard or ANSI/DASMA 115.

Exception: Wood structural panels with a thickness of not less than $^{7}/_{16}$ inch (11 mm) and a span of not more than 8 feet (2438 mm) shall be permitted for opening protection. Panels shall be precut and attached to the framing surrounding the opening containing the product with the glazed opening. Panels shall be predrilled as required for the anchorage method and shall be secured with the attachment hardware provided. Attachments shall be designed to resist the component and cladding loads determined in accordance with either Table R301.2(2) or ASCE 7, with the permanent corrosion-resistant attachment hardware provided and anchors permanently installed on the building. Attachment in accordance with Table R301.2.1.2 is permitted for buildings with a *mean roof height* of 45 feet (13, 728 mm) or less where the ultimate design wind speed, V_{ult}, is 180 mph (290 kph) or less.

❖ Exterior glazing in buildings located in windborne debris regions must have openings that provide protection from windborne debris. The definition of "Windborne debris region" in Section R202 indicates that such regions are areas within hurricane-prone regions that are also located either:

1. Within 1 mile of the coastal mean high water line and where the ultimate design wind speed, V_{ult}, is 130 mph (58 m/s) or more, or
2. In Hawaii or where the ultimate design wind speed is 140 mph (63.6 m/s) or more.

The ultimate design wind speed, V_{ult}, is determined in accordance with Figure R301.2(4)A.

The opening protection, usually in the form of permanent shutters or laminated glass, must meet the requirements of the Large Missile Test of ASTM E1996 and ASTM E1886, as listed in Chapter 44. Section R301.2.1.2.1 contains code-required modifications to ASTM E1886. Glazing in garage doors must meet the protection requirements for garage doors in ANSI/DSMA 115, *Standard Method for Testing Sectional Garage Doors and Rolling Doors: Determination of Structural Performance Under Missile Impact and Cyclic Wind Pressure*.

The exception to Section R301.2.1.2 provides a prescriptive and more economical method for one- and two-story buildings. This method of opening protection uses wood structural panels that are limited to a maximum span of 8 feet (2438 mm), with fastening as specified in Table R301.2.1.2. The method is applicable to buildings with a mean roof height of 45 feet (13 728 mm) or less that are located where the ultimate design wind speed, V_{ult}, is 180 mph or less, as determined in accordance with Figure R301.2(4)A. The builder must precut the opening protection panels to fit each glazed opening and provide the necessary attachment hardware so that panels can be adequately anchored and installed quickly.

INTERNATIONAL CODE COUNCIL®
Copyright © 2015 ICC. ALL RIGHTS RESERVED. Accessed by David Dammon on Jun 21, 2017 12:30:52 PM pursuant to License Agreement with ICC. No further reproduction or distribution authorized. ANY UNAUTHORIZED REPRODUCTION OR DISTRIBUTION IS A VIOLATION OF THE FEDERAL COPYRIGHT ACT AND THE LICENSE AGREEMENT, AND SUBJECT TO CIVIL AND CRIMINAL PENALTIES THEREUNDER.

TABLE R301.2.1.2
WINDBORNE DEBRIS PROTECTION FASTENING SCHEDULE FOR WOOD STRUCTURAL PANELS[a, b, c, d]

FASTENER TYPE	FASTENER SPACING (inches)[a, b]		
	Panel span ≤ 4 feet	4 feet < panel span ≤ 6 feet	6 feet < panel span ≤ 8 feet
No. 8 wood screw based anchor with 2-inch embedment length	16	10	8
No. 10 wood screw based anchor with 2-inch embedment length	16	12	9
$^1/_4$-inch lag screw based anchor with 2-inch embedment length	16	16	16

For SI: 1 inch = 25.4 mm, 1 foot = 304.8 mm, 1 pound = 4.448 N, 1 mile per hour = 0.447 m/s.

a. This table is based on 180 mph ultimate design wind speeds, V_{ult}, and a 33-foot *mean roof height*.

b. Fasteners shall be installed at opposing ends of the wood structural panel. Fasteners shall be located not less than 1 inch from the edge of the panel.

c. Anchors shall penetrate through the *exterior wall* covering with an embedment length of not less than 2 inches into the building frame. Fasteners shall be located not less than $2^1/_2$ inches from the edge of concrete block or concrete.

d. Panels attached to masonry or masonry/stucco shall be attached using vibration-resistant anchors having an ultimate withdrawal capacity of not less than 1,500 pounds.

❖ The fastening schedule provided in this table allows for the selection of the appropriate fasteners size and spacing when the prescriptive alternative is applied to a tested assembly, as required by Section R301.2.1.2. Installing the specified fasteners at both ends of the wood structural panel provides the necessary panel support. Hardware must be permanently mounted when using wood structural panel shutters for window protection for new construction. Using wood structural panels as window protection is basically an emergency option for the protection of existing buildings where the homeowner does not have some permanent shutter system in place.

While the code requires the panels to be precut and the attachment hardware provided, there are potentially many logistical problems with homeowners actually installing the panels when attachment hardware is not permanent. It is not clear that the homeowners will be sufficiently instructed on (or remember at a later date) how to attach the panels, in particular using the prescribed minimum spacing. Additionally, it can be extremely cumbersome to attempt to nail a sheet of plywood over a window, particularly on the second story of a building. There are also concerns about the capacity of nailed connections where the nails are installed in the same hole repeatedly.

The minimum required capacity of masonry anchors is 1,500 pounds (6672 N). Evaluation reports (ICC, NES and SBCCI) for masonry anchors require a Factor of Safety (FS) of 4.0 if a special inspection is performed on the anchor installation. The required capacity of the masonry anchors to 1,500 pounds (6672 N) provides an FS more in line with the evaluation reports for masonry anchors.

R301.2.1.2.1 Application of ASTM E1996. The text of Section 2.2 of ASTM E1996 shall be substituted as follows:

2.2 ASCE Standard:

ASCE 7-10 American Society of Civil Engineers *Minimum Design Loads for Buildings and Other Structures*

The text of Section 6.2.2 of ASTM E1996 shall be substituted as follows:

6.2.2 Unless otherwise specified, select the wind zone based on the ultimate design wind speed, V_{ult}, as follows:

6.2.2.1 Wind Zone 1–130 mph ≤ ultimate design wind speed, V_{ult} < 140 mph.

6.2.2.2 Wind Zone 2–140 mph ≤ ultimate design wind speed, V_{ult} < 150 mph at greater than 1 mile (1.6 km) from the coastline. The coastline shall be measured from the mean high water mark.

6.2.2.3 Wind Zone 3–150 mph (58 m/s) ≤ ultimate design wind speed, V_{ult} ≤ 170 mph (76 m/s), or 140 mph (54 m/s) ≤ ultimate design wind speed, V_{ult} ≤ 170 mph (76 m/s) and within 1 mile (1.6 km) of the coastline. The coastline shall be measured from the mean high water mark.

6.2.2.4 Wind Zone 4–ultimate design wind speed, V_{ult} > 170 mph (76 m/s).

❖ See commentary to Section R301.2.1.

R301.2.1.3 Wind speed conversion. Where referenced documents are based on nominal design wind speeds and do not provide the means for conversion between ultimate design wind speeds and nominal design wind speeds, the ultimate design wind speeds, V_{ult}, of Figure R301.2(4)A shall be converted to nominal design wind speeds, V_{asd}, using Table R301.2.1.3.

❖ See commentary to Section R301.2.1.

TABLE R301.2.1.3
WIND SPEED CONVERSIONS[a]

V_{ult}	110	115	120	130	140	150	160	170	180	190	200
V_{asd}	85	89	93	101	108	116	124	132	139	147	155

For SI: 1 mile per hour = 0.447 m/s.

a. Linear interpolation is permitted.

❖ Where referenced documents are based on nominal design wind speeds, the appropriate wind speed can be selected directly from this table using the ultimate design wind speed determined from Figure R301.2(4)A. For example, if the ultimate design wind speed, V_{ult}, for a site is determined to be 110 mph (49.2 m/s), and it is necessary to design using one of the referenced standards in Section R301.2.1.1, the corresponding nominal design wind velocity would be 85 mph (38 m/s).

INTERNATIONAL CODE COUNCIL®
Copyright © 2015 ICC. ALL RIGHTS RESERVED. Accessed by David Dammon on Jun 21, 2017 12:30:52 PM pursuant to License Agreement with ICC. No further reproduction or distribution authorized. ANY UNAUTHORIZED REPRODUCTION OR DISTRIBUTION IS A VIOLATION OF THE FEDERAL COPYRIGHT ACT AND THE LICENSE AGREEMENT, AND SUBJECT TO CIVIL AND CRIMINAL PENALTIES THEREUNDER.

R301.2.1.4 Exposure category. For each wind direction considered, an exposure category that adequately reflects the characteristics of ground surface irregularities shall be determined for the site at which the building or structure is to be constructed. For a site located in the transition zone between categories, the category resulting in the largest wind forces shall apply. Account shall be taken of variations in ground surface roughness that arise from natural topography and vegetation as well as from constructed features. For a site where multiple detached one- and two-family *dwellings*, *townhouses* or other structures are to be constructed as part of a subdivision or master-planned community, or are otherwise designated as a developed area by the authority having jurisdiction, the exposure category for an individual structure shall be based upon the site conditions that will exist at the time when all adjacent structures on the site have been constructed, provided that their construction is expected to begin within one year of the start of construction for the structure for which the exposure category is determined. For any given wind direction, the exposure in which a specific building or other structure is sited shall be assessed as being one of the following categories:

1. Exposure B. Urban and suburban areas, wooded areas or other terrain with numerous closely spaced obstructions having the size of single-family *dwellings* or larger. Exposure B shall be assumed unless the site meets the definition of another type exposure.
2. Exposure C. Open terrain with scattered obstructions, including surface undulations or other irregularities, having heights generally less than 30 feet (9144 mm) extending more than 1,500 feet (457 m) from the building site in any quadrant. This exposure shall also apply to any building located within Exposure B type terrain where the building is directly adjacent to open areas of Exposure C type terrain in any quadrant for a distance of more than 600 feet (183 m). This category includes flat, open country and grasslands.
3. Exposure D. Flat, unobstructed areas exposed to wind flowing over open water, smooth mud flats, salt flats and unbroken ice for a distance of not less than 5,000 feet (1524 m). This exposure shall apply only to those buildings and other structures exposed to the wind coming from over the unobstructed area. Exposure D extends downwind from the edge of the unobstructed area a distance of 600 feet (183 m) or 20 times the height of the building or structure, whichever is greater.

❖ Wind loading on structures is a function of a site exposure category, which reflects the characteristics of ground surface irregularities and accounts for variations in ground surface roughness that arise from natural topography and vegetation, as well as from constructed features. These categories range from Exposure B for the least severe exposure category to Exposure D for the most severe exposure category. Exposure B should be used wherever the site does not meet the definition for another category of exposure, as well as for urban and suburban areas, wooded areas and other terrain with numerous, closely spaced obstructions having the size of single-family dwellings or larger. The commentary of ASCE 7 contains a detailed discussion of wind exposure categories. The exposure category of homes constructed on a large residential development site should be based upon the exposure condition that will exist for the vast majority of the structure's life, not the temporary condition that may exist during build-out of the development. Residential construction frequently involves the construction of multiple detached homes and/or townhouses on a large residential development site. Such sites are often cleared creating a temporary situation where Exposure Category C exists until a significant number of the homes are constructed.

The commentary to ASCE 7 indicates that in a recent study, the majority of buildings are in Exposure Category B—as many as 60 to 80 percent. Even a higher percentage is likely for residential construction as jurisdictions push for higher density development and homes are constructed on smaller lots to reduce the impact of rapidly escalating land costs

R301.2.1.5 Topographic wind effects. In areas designated in Table R301.2(1) as having local historical data documenting structural damage to buildings caused by wind speed-up at isolated hills, ridges and escarpments that are abrupt changes from the general topography of the area, topographic wind effects shall be considered in the design of the building in accordance with Section R301.2.1.5.1 or in accordance with the provisions of ASCE 7. See Figure R301.2.1.5.1(1) for topographic features for wind speed-up effect.

In these designated areas, topographic wind effects shall apply only to buildings sited on the top half of an isolated hill, ridge or escarpment where all of the following conditions exist:

1. The average slope of the top half of the hill, ridge or escarpment is 10 percent or greater.
2. The hill, ridge or escarpment is 60 feet (18 288 mm) or greater in height for Exposure B, 30 feet (9144 mm) or greater in height for Exposure C, and 15 feet (4572 mm) or greater in height for Exposure D.
3. The hill, ridge or escarpment is isolated or unobstructed by other topographic features of similar height in the upwind direction for a distance measured from its high point of 100 times its height or 2 miles (3.2 km), whichever is less. See Figure R301.2.1.5.1(3) for upwind obstruction.
4. The hill, ridge or escarpment protrudes by a factor of two or more above the height of other upwind topographic features located in any quadrant within a radius of 2 miles (3.2 km) measured from its high point.

❖ These requirements are for consideration of topographic wind effects. Historically, consideration of wind speed-up due to topographic effects has been ignored in the United States for the design and construction of new homes. Provisions calling for consideration of topographic effects on wind were first included in the 1995 edition of ASCE 7.

The procedures for determining wind speed-up due to topographic effects require the services of a structural engineer with experience in wind analysis and

INTERNATIONAL CODE COUNCIL®
Copyright © 2015 ICC. ALL RIGHTS RESERVED. Accessed by David Dammon on Jun 21, 2017 12:30:52 PM pursuant to License Agreement with ICC. No further reproduction or distribution authorized. ANY UNAUTHORIZED REPRODUCTION OR DISTRIBUTION IS A VIOLATION OF THE FEDERAL COPYRIGHT ACT AND THE LICENSE AGREEMENT, AND SUBJECT TO CIVIL AND CRIMINAL PENALTIES THEREUNDER.

design. Topographic configurations can be quite complex and any resulting speed-up can be difficult, at best, to determine. In fact, modeling the ground topography and testing in a wind tunnel is probably the only means of getting an accurate estimate of the wind speed-up. Using engineering calculations will likely give an overly conservative estimate of the resulting speed-up for an idealized topographic configuration.

A jurisdiction would require an investigation of topographic wind effects when historical data for the area documents structural damage to buildings due to wind speed-up at isolated hills, ridges and escarpments. The jurisdiction would indicate the need for this additional design requirement in Table R301.2(1).

Additionally, Figures R301.2.1.5.1(1), R301.2.1.5.1(2) and R301.2.1.5.1(3) provide guidance to aid builders and designers in designated areas requiring consideration of topographic wind effects on where wind speed-up will likely occur and needs to be considered. These provisions are based on the requirements of ASCE 7, with one exception. ASCE 7 requires consideration of wind speed-up for a building located on the top half of a hill, ridge or escarpment in Exposure Category C when its height is 15 feet (4572 mm) or greater.

This section sets the height at 30 feet (9144 mm) or greater for Exposure C, which is consistent with earlier editions of ASCE 7. If left at 15 feet (4572 mm) or greater, every isolated farmhouse located on a small hill surrounded by flat, cleared farmland would be subjected to wind speed-up due to topographic effects. The 15-foot (4572 mm) trigger was considered to be simply too low and does not reflect what is occurring in the built environment.

An alternative simplified method of designing for topographic wind speed-up effects is offered in Section R301.2.1.5.1, which can be used with the prescriptive methods, and thus does not require engineering design.

R301.2.1.5.1 Simplified topographic wind speed-up method. As an alternative to the ASCE 7 topographic wind provisions, the provisions of Section R301.2.1.5.1 shall be permitted to be used to design for wind speed-up effects, where required by Section R301.2.1.5.

Structures located on the top half of isolated hills, ridges or escarpments meeting the conditions of Section R301.2.1.5 shall be designed for an increased basic wind speed as determined by Table R301.2.1.5.1. On the high side of an escarpment, the increased basic wind speed shall extend horizontally downwind from the edge of the escarpment 1.5 times the horizontal length of the upwind slope (1.5L) or 6 times the height of the escarpment (6H), whichever is greater. See Figure R301.2.1.5.1(2) for where wind speed increase is applied.

❖ Section R301.2.1.5.1 is an alternative for compliance with ASCE 7 as specified in Section R301.2.1.5. The methodology proposed is an outgrowth of the wind simplification process developed by the Structural Engineers of Washington (SEAW) and the Applied Technology Council (ATC), and is an attempt at simplifying the wind design process in the code for areas with extreme topography.

R301.2.2 Seismic provisions. The seismic provisions of this code shall apply as follows:

1. *Townhouses* in Seismic Design Categories C, D_0, D_1 and D_2.
2. Detached one- and two-family *dwellings* in Seismic Design Categories, D_0, D_1 and D_2.

❖ Earthquakes generate internal forces in a structure caused by inertia. This is depicted in Commentary Figure R301.2.2. These forces can cause a building to be distorted and severely damaged. The objective of earthquake-resistant construction is to resist these forces and the resulting distortions.

Providing for the adequate earthquake performance of any structure begins with assessing the degree of hazard at the proposed site. As in the IBC, this is accomplished in the code by assigning a seismic design category (see Section R301.2.2.1 and the definition in Chapter 2). These range from Seismic Design

TABLE R301.2.1.5.1
ULTIMATE DESIGN WIND SPEED MODIFICATION FOR TOPOGRAPHIC WIND EFFECT[a, b]

ULTIMATE DESIGN WIND SPEED FROM FIGURE R301.2(4)A (mph)	AVERAGE SLOPE OF THE TOP HALF OF HILL, RIDGE OR ESCARPMENT (percent)						
	0.10	0.125	0.15	0.175	0.20	0.23	0.25
	Required ultimate design wind speed-up, modified for topographic wind speed-up (mph)						
110	132	137	142	147	152	158	162
115	138	143	148	154	159	165	169
120	144	149	155	160	166	172	176
130	156	162	168	174	179	N/A	N/A
140	168	174	181	N/A	N/A	N/A	N/A
150	180	N/A	N/A	N/A	N/A	N/A	N/A

For SI: 1 mile per hour = 0.447 m/s, 1 foot = 304.8 mm.

a. Table applies to a feature height of 500 feet or less and dwellings sited a distance equal or greater than half the feature height.

b. Where the ultimate design wind speed as modified by Table R301.2.1.5.1 equals or exceeds 140 miles per hour, the building shall be considered as "wind design required" in accordance with Section R301.2.1.1.

❖ See the commentary to Sections R301.2.1.5 and R301.2.1.5.1.

INTERNATIONAL CODE COUNCIL®
Copyright © 2015 ICC. ALL RIGHTS RESERVED. Accessed by David Dammon on Jun 21, 2017 12:30:52 PM pursuant to License Agreement with ICC. No further reproduction or distribution authorized. ANY UNAUTHORIZED REPRODUCTION OR DISTRIBUTION IS A VIOLATION OF THE FEDERAL COPYRIGHT ACT AND THE LICENSE AGREEMENT, AND SUBJECT TO CIVIL AND CRIMINAL PENALTIES THEREUNDER.

Category A, representing the lowest level of seismic hazard, to Seismic Design Category E, representing the highest hazard. Buildings in Seismic Design Category E must be designed in accordance with the IBC, except as allowed in Section R301.2.2.1. Under the code, the seismic design category depends on the building location according to Figure R301.2(2), unless one of the options permitting a more precise determination is exercised.

The code's seismic provisions apply to buildings classified as Seismic Design Category C, D_0, D_1 or D_2. Detached one- and two-family dwellings need to comply with only the seismic requirements of the code when classified as Seismic Design Category D_0, D_1 or D_2. In other words, only townhouses constructed under Section R101.2 need to comply with Seismic Design Category C requirements. All buildings classified as Seismic Design Category A or B, as well as detached one- and two-family dwellings classified as Seismic Design Category C, will perform satisfactorily when constructed in accordance with the basic prescriptive requirements of the code.

Values for seismic loads on structures are based on a percentage of the dead load, and the code prescriptive provisions for structural elements that resist seismic forces are based on an assumed dead load. Generally, the building dead loads as described in Section R301.4 are reflected in the prescriptive design tables throughout the code.

FEMA 232, *Home Builder's Guide to Seismic-resistant Construction*, is an excellent source of additional information on seismic-resistant construction, particularly as it pertains to residential buildings.

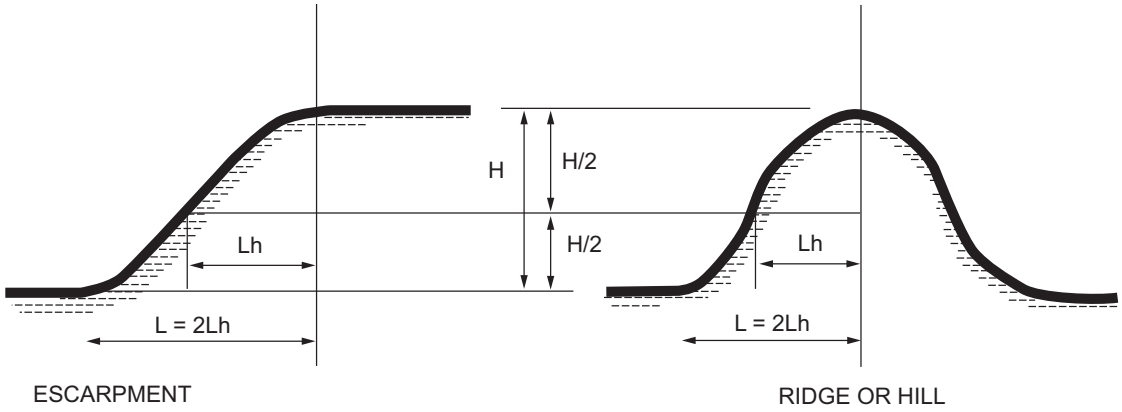

Note: H/2 determines the measurement point for Lh. L is twice Lh.

FIGURE R301.2.1.5.1(1)
TOPOGRAPHIC FEATURES FOR WIND SPEED-UP EFFECT

❖ This figure provides guidance to aid builders and designers in designated areas requiring consideration of topographic wind effects on where wind speed-up will likely occur and needs to be considered (see commentary, Sections R301.2.1.5 and R301.2.1.5.1).

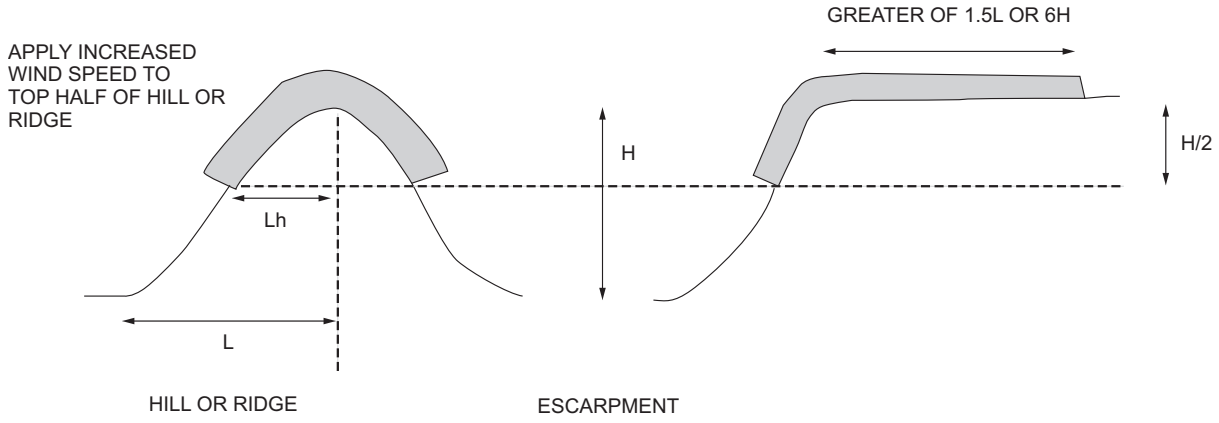

FIGURE R301.2.1.5.1(2)
ILLUSTRATION OF WHERE ON A TOPOGRAPHIC FEATURE, WIND SPEED INCREASE IS APPLIED

❖ This figure provides guidance to aid builders and designers in designated areas requiring consideration of topographic wind effects on where wind speed-up will likely occur and needs to be considered (see commentary, Sections R301.2.1.5 and R301.2.1.5.1).

INTERNATIONAL CODE COUNCIL®
Copyright © 2015 ICC. ALL RIGHTS RESERVED. Accessed by David Dammon on Jun 21, 2017 12:30:52 PM pursuant to License Agreement with ICC. No further reproduction or distribution authorized. ANY UNAUTHORIZED REPRODUCTION OR DISTRIBUTION IS A VIOLATION OF THE FEDERAL COPYRIGHT ACT AND THE LICENSE AGREEMENT, AND SUBJECT TO CIVIL AND CRIMINAL PENALTIES THEREUNDER.

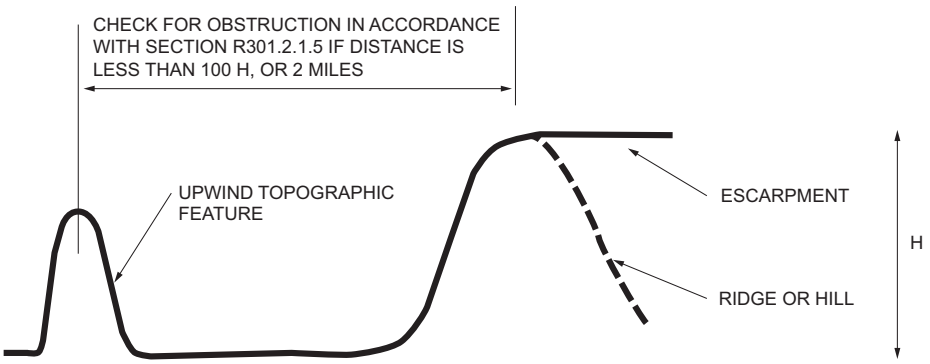

FIGURE R301.2.1.5.1(3)
UPWIND OBSTRUCTION

❖ This figure provides guidance to aid builders and designers in designated areas requiring consideration of topographic wind effects on where wind speed-up will likely occur and needs to be considered (see commentary, Sections R301.2.1.5 and R301.2.1.5.1).

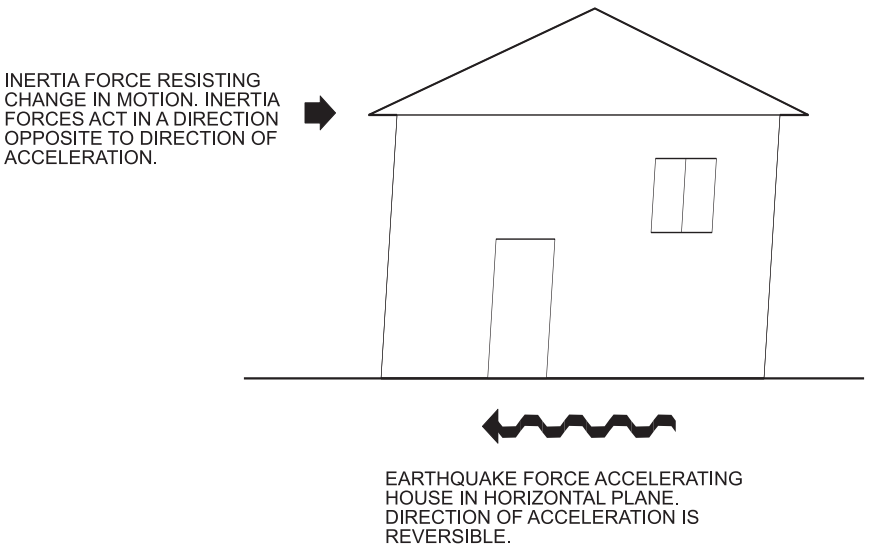

Figure R301.2.2
SEISMIC FORCE

R301.2.2.1 Determination of seismic design category. Buildings shall be assigned a seismic design category in accordance with Figure R301.2(2).

❖ Unlike the IBC, the code does not require a calculation to determine the seismic design category of a structure. Instead, the seismic design category is taken directly from Figure R301.2(2). The seismic design categories shown in Figure R301.2(2) are based solely on the Short Period Design Spectral Response Accelerations, SDS, assuming soil Site Class D, as defined in Section 1613 of the IBC.

A convenient alternative to the maps of Figure R301.2(2) and the calculations described in Section R301.2.2.1.1 is the Seismic Design Parameters program prepared by USGS and the USGS National Seismic Hazard Mapping Project web site (http://earthquake.usgs.gov/hazards). Either of these allows a computer user to view the seismic hazard map of the code in more detail. The Seismic Design Parameters program also provides determination of a site's seismic design category using either the zip code or the longitude and latitude of the site. Because use of longitude and latitude is more precise, this approach is preferable.

The seismic design category classification provides a relative scale of earthquake risk to structures. The seismic design category considers not only the seismicity of the site in terms of the mapped spectral response accelerations, but also the site soil profile and the nature of the structure's occupancy category. Housing, in areas that have a low seismic risk and are classified as Seismic Design Categories A and B, need not go through the seismic design consideration. Structures in Seismic Design Categories C and D are considered moderate to high risk and should be designed in accordance with this section. In an area that is close to a

INTERNATIONAL CODE COUNCIL®
Copyright © 2015 ICC. ALL RIGHTS RESERVED. Accessed by David Dammon on Jun 21, 2017 12:30:52 PM pursuant to License Agreement with ICC. No further reproduction or distribution authorized. ANY UNAUTHORIZED REPRODUCTION OR DISTRIBUTION IS A VIOLATION OF THE FEDERAL COPYRIGHT ACT AND THE LICENSE AGREEMENT, AND SUBJECT TO CIVIL AND CRIMINAL PENALTIES THEREUNDER.

major active fault, where S1 is greater than or equal to 1.17g, there is deemed to be considerable seismic risk, and the seismic design category is classified as E. Dwellings in Seismic Category E must be designed in accordance with the IBC (see Section R301.2.2.4). The seismic design category classification is a key criterion in using and understanding the seismic requirements because the analysis method, general design, structural material detailing, and the structure's component and system design requirements are determined, at least in part, by the seismic design category.

R301.2.2.1.1 Alternate determination of seismic design category. The seismic design categories and corresponding short-period design spectral response accelerations, S_{DS} shown in Figure R301.2(2) are based on soil Site Class D, as defined in Section 1613.3.2 of the *International Building Code*. If soil conditions are other than Site Class D, the short-period design spectral response accelerations, S_{DS}, for a site can be determined in accordance with Section 1613.3 of the *International Building Code*. The value of S_{DS} determined in accordance with Section 1613.3 of the *International Building Code* is permitted to be used to set the seismic design category in accordance with Table R301.2.2.1.1, and to interpolate between values in Tables R602.10.3(3), R603.9.2(1) and other seismic design requirements of this code.

❖ In recognition that there may be an advantage to determining a building's seismic design category using the more detailed procedure of the IBC, the code allows this as an option. If soil conditions are other than Site Class D, for instance, the Short Period Design Spectral Response Acceleration (SDS) for a site may be determined using Section 1613 of the IBC. This value of SDS can then be used to establish the seismic design category according to Table R301.2.2.1.1. Determining SDS in this manner, although requiring more work, will provide the benefit of reducing the amount of wall bracing that would otherwise be required by the provisions in Chapter 6, based solely on seismic design category. This is accomplished, in Table R602.10.3(3) for instance, by interpolating between the tabulated values using the values of SDS determined as described above.

TABLE R301.2.2.1.1
SEISMIC DESIGN CATEGORY DETERMINATION

CALCULATED S_{DS}	SEISMIC DESIGN CATEGORY
$S_{DS} \le 0.17g$	A
$0.17g < S_{DS} \le 0.33g$	B
$0.33g < S_{DS} \le 0.50g$	C
$0.50g < S_{DS} \le 0.67g$	D_0
$0.67g < S_{DS} \le 0.83g$	D_1
$0.83g < S_{DS} \le 1.25g$	D_2
$1.25g < S_{DS}$	E

❖ This table lists the seismic design category for ranges of Short Period Design Spectral Response Acceleration, SDS. These numbers correspond exactly to the legend in the Seismic Design Category Map, Figure R301.2(2). Use of this table is necessary only if the alternative seismic design category determination is used.

R301.2.2.1.2 Alternative determination of Seismic Design Category E. Buildings located in Seismic Design Category E in accordance with Figure R301.2(2) are permitted to be reclassified as being in Seismic Design Category D_2 provided that one of the following is done:

1. A more detailed evaluation of the seismic design category is made in accordance with the provisions and maps of the *International Building Code*. Buildings located in Seismic Design Category E in accordance with Table R301.2.2.1.1, but located in Seismic Design Category D in accordance with the *International Building Code*, shall be permitted to be designed using the Seismic Design Category D_2 requirements of this code.
2. Buildings located in Seismic Design Category E that conform to the following additional restrictions are permitted to be constructed in accordance with the provisions for Seismic Design Category D_2 of this code:
   2.1. All exterior shear wall lines or *braced wall panels* are in one plane vertically from the foundation to the uppermost *story*.
   2.2. Floors shall not cantilever past the *exterior walls*.
   2.3. The building is within the requirements of Section R301.2.2.2.5 for being considered as regular.

❖ The code permits construction of buildings classified as Seismic Design Category E in Figure R301.2(2) in accordance with the provisions for Seismic Design Category D_2 if the building has no irregular features as described in Section R301.2.2.2.5. In addition, out-of-plane offsets in the exterior shear-wall lines or braced wall panels are not allowed, and floors are not permitted to cantilever beyond the exterior walls. In other words, this reclassification to a lower seismic design category is limited to very regular, "box-like" structures.

Also, a building classified as Seismic Design Category E using Figure R301.2(2) may possibly be reclassified to Seismic Design Category D_2 if a more detailed evaluation in accordance with the provisions of the IBC is undertaken. If application of the IBC provisions results in a classification of Seismic Design Category D, then the building may be constructed as Seismic Design Category D_2 under the code.

R301.2.2.2 Seismic Design Category C. Structures assigned to Seismic Design Category C shall conform to the requirements of this section.

❖ This section establishes the limitations for weights, irregularity and structures in Seismic Design Category C. This would also be applicable for Seismic Design Categories D_0, D_1 and D_2 by the reference in Section R301.2.2.3.

INTERNATIONAL CODE COUNCIL®
Copyright © 2015 ICC. ALL RIGHTS RESERVED. Accessed by David Dammon on Jun 21, 2017 12:30:52 PM pursuant to License Agreement with ICC. No further reproduction or distribution authorized. ANY UNAUTHORIZED REPRODUCTION OR DISTRIBUTION IS A VIOLATION OF THE FEDERAL COPYRIGHT ACT AND THE LICENSE AGREEMENT, AND SUBJECT TO CIVIL AND CRIMINAL PENALTIES THEREUNDER.

R301.2.2.2.1 Weights of materials. Average dead loads shall not exceed 15 pounds per square foot (720 Pa) for the combined roof and ceiling assemblies (on a horizontal projection) or 10 pounds per square foot (480 Pa) for floor assemblies, except as further limited by Section R301.2.2. Dead loads for walls above *grade* shall not exceed:

1. Fifteen pounds per square foot (720 Pa) for exterior light-frame wood walls.
2. Fourteen pounds per square foot (670 Pa) for exterior light-frame cold-formed steel walls.
3. Ten pounds per square foot (480 Pa) for interior light-frame wood walls.
4. Five pounds per square foot (240 Pa) for interior light-frame cold-formed steel walls.
5. Eighty pounds per square foot (3830 Pa) for 8-inch-thick (203 mm) masonry walls.
6. Eighty-five pounds per square foot (4070 Pa) for 6-inch-thick (152 mm) concrete walls.
7. Ten pounds per square foot (480 Pa) for SIP walls.

Exceptions:

1. Roof and ceiling dead loads not exceeding 25 pounds per square foot (1190 Pa) shall be permitted provided that the wall bracing amounts in Section R602.10.3 are increased in accordance with Table R602.10.3(4).
2. Light-frame walls with stone or masonry veneer shall be permitted in accordance with the provisions of Sections R702.1 and R703.
3. Fireplaces and chimneys shall be permitted in accordance with Chapter 10.

❖ As stated in Section R301.2.2, the dead loads of structures in seismic design categories regulated by the code must be within the limits listed in this section. Exceeding these limits would necessitate a design of the lateral-force-resisting system as described in Section R301.1.2. In some cases, these dead load limits are more restrictive than the dead load allowances in the prescriptive tables of the code [e.g., Table R502.3.1(1) for floor joist and Table R802.5(1) for rafters].

Exception 1 permits the use of roof/ceiling assemblies that exceed the 15 pounds per square foot (psf) (720 Pa) dead load limit if additional wall bracing is installed as determined using the adjustment factors of Table R602.10.3(4). This would permit the use of heavier roof coverings, such as tile. The additional wall bracing compensates for the additional seismic force that would be attributed to the added dead load.

Exception 2 directly references Sections R702.1 and R703. Section R702.1 specifically addresses interior stone and masonry veneer and Section R703 contains the requirements for the support and anchorage of masonry veneer.

Exception 3 references Chapter 10 for the seismic limitations for chimneys and fireplaces. Seismic reinforcing requirements for masonry fireplaces are found in Section R1001.3 and seismic anchorage of masonry fireplaces is covered in Section R1001.4.

R301.2.2.2.2 Stone and masonry veneer. Anchored stone and masonry veneer shall comply with the requirements of Sections R702.1 and R703.

❖ Stone and masonry veneer are addressed in Chapter 7 of the code. Table R703.7(1) lists the stone and masonry veneer limitations based on the seismic design category.

R301.2.2.2.3 Masonry construction. Masonry construction shall comply with the requirements of Section R606.12.

❖ This section provides a cross reference to the masonry sections in the code for seismic requirements.

R301.2.2.2.4 Concrete construction. Detached one- and two-family *dwellings* with exterior above-*grade* concrete walls shall comply with the requirements of Section R608, PCA 100 or shall be designed in accordance with ACI 318. *Townhouses* with above-*grade* exterior concrete walls shall comply with the requirements of PCA 100 or shall be designed in accordance with ACI 318.

❖ This section provides a cross reference to the prescriptive provisions for concrete construction in Seismic Design Category C. Townhouses, by nature of being multiple-family housings, and exterior above-grade concrete walls, may not use the simplified approach in Section R608. As an alternative, concrete construction may be designed in accordance with accepted engineering practice.

R301.2.2.2.5 Irregular buildings. The seismic provisions of this code shall not be used for irregular structures located in Seismic Design Categories C, D_0, D_1 and D_2. Irregular portions of structures shall be designed in accordance with accepted engineering practice to the extent the irregular features affect the performance of the remaining structural system. Where the forces associated with the irregularity are resisted by a structural system designed in accordance with accepted engineering practice, design of the remainder of the building shall be permitted using the provisions of this code. A building or portion of a building shall be considered to be irregular where one or more of the following conditions occur:

1. Where exterior shear wall lines or *braced wall panels* are not in one plane vertically from the foundation to the uppermost *story* in which they are required.

   Exception: For wood light-frame construction, floors with cantilevers or setbacks not exceeding four times the nominal depth of the wood floor joists are permitted to support *braced wall panels* that are out of plane with *braced wall panels* below provided that:

   1. Floor joists are nominal 2 inches by 10 inches (51 mm by 254 mm) or larger and spaced not more than 16 inches (406 mm) on center.
   2. The ratio of the back span to the cantilever is not less than 2 to 1.
   3. Floor joists at ends of *braced wall panels* are doubled.

INTERNATIONAL CODE COUNCIL®
Copyright © 2015 ICC. ALL RIGHTS RESERVED. Accessed by David Dammon on Jun 21, 2017 12:30:52 PM pursuant to License Agreement with ICC. No further reproduction or distribution authorized. ANY UNAUTHORIZED REPRODUCTION OR DISTRIBUTION IS A VIOLATION OF THE FEDERAL COPYRIGHT ACT AND THE LICENSE AGREEMENT, AND SUBJECT TO CIVIL AND CRIMINAL PENALTIES THEREUNDER.

4. For wood-frame construction, a continuous rim joist is connected to ends of cantilever joists. When spliced, the rim joists shall be spliced using a galvanized metal tie not less than 0.058 inch (1.5 mm) (16 gage) and $1^1/_2$ inches (38 mm) wide fastened with six 16d nails on each side of the splice or a block of the same size as the rim joist of sufficient length to fit securely between the joist space at which the splice occurs fastened with eight 16d nails on each side of the splice; and
5. Gravity loads carried at the end of cantilevered joists are limited to uniform wall and roof loads and the reactions from headers having a span of 8 feet (2438 mm) or less.

2. Where a section of floor or roof is not laterally supported by shear walls or *braced wall lines* on all edges.

   Exception: Portions of floors that do not support shear walls or *braced wall panels* above, or roofs, shall be permitted to extend not more than 6 feet (1829 mm) beyond a shear wall or *braced wall line*.

3. Where the end of a *braced wall panel* occurs over an opening in the wall below and ends at a horizontal distance greater than 1 foot (305 mm) from the edge of the opening. This provision is applicable to shear walls and *braced wall panels* offset in plane and to *braced wall panels* offset out of plane as permitted by the exception to Item 1.

   Exception: For wood light-frame wall construction, one end of a *braced wall panel* shall be permitted to extend more than 1 foot (305 mm) over an opening not more than 8 feet (2438 mm) in width in the wall below provided that the opening includes a header in accordance with the following:

   1. The building width, loading condition and framing member species limitations of Table R602.7(1) shall apply; and
   2. Not less than one 2 × 12 or two 2 × 10 for an opening not more than 4 feet (1219 mm) wide; or
   3. Not less than two 2 × 12 or three 2 × 10 for an opening not more than 6 feet (1829 mm) in width; or
   4. Not less than three 2 × 12 or four 2 × 10 for an opening not more than 8 feet (2438 mm) in width; and
   5. The entire length of the *braced wall panel* does not occur over an opening in the wall below.

4. Where an opening in a floor or roof exceeds the lesser of 12 feet (3658 mm) or 50 percent of the least floor or roof dimension.

5. Where portions of a floor level are vertically offset.

   Exceptions:

   1. Framing supported directly by continuous foundations at the perimeter of the building.
   2. For wood light-frame construction, floors shall be permitted to be vertically offset when the floor framing is lapped or tied together as required by Section R502.6.1.

6. Where shear walls and *braced wall lines* do not occur in two perpendicular directions.

7. Where stories above *grade plane* partially or completely braced by wood wall framing in accordance with Section R602 or cold-formed steel wall framing in accordance with Section R603 include masonry or concrete construction. Where this irregularity applies, the entire *story* shall be designed in accordance with accepted engineering practice.

   Exception: Fireplaces, chimneys and masonry veneer as permitted by this code.

❖ Conventional light-frame construction typically allows cantilevers, offsets, etc., within certain limits in order to accommodate common design features and options. These features are not well suited to resisting earthquake forces. This becomes more of a concern in areas of higher seismic hazard. Where this is the case, it is preferable that the building, or more importantly the lateral-force-resisting system, be more "box-like" or regular.

Accordingly, this section identifies building features that are irregular and are not permitted under the concrete or conventional light-frame construction provisions in Seismic Design Categories C, D_0, D_1 and D_2. These irregular portions of structures must be designed in accordance with accepted engineering practice. A portion of a building is classified as "irregular" when one of the several conditions described in the code occurs.

Out-of-plane offsets in exterior braced wall lines have been recognized as a factor in buildings damaged by earthquakes. Where an offset occurs, the earthquake forces must be transferred through the floor framing. Thus, Item 1 stipulates that exterior shear wall lines or braced wall panels that are not in one plane vertically from the foundation to the uppermost story in which they are required constitute an irregularity as illustrated in Commentary Figure R301.2.2.2.5(1). The exception, illustrated in Commentary Figure R301.2.2.2.5(2), allows out-of-plane offsets not exceeding four times the nominal depth of the wood floor joists supporting the braced wall line above. There are five additional limitations that must be met to ensure the adequacy of the supporting floor framing. Use of this exception is limited to wood light-frame construction.

Typically, braced wall lines are located around the perimeter of floors and walls where forces are greatest. As Item 2 indicates, an irregularity occurs where a portion of a floor or roof is not laterally supported by shear walls or braced wall lines on all edges. This is shown in Commentary Figure R301.2.2.2.5(3). The exception permits a floor or roof to extend beyond a braced wall line as illustrated in Commentary Figure R301.2.2.2.5(4).

INTERNATIONAL CODE COUNCIL®
Copyright © 2015 ICC. ALL RIGHTS RESERVED. Accessed by David Dammon on Jun 21, 2017 12:30:52 PM pursuant to License Agreement with ICC. No further reproduction or distribution authorized. ANY UNAUTHORIZED REPRODUCTION OR DISTRIBUTION IS A VIOLATION OF THE FEDERAL COPYRIGHT ACT AND THE LICENSE AGREEMENT, AND SUBJECT TO CIVIL AND CRIMINAL PENALTIES THEREUNDER.

Where the end of a braced wall panel occurs over an opening in the wall below, an irregularity will be present if the panel extends a horizontal distance greater than 1 foot (305 mm) from the edge of the opening. As Commentary Figure R301.2.2.2.5(5) illustrates, this applies to braced wall panels offset out of plane, as well as in plane. An exception for wood light-frame construction permits a braced wall panel to extend more than 1 foot (305 mm) over an opening in the wall below if the opening includes a header, in accordance with this exception, and the entire length of the braced wall panel does not occur over the opening. Openings in floors are

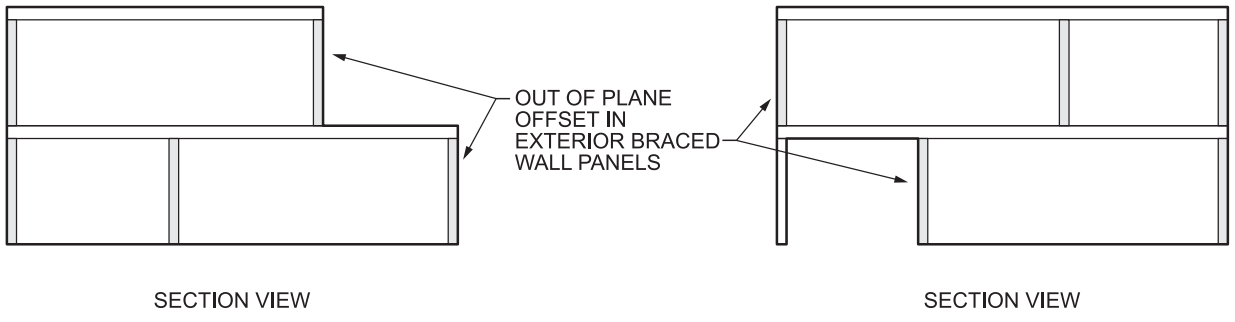

Figure R301.2.2.2.5(1)
BRACED WALL PANELS OUT OF PLANE

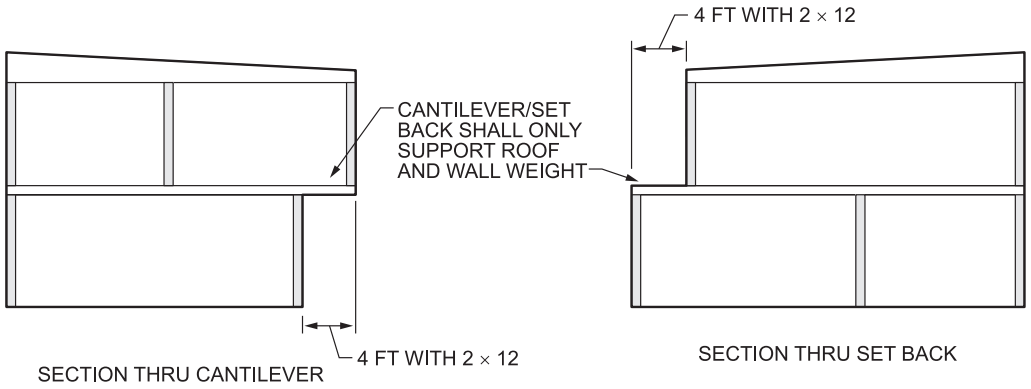

For SI: 1 inch = 25.4 mm, 1 foot = 304.8 mm.

Figure R301.2.2.2.5(2)
BRACED WALL PANELS SUPPORTED BY CANTILEVER OR SET BACK

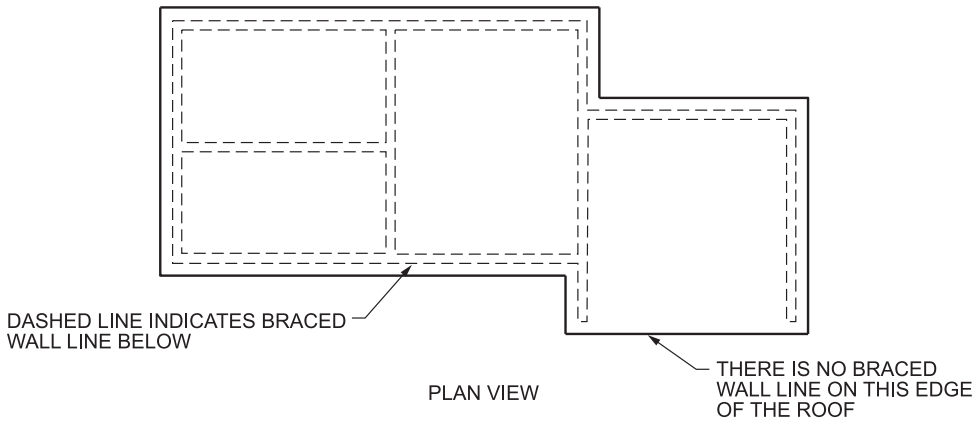

Figure R301.2.2.2.5(3)
FLOOR OR ROOF NOT SUPPORTED AT ALL EDGES

INTERNATIONAL CODE COUNCIL®
Copyright © 2015 ICC. ALL RIGHTS RESERVED. Accessed by David Dammon on Jun 21, 2017 12:30:52 PM pursuant to License Agreement with ICC. No further reproduction or distribution authorized. ANY UNAUTHORIZED REPRODUCTION OR DISTRIBUTION IS A VIOLATION OF THE FEDERAL COPYRIGHT ACT AND THE LICENSE AGREEMENT, AND SUBJECT TO CIVIL AND CRIMINAL PENALTIES THEREUNDER.

required in most buildings to provide for stairways, equipment chases, etc. If the size of the opening is large compared to the size of the floor diaphragm, earthquake forces may overstress portions of the diaphragm. Because this could result in premature failure of the diaphragm and, thus, constitute an incomplete load path, the code limits the size of such openings allowed under conventional light-frame construction. Commentary Figure R301.2.2.2.5(6) illustrates the irregularity created by an opening in a floor or roof that exceeds the lesser of 12 feet (3657 mm) or 50 percent of the least floor or roof dimension.

Commentary Figure R301.2.2.2.5(7) illustrates Item 5. An irregularity results where portions of a floor level are vertically offset. This limitation does not apply to framing that is supported directly by continuous foundations at the perimeter of the building. Also, in wood light-frame construction, floors may be vertically offset if the floor framing is lapped or tied together as required by Section R502.6.1.

More often than not, the shape of conventional light-frame buildings is regular with wall lines perpendicular to one another. Commentary Figure R301.2.2.2.5(8) depicts a nonorthogonal system. This type of irregularity occurs where shear walls or braced wall lines are not oriented perpendicular to each other.

In addition, an irregularity occurs if shear walls or braced wall lines are constructed of dissimilar bracing systems on any story level above grade plane. This requirement applies to the underlying framing system material, such as steel-framed shear walls or wood-framed braced wall panels combined with masonry or concrete construction in the same story.

Where this condition occurs, the entire story must be designed in accordance with accepted engineering practice.

Masonry or concrete fireplaces, chimneys and masonry veneer can be combined with steel or wood framing and not be considered irregular.

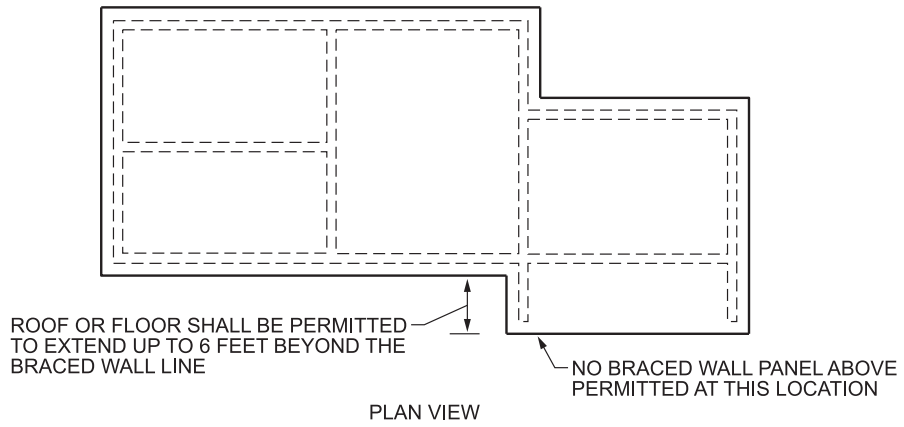

For SI: 1 foot = 304.8 mm.

Figure R301.2.2.2.5(4)
ROOF OR FLOOR EXTENSION BEYOND BRACED WALL LINE

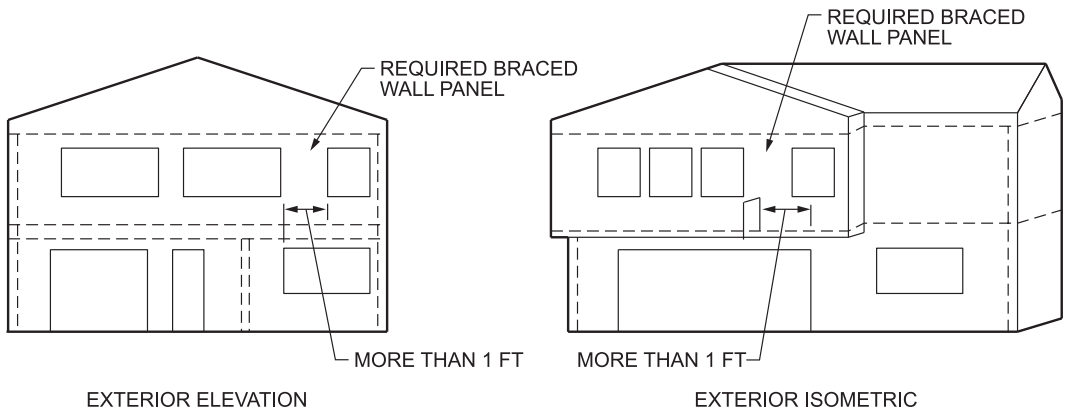

For SI: 1 foot = 304.8 mm.

Figure R301.2.2.2.5(5)
BRACED WALL PANEL EXTENSION OVER OPENING

INTERNATIONAL CODE COUNCIL®
Copyright © 2015 ICC. ALL RIGHTS RESERVED. Accessed by David Dammon on Jun 21, 2017 12:30:52 PM pursuant to License Agreement with ICC. No further reproduction or distribution authorized. ANY UNAUTHORIZED REPRODUCTION OR DISTRIBUTION IS A VIOLATION OF THE FEDERAL COPYRIGHT ACT AND THE LICENSE AGREEMENT, AND SUBJECT TO CIVIL AND CRIMINAL PENALTIES THEREUNDER.

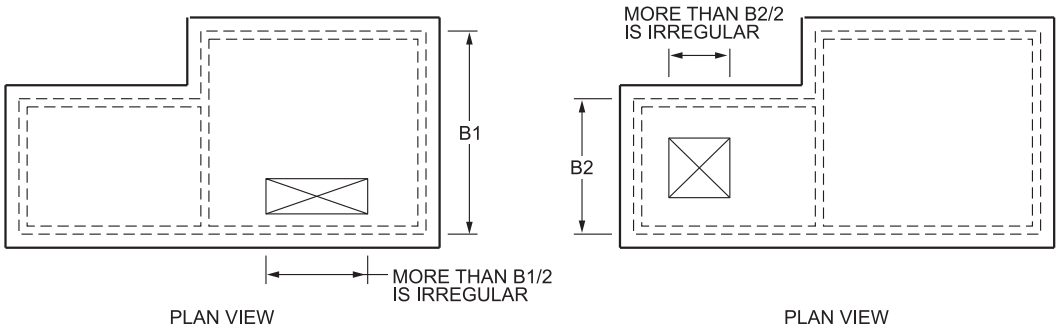

Figure R301.2.2.2.5(6)
OPENING LIMITATIONS FOR FLOOR AND ROOF DIAPHRAGMS

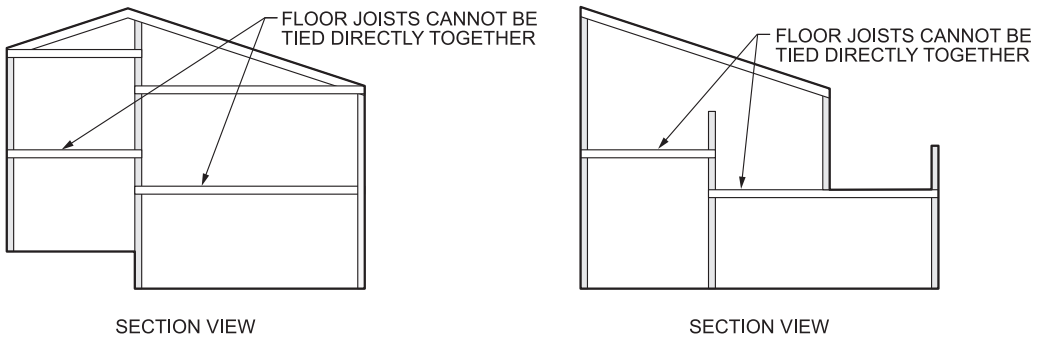

Figure R301.2.2.2.5(7)
PORTIONS OF FLOOR LEVEL OFFSET VERTICALLY

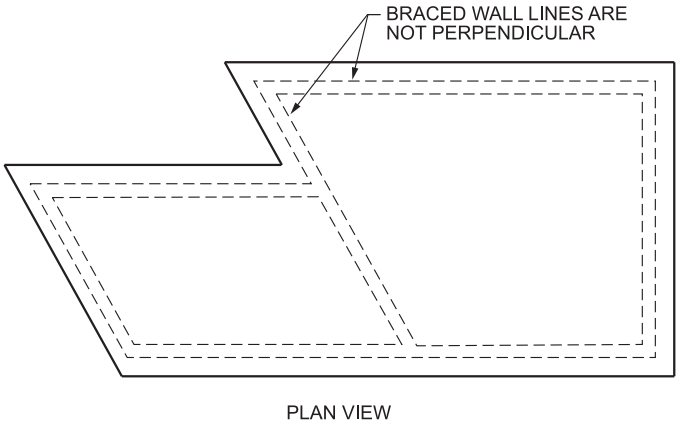

Figure R301.2.2.2.5(8)
BRACED WALL LINES NOT PERPENDICULAR

R301.2.2.3 Seismic Design Categories D_0, D_1 and D_2. Structures assigned to Seismic Design Categories D_0, D_1 and D_2 shall conform to the requirements for Seismic Design Category C and the additional requirements of this section.

❖ Seismic requirements are cumulative as the seismic design category becomes higher. A structure that is assigned to Seismic Design Category D_0, D_1 or D_2 must comply with all the seismic requirements for Seismic Design Category C structures (see Section R301.2.2.2, in addition to those for Seismic Design Categories D_0, D_1 and D_2).

R301.2.2.3.1 Height limitations. Wood-framed buildings shall be limited to three stories above *grade plane* or the limits given in Table R602.10.3(3). Cold-formed, steel-framed

INTERNATIONAL CODE COUNCIL®
Copyright © 2015 ICC. ALL RIGHTS RESERVED. Accessed by David Dammon on Jun 21, 2017 12:30:52 PM pursuant to License Agreement with ICC. No further reproduction or distribution authorized. ANY UNAUTHORIZED REPRODUCTION OR DISTRIBUTION IS A VIOLATION OF THE FEDERAL COPYRIGHT ACT AND THE LICENSE AGREEMENT, AND SUBJECT TO CIVIL AND CRIMINAL PENALTIES THEREUNDER.

buildings shall be limited to less than or equal to three stories above *grade plane* in accordance with AISI S230. Mezzanines as defined in Section R202 that comply with Section R325 shall not be considered as stories. Structural insulated panel buildings shall be limited to two stories above *grade plane*.

❖ This section limits the building height so that the lateral-force-resisting elements will not be overloaded during an earthquake. It provides a cross reference to other sections that limit the height of structures. Wood-framed buildings are generally limited to three stories. Floor levels meeting the limitations for mezzanines (see the definition in Chapter 2) need not be counted as a story.

R301.2.2.3.2 Stone and masonry veneer. Anchored stone and masonry veneer shall comply with the requirements of Sections R702.1 and R703.

❖ This section limits the height of stone and masonry veneer so that the bracing capacity will not be exceeded during an earthquake. This section references Sections R702.1 and R703. Tables R703.8.1(1) and R703.8(2) provide specific information on the maximum allowed height of veneer and the maximum allowed thickness and weight of veneer.

R301.2.2.3.3 Masonry construction. Masonry construction in Seismic Design Categories D_0 and D_1 shall comply with the requirements of Section R606.12.1. Masonry construction in Seismic Design Category D_2 shall comply with the requirements of Section R606.12.4.

❖ This is a cross reference to the section that is applicable to masonry seismic requirements.

R301.2.2.3.4 Concrete construction. Buildings with exterior above-*grade* concrete walls shall comply with PCA 100 or shall be designed in accordance with ACI 318.

❖ In Seismic Design Categories D_0, D_1 and D_2, exterior above-grade concrete walls must be engineered in accordance with PCA 100, *Prescriptive Design for Exterior Concrete Walls for One- and Two-family Dwellings*, or ACI 318, *Building Code Requirements for Structural Concrete*.

R301.2.2.3.5 Cold-formed steel framing in Seismic Design Categories D_0, D_1 and D_2. In Seismic Design Categories D_0, D_1 and D_2 in addition to the requirements of this code, cold-formed steel framing shall comply with the requirements of AISI S230.

❖ The prescriptive requirements for cold-formed steel framing in Seismic Design Category C are contained in the code. In addition to the seismic requirements found in the code, the cold-formed steel framing must comply with AISI S230.

R301.2.2.3.6 Masonry chimneys. Masonry chimneys shall be reinforced and anchored to the building in accordance with Sections R1003.3 and R1003.4.

❖ This is a cross reference to the section that is applicable to masonry chimney requirements.

R301.2.2.3.7 Anchorage of water heaters. Water heaters shall be anchored against movement and overturning in accordance with Section M1307.2.

❖ This is a cross reference to the section that is applicable to water heater anchorage.

R301.2.2.4 Seismic Design Category E. Buildings in Seismic Design Category E shall be designed to resist seismic loads in accordance with the *International Building Code*, except where the seismic design category is reclassified to a lower seismic design category in accordance with Section R301.2.2.1. Components of buildings not required to be designed to resist seismic loads shall be constructed in accordance with the provisions of this code.

❖ In an area that is close to a major active fault, where S_1 is greater than or equal to 1.25g, there is deemed to be considerable seismic risk, and the seismic design category is classified as E. Dwellings in Seismic Design Category E must be designed in accordance with Section 1613 of the IBC. The seismic design category classification is a key criterion in using and understanding the seismic requirements because the analysis method, general design, structural material detailing, and the structure's component and system design requirements are determined, at least in part, by the seismic design category. See the commentary to Section R301.2.2.1.2 for the alternative design of buildings in Seismic Design Category E.

R301.2.3 Snow loads. Wood-framed construction, cold-formed, steel-framed construction and masonry and concrete construction, and structural insulated panel construction in regions with ground snow loads 70 pounds per square foot (3.35 kPa) or less, shall be in accordance with Chapters 5, 6 and 8. Buildings in regions with ground snow loads greater than 70 pounds per square foot (3.35 kPa) shall be designed in accordance with accepted engineering practice.

❖ This section specifies the maximum ground snow load where the prescriptive provisions in Chapters 5, 6 and 8 apply.

The prescriptive provisions for floors, walls and roofs in Chapters 5, 6 and 8 apply in regions with ground snow loads of 70 psf (3.35 kPa) or less. Structures in regions with ground snow loads exceeding 70 psf (3.35 kPa) are beyond the limitations of these prescriptive provisions and, as stated in Section R301.1, a design would be required for all elements that carry snow loads. The ground snow load is to be determined using Figure R301.2(5) or by site-specific case studies as discussed in Section 7.0 of ASCE 7.

R301.2.4 Floodplain construction. Buildings and structures constructed in whole or in part in flood hazard areas (including A or V Zones) as established in Table R301.2(1), and substantial improvement and restoration of substantial damage of buildings and structures in flood hazard areas, shall be designed and constructed in accordance with Section R322. Buildings and structures that are located in more than one flood hazard area shall comply with the provisions associated with the most restrictive flood hazard area. Buildings and structures located in whole or in part in identified flood-

INTERNATIONAL CODE COUNCIL®
Copyright © 2015 ICC. ALL RIGHTS RESERVED. Accessed by David Dammon on Jun 21, 2017 12:30:52 PM pursuant to License Agreement with ICC. No further reproduction or distribution authorized. ANY UNAUTHORIZED REPRODUCTION OR DISTRIBUTION IS A VIOLATION OF THE FEDERAL COPYRIGHT ACT AND THE LICENSE AGREEMENT, AND SUBJECT TO CIVIL AND CRIMINAL PENALTIES THEREUNDER.

ways shall be designed and constructed in accordance with ASCE 24.

❖ Buildings in flood hazard areas must meet certain requirements. The requirements are intended to reduce flood damage and improve resistance to flood loads and other effects of flooding, such as saturation. See commentary for Section R105.3.1.1 regarding substantial improvement and substantial damage requirements. Some riverine flood plains are mapped to show floodways. Because floodways typically are characterized by deeper and faster moving water, it is appropriate that the design of buildings in these areas explicitly account for flood loads as called for in ASCE 24 (see commentary, Section R322). Where portions of buildings are located in different flood hazard areas, the entire building must comply with the most restrictive requirements.

R301.2.4.1 Alternative provisions. As an alternative to the requirements in Section R322, ASCE 24 is permitted subject to the limitations of this code and the limitations therein.

❖ This section provides an alternative for buildings and structures in all flood hazard areas to be designed and constructed according to ASCE 24.

R301.3 Story height. The wind and seismic provisions of this code shall apply to buildings with *story heights* not exceeding the following:

1. For wood wall framing, the *story height* shall not exceed 11 feet 7 inches (3531 mm) and the laterally unsupported bearing wall stud height permitted by Table R602.3(5).
2. For cold-formed steel wall framing, the *story height* shall be not more than 11 feet 7 inches (3531 mm) and the unsupported bearing wall stud height shall be not more than 10 feet (3048 mm).
3. For masonry walls, the *story height* shall be not more than 13 feet 7 inches (4140 mm) and the bearing wall clear height shall be not greater than 12 feet (3658 mm).

   Exception: An additional 8 feet (2438 mm) of bearing wall clear height is permitted for gable end walls.
4. For insulating concrete form walls, the maximum story height shall not exceed 11 feet 7 inches (3531 mm) and the maximum unsupported wall height per *story* as permitted by Section R608 tables shall not exceed 10 feet (3048 mm).
5. For structural insulated panel (SIP) walls, the story height shall be not greater than 11 feet 7 inches (3531 mm) and the bearing wall height per *story* as permitted by Section R610 tables shall not exceed 10 feet (3048 mm).

Individual walls or wall studs shall be permitted to exceed these limits as permitted by Chapter 6 provisions, provided that *story heights* are not exceeded. An engineered design shall be provided for the wall or wall framing members where the limits of Chapter 6 are exceeded. Where the *story height* limits of this section are exceeded, the design of the building, or the noncompliant portions thereof, to resist wind and seismic loads shall be in accordance with the *International Building Code*.

❖ This section defines the story height and wall height limits. These story heights are the basis for the wind- and seismic-force-resisting system. The wall heights are based on the materials used for wall construction. The wall height limits are prescribed for wood, steel, masonry and concrete. The story height permitted is the wall height including floor framing [not to exceed 16 inches (406 mm)]. The story height may vary depending on the material used for wall construction. Individual walls or wall studs are permitted to exceed these limits as permitted by Chapter 6 provisions, provided story heights are not exceeded. An engineered design must be provided for the wall or wall framing members when they exceed the limits of Chapter 6. However, if the story heights of this section are exceeded, an engineered design in accordance with the IBC must be provided for the building, or noncompliant portion thereof, for wind and seismic lateral forces.

R301.4 Dead load. The actual weights of materials and construction shall be used for determining dead load with consideration for the dead load of fixed service *equipment*.

❖ The actual weights of the materials used in the construction of a structure must be used to determine the dead loads. The code requires the weight of fixed service equipment (see the definition in Chapter 2) to be included, as well. It is important to verify that the actual dead loads of proposed buildings are within the limits of the dead load allowance in the prescriptive design tables of subsequent chapters. Otherwise, in accordance with Section R301.1, an engineered design is required. Also, the dead load limits of Section R301.2.2.2.1 must be met where required by a structure's seismic design category as explained in the commentary to Section R301.2.2.

The dead load of a building or other structure is the weight of all permanent construction, such as floors, roofs, permanent partitions, stairways and walls. The actual weights of materials and construction should be considered in the building design along with the dead load of fixed service equipment. Commentary Figure R301.4 lists the weight of typical residential building components. Sources of information for weights of fixed service equipment include manufacturer's literature and trade association publications.

INTERNATIONAL CODE COUNCIL®
Copyright © 2015 ICC. ALL RIGHTS RESERVED. Accessed by David Dammon on Jun 21, 2017 12:30:52 PM pursuant to License Agreement with ICC. No further reproduction or distribution authorized. ANY UNAUTHORIZED REPRODUCTION OR DISTRIBUTION IS A VIOLATION OF THE FEDERAL COPYRIGHT ACT AND THE LICENSE AGREEMENT, AND SUBJECT TO CIVIL AND CRIMINAL PENALTIES THEREUNDER.

COMPONENT	LOAD (psf)
CEILINGS	
Acoustical fiber tile	1
Gypsum board (per $^1/_8$-inch thickness)	0.55
Mechanical duct allowance	4
Plaster on tile or concrete	5
Plaster on wood lath	8
Suspended steel channel system	2
Suspended metal lath and cement plaster	15
Suspended metal lath and gypsum plaster	10
Wood-furring suspension system	2.5
COVERINGS, ROOF AND WALL	
Asbestos-cement shingles	4
Asphalt shingles	2
Cement tile	16
Clay tile (for mortar add 10 lb)	
Book tile, 2-inch	12
Book tile, 3-inch	20
Ludowici	10
Roman	12
Spanish	19
Composition:	
Three-ply ready roofing	1
Four-ply felt and gravel	5.5
Five-ply felt and gravel	6
Copper or tin	1
Corrugated asbestos-cement roofing	4
Deck, metal 20 gage	2.5
Deck, metal, 18 gage	3
Decking, 2-inch wood (Douglas fir)	5
Decking, 3-inch wood (Douglas fir)	8
Fiberboard, 2-inch	0.75
Gypsum sheathing, 2-inch	2
Insulation, roof boards (per inch thickness)	
Cellular glass	0.7
Fibrous glass	1.1
Fiberboard	1.5
Perlite	0.8
Polystyrene foam	0.2
Urethane foam with skin	0.5
Plywood (per $^1/_8$-inch thickness)	0.4
Rigid insulation, 2-inch	0.75
Skylight, metal frame, $^3/_8$-inch wired glass	8
Slate, $^3/_{16}$-inch	7
Slate, $^1/_4$-inch	10
Structural insulated panelsw (SIPs)	
$4^1/_2$-inch thick	3
$6^1/_2$-inch thick	3.5
$8^1/_2$-inch thick	3.5
$10^1/_2$-inch thick	4.0
$12^1/_2$-inch thick	4.5
Waterproofing members	
Bituminous, gravel-covered	5.5
Bituminous, smooth surface	1.5
Liquid applied	1.0
Single-ply, sheet	0.7
Wood sheathing (per 1-inch thickness)	3
Wood shingles	3

COMPONENT	LOAD (psf)
FLOORS AND FLOOR FINISHES	
Asphalt block (2-inch), $^1/_2$-inch mortar	30
Cement finish (1-inch) on stone-concrete fill	32
Ceramic or quarry tile ($^3/_4$-inch) on $^1/_2$-inch motar bed	16
Ceramic or quarry tile ($^3/_4$-inch) on 1-inch motar bed	23
Concrete fill finish (per thickness)	12
Hardwood flooring, $^7/_8$-inch	4
Linoleum or asphalt tile, $^1/_4$-inch	1
Marble and motar on stone-concrete fill	33
Slate (per inch thickness)	15
Solid flat tile on 1-inch motar base	23
Subflooring, $^3/_4$-inch	3
Terrazzo (12-inch) directly on slab	19
Terrazzo (1-inch) on stone-concrete fill	32
Terrazzo (1-inch) 2-inch stone concrete	32
Wood block (3-inch) on mastic, no fill	10
Wood block (3-inch) on 2-inch mortar base	16

FLOOR, WOOD-JOIST (NO PLASTER) DOUBLE WOOD FLOOR

Joint Sizes (inches	12-inch spacing (lb/ft^2)	16-inch spacing (1b/ft^2)	24-inch spacing (lb/ft^2)
2 × 6	6	5	5
2 × 8	6	6	5
2 × 10	7	6	6
2 × 12	8	7	6

FRAME PARTITIONS	
Moveable steel partitions	4
Wood or steel studs, 2-inch gypsum board each side	8
Wood studs, 2 × 4 unplastered	4
Wood studs, 2 × 4, plastered one side	12
Wood studs, 2 × 4, plastered two sides	20
FRAME WALLS	
Exterior stud walls:	
2 × 4 @ 16 inches, $^5/_8$-inch gypsum insulated, $^3/_8$-inch siding	11
2 × 6 @ 16 inches, $^5/_8$-inch gypsum insulated, $^3/_8$-inch siding	12
Exterior stud walls, with brick veneer	48
Windows, glass, frame and sash	8
MASONRY PARTITIONS AND WALLS	
Clay tile:	
4-inch	18
6-inch	24
8-inch	24
Concrete block, heavy aggregate:	
4-inch	30
6-inch	42
8-inch	55
12-inch	85
Concrete block, light aggregate:	
4-inch	20
6-inch	28
8-inch	38
12-inch	55

For SI:1 pound per square foot = 0.0479 kPa, 1 inch = 25.4 mm, 1 pound = 0.4536 kg.

Note: Weights of masonry include mortar but nor plaster. For plaster add 5 lb/ft^2 for each inch of plaster. Values given represent averages. In some cases there is considerable range for the same construction.

Figure R301.4
MINIMUM DESIGN DEAD LOADS FOR TYPICAL RESIDENTIAL COMPONENTS

INTERNATIONAL CODE COUNCIL®
Copyright © 2015 ICC. ALL RIGHTS RESERVED. Accessed by David Dammon on Jun 21, 2017 12:30:52 PM pursuant to License Agreement with ICC. No further reproduction or distribution authorized. ANY UNAUTHORIZED REPRODUCTION OR DISTRIBUTION IS A VIOLATION OF THE FEDERAL COPYRIGHT ACT AND THE LICENSE AGREEMENT, AND SUBJECT TO CIVIL AND CRIMINAL PENALTIES THEREUNDER.

R301.5 Live load. The minimum uniformly distributed live load shall be as provided in Table R301.5.

❖ Table R301.5 lists the minimum uniformly distributed live loads (see the definition in Chapter 2) required for design of various portions of a residence. These loads are the basis for the prescriptive tables for floor systems in Chapter 5.

TABLE R301.5
MINIMUM UNIFORMLY DISTRIBUTED LIVE LOADS
(in pounds per square foot)

USE	LIVE LOAD
Uninhabitable attics without storage[b]	10
Uninhabitable attics with limited storage[b, g]	20
Habitable attics and attics served with fixed stairs	30
Balconies (exterior) and decks[e]	40
Fire escapes	40
Guards and handrails[d]	200[h]
Guard in-fill components[f]	50[h]
Passenger vehicle garages[a]	50[a]
Rooms other than sleeping rooms	40
Sleeping rooms	30
Stairs	40[c]

For SI: 1 pound per square foot = 0.0479 kPa, 1 square inch = 645 mm^2, 1 pound = 4.45 N.

a. Elevated garage floors shall be capable of supporting a 2,000-pound load applied over a 20-square-inch area.

b. Uninhabitable *attics* without storage are those where the clear height between joists and rafters is not more than 42 inches, or where there are not two or more adjacent trusses with web configurations capable of accommodating an assumed rectangle 42 inches in height by 24 inches in width, or greater, within the plane of the trusses. This live load need not be assumed to act concurrently with any other live load requirements.

c. Individual stair treads shall be designed for the uniformly distributed live load or a 300-pound concentrated load acting over an area of 4 square inches, whichever produces the greater stresses.

d. A single concentrated load applied in any direction at any point along the top.

e. See Section R507.1 for decks attached to *exterior walls*.

f. *Guard* in-fill components (all those except the handrail), balusters and panel fillers shall be designed to withstand a horizontally applied normal load of 50 pounds on an area equal to 1 square foot. This load need not be assumed to act concurrently with any other live load requirement.

g. Uninhabitable *attics* with limited storage are those where the clear height between joists and rafters is not greater than 42 inches, or where there are two or more adjacent trusses with web configurations capable of accommodating an assumed rectangle 42 inches in height by 24 inches in width, or greater, within the plane of the trusses.

The live load need only be applied to those portions of the joists or truss bottom chords where all of the following conditions are met:

1. The *attic* area is accessible from an opening not less than 20 inches in width by 30 inches in length that is located where the clear height in the *attic* is not less than 30 inches.
2. The slopes of the joists or truss bottom chords are not greater than 2 inches vertical to 12 units horizontal.
3. Required insulation depth is less than the joist or truss bottom chord member depth.

The remaining portions of the joists or truss bottom chords shall be designed for a uniformly distributed concurrent live load of not less than 10 pounds per square foot.

h. Glazing used in handrail assemblies and *guards* shall be designed with a safety factor of 4. The safety factor shall be applied to each of the concentrated loads applied to the top of the rail, and to the load on the in-fill components. These loads shall be determined independent of one another, and loads are assumed not to occur with any other live load.

❖ The uniform live loads of this table are consistent with Table 1607.1 of the IBC, which in turn is similar to ASCE 7. The table provides the minimum loads based on the use of a particular area or portion of a structure that must be considered for the design of corresponding structural elements of any residence constructed under the code. For instance, bedrooms (sleeping rooms) require use of a 30-psf (1.48 kN/m^2) live load, while all other rooms must be designed for 40-psf (1915 kN/m^2) uniform live load.

Attics with limited storage must be designed for 20-psf (957.6 N/m^2) live loads, while a 10-psf (0.48 kN/m^2) live load is required without storage. Note b provides criteria for when an attic is to be considered too small to provide adequate space for storage. Also, attics not required to have access in accordance with Section R807 may be considered as attics without storage. Habitable attics and attics accessed by fixed stairs, as they may be finished later, must be designed for a 30 psf (1.44 kN/m^2) live load. Note g provides criteria for when the attic space is considered large enough to become potential storage or living space.

R301.6 Roof load. The roof shall be designed for the live load indicated in Table R301.6 or the snow load indicated in Table R301.2(1), whichever is greater.

❖ The basic 20-psf (0.96 kN/m^2) roof live load indicated in Table R301.6 is a severe enough loading condition on the roof to address the support live loads created by maintenance workers, including their equipment and materials. The code permits reduction of this basic live load based on the tributary area supported by any structural member of the roof. The rationale for this reduction of the roof live load is that it is highly improbable that structural members with large tributary areas would be loaded over the entire area with the full live load. In addition, the reduction of the basic roof live load for roofs is also a function of the slope of the roof because it becomes less probable that the loads on the roof members would be at maximum levels as the roof slope increases.

The code requires that the roof be designed to resist snow loading and does not permit a reduction of snow loads based on the tributary area, as it does for the roof live load. Be aware, however, that snow on the roof rarely accumulates evenly. The design should account for unbalanced snow loading. One case would be the loading of one slope of a gable roof with snow while the other slope is unloaded. Many roofs fail from accumulation of snow at valleys, parapets, roof structures and offsets in roofs. However, the code does not specify criteria for the determination of how these potential accumulations are to be handled. Snow loading provisions in the IBC may be consulted for these loading scenarios.

INTERNATIONAL CODE COUNCIL®
Copyright © 2015 ICC. ALL RIGHTS RESERVED. Accessed by David Dammon on Jun 21, 2017 12:30:52 PM pursuant to License Agreement with ICC. No further reproduction or distribution authorized. ANY UNAUTHORIZED REPRODUCTION OR DISTRIBUTION IS A VIOLATION OF THE FEDERAL COPYRIGHT ACT AND THE LICENSE AGREEMENT, AND SUBJECT TO CIVIL AND CRIMINAL PENALTIES THEREUNDER.

TABLE R301.6
MINIMUM ROOF LIVE LOADS IN POUNDS-FORCE PER SQUARE FOOT OF HORIZONTAL PROJECTION

ROOF SLOPE	TRIBUTARY LOADED AREA IN SQUARE FEET FOR ANY STRUCTURAL MEMBER		
	0 to 200	201 to 600	Over 600
Flat or rise less than 4 inches per foot (1:3)	20	16	12
Rise 4 inches per foot (1:3) to less than 12 inches per foot (1:1)	16	14	12
Rise 12 inches per foot (1:1) and greater	12	12	12

For SI: 1 square foot = 0.0929 m^2, 1 pound per square foot = 0.0479 kPa, 1 inch per foot = 83.3 mm/m.

❖ See the commentary to Section R301.6.

R301.7 Deflection. The allowable deflection of any structural member under the live load listed in Sections R301.5 and R301.6 or wind loads determined by Section R301.2.1 shall not exceed the values in Table R301.7.

❖ The allowable deflection of structural members from the design live load must not exceed the values in Table R301.7. These limits are expressed in terms of the span length. Brittle finishes, such as plaster ceilings and exterior stucco walls, are protected by limiting the deflection of those elements.

Commentary Figure R301.7 shows a simply supported beam with dead load deflection before the live load has been applied. It also shows the same beam after the live load has been applied. The vertical distance that the center of the beam has moved from the initial dead load deflection position is called the live load deflection. If a finish material is applied to this beam, the finish material is subject to distortion in proportion to this deflection.

TABLE R301.7
ALLOWABLE DEFLECTION OF STRUCTURAL MEMBERS[b, c]

STRUCTURAL MEMBER	ALLOWABLE DEFLECTION
Rafters having slopes greater than 3:12 with finished ceiling not attached to rafters	*L*/180
Interior walls and partitions	*H*/180
Floors	*L*/360
Ceilings with brittle finishes (including plaster and stucco)	*L*/360
Ceilings with flexible finishes (including gypsum board)	*L*/240
All other structural members	*L*/240
Exterior walls—wind loads[a] with plaster or stucco finish	*H*/360
Exterior walls—wind loads[a] with other brittle finishes	*H*/240
Exterior walls—wind loads[a] with flexible finishes	*H*/120[d]
Lintels supporting masonry veneer walls[e]	*L*/600

Note: *L* = span length, *H* = span height.

a. For the purpose of the determining deflection limits herein, the wind load shall be permitted to be taken as 0.7 times the component and cladding (ASD) loads obtained from Table R301.2(2).

b For cantilever members, *L* shall be taken as twice the length of the cantilever.

c. For aluminum structural members or panels used in roofs or walls of sunroom additions or patio covers, not supporting edge of glass or sandwich panels, the total load deflection shall not exceed *L*/60. For continuous aluminum structural members supporting edge of glass, the total load deflection shall not exceed *L*/175 for each glass lite or *L*/60 for the entire length of the member, whichever is more stringent. For sandwich panels used in roofs or walls of sunroom additions or patio covers, the total load deflection shall not exceed *L*/120.

d. Deflection for *exterior walls* with interior gypsum board finish shall be limited to an allowable deflection of *H*/180.

e. Refer to Section R703.8.2.

❖ Generally, it is not necessary to calculate the deflection indicated in Table R301.7, since the deflection limit is typically accounted for in the prescriptive design tables of the code. Since this is not the case for elements that required design in accordance with Section R301.1.2, the following example illustrates this requirement.

Example:

What is the maximum allowable deflection of a 20-foot (6096 mm) span with the following conditions?

a. Rafter with no ceiling load having a slope of 5 units vertical in 12 units horizontal (42 percent).

b. Rafters with no ceiling load having a slope of 2 units in 12 units horizontal (17 percent).

c. A floor joist supporting a finished floor.

Solution:

Length = Span = 20-feet (6096 mm)

a. D MAX = L/180 = 20 feet 12 inches/180 = 1.33 inches or approx. $1^3/_8$ inches (35 mm)

b. D MAX = L/240 = 20 feet 12 inches/240 = 1.00 inches or approx. 1 inch (25.4 mm)

c. D MAX = L/360 = 20 feet 12 inches/360 = 0.67 inches or approx. $^5/_8$ inch (15.9 mm)

R301.8 Nominal sizes. For the purposes of this code, dimensions of lumber specified shall be deemed to be nominal dimensions unless specifically designated as actual dimensions.

❖ Because solid-sawn lumber sizes are normally referred to using the nominal lumber dimensions, this clarification explains that any code references to lumber dimensions are to be taken as nominal dimensions unless explicitly stated otherwise.

SECTION R302
FIRE-RESISTANT CONSTRUCTION

❖ This section groups the fire-resistant construction requirements for building elements that are located between and within dwelling units and within close proximity of lot lines. This section addresses exterior wall location; townhouse separation; two-family dwellings separation; rated penetrations; garage penetrations; garage separation; under-stair protection; flame spread and smoke development; insulation; fireblocking; draft stopping required and insulation clearance from heat-producing devices.

INTERNATIONAL CODE COUNCIL®
Copyright © 2015 ICC. ALL RIGHTS RESERVED. Accessed by David Dammon on Jun 21, 2017 12:30:52 PM pursuant to License Agreement with ICC. No further reproduction or distribution authorized. ANY UNAUTHORIZED REPRODUCTION OR DISTRIBUTION IS A VIOLATION OF THE FEDERAL COPYRIGHT ACT AND THE LICENSE AGREEMENT, AND SUBJECT TO CIVIL AND CRIMINAL PENALTIES THEREUNDER.

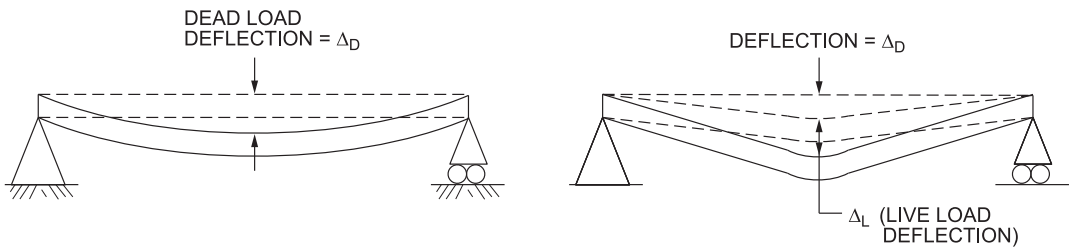

Figure R301.7
BEAM DEFLECTION

R302.1 Exterior walls. Construction, projections, openings and penetrations of *exterior walls* of *dwellings* and accessory buildings shall comply with Table R302.1(1); or *dwellings* equipped throughout with an *automatic sprinkler system* installed in accordance with Section P2904 shall comply with Table R302.1(2).

Exceptions:

1. Walls, projections, openings or penetrations in walls perpendicular to the line used to determine the *fire separation distance*.
2. Walls of *dwellings* and *accessory structures* located on the same *lot*.
3. Detached tool sheds and storage sheds, playhouses and similar structures exempted from permits are not required to provide wall protection based on location on the *lot*. Projections beyond the *exterior wall* shall not extend over the *lot line*.
4. Detached garages accessory to a *dwelling* located within 2 feet (610 mm) of a *lot line* are permitted to have roof eave projections not exceeding 4 inches (102 mm).
5. Foundation vents installed in compliance with this code are permitted.

❖ This section provides details for issues related to building location on the property, including the fire rating of exterior walls, permitted openings and projections. Tables R302.1(1) and R302.1(2) provide a tabular overview of the requirements of this section.

Concerning exterior wall protection, the code assumes that an owner has no control over an adjoining property. Thus, the location of buildings on the owner's property relative to the property line requires regulation. In addition, Section R302.6, which lists the separation requirements for garages and carports, specifically requires garages located less than 3 feet (914 mm) from a dwelling unit on the same lot to have not less than $^1/_2$-inch (12.7 mm) gypsum board applied to the interior side of the walls. Opening protection for these walls is regulated by Section R302.5.

TABLE R302.1(1)
EXTERIOR WALLS

EXTERIOR WALL ELEMENT		MINIMUM FIRE-RESISTANCE RATING	MINIMUM FIRE SEPARATION DISTANCE
Walls	Fire-resistance rated	1 hour—tested in accordance with ASTM E119 or UL 263 with exposure from both sides	< 5 feet
	Not fire-resistance rated	0 hours	≥ 5 feet
Projections	Not allowed	N/A	< 2 feet
	Fire-resistance rated	1 hour on the underside[a, b]	≥ 2 feet to < 5 feet
	Not fire-resistance rated	0 hours	≥ 5 feet
Openings in walls	Not allowed	N/A	< 3 feet
	25% maximum of wall area	0 hours	3 feet
	Unlimited	0 hours	5 feet
Penetrations	All	Comply with Section R302.4	< 3 feet
		None required	3 feet

For SI: 1 foot = 304.8 mm.

N/A = Not Applicable.

a. Roof eave fire-resistance rating shall be permitted to be reduced to 0 hours on the underside of the eave if fireblocking is provided from the wall top plate to the underside of the roof sheathing.

b. Roof eave fire-resistance rating shall be permitted to be reduced to 0 hours on the underside of the eave provided that gable vent openings are not installed.

❖ See the commentary to Section R302.1.

INTERNATIONAL CODE COUNCIL®
Copyright © 2015 ICC. ALL RIGHTS RESERVED. Accessed by David Dammon on Jun 21, 2017 12:30:52 PM pursuant to License Agreement with ICC. No further reproduction or distribution authorized. ANY UNAUTHORIZED REPRODUCTION OR DISTRIBUTION IS A VIOLATION OF THE FEDERAL COPYRIGHT ACT AND THE LICENSE AGREEMENT, AND SUBJECT TO CIVIL AND CRIMINAL PENALTIES THEREUNDER.

The property line concept is a convenient means of protecting one building from another as far as exposure is concerned. Exposure is the potential for heat to be transmitted from one building to another during a fire in the exposing building. Radiation is the primary means of heat transfer.

Table R302.1(1) specifies the exterior wall elements, fire separation distance and fire-resistance rating for dwellings without sprinkler systems. Walls less than 5 feet (1525 mm) from the property line must be of 1-hour fire-resistant construction. The fire-resistance rating also requires the rating exposure to be for both sides. The exterior rated walls are required to be an assembly that has been tested in accordance with either ASTM E119 or UL 263. This is not intended to limit fire-resistance-rated assemblies solely to the test criteria contained in these standards. Section R104.11 still allows the building official to approve alternative fire-resistance methodologies, such as those described in Section 703.3 of the IBC. This would still allow a builder to use acceptable engineering analysis, calculations in accordance with Section 721 of the IBC or prescriptive assemblies permitted by Section 720 of the IBC as alternatives to the standards contained within the code.

Projections cannot be closer than 2 feet (610 mm) from the lot line. Projections that have a fire separation distance of less than 5 feet (1525 mm) from the lot line in unsprinklered buildings, or less than 3 feet in sprinklered buildings, are required to be protected on the underside with 1-hour fire-resistant construction in accordance with Tables R302.1(1) and R302.1(2), respectively [see Commentary Figure R302.1(1)]. Footnotes to the tables allow the underside protection to be omitted where fireblocking is provided or gable vents openings are not present.

Unlike the IBC, the code does not set a distance from the property line at which openings must be protected. Openings are not permitted in exterior walls where the exterior wall has a fire separation distance of less than 3 feet (914 mm) from the lot line. Openings in a wall with a fire separation distance that is equal to or greater than 3 feet (914 mm), but less than 5 feet (1525 mm) from the lot line, cannot exceed 25 percent of the maximum wall area [see Commentary Figures R302.1(2) and R302.1(3)]. The consensus as to the minimum distance necessary to provide a sufficient buffer against the spread of fire has changed somewhat over the years. For example, the 2000 and 2003 editions of the IRC required a 3-foot (914 mm) minimum fire separation distance for unrated exterior walls. In the 2006 edition, that distance was increased to 5 feet (1525 mm) to provide a higher level of safety and to correlate with the provisions for residential occupancies regulated by the IBC. The 2009 IRC introduced requirements for automatic fire sprinkler systems in all new one- and two-family dwellings and townhouses. Table R302.1(2) permits nonrated walls that have a 3-foot (914 mm) minimum fire separation distance, a dimension previously prescribed in earlier editions of the code. The 3-foot (914 mm) dimension specified in Table R302.1(2) is the new threshold for exterior wall construction, projections, openings and penetrations for dwellings that are sprinklered in accordance with Section P2904 or NFPA 13D. For dwellings without sprinkler systems, the 5-foot (1525 mm) separation distance still applies.

The reduced clearances are intend to provide design flexibility and reduce costs associated with fire-resistant construction, while maintaining a reasonable level of safety based on past performance of dwelling fire sprinkler systems. A dwelling automatic sprinkler system installed in accordance with Section P2904 or NFPA 13D aids in the detection and control of fires in residential occupancies regulated by the IRC. The design criteria of these sprinkler systems are for life

TABLE R302.1(2)
EXTERIOR WALLS—DWELLINGS WITH FIRE SPRINKLERS

EXTERIOR WALL ELEMENT		MINIMUM FIRE-RESISTANCE RATING	MINIMUM FIRE SEPARATION DISTANCE
Walls	Fire-resistance rated	1 hour—tested in accordance with ASTM E119 or UL 263 with exposure from the outside	0 feet
	Not fire-resistance rated	0 hours	3 feet[a]
Projections	Not allowed	N/A	< 2 feet
	Fire-resistance rated	1 hour on the underside[b, c]	2 feet[a]
	Not fire-resistance rated	0 hours	3 feet
Openings in walls	Not allowed	N/A	< 3 feet
	Unlimited	0 hours	3 feet[a]
Penetrations	All	Comply with Section R302.4	< 3 feet
		None required	3 feet[a]

For SI: 1 foot = 304.8 mm.
N/A = Not Applicable

a. For residential subdivisions where all *dwellings* are equipped throughout with an automatic sprinkler system installed in accordance with Section P2904, the *fire separation distance* for nonrated exterior walls and rated projections shall be permitted to be reduced to 0 feet, and unlimited unprotected openings and penetrations shall be permitted, where the adjoining *lot* provides an open setback *yard* that is 6 feet or more in width on the opposite side of the property line.

b. The roof eave fire-resistance rating shall be permitted to be reduced to 0 hours on the underside of the eave if fireblocking is provided from the wall top plate to the underside of the roof sheathing.

c. The roof eave fire-resistance rating shall be permitted to be reduced to 0 hours on the underside of the eave provided that gable vent openings are not installed.

❖ See the commentary to Section R302.1.

INTERNATIONAL CODE COUNCIL®
Copyright © 2015 ICC. ALL RIGHTS RESERVED. Accessed by David Dammon on Jun 21, 2017 12:30:52 PM pursuant to License Agreement with ICC. No further reproduction or distribution authorized. ANY UNAUTHORIZED REPRODUCTION OR DISTRIBUTION IS A VIOLATION OF THE FEDERAL COPYRIGHT ACT AND THE LICENSE AGREEMENT, AND SUBJECT TO CIVIL AND CRIMINAL PENALTIES THEREUNDER.

safety to buy time for occupants to escape a fire; dwelling fire sprinklers are not designed for property protection. Sprinklers in accordance with Section P2904 or NFPA 13D are not required throughout the dwelling-they generally may be omitted in concealed spaces, closets, bathrooms, garages, and attics and crawl spaces without gas-fired appliances, for example. However, the automatic sprinkler system is expected to prevent total fire involvement (flashover) in the room of fire origin if the room is sprinklered. In addition to increasing the likelihood of occupants escaping or being evacuated, sprinklers often provide some measure of property protection as well.

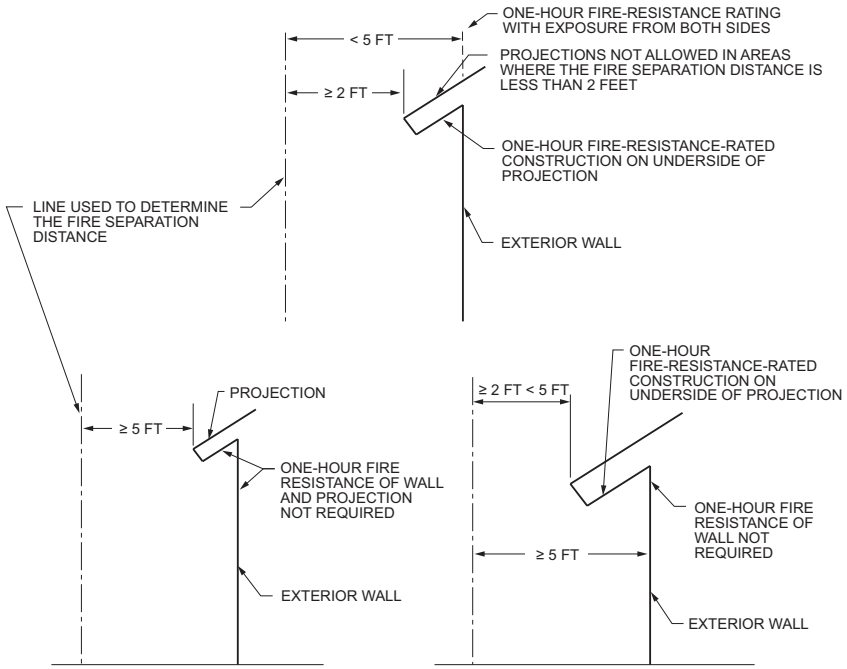

For SI: 1 foot = 304.8 mm.

Figure R302.1(1)
EXTERIOR WALLS AND PROJECTIONS FOR DWELLINGS WITHOUT AUTOMATIC SPRINKLER SYSTEMS

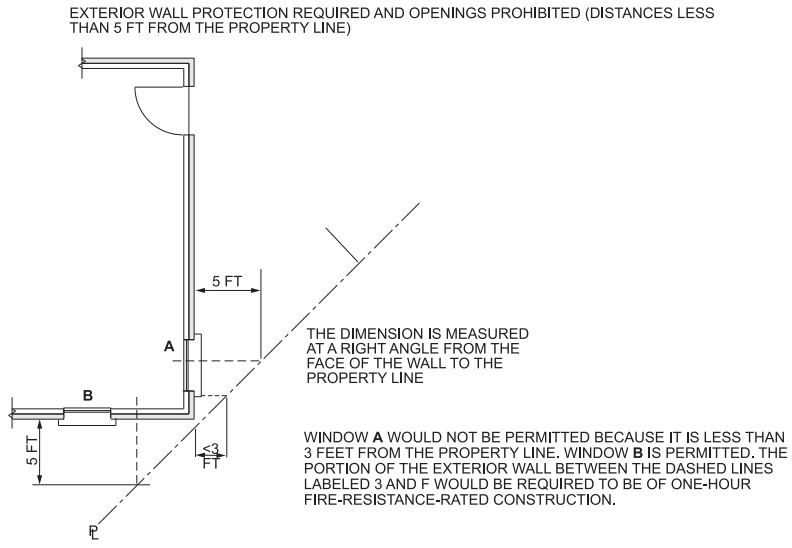

For SI: 1 foot = 304.8 mm.

Figure R302.1(2)
EXTERIOR WALL FIRE-RESISTANCE-RATED REQUIREMENTS AND PROHIBITED OPENINGS FOR DWELLINGS WITHOUT AUTOMATIC SPRINKLER SYSTEMS

INTERNATIONAL CODE COUNCIL®
Copyright © 2015 ICC. ALL RIGHTS RESERVED. Accessed by David Dammon on Jun 21, 2017 12:30:52 PM pursuant to License Agreement with ICC. No further reproduction or distribution authorized. ANY UNAUTHORIZED REPRODUCTION OR DISTRIBUTION IS A VIOLATION OF THE FEDERAL COPYRIGHT ACT AND THE LICENSE AGREEMENT, AND SUBJECT TO CIVIL AND CRIMINAL PENALTIES THEREUNDER.

Note a to Table R302.1(2) allows exterior walls in subdivisions where all dwellings are equipped with sprinkler systems to be placed on the lot line if the adjacent lot maintains a 6-foot (1829 mm) setback for buildings on the opposite side of the lot line. This provision allows flexibility in placing buildings on the lot for maximum effective use of the buildable area while still maintaining a minimum 6 feet (1829 mm) of clearance between buildings. Commentary Figure R302.1 summarizes the fire separation distance requirements for exterior walls that are not fire-resistance rated.

Exception 1 permits walls, openings, projections or penetrations that are 90 degrees (1.57 rad) (perpendicular) to the line used to determine the fire separation distance to be exempt from the requirements of Tables R302.1(1) and R302.1(2). Section R302.4 describes through penetrations and membrane penetrations in detail (see the definition of "Fire separation distance" in Chapter 2) [see Commentary Figures R302.1(2) and R302.1(3)].

Exception 2 allows dwellings and accessory structures, on the same lot, to be considered one building such that the requirements of Tables R302.1(1) and R302.1(2) will not apply to the exterior walls facing each other. This exception eliminates the imaginary line between two buildings on the lot when measuring the fire separation distance. Tables R302.1(1) and R302.1(2) will apply to the other exterior walls of the buildings.

Exception 3 applies to detached tool and storage sheds, playhouses and similar structures that are exempt from permits. Projections from these structures, however, are not permitted to extend over the property line.

Exception 4 will allow roof eave projection for detached garages to be closer than 2 feet (610 mm) from the lot line, but limits the roof eave projection to 4 inches (102 mm). This projection cannot extend over the property line.

Exception 5 allows foundation vents installed in compliance with the code in areas where openings are otherwise prohibited.

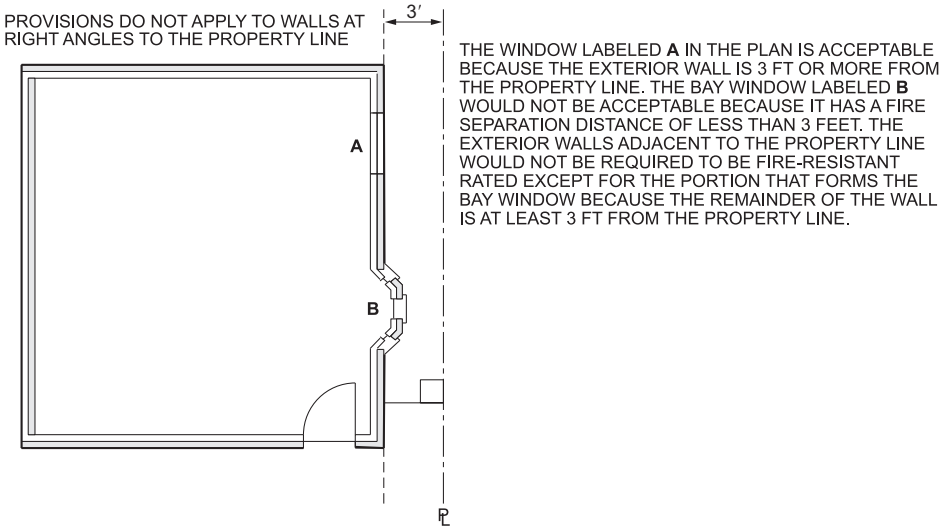

Figure R302.1(3)
EXTERIOR WALL FIRE-RESISTANCE-RATED REQUIREMENTS AND PROHIBITED OPENINGS FOR DWELLINGS WITHOUT AUTOMATIC SPRINKLER SYSTEMS

EXTERIOR WALL ELEMENT (Not fire-resistance rated)	MINIMUM FIRE SEPARATION DISTANCE		
	Without Sprinkler System	With Sprinkler System	With Sprinkler System in all Dwellings of Subdivision and 6-foot Setback for Building on Adjoining Lot
Walls	5 feet	3 feet	0 feet
Projections	5 feet	3 feet	0 feet
Unlimited openings in walls	5 feet	3 feet	0 feet
Penetrations (no restrictions)	3 feet	3 feet	0 feet

For SI:1 foot = 304.8 mm.

Figure R302.1
MINIMUM FIRE SEPARATION DISTANCE COMPARISON (NONRATED CONSTRUCTION)

INTERNATIONAL CODE COUNCIL®
Copyright © 2015 ICC. ALL RIGHTS RESERVED. Accessed by David Dammon on Jun 21, 2017 12:30:52 PM pursuant to License Agreement with ICC. No further reproduction or distribution authorized. ANY UNAUTHORIZED REPRODUCTION OR DISTRIBUTION IS A VIOLATION OF THE FEDERAL COPYRIGHT ACT AND THE LICENSE AGREEMENT, AND SUBJECT TO CIVIL AND CRIMINAL PENALTIES THEREUNDER.

R302.2 Townhouses. Common walls separating *townhouses* shall be assigned a fire-resistance rating in accordance with Section R302.2, Item 1 or 2. The common wall shared by two *townhouses* shall be constructed without plumbing or mechanical equipment, ducts or vents in the cavity of the common wall. The wall shall be rated for fire exposure from both sides and shall extend to and be tight against exterior walls and the underside of the roof sheathing. Electrical installations shall be in accordance with Chapters 34 through 43. Penetrations of the membrane of common walls for electrical outlet boxes shall be in accordance with Section R302.4.

1. Where a fire sprinkler system in accordance with Section P2904 is provided, the common wall shall be not less than a 1-hour fire-resistance-rated wall assembly tested in accordance with ASTM E119 or UL 263.
2. Where a fire sprinkler system in accordance with Section P2904 is not provided, the common wall shall be not less than a 2-hour fire-resistance-rated wall assembly tested in accordance with ASTM E119 or UL 263.

❖ The application of this section has its basis in the exterior wall requirements found in Section R302.1 that deal with the building's location on the lot. The definition of a townhouse in Section R202 should be reviewed, as well as the requirement for structural independence in Section R302.2.4. In general, because the "exterior wall" of the townhouse is essentially being constructed with no fire separation distance where one townhouse adjoins another, the code requires, by Section R302. 1, that the wall have not less than a 1-hour fire-resistance rating. The adjacent townhouse would have the same requirement. Therefore, the general requirement at this location (based on Sections R302.1 and R302.3) would be that each townhouse has its own fire-resistance rated "exterior wall." This would result in the construction of two separate 1-hour walls located side by side where one townhouse adjoins another.

Because of the difficulties involved in construction and the potential for unnecessary duplication, Item 1 offers an alternative to the two separate 1-hour walls by permitting the construction of a shared or "common" wall between the townhouses. The common wall must be 1-hour fire-resistance rated in sprinklered buildings or 2-hour fire-resistance rated in unsprinklered buildings, as tested in accordance with ASTM E119 or UL 263 (see the discussion of Section R104.11 in the commentary for Section R302.1).

See Commentary Figure R302.2 for an illustration of the two separate 1-hour walls and the common 2-hour wall. Because the common wall has the potential to create an interconnection between the adjacent dwelling units and reduce the clear separation that would exist if two separate walls were constructed, the code places limits on services being located within the wall. This exception does not permit the inclusion of any type of plumbing, mechanical equipment, ducts or vents within the cavity of the common wall. This prohibition is applicable even if the penetrations or openings are protected by the penetration provisions of Section R302.4 or if a damper is installed in the duct or vent. The prohibition on plumbing includes all types of plumbing materials and systems, as well as water supply and drainage piping of either combustible or noncombustible materials. However, the exception permits the cavity of the wall to be used for electrical installations if they comply with the electrical provisions of the code and the penetrations are properly protected.

R302.2.1 Continuity. The fire-resistance-rated wall or assembly separating *townhouses* shall be continuous from the foundation to the underside of the roof sheathing, deck or slab. The fire-resistance rating shall extend the full length of the wall or assembly, including wall extensions through and separating attached enclosed *accessory structures*.

❖ This section addresses the continuity of the fire-resistance-rated wall or assembly separating townhouses using the exception in Section R302.2. The requirements are conceptually similar to the continuity issues

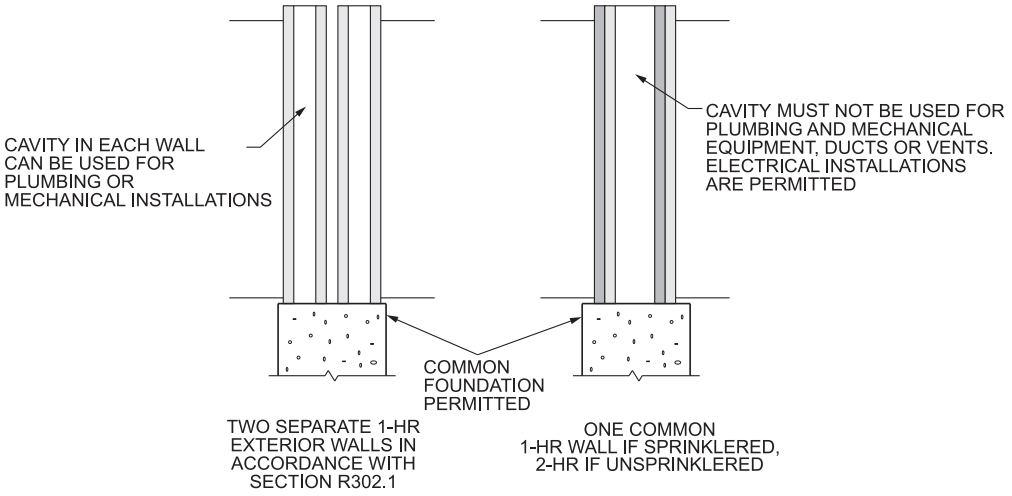

Figure R302.2
DWELLING UNIT SEPARATION FOR TOWNHOUSES

INTERNATIONAL CODE COUNCIL®
Copyright © 2015 ICC. ALL RIGHTS RESERVED. Accessed by David Dammon on Jun 21, 2017 12:30:52 PM pursuant to License Agreement with ICC. No further reproduction or distribution authorized. ANY UNAUTHORIZED REPRODUCTION OR DISTRIBUTION IS A VIOLATION OF THE FEDERAL COPYRIGHT ACT AND THE LICENSE AGREEMENT, AND SUBJECT TO CIVIL AND CRIMINAL PENALTIES THEREUNDER.

that exist in Section R302.3. These provisions, by regulating the extensions and terminations of the wall, can make possible the separation of dwelling units from each other.

R302.2.2 Parapets for townhouses. Parapets constructed in accordance with Section R302.2.3 shall be constructed for *townhouses* as an extension of exterior walls or common walls in accordance with the following:

1. Where roof surfaces adjacent to the wall or walls are at the same elevation, the parapet shall extend not less than 30 inches (762 mm) above the roof surfaces.
2. Where roof surfaces adjacent to the wall or walls are at different elevations and the higher roof is not more than 30 inches (762 mm) above the lower roof, the parapet shall extend not less than 30 inches (762 mm) above the lower roof surface.

   Exception: A parapet is not required in the preceding two cases where the roof covering complies with a minimum Class C rating as tested in accordance with ASTM E108 or UL 790 and the roof decking or sheathing is of noncombustible materials or *approved* fire-retardant-treated wood for a distance of 4 feet (1219 mm) on each side of the wall or walls, or one layer of $^{5}/_{8}$-inch (15.9 mm) Type X gypsum board is installed directly beneath the roof decking or sheathing, supported by not less than nominal 2-inch (51 mm) ledgers attached to the sides of the roof framing members, for a distance of not less than 4 feet (1219 mm) on each side of the wall or walls and any openings or penetrations in the roof are not within 4 feet (1219 mm) of the common walls.
3. A parapet is not required where roof surfaces adjacent to the wall or walls are at different elevations and the higher roof is more than 30 inches (762 mm) above the lower roof. The common wall construction from the lower roof to the underside of the higher roof deck shall have not less than a 1-hour fire-resistance rating. The wall shall be rated for exposure from both sides.

❖ This section provides for the continuation of the dwelling-unit separation by requiring that a parapet be constructed above the common wall or the two "exterior walls" that occur between adjacent townhouses. This parapet requirement is applicable only to the wall or walls between townhouses and does not apply to the separation in a two-family dwelling, nor does it apply to other exterior walls on either townhouses or dwellings.

The code states three requirements that address the details of the parapet depending on the height of the adjacent roofs. The code also has an exception that can be used to eliminate the need for the parapet in the two conditions that require them. In general, parapets must extend at least 30 inches (762 mm) above the roof surfaces of the adjacent townhouses. This standard requirement is found in Item 1 and is applicable where the roof surfaces of the adjacent dwelling units are at the same level, unless the exception is satisfied.

The second item requires a parapet where the roofs are at different levels, but the difference is less than 30 inches (762 mm), unless the exception is satisfied. Under this condition, the parapet height must still be 30 inches (762 mm), but it is measured only from the roof surface of the lower roof. The exception to this item indicates that a parapet is not required in this scenario if the roof is covered with a roof covering that have a minimum Class C rating as tested in accordance with ASTM E108 or UL 790 and the roof sheathing is noncombustible or fire-retardant-treated wood. Compliance with this item is not required, however, where the exception is satisfied.

The third item requires a parapet where the height difference between roofs above the common wall is more than 30 inches (762 mm) unless the common wall between the units is rated to the height of the upper roof deck. The required minimum fire-resistance rating for this portion of the wall is 1 hour. See Commentary Figure R302.2.2(1) for an illustration of the three requirements.

See Commentary Figure R302.2.2(2) for an illustration of the exception. Openings or penetrations through the roof are prohibited within 4 feet of the common wall or walls. It does not apply where the height difference between the roofs is more than 30 inches (762 mm) and the provisions of Item 3 have been satisfied.

R302.2.3 Parapet construction. Parapets shall have the same fire-resistance rating as that required for the supporting wall or walls. On any side adjacent to a roof surface, the parapet shall have noncombustible faces for the uppermost 18 inches (457 mm), to include counterflashing and coping materials. Where the roof slopes toward a parapet at slopes greater than 2 units vertical in 12 units horizontal (16.7-percent slope), the parapet shall extend to the same height as any portion of the roof within a distance of 3 feet (914 mm), and the height shall be not less than 30 inches (762 mm).

❖ In addition to having the same degree of fire resistance as required for the wall or walls below, the surface of the parapet that faces the roof must be of noncombustible materials for the upper 18 inches (457 mm). Thus, a fire might travel along the roof and reach the parapet but would not be able to continue upward along the face of the parapet and over the top, exposing the adjacent building. The requirement applies to the upper 18 inches (457 mm) of the parapet to allow for extending the roof covering up the base of the parapet so that it can be effectively flashed. The 18-inch (457 mm) figure is based on a parapet height of at least 30 inches (762 mm) and would not be applicable to the face of the parapet that was toward the higher roof deck as constructed using Section R302.2.2, Item 2, nor would it be applicable where the parapet is not required based on the exception in Section R302.2.2 or on Item 3 of that section.

The 30-inch (762 mm) requirement is measured "above the roof surface" as stated in Section R302.2.2. When a cricket or other element is installed adjacent to the parapet, the 30-inch (762 mm) dimension must be taken from the top of the roof surface on the cricket so the parapet truly extends 30 inches (762 mm) above the roof.

INTERNATIONAL CODE COUNCIL®
Copyright © 2015 ICC. ALL RIGHTS RESERVED. Accessed by David Dammon on Jun 21, 2017 12:30:52 PM pursuant to License Agreement with ICC. No further reproduction or distribution authorized. ANY UNAUTHORIZED REPRODUCTION OR DISTRIBUTION IS A VIOLATION OF THE FEDERAL COPYRIGHT ACT AND THE LICENSE AGREEMENT, AND SUBJECT TO CIVIL AND CRIMINAL PENALTIES THEREUNDER.

In those cases where the roof slopes upward away from the parapet and the slope exceeds 2 units vertical in 12 units horizontal (16.7-percent slope), the parapet must be extended to the same height as any portion of the roof that is within a distance of 3 feet (914 mm). However, in no case can the height of the parapet be less than 30 inches (762 mm). See Commentary Figure R302.2.3 for an illustration of this requirement.

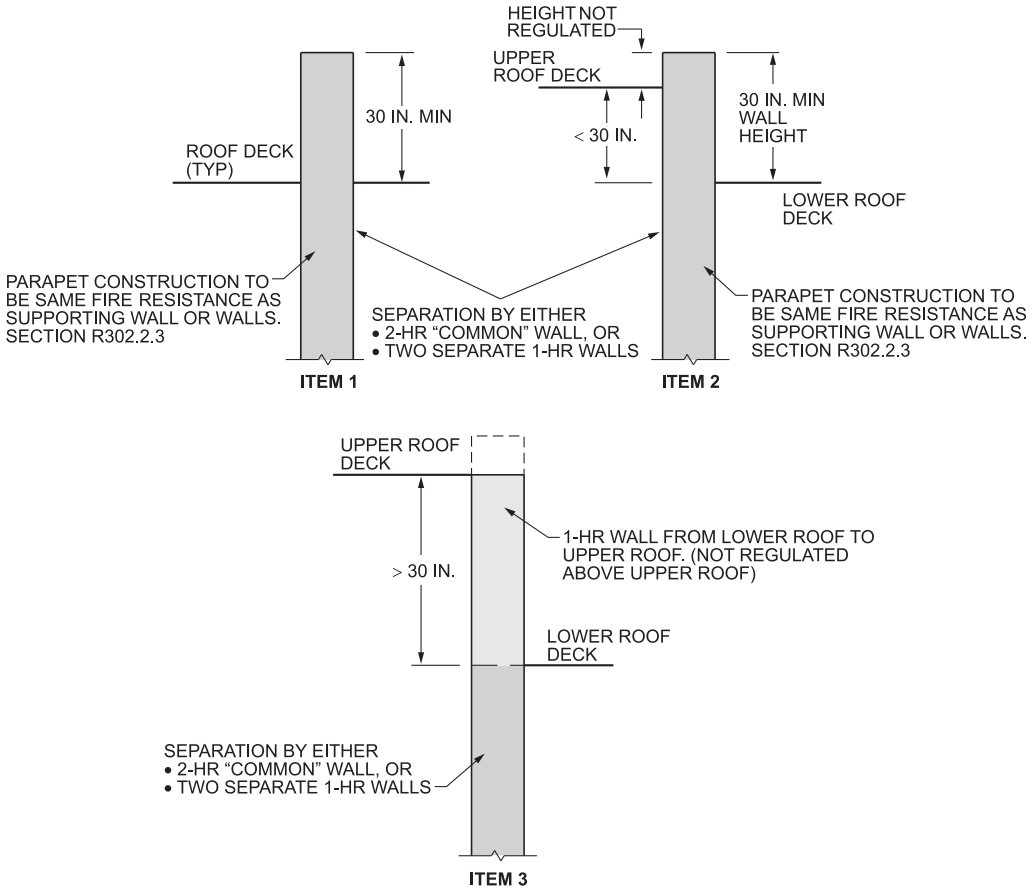

For SI: 1 inch = 25.4 mm.

Figure R302.2.2(1)
PARPET REQUIREMENTS FOR WALL BETWEEN TOWNHOUSES

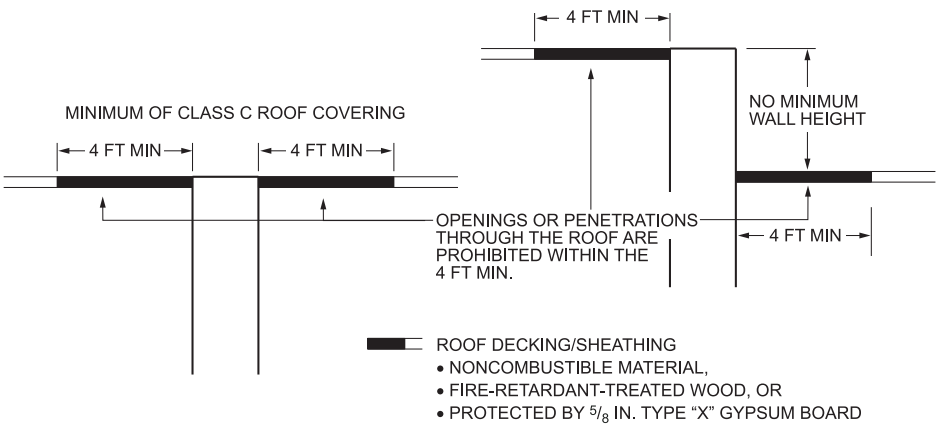

For SI: 1 inch = 25.4 mm, 1 foot = 304.8 mm.

Figure R302.2.2(2)
EXCEPTION TO ELIMINATE PARPET

INTERNATIONAL CODE COUNCIL®
Copyright © 2015 ICC. ALL RIGHTS RESERVED. Accessed by David Dammon on Jun 21, 2017 12:30:52 PM pursuant to License Agreement with ICC. No further reproduction or distribution authorized. ANY UNAUTHORIZED REPRODUCTION OR DISTRIBUTION IS A VIOLATION OF THE FEDERAL COPYRIGHT ACT AND THE LICENSE AGREEMENT, AND SUBJECT TO CIVIL AND CRIMINAL PENALTIES THEREUNDER.

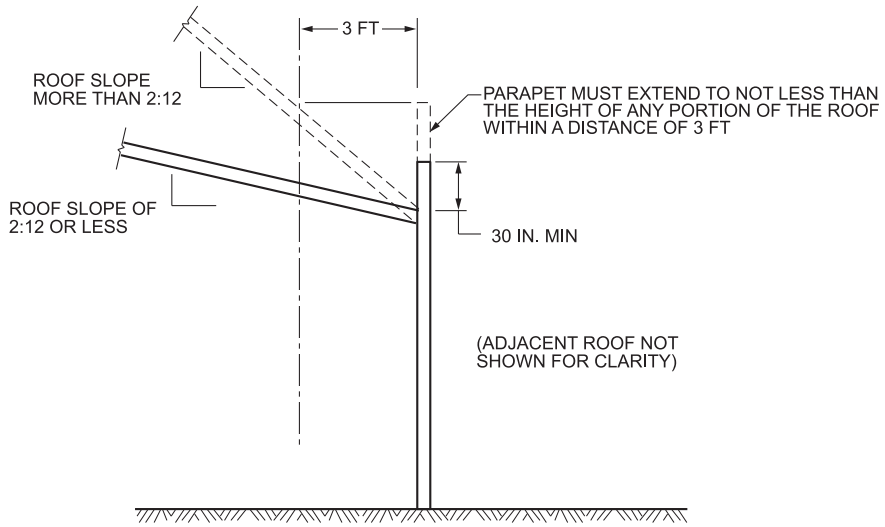

For SI: 1 inch = 25.4 mm, 304.8 mm.

Figure R302.2.3
PARPET REQUIREMENTS

R302.2.4 Structural independence. Each individual *townhouse* shall be structurally independent.

Exceptions:

1. Foundations supporting *exterior walls* or common walls.
2. Structural roof and wall sheathing from each unit fastened to the common wall framing.
3. Nonstructural wall and roof coverings.
4. Flashing at termination of roof covering over common wall.
5. *Townhouses* separated by a common wall as provided in Section R302.2, Item 1 or 2.

❖ Each townhouse must be structurally independent and capable of being removed without affecting the adjacent dwelling unit. This provision is applicable only to townhouses, not two-family dwellings. This independence is useful not only in the event of a fire in one unit, but also during any remodeling or alteration. The objective of this structural independence is that a complete burnout could occur on one side of the wall without causing the collapse of the adjacent townhouse. This condition occurs rarely. The provision also helps if there is ever a fire or other problem by creating a clear separation between the units. With separate ownership and each owner having a different insurance company, the ability to gain access or get repairs made can be difficult and time consuming. By having clearly separated units, it is much easier to determine who is responsible and to make any needed repairs.

The code lists five exceptions that waive the structural independence requirement. A quick review of the exceptions shows that they generally deal with items that will not structurally affect townhouses should a problem develop in the adjacent dwelling unit. Exception 1 is based on the norm within the industry for foundation construction. In the code, Section R402 lists only wood and concrete within the foundation materials section, although Section R404 accepts masonry foundation walls. In general, concrete and masonry are the most common types of foundations; wood foundations are viewed as unique. Given the performance of both masonry and concrete, and the fact that these foundation systems must sustain loads from both the structure and the adjacent soils, it is reasonable to assume that the foundation will not be the item that fails in most situations. Permitting a common foundation also helps solve other problems that would arise if the structural independence issue were taken as an absolute. An example where requiring separate foundations would probably create more problems or difficulty is in the dampproofing or waterproofing of below-grade foundation walls.

If a wood foundation is used between adjacent units, what is the level of fire protection that may be needed? Because concrete and masonry foundations are the norm, it would be easy to forget or overlook protecting the foundation when it is constructed of wood. In these cases, it would seem appropriate to deal with the foundation as any other wall, and protect it on any exposed side. The level of fire resistance should be equal to that of the wall or walls that the foundation supports.

R302.3 Two-family dwellings. *Dwelling units* in two-family dwellings shall be separated from each other by wall and floor assemblies having not less than a 1-hour fire-resistance rating where tested in accordance with ASTM E119 or UL 263. Fire-resistance-rated floor/ceiling and wall assemblies

INTERNATIONAL CODE COUNCIL®
Copyright © 2015 ICC. ALL RIGHTS RESERVED. Accessed by David Dammon on Jun 21, 2017 12:30:52 PM pursuant to License Agreement with ICC. No further reproduction or distribution authorized. ANY UNAUTHORIZED REPRODUCTION OR DISTRIBUTION IS A VIOLATION OF THE FEDERAL COPYRIGHT ACT AND THE LICENSE AGREEMENT, AND SUBJECT TO CIVIL AND CRIMINAL PENALTIES THEREUNDER.

shall extend to and be tight against the *exterior wall*, and wall assemblies shall extend from the foundation to the underside of the roof sheathing.

Exceptions:

1. A fire-resistance rating of $^1/_2$ hour shall be permitted in buildings equipped throughout with an automatic sprinkler system installed in accordance with NFPA 13.
2. Wall assemblies need not extend through *attic* spaces where the ceiling is protected by not less than $^5/_8$-inch (15.9 mm) Type X gypsum board, an *attic* draft stop constructed as specified in Section R302.12.1 is provided above and along the wall assembly separating the *dwellings* and the structural framing supporting the ceiling is protected by not less than $^1/_2$-inch (12.7 mm) gypsum board or equivalent.

❖ Most of the nation's fires occur in residential buildings, particularly one- and two-family dwellings. These fires account for more than 80 percent of all deaths from fire in residential uses (including hotels, apartments, dormitories, etc.) and about two-thirds of all fire fatalities in any type of building. One- and two-family dwellings also account for more than 80 percent of residential property losses and more than one-half of all property losses from fire. Despite this poor fire record, there is widespread resistance to mandating much in the way of fire protection systems or methods because of our society's belief that people's homes are their castles. This viewpoint has limited the types of protection that are imposed on these private homes to the installation of smoke alarms and the more recent requirement of dwelling unit separation. Section R302.3 provides a separation for protection of the occupants of one dwelling unit in a two-family dwelling from the actions of their neighbor in the adjacent dwelling unit. To accomplish this protection, the code addresses separation between the units, structural support and any openings or penetrations of the separation.

Depending on the layout of the various dwelling units, Section R302.3 requires that the walls and/or floor assemblies that divide one dwelling unit from the adjacent unit be at least 1-hour fire-resistance rated. See Commentary Figure R302.3 for examples of the separation. The separation rating is to be determined by either ASTM E119 or UL 263, which is the normal test used for determining fire resistance. Many tested assemblies are available for use in these locations.

The provisions of the section also address the continuity of the separation, so that one dwelling unit is completely divided from the other. The horizontal aspect of the separation, which requires that the assemblies extend to and be tight against the exterior wall, is not difficult to comply with. It is most likely the vertical aspect (continuing a wall assembly to the underside of the roof sheathing) that will require some detailed planning, careful construction and careful inspection for the units to be separated.

Exception 1 grants a reduction in the required separation for those cases in which the building is equipped with an automatic sprinkler system. In these cases, a rating of $^1/_2$ hour is permitted versus a 1-hour fire-resistance rating. The sprinkler system must be "installed in accordance with NFPA 13," and is to be installed "throughout" the building. The type of sprinkler system used must meet NFPA 13 and may not be installed to either NFPA 13D or 13R, even though those two standards do address certain types of residential uses. The word "throughout" requires that the sprinkler system be installed in all portions of both dwelling units and any

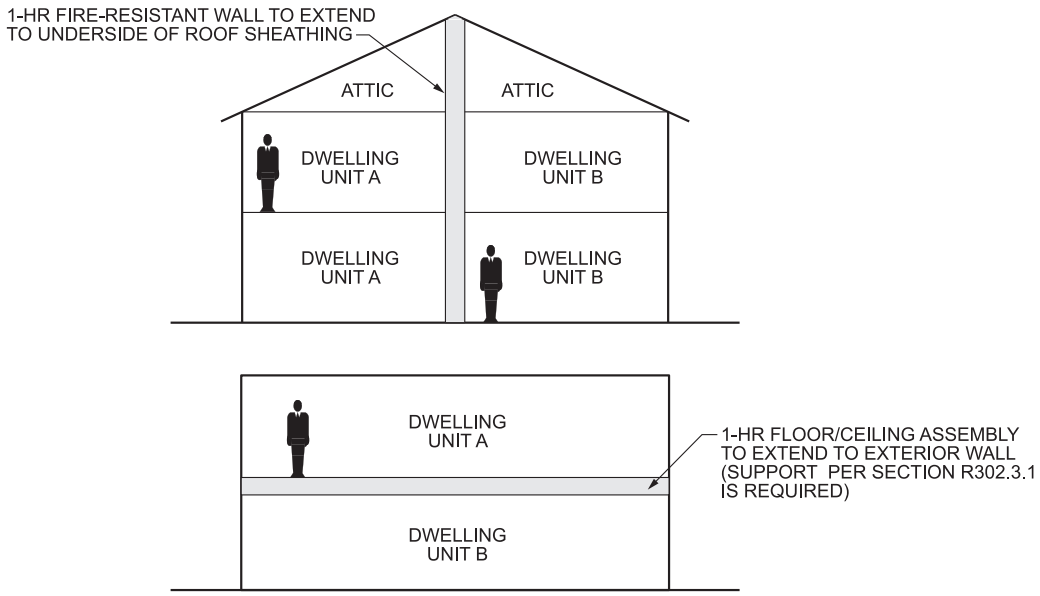

Figure R302.3
DWELLING UNIT SEPARATIONS IN TWO-FAMILY DWELLINGS

INTERNATIONAL CODE COUNCIL®
Copyright © 2015 ICC. ALL RIGHTS RESERVED. Accessed by David Dammon on Jun 21, 2017 12:30:52 PM pursuant to License Agreement with ICC. No further reproduction or distribution authorized. ANY UNAUTHORIZED REPRODUCTION OR DISTRIBUTION IS A VIOLATION OF THE FEDERAL COPYRIGHT ACT AND THE LICENSE AGREEMENT, AND SUBJECT TO CIVIL AND CRIMINAL PENALTIES THEREUNDER.

common spaces. The provisions of NFPA 13 that permit omitting sprinklers in certain areas, such as small concealed spaces, are applicable. Therefore, the provision requires a complying sprinkler system "throughout" the building (that is, in all areas of the building that must be protected according to the standard), and it does not accept any partial system, such as one installed in only one dwelling unit or only in the basement level of both units.

Exception 2 addresses separation in the area of the attic of two-family dwellings or duplexes. As long as an attic draft stop is present that meets the requirements in Section R302.12.1, the 1-hour fire separation is permitted to stop at a ceiling constructed of $^{5}/_{8}$-inch (15.9 mm) Type X gypsum board. This may be beneficial as, in many cases, the type of truss or attic rafter and rafter tie/collar tie configuration will prohibit continuing construction of the 1-hour separation wall all the way up to the roof sheathing.

R302.3.1 Supporting construction. Where floor assemblies are required to be fire-resistance rated by Section R302.3, the supporting construction of such assemblies shall have an equal or greater fire-resistance rating.

❖ This provision applies only to walls that support the fire-resistance-rated floor assemblies that form the separation between dwelling units in a two-family dwelling where the dwelling units are stacked vertically. When either all or portions of a dwelling unit separation are provided by a floor assembly, the code requires that the structural supports for the separation have a rating equal to or higher than the floor. This is conceptually similar to the garage separation of Section R302.6. Without the supporting construction being protected, a fire on the lower level could lead to an early failure of the dwelling unit separation (see Commentary Figure R302.3.1).

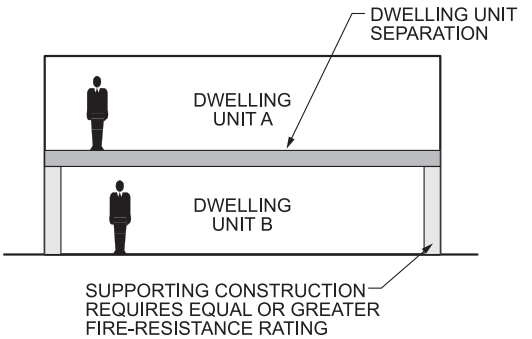

Figure R302.3.1
SUPPORT OF DWELLING UNIT SEPARATION

R302.4 Dwelling unit rated penetrations. Penetrations of wall or floor-ceiling assemblies required to be fire-resistance rated in accordance with Section R302.2 or R302.3 shall be protected in accordance with this section.

❖ This section addresses the specific requirements for maintaining the integrity of fire-resistance-rated assemblies at penetrations. If the penetration of a rated assembly is not properly constructed, the assembly itself is jeopardized and may not perform as intended. The provisions of this section apply to penetrations of fire-resistance-rated walls and floor/ceiling assemblies that are a part of the dwelling unit separation in either two-family dwellings or townhouses. Penetrations of the rated assemblies range from combustible pipe and tubing to noncombustible wiring with combustible covering to noncombustible items, such as pipe, tube, conduit and ductwork.

Each type of penetration requires a specific method of protection, which is based on the type of fire-resistance-rated assembly penetrated and the size and type of the penetrating item. The first step in determining the type of penetration protection required is to identify whether a wall or floor/ceiling assembly is being penetrated. The next step is to determine the type of penetrating item and whether it is a membrane or through penetration. Once these factors are known, then the applicable section must be applied and the applicable method of protection must be decided upon.

R302.4.1 Through penetrations. Through penetrations of fire-resistance-rated wall or floor assemblies shall comply with Section R302.4.1.1 or R302.4.1.2.

Exception: Where the penetrating items are steel, ferrous or copper pipes, tubes or conduits, the annular space shall be protected as follows:

1. In concrete or masonry wall or floor assemblies, concrete, grout or mortar shall be permitted where installed to the full thickness of the wall or floor assembly or the thickness required to maintain the fire-resistance rating, provided that both of the following are complied with:
   1.1. The nominal diameter of the penetrating item is not more than 6 inches (152 mm).
   1.2. The area of the opening through the wall does not exceed 144 square inches (92 900 mm^2).
2. The material used to fill the annular space shall prevent the passage of flame and hot gases sufficient to ignite cotton waste where subjected to ASTM E119 or UL 263 time temperature fire conditions under a positive pressure differential of not less than 0.01 inch of water (3 Pa) at the location of the penetration for the time period equivalent to the fire-resistance rating of the construction penetrated.

❖ This section contains the general requirements for through penetrations, which are penetrations that pass through an entire assembly. A through penetration is in contrast to a membrane penetration, which creates a penetration through only one side of an assembly. Membrane penetrations are addressed later in Section R302.4.2. See Commentary Figure R302.4.1 for an illustration of these two types of penetrations.

Through penetrations must be protected to maintain the fire resistance of the penetrated assembly. The code states two methods, found in Sections R302.4.1.1 and R302.4.1.2, which can be used to

INTERNATIONAL CODE COUNCIL®
Copyright © 2015 ICC. ALL RIGHTS RESERVED. Accessed by David Dammon on Jun 21, 2017 12:30:52 PM pursuant to License Agreement with ICC. No further reproduction or distribution authorized. ANY UNAUTHORIZED REPRODUCTION OR DISTRIBUTION IS A VIOLATION OF THE FEDERAL COPYRIGHT ACT AND THE LICENSE AGREEMENT, AND SUBJECT TO CIVIL AND CRIMINAL PENALTIES THEREUNDER.

assure the adequacy of the penetration protection. The difference between these two is the test methodology used, but they both provide essentially the same results. The commentary for those sections is additional discussion of the differences.

Based on the history of these provisions and on the wealth of fire test data that exists concerning items such as conduit, water piping and other similar penetrations, the code provides two exceptions that permit protection by methods other than those generally required. The first permits the use of concrete, grout or mortar to protect certain penetrations of concrete and masonry wall or floor assemblies. The concrete, grout or mortar must be applied for the full thickness of the assembly unless evidence can be produced demonstrating that the required fire-resistance rating can be achieved with a lesser depth. Concrete, grout and mortar have traditionally been used as protection for the annular space in penetrations of concrete and masonry assemblies. Experience has shown this form of protection to be viable. However, caution must be used any time something, such as a water pipe or conduit, is placed in concrete or masonry. Sections P2603.3 and P2603.5 contain examples of protection of plumbing systems.

Exception 2 addresses the space between the penetrating item and the original assembly construction. This gap is called the annular space, and this exception provides a method to simply evaluate the performance of the material used to fill that space. It is often mistakenly believed that this exception permits a variety of untested items, but as can be seen from the provision itself, the materials need to meet a specific performance level. This exception requires that the ability of the material to prevent the passage of flame and hot gases sufficient to ignite cotton when subjected to the time-temperature criteria of the ASTM E119 test standard be prequalified. This requirement is similar to provisions found in both ASTM E119 and ASTM E814, the standards used to evaluate fire-resistant assemblies and penetration protection. Because it is very likely that the penetration in the actual fire will be exposed to a positive pressure, this section specifies that the test-fire exposure include a positive pressure of 0.01 inch (0.25 mm) of water column as a further means to verify the performance of this protection method. Thus the protection will not be blown out or moved from its place during a fire.

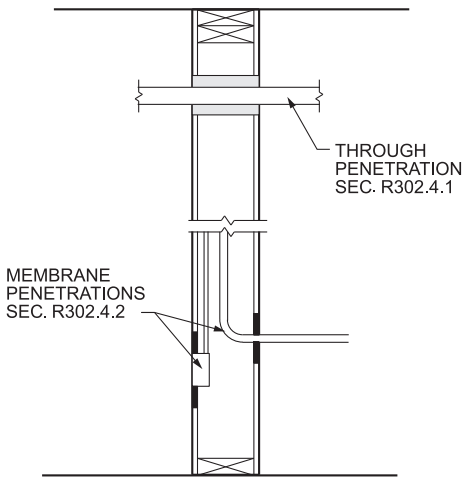

Figure R302.4.1
TYPES OF PENETRATIONS

R302.4.1.1 Fire-resistance-rated assembly. Penetrations shall be installed as tested in the *approved* fire-resistance-rated assembly.

❖ This section addresses situations in which the penetration is tested as a part of the regular full-scale test for the wall or floor/ceiling assembly. The penetration and proposed type of protection are evaluated as a part of the regular ASTM E119 test, which evaluates the wall or floor/ceiling rating. This section and the option it provides are not used frequently because of the cost of conducting such full-scale tests and the limitations placed on the application of the tested assembly. Because of these issues, penetrations are most often protected in accordance with one of the exceptions in Section R302.4.1 or the provisions of Section R302.4.1.2.

R302.4.1.2 Penetration firestop system. Penetrations shall be protected by an *approved* penetration firestop system installed as tested in accordance with ASTM E814 or UL 1479, with a positive pressure differential of not less than 0.01 inch of water (3 Pa) and shall have an F rating of not less than the required fire-resistance rating of the wall or floor-ceiling assembly penetrated.

❖ Through-penetration firestop systems consist of specific materials or an assembly of materials that are designed to restrict the passage of fire and hot gases for a prescribed period of time through openings made in fire-resistance-rated assemblies. To determine the effectiveness of a through-penetration firestop system in restricting the passage of fire, and to determine that the penetration has not jeopardized the original fire-resistant assembly, firestop systems must be subjected to fire testing using the ASTM E814 or UL 1479 test standard. This is a small-scale test method developed specifically for the evaluation of a firestop system's ability to resist the passage of flame and hot gases, withstand thermal stresses and restrict the transfer of heat through the penetrated assembly. There are hundreds if not thousands of tested through-penetration firestop systems available today. The actual type of system used will depend on the type and construction of the assembly being penetrated, the material makeup and size of the penetrating item, and the size of the annular space that exists between the penetrating item and the assembly being penetrated. Because there are a multitude of products available, and there is no "one size fits all" system available, it is helpful if the methods of protection are included on the construction documents as covered by Section R106.1.1.

The actual rating of the through-penetration firestop system is generated from the results of the testing and

INTERNATIONAL CODE COUNCIL®
Copyright © 2015 ICC. ALL RIGHTS RESERVED. Accessed by David Dammon on Jun 21, 2017 12:30:52 PM pursuant to License Agreement with ICC. No further reproduction or distribution authorized. ANY UNAUTHORIZED REPRODUCTION OR DISTRIBUTION IS A VIOLATION OF THE FEDERAL COPYRIGHT ACT AND THE LICENSE AGREEMENT, AND SUBJECT TO CIVIL AND CRIMINAL PENALTIES THEREUNDER.

is reported as an "F" (flame) rating and a "T" (temperature) rating. The code requires only an F rating. The F rating indicates the period of time, in hours, that the through-penetration firestop system remained in place without allowing the passage of fire during the fire exposure test, or the passage of water during the hose stream portion of the test. The required F rating must be equal to the fire-resistance rating of the wall or floor/ceiling assembly that is being penetrated. This means either a 1- or 2-hour rating, depending on the dwelling unit separation.

Two of the most common materials used in through-penetration firestop systems are intumescent and endothermic materials. Intumescent materials expand approximately 8 to 10 times their original volume when exposed to temperatures exceeding 250°F (121°C). The expansion of the material fills the voids or openings within the penetration to resist the passage of flame, while the outer layer of the expanded intumescent material forms an insulating charred layer that assists in limiting the transfer of heat. The expansion properties of intumescent materials allow them to seal openings left by combustible penetrating items that burn away during a fire, but they do not retard heat as well as endothermic materials. Intumescent materials are typically used with combustible penetrating items or where a higher T rating is not required.

Endothermic materials provide protection through chemically bound water released in the form of steam when exposed to temperatures exceeding 600°F (316°C). This released water cools the penetration and retards heat transfer through the penetration. Endothermic materials tend to be superior in heat-transfer resistance and have higher T ratings, but they do not expand to fill voids left by combustible penetrating items that burn away during a fire. Therefore, endothermic materials are typically used with noncombustible penetrating items and where a higher T rating is required.

R302.4.2 Membrane penetrations. Membrane penetrations shall comply with Section R302.4.1. Where walls are required to have a fire-resistance rating, recessed fixtures shall be installed so that the required fire-resistance rating will not be reduced.

Exceptions:

1. Membrane penetrations of not more than 2-hour fire-resistance-rated walls and partitions by steel electrical boxes that do not exceed 16 square inches (0.0103 m^2) in area provided that the aggregate area of the openings through the membrane does not exceed 100 square inches (0.0645 m^2) in any 100 square feet (9.29 m^2) of wall area. The annular space between the wall membrane and the box shall not exceed $^1/_8$ inch (3.1 mm). Such boxes on opposite sides of the wall shall be separated by one of the following:
    1.1. By a horizontal distance of not less than 24 inches (610 mm) where the wall or partition is constructed with individual noncommunicating stud cavities.
    1.2. By a horizontal distance of not less than the depth of the wall cavity where the wall cavity is filled with cellulose loose-fill, rockwool or slag mineral wool insulation.
    1.3. By solid fireblocking in accordance with Section R302.11.
    1.4. By protecting both boxes with *listed* putty pads.
    1.5. By other *listed* materials and methods.
2. Membrane penetrations by *listed* electrical boxes of any materials provided that the boxes have been tested for use in fire-resistance-rated assemblies and are installed in accordance with the instructions included in the *listing*. The annular space between the wall membrane and the box shall not exceed $^1/_8$ inch (3.1 mm) unless *listed* otherwise. Such boxes on opposite sides of the wall shall be separated by one of the following:
    2.1. By the horizontal distance specified in the *listing* of the electrical boxes.
    2.2. By solid fireblocking in accordance with Section R302.11.
    2.3. By protecting both boxes with *listed* putty pads.
    2.4. By other *listed* materials and methods.
3. The annular space created by the penetration of a fire sprinkler provided that it is covered by a metal escutcheon plate.

❖ This section deals with instances where only a single side of the fire-resistance-rated assembly is penetrated. This would be the situation for items such as electrical outlet boxes or plumbing fixtures located on one side of the wall only. Commentary Figure R302.4.1 shows this type of penetration. For the most part, a membrane penetration is to be protected by one of the previously described methods established for through penetrations. However, there are some penetrations that are allowed without a specific firestopping material in the annular space around them. These are addressed by the exceptions. This section also deals with the installation of recessed luminaires in fire-resistance-rated assemblies and states that their installation may not reduce the assembly's protection. Although these fixtures are common, they do represent a penetration of the assembly's protection and must be installed so that the assembly is not compromised.

Exception 1 allows penetrations of steel electrical outlet boxes under certain conditions. The criteria of this section limit the size of the box to 16 square inches (0.0103 m^2) or less in area and to an aggregate area not to exceed 100 square inches (64 500 mm^2) in each 100 square foot (9.3 m^2) area. Commentary Figure R302.4.2(1) shows some of the requirements of this section. The area limitations are consistent with the criteria from fire tests, which have shown that within these limitations, these penetrations will not adversely affect the fire-resistance rating of the assembly. However, the

INTERNATIONAL CODE COUNCIL®
Copyright © 2015 ICC. ALL RIGHTS RESERVED. Accessed by David Dammon on Jun 21, 2017 12:30:52 PM pursuant to License Agreement with ICC. No further reproduction or distribution authorized. ANY UNAUTHORIZED REPRODUCTION OR DISTRIBUTION IS A VIOLATION OF THE FEDERAL COPYRIGHT ACT AND THE LICENSE AGREEMENT, AND SUBJECT TO CIVIL AND CRIMINAL PENALTIES THEREUNDER.

boxes are assumed to be installed as they were during the fire tests. In general, the test requirements match the limitations shown by the code regarding their size and the need to be offset. An additional requirement, one that does not appear in the code, regulates the size of the annular space created around the outlet boxes. Both the Underwriters Laboratory's (UL) *Fire-Resistance Directory* and the Gypsum Association's *Fire-resistance Design Manual* specify a maximum over-cut of $^1/_8$ inch (3 mm) for the annular space around the outlet boxes. Additionally, Article 314 of the *National Electrical Code* (NEC) (also known as NFPA 70) includes the size limitation of the over-cut. Therefore, the exception applies only when the boxes are installed as they were during the original fire tests, including the limited annular space. Because outlet boxes on both sides of a wall create penetrations of both layers of a wall assembly's protection, the code provides five methods to address this problem. This gives code users several options and does not limit them to the usual 24-inch (610 mm) offset.

Exception 2 permits using outlet boxes of nonmetallic materials if they have been specifically tested. Because many different types of nonmetallic boxes are available, it is important to determine that the boxes being used in the rated dwelling unit separation have been tested. Although the exception applies to nonmetallic electrical outlet boxes, the same concept would apply to steel boxes that exceed the sizes specified in Exception 1.

Exception 3 provides an alternative to the annular space protection provisions for a fire sprinkler that penetrates a single membrane. This exception is available if the annular space around the sprinkler is completely covered by an escutcheon plate of noncombustible material. The nature of the hazard posed by single-membrane penetrations of the sprinkler is limited by the size of the opening, the potential number of openings present and the presence of a sprinkler system. The installation of a noncombustible escutcheon provides protection against the free passage of fire through the annular space and allows for the movement of the sprinkler piping without breaking during a seismic event [see Commentary Figure R302.4.2(2)].

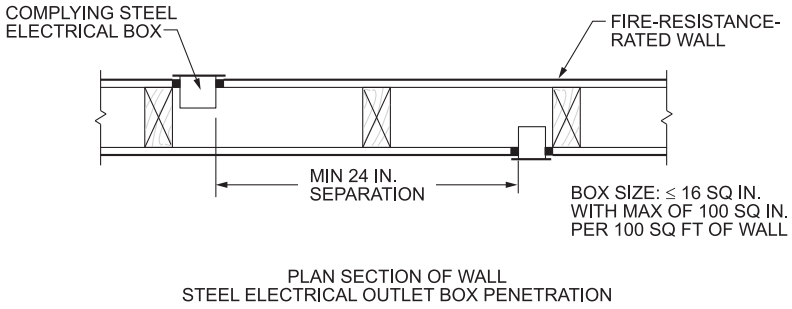

For SI: 1 inch = 25.4 mm, 1 square inch = 645 mm^2, 1 square foot = 0.0929 m^2.

Figure R302.4.2(1)
MEMBRANE PENETRATION BY OUTLET BOX

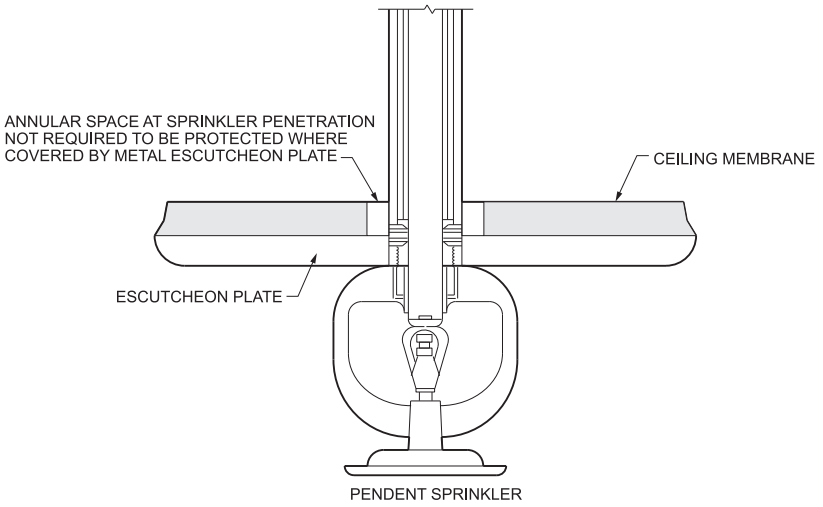

Figure R302.4.2(2)
EXCEPTION TO ANNULAR SPACE PROTECTION

INTERNATIONAL CODE COUNCIL®
Copyright © 2015 ICC. ALL RIGHTS RESERVED. Accessed by David Dammon on Jun 21, 2017 12:30:52 PM pursuant to License Agreement with ICC. No further reproduction or distribution authorized. ANY UNAUTHORIZED REPRODUCTION OR DISTRIBUTION IS A VIOLATION OF THE FEDERAL COPYRIGHT ACT AND THE LICENSE AGREEMENT, AND SUBJECT TO CIVIL AND CRIMINAL PENALTIES THEREUNDER.

R302.5 Dwelling-garage opening and penetration protection. Openings and penetrations through the walls or ceilings separating the *dwelling* from the garage shall be in accordance with Sections R302.5.1 through R302.5.3.

❖ Openings to sleeping rooms from garages are not allowed because a person might not wake up in time if there was a hazard from CO fumes or smoke from the garage. The three subsections address doors, ducts and pipes. For wall and ceiling separation requirements, see Section R302.6 and Table R302.6.

R302.5.1 Opening protection. Openings from a private garage directly into a room used for sleeping purposes shall not be permitted. Other openings between the garage and residence shall be equipped with solid wood doors not less than $1^3/_8$ inches (35 mm) in thickness, solid or honeycomb-core steel doors not less than $1^3/_8$ inches (35 mm) thick, or 20-minute fire-rated doors, equipped with a self-closing device.

❖ Openings from the garage are permitted only into rooms that are not used for sleeping. These openings must be protected by the installation of a door complying with the provisions of this section. The most common situation is the door between the garage and the inside of the home. Solid wood doors $1^3/_8$-inches (35 mm) thick, solid or honeycomb steel doors and 20-minute fire-rated doors are required for use in the opening between the garage and dwelling unit. A self-closing device must be installed on these doors as a safeguard to limit free flow of carbon monoxide or other products of combustion into the living area.

R302.5.2 Duct penetration. Ducts in the garage and ducts penetrating the walls or ceilings separating the *dwelling* from the garage shall be constructed of a minimum No. 26 gage (0.48 mm) sheet steel or other *approved* material and shall not have openings into the garage.

❖ Ducts are permitted to penetrate the required separation (see Section R302.6) between the garage and dwelling unit when the ducts within the garage and the portion of the duct penetrating the wall are of No. 26 gage (0.48 mm) sheet steel or other materials acceptable to the building official. Steel ducts are required to help prevent the passage of an undetected fire within the garage to the dwelling unit (see Commentary Figure R302.5.2). The opening limitation in the garage is to limit the path for smoke to enter the dwelling unit.

R302.5.3 Other penetrations. Penetrations through the separation required in Section R302.6 shall be protected as required by Section R302.11, Item 4.

❖ This section addresses the annular space that results from a penetration of the common wall by pipes, conduits or ductwork. It is important that the building official verify that these spaces are properly filled and do not compromise the protection offered by the common wall between the residence and garage against the free passage of smoke, fire, noxious gases and odors.

R302.6 Dwelling-garage fire separation. The garage shall be separated as required by Table R302.6. Openings in garage walls shall comply with Section R302.5. Attachment of gypsum board shall comply with Table R702.3.5. The wall separation provisions of Table R302.6 shall not apply to garage walls that are perpendicular to the adjacent *dwelling unit* wall.

❖ Numerous potential hazards exist within garages because occupants of dwelling units tend to store a variety of hazardous materials there. Along with this and the potential for CO build-up within the garage, the code requires that the garage be separated from the dwelling unit and attic as indicated in Table R302.6. Garage walls and ceilings that do not form a separation from the dwelling unit are not required to be rated unless they are an extension of a rated assembly.

Table R302.6. See page 3-54.

❖ This table specifies when and how the garage must be separated from the dwelling unit and any attic space. Walls between the residence and the attached garage, or ceilings between the garage and an attic space, must have at least $^1/_2$-inch (12.7 mm) gypsum board on the garage side. If a habitable room is above the garage, the ceiling must be at least $^5/_8$-inch (15.9 mm) Type X gypsum board on the garage side. Additionally, the exterior walls of the garage are required to have $^1/_2$-inch (12.7 mm) gypsum board on the interior face where they support floors separating all or part of a dwelling unit above the garage.

Detached garages located less than 3 feet (305 mm) from an adjacent dwelling unit must be protected with at least $^1/_2$-inch (12.7 mm) gypsum board applied to the interior side of the garage. The close proximity to adjacent dwellings requires the additional protection. This $^1/_2$-inch (12.7 mm) gypsum board is required even when the exterior walls are exempted by Section R302.1.

The term “or equivalent” under each option allows for alternative means consistent with Section R104.11.

There are two primary reasons for the enhanced fire endurance of a garage ceiling located beneath a habitable room. First, a fire occurring in a garage may well go undetected for an extended period prior to activation of a detector or other visual alerting.

Second, the inherent fire load and hazardous household activities associated with a garage necessitate this additional level of protection if fire suppression forces are to have a reasonable opportunity to contain a garage fire to the area of origin.

The single layer of $^5/_8$-inch (15.9 mm) Type X gypsum board at the garage ceiling increases the fire endurance of the assembly considerably, from 15 minutes for a $^1/_2$-inch (12.7 mm) layer, to at least 40 minutes, or a 167-percent increase in endurance. When added to the rating for floor joists and certain subflooring combinations, the final endurance is close to 1 hour.

Commentary Figure R302.6 shows two locations of gypsum wallboard; each achieves the protection required by the code.

INTERNATIONAL CODE COUNCIL®
Copyright © 2015 ICC. ALL RIGHTS RESERVED. Accessed by David Dammon on Jun 21, 2017 12:30:52 PM pursuant to License Agreement with ICC. No further reproduction or distribution authorized. ANY UNAUTHORIZED REPRODUCTION OR DISTRIBUTION IS A VIOLATION OF THE FEDERAL COPYRIGHT ACT AND THE LICENSE AGREEMENT, AND SUBJECT TO CIVIL AND CRIMINAL PENALTIES THEREUNDER.

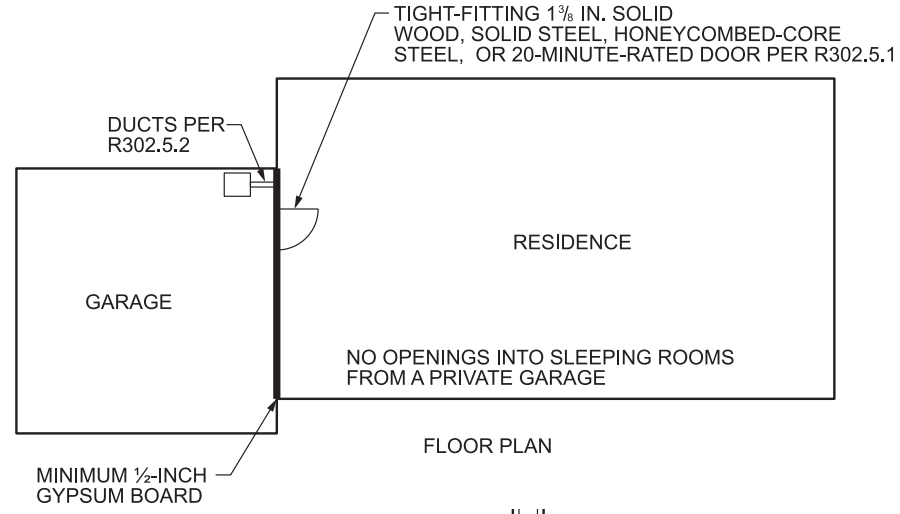

FLOOR PLAN

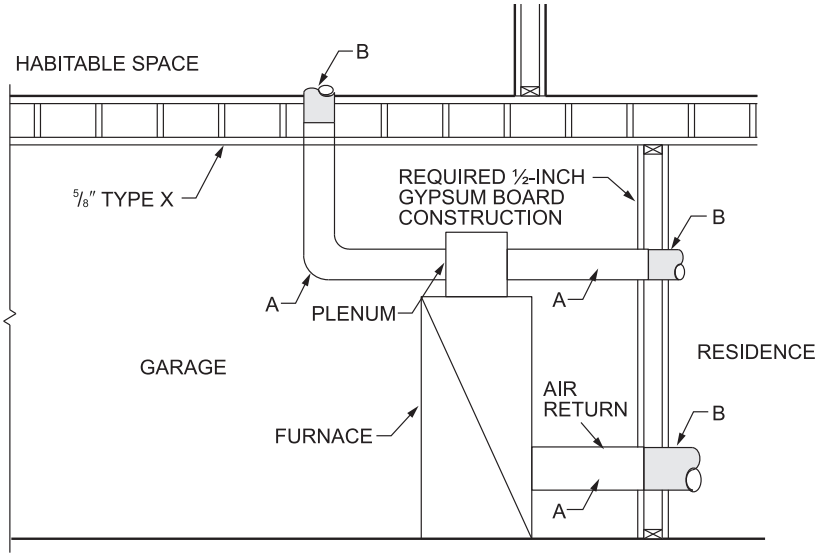

CROSS SECTION THROUGH GARAGE

DUCTS A – 0.019 IN. (NO. 26 GAUGE) GALVANIZED STEEL WITH NO OPENINGS INTO GARAGE

DUCT B – ANY DUCT THAT COMPLIES WITH THE IRC

For SI: 1 inch = 25.4 mm.

Figure R302.5.2
GARAGE/DWELLING SEPARATION

TABLE R302.6
DWELLING-GARAGE SEPARATION

SEPARATION	MATERIAL
From the residence and attics	Not less than $^1/_2$-inch gypsum board or equivalent applied to the garage side
From habitable rooms above the garage	Not less than $^5/_8$-inch Type X gypsum board or equivalent
Structure(s) supporting floor/ceiling assemblies used for separation required by this section	Not less than $^1/_2$-inch gypsum board or equivalent
Garages located less than 3 feet from a dwelling unit on the same lot	Not less than $^1/_2$-inch gypsum board or equivalent applied to the interior side of exterior walls that are within this area

For SI: 1 inch = 25.4 mm, 1 foot = 304.8 mm.

INTERNATIONAL CODE COUNCIL®
Copyright © 2015 ICC. ALL RIGHTS RESERVED. Accessed by David Dammon on Jun 21, 2017 12:30:52 PM pursuant to License Agreement with ICC. No further reproduction or distribution authorized. ANY UNAUTHORIZED REPRODUCTION OR DISTRIBUTION IS A VIOLATION OF THE FEDERAL COPYRIGHT ACT AND THE LICENSE AGREEMENT, AND SUBJECT TO CIVIL AND CRIMINAL PENALTIES THEREUNDER.

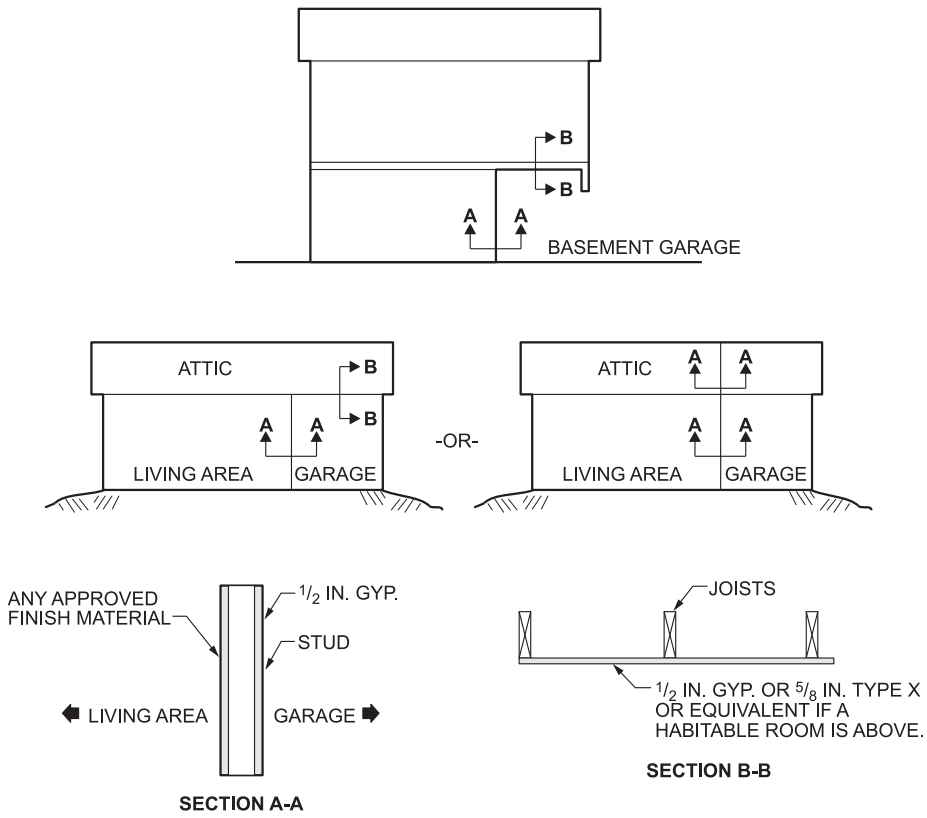

For SI: 1 inch = 25.4 mm.

Figure R302.6
SEPARATION BETWEEN ATTACHED GARAGES AND DWELLING UNITS

R302.7 Under-stair protection. Enclosed accessible space under stairs shall have walls, under-stair surface and any soffits protected on the enclosed side with $^1/_2$-inch (12.7 mm) gypsum board.

❖ Often times the space under a stairway is used for storage because this space is often of little use for other purposes. The code permits the use of an open space beneath a stair without the need for any additional protection. Additionally, if the space is walled off and there is no access to the area, the code is also not concerned. If, however, the area beneath the stairway is enclosed and any type of access is provided into the space, the walls, soffits and ceilings of the enclosed space must be protected on the enclosed side with at least $^1/_2$-inch (12.7 mm) gypsum board.

R302.8 Foam plastics. For requirements for foam plastics, see Section R316.

❖ This section provides a cross reference to the foam plastic fire-resistant requirements for when this product is used within a home. Foam plastics are most commonly used in applications where their thermal qualities can be a cost savings for the home owner over time.

R302.9 Flame spread index and smoke-developed index for wall and ceiling finishes. Flame spread and smoke developed indexes for wall and ceiling finishes shall be in accordance with Sections R302.9.1 through R302.9.4.

❖ Wall and ceiling finishes have requirements for flame spread and smoke-developed indexes, and testing, which are addressed in the following subsections.

R302.9.1 Flame spread index. Wall and ceiling finishes shall have a flame spread index of not greater than 200.

Exception: Flame spread index requirements for finishes shall not apply to trim defined as picture molds, chair rails, baseboards and handrails; to doors and windows or their frames; or to materials that are less than $^1/_{28}$ inch (0.91 mm) in thickness cemented to the surface of walls or ceilings if these materials exhibit flame spread index values not greater than those of paper of this thickness cemented to a noncombustible backing.

❖ The control of interior finishes is an important aspect of fire protection. Section R315.9 contains the requirements for controlling fire growth within buildings by restricting interior finish materials. The dangers of unregulated interior finish include both the rapid spread of fire and the contribution of additional fuel to the fire. The rapid spread of fire presents a threat to the occupants of a building by limiting or denying their use of exitways within and outside the building. This can be caused by the rapid spread of the fire itself or by the

INTERNATIONAL CODE COUNCIL®
Copyright © 2015 ICC. ALL RIGHTS RESERVED. Accessed by David Dammon on Jun 21, 2017 12:30:52 PM pursuant to License Agreement with ICC. No further reproduction or distribution authorized. ANY UNAUTHORIZED REPRODUCTION OR DISTRIBUTION IS A VIOLATION OF THE FEDERAL COPYRIGHT ACT AND THE LICENSE AGREEMENT, AND SUBJECT TO CIVIL AND CRIMINAL PENALTIES THEREUNDER.

production of large quantities of dense, black smoke, which obscures the exit path or makes movement difficult. Unregulated finish materials also have the potential for adding fuel to the fire, thus increasing its intensity and shortening the time available for the occupants to exit safely. However, based on the test standard that is used, the code does not regulate the fuel contribution of interior finish materials.

The code regulates interior finish materials on both walls and ceilings. These provisions do not address the floor or any coverings applied to the floor. The level of performance the code establishes for finish materials is a flame spread index of 200 or less. The flame spread index for a material is based on reviewing its performance under the test standard specified in Section R302.9.3. The limitation of 200 for the flame spread index matches a "Class C" material in the IBC. Therefore, any material that has a flame spread index of less than 200 may be used as a finish material on both walls and ceilings. When foam plastics are used for interior wall and ceiling finishes, they must comply with Section R316.5.10.

The exception will permit the installation of materials that will not significantly contribute to a fire. This includes various types of trim, such as chair rails, door and window frames, and baseboards, which because of their quantities and locations, do not cause great concern. The actual size and quantity of such trim is not specified in the code because it has not been a concern. However, if some type of foam plastic is being used instead of other types of combustible trim, Section R316.5.9 does limit those situations. The exception also does not regulate thin materials, such as wallpaper, which are less than $^{1}/_{28}$-inch (0.907 mm) thick when they are properly installed. These thin materials, when cemented to the surface of the wall or ceiling, behave essentially as the backing to which they are applied and, as a result, are not regulated.

R302.9.2 Smoke-developed index. Wall and ceiling finishes shall have a smoke-developed index of not greater than 450.

❖ The development of smoke affects the occupants' safety. This section places a limitation of 450 on the density of smoke that is allowed from the wall and ceiling finishes. A product's smoke-developed index is established for the finish materials when they are tested under the standard specified in Section R302.9.3. The test measures only the obscurity caused by the smoke and does not consider the toxic content within the smoke.

R302.9.3 Testing. Tests shall be made in accordance with ASTM E84 or UL 723.

❖ This section establishes that the standard test for flame spread and smoke-development characteristics is either ASTM E84 or UL 723, commonly known as the Steiner Tunnel Test. ASTM E84 and UL 723 determine the relative burning behavior of materials on exposed surfaces, such as ceilings and walls, by visually observing the flame spread along the test specimen. Flame spread and smoke density are reported. The test method renders measurements of surface flame spread and smoke density in comparison with test results obtained by using select red oak and asbestos-cement board as control materials. Red oak is used for the furnace calibration because it is a fairly uniform grade of lumber that is readily available nationally, is uniform in thickness and moisture content, and generally gives consistent and reproducible results. Asbestos-cement board has a flame spread index of zero, while the red oak is assigned a flame spread index of 100. All other materials are then given an index based on a comparison with these two materials. Therefore, the flame spread index of 200 that is permitted by Section R302.9.1 essentially means that the maximum flame spread index for any finish material is twice that of the sample specimen of red oak.

R302.9.4 Alternative test method. As an alternative to having a flame spread index of not greater than 200 and a smoke-developed index of not greater than 450 where tested in accordance with ASTM E84 or UL 723, wall and ceiling finishes shall be permitted to be tested in accordance with NFPA 286. Materials tested in accordance with NFPA 286 shall meet the following criteria:

The interior finish shall comply with the following:

1. During the 40 kW exposure, flames shall not spread to the ceiling.
2. The flame shall not spread to the outer extremity of the sample on any wall or ceiling.
3. Flashover, as defined in NFPA 286, shall not occur.
4. The peak heat release rate throughout the test shall not exceed 800 kW.
5. The total smoke released throughout the test shall not exceed 1,000 m^2.

❖ This section allows the use of NFPA 286 instead of ASTM E84 or UL 723 for testing of wall and ceiling finishes other than textiles. NFPA 286 is known as a "room corner" fire test. In this test, a fire source consisting of a wood crib is placed in the corner of a compartment. The materials tested are then placed on the walls of the compartment (see Commentary Figure R302.9.4). This generally provides a more realistic understanding of the hazards involved with the materials.

Two levels of exposures are used during an NFPA 286 fire test to better represent a growing fire. The first is a 40-kW fire size for 5 minutes and then a 160-kW exposure for 10 minutes. The 40-kW exposure represents the beginning of a fire where the initial spread is critical. Therefore, the stated criterion is that the fire cannot spread to the ceiling. The 160-kW exposure is obviously a more intense fire and the criterion relates to preventing flashover (as defined by NFPA 286) and the extent of flame spread throughout the entire test assembly. There is also a peak heat release limit of 800 kw and a total smoke production limit of 1,000 square feet (92.9 m^2) for both levels of exposure.

INTERNATIONAL CODE COUNCIL®
Copyright © 2015 ICC. ALL RIGHTS RESERVED. Accessed by David Dammon on Jun 21, 2017 12:30:52 PM pursuant to License Agreement with ICC. No further reproduction or distribution authorized. ANY UNAUTHORIZED REPRODUCTION OR DISTRIBUTION IS A VIOLATION OF THE FEDERAL COPYRIGHT ACT AND THE LICENSE AGREEMENT, AND SUBJECT TO CIVIL AND CRIMINAL PENALTIES THEREUNDER.

It should be noted that the flashover criteria for NFPA 286 are as follows:

- Heat release exceeds 1 MW,
- Heat flux at the floor exceeds 20 kW/m^2,
- Average upper layer temperature exceeds 600°C (1112°F),
- Flames exit the doorway, and
- Autoignition of paper target on the floor occurs.

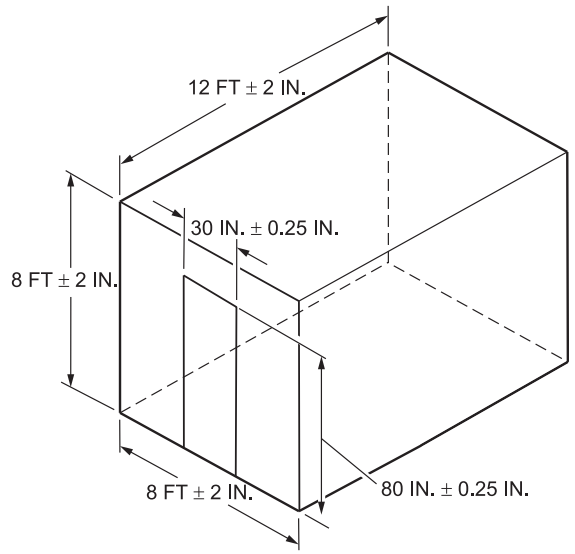

For SI: 1 inch = 25.4 mm, 1 foot = 304.8 mm.

Figure R302.9.4
INTERIOR FIRE TEST ROOM DIMENSIONS

R302.10 Flame spread index and smoke-developed index for insulation. Flame spread and smoke-developed index for insulation shall be in accordance with Sections R302.10.1 through R302.10.5.

❖ Section R302.10 addresses insulating materials installed in building spaces. Insulating materials can affect fire development and fire spread and, therefore, are regulated. Insulation has requirements for flame spread, smoke development, critical radiant flux and testing, which are addressed in the following subsections. There are unique testing requirements for loose-fill insulations.

R302.10.1 Insulation. Insulation materials, including facings, such as vapor retarders and vapor-permeable membranes installed within floor-ceiling assemblies, roof-ceiling assemblies, wall assemblies, crawl spaces and *attics* shall have a flame spread index not to exceed 25 with an accompanying smoke-developed index not to exceed 450 where tested in accordance with ASTM E84 or UL 723.

Exceptions:

1. Where such materials are installed in concealed spaces, the flame spread index and smoke-developed index limitations do not apply to the facings, provided that the facing is installed in substantial contact with the unexposed surface of the ceiling, floor or wall finish.
2. Cellulose fiber loose-fill insulation, that is not spray applied, complying with the requirements of Section R302.10.3, shall not be required to meet the smoke-developed index of not more than 450 and shall be required to meet a smoke-developed index of not more than 450 where tested in accordance with CAN/ULC S102.2.
3. Foam plastic insulation shall comply with Section R316.

❖ Section R302.10.1 addresses the various insulating materials that may be installed in building spaces, including insulating batts, blankets, fills (including vapor barriers and vapor-permeable membranes) and other coverings. Exposed insulating materials represent the same fire exposure hazard as any other exposed material, such as an interior finish. The provisions of Sections R302.10.2, R302.10.3 and R302.10.4, as well as the foam plastic provisions of Section R316, should also be reviewed based on the actual type of insulation and how it is installed. As a general requirement, insulation, including facings used as vapor retarders or as breather papers, must have a flame spread index not in excess of 25 and a smoke-developed index not in excess of 450. These values limit the contribution of the insulation to a fire. The flame spread requirement of 25 for the insulation will be more limiting than the 200, which is accepted for interior finishes by Section R302.9. The test method used to establish these limits is either ASTM E84 or UL 723. See the commentary to Section R302.9.3 for additional information.

Exceptions 1 and 2 address situations where, because of the way the material is installed or because of other imposed regulations, the material does not make any significant contribution to a fire.

The first exception eliminates the flame spread and smoke-developed indexes for the facing portion of the insulation if it is installed "in substantial contact" with the unexposed surface of the ceiling, floor or wall finish. For example, when paper-backed insulation is placed directly on top of a ceiling, the paper facing is not required to meet the smoke and flame spread limits. If the same material is applied to the underside of a roof deck and the paper facing is exposed to the attic space, the paper facing must then meet the general criteria. The potential for flame spread is greatly diminished when the facings are installed in direct contact with the finish material because of the lack of airspace to support a fire if the facing were to be exposed to a source of ignition. See Commentary Figure R302.10.1 for an example of the various facing provisions.

The second exception addresses the fact that cellulosic fiber loose-fill insulation is federally regulated by the Consumer Product Safety Commission (CPSC). Parts 1209 and 1404 of CPSC 16 CFR contain various requirements that regulate the product to avoid excessive flammability or significant fire hazards. The

INTERNATIONAL CODE COUNCIL®
Copyright © 2015 ICC. ALL RIGHTS RESERVED. Accessed by David Dammon on Jun 21, 2017 12:30:52 PM pursuant to License Agreement with ICC. No further reproduction or distribution authorized. ANY UNAUTHORIZED REPRODUCTION OR DISTRIBUTION IS A VIOLATION OF THE FEDERAL COPYRIGHT ACT AND THE LICENSE AGREEMENT, AND SUBJECT TO CIVIL AND CRIMINAL PENALTIES THEREUNDER.

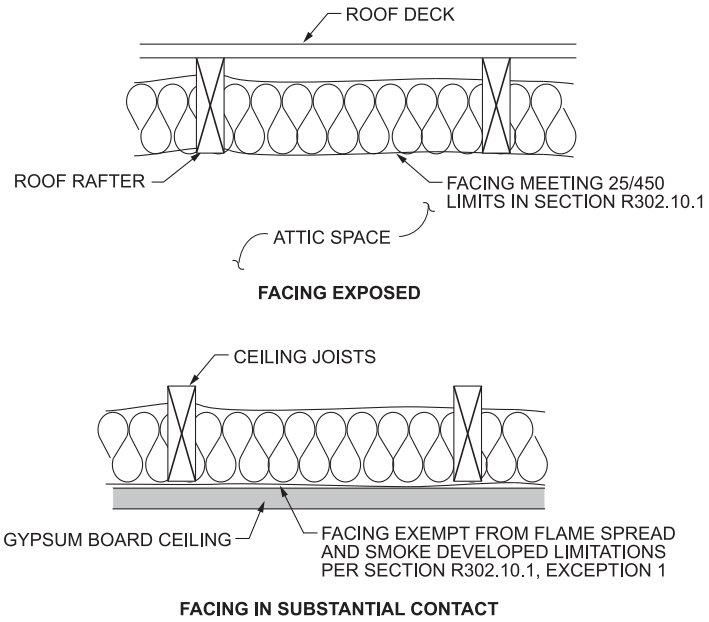

Figure R302.10.1
INSULATION FACING

smoke-developed index for cellulosic fiber loose-fill insulation that is spray applied must be 450 or less, as tested in accordance with CAN/ULC S102.2.

Exception 3 points the user to Section R316 for foam plastic insulation. Foam plastic materials pose some different problems that are addressed in Section R316.

R302.10.2 Loose-fill insulation. Loose-fill insulation materials that cannot be mounted in the ASTM E84 or UL 723 apparatus without a screen or artificial supports shall comply with the flame spread and smoke-developed limits of Section R302.10.1 where tested in accordance with CAN/ULC S102.2.

Exception: Cellulosic fiber loose-fill insulation shall not be required to be tested in accordance with CAN/ULC S102.2, provided such insulation complies with the requirements of Sections R302.10.1 and R302.10.3.

❖ The main provision establishes that CAN/ULC S102.2 is used as the test standard to determine the flame spread and smoke-developed indexes for cellulosic fiber loose-fill insulation materials that cannot be tested using the normal ASTM E84 or UL 723 test method. The exception makes a distinction between cellulosic fiber insulation that is spray applied using a water-mist spray applicator and cellulose loose-fill insulation that is poured or blown into place. Spray-applied cellulosic fiber insulation can be exposed on vertical and horizontal ceiling-type surfaces, so it is tested like any other insulating material. Cellulosic fiber loose-fill insulation that is poured (see commentary to Section R302.10.1, Exception 2) is exempt from the test procedure described in this section.

R302.10.3 Cellulosic fiber loose-fill insulation. Cellulosic fiber loose-fill insulation shall comply with CPSC 16 CFR, Parts 1209 and 1404. Each package of such insulating material shall be clearly *labeled* in accordance with CPSC 16 CFR, Parts 1209 and 1404.

❖ Because cellulosic fiber loose-fill insulation is federally regulated, this section provides the reference to the various federal regulations that are to be used. Because the federal regulations have precedence, the code cannot impose other requirements on this product. Therefore, this section and the reference to it from Section R302.10.1, Exception 2, establish the requirements for this product and provide the exemption from the normal ASTM E84 or UL 723 test standards.

R302.10.4 Exposed attic insulation. Exposed insulation materials installed on *attic* floors shall have a critical radiant flux not less than 0.12 watt per square centimeter.

❖ This section provides the performance requirements for the test exposure that insulation must meet when it is exposed on the floor of an attic. It is tied to the testing provisions found in Section R302.10.5, which specifies that the ASTM E970 test is to be used for determining the critical radiant flux. See the commentary to Section R302.10.5 regarding the application of this requirement to cellulosic fiber loose-fill insulation.

R302.10.5 Testing. Tests for critical radiant flux shall be made in accordance with ASTM E970.

❖ ASTM E970 is a test method developed by the insulation industry to evaluate the fire hazard of exposed attic insulation and is referenced in the material standards for insulation. Cellulosic fiber loose-fill insulation must comply with CPSC 16 CFR, Part 1209 (see Section R302.10.3), which requires testing by this standard. Spray-applied cellulose insulation that is not

INTERNATIONAL CODE COUNCIL®
Copyright © 2015 ICC. ALL RIGHTS RESERVED. Accessed by David Dammon on Jun 21, 2017 12:30:52 PM pursuant to License Agreement with ICC. No further reproduction or distribution authorized. ANY UNAUTHORIZED REPRODUCTION OR DISTRIBUTION IS A VIOLATION OF THE FEDERAL COPYRIGHT ACT AND THE LICENSE AGREEMENT, AND SUBJECT TO CIVIL AND CRIMINAL PENALTIES THEREUNDER.

subject to the CPSC standard (see Section R302.10.1 and Exception 2 in that section) is also subject to the ASTM E970 testing by Section R302.10.4.

R302.11 Fireblocking. In combustible construction, fireblocking shall be provided to cut off both vertical and horizontal concealed draft openings and to form an effective fire barrier between stories, and between a top *story* and the roof space.

Fireblocking shall be provided in wood-framed construction in the following locations:

1. In concealed spaces of stud walls and partitions, including furred spaces and parallel rows of studs or staggered studs, as follows:
   1.1. Vertically at the ceiling and floor levels.
   1.2. Horizontally at intervals not exceeding 10 feet (3048 mm).
2. At interconnections between concealed vertical and horizontal spaces such as occur at soffits, drop ceilings and cove ceilings.
3. In concealed spaces between stair stringers at the top and bottom of the run. Enclosed spaces under stairs shall comply with Section R302.7.
4. At openings around vents, pipes, ducts, cables and wires at ceiling and floor level, with an *approved* material to resist the free passage of flame and products of combustion. The material filling this annular space shall not be required to meet the ASTM E136 requirements.
5. For the fireblocking of chimneys and fireplaces, see Section R1003.19.
6. Fireblocking of cornices of a two-family *dwelling* is required at the line of *dwelling unit* separation.

❖ To restrict the movement of flame and gasses to other areas of a building through concealed passages in building components, such as floors, walls and stairs, fireblocking of these concealed combustible spaces is required to form a barrier between stories, and between a top story and the roof space. For example, the following locations must be firestopped in wood frame construction:

- Concealed spaces of stud walls and partitions, including spaces at the ceiling and floor levels [see Commentary Figures R302.11(1) and R302.11(2)].
- Interconnections between concealed vertical and horizontal spaces such as soffits [see Commentary Figure R302.11(3)], dropped ceilings [see Commentary Figure R302.11(4)] and cove ceilings [see Commentary Figure R302.11(5)]. Interconnections shown in Commentary Figure R302.11(6) for a bathtub installation must also be firestopped.
- Concealed spaces between stair stringers at the top and bottom of the run [see Commentary Figure R302.11(7)].
- Openings around vent pipes, ducts, chimneys and fireplaces at ceiling and floor levels [see Commentary Figures R302.11(8) and R302.11(9)]. By not requiring compliance with ASTM E136, Item 4 indicates that the fireblocking material can be of combustible materials. Commentary Figure R302.11(9) illustrates noncombustible fireblocking at masonry chimneys and fireplaces as required in accordance with Section R1003.19. The fireblocking at the ductwork would be similar, but is not required to be noncombustible.

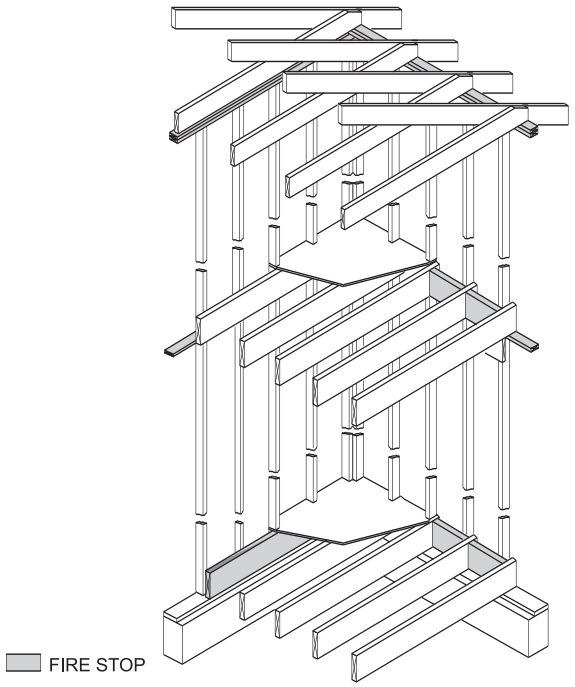

Figure R302.11(1)
FIRESTOPPING—BALLON FRAMING

R302.11.1 Fireblocking materials. Except as provided in Section R302.11, Item 4, fireblocking shall consist of the following materials.

1. Two-inch (51 mm) nominal lumber.
2. Two thicknesses of 1-inch (25.4 mm) nominal lumber with broken lap joints.
3. One thickness of $^{23}/_{32}$-inch (18.3 mm) wood structural panels with joints backed by $^{23}/_{32}$-inch (18.3 mm) wood structural panels.
4. One thickness of $^{3}/_{4}$-inch (19.1 mm) particleboard with joints backed by $^{3}/_{4}$-inch (19.1 mm) particleboard.
5. One-half-inch (12.7 mm) gypsum board.
6. One-quarter-inch (6.4 mm) cement-based millboard.
7. Batts or blankets of mineral wool or glass fiber or other *approved* materials installed in such a manner as to be securely retained in place.

INTERNATIONAL CODE COUNCIL®
Copyright © 2015 ICC. ALL RIGHTS RESERVED. Accessed by David Dammon on Jun 21, 2017 12:30:52 PM pursuant to License Agreement with ICC. No further reproduction or distribution authorized. ANY UNAUTHORIZED REPRODUCTION OR DISTRIBUTION IS A VIOLATION OF THE FEDERAL COPYRIGHT ACT AND THE LICENSE AGREEMENT, AND SUBJECT TO CIVIL AND CRIMINAL PENALTIES THEREUNDER.

8. Cellulose insulation installed as tested in accordance with ASTM E119 or UL 263, for the specific application.

❖ This section specifies the material required for fireblocking. Fireblocking around chimneys and fireplaces must be noncombustible according to Section R1003.19 as specified in Item 5 of Section R302.11. The fireblocking at openings around vents, pipes, ducts and wires at the ceiling and floor level is required only to be adequate to resist the free passage of flames and smoke according to Item 4 of Section R302.11; however, this fireblocking can be constructed from combustible materials. So that it is not accidentally displaced, all fireblocking material must be securely fastened in place.

R302.11.1.1 Batts or blankets of mineral or glass fiber. Batts or blankets of mineral or glass fiber or other *approved* nonrigid materials shall be permitted for compliance with the 10-foot (3048 mm) horizontal fireblocking in walls constructed using parallel rows of studs or staggered studs.

❖ Batts or blankets may serve as horizontal fireblocking in walls where they are installed in accordance with Sections R302.11.1.2 through R302.11.1.3.

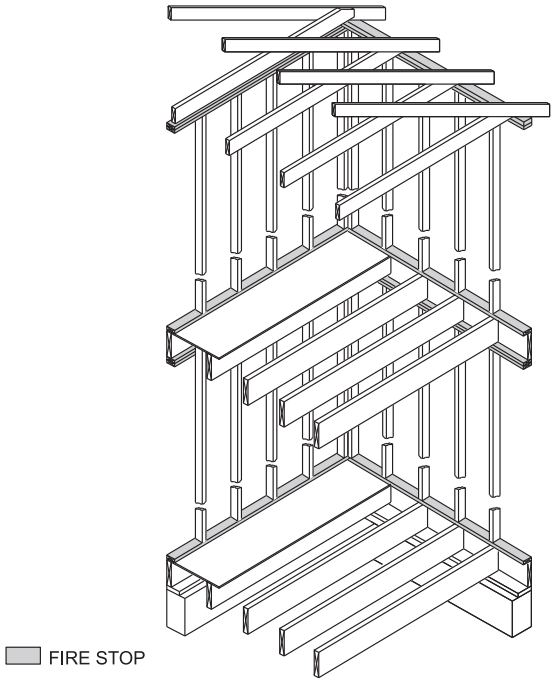

Figure R302.11(2)
FIRESTOPPING—PLATFORM FRAMING

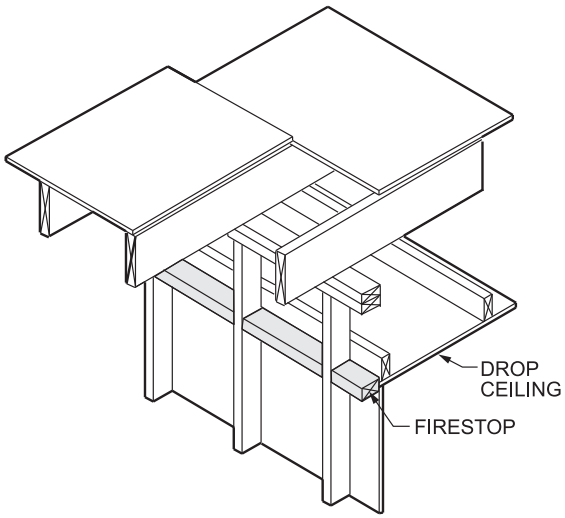

Figure R302.11(4)
FIRESTOPPING—DROPPED CEILING

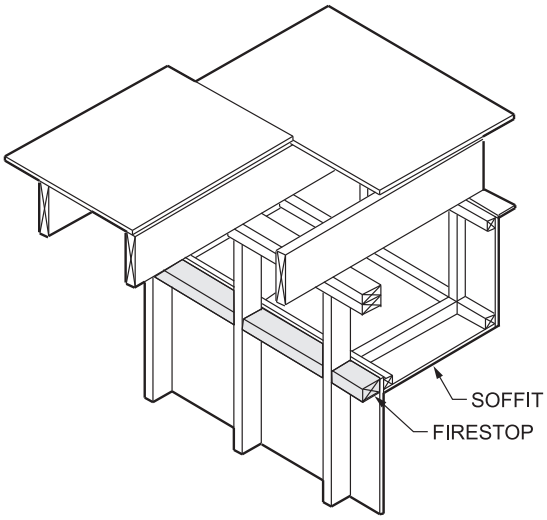

Figure R302.11(3)
FIRESTOPPING—FURRED SOFFIT

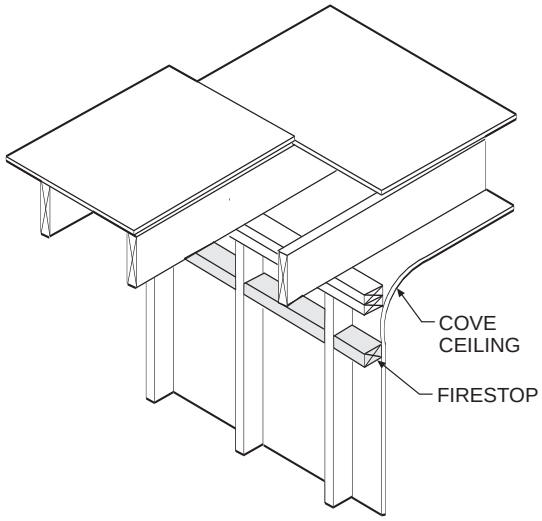

Figure R302.11(5)
FIRESTOPPING—COVE CEILING

INTERNATIONAL CODE COUNCIL®
Copyright © 2015 ICC. ALL RIGHTS RESERVED. Accessed by David Dammon on Jun 21, 2017 12:30:52 PM pursuant to License Agreement with ICC. No further reproduction or distribution authorized. ANY UNAUTHORIZED REPRODUCTION OR DISTRIBUTION IS A VIOLATION OF THE FEDERAL COPYRIGHT ACT AND THE LICENSE AGREEMENT, AND SUBJECT TO CIVIL AND CRIMINAL PENALTIES THEREUNDER.

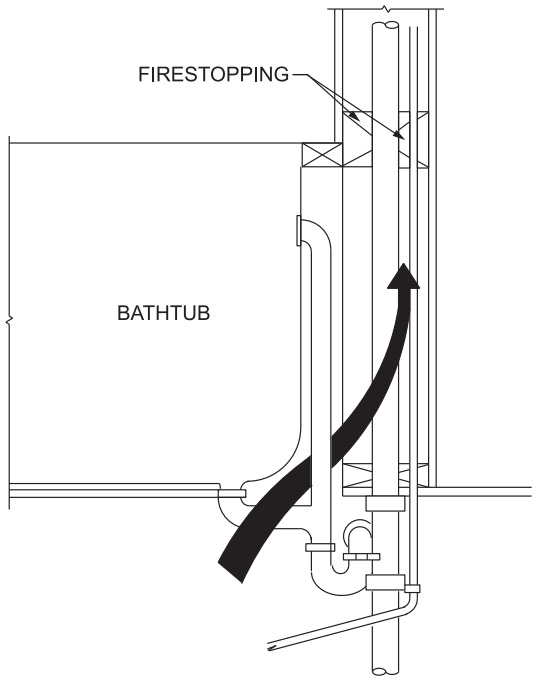

Figure R302.11(6)
FIRESTOPPING—AT TUB

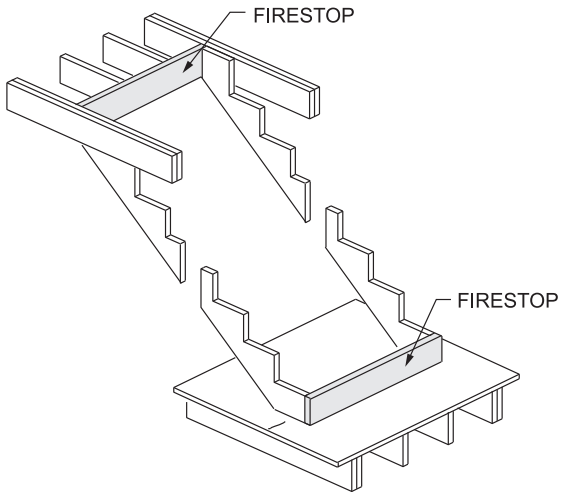

Figure R301.11(7)
FIRESTOPPING—AT STAIRWAYS

R302.11.1.2 Unfaced fiberglass. Unfaced fiberglass batt insulation used as fireblocking shall fill the entire cross section of the wall cavity to a height of not less than 16 inches (406 mm) measured vertically. Where piping, conduit or similar obstructions are encountered, the insulation shall be packed tightly around the obstruction.

❖ When batts or blankets are used for fireblocking they must fill the wall cavity from stud to stud and be at least 16 inches (406 mm) as measured from the bottom to the top of the fill.

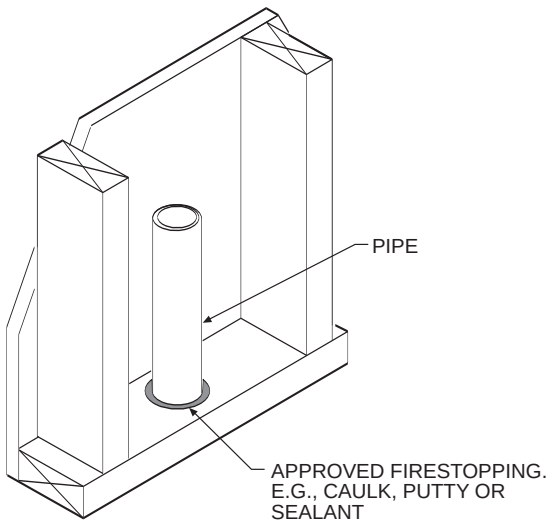

Figure R302.11(8)
FIRESTOPPING—AROUND PIPING

R302.11.1.3 Loose-fill insulation material. Loose-fill insulation material shall not be used as a fireblock unless specifically tested in the form and manner intended for use to demonstrate its ability to remain in place and to retard the spread of fire and hot gases.

❖ Not every type of batt or blanket insulation is acceptable as a fireblocking material. Testing must show that the type utilized will provide the intended protection.

R302.11.2 Fireblocking integrity. The integrity of fireblocks shall be maintained.

❖ Piping, ducts or other similar items that pass through firestops must be installed so that the integrity of the firestop is maintained. This may be accomplished by packing an oversized hole with an acceptable fireblocking material.

R302.12 Draftstopping. In combustible construction where there is usable space both above and below the concealed space of a floor-ceiling assembly, draftstops shall be installed so that the area of the concealed space does not exceed 1,000 square feet (92.9 m^2). Draftstopping shall divide the concealed space into approximately equal areas. Where the assembly is enclosed by a floor membrane above and a ceiling membrane below, draftstopping shall be provided in floor-ceiling assemblies under the following circumstances:

1. Ceiling is suspended under the floor framing.
2. Floor framing is constructed of truss-type open-web or perforated members.

❖ Draftstopping is required to limit the spread of fire through combustible spaces in floor/ceiling assemblies when such spaces create a connected area beyond the normal joist cavity. For example, draftstopping is required when the ceiling is suspended under the floor

INTERNATIONAL CODE COUNCIL®
Copyright © 2015 ICC. ALL RIGHTS RESERVED. Accessed by David Dammon on Jun 21, 2017 12:30:52 PM pursuant to License Agreement with ICC. No further reproduction or distribution authorized. ANY UNAUTHORIZED REPRODUCTION OR DISTRIBUTION IS A VIOLATION OF THE FEDERAL COPYRIGHT ACT AND THE LICENSE AGREEMENT, AND SUBJECT TO CIVIL AND CRIMINAL PENALTIES THEREUNDER.

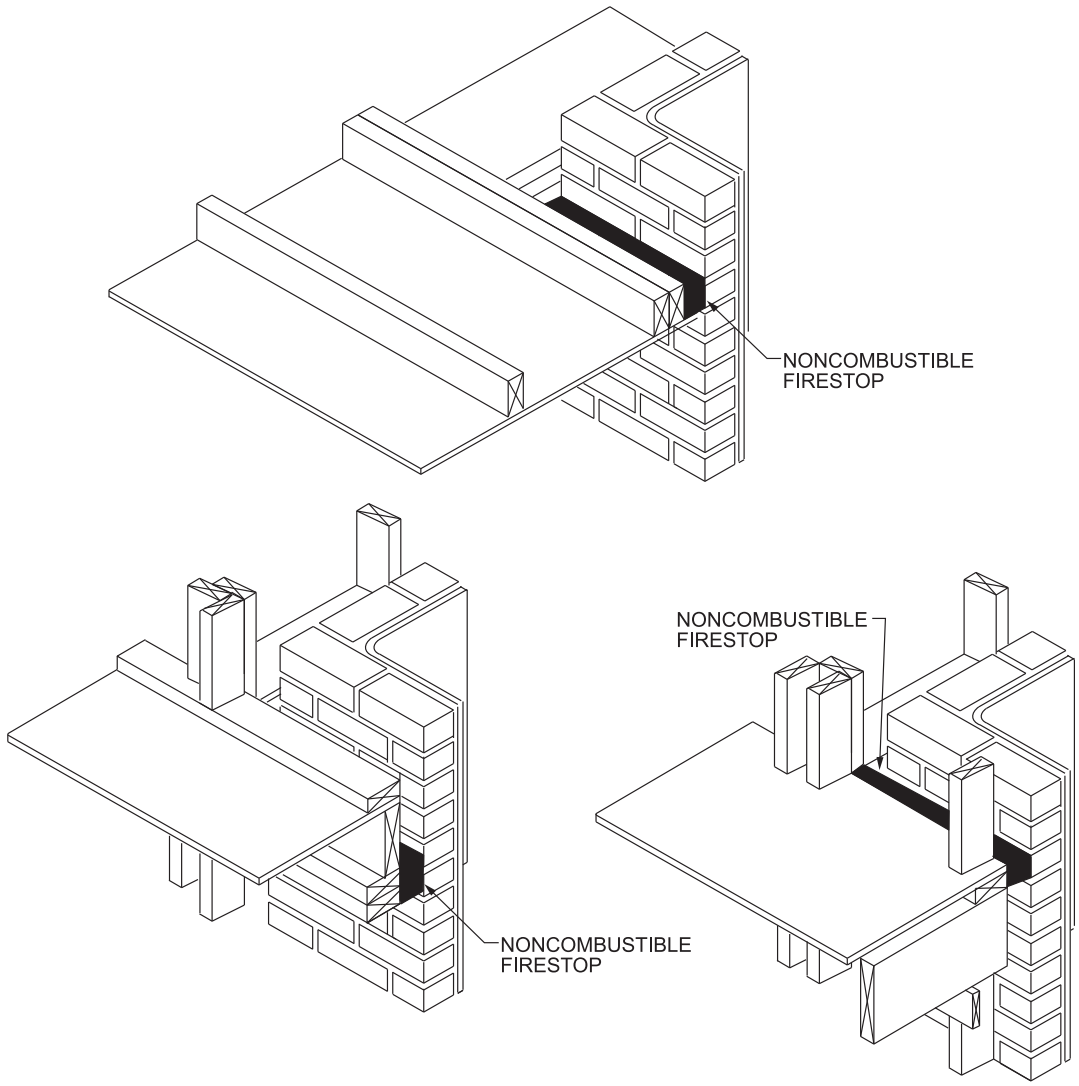

Figure R302.11(9)
FIRESTOPPING—AROUND MASONRY CHIMNEYS AND FIREPLACES

framing, as illustrated in Commentary Figure R302.12(1), or when the floor framing is constructed of truss-type or open-web perforated members, as illustrated in Commentary Figure R302.12(2). When such space exceeds 1,000 square feet (92.9 m^2) in area, the code requires the space between the ceiling membrane and the floor to be divided into two approximately equal areas with no area larger than 1,000 square feet (92.9 m^2). A floor/ceiling assembly having a space exceeding 2,000 square feet (185.8 m^2), but not exceeding 3,000 square feet (278.7 m^2), would have to be divided into a minimum of three approximately equal areas.

R302.12.1 Materials. Draftstopping materials shall be not less than $^1/_2$-inch (12.7 mm) gypsum board, $^3/_8$-inch (9.5 mm) wood structural panels or other *approved* materials adequately supported. Draftstopping shall be installed parallel to the floor framing members unless otherwise *approved* by the *building official*. The integrity of the draftstops shall be maintained.

❖ Materials used to meet draftstopping requirements are typically $^1/_2$-inch (12.7 mm) gypsum board or $^3/_8$-inch (9.5 mm) plywood adequately attached to the supporting members. Other materials may be used for draftstopping, if those materials produce an equivalent barrier.

The code places an additional restriction on the specific location of the draftstopping, mandating that the draftstopping be placed parallel to the main floor framing members. Commentary Figures R302.12(1) and R302.12(2) illustrate two examples of draftstopping orientation placed as required.

When a penetration through the draftstopping is necessary, the integrity of the draftstop must be maintained in a manner similar to firestopping penetrations.

INTERNATIONAL CODE COUNCIL®
Copyright © 2015 ICC. ALL RIGHTS RESERVED. Accessed by David Dammon on Jun 21, 2017 12:30:52 PM pursuant to License Agreement with ICC. No further reproduction or distribution authorized. ANY UNAUTHORIZED REPRODUCTION OR DISTRIBUTION IS A VIOLATION OF THE FEDERAL COPYRIGHT ACT AND THE LICENSE AGREEMENT, AND SUBJECT TO CIVIL AND CRIMINAL PENALTIES THEREUNDER.

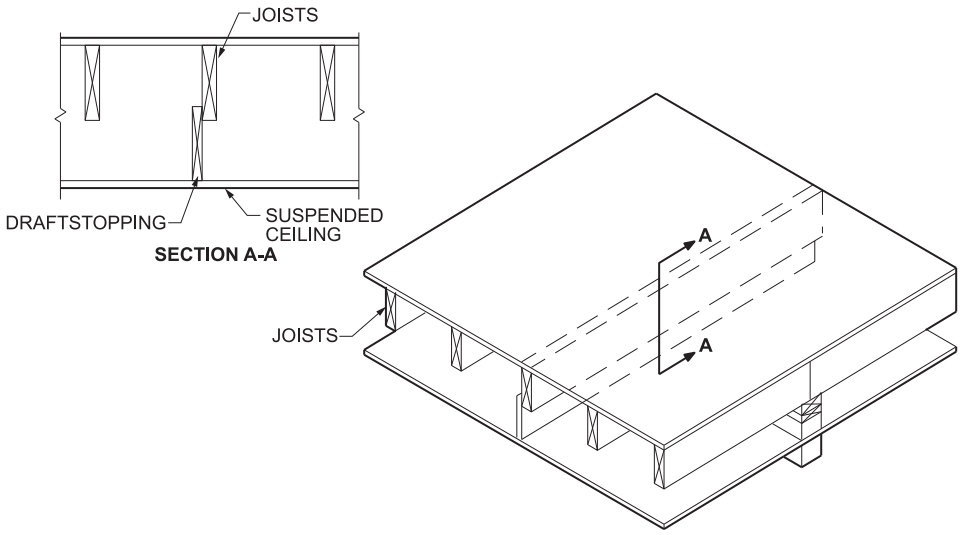

Figure 302.12(1)
DRAFTSTOPPING OF CEILING SUSPENDED UNDER FLOOR FRAMING

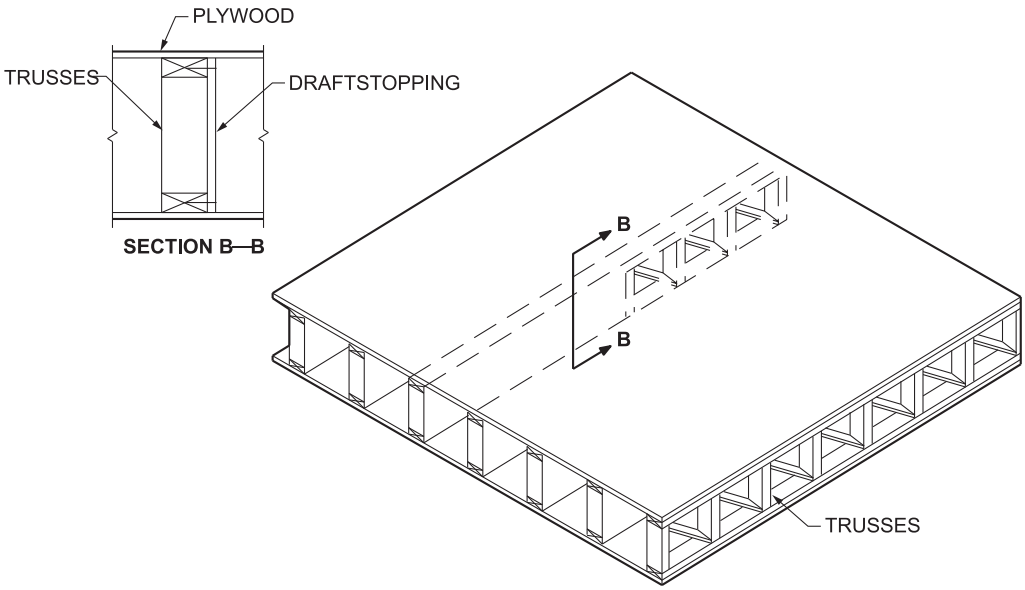

Figure 302.12(2)
DRAFTSTOPPING OF TRUSS-TYPE FLOOR FRAMING

R302.13 Fire protection of floors. Floor assemblies that are not required elsewhere in this code to be fire-resistance rated, shall be provided with a $^{1}/_{2}$-inch (12.7 mm) gypsum wallboard membrane, $^{5}/_{8}$-inch (16 mm) wood structural panel membrane, or equivalent on the underside of the floor framing member. Penetrations or openings for ducts, vents, electrical outlets, lighting, devices, luminaires, wires, speakers, drainage, piping and similar openings or penetrations shall be permitted.

Exceptions:

1. Floor assemblies located directly over a space protected by an automatic sprinkler system in accordance with Section P2904, NFPA 13D, or other approved equivalent sprinkler system.
2. Floor assemblies located directly over a crawl space not intended for storage or fuel-fired appliances.
3. Portions of floor assemblies shall be permitted to be unprotected where complying with the following:
   3.1. The aggregate area of the unprotected portions does not exceed 80 square feet (7.4 m^2) per story
   3.2. Fireblocking in accordance with Section R302.11.1 is installed along the perimeter of the unprotected portion to separate the unprotected

INTERNATIONAL CODE COUNCIL®
Copyright © 2015 ICC. ALL RIGHTS RESERVED. Accessed by David Dammon on Jun 21, 2017 12:30:52 PM pursuant to License Agreement with ICC. No further reproduction or distribution authorized. ANY UNAUTHORIZED REPRODUCTION OR DISTRIBUTION IS A VIOLATION OF THE FEDERAL COPYRIGHT ACT AND THE LICENSE AGREEMENT, AND SUBJECT TO CIVIL AND CRIMINAL PENALTIES THEREUNDER.

portion from the remainder of the floor assembly.

4. Wood floor assemblies using dimension lumber or structural composite lumber equal to or greater than 2-inch by 10-inch (50.8 mm by 254 mm) nominal dimension, or other approved floor assemblies demonstrating equivalent fire performance.

❖ During a fire unprotected floor assemblies of light-weight construction have a short time gap between untenable conditions and the structural collapse of the floor assembly. Section R302.1.3 requires protection to floors of light-weight construction that will provide the occupants additional time for self-evacuation and safety for fire fighters performing search and rescue. This section requires all floor assemblies, not fire rated, to be protected on the underside with $^1/_2$-inch gypsum board, $^5/_8$-inch wood structural panels or equivalent. This will apply mainly to floor assemblies located over nonsprinklered areas such as unfinished basements and crawl spaces for storage or containing fuel-fired appliances. There are four exceptions provided that specify where the protection is not required.

Exception 1 permits floor assemblies above any space protected by an automatic sprinkler system to be exempt from the application of the protective membrane to the underside of the floor-framing members. Section R313 requires an automatic residential fire sprinkler system (ARFSS) for new construction and the floor assemblies at each story will have the space below protected; therefore, Section R302.1.3 is not required. For crawl spaces used for storage or containing fuel-fired appliances and alterations or additions to existing buildings that are not provided with an ARFSS, existing buildings that are not provided with an AFRSS, this exception will permit deletion of the protective membrane if the space is protected by an AFRSS in accordance with Section P2904, NFPA 13 D or other approved methods.

Exception 2 exempts floor assemblies over crawl spaces, unless the crawl space contains fuel-fired appliances or is intended for storage. However, Exception 1 may be used for crawl spaces intended for storage or containing fuel-fired appliances.

Exception 3 prescribes an allowable area where the protective membrane may be omitted.

Exception 4 permits floor framing of sawn lumber or structural composite lumber equal to or greater than 2 $\times$ 10 nominal dimension to be exempt from the application of the protective membrane to the underside of the floor-framing members. The basis for this exception is that tests conducted of floor framing constructed of 2 $\times$ 10 lumber and loaded to 50 percent of full design load showed that the assemblies provided adequate time for occupants to self-evacuate and safety for fire fighters performing search and reuse.

R302.14 Combustible insulation clearance. Combustible insulation shall be separated not less than 3 inches (76 mm) from recessed luminaires, fan motors and other heat-producing devices.

Exception: Where heat-producing devices are *listed* for lesser clearances, combustible insulation complying with the listing requirements shall be separated in accordance with the conditions stipulated in the listing.

Recessed luminaires installed in the *building thermal envelope* shall meet the requirements of Section N1102.4.5 of this code.

❖ The minimum clearance required between combustible insulation and light fixtures, fan motors, etc., minimizes the chance of accidental ignition of the insulation. If a heat-producing device is listed for less than the minimum clearance specified in this section and all conditions of the listing are satisfied, the reduced clearance would apply.

SECTION R303
LIGHT, VENTILATION AND HEATING

R303.1 Habitable rooms. Habitable rooms shall have an aggregate glazing area of not less than 8 percent of the floor area of such rooms. Natural *ventilation* shall be through windows, skylights, doors, louvers or other *approved* openings to the outdoor air. Such openings shall be provided with ready access or shall otherwise be readily controllable by the building occupants. The openable area to the outdoors shall be not less than 4 percent of the floor area being ventilated.

Exceptions:

1. The glazed areas need not be openable where the opening is not required by Section R310 and a whole-house mechanical *ventilation* system is installed in accordance with Section M1507.
2. The glazed areas need not be installed in rooms where Exception 1 is satisfied and artificial light is provided that is capable of producing an average illumination of 6 footcandles (65 lux) over the area of the room at a height of 30 inches (762 mm) above the floor level.
3. Use of sunroom and patio covers, as defined in Section R202, shall be permitted for natural *ventilation* if in excess of 40 percent of the exterior sunroom walls are open, or are enclosed only by insect screening.

❖ All habitable rooms are to be constructed with an aggregate glazing area of not less than 8 percent of the floor area. The code does not require the glazed area to be openable. This section also provides the standard of natural ventilation for all habitable rooms. Openings to the outdoor air, such as doors, windows and louvers, provide natural ventilation. The openable area must be not less than 4 percent of the floor area being ventilated. This section does not, however, state

INTERNATIONAL CODE COUNCIL®
Copyright © 2015 ICC. ALL RIGHTS RESERVED. Accessed by David Dammon on Jun 21, 2017 12:30:52 PM pursuant to License Agreement with ICC. No further reproduction or distribution authorized. ANY UNAUTHORIZED REPRODUCTION OR DISTRIBUTION IS A VIOLATION OF THE FEDERAL COPYRIGHT ACT AND THE LICENSE AGREEMENT, AND SUBJECT TO CIVIL AND CRIMINAL PENALTIES THEREUNDER.

or intend that the doors, windows or openings actually be constantly open. The intent is that they be maintained in an operable condition so that they are available for use at the discretion of the occupant. In addition to the natural ventilation provisions of this section, a whole-house mechanical ventilation system may be required in accordance with the provisions of Section R303.4.

Although the glazed area may be operable, Exception 1 permits the glazed area for all openings, except the ones required for emergency escape and rescue, to be fixed or "not openable" when a whole-house mechanical ventilation system is installed in accordance with Section M1507.

Exception 2 to Section R303.1 allows glazing to be completely deleted from habitable rooms where artificial light is available that is capable of producing an average illumination of 6 footcandles (65 lux) over the room at a height of 30 inches (762 mm) above the floor level and where a whole-house mechanical ventilation system complying with Exception 1 to Section R303.1 is installed.

Exception 3 allows for the openings in a sunroom (those in which more than 40 percent of the exterior sunroom walls is open) to provide natural ventilation when the exterior walls of the sunroom are open. Insect screening for these seasonal rooms is also acceptable to make use of this exception.

Various handbooks are available from lighting manufacturers for calculating the required illumination.

R303.2 Adjoining rooms. For the purpose of determining light and *ventilation* requirements, any room shall be considered to be a portion of an adjoining room where not less than one-half of the area of the common wall is open and unobstructed and provides an opening of not less than one-tenth of the floor area of the interior room and not less than 25 square feet (2.3 m^2).

Exception: Openings required for light or *ventilation* shall be permitted to open into a sunroom with thermal isolation or a patio cover, provided that there is an openable area between the adjoining room and the sunroom or patio cover of not less than one-tenth of the floor area of the interior room and not less than 20 square feet (2 m^2). The minimum openable area to the outdoors shall be based upon the total floor area being ventilated.

❖ Where rooms do not have access to an exterior wall to satisfy light and ventilation requirements, they may be considered as part of an adjoining room if they are open to that room as shown in Commentary Figure R303.2.

The exception deals with a very common circumstance, especially in residential construction. As long as the sunroom addition is large enough and is thermally isolated, the building owner need not move openings for lighting and/or ventilation when installing an addition that meets the definition of "Sunroom addition."

R303.3 Bathrooms. Bathrooms, water closet compartments and other similar rooms shall be provided with aggregate glazing area in windows of not less than 3 square feet (0.3 m^2), one-half of which must be openable.

Exception: The glazed areas shall not be required where artificial light and a local exhaust system are provided. The minimum local exhaust rates shall be determined in accordance with Section M1507. Exhaust air from the space shall be exhausted directly to the outdoors.

❖ Like habitable rooms, bathrooms must be provided with natural light and ventilation or adequate artificial

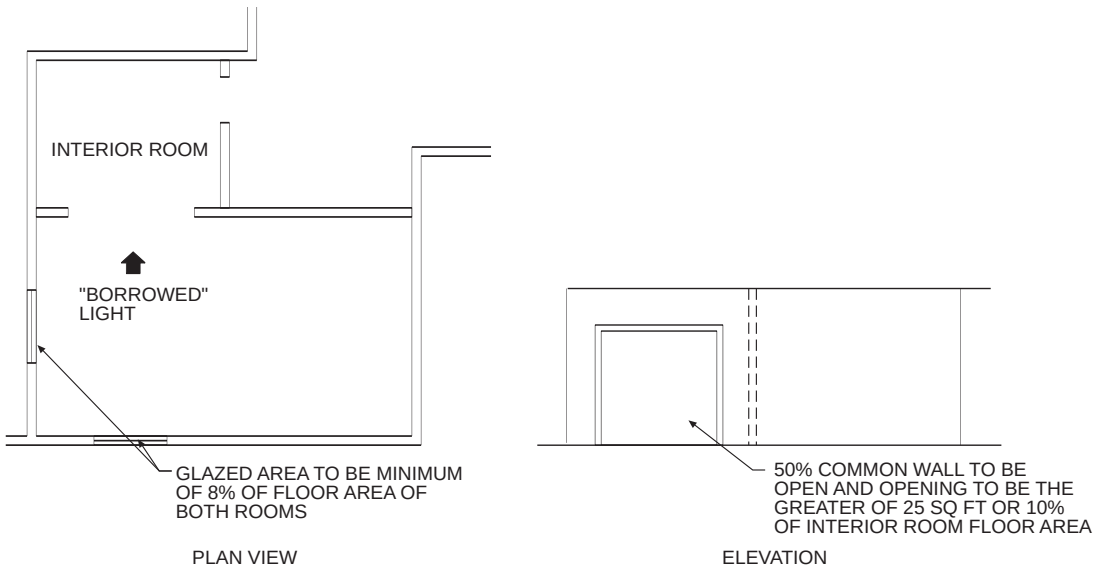

For SI: 1 square foot = 0.0929 m^2.

Figure R303.2
NATURAL LIGHT

INTERNATIONAL CODE COUNCIL®
Copyright © 2015 ICC. ALL RIGHTS RESERVED. Accessed by David Dammon on Jun 21, 2017 12:30:52 PM pursuant to License Agreement with ICC. No further reproduction or distribution authorized. ANY UNAUTHORIZED REPRODUCTION OR DISTRIBUTION IS A VIOLATION OF THE FEDERAL COPYRIGHT ACT AND THE LICENSE AGREEMENT, AND SUBJECT TO CIVIL AND CRIMINAL PENALTIES THEREUNDER.

light and mechanical ventilation. For natural light, exterior glazing of at least 3 square feet (0.3 m^2) must be provided. To meet the natural ventilation requirement, at least 1.5 square feet (0.140 m^2) must be openable.

For local exhaust the exhaust rates must be determined in accordance with Section M1507.4. The exhaust must be directly to the outdoors.

R303.4 Mechanical ventilation. Where the air infiltration rate of a *dwelling unit* is 5 air changes per hour or less where tested with a blower door at a pressure of 0.2 inch w.c (50 Pa) in accordance with Section N1102.4.1.2, the *dwelling unit* shall be provided with whole-house mechanical ventilation in accordance with Section M1507.3.

❖ Section R303.1 requires natural ventilation through windows, doors or other approved openings, with an option for mechanical ventilation. Multiple studies have shown that natural ventilation alone is not sufficient for dwellings that are tightly sealed such that their infiltration rate is below 5 air changes per hour (ACH). Section R303.4 sets the threshold for tightly sealed at 5 ACH at a 50 Pascal pressure differential between the indoors and outdoors (5 ACH50). For perspective, 50 Pa = 0.2 inch water column; 1 inch water column = 250 Pa. Traditionally, 0.35 ACH or 15 cfm per occupant has been the required mechanical ventilation rate allowed as an alternative to natural ventilation. An ACH of 0.35 at typical ambient pressure differentials is roughly equivalent to 7 to 10 ACH at a 50 Pa differential, thus the threshold of 5 ACH50 is comparable to the traditional ventilation rate. If the blower door test required by Section N1102.4.1.2 of the code indicates that the infiltration rate is less than 5 ACH50, the dwelling must be provided with whole-house mechanical ventilation. Note that Section N1102.4.1.2 intends for the infiltration rate to be 5 ACH50 or less, consistent with the trend for tighter building envelopes. Where a whole-house mechanical ventilation system is provided in accordance with Section R303.1, Exception 1, the intent of this section is satisfied and the ACH rate need not be known because Exception 1 short-cuts directly to Section M1507. As dwelling envelopes become more air tight, there is evidence that indoor contaminant levels are rising. Poor indoor air quality, the inability to predict ventilation rates from natural ventilation and the decreasing rates of infiltration have all led to this requirement for mechanical ventilation in dwellings. The model for the requirements of this section is ASHRAE 62.2, the standard for ventilation and indoor air quality in residential buildings, which is similar to that in Appendix B of ICC 700, *National Green Building Standard*. Also, several state codes now mandate mechanical ventilation in dwellings. This section applies whether or not the natural ventilation provisions of Section R303.1 are applied. In other words, the requirement of this section is in addition to the provisions of Section R303.1 (see commentary, Section M1507).

R303.5 Opening location. Outdoor intake and exhaust openings shall be located in accordance with Sections R303.5.1 and R303.5.2.

❖ This section regulates the locations of outdoor air intake and exhaust air openings. These provisions are intended to prevent the introduction of contaminants into the ventilation air of a building or to avoid the exhausting of contaminants into areas that may be occupied by people or into other buildings.

R303.5.1 Intake openings. Mechanical and gravity outdoor air intake openings shall be located not less than 10 feet (3048 mm) from any hazardous or noxious contaminant, such as vents, chimneys, plumbing vents, streets, alleys, parking lots and loading docks.

For the purpose of this section, the exhaust from *dwelling* unit toilet rooms, bathrooms and kitchens shall not be considered as hazardous or noxious.

Exceptions:

1. The 10-foot (3048 mm) separation is not required where the intake opening is located 3 feet (914 mm) or greater below the contaminant source.
2. Vents and chimneys serving fuel-burning appliances shall be terminated in accordance with the applicable provisions of Chapters 18 and 24.
3. Clothes dryer exhaust ducts shall be terminated in accordance with Section M1502.3.

❖ In the context of this section, intake openings include windows, doors, gravity air intakes, soffit vents, combustion air intake openings, outside air intakes for air handlers, makeup air intakes and similar openings that naturally or mechanically draw in air from the building exterior. This section identifies specific locations that are known to generate or emit noxious contaminants, and requires that both mechanical and gravity air intake openings be located a minimum of 10 feet (3048 mm) from such hazards to avoid introducing contaminants into the building. As an alternative, Exception 1 allows mechanical and gravity air intakes to be located within 10 feet (3048 mm) of such sources of contamination if the intakes are located at least 3 feet (914 mm) below the contaminant source. A 3-foot (914 mm) vertical separation distance will allow the noxious gases and contaminants to disperse into the atmosphere before they can be drawn into an air intake opening. Placing the source of contamination above an air intake takes advantage of the fact that normally encountered sources of contamination are lighter (less dense) than the surrounding air and, therefore, will rise above the vicinity of an air intake located below. Commentary Figure R303.4.1 shows an example of the relative locations for intake air openings for a building where sources of contaminants are present.

Particular types of exhausts may have more specific restrictions on their location that would supersede this section. Therefore, Exception 2 references Chapters

INTERNATIONAL CODE COUNCIL®
Copyright © 2015 ICC. ALL RIGHTS RESERVED. Accessed by David Dammon on Jun 21, 2017 12:30:52 PM pursuant to License Agreement with ICC. No further reproduction or distribution authorized. ANY UNAUTHORIZED REPRODUCTION OR DISTRIBUTION IS A VIOLATION OF THE FEDERAL COPYRIGHT ACT AND THE LICENSE AGREEMENT, AND SUBJECT TO CIVIL AND CRIMINAL PENALTIES THEREUNDER.

18 and 24 for the termination of vents and chimneys serving fuel-burning appliances and Exception 3 references Section M1502.3 for the termination of clothes dryer exhaust ducts.

R303.5.2 Exhaust openings. Exhaust air shall not be directed onto walkways.

❖ For obvious health reasons, exhaust air cannot be directed onto walkways in a manner that subjects the users of the walkway to the exhaust airstream.

Ideally, mechanical exhaust air openings should not be located in any position where they may create a nuisance. A "Nuisance" is defined in Chapter 2 of the *International Plumbing Code*® (IPC®) as "whatever is dangerous to human life or detrimental to health; whatever structure or premises is not sufficiently ventilated, sewered, drained, cleaned or lighted, with respect to its intended occupancy; and whatever renders the air, or human food, drink or water supply unwholesome." A nuisance is defined as much more than or much worse than simply "bothersome." Unfortunately, it is not an easy task to determine whether or not a nuisance will be present because the conditions under which an exhaust system performs vary considerably with the change of seasons, the ambient temperatures and the prevailing winds. As much information as possible should be gathered regarding the installation in order to evaluate the hypothetical worst-case scenario. This would include the characteristics and geometry of the installation, as well as the local ambient conditions, so that an educated guess may be made to determine the "nuisance effect" of the exhaust outlet.

R303.6 Outside opening protection. Air exhaust and intake openings that terminate outdoors shall be protected with corrosion-resistant screens, louvers or grilles having an opening size of not less than $^1/_4$ inch (6 mm) and a maximum opening size of $^1/_2$ inch (13 mm), in any dimension. Openings shall be protected against local weather conditions. Outdoor air exhaust and intake openings shall meet the provisions for *exterior wall* opening protectives in accordance with this code.

❖ Outside air exhaust and intake openings must have corrosion-resistant screens, grilles or louvers to prevent foreign objects (such as insects or debris) from entering the system or building. Also, such openings must be protected against the entry of falling or wind-driven water, snow and ice. Exhaust systems sometimes incorporate rotating hoods over the opening to prevent high winds from restricting the flow of exhaust gases out of the system. The hoods align themselves with the direction of the wind to allow the unimpeded, and actually induced, discharge from the exhaust outlet. Rotating turbines are also used as both weather protection and a means of inducing airflow.

The opening sizes for louvers and grilles and the mesh sizes for screens must be within the specified range as indicated. The opening size must be large enough to inhibit blockage by debris, to prevent significant resistance to airflow, and still be small enough to keep out what must be kept out. A screen of such mesh size would restrict the passage of rodents and large insects and would be resistant to blockage by lint, debris and plant fibers.

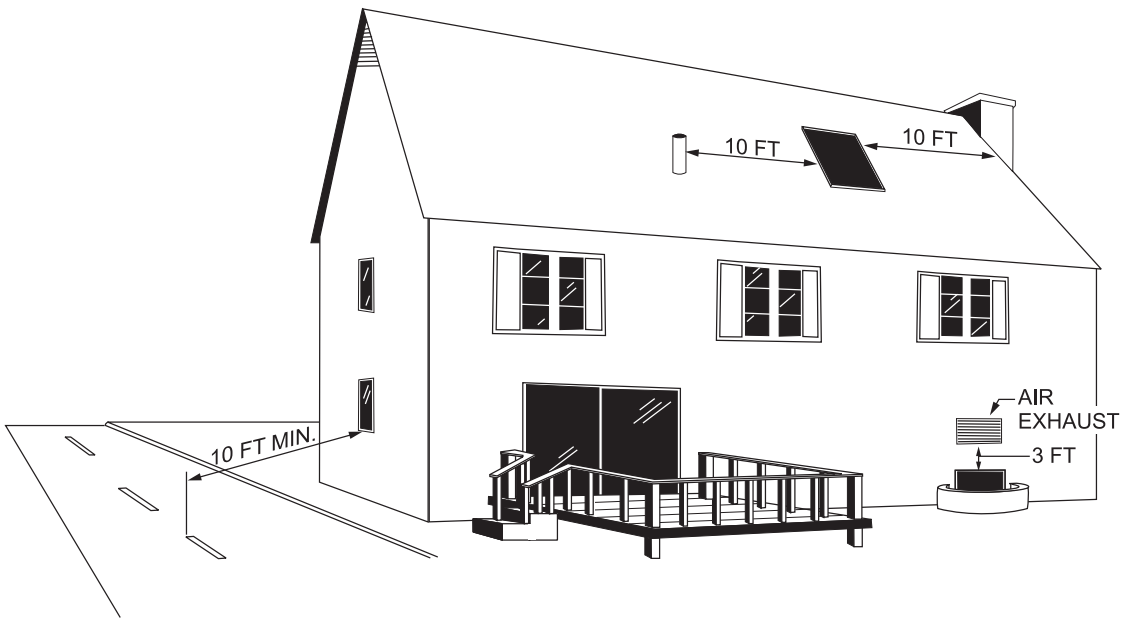

For SI: 1 foot = 304.8 mm.

Figure R303.4.1
AIR INTAKE OPENING LOCATIONS

INTERNATIONAL CODE COUNCIL®
Copyright © 2015 ICC. ALL RIGHTS RESERVED. Accessed by David Dammon on Jun 21, 2017 12:30:52 PM pursuant to License Agreement with ICC. No further reproduction or distribution authorized. ANY UNAUTHORIZED REPRODUCTION OR DISTRIBUTION IS A VIOLATION OF THE FEDERAL COPYRIGHT ACT AND THE LICENSE AGREEMENT, AND SUBJECT TO CIVIL AND CRIMINAL PENALTIES THEREUNDER.

R303.7 Interior stairway illumination. Interior stairways shall be provided with an artificial light source to illuminate the landings and treads. The light source shall be capable of illuminating treads and landings to levels of not less than 1 foot-candle (11 lux) as measured at the center of treads and landings. There shall be a wall switch at each floor level to control the light source where the stairway has six or more risers.

Exception: A switch is not required where remote, central or automatic control of lighting is provided.

❖ Interior stairways may be illuminated in two ways. The first option is to install artificial lighting in the vicinity of each landing and the treads. This would include top, intermediate and bottom landings and each tread run. However, this does not mean that a separate artificial light source must be installed in each of these locations. The artificial light must be capable of illuminating treads and landings to not less than 1 footcandle (11 lux). The measurement of 1 footcandle (11 lux) is to be taken at the center of landings and treads. Where a stair has six or more risers, a wall switch to control the artificial light source is required at each floor level, except where remote, central or automatic control is provided (see Commentary Figure R303.7).

R303.8 Exterior stairway illumination. Exterior stairways shall be provided with an artificial light source located at the top landing of the stairway. Exterior stairways providing access to a *basement* from the outdoor *grade* level shall be provided with an artificial light source located at the bottom landing of the stairway.

❖ Exterior stairways require illumination only at the top landing (see Commentary Figure R303.7).

Exterior stairways to a basement must have artificial illumination near the bottom landing.

The exception allows the light source to be installed over each individual stairway section, thus eliminating the lighting over the landings.

R303.9 Required glazed openings. Required glazed openings shall open directly onto a street or public alley, or a *yard* or court located on the same *lot* as the building.

Exception:

1. Required glazed openings that face into a roofed porch where the porch abuts a street, *yard* or court and the longer side of the porch is not less than 65 percent unobstructed and the ceiling height is not less than 7 feet (2134 mm).
2. Eave projections shall not be considered as obstructing the clear open space of a *yard* or court.
3. Required glazed openings that face into the area under a deck, balcony, bay or floor cantilever where a clear vertical space not less than 36 inches (914 mm) in height is provided.

❖ Glazed openings must be placed so that natural light will be available even after future adjacent construction occurs. Where glazing is required by the code, it must face onto a street, public alley, yard or court of the lot on which the building is located. Glazed openings are not permitted in walls that must be of 1-hour fire-resistant construction in accordance with Section R302.1.

Exception 1 allows for an open porch where natural light will be available. Glazed openings required by the code are permitted to open onto a porch if it abuts a yard, street or court and the longer side is open at least 65 percent. The porch ceiling height must be at least 7 feet (2134 mm).

Yards and courts are defined as being open and unobstructed from the ground to the sky. Interpreted lit-

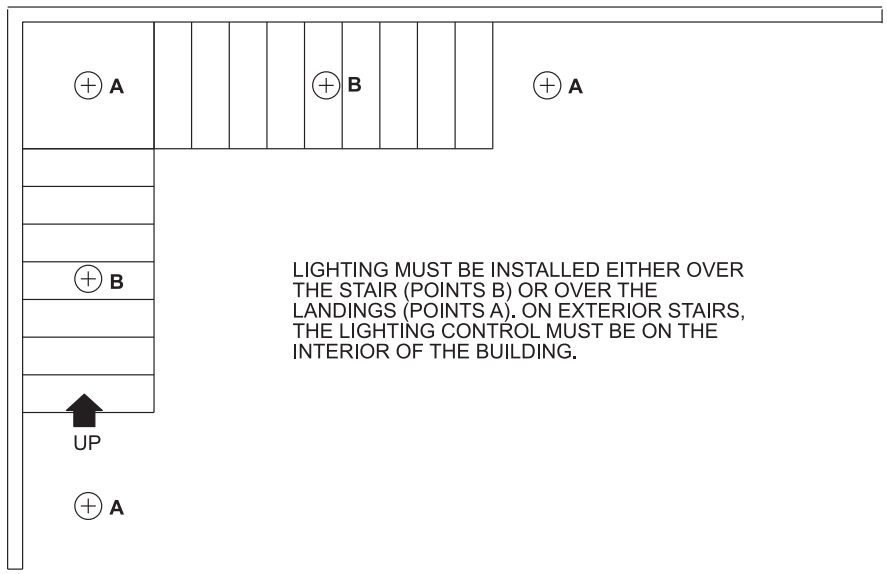

Figure R303.7
STAIRWAY ILLUMINATION

INTERNATIONAL CODE COUNCIL®
Copyright © 2015 ICC. ALL RIGHTS RESERVED. Accessed by David Dammon on Jun 21, 2017 12:30:52 PM pursuant to License Agreement with ICC. No further reproduction or distribution authorized. ANY UNAUTHORIZED REPRODUCTION OR DISTRIBUTION IS A VIOLATION OF THE FEDERAL COPYRIGHT ACT AND THE LICENSE AGREEMENT, AND SUBJECT TO CIVIL AND CRIMINAL PENALTIES THEREUNDER.

erally, this would prevent any projection above a required window. Yet, eaves are commonly placed above windows and in apartment buildings it is common to have decks over required windows. Exception 2 removes that problem. Concern that an eave could project to a lot line and, thus, block all natural light is unfounded as eave projections are limited from extending to a lot line so there will always be some open space above them.

Exception 3 addresses windows that open under balconies, decks, bays, etc. Section R310.5 permits emergency escape openings to open "under decks and porches provided the location of the deck allows the emergency escape window to be fully opened and provides a path not less than 36 inches (914 mm) in height to a yard or court." This allowance will make the two types of windows consistent.

R303.9.1 Sunroom additions. Required glazed openings shall be permitted to open into sunroom *additions* or patio covers that abut a street, *yard* or court if in excess of 40 percent of the exterior sunroom walls are open, or are enclosed only by insect screening, and the ceiling height of the sunroom is not less than 7 feet (2134 mm).

❖ This section permits openings for lighting to open into a sunroom that meets the criterion of being more than 40 percent open. Both enclosed porches and sunrooms must be a minimum of 7 feet (2134 mm) high and abut a court, yard or public space. Open areas near the sunroom enable the sunlight to effectively reach the structure. Sunrooms are those which are not conditioned and are either open or enclosed by screening or plastic.

R303.10 Required heating. Where the winter design temperature in Table R301.2(1) is below 60°F (16°C), every *dwelling unit* shall be provided with heating facilities capable of maintaining a room temperature of not less than 68°F (20°C) at a point 3 feet (914 mm) above the floor and 2 feet (610 mm) from exterior walls in habitable rooms at the design temperature. The installation of one or more portable space heaters shall not be used to achieve compliance with this section.

❖ Minimum heating requirements are for health reasons. In areas where the design temperature is based on Table R301.2(1) and is below 60°F (16°C), dwelling units must be provided with heating facilities capable of maintaining a minimum room temperature of 68°F (20°C). The primary need here is that of human comfort. The minimum temperature is measured at 3 feet (914 mm) above the floor and 2 feet (610 mm) from the exterior walls of all habitable rooms (see Commentary Figure R303.10). Portable space heaters cannot be used to achieve compliance with this section.

SECTION R304
MINIMUM ROOM AREAS

R304.1 Minimum area. Habitable rooms shall have a floor area of not less than 70 square feet (6.5 m^2).

Exception: Kitchens.

❖ The interior living environment is affected by a number of issues. Among these are the size of the room, tightness of construction, ceiling height, number of occupants and ventilation. These all interact and impact the interior living conditions including odors, moisture and disease transmission. The code regulates room sizes to assist in maintaining a safe and comfortable interior environment (see Commentary Figure R304.1). All habitable rooms and spaces, other than kitchens, are required to have a minimum area of 70 square feet. The definition of "Habitable space" in Section R202 includes rooms used for living, sleeping, eating or cooking (see commentary for Section 305.1).

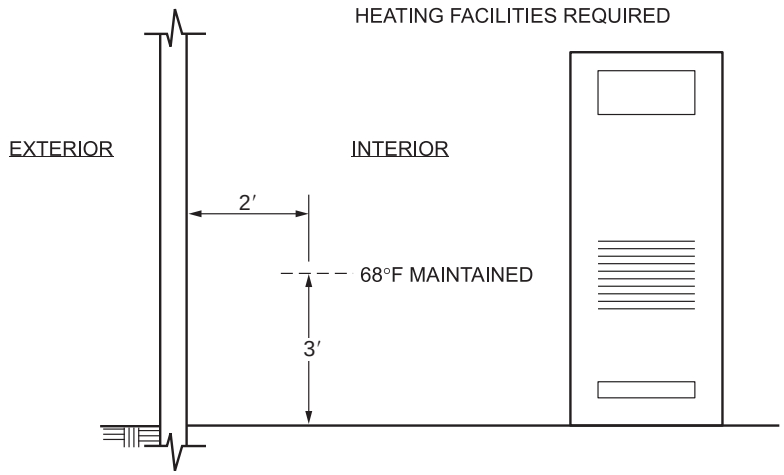

For SI: 1 foot = 304.8 mm, °C = [(°F)-32]/1.8.

Figure R303.10
REQUIRED HEATING

INTERNATIONAL CODE COUNCIL®
Copyright © 2015 ICC. ALL RIGHTS RESERVED. Accessed by David Dammon on Jun 21, 2017 12:30:52 PM pursuant to License Agreement with ICC. No further reproduction or distribution authorized. ANY UNAUTHORIZED REPRODUCTION OR DISTRIBUTION IS A VIOLATION OF THE FEDERAL COPYRIGHT ACT AND THE LICENSE AGREEMENT, AND SUBJECT TO CIVIL AND CRIMINAL PENALTIES THEREUNDER.

R304.2 Minimum dimensions. Habitable rooms shall be not less than 7 feet (2134 mm) in any horizontal dimension.

Exception: Kitchens.

❖ Except for kitchens, all habitable rooms must have a minimum horizontal dimension in any direction of at least 7 feet (2134 mm) (see Commentary Figure R304.1).

R304.3 Height effect on room area. Portions of a room with a sloping ceiling measuring less than 5 feet (1524 mm) or a furred ceiling measuring less than 7 feet (2134 mm) from the finished floor to the finished ceiling shall not be considered as contributing to the minimum required habitable area for that room.

❖ In a room with a sloping ceiling, any portion of the room with a vertical ceiling height of less than 5 feet (1524 mm), as measured from the finished floor, must not be included in the calculation of the minimum required floor area for habitation. Likewise, the area under a furred ceiling with a vertical height less than 7 feet (2134 mm) from the finished floor is not part of the habitable area. An example of the first case would be an A-frame structure, which consists of a sloping roof and no or minimal exterior walls. This condition could also exist in any room that has a sloping ceiling. The low height makes those portions of the room generally unusable for adults (see Commentary Figure R304.3 and commentary to Section 305.1).

SECTION R305
CEILING HEIGHT

R305.1 Minimum height. *Habitable space*, hallways and portions of *basements* containing these spaces shall have a ceiling height of not less than 7 feet (2134 mm). Bathrooms, toilet rooms and laundry rooms shall have a ceiling height of not less than 6 feet 8 inches (2032 mm).

Exceptions:

1. For rooms with sloped ceilings, the required floor area of the room shall have a ceiling height of not less than 5 feet (1524 mm) and not less than 50 percent of the required floor area shall have a ceiling height of not less than 7 feet (2134 mm).
2. The ceiling height above bathroom and toilet room fixtures shall be such that the fixture is capable of being used for its intended purpose. A shower or tub equipped with a showerhead shall have a ceiling height of not less than 6 feet 8 inches (2032 mm) above an area of not less than 30 inches (762 mm) by 30 inches (762 mm) at the showerhead.
3. Beams, girders, ducts or other obstructions in *basements* containing *habitable space* shall be permitted to project to within 6 feet 4 inches (1931 mm) of the finished floor.

❖ Minimum ceiling heights are required for habitable spaces (see the definition in Chapter 2), including kitchens, hallways, bathrooms, toilet rooms and laundry rooms, as well as those portions of basements that contain habitable space.

For habitable spaces and hallways, as well as portions of basements that contain such spaces, the minimum required ceiling height is 7 feet (2134 mm). This is intended to help maintain a healthy interior environment. The minimum required ceiling height for bathrooms, toilet rooms and laundry rooms is 6 feet 8 inches (2032 mm).

Exception 1 is applicable to habitable spaces that have sloped ceilings. It requires that not less than one half of the required room area (or 70 feet in accordance with Section R304.1, divided by 2, for a result of 35 square feet of room area) must have a ceiling height of not less than 7 feet, and the remaining portion of the required room area (70 square feet minus the area of the room with a ceiling height of not less than 7 feet) must have a ceiling height of not less than 5 feet. Sloped ceiling heights in the remainder of such rooms are not regulated. Note that, similar to Exception 1,

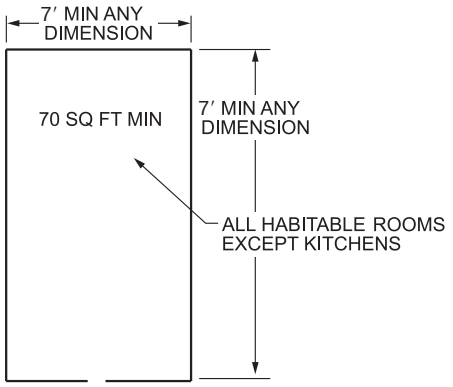

For SI: 1 foot = 304.8 mm, 1 square foot = 0.0929 m^2.

Figure R304.1
ROOM AREA AND DIMENSIONS

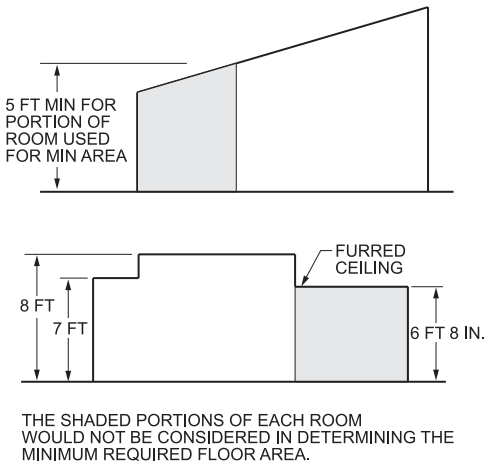

For SI: 1 inch = 25.4 mm, 1 foot = 304.8 mm.

Figure R304.3
HEIGHT EFFECT ON ROOM AREA

INTERNATIONAL CODE COUNCIL®
Copyright © 2015 ICC. ALL RIGHTS RESERVED. Accessed by David Dammon on Jun 21, 2017 12:30:52 PM pursuant to License Agreement with ICC. No further reproduction or distribution authorized. ANY UNAUTHORIZED REPRODUCTION OR DISTRIBUTION IS A VIOLATION OF THE FEDERAL COPYRIGHT ACT AND THE LICENSE AGREEMENT, AND SUBJECT TO CIVIL AND CRIMINAL PENALTIES THEREUNDER.

Section R304.3 requires that portions of a room with sloped ceilings less than 5 feet in height, as well as furred ceilings with a height of less than 7 feet (2134 mm), as measured from finished floor to finished ceiling, are not allowed to be considered as part of the minimum required area of habitable rooms. Section R304.3 also requires that ceiling heights be measured from the top of finished floors to the underside of finished ceilings.

Exception 2 requires that showers and tubs equipped with a shower head have a ceiling height at the shower head of not less than 6 feet 8 inches for an area of not less than 30 inches (763 mm) by 30 inches (762 mm) at the shower head, but allows other areas over showers and tubs to have lesser ceiling heights, as long as the fixture is capable of being used for its intended purpose. Similarly, the required minimum ceiling height over other bathroom and toilet room fixtures is allowed to be less than 6 feet 8 inches (2032 mm), as long as the fixtures are capable of being used for their intended purpose. This exception would allow a sloping ceiling over toilet, bath or shower fixtures if the minimum ceiling height of 6 feet, 8 inches (2036 mm) is maintained over the front clearance area (see Figure R307.1). If the fixture can still be used effectively, the ceiling height can be lower over the fixture itself. For example, the ceiling height over the tank and bowl of the toilet can be below 6 feet, 8 inches (2033 mm), provided that the clearance was high enough to allow someone to sit on the toilet.

Exception 3 allows a ceiling height of 6 feet 4 inches (1931 mm), as measured from the top of the finished floor, under beams, girders, ducts and other obstructions in those portions of basements that contain habitable spaces (see commentary for Section R305.1.1).

R305.1.1 Basements. Portions of *basements* that do not contain *habitable space* or hallways shall have a ceiling height of not less than 6 feet 8 inches (2032 mm).

Exception: At beams, girders, ducts or other obstructions, the ceiling height shall be not less than 6 feet 4 inches (1931 mm) from the finished floor.

❖ Portions of basements that are not addressed in Section R305.1 need to have a ceiling height of only 6 feet, 8 inches (2033 mm) or more, with at least 6 feet, 4 inches (1932 mm) of clear height under beams, girders, ducts and similar obstructions (see commentary to Section R305.1).

SECTION R306
SANITATION

R306.1 Toilet facilities. Every *dwelling* unit shall be provided with a water closet, lavatory, and a bathtub or shower.

❖ Dwelling units must have at least one of each of the fixtures indicated in the code, and the fixtures must be connected to an approved sanitary sewer or private sewage disposal system. A water closet, lavatory and either a bathtub or shower are the minimum fixtures needed to maintain the occupant's health and cleanliness. For additional information on plumbing requirements, see Chapters 25 through 33.

R306.2 Kitchen. Each *dwelling* unit shall be provided with a kitchen area and every kitchen area shall be provided with a sink.

❖ Dwelling units must have a kitchen area with a sink for the basic preparation of food.

R306.3 Sewage disposal. Plumbing fixtures shall be connected to a sanitary sewer or to an *approved* private sewage disposal system.

❖ To maintain sanitary conditions in the dwelling, plumbing fixtures must be attached to either a sanitary sewer or approved private sewage disposal system.

R306.4 Water supply to fixtures. Plumbing fixtures shall be connected to an *approved* water supply. Kitchen sinks, lavatories, bathtubs, showers, bidets, laundry tubs and washing machine outlets shall be provided with hot and cold water.

❖ To provide proper sanitation for occupants of dwelling units, each plumbing fixture must be connected to an approved water supply. Additionally, specific fixtures must have both a hot and cold water supply.

SECTION R307
TOILET, BATH AND SHOWER SPACES

R307.1 Space required. Fixtures shall be spaced in accordance with Figure R307.1, and in accordance with the requirements of Section P2705.1.

❖ Fixtures require certain clearances to be accessible and usable. Figure R307.1 shows the minimum fixture clearances. The diagram is consistent with the requirements in Section P2705.1, Item 5. In addition, Item 5 also specifies that adjacent fixtures must be at least 30 inches (762 mm) center-to-center. A common fixture configuration in a bathroom that could be affected by this would be two adjacent lavatories in one vanity or a lavatory adjacent to a water closet.

R307.2 Bathtub and shower spaces. Bathtub and shower floors and walls above bathtubs with installed shower heads and in shower compartments shall be finished with a nonabsorbent surface. Such wall surfaces shall extend to a height of not less than 6 feet (1829 mm) above the floor.

❖ Wall surfaces subject to water spray by showerheads must be protected with a nonabsorbent surface to a height of at least 6 feet (1829 mm) above the floor of a bathtub or shower.

INTERNATIONAL CODE COUNCIL®
Copyright © 2015 ICC. ALL RIGHTS RESERVED. Accessed by David Dammon on Jun 21, 2017 12:30:52 PM pursuant to License Agreement with ICC. No further reproduction or distribution authorized. ANY UNAUTHORIZED REPRODUCTION OR DISTRIBUTION IS A VIOLATION OF THE FEDERAL COPYRIGHT ACT AND THE LICENSE AGREEMENT, AND SUBJECT TO CIVIL AND CRIMINAL PENALTIES THEREUNDER.

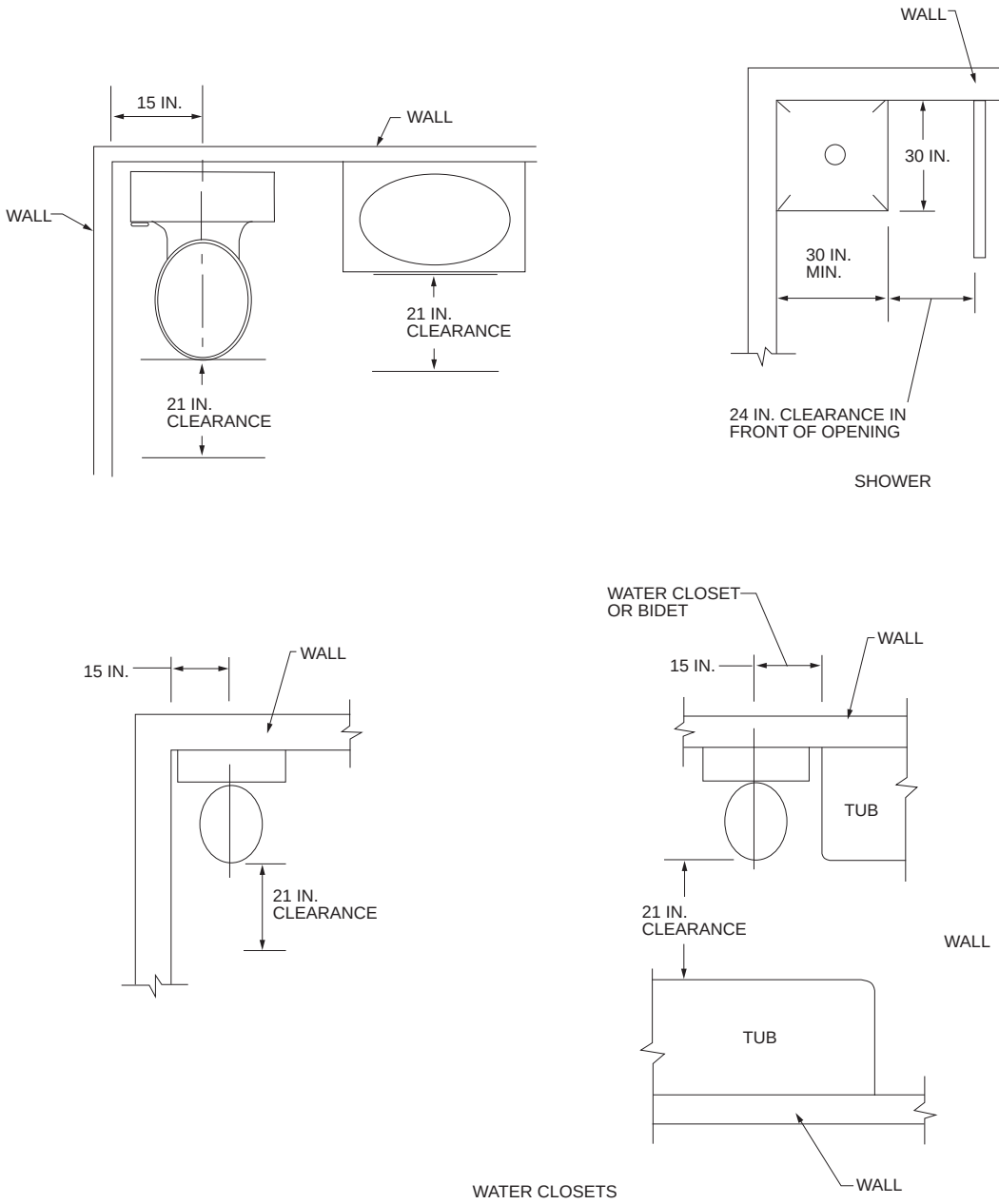

For SI: 1 inch = 25.4 mm.

FIGURE R307.1
MINIMUM FIXTURE CLEARANCES

❖ See the commentary to Section R301.1.

SECTION R308
GLAZING

R308.1 Identification. Except as indicated in Section R308.1.1 each pane of glazing installed in hazardous locations as defined in Section R308.4 shall be provided with a manufacturer's designation specifying who applied the designation, designating the type of glass and the safety glazing standard with which it complies, which is visible in the final installation. The designation shall be acid etched, sandblasted, ceramic-fired, laser etched, embossed, or be of a type that once applied cannot be removed without being destroyed. A *label* shall be permitted in lieu of the manufacturer's designation.

Exceptions:

1. For other than tempered glass, manufacturer's designations are not required provided that the *building official* approves the use of a certificate, affidavit or other evidence confirming compliance with this code.

INTERNATIONAL CODE COUNCIL®
Copyright © 2015 ICC. ALL RIGHTS RESERVED. Accessed by David Dammon on Jun 21, 2017 12:30:52 PM pursuant to License Agreement with ICC. No further reproduction or distribution authorized. ANY UNAUTHORIZED REPRODUCTION OR DISTRIBUTION IS A VIOLATION OF THE FEDERAL COPYRIGHT ACT AND THE LICENSE AGREEMENT, AND SUBJECT TO CIVIL AND CRIMINAL PENALTIES THEREUNDER.

2. Tempered spandrel glass is permitted to be identified by the manufacturer with a removable paper designation.

❖ Once glass is installed in a window frame by a manufacturer, whether that glass is safety glazing or not is not easily determined. In theory, this can be established only by breaking the particular piece of glass, in which case the glass is no longer useable. Thus, the code requires that safety glazing be marked with a manufacturer's designation that is visible during the final building inspection. Except for tempered glass labels, labels may be omitted where approved by the building official and an affidavit, certificate or other evidence is submitted indicating compliance with the code. A manufacturer can identify safety glazing with a removable paper designation, provided removal would destroy the designation. This ensures that the designation will not be applied to a noncomplying piece of glass.

R308.1.1 Identification of multiple assemblies. Multipane assemblies having individual panes not exceeding 1 square foot (0.09 m^2) in exposed area shall have not less than one pane in the assembly identified in accordance with Section R308.1. Other panes in the assembly shall be *labeled* "CPSC 16 CFR 1201" or "ANSI Z97.1" as appropriate.

❖ Multipane assemblies of glass need identification for the same reasons noted in Section R308.1. This provision allows labeling of only one pane of glass in accordance with Section R308.1.1 when the exposed area of each pane is 1 square foot (0.09 m^2) or less. All other panes must be labeled either "16 CFR 1201" or "ANSI Z97.1."

R308.2 Louvered windows or jalousies. Regular, float, wired or patterned glass in jalousies and louvered windows shall be not less than nominal $^3/_{16}$ inch (5 mm) thick and not more than 48 inches (1219 mm) in length. Exposed glass edges shall be smooth.

❖ The requirements for louvered windows exist because there is no edge support on the longitudinal edges of these panes. The code requires that the exposed edges be smooth for safety. The minimum thickness and maximum span are specified so that the glass has sufficient resistance to human impact loads.

R308.2.1 Wired glass prohibited. Wired glass with wire exposed on longitudinal edges shall not be used in jalousies or louvered windows.

❖ Wired glass is not permitted in jalousies or louvered windows if the wire is exposed on the longitudinal edge because it would be a hazard.

R308.3 Human impact loads. Individual glazed areas, including glass mirrors in hazardous locations such as those indicated as defined in Section R308.4, shall pass the test requirements of Section R308.3.1.

Exceptions:

1. Louvered windows and jalousies shall comply with Section R308.2.
2. Mirrors and other glass panels mounted or hung on a surface that provides a continuous backing support.
3. Glass unit masonry complying with Section R607.

❖ The code requires that glazing in hazardous locations subject to human impact pass impact tests. Criteria is based on size and location [see Section R308.3.1, and Tables R308.3.1(1) and R308.3.1(2)]. The exceptions provide for three types of glazing that have alternative means of offering protection when used in hazardous locations: louvered windows and jalousies meeting the thickness and length limitations in Section R308.2; mirrors or glass hung on a wall or fitted with a backing; and glass block constructed in accordance with Section R610. Glass block is becoming more prevalent in the design of homes. One of the more common uses is enclosures for walk-in showers.

R308.3.1 Impact test. Where required by other sections of the code, glazing shall be tested in accordance with CPSC 16 CFR 1201. Glazing shall comply with the test criteria for Category II unless otherwise indicated in Table R308.3.1(1).

Exception: Glazing not in doors or enclosures for hot tubs, whirlpools, saunas, steam rooms, bathtubs and showers shall be permitted to be tested in accordance with ANSI Z97.1. Glazing shall comply with the test criteria for Class A unless indicated in Table R308.3.1(2).

❖ Section R308.4 lists seven different situations where there is a chance of someone falling or reaching into a piece of glass and possibly injuring themselves; therefore, testing is required to resist these human impact loads. Glazing in hazardous locations must pass the test requirements of CPSC 16 CFR, Part 1201 and meet the test criteria of Category Class II. Table R308.3.1(1) permits some glazing in hazardous locations to be less than Category Class II. The exception allows for another standard, ANSI Z97.1, as an alternative test for glazing that is in a location other than in a door or serving as part of a bathing enclosure. This limitation in the exception is due to the mandatory location requirements in CPSC 16 CFR, Part 1201. The exception requires the glazing to pass ANSI Z97.1 and meet the test criteria of Category A. Table R308.3.1(2) then permits some glazing in hazardous locations to be less than Category A.

Following are the more significant differences between these two standards, both of which are applicable to safety glazing materials used in architectural applications. This overview makes no attempt to summarize all pertinent provisions of the two standards, only their significant differences.

The principal differences between CPSCs 16 CFR, Part 1201 and ANSI Z97.1 relate to their scope and function. The CPSC standard is not only a test method and a procedure for determining the safety performance of architectural glazing, but also a federal standard that mandates where and when safety glazing materials must be used in architectural applications and preempts any nonidentical state or local standard. In contrast, ANSI Z97.1 is only a voluntary safety per-

INTERNATIONAL CODE COUNCIL®
Copyright © 2015 ICC. ALL RIGHTS RESERVED. Accessed by David Dammon on Jun 21, 2017 12:30:52 PM pursuant to License Agreement with ICC. No further reproduction or distribution authorized. ANY UNAUTHORIZED REPRODUCTION OR DISTRIBUTION IS A VIOLATION OF THE FEDERAL COPYRIGHT ACT AND THE LICENSE AGREEMENT, AND SUBJECT TO CIVIL AND CRIMINAL PENALTIES THEREUNDER.

formance specification and test method. It does not purport to indicate where and when safety glazing materials must be used, leaving those determinations up to the building codes and to glass and fenestration specifiers. In this instance, the code provides the requirements regarding the safety performance of architectural glazing beyond that which is covered by the federal standard.

The CPSC standard requires the installation of safety glazing materials meeting 16 CFR, Part 1201 only in storm doors, combination doors, entrance-exit doors, sliding patio doors, closet doors, and shower and tub doors and enclosures. See Section 308.4 of the IBC for additional locations where the code requires safety glazing in commercial applications.

Test Specimens: For impact testing, the CPSC standard requires only one specimen of each nominal thickness be submitted for testing and specifies it must be the largest size the manufacturer produces up to a maximum size of 34 inches by 76 inches (864 mm by 1830 mm). ANSI Z97.1 requires that four specimens of each nominal thickness and size must be impact tested. The manufacturer has the option of testing either 34-inch by 76-inch (864 mm by 1830 mm) specimens or the largest size it commercially produces less than 34 inches by 76 inches (864 mm by 1830 mm), but with a minimum size of 24 inches by 30 inches (610 mm by 762 mm).

Types of Glass: The CPSC standard has no performance tests for plastics or for bent glass. ANSI Z97.1 has specific tests for both.

The CPSC standard does not prohibit the use of ordinary annealed glass in hazardous locations as long as it passes the appropriate impact tests, consistent with the concept of a performance-based impact test. [Thick, heavy annealed glass is likely to pass the CPSC 18-inch (457 mm) drop-height and 48-inch (1219 mm) drop-height impact tests for Category I and

TABLE R308.3.1(1)
MINIMUM CATEGORY CLASSIFICATION OF GLAZING USING CPSC 16 CFR 1201

EXPOSED SURFACE AREA OF ONE SIDE OF ONE LITE	GLAZING IN STORM OR COMBINATION DOORS (Category Class)	GLAZING IN DOORS (Category Class)	GLAZED PANELS REGULATED BY SECTION R308.4.3 (Category Class)	GLAZED PANELS REGULATED BY SECTION R308.4.2 (Category Class)	GLAZING IN DOORS AND ENCLOSURES REGULATED BY SECTION 308.4.5 (Category Class)	SLIDING GLASS DOORS PATIO TYPE (Category Class)
9 square feet or less	I	I	NR	I	II	II
More than 9 square feet	II	II	II	II	II	II

For SI: 1 square foot = 0.0929 m^2.
NR = "No Requirement."

❖ In 1977, the CPSC adopted as a mandatory federal safety regulation *Safety Standard for Architectural Glazing Materials*, codified as16 CFR, Part 1201. The CPSC amended the regulation on several occasions subsequent to its initial adoption, the last time on June 28, 1982. For additional information, see the commentary to Section R308.3.1.

Impact Categories or Levels: The CPSC standard has two distinct impact levels or categories, Category I and Category II, and specifies which defined hazardous location must contain Category II safety glazing materials and which may use Category I glazing materials. Glazing material successfully passing the impact test of a 48-inch (1219 mm) drop height at 400 foot-pound (940 J) impact is classified as Category II glass. Glazing material passing the 18-inch (457 mm) drop height, at 150 foot-pounds (203.4 J) impact, is classified as Category I glass.

TABLE R308.3.1(2)
MINIMUM CATEGORY CLASSIFICATION OF GLAZING USING ANSI Z97.1

EXPOSED SURFACE AREA OF ONE SIDE OF ONE LITE	GLAZED PANELS REGULATED BY SECTION R308.4.3 (Category Class)	GLAZED PANELS REGULATED BY SECTION R308.4.2 (Category Class)	DOORS AND ENCLOSURES REGULATED BY SECTION R308.4.5[a] (Category Class)
9 square feet or less	No requirement	B	A
More than 9 square feet	A	A	A

For SI: 1 square foot = 0.0929 m^2.
a. Use is permitted only by the exception to Section R308.3.1.

❖ ANSI Z97.1 was revised in 2004. Utilization of this testing for glazing in hazardous locations is limited by the exception in Section R308.3.1. For additional information, see the commentary to Section R308.3.1.

Impact Categories or Levels: ANSI Z97.1 has adopted three separate impact categories or classes, based on impact performance. ANSI Z97.1's Class A glazing materials are comparable to the CPSC's Category II glazing materials, passing a 48-inch (1219 mm) drop-height test, and its Class B glazing materials are comparable to the CPSC's Category I glazing materials, passing the 18-inch (457 mm) drop-height test. ANSI Z97.1 also has a product-specific Class C impact test, a 12-inch (305 mm) drop-height test, applicable only for fire-resistant glazing materials. However, Table R308.3.1(2) does not identify Class C as an acceptable product for use in hazardous locations.

INTERNATIONAL CODE COUNCIL®
Copyright © 2015 ICC. ALL RIGHTS RESERVED. Accessed by David Dammon on Jun 21, 2017 12:30:52 PM pursuant to License Agreement with ICC. No further reproduction or distribution authorized. ANY UNAUTHORIZED REPRODUCTION OR DISTRIBUTION IS A VIOLATION OF THE FEDERAL COPYRIGHT ACT AND THE LICENSE AGREEMENT, AND SUBJECT TO CIVIL AND CRIMINAL PENALTIES THEREUNDER.

II locations.] ANSI Z97.1 contains an express limitation on annealed glass: "Monolithic annealed in any thickness is not considered safety glazing material under this standard."

Asymmetrical Glazing Material: The CPSC standard requires all asymmetrical glazing materials to be impacted on both sides of each specimen and then evaluated under the pass-fail criteria. There is no exception. ANSI Z97.1 requires that, with the exception of mirror glazing, all asymmetrical glass specimens must be impacted on both sides, two on one side and two on the other. With respect to mirror glazing products using reinforced or nonreinforced organic adhesive backing, all four specimens must be impacted only on the nonreinforced side "and with no other material applied."

Impact Categories or Levels: See the commentary to Tables R308.3.1(1) and R308.3.1(2).

Pass-fail Impact Criteria: The CPSC standard, like the ANSI standard, offers alternative criteria for evaluating whether a test specimen passes the impact test. The CPSC standard considers the specimen a pass if a 3-inch-diameter (76 mm) solid steel ball, weighing 4 pounds (18 N), will not pass through the opening when placed on the specimen for 1 second. ANSI uses the 3-inch (76 mm) sphere measure, but does not require the sphere to be a steel ball and does not specify its weight. It does require that the sphere not pass freely through the opening when a force of 4 pounds (18 N) is applied to the sphere. There is no time element associated with this alternative.

A second alternative pass-fail criterion under the CPSC standard involves weighing the 10 largest particles selected within 5 minutes after the impact test; they must weigh no more than the equivalent weight of 10 square inches (6452 m^2) of the original specimen. The ANSI standard has an almost identical criterion, except the 10 largest particles must be "crack free." It also includes additional product-specific qualifications applicable solely to selecting the 10 largest particles of tempered glass and offers a formula for determining the weight of 10 square inches (6452 m^2) of the original specimen.

The CPSC standard has no separate pass-fail impact criteria for the scenario in which the glass specimen separates from the frame after impact and breaks or produces a hole in the glass. The ANSI standard has a special criterion for that scenario: to pass, the glass is subjected to the same 3-inch (76 mm) sphere measure or to the weight criterion for the 10 largest crack-free particles.

The CPSC standard involves impact testing of only a single specimen of each nominal glass thickness. Accordingly, if that specimen passes, all glass of that type and thickness is deemed to pass. Under the ANSI standard, four specimens of each type, size and thickness must be impact tested, and if any one of the four specimens fails, there is a failure of that specific type, thickness and size.

Impact Testing Apparatus: Relatively minor technical differences exist between the test frames and impactors specified in the CPSC standard and those in ANSI Z97.1. The ANSI standard prescribes special test frame and subframe configurations for impact testing bent glass; the CPSC standard has no provisions for testing bent glass. The ANSI standard includes detailed specifications for the impactor suspension device and traction and release system, and for their operation; the CPSC standard does not.

Weathering Tests: The CPSC standard requires a weathering test only for organic-coated glass. ANSI requires a weathering test for laminated glass and plastics, as well as for organic-coated glass.

The CPSC accelerated weathering test (only for organic-coated glass) uses the xenon arc Weatherometer. The ANSI standard gives the manufacturer the choice of one of three weathering exposure alternatives: the xenon arc exposure, the enclosed twin carbon arc exposure or the 1-year outdoor exposure in South Florida. The ANSI prescribed xenon arc apparatus and procedure are the more current versions of the pertinent ASTM standards, ASTM D2565 and ASTM G155, than the versions referenced in the CPSC standard. The CPSC's xenon arc procedure for interpreting results of the adhesion test requires an average adhesion value or pull force of no less than 90 percent of the average of the unexposed organic-coated glass specimens in order to "pass," whereas the ANSI standard requires no less than 75 percent of the average of the unexposed specimens.

Indoor Aging Tests: The CPSC standard does not prescribe any indoor aging test; the ANSI standard requires specified indoor aging tests for plastics and organic-coated glass intended for indoor-use only, followed by impact tests.

R308.4 Hazardous locations. The locations specified in Sections R308.4.1 through R308.4.7 shall be considered to be specific hazardous locations for the purposes of glazing.

❖ Section R308.4 lists seven specific hazardous locations (Sections R308.4.1 through R308.4.7) where safety glazing is required. Listed under each location are the exceptions specific to that location. Some of these locations are shown in Commentary Figures R308.4(1) through R308.4(11). In addition to the hazardous locations shown in the 11 drawings, safety glazing is also required in a number of other locations, including fixed and sliding panels of sliding door assemblies, storm doors and glass railings.

Commentary Figure R308.4(1) illustrates several locations where safety glazing may or may not be required. To facilitate discussion, each glazed panel has been numbered. Panel 1 is not required to have safety glazing because a protective bar has been installed in compliance with Exception 2 to Section R308.4.3, the details of which are illustrated in Commentary Figure R308.4(2). Panels 4 and 7 require safety glazing because they are door sidelights.

INTERNATIONAL CODE COUNCIL®
Copyright © 2015 ICC. ALL RIGHTS RESERVED. Accessed by David Dammon on Jun 21, 2017 12:30:52 PM pursuant to License Agreement with ICC. No further reproduction or distribution authorized. ANY UNAUTHORIZED REPRODUCTION OR DISTRIBUTION IS A VIOLATION OF THE FEDERAL COPYRIGHT ACT AND THE LICENSE AGREEMENT, AND SUBJECT TO CIVIL AND CRIMINAL PENALTIES THEREUNDER.

Exception 2 to Section R308.4.3 does not apply to panels adjacent to a door, so even though Panel 7 has a protective bar, safety glazing is still required (see Section R308.4.2).

Commentary Figures R308.4(3) and R308.4(4) illustrate where safety glazing is required for panels adjacent to a door (see Section R308.4.2). This requirement applies to both fixed and operable panels. Where there is an intervening wall or permanent barrier, as shown in Commentary Figure R308.4(5), safety glazing would not be required (see Section R308.4.2, Exception 2). Commentary Figure R308.4(6) illustrates Exception 3 to Section R308.4.2, which applies to glazing positioned perpendicular to the plane of the door when it is in the closed position and the perpendicular glazing is on the latch side. Only one side is considered to be the hazardous location, the side that the door swings toward. The other side need not have safety glazing. This wall has a much lower risk of problems. When a door swings open to a perpendicular wall with glazing within 24 inches (610 mm), it is possible that if the door were caught by a

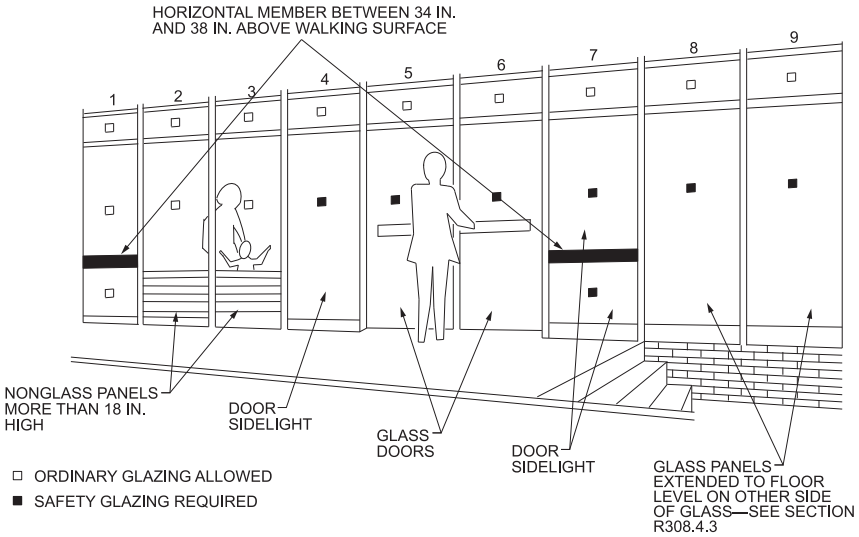

For SI: 1 inch = 25.4 mm.

Figure R308.4(1)
HAZARDOUS LOCATIONS

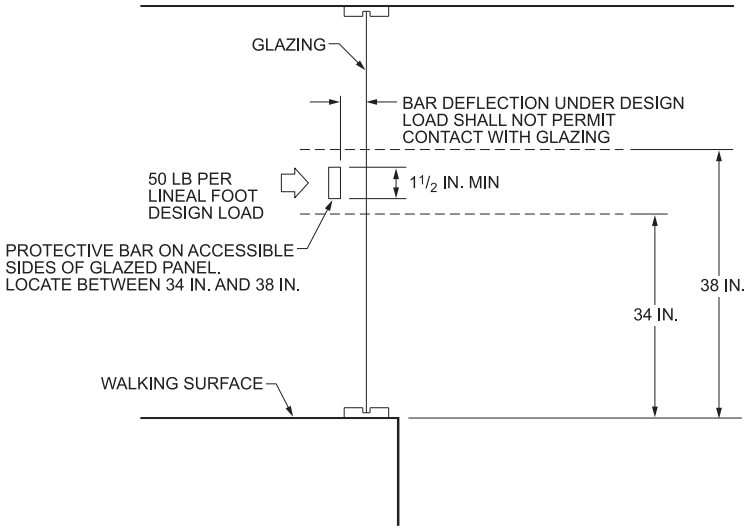

For SI: 1 inch = 25.4 mm, 1 pound per linear foot = 2.46 N/m.

Figure R308.4(2)
PROTECTIVE BAR ALTERNATIVE
(Section R308.4.3, Exception 2)

INTERNATIONAL CODE COUNCIL®
Copyright © 2015 ICC. ALL RIGHTS RESERVED. Accessed by David Dammon on Jun 21, 2017 12:30:52 PM pursuant to License Agreement with ICC. No further reproduction or distribution authorized. ANY UNAUTHORIZED REPRODUCTION OR DISTRIBUTION IS A VIOLATION OF THE FEDERAL COPYRIGHT ACT AND THE LICENSE AGREEMENT, AND SUBJECT TO CIVIL AND CRIMINAL PENALTIES THEREUNDER.

strong wind it could slam into the wall and break the glass, or the doorknob could hit the glass and break it. There is also the possibility that someone could be caught behind the door when it is opened and they could be pushed into/through the glass. Thus, this would be an appropriate area to have the required safety glazing to protect the occupants.

Panels 8 and 9, as well as Panels 2 and 3, fall under Section R308.4.3. Under this section, all four stated conditions must occur before safety glazing is required. These conditions are as follows:

1. The area of an individual pane must be more than 9 square feet (0.84 m^2);
2. The bottom edge must be less than 18 inches (457 mm) above the floor;
3. The top edge must be more than 36 inches (914 mm) above the floor; and
4. One or more walking surfaces must be within 36 inches (914 mm), measured horizontally from the glazed panel.

However, Panels 2 and 3 do not require safety glazing because their bottom edges are not less than 18 inches (457 mm) from the floor.

If Panels 8 and 9 have a walking surface within 36 inches (914 mm) horizontally of the interior, safety glazing would be required. From the exterior side, as shown in Commentary Figure R308.4(1), the bottom of the panel appears to be more than 18 inches (457 mm) above the exterior walking surface, so the exterior condition would have no bearing on the determination. Panels 5 and 6 are glass doors, which require safety glazing based on the provisions of Section R308.4.1. Glazing in doors (except louvered or jalousies in accordance with Exception 1 to Section R308.3) requires safety glazing, but there are two exceptions. If openings in a door will not pass a 3-inch-diameter (76 mm) sphere, the glazing is exempt (see Section R308.4.1, Exception 1), as are assemblies of decorative glass which is defined in Chapter 2 (see Section R308.4.1, Exception 2). The latter exception applies not only to doors but also to sidelights and other glazed panels (see Section R308.4.2, Exception 1). Glazing in railings, balusters, panels

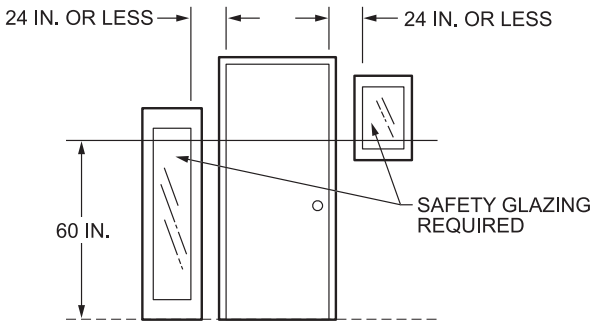

For SI: 1 inch = 25.4 mm.

Figure R308.4(3)
GLAZING IN PANELS ADJACENT TO DOORS—ELEVATION
(Section R308.4.2)

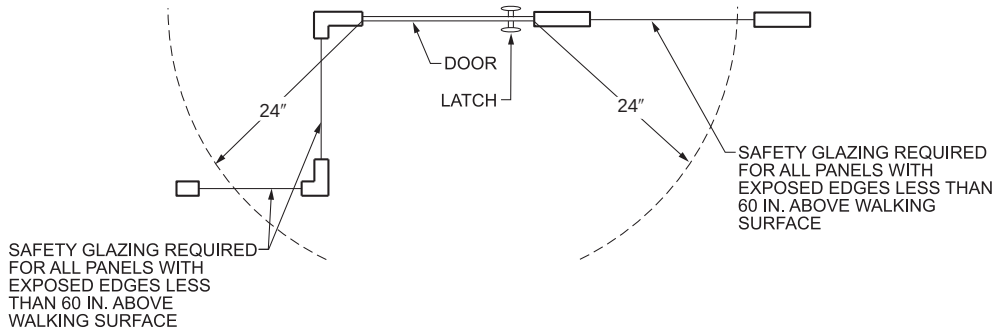

For SI: 1 inch = 25.4 mm.

Figure R308.4(4)
GLAZING IN PANELS ADJACENT TO DOORS—PLAN
(Section R308.4.2)

INTERNATIONAL CODE COUNCIL®
Copyright © 2015 ICC. ALL RIGHTS RESERVED. Accessed by David Dammon on Jun 21, 2017 12:30:52 PM pursuant to License Agreement with ICC. No further reproduction or distribution authorized. ANY UNAUTHORIZED REPRODUCTION OR DISTRIBUTION IS A VIOLATION OF THE FEDERAL COPYRIGHT ACT AND THE LICENSE AGREEMENT, AND SUBJECT TO CIVIL AND CRIMINAL PENALTIES THEREUNDER.

and nonstructural in-fill panels, regardless of their height above a walking surface, requires safety glazing (see Section R308.4.4). Because of the high probability that people will strike guards, it is critical that an increased level of protection be provided.

Section R308.4.5 addresses glazing near water or wet areas. Safety glazing is required adjacent to hot tubs, spas, whirlpools, saunas, steam rooms, bathtubs, showers and swimming pools. Because of the presence of water, all of these locations represent slip hazards and need safety glazing to prevent injury in case of a fall. Glazing adjacent to these areas must be safety glazed if the glazing is less than 60 inches above any standing or walking surface. Commentary Figure R308.4(7) illustrates the condition where a window occurs within a shower enclosure. Commentary Figure R308.4(8) illustrates the requirements of Section R308.4.5. Glazing that is more than 60 inches (1524 mm) from the water's edge of a bathtub, hot tub, spa, whirlpool, swimming pool, shower, sauna or steam room is not a hazardous location in accordance with the exception to Section R308.4.5. Commentary Figure R308.4(9) illustrates the exception to Section R308.4.5.

Sections R308.4.6 and R308.4.7 address the hazardous locations to be considered for stairways, landings and ramps. Stairways and ramps present users with a greater risk for injury caused by falling than a flat surface. Not only is the risk of falling greater when using a stair, but the injuries are generally more severe. Unlike falling on a flat surface where the floor will, for the most part, break a person's fall, there is nothing to stop someone from continuing to fall until he or she reaches the bottom of the stair. The

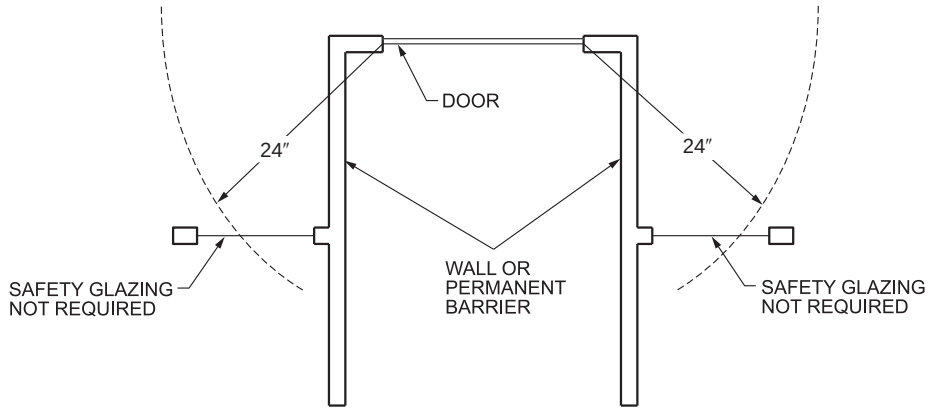

For SI: 12 inch = 25.4 mm.

Figure R308.4(5)
BARRIER BETWEEN GLAZING AND DOOR
(Section R308.4.2, Exception 2)

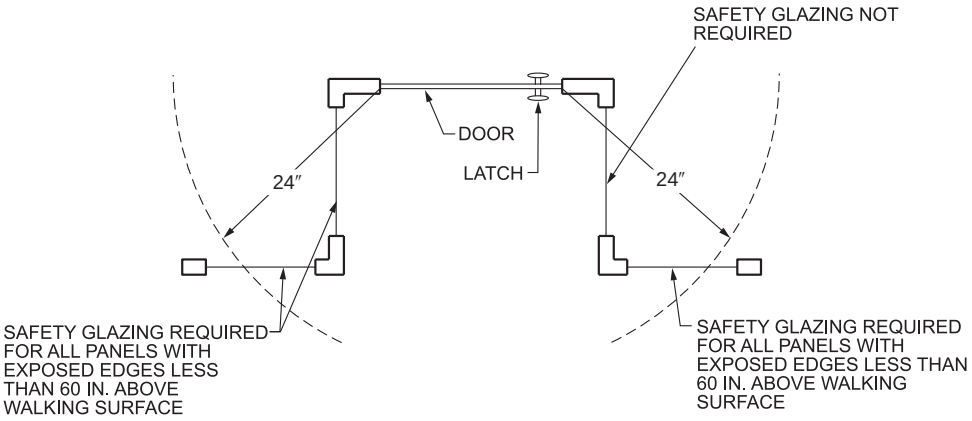

For SI: 1 degree = 0.01745 rad.

Figure R308.4(6)
GLAZING IN PANELS ADJACENT TO DOORS—PLAN
(Section R308.4.2, Item 2)

INTERNATIONAL CODE COUNCIL®
Copyright © 2015 ICC. ALL RIGHTS RESERVED. Accessed by David Dammon on Jun 21, 2017 12:30:52 PM pursuant to License Agreement with ICC. No further reproduction or distribution authorized. ANY UNAUTHORIZED REPRODUCTION OR DISTRIBUTION IS A VIOLATION OF THE FEDERAL COPYRIGHT ACT AND THE LICENSE AGREEMENT, AND SUBJECT TO CIVIL AND CRIMINAL PENALTIES THEREUNDER.

increased risks inherent in stairways, as well as attempting to be consistent with other chapters in the code that mandate more restrictive requirements when addressing safety issues involving stairways and ramps, account for the more restrictive requirements for glazing in and around stairways and ramps.

Section R308.4.6 includes any glazing when the exposed surface of that glazing is within 36 inches (914 mm) above the plane of the adjacent walking surface. The walking surface in question would be part of a stair or ramp itself, including intermediate landings [see Commentary Figure R308.4(10)]. Safety glazing is not required for Exception 1 of Section R308.4.6 where the side of the stairway, landing or ramp has a rail, which can be part of the guard or handrail, which has a load resistance of 50 pounds per linear foot (730 N/m) (for additional loading criteria for handrails and guards, see Table R301.5).

In Section R308.4.7, the concern is glazing that may be located within 60 inches (1524 mm) horizon-

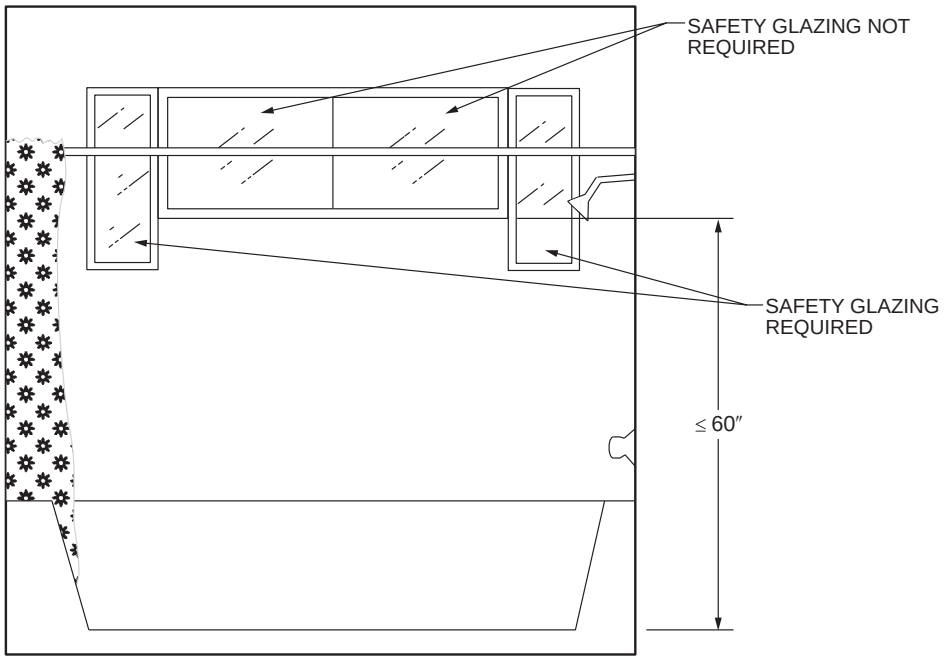

For SI: 1 inch = 25.4 mm.

Figure R308.4(7)
GLAZING WITHIN A SHOWER ENCLOSURE

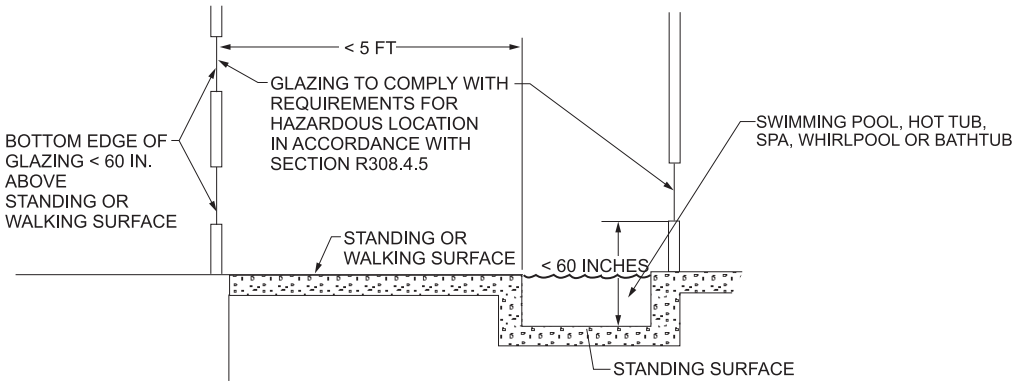

For SI: 1 inch = 25.4 mm, 1 foot = 304.8 mm.

Figure R308.4(8)
GLAZING IN WET AREAS ADJACENT TO HOT TUBS, SPAS, WHIRLPOOLS, SAUNAS, STEAM ROOMS, BATHTUBS, SHOWERS AND SWIMMING POOLS

INTERNATIONAL CODE COUNCIL®
Copyright © 2015 ICC. ALL RIGHTS RESERVED. Accessed by David Dammon on Jun 21, 2017 12:30:52 PM pursuant to License Agreement with ICC. No further reproduction or distribution authorized. ANY UNAUTHORIZED REPRODUCTION OR DISTRIBUTION IS A VIOLATION OF THE FEDERAL COPYRIGHT ACT AND THE LICENSE AGREEMENT, AND SUBJECT TO CIVIL AND CRIMINAL PENALTIES THEREUNDER.

tally of the bottom tread of the stairway and within 36 inches (914 mm) vertically above the bottom landing of a stairway. The 60-inch (1524 mm) dimension is from any point along the nosing of the bottom tread, as measured horizontally in any direction to any surface of any glazing within that range [see Commentary Figure R308.4(11) and Figure R308.4.7]. The exception to Section R308.4.7 will permit nonsafety glazing where a guard is installed and the actual plane of the glazing is located at least 18 inches (457 mm) from the guard.

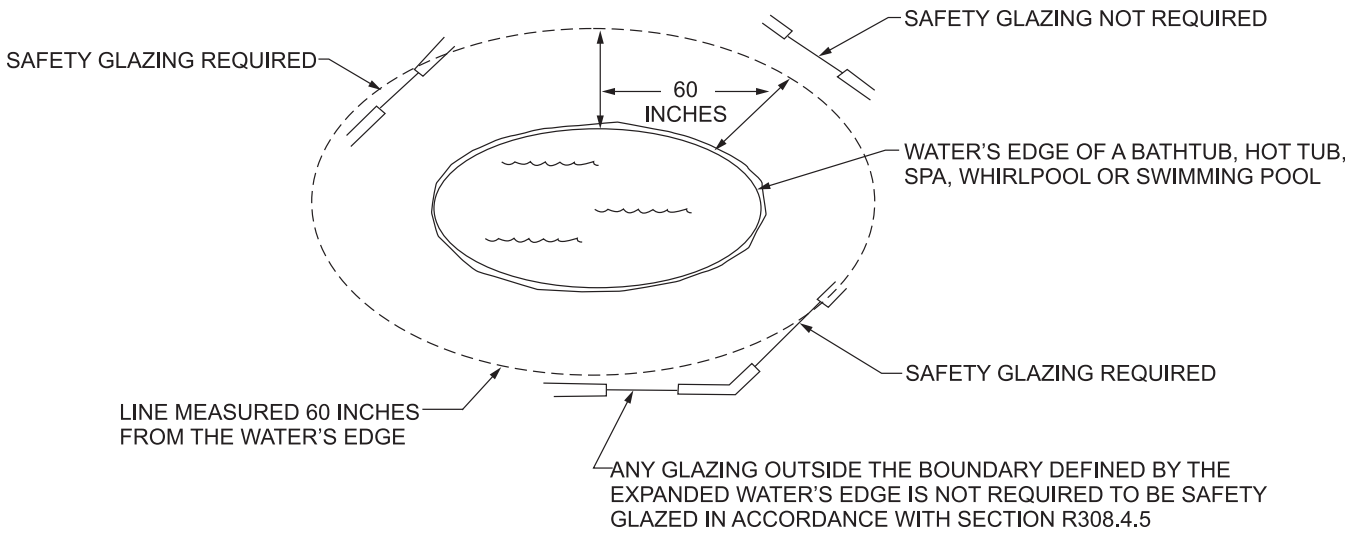

For SI: 1 inch = 25.4 mm.

Figure R308.4(9)
GLAZING AND WET SURFACES—PLAN VIEW
(Section R308.4.5, Exception)

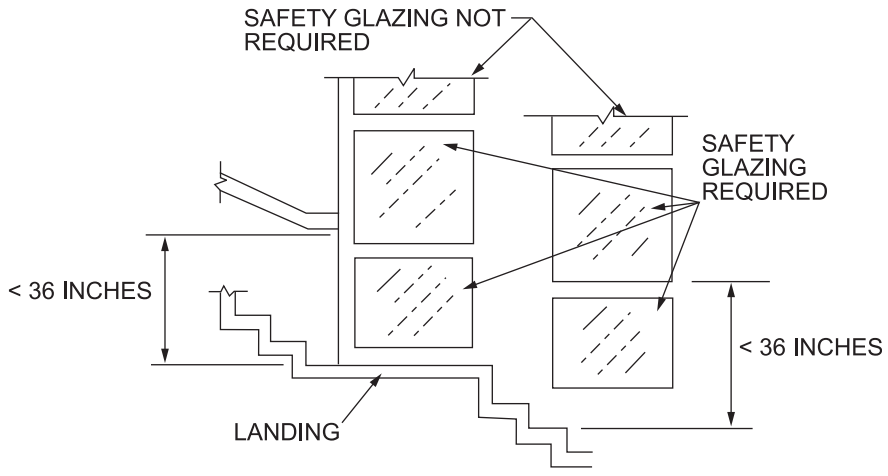

For SI: 1 inch = 25.4 mm, 1 foot = 304.8 mm.

Figure R308.4(10)
GLAZING ADJACENT TO STAIRWAYS
(Section to R308.4.6)

INTERNATIONAL CODE COUNCIL®
Copyright © 2015 ICC. ALL RIGHTS RESERVED. Accessed by David Dammon on Jun 21, 2017 12:30:52 PM pursuant to License Agreement with ICC. No further reproduction or distribution authorized. ANY UNAUTHORIZED REPRODUCTION OR DISTRIBUTION IS A VIOLATION OF THE FEDERAL COPYRIGHT ACT AND THE LICENSE AGREEMENT, AND SUBJECT TO CIVIL AND CRIMINAL PENALTIES THEREUNDER.

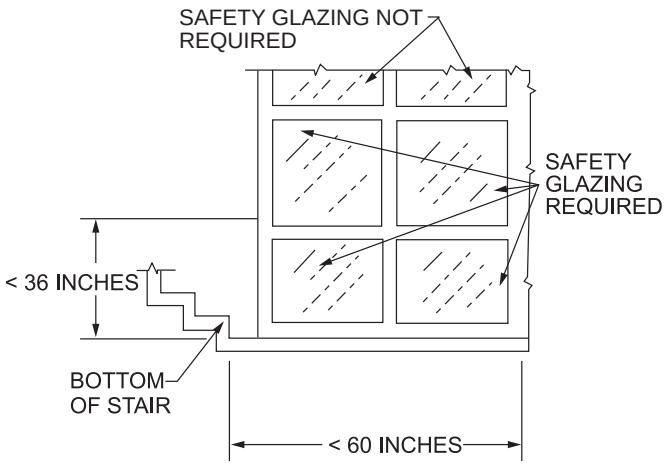

For SI: 1 inch = 25.4 mm.

Figure R308.4(11)
GLAZING ADJACENT TO THE BOTTOM STAIR LANDING
(Section R308.4.7)

R308.4.1 Glazing in doors. Glazing in fixed and operable panels of swinging, sliding and bifold doors shall be considered to be a hazardous location.

Exceptions:

1. Glazed openings of a size through which a 3-inch-diameter (76 mm) sphere is unable to pass.
2. Decorative glazing.

❖ See the commentary to Section R308.4.

R308.4.2 Glazing adjacent to doors. Glazing in an individual fixed or operable panel adjacent to a door shall be considered to be a hazardous location where the bottom exposed edge of the glazing is less than 60 inches (1524 mm) above the floor or walking surface and it meets either of the following conditions:

1. Where the glazing is within 24 inches (610 mm) of either side of the door in the plane of the door in a closed position.
2. Where the glazing is on a wall perpendicular to the plane of the door in a closed position and within 24 inches (610 mm) of the hinge side of an in-swinging door.

   Exceptions:

   1. Decorative glazing.
   2. Where there is an intervening wall or other permanent barrier between the door and the glazing.
   3. Where access through the door is to a closet or storage area 3 feet (914 mm) or less in depth. Glazing in this application shall comply with Section R308.4.3.
   4. Glazing that is adjacent to the fixed panel of patio doors.

❖ See the commentary to Section R308.4.

R308.4.3 Glazing in windows. Glazing in an individual fixed or operable panel that meets all of the following conditions shall be considered to be a hazardous location:

1. The exposed area of an individual pane is larger than 9 square feet (0.836 m^2),
2. The bottom edge of the glazing is less than 18 inches (457 mm) above the floor,
3. The top edge of the glazing is more than 36 inches (914 mm) above the floor; and
4. One or more walking surfaces are within 36 inches (914 mm), measured horizontally and in a straight line, of the glazing.

   Exceptions:

   1. Decorative glazing.
   2. Where a horizontal rail is installed on the accessible side(s) of the glazing 34 to 38 inches (864 to 965 mm) above the walking surface. The rail shall be capable of withstanding a horizontal load of 50 pounds per linear foot (730 N/m) without contacting the glass and have a cross-sectional height of not less than $1^1/_2$ inches (38 mm).
   3. Outboard panes in insulating glass units and other multiple glazed panels where the bottom edge of the glass is 25 feet (7620 mm) or more above *grade*, a roof, walking surfaces or other horizontal [within 45 degrees (0.79 rad) of horizontal] surface adjacent to the glass exterior.

❖ See the commentary to Section R308.4.

R308.4.4 Glazing in guards and railings. Glazing in *guards* and railings, including structural baluster panels and nonstructural in-fill panels, regardless of area or height above a walking surface shall be considered to be a hazardous location.

❖ See the commentary to Section R308.4.

INTERNATIONAL CODE COUNCIL®
Copyright © 2015 ICC. ALL RIGHTS RESERVED. Accessed by David Dammon on Jun 21, 2017 12:30:52 PM pursuant to License Agreement with ICC. No further reproduction or distribution authorized. ANY UNAUTHORIZED REPRODUCTION OR DISTRIBUTION IS A VIOLATION OF THE FEDERAL COPYRIGHT ACT AND THE LICENSE AGREEMENT, AND SUBJECT TO CIVIL AND CRIMINAL PENALTIES THEREUNDER.

R308.4.5 Glazing and wet surfaces. Glazing in walls, enclosures or fences containing or facing hot tubs, spas, whirlpools, saunas, steam rooms, bathtubs, showers and indoor or outdoor swimming pools where the bottom exposed edge of the glazing is less than 60 inches (1524 mm) measured vertically above any standing or walking surface shall be considered to be a hazardous location. This shall apply to single glazing and each pane in multiple glazing.

Exception: Glazing that is more than 60 inches (1524 mm), measured horizontally and in a straight line, from the water's edge of a bathtub, hot tub, spa, whirlpool or swimming pool or from the edge of a shower, sauna or steam room.

❖ See the commentary to Section R308.4.

R308.4.6 Glazing adjacent to stairs and ramps. Glazing where the bottom exposed edge of the glazing is less than 36 inches (914 mm) above the plane of the adjacent walking surface of stairways, landings between flights of stairs and ramps shall be considered to be a hazardous location.

Exceptions:

1. Where a rail is installed on the accessible side(s) of the glazing 34 to 38 inches (864 to 965 mm) above the walking surface. The rail shall be capable of withstanding a horizontal load of 50 pounds per linear foot (730 N/m) without contacting the glass and have a cross-sectional height of not less than $1^1/_2$ inches (38 mm).
2. Glazing 36 inches (914 mm) or more measured horizontally from the walking surface.

❖ See the commentary to Section R308.4.

R308.4.7 Glazing adjacent to the bottom stair landing. Glazing adjacent to the landing at the bottom of a stairway where the glazing is less than 36 inches (914 mm) above the landing and within a 60-inch (1524 mm) horizontal arc less than 180 degrees from the bottom tread nosing shall be considered to be a hazardous location.

Exception: The glazing is protected by a *guard* complying with Section R312 and the plane of the glass is more than 18 inches (457 mm) from the *guard*.

❖ See the commentary to Section R308.4.

R308.5 Site-built windows. Site-built windows shall comply with Section 2404 of the *International Building Code.*

❖ Because site-built windows are not constructed in a manufacturing facility that follows industry standards, they must be constructed in accordance with Section 2404 of the IBC, which sets forth the wind, snow, seismic and dead loads on glass.

R308.6 Skylights and sloped glazing. Skylights and sloped glazing shall comply with the following sections.

❖ Sloped glazing and skylights consist of glazing installed in roofs or walls that are on a slope 15 degrees (0.26 rad) or more from the vertical. The provisions of the code address loads normally attributed to roofs. The provisions also enhance the protection of the occupants of a building from the possibility of falling glazing materials.

R308.6.1 Definitions. The following terms are defined in Chapter 2:

SKYLIGHT, UNIT.

❖ Unit skylights are a specific type of sloped glazing assembly which is factory assembled. The IBC and the

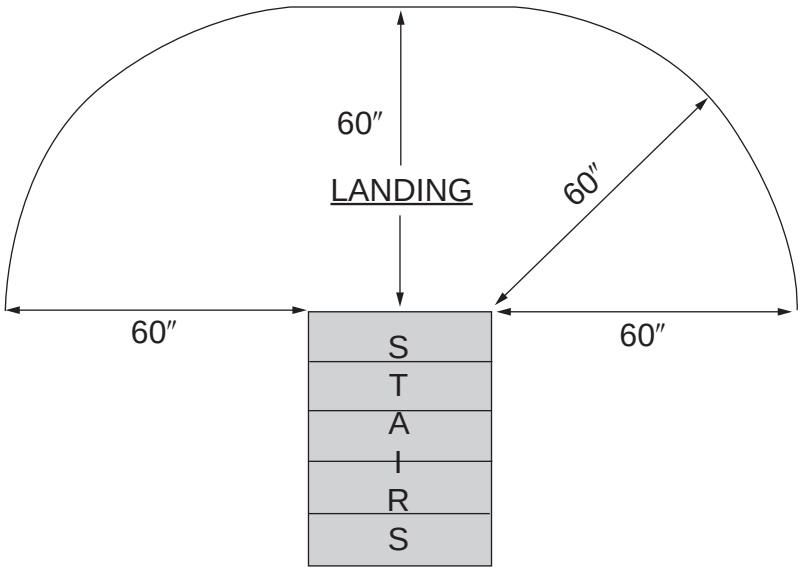

FIGURE R308.4.7
PROHIBITED GLAZING LOCATIONS AT BOTTOM STAIR LANDINGS

❖ This figure depicts glazing locations that are to be considered hazardous in accordance with Sections R308.4 and R308.4.7, unless the exception to Section R308.4.7 is satisfied (see the commentary to Section R308.4).

INTERNATIONAL CODE COUNCIL®
Copyright © 2015 ICC. ALL RIGHTS RESERVED. Accessed by David Dammon on Jun 21, 2017 12:30:52 PM pursuant to License Agreement with ICC. No further reproduction or distribution authorized. ANY UNAUTHORIZED REPRODUCTION OR DISTRIBUTION IS A VIOLATION OF THE FEDERAL COPYRIGHT ACT AND THE LICENSE AGREEMENT, AND SUBJECT TO CIVIL AND CRIMINAL PENALTIES THEREUNDER.

code contain specific provisions that are appropriate for this type of building component. Factory-assembled units, as opposed to site-built skylights, can be designed, tested and rated as one component, which incorporates both glazing and framing, if applicable. The individual components of site-built glazing must be designed to resist the design loads of the codes individually, and are not usually rated as an assembly.

SKYLIGHTS AND SLOPED GLAZING.

❖ The failure of skylights and sloped glazing could result in injury and building damage. This definition establishes the criteria to which the code requirements of Section R308.6 are to apply.

TUBULAR DAYLIGHTING DEVICE (TDD).

❖ This definition provides the distinction from a unit skylight. Although tubular daylighting devices (TDDs) and unit skylights are similar and subjected to the same testing and labeling requirements, there are some differences. A TDD is typically field assembled from a manufactured kit, unlike a unit skylight which is typically shipped as a factory-assembled unit. If the unit skylight definition is applied to TDDs, it would imply that TDDs be entirely assembled in the factory. Also, the dome of a TDD is not necessarily constructed out of a single panel of glazing material. As such, a separate definition from that of a unit skylight is needed. The definition is adapted from the definition in AAMA/WDMA A440.

R308.6.2 Materials. The following types of glazing shall be permitted to be used:

1. Laminated glass with not less than a 0.015-inch (0.38 mm) polyvinyl butyral interlayer for glass panes 16 square feet (1.5 m^2) or less in area located such that the highest point of the glass is not more than 12 feet (3658 mm) above a walking surface or other accessible area; for higher or larger sizes, the interlayer thickness shall be not less than 0.030 inch (0.76 mm).
2. Fully tempered glass.
3. Heat-strengthened glass.
4. Wired glass.
5. *Approved* rigid plastics.

❖ The provisions of this section limit glazing materials in skylights and sloped glazing to those specified, and they outline glazing materials and protective measures for sloped glazing and skylights. The materials and their characteristics and limitations are as follows:

Laminated glass. Laminated glass is usually constructed with an inner layer of polyvinyl butyral, which has a minimum thickness of 0.030 inch (0.76 mm). Such glass is highly resistant to impact and, as a result, requires no further protection below. When used within dwelling units, laminated glass is permitted to have a 0.015-inch (0.38 mm) polyvinyl butyral inner layer if each pane of glass is 16 square feet (1.5 m^2) or less in area, and the highest point of the glass is no more than 12 feet (3658 mm) above a walking surface or other accessible area.

Fully tempered glass. Tempered glass has been specifically heat-treated or chemically treated to obtain high strength. When broken, the entire piece of glass immediately breaks into numerous small granular pieces. Because of its high strength and manner of breakage, tempered glass has been considered in the past to be a desirable glazing material for skylights that have no protective screens. However, as a result of studies by the industry that show that tempered glass is subject to spontaneous breakage that can result in large chunks of glass falling, the code requires screen protection below tempered glass.

Heat-strengthened glass. Heat-strengthened glass that has been reheated to just below its melting point and then cooled. This process forms a compression on the outer surface and increases the strength of the glass. However, heat-strengthened glass requires screen protection below the skylight to protect the occupants from falling shards.

Wired glass. Wired glass is resistant to impact and, when used as a single-layer glazing, requires no additional protection below.

Approved rigid plastics. Rigid plastics are fairly durable as a glazing material.

Annealed glass. Annealed glass is not allowed because it is subject to breakage by impact and has very low strength. Annealed glass is also unsatisfactory for use as a skylight because it breaks up under impact into large sharp shards, which, when they fall, are hazardous to occupants of a building.

R308.6.3 Screens, general. For fully tempered or heat-strengthened glass, a retaining screen meeting the requirements of Section R308.6.7 shall be installed below the glass, except for fully tempered glass that meets either condition listed in Section R308.6.5.

❖ As a general rule, single-layer glazing of heat-strengthened glass and fully tempered glass must be fitted with screens below the glazing material.

R308.6.4 Screens with multiple glazing. Where the inboard pane is fully tempered, heat-strengthened or wired glass, a retaining screen meeting the requirements of Section R308.6.7 shall be installed below the glass, except for either condition listed in Section R308.6.5. Other panes in the multiple glazing shall be of any type listed in Section R308.6.2.

❖ As does Section R308.6.3, this section states that screens are required for the inbound plane of glazing when it is fully tempered, heat-strengthened or wired glass. The screen must comply with Section R308.6.7. Screens are not required for either approved laminated glass or approved rigid plastics.

INTERNATIONAL CODE COUNCIL®
Copyright © 2015 ICC. ALL RIGHTS RESERVED. Accessed by David Dammon on Jun 21, 2017 12:30:52 PM pursuant to License Agreement with ICC. No further reproduction or distribution authorized. ANY UNAUTHORIZED REPRODUCTION OR DISTRIBUTION IS A VIOLATION OF THE FEDERAL COPYRIGHT ACT AND THE LICENSE AGREEMENT, AND SUBJECT TO CIVIL AND CRIMINAL PENALTIES THEREUNDER.

R308.6.5 Screens not required. Screens shall not be required where fully tempered glass is used as single glazing or the inboard pane in multiple glazing and either of the following conditions are met:

1. Glass area 16 square feet (1.49 m^2) or less. Highest point of glass not more than 12 feet (3658 mm) above a walking surface or other accessible area, nominal glass thickness not more than $^3/_{16}$ inch (4.8 mm), and (for multiple glazing only) the other pane or panes fully tempered, laminated or wired glass.
2. Glass area greater than 16 square feet (1.49 m^2). Glass sloped 30 degrees (0.52 rad) or less from vertical, and highest point of glass not more than 10 feet (3048 mm) above a walking surface or other accessible area.

❖ Section R308.6.5 states two exceptions to the provisions of Sections R308.6.3 and R308.6.4. The first exception applies to a glazing area that is no larger than 16 square feet (1.49 m^2) and no more than 12 feet (3658 mm) above a walking surface or other accessible area. The second exception applies to sloped glazing with a maximum slope of 30 degrees (0.52 rad) from vertical that is not larger than 16 square feet (1.49 m^2) in area and is no greater than 10 feet (3048 mm) above a walking surface or other accessible area. Generally, installed skylights and sloped glazing will meet one of these exceptions, so screens are not required.

R308.6.6 Glass in greenhouses. Any glazing material is permitted to be installed without screening in the sloped areas of greenhouses, provided that the greenhouse height at the ridge does not exceed 20 feet (6096 mm) above *grade*.

❖ The glazing regulations for greenhouses are less stringent because greenhouses are seldom occupied during storms that might break the glass. These provisions also explain an exception to the screening provisions of Sections R308.6 and R308.6.4, specifically for the sloped glazing areas within greenhouses. Screens are not required for sloped areas of greenhouses if the ridge of the greenhouse is not more than 20 feet (6096 mm) above grade.

R308.6.7 Screen characteristics. The screen and its fastenings shall be capable of supporting twice the weight of the glazing, be firmly and substantially fastened to the framing members, and have a mesh opening of not more than 1 inch by 1 inch (25 mm by 25 mm).

❖ It is critical that screens be installed in a manner that will adequately support the weight of the glass. In using a safety factor of 2, the screen and its fastenings must be capable of supporting twice the weight of the glazing. To accomplish this, the screen is to be fastened firmly to the framing members.

R308.6.8 Curbs for skylights. Unit skylights installed in a roof with a pitch flatter than three units vertical in 12 units horizontal (25-percent slope) shall be mounted on a curb extending not less than 4 inches (102 mm) above the plane of the roof unless otherwise specified in the manufacturer's installation instructions.

❖ Skylights installed on low-sloped roofs are more susceptible to leaking than those on higher pitched roofs because water does not drain as quickly on low-sloped roofs. For these skylights to be properly flashed to prevent leakage, they must be placed on a 4-inch-high (102 mm) curb unless the manufacturer's installation instructions indicate otherwise.

R308.6.9 Testing and labeling. Unit skylights and tubular daylighting devices shall be tested by an *approved* independent laboratory, and bear a *label* identifying manufacturer, performance grade rating and *approved* inspection agency to indicate compliance with the requirements of AAMA/WDMA/CSA 101/I.S.2/A440.

❖ The referenced standard, ANSI/AAMA/WDMA 101/I.S.2/NAFS: *Voluntary Performance Specification for Windows, Skylights and Glass Doors*, includes a separate rating system for positive and negative pressure on skylights and TDDs which allows the manufacturer to design and fabricate products that are best suited for the climate in which they will be used. The standard establishes the performance requirements for skylights and TDDs based on the desired performance grade rating which includes minimum requirements for resistance to air leakage, water infiltration and the design load pressures. The resulting performance grade rating states the design load pressure used to rate the product, but it also includes consideration of these additional performance characteristics. For skylights and TDDs certified for only one performance grade, the rating is based on the minimum requirements met for both positive and negative design pressure. Skylights and TDDs certified for two performance grades are rated separately for positive and negative design pressure.

Skylights and TDDs must be capable of withstanding the component and cladding wind pressures of Table R301.2(2) adjusted by the height and exposure coefficients given in Table R301.2(3).

The most critical load on a skylight or TDD is determined by the climate in which it is installed. In a colder climate with heavier snow loads and moderate design wind speeds, the positive load on a skylight or TDD from the combined snow and dead load will be more critical than the negative load from wind uplift. The opposite will be the case in warmer, coastal climates with higher design wind speeds and little or no snow load.

R308.6.9.1 Comparative analysis for glass-glazed unit skylights. Structural wind load design pressures for glass-glazed unit skylights different than the size tested in accordance with Section R308.6.9 shall be permitted to be different than the design value of the tested unit where determined

INTERNATIONAL CODE COUNCIL®
Copyright © 2015 ICC. ALL RIGHTS RESERVED. Accessed by David Dammon on Jun 21, 2017 12:30:52 PM pursuant to License Agreement with ICC. No further reproduction or distribution authorized. ANY UNAUTHORIZED REPRODUCTION OR DISTRIBUTION IS A VIOLATION OF THE FEDERAL COPYRIGHT ACT AND THE LICENSE AGREEMENT, AND SUBJECT TO CIVIL AND CRIMINAL PENALTIES THEREUNDER.

in accordance with one of the following comparative analysis methods:

1. Structural wind load design pressures for glass-glazed unit skylights smaller than the size tested in accordance with Section R308.6.9 shall be permitted to be higher than the design value of the tested unit provided that such higher pressures are determined by accepted engineering analysis. Components of the smaller unit shall be the same as those of the tested unit. Such calculated design pressures shall be validated by an additional test of the glass-glazed unit skylight having the highest allowable design pressure.
2. In accordance with WDMA I.S. 11.

❖ Comparative analysis based on accepted engineering methods provides a proven, accurate and reliable means for determining design pressures of different sized products within a fenestration product line based on testing of specimen units from the respective line. This alleviates the need for design pressure (DP) testing of all sizes within the line, saving considerable construction costs and providing greater design flexibility without incurring additional time and costs, especially for specialty/custom products.

Previously the code only allowed comparative analysis for windows and doors in Section R609.3.1, which has been and continues to be widely utilized for those products for the reasons stated above. Since comparative analysis as noted above is equally applicable to glass-glazed unit skylights, it is also permitted by the code for them.

Method 1 is taken verbatim from the existing comparative analysis provision in Section R609.3.1, except for the substitution of "glass-glazed unit skylights" for "windows and door units." However, Section R609.3.1 is limited only to allowing comparative analysis for units smaller than the unit tested, not larger. Because comparative analysis can also be effectively used to accurately determine DP ratings for fenestration products that are larger in width and/or height than the actual tested specimens, provided proper analytical methods are followed, it is also permitted by the code for glass-glazed unit skylights for that purpose as long as proper engineering analysis is provided.

Method 2 requires compliance with WDMA I.S. 11. WDMA I.S. 11—*Industry Standard for Voluntary Analytical Method for Design Pressure (DP) Ratings of Fenestration Products*. This standard provides more comprehensive alternative methods appropriate for using comparative analysis to determine DP of units different in size, both smaller and larger, than that of the tested units within a product line. The comparative analysis methods included in WDMA I.S. 11 are based on accepted engineering analysis which must also be sealed by a licensed Professional Engineer (PE), making it technically sound for use in the code for this purpose.

SECTION R309
GARAGES AND CARPORTS

R309.1 Floor surface. Garage floor surfaces shall be of *approved* noncombustible material.

The area of floor used for parking of automobiles or other vehicles shall be sloped to facilitate the movement of liquids to a drain or toward the main vehicle entry doorway.

❖ Garage floor surfaces must be of an approved noncombustible material such as concrete. Additionally, the floor surface must either slope toward the garage door opening or slope to an approved drain. This allows grease, flammable liquids or other hazardous materials that might drain from an automobile to drain from the garage.

R309.2 Carports. Carports shall be open on not less than two sides. Carport floor surfaces shall be of *approved* noncombustible material. Carports not open on two or more sides shall be considered to be a garage and shall comply with the provisions of this section for garages.

Exception: Asphalt surfaces shall be permitted at ground level in carports.

The area of floor used for parking of automobiles or other vehicles shall be sloped to facilitate the movement of liquids to a drain or toward the main vehicle entry doorway.

❖ The area of floor used for the parking of automobiles or other vehicles must be sloped to facilitate the movement of liquids associated with motor vehicles such as oil, gasoline or antifreeze. These are toxic or flammable materials that should not be allowed to collect in the building.

Carports must have at least two sides open to outside air. If two sides are not open, the structure is a garage and comes under the provisions of Sections R302.5, R302.6, R309.1 and R309.3.

R309.3 Flood hazard areas. For buildings located in flood hazard areas as established by Table R301.2(1), garage floors shall be:

1. Elevated to or above the design flood elevation as determined in accordance with Section R322; or
2. Located below the design flood elevation provided that the floors are at or above *grade* on not less than one side, are used solely for parking, building access or storage, meet the requirements of Section R322 and are otherwise constructed in accordance with this code.

❖ Floors of garages in flood hazard areas must meet one of two requirements. The first option is to construct the garage floor elevated to or above the design flood elevation. The second option allows the floor of the garage to be below the design flood elevation if construction is compliant with the applicable provisions of Section R322 for enclosures, including: 1. The floor is at or above finished exterior grade on at least one side (not a basement); 2. It complies with provisions for enclosed areas below the design flood elevation (see

INTERNATIONAL CODE COUNCIL®
Copyright © 2015 ICC. ALL RIGHTS RESERVED. Accessed by David Dammon on Jun 21, 2017 12:30:52 PM pursuant to License Agreement with ICC. No further reproduction or distribution authorized. ANY UNAUTHORIZED REPRODUCTION OR DISTRIBUTION IS A VIOLATION OF THE FEDERAL COPYRIGHT ACT AND THE LICENSE AGREEMENT, AND SUBJECT TO CIVIL AND CRIMINAL PENALTIES THEREUNDER.

Section R322.2.2 in A Zones and Section R322.3.5 in V Zones and Coastal A Zones); 3. Materials and finishes below the design flood elevation are flood resistant (see Section R322.1.8); and 4. Service equipment and systems comply with Section R322.1.6. Because of these limitations, garages must not be designed or converted to accommodate other uses.

R309.4 Automatic garage door openers. Automatic garage door openers, if provided, shall be *listed* and *labeled* in accordance with UL 325.

❖ The code does not require an automatic garage door opener. However, if one is installed, it must be listed and labeled in accordance with UL 325. Federal law requires automatic residential garage door openers to conform to the entrapment protection requirements of UL 325.

R309.5 Fire sprinklers. Private garages shall be protected by fire sprinklers where the garage wall has been designed based on Table R302.1(2), Footnote a. Sprinklers in garages shall be connected to an automatic sprinkler system that complies with Section P2904. Garage sprinklers shall be residential sprinklers or quick-response sprinklers, designed to provide a density of 0.05 gpm/ft^2. Garage doors shall not be considered obstructions with respect to sprinkler placement.

❖ Section R309.5 provides a limitation on the application of Table R302.1(2) by only allowing use of sprinkler incentives in areas where sprinklers are provided. Normally, garages aren't required to have sprinklers; however, where a designer chooses to take advantage of reduced separation requirements for a garage wall, it is appropriate for the garage to be provided with sprinklers as a means of property protection. Proposed design criteria for sprinklers were derived from NFPA 13R Section 6.8.3.3, which addresses sprinkler protection for garages in buildings protected by NFPA 13R sprinkler systems. Often, garage protection is provided by dry pendant or dry sidewall sprinklers connected to a wet pipe sprinkler system.

SECTION R310
EMERGENCY ESCAPE AND RESCUE OPENINGS

R310.1 Emergency escape and rescue opening required. *Basements, habitable attics* and every sleeping room shall have not less than one operable emergency escape and rescue opening. Where *basements* contain one or more sleeping rooms, an emergency escape and rescue opening shall be required in each sleeping room. Emergency escape and rescue openings shall open directly into a public way, or to a *yard* or court that opens to a public way.

Exception: Storm shelters and *basements* used only to house mechanical *equipment* not exceeding a total floor area of 200 square feet (18.58 m^2).

❖ Because so many fire deaths occur as a result of occupants being asleep in a residential building during a fire, the code requires that all basements, habitable attics and sleeping rooms have windows or doors that may be used for emergency escape or rescue. The requirement for emergency escape and rescue openings in sleeping rooms exists because a fire will usually have spread before the occupants are aware of the problem, and the normal exit channels may be blocked. The requirement for basements and habitable attics exists because they are so often used as sleeping rooms. A fire in a mechanical room adjacent to a stairway could engulf the only means of egress for the basement without the egress window or door.

Openings required for emergency escape or rescue must be located on the exterior of the building so that rescue can be performed from the exterior and so that occupants may escape through that opening to the exterior of the building without having to travel through the building itself. Therefore, where openings are required, they should open directly into a public street, public alley, yard or court. After the occupants pass through the emergency escape and rescue opening, their continued egress is essential. Where a basement contains sleeping rooms and a habitable space, an emergency escape and rescue opening is required in each sleeping room, but is not required in adjoining areas of the basement.

There is an exception for storm shelters and basements used only to house mechanical equipment with a total floor area not exceeding 200 square feet (18.58 m^2).

The dimensions prescribed in the code for emergency escape and rescue openings in Sections R310.2 through R310.2.2, and as illustrated in Commentary Figure R310.2.1, are based, in part, on extensive testing by the San Diego Building and Fire Departments to determine the proper relationships of the height and width of window openings to adequately serve for both rescue and escape. The minimum of 20 inches (508 mm) for the width is based on two criteria: the width necessary to place a ladder within the window opening and the width necessary to admit a fire fighter with full rescue equipment, including a breathing apparatus. The minimum 24-inch (610 mm) height is based on the minimum size necessary to admit a fire fighter with full rescue equipment. By requiring a minimum net clear opening size of at least 5.7 square feet (0.53 m^2), the code provides for an opening of adequate dimensions. To be accessible from the interior of the sleeping room, attic or basement, Section R310.2.2 requires that the emergency escape and rescue opening be located not more than 44 inches (1118 mm) above the floor. The measurement is to be taken from the floor to the bottom of the clear opening.

Section R310.1.1 requires that the required opening dimensions be achieved by the normal operation of the window, door or hatch from the inside without the use of keys, tools or special knowledge. Section R310.1.1 also allows window opening control devices to be used on windows that serve as required emergency escape and rescue openings, provided that such devices comply with ASTM F2090. The window industry is a highly competitive market. Manufacturers are constantly developing new products that are easier to clean and

INTERNATIONAL CODE COUNCIL®
Copyright © 2015 ICC. ALL RIGHTS RESERVED. Accessed by David Dammon on Jun 21, 2017 12:30:52 PM pursuant to License Agreement with ICC. No further reproduction or distribution authorized. ANY UNAUTHORIZED REPRODUCTION OR DISTRIBUTION IS A VIOLATION OF THE FEDERAL COPYRIGHT ACT AND THE LICENSE AGREEMENT, AND SUBJECT TO CIVIL AND CRIMINAL PENALTIES THEREUNDER.

possess higher thermal protection properties. It is important to keep in mind that no special knowledge for operation of the egress window is a key operational constraint. It is impractical to assume that all occupants can operate a window that requires a special sequence of operations to achieve the required opening size. Although most occupants are familiar with the normal operation to open the window, children and guests are frequently unfamiliar with special procedures necessary to remove the sashes. The time spent comprehending special operations unnecessarily delays egress from the bedroom and could lead to panic and further confusion. Thus, windows that achieve the required opening dimensions only by performing a special sequence of operations, such as the removal of sashes or mullions, are not permitted. For example, if a specific area of the window has to be depressed or manipulated to allow the sash to be removed or released to achieve the open area requirement of 5.7 square feet (0.53 m^2), the window does not qualify as an egress window.

R310.1.1 Operational constraints and opening control devices. Emergency escape and rescue openings shall be operational from the inside of the room without the use of keys, tools or special knowledge. Window opening control devices complying with ASTM F2090 shall be permitted for use on windows serving as a required emergency escape and rescue opening.

❖ Openings for emergency escape and rescue must be operational from the inside. Keys, tools or special knowledge must not be needed to operate these openings. If keys or tools were necessary, they might not be readily available in an emergency or panic situation, and an individual might not be able to operate them, rendering the opening unusable. Section R310.1 also requires the opening size to be obtained by the normal operation of the window (see commentary to Section R310.1).

R310.2 Emergency escape and rescue openings. Emergency escape and rescue openings shall have minimum dimensions as specified in this section.

❖ See the commentary to Section R310.1.

R310.2.1 Minimum opening area. Emergency and escape rescue openings shall have a net clear opening of not less than 5.7 square feet (0.530 m^2). The net clear opening dimensions required by this section shall be obtained by the normal operation of the emergency escape and rescue opening from the inside. The net clear height opening shall be not less than 24 inches (610 mm) and the net clear width shall be not less than 20 inches (508 mm).

Exception: *Grade* floor or below *grade* openings shall have a net clear opening of not less than 5 square feet (0.465 m^2).

❖ The minimum opening dimensions for emergency space and rescue openings are 24 inches (610 mm) in height and 20 inches (508 mm) in width. These dimensions are based on the minimum dimensions for a fire fighter with full rescue equipment to navigate through the opening (see commentary to Section R310.1 and Commentary Figure R310.2.1). Note that this section requires a minimum opening area of 5.7 square feet, which cannot be achieved if both the minimum height and the minimum width dimensions are used.

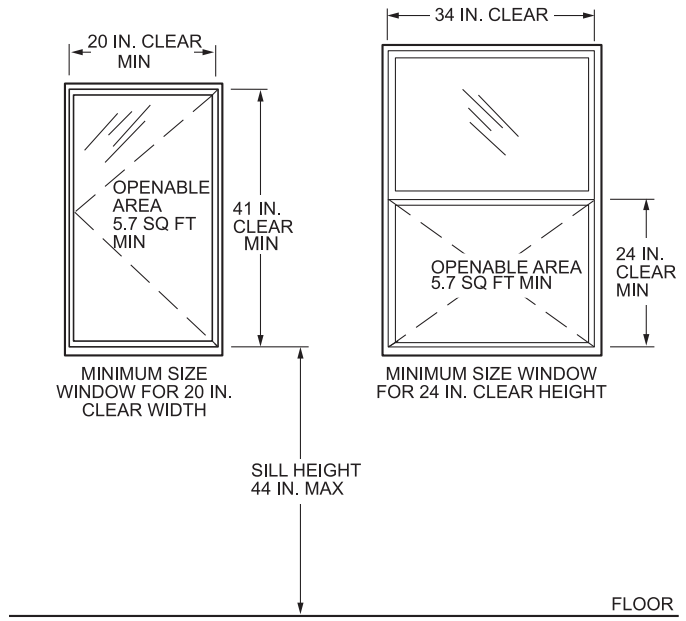

For SI: 1 inch = 25.4 mm, 1 square foot = 0.0929 m^2.

Figure R310.2.1
EMERGENCY ESCAPE AND RESCUE WINDOW

INTERNATIONAL CODE COUNCIL®
Copyright © 2015 ICC. ALL RIGHTS RESERVED. Accessed by David Dammon on Jun 21, 2017 12:30:52 PM pursuant to License Agreement with ICC. No further reproduction or distribution authorized. ANY UNAUTHORIZED REPRODUCTION OR DISTRIBUTION IS A VIOLATION OF THE FEDERAL COPYRIGHT ACT AND THE LICENSE AGREEMENT, AND SUBJECT TO CIVIL AND CRIMINAL PENALTIES THEREUNDER.

The exception allows the opening size requirement to be reduced to 5 square feet (0.46 m^2) where the emergency escape and rescue window is located at grade level. This results from the increased ease of access from the exterior and the probability that a ladder will not be needed (see Commentary Figure R310.2.1).

R310.2.2 Window sill height. Where a window is provided as the emergency escape and rescue opening, it shall have a sill height of not more than 44 inches (1118 mm) above the floor; where the sill height is below *grade*, it shall be provided with a window well in accordance with Section R310.2.3.

❖ See the commentary to Section R310.1.

R310.2.3 Window wells. The horizontal area of the window well shall be not less than 9 square feet (0.9 m^2), with a horizontal projection and width of not less than 36 inches (914 mm). The area of the window well shall allow the emergency escape and rescue opening to be fully opened.

Exception: The ladder or steps required by Section R310.2.3.1 shall be permitted to encroach not more than 6 inches (152 mm) into the required dimensions of the window well.

❖ Window wells in front of emergency escape and rescue openings also have minimum size requirements. These provisions address those emergency escape windows that occur below grade. Just applying the standard emergency escape window criteria to these windows will result in an opening that occupants can get through, but the window well may actually trap the occupants against the building without providing for their escape from the window well or providing for a fire fighter to enter the residence.

The minimum size requirements in cross section are similar to the emergency escape and opening criteria; that is, they are sufficient to provide a nominal size to allow for the escape of occupants or the entry of fire fighters (see Commentary Figure R310.2.3). The ladder or steps requirement is the main difference.

R310.2.3.1 Ladder and steps. Window wells with a vertical depth greater than 44 inches (1118 mm) shall be equipped with a permanently affixed ladder or steps usable with the window in the fully open position. Ladders or steps required by this section shall not be required to comply with Sections R311.7 and R311.8. Ladders or rungs shall have an inside width of not less than 12 inches (305 mm), shall project not less than 3 inches (76 mm) from the wall and shall be spaced not more than 18 inches (457 mm) on center vertically for the full height of the window well.

❖ When the depth of a window well exceeds 44 inches (1118 mm), a ladder or steps from the window is required. The details for construction of steps are not identified in the provisions; however, the design of the ladder is specifically addressed. Because ladders and steps in window wells are provided for emergency use only, they are not required to comply with the provisions for stairways found in Section R311.7.

R310.2.3.2 Drainage. Window wells shall be designed for proper drainage by connecting to the building's foundation drainage system required by Section R405.1 or by an approved alternative method.

Exception: A drainage system for window wells is not required where the foundation is on well-drained soil or sand-gravel mixture soils in accordance with the United Soil Classification System, Group I Soils, as detailed in Table R405.1.

❖ This section requires the window well to be properly drained. Improper window well drainage could create a water accumulation level that could cause the window to become inoperable, or even break due to the pressure and blow out into the occupied room causing serious injury. Improper window well drainage may cause an emergency escape window to become a hazard to the occupants. If the foundation is on well-drained soil, the exception permits deletion of the drainage system.

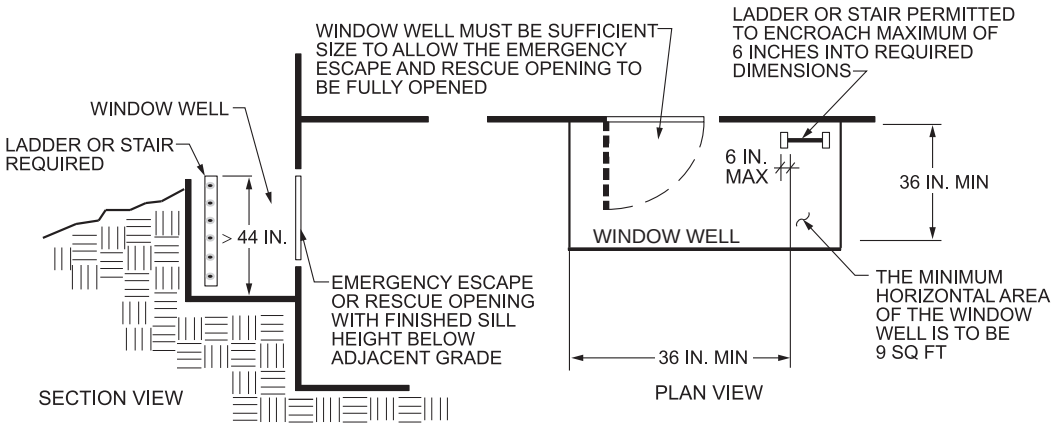

For SI: 1 inch = 25.4 mm, 1 square foot = 0.0929 m^2.

Figure R310.2.3
WINDOW WELLS

INTERNATIONAL CODE COUNCIL®
Copyright © 2015 ICC. ALL RIGHTS RESERVED. Accessed by David Dammon on Jun 21, 2017 12:30:52 PM pursuant to License Agreement with ICC. No further reproduction or distribution authorized. ANY UNAUTHORIZED REPRODUCTION OR DISTRIBUTION IS A VIOLATION OF THE FEDERAL COPYRIGHT ACT AND THE LICENSE AGREEMENT, AND SUBJECT TO CIVIL AND CRIMINAL PENALTIES THEREUNDER.

R310.2.4 Emergency escape and rescue openings under decks and porches. Emergency escape and rescue openings shall be permitted to be installed under decks and porches provided that the location of the deck allows the emergency escape and rescue openings to be fully opened and provides a path not less than 36 inches (914 mm) in height to a *yard* or court.

❖ The design of some homes makes the underside of decks the only location where an emergency escape and rescue window can be located. The 36-inch (914 mm) minimum height requirement allows a usable means of egress pathway. The 36-inch (914 mm) minimum height was based on the minimum window well size of 3 feet by 3 feet (914 mm by 914 mm).

R310.2.5 Replacement windows. Replacement windows installed in buildings meeting the scope of this code shall be exempt form the maximum sill height requirements of Sections R310.1 and Sections R310.2.1 and R310.2.2, provided the replacement window meets the following conditions:

1. The replacement window is the manufacturer's largest standard size window that will fit within the existing frame or existing rough opening. The replacement window is of the same operating style as the existing window or a style that provides for an equal or greater window opening area than the existing window.
2. The replacement window is not part of a change of occupany.

❖ Window replacements are one of the most common alterations to existing one- and two-family dwellings and townhomes. These provisions are based on requirements in the State of Minnesota's residential code and are consistent with similar provisions in the *International Existing Building Code*® (IEBC®).

Requiring replacement windows to meet the strict requirements for emergency escape and rescue openings, such as is required by Sections R310.2.1 and R310.2.2 for basements, habitable attics and sleeping rooms in new buildings, can be prohibitive and can discourage alterations that might otherwise improve building safety. These requirements are intended to ensure that the IRC does not discourage or prevent improvements in emergency escape and rescue openings, especially improvements related to fire safety, in older residential occupancies.

Many older dwellings have been constructed under codes that did not include the same emergency escape and rescue opening provisions that the IRC now requires for new construction. As such, window replacements often could only be accomplished by increasing the size of the rough opening, altering the interior and/or exterior walls and/or lowering the window sill height. This often led to significant costs and design challenges. This could discourage or prevent window replacement and, at worst, could discourage or prevent the replacement of older windows that may be (a) harder to operate, (b) inoperable due to their age or to poor maintenance, or (c) significantly less energy efficient. When that happens, improvements to safety as well as energy efficiency may be needlessly compromised. For these reasons, the provisions of this section relax the opening size and sill height requirements for replacement windows in existing buildings, as compared to the emergency escape and rescue opening requirements for new construction contained in Sections R310.2.1 and R310.2.2. For example, while some windows in sleeping rooms of older homes may not provide the full clear opening that is required for new construction or may have a sill height above 44 inches, they nonetheless may still provide a viable emergency and escape rescue opening, which is the primary intent of the code. Replacement of these windows with the same type of operating window or other type that can provide an equal or greater clear opening than the existing window—even if they do not fully meet the clear opening or sill height requirements of Section 310—is always an improvement in safety, especially when a replacement opening can provide a larger clear opening than the existing window. Such improvements in safety should not be discouraged or prevented by overly onerous requirements for replacement windows.

These requirements ensure that does not happen by essentially providing limited exceptions to the requirements of Section 310 that can only be applied when certain conditions are met and an acceptable level of safety is provided. The requirements for new construction stating that emergency escape and rescue openings be provided as well as the operational requirements of Section 310.1.1 are retained and are still applicable to replacement windows.

R310.3 Emergency escape and rescue doors. Where a door is provided as the required emergency escape and rescue opening, it shall be permitted to be a side-hinged door or a slider. Where the opening is below the adjacent ground elevation, it shall be provided with a bulkhead enclosure.

❖ This section is intended to provide minimum requirements for doors that are intended to serve as emergency escape and rescue openings. Such doors must be either side hinged or sliders and, where such doors are located below the adjacent grade, a bulkhead enclosure must be provided.

R310.3.1 Minimum door opening size. The minimum net clear height opening for any door that serves as an emergency and escape rescue opening shall be in accordance with Section R310.2.1.

❖ This section requires that doors that are intended to serve as emergency escape and rescue openings must comply with the opening area and size requirements of Section R310.2.1, which are the same provisions that regulate the area and size of windows that serve as emergency escape and rescue openings.

R310.3.2 Bulkhead enclosures. Bulkhead enclosures shall provide direct access from the *basement*. The bulkhead enclosure shall provide the minimum net clear opening equal to the door in the fully open position.

❖ Bulkhead enclosures required by Section R310.3 must meet the net openable area provisions of Section R310.2.1.

INTERNATIONAL CODE COUNCIL®
Copyright © 2015 ICC. ALL RIGHTS RESERVED. Accessed by David Dammon on Jun 21, 2017 12:30:52 PM pursuant to License Agreement with ICC. No further reproduction or distribution authorized. ANY UNAUTHORIZED REPRODUCTION OR DISTRIBUTION IS A VIOLATION OF THE FEDERAL COPYRIGHT ACT AND THE LICENSE AGREEMENT, AND SUBJECT TO CIVIL AND CRIMINAL PENALTIES THEREUNDER.

R310.3.2.1 Drainage. Bulkhead enclosures shall be designed for proper drainage by connecting to the building's foundation drainage system required by Section R405.1 or by an *approved* alternative method.

Exception: A drainage system for bulkhead enclosures is not required where the foundation is on well-drained soil or sand-gravel mixture soils in accordance with the United Soil Classification System, Group I Soils, as detailed in Table R405.1.

❖ Similar to Section R310.2.2, which applies to window well drainage, this section requires that bulkhead enclosures that serve emergency escape and rescue openings be properly drained. Improper bulkhead drainage could create a water accumulation level that could cause the bulkhead enclosure to become inoperable, or even cause serious injury. Improper window well drainage may cause a bulkhead enclosure to become a hazard to the occupants. If the foundation is on well-drained soil, the exception permits deletion of the drainage system.

R310.4 Bars, grilles, covers and screens. Bars, grilles, covers, screens or similar devices are permitted to be placed over emergency escape and rescue openings, bulkhead enclosures, or window wells that serve such openings, provided that the minimum net clear opening size complies with Sections R310.1.1 to R310.2.3, and such devices shall be releasable or removable from the inside without the use of a key, tool, special knowledge or force greater than that required for the normal operation of the escape and rescue opening.

❖ The ever-increasing concern for security, particularly in residential buildings, has created a fairly large demand for security devices, such as grilles, bars and steel shutters. Unless properly designed and constructed, the security devices over bedroom windows can completely defeat the purpose of the emergency escape and rescue opening. Therefore, the code makes provisions for security devices if the release mechanism has been approved and is operable from the inside without the use of a key, tool or force greater than that required for the normal operation of the escape and rescue opening.

The essence of the requirement for emergency escape openings is that a person must be able to effect escape or be rescued in a short period of time because the fire might have spread to a point where all other exit routes are blocked. Thus, time cannot be wasted in figuring out means of opening rescue windows or obtaining egress through them. Any impediment to escape or rescue caused by security devices, inadequate window size or difficult operating mechanisms is not permitted by the code.

R310.5 Dwelling additions. Where *dwelling additions* occur that contain sleeping rooms, an emergency escape and rescue opening shall be provided in each new sleeping room. Where *dwelling additions* occur that have *basements*, an emergency escape and rescue opening shall be provided in the new *basement*.

Exceptions:

1. An emergency escape and rescue opening is not required in a new *basement* that contains a sleeping room with an emergency escape and rescue opening.
2. An emergency escape and rescue opening is not required in a new *basement* where there is an emergency escape and rescue opening in an existing *basement* that is accessible from the new *basement*.

❖ This section reaffirms that the requirements for emergency escape and rescue openings in sleeping rooms and basements that are applicable to new construction are also applicable to sleeping rooms in additions. Note that the new and added portions of a basement are evaluated as one common basement for the purposes of this section.

R310.6 Alterations or repairs of existing basements. An emergency escape and rescue opening is not required where existing *basements* undergo alterations or repairs.

Exception: New sleeping rooms created in an existing *basement* shall be provided with emergency escape and rescue openings in accordance with Section R310.1.

❖ Where alterations are made to an existing basement, emergency escape and rescue openings are required only where new sleeping rooms are created.

SECTION R311
MEANS OF EGRESS

R311.1 Means of egress. *Dwellings* shall be provided with a means of egress in accordance with this section. The means of egress shall provide a continuous and unobstructed path of vertical and horizontal egress travel from all portions of the *dwelling* to the required egress door without requiring travel through a garage. The required egress door shall open directly into a public way or to a *yard* or court that opens to a public way.

❖ Sections R311.2 through R311.8 contain the requirements for the exit and the means of egress components. All dwelling units must have at least one egress door that opens directly to a public way or a yard or court that opens to a public way and complies with the provisions of Sections R311.2 and R311.3. This door must also access the exterior without the dwelling's occupants traveling through a garage where hazards could prevent a suitable means of egress. A ramp or stairway is required for access to habitable areas not having an exit on that level (see Section R311.4). The emergency escape and rescue openings in Section 310 are not considered an exit.

R311.2 Egress door. Not less than one egress door shall be provided for each *dwelling* unit. The egress door shall be side-hinged, and shall provide a clear width of not less than 32 inches (813 mm) where measured between the face of the door and the stop, with the door open 90 degrees (1.57 rad).

INTERNATIONAL CODE COUNCIL®
Copyright © 2015 ICC. ALL RIGHTS RESERVED. Accessed by David Dammon on Jun 21, 2017 12:30:52 PM pursuant to License Agreement with ICC. No further reproduction or distribution authorized. ANY UNAUTHORIZED REPRODUCTION OR DISTRIBUTION IS A VIOLATION OF THE FEDERAL COPYRIGHT ACT AND THE LICENSE AGREEMENT, AND SUBJECT TO CIVIL AND CRIMINAL PENALTIES THEREUNDER.

The clear height of the door opening shall be not less than 78 inches (1981 mm) in height measured from the top of the threshold to the bottom of the stop. Other doors shall not be required to comply with these minimum dimensions. Egress doors shall be readily openable from inside the *dwelling* without the use of a key or special knowledge or effort.

❖ All dwelling units must have at least one exit door that complies with the provisions of Sections R311.2 through R311.3.3. Other exterior doors need not comply with the provisions of this section.

The required egress door must be side hinged. A sliding patio door would not count as the required egress door.

Typically, a 36-inch-wide (914 mm) door slab would be required to achieve a minimum 32-inch-wide (813 mm) width opening. Door slabs are manufactured in width increments of 2 inches (51 mm) [32 inches (813 mm), 34 inches (864 mm), 36 inches (914 mm), etc.]. Once the thickness of the door slab [usually $1^3/_4$ inches (44 mm) for exterior doors], thickness of the door stop and allowance for hinges or other hardware are combined, the difference between the width of the door slab and the resultant opening size is greater than 2 inches (51 mm). Therefore, a 34-inch-wide (864 mm) door slab would not provide the 32-inch-wide (813 mm) door opening required, and a 36-inch-wide (914 mm) slab would need to be used.

In a similar fashion, the 80-inch (2032 mm) door height requirement is replaced with a 78-inch (1981 mm) height of opening requirement, with the height of the opening measured from the bottom of the doorstop to the top of the threshold. Since door slabs are also manufactured in height increments of 2 inches (51 mm), it is not anticipated that this proposal would result in a reduction in the actual door size.

So that egress is always available, any locks provided on the egress door must be openable from the inside without the use of a key or special knowledge. While this would not limit the number of locks someone could install on the egress door, this will prohibit the type of dead bolt lock that is key operated from both the inside and outside. These lock provisions are not applicable to other exterior doors, however, just in case the way to the required egress door was blocked, following these provisions for other exterior doors may provide an extra level of safety.

R311.3 Floors and landings at exterior doors. There shall be a landing or floor on each side of each exterior door. The width of each landing shall be not less than the door served. Every landing shall have a dimension of not less than 36 inches (914 mm) measured in the direction of travel. The slope at exterior landings shall not exceed $^1/_4$ unit vertical in 12 units horizontal (2 percent).

Exception: Exterior balconies less than 60 square feet (5.6 m^2) and only accessible from a door are permitted to have a landing less than 36 inches (914 mm) measured in the direction of travel.

❖ Landings are required for exterior doors and must be constructed on both the exterior and interior side of the door. Landings must be the same width as the door they serve and must be at least 36 inches (914 mm) in length. The length of a landing is measured in the direction of travel. The exterior landing must be reasonably level (a slope not exceeding 25:12) while still allowing enough of a slope for proper drainage.

The exception allows for smaller landings when an exterior door only leads out onto a small balcony. An example of this would be the french balconies commonly found in New Orleans' style architecture.

R311.3.1 Floor elevations at the required egress doors. Landings or finished floors at the required egress door shall be not more than $1^1/_2$ inches (38 mm) lower than the top of the threshold.

Exception: The landing or floor on the exterior side shall be not more than $7^3/_4$ inches (196 mm) below the top of the threshold provided the door does not swing over the landing or floor.

Where exterior landings or floors serving the required egress door are not at *grade*, they shall be provided with access to *grade* by means of a ramp in accordance with Section R311.8 or a stairway in accordance with Section R311.7.

❖ Thresholds should not be higher than $1^1/_2$ inches (38 mm) above interior floor level (see Commentary Figure R311.3.1). The exception permits the exterior landing of an exterior egress door, to be a maximum of $7^3/_4$ inches (196 mm) below the top of the threshold. The threshold height represents an important element in building construction. It has to be high enough to keep out snow accumulation and driving rain, yet low enough not to represent a tripping hazard or become a barrier to entry. The exception is limited to locations where the door swings in. Since this is the typical design for single-family homes and townhouses, the step down for the exterior landing will typically be permitted. A screen door that swung out in front of an egress door that swung in would not violate this exception (see Section R311.3.2).

If the door landing is not at grade level, any stairway or ramp leading from the door landing to grade must comply with the stairway and ramp provisions in Sections R311.7 and R311.8.

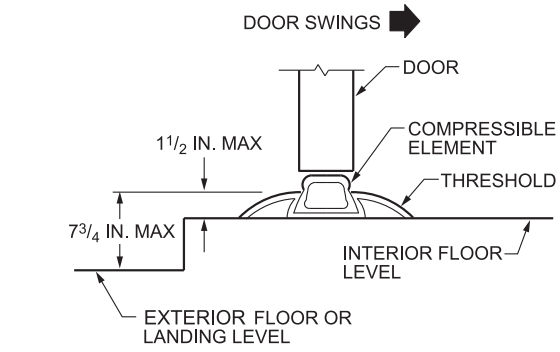

For SI: 1 inch = 25.4 mm.

Figure R311.3.1
THRESHOLD HEIGHTS

INTERNATIONAL CODE COUNCIL®
Copyright © 2015 ICC. ALL RIGHTS RESERVED. Accessed by David Dammon on Jun 21, 2017 12:30:52 PM pursuant to License Agreement with ICC. No further reproduction or distribution authorized. ANY UNAUTHORIZED REPRODUCTION OR DISTRIBUTION IS A VIOLATION OF THE FEDERAL COPYRIGHT ACT AND THE LICENSE AGREEMENT, AND SUBJECT TO CIVIL AND CRIMINAL PENALTIES THEREUNDER.

R311.3.2 Floor elevations for other exterior doors. Doors other than the required egress door shall be provided with landings or floors not more than $7^3/_4$ inches (196 mm) below the top of the threshold.

Exception: A top landing is not required where a stairway of not more than two risers is located on the exterior side of the door, provided that the door does not swing over the stairway.

❖ For exterior doors other than the required egress door, the top of the threshold can be up to $7^3/_4$ inches (196 mm) above both the inside and outside floor surface. Note that, in typical applications, the landing at the exterior side of an exterior door is lower than the interior landing or floor surface, and this "threshold" dimension is intended to include the riser that is inherently created by the difference in elevation between the exterior and interior landings.

The exception would not require a top landing when two or fewer stair risers are on the exterior side of exterior doors other than required egress door (for the required egress exit door, see Section R311.3.1). However, the door, other than a storm or screen door, is not allowed to swing over the steps to take advantage of this exception (see Section R311.3.3).

R311.3.3 Storm and screen doors. Storm and screen doors shall be permitted to swing over exterior stairs and landings.

❖ Sections R311.3.1 and R311.3.2 both have allowances for landing elevations when the door does not swing out over the landing. A common scenario is to have both a screen door and a wood/metal door at the front and/or rear entrance to the home. The screen door swinging out over the landing would not violate these exceptions.

R311.4 Vertical egress. Egress from habitable levels including habitable attics and *basements* not provided with an egress door in accordance with Section R311.2 shall be by a ramp in accordance with Section R311.8 or a stairway in accordance with Section R311.7.

❖ All dwelling units must have at least one egress door that complies with the provisions of Sections R311.2 and R311.3. In a multiple-level home, a ramp or stairway is required for access from basements, upper floors, mezzanines, split levels or habitable attics that do not have an exit on that level. The emergency escape and rescue openings in Section 310 are not considered an exit.

R311.5 Construction.

R311.5.1 Attachment. Exterior landings, decks, balconies, stairs and similar facilities shall be positively anchored to the primary structure to resist both vertical and lateral forces or shall be designed to be self-supporting. Attachment shall not be accomplished by use of toenails or nails subject to withdrawal.

❖ Exterior exit balconies, stairs and similar exit facilities must be properly attached to the primary structure so that their reaction to vertical and lateral forces will not cause separation from the structure. This is reiterating the requirement for a complete load path in Section R301.1. The reason for doing so is the need to maintain key elements of the egress system that are needed for emergency evacuations and the increased possibility of overlooking such connection. The requirement for positive anchor to the primary structure applies to all exterior means of egress components used as part of an egress system whether part of the required exit or not.

R311.6 Hallways. The width of a hallway shall be not less than 3 feet (914 mm).

❖ Hallways must be a minimum of 3 feet (914 mm) wide to accommodate moving furniture into rooms off the hallway and for safe egress from the structure. The code uses the term "hallway" instead of corridors to avoid confusion with the IBC. In the IBC, "corridor" is a defined term, and corridors may have a required fire-resistance rating.

R311.7 Stairways.

❖ The requirements for stairways are contained in Sections R311.7.1 through R311.7.9. The provisions address a wide variety of issues that must be considered when designing a stairway that is both safe and usable.

R311.7.1 Width. Stairways shall be not less than 36 inches (914 mm) in clear width at all points above the permitted handrail height and below the required headroom height. Handrails shall not project more than $4^1/_2$ inches (114 mm) on either side of the stairway and the clear width of the stairway at and below the handrail height, including treads and landings, shall be not less than $31^1/_2$ inches (787 mm) where a handrail is installed on one side and 27 inches (698 mm) where handrails are provided on both sides.

Exception: The width of spiral stairways shall be in accordance with Section R311.7.10.1.

❖ Section R311.7.1 requires a minimum stairway width of 36 inches (914 mm). Generally, when the code specifies a required width of a component in the egress system, the width will be the clear, net, usable, unobstructed width. In this case, however, the width is specified as applying only to the area "above the permitted handrail height and below the required headroom height."

At and below the handrail height, the required width for the stairway, including treads and landings, is 27 inches (686 mm) if handrails are provided on each side, and $31^1/_2$ inches (800 mm) if there is a handrail installed on only one side. In essence, the code is not concerned about elements such as trim, stringers or other items that may be found below the level of the handrail, as long as they do not exceed the handrail's projection. This reduced width below the handrail is based on a body's movements as a person walks on a stair or other surface (see Commentary Figure R311.7.1). The exception and the provisions of Section R311.7.10.1 will permit a minimum width of 26 inches (660 mm) for spiral stairways.

It is important to note that each of the three key elements in the means of egress, hallways, stairways and the egress door, have a required minimum width.

INTERNATIONAL CODE COUNCIL®
Copyright © 2015 ICC. ALL RIGHTS RESERVED. Accessed by David Dammon on Jun 21, 2017 12:30:52 PM pursuant to License Agreement with ICC. No further reproduction or distribution authorized. ANY UNAUTHORIZED REPRODUCTION OR DISTRIBUTION IS A VIOLATION OF THE FEDERAL COPYRIGHT ACT AND THE LICENSE AGREEMENT, AND SUBJECT TO CIVIL AND CRIMINAL PENALTIES THEREUNDER.

R311.7.2 Headroom. The headroom in stairways shall be not less than 6 feet 8 inches (2032 mm) measured vertically from the sloped line adjoining the tread nosing or from the floor surface of the landing or platform on that portion of the stairway.

Exceptions:

1. Where the nosings of treads at the side of a flight extend under the edge of a floor opening through which the stair passes, the floor opening shall be allowed to project horizontally into the required headroom not more than $4^3/_4$ inches (121 mm).
2. The headroom for spiral stairways shall be in accordance with Section R311.7.10.1.

❖ A minimum headroom clearance of 6 feet, 8 inches (2032 mm) is required in connection with every stairway. This includes not only the above-the-tread portion, but also above any landings serving the stairway. The clearance is to be measured vertically above a plane that connects the stair nosings and also vertically above any landing or floor surface that is a part of the stairway [see Commentary Figure R311.7.2(1)]. This specific height requirement overrides the general ceiling height limitations of Section R305 and is modified for spiral stairways by Section R311.7.10.1.

The exception clarifies interpretation and practice by recognizing the common method of stairwell construction in which the open side of a stair is supported by the same structure as the side of the opening through which the stairway passes. The exception allows for common stairways that are slightly wider at the bottom and narrow in width as they ascend through a smaller

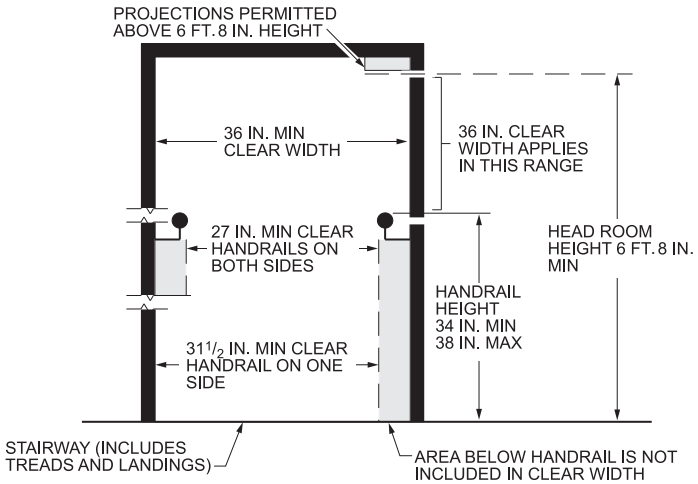

For SI: 1inch = 25.4 mm, 1 foot = 304.8 mm.

Figure R311.7.1
STAIRWAY CLEARANCES

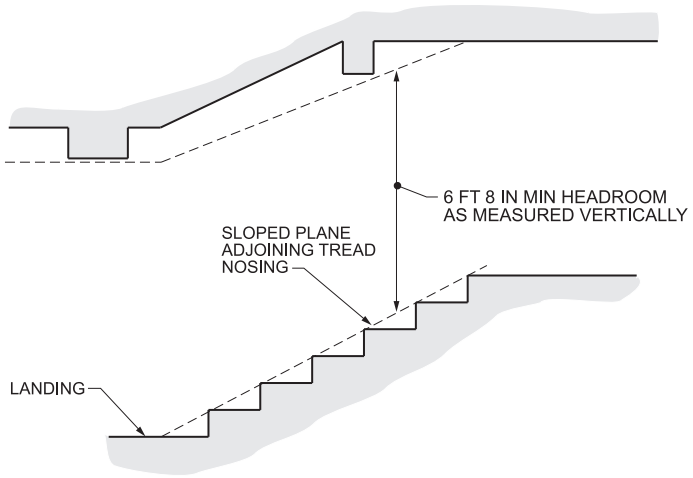

For SI: 1 inch = 25.4 mm, 1 foot = 304.8 mm.

Figure R311.7.2(1)
MINIMUM HEADROOM

INTERNATIONAL CODE COUNCIL®
Copyright © 2015 ICC. ALL RIGHTS RESERVED. Accessed by David Dammon on Jun 21, 2017 12:30:52 PM pursuant to License Agreement with ICC. No further reproduction or distribution authorized. ANY UNAUTHORIZED REPRODUCTION OR DISTRIBUTION IS A VIOLATION OF THE FEDERAL COPYRIGHT ACT AND THE LICENSE AGREEMENT, AND SUBJECT TO CIVIL AND CRIMINAL PENALTIES THEREUNDER.



Figure R311.7.2(2)
EXAMPLE OF EXCEPTION TO SECTION R311.7.2

width opening in the floor above. In this case, the plane of the nosings, from which headroom is determined, at the side of the stairs, extends under the ceiling or joist above at the edge of the floor opening. The exception allows this offset to be a maximum of $4^3/_4$ inches (121 mm) without being considered a projection into the required headroom. It is important to note that this exception only applies at the side of stairs [see Commentary Figure R311.7.2(2)].

R311.7.3 Vertical rise. A flight of stairs shall not have a vertical rise larger than 147 inches (3734 mm) between floor levels or landings.

❖ Between landings and platforms, the vertical rise is to be measured from one landing walking surface to another. The limited height provides a reasonable interval for users with physical limitations to rest on a level surface and also serves to alleviate potential negative psychological effects of long and uninterrupted stairway flights.

R311.7.4 Walkline. The walkline across winder treads shall be concentric to the curved direction of travel through the turn and located 12 inches (305 mm) from the side where the winders are narrower. The 12-inch (305 mm) dimension shall be measured from the widest point of the clear stair width at the walking surface of the winder. If winders are adjacent within the flight, the point of the widest clear stair width of the adjacent winders shall be used.

❖ This requirement is essential for smooth, consistent travel on stairs that turn with winder treads. It provides a standard location for the regulation of the uniform tread depth of winders. Due to the wide range of anthropometrics of stairway users, there is no one line that all persons will travel on stairs. However, the code recognizes that a standard location of a walkline is essential to design and enforcement. Each footfall of the user through the turn can be connected in an arc to describe the path traveled. As a user ascends or descends the flight, the turning at each step should be consistent through the turn. The walkline is established concentric, having the same center, or approximately parallel to the arc of travel of the user. The tread depth dimension at the walkline is one of two tread depths across the width of the stair at which winder tread depth is regulated. The second is the minimum tread depth. Regulation at these two points controls the angularity of the turn and the configuration of the flight. In order to establish consistently shaped winders, tread depths must always be measured concentric to the arc of travel. The walkline is unique as the only line or path of travel where winder tread depth is controlled by the same minimum tread depth as rectangular treads. However, Section R311.7.5.2 recognizes winder tread depth need not be compared to rectangular tread depths for dimensional uniformity in the same flight because the location of the walkline is chosen for the purpose of providing a standard and cannot be specific to the variety of actual paths followed by all users. This specific line location is determined by measuring along each nosing edge 12 inches (305 mm) from the extreme of the clear width of the stair at the surface of the winder tread or the limit of where the foot might be placed in use of the stair [see Commentary Figures R311.7.5.2.1(1) and R311.7.5.2.1(2)]. If adjacent winders are present the point of the widest clear stair width at the surface of the tread in the group of

INTERNATIONAL CODE COUNCIL®
Copyright © 2015 ICC. ALL RIGHTS RESERVED. Accessed by David Dammon on Jun 21, 2017 12:30:52 PM pursuant to License Agreement with ICC. No further reproduction or distribution authorized. ANY UNAUTHORIZED REPRODUCTION OR DISTRIBUTION IS A VIOLATION OF THE FEDERAL COPYRIGHT ACT AND THE LICENSE AGREEMENT, AND SUBJECT TO CIVIL AND CRIMINAL PENALTIES THEREUNDER.

adjacent consecutive winders is used to provide the reference from which the 12-inch (305 mm) dimension will be measured along each nosing. The tread depth may be determined by measuring between adjacent nosings at these determined intersections of the nosings with the walkline. It is important to note that the clear stair width is only that portion of the stair width that is clear for passage. Portions of the stair beyond the clear width are not consequential to use of the stair, consistent travel or location of the walkline.

R311.7.5 Stair treads and risers. Stair treads and risers shall meet the requirements of this section. For the purposes of this section, dimensions and dimensioned surfaces shall be exclusive of carpets, rugs or runners.

❖ The riser height, tread depth and profile requirements for stairways are specified in Sections R311.7.5.1 through R311.7.5.3. These provisions facilitate smooth and consistent travel. This section provides dimensional ranges and tolerances for the component elements to allow the flexibility required to design and construct a stair or a flight of stairs, which are elements of a stairway. The allowed proportion of maximum riser height and minimum tread depth provides for a maximum angle of ascent, but there is no maximum tread depth or minimum riser height that would define a minimum angle for a stairway. Nor is the proportion of riser height to tread depth compared with the limitations of the length of the users stride on stairways that is significantly foreshortened from the users stride on the level. For this reason, care should be taken when incorporating large tread depths or short risers to proportion the riser height and tread depth to avoid a step that is wide enough to require more than one step to cross or a short narrow step, which can be easily stepped over. With these same limitations for proportion in mind, by controlling the minimum depth of rectangular treads and the minimum depth and angularity of winder treads, these components can control the configuration of the plan of a flight of stairs to provide for smooth and consistent travel. Carpets, rugs and runners, like furniture, are frequently changed by the occupants and are not regulated by the code. For this reason, it is essential that the riser height and tread depth be regulated exclusive of these transitory surfaces to provide an enforceable standard. This practice minimizes the possible variation due to the removal of nonpermanent carpeting throughout the life of a structure and provides a standard enforcement methodology that will provide consistency across the built environment for all users. When owners or occupants add carpeting, rugs or runners they need to be able to add it to all tread and landing surfaces in the stairway. It is important that the tread and landing surfaces are consistent and comply with the code prior to the addition of carpet. This methodology of enforcement makes it unnecessary to reconstruct floor and stair elevations in the stairway when nonpermanent carpet surfaces are changed that do not require a building permit and eliminates the resulting variations in the built environment that will not comply with the tolerance in Sections R311.7.5.1 and R311.7.5.2.

R311.7.5.1 Risers. The riser height shall be not more than $7^3/_4$ inches (196 mm). The riser shall be measured vertically between leading edges of the adjacent treads. The greatest riser height within any flight of stairs shall not exceed the smallest by more than $^3/_8$ inch (9.5 mm). Risers shall be vertical or sloped from the underside of the nosing of the tread above at an angle not more than 30 degrees (0.51 rad) from the vertical. Open risers are permitted provided that the openings located more than 30 inches (762 mm), as measured vertically, to the floor or grade below do not permit the passage of a 4-inch-diameter (102 mm) sphere.

Exceptions:

1. The opening between adjacent treads is not limited on spiral stairways.
2. The riser height of spiral stairways shall be in accordance with Section R311.7.10.1.

❖ The code establishes that the maximum riser height is $7^3/_4$ inches (197 mm). The provisions specify how the riser height is to be measured [see Commentary Figure R311.7.5.1(1)]. The uniformity of risers and treads is a safety factor in any flight of stairs. The section of a stairway leading from one landing to the next is defined as a flight of stairs. This is important because variations in excess of the $^3/_8$-inch (9.5 mm) tolerance could interfere with the rhythm of the stair user. It is true that adequate attention to the use of the stair can compensate for substantial variations in risers and treads; however, the stair user does not always give the necessary attention.

To obtain the best uniformity possible in a flight of stairs, the maximum variation between the highest and lowest risers is limited to $^3/_8$ inch (9.5 mm). This tolerance is not to be used as a design variation, but its inclusion is in recognition that normal construction practices give rise to variables that make it impossible to get exactly identical riser heights and tread dimensions in constructing a stairway. Therefore, the code allows the variation indicated in Commentary Figure R311.7.5.1(2).

The risers must be vertical or slope back, effectively providing a wider overall tread depth. The code does not require solid risers, but riser openings that are located more than 30 inches above the floor or grade below must not allow the passage of a 4-inch-diameter sphere. This is consistent with the guard provisions of Section R312, where a 4-inch (102 mm) sphere is used to determine compliance.

For spiral stairways, the openings between adjacent treads are not limited and riser heights are regulated by Section R311.7.10.1.

INTERNATIONAL CODE COUNCIL®
Copyright © 2015 ICC. ALL RIGHTS RESERVED. Accessed by David Dammon on Jun 21, 2017 12:30:52 PM pursuant to License Agreement with ICC. No further reproduction or distribution authorized. ANY UNAUTHORIZED REPRODUCTION OR DISTRIBUTION IS A VIOLATION OF THE FEDERAL COPYRIGHT ACT AND THE LICENSE AGREEMENT, AND SUBJECT TO CIVIL AND CRIMINAL PENALTIES THEREUNDER.

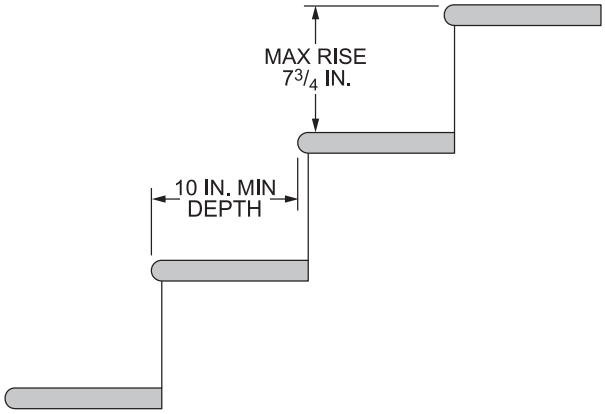

For SI: 1 inch = 25.4 mm.

Figure R311.7.5.1(1)
CONVENTIONAL STAIRWAY

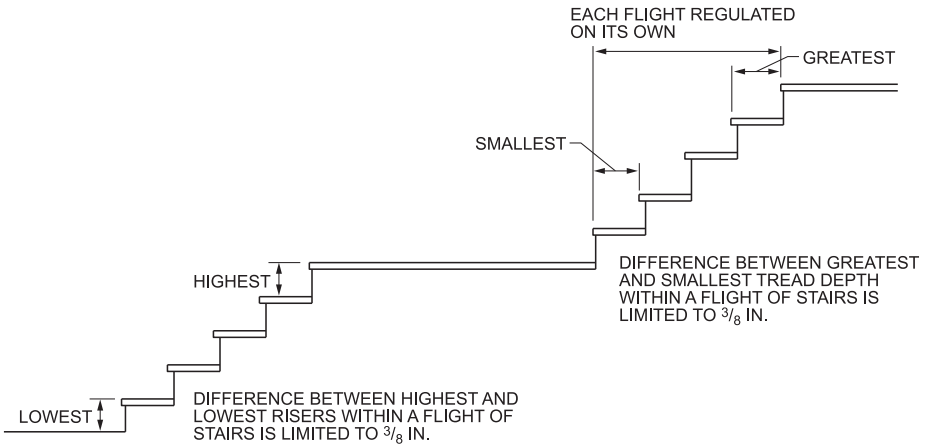

For SI: 1 inch = 25.4 mm.

Figure R311.7.5.1(2)
STAIR TOLERANCES

R311.7.5.2 Treads. The tread depth shall be not less than 10 inches (254 mm). The tread depth shall be measured horizontally between the vertical planes of the foremost projection of adjacent treads and at a right angle to the tread's leading edge. The greatest tread depth within any flight of stairs shall not exceed the smallest by more than $^3/_8$ inch (9.5 mm).

❖ The code establishes that the minimum tread depth is 10 inches (254 mm).The provisions specify how the tread depth is to be measured [see Commentary Figure R311.7.5.1(1)]. To obtain the best uniformity possible in a flight of stairs, the maximum variation between the greatest and smallest tread depth is limited to $^3/_8$ inch (9.5 mm). See the commentary to Section R311.7.5.1 for the discussion on uniformity.

R311.7.5.2.1 Winder treads. Winder treads shall have a tread depth of not less than 10 inches (254 mm) measured between the vertical planes of the foremost projection of adjacent treads at the intersections with the walkline. Winder treads shall have a tread depth of not less than 6 inches (152 mm) at any point within the clear width of the stair. Within any flight of stairs, the largest winder tread depth at the walkline shall not exceed the smallest winder tread by more than $^3/_8$ inch (9.5 mm). Consistently shaped winders at the walkline shall be allowed within the same flight of stairs as rectangular treads and do not have to be within $^3/_8$ inch (9.5 mm) of the rectangular tread depth.

Exception: The tread depth at spiral stairways shall be in accordance with Section R311.7.10.1.

❖ The same criterion for rectangular treads applies to winder treads. However, the depth is to be measured as the horizontal distance between the points where the nosing of the adjacent treads intersects with the "walkline." The location of the "walkline" is defined in Section R311.7.4. Winder treads must have a minimum depth of 6 inches (152 mm) at any point. A stair-

INTERNATIONAL CODE COUNCIL®
Copyright © 2015 ICC. ALL RIGHTS RESERVED. Accessed by David Dammon on Jun 21, 2017 12:30:52 PM pursuant to License Agreement with ICC. No further reproduction or distribution authorized. ANY UNAUTHORIZED REPRODUCTION OR DISTRIBUTION IS A VIOLATION OF THE FEDERAL COPYRIGHT ACT AND THE LICENSE AGREEMENT, AND SUBJECT TO CIVIL AND CRIMINAL PENALTIES THEREUNDER.

way may have straight treads and winder treads within the same flight. If winders are used, they can either be used for an entire flight of a stairway, as a portion of a flight to provide a change of direction or to form a curved stairway. Because winder treads are used to change the direction of the stair it is important that winders comply with the specified dimensional criteria. See Commentary Figure R311.7.5.2.1(1) for examples of winders used as a portion of a stairway at a change of direction. See Commentary Figure R311.7.5.2.1(2) for an example of winders used to form a circular stairway. Rectangular treads can be used in combination with winder treads. The goal is to allow the foot placement along the walkline to be consistent along the length of the flight. For spiral stairs, tread depth is regulated by Section R311.7.10.1.

R311.7.5.3 Nosings. The radius of curvature at the nosing shall be not greater than $^{9}/_{16}$ inch (14 mm). A nosing projection not less than $^{3}/_{4}$ inch (19 mm) and not more than $1^{1}/_{4}$ inches (32 mm) shall be provided on stairways with solid risers. The greatest nosing projection shall not exceed the smallest nosing projection by more than $^{3}/_{8}$ inch (9.5 mm) between two stories, including the nosing at the level of floors and landings. Beveling of nosings shall not exceed $^{1}/_{2}$ inch (12.7 mm).

Exception: A nosing projection is not required where the tread depth is not less than 11 inches (279 mm).

❖ The sectional parameters of the components of a step or stair contribute to stairway safety. The radius or bevel of the nosing eases the otherwise square edge of the tread and prevents irregular chipping that can become a maintenance issue seriously affecting the safe use of the stair; and eliminates a sharp square edge that will cause greater injury in falls. A radius or bevel allows light modeling, reflecting light at various angles, providing a certain contrast from the other surfaces of the stair allowing easier visual location of the start of the tread surface. The maximum radius of curvature at the leading edge of the tread is intended to allow descending foot placement on a surface that does not pitch the foot forward or allow the ball of the foot to slide off the treads and ascending foot placement to slide on to the tread without catching on a square edge. If a stairway design uses a beveled nosing configuration, the bevel is limited to a depth of $^{1}/_{2}$ inch (12.7 mm). A nosing projection allows the descending foot to be placed further forward on the tread and the heel to then clear the nosing of the tread above as it swings down in an arc landing further away from the riser on the tread that is effectively deeper than if no nosing projection is used. Nosing projections are so common in stair design that they are noticed by users when absent as affecting their gait and anticipated clearance for their heels from the riser in descent. A nosing projection may also be accommodated by slanting the riser under the tread above. The nosing projection is between $^{3}/_{4}$ inch minimum (19 mm) and $1^{1}/_{4}$ inches (32 mm) maximum (see Commentary Figure R311.7.5.3). It is critical that all tread and landing nosings associated with each step in the stairway

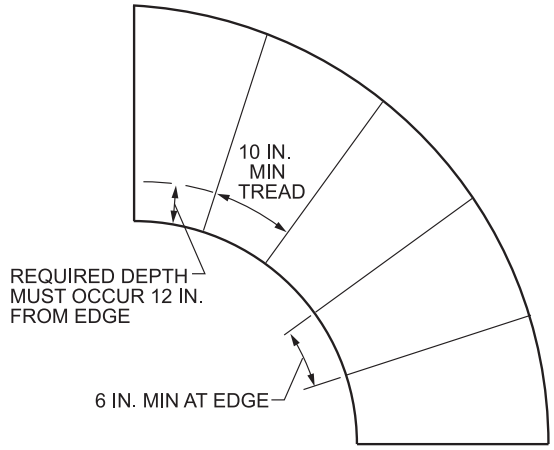

For SI: 1 inch = 25.4 mm.

Figure R311.7.5.2.1(2)
WINDERS USED FOR CIRCULAR STAIRWAY

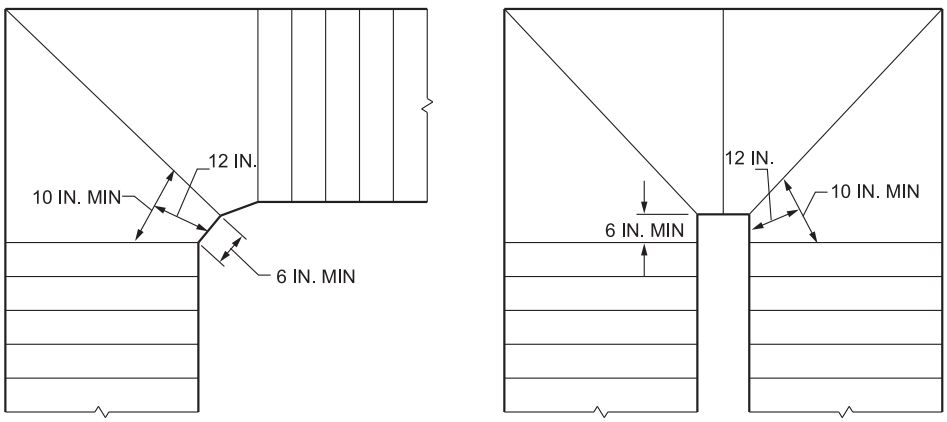

For SI: 1 inch = 25.4 mm.

Figure R311.7.5.2.1(1)
WINDERS

INTERNATIONAL CODE COUNCIL®
Copyright © 2015 ICC. ALL RIGHTS RESERVED. Accessed by David Dammon on Jun 21, 2017 12:30:52 PM pursuant to License Agreement with ICC. No further reproduction or distribution authorized. ANY UNAUTHORIZED REPRODUCTION OR DISTRIBUTION IS A VIOLATION OF THE FEDERAL COPYRIGHT ACT AND THE LICENSE AGREEMENT, AND SUBJECT TO CIVIL AND CRIMINAL PENALTIES THEREUNDER.

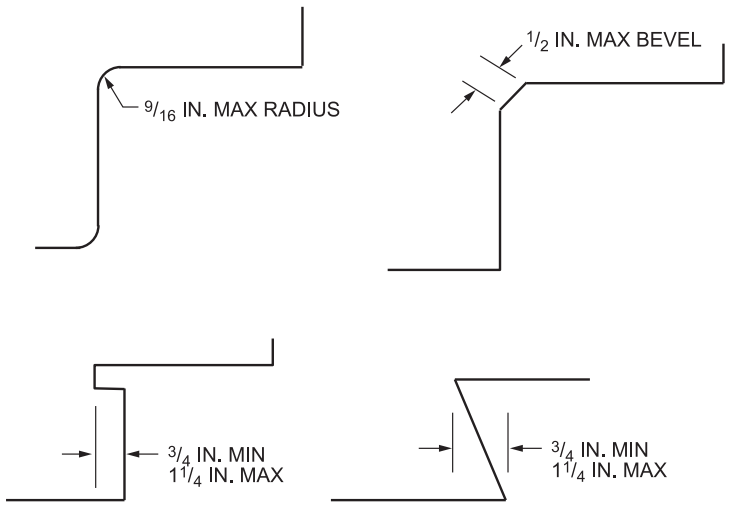

For SI: 1 inch = 25.4 mm, 1 degree = 0.01749 rad.

Figure R311.7.5.3
NOSINGS

be uniform to ensure that the user does not experience an effective change in tread depth outside the $^3/_8$ inch (9.5 mm) between stories. Critical to this understanding is that tread depth is regulated by measuring between the nosing edges of treads or a tread and a landing. The lack of a uniform nosing at the top landing of a flight is a serious safety problem that may not be apparent in initial rough inspections. Treads with a tread depth of at least 11 inches (279 mm) are allowed with or without a nosing projection.

R311.7.5.4 Exterior plastic composite stair treads. Plastic composite exterior stair treads shall comply with the provisions of this section and Section R507.3.

❖ Stair treads made of wood/plastic composite materials must meet the requirements for installation, labeling and compliance with ASTM D7032 in accordance with Section R507.3, in addition to the requirements of Section R311.7.5.

R311.7.6 Landings for stairways. There shall be a floor or landing at the top and bottom of each stairway. The width perpendicular to the direction of travel shall be not less than the width of the flight served. Landings of shapes other than square or rectangular shall be permitted provided that the depth at the walk line and the total area is not less than that of a quarter circle with a radius equal to the required landing width. Where the stairway has a straight run, the depth in the direction of travel shall be not less than 36 inches (914 mm).

Exception: A floor or landing is not required at the top of an interior flight of stairs, including stairs in an enclosed garage, provided that a door does not swing over the stairs.

❖ A landing is required at the top and bottom of each stairway; however, a landing is not required at the top of interior stairways, including an enclosed garage, if a door does not swing over the stairway [see Commentary Figure R311.7.6(1)]. Section R311.7.3 states that flights must be interrupted by a landing or floor such that they do not have a total rise of more than 12 feet (3658 mm).

The width of landings for stairways is measured perpendicular to the direction of travel. It is not the intent to require specifically shaped landings. Landings may have curved or segmented periphery edges provided the width perpendicular to the direction of travel is not less than the width of the stairway served. For a straight stairway run, the minimum dimension of 36 inches (914 mm) in the direction of travel is intended to provide a minimum depth at the landing that cannot be overstepped in descent of a straight run stairway. Landings that are square or rectangular serve to limit the minimum angle of turn of a landing to 90 degrees (1.57 rad) for at least 36 inches (914 mm). Landings for turns of 90 degrees (1.57 rad) or less or of any shape are permitted provided the depth of the tread at the walkline and the total area of the landing are the same as a quarter circle with a radius the same as the stairway width. See Commentary Figure R311.7.6(2) for an example.

R311.7.7 Stairway walking surface. The walking surface of treads and landings of stairways shall be sloped not steeper than one unit vertical in 48 inches horizontal (2-percent slope).

❖ The slope of the walking surfaces must provide drainage to stairs and landings that may be subjected to accumulation of liquids, such as water, rain or melting snow. The use of such a slope, called a "wash," is a common technique used on all stairs to allow the nosing to be at a lower elevation than the remainder of the tread surface. This technique of building the flight to a slightly shorter total rise than the actual condition slopes the entire flight forward and better accommodates the placement of the user's foot as it slides onto the tread. It also serves to prevent long-term wear and tear at the nosing limiting problematic maintenance

INTERNATIONAL CODE COUNCIL®
Copyright © 2015 ICC. ALL RIGHTS RESERVED. Accessed by David Dammon on Jun 21, 2017 12:30:52 PM pursuant to License Agreement with ICC. No further reproduction or distribution authorized. ANY UNAUTHORIZED REPRODUCTION OR DISTRIBUTION IS A VIOLATION OF THE FEDERAL COPYRIGHT ACT AND THE LICENSE AGREEMENT, AND SUBJECT TO CIVIL AND CRIMINAL PENALTIES THEREUNDER.

and safety issues. This section provides a limit of the slope to maintain a safe walking surface. This requirement applies to all stairs and landings, both exterior and interior.

R311.7.8 Handrails. Handrails shall be provided on not less than one side of each continuous run of treads or flight with four or more risers.

❖ The provision of handrails increases the level of safety when used by the occupants while ascending and descending stairs. Handrails are used for guidance, stabilization, pulling and to assist in arresting a fall. This section states that a handrail must be provided on at least one side of flights of four or more risers. Handrails may be provided on both sides and this eliminates choosing the best side to securely attach the handrail. Otherwise, the generally preferred location is for use by the right hand in descent when feasible. Sections R311.7.8.1 through R311.7.8.3 contain provisions essential to the height, continuity and grip size of the handrail provided.

R311.7.8.1 Height. Handrail height, measured vertically from the sloped plane adjoining the tread nosing, or finish surface of ramp slope, shall be not less than 34 inches (864 mm) and not more than 38 inches (965 mm).

Exceptions:

1. The use of a volute, turnout or starting easing shall be allowed over the lowest tread.
2. Where handrail fittings or bendings are used to provide continuous transition between flights, transitions at winder treads, the transition from handrail to *guard*, or used at the start of a flight, the handrail

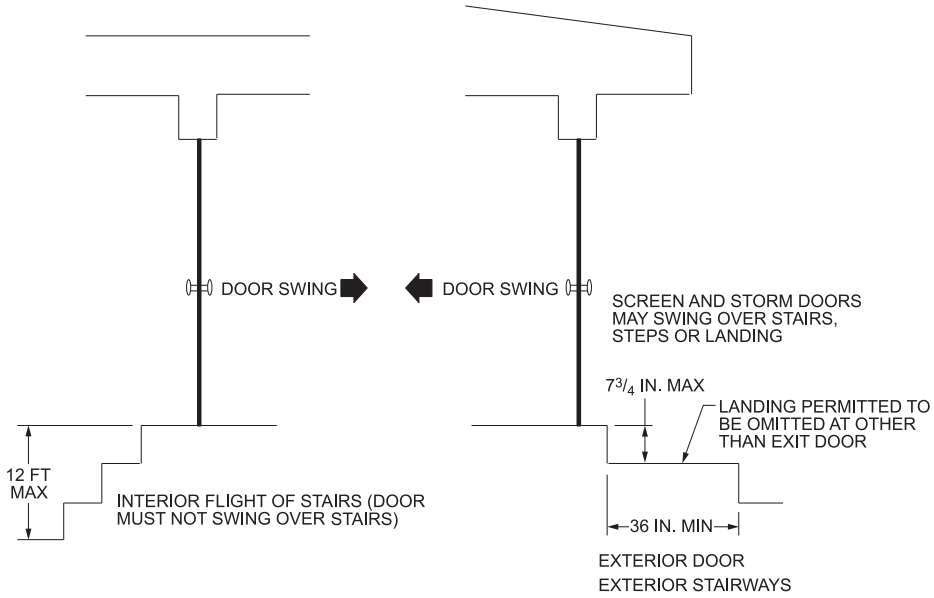

For SI: 1 inch = 25.4 mm, 1 foot = 304.8 mm.

Figure R311.7.6(1)
LANDINGS AT STAIRS AND DOORS

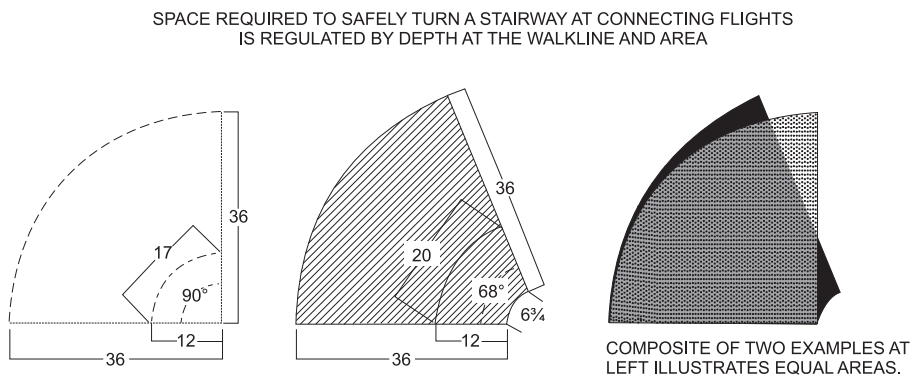

Figure R311.7.6(2)
EXAMPLE OF LANDING OF SHAPES OTHER THAN SQUARE OR RECTANGULAR

INTERNATIONAL CODE COUNCIL®
Copyright © 2015 ICC. ALL RIGHTS RESERVED. Accessed by David Dammon on Jun 21, 2017 12:30:52 PM pursuant to License Agreement with ICC. No further reproduction or distribution authorized. ANY UNAUTHORIZED REPRODUCTION OR DISTRIBUTION IS A VIOLATION OF THE FEDERAL COPYRIGHT ACT AND THE LICENSE AGREEMENT, AND SUBJECT TO CIVIL AND CRIMINAL PENALTIES THEREUNDER.

height at the fittings or bendings shall be permitted to exceed 38 inches (956 mm).

❖ Where handrails are required, they must be installed at a height of not less than 34 inches (864 mm) and not more than 38 inches (965 mm). This height is to be measured vertically to the top of the handrail from the plane adjoining the tread nosings of the flight or the surface of the ramp slope. Exception 1 allows common starting fittings used as terminals over the lowest tread to fall outside the required height range. Exception 2 allows transition fittings to exceed the required height when used to provide a continuous rail at changes in the pitch of the rail within the stairway.

R311.7.8.2 Continuity. Handrails for stairways shall be continuous for the full length of the flight, from a point directly above the top riser of the flight to a point directly above the lowest riser of the flight. Handrail ends shall be returned or shall terminate in newel posts or safety terminals. Handrails adjacent to a wall shall have a space of not less than $1^1/_2$ inches (38 mm) between the wall and the handrails.

Exceptions:

1. Handrails shall be permitted to be interrupted by a newel post at the turn.
2. The use of a volute, turnout, starting easing or starting newel shall be allowed over the lowest tread.

❖ The required handrail is to be continuous for the length of the flight. Where stairway flights are separated by landings or floor levels, handrails are not required (see Commentary Figure R311.7.8.2). The term "continuous" means not only that a single handrail must run from the top riser to the bottom riser, but it also indicates that users should be able to grasp the handrail and maintain their grasp without having to release the rail where it is supported. There is no requirement within the code for installation of a second handrail, but depending on the design and the placement of the required handrail, the requirement for a guard should be reviewed. The two exceptions to this section create situations where the graspable portion of the handrail may not be completely continuous from the top riser to the bottom riser. These traditional situations are well known to the occupants and have not been shown to represent a safety hazard requiring their restriction.

The ends of handrails are to be returned to the wall or floor, or to end in some type of terminal that will not catch clothing or limbs. A clear space of at least $1^1/_2$ inches (38 mm) is necessary between the handrail and any abutting wall. This distance will permit the fingers to slide past any adjacent rough surface that may cause injury, and it will provide an adequate distance so that the handrail may be quickly grabbed as an assist in the arrest of a fall.

R311.7.8.3 Grip-size. Required handrails shall be of one of the following types or provide equivalent graspability.

1. Type I. Handrails with a circular cross section shall have an outside diameter of not less than $1^1/_4$ inches (32 mm) and not greater than 2 inches (51 mm). If the handrail is not circular, it shall have a perimeter dimension of not less than 4 inches (102 mm) and not greater than $6^1/_4$ inches (160 mm) with a cross section of dimension of not more than $2^1/_4$ inches (57 mm). Edges shall have a radius of not less than 0.01 inch (0.25 mm).
2. Type II. Handrails with a perimeter greater than $6^1/_4$ inches (160 mm) shall have a graspable finger recess area on both sides of the profile. The finger recess shall begin within a distance of $^3/_4$ inch (19 mm) measured vertically from the tallest portion of the profile and achieve a depth of not less than $^5/_{16}$ inch (8 mm) within $^7/_8$ inch (22 mm) below the widest portion of the profile. This required depth shall continue for not less than $^3/_8$ inch (10 mm) to a level that is not less than $1^3/_4$ inches (45 mm) below the tallest portion of the profile. The width of the handrail above the recess shall be not less than $1^1/_4$ inches (32 mm) and not more than $2^3/_4$ inches (70 mm). Edges shall have a radius of not less than 0.01 inch (0.25 mm).

❖ To be effective, a handrail must be easily grasped by the vast majority of users. If it is too large, it is difficult for a user to get a strong enough grip to provide the needed support. If it is too small the fingers wrap and interfere with the thumb and palm and cannot close in a sufficient grip. For this reason Type I rails have minimum and maximum perimeters to restrict their use to the effective size range. Tests have proven that it is beneficial to have graspable recesses for the fingers and opposing thumb such that wider and taller shapes can provide graspability comparable to rails within the

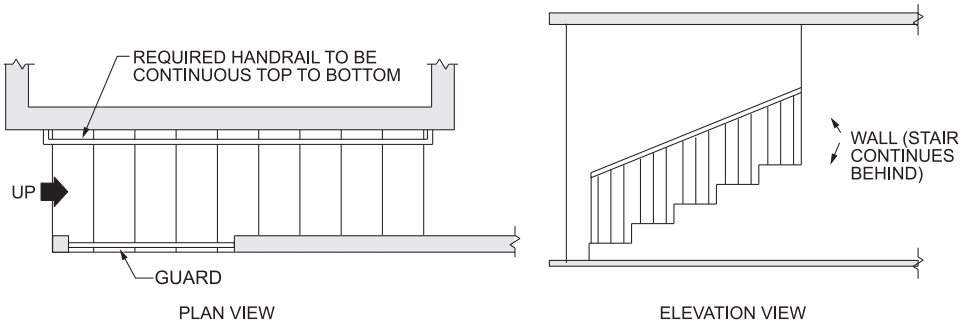

Figure R311.7.8.2
HANDRAILS

INTERNATIONAL CODE COUNCIL®
Copyright © 2015 ICC. ALL RIGHTS RESERVED. Accessed by David Dammon on Jun 21, 2017 12:30:52 PM pursuant to License Agreement with ICC. No further reproduction or distribution authorized. ANY UNAUTHORIZED REPRODUCTION OR DISTRIBUTION IS A VIOLATION OF THE FEDERAL COPYRIGHT ACT AND THE LICENSE AGREEMENT, AND SUBJECT TO CIVIL AND CRIMINAL PENALTIES THEREUNDER.

Type I size range limitations. The Type II handrail requirements provide details for the location and depth of the recess as it relates to the variables of crown height and width to ensure that the design is of a graspable shape. The mountings of smaller profiles can cause interference, as well. Care should be taken to minimize the interference caused by brackets and balusters supporting profiles that require the bottom mounting surface to be grasped.

The code specifies that the handrail be either Type I or Type II, or be equivalently graspable. A Type I handrail can be either circular or noncircular in shape. See Commentary Figure R311.7.8.3(1) for examples of Type I handrails.

A Type II handrail has a perimeter larger than $6^1/_4$ inches (160 mm) with graspable finger recess area on both sides of the profile. See Commentary Figure R311.7.8.3(2) for the limitations of a Type II handrail.

R311.7.8.4 Exterior plastic composite handrails. Plastic composite exterior handrails shall comply with the requirements of Section R507.3.

❖ Handrails made of wood/plastic composite materials must meet the requirements for installation and labeling, and comply with ASTM D7032 in accordance with Section R507.3, in addition to the general requirements for handrails in this section.

R311.7.9 Illumination. Stairways shall be provided with illumination in accordance with Section R303.7.

❖ This section contains a reference to the illumination provisions of Section R303.7. The proper illumination of stairways is an important part of stairway safety. This lighting can assist users by making sure the level changes do not occur in areas with shadows or in contrasting light, which would therefore make them difficult to see. See the commentary to Section R303.7 for additional information.

R311.7.10 Special stairways. Spiral stairways and bulkhead enclosure stairways shall comply with the requirements of Section R311.7 except as specified in Sections R311.7.10.1 and R311.7.10.2.

❖ Sections R311.7.10.1 and R311.7.10.2 are exceptions to the general requirements for stairways as prescribed in Section R311.7.

R311.7.10.1 Spiral stairways. Spiral stairways are permitted, provided that the clear width at and below the handrail is not less than 26 inches (660 mm) and the walkline radius is not greater than $24^1/_2$ inches (622 mm). Each tread shall have a depth of not less than $6^3/_4$ inches (171 mm) at the walkline. All treads shall be identical, and the rise shall be not more than $9^1/_2$ inches (241 mm). Headroom shall be not less than 6 feet 6 inches (1982 mm).

❖ A spiral stairway is one of two types of special stairs that the code permits. Although a spiral stair may be difficult to use to move furniture from one level to another, the code places no limitations on its use within the egress system if it meets the size requirements of this section. A spiral stairway that meets these require-

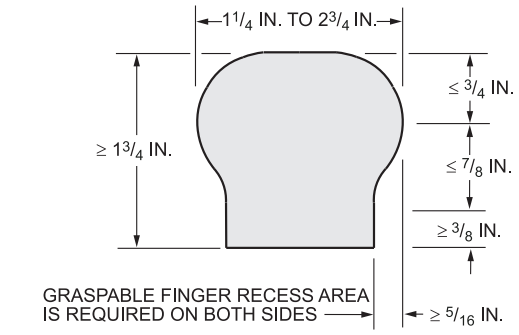

For SI: 1 inch = 25.4 mm.

Figure R311.7.8.3(2)
TYPE II HANDRAIL

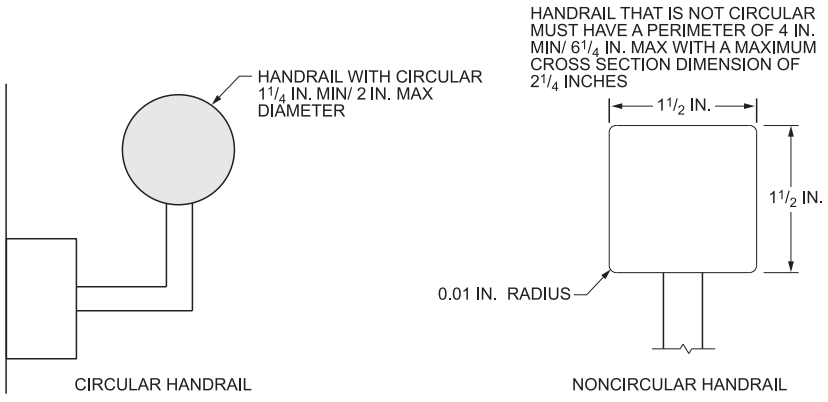

For SI: 1 inch = 25.4 mm.

Figure R311.7.8.3(1)
TYPE I HANDRAIL

INTERNATIONAL CODE COUNCIL®
Copyright © 2015 ICC. ALL RIGHTS RESERVED. Accessed by David Dammon on Jun 21, 2017 12:30:52 PM pursuant to License Agreement with ICC. No further reproduction or distribution authorized. ANY UNAUTHORIZED REPRODUCTION OR DISTRIBUTION IS A VIOLATION OF THE FEDERAL COPYRIGHT ACT AND THE LICENSE AGREEMENT, AND SUBJECT TO CIVIL AND CRIMINAL PENALTIES THEREUNDER.

ments may provide the only means of egress from a level within an individual dwelling regardless of the occupant load or size of area served.

A spiral stairway is one in which the treads radiate from a central pole. Such a stair must provide a clear width of at least 26 inches (660 mm) at and below the handrail. Each tread must be identical and have a minimum dimension of $7^1/_2$ inches (191 mm) at a point 12 inches (305 mm) from its narrow end. The stair must have at least 6 feet, 6 inches (1981 mm) of headroom as measured vertically from the leading edge of the tread. The rise between treads can be as much as, but not more than, $9^1/_2$ inches (241 mm). Commentary Figure R311.7.10.1 shows the required dimensions of a spiral stairway.

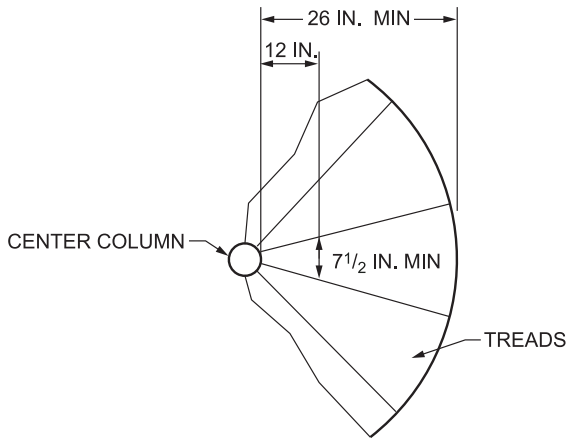

For SI: 1 inch = 25.4 mm.

Figure R311.7.10.1
SPIRAL STAIRS

R311.7.10.2 Bulkhead enclosure stairways. Stairways serving bulkhead enclosures, not part of the required building egress, providing access from the outside *grade* level to the *basement* shall be exempt from the requirements of Sections R311.3 and R311.7 where the height from the *basement* finished floor level to *grade* adjacent to the stairway is not more than 8 feet (2438 mm) and the *grade* level opening to the stairway is covered by a bulkhead enclosure with hinged doors or other *approved* means.

❖ This section exempts exterior "bulkhead enclosure stairways" from the landing stairway and handrail requirements found in Chapter 3, and it therefore permits a situation that has been fairly common in some areas.

See Commentary Figure R311.7.10.2 for an illustration of the requirements. Because these stairways are not a part of the building's egress system and serve only as a convenient way to access the basement from the exterior, the code exemption will not greatly affect the occupants' safety. Through this exemption, the size of the enclosure that is needed to provide weather protection for the stairway is greatly reduced.

R311.7.11 Alternating tread devices. Alternating tread devices shall not be used as an element of a means of egress. Alternating tread devices shall be permitted provided that the required means of egress stairway or ramp serves the same space at each adjoining level or where a means of egress is not required. The clear width at and below the handrails shall be not less than 20 inches (508 mm).

❖ Prior to the 2015 edition of the code, alternating tread devices were occasionally used in residential applications, but were not regulated. This language adopts the specifications from the IBC providing the needed guidance when they are used. These provisions further clarify that an alternating tread device cannot be used as an element of a means of egress, and can only be

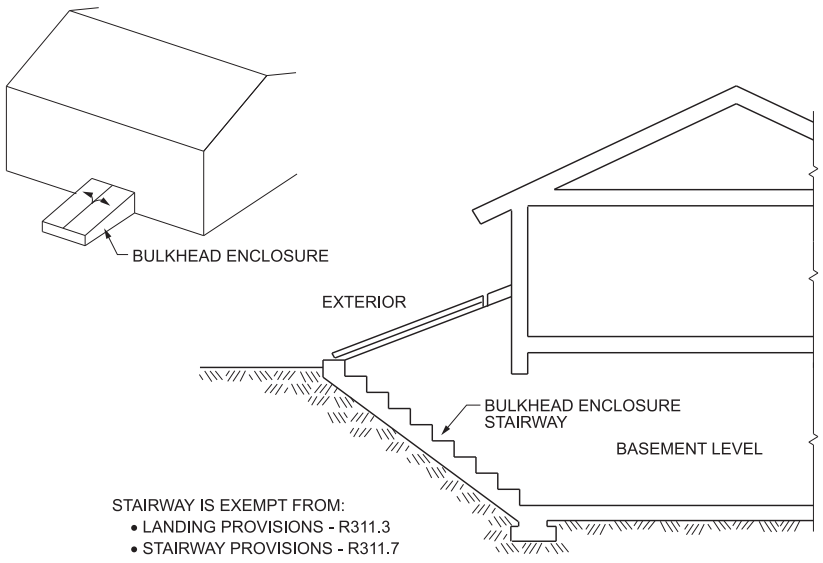

Figure R311.7.10.2
BULKHEAD ENCLOSURE STAIRWAY

INTERNATIONAL CODE COUNCIL®
Copyright © 2015 ICC. ALL RIGHTS RESERVED. Accessed by David Dammon on Jun 21, 2017 12:30:52 PM pursuant to License Agreement with ICC. No further reproduction or distribution authorized. ANY UNAUTHORIZED REPRODUCTION OR DISTRIBUTION IS A VIOLATION OF THE FEDERAL COPYRIGHT ACT AND THE LICENSE AGREEMENT, AND SUBJECT TO CIVIL AND CRIMINAL PENALTIES THEREUNDER.

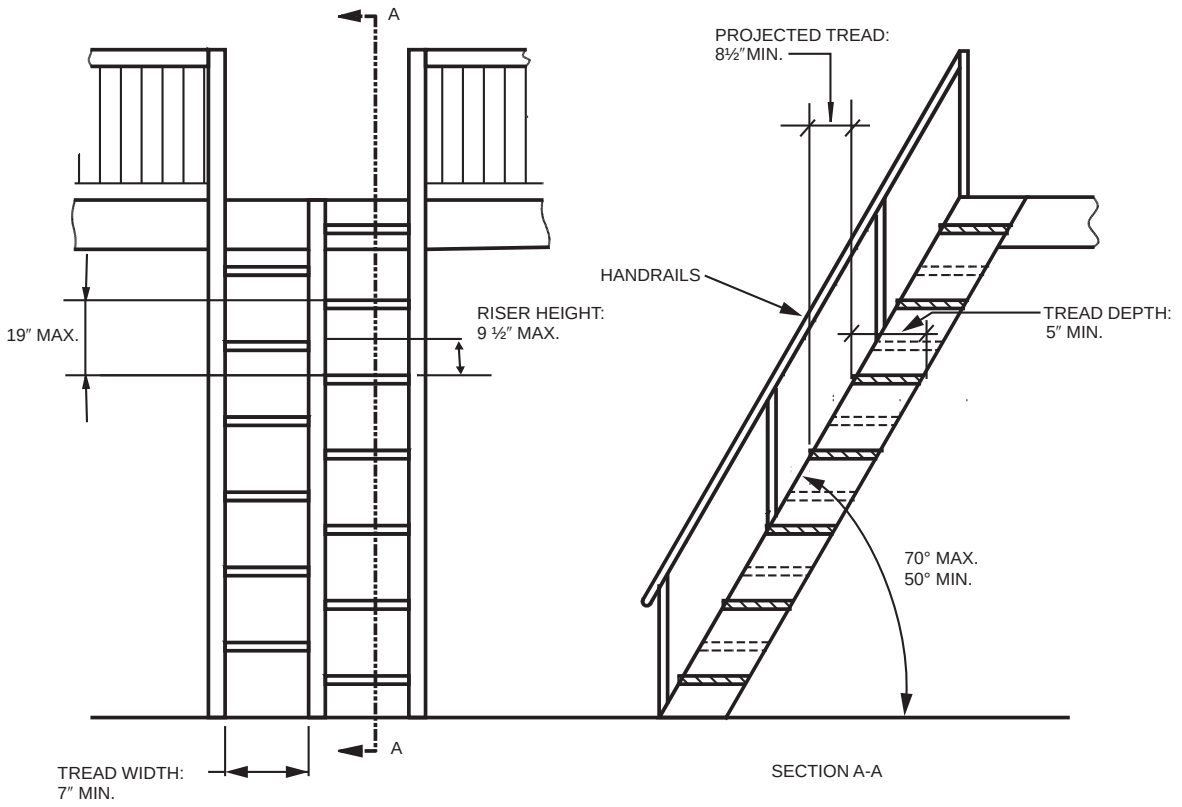

For SI: 1 inch = 25.4 mm.

Figure R311.7.11
TYPICAL ALTERNATING TREAD DEVICE

used to access a space that does not require a means of egress, or where a required means of egress stairway or ramp is also provided to serve the same spaces that the alternating tread devices serve at each level.

Alternating tread devices are constructed in such a way that each tread alternates with each adjacent tread so that the device consists of a system of right-footed and left-footed treads (see Commentary Figure R311.7.11) and the definition of "Alternating tread device" in Section R202). The use of center stringer construction, half-treads and an incline that is considerably steeper than allowed for ordinary stairway construction makes the alternating tread device unique. However, because of its structural features, only single-file use of the device (between handrails) is possible, thus preventing occupants from passing one another. The pace of occupant travel is set by the slowest user, a condition that could become critical in an emergency situation. Furthermore, it is impossible for fire service personnel to use an alternating tread device at the same time and in a direction opposite that being used by occupants to exit the premises, possibly causing a serious delay in fire-fighting operations.

This section specifies the minimum width between handrails for alternating tread devices as 20 inches. Sections R311.7.11.1 and R311.7.11.2 contain tread and handrail details, respectively, for alternating tread devices.

R311.7.11.1 Treads of alternating tread devices. Alternating tread devices shall have a tread depth of not less than 5 inches (127 mm), a projected tread depth of not less than $8^1/_2$ inches (216 mm), a tread width of not less than 7 inches (178 mm) and a riser height of not more than $9^1/_2$ inches (241 mm). The tread depth shall be measured horizontally between the vertical planes of the foremost projections of adjacent treads. The riser height shall be measured vertically between the leading edges of adjacent treads. The riser height and tread depth provided shall result in an angle of ascent from the horizontal of between 50 and 70 degrees (0.87 and 1.22 rad). The initial tread of the device shall begin at the same elevation as the platform, landing or floor surface.

❖ Alternating tread stairways (see Section R311.7.1) are required to have tread depths of at least 5 inches (127 mm). Tread projections when measured from tread nosing to tread nosing of next tread above or below must provide a minimum projected tread depth of $8^1/_2$ inches (216 mm) (see Commentary Figure R311.7.11).

The riser height, or the vertical distance between alternating risers (next adjacent tread to the left or right), must be not more than $9^1/_2$ inches (241 mm). The rise between treads on the same side would be 19

INTERNATIONAL CODE COUNCIL®
Copyright © 2015 ICC. ALL RIGHTS RESERVED. Accessed by David Dammon on Jun 21, 2017 12:30:52 PM pursuant to License Agreement with ICC. No further reproduction or distribution authorized. ANY UNAUTHORIZED REPRODUCTION OR DISTRIBUTION IS A VIOLATION OF THE FEDERAL COPYRIGHT ACT AND THE LICENSE AGREEMENT, AND SUBJECT TO CIVIL AND CRIMINAL PENALTIES THEREUNDER.

inches (482 mm) maximum. Applying the limiting dimensions stated above results in a device with a very steep incline that is common to ladders; however, because the device may be walked facing down in descent, it is considered a type of stairway in the code.

Tread widths are required to be a minimum of 7 inches (178 mm). With a center support, the total width will be more than 15 inches (381 mm). Although no maximum width of the tread is stated, the device must be of a width to provide for functional use of both handrails at the same time in ascent and descent. For this reason, handrail heights for alternating tread devices are modified from those stairways in Section R311.7.

Just using the dimensions could result in an alternating tread device with an angle of over 75 degrees (1.3 rad) from horizontal. However, the code requires the overall angle of the device to be between 50 and 70 degrees (0.87 and 1.22 rad).

R311.7.11.2 Handrails of alternating tread devices. Handrails shall be provided on both sides of alternating tread devices and shall comply with Sections R311.7.8.2 to R311.7.8.4. Handrail height shall be uniform, not less than 30 inches (762 mm) and not more than 34 inches (864 mm).

❖ For the safety of occupants, this section references the dimensional requirements for handrails of Sections R311.7.8.2 through R311.7.8.4, which are also applicable to means of egress stairs. Because of the steepness of these devices, handrails on both sides are essential for safe functional use and additional clearances are required so that hand movement will not be encumbered by obstructions. The top of handrails for alternating tread devices must be uniform and be located not less than 30 inches and not more than 34 inches, as measured vertically, above an imaginary line connecting the leading edge of the treads (see Commentary Figure R311.7.11).

R311.7.12 Ship's ladders. Ship's ladders shall not be used as an element of a means of egress. Ship's ladders shall be permitted provided that a required means of egress stairway or ramp serves the same space at each adjoining level or where a means of egress is not required. The clear width at and below the handrails shall be not less than 20 inches.

❖ Prior to the 2015 edition of the code, ship's ladders were occasionally used in residential applications, but were not regulated. This language adopts the specifications from the IBC providing the needed guidance where they are used. These provisions further clarify that a ship's ladder cannot be used as an element of a means of egress, and can only be used to access a space that does not require a means of egress, or where a required means of egress stairway or ramp is also provided to serve the same spaces that the ship's ladders serve at each level.

Ship's ladders must be at least 20 inches wide, as measured at and below handrails. Sections R311.7.12.1 and R311.7.12.2 contain tread and handrail details, respectively, for ship's ladders (see Commentary Figure R311.7.12).

R311.7.12.1 Treads of ship's ladders. Treads shall have a depth of not less than 5 inches (127 mm). The tread shall be projected such that the total of the tread depth plus the nosing projection is not less than $8^1/_2$ inches (216 mm). The riser height shall be not more than $9^1/_2$ inches (241 mm).

❖ See Commentary Figure R311.7.12 for an example of this configuration.

R311.7.12.2 Handrails of ship's ladders. Handrails shall be provided on both sides of ship's ladders and shall comply with Sections R311.7.8.2 to R311.7.8.4. Handrail height shall be uniform, not less than 30 inches (762 mm) and not more than 34 inches (864 mm).

❖ For the safety of occupants, this section references the dimensional requirements for handrails of Sections R311.7.8.2 through R311.7.8.4, which are also applicable to means of egress stairs. Because of the steepness of ship's ladders, handrails on both sides are essential for safe functional use and additional clearances are required so that hand movement will not be encumbered by obstructions. The height at the top of handrails for ship's ladders must be uniform and be located not less than 30 inches and not more than 34 inches, as measured vertically, above an imaginary line connecting the leading edge of the treads. See Commentary Figure R311.7.12 for an example of this configuration.

R311.8 Ramps.

❖ Section R311.8 states the code requirements for ramps when they are used to access, or are located within, a dwelling.

"Ramps" are defined in Section R202 as being a walking surface that has a running slope steeper than one unit vertical in 20 units horizontal (5-percent slope).

R311.8.1 Maximum slope. Ramps serving the egress door required by Section R311.2 shall have a slope of not more than 1 unit vertical in 12 units horizontal (8.3-percent slope). All other ramps shall have a maximum slope of 1 unit vertical in 8 units horizontal (12.5 percent).

Exception: Where it is technically infeasible to comply because of site constraints, ramps shall have a slope of not more than 1 unit vertical in 8 units horizontal (12.5 percent).

❖ Section R311.8.1 requires ramps that serve the egress door required by Section R311.2 to have a maximum slope of 1 unit vertical in 12 units horizontal (8.3-percent), unless it is technically infeasible to do so. For ramps serving other exterior doors or located within the dwelling unit, or where it is technically infeasible for a ramp serving the egress door to have a slope of 1:12, the code requires maximum slope of 1 unit vertical in 8 units horizontal (12.5 percent). A 1:12 slope can sometimes be difficult to achieve and absorbs much more space than may be necessary. For example, additions to older homes sometimes have new basements at a deeper level and the owner may wish to make the transition by ramp. Media rooms are often designed to have sloping floors with ramps serving the seating, and

INTERNATIONAL CODE COUNCIL®
Copyright © 2015 ICC. ALL RIGHTS RESERVED. Accessed by David Dammon on Jun 21, 2017 12:30:52 PM pursuant to License Agreement with ICC. No further reproduction or distribution authorized. ANY UNAUTHORIZED REPRODUCTION OR DISTRIBUTION IS A VIOLATION OF THE FEDERAL COPYRIGHT ACT AND THE LICENSE AGREEMENT, AND SUBJECT TO CIVIL AND CRIMINAL PENALTIES THEREUNDER.

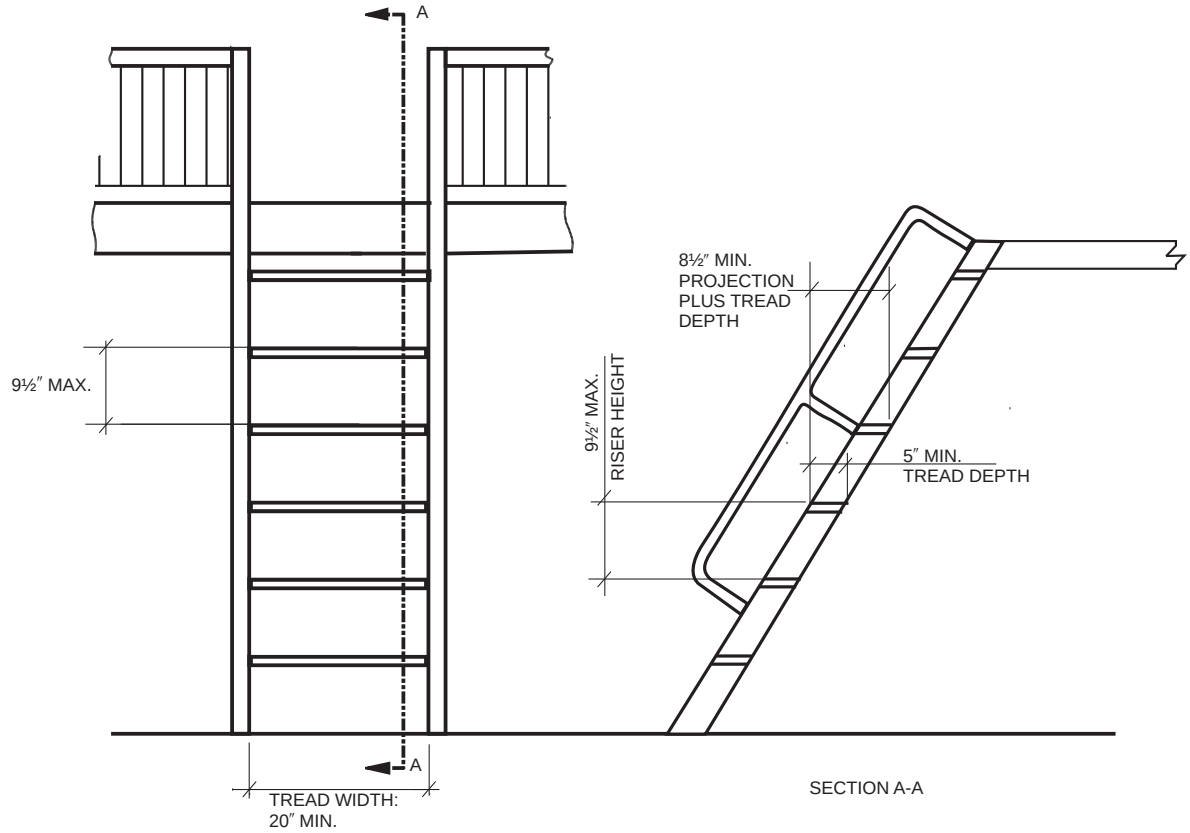

For SI: 1 inch = 25.4 mm.

Figure R311.7.12
TYPICAL SHIP'S LADDER

again the 1:12 slope is problematic. This proposal gives some relief for those situations where accessibility may not be an issue. This also is consistent with Section 1012.2 of the IBC which allows a 1:8 slope for pedestrian ramps not used as a means of egress.

R311.8.2 Landings required. There shall be a floor or landing at the top and bottom of each ramp, where doors open onto ramps, and where ramps change directions. The width of the landing perpendicular to the ramp slope shall be not less than 36 inches (914 mm).

❖ The code requires a floor or landing that measures not less than 36 inches both in the direction of travel, and perpendicular to the direction of travel at three specific locations for ramps. Landings should be provided at the top and bottom of each ramp run. When a ramp leaves or approaches a door, there needs to be a level landing to allow someone to open the door from a level surface. A change in direction could be any angle; however, these provisions are not intended to prohibit curved ramps. These dimensions are not tied to the actual width of the ramp. For doors that open onto ramps, the code calls for a larger size landing if it is also required by Section R311.3. The specified landing dimensions coordinate with the requirements for nonaccessible dwelling units, which are found in exceptions in the IBC. While not a requirement, if the ramp is intended to serve as part of an accessible route, the landing should be sized as indicated in ICC A117.1 in order to allow full wheelchair access.

R311.8.3 Handrails required. Handrails shall be provided on not less than one side of ramps exceeding a slope of one unit vertical in 12 units horizontal (8.33-percent slope).

❖ Where a ramp exceeds a slope of one unit vertical in 12 units horizontal (8.3-percent slope) the code requires that a handrail be installed on at least one side to assist ramp users. Therefore, ramps would require handrails when the exception to Section R311.8.1 was utilized. This provision differs from that of the IBC, where a slope of one unit vertical in 20 units horizontal (5-percent slope) and a ramp rise of 6 inches (152 mm) establishes the limits. A designer might choose to provide handrails, edge protection and/or guards on a ramp as a safety concern, even if it is not literally a requirement. If the purpose of the ramp is for wheelchair access, ICC A117.1 would be a good resource for information.

R311.8.3.1 Height. Handrail height, measured above the finished surface of the ramp slope, shall be not less than 34 inches (864 mm) and not more than 38 inches (965 mm).

❖ Where handrails are required, they must be installed at a height within a range of at least 34 inches (864 mm)

INTERNATIONAL CODE COUNCIL®
Copyright © 2015 ICC. ALL RIGHTS RESERVED. Accessed by David Dammon on Jun 21, 2017 12:30:52 PM pursuant to License Agreement with ICC. No further reproduction or distribution authorized. ANY UNAUTHORIZED REPRODUCTION OR DISTRIBUTION IS A VIOLATION OF THE FEDERAL COPYRIGHT ACT AND THE LICENSE AGREEMENT, AND SUBJECT TO CIVIL AND CRIMINAL PENALTIES THEREUNDER.

and not more than 38 inches (965 mm), measured vertically from the finished surface of the ramp slope. This height should be measured to the top of the handrail.

R311.8.3.2 Grip size. Handrails on ramps shall comply with Section R311.7.8.3.

❖ The grip size for handrails along ramps is the same as that required for stairways (see commentary, Section R311.7.8.3).

R311.8.3.3 Continuity. Handrails where required on ramps shall be continuous for the full length of the ramp. Handrail ends shall be returned or shall terminate in newel posts or safety terminals. Handrails adjacent to a wall shall have a space of not less than $1^1/_2$ inches (38 mm) between the wall and the handrails.

❖ The continuity requirement for the ramp handrail is similar to the continuity requirement for the stair handrail (see commentary, Section R311.7.8.2).

SECTION R312
GUARDS AND WINDOW FALL PROTECTION

R312.1 Guards. *Guards* shall be provided in accordance with Sections R312.1.1 through R312.1.4.

❖ The guard provisions of the code address the issue of protecting occupants from falling from any type of elevated walking surface. The provisions in Section R312 provide the scoping requirements, as well as the general construction requirements for the guards. Besides this section, code users should be aware that Section R301.5 contains the design load criteria for guards.

R312.1.1 Where required. *Guards* shall be located along open-sided walking surfaces, including stairs, ramps and landings, that are located more than 30 inches (762 mm) measured vertically to the floor or *grade* below at any point within 36 inches (914 mm) horizontally to the edge of the open side. Insect screening shall not be considered as a *guard*.

❖ Section R312.1.1 establishes stairs, ramps and landings as examples of open-sided walking surfaces, but this is not an all-inclusive list of locations where guards are required. This section gives further specifics, to define the minimum elevation of the walking surface as greater than 30 inches (762 mm) that requires a guard. It also recognizes that a guard is needed to minimize falls if the elevation exceeds the 30-inch (762 mm) height at any point within 36 inches (914 mm) of the edge of the walking surface in consideration of such conditions as a sloping site or sudden drop. The scoping requirement for guards along open sides of stairs only applies to that portion of the stairway that is more than 30 inches (762 mm) above the determined point on the grade or floor below (see Commentary Figure R312.1.1).

Insect screening lacks sufficient strength to prevent someone from falling under a top rail. For this reason a guard is required for porches and decks enclosed with insect screening where the walking surface is located more than 30 inches (762 mm) above a floor or grade below.

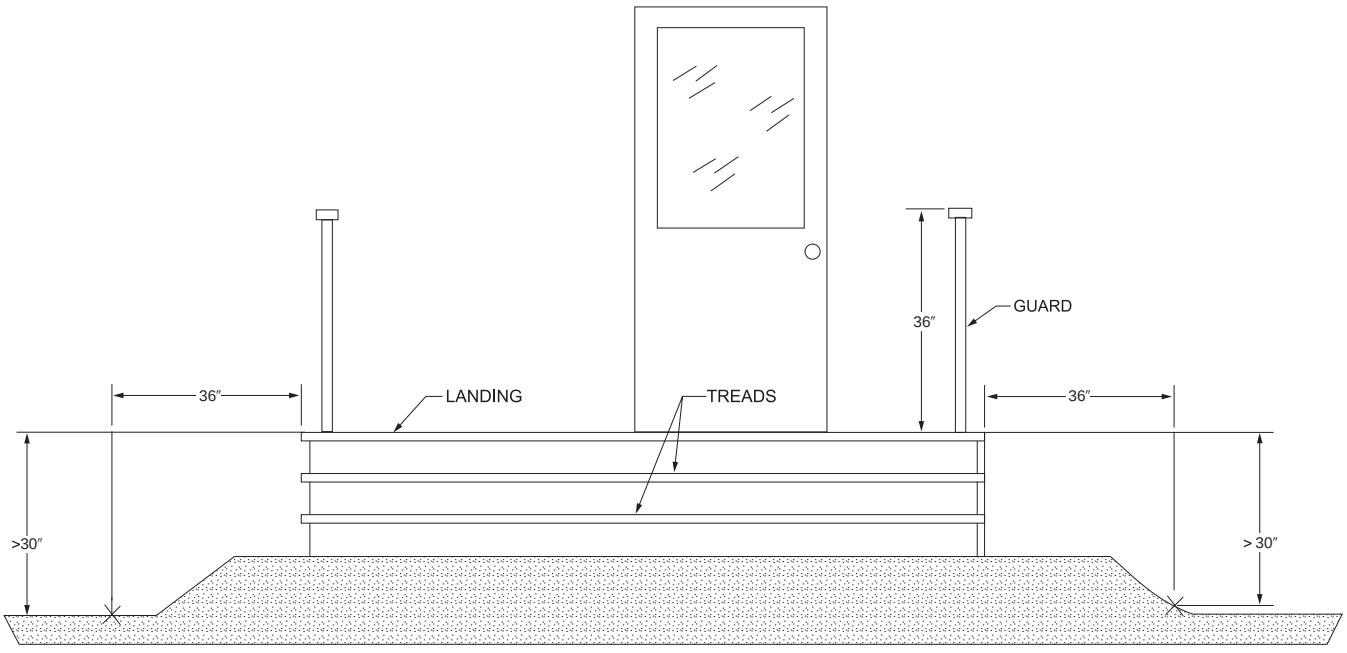

For SI: 1 inch = 25.4 mm.

Figure R312.1.1
DROP OFF AND GUARD HEIGHT REQUIREMENTS

INTERNATIONAL CODE COUNCIL®
Copyright © 2015 ICC. ALL RIGHTS RESERVED. Accessed by David Dammon on Jun 21, 2017 12:30:52 PM pursuant to License Agreement with ICC. No further reproduction or distribution authorized. ANY UNAUTHORIZED REPRODUCTION OR DISTRIBUTION IS A VIOLATION OF THE FEDERAL COPYRIGHT ACT AND THE LICENSE AGREEMENT, AND SUBJECT TO CIVIL AND CRIMINAL PENALTIES THEREUNDER.

R312.1.2 Height. Required *guards* at open-sided walking surfaces, including stairs, porches, balconies or landings, shall be not less than 36 inches (914 mm) in height as measured vertically above the adjacent walking surface or the line connecting the leading edges of the treads.

Exceptions:

1. *Guards* on the open sides of stairs shall have a height not less than 34 inches (864 mm) measured vertically from a line connecting the leading edges of the treads.
2. Where the top of the *guard* serves as a handrail on the open sides of stairs, the top of the *guard* shall be not less than 34 inches (864 mm) and not more than 38 inches (965 mm) as measured vertically from a line connecting the leading edges of the treads.

❖ Where guards are required by Section R312.1.1, Section 312.1.2 specifies a minimum height for those guards. The code requires guards at open sides along walking surfaces and gives examples, but this list is not to be considered all inclusive. Required guards must be of an adequate height to minimize the chances of someone from falling off the edge of the walking surface. Therefore, the code establishes 36 inches (914 mm) as the minimum acceptable height for most guards at walking surfaces. However, Exceptions 1 and 2 recognize that the minimum height for handrails along stairways is 34 inches (864 mm), therefore, there is a special allowance at the top of the guard along stairways that is consistent with the height of such handrails.

Guard heights are determined by measuring vertically from the walking surface or the line connecting the nosings of the treads on stairways; however, when fixed seating is adjacent to a guard the height of the guard is to be measured from the seat where children might be inclined to stand or walk. See Commentary Figures R312.1.1 and R312.1.2 for examples of how this provision is applied.

R312.1.3 Opening limitations. Required *guards* shall not have openings from the walking surface to the required *guard* height that allow passage of a sphere 4 inches (102 mm) in diameter.

Exceptions:

1. The triangular openings at the open side of stair, formed by the riser, tread and bottom rail of a *guard*, shall not allow passage of a sphere 6 inches (153 mm) in diameter.
2. *Guards* on the open side of stairs shall not have openings that allow passage of a sphere $4^3/_8$ inches (111 mm) in diameter.

❖ Guards must be constructed so that they prohibit smaller occupants, such as children, from falling through them. To prohibit people from slipping through a guard, any required guard would need to have supports, spindles, intermediate rails or some type of ornamental pattern so that a 4-inch (102 mm) sphere cannot pass through it. This spacing was chosen based on the head size and the chest depth of a child who had not yet developed an ability to crawl. The code does allow two exceptions for this spacing requirement. A $4^3/_8$-inch (111 mm) sphere rule is used for the guard on the open side of stair treads. This minor difference of just $^3/_8$ inch (9.5 mm) allows the use of just two balusters at each tread greatly reducing costs with no limitation of safety. A 6-inch (152 mm) sphere rule is used for the triangular area formed by the riser, tread and bottom rail of a guard along the open side of a stair because the triangular shape is more restrictive (see Commentary Figure R312.1.3).

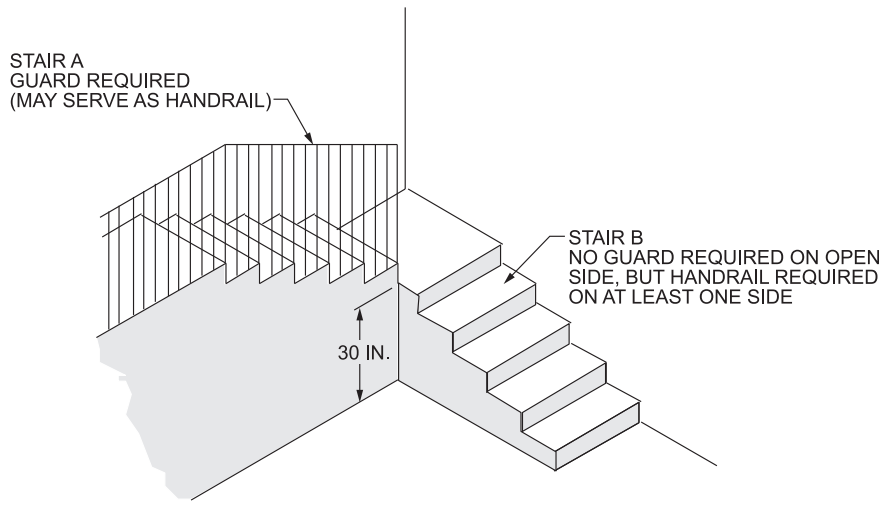

For SI: 1 inch = 25.4 mm.

Figure R312.1.2
STAIRWAY GUARD

INTERNATIONAL CODE COUNCIL®
Copyright © 2015 ICC. ALL RIGHTS RESERVED. Accessed by David Dammon on Jun 21, 2017 12:30:52 PM pursuant to License Agreement with ICC. No further reproduction or distribution authorized. ANY UNAUTHORIZED REPRODUCTION OR DISTRIBUTION IS A VIOLATION OF THE FEDERAL COPYRIGHT ACT AND THE LICENSE AGREEMENT, AND SUBJECT TO CIVIL AND CRIMINAL PENALTIES THEREUNDER.

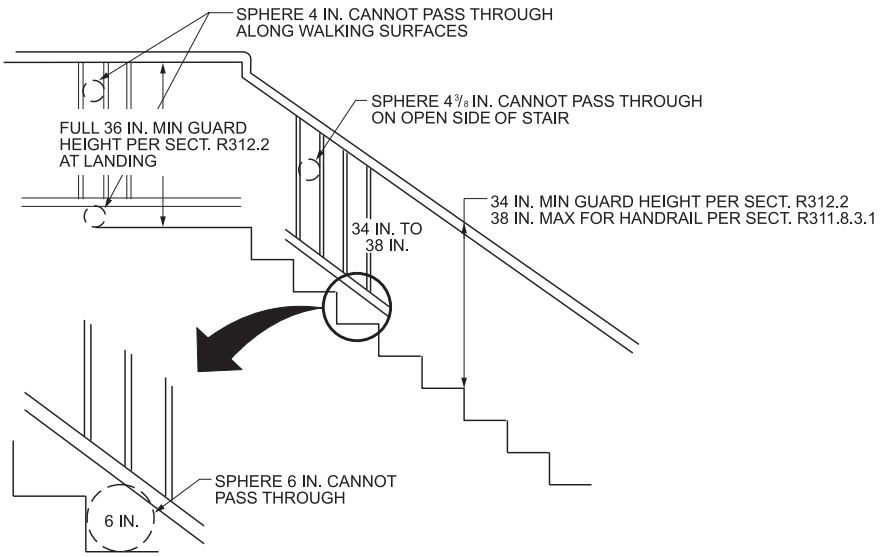

For SI: 1 inch = 25.4 mm.

Figure R312.1.3
GUARD REQUIREMENTS

R312.1.4 Exterior plastic composite guards. Plastic composite exterior *guards* shall comply with the requirements of Section R317.4.

❖ Guards made of wood or plastic composite materials must meet the requirements for installation and labeling, and must comply with ASTM D7032, as stated in Section R317.4, in addition to the general requirements for guards in this section.

R312.2 Window fall protection. Window fall protection shall be provided in accordance with Sections R312.2.1 and R312.2.2.

❖ Section R312.2 requires compliance with Sections R312.2.1 and R312.2.2 for window fall protection.

Section R312.2.1 indicates that the window fall protection is only required for windows that meet all of the following conditions:

1. Are operable,
2. Are located more than 72 inches (1829 mm) above finished grade or other exterior surface below, and
3. Have a sill height of less than 24 inches, as measured vertically from the floor surface of the room in which they are located.

Where a window meets all of these conditions, Section R312.2.1 requires that they comply with at least one of the following:

1. Have openings which will not allow passage of a 4-inch-diameter (102 mm) sphere,
2. Be equipped with a window fall prevention device in accordance with ASTM F2090, or
3. Be equipped with opening control devices in accordance with Section R312.2.2 (see Commentary Figure R312.2.1).

Where a window opening device in accordance with ASTM F2090 is used, Section R312.2.2 requires that the device must not reduce the net clear opening area of the window in its fully open position to less than that required for required emergency escape and rescue openings (Section R310.2.1).

The intent of these provisions is to prevent small children from falling out of open windows. An opening control device installed on any window must have an emergency release device that is clearly identified and that operates without the need for a key, tool or special knowledge. These operation criteria match the language in the provisions for emergency escape and rescue openings.

The code references ASTM F2090, *Window Fall Prevention Devices with Emergency Escape (Egress) Release Mechanisms* for the device requirements. The standard requires window fall prevention devices to be constructed such that a 4-inch-diameter (102 mm) sphere cannot pass through. Window fall prevention devices installed on any window must conform to ASTM F2090, thereby complying with the operation provisions for emergency escape and rescue openings in Section R310.

R312.2.1 Window sills. In dwelling units, where the top of the sill of an operable window opening is located less than 24 inches (610 mm) above the finished floor and greater than 72 inches (1829 mm) above the finished *grade* or other surface below on the exterior of the building, the operable window shall comply with one of the following:

1. Operable windows with openings that will not allow a 4-inch-diameter (102 mm) sphere to pass through the

INTERNATIONAL CODE COUNCIL®
Copyright © 2015 ICC. ALL RIGHTS RESERVED. Accessed by David Dammon on Jun 21, 2017 12:30:52 PM pursuant to License Agreement with ICC. No further reproduction or distribution authorized. ANY UNAUTHORIZED REPRODUCTION OR DISTRIBUTION IS A VIOLATION OF THE FEDERAL COPYRIGHT ACT AND THE LICENSE AGREEMENT, AND SUBJECT TO CIVIL AND CRIMINAL PENALTIES THEREUNDER.

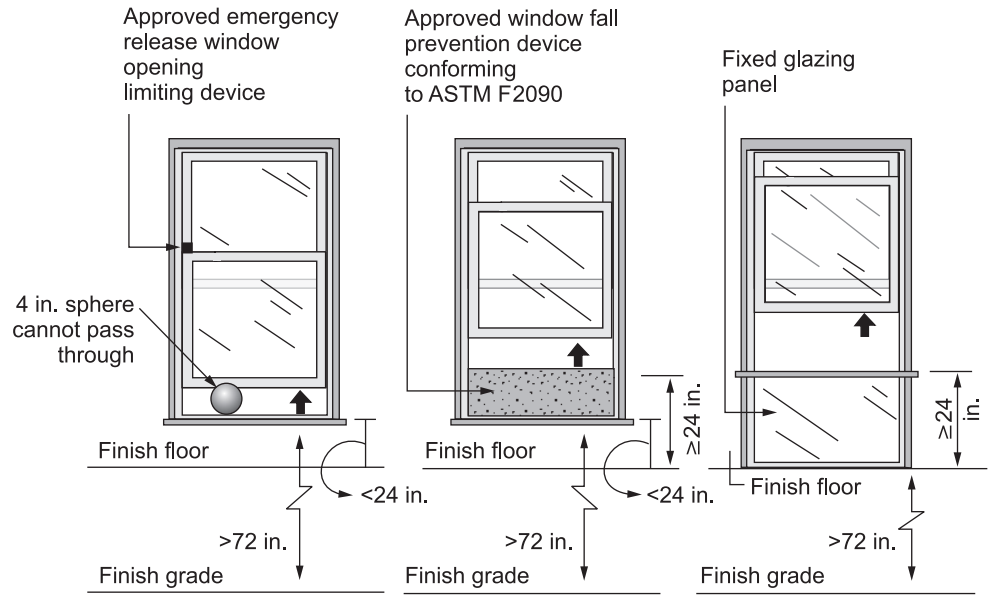

For SI: 1 inch = 25.4 mm.

Figure R312.2.1
WINDOW SILL HEIGHT

opening where the opening is in its largest opened position.

2. Operable windows that are provided with window fall prevention devices that comply with ASTM F2090.
3. Operable windows that are provided with window opening control devices that comply with Section R312.2.2.

❖ See the commentary to Section R312.2.

R312.2.2 Window opening control devices. Window opening control devices shall comply with ASTM F2090. The window opening control device, after operation to release the control device allowing the window to fully open, shall not reduce the net clear opening area of the window unit to less than the area required by Section R310.2.1.

❖ See the commentary to Section R312.2.

SECTION R313
AUTOMATIC FIRE SPRINKLER SYSTEMS

R313.1 Townhouse automatic fire sprinkler systems. An automatic residential fire sprinkler system shall be installed in *townhouses*.

Exception: An automatic residential fire sprinkler system shall not be required where *additions* or *alterations* are made to existing *townhouses* that do not have an automatic residential fire sprinkler system installed.

❖ Residential occupancies are the number one group of occupancies that suffer loss of life during fire events. A published study by the National Institute of Standards and Technology (NIST) entitled *Benefit-cost Analysis of Residential Fire Sprinkler Systems*, reports that, out of almost 2,000 fire incidents in homes equipped with fire sprinklers during the 4-year period 2002 to 2005, there were no fire-related fatalities. This statistic demonstrates the potential for sprinklers to save lives that would otherwise be lost in residential fires.

Since installation of a sprinkler system could be extensive in an existing dwelling unit, sprinkler systems are not required when an existing dwelling unit is being altered or has an addition. If the dwelling unit already has a sprinkler system, that system must be altered or added to as appropriate.

R313.1.1 Design and installation. Automatic residential fire sprinkler systems for *townhouses* shall be designed and installed in accordance with Section P2904 or NFPA 13D.

❖ This section requires compliance with either Section P2904 or NFPA 13D for the design of a sprinkler system in a townhouse. Section P2904 includes requirements considered to provide an equivalent level of protection as an NFPA 13D sprinkler system. Section P2904 provides criteria for sprinklers, sprinkler piping, water supply, pipe sizing, instructions and inspection.

R313.2 One- and two-family dwellings automatic fire systems. An automatic residential fire sprinkler system shall be installed in one- and two-family *dwellings*.

Exception: An automatic residential fire sprinkler system shall not be required for *additions* or *alterations* to existing buildings that are not already provided with an automatic residential sprinkler system.

❖ See the commentary to Section R313.1.

INTERNATIONAL CODE COUNCIL®
Copyright © 2015 ICC. ALL RIGHTS RESERVED. Accessed by David Dammon on Jun 21, 2017 12:30:52 PM pursuant to License Agreement with ICC. No further reproduction or distribution authorized. ANY UNAUTHORIZED REPRODUCTION OR DISTRIBUTION IS A VIOLATION OF THE FEDERAL COPYRIGHT ACT AND THE LICENSE AGREEMENT, AND SUBJECT TO CIVIL AND CRIMINAL PENALTIES THEREUNDER.

R313.2.1 Design and installation. Automatic residential fire sprinkler systems shall be designed and installed in accordance with Section P2904 or NFPA 13D.

❖ This section and Section P2904.1 allows for a designer to use either Section P2904 or NFPA 13D requirements for the design of a sprinkler system in a single-family home or duplex. Section P2904 includes requirements considered to provide an equivalent level of protection as an NFPA 13D sprinkler system. Section P2904 provides criteria for sprinklers, sprinkler piping, water supply, pipe sizing, instructions and inspection.

SECTION R314
SMOKE ALARMS

R314.1 General. Smoke alarms shall comply with NFPA 72 and Section R314.

❖ Section R314 provides the details of smoke detection and notification to alert occupants of potential problems. When asleep, the occupants of residential buildings will usually be unaware of a fire, and the fire will have an opportunity to spread before being detected. A majority of fire deaths occurring in residential buildings have occurred because of this delay in detection. It is for this reason that the code requires smoke alarms that comply with NFPA 72 and Section R314.

R314.1.1 Listings. Smoke alarms shall be *listed* in accordance with UL 217. Combination smoke and carbon monoxide alarms shall be *listed* in accordance with UL 217 and UL 2034.

❖ Smoke alarms must be listed to UL 217. Combination smoke and carbon monoxide alarms, if they are provided, must be listed in accordance with UL 217 and UL 2034.

R314.2 Where required. Smoke alarms shall be provided in accordance with this section.

❖ See commentary to Section R314.1.

R314.2.1 New construction. Smoke alarms shall be provided in *dwelling units*.

❖ See commentary to Section R314.1.

R314.2.2 Alterations, repairs and additions. Where *alterations*, *repairs* or *additions* requiring a permit occur, or where one or more sleeping rooms are added or created in existing *dwellings*, the individual *dwelling unit* shall be equipped with smoke alarms located as required for new *dwellings*.

Exceptions:

1. Work involving the exterior surfaces of *dwellings*, such as the replacement of roofing or siding, the *addition* or replacement of windows or doors, or the addition of a porch or deck, are exempt from the requirements of this section.
2. Installation, alteration or repairs of plumbing or mechanical systems are exempt from the requirements of this section.

❖ This section contains a unique provision in the code, applying the smoke alarm provisions to existing buildings when an addition, alteration or repair is made that will require a permit, or if any sleeping rooms are added or created. See the commentary to Section R105.2 regarding what types of repairs or alterations require a permit. The smoke alarms in these existing buildings are to be installed in the same manner as required for new dwellings. This would not only require their installation in the same locations within the dwelling, but also that they be interconnected and receive their power from the building wiring. The commentary to Section R314.4 contains more discussion of the power source.

Two exceptions provide relief from the normal smoke alarm requirements in existing buildings that undergo some types of alteration, repair or addition.

The first exception exempts "exterior surface" repairs from initiating the requirement for smoke alarms being placed in an existing dwelling. This exception exempts work that is done on the exterior only. The final determination of what type of work is included is left to the building official, but this would generally be viewed as covering reroofing, siding repairs or siding replacement and could possibly include some window replacements.

The second exception exempts alterations that involve the replacement or repair of plumbing or mechanical equipment, fixtures or systems. This exception would allow replacement of items such as a furnace without expanding the project to include smoke alarms.

R314.3 Location. Smoke alarms shall be installed in the following locations:

1. In each sleeping room.
2. Outside each separate sleeping area in the immediate vicinity of the bedrooms.
3. On each additional *story* of the *dwelling*, including *basements* and *habitable attics* and not including crawl spaces and uninhabitable *attics*. In *dwellings* or *dwelling units* with split levels and without an intervening door between the adjacent levels, a smoke alarm installed on the upper level shall suffice for the adjacent lower level provided that the lower level is less than one full *story* below the upper level.
4. Smoke alarms shall be installed not less than 3 feet (914 mm) horizontally from the door or opening of a bathroom that contains a bathtub or shower unless this would prevent placement of a smoke alarm required by Section R314.3.

❖ So that all areas have at least some level of protection, and so that sleeping areas are adequately protected, Section R314.3 specifies where smoke alarms are to be installed. The code requires that alarms be located within each sleeping room, as well as outside each separate sleeping area in the immediate vicinity of the bedrooms. The device within the bedroom will provide protection should the fire begin within that sleeping room, while the device outside of the room will provide

INTERNATIONAL CODE COUNCIL®
Copyright © 2015 ICC. ALL RIGHTS RESERVED. Accessed by David Dammon on Jun 21, 2017 12:30:52 PM pursuant to License Agreement with ICC. No further reproduction or distribution authorized. ANY UNAUTHORIZED REPRODUCTION OR DISTRIBUTION IS A VIOLATION OF THE FEDERAL COPYRIGHT ACT AND THE LICENSE AGREEMENT, AND SUBJECT TO CIVIL AND CRIMINAL PENALTIES THEREUNDER.

early notification and protection should a problem develop in the area that generally will serve as the egress path for the bedroom. In addition, Item 3 will require installation of at least one smoke alarm on each story of the dwelling, including basements and habitable attics. The code does not require the installation of alarms within crawl spaces or within attics that are not habitable. This provides detection and notification within the areas of general occupancy, but ignores spaces that are not occupied. See Commentary Figure R314.3(1) for an illustration of the required alarm locations.

Where split levels occur in a dwelling and the adjacent levels openly communicate with each other, the alarm may be placed on the upper portion of the split level if it is not more than one full story different in elevation. Commentary Figure R314.3(2) is an example of this provision. This requirement is based on the fact that any fire initiating on the lower portion of the level will send products of combustion up to the upper portion and that a detector there will provide a quick response and early warning.

Item 4 prohibits smoke alarms within 3 feet, as measured horizontally, from doors or openings to spaces that contain a tub or shower, except where it would interfere with the location of another smoke alarm required by this section.

R314.3.1 Installation near cooking appliances. Smoke alarms shall not be installed in the following locations unless this would prevent placement of a smoke alarm in a location required by Section R314.3.

1. Ionization smoke alarms shall not be installed less than 20 feet (6096 mm) horizontally from a permanently installed cooking *appliance*.
2. Ionization smoke alarms with an alarm-silencing switch shall not be installed less than 10 feet (3048

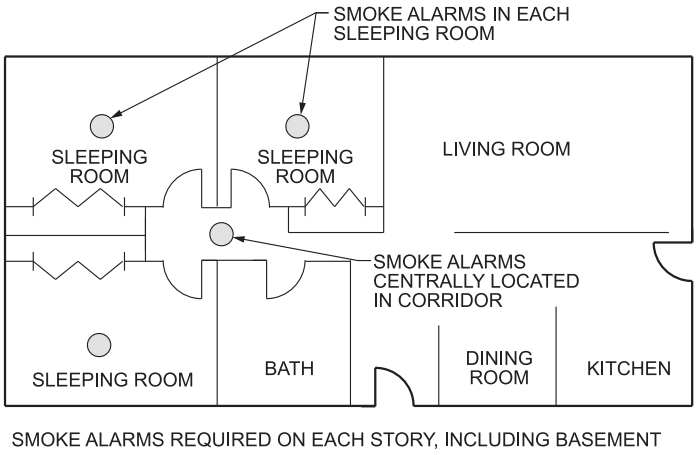

Figure R314.3(1)
LOCATION OF SMOKE ALARMS

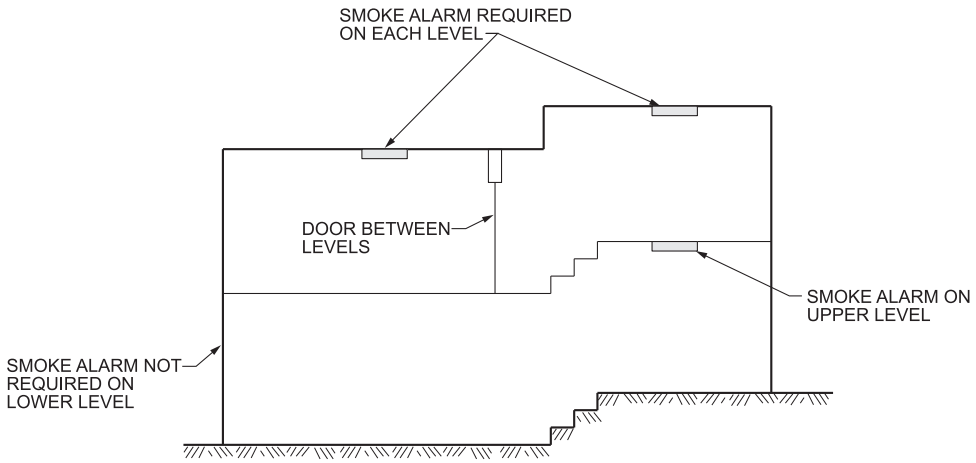

Figure R314.3(2)
SMOKE ALARM LOCATION

INTERNATIONAL CODE COUNCIL®
Copyright © 2015 ICC. ALL RIGHTS RESERVED. Accessed by David Dammon on Jun 21, 2017 12:30:52 PM pursuant to License Agreement with ICC. No further reproduction or distribution authorized. ANY UNAUTHORIZED REPRODUCTION OR DISTRIBUTION IS A VIOLATION OF THE FEDERAL COPYRIGHT ACT AND THE LICENSE AGREEMENT, AND SUBJECT TO CIVIL AND CRIMINAL PENALTIES THEREUNDER.

mm) horizontally from a permanently installed cooking *appliance*.

3. Photoelectric smoke alarms shall not be installed less than 6 feet (1828 mm) horizontally from a permanently installed cooking *appliance.*

❖ Ionization smoke alarms must not be installed within 20 feet, as measured horizontally, of a permanently installed cooking appliance except that, where the alarms are equipped with an alarm-silencing switch, they are permitted to be installed within 10 feet. Photoelectric smoke alarms must not be installed within 6 feet (1828 mm) of a permanently installed cooking appliance. These restrictions do not apply if they would prevent smoke alarm placement in accordance with Section R314.3.

R314.4 Interconnection. Where more than one smoke alarm is required to be installed within an individual dwelling unit in accordance with Section R314.3, the alarm devices shall be interconnected in such a manner that the actuation of one alarm will activate all of the alarms in the individual *dwelling unit.* Physical interconnection of smoke alarms shall not be required where listed wireless alarms are installed and all alarms sound upon activation of one alarm.

Exception: Interconnection of smoke alarms in existing areas shall not be required where *alterations* or repairs do not result in removal of interior wall or ceiling finishes exposing the structure, unless there is an *attic*, crawl space or *basement* available that could provide access for interconnection without the removal of interior finishes.

❖ Smoke detectors within a dwelling are required to be interconnected so that activation of any of the smoke detectors on any level will activate all detectors in the building and ensure that occupants are alarmed. Section R314.4 will allow listed wireless interconnected alarms to substitute for wired interconnection of the smoke alarms in both new and existing construction.

One of the main concerns of the code is occupants who may be asleep and unaware of any developing fire. The code requires that the alarm signal be "clearly audible" in the bedroom area. If smoke alarms are being installed in an existing building, see the commentary to Section R314.2.2, which contains an exception to the requirement for interconnection.

The exception lifts the requirement for interconnection in alterations and repairs where ceiling and wall finishes are not removed to reveal the structural members, unless an attic, crawl space or basement provides access that facilitates the interconnection.

R314.5 Combination alarms. Combination smoke and carbon monoxide alarms shall be permitted to be used in lieu of smoke alarms.

❖ This section allows listed combination smoke and carbon monoxide alarms to be used in lieu of smoke alarms.

R314.6 Power source. Smoke alarms shall receive their primary power from the building wiring where such wiring is served from a commercial source and, where primary power is interrupted, shall receive power from a battery. Wiring shall be permanent and without a disconnecting switch other than those required for overcurrent protection.

Exceptions:

1. Smoke alarms shall be permitted to be battery operated where installed in buildings without commercial power.
2. Smoke alarms installed in accordance with Section R314.2.2 shall be permitted to be battery powered.

❖ Smoke alarms must use AC power as their primary source and battery power as a secondary source to enhance their reliability. For example, during a power outage, the probability of fire is increased because of the use of candles or lanterns for temporary light. Required backup battery power provides for continued performance of the smoke alarms. Smoke alarms are commonly designed to emit a recurring signal when batteries are low and need to be replaced. It is also for the reliability issue that the code does not permit the alarms to be on any type of circuit that could be disconnected or turned off, such as a lighting circuit with a switch. The only way to disconnect power to the smoke alarms should be through the electrical panel box by either flipping a circuit breaker or removing the circuit's fuse.

The exceptions acknowledge that the code does not require that smoke alarms in all existing buildings be served from a commercial power source. Battery-operated smoke alarms may be the only power source when a commercial power source is not available or when extensive alterations or repairs (see Section R314.2.2) are not being made. Where permanent building wiring can be installed without the removal of interior finishes, this section recognizes the increased reliability that the "hardwired" commercial power source with battery back-up can provide. Therefore, where feasible, permanent wiring is to be installed.

R314.7 Fire alarm systems. Fire alarm systems shall be permitted to be used in lieu of smoke alarms and shall comply with Sections R314.7.1 through R314.7.4.

❖ The detection and notification system requirements of Sections R314.7 through R314.7.4 provide early warning to occupants of the building in the event of a fire, thereby providing a greater opportunity for everyone in the building to evacuate or relocate to a safe area. Installation of a fire alarm system in accordance with this section is considered a viable alternative to the installation of required smoke alarms. Of all of the provisions for safety features that have been placed within the code over the past few decades other than fire sprinkler system requirements, the provisions for these detection and alarm devices have probably offered the greatest benefit in increasing safety and reducing the loss of life, and these benefits come at a comparatively minor expense.

Requiring the system to become a permanent fixture (see Section R314.7.3) of the occupancy and not be leased will prevent the system from being removed

INTERNATIONAL CODE COUNCIL®
Copyright © 2015 ICC. ALL RIGHTS RESERVED. Accessed by David Dammon on Jun 21, 2017 12:30:52 PM pursuant to License Agreement with ICC. No further reproduction or distribution authorized. ANY UNAUTHORIZED REPRODUCTION OR DISTRIBUTION IS A VIOLATION OF THE FEDERAL COPYRIGHT ACT AND THE LICENSE AGREEMENT, AND SUBJECT TO CIVIL AND CRIMINAL PENALTIES THEREUNDER.

due to nonpayment. "Owned by the homeowner" is a good beginning and adds additional language that will ensure system reliability by requiring the owner to have the system electronically monitored and maintained in accordance with the referenced standard.

For larger homes, the only possible way to provide detection is through the use of a household fire warning system (see Section R314.7.1). NFPA 72, *National Fire Alarm Code*, has limits as to the number of smoke alarms that may be interconnected. Section 11.8.2.2 of the 2006 edition of the NFPA 72 allows only 12 smoke alarms to be interconnected if the interconnecting means is not supervised. Up to 42 smoke alarms may be interconnected if they are supervised. A number of homeowners prefer that their household fire warning systems be monitored by a supervising station. The requirement in Section R314.1.1 for listing of smoke alarms with UL 217, however, prohibits them from being monitored.

R314.7.1 General. Fire alarm systems shall comply with the provisions of this code and the household fire warning *equipment* provisions of NFPA 72. Smoke detectors shall be *listed* in accordance with UL 268.

❖ See the commentary to Section R314.7.

R314.7.2 Location. Smoke detectors shall be installed in the locations specified in Section R314.3.

❖ See the commentary to Section R314.7.

R314.7.3 Permanent fixture. Where a household fire alarm system is installed, it shall become a permanent fixture of the occupancy, owned by the homeowner.

❖ See the commentary to Section R314.7.

R314.7.4 Combination detectors. Combination smoke and carbon monoxide detectors shall be permitted to be installed in fire alarm systems in lieu of smoke detectors, provided that they are *listed* in accordance with UL 268 and UL 2075.

❖ See the commentary to Section R314.7.

SECTION R315
CARBON MONOXIDE ALARMS

R315.1 General. Carbon monoxide alarms shall comply with Section R315.

❖ Carbon monoxide (CO) is an odorless, colorless and toxic gas. Because it is impossible to see, taste or smell the toxic fumes, CO can kill occupants before they are aware it is in their home. At lower levels of exposure, CO causes mild effects that are often mistaken for the flu. These symptoms include headaches, dizziness, disorientation, nausea and fatigue. The effects of CO exposure can vary greatly from person to person depending on age, overall health, and the concentration and length of exposure. According to the *Journal of the American Medical Association* (JAMA), CO is the leading cause of accidental poisoning deaths in America.

Sources of CO include unvented kerosene and gas space heaters; leaking chimneys and furnaces; backdrafting from furnaces, gas water heaters, wood stoves and fireplaces; gas stoves; generators and other gasoline-powered equipment; and automobile exhaust from attached garages. Incomplete oxidation during combustion in gas ranges and unvented gas or kerosene heaters may cause high concentrations of CO in indoor air. Worn or poorly adjusted and maintained combustion devices (e.g., boilers, furnaces) can be significant sources, especially if the flue is improperly sized, blocked, disconnected or is leaking. Auto, truck or bus exhaust from attached garages, nearby roads or parking areas can also be a source.

Average levels of CO in homes without gas stoves vary from 0.5 to 5 parts per million (ppm). Levels near properly adjusted gas stoves are often 5 to 15 ppm and those near poorly adjusted stoves may be 30 ppm or higher.

CO alarms and detectors must not be considered a replacement for the proper use and maintenance of fuel-burning appliances. The industry has addressed the issue of reliability by updating the requirements of UL 2034. All CO detectors available today meet the updated requirements, which eliminated the false positive indications that occurred when CO detectors were first brought to market in the 1990s.

For new construction, Section R315.2.1 requires carbon monoxide alarms where dwelling units contain a fuel-fired appliance or have an attached garage with a door at the common wall between the dwelling unit and the garage.

For alterations, repairs and additions that require a permit, or where one or more sleeping rooms are added or created, Section R315.2.2 indicates that the requirements are the same as for new construction. However, Section R315.2.2 exempts carbon monoxide alarms for work related to plumbing and mechanical systems, as well as work related to exterior surfaces, such as the replacement of siding or roofing or the addition of windows, doors, porches and decks.

Section R315.3 requires that CO alarms be located outside each separate sleeping area in the immediate vicinity of the bedrooms. The carbon monoxide alarm can be located near the smoke alarm required in the immediate area of the bedrooms by Section R314.3. Section R315.1.1 requires that the alarms be listed in accordance with UL 2034. Alternatively, Sections R315.1.1 and R315.4 allow combination carbon monoxide alarms and smoke alarms where they are listed in accordance with both UL 2034 and UL 217.

For new construction, Section R315.5 requires that carbon monoxide alarms be "hard wired" to the building wiring where the building wiring is from a commercial source, such as a utility company. A battery backup is required so that power is also available when the commercial source is interrupted. For alterations, repairs and additions, the system is permitted to be either battery powered or hard wired.

Section R315.1 does not require CO detectors to be hard wired or interconnected like smoke alarms (see Commentary Figure R315.3).

INTERNATIONAL CODE COUNCIL®
Copyright © 2015 ICC. ALL RIGHTS RESERVED. Accessed by David Dammon on Jun 21, 2017 12:30:52 PM pursuant to License Agreement with ICC. No further reproduction or distribution authorized. ANY UNAUTHORIZED REPRODUCTION OR DISTRIBUTION IS A VIOLATION OF THE FEDERAL COPYRIGHT ACT AND THE LICENSE AGREEMENT, AND SUBJECT TO CIVIL AND CRIMINAL PENALTIES THEREUNDER.

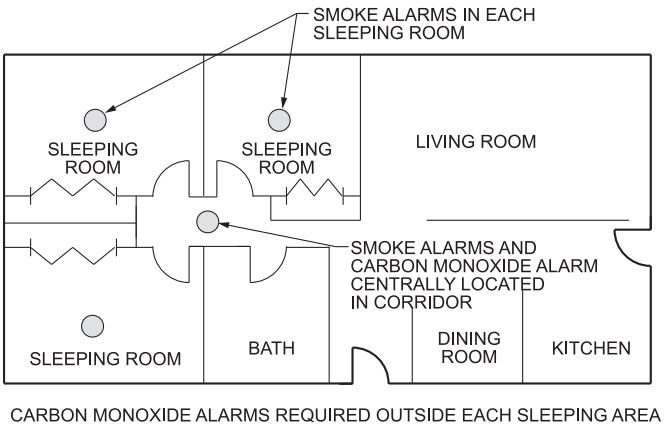

Figure R315.3
LOCATION OF CARBON MONOXIDE ALARMS

R315.1.1 Listings. Carbon monoxide alarms shall be *listed* in accordance with UL 2034. Combination carbon monoxide and smoke alarms shall be *listed* in accordance with UL 2034 and UL 217.

❖ See the commentary to Section R315.1.

R315.2 Where required. Carbon monoxide alarms shall be provided in accordance with Sections R315.2.1 and R315.2.2.

❖ See the commentary to Section R315.1.

R315.2.1 New construction. For new construction, carbon monoxide alarms shall be provided in dwelling units where either or both of the following conditions exist.

1. The *dwelling unit* contains a fuel-fired *appliance*.
2. The *dwelling unit* has an attached garage with an opening that communicates with the dwelling unit.

❖ See the commentary to Section R315.1.

R315.2.2 Alterations, repairs and additions. Where *alterations*, repairs or *additions* requiring a permit occur, or where one or more sleeping rooms are added or created in existing *dwellings*, the individual *dwelling unit* shall be equipped with carbon monoxide alarms located as required for new *dwellings*.

Exceptions:

1. Work involving the exterior surfaces of *dwellings*, such as the replacement of roofing or siding, or the addition or replacement of windows or doors, or the addition of a porch or deck, is exempt from the requirements of this section.
2. Installation, alteration or repairs of plumbing or mechanical systems are exempt from the requirements of this section.

❖ See the commentary to Section R315.1.

R315.3 Location. Carbon monoxide alarms in *dwelling units* shall be installed outside of each separate sleeping area in the immediate vicinity of the bedrooms. Where a fuel-burning *appliance* is located within a bedroom or its attached bathroom, a carbon monoxide alarm shall be installed within the bedroom.

❖ See the commentary to Section R315.1.

R315.4 Combination alarms. Combination carbon monoxide and smoke alarms shall be permitted to be used in lieu of carbon monoxide alarms.

❖ See the commentary to Section R315.1.

R315.5 Power source. Carbon monoxide alarms shall receive their primary power from the building wiring where such wiring is served from a commercial source and, where primary power is interrupted, shall receive power from a battery. Wiring shall be permanent and without a disconnecting switch other than those required for overcurrent protection.

Exceptions:

1. Carbon monoxide alarms shall be permitted to be battery operated where installed in buildings without commercial power.
2. Carbon monoxide alarms installed in accordance with Section R315.2.2 shall be permitted to be battery powered.

❖ See the commentary to Section R315.1.

R315.6 Carbon monoxide detection systems. Carbon monoxide detection systems shall be permitted to be used in lieu of carbon monoxide alarms and shall comply with Sections R315.6.1 through R315.6.4.

❖ Section 9.6.5 of NFPA 720 requires that when two or more carbon monoxide alarms are to be installed that they be interconnected. The rationale for this requirement is that if a CO device is activated in the basement, the occupants on the second floor on the opposite end of the home may be unable to hear the audible alarm if the devices are not interconnected. NFPA 720 requires CO devices to be installed on every level of a dwelling unit, including basements as well as outside each separate dwelling unit sleeping area in the immediate vicinity of the bedrooms.

INTERNATIONAL CODE COUNCIL®
Copyright © 2015 ICC. ALL RIGHTS RESERVED. Accessed by David Dammon on Jun 21, 2017 12:30:52 PM pursuant to License Agreement with ICC. No further reproduction or distribution authorized. ANY UNAUTHORIZED REPRODUCTION OR DISTRIBUTION IS A VIOLATION OF THE FEDERAL COPYRIGHT ACT AND THE LICENSE AGREEMENT, AND SUBJECT TO CIVIL AND CRIMINAL PENALTIES THEREUNDER.

Section R315.6.2 indicates that the location requirements for carbon monoxide detectors are the same as those for carbon monoxide alarms and these requirements supersede the locations indicated in NFPA 720.

The requirement of Section R315.6.3 for the household carbon monoxide detection system to be owned by the homeowner and to be monitored by an approved supervising station mirrors the household fire alarm system requirements in Section R314.7.3.

Section R315.6.4 requires combination carbon monoxide detectors and smoke detectors to be listed in accordance with UL2075 and UL268 where they are part of a carbon monoxide detection system.

R315.6.1 General. Household carbon monoxide detection systems shall comply with NFPA 720. Carbon monoxide detectors shall be *listed* in accordance with UL 2075.

❖ See the commentary to Section R315.6.

R315.6.2 Location. Carbon monoxide detectors shall be installed in the locations specified in Section R315.3. These locations supersede the locations specified in NFPA 720.

❖ See the commentary to Section R315.6.

R315.6.3 Permanent fixture. Where a household carbon monoxide detection system is installed, it shall become a permanent fixture of the occupancy and owned by the homeowner.

❖ See the commentary to Section R315.6.

R315.6.4 Combination detectors. Combination carbon monoxide and smoke detectors shall be permitted to be installed in carbon monoxide detection systems in lieu of carbon monoxide detectors, provided that they are *listed* in accordance with UL 2075 and UL 268.

❖ See the commentary to Section R315.6.

SECTION R316
FOAM PLASTIC

R316.1 General. The provisions of this section shall govern the materials, design, application, construction and installation of foam plastic materials.

❖ Section R316 covers several topics related to the use and installation of various types of foam plastic materials used for insulation, trim and finishes. These requirements cover the acceptable uses of this combustible product and the associated protection needed to use it in building construction.

Section R316.1 lists the two basic issues that serve as the basis for foam plastic insulation requirements: the flame spread rating of the material and the separation of the foam plastic insulation from the interior of the building.

Commentary Figure R316.1 shows a simple flowchart to help the code user more easily comply with the foam plastics sections of the code.

R316.2 Labeling and identification. Packages and containers of foam plastic insulation and foam plastic insulation components delivered to the job site shall bear the *label* of an *approved agency* showing the manufacturer's name, the product listing, product identification and information sufficient to determine that the end use will comply with the requirements.

❖ Foam plastics or packages of foam plastics delivered to the construction site must be labeled. Also, labels are required on containers [usually two components in 55-gallon (208 L) drums] of ingredients delivered for the production of foam plastic at the construction site. The label must include the name of the manufacturer or distributor, the type of foam plastic, the performance characteristics required to show code compliance and the name of the approved testing agency. The label may reference documents, such as ICC-ES reports, approval agency certificates and other information, that can be used to determine code-required performance characteristics. [Note, although not required by the code, the Federal Trade Commission (FTC) also places specific labeling requirements regarding the insulation power or *R*-value on all insulations, including foam plastic insulation, used in residential applications.]

R316.3 Surface burning characteristics. Unless otherwise allowed in Section R316.5, foam plastic or foam plastic cores used as a component in manufactured assemblies used in building construction shall have a flame spread index of not more than 75 and shall have a smoke-developed index of not more than 450 when tested in the maximum thickness and density intended for use in accordance with ASTM E84 or UL 723. Loose-fill-type foam plastic insulation shall be tested as board stock for the flame spread index and smoke-developed index.

Exception: Foam plastic insulation more than 4 inches (102 mm) thick shall have a flame spread index of not more than 75 and a smoke-developed index of not more than 450 where tested at a thickness of not more than 4 inches (102 mm), provided that the end use is *approved* in accordance with Section R316.6 using the thickness and density intended for use.

❖ Unless otherwise allowed in Section R316.5 or R316.6, foam plastic or foam plastic cores used as a component in manufactured assemblies used in building construction must have a flame spread index of not more than 75 and a smoke-developed index of not more than 450 when tested in the maximum thickness and density intended for use in accordance with ASTM E84 or UL 723. Loose-fill-type foam plastic insulation must be tested as board stock for the flame spread index and smoke-developed index.

Foam plastic insulation or foam plastic cores used as a component in a manufactured assembly are combustible and must be assessed for flame spread (FS) and smoke-developed indexes. Foam plastic materials must be tested in accordance with test method ASTM E84 or UL 723, unless they are:

1. Specifically exempted in accordance with Section R316.3;
2. One of several applications listed in Section R316.5 (i.e., roofing, foam-filled exterior doors,

INTERNATIONAL CODE COUNCIL®
Copyright © 2015 ICC. ALL RIGHTS RESERVED. Accessed by David Dammon on Jun 21, 2017 12:30:52 PM pursuant to License Agreement with ICC. No further reproduction or distribution authorized. ANY UNAUTHORIZED REPRODUCTION OR DISTRIBUTION IS A VIOLATION OF THE FEDERAL COPYRIGHT ACT AND THE LICENSE AGREEMENT, AND SUBJECT TO CIVIL AND CRIMINAL PENALTIES THEREUNDER.

foam, filled garage doors, interior trim, interior finish); or

3. Tested in an application that has been approved through Section R316.6 (testing under actual end-use configurations).

When testing in accordance with ASTM E84 or UL 723 is required, the materials must be tested in the maximum thickness and density to be used [up to 4-inch (102 mm) thickness] with flame spread index results less than 75 and smoke-developed index results less than 450 SD, unless otherwise specified. If thicker foam is going to be used, it must still be tested to ASTM E84 or UL 723 at 4-inch (102 mm) thickness with flame spread index results less than 75 and smoke-developed index results less than 450 results, as well as testing in accordance with Section R316.6 that is done at the actual foam thickness and density. If the material is loose-fill-type foam plastic, it must be tested as board stock for flame spread and smoke-development performances.

The maximum flame spread value of 75 was chosen on the basis that it was lower than untreated wood (which usually was 100 to 165). The maximum smoke-developed rating of 450 was selected because, at the time, the code permitted interior finish materials that gave off "smoke no more dense than that given off by untreated wood." In selecting the maximum flame spread and smoke developed values, it was believed that a conservative approach was

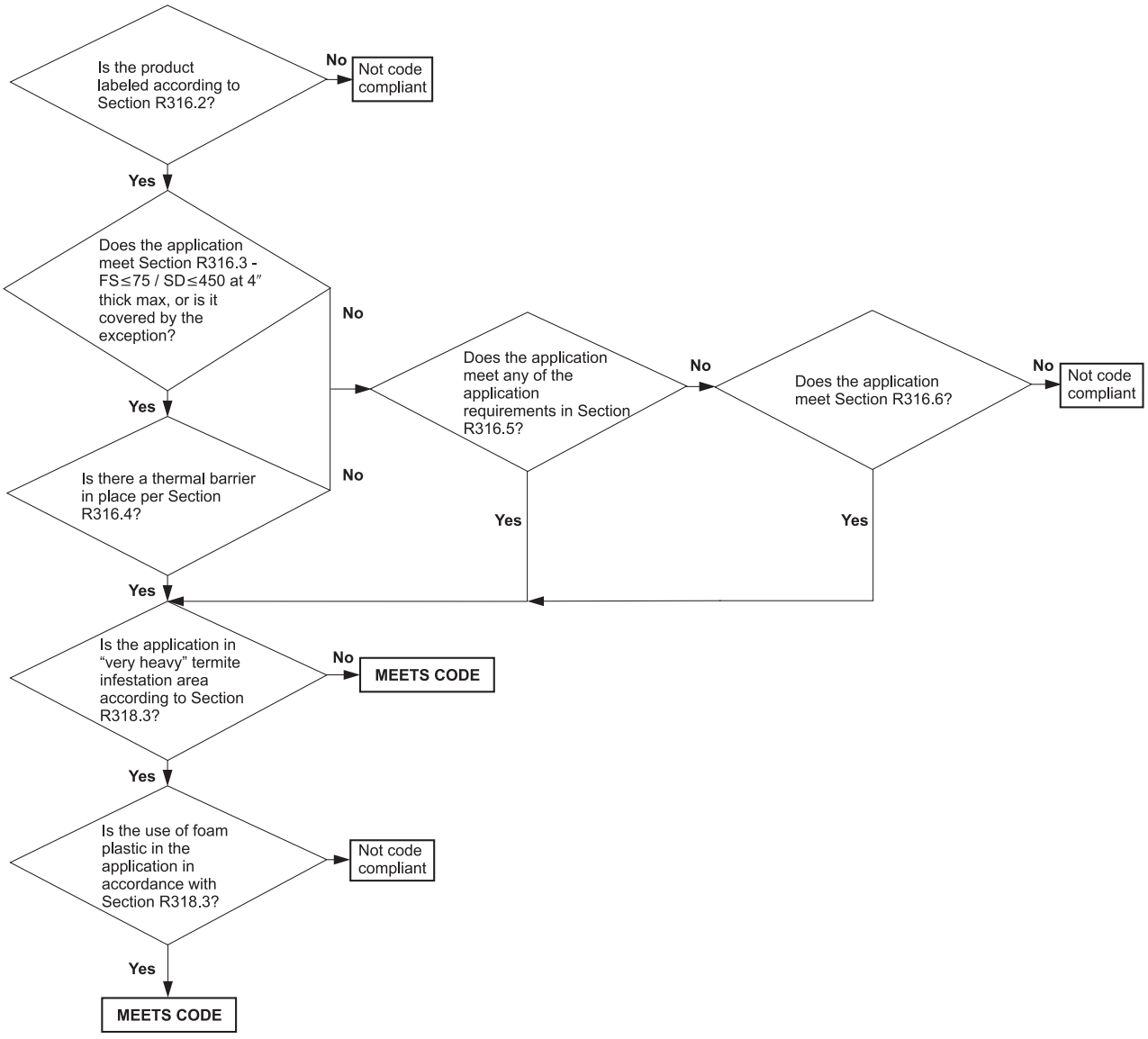

For SI: 1 inch = 25.4 mm.

Figure R316.1
USE AND INSTALLATION REQUIREMENTS OF FOAM PLASTIC IN BUILDING CONSTRUCTION

INTERNATIONAL CODE COUNCIL®
Copyright © 2015 ICC. ALL RIGHTS RESERVED. Accessed by David Dammon on Jun 21, 2017 12:30:52 PM pursuant to License Agreement with ICC. No further reproduction or distribution authorized. ANY UNAUTHORIZED REPRODUCTION OR DISTRIBUTION IS A VIOLATION OF THE FEDERAL COPYRIGHT ACT AND THE LICENSE AGREEMENT, AND SUBJECT TO CIVIL AND CRIMINAL PENALTIES THEREUNDER.

being taken by requiring an insulation material to meet the same requirements as interior finish, even though the insulation was intended to be covered with an interior finish material. The requirements for surface-burning characteristics of foam plastic apply to foam plastics used as cores of manufactured assemblies. The intent is that, even though the finished assemblies might or might not require testing for surface-burning characteristics, the foam plastic core is not exempt from the general requirement; therefore, foam plastic is regulated in factory-manufactured assemblies the same as it is in field-fabricated applications.

R316.4 Thermal barrier. Unless otherwise allowed in Section R316.5, foam plastic shall be separated from the interior of a building by an *approved* thermal barrier of not less than $^{1}/_{2}$-inch (12.7 mm) gypsum wallboard, $^{23}/_{32}$-inch (18.2 mm) wood structural panel or a material that is tested in accordance with and meets the acceptance criteria of both the Temperature Transmission Fire Test and the Integrity Fire Test of NFPA 275.

❖ The use of an approved thermal barrier to separate foam plastics from the interior of a building is a basic requirement for the use of foam plastic as shown in this section of the code. The job of a thermal barrier is to isolate the foam plastic. An approved thermal barrier is defined as minimum $^{1}/_{2}$-inch (12.7 mm) gypsum wallboard, $^{23}/_{32}$-inch (18.2 mm) wood structural panel or a material tested to NFPA 275. Before 1975, experience had shown that foam plastics covered with plaster or $^{1}/_{2}$-inch (12.7 mm) gypsum wallboard had performed satisfactorily in building fires. For this reason, $^{1}/_{2}$-inch (12.7 mm) gypsum wallboard was included in the code as a minimum requirement. It is recognized that specifying a single material is not desirable in a performance code; therefore, a material tested to NFPA 275 is permitted.

This section sets forth the test methods and performance criteria by which alternative thermal barriers are to be qualified. NFPA 275 *Standard Method of Fire Tests for the Evaluation of Thermal Barriers Used Over Foam Plastic Insulation* was developed to specifically address the testing of materials to qualify as a thermal barrier. The test method provides specific sample construction, fire exposures and acceptance criteria to qualify a material to be a 15-minute thermal barrier. The test methods address both the capability of the material to retard heat transfer via a fire-resistance test and to remain in place via a full-scale fire test.

Sections R316.5 and R316.6 describe circumstances where the requirement for a thermal barrier is modified or eliminated.

R316.5 Specific requirements. The following requirements shall apply to these uses of foam plastic unless specifically *approved* in accordance with Section R316.6 or by other sections of the code or the requirements of Sections R316.2 through R316.4 have been met.

❖ This prescriptive section can be used as another path to code compliance for foam plastics. As the flowchart in the commentary to Section R316.1 points out, if an application, including any listed below, meets the requirements in Sections R316.2, R316.3, R316.4 and R316.7, or Sections R316.2, R316.6 and R316.7, that application is code compliant and the requirements spelled out below do not apply. It is only when the requirements of Section R316.3 or R316.4 are not met that the applications spelled out below can be used to show code compliance. Many of the applications below modify or remove the flame spread and smoke-developed requirements of Section R316.3 or modify or remove the need for the thermal barrier specified in Section R316.4.

Two applications that have caused confusion in the past are foam backer board and foam insulation used in residential applications. These two applications, by definition, are examples of foam plastic insulation used on the exterior of a wall assembly. If the foam plastic being used meets the requirements of Section R316.3 (requiring a flame spread index less that 75 and a smoke-developed index less than 450) and Section R316.4 [thermal barrier of $^{1}/_{2}$-inch (12.7 mm) gypsum board or an equivalent on the interior of the wall], the foam plastic insulation can be used up to the allowed thickness of 4 inches (102 mm), and Sections R316.5.7 and R316.5.8 do not apply.

R316.5.1 Masonry or concrete construction. The thermal barrier specified in Section R316.4 is not required in a masonry or concrete wall, floor or roof when the foam plastic insulation is separated from the interior of the building by not less than a 1-inch (25 mm) thickness of masonry or concrete.

❖ No thermal barrier is required when 1 inch (25 mm) or more of masonry or concrete is placed between the foam plastic and the interior of the building. The intent is to accept 1-inch (25 mm) of masonry or concrete as adequate protection against ignition, even though the concrete does not necessarily meet the performance criteria for thermal barriers. This condition can arise when foam plastics are installed either within a wall or on one side of a wall. Some common examples are when foam plastics are installed:

- In the cavity of a hollow masonry wall,
- As the core of a concrete-faced panel,
- On the exterior face of a masonry wall and covered with an exterior finish, or
- Within the cores of hollow masonry units.
- Encapsulated within a minimum of 1 inch (25 mm) concrete or masonry wall, floor or roof system, as in insulated tilt-up or pour-in-place concrete panels (see Commentary Figure R316.5.1).

INTERNATIONAL CODE COUNCIL®
Copyright © 2015 ICC. ALL RIGHTS RESERVED. Accessed by David Dammon on Jun 21, 2017 12:30:52 PM pursuant to License Agreement with ICC. No further reproduction or distribution authorized. ANY UNAUTHORIZED REPRODUCTION OR DISTRIBUTION IS A VIOLATION OF THE FEDERAL COPYRIGHT ACT AND THE LICENSE AGREEMENT, AND SUBJECT TO CIVIL AND CRIMINAL PENALTIES THEREUNDER.

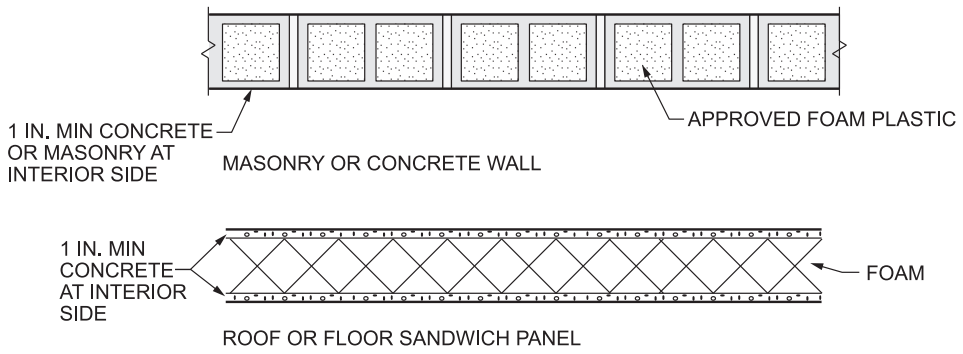

For SI: 1 inch = 25.4 mm.

Figure R316.5.1
ENCAPSULATED FOAM PLASTIC

R316.5.2 Roofing. The thermal barrier specified in Section R316.4 is not required where the foam plastic in a roof assembly or under a roof covering is installed in accordance with the code and the manufacturer's instructions and is separated from the interior of the building by tongue-and-groove wood planks or wood structural panel sheathing, in accordance with Section R803, that is not less than $^{15}/_{32}$ inch (11.9 mm) thick bonded with exterior glue, identified as Exposure 1 and with edges supported by blocking or tongue-and-groove joints or an equivalent material. The smoke-developed index for roof applications shall not be limited.

❖ No thermal barrier is required when a foam plastic is incorporated into a roof assembly on the exterior side, over tongue-and-groove wood planks or wood structural panel sheathing, if the wood product meets all of the following:

- Used in accordance with Section R803,
- Identified as Exposure 1,
- Manufactured with exterior grade glue,
- Minimum $^{15}/_{32}$ inch thick (12 mm),
- Installed according to manufacturer's instructions and
- Installed to provide adequate edge support (blocking when edges do not occur over framing members, tongue-and-groove joints or equivalent).

Also, the flame spread rating of the foam plastic used must comply with the requirements of Section R316.3, but the smoke-developed rating of the foam plastic is not limited.

R316.5.3 Attics. The thermal barrier specified in Section R316.4 is not required where all of the following apply:

1. *Attic* access is required by Section R807.1.
2. The space is entered only for purposes of repairs or maintenance.
3. The foam plastic insulation has been tested in accordance with Section R316.6 or the foam plastic insulation is protected against ignition using one of the following ignition barrier materials:
   - 3.1. $1^{1}/_{2}$-inch-thick (38 mm) mineral fiber insulation.
   - 3.2. $^{1}/_{4}$-inch-thick (6.4 mm) wood structural panels.
   - 3.3. $^{3}/_{8}$-inch (9.5 mm) particleboard.
   - 3.4. $^{1}/_{4}$-inch (6.4 mm) hardboard.
   - 3.5. $^{3}/_{8}$-inch (9.5 mm) gypsum board.
   - 3.6. Corrosion-resistant steel having a base metal thickness of 0.016 inch (0.406 mm).
   - 3.7. $1^{1}/_{2}$-inch-thick (38 mm) cellulose insulation; or
   - 3.8. $^{1}/_{4}$-inch (6.4 mm) fiber-cement panel, soffit or backer board.

The ignition barrier is not required where the foam plastic insulation has been tested in accordance with Section R316.6.

❖ In an attic where access is required by Section R807.1 [where attic areas exceed 30 square feet (2.8 m^2) and have a vertical height of 30 inches (762 mm) or more], and entry is only for service of utilities, foam plastics are not required to be provided with the thermal barrier required by Section R316.4 where (a) the foam plastic has been tested in accordance with Section R316.6, or (b) where an ignition barrier is used in place of a thermal barrier to cover the foam plastic. Multiple materials are listed that can be used as the ignition barrier (see Commentary Figure R316.5.3). The foam plastic material, covered with the ignition barrier can be on the floor, wall (often called a knee wall or gable end) or the ceiling of the attic. The phrase "purposes of repairs and maintenance" applies to attics that contain only mechanical equipment, electrical wiring, fans, plumbing, gas or electric hot water heaters, gas or electric furnaces, etc. The attic space cannot be used for storage. The reduced provision (from a thermal barrier to an ignition barrier) provides a barrier whose only purpose is to prevent the direct impingement of flame on the foam plastic insulation.

INTERNATIONAL CODE COUNCIL®
Copyright © 2015 ICC. ALL RIGHTS RESERVED. Accessed by David Dammon on Jun 21, 2017 12:30:52 PM pursuant to License Agreement with ICC. No further reproduction or distribution authorized. ANY UNAUTHORIZED REPRODUCTION OR DISTRIBUTION IS A VIOLATION OF THE FEDERAL COPYRIGHT ACT AND THE LICENSE AGREEMENT, AND SUBJECT TO CIVIL AND CRIMINAL PENALTIES THEREUNDER.

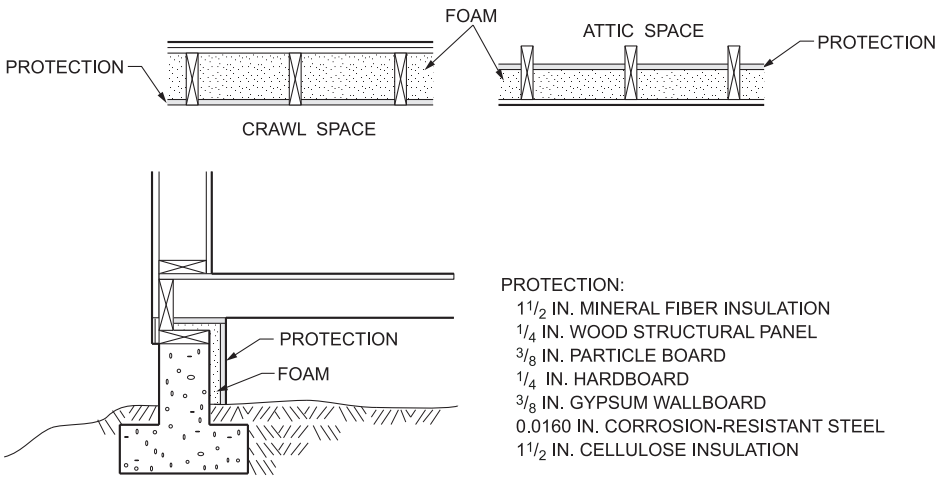

For SI: 1 inch = 25.4 mm.

Figure R316.5.3
FOAM PLASTIC, ATTIC AND CRAWL SPACES

R316.5.4 Crawl spaces. The thermal barrier specified in Section R316.4 is not required where all of the following apply:

1. Crawl space access is required by Section R408.4.
2. Entry is made only for purposes of repairs or maintenance.
3. The foam plastic insulation has been tested in accordance with Section R316.6 or the foam plastic insulation is protected against ignition using one of the following ignition barrier materials:
   - 3.1. $1^1/_2$-inch-thick (38 mm) mineral fiber insulation;
   - 3.2. $^1/_4$-inch-thick (6.4 mm) wood structural panels;
   - 3.3. $^3/_8$-inch (9.5 mm) particleboard;
   - 3.4. $^1/_4$-inch (6.4 mm) hardboard;
   - 3.5. $^3/_8$-inch (9.5 mm) gypsum board; or
   - 3.6. Corrosion-resistant steel having a base metal thickness of 0.016 inch (0.406 mm).

❖ In a crawl space where access is required by Section R408.4 (access must be provided to all under-floor spaces) and entry is only for service of utilities, foam plastics are not required to be provided with the thermal barrier required by Section R316.4 where (a) the foam plastic has been tested in accordance with Section R316.6, or (b) where an ignition barrier is used in place of a thermal barrier to cover the foam plastic. Multiple materials are listed that can be used as the ignition barrier (see Commentary Figure R316.5.3). The foam plastic material, covered with the ignition barrier can be on the floor, wall or ceiling of the crawl space. The phrase "purposes of repairs or maintenance" applies to crawl spaces that contain only mechanical equipment, electrical wiring, fans, plumbing, gas, or electric hot water heaters, gas or electric furnaces, etc. The crawl space cannot be used for storage. The reduced requirement (from a thermal barrier to an ignition barrier) provides a barrier whose only purpose is to prevent the direct impingement of flame on the foam plastic.

R316.5.5 Foam-filled exterior doors. Foam-filled exterior doors are exempt from the requirements of Sections R316.3 and R316.4.

❖ No thermal barrier (see Section R316.4) or surface-burning characteristics testing (see Section R316.3) is required for foam-filled exterior doors.

R316.5.6 Foam-filled garage doors. Foam-filled garage doors in attached or detached garages are exempt from the requirements of Sections R316.3 and R316.4.

❖ No thermal barrier (see Section R316.4) or surface-burning characteristics testing (see Section R316.3) is required for foam-filled garage doors in either an attached or detached garage.

R316.5.7 Foam backer board. The thermal barrier specified in Section R316.4 is not required where siding backer board foam plastic insulation has a thickness of not more than 0.5 inch (12.7 mm) and a potential heat of not more than 2000 Btu per square foot (22 720 kJ/m^2) when tested in accordance with NFPA 259 provided that:

1. The foam plastic insulation is separated from the interior of the building by not less than 2 inches (51 mm) of mineral fiber insulation;
2. The foam plastic insulation is installed over existing *exterior wall* finish in conjunction with re-siding; or
3. The foam plastic insulation has been tested in accordance with Section R316.6.

❖ The code contains a definition for "Foam backer board" (see Section R202). If these siding products are used on the exterior of a wall and the requirements of Sections R316.3 and R316.4 are met, this section of the

INTERNATIONAL CODE COUNCIL®
Copyright © 2015 ICC. ALL RIGHTS RESERVED. Accessed by David Dammon on Jun 21, 2017 12:30:52 PM pursuant to License Agreement with ICC. No further reproduction or distribution authorized. ANY UNAUTHORIZED REPRODUCTION OR DISTRIBUTION IS A VIOLATION OF THE FEDERAL COPYRIGHT ACT AND THE LICENSE AGREEMENT, AND SUBJECT TO CIVIL AND CRIMINAL PENALTIES THEREUNDER.

code does not apply. If a thermal barrier is not used on the interior of the building, limitations are placed on the product and its use. In addition to the flame spread limitations of Section R316.3, other properties of the foam plastic portion of the product include maximum thickness of $^1/_2$ inch (12.7 mm) and potential heat of no more than 2000 British thermal units (Btu) per square foot (22 720 kJ/m^2) when tested using NFPA 259. Limitation in siding/foam combination product use includes separation from the interior of the building by no less than 2 inches (51 mm) of mineral fiber insulation or installation over an existing wall finish as part of residing or the foam plastic insulation is tested in accordance with Section R316.6. The removal of the thermal barrier requirement in this section is reasonable considering the separation provided by the existing construction and the limitation of the potential heat of the foam plastic imposed by the code.

R316.5.8 Re-siding. The thermal barrier specified in Section R316.4 is not required where the foam plastic insulation is installed over existing *exterior wall* finish in conjunction with re-siding provided that the foam plastic has a thickness of not more than 0.5 inch (12.7 mm) and a potential heat of not more than 2000 Btu per square foot (22 720 kJ/m^2) when tested in accordance with NFPA 259.

❖ Foam plastic is frequently used in residing applications to provide a leveling surface for new siding, while also bringing additional insulation value to the wall assembly. If these products are used in a wall assembly and the requirements of Sections R316.3 and R316.4 are met, this section of the code does not apply. If a thermal barrier is not used between the foam plastic and the interior of the building, the foam insulation must meet the flame spread requirements of Section R316.3, is limited to a maximum thickness of $^1/_2$ inch (12.7 mm) and potential heat of no less than 2,000 Btu per square foot (22 720 kJ/m^2) when tested using NFPA 259. The removal of the thermal barrier requirement in this section is reasonable considering the separation provided by the existing construction and the limitation of the potential heat of the foam plastic imposed by the code.

R316.5.9 Interior trim. The thermal barrier specified in Section R316.4 is not required for exposed foam plastic interior trim, provided that all of the following are met:

1. The density is not less than 20 pounds per cubic foot (320 kg/m^3).
2. The thickness of the trim is not more than 0.5 inch (12.7 mm) and the width is not more than 8 inches (204 mm).
3. The interior trim shall not constitute more than 10 percent of the aggregate wall and ceiling area of any room or space.
4. The flame spread index does not exceed 75 when tested per ASTM E84 or UL 723. The smoke-developed index is not limited.

❖ Foam plastic interior trim is defined in Section R202 as exposed foam plastic used as picture molds, chair rails, crown moldings, baseboards, handrails, ceiling beams, door trim and window trim, and similar decorative or protective materials.

Foam plastic interior trim must be provided with a thermal barrier (which would effectively prevent its actual use as interior trim) unless it complies with all four items listed in this section.

Item 1: The density of materials must be at least 20 pounds per cubic foot (pcf) (320 kg/m^3). The intent was to separate those materials used for trim from those intended for use as insulation. As a comparison, most foam plastic insulation is in the range of 1 to $2^1/_2$ pounds per cubic foot (16.02 to 40 kg/m^3) with very few materials over 5 pcf (81 kg/m^3).

Item 2: Even though other nonfoam plastic trim materials are not limited in dimension, the maximum thickness and width of foam plastic trim is limited to $^1/_2$ inch (12.7 mm) and 4 inches (12.7 mm and 102 mm), respectively.

Item 3: Foam plastic trim cannot constitute more than 10 percent of the aggregate area of the walls and ceiling of a room.

Item 4: The flame spread index must not be higher than 75 when tested in accordance with ASTM E84 or UL 723. The value of 75 was selected to be consistent with the requirement for foam plastic insulation, even though other materials used as trim are permitted to have flame spread indexes of up to 200 in many locations. The smoke-developed index is not regulated.

R316.5.10 Interior finish. Foam plastics shall be permitted as interior finish where *approved* in accordance with Section R316.6. Foam plastics that are used as an interior finish shall meet the flame spread index and smoke-developed index requirements of Sections R302.9.1 and R302.9.2.

❖ Foam plastic used as interior finish must be approved through Section R316.6. This means that the foam plastic material must be tested in order to eliminate the thermal barrier in accordance with NFPA 286 and the acceptance criteria of Section R302.9.4, FM 4880, UL 723, UL 1040 or UL 1715, or fire tests related to actual end-use configurations (including the foam plastic thickness). The foam plastic must also meet the flame spread index requirements of Section R302.9 (flame spread index less than 200).

R316.5.11 Sill plates and headers. Foam plastic shall be permitted to be spray applied to sill plates and headers or installed in the perimeter joist space without the thermal barrier specified in Section R316.4 subject to all of the following:

1. The thickness of the foam plastic shall be not more than $3^1/_4$ inches (83 mm).
2. The density of the foam plastic shall be in the range of 0.5 to 2.0 pounds per cubic foot (8 to 32 kg/m^3).
3. The foam plastic shall have a flame spread index of 25 or less and an accompanying smoke-developed index of 450 or less when tested in accordance with ASTM E84 or UL 723.

❖ No thermal barrier is required when a foam plastic is spray applied to the sill plate and joist header where all

INTERNATIONAL CODE COUNCIL®
Copyright © 2015 ICC. ALL RIGHTS RESERVED. Accessed by David Dammon on Jun 21, 2017 12:30:52 PM pursuant to License Agreement with ICC. No further reproduction or distribution authorized. ANY UNAUTHORIZED REPRODUCTION OR DISTRIBUTION IS A VIOLATION OF THE FEDERAL COPYRIGHT ACT AND THE LICENSE AGREEMENT, AND SUBJECT TO CIVIL AND CRIMINAL PENALTIES THEREUNDER.

of the conditions listed in Section R316.5.11 are met. Because foam plastic insulation in this application is left exposed, the three conditions listed [thickness less than $3^1/_4$ inches (82.6 mm), density 0.5 to 2.0 pcf (24 to 32 kg/m^3), flame spread index less than 25 and smoke-developed index less than 450] control the spray applied foam plastic used in this application (see Commentary Figure R316.5.11).

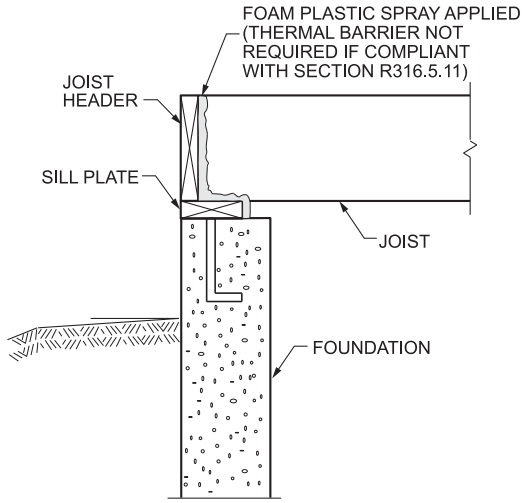

Figure R316.5.11
FOAM PLASTIC SPRAY APPLIED TO SILL PLATE AND HEADER

R316.5.12 Sheathing. Foam plastic insulation used as sheathing shall comply with Section R316.3 and Section R316.4. Where the foam plastic sheathing is exposed to the *attic* space at a gable or kneewall, the provisions of Section R316.5.3 shall apply. Where foam plastic insulation is used as *exterior wall* sheathing on framed wall assemblies, it shall comply with Section R316.8.

❖ Foam plastic used as sheathing is a very common application, adding insulation to the framing of the building. Where used as a sheathing material, foam plastic sheathing must meet the requirements of Sections R316.3 and R316.4. Often foam plastic sheathing is used on the outside of an exterior wall, continuously covering the wall. Where used on framed wall assemblies, exterior foam plastic sheathing must comply with the wind resistance requirements of Section R316.8.

Consider an example where the living area of the building has a thermal barrier, such as $^1/_2$-inch (12.7 mm) gypsum board, in place. That thermal barrier, combined with foam plastic that meets the surface burning requirements of less than 75 for a flame spread index and less than 450 for a smoke developed index, results in a code compliant application.

Where foam plastic sheathing is exposed to the attic space at a gable or knee wall, the foam plastic insulation must meet the requirements of Section R316.5.3. For applications where foam plastic is used as sheathing, code approval follows the same paths outlined in Section R316.1.

If the foam plastic insulation has passed testing, in the thickness and density intended for use, in accordance with Section R316.6, no thermal barrier or ignition barrier is required over the foam plastic insulation and this section of the code does not apply. It is important to note that the actual configuration must be tested, including typical seams, joints and other details that will occur in the finished installation.

R316.5.13 Floors. The thermal barrier specified in Section R316.4 is not required to be installed on the walking surface of a structural floor system that contains foam plastic insulation when the foam plastic is covered by not more than a nominal $^1/_2$-inch-thick (12.7 mm) wood structural panel or equivalent. The thermal barrier specified in Section R316.4 is required on the underside of the structural floor system that contains foam plastic insulation when the underside of the structural floor system is exposed to the interior of the building.

❖ In today's construction, new types of products are being used that incorporate foam plastic insulation for energy reasons. One example is structural insulated panels where foam plastic is laminated between two structural wood facings. This type of panel can be used as a wall, floor or roof. Foam plastic is required to be protected by a thermal barrier which typically is $^1/_2$-inch (12.7 mm) gypsum wallboard. In the case of flooring, gypsum wallboard or other common thermal barrier materials cannot be used on the walking surfaces due to their friability, etc. Section R316.5.13 addresses this problem. The requirement for the $^1/_2$-inch-thick (12.7 mm) plywood or equivalent will provide sufficient protection to the foam plastic insulation. While $^1/_2$-inch (12.7 mm) plywood is not by itself a thermal barrier, in the case of a floor, it will provide sufficient protection since in the event of an interior fire, the floor is typically the last building element to be significantly exposed by the fire. If the foam plastic on the underside of the floor system is exposed to the interior of the building, then the foam plastic on the underside of the floor system must be covered by the required thermal barrier

R316.6 Specific approval. Foam plastic not meeting the requirements of Sections R316.3 through R316.5 shall be specifically *approved* on the basis of one of the following *approved* tests: NFPA 286 with the acceptance criteria of Section R302.9.4, FM 4880, UL 1040 or UL 1715, or fire tests related to actual end-use configurations. Approval shall be based on the actual end-use configuration and shall be performed on the finished foam plastic assembly in the maximum thickness intended for use. Assemblies tested shall include seams, joints and other typical details used in the installation of the assembly and shall be tested in the manner intended for use.

❖ Foam plastic does not have to comply with the installation and use requirements of Sections R316.3 through R316.5 where specific approval is obtained in accordance with this section. This section lists examples of specific large-scale tests, such as FM 4880, NFPA 286, UL 1040 or UL 1715. Also, other large-scale fire tests related to actual end-use configuration can be used. The intent is to require testing based on

INTERNATIONAL CODE COUNCIL®
Copyright © 2015 ICC. ALL RIGHTS RESERVED. Accessed by David Dammon on Jun 21, 2017 12:30:52 PM pursuant to License Agreement with ICC. No further reproduction or distribution authorized. ANY UNAUTHORIZED REPRODUCTION OR DISTRIBUTION IS A VIOLATION OF THE FEDERAL COPYRIGHT ACT AND THE LICENSE AGREEMENT, AND SUBJECT TO CIVIL AND CRIMINAL PENALTIES THEREUNDER.

the proposed end-use configuration of the foam plastic assembly with a fire exposure that is appropriate in size and location for the proposed application. These tests must be performed on full-scale assemblies. The tested assemblies must include typical seams, joints and other details that will occur in the finished installation. The foam plastic must be tested in the maximum thickness and density intended for use. Thorough testing provides an accurate depiction of the in-place fire performance of assemblies and systems using foam plastics.

There are two ways to show code compliance under Section R316.6. One method is to provide the actual test report that contains a description of the assembly and test results showing that the foam plastic, in the end use application, has passed the test. The second method is to obtain, from the ICC-ES, an evaluation report that covers the end-use application.

R316.7 Termite damage. The use of foam plastics in areas of "very heavy" termite infestation probability shall be in accordance with Section R318.4.

❖ This section of the code refers to Section R318.4 that addresses the use of foam plastics in areas of "very heavy" termite infestation probability. When the structure is built in an area defined as "very heavy" termite infestation, Section R318.4 prohibits the use of foam plastics installed on the exterior face of below grade foundations walls or slab foundations, under exterior or interior foundation walls or slab foundations below-grade or where located within 6 inches (152 mm) of exposed earth. Section R318.4 states three exceptions where foam plastics are permitted:

1. Where the structural members of the building are either noncombustible or pressure-preservative-treated wood;
2. Where, in addition to the requirements of Section R318.1, the foam plastic is adequately protected from subterranean termite damage; or
3. On the interior side of basement walls.

R316.8 Wind resistance. Foam plastic insulation complying with ASTM C578 and ASTM C1289 and used as *exterior wall* sheathing on framed wall assemblies shall comply with SBCA FS 100 for wind pressure resistance unless installed directly over a sheathing material that is separately capable of resisting the wind load or otherwise exempted from the scope of SBCA FS 100.

❖ Foam plastic insulation sheathing that complies with ASTM C578 and C1289, is used as exterior wall sheathing on framed wall assemblies and is intended to resist wind pressure must comply with SBCA FS 100. This standard provides a methodology by which a manufacturer can qualify their product, through testing, to meet the requirements of the *International Codes*® (I-Codes®) in establishing the wind pressure resistance of the product. It also provides for on-going quality control procedures to ensure that the product continues to meet its qualified wind pressure resistance.

SECTION R317
PROTECTION OF WOOD AND WOOD-BASED PRODUCTS AGAINST DECAY

R317.1 Location required. Protection of wood and wood-based products from decay shall be provided in the following locations by the use of naturally durable wood or wood that is preservative-treated in accordance with AWPA U1 for the species, product, preservative and end use. Preservatives shall be listed in Section 4 of AWPA U1.

1. Wood joists or the bottom of a wood structural floor when closer than 18 inches (457 mm) or wood girders when closer than 12 inches (305 mm) to the exposed ground in crawl spaces or unexcavated area located within the periphery of the building foundation.
2. Wood framing members that rest on concrete or masonry exterior foundation walls and are less than 8 inches (203 mm) from the exposed ground.
3. Sills and sleepers on a concrete or masonry slab that is in direct contact with the ground unless separated from such slab by an impervious moisture barrier.
4. The ends of wood girders entering exterior masonry or concrete walls having clearances of less than $^1/_2$ inch (12.7 mm) on tops, sides and ends.
5. Wood siding, sheathing and wall framing on the exterior of a building having a clearance of less than 6 inches (152 mm) from the ground or less than 2 inches (51 mm) measured vertically from concrete steps, porch slabs, patio slabs and similar horizontal surfaces exposed to the weather.
6. Wood structural members supporting moisture-permeable floors or roofs that are exposed to the weather, such as concrete or masonry slabs, unless separated from such floors or roofs by an impervious moisture barrier.
7. Wood furring strips or other wood framing members attached directly to the interior of exterior masonry walls or concrete walls below *grade* except where an *approved* vapor retarder is applied between the wall and the furring strips or framing members.

❖ This section addresses the need for minimum protection against decay damage for wood members located in certain locations.

For those portions of a wood-framed structure that are subject to damage by decay, the code mandates that the lumber be pressure-preservative treated or be naturally durable wood, or be of a species of wood having a natural resistance to decay. Naturally durable wood by definition is the heartwood of decay-resistant redwood, cedars, black locust and black walnut.

Item 1: Crawl spaces and unexcavated areas under a building usually contain moisture-laden air. These spaces must be ventilated in accordance with Section R408 to remove as much moisture as possible before it causes decay. Wood placed a minimum specified distance above grade in unexcavated under-floor areas or crawl spaces, as shown in Commentary Figure R317.1(1), need not be either preservative-treated wood or wood that is naturally decay-resistant durable

INTERNATIONAL CODE COUNCIL®
Copyright © 2015 ICC. ALL RIGHTS RESERVED. Accessed by David Dammon on Jun 21, 2017 12:30:52 PM pursuant to License Agreement with ICC. No further reproduction or distribution authorized. ANY UNAUTHORIZED REPRODUCTION OR DISTRIBUTION IS A VIOLATION OF THE FEDERAL COPYRIGHT ACT AND THE LICENSE AGREEMENT, AND SUBJECT TO CIVIL AND CRIMINAL PENALTIES THEREUNDER.

wood. These clearances below floor joists and beams are deemed to be the minimum necessary to allow adequate circulation and removal of moisture from the air and from the wood framing members. Such clearances apply within the exterior wall line of the building foundation.

Item 2: Foundation walls will absorb moisture from the ground and by capillary action move it to framing members that are in contact with the foundation. Unless a minimum clearance of 8 inches (203 mm) is maintained from the finished grade to wood sills resting on concrete or masonry exterior foundation walls, decay-resistant or preservative-treated wood, as shown in Commentary Figure R317.1(2), must be used. The 8-inch (203 mm) clearance specified in this section has been determined to be large enough to prevent wetting of wood framing members under most circumstances.

Item 3: Concrete and masonry slabs that are in direct contact with the earth are very susceptible to moisture because of absorption of ground water. This can occur on interior slabs, as well as at the perimeter. In the case of wood sills or sleepers placed on concrete or masonry slabs, decay-resistant wood or pressure-treated wood is required where the slabs are in direct contact with the ground, as illustrated in Commentary Figure R317.1(3). Concrete that is fully separated from the ground by a vapor barrier is not in direct contact with earth.

Item 4: A minimum $^1/_2$-inch (12.7 mm) clearance along the top, sides and ends of wood members projecting into exterior masonry or concrete walls must be maintained, as illustrated in Commentary Figure R317.1(4), unless the wood is treated or is of a species that is naturally decay resistant.

Item 5: Experience has shown that wood siding may extend below the sill plate to within 6 inches (152 mm) of the earth without decaying. Commentary Figure R317.1(5) shows the required minimum 6-inch (152 mm) clearance from the ground for wood siding, sheathing and wall framing on the exterior of a building. It should not be in direct contact with the foundation wall. If the sheathing is located over a concrete step or slab, the clearance may be reduced to 2 inches (51 mm) minimum.

Item 6: Concrete or masonry slabs that serve as roofs or floor systems that are exposed to the weather are very susceptible to moisture from rain or snow. If these slabs are supported by wood, the wood must be decay resistant or must be separated from the slabs by vapor barriers so there is not direct contact. This is similar to Item 3.

Item 7: When a basement area is finished, a common practice is to provide wood furring strips on top of the concrete or masonry walls for attachment of finishes. These furring strips must either be of decay-resistant

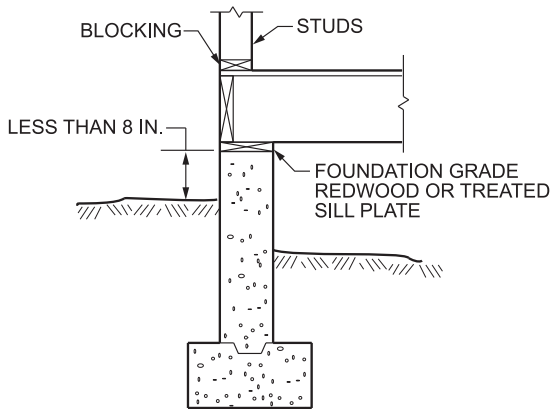

For SI: 1 inch = 25.4 mm.

Figure R317.1(2)
WOOD SILLS ON FOUNDATION WALLS

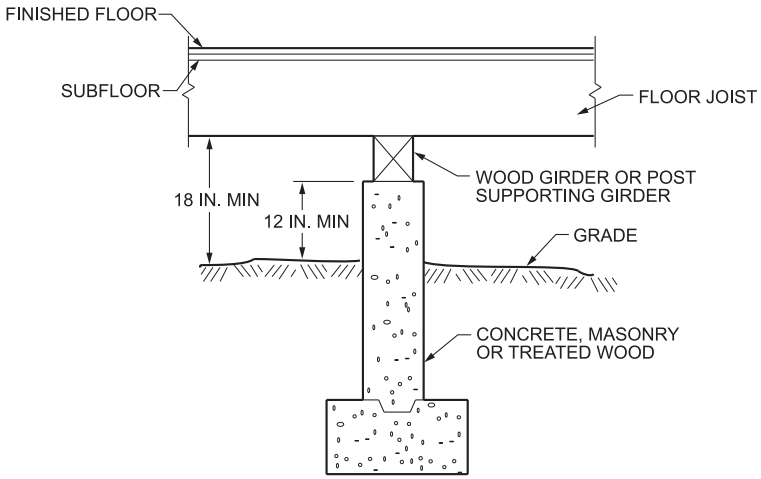

For SI: 1 inch = 25.4 mm.

Figure R317.1(1)
MINIMUM SEPARATION OF NONTREATED WOOD FROM GROUND

INTERNATIONAL CODE COUNCIL®
Copyright © 2015 ICC. ALL RIGHTS RESERVED. Accessed by David Dammon on Jun 21, 2017 12:30:52 PM pursuant to License Agreement with ICC. No further reproduction or distribution authorized. ANY UNAUTHORIZED REPRODUCTION OR DISTRIBUTION IS A VIOLATION OF THE FEDERAL COPYRIGHT ACT AND THE LICENSE AGREEMENT, AND SUBJECT TO CIVIL AND CRIMINAL PENALTIES THEREUNDER.

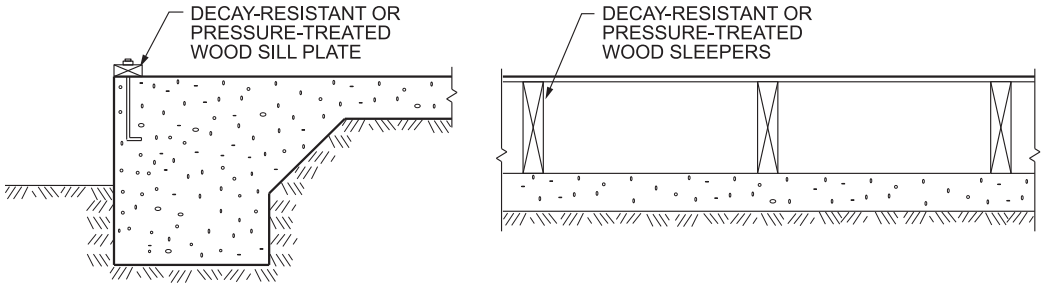

Figure R317.1(3)
WOOD SILLS AND SLEEPERS

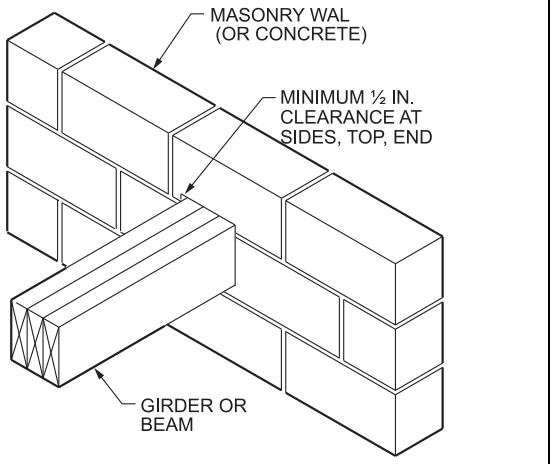

For SI: 1 inch = 25.4 mm.

Figure R317.1(4)
NONTREATED WOOD PROJECTING INTO BEAM POCKET

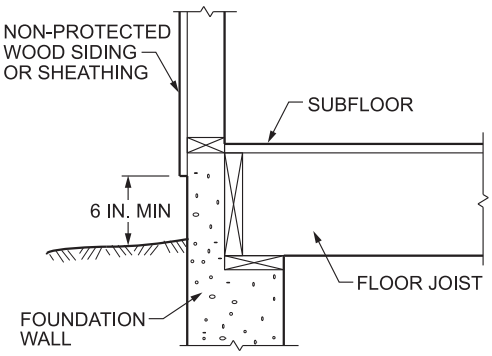

For SI: 1 inch = 25.4 mm.

Figure R317.1(5)
NONTREATED WOOD SIDING OR SHEATHING

material or must be separated from the wall by a vapor barrier. This will prevent the moisture from moving through the walls and rotting the furring strips, and even possibly transferring the moisture to the inside finish materials.

R317.1.1 Field treatment. Field-cut ends, notches and drilled holes of preservative-treated wood shall be treated in the field in accordance with AWPA M4.

❖ The requirement for field treatment of cuts and holes is duplicated from Section R318.1.2, which addresses the same type of situation in treated wood applications for termite protection. Where pressure-preservative-treated wood is used for protection against decay, any cuts, notches or bored holes done in the field must be retreated. The retreatment methods and materials are to be in accordance with AWPA M4, which regulates the care of preservative-treated wood products.

R317.1.2 Ground contact. All wood in contact with the ground, embedded in concrete in direct contact with the ground or embedded in concrete exposed to the weather that supports permanent structures intended for human occupancy shall be *approved* pressure-preservative-treated wood suitable for ground contact use, except that untreated wood used entirely below groundwater level or continuously submerged in fresh water shall not be required to be pressure-preservative treated.

❖ Wood members that are designed to be in contact with the ground and wood that is embedded in concrete in direct contact with the ground, or embedded in concrete exposed to the weather must be suitable for ground contact use. This provision applies to all wood members that support permanent structures designed for human occupancy. Untreated wood is permitted only where the wood members will be located below the ground water level or where the members are continuously submerged in fresh water because fungus that decays wood and termites cannot survive in a water-only environment with no oxygen (see Commentary Figure R317.1.2).

INTERNATIONAL CODE COUNCIL®
Copyright © 2015 ICC. ALL RIGHTS RESERVED. Accessed by David Dammon on Jun 21, 2017 12:30:52 PM pursuant to License Agreement with ICC. No further reproduction or distribution authorized. ANY UNAUTHORIZED REPRODUCTION OR DISTRIBUTION IS A VIOLATION OF THE FEDERAL COPYRIGHT ACT AND THE LICENSE AGREEMENT, AND SUBJECT TO CIVIL AND CRIMINAL PENALTIES THEREUNDER.

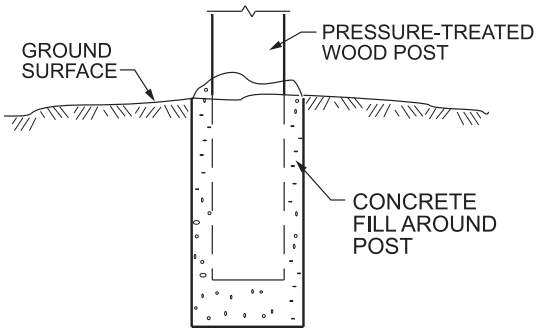

Figure R317.1.2
WOOD POST EMBEDDED IN CONCRETE

R317.1.3 Geographical areas. In geographical areas where experience has demonstrated a specific need, *approved* naturally durable or pressure-preservative-treated wood shall be used for those portions of wood members that form the structural supports of buildings, balconies, porches or similar permanent building appurtenances when those members are exposed to the weather without adequate protection from a roof, eave, overhang or other covering that would prevent moisture or water accumulation on the surface or at joints between members. Depending on local experience, such members may include:

1. Horizontal members such as girders, joists and decking.
2. Vertical members such as posts, poles and columns.
3. Both horizontal and vertical members.

❖ This section gives the local jurisdiction the authority to require additional protection where the need can be documented by experience. Such experience may include high water tables, extended high-humidity conditions, etc.

Guidance is provided in this section for the protection of wood members other than those specifically identified elsewhere in this section that are exposed to the weather without benefit of protective elements. Included in the list of possible wood members that must be pressure-preservative treated or naturally durable wood are girders, joists, decking, columns and similar structural members of porches, balconies and other exterior building elements.

R317.1.4 Wood columns. Wood columns shall be *approved* wood of natural decay resistance or *approved* pressure-preservative-treated wood.

Exceptions:

1. Columns exposed to the weather or in *basements* where supported by concrete piers or metal pedestals projecting 1 inch (25 mm) above a concrete floor or 6 inches (152 mm) above exposed earth and the earth is covered by an *approved* impervious moisture barrier.
2. Columns in enclosed crawl spaces or unexcavated areas located within the periphery of the building when supported by a concrete pier or metal pedestal at a height more than 8 inches (203 mm) from exposed earth and the earth is covered by an impervious moisture barrier.
3. Deck posts supported by concrete piers or metal pedestals projecting not less than 1 inch (25 mm) above a concrete floor or 6 inches (152 mm) above exposed earth.

❖ Protection against decay is required for wood structural columns. The exceptions permit the use of common framing lumber where the column is isolated from the earth or concrete. Generally, structural elements in basements or cellars are easier to inspect, which explains the lower clearances. Columns in crawl spaces must have a larger separation distance to safeguard against termites between inspections. In Exceptions 1 and 2, an impervious moisture barrier must be installed to ensure the column does not absorb water from the earth or concrete pier. Exception 3 allows deck posts to be of nontreated wood if they are supported on concrete piers or metal pedestals at least 1 inch thick.

R317.1.5 Exposed glued-laminated timbers. The portions of glued-laminated timbers that form the structural supports of a building or other structure and are exposed to weather and not properly protected by a roof, eave or similar covering shall be pressure treated with preservative, or be manufactured from naturally durable or preservative-treated wood.

❖ It is common practice to design large glued-laminated arches that are connected to foundations near ground level. Exterior walls are built inside the span of these arches, leaving the initial few feet of the wood arches exposed to the weather. Experience has shown that covering the tops of these arches with metal or other water seals is not sufficient to prevent decay of the timber. Therefore, arches and other exposed wood members not protected by roofs or similar covers must be laminated of naturally durable or preservative-treated wood.

R317.2 Quality mark. Lumber and plywood required to be pressure-preservative treated in accordance with Section R318.1 shall bear the quality *mark* of an *approved* inspection agency that maintains continuing supervision, testing and inspection over the quality of the product and that has been *approved* by an accreditation body that complies with the requirements of the American Lumber Standard Committee treated wood program.

❖ The quality of lumber or plywood that has been pressure-preservative treated in accordance with the code is identifiable through a quality mark, such as shown in Commentary Figure R317.2.1. Without the proper identifying mark, it would be impossible to determine in the field that preservative-treated wood conforms to the applicable standards. The identifying mark must be from an approved inspection agency that has continuous follow-up services. Additionally, the inspection agency must be certified as being competent by an approved organization. The required identifying mark

INTERNATIONAL CODE COUNCIL®
Copyright © 2015 ICC. ALL RIGHTS RESERVED. Accessed by David Dammon on Jun 21, 2017 12:30:52 PM pursuant to License Agreement with ICC. No further reproduction or distribution authorized. ANY UNAUTHORIZED REPRODUCTION OR DISTRIBUTION IS A VIOLATION OF THE FEDERAL COPYRIGHT ACT AND THE LICENSE AGREEMENT, AND SUBJECT TO CIVIL AND CRIMINAL PENALTIES THEREUNDER.

is in addition to the requirements for grade marks to identify the species and grade as specified elsewhere in the code.

R317.2.1 Required information. The required quality *mark* on each piece of pressure-preservative-treated lumber or plywood shall contain the following information:

1. Identification of the treating plant.
2. Type of preservative.
3. The minimum preservative retention.
4. End use for which the product was treated.
5. Standard to which the product was treated.
6. Identity of the *approved* inspection agency.
7. The designation "Dry," if applicable.

Exception: Quality *mark*s on lumber less than 1 inch (25 mm) nominal thickness, or lumber less than nominal 1 inch by 5 inches (25 mm by 127 mm) or 2 inches by 4 inches (51 mm by 102 mm) or lumber 36 inches (914 mm) or less in length shall be applied by stamping the faces of exterior pieces or by end labeling not less than 25 percent of the pieces of a bundled unit.

❖ This section provides the information that must be shown on a quality mark for pressure-preservative-treated lumber or plywood. Commentary Figure R317.2.1 illustrates how this information may be shown on a quality label.

R317.3 Fasteners and connectors in contact with preservative-treated and fire-retardant-treated wood. Fasteners, including nuts and washers, and connectors in contact with preservative-treated wood and fire-retardant-treated wood shall be in accordance with this section. The coating weights for zinc-coated fasteners shall be in accordance with ASTM A153. Stainless steel driven fasteners shall be in accordance with the material requirements of ASTM F1667.

❖ This section provides a charging statement for fasteners utilized in situations where the surroundings or the type of wood could corrode the fasteners over time. ASTM A153 specifies criteria for hot-dipped zinc coating for iron and steel hardware. ASTM F1667 provides minimum specifications for driven nails, spikes and staples.

R317.3.1 Fasteners for preservative-treated wood. Fasteners, including nuts and washers, for preservative-treated wood shall be of hot-dipped, zinc-coated galvanized steel, stainless steel, silicon bronze or copper. Coating types and weights for connectors in contact with preservative-treated wood shall be in accordance with the connector manufacturer's recommendations. In the absence of manufacturer's recommendations, a minimum of ASTM A653 type G185 zinc-coated galvanized steel, or equivalent, shall be used.

Exceptions:

1. $^{1}/_{2}$-inch-diameter (12.7 mm) or greater steel bolts.
2. Fasteners other than nails and timber rivets shall be permitted to be of mechanically deposited zinc-coated steel with coating weights in accordance with ASTM B695, Class 55 minimum.
3. Plain carbon steel fasteners in SBX/DOT and zinc borate preservative-treated wood in an interior, dry environment shall be permitted.

❖ Except for large steel bolts, all fasteners used in conjunction with pressure-preservative-treated wood must be corrosion resistant. Some chemicals used to preservative-treat or fire-retardant-treat wood may have a corrosive effect on fasteners installed in locations that are high in moisture. Acceptable materials include stainless steel, silicon bronze, copper or hot-dipped zinc-coated galvanized steel. Such fasteners are also mandated for use with fire-retardant-treated wood members. Use of durable fasteners is required to decrease the likelihood that the load-carrying capacity of fasteners will be reduced by corrosion.

The second exception allows the use of a mechanical galvanization process in which the coating weight is mandatory as outlined in ASTM B695.

The third exception permits the use of nonzinc-coated galvanized steel where used in a dry environment and in contact with SBX/DOT and zinc borate-treated wood.

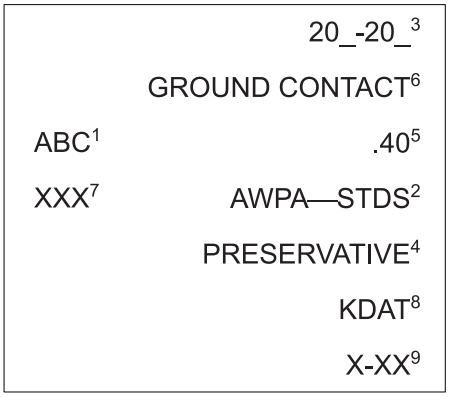

1- THE IDENTIFYING SYMBOL, LOGO OR NAME OF THE ACCREDITED AGENCY.
2- THE APPLICABLE AMERICAN WOOD PRESERVER'S ASSOCIATION (AWPA) COMMODITY STANDARD.
3- THE YEAR OF TREATMENT IF REQUIRED BY AWPA STANDARD.
4- THE PRESERVATIVE USED, WHICH MAY BE ABBREVIATED.
5- THE PRESERVATIVE RETENTION.
6- THE EXPOSURE CATEGORY (E.G., ABOVE GROUND, GROUND CONTACT, ETC.).
7- THE PLANT NAME AND LOCATION; PLANT NAME AND NUMBER, OR PLANT NUMBER.
8- IF APPLICABLE, MOISTURE CONTENT AFTER TREATMENT.
9- IF APPLICABLE, LENGTH, AND/OR CLASS.

Figure R317.2.1
TYPICAL LABEL FOR PRESSURE-TREATED WOOD

INTERNATIONAL CODE COUNCIL®
Copyright © 2015 ICC. ALL RIGHTS RESERVED. Accessed by David Dammon on Jun 21, 2017 12:30:52 PM pursuant to License Agreement with ICC. No further reproduction or distribution authorized. ANY UNAUTHORIZED REPRODUCTION OR DISTRIBUTION IS A VIOLATION OF THE FEDERAL COPYRIGHT ACT AND THE LICENSE AGREEMENT, AND SUBJECT TO CIVIL AND CRIMINAL PENALTIES THEREUNDER.

R317.3.2 Fastenings for wood foundations. Fastenings, including nuts and washers, for wood foundations shall be as required in AF&PA PWF.

❖ A permanent wood foundation (PWF) system is intended for light-frame construction including residential buildings. The AWC PWF—*Permanent Wood Foundation Design Specification*, primarily addresses the structural design requirements.

The PWF is a load-bearing wood frame wall and floor system designed for both above- and below-grade use as a foundation for light-frame construction. The PWF specifications are based on information developed cooperatively by the wood products industry and the U.S. Forest Service, with the advice and guidance of the Department of Housing and Urban Development's (HUD) Federal Housing Administration, and utilizing research findings of the National Association of Home Builders Research Center.

The PWF standard is also referenced in Sections R401.1 and R404.2.3.

R317.3.3 Fasteners for fire-retardant-treated wood used in exterior applications or wet or damp locations. Fasteners, including nuts and washers, for fire-retardant-treated wood used in exterior applications or wet or damp locations shall be of hot-dipped, zinc-coated galvanized steel, stainless steel, silicon bronze or copper. Fasteners other than nails and timber rivets shall be permitted to be of mechanically deposited zinc-coated steel with coating weights in accordance with ASTM B695, Class 55 minimum.

❖ Sections R317.3.3 and R317.3.4 are intended to recognize the different exposures for fire-retardant-treated wood and the fastener requirements for that exposure. For wet conditions where corrosion may be a concern, this section allows the use of a mechanical galvanization process in which the coating weight is mandatory as outlined in ASTM B695.

R317.3.4 Fasteners for fire-retardant-treated wood used in interior applications. Fasteners, including nuts and washers, for fire-retardant-treated wood used in interior locations shall be in accordance with the manufacturer's recommendations. In the absence of the manufacturer's recommendations, Section R317.3.3 shall apply.

❖ Sections R317.3.3 and R317.3.4 are intended to recognize the different exposures for fire-retardant-treated wood and the fastener requirements for that exposure. The interior exposure for fire-retardant-treated wood is far less severe than the exposure for fire-retardant treated wood in wet, damp or exterior locations. Manufacturers of fire-retardant-treated wood make their recommendations for the appropriate fastener for fire-retardant-treated wood based on testing. If the manufacturer has no recommendations, the more restrictive provisions in Section R317.3.3 are applicable.

R317.4 Plastic composites. Plastic composite exterior deck boards, stair treads, guards and handrails containing wood, cellulosic or other biodegradable materials shall comply with the requirements of Section R507.3.

❖ Plastic composite materials, commonly used in exterior deck boards, guards and handrails, must be rated for appropriate performance criteria. These materials have a widespread acceptance for residential construction, and requiring that wood, cellulosic and other biodegradable materials comply with Section R507.3 will ensure the safe application of these materials in exterior deck systems. The standard referenced in Section R507.3, ASTM D7032, includes performance evaluations, such as flexural tests, ultraviolet resistance tests, freeze-thaw resistance tests, biodeterioration tests, fire performance tests, creep recovery tests, mechanical fastener holding tests and slip resistance tests. The standard also includes considerations of the effects of temperature and moisture, concentrated loads and fire propagation tests.

SECTION R318
PROTECTION AGAINST SUBTERRANEAN TERMITES

R318.1 Subterranean termite control methods. In areas subject to damage from termites as indicated by Table R301.2(1), methods of protection shall be one, or a combination, of the following methods:

1. Chemical termiticide treatment in accordance with Section R318.2.
2. Termite baiting system installed and maintained in accordance with the *label*.
3. Pressure-preservative-treated wood in accordance with the provisions of Section R317.1.
4. Naturally durable termite-resistant wood.
5. Physical barriers in accordance with Section R318.3 and used in locations as specified in Section R317.1.
6. Cold-formed steel framing in accordance with Sections R505.2.1 and R603.2.1.

❖ This section establishes the rules for the protection of structures from damage caused by termites. The methods of protection address not only wood members, but also foam plastic and cold-formed steel materials.

Figure R301.2(6) illustrates those geographical areas where termite damage is probable. In those areas, the structure must be protected from termite damage in an appropriate manner. There are a number of methods permitted by the code to provide the necessary protection against termite damage. The most common method of termite control is soil poisoning. Alternatives include the use of pressure-preservative treated, naturally termite-resistant wood and

INTERNATIONAL CODE COUNCIL®
Copyright © 2015 ICC. ALL RIGHTS RESERVED. Accessed by David Dammon on Jun 21, 2017 12:30:52 PM pursuant to License Agreement with ICC. No further reproduction or distribution authorized. ANY UNAUTHORIZED REPRODUCTION OR DISTRIBUTION IS A VIOLATION OF THE FEDERAL COPYRIGHT ACT AND THE LICENSE AGREEMENT, AND SUBJECT TO CIVIL AND CRIMINAL PENALTIES THEREUNDER.

barriers over perimeter walls. Often a combination of these methods is necessary to establish the required level of protection. The six acceptable methods of protection are broken out to make them easier to read.

R318.1.1 Quality mark. Lumber and plywood required to be pressure-preservative treated in accordance with Section R318.1 shall bear the quality *mark* of an *approved* inspection agency that maintains continuing supervision, testing and inspection over the quality of the product and that has been *approved* by an accreditation body that complies with the requirements of the American Lumber Standard Committee treated wood program.

❖ The required quality mark is similar to what is required for pressure-preservative-treated wood where decay is a concern (see commentary, Section R317.2 and Commentary Figure R317.2.1).

R318.1.2 Field treatment. Field-cut ends, notches and drilled holes of pressure-preservative-treated wood shall be retreated in the field in accordance with AWPA M4.

❖ Where pressure-preservative-treated wood is used for protection against termites, any cuts, notches or bored holes done in the field must be retreated. The retreatment methods and materials are to be in accordance with AWPA M4, which regulates the care of preservative-treated wood products. This same requirement is found in Section R317.1.1 for pressure-preservative-treated wood used to prevent decay.

R318.2 Chemical termiticide treatment. Chemical termiticide treatment shall include soil treatment or field-applied wood treatment. The concentration, rate of application and method of treatment of the chemical termiticide shall be in strict accordance with the termiticide *label*.

❖ This language accurately reflects the current industry terminology in reference to termiticides and it emphasizes the necessity of using chemicals as required by their labels.

Where using a chemical poisoning of the soil for termite control, the chemical's instructions must be followed in detail. Treatment must be consistent with the recommendations of the chemical manufacturer.

R318.3 Barriers. *Approved* physical barriers, such as metal or plastic sheeting or collars specifically designed for termite prevention, shall be installed in a manner to prevent termites from entering the structure. Shields placed on top of an exterior foundation wall are permitted to be used only if in combination with another method of protection.

❖ This section specifically lists several specific types of termite barriers. In addition, the proper use of a termite shield is addressed. Historically, termite shields were assumed to be effective in preventing termite penetration. However, the term "shield" is actually somewhat of a misnomer because they do not stop termites and were originally designed to make inspection and observation easier.

R318.4 Foam plastic protection. In areas where the probability of termite infestation is "very heavy" as indicated in Figure R301.2(6), extruded and expanded polystyrene, polyisocyanurate and other foam plastics shall not be installed on the exterior face or under interior or exterior foundation walls or slab foundations located below *grade*. The clearance between foam plastics installed above *grade* and exposed earth shall be not less than 6 inches (152 mm).

Exceptions:

1. Buildings where the structural members of walls, floors, ceilings and roofs are entirely of noncombustible materials or pressure-preservative-treated wood.
2. Where in *addition* to the requirements of Section R318.1, an *approved* method of protecting the foam plastic and structure from subterranean termite damage is used.
3. On the interior side of *basement walls*.

❖ In those geographical areas where there is a very high risk of termite infestation, the code prohibits the use of foam plastic materials below or adjacent to ground level. This prohibition includes foam plastics installed on the exterior face of foundation walls or slab foundations, under exterior or interior foundation walls or slab foundations below grade or where located within 6 inches (152 mm) of exposed earth. Foam plastics are permitted where they are adequately protected or where the structural members are either noncombustible or of pressure-preservative-treated wood.

SECTION R319
SITE ADDRESS

R319.1 Address identification. Buildings shall be provided with *approved* address identification. The address identification shall be legible and placed in a position that is visible from the street or road fronting the property. Address identification characters shall contrast with their background. Address numbers shall be Arabic numbers or alphabetical letters. Numbers shall not be spelled out. Each character shall be not less than 4 inches (102 mm) in height with a stroke width of not less than 0.5 inch (12.7 mm). Where required by the fire code official, address identification shall be provided in additional *approved* locations to facilitate emergency response. Where access is by means of a private road and the building address cannot be viewed from the public way, a monument, pole or other sign or means shall be used to identify the structure. Address identification shall be maintained.

❖ The address requirements are consistent with the IBC, IFC and the code. The code requires buildings to have plainly visible and legible address numbers posted on the building or in such a place on the property that the building may be identified by emergency services, such as fire, medical and police. The primary concern is that emergency forces should be able to locate the building without going through a lengthy search procedure. In furthering the concept, the code states that the approved street numbers must be placed in a location readily visible from the street or roadway fronting the property if a sign on the building would not be visible from the street. Address posting on a mailbox is not

INTERNATIONAL CODE COUNCIL®
Copyright © 2015 ICC. ALL RIGHTS RESERVED. Accessed by David Dammon on Jun 21, 2017 12:30:52 PM pursuant to License Agreement with ICC. No further reproduction or distribution authorized. ANY UNAUTHORIZED REPRODUCTION OR DISTRIBUTION IS A VIOLATION OF THE FEDERAL COPYRIGHT ACT AND THE LICENSE AGREEMENT, AND SUBJECT TO CIVIL AND CRIMINAL PENALTIES THEREUNDER.

adequate for emergency responders when they are grouped or placed across the street from the dwelling. This section also gives the fire code official the authority to require address identification in other locations to facilitate emergency response.

SECTION R320
ACCESSIBILITY

R320.1 Scope. Where there are four or more *dwelling units* or sleeping units in a single structure, the provisions of Chapter 11 of the *International Building Code* for Group R-3 shall apply.

❖ Several editions of the IBC have been certified by HUD as a safe harbor document for complying with the accessibility provisions in the Fair Housing Act (FHA). Safe harbor means that the requirements in the IBC and ICC A117.1 meet or exceed the accessibility construction requirements in the Fair Housing Accessibility Guidelines (FHAG). Since FHA requirements start when four units are constructed together, detached one-, two- and three-family homes are not required to comply with the IBC for accessibility requirements. However, town-houses and congregate residences are covered in Chapter 11 of the IBC. Such facilities should use the requirements in the IBC for Group R-3 occupancies to identify which units and facilities have accessibility requirements.

The scope of this code (see Section R101.2) includes some small group homes, live/work units and bed-and-breakfast hotels or lodging houses that are owner occupied and have not more than five guestrooms. IRC Section R320.1.1 requires dwelling units that contain guestrooms to comply with Chapter 11 of the IBC for Group R-3. For the purpose of applying the IBC provisions, guestrooms are to be considered as sleeping rooms. The exception to Section R320.1.1 exempts owner-occupied lodging houses from accessibility requirements where they have not more than five guestrooms and they are constructed in accordance with the IRC. Note that Exception 2 of Section R101.2 requires that such lodging houses be sprinklered in accordance with Section P2904.

"Guestrooms" and "Lodging houses" are defined in Section R202. A guestroom is a room that is intended to be used for living or sleeping purposes by one or more guests. A lodging house is a one-family dwelling where at least one occupant is primarily permanent in nature, and rent is paid for.

Sleeping units are not defined in the IRC, except as they apply to energy provisions, but they are relevant to Fair Housing/Type B unit requirements. While some may not prefer to define sleeping rooms in group homes as guestrooms, with the current language, that is the best fit.

Section 1103.2.3 of the IBC reinforces the detached home exception by specifying that detached one- and two-family dwellings, their accessory structures and their associated sites and facilities need not be accessible.

Section 1007.6.3 of the IBC requires that, for Group R-3 with four or more dwelling or sleeping units in a single structure, every unit must meet Type B unit requirements. Notice the use of the term "structure" rather than "building." To determine the number of units in a single structure, the FHA considers all the units built under the same roof. The FHA does not recognize separating units with fire walls to create separate buildings. Neither are legal property lines considered to create separate buildings. All dwelling units built in a single structure are counted together. Bedrooms in congregate living facilities must be considered and counted as sleeping units for the purpose of determining the number of units. If a structure or individual unit has elevator service (passenger elevators, limited use/limited access (LULA) elevators or private residence elevators), the units served by the elevator must comply with the Type B accessibility requirements in Section 1004 of ICC A117.1.

Sections 1107.7 through 1107.7.5 of the IBC provide for a series of exceptions for Type B units. Section 1107.7.2 is an exception for multiple-story units without elevator service which would basically exempt most multiple-story townhouses. Since "multiple-story" is defined in Section R202 as having living space on two or more levels, single-story townhouses with finished basements and two- and three-story townhouses would be exempted from complying with Type B unit requirements. In congregate residences without elevators, the grade level must contain at least one sleeping unit, and all shared spaces must meet Type B unit requirements. Section 1107.7.4 of the IBC exempts some structures in very hilly sites. Section 1107.7.5 of the IBC has allowances for homes constructed in areas with requirements for raised floor elevations due to flood concerns.

When there are units that must comply with Type B requirements, there are also provisions for the parking, building entrances and the site, including any recreational facilities. See the commentary to Chapter 11 and Section 1107 of the IBC for additional history and information on these requirements.

R320.1.1 Guestrooms. A *dwelling* with guestrooms shall comply with the provisions of Chapter 11 of the *International Building Code* for Group R-3. For the purpose of applying the requirements of Chapter 11 of the *International Building Code*, guestrooms shall be considered to be sleeping units.

Exception: Owner-occupied lodging houses with five or fewer guestrooms constructed in accordance with the *International Residential Code* are not required to be accessible.

❖ "Lodging house" and "Guestroom" are defined in Chapter 2. Lodging houses that are both owner occupied and have five or fewer rooms to rent are scoped to the IBC in Section 101.2 Exception 2. Consistent with Section 1103.2.11 of the IBC, these small bed-and-breakfast-type hotels are not required to be accessible.

INTERNATIONAL CODE COUNCIL®
Copyright © 2015 ICC. ALL RIGHTS RESERVED. Accessed by David Dammon on Jun 21, 2017 12:30:52 PM pursuant to License Agreement with ICC. No further reproduction or distribution authorized. ANY UNAUTHORIZED REPRODUCTION OR DISTRIBUTION IS A VIOLATION OF THE FEDERAL COPYRIGHT ACT AND THE LICENSE AGREEMENT, AND SUBJECT TO CIVIL AND CRIMINAL PENALTIES THEREUNDER.

SECTION R321
ELEVATORS AND PLATFORM LIFTS

R321.1 Elevators. Where provided, passenger elevators, limited-use and limited-application elevators or private residence elevators shall comply with ASME A17.1/CSA B44.

❖ ASME A17.1 is the safety code for elevators. All three types of elevators listed in this section are considered "passenger elevators." The vertical travel of the elevator car and which types can be used for public or private use is part of the ASME A17.1 safety requirements. Part V applies to elevators installed in or at a private residence. This part also applies to similar elevators installed in buildings as a means of access to private residences within such buildings if the elevators are installed so that they are not available to the general public or to other occupants of the building. All three types of elevators can serve as part of a required accessible route as they also comply with ICC A117.1 (see Section R320).

R321.2 Platform lifts. Where provided, platform lifts shall comply with ASME A18.1.

❖ The previous technical standard (i.e., ASME A17.1) required key operation to platform lifts, which necessarily inhibits independent access by persons with physical disabilities. The requirements for platform lifts have been removed from the platform standard and now have their own standard, ASME 18.1, *Safety Standard for Platform Lifts and Stairway Chair Lifts*, which is referenced in this section.

A platform lift is an electrically operated mechanical device designed to transport a person who cannot use stairs over a short vertical distance. Platform lifts must be sized to accommodate a wheelchair user. Platform lifts can be used by wheelchair users and persons with limited mobility and are sometimes also equipped with folding seats. A fold-down seat that moves up the stairway is not a platform lift. While a stairway chair lift can be installed within a dwelling unit, it cannot serve as part of a required accessible route (see Section R320). A platform lift is most suitable for changes of elevation of one story or less where the installation of a ramp or elevator is not feasible. The maximum rise for a platform lift is 14 feet.

There are two kinds of platform lifts: vertical lifts and inclined lifts. Vertical lifts are similar to elevators in that they travel only up and down in a fixed vertical space. Inclined platform lifts are usually installed in conjunction with a stairway and travel along the slope of the stairway. Inclined lifts are a design consideration for long flights of stairs where a vertical platform lift is not practical, where headroom is limited or where ceilings are low.

R321.3 Accessibility. Elevators or platform lifts that are part of an accessible route required by Chapter 11 of the *International Building Code*, shall comply with ICC A117.1.

❖ Section 1107 of the IBC includes scoping requirements for three levels of accessibility: Accessible units, Type A units and Type B units. The types of facilities can include dwelling units or congregate residences constructed under the code. Accessible routes may also be required to public or common areas on a site, including recreational facilities, such as a pool or community building in a townhouse complex. Also see Section R320.1. This section requires that all elevators or platform lifts on an accessible route be useable by a person in a wheelchair without assistance. ICC A117.1 provides technical data on elevator and platform lift size, operation and controls. LULA elevators and private residence elevators are considered a type of passenger elevator that can serve as part of an accessible route.

SECTION R322
FLOOD-RESISTANT CONSTRUCTION

R322.1 General. Buildings and structures constructed in whole or in part in flood hazard areas, including A or V Zones and Coastal A Zones, as established in Table R301.2(1), and substantial improvement and restoration of substantial damage of buildings and structures in flood hazard areas, shall be designed and constructed in accordance with the provisions contained in this section. Buildings and structures that are located in more than one flood hazard area shall comply with the provisions associated with the most restrictive flood hazard area. Buildings and structures located in whole or in part in identified floodways shall be designed and constructed in accordance with ASCE 24.

❖ This section addresses general requirements for all buildings and structures proposed to be located in whole or in part in areas designated as flood hazard areas. These areas are commonly referred to as "flood plains" and are shown on a community's FIRM prepared by FEMA or other adopted flood hazard map. Flood hazard areas are determined using the base flood, which is defined as having a 1-percent chance (one chance in 100) of occurring in any given year. The maps do not show the worst case flood, nor the "flood of record," which usually refers to the most severe flood in the history of the community. Although a 1-percent chance seems fairly remote, larger floods occur regularly throughout the United States. Application of the flood-resistant provisions of the code cannot prevent or eliminate all future flood damage. These provisions represent a reasonable balance of the knowledge and awareness of flood hazards, methods to guide development to less hazard-prone locations, methods of design and construction intended to resist flood damage, and each community's and landowner's reasonable expectations to use the land.

FEMA uses multiple designations for the flood hazard areas shown on each FIRM, including A, AO, AH, A1-30, AE, A99, AR, AR/A1-30, AR/AE, AR/AO, AR/AH, AR/A, VO, V1 -30, VE and V. Along many open coasts and lake shores, where wind-driven waves are predicted, the flood hazard area is commonly referred to as the "V Zone." Flood hazard areas that are inland of coastal high-hazard areas subject to high-velocity wave action, plus flood hazard areas along rivers and

INTERNATIONAL CODE COUNCIL®
Copyright © 2015 ICC. ALL RIGHTS RESERVED. Accessed by David Dammon on Jun 21, 2017 12:30:52 PM pursuant to License Agreement with ICC. No further reproduction or distribution authorized. ANY UNAUTHORIZED REPRODUCTION OR DISTRIBUTION IS A VIOLATION OF THE FEDERAL COPYRIGHT ACT AND THE LICENSE AGREEMENT, AND SUBJECT TO CIVIL AND CRIMINAL PENALTIES THEREUNDER.

streams, are commonly referred to as "A Zones." Because of waves, the flood loads in areas subject to high-velocity wave action differ from those in other flood hazard areas.

Some buildings are proposed to be located such that either they are in more than one flood zone or only a portion of the building is in a flood zone. Where this occurs, the entire building or structure is required to be designed and constructed according to the requirements of the more restrictive flood zone. For example, if a building is partially in a coastal high-hazard area (V Zone), then the entire building must meet the requirements for that area. Similarly, if a building is partially in a flood hazard area and partially out of the mapped flood hazard area, then the entire building must be designed and constructed in accordance with the flood-resistant provisions of the building code.

Some riverine floodplains are mapped to show floodways. Because floodways typically are characterized by deeper and faster moving water, it is appropriate that the design of buildings in these areas explicitly accounts for flood loads as called for in ASCE 24. Designs prepared in accordance with ASCE 24 should be prepared and sealed by registered design professionals.

Since 2009, some FIRMs prepared for coastal communities show the "Limit of Moderate Wave Action," which is the inland extent of the $1^1/_2$-foot (457 mm) wave height. Post-flood field investigations and laboratory testing have indicated that significant structural damage can occur in areas shown as A/AE Zones that are inland of V Zones and inland of some shorelines without V Zones, and where breaking wave heights are less than 3 feet (914 mm), but more than $1^1/_2$ feet (457 mm) [areas with breaking waves 3 feet (914 mm) or higher are designated as V Zones]. In ASCE 7 and ASCE 24, as well as in common usage, the area between the V Zone and Limit of Moderate Wave Action is called "Coastal A Zone" (see commentary, Section R322.2).

Some coastal communities have FIRMs that show areas that are designated as units of the Coastal Barrier Resource System (CBRS) established by the Coastal Barrier Resource Act (CoBRA) of 1982 and subsequent amendments. The NFIP is prohibited from offering flood insurance on new or substantially improved buildings in these areas. Jurisdictions are responsible for the application of the provisions of the code concerning flood resistance in all designated flood hazard areas, even if federal flood insurance is not available.

Communities that have AR Zones and A99 Zones shown on their FIRMs should consult with the appropriate state agency or FEMA regional office for guidance on requirements that must apply if the community participates in the NFIP. AR Zones are areas that result from the decertification of a previously accredited flood protection system (such as a levee) that is determined to be in the process of being restored to provide base flood protection. A99 Zones are areas subject to inundation by the 1-percent-annual-chance flood event, but which will ultimately be protected upon completion of an under-construction federal flood protection system.

Through the adoption of the code, communities meet some of the requirements necessary to participate in the NFIP. To learn more about how communities may meet the requirements by adoption of the code and the IBC (with IBC Appendix G or a comparable ordinance), see *Reducing Flood Losses Through the International Code Series: Coordinating Building Codes and Floodplain Management Regulations* (ICC and FEMA).

The NFIP was established to reduce flood losses, to better indemnify individuals from flood losses and to reduce federal expenditures for disaster assistance. A community that has flood hazard areas participates in the NFIP to protect health, safety and property, and so that its citizens can purchase federally-backed flood insurance. FEMA administers the NFIP and monitors community compliance with the flood plain management requirements of the NFIP.

Many states require that communities regulate flood plain development to a higher standard than the minimum standards established by the NFIP. Communities considering using the code and other I-Codes to meet the flood plain management requirements of the NFIP are advised to consult with their NFIP state coordinator or the appropriate FEMA regional office.

R322.1.1 Alternative provisions. As an alternative to the requirements in Section R322, ASCE 24 is permitted subject to the limitations of this code and the limitations therein.

❖ This section provides an engineering option to the requirements of Section R322 by allowing designs in accordance with ASCE 24. Designs prepared in accordance with ASCE 24 should be prepared and sealed by registered design professionals; Section R322.3.6 requires designs for dwellings in coastal high-hazard areas and Coastal A Zones to be prepared and sealed by registered design professionals.

R322.1.2 Structural systems. Structural systems of buildings and structures shall be designed, connected and anchored to resist flotation, collapse or permanent lateral movement due to structural loads and stresses from flooding equal to the design flood elevation.

❖ New buildings, new structures and substantial improvements to existing buildings and structures in flood hazard areas must be designed and constructed to resist flood forces to minimize damage. Buildings must be connected to structural foundation systems that are capable of resisting flood forces, including flotation, lateral (hydrostatic) pressures, moving water (hydrodynamic) pressures, wave impact and debris impact.

See commentary for Section R322.3.3 for reference to FEMA P-550, a publication that provides residential foundation designs for open foundations (pilings and piers) up to 15 feet (4572 mm) above ground level and

INTERNATIONAL CODE COUNCIL®
Copyright © 2015 ICC. ALL RIGHTS RESERVED. Accessed by David Dammon on Jun 21, 2017 12:30:52 PM pursuant to License Agreement with ICC. No further reproduction or distribution authorized. ANY UNAUTHORIZED REPRODUCTION OR DISTRIBUTION IS A VIOLATION OF THE FEDERAL COPYRIGHT ACT AND THE LICENSE AGREEMENT, AND SUBJECT TO CIVIL AND CRIMINAL PENALTIES THEREUNDER.

for closed foundations (crawl spaces and stemwalls) up to 8 feet (2438 mm) above ground level, subject to certain limitations such as wind speed.

R322.1.3 Flood-resistant construction. Buildings and structures erected in areas prone to flooding shall be constructed by methods and practices that minimize flood damage.

❖ In addition to the structural requirement of Section R322.1.2, this section establishes a broad requirement that techniques used for construction in flood hazard areas must contribute to flood resistance by minimizing flood damage.

R322.1.4 Establishing the design flood elevation. The design flood elevation shall be used to define flood hazard areas. At a minimum, the design flood elevation shall be the higher of the following:

1. The base flood elevation at the depth of peak elevation of flooding, including wave height, that has a 1 percent (100-year flood) or greater chance of being equaled or exceeded in any given year; or
2. The elevation of the design flood associated with the area designated on a flood hazard map adopted by the community, or otherwise legally designated.

❖ This section defines the "design flood elevation (DFE)" that is used to delineate and define flood hazard areas. At a minimum, the flood plain is the Special Flood Hazard Area shown on the community's FIRM. The term "design flood elevation" is used throughout the code. The design flood elevation is the greater of the base flood elevation shown on the FIRM or other flood hazard area map identified in Table R301.2(1). The majority of communities use the FIS and FIRM as the basis for regulations, and in those communities the design flood elevation is the base flood elevation.

R322.1.4.1 Determination of design flood elevations. If design flood elevations are not specified, the *building official* is authorized to require the applicant to comply with either of the following:

1. Obtain and reasonably use data available from a federal, state or other source; or
2. Determine the design flood elevation in accordance with accepted hydrologic and hydraulic engineering practices used to define special flood hazard areas. Determinations shall be undertaken by a registered *design professional* who shall document that the technical methods used reflect currently accepted engineering practice. Studies, analyses and computations shall be submitted in sufficient detail to allow thorough review and approval.

❖ Many FIRMs show flood hazard areas without specifying base flood elevations. These areas, often referred to as unnumbered A Zones or approximate A Zones, are subject to the flood resistant construction requirements of the code even though the minimum elevation to which buildings and structures must be elevated has not been determined by FEMA. An important step in regulating these flood hazard areas is determination of the design flood elevation. As defined in Section R322.1.4, at a minimum the DFE is the base flood elevation shown on a community's FIRM identified in Table R301.2(1). In some instances, flood elevation information may have been developed by sources other than FEMA, including other federal or state agencies or other sources, such as the U.S. Army Corps of Engineers, the Natural Resources Conservation Service, a state agency (transportation, water resources, environment), local planning or public works department, a flood control agency or district, or historical records. The building official is to obtain the information if it is available or the building official can require the permit applicant to determine the DFE in accordance with accepted engineering practices. Some communities develop flood hazard information and provide it to applicants so that all development in an area is based on the same level of risk. Local officials unfamiliar with establishing design flood elevations in unnumbered flood zones are encouraged to contact the NFIP state coordinator or the appropriate FEMA regional office. For additional guidance, refer to FEMA 265.

R322.1.4.2 Determination of impacts. In riverine flood hazard areas where design flood elevations are specified but floodways have not been designated, the applicant shall demonstrate that the effect of the proposed buildings and structures on design flood elevations, including fill, when combined with other existing and anticipated flood hazard area encroachments, will not increase the design flood elevation more than 1 foot (305 mm) at any point within the *jurisdiction*.

❖ Although FEMA has provided floodways along many rivers and streams shown on a community's FIRM, other riverine flood hazard areas have base flood elevation but do not have designated floodways. In these areas, the potential effects that flood plain activities may have on flood elevations have not been evaluated. If FEMA has not designated a regulatory floodway, the community is responsible for regulating development so as not to increase flood elevations by more than 1 foot (305 mm) at any point in the community. In effect, this means a community must either prepare a hydraulic analysis for proposed activities or require permit applicants to do so. These analyses should be prepared in accordance with accepted engineering practices by a qualified professional (see commentary, Section R322.1.4.1). Several states have guidance for satisfying this requirement and some states have more restrictive requirements, which can be determined by contacting the NFIP state coordinator.

R322.1.5 Lowest floor. The lowest floor shall be the lowest floor of the lowest enclosed area, including *basement*, and excluding any unfinished flood-resistant enclosure that is useable solely for vehicle parking, building access or limited storage provided that such enclosure is not built so as to render the building or structure in violation of this section.

❖ The lowest floor is the most important reference point when designing and constructing a building or structure in a flood hazard area. The term is specifically

INTERNATIONAL CODE COUNCIL®
Copyright © 2015 ICC. ALL RIGHTS RESERVED. Accessed by David Dammon on Jun 21, 2017 12:30:52 PM pursuant to License Agreement with ICC. No further reproduction or distribution authorized. ANY UNAUTHORIZED REPRODUCTION OR DISTRIBUTION IS A VIOLATION OF THE FEDERAL COPYRIGHT ACT AND THE LICENSE AGREEMENT, AND SUBJECT TO CIVIL AND CRIMINAL PENALTIES THEREUNDER.

defined to include basements, which are any areas that are below grade on all sides. (This definition differs from the one in Chapter 2, which includes areas that are partly below grade.) To avoid being considered basements, the interior grade or floor of crawl spaces or enclosures should be at or above the finished exterior grade along one entire side of the building.

It is important to understand the lowest floor of a building or structure and how it relates to enclosures. The NFIP recognizes that elevated buildings may have enclosures below the elevated building that will be subject to flooding. Enclosures that are built in accordance with the code are deemed not to be the lowest floor. Federal flood insurance premium rates take into account a number of factors, including the elevation of the lowest floor relative to the BFE. For flood hazard areas known as "A Zones," enclosure provisions are set forth in Section R322.2.2. For coastal high-hazard areas (identified as "V Zones,") and Coastal A Zones, provisions for enclosures are set forth in Sections R322.3.4 and R322.3.5. In Chapter 2, the definition of "Habitable space" notes that certain spaces and areas are not considered habitable spaces (bathrooms, closets, hallway, storage or utility spaces, and similar areas). However, to comply with the requirements of Section 322, only three nonhabitable uses are allowed as enclosures below elevated buildings: vehicle parking, building access and limited storage.

R322.1.6 Protection of mechanical, plumbing and electrical systems. Electrical systems, *equipment* and components; heating, ventilating, air conditioning; plumbing *appliances* and plumbing fixtures; *duct systems*; and other service *equipment* shall be located at or above the elevation required in Section R322.2 or R322.3. If replaced as part of a substantial improvement, electrical systems, *equipment* and components; heating, ventilating, air conditioning and plumbing *appliances* and plumbing fixtures; *duct systems*; and other service *equipment* shall meet the requirements of this section. Systems, fixtures, and *equipment* and components shall not be mounted on or penetrate through walls intended to break away under flood loads.

Exception: Locating electrical systems, *equipment* and components; heating, ventilating, air conditioning; plumbing *appliances* and plumbing fixtures; *duct systems*; and other service *equipment* is permitted below the elevation required in Section R322.2 or R322.3 provided that they are designed and installed to prevent water from entering or accumulating within the components and to resist hydrostatic and hydrodynamic loads and stresses, including the effects of buoyancy, during the occurrence of flooding to the design flood elevation in accordance with ASCE 24. Electrical wiring systems are permitted to be located below the required elevation provided that they conform to the provisions of the electrical part of this code for wet locations.

❖ This section sets a broad requirement that electrical, plumbing and mechanical system elements, including electrical, heating, ventilating, air-conditioning, plumbing fixtures, duct systems and other service equipment, are to be located above the elevations specified depending on whether the location is in a flood hazard area (A Zone) or coastal high-hazard areas (V Zones) or Coastal A Zone. The same requirement applies to the replacement of electrical and mechanical system elements that are included as part of substantial improvements to existing buildings. Attention should be paid to ductwork. If ducts must be installed under a floor system or between floor joists and if the ducts are not water tight, then the lowest floor must be placed high enough so that the ducts are at or above the elevation specified by the code. If a building is elevated to satisfy the minimum requirement, anything installed below that elevation is automatically not in compliance with this section unless it explicitly complies with the exception. For additional guidance, refer to FEMA 348.

The exception to this section provides criteria for placing equipment below the required elevation. It is important to be clear that to do so the equipment must be designed to prevent the entry or accumulation of water. For example, typical dwellings have exterior air-conditioning units located on the ground adjacent to the structure. These types of units typically are not designed to withstand the entry of water and would not meet the requirements of this exception.

Personal elevators may be allowed even though they extend below the design flood elevation provided the control equipment is above that elevation. In coastal high-hazard areas (V Zones), and Coastal A Zones flood loads acting on the elevator components and any nonbreakaway shaft walls must be accounted for in the building design. For guidance, see FEMA TB #4.

R322.1.7 Protection of water supply and sanitary sewage systems. New and replacement water supply systems shall be designed to minimize or eliminate infiltration of flood waters into the systems in accordance with the plumbing provisions of this code. New and replacement sanitary sewage systems shall be designed to minimize or eliminate infiltration of floodwaters into systems and discharges from systems into floodwaters in accordance with the plumbing provisions of this code and Chapter 3 of the *International Private Sewage Disposal Code.*

❖ Health concerns arise when water supply systems are exposed to flood waters, and contamination from flooded sewage systems can pose health and environmental risks. To reduce these risks, water supply systems and sanitary sewage systems must be designed to minimize or eliminate infiltration and discharges under flood conditions. For on-site sewage disposal systems, the effects of flooding may be reduced by locating the systems on the highest available ground. State health regulations may apply to on-site sewage disposal systems proposed in flood hazard areas.

R322.1.8 Flood-resistant materials. Building materials and installation methods used for flooring and interior and exterior walls and wall coverings below the elevation required in Section R322.2 or R322.3 shall be flood damage-resistant materials that conform to the provisions of FEMA TB-2.

❖ To minimize flood damage, materials used below the elevation required in this section must resist damage caused by flood waters. Even though certain enclo-

INTERNATIONAL CODE COUNCIL®
Copyright © 2015 ICC. ALL RIGHTS RESERVED. Accessed by David Dammon on Jun 21, 2017 12:30:52 PM pursuant to License Agreement with ICC. No further reproduction or distribution authorized. ANY UNAUTHORIZED REPRODUCTION OR DISTRIBUTION IS A VIOLATION OF THE FEDERAL COPYRIGHT ACT AND THE LICENSE AGREEMENT, AND SUBJECT TO CIVIL AND CRIMINAL PENALTIES THEREUNDER.

sures may be allowed under otherwise elevated buildings, the materials used in those enclosures must be resistant to water damage to minimize flood losses. For general flood-resistance requirements, see FEMA TB #2, and for corrosion resistance, see FEMA TB #8.

R322.1.9 Manufactured homes. The bottom of the frame of new and replacement *manufactured homes* on foundations that conform to the requirements of Section R322.2 or R322.3, as applicable, shall be elevated to or above the elevations specified in Section R322.2 (flood hazard areas including A Zones) or R322.3 in coastal high-hazard areas (V Zones and Coastal A Zones). The anchor and tie-down requirements of the applicable state or federal requirements shall apply. The foundation and anchorage of *manufactured homes* to be located in identified floodways shall be designed and constructed in accordance with ASCE 24.

❖ The placement of new manufactured homes is subject to the same elevation requirements as other new construction. Replacement of existing manufactured homes is considered "new construction" and must comply with the provisions of this section. Manufactured homes are to be elevated so that the bottom of the frames is at or above the elevations specified based on flood zone. Because of anticipated flood forces, units must be anchored and tied down in accordance with applicable requirements. Within floodways, where water depths and velocities are anticipated to be greatest, foundation and anchorage must be designed in accordance with the ASCE 24. Some states and communities do not allow manufactured homes to be installed in coastal high-hazard areas (V Zones) or floodways. See FEMA P-85 for additional guidance and several pre-engineered foundation solutions.

HUD's October 2007 final rule for Model Manufactured Home Installation Standard (24 CFR, Part 3285) includes some provisions related to flood hazard areas. Manufacturers must clearly specify that their installation instructions and foundation specifications have either (a) been designed for flood-resistant considerations [in which case the conditions are to be listed (velocities, depths, or wave action) and the design must be certified by a registered professional engineer or architect], or (b) not been designed to address flood loads, in which case the instructions must direct the installer to "obtain an alternate design prepared and certified by a registered professional engineer or registered architect for the support and anchorage." HUD places the burden on the installer to determine whether a home site is wholly or partly in a flood hazard area and to obtain additional designs, if needed.

R322.1.10 As-built elevation documentation. A registered *design professional* shall prepare and seal documentation of the elevations specified in Section R322.2 or R322.3.

❖ Documentation of the "as-built" elevations is to be submitted to verify compliance. Most communities require or request submission of FEMA's Elevation Certificate (FEMA Form 086-0-33), which is designed to obtain the information necessary to show compliance. Building owners will need elevation information to obtain federal flood insurance, and insurance agents use the information to compute the applicable flood insurance premium rates. The elevation certificate is available on-line. For guidance on the elevation certificate, see FEMA P-467-1.

As called for in Section R109.1.3, as part of the flood plain inspection the elevation information is to be provided when the lowest floor elevation is set and before further vertical construction occurs. If an error is discovered at the time, it will be significantly easier and less expensive to correct at this stage. Section R109.1.6.1 requires submission of "as-built" elevation documentation prior to the final inspection and before the certificate of occupancy is issued to determine that the building is in compliance with the flood-resistant provisions of the code. The building official must maintain copies of the elevation information on file and make elevation and related building information available for insurance rating and other purposes. Elevation documentation may be reviewed as part of periodic community assistance visits conducted by FEMA or states; FEMA considers buildings without elevation documentation to be violations.

R322.2 Flood hazard areas (including A Zones). Areas that have been determined to be prone to flooding and that are not subject to high-velocity wave action shall be designated as flood hazard areas. Flood hazard areas that have been delineated as subject to wave heights between $1^1/_2$ feet (457 mm) and 3 feet (914 mm) or otherwise designated by the jurisdiction shall be designated as Coastal A Zones and are subject to the requirements of Section R322.3. Buildings and structures constructed in whole or in part in flood hazard areas shall be designed and constructed in accordance with Sections R322.2.1 through R322.2.3.

❖ Flood hazard areas, often referred to as "A Zones," are found along nontidal waterways and lakes, and include the inland portions of coastal flood plains that are not subject to high velocity wave action [i.e., where waves are less than 3 feet (914 mm) in height]. The zone designation does not indicate anticipated velocities of river and stream flooding. Especially in areas where the slopes of streambeds are relatively steep, designers should check the Flood Insurance Study and local sources of information to see whether velocity information is available for use in considering the effects of hydrodynamic flood loads.

Some FIRMs in coastal communities show the "limit of moderate wave action," which is the inland extent of the $1^1/_2$-foot (457 mm) wave height. Post-flood field investigations and laboratory testing indicate that significant structural damage can occur in areas shown as A/AE Zones that are inland of V Zones and inland of some shorelines without V Zones, where wave heights are less than 3 feet (914 mm), but more than $1^1/_2$ feet (457 mm). These areas are commonly called "Coastal A Zones." Some communities designate Coastal A Zones even if a limit of moderate wave action is not shown on the FIRM, for example by specifying a certain distance inland of the Zone V boundary. A new requirement in the 2015 IRC is that if a Coastal A Zone

INTERNATIONAL CODE COUNCIL®
Copyright © 2015 ICC. ALL RIGHTS RESERVED. Accessed by David Dammon on Jun 21, 2017 12:30:52 PM pursuant to License Agreement with ICC. No further reproduction or distribution authorized. ANY UNAUTHORIZED REPRODUCTION OR DISTRIBUTION IS A VIOLATION OF THE FEDERAL COPYRIGHT ACT AND THE LICENSE AGREEMENT, AND SUBJECT TO CIVIL AND CRIMINAL PENALTIES THEREUNDER.

is delineated or designated, the requirements of Section R322.3 apply so that Coastal A Zones are regulated like Zone V. Commentary Figure R322.2 shows how the limit of moderate wave action is delineated on FIRMs.

R322.2.1 Elevation requirements.

1. Buildings and structures in flood hazard areas, including flood hazard areas designated as Coastal A Zones, shall have the lowest floors elevated to or above the base flood elevation plus 1 foot (305 mm), or the design flood elevation, whichever is higher.
2. In areas of shallow flooding (AO Zones), buildings and structures shall have the lowest floor (including *basement*) elevated to a height above the highest adjacent *grade* of not less than the depth number specified in feet (mm) on the FIRM plus 1 foot (305 mm), or not less than 3 feet (915 mm) if a depth number is not specified.
3. Basement floors that are below *grade* on all sides shall be elevated to or above base flood elevation plus 1 foot (305 mm), or the design flood elevation, whichever is higher.

Exception: Enclosed areas below the design flood elevation, including *basements* with floors that are not below

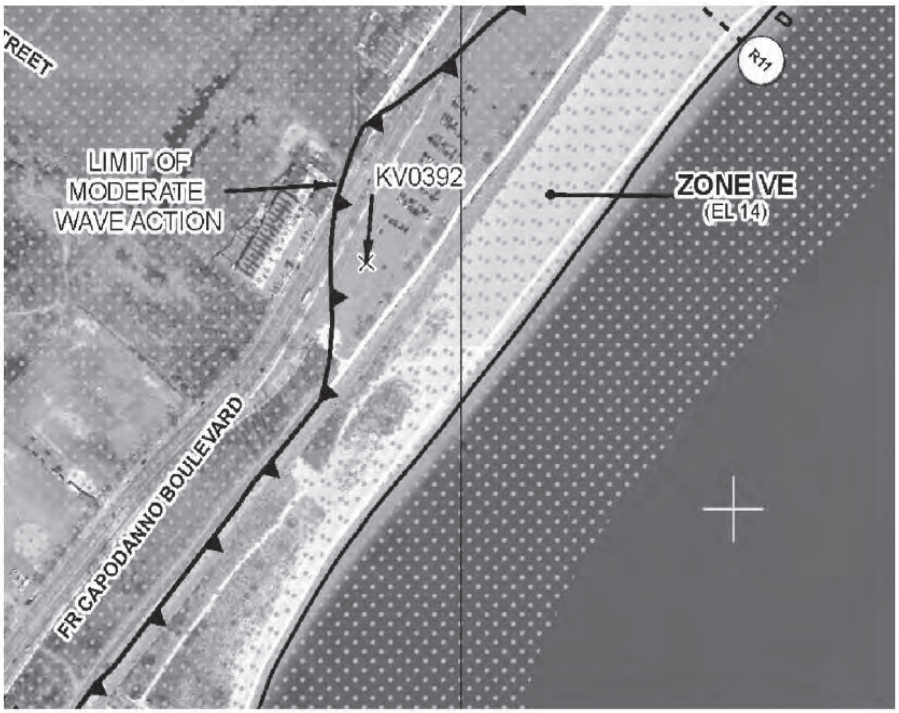

Legend

Limit of Moderate Wave Action

Notes to Users

The AE Zone category has been divided by a Limit of Moderate Wave Action (LiMWA), The LiMWA represents the approximate landward limit of the 1.5—foot breaking wave. The effects of wave hazards between the VE Zone and the LiMWA (or between the shoreline and the LiMWA for areas where VE Zones are not identified) will be similar to, but less severe than those in the VE Zone.

For Information on available products associated with the FIRM visit the Map Service Center (MSC) website at http://msc.fema.gov. Available products may include previously issued Letters of Map Change, a Flood Insurance Study Report, and/or digital versions of this map. Many of these products can be ordered or obtained directly from the MSC website.

If you have questions about this map, how to order products or the National Flood Insurance Program in general, please call the FEMA Map Information eXchange (FMIX) at 1-877-FEMA-MAP (1-877-336-2627) or visit the FEMA website at http://www.fema.gov/business/nfip.

Figure R322.2
SAMPLE FIRM WITH LiMWA

INTERNATIONAL CODE COUNCIL®
Copyright © 2015 ICC. ALL RIGHTS RESERVED. Accessed by David Dammon on Jun 21, 2017 12:30:52 PM pursuant to License Agreement with ICC. No further reproduction or distribution authorized. ANY UNAUTHORIZED REPRODUCTION OR DISTRIBUTION IS A VIOLATION OF THE FEDERAL COPYRIGHT ACT AND THE LICENSE AGREEMENT, AND SUBJECT TO CIVIL AND CRIMINAL PENALTIES THEREUNDER.

grade on all sides, shall meet the requirements of Section R322.2.2.

❖ The minimum requirement is that lowest floors must be elevated at least 1 foot above the base flood elevation or the BFE. Earlier editions of the IRC permitted the lowest floor to be at or above the BFE. Note that Section R322.2 states that Coastal A Zones are subject to the requirement of Section R322.3; thus, in Coastal A Zones the elevation of the bottom of the lowest horizontal structural member of the lowest floor is specified in Section R322.2, superseding application of Item 1 in those areas. The benefits of elevating lowest floors higher than the minimum NFIP requirements have been documented in several sources, notably in an independent report prepared for FEMA, *Evaluation of the National Flood Insurance Program's Building Standards* (American Institutes for Research, 2006) that documented the benefits in terms of avoided flood damage over a building's life as well as lower cost federal flood insurance. The report concluded that, based on avoided damage alone, it is worth spending an additional amount over the cost of the at-BFE building cost to incorporate freeboard.

AO Zones are areas of shallow flooding where FEMA has specified a "depth number" rather than a flood elevation that is referenced to a datum. Buildings in AO Zones must be elevated so the lowest floor, including the basement, is at least as high above grade as the depth number plus 1 foot, or at least 3 feet (915 mm) if a depth number is not specified. The point where this depth is measured is at the highest natural grade adjacent to the proposed building. FEMA refers to some areas subject to shallow flooding as AH Zones. AH Zones have base flood elevations and they are treated the same as other A Zones with base flood elevations.

This section emphasizes that basements that are below grade on all sides must be elevated to at least 1 foot above the base flood elevation, or to design flood elevation, whichever is higher. The NFIP defines a basement not by its common use, but by whether it is below grade on all sides. Even if below grade on all sides by only 1 inch (25 mm), such an area is, technically, a basement.

In many flood hazard areas, it is common to place fill to elevate a building site above the design flood elevation. Fills that are exposed to flooding may become saturated and unstable and slopes may be exposed to erosive velocities and waves during a flood. For additional guidance for development activities involving the placement of fill in a flood hazard area, refer to FEMA TB #10. Building officials may require applicants to submit documentation regarding the use of fill and whether structures on fill are reasonably safe from flooding.

The specification in Item 3 means that basements must not be excavated below the design flood elevation. The exception to this section allows enclosures that, if designed and constructed to meet the use limitations and the flood opening specifications of Section R322.2.2, are not the lowest floor. Allowable uses of such enclosures include parking of vehicles, building access, limited storage and crawl spaces.

R322.2.2 Enclosed area below design flood elevation. Enclosed areas, including crawl spaces, that are below the design flood elevation shall:

1. Be used solely for parking of vehicles, building access or storage.
2. Be provided with flood openings that meet the following criteria and are installed in accordance with Section R322.2.2.1:
   - 2.1. The total net area of nonengineered openings shall be not less than 1 square inch (645 mm^2) for each square foot (0.093 m^2) of enclosed area where the enclosed area is measured on the exterior of the enclosure walls, or the openings shall be designed as engineered openings and the *construction documents* shall include a statement by a registered *design professional* that the design of the openings will provide for equalization of hydrostatic flood forces on *exterior walls* by allowing for the automatic entry and exit of floodwaters as specified in Section 2.7.2.2 of ASCE 24.
   - 2.2. Openings shall be not less than 3 inches (76 mm) in any direction in the plane of the wall.
   - 2.3. The presence of louvers, blades, screens and faceplates or other covers and devices shall allow the automatic flow of floodwater into and out of the enclosed areas and shall be accounted for the determination of the net open area.

❖ This section contains the use limitations and flood opening requirements that apply to enclosures below otherwise properly elevated buildings. If enclosures meet these requirements they are not considered the "lowest floor." The use limitation states that enclosures, including crawl spaces, must be used only for parking of vehicles, building access or storage (see commentary to Section R322.1.5 regarding use limitations and the terms habitable and nonhabitable spaces that are defined elsewhere in the code). Although the NFIP regulations do not define storage, most states interpret it to mean "limited" storage. Some states specify that hazardous materials must not be stored in enclosures. Experience has suggested that two design factors influence the use of enclosures and may discourage illegal conversions by owners: the size of the enclosed area and utility service. Some states and communities limit the size of enclosures. Plumbing service is not appropriate for the allowable uses, and only minimal electrical service should be provided (a light switch for a stairwell, for example, or electrical outlets wired from above).

INTERNATIONAL CODE COUNCIL®
Copyright © 2015 ICC. ALL RIGHTS RESERVED. Accessed by David Dammon on Jun 21, 2017 12:30:52 PM pursuant to License Agreement with ICC. No further reproduction or distribution authorized. ANY UNAUTHORIZED REPRODUCTION OR DISTRIBUTION IS A VIOLATION OF THE FEDERAL COPYRIGHT ACT AND THE LICENSE AGREEMENT, AND SUBJECT TO CIVIL AND CRIMINAL PENALTIES THEREUNDER.

Enclosed areas below elevated buildings must have flood openings. The total net open area of the flood openings is determined prescriptively (called "nonengineered openings") by computing the total area enclosed by the walls that extend below the design flood elevation and providing 1 square inch of net open area for every square foot (6944 mm^2 per m^2) of enclosed area. Alternatively, flood openings may be designed to automatically equalize hydrostatic flood forces (called "engineered openings"), in which case the construction documents must include a statement from a registered design professional that the openings are designed to meet this requirement. Engineered openings may be site-built and individually certified, or they may be products manufactured to meet this requirement, in which case they must have been issued an evaluation report by the ICC-ES. Devices intended for under-floor ventilation openings may be used as nonengineered openings. Care should be taken to determine the net open area provided by any devices, taking into account obstructions such as louvers, blades, screens, face plates, grilles, slats and other coverings. Airflow vent devices must be disabled in the "open" position to ensure automatic functioning in the event of a flood. For additional guidance on meeting the flood opening requirements of this section, see FEMA TB #1.

R322.2.2.1 Installation of openings. The walls of enclosed areas shall have openings installed such that:

1. There shall be not less than two openings on different sides of each enclosed area; if a building has more than one enclosed area below the design flood elevation, each area shall have openings.
2. The bottom of each opening shall be not more than 1 foot (305 mm) above the higher of the final interior grade or floor and the finished exterior grade immediately under each opening.
3. Openings shall be permitted to be installed in doors and windows; doors and windows without installed openings do not meet the requirements of this section.

❖ Openings intended to relieve differential hydrostatic pressure during the rise and fall of floodwaters must be installed as specified. Information about the number, size and location of flood openings is collected when a FEMA Elevation Certificate is completed. The information is useful for compliance inspections and property owners are required to submit it to obtain federal flood insurance.

The requirements related to the location of flood openings are clear. Openings are to be in exterior walls on different sides of the enclosed area and they are to be no more than 1 foot above the higher of the interior grade/floor or the finished exterior grade under each opening. For additional guidance on meeting the flood opening requirements of this section, see FEMA TB #1.

R322.2.3 Foundation design and construction. Foundation walls for buildings and structures erected in flood hazard areas shall meet the requirements of Chapter 4.

Exception: Unless designed in accordance with Section R404:

1. The unsupported height of 6-inch (152 mm) plain masonry walls shall be not more than 3 feet (914 mm).
2. The unsupported height of 8-inch (203 mm) plain masonry walls shall be not more than 4 feet (1219 mm).
3. The unsupported height of 8-inch (203 mm) reinforced masonry walls shall be not more than 8 feet (2438 mm).

For the purpose of this exception, unsupported height is the distance from the finished *grade* of the under-floor space to the top of the wall.

❖ Flood conditions impose additional or different loads on foundation walls than those imposed solely by unbalanced fill conditions. Flood loads include hydrostatic and hydrodynamic loads. If foundation walls form enclosed areas, unequal hydrostatic loads are relieved by meeting the flood opening requirements of Section R322.2.2. FEMA analyzed hydrodynamic loads at varying depths and velocities to re-examine the structural adequacy of the masonry walls prescribed in Chapter 4 and referenced in this section.

The results indicate that unless the walls are designed in accordance with Section R404, in flood hazard areas it is appropriate to limit the unsupported height of masonry walls based on wall thickness and whether they are plain or reinforced.

R322.2.4 Tanks. Underground tanks shall be anchored to prevent flotation, collapse and lateral movement under conditions of the base flood. Above-ground tanks shall be installed at or above the elevation required in Section R322.2.1 or shall be anchored to prevent flotation, collapse and lateral movement under conditions of the base flood.

❖ Tanks dislodged during flooding not only can release contents into floodwater, but they can become battering debris that can contribute to damage of buildings and structures. Underground tanks need to be installed in ways that take into consideration the fact that soils may be saturated during flooding, creating conditions that can cause tanks to be dislodged. Above-ground tanks must be elevated otherwise buildings would not comply with the free of obstruction requirement in Section R322.3.3.

R322.3 Coastal high-hazard areas (including V Zones and Coastal A Zones, where designated). Areas that have been determined to be subject to wave heights in excess of 3 feet (914 mm) or subject to high-velocity wave action or wave-induced erosion shall be designated as coastal high-hazard areas. Flood hazard areas that have been designated as subject to wave heights between $1^1/_2$ feet (457 mm) and 3 feet (914

INTERNATIONAL CODE COUNCIL®
Copyright © 2015 ICC. ALL RIGHTS RESERVED. Accessed by David Dammon on Jun 21, 2017 12:30:52 PM pursuant to License Agreement with ICC. No further reproduction or distribution authorized. ANY UNAUTHORIZED REPRODUCTION OR DISTRIBUTION IS A VIOLATION OF THE FEDERAL COPYRIGHT ACT AND THE LICENSE AGREEMENT, AND SUBJECT TO CIVIL AND CRIMINAL PENALTIES THEREUNDER.

mm) or otherwise designated by the jurisdiction shall be designated as Coastal A Zones. Buildings and structures constructed in whole or in part in coastal high-hazard areas and coastal A Zones, where designated, shall be designed and constructed in accordance with Sections R322.3.1 through R322.3.7.

❖ Buildings and structures located in flood hazard areas known as "V Zones," or coastal high-hazard areas, are exposed to flooding and wind-driven waves 3 feet (914 mm) or higher and in Coastal A Zones they are exposed to flooding and waves between $1^1/_2$ and 3 feet high. Waves impose additional loads on foundations and can cause erosion. A new requirement in the 2015 IRC is that Coastal A Zones are regulated like Zone V if they are delineated or designated by a community.

Note that Section R322.1.1 allows building officials to accept designs based on ASCE 24 or to specify that buildings in these areas must be designed according to ASCE 24. In addition, designers are referred to FEMA P-55, and builders are referred to FEMA P-499. Training on the design and construction of residential structures in coastal areas may be offered by the NFIP state coordinator or the appropriate FEMA regional office. Additional guidance about design and construction in coastal areas can be found in FEMA TB #5, FEMA TB #8, and FEMA TB #9.

R322.3.1 Location and site preparation.

1. New buildings and buildings that are determined to be substantially improved pursuant to Section R105.3.1.1 shall be located landward of the reach of mean high tide.
2. For any alteration of sand dunes and mangrove stands, the *building official* shall require submission of an engineering analysis that demonstrates that the proposed *alteration* will not increase the potential for flood damage.

❖ Buildings, including existing buildings for which a determination has been made that proposed work constitutes substantial improvement (or repair of substantial damage) must be sited such that they are not regularly affected by normal (mean) high tides. Many coastal locations benefit from natural storm protection because of the presence of sand dunes and mangrove stands. Those natural features must remain intact. However, alterations may be considered if specific analyses indicate that the alterations will not increase the potential for flood damage, including increasing the exposure of the site to greater flood depths and higher wave heights.

R322.3.2 Elevation requirements.

1. Buildings and structures erected within coastal high-hazard areas and Coastal A Zones, shall be elevated so that the bottom of the lowest horizontal structural members supporting the lowest floor, with the exception of piling, pile caps, columns, grade beams and bracing, is elevated to or above the base flood elevation plus 1 foot (305 mm) or the design flood elevation, whichever is higher.
2. Basement floors that are below *grade* on all sides are prohibited.
3. The use of fill for structural support is prohibited.
4. Minor grading, and the placement of minor quantities of fill, shall be permitted for landscaping and for drainage purposes under and around buildings and for support of parking slabs, pool decks, patios and walkways.
5. Walls and partitions enclosing areas below the design flood elevation shall meet the requirements of Sections R322.3.4 and R322.3.5.

❖ Buildings and structures to be located in coastal high-hazard areas (V Zones) and Coastal A Zones must be elevated so that the bottom of the lowest horizontal structural members is not subject to flood loads during conditions of the base flood. Elevation is one of the most important requirements to provide resistance to flood damage. It is also the main factor used in determining federal flood insurance premium rates for buildings and structures.

Prior to the 2015 edition, this code had different elevation requirements based on the orientation of the lowest horizontal structural member. The 2015 edition simplifies application of the elevation requirement by eliminating differences as a function of orientation of the lowest horizontal structural member. Instead, the minimum requirement for all dwellings is that the bottom of the lowest horizontal structural member must be at or above the base flood elevation plus 1 foot, or the DFE, whichever is higher. The benefits of additional elevation above the NFIP minimum, called "freeboard," have been documented in several sources, notably in an independent report prepared for FEMA, *Evaluation of the National Flood Insurance Program's Building Standards* (American Institutes for Research, 2006) that documented the benefits in terms of avoided flood damage over a building's life as well as lower cost federal flood insurance. The report concluded that, based on avoided damage along, it is worth spending an additional percentage of the at-BFE building code to incorporate freeboard.

In coastal high-hazard areas and Coastal A Zones, the use of fill to provide structural support is prohibited because areas subject to wave action are more likely to experience flood-related erosion, which may lead to the failure of foundations on fill. Minor quantities of nonstructural fill may be allowed for the limited purposes of drainage and landscaping. For more guidance on acceptable uses of fill, see FEMA TB #5.

This section and the NFIP allow certain enclosures under buildings that otherwise meet the elevation requirements, and the exception notes that the requirements for such enclosures are found in Sections R322.3.4 and R322.3.5.

R322.3.3 Foundations. Buildings and structures erected in coastal high-hazard areas and Coastal A Zones shall be supported on pilings or columns and shall be adequately anchored to such pilings or columns. The space below the elevated building shall be either free of obstruction or, if enclosed with

INTERNATIONAL CODE COUNCIL®
Copyright © 2015 ICC. ALL RIGHTS RESERVED. Accessed by David Dammon on Jun 21, 2017 12:30:52 PM pursuant to License Agreement with ICC. No further reproduction or distribution authorized. ANY UNAUTHORIZED REPRODUCTION OR DISTRIBUTION IS A VIOLATION OF THE FEDERAL COPYRIGHT ACT AND THE LICENSE AGREEMENT, AND SUBJECT TO CIVIL AND CRIMINAL PENALTIES THEREUNDER.

walls, the walls shall meet the requirements of Section R322.3.4. Pilings shall have adequate soil penetrations to resist the combined wave and wind loads (lateral and uplift). Water-loading values used shall be those associated with the design flood. Wind-loading values shall be those required by this code. Pile embedment shall include consideration of decreased resistance capacity caused by scour of soil strata surrounding the piling. Pile systems design and installation shall be certified in accordance with Section R322.3.6. Spread footing, mat, raft or other foundations that support columns shall not be permitted where soil investigations that are required in accordance with Section R401.4 indicate that soil material under the spread footing, mat, raft or other foundation is subject to scour or erosion from wave-velocity flow conditions. If permitted, spread footing, mat, raft or other foundations that support columns shall be designed in accordance with ASCE 24. Slabs, pools, pool decks and walkways shall be located and constructed to be structurally independent of buildings and structures and their foundations to prevent transfer of flood loads to the buildings and structures during conditions of flooding, scour or erosion from wave-velocity flow conditions, unless the buildings and structures and their foundations are designed to resist the additional flood load.

Exception: In Coastal A Zones, stem wall foundations supporting a floor system above and backfilled with soil or gravel to the underside of the floor system shall be permitted provided the foundations are designed to account for wave action, debris impact, erosion and local scour. Where soils are susceptible to erosion and local scour, stem wall foundations shall have deep footings to account for the loss of soil.

❖ Several provisions applicable to foundations for buildings and structures in coastal high-hazard areas (V Zones) and Coastal A Zones are in this section. During coastal storms, both wind and water loads are significant, and buildings must be designed and constructed to withstand both loads. Buildings must be anchored to their foundations, and the foundations must withstand the anticipated forces. The requirement that the area under elevated buildings be free of obstructions is intended to minimize flood loads on foundations. Building elements that may be obstructions unless properly designed and constructed include stairs and ramps, decks and patios, elevators, equipment and cabinets mounted on foundation elements, foundation bracing (especially if perpendicular to the anticipate direction of wave approach), grade beams, shear walls, and slabs, including slabs used for parking (see FEMA TB #5).

Where soils are subject to scour and erosion from wave action, spread footing, mat, raft or other foundation elements cannot be used to support columns; if those foundation elements are used elsewhere, the requirements of ASCE 24 apply. It is common to have structures, such as pools, pool decks and slabs, built immediately adjacent to buildings in coastal communities. Such structures should be located and built so they do not obstruct waves and the flow of water or adversely impact buildings during a flood, including wave-induced scour and erosion. Additional guidance on these elements is found in FEMA TB #5.

After Hurricane Katrina, FEMA produced FEMA P-550. The designs account for wind loads and flood loads and are applicable throughout the United States, with certain limitations. Selection of applicable designs depends on several factors, including flood depths, wind loads and soils. Designs applicable in coastal high-hazard areas and Coastal A Zones are provided for open foundations (pilings and columns) up to 15 feet (4572 mm) above ground level.

The exception to allow stem wall foundations in Coastal A Zones was added in the 2015 edition of the code. FEMA P-550 notes that stem wall foundations have been observed to perform well in Coastal A Zones where erosion and local scour effects are minor, but this foundation type should not be used without a deep footing. The stem wall foundation design included in FEMA P-550 does not account for potential, site-specific erosion and local scour.

R322.3.4 Walls below design flood elevation. Walls and partitions are permitted below the elevated floor, provided that such walls and partitions are not part of the structural support of the building or structure and:

1. Electrical, mechanical and plumbing system components are not to be mounted on or penetrate through walls that are designed to break away under flood loads; and
2. Are constructed with insect screening or open lattice; or
3. Are designed to break away or collapse without causing collapse, displacement or other structural damage to the elevated portion of the building or supporting foundation system. Such walls, framing and connections shall have a resistance of not less than 10 (479 Pa) and not more than 20 pounds per square foot (958 Pa) as determined using allowable stress design; or
4. Where wind loading values of this code exceed 20 pounds per square foot (958 Pa), as determined using allowable stress design, the *construction documents* shall include documentation prepared and sealed by a registered *design professional* that:
    4.1. The walls and partitions below the design flood elevation have been designed to collapse from a water load less than that which would occur during the base flood.
    4.2. The elevated portion of the building and supporting foundation system have been designed to withstand the effects of wind and flood loads acting simultaneously on structural and nonstructural building components. Water-loading values used shall be those associated with the design flood. Wind-loading values shall be those required by this code.
5. Walls intended to break away under flood loads as specified in Item 3 or 4 have flood openings that meet the criteria in Section R322.2.2, Item 2.

❖ Buildings and structures in coastal high-hazard areas and Coastal A Zones must be elevated to or above the elevations specified in Section R322.3. However, cer-

INTERNATIONAL CODE COUNCIL®
Copyright © 2015 ICC. ALL RIGHTS RESERVED. Accessed by David Dammon on Jun 21, 2017 12:30:52 PM pursuant to License Agreement with ICC. No further reproduction or distribution authorized. ANY UNAUTHORIZED REPRODUCTION OR DISTRIBUTION IS A VIOLATION OF THE FEDERAL COPYRIGHT ACT AND THE LICENSE AGREEMENT, AND SUBJECT TO CIVIL AND CRIMINAL PENALTIES THEREUNDER.

tain enclosures are allowed below elevated buildings if the walls surrounding the enclosures (and partition walls) are designed to fail or break away under certain loads without causing damage to the foundation. Post-flood investigations indicate that breakaway walls do not perform as intended if wires, pipes and other utility components are mounted on or penetrate through the walls. Walls other than lattice, slats, shutters or insect screening must meet specific loading resistance; they are to be designed to fail under certain specified loads. If anticipated allowable loads exceed 20 pounds per square foot (958 Pa) as determined using allowable stress design, the wall design is to be certified as meeting certain specifications. Wood or plastic lattice, slats or shutters installed between the foundation elements are not considered walls, provided at least 40 percent of the area is open to the passage of floodwaters and the material used is thin enough to break away, considered to be no thicker than $^1/_2$ inch (12.7 mm) for lattice and no thicker than 1 inch (25 mm) for slats and shutters. For additional guidance, refer to FEMA TB #5, FEMA P-499 and FEMA P-55. FEMA TB #9 is particularly useful because it includes three methods to design breakaway walls: a prescriptive design approach, a simplified design approach and a performance-based design approach.

A new requirement in the 2015 IRC is for flood opening walls in all flood zones. Experience shows that walls designed to break away are breaking away under water depths and wave conditions that are less than the conditions of the base flood. Having openings will permit the water level inside to match the water level outside, limiting failure under "shallow" flooding that occurs more frequently than the base (100-year) flood. These same requirements are included in ASCE 24. Homes that are built with enclosures surrounded by breakaway walls that have flood openings will sustain damage less frequently, not only to the walls themselves, but the interior of the enclosures will not be exposed to wind-driven rain and sand. In addition, with fewer wall failures there will be less debris added to floodwater which will reduce damage by battering.

R322.3.5 Enclosed areas below design flood elevation. Enclosed areas below the design flood elevation shall be used solely for parking of vehicles, building access or storage.

❖ The limitations that are outlined in Section R322.2.2 on how enclosures below elevated buildings are used are repeated here. Enclosures are to be used only for parking, building access and storage. Although the NFIP regulations do not define storage, most states interpret it to mean "limited" storage. Some states specify that hazardous materials must not be stored in enclosures. Experience has suggested that two design factors influence the use of enclosures and may discourage illegal conversions by owners: the size of the enclosed area and utility service. Some communities limit the size of enclosures [federal flood insurance costs more if buildings in coastal high-hazard areas have enclosures, especially enclosures larger than 300 square feet (28 m^2)]. Another factor that influences enclosure use is the availability of utility services. Plumbing service is not associated with the allowable uses and in accordance with Section R322.1.6 must not be located below the design flood elevation. Only minimal electrical service should be provided (a light switch for a stairwell, for example, or electrical outlets that are wired from above).

R322.3.5.1 Protection of building envelope. An exterior door that meets the requirements of Section R609 shall be installed at the top of stairs that provide access to the building and that are enclosed with walls designed to break away in accordance with Section R322.3.4.

❖ Post-disaster investigations have identified increased damage to elevated buildings if breakaway walls fail as designed, exposing building interiors to wave splash, wave run-up, and wind-driven rain that enters through unprotected doors at the top of stairs.

R322.3.6 Construction documents. The *construction documents* shall include documentation that is prepared and sealed by a registered *design professional* that the design and methods of construction to be used meet the applicable criteria of this section.

❖ Documentation must be submitted to demonstrate that the design and proposed construction methods address the provisions of the code. This requirement recognizes that coastal high-hazard areas and Coastal A Zones subject to waves and erosion are dynamic environments that impose significant loads on buildings. This documentation is different than the documentation of the elevation of the bottom of the lowest horizontal structural member that is required in Section 109.1.3 (flood plain inspections), Section 109.1.6.1 (prior to final inspection), and Section R322.1.10 (as-built).

R322.3.7 Tanks. Underground tanks shall be anchored to prevent flotation, collapse and lateral movement under conditions of the base flood. Above-ground tanks shall be installed at or above the elevation required in Section R322.3.2. Where elevated on platforms, the platforms shall be cantilevered from or knee braced to the building or shall be supported on foundations that conform to the requirements of Section R322.3.

❖ Tanks dislodged during flooding not only can release contents into floodwater, but they become battering debris that can contribute to damage of buildings and structures. Underground tanks need to be installed in ways that take into consideration the fact that soils may be saturated during flooding, creating conditions that can cause tanks to be dislodged. Above-ground tanks must be elevated otherwise buildings would not comply with the free of obstruction requirement in Section R322.3.3.

INTERNATIONAL CODE COUNCIL®
Copyright © 2015 ICC. ALL RIGHTS RESERVED. Accessed by David Dammon on Jun 21, 2017 12:30:52 PM pursuant to License Agreement with ICC. No further reproduction or distribution authorized. ANY UNAUTHORIZED REPRODUCTION OR DISTRIBUTION IS A VIOLATION OF THE FEDERAL COPYRIGHT ACT AND THE LICENSE AGREEMENT, AND SUBJECT TO CIVIL AND CRIMINAL PENALTIES THEREUNDER.

SECTION R323
STORM SHELTERS

R323.1 General. This section applies to storm shelters where constructed as separate detached buildings or where constructed as safe rooms within buildings for the purpose of providing refuge from storms that produce high winds, such as tornados and hurricanes. In addition to other applicable requirements in this code, storm shelters shall be constructed in accordance with ICC/NSSA-500.

❖ ICC 500 provides requirements for the design and construction of shelters to protect people from the violent winds of hurricanes and tornadoes. The standard includes special requirements for structural design, including wind loads that are considerably higher than the wind loads required by Section 301.2.1 for all structures.

Wind loads for storm shelters will be based upon wind speed contour maps developed specially for this standard. The wind load design requirements are relatively severe when compared to the wind speed maps in Chapter 3. Contour maps for wind speeds in hurricane-prone regions were determined based upon a 10,000-year mean return period. The map shows 200 mph (88 m/s) wind speeds on the coast of Florida and the Carolinas, and wind speeds higher than 200 mph (88 m/s) in some locations. These are wind speeds associated with a Category 5 hurricane. Shelter design wind speeds in the central part of the United States (a region called "tornado alley") are as high as 250 mph (110 m/s).

Such high wind speeds, of course, produce flying debris, turning construction materials into deadly missiles. The standard contains specific test methods and pass-fail criteria for window and door protection from flying debris.

SECTION 324
SOLAR ENERGY SYSTEMS

R324.1 General. Solar energy systems shall comply with the provisions of this section.

❖ Solar thermal energy systems are water- and/or air-based systems, while solar photovoltaic energy systems are electrical-based systems. As the provisions related to solar photovoltaic energy systems were not related to plumbing and are actually of a structural and installation or general nature, they have been moved from Chapter 23 to Chapter 3 for the 2015 edition of the IRC, along with further enhancements. The solar thermal requirements of the code remain in Chapter 23 and Section R324.2 provides a pointer to reinforce that fact.

Although Section R324.2 requires that solar thermal systems also comply with the IFC, the solar-related provisions of the IFC (Section 605.11) pertain to rooftop-mounted solar photovoltaic arrays, not solar thermal systems.

R324.2 Solar thermal systems. Solar thermal systems shall be designed and installed in accordance with Chapter 23 and the *International Fire Code*.

❖ See the commentary to Section R324.1.

R324.3 Photovoltaic systems. Photovoltaic systems shall be designed and installed in accordance with Sections R324.3.1 through R324.6.1 and NFPA 70. Inverters shall be *listed* and *labeled* in accordance with UL 1741. Systems connected to the utility grid shall use inverters listed for utility interaction.

❖ Section R324.3 requires that solar photovoltaic energy systems comply with Sections R324.3.1 through R324.6.1 and NFPA 70. NFPA 70 is the *National Electrical Code*®.

Section R324.3 also requires that inverters for photovoltaic solar energy systems be listed and labeled in accordance with UL 1741 and that, where systems are connected to the utility grid, the inverters be listed for that purpose.

The ever-increasing demand for alternative power sources brings with it new hazards to confront emergency responders. Among the most popular of these alternative energy sources are solar photovoltaic (PV) power systems. A number of United States electric utility power suppliers offer incentives for the installation of PV systems on buildings because such systems offer the property owners the ability to generate their own electricity and, in many cases, sell excess electricity back to the utility provider. Such an arrangement is a benefit to the utility provider because it reduces their power generation demand, which in turn can control the rates that commercial and residential customers pay. Demand for PV power systems has increased by several orders of magnitude in the past decade. According to the U.S. Energy Information Administration, approximately 21,200 PV cells and modules were shipped domestically in 1999; by 2008, the number shipped was over 524,200. As the number of PV power systems increases, economy of scale will continue to reduce the system's costs, making them more common on commercial and residential buildings.

PV systems are designed to convert light energy into direct current (DC) electricity. They have no moving parts and do not contain fluids. The light-to-electricity conversion begins at the PV cell, which is commonly a semiconductor device that generates electricity when exposed to light. To be effective, PV cells are assembled into PV modules, which are then assembled into PV panels. The panels are assembled onto a frame or a flexible substrate, which then can be affixed to the roof of buildings to create a PV array. The PV arrays and its modules are wired together and generally operate as a series electrical circuit. PV arrays are required by NFPA 70 to have a fuse or other means of branch-circuit protection to prevent them from being overloaded. While not required, a PV array is commonly equipped with a blocking diode. A blocking diode is analogous to a check valve in a piping system because it limits the direction the electrons can travel. The blocking diode prevents electrical current from one power supply from finding entry into another. In PV systems, the blocking diode protects each individual PV panel if other panels fail and prevents the withdrawal of electricity from the system during the nighttime.

INTERNATIONAL CODE COUNCIL®
Copyright © 2015 ICC. ALL RIGHTS RESERVED. Accessed by David Dammon on Jun 21, 2017 12:30:52 PM pursuant to License Agreement with ICC. No further reproduction or distribution authorized. ANY UNAUTHORIZED REPRODUCTION OR DISTRIBUTION IS A VIOLATION OF THE FEDERAL COPYRIGHT ACT AND THE LICENSE AGREEMENT, AND SUBJECT TO CIVIL AND CRIMINAL PENALTIES THEREUNDER.

The greatest danger facing emergency responders operating in proximity to solar energy collection systems is the lack of knowledge needed to operate safely around these systems. Some of the potential hazards associated with PV systems are tripping hazards and/or falls for fire fighters operating on the roof and the potential for earlier roof collapse due to the added dead load and electric shock. The provisions of Sections R324.3 through R324.6.1 were based on similar provisions in the IFC and were developed to provide for the proper installation of PV systems and to address the potential hazards to fire fighters.

R324.3.1 Equipment listings. Photovoltaic panels and modules shall be listed and labeled in accordance with UL 1703.

❖ Photovoltaic panels and modules must be listed and labeled by an approved agency to show that they comply with applicable national standards. The label is the primary, if not the only, assurance to the installer, the inspector and the end user that a similar appliance has been tested and evaluated by an approved agency and performed safely and efficiently when installed and operated in accordance with its listing. Photovoltaic panels and modules must be listed and labeled to UL 1703, which is a referenced standard for flat plate photovoltaic modules and panels with a system voltage of 1,000 or less.

R324.4 Rooftop-mounted photovoltaic systems. Rooftop-mounted photovoltaic panel systems installed on or above the roof covering shall be designed and installed in accordance with Section R909.

❖ For photovoltaic panel systems that are mounted directly to rooftops, Section R324.3.1 requires compliance with the structural and installation requirements of Section 909. Section 909 applies specifically to rooftop-mounted photovoltaic panel systems. Photovoltaic panel systems are defined in Section R202.

R324.4.1 Roof live load. Roof structures that provide support for photovoltaic panel systems shall be designed for applicable roof live load. The design of roof structures need not include roof live load in the areas covered by photovoltaic panel systems. Portions of roof structures not covered by photovoltaic panels shall be designed for roof live load. Roof structures that provide support for photovoltaic panel systems shall be designed for live load, L_R, for the load case where the photovoltaic panel system is not present.

❖ This section addresses live loads for photovoltaic (PV) panel systems (see the definition of "Photovoltaic panel system") and indicates where and how such loads must be considered. Note that the loads imposed by PV panel systems are dead loads, not live loads. This section does not address dead loads. This section addresses roof live loads in two cases as follows:

Case 1, areas of roofs that are covered by PV panels: Roof live load is not required to be considered or modeled in these areas because the assumption is that no one will be walking on top of the panels or on the roof area covered by the panels.

Case 2, areas of roofs that are not covered by PV panels: The code-prescribed roof live load is required to be considered in the same manner that they typically would in conditions where photovoltaic panels are not present.

R324.5 Building-integrated photovoltaic systems. Building-integrated photovoltaic systems that serve as roof coverings shall be designed and installed in accordance with Section R905.

❖ Building-integrated photovoltaic product is defined in Section R202 as a building product that is part of the building envelope and incorporates photovoltaic modules. Building integrated photovoltaic systems must be designed and installed in accordance with Section 905. Section R202 also defines "Photovoltaic module."

R324.5.1 Photovoltaic shingles. Photovoltaic shingles shall comply with Section R905.16.

❖ Where photovoltaic collectors also function as shingle roof coverings, they must comply with Section R905.16, which specifically addresses photovoltaic shingles, and its subsections. Section R202 defines "Photovoltaic shingles" and "Photovoltaic module." Photovoltaic shingles are roof coverings that include photovoltaic modules and resemble conventional shingles. Photovoltaic modules are environmentally protected units that include solar cells, optics and components, other than a tracker, that generate electrical power from sunlight.

R324.6 Ground-mounted photovoltaic systems. Ground-mounted photovoltaic systems shall be designed and installed in accordance with Section R301.

❖ Photovoltaic systems that are mounted on the ground must meet the structural design provisions of Section R301.

R324.6.1 Fire separation distances. Ground-mounted photovoltaic systems shall be subject to the *fire separation distance* requirements determined by the local *jurisdiction*.

❖ The code does not contain specific requirements for ground-mounted photovoltaic systems based on fire separation distance. Instead, the code defaults to the local jurisdiction for guidance on this subject.

SECTION R325
MEZZANINES

R325.1 General. Mezzanines shall comply with Section R325.

❖ Mezzanines are defined in Section R202 as intermediate levels between the floor and ceiling of a story. The provisions for mezzanines in the IRC were adapted from relevant portions of the mezzanine provisions in the IBC.

The provisions for mezzanines are not intended to prevent portions of one story from being open to another story. They are intended to set a threshold over which intermediate levels must be considered as stories.

INTERNATIONAL CODE COUNCIL®
Copyright © 2015 ICC. ALL RIGHTS RESERVED. Accessed by David Dammon on Jun 21, 2017 12:30:52 PM pursuant to License Agreement with ICC. No further reproduction or distribution authorized. ANY UNAUTHORIZED REPRODUCTION OR DISTRIBUTION IS A VIOLATION OF THE FEDERAL COPYRIGHT ACT AND THE LICENSE AGREEMENT, AND SUBJECT TO CIVIL AND CRIMINAL PENALTIES THEREUNDER.

Mezzanines are not required to be considered as stories because they are limited in size and because they are subject to provisions that provide protection from fire hazards.

Section R301.2.2.3.1 indicates that mezzanines are not to be considered stories in the context of height limitations for buildings in higher seismic design categories. Mezzanines that are large in relation to the size of the story will act more like a story in response to seismic forces and, therefore, should be treated as stories. Otherwise, unsafe conditions could be created.

Section R325.2 requires a clear height of at least 7 feet above and below mezzanines.

Section R325.3 includes specific provisions for determining the portion of a room that can be included in the allowable area of a mezzanine. The area of the mezzanine, or multiple mezzanines relative to any individual story, must not be greater than one-third of the area of the space in which they are located.

Section R325.4 requires compliance with the means of egress requirements of Section R311.

Section R325.5 specifies the minimum degree of openness that must be provided between a mezzanine and the room or story in which it is located. This provides early warning to occupants should a fire occur in either the mezzanine or in the room. The exceptions to Section R325.5 specify the conditions under which openness is not required.

R325.2 Mezzanines. The clear height above and below mezzanine floor construction shall be not less than 7 feet (2134 mm).

❖ See the commentary to Section R325.1.

R325.3 Area limitation. The aggregate area of a mezzanine or mezzanines shall be not greater than one-third of the floor area of the room or space in which they are located. The enclosed portion of a room shall not be included in a determination of the floor area of the room in which the *mezzanine* is located.

❖ See the commentary to Section R325.1.

R325.4 Means of egress. The means of egress for mezzanines shall comply with the applicable provisions of Section R311.

❖ See the commentary to Section R325.1.

R325.5 Openness. Mezzanines shall be open and unobstructed to the room in which they are located except for walls not more than 36 inches (1067 mm) in height, columns and posts.

Exceptions:

1. Mezzanines or portions thereof are not required to be open to the room in which they are located, provided that the aggregate floor area of the enclosed space is not greater than 10 percent of the mezzanine area.
2. In buildings that are not more than two stories above *grade plane* and equipped throughout with an automatic sprinkler system in accordance with Section R313, a mezzanine shall not be required to be open to the room in which the mezzanine is located.

❖ See the commentary to Section R325.1.

SECTION R326
SWIMMING POOLS, SPAS AND HOT TUBS

R326.1 General. The design and construction of pools and spas shall comply with the *International Swimming Pool and Spa Code*.

❖ This section references the *International Swimming Pool and Spa Code*® (ISPSC®) for the design of aquatic vessels.

The ISPSC uses the term “aquatic vessels” to cover all types of vessels including pools, water parks, spas and hot tubs. The ISPSC provisions comprehensively address all aspects of such vessels including:

- Administration and definitions.
- Construction features for pools including size and depth, wall and floor construction, and calculation of bather occupant load.
- Safety features such as barriers to pool entry and deep areas.
- Equipment such as suction entrapment avoidance, circulation, filters, pumps and motors, skimmers, heaters, return and suction fittings.
- Appurtenances such as ladders and diving equipment.

The ISPSC is a comprehensive set of regulations for swimming pools and spas that is consistent and coordinated with the I-Codes. Technical content was developed from provisions of the I-Codes and applicable standards from the Association of Pool & Spa Professionals (APSP). The APSP standards considered were:

- ANSI-1 2003 Public Swimming Pools
- ANSI-2 1999 Public Spas
- ANSI-3 1999 Permanent Residential Spas
- ANSI-4 2007 Aboveground/On-ground Residential Swimming Pools
- ANSI-5 2003 Residential In-ground Swimming Pools
- ANSI-6 1999 Portal Spas
- ANSI-7 2006 Suction Entrapment Avoidance
- ANSI-8 2005 Model Barrier Code
- ANSI-9 2005 Aquatic Recreational Facilities
- ANSI-11 2009 Standard for water quality in public swimming pools and spas

Bibliography

The following resource materials were used in the preparation of the commentary for this chapter of the code:

AAMA/WDMA/CSA 101/I.S.2/A440–11, *North American Fenestration Standards/Specifications for Windows, Doors and Unit Skylights.* Schaumburg, IL: American Architectural Manufacturers Association, 2011.

INTERNATIONAL CODE COUNCIL®
Copyright © 2015 ICC. ALL RIGHTS RESERVED. Accessed by David Dammon on Jun 21, 2017 12:30:52 PM pursuant to License Agreement with ICC. No further reproduction or distribution authorized. ANY UNAUTHORIZED REPRODUCTION OR DISTRIBUTION IS A VIOLATION OF THE FEDERAL COPYRIGHT ACT AND THE LICENSE AGREEMENT, AND SUBJECT TO CIVIL AND CRIMINAL PENALTIES THEREUNDER.

ACI 318–11, *Building Code for Structural Concrete.* Farmington Hills, MI: American Concrete Institute, 2011.

AF&PA WFCM–2012, *Wood Frame Construction Manual for One- and Two-family Dwellings.* Washington, DC: American Forest and Paper Association, 2012.

AISI S230–07, *Standard for Cold-formed Steel Framing-prescriptive Method for One- and Two-family Dwellings with Supplement 2, dated 2008.* Washington, DC: American Iron and Steel Institute, 2007.

American Institutes for Research (October 2006), *Evaluation of the National Flood Insurance Program's Building Standards.* Available online: https://www.fema.gov/media-library/assets/documents/9585.

ANSI/AF&PA PWF–07, *Permanent Wood Foundation Design Specifications.* New York, NY: American National Standards Institute, 2007.

ANSI/DSMA 115–05, *Standard Method for Testing Sectional Garage Doors and Rolling Doors: Determination of Structural Performance Under Missile Impact and Cyclic Wind Pressure.* New York, NY: American National Standards Institute, 2005.

ANSI Z97.1–09, *Safety Glazing Materials Used in Buildings-Safety Performance Specifications and Methods of Test.* New York, NY: American National Standards Institute, 2009.

ASCE 7–10, *Minimum Design Loads for Buildings and Other Structures.* Reston, VA: American Society of Civil Engineers, 2010.

ASCE 24–05, *Flood-resistant Design and Construction.* Reston, VA: American Society of Civil Engineers, 2005.

ASME A17.1/CSA B44–07, *Safety Code for Elevators and Escalators.* New York, NY: American Society of Mechanical Engineers, 2007.

ASME A18.1–08, *Safety Standard for Platforms and Stairway Chair Lifts.* New York, NY: American Society of Mechanical Engineers, 2008.

ASTM A153/A153M–05, *Standard Specification for Zinc Coating (Hot-Dip) on Iron and Steel Hardware.* West Conshohocken, PA: ASTM International, 2005.

ASTM B695–04, *Standard Specification for Coatings of Zinc Mechanically Deposited on Iron and Steel.* West Conshohocken, PA: ASTM International, 2004.

ASTM D698–12e1, *Standard Test Methods for Laboratory Compaction Characteristics of Soil Using Standard Effort.* West Conshohocken, PA: ASTM International, 2012.

ASTM D2565–99, *Standard Practice for Xenon Arc Exposure of Plastics Intended for Outdoor Applications.* West Conshohocken, PA: ASTM International, 1999.

ASTM D7032–08, *Standard Specification for Establishing Performance Ratings for Wood-plastic Composite Deck Boards and Guardrail Systems (Guards or Handrails).* West Conshohocken, PA: ASTM International, 2008.

ASTM E84–09, *Test Method for Surface-burning Characteristics of Building Materials.* West Conshohocken, PA: ASTM International, 2009.

ASTM E119–08a, *Test Method for Fire Tests of Building Construction and Materials.* West Conshohocken, PA: ASTM International, 2008.

ASTM E136–09, *Test Method for Behavior of Materials in a Vertical Tube Furnace at 750°C.* West Conshohocken, PA: ASTM International, 2009.

ASTM E152–95, *Method of Fire Tests for Door Assemblies.* West Conshohocken, PA: ASTM International, 1995.

ASTM E814–08b, *Test Method for Fire Tests of Through-penetration Firestops.* West Conshohocken, PA: ASTM International, 2008.

ASTM E970–08a, *Test Method for Critical Radiant Flux of Exposed Attic Floor Insulation Using a Radiant Heat Energy Source.* West Conshohocken, PA: ASTM International, 2008.

ASTM E1886–05, *Test Method for Performance of Exterior Windows, Curtain Walls, Doors and Storm Shutters Impacted by Missile(s) and Exposed to Cyclic Pressure Differentials.* West Conshohocken, PA: ASTM International, 2005.

ASTM E1996–09, *Specification for Performance of Exterior Windows, Curtain Walls, Doors and Storm Shutters Impacted by Wind-borne Debris in Hurricanes.* West Conshohocken, PA: ASTM International, 2009.

ASTM F2090–08, *Standard Specification for Window Fall Prevention Devices with Emergency Escape (Egress) Release Mechanisms.* West Conshohocken, PA: ASTM International, 2008.

ASTM G155–05a, *Standard Practice for Operating Xenon Arc light Apparatus for Exposure of Non-metallic Materials.* West Conshohocken, PA: ASTM International, 1999.

AWPA M4–08, *Standard for the Care of Preservative-treated Wood Products.* Granbury, TX: American Wood-Preservers' Association, 2008.

CAN/ULC-S102.2–1988, *Method of Test for Surface Burning Characteristics of Building Materials and Assemblies with 2000 Revisions.* Ontario, Canada: Underwriters Laboratories Canada, 2000.

CPSC 16 CFR, Part 1201–(2002), *Safety Standard for Architectural Glazing.* Bethesda, MD: Consumer Product Safety Commission, 2002.

INTERNATIONAL CODE COUNCIL®

Copyright © 2015 ICC. ALL RIGHTS RESERVED. Accessed by David Dammon on Jun 21, 2017 12:30:52 PM pursuant to License Agreement with ICC. No further reproduction or distribution authorized. ANY UNAUTHORIZED REPRODUCTION OR DISTRIBUTION IS A VIOLATION OF THE FEDERAL COPYRIGHT ACT AND THE LICENSE AGREEMENT, AND SUBJECT TO CIVIL AND CRIMINAL PENALTIES THEREUNDER.

CPSC 16 CFR, Part 1209–(2002), *Interim Safety Standard for Cellulose Insulation.* Bethesda, MD: Consumer Product Safety Commission, 2002.

CPSC 16 CFR, Part 1404–(2002), *Cellulose Insulation.* Bethesda, MD: Consumer Product Safety Commission, 2002.

FEMA 44 CFR Parts 59–73: *National Flood Insurance Program (NFIP).* Frederick, MD: Federal Emergency Management Agency.

FEMA P-55CD (third edition): *Coastal Construction Manual.* Frederick, MD: Federal Emergency Management Agency.

FEMA P-85, *Protecting Manufactured Homes from Floods and Other Hazards: A Multi-Hazard Foundation and Installation Guide.* Frederick, MD: Federal Emergency Management Agency.

FEMA 232, *Home Builder's Guide to Seismic-resistant Construction.* Frederick, MD: Federal Emergency Management Agency.

FEMA 259, *Engineering Principles and Practices for Retrofitting Floodprone Residential Structures.* Frederick, MD: Federal Emergency Management Agency.

FEMA 265, *Managing Flood Plain Development in Approximate Zone Areas: A Guide for Obtaining and Developing Base (100-year) Flood Elevations.* Frederick, MD: Federal Emergency Management Agency.

FEMA 348, *Protecting Building Utilities From Flood Damage: Principles and Practices for the Design and Construction of Flood-resistant Building Utility Systems.* Frederick, MD: Federal Emergency Management Agency.

FEMA Form 086-0-33: *Elevation Certificate.* Available at http://www.fema.gov/national-flood-insurance-program-2/elevation-certificate. Frederick, MD: Federal Emergency Management Agency.

FEMA P-467-1: *Floodplain Management Bulletin on the Elevation Certificate.* Frederick, MD: Federal Emergency Management Agency.

FEMA P-467-2: *Floodplain Management Bulletin on Historic Structures.* Frederick, MD: Federal Emergency Management Agency.

FEMA P-499, *Home Builder's Guide to Coastal Construction: Technical Fact Sheet Series.* Frederick, MD: Federal Emergency Management Agency.

FEMA P-550, *Recommended Residential Construction for the Gulf Coast Building on Strong and Safe Foundations.* Frederick, MD: Federal Emergency Management Agency.

FEMA P-758: *Substantial Improvement/Substantial Damage Desk Reference.* Frederick, MD: Federal Emergency Management Agency.

FEMA P-784: *Substantial Damage Estimator.* Frederick, MD: Federal Emergency Management Agency.

FEMA TB #1, *Openings in Foundation Walls and Walls of Enclosures Below Elevated Buildings Located in Special Flood Hazard Areas.* Frederick, MD: Federal Emergency Management Agency.

FEMA TB #2, *Flood Damage-resistant Materials Requirements for Buildings Located in Special Flood Hazard Areas in accordance with the National Flood Insurance Program.* Frederick, MD: Federal Emergency Management Agency.

FEMA TB #3: *Non-Residential Floodproofing Requirements and Certification for Buildings Located in Special Flood Hazard Areas.* Frederick, MD: Federal Emergency Management Agency.

FEMA TB #4, *Elevator Installation for Buildings Located in Special Flood Hazard Areas.* Frederick, MD: Federal Emergency Management Agency.

FEMA TB #5, *Free-of-obstruction Requirements for Buildings Located in Coastal High-Hazard Areas.* Frederick, MD: Federal Emergency Management Agency.

FEMA TB #6, *Below-grade Parking Requirements for Buildings Located in Special Flood Hazard Areas.* Frederick, MD: Federal Emergency Management Agency.

FEMA TB #7: *Wet Floodproofing Requirements for Structures Located in Special Flood Hazard Areas.* Frederick, MD: Federal Emergency Management Agency.

FEMA TB #8, *Corrosion Protection for Metal Connectors In Coastal Areas for Structures Located in Special Flood Hazard Areas.* Frederick, MD: Federal Emergency Management Agency.

FEMA TB #9, *Design and Construction Guidance for Breakaway Walls Below Elevated Coastal Buildings in Coastal High-Hazard Areas.* Frederick, MD: Federal Emergency Management Agency.

FEMA TB #10, *Ensuring that Structures Built on Fill In or Near Special Flood Hazard Areas are Reasonably Safe from Flooding.* Frederick, MD: Federal Emergency Management Agency.

FEMA TB #11: *Crawlspace Construction for Buildings Located in Special Flood Hazard Areas.* Frederick, MD: Federal Emergency Management Agency.

Fire Resistance Design Manual (GA-600-2009). Hyattsville, MD: Gypsum Association, 2009.

FM 4880–05, *American National Standard for Evaluating Insulated Wall or Wall and Roof/Ceiling Assemblies, Plastic Interior Finish Materials, Plastic Exterior Building Panels, Wall/Ceiling Coating Systems, Interior or Exterior Finish Systems.* Johnson, RI: Factory Mutual Global Research Standards Laboratories Department, 2005.

HUD 24 CFR Part 3285, *Model Manufactured Home Installation Standard.*

INTERNATIONAL CODE COUNCIL®

Copyright © 2015 ICC. ALL RIGHTS RESERVED. Accessed by David Dammon on Jun 21, 2017 12:30:52 PM pursuant to License Agreement with ICC. No further reproduction or distribution authorized. ANY UNAUTHORIZED REPRODUCTION OR DISTRIBUTION IS A VIOLATION OF THE FEDERAL COPYRIGHT ACT AND THE LICENSE AGREEMENT, AND SUBJECT TO CIVIL AND CRIMINAL PENALTIES THEREUNDER.

HUD Fair Housing Act.

HUD Fair Housing Accessibility Guidelines.

IBC–15, *International Building Code.* Washington, DC: International Code Council, 2014.

ICC 400–12, *Standard on The Design and Construction of Log Structures.* Washington, DC: International Code Council, 2011.

ICC 500–14, *ICC/NSSA Standard on the Design and Construction of Storm Shelters.* Washington, DC: International Code Council, 2014.

ICC 600–14, *Standard for Residential Construction in High-wind Regions.* Washington, DC: International Code Council, 2014.

ICC 700–12 *National Green Building Standard.* Washington, DC: International Code Council, 2012.

ICC/ANSI A117.1–09, *Accessible and Usable Buildings and Facilities.* Washington, DC: International Code Council, 2009.

IFC–15, *International Fire Code.* Washington, DC: International Code Council, 2014.

IPC–15, *International Plumbing Code.* Washington, DC: International Code Council, 2014.

NFIP Technical Bulletin Series. Available at http://www.fema.gov/mit/techbul.htm

NFPA 13–10, *Installation of Sprinkler Systems.* Quincy, MA: National Fire Protection Association, 2010.

NFPA 13D–10, *Installation of Sprinkler Systems in One- and Two-family Dwellings and Manufactured Homes.* Quincy, MA: National Fire Protection Association, 2010.

NFPA 13R–10, *Installation of Sprinkler Systems in Residential Occupancies Up to and Including Four Stories in Height.* Quincy, MA: National Fire Protection Association, 2010.

NFPA 70–11, *National Electrical Code.* Quincy, MA: National Fire Protection Association, 2011.

NFPA 72–11, *National Fire Alarm Code.* Quincy, MA: National Fire Protection Association, 2011.

NFPA 259–08, *Standard Test Method for Potential Heat of Building Materials.* Quincy, MA: National Fire Protection Association, 2008.

NFPA 275–09, *Standard Method of Fire Tests for the Evaluation of Thermal Barriers Used Over Foam Plastic Insulation.* Quincy, MA: National Fire Protection Association, 2009.

NFPA 286–11, *Standard Methods of Fire Tests for Evaluating Contribution of Wall and Ceiling Interior Finish to Room Fire Growth.* Quincy, MA: National Fire Protection Association, 2011.

NFPA 720–09 *Standard for The Installation of Carbon Monoxide (CO) Detection and Warning Equipment.* Quincy, MA: National Fire Protection Association, 2009.

NIST 7451–07, *Benefit-cost Analysis of Residential Fire Sprinkler Systems.* Gaithersburg, MD: National Institute of Standards and Technology, 2007.

PCA 100–10, *Prescriptive Design for Exterior Concrete Walls for One- and Two-family Dwellings.* Skokie, IL: Portland Cement Organization, 2010.

Reducing Flood Losses Through the International Code Series: Meeting the Requirements of the National Flood Insurance Program. Washington, DC: International Code Council, 2008.

UL 217–06, *Single- and Multiple-station Smoke Alarms-with Revisions through August 2005.* Northbrook, IL: Underwriters Laboratories Inc., 2006.

UL 263–03, *Standard for Fire Test of Building Construction and Materials.* Northbrook, IL: Underwriters Laboratories Inc., 1996.

UL 325–02, *Door, Drapery, Gate, Louver and Window Operations and Systems-with Revisions through February 2006.* Northbrook, IL: Underwriters Laboratories Inc., 1996.

UL 723–03, *Standard for Test for Surface-burning Characteristics of Building Materials-with Revisions through May 2005.* Northbrook, IL: Underwriters Laboratories Inc., 1996.

UL 1040–96, *Fire Test of Insulated Wall Construction-with Revisions through April 2001.* Northbrook, IL: Under-writers Laboratories Inc., 1996.

UL 1479–03, *Fire Tests of Through-penetration Firestops.* Northbrook, IL: Underwriters Laboratories Inc., 2003.

UL 1715–97, *Fire Test of Interior Finish Material.* Northbrook, IL: Underwriters Laboratories Inc., 1997.

UL 2034–08, *Standard for Single- and Multiple-station Carbon Monoxide Alarms.* Northbrook, IL: Underwriters Laboratories Inc., 2008.

UL 2075–04, *Gas and Vapor Detectors and Sensors-with Revisions through September 28, 2007.* Northbrook, IL: Underwriters Laboratories Inc., 2004.

UL *Fire Resistance Directory.* Northbrook, IL: Underwriters Laboratories Inc., 2010.

USGS *National Seismic Hazards Mapping Project*, http://earthquake.usgs.gov/hazards. Reston, VA.

INTERNATIONAL CODE COUNCIL®

Copyright © 2015 ICC. ALL RIGHTS RESERVED. Accessed by David Dammon on Jun 21, 2017 12:30:52 PM pursuant to License Agreement with ICC. No further reproduction or distribution authorized. ANY UNAUTHORIZED REPRODUCTION OR DISTRIBUTION IS A VIOLATION OF THE FEDERAL COPYRIGHT ACT AND THE LICENSE AGREEMENT, AND SUBJECT TO CIVIL AND CRIMINAL PENALTIES THEREUNDER.

Chapter 4: Foundations

General Comments

Section R401 establishes the scope and applicability of the chapter. The criteria provide the details necessary for designing, building and inspecting most common foundation systems for homes. The selection of a particular type of foundation is based on many variables and it should result in the system that best suits the needs of a particular project. Also, the lot itself must be evaluated to determine the type of soil and the drainage pattern.

Section R402 specifies material requirements for wood, concrete and precast concrete foundations. Section R403 provides minimum requirements for concrete and masonry footings as well as footing for wood foundations and precast concrete foundations. Section R404 regulates foundation walls of concrete, masonry and wood as well as insulating concrete form foundation walls and precast concrete foundation walls. Section R405 has important criteria for maintaining the drainage of water away from foundations. The requirements for waterproofing and dampproofing in Section R406 protect below-grade habitable spaces from moisture. Section R407 provides requirements for underfloor areas and for protecting columns. Section R408 includes provisions for proper ventilation, adequate access, the removal of debris and flood resistance.

Purpose

Chapter 4 provides the requirements for the design and construction of foundation systems for buildings regulated by the code. Provisions for seismic load, flood load and frost protection are contained in this chapter. A foundation system consists of two interdependent components: the foundation structure itself and the supporting soil.

This chapter provides prescriptive requirements for constructing footings and walls for foundations of wood, masonry, concrete, and precast concrete. In addition to a foundation's ability to support the required design loads, this chapter addresses several other factors that can affect foundation performance. These include controlling surface water and subsurface drainage, requiring soil tests where conditions warrant, and evaluating proximity to slopes and minimum depth requirements. The chapter also provides requirements to minimize adverse effects of moisture, decay and pests in basements and crawl spaces.

SECTION R401 GENERAL

R401.1 Application. The provisions of this chapter shall control the design and construction of the foundation and foundation spaces for buildings. In addition to the provisions of this chapter, the design and construction of foundations in flood hazard areas as established by Table R301.2(1) shall meet the provisions of Section R322. Wood foundations shall be designed and installed in accordance with AWC PWF.

Exception: The provisions of this chapter shall be permitted to be used for wood foundations only in the following situations:

1. In buildings that have no more than two floors and a roof.
2. Where interior *basement* and foundation walls are constructed at intervals not exceeding 50 feet (15 240 mm).

Wood foundations in Seismic Design Category D_0, D_1 or D_2 shall be designed in accordance with accepted engineering practice.

❖ This chapter contains all requirements relating to the design and construction of foundations and underfloor spaces. Also, an explicit link is provided to the flood-resistant construction provisions of Section R322. Thus, foundations for buildings to be located in flood hazard areas are to meet the provisions of Section R322 as well.

This section also specifically allows a wood foundation system designed and installed according to the American Wood Council (PWF) *Permanent Wood Foundation Design Specification.* When this system is installed under the prescriptive code requirements of this chapter, the code limits its use to structures where the loads exerted on the foundation are relatively light and to areas of low or moderate seismic hazard. This type of foundation construction is essentially a below-grade, load-bearing, wood-frame system capable of providing support for light frame structures. It generally would consist of the following components:

1. Walls consisting of plywood fastened to wood studs (see Section R404.2).
2. A composite footing made up of a continuous wood plate set on a bed of granular materials, such as sand, gravel, or crushed stone, which in turn supports the foundation walls and transmits their loads to the bearing soil below (see Section R403.2).
3. Polyethylene film that serves as a vapor barrier and covers the exterior side of the plywood

INTERNATIONAL CODE COUNCIL®
Copyright © 2015 ICC. ALL RIGHTS RESERVED. Accessed by David Dammon on Jun 21, 2017 12:30:52 PM pursuant to License Agreement with ICC. No further reproduction or distribution authorized. ANY UNAUTHORIZED REPRODUCTION OR DISTRIBUTION IS A VIOLATION OF THE FEDERAL COPYRIGHT ACT AND THE LICENSE AGREEMENT, AND SUBJECT TO CIVIL AND CRIMINAL PENALTIES THEREUNDER.

foundation walls from grade level down to the footing plate (see Section R406.3).

4. Caulking compounds used for sealing the joints in the plywood walls, bonding agents for attaching the polyethylene film to the plywood, and for the film joints (see Section R406.3).
5. Metal fasteners made of silicon bronze, copper, or stainless steel or hot-dipped zinc-coated steel nails or staples (see Section R402.1).
6. Pressure-treated plywood and lumber to protect the foundation material against decay, termites, and other insects (see Section R402.1).

R401.2 Requirements. Foundation construction shall be capable of accommodating all loads in accordance with Section R301 and of transmitting the resulting loads to the supporting soil. Fill soils that support footings and foundations shall be designed, installed and tested in accordance with accepted engineering practice. Gravel fill used as footings for wood and precast concrete foundations shall comply with Section R403.

❖ In order to fulfill its role in the complete load path, the foundation must support the required design loads and transmit these to the soil. The phrase "accepted engineering practice" in this section means common practice that is acceptable to the code official of the jurisdiction.

R401.3 Drainage. Surface drainage shall be diverted to a storm sewer conveyance or other *approved* point of collection that does not create a hazard. *Lots* shall be graded to drain surface water away from foundation walls. The *grade* shall fall a minimum of 6 inches (152 mm) within the first 10 feet (3048 mm).

Exception: Where *lot lines*, walls, slopes or other physical barriers prohibit 6 inches (152 mm) of fall within 10 feet (3048 mm), drains or swales shall be constructed to ensure drainage away from the structure. Impervious surfaces within 10 feet (3048 mm) of the building foundation shall be sloped a minimum of 2 percent away from the building.

❖ Along with the proper support for a structure through the foundation system, adequate preparation of the building site is necessary to keep water drainage away from the supporting foundations. Proper site drainage is an important element in preventing wet basements, damp crawl spaces, eroded banks, and possible failure of a foundation system.

One of the most important considerations is the arrangement of structures on a building site in a manner that retains natural drainage patterns and minimizes the alteration or disturbance to existing grades. If the designer keeps such factors in mind, the result will be a reduction of ground surface stabilization problems and opportunities for differential settlement through the reduction in the use of fills. A detailed treatment of drainage design is beyond the scope of this document; therefore, only rough guidelines can be provided for areas where a more comprehensive set of grading regulations does not exist.

As illustrated in Commentary Figures R401.3(1) and R401.3(2), drainage patterns should result in adequate slopes to approved drainage devices that are capable of carrying concentrated runoff. In some cases, control of concentrated roof runoff by gutters and downspouts may be needed, and if gutters and downspouts are used, provisions should be made to discharge runoff in order to prevent soil erosion. Refer also to Section R801.3.

Cross-lot drainage and drainage over graded slopes should generally be avoided. Slopes should be designed with as moderate a grade as possible to minimize instability and erosion. The minimum slope gradients which should be used are a function of the combined ground frost and moisture conditions, soil type, geological features, and geographic conditions. The slope away from the building is required to be 6 inches (152 mm) within the first 10 feet (3048 mm). The

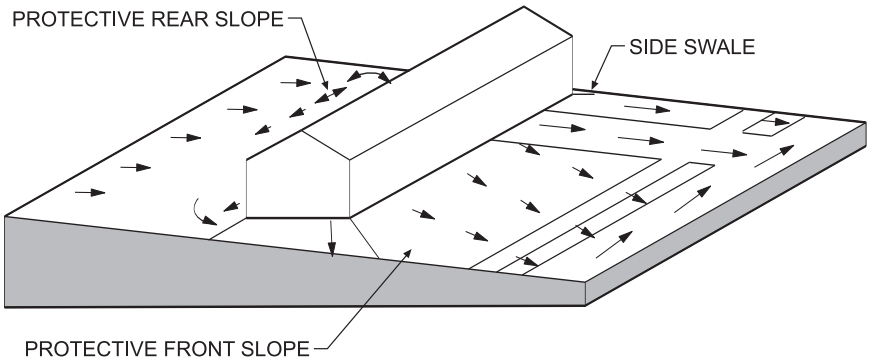

GRADING METHOD FOR LOT WHERE SLOPE IS FROM REAR TO FRONT LOT.
DRAINAGE SWALES ARE LOCATED AT REAR AND SIDES OF DWELLING.

Figure R401.3(1)
LOT GRADING EXAMPLE

INTERNATIONAL CODE COUNCIL®
Copyright © 2015 ICC. ALL RIGHTS RESERVED. Accessed by David Dammon on Jun 21, 2017 12:30:52 PM pursuant to License Agreement with ICC. No further reproduction or distribution authorized. ANY UNAUTHORIZED REPRODUCTION OR DISTRIBUTION IS A VIOLATION OF THE FEDERAL COPYRIGHT ACT AND THE LICENSE AGREEMENT, AND SUBJECT TO CIVIL AND CRIMINAL PENALTIES THEREUNDER.

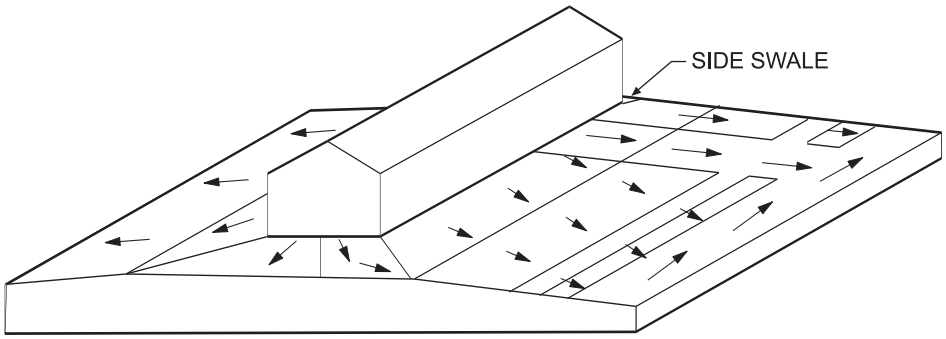

GRADING METHOD FOR LOT WHERE DWELLING IS LOCATED ON A RIDGE.
DRAINAGE SWALES ARE LOCATED AT SIDE YARDS IN AREA OF POSITIVE SLOPES.

Figure R401.3(2)
LOT GRADING EXAMPLE

exception in this section allows for use of drains and swales if lot lines or physical barriers, such as a steeply sloping lot, do not allow for a 6-inch (152 mm) slope.

R401.4 Soil tests. Where quantifiable data created by accepted soil science methodologies indicate expansive, compressible, shifting or other questionable soil characteristics are likely to be present, the *building official* shall determine whether to require a soil test to determine the soil's characteristics at a particular location. This test shall be done by an *approved agency* using an *approved* method.

❖ Loading conditions beyond the normal live, dead, and wind or earthquake loading generally include the types of loading attributable to special regional conditions. Such conditions might include soil instability, forces generated on foundations by expansive soils, and increased lateral pressures due to a high water table or surcharge loads from adjacent structures. Accounting for such conditions in the structure is generally considered to be beyond the scope of the conventional methods of foundation construction specified within this chapter. In some cases, a soil test may be required to evaluate the existing conditions.

Where the bearing capacity of the soil has not been determined by geotechnical evaluation such as borings, field load tests, laboratory tests, and engineering analysis, it is a common practice to use presumptive bearing values for the design of the foundation system. Section R401.4.1 requires that the presumptive bearing values in Table R401.4.1 be used if a geotechnical evaluation has not been performed.

R401.4.1 Geotechnical evaluation. In lieu of a complete geotechnical evaluation, the load-bearing values in Table R401.4.1 shall be assumed.

❖ See the commentary to Section R401.4.

TABLE R401.4.1
PRESUMPTIVE LOAD-BEARING VALUES OF FOUNDATION MATERIALS[a]

CLASS OF MATERIAL	LOAD-BEARING PRESSURE (pounds per square foot)
Crystalline bedrock	12,000
Sedimentary and foliated rock	4,000
Sandy gravel and/or gravel (GW and GP)	3,000
Sand, silty sand, clayey sand, silty gravel and clayey gravel (SW, SP, SM, SC, GM and GC)	2,000
Clay, sandy, silty clay, clayey silt, silt and sandy siltclay (CL, ML, MH and CH)	1,500[b]

For SI: 1 pound per square foot = 0.0479 kPa.

a. Where soil tests are required by Section R401.4, the allowable bearing capacities of the soil shall be part of the recommendations.

b. Where the building official determines that in-place soils with an allowable bearing capacity of less than 1,500 psf are likely to be present at the site, the allowable bearing capacity shall be determined by a soils investigation.

❖ As explained in the commentary to Section R401.4, where a soils investigation is not required by the code, load-bearing values of Table R401.4.1 are to be used. The values vary by soil classifications, which are based on the Unified Soil Classification System. Table R405.1 also gives these soil descriptions in more detail. The allowable soil bearing values listed in the table are based on lengthy experience with the behavior of these materials in supporting loads from all types of structures.

R401.4.2 Compressible or shifting soil. Instead of a complete geotechnical evaluation, where top or subsoils are compressible or shifting, they shall be removed to a depth and width sufficient to ensure stable moisture content in each

INTERNATIONAL CODE COUNCIL®
Copyright © 2015 ICC. ALL RIGHTS RESERVED. Accessed by David Dammon on Jun 21, 2017 12:30:52 PM pursuant to License Agreement with ICC. No further reproduction or distribution authorized. ANY UNAUTHORIZED REPRODUCTION OR DISTRIBUTION IS A VIOLATION OF THE FEDERAL COPYRIGHT ACT AND THE LICENSE AGREEMENT, AND SUBJECT TO CIVIL AND CRIMINAL PENALTIES THEREUNDER.

active zone and shall not be used as fill or stabilized within each active zone by chemical, dewatering or presaturation.

❖ A geotechnical engineer should be consulted by the owner or the owner's builder if there is a concern that a compressible or shifting soil condition exists. Where these conditions are present, one of two methods must be used. The first of these deals with removal and replacement of the soil, thus reducing the forces associated with soil movement. The second approach is soil stabilization by chemical means, dewatering or presaturation.

SECTION R402
MATERIALS

R402.1 Wood foundations. Wood foundation systems shall be designed and installed in accordance with the provisions of this code.

❖ The wood foundation system requirements are from the American Wood Council (PWF) *Permanent Wood Foundation Design Specification*. Figures R403.1(2) and R403.1(3) of the code illustrate some typical details of this system. Also refer to the commentary to Section R401.1.

R402.1.1 Fasteners. Fasteners used below *grade* to attach plywood to the exterior side of exterior *basement* or crawlspace wall studs, or fasteners used in knee wall construction, shall be of Type 304 or 316 stainless steel. Fasteners used above *grade* to attach plywood and all lumber-to-lumber fasteners except those used in knee wall construction shall be of Type 304 or 316 stainless steel, silicon bronze, copper, hot-dipped galvanized (zinc coated) steel nails, or hot-tumbled galvanized (zinc coated) steel nails. Electro-galvanized steel nails and galvanized (zinc coated) steel staples shall not be permitted.

❖ Appropriate fasteners must be used in wood foundation construction because the presence of any moisture in combination with the preservative treatment can corrode incompatible fasteners.

R402.1.2 Wood treatment. All lumber and plywood shall be pressure-preservative treated and dried after treatment in accordance with AWPA U1 (Commodity Specification A, Use Category 4B and Section 5.2), and shall bear the *label* of an accredited agency. Where lumber and/or plywood is cut or drilled after treatment, the treated surface shall be field treated with copper naphthenate, the concentration of which shall contain a minimum of 2-percent copper metal, by repeated brushing, dipping or soaking until the wood absorbs no more preservative.

❖ Performance of the wood foundation system is dependent on the use of properly treated materials; thus, the code provision emphasizes the use of properly treated lumber and plywood. Verification of the proper materials is provided by identification showing the approval of an accredited inspection agency. An example of such identification is shown in Commentary Figure R402.1.2. Where treated lumber or plywood is field cut (exposing wood that is untreated), the code specifies the method of treating the cut surface.

R402.2 Concrete. Concrete shall have a minimum specified compressive strength of f'_c, as shown in Table R402.2. Concrete subject to moderate or severe weathering as indicated in Table R301.2(1) shall be air entrained as specified in Table R402.2. The maximum weight of fly ash, other pozzolans, silica fume, slag or blended cements that is included in concrete mixtures for garage floor slabs and for exterior porches, carport slabs and steps that will be exposed to deicing chemicals shall not exceed the percentages of the total weight of cementitious materials specified in Section 19.3.3.4 of ACI 318. Materials used to produce concrete and testing thereof shall comply with the applicable standards listed in Chapters 19 and 20 of ACI 318 or ACI 332.

❖ The code specifies minimum concrete compressive strengths ranging from 2,500 to 3,000 psi (17.2 to 24.1 Mpa). Table R402.2 specifies the required compressive strength of concrete based on a locale's weathering potential and a building element's exposure. Section R301 uses the Weathering Probability Map for Concrete to classify an area's weathering potential as negligible, moderate or severe. For concrete that will be subject to freezing and thawing in a moist condition (i.e., weathering) or subject to direct or indirect application of deicing chemicals, Table R402.2 requires the use of higher-strength, air-entrained concrete. Freezing and thawing cycles can be the most destructive weathering factors for concrete when it is wet. Water freezing in the cement matrix, in the aggregate, or both causes deterioration of concrete that is not air-entrained. Studies have documented that concrete with proper air entrainment is highly resistant to this deterioration.

All materials and testing must be in accordance with the American Concrete Institute's ACI 318, *Building Code Requirements for Structural Concrete*. Cementitious materials include portland cement (ASTM C150), blended hydraulic cements (ASTM C595 and ASTM C1157), and expansive cement (ASTM C845). They can also include pozzolanic materials such as fly ash and other raw or calcined natural pozzolan (ASTM C618), ground granulated blast-furnace slag (ASTM C989), and/or silica fume (ASTM C1240) when used in combination with the cements. Most concrete contains admixtures such as fly ash or other pozzolans that are added as a replacement for a portion of the cement. Although such substitutions can be for economic reasons, in some cases they can also be used to improve certain concrete properties.

TABLE R402.2. See Page 4-5.

❖ The code requires the use of higher-strength, air-entrained concrete for enclosed garage floor slabs in moderate and severe weathering regions. Even though these slabs may be enclosed and not subject to freezing and thawing conditions, they are likely to be subject to the deteriorating effects of deicing chemicals that drip from vehicles. The replacement of portland cement with other cementitious materials can be detri-

INTERNATIONAL CODE COUNCIL®
Copyright © 2015 ICC. ALL RIGHTS RESERVED. Accessed by David Dammon on Jun 21, 2017 12:30:52 PM pursuant to License Agreement with ICC. No further reproduction or distribution authorized. ANY UNAUTHORIZED REPRODUCTION OR DISTRIBUTION IS A VIOLATION OF THE FEDERAL COPYRIGHT ACT AND THE LICENSE AGREEMENT, AND SUBJECT TO CIVIL AND CRIMINAL PENALTIES THEREUNDER.

mental to the durability of the concrete if the concrete will be exposed to deicing chemicals. Thus, the code limits the total amount of these replacement materials to 50 percent of the total weight of all cementitious materials.

Note c to Table R402.2 requires air-entrained concrete for concrete elements not exposed to freezing and thawing conditions when the building is completed if it is likely that these elements will be subject to freezing and thawing during construction (also see commentary, Section R404.2).

Note f permits the air entrainment to be reduced to not less than 3 percent where the garage floor will have steel trowel finish. Field experience has shown that durable concrete may be obtained with a lesser amount of air-entrainment if the specified compressive strength of the concrete is increased to 4,000 psi (27.6 MPa). The higher concrete strength is accompanied by a denser cement-paste matrix, which results in the concrete being less permeable. This option has been successfully used on garage slabs with a steel trowel finish in areas of moderate and severe exposures.

R402.2.1 Materials for concrete. Materials for concrete shall comply with the requirements of Section R608.5.1.

❖ See the commentary to Section R608.5.1.

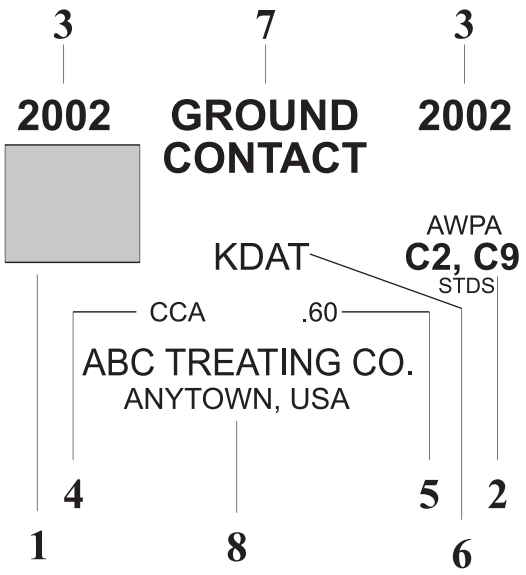

1 TRADEMARK OF INSPECTION AGENCY ACCREDITED BY AMERICAN LUMBER STANDARD COMMITTEE (ALSC)
2 APPLICABLE AMERICAN WOOD PRESERVER'S ASSOCIATION (AWPA) STANDARD
3 YEAR OF TREATMENT
4 PRESERVATIVE USED FOR TREATMENT
5 RETENTION LEVEL
6 DRY OR KDAT, IF APPLICABLE
7 PROPER EXPOSURE CONDITIONS
8 TREATING COMPANY & LOCATION

Figure R402.1.2
EXAMPLE OF QUALITY MARK FOR PRESSURE-TREATED LUMBER

TABLE R402.2
MINIMUM SPECIFIED COMPRESSIVE STRENGTH OF CONCRETE

TYPE OR LOCATION OF CONCRETE CONSTRUCTION	MINIMUM SPECIFIED COMPRESSIVE STRENGTH[a] (f'_c)		
	Weathering Potential[b]		
	Negligible	Moderate	Severe
Basement walls, foundations and other concrete not exposed to the weather	2,500	2,500	2,500[c]
Basement slabs and interior slabs on grade, except garage floor slabs	2,500	2,500	2,500[c]
Basement walls, foundation walls, exterior walls and other vertical concrete work exposed to the weather	2,500	3,000[d]	3,000[d]
Porches, carport slabs and steps exposed to the weather, and garage floor slabs	2,500	3,000[d, e, f]	3,500[d, e, f]

For SI: 1 pound per square inch = 6.895 kPa.

a. Strength at 28 days psi.
b. See Table R301.2(1) for weathering potential.
c. Concrete in these locations that is subject to freezing and thawing during construction shall be air-entrained concrete in accordance with Footnote d.
d. Concrete shall be air-entrained. Total air content (percent by volume of concrete) shall be not less than 5 percent or more than 7 percent.
e. See Section R402.2 for maximum cementitious materials content.
f. For garage floors with a steel-troweled finish, reduction of the total air content (percent by volume of concrete) to not less than 3 percent is permitted if the specified compressive strength of the concrete is increased to not less than 4,000 psi.

INTERNATIONAL CODE COUNCIL®
Copyright © 2015 ICC. ALL RIGHTS RESERVED. Accessed by David Dammon on Jun 21, 2017 12:30:52 PM pursuant to License Agreement with ICC. No further reproduction or distribution authorized. ANY UNAUTHORIZED REPRODUCTION OR DISTRIBUTION IS A VIOLATION OF THE FEDERAL COPYRIGHT ACT AND THE LICENSE AGREEMENT, AND SUBJECT TO CIVIL AND CRIMINAL PENALTIES THEREUNDER.

R402.3 Precast concrete. Precast concrete foundations shall be designed in accordance with Section R404.5 and shall be installed in accordance with the provisions of this code and the manufacturer's instructions.

❖ This section provides requirements for the design and installation of precast concrete foundations. See Section R404.5 for the design requirements for precast concrete walls. The materials used to produce precast concrete foundations must comply with Section R402.3.1. All requirements in the code for concrete foundations apply to precast concrete as well. Also, any manufacturer's instructions must be complied with.

R402.3.1 Precast concrete foundation materials. Materials used to produce precast concrete foundations shall meet the following requirements.

1. All concrete used in the manufacture of precast concrete foundations shall have a minimum compressive strength of 5,000 psi (34 470 kPa) at 28 days. Concrete exposed to a freezing and thawing environment shall be air entrained with a minimum total air content of 5 percent.
2. Structural reinforcing steel shall meet the requirements of ASTM A615, A706 or A996. The minimum yield strength of reinforcing steel shall be 40,000 psi (Grade 40) (276 MPa). Steel reinforcement for precast concrete foundation walls shall have a minimum concrete cover of $^3/_4$ inch (19.1 mm).
3. Panel-to-panel connections shall be made with Grade II steel fasteners.
4. The use of nonstructural fibers shall conform to ASTM C1116.
5. Grout used for bedding precast foundations placed upon concrete footings shall meet ASTM C1107.

❖ Precast concrete foundations are preengineered systems. This section prescribes the minimum quality for materials to be used in the manufacture of precast concrete foundations.

R402.4 Masonry. Masonry systems shall be designed and installed in accordance with this chapter and shall have a minimum specified compressive strength of 1,500 psi (10.3 MPa).

❖ The minimum compressive strength of 1,500 psi reflects the design assumption upon which the prescriptive masonry foundation tables of Section R404.1.2.1 are based.

SECTION R403
FOOTINGS

R403.1 General. All exterior walls shall be supported on continuous solid or fully grouted masonry or concrete footings, crushed stone footings, wood foundations, or other *approved* structural systems which shall be of sufficient design to accommodate all loads according to Section R301 and to transmit the resulting loads to the soil within the limitations as determined from the character of the soil. Footings shall be supported on undisturbed natural soils or engineered fill. Concrete footing shall be designed and constructed in accordance with the provisions of Section R403 or in accordance with ACI 332.

❖ The provisions of this section include the general statement, also contained in Section R401.2, that a footing must be capable of supporting the required design loads. The section expands on this by referencing the character of the soil and the minimum extension below the frost line. The code mandates that footings be supported on undisturbed natural soil or engineered fill. The use of ACI 332 for concrete footing is permitted. ACI 332 provides additional technical details for the design and construction of concrete footings.

R403.1.1 Minimum size. The minimum width, W, and thickness, T, for concrete footings shall be in accordance with Tables R403.1(1) through R403.1(3) and Figure R403.1(1) or R403.1.3, as applicable. The footing width shall be based on the load-bearing value of the soil in accordance with Table R401.4.1. Footing projections, P, shall be not less than 2 inches (51 mm) and shall not exceed the thickness of the footing. Footing thickness and projection for fireplaces shall be in accordance with Section R1001.2. The size of footings supporting piers and columns shall be based on the tributary load and allowable soil pressure in accordance with Table R401.4.1. Footings for wood foundations shall be in accordance with the details set forth in Section R403.2, and Figures R403.1(2) and R403.1(3).

❖ Tables R403.1(1) through R403.1(3) specify minimum footing widths and thickness based on soil pressure, the number of stories supported and roof snow or live load. Figures R403.1(1) and R403.1.3 specify the details for plain and reinforced concrete footings with concrete or masonry stem walls. The limitation on the maximum projection of the footing, P, beyond the face of the foundation wall is particularly important for 6-inch-thick (152 mm) footings of plain concrete subjected to soil-bearing pressures on the order of 2,000 pounds per square foot (95.8 kPa). Projections in excess of the maximum allowable could result in the footing being cracked in a plane coinciding with the face of the foundation wall. A crack could occur if the allowable flexural tension stress of the concrete is exceeded. The size of isolated footings for piers and columns should be determined from the tributary (design) load supported using the presumptive soil values of Table R401.4.1.

TABLE R403.1(1). See Page 4-8.

❖ In previous editions of the IRC, the minimum width of footings shown in Table R403.1 was too conservative for concrete footings. The table for minimum footing size has been expanded into three tables. Loading conditions are clarified to more accurately determine the footing size required. The new minimum footing may be smaller, the same size, or larger than the 2012 IRC required minimum footing. Often the new minimum footing is slightly larger than the 2012 minimum for light-frame construction. For buildings with veneer, the minimum footing may be smaller.

INTERNATIONAL CODE COUNCIL®
Copyright © 2015 ICC. ALL RIGHTS RESERVED. Accessed by David Dammon on Jun 21, 2017 12:30:52 PM pursuant to License Agreement with ICC. No further reproduction or distribution authorized. ANY UNAUTHORIZED REPRODUCTION OR DISTRIBUTION IS A VIOLATION OF THE FEDERAL COPYRIGHT ACT AND THE LICENSE AGREEMENT, AND SUBJECT TO CIVIL AND CRIMINAL PENALTIES THEREUNDER.

The new tables are Table R403.1(1), light-frame construction; Table R403.1(2), light-frame construction with veneer; and Table R403.1(3), cast-in-place concrete or fully grouted masonry wall construction. Note: The new tables apply to concrete footings only. The tables do not address grouted or solid masonry, crushed stone or wood footings.

The 2015 IRC minimum footing size tables are based on the following assumptions:

- 32-foot building width.
- Snow load or roof live load of 20 psf (the minimum allowed per Table R301.6), 30 psf, 50 psf and 70 psf (the maximum allowed prescriptively by the IRC in accordance with Section R301.2.3).
- 18 feet of tributary roof area.
- 16 feet of tributary floor area.
- 10-foot basement and first-floor height.
- 9-foot second-floor height.
- 8-foot third-floor height.

Note a allows interpolation of soil and snow load conditions. Note b accounts for an increase or decrease in building width allowing an increase or decrease in the footing width and thickness. The minimum footing thickness is 6 inches. The minimum footing width is 12 inches. Calculation of footing size may result in a smaller footing but the code requires a minimum 12 x 6 or 12 inches wide and 6 inches deep footing.

In addition, tables are based on the type of foundation. Categories include:

1. One, two and three stories built slab on grade (without a first-floor load).
2. One, two and three stories built over a crawl space (with a first-floor load and foundation wall/footing load).
3. One, two and three stories built with a basement (with a first-floor load and a basement wall load).

Previously, the table was silent on how to handle the extra load from a masonry or concrete basement wall. In the new tables, footing size increase for homes with a crawl space or basement.

The width of the footing is provided based on the loads described above and the minimum footing projection. The tables are based on the following load case:

Total load (*TL*) equal to dead load (*D*) plus 75 percent of the snow or roof live load (S, R_{LL}):

$TL = D + .75(S \text{ or } R_{LL})$

In combining the two loads, a reduction is allowed in the live load.

If any of the following conditions exist in the area of the foundation, conventional spread footings should not be used, and a designed foundation may be necessary:

- Filled ground, except when properly compacted.
- Foundation soils subject to subsidence.
- Expansive soils such as those having a plasticity index of 15 or greater (see Section R403.1.8.1).
- Highly compressive clays.
- Unconfined sands and silts.

In cold weather, care must be taken that foundations are not placed on frozen soil, nor should such foundations be placed in freezing weather unless a method of verifying that the underlying soil is free of frost is employed and the foundations are properly protected against the weather.

TABLE R403.1(2). See Page 4-9.

❖ See the commentary to Table R403.1(1).

TABLE R403.1(3). See Page 4-10.

❖ See the commentary to Table R403.1(1).

INTERNATIONAL CODE COUNCIL®
Copyright © 2015 ICC. ALL RIGHTS RESERVED. Accessed by David Dammon on Jun 21, 2017 12:30:52 PM pursuant to License Agreement with ICC. No further reproduction or distribution authorized. ANY UNAUTHORIZED REPRODUCTION OR DISTRIBUTION IS A VIOLATION OF THE FEDERAL COPYRIGHT ACT AND THE LICENSE AGREEMENT, AND SUBJECT TO CIVIL AND CRIMINAL PENALTIES THEREUNDER.

TABLE R403.1(1)
MINIMUM WIDTH AND THICKNESS FOR CONCRETE FOOTINGS FOR LIGHT-FRAME CONSTRUCTION (inches)[a, b]

SNOW LOAD OR ROOF LIVE LOAD	STORY AND TYPE OF STRUCTURE WITH LIGHT FRAME	LOAD-BEARING VALUE OF SOIL (psf)					
		1500	2000	2500	3000	3500	4000
20 psf	1 story—slab-on-grade	12 × 6	12 × 6	12 × 6	12 × 6	12 × 6	12 × 6
	1 story—with crawl space	12 × 6	12 × 6	12 × 6	12 × 6	12 × 6	12 × 6
	1 story—plus basement	18 × 6	14 × 6	12 × 6	12 × 6	12 × 6	12 × 6
	2 story—slab-on-grade	12 × 6	12 × 6	12 × 6	12 × 6	12 × 6	12 × 6
	2 story—with crawl space	16 × 6	12 × 6	12 × 6	12 × 6	12 × 6	12 × 6
	2 story—plus basement	22 × 6	16 × 6	13 × 6	12 × 6	12 × 6	12 × 6
	3 story—slab-on-grade	14 × 6	12 × 6	12 × 6	12 × 6	12 × 6	12 × 6
	3 story—with crawl space	19 × 6	14 × 6	12 × 6	12 × 6	12 × 6	12 × 6
	3 story—plus basement	25 × 8	19 × 6	15 × 6	13 × 6	12 × 6	12 × 6
30 psf	1 story—slab-on-grade	12 × 6	12 × 6	12 × 6	12 × 6	12 × 6	12 × 6
	1 story—with crawl space	13 × 6	12 × 6	12 × 6	12 × 6	12 × 6	12 × 6
	1 story—plus basement	19 × 6	14 × 6	12 × 6	12 × 6	12 × 6	12 × 6
	2 story—slab-on-grade	12 × 6	12 × 6	12 × 6	12 × 6	12 × 6	12 × 6
	2 story—with crawl space	17 × 6	13 × 6	12 × 6	12 × 6	12 × 6	12 × 6
	2 story—plus basement	23 × 6	17 × 6	14 × 6	12 × 6	12 × 6	12 × 6
	3 story—slab-on-grade	15 × 6	12 × 6	12 × 6	12 × 6	12 × 6	12 × 6
	3 story—with crawl space	20 × 6	15 × 6	12 × 6	12 × 6	12 × 6	12 × 6
	3 story—plus basement	26 × 8	20 × 6	16 × 6	13 × 6	12 × 6	12 × 6
50 psf	1 story—slab-on-grade	12 × 6	12 × 6	12 × 6	12 × 6	12 × 6	12 × 6
	1 story—with crawl space	16 × 6	12 × 6	12 × 6	12 × 6	12 × 6	12 × 6
	1 story—plus basement	21 × 6	16 × 6	13 × 6	12 × 6	12 × 6	12 × 6
	2 story—slab-on-grade	14 × 6	12 × 6	12 × 6	12 × 6	12 × 6	12 × 6
	2 story—with crawl space	19 × 6	14 × 6	12 × 6	12 × 6	12 × 6	12 × 6
	2 story—plus basement	25 × 7	19 × 6	15 × 6	12 × 6	12 × 6	12 × 6
	3 story—slab-on-grade	17 × 6	13 × 6	12 × 6	12 × 6	12 × 6	12 × 6
	3 story—with crawl space	22 × 6	17 × 6	13 × 6	12 × 6	12 × 6	12 × 6
	3 story—plus basement	28 × 9	21 × 6	17 × 6	14 × 6	12 × 6	12 × 6
70 psf	1 story—slab-on-grade	12 × 6	12 × 6	12 × 6	12 × 6	12 × 6	12 × 6
	1 story—with crawl space	18 × 6	13 × 6	12 × 6	12 × 6	12 × 6	12 × 6
	1 story—plus basement	24 × 7	18 × 6	14 × 6	12 × 6	12 × 6	12 × 6
	2 story—slab-on-grade	16 × 6	12 × 6	12 × 6	12 × 6	12 × 6	12 × 6
	2 story—with crawl space	21 × 6	16 × 6	13 × 6	12 × 6	12 × 6	12 × 6
	2 story—plus basement	27 × 9	20 × 6	16 × 6	14 × 6	12 × 6	12 × 6
	3 story—slab-on-grade	19 × 6	14 × 6	12 × 6	12 × 6	12 × 6	12 × 6
	3 story—with crawl space	25 × 7	18 × 6	15 × 6	12 × 6	12 × 6	12 × 6
	3 story—plus basement	30 × 10	23 × 6	18 × 6	15 × 6	13 × 6	12 × 6

For SI: 1 inch = 25.4 mm, 1 plf = 14.6 N/m, 1 pound per square foot = 47.9 N/m^2.

a. Interpolation allowed. Extrapolation is not allowed.

b. Based on 32-foot-wide house with load-bearing center wall that carries half of the tributary attic, and floor framing. For every 2 feet of adjustment to the width of the house, add or subtract 2 inches of footing width and 1 inch of footing thickness (but not less than 6 inches thick).

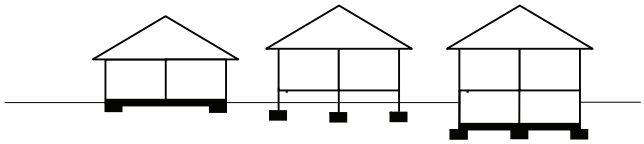

INTERNATIONAL CODE COUNCIL®
Copyright © 2015 ICC. ALL RIGHTS RESERVED. Accessed by David Dammon on Jun 21, 2017 12:30:52 PM pursuant to License Agreement with ICC. No further reproduction or distribution authorized. ANY UNAUTHORIZED REPRODUCTION OR DISTRIBUTION IS A VIOLATION OF THE FEDERAL COPYRIGHT ACT AND THE LICENSE AGREEMENT, AND SUBJECT TO CIVIL AND CRIMINAL PENALTIES THEREUNDER.

TABLE R403.1(2)
MINIMUM WIDTH AND THICKNESS FOR CONCRETE FOOTINGS FOR LIGHT-FRAME CONSTRUCTION WITH BRICK VENEER (inches)[a, b]

SNOW LOAD OR ROOF LIVE LOAD	STORY AND TYPE OF STRUCTURE WITH BRICK VENEER	LOAD-BEARING VALUE OF SOIL (psf)					
		1500	2000	2500	3000	3500	4000
20 psf	1 story—slab-on-grade	12 × 6	12 × 6	12 × 6	12 × 6	12 × 6	12 × 6
	1 story—with crawl space	15 × 6	12 × 6	12 × 6	12 × 6	12 × 6	12 × 6
	1 story—plus basement	21 × 6	15 × 6	12 × 6	12 × 6	12 × 6	12 × 6
	2 story—slab-on-grade	15 × 6	12 × 6	12 × 6	12 × 6	12 × 6	12 × 6
	2 story—with crawl space	20 × 6	15 × 6	12 × 6	12 × 6	12 × 6	12 × 6
	2 story—plus basement	26 × 8	20 × 6	16 × 6	13 × 6	12 × 6	12 × 6
	3 story—slab-on-grade	20 × 6	15 × 6	12 × 6	12 × 6	12 × 6	12 × 6
	3 story—with crawl space	26 × 8	19 × 6	15 × 6	13 × 6	12 × 6	12 × 6
	3 story—plus basement	32 × 11	24 × 7	19 × 6	16 × 6	14 × 6	12 × 6
30 psf	1 story—slab-on-grade	12 × 6	12 × 6	12 × 6	12 × 6	12 × 6	12 × 6
	1 story—with crawl space	16 × 6	12 × 6	12 × 6	12 × 6	12 × 6	12 × 6
	1 story—plus basement	22 × 6	16 × 6	13 × 6	12 × 6	12 × 6	12 × 6
	2 story—slab-on-grade	16 × 6	12 × 6	12 × 6	12 × 6	12 × 6	12 × 6
	2 story—with crawl space	22 × 6	16 × 6	13 × 6	12 × 6	12 × 6	12 × 6
	2 story—plus basement	27 × 9	21 × 6	16 × 6	14 × 6	12 × 6	12 × 6
	3 story—slab-on-grade	21 × 6	16 × 6	13 × 6	12 × 6	12 × 6	12 × 6
	3 story—with crawl space	27 × 8	20 × 6	16 × 6	13 × 6	12 × 6	12 × 6
	3 story—plus basement	33 × 11	24 × 7	20 × 6	16 × 6	14 × 6	12 × 6
50 psf	1 story—slab-on-grade	13 × 6	12 × 6	12 × 6	12 × 6	12 × 6	12 × 6
	1 story—with crawl space	18 × 6	14 × 6	12 × 6	12 × 6	12 × 6	12 × 6
	1 story—plus basement	24 × 7	18 × 6	14 × 6	12 × 6	12 × 6	12 × 6
	2 story—slab-on-grade	18 × 6	14 × 6	12 × 6	12 × 6	12 × 6	12 × 6
	2 story—with crawl space	24 × 7	18 × 6	14 × 6	12 × 6	12 × 6	12 × 6
	2 story—plus basement	29 × 10	22 × 6	18 × 6	15 × 6	13 × 6	12 × 6
	3 story—slab-on-grade	27 × 7	18 × 6	13 × 6	12 × 6	12 × 6	12 × 6
	3 story—with crawl space	29 × 9	22 × 6	17 × 6	14 × 6	12 × 6	12 × 6
	3 story—plus basement	35 × 12	26 × 8	21 × 6	17 × 6	15 × 6	13 × 6
70 psf	1 story—slab-on-grade	15 × 6	12 × 6	12 × 6	12 × 6	12 × 6	12 × 6
	1 story—with crawl space	20 × 6	15 × 6	12 × 6	12 × 6	12 × 6	12 × 6
	1 story—plus basement	26 × 8	20 × 6	16× 6	13 × 6	12 × 6	12 × 6
	2 story—slab-on grade	20 × 6	15 × 6	12 × 6	12 × 6	12 × 6	12 × 6
	2 story—with crawl space	26 × 8	19 × 6	15× 6	13 × 6	12 × 6	12 × 6
	2 story—plus basement	32 × 11	24 × 7	19 × 6	16 × 6	14 × 6	12 × 6
	3 story—slab-on-grade	26 × 8	19 × 6	15 × 6	13 × 6	12 × 6	12 × 6
	3 story—with crawl space	31 × 11	23 × 7	19 × 6	16 × 6	13 × 6	12 × 6
	3 story—plus basement	37 × 13	28 × 9	22 × 6	18 × 6	16 × 6	14 × 6

For SI: 1 inch = 25.4 mm, 1 plf = 14.6 N/m, 1 pound per square foot = 47.9 N/m^2.

a. Interpolation allowed. Extrapolation is not allowed.

b. Based on 32-foot-wide house with load-bearing center wall that carries half of the tributary attic, and floor framing. For every 2 feet of adjustment to the width of the house, add or subtract 2 inches of footing width and 1 inch of footing thickness (but not less than 6 inches thick).

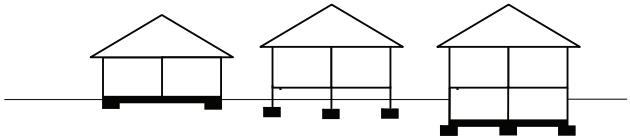

INTERNATIONAL CODE COUNCIL®
Copyright © 2015 ICC. ALL RIGHTS RESERVED. Accessed by David Dammon on Jun 21, 2017 12:30:52 PM pursuant to License Agreement with ICC. No further reproduction or distribution authorized. ANY UNAUTHORIZED REPRODUCTION OR DISTRIBUTION IS A VIOLATION OF THE FEDERAL COPYRIGHT ACT AND THE LICENSE AGREEMENT, AND SUBJECT TO CIVIL AND CRIMINAL PENALTIES THEREUNDER.

TABLE R403.1(3)
MINIMUM WIDTH AND THICKNESS FOR CONCRETE FOOTINGS
WITH CAST-IN-PLACE CONCRETE OR FULLY GROUTED MASONRY WALL CONSTRUCTION (inches)[a, b]

SNOW LOAD OR ROOF LIVE LOAD	STORY AND TYPE OF STRUCTURE WITH CMU	LOAD-BEARING VALUE OF SOIL (psf)					
		1500	2000	2500	3000	3500	4000
20 psf	1 story—slab-on-grade	14 × 6	12 × 6	12 × 6	12 × 6	12 × 6	12 × 6
	1 story—with crawl space	19 × 6	14 × 6	12 × 6	12 × 6	12 × 6	12 × 6
	1 story—plus basement	25 × 8	19 × 6	15 × 6	13 × 6	12 × 6	12 × 6
	2 story—slab-on-grade	23 × 7	18 × 6	14 × 6	12 × 6	12 × 6	12 × 6
	2 story—with crawl space	29 × 9	22 × 6	17 × 6	14 × 6	12 × 6	12 × 6
	2 story—plus basement	35 × 12	26 × 8	21 × 6	17 × 6	15 × 6	13 × 6
	3 story—slab-on-grade	32× 11	24 × 7	19 × 6	16 × 6	14 × 6	12 × 6
	3 story—with crawl space	38 × 14	28 × 9	23 × 6	19 × 6	16 × 6	14 × 6
	3 story—plus basement	43 × 17	33 × 11	26 × 8	22 × 6	19 × 6	16 × 6
30 psf	1 story—slab-on-grade	15 × 6	12 × 6	12 × 6	12 × 6	12 × 6	12 × 6
	1 story—with crawl space	20 × 6	15 × 6	12 × 6	12 × 6	12 × 6	12 × 6
	1 story—plus basement	26 × 8	20 × 6	16 × 6	13 × 6	12 × 6	12 × 6
	2 story—slab-on-grade	24 × 7	18 × 6	15 × 6	12 × 6	12 × 6	12 × 6
	2 story—with crawl space	30 × 10	22 × 6	18 × 6	15 × 6	13 × 6	12 × 6
	2 story—plus basement	36 × 13	27 × 8	21 × 6	18 × 6	15 × 6	13 × 6
	3 story—slab-on-grade	33 × 12	25 × 7	20 × 6	17 × 6	14 × 6	12 × 6
	3 story—with crawl space	39 × 14	29 × 9	23 × 7	19 × 6	17 × 6	14 × 6
	3 story—plus basement	44 × 17	33 × 12	27× 8	22 × 6	19 × 6	17 × 6
50 psf	1 story—slab-on-grade	17 × 6	13 × 6	12 × 6	12 × 6	12 × 6	12 × 6
	1 story—with crawl space	22 × 6	17 × 6	13 × 6	12 × 6	12 × 6	12 × 6
	1 story—plus basement	28× 9	21 × 6	17 × 6	14 × 6	12 × 6	12 × 6
	2 story—slab-on-grade	27 × 8	20 × 6	16 × 6	13 × 6	12 × 6	12 × 6
	2 story—with crawl space	32 × 11	24 × 7	19 × 6	16 × 6	14 × 6	12 × 6
	2 story—plus basement	38 × 14	28 × 9	23 × 6	19 × 6	16 × 6	14 × 6
	3 story—slab-on-grade	35 × 13	27 × 8	21 × 6	18 × 6	15 × 6	13 × 6
	3 story—with crawl space	41 × 15	31 × 10	24 × 7	20 × 6	17 × 6	15 × 6
	3 story—plus basement	47 × 18	35 × 12	28 × 9	23 × 7	20 × 6	17 × 6
70 psf	1 story—slab-on-grade	19 × 6	14 × 6	12 × 6	12 × 6	12 × 6	12 × 6
	1 story—with crawl space	25 × 7	18 × 6	15 × 6	12 × 6	12 × 6	12 × 6
	1 story—plus basement	30 × 10	23 × 6	18 × 6	15 × 6	13 × 6	12 × 6
	2 story—slab-on-grade	29 × 9	22 × 6	17 × 6	14 × 6	12 × 6	12 × 6
	2 story—with crawl space	34 × 12	26 × 8	21 × 6	17 × 6	15 × 6	13 × 6
	2 story—plus basement	40 × 15	30 × 10	24 × 7	20 × 6	17 × 6	15 × 6
	3 story—slab-on-grade	38 × 14	28 × 9	23 × 6	19 × 6	16 × 6	14 × 6
	3 story—with crawl space	43 × 16	32 × 11	26 × 8	21 × 6	18 × 6	16 × 6
	3 story—plus basement	49 × 19	37 × 13	29 × 10	24 × 7	21 × 6	18 × 6

For SI: 1 inch = 25.4 mm, 1 plf = 14.6 N/m, 1 pound per square foot = 47.9 N/m^2.

a. Interpolation allowed. Extrapolation is not allowed.

b. Based on 32-foot-wide house with load-bearing center wall that carries half of the tributary attic, and floor framing. For every 2 feet of adjustment to the width of the house add or subtract 2 inches of footing width and 1 inch of footing thickness (but not less than 6 inches thick).

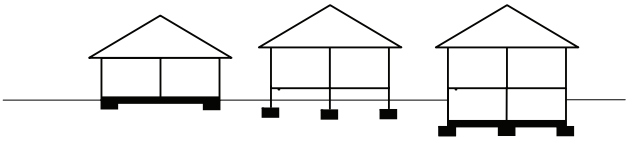

INTERNATIONAL CODE COUNCIL®
Copyright © 2015 ICC. ALL RIGHTS RESERVED. Accessed by David Dammon on Jun 21, 2017 12:30:52 PM pursuant to License Agreement with ICC. No further reproduction or distribution authorized. ANY UNAUTHORIZED REPRODUCTION OR DISTRIBUTION IS A VIOLATION OF THE FEDERAL COPYRIGHT ACT AND THE LICENSE AGREEMENT, AND SUBJECT TO CIVIL AND CRIMINAL PENALTIES THEREUNDER.

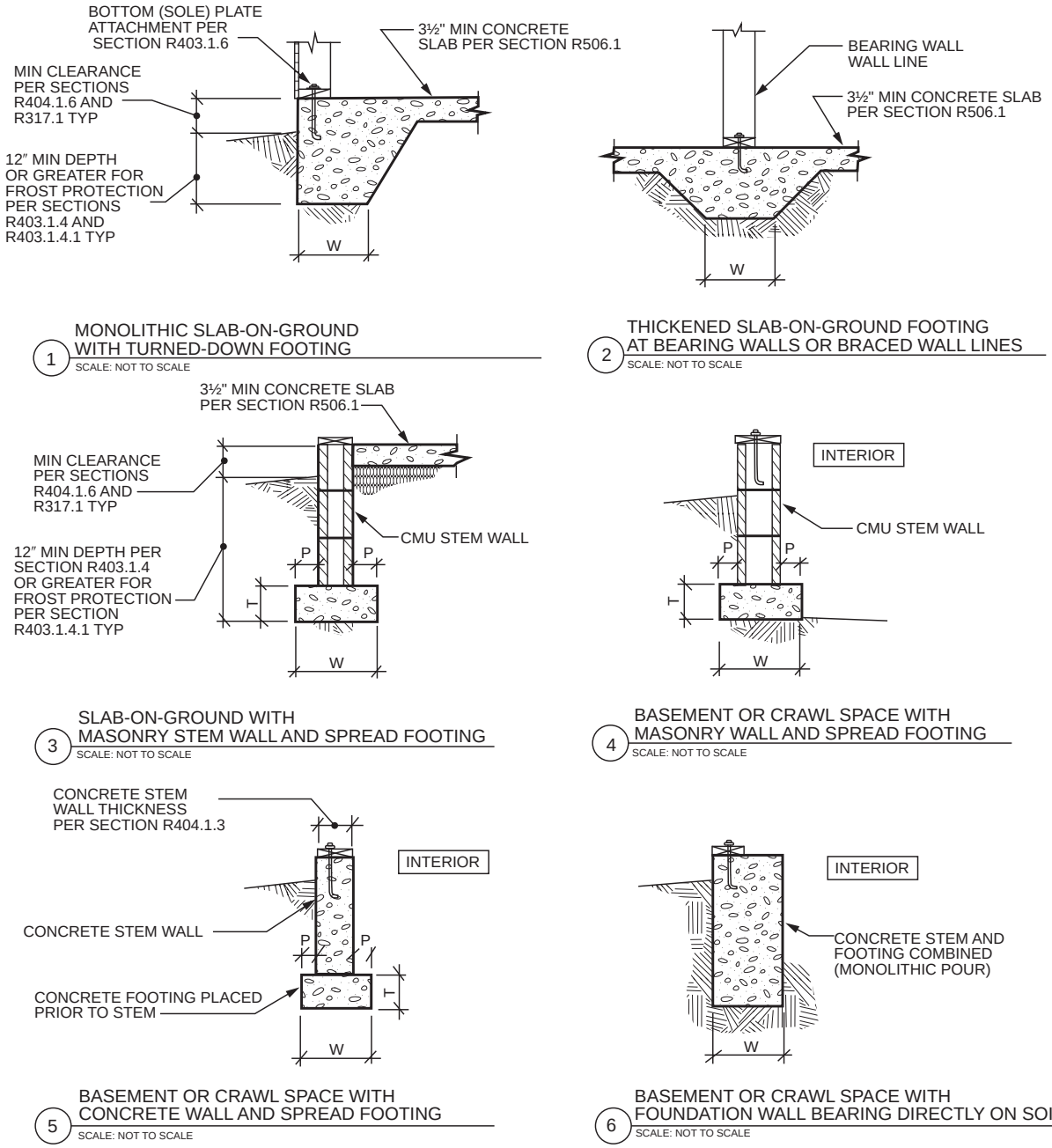

For SI: 1 inch = 25.4 mm.

W = Width of footing, T = Thickness of footing and P = Projection per Section R403.1.1

NOTES:

a. See Section R404.3 for sill requirements.
b. See Section R403.1.6 for sill attachment.
c. See Section R506.2.3 for vapor barrier requirements.
d. See Section R403.1 for base.
e. See Figure R403.1.3 for additional footing requirements for structures in SDC D_0, D_1 and D_2 and townhouses in SDC C.
f. See Section R408 for under-floor ventilation and access requirements.

FIGURE R403.1(1)
PLAIN CONCRETE FOOTINGS WITH MASONRY AND CONCRETE STEM WALLS IN SDC A, B AND C[a, b, c, d, e, f]

❖ See the commentary to Section R403.1.1.

INTERNATIONAL CODE COUNCIL®
Copyright © 2015 ICC. ALL RIGHTS RESERVED. Accessed by David Dammon on Jun 21, 2017 12:30:52 PM pursuant to License Agreement with ICC. No further reproduction or distribution authorized. ANY UNAUTHORIZED REPRODUCTION OR DISTRIBUTION IS A VIOLATION OF THE FEDERAL COPYRIGHT ACT AND THE LICENSE AGREEMENT, AND SUBJECT TO CIVIL AND CRIMINAL PENALTIES THEREUNDER.

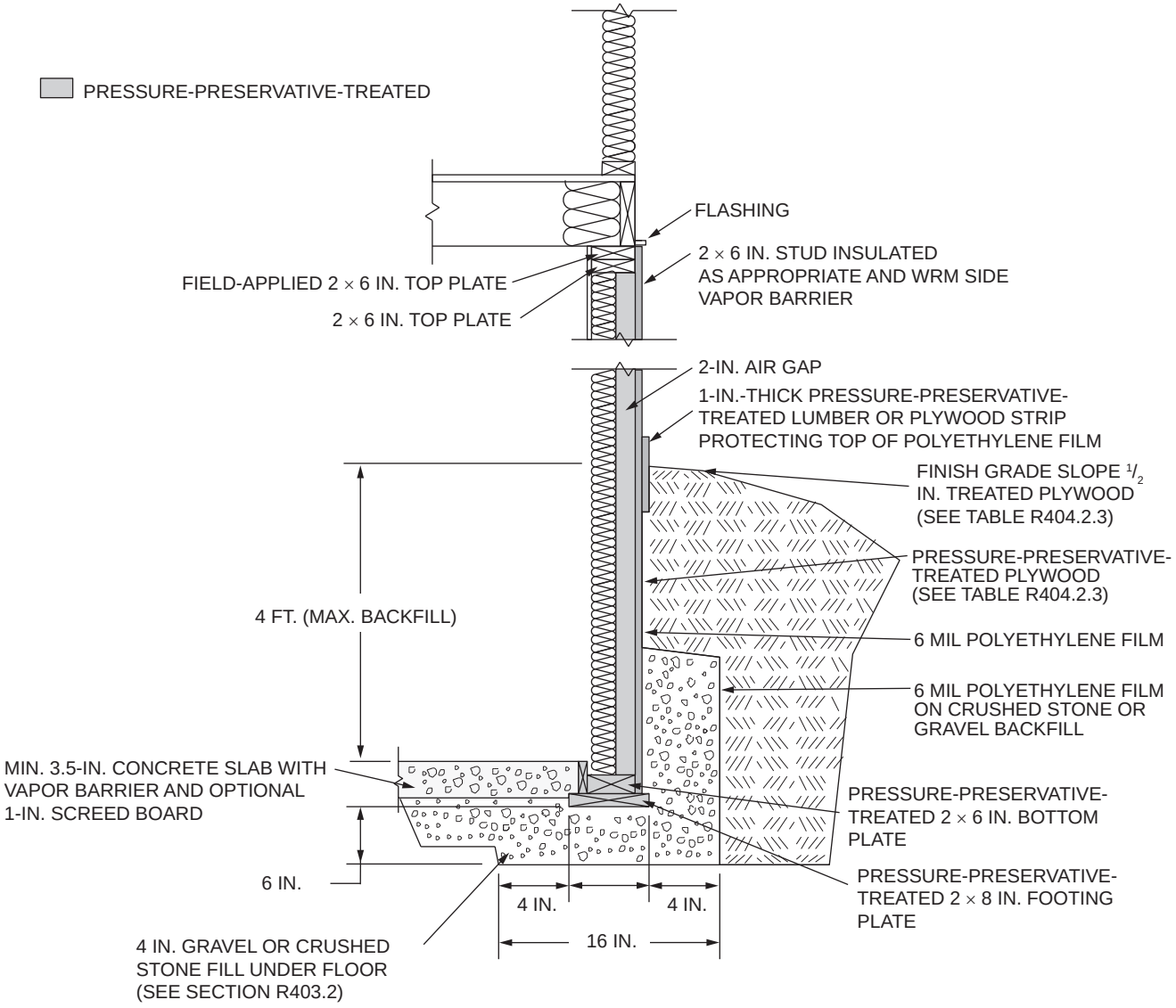

For SI: 1 inch = 25.4 mm, 1 foot = 304.8 mm, 1 mil = 0.0254.

FIGURE R403.1(2)
PERMANENT WOOD FOUNDATION BASEMENT WALL SECTION

❖ See the commentary to Section 403.1.

INTERNATIONAL CODE COUNCIL®
Copyright © 2015 ICC. ALL RIGHTS RESERVED. Accessed by David Dammon on Jun 21, 2017 12:30:52 PM pursuant to License Agreement with ICC. No further reproduction or distribution authorized. ANY UNAUTHORIZED REPRODUCTION OR DISTRIBUTION IS A VIOLATION OF THE FEDERAL COPYRIGHT ACT AND THE LICENSE AGREEMENT, AND SUBJECT TO CIVIL AND CRIMINAL PENALTIES THEREUNDER.

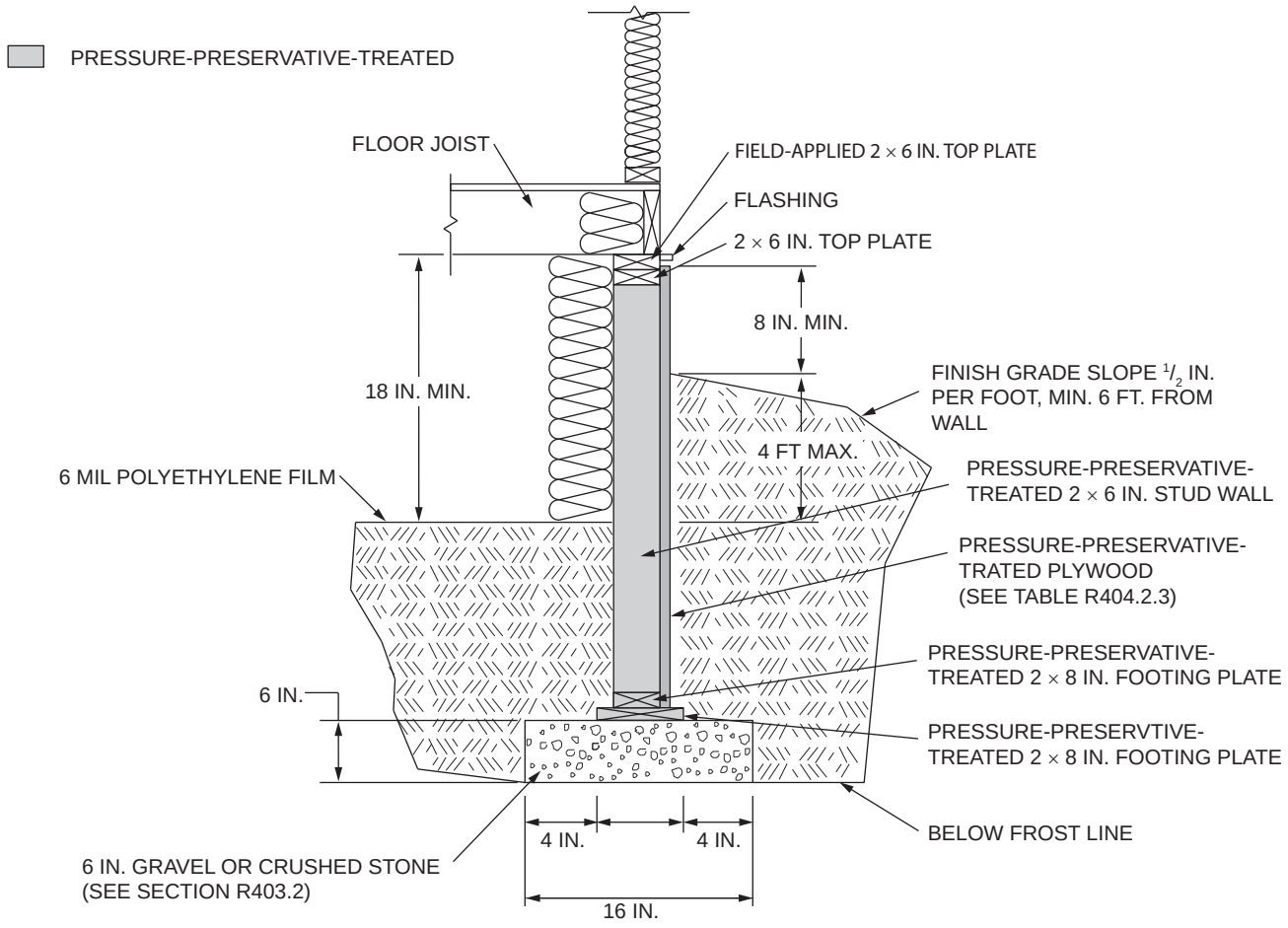

For SI: 1 inch = 25.4 mm, 1 foot = 304.8 mm, 1 mil = 0.0254 mm.

FIGURE R403.1(3)
PERMANENT WOOD FOUNDATION CRAWL SPACE SECTION

❖ See the commentary to Section 403.1.

INTERNATIONAL CODE COUNCIL®
Copyright © 2015 ICC. ALL RIGHTS RESERVED. Accessed by David Dammon on Jun 21, 2017 12:30:52 PM pursuant to License Agreement with ICC. No further reproduction or distribution authorized. ANY UNAUTHORIZED REPRODUCTION OR DISTRIBUTION IS A VIOLATION OF THE FEDERAL COPYRIGHT ACT AND THE LICENSE AGREEMENT, AND SUBJECT TO CIVIL AND CRIMINAL PENALTIES THEREUNDER.

R403.1.2 Continuous footing in Seismic Design Categories D_0, D_1 and D_2. Exterior walls of buildings located in Seismic Design Categories D_0, D_1 and D_2 shall be supported by continuous solid or fully grouted masonry or concrete footings. Other footing materials or systems shall be designed in accordance with accepted engineering practice. All required interior *braced wall panels* in buildings located in Seismic Design Categories D_0, D_1 and D_2 with plan dimensions greater than 50 feet (15 240 mm) shall be supported by continuous solid or fully grouted masonry or concrete footings in accordance with Section R403.1.3.4, except for two-story buildings in Seismic Design Category D_2, in which all *braced wall panels*, interior and exterior, shall be supported on continuous foundations.

Exception: Two-story buildings shall be permitted to have interior *braced wall panels* supported on continuous foundations at intervals not exceeding 50 feet (15 240 mm) provided that:

1. The height of cripple walls does not exceed 4 feet (1219 mm).
2. First-floor braced wall panels are supported on doubled floor joists, continuous blocking or floor beams.
3. The distance between bracing lines does not exceed twice the building width measured parallel to the braced wall line.

❖ When a braced wall line is not supported by a continuous footing, the supporting floor (diaphragm) must distribute the lateral force to a resisting element (foundation). If a floor diaphragm is overloaded, it could lead to a failure, which in turn results in an incomplete load path. This section limits this condition for buildings in all high seismic regions. Where any of the overall plan dimensions of the building are greater than 50 feet (15 240 mm), all interior braced wall panels must be supported on continuous footings in any building located in Seismic Design Category (SDC) D_0, D_1 or D_2.

In previous editions of the code, provisions in Chapters 4 and 6 for continuous footings and foundations were widely separated and confusing. In Section R602.10.9.1, there was no specific guidance on what to do in SDC D_0 and D_1 below interior braced wall panels. Section R403.1.2 clarifies the foundation requirements under braced wall panels in all high-seismic regions. All requirements for footings in high-seismic regions are now located in Section R403.1.2 within the foundation chapter. Section R403.1.2 requires continuous footings for the cases listed in Commentary Figure R403.1.2.

R403.1.3 Footing and stem wall reinforcing in Seismic Design Categories D_0, D_1, and D_2. Concrete footings located in Seismic Design Categories D_0, D_1 and D_2, as established in Table R301.2(1), shall have minimum reinforcement in

SDC	NUMBER OF STORIES	WALL LOCATION	LENGTH OF PLAN DIMENSIONS	
			Both dimensions ≤ 50 ft	One or more dimensions > 50 ft
D_0, D_1, D_2	One story	Exterior walls	Continuous footing required	
		Interior Walls	No continuous footings required	Continuous footings required below all interior braced wall panels
D_0, D_1	Two stories	Exterior walls	Continuous footing required	
		Interior walls	No continuous footings required	Continuous footings are required below all interior braced wall panels unless the Section R403.1.2 exception is used. Then interior wall lines with braced wall panels may be supported according to the exception with footings below interior braced wall panels spaced a maximum of 50 ft or less.
D_2	Two stories	Exterior walls	Continuous footing required	
		Interior walls	Continuous footings are required below all interior braced wall panels unless the Section R403.1.2 exception is used.	Continuous footings are required below all interior braced wall panels unless the Section R403.1.2 exception is used. Then interior wall lines with braced wall panels may be supported according to the exception with footings below interior braced wall panels spaced a maximum of 50 ft or less.

Figure R403.1.2
CONTINUOUS FOOTING REQUIREMENTS IN HIGH-SEISMIC REGIONS

INTERNATIONAL CODE COUNCIL®
Copyright © 2015 ICC. ALL RIGHTS RESERVED. Accessed by David Dammon on Jun 21, 2017 12:30:52 PM pursuant to License Agreement with ICC. No further reproduction or distribution authorized. ANY UNAUTHORIZED REPRODUCTION OR DISTRIBUTION IS A VIOLATION OF THE FEDERAL COPYRIGHT ACT AND THE LICENSE AGREEMENT, AND SUBJECT TO CIVIL AND CRIMINAL PENALTIES THEREUNDER.

accordance with this section and Figure R403.1.3. Reinforcement shall be installed with support and cover in accordance with Section R403.1.3.5.

❖ This section and Figure R403.1.3 specify minimal reinforcement for buildings classified as Seismic Design Category D_0, D_1 or D_2. Interconnection of stem walls and supporting foundations is necessary to resist the tendency of the wall to slip in an earthquake. In solid grouted masonry stem walls supported on concrete footings and at construction joints between concrete stem walls and their supporting footing, a minimum of one vertical No. 4 bar at 48 inches (1219 mm) spacing must be provided. Longitudinal reinforcement consisting of one No. 4 bar at the top of the stem wall and one No. 4 bar located 3 to 4 inches (76 to 102 mm) from the bottom of the footing must be provided. Masonry stem walls must be solid grouted. The footing and stem wall reinforcement material, location, support, cover and lap splices must comply with Section R403.1.3.5.

R403.1.3.1 Concrete stem walls with concrete footings. In Seismic Design Categories D_0, D_1 and D_2 where a construction joint is created between a concrete footing and a concrete stem wall, a minimum of one No. 4 vertical bar shall be installed at not more than 4 feet (1219 mm) on center. The vertical bar shall have a standard hook and extend to the bottom of the footing and shall have support and cover as specified in Section R403.1.3.5.3 and extend a minimum of 14 inches (357 mm) into the stem wall. Standard hooks shall comply with Section R608.5.4.5. A minimum of one No. 4 horizontal bar shall be installed within 12 inches (305 mm) of the top of the stem wall and one No. 4 horizontal bar shall be located 3 to 4 inches (76 mm to 102 mm) from the bottom of the footing.

❖ See the commentary to Section R403.1.3.

R403.1.3.2 Masonry stem walls with concrete footings. In Seismic Design Categories D_0, D_1 and D_2 where a masonry stem wall is supported on a concrete footing, a minimum of one No. 4 vertical bar shall be installed at not more than 4 feet (1219 mm) on center. The vertical bar shall have a standard hook and extend to the bottom of the footing and shall have support and cover as specified in Section R403.1.3.5.3 and extend a minimum of 14 inches (357 mm) into the stem wall. Standard hooks shall comply with Section R608.5.4.5. A minimum of one No. 4 horizontal bar shall be installed within 12 inches (305 mm) of the top of the wall and one No. 4 horizontal bar shall be located 3 to 4 inches (76 mm to 102 mm) from the bottom of the footing. Masonry stem walls shall be solid grouted.

❖ See the commentary to Section R403.1.3.

R403.1.3.3 Slabs-on-ground with turned-down footings. In Seismic Design Categories D_0, D_1 and D_2, slabs on ground cast monolithically with turned-down footings shall have a minimum of one No. 4 bar at the top and the bottom of the footing or one No. 5 bar or two No. 4 bars in the middle third of the footing depth.

Where the slab is not cast monolithically with the footing, No. 3 or larger vertical dowels with standard hooks on each end shall be installed at not more than 4 feet (1219 mm) on center in accordance with Figure R403.1.3, Detail 2. Standard hooks shall comply with Section R608.5.4.5.

❖ For footings in Seismic Design Category D_0, D_1 or D_2, a slab-on-ground cast monolithically with a turned-down footing requires a No. 4 bar at the top and bottom of the footing or one No. 5 or two No. 4 bars to be placed in the middle third of the footing depth. Where the slab is not cast monolithically, vertical dowels must be placed at the construction joint as shown in Figure R403.1.3, Detail 2. These dowels are required to prevent damage due to slippage at the construction joint during a seismic event.

R403.1.3.4 Interior bearing and braced wall panel footings in Seismic Design Categories D_0, D_1 and D_2. In Seismic Design Categories D_0, D_1 and D_2, interior footings supporting bearing walls or *braced wall panels*, and cast monolithically with a slab on *grade*, shall extend to a depth of not less than 12 inches (305 mm) below the top of the slab.

❖ In buildings classified as Seismic Design Category D_0, D_1 or D_2, the code establishes the minimum depth below the top of slab for interior footings that support bearing or braced wall panels and are poured monolithically with the slab. This allows for the installation of anchor bolts, tie-downs, etc.

R403.1.3.5 Reinforcement. Footing and stem wall reinforcement shall comply with Sections R403.1.3.5.1 through R403.1.3.5.4.

❖ See the commentary to Section R403.1.3.

R403.1.3.5.1 Steel reinforcement. Steel reinforcement shall comply with the requirements of ASTM A615, A706 or A996. ASTM A996 bars produced from rail steel shall be Type R. The minimum yield strength of reinforcing steel shall be 40,000 psi (Grade 40) (276 MPa).

❖ See the commentary to Section R403.1.3.

R403.1.3.5.2 Location of reinforcement in wall. The center of vertical reinforcement in stem walls shall be located at the centerline of the wall. Horizontal and vertical reinforcement shall be located in footings and stem walls to provide the minimum cover required by Section R403.1.3.5.3.

❖ See the commentary to Section R403.1.3.

R403.1.3.5.3 Support and cover. Reinforcement shall be secured in the proper location in the forms with tie wire or other bar support system to prevent displacement during the concrete placement operation. Steel reinforcement in concrete cast against the earth shall have a minimum cover of 3 inches (75 mm). Minimum cover for reinforcement in concrete cast in removable forms that will be exposed to the earth or weather shall be $1^1/_2$ inches (38 mm) for No. 5 bars and smaller, and 2 inches (50 mm) for No. 6 bars and larger. For concrete cast in removable forms that will not be exposed to the earth or weather, and for concrete cast in stay-in-place forms, minimum cover shall be $^3/_4$ inch (19 mm).

❖ See the commentary to Section R403.1.3.

INTERNATIONAL CODE COUNCIL®
Copyright © 2015 ICC. ALL RIGHTS RESERVED. Accessed by David Dammon on Jun 21, 2017 12:30:52 PM pursuant to License Agreement with ICC. No further reproduction or distribution authorized. ANY UNAUTHORIZED REPRODUCTION OR DISTRIBUTION IS A VIOLATION OF THE FEDERAL COPYRIGHT ACT AND THE LICENSE AGREEMENT, AND SUBJECT TO CIVIL AND CRIMINAL PENALTIES THEREUNDER.

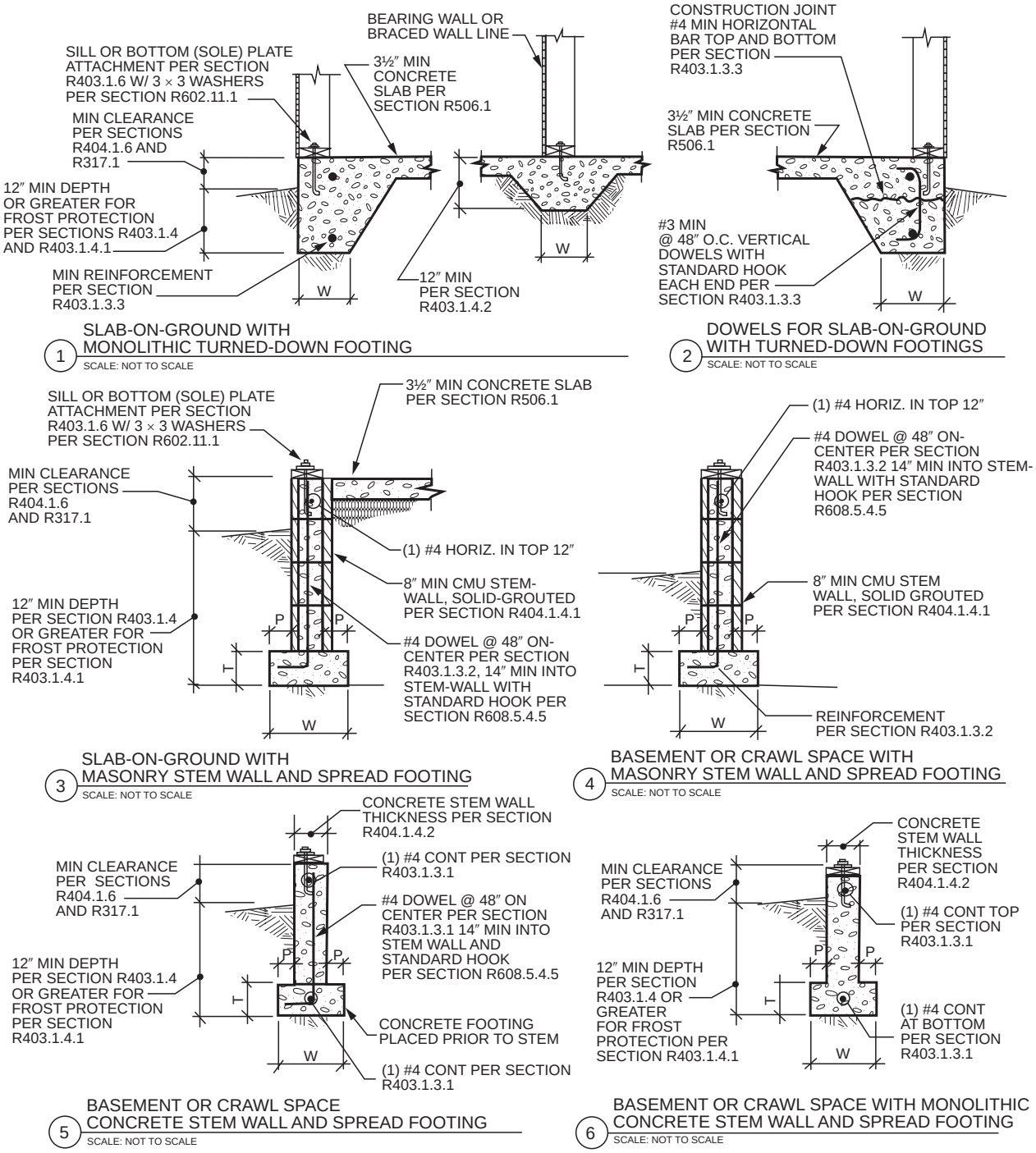

W = Width of footing, T = Thickness of footing and P = Projection per Section R403.1.1

NOTES:

a. See Section R404.3 for sill requirements.
b. See Section R403.1.6 for sill attachment.
c. See Section R506.2.3 for vapor barrier requirements.
d. See Section R403.1 for base.
e. See Section R408 for under-floor ventilation and access requirements.
f. See Section R403.1.3.5 for reinforcement requirements.

FIGURE R403.1.3
REINFORCED CONCRETE FOOTINGS AND MASONRY AND CONCRETE STEM WALLS IN SDC D_0, D_1 AND D_2 [a, b, c, d, e, f]

❖ See the commentary to Sections R403.1.1, R403.1.3 and R403.1.3.3.

INTERNATIONAL CODE COUNCIL®
Copyright © 2015 ICC. ALL RIGHTS RESERVED. Accessed by David Dammon on Jun 21, 2017 12:30:52 PM pursuant to License Agreement with ICC. No further reproduction or distribution authorized. ANY UNAUTHORIZED REPRODUCTION OR DISTRIBUTION IS A VIOLATION OF THE FEDERAL COPYRIGHT ACT AND THE LICENSE AGREEMENT, AND SUBJECT TO CIVIL AND CRIMINAL PENALTIES THEREUNDER.

R403.1.3.5.4 Lap splices. Vertical and horizontal reinforcement shall be the longest lengths practical. Where splices are necessary in reinforcement, the length of lap splice shall be in accordance with Table R608.5.4.(1) and Figure R608.5.4(1). The maximum gap between noncontact parallel bars at a lap splice shall not exceed the smaller of one-fifth the required lap length and 6 inches (152 mm) [see Figure R608.5.4(1)].

❖ See the commentary to Section R403.1.3.

R403.1.3.6 Isolated concrete footings. In detached one- and two-family dwellings that are three stories or less in height and constructed with stud bearing walls, isolated plain concrete footings supporting columns or pedestals are permitted.

❖ This section permits isolated plain concrete footings for columns or pedestals since these are not used to support or anchor braced walls unless engineered.

R403.1.4 Minimum depth. Exterior footings shall be placed not less than 12 inches (305 mm) below the undisturbed ground surface. Where applicable, the depth of footings shall also conform to Sections R403.1.4.1 through R403.1.4.2.

❖ Footings are required to extend below the ground surface a minimum of 12 inches (305 mm). This is considered a minimum depth to protect the footing from movement of the soil caused by freezing and thawing in mild climate areas. See Section R403.1.4.1 for general frost protection requirements.

Footing depths may also be influenced by adjacent footings at different elevations; the footing at a higher elevation imposes surcharge pressures on lower adjacent footings. One method of alleviating the surcharge pressures on lower adjacent footings is the use of the guidelines illustrated in Commentary Figure R403.1.4. Other methods based on a soil and foundation analysis are also acceptable.

R403.1.4.1 Frost protection. Except where otherwise protected from frost, foundation walls, piers and other permanent supports of buildings and structures shall be protected from frost by one or more of the following methods:

1. Extended below the frost line specified in Table R301.2.(1).
2. Constructed in accordance with Section R403.3.
3. Constructed in accordance with ASCE 32.
4. Erected on solid rock.

Exceptions:

1. Protection of freestanding *accessory structures* with an area of 600 square feet (56 m^2) or less, of light-frame construction, with an eave height of 10 feet (3048 mm) or less shall not be required.
2. Protection of freestanding *accessory structures* with an area of 400 square feet (37 m^2) or less, of other than light-frame construction, with an eave height of 10 feet (3048 mm) or less shall not be required.
3. Decks not supported by a dwelling need not be provided with footings that extend below the frost line.

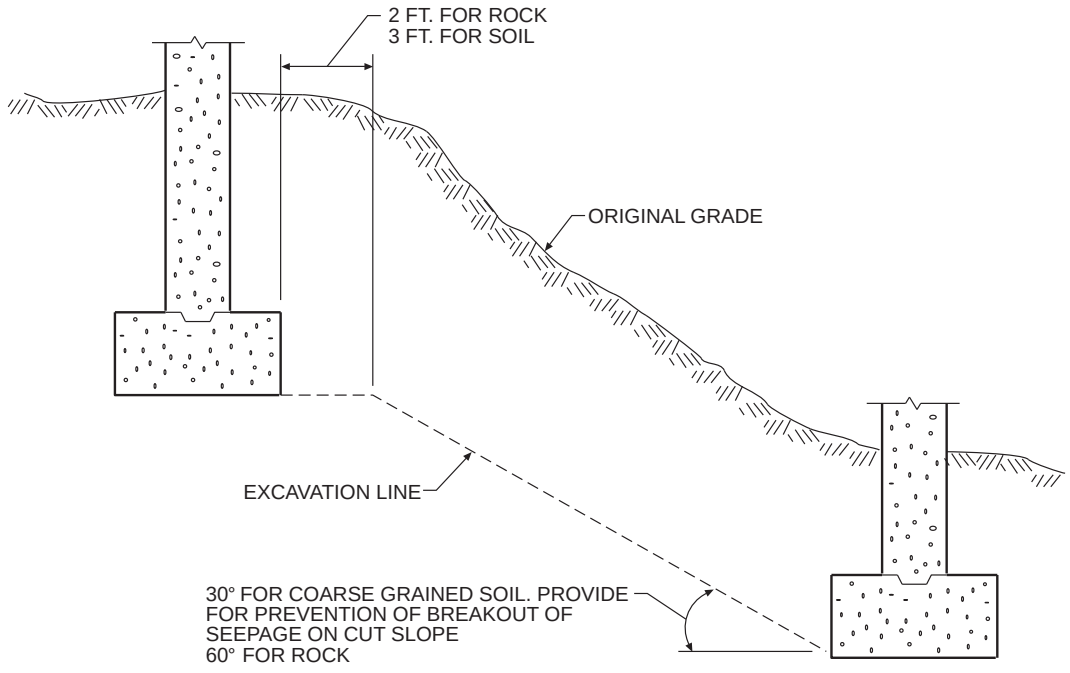

For SI: 1 foot = 304.8 mm, 1 degree = 0.01745 rad.

Figure R403.1.4
RECOMMENDATION FOR ADJACENT FOOTINGS AT DIFFERENT ELEVATIONS

INTERNATIONAL CODE COUNCIL®
Copyright © 2015 ICC. ALL RIGHTS RESERVED. Accessed by David Dammon on Jun 21, 2017 12:30:52 PM pursuant to License Agreement with ICC. No further reproduction or distribution authorized. ANY UNAUTHORIZED REPRODUCTION OR DISTRIBUTION IS A VIOLATION OF THE FEDERAL COPYRIGHT ACT AND THE LICENSE AGREEMENT, AND SUBJECT TO CIVIL AND CRIMINAL PENALTIES THEREUNDER.

Footings shall not bear on frozen soil unless the frozen condition is permanent.

❖ Buildings must not be founded on or within frozen ground. This provision prevents damage to the exterior walls and other walls bearing on the frozen soil. The volume changes (frost heave) that take place during freezing and thawing produce excessive stresses in the foundations and, as a result, may cause extensive damage to the walls that are supported.

Section R403.1.4.1, Frost Protection, contains the three acceptable ways of protecting the footings and foundations from frost: 1. Extend below the frost line; 2. Insulate the foundation according to the code's prescriptive frost protected shallow foundation requirements or the ASCE 32, *Design and Construction of Frost-protected Shallow Foundation*, performance standard; and 3. Erect the foundation on solid rock.

The frost-line depth is established by the authority having jurisdiction based on field experience and must be listed along with other design criteria in Table R301.2(1). Exterior foundations must extend below the frost line and a minimum of 12 inches (305 mm) below undisturbed soil. Foundations supported on rock or that are frost-protected in accordance with Section R403.3 are exempt from the extension below the frost line, but the 12-inch (305 mm) minimum still applies.

ASCE 32 contains requirements for:

1. A simplified method for heated buildings.
2. A more complicated performance method that permits trading off insulation for frost-susceptible fill or use of varying foundation depths.
3. Requirements for slabs-on-ground, crawl spaces (without outside vents), walk out basements and semi-heated buildings.
4. Requirements for unheated buildings that conserve heat from the ground with thick layers of insulation under the entire foundation and beyond it several feet; continuous walls and columns.
5. Special design conditions.

All the ASCE standard requirements are consistent with theory, widespread practice in Scandinavia, and the successful construction of thousands of buildings in the U.S.

Foundations are not to be placed on frozen soil because when the ground thaws, uneven settlement of the structure is apt to occur, thereby causing structural damage. This section does, however, permit footings to be constructed on permanently frozen soil. In permafrost areas, special precautions are necessary to prevent heat from the structure from thawing the soil beneath the foundation.

R403.1.5 Slope. The top surface of footings shall be level. The bottom surface of footings shall not have a slope exceeding one unit vertical in 10 units horizontal (10-percent slope). Footings shall be stepped where it is necessary to change the elevation of the top surface of the footings or where the slope of the bottom surface of the footings will exceed one unit vertical in 10 units horizontal (10-percent slope).

❖ The code requires that the top surface of footings for buildings be essentially level. However, a slope of 1 unit vertical in 10 units horizontal (10-percent slope) is permitted for the bottom bearing surface. If the slope is steeper, the foundation must be stepped. Commentary Figure R403.1.5 schematically shows a stepped foundation. Although the code places no restriction on a stepped foundation, the figure shows a recommended overlap of the top of the foundation wall beyond the step in the foundation. It is larger than the vertical step in the foundation wall at that point. This recommendation is based on possible crack propagation at an angle of 45 degrees (0.79 rad).

R403.1.6 Foundation anchorage. Wood sill plates and wood walls supported directly on continuous foundations shall be anchored to the foundation in accordance with this section.

Cold-formed steel framing shall be anchored directly to the foundation or fastened to wood sill plates anchored to the foundation. Anchorage of cold-formed steel framing and sill plates supporting cold-formed steel framing shall be in accordance with this section and Section R505.3.1 or R603.3.1.

Wood sole plates at all exterior walls on monolithic slabs, wood sole plates of *braced wall panels* at building interiors on monolithic slabs and all wood sill plates shall be anchored to the foundation with minimum $^1/_2$-inch- diameter (12.7 mm) anchor bolts spaced a maximum of 6 feet (1829 mm) on center or *approved* anchors or anchor straps spaced as required to provide equivalent anchorage to $^1/_2$-inch-diameter (12.7 mm) anchor bolts. Bolts shall extend a minimum of 7 inches (178 mm) into concrete or grouted cells of concrete masonry units. The bolts shall be located in the middle third of the width of the plate. A nut and washer shall be tightened on each anchor bolt. There shall be a minimum of two bolts per plate section with one bolt located not more than 12 inches (305 mm) or less than seven bolt diameters from each end of the plate section. Interior bearing wall sole plates on monolithic slab foundation that are not part of a *braced wall panel* shall be positively anchored with *approved* fasteners. Sill plates and sole plates shall be protected against decay and termites where required by Sections R317 and R318.

Exceptions:

1. Walls 24 inches (610 mm) total length or shorter connecting offset braced wall panels shall be anchored to the foundation with a minimum of one anchor bolt located in the center third of the plate section and shall be attached to adjacent braced wall panels at corners as shown in Item 9 of Table R602.3(1).
2. Connection of walls 12 inches (305 mm) total length or shorter connecting offset *braced wall panels* to the foundation without anchor bolts shall be permitted. The wall shall be attached to adjacent braced

INTERNATIONAL CODE COUNCIL®
Copyright © 2015 ICC. ALL RIGHTS RESERVED. Accessed by David Dammon on Jun 21, 2017 12:30:52 PM pursuant to License Agreement with ICC. No further reproduction or distribution authorized. ANY UNAUTHORIZED REPRODUCTION OR DISTRIBUTION IS A VIOLATION OF THE FEDERAL COPYRIGHT ACT AND THE LICENSE AGREEMENT, AND SUBJECT TO CIVIL AND CRIMINAL PENALTIES THEREUNDER.

wall panels at corners as shown in Item 9 of Table R602.3(1).

❖ To prevent walls and floors from shifting under lateral loads, the code requires anchorage to the supporting foundation. Anchor bolts installed as specified in this section supply the minimum required capacity. Commentary Figure R403.1.6 illustrates anchorage of wood sill plates. The $^1/_2$-inch (12.7 mm) bolts must extend into concrete or grouted cells of concrete masonry units. The anchor bolts must be located within the middle third of the plate width. It is common to see an anchor bolt placed near the edge of a wood sole plate. The general industry standard is for the bolt to be located at least two bolt diameters from the plate's edge, but there have been no provisions in the IRC to govern edge distance. The requirement for placement of a bolt within the middle third of the wood plate width allows some flexibility while providing for a minimum edge distance.

Testing has demonstrated that a bolt loses anchoring capacity when placed closer than $1^3/_4$ inches from the plate's edge. Manufacturers of anchor bolts require a minimum plate edge distance of $1^3/_4$ inches in their installation and technical documents. This provision places an anchor bolt at least $1^1/_8$ inches from the edge of a 2 × 4 sill plate. With 2 × 6 construction, the bolt is a minimum of $1^3/_4$ inches from plate edge.

This anchorage applies at exterior walls in any seismic design category. Braced wall panels at building interiors are designed to resist in-plane shear forces comparable to braced wall panels at building exteriors, so equal anchorage is required. Use of approved fastening for anchorage is permitted where interior bearing- wall sole plates are not part of a braced wall panel. Where approved, other foundation anchorages are allowed if they are spaced to provide anchorage capacity equivalent to that of the $^1/_2$-inch-diameter (12.7 mm) anchor bolts specified. In this case it would be necessary to use manufacturers' data, such as evaluation reports, to document the anchorage shear and tension capacities.

R403.1.6.1 Foundation anchorage in Seismic Design Categories C, D_0, D_1 and D_2. In addition to the requirements of Section R403.1.6, the following requirements shall apply to wood light-frame structures in Seismic Design Categories D_0, D_1 and D_2 and wood light-frame townhouses in Seismic Design Category C.

1. Plate washers conforming to Section R602.11.1 shall be provided for all anchor bolts over the full length of required *braced wall lines* except where *approved*

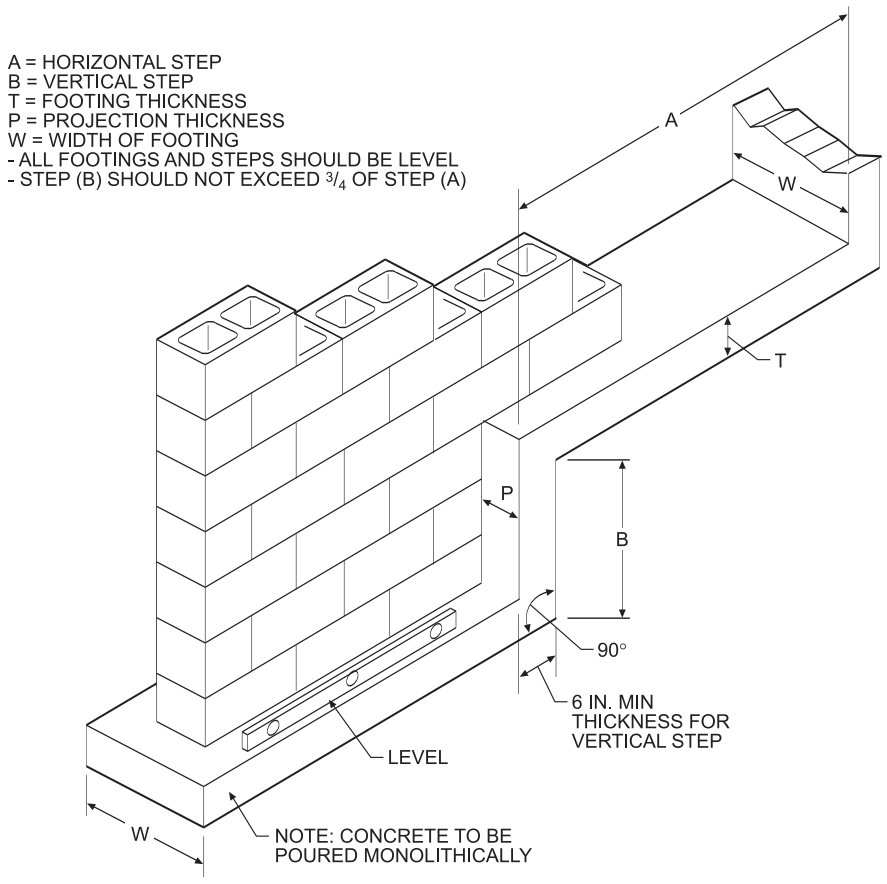

For SI: 1 inch = 25.4 mm, 1 degree = 0.01745 rad.

Figure R403.1.5
RECOMMENDATION FOR STEPPED WALL FOOTINGS

INTERNATIONAL CODE COUNCIL®
Copyright © 2015 ICC. ALL RIGHTS RESERVED. Accessed by David Dammon on Jun 21, 2017 12:30:52 PM pursuant to License Agreement with ICC. No further reproduction or distribution authorized. ANY UNAUTHORIZED REPRODUCTION OR DISTRIBUTION IS A VIOLATION OF THE FEDERAL COPYRIGHT ACT AND THE LICENSE AGREEMENT, AND SUBJECT TO CIVIL AND CRIMINAL PENALTIES THEREUNDER.

anchor straps are used. Properly sized cut washers shall be permitted for anchor bolts in wall lines not containing *braced wall panels*.

2. Interior braced wall plates shall have anchor bolts spaced at not more than 6 feet (1829 mm) on center and located within 12 inches (305 mm) of the ends of each plate section when supported on a continuous foundation.
3. Interior bearing wall sole plates shall have anchor bolts spaced at not more than 6 feet (1829 mm) on center and located within 12 inches (305 mm) of the ends of each plate section when supported on a continuous foundation.
4. The maximum anchor bolt spacing shall be 4 feet (1219 mm) for buildings over two stories in height.
5. Stepped cripple walls shall conform to Section R602.11.2.
6. Where continuous wood foundations in accordance with Section R404.2 are used, the force transfer shall have a capacity equal to or greater than the connections required by Section R602.11.1 or the *braced wall panel* shall be connected to the wood foundations in accordance with the *braced wall panel*-to-floor fastening requirements of Table R602.3(1).

❖ The additional anchorage requirements of this section apply to light-frame wood structures classified as Seismic Design Category D_0, D_1 or D_2 and wood light-frame townhouses in Seismic Design Category C. These provisions were added following observations of past earthquakes, especially the 1994 Northridge earthquake in California. Considerable longitudinal splitting of sill plates occurred in that earthquake, resulting in substantial damage to the plates and subsequent loss of lateral load capacity. Plate washers are required on each bolt along the full length of the braced wall line (see commentary, Section R602.11.1). Approved anchor straps are permitted to be substituted for the anchor bolts with plate washers. The anchor straps must comply with Exception 1 of Section R403.1.6.

R403.1.7 Footings on or adjacent to slopes. The placement of buildings and structures on or adjacent to slopes steeper than one unit vertical in three units horizontal (33.3-percent slope) shall conform to Sections R403.1.7.1 through R403.1.7.4.

❖ The provisions of the referenced sections apply to buildings placed on or adjacent to slopes steeper than one unit vertical in three units horizontal (33.3-percent slope) only.

R403.1.7.1 Building clearances from ascending slopes. In general, buildings below slopes shall be set a sufficient distance from the slope to provide protection from slope drainage, erosion and shallow failures. Except as provided in Section R403.1.7.4 and Figure R403.1.7.1, the following criteria will be assumed to provide this protection. Where the existing slope is steeper than one unit vertical in one unit horizontal (100-percent slope), the toe of the slope shall be assumed to be at the intersection of a horizontal plane drawn from the top of the foundation and a plane drawn tangent to the slope at an angle of 45 degrees (0.79 rad) to the horizontal. Where a retaining wall is constructed at the toe of the slope, the height of the slope shall be measured from the top of the wall to the top of the slope.

❖ Figure R403.1.7.1 provides the criteria for the location of foundations adjacent to the toe of ascending slopes not exceeding one unit vertical in one unit horizontal. Commentary Figure R403.1.7.2(1) illustrates the criteria for the determination of the location of the toe of the slope where the slope exceeds one unit vertical in one unit horizontal.

FIGURE R403.1.7.1. See Page 4-21.

❖ The setback required by the code provides protection to the structure from shallow failures (sometimes referred to as sloughing) and protection from erosion and slope drainage. Furthermore, the space provided

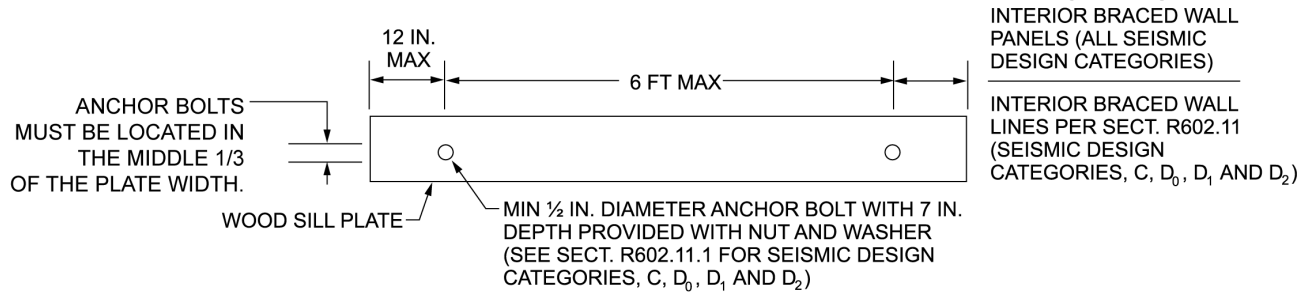

CARE SHOULD BE TAKEN THAT THE HOLES ARE NOT EXCESSIVELY OVERSIZED AND PROPER EDGE DISTANCE IS MAINTAINED. REFER TO THE AFPA NDS OR OTHER INDUSTRY STANDARD FOR GUIDANCE.

For SI: 1 inch = 25.4 mm, 1 foot = 304.mm.

Figure R403.1.6
WOOD SILL PLATE ANCHORAGE TO FOUNDATIONS

INTERNATIONAL CODE COUNCIL®
Copyright © 2015 ICC. ALL RIGHTS RESERVED. Accessed by David Dammon on Jun 21, 2017 12:30:52 PM pursuant to License Agreement with ICC. No further reproduction or distribution authorized. ANY UNAUTHORIZED REPRODUCTION OR DISTRIBUTION IS A VIOLATION OF THE FEDERAL COPYRIGHT ACT AND THE LICENSE AGREEMENT, AND SUBJECT TO CIVIL AND CRIMINAL PENALTIES THEREUNDER.

by the setback provides access around the building and helps to create a light and open-air environment. The dimension from the toe of the slope to the face of the structure need to exceed 15 feet (4572 mm). Also refer to the commentary to Section R403.1.7.1.

R403.1.7.2 Footing setback from descending slope surfaces. Footings on or adjacent to slope surfaces shall be founded in material with an embedment and setback from the slope surface sufficient to provide vertical and lateral support for the footing without detrimental settlement. Except as provided for in Section R403.1.7.4 and Figure R403.1.7.1, the following setback is deemed adequate to meet the criteria. Where the slope is steeper than one unit vertical in one unit horizontal (100-percent slope), the required setback shall be measured from an imaginary plane 45 degrees (0.79 rad) to the horizontal, projected upward from the toe of the slope.

❖ In this section, the code restricts the placement of footings adjacent to or on descending slopes so that both vertical and lateral support are provided. The criteria for this condition are as shown in Figure R403.1.7.1. It is possible to locate buildings closer to the slope than the indicated setback in Figure R403.1.7.1, and in fact it is possible to locate the footing of the structure on the slope itself. In these two cases, it will be necessary to provide an adequate depth of embedment of the footing so that the face of the footing at the bearing plane is set back from the edge of the slope at least the distance required by the code [H/3, but need not exceed 40 feet (12 192 mm)].

Commentary Figure R403.1.7.2(2) depicts the condition where the descending slope is steeper than one unit vertical in one unit horizontal and shows the proper location of the top of the slope as required by the code. The setback at the top of descending slopes will primarily provide lateral support for the foundations. The area so allocated also provides space for lot drainage away from the slope without creating too steep a drainage profile, which could create erosion problems. Furthermore, this space also provides for access around the building.

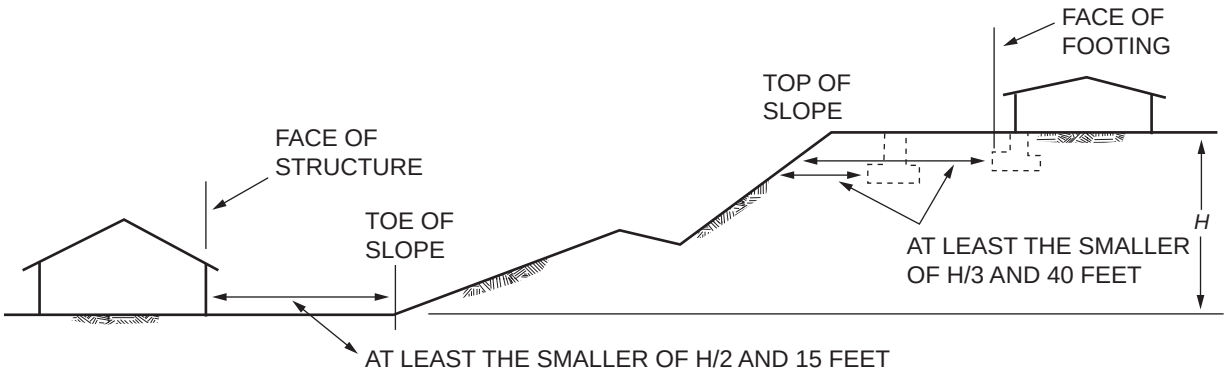

For SI: 1 foot = 304.8 mm.

FIGURE R403.1.7.1
FOUNDATION CLEARANCE FROM SLOPES

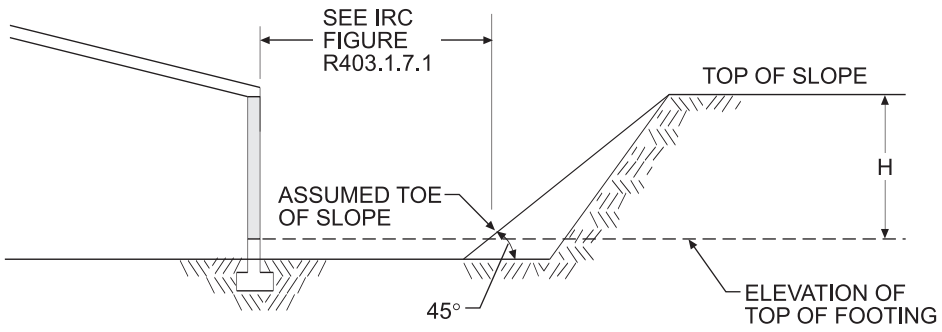

For SI: 1 degree = 0.01745 rad.

Figure R403.1.7.2(1)
BUILDINGS ADJACENT TO ASCENDING SLOPE EXCEEDING 1 TO 1

INTERNATIONAL CODE COUNCIL®
Copyright © 2015 ICC. ALL RIGHTS RESERVED. Accessed by David Dammon on Jun 21, 2017 12:30:52 PM pursuant to License Agreement with ICC. No further reproduction or distribution authorized. ANY UNAUTHORIZED REPRODUCTION OR DISTRIBUTION IS A VIOLATION OF THE FEDERAL COPYRIGHT ACT AND THE LICENSE AGREEMENT, AND SUBJECT TO CIVIL AND CRIMINAL PENALTIES THEREUNDER.

R403.1.7.3 Foundation elevation. On graded sites, the top of any exterior foundation shall extend above the elevation of the street gutter at point of discharge or the inlet of an *approved* drainage device a minimum of 12 inches (305 mm) plus 2 percent. Alternate elevations are permitted subject to the approval of the *building official*, provided it can be demonstrated that required drainage to the point of discharge and away from the structure is provided at all locations on the site.

❖ Commentary Figure R403.1.7.3 depicts the requirements of the code in this item for the elevation for exterior foundations with respect to the street, gutter or point of inlet of a drainage device. The elevation of the street or gutter shown is that point at which drainage from the site reaches the street or gutter.

This requirement protects the building from water encroachment in case of unusually heavy rains and may be modified on the approval of the building official if the building official finds that positive drainage slopes are provided to drain water away from the building and that the drainage pattern is not subject to temporary flooding due to landscaping or other impediments to drainage.

R403.1.7.4 Alternate setbacks and clearances. Alternate setbacks and clearances are permitted, subject to the approval of the *building official*. The *building official* is permitted to require an investigation and recommendation of a qualified engineer to demonstrate that the intent of this section has been satisfied. Such an investigation shall include consideration of material, height of slope, slope gradient, load intensity and erosion characteristics of slope material.

❖ This item provides that the building official may approve alternate setbacks and clearances from slopes provided the building official is satisfied that the intent of this section has been met. The code gives the building official authority to require a foundation investigation by a qualified geotechnical engineer. This section also specifies which parameters must be

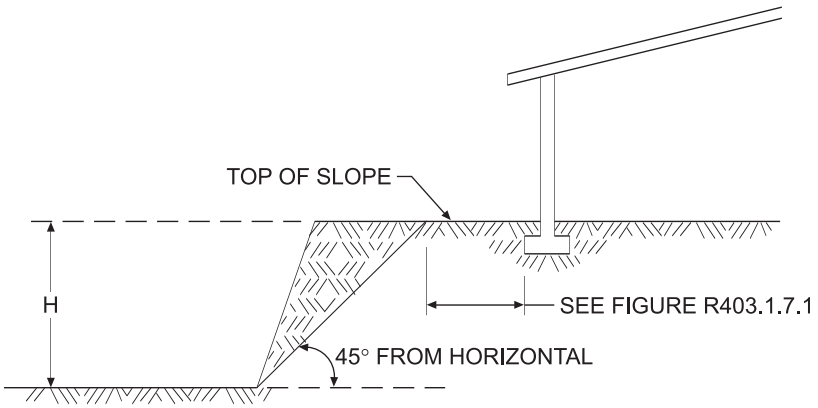

For SI: 1 degree = 0.01745 rad.

Figure R403.1.7.2(2)
BUILDINGS ADJACENT TO DESCENDING SLOPE EXCEEDING 1 TO 1

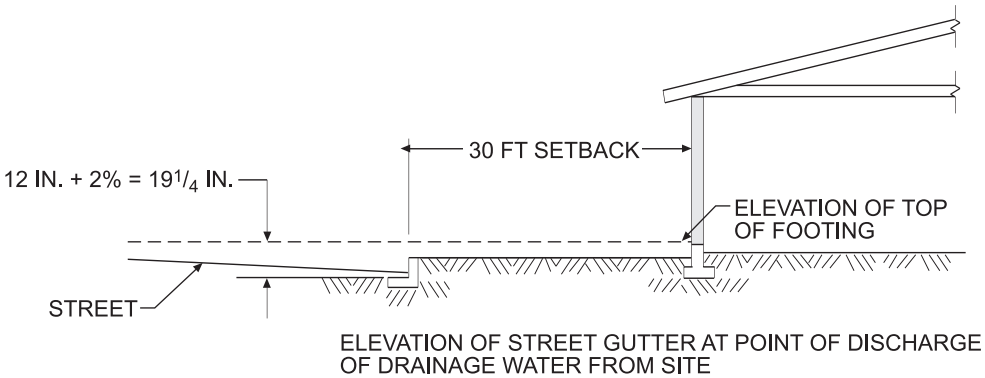

For SI: 1 degree = 0.01745 rad, 1 inch = 25.4 mm, 1 foot = 304.8 mm.

Figure R403.1.7.3
DETERMINATION OF FOUNDATION ELEVATION ON GRADED SITES

INTERNATIONAL CODE COUNCIL®
Copyright © 2015 ICC. ALL RIGHTS RESERVED. Accessed by David Dammon on Jun 21, 2017 12:30:52 PM pursuant to License Agreement with ICC. No further reproduction or distribution authorized. ANY UNAUTHORIZED REPRODUCTION OR DISTRIBUTION IS A VIOLATION OF THE FEDERAL COPYRIGHT ACT AND THE LICENSE AGREEMENT, AND SUBJECT TO CIVIL AND CRIMINAL PENALTIES THEREUNDER.

considered by the geotechnical engineer in such an investigation.

R403.1.8 Foundations on expansive soils. Foundation and floor slabs for buildings located on expansive soils shall be designed in accordance with Section 1808.6 of the *International Building Code*.

Exception: Slab-on-ground and other foundation systems which have performed adequately in soil conditions similar to those encountered at the building site are permitted subject to the approval of the *building official*.

❖ Expansive soils are those that shrink and swell due to changes in moisture content. The resulting movements can be damaging to residential structures. The amount and depth of potential swelling that can occur in a clay material are to some extent functions of the cyclical moisture content in the soil. In dryer climates where the moisture content in the soil near the ground surface is low because of evaporation, there is a greater potential for extensive swelling than in the same soil in wetter climates where the variations of moisture content are not as severe.

When foundations or floor slabs are supported on soils determined to be expansive, the code defers to the *International Building Code*® (IBC®) provisions that address the design of foundations and slabs on expansive soil. The exception permits the use of systems that have demonstrated adequate performance with the approval of the building official.

R403.1.8.1 Expansive soils classifications. Soils meeting all four of the following provisions shall be considered expansive, except that tests to show compliance with Items 1, 2 and 3 shall not be required if the test prescribed in Item 4 is conducted:

1. Plasticity Index (PI) of 15 or greater, determined in accordance with ASTM D4318.
2. More than 10 percent of the soil particles pass a No. 200 sieve (75 μm), determined in accordance with ASTM D422.
3. More than 10 percent of the soil particles are less than 5 micrometers in size, determined in accordance with ASTM D422.
4. Expansion Index greater than 20, determined in accordance with ASTM D4829.

❖ This section defines "expansive soil" as any plastic material with a PI of 15 or greater with more than 10 percent of the soil particles passing a No. 200 sieve and less than 5 micrometers in size. As an alternative, tests in accordance with ASTM D4829 can be used to determine whether a soil is expansive. The expansion index is a measure of the swelling potential of the soil.

R403.2 Footings for wood foundations. Footings for wood foundations shall be in accordance with Figures R403.1(2) and R403.1(3). Gravel shall be washed and well graded. The maximum size stone shall not exceed $^3/_4$ inch (19.1 mm). Gravel shall be free from organic, clayey or silty soils. Sand shall be coarse, not smaller than $^1/_{16}$-inch (1.6 mm) grains and shall be free from organic, clayey or silty soils. Crushed stone shall have a maximum size of $^1/_2$ inch (12.7 mm).

❖ See Figures R403.1(2) and R403.1(3) and the commentary to Section R401.1.

R403.3 Frost-protected shallow foundations. For buildings where the monthly mean temperature of the building is maintained at a minimum of 64°F (18°C), footings are not required to extend below the frost line when protected from frost by insulation in accordance with Figure R403.3(1) and Table R403.3(1). Foundations protected from frost in accordance with Figure R403.3(1) and Table R403.3(1) shall not be used for unheated spaces such as porches, utility rooms, garages and carports, and shall not be attached to basements or crawl spaces that are not maintained at a minimum monthly mean temperature of 64°F (18°C).

Materials used below *grade* for the purpose of insulating footings against frost shall be *labeled* as complying with ASTM C578.

❖ This section provides an alternative method of protecting foundations against frost heave, thus allowing foundations to be constructed above the frost line. Frost-protected foundations use insulation to reduce the heat loss at the slab edge. By holding heat from the dwelling in the ground under the foundation, the insulation, in effect, raises the frost line around the foundation.

The provisions require that the building be heated and that insulation be installed in accordance with the criteria specified in Figure R403.3(1) and Table R403.3(1) based on the air-freezing index established by Figure R403.3(2) or Table R403.3(2). As Figure R403.3(1) illustrates, these provisions apply only to slab-on-ground floors. Frost-protected shallow foundation (FPSF) designs for heated buildings are not to be used for unheated spaces. The provisions also prohibit the attachment of additions with FPSF to basements or crawl spaces that are not heated because, although unlikely, in very cold climates frost could penetrate under FPSFs from unheated basements or ventilated crawl spaces. The insulation values specified in this section are only for the purposes of exercising this option, and the Chapter 11 energy conservation provisions could result in slab-edge insulation with a greater degree of thermal resistance. Conversely, if slab-edge insulation is used to comply with Chapter 11, a builder may take advantage of that insulation to reduce the foundation depth in accordance with this section.

TABLE R403.3(1). See Page 4-25.

❖ This table provides the required *R*-value of horizontal and vertical insulation based on the air-freezing index. In addition, it gives the minimum footing depth and the plan dimensions required for the horizontal insulation in Figures R403.3(1) and R403.3(3) (see commentary, Sections R403.3 and R403.3.1.1).

INTERNATIONAL CODE COUNCIL®
Copyright © 2015 ICC. ALL RIGHTS RESERVED. Accessed by David Dammon on Jun 21, 2017 12:30:52 PM pursuant to License Agreement with ICC. No further reproduction or distribution authorized. ANY UNAUTHORIZED REPRODUCTION OR DISTRIBUTION IS A VIOLATION OF THE FEDERAL COPYRIGHT ACT AND THE LICENSE AGREEMENT, AND SUBJECT TO CIVIL AND CRIMINAL PENALTIES THEREUNDER.

R403.3.1 Foundations adjoining frost-protected shallow foundations. Foundations that adjoin frost-protected shallow foundations shall be protected from frost in accordance with Section R403.1.4.

❖ This section requires that foundations that adjoin FPSFs be protected from frost according to the current requirements of Section R403.1.4, which requires that foundations extend below the frost line, be built on solid rock, or use FPSF designs. Each method prevents frost from heaving foundations. This language prevents the attachment of FPSFs to reinforced floating garage foundations, which may be permitted by some local codes to be placed at shallow depths without insulating for frost protection (i.e., the foundation moves up and down with frost).

R403.3.1.1 Attachment to unheated slab-on-ground structure. Vertical wall insulation and horizontal insulation of frost-protected shallow foundations that adjoin a slab-on-ground foundation that does not have a monthly mean temperature maintained at a minimum of 64°F (18°C) shall be in accordance with Figure R403.3(3) and Table R403.3(1). Vertical wall insulation shall extend between the frost-protected shallow foundation and the adjoining slab foundation. Required horizontal insulation shall be continuous under the adjoining slab foundation and through any foundation walls adjoining the frost-protected shallow foundation. Where insulation passes through a foundation wall, it shall be either of a type complying with this section and having bearing capacity equal to or greater than the structural loads imposed by the building, or the building shall be designed and constructed using beams, lintels, cantilevers or other means of transfer-

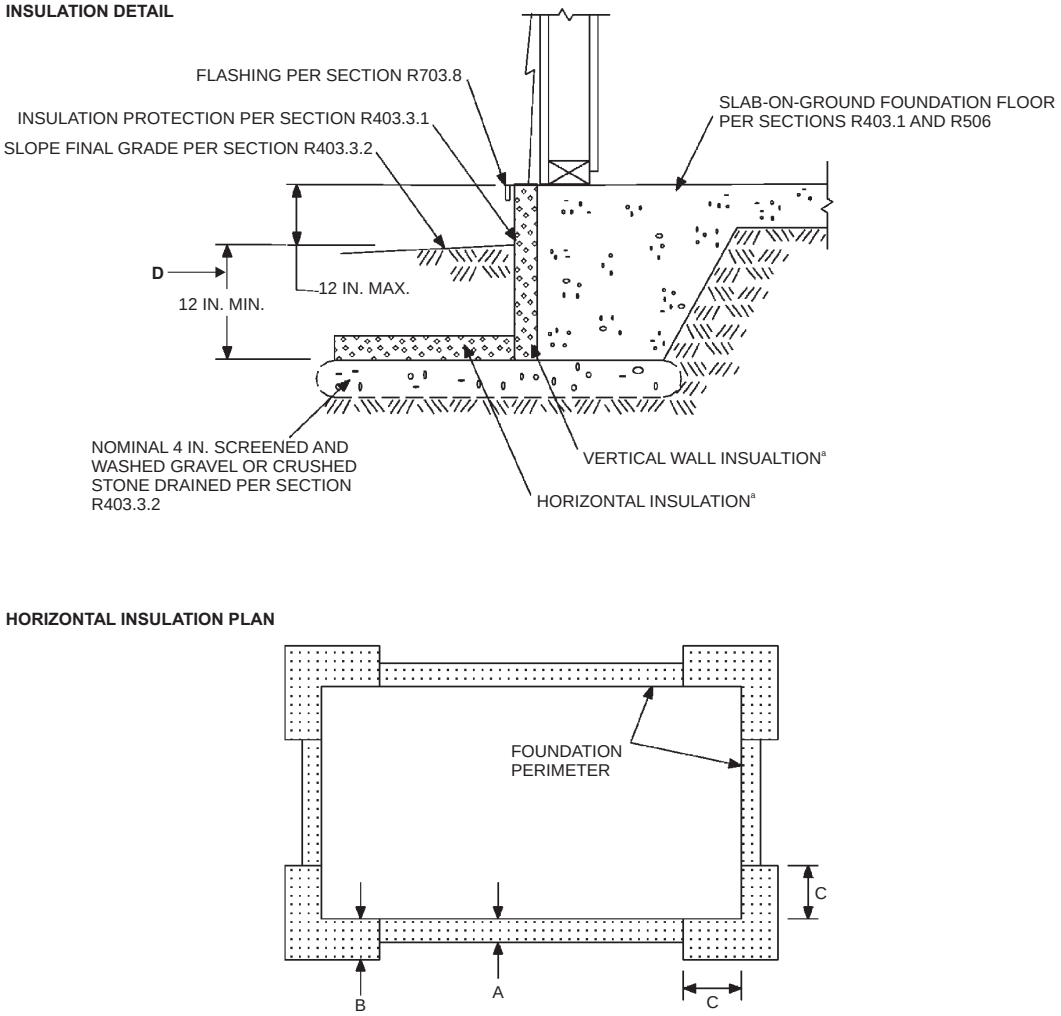

For SI: 1 inch = 25.4 mm.

a. See Table R403.3(1) for required dimensions and *R*-values for vertical and horizontal insulation and minimum footing depth.

FIGURE R403.3(1)
INSULATION PLACEMENT FOR FROST-PROTECTED FOOTINGS IN HEATED BUILDINGS

❖ See the commentary to Section R403.3.

INTERNATIONAL CODE COUNCIL®
Copyright © 2015 ICC. ALL RIGHTS RESERVED. Accessed by David Dammon on Jun 21, 2017 12:30:52 PM pursuant to License Agreement with ICC. No further reproduction or distribution authorized. ANY UNAUTHORIZED REPRODUCTION OR DISTRIBUTION IS A VIOLATION OF THE FEDERAL COPYRIGHT ACT AND THE LICENSE AGREEMENT, AND SUBJECT TO CIVIL AND CRIMINAL PENALTIES THEREUNDER.

TABLE R403.3(1)
MINIMUM FOOTING DEPTH AND INSULATION REQUIREMENTS FOR FROST-PROTECTED FOOTINGS IN HEATED BUILDINGS[a]

AIR FREEZING INDEX (°F-days)[b]	MINIMUM FOOTING DEPTH, D (inches)	VERTICAL INSULATION R-VALUE[c, d]	HORIZONTAL INSULATION R-VALUE[c, e]		HORIZONTAL INSULATION DIMENSIONS PER FIGURE R403.3(1) (inches)		
			Along walls	At corners	A	B	C
1,500 or less	12	4.5	Not required	Not required	Not required	Not required	Not required
2,000	14	5.6	Not required	Not required	Not required	Not required	Not required
2,500	16	6.7	1.7	4.9	12	24	40
3,000	16	7.8	6.5	8.6	12	24	40
3,500	16	9.0	8.0	11.2	24	30	60
4,000	16	10.1	10.5	13.1	24	36	60

For SI: 1 inch = 25.4 mm, °C = [(°F) - 32]/1.8.

a. Insulation requirements are for protection against frost damage in heated buildings. Greater values may be required to meet energy conservation standards.

b. See Figure R403.3(2) or Table R403.3(2) for Air Freezing Index values.

c. Insulation materials shall provide the stated minimum *R*-values under long-term exposure to moist, below-ground conditions in freezing climates. The following *R*-values shall be used to determine insulation thicknesses required for this application: Type II expanded polystyrene-2.4*R* per inch; Type IV extruded polystyrene-4.5*R* per inch; Type VI extruded polystyrene-4.5*R* per inch; Type IX expanded polystyrene-3.2*R* per inch; Type X extruded polystyrene-4.5*R* per inch.

d. Vertical insulation shall be expanded polystyrene insulation or extruded polystyrene insulation.

e. Horizontal insulation shall be expanded polystyrene insulation or extruded polystyrene insulation.

ring building loads such that the structural loads of the building do not bear on the insulation.

❖ This section requires that a building with a FPSF be insulated to current FPSF requirements even where an unheated garage or other slab-on-ground is attached to it. The vertical and horizontal insulation must be in accordance with Figure 403.3(3) and Table R403.3(1) and be continuous through the foundation of the unheated structure. The vertical wall insulation must extend between the FPSF and the adjoining slab foundation, and any required horizontal insulation must be continuous through any foundation walls adjoining the FPSF. No frost penetration or differential movement occurred with this construction in a HUD demonstration in Fargo, North Dakota. Deep foundations of unheated garages have been attached to hundreds of other buildings built on FPSFs in the U.S. In most cases the FPSF insulation has been placed continuously between the garage floor and the house FPSF; however, the insulation has not been continuous through the foundation walls of the unheated structures. In these buildings, no differential movement between the deep and shallow foundations has been reported.

Insulation passing through a foundation wall must comply with the requirements of Section R403.3, i.e., it must meet ASTM C578 and the requirements of Table R403.3(1), and the insulation must be of a type that has sufficient compressive strength to carry the load of the building. Alternatively, the building must be designed to carry those loads over the insulation and not bear on it.

R403.3.1.2 Attachment to heated structure. Where a frost-protected shallow foundation abuts a structure that has a monthly mean temperature maintained at a minimum of 64°F (18°C), horizontal insulation and vertical wall insulation shall not be required between the frost-protected shallow foundation and the adjoining structure. Where the frost-protected shallow foundation abuts the heated structure, the horizontal insulation and vertical wall insulation shall extend along the adjoining foundation in accordance with Figure R403.3(4) a distance of not less than Dimension A in Table R403.3(1).

Exception: Where the frost-protected shallow foundation abuts the heated structure to form an inside corner, vertical insulation extending along the adjoining foundation is not required.

❖ This section stipulates that additions built on FPSFs need not be insulated where they join a heated structure because heat from both structures keeps the ground from freezing. However, where the FPSF abuts the heated building, the horizontal and vertical insulation must extend along the adjoining foundation to prevent cold from intruding under the slab through the foundation wall. The dimension of the insulation is related to the width of the horizontal insulation. This technique was shown to be effective by the U.S. Army Corps of Engineers Cold Regions Research and Engineering Laboratory (CRREL) on a FPSF addition to an airport control tower with a deep foundation in a severe Alaskan climate with a 13-foot (3962 mm) frost line.

An abutment at an inside corner is an exception. In this condition, both the building and the addition heat the ground, and extra insulation is not needed.

R403.3.2 Protection of horizontal insulation below ground. Horizontal insulation placed less than 12 inches (305 mm) below the ground surface or that portion of horizontal insulation extending outward more than 24 inches (610 mm) from the foundation edge shall be protected against damage by use of a concrete slab or asphalt paving on the ground surface directly above the insulation or by cementitious board, plywood rated for below-ground use, or other *approved* materials placed below ground, directly above the top surface of the insulation.

❖ This protection for the insulation prevents damage due to excavating (e.g., for landscaping purposes).

INTERNATIONAL CODE COUNCIL®
Copyright © 2015 ICC. ALL RIGHTS RESERVED. Accessed by David Dammon on Jun 21, 2017 12:30:52 PM pursuant to License Agreement with ICC. No further reproduction or distribution authorized. ANY UNAUTHORIZED REPRODUCTION OR DISTRIBUTION IS A VIOLATION OF THE FEDERAL COPYRIGHT ACT AND THE LICENSE AGREEMENT, AND SUBJECT TO CIVIL AND CRIMINAL PENALTIES THEREUNDER.

For SI: $^{\circ}C = [(^{\circ}F) - 32]/1.8$.

Note: The air-freezing index is defined as cumulative degree days below 32°F. It is used as a measure of the combined magnitude and duration of air temperature below freezing. The index was computed over a 12-month period (July-June) for each of the 3,044 stations used in the above analysis. Dates from the 1951-80 period were fitted to a Weibull probability distribution to produce an estimate of the 100-year return period.

FIGURE R403.3(2)
AIR-FREEZING INDEX AN ESTIMATE OF THE 100-YEAR RETURN PERIOD

❖ This figure provides the criteria necessary to apply insulation requirements to Table R404.3. The note explains the term air-freezing index.

INTERNATIONAL CODE COUNCIL®
Copyright © 2015 ICC. ALL RIGHTS RESERVED. Accessed by David Dammon on Jun 21, 2017 12:30:52 PM pursuant to License Agreement with ICC. No further reproduction or distribution authorized. ANY UNAUTHORIZED REPRODUCTION OR DISTRIBUTION IS A VIOLATION OF THE FEDERAL COPYRIGHT ACT AND THE LICENSE AGREEMENT, AND SUBJECT TO CIVIL AND CRIMINAL PENALTIES THEREUNDER.

TABLE R403.3(2)
AIR-FREEZING INDEX FOR U.S. LOCATIONS BY COUNTY

STATE	AIR-FREEZING INDEX					
	1500 or less	2000	2500	3000	3500	4000
Alabama	All counties	—	—	—	—	—
Alaska	Ketchikan Gateway, Prince of Wales-Outer Ketchikan (CA), Sitka, Wrangell-Petersburg (CA)	—	Aleutians West (CA), Haines, Juneau, Skagway-Hoonah-Angoon (CA), Yakutat	—	—	All counties not listed
Arizona	All counties	—	—	—	—	—
Arkansas	All counties	—	—	—	—	—
California	All counties not listed	Nevada, Sierra	—	—	—	—
Colorado	All counties not listed	Archuleta, Custer, Fremont, Huerfano, Las Animas, Ouray, Pitkin, San Miguel	Clear Creek, Conejos, Costilla, Dolores, Eagle, La Plata, Park, Routt, San Juan, Summit	Alamosa, Grand, Jackson, Larimer, Moffat, Rio Blanco, Rio Grande	Chaffee, Gunnison, Lake, Saguache	Hinsdale, Mineral
Connecticut	All counties not listed	Hartford, Litchfield	—	—	—	—
Delaware	All counties	—	—	—	—	—
District of Columbia	All counties	—	—	—	—	—
Florida	All counties	—	—	—	—	—
Georgia	All counties	—	—	—	—	—
Hawaii	All counties	—	—	—	—	—
Idaho	All counties not listed	Adams, Bannock, Blaine, Clearwater, Idaho, Lincoln, Oneida, Power, Valley, Washington	Bingham, Bonneville, Camas, Caribou, Elmore, Franklin, Jefferson, Madison, Teton	Bear Lake, Butte, Custer, Fremont, Lemhi	Clark	—
Illinois	All counties not listed	Boone, Bureau, Cook, Dekalb, DuPage, Fulton, Grundy, Henderson, Henry, Iroquois, Jo Daviess, Kane, Kankakee, Kendall, Knox, La Salle, Lake, Lee, Livingston, Marshall, Mason, McHenry, McLean, Mercer, Peoria, Putnam, Rock Island, Stark, Tazewell, Warren, Whiteside, Will, Woodford	Carroll, Ogle, Stephenson, Winnebago	—	—	—
Indiana	All counties not listed	Allen, Benton, Cass, Fountain, Fulton, Howard, Jasper, Kosciusko, La Porte, Lake, Marshall, Miami, Newton, Porter, Pulaski, Starke, Steuben, Tippecanoe, Tipton, Wabash, Warren, White	—	—	—	—

(continued)

INTERNATIONAL CODE COUNCIL®
Copyright © 2015 ICC. ALL RIGHTS RESERVED. Accessed by David Dammon on Jun 21, 2017 12:30:52 PM pursuant to License Agreement with ICC. No further reproduction or distribution authorized. ANY UNAUTHORIZED REPRODUCTION OR DISTRIBUTION IS A VIOLATION OF THE FEDERAL COPYRIGHT ACT AND THE LICENSE AGREEMENT, AND SUBJECT TO CIVIL AND CRIMINAL PENALTIES THEREUNDER.

TABLE R403.3(2)—continued
AIR-FREEZING INDEX FOR U.S. LOCATIONS BY COUNTY

STATE	AIR-FREEZING INDEX					
	1500 or less	2000	2500	3000	3500	4000
Iowa	Appanoose, Davis, Fremont, Lee, Van Buren	All counties not listed	Allamakee, Black Hawk, Boone, Bremer, Buchanan, Buena Vista, Butler, Calhoun, Cerro Gordo, Cherokee, Chickasaw, Clay, Clayton, Delaware, Dubuque, Fayette, Floyd, Franklin, Grundy, Hamilton, Hancock, Hardin, Humboldt, Ida, Jackson, Jasper, Jones, Linn, Marshall, Palo Alto, Plymouth, Pocahontas, Poweshiek, Sac, Sioux, Story, Tama, Webster, Winnebago, Woodbury, Worth, Wright	Dickinson, Emmet, Howard, Kossuth, Lyon, Mitchell, O'Brien, Osceola, Winneshiek	—	—
Kansas	All counties	—	—	—	—	—
Kentucky	All counties	—	—	—	—	—
Louisiana	All counties	—	—	—	—	—
Maine	York	Knox, Lincoln, Sagadahoc	Androscoggin, Cumberland, Hancock, Kennebec, Waldo, Washington	Aroostook, Franklin, Oxford, Penobscot, Piscataquis, Somerset	—	—
Maryland	All counties	—	—	—	—	—
Massachusetts	All counties not listed	Berkshire, Franklin, Hampden, Worcester	—	—	—	—
Michigan	Berrien, Branch, Cass, Kalamazoo, Macomb, Ottawa, St. Clair, St. Joseph	All counties not listed	Alger, Charlevoix, Cheboygan, Chippewa, Crawford, Delta, Emmet, Iosco, Kalkaska, Lake, Luce, Mackinac, Menominee, Missaukee, Montmorency, Ogemaw, Osceola, Otsego, Roscommon, Schoolcraft, Wexford	Baraga, Dickinson, Iron, Keweenaw, Marquette	Gogebic, Houghton, Ontonagon	—
Minnesota	—	—	Houston, Winona	All counties not listed	Aitkin, Big Stone, Carlton, Crow Wing, Douglas, Itasca, Kanabec, Lake, Morrison, Pine, Pope, Stearns, Stevens, Swift, Todd, Wadena	Becker, Beltrami, Cass, Clay, Clearwater, Grant, Hubbard, Kittson, Koochiching, Lake of the Woods, Mahnomen, Marshall, Norman, Otter Tail, Pennington, Polk, Red Lake, Roseau, St. Louis, Traverse, Wilkin

(continued)

INTERNATIONAL CODE COUNCIL®
Copyright © 2015 ICC. ALL RIGHTS RESERVED. Accessed by David Dammon on Jun 21, 2017 12:30:52 PM pursuant to License Agreement with ICC. No further reproduction or distribution authorized. ANY UNAUTHORIZED REPRODUCTION OR DISTRIBUTION IS A VIOLATION OF THE FEDERAL COPYRIGHT ACT AND THE LICENSE AGREEMENT, AND SUBJECT TO CIVIL AND CRIMINAL PENALTIES THEREUNDER.

TABLE R403.3(2)—continued
AIR-FREEZING INDEX FOR U.S. LOCATIONS BY COUNTY

STATE	AIR-FREEZING INDEX					
	1500 or less	2000	2500	3000	3500	4000
Mississippi	All counties	—	—	—	—	—
Missouri	All counties not listed	Atchison, Mercer, Nodaway, Putnam	—	—	—	—
Montana	Mineral	Broadwater, Golden Valley, Granite, Lake, Lincoln, Missoula, Ravalli, Sanders, Sweet Grass	Big Horn, Carbon, Jefferson, Judith Basin, Lewis and Clark, Meagher, Musselshell, Powder River, Powell, Silver Bow, Stillwater, Westland	Carter, Cascade, Deer Lodge, Falcon, Fergus, Flathead, Gallanting, Glacier, Madison, Park, Petroleum, Ponder, Rosebud, Teton, Treasure, Yellowstone	Beaverhead, Blaine, Chouteau, Custer, Dawson, Garfield, Liberty, McCone, Prairie, Toole, Wibaux	Daniels, Hill, Phillips, Richland, Roosevelt, Sheridan, Valley
Nebraska	Adams, Banner, Chase, Cheyenne, Clay, Deuel, Dundy, Fillmore, Franklin, Frontier, Furnas, Gage, Garden, Gosper, Harlan, Hayes, Hitchcock, Jefferson, Kimball, Morrill, Nemaha, Nuckolls, Pawnee, Perkins, Phelps, Red Willow, Richardson, Saline, Scotts Bluff, Seward, Thayer, Webster	All counties not listed	Boyd, Burt, Cedar, Cuming, Dakota, Dixon, Dodge, Knox, Thurston	—	—	—
Nevada	All counties not listed	Elko, Eureka, Nye, Washoe, White Pine	—	—	—	—
New Hampshire	—	All counties not listed	—	—	—	Carroll, Coos, Grafton
New Jersey	All counties	—	—	—	—	—
New Mexico	All counties not listed	Rio Arriba	Colfax, Mora, Taos	—	—	—
New York	Albany, Bronx, Cayuga, Columbia, Cortland, Dutchess, Genessee, Kings, Livingston, Monroe, Nassau, New York, Niagara, Onondaga, Ontario, Orange, Orleans, Putnam, Queens, Richmond, Rockland, Seneca, Suffolk, Wayne, Westchester, Yates	All counties not listed	Clinton, Essex, Franklin, Hamilton, Herkimer, Jefferson, Lewis, St. Lawrence, Warren	—	—	—
North Carolina	All counties	—	—	—	—	—

(continued)

INTERNATIONAL CODE COUNCIL®
Copyright © 2015 ICC. ALL RIGHTS RESERVED. Accessed by David Dammon on Jun 21, 2017 12:30:52 PM pursuant to License Agreement with ICC. No further reproduction or distribution authorized. ANY UNAUTHORIZED REPRODUCTION OR DISTRIBUTION IS A VIOLATION OF THE FEDERAL COPYRIGHT ACT AND THE LICENSE AGREEMENT, AND SUBJECT TO CIVIL AND CRIMINAL PENALTIES THEREUNDER.

TABLE R403.3(2)—continued
AIR-FREEZING INDEX FOR U.S. LOCATIONS BY COUNTY

STATE	AIR-FREEZING INDEX					
	1500 or less	2000	2500	3000	3500	4000
North Dakota	—	—	—	Billings, Bowman	Adams, Dickey, Golden Valley, Hettinger, LaMoure, Oliver, Ransom, Sargent, Sioux, Slope, Stark	All counties not listed
Ohio	All counties not listed	Ashland, Crawford, Defiance, Holmes, Huron, Knox, Licking, Morrow, Paulding, Putnam, Richland, Seneca, Williams	—	—	—	—
Oklahoma	All counties	—	—	—	—	—
Oregon	All counties not listed	Baker, Crook, Grant, Harney	—	—	—	—
Pennsylvania	All counties not listed	Berks, Blair, Bradford, Cambria, Cameron, Centre, Clarion, Clearfield, Clinton, Crawford, Elk, Forest, Huntingdon, Indiana, Jefferson, Lackawanna, Lycoming, McKean, Pike, Potter, Susquehanna, Tioga, Venango, Warren, Wayne, Wyoming	—	—	—	—
Rhode Island	All counties	—	—	—	—	—
South Carolina	All counties	—	—	—	—	—
South Dakota	—	Bennett, Custer, Fall River, Lawrence, Mellette, Shannon, Todd, Tripp	Bon Homme, Charles Mix, Davison, Douglas, Gregory, Jackson, Jones, Lyman	All counties not listed	Beadle, Brookings, Brown, Campbell, Codington, Corson, Day, Deuel, Edmunds, Faulk, Grant, Hamlin, Kingsbury, Marshall, McPherson, Perkins, Roberts, Spink, Walworth	—
Tennessee	All counties	—	—	—	—	—
Texas	All counties	—	—	—	—	—
Utah	All counties not listed	Box Elder, Morgan, Weber	Garfield, Salt Lake, Summit	Carbon, Daggett, Duchesne, Rich, Sanpete, Uintah, Wasatch	—	—

(continued)

INTERNATIONAL CODE COUNCIL®
Copyright © 2015 ICC. ALL RIGHTS RESERVED. Accessed by David Dammon on Jun 21, 2017 12:30:52 PM pursuant to License Agreement with ICC. No further reproduction or distribution authorized. ANY UNAUTHORIZED REPRODUCTION OR DISTRIBUTION IS A VIOLATION OF THE FEDERAL COPYRIGHT ACT AND THE LICENSE AGREEMENT, AND SUBJECT TO CIVIL AND CRIMINAL PENALTIES THEREUNDER.

TABLE R403.3(2)—continued
AIR-FREEZING INDEX FOR U.S. LOCATIONS BY COUNTY

STATE	AIR-FREEZING INDEX					
	1500 or less	2000	2500	3000	3500	4000
Vermont	—	Bennington, Grand Isle, Rutland, Windham	Addison, Chittenden, Franklin, Orange, Washington, Windsor	Caledonia, Essex, Lamoille, Orleans	—	—
Virginia	All counties	—	—	—	—	—
Washington	All counties not listed	Chelan, Douglas, Ferry, Okanogan	—	—	—	—
West Virginia	All counties	—	—	—	—	—
Wisconsin	—	Kenosha, Kewaunee, Racine, Sheboygan, Walworth	All counties not listed	Ashland, Barron, Burnett, Chippewa, Clark, Dunn, Eau Claire, Florence, Forest, Iron, Jackson, La Crosse, Langlade, Marathon, Monroe, Pepin, Polk, Portage, Price, Rust, St. Croix, Taylor, Trempealeau, Vilas, Wood	Bayfield, Douglas, Lincoln, Oneida, Sawyer, Washburn	—
Wyoming	Goshen, Platte	Converse, Crook, Laramie, Niobrara	Campbell, Carbon, Hot Springs, Johnson, Natrona, Sheridan, Uinta, Weston	Albany, Big Horn, Park, Washakie	Fremont, Teton	Lincoln, Sublette, Sweetwater

❖ This table is an alternative to Figure R403.3(2) for determining the air-freezing index. See the commentary to Section R403.3 and Table R403.3(1).

INTERNATIONAL CODE COUNCIL®
Copyright © 2015 ICC. ALL RIGHTS RESERVED. Accessed by David Dammon on Jun 21, 2017 12:30:52 PM pursuant to License Agreement with ICC. No further reproduction or distribution authorized. ANY UNAUTHORIZED REPRODUCTION OR DISTRIBUTION IS A VIOLATION OF THE FEDERAL COPYRIGHT ACT AND THE LICENSE AGREEMENT, AND SUBJECT TO CIVIL AND CRIMINAL PENALTIES THEREUNDER.

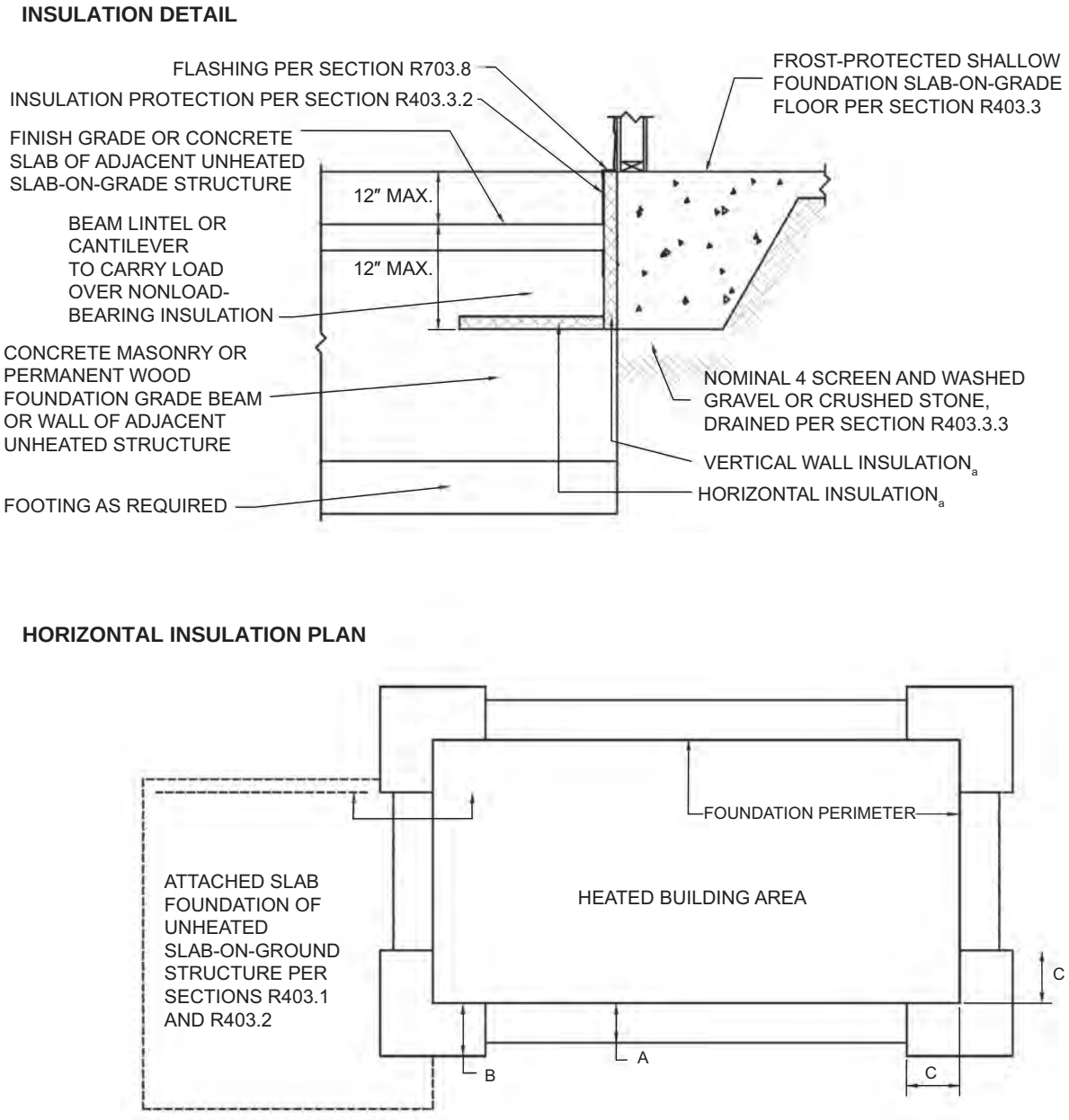

For SI: 1 inch = 25.4 mm.

a. See Table R403.3(1) for required dimensions and *R*-values for vertical and horizontal insulation.

FIGURE R403.3(3)
INSULATION PLACEMENT FOR FROST-PROTECTED FOOTINGS ADJACENT TO UNHEATED SLAB-ON-GROUND STRUCTURE

❖ This figure of insulation detail shows: 1. The maximum vertical distance between the top of the FPSF and the top of slab of adjacent unheated slab-on-ground structure; and 2. The minimum vertical distance from the top of the slab and the bottom of the insulation. The horizontal insulation plan shows placement of FPSF where it meets an unheated structure.

INTERNATIONAL CODE COUNCIL®
Copyright © 2015 ICC. ALL RIGHTS RESERVED. Accessed by David Dammon on Jun 21, 2017 12:30:52 PM pursuant to License Agreement with ICC. No further reproduction or distribution authorized. ANY UNAUTHORIZED REPRODUCTION OR DISTRIBUTION IS A VIOLATION OF THE FEDERAL COPYRIGHT ACT AND THE LICENSE AGREEMENT, AND SUBJECT TO CIVIL AND CRIMINAL PENALTIES THEREUNDER.

R403.3.3 Drainage. Final *grade* shall be sloped in accordance with Section R401.3. In other than Group I Soils, as detailed in Table R405.1, gravel or crushed stone beneath horizontal insulation below ground shall drain to daylight or into an *approved* sewer system.

❖ See Figure R403.3(1) and the commentary to Section R401.3.

R403.3.4 Termite protection. The use of foam plastic in areas of "very heavy" termite infestation probability shall be in accordance with Section R318.4.

❖ Studies have shown that rigid board insulation installed below grade, particularly in areas where the hazard associated with termite infestation is very heavy, creates a pathway for termites that cannot be blocked with currently available termiticide treatments. Because it provides a place for termites to burrow in areas of very heavy termite infestation probability, the foam plastic insulation must be protected as stated in Section R320.5.

R403.4 Footings for precast concrete foundations. Footings for precast concrete foundations shall comply with Section R403.4.

❖ Footings for precast concrete foundations may be crushed stone or concrete complying with Section R403.4.1 or R403.4.2.

R403.4.1 Crushed stone footings. Clean crushed stone shall be free from organic, clayey or silty soils. Crushed stone shall be angular in nature and meet ASTM C33, with the maximum size stone not to exceed $^1/_2$ inch (12.7 mm) and the minimum stone size not to be smaller than $^1/_{16}$ inch (1.6 mm). Crushed stone footings for precast foundations shall be installed in accordance with Figure R403.4(1) and Table R403.4. Crushed stone footings shall be consolidated using a vibratory plate in a maximum of 8-inch (203 mm) lifts. Crushed stone footings shall be limited to Seismic Design Categories A, B and C.

❖ This section prescribes the material and installation requirements for crushed stone footing to be used for precast concrete foundations, as shown in Figure R403.4(1). The soil or the interior should not be excavated below the elevation of the top of the footing. Crushed stone footings installed in accordance with this section are limited in use to areas of low or moderate seismic hazards.

Table R403.4. See Page 4-34.

❖ This table and Figure R403.4(1) prescribe the crushed stone footing size based on story height, load-bearing value of the soil and the precast foundation wall thickness. Table R403.4 prescribes the footing width required based on story height above grade, for buildings with "a story below grade," i.e., basement and stories above grade, the additional load of the "story below grade" must be accounted for. The additional load will be the dead load of the basement wall plus any tributary load from the basement floor load. As an example, a one-story building with a basement could conservatively use the two-story requirement rather than provide an engineered design.

R403.4.2 Concrete footings. Concrete footings shall be installed in accordance with Section R403.1 and Figure R403.4(2).

❖ See the commentary to Section R403.1.

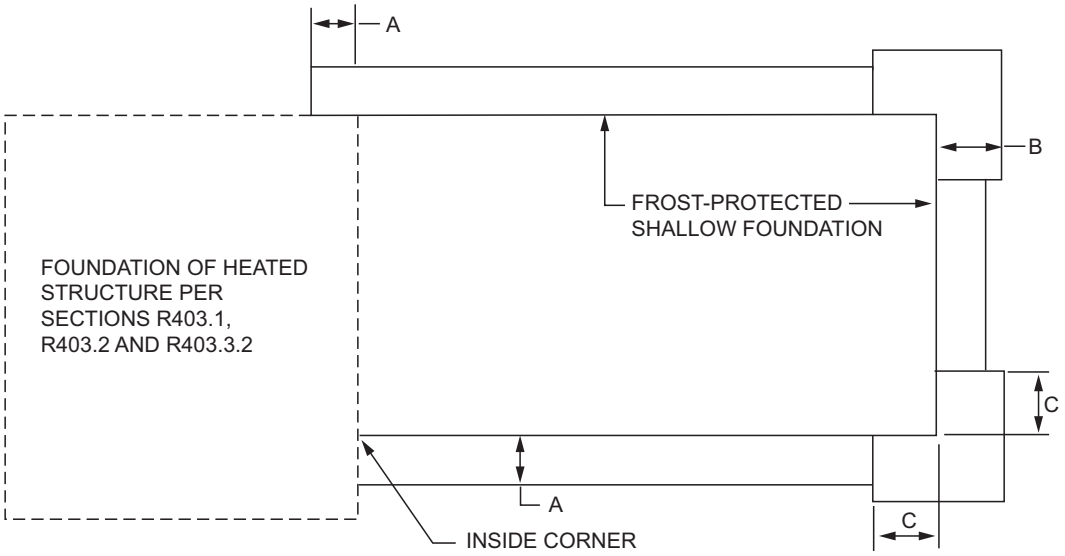

FIGURE R403.3(4)
INSULATION PLACEMENT FOR FROST-PROTECTED FOOTINGS ADJACENT TO HEATED STRUCTURE

❖ This figure shows where extra insulation is required when a FPSF abuts a heated structure.

INTERNATIONAL CODE COUNCIL®
Copyright © 2015 ICC. ALL RIGHTS RESERVED. Accessed by David Dammon on Jun 21, 2017 12:30:52 PM pursuant to License Agreement with ICC. No further reproduction or distribution authorized. ANY UNAUTHORIZED REPRODUCTION OR DISTRIBUTION IS A VIOLATION OF THE FEDERAL COPYRIGHT ACT AND THE LICENSE AGREEMENT, AND SUBJECT TO CIVIL AND CRIMINAL PENALTIES THEREUNDER.

TABLE R403.4
MINIMUM DEPTH OF CRUSHED STONE FOOTINGS[a] (D), (inches)

NUMBER OF STORIES	UNIFORM WALL LOAD	LOAD-BEARING VALUE OF SOIL (psf)															
		1500				2000				3000				4000			
		MH, CH, CL, ML				SC, GC, SM, GM, SP, SW				GP, GW							
		Wall width (inches)				Wall width (inches)				Wall width (inches)				Wall width (inches)			
		6	8	10	12	6	8	10	12	6	8	10	12	6	8	10	12
Conventional light-frame construction																	
1-story	1100 plf	6	4	4	4	6	4	4	4	6	4	4	4	6	4	4	4
2-story	1800 plf	8	6	4	4	6	4	4	4	6	4	4	4	6	4	4	4
3-story	2900 plf	16	14	12	10	10	8	6	6	6	4	4	4	6	4	4	4
4-inch brick veneer over light-frame or 8-inch hollow concrete masonry																	
1-story	1500 plf	6	4	4	4	6	4	4	4	6	4	4	4	6	4	4	4
2-story	2700 plf	14	12	10	8	10	8	6	4	6	4	4	4	6	4	4	4
3-story	4000 plf	22	22	20	18	16	14	12	10	10	8	6	4	6	4	4	4
8-inch solid or fully grouted masonry																	
1-story	2000 plf	10	8	6	4	6	4	4	4	6	4	4	4	6	4	4	4
2-story	3600 plf	20	18	16	16	14	12	10	8	8	6	4	4	6	4	4	4
3-story	5300 plf	32	30	28	26	22	22	20	18	14	12	10	8	10	8	6	4

For SI: 1 inch = 25.4 mm, 1 plf = 14.6 N/m, 1 pound per square foot = 47.9 N/m^2.
a. Linear interpolation of stone depth between wall widths is permitted within each Load-Bearing Value of Soil (psf).

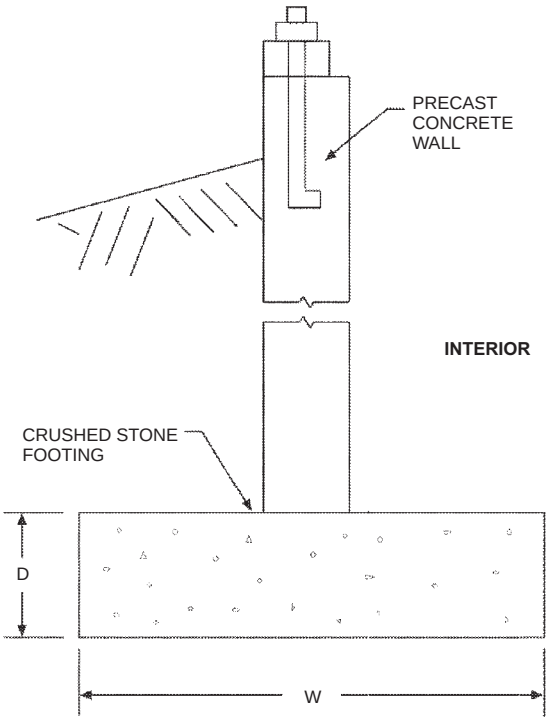

FIGURE R403.4(1)
BASEMENT OR CRAWL SPACE WITH PRECAST FOUNDATION WALL BEARING ON CRUSHED STONE

❖ See the commentary to Section R403.4.1 and Table R403.4.

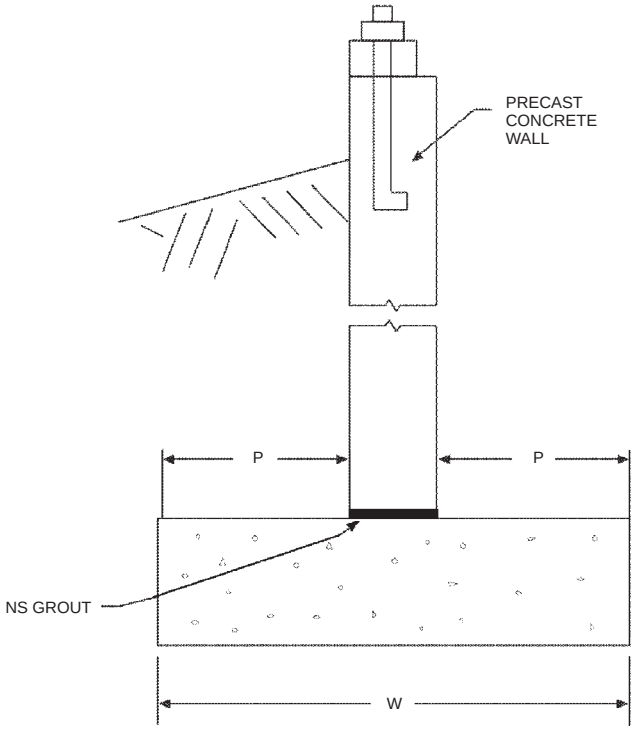

FIGURE R403.4(2)
BASEMENT OR CRAWL SPACE WITH PRECAST FOUNDATION WALL ON SPREAD FOOTING

❖ See the commentary to Section R403.1.

INTERNATIONAL CODE COUNCIL®
Copyright © 2015 ICC. ALL RIGHTS RESERVED. Accessed by David Dammon on Jun 21, 2017 12:30:52 PM pursuant to License Agreement with ICC. No further reproduction or distribution authorized. ANY UNAUTHORIZED REPRODUCTION OR DISTRIBUTION IS A VIOLATION OF THE FEDERAL COPYRIGHT ACT AND THE LICENSE AGREEMENT, AND SUBJECT TO CIVIL AND CRIMINAL PENALTIES THEREUNDER.

SECTION R404
FOUNDATION AND RETAINING WALLS

R404.1 Concrete and masonry foundation walls. Concrete foundation walls shall be selected and constructed in accordance with the provisions of Section R404.1.3. Masonry foundation walls shall be selected and constructed in accordance with the provisions of Section R404.1.2.

❖ Masonry and concrete foundation walls must be designed and constructed in accordance with Sections R404.1.2 and R404.1.3.

R404.1.1 Design required. Concrete or masonry foundation walls shall be designed in accordance with accepted engineering practice where either of the following conditions exists:

1. Walls are subject to hydrostatic pressure from ground water.
2. Walls supporting more than 48 inches (1219 mm) of unbalanced backfill that do not have permanent lateral support at the top or bottom.

❖ Walls subjected to hydrostatic pressure from groundwater and walls without permanent lateral support at the top or bottom are not specifically included in the code. This section specifies conditions under which foundation walls require design. Sections R404.1.2 and R404.1.3 cite the standards that are commonly used for "accepted engineering practice."

R404.1.2 Design of masonry foundation walls. Masonry foundation walls shall be designed and constructed in accordance with the provisions of this section or in accordance with the provisions of TMS 402/ACI 530/ASCE 5. When TMS 402/ACI 530/ASCE 5 or the provisions of this section are used to design masonry foundation walls, project drawings, typical details and specifications are not required to bear the seal of the architect or engineer responsible for design, unless otherwise required by the state law of the jurisdiction having authority.

❖ These provisions are for masonry foundation walls. Foundation walls should be in accordance with this section or designed in accordance with TMS 402/ACI 530/ASCE 5: *Building Code Requirements for Masonry Structures*.

Foundation walls are usually designed and constructed to carry the vertical loads from the structure above, resist wind and any lateral forces transmitted to the foundations, and sustain earth pressures exerted against the walls, including any forces that may be imposed by frost action.

Most states do not require the seal of an architect or engineer for small residential buildings. Check with the state authorities in the location of the project for local regulations.

R404.1.2.1 Masonry foundation walls. Concrete masonry and clay masonry foundation walls shall be constructed as set forth in Table R404.1.1(1), R404.1.1(2), R404.1.1(3) or R404.1.1(4) and shall also comply with applicable provisions of Section R606. In buildings assigned to Seismic Design Categories D_0, D_1 and D_2, concrete masonry and clay masonry foundation walls shall also comply with Section R404.1.4.1. Rubble stone masonry foundation walls shall be constructed in accordance with Sections R404.1.8 and R606.3.2. Rubble stone masonry walls shall not be used in Seismic Design Categories D_0, D_1 and D_2.

❖ Minimum thickness of concrete masonry and clay masonry foundation walls listed in Table R404.1.1(1) are predicated on the type of soil (see Table R405.1), the maximum heights of wall and unbalanced backfill (see Commentary Figure R404.1.1), and the type of wall system that is to be supported. The tabulated values are based on the assumption that the lateral loads will be carried by the walls through bending in the vertical direction. The ASTM standards for masonry units regulate this minimum thickness of the units. The minimum thickness may be as much as $^1/_2$ inch (12.7 mm) less than the required nominal thickness specified in the table.

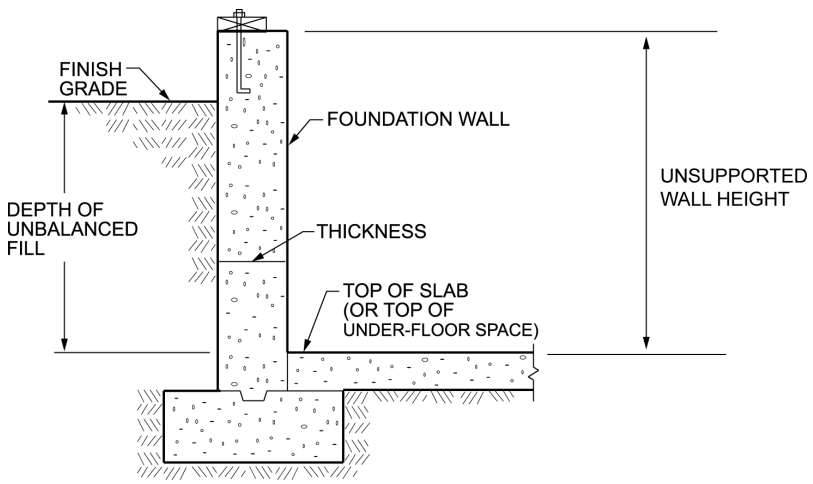

Figure R404.1.1
FOUNDATION WALL WITH UNBALANCED FILL

INTERNATIONAL CODE COUNCIL®
Copyright © 2015 ICC. ALL RIGHTS RESERVED. Accessed by David Dammon on Jun 21, 2017 12:30:52 PM pursuant to License Agreement with ICC. No further reproduction or distribution authorized. ANY UNAUTHORIZED REPRODUCTION OR DISTRIBUTION IS A VIOLATION OF THE FEDERAL COPYRIGHT ACT AND THE LICENSE AGREEMENT, AND SUBJECT TO CIVIL AND CRIMINAL PENALTIES THEREUNDER.

Example:

From Table R404.1.1(1): an 8-foot-high (2438 mm) foundation wall constructed of hollow-unit masonry in a gravel-sand-clay mixture (SM) with a backfill height above the basement floor of 5 feet (1524 mm) would have to be minimum nominal thickness of 10 inches (254 mm). The actual wall thickness could be a minimum of $9^1/_2$ inches (241 mm).

The reinforcement specified in Tables R404.1.1(2) through R404.1.1(4) of the code is based on the nominal wall thickness, the type of soil, the height of the wall and the height of unbalanced fill. The height of unbalanced fill is measured as shown in Commentary Figure R404.1.1. The tabulated values are based on the assumption that lateral loads will be carried by the walls through bending, primarily in the vertical direction.

Additional (general) requirements for masonry construction found in Section R606 must be followed also. See Section R404.1.4.1 for buildings in Seismic Design Category D_0, D_1 or D_2, and for rubble stone masonry, see the commentary to Section R404.1.8.

TABLE R404.1.1(1)
PLAIN MASONRY FOUNDATION WALLS[f]

MAXIMUM WALL HEIGHT (feet)	MAXIMUM UNBALANCED BACKFILL HEIGHT[c] (feet)	PLAIN MASONRY[a] MINIMUM NOMINAL WALL THICKNESS (inches)		
		Soil classes[b]		
		GW, GP, SW and SP	GM, GC, SM, SM-SC and ML	SC, MH, ML-CL and inorganic CL
5	4 5	6 solid[d] or 8 6 solid[d] or 8	6 solid[d] or 8 8	6 solid[d] or 8 10
6	4 5 6	6 solid[d] or 8 6 solid[d] or 8 8	6 solid[d] or 8 8 10	6 solid[d] or 8 10 12
7	4 5 6 7	6 solid[d] or 8 6 solid[d] or 8 10 12	8 10 12 10 solid[d]	8 10 10 solid[d] 12 solid[d]
8	4 5 6 7 8	6 solid[d] or 8 6 solid[d] or 8 10 12 10 grout[d]	6 solid[d] or 8 10 12 12 solid[d] 12 grout[d]	8 12 12 solid[d] Footnote e Footnote e
9	4 5 6 7 8 9	6 grout[d] or 8 solid[d] or 12 6 grout[d] or 10 solid[d] 8 grout[d] or 12 solid[d] 10 grout[d] 10 grout[d] 12 grout	6 grout[d] or 8 solid[d] 8 grout[d] or 12 solid[d] 10 grout[d] 10 grout[d] 12 grout Footnote e	8 grout[d] or 10 solid[d] 8 grout[d] 10 grout[d] 12 grout Footnote e Footnote e

For SI: 1 inch = 25.4 mm, 1 foot = 304.8 mm, 1 pound per square inch = 6.895 Pa.

a. Mortar shall be Type M or S and masonry shall be laid in running bond. Ungrouted hollow masonry units are permitted except where otherwise indicated.

b. Soil classes are in accordance with the Unified Soil Classification System. Refer to Table R405.1.

c. Unbalanced backfill height is the difference in height between the exterior finish ground level and the lower of the top of the concrete footing that supports the foundation wall or the interior finish ground level. Where an interior concrete slab-on-grade is provided and is in contact with the interior surface of the foundation wall, measurement of the unbalanced backfill height from the exterior finish ground level to the top of the interior concrete slab is permitted.

d. Solid indicates solid masonry unit; grout indicates grouted hollow units.

e. Wall construction shall be in accordance with either Table R404.1.1(2), Table R404.1.1(3), Table R404.1.1(4), or a design shall be provided.

f. The use of this table shall be prohibited for soil classifications not shown.

❖ See the commentary to Section R404.1.2.1.

INTERNATIONAL CODE COUNCIL®
Copyright © 2015 ICC. ALL RIGHTS RESERVED. Accessed by David Dammon on Jun 21, 2017 12:30:52 PM pursuant to License Agreement with ICC. No further reproduction or distribution authorized. ANY UNAUTHORIZED REPRODUCTION OR DISTRIBUTION IS A VIOLATION OF THE FEDERAL COPYRIGHT ACT AND THE LICENSE AGREEMENT, AND SUBJECT TO CIVIL AND CRIMINAL PENALTIES THEREUNDER.

TABLE R404.1.1(2)
8-INCH MASONRY FOUNDATION WALLS WITH REINFORCING WHERE d ≥ 5 INCHES[a, c, f]

WALL HEIGHT	HEIGHT OF UNBALANCED BACKFILL[e]	MINIMUM VERTICAL REINFORCEMENT AND SPACING (INCHES)[b, c]		
		Soil classes and lateral soil load[d] (psf per foot below grade)		
		GW, GP, SW and SP soils 30	GM, GC, SM, SM-SC and ML soils 45	SC, ML-CL and inorganic CL soils 60
6 feet 8 inches	4 feet (or less)	#4 at 48	#4 at 48	#4 at 48
	5 feet	#4 at 48	#4 at 48	#4 at 48
	6 feet 8 inches	#4 at 48	#5 at 48	#6 at 48
7 feet 4 inches	4 feet (or less)	#4 at 48	#4 at 48	#4 at 48
	5 feet	#4 at 48	#4 at 48	#4 at 48
	6 feet	#4 at 48	#5 at 48	#5 at 48
	7 feet 4 inches	#5 at 48	#6 at 48	#6 at 40
8 feet	4 feet (or less)	#4 at 48	#4 at 48	#4 at 48
	5 feet	#4 at 48	#4 at 48	#4 at 48
	6 feet	#4 at 48	#5 at 48	#5 at 48
	7 feet	#5 at 48	#6 at 48	#6 at 40
	8 feet	#5 at 48	#6 at 48	#6 at 32
8 feet 8 inches	4 feet (or less)	#4 at 48	#4 at 48	#4 at 48
	5 feet	#4 at 48	#4 at 48	#5 at 48
	6 feet	#4 at 48	#5 at 48	#6 at 48
	7 feet	#5 at 48	#6 at 48	#6 at 40
	8 feet 8 inches	#6 at 48	#6 at 32	#6 at 24
9 feet 4 inches	4 feet (or less)	#4 at 48	#4 at 48	#4 at 48
	5 feet	#4 at 48	#4 at 48	#5 at 48
	6 feet	#4 at 48	#5 at 48	#6 at 48
	7 feet	#5 at 48	#6 at 48	#6 at 40
	8 feet	#6 at 48	#6 at 40	#6 at 24
	9 feet 4 inches	#6 at 40	#6 at 24	#6 at 16
10 feet	4 feet (or less)	#4 at 48	#4 at 48	#4 at 48
	5 feet	#4 at 48	#4 at 48	#5 at 48
	6 feet	#4 at 48	#5 at 48	#6 at 48
	7 feet	#5 at 48	#6 at 48	#6 at 32
	8 feet	#6 at 48	#6 at 32	#6 at 24
	9 feet	#6 at 40	#6 at 24	#6 at 16
	10 feet	#6 at 32	#6 at 16	#6 at 16

For SI: 1 inch = 25.4 mm, 1 foot = 304.8 mm, 1 pound per square foot per foot = 0.157 kPa/mm.

a. Mortar shall be Type M or S and masonry shall be laid in running bond.

b. Alternative reinforcing bar sizes and spacings having an equivalent cross-sectional area of reinforcement per lineal foot of wall shall be permitted provided the spacing of the reinforcement does not exceed 72 inches in Seismic Design Categories A, B and C, and 48 inches in Seismic Design Categories D_0, D_1 and D_2.

c. Vertical reinforcement shall be Grade 60 minimum. The distance, *d*, from the face of the soil side of the wall to the center of vertical reinforcement shall be not less than 5 inches.

d. Soil classes are in accordance with the Unified Soil Classification System and design lateral soil loads are for moist conditions without hydrostatic pressure. Refer to Table R405.1.

e. Unbalanced backfill height is the difference in height between the exterior finish ground level and the lower of the top of the concrete footing that supports the foundation wall or the interior finish ground level. Where an interior concrete slab-on-grade is provided and is in contact with the interior surface of the foundation wall, measurement of the unbalanced backfill height from the exterior finish ground level to the top of the interior concrete slab is permitted.

f. The use of this table shall be prohibited for soil classifications not shown.

❖ See the commentary to Section R404.1.2.1.

INTERNATIONAL CODE COUNCIL®
Copyright © 2015 ICC. ALL RIGHTS RESERVED. Accessed by David Dammon on Jun 21, 2017 12:30:52 PM pursuant to License Agreement with ICC. No further reproduction or distribution authorized. ANY UNAUTHORIZED REPRODUCTION OR DISTRIBUTION IS A VIOLATION OF THE FEDERAL COPYRIGHT ACT AND THE LICENSE AGREEMENT, AND SUBJECT TO CIVIL AND CRIMINAL PENALTIES THEREUNDER.

TABLE R404.1.1(3)
10-INCH MASONRY FOUNDATION WALLS WITH REINFORCING WHERE d ≥ 6.75 INCHES[a, c, f]

WALL HEIGHT	HEIGHT OF UNBALANCED BACKFILL[e]	MINIMUM VERTICAL REINFORCEMENT AND SPACING (INCHES)[b, c]		
		Soil classes and later soil load[d] (psf per foot below grade)		
		GW, GP, SW and SP soils 30	GM, GC, SM, SM-SC and ML soils 45	SC, ML-CL and inorganic CL soils 60
6 feet 8 inches	4 feet (or less)	#4 at 56	#4 at 56	#4 at 56
	5 feet	#4 at 56	#4 at 56	#4 at 56
	6 feet 8 inches	#4 at 56	#5 at 56	#5 at 56
7 feet 4 inches	4 feet (or less)	#4 at 56	#4 at 56	#4 at 56
	5 feet	#4 at 56	#4 at 56	#4 at 56
	6 feet	#4 at 56	#4 at 56	#5 at 56
	7 feet 4 inches	#4 at 56	#5 at 56	#6 at 56
8 feet	4 feet (or less)	#4 at 56	#4 at 56	#4 at 56
	5 feet	#4 at 56	#4 at 56	#4 at 56
	6 feet	#4 at 56	#4 at 56	#5 at 56
	7 feet	#4 at 56	#5 at 56	#6 at 56
	8 feet	#5 at 56	#6 at 56	#6 at 48
8 feet 8 inches	4 feet (or less)	#4 at 56	#4 at 56	#4 at 56
	5 feet	#4 at 56	#4 at 56	#4 at 56
	6 feet	#4 at 56	#4 at 56	#5 at 56
	7 feet	#4 at 56	#5 at 56	#6 at 56
	8 feet 8 inches	#5 at 56	#6 at 48	#6 at 32
9 feet 4 inches	4 feet (or less)	#4 at 56	#4 at 56	#4 at 56
	5 feet	#4 at 56	#4 at 56	#4 at 56
	6 feet	#4 at 56	#5 at 56	#5 at 56
	7 feet	#4 at 56	#5 at 56	#6 at 56
	8 feet	#5 at 56	#6 at 56	#6 at 40
	9 feet 4 inches	#6 at 56	#6 at 40	#6 at 24
10 feet	4 feet (or less)	#4 at 56	#4 at 56	#4 at 56
	5 feet	#4 at 56	#4 at 56	#4 at 56
	6 feet	#4 at 56	#5 at 56	#5 at 56
	7 feet	#5 at 56	#6 at 56	#6 at 48
	8 feet	#5 at 56	#6 at 48	#6 at 40
	9 feet	#6 at 56	#6 at 40	#6 at 24
	10 feet	#6 at 48	#6 at 32	#6 at 24

For SI: 1 inch = 25.4 mm, 1 foot = 304.8 mm, 1 pound per square foot per foot = 0.157 kPa/mm.

a. Mortar shall be Type M or S and masonry shall be laid in running bond.

b. Alternative reinforcing bar sizes and spacings having an equivalent cross-sectional area of reinforcement per lineal foot of wall shall be permitted provided the spacing of the reinforcement does not exceed 72 inches in Seismic Design Categories A, B and C, and 48 inches in Seismic Design Categories D_0, D_1 and D_2.

c. Vertical reinforcement shall be Grade 60 minimum. The distance, *d*, from the face of the soil side of the wall to the center of vertical reinforcement shall be not less than 6.75 inches.

d. Soil classes are in accordance with the Unified Soil Classification System and design lateral soil loads are for moist conditions without hydrostatic pressure. Refer to Table R405.1.

e. Unbalanced backfill height is the difference in height between the exterior finish ground level and the lower of the top of the concrete footing that supports the foundation wall or the interior finish ground level. Where an interior concrete slab-on-grade is provided and is in contact with the interior surface of the foundation wall, measurement of the unbalanced backfill height from the exterior finish ground level to the top of the interior concrete slab is permitted.

f. The use of this table shall be prohibited for soil classifications not shown.

❖ See the commentary to Section R404.1.2.1.

INTERNATIONAL CODE COUNCIL®
Copyright © 2015 ICC. ALL RIGHTS RESERVED. Accessed by David Dammon on Jun 21, 2017 12:30:52 PM pursuant to License Agreement with ICC. No further reproduction or distribution authorized. ANY UNAUTHORIZED REPRODUCTION OR DISTRIBUTION IS A VIOLATION OF THE FEDERAL COPYRIGHT ACT AND THE LICENSE AGREEMENT, AND SUBJECT TO CIVIL AND CRIMINAL PENALTIES THEREUNDER.

TABLE R404.1.1(4)
12-INCH MASONRY FOUNDATION WALLS WITH REINFORCING WHERE d ≥ 8.75 INCHES[a, c, f]

WALL HEIGHT	HEIGHT OF UNBALANCED BACKFILL[e]	MINIMUM VERTICAL REINFORCEMENT AND SPACING (INCHES)[b, c]		
		Soil classes and lateral soil load[d] (psf per foot below grade)		
		GW, GP, SW and SP soils 30	GM, GC, SM, SM-SC and ML soils 45	SC, ML-CL and inorganic CL soils 60
6 feet 8 inches	4 feet (or less)	#4 at 72	#4 at 72	#4 at 72
	5 feet	#4 at 72	#4 at 72	#4 at 72
	6 feet 8 inches	#4 at 72	#4 at 72	#5 at 72
7 feet 4 inches	4 feet (or less)	#4 at 72	#4 at 72	#4 at 72
	5 feet	#4 at 72	#4 at 72	#4 at 72
	6 feet	#4 at 72	#4 at 72	#5 at 72
	7 feet 4 inches	#4 at 72	#5 at 72	#6 at 72
8 feet	4 feet (or less)	#4 at 72	#4 at 72	#4 at 72
	5 feet	#4 at 72	#4 at 72	#4 at 72
	6 feet	#4 at 72	#4 at 72	#5 at 72
	7 feet	#4 at 72	#5 at 72	#6 at 72
	8 feet	#5 at 72	#6 at 72	#6 at 64
8 feet 8 inches	4 feet (or less)	#4 at 72	#4 at 72	#4 at 72
	5 feet	#4 at 72	#4 at 72	#4 at 72
	6 feet	#4 at 72	#4 at 72	#5 at 72
	7 feet	#4 at 72	#5 at 72	#6 at 72
	8 feet 8 inches	#5 at 72	#7 at 72	#6 at 48
9 feet 4 inches	4 feet (or less)	#4 at 72	#4 at 72	#4 at 72
	5 feet	#4 at 72	#4 at 72	#4 at 72
	6 feet	#4 at 72	#5 at 72	#5 at 72
	7 feet	#4 at 72	#5 at 72	#6 at 72
	8 feet	#5 at 72	#6 at 72	#6 at 56
	9 feet 4 inches	#6 at 72	#6 at 48	#6 at 40
10 feet	4 feet (or less)	#4 at 72	#4 at 72	#4 at 72
	5 feet	#4 at 72	#4 at 72	#4 at 72
	6 feet	#4 at 72	#5 at 72	#5 at 72
	7 feet	#4 at 72	#6 at 72	#6 at 72
	8 feet	#5 at 72	#6 at 72	#6 at 48
	9 feet	#6 at 72	#6 at 56	#6 at 40
	10 feet	#6 at 64	#6 at 40	#6 at 32

For SI: 1 inch = 25.4 mm, 1 foot = 304.8 mm, 1 pound per square foot per foot = 0.157 kPa/mm.

a. Mortar shall be Type M or S and masonry shall be laid in running bond.

b. Alternative reinforcing bar sizes and spacings having an equivalent cross-sectional area of reinforcement per lineal foot of wall shall be permitted provided the spacing of the reinforcement does not exceed 72 inches in Seismic Design Categories A, B and C, and 48 inches in Seismic Design Categories D_0, D_1 and D_2.

c. Vertical reinforcement shall be Grade 60 minimum. The distance, *d*, from the face of the soil side of the wall to the center of vertical reinforcement shall be not less than 8.75 inches.

d. Soil classes are in accordance with the Unified Soil Classification System and design lateral soil loads are for moist conditions without hydrostatic pressure. Refer to Table R405.1.

e. Unbalanced backfill height is the difference in height between the exterior finish ground level and the lower of the top of the concrete footing that supports the foundation wall or the interior finish ground levels. Where an interior concrete slab-on-grade is provided and in contact with the interior surface of the foundation wall, measurement of the unbalanced backfill height is permitted to be measured from the exterior finish ground level to the top of the interior concrete slab is permitted.

f. The use of this table shall be prohibited for soil classifications not shown.

❖ See the commentary to Section R404.1.2.1.

INTERNATIONAL CODE COUNCIL®
Copyright © 2015 ICC. ALL RIGHTS RESERVED. Accessed by David Dammon on Jun 21, 2017 12:30:52 PM pursuant to License Agreement with ICC. No further reproduction or distribution authorized. ANY UNAUTHORIZED REPRODUCTION OR DISTRIBUTION IS A VIOLATION OF THE FEDERAL COPYRIGHT ACT AND THE LICENSE AGREEMENT, AND SUBJECT TO CIVIL AND CRIMINAL PENALTIES THEREUNDER.

R404.1.3 Concrete foundation walls. Concrete foundation walls that support light-frame walls shall be designed and constructed in accordance with the provisions of this section, ACI 318, ACI 332 or PCA 100. Concrete foundation walls that support above-grade concrete walls that are within the applicability limits of Section R608.2 shall be designed and constructed in accordance with the provisions of this section, ACI 318, ACI 332 or PCA 100. Concrete foundation walls that support above-grade concrete walls that are not within the applicability limits of Section R608.2 shall be designed and constructed in accordance with the provisions of ACI 318, ACI 332 or PCA 100. When ACI 318, ACI 332, PCA 100 or the provisions of this section are used to design concrete foundation walls, project drawings, typical details and specifications are not required to bear the seal of the architect or engineer responsible for design, unless otherwise required by the state law of the *jurisdiction* having authority.

❖ These provisions are for concrete foundation walls. Foundation walls should be in accordance with this section or designed in accordance with one of the following documents:

- ACI 318, *Building Code Requirements for Structural Concrete*
- ACI 332, *Requirements for Residential Concrete Construction*
- PCA100, *Prescriptive Design of Exterior Concrete Walls for One- and Two-family Dwellings*

Foundation walls are usually designed and constructed to carry the vertical loads from the structure above, resist wind and any lateral forces transmitted to the foundations, and sustain earth pressures exerted against the walls, including any forces that may be imposed by frost action.

Most states do not require the seal of an architect or engineer for small residential buildings. Check with the state authorities in the location of the project for local regulations.

R404.1.3.1 Concrete cross-section. Concrete walls constructed in accordance with this code shall comply with the shapes and minimum concrete cross-sectional dimensions required by Table R608.3. Other types of forming systems resulting in concrete walls not in compliance with this section and Table R608.3 shall be designed in accordance with ACI 318.

❖ The minimum thickness and cross-section dimension of concrete walls must comply with Section R404.1.3 and Table R608.3. Other sizes must be designed in accordance with ACI 318.

Unlike masonry units, which must be manufactured in accordance with an ASTM standard, there is no standard to require the minimum thickness of nominal 6-, 8-, 10-, or 12-inch (127 mm, 203 mm, 254 mm, or 305 mm) flat concrete wall. The actual as-built minimum thickness is permitted to be no more than $^1/_2$ inch (12.7 mm) less than the nominal thickness. See Note d of Table R608.3.

The design strength of flat concrete walls is based on thicknesses of 5.5 (139.7 mm), 7.5 (180.5 mm), 9.5 (241.3 mm) and 11.5 inches (292.1 mm).

For waffle-grid and screen-grid minimum thickness, see Notes e, f and g of Table R608.3.

R404.1.3.2 Reinforcement for foundation walls. Concrete foundation walls shall be laterally supported at the top and bottom. Horizontal reinforcement shall be provided in accordance with Table R404.1.2(1). Vertical reinforcement shall be provided in accordance with Table R404.1.2(2), R404.1.2(3), R404.1.2(4), R404.1.2(5), R404.1.2(6), R404.1.2(7) or R404.1.2(8). Vertical reinforcement for flat *basement* walls retaining 4 feet (1219 mm) or more of unbalanced backfill is permitted to be determined in accordance with Table R404.1.2(9). For *basement* walls supporting above-grade concrete walls, vertical reinforcement shall be the greater of that required by Tables R404.1.2(2) through R404.1.2(8) or by Section R608.6 for the above-grade wall. In buildings assigned to Seismic Design Category D_0, D_1 or D_2, concrete foundation walls shall also comply with Section R404.1.4.2.

❖ This section provides reinforcement requirements and tables for foundation walls constructed in accordance with Section R404.1.3. The tables provide the minimum required vertical and horizontal wall reinforcement for various lateral soil loads, wall heights, and unbalanced backfill heights. Vertical wall reinforcement tables are provided for foundation walls with unsupported wall heights up to 10 feet (3048 mm). The

TABLE R404.1.2(1)
MINIMUM HORIZONTAL REINFORCEMENT FOR CONCRETE BASEMENT WALLS[a, b]

MAXIMUM UNSUPPORTED HEIGHT OF BASEMENT WALL (feet)	LOCATION OF HORIZONTAL REINFORCEMENT
≤ 8	One No. 4 bar within 12 inches of the top of the wall story and one No. 4 bar near mid-height of the wall story.
> 8	One No. 4 bar within 12 inches of the top of the wall story and one No. 4 bar near third points in the wall story.

For SI: 1 inch = 25.4 mm, 1 foot = 304.8 mm, 1 pound per square inch = 6.895 kPa.

a. Horizontal reinforcement requirements are for reinforcing bars with a minimum yield strength of 40,000 psi and concrete with a minimum concrete compressive strength of 2,500 psi.

b. See Section R404.1.2.2 for minimum reinforcement required for foundation walls supporting above-grade concrete walls.

❖ See the commentary to Section R404.1.3.2.

INTERNATIONAL CODE COUNCIL®
Copyright © 2015 ICC. ALL RIGHTS RESERVED. Accessed by David Dammon on Jun 21, 2017 12:30:52 PM pursuant to License Agreement with ICC. No further reproduction or distribution authorized. ANY UNAUTHORIZED REPRODUCTION OR DISTRIBUTION IS A VIOLATION OF THE FEDERAL COPYRIGHT ACT AND THE LICENSE AGREEMENT, AND SUBJECT TO CIVIL AND CRIMINAL PENALTIES THEREUNDER.

unsupported wall height is the maximum clear vertical distance between the exterior finish grade or interior finish ground level or top of finish floor, whichever is lower, and the sill plate (see Commentary Figure R404.1.1).

The wall must be laterally supported at the top and bottom. The tables were developed in accordance with ACI 318.

The following design assumptions were used to analyze the walls:

1. Walls are simply supported at the top and bottom.
2. Walls contain no openings.
3. Lateral bracing is provided for the wall by the floors above and the floor slabs below.
4. Allowable deflection criterion is the laterally unsupported height of the wall, in inches, divided by 240.

Tables R404.1.2(2) through R404.1.2(7) require the vertical steel to be located at the centerline of the wall. For flat concrete walls, Table R404.1.2(8) requires the steel to be located with a maximum cover of $1^1/_4$ inches (31.75 mm) from the inside face of the wall

TABLE R404.1.2(2)
MINIMUM VERTICAL REINFORCEMENT FOR 6-INCH NOMINAL FLAT CONCRETE BASEMENT WALLS[b, c, d, e, g, h, i, j, k]

MAXIMUM UNSUPPORTED WALL HEIGHT (feet)	MAXIMUM UNBALANCED BACKFILL HEIGHT[f] (feet)	MINIMUM VERTICAL REINFORCEMENT-BAR SIZE AND SPACING (inches)		
		Soil classes[a] and design lateral soil (psf per foot of depth)		
		GW, GP, SW, SP 30	GM, GC, SM, SM-SC and ML 45	SC, ML-CL and inorganic CL 60
8	4	NR	NR	NR
	5	NR	6 @ 39	6 @ 48
	6	5 @ 39	6 @ 48	6 @ 35
	7	6 @ 48	6 @ 34	6 @ 25
	8	6 @ 39	6 @ 25	6 @ 18
9	4	NR	NR	NR
	5	NR	5 @ 37	6 @ 48
	6	5 @ 36	6 @ 44	6 @ 32
	7	6 @ 47	6 @ 30	6 @ 22
	8	6 @ 34	6 @ 22	6 @ 16
	9	6 @ 27	6 @ 17	DR
10	4	NR	NR	NR
	5	NR	5 @ 35	6 @ 48
	6	6 @ 48	6 @ 41	6 @ 30
	7	6 @ 43	6 @ 28	6 @ 20
	8	6 @ 31	6 @ 20	DR
	9	6 @ 24	6 @ 15	DR
	10	6 @ 19	DR	DR

For SI: 1 inch = 25.4 mm; 1 foot = 304.8 mm; 1 pound per square foot per foot = 0.1571 kPa^2/m, 1 pound per square inch = 6.895 kPa.

NR = Not required.

a. Soil classes are in accordance with the Unified Soil Classification System. Refer to Table R405.1.

b. Table values are based on reinforcing bars with a minimum yield strength of 60,000 psi concrete with a minimum specified compressive strength of 2,500 psi and vertical reinforcement being located at the centerline of the wall. See Section R404.1.3.3.7.2.

c. Vertical reinforcement with a yield strength of less than 60,000 psi and/or bars of a different size than specified in the table are permitted in accordance with Section R404.1.3.3.7.6 and Table R404.1.2(9).

d. Deflection criterion is $L/240$, where L is the height of the basement wall in inches.

e. Interpolation is not permitted.

f. Where walls will retain 4 feet or more of unbalanced backfill, they shall be laterally supported at the top and bottom before backfilling.

g. NR indicates no vertical wall reinforcement is required, except for 6-inch-nominal walls formed with stay-in-place forming systems in which case vertical reinforcement shall be No. 4@48 inches on center.

h. See Section R404.1.3.2 for minimum reinforcement required for basement walls supporting above-grade concrete walls.

i. See Table R608.3 for tolerance from nominal thickness permitted for flat walls.

j. DR means design is required in accordance with the applicable building code, or where there is no code, in accordance with ACI 318.

k. The use of this table shall be prohibited for soil classifications not shown.

❖ See the commentary to Section R404.1.3.2.

INTERNATIONAL CODE COUNCIL®
Copyright © 2015 ICC. ALL RIGHTS RESERVED. Accessed by David Dammon on Jun 21, 2017 12:30:52 PM pursuant to License Agreement with ICC. No further reproduction or distribution authorized. ANY UNAUTHORIZED REPRODUCTION OR DISTRIBUTION IS A VIOLATION OF THE FEDERAL COPYRIGHT ACT AND THE LICENSE AGREEMENT, AND SUBJECT TO CIVIL AND CRIMINAL PENALTIES THEREUNDER.

(see Section R404.1.3.3.7.2). Tables R404.1.2(2) through R404.1.2(8) are based on reinforcing bars of Grade 60 (60,000 psi minimum yield strength). Table R404.1.2(9) provides for use of an alternate grade of steel and alternate bar size. See Section R404.1.4.2 for additional requirements for foundation walls in Seismic Design Categories D_0, D_1 and D_2.

R404.1.3.2.1 Concrete foundation stem walls supporting above-grade concrete walls. Foundation stem walls that support above-grade concrete walls shall be designed and constructed in accordance with this section.

1. Stem walls not laterally supported at top. Concrete stem walls that are not monolithic with slabs-on-ground or are not otherwise laterally supported by slabs-on-ground shall comply with this section. Where unbalanced backfill retained by the stem wall is less than or equal to 18 inches (457 mm), the stem wall and above-grade wall it supports shall be provided with vertical reinforcement in accordance with Section R608.6 and Table R608.6(1), R608.6(2) or R608.6(3) for above-grade walls. Where unbalanced backfill retained by the stem wall is greater than 18 inches (457 mm), the stem wall and above-grade wall it supports shall be provided with vertical reinforcement in accordance with Section R608.6 and Table R608.6(4).
2. Stem walls laterally supported at top. Concrete stem walls that are monolithic with slabs-on-ground or are otherwise laterally supported by slabs-on-ground shall be vertically reinforced in accordance with Section R608.6 and Table R608.6(1), R608.6(2) or R608.6(3) for above-grade walls. Where the unbalanced backfill

TABLE R404.1.2(3)
MINIMUM VERTICAL REINFORCEMENT FOR 8-INCH (203 mm) NOMINAL FLAT CONCRETE BASEMENT WALLS[b, c, d, e, f, h, i, j]

MAXIMUM UNSUPPORTED WALL HEIGHT (feet)	MAXIMUM UNBALANCED BACKFILL HEIGHT[g] (feet)	MINIMUM VERTICAL REINFORCEMENT-BAR SIZE AND SPACING (inches)		
		Soil classes[a] and design lateral soil (psf per foot of depth)		
		GW, GP, SW, SP 30	GM, GC, SM, SM-SC and ML 45	SC, ML-CL and inorganic CL 60
8	4	NR	NR	NR
	5	NR	NR	NR
	6	NR	NR	6 @ 37
	7	NR	6 @ 36	6 @ 35
	8	6 @ 41	6 @ 35	6 @ 26
9	4	NR	NR	NR
	5	NR	NR	NR
	6	NR	NR	6 @ 35
	7	NR	6 @ 35	6 @ 32
	8	6 @ 36	6 @ 32	6 @ 23
	9	6 @ 35	6 @ 25	6 @ 18
10	4	NR	NR	NR
	5	NR	NR	NR
	6	NR	NR	6 @ 35
	7	NR	6 @ 35	6 @ 29
	8	6 @ 35	6 @ 29	6 @ 21
	9	6 @ 34	6 @ 22	6 @ 16
	10	6 @ 27	6 @ 17	6 @ 13

For SI: 1 inch = 25.4 mm; 1 foot = 304.8 mm; 1 pound per square foot per foot = 0.1571 kPa^2/m, 1 pound per square inch = 6.895 kPa.

NR = Not required.

a. Soil classes are in accordance with the Unified Soil Classification System. Refer to Table R405.1.

b. Table values are based on reinforcing bars with a minimum yield strength of 60,000 psi, concrete with a minimum specified compressive strength of 2,500 psi and vertical reinforcement being located at the centerline of the wall. See Section R404.1.3.3.7.2.

c. Vertical reinforcement with a yield strength of less than 60,000 psi and/or bars of a different size than specified in the table are permitted in accordance with Section R404.1.3.3.7.6 and Table R404.1.2(9).

d. NR indicates no vertical reinforcement is required.

e. Deflection criterion is $L/240$, where L is the height of the basement wall in inches.

f. Interpolation is not permitted.

g. Where walls will retain 4 feet or more of unbalanced backfill, they shall be laterally supported at the top and bottom before backfilling.

h. See Section R404.1.3.2 for minimum reinforcement required for basement walls supporting above-grade concrete walls.

i. See Table R608.3 for tolerance from nominal thickness permitted for flat walls.

j. The use of this table shall be prohibited for soil classifications not shown.

❖ See the commentary to Section R404.1.3.2.

INTERNATIONAL CODE COUNCIL®
Copyright © 2015 ICC. ALL RIGHTS RESERVED. Accessed by David Dammon on Jun 21, 2017 12:30:52 PM pursuant to License Agreement with ICC. No further reproduction or distribution authorized. ANY UNAUTHORIZED REPRODUCTION OR DISTRIBUTION IS A VIOLATION OF THE FEDERAL COPYRIGHT ACT AND THE LICENSE AGREEMENT, AND SUBJECT TO CIVIL AND CRIMINAL PENALTIES THEREUNDER.

retained by the stem wall is greater than 18 inches (457 mm), the connection between the stem wall and the slab-on-ground, and the portion of the slab-on-ground providing lateral support for the wall shall be designed in accordance with PCA 100 or with accepted engineering practice. Where the unbalanced backfill retained by the stem wall is greater than 18 inches (457 mm), the minimum nominal thickness of the wall shall be 6 inches (152 mm).

❖ A stem wall is a foundation wall that supports an above-grade wall and retains unbalanced backfill beneath the slab-on-ground of the first story above grade plane.

Stem walls supporting above-grade concrete walls must meet the following:

- Vertical reinforcement in accordance with Section R608.6 and Tables R608.6(1) through R608.6(3).
- Stem walls not laterally supported at the top and unbalanced backfill greater than 18 inches (457 mm), use Section R608.6 and Table R608.6(4).
- Stem walls laterally supported at the top and unbalanced backfill greater than 18 inches (457 mm), the connection to the slab-on-ground must be designed in accordance with PCA 100 or accepted engineering practice.

TABLE R404.1.2(4)
MINIMUM VERTICAL REINFORCEMENT FOR 10-INCH NOMINAL FLAT CONCRETE BASEMENT WALLS[b, c, d, e, f, h, i, j]

MAXIMUM UNSUPPORTED WALL HEIGHT (feet)	MAXIMUM UNBALANCED BACKFILL HEIGHT[g] (feet)	MINIMUM VERTICAL REINFORCEMENT-BAR SIZE AND SPACING (inches)		
		Soil classes[a] and design lateral soil (psf per foot of depth)		
		GW, GP, SW, SP 30	GM, GC, SM, SM-SC and ML 45	SC, ML-CL and inorganic CL 60
8	4	NR	NR	NR
	5	NR	NR	NR
	6	NR	NR	NR
	7	NR	NR	NR
	8	6 @ 48	6 @ 35	6 @ 28
9	4	NR	NR	NR
	5	NR	NR	NR
	6	NR	NR	NR
	7	NR	NR	6 @ 31
	8	NR	6 @ 31	6 @ 28
	9	6 @ 37	6 @ 28	6 @ 24
10	4	NR	NR	NR
	5	NR	NR	NR
	6	NR	NR	NR
	7	NR	NR	6 @ 28
	8	NR	6 @ 28	6 @ 28
	9	6 @ 33	6 @ 28	6 @ 21
	10	6 @ 28	6 @ 23	6 @ 17

For SI: 1 inch = 25.4 mm; 1 foot = 304.8 mm; 1 pound per square foot per foot = 0.1571 kPa^2/m, 1 pound per square inch = 6.895 kPa.
NR = Not required.

a. Soil classes are in accordance with the Unified Soil Classification System. Refer to Table R405.1.
b. Table values are based on reinforcing bars with a minimum yield strength of 60,000 psi concrete with a minimum specified compressive strength of 2,500 psi and vertical reinforcement being located at the centerline of the wall. See Section R404.1.3.3.7.2.
c. Vertical reinforcement with a yield strength of less than 60,000 psi and/or bars of a different size than specified in the table are permitted in accordance with Section R404.1.3.3.7.6 and Table R404.1.2(9).
d. NR indicates no vertical reinforcement is required.
e. Deflection criterion is $L/240$, where L is the height of the basement wall in inches.
f. Interpolation is not permitted.
g. Where walls will retain 4 feet or more of unbalanced backfill, they shall be laterally supported at the top and bottom before backfilling.
h. See Section R404.1.3.2 for minimum reinforcement required for basement walls supporting above-grade concrete walls.
i. See Table R608.3 for tolerance from nominal thickness permitted for flat walls.
j. The use of this table shall be prohibited for soil classifications not shown.

❖ See the commentary to Section R404.1.3.2.

INTERNATIONAL CODE COUNCIL®
Copyright © 2015 ICC. ALL RIGHTS RESERVED. Accessed by David Dammon on Jun 21, 2017 12:30:52 PM pursuant to License Agreement with ICC. No further reproduction or distribution authorized. ANY UNAUTHORIZED REPRODUCTION OR DISTRIBUTION IS A VIOLATION OF THE FEDERAL COPYRIGHT ACT AND THE LICENSE AGREEMENT, AND SUBJECT TO CIVIL AND CRIMINAL PENALTIES THEREUNDER.

R404.1.3.2.2 Concrete foundation stem walls supporting light-frame above-grade walls. Concrete foundation stem walls that support light-frame above-grade walls shall be designed and constructed in accordance with this section.

1. Stem walls not laterally supported at top. Concrete stem walls that are not monolithic with slabs-on-ground or are not otherwise laterally supported by slabs-on-ground and retain 48 inches (1219 mm) or less of unbalanced fill, measured from the top of the wall, shall be constructed in accordance with Section R404.1.3. Foundation stem walls that retain more than 48 inches (1219 mm) of unbalanced fill, measured from the top of the wall, shall be designed in accordance with Sections R404.1.4 and R404.4.
2. Stem walls laterally supported at top. Concrete stem walls that are monolithic with slabs-on-ground or are otherwise laterally supported by slabs-on-ground shall be constructed in accordance with Section R404.1.3. Where the unbalanced backfill retained by the stem wall is greater than 48 inches (1219 mm), the connection between the stem wall and the slab-on-ground, and the portion of the slab-on-ground providing lateral support for the wall, shall be designed in accordance with PCA 100 or in accordance with accepted engineering practice.

❖ Stem walls supporting light-frame above-grade walls must meet the following:

- Constructed in accordance with Section R404.1.3.
- Not laterally supported at the top and unbalanced backfill greater than 48 inches (1219 mm), must be designed in accordance with Sections R404.1.1 and R404.4.
- Laterally supported at the top and unbalanced backfill greater than 48 inches (1219 mm), must be designed in accordance with PCA 100 or accepted engineering practice.

TABLE R404.1.2(5)
MINIMUM VERTICAL WALL REINFORCEMENT FOR 6-INCH WAFFLE-GRID BASEMENT WALLS[b, c, d, e, g, h, i, j]

MAXIMUM UNSUPPORTED WALL HEIGHT (feet)	MAXIMUM UNBALANCED BACKFILL HEIGHT[f] (feet)	MINIMUM VERTICAL REINFORCEMENT-BAR SIZE AND SPACING (inches)		
		Soil classes[a] and design lateral soil (psf per foot of depth)		
		GW, GP, SW, SP 30	GM, GC, SM, SM-SC and ML 45	SC, ML-CL and inorganic CL 60
8	4	4 @ 48	4 @ 46	6 @ 39
	5	4 @ 45	5 @ 46	6 @ 47
	6	5 @ 45	6 @ 40	DR
	7	6 @ 44	DR	DR
	8	6 @ 32	DR	DR
9	4	4 @ 48	4 @ 46	4 @ 37
	5	4 @ 42	5 @ 43	6 @ 44
	6	5 @ 41	6 @ 37	DR
	7	6 @ 39	DR	DR
	> 8	DR[i]	DR	DR
10	4	4 @ 48	4 @ 46	4 @ 35
	5	4 @ 40	5 @ 40	6 @ 41
	6	5 @ 38	6 @ 34	DR
	7	6 @ 36	DR	DR
	> 8	DR	DR	DR

For SI: 1 inch = 25.4 mm; 1 foot = 304.8 mm; 1 pound per square foot per foot = 0.1571 kPa^2/m, 1 pound per square inch = 6.895 kPa.

a. Soil classes are in accordance with the Unified Soil Classification System. Refer to Table R405.1.

b. Table values are based on reinforcing bars with a minimum yield strength of 60,000 psi concrete with a minimum specified compressive strength of 2,500 psi and vertical reinforcement being located at the centerline of the wall. See Section R404.1.3.3.7.2.

c. Maximum spacings shown are the values calculated for the specified bar size. Where the bar used is Grade 60 and the size specified in the table, the actual spacing in the wall shall not exceed a whole-number multiple of 12 inches (i.e., 12, 24, 36 and 48) that is less than or equal to the tabulated spacing. Vertical reinforcement with a yield strength of less than 60,000 psi and/or bars of a different size than specified in the table are permitted in accordance with Section R404.1.3.3.7.6 and Table R404.1.2(9).

d. Deflection criterion is $L/240$, where L is the height of the basement wall in inches.

e. Interpolation is not permitted.

f. Where walls will retain 4 feet or more of unbalanced backfill, they shall be laterally supported at the top and bottom before backfilling.

g. See Section R404.1.3.2 for minimum reinforcement required for basement walls supporting above-grade concrete walls.

h. See Table R608.3 for thicknesses and dimensions of waffle-grid walls.

i. DR means design is required in accordance with the applicable building code, or where there is no code, in accordance with ACI 318.

j. The use of this table shall be prohibited for soil classifications not shown.

❖ See the commentary to Section R404.1.3.2.

INTERNATIONAL CODE COUNCIL®
Copyright © 2015 ICC. ALL RIGHTS RESERVED. Accessed by David Dammon on Jun 21, 2017 12:30:52 PM pursuant to License Agreement with ICC. No further reproduction or distribution authorized. ANY UNAUTHORIZED REPRODUCTION OR DISTRIBUTION IS A VIOLATION OF THE FEDERAL COPYRIGHT ACT AND THE LICENSE AGREEMENT, AND SUBJECT TO CIVIL AND CRIMINAL PENALTIES THEREUNDER.

R404.1.3.3 Concrete, materials for concrete, and forms. Materials used in concrete, the concrete itself and forms shall conform to requirements of this section or ACI 318.

❖ Concrete, materials for concrete and forms must comply with this section or ACI 318.

R404.1.3.3.1 Compressive strength. The minimum specified compressive strength of concrete, f'_c, shall comply with Section R402.2 and shall be not less than 2,500 psi (17.2 MPa) at 28 days in buildings assigned to Seismic Design Category A, B or C and 3000 psi (20.5 MPa) in buildings assigned to Seismic Design Category D_0, D_1 or D_2.

❖ The minimum specified compressive strength of concrete of 2,500 psi (17.2 MPa) is based on the minimum current practice, which corresponds to minimum compressive strength permitted by ACI 318 and the code. Table R404.1.2(8) provides adjustment factors in the footnotes that recognize the benefits of using higher strength concrete. For all buildings assigned to Seismic Design Category D_0, D_1 or D_2, a minimum specified compressive strength of concrete of 3,000 psi (20.7 MPa) is required, which is consistent with Chapter 21 of ACI 318.

TABLE R404.1.2(6)
MINIMUM VERTICAL REINFORCEMENT FOR 8-INCH WAFFLE-GRID BASEMENT WALLS[b, c, d, e, f, h, i, j, k]

MAXIMUM UNSUPPORTED WALL HEIGHT (feet)	MAXIMUM UNBALANCED BACKFILL HEIGHT[g] (feet)	MINIMUM VERTICAL REINFORCEMENT-BAR SIZE AND SPACING (inches)		
		Soil classes[a] and design lateral soil (psf per foot of depth)		
		GW, GP, SW, SP 30	GM, GC, SM, SM-SC and ML 45	SC, ML-CL and inorganic CL 60
8	4	NR	NR	NR
	5	NR	5 @ 48	5 @ 46
	6	5 @ 48	5 @ 43	6 @ 45
	7	5 @ 46	6 @ 43	6 @ 31
	8	6 @ 48	6 @ 32	6 @ 23
9	4	NR	NR	NR
	5	NR	5 @ 47	5 @ 46
	6	5 @ 46	5 @ 39	6 @ 41
	7	5 @ 42	6 @ 38	6 @ 28
	8	6 @ 44	6 @ 28	6 @ 20
	9	6 @ 34	6 @ 21	DR
10	4	NR	NR	NR
	5	NR	5 @ 46	5 @ 44
	6	5 @ 46	5 @ 37	6 @ 38
	7	5 @ 38	6 @ 35	6 @ 25
	8	6 @ 39	6 @ 25	DR
	9	6 @ 30	DR	DR
	10	6 @ 24	DR	DR

For SI: 1 inch = 25.4 mm; 1 foot = 304.8 mm; 1 pound per square foot per foot = 0.1571 kPa^2/m, 1 pound per square inch = 6.895 kPa.
NR = Not required.

a. Soil classes are in accordance with the Unified Soil Classification System. Refer to Table R405.1.
b. Table values are based on reinforcing bars with a minimum yield strength of 60,000 psi concrete with a minimum specified compressive strength of 2,500 psi and vertical reinforcement being located at the centerline of the wall. See Section R404.1.3.3.7.2.
c. Maximum spacings shown are the values calculated for the specified bar size. Where the bar used is Grade 60 (420 MPa) and the size specified in the table, the actual spacing in the wall shall not exceed a whole-number multiple of 12 inches (i.e., 12, 24, 36 and 48) that is less than or equal to the tabulated spacing. Vertical reinforcement with a yield strength of less than 60,000 psi and/or bars of a different size than specified in the table are permitted in accordance with Section R404.1.3.3.7.6 and Table R404.1.2(9).
d. NR indicates no vertical reinforcement is required.
e. Deflection criterion is $L/240$, where L is the height of the basement wall in inches.
f. Interpolation shall not be permitted.
g. Where walls will retain 4 feet or more of unbalanced backfill, they shall be laterally supported at the top and bottom before backfilling.
h. See Section R404.1.3.2 for minimum reinforcement required for basement walls supporting above-grade concrete walls.
i. See Table R608.3 for thicknesses and dimensions of waffle-grid walls.
j. DR means design is required in accordance with the applicable building code, or where there is no code, in accordance with ACI 318.
k. The use of this table shall be prohibited for soil classifications not shown.

❖ See the commentary to Section R404.1.3.2.

INTERNATIONAL CODE COUNCIL®
Copyright © 2015 ICC. ALL RIGHTS RESERVED. Accessed by David Dammon on Jun 21, 2017 12:30:52 PM pursuant to License Agreement with ICC. No further reproduction or distribution authorized. ANY UNAUTHORIZED REPRODUCTION OR DISTRIBUTION IS A VIOLATION OF THE FEDERAL COPYRIGHT ACT AND THE LICENSE AGREEMENT, AND SUBJECT TO CIVIL AND CRIMINAL PENALTIES THEREUNDER.

R404.1.3.3.2 Concrete mixing and delivery. Mixing and delivery of concrete shall comply with ASTM C94 or ASTM C685.

❖ Concrete must be mixed and delivered in accordance with the requirements of *Specification for Ready-Mixed Concrete* (ASTM C94) or *Specification for Concrete Made by Volumetric Batching and Continuous Mixing* (ASTM C685). Test methods for uniformity of mixing are given in ASTM C94.

R404.1.3.3.3 Maximum aggregate size. The nominal maximum size of coarse aggregate shall not exceed one-fifth the narrowest distance between sides of forms, or three-fourths the clear spacing between reinforcing bars or between a bar and the side of the form.

Exception: When *approved*, these limitations shall not apply where removable forms are used and workability and methods of consolidation permit concrete to be placed without honeycombs or voids.

❖ The maximum aggregate size is based on requirements in ACI 318. These limitations on aggregate size are intended to result in concrete that can be placed such that it properly encases reinforcement and minimizes honeycombing and voids. The exception, which is also based on ACI 318, is limited to use with removable forms because proper placement and encasement of reinforcement can be verified through visual inspection after removal of forms.

TABLE R404.1.2(7)
MINIMUM VERTICAL REINFORCEMENT FOR 6-INCH (152 mm) SCREEN-GRID BASEMENT WALLS[b, c, d, e, g, h, i, j]

MAXIMUM UNSUPPORTED WALL HEIGHT (feet)	MAXIMUM UNBALANCED BACKFILL HEIGHT[f] (feet)	MINIMUM VERTICAL REINFORCEMENT-BAR SIZE AND SPACING (inches)		
		Soil classes[a] and design lateral soil (psf per foot of depth)		
		GW, GP, SW, SP 30	GM, GC, SM, SM-SC and ML 45	SC, ML-CL and inorganic CL 60
8	4	4 @ 48	4 @ 48	5 @ 43
	5	4 @ 48	5 @ 48	5 @ 37
	6	5 @ 48	6 @ 45	6 @ 32
	7	6 @ 48	DR	DR
	8	6 @ 36	DR	DR
9	4	4 @ 48	4 @ 48	4 @ 41
	5	4 @ 48	5 @ 48	6 @ 48
	6	5 @ 45	6 @ 41	DR
	7	6 @ 43	DR	DR
	> 8	DR	DR	DR
10	4	4 @ 48	4 @ 48	4 @ 39
	5	4 @ 44	5 @ 44	6 @ 46
	6	5 @ 42	6 @ 38	DR
	7	6 @ 40	DR	DR
	> 8	DR	DR	DR

For SI: 1 inch = 25.4 mm; 1 foot = 304.8 mm; 1 pound per square foot per foot = 0.1571 kPa^2/m, 1 pound per square inch = 6.895 kPa.

a. Soil classes are in accordance with the Unified Soil Classification System. Refer to Table R405.1.

b. Table values are based on reinforcing bars with a minimum yield strength of 60,000 psi, concrete with a minimum specified compressive strength of 2,500 psi and vertical reinforcement being located at the centerline of the wall. See Section R404.1.3.3.7.2.

c. Maximum spacings shown are the values calculated for the specified bar size. Where the bar used is Grade 60 and the size specified in the table, the actual spacing in the wall shall not exceed a whole-number multiple of 12 inches (i.e., 12, 24, 36 and 48) that is less than or equal to the tabulated spacing. Vertical reinforcement with a yield strength of less than 60,000 psi and/or bars of a different size than specified in the table are permitted in accordance with Section R404.1.3.3.7.6 and Table R404.1.2(9).

d. Deflection criterion is $L/240$, where L is the height of the basement wall in inches.

e. Interpolation is not permitted.

f. Where walls will retain 4 feet or more of unbalanced backfill, they shall be laterally supported at the top and bottom before backfilling.

g. See Sections R404.1.3.2 for minimum reinforcement required for basement walls supporting above-grade concrete walls.

h. See Table R608.3 for thicknesses and dimensions of screen-grid walls.

i. DR means design is required in accordance with the applicable building code, or where there is no code, in accordance with ACI 318.

j. The use of this table shall be prohibited for soil classifications not shown.

❖ See the commentary to Section R404.1.3.2.

INTERNATIONAL CODE COUNCIL®
Copyright © 2015 ICC. ALL RIGHTS RESERVED. Accessed by David Dammon on Jun 21, 2017 12:30:52 PM pursuant to License Agreement with ICC. No further reproduction or distribution authorized. ANY UNAUTHORIZED REPRODUCTION OR DISTRIBUTION IS A VIOLATION OF THE FEDERAL COPYRIGHT ACT AND THE LICENSE AGREEMENT, AND SUBJECT TO CIVIL AND CRIMINAL PENALTIES THEREUNDER.

TABLE R404.1.2(8)
MINIMUM VERTICAL REINFORCEMENT FOR 6-, 8-, 10- AND 12-INCH NOMINAL FLAT BASEMENT WALLS[b, c, d, e, f, h, i, k, n, o]

MAXIMUM WALL HEIGHT (feet)	MAXIMUM UNBALANCED BACKFILL HEIGHT[g] (feet)	MINIMUM VERTICAL REINFORCEMENT-BAR SIZE AND SPACING (inches)											
		Soil classes[a] and design lateral soil (psf per foot of depth)											
		GW, GP, SW, SP 30				GM, GC, SM, SM-SC and ML 45				SC, ML-CL and inorganic CL 60			
		Minimum nominal wall thickness (inches)											
		6	8	10	12	6	8	10	12	6	8	10	12
5	4	NR	NR	NR	NR	NR	NR	NR	NR	NR	NR	NR	NR
	5	NR	NR	NR	NR	NR	NR	NR	NR	NR	NR	NR	NR
6	4	NR	NR	NR	NR	NR	NR	NR	NR	NR	NR	NR	NR
	5	NR	NR	NR	NR	NR	NR[l]	NR	NR	4 @ 35	NR[l]	NR	NR
	6	NR	NR	NR	NR	5 @ 48	NR	NR	NR	5 @ 36	NR	NR	NR
7	4	NR	NR	NR	NR	NR	NR	NR	NR	NR	NR	NR	NR
	5	NR	NR	NR	NR	NR	NR	NR	NR	5 @ 47	NR	NR	NR
	6	NR	NR	NR	NR	5 @ 42	NR	NR	NR	6 @ 43	5 @ 48	NR[l]	NR
	7	5 @ 46	NR	NR	NR	6 @ 42	5 @ 46	NR[l]	NR	6 @ 34	6 @ 48	NR	NR
8	4	NR	NR	NR	NR	NR	NR	NR	NR	NR	NR	NR	NR
	5	NR	NR	NR	NR	4 @ 38	NR[l]	NR	NR	5 @ 43	NR	NR	NR
	6	4 @ 37	NR[l]	NR	NR	5 @ 37	NR	NR	NR	6 @ 37	5 @ 43	NR[l]	NR
	7	5 @ 40	NR	NR	NR	6 @ 37	5 @ 41	NR[l]	NR	6 @ 34	6 @ 43	NR	NR
	8	6 @ 43	5 @ 47	NR[l]	NR	6 @ 34	6 @ 43	NR	NR	6 @ 27	6 @ 32	6 @ 44	NR
9	4	NR	NR	NR	NR	NR	NR	NR	NR	NR	NR	NR	NR
	5	NR	NR	NR	NR	4 @ 35	NR[l]	NR	NR	5 @ 40	NR	NR	NR
	6	4 @ 34	NR[l]	NR	NR	6 @ 48	NR	NR	NR	6 @ 36	6 @ 39	NR[l]	NR
	7	5 @ 36	NR	NR	NR	6 @ 34	5 @ 37	NR	NR	6 @ 33	6 @ 38	5 @ 37	NR[l]
	8	6 @ 38	5 @ 41	NR[l]	NR	6 @ 33	6 @ 38	5 @ 37	NR[l]	6 @ 24	6 @ 29	6 @ 39	4 @ 48[m]
	9	6 @ 34	6 @ 46	NR	NR	6 @ 26	6 @ 30	6 @ 41	NR	6 @ 19	6 @ 23	6 @ 30	6 @ 39
10	4	NR	NR	NR	NR	NR	NR	NR	NR	NR	NR	NR	NR
	5	NR	NR	NR	NR	4 @ 33	NR[l]	NR	NR	5 @ 38	NR	NR	NR
	6	5 @ 48	NR[l]	NR	NR	6 @ 45	NR	NR	NR	6 @ 34	5 @ 37	NR	NR
	7	6 @ 47	NR	NR	NR	6 @ 34	6 @ 48	NR	NR	6 @ 30	6 @ 35	6 @ 48	NR[l]
	8	6 @ 34	5 @ 38	NR	NR	6 @ 30	6 @ 34	6 @ 47	NR[l]	6 @ 22	6 @ 26	6 @ 35	6 @ 45[m]
	9	6 @ 34	6 @ 41	4 @ 48	NR[l]	6 @ 23	6 @ 27	6 @ 35	4 @ 48[m]	DR	6 @ 22	6 @ 27	6 @ 34
	10	6 @ 28	6 @ 33	6 @ 45	NR	DR[j]	6 @ 23	6 @ 29	6 @ 38	DR	6 @ 22	6 @ 22	6 @ 28

For SI: 1 inch = 25.4 mm; 1 foot = 304.8 mm; 1 pound per square foot per foot = 0.1571 kPa^2/m, 1 pound per square inch = 6.895 kPa.
NR = Not required.

a. Soil classes are in accordance with the Unified Soil Classification System. Refer to Table R405.1.
b. Table values are based on reinforcing bars with a minimum yield strength of 60,000 psi.
c. Vertical reinforcement with a yield strength of less than 60,000 psi and/or bars of a different size than specified in the table are permitted in accordance with Section R404.1.3.3.7.6 and Table R404.1.2(9).
d. NR indicates no vertical wall reinforcement is required, except for 6-inch nominal walls formed with stay-in-place forming systems in which case vertical reinforcement shall be No. 4@48 inches on center.
e. Allowable deflection criterion is $L/240$, where L is the unsupported height of the basement wall in inches.
f. Interpolation is not permitted.
g. Where walls will retain 4 feet or more of unbalanced backfill, they shall be laterally supported at the top and bottom before backfilling.
h. Vertical reinforcement shall be located to provide a cover of $1^1/_4$ inches measured from the inside face of the wall. The center of the steel shall not vary from the specified location by more than the greater of 10 percent of the wall thickness or $^3/_8$ inch.
i. Concrete cover for reinforcement measured from the inside face of the wall shall be not less than $^3/_4$ inch. Concrete cover for reinforcement measured from the outside face of the wall shall be not less than $1^1/_2$ inches for No. 5 bars and smaller, and not less than 2 inches for larger bars.
j. DR means design is required in accordance with the applicable building code, or where there is no code, in accordance with ACI 318.
k. Concrete shall have a specified compressive strength, f'_c, of not less than 2,500 psi at 28 days, unless a higher strength is required by Footnote l or m.
l. The minimum thickness is permitted to be reduced 2 inches, provided the minimum specified compressive strength of concrete, f'_c, is 4,000 psi.
m. A plain concrete wall with a minimum nominal thickness of 12 inches is permitted, provided minimum specified compressive strength of concrete, f'_c, is 3,500 psi.
n. See Table R608.3 for tolerance from nominal thickness permitted for flat walls.
o. The use of this table shall be prohibited for soil classifications not shown.

❖ See the commentary to Section R404.1.3.2.

INTERNATIONAL CODE COUNCIL®
Copyright © 2015 ICC. ALL RIGHTS RESERVED. Accessed by David Dammon on Jun 21, 2017 12:30:52 PM pursuant to License Agreement with ICC. No further reproduction or distribution authorized. ANY UNAUTHORIZED REPRODUCTION OR DISTRIBUTION IS A VIOLATION OF THE FEDERAL COPYRIGHT ACT AND THE LICENSE AGREEMENT, AND SUBJECT TO CIVIL AND CRIMINAL PENALTIES THEREUNDER.

TABLE R404.1.2(9)
MINIMUM SPACING FOR ALTERNATE BAR SIZE AND/OR ALTERNATE GRADE OF STEEL[a, b, c]

BAR SPACING FROM APPLICABLE TABLE IN SECTION R404.1.3.2 (inches)	BAR SIZE FROM APPLICABLE TABLE IN SECTION R404.1.3.2															
	#4					#5					#6					
	Alternate bar size and/or alternate grade of steel desired															
	Grade 60		Grade 40			Grade 60		Grade 40			Grade 60		Grade 40			
	#5	#6	#4	#5	#6	#4	#6	#4	#5	#6	#4	#5	#4	#5	#6	
	Maximum spacing for alternate bar size and/or alternate grade of steel (inches)															
8	12	18	5	8	12	5	11	3	5	8	4	6	2	4	5	
9	14	20	6	9	13	6	13	4	6	9	4	6	3	4	6	
10	16	22	7	10	15	6	14	4	7	9	5	7	3	5	7	
11	17	24	7	11	16	7	16	5	7	10	5	8	3	5	7	
12	19	26	8	12	18	8	17	5	8	11	5	8	4	6	8	
13	20	29	9	13	19	8	18	6	9	12	6	9	4	6	9	
14	22	31	9	14	21	9	20	6	9	13	6	10	4	7	9	
15	23	33	10	16	22	10	21	6	10	14	7	11	5	7	10	
16	25	35	11	17	23	10	23	7	11	15	7	11	5	8	11	
17	26	37	11	18	25	11	24	7	11	16	8	12	5	8	11	
18	28	40	12	19	26	12	26	8	12	17	8	13	5	8	12	
19	29	42	13	20	28	12	27	8	13	18	9	13	6	9	13	
20	31	44	13	21	29	13	28	9	13	19	9	14	6	9	13	
21	33	46	14	22	31	14	30	9	14	20	10	15	6	10	14	
22	34	48	15	23	32	14	31	9	15	21	10	16	7	10	15	
23	36	48	15	24	34	15	33	10	15	22	10	16	7	11	15	
24	37	48	16	25	35	15	34	10	16	23	11	17	7	11	16	
25	39	48	17	26	37	16	35	11	17	24	11	18	8	12	17	
26	40	48	17	27	38	17	37	11	17	25	12	18	8	12	17	
27	42	48	18	28	40	17	38	12	18	26	12	19	8	13	18	
28	43	48	19	29	41	18	40	12	19	26	13	20	8	13	19	
29	45	48	19	30	43	19	41	12	19	27	13	20	9	14	19	
30	47	48	20	31	44	19	43	13	20	28	14	21	9	14	20	
31	48	48	21	32	45	20	44	13	21	29	14	22	9	15	21	
32	48	48	21	33	47	21	45	14	21	30	15	23	10	15	21	
33	48	48	22	34	48	21	47	14	22	31	15	23	10	16	22	
34	48	48	23	35	48	22	48	15	23	32	15	24	10	16	23	
35	48	48	23	36	48	23	48	15	23	33	16	25	11	16	23	
36	48	48	24	37	48	23	48	15	24	34	16	25	11	17	24	
37	48	48	25	38	48	24	48	16	25	35	17	26	11	17	25	
38	48	48	25	39	48	25	48	16	25	36	17	27	12	18	25	
39	48	48	26	40	48	25	48	17	26	37	18	27	12	18	26	
40	48	48	27	41	48	26	48	17	27	38	18	28	12	19	27	
41	48	48	27	42	48	26	48	18	27	39	19	29	12	19	27	
42	48	48	28	43	48	27	48	18	28	40	19	30	13	20	28	
43	48	48	29	44	48	28	48	18	29	41	20	30	13	20	29	
44	48	48	29	45	48	28	48	19	29	42	20	31	13	21	29	
45	48	48	30	47	48	29	48	19	30	43	20	32	14	21	30	
46	48	48	31	48	48	30	48	20	31	44	21	32	14	22	31	
47	48	48	31	48	48	30	48	20	31	44	21	33	14	22	31	
48	48	48	32	48	48	31	48	21	32	45	22	34	15	23	32	

For SI: 1 inch = 25.4 mm, 1 pound per square inch = 6.895 kPa.

a. This table is for use with tables in Section R404.1.3.2 that specify the minimum bar size and maximum spacing of vertical wall reinforcement for foundation walls and above-grade walls. Reinforcement specified in tables in Section R404.1.3.2 is based on Grade 60 steel reinforcement.

b. Bar spacing shall not exceed 48 inches on center and shall be not less than one-half the nominal wall thickness.

c. For Grade 50 steel bars (ASTM A996, Type R), use spacing for Grade 40 bars or interpolate between Grades 40 and 60.

❖ See the commentary to Section R404.1.3.2.

INTERNATIONAL CODE COUNCIL®
Copyright © 2015 ICC. ALL RIGHTS RESERVED. Accessed by David Dammon on Jun 21, 2017 12:30:52 PM pursuant to License Agreement with ICC. No further reproduction or distribution authorized. ANY UNAUTHORIZED REPRODUCTION OR DISTRIBUTION IS A VIOLATION OF THE FEDERAL COPYRIGHT ACT AND THE LICENSE AGREEMENT, AND SUBJECT TO CIVIL AND CRIMINAL PENALTIES THEREUNDER.

R404.1.3.3.4 Proportioning and slump of concrete. Proportions of materials for concrete shall be established to provide workability and consistency to permit concrete to be worked readily into forms and around reinforcement under conditions of placement to be employed, without segregation or excessive bleeding. Slump of concrete placed in removable forms shall not exceed 6 inches (152 mm).

Exception: When *approved*, the slump is permitted to exceed 6 inches (152 mm) for concrete mixtures that are resistant to segregation, and are in accordance with the form manufacturer's recommendations.

Slump of concrete placed in stay-in-place forms shall exceed 6 inches (152 mm). Slump of concrete shall be determined in accordance with ASTM C143.

❖ The maximum slump requirements are based on current practice. Considerations included in the prescribed maximums are ease of placement, ability to fill cavities thoroughly and limiting the pressures exerted on the form by fresh concrete.

Where removable wall forms are used, maximum slump of concrete is 6 inches (152 mm). The maximum slump is based on experience with ease of placement, ability to fill cavities thoroughly and limiting the pressures exerted on the form by fresh concrete. The 6-inch (152 mm) maximum slump refers to the characteristics of the specified mixture proportions based on water/cementitious materials ratio only. The exception envisions the use of mid-range or high-range water-reducing admixtures to increase the slump above 6 inches (152 mm), since their use does not adversely affect the tendency of the aggregate to segregate.

The minimum slump requirement for walls cast in stay-in-place forms must be greater than 6 inches (152 mm). It is important that the concrete mix design utilize proper materials in the proper proportions so that the specified strength is achieved at the specified slump [i.e., greater than 6 inches (152 mm)]. Ordering a concrete mix at a lower slump [e.g., 4 inches (102 mm)] and adding water at the job site to increase the slump to more than 6 inches (152 mm) will adversely affect the strength of the concrete, and possibly jeopardize the safety of the structure. Normally it would be expected that a concrete mixture with a specified slump in excess of 6 inches (152 mm) would contain mid-range or high-range water-reducing admixtures so as to mitigate the possibility of segregation of the aggregate.

R404.1.3.3.5 Consolidation of concrete. Concrete shall be consolidated by suitable means during placement and shall be worked around embedded items and reinforcement and into corners of forms. Where stay-in-place forms are used, concrete shall be consolidated by internal vibration.

Exception: When *approved* for concrete to be placed in stay-in-place forms, self-consolidating concrete mixtures with slumps equal to or greater than 8 inches (203 mm) that are specifically designed for placement without internal vibration need not be internally vibrated.

❖ Where stay-in-place forms are used, concrete must be consolidated by internal vibration. A study by PCA determined that internal vibration is required for standard mix design with a slump between 4 inches (102 mm) and 8 inches (203 mm). Two of the mixtures were intended to be used without internal vibration and good results were obtained with both. One mixture utilized a high-range water-reducing admixture to achieve a slump between 8 inches (203 mm) and 10 inches (254 mm). The other contained a high-range water-reducing admixture and a viscosity-modifying admixture to achieve a self-consolidating concrete (SCC) with a slump in excess of 8 inches (203 mm). Slumps in excess of 8 inches (103 mm) should not be obtained by the use of water alone since segregation is likely.

R404.1.3.3.6 Form materials and form ties. Forms shall be made of wood, steel, aluminum, plastic, a composite of cement and foam insulation, a composite of cement and wood chips, or other *approved* material suitable for supporting and containing concrete. Forms shall provide sufficient strength to contain concrete during the concrete placement operation.

Form ties shall be steel, solid plastic, foam plastic, a composite of cement and wood chips, a composite of cement and foam plastic, or other suitable material capable of resisting the forces created by fluid pressure of fresh concrete.

❖ The materials listed are based on currently available removable and stay-in-place forming systems. From a structural design standpoint, the material can be anything that has sufficient strength and durability to contain the concrete during pouring and curing.

R404.1.3.3.6.1 Stay-in-place forms. Stay-in-place concrete forms shall comply with this section.

1. Surface burning characteristics. The flame-spread index and smoke-developed index of forming material, other than foam plastic, left exposed on the interior shall comply with Section R302. The surface burning characteristics of foam plastic used in insulating concrete forms shall comply with Section R316.3.
2. Interior covering. Stay-in-place forms constructed of rigid foam plastic shall be protected on the interior of the building as required by Section R316. Where gypsum board is used to protect the foam plastic, it shall be installed with a mechanical fastening system. Use of adhesives in addition to mechanical fasteners is permitted.
3. Exterior wall covering. Stay-in-place forms constructed of rigid foam plastics shall be protected from sunlight and physical damage by the application of an approved exterior wall covering complying with this code. Exterior surfaces of other stay-in-place forming systems shall be protected in accordance with this code.
4. Termite protection. In areas where the probability of termite infestation is "very heavy" as indicated by Table R301.2(1) or Figure R301.2(6), foam plastic insulation shall be permitted below grade on foundation walls in accordance with Section R318.4.
5. Flat ICF wall system forms shall conform to ASTM E2634.

❖ Materials that stay in place after concrete cures must be able to withstand the rigors of the environment.

INTERNATIONAL CODE COUNCIL®
Copyright © 2015 ICC. ALL RIGHTS RESERVED. Accessed by David Dammon on Jun 21, 2017 12:30:52 PM pursuant to License Agreement with ICC. No further reproduction or distribution authorized. ANY UNAUTHORIZED REPRODUCTION OR DISTRIBUTION IS A VIOLATION OF THE FEDERAL COPYRIGHT ACT AND THE LICENSE AGREEMENT, AND SUBJECT TO CIVIL AND CRIMINAL PENALTIES THEREUNDER.

From a thermal standpoint, most stay-in-place form systems and some removable form systems that incorporate insulation into the wall before the concrete is placed provide enough insulating value to meet code requirements. However, some forming systems will require the addition of insulation to the interior or exterior of the concrete wall to meet code requirements for insulating value. The form material, except foam plastic, can be anything that meets the flame spread and smoke-developed indices of Section R302. Foam plastic must comply with Section R316.3. Covering foam plastic that would otherwise be exposed to the interior of the building must comply with Section R316. Adhesively attaching the gypsum board to the foam plastic as the only means of fastening is not permitted out of concern that when the adhesive is exposed to higher temperatures expected in a fire, it may soften and allow the gypsum board to delaminate from the foam plastic.

It is generally accepted that a monolithic concrete wall is a solid wall through which water and air cannot readily flow; however, there is a possibility that the concrete wall may have drying shrinkage cracks through which water may enter. Small gaps between stay-in-place form blocks are inherent in current screen-grid stay-in-place form walls and may allow water to enter the structure. As a result, a moisture barrier on the exterior face of the stay-in-place form wall is generally required and should be considered minimum acceptable practice. See the requirements for concrete wall dampproofing and waterproofing in Sections R405 and R406.

Where the termite hazard is very heavy, foam plastic insulation may be installed below grade only if installed on the interior or if all walls, floors and ceilings are noncombustible material or treated wood or in accordance with Section R318.1 (see commentary, Section R403.3.4). Flat insulating concrete form (ICF) wall systems must comply with ASTM E2634.

R404.1.3.3.7 Reinforcement.

❖ This section prescribes the requirements for steel reinforcement for concrete foundation walls.

R404.1.3.3.7.1 Steel reinforcement. Steel reinforcement shall comply with the requirements of ASTM A615, A706, or A996. ASTM A996 bars produced from rail steel shall be Type R. In buildings assigned to Seismic Design Category A, B or C, the minimum yield strength of reinforcing steel shall be 40,000 psi (Grade 40) (276 MPa). In buildings assigned to Seismic Design Category D_0, D_1 or D_2, reinforcing steel shall comply with the requirements of ASTM A706 for low-alloy steel with a minimum yield strength of 60,000 psi (Grade 60) (414 MPa).

❖ The types of steel reinforcement permitted by this section are consistent with ACI 318. Type R is specified for ASTM A996 (rail steel) because the ASTM standard permits two designations. The type designated R is specified because it is the only one of the two that complies with the more stringent bend requirements of ACI 318. ASTM A615 Grade 60(420 MPa) reinforcing steel that complies with the additional criteria of Section 21.2.5 of ACI 318, or ASTM A706 (low-alloy) Grade 60 (420 MPa) reinforcing steel is required in all buildings assigned to Seismic Design Category D_0, D_1 or D_2 for improved ductility. This too is consistent with ACI 318.

R404.1.3.3.7.2 Location of reinforcement in wall. The center of vertical reinforcement in *basement* walls determined from Tables R404.1.2(2) through R404.1.2(7) shall be located at the centerline of the wall. Vertical reinforcement in *basement* walls determined from Table R404.1.2(8) shall be located to provide a maximum cover of $1^1/_4$ inches (32 mm) measured from the inside face of the wall. Regardless of the table used to determine vertical wall reinforcement, the center of the steel shall not vary from the specified location by more than the greater of 10 percent of the wall thickness and $^3/_8$ inch (10 mm). Horizontal and vertical reinforcement shall be located in foundation walls to provide the minimum cover required by Section R404.1.3.3.7.4.

❖ The amount of reinforcement required by Tables R404.1.2(2) through R404.1.2(7) for a given condition of wall type, height, backfill height and design lateral soil load was computed based on the centroid of the vertical reinforcement being at the center of the wall. In engineering terms, the effective depth, d, is one-half the wall thickness. Table R404.1.2(8) is based on the vertical reinforcement being placed with a cover of 1.25 inches (32 mm) from the inside face of the wall. This greatly increases the effective depth, d, for the thicker walls, thus significantly increasing the moment strength for a given amount of reinforcement. Use of Table R404.1.2(8) is restricted to situations where there are 4 feet (1.2 m) or more of unbalanced backfill to ensure that moment-reversal caused by outward acting wind pressure does not control the design. The vertical reinforcement must be placed within a tolerance of the larger of 10 percent of the wall thickness and $^3/_8$ inch (10 mm). The latter criterion is based on the tolerance on d in ACI 318 for members with effective depth, d, less than or equal to 8 inches (203 mm).

R404.1.3.3.7.3 Wall openings. Vertical wall reinforcement required by Section R404.1.3.2 that is interrupted by wall openings shall have additional vertical reinforcement of the same size placed within 12 inches (305 mm) of each side of the opening.

❖ If a wall opening interrupts reinforcement, additional reinforcement of equivalent area must be provided. Although the code does not elaborate, a good practice is to distribute this equivalent reinforcing symmetrically on either side of the opening.

R404.1.3.3.7.4 Support and cover. Reinforcement shall be secured in the proper location in the forms with tie wire or other bar support system to prevent displacement during the concrete placement operation. Steel reinforcement in concrete cast against the earth shall have a minimum cover of 3 inches (75 mm). Minimum cover for reinforcement in concrete cast in removable forms that will be exposed to the earth or weather shall be $1^1/_2$ inches (38 mm) for No. 5 bars and smaller, and 2 inches (50 mm) for No. 6 bars and larger. For concrete cast in removable forms that will not be exposed to

INTERNATIONAL CODE COUNCIL®
Copyright © 2015 ICC. ALL RIGHTS RESERVED. Accessed by David Dammon on Jun 21, 2017 12:30:52 PM pursuant to License Agreement with ICC. No further reproduction or distribution authorized. ANY UNAUTHORIZED REPRODUCTION OR DISTRIBUTION IS A VIOLATION OF THE FEDERAL COPYRIGHT ACT AND THE LICENSE AGREEMENT, AND SUBJECT TO CIVIL AND CRIMINAL PENALTIES THEREUNDER.

the earth or weather, and for concrete cast in stay-in-place forms, minimum cover shall be $^3/_4$ inch (19 mm). The minus tolerance for cover shall not exceed the smaller of one-third the required cover or $^3/_8$ inch (10 mm).

❖ Reinforcement should be adequately supported in the forms to prevent displacement by concrete placement or workers. Concrete cover as protection of reinforcement against weather and other effects is measured from the concrete surface to the outermost surface of the steel to which the cover requirement applies. The condition "concrete surfaces exposed to earth or weather" refers to direct exposure to moisture changes and not just to temperature changes. Stay-in-place forms provide an alternative method of protection from earth or weather and the minimum cover for concrete not exposed to weather or earth is allowed. The tolerance for cover is based on ACI 318 requirements.

R404.1.3.3.7.5 Lap splices. Vertical and horizontal wall reinforcement shall be the longest lengths practical. Where splices are necessary in reinforcement, the length of lap splice shall be in accordance with Table R608.5.4.(1) and Figure R608.5.4(1). The maximum gap between noncontact parallel bars at a lap splice shall not exceed the smaller of one-fifth the required lap length and 6 inches (152 mm) [See Figure R608.5.4(1)].

❖ Where continuous bars are not provided, lap splices are necessary to allow forces to be transferred between sections of rebar. The length of lap splices in Table R608.5.4(1) is based on ACI 318 requirements. Noncontact lap splices are permitted provided the spacing of lapped bars does not exceed the smaller of one-fifth the required lap length or 6 inches (152 mm). If individual bars in nonconcact lap splices are too widely spaced, an unreinforced section is created. Forcing a potential crack to follow a zigzag line (5:1 slope) is considered a minimum precaution. These requirements are based on ACI 318. Figure R608.5.4(1) illustrates the code text requirements.

R404.1.3.3.7.6 Alternate grade of reinforcement and spacing. Where tables in Section R404.1.3.2 specify vertical wall reinforcement based on minimum bar size and maximum spacing, which are based on Grade 60 (414 MPa) steel reinforcement, different size bars or bars made from a different grade of steel are permitted provided an equivalent area of steel per linear foot of wall is provided. Use of Table R404.1.2(9) is permitted to determine the maximum bar spacing for different bar sizes than specified in the tables or bars made from a different grade of steel. Bars shall not be spaced less than one-half the wall thickness, or more than 48 inches (1219 mm) on center.

❖ See the commentary to Section R404.1.3.2.

R404.1.3.3.7.7 Standard hooks. Where reinforcement is required by this code to terminate with a standard hook, the hook shall comply with Section R608.5.4.5 and Figure R608.5.4(3).

❖ The hook requirements shown in Figure R608.5.4(3) are consistent with the ACI 318 requirements.

R404.1.3.3.7.8 Construction joint reinforcement. Construction joints in foundation walls shall be made and located to not impair the strength of the wall. Construction joints in plain concrete walls, including walls required to have not less than No. 4 bars at 48 inches (1219 mm) on center by Sections R404.1.3.2 and R404.1.4.2, shall be located at points of lateral support, and a minimum of one No. 4 bar shall extend across the construction joint at a spacing not to exceed 24 inches (610 mm) on center. Construction joint reinforcement shall have a minimum of 12 inches (305 mm) embedment on both sides of the joint. Construction joints in reinforced concrete walls shall be located in the middle third of the span between lateral supports, or located and constructed as required for joints in plain concrete walls.

Exception: Use of vertical wall reinforcement required by this code is permitted in lieu of construction joint reinforcement provided the spacing does not exceed 24 inches (610 mm), or the combination of wall reinforcement and No.4 bars described above does not exceed 24 inches (610 mm).

❖ Construction joints must be located where they will cause the least weakness in the structure. The reinforcement required by this section is required to provide for transfer of shear and other forces through the construction joint. These provisions are consistent with ACI 318.

R404.1.3.3.8 Exterior wall coverings. Requirements for installation of masonry veneer, stucco and other wall coverings on the exterior of concrete walls and other construction details not covered in this section shall comply with the requirements of this code.

❖ The commentary to exterior wall coverings is contained in the commentary to Chapter 7 of the code.

R404.1.3.4 Requirements for Seismic Design Category C. Concrete foundation walls supporting above-grade concrete walls in townhouses assigned to Seismic Design Category C shall comply with ACI 318, ACI 332 or PCA 100 (see Section R404.1.3).

❖ See the commentary to Section R404.1.3.

R404.1.4 Seismic Design Category D_0, D_1 or D_2.

❖ This section provides the requirement for masonry and concrete foundation walls in Seismic Design Category D_0, D_1 or D_2.

R404.1.4.1 Masonry foundation walls. In buildings assigned to Seismic Design Category D_0, D_1 or D_2, as established in Table R301.2(1), masonry foundation walls shall comply with this section. In addition to the requirements of Table R404.1.1(1), plain masonry foundation walls shall comply with the following:

1. Wall height shall not exceed 8 feet (2438 mm).
2. Unbalanced backfill height shall not exceed 4 feet (1219 mm).
3. Minimum nominal thickness for plain masonry foundation walls shall be 8 inches (203 mm).
4. Masonry stem walls shall have a minimum vertical reinforcement of one No. 4 (No. 13) bar located a maximum of 4 feet (1219 mm) on center in grouted cells.

INTERNATIONAL CODE COUNCIL®
Copyright © 2015 ICC. ALL RIGHTS RESERVED. Accessed by David Dammon on Jun 21, 2017 12:30:52 PM pursuant to License Agreement with ICC. No further reproduction or distribution authorized. ANY UNAUTHORIZED REPRODUCTION OR DISTRIBUTION IS A VIOLATION OF THE FEDERAL COPYRIGHT ACT AND THE LICENSE AGREEMENT, AND SUBJECT TO CIVIL AND CRIMINAL PENALTIES THEREUNDER.

Vertical reinforcement shall be tied to the horizontal reinforcement in the footings.

Foundation walls, supporting more than 4 feet (1219 mm) of unbalanced backfill or exceeding 8 feet (2438 mm) in height shall be constructed in accordance with Table R404.1.1(2), R404.1.1(3) or R404.1.1(4). Masonry foundation walls shall have two No. 4 (No. 13) horizontal bars located in the upper 12 inches (305 mm) of the wall.

❖ This section places four restrictions on the requirements in Table R404.1.1(1) for plain masonry foundation walls in Seismic Design Category D_0, D_1 or D_2.

The code requires minimum vertical reinforcement of masonry stem walls in order for them to resist lateral earthquake forces. Any wall over 8 feet (2338 mm) or supporting more than 4 feet (1219 mm) of unbalanced backfill must be constructed with minimum vertical reinforcement in accordance with Tables R404.1.1(2) through R404.1.1(4) and have the specified longitudinal reinforcement.

R404.1.4.2 Concrete foundation walls. In buildings assigned to Seismic Design Category D_0, D_1 or D_2, as established in Table R301.2(1), concrete foundation walls that support light-frame walls shall comply with this section, and concrete foundation walls that support above-grade concrete walls shall comply with ACI 318, ACI 332 or PCA 100 (see Section R404.1.3). In addition to the horizontal reinforcement required by Table R404.1.2(1), plain concrete walls supporting light-frame walls shall comply with the following.

1. Wall height shall not exceed 8 feet (2438 mm).
2. Unbalanced backfill height shall not exceed 4 feet (1219 mm).
3. Minimum thickness for plain concrete foundation walls shall be 7.5 inches (191 mm) except that 6 inches (152 mm) is permitted where the maximum wall height is 4 feet, 6 inches (1372 mm).

Foundation walls less than 7.5 inches (191 mm) in thickness, supporting more than 4 feet (1219 mm) of unbalanced backfill or exceeding 8 feet (2438 mm) in height shall be provided with horizontal reinforcement in accordance with Table R404.1.2(1), and vertical reinforcement in accordance with Table R404.1.2(2), R404.1.2(3), R404.1.2(4), R404.1.2(5), R404.1.2(6), R404.1.2(7) or R404.1.2(8). Where Tables R404.1.2(2) through R404.1.2(8) permit plain concrete walls, not less than No. 4 (No. 13) vertical bars at a spacing not exceeding 48 inches (1219 mm) shall be provided.

❖ This section contains the provisions for concrete foundation walls supporting light-frame construction in Seismic Design Category D_0, D_1 or D_2. Concrete foundation walls supporting above-grade concrete walls must comply with ACI 318, ACI 332 or PCA 100.

In addition to the horizontal reinforcing, this section places three restrictions on the use of plain concrete foundation walls in Seismic Design Category D_0, D_1 or D_2.

Any wall over 8 feet (2338 mm) or supporting more than 4 feet (1219 mm) of unbalanced backfill must be constructed with minimum vertical reinforcement in accordance with Tables R404.1.2(2) through R404.1.2(8). Where no vertical reinforcement is required in Tables R404.1.2(2) through R404.1.2(8), No. 4 vertical bars at 48 inches on center are required.

R404.1.5 Foundation wall thickness based on walls supported. The thickness of masonry or concrete foundation walls shall be not less than that required by Section R404.1.5.1 or R404.1.5.2, respectively.

❖ This section provides the requirement for minimum thickness of masonry and concrete foundation walls.

R404.1.5.1 Masonry wall thickness. Masonry foundation walls shall be not bless than the thickness of the wall supported, except that masonry foundation walls of at least 8-inch (203 mm) nominal thickness shall be permitted under brick veneered frame walls and under 10-inch-wide (254 mm) cavity walls where the total height of the wall supported, including gables, is not more than 20 feet (6096 mm), provided the requirements of Section R404.1.1 are met.

❖ Other than the two exceptions noted, masonry foundation walls should be equal to or greater than the thickness of the wall supported. The first exception permits brick veneered frame wall to be supported on 8-inch (203 mm) nominal thickness foundation walls. The second exception permits 10-inch-wide (254 mm) cavity walls with total height, including gables, of 20 feet (6096 mm) maximum to be supported on 8-inch (203 mm) nominal thickness foundation walls.

R404.1.5.2 Concrete wall thickness. The thickness of concrete foundation walls shall be equal to or greater than the thickness of the wall in the *story* above. Concrete foundation walls with corbels, brackets or other projections built into the wall for support of masonry veneer or other purposes are not within the scope of the tables in this section.

Where a concrete foundation wall is reduced in thickness to provide a shelf for the support of masonry veneer, the reduced thickness shall be equal to or greater than the thickness of the wall in the *story* above. Vertical reinforcement for the foundation wall shall be based on Table R404.1.2(8) and located in the wall as required by Section R404.1.3.3.7.2 where that table is used. Vertical reinforcement shall be based on the thickness of the thinner portion of the wall.

Exception: Where the height of the reduced thickness portion measured to the underside of the floor assembly or sill plate above is less than or equal to 24 inches (610 mm) and the reduction in thickness does not exceed 4 inches (102 mm), the vertical reinforcement is permitted to be based on the thicker portion of the wall.

❖ Other than the reduced thickness for a shelf for masonry veneer, concrete foundation walls must be equal to or greater than the thickness of the wall in the story above.

It is common practice to reduce the thickness of foundation walls approximately 4 inches (102 mm) to form a shelf for the support of masonry veneer. Generally the shelf is not located at the floor assembly that provides lateral support for the top of the foundation wall. The exception permits the vertical reinforcement

INTERNATIONAL CODE COUNCIL®
Copyright © 2015 ICC. ALL RIGHTS RESERVED. Accessed by David Dammon on Jun 21, 2017 12:30:52 PM pursuant to License Agreement with ICC. No further reproduction or distribution authorized. ANY UNAUTHORIZED REPRODUCTION OR DISTRIBUTION IS A VIOLATION OF THE FEDERAL COPYRIGHT ACT AND THE LICENSE AGREEMENT, AND SUBJECT TO CIVIL AND CRIMINAL PENALTIES THEREUNDER.

for the foundation wall to be based on the thicker portion of the wall provided the shelf is located not more than 24 inches (610 mm) below the underside of the floor assembly and the reduction in thickness does not exceed 4 inches (104 mm). This assures that the location of the reduction in thickness is not near the point of maximum moment, which for a foundation wall is generally in the lower one-half of the wall height.

R404.1.5.3 Pier and curtain wall foundations. Use of pier and curtain wall foundations shall be permitted to support light-frame construction not more than two stories in height, provided the following requirements are met:

1. All load-bearing walls shall be placed on continuous concrete footings placed integrally with the exterior wall footings.
2. The minimum actual thickness of a load-bearing masonry wall shall be not less than 4 inches (102 mm) nominal or $3^3/_8$ inches (92 mm) actual thickness, and shall be bonded integrally with piers spaced in accordance with Section R606.6.4.
3. Piers shall be constructed in accordance with Sections R606.7 and R606.7.1, and shall be bonded into the load-bearing masonry wall in accordance with Section R606.13.1 or R606.13.1.1.
4. The maximum height of a 4-inch (102 mm) load-bearing masonry foundation wall supporting wood-frame walls and floors shall be not more than 4 feet (1219 mm).
5. Anchorage shall be in accordance with Section R403.1.6, Figure R404.1.5(1), or as specified by engineered design accepted by the *building official*.
6. The unbalanced fill for 4-inch (102 mm) foundation walls shall not exceed 24 inches (610 mm) for solid masonry or 12 inches (305 mm) for hollow masonry.
7. In Seismic Design Categories D_0, D_1 and D_2, prescriptive reinforcement shall be provided in the horizontal and vertical direction. Provide minimum horizontal joint reinforcement of two No. 9 gage wires spaced not less than 6 inches (152 mm) or one $^1/_4$-inch-diameter (6.4 mm) wire at 10 inches (254 mm) on center vertically. Provide minimum vertical reinforcement of one No. 4 bar at 48 inches (1220 mm) on center horizontally grouted in place.

❖ Pier and curtain wall foundations may be used to support light-frame construction for buildings in Seismic Design Category A, B, C, D_0, D_1 or D_2, provided several conditions are met. A curtain wall typically refers to a nonload-bearing wall, but within the limits established in this section, it may be used to support up to two stories of light-frame construction. Four-inch (102 mm) nominal masonry walls are limited to 4 feet (1219 mm) in height so that a thin wall does not fail laterally due to the vertical loads on the wall. In addition, no more than 2 feet (610 mm) of unbalanced fill is permitted for solid masonry and 1 foot (305 mm) of unbalanced fill for hollow masonry to prevent failure due to the pressures created by unbalanced fill. Additional requirements are shown in Figure R404.1.5(1). This type of foundation wall must be reinforced when located in Seismic Design Category D_0, D_1 or D_2.

R404.1.6 Height above finished grade. Concrete and masonry foundation walls shall extend above the finished *grade* adjacent to the foundation at all points a minimum of 4 inches (102 mm) where masonry veneer is used and a minimum of 6 inches (152 mm) elsewhere.

❖ The minimum distance above adjacent grade to which the foundation must be extended provides termite protection and minimizes the chance of decay resulting from moisture migrating to the wood framing. A reduced foundation extension is permitted when masonry veneer is used.

R404.1.7 Backfill placement. Backfill shall not be placed against the wall until the wall has sufficient strength and has been anchored to the floor above, or has been sufficiently braced to prevent damage by the backfill.

Exception: Bracing is not required for walls supporting less than 4 feet (1219 mm) of unbalanced backfill.

❖ Backfilling should not begin until a foundation wall is in suitable condition to resist lateral earth pressure. The wall must have sufficient strength, and the floor framing system should be in place and anchored to the foundation wall as shown in Commentary Figure R404.1.7 to minimize the chance of damage to the foundation wall resulting from placement of backfill against the foundation wall.

R404.1.8 Rubble stone masonry. Rubble stone masonry foundation walls shall have a minimum thickness of 16 inches (406 mm), shall not support an unbalanced backfill exceeding 8 feet (2438 mm) in height, shall not support a soil pressure greater than 30 pounds per square foot per foot (4.71 kPa/m), and shall not be constructed in Seismic Design Categories D_0, D_1, D_2 or townhouses in Seismic Design Category C, as established in Figure R301.2(2).

❖ Rubble stone masonry is masonry walls constructed of roughly shaped stones. See the definitions in the IBC. Rubble stone masonry is almost never used for foundation walls. This type of wall construction is permitted only in Seismic Design Category A or B, and detached one- and two-family dwelling in Seismic Design Category C. Furthermore, it is restricted to a maximum unbalanced backfill height of 8 feet (2438 mm) and must not be subjected to lateral soil pressures more than 30 pounds per square foot (1436 Pa).

INTERNATIONAL CODE COUNCIL®
Copyright © 2015 ICC. ALL RIGHTS RESERVED. Accessed by David Dammon on Jun 21, 2017 12:30:52 PM pursuant to License Agreement with ICC. No further reproduction or distribution authorized. ANY UNAUTHORIZED REPRODUCTION OR DISTRIBUTION IS A VIOLATION OF THE FEDERAL COPYRIGHT ACT AND THE LICENSE AGREEMENT, AND SUBJECT TO CIVIL AND CRIMINAL PENALTIES THEREUNDER.

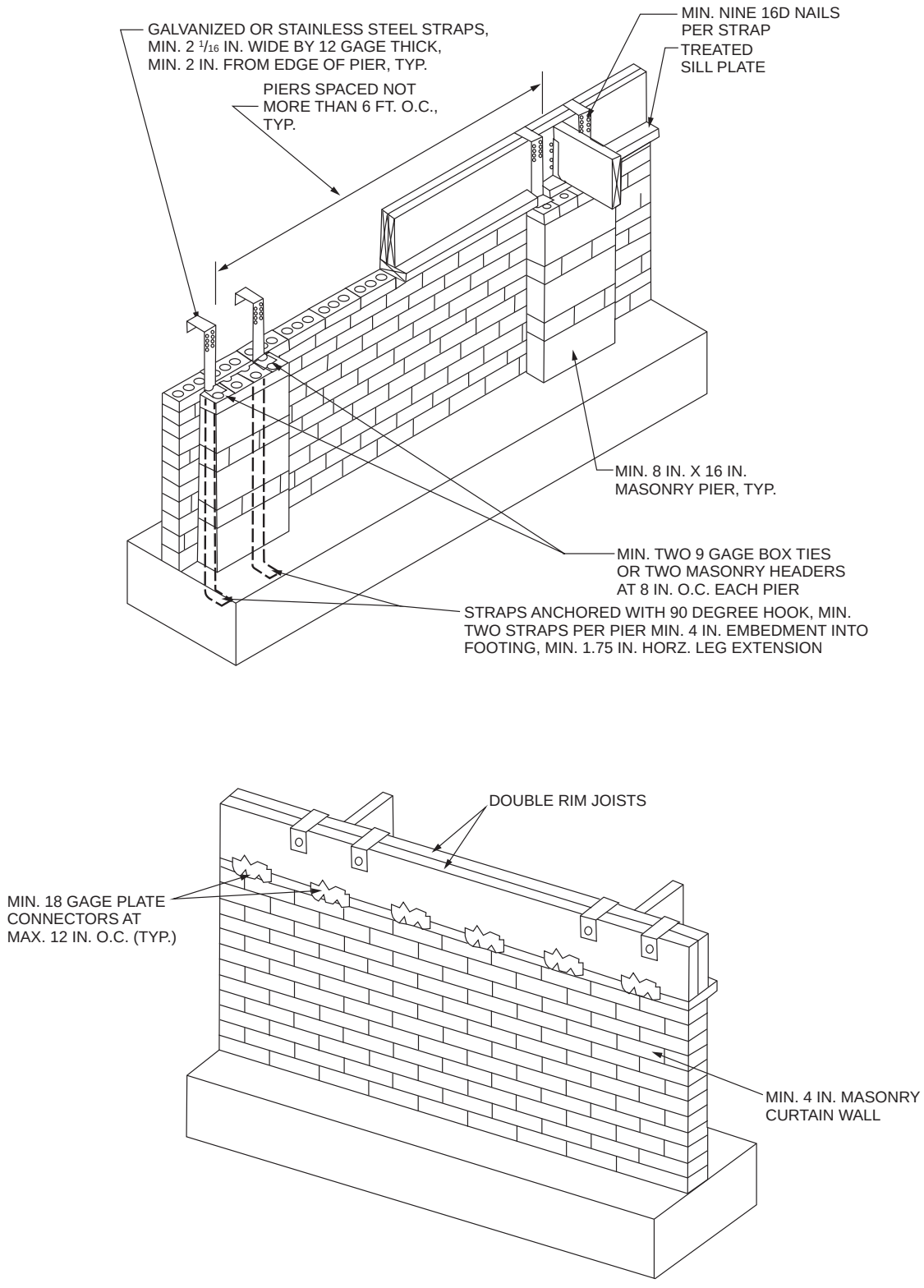

For SI: 1 inch = 25.4 mm, 1 foot = 304.8 mm, 1 degree = 0.0175 rad.

FIGURE R404.1.5(1)
FOUNDATION WALL CLAY MASONRY CURTAIN WALL WITH CONCRETE MASONRY PIERS

❖ This figure illustrates several requirements for pier and curtain wall foundations described in Section R404.1.5.3. The pier spacing of not more than 6 feet, 0 inches (1829 mm) on center establishes minimum lateral (horizontal) wall support similar to that of Section R606.6.4 (also see the commentary to Section R404.1.5.3).

INTERNATIONAL CODE COUNCIL®
Copyright © 2015 ICC. ALL RIGHTS RESERVED. Accessed by David Dammon on Jun 21, 2017 12:30:52 PM pursuant to License Agreement with ICC. No further reproduction or distribution authorized. ANY UNAUTHORIZED REPRODUCTION OR DISTRIBUTION IS A VIOLATION OF THE FEDERAL COPYRIGHT ACT AND THE LICENSE AGREEMENT, AND SUBJECT TO CIVIL AND CRIMINAL PENALTIES THEREUNDER.

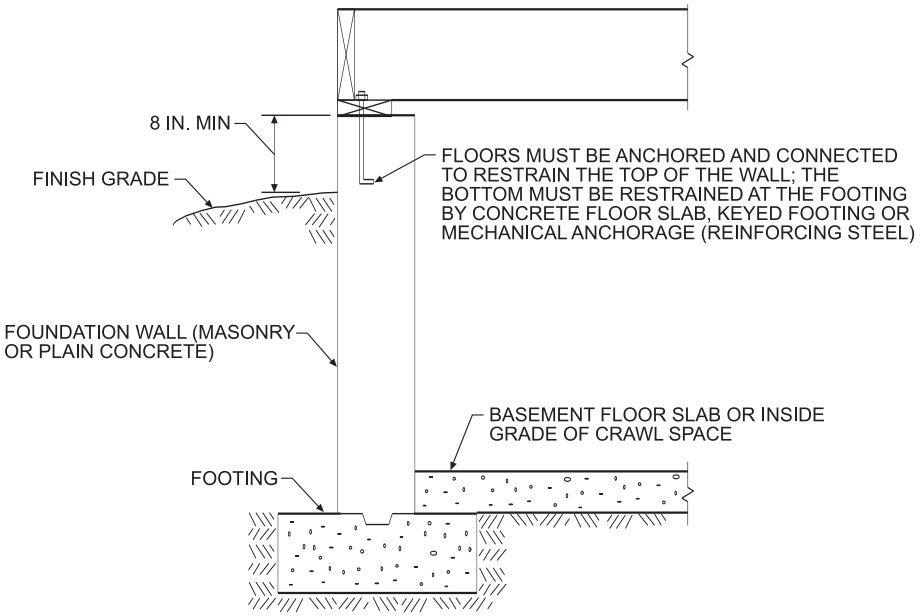

Figure R404.1.7
BEARING FOUNDATION WALLS AGAINST LATERAL EARTH PRESSURE

R404.1.9 Isolated masonry piers. Isolated masonry piers shall be constructed in accordance with this section and the general masonry construction requirements of Section R606. Hollow masonry piers shall have a minimum nominal thickness of 8 inches (203 mm), with a nominal height not exceeding four times the nominal thickness and a nominal length not exceeding three times the nominal thickness. Where hollow masonry units are solidly filled with concrete or grout, piers shall be permitted to have a nominal height not exceeding ten times the nominal thickness. Footings for isolated masonry piers shall be sized in accordance with Section R403.1.1.

❖ Installing masonry pier foundations is a common construction method. This section provides prescriptive requirements for isolated masonry piers used as foundations for raised wood floor systems.

The requirements of this section provide prescriptive guidance for isolated masonry piers constructed inside a basement or crawl space. The requirements of Section R404.1.9 are based on the empirical design limits contained in the TMS 402/ACI 530/ASCE 5. The language is adopted from the paragraph on foundation piers in the National Concrete Masonry Association's (NCMA) TEK Note 5-3A, *Concrete Masonry Foundation Wall Details*. Further limits are provided for piers supporting floor girders, braced wall panels and for piers in high-seismic or flood-hazard areas. Taller masonry piers supporting an elevated deck, sunroom or other substantially raised portion of a dwelling are relegated to engineered design.

R404.1.9.1 Pier cap. Hollow masonry piers shall be capped with 4 inches (102 mm) of solid masonry or concrete, a masonry cap block, or shall have cavities of the top course filled with concrete or grout. Where required, termite protection for the pier cap shall be provided in accordance with Section R318.

❖ See the commentary to Section R404.1.9.

R404.1.9.2 Masonry piers supporting floor girders. Masonry piers supporting wood girders sized in accordance with Tables R602.7(1) and R602.7(2) shall be permitted in accordance with this section. Piers supporting girders for interior bearing walls shall have a minimum nominal dimension of 12 inches (305 mm) and a maximum height of 10 feet (3048 mm) from top of footing to bottom of sill plate or girder. Piers supporting girders for exterior bearing walls shall have a minimum nominal dimension of 12 inches (305 mm) and a maximum height of 4 feet (1220 mm) from top of footing to bottom of sill plate or girder. Girders and sill plates shall be anchored to the pier or footing in accordance with Section R403.1.6 or Figure R404.1.5(1). Floor girder bearing shall be in accordance with Section R502.6.

❖ See the commentary to Section R404.1.9.

R404.1.9.3 Masonry piers supporting braced wall panels. Masonry piers supporting *braced wall panels* shall be designed in accordance with accepted engineering practice.

❖ See the commentary to Section R404.1.9.

R404.1.9.4 Seismic design of masonry piers. Masonry piers in *dwellings* located in Seismic Design Category D_0, D_1 or D_2, and townhouses in Seismic Design Category C, shall be designed in accordance with accepted engineering practice.

❖ See the commentary to Section R404.1.9.

R404.1.9.5 Masonry piers in flood hazard areas. Masonry piers for *dwellings* in flood hazard areas shall be designed in accordance with Section R322.

❖ See the commentary to Section R404.1.9.

INTERNATIONAL CODE COUNCIL®
Copyright © 2015 ICC. ALL RIGHTS RESERVED. Accessed by David Dammon on Jun 21, 2017 12:30:52 PM pursuant to License Agreement with ICC. No further reproduction or distribution authorized. ANY UNAUTHORIZED REPRODUCTION OR DISTRIBUTION IS A VIOLATION OF THE FEDERAL COPYRIGHT ACT AND THE LICENSE AGREEMENT, AND SUBJECT TO CIVIL AND CRIMINAL PENALTIES THEREUNDER.

R404.2 Wood foundation walls. Wood foundation walls shall be constructed in accordance with the provisions of Sections R404.2.1 through R404.2.6 and with the details shown in Figures R403.1(2) and R403.1(3).

❖ This section covers the design and installation of a multicomponent wood foundation system. The construction is essentially a below-grade load-bearing wood frame system that serves not only as the enclosure for basements and crawl spaces but also as the structural foundation for the support of light-frame structures. See Figures R403.1(2) and R403.1(3) for typical installation details for wood foundation walls (also see commentary, Section R401.1).

Certain cold-weather precautions should be taken during the installation of the wood foundation system. The composite footing consisting of a wood plate supported on a bed of stone or sand fill should not be placed on frozen ground. While the bottom of the wood plate footing would normally be placed below the frost line (i.e., basement construction) under certain drainage conditions, AWC PWF permits the wood plate to be set above the frost level. The code official should verify that such an alternative design satisfies the intent of the code. Also important is the use of proper sealants during very cold weather. All manufacturers of sealants and bonding agents impose temperature restrictions on the use of their products. Only sealants and bonding agents specifically produced for cold weather conditions should be used.

R404.2.1 Identification. Load-bearing lumber shall be identified by the grade *mark* of a lumber grading or inspection agency which has been *approved* by an accreditation body that complies with DOC PS 20. In lieu of a grade *mark*, a certificate of inspection issued by a lumber grading or inspection agency meeting the requirements of this section shall be accepted. Wood structural panels shall conform to DOC PS 1 or DOC PS 2 and shall be identified by a grade *mark* or certificate of inspection issued by an *approved agency*.

❖ See the commentary to Sections R502.1 and R503.2.1 as well as Figures R502.1 and R503.2.1.

R404.2.2 Stud size. The studs used in foundation walls shall be 2-inch by 6-inch (51 mm by 152 mm) members. When spaced 16 inches (406 mm) on center, a wood species with an F_b value of not less than 1,250 pounds per square inch (8619 kPa) as listed in ANSI AWC NDS shall be used. When spaced 12 inches (305 mm) on center, an F_b of not less than 875 psi (6033 kPa) shall be required.

❖ This section specifies the minimum bending stress, F_b, for studs based on their spacing in a foundation wall. The appropriate wood species that meet this requirement can be found in the supplement to the ANSI/AWC NDS *National Design Specification for Wood Construction*.

R404.2.3 Height of backfill. For wood foundations that are not designed and installed in accordance with AWC PWF, the height of backfill against a foundation wall shall not exceed 4 feet (1219 mm). When the height of fill is more than 12 inches (305 mm) above the interior *grade* of a crawl space or floor of a *basement*, the thickness of the plywood sheathing shall meet the requirements of Table R404.2.3.

❖ Table R404.2.3 specifies requirements for plywood based on height of backfill and plywood span (stud spacing) where the height of retained earth is more than 12 inches (305 mm) [see Figure R403.1(2)]. The backfill limits of Table R404.2.3 do not apply to wood foundations designed and installed in accordance with AWC PWF.

R404.2.4 Backfilling. Wood foundation walls shall not be backfilled until the *basement* floor and first floor have been constructed or the walls have been braced. For crawl space construction, backfill or bracing shall be installed on the interior of the walls prior to placing backfill on the exterior.

❖ These provisions require that lateral support be in place prior to backfilling on the exterior.

R404.2.5 Drainage and dampproofing. Wood foundation basements shall be drained and dampproofed in accordance with Sections R405 and R406, respectively.

❖ See Sections R405.2 and R406.3 of this commentary.

R404.2.6 Fastening. Wood structural panel foundation wall sheathing shall be attached to framing in accordance with Table R602.3(1) and Section R402.1.1.

❖ The fastening schedule must be followed for wall sheathing attachment. Also see the commentary to Section R402.1.1.

R404.3 Wood sill plates. Wood sill plates shall be a minimum of 2-inch by 4-inch (51 mm by 102 mm) nominal lumber. Sill plate anchorage shall be in accordance with Sections R403.1.6 and R602.11.

❖ Minimum 2-inch by 4-inch (51 mm by 102 mm) nominal sill plates are required, and should be anchored to the foundation as required by Section R403.1.6.

R404.4 Retaining walls. Retaining walls that are not laterally supported at the top and that retain in excess of 48 inches (1219 mm) of unbalanced fill, or retaining walls exceeding 24 inches (610 mm) in height that resist lateral loads in addition to soil, shall be designed in accordance with accepted engineering practice to ensure stability against overturning, sliding, excessive foundation pressure and water uplift. Retaining walls shall be designed for a safety factor of 1.5 against lateral sliding and overturning. This section shall not apply to foundation walls supporting buildings.

❖ This section provides design considerations for a retaining wall that retains in excess of 48 inches (610 mm) of unbalanced fill or retaining walls exceeding 24 inches in height that resist additional lateral loads such as vehicle surcharges or structures built on top of the wall that are subject to wind loads.The lateral pressure of the soil against the retaining wall is greatly influenced by soil moisture. Backfill is usually kept from being saturated for an extended length of time by placing drains near the base of the retaining wall to remove the water in the soil behind it.

INTERNATIONAL CODE COUNCIL®
Copyright © 2015 ICC. ALL RIGHTS RESERVED. Accessed by David Dammon on Jun 21, 2017 12:30:52 PM pursuant to License Agreement with ICC. No further reproduction or distribution authorized. ANY UNAUTHORIZED REPRODUCTION OR DISTRIBUTION IS A VIOLATION OF THE FEDERAL COPYRIGHT ACT AND THE LICENSE AGREEMENT, AND SUBJECT TO CIVIL AND CRIMINAL PENALTIES THEREUNDER.

R404.5 Precast concrete foundation walls.

❖ This section prescribes the design, drawings and identification requirements for precast concrete foundation walls.

R404.5.1 Design. Precast concrete foundation walls shall be designed in accordance with accepted engineering practice. The design and manufacture of precast concrete foundation wall panels shall comply with the materials requirements of Section R402.3 or ACI 318. The panel design drawings shall be prepared by a registered design professional where required by the statutes of the *jurisdiction* in which the project is to be constructed in accordance with Section R106.1.

❖ This section prescribes the minimum design and manufacture requirement for precast concrete foundation walls. The material required must comply with ACI 318 or Section R402.3 (see commentary, Section R402.3).

R404.5.2 Precast concrete foundation design drawings. Precast concrete foundation wall design drawings shall be submitted to the *building official* and *approved* prior to installation. Drawings shall include, at a minimum, the following information:

1. Design loading as applicable.
2. Footing design and material.
3. Concentrated loads and their points of application.
4. Soil bearing capacity.
5. Maximum allowable total uniform load.
6. Seismic design category.
7. Basic wind speed.

❖ This section prescribes the minimum design requirement for precast concrete foundations and must be shown on the design drawings that are submitted to the building official. Precast foundation systems are engineered products based on several design approaches including, but not limited to, stud and cavity, solid wall panel, composite panel and hollow core systems. This section provides minimum performance design criteria that all precast concrete foundation systems must meet.

TABLE R404.2.3
PLYWOOD GRADE AND THICKNESS FOR WOOD FOUNDATION CONSTRUCTION (30 pcf equivalent-fluid weight soil pressure)

HEIGHT OF FILL (inches)	STUD SPACING (inches)	FACE GRAIN ACROSS STUDS			FACE GRAIN PARALLEL TO STUDS		
		Grade[a]	Minimum thickness (inches)	Span rating	Grade[a]	Minimum thickness (inches)[b, c]	Span rating
24	12	B	15/32	32/16	A	15/32	32/16
					B	15/32 c	32/16
	16	B	15/32	32/16	A	15/32 c	32/16
					B	19/32 c (4, 5 ply)	40/20
36	12	B	15/32	32/16	A	15/32	32/16
					B	15/32 c (4, 5 ply)	32/16
					B	19/32 (4, 5 ply)	40/20
	16	B	15/32 c	32/16	A	19/32	40/20
					B	23/32	48/24
48	12	B	15/32	32/16	A	15/32 c	32/16
					B	19/32 c (4, 5 ply)	40/20
	16	B	19/32	40/20	A	19/32 c	40/20
					A	23/32	48/24

For SI: 1 inch = 25.4 mm, 1 foot = 304.8 mm, 1 pound per cubic foot = 0.1572 kN/m^3.

a. Plywood shall be of the following minimum grades in accordance with DOC PS 1 or DOC PS 2:
   1. DOC PS 1 Plywood grades marked:
      1.1. Structural I C-D (Exposure 1).
      1.2. C-D (Exposure 1).
   2. DOC PS 2 Plywood grades marked:
      2.1. Structural I Sheathing (Exposure 1).
      2.2. Sheathing (Exposure 1).
   3. Where a major portion of the wall is exposed above ground and a better appearance is desired, the following plywood grades marked exterior are suitable:
      3.1. Structural I A-C, Structural I B-C or Structural I C-C (Plugged) in accordance with DOC PS 1.
      3.2. A-C Group 1, B-C Group 1, C-C (Plugged) Group 1 or MDO Group 1 in accordance with DOC PS 1.
      3.3. Single Floor in accordance with DOC PS 1 or DOC PS 2.

b. Minimum thickness 15/32 inch, except crawl space sheathing shall have not less than 3/8 inch for face grain across studs 16 inches on center and maximum 2-foot depth of unequal fill.

c. For this fill height, thickness and grade combination, panels that are continuous over less than three spans (across less than three stud spacings) require blocking 16 inches above the bottom plate. Offset adjacent blocks and fasten through studs with two 16d corrosion-resistant nails at each end.

❖ This table specifies the minimum grade and thickness of plywood based on the height of retained earth (fill) and the plywood span (see the commentary to Section R404.2.3).

INTERNATIONAL CODE COUNCIL®
Copyright © 2015 ICC. ALL RIGHTS RESERVED. Accessed by David Dammon on Jun 21, 2017 12:30:52 PM pursuant to License Agreement with ICC. No further reproduction or distribution authorized. ANY UNAUTHORIZED REPRODUCTION OR DISTRIBUTION IS A VIOLATION OF THE FEDERAL COPYRIGHT ACT AND THE LICENSE AGREEMENT, AND SUBJECT TO CIVIL AND CRIMINAL PENALTIES THEREUNDER.

R404.5.3 Identification. Precast concrete foundation wall panels shall be identified by a certificate of inspection *label* issued by an *approved* third-party inspection agency.

❖ This section requires identification by a certificate of inspection that should verify that precast foundation walls are designed to recognized engineering standards, manufactured in a plant under verified quality control, when installed will meet required performance criteria, and are neutral regarding the various design approaches and systems.

SECTION R405
FOUNDATION DRAINAGE

R405.1 Concrete or masonry foundations. Drains shall be provided around concrete or masonry foundations that retain earth and enclose habitable or usable spaces located below *grade*. Drainage tiles, gravel or crushed stone drains, perforated pipe or other *approved* systems or materials shall be installed at or below the area to be protected and shall discharge by gravity or mechanical means into an *approved* drainage system. Gravel or crushed stone drains shall extend not less than 1 foot (305 mm) beyond the outside edge of the footing and 6 inches (152 mm) above the top of the footing and be covered with an *approved* filter membrane material. The top of open joints of drain tiles shall be protected with strips of building paper. Except where otherwise recommended by the drain manufacturer, perforated drains shall be surrounded with an *approved* filter membrane or the filter membrane shall cover the washed gravel or crushed rock covering the drain. Drainage tiles or perforated pipe shall be placed on a minimum of 2 inches (51 mm) of washed gravel or crushed rock not less than one sieve size larger than the tile joint opening or perforation and covered with not less than 6 inches (152 mm) of the same material.

Exception: A drainage system is not required where the foundation is installed on well-drained ground or sand-gravel mixture soils according to the Unified Soil Classification System, Group I soils, as detailed in Table R405.1.

❖ To allow free groundwater that may be present adjacent to the foundation wall to be drained away, drains are usually placed around houses to remove water and prevent leakage into habitable or usable spaces below grade. The top of the gravel or crushed stone drain, with or without drainage tile or perforated pipe, must be covered with an approved filter membrane. Drainage tiles are extremely important in areas having moderate to heavy rainfall and in soils having a low percolation rate. Perforated pipe has perforations around the entire pipe. The perforations will be subject to clogging if not protected. Except where otherwise recommended by the drain manufacturer, the code requires an approved filter membrane to surround the perforated drain pipe. As an alternate the code permits the wash gravel or crushed stone covering the perforated pipe to be covered with an approved filter membrane. The filter membrane allows water to pass through the perimeter drain tiles or pipes without allowing, or at least greatly reducing, the possibility of fine soil materials entering the drainage system. A few examples of such systems are illustrated in Commentary Figures R405.1(1) and R405.1(2). The exception allows omission of the drainage system in Group I soils, which by definition exhibit good drainage characteristics as shown in Table R405.1.

R405.1.1 Precast concrete foundation. Precast concrete walls that retain earth and enclose habitable or useable space located below-*grade* that rest on crushed stone footings shall have a perforated drainage pipe installed below the base of the wall on either the interior or exterior side of the wall, not less than 1 foot (305 mm) beyond the edge of the wall. If the exterior drainage pipe is used, an *approved* filter membrane material shall cover the pipe. The drainage system shall discharge into an *approved* sewer system or to daylight.

❖ A perforated drainage pipe is required where crushed stone footing is used with precast concrete foundation walls that enclose habitable or usable space. It is important that the perforated drainage pipe be located at least 1 foot (305 mm) away from the edge of the wall. This is similar to the drainage requirement of Section R405.1 except it is limited to perforated drainage pipe and there is no exception for omission when installed in Group I soils.

R405.2 Wood foundations. Wood foundations enclosing habitable or usable spaces located below *grade* shall be adequately drained in accordance with Sections R405.2.1 through R405.2.3.

❖ As does Section R405.1, this section gives specific drainage requirements for wood foundations. Also refer to the commentary to Section R401.1.

R405.2.1 Base. A porous layer of gravel, crushed stone or coarse sand shall be placed to a minimum thickness of 4 inches (102 mm) under the *basement* floor. Provision shall be made for automatic draining of this layer and the gravel or crushed stone wall footings.

❖ See Figure R403.1(2). This requirement for drainage under the basement floor is similar to those in Sections R504.2.1 (wood floor) and R506.2.2 (concrete floor).

R405.2.2 Vapor retarder. A 6-mil-thick (0.15 mm) polyethylene vapor retarder shall be applied over the porous layer with the *basement* floor constructed over the polyethylene.

❖ See Figure R403.1(2). Also see the commentary to Section R506.2.3.

R405.2.3 Drainage system. In other than Group I soils, a sump shall be provided to drain the porous layer and footings. The sump shall be not less than 24 inches (610 mm) in diameter or 20 inches square (0.0129 m^2), shall extend not less than 24 inches (610 mm) below the bottom of the *basement* floor and shall be capable of positive gravity or mechanical drainage to remove any accumulated water. The drainage system shall discharge into an *approved* sewer system or to daylight.

❖ Except for Group I soils, which exhibit good drainage (see Table R405.1), a sump is necessary to drain the footing (see Section R403.2) and porous layer (see Section R405.2.1). Also see Figure R403.1(2).

INTERNATIONAL CODE COUNCIL®
Copyright © 2015 ICC. ALL RIGHTS RESERVED. Accessed by David Dammon on Jun 21, 2017 12:30:52 PM pursuant to License Agreement with ICC. No further reproduction or distribution authorized. ANY UNAUTHORIZED REPRODUCTION OR DISTRIBUTION IS A VIOLATION OF THE FEDERAL COPYRIGHT ACT AND THE LICENSE AGREEMENT, AND SUBJECT TO CIVIL AND CRIMINAL PENALTIES THEREUNDER.

TABLE R405.1
PROPERTIES OF SOILS CLASSIFIED ACCORDING TO THE UNIFIED SOIL CLASSIFICATION SYSTEM

SOIL GROUP	UNIFIED SOIL CLASSIFICATION SYSTEM SYMBOL	SOIL DESCRIPTION	DRAINAGE CHARACTERISTICS[a]	FROST HEAVE POTENTIAL	VOLUME CHANGE POTENTIAL EXPANSION[b]
Group I	GW	Well-graded gravels, gravel sand mixtures, little or no fines	Good	Low	Low
	GP	Poorly graded gravels or gravel sand mixtures, little or no fines	Good	Low	Low
	SW	Well-graded sands, gravelly sands, little or no fines	Good	Low	Low
	SP	Poorly graded sands or gravelly sands, little or no fines	Good	Low	Low
	GM	Silty gravels, gravel-sand-silt mixtures	Good	Medium	Low
	SM	Silty sand, sand-silt mixtures	Good	Medium	Low
Group II	GC	Clayey gravels, gravel-sand-clay mixtures	Medium	Medium	Low
	SC	Clayey sands, sand-clay mixture	Medium	Medium	Low
	ML	Inorganic silts and very fine sands, rock flour, silty or clayey fine sands or clayey silts with slight plasticity	Medium	High	Low
	CL	Inorganic clays of low to medium plasticity, gravelly clays, sandy clays, silty clays, lean clays	Medium	Medium	Medium to Low
Group III	CH	Inorganic clays of high plasticity, fat clays	Poor	Medium	High
	MH	Inorganic silts, micaceous or diatomaceous fine sandy or silty soils, elastic silts	Poor	High	High
Group IV	OL	Organic silts and organic silty clays of low plasticity	Poor	Medium	Medium
	OH	Organic clays of medium to high plasticity, organic silts	Unsatisfactory	Medium	High
	Pt	Peat and other highly organic soils	Unsatisfactory	Medium	High

For SI: 1 inch = 25.4 mm.

a. The percolation rate for good drainage is over 4 inches per hour, medium drainage is 2 inches to 4 inches per hour, and poor is less than 2 inches per hour.

b. Soils with a low potential expansion typically have a plasticity index (PI) of 0 to 15, soils with a medium potential expansion have a PI of 10 to 35 and soils with a high potential expansion have a PI greater than 20.

❖ This table provides soil properties based on the soil's classification in accordance with the United Soil Classification System. This method of identifying soil is determined in ASTM D2487, *Standard Classification of Soils for Engineering Purposes*. See the commentary to Section R405.1.

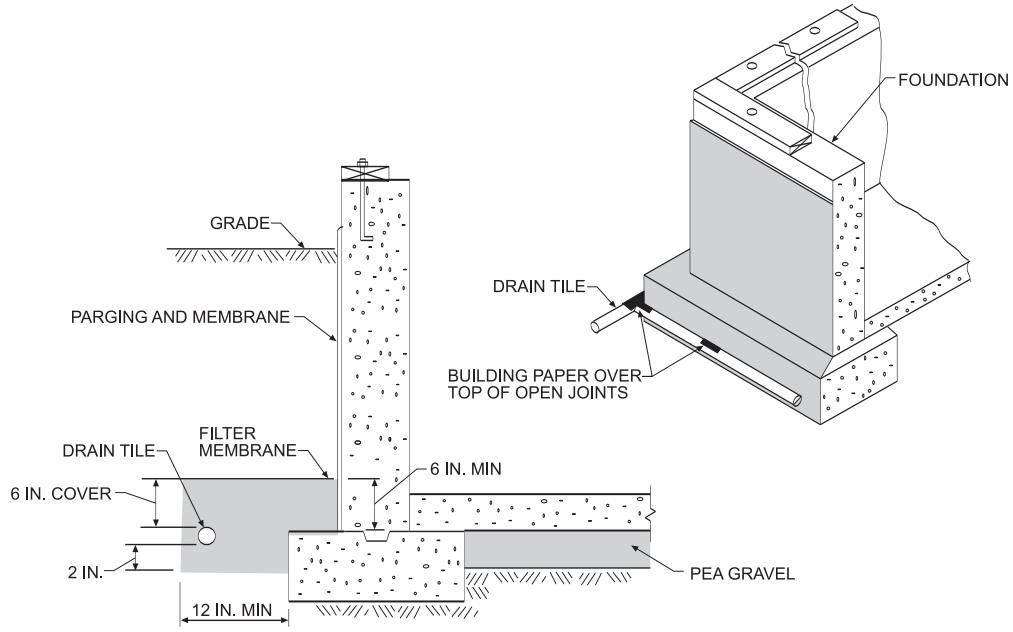

For SI: 1 inch = 25.4 mm.

Figure R405.1(1)
FOUNDATION DRAINAGE FOR HABITABLE SPACE BELOW GRADE

INTERNATIONAL CODE COUNCIL®
Copyright © 2015 ICC. ALL RIGHTS RESERVED. Accessed by David Dammon on Jun 21, 2017 12:30:52 PM pursuant to License Agreement with ICC. No further reproduction or distribution authorized. ANY UNAUTHORIZED REPRODUCTION OR DISTRIBUTION IS A VIOLATION OF THE FEDERAL COPYRIGHT ACT AND THE LICENSE AGREEMENT, AND SUBJECT TO CIVIL AND CRIMINAL PENALTIES THEREUNDER.

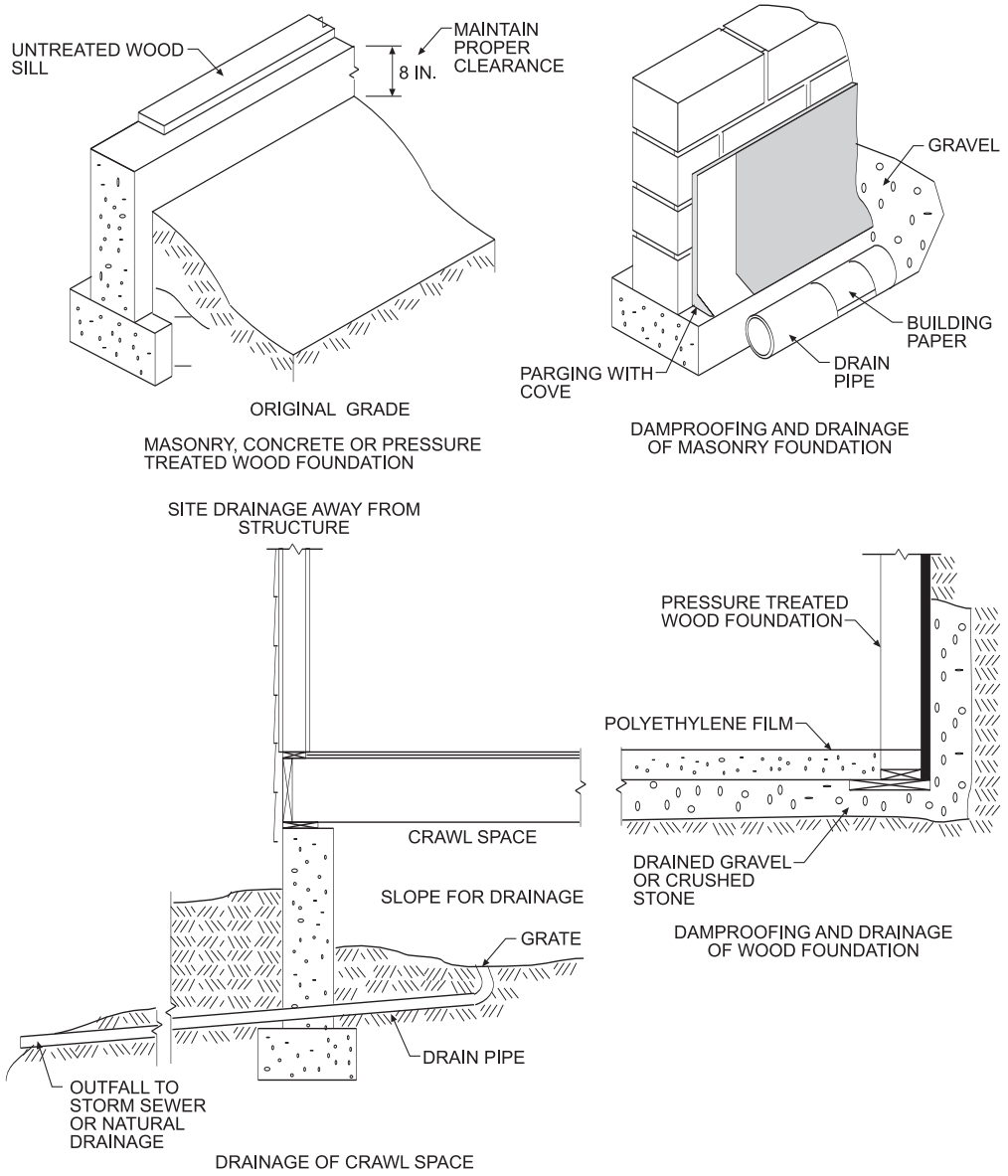

For SI: 1 inch = 25.4 mm.

Figure R405.1(2)
OTHER SUGGESTED METHODS OF FOUNDATION DRAINAGE

SECTION R406
FOUNDATION WATERPROOFING AND DAMPPROOFING

R406.1 Concrete and masonry foundation dampproofing. Except where required by Section R406.2 to be waterproofed, foundation walls that retain earth and enclose interior spaces and floors below *grade* shall be dampproofed from the higher of (a) the top of the footing or (b) 6 inches (152 mm) below the top of the basement floor, to the finished grade. Masonry walls shall have not less than $^3/_8$ inch (9.5 mm) portland cement parging applied to the exterior of the wall. The parging shall be dampproofed in accordance with one of the following:

1. Bituminous coating.
2. Three pounds per square yard (1.63 kg/m^2) of acrylic modified cement.
3. One-eighth-inch (3.2 mm) coat of surface-bonding cement complying with ASTM C887.
4. Any material permitted for waterproofing in Section R406.2.
5. Other *approved* methods or materials.

   Exception: Parging of unit masonry walls is not required where a material is approved for direct application to the masonry.

Concrete walls shall be dampproofed by applying any one of the listed dampproofing materials or any one of the waterproofing materials listed in Section R406.2 to the exterior of the wall.

❖ To minimize moisture in the form of water vapor from entering below-ground spaces from the outside, damp-

INTERNATIONAL CODE COUNCIL®
Copyright © 2015 ICC. ALL RIGHTS RESERVED. Accessed by David Dammon on Jun 21, 2017 12:30:52 PM pursuant to License Agreement with ICC. No further reproduction or distribution authorized. ANY UNAUTHORIZED REPRODUCTION OR DISTRIBUTION IS A VIOLATION OF THE FEDERAL COPYRIGHT ACT AND THE LICENSE AGREEMENT, AND SUBJECT TO CIVIL AND CRIMINAL PENALTIES THEREUNDER.

proofing of the exterior foundation walls is necessary, unless waterproofing is required by Section R406.2. Although the terms "waterproofing" and "dampproofing" both relate to moisture protection, they are sometimes misapplied in the sense that "waterproofing" is used when "dampproofing" is really meant. Dampproofing does not give the same degree of moisture protection as does waterproofing. Methods of dampproofing for masonry and concrete foundation walls are shown in Commentary Figures R406.1(1) and R406.1(2).

Dampproofing installations generally consist of the application of one or more coatings of impervious compounds that are intended to prevent the passage of water vapor through walls or other building elements. Dampproofing may also restrict the flow of water under slight pressure.

R406.2 Concrete and masonry foundation waterproofing. In areas where a high water table or other severe soil-water conditions are known to exist, exterior foundation walls that retain earth and enclose interior spaces and floors below *grade* shall be waterproofed from the higher of (a) the top of the footing or (b) 6 inches (152 mm) below the top of the basement floor, to the finished *grade*. Walls shall be waterproofed in accordance with one of the following:

1. Two-ply hot-mopped felts.
2. Fifty-five-pound (25 kg) roll roofing.
3. Six-mil (0.15 mm) polyvinyl chloride.
4. Six-mil (0.15 mm) polyethylene.
5. Forty-mil (1 mm) polymer-modified asphalt.
6. Sixty-mil (1.5 mm) flexible polymer cement.
7. One-eighth-inch (3 mm) cement-based, fiber-reinforced, waterproof coating.

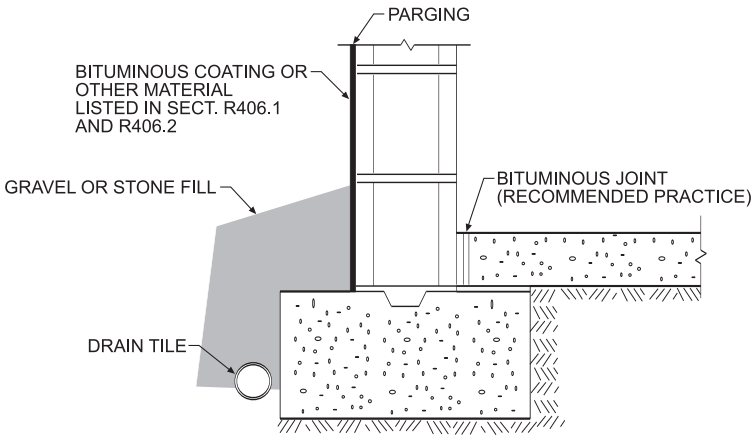

Figure R406.1(1)
DAMPPROOFING OF MASONRY FOUNDATION WALL
[see also Figure R405.1(1)]

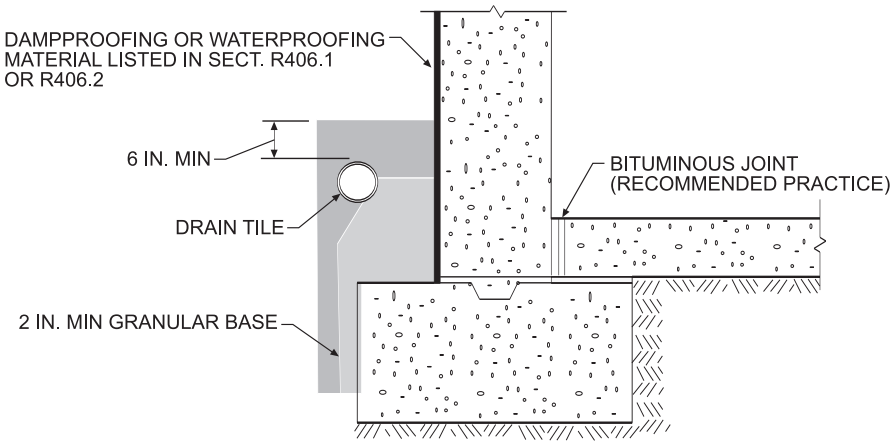

For SI: 1 inch = 25.4 mm.

Figure R406.1(2)
DAMPPROOFING OF CONCRETE FOUNDATION WALL
[see also Figure R405.1(1)]

INTERNATIONAL CODE COUNCIL®
Copyright © 2015 ICC. ALL RIGHTS RESERVED. Accessed by David Dammon on Jun 21, 2017 12:30:52 PM pursuant to License Agreement with ICC. No further reproduction or distribution authorized. ANY UNAUTHORIZED REPRODUCTION OR DISTRIBUTION IS A VIOLATION OF THE FEDERAL COPYRIGHT ACT AND THE LICENSE AGREEMENT, AND SUBJECT TO CIVIL AND CRIMINAL PENALTIES THEREUNDER.

8. Sixty-mil (1.5 mm) solvent-free liquid-applied synthetic rubber.

Exception: Organic-solvent-based products such as hydrocarbons, chlorinated hydrocarbons, ketones and esters shall not be used for ICF walls with expanded polystyrene form material. Use of plastic roofing cements, acrylic coatings, latex coatings, mortars and pargings to seal ICF walls is permitted. Cold-setting asphalt or hot asphalt shall conform to Type C of ASTM D449. Hot asphalt shall be applied at a temperature of less than 200°F (93°C).

All joints in membrane waterproofing shall be lapped and sealed with an adhesive compatible with the membrane.

❖ Foundation walls that retain earth and enclose interior spaces and floors and extend below ground water level (seasonal or otherwise) require a positive means of preventing moisture migration. Waterproofing installations consist of the application of a combination of sealing materials and impervious coatings used on walls or other building elements to prevent the passage of moisture in either a vapor or liquid form under conditions of significant hydrostatic pressure. Methods for waterproofing concrete and masonry foundation walls are shown in Commentary Figure R406.2.

R406.3 Dampproofing for wood foundations. Wood foundations enclosing habitable or usable spaces located below *grade* shall be dampproofed in accordance with Sections R406.3.1 through R406.3.4.

❖ The requirements for dampproofing wood foundation walls are shown in Figure R403.1(2). These requirements for sealing the plywood panel joints, installing a moisture barrier and installing porous fill can minimize the intrusion of water into a basement or usable space. Also refer to the commentary to Section R401.1.

R406.3.1 Panel joint sealed. Plywood panel joints in the foundation walls shall be sealed full length with a caulking compound capable of producing a moistureproof seal under the conditions of temperature and moisture content at which it will be applied and used.

❖ See the commentary to Section R406.3.

R406.3.2 Below-grade moisture barrier. A 6-mil-thick (0.15 mm) polyethylene film shall be applied over the below-*grade* portion of exterior foundation walls prior to backfilling. Joints in the polyethylene film shall be lapped 6 inches (152 mm) and sealed with adhesive. The top edge of the polyethylene film shall be bonded to the sheathing to form a seal. Film areas at *grade* level shall be protected from mechanical damage and exposure by a pressure-preservative treated lumber or plywood strip attached to the wall several inches above finished *grade* level and extending approximately 9 inches (229 mm) below *grade*. The joint between the strip and the wall shall be caulked full length prior to fastening the strip to the wall. Where approved, other coverings appropriate to the architectural treatment shall be permitted to be used. The polyethylene film shall extend down to the bottom of the wood footing plate but shall not overlap or extend into the gravel or crushed stone footing.

❖ See the commentary to Section R406.3.

R406.3.3 Porous fill. The space between the excavation and the foundation wall shall be backfilled with the same material used for footings, up to a height of 1 foot (305 mm) above the footing for well-drained sites, or one-half the total back-fill height for poorly drained sites. The porous fill shall be covered with strips of 30-pound (13.6 kg) asphalt paper or 6-mil (0.15 mm) polyethylene to permit water seepage while avoiding infiltration of fine soils.

❖ See the commentary to Section R406.3.

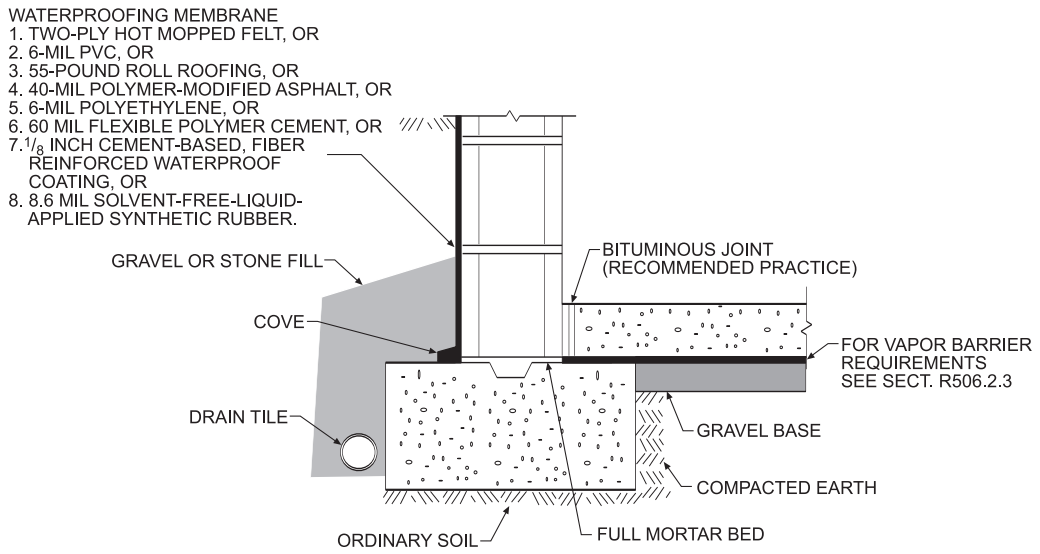

For SI: 1 inch = 25.4 mm.

Figure R406.2
METHODS OF WATERPROOFING BASEMENT WALLS
[see also Figures R405.1(1) and R405.1(2) for typical drainage details]

INTERNATIONAL CODE COUNCIL®
Copyright © 2015 ICC. ALL RIGHTS RESERVED. Accessed by David Dammon on Jun 21, 2017 12:30:52 PM pursuant to License Agreement with ICC. No further reproduction or distribution authorized. ANY UNAUTHORIZED REPRODUCTION OR DISTRIBUTION IS A VIOLATION OF THE FEDERAL COPYRIGHT ACT AND THE LICENSE AGREEMENT, AND SUBJECT TO CIVIL AND CRIMINAL PENALTIES THEREUNDER.

R406.3.4 Backfill. The remainder of the excavated area shall be backfilled with the same type of soil as was removed during the excavation.

❖ See the commentary to Sections R404.2.4 and R406.3.

R406.4 Precast concrete foundation system dampproofing. Except where required by Section R406.2 to be waterproofed, precast concrete foundation walls enclosing habitable or useable spaces located below *grade* shall be dampproofed in accordance with Section R406.1.

❖ See the commentary to Sections R406.1 and R406.2.

R406.4.1 Panel joints sealed. Precast concrete foundation panel joints shall be sealed full height with a sealant meeting ASTM C920, Type S or M, *Grade* NS, Class 25, Use NT, M or A. Joint sealant shall be installed in accordance with the manufacturer's instructions.

❖ All joints between precast concrete panels must be sealed in order to afford proper dampproofing or waterproofing. This section specifies the sealant material and the requirement to install the sealant in accordance with the manufacturer's instructions.

SECTION R407
COLUMNS

R407.1 Wood column protection. Wood columns shall be protected against decay as set forth in Section R317.

❖ See the commentary to Section R319.

R407.2 Steel column protection. All surfaces (inside and outside) of steel columns shall be given a shop coat of rust-inhibitive paint, except for corrosion-resistant steel and steel treated with coatings to provide corrosion resistance.

❖ The requirements of this section protect steel columns from the adverse effects of corrosion.

R407.3 Structural requirements. The columns shall be restrained to prevent lateral displacement at the bottom end. Wood columns shall be not less in nominal size than 4 inches by 4 inches (102 mm by 102 mm). Steel columns shall be not less than 3-inch-diameter (76 mm) Schedule 40 pipe manufactured in accordance with ASTM A53 Grade B or *approved* equivalent.

Exception: In Seismic Design Categories A, B and C, columns not more than 48 inches (1219 mm) in height on a pier or footing are exempt from the bottom end lateral displacement requirement within under-floor areas enclosed by a continuous foundation.

❖ Columns must be designed in accordance with accepted engineering practice. Minimum sizes for wood and steel columns are specified to reduce concerns about the structural capacity of slender columns. To minimize the chance of accidentally displacing columns supporting beams or girders, a means of mechanically anchoring a column is required [see Commentary Figures R407.3(1), R407.3(2) and R407.3(3)]. If prefabricated metal-wood connectors are used, they should be installed in accordance with the manufacturer's instructions.

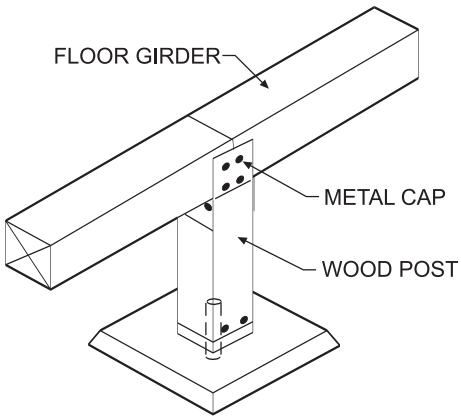

Figure R407.3(2)
COLUMN ANCHORAGE

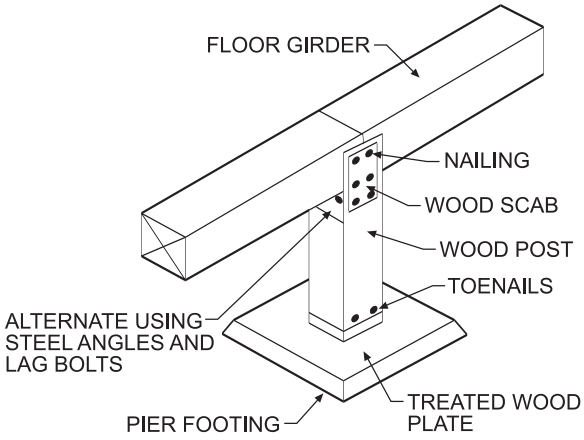

Figure R407.3(1)
COLUMN ANCHORAGE

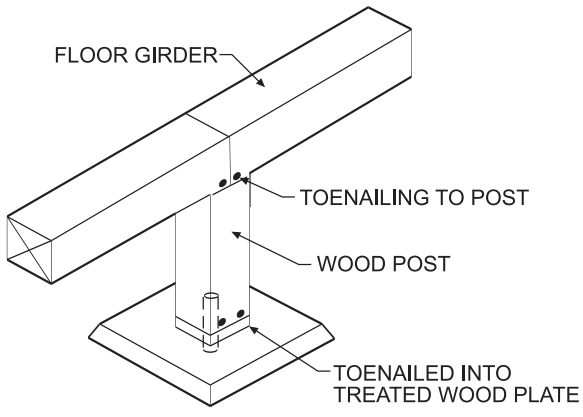

Figure R407.3(3)
COLUMN ANCHORAGE

INTERNATIONAL CODE COUNCIL®
Copyright © 2015 ICC. ALL RIGHTS RESERVED. Accessed by David Dammon on Jun 21, 2017 12:30:52 PM pursuant to License Agreement with ICC. No further reproduction or distribution authorized. ANY UNAUTHORIZED REPRODUCTION OR DISTRIBUTION IS A VIOLATION OF THE FEDERAL COPYRIGHT ACT AND THE LICENSE AGREEMENT, AND SUBJECT TO CIVIL AND CRIMINAL PENALTIES THEREUNDER.

SECTION R408
UNDER-FLOOR SPACE

R408.1 Ventilation. The under-floor space between the bottom of the floor joists and the earth under any building (except space occupied by a *basement*) shall have ventilation openings through foundation walls or exterior walls. The minimum net area of ventilation openings shall be not less than 1 square foot (0.0929 m^2) for each 150 square feet (14 m^2) of under-floor space area, unless the ground surface is covered by a Class 1 vapor retarder material. Where a Class 1 vapor retarder material is used, the minimum net area of ventilation openings shall be not less than 1 square foot (0.0929 m^2) for each 1,500 square feet (140 m^2) of under-floor space area. One such ventilating opening shall be within 3 feet (914 mm) of each corner of the building.

❖ Raised floor construction results in an under-floor space, commonly referred to as a "crawl space." To control condensation within crawl space areas and thus reduce the chance of dry rot, natural ventilation of such spaces by reasonably distributed openings through foundation walls or exterior walls is required. Condensation is a function of the geographical location and climatic conditions; therefore, the dependence on ventilating openings through the foundation wall or exterior wall may run counter to energy conservation measures. The use of a vapor retarder material on the ground surface inhibits the flow of moisture from the ground surface into the crawl space and thus reduces the need for ventilation. Commentary Figure R408.1 illustrates the use of openings through the foundation walls.

R408.2 Openings for under-floor ventilation. The minimum net area of ventilation openings shall be not less than 1 square foot (0.0929 m^2) for each 150 square feet (14 m^2) of under-floor area. One ventilation opening shall be within 3 feet (915 mm) of each corner of the building. Ventilation openings shall be covered for their height and width with any of the following materials provided that the least dimension of the covering shall not exceed $^1/_4$ inch (6.4 mm):

1. Perforated sheet metal plates not less than 0.070 inch (1.8 mm) thick.
2. Expanded sheet metal plates not less than 0.047 inch (1.2 mm) thick.
3. Cast-iron grill or grating.
4. Extruded load-bearing brick vents.
5. Hardware cloth of 0.035 inch (0.89 mm) wire or heavier.
6. Corrosion-resistant wire mesh, with the least dimension being $^1/_8$ inch (3.2 mm) thick.

Exception: The total area of ventilation openings shall be permitted to be reduced to $^1/_{1,500}$ of the under-floor area where the ground surface is covered with an *approved* Class I vapor retarder material and the required openings are placed to provide cross ventilation of the space. The installation of operable louvers shall not be prohibited.

❖ Installing a covering material over the ventilation opening keeps animals such as rodents or vermin from entering the crawl space. Several options are provided and they all must have openings that have no dimension exceeding $^1/_4$ inch (6.4 mm). The area of the ventilation opening accounts for net free area of the covering material used to protect the ventilation opening. For some covering materials the net free area can be up to 50 percent less than the gross area of the ventilation opening.

The use of a vapor retarder material on the ground surface inhibits the flow of moisture from the ground surface into the crawl space and thus reduces, if not virtually eliminates, the need for ventilation. Therefore,

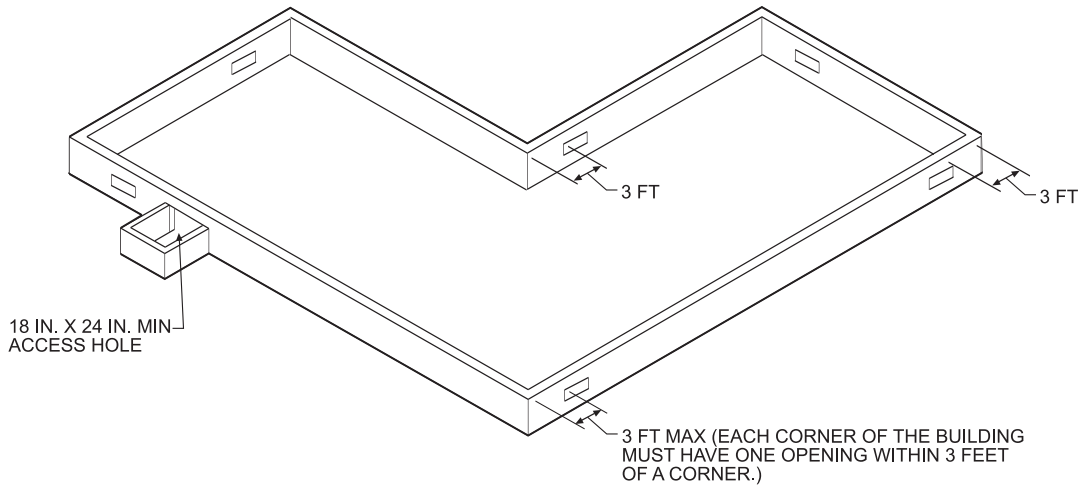

For SI: 1 inch = 25.4 mm, 1 foot = 304.8 mm.

Figure R408.1
CRAWL-SPACE VENTILATION

INTERNATIONAL CODE COUNCIL®
Copyright © 2015 ICC. ALL RIGHTS RESERVED. Accessed by David Dammon on Jun 21, 2017 12:30:52 PM pursuant to License Agreement with ICC. No further reproduction or distribution authorized. ANY UNAUTHORIZED REPRODUCTION OR DISTRIBUTION IS A VIOLATION OF THE FEDERAL COPYRIGHT ACT AND THE LICENSE AGREEMENT, AND SUBJECT TO CIVIL AND CRIMINAL PENALTIES THEREUNDER.

the exception provides for a drastic reduction in the amount of ventilation openings required. While the vapor retarder may significantly reduce the moisture accumulation, ventilation openings are still required but may be equipped with manual dampers to permit them to be closed during the coldest weeks of the year in northern climates.

The following is an example of the area calculation:

Example 1:

A house has a crawl space area of 1,300 square feet (121 m^2). The amount of ventilation opening required is 1,300/150 = 8.7 square feet (0.805 m^2) $\times$ 144 square inches per square foot = 1,252 square inches (0.81 m^2). This is the total net clear area of opening required that must be distributed among all the openings. An 8-inch by 16-inch (203 mm by 406 mm) opening provides 128 square inches (0.83 m^2). Ten 8 by 16-inch (203 mm by 406 mm) openings will provide 1,280 square inches (0.83 m^2) which is greater than the 1,252 square inches (0.81 m^2) required.

The following is an example of using the exception:

Example 2:

In Example 1, the required amount opening area (1252 square inches) may be reduced by a factor of 10 to 125.2 square inches (80 826 mm^2) if an approved Class I vapor retarder is used on the ground surface of the crawl space in accordance with the exception. Note that opening placement must provide cross ventilation.

R408.3 Unvented crawl space. Ventilation openings in under-floor spaces specified in Sections R408.1 and R408.2 shall not be required where the following items are provided:

1. Exposed earth is covered with a continuous Class I vapor retarder. Joints of the vapor retarder shall overlap by 6 inches (152 mm) and shall be sealed or taped. The edges of the vapor retarder shall extend not less than 6 inches (152 mm) up the stem wall and shall be attached and sealed to the stem wall or insulation.
2. One of the following is provided for the under-floor space:
   2.1. Continuously operated mechanical exhaust ventilation at a rate equal to 1 cubic foot per minute (0.47 L/s) for each 50 square feet (4.7 m^2) of crawl space floor area, including an air pathway to the common area (such as a duct or transfer grille), and perimeter walls insulated in accordance with Section N1102.2.11 of this code.
   2.2. *Conditioned air* supply sized to deliver at a rate equal to 1 cubic foot per minute (0.47 L/s) for each 50 square feet (4.7 m^2) of under-floor area, including a return air pathway to the common area (such as a duct or transfer grille), and perimeter walls insulated in accordance with Section N1102.2.11 of this code.
   2.3. Plenum in existing structures complying with Section M1601.5, if under-floor space is used as a plenum.

❖ This section lists several conditions under which the ventilation openings through the foundation walls are not required. The exposed earth of the under-floor area must be covered with a continuous Class I vapor retarder. See the commentary to Section R202 for the definition of "Vapor retarder class." If the perimeter walls are insulated, either a continuously operating mechanical exhaust vent or conditioned air must be provided in order to eliminate the ventilation openings.

Elimination of the ventilation openings is permitted in existing structures when the under-floor space is used as a plenum. Under-floor plenums are prohibited in new construction (see commentary, Section M1601.5).

R408.4 Access. Access shall be provided to all under-floor spaces. Access openings through the floor shall be a minimum of 18 inches by 24 inches (457 mm by 610 mm). Openings through a perimeter wall shall be not less than 16 inches by 24 inches (407 mm by 610 mm). Where any portion of the through-wall access is below *grade*, an areaway not less than 16 inches by 24 inches (407 mm by 610 mm) shall be provided. The bottom of the areaway shall be below the threshold of the access opening. Through wall access openings shall not be located under a door to the residence. See Section M1305.1.4 for access requirements where mechanical *equipment* is located under floors.

❖ The provisions of this section require access to all under-floor spaces. Access is required for continuing maintenance of the building and for inspection and repair of such items as plumbing, mechanical systems or electrical system runs within the crawl space. This section addresses the different conditions encountered in accessing an under-floor space through the floor system or the foundation wall. Where the access opening is through the floor, an opening of not less than 18 inches by 24 inches (457 mm by 610 mm) is required. Where the access opening is through the foundation wall, an opening of not less than 16 inches by 24 inches (406 mm by 610 mm) is required. See Commentary Figure R408.1. The 16- and 24-inch (406 mm and 610 mm) dimensions are to work with standard CMU coursing. Where mechanical equipment is located under the floor, the minimum access opening must comply with Section M1305.1.4.

R408.5 Removal of debris. The under-floor *grade* shall be cleaned of all vegetation and organic material. All wood forms used for placing concrete shall be removed before a building is occupied or used for any purpose. All construction materials shall be removed before a building is occupied or used for any purpose.

❖ Vegetation, stumps, roots and other matter left in an excavation around a building are major causes of termite infestation and moisture problems. As such material decays, the ground settles, negating the original drainage plan. Even before decay, the material provides pockets for water accumulation, which can have

INTERNATIONAL CODE COUNCIL®
Copyright © 2015 ICC. ALL RIGHTS RESERVED. Accessed by David Dammon on Jun 21, 2017 12:30:52 PM pursuant to License Agreement with ICC. No further reproduction or distribution authorized. ANY UNAUTHORIZED REPRODUCTION OR DISTRIBUTION IS A VIOLATION OF THE FEDERAL COPYRIGHT ACT AND THE LICENSE AGREEMENT, AND SUBJECT TO CIVIL AND CRIMINAL PENALTIES THEREUNDER.

subsequent destructive impact on the structure. To eliminate a natural attraction to termites, insects or animals, all vegetation and organic material must be cleared.

R408.6 Finished grade. The finished *grade* of under-floor surface shall be permitted to be located at the bottom of the footings; however, where there is evidence that the groundwater table can rise to within 6 inches (152 mm) of the finished floor at the building perimeter or where there is evidence that the surface water does not readily drain from the building site, the *grade* in the under-floor space shall be as high as the outside finished *grade*, unless an *approved* drainage system is provided.

❖ To circumvent moisture accumulation in the crawl space area, the grade in the under-floor space must be at the same elevation as grade outside of the building if the groundwater table can rise to within 6 inches (152 mm) of the finished floor elevation or the surface water does not readily drain from the site. An alternative would be an approved drainage system.

R408.7 Flood resistance. For buildings located in flood hazard areas as established in Table R301.2(1):

1. Walls enclosing the under-floor space shall be provided with flood openings in accordance with Section R322.2.2.
2. The finished ground level of the under-floor space shall be equal to or higher than the outside finished ground level on at least one side.

   Exception: Under-floor spaces that meet the requirements of FEMA/FIA TB 11-1.

❖ To minimize hydrostatic loads by allowing the free inflow and outflow of floodwaters, buildings in flood hazard areas (A Zones) that have walls enclosing under-floor spaces are to have flood openings in those walls. This provision alerts the designer that flood openings are to be provided in addition to standard ventilation openings. This requirement applies only to buildings in flood hazard areas not subject to high-velocity wave action. Buildings in coastal high-hazard areas subject to high-velocity wave action may have enclosed areas below the design flood elevation, but only if those walls are intended to break away as specified in Section R324.3.4.

The provisions of this section require the elevation of the finished ground level of the under-floor space to be at or above the elevation of the outside finished ground level on at least one side. In flood hazard areas, if the floor of an enclosed area, including a crawl space, is below the exterior grade on all sides, then the building is considered to have a basement and Section R322 requires basements to be elevated to or above the required elevation. Note that an under-floor space may be partially below grade. As long as the interior finished ground level is at or above the exterior finished grade on at least one side, then a basement is not created. Section R408.6 requires the grade in under-floor spaces to be as high as the outside finished grade unless an approved drainage system is provided. Section R408.7, Item 2, clarifies that use of a drainage system should not be permitted in flood hazard areas because a basement (below grade on all sides) would be created. The exception permits the use of FEMA TB 11, which permits the elevation of the under-floor space to be below the elevation of the outside finished ground level with limitations on maximum depth below grade (top of footing no more than 2 feet below grade) and maximum foundation wall height (no more than 4 feet from top of footing to top of wall). Use of FEMA TB 11 will result in flood insurance rates higher than for buildings that have the finished ground level of the under-floor space at or above the elevation of the outside finished ground level on at least one side.

Bibliography

The following resource materials were used in the preparation of the commentary for this chapter of the code:

ACI 318–14, *Building Code Requirements for Structural Concrete.* Farmington Hills, MI: American Concrete Institute, 2014.

ACI 332–14, *Requirements for Residential Concrete Construction.* Farmington Hills, MI: American Concrete Institute, 2014.

ANSI/AWC NDS–2015, *National Design Specification (NDS) for Wood Construction—with 2015 NDS Supplement*. Leesburg, VA: American Wood Council, 2014.

ASCE 32–01, *Design and Construction of Frost Protected Shallow Foundations.* Reston, VA: American Society of Civil Engineers, 2001.

ASTM A615/A 615M–12, *Specification for Deformed and Plain Billet Steel Bars for Concrete Reinforcement.* West Conshohocken, PA: ASTM International, 2012.

ASTM A706 M–09b, *Specification for Low-alloy Steel-Deformed Plain Bars for Concrete Reinforcement.* West Conshohocken, PA: ASTM International, 2009.

ASTM A996/A 996M–2009b, *Specifications for Rail-steel and Axel-steel Deformed Bars for Concrete Reinforcement*. West Conshohocken, PA: ASTM International, 2009.

ASTM C94/C 94M–13, *Specification for Ready-mixed Concrete*. West Conshohocken, PA: ASTM International, 2013.

ASTM C150–12, *Specification for Portland Cement*. West Conshohocken, PA: ASTM International, 2012.

ASTM C578–12b, *Specification for Rigid, Celluar Polystyrene Thermal Insulation*. West Conshohocken, PA: ASTM International, 2012.

ASTM C595/C 595M–13, *Specification for Blended Hydraulic Cements*. West Conshohocken, PA: ASTM International, 2013.

INTERNATIONAL CODE COUNCIL®

Copyright © 2015 ICC. ALL RIGHTS RESERVED. Accessed by David Dammon on Jun 21, 2017 12:30:52 PM pursuant to License Agreement with ICC. No further reproduction or distribution authorized. ANY UNAUTHORIZED REPRODUCTION OR DISTRIBUTION IS A VIOLATION OF THE FEDERAL COPYRIGHT ACT AND THE LICENSE AGREEMENT, AND SUBJECT TO CIVIL AND CRIMINAL PENALTIES THEREUNDER.

ASTM C618–12a, *Standard Specification for Coal Fly Ash and Raw or Calcined Natural Pozzolan for Use in Concrete*. West Conshohocken, PA: ASTM International, 2012.

ASTM C685/C 685M–11, *Specification for Concrete Made by Volumetric Batching and Continuous Mixing*. West Conshohocken, PA: ASTM International, 2011.

ASTM C845/C845M–12, *Standard Specification for Expansive Hydraulic Cement*. West Conshohocken, PA: ASTM International, 2012.

ASTM C989/C989M–13, *Standard Specification for Slag Cement for Use in Concrete and Mortars*. West Conshohocken, PA: ASTM International, 2013.

ASTM C1157/C1157–11, *Standard Performance Specification for Hydraulic Cement*. West Conshohocken, PA: ASTM International, 2011.

ASTM C1240–12, *Standard Specification for Silica Fume Used in Cementitious Mixtures*. West Conshohocken, PA: ASTM International, 2012.

ASTM D4829–11, *Test Method for Expansion Index of Soils*. West Conshohocken, PA: ASTM International, 2011.

ASTM E2634–11, *Standard Specification for Flat Wall Insulating Concrete Form (ICF) Systems*. West Conshohocken, PA: ASTM International, 2011.

AWC PWF–2015, *Permanent Wood Foundation Design Specification*. Leesburg, VA: American Wood Council, 2014.

FEMA TB-11–01, *Crawl space Construction for Buildings Located in Special Flood Hazard Area*. Washington, DC: Federal Emergency Management Agency, 2001.

IBC–15, *International Building Code*. Washington, DC: International Code Council, 2014.

PCA 100–12. *Prescriptive Design of Exterior Concrete Walls for One- and Two-family Dwellings (Pub. No. EB241)*. Skokie, IL: Portland Cement Association, 2012.

TEK 5–3A, *Concrete Masonry Foundation Wall Details*. Herndon, VA: National Concrete Masonry Association, 2003.

TMS 402/ACI 530/ASCE 5–2013, *Building Code Requirements for Masonry Structures*. Boulder, CO: The Masonry Society, 2013.

INTERNATIONAL CODE COUNCIL®
Copyright © 2015 ICC. ALL RIGHTS RESERVED. Accessed by David Dammon on Jun 21, 2017 12:30:52 PM pursuant to License Agreement with ICC. No further reproduction or distribution authorized. ANY UNAUTHORIZED REPRODUCTION OR DISTRIBUTION IS A VIOLATION OF THE FEDERAL COPYRIGHT ACT AND THE LICENSE AGREEMENT, AND SUBJECT TO CIVIL AND CRIMINAL PENALTIES THEREUNDER.

INTERNATIONAL CODE COUNCIL®
Copyright © 2015 ICC. ALL RIGHTS RESERVED. Accessed by David Dammon on Jun 21, 2017 12:30:52 PM pursuant to License Agreement with ICC. No further reproduction or distribution authorized. ANY UNAUTHORIZED REPRODUCTION OR DISTRIBUTION IS A VIOLATION OF THE FEDERAL COPYRIGHT ACT AND THE LICENSE AGREEMENT, AND SUBJECT TO CIVIL AND CRIMINAL PENALTIES THEREUNDER.

Chapter 5: Floors

General Comments

Section R501 provides the scope of the chapter and states the general performance requirements for floor systems. The floor systems covered in the code consist of four different types: wood floor framing, wood floors on the ground, steel floor framing and concrete slabs on the ground. Section R502 addresses wood floor framing criteria and includes prescriptive tables from which the size of the joists can be determined based on the span and species of wood.

Section R503 specifies floor-sheathing requirements. Section R504 governs wood floors constructed on ground that would serve as part of a wood foundation system described in Chapter 4. This system relies on pressure-preservative-treated wood to resist the damage from exposure to moisture from contact with the ground. Section R505 contains cold-formed steel floor framing provisions, which include prescriptive criteria that greatly simplify the use of cold-formed steel framing in a floor system. Section R506 contains requirements for concrete slab-on-ground floors. Concrete slab-on-grade construction requires a minimum 3.5-inch-thick (89 mm) slab and a vapor retarder in most cases.

The primary consideration of this chapter is the structural integrity of the floor system. In a two-family dwelling, a floor that separates dwelling units must be a fire-resistance-rated assembly in accordance with Section R302.3. Such a floor must conform to the conditions of the floor assembly's listing in addition to the requirements of this chapter. Section R507 provides prescriptive requirements for exterior decks of wood-framed construction and the connection to the main building. This section also addresses the use of plastic composites for deck construction.

Purpose

Chapter 5 provides the requirements for the design and construction of floor systems that will be capable of supporting minimum required design loads. This chapter covers four different types: wood floor framing, wood floors on the ground, steel floor framing and concrete slabs on the ground. Allowable span tables are provided that greatly simplify the determination of joist, girder and sheathing sizes for raised floor systems of wood framing and cold-formed steel framing. This chapter also contains prescriptive requirements for exterior decks of wood-framed construction.

The floor system must also serve as a diaphragm; therefore, it plays a key role in resisting lateral loads from earthquakes and/or wind. Although this chapter does not base floor system requirements on these loads, floor systems constructed as required in this chapter will perform this function. Chapter 6 of the code accounts for these loads by varying the spacing of the supporting braced wall lines or shear walls based on seismic design category and basic wind speed or, in selected cases, specifying additional diaphragm requirements.

SECTION R501 GENERAL

R501.1 Application. The provisions of this chapter shall control the design and construction of the floors for buildings, including the floors of *attic* spaces used to house mechanical or plumbing fixtures and *equipment*.

❖ Floors (including attic floors) that house mechanical equipment or plumbing fixtures (see the definition in Chapter 2) must comply with this chapter.

R501.2 Requirements. Floor construction shall be capable of accommodating all loads in accordance with Section R301 and of transmitting the resulting loads to the supporting structural elements.

❖ This is a general performance statement that requires the floor system to support the design loads and provide the necessary load path to supporting elements.

SECTION R502 WOOD FLOOR FRAMING

R502.1 General. Wood and wood-based products used for load-supporting purposes shall conform to the applicable provisions of this section.

❖ Sections R502.1.1 through R502.1.7 contain the prescriptive requirements for wood and wood-based products used in wood floor framing.

R502.1.1 Sawn lumber. Sawn lumber shall be identified by a grade *mark* of an accredited lumber grading or inspection agency and have design values certified by an accreditation body that complies with DOC PS 20. In lieu of a grade *mark*, a certificate of inspection issued by a lumber grading or inspection agency meeting the requirements of this section shall be accepted.

❖ Load-carrying wood members must be identified to verify their conformance to a minimum quality control

INTERNATIONAL CODE COUNCIL®
Copyright © 2015 ICC. ALL RIGHTS RESERVED. Accessed by David Dammon on Jun 21, 2017 12:30:52 PM pursuant to License Agreement with ICC. No further reproduction or distribution authorized. ANY UNAUTHORIZED REPRODUCTION OR DISTRIBUTION IS A VIOLATION OF THE FEDERAL COPYRIGHT ACT AND THE LICENSE AGREEMENT, AND SUBJECT TO CIVIL AND CRIMINAL PENALTIES THEREUNDER.

standard. The required grade mark must reflect the following information:

1. The species.
2. The grade.
3. The moisture content (MC) at time of grading: S-Dry or S-Gm, MC15, KD15, or KD19. S-Grn indicates that the moisture content was in excess of 19 percent at the time of grading, and KD indicates kiln dried.
4. The grading agency.
5. The mill name or mill number.
6. In the case of independent agencies, the rules used for grading.

For examples of grade marks, see Commentary Figure R502.1.

R502.1.1.1 Preservative-treated lumber. Preservative treated dimension lumber shall also be identified as required by Section R317.2.

❖ Grade marks as described in Section R502.1.1 must also include the quality mark of an agency accredited in the ALSC treated wood program. See Commentary Figure R502.1.1 for an example of a preservative-treated-lumber grade mark.

R502.1.1.2 End-jointed lumber. *Approved* end-jointed lumber identified by a grade *mark* conforming to Section R502.1.1 shall be permitted to be used interchangeably with solid-sawn members of the same species and grade. End-jointed lumber used in an assembly required elsewhere in this code to have a fire-resistance rating shall have the designation "Heat Resistant Adhesive" or "HRA" included in its grade mark.

❖ End-jointed lumber is generally considered equivalent to solid sawn lumber, provided it is properly identified by a grade mark. The key is verifying proper end use. For instance, grade marks including the phrase "STUD USE ONLY" denote finger-jointed lumber that is limited to stud use and/or bending or tension stresses of short duration loads such as wind and seismic. Structural finger joints, on the other hand, allow horizontal as well as vertical applications. When end-jointed lumber is used in fire-resistance-rated assemblies, the adhesive used in the end joint must be heat-resistant adhesive (HRA).

The American Lumber Standards Committee (ALSC) recently added elevated-temperature performance requirements for end-jointed lumber adhesives intended for use in fire-resistance-rated assemblies.

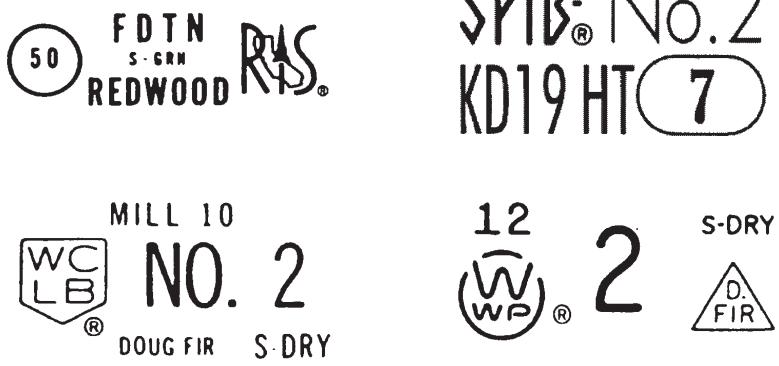

Figure R502.1
GRADE MARK EXAMPLES

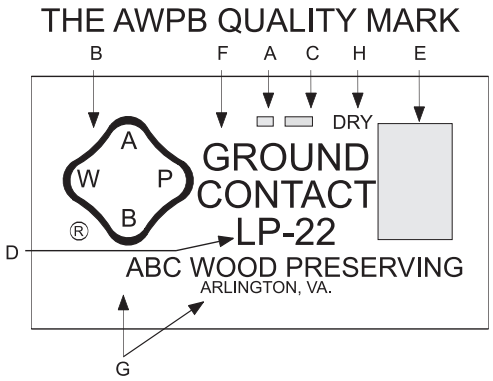

A. YEAR OF TREATMENT
B. AMERICAN WOOD PRESERVERS BUREAU TRADEMARK
C. THE PRESERVATIVE USED FOR TREATMENT
D. THE APPLICABLE AMERICAN WOOD PRESERVERS BUREAU QUALITY STANDARD
E. TRADEMARK OF THE AGENCY SUPERVISING THE TREATING PLANT
F. PROPER EXPOSURE CONDITIONS
G. TREATING COMPANY AND PLANT LOCATION
H. DRY OR KDAT IF APPLICABLE

Figure R502.1.1
TREATED LUMBER GRADE MARK

INTERNATIONAL CODE COUNCIL®
Copyright © 2015 ICC. ALL RIGHTS RESERVED. Accessed by David Dammon on Jun 21, 2017 12:30:52 PM pursuant to License Agreement with ICC. No further reproduction or distribution authorized. ANY UNAUTHORIZED REPRODUCTION OR DISTRIBUTION IS A VIOLATION OF THE FEDERAL COPYRIGHT ACT AND THE LICENSE AGREEMENT, AND SUBJECT TO CIVIL AND CRIMINAL PENALTIES THEREUNDER.

End-jointed lumber manufactured with adhesives that meet the new requirements is being designated as "heat resistant adhesive" or "HRA" on the grade stamp. HRAs are required to be qualified in accordance with one of two new ASTM standards, ASTM D7374-08, *Practice for Evaluating Elevated Temperature Performance of Adhesives Used in End-Jointed Lumber* and ASTM D7470-08, *Practice for Evaluating Elevated Temperature Performance of End-Jointed Lumber Studs*. End-jointed lumber manufactured with HRAs under an auditing program of an ALSC-accredited grading agency is allowed to carry the HRA mark on the grade stamp. End-jointed lumber manufactured with an adhesive not qualified as an HRA will be designated as "non-heat resistant adhesive" or "non-HRA" on the grade stamp. Lumber carrying the HRA mark is permitted to be used interchangeably with solid-sawn members of the same species and grade in fire-rated applications.

R502.1.2 Prefabricated wood I-joists. Structural capacities and design provisions for prefabricated wood I-joists shall be established and monitored in accordance with ASTM D5055.

❖ Prefabricated wood I-joists are some of the many engineered wood products currently available. These structural members consist of sawn lumber or structural composite lumber flanges bonded to wood structural panel webs, forming an I-shaped cross section. Because these products are widely used in residential floor construction, ASTM D5055, *Standard Specification for Establishing and Monitoring Structural Capacities of Prefabricated Wood I-joists*, is referenced as the applicable standard.

This standard does not specify the makeup of the component materials or how they must be assembled. Each manufacturer must develop product specifications and construction details for its products. These are subject to qualification tests, which are conducted or witnessed by qualified, independent agencies. The best results are used to establish the following design values:

- Allowable bending moment.
- Allowable shear.
- Member stiffness (EI).
- Sheer deflection factor (K).
- Allowable reactions.
- Bearing length requirements.
- Web stiffener requirements.
- A chart detailing the size, location, shape and spacing of any holes permitted in the web.

R502.1.3 Structural glued laminated timbers. Glued laminated timbers shall be manufactured and identified as required in ANSI/AITC A190.1 and ASTM D3737.

❖ This section requires that glulam timbers be manufactured following ANSI/AITC A190.1 and ASTM D3737. Knowing these standards makes it easier to determine that the product found in the field will meet the design requirements.

R502.1.4 Structural log members. Structural log members shall comply with the provisions of ICC-400.

❖ The material requirements for structural logs, such as stress grading, grade mark or Certificate of Inspection, must be in accordance with ICC 400 *Standard on the Design and Construction of Log Structures*.

R502.1.5 Structural composite lumber. Structural capacities for structural composite lumber shall be established and monitored in accordance with ASTM D5456.

❖ ASTM D5456 is the standard by which structural composite lumber is evaluated. Products manufactured to this standard are increasingly available in the marketplace and are being used in residential construction. These products are being used as beams, headers, long-length studs, floor and roof framing and other applications where high strength, long length and/or dimensional stability make sawn lumber unacceptable.

Recognition of the appropriate standard on the identification marks required by the code will provide the designer, builder, plans examiner and building inspector with the ensurance that structural composite lumber products are being manufactured with the appropriate quality control systems in place and that the design properties of the product are properly derived and maintained during production.

R502.1.6 Cross-laminated timber. Cross-laminated timber shall be manufactured and identified as required by ANSI/APA PRG 320.

❖ Cross-laminated timber (CLT) was first developed in Europe nearly 20 years ago, where it has been used extensively. It is generally analogous to large section members currently associated with heavy timber. Although the primary use is for nonresidential construction it is currently being used in some residential applications. As a new product in North America, ANSI/APA PRG 320 provides a consensus manufacturing standard for cross-laminated timber.

R502.1.7 Engineered wood rim board. Engineered wood rim boards shall conform to ANSI/APA PRR 410 or shall be evaluated in accordance with ASTM D7672. Structural capacities shall be in accordance with ANSI/APA PRR 410 or established in accordance with ASTM D7672. Rim boards conforming to ANSI/APA PRR 410 shall be marked in accordance with that standard.

❖ Engineered rim board is a key structural element in wood floor construction where both structural load path through the perimeter member and dimensional change compatibility are design considerations. Both ANSI/APA PRR 410 and ASTM D7672 address the fundamental requirements for testing and evaluation of engineered rim board. PRR 410 also includes performance categories for engineered wood products used in engineered rim board applications. Under PRR 410, products are assigned a grade based on performance category (e.g., categories based on structural capacity) and will bear a mark in accordance with the grade. In contrast, ASTM D7672 is applicable for determination of product-specific rim board performance (i.e., struc-

INTERNATIONAL CODE COUNCIL®
Copyright © 2015 ICC. ALL RIGHTS RESERVED. Accessed by David Dammon on Jun 21, 2017 12:30:52 PM pursuant to License Agreement with ICC. No further reproduction or distribution authorized. ANY UNAUTHORIZED REPRODUCTION OR DISTRIBUTION IS A VIOLATION OF THE FEDERAL COPYRIGHT ACT AND THE LICENSE AGREEMENT, AND SUBJECT TO CIVIL AND CRIMINAL PENALTIES THEREUNDER.

tural capacities) for engineered wood products that may be recognized in manufacturers' literature or product evaluation reports.

R502.2 Design and construction. Floors shall be designed and constructed in accordance with the provisions of this chapter, Figure R502.2 and Sections R317 and R318 or in accordance with ANSI AWC NDS.

❖ Design and construction of wood floors must be in accordance with the prescriptive requirements of this section or where required in accordance with ANSI AWC NDS, *National Design Specification for Wood Construction*. Figure R502.2 includes section references to provisions that apply to typical elements of floor systems.

R502.2.1 Framing at braced wall lines. A load path for lateral forces shall be provided between floor framing and *braced wall panels* located above or below a floor, as specified in Section R602.10.8.

❖ At braced wall panels, joists and blocking are an essential part of a complete lateral load path for either wind or seismic loads. These framing members are needed to accomplish the framing to framing connections specified in Table R602.3(1) and Section R602.10.8. Section R602.10.8 specifies the framing required for a complete load path for these conditions. Section R602.10.8 addresses the framing needed when braced wall panels occur above or below a floor and when floor framing is parallel to a braced wall panel.

R502.2.2 Blocking and subflooring. Blocking for fastening panel edges or fixtures shall be a minimum of utility grade lumber. Subflooring shall be a minimum of utility grade lumber or No. 4 common grade boards. Fireblocking shall be of any grade lumber.

❖ Allowing the use of lower lumber grades in blocking and subflooring in these instances results in possible economies.

R502.3 Allowable joist spans. Spans for floor joists shall be in accordance with Tables R502.3.1(1) and R502.3.1(2). For other grades and species and for other loading conditions, refer to the AWC STJR.

❖ Tables R502.3.1(1) and R502.3.1(2) contain allowable floor joist spans for common lumber species and grades based on design loads and joist spacing. The span tables have been updated from the 2012 IRC to account for changes in design values for Douglas fir-larch, Hem-fir and Southern pine. The allowable spans for some grades of Southern pine have been reduced from that in the 2012 IRC. The allowable spans for some grades of Douglas fir-larch and Hem-fir have been increased from that in the 2012 IRC.

The reduced design values for visually-graded Southern pine lumber were approved by the American Lumber Standards Committee (ALSC) in 2013. Values are a result of 2 years of testing current lumber available on the market to identify what changes had occurred in the strength of the Southern pine lumber inventory.

Although the increased design values for Douglas fir-larch and Hem-fir were approved in the 1990s, the values were never incorporated into the *International Building Code*® (IBC®) and IRC allowable span tables. Recent testing of current stock has validated the 1990's values.

The 2015 IRC span tables are now in agreement with the wood standards' span tables with the revisions for Southern pine, Douglas fir-larch and Hem-fir. The new design values apply only to new construction. The integrity of existing structures designed and built using design values meeting the applicable building codes in effect at the time of permitting does not change.

The tables provide spans for dead loads of 10 or 20 psf (479 Pa or 958 Pa). The weight of the floor joist is included in the 10 or 20 psf (479 Pa or 958 Pa) dead load.

The dead load of the floor assembly must not exceed 10 psf (479 Pa) for townhouses in Seismic Design Category C and all structures in Seismic Design Categories D_0, D_1 and D_2 (see commentary, Section R301.2.2.2.1).

The referenced standard may be used for grades and species of lumber not included in these tables.

Table R502.3.1(1) covers sleeping rooms where the design live load is 30 pounds per square foot (psf) (1.44 kPa) per Table R301.5. This includes attics with fixed stair access. It is important to identify the intended use because an attic space used as a bonus room, for example, could require use of a 40-pounds-per-square-foot (1.92 kPa) live load. Table 502.3.1(2) covers rooms other than sleeping rooms where the design load is 40 pounds per square foot (1.92 kPa) in accordance with Table R301.5.

Example:

A floor has a design live load of 40 psf (1.92 kPa) and a dead load of 10 psf (0.48 kPa). The joists span 17 feet, 6 inches (5334 mm). Find the required joist size using Douglas-Fir Larch #2 lumber and a joist spacing of 16 inches (406 mm).

Solution:

In Table R502.3.1(2), which is based on LL = 40 psf (1.92 kPa), find 16-inch (406 mm) joist spacing in the left hand column. Locate Douglas Fir-Larch #2 and under DL = 10 psf (0.48 kPa) look for an allowable span of 17 feet, 6 inches (5334 mm) or greater. Note that the allowable span for 2 inch by 12 inch (51 mm by 305 mm) is 18 feet, 1 inch (5512 mm). Therefore, use 2-inch by 12-inch (51 mm by 305 mm) joists at 16-inch (406 mm) spacing.

The span tables account for a uniform load condition. They will also permit isolated concentrated loads such as nonbearing partitions offset from a support by a distance less than or equal to the joist depth. They may not support large concentrated loads such as ones that result from an entire kitchen utility wall or bathtubs parallel to joists. In such instances, additional joists and other adequate supports must be installed.

INTERNATIONAL CODE COUNCIL®
Copyright © 2015 ICC. ALL RIGHTS RESERVED. Accessed by David Dammon on Jun 21, 2017 12:30:52 PM pursuant to License Agreement with ICC. No further reproduction or distribution authorized. ANY UNAUTHORIZED REPRODUCTION OR DISTRIBUTION IS A VIOLATION OF THE FEDERAL COPYRIGHT ACT AND THE LICENSE AGREEMENT, AND SUBJECT TO CIVIL AND CRIMINAL PENALTIES THEREUNDER.

R502.3.1 Sleeping areas and attic joists. Table R502.3.1(1) shall be used to determine the maximum allowable span of floor joists that support sleeping areas and *attics* that are accessed by means of a fixed stairway in accordance with Section R311.7 provided that the design live load does not exceed 30 pounds per square foot (1.44 kPa) and the design dead load does not exceed 20 pounds per square foot (0.96 kPa). The allowable span of ceiling joists that support *attics* used for limited storage or no storage shall be determined in accordance with Section R802.4.

❖ See the commentary to Section R502.3.

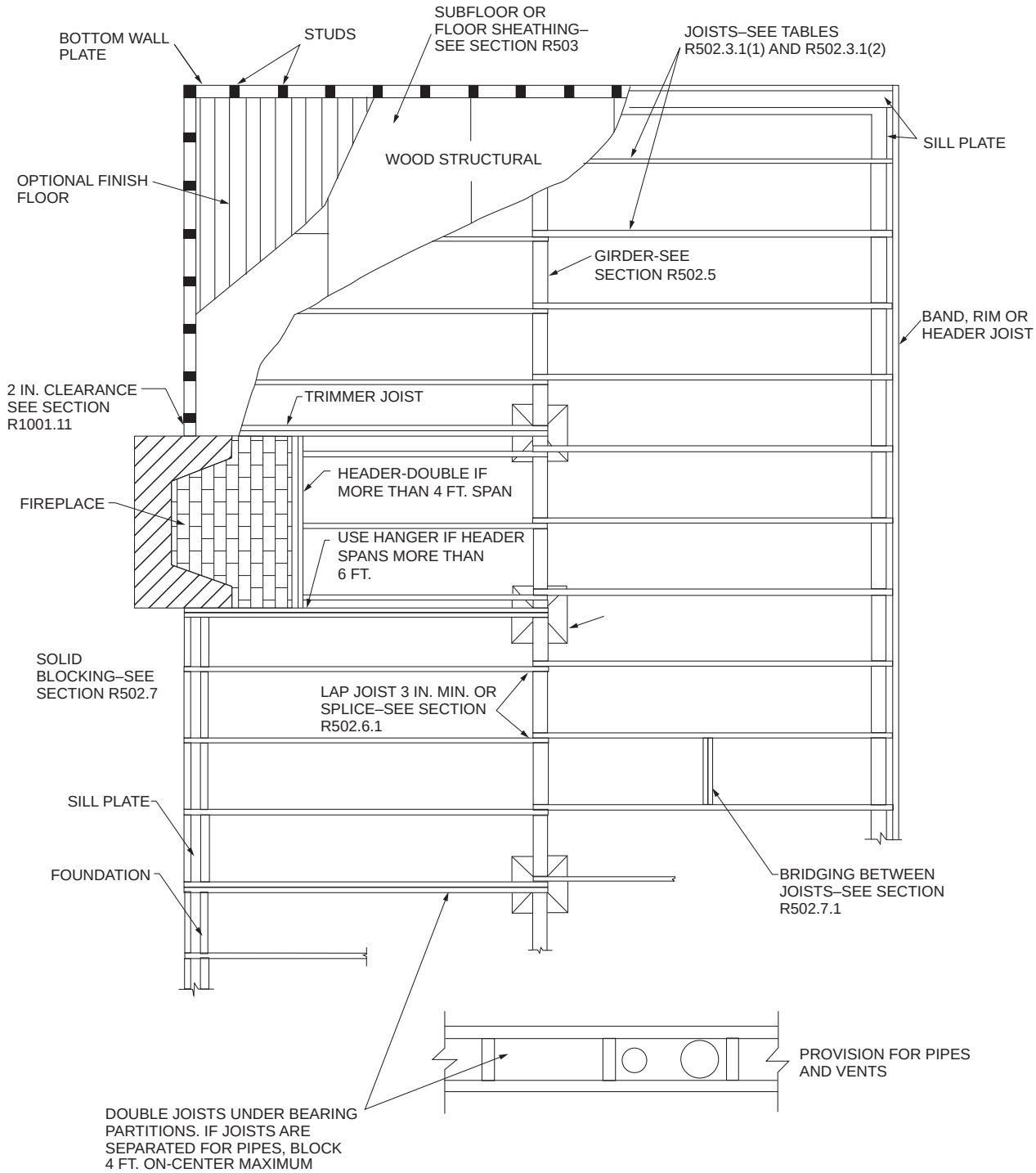

For SI: 1 inch = 25.4 mm, 1 foot = 304.8 mm.

FIGURE R502.2
FLOOR CONSTRUCTION

INTERNATIONAL CODE COUNCIL®
Copyright © 2015 ICC. ALL RIGHTS RESERVED. Accessed by David Dammon on Jun 21, 2017 12:30:52 PM pursuant to License Agreement with ICC. No further reproduction or distribution authorized. ANY UNAUTHORIZED REPRODUCTION OR DISTRIBUTION IS A VIOLATION OF THE FEDERAL COPYRIGHT ACT AND THE LICENSE AGREEMENT, AND SUBJECT TO CIVIL AND CRIMINAL PENALTIES THEREUNDER.

TABLE R502.3.1(1)
FLOOR JOIST SPANS FOR COMMON LUMBER SPECIES
(Residential sleeping areas, live load = 30 psf, L/Δ = 360)[a]

JOIST SPACING (inches)	SPECIES AND GRADE		DEAD LOAD = 10 psf				DEAD LOAD = 20 psf			
			2 × 6	2 × 8	2 × 10	2 × 12	2 × 6	2 × 8	2 × 10	2 × 12
			Maximum floor joist spans							
			(ft. - in.)	(ft. - in.)	(ft. - in.)	(ft. - in.)	(ft. - in.)	(ft. - in.)	(ft. - in.)	(ft. - in.)
12	Douglas fir-larch	SS	12-6	16-6	21-0	25-7	12-6	16-6	21-0	25-7
	Douglas fir-larch	#1	12-0	15-10	20-3	24-8	12-0	15-7	19-0	22-0
	Douglas fir-larch	#2	11-10	15-7	19-10	23-4	11-8	14-9	18-0	20-11
	Douglas fir-larch	#3	9-11	12-7	15-5	17-10	8-11	11-3	13-9	16-0
	Hem-fir	SS	11-10	15-7	19-10	24-2	11-10	15-7	19-10	24-2
	Hem-fir	#1	11-7	15-3	19-5	23-7	11-7	15-3	18-9	21-9
	Hem-fir	#2	11-0	14-6	18-6	22-6	11-0	14-4	17-6	20-4
	Hem-fir	#3	9-8	12-4	15-0	17-5	8-8	11-0	13-5	15-7
	Southern pine	SS	12-3	16-2	20-8	25-1	12-3	16-2	20-8	25-1
	Southern pine	#1	11-10	15-7	19-10	24-2	11-10	15-7	18-7	22-0
	Southern pine	#2	11-3	14-11	18-1	21-4	10-9	13-8	16-2	19-1
	Southern pine	#3	9-2	11-6	14-0	16-6	8-2	10-3	12-6	14-9
	Spruce-pine-fir	SS	11-7	15-3	19-5	23-7	11-7	15-3	19-5	23-7
	Spruce-pine-fir	#1	11-3	14-11	19-0	23-0	11-3	14-7	17-9	20-7
	Spruce-pine-fir	#2	11-3	14-11	19-0	23-0	11-3	14-7	17-9	20-7
	Spruce-pine-fir	#3	9-8	12-4	15-0	17-5	8-8	11-0	13-5	15-7
16	Douglas fir-larch	SS	11-4	15-0	19-1	23-3	11-4	15-0	19-1	23-3
	Douglas fir-larch	#1	10-11	14-5	18-5	21-4	10-8	13-6	16-5	19-1
	Douglas fir-larch	#2	10-9	14-2	17-5	20-3	10-1	12-9	15-7	18-1
	Douglas fir-larch	#3	8-7	10-11	13-4	15-5	7-8	9-9	11-11	13-10
	Hem-fir	SS	10-9	14-2	18-0	21-11	10-9	14-2	18-0	21-11
	Hem-fir	#1	10-6	13-10	17-8	21-1	10-6	13-4	16-3	18-10
	Hem-fir	#2	10-0	13-2	16-10	19-8	9-10	12-5	15-2	17-7
	Hem-fir	#3	8-5	10-8	13-0	15-1	7-6	9-6	11-8	13-6
	Southern pine	SS	11-2	14-8	18-9	22-10	11-2	14-8	18-9	22-10
	Southern pine	#1	10-9	14-2	18-0	21-4	10-9	13-9	16-1	19-1
	Southern pine	#2	10-3	13-3	15-8	18-6	9-4	11-10	14-0	16-6
	Southern pine	#3	7-11	10-0	11-1	14-4	7-1	8-11	10-10	12-10
	Spruce-pine-fir	SS	10-6	13-10	17-8	21-6	10-6	13-10	17-8	21-4
	Spruce-pine-fir	#1	10-3	13-6	17-2	19-11	9-11	12-7	15-5	17-10
	Spruce-pine-fir	#2	10-3	13-6	17-2	19-11	9-11	12-7	15-5	17-10
	Spruce-pine-fir	#3	8-5	10-8	13-0	15-1	7-6	9-6	11-8	13-6

(continued)

INTERNATIONAL CODE COUNCIL®
Copyright © 2015 ICC. ALL RIGHTS RESERVED. Accessed by David Dammon on Jun 21, 2017 12:30:52 PM pursuant to License Agreement with ICC. No further reproduction or distribution authorized. ANY UNAUTHORIZED REPRODUCTION OR DISTRIBUTION IS A VIOLATION OF THE FEDERAL COPYRIGHT ACT AND THE LICENSE AGREEMENT, AND SUBJECT TO CIVIL AND CRIMINAL PENALTIES THEREUNDER.

TABLE R502.3.1(1)—continued
FLOOR JOIST SPANS FOR COMMON LUMBER SPECIES
(Residential sleeping areas, live load = 30 psf, L/Δ = 360)[a]

JOIST SPACING (inches)	SPECIES AND GRADE		DEAD LOAD = 10 psf				DEAD LOAD = 20 psf			
			2 × 6	2 × 8	2 × 10	2 × 12	2 × 6	2 × 8	2 × 10	2 × 12
			Maximum floor joist spans							
			(ft.- in.)	(ft. - in.)	(ft. - in.)	(ft. - in.)	(ft. - in.)	(ft. - in.)	(ft. - in.)	(ft. - in.)
19.2	Douglas fir-larch	SS	10-8	14-1	18-0	21-10	10-8	14-1	18-0	21-4
	Douglas fir-larch	#1	10-4	13-7	16-9	19-6	9-8	12-4	15-0	17-5
	Douglas fir-larch	#2	10-1	13-0	15-11	18-6	9-3	11-8	14-3	16-6
	Douglas fir-larch	#3	7-10	10-0	12-2	14-1	7-0	8-11	10-11	12-7
	Hem-fir	SS	10-1	13-4	17-0	20-8	10-1	13-4	17-0	20-7
	Hem-fir	#1	9-10	13-0	16-7	19-3	9-7	12-2	14-10	17-2
	Hem-fir	#2	9-5	12-5	15-6	17-1	8-11	11-4	13-10	16-1
	Hem-fir	#3	7-8	9-9	11-10	13-9	6-10	8-8	10-7	12-4
	Southern pine	SS	10-6	13-10	17-8	21-6	10-6	13-10	17-8	21-6
	Southern pine	#1	10-1	13-4	16-5	19-6	9-11	12-7	14-8	17-5
	Southern pine	#2	9-6	12-1	14-4	16-10	8-6	10-10	12-10	15-1
	Southern pine	#3	7-3	9-1	11-0	13-1	6-5	8-2	9-10	11-8
	Spruce-pine-fir	SS	9-10	13-0	16-7	20-2	9-10	13-0	16-7	19-6
	Spruce-pine-fir	#1	9-8	12-9	15-8	18-3	9-1	11-6	14-1	16-3
	Spruce-pine-fir	#2	9-8	12-9	15-8	18-3	9-1	11-6	14-1	16-3
	Spruce-pine-fir	#3	7-8	9-9	11-10	13-9	6-10	8-8	10-7	12-4
24	Douglas fir-larch	SS	9-11	13-1	16-8	20-3	9-11	13-1	16-5	19-1
	Douglas fir-larch	#1	9-7	12-4	15-0	17-5	8-8	11-0	13-5	15-7
	Douglas fir-larch	#2	9-3	11-8	14-3	16-6	8-3	10-5	12-9	14-9
	Douglas fir-larch	#3	7-0	8-11	10-11	12-7	6-3	8-0	9-9	11-3
	Hem-fir	SS	9-4	12-4	15-9	19-2	9-4	12-4	15-9	18-5
	Hem-fir	#1	9-2	12-1	14-10	17-2	8-7	10-10	13-3	15-5
	Hem-fir	#2	8-9	11-4	13-10	16-1	8-0	10-2	12-5	14-4
	Hem-fir	#3	6-10	8-8	10-7	12-4	6-2	7-9	9-6	11-0
	Southern pine	SS	9-9	12-10	16-5	19-11	9-9	12-10	16-5	19-8
	Southern pine	#1	9-4	12-4	14-8	17-5	8-10	11-3	13-1	15-7
	Southern pine	#2	8-6	10-10	12-10	15-1	7-7	9-8	11-5	13-6
	Southern pine	#3	6-5	8-2	9-10	11-8	5-9	7-3	8-10	10-5
	Spruce-pine-fir	SS	9-2	12-1	15-5	18-9	9-2	12-1	15-0	17-5
	Spruce-pine-fir	#1	8-11	11-6	14-1	16-3	8-1	10-3	12-7	14-7
	Spruce-pine-fir	#2	8-11	11-6	14-1	16-3	8-1	10-3	12-7	14-7
	Spruce-pine-fir	#3	6-10	8-8	10-7	12-4	6-2	7-9	9-6	11-0

For SI: 1 inch = 25.4 mm, 1 foot = 304.8 mm, 1 pound per square foot = 0.0479 kPa.

Note: Check sources for availability of lumber in lengths greater than 20 feet.

a. Dead load limits for townhouses in Seismic Design Category C and all structures in Seismic Design Categories D_0, D_1 and D_2 shall be determined in accordance with Section R301.2.2.2.1.

❖ This table provides allowable joist spans for common lumber species, grades and joist sizes. The spans are applicable to residential sleeping areas. Use of this table is similar to the use described in the example in Section R502.3 (see commentary, Section R502.3).

INTERNATIONAL CODE COUNCIL®
Copyright © 2015 ICC. ALL RIGHTS RESERVED. Accessed by David Dammon on Jun 21, 2017 12:30:52 PM pursuant to License Agreement with ICC. No further reproduction or distribution authorized. ANY UNAUTHORIZED REPRODUCTION OR DISTRIBUTION IS A VIOLATION OF THE FEDERAL COPYRIGHT ACT AND THE LICENSE AGREEMENT, AND SUBJECT TO CIVIL AND CRIMINAL PENALTIES THEREUNDER.

TABLE R502.3.1(2)
FLOOR JOIST SPANS FOR COMMON LUMBER SPECIES
(Residential living areas, live load = 40 psf, L/Δ = 360)[b]

JOIST SPACING (inches)	SPECIES AND GRADE		DEAD LOAD = 10 psf				DEAD LOAD = 20 psf			
			2 × 6	2 × 8	2 × 10	2 × 12	2 × 6	2 × 8	2 × 10	2 × 12
			Maximum floor joist spans							
			(ft. - in.)	(ft. - in.)	(ft. - in.)	(ft. - in.)	(ft. - in.)	(ft. - in.)	(ft. - in.)	(ft. - in.)
12	Douglas fir-larch	SS	11-4	15-0	19-1	23-3	11-4	15-0	19-1	23-3
	Douglas fir-larch	#1	10-11	14-5	18-5	22-0	10-11	14-2	17-4	20-1
	Douglas fir-larch	#2	10-9	14-2	18-0	20-11	10-8	13-6	16-5	19-1
	Douglas fir-larch	#3	8-11	11-3	13-9	16-0	8-1	10-3	12-7	14-7
	Hem-fir	SS	10-9	14-2	18-0	21-11	10-9	14-2	18-0	21-11
	Hem-fir	#1	10-6	13-10	17-8	21-6	10-6	13-10	17-1	19-10
	Hem-fir	#2	10-0	13-2	16-10	20-4	10-0	13-1	16-0	18-6
	Hem-fir	#3	8-8	11-0	13-5	15-7	7-11	10-0	12-3	14-3
	Southern pine	SS	11-2	14-8	18-9	22-10	11-2	14-8	18-9	22-10
	Southern pine	#1	10-9	14-2	18-0	21-11	10-9	14-2	16-11	20-1
	Southern pine	#2	10-3	13-6	16-2	19-1	9-10	12-6	14-9	17-5
	Southern pine	#3	8-2	10-3	12-6	14-9	7-5	9-5	11-5	13-6
	Spruce-pine-fir	SS	10-6	13-10	17-8	21-6	10-6	13-10	17-8	21-6
	Spruce-pine-fir	#1	10-3	13-6	17-3	20-7	10-3	13-3	16-3	18-10
	Spruce-pine-fir	#2	10-3	13-6	17-3	20-7	10-3	13-3	16-3	18-10
	Spruce-pine-fir	#3	8-8	11-0	13-5	15-7	7-11	10-0	12-3	14-3
16	Douglas fir-larch	SS	10-4	13-7	17-4	21-1	10-4	13-7	17-4	21-1
	Douglas fir-larch	#1	9-11	13-1	16-5	19-1	9-8	12-4	15-0	17-5
	Douglas fir-larch	#2	9-9	12-9	15-7	18-1	9-3	11-8	14-3	16-6
	Douglas fir-larch	#3	7-8	9-9	11-11	13-10	7-0	8-11	10-11	12-7
	Hem-fir	SS	9-9	12-10	16-5	19-11	9-9	12-10	16-5	19-11
	Hem-fir	#1	9-6	12-7	16-0	18-10	9-6	12-2	14-10	17-2
	Hem-fir	#2	9-1	12-0	15-2	17-7	8-11	11-4	13-10	16-1
	Hem-fir	#3	7-6	9-6	11-8	13-6	6-10	8-8	10-7	12-4
	Southern pine	SS	10-2	13-4	17-0	20-9	10-2	13-4	17-0	20-9
	Southern pine	#1	9-9	12-10	16-1	19-1	9-9	12-7	14-8	17-5
	Southern pine	#2	9-4	11-10	14-0	16-6	8-6	10-10	12-10	15-1
	Southern pine	#3	7-1	8-11	10-10	12-10	6-5	8-2	9-10	11-8
	Spruce-pine-fir	SS	9-6	12-7	16-0	19-6	9-6	12-7	16-0	19-6
	Spruce-pine-fir	#1	9-4	12-3	15-5	17-10	9-1	11-6	14-1	16-3
	Spruce-pine-fir	#2	9-4	12-3	15-5	17-10	9-1	11-6	14-1	16-3
	Spruce-pine-fir	#3	7-6	9-6	11-8	13-6	6-10	8-8	10-7	12-4

(continued)

INTERNATIONAL CODE COUNCIL®
Copyright © 2015 ICC. ALL RIGHTS RESERVED. Accessed by David Dammon on Jun 21, 2017 12:30:52 PM pursuant to License Agreement with ICC. No further reproduction or distribution authorized. ANY UNAUTHORIZED REPRODUCTION OR DISTRIBUTION IS A VIOLATION OF THE FEDERAL COPYRIGHT ACT AND THE LICENSE AGREEMENT, AND SUBJECT TO CIVIL AND CRIMINAL PENALTIES THEREUNDER.

TABLE R502.3.1(2)—continued
FLOOR JOIST SPANS FOR COMMON LUMBER SPECIES
(Residential living areas, live load = 40 psf, L/Δ = 360)[b]

JOIST SPACING (inches)	SPECIES AND GRADE		DEAD LOAD = 10 psf				DEAD LOAD = 20 psf			
			2 × 6	2 × 8	2 × 10	2 × 12	2 × 6	2 × 8	2 × 10	2 × 12
			Maximum floor joist spans							
			(ft. - in.)	(ft. - in.)	(ft. - in.)	(ft. - in.)	(ft. - in.)	(ft. - in.)	(ft. - in.)	(ft. - in.)
19.2	Douglas fir-larch	SS	9-8	12-10	16-4	19-10	9-8	12-10	16-4	19-6
	Douglas fir-larch	#1	9-4	12-4	15-0	17-5	8-10	11-3	13-8	15-11
	Douglas fir-larch	#2	9-2	11-8	14-3	16-6	8-5	10-8	13-0	15-1
	Douglas fir-larch	#3	7-0	8-11	10-11	12-7	6-5	8-2	9-11	11-6
	Hem-fir	SS	9-2	12-1	15-5	18-9	9-2	12-1	15-5	18-9
	Hem-fir	#1	9-0	11-10	14-10	17-2	8-9	11-1	13-6	15-8
	Hem-fir	#2	8-7	11-3	13-10	16-1	8-2	10-4	12-8	14-8
	Hem-fir	#3	6-10	8-8	10-7	12-4	6-3	7-11	9-8	11-3
	Southern pine	SS	9-6	12-7	16-0	19-6	9-6	12-7	16-0	19-6
	Southern pine	#1	9-2	12-1	14-8	17-5	9-0	11-5	13-5	15-11
	Southern pine	#2	8-6	10-10	12-10	15-1	7-9	9-10	11-8	13-9
	Southern pine	#3	6-5	8-2	9-10	11-8	5-11	7-5	9-0	10-8
	Spruce-pine-fir	SS	9-0	11-10	15-1	18-4	9-0	11-10	15-1	17-9
	Spruce-pine-fir	#	8-9	11-6	14-1	16-3	8-3	10-6	12-10	14-10
	Spruce-pine-fir	#2	8-9	11-6	14-1	16-3	8-3	10-6	12-10	14-10
	Spruce-pine-fir	#3	6-10	8-8	10-7	12-4	6-3	7-11	9-8	11-3
24	Douglas fir-larch	SS	9-0	11-11	15-2	18-5	9-0	11-11	15-0	17-5
	Douglas fir-larch	#1	8-8	11-0	13-5	15-7	7-11	10-0	12-3	14-3
	Douglas fir-larch	#2	8-3	10-5	12-9	14-9	7-6	9-6	11-8	13-6
	Douglas fir-larch	#3	6-3	8-0	9-9	11-3	5-9	7-3	8-11	10-4
	Hem-fir	SS	8-6	11-3	14-4	17-5	8-6	11-3	14-4	16-10[a]
	Hem-fir	#1	8-4	10-10	13-3	15-5	7-10	9-11	12-1	14-0
	Hem-fir	#2	7-11	10-2	12-5	14-4	7-4	9-3	11-4	13-1
	Hem-fir	#3	6-2	7-9	9-6	11-0	5-7	7-1	8-8	10-1
	Southern pine	SS	8-10	11-8	14-11	18-1	8-10	11-8	14-11	18-0
	Southern pine	#1	8-6	11-3	13-1	15-7	8-1	10-3	12-0	14-3
	Southern pine	#2	7-7	9-8	11-5	13-6	7-0	8-10	10-5	12-4
	Southern pine	#3	5-9	7-3	8-10	10-5	5-3	6-8	8-1	9-6
	Spruce-pine-fir	SS	8-4	11-0	14-0	17-0	8-4	11-0	13-8	15-11
	Spruce-pine-fir	#1	8-1	10-3	12-7	14-7	7-5	9-5	11-6	13-4
	Spruce-pine-fir	#2	8-1	10-3	12-7	14-7	7-5	9-5	11-6	13-4
	Spruce-pine-fir	#3	6-2	7-9	9-6	11-0	5-7	7-1	8-8	10-1

For SI: 1 inch = 25.4 mm, 1 foot = 304.8 mm, 1 pound per square foot = 0.0479 kPa.

Note: Check sources for availability of lumber in lengths greater than 20 feet.

a. End bearing length shall be increased to 2 inches.

b. Dead load limits for townhouses in Seismic Design Category C and all structures in Seismic Design Categories D_0, D_1, and D_2 shall be determined in accordance with Section R301.2.2.2.1.

❖ See the commentary to Section R502.3.

INTERNATIONAL CODE COUNCIL®
Copyright © 2015 ICC. ALL RIGHTS RESERVED. Accessed by David Dammon on Jun 21, 2017 12:30:52 PM pursuant to License Agreement with ICC. No further reproduction or distribution authorized. ANY UNAUTHORIZED REPRODUCTION OR DISTRIBUTION IS A VIOLATION OF THE FEDERAL COPYRIGHT ACT AND THE LICENSE AGREEMENT, AND SUBJECT TO CIVIL AND CRIMINAL PENALTIES THEREUNDER.

R502.3.2 Other floor joists. Table R502.3.1(2) shall be used to determine the maximum allowable span of floor joists that support other areas of the building, other than sleeping rooms and *attics*, provided that the design live load does not exceed 40 pounds per square foot (1.92 kPa) and the design dead load does not exceed 20 pounds per square foot (0.96 kPa).

❖ See the commentary to Section R502.3.

R502.3.3 Floor cantilevers. Floor cantilever spans shall not exceed the nominal depth of the wood floor joist. Floor cantilevers constructed in accordance with Table R502.3.3(1) shall be permitted where supporting a light-frame bearing wall and roof only. Floor cantilevers supporting an exterior balcony are permitted to be constructed in accordance with Table R502.3.3(2).

❖ The cantilever span is permitted to be equal to the nominal depth of the joist without additional limitations. This provides for load transfer to the support by direct bearing so that shear and bending of the joist is not a concern.

Larger cantilevers are permitted in accordance with the limitations of the appropriate table for floor joists supporting an exterior balcony or a light-frame bearing wall and roof.

TABLE R502.3.3(1). See below.

❖ This table provides the prescriptive span and uplift requirements for cantilever wood floor joists supporting a light-frame bearing wall and roof only. The permitted cantilever span ranges from 15 to 48 inches (331 to 1219 mm) based on the limitations prescribed in the table and in the notes.

TABLE R502.3.3(2). See Page 5-11.

❖ This table provides the prescriptive span and uplift requirements for cantilever wood floor joists supporting an exterior balcony. The table was developed based on an engineered design consistent with the requirements of the IBC. A live load of 60 psf (2.87 kPa) is used for the cantilevered portion of the floor joists and is combined with anticipated dead loads and snow loads. Snow loads vary up to 70 psf (3.35 kPa) and include consideration of drifted snow from an adjacent roof. Deflections are limited to the values specified in Table 1604.3 of the IBC. As indicated in Note b, the ratio of backspan to cantilever span is limited to a minimum of 2:1.

TABLE R502.3.3(1)
CANTILEVER SPANS FOR FLOOR JOISTS SUPPORTING LIGHT-FRAME EXTERIOR BEARING WALL AND ROOF ONLY[a, b, c, f, g, h]
(Floor Live Load ≤ 40 psf, Roof Live Load ≤ 20 psf)

MEMBER & SPACING	MAXIMUM CANTILEVER SPAN (uplift force at backspan support in lbs.)[d, e]											
	Ground Snow Load											
	≤ 20 psf			30 psf			50 psf			70 psf		
	Roof Width			Roof Width			Roof Width			Roof Width		
	24 ft	32 ft	40 ft	24 ft	32 ft	40 ft	24 ft	32 ft	40 ft	24 ft	32 ft	40 ft
2 × 8 @ 12″	20″ (177)	15″ (227)	—	18″ (209)	—	—	—	—	—	—	—	—
2 × 10 @ 16″	29″ (228)	21″ (297)	16″ (364)	26″ (271)	18″ (354)	—	20″ (375)	—	—	—	—	—
2 × 10 @ 12″	36″ (166)	26″ (219)	20″ (270)	34″ (198)	22″ (263)	16″ (324)	26″ (277)	—	—	19″ (356)	—	—
2 × 12 @ 16″	—	32″ (287)	25″ (356)	36″ (263)	29″ (345)	21″ (428)	29″ (367)	20″ (484)	—	23″ (471)	—	—
2 × 12 @ 12″	—	42″ (209)	31″ (263)	—	37″ (253)	27″ (317)	36″ (271)	27″ (358)	17″ (447)	31″ (348)	19″ (462)	—
2 × 12 @ 8″	—	48″ (136)	45″ (169)	—	48″ (164)	38″ (206)	—	40″ (233)	26″ (294)	36″ (230)	29″ (304)	18″ (379)

For SI: 1 inch = 25.4 mm, 1 foot = 304.8 mm, 1 pound per square foot = 0.0479 kPa.

a. Tabulated values are for clear-span roof supported solely by exterior bearing walls.

b. Spans are based on No. 2 Grade lumber of Douglas fir-larch, hem-fir, and spruce-pine-fir for repetitive (three or more) members. No.1 or better shall be used for southern pine.

c. Ratio of backspan to cantilever span shall be not less than 3:1.

d. Connections capable of resisting the indicated uplift force shall be provided at the backspan support.

e. Uplift force is for a backspan to cantilever span ratio of 3:1. Tabulated uplift values are permitted to be reduced by multiplying by a factor equal to 3 divided by the actual backspan ratio provided (3/backspan ratio).

f. See Section R301.2.2.2.5, Item 1, for additional limitations on cantilevered floor joists for detached one- and two-family dwellings in Seismic Design Category D_0, D_1, or D_2 and townhouses in Seismic Design Category C, D_0, D_1 or D_2.

g. A full-depth rim joist shall be provided at the unsupported end of the cantilever joists. Solid blocking shall be provided at the supported end. Where the cantilever length is 24 inches or less and the building is assigned to Seismic Design Category A, B or C, solid blocking at the support for the cantilever shall not be required.

h. Linear interpolation shall be permitted for building widths and ground snow loads other than shown.

INTERNATIONAL CODE COUNCIL®
Copyright © 2015 ICC. ALL RIGHTS RESERVED. Accessed by David Dammon on Jun 21, 2017 12:30:52 PM pursuant to License Agreement with ICC. No further reproduction or distribution authorized. ANY UNAUTHORIZED REPRODUCTION OR DISTRIBUTION IS A VIOLATION OF THE FEDERAL COPYRIGHT ACT AND THE LICENSE AGREEMENT, AND SUBJECT TO CIVIL AND CRIMINAL PENALTIES THEREUNDER.

TABLE R502.3.3(2)
CANTILEVER SPANS FOR FLOOR JOISTS SUPPORTING EXTERIOR BALCONY[a, b, e, f]

MEMBER SIZE	SPACING	MAXIMUM CANTILEVER SPAN (uplift force at backspan support in lbs.)[c, d]		
		Ground Snow Load		
		≤ 30 psf	50 psf	70 psf
2 × 8	12″	42″ (139)	39″ (156)	34″ (165)
2 × 8	16″	36″ (151)	34″ (171)	29″ (180)
2 × 10	12″	61″ (164)	57″ (189)	49″ (201)
2 × 10	16″	53″ (180)	49″ (208)	42″ (220)
2 × 10	24″	43″ (212)	40″ (241)	34″ (255)
2 × 12	16″	72″ (228)	67″ (260)	57″ (268)
2 × 12	24″	58″ (279)	54″ (319)	47″ (330)

For SI: 1 inch = 25.4 mm, 1 pound per square foot = 0.0479 kPa.

a. Spans are based on No. 2 Grade lumber of Douglas fir-larch, hem-fir, and spruce-pine-fir for repetitive (three or more) members. No.1 or better shall be used for southern pine.

b. Ratio of backspan to cantilever span shall be not less than 2:1.

c. Connections capable of resisting the indicated uplift force shall be provided at the backspan support.

d. Uplift force is for a backspan to cantilever span ratio of 2:1. Tabulated uplift values are permitted to be reduced by multiplying by a factor equal to 2 divided by the actual backspan ratio provided (2/backspan ratio).

e. A full-depth rim joist shall be provided at the unsupported end of the cantilever joists. Solid blocking shall be provided at the supported end. Where the cantilever length is 24 inches or less and the building is assigned to Seismic Design Category A, B or C, solid blocking at the support for the cantilever shall not be required.

f. Linear interpolation shall be permitted for ground snow loads other than shown.

R502.4 Joists under bearing partitions. Joists under parallel bearing partitions shall be of adequate size to support the load. Double joists, sized to adequately support the load, that are separated to permit the installation of piping or vents shall be full depth solid blocked with lumber not less than 2 inches (51 mm) in nominal thickness spaced not more than 4 feet (1219 mm) on center. Bearing partitions perpendicular to joists shall not be offset from supporting girders, walls or partitions more than the joist depth unless such joists are of sufficient size to carry the additional load.

❖ Where floor joists support bearing partitions, the joists must be of adequate size [see Commentary Figure R502.4(1)] for an example. This provides added support for the additional load from the bearing partition above. Alternatively, a beam of adequate size may also be substituted for the double joist.

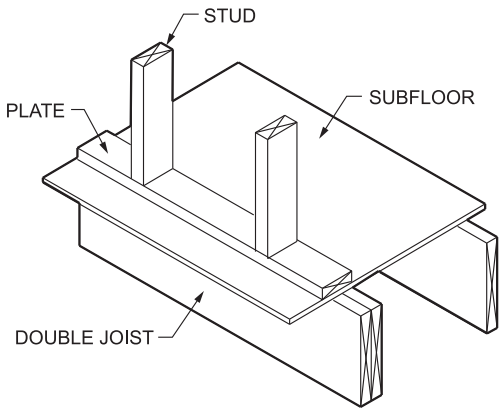

Figure R502.4(1)
DOUBLE JOIST UNDER BEARING PARTITION

Where piping or vents must penetrate the floor system, the double joists must be separated to allow the pipe or vent to pass through. In this case, full-depth solid blocking spaced a maximum of 4 feet (1219 mm) on center, as shown in Commentary Figure R502.4(2), is required so that the two joists will function as a combined member without twisting.

Bearing partitions oriented perpendicular to joists cannot be offset from supporting girders, walls or partitions more than the depth of the joists unless the joists are of sufficient size to carry the additional load.

R502.5 Allowable girder and header spans. The allowable spans of girders and headers fabricated of dimension lumber shall not exceed the values set forth in Tables R602.7(1), R602.7(2) and R602.7(3).

❖ Tables R602.7(1) and R602.7(2) list allowable spans for girders. These tables also apply to header spans and are referenced in Section R602.7 for that purpose. See Commentary Figure R502.5(1) and the following example for girder span-spacing relationships.

Example:

Assuming two equal floor joist spans of 10 feet (3048 mm) as indicated in Figure R502.5(1) (only one joist span and the two supporting girders are shown for clarity), determine the maximum span for a double 2-inch by 10-inch (51 mm by 254 mm) interior girder supporting one floor only.

Solution:

Table R602.7(2) contains the information for an interior girder supporting one floor only. For a double 2-inch by 10-inch (51 mm by 254 mm) girder and a building width of 20 feet (6096 mm), the maximum allowable girder span is read directly from Table R602.7(2) as 7 feet (2134 mm).

INTERNATIONAL CODE COUNCIL®
Copyright © 2015 ICC. ALL RIGHTS RESERVED. Accessed by David Dammon on Jun 21, 2017 12:30:52 PM pursuant to License Agreement with ICC. No further reproduction or distribution authorized. ANY UNAUTHORIZED REPRODUCTION OR DISTRIBUTION IS A VIOLATION OF THE FEDERAL COPYRIGHT ACT AND THE LICENSE AGREEMENT, AND SUBJECT TO CIVIL AND CRIMINAL PENALTIES THEREUNDER.

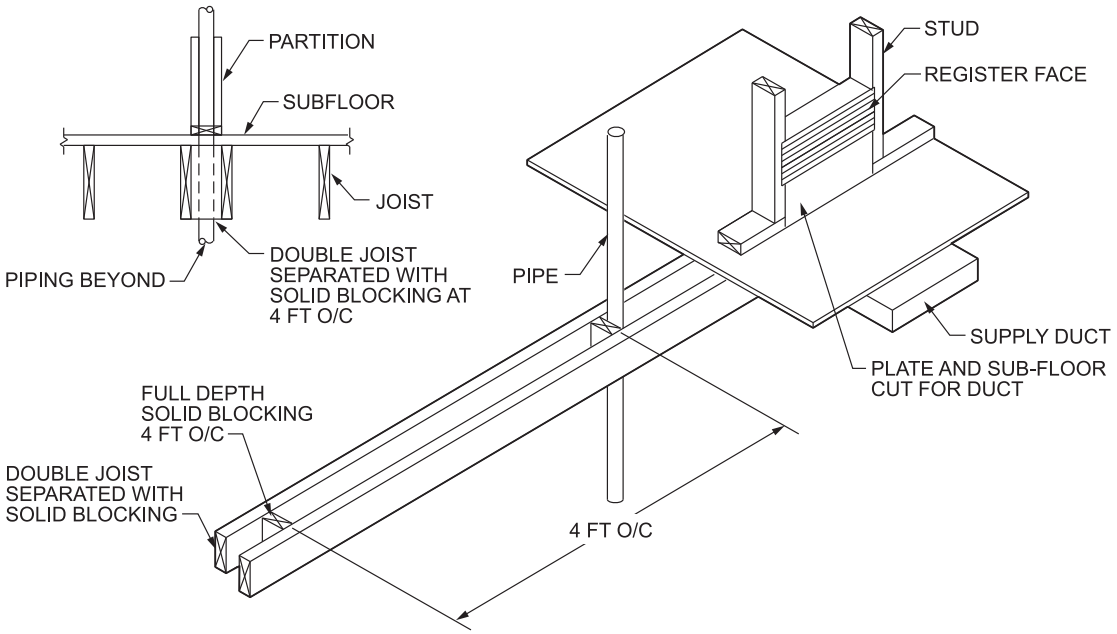

Figure R502.4(2)
SPACED JOISTS UNDER BEARING PARTITION WITH BLOCKING AT PENETRATION

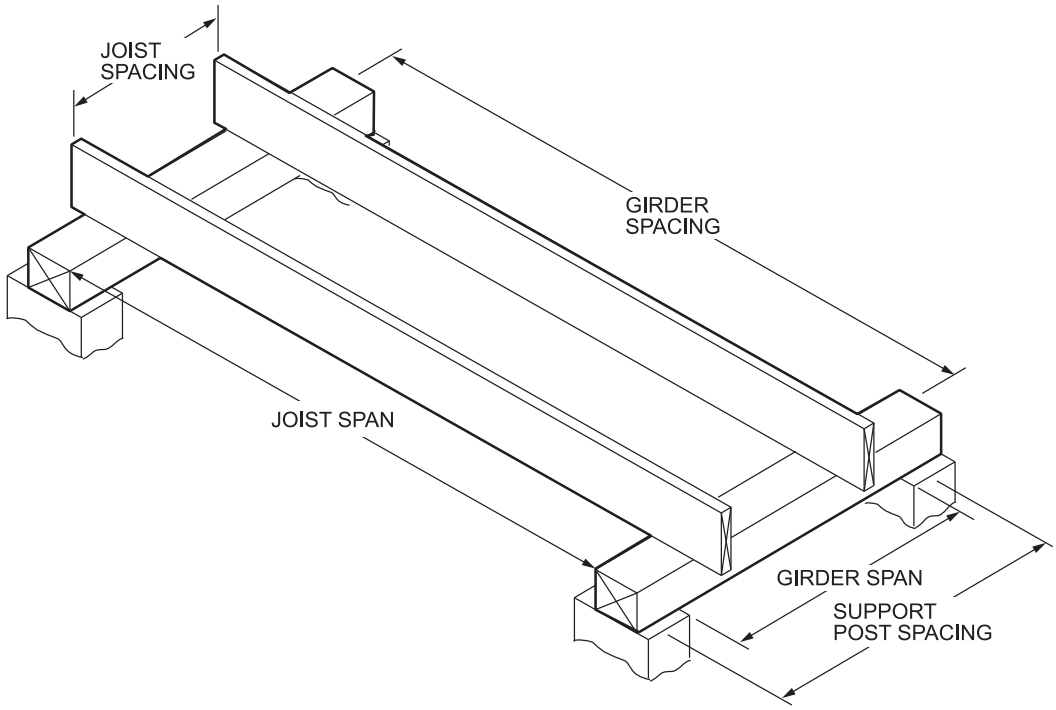

Figure R502.5(1)
GIRDER SPAN-SPACING RELATIONSHIP

INTERNATIONAL CODE COUNCIL®
Copyright © 2015 ICC. ALL RIGHTS RESERVED. Accessed by David Dammon on Jun 21, 2017 12:30:52 PM pursuant to License Agreement with ICC. No further reproduction or distribution authorized. ANY UNAUTHORIZED REPRODUCTION OR DISTRIBUTION IS A VIOLATION OF THE FEDERAL COPYRIGHT ACT AND THE LICENSE AGREEMENT, AND SUBJECT TO CIVIL AND CRIMINAL PENALTIES THEREUNDER.

R502.6 Bearing. The ends of each joist, beam or girder shall have not less than $1^1/_2$ inches (38 mm) of bearing on wood or metal and not less than 3 inches (76 mm) on masonry or concrete except where supported on a 1-inch by 4-inch (25 mm by 102 mm) ribbon strip and nailed to the adjacent stud or by the use of approved joist hangers. The bearing on masonry or concrete shall be direct, or a sill plate of 2-inch-minimum (51 mm) nominal thickness shall be provided under the joist, beam or girder. The sill plate shall provide a minimum nominal bearing area of 48 square inches (30 865 square mm).

❖ This section establishes minimum lengths of bearing for several alternative support systems to provide for the transfer of floor loads to supporting elements. These minimum requirements are based on anticipated loads and the allowable compressive stresses perpendicular to the grain for beam sizes and grades typical for wood-frame construction in addition to consideration of shear failure of the masonry. For joists, beams or girders bearing on wood or metal, the minimum bearing shown in Commentary Figure R502.6(1) must be provided.

As an alternative, the members may be supported by a 1-inch by 4-inch (25 mm by 102 mm) ribbon strip when joists are nailed to adjacent studs as shown in Commentary Figure R502.6(3) or by the use of approved joist hangers as shown in Commentary Figure R502.6(4).

When joists, beams or girders bear on masonry, a minimum bearing of 3 inches (76 mm) is required, as shown in Commentary Figure R502.6(2).

Where joists, beams or girders span across masonry or concrete piers, full bearing of not less than 3 inches (76 mm) directly on the masonry or concrete pier is required. The code permits a sill plate of 2-inch (51 mm) minimum nominal thickness in lieu of bearing directly on the masonry or concrete. This will allow for the condition where the elevation of the top of the pier is below the elevation of the bottom of the joist, beam or girder and the joist, beam or girder is not bearing directly on the masonry or concrete. The minimum nominal bearing area of 48 square inches (0.03 m^2) is required to provide a bearing area on top of hollow masonry walls or piers.

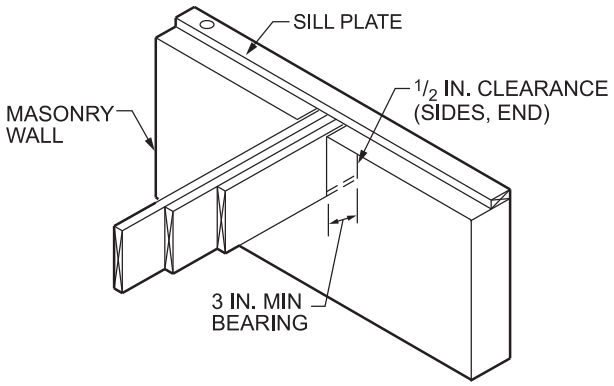

For SI: 1 inch = 25.4 mm.

Figure R502.6(2)
FLOOR JOIST BEARING ON MASONRY

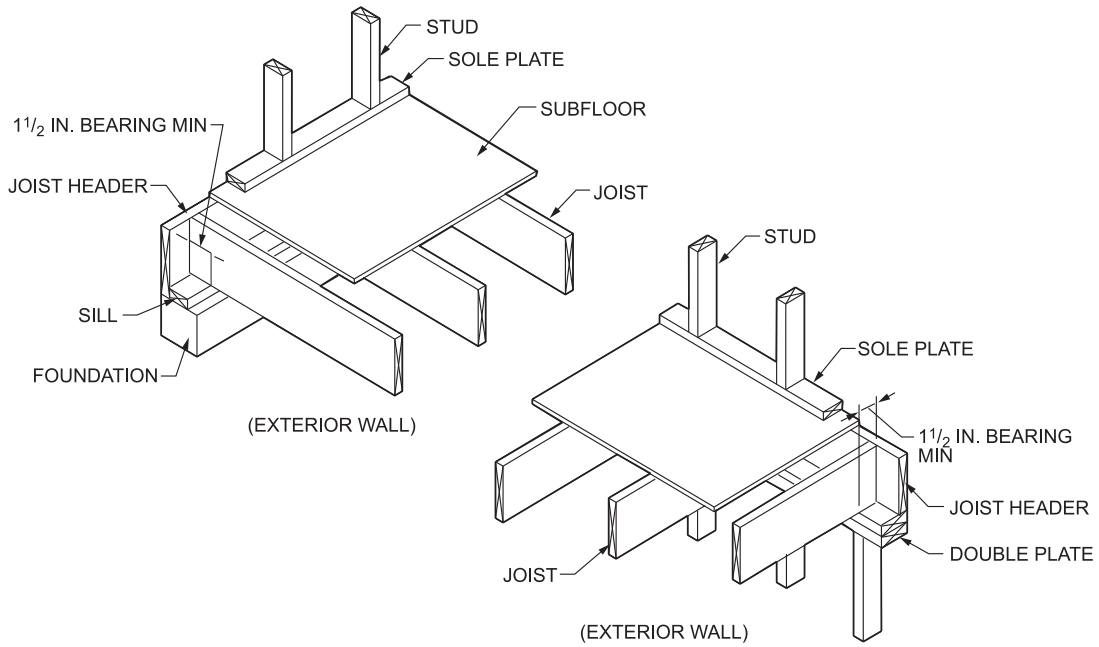

For SI: 1 inch = 25.4 mm.

Figure R502.6(1)
FLOOR JOIST BEARING ON WOOD

INTERNATIONAL CODE COUNCIL®
Copyright © 2015 ICC. ALL RIGHTS RESERVED. Accessed by David Dammon on Jun 21, 2017 12:30:52 PM pursuant to License Agreement with ICC. No further reproduction or distribution authorized. ANY UNAUTHORIZED REPRODUCTION OR DISTRIBUTION IS A VIOLATION OF THE FEDERAL COPYRIGHT ACT AND THE LICENSE AGREEMENT, AND SUBJECT TO CIVIL AND CRIMINAL PENALTIES THEREUNDER.

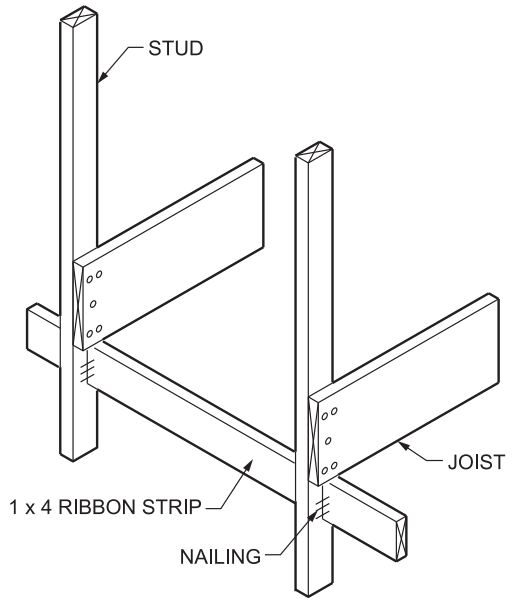

For SI: 1 inch = 25.4 mm.

Figure R502.6(3)
FLOOR JOIST BEARING ON RIBBON STRIP

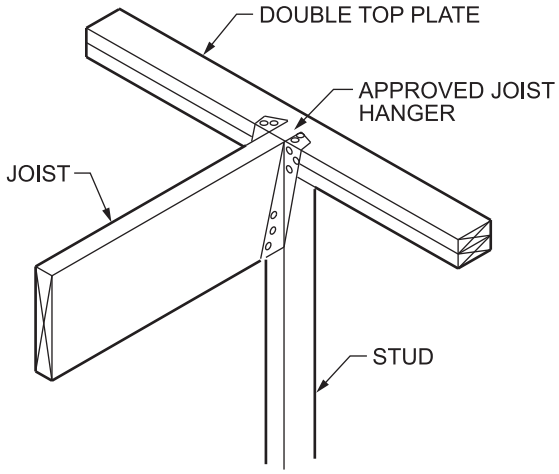

Figure R502.6(4)
JOIST HANGER AT DOUBLE TOP PLATE

R502.6.1 Floor systems. Joists framing from opposite sides over a bearing support shall lap not less than 3 inches (76 mm) and shall be nailed together with a minimum three 10d face nails. A wood or metal splice with strength equal to or greater than that provided by the nailed lap is permitted.

❖ To provide a concentric application of load from the joist to supporting beams or girders, joists framing from opposite sides of a beam or girder are required to lap at least 3 inches (76 mm) or the opposing joists are to be tied together with a wood or metal splice (see Commentary Figure R502.6.1).

R502.6.2 Joist framing. Joists framing into the side of a wood girder shall be supported by *approved* framing anchors or on ledger strips not less than nominal 2 inches by 2 inches (51 mm by 51 mm).

❖ For joists framed into the side of a wood beam or girder, the joists must be supported by approved framing anchors, as shown in Commentary Figure R502.6.2(1), or by ledger strips having a minimum nominal dimension of 2 inches (51 mm), as shown in Commentary Figure R502.6.2(2).

R502.7 Lateral restraint at supports. Joists shall be supported laterally at the ends by full-depth solid blocking not less than 2 inches (51 mm) nominal in thickness; or by attachment to a full-depth header, band or rim joist, or to an adjoining stud or shall be otherwise provided with lateral support to prevent rotation.

Exceptions:

1. Trusses, structural composite lumber, structural glued-laminated members and I-joists shall be supported laterally as required by the manufacturer's recommendations.
2. In Seismic Design Categories D_0, D_1 and D_2, lateral restraint shall be provided at each intermediate support.

❖ Bridging, blocking or some other acceptable means of holding a joist in place is required so the floor joists do not twist out of the plane of the applied load. Lateral support at the ends of joists provide an additional function by transferring lateral loads to the supporting elements. Lateral support at ends may be provided by full-depth solid blocking not less than 2 inches (51 mm) in thickness, or the ends of joists may be nailed or bolted to a full-depth header, band or rim joist or to an adjoining stud as shown in Commentary Figure R502.7.

The requirements for lateral restraint of engineered wood products may require restraint other than that required for solid-sawn joists. Exception 1 requires restraint of the engineered wood products to be as required by the manufacturer's recommendations. Lateral restraint at each intermediate support is required for joists in Seismic Design Categories D_0, D_1 and D_2.

R502.7.1 Bridging. Joists exceeding a nominal 2 inches by 12 inches (51 mm by 305 mm) shall be supported laterally by solid blocking, diagonal bridging (wood or metal), or a continuous 1 inch by 3 inch (25.4 mm by 76 mm) strip nailed across the bottom of joists perpendicular to joists at intervals not exceeding 8 feet (2438 mm).

Exception: Trusses, structural composite lumber, structural glued-laminated members and I-joists shall be sup-

INTERNATIONAL CODE COUNCIL®
Copyright © 2015 ICC. ALL RIGHTS RESERVED. Accessed by David Dammon on Jun 21, 2017 12:30:52 PM pursuant to License Agreement with ICC. No further reproduction or distribution authorized. ANY UNAUTHORIZED REPRODUCTION OR DISTRIBUTION IS A VIOLATION OF THE FEDERAL COPYRIGHT ACT AND THE LICENSE AGREEMENT, AND SUBJECT TO CIVIL AND CRIMINAL PENALTIES THEREUNDER.

ported laterally as required by the manufacturer's recommendations.

❖ In addition to the lateral support at the ends, joists must have intermediate lateral support at intervals not exceeding 8 feet (2438 mm). Intermediate blocking is not required for joists 2 inches by 12 inches (51 mm by 305 mm) or smaller. The intermediate lateral support may be provided by solid blocking, diagonal bridging or wood bridging not less than 1 inch by 3 inches (25 mm by 76 mm) nominal, nailed to the bottom of the joist. Commentary Figure R502.7.1 illustrates the various alternatives for intermediate lateral support.

The requirements for bridging of engineered wood products may require bridging other than that required for solid-sawn joists. Exception 1 requires bridging of the engineered wood products to be as required by the manufacturer's recommendations.

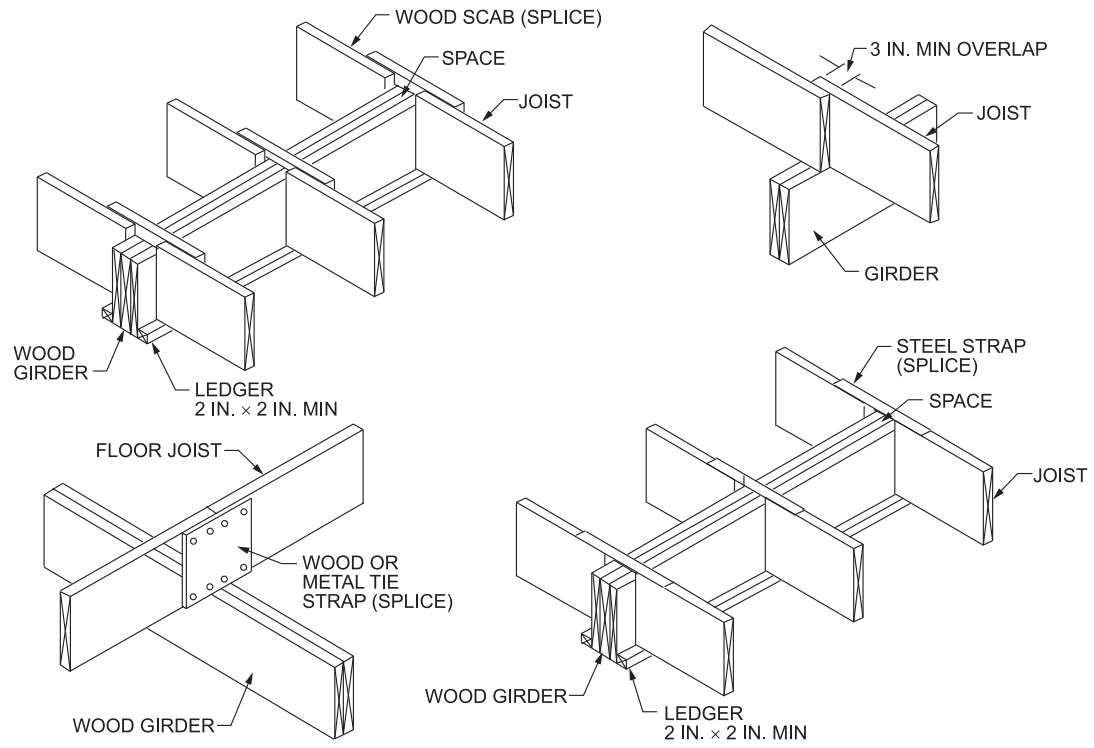

For SI: 1 inch = 25.4 mm.

Figure R502.6.1
JOIST AT GIRDER

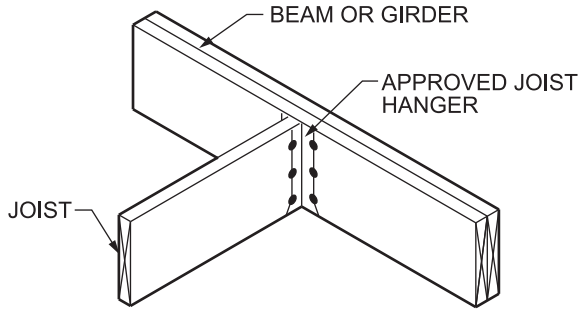

Figure R502.6.2(1)
JOIST HANGER AT GIRDER

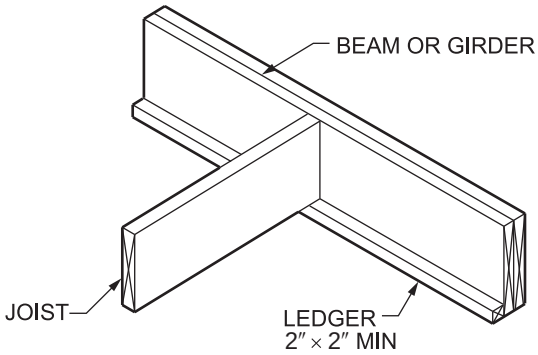

For SI: 1 inch = 25.4 mm.

Figure R502.6.2(2)
LEDGER STRIPS AT BEAM OR GIRDER

INTERNATIONAL CODE COUNCIL®
Copyright © 2015 ICC. ALL RIGHTS RESERVED. Accessed by David Dammon on Jun 21, 2017 12:30:52 PM pursuant to License Agreement with ICC. No further reproduction or distribution authorized. ANY UNAUTHORIZED REPRODUCTION OR DISTRIBUTION IS A VIOLATION OF THE FEDERAL COPYRIGHT ACT AND THE LICENSE AGREEMENT, AND SUBJECT TO CIVIL AND CRIMINAL PENALTIES THEREUNDER.

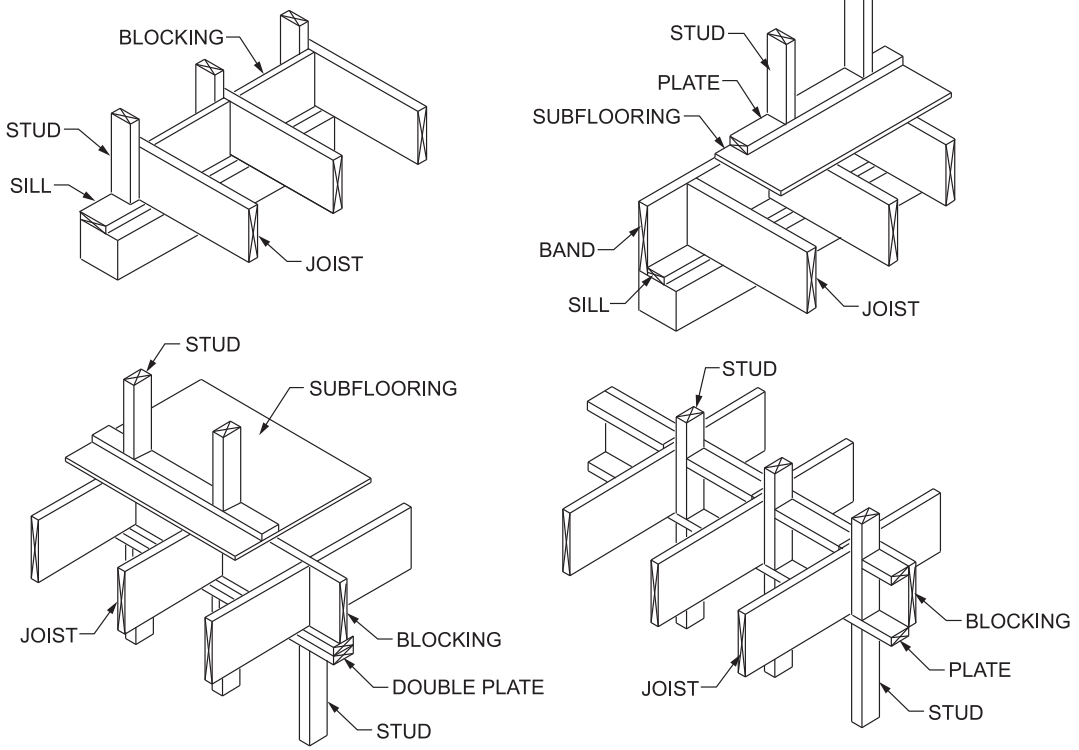

Figure R502.7
BLOCKING OF JOISTS

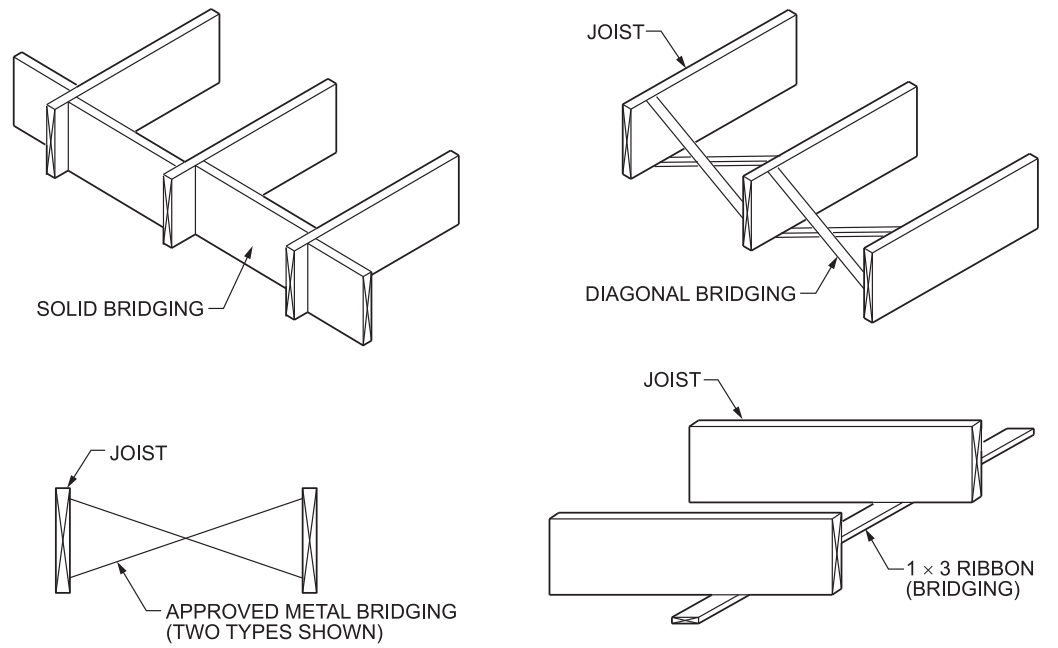

Figure R502.7.1
INTERMEDIATE LATERAL SUPPORT

INTERNATIONAL CODE COUNCIL®
Copyright © 2015 ICC. ALL RIGHTS RESERVED. Accessed by David Dammon on Jun 21, 2017 12:30:52 PM pursuant to License Agreement with ICC. No further reproduction or distribution authorized. ANY UNAUTHORIZED REPRODUCTION OR DISTRIBUTION IS A VIOLATION OF THE FEDERAL COPYRIGHT ACT AND THE LICENSE AGREEMENT, AND SUBJECT TO CIVIL AND CRIMINAL PENALTIES THEREUNDER.

R502.8 Cutting, drilling and notching. Structural floor members shall not be cut, bored or notched in excess of the limitations specified in this section. See Figure R502.8.

❖ Some designs and installation practices require that limited notching and cutting occur. Notching should be avoided when possible, and holes bored in beams and joists create the same problems as notches. When necessary, the holes should be located in areas with the least stress concentration, generally along the neutral axis of the joist. Limitations on the allowable cutting and notching of wood floor joists are meant to retain structural or functional integrity.

R502.8.1 Sawn lumber. Notches in solid lumber joists, rafters and beams shall not exceed one-sixth of the depth of the member, shall not be longer than one-third of the depth of the member and shall not be located in the middle one-third of the span. Notches at the ends of the member shall not exceed one-fourth the depth of the member. The tension side of members 4 inches (102 mm) or greater in nominal thickness shall not be notched except at the ends of the members. The diameter of holes bored or cut into members shall not exceed one-third the depth of the member. Holes shall not be closer than 2 inches (51 mm) to the top or bottom of the member, or to any other hole located in the member. Where the member is also notched, the hole shall not be closer than 2 inches (51 mm) to the notch.

❖ Cutting and notching limitations are illustrated in Figure R502.8. Additionally, the tension side of members with a thickness of 4 inches (102 mm) or more can be notched at the ends only (see commentary, Section R502.8).

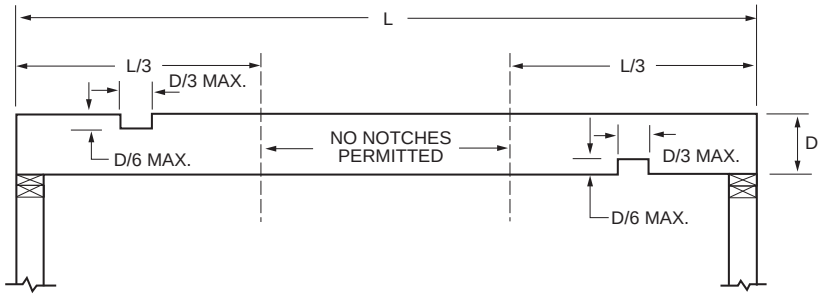

FLOOR JOIST— CENTER CUTS

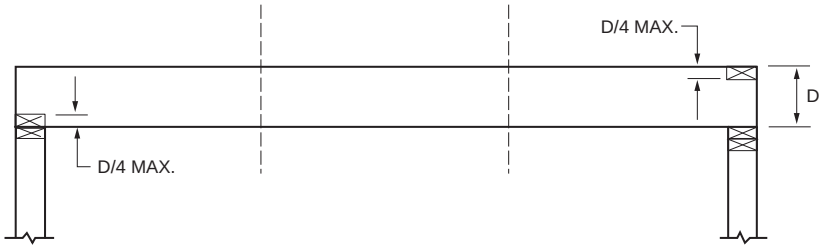

FLOOR JOIST— END CUTS

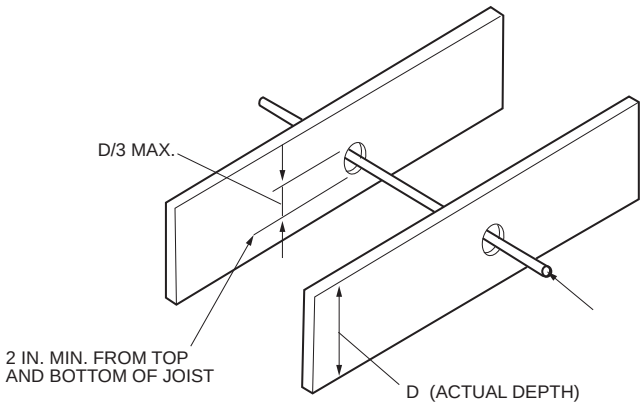

For SI: 1 inch = 25.4 mm.

FIGURE R502.8
CUTTING, NOTCHING AND DRILLING

INTERNATIONAL CODE COUNCIL®
Copyright © 2015 ICC. ALL RIGHTS RESERVED. Accessed by David Dammon on Jun 21, 2017 12:30:52 PM pursuant to License Agreement with ICC. No further reproduction or distribution authorized. ANY UNAUTHORIZED REPRODUCTION OR DISTRIBUTION IS A VIOLATION OF THE FEDERAL COPYRIGHT ACT AND THE LICENSE AGREEMENT, AND SUBJECT TO CIVIL AND CRIMINAL PENALTIES THEREUNDER.

R502.8.2 Engineered wood products. Cuts, notches and holes bored in trusses, structural composite lumber, structural glue-laminated members, cross-laminated timber members or I-joists are prohibited except where permitted by the manufacturer's recommendations or where the effects of such alterations are specifically considered in the design of the member by a *registered design professional*.

❖ Cutting and notching limitations for sawn lumber do not apply to engineered wood products. Structural composite lumber is a generic term which encompasses a variety of engineered composite wood products including laminated veneer lumber (LVL). Also, included in the term are laminated strand lumber (LSL), parallel strand lumber (PSL), and oriented strand lumber (OSL). The prohibitions in this section apply to all of these products.

Engineered wood products must not be cut, notched or bored unless those alterations are considered in the design of the member. That consideration must come from either the manufacturer and be reflected in use recommendations (which is common in I-joists, permitting some limited alterations to webs) or from a registered design professional.

R502.9 Fastening. Floor framing shall be nailed in accordance with Table R602.3(1). Where posts and beam or girder construction is used to support floor framing, positive connections shall be provided to ensure against uplift and lateral displacement.

❖ Commentary Figure R502.9 shows various methods of accomplishing the mandatory positive connection between post and beam or girder construction.

R502.10 Framing of openings. Openings in floor framing shall be framed with a header and trimmer joists. Where the header joist span does not exceed 4 feet (1219 mm), the header joist shall be a single member the same size as the floor joist. Single trimmer joists shall be used to carry a single header joist that is located within 3 feet (914 mm) of the trimmer joist bearing. Where the header joist span exceeds 4 feet (1219 mm), the trimmer joists and the header joist shall be doubled and of sufficient cross section to support the floor joists framing into the header.

❖ Where larger floor openings are necessary, adequate load-carrying transfer capability must be provided. Header joists the same size as floor joists may be used for spans not exceeding 4 feet (1219 mm), as shown in Commentary Figure R502.10(1). Trimmers must also be doubled to carry the additional load, unless the header joist is located within 3 feet (914 mm) of the trimmer joist bearing.

Where the header joist span exceeds 4 feet (1219 mm), a larger load-carrying capability is required. The header and trimmer joists must be doubled and be of sufficient size to support floor joist framing as illustrated in Commentary Figure R502.10(2).

In some cases, nailing would be insufficient to transfer vertical loads. Therefore, positive connections as shown in Commentary Figure R502.10(3) must be used. These hangers are required when the header joist span exceeds 6 feet (1829 mm).

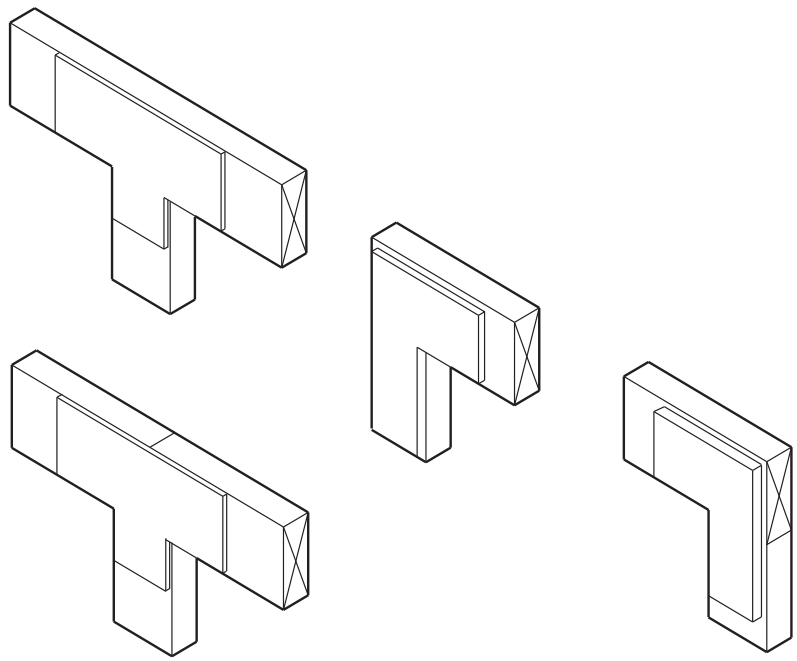

Figure R502.9
POSITIVE CONNECTION BETWEEN POSTS AND GIRDERS

INTERNATIONAL CODE COUNCIL®
Copyright © 2015 ICC. ALL RIGHTS RESERVED. Accessed by David Dammon on Jun 21, 2017 12:30:52 PM pursuant to License Agreement with ICC. No further reproduction or distribution authorized. ANY UNAUTHORIZED REPRODUCTION OR DISTRIBUTION IS A VIOLATION OF THE FEDERAL COPYRIGHT ACT AND THE LICENSE AGREEMENT, AND SUBJECT TO CIVIL AND CRIMINAL PENALTIES THEREUNDER.

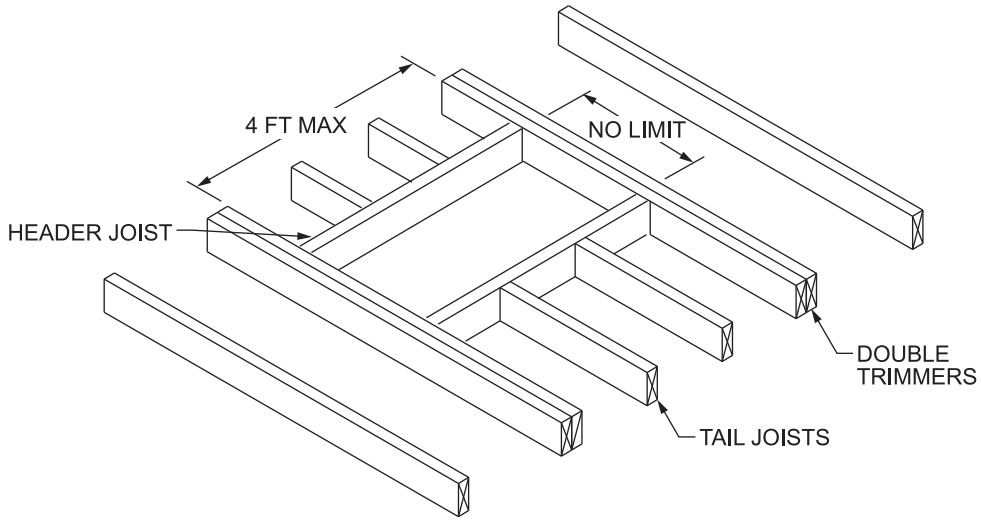

For SI: 1 foot = 304.8 mm.

Figure R502.10(1)
FLOOR FRAMING FOR MAXIMUM 4-FOOT OPENINGS

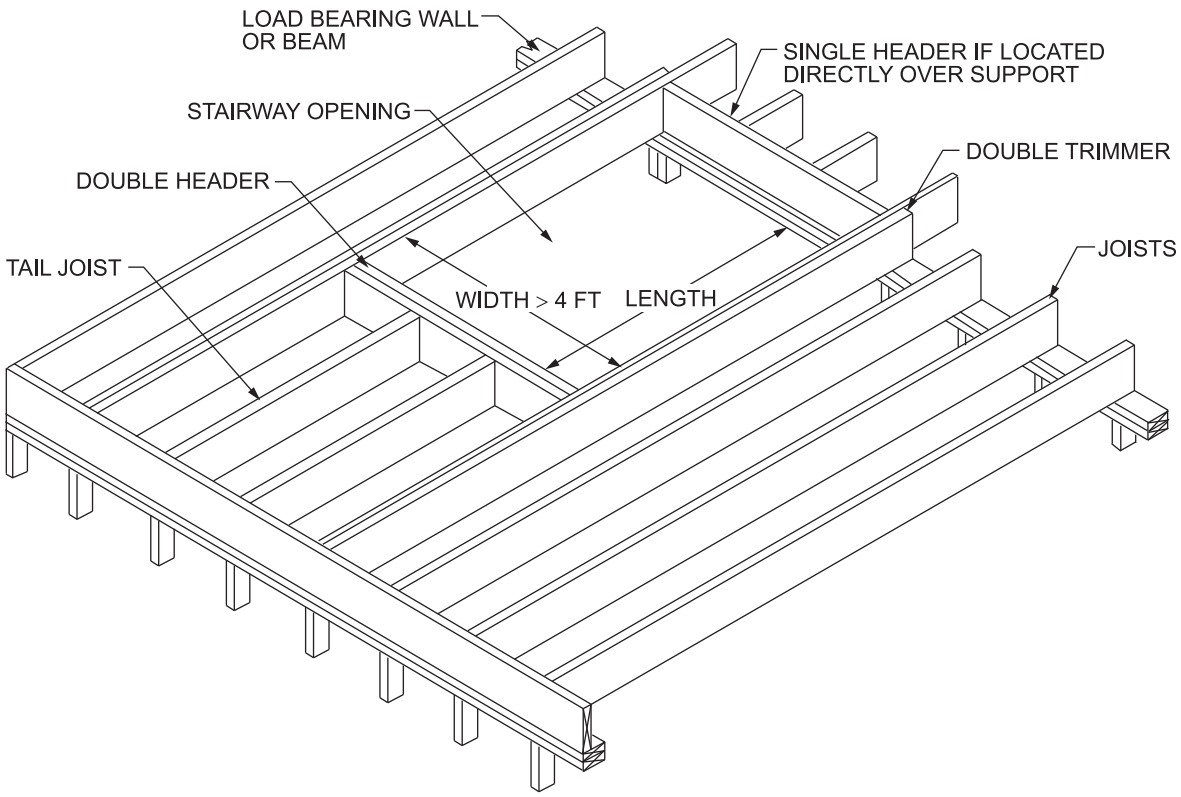

For SI: 1 foot = 304.8 mm.

Figure R502.10(2)
FLOOR FRAMING FOR GREATER THAN 4-FOOT OPENINGS

INTERNATIONAL CODE COUNCIL®
Copyright © 2015 ICC. ALL RIGHTS RESERVED. Accessed by David Dammon on Jun 21, 2017 12:30:52 PM pursuant to License Agreement with ICC. No further reproduction or distribution authorized. ANY UNAUTHORIZED REPRODUCTION OR DISTRIBUTION IS A VIOLATION OF THE FEDERAL COPYRIGHT ACT AND THE LICENSE AGREEMENT, AND SUBJECT TO CIVIL AND CRIMINAL PENALTIES THEREUNDER.

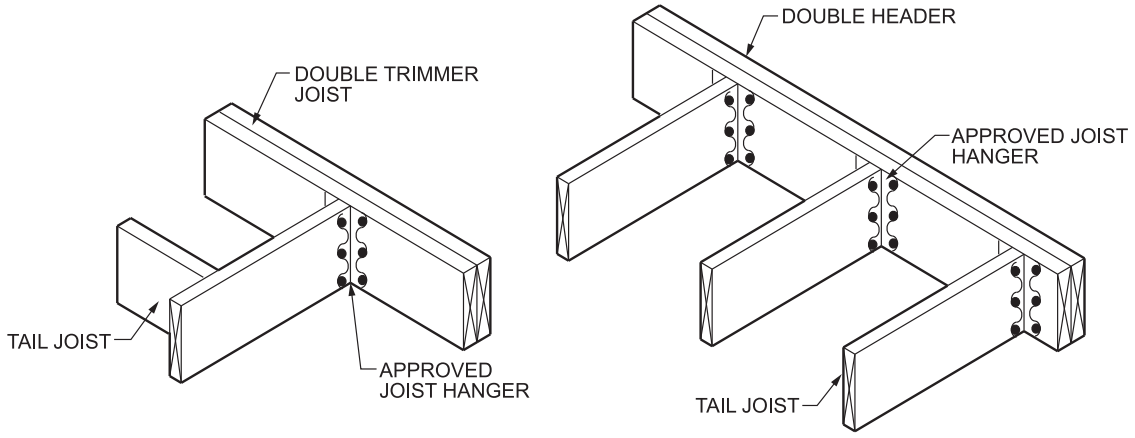

Figure R502.10(3)
HANGERS FOR JOIST-HEADER CONNECTION

R502.11 Wood trusses.

R502.11.1 Design. Wood trusses shall be designed in accordance with *approved* engineering practice. The design and manufacture of metal-plate-connected wood trusses shall comply with ANSI/TPI 1. The truss design drawings shall be prepared by a registered professional where required by the statutes of the *jurisdiction* in which the project is to be constructed in accordance with Section R106.1.

❖ The code contains no prescriptive provisions for the design and installation of wood trusses. A design that conforms to accepted engineering practice is required. Recognizing the extensive use of trusses in residential construction, the code references ANSI/TPI 1, *National Design Standard for Metal-plate-connected Wood Truss Construction*. The standard contains regulations for the design and installation of metal-plate-connected wood trusses, including the procedures for full-scale tests and testing methods for evaluating metal plate connectors. In addition to adequate design, it is important that the trusses be handled and erected properly so that the performance capability of the trusses is not compromised. A truss member should never be cut without approval from the design engineer.

Usually trusses are delivered in bundles, which reduces the potential for damage. Slings and spreader bars sized for the load should be used to reduce stresses caused by sway and bending.

Shop drawings showing the lumber schedule, design loads and panel point details (size, location and attachment of plates) should be filed with the building permit application and should be available at the time of inspection.

R502.11.2 Bracing. Trusses shall be braced to prevent rotation and provide lateral stability in accordance with the requirements specified in the *construction documents* for the building and on the individual truss design drawings. In the absence of specific bracing requirements, trusses shall be braced in accordance with accepted industry practices, such as, the SBCA *Building Component Safety Information (BCSI) Guide to Good Practice for Handling, Installing & Bracing of Metal Plate Connected Wood Trusses*.

❖ To prevent collapse during construction and until permanent bracing is installed, trusses should be adequately braced temporarily. When braced for use, trusses should be positioned as vertical as possible; tilted trusses will not perform as required.

R502.11.3 Alterations to trusses. Truss members and components shall not be cut, notched, spliced or otherwise altered in any way without the approval of a registered *design professional*. *Alterations* resulting in the addition of load that exceed the design load for the truss, shall not be permitted without verification that the truss is capable of supporting the additional loading.

❖ Addition of loads in excess of the design load is allowed only if the additional capacity of the truss can be verified. Also see the commentary to Section R502.8.2.

R502.11.4 Truss design drawings. Truss design drawings, prepared in compliance with Section R502.11.1, shall be submitted to the *building official* and *approved* prior to installation. Truss design drawings shall be provided with the shipment of trusses delivered to the job site. Truss design drawings shall include, at a minimum, the information specified as follows:

1. Slope or depth, span and spacing.
2. Location of all joints.
3. Required bearing widths.
4. Design loads as applicable:
   4.1. Top chord live load.
   4.2. Top chord dead load.

INTERNATIONAL CODE COUNCIL®
Copyright © 2015 ICC. ALL RIGHTS RESERVED. Accessed by David Dammon on Jun 21, 2017 12:30:52 PM pursuant to License Agreement with ICC. No further reproduction or distribution authorized. ANY UNAUTHORIZED REPRODUCTION OR DISTRIBUTION IS A VIOLATION OF THE FEDERAL COPYRIGHT ACT AND THE LICENSE AGREEMENT, AND SUBJECT TO CIVIL AND CRIMINAL PENALTIES THEREUNDER.

4.3. Bottom chord live load.

4.4. Bottom chord dead load.

4.5. Concentrated loads and their points of application.

4.6. Controlling wind and earthquake loads.

5. Adjustments to lumber and joint connector design values for conditions of use.
6. Each reaction force and direction.
7. Joint connector type and description, such as size, thickness or gage, and the dimensioned location of each joint connector except where symmetrically located relative to the joint interface.
8. Lumber size, species and grade for each member.
9. Connection requirements for:

   9.1. Truss-to-girder-truss.

   9.2. Truss ply-to-ply.

   9.3. Field splices.
10. Calculated deflection ratio and/or maximum description for live and total load.
11. Maximum axial compression forces in the truss members to enable the building designer to design the size, connections and anchorage of the permanent continuous lateral bracing. Forces shall be shown on the truss drawing or on supplemental documents.
12. Required permanent truss member bracing location.

❖ See the definition in Chapter 2 and the commentary to Section R502.11.1.

R502.12 Draftstopping required. Draftstopping shall be provided in accordance with Section R302.12.

❖ See the commentary to Section R302.12.

R502.13 Fireblocking required. Fireblocking shall be provided in accordance with Section R302.11.

❖ See the commentary to Section R302.11.

SECTION R503
FLOOR SHEATHING

R503.1 Lumber sheathing. Maximum allowable spans for lumber used as floor sheathing shall conform to Tables R503.1, R503.2.1.1(1) and R503.2.1.1(2).

❖ Table R503.1 sets forth the required thickness of lumber used as floor sheathing. The allowable spans are based on the floor sheathing thickness, joist spacing and the orientation of the sheathing with respect to the joist. Commentary Figures R503.1(1) and R503.1(2) show floor sheathing applications that are perpendicular and diagonal to the joist.

TABLE R503.1
MINIMUM THICKNESS OF LUMBER FLOOR SHEATHING

JOIST OR BEAM SPACING (inches)	MINIMUM NET THICKNESS	
	Perpendicular to joist	Diagonal to joist
24	$^{11}/_{16}$	$^{3}/_{4}$
16	$^{5}/_{8}$	$^{5}/_{8}$
48[a]	$1^{1}/_{2}$ T & G	N/A
54[b]		
60[c]		

For SI: 1 inch = 25.4 mm, 1 pound per square inch = 6.895 kPa.

N/A = Not applicable.

a. For this support spacing, lumber sheathing shall have a minimum F_b of 675 and minimum E of 1,100,000 (see ANSI AWC NDS).

b. For this support spacing, lumber sheathing shall have a minimum F_b of 765 and minimum E of 1,400,000 (see ANSI AWC NDS).

c. For this support spacing, lumber sheathing shall have a minimum F_b of 855 and minimum E of 1,700,000 (see ANSI AWC NDS).

❖ See the commentary to Section R503.1.

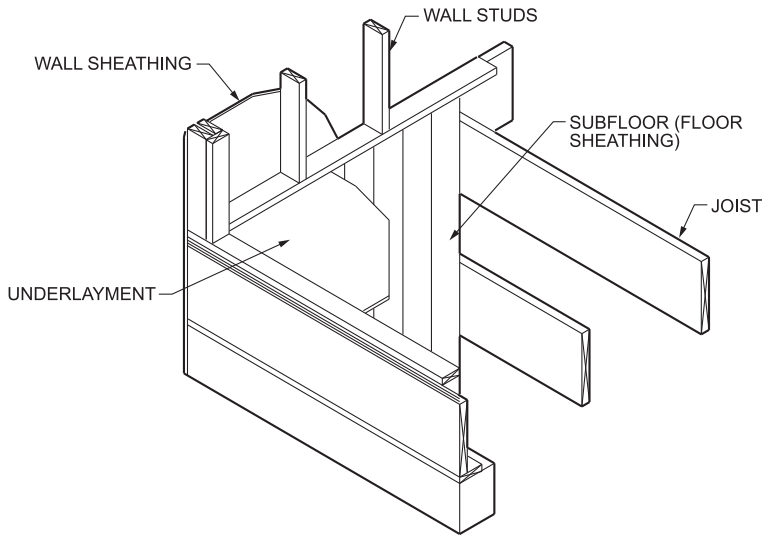

Figure R503.1(1)
FLOOR SHEATHING AS SUBFLOORING

INTERNATIONAL CODE COUNCIL®
Copyright © 2015 ICC. ALL RIGHTS RESERVED. Accessed by David Dammon on Jun 21, 2017 12:30:52 PM pursuant to License Agreement with ICC. No further reproduction or distribution authorized. ANY UNAUTHORIZED REPRODUCTION OR DISTRIBUTION IS A VIOLATION OF THE FEDERAL COPYRIGHT ACT AND THE LICENSE AGREEMENT, AND SUBJECT TO CIVIL AND CRIMINAL PENALTIES THEREUNDER.

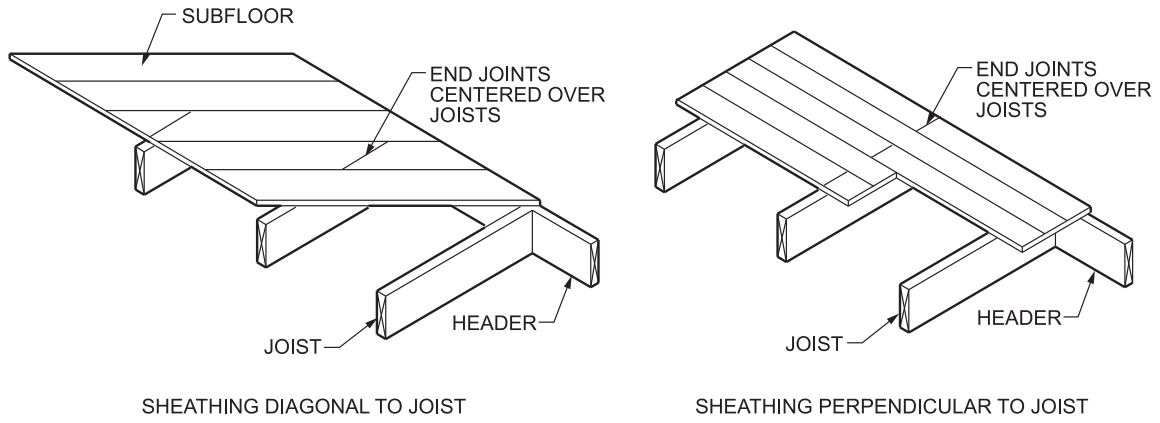

Figure R503.1(2)
SUBFLOOR (FLOOR SHEATHING) ORIENTATION

R503.1.1 End joints. End joints in lumber used as subflooring shall occur over supports unless end-matched lumber is used, in which case each piece shall bear on not less than two joists. Subflooring shall be permitted to be omitted where joist spacing does not exceed 16 inches (406 mm) and a 1-inch (25 mm) nominal tongue-and-groove wood strip flooring is applied perpendicular to the joists.

❖ When lumber is to be used as subflooring, adequate load-carrying capability and continuity must be provided through either the proper placement of end joints over supports or the use of end-matched lumber as illustrated in Commentary Figure R503.1.1.

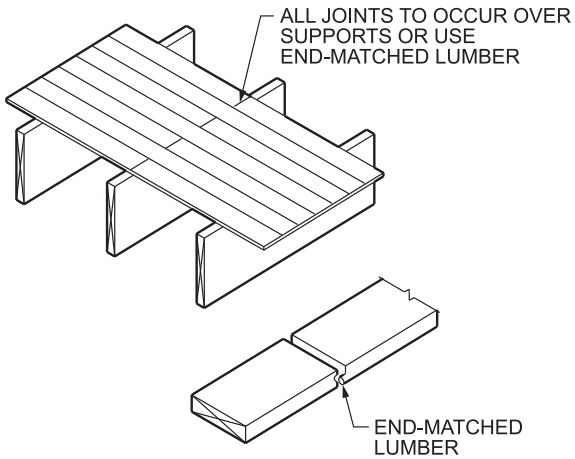

Figure R503.1.1
SUBFLOOR (FLOOR SHEATHING) ORIENTATION

R503.2 Wood structural panel sheathing.

❖ Wood structural panels are manufactured with fully waterproof adhesive and include plywood, oriented strand board (OSB) and composite panels made up of a combination of wood veneers and reconstructed wood layers. Additional information on wood structural panels is available from the APA—The Engineered Wood Association (formerly the American Plywood Association), other trade groups and manufacturers.

Plywood is a wood structural panel manufactured by gluing three or more cross-laminated wood layers together. Plywood may be manufactured in accordance with PS 1 or PS 2. It is inspected, and if it is certified, the trademark of an approved testing and grading agency is stamped on it.

OSB panels are fabricated out of multiple layers of wood flakes or strands called “furnish.” Like the layers in plywood, these layers of furnish are oriented 90 degrees (1.57 rad) to each other. This gives OSB panels properties that are very similar to those of plywood.

Composite panels are structural panels made up of a combination of wood veneers and wood-based materials. The wood veneer usually forms the two outer layers and may also be used in the core of the panel. These layers of veneer and furnish may be cross laminated.

Both OSB and composite panels are manufactured in accordance with PS 2. They are inspected, and if they are certified, the trademark of an approved testing and grading agency is stamped on them. The grade stamps of plywood, OSB and composite panels are almost identical in appearance, and in most cases, wood structural panels can be specified without regard to specific panel type.

Wood structural panels can be manufactured with Exterior, Exposure 1, Exposure 2 and Interior exposure durability classifications. Exterior and Exposure 1 are by far the most common classifications and both are manufactured with the same class of fully waterproof adhesives. Exterior panels are intended for applications subject to permanent exposure to the weather or moisture. Exposure 1 panels are intended for applications where long construction delays may be expected prior to protection being installed. Exposure 2 panels may be used for protected applications that

INTERNATIONAL CODE COUNCIL®
Copyright © 2015 ICC. ALL RIGHTS RESERVED. Accessed by David Dammon on Jun 21, 2017 12:30:52 PM pursuant to License Agreement with ICC. No further reproduction or distribution authorized. ANY UNAUTHORIZED REPRODUCTION OR DISTRIBUTION IS A VIOLATION OF THE FEDERAL COPYRIGHT ACT AND THE LICENSE AGREEMENT, AND SUBJECT TO CIVIL AND CRIMINAL PENALTIES THEREUNDER.

are not continuously exposed to high humidity conditions. Interior panels may be used only for permanently protected interior applications. Exposure 2 and Interior panels are not readily available.

The intended end use of wood structural panels is designated in their grade-marking stamp.

R503.2.1 Identification and grade. Wood structural panel sheathing used for structural purposes shall conform to DOC PS 1, DOC PS 2, CSA O437 or CSA O325. Panels shall be identified for grade, bond classification and Performance Category by a grade mark or certificate of inspection issued by an approved agency. The Performance Category value shall be used as the "nominal panel thickness" or "panel thickness" wherever referenced in this code.

❖ Plywood that performs a load-carrying function in floor construction must conform to a known quality control standard; therefore, a method of identifying the limitations under which the plywood may be used is needed. This is accomplished by a grade mark or certificate of inspection issued by an approved agency. Examples of plywood grade marks are shown in Commentary Figure R503.2.1.

R503.2.1.1 Subfloor and combined subfloor underlayment. Where used as subflooring or combination subfloor underlayment, wood structural panels shall be of one of the grades specified in Table R503.2.1.1(1). Where sanded plywood is used as combination subfloor underlayment, the grade, bond classification, and Performance Category shall be as specified in Table R503.2.1.1(2).

❖ This section specifies grades of wood structural panels when they are used as subflooring or combination subflooring underlayment. It also addresses the use of sanded plywood as a combination subfloor underlayment.

A floor system could consist of three elements: 1. A subfloor; 2. An underlayment or a combination subfloor/underlayment system; and 3. A finished floor surface material. A finished surfacing material may be wood-strip flooring; tongue-and-groove flooring or various types of resilient flooring coverings such as vinyl, tile or carpeting.

Wood structural panels are manufactured for use as either structural subfloor or combination subfloor underlayment. The allowable spans for structural subfloorings and combination subfloor underlayment are based on the wood structural panels' face grain strength axis parallel to its supporting member, or they are based on the panels being continuous over two or more spans, with a face grain placed perpendicular to the supports. These qualifications are critical in determining the permissible spans. Most wood structural panels are considerably stronger when their face grain is parallel to the

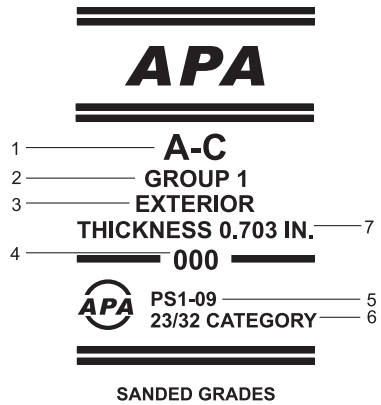

1 Panel grade
2 Species group number
3 Bond classification
4 Mill number
5 PS 1 standard
6 Panel performance category
7 Mill thickness declaration

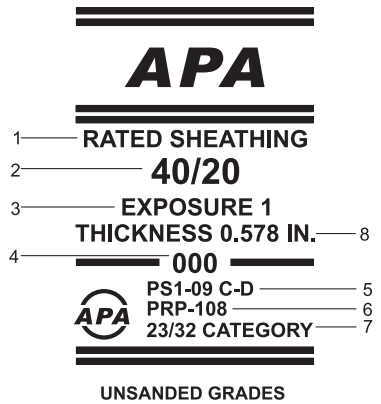

1 APA proprietary panel grade name
2 Span rating
3 Bond classification
4 Mill number
5 PS 1 standard & panel grade name
6 APA proprietary performance standard
7 Panel performance category
8 Mill thickness declaration

Figure R503.2.1
PLYWOOD GRADE MARK EXAMPLES

INTERNATIONAL CODE COUNCIL®
Copyright © 2015 ICC. ALL RIGHTS RESERVED. Accessed by David Dammon on Jun 21, 2017 12:30:52 PM pursuant to License Agreement with ICC. No further reproduction or distribution authorized. ANY UNAUTHORIZED REPRODUCTION OR DISTRIBUTION IS A VIOLATION OF THE FEDERAL COPYRIGHT ACT AND THE LICENSE AGREEMENT, AND SUBJECT TO CIVIL AND CRIMINAL PENALTIES THEREUNDER.

supports and continuous over two or more spans. Panels with multiple spans have greater capacity than those that are simply supported between the two joists.

TABLE R503.2.1.1(1). See below.

❖ The maximum spans for wood structural panel floor and roof sheathing are limited by the stresses and deflection imposed by the design live loads. For convenience, the trademarks of the inspection agencies include a span rating, which appears as two numbers separated by a slash (32/16 or 48/24, for example). The first number represents the maximum recommended span for roof sheathing when the panels are applied with the long dimension (strength axis) across three or more supports and the edges are blocked or when other support required by the table is provided. The second number indicates the maximum recommended span when the panel is used for structural floor sheathing with the panels applied with the long dimension (strength axis) across three or more supports. Single panels intended for single floor applications will be marked with a single number representing this span.

The edges of the wood structural panels between floor supports are prevented from moving relative to each other by tongue and groove panel edges, by the addition of wood blocking or by the use of an approved underlayment or structural finished floor system.

TABLE R503.2.1.1(1)
ALLOWABLE SPANS AND LOADS FOR WOOD STRUCTURAL PANELS FOR ROOF AND SUBFLOOR SHEATHING AND COMBINATION SUBFLOOR UNDERLAYMENT[a, b, c]

SPAN RATING	MINIMUM NOMINAL PANEL THICKNESS (inch)	ALLOWABLE LIVE LOAD (psf)[h, l]		MAXIMUM SPAN (inches)		LOAD (pounds per square foot, at maximum span)		MAXIMUM SPAN (inches)
		SPAN @ 16″ o.c.	SPAN @ 24″ o.c.	With edge support[d]	Without edge support	Total load	Live load	
Sheathing[e]				Roof[f]				Subfloor[j]
16/0	3/8	30	—	16	16	40	30	0
20/0	3/8	50	—	20	20	40	30	0
24/0	3/8	100	30	24	20[g]	40	30	0
24/16	7/16	100	40	24	24	50	40	16
32/16	15/32, 1/2	180	70	32	28	40	30	16[h]
40/20	19/32, 5/8	305	130	40	32	40	30	20[h, i]
48/24	23/32, 3/4	—	175	48	36	45	35	24
60/32	7/8	—	305	60	48	45	35	32
Underlayment, C-C plugged, single floor[e]				Roof[f]				Combination subfloor underlayment[k]
16 o.c.	19/32, 5/8	100	40	24	24	50	40	16[i]
20 o.c.	19/32, 5/8	150	60	32	32	40	30	20[i, j]
24 o.c.	23/32, 3/4	240	100	48	36	35	25	24
32 o.c.	7/8	—	185	48	40	50	40	32
48 o.c.	1 3/32, 1 1/8	—	290	60	48	50	40	48

For SI: 1 inch = 25.4 mm, 1 pound per square foot = 0.0479 kPa.

a. The allowable total loads were determined using a dead load of 10 psf. If the dead load exceeds 10 psf, then the live load shall be reduced accordingly.

b. Panels continuous over two or more spans with long dimension (strength axis) perpendicular to supports. Spans shall be limited to values shown because of possible effect of concentrated loads.

c. Applies to panels 24 inches or wider.

d. Lumber blocking, panel edge clips (one midway between each support, except two equally spaced between supports where span is 48 inches), tongue-and-groove panel edges, or other approved type of edge support.

e. Includes Structural I panels in these grades.

f. Uniform load deflection limitation: 1/180 of span under live load plus dead load, 1/240 of span under live load only.

g. Maximum span 24 inches for 15/32-and 1/2-inch panels.

h. Maximum span 24 inches where 3/4-inch wood finish flooring is installed at right angles to joists.

i. Maximum span 24 inches where 1.5 inches of lightweight concrete or approved cellular concrete is placed over the subfloor.

j. Unsupported edges shall have tongue-and-groove joints or shall be supported with blocking unless minimum nominal 1/4-inch-thick wood panel-type underlayment, fiber-cement underlayment with end and edge joints offset not less than 2 inches or 1 1/2 inches of lightweight concrete or approved cellular concrete is placed over the subfloor, or 3/4-inch wood finish flooring is installed at right angles to the supports. Fiber-cement underlayment shall comply with ASTM C1288 or ISO 8336 Category C. Allowable uniform live load at maximum span, based on deflection of 1/360 of span, is 100 psf.

k. Unsupported edges shall have tongue-and-groove joints or shall be supported by blocking unless nominal 1/4-inch-thick wood panel-type underlayment, fiber-cement underlayment with end and edge joints offset not less than 2 inches or 3/4-inch wood finish flooring is installed at right angles to the supports. Fiber-cement underlayment shall comply with ASTM C1288 or ISO 8336 Category C. Allowable uniform live load at maximum span, based on deflection of 1/360 of span, is 100 psf, except panels with a span rating of 48 on center are limited to 65 psf total uniform load at maximum span.

l. Allowable live load values at spans of 16 inches on center and 24 inches on center taken from reference standard APA E30, APA Engineered Wood Construction Guide. Refer to reference standard for allowable spans not listed in the table.

INTERNATIONAL CODE COUNCIL®
Copyright © 2015 ICC. ALL RIGHTS RESERVED. Accessed by David Dammon on Jun 21, 2017 12:30:52 PM pursuant to License Agreement with ICC. No further reproduction or distribution authorized. ANY UNAUTHORIZED REPRODUCTION OR DISTRIBUTION IS A VIOLATION OF THE FEDERAL COPYRIGHT ACT AND THE LICENSE AGREEMENT, AND SUBJECT TO CIVIL AND CRIMINAL PENALTIES THEREUNDER.

TABLE R503.2.1.1(2)
ALLOWABLE SPANS FOR SANDED PLYWOOD COMBINATION SUBFLOOR UNDERLAYMENT[a]

IDENTIFICATION	SPACING OF JOISTS (inches)		
	16	20	24
Species group[b]	—	—	—
1	1/2	5/8	3/4
2, 3	5/8	3/4	7/8
4	3/4	7/8	1

For SI: 1 inch = 25.4 mm, 1 pound per square foot = 0.0479 kPa.

a. Plywood continuous over two or more spans and face grain perpendicular to supports. Unsupported edges shall be tongue-and-groove or blocked except where nominal 1/4-inch-thick wood panel-type underlayment, fiber-cement underlayment or 3/4-inch wood finish floor is used. Fiber-cement underlayment shall comply with ASTM C 1288 or ISO 8336 Category C. Allowable uniform live load at maximum span based on deflection of 1/360 of span is 100 psf.

b. Applicable to all grades of sanded exterior-type plywood.

❖ For exterior-type sanded plywood grades, the thickness required for a specific span is related to the species grouping of the panel used. For example, species Group 1 may be 1/2 inch (12.7 mm) for 16-inch (406 mm) joist spacing, but Group 4 will require a thickness of 3/4 inch (19.1 mm) for the same span.

When the panels are used as a combination subfloor/underlayment, extra precautions should be observed in attaching the panels to the floor framing. Joints in adjacent panels should not be continuous and should not occur at locations where the orientation of the joist supports is different.

R503.2.2 Allowable spans. The maximum allowable span for wood structural panels used as subfloor or combination subfloor underlayment shall be as set forth in Table R503.2.1.1(1), or APA E30. The maximum span for sanded plywood combination subfloor underlayment shall be as set forth in Table R503.2.1.1(2).

❖ Table R503.2.1.1(1) indicates spans for plywood and wood structural panels used as subflooring. This table also covers roof sheathing and is referenced in Section R803.2.2 for that purpose. The span limitations are predicated on the grade of plywood used. In the case of rated sheathing used as structural subflooring, the maximum span is easily identified through the panel span rating (identification index). Where the panel span rating is stamped on the sheet of plywood, the denominator represents the allowable span of the plywood floor sheathing [see Commentary Figure R503.2.2(1)]. An illustration of the limitations imposed by Notes j and k to Table R503.2.1.1(1) on combination subfloor underlayment applications is illustrated in Commentary Figure R503.2.2(2). Allowable increases in the maximum span for certain span ratings are permitted as described in Notes h and i to Table R503.2.1.1(1).

In lieu of using Table R503.2.1.1(1), the code permits the use of APA E30, *Engineered Wood Construction Guide*.

When plywood combination subfloor underlayment is to be used, the allowable span as listed in Table R503.2.1.1(2) is applicable to underlayment grade C-C plugged and sanded exterior-type plywood of specific species.

R503.2.3 Installation. Wood structural panels used as subfloor or combination subfloor underlayment shall be attached to wood framing in accordance with Table R602.3(1) and shall be attached to cold-formed steel framing in accordance with Table R505.3.1(2).

❖ This section refers to the wood framing fastener schedule in Chapter 6 and the cold-formed steel floor-fastening schedule in Table R505.3.1(2).

R503.3 Particleboard.

❖ Particleboard is a generic term given to panels manufactured from cellulosic materials, usually wood in the form of discrete pieces and particles rather than fibers. The particles and pieces are combined with synthetic resins and other binders and bonded together under heat and pressure. Particleboard must conform to ANSI A208.1.

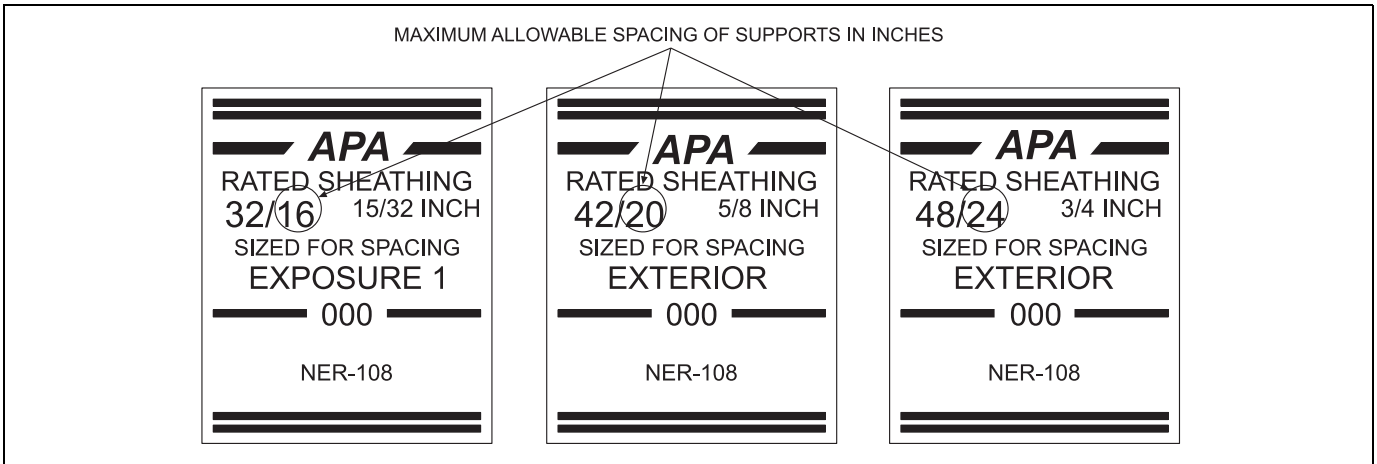

For SI: 1 inch = 25.4 mm.

Figure R503.2.2(1)
IDENTIFICATION OF PLYWOOD SUBFLOOR SPAN LIMITATIONS

INTERNATIONAL CODE COUNCIL®
Copyright © 2015 ICC. ALL RIGHTS RESERVED. Accessed by David Dammon on Jun 21, 2017 12:30:52 PM pursuant to License Agreement with ICC. No further reproduction or distribution authorized. ANY UNAUTHORIZED REPRODUCTION OR DISTRIBUTION IS A VIOLATION OF THE FEDERAL COPYRIGHT ACT AND THE LICENSE AGREEMENT, AND SUBJECT TO CIVIL AND CRIMINAL PENALTIES THEREUNDER.

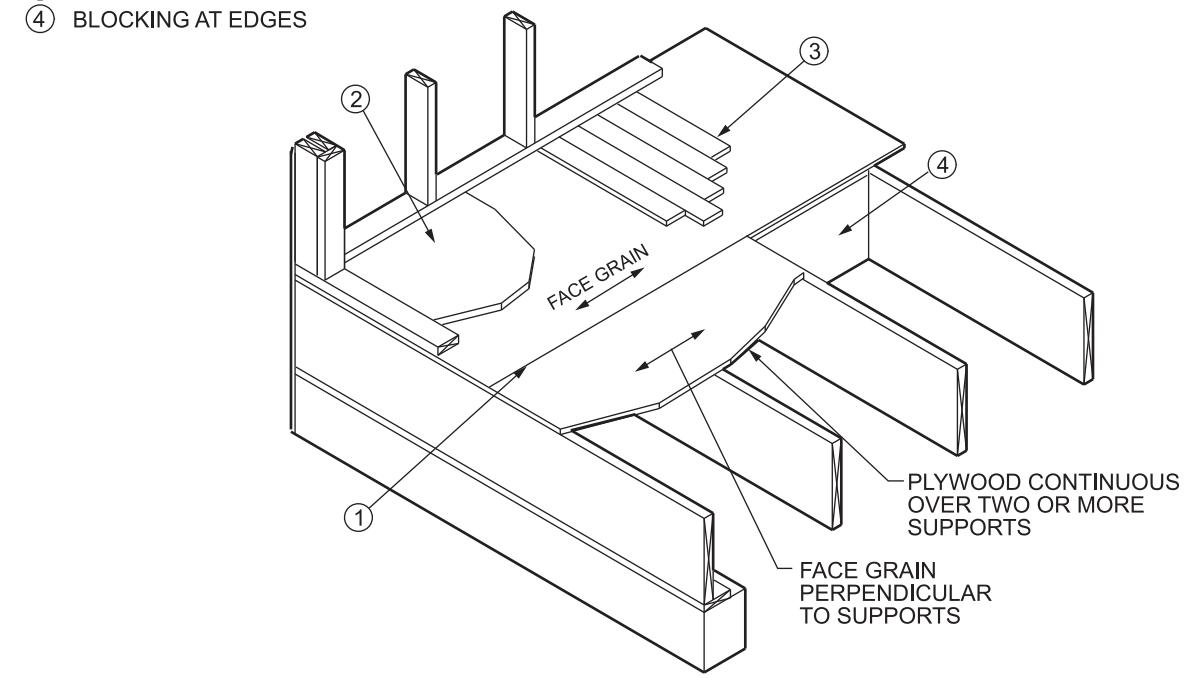

For SI: 1 inch = 25.4 mm.

Figure R503.2.2(2)
COMBINATION SUBFLOOR UNDERLAYMENT ALTERNATIVES

R503.3.1 Identification and grade. Particleboard shall conform to ANSI A208.1 and shall be so identified by a grade *mark* or certificate of inspection issued by an *approved agency*.

❖ Particleboard used in floor construction that performs a load-carrying function must conform to a known quality control standard. To this end, a grade mark or certificate of inspection issued by an approved agency identifies the limitations under which the particleboard may be used. Commentary Figure R503.3.1 shows an example of a particleboard grade mark.

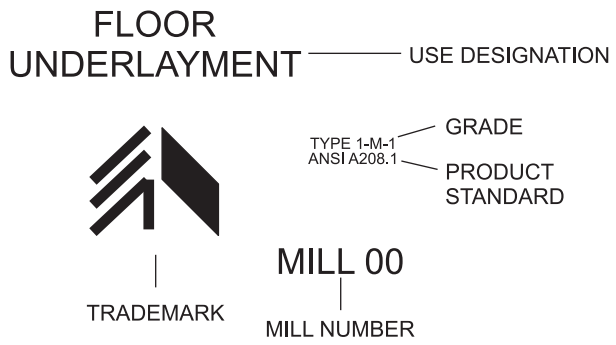

Figure R503.3.1
PARTICLEBOARD GRADE MARK EXAMPLE

The particleboard grades in ANSI A208.1 are identified by a letter followed by a hyphen and a digit or another letter. A letter, number or term following the grade designation identifies special performance characteristics. The first letter has the following meaning:

H: High density (above 50 lb/ft^3) (801 kg/m^3).

M: Medium density (40-50 lb/ft^3) (641-801 kg/m^3).

LD: Low density (below 40 lb/ft^3) (641 kg/m^3).

D: Manufactured home decking.

PBU: Underlayment.

The digit or letter following the hyphen indicates the grade identification within a particular description. For example, 2 indicates medium-density particleboard, Grade 2.

R503.3.2 Floor underlayment. Particleboard floor underlayment shall conform to Type PBU and shall be not less than $^1/_4$ inch (6.4 mm) in thickness.

❖ Particleboard is often used over a structural subfloor to provide a smooth, even surface under textile or resilient-type finish floors. Particleboard must conform to Type PBU with a minimum thickness of $^1/_4$ inch (6.4 mm).

INTERNATIONAL CODE COUNCIL®
Copyright © 2015 ICC. ALL RIGHTS RESERVED. Accessed by David Dammon on Jun 21, 2017 12:30:52 PM pursuant to License Agreement with ICC. No further reproduction or distribution authorized. ANY UNAUTHORIZED REPRODUCTION OR DISTRIBUTION IS A VIOLATION OF THE FEDERAL COPYRIGHT ACT AND THE LICENSE AGREEMENT, AND SUBJECT TO CIVIL AND CRIMINAL PENALTIES THEREUNDER.

R503.3.3 Installation. Particleboard underlayment shall be installed in accordance with the recommendations of the manufacturer and attached to framing in accordance with Table R602.3(1).

❖ Particleboard used as underlayment only is not subject to span limitations because the plywood or lumber subflooring provides the load-carrying capability for the floor system; the particleboard has a nonstructural role. However, joints in particleboard should not occur over joints in the subfloor; the joints should be staggered.

SECTION R504
PRESSURE PRESERVATIVE-TREATED WOOD FLOORS (ON GROUND)

R504.1 General. Pressure preservative treated-wood *basement* floors and floors on ground shall be designed to withstand axial forces and bending moments resulting from lateral soil pressures at the base of the exterior walls and floor live and dead loads. Floor framing shall be designed to meet joist deflection requirements in accordance with Section R301.

❖ As indicated in the commentary to Section R404.1.1, lateral soil pressure loads are carried by the foundation walls through bending in the vertical direction. The resulting forces (reactions) are resisted by the basement floor and the first floor above. This section stipulates the requirements for basement wood-floor framing in order for it to resist the applied loads at the base of the foundation wall. It is implicit that this type of floor would be used in conjunction with wood foundations described in Section R401.1.

R504.1.1 Unbalanced soil loads. Unless special provision is made to resist sliding caused by unbalanced lateral soil loads, wood *basement* floors shall be limited to applications where the differential depth of fill on opposite exterior foundation walls is 2 feet (610 mm) or less.

❖ The requirements of foundation walls permit up to 4 feet (1219 mm) of unbalanced fill (see Table R404.2.3). When exterior foundation walls on opposite sides of a building support an equal (or nearly equal) height of unbalanced fill, sliding is not a concern. When there is a difference in the amount of fill supported, however, there is a net horizontal force that must be resisted; otherwise, sliding may occur. To limit this unbalanced force, the height of differential fill is accordingly limited to 2 feet (610 mm) for this floor system.

R504.1.2 Construction. Joists in wood *basement* floors shall bear tightly against the narrow face of studs in the foundation wall or directly against a band joist that bears on the studs. Plywood subfloor shall be continuous over lapped joists or over butt joints between in-line joists. Sufficient blocking shall be provided between joists to transfer lateral forces at the base of the end walls into the floor system.

❖ These construction requirements provide a load path for the horizontal force described in the previous section.

R504.1.3 Uplift and buckling. Where required, resistance to uplift or restraint against buckling shall be provided by interior bearing walls or properly designed stub walls anchored in the supporting soil below.

❖ This is a general caution that the effects of uplift forces on the floor system, which could result from fluctuations in the water table, should be considered.

R504.2 Site preparation. The area within the foundation walls shall have all vegetation, topsoil and foreign material removed, and any fill material that is added shall be free of vegetation and foreign material. The fill shall be compacted to ensure uniform support of the pressure preservative treated-wood floor sleepers.

❖ This requirement is similar to Section R506.2. See the commentary to Section R506.2.2.

R504.2.1 Base. A minimum 4-inch-thick (102 mm) granular base of gravel having a maximum size of $^3/_4$ inch (19.1 mm) or crushed stone having a maximum size of $^1/_2$ inch (12.7 mm) shall be placed over the compacted earth.

❖ This requirement is similar to Section R506.2.2. See the commentary to Section R506.2.2.

R504.2.2 Moisture barrier. Polyethylene sheeting of minimum 6-mil (0.15 mm) thickness shall be placed over the granular base. Joints shall be lapped 6 inches (152 mm) and left unsealed. The polyethylene membrane shall be placed over the pressure preservative treated-wood sleepers and shall not extend beneath the footing plates of the exterior walls.

❖ See the commentary to Section R506.2.2 concerning application of the moisture barrier.

R504.3 Materials. Framing materials, including sleepers, joists, blocking and plywood subflooring, shall be pressure-preservative treated and dried after treatment in accordance with AWPA U1 (Commodity Specification A, Use Category 4B and Section 5.2), and shall bear the *label* of an accredited agency.

❖ To resist potential decay, wood floor material is to be treated in accordance with AWPA U1, use category system: *User Specification for Treated Wood*. The wood materials must be treated as Use Category 413 (UC413), Commodity Specification A, in accordance with AWPA U1. Also the material must bear the label of an accredited agency to ensure that the treated wood is produced under an accredited quality auditing program.

SECTION R505
COLD-FORMED STEEL FLOOR FRAMING

R505.1 Cold-formed steel floor framing. Elements shall be straight and free of any defects that would significantly affect structural performance. Cold-formed steel floor framing members shall be in accordance with the requirements of this section.

❖ The provisions of this section apply to the construction of floor systems using cold-formed steel framing,

INTERNATIONAL CODE COUNCIL®
Copyright © 2015 ICC. ALL RIGHTS RESERVED. Accessed by David Dammon on Jun 21, 2017 12:30:52 PM pursuant to License Agreement with ICC. No further reproduction or distribution authorized. ANY UNAUTHORIZED REPRODUCTION OR DISTRIBUTION IS A VIOLATION OF THE FEDERAL COPYRIGHT ACT AND THE LICENSE AGREEMENT, AND SUBJECT TO CIVIL AND CRIMINAL PENALTIES THEREUNDER.

which is a type of construction made up in part or entirely of steel structural members cold formed to shape from sheet or strip steel. The general shape of the framing members is in the form of the letter "C" (C-shape) and is described in further detail in Section R505.2. The use of cold-formed steel-framed designs not consistent with these provisions is beyond the scope of this code, and an analysis by a design professional is recommended.

R505.1.1 Applicability limits. The provisions of this section shall control the construction of cold-formed steel floor framing for buildings not greater than 60 feet (18 288 mm) in length perpendicular to the joist span, not greater than 40 feet (12 192 mm) in width parallel to the joist span and less than or equal to three stories above grade plane. Cold-formed steel floor framing constructed in accordance with the provisions of this section shall be limited to sites where the ultimate design wind speed is less than 139 miles per hour (62 m/s), Exposure Category B or C, and the ground snow load is less than or equal to 70 pounds per square foot (3.35 kPa).

❖ Commentary Figure R505.1.1 depicts building limitations. These limits are repeated in Section R603.1.1 for walls and in Section R804.1.1 for roofs. Cold-formed steel floor framing constructed in accordance with the provisions of this section must be limited to sites with a maximum design wind speed of 110 miles per hour (49 m/s); Exposure B, or C and a maximum ground snow load of 70 pounds per square foot (3.35 kPa).

R505.1.2 In-line framing. Where supported by cold-formed steel framed walls in accordance with Section R603, cold-formed steel floor framing shall be constructed with floor joists located in-line with load-bearing studs located below the joists in accordance with Figure R505.1.2 and the tolerances specified as follows:

1. The maximum tolerance shall be $^{3}/_{4}$ inch (19.1 mm) between the centerline of the horizontal framing member and the centerline of the vertical framing member.
2. Where the centerline of the horizontal framing member and bearing stiffener are located to one side of the centerline of the vertical framing member, the maximum

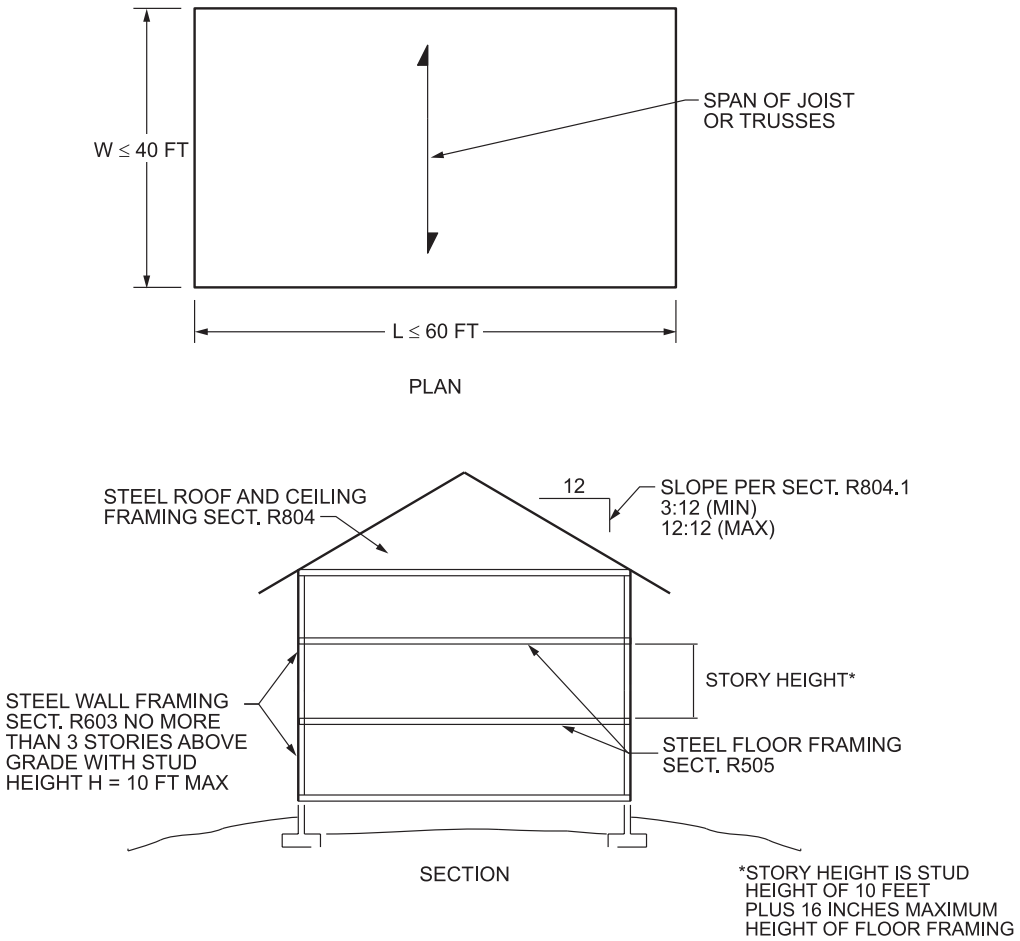

For SI: 1 foot = 304.8 mm.

Figure R505.1.1
STEEL FRAMING APPLICABILITY LIMITS

INTERNATIONAL CODE COUNCIL®
Copyright © 2015 ICC. ALL RIGHTS RESERVED. Accessed by David Dammon on Jun 21, 2017 12:30:52 PM pursuant to License Agreement with ICC. No further reproduction or distribution authorized. ANY UNAUTHORIZED REPRODUCTION OR DISTRIBUTION IS A VIOLATION OF THE FEDERAL COPYRIGHT ACT AND THE LICENSE AGREEMENT, AND SUBJECT TO CIVIL AND CRIMINAL PENALTIES THEREUNDER.

tolerance shall be $^1/_8$ inch (3 mm) between the web of the horizontal framing member and the edge of the vertical framing member.

❖ In-line framing is the preferred framing method because it provides a direct load path for the transfer of forces from joists to studs. In-line framing maximizes framing alignment in order to minimize secondary moments on the framing members, taking into account that the track cannot function as a load-transfer member. The $^3/_4$-inch (19 mm) alignment value is accepted industry practice and addresses those conditions where two framing members (e.g., roof rafter and ceiling joist) are to be aligned over a wall stud. Where the bearing stiffener is located on the backside of the joist, the web of the joist cannot be more than $^1/_8$ inch (3 mm) from the edge of the wall stud. In the absence of in-line framing, a load distribution member, such as a structural track, may be required for this force transfer.

R505.1.3 Floor trusses. Cold-formed steel trusses shall be designed, braced and installed in accordance with AISI S100, Section D4. In the absence of specific bracing requirements, trusses shall be braced in accordance with accepted industry practices, such as the SBCA *Cold-Formed Steel Building Component Safety Information (CFSBCSI), Guide to Good Practice for Handling, Installing & Bracing of Cold-Formed Steel Trusses*. Truss members shall not be notched, cut or altered in any manner without an *approved* design.

❖ The code contains no prescriptive provisions for the design and installation of cold-formed steel trusses. A design is required that complies with accepted engineering practice. Recognizing the extensive use of trusses in residential construction, the code references AISI S100, Section D4. Section D4 of AISI S100 specifies the criteria for the design of cold-formed steel light-frame construction and requires trusses to be designed in accordance with AISI S214. The standard provides regulations for the design and installation of cold-formed steel trusses, including quality assurance and the procedures for full-scale tests. In addition to adequate design, it is important that the handling and erection of the trusses be performed properly so that the performance capability of the trusses is not compromised. A truss member must never be cut, notched or altered without approval from the design professional.

R505.2 Structural framing. Load-bearing cold-formed steel floor framing members shall be in accordance with this section.

❖ Sections R505.2.1 through R505.2.6 specify the requirements for cold-formed steel sections used for floor framing.

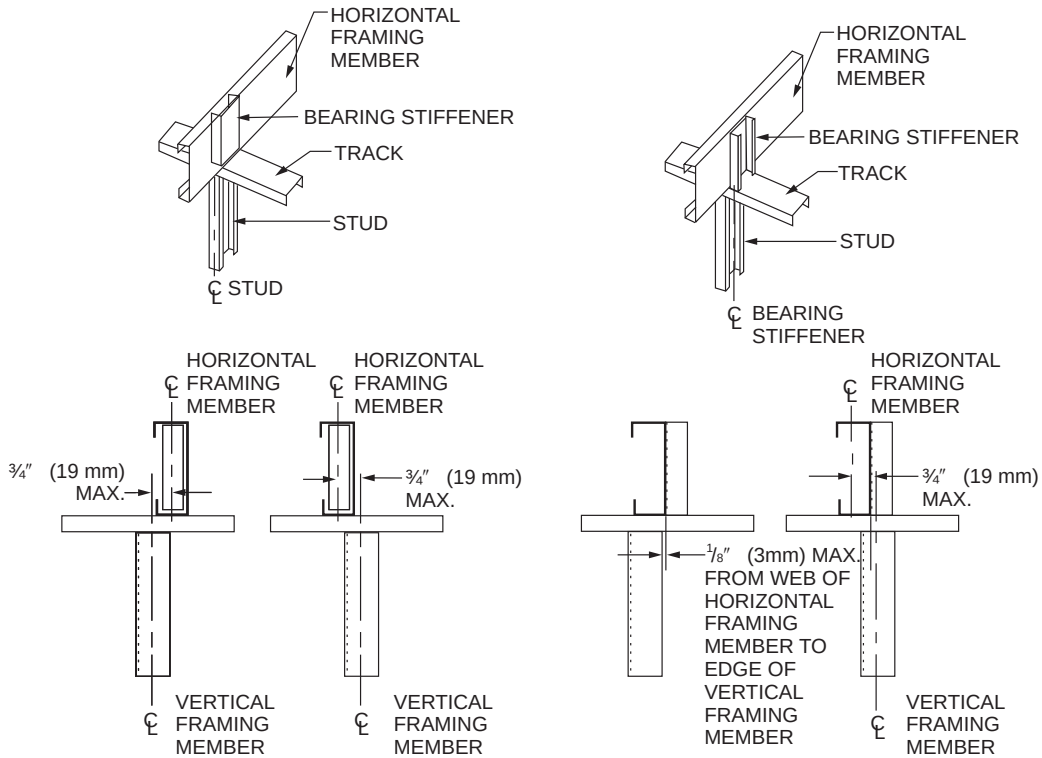

For SI: 1 inch = 25.4 mm.

FIGURE R505.1.2
IN-LINE FRAMING

INTERNATIONAL CODE COUNCIL®
Copyright © 2015 ICC. ALL RIGHTS RESERVED. Accessed by David Dammon on Jun 21, 2017 12:30:52 PM pursuant to License Agreement with ICC. No further reproduction or distribution authorized. ANY UNAUTHORIZED REPRODUCTION OR DISTRIBUTION IS A VIOLATION OF THE FEDERAL COPYRIGHT ACT AND THE LICENSE AGREEMENT, AND SUBJECT TO CIVIL AND CRIMINAL PENALTIES THEREUNDER.

R505.2.1 Material. Load-bearing cold-formed steel framing members shall be cold formed to shape from structural quality sheet steel complying with the requirements of ASTM A 1003: Structural Grades 33 Type H and 50 Type H.

❖ Load-bearing steel framing members must have a legible label, stencil stamp or embossment. This identification allows for verification that materials installed are consistent with the design and meet the provisions of the code.

R505.2.2 Corrosion protection. Load-bearing cold-formed steel framing shall have a metallic coating complying with ASTM A1003 and one of the following:

1. A minimum of G 60 in accordance with ASTM A653.
2. A minimum of AZ 50 in accordance with ASTM A792.

❖ The specified metallic coatings correspond to requirements in the referenced material standards. The minimum coating designations assume normal exposure conditions that are best defined as having the framing members enclosed within a building envelope or wall assembly within a controlled environment. When more severe exposure conditions are probable, such as industrial or marine atmospheres, consideration should be given to specifying a heavier coating.

R505.2.3 Dimension, thickness and material grade. Load-bearing cold-formed steel floor framing members shall comply with Figure R505.2.3(1) and with the dimensional and thickness requirements specified in Table R505.2.3. Additionally, all C-shaped sections shall have a minimum flange width of 1.625 inches (41 mm) and a maximum flange width of 2 inches (51 mm). The minimum lip size for C-shaped sections shall be $^1/_2$ inch (12.7 mm). Track sections shall comply with Figure R505.2.3(2) and shall have a minimum flange width of $1^1/_4$ inch (32 mm). Minimum Grade 33 ksi steel shall be used wherever 33 mil and 43 mil thicknesses are specified. Minimum Grade 50 ksi steel shall be used wherever 54 and 68 mil thicknesses are specified.

❖ C-shaped joists must comply with Figure R505.2.3(1) and the dimensional and minimum thickness requirements of Table R505.2.3. Note a to Table R505.2.3 explains the meaning of the alphanumeric member designation used for all steel framing members in the code. This system replaces the varied designation approaches that were used by each individual manufacturer. In addition, the designation is used to identify not only a specific steel framing member, but also the section properties of that same member through the use of the product technical information document. The flange width of C-shaped sections must be from $1^1/_2$ inches to 2 inches with a minimum lip of $^1/_2$ inch.

Steel track sections are to serve in nonload-bearing applications only and are shown in Figure R505.2.3(2). They must have a minimum flange width of $1^1/_4$ inches (32 mm).

Steel thickness is expressed in mils, which pertains to the base metal thickness measured prior to painting or the application of metallic (corrosion-resistant) coatings. The base metal thickness is typically stamped or embossed on the member by the manufacturer. Table R505.2.3 also references the equivalent thickness in inches.

Minimum Grade 33 ksi steel must be used where the thickness is 33 mil or 43 mil. Where the thickness is 54 mil or 68 mil, the minimum grade must be Grade 50 ksi steel.

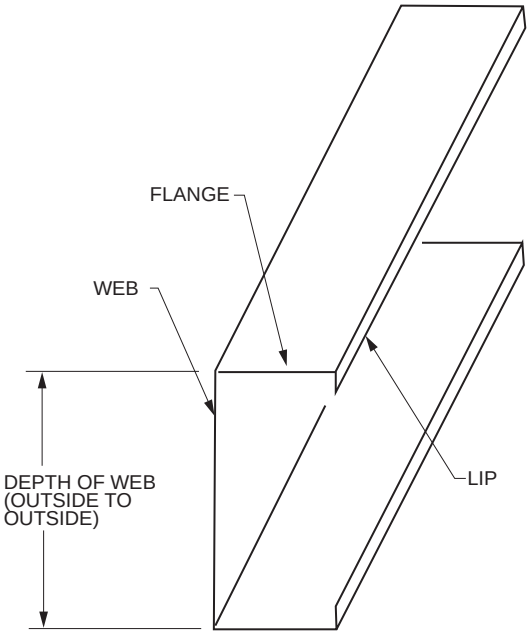

FIGURE R505.2.3(1)
C-SHAPED SECTION

❖ See the commentary to Section R505.2.3.

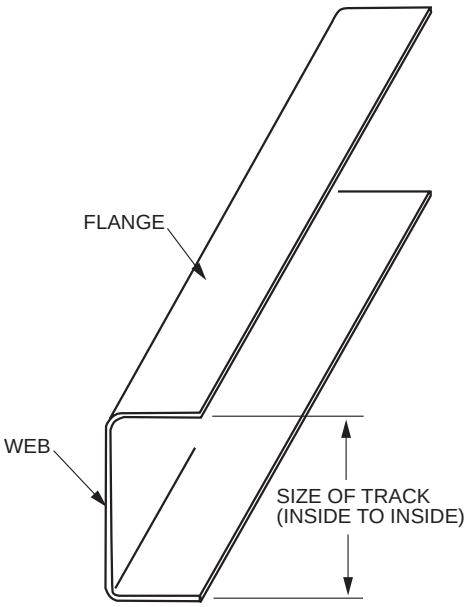

FIGURE R505.2.3(2)
TRACK SECTION

❖ See the commentary to Section R505.2.3

INTERNATIONAL CODE COUNCIL®
Copyright © 2015 ICC. ALL RIGHTS RESERVED. Accessed by David Dammon on Jun 21, 2017 12:30:52 PM pursuant to License Agreement with ICC. No further reproduction or distribution authorized. ANY UNAUTHORIZED REPRODUCTION OR DISTRIBUTION IS A VIOLATION OF THE FEDERAL COPYRIGHT ACT AND THE LICENSE AGREEMENT, AND SUBJECT TO CIVIL AND CRIMINAL PENALTIES THEREUNDER.

TABLE R505.2.3
COLD-FORMED STEEL JOIST SIZES AND THICKNESS

MEMBER DESIGNATION[a]	WEB DEPTH (inches)	MINIMUM BASE STEEL THICKNESS mil (inches)
550S162-t	5.5	33 (0.0329), 43 (0.0428), 54 (0.0538), 68 (0.0677)
800S162-t	8	33 (0.0329), 43 (0.0428), 54 (0.0538), 68 (0.0677)
1000S162-t	10	43 (0.0428), 54 (0.0538), 68 (0.0677)
1200S162-t	12	43 (0.0428), 54 (0.0538), 68 (0.0677)

For SI: 1 inch = 25.4 mm, 1 mil = 0.0254 mm.

a. The member designation is defined by the first number representing the member depth in 0.01 inch, the letter "S" representing a stud or joist member, the second number representing the flange width in 0.01 inch, and the letter "t" shall be a number representing the minimum base metal thickness in mils.

❖ See the commentary to Section R505.2.3.

R505.2.4 Identification. Load-bearing cold-formed steel framing members shall have a legible *label*, stencil, stamp or embossment with the following information as a minimum:

1. Manufacturer's identification.
2. Minimum base steel thickness in inches (mm).
3. Minimum coating designation.
4. Minimum yield strength, in kips per square inch (ksi) (MPa).

❖ Load-bearing steel framing members must have a legible label, stencil, stamp or embossment. This allows for verification that the materials installed are consistent with the design and meet the code requirements.

R505.2.5 Fastening. Screws for steel-to-steel connections shall be installed with a minimum edge distance and center-to-center spacing of $^1/_2$ inch (12.7 mm), shall be self-drilling tapping, and shall conform to ASTM C1513. Floor sheathing shall be attached to cold-formed steel joists with minimum No. 8 self-drilling tapping screws that conform to ASTM C1513. Screws attaching floor sheathing to cold-formed steel joists shall have a minimum head diameter of 0.292 inch (7.4 mm) with countersunk heads and shall be installed with a minimum edge distance of $^3/_8$ inch (9.5 mm). Gypsum board ceilings shall be attached to cold-formed steel joists with minimum No. 6 screws conforming to ASTM C954 or ASTM C1513 with a bugle head style and shall be installed in accordance with Section R702. For all connections, screws shall extend through the steel a minimum of three exposed threads. All fasteners shall have rust-inhibitive coating suitable for the installation in which they are being used, or be manufactured from material not susceptible to corrosion.

❖ Fasteners meeting the referenced standards and installed in accordance with this section provide the necessary load capacity consistent with these prescriptive provisions. This section specifies self-drilling tapping screws conforming to ASTM C1513, *Specification for Steel Tapping Screws for Cold-formed Steel Framing Connection*, for all steel-to-steel connections as well as for fastening floor sheathing to steel joists. All fasteners must have rust-inhibitive coating or be manufactured from material not susceptible to corrosion. Gypsum board must be attached to steel joists with No. 6 screws (minimum) conforming to ASTM C954, *Standard Specification for Steel Drill Screws for the Application of Gypsum Panel Products or Metal Plaster Bases to Steel Studs from 0.033 in. (0.84 mm) to 0.112 in. (2.84 mm) in Thickness*, or ASTM C1513. See Section R702 for installation. For all connections, screws must extend through the steel a minimum of three exposed threads.

R505.2.6 Web holes, web hole reinforcing and web hole patching. Web holes, web hole reinforcing, and web hole patching shall be in accordance with this section.

❖ Sections R505.2.6.1 through R505.2.6.3 specify the criteria for web holes, web hole reinforcing, and web hole patching in floor joists.

R505.2.6.1 Web holes. Web holes in floor joists shall comply with all of the following conditions:

1. Holes shall conform to Figure R505.2.6.1.
2. Holes shall be permitted only along the centerline of the web of the framing member.
3. Holes shall have a center-to-center spacing of not less than 24 inches (610 mm).
4. Holes shall have a web hole width not greater than 0.5 times the member depth, or $2^1/_2$ inches (64.5 mm).
5. Holes shall have a web hole length not exceeding $4^1/_2$ inches (114 mm).
6. Holes shall have a minimum distance between the edge of the bearing surface and the edge of the web hole of not less than 10 inches (254 mm).

Framing members with web holes not conforming to the above requirements shall be reinforced in accordance with Section R505.2.6.2, patched in accordance with Section R505.2.6.3 or designed in accordance with accepted engineering practices.

❖ To allow for routing utilities through steel-framed floors, holes (also referred to as penetrations, utility holes and punchouts) are permitted in the webs of floor joists. To avoid adversely affecting the strength of floor joists, the web holes are limited to the locations along the centerline of the web of the framing member, as illustrated in Figure R505.2.6.1.

To avoid overstressing the joist web through high shear, these web holes must occur more than 10 inches (254 mm) from the edge of a load-bearing sur-

INTERNATIONAL CODE COUNCIL®
Copyright © 2015 ICC. ALL RIGHTS RESERVED. Accessed by David Dammon on Jun 21, 2017 12:30:52 PM pursuant to License Agreement with ICC. No further reproduction or distribution authorized. ANY UNAUTHORIZED REPRODUCTION OR DISTRIBUTION IS A VIOLATION OF THE FEDERAL COPYRIGHT ACT AND THE LICENSE AGREEMENT, AND SUBJECT TO CIVIL AND CRIMINAL PENALTIES THEREUNDER.

face. Patching of web holes must extend at least 1 inch (25 mm) beyond all edges of the hole, and it must be fastened to the web with No. 8 screws having a minimum edge distance of $^1/_2$ inch (12.7 mm). Framing members with web holes exceeding these limits must be reinforced, patched or designed in accordance with accepted engineering practice (see commentary, Sections R505.2.6.2 and R505.2.6.3.)

R505.2.6.2 Web hole reinforcing. Reinforcement of web holes in floor joists not conforming to the requirements of Section R505.2.6.1 shall be permitted if the hole is located fully within the center 40 percent of the span and the depth and length of the hole does not exceed 65 percent of the flat width of the web. The reinforcing shall be a steel plate or C-shape section with a hole that does not exceed the web hole size limitations of Section R505.2.6.1 for the member being reinforced. The steel reinforcing shall be the same thickness as the receiving member and shall extend not less than 1 inch (25 mm) beyond all edges of the hole. The steel reinforcing shall be fastened to the web of the receiving member with No. 8 screws spaced not more than 1 inch (25 mm) center-to-center along the edges of the patch with minimum edge distance of $^1/_2$ inch (12.7 mm).

❖ Web holes that are not within the criteria of Section R505.2.6.1 are permitted if they are reinforced and comply with the criteria of this section.

The reinforcing provisions of this section were developed based on engineering judgement and accepted engineering practice and confirmed by testing.

R505.2.6.3 Hole patching. Patching of web holes in floor joists not conforming to the requirements in Section R505.2.6.1 shall be permitted in accordance with either of the following methods:

1. Framing members shall be replaced or designed in accordance with accepted engineering practices where web holes exceed the following size limits:
   1.1. The depth of the hole, measured across the web, exceeds 70 percent of the flat width of the web.
   1.2. The length of the hole, measured along the web, exceeds 10 inches (254 mm) or the depth of the web, whichever is greater.
2. Web holes not exceeding the dimensional requirements in Section R505.2.6.3, Item 1, shall be patched with a solid steel plate, stud section or track section in accordance with Figure R505.2.6.3. The steel patch shall, as a minimum, be of the same thickness as the receiving member and shall extend not less than 1 inch (25 mm) beyond all edges of the hole. The steel patch shall be fastened to the web of the receiving member with No. 8 screws spaced not more than 1 inch (25 mm) center-to-center along the edges of the patch with minimum edge distance of $^1/_2$ inch (12.7 mm).

❖ Framing members with web holes exceeding the limits, outlined in Item 1 of this section must be replaced or designed in accordance with accepted engineering practice. Framing members with web holes within the limits of Item 1, but exceeding the limits of Section R505.2.6.1, must be patched in accordance with Item 2 of this section (see commentary, Section R505.2.6.1).

R505.3 Floor construction. Cold-formed steel floors shall be constructed in accordance with this section.

❖ Load-bearing steel-framing members must be cold formed to shape from structural quality sheet steel complying with appropriate material standards. The steel grades specified have the ductility and strength to meet these provisions. For more detailed information refer to the AISI *Specification for Design of Cold-formed Steel Structural Members Commentary*.

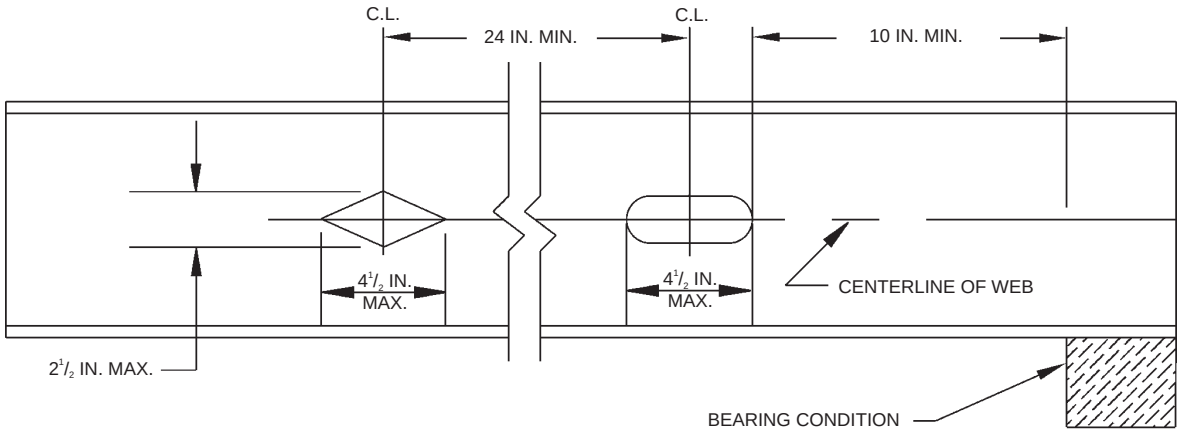

For SI: 1 inch = 25.4 mm.

FIGURE R505.2.6.1
FLOOR JOIST WEB HOLES

❖ See the commentary to Section R505.2.6.1.

INTERNATIONAL CODE COUNCIL®
Copyright © 2015 ICC. ALL RIGHTS RESERVED. Accessed by David Dammon on Jun 21, 2017 12:30:52 PM pursuant to License Agreement with ICC. No further reproduction or distribution authorized. ANY UNAUTHORIZED REPRODUCTION OR DISTRIBUTION IS A VIOLATION OF THE FEDERAL COPYRIGHT ACT AND THE LICENSE AGREEMENT, AND SUBJECT TO CIVIL AND CRIMINAL PENALTIES THEREUNDER.

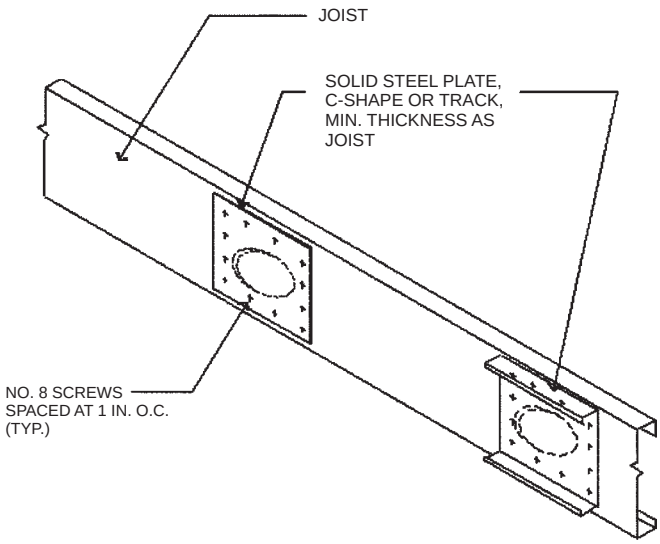

For SI: 1 inch = 25.4 mm.

FIGURE R505.2.6.3
FLOOR JOIST WEB HOLE PATCH

❖ See the commentary to Section R505.2.6.3.

R505.3.1 Floor to foundation or load-bearing wall connections. Cold-formed steel framed floors shall be anchored to foundations, wood sills or load-bearing walls in accordance with Table R505.3.1(1) and Figure R505.3.1(1), R505.3.1(2), R505.3.1(3), R505.3.1(4), R505.3.1(5) or R505.3.1(6). Anchor bolts shall be located not more than 12 inches (305 mm) from corners or the termination of bottom tracks. Continuous cold-formed steel joists supported by interior load-bearing walls shall be constructed in accordance with Figure R505.3.1(7). Lapped cold-formed steel joists shall be constructed in accordance with Figure R505.3.1(8). End floor joists constructed on foundation walls parallel to the joist span shall be doubled unless a C-shaped bearing stiffener, sized in accordance with Section R505.3.4, is installed web-to-web with the floor joist beneath each supported wall stud, as shown in Figure R505.3.1(9). Fastening of cold-formed steel joists to other framing members shall be in accordance with Section R505.2.5 and Table R505.3.1(2).

❖ This section provides minimum fastening requirements for attachment of steel floor framing to foundations, wood sills and both exterior and interior load-bearing walls. Figures R505.3.1(1) through R505.3.1(6) illustrate exterior wall conditions; thus, the corresponding connection requirements in Table R505.3.1(1) vary based on a site's basic wind speed and seismic design category. End joists must be doubled or have a C-shaped bearing stiffener beneath each wall stud as depicted in Figure R505.3.1(9). In the event these criteria give rise to requirements that are different from those in the table, the more restrictive would govern. Figures R505.3.1(7) and R505.3.1(8) illustrate the minimum connection requirements for floor joists supported by interior load-bearing walls in conjunction with the first line of Table R505.3.1(2).

TABLE R505.3.1(1)
FLOOR TO FOUNDATION OR BEARING WALL CONNECTION REQUIREMENTS[a, b]

FRAMING CONDITION	BASIC ULTIMATE WIND SPEED (mph) AND EXPOSURE	
	110 mph Exposure Category C or less than 139 mph Exposure Category B	Less than 139 mph Exposure Category C
Floor joist to wall track of exterior wall in accordance with Figure R505.3.1(1)	2-No. 8 screws	3-No. 8 screws
Rim track or end joist to load-bearing wall top track in accordance with Figure R505.3.1(1)	1-No. 8 screw at 24 inches o.c.	1-No. 8 screw at 24 inches o.c.
Rim track or end joist to wood sill in accordance with Figure R505.3.1(2)	Steel plate spaced at 4 feet o.c. with 4-No. 8 screws and 4-10d or 6-8d common nails	Steel plate spaced at 2 feet o.c. with 4-No. 8 screws and 4-10d or 6-8d common nails
Rim track or end joist to foundation in accordance with Figure R505.3.1(3)	$^1/_2$ inch minimum diameter anchor bolt and clip angle spaced at 6 feet o.c. with 8-No. 8 screws	$^1/_2$ inch minimum diameter anchor bolt and clip angle spaced at 4 feet o.c. with 8-No. 8 screws
Cantilevered joist to foundation in accordance with Figure R505.3.1(4)	$^1/_2$ inch minimum diameter anchor bolt and clip angle spaced at 6 feet o.c. with 8-No. 8 screws	$^1/_2$ inch minimum diameter anchor bolt and clip angle spaced at 4 feet o.c. with 8-No. 8 screws
Cantilevered joist to wood sill in accordance with Figure R505.3.1(5)	Steel plate spaced at 4 feet o.c. with 4-No. 8 screws and 4-10d or 6-8d common nails	Steel plate spaced at 2 feet o.c. with 4-No. 8 screws and 4-10d or 6-8d common nails
Cantilevered joist to exterior load-bearing wall track in accordance with Figure R505.3.1(6)	2-No. 8 screws	3-No. 8 screws

For SI: 1 inch = 25.4 mm, 1 pound per square foot = 0.0479 kPa, 1 mile per hour = 0.447 m/s, 1 foot = 304.8 mm.

a. Anchor bolts are to be located not more than 12 inches from corners or the termination of bottom tracks such as at door openings or corners. Bolts extend a minimum of 15 inches into masonry or 7 inches into concrete. Anchor bolts connecting cold-formed steel framing to the foundation structure are to be installed so that the distance from the center of the bolt hole to the edge of the connected member is not less than one and one-half bolt diameters.

b. All screw sizes shown are minimum.

❖ See the commentary to Section R505.3.1 as well as Figures R505.3.1(1) through R505.3.1(6).

INTERNATIONAL CODE COUNCIL®
Copyright © 2015 ICC. ALL RIGHTS RESERVED. Accessed by David Dammon on Jun 21, 2017 12:30:52 PM pursuant to License Agreement with ICC. No further reproduction or distribution authorized. ANY UNAUTHORIZED REPRODUCTION OR DISTRIBUTION IS A VIOLATION OF THE FEDERAL COPYRIGHT ACT AND THE LICENSE AGREEMENT, AND SUBJECT TO CIVIL AND CRIMINAL PENALTIES THEREUNDER.

TABLE R505.3.1(2)
FLOOR FASTENING SCHEDULE[a]

DESCRIPTION OF BUILDING ELEMENTS	NUMBER AND SIZE OF FASTENERS	SPACING OF FASTENERS
Floor joist to track of an interior load-bearing wall in accordance with Figures R505.3.1(7) and R505.3.1(8)	2 No. 8 screws	Each joist
Floor joist to track at end of joist	2 No. 8 screws	One per flange or two per bearing stiffener
Subfloor to floor joists	No. 8 screws	6 in. o.c. on edges and 12 in. o.c. at intermediate supports

For SI: 1 inch = 25.4 mm.
a. All screw sizes shown are minimum.

❖ In addition to the other connections covered under Section R505.3.1, Table R505.3.1(2) provides the fastening requirements for tracks at the end of floor joists and for subfloor-to-floor joists.

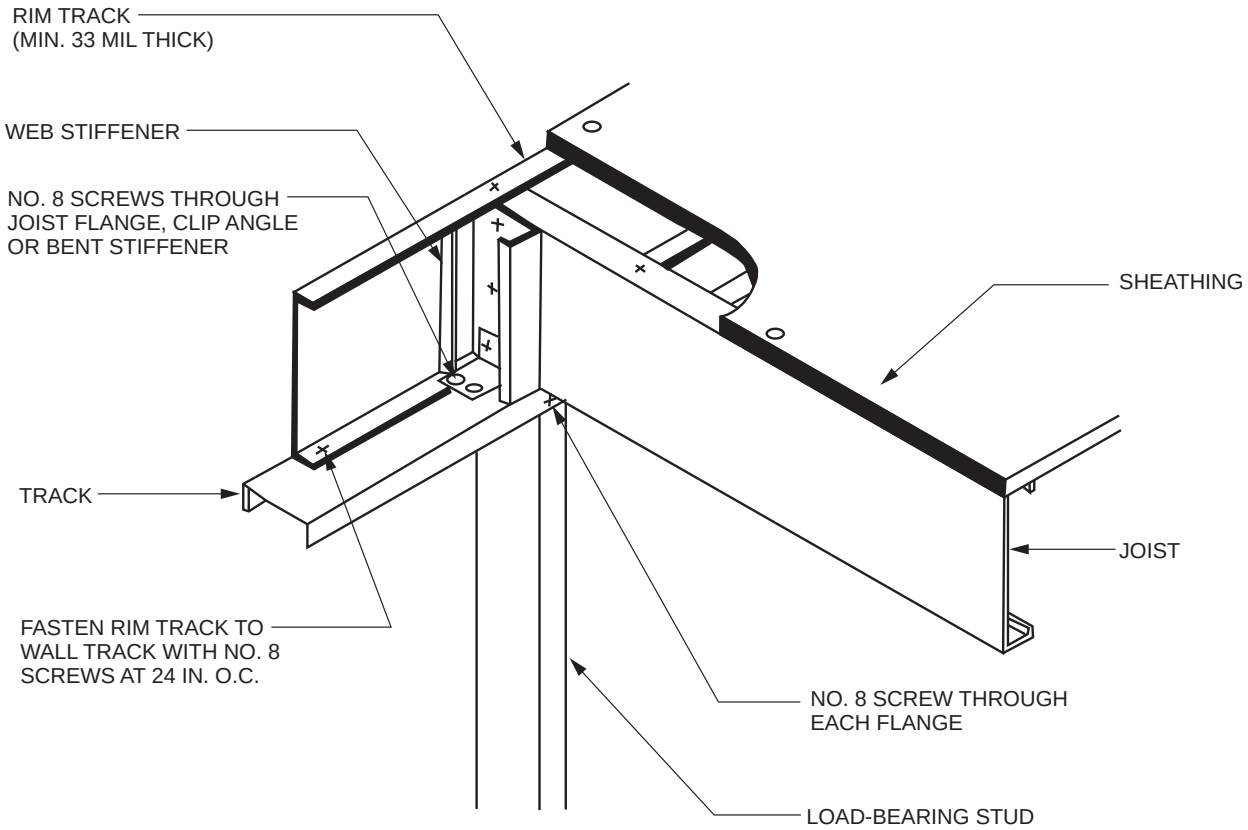

For SI: 1 mil = 0.0254 mm, 1 inch = 25.4 mm.

FIGURE 505.3.1(1)
FLOOR TO EXTERIOR LOAD-BEARING WALL STUD CONNECTION

❖ Figure R505.3.1(1) depicts connection requirements for steel floor joists at exterior steel bearing walls. The minimum number of screws through either the joist flange, clip angle or bent stiffener should be selected from the first row of Table R505.3.1(1) based on the seismic design category or wind speed and exposure. Similarly, if these joists cantilever beyond the wall as illustrated in Figure R505.3.1(7), the required number of screws should be selected from the seventh row of Table R505.3.1(1).

INTERNATIONAL CODE COUNCIL®
Copyright © 2015 ICC. ALL RIGHTS RESERVED. Accessed by David Dammon on Jun 21, 2017 12:30:52 PM pursuant to License Agreement with ICC. No further reproduction or distribution authorized. ANY UNAUTHORIZED REPRODUCTION OR DISTRIBUTION IS A VIOLATION OF THE FEDERAL COPYRIGHT ACT AND THE LICENSE AGREEMENT, AND SUBJECT TO CIVIL AND CRIMINAL PENALTIES THEREUNDER.

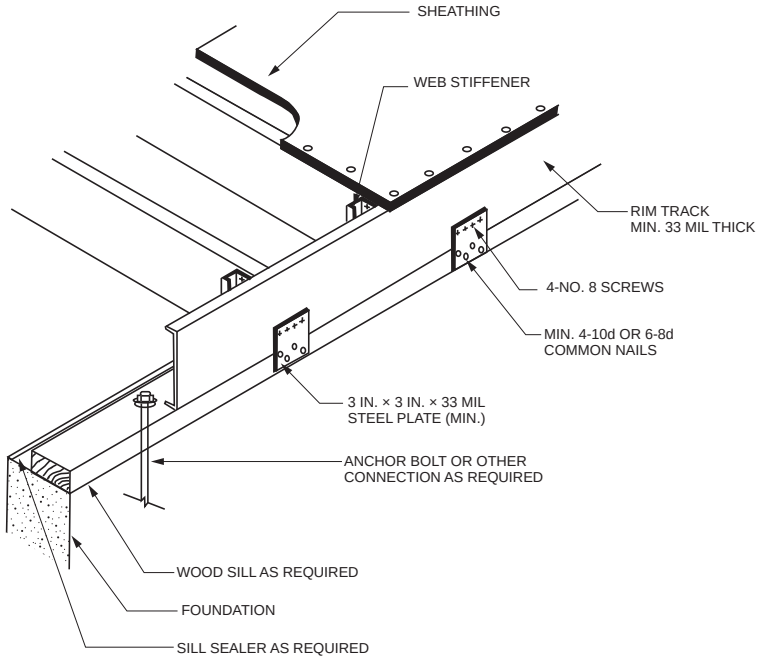

For SI: 1 mil = 0.0254 mm, 1 inch = 25.4 mm.

FIGURE R505.3.1(2)
FLOOR TO WOOD SILL CONNECTION

❖ Figures R505.3.1(2) and R505.3.1(5) depict the connection requirements of steel floor framing to a wood sill, which, in turn, is anchored to the foundation. Details such as the spacing of the clip angle and anchor bolt should be selected from the appropriate row of Table R505.3.1(1) [see Figure R505.3.1(1)].

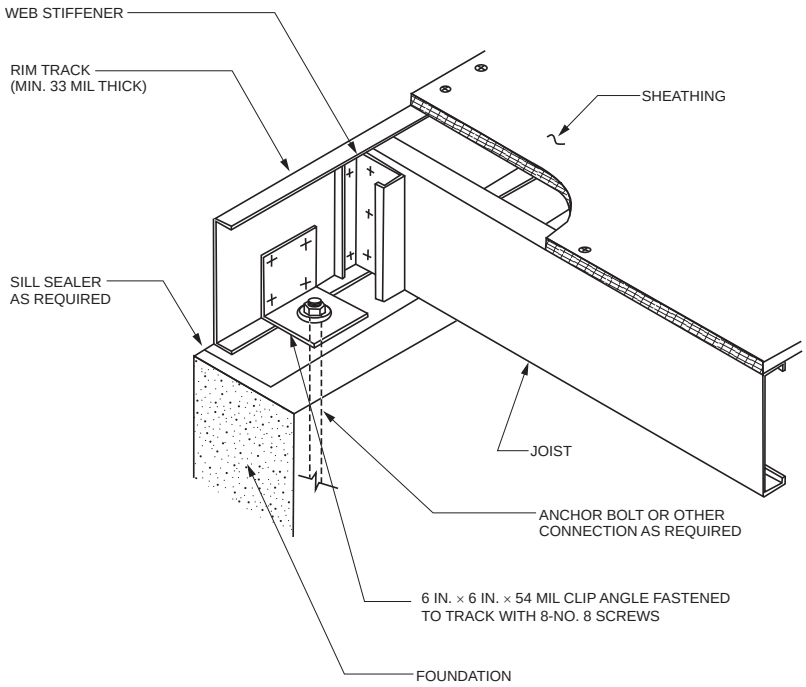

For SI: 1 mil = 0.0254 mm, 1 inch = 25.4 mm.

FIGURE R505.3.1(3)
FLOOR TO FOUNDATION CONNECTION

❖ Figures R505.3.1(3) and R505.3.1(4) depict requirements for anchoring steel floor framing directly to concrete or masonry foundations. Details such as the spacing of the clip angle and anchor bolt should be selected from the appropriate row of Table R505.3.1(1) [see Figure R505.3.1(1)].

INTERNATIONAL CODE COUNCIL®
Copyright © 2015 ICC. ALL RIGHTS RESERVED. Accessed by David Dammon on Jun 21, 2017 12:30:52 PM pursuant to License Agreement with ICC. No further reproduction or distribution authorized. ANY UNAUTHORIZED REPRODUCTION OR DISTRIBUTION IS A VIOLATION OF THE FEDERAL COPYRIGHT ACT AND THE LICENSE AGREEMENT, AND SUBJECT TO CIVIL AND CRIMINAL PENALTIES THEREUNDER.

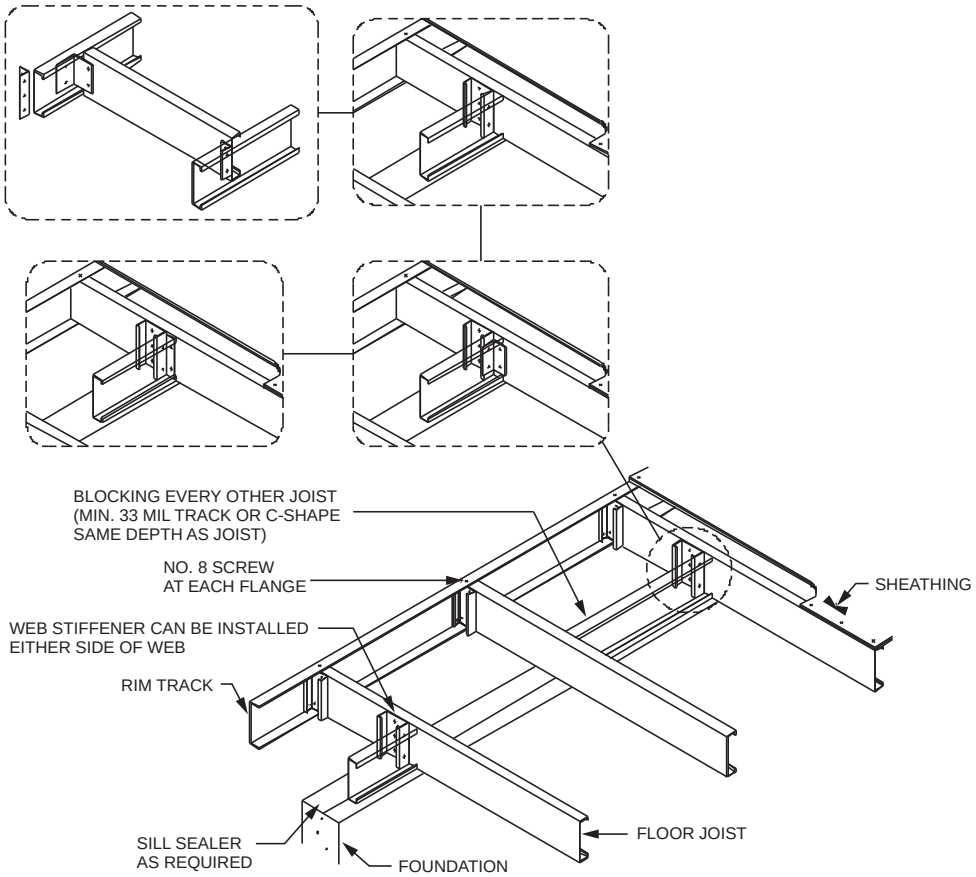

For SI: 1 mil = 0.0254 mm.

FIGURE R505.3.1(4)
CANTILEVERED FLOOR TO FOUNDATION CONNECTION

❖ See the commentary to Figure R505.3.1(1).

INTERNATIONAL CODE COUNCIL®
Copyright © 2015 ICC. ALL RIGHTS RESERVED. Accessed by David Dammon on Jun 21, 2017 12:30:52 PM pursuant to License Agreement with ICC. No further reproduction or distribution authorized. ANY UNAUTHORIZED REPRODUCTION OR DISTRIBUTION IS A VIOLATION OF THE FEDERAL COPYRIGHT ACT AND THE LICENSE AGREEMENT, AND SUBJECT TO CIVIL AND CRIMINAL PENALTIES THEREUNDER.

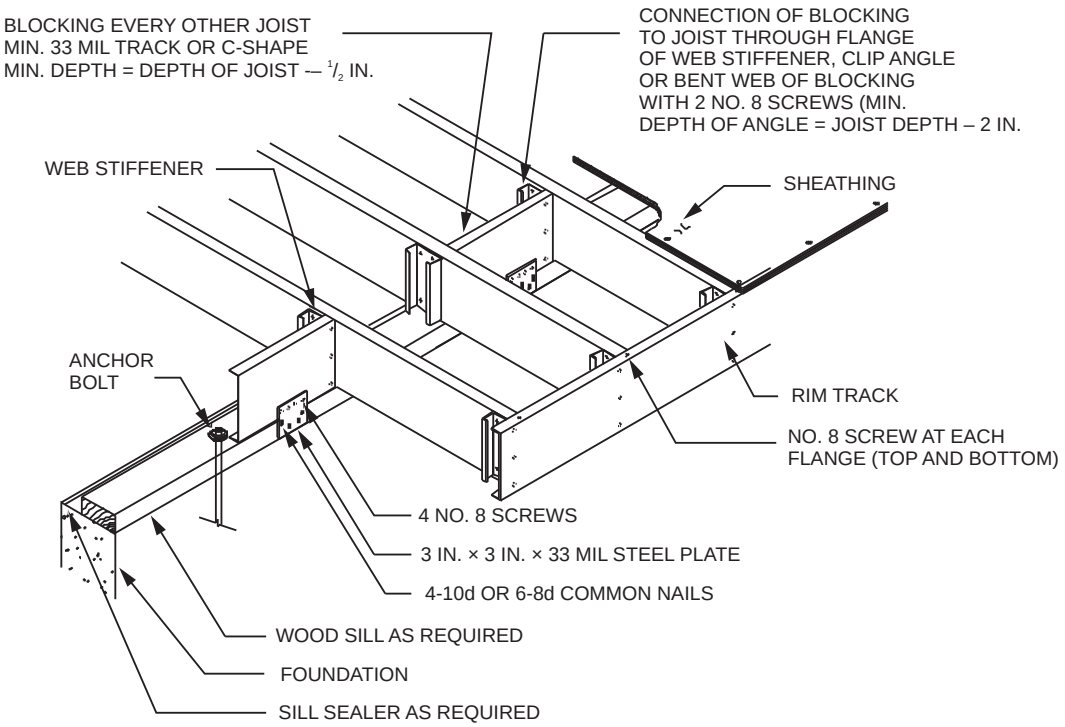

For SI: 1 mil = 0.0254 mm, 1 inch = 25.4 mm.

FIGURE R505.3.1(5)
CANTILEVERED FLOOR TO WOOD SILL CONNECTION

❖ See the commentary to Figures R505.3.1(1) and R505.3.1(2).

INTERNATIONAL CODE COUNCIL®
Copyright © 2015 ICC. ALL RIGHTS RESERVED. Accessed by David Dammon on Jun 21, 2017 12:30:52 PM pursuant to License Agreement with ICC. No further reproduction or distribution authorized. ANY UNAUTHORIZED REPRODUCTION OR DISTRIBUTION IS A VIOLATION OF THE FEDERAL COPYRIGHT ACT AND THE LICENSE AGREEMENT, AND SUBJECT TO CIVIL AND CRIMINAL PENALTIES THEREUNDER.

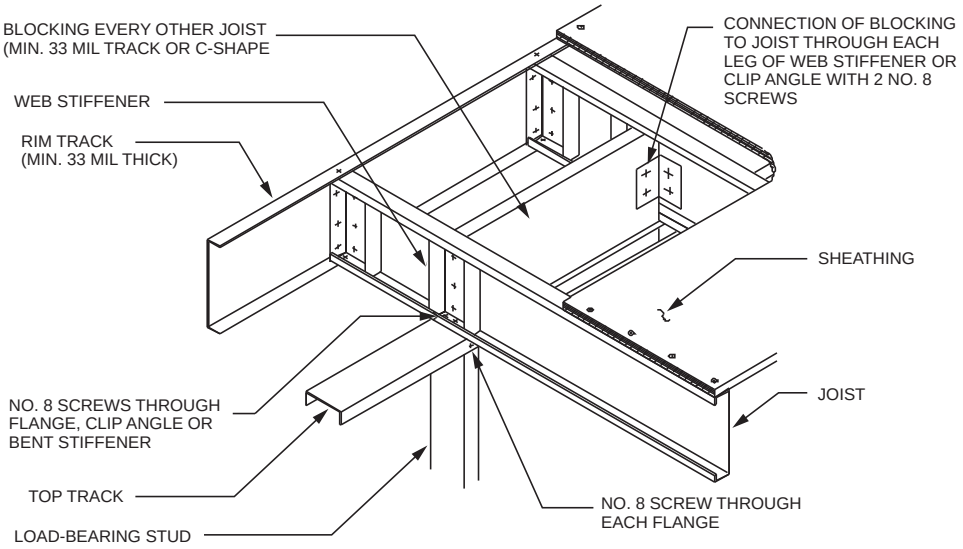

For SI: 1 mil = 0.0254 mm.

FIGURE R505.3.1(6)
CANTILEVERED FLOOR TO EXTERIOR LOAD-BEARING WALL CONNECTION

❖ See the commentary to Figures R505.3.1(1) and R505.3.1(3).

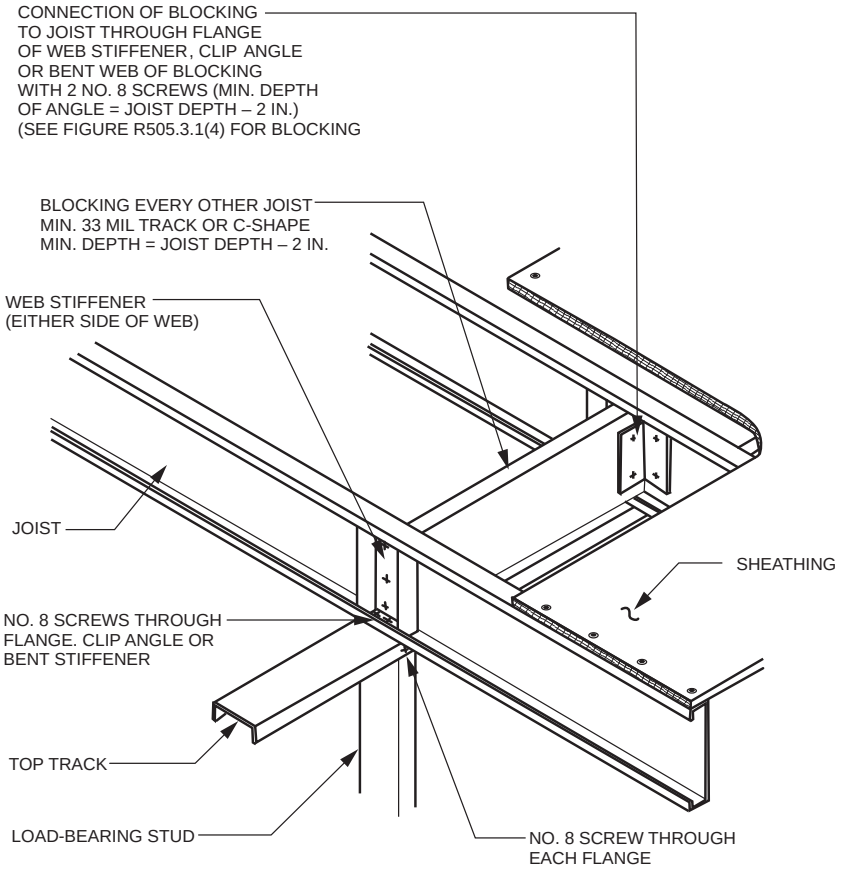

For SI: 1 mil = 0.0254 mm, 1 inch = 25.4 mm.

FIGURE R505.3.1(7)
CONTINUOUS SPAN JOIST SUPPORTED ON INTERIOR LOAD-BEARING WALL

❖ See the commentary to Section R505.3.1.

INTERNATIONAL CODE COUNCIL®
Copyright © 2015 ICC. ALL RIGHTS RESERVED. Accessed by David Dammon on Jun 21, 2017 12:30:52 PM pursuant to License Agreement with ICC. No further reproduction or distribution authorized. ANY UNAUTHORIZED REPRODUCTION OR DISTRIBUTION IS A VIOLATION OF THE FEDERAL COPYRIGHT ACT AND THE LICENSE AGREEMENT, AND SUBJECT TO CIVIL AND CRIMINAL PENALTIES THEREUNDER.

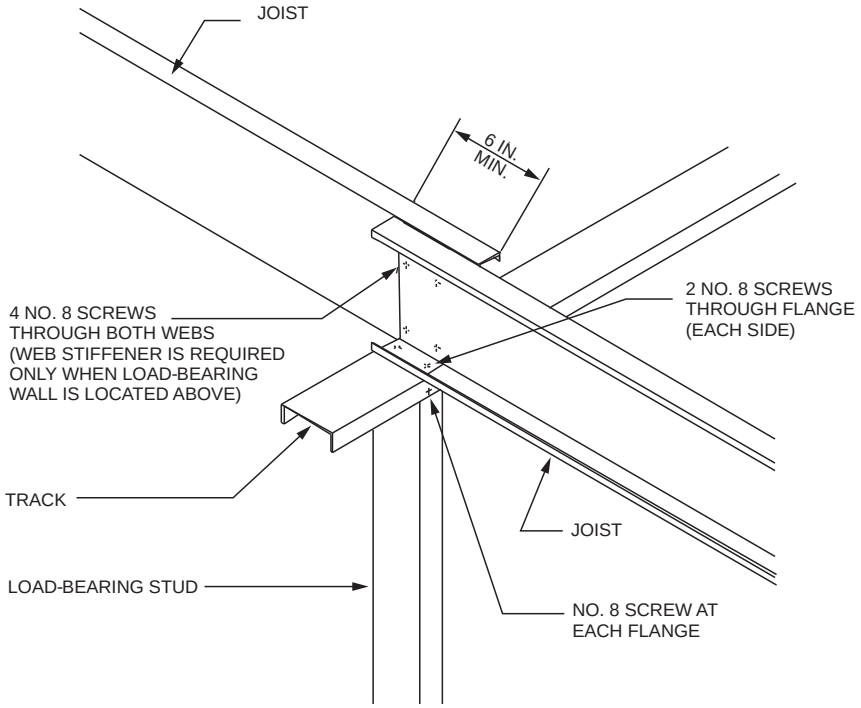

For SI: 1 inch = 25.4 mm.

FIGURE R505.3.1(8)
LAPPED JOISTS SUPPORTED ON INTERIOR LOAD-BEARING WALL

❖ See the commentary to Section R505.3.

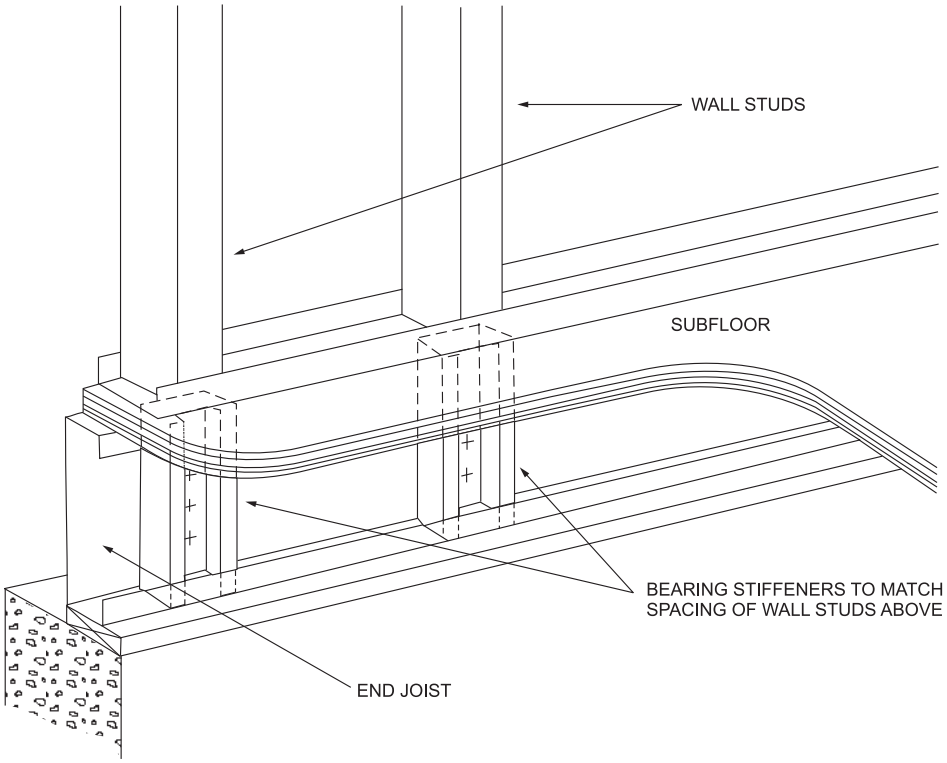

FIGURE R505.3.1(9)
BEARING STIFFENERS FOR END JOISTS

❖ See the commentary to Section R505.3.1.

INTERNATIONAL CODE COUNCIL®
Copyright © 2015 ICC. ALL RIGHTS RESERVED. Accessed by David Dammon on Jun 21, 2017 12:30:52 PM pursuant to License Agreement with ICC. No further reproduction or distribution authorized. ANY UNAUTHORIZED REPRODUCTION OR DISTRIBUTION IS A VIOLATION OF THE FEDERAL COPYRIGHT ACT AND THE LICENSE AGREEMENT, AND SUBJECT TO CIVIL AND CRIMINAL PENALTIES THEREUNDER.

R505.3.2 Minimum floor joist sizes. Floor joist size and thickness shall be determined in accordance with the limits set forth in Table R505.3.2 for single or continuous spans. Where continuous joist members are used, the interior bearing supports shall be located within 2 feet (610 mm) of mid-span of the cold-formed steel joists, and the individual spans shall not exceed the spans in Table R505.3.2. Floor joists shall have a bearing support length of not less than $1^1/_2$ inches (38 mm) for exterior wall supports and $3^1/_2$ inches (89 mm) for interior wall supports. Tracks shall be not less than 33 mils (0.84 mm) thick except when used as part of a floor header or trimmer in accordance with Section R505.3.8. Bearing stiffeners shall be installed in accordance with Section R505.3.4.

❖ Table R505.3.2 lists the allowable clear spans for single or continuous-span steel floor joists. Where continuous span is used the interior bearing support must be located within 2 feet of mid-span. The continuous span must be arranged as illustrated in Commentary Figure R505.3.2 and the spans must not exceed the limits in Table R505.3.2. The tabulated spans are based on dead loads of 10 psf (0.48 kPa) and design live loads of 30 psf (1.44 kPa) or 40 psf (1.92 kPa). The following example illustrates use of the table.

Example:

Steel floor joists spaced at 16 inches (406 mm) on center support a floor live load of 40 psf (1.92 kPa), a dead load of 10 psf (0.48 kPa) and span 17 feet, 6 inches (5334 mm). Determine the required joist size and minimum grade of steel.

Solution:

In Table R505.2.2 under 40 psf (1.92 kPa), find the live load column headed 16 inches (406 mm). Read down this column to find the first span greater than 17 feet, 6 inches (5334 mm), which is 18 feet, 2 inches (5537 mm). The required joist is 1000S162-54. Since the thickness is 54 mil, the steel must be minimum Grade 50 ksi.

R505.3.3 Joist bracing and blocking. Joist bracing and blocking shall be in accordance with this section.

❖ Sections R505.3.3.1 through R505.3.3.4 provide the requirements for joist top flange bracing, joist bottom flange bracing/blocking, blocking at interior bearing supports and blocking at cantilevers.

R505.3.3.1 Joist top flange bracing. The top flanges of cold-formed steel joists shall be laterally braced by the application of floor sheathing fastened to the joists in accordance with Section R505.2.5 and Table R505.3.1(2).

❖ The application of floor sheathing to steel floor joists in accordance with Table R505.3.1(2) and Section R505.2.5 of the code allows the transfer of loads to the joists and provides the necessary lateral bracing for the top flanges of those joists.

TABLE R505.3.2
ALLOWABLE SPANS FOR COLD-FORMED STEEL JOISTS—SINGLE OR CONTINUOUS SPANS[a, b, c, d, e]

JOIST DESIGNATION	30 PSF LIVE LOAD				40 PSF LIVE LOAD			
	Spacing (inches)				Spacing (inches)			
	12	16	19.2	24	12	16	19.2	24
550S162-33	11′-7″	10′-7″	9′-6″	8′-6″	10′-7″	9′-3″	8′-6″	7′-6″
550S162-43	12′-8″	11′-6″	10′-10″	10′-2″	11′-6″	10′-5″	9′-10″	9′-1″
550S162-54	13′-7″	12′-4″	11′-7″	10′-9″	12′-4″	11′-2″	10′-6″	9′-9″
550S162-68	14′-7″	13′-3″	12′-6″	11′-7″	13′-3″	12′-0″	11′-4″	10′-6″
800S162-33	15′-8″	13′-11″	12′-9″	11′-5″	14′-3″	12′-5″	11′-3″	9′-0″
800S162-43	17′-1″	15′-6″	14′-7″	13′-7″	15′-6″	14′-1″	13′-3″	12′-4″
800S162-54	18′-4″	16′-8″	15′-8″	14′-7″	16′-8″	15′-2″	14′-3″	13′-3″
800S162-68	19′-9″	17′-11″	16′-10″	15′-8″	17′-11″	16′-3″	15′-4″	14′-2″
1000S162-43	20′-6″	18′-8″	17′-6″	15′-8″	18′-8″	16′-11″	15′-6″	13′-11″
1000S162-54	22′-1″	20′-0″	18′-10″	17′-6″	20′-0″	18′-2″	17′-2″	15′-11″
1000S162-68	23′-9″	21′-7″	20′-3″	18′-10″	21′-7″	19′-7″	18′-5″	17′-1″
1200S162-43	23′-9″	20′-10″	19′-0″	16′-8″	21′-5″	18′-6″	16′-6″	13′-2″
1200S162-54	25′-9″	23′-4″	22′-0″	20′-1″	23′-4″	21′-3″	20′-0″	17′-10″
1200S162-68	27′-8″	25′-1″	23′-8″	21′-11″	25′-1″	22′-10″	21′-6″	21′-1″

For SI: 1 inch = 25.4 mm, 1 foot = 304.8 mm, 1 pound per square foot = 0.0479 kPa, 1 mil = 0.0254 mm.

a. Deflection criteria: *L*/480 for live loads, *L*/240 for total loads.

b. Floor dead load = 10 psf.

c. Table provides the maximum clear span in feet and inches.

d. Bearing stiffeners are to be installed at all support points and concentrated loads.

e. Minimum Grade 33 ksi steel shall be used for 33 mil and 43 mil thickness. Minimum Grade 50 ksi steel shall be used for 54 and 68 mil thickness.

❖ See the commentary and example to Section R505.3.2.

INTERNATIONAL CODE COUNCIL®
Copyright © 2015 ICC. ALL RIGHTS RESERVED. Accessed by David Dammon on Jun 21, 2017 12:30:52 PM pursuant to License Agreement with ICC. No further reproduction or distribution authorized. ANY UNAUTHORIZED REPRODUCTION OR DISTRIBUTION IS A VIOLATION OF THE FEDERAL COPYRIGHT ACT AND THE LICENSE AGREEMENT, AND SUBJECT TO CIVIL AND CRIMINAL PENALTIES THEREUNDER.

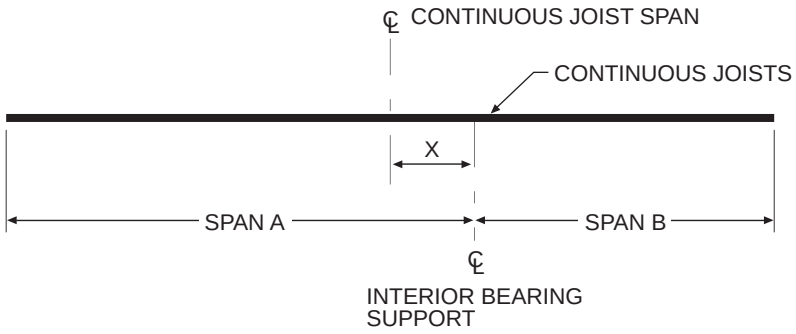

For SI: 1 inch = 25.4 mm.

Figure R505.3.2
SPAN ARRANGEMENT FOR FLOOR JOIST CONTINUOUS OVER SUPPORT

R505.3.3.2 Joist bottom flange bracing/blocking. Floor joists with spans that exceed 12 feet (3658 mm) shall have the bottom flanges laterally braced in accordance with one of the following:

1. Gypsum board installed with minimum No. 6 screws in accordance with Section R702.
2. Continuous steel straps installed in accordance with Figure R505.3.3.2(1). Steel straps shall be spaced at a maximum of 12 feet (3658 mm) on center and shall be at least $1^1/_2$ inches (38 mm) in width and 33 mils (0.84 mm) in thickness. Straps shall be fastened to the bottom flange of each joist with one No. 8 screw, fastened to blocking with two No. 8 screws, and fastened at each end (of strap) with two No. 8 screws. Blocking in accordance with Figure R505.3.3.2(1) or R505.3.3.2(2) shall be installed between joists at each end of the continuous strapping and at a maximum spacing of 12 feet (3658 mm) measured along the continuous strapping (perpendicular to the joist run). Blocking shall also be located at the termination of all straps. As an alternative to blocking at the ends, anchoring the strap to a stable building component with two No. 8 screws shall be permitted.

❖ Steel floor joists with spans greater than 12 feet (3658 mm) are more prone to overturning and therefore must also have the bottom flanges laterally braced either with gypsum board or continuous steel strapping as illustrated in Figure R505.3.3.2(1) of the code. Strap bracing requires the installation of solid blocking or bridging (X-bracing) [see Figure R505.3.3.2(1) or R505.3.3.2(2)] in line with the straps at the termination of all straps and at a maximum spacing of 12 feet (3658 mm) measured perpendicular to the joist run.

R505.3.3.3 Blocking at interior bearing supports. Blocking is not required for continuous back-to-back floor joists at bearing supports. Blocking shall be installed between every other joist for single continuous floor joists across bearing supports in accordance with Figure R505.3.1(7). Blocking shall consist of C-shape or track section with a minimum thickness of 33 mils (0.84 mm). Blocking shall be fastened to each adjacent joist through a 33-mil (0.84 mm) clip angle, bent web of blocking or flanges of web stiffeners with two No. 8 screws on each side. The minimum depth of the blocking shall be equal to the depth of the joist minus 2 inches (51 mm). The minimum length of the angle shall be equal to the depth of the joist minus 2 inches (51 mm).

❖ Blocking must be installed between the joists, at the interior bearing support, for a single continuous floor joist. Blocking is not required at the bearing support for back-to-back floor joists [see Figure R505.3.1(7)].

R505.3.3.4 Blocking at cantilevers. Blocking shall be installed between every other joist over cantilever bearing supports in accordance with Figure R505.3.1(4), R505.3.1(5) or R505.3.1(6). Blocking shall consist of C-shape or track section with minimum thickness of 33 mils (0.84 mm). Blocking shall be fastened to each adjacent joist through bent web of blocking, 33 mil clip angle or flange of web stiffener with two No. 8 screws at each end. The depth of the blocking shall be equal to the depth of the joist. The minimum length of the angle shall be equal to the depth of the joist minus 2 inches (51 mm). Blocking shall be fastened through the floor sheathing and to the support with three No. 8 screws (top and bottom).

❖ Blocking must be installed between every other joist at the cantilever support [see Figure R505.3.1(4), R505.3.1(5) or R505.3.1(6)].

INTERNATIONAL CODE COUNCIL®
Copyright © 2015 ICC. ALL RIGHTS RESERVED. Accessed by David Dammon on Jun 21, 2017 12:30:52 PM pursuant to License Agreement with ICC. No further reproduction or distribution authorized. ANY UNAUTHORIZED REPRODUCTION OR DISTRIBUTION IS A VIOLATION OF THE FEDERAL COPYRIGHT ACT AND THE LICENSE AGREEMENT, AND SUBJECT TO CIVIL AND CRIMINAL PENALTIES THEREUNDER.

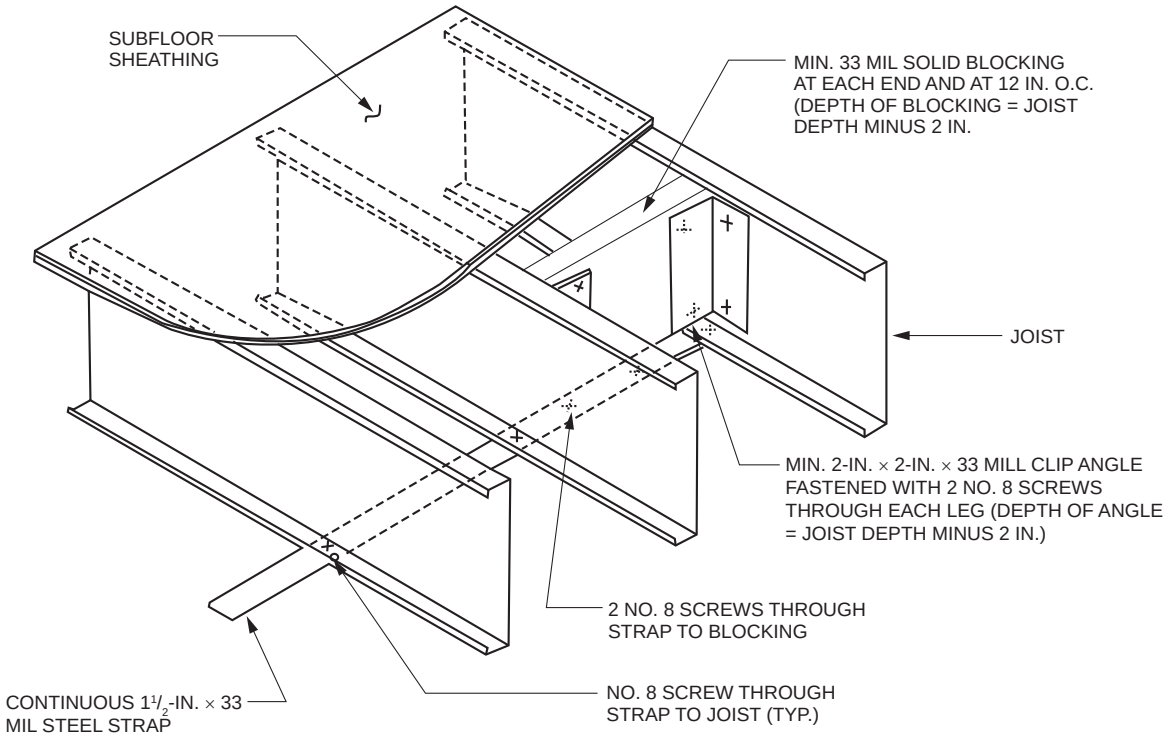

For SI: 1 mil = 0.0254, 1 inch = 25.4 mm.

FIGURE R505.3.3.2(1)
JOIST BLOCKING (SOLID)

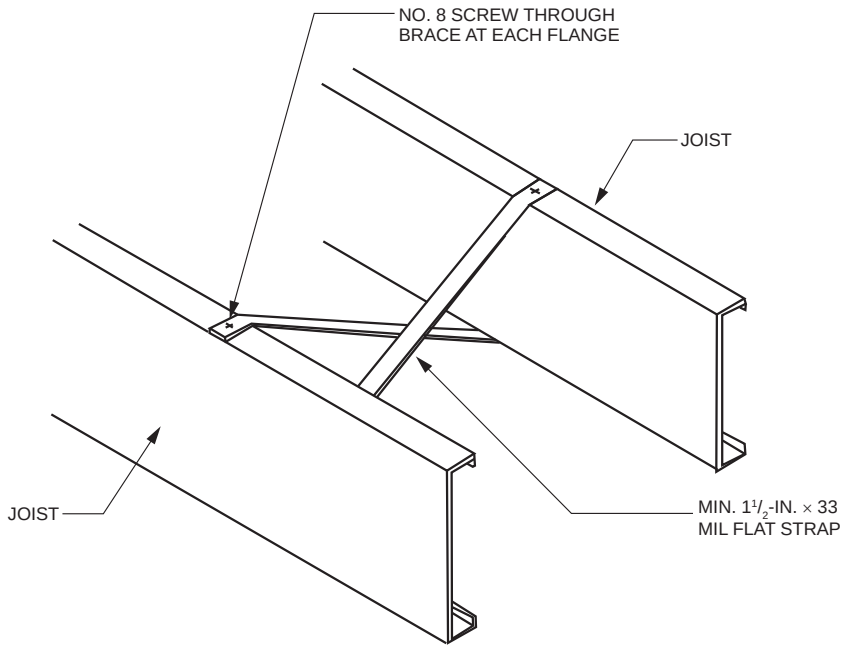

For SI: 1 mil = 0.0254, 1 inch = 25.4 mm.

FIGURE R505.3.3.2(2)
JOIST BLOCKING (STRAP)

INTERNATIONAL CODE COUNCIL®
Copyright © 2015 ICC. ALL RIGHTS RESERVED. Accessed by David Dammon on Jun 21, 2017 12:30:52 PM pursuant to License Agreement with ICC. No further reproduction or distribution authorized. ANY UNAUTHORIZED REPRODUCTION OR DISTRIBUTION IS A VIOLATION OF THE FEDERAL COPYRIGHT ACT AND THE LICENSE AGREEMENT, AND SUBJECT TO CIVIL AND CRIMINAL PENALTIES THEREUNDER.

R505.3.4 Bearing stiffeners. Bearing stiffeners shall be installed at each joist bearing location in accordance with this section, except for joists lapped over an interior support not carrying a load-bearing wall above. Floor joists supporting jamb studs with multiple members shall have two bearing stiffeners in accordance with Figure R505.3.4(1). Bearing stiffeners shall be fabricated from a C-shaped, track or clip angle member in accordance with the one of following:

1. C-shaped bearing stiffeners:
   1.1. Where the joist is not carrying a load-bearing wall above, the bearing stiffener shall be a minimum 33 mil (0.84 mm) thickness.
   1.2. Where the joist is carrying a load-bearing wall above, the bearing stiffener shall be not less than the same designation thickness as the wall stud above.
2. Track bearing stiffeners:
   2.1. Where the joist is not carrying a load-bearing wall above, the bearing stiffener shall be a minimum 43 mil (1.09 mm) thickness.
   2.2. Where the joist is carrying a load-bearing wall above, the bearing stiffener shall be not less than one designation thickness greater than the wall stud above.

The minimum length of a bearing stiffener shall be the depth of member being stiffened minus $^{3}/_{8}$ inch (9.5 mm). Each bearing stiffener shall be fastened to the web of the member it is stiffening as shown in Figure R505.3.4(2).

❖ Stiffeners (also referred to as transverse stiffeners or web stiffeners) at points of bearing provide resistance to web crippling in the joist. This section provides the option to use C-shaped or track section stiffening. These stiffeners are illustrated in Figure R505.3.4(2), but a stiffener can be installed on either side of the web of a joist as depicted in Figures R505.3.1(1) through R505.3.1(9). Two bearing stiffeners are required to be located where jamb studs are supported by the floor joist [see Figure R505.3.4(1)].

All bearing stiffeners are to be fastened in accordance with Figure R505.3.4(2).

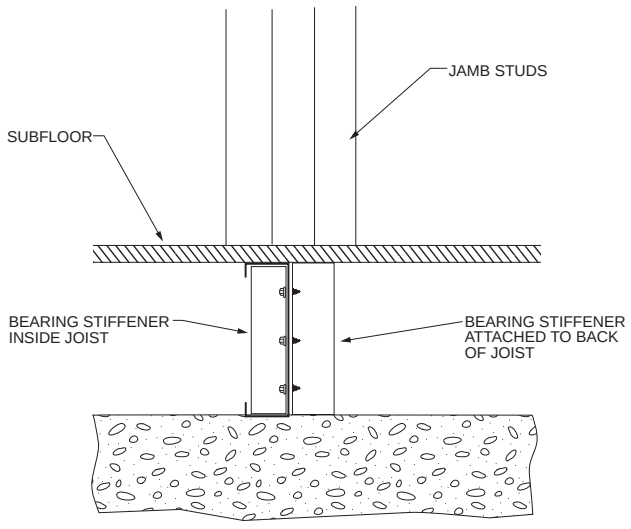

FIGURE R505.3.4(1)
BEARING STIFFENERS UNDER JAMB STUDS

R505.3.5 Cutting and notching. Flanges and lips of load-bearing cold-formed steel floor framing members shall not be cut or notched.

❖ Flanges and lips of load-bearing steel floor framing members must not be cut or notched because this would affect their structural integrity. The only holes permitted in steel floor joists are those that conform to Section R505.2.6.

R505.3.6 Floor cantilevers. Floor cantilevers for the top floor of a two- or three-story building or the first floor of a one-story building shall not exceed 24 inches (610 mm). Cantilevers, not exceeding 24 inches (610 mm) and supporting two stories and roof (first floor of a two-story building), shall be permitted provided that all cantilevered joists are doubled (nested or back-to-back). The doubled cantilevered joists shall extend not less than 6 feet (1829 mm) toward the inside and shall be fastened with not less than two No. 8 screws spaced at 24 inches (610 mm) on center through the webs (for back-to-back) or flanges (for nested joists).

❖ The maximum permitted floor cantilever is 24 inches (610 mm). Floor cantilevers that support a roof only are permitted to be single joist conforming to the allowable span requirements of Section R505.3.2.

Where a cantilever floor supports two stories and a roof all cantilever joists must be doubled (nested or back to back). Double joist consists of members of the same size and material thickness as that for single joist in accordance with the allowable span requirements of Section R505.3.2. The double joist must extend a minimum of 6 feet (1829 mm) within the building.

R505.3.7 Splicing. Joists and other structural members shall not be spliced. Splicing of tracks shall conform to Figure R505.3.7.

❖ Splicing of structural members is not permitted except when lapped joists occur at interior bearing points.

Splicing of tracks is allowed because they are not permitted to act as load-carrying members (see Figure R505.3.7). The exception to this would be under lateral loads from wind and earthquakes. In this case, the floor system must act as a diaphragm, with tracks serving as diaphragm chords. To provide continuity and carry the anticipated chord force, the splice must be as shown in Figure R505.3.7.

INTERNATIONAL CODE COUNCIL®
Copyright © 2015 ICC. ALL RIGHTS RESERVED. Accessed by David Dammon on Jun 21, 2017 12:30:52 PM pursuant to License Agreement with ICC. No further reproduction or distribution authorized. ANY UNAUTHORIZED REPRODUCTION OR DISTRIBUTION IS A VIOLATION OF THE FEDERAL COPYRIGHT ACT AND THE LICENSE AGREEMENT, AND SUBJECT TO CIVIL AND CRIMINAL PENALTIES THEREUNDER.

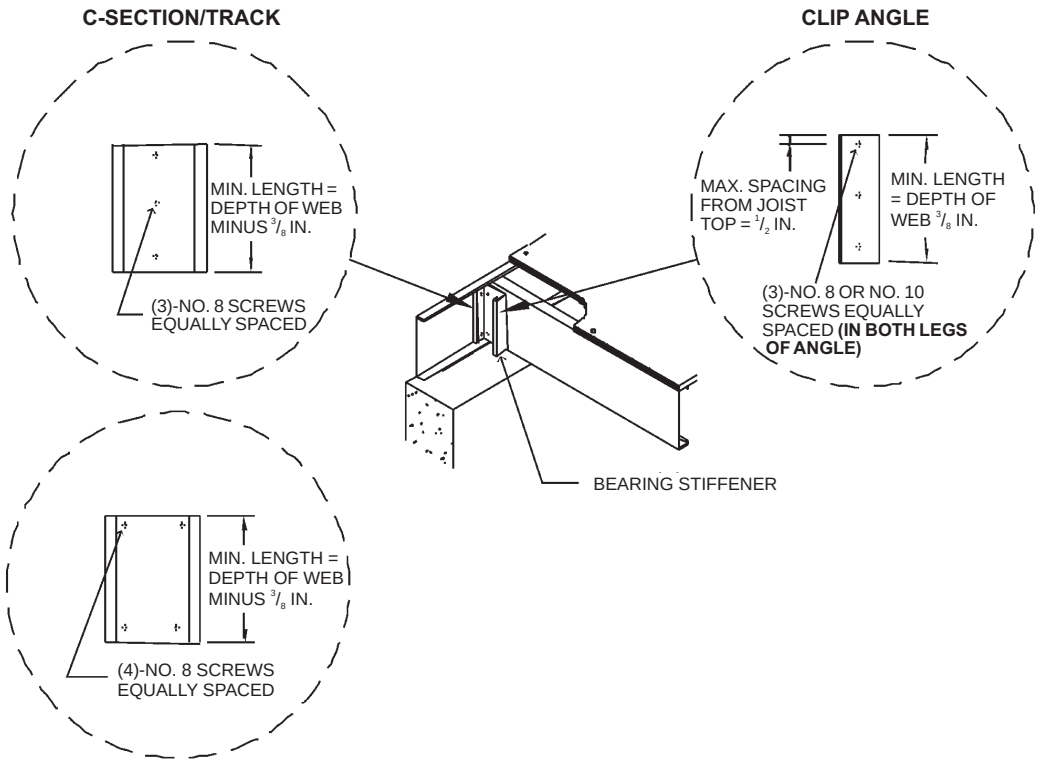

For SI: 1 inch = 25.4 mm.

FIGURE R505.3.4(2)
BEARING STIFFENER

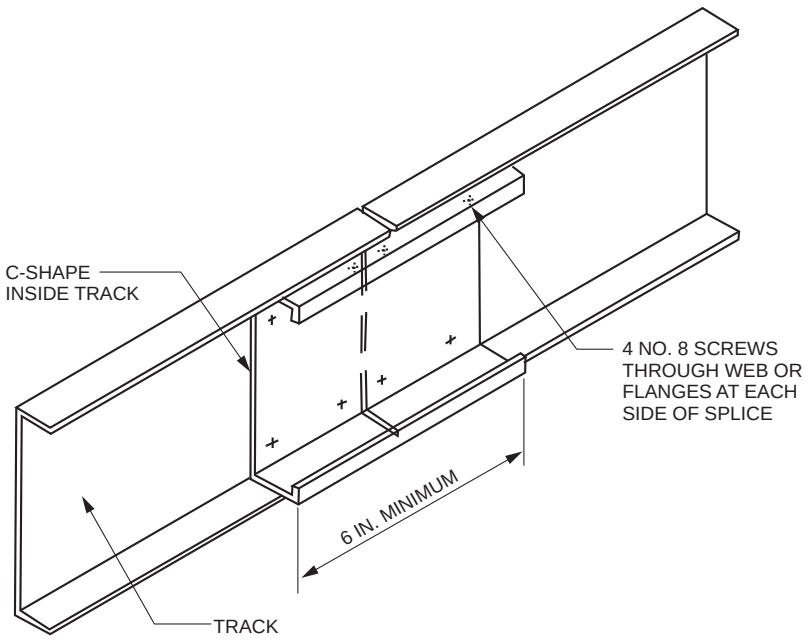

For SI: 1 inch = 25.4 mm.

FIGURE R505.3.7
TRACK SPLICE

INTERNATIONAL CODE COUNCIL®
Copyright © 2015 ICC. ALL RIGHTS RESERVED. Accessed by David Dammon on Jun 21, 2017 12:30:52 PM pursuant to License Agreement with ICC. No further reproduction or distribution authorized. ANY UNAUTHORIZED REPRODUCTION OR DISTRIBUTION IS A VIOLATION OF THE FEDERAL COPYRIGHT ACT AND THE LICENSE AGREEMENT, AND SUBJECT TO CIVIL AND CRIMINAL PENALTIES THEREUNDER.

R505.3.8 Framing of floor openings. Openings in floors shall be framed with header and trimmer joists. Header joist spans shall not exceed 6 feet (1829 mm) or 8 feet (2438 mm) in length in accordance with Figure R505.3.8(1) or R505.3.8(2), respectively. Header and trimmer joists shall be fabricated from joist and track members, having a minimum size and thickness at least equivalent to the adjacent floor joists, and shall be installed in accordance with Figures R505.3.8(1), R505.3.8(2), R505.3.8(3) and R505.3.8(4). Each header joist shall be connected to trimmer joists with four 2-inch by 2-inch (51-mm by 51-mm) clip angles. Each clip angle shall be fastened to both the header and trimmer joists with four No. 8 screws, evenly spaced, through each leg of the clip angle. The clip angles shall have a thickness not less than that of the floor joist. Each track section for a built-up header or trimmer joist shall extend the full length of the joist (continuous).

❖ Recognizing that floor openings are necessary for such things as stairways and utility chases, the code provides prescriptive criteria for framing these openings. This section provides prescriptive design for floor openings 6 feet (1829 mm) and 8 feet (2438 mm) in length. These requirements for openings in floors are illustrated in Figures R505.3.8(1) through R505.3.8(4).

SECTION R506
CONCRETE FLOORS (ON GROUND)

R506.1 General. Concrete slab-on-ground floors shall be designed and constructed in accordance with the provisions of this section or ACI 332. Floors shall be a minimum $3^1/_2$ inches (89 mm) thick (for expansive soils, see Section R403.1.8). The specified compressive strength of concrete shall be as set forth in Section R402.2.

❖ For weathering requirements, see the commentary to Sections R301.2 and R402.2. Commentary Figure R506.1 shows the requirements of this section.

R506.2 Site preparation. The area within the foundation walls shall have all vegetation, top soil and foreign material removed.

❖ Removal of construction debris and foreign materials, such as lumber formwork, stakes, tree stumps and other vegetation, limits the attraction of termites, insects and vermin. Top soil and soil vegetation should also be removed because such top soil is generally loosely compacted or so full of vegetation that soil settlement will occur when the vegetation decays. For concrete slabs placed on uncompacted fill or on large quantities of foreign materials, differential settlement may take place as a result of subsequent compaction of the soil, which can result in cracking of the floor slab and the interior wall/ceiling finishes.

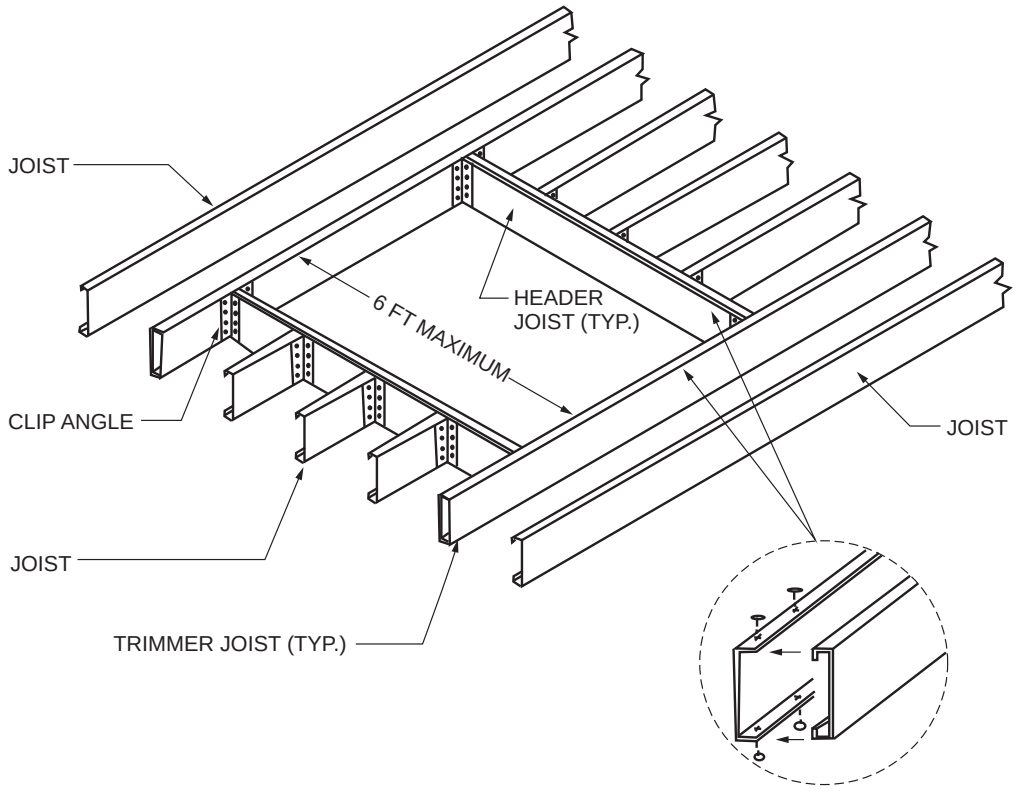

For SI: 1 foot = 304.8 mm.

FIGURE R505.3.8(1)
COLD-FORMED STEEL FLOOR CONSTRUCTION—6-FOOT FLOOR OPENING

INTERNATIONAL CODE COUNCIL®
Copyright © 2015 ICC. ALL RIGHTS RESERVED. Accessed by David Dammon on Jun 21, 2017 12:30:52 PM pursuant to License Agreement with ICC. No further reproduction or distribution authorized. ANY UNAUTHORIZED REPRODUCTION OR DISTRIBUTION IS A VIOLATION OF THE FEDERAL COPYRIGHT ACT AND THE LICENSE AGREEMENT, AND SUBJECT TO CIVIL AND CRIMINAL PENALTIES THEREUNDER.

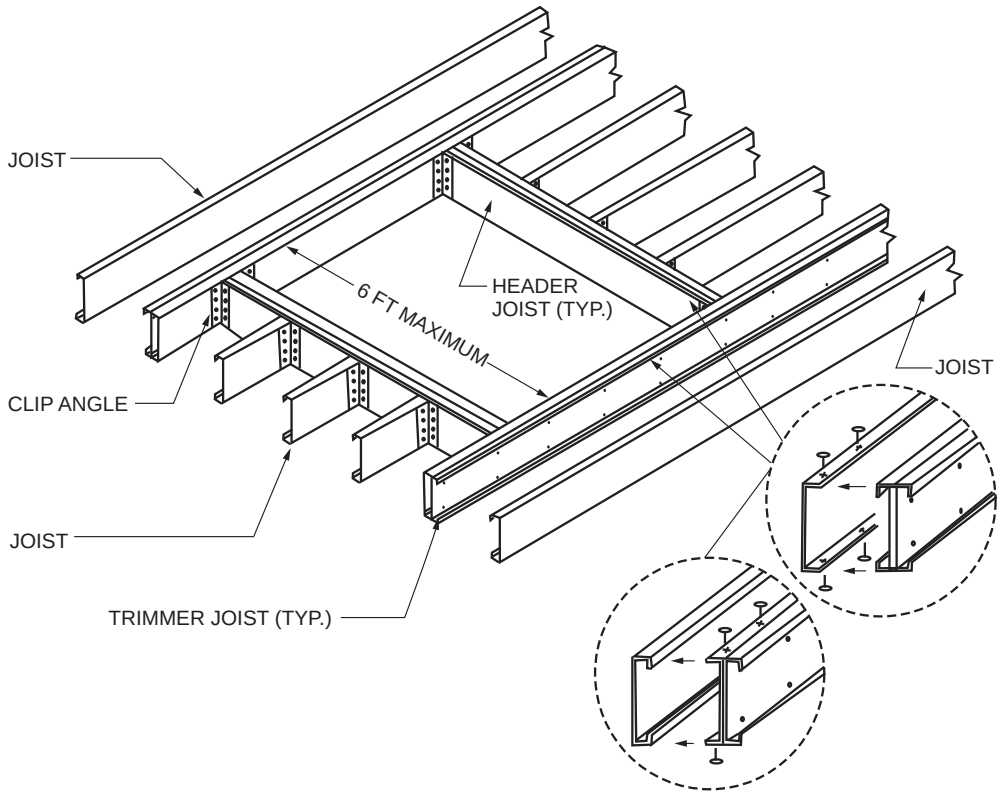

For SI: 1 foot = 304.8 mm.

FIGURE R505.3.8(2)
COLD-FORMED STEEL FLOOR CONSTRUCTION—8-FOOT FLOOR OPENING

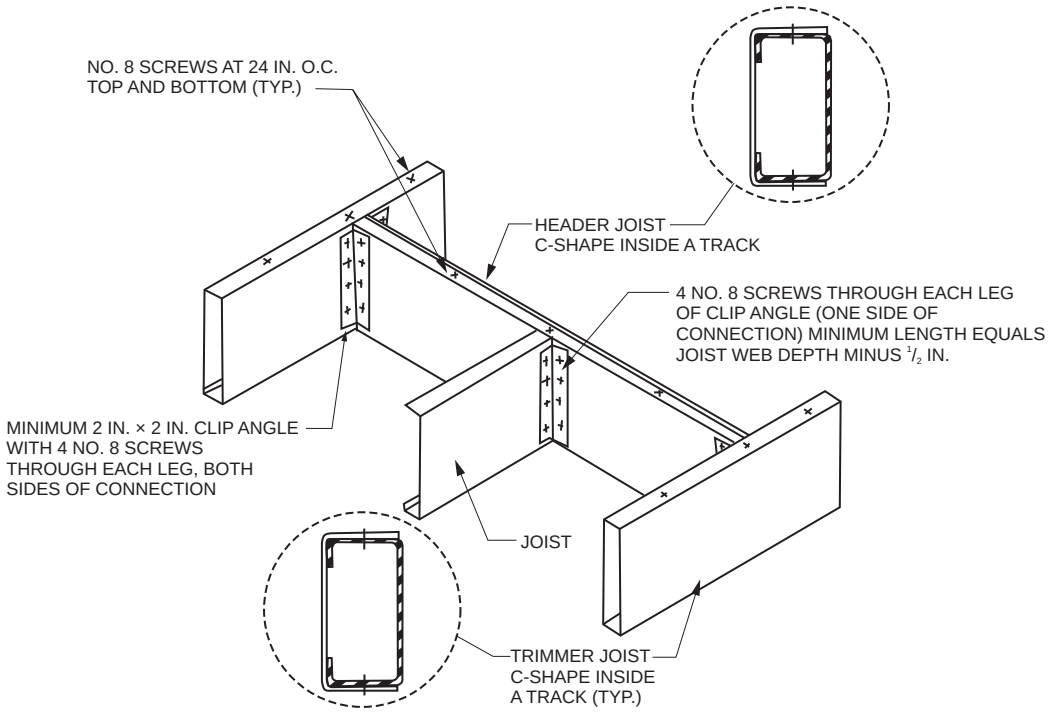

For SI: 1 inch = 25.4 mm, 1 foot = 304.8 mm.

FIGURE R505.3.8(3)
COLD-FORMED STEEL FLOOR CONSTRUCTION: FLOOR HEADER TO TRIMMER CONNECTION—6-FOOT OPENING

INTERNATIONAL CODE COUNCIL®
Copyright © 2015 ICC. ALL RIGHTS RESERVED. Accessed by David Dammon on Jun 21, 2017 12:30:52 PM pursuant to License Agreement with ICC. No further reproduction or distribution authorized. ANY UNAUTHORIZED REPRODUCTION OR DISTRIBUTION IS A VIOLATION OF THE FEDERAL COPYRIGHT ACT AND THE LICENSE AGREEMENT, AND SUBJECT TO CIVIL AND CRIMINAL PENALTIES THEREUNDER.

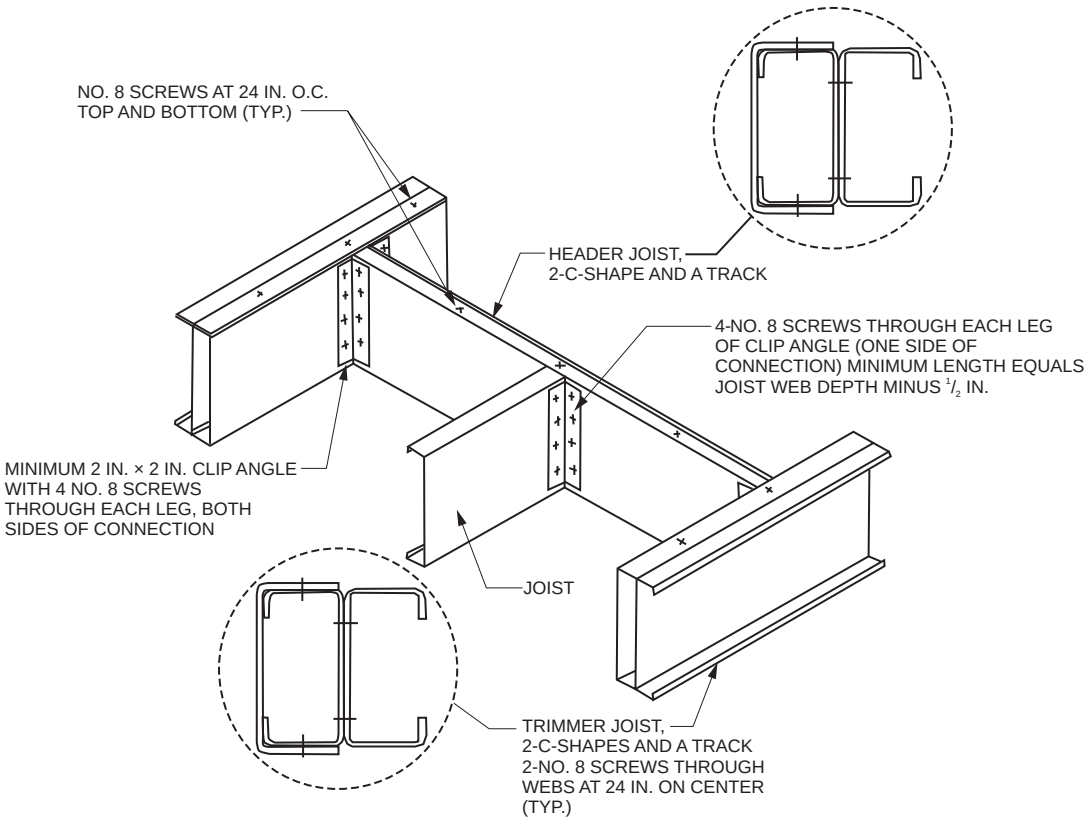

For SI: 1 inch = 25.4 mm, 1 foot = 304.8 mm.

FIGURE R505.3.8(4)
COLD-FORMED STEEL FLOOR CONSTRUCTION: FLOOR HEADER TO TRIMMER CONNECTION—8-FOOT OPENING

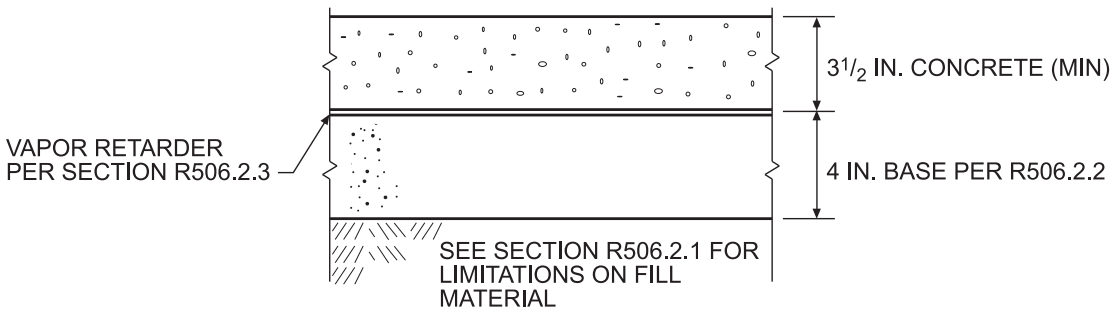

For SI: 1 inch = 25.4 mm.

Figure R506.1
CONCRETE SLAB-ON-GROUND REQUIREMENTS

R506.2.1 Fill. Fill material shall be free of vegetation and foreign material. The fill shall be compacted to ensure uniform support of the slab, and except where *approved*, the fill depths shall not exceed 24 inches (610 mm) for clean sand or gravel and 8 inches (203 mm) for earth.

❖ To minimize differential settlement caused by consolidation of uncompacted fill and the problems associated with differential settlement, any fill beneath a concrete slab must be compacted. Properly compacted fill, besides minimizing settlement, increases the soil load-bearing characteristics and soil stability and reduces water penetration. The amount of compaction for fill is not specifically stipulated. Generally, fill soils should be compacted to 95-percent maximum density as determined by a Standard Proctor Test (ASTM D698). Compaction requirements for expansive soils should be determined from an engineering analysis.

INTERNATIONAL CODE COUNCIL®
Copyright © 2015 ICC. ALL RIGHTS RESERVED. Accessed by David Dammon on Jun 21, 2017 12:30:52 PM pursuant to License Agreement with ICC. No further reproduction or distribution authorized. ANY UNAUTHORIZED REPRODUCTION OR DISTRIBUTION IS A VIOLATION OF THE FEDERAL COPYRIGHT ACT AND THE LICENSE AGREEMENT, AND SUBJECT TO CIVIL AND CRIMINAL PENALTIES THEREUNDER.

Soil may be compacted using equipment appropriate to the type of material being compacted, with lifts not exceeding 8 inches (203 mm). In general, thinner layers produce better compaction of fill, regardless of the type of soil being compacted.

R506.2.2 Base. A 4-inch-thick (102 mm) base course consisting of clean graded sand, gravel, crushed stone, crushed concrete or crushed blast-furnace slag passing a 2-inch (51 mm) sieve shall be placed on the prepared subgrade where the slab is below *grade*.

Exception: A base course is not required where the concrete slab is installed on well-drained or sand-gravel mixture soils classified as Group I according to the United Soil Classification System in accordance with Table R405.1.

❖ Slabs need to be protected from the penetration of water and water vapor from below to prevent damage to interior finish material. Additionally, the effectiveness of thermal insulation at the slab may be adversely affected because of moisture. A 4-inch (102 mm) minimum granular base course is placed over the fill or undisturbed soil for slabs below grade to provide a capillary stop for water rising through the soil and into the slab. A base course is especially necessary when the site soil is other than gravel or clean sand. Both surface and groundwater problems must be addressed. Proper site preparation, selection of adequate fill and base course materials, and the installation of a vapor barrier minimize potential moisture problems associated with slab-on-grade construction.

R506.2.3 Vapor retarder. A 6-mil (0.006 inch; 152 μm) polyethylene or *approved* vapor retarder with joints lapped not less than 6 inches (152 mm) shall be placed between the concrete floor slab and the base course or the prepared subgrade where no base course exists.

Exception: The vapor retarder is not required for the following:

1. Garages, utility buildings and other unheated *accessory structures*.
2. For unheated storage rooms having an area of less than 70 square feet (6.5 m^2) and carports.
3. Driveways, walks, patios and other flatwork not likely to be enclosed and heated at a later date.
4. Where *approved* by the *building official*, based on local site conditions.

❖ Although good quality, uncracked concrete is practically impermeable to the passage of water (unless the water is under a considerable pressure), concrete is not impervious to the passage of water vapors. If the surface of the slab is not sealed, water vapor will pass through the slab. If a floor finish such as linoleum, vinyl tile, wood flooring or any type of covering is placed on top of the slab, the moisture will be trapped in the slab. If the floor finish is adhered to the concrete, it may eventually loosen and buckle or blister.

Many of the moisture problems associated with enclosed slabs-on-ground can be minimized by installing a vapor retarder. When required, vapor retarders of either single- or multiple-layer membranes should be acceptable if the vapor retarder is properly installed with lapped joints and the barrier is not punctured during construction.

R506.2.4 Reinforcement support. Where provided in slabs-on-ground, reinforcement shall be supported to remain in place from the center to upper one-third of the slab for the duration of the concrete placement.

❖ The code does not require reinforcement for the concrete slab-on-ground floors. When reinforcement is provided, common practice is to use welded wire fabric. The welded wire fabric frequently is left on the ground during the pour and not picked up. When lifted up by construction personnel, it is often not in a proper or consistent location, with some on the ground and some near the top of the slab. This section does not require installation of reinforcement; however, if it is installed, it must be properly located in the slab, or its benefit is lost.

SECTION R507
EXTERIOR DECKS

R507.1 Decks. Wood-framed decks shall be in accordance with this section or Section R301 for materials and conditions not prescribed herein. Where supported by attachment to an exterior wall, decks shall be positively anchored to the primary structure and designed for both vertical and lateral loads.

Such attachment shall not be accomplished by the use of toenails or nails subject to withdrawal. Where positive connection to the primary building structure cannot be verified during inspection, decks shall be self-supporting. For decks with cantilevered framing members connections to exterior walls or other framing members shall be designed and constructed to resist uplift resulting from the full live load specified in Table R301.5 acting on the cantilevered portion of the deck.

❖ If an exterior wall is used to support a deck, the deck framing must be positively attached to the building structure. This connection design must include a consideration of both vertical and lateral loads, and the connection must be available for inspection. If it is not, this method of support is not permitted and the deck must be self-supporting.

If a deck has cantilevered framing, the framing must have a connection to its support that is designed to resist any uplift resulting from the full live load acting on the cantilevered span only. This load condition will produce maximum uplift at the support opposite the cantilevered end.

R507.2 Deck ledger connection to band joist. Deck ledger connections to band joists shall be in accordance with this section, Tables R507.2 and R507.2.1, and Figures R507.2.1(1) and R507.2.1(2). For other grades, species, connection details and loading conditions, deck ledger connections shall be designed in accordance with Section R301.

❖ This section contains the prescriptive design for positive anchorage of a deck attached to the primary struc-

INTERNATIONAL CODE COUNCIL®
Copyright © 2015 ICC. ALL RIGHTS RESERVED. Accessed by David Dammon on Jun 21, 2017 12:30:52 PM pursuant to License Agreement with ICC. No further reproduction or distribution authorized. ANY UNAUTHORIZED REPRODUCTION OR DISTRIBUTION IS A VIOLATION OF THE FEDERAL COPYRIGHT ACT AND THE LICENSE AGREEMENT, AND SUBJECT TO CIVIL AND CRIMINAL PENALTIES THEREUNDER.

ture. The design is for vertical loads only [50 psf (2394 Pa) maximum] on the deck. Section R507.2.1 specifies the material requirements for the deck ledger. Deck ledgers must not support the girders supporting deck joists. The deck ledger is prohibited from being supported by stone or masonry veneer.

Researchers at Virginia Tech University and Washington State University have tested simulated deck-ledger to house-band-joist connections in their respective laboratories. A practical range of pressure-preservative-treated (PPT) deck ledger lumber (incised Hem-fir and Southern pine) was attached to a simulated Spruce-pine-fir band joist by $^1/_2$-inch (12.7 mm) lag screws or bolts with washers. The ledger connection tests did not include carriage bolts; therefore, an engineered design of the ledger connection is required if carriage bolts are used. The deck ledger was separated from the house band joist by placing a piece of $^{15}/_{32}$-inch wall sheathing in the connection, and in another test case for bolts only, a $^1/_2$-inch (12.7 mm) stack of washers was inserted into the connection to produce a drainage plane. The specimens were tested to failure and the average test results ware divided by a factor of 3.0, intended to provide an adequate in-service safety factor, and further divided by 1.6 to convert from a "test duration" to a "normal duration" of 10 years recognized by the NDS and IBC as the proper duration for an occupancy live load.

The test was made with two different band joists, a 2-inch (51 mm) nominal Spruce-pine-fir and a 1-inch by $9^1/_2$-inch Douglas fir-laminated (DFL) veneer. Section R507.2.2 permits the DFL band joist in lieu of the 2-inch (51 mm) nominal. Due to the limited investigation into the performance of composite-type band joists (only DFL was evaluated) and the possibility of band joists entering the market being a lower quality than what was tested at Washington State University, engineered wood band joists are not included in the scope of the fastener spacing table. Instead, the attachment must be designed in accordance with accepted engineering practice where an engineered wood product is used as the band joist. The maximum distance between the face of the band joist and the deck ledger must not exceed 1 inch (25 mm). Note e of Table R507.2 will permit $^1/_2$-inch thickness of stacked washers to substitute for $^1/_2$ inch of allowable sheathing thickness where combined with wood structural panel or lumber sheathing if the 1-inch distance is not exceeded.

Penetration of moisture at the interface of the deck and the exterior of the house can be detrimental to the connectors. For this reason, Section R502.2.3 requires the connectors to be hot-dipped galvanized or stainless steel.

The on-center spacing of the fasteners as shown in Table R507.2.1 and Figures R507.2.1(1) and R507.2.1(2) is the closest spacing for the two cases of deck ledger lumber tested. In deck construction, a joist hanger or angle connector is commonly installed at the end of the ledger board to support the deck rim joist. Often these members are double 2x members [3-inch (76 mm) nominal width]. The spacing of 2 inches to 5 inches (51 mm to 127 mm) from the ends will allow the installer flexibility to locate the lag screw or bolt so that it does not interfere with the installation of the joist hanger or structural connector. Five inches (127 mm) will accommodate an inverted flange double 2x joist hanger.

TABLE R507.2
DECK LEDGER CONNECTION TO BAND JOIST[a, b]
(Deck live load = 40 psf, deck dead load = 10 psf, snow load ≤ 40 psf)

CONNECTION DETAILS	JOIST SPAN						
	6′ and less	6′1″ to 8′	8′1″ to 10′	10′1″ to 12′	12′1″ to 14′	14′1″ to 16′	16′1″ to 18′
	On-center spacing of fasteners						
$^1/_2$-inch diameter lag screw with $^1/_2$-inch maximum sheathing[c, d]	30	23	18	15	13	11	10
$^1/_2$-inch diameter bolt with $^1/_2$-inch maximum sheathing[d]	36	36	34	29	24	21	19
$^1/_2$-inch diameter bolt with 1-inch maximum sheathing[e]	36	36	29	24	21	18	16

For SI: 1 inch = 25.4 mm, 1 foot = 304.8 mm, 1 pound per square foot = 0.0479 kPa.

a. Ledgers shall be flashed in accordance with Section R703.8 to prevent water from contacting the house band joist.

b. Snow load shall not be assumed to act concurrently with live load.

c. The tip of the lag screw shall fully extend beyond the inside face of the band joist.

d. Sheathing shall be wood structural panel or solid sawn lumber.

e. Sheathing shall be permitted to be wood structural panel, gypsum board, fiberboard, lumber or foam sheathing. Up to $^1/_2$-inch thickness of stacked washers shall be permitted to substitute for up to $^1/_2$ inch of allowable sheathing thickness where combined with wood structural panel or lumber sheathing.

❖ See the commentary to Sections R507.2 and R507.2.1.

INTERNATIONAL CODE COUNCIL®
Copyright © 2015 ICC. ALL RIGHTS RESERVED. Accessed by David Dammon on Jun 21, 2017 12:30:52 PM pursuant to License Agreement with ICC. No further reproduction or distribution authorized. ANY UNAUTHORIZED REPRODUCTION OR DISTRIBUTION IS A VIOLATION OF THE FEDERAL COPYRIGHT ACT AND THE LICENSE AGREEMENT, AND SUBJECT TO CIVIL AND CRIMINAL PENALTIES THEREUNDER.

TABLE 507.2.1
PLACEMENT OF LAG SCREWS AND BOLTS IN DECK LEDGERS AND BAND JOISTS

MINIMUM END AND EDGE DISTANCES AND SPACING BETWEEN ROWS				
	TOP EDGE	BOTTOM EDGE	ENDS	ROW SPACING
Ledger[a]	2 inches[d]	$^3/_4$ inch	2 inches[b]	$1^5/_8$ inches[b]
Band Joist[c]	$^3/_4$ inch	2 inches	2 inches[b]	$1^5/_8$ inches[b]

For SI: 1 inch = 25.4 mm.

a. Lag screws or bolts shall be staggered from the top to the bottom along the horizontal run of the deck ledger in accordance with Figure R507.2.1(1).

b. Maximum 5 inches.

c. For engineered rim joists, the manufacturer's recommendations shall govern.

d. The minimum distance from bottom row of lag screws or bolts to the top edge of the ledger shall be in accordance with Figure R507.2.1(1).

❖ See the commentary to Section R507.2.1.

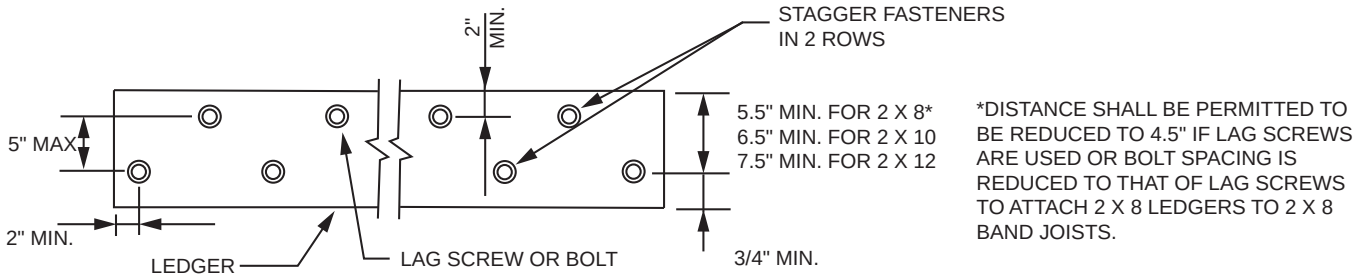

For SI: 1 inch = 25.4 mm.

FIGURE R507.2.1(1)
PLACEMENT OF LAG SCREWS AND BOLTS IN LEDGERS

❖ See the commentary to Section R507.2.

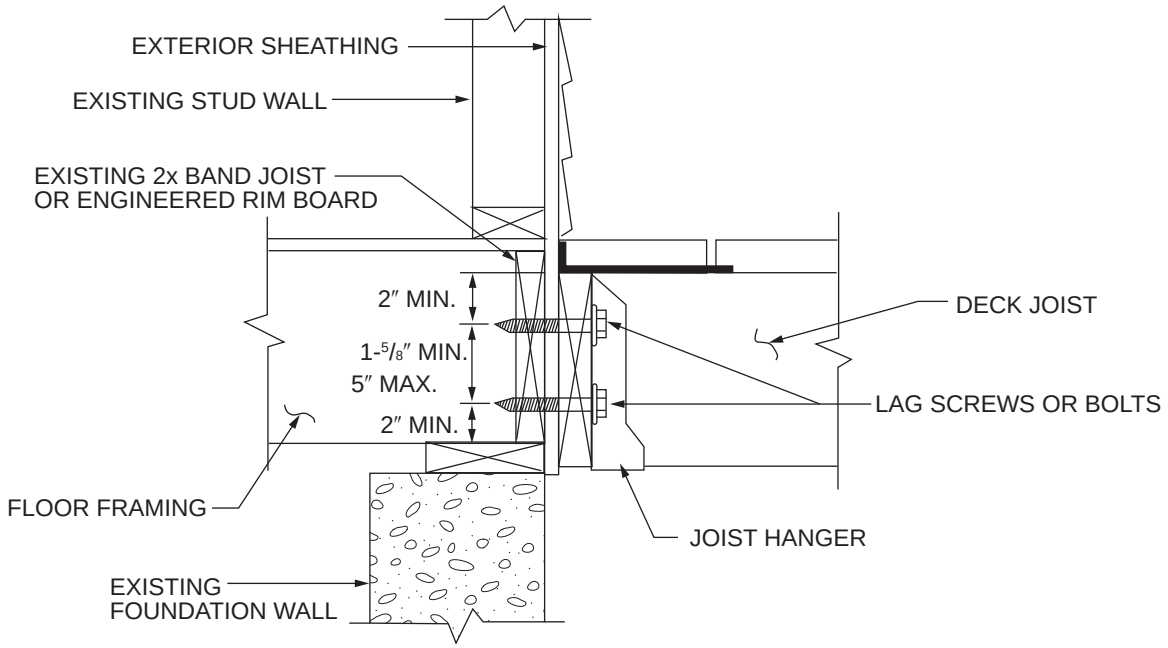

For SI: 1 inch = 25.4 mm.

FIGURE R507.2.1(2)
PLACEMENT OF LAG SCREWS AND BOLTS IN BAND JOISTS

❖ See the commentary to Section R507.2.

INTERNATIONAL CODE COUNCIL®
Copyright © 2015 ICC. ALL RIGHTS RESERVED. Accessed by David Dammon on Jun 21, 2017 12:30:52 PM pursuant to License Agreement with ICC. No further reproduction or distribution authorized. ANY UNAUTHORIZED REPRODUCTION OR DISTRIBUTION IS A VIOLATION OF THE FEDERAL COPYRIGHT ACT AND THE LICENSE AGREEMENT, AND SUBJECT TO CIVIL AND CRIMINAL PENALTIES THEREUNDER.

R507.2.1 Ledger details. Deck ledgers installed in accordance with Section R507.2 shall be a minimum 2-inch by 8-inch (51 mm by 203 mm) nominal, pressure-preservative-treated southern pine, incised pressure-preservative-treated Hem-fir, or approved, naturally durable, No. 2 grade or better lumber. Deck ledgers installed in accordance with Section R507.2 shall not support concentrated loads from beams or girders. Deck ledgers shall not be supported on stone or masonry veneer.

❖ See the commentary to Section R507.2.

R507.2.2 Band joist details. Band joists attached by a ledger in accordance with Section R507.2 shall be a minimum 2-inch-nominal (51 mm), solid-sawn, spruce-pine-fir lumber or a minimum 1-inch by $9^1/_2$-inch (25 mm × 241 mm) dimensional, Douglas fir, laminated veneer lumber. Band joists attached by a ledger in accordance with Section R507.2 shall be fully supported by a wall or sill plate below.

❖ See the commentary to Section R507.2.

R507.2.3 Ledger to band joist fastener details. Fasteners used in deck ledger connections in accordance with Table R507.2 shall be hot-dipped galvanized or stainless steel and shall be installed in accordance with Table R507.2.1 and Figures R507.2.1(1) and R507.2.1(2).

❖ See the commentary to Section R507.2.

R507.2.4 Deck lateral load connection. The lateral load connection required by Section R507.1 shall be permitted to be in accordance with Figure R507.2.3(1) or R507.2.3(2). Where the lateral load connection is provided in accordance with Figure R507.2.3(1), hold-down tension devices shall be installed in not less than two locations per deck, within 24 inches of each end of the deck. Each device shall have an allowable stress design capacity of not less than 1,500 pounds (6672 N). Where the lateral load connections are provided in accordance with Figure R507.2.3(2), the hold-down tension devices shall be installed in not less than four locations per deck, and each device shall have an allowable stress design capacity of not less than 750 pounds (3336 N).

❖ The code requires decks that are supported by attachment to an exterior wall to be positively anchored to the primary structure, and be designed for both vertical and lateral loads. The vertical and lateral loads referred to are code-prescribed loads such as dead, live, wind and seismic loads. The magnitude of the lateral loads to be resisted is not specified and must be determined in accordance with accepted engineering practice.

Attachment only to the band joist may not be sufficient for the lateral loads. Positive anchorage of the deck joist to the floor framing addresses this potential failure. Figures R507.2.3(1) and R507.2.3(2) show typical hold-down devices that provide a positive connection to the floor framing in order to resist the lateral loads. Figure R507.2.3(1) is based on a similar figure from FEMA 232. The number required and actual design of the connection to resist the lateral loads must

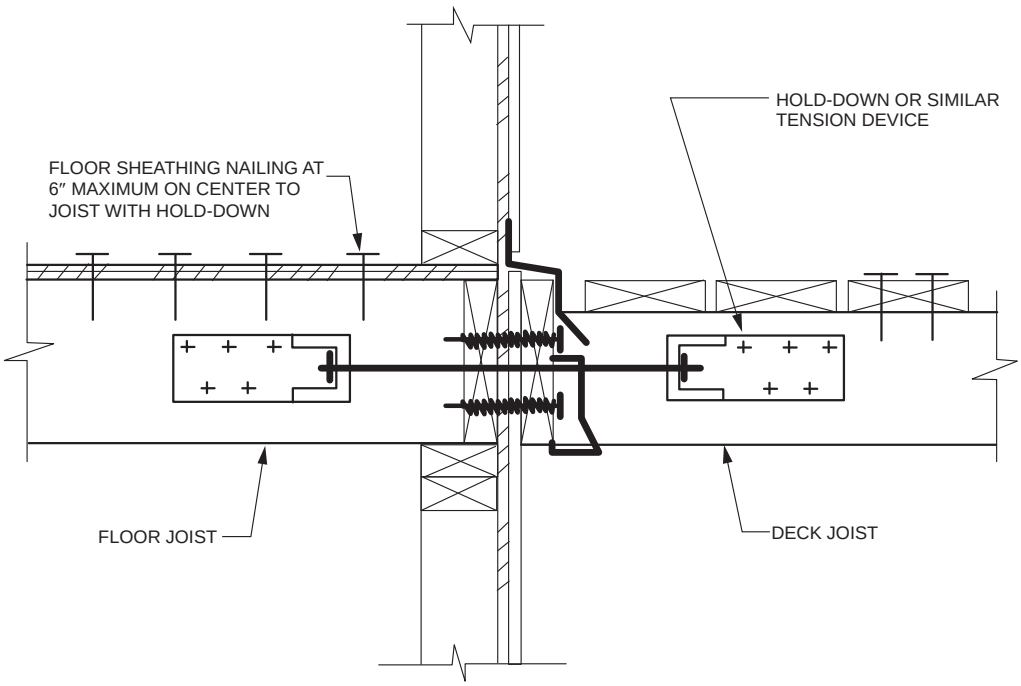

For SI: 1 inch = 25.4 mm.

FIGURE 507.2.3(1)
DECK ATTACHMENT FOR LATERAL LOADS

❖ See the commentary to Section R507.2.4.

INTERNATIONAL CODE COUNCIL®
Copyright © 2015 ICC. ALL RIGHTS RESERVED. Accessed by David Dammon on Jun 21, 2017 12:30:52 PM pursuant to License Agreement with ICC. No further reproduction or distribution authorized. ANY UNAUTHORIZED REPRODUCTION OR DISTRIBUTION IS A VIOLATION OF THE FEDERAL COPYRIGHT ACT AND THE LICENSE AGREEMENT, AND SUBJECT TO CIVIL AND CRIMINAL PENALTIES THEREUNDER.

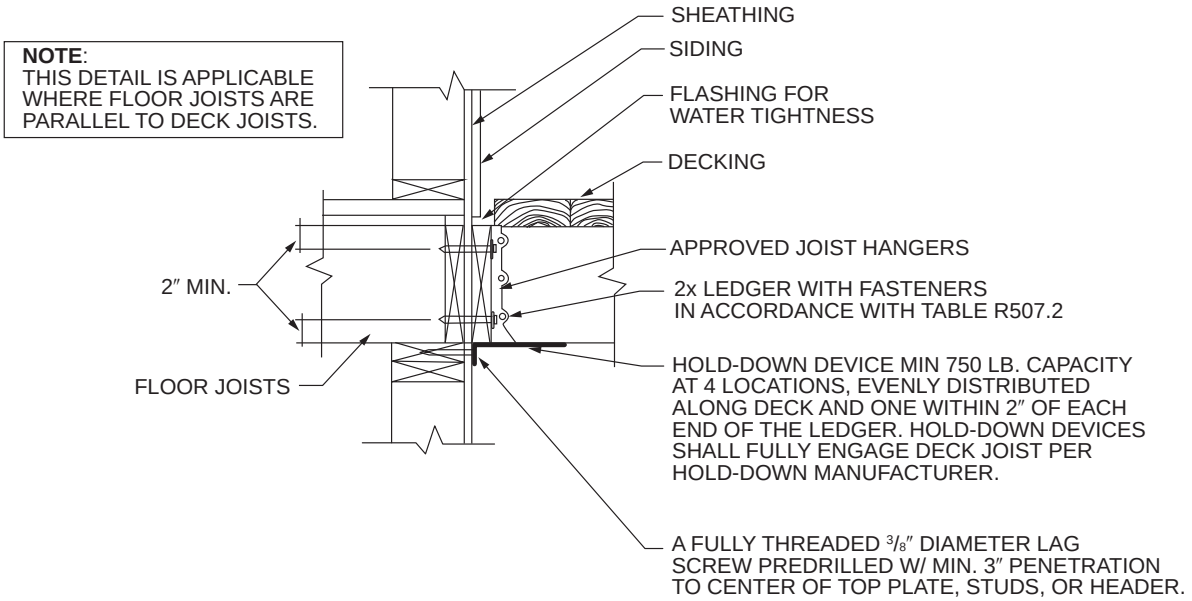

For SI: 1 inch = 25.4 mm, 1 foot = 304.8 mm.

FIGURE R507.2.3(2)
DECK ATTACHMENT FOR LATERAL LOADS

❖ See the commentary to Section R507.2.4.

be determined in accordance with accepted engineering practice. Where Figure R507.2.3(1) is used, a minimum of two hold-down devices, located within 24 inches of each end of the deck, with a design capacity of 1,500 pounds (6672 N) each, are required.

Figure R507.2.3(2) provides an alternative prescriptive method to achieve an acceptable lateral load connection for residential decks. For new or replacement decks on existing homes, builders or homeowners must often remove interior sheet rock on ceilings in order to install hold-down tension devices as required by Figure R507.2.3(1). Figure R507.2.3(2) achieves an acceptable lateral load connection between the deck and primary structure by permitting the installation of surface-mounted hold-down connection devices spread out along the length of the ledger and precludes the need to make expensive and unnecessary ceiling repairs.Where Figure R507.2.3(2) is used, a minimum of four hold-down devices, with one located within 24 inches of each end of the deck, with a design capacity of 750 pounds each, are required.

Where Figure R507.2.3(1) or R507.2.3(2) is not used, the quantity and load capacity must comply with the engineered design.

R507.3 Plastic composite deck boards, stair treads, guards, or handrails. Plastic composite exterior deck boards, stair treads, guards and handrails shall comply with the requirements of ASTM D7032 and the requirements of Section 507.3.

❖ Plastic composite, as defined in Section R202, is a generic designation that refers to wood/plastic composites and plastic lumber. Plastic composite (PC) materials, commonly used in exterior deck boards, guards and handrails, must be rated for appropriate performance criteria. These materials have a widespread acceptance for residential construction, and labeling requirements for PCs allow the safe application of these materials in exterior deck systems. The referenced standard, ASTM D7032, includes performance evaluations, such as flexural tests, ultraviolet-resistance tests, freeze-thaw-resistance tests, biodegradation tests, fire-performance tests, creep-recovery tests, mechanical fastener holding tests and slip-resistance tests. The standard also includes considerations of the effects of temperature and moisture, concentrated loads and fire propagation tests.

Section R507.3.1 clarifies mandatory labeling requirements for plastic composites. Each deck board and stair tread, similar to pressure-preservative-treated wood, is required to have a label. The required label would be applied on an end or on a face (side) of each board. Product labels will show verification of compliance with ASTM D7032 and provide the appropriate performance information. For example, deck board labels would identify the allowable load and span [e.g., 40 psf load on a 16-inch (406 mm) span would be expressed as “16/40”]. Handrails and guardrail systems, which are more often supplied as “kits” in packages, require labels on the items or on the packaging. The maximum span (maximum vertical post spacing) is required to be on the label, as is verifying compliance with ASTM D7032.

Section 507.3.5 includes the requirement for the installation of these PC products in accordance with

INTERNATIONAL CODE COUNCIL®
Copyright © 2015 ICC. ALL RIGHTS RESERVED. Accessed by David Dammon on Jun 21, 2017 12:30:52 PM pursuant to License Agreement with ICC. No further reproduction or distribution authorized. ANY UNAUTHORIZED REPRODUCTION OR DISTRIBUTION IS A VIOLATION OF THE FEDERAL COPYRIGHT ACT AND THE LICENSE AGREEMENT, AND SUBJECT TO CIVIL AND CRIMINAL PENALTIES THEREUNDER.

the manufacturer's instructions, which is the best way to ensure that PCs perform to the required design loads, and installation instructions are an integral part of the manufacturer's labeling program.

The flame spread index of these PC materials is limited to 200 when tested in accordance with ASTM E84 or UL723. This is a measure of how rapid a fire will spread for these PC materials and is consistent with the requirements for interior finish material used throughout the building (see commentary, Section R302.9).

R507.3.1 Labeling. Plastic composite deck boards and stair treads, or their packaging, shall bear a label that indicates compliance to ASTM D7032 and includes the allowable load and maximum allowable span determined in accordance with ASTM D7032. Plastic or composite handrails and guards, or their packaging, shall bear a label that indicates compliance to ASTM D7032 and includes the maximum allowable span determined in accordance with ASTM D7032.

❖ See the commentary to Section R507.3.

R507.3.2 Flame spread index. Plastic composite deck boards, stair treads, guards, and handrails shall exhibit a flame spread index not exceeding 200 when tested in accordance with ASTM E84 or UL 723 with the test specimen remaining in place during the test.

Exception: Plastic composites determined to be noncombustible.

❖ See the commentary to Section R507.3.

R507.3.3 Decay resistance. Plastic composite deck boards, stair treads, guards and handrails containing wood, cellulosic or other biodegradable materials shall be decay resistant in accordance with ASTM D 7032.

❖ See the commentary to Section R507.3.

R507.3.4 Termite resistance. Where required by Section 318, plastic composite deck boards, stair treads, guards and handrails containing wood, cellulosic or other biodegradable materials shall be termite resistant in accordance with ASTM D7032.

❖ See the commentary to Section R507.3.

507.3.5 Installation of plastic composites. Plastic composite deck boards, stair treads, guards and handrails shall be installed in accordance with this code and the manufacturer's instructions.

❖ See the commentary to Section R507.3.

R507.4 Decking. Maximum allowable spacing for joists supporting decking shall be in accordance with Table R507.4. Wood decking shall be attached to each supporting member with not less than (2) 8d threaded nails or (2) No. 8 wood screws.

❖ Sections R507.4, R507.5, R507.6 and R507.7 provide the prescriptive design and details for deck boards, joist spacing, joist span, deck beam span, bearing requirements for joist and beams and connection of deck beam to deck post. Tables R507.4, R507.5 and R507.6 are based on wet use and treated or incised lumber. The span tables for wood floors in Section R502 are not appropriate for exterior wood-framed decks. Also, additional wood species that are not in Section R502 have been included. Table R507.4 provides for the deck boards to be either perpendicular or diagonal to the joist. The maximum angle of the diagonal deck board is 45 degrees from perpendicular.

The new tables are based on wood capacity using the *National Design Specification for Wood Construction* (NDS). The deck joist and beam tables assume No. 2 grade wood, wet use and incising, when applicable. Incising is done to assist chemical additives to soak deeper into preservative-treated lumber. Incising is only assumed in lumber species that are preservative treated, such as Douglas fir-larch and Hem-fir and resistant to pressure treatment. Southern pine more easily absorbs preservatives during the pressure treating process and does not require incising.

Bearing requirements in Section R507.7 are consistent with bearing requirements in Section R502.6.

R507.5 Deck joists. Maximum allowable spans for wood deck joists, as shown in Figure R507.5, shall be in accordance with Table R507.5. Deck joists shall be permitted to cantilever not greater than one-fourth of the actual, adjacent joist span.

❖ See the commentary to Section R507.4.

R507.5.1 Lateral restraint at supports. Joist ends and bearing locations shall be provided with lateral restraint to prevent rotation. Where lateral restraint is provided by joist hangers or blocking between joists, their depth shall equal not less than 60 percent of the joist depth. Where lateral restraint is provided by rim joists, they shall be secured to the end of each joist with not less than (3) 10d (3-inch × 0.128-inch) nails or (3) No. 10 × 3-inch (76 mm) long wood screws.

❖ See the commentary to Section R507.4.

TABLE R507.4
MAXIMUM JOIST SPACING

MATERIAL TYPE AND NOMINAL SIZE	MAXIMUM ON-CENTER JOIST SPACING	
	Perpendicular to joist	Diagonal to joist[a]
$1^1/_4$-inch-thick wood	16 inches	12 inches
2-inch-thick wood	24 inches	16 inches
Plastic composite	In accordance with Section R507.3	In accordance with Section R507.3

For SI: 1 inch = 25.4 mm, 1 foot = 304.8 mm, 1 degree = 0.01745 rad.

a. Maximum angle of 45 degrees from perpendicular for wood deck boards.

INTERNATIONAL CODE COUNCIL®
Copyright © 2015 ICC. ALL RIGHTS RESERVED. Accessed by David Dammon on Jun 21, 2017 12:30:52 PM pursuant to License Agreement with ICC. No further reproduction or distribution authorized. ANY UNAUTHORIZED REPRODUCTION OR DISTRIBUTION IS A VIOLATION OF THE FEDERAL COPYRIGHT ACT AND THE LICENSE AGREEMENT, AND SUBJECT TO CIVIL AND CRIMINAL PENALTIES THEREUNDER.

TABLE R507.5
DECK JOIST SPANS FOR COMMON LUMBER SPECIES[f] (ft. - in.)

SPECIES[a]	SIZE	SPACING OF DECK JOISTS WITH NO CANTILEVER[b] (inches)			SPACING OF DECK JOISTS WITH CANTILEVERS[c] (inches)		
		12	16	24	12	16	24
Southern pine	2 × 6	9-11	9-0	7-7	6-8	6-8	6-8
	2 × 8	13-1	11-10	9-8	10-1	10-1	9-8
	2 × 10	16-2	14-0	11-5	14-6	14-0	11-5
	2 × 12	18-0	16-6	13-6	18-0	16-6	13-6
Douglas fir-larch[d], hem-fir[d] spruce-pine-fir[d]	2 × 6	9-6	8-8	7-2	6-3	6-3	6-3
	2 × 8	12-6	11-1	9-1	9-5	9-5	9-1
	2 × 10	15-8	13-7	11-1	13-7	13-7	11-1
	2 × 12	18-0	15-9	12-10	18-0	15-9	12-10
Redwood, western cedars, ponderosa pine[e], red pine[e]	2 × 6	8-10	8-0	7-0	5-7	5-7	5-7
	2 × 8	11-8	10-7	8-8	8-6	8-6	8-6
	2 × 10	14-11	13-0	10-7	12-3	12-3	10-7
	2 × 12	17-5	15-1	12-4	16-5	15-1	12-4

For SI: 1 inch = 25.4 mm, 1 foot = 304.8 mm, 1 pound per square foot = 0.0479 kPa, 1 pound = 0.454 kg.

a. No. 2 grade with wet service factor.

b. Ground snow load, live load = 40 psf, dead load = 10 psf, L/Δ = 360.

c. Ground snow load, live load = 40 psf, dead load = 10 psf, L/Δ = 360 at main span, L/Δ = 180 at cantilever with a 220-pound point load applied to end.

d. Includes incising factor.

e. Northern species with no incising factor

f. Cantilevered spans not exceeding the nominal depth of the joist are permitted.

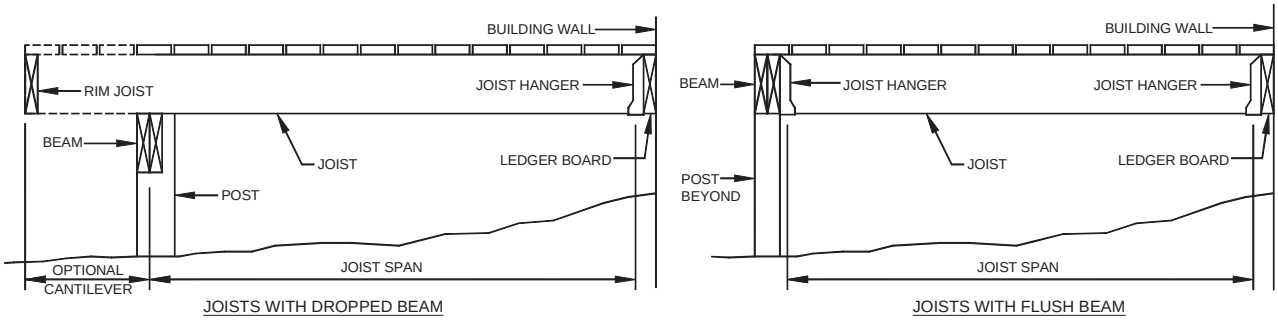

FIGURE R507.5
TYPICAL DECK JOIST SPANS

R507.6 Deck Beams. Maximum allowable spans for wood deck beams, as shown in Figure R507.6, shall be in accordance with Table R507.6. Beam plies shall be fastened with two rows of 10d (3-inch × 0.128-inch) nails minimum at 16 inches (406 mm) on center along each edge. Beams shall be permitted to cantilever at each end up to one-fourth of the actual beam span. Splices of multispan beams shall be located at interior post locations.

❖ See the commentary to Section R507.4.

R507.7 Deck joist and deck beam bearing. The ends of each joist and beam shall have not less than $1^1/_2$ inches (38 mm) of bearing on wood or metal and not less than 3 inches (76 mm) on concrete or masonry for the entire width of the beam. Joist framing into the side of a ledger board or beam shall be supported by approved joist hangers. Joists bearing on a beam shall be connected to the beam to resist lateral displacement.

❖ See the commentary to Section R507.4.

R507.7.1 Deck post to deck beam. Deck beams shall be attached to deck posts in accordance with Figure R507.7.1 or by other equivalent means capable to resist lateral displacement. Manufactured post-to-beam connectors shall be sized for the post and beam sizes. All bolts shall have washers under the head and nut.

Exception: Where deck beams bear directly on footings in accordance with Section R507.8.1.

❖ See the commentary to Section R507.4.

INTERNATIONAL CODE COUNCIL®
Copyright © 2015 ICC. ALL RIGHTS RESERVED. Accessed by David Dammon on Jun 21, 2017 12:30:52 PM pursuant to License Agreement with ICC. No further reproduction or distribution authorized. ANY UNAUTHORIZED REPRODUCTION OR DISTRIBUTION IS A VIOLATION OF THE FEDERAL COPYRIGHT ACT AND THE LICENSE AGREEMENT, AND SUBJECT TO CIVIL AND CRIMINAL PENALTIES THEREUNDER.

TABLE R507.6
DECK BEAM SPAN LENGTHS[a, b] (ft. - in.)

SPECIES[c]	SIZE[d]	DECK JOIST SPAN LESS THAN OR EQUAL TO: (feet)						
		6	8	10	12	14	16	18
Southern pine	2 – 2 × 6	6-11	5-11	5-4	4-10	4-6	4-3	4-0
	2 – 2 × 8	8-9	7-7	6-9	6-2	5-9	5-4	5-0
	2 – 2 × 10	10-4	9-0	8-0	7-4	6-9	6-4	6-0
	2 – 2 × 12	12-2	10-7	9-5	8-7	8-0	7-6	7-0
	3 – 2 × 6	8-2	7-5	6-8	6-1	5-8	5-3	5-0
	3 – 2 × 8	10-10	9-6	8-6	7-9	7-2	6-8	6-4
	3 – 2 × 10	13-0	11-3	10-0	9-2	8-6	7-11	7-6
	3 – 2 × 12	15-3	13-3	11-10	10-9	10-0	9-4	8-10
Douglas fir-larch[e], hem-fir[e], spruce-pine-fir[e], redwood, western cedars, ponderosa pine[f], red pine[f]	3 × 6 or 2 – 2 x 6	5-5	4-8	4-2	3-10	3-6	3-1	2-9
	3 × 8 or 2 – 2 × 8	6-10	5-11	5-4	4-10	4-6	4-1	3-8
	3 × 10 or 2 – 2 × 10	8-4	7-3	6-6	5-11	5-6	5-1	4-8
	3 × 12 or 2 – 2 × 12	9-8	8-5	7-6	6-10	6-4	5-11	5-7
	4 × 6	6-5	5-6	4-11	4-6	4-2	3-11	3-8
	4 × 8	8-5	7-3	6-6	5-11	5-6	5-2	4-10
	4 × 10	9-11	8-7	7-8	7-0	6-6	6-1	5-8
	4 × 12	11-5	9-11	8-10	8-1	7-6	7-0	6-7
	3 – 2 × 6	7-4	6-8	6-0	5-6	5-1	4-9	4-6
	3 – 2 × 8	9-8	8-6	7-7	6-11	6-5	6-0	5-8
	3 – 2 × 10	12-0	10-5	9-4	8-6	7-10	7-4	6-11
	3 – 2 × 12	13-11	12-1	10-9	9-10	9-1	8-6	8-1

For SI: 1 inch = 25.4 mm, 1 foot = 304.8 mm, 1 pound per square foot = 0.0479 kPa, 1 pound = 0.454 kg.

a. Ground snow load, live load = 40 psf, dead load = 10 psf, L/Δ = 360 at main span, L/Δ = 180 at cantilever with a 220-pound point load applied at the end.

b. Beams supporting deck joists from one side only.

c. No. 2 grade, wet service factor.

d. Beam depth shall be greater than or equal to depth of joists with a flush beam condition.

e. Includes incising factor.

f. Northern species. Incising factor not included.

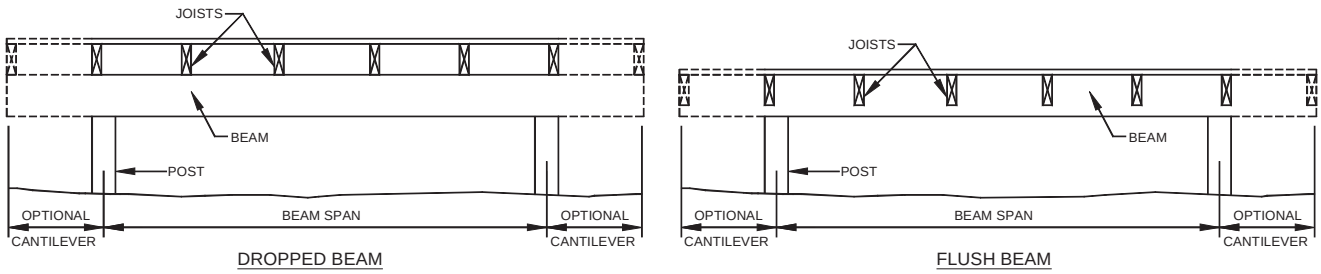

FIGURE R507.6
TYPICAL DECK BEAM SPANS

INTERNATIONAL CODE COUNCIL®
Copyright © 2015 ICC. ALL RIGHTS RESERVED. Accessed by David Dammon on Jun 21, 2017 12:30:52 PM pursuant to License Agreement with ICC. No further reproduction or distribution authorized. ANY UNAUTHORIZED REPRODUCTION OR DISTRIBUTION IS A VIOLATION OF THE FEDERAL COPYRIGHT ACT AND THE LICENSE AGREEMENT, AND SUBJECT TO CIVIL AND CRIMINAL PENALTIES THEREUNDER.

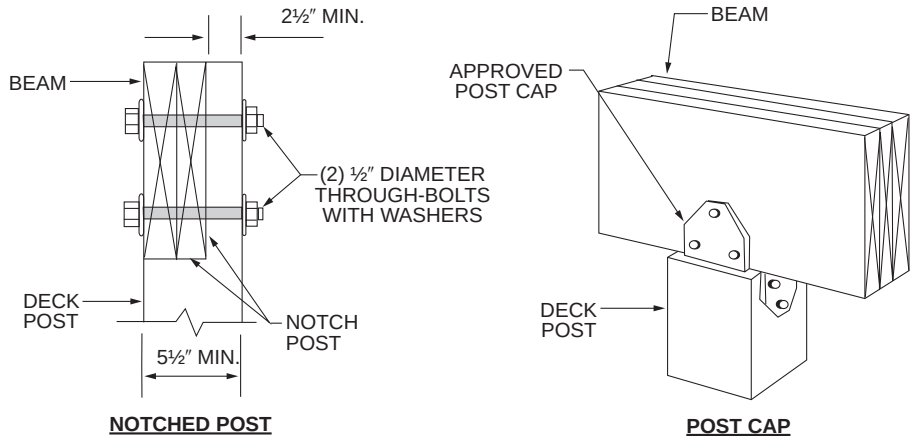

For SI: 1 inch = 25.4 mm.

FIGURE R507.7.1
DECK BEAM TO DECK POST

R507.8 Deck posts. For single-level wood-framed decks with beams sized in accordance with Table R507.6, deck post size shall be in accordance with Table R507.8.

❖ Sections R507.8 and R507.8.1 contain prescriptive provisions for sizing wood posts and connecting the post to the foundation for a deck. The post-sizing provisions are presented in Table R507.8. Posts must be restrained at the bottom to prevent lateral displacement. The lateral restraint may be provided by a minimum post-to-footing connection based on the manufacturer's requirements for connections supplying lateral restraint or embedding the post 12 inches or greater into the soil or concrete piers. The minimum footing depth and connection requirement adds an additional provision useful in determining whether a deck meets minimum safety requirements. See Section R317.1.4 for decay resistance of wood columns.

Note: While Section R507 adds details needed for building a residential deck, the section does not cover all the details required to build a deck.

TABLE R507.8
DECK POST HEIGHT[a]

DECK POST SIZE	MAXIMUM HEIGHT[a]
4 × 4	8'
4 × 6	8'
6 × 6	14'

For SI: 1 foot = 304.8 mm.
a. Measured to the underside of the beam.

R507.8.1 Deck post to deck footing. Posts shall bear on footings in accordance with Section R403 and Figure R507.8.1. Posts shall be restrained to prevent lateral displacement at the bottom support. Such lateral restraint shall be provided by manufactured connectors installed in accordance with Section R507 and the manufacturers' instructions or a minimum post embedment of 12 inches (305 mm) in surrounding soils or concrete piers.

❖ See the commentary to Section R507.8.

Bibliography

The following resource materials were used in the preparation of the commentary for this chapter of the code:

AISI S100–12, *North American Specification for Design of Cold-formed Steel Structural Members*. Washington, DC: American Iron and Steel Institute, 2012.

AISI S214–12, *North American Standard for Cold-formed Steel Framing-Truss Design*. Washington, DC: American Iron and Steel Institute, 2012.

ANSI A208.1–2009, *Particleboard*. New York: American National Standards Institute, 2009.

ANSI/AITC A 190.1–07, *Structural Glued Laminated Timber*. Centennial, CO: American Institute of Timber Construction, 2007.

ANSI/APA PRG 320–2012 *Standard for Performance-rated Cross-Laminated Timber*, Tacoma, WA: APA-The Engineered Wood Association, 2012.

ANSI/APA PRR 410–2011 *Standard for Performance-rated Engineered Wood Rim Boards*, Tacoma, WA: APA-The Engineered Wood Association, 2011.

ANSI/AWC NDS–2015, *National Design Specification for Wood Construction with 2015 NDS Supplement*, Leesburg, VA: American Wood Council, 2015.

APA E30–11, *Engineered Wood Construction Guide. Tacoma*, WA: APA-The Engineered Wood Association, 2011.

ASTM C954–11, *Specification for Steel Drill Screws for the Application of Gypsum Panel Products or Metal Plaster Bases to Steel Studs from 0.033 in. (0.84 mm) to 0.112 in. (2.84 mm) in Thickness*. West Conshohocken, PA: ASTM International, 2011.

ASTM C1513–2013, *Standard Specification for Steel Tapping Screws for Cold-formed Steel Framing Connections*. West Conshohocken, PA: ASTM International, 2013.

INTERNATIONAL CODE COUNCIL®
Copyright © 2015 ICC. ALL RIGHTS RESERVED. Accessed by David Dammon on Jun 21, 2017 12:30:52 PM pursuant to License Agreement with ICC. No further reproduction or distribution authorized. ANY UNAUTHORIZED REPRODUCTION OR DISTRIBUTION IS A VIOLATION OF THE FEDERAL COPYRIGHT ACT AND THE LICENSE AGREEMENT, AND SUBJECT TO CIVIL AND CRIMINAL PENALTIES THEREUNDER.

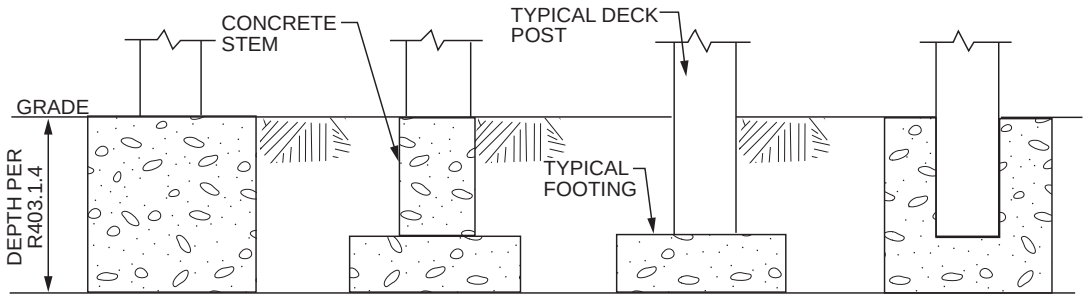

FIGURE R507.8.1
TYPICAL DECK POSTS TO DECK FOOTINGS

ASTM D698–12e1, *Standard Test Methods for Laboratory Compaction Characteristics of Soil Using Effort [12 400 ft-lbf/ft³ (600 kN-m/m³)]*. West Conshohocken, PA: ASTM International, 2012.

ASTM D3737–2012 *Practice for Establishing Allowable Properties for Structural Glued Laminated Timber (Glulam)*. West Conshohocken, PA: ASTM International, 2012.

ASTM D5055–2013, *Specification for Establishing and Monitoring Structural Capacities of Prefabricated Wood I-Joists*. West Conshohocken, PA: ASTM International, 2013.

ASTM D5456–2013, *Standard Specification for Evaluation of Structural Composite Lumber Products*. West Conshohocken, PA: ASTM International, 2013.

ASTM D7032–10a, *Standard Specification for Establishing Performance Ratings for Wood-Plastic Composite Deck Boards and Guardrail Systems (Guards or Handrails)*. West Conshohocken, PA: ASTM International, 2010.

ASTM D7374–08, *Standard Practice for Evaluating Temperature Performance of Adhesives Used In End-Jointed Lumber*. West Conshohocken, PA: ASTM International, 2008.

ASTM D7470–08, *Standard Practice for Evaluating Elevated Temperature Performance of End-Jointed Lumber Studs*. West Conshohocken, PA: ASTM International, 2008.

ASTM D7672–2012 *Standard Specification for Evaluating Structural Capacities of Rim Board Products and Assemblies*. West Conshohocken, PA: ASTM International, 2012.

ASTM E84–2013a *Test Method for Surface Burning Characteristics of Building Materials*. West Conshohocken, PA: ASTM International, 2013.

AWPA U1–14, *Use Category System: User Specification for Treated Wood, except Section 6, Commodity Specification H*. Birmingham, AL: American Wood-Preservers Association, 2014.

FEMA 232–06, *Homebuilders' Guide to Earthquake Resistant Design and Construction*. Washington, DC: Federal Emergency Management Agency, 2006.

ICC 400–12, *Standard on the Design and Construction of Log Structures*. Washington, DC: International Code Council, 2011.

IBC–15, *International Building Code*. Washington, DC: International Code Council, 2014.

TPI 1–2014, *National Design Standard for Metal-plate-connected Wood Truss Construction*. Madison, WI: Truss Plate Institute, 2014.

UL 723–08, *Standard for Test for Surface Burning Characteristics of Building Materials—with revisions through September 2010*. Northbrook, IL: UL LLC, 2010.

INTERNATIONAL CODE COUNCIL®
Copyright © 2015 ICC. ALL RIGHTS RESERVED. Accessed by David Dammon on Jun 21, 2017 12:30:52 PM pursuant to License Agreement with ICC. No further reproduction or distribution authorized. ANY UNAUTHORIZED REPRODUCTION OR DISTRIBUTION IS A VIOLATION OF THE FEDERAL COPYRIGHT ACT AND THE LICENSE AGREEMENT, AND SUBJECT TO CIVIL AND CRIMINAL PENALTIES THEREUNDER.

INTERNATIONAL CODE COUNCIL®
Copyright © 2015 ICC. ALL RIGHTS RESERVED. Accessed by David Dammon on Jun 21, 2017 12:30:52 PM pursuant to License Agreement with ICC. No further reproduction or distribution authorized. ANY UNAUTHORIZED REPRODUCTION OR DISTRIBUTION IS A VIOLATION OF THE FEDERAL COPYRIGHT ACT AND THE LICENSE AGREEMENT, AND SUBJECT TO CIVIL AND CRIMINAL PENALTIES THEREUNDER.

Chapter 6: Wall Construction

General Comments

Chapter 6 contains provisions that regulate the design and construction of walls. The wall construction covered in Chapter 6 consists of five different types: wood framed, cold-formed steel framed, masonry, concrete and structural insulated panel (SIP). The primary concern of this chapter is the structural integrity of wall construction and transfer of all imposed loads to the supporting structure.

Section R601 contains the scope, as well as the performance expectations for walls. Section R602 addresses wood wall framing. Section R603 addresses cold-formed steel wall framing. Section R604 specifies requirements for wood-structural-panel wall sheathing. Section R605 provides requirements for particleboard used as wall sheathing. Section R606 states the general requirements pertaining to masonry wall construction. Section R607 specifies requirements for wall panels of glass unit masonry. Section R608 addresses prescriptive requirements for concrete wall construction with stay-in-place or removable forms. Section R609 contains the criteria for the performance of exterior windows and doors. Section R610 contains the provisions for SIP wall construction.

In certain instances a wall must have a fire-resistance rating. Where this is necessary, the wall system must be a tested assembly, and any conditions specific to the installation of the assembly must apply as well. Examples of these provisions include:

- Exterior walls based on location on property (see Section R302).
- Walls serving as dwelling unit separations in two-family dwellings (see Section R302.3).
- Common wall between townhouses (see Section R302.2).

Purpose

This chapter provides the requirements for the design and construction of wall systems that are capable of supporting the minimum design vertical loads (dead, live and snow loads) and lateral loads (wind or seismic loads). This chapter contains the prescriptive requirements for wall bracing and/or shear walls to resist the imposed lateral loads due to wind and seismic.

Chapter 6 also regulates exterior windows and doors installed in walls. The chapter contains criteria for the performance of exterior windows and doors and includes provisions for window sill height, testing and labeling, vehicular access doors, wind-borne debris protection and anchorage details.

SECTION R601 GENERAL

R601.1 Application. The provisions of this chapter shall control the design and construction of walls and partitions for buildings.

❖ This section establishes the scope of the chapter.

R601.2 Requirements. Wall construction shall be capable of accommodating all loads imposed in accordance with Section R301 and of transmitting the resulting loads to the supporting structural elements.

❖ This is a general performance statement, requiring that walls support the required design loads and provide an adequate load path to supporting elements.

R601.2.1 Compressible floor-covering materials. Compressible floor-covering materials that compress more than $^{1}/_{32}$ inch (0.8 mm) when subjected to 50 pounds (23 kg) applied over 1 inch square (645 mm) of material and are greater than $^{1}/_{8}$ inch (3.2 mm) in thickness in the uncompressed state shall not extend beneath walls, partitions or columns, which are fastened to the floor.

❖ Although it is preferable to fasten walls directly to the supporting structure, this provision allows them to be installed over finish floor materials that meet the specified criteria.

SECTION R602 WOOD WALL FRAMING

R602.1 General. Wood and wood-based products used for load-supporting purposes shall conform to the applicable provisions of this section.

❖ Sections R602.1.1 through R602.1.10 contain the prescriptive requirements for wood and wood-based products used in wood wall framing.

R602.1.1 Sawn lumber. Sawn lumber shall be identified by a grade mark of an accredited lumber grading or inspection agency and have design values certified by an accreditation body that complies with DOC PS 20. In lieu of a grade mark, a certification of inspection issued by a lumber grading or inspection agency meeting the requirements of this section shall be accepted.

❖ Sawn lumber performing a load-carrying function must conform to a minimum quality control standard. To verify this, load-bearing lumber must be properly identified to indicate that the grades and species meet the minimum requirements specified in this chapter. Commen-

INTERNATIONAL CODE COUNCIL®
Copyright © 2015 ICC. ALL RIGHTS RESERVED. Accessed by David Dammon on Jun 21, 2017 12:30:52 PM pursuant to License Agreement with ICC. No further reproduction or distribution authorized. ANY UNAUTHORIZED REPRODUCTION OR DISTRIBUTION IS A VIOLATION OF THE FEDERAL COPYRIGHT ACT AND THE LICENSE AGREEMENT, AND SUBJECT TO CIVIL AND CRIMINAL PENALTIES THEREUNDER.

tary Figure R602.1.1 shows the information contained in a grade mark. For more examples, see Commentary Figure R502.1. For examples of marks for wood structural panels, see Commentary Figure R503.2.1.

R602.1.2 End-jointed lumber. Approved end-jointed lumber identified by a grade mark conforming to Section R602.1 shall be permitted to be used interchangeably with solid-sawn members of the same species and grade. End-jointed lumber used in an assembly required elsewhere in this code to have a fire-resistance rating shall have the designation "Heat Resistant Adhesive" or "HRA" included in its grade mark.

❖ End-jointed lumber that has been fabricated in accordance with nationally recognized standards can be used interchangeably with solid-sawn members, provided that the species and grade of the wood are comparable. Commentary Figure R602.1.2(1) shows end-jointed lumber, which is also referred to as "finger-jointed" (see commentary, Section R502.1.1.2).

End-jointed lumber carrying the HRA mark, indicating it has been joined using heat-resistant adhesive, is permitted to be used interchangeably with solid-sawn members of the same species and grade in fire-rated applications. End-jointed lumber manufactured with an adhesive not qualified as a heat-resistant adhesive will be designated as "non-heat resistant adhesive" or "non-HRA" on the grade stamp. Commentary Figure R602.1.2(2) shows the HRA mark included in a grade stamp.

R602.1.3 Structural glued-laminated timbers. Glued- laminated timbers shall be manufactured and identified as required in ANSI/AITC A190.1 and ASTM D3737.

❖ Glued laminated (gluelam) timbers are engineered wood elements consisting of layers of plywood plies with varying grades of plywood through the thickness of the member. The strength of the members and the use of the members (beams, studs, etc.) are based on different combinations of plywood veneer grades, called layups. The design, testing and manufacture of different layups for different applications are standardized in the referenced standards. The standards also address the identification of these timbers, which is useful at the construction site during inspection.

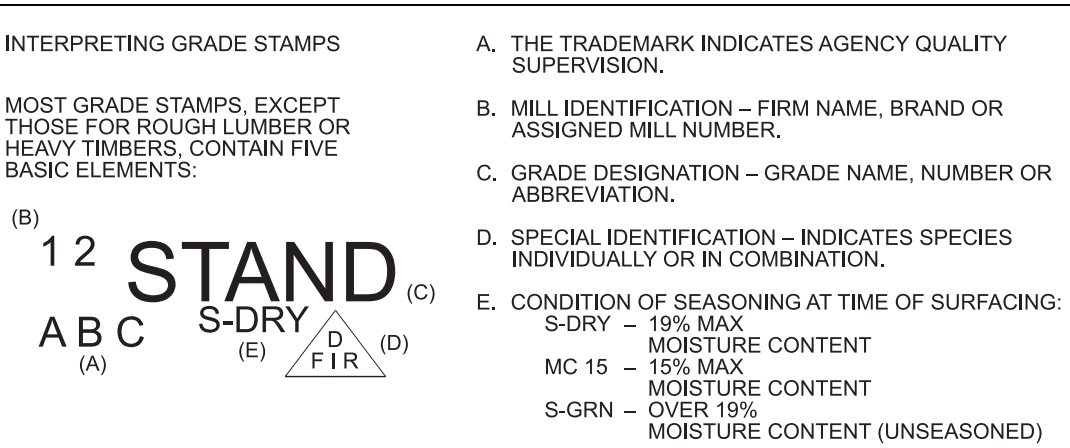

Figure R602.1.1
GRADE STAMP EXAMPLE FOR DIMENSIONAL LUMBER

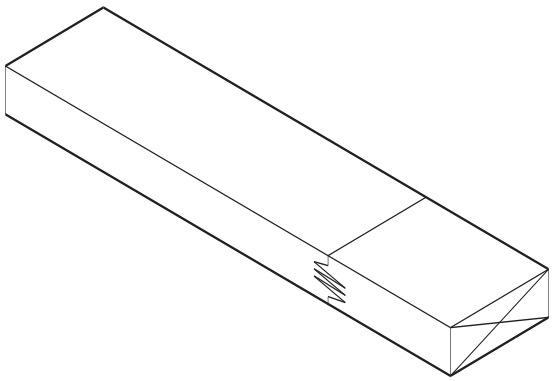

Figure R602.1.2(1)
END-JOINTED LUMBER-FINGER JOINT

INTERNATIONAL CODE COUNCIL®
Copyright © 2015 ICC. ALL RIGHTS RESERVED. Accessed by David Dammon on Jun 21, 2017 12:30:52 PM pursuant to License Agreement with ICC. No further reproduction or distribution authorized. ANY UNAUTHORIZED REPRODUCTION OR DISTRIBUTION IS A VIOLATION OF THE FEDERAL COPYRIGHT ACT AND THE LICENSE AGREEMENT, AND SUBJECT TO CIVIL AND CRIMINAL PENALTIES THEREUNDER.



Figure R602.1.2(2)
GRADE STAMP INCLUDING HRA MARK

R602.1.4 Structural log members. Structural log members shall comply with the provisions of ICC 400.

❖ The material requirements for structural logs, such as stress grading, grade mark or Certificate of Inspection must be in accordance with ICC 400, *Standard on the Design and Construction of Log Structures*.

R602.1.5 Structural composite lumber. Structural capacities for structural composite lumber shall be established and monitored in accordance with ASTM D5456.

❖ Structural composite lumber (SCL) is an engineered wood product using veneer sheets or strands of wood glued together to form structural beams, columns, studs, or sheathing. The strength and use of the members depends upon the size and thickness of the strands, the use of veneer sheets, and the orientation of the strand or veneer. Design, testing and manufacture of the engineered lumber are standardized in ASTM D5456, the referenced standard for SCL.

R602.1.6 Cross-laminated timber. Cross-laminated timber shall be manufactured and identified as required by ANSI/APA PRG 320.

❖ Cross-laminated timber (CLT) was first developed in Europe nearly 20 years ago, where it has been used extensively. It is generally analogous to large section members currently associated with heavy timber. Although the primary use is for nonresidential construction, CLT is currently being used in some residential applications. As a new product in North America, ANSI/APA PRG 320 provides a consensus manufacturing standard for cross-laminated timber.

R602.1.7 Engineered wood rim board. Engineered wood rim boards shall conform to ANSI/APA PRR 410 or shall be evaluated in accordance with ASTM D7672. Structural capacities shall be in accordance with either ANSI/APA PRR 410 or established in accordance with ASTM D7672. Rim boards conforming to ANSI/APA PRR 410 shall be marked in accordance with that standard.

❖ Engineered rim board is a key structural element in wood floor construction where both structural load path through the perimeter member and dimensional change compatibility are design considerations. Both ANSI/APA PRR 410 and ASTM D7672 address the fundamental requirements for testing and evaluation of engineered rim board, PRR 410 also includes performance categories for engineered wood products used in engineered rim board applications. Under PRR 410, products are assigned a grade based on performance category (e.g., categories based on structural capacity) and will bear a mark in accordance with the grade. In contrast, ASTM D7672 is applicable for determination of product-specific rim board performance (i.e., structural capacities) for engineered wood products that may be recognized in manufacturer's literature or product evaluation reports.

R602.1.8 Wood structural panels. Wood structural panel sheathing shall conform to DOC PS 1, DOC PS 2 or, when manufactured in Canada, CSA O437 or CSA O325. Panels shall be identified for grade, bond classification, and performance category by a grade mark or certificate of inspection issued by an approved agency.

❖ To verify the acceptability of wood structural panel products, this section requires labeling in accordance with the referenced standards. The purpose is the same as the purpose of Section R602.1.1 for sawn lumber. This label provides the inspector with the necessary information to determine the acceptability of the wood structural panel (see commentary, Sections R503.2 and R503.2.1).

R602.1.9 Particleboard. Particleboard shall conform to ANSI A208.1. Particleboard shall be identified by the grade mark or certificate of inspection issued by an approved agency.

❖ Particleboard is a generic term given to panels manufactured from cellulosic materials, usually wood in the form of discrete pieces and particles rather than fibers. The particles and pieces are combined with synthetic resins and other binders and bonded together under heat and pressure. Particleboard must conform to ANSI A208 (see commentary, Section R503.3.1).

R602.1.10 Fiberboard. Fiberboard shall conform to ASTM C208. Fiberboard sheathing, where used structurally, shall be identified by an approved agency as conforming to ASTM C208.

❖ All fiberboard must meet the requirements of ASTM C208, as well as being verminproof, resistant to rot-producing fungi and water repellent. This standard gives physical requirements for construction grades of fiberboard, including sheathing grade and roof-insulating grade. The sheathing grade of fiberboard is further broken down into regular and intermediate densities.

INTERNATIONAL CODE COUNCIL®
Copyright © 2015 ICC. ALL RIGHTS RESERVED. Accessed by David Dammon on Jun 21, 2017 12:30:52 PM pursuant to License Agreement with ICC. No further reproduction or distribution authorized. ANY UNAUTHORIZED REPRODUCTION OR DISTRIBUTION IS A VIOLATION OF THE FEDERAL COPYRIGHT ACT AND THE LICENSE AGREEMENT, AND SUBJECT TO CIVIL AND CRIMINAL PENALTIES THEREUNDER.

R602.2 Grade. Studs shall be a minimum No. 3, standard or stud grade lumber.

Exception: Bearing studs not supporting floors and nonbearing studs shall be permitted to be utility grade lumber, provided the studs are spaced in accordance with Table R602.3(5).

❖ A minimum grade of No. 3, standard, or stud grade lumber is specified for studs in conventional wood-framed walls to maintain minimum load-carrying capabilities. The maximum size of standard grade lumber is limited to 2 to 4 inches (51 to 102 mm) nominal in thickness and 4 inches (102 mm) in width. Thus, a 4-inch by 6-inch (102 mm by 152 mm) piece of dimensional lumber would not be available in the standard grade.

To allow more economical use of lumber for bearing studs not supporting floors and nonbearing studs, the exception permits the use of utility grade lumber, provided that the studs are spaced according to the limits established in Table R602.3(5). Note "a" of the table places a more restrictive limit on utility grade stud spacing where permitted in a load-bearing application.

R602.3 Design and construction. Exterior walls of wood-frame construction shall be designed and constructed in accordance with the provisions of this chapter and Figures R602.3(1) and R602.3(2), or in accordance with AWC NDS. Components of exterior walls shall be fastened in accordance with Tables R602.3(1) through R602.3(4). Wall sheathing shall be fastened directly to framing members and, where placed on the exterior side of an exterior wall, shall be capable of resisting the wind pressures listed in Table R301.2(2) adjusted for height and exposure using Table R301.2(3) and shall conform to the requirements of Table R602.3(3). Wall sheathing used only for exterior wall covering purposes shall comply with Section R703.

Studs shall be continuous from support at the sole plate to a support at the top plate to resist loads perpendicular to the wall. The support shall be a foundation or floor, ceiling or roof diaphragm or shall be designed in accordance with accepted engineering practice.

Exception: Jack studs, trimmer studs and cripple studs at openings in walls that comply with Tables R602.7(1) and R602.7(2).

❖ Figures R602.3(1) and R602.3(2) in conjunction with the minimum nailing requirements of Tables R602.3(1) and R602.3(2) provide typical wall-framing details for construction of exterior walls. Walls must be in accordance with this section or American Wood Council (AWC) *National Design Specification* (NDS) (AWC NDS).

All exterior wall coverings must be capable of resisting the wind pressures required by Section R301.2.1.

Wall sheathing used only for exterior wall covering purposes shall comply with Section R703. Wall sheathing used for structural purposes, i.e., wall bracing, must comply with Section R602.10 or R602.12. All wood structural panels used for sheathing on exterior walls must be fastened in accordance with Table R602.3(3).

For wood structural panel sheathing used for interior walls, the fastening is in accordance with Table R602.3(1). The 6d common nail fastening for the wood structural panels in Table R602.3(1) is not adequate for the wind pressures required by Section R301.2.

The studs for exterior walls must be continuous from the support at the bottom to the support at the top, i.e., stacked framing that forms a "hinge" is not permitted. There is no prescriptive design in the code for stacked framing. Exterior wall framing that is stacked and forms a "hinge" must be engineered. The exception for continuity of studs is for jack studs, trimmer studs, and cripple studs at openings.

R602.3.1 Stud size, height and spacing. The size, height and spacing of studs shall be in accordance with Table R602.3.(5).

Exceptions:

1. Utility grade studs shall not be spaced more than 16 inches (406 mm) on center, shall not support more than a roof and ceiling, and shall not exceed 8 feet (2438 mm) in height for exterior walls and load-bearing walls or 10 feet (3048 mm) for interior non-load-bearing walls.
2. Where snow loads are less than or equal to 25 pounds per square foot (1.2 kPa), and the ultimate design wind speed is less than or equal to 130 mph (58.1 m/s), 2-inch by 6-inch (38 mm by 14 mm) studs supporting a roof load with not more than 6 feet (1829 mm) of tributary length shall have a maximum height of 18 feet (5486 mm) where spaced at 16 inches (406 mm) on center, or 20 feet (6096 mm) where spaced at 12 inches (304.8 mm) on center. Studs shall be minimum No. 2 grade lumber.

❖ Table R602.3(5) lists required stud spacing based on the stud size and loading condition.

Exception 1 addresses the fact that utility grade lumber is lower in strength and quality and therefore requires tighter spacing and shorter lengths in exterior walls. Note that the minimum grade lumber for application of Table R602.3(5) is, by implication, stud grade or standard grade.

Exception 2 has been revised to eliminate Table R602.3.1. The exception specifies the criteria for tall walls, walls up to 20 feet maximum height. Previously Table R602.3.1 was a source of confusion. Note b of Table R602.3.1, referring to engineering loads and properties, was confusing and often misunderstood. Tall walls meeting Exception 2 do not require engineering. Note that Exception 2 does not apply in locations with more than 25 psf snow load, 2×4 construction or roof tributary widths greater than 6 feet. The process for determining whether wall studs, a wall or a story must be engineered based on stud height now checks:

1. Table R602.3(5),
2. Section R602.10, and if necessary
3. Section R602.3.1, Exception 2.

If wall studs fail to meet the requirements of the three sections, the wall or story must be engineered.

INTERNATIONAL CODE COUNCIL®
Copyright © 2015 ICC. ALL RIGHTS RESERVED. Accessed by David Dammon on Jun 21, 2017 12:30:52 PM pursuant to License Agreement with ICC. No further reproduction or distribution authorized. ANY UNAUTHORIZED REPRODUCTION OR DISTRIBUTION IS A VIOLATION OF THE FEDERAL COPYRIGHT ACT AND THE LICENSE AGREEMENT, AND SUBJECT TO CIVIL AND CRIMINAL PENALTIES THEREUNDER.

Example: Prescriptive Tall Walls

In the three cases below, a tall wall meeting the code's limits are illustrated.

Case 1: 2 × 6 continuous studs used in an 18-foot gable end wall

The gable end wall studs do not support a roof load. They form a nonload-bearing wall. From Table R602.3(5), nonbearing walls may have studs up to 20 feet tall when using 2 × 6 lumber.

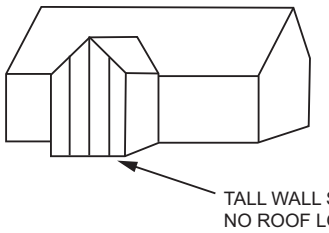

Case 2: 2 × 6 continuous studs used in a 20-foot tall wall supporting a projection (roof framing parallel to wall)

The studs used for a two-story projection where the roof framing runs parallel to the wall will carry a roof load. If the studs can meet all the limits of Section R602.3.1 Exception 2, then no engineering of the wall is required. The following four limits must be met:

1. Snow load ≤ 25 psf
2. Wind speed ≤ 130 mph
3. 2 × 6 construction
4. Roof load tributary width ≤ 6 feet

Assuming the first three conditions are met, the roof load tributary width limit is determined as follows:

Roof load tributary width describes the width of the roof surface that will transfer live or snow loads to nearby walls. To determine tributary width in a roof, measure the total distance between roof supports, typically walls in residential construction, and divide the distance in half. If walls supporting the roof are 12 feet apart or less (a roof tributary width of 6 feet), Exception 2 limits are met.

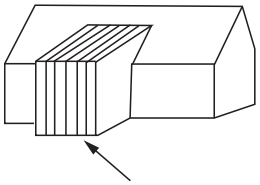

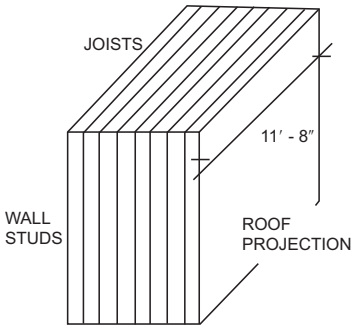

FRAMING: WALL STUDS AND ROOF PROJECTION JOISTS AT 16″ o.c.

TOTAL DISTANCE = 11′-8″,
TRIBUTARY WIDTH = 5′-10″

Case 3: 2 × 6 continuous studs used in a variable height wall supporting a projection (roof framing perpendicular to wall)

The studs where the roof framing runs perpendicular to the wall do not carry a roof load. They form a nonload-bearing wall. From Table R602.3(5), nonbearing walls may have studs up to 20 feet tall when using 2 × 6 lumber.

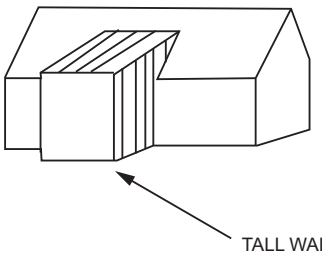

INTERNATIONAL CODE COUNCIL®
Copyright © 2015 ICC. ALL RIGHTS RESERVED. Accessed by David Dammon on Jun 21, 2017 12:30:52 PM pursuant to License Agreement with ICC. No further reproduction or distribution authorized. ANY UNAUTHORIZED REPRODUCTION OR DISTRIBUTION IS A VIOLATION OF THE FEDERAL COPYRIGHT ACT AND THE LICENSE AGREEMENT, AND SUBJECT TO CIVIL AND CRIMINAL PENALTIES THEREUNDER.

TABLE R602.3(1)
FASTENING SCHEDULE

ITEM	DESCRIPTION OF BUILDING ELEMENTS	NUMBER AND TYPE OF FASTENER[a, b, c]	SPACING AND LOCATION
		Roof	
1	Blocking between ceiling joists or rafters to top plate	4-8d box ($2^1/_2$″ × 0.113″) or 3-8d common ($2^1/_2$″ × 0.131″); or 3-10d box (3″ × 0.128″); or 3-3″ × 0.131″ nails	Toe nail
2	Ceiling joists to top plate	4-8d box ($2^1/_2$″ × 0.113″); or 3-8d common ($2^1/_2$″ × 0.131″); or 3-10d box (3″ × 0.128″); or 3-3″ × 0.131″ nails	Per joist, toe nail
3	Ceiling joist not attached to parallel rafter, laps over partitions [see Sections R802.3.1, R802.3.2 and Table R802.5.1(9)]	4-10d box (3″ × 0.128″); or 3-16d common ($3^1/_2$″ × 0.162″); or 4-3″ × 0.131″ nails	Face nail
4	Ceiling joist attached to parallel rafter (heel joint) [see Sections R802.3.1 and R802.3.2 and Table R802.5.1(9)]	Table R802.5.1(9)	Face nail
5	Collar tie to rafter, face nail or $1^1/_4$″ × 20 ga. ridge strap to rafter	4-10d box (3″ × 0.128″); or 3-10d common (3″ × 0.148″); or 4-3″ × 0.131″ nails	Face nail each rafter
6	Rafter or roof truss to plate	3-16d box nails ($3^1/_2$″ × 0.135″); or 3-10d common nails (3″ × 0.148″); or 4-10d box (3″ × 0.128″); or 4-3″ × 0.131″ nails	2 toe nails on one side and 1 toe nail on opposite side of each rafter or truss[i]
7	Roof rafters to ridge, valley or hip rafters or roof rafter to minimum 2″ ridge beam	4-16d ($3^1/_2$″ × 0.135″); or 3-10d common ($3^1/_2$″ × 0.148″); or 4-10d box (3″ × 0.128″); or 4-3″ × 0.131″ nails	Toe nail
		3-16d box $3^1/_2$″ × 0.135″); or 2-16d common ($3^1/_2$″ × 0.162″); or 3-10d box (3″ × 0.128″); or 3-3″ × 0.131″ nails	End nail
		Wall	
8	Stud to stud (not at braced wall panels)	16d common ($3^1/_2$″ × 0.162″)	24″ o.c. face nail
		10d box (3″ × 0.128″); or 3″ × 0.131″ nails	16″ o.c. face nail
9	Stud to stud and abutting studs at intersecting wall corners (at braced wall panels)	16d box ($3^1/_2$″ × 0.135″); or 3″ × 0.131″ nails	12″ o.c. face nail
		16d common ($3^1/_2$″ × 0.162″)	16″ o.c. face nail
10	Built-up header (2″ to 2″ header with $^1/_2$″ spacer)	16d common ($3^1/_2$″ × 0.162″)	16″ o.c. each edge face nail
		16d box ($3^1/_2$″ × 0.135″)	12″ o.c. each edge face nail
11	Continuous header to stud	5-8d box ($2^1/_2$″ × 0.113″); or 4-8d common ($2^1/_2$″ × 0.131″); or 4-10d box (3″ × 0.128″)	Toe nail
12	Top plate to top plate	16d common ($3^1/_2$″ × 0.162″)	16″ o.c. face nail
		10d box (3″ × 0.128″); or 3″ × 0.131″ nails	12″ o.c. face nail
13	Double top plate splice for SDCs A-D_2 with seismic braced wall line spacing < 25′	8-16d common ($3^1/_2$″ × 0.162″); or 12-16d box ($3^1/_2$″ × 0.135″); or 12-10d box (3″ × 0.128″); or 12-3″ × 0.131″ nails	Face nail on each side of end joint (minimum 24″ lap splice length each side of end joint)
	Double top plate splice SDCs D_0, D_1, or D_2; and braced wall line spacing ≥ 25′	12-16d ($3^1/_2$″ × 0.135″)	

(continued)

INTERNATIONAL CODE COUNCIL®
Copyright © 2015 ICC. ALL RIGHTS RESERVED. Accessed by David Dammon on Jun 21, 2017 12:30:52 PM pursuant to License Agreement with ICC. No further reproduction or distribution authorized. ANY UNAUTHORIZED REPRODUCTION OR DISTRIBUTION IS A VIOLATION OF THE FEDERAL COPYRIGHT ACT AND THE LICENSE AGREEMENT, AND SUBJECT TO CIVIL AND CRIMINAL PENALTIES THEREUNDER.

TABLE R602.3(1)—continued
FASTENING SCHEDULE

ITEM	DESCRIPTION OF BUILDING ELEMENTS	NUMBER AND TYPE OF FASTENER[a, b, c]	SPACING AND LOCATION
14	Bottom plate to joist, rim joist, band joist or blocking (not at braced wall panels)	16d common ($3^1/_2$″ × 0.162″)	16″ o.c. face nail
		16d box ($3^1/_2$″ × 0.135″); or 3″ × 0.131″ nails	12″ o.c. face nail
15	Bottom plate to joist, rim joist, band joist or blocking (at braced wall panel)	3-16d box ($3^1/_2$″ × 0.135″); or 2-16d common ($3^1/_2$″ × 0.162″); or 4-3″ × 0.131″ nails	3 each 16″ o.c. face nail 2 each 16″ o.c. face nail 4 each 16″ o.c. face nail
16	Top or bottom plate to stud	4-8d box ($2^1/_2$″ × 0.113″); or 3-16d box ($3^1/_2$″ × 0.135″); or 4-8d common ($2^1/_2$″ × 0.131″); or 4-10d box (3″ × 0.128″); or 4-3″ × 0.131″ nails	Toe nail
		3-16d box ($3^1/_2$″ × 0.135″); or 2-16d common ($3^1/_2$″ × 0.162″); or 3-10d box (3″ × 0.128″); or 3-3″ × 0.131″ nails	End nail
17	Top plates, laps at corners and intersections	3-10d box (3″ × 0.128″); or 2-16d common ($3^1/_2$″ × 0.162″); or 3-3″ × 0.131″ nails	Face nail
18	1″ brace to each stud and plate	3-8d box ($2^1/_2$″ × 0.113″); or 2-8d common ($2^1/_2$″ × 0.131″); or 2-10d box (3″ × 0.128″); or 2 staples $1^3/_4$″	Face nail
19	1″ × 6″ sheathing to each bearing	3-8d box ($2^1/_2$″ × 0.113″); or 2-8d common ($2^1/_2$″ × 0.131″); or 2-10d box (3″ × 0.128″); or 2 staples, 1″ crown, 16 ga., $1^3/_4$″ long	Face nail
20	1″ × 8″ and wider sheathing to each bearing	3-8d box ($2^1/_2$″ × 0.113″); or 3-8d common ($2^1/_2$″ × 0.131″); or 3-10d box (3″ × 0.128″); or 3 staples, 1″ crown, 16 ga., $1^3/_4$″ long	Face nail
		Wider than 1″ × 8″ 4-8d box ($2^1/_2$″ × 0.113″); or 3-8d common ($2^1/_2$″ × 0.131″); or 3-10d box (3″ × 0.128″); or 4 staples, 1″ crown, 16 ga., $1^3/_4$″ long	
Floor			
21	Joist to sill, top plate or girder	4-8d box ($2^1/_2$″ × 0.113″); or 3-8d common ($2^1/_2$″ × 0.131″); or 3-10d box (3″ × 0.128″); or 3-3″ × 0.131″ nails	Toe nail
22	Rim joist, band joist or blocking to sill or top plate (roof applications also)	8d box ($2^1/_2$″ × 0.113″)	4″ o.c. toe nail
		8d common ($2^1/_2$″ × 0.131″); or 10d box (3″ × 0.128″); or 3″ × 0.131″ nails	6″ o.c. toe nail
23	1″ × 6″ subfloor or less to each joist	3-8d box ($2^1/_2$″ × 0.113″); or 2-8d common ($2^1/_2$″ × 0.131″); or 3-10d box (3″ × 0.128″); or 2 staples, 1″ crown, 16 ga., $1^3/_4$″ long	Face nail

(continued)

INTERNATIONAL CODE COUNCIL®
Copyright © 2015 ICC. ALL RIGHTS RESERVED. Accessed by David Dammon on Jun 21, 2017 12:30:52 PM pursuant to License Agreement with ICC. No further reproduction or distribution authorized. ANY UNAUTHORIZED REPRODUCTION OR DISTRIBUTION IS A VIOLATION OF THE FEDERAL COPYRIGHT ACT AND THE LICENSE AGREEMENT, AND SUBJECT TO CIVIL AND CRIMINAL PENALTIES THEREUNDER.

TABLE 602.3(1)
FASTENING SCHEDULE—continued

ITEM	DESCRIPTION OF BUILDING ELEMENTS	NUMBER AND TYPE OF FASTENER[a, b, c]	SPACING AND LOCATION
		Floor	
24	2″ subfloor to joist or girder	3-16d box ($3^1/_2$″ × 0.135″); or 2-16d common ($3^1/_2$″ × 0.162″)	Blind and face nail
25	2″ planks (plank & beam—floor & roof)	3-16d box ($3^1/_2$″ × 0.135″); or 2-16d common ($3^1/_2$″ × 0.162″)	At each bearing, face nail
26	Band or rim joist to joist	3-16d common ($3^1/_2$″ × 0.162″) 4-10 box (3″ × 0.128″), or 4-3″ × 0.131″ nails; or 4-3″ × 14 ga. staples, $^7/_{16}$″ crown	End nail
27	Built-up girders and beams, 2-inch lumber layers	20d common (4″ × 0.192″); or	Nail each layer as follows: 32″ o.c. at top and bottom and staggered.
		10d box (3″ × 0.128″); or 3″ × 0.131″ nails	24″ o.c. face nail at top and bottom staggered on opposite sides
		And: 2-20d common (4″ × 0.192″); or 3-10d box (3″ × 0.128″); or 3-3″ × 0.131″ nails	Face nail at ends and at each splice
28	Ledger strip supporting joists or rafters	4-16d box ($3^1/_2$″ × 0.135″); or 3-16d common ($3^1/_2$″ × 0.162″); or 4-10d box (3″ × 0.128″); or 4-3″ × 0.131″ nails	At each joist or rafter, face nail
29	Bridging to joist	2-10d (3″ × 0.128″)	Each end, toe nail

ITEM	DESCRIPTION OF BUILDING ELEMENTS	NUMBER AND TYPE OF FASTENER[a, b, c]	SPACING OF FASTENERS	
			Edges (inches)[h]	Intermediate supports[c, e] (inches)
	Wood structural panels, subfloor, roof and interior wall sheathing to framing and particleboard wall sheathing to framing [see Table R602.3(3) for wood structural panel *exterior* wall sheathing to wall framing]			
30	$^3/_8$″ – $^1/_2$″	6d common (2″ × 0.113″) nail (subfloor, wall)[i] 8d common ($2^1/_2$″ × 0.131″) nail (roof)	6	12[f]
31	$^{19}/_{32}$″ – 1″	8d common nail ($2^1/_2$″ × 0.131″)	6	12[f]
32	$1^1/_8$″ – $1^1/_4$″	10d common (3″ × 0.148″) nail; or 8d ($2^1/_2$″ × 0.131″) deformed nail	6	12
	Other wall sheathing[g]			
33	$^1/_2$″ structural cellulosic fiberboard sheathing	$1^1/_2$″ galvanized roofing nail, $^7/_{16}$″ head diameter, or 1″ crown staple 16 ga., $1^1/_4$″ long	3	6
34	$^{25}/_{32}$″ structural cellulosic fiberboard sheathing	$1^3/_4$″ galvanized roofing nail, $^7/_{16}$″ head diameter, or 1″ crown staple 16 ga., $1^1/_4$″ long	3	6
35	$^1/_2$″ gypsum sheathing[d]	$1^1/_2$″ galvanized roofing nail; staple galvanized, $1^1/_2$″ long; $1^1/_4$″ screws, Type W or S	7	7
36	$^5/_8$″ gypsum sheathing[d]	$1^3/_4$″ galvanized roofing nail; staple galvanized, $1^5/_8$″ long; $1^5/_8$″ screws, Type W or S	7	7
	Wood structural panels, combination subfloor underlayment to framing			
37	$^3/_4$″ and less	6d deformed (2″ × 0.120″) nail; or 8d common ($2^1/_2$″ × 0.131″) nail	6	12
38	$^7/_8$″ – 1″	8d common ($2^1/_2$″ × 0.131″) nail; or 8d deformed ($2^1/_2$″ × 0.120″) nail	6	12
39	$1^1/_8$″ – $1^1/_4$″	10d common (3″ × 0.148″) nail; or 8d deformed ($2^1/_2$″ × 0.120″) nail	6	12

For SI: 1 inch = 25.4 mm, 1 foot = 304.8 mm, 1 mile per hour = 0.447 m/s; 1 ksi = 6.895 MPa.

(continued)

INTERNATIONAL CODE COUNCIL®
Copyright © 2015 ICC. ALL RIGHTS RESERVED. Accessed by David Dammon on Jun 21, 2017 12:30:52 PM pursuant to License Agreement with ICC. No further reproduction or distribution authorized. ANY UNAUTHORIZED REPRODUCTION OR DISTRIBUTION IS A VIOLATION OF THE FEDERAL COPYRIGHT ACT AND THE LICENSE AGREEMENT, AND SUBJECT TO CIVIL AND CRIMINAL PENALTIES THEREUNDER.

TABLE R602.3(1)—continued
FASTENING SCHEDULE

a. Nails are smooth-common, box or deformed shanks except where otherwise stated. Nails used for framing and sheathing connections shall have minimum average bending yield strengths as shown: 80 ksi for shank diameter of 0.192 inch (20d common nail), 90 ksi for shank diameters larger than 0.142 inch but not larger than 0.177 inch, and 100 ksi for shank diameters of 0.142 inch or less.
b. Staples are 16 gage wire and have a minimum $^{7}/_{16}$-inch on diameter crown width.
c. Nails shall be spaced at not more than 6 inches on center at all supports where spans are 48 inches or greater.
d. Four-foot by 8-foot or 4-foot by 9-foot panels shall be applied vertically.
e. Spacing of fasteners not included in this table shall be based on Table R602.3(2).
f. Where the ultimate design wind speed is 130 mph or less, nails for attaching wood structural panel roof sheathing to gable end wall framing shall be spaced 6 inches on center. Where the ultimate design wind speed is greater than 130 mph, nails for attaching panel roof sheathing to intermediate supports shall be spaced 6 inches on center for minimum 48-inch distance from ridges, eaves and gable end walls; and 4 inches on center to gable end wall framing.
g. Gypsum sheathing shall conform to ASTM C1396 and shall be installed in accordance with GA 253. Fiberboard sheathing shall conform to ASTM C208.
h. Spacing of fasteners on floor sheathing panel edges applies to panel edges supported by framing members and required blocking and at floor perimeters only. Spacing of fasteners on roof sheathing panel edges applies to panel edges supported by framing members and required blocking. Blocking of roof or floor sheathing panel edges perpendicular to the framing members need not be provided except as required by other provisions of this code. Floor perimeter shall be supported by framing members or solid blocking.
i. Where a rafter is fastened to an adjacent parallel ceiling joist in accordance with this schedule, provide two toe nails on one side of the rafter and toe nails from the ceiling joist to top plate in accordance with this schedule. The toe nail on the opposite side of the rafter shall not be required.

❖ The fastener schedule provides minimum nailing requirements (i.e., size, spacing) for connecting building elements used in wood framed construction. For wood structural panels, both edge nailing and intermediate (field) nailing are specified. In addition to the nailing for wood structural panels, fasteners are specified for gypsum wall sheathing, cellulosic fiberboard wall sheathing and combination subfloor underlayment.

TABLE R602.3(2)
ALTERNATE ATTACHMENTS TO TABLE R602.3(1)

NOMINAL MATERIAL THICKNESS (inches)	DESCRIPTION[a, b] OF FASTENER AND LENGTH (inches)	SPACING[c] OF FASTENERS	
		Edges (inches)	Intermediate supports (inches)
Wood structural panels subfloor, roof[g] and wall sheathing to framing and particleboard wall sheathing to framing[f]			
Up to $^{1}/_{2}$	Staple 15 ga. $1^{3}/_{4}$	4	8
	0.097 - 0.099 Nail $2^{1}/_{4}$	3	6
	Staple 16 ga. $1^{3}/_{4}$	3	6
$^{19}/_{32}$ and $^{5}/_{8}$	0.113 Nail 2	3	6
	Staple 15 and 16 ga. 2	4	8
	0.097 - 0.099 Nail $2^{1}/_{4}$	4	8
$^{23}/_{32}$ and $^{3}/_{4}$	Staple 14 ga. 2	4	8
	Staple 15 ga. $1^{3}/_{4}$	3	6
	0.097 - 0.099 Nail $2^{1}/_{4}$	4	8
	Staple 16 ga. 2	4	8
1	Staple 14 ga. $2^{1}/_{4}$	4	8
	0.113 Nail $2^{1}/_{4}$	3	6
	Staple 15 ga. $2^{1}/_{4}$	4	8
	0.097 - 0.099 Nail $2^{1}/_{2}$	4	8
NOMINAL MATERIAL THICKNESS (inches)	**DESCRIPTION[a, b] OF FASTENER AND LENGTH (inches)**	**SPACING[c] OF FASTENERS**	
		Edges (inches)	**Body of panel[d] (inches)**
Floor underlayment; plywood-hardboard-particleboard[f]-fiber-cement[h]			
Fiber-cement			
$^{1}/_{4}$	3d, corrosion-resistant, ring shank nails (finished flooring other than tile)	3	6
	Staple 18 ga., $^{7}/_{8}$ long, $^{1}/_{4}$ crown (finished flooring other than tile)	3	6
	$1^{1}/_{4}$ long × .121 shank × .375 head diameter corrosion-resistant (galvanized or stainless steel) roofing nails (for tile finish)	8	8
	$1^{1}/_{4}$ long, No. 8 × .375 head diameter, ribbed wafer-head screws (for tile finish)	8	8

(continued)

INTERNATIONAL CODE COUNCIL®
Copyright © 2015 ICC. ALL RIGHTS RESERVED. Accessed by David Dammon on Jun 21, 2017 12:30:52 PM pursuant to License Agreement with ICC. No further reproduction or distribution authorized. ANY UNAUTHORIZED REPRODUCTION OR DISTRIBUTION IS A VIOLATION OF THE FEDERAL COPYRIGHT ACT AND THE LICENSE AGREEMENT, AND SUBJECT TO CIVIL AND CRIMINAL PENALTIES THEREUNDER.

TABLE R602.3(2)—continued
ALTERNATE ATTACHMENTS TO TABLE R602.3(1)

NOMINAL MATERIAL THICKNESS (inches)	DESCRIPTION[a, b] OF FASTENER AND LENGTH (inches)	SPACING[c] OF FASTENERS	
		Edges (inches)	Intermediate supports (inches)
Plywood			
1/4 and 5/16	1 1/4 ring or screw shank nail-minimum 12 1/2 ga. (0.099″) shank diameter	3	6
	Staple 18 ga., 7/8, 3/16 crown width	2	5
11/32, 3/8, 15/32, and 1/2	1 1/4 ring or screw shank nail-minimum 12 1/2 ga. (0.099″) shank diameter	6	8[e]
19/32, 5/8, 23/32 and 3/4	1 1/2 ring or screw shank nail-minimum 12 1/2 ga. (0.099″) shank diameter	6	8
	Staple 16 ga. 1 1/2	6	8
Hardboard[f]			
0.200	1 1/2 long ring-grooved underlayment nail	6	6
	4d cement-coated sinker nail	6	6
	Staple 18 ga., 7/8 long (plastic coated)	3	6
Particleboard			
1/4	4d ring-grooved underlayment nail	3	6
	Staple 18 ga., 7/8 long, 3/16 crown	3	6
3/8	6d ring-grooved underlayment nail	6	10
	Staple 16 ga., 1 1/8 long, 3/8 crown	3	6
1/2, 5/8	6d ring-grooved underlayment nail	6	10
	Staple 16 ga., 1 5/8 long, 3/8 crown	3	6

For SI: 1 inch = 25.4 mm.

a. Nail is a general description and shall be permitted to be T-head, modified round head or round head.

b. Staples shall have a minimum crown width of 7/16-inch on diameter except as noted.

c. Nails or staples shall be spaced at not more than 6 inches on center at all supports where spans are 48 inches or greater. Nails or staples shall be spaced at not more than 12 inches on center at intermediate supports for floors.

d. Fasteners shall be placed in a grid pattern throughout the body of the panel.

e. For 5-ply panels, intermediate nails shall be spaced not more than 12 inches on center each way.

f. Hardboard underlayment shall conform to CPA/ANSI A135.4

g. Specified alternate attachments for roof sheathing shall be permitted where the ultimate design wind speed is less than 130 mph. Fasteners attaching wood structural panel roof sheathing to gable end wall framing shall be installed using the spacing listed for panel edges.

h. Fiber-cement underlayment shall conform to ASTM C1288 or ISO 8336, Category C.

❖ This table offers alternatives to the nailing specified for wood structural panels in Table R602.3(1).

INTERNATIONAL CODE COUNCIL®
Copyright © 2015 ICC. ALL RIGHTS RESERVED. Accessed by David Dammon on Jun 21, 2017 12:30:52 PM pursuant to License Agreement with ICC. No further reproduction or distribution authorized. ANY UNAUTHORIZED REPRODUCTION OR DISTRIBUTION IS A VIOLATION OF THE FEDERAL COPYRIGHT ACT AND THE LICENSE AGREEMENT, AND SUBJECT TO CIVIL AND CRIMINAL PENALTIES THEREUNDER.

TABLE R602.3(3)
REQUIREMENTS FOR WOOD STRUCTURAL PANEL WALL SHEATHING USED TO RESIST WIND PRESSURES[a, b, c]

MINIMUM NAIL		MINIMUM WOOD STRUCTURAL PANEL SPAN RATING	MINIMUM NOMINAL PANEL THICKNESS (inches)	MAXIMUM WALL STUD SPACING (inches)	PANEL NAIL SPACING		ULTIMATE DESIGN WIND SPEED V_{ult} (mph)		
Size	Penetration (inches)				Edges (inches o.c.)	Field (inches o.c.)	Wind exposure category		
							B	C	D
6d Common (2.0″ × 0.113″)	1.5	24/0	3/8	16	6	12	140	115	110
8d Common (2.5″ × 0.131″)	1.75	24/16	7/16	16	6	12	170	140	135
				24	6	12	140	115	110

For SI: 1 inch = 25.4 mm, 1 mile per hour = 0.447 m/s.

a. Panel strength axis parallel or perpendicular to supports. Three-ply plywood sheathing with studs spaced more than 16 inches on center shall be applied with panel strength axis perpendicular to supports.

b. Table is based on wind pressures acting toward and away from building surfaces in accordance with Section R301.2. Lateral bracing requirements shall be in accordance with Section R602.10.

c. Wood structural panels with span ratings of Wall-16 or Wall-24 shall be permitted as an alternate to panels with a 24/0 span rating. Plywood siding rated 16 o.c. or 24 o.c. shall be permitted as an alternate to panels with a 24/16 span rating. Wall-16 and Plywood siding 16 o.c. shall be used with studs spaced not more than 16 inches on center.

❖ In 2009, this table updated the previous wood structural panel wall sheathing table to include requirements for the wind pressures specified in Section R301.2.1. The 5/16-inch (8 mm) wood structural panels have been deleted since they are currently a very small fraction of the panels produced today. While they have been the minimum panel thickness specified for many applications over the years, the building industry has shifted away from them due to manufacturing efficiencies and marketplace demand. The de facto minimum has become 3/8 inch (9.5 mm).

This table provides the minimum thickness, maximum wall stud spacing and fastening for wood structural panels used for sheathing on exterior walls. See Table R602.3(1) for wood structural panel sheathing for interior walls.

The previous Table R602.3(3) in the code gave recommended minimum panel thicknesses for wall panel sheathing. It was adequate most of the time but in higher wind regions (still within the range of the code) the panel thicknesses and orientations recommended in the table and footnotes may not provide the minimum protection to the home and inhabitants that is currently required in Section R301.2.1. Analysis conducted by the APA—The Engineered Wood Association (APA) staff indicates that in the extreme wind regions covered by the code [less than 140 mph ultimate design wind speed] and with more severe exposures (C and D) the minimum thicknesses recommendations given in the previous Table R603.3(3), Wood Structural Panel Wall Sheathing, were insufficient in thickness and attachment. This new table provides the requirements to ensure that this important part of the structural system is correct. The analysis considered panel bending, stiffness, nail withdrawal and nail head pull through as well as the wind pressure requirements of Section R301.2.1. Note that the impact to most will be minimal because the most commonly used wood structural panel sheathing thickness in the US is 7/16 inch (11 mm). As can be seen in the new table, this sheathing thickness is satisfactory for ultimate design wind speeds up to 140 mph in all but Exposure D conditions. Most builders will only see the requirement for 8d nails as a change, and this is already the nail required for roof sheathing applications.

TABLE R602.3(4)
ALLOWABLE SPANS FOR PARTICLEBOARD WALL SHEATHING[a]

THICKNESS (inch)	GRADE	STUD SPACING (inches)	
		When siding is nailed to studs	When siding is nailed to sheathing
3/8	M-1 Exterior glue	16	—
1/2	M-2 Exterior glue	16	16

For SI: 1 inch = 25.4 mm.

a. Wall sheathing not exposed to the weather. If the panels are applied horizontally, the end joints of the panel shall be offset so that four panel corners will not meet. All panel edges must be supported. Leave a 1/16-inch gap between panels and nail not less than 3/8 inch from panel edges.

❖ The allowable spans for particleboard wall sheathing listed in Table R602.3(4) are for wall sheathing that is not exposed to weather. The panels may be applied with the long dimension parallel or perpendicular to the studs.

INTERNATIONAL CODE COUNCIL®
Copyright © 2015 ICC. ALL RIGHTS RESERVED. Accessed by David Dammon on Jun 21, 2017 12:30:52 PM pursuant to License Agreement with ICC. No further reproduction or distribution authorized. ANY UNAUTHORIZED REPRODUCTION OR DISTRIBUTION IS A VIOLATION OF THE FEDERAL COPYRIGHT ACT AND THE LICENSE AGREEMENT, AND SUBJECT TO CIVIL AND CRIMINAL PENALTIES THEREUNDER.

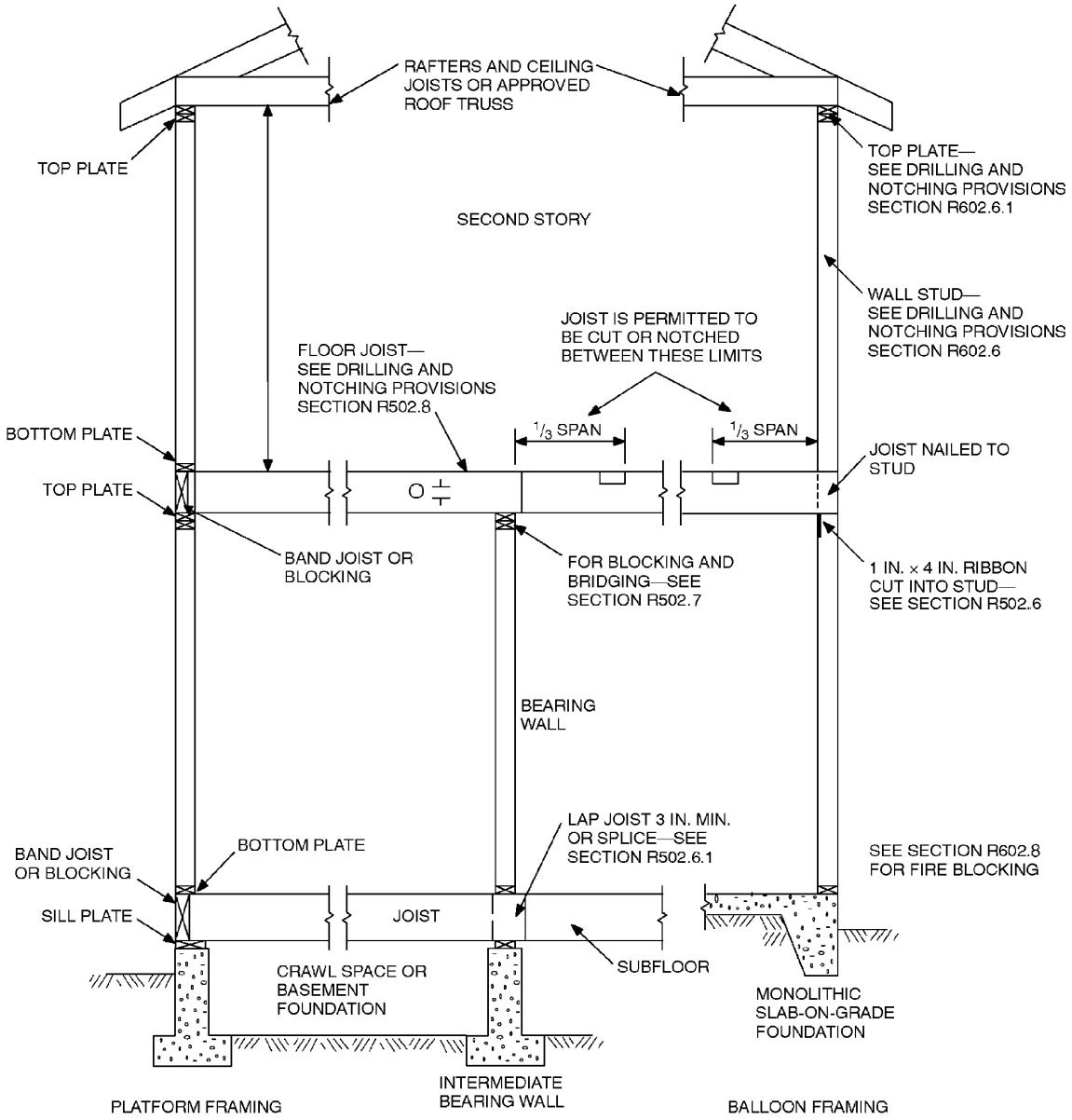

For SI: 1 inch = 25.4 mm, 1 foot = 304.8 mm.

FIGURE R602.3(1)
TYPICAL WALL, FLOOR AND ROOF FRAMING

❖ This is a schematic wood-framed building section that shows code provisions for wood floor systems as well as wall construction.

INTERNATIONAL CODE COUNCIL®
Copyright © 2015 ICC. ALL RIGHTS RESERVED. Accessed by David Dammon on Jun 21, 2017 12:30:52 PM pursuant to License Agreement with ICC. No further reproduction or distribution authorized. ANY UNAUTHORIZED REPRODUCTION OR DISTRIBUTION IS A VIOLATION OF THE FEDERAL COPYRIGHT ACT AND THE LICENSE AGREEMENT, AND SUBJECT TO CIVIL AND CRIMINAL PENALTIES THEREUNDER.

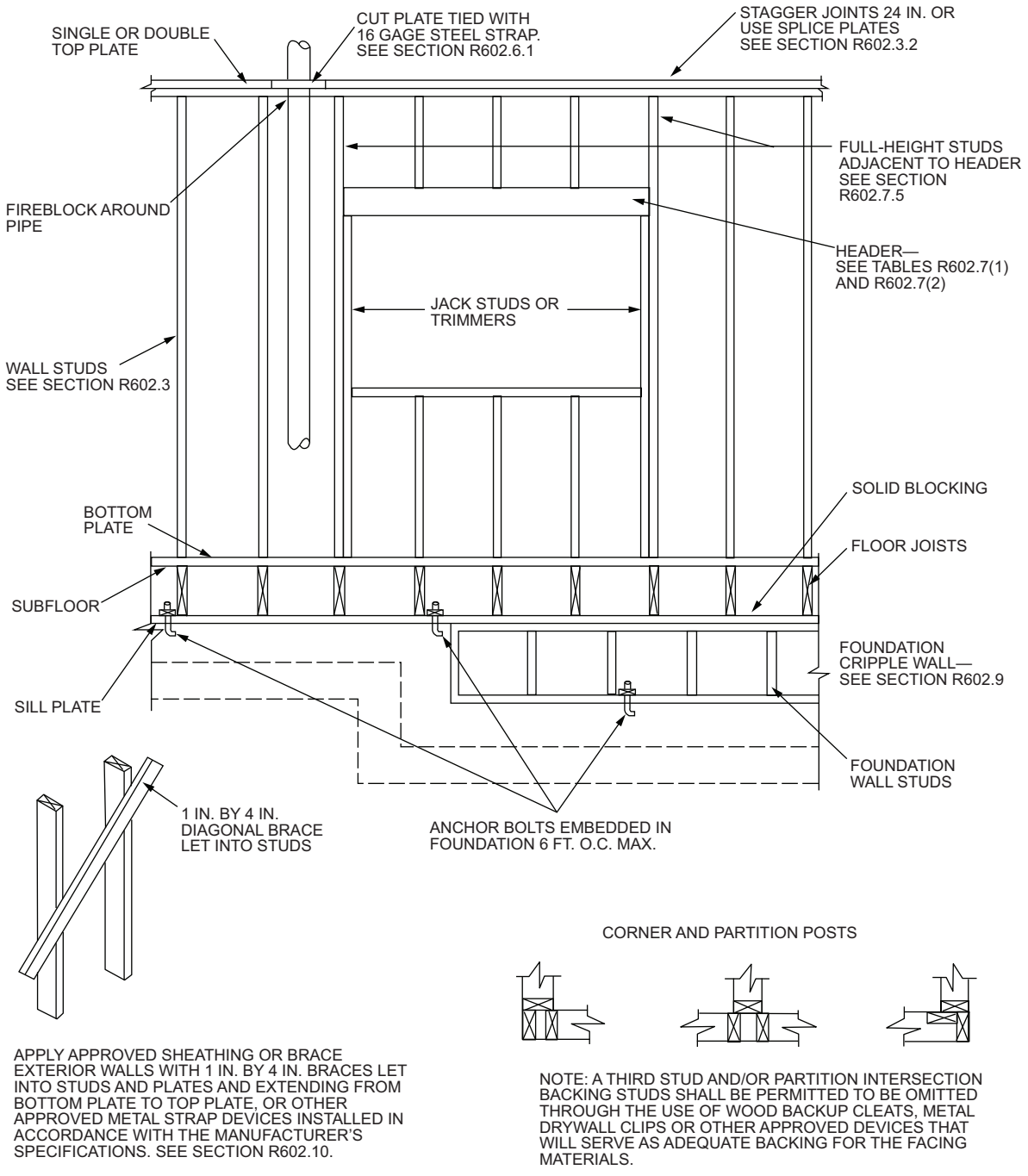

For SI: 1 inch = 25.4 mm, 1 foot = 304.8 mm.

FIGURE R602.3(2)
FRAMING DETAILS

❖ This figure is an elevation of typical wood-framed wall construction showing several code provisions as well as illustrating features such as cripple walls.

INTERNATIONAL CODE COUNCIL®
Copyright © 2015 ICC. ALL RIGHTS RESERVED. Accessed by David Dammon on Jun 21, 2017 12:30:52 PM pursuant to License Agreement with ICC. No further reproduction or distribution authorized. ANY UNAUTHORIZED REPRODUCTION OR DISTRIBUTION IS A VIOLATION OF THE FEDERAL COPYRIGHT ACT AND THE LICENSE AGREEMENT, AND SUBJECT TO CIVIL AND CRIMINAL PENALTIES THEREUNDER.

TABLE R602.3(5)
SIZE, HEIGHT AND SPACING OF WOOD STUDS[a]

STUD SIZE (inches)	BEARING WALLS					NONBEARING WALLS	
	Laterally unsupported stud height[a] (feet)	Maximum spacing when supporting a roof-ceiling assembly or a habitable attic assembly, only (inches)	Maximum spacing when supporting one floor, plus a roof-ceiling assembly or a habitable attic assembly (inches)	Maximum spacing when supporting two floors, plus a roof-ceiling assembly or a habitable attic assembly (inches)	Maximum spacing when supporting one floor height[a] (inches)	Laterally unsupported stud height[a] (feet)	Maximum spacing (inches)
		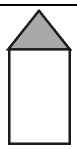	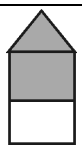	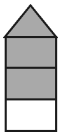	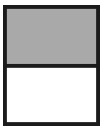		
2 × 3[b]	—	—	—	—	—	10	16
2 × 4	10	24[c]	16[c]	—	24	14	24
3 × 4	10	24	24	16	24	14	24
2 × 5	10	24	24	—	24	16	24
2 × 6	10	24	24	16	24	20	24

For SI: 1 inch = 25.4 mm, 1 foot = 304.8 mm.

a. Listed heights are distances between points of lateral support placed perpendicular to the plane of the wall. Bearing walls shall be sheathed on not less than one side or bridging shall be installed not greater than 4 feet apart measured vertically from either end of the stud. Increases in unsupported height are permitted where in compliance with Exception 2 of Section R602.3.1 or designed in accordance with accepted engineering practice.

b. Shall not be used in exterior walls.

c. A habitable attic assembly supported by 2 × 4 studs is limited to a roof span of 32 feet. Where the roof span exceeds 32 feet, the wall studs shall be increased to 2 × 6 or the studs shall be designed in accordance with accepted engineering practice.

❖ This table provides the allowed stud spacing in bearing walls up to 10 feet (3048 mm) high as stated in Section R602.3.1. As described in Note a, increases in unsupported height are permitted where justified by an engineering analysis. The "unsupported height" of a stud is really the distance between points of lateral support, which generally occurs at each floor level. Bearing walls must be sheathed on at least one side or bridging installed with a spacing of 4 feet or less vertically.

This table was updated in 2009 to include a habitable attic assembly. See Section R202 for the definition of "Attic, habitable." This update permits the addition of a habitable attic without considering it as a story load on the studs. The basis of the limit of how much habitable attic load the wall can support is a 32-foot (9754 mm) span with 2 by 4 wall studs. Where the span exceeds 32 feet (9754 mm), the wall stud must be 2 by 6 or designed in accordance with accompanying engineering practice.

INTERNATIONAL CODE COUNCIL®
Copyright © 2015 ICC. ALL RIGHTS RESERVED. Accessed by David Dammon on Jun 21, 2017 12:30:52 PM pursuant to License Agreement with ICC. No further reproduction or distribution authorized. ANY UNAUTHORIZED REPRODUCTION OR DISTRIBUTION IS A VIOLATION OF THE FEDERAL COPYRIGHT ACT AND THE LICENSE AGREEMENT, AND SUBJECT TO CIVIL AND CRIMINAL PENALTIES THEREUNDER.

R602.3.2 Top plate. Wood stud walls shall be capped with a double top plate installed to provide overlapping at corners and intersections with bearing partitions. End joints in top plates shall be offset not less than 24 inches (610 mm). Joints in plates need not occur over studs. Plates shall be not less than 2-inches (51 mm) nominal thickness and have a width not less than the width of the studs.

Exception: A single top plate used as an alternative to a double top plate shall comply with the following:

1. The single top plate shall be tied at corners, intersecting walls, and at in-line splices in straight wall lines in accordance with Table R602.3.2.
2. The rafters or joists shall be centered over the studs with a tolerance of not more than 1 inch (25 mm).
3. Omission of the top plate is permitted over headers where the headers are adequately tied to adjacent wall sections in accordance with Table R602.3.2.

❖ Plates are the horizontal elements of walls capping the top of walls and framing the bottom of stud walls. They are called plates because they are laid flat, with the deeper dimension horizontal. In building construction applications, top plates must be a nominal 2-inch (51 mm) thickness.

Double top plates serve three major functions:

1. They overlap at corners and bearing wall intersections, providing a means of tying the building together. (Note that the overlap is not required at intersections with nonbearing interior walls.)
2. They serve as beams to support joists and rafters that are not located directly over the studs.
3. They serve as chords for floor and roof diaphragms.

Along with provisions for stud size and spacing limitations, this section requires the installation of double top plates to provide a continuous tie along the tops of the walls. With the advent of wider wall framing to accommodate increased thickness of insulation, a desire to save on material costs led to the allowance of a single top plate alternative. The exception permits the use of a single top plate in bearing and exterior walls as long as adequate top-plate ties are provided. In addition, joists or rafters framing into the wall must be placed more closely to the vertical stud below. This is necessary to limit the bending stress in the top plate. The single top plate exception is illustrated in Commentary Figure R602.3.2.

TABLE R602.3.2
SINGLE TOP-PLATE SPLICE CONNECTION DETAILS

CONDITION	TOP-PLATE SPLICE LOCATION			
	Corners and intersecting walls		Butt joints in straight walls	
	Splice plate size	Minimum nails each side of joint	Splice plate size	Minimum nails each side of joint
Structures in SDC A-C; and in SDC D_0, D_1 and D_2 with braced wall line spacing less than 25 feet	3″ × 6″ × 0.036″ galvanized steel plate or equivalent	(6) 8d box ($2^1/_2$″ × 0.113″) nails	3′ × 12″ × 0.036″ galvanized steel plate or equivalent	(12) 8d box ($2^1/_2$″ × 0.113″) nails
Structures in SDC D_0, D_1 and D_2, with braced wall line spacing greater than or equal to 25 feet	3″ × 8″ by 0.036″ galvanized steel plate or equivalent	(9) 8d box ($2^1/_2$″ × 0.113″) nails	3′ × 16″ × 0.036″ galvanized steel plate or equivalent	(18) 8d box ($2^1/_2$″ × 0.113″) nails

For SI: 1 inch = 25.4 mm, 1 foot = 304.8 mm.

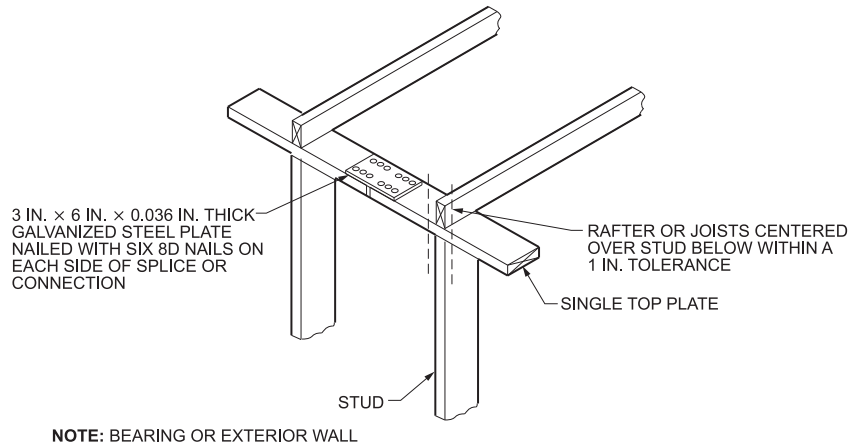

For SI: 1 inch = 25.4 mm.

Figure R602.3.2
SINGLE TOP-PLATE SPLICE

INTERNATIONAL CODE COUNCIL®
Copyright © 2015 ICC. ALL RIGHTS RESERVED. Accessed by David Dammon on Jun 21, 2017 12:30:52 PM pursuant to License Agreement with ICC. No further reproduction or distribution authorized. ANY UNAUTHORIZED REPRODUCTION OR DISTRIBUTION IS A VIOLATION OF THE FEDERAL COPYRIGHT ACT AND THE LICENSE AGREEMENT, AND SUBJECT TO CIVIL AND CRIMINAL PENALTIES THEREUNDER.

There are two double top plate splices specified in Item 13 of Table R602.3(1) that establish the minimum capacity required to provide an adequate tension splice. The first is adequate for braced wall line spacing of less than 25 feet. The second is for braced wall line spacing equal to or greater than 25 feet in SDC D_0, D_1 or D_2. Aside from simply providing continuity between wall segments, the top-plate splice also acts as a tension tie (often called a collector or drag strut) to distribute the roof and floor shear loads into the bracing elements often spaced as much as 20 feet apart.

The exception to Section R602.3.2 for a single top plate has been updated to include splice connection details that provide equivalent capacity to the double top plate splice. Table R602.3.2 provides the prescriptive splice plate sizes and minimum number and size of nails that must be provided at each side of the joint.

R602.3.3 Bearing studs. Where joists, trusses or rafters are spaced more than 16 inches (406 mm) on center and the bearing studs below are spaced 24 inches (610 mm) on center, such members shall bear within 5 inches (127 mm) of the studs beneath.

Exceptions:

1. The top plates are two 2-inch by 6-inch (38 mm by 140 mm) or two 3-inch by 4-inch (64 mm by 89 mm) members.
2. A third top plate is installed.
3. Solid blocking equal in size to the studs is installed to reinforce the double top plate.

❖ The bottom plate serves to anchor the wall to the floor, and studs are attached to it by end nailing or toe-nailing. The basic requirements of this section are shown in Commentary Figures R602.3.3(1) and R602.3.3(3). The code permits three options (exceptions) to account for loading that must be resisted by the double top plate when the stud spacing is 24 inches (610 mm) on center. Exception 1 is an increase in the minimum top plate size. Exception 2 is to provide a third plate. Exception 3 is solid blocking used as reinforcement for a double plate, installed so that the load from the framing members above is transferred to the supporting studs. Commentary Figures R602.3.3(2) and R602.3.3(4) illustrate Exceptions 1 and 3.

R602.3.4 Bottom (sole) plate. Studs shall have full bearing on a nominal 2-by (51 mm) or larger plate or sill having a width not less than to the width of the studs.

❖ This provision requires that studs bear on an adequately sized bottom plate. This allows the bottom plate to serve as a nailing surface for the wall sheathing while controlling compression perpendicular to the grain on the sill. If too great, this stress could result in crushing.

R602.3.5 Braced wall panel uplift load path. Braced wall panels located at exterior walls that support roof rafters or trusses (including stories below top story) shall have the framing members connected in accordance with one of the following:

1. Fastening in accordance with Table R602.3(1) where:
   1.1. The ultimate design wind speed does not exceed 115 mph (51 m/s), the wind exposure category is B, the roof pitch is 5:12 or greater, and the roof span is 32 feet (9754 mm) or less.
   1.2. The net uplift value at the top of a wall does not exceed 100 plf (146 N/mm). The net uplift value shall be determined in accordance with Section R802.11 and shall be permitted to be reduced by 60 plf (86 N/mm) for each full wall above.
2. Where the net uplift value at the top of a wall exceeds 100 plf (146 N/mm), installing approved uplift framing connectors to provide a continuous load path from the top of the wall to the foundation or to a point where the uplift force is 100 plf (146 N/mm) or less. The net uplift value shall be as determined in Item 1.2.
3. Wall sheathing and fasteners designed to resist combined uplift and shear forces in accordance with accepted engineering practice.

❖ As Section R602.3.5 is currently written, braced wall panels on the exterior walls that support roof framing require an uplift load path. As braced wall panels on floors below support the upper braced wall panels, uplift requirements must also be met at the lower floors. The intention of this section is to provide an adequate load path for the lateral-force-resisting system of the structure (wall bracing) as a minimum. From an engineering perspective, however, this provision appears to be incomplete because uplift loads are possible at the end of every roof truss or rafter, whether it bears on a bracing panel or not. To provide for the appropriate attachment of roof framing to the supporting walls for the whole structure, the uplift requirements of Chapter 6 must be used in conjunction with the requirements of Section R802.11, as discussed below.

The prescriptive nailing provisions in Table R602.3(1), Item 6, specify three 16d toenails for the "rafter or roof truss to plate" connection. Based on historical performance, this prescriptive schedule is deemed to provide sufficient attachment for ultimate design wind speed of 115 mph (51 m/s) winds, Exposure B, 5:12 roof pitch or greater, and a roof span of 32 feet (9754 mm) or less. For this reason, the minimum connection required by Table R602.3(1), Item 6 is adequate for uplift resistance within the parameters stated in Section R602.3.5, Item 1.

From Section R602.3.5, Item 1.1, it can be inferred that the Table R602.3(1), Item 6 prescriptive nailing requirements provide 100 pounds (45 kg) of net uplift (plf) (146 N/mm) resistance to properly attached roofs. No additional attachment is required until the uplift loads specified in Table R802.11 exceed this amount. In addition, Section R602.3.5, Item 1.2, provides the effective weight of each full wall above the wall-to-floor

INTERNATIONAL CODE COUNCIL®
Copyright © 2015 ICC. ALL RIGHTS RESERVED. Accessed by David Dammon on Jun 21, 2017 12:30:52 PM pursuant to License Agreement with ICC. No further reproduction or distribution authorized. ANY UNAUTHORIZED REPRODUCTION OR DISTRIBUTION IS A VIOLATION OF THE FEDERAL COPYRIGHT ACT AND THE LICENSE AGREEMENT, AND SUBJECT TO CIVIL AND CRIMINAL PENALTIES THEREUNDER.

connection in question as 60 plf (86 N/mm). This amount can be subtracted from the uplift amount, as the uplift requirement for each lower floor is calculated (see the example in this section). Given this information, the user is able to use the truss or rafter connection uplift force provided in Table R802.11 and its notes to compute the net uplift requirement for a structure at a given location.

When the uplift resistance of the roof framing provided in Table R802.11 is reduced by the number of walls above the connection in question or the location in the structure, and the net result is less than 100 pounds per linear foot (146 N/mm), the prescriptive nailing requirements of Table R602.3(1) are deemed to be sufficient to provide an adequate load path.

When the uplift resistance of the roof framing provided in Table R802.11 is reduced by the number of walls above the connection in question or the location in the structure, and the net result is greater than 100 plf (146 N/mm), the prescriptive nailing requirements of Table R602.3(1) are insufficient to provide an adequate load path and the following options are available:

1. Installation of an approved uplift framing anchor of sufficient capacity to resist the net uplift force.
2. Section R104.11 permits engineering design to be used to determine other nailing schedules or details that may provide sufficient uplift resistance.
3. Engineering analysis can be used to determine the wind uplift capacity in lieu of Table R802.11. Such analysis can take into account heavier roofing materials and other details not accounted for in the tables.
4. Other referenced documents, such as the American Wood Council's (AWC) *Wood Frame Construction Manual for One- and Two-family Dwellings*, can be used to generate uplift requirements and prescriptive hold-down requirements.

Example:

What is the net uplift capacity for each level of a two-story home located in a 140 mph Exposure B wind zone? The width of the house is 32 feet (9754 mm) the house has no roof overhangs, the roof pitch is 4:12 and the roof framing is at 24 inches (610 mm) on center.

Solution:

From Table R802.11, the wind uplift acting at the roof-to-second story wall is 480 pounds per connection.

- Capacity of the roof-to-second-story wall connection—There is no wall above this connection, so the uplift at this point is 480 pounds per connection. Table R602.3(1), Item 6 attachment schedule provides 200 pounds (90 kg) per connector of uplift resistance. If this attachment schedule is used, a connector with a minimum capacity of [480 pounds per connector—200 pounds (90 kg) per connector =] 280 pounds per connector is required. If this attachment schedule is not used, a connector with the full 480 pound capacity is required.
- Capacity of the second-story to first-story connection—As each lineal foot of wall contributes 60 pounds of uplift (86 N/mm) resistance, and there are 2 feet (610 mm) of wall per connector [roof framing/connectors on 24-inch (610 mm) centers], the uplift requirement for the second-story to first-story connection will be [480 - (2 × 60) =] 360 pounds (175 kg) per connector.
- Capacity of the first-story to foundation connection—In this case, there are two stories above the connection, and each lineal foot of wall contributes 60 pounds of uplift (86 N/mm) resistance, and there are 2 feet (610 mm) of wall per connector (roof framing/connectors on 24-inch (610 mm) centers). The uplift requirement for the first-story to foundation connection will be [480 - (2 × 2 × 60) =] 240 pounds per connector.

While not specified in the code, it is reasonable to assume that Table R602.3(1) nailing schedules provide at least some of this uplift resistance at the second-to-first and first-to-foundation locations. The use of 100 pounds per foot (0.34 kg/m) for the capacity of the Table R602.3(1) connections at these two locations is probably as reasonable as the assumption that Table R602.3(1), Items 1-6 provide 100 plf (146 N/m) uplift resistance capacity. From a historical perspective, these second to first-story and first-story to foundation connections as specified have been as effective as the roof-to-top story connections. As noted elsewhere, deviations from the code provisions should be approved by the building official.

R602.4 Interior load-bearing walls. Interior load-bearing walls shall be constructed, framed and fireblocked as specified for exterior walls.

❖ Interior load-bearing walls must be designed and constructed using the criteria for exterior walls. Thus, Table R602.3(5) should be used to establish stud spacing of walls up to 10 feet (3048 mm) high, and Section R602.3.1, Exception 2 applies to walls over 10 feet (3048 mm).

R602.5 Interior nonbearing walls. Interior nonbearing walls shall be permitted to be constructed with 2-inch by 3-inch (51 mm by 76 mm) studs spaced 24 inches (610 mm) on center or, where not part of a *braced wall line*, 2-inch by 4-inch (51 mm by 102 mm) flat studs spaced at 16 inches (406 mm) on center. Interior nonbearing walls shall be capped with not less than a single top plate. Interior nonbearing walls shall be fireblocked in accordance with Section R602.8.

❖ The code permits reduced stud sizes, increased stud spacing and capping with a single top plate in interior nonbearing partitions. These allowances are based on minimal superimposed vertical loads.

INTERNATIONAL CODE COUNCIL®
Copyright © 2015 ICC. ALL RIGHTS RESERVED. Accessed by David Dammon on Jun 21, 2017 12:30:52 PM pursuant to License Agreement with ICC. No further reproduction or distribution authorized. ANY UNAUTHORIZED REPRODUCTION OR DISTRIBUTION IS A VIOLATION OF THE FEDERAL COPYRIGHT ACT AND THE LICENSE AGREEMENT, AND SUBJECT TO CIVIL AND CRIMINAL PENALTIES THEREUNDER.

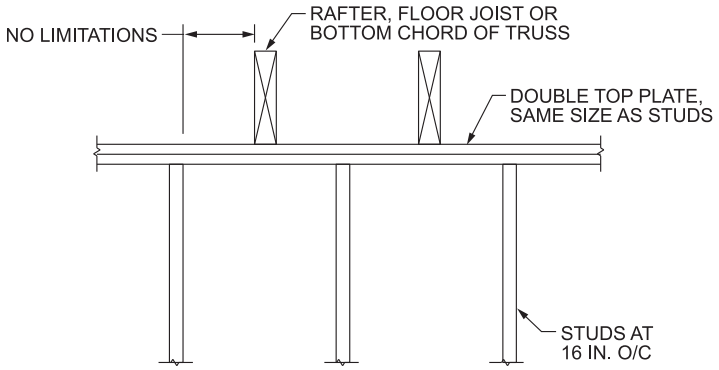

NOTE: NO LIMIT ON RAFTER OR BOTTOM OF TRUSS LOCATION

For SI: 1 inch = 25.4 mm.

Figure R602.3.3(1)
TOP PLATE WITH 16-INCH STUD SPACING

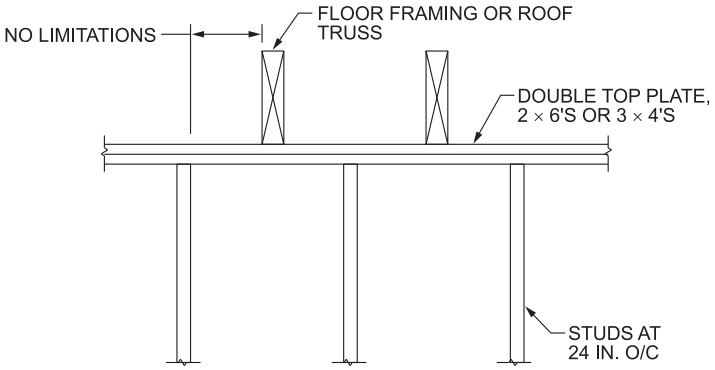

NOTE: NO LIMIT ON FLOOR FRAMING OR ROOF TRUSS CHORD LOCATION

For SI: 1 inch = 25.4 mm.

Figure R602.3.3(2)
TOP PLATE WITH 24-INCH STUD SPACING

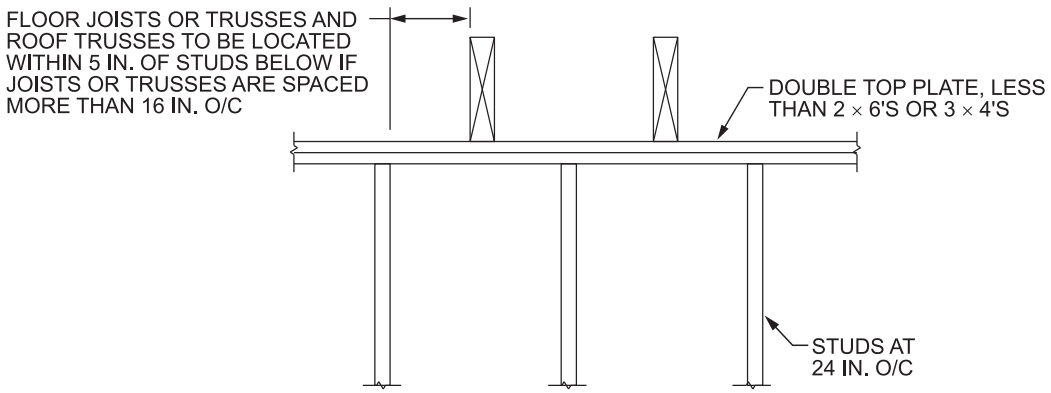

For SI: 1 inch = 25.4 mm.

Figure R602.3.3(3)
TOP PLATE WITH 24-INCH STUD SPACING AND BEARING POINT LIMITATIONS

INTERNATIONAL CODE COUNCIL®
Copyright © 2015 ICC. ALL RIGHTS RESERVED. Accessed by David Dammon on Jun 21, 2017 12:30:52 PM pursuant to License Agreement with ICC. No further reproduction or distribution authorized. ANY UNAUTHORIZED REPRODUCTION OR DISTRIBUTION IS A VIOLATION OF THE FEDERAL COPYRIGHT ACT AND THE LICENSE AGREEMENT, AND SUBJECT TO CIVIL AND CRIMINAL PENALTIES THEREUNDER.

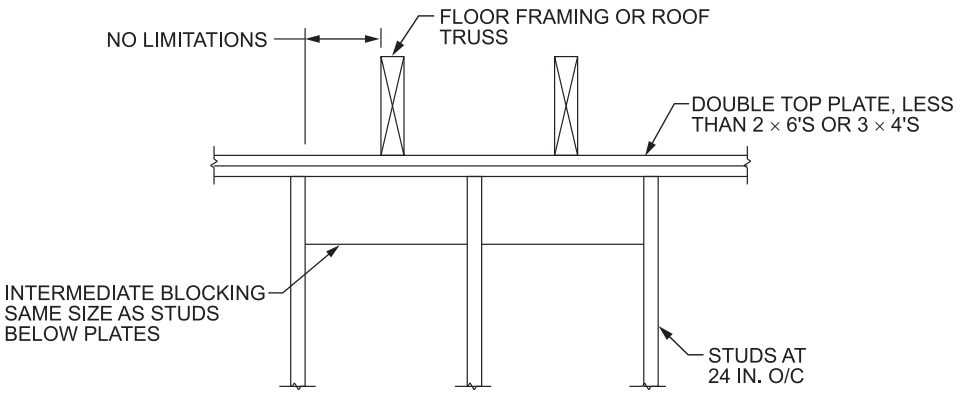

For SI: 1 inch = 25.4 mm.

Figure R602.3.3(4)
BLOCKED TOP PLATE WITH 24-INCH STUD SPACING

R602.6 Drilling and notching of studs. Drilling and notching of studs shall be in accordance with the following:

1. Notching. Any stud in an exterior wall or bearing partition shall be permitted to be cut or notched to a depth not exceeding 25 percent of its width. Studs in nonbearing partitions shall be permitted to be notched to a depth not to exceed 40 percent of a single stud width.
2. Drilling. Any stud shall be permitted to be bored or drilled, provided that the diameter of the resulting hole is not more than 60 percent of the stud width, the edge of the hole is not more than $^5/_8$ inch (16 mm) to the edge of the stud, and the hole is not located in the same section as a cut or notch. Studs located in exterior walls or bearing partitions drilled over 40 percent and up to 60 percent shall be doubled with not more than two successive doubled studs bored. See Figures R602.6(1) and R602.6(2).

   Exception: Use of *approved* stud shoes is permitted where they are installed in accordance with the manufacturer's recommendations.

❖ This section addresses the allowable drilling and notching of studs used to frame partitions. See Figures R602.6(1) and R602.6(2) for examples of permitted drilling and notching of studs in exterior walls, bearing walls and nonbearing walls. These limitations retain the structural integrity of the studs. Where stud shoes are used, the exception allows drilling and notching to be in accordance with the approved manufacturer's instructions.

R602.6.1 Drilling and notching of top plate. When piping or ductwork is placed in or partly in an exterior wall or interior load-bearing wall, necessitating cutting, drilling or notching of the top plate by more than 50 percent of its width, a galvanized metal tie not less than 0.054 inch thick (1.37 mm) (16 ga) and $1^1/_2$ inches (38 mm) wide shall be fastened across and to the plate at each side of the opening with not less than eight 10d (0.148 inch diameter) nails having a minimum length of $1^1/_2$ inches (38 mm) at each side or equivalent. The metal tie must extend a minimum of 6 inches past the opening. See Figure R602.6.1.

Exception: When the entire side of the wall with the notch or cut is covered by wood structural panel sheathing.

❖ In many cases, drilling or notching of the top plate is necessary to allow plumbing, heating or other pipes to be placed within the exterior walls and load-bearing interior walls. When cutting the top plate by more than one-half its width is necessary, strapping across the plates as illustrated in Figure R602.6.1, is required to provide top plate continuity and to retain the structural integrity of the wall system as a whole. In the case of a double top plate, only the upper of the two plates needs to have a strap installed as described.

The top plate functions as a collector as part of the lateral load path. It collects the lateral loads, due to wind and seismic, from the roof or floor diaphragm and distributes them along the wall into the wall bracing.

In doing so, the top plate is subjected to tension or compression due to the lateral loads in the plane of the wall.

Removal of any top plate material due to cutting, drilling or notching will reduce the tension/compression capacity of the top plate.

This section provides a prescriptive design that allows removal of 50 percent or less of the top plate material without replacing the material.

If more than 50 percent is removed, a metal strap is required to replace the material removed as shown in Figure R602.6.1.

Common practice is to notch the top plate as shown in Figure R602.6.1.

This section does not specifically state the amount of top plate material that must remain. However, Section R602.6 requires $^5/_8$ inch (16 mm) minimum to edge for holes in studs. This can be used as a guide-

INTERNATIONAL CODE COUNCIL®
Copyright © 2015 ICC. ALL RIGHTS RESERVED. Accessed by David Dammon on Jun 21, 2017 12:30:52 PM pursuant to License Agreement with ICC. No further reproduction or distribution authorized. ANY UNAUTHORIZED REPRODUCTION OR DISTRIBUTION IS A VIOLATION OF THE FEDERAL COPYRIGHT ACT AND THE LICENSE AGREEMENT, AND SUBJECT TO CIVIL AND CRIMINAL PENALTIES THEREUNDER.

line since this is for the compression load and assuming the metal strap is for the tension load.

For notching as shown in Figure R602.6.1, at least $^5/_8$ inch (16 mm) of the top plate should remain.

For a bored hole, $^5/_8$ inch (16 mm) should remain on at least one edge. The edge with less than $^5/_8$ inch (16 mm) will require the tension strap.

Notching or boring holes outside those guidelines will require a design in accordance with accepted engineering practices.

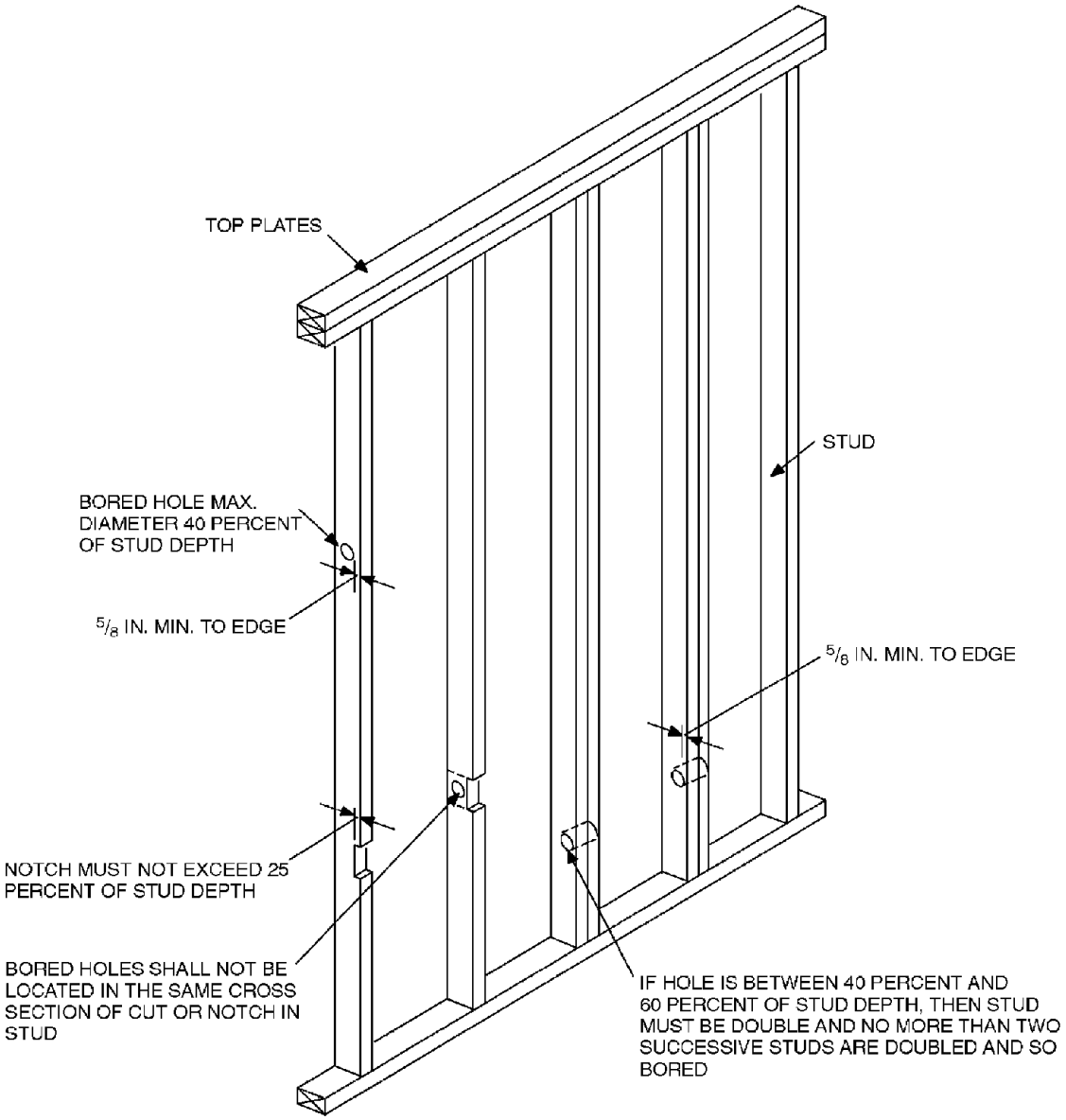

For SI: 1 inch = 25.4 mm.
Note: Condition for exterior and bearing walls.

FIGURE R602.6(1)
NOTCHING AND BORED HOLE LIMITATIONS FOR EXTERIOR WALLS AND BEARING WALLS

❖ See the commentary to Section R602.6.

INTERNATIONAL CODE COUNCIL®
Copyright © 2015 ICC. ALL RIGHTS RESERVED. Accessed by David Dammon on Jun 21, 2017 12:30:52 PM pursuant to License Agreement with ICC. No further reproduction or distribution authorized. ANY UNAUTHORIZED REPRODUCTION OR DISTRIBUTION IS A VIOLATION OF THE FEDERAL COPYRIGHT ACT AND THE LICENSE AGREEMENT, AND SUBJECT TO CIVIL AND CRIMINAL PENALTIES THEREUNDER.

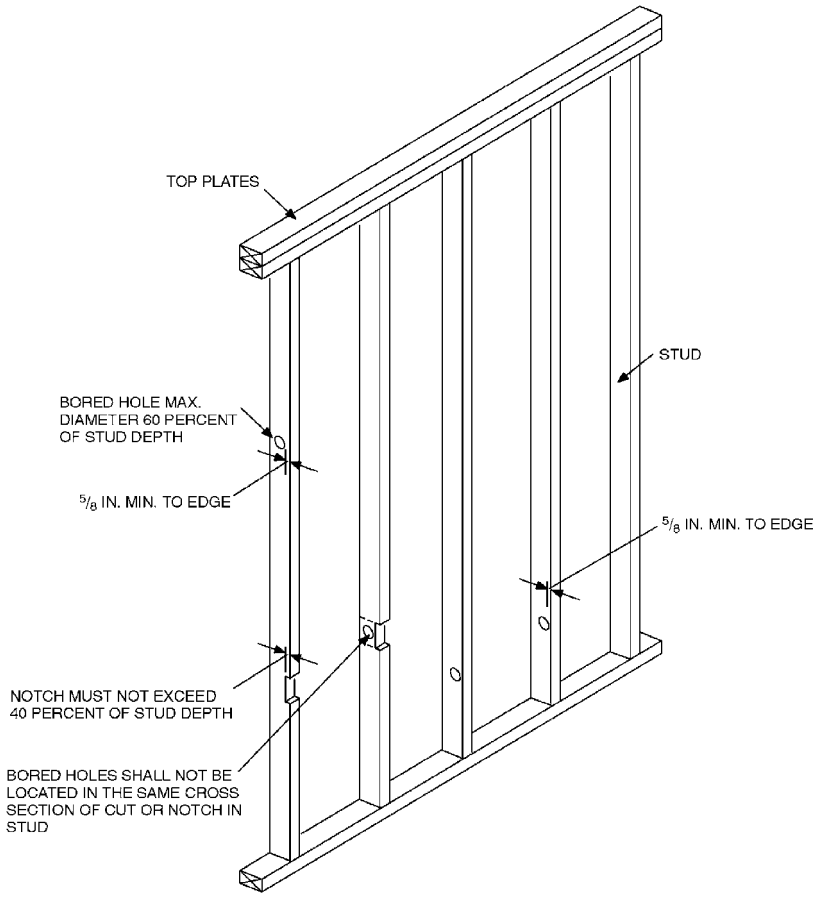

For SI: 1 inch = 25.4 mm.

FIGURE R602.6(2)
NOTCHING AND BORED HOLE LIMITATIONS FOR INTERIOR NONBEARING WALLS

❖ See the commentary to Section R602.6.

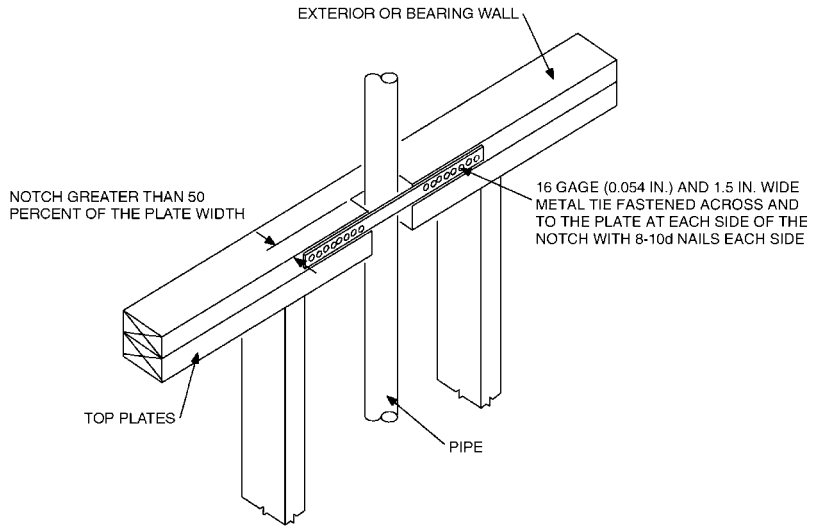

For SI: 1 inch = 25.4 mm.

FIGURE R602.6.1
TOP PLATE FRAMING TO ACCOMMODATE PIPING

❖ See the commentary to Section R602.6.1.

INTERNATIONAL CODE COUNCIL®
Copyright © 2015 ICC. ALL RIGHTS RESERVED. Accessed by David Dammon on Jun 21, 2017 12:30:52 PM pursuant to License Agreement with ICC. No further reproduction or distribution authorized. ANY UNAUTHORIZED REPRODUCTION OR DISTRIBUTION IS A VIOLATION OF THE FEDERAL COPYRIGHT ACT AND THE LICENSE AGREEMENT, AND SUBJECT TO CIVIL AND CRIMINAL PENALTIES THEREUNDER.

R602.7 Headers. For header spans, see Tables R602.7(1), R602.7(2) and R602.7(3).

❖ Section R602.7 has been reorganized to combine single and multiple headers into one table. The 2012 IRC Tables R502.5(1) and R502.5(2) were moved from Chapter 5 to Section R602.7 and renumbered as Tables R602.7(1) and R602.7(2). Because the tables are frequently referenced in the wall provisions and the tables are used for headers more frequently than for girders, this change makes the tables conveniently located for header sizing. 2012 IRC Table R602.7.1 is combined with Table R502.5(1) to give a single table containing 1, 2 and 3 ply headers in 2015 IRC Table R602.7(1). The table also contains minimum jack stud requirements for all header options.

The single-ply header spans have been recalculated based on #2 grade hem-fir values. The single-ply spans are slightly longer than those in the 2012 IRC. Tables R602.7(1) and R602.7(2) are based on minimum design values for #2 grade of Douglas fir-larch, hem-fir and spruce-pine fir and #1 or better grade of southern pine.

New Table R602.7(3) has been added to provide girder and header spans for open porches. The table is based on post construction to support headers for porches with an 8 foot or 14 foot depth. The span lengths are based on the 2005 AWC NDS.

At a wall opening, headers transfer loads received from the wall and floors or roof to the foundation. Openings such as doors or windows within bearing walls must be framed with headers of sufficient size to span the opening and transfer loads to jack studs. Commentary Figure R602.7 illustrates a double header over a door opening. Tables R602.7(1) and R602.7(2) of the code are used to determine allowable spans for headers as well as girders. These tables are applicable to openings in bearing walls but are not applicable to nonbearing walls. See Section R602.7.4 for headers in nonbearing walls. Table R602.7(1) is to be used for headers over openings in exterior bearing walls. Table R602.7(2) is to be used for headers over openings in interior bearing walls. Where wood girders are used in a basement of a one-story dwelling, Table R602.7(2) may be used to prescriptively size the basement girders (the space between supporting columns may be viewed as openings).

Example:

You wish to size a header in the exterior wall of a one-story house that is 30 feet (9144 mm) wide. The opening size is 8 feet (2438 mm). Southern pine is the wood species common for the area, and the ground-snow loading is 20 pounds per square foot (958 Pa).

Solution:

Table R602.7(1) lists, for a 30 psf (1436 Pa) snow load and a building width of 36 feet (10 973 mm), a triple 2 by 10 inch (51 mm by 254 mm) header; it will span 8 feet, 2 inches (2489 mm). No. 1 grade or better must be used for southern pine.

R602.7.1 Single member headers. Single headers shall be framed with a single flat 2-inch-nominal (51 mm) member or wall plate not less in width than the wall studs on the top and bottom of the header in accordance with Figures R602.7.1(1) and R602.7.1(2) and face nailed to the top and bottom of the header with 10d box nails (3 inches × 0.128 inches) spaced 12 inches on center.

❖ Single-ply headers under limited loading conditions allow an increase in the energy efficiency of a dwelling. Installation of a single header results in a greater thickness of cavity insulation to reduce heat loss through the header in exterior walls.

The single-ply header configuration prescribed in Table R602.7(1) may be used for small openings. Use is limited to headers supporting roof and ceiling or roof, ceiling and one floor. Two figures clarify the installation details for single-ply headers with two different top plate conditions. In Figure R602.7.1(1), a cripple wall may be built above the header to finish out the space between the top plate and header. In Figure R602.7.1(2), the header fills the entire space between the top plate above the header and the plate below the header. In both cases the plates must be face nailed to the header as specified in Section R602.7.1. This nailing serves as a means of stiffening the header to limit out-of-plane buckling under gravity loads.

R602.7.2 Rim board headers. Rim board header size, material and span shall be in accordance with Table R602.7(1). Rim board headers shall be constructed in accordance with Figure R602.7.2 and shall be supported at each end by full-height studs. The number of full-height studs at each end shall be not less than the number of studs displaced by half of the header span based on the maximum stud spacing in accordance with Table R602.3(5). Rim board headers supporting concentrated loads shall be designed in accordance with accepted engineering practice.

❖ This section prescribes the requirements for sawn lumber rim board headers. Rim board headers improve the energy efficiency of wall framing by allowing a greater thickness of cavity insulation. Rim board header size, material and span are in accordance with Table R602.7(1). Rim board headers must be constructed in accordance with Figure R602.7.2. Full-height studs at each end must be used to support this type of header. The design does not include support of concentrated loads. Spans for engineered wood rim boards are not included and must be in accordance with the manufacturer's installation instructions.

INTERNATIONAL CODE COUNCIL®
Copyright © 2015 ICC. ALL RIGHTS RESERVED. Accessed by David Dammon on Jun 21, 2017 12:30:52 PM pursuant to License Agreement with ICC. No further reproduction or distribution authorized. ANY UNAUTHORIZED REPRODUCTION OR DISTRIBUTION IS A VIOLATION OF THE FEDERAL COPYRIGHT ACT AND THE LICENSE AGREEMENT, AND SUBJECT TO CIVIL AND CRIMINAL PENALTIES THEREUNDER.

TABLE R602.7(1)
GIRDER SPANS[a] AND HEADER SPANS[a] FOR EXTERIOR BEARING WALLS
(Maximum spans for Douglas fir-larch, hem-fir, southern pine and spruce-pine-fir[b] and required number of jack studs)

GIRDERS AND HEADERS SUPPORTING	SIZE	GROUND SNOW LOAD (psf)[e]																	
		30						50						70					
		Building width[c] (feet)																	
		20		28		36		20		28		36		20		28		36	
		Span	NJ[d]	Span	NJ[d]	Span	NJ[d]	Span	NJ[d]	Span	NJ[d]	Span	NJ[d]	Span	NJ[d]	Span	NJ[d]	Span	NJ[d]
Roof and ceiling	1-2 × 8	4-6	1	3-10	1	3-5	1	3-9	1	3-2	1	2-10	2	—	—	—	—	—	—
	1-2 × 10	5-8	1	4-11	1	4-4	1	4-9	1	4-1	1	3-7	2	—	—	—	—	—	—
	1-2 × 12	6-11	1	5-11	2	5-3	2	5-9	2	4-8	2	3-8	2	—	—	—	—	—	—
	2-2 × 4	3-6	1	3-2	1	2-10	1	3-2	1	2-9	1	2-6	1	2-10	1	2-6	1	2-3	1
	2-2 × 6	5-5	1	4-8	1	4-2	1	4-8	1	4-1	1	3-8	2	4-2	1	3-8	2	3-3	2
	2-2 × 8	6-10	1	5-11	2	5-4	2	5-11	2	5-2	2	4-7	2	5-4	2	4-7	2	4-1	2
	2-2 × 10	8-5	2	7-3	2	6-6	2	7-3	2	6-3	2	5-7	2	6-6	2	5-7	2	5-0	2
	2-2 × 12	9-9	2	8-5	2	7-6	2	8-5	2	7-3	2	6-6	2	7-6	2	6-6	2	5-10	3
	3-2 × 8	8-4	1	7-5	1	6-8	1	7-5	1	6-5	2	5-9	2	6-8	1	5-9	2	5-2	2
	3-2 × 10	10-6	1	9-1	2	8-2	2	9-1	2	7-10	2	7-0	2	8-2	2	7-0	2	6-4	2
	3-2 × 12	12-2	2	10-7	2	9-5	2	10-7	2	9-2	2	8-2	2	9-5	2	8-2	2	7-4	2
	4-2 × 8	9-2	1	8-4	1	7-8	1	8-4	1	7-5	1	6-8	1	7-8	1	6-8	1	5-11	2
	4-2 × 10	11-8	1	10-6	1	9-5	2	10-6	1	9-1	2	8-2	2	9-5	2	8-2	2	7-3	2
	4-2 × 12	14-1	1	12-2	2	10-11	2	12-2	2	10-7	2	9-5	2	10-11	2	9-5	2	8-5	2
Roof, ceiling and one center-bearing floor	1-2 × 8	3-11	1	3-5	1	3-0	1	3-7	1	3-0	2	2-8	2	—	—	—	—	—	—
	1-2 × 10	5-0	2	4-4	2	3-10	2	4-6	2	3-11	2	3-4	2	—	—	—	—	—	—
	1-2 × 12	5-10	2	4-9	2	4-2	2	5-5	2	4-2	2	3-4	2	—	—	—	—	—	—
	2-2 × 4	3-1	1	2-9	1	2-5	1	2-9	1	2-5	1	2-2	1	2-7	1	2-3	1	2-0	1
	2-2 × 6	4-6	1	4-0	1	3-7	2	4-1	1	3-7	2	3-3	2	3-9	2	3-3	2	2-11	2
	2-2 × 8	5-9	2	5-0	2	4-6	2	5-2	2	4-6	2	4-1	2	4-9	2	4-2	2	3-9	2
	2-2 × 10	7-0	2	6-2	2	5-6	2	6-4	2	5-6	2	5-0	2	5-9	2	5-1	2	4-7	3
	2-2 × 12	8-1	2	7-1	2	6-5	2	7-4	2	6-5	2	5-9	3	6-8	2	5-10	3	5-3	3
	3-2 × 8	7-2	1	6-3	2	5-8	2	6-5	2	5-8	2	5-1	2	5-11	2	5-2	2	4-8	2
	3-2 × 10	8-9	2	7-8	2	6-11	2	7-11	2	6-11	2	6-3	2	7-3	2	6-4	2	5-8	2
	3-2 × 12	10-2	2	8-11	2	8-0	2	9-2	2	8-0	2	7-3	2	8-5	2	7-4	2	6-7	2
	4-2 × 8	8-1	1	7-3	1	6-7	1	7-5	1	6-6	1	5-11	2	6-10	1	6-0	2	5-5	2
	4-2 × 10	10-1	1	8-10	2	8-0	2	9-1	2	8-0	2	7-2	2	8-4	2	7-4	2	6-7	2
	4-2 × 12	11-9	2	10-3	2	9-3	2	10-7	2	9-3	2	8-4	2	9-8	2	8-6	2	7-7	2
Roof, ceiling and one clear span floor	1-2 × 8	3-6	1	3-0	1	2-8	1	3-5	1	2-11	1	2-7	2	—	—	—	—	—	—
	1-2 × 10	4-6	1	3-10	1	3-3	1	4-4	1	3-9	1	3-1	2	—	—	—	—	—	—
	1-2 × 12	5-6	1	4-2	2	3-3	2	5-4	2	3-11	2	3-1	2	—	—	—	—	—	—
	2-2 × 4	2-8	1	2-4	1	2-1	1	2-7	1	2-3	1	2-0	1	2-5	1	2-1	1	1-10	1
	2-2 × 6	3-11	1	3-5	2	3-0	2	3-10	2	3-4	2	3-0	2	3-6	2	3-1	2	2-9	2
	2-2 × 8	5-0	2	4-4	2	3-10	2	4-10	2	4-2	2	3-9	2	4-6	2	3-11	2	3-6	2
	2-2 × 10	6-1	2	5-3	2	4-8	2	5-11	2	5-1	2	4-7	3	5-6	2	4-9	2	4-3	3
	2-2 × 12	7-1	2	6-1	3	5-5	3	6-10	2	5-11	3	5-4	3	6-4	2	5-6	3	5-0	3
	3-2 × 8	6-3	2	5-5	2	4-10	2	6-1	2	5-3	2	4-8	2	5-7	2	4-11	2	4-5	2
	3-2 × 10	7-7	2	6-7	2	5-11	2	7-5	2	6-5	2	5-9	2	6-10	2	6-0	2	5-4	2
	3-2 × 12	8-10	2	7-8	2	6-10	2	8-7	2	7-5	2	6-8	2	7-11	2	6-11	2	6-3	2
	4-2 × 8	7-2	1	6-3	2	5-7	2	7-0	1	6-1	2	5-5	2	6-6	1	5-8	2	5-1	2
	4-2 × 10	8-9	2	7-7	2	6-10	2	8-7	2	7-5	2	6-7	2	7-11	2	6-11	2	6-2	2
	4-2 × 12	10-2	2	8-10	2	7-11	2	9-11	2	8-7	2	7-8	2	9-2	2	8-0	2	7-2	2

(continued)

INTERNATIONAL CODE COUNCIL®
Copyright © 2015 ICC. ALL RIGHTS RESERVED. Accessed by David Dammon on Jun 21, 2017 12:30:52 PM pursuant to License Agreement with ICC. No further reproduction or distribution authorized. ANY UNAUTHORIZED REPRODUCTION OR DISTRIBUTION IS A VIOLATION OF THE FEDERAL COPYRIGHT ACT AND THE LICENSE AGREEMENT, AND SUBJECT TO CIVIL AND CRIMINAL PENALTIES THEREUNDER.

TABLE R602.7(1)—continued
GIRDER SPANS[a] AND HEADER SPANS[a] FOR EXTERIOR BEARING WALLS
(Maximum spans for Douglas fir-larch, hem-fir, southern pine and spruce-pine-fir[b] and required number of jack studs)

GIRDERS AND HEADERS SUPPORTING	SIZE	GROUND SNOW LOAD (psf)[e]																	
		30						50						70					
		Building width[c] (feet)																	
		20		28		36		20		28		36		20		28		36	
		Span	NJ[d]	Span	NJ[d]	Span	NJ[d]	Span	NJ[d]	Span	NJ[d]	Span	NJ[d]	Span	NJ[d]	Span	NJ[d]	Span	NJ[d]
Roof, ceiling and two center-bearing floors	2-2 × 4	2-7	1	2-3	1	2-0	1	2-6	1	2-2	1	1-11	1	2-4	1	2-0	1	1-9	1
	2-2 × 6	3-9	2	3-3	2	2-11	2	3-8	2	3-2	2	2-10	2	3-5	2	3-0	2	2-8	2
	2-2 × 8	4-9	2	4-2	2	3-9	2	4-7	2	4-0	2	3-8	2	4-4	2	3-9	2	3-5	2
	2-2 × 10	5-9	2	5-1	2	4-7	3	5-8	2	4-11	2	4-5	3	5-3	2	4-7	3	4-2	3
	2-2 × 12	6-8	2	5-10	3	5-3	3	6-6	2	5-9	3	5-2	3	6-1	3	5-4	3	4-10	3
	3-2 × 8	5-11	2	5-2	2	4-8	2	5-9	2	5-1	2	4-7	2	5-5	2	4-9	2	4-3	2
	3-2 × 10	7-3	2	6-4	2	5-8	2	7-1	2	6-2	2	5-7	2	6-7	2	5-9	2	5-3	2
	3-2 × 12	8-5	2	7-4	2	6-7	2	8-2	2	7-2	2	6-5	3	7-8	2	6-9	2	6-1	3
	4-2 × 8	6-10	1	6-0	2	5-5	2	6-8	1	5-10	2	5-3	2	6-3	2	5-6	2	4-11	2
	4-2 × 10	8-4	2	7-4	2	6-7	2	8-2	2	7-2	2	6-5	2	7-7	2	6-8	2	6-0	2
	4-2 × 12	9-8	2	8-6	2	7-8	2	9-5	2	8-3	2	7-5	2	8-10	2	7-9	2	7-0	2
Roof, ceiling, and two clear-span floors	2-2 × 4	2-1	1	1-8	1	1-6	2	2-0	1	1-8	1	1-5	2	2-0	1	1-8	1	1-5	2
	2-2 × 6	3-1	2	2-8	2	2-4	2	3-0	2	2-7	2	2-3	2	2-11	2	2-7	2	2-3	2
	2-2 × 8	3-10	2	3-4	2	3-0	3	3-10	2	3-4	2	2-11	3	3-9	2	3-3	2	2-11	3
	2-2 × 10	4-9	2	4-1	3	3-8	3	4-8	2	4-0	3	3-7	3	4-7	3	4-0	3	3-6	3
	2-2 × 12	5-6	3	4-9	3	4-3	3	5-5	3	4-8	3	4-2	3	5-4	3	4-7	3	4-1	4
	3-2 × 8	4-10	2	4-2	2	3-9	2	4-9	2	4-1	2	3-8	2	4-8	2	4-1	2	3-8	2
	3-2 × 10	5-11	2	5-1	2	4-7	3	5-10	2	5-0	2	4-6	3	5-9	2	4-11	2	4-5	3
	3-2 × 12	6-10	2	5-11	3	5-4	3	6-9	2	5-10	3	5-3	3	6-8	2	5-9	3	5-2	3
	4-2 × 8	5-7	2	4-10	2	4-4	2	5-6	2	4-9	2	4-3	2	5-5	2	4-8	2	4-2	2
	4-2 × 10	6-10	2	5-11	2	5-3	2	6-9	2	5-10	2	5-2	2	6-7	2	5-9	2	5-1	2
	4-2 × 12	7-11	2	6-10	2	6-2	3	7-9	2	6-9	2	6-0	3	7-8	2	6-8	2	5-11	3

For SI: 1 inch = 25.4 mm, 1 pound per square foot = 0.0479 kPa.

a. Spans are given in feet and inches.

b. No. 1 or better grade lumber shall be used for southern pine. Other tabulated values assume #2 grade lumber.

c. Building width is measured perpendicular to the ridge. For widths between those shown, spans are permitted to be interpolated.

d. NJ = Number of jack studs required to support each end. Where the number of required jack studs equals one, the header is permitted to be supported by an approved framing anchor attached to the full-height wall stud and to the header.

e. Use 30 psf ground snow load for cases in which ground snow load is less than 30 psf and the roof live load is equal to or less than 20 psf.

❖ See the commentary to Section R602.7.1.

INTERNATIONAL CODE COUNCIL®
Copyright © 2015 ICC. ALL RIGHTS RESERVED. Accessed by David Dammon on Jun 21, 2017 12:30:52 PM pursuant to License Agreement with ICC. No further reproduction or distribution authorized. ANY UNAUTHORIZED REPRODUCTION OR DISTRIBUTION IS A VIOLATION OF THE FEDERAL COPYRIGHT ACT AND THE LICENSE AGREEMENT, AND SUBJECT TO CIVIL AND CRIMINAL PENALTIES THEREUNDER.

TABLE R602.7(2)
GIRDER SPANS[a] AND HEADER SPANS[a] FOR INTERIOR BEARING WALLS
(Maximum spans for Douglas fir-larch, hem-fir, southern pine and spruce-pine-fir[b] and required number of jack studs)

HEADERS AND GIRDERS SUPPORTING	SIZE	BUILDING Width[c] (feet)					
		20		28		36	
		Span	NJ[d]	Span	NJ[d]	Span	NJ[d]
One floor only	2-2 × 4	3-1	1	2-8	1	2-5	1
	2-2 × 6	4-6	1	3-11	1	3-6	1
	2-2 × 8	5-9	1	5-0	2	4-5	2
	2-2 × 10	7-0	2	6-1	2	5-5	2
	2-2 × 12	8-1	2	7-0	2	6-3	2
	3-2 × 8	7-2	1	6-3	1	5-7	2
	3-2 × 10	8-9	1	7-7	2	6-9	2
	3-2 × 12	10-2	2	8-10	2	7-10	2
	4-2 × 8	9-0	1	7-8	1	6-9	1
	4-2 × 10	10-1	1	8-9	1	7-10	2
	4-2 × 12	11-9	1	10-2	2	9-1	2
Two floors	2-2 × 4	2-2	1	1-10	1	1-7	1
	2-2 × 6	3-2	2	2-9	2	2-5	2
	2-2 × 8	4-1	2	3-6	2	3-2	2
	2-2 × 10	4-11	2	4-3	2	3-10	3
	2-2 × 12	5-9	2	5-0	3	4-5	3
	3-2 × 8	5-1	2	4-5	2	3-11	2
	3-2 × 10	6-2	2	5-4	2	4-10	2
	3-2 × 12	7-2	2	6-3	2	5-7	3
	4-2 × 8	6-1	1	5-3	2	4-8	2
	4-2 × 10	7-2	2	6-2	2	5-6	2
	4-2 × 12	8-4	2	7-2	2	6-5	2

For SI: 1 inch = 25.4 mm, 1 foot = 304.8 mm.

a. Spans are given in feet and inches.

b. No. 1 or better grade lumber shall be used for southern pine. Other tabulated values assume #2 grade lumber.

c. Building width is measured perpendicular to the ridge. For widths between those shown, spans are permitted to be interpolated.

d. NJ = Number of jack studs required to support each end. Where the number of required jack studs equals one, the header is permitted to be supported by an approved framing anchor attached to the full-height wall stud and to the header.

❖ See the commentary to Section R602.7.2.

TABLE R602.7(3)
GIRDER AND HEADER SPANS[a] FOR OPEN PORCHES
(Maximum span for Douglas fir-larch, hem-fir, southern pine and spruce-pine-fir[b])

SIZE	SUPPORTING ROOF						SUPPORTING FLOOR	
	GROUND SNOW LOAD (psf)							
	30		50		70			
	DEPTH OF PORCH[c] (feet)							
	8	14	8	14	8	14	8	14
2-2 × 6	7-6	5-8	6-2	4-8	5-4	4-0	6-4	4-9
2-2 × 8	10-1	7-7	8-3	6-2	7-1	5-4	8-5	6-4
2-2 × 10	12-4	9-4	10-1	7-7	8-9	6-7	10-4	7-9
2-2 × 12	14-4	10-10	11-8	8-10	10-1	7-8	11-11	9-0

For SI: 1 inch = 25.4 mm, 1 foot = 304.8 mm, 1 pound per square foot = 0.0479 kPa.

a. Spans are given in feet and inches.

b. Tabulated values assume #2 grade lumber, wet service and incising for refractory species. Use 30 psf ground snow load for cases in which ground snow load is less than 30 psf and the roof live load is equal to or less than 20 psf.

c. Porch depth is measured horizontally from building face to centerline of the header. For depths between those shown, spans are permitted to be interpolated.

INTERNATIONAL CODE COUNCIL®
Copyright © 2015 ICC. ALL RIGHTS RESERVED. Accessed by David Dammon on Jun 21, 2017 12:30:52 PM pursuant to License Agreement with ICC. No further reproduction or distribution authorized. ANY UNAUTHORIZED REPRODUCTION OR DISTRIBUTION IS A VIOLATION OF THE FEDERAL COPYRIGHT ACT AND THE LICENSE AGREEMENT, AND SUBJECT TO CIVIL AND CRIMINAL PENALTIES THEREUNDER.

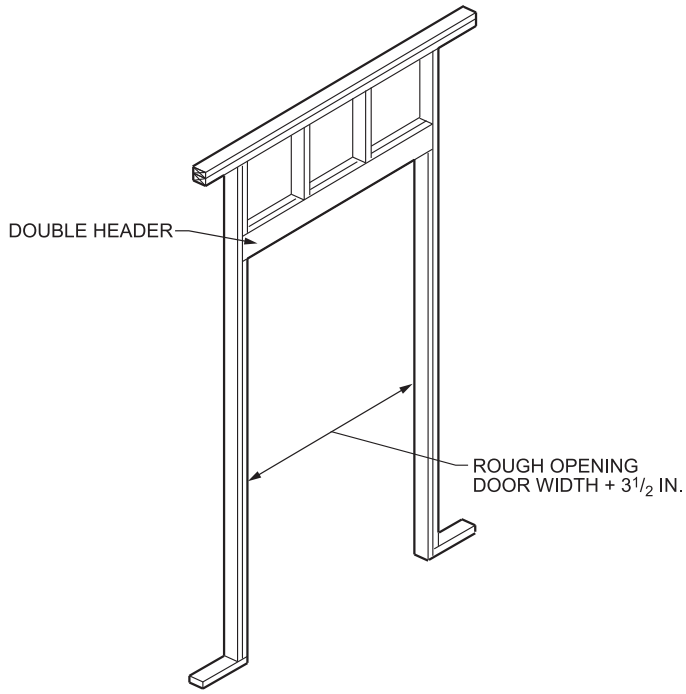

For SI: 1 inch = 25.4 mm.

Figure R602.7
HEADER DETAIL

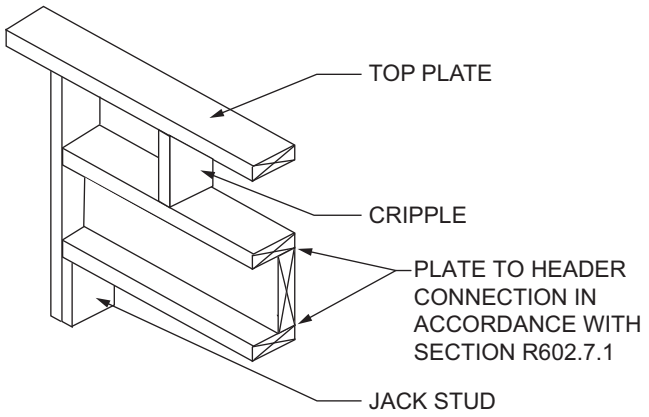

FIGURE R602.7.1(1)
SINGLE MEMBER HEADER IN EXTERIOR BEARING WALL

❖ See the commentary to Section R602.7.1.

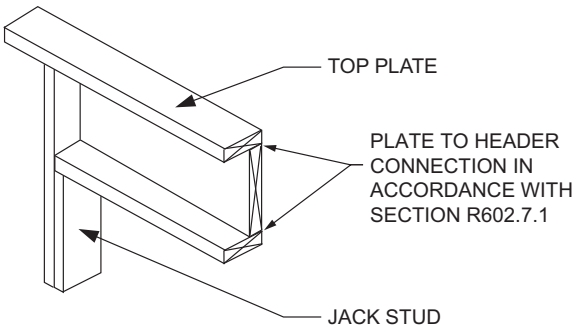

FIGURE R602.7.1(2)
ALTERNATIVE SINGLE MEMBER HEADER WITHOUT CRIPPLE

❖ See the commentary to Section R602.7.1.

INTERNATIONAL CODE COUNCIL®
Copyright © 2015 ICC. ALL RIGHTS RESERVED. Accessed by David Dammon on Jun 21, 2017 12:30:52 PM pursuant to License Agreement with ICC. No further reproduction or distribution authorized. ANY UNAUTHORIZED REPRODUCTION OR DISTRIBUTION IS A VIOLATION OF THE FEDERAL COPYRIGHT ACT AND THE LICENSE AGREEMENT, AND SUBJECT TO CIVIL AND CRIMINAL PENALTIES THEREUNDER.

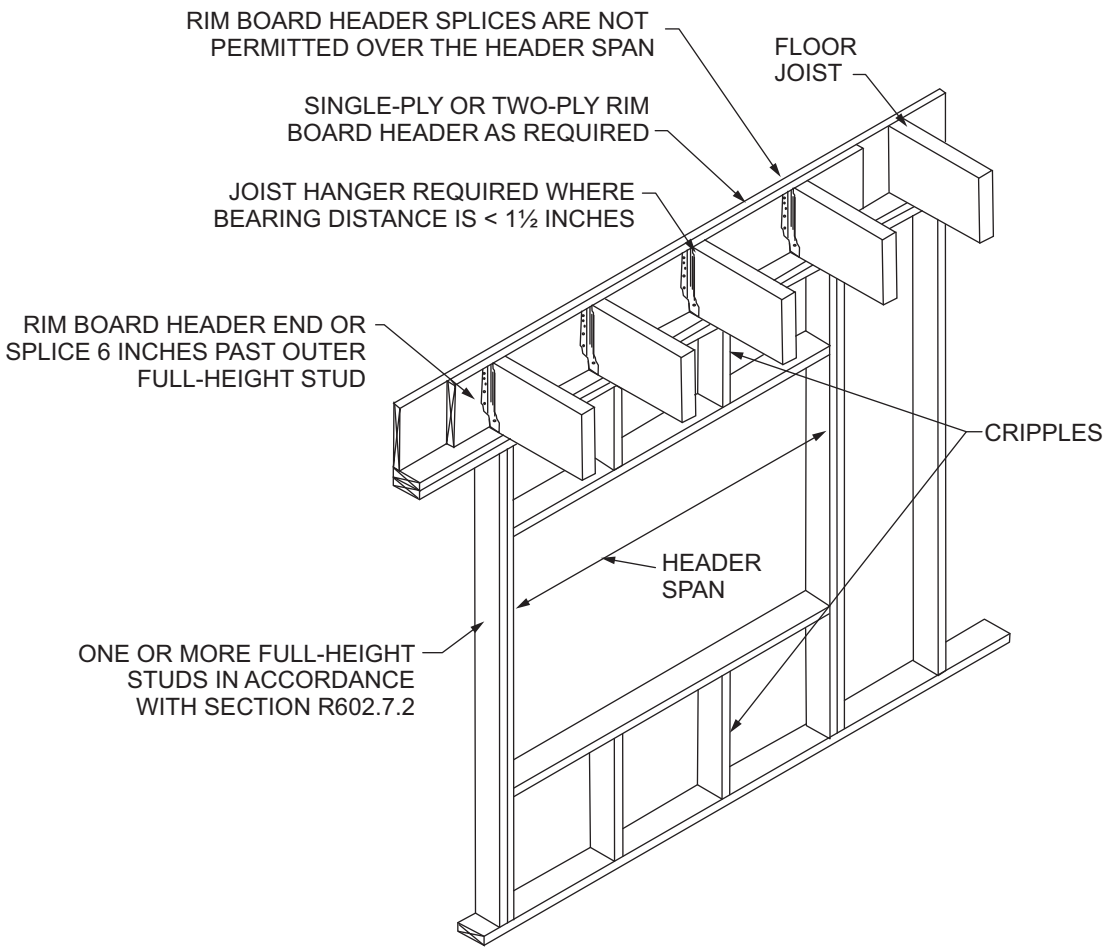

For SI: 25.4 mm = 1 inch.

FIGURE R602.7.2
RIM BOARD HEADER CONSTRUCTION

R602.7.3 Wood structural panel box headers. Wood structural panel box headers shall be constructed in accordance with Figure R602.7.3 and Table R602.7.3.

❖ Wood structural panel box headers are used in some construction and are an efficient way of carrying load over an opening. The box header must be built in accordance with the criteria specified in Figure R602.7.3 and Table R602.7.3. Spans of box headers are established based on the construction of the header, the header depth, and the depth of the house. Note a to the table explains the depth criterion, which is based on a single story with a clear-span trussed roof or a two-story in which part of the load from the floors and roofs is supported by interior bearing walls. House depth is based on the span from the header to an interior bearing wall or the opposing exterior wall.

R602.7.4 Nonbearing walls. Load-bearing headers are not required in interior or exterior nonbearing walls. A single flat 2-inch by 4-inch (51 mm by 102 mm) member shall be permitted to be used as a header in interior or exterior nonbearing walls for openings up to 8 feet (2438 mm) in width if the vertical distance to the parallel nailing surface above is not more than 24 inches (610 mm). For such nonbearing headers, cripples or blocking are not required above the header.

❖ In walls that are not supporting significant loads, the code provides a simple (more economical) option for constructing headers.

R602.7.5 Supports for headers. Headers shall be supported on each end with one or more jack studs or with approved framing anchors in accordance with Table R602.7(1) or R602.7(2). The full-height stud adjacent to each end of the header shall be end nailed to each end of the header with four-16d nails (3.5 inches × 0.135 inches). The minimum number of full-height studs at each end of a header shall be in accordance with Table R602.7.5.

❖ Section R602.7.5 prescribes the required supports for headers. All headers must be supported by one or more jack studs or approved framing anchors. Additionally one or more full-height studs are required at each end of the header. Rim joist headers are only supported by full-height headers in accordance with Section R602.7.2.

INTERNATIONAL CODE COUNCIL®
Copyright © 2015 ICC. ALL RIGHTS RESERVED. Accessed by David Dammon on Jun 21, 2017 12:30:52 PM pursuant to License Agreement with ICC. No further reproduction or distribution authorized. ANY UNAUTHORIZED REPRODUCTION OR DISTRIBUTION IS A VIOLATION OF THE FEDERAL COPYRIGHT ACT AND THE LICENSE AGREEMENT, AND SUBJECT TO CIVIL AND CRIMINAL PENALTIES THEREUNDER.

The intent of the minimum full-height stud requirements is to provide structural integrity in resisting loads by compensating for removal of full-height layout studs over the span of the wall opening. Full-height studs are used to stabilize a header by nailing the first stud into the end of the header preventing header rotation. The number of full-height studs required is based on out-of-plane wind and gravity loads. An out-of-plane wind load is the load a wall resists due to wind pressing directly on it. Gravity loads passing down from the roof or wall above are transferred by both king studs and headers. Gravity loads passing through the header are then transferred by trimmers, or jack studs to the foundation or story below.

The minimum number of full-height studs required at each end of the header is listed in Table R602.7.5. The minimum number of full-height studs is based on header span and maximum stud spacing in order to maintain the number of studs displaced by the opening over which the header spans. The previous requirement for only one full height at each end of longer headers is appropriate for shorter header spans but inadequate for longer header spans.

TABLE R602.7.3
MAXIMUM SPANS FOR WOOD STRUCTURAL PANEL BOX HEADERS[a]

HEADER CONSTRUCTION[b]	HEADER DEPTH (inches)	HOUSE DEPTH (feet)				
		24	26	28	30	32
Wood structural panel–one side	9 15	4 5	4 5	3 4	3 3	— 3
Wood structural panel–both sides	9 15	7 8	5 8	5 7	4 7	3 6

For SI: 1 inch = 25.4 mm, 1 foot = 304.8 mm.

a. Spans are based on single story with clear-span trussed roof or two story with floor and roof supported by interior-bearing walls.

b. See Figure R602.7.3 for construction details.

❖ See the commentary to Section R602.7.3.

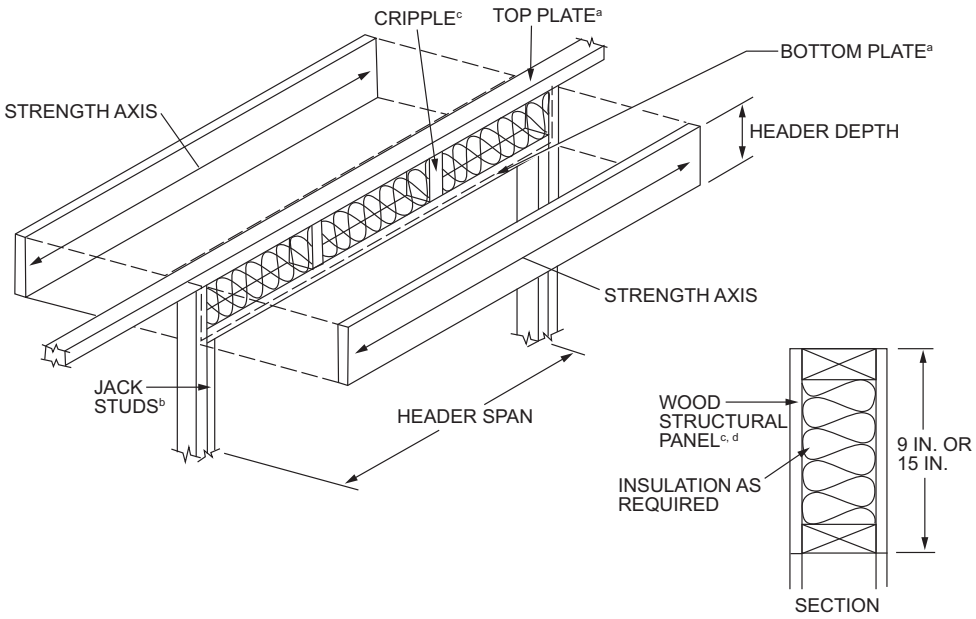

For SI: 1 inch = 25.4 mm, 1 foot = 304.8 mm.

NOTES:

a. The top and bottom plates shall be continuous at header location.

b. Jack studs shall be used for spans over 4 feet.

c. Cripple spacing shall be the same as for studs.

d. Wood structural panel faces shall be single pieces of $^{15}/_{32}$-inch-thick Exposure 1 (exterior glue) or thicker, installed on the interior or exterior or both sides of the header.

e. Wood structural panel faces shall be nailed to framing and cripples with 8d common or galvanized box nails spaced 3 inches on center, staggering alternate nails $^{1}/_{2}$ inch. Galvanized nails shall be hot-dipped or tumbled.

FIGURE R602.7.3
TYPICAL WOOD STRUCTURAL PANEL BOX HEADER CONSTRUCTION

❖ See the commentary to Section R602.7.3.

INTERNATIONAL CODE COUNCIL®
Copyright © 2015 ICC. ALL RIGHTS RESERVED. Accessed by David Dammon on Jun 21, 2017 12:30:52 PM pursuant to License Agreement with ICC. No further reproduction or distribution authorized. ANY UNAUTHORIZED REPRODUCTION OR DISTRIBUTION IS A VIOLATION OF THE FEDERAL COPYRIGHT ACT AND THE LICENSE AGREEMENT, AND SUBJECT TO CIVIL AND CRIMINAL PENALTIES THEREUNDER.

The maximum stud spacing in accordance with Table R602.3(5) is specifically listed in the column heading to make clear that the maximum stud spacing, not actual stud spacing, is the determining factor for the number of required full-height studs at each end of the header. In construction, actual stud spacing is often 16 inches on center; however, the maximum stud spacing often permitted in the code is 24 inches on center. If the actual stud spacing is used and is less than the maximum stud spacing in accordance with Table R602.3(5), the required number of full-height studs at each end of the header would be overestimated.

TABLE R602.7.5
MINIMUM NUMBER OF FULL HEIGHT STUDS AT EACH END OF HEADERS IN EXTERIOR WALLS

HEADER SPAN (feet)	MAXIMUM STUD SPACING (inches) [per Table R602.3(5)]	
	16	24
≤ 3′	1	1
4′	2	1
8′	3	2
12′	5	3
16′	6	4

R602.8 Fireblocking required. Fireblocking shall be provided in accordance with Section R302.11.

❖ See the commentary to Section R302.11.

R602.9 Cripple walls. Foundation cripple walls shall be framed of studs not smaller than the studding above. When exceeding 4 feet (1219 mm) in height, such walls shall be framed of studs having the size required for an additional *story*.

Cripple walls with a stud height less than 14 inches (356 mm) shall be continuously sheathed on one side with wood structural panels fastened to both the top and bottom plates in accordance with Table R602.3(1), or the cripple walls shall be constructed of solid blocking.

Cripple walls shall be supported on continuous foundations.

❖ A cripple wall is a framed stud extending from the top of foundation to the underside of the floor framing above the foundation. Should these foundation studs exceed 4 feet (1219 mm) in height, the partial-height wall must, for purposes of stud sizing, be sized as if the partial-height wall were an additional story. Such a condition may occur in buildings of a split-level type with floor levels partially below grade or in buildings with under-floor crawl spaces larger than the minimum specified. See Figure R602.3(2). The rationale for the wall being considered an additional story is based on the load capacity of studs of a particular size changing as the unsupported length is increased.

The minimum length of 14 inches (356 mm) for cripple wall studs provides sufficient clear space for required nailing of the framing. If the wood-framed foundation wall does not permit the installation of foundation studs of such a length, wood structural panel sheathing must be applied, or a solid-blocking method of construction may be used.

R602.10 Wall bracing. Buildings shall be braced in accordance with this section or, when applicable, Section R602.12. Where a building, or portion thereof, does not comply with one or more of the bracing requirements in this section, those portions shall be designed and constructed in accordance with Section R301.1.

❖ All buildings must be braced to resist lateral loads due to wind and seismic forces. Wall construction must include bracing to resist imposed lateral loads resulting from wind or seismic loading and to provide stability to the structure. When subjected to wind loads, the upper portion of the structure moves horizontally while the lower portion is restrained at ground level. During an earthquake, the ground motion displaces the foundation while the top portion of the structure tries to remain stationary. In both of these cases the bracing resists the differential movement and thus prevents or limits damage to the building.

This section provides the prescriptive requirements for conventional construction of wall bracing to resist the lateral wind and seismic loads within the scope of the code. For buildings, or portions of buildings, that do not meet the bracing requirements of this section, an engineered design in accordance with the *International Building Code*® (IBC®) or other referenced standard is required in accordance with Section R301.1.

Wall bracing for lateral loads due to wind speed is required for all buildings. Wall bracing for lateral loads due to seismic loading is required for townhouses in Seismic Design Category (SDC) C and all buildings in SDC D_0, D_1 and D_2 as defined in Section R301.2.2. Buildings in Seismic Design Categories A, B or, for detached one- and two-family dwellings, SDC C, are only required to meet wind provisions. Dwellings and townhouses in these seismic design categories are exempt from all seismic provisions.

For walls to meet wall bracing requirements, a continuous lateral load path must be prescribed for the building. It is very important to understand the concept of a lateral load path because it helps make sense of the prescriptive requirements in the code. In short, the lateral load path is simply the path that the lateral or horizontal load takes as it passes through the structure, including components and connections, on its way to the ground.

The lateral load path for wind loads is simpler to visualize than the load path for seismic loads. Commentary Figure R602.10 provides a basic example of the lateral load path resulting from wind loading. The load is shown acting on a windward receiving wall, and its subsequent load path through the building. For simplicity, the suction pressure on the leeward receiving wall is not included in this illustration.

As shown in Commentary Figure R602.10, there are six critical parts in the load path for a simple rectangular structure. The critical parts of the lateral load path addressed in this section are Items 4, 5 and 6 of Commentary Figure R602.10.

INTERNATIONAL CODE COUNCIL®
Copyright © 2015 ICC. ALL RIGHTS RESERVED. Accessed by David Dammon on Jun 21, 2017 12:30:52 PM pursuant to License Agreement with ICC. No further reproduction or distribution authorized. ANY UNAUTHORIZED REPRODUCTION OR DISTRIBUTION IS A VIOLATION OF THE FEDERAL COPYRIGHT ACT AND THE LICENSE AGREEMENT, AND SUBJECT TO CIVIL AND CRIMINAL PENALTIES THEREUNDER.

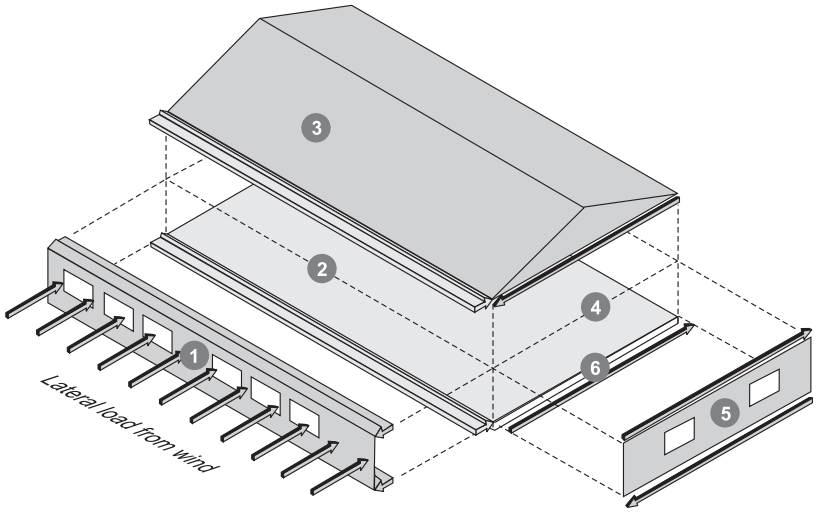

1. Windward receiving wall carries load to foundation at bottom of wall and roof diaphragm at top of wall
2. Connections at bottom and top of wall transfer these loads into the foundation and diaphragm
3. Roof or floor diaphragm carries load to bracing walls
4. Connections between roof/floor and wall transfers load from diaphragm to bracing walls
5. Bracing wall carries load from diaphragm to foundation
6. Transfer of loads from the shear walls to the foundation

Figure R602.10
CRITICAL PARTS OF THE LATERAL LOAD PATH

From a lateral load perspective, the walls support the roof and floor diaphragms through the use of bracing panels. The type, amount and number of bracing panels are, of course, dependent on the magnitude of the lateral load. Stronger resistance (greater numbers of bracing panels) and reduced braced wall line spacing (interior braced wall lines) may be required in areas of high wind and/or seismic activity.

Failure of a braced wall line is evidenced by racking of the wall line. Racking occurs when a rectangular wall deforms to a parallelogram shape, in which the top and the bottom of the wall remain horizontal but the sides are no longer vertical. The purpose of wall bracing is to prevent such failures.

The wall bracing section is organized to address one bracing topic per subsection. Intermittent and continuous sheathing methods are combined into a single section. Section R602.12 offers a simplified prescriptive approach for wall bracing in low-wind, low-seismic regions.

A portion of the commentary on the wall bracing provisions is based on information found in "*A Guide to the IRC Wood Wall Bracing Provisions*." This guide, with versions written for the 2006, 2009, 2012 and 2015 IRC, is a joint publication by ICC and APA and provides a more extensive explanation and application of the wall bracing provisions.

R602.10.1 Braced wall lines. For the purpose of determining the amount and location of bracing required in each story level of a building, *braced wall lines* shall be designated as straight lines in the building plan placed in accordance with this section.

❖ The definition of a "Braced wall line" from Section R202 is:

BRACED WALL LINE. A straight line through the building plan that represents the location of the lateral resistance provided by the wall bracing.

Information about braced wall lines—length, spacing, and orientation—is in Section R602.10.1. Commentary Figure R602.10.1(1) shows two braced wall lines (1 and 2) in the longitudinal direction and three braced wall lines (A, B and C) in the transverse direction. Each wall line is made up of a number of braced wall panels. Not every braced wall line has to be continuous, as shown in braced wall line B. Furthermore, the code permits offsets of up to 4 feet (1219 mm) from the braced wall line (see Section R602.10.1.2). If sections of a braced wall line are offset by 4 feet (1219 mm) or less, they are assumed to act in combination to resist lateral load. If the sections are farther than 4 feet (1219 mm) from the braced wall line, they must be considered as separate braced wall lines. Offsets in

INTERNATIONAL CODE COUNCIL®
Copyright © 2015 ICC. ALL RIGHTS RESERVED. Accessed by David Dammon on Jun 21, 2017 12:30:52 PM pursuant to License Agreement with ICC. No further reproduction or distribution authorized. ANY UNAUTHORIZED REPRODUCTION OR DISTRIBUTION IS A VIOLATION OF THE FEDERAL COPYRIGHT ACT AND THE LICENSE AGREEMENT, AND SUBJECT TO CIVIL AND CRIMINAL PENALTIES THEREUNDER.

braced wall lines are further discussed in Section R602.10.1.2.

Braced wall lines may include interior walls, as braced wall line B in Commentary Figure R602.10.1(1) illustrates. An interior braced wall line may be required—depending on the size of the house, the wind speed, or seismic design category—to supplement the exterior braced wall lines. Interior braced wall lines have requirements similar to exterior wall lines in terms of bracing length, panel location, wall line offsets and attachments.

The effective (imaginary) braced wall line, a concept introduced in Commentary Figure R602.10.1(2), is based on the principle that a braced wall line does not have to coincide with a physical wall line. The designated wall line location may be within a grouping of wall line sections and assumed to provide a line of lateral resistance somewhere near the center of the wall sections. This concept is illustrated in Commentary Figure R602.10.1(2).

R602.10.1.1 Length of a braced wall line. The length of a *braced wall line* shall be the distance between its ends. The end of a *braced wall line* shall be the intersection with a perpendicular *braced wall line*, an angled *braced wall line* as permitted in Section R602.10.1.4 or an exterior wall as shown in Figure R602.10.1.1.

❖ In Section R602.10.1.1, the definition of a braced wall line (BWL) is the distance between the most distant ends of the wall lines included in the braced wall line. If a wall line segment is angled and 8 feet (2438 mm) or less in length, the projected length of the angled wall segment may also count as part of the length of the braced wall line. There is no longer a requirement to draw projections of braced wall lines beyond the end of an intersecting wall line. The end of the building determines a braced wall line's end point.

The braced wall line length is the distance between the most distant ends of the wall lines included in the braced wall line. The braced wall line does not need to be extended to intersect other braced wall lines in the

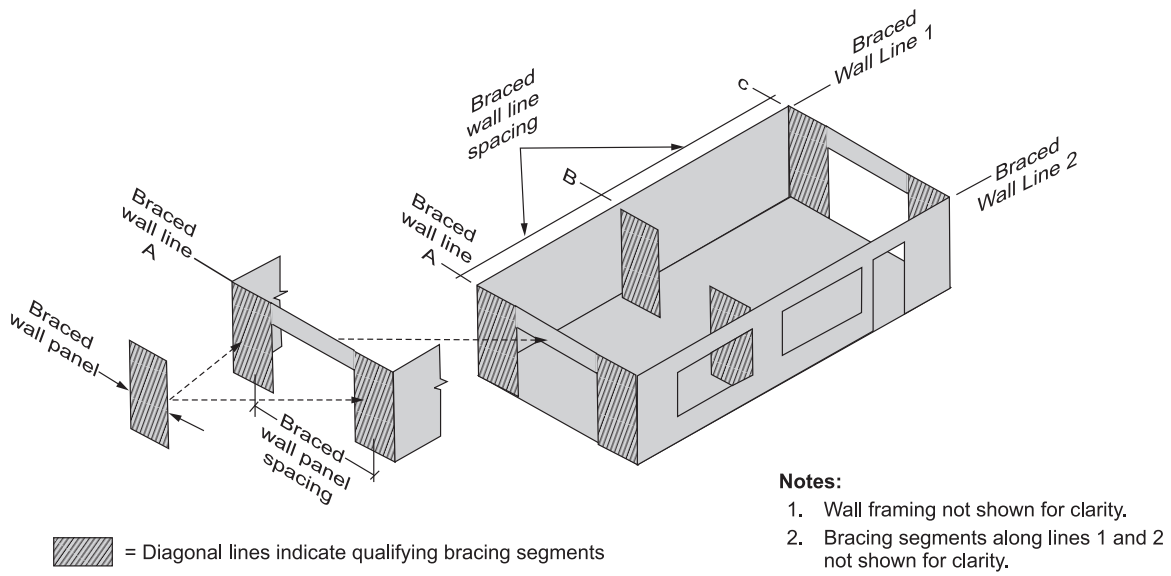

Figure R602.10.1(1)
WALL BRACING TERMINOLOGY

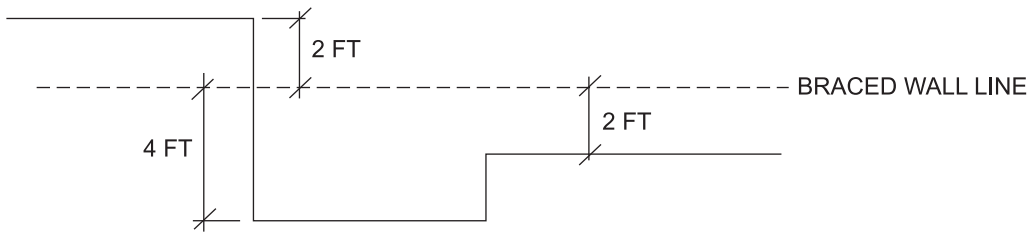

Figure R602.10.1(2)
EFFECTIVE (IMAGINARY) BRACED WALL LINES

INTERNATIONAL CODE COUNCIL®
Copyright © 2015 ICC. ALL RIGHTS RESERVED. Accessed by David Dammon on Jun 21, 2017 12:30:52 PM pursuant to License Agreement with ICC. No further reproduction or distribution authorized. ANY UNAUTHORIZED REPRODUCTION OR DISTRIBUTION IS A VIOLATION OF THE FEDERAL COPYRIGHT ACT AND THE LICENSE AGREEMENT, AND SUBJECT TO CIVIL AND CRIMINAL PENALTIES THEREUNDER.

plans. Note BWL A in Commentary Figure R602.10.1.1. BWL A is not required to continue beyond the end of the physical wall line. Instead, the braced wall line and the physical wall line end at the perpendicular exterior wall on the left side of the building. Changes to this provision have allowed a decrease of nearly 50 percent for the BWL A length in Commentary Figure R602.10.1.1.

R602.10.1.2 Offsets along a braced wall line. Exterior walls parallel to a *braced wall line* shall be offset not more than 4 feet (1219 mm) from the designated *braced wall line* location as shown in Figure R602.10.1.1. Interior walls used as bracing shall be offset not more than 4 feet (1219 mm) from a *braced wall line* through the interior of the building as shown in Figure R602.10.1.1.

❖ Many home designs feature offsets along the braced wall line length. Figure R602.10.1.1 shows offsets, braced wall line spacing and placement. A designated braced wall line is not required to be placed on a wall line in the plans. It may be placed between two or more wall lines. For wall line offsets, the limit is a maximum of 4 feet (1219 mm) from the braced wall line to a physical wall line requiring a braced panel. The maximum distance of a wall line segment to either side of the braced wall line is 4 feet (1219 mm).

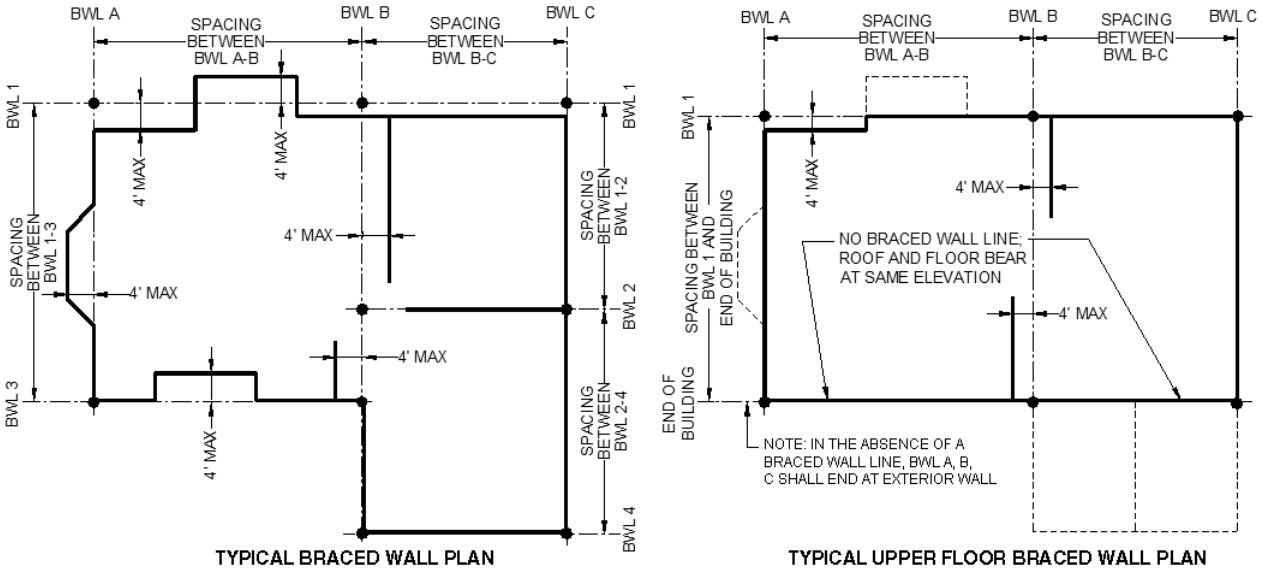

For SI: 1 foot = 304.8 mm.

FIGURE R602.10.1.1
BRACED WALL LINES

❖ See the commentary to Sections R602.10.1.1 and R602.10.1.2.

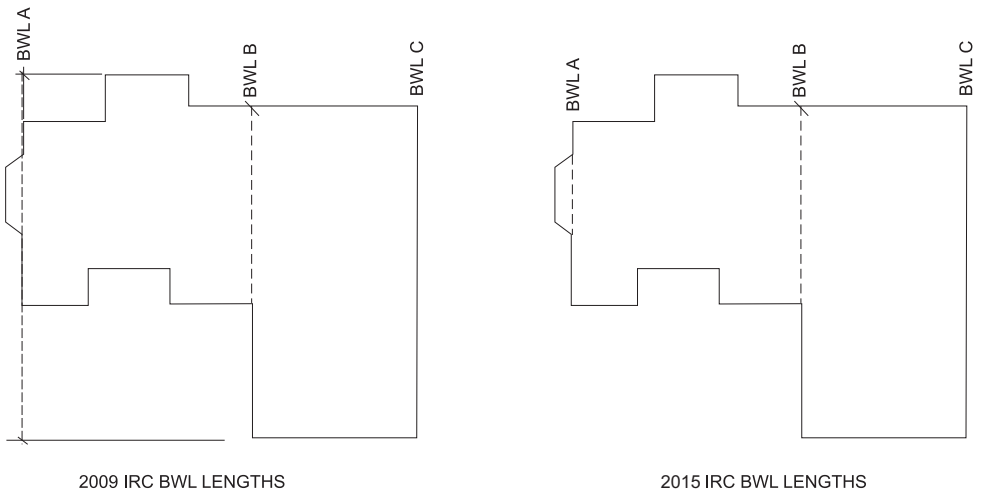

Figure R602.10.1.1
COMPARISON OF 2009 AND 2015 IRC PROVISIONS FOR BRACED WALL LINE LENGTH

INTERNATIONAL CODE COUNCIL®
Copyright © 2015 ICC. ALL RIGHTS RESERVED. Accessed by David Dammon on Jun 21, 2017 12:30:52 PM pursuant to License Agreement with ICC. No further reproduction or distribution authorized. ANY UNAUTHORIZED REPRODUCTION OR DISTRIBUTION IS A VIOLATION OF THE FEDERAL COPYRIGHT ACT AND THE LICENSE AGREEMENT, AND SUBJECT TO CIVIL AND CRIMINAL PENALTIES THEREUNDER.

R602.10.1.3 Spacing of braced wall lines. The spacing between parallel *braced wall lines* shall be in accordance with Table R602.10.1.3. Intermediate *braced wall lines* through the interior of the building shall be permitted.

❖ All BWL spacing information is located in Table R602.10.1.3. The limitation of 60 feet (18 287 mm) for wind requirements and 25 feet (7620 mm) for seismic requirements for BWL spacing is unchanged.

For townhouses in SDC C, braced wall lines must not be spaced more than 35 feet (10 668 mm) apart. However, an exception permits spacing up to 50 (15 239 mm) feet with certain limitations.

- The exception permits an increase up to 50 feet (15 239 mm) provided the length of the required wall bracing has been increased in accordance with Table R602.10.3(4) for braced wall lines spaced greater than 35 feet (10 668 mm).

For structures in SDC D_0, D_1 or D_2, braced wall lines must not be spaced more than 25 feet (7620 mm) apart. However, two exceptions permit a spacing of 35 feet (10 668 mm) with certain limitations.

- The first permits an increase to 35 feet (10 668 mm) for a single room up to 900 feet square (84 m^2) where the spacing between all other braced wall lines does not exceed 25 feet (7620 mm).
- The second permits an increase to 35 feet (10 668 mm) provided the length of the required wall bracing has been increased in accordance with Table R602.10.3(4) for the braced wall lines spaced greater than 25 feet (7620 mm), the aspect ratio of the floor above or roof diaphragm does not exceed 3:1, and the top plate, of the braced wall line is spliced as specified.

Table R602.10.3(4) provides bracing adjustments for braced wall line spacing up to 50 feet (15 239 mm) for SDC C townhouses and for BWL spacing of 30 and 35 feet (9144 and 10 668 mm) for structures in SDC D_0, D_1 or D_2.

R602.10.1.4 Angled walls. Any portion of a wall along a *braced wall line* shall be permitted to angle out of plane for a maximum diagonal length of 8 feet (2438 mm). Where the angled wall occurs at a corner, the length of the *braced wall line* shall be measured from the projected corner as shown in Figure R602.10.1.4. Where the diagonal length is greater than 8 feet (2438 mm), it shall be considered a separate *braced wall line* and shall be braced in accordance with Section R602.10.1.

❖ This provision allows the sheathing in a diagonal wall to be "counted" towards the total bracing length for a single braced wall line. Note that the angled portion of the wall line must be less than or equal to 8 feet (2438 mm) in length. If it is greater than 8 feet (2438 mm) in length, it must be considered its own braced wall line.

Note that the provision does not permit "double dipping": the bracing on an angled wall may be applied towards the total bracing length required for only one braced wall line connected to the angled wall line.

Angled wall lines may be counted as part of a braced wall line when 8 feet (2438 mm) long or less. The projected length of the braced wall line should be added to the total wall line length. Commentary Figure R602.10.1.4(1) gives the projected braced wall line length to add to the braced wall line length for 4, 6, and 8-foot (1219, 1829, and 2438 mm) long angled wall lines. If an angled wall line is longer than 8 feet (2438 mm), it should be considered a separate braced wall line. See Commentary Figure R602.10.1.4(2) for the projected angled wall length.

TABLE R602.10.1.3
BRACED WALL LINE SPACING

APPLICATION	CONDITION	BUILDING TYPE	BRACED WALL LINE SPACING CRITERIA	
			Maximum Spacing	Exception to Maximum Spacing
Wind bracing	Ultimate design wind speed 100 mph to < 140 mph	Detached, townhouse	60 feet	None
Seismic bracing	SDC A – C	Detached	Use wind bracing	
	SDC A – B	Townhouse	Use wind bracing	
	SDC C	Townhouse	35 feet	Up to 50 feet when length of required bracing per Table R602.10.3(3) is adjusted in accordance with Table R602.10.3(4).
	SDC D_0, D_1, D_2	Detached, townhouses, one- and two-story only	25 feet	Up to 35 feet to allow for a single room not to exceed 900 square feet. Spacing of all other braced wall lines shall not exceed 25 feet.
	SDC D_0, D_1, D_2	Detached, townhouse	25 feet	Up to 35 feet when length of required bracing per Table R602.10.3(3) is adjusted in accordance with Table R602.10.3(4).

For SI: 1 foot = 304.8 mm, 1 square foot = 0.0929 m^2, 1 mile per hour = 0.447 m/s.

❖ See the commentary to Section R602.10.1.3.

INTERNATIONAL CODE COUNCIL®
Copyright © 2015 ICC. ALL RIGHTS RESERVED. Accessed by David Dammon on Jun 21, 2017 12:30:52 PM pursuant to License Agreement with ICC. No further reproduction or distribution authorized. ANY UNAUTHORIZED REPRODUCTION OR DISTRIBUTION IS A VIOLATION OF THE FEDERAL COPYRIGHT ACT AND THE LICENSE AGREEMENT, AND SUBJECT TO CIVIL AND CRIMINAL PENALTIES THEREUNDER.

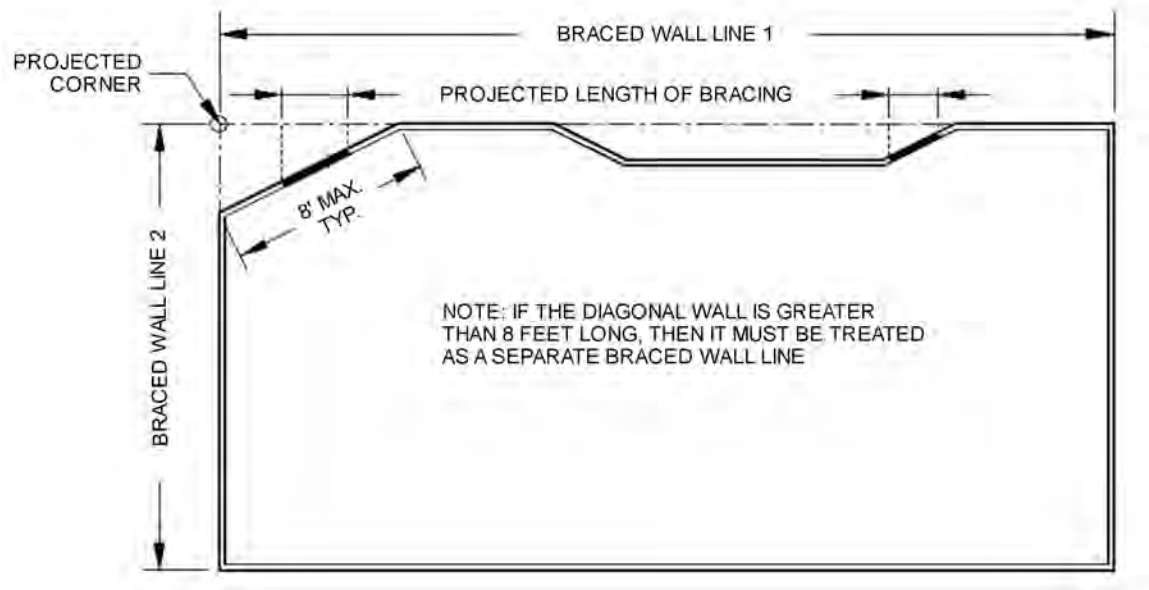

For SI: 1 foot = 304.8 mm.

FIGURE R602.10.1.4
ANGLED WALLS

❖ See the commentary to Section R602.10.1.4.

ANGLE FROM BWL (DEGREES)	PROJECTED BWL LENGTH FROM ANGLED WALL LINE (feet)		
	4	6	8
15	3.9	5.8	7.8
30	3.5	5.2	7.0
45	2.9	4.3	5.7

Figure R602.10.1.4(1)
PROJECTED BRACED WALL LINE LENGTH CONTRIBUTED BY THE ANGLED WALL

What if the angled wall contains the entryway of the house and there is not sufficient space for bracing panels? The length of the angled entryway still counts towards the length of the wall line, and the 10 foot (3048 mm) rule (see Section R602.10.2.2) also applies. When the length of the angled wall shown in Commentary Figure R602.10.1.4(2) is less than 10 feet (3048 mm) bracing panels are not required in the angled wall section, provided that the other requirements of Section R602.10.2.2 are met.

What happens if the angled wall segment is greater than 10 feet (3048 mm)? Whenever the length of the angled wall is greater than 8 feet (2438 mm), the angled wall provision of Section R602.10.1.4 no longer applies and the angled wall is considered its own wall line which must be braced accordingly, as shown in Commentary Figure R602.10.1.4(3). This can be a difficult proposition when using the 2015 code because of the need for "braced wall line spacing" in accordance with both the wind and seismic bracing tables. If no parallel angled line is available to measure between, then determining the correct distance to use for the braced wall line spacing becomes a matter of interpretation. A reasonable solution is to run a perpendicular line from the center of the angled wall until it intersects a braced wall line and use that distance as the braced wall line spacing.

If there are no bracing elements in the angled wall segment and the first braced wall panel is a distance greater than 10 feet (3048 mm) from the end of the wall line, an engineered solution will be required for the entire wall line.

R602.10.2 Braced wall panels. *Braced wall panel*s shall be full-height sections of wall that shall not have vertical or horizontal offsets. *Braced wall panel*s shall be constructed and placed along a *braced wall line* in accordance with this section and the bracing methods specified in Section R602.10.4.

❖ The definition of a braced wall panel (BWP), information on BWP location, and the minimum required number of BWPs in a wall line are now in one section. The BWP definition has been clarified to limit panels to areas of a wall line with no vertical or horizontal irregularities.

The definition of a braced wall panel, from Section R202, is:

BRACED WALL PANEL. A full-height section of wall constructed to resist in-plane shear loads through interaction of framing members, sheathing material and anchors. The panel's length meets the require-

INTERNATIONAL CODE COUNCIL®
Copyright © 2015 ICC. ALL RIGHTS RESERVED. Accessed by David Dammon on Jun 21, 2017 12:30:52 PM pursuant to License Agreement with ICC. No further reproduction or distribution authorized. ANY UNAUTHORIZED REPRODUCTION OR DISTRIBUTION IS A VIOLATION OF THE FEDERAL COPYRIGHT ACT AND THE LICENSE AGREEMENT, AND SUBJECT TO CIVIL AND CRIMINAL PENALTIES THEREUNDER.

ments of its particular bracing method and contributes toward the total amount of bracing required along its braced wall line in accordance with Section R602.10.2.

Put in simpler terms, braced wall panel describes a code-qualified bracing element. The name is probably derived from the fact that most of the recognized methods of bracing use panel-type products. Even let-in bracing is often referred to as a bracing panel. "Panel" is somewhat of a misnomer since it actually describes a wall "section," "segment" or "unit." As such, the terms braced wall section, braced wall segment and bracing unit are often used interchangeably.

Each braced wall panel must extend the full height of the wall—from the bottom plate to the top of the double top plates. A "panel" may be constructed from more than one piece of sheathing. For example, a 6-foot-long (1829 mm) braced wall panel may be constructed by joining a 4-foot-long (1219 mm) panel with a 2-foot-long (610 mm) panel.

Braced wall panels have a height and a length dimension. The permitted height of a braced wall panel ranges from 8 to 12 feet (2438 to 3658 mm). In some cases, the panel height is limited to 10 feet (3048 mm). The length dimension is measured parallel to the length of the wall. For example, the length of a 4 by 8 oriented strand board (OSB) bracing panel placed with the 8-foot (2438 mm) dimension in the up-and-down direction is 4 feet (1219 mm). Knowing the length of a braced wall panel is important because the

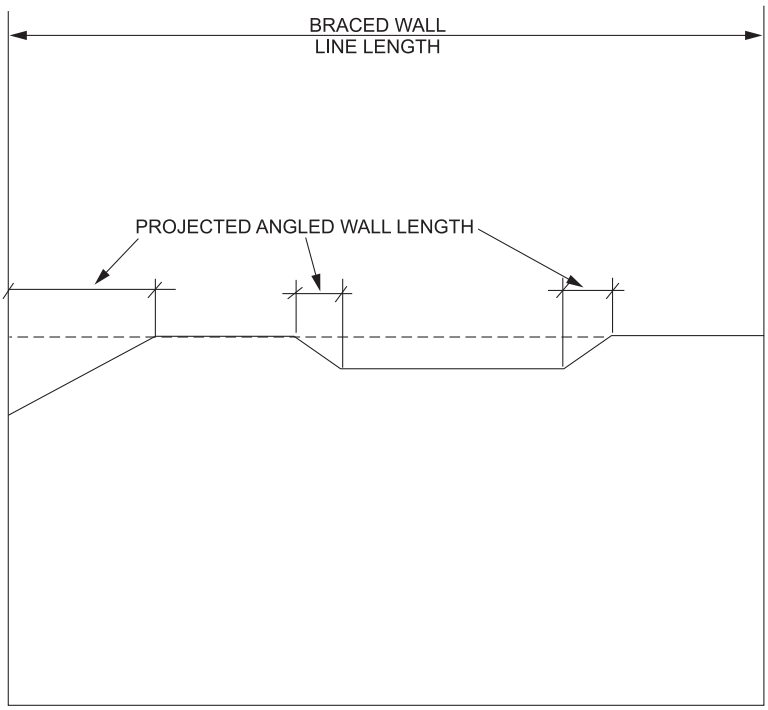

Figure R602.10.1.4(2)
PROJECTED ANGLE WALL LENGTH

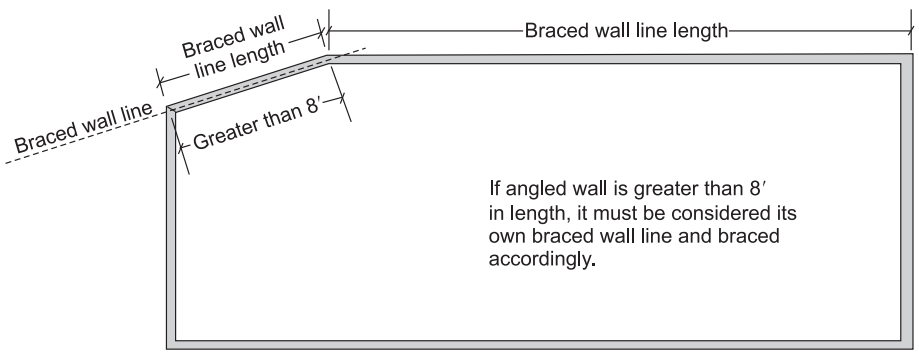

Figure R602.10.1.4(3)
ANGLED WALL GREATER THAN 8 FEET IN LENGTH

INTERNATIONAL CODE COUNCIL®
Copyright © 2015 ICC. ALL RIGHTS RESERVED. Accessed by David Dammon on Jun 21, 2017 12:30:52 PM pursuant to License Agreement with ICC. No further reproduction or distribution authorized. ANY UNAUTHORIZED REPRODUCTION OR DISTRIBUTION IS A VIOLATION OF THE FEDERAL COPYRIGHT ACT AND THE LICENSE AGREEMENT, AND SUBJECT TO CIVIL AND CRIMINAL PENALTIES THEREUNDER.

various bracing methods have different required minimum lengths. Also, the combined length of individual braced wall panels must total or exceed a required minimum length for the braced wall line.

R602.10.2.1 Braced wall panel uplift load path. The bracing lengths in Table R602.10.3(1) apply only when uplift loads are resisted in accordance with Section R602.3.5.

❖ The wall bracing section assumes that all wall lines with braced panels have been nailed to prescriptive requirements for the uplift load path. When uplift connection is not as specified in Section R602.3.5, the required wall bracing in Tables R602.10.3(1) and R602.10.3(3) does not apply and the wall lines will need engineering to determine bracing requirements. Refer to Section R602.3.5 for more information on the requirements of uplift load paths for braced wall panels.

R602.10.2.2 Locations of braced wall panels. A *braced wall panel* shall begin within 10 feet (3810 mm) from each end of a *braced wall line* as determined in Section R602.10.1.1. The distance between adjacent edges of *braced wall panel*s along a *braced wall line* shall be not greater than 20 feet (6096 mm) as shown in Figure R602.10.2.2.

❖ Braced wall panels are to begin within 10 feet (3048 mm) of the end of the braced wall line in SDC A, B and C and all wind speeds for buildings that are allowed to be designed in accordance with the IRC. The panels may be inset up to 10 feet (3048 mm) from both ends of a wall line for all intermittent and continuous sheathing bracing methods, as shown in Figure R602.10.2.2.

If bracing is located more than 10 feet (3048 mm) from either end of a braced wall line, the wall line requires an engineered design for lateral loads.

The maximum distance between two braced wall panels is measured from edge to edge. Previous codes measured braced wall panel distances on center. The 25-foot (7620 mm) braced wall panel spacing requirement was straightforward when 4-foot (1219 mm) braced wall panels were used; however, the intent of the requirement needed to be considered when dealing with longer lengths of bracing or continuously sheathed bracing methods. The intent is that unbraced wall lengths longer than 21 feet (6401 mm) (measured between adjacent bracing panel edges) are not permitted. Given this interpretation, for example, the center of a 4-foot (1219 mm) section within an 8-foot (2438 mm) braced wall panel can be used as the measuring point for determining the 25-foot (7620 mm) maximum distance. In such a case, measuring 21 feet (6401 mm) between bracing panels may be the easier method of determining the maximum braced wall panel spacing.

Without this interpretation, the permissible distance between bracing segments would decrease as the length of the segments increased. This was not the

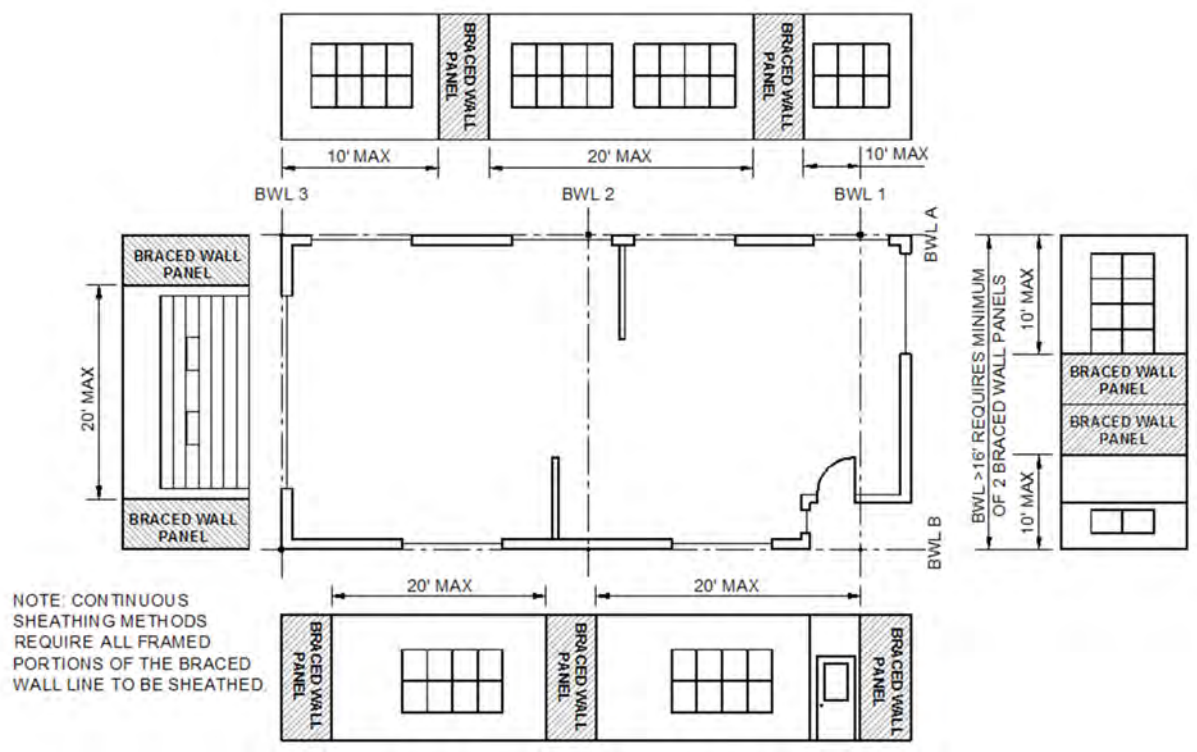

For SI: 1 foot = 304.8 mm.

FIGURE R602.10.2.2
LOCATION OF BRACED WALL PANELS

❖ See the commentary to Section R602.10.2.2.

INTERNATIONAL CODE COUNCIL®
Copyright © 2015 ICC. ALL RIGHTS RESERVED. Accessed by David Dammon on Jun 21, 2017 12:30:52 PM pursuant to License Agreement with ICC. No further reproduction or distribution authorized. ANY UNAUTHORIZED REPRODUCTION OR DISTRIBUTION IS A VIOLATION OF THE FEDERAL COPYRIGHT ACT AND THE LICENSE AGREEMENT, AND SUBJECT TO CIVIL AND CRIMINAL PENALTIES THEREUNDER.

intent of the code. As long as the distance between braced wall panels did not yield unbraced wall lengths of greater than 21 feet (6401 mm), the code's braced wall panel spacing requirements were satisfied.

Changing to a measurement of distance from panel edge to panel edge is intended to simplify calculations. The previous provision of braced wall panel spacing of 25 feet (7620 mm) on center is now a distance of 20 feet (6096 mm) edge to edge. This reduces maximum panel spacing by 1 foot (305 mm), but allows all measurements to be edge to edge distances.

R602.10.2.2.1 Location of braced wall panels in Seismic Design Categories D_0, D_1 and D_2. Braced wall panels shall be located at each end of a braced wall line.

Exception: Braced wall panels constructed of Method WSP or BV-WSP and continuous sheathing methods as specified in Section R602.10.4 shall be permitted to begin not more than 10 feet (3048 mm) from each end of a braced wall line provided each end complies with one of the following:

1. A minimum 24-inch-wide (610 mm) panel for Methods WSP, CS-WSP, CS-G and CS-PF is applied to each side of the building corner as shown in End Condition 4 of Figure R602.10.7.
2. The end of each braced wall panel closest to the end of the braced wall line shall have an 1,800 lb (8 kN) hold-down device fastened to the stud at the edge of the braced wall panel closest to the corner and to the foundation or framing below as shown in End Condition 5 of Figure R602.10.7.

❖ To further simplify the provisions, in SDC D_0, D_1 and D_2, braced wall panels must be placed at the ends of the braced wall line. Using Method WSP, if a hold-down or end panel is used, an exception allows braced panels to begin up to 10 feet (3048 mm) from the end of the braced wall line. In previous codes, the allowable offset was 8 feet (2438 mm). To simplify the provisions, all braced wall panel inset distances are a maximum of 10 feet (3048 mm) from the end of the wall line. In all seismic design categories, the distance from wall end to braced wall panel is measured from wall end to panel edge.

Note that a 10-foot (3048 mm) maximum panel distance is permitted at each end if either a hold-down is placed at the panel edge or a 24-inch (610 mm) end panel is provided. If two braced wall lines meet at a corner and along one wall line the first panel is displaced from the corner, then both braced wall lines lose the structural effect of the return corner. In this case, both wall lines must be anchored with a 1,800 pound (8 kN) hold-down device.

For wind and seismic requirements, offset of braced wall panels may now be up to 10 feet (3048 mm) from each end of the braced wall line if all provisions are met.

R602.10.2.3 Minimum number of braced wall panels. *Braced wall lines* with a length of 16 feet (4877 mm) or less shall have not less than two *braced wall panel*s of any length or one *braced wall panel* equal to 48 inches (1219 mm) or more. *Braced wall lines* greater than 16 feet (4877 mm) shall have not less than two *braced wall panel*s.

❖ Minimum bracing length for short wall lines is now provided in the code. A braced wall line of 16 feet (4877 mm) or less in length may have one braced wall panel when it is at least 48 inches (1219 mm) long. A braced wall line of 16 feet (4877 mm) or less may alternatively have two qualifying braced wall panels from the tables in Section R602.10 that are less than 48 inches (1219 mm) in length. Braced wall panel spacing and maximum edge distances are illustrated in Figure R602.10.2.2. All distances are measured from a braced wall panel's edge.

R602.10.3 Required length of bracing. The required length of bracing along each *braced wall line* shall be determined as follows:

1. All buildings in Seismic Design Categories A and B shall use Table R602.10.3(1) and the applicable adjustment factors in Table R602.10.3(2).
2. Detached buildings in Seismic Design Category C shall use Table R602.10.3(1) and the applicable adjustment factors in Table R602.10.3(2).
3. Townhouses in Seismic Design Category C shall use the greater value determined from Table R602.10.3(1) or R602.10.3(3) and the applicable adjustment factors in Table R602.10.3(2) or R602.10.3(4), respectively.
4. All buildings in Seismic Design Categories D_0, D_1 and D_2 shall use the greater value determined from Table R602.10.3(1) or R602.10.3(3) and the applicable adjustment factors in Table R602.10.3(2) or R602.10.3(4), respectively.

Only *braced wall panel*s parallel to the *braced wall line* shall contribute toward the required length of bracing of that *braced wall line*. *Braced wall panel*s along an angled wall meeting the minimum length requirements of Tables R602.10.5 and R602.10.5.2 shall be permitted to contribute its projected length toward the minimum required length of bracing for the *braced wall line* as shown in Figure R602.10.1.4. Any *braced wall panel* on an angled wall at the end of a *braced wall line* shall contribute its projected length for only one of the *braced wall lines* at the projected corner.

Exception: The length of wall bracing for dwellings in Seismic Design Categories D_0, D_1 and D_2 with stone or masonry veneer installed in accordance with Section R703.8 and exceeding the first-story height shall be in accordance with Section R602.10.6.5.

❖ The required length of bracing is determined from either Table R602.10.3(1) or R602.10.3(3). Table R602.10.3(1) specifies the required bracing based on ultimate design wind speed. The required wind bracing length values have changed slightly from the 2012 code. This is due to the use of the new ultimate design wind speed to calculate the bracing requirement. Table R602.10.3(3) specifies the required bracing based on the seismic design category. Each process for determining required bracing length includes adjustment

INTERNATIONAL CODE COUNCIL®
Copyright © 2015 ICC. ALL RIGHTS RESERVED. Accessed by David Dammon on Jun 21, 2017 12:30:52 PM pursuant to License Agreement with ICC. No further reproduction or distribution authorized. ANY UNAUTHORIZED REPRODUCTION OR DISTRIBUTION IS A VIOLATION OF THE FEDERAL COPYRIGHT ACT AND THE LICENSE AGREEMENT, AND SUBJECT TO CIVIL AND CRIMINAL PENALTIES THEREUNDER.

factors. These adjustment factors—modifications to the amount of bracing based on variations in the structural geometry—are in tables following the bracing requirements tables. Adjustment factors vary for the wind and seismic tables. It is important to note that neglecting an adjustment factor can result in insufficient bracing for a specific application. For example, the wind bracing tables are based on a roof eave-to-ridge height of 10 feet (3048 mm). If the roof height of a given single-story structure is 15 feet (4572 mm) and the adjustment factor is ignored, the wall bracing will be insufficient by 30 percent. For this reason, all adjustment factors in Tables R602.10.3(2) and R602.10.3(4) must be considered carefully.

For wind bracing, Table R602.10.3(1), the user inputs braced wall line spacing to determine the required bracing length in feet, regardless of building length. Basing the bracing requirement on the width of the building (the braced wall line spacing) is appropriate for wind. Wind pushes against a building in the same manner that it pushes against a sail on a boat. When wind acts on the building width, the length of the building (dimension parallel to the wind) is irrelevant to determining the bracing required to resist that wind load. In other words, a short building that is 35 feet (10 668 mm) wide has the same "sail area"—and receives the same wind load—as a long building that is 35 feet (10 668 mm) wide. Therefore, if the short building requires 12 feet (3658 mm) of bracing, the long building also requires 12 feet (3658 mm) of bracing.

As illustrated in Commentary Figure R602.10.3(1), the information in the wind bracing table is based on:

- Exposure Category B.
- 30-foot (9144 mm) mean roof height.
- 10-foot (3048 mm) eave-to-ridge height.
- 10-foot (3048 mm) wall height per story.
- Two braced wall lines per direction of wind.

Notes to Tables R602.10.3(1), Bracing Requirements Based on Wind Speed, and R602.10.3(3), Bracing Requirements Based on Seismic Design Category, must be followed. After selection of a required bracing length from Table R602.10.3(1) or (3), check the notes at the bottom of the tables for additional requirements and then go to Table R602.10.3(2) or (4) for applicable adjustment factors.

In Table R602.10.3(1), Note b clarifies additional requirements for Method LIB. While all intermittent bracing methods shall have gypsum board on at least one side of the wall (see Section R602.10.4.3), Note b requires that Method LIB have gypsum board installed on at least one side in accordance with Table R602.3(1) for exterior sheathing or Table R702.3.5 for interior gypsum board at the Method LIB location on either side of the wall. Spacing of fasteners at panel edges may not exceed 8 inches (203 mm).

Note c permits using an average spacing for braced wall line spacing.

Table R602.10.3(2), Wind Adjustment Factors to the Required Length of Wall Bracing, contains adjustment factors to accommodate variations from the table's assumptions for the wide range of residential structures covered by the code. The adjustment factors are described below:

- Exposure category—Note that the wind-bracing table is based on Exposure Category B. The exposure category for a given jurisdiction can be obtained from the local building department.

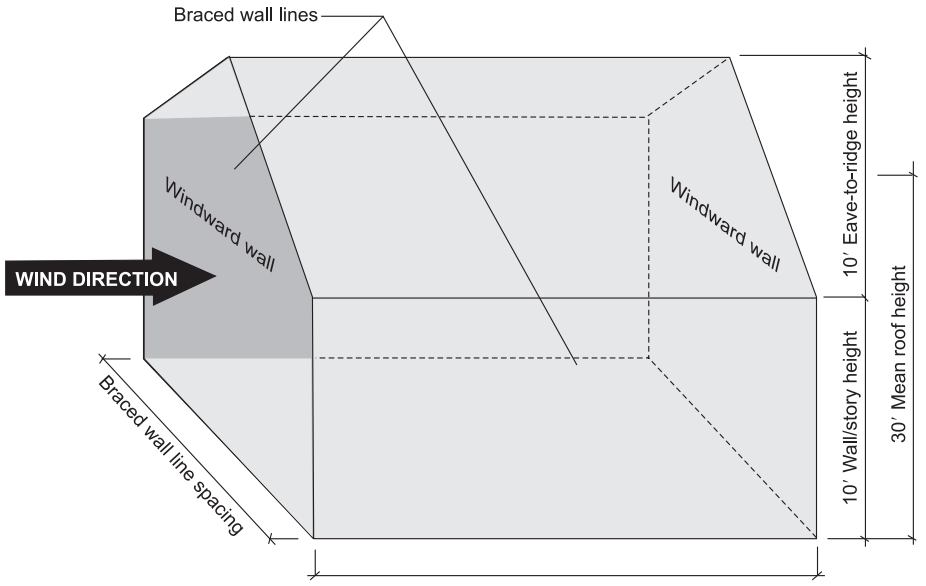

For SI: 1 foot = 304.8 mm.

Figure R602.10.3(1)
BASIS FOR WIND BRACING TABLE

INTERNATIONAL CODE COUNCIL®
Copyright © 2015 ICC. ALL RIGHTS RESERVED. Accessed by David Dammon on Jun 21, 2017 12:30:52 PM pursuant to License Agreement with ICC. No further reproduction or distribution authorized. ANY UNAUTHORIZED REPRODUCTION OR DISTRIBUTION IS A VIOLATION OF THE FEDERAL COPYRIGHT ACT AND THE LICENSE AGREEMENT, AND SUBJECT TO CIVIL AND CRIMINAL PENALTIES THEREUNDER.

[Refer to Table R301.2(1) of the locally adopted version of the IRC.]

As the number of stories increases (increasing the mean roof height); the adjustment factors increase. This is to accommodate the increased exposure and larger sail area of the structure. The following two adjustment factors account for increased sail area.

- Eave-to-ridge height—Eave-to-ridge height is an important consideration because it increases the sail area of a structure, therefore increasing the wind load on the structure, as illustrated in Commentary Figure R602.10.3(2). Increasing eave-to-ridge height by as little as 5 feet (1524 mm), from 10 to 15 feet (3048 to 4572 mm) for example, can increase the required bracing panel length by up to 30 percent. Note that as the number of stories increases the contribution of the roof eave-to-ridge height to the sail area decreases.
- Wall height—Like eave-to-ridge height, increasing the sail area of the structure by making it taller increases the wind load on the structure, thus requiring more bracing. Because the bracing wind table assumes a 10-foot (3048 mm) wall height, taller walls require an adjustment to increase the amount of required bracing, while shorter walls are permitted an adjustment to decrease the amount of required bracing. This adjustment can be applied to each story individually. For example, in a house with a first story

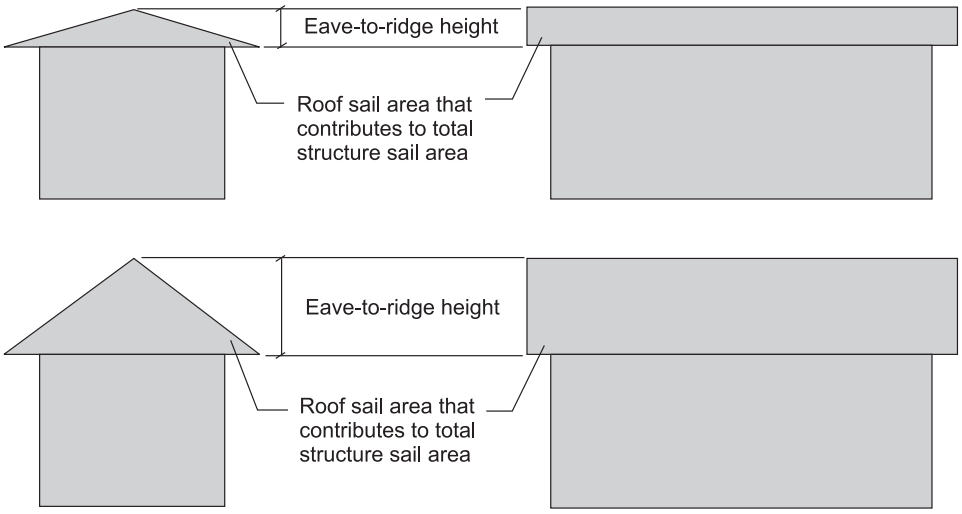

Figure R602.10.3(2)
EAVE-TO-RIDGE HEIGHT

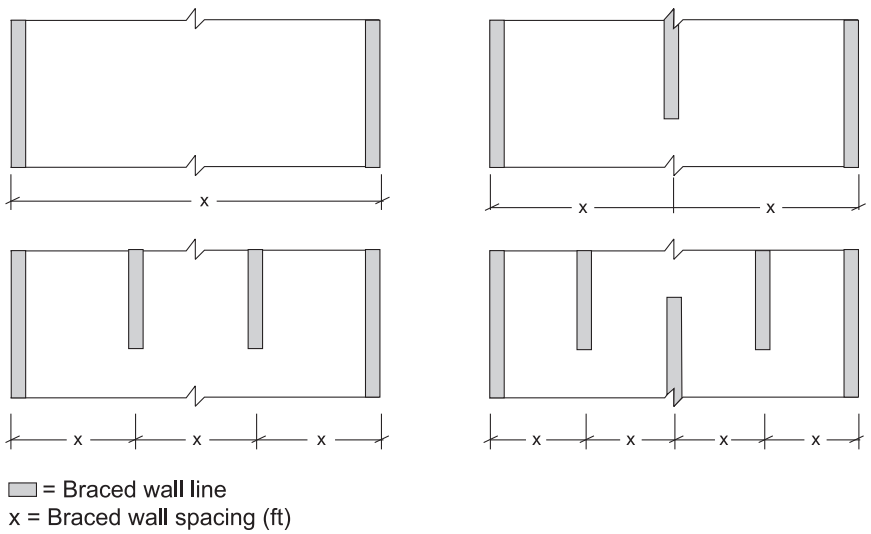

Figure R602.10.3(3)
BRACED WALL LINE SPACING

INTERNATIONAL CODE COUNCIL®
Copyright © 2015 ICC. ALL RIGHTS RESERVED. Accessed by David Dammon on Jun 21, 2017 12:30:52 PM pursuant to License Agreement with ICC. No further reproduction or distribution authorized. ANY UNAUTHORIZED REPRODUCTION OR DISTRIBUTION IS A VIOLATION OF THE FEDERAL COPYRIGHT ACT AND THE LICENSE AGREEMENT, AND SUBJECT TO CIVIL AND CRIMINAL PENALTIES THEREUNDER.

wall height of 9 feet (2743 mm) and a second-story wall height of 8 feet (2438 mm), the bracing amount for the first story can be reduced by 5 percent, and the bracing amount for the second story reduced by 10 percent.

- Number of braced wall lines (per plan direction)—At first glance this adjustment factor may give the impression that adding additional interior bracing walls is a disadvantage because the amount of bracing in the wall lines must increase. However, the values in Table R602.10.3(1) are based on the spacing of the braced wall lines. If, for example, the distance between two exterior walls in a home design requires a length of bracing that cannot be accommodated by the exterior wall lines alone, a braced wall line may be added through the interior of the structure. In this case, because the spacing of the braced wall lines decreases, the amount of bracing required for the braced wall lines also decreases. The adjustment factor is applied to the reduced amount of bracing for the braced wall lines. This method is conservative [see Commentary Figure R602.10.3(3)]. Only the interior wall lines receive loads from the floor or roof along both sides of the wall line. The exterior wall lines have tributary loads from only one side of the wall line. But at this time, all wall lines require the increase in bracing. Interior wall lines double the lateral load carried by adjacent exterior wall lines, but the required adjustment factors do not require a 200-percent increase in bracing. Rather, the dwelling is assumed to be tied together sufficiently by connections to allow loads to be transferred to both wall lines.
- Additional 800-pound (363 kg) hold-down device—In developing the new wind-bracing provisions, braced wall panels only supporting the roof above them (one-story buildings and the top story of multistory buildings) were recognized to be more effective in resisting wind forces when a hold-down was installed at the base of each panel. The use of an 800-pound (363 kg) hold-down device, installed in accordance with the manufacturer's recommendations, increases the capacity of bracing methods when supporting roof loads only. A 20-percent reduction in the length of bracing is permitted due to the increased capacity achieved by adding a hold-down device. Note that the hold-downs must be used at both ends of every bracing panel in the wall line and the hold-down anchorage must extend through all lower floors (if any) to provide a continuous load path until anchored into the foundation.
- Interior gypsum board finish—The wind bracing table was developed based on balancing the wind load acting on the structure against the strength of the bracing material providing resistance. The bracing lengths are based on the assumption that gypsum wall board is applied on the inside surface of braced wall panels. The addition of gypsum wall board, even though not attached with the same quantity of fasteners as Method GB bracing, does add strength and stiffness to the bracing; therefore, in cases in which gypsum board is not applied on the inside surface of braced wall panels, an adjustment must be made. In modern residential construction, the absence of gypsum board finish material is only likely to occur at gable end walls (above the plate) and at exterior garage walls. Typically, in either of these applications, it is not difficult to increase the amount of bracing because these walls are not likely to have many openings. Note this adjustment factor is used with Methods DWB, WSP, SFB, PBS, PCP, HPS, CS-WSP, CS-G and CS-SFB.
- Gypsum board fastening—Using the bracing lengths as stated from the Method GB column in Table R602.10.3(1) requires both sides of the braced wall line to be constructed to meet the requirements of Method GB bracing, including type and quantity of fasteners.

  When fastener spacing is reduced to 4 inches (102 mm) on center at all panel ends, edges and intermediate supports with horizontal joints blocked, the required length of Method GB bracing may be multiplied by a factor of 0.7 for wind applications only. The reduction may be applied to single-sided or double-sided Method GB.

For seismic bracing [Table R602.10.3(3)], the user inputs the length of the braced wall line to determine the amount of bracing required. Bracing for seismic loads is determined based on the length of the braced wall line. When determining the amount of bracing required to resist seismic forces, the length of the building parallel to the direction of loading is the most important consideration. This is because mass is generally evenly distributed along the length and width of a building. For a given building width, the long building has more mass—and thus receives greater earthquake forces—than the short building. As a result, the long building requires a greater amount of bracing.

To determine whether a dwelling requires seismic bracing, Section R301.2.2 should be reviewed. Section R301.2.2 exempts detached one- and two-family dwellings in SDC A, B and C and townhouses in SDC A and B from the seismic provisions of the code. In these cases, only the wind bracing requirements must be met.

As illustrated in Commentary Figure R602.10.3(4), the information in Table R602.10.3(3), the seismic bracing table, is based on:

- Soil site classification D.
- 10-foot (3048 mm) wall height.

INTERNATIONAL CODE COUNCIL®
Copyright © 2015 ICC. ALL RIGHTS RESERVED. Accessed by David Dammon on Jun 21, 2017 12:30:52 PM pursuant to License Agreement with ICC. No further reproduction or distribution authorized. ANY UNAUTHORIZED REPRODUCTION OR DISTRIBUTION IS A VIOLATION OF THE FEDERAL COPYRIGHT ACT AND THE LICENSE AGREEMENT, AND SUBJECT TO CIVIL AND CRIMINAL PENALTIES THEREUNDER.

- 10 psf (479 Pa) floor dead load.
- 15 psf (718 Pa) roof and ceiling dead load.
- Braced wall line spacing of 25 feet (7620 mm) or less.

Table R602.10.3(3) is based on soil Site Class D, which is defined in Section 1613.5.2 of the IBC. When the soil properties are not known in sufficient detail to determine a specific soil site class, site Class D shall be used unless the building official or geotechnical data determines that Site Class E or F is present. If Site Class E or F is present, IBC Section 1613.5, provides a methodology for determining the site SDS and converting it into a SDC that can be used directly in Table R602.10.3(3). Note c clarifies how to determine the bracing where the braced wall line length is greater than 50 feet.

Table R602.10.3(4) includes adjustment factors to accommodate variations from these assumptions for the wide range of residential structures covered by the code.

Each of the adjustments described in Table R602.10.3(4) is explained below:

- Story height (see Section R301.3)—The amount of bracing required for seismic loads is directly related to the mass/weight of the structure. As a wall gets taller, its mass increases, thus requiring more bracing to resist the resulting seismic loads.
- Braced wall line spacing, townhouses in SDC C—This adjustment factor applies to townhouses in SDC C. Townhouses in SDC C are permitted to have a 35- to 50-foot (10 668 mm to 15 240 mm) braced wall line spacing using this adjustment factor.
- Braced wall line spacing in SDC D_0, D_1 and D_2—The 25-foot (7620 mm) braced wall line spacing applies to one- and two-family dwellings and townhouses in SDC D_0, D_1 and D_2. However, for one room only per dwelling unit, the 25-foot (7620 mm) braced wall line spacing for these structures can be increased to a maximum of 35 feet (10 668 mm).

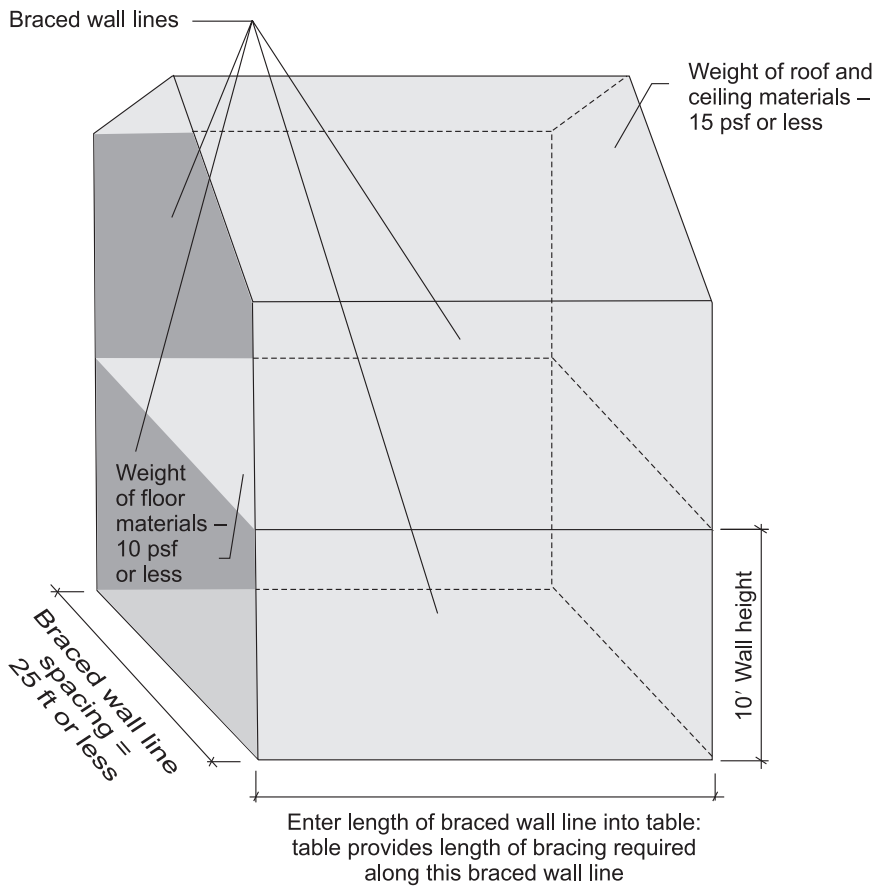

For SI: 1 foot = 304.8 mm,
1 pound per square foot = 47.89 Pa.

Figure R602.10.3(4)
BASIS FOR SEISMIC BRACING TABLE

INTERNATIONAL CODE COUNCIL®
Copyright © 2015 ICC. ALL RIGHTS RESERVED. Accessed by David Dammon on Jun 21, 2017 12:30:52 PM pursuant to License Agreement with ICC. No further reproduction or distribution authorized. ANY UNAUTHORIZED REPRODUCTION OR DISTRIBUTION IS A VIOLATION OF THE FEDERAL COPYRIGHT ACT AND THE LICENSE AGREEMENT, AND SUBJECT TO CIVIL AND CRIMINAL PENALTIES THEREUNDER.

- Wall dead load - Table R602.10.3(3) is based on a wall weight of 8 to 15 pounds per square feet (338 to 718 Pa). If a lighter weight wall is used, a reduction is permitted in the amount of bracing required. (Again, more mass requires more bracing and less mass requires less bracing.) Note that a standard wood-framed stud wall has a weight of 11 to 12 psf (527 to 575 Pa) (see Table C3-1 of ASCE 7).
- Roof/ceiling dead load for wall supporting—Table R602.10.3(3) is based on a roof/ceiling weight of 15 pounds per square feet (718 Pa) or less. As the roof weight/mass increases, so does the amount of bracing required. Note that a standard wood-framed roof ceiling with light-weight asphalt or wood shingles has a weight that varies between 10 and 15 psf (479 to 718 Pa) (Table C3-1 of ASCE 7).
- Roof/ceiling dead load adjustment factors vary depending on how many floors exist below the roof. If the building is a single-story structure, the effect of the additional weight on the roof is greater than when the building is three stories tall. The adjustment factors are dependent upon the number of stories in the structure. From Table R602.10.3(4), for a single-story building the adjustment factor for roof loads greater than 15 psf (718 Pa) is 1.2. For a two-story or three-story building, the adjustment factor is 1.1.
- Walls with stone or masonry veneer, townhouses in SDC C—This is a case of more mass requiring more bracing. This adjustment factor applies only to townhouses in SDC C. The adjustment factor varies based on story height. Any intermittent or continuous sheathing method may be used.

  The adjustment factor for wall bracing length for the bottom of a two-story and bottom two stories of a three-story townhouse is 1.5. This increase applies only when veneer extends more than one story in height. The top story of a multi-story house does not require an increase in bracing for masonry and stone veneer regardless of veneer height.
- Walls with stone or masonry veneer in SDC D_0, D_1 and D_2—This is another case of more mass requiring more bracing. Section R602.10.6.5 describes the limits and requirements for wall bracing in SDC D_0-D_2 with walls with stone and masonry veneer in one- and two-family dwellings. Townhouses in SDC D_0, D_1 and D_2 with stone or masonry veneer exceeding the first story height must be designed in accordance with accepted engineering practice.
- Interior gypsum board finish—The seismic bracing table was developed based on balancing the seismic forces acting on the structure against the strength of the bracing material providing resistance. The bracing lengths are based on the assumption that gypsum wall board is applied on the inside surface of braced wall panels. The addition of gypsum wall board, even though not attached with the same quantity of fasteners as Method GB bracing, does add strength and stiffness to the bracing; therefore, in cases in which gypsum board is not applied on the inside surface of braced wall panels, an adjustment must be made. In modern residential construction, the absence of gypsum board finish material is only likely to occur at gable end walls (above the plate) and at exterior garage walls. Typically, in either of these applications, it is not difficult to increase the amount of bracing because these walls are not likely to have many openings. This factor is applied when the following methods are used without interior gypsum board finish - DWB, WSP, SFB, PBS, PCP, HPS, CS-WSP, CS-G, or CS-SFB [SDC C only and winds less than 100 mph (45 m/s)].

INTERNATIONAL CODE COUNCIL®
Copyright © 2015 ICC. ALL RIGHTS RESERVED. Accessed by David Dammon on Jun 21, 2017 12:30:52 PM pursuant to License Agreement with ICC. No further reproduction or distribution authorized. ANY UNAUTHORIZED REPRODUCTION OR DISTRIBUTION IS A VIOLATION OF THE FEDERAL COPYRIGHT ACT AND THE LICENSE AGREEMENT, AND SUBJECT TO CIVIL AND CRIMINAL PENALTIES THEREUNDER.

TABLE R602.10.3(1)
BRACING REQUIREMENTS BASED ON WIND SPEED

• EXPOSURE CATEGORY B • 30-FOOT MEAN ROOF HEIGHT • 10-FOOT WALL HEIGHT • 2 BRACED WALL LINES			MINIMUM TOTAL LENGTH (FEET) OF BRACED WALL PANELS REQUIRED ALONG EACH BRACED WALL LINE[a]			
Ultimate Design Wind Speed (mph)	Story Location	Braced Wall Line Spacing (feet)	Method LIB[b]	Method GB	Methods DWB, WSP, SFB, PBS, PCP, HPS, BV-WSP, ABW, PFH, PFC, CS-SFB[c]	Methods CS-WSP, CS-G, CS-PF
≤ 110	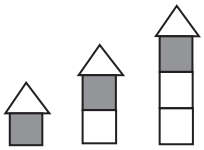	10	3.5	3.5	2.0	1.5
		20	6.0	6.0	3.5	3.0
		30	8.5	8.5	5.0	4.5
		40	11.5	11.5	6.5	5.5
		50	14.0	14.0	8.0	7.0
		60	16.5	16.5	9.5	8.0
	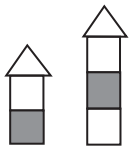	10	6.5	6.5	3.5	3.0
		20	11.5	11.5	6.5	5.5
		30	16.5	16.5	9.5	8.0
		40	21.5	21.5	12.5	10.5
		50	26.5	26.5	15.5	13.0
		60	31.5	31.5	18.0	15.5
	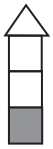	10	NP	9.5	5.5	4.5
		20	NP	17.0	10.0	8.5
		30	NP	24.5	14.0	12.0
		40	NP	32.0	18.5	15.5
		50	NP	39.5	22.5	19.0
		60	NP	46.5	26.5	23.0
≤ 115	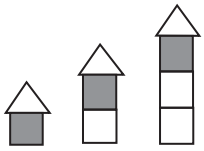	10	3.5	3.5	2.0	2.0
		20	6.5	6.5	3.5	3.5
		30	9.5	9.5	5.5	4.5
		40	12.5	12.5	7.0	6.0
		50	15.0	15.0	9.0	7.5
		60	18.0	18.0	10.5	9.0
	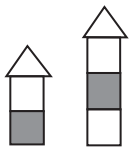	10	7.0	7.0	4.0	3.5
		20	12.5	12.5	7.5	6.5
		30	18.0	18.0	10.5	9.0
		40	23.5	23.5	13.5	11.5
		50	29.0	29.0	16.5	14.0
		60	34.5	34.5	20.0	17.0
	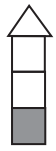	10	NP	10.0	6.0	5.0
		20	NP	18.5	11.0	9.0
		30	NP	27.0	15.5	13.0
		40	NP	35.0	20.0	17.0
		50	NP	43.0	24.5	21.0
		60	NP	51.0	29.0	25.0

(continued)

INTERNATIONAL CODE COUNCIL®
Copyright © 2015 ICC. ALL RIGHTS RESERVED. Accessed by David Dammon on Jun 21, 2017 12:30:52 PM pursuant to License Agreement with ICC. No further reproduction or distribution authorized. ANY UNAUTHORIZED REPRODUCTION OR DISTRIBUTION IS A VIOLATION OF THE FEDERAL COPYRIGHT ACT AND THE LICENSE AGREEMENT, AND SUBJECT TO CIVIL AND CRIMINAL PENALTIES THEREUNDER.

TABLE R602.10.3(1)—continued
BRACING REQUIREMENTS BASED ON WIND SPEED

• EXPOSURE CATEGORY B • 30-FOOT MEAN ROOF HEIGHT • 10-FOOT WALL HEIGHT • 2 BRACED WALL LINES			MINIMUM TOTAL LENGTH (FEET) OF BRACED WALL PANELS REQUIRED ALONG EACH BRACED WALL LINE[a]			
Ultimate Design Wind Speed (mph)	Story Location	Braced Wall Line Spacing (feet)	Method LIB[b]	Method GB	Methods DWB, WSP, SFB, PBS, PCP, HPS, BV-WSP, ABW, PFH, PFG, CS-SFB[c]	Methods CS-WSP, CS-G, CS-PF
≤ 120	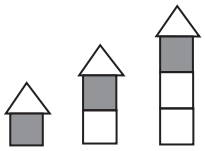	10	4.0	4.0	2.5	2.0
		20	7.0	7.0	4.0	3.5
		30	10.5	10.5	6.0	5.0
		40	13.5	13.5	8.0	6.5
		50	16.5	16.5	9.5	8.0
		60	19.5	19.5	11.5	9.5
	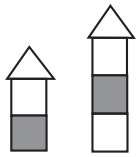	10	7.5	7.5	4.5	3.5
		20	14.0	14.0	8.0	7.0
		30	20.0	20.0	11.5	9.5
		40	25.5	25.5	15.0	12.5
		50	31.5	31.5	18.0	15.5
		60	37.5	37.5	21.5	18.5
		10	NP	11.0	6.5	5.5
		20	NP	20.5	11.5	10.0
		30	NP	29.0	17.0	14.5
		40	NP	38.0	22.0	18.5
		50	NP	47.0	27.0	23.0
		60	NP	55.5	32.0	27.0
≤ 130	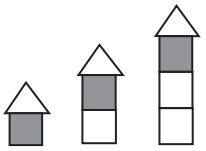	10	4.5	4.5	2.5	2.5
		20	8.5	8.5	5.0	4.0
		30	12.0	12.0	7.0	6.0
		40	15.5	15.5	9.0	7.5
		50	19.5	19.5	11.0	9.5
		60	23.0	23.0	13.0	11.0
	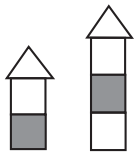	10	8.5	8.5	5.0	4.5
		20	16.0	16.0	9.5	8.0
		30	23.0	23.0	13.5	11.5
		40	30.0	30.0	17.5	15.0
		50	37.0	37.0	21.5	18.0
		60	44.0	44.0	25.0	21.5
		10	NP	13.0	7.5	6.5
		20	NP	24.0	13.5	11.5
		30	NP	34.5	19.5	17.0
		40	NP	44.5	25.5	22.0
		50	NP	55.0	31.5	26.5
		60	NP	65.0	37.5	31.5

(continued)

INTERNATIONAL CODE COUNCIL®
Copyright © 2015 ICC. ALL RIGHTS RESERVED. Accessed by David Dammon on Jun 21, 2017 12:30:52 PM pursuant to License Agreement with ICC. No further reproduction or distribution authorized. ANY UNAUTHORIZED REPRODUCTION OR DISTRIBUTION IS A VIOLATION OF THE FEDERAL COPYRIGHT ACT AND THE LICENSE AGREEMENT, AND SUBJECT TO CIVIL AND CRIMINAL PENALTIES THEREUNDER.

TABLE R602.10.3(1)—continued
BRACING REQUIREMENTS BASED ON WIND SPEED

• EXPOSURE CATEGORY B • 30-FOOT MEAN ROOF HEIGHT • 10-FOOT WALL HEIGHT • 2 BRACED WALL LINES			MINIMUM TOTAL LENGTH (FEET) OF BRACED WALL PANELS REQUIRED ALONG EACH BRACED WALL LINE[a]			
Ultimate Design Wind Speed (mph)	Story Location	Braced Wall Line Spacing (feet)	Method LIB[b]	Method GB	Methods DWB, WSP, SFB, PBS, PCP, HPS, BV-WSP, ABW, PFH, PFG, CS-SFB[c]	Methods CS-WSP, CS-G, CS-PF
≤ 140	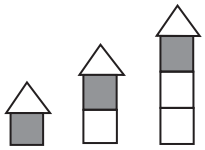	10	5.5	5.5	3.0	2.5
		20	10.0	10.0	5.5	5.0
		30	14.0	14.0	8.0	7.0
		40	18.0	18.0	10.5	9.0
		50	22.5	22.5	13.0	11.0
		60	26.5	26.5	15.0	13.0
	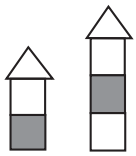	10	10.0	10.0	6.0	5.0
		20	18.5	18.5	11.0	9.0
		30	27.0	27.0	15.5	13.0
		40	35.0	35.0	20.0	17.0
		50	43.0	43.0	24.5	21.0
		60	51.0	51.0	29.0	25.0
	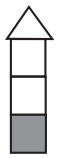	10	NP	15.0	8.5	7.5
		20	NP	27.5	16.0	13.5
		30	NP	39.5	23.0	19.5
		40	NP	51.5	29.5	25.0
		50	NP	63.5	36.5	31.0
		60	NP	75.5	43.0	36.5

For SI: 1 inch = 25.4 mm, 1 foot = 304.8 mm, 1 mile per hour = 0.447 m/s.

a. Linear interpolation shall be permitted.

b. Method LIB shall have gypsum board fastened to not less than one side with nails or screws in accordance with Table R602.3(1) for exterior sheathing or Table R702.3.5 for interior gypsum board. Spacing of fasteners at panel edges shall not exceed 8 inches.

c. Where a braced wall line has parallel braced wall lines on one or both sides of differing dimensions, the average dimension shall be permitted to be used for braced wall line spacing.

❖ See the commentary to Section R602.10.3.

INTERNATIONAL CODE COUNCIL®
Copyright © 2015 ICC. ALL RIGHTS RESERVED. Accessed by David Dammon on Jun 21, 2017 12:30:52 PM pursuant to License Agreement with ICC. No further reproduction or distribution authorized. ANY UNAUTHORIZED REPRODUCTION OR DISTRIBUTION IS A VIOLATION OF THE FEDERAL COPYRIGHT ACT AND THE LICENSE AGREEMENT, AND SUBJECT TO CIVIL AND CRIMINAL PENALTIES THEREUNDER.

TABLE R602.10.3(2)
WIND ADJUSTMENT FACTORS TO THE REQUIRED LENGTH OF WALL BRACING

ITEM NUMBER	ADJUSTMENT BASED ON	STORY/SUPPORTING	CONDITION	ADJUSTMENT FACTOR[a, b] [multiply length from Table R602.10.3(1) by this factor]	APPLICABLE METHODS
1	Exposure category	One-story structure	B	1.00	All methods
			C	1.20	
			D	1.50	
		Two-story structure	B	1.00	
			C	1.30	
			D	1.60	
		Three-story structure	B	1.00	
			C	1.40	
			D	1.70	
2	Roof eave-to-ridge height	Roof only	≤ 5 feet	0.70	
			10 feet	1.00	
			15 feet	1.30	
			20 feet	1.60	
		Roof + 1 floor	≤ 5 feet	0.85	
			10 feet	1.00	
			15 feet	1.15	
			20 feet	1.30	
		Roof + 2 floors	≤ 5 feet	0.90	
			10 feet	1.00	
			15 feet	1.10	
			20 feet	Not permitted	
3	Wall height adjustment	Any story	8 feet	0.90	
			9 feet	0.95	
			10 feet	1.00	
			11 feet	1.05	
			12 feet	1.10	
4	Number of braced wall lines (per plan direction)[c]	Any story	2	1.00	
			3	1.30	
			4	1.45	
			≥ 5	1.60	
5	Additional 800-pound hold-down device	Top story only	Fastened to the end studs of each braced wall panel and to the foundation or framing below	0.80	DWB, WSP, SFB, PBS, PCP, HPS
6	Interior gypsum board finish (or equivalent)	Any story	Omitted from inside face of braced wall panels	1.40	DWB, WSP, SFB, PBS, PCP, HPS, CS-WSP, CS-G, CS-SFB
7	Gypsum board fastening	Any story	4 inches o.c. at panel edges, including top and bottom plates, and all horizontal joints blocked	0.7	GB

For SI: 1 inch = 25.4 mm, 1 foot = 304.8 mm, 1 pound = 4.48 N.

a. Linear interpolation shall be permitted.

b. The total adjustment factor is the product of all applicable adjustment factors.

c. The adjustment factor is permitted to be 1.0 when determining bracing amounts for intermediate braced wall lines provided the bracing amounts on adjacent braced wall lines are based on a spacing and number that neglects the intermediate braced wall line.

❖ See the commentary to Section R602.10.3.

INTERNATIONAL CODE COUNCIL®
Copyright © 2015 ICC. ALL RIGHTS RESERVED. Accessed by David Dammon on Jun 21, 2017 12:30:52 PM pursuant to License Agreement with ICC. No further reproduction or distribution authorized. ANY UNAUTHORIZED REPRODUCTION OR DISTRIBUTION IS A VIOLATION OF THE FEDERAL COPYRIGHT ACT AND THE LICENSE AGREEMENT, AND SUBJECT TO CIVIL AND CRIMINAL PENALTIES THEREUNDER.

TABLE R602.10.3(3)
BRACING REQUIREMENTS BASED ON SEISMIC DESIGN CATEGORY

• SOIL CLASS D[b] • WALL HEIGHT = 10 FEET • 10 PSF FLOOR DEAD LOAD • 15 PSF ROOF/CEILING DEAD LOAD • BRACED WALL LINE SPACING ≤ 25 FEET			MINIMUM TOTAL LENGTH (FEET) OF BRACED WALL PANELS REQUIRED ALONG EACH BRACED WALL LINE[a]				
Seismic Design Category	**Story Location**	**Braced Wall Line Length (feet)[c]**	**Method LIB[d]**	**Method GB**	**Methods DWB, SFB, PBS, PCP, HPS, CS-SFB[e]**	**Method WSP**	**Methods CS-WSP, CS-G**
C (townhouses only)	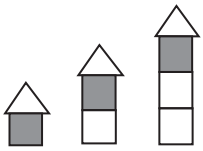	10	2.5	2.5	2.5	1.6	1.4
		20	5.0	5.0	5.0	3.2	2.7
		30	7.5	7.5	7.5	4.8	4.1
		40	10.0	10.0	10.0	6.4	5.4
		50	12.5	12.5	12.5	8.0	6.8
	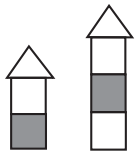	10	NP	4.5	4.5	3.0	2.6
		20	NP	9.0	9.0	6.0	5.1
		30	NP	13.5	13.5	9.0	7.7
		40	NP	18.0	18.0	12.0	10.2
		50	NP	22.5	22.5	15.0	12.8
	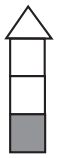	10	NP	6.0	6.0	4.5	3.8
		20	NP	12.0	12.0	9.0	7.7
		30	NP	18.0	18.0	13.5	11.5
		40	NP	24.0	24.0	18.0	15.3
		50	NP	30.0	30.0	22.5	19.1
D_0	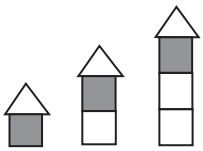	10	NP	2.8	2.8	1.8	1.6
		20	NP	5.5	5.5	3.6	3.1
		30	NP	8.3	8.3	5.4	4.6
		40	NP	11.0	11.0	7.2	6.1
		50	NP	13.8	13.8	9.0	7.7
	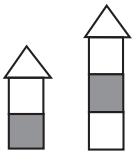	10	NP	5.3	5.3	3.8	3.2
		20	NP	10.5	10.5	7.5	6.4
		30	NP	15.8	15.8	11.3	9.6
		40	NP	21.0	21.0	15.0	12.8
		50	NP	26.3	26.3	18.8	16.0
	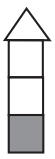	10	NP	7.3	7.3	5.3	4.5
		20	NP	14.5	14.5	10.5	9.0
		30	NP	21.8	21.8	15.8	13.4
		40	NP	29.0	29.0	21.0	17.9
		50	NP	36.3	36.3	26.3	22.3

(continued)

INTERNATIONAL CODE COUNCIL®
Copyright © 2015 ICC. ALL RIGHTS RESERVED. Accessed by David Dammon on Jun 21, 2017 12:30:52 PM pursuant to License Agreement with ICC. No further reproduction or distribution authorized. ANY UNAUTHORIZED REPRODUCTION OR DISTRIBUTION IS A VIOLATION OF THE FEDERAL COPYRIGHT ACT AND THE LICENSE AGREEMENT, AND SUBJECT TO CIVIL AND CRIMINAL PENALTIES THEREUNDER.

TABLE R602.10.3(3)—continued
BRACING REQUIREMENTS BASED ON SEISMIC DESIGN CATEGORY

• SOIL CLASS D[b] • WALL HEIGHT = 10 FEET • 10 PSF FLOOR DEAD LOAD • 15 PSF ROOF/CEILING DEAD LOAD • BRACED WALL LINE SPACING ≤ 25 FEET			MINIMUM TOTAL LENGTH (FEET) OF BRACED WALL PANELS REQUIRED ALONG EACH BRACED WALL LINE[a]				
Seismic Design Category	**Story Location**	**Braced Wall Line Length (feet)[c]**	**Method LIB[d]**	**Method GB**	**Methods DWB, SFB, PBS, PCP, HPS, CS-SFB[e]**	**Method WSP**	**Methods CS-WSP, CS-G**
D_1	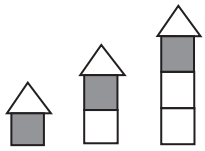	10	NP	3.0	3.0	2.0	1.7
		20	NP	6.0	6.0	4.0	3.4
		30	NP	9.0	9.0	6.0	5.1
		40	NP	12.0	12.0	8.0	6.8
		50	NP	15.0	15.0	10.0	8.5
	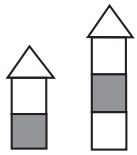	10	NP	6.0	6.0	4.5	3.8
		20	NP	12.0	12.0	9.0	7.7
		30	NP	18.0	18.0	13.5	11.5
		40	NP	24.0	24.0	18.0	15.3
		50	NP	30.0	30.0	22.5	19.1
	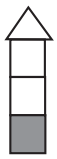	10	NP	8.5	8.5	6.0	5.1
		20	NP	17.0	17.0	12.0	10.2
		30	NP	25.5	25.5	18.0	15.3
		40	NP	34.0	34.0	24.0	20.4
		50	NP	42.5	42.5	30.0	25.5
D_2	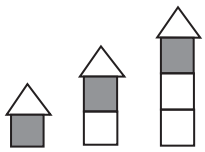	10	NP	4.0	4.0	2.5	2.1
		20	NP	8.0	8.0	5.0	4.3
		30	NP	12.0	12.0	7.5	6.4
		40	NP	16.0	16.0	10.0	8.5
		50	NP	20.0	20.0	12.5	10.6
	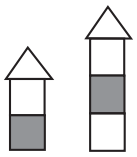	10	NP	7.5	7.5	5.5	4.7
		20	NP	15.0	15.0	11.0	9.4
		30	NP	22.5	22.5	16.5	14.0
		40	NP	30.0	30.0	22.0	18.7
		50	NP	37.5	37.5	27.5	23.4
		10	NP	NP	NP	NP	NP
		20	NP	NP	NP	NP	NP
		30	NP	NP	NP	NP	NP
		40	NP	NP	NP	NP	NP
		50	NP	NP	NP	NP	NP
	Cripple wall below one- or two-story dwelling	10	NP	NP	NP	7.5	6.4
		20	NP	NP	NP	15.0	12.8
		30	NP	NP	NP	22.5	19.1
		40	NP	NP	NP	30.0	25.5
		50	NP	NP	NP	37.5	31.9

For SI: 1 inch = 25.4 mm, 1 foot = 304.8 mm, 1 pound per square foot = 0.0479 kPa.

a. Linear interpolation shall be permitted.

b. Wall bracing lengths are based on a soil site class "D." Interpolation of bracing length between the S_{ds} values associated with the seismic design categories shall be permitted when a site-specific S_{ds} value is determined in accordance with Section 1613.3 of the *International Building Code*.

c. Where the braced wall line length is greater than 50 feet, braced wall lines shall be permitted to be divided into shorter segments having lengths of 50 feet or less, and the amount of bracing within each segment shall be in accordance with this table.

d. Method LIB shall have gypsum board fastened to not less than one side with nails or screws in accordance with Table R602.3(1) for exterior sheathing or Table R702.3.5 for interior gypsum board. Spacing of fasteners at panel edges shall not exceed 8 inches.

e. Method CS-SFB does not apply in Seismic Design Categories D_0, D_1 and D_2.

❖ See the commentary to Section R602.10.3.

INTERNATIONAL CODE COUNCIL®
Copyright © 2015 ICC. ALL RIGHTS RESERVED. Accessed by David Dammon on Jun 21, 2017 12:30:52 PM pursuant to License Agreement with ICC. No further reproduction or distribution authorized. ANY UNAUTHORIZED REPRODUCTION OR DISTRIBUTION IS A VIOLATION OF THE FEDERAL COPYRIGHT ACT AND THE LICENSE AGREEMENT, AND SUBJECT TO CIVIL AND CRIMINAL PENALTIES THEREUNDER.

TABLE R602.10.3(4)
SEISMIC ADJUSTMENT FACTORS TO THE REQUIRED LENGTH OF WALL BRACING

ITEM NUMBER	ADJUSTMENT BASED ON:	STORY	CONDITION	ADJUSTMENT FACTOR[a, b] [Multiply length from Table R602.10.3(3) by this factor]	APPLICABLE METHODS
1	Story height (Section 301.3)	Any story	≤ 10 feet	1.0	All methods
			> 10 feet and ≤ 12 feet	1.2	
2	Braced wall line spacing, townhouses in SDC C	Any story	≤ 35 feet	1.0	
			> 35 feet and ≤ 50 feet	1.43	
3	Braced wall line spacing, in SDC D_0, D_1, D_2[c]	Any story	> 25 feet and ≤ 30 feet	1.2	
			> 30 feet and ≤ 35 feet	1.4	
4	Wall dead load	Any story	> 8 psf and < 15 psf	1.0	
			< 8 psf	0.85	
5	Roof/ceiling dead load for wall supporting	1-, 2- or 3-story building	≤15 psf	1.0	
		2- or 3-story building	> 15 psf and ≤ 25 psf	1.1	
		1-story building	> 15 psf and ≤ 25 psf	1.2	
6	Walls with stone or masonry veneer, townhouses in SDC C[d, e]	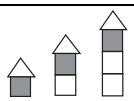	1.0		All methods
			1.5		
		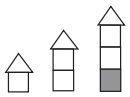	1.5		
7	Walls with stone or masonry veneer, detached one- and two-family dwellings in SDC D_0 – D_2[d, f]	Any story	See Table R602.10.6.5		BV-WSP
8	Interior gypsum board finish (or equivalent)	Any story	Omitted from inside face of braced wall panels	1.5	DWB, WSP, SFB, PBS, PCP, HPS, CS-WSP, CS-G, CS-SFB

For SI: 1 foot = 304.8 mm, 1 pound per square foot = 0.0479 kPa.

a. Linear interpolation shall be permitted.

b. The total length of bracing required for a given wall line is the product of all applicable adjustment factors.

c. The length-to-width ratio for the floor/roof *diaphragm* shall not exceed 3:1. The top plate lap splice nailing shall be in accordance with Table R602.3(1), Item 13.

d. Applies to stone or masonry veneer exceeding the first story height.

e. The adjustment factor for stone or masonry veneer shall be applied to all exterior *braced wall lines* and all *braced wall lines* on the interior of the building, backing or perpendicular to and laterally supported veneered walls.

f. See Section R602.10.6.5 for requirements where stone or masonry veneer does not exceed the first-story height.

❖ See the commentary to Section R602.10.3.

INTERNATIONAL CODE COUNCIL®
Copyright © 2015 ICC. ALL RIGHTS RESERVED. Accessed by David Dammon on Jun 21, 2017 12:30:52 PM pursuant to License Agreement with ICC. No further reproduction or distribution authorized. ANY UNAUTHORIZED REPRODUCTION OR DISTRIBUTION IS A VIOLATION OF THE FEDERAL COPYRIGHT ACT AND THE LICENSE AGREEMENT, AND SUBJECT TO CIVIL AND CRIMINAL PENALTIES THEREUNDER.

R602.10.4 Construction methods for braced wall panels. Intermittent and continuously sheathed *braced wall panel*s shall be constructed in accordance with this section and the methods listed in Table R602.10.4.

❖ There are 12 intermittent and four continuously sheathed bracing methods included in Table R602.10.4, each with its own minimum length and installation requirements. Each method lists minimum thickness requirements and connection criteria separated into fastener type and spacing requirements. The last three intermittent methods are alternate methods for bracing along a wall line or adjacent to a garage opening. The purpose of the alternate methods is to provide a narrow-length option for sections of wall line with less than 48 inches (1219 mm) of space requiring a braced panel.

The nomenclature for the abbreviations used for the bracing methods is based on the following:

- Abbreviations for the intermittent methods come from the material used to make the braced wall panel.
- Alternate method abbreviations come from the braced panel names.
- Continuously sheathed methods each start with CS (e.g., Method CS-PF is the continuously sheathed portal frame bracing method).

The term "intermittent" is used to identify bracing methods that provide braced wall panels placed in discrete locations along a braced wall line, while the term "continuous" is used to identify bracing methods that require the whole wall line to be sheathed. The first nine intermittent methods abbreviations are:

1. Let-in bracing (Method LIB)
2. $^5/_8$-inch (16 mm) diagonal wood boards (Method DWB)
3. Wood structural panel (plywood or OSB) (Method WSP)
4. $^7/_{16}$-inch (11.1 mm) wood structural panel with stone or masonry veneer (Method BV-WSP)
5. $^1/_2$-inch (12.7 mm) structural fiberboard sheathing (Method SFB)
6. $^1/_2$-inch (12.7 mm) gypsum board (Method GB)
7. Particleboard sheathing (Method PBS)
8. Portland cement plaster (Method PCP)
9. Hardboard panel siding (Method HPS)

As the name implies, intermittent bracing methods are meant to be used intermittently along the wall line. For these methods, the minimum length required for a single braced wall panel segment ranges from 48 to 96 inches (1219 to 2438 mm).

Three alternative methods are also classified as intermittent bracing methods because, while structurally different from the traditional methods, these methods are designed to be used intermittently and can be substituted for any of the traditional bracing methods on a one-for-one basis (they may be intermixed with other intermittent bracing methods along the same wall line). The intermittent alternate braced methods are designated as:

1. Alternate braced wall (Method ABW)
2. Portal frame with hold-downs (Method PFH)
3. Portal frame at garage (Method PFG)

The minimum lengths for methods ABW and PFH range from 16 to 40 inches (406 to 1016 mm). Either may be substituted for any intermittent bracing method permitted in Table R602.10.4. For the purposes of computing the required length of bracing, a single unit of either method is equivalent to 4 feet (1219 mm). Both utilize prefabricated metal hold-downs, in addition to anchor bolts, to connect the bracing panel to the foundation below.

Bracing method PFG is a type of portal frame that does not require hold-downs, has a minimum length of 24 inches (610 mm), may only be used in SDC A, B and C and may only be used adjacent to a garage door. For the purposes of computing the required length of bracing, a single unit of this method is equivalent to 1.5 times its actual length.

The four continuous bracing methods require continuous sheathing on all wall areas of the wall line. As walls with continuous sheathing are generally considered to be stiffer and stronger than similar walls with intermittent bracing, the continuous methods allow for bracing solutions that are narrower than the widths required for the intermittent methods.

Three of these bracing methods are for use with continuous wood structural panel sheathing.

Method CS-WSP, continuously sheathed wood structural panel, requires all braced wall lines, including areas above and below openings and gable ends, to be fully sheathed with a minimum of $^3/_8$-inch (9.5 mm) wood structural panel sheathing.

Method CS-G, continuously sheathed wood structural panel adjacent to garage openings, is a narrow-length panel that can be used with Method CS-WSP. This method permits the use of a panel length as short as 24 inches (610 mm) for an 8-foot (2438 mm) wall, but because the length of the wall is linked to an aspect ratio, the segment is required to get longer as the wall gets taller.

Pay particular attention to Notes b and c in Table R602.10.4. Note b does not permit the use of 4:1 aspect ratio narrow wall panels on more than one wall of a garage. In other words, the braced panel may only be used around the garage door opening. If garage door openings occur in two walls of the garage, only one wall may use this braced panel. This should not be interpreted to mean that narrow wall segments cannot be used on both sides of a garage door within a single wall; rather, that is their designed use.

INTERNATIONAL CODE COUNCIL®
Copyright © 2015 ICC. ALL RIGHTS RESERVED. Accessed by David Dammon on Jun 21, 2017 12:30:52 PM pursuant to License Agreement with ICC. No further reproduction or distribution authorized. ANY UNAUTHORIZED REPRODUCTION OR DISTRIBUTION IS A VIOLATION OF THE FEDERAL COPYRIGHT ACT AND THE LICENSE AGREEMENT, AND SUBJECT TO CIVIL AND CRIMINAL PENALTIES THEREUNDER.

The note also restricts 4:1 aspect ratio narrow wall segments to supporting roofs only, and further restricts the dead load of the roof covering to 3 pounds per square foot (144 Pa) for SDC D_0, D_1, and D_2. This minimizes the seismic weight (mass) of the roof in a seismic event by limiting the roof covering to relatively light roofing materials. Note c requires a header above a garage opening adjacent to Method CS-G panels. The opening is not permitted to be full height next to this panel. Use Table R602.7(1) to select a header for the opening.

For purposes of determining length of bracing in a wall line with Method CS-G, use the actual length of the narrow braced wall panels. Of course, the required length of bracing must be met for any wall in the structure: this provision simply allows the use of smaller segments to make up the required length of bracing.

Method CS-PF, continuously sheathed portal frame, has been in the code since the 2006 edition where it was listed as a note in Table R602.10.5, Length Requirements for Braced Wall Panels in a Continuously Sheathed Wall. In the 2009 edition it was redefined as a bracing method and only permitted when using Method CS-WSP.

The fourth continuously sheathed method, Method CS-SFB, was added to the 2009 edition of the code. It is very similar to Method CS-WSP except that there are restrictions as to where it may be used. Method CS-SFB is not permitted to be used in SDC D_0, D_1 or D_2.

When using Method CS-SFB, the entire length of the braced wall line (including areas above and below openings and gable ends, if applicable) must be fully sheathed with a minimum of $^1/_2$-inch (13 mm) structural fiberboard sheathing.

The length of bracing for continuous sheathing is determined from the continuous sheathing column of Tables R602.10.3(1) and R602.10.3(3). Only full-height braced wall panels in accordance with Section R602.10.5 are to be counted toward the minimum required length of bracing.

Methods CS-WSP and CS-SFB bracing lengths are based on the adjacent clear opening height as shown in Figure R602.10.5. Note that for Methods CS-WSP and CS-SFB the minimum panel length is aspect-ratio linked (the minimum bracing length increases as the wall height increases). This is done to ensure that as the wall gets taller, it remains sufficiently stiff.

Method CS-G and Method CS-PF, although continuously sheathed methods, are based on the use of wood structural panel sheathing and are not applicable for Method CS-SFB.

Lastly, Note a of Table R602.10.4 prohibits the use of adhesives in moderate-to-high seismic areas (SDC C, D_0, D_1 and D_2). The intent of this provision is that only sheathing used as a part of a braced wall segment, as described in Table R602.10.4, shall not be attached with adhesives. Note that detached one- and two-family dwellings are exempt from seismic rules in SDC C. Only townhouses in SDC C must meet this provision. This provision does not apply to Section R602.10.4.3 (braced wall panel interior finish material). While the interior finish is a required part of the bracing panel segment, its contribution to the overall bracing strength is relatively minor, and is actually predicated on the fastener spacing used in conjunction with the adhesive attachment of gypsum wall board.

R602.10.4.1 Mixing methods. Mixing of bracing methods shall be permitted as follows:

1. Mixing intermittent bracing and continuous sheathing methods from story to story shall be permitted.
2. Mixing intermittent bracing methods from *braced wall line* to *braced wall line* within a story shall be permitted. In regions within Seismic Design Categories A, B and C where the ultimate design wind speed is less than or equal to 130 mph (58m/s), mixing of intermittent bracing and continuous sheathing methods from braced wall line to braced wall line within a story shall be permitted.
3. Mixing intermittent bracing methods along a *braced wall line* shall be permitted in Seismic Design Categories A and B, and detached dwellings in Seismic Design Category C, provided the length of required bracing in accordance with Table R602.10.3(1) or R602.10.3(3) is the highest value of all intermittent bracing methods used.
4. Mixing of continuous sheathing methods CS-WSP, CS-G and CS-PF along a *braced wall line* shall be permitted. Intermittent methods ABW, PFH and PFG shall be permitted to be used along a *braced wall line* with continuous sheathed methods.
5. In Seismic Design Categories A and B, and for detached one- and two-family dwellings in Seismic Design Category C, mixing of intermittent bracing methods along the interior portion of a *braced wall line* with continuous sheathing methods CS-WSP, CS-G and CS-PF along the exterior portion of the same braced wall line shall be permitted. The length of required bracing shall be the highest value of all intermittent bracing methods used in accordance with Table R602.10.3(1) or R602.10.3(3) as adjusted by Tables R602.10.3(2) and R602.10.3(4), respectively. The requirements of Section R602.10.7 shall apply to each end of the continuously sheathed portion of the braced wall line.

❖ For detached one- and two-family dwellings and townhouses in SDC A and B, and detached dwellings in SDC C, braced wall lines which have sections of both exterior and interior wall line may now mix continuous sheathing made of wood structural panels on the exterior portion of the wall line with intermittent bracing methods along the interior of the braced wall line. This is commonly used for a continuously sheathed exterior of wood structural panel with interior wall lines sheathed in gypsum board intermittent braced wall panels.

INTERNATIONAL CODE COUNCIL®
Copyright © 2015 ICC. ALL RIGHTS RESERVED. Accessed by David Dammon on Jun 21, 2017 12:30:52 PM pursuant to License Agreement with ICC. No further reproduction or distribution authorized. ANY UNAUTHORIZED REPRODUCTION OR DISTRIBUTION IS A VIOLATION OF THE FEDERAL COPYRIGHT ACT AND THE LICENSE AGREEMENT, AND SUBJECT TO CIVIL AND CRIMINAL PENALTIES THEREUNDER.

Commentary Figure R602.10.4.1 shows the mixing possibilities and their limitations.

The 2015 edition permits mixing of bracing methods as follows:

1. Story-to-story. Mixing any bracing methods from story-to-story is permitted. An example is using Method CS-WSP (continuously sheathed wood structural panel) bracing on the bottom two stories of a three-story building while using Method PBS (particleboard sheathing) or Method GB (gypsum board) bracing on the top story.
2. Braced wall line to braced wall line within one story. A builder is permitted to use different bracing methods on different walls within a story. For example, in a "window wall," a designer may use Method WSP bracing along one wall line of a story because its lower bracing length requirements can help to accommodate additional windows. On the other walls having fewer windows, the designer may use Method GB or another intermittent bracing method.

   Mixing any bracing methods with continuously sheathed methods from one wall line to another is permitted in SDC A, B or C and where the basic wind speeds are 130 mph (58 m/s) or less.

   In regions of SDC D_0–D_2 or wind speeds above 130 mph, intermittent bracing methods may change from wall line to wall line. When using continuously sheathed methods, all exterior wall lines must be continuously sheathed.

   For the 2009 code, it was determined that in high seismic and high wind zones, all exterior walls of a given level must be continuously sheathed if a single wall on that level is continuously sheathed. However, walls inside the building or walls on other levels may use whatever bracing meets the requirements for that wall or level.
3. Mixing in one braced wall line. For one- and two-family dwellings in SDC A, B and C, and for townhouses in SDC A and B, mixing intermittent bracing methods within a braced wall line is permitted. The length of the required bracing for the braced wall line with mixed sheathing types must have the greatest required bracing length, with all applicable adjustment factors applied, of all types of bracing used in that wall line.
4. Mixing continuous sheathing methods in one wall line. Mixing of continuous sheathing methods CS-WSP, CS-G and CS-PF along a braced wall line is permitted as these methods assume use in a continuously sheathed wood structural panel wall line. For example, the braced wall line at the front of a house might have CS-WSP along the majority of the wall line with CS-PF at the garage opening. Also, the three intermittent alternate bracing methods, ABW, PFH and PFG are permitted to be mixed with the CS-WSP method.
5. Mixing intermittent and continuous sheathing methods in one wall line. In SDC A-C for detached one- and two-family dwellings and SDC A-B for townhouses, mixing of intermittent bracing methods along the interior portion of a braced wall line with continuous sheathing methods CS-WSP, CS-G and CS-PF along the exterior portion of the same braced wall line is permitted. The length of required bracing is the highest value of all intermittent bracing methods used with all applicable adjustment factors applied. The requirements of Section R602.10.7 apply to each end of the continuously sheathed portion of the braced wall line.

MIXING LOCATIONS	MIXING LIMITATIONS	SDC A-B	SDC C DETACHED	SDC C TOWNHOUSES	SDC D_0-D_2
Story to Story	Mixing intermittent & continuously sheathed methods	X	X	X	X
BWL to BWL	Mixing intermittent methods	X	X	X	X
BWL to BWL	Mixing intermittent & continuously sheathed methods	X	X	X	NP
Within BWL	Mixing intermittent methods in a single wall line	X	X	NP	NP
Within BWL	Mixing continuously sheathed methods using wood structural panels only (Mixing CS-WSP, CS-G, CS-PF, ABW, PFH & PFG)	X	X	X	X
Within BWL	Mixing an intermittent method on an interior portion & CS-WSP, CS-PF, and CS-G on an exterior portion of a wall line	X	X	NP	NP

BWL = Braced Wall Line, NP = Not Permitted.

Figure R602.10.4.1
MIXING BRACING METHODS

INTERNATIONAL CODE COUNCIL®
Copyright © 2015 ICC. ALL RIGHTS RESERVED. Accessed by David Dammon on Jun 21, 2017 12:30:52 PM pursuant to License Agreement with ICC. No further reproduction or distribution authorized. ANY UNAUTHORIZED REPRODUCTION OR DISTRIBUTION IS A VIOLATION OF THE FEDERAL COPYRIGHT ACT AND THE LICENSE AGREEMENT, AND SUBJECT TO CIVIL AND CRIMINAL PENALTIES THEREUNDER.

TABLE R602.10.4
BRACING METHODS

METHODS, MATERIAL		MINIMUM THICKNESS	FIGURE	CONNECTION CRITERIA[a]	
				Fasteners	Spacing
Intermittent Bracing Method	**LIB** Let-in-bracing	1 × 4 wood or approved metal straps at 45° to 60° angles for maximum 16″ stud spacing		Wood: 2-8d common nails or 3-8d ($2^1/_2$″ long x 0.113″ dia.) nails	Wood: per stud and top and bottom plates
				Metal strap: per manufacturer	Metal: per manufacturer
	DWB Diagonal wood boards	$^3/_4$″(1″ nominal) for maximum 24″ stud spacing	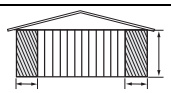	2-8d ($2^1/_2$″ long × 0.113″ dia.) nails or 2 - $1^3/_4$″ long staples	Per stud
	WSP Wood structural panel (See Section R604)	$^3/_8$″	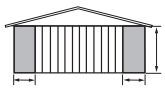	Exterior sheathing per Table R602.3(3)	6″ edges 12″ field
				Interior sheathing per Table R602.3(1) or R602.3(2)	Varies by fastener
	BV-WSP[e] Wood structural panels with stone or masonry veneer (See Section R602.10.6.5)	$^7/_{16}$″	See Figure R602.10.6.5	8d common ($2^1/_2$″ × 0.131) nails	4″ at panel edges 12″ at intermediate supports 4″ at braced wall panel end posts
	SFB Structural fiberboard sheathing	$^1/_2$″ or $^{25}/_{32}$″ for maximum 16″ stud spacing		$1^1/_2$″ long × 0.12″ dia. (for $^1/_2$″ thick sheathing) $1^3/_4$″ long × 0.12″ dia. (for $^{25}/_{32}$″ thick sheathing) galvanized roofing nails or 8d common ($2^1/_2$″ long × 0.131″ dia.) nails	3″ edges 6″ field
	GB Gypsum board	$^1/_2$″	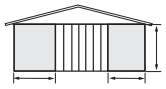	Nails or screws per Table R602.3(1) for exterior locations	For all braced wall panel locations: 7″ edges (including top and bottom plates) 7″ field
				Nails or screws per Table R702.3.5 for interior locations	
	PBS Particleboard sheathing (See Section R605)	$^3/_8$″ or $^1/_2$″ for maximum 16″ stud spacing		For $^3/_8$″, 6d common (2″ long × 0.113″ dia.) nails For $^1/_2$″, 8d common ($2^1/_2$″ long × 0.131″ dia.) nails	3″ edges 6″ field
	PCP Portland cement plaster	See Section R703.6 for maximum 16″ stud spacing	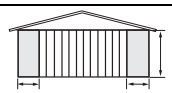	$1^1/_2$″ long, 11 gage, $^7/_{16}$″ dia. head nails or $^7/_8$″ long, 16 gage staples	6″ o.c. on all framing members
	HPS Hardboard panel siding	$^7/_{16}$″ for maximum 16″ stud spacing	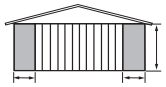	0.092″ dia., 0.225″ dia. head nails with length to accommodate $1^1/_2$″ penetration into studs	4″ edges 8″ field
	ABW Alternate braced wall	$^3/_8$″	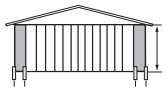	See Section R602.10.6.1	See Section R602.10.6.1

(continued)

INTERNATIONAL CODE COUNCIL®
Copyright © 2015 ICC. ALL RIGHTS RESERVED. Accessed by David Dammon on Jun 21, 2017 12:30:52 PM pursuant to License Agreement with ICC. No further reproduction or distribution authorized. ANY UNAUTHORIZED REPRODUCTION OR DISTRIBUTION IS A VIOLATION OF THE FEDERAL COPYRIGHT ACT AND THE LICENSE AGREEMENT, AND SUBJECT TO CIVIL AND CRIMINAL PENALTIES THEREUNDER.

TABLE R602.10.4—continued
BRACING METHODS

METHODS, MATERIAL		MINIMUM THICKNESS	FIGURE	CONNECTION CRITERIA[a]	
				Fasteners	Spacing
Intermittent Bracing Methods	**PFH** Portal frame with hold-downs	$^3/_8$″	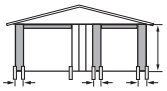	See Section R602.10.6.2	See Section R602.10.6.2
	PFG Portal frame at garage	$^7/_{16}$″	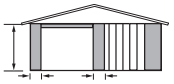	See Section R602.10.6.3	See Section R602.10.6.3
Continuous Sheathing Methods	**CS-WSP** Continuously sheathed wood structural panel	$^3/_8$″	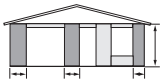	Exterior sheathing per Table R602.3(3)	6″ edges 12″ field
				Interior sheathing per Table R602.3(1) or R602.3(2)	Varies by fastener
	CS-G[b, c] Continuously sheathed wood structural panel adjacent to garage openings	$^3/_8$″	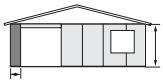	See Method CS-WSP	See Method CS-WSP
	CS-PF Continuously sheathed portal frame	$^7/_{16}$″	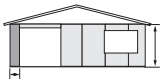	See Section R602.10.6.4	See Section R602.10.6.4
	CS-SFB[d] Continuously sheathed structural fiberboard	$^1/_2$″ or $^{25}/_{32}$″ for maximum 16" stud spacing	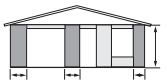	$1^1/_2$″ long × 0.12″ dia. (for $^1/_2$″ thick sheathing) $1^3/_4$″ long × 0.12″ dia. (for $^{25}/_{32}$″ thick sheathing) galvanized roofing nails or 8d common ($2^1/_2$″ long × 0.131″ dia.) nails	3″ edges 6″ field

For SI: 1 inch = 25.4 mm, 1 foot = 304.8 mm, 1 degree = 0.0175 rad, 1 pound per square foot = 47.8 N/m^2, 1 mile per hour = 0.447 m/s.

a. Adhesive attachment of wall sheathing, including Method GB, shall not be permitted in Seismic Design Categories C, D_0, D_1 and D_2.

b. Applies to panels next to garage door opening where supporting gable end wall or roof load only. Shall only be used on one wall of the garage. In Seismic Design Categories D_0, D_1 and D_2, roof covering dead load shall not exceed 3 psf.

c. Garage openings adjacent to a Method CS-G panel shall be provided with a header in accordance with Table R602.7(1). A full-height clear opening shall not be permitted adjacent to a Method CS-G panel.

d. Method CS-SFB does not apply in Seismic Design Categories D_0, D_1 and D_2.

e. Method applies to detached one- and two-family dwellings in Seismic Design Categories D_0 through D_2 only.

❖ See the commentary to Section R602.10.3.

INTERNATIONAL CODE COUNCIL®
Copyright © 2015 ICC. ALL RIGHTS RESERVED. Accessed by David Dammon on Jun 21, 2017 12:30:52 PM pursuant to License Agreement with ICC. No further reproduction or distribution authorized. ANY UNAUTHORIZED REPRODUCTION OR DISTRIBUTION IS A VIOLATION OF THE FEDERAL COPYRIGHT ACT AND THE LICENSE AGREEMENT, AND SUBJECT TO CIVIL AND CRIMINAL PENALTIES THEREUNDER.

R602.10.4.2 Continuous sheathing methods. Continuous sheathing methods require structural panel sheathing to be used on all sheathable surfaces on one side of a *braced wall line* including areas above and below openings and gable end walls and shall meet the requirements of Section R602.10.7.

❖ The definition of a continuously sheathed braced wall line from Section R202 is:

BRACED WALL LINE, CONTINUOUSLY SHEATHED. A braced wall line with structural sheathing applied to all sheathable surfaces including the areas above and below openings.

The four continuous bracing methods require continuous sheathing on all wall areas of the wall line. As walls with continuous sheathing are generally considered to be stiffer and stronger than similar walls with intermittent bracing, the continuous methods allow for bracing solutions that are narrower than the widths required for the intermittent methods. Mixing of continuous bracing with intermittent bracing is allowed as specified in Section R602.10.4.1 (see commentary, Section R602.10.4.1).

R602.10.4.3 Braced wall panel interior finish material. *Braced wall panel*s shall have gypsum wall board installed on the side of the wall opposite the bracing material. Gypsum wall board shall be not less than $^1/_2$ inch (12.7 mm) in thickness and be fastened with nails or screws in accordance with Table R602.3(1) for exterior sheathing or Table R702.3.5 for interior gypsum wall board. Spacing of fasteners at panel edges for gypsum wall board opposite Method LIB bracing shall not exceed 8 inches (203 mm). Interior finish material shall not be glued in Seismic Design Categories D_0, D_1 and D_2.

Exceptions:

1. Interior finish material is not required opposite wall panels that are braced in accordance with Methods GB, BV-WSP, ABW, PFH, PFG and CS-PF, unless otherwise required by Section R302.6.
2. An approved interior finish material with an in-plane shear resistance equivalent to gypsum board shall be permitted to be substituted, unless otherwise required by Section R302.6.
3. Except for Method LIB, gypsum wall board is permitted to be omitted provided the required length of bracing in Tables R602.10.3(1) and R602.10.3(3) is multiplied by the appropriate adjustment factor in Tables R602.10.3(2) and R602.10.3(4), respectively, unless otherwise required by Section R302.6.

❖ In the 2009 code a requirement was added that, for intermittent braced wall panels, regular gypsum wall board must be installed as an interior finish material on the side of the wall opposite the bracing material. Note that this requirement is for the use of standard gypsum wall board, not Method GB bracing. Interior finish gypsum wall board can be attached in accordance with Section R702.3.5 (7 inches (178 mm) on center attachment required for Method GB does not apply). Narrow wall intermittent bracing methods (AWB, PFG, PFH and CS-PF) are exempt from this requirement because they were developed without gypsum wall board interior finish and they are typically used adjacent to garage door openings, where gypsum wall board is not commonly used. Wood structural panels with stone or masonry veneer (BV-WSP) do not require interior finish material. Additionally, there are exceptions that eliminate this requirement for gypsum wall board as an interior finish material if the wall bracing amount is increased.

Although the other bracing methods permit the gypsum board to be installed as a wall covering rather than a Method GB bracing material; when gypsum board is installed as Method GB bracing, the fasteners must be spaced 7 inches (178 mm) on center at all panel ends, edges and intermediate supports. The fastener schedule for gypsum board installed as a wall covering (see Section R702.3.5) is less stringent than when it is installed as a bracing material.

R602.10.5 Minimum length of a braced wall panel. The minimum length of a *braced wall panel* shall comply with Table R602.10.5. For Methods CS-WSP and CS-SFB, the minimum panel length shall be based on the adjacent clear opening height in accordance with Table R602.10.5 and Figure R602.10.5. Where a panel has an opening on either side of differing heights, the taller opening height shall be used to determine the panel length.

❖ Braced wall panel minimum lengths are placed into Table R602.10.5 for clarity. The column titled "Contributing length" gives the equivalent intermittent braced panel length for alternate intermittent braced wall panels and the continuously sheathed braced panel length for continuous sheathing methods.

This section requires that the minimum intermittent braced panel length be at least 48 inches (1219 mm), except when employing alternate braced panels. Minimum continuously sheathed braced panel length is dependent on the height of the wall and adjacent opening; therefore, the braced panels vary in required minimum length.

Minimum braced panel length varies depending upon bracing method and in some cases wall height, seismic design category or adjacent opening height.

- Minimum bracing length is 48 inches (1219 mm) for Methods DWB, WSP, SFB, PBS, GB, PCP, HPS, and BV-WSP for walls 10 feet (3048 mm) tall or less. Walls taller than 10 feet (3048 mm) require longer minimum braced panel lengths.
- Method LIB requires a minimum length of 55 inches (1397 mm) for an 8-foot-tall (2438 mm) wall. The minimum length varies depending upon the wall height.
- Minimum length of a Method ABW panel varies depending upon wall height and seismic design category.
- Methods CS-WSP and CS-SFB minimum length depend upon wall height and the size of the opening next to the braced wall panel.

INTERNATIONAL CODE COUNCIL®
Copyright © 2015 ICC. ALL RIGHTS RESERVED. Accessed by David Dammon on Jun 21, 2017 12:30:52 PM pursuant to License Agreement with ICC. No further reproduction or distribution authorized. ANY UNAUTHORIZED REPRODUCTION OR DISTRIBUTION IS A VIOLATION OF THE FEDERAL COPYRIGHT ACT AND THE LICENSE AGREEMENT, AND SUBJECT TO CIVIL AND CRIMINAL PENALTIES THEREUNDER.

- Methods PFH (supporting one story and a roof), PFG and CS-G have a minimum braced panel length of 24 inches (610 mm).
- Method PFH (supporting a roof) and Method CS-PF have a minimum panel length of 16 inches (406 mm).

Methods ABW, PFG, CS-G and CS-PF have a bracing capacity related to the ratio of their panel height to length. Note that this aspect ratio adjustment is separate from the required bracing adjustment in Table R602.10.3(4). However, any increase in length as a result of the aspect ratio adjustment in Table R602.10.5 is permitted to be counted towards the amount of bracing required. In many cases, when a number of minimum-length panels are used for bracing, the aspect ratio adjustment will completely account for the length increase from Table R602.10.3(4).

Remember that, for all bracing methods, wall length is measured along the wall line in the horizontal direction.

R602.10.5.1 Contributing length. For purposes of computing the required length of bracing in Tables R602.10.3(1) and R602.10.3(3), the contributing length of each *braced wall panel* shall be as specified in Table R602.10.5.

❖ This section clarifies what length should be counted for a specific bracing method when the actual length of the panel is not used.

The following bracing methods contribute the measured length of the braced panel to the total bracing length:

- LIB, DWB, WSP, SFB, PBS, PCP, HPS, and BV-WSP for intermittent bracing.
- Double-sided GB.
- CS-PF in SDC D_0, D_1 and D_2.
- CS-WSP, CS-G and CS-SFB.

Other methods have a fixed amount of bracing per braced panel or an adjustment factor that is applied to the measured length of braced panel.

- Method ABW panel and each Method PFH panel in a portal contribute 4 feet (1219 mm) of bracing.
- Method GB is worth half its length for single-sided applications, i.e., 20 feet (6096 mm) of single-sided GB equals 10 feet (3048 mm) of wall bracing.
- Method PFG panel is worth $1^1/_2$ times its physical length for wall bracing length, i.e., a 24-inch (610 mm) panel is worth 36 inches (914 mm) of wall bracing.
- Method CS-PF in SDC A, B and C is worth $1^1/_2$ times its physical length for wall bracing length.

Only full-height braced wall panels are to be counted toward the minimum required length of bracing. Table R602.10.5 provides minimum length requirements for Methods CS-WSP or CS-SFB for various wall heights.

The braced panel lengths are based on the adjacent clear opening height as shown in Figure R602.10.5. Note that minimum panel lengths are aspect-ratio linked: as the wall height increases, so does the minimum bracing panel length. This is necessary to ensure that, as the wall gets taller, it remains sufficiently stiff.

R602.10.5.2 Partial credit. For Methods DWB, WSP, SFB, PBS, PCP and HPS in Seismic Design Categories A, B and C, panels between 36 inches and 48 inches (914 mm and 1219 mm)) in length shall be considered a *braced wall panel* and shall be permitted to partially contribute toward the required length of bracing in Tables R602.10.3(1) and R602.10.3(3), and the contributing length shall be determined from Table R602.10.5.2.

❖ Section R602.10.5.2 permits reductions in the minimum panel length for specific panel-type bracing methods (DWB, WSP, SFB, PBS, PCP and HPS) in SDC A, B and C as long as a length penalty is applied to the actual length of the wall panel in accordance with Table R602.10.5.2. For example, a 36-inch (914 mm) panel can be used in an 8-foot (2438 mm) wall instead of a full 48-inch (1219 mm) panel, but it will only count as 27 inches (686 mm) towards the required length of bracing.

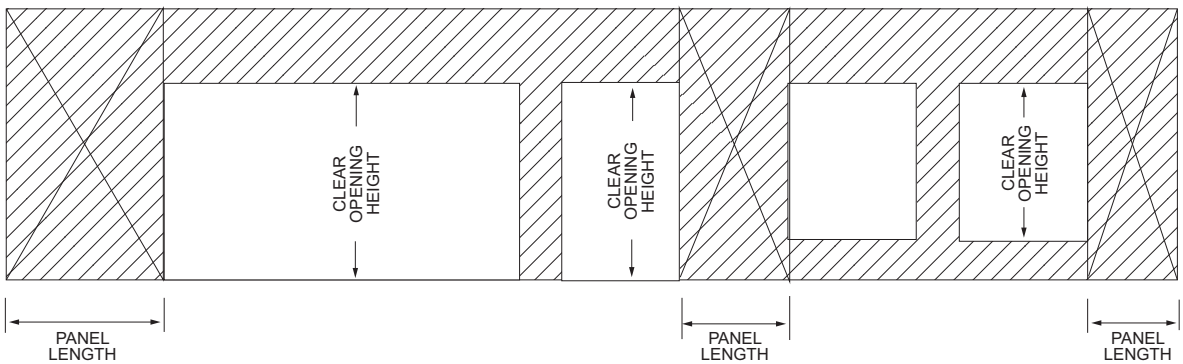

FIGURE R602.10.5
BRACED WALL PANELS WITH CONTINUOUS SHEATHING

❖ See the commentary to Sections R602.10.5 and R602.10.5.1.

INTERNATIONAL CODE COUNCIL®
Copyright © 2015 ICC. ALL RIGHTS RESERVED. Accessed by David Dammon on Jun 21, 2017 12:30:52 PM pursuant to License Agreement with ICC. No further reproduction or distribution authorized. ANY UNAUTHORIZED REPRODUCTION OR DISTRIBUTION IS A VIOLATION OF THE FEDERAL COPYRIGHT ACT AND THE LICENSE AGREEMENT, AND SUBJECT TO CIVIL AND CRIMINAL PENALTIES THEREUNDER.

TABLE R602.10.5
MINIMUM LENGTH OF BRACED WALL PANELS

METHOD (See Table R602.10.4)		MINIMUM LENGTH[a] (inches) Wall Height					CONTRIBUTING LENGTH (inches)
		8 feet	9 feet	10 feet	11 feet	12 feet	
DWB, WSP, SFB, PBS, PCP, HPS, BV-WSP		48	48	48	53	58	Actual[b]
GB		48	48	48	53	58	Double sided = Actual Single sided = 0.5 × Actual
LIB		55	62	69	NP	NP	Actual[b]
ABW	SDC A, B and C, ultimate design wind speed < 140 mph	28	32	34	38	42	48
	SDC D_0, D_1 and D_2, ultimate design wind speed < 140 mph	32	32	34	NP	NP	
PFH	Supporting roof only	16	16	16	18[c]	20[c]	48
	Supporting one story and roof	24	24	24	27[c]	29[c]	48
PFG		24	27	30	33[d]	36[d]	1.5 × Actual[b]
CS-G		24	27	30	33	36	Actual[b]
CS-PF	SDC A, B and C	16	18	20	22[e]	24[e]	1.5 × Actual[b]
	SDC D_0, D_1 and D_2	16	18	20	22[e]	24[e]	Actual[b]
CS-WSP, CS-SFB	Adjacent clear opening height (inches)						
	≤ 64	24	27	30	33	36	Actual[b]
	68	26	27	30	33	36	
	72	27	27	30	33	36	
	76	30	29	30	33	36	
	80	32	30	30	33	36	
	84	35	32	32	33	36	
	88	38	35	33	33	36	
	92	43	37	35	35	36	
	96	48	41	38	36	36	
	100	—	44	40	38	38	
	104	—	49	43	40	39	
	108	—	54	46	43	41	
	112	—	—	50	45	43	
	116	—	—	55	48	45	
	120	—	—	60	52	48	
	124	—	—	—	56	51	
	128	—	—	—	61	54	
	132	—	—	—	66	58	
	136	—	—	—	—	62	
	140	—	—	—	—	66	
	144	—	—	—	—	72	

For SI: 1 inch = 25.4 mm, 1 foot = 304.8 mm, 1 mile per hour = 0.447 m/s.
NP = Not Permitted.

a. Linear interpolation shall be permitted.
b. Use the actual length where it is greater than or equal to the minimum length.
c. Maximum header height for PFH is 10 feet in accordance with Figure R602.10.6.2, but wall height shall be permitted to be increased to 12 feet with pony wall.
d. Maximum opening height for PFG is 10 feet in accordance with Figure R602.10.6.3, but wall height shall be permitted to be increased to 12 feet with pony wall.
e. Maximum opening height for CS-PF is 10 feet in accordance with Figure R602.10.6.4, but wall height shall be permitted to be increased to 12 feet with pony wall.

❖ See the commentary to Sections R602.10.5 and R602.10.5.1.

INTERNATIONAL CODE COUNCIL®
Copyright © 2015 ICC. ALL RIGHTS RESERVED. Accessed by David Dammon on Jun 21, 2017 12:30:52 PM pursuant to License Agreement with ICC. No further reproduction or distribution authorized. ANY UNAUTHORIZED REPRODUCTION OR DISTRIBUTION IS A VIOLATION OF THE FEDERAL COPYRIGHT ACT AND THE LICENSE AGREEMENT, AND SUBJECT TO CIVIL AND CRIMINAL PENALTIES THEREUNDER.

TABLE R602.10.5.2
PARTIAL CREDIT FOR BRACED WALL PANELS LESS THAN 48 INCHES IN ACTUAL LENGTH

ACTUAL LENGTH OF BRACED WALL PANEL (inches)	CONTRIBUTING LENGTH OF BRACED WALL PANEL (inches)[a]	
	8-foot Wall Height	9-foot Wall Height
48	48	48
42	36	36
36	27	N/A

For SI: 1 inch = 25.4 mm, 1 foot = 304.8 mm.
N/A = Not Applicable.
a. Linear interpolation shall be permitted.

❖ See the commentary to Section R602.10.5.2.

R602.10.6 Construction of Methods ABW, PFH, PFG, CS-PF and BV-WSP. Methods ABW, PFH, PFG, CS-PF and BV-WSP shall be constructed as specified in Sections R602.10.6.1 through R602.10.6.5.

❖ This section places former intermittent and continuously sheathed alternate braced wall panel methods together. The text descriptions of the methods have been deleted with a figure replacing the text description. The figures contain the majority of the construction requirements for Methods ABW, PFH, PFG, CS-PF and BV-WSP.

Allowed wall heights have been increased to 12 feet (3658 mm) with the portal header height limited to 10 feet (3048 mm) and a cripple wall built above. When a cripple wall is above the header, tension straps should be nailed to the cripple wall stud, header and the jack stud below creating a continuous load path to the story or foundation below.

The use of a cripple wall (pony wall) directly over the continuously sheathed portal frame has been included in all the portal frame alternate methods in the 2015 edition. The pony wall provisions are used often as a means of elevating the second story of the structure over the garage in a home with a split-level entry. Cripple walls are meant to address a problem in which a structural hinge is created over a door or window header that can result in the header bulging in or out due to wind loads blowing directly against the wall, or even differential moisture conditions. In severe cases, it can lead to structural problems. Often in garages, these areas are braced back to the ceiling with framing to prevent such an occurrence.

When "braced back" detailing is not desired, the information provided in Table R602.10.6.4 and Figure R602.10.6.2, R602.10.6.3, or R602.10.6.4 can be used to detail the portal frame to handle various design wind loads and exposures. While not specifically permitted in the code, from an engineering perspective, interpolation of the variables in the table is appropriate.

Note that the cripple wall information in Table R602.10.6.4 may be used for pony walls over any header within the scope of the table. For conventionally framed headers, the table is slightly conservative, but it is the only prescriptive guidance available for cripple walls over headers. The use of this table will ensure that the header/pony wall assembly has sufficient stiffness to prevent a hinge from forming at the header-to-pony wall joint when subjected to wind loads acting against the wall.

R602.10.6.1 Method ABW: Alternate braced wall panels. Method ABW *braced wall panel*s shall be constructed in accordance with Figure R602.10.6.1. The hold-down force shall be in accordance with Table R602.10.6.1.

❖ Method ABW (see Section R602.10.6.1) has been in the IRC in one form or another since 2000 and was often referred to as the "32-inch (813 mm) alternate with hold-downs." Method ABW panels are typically used

TABLE R602.10.6.1
MINIMUM HOLD-DOWN FORCES FOR METHOD ABW BRACED WALL PANELS

SEISMIC DESIGN CATEGORY AND WIND SPEED	SUPPORTING/STORY	HOLD-DOWN FORCE (pounds)				
		Height of Braced Wall Panel				
		8 feet	9 feet	10 feet	11 feet	12 feet
SDC A, B and C Ultimate design wind speed < 140 mph	One story	1,800	1,800	1,800	2,000	2,200
	First of two stories	3,000	3,000	3,000	3,300	3,600
SDC D_0, D_1 and D_2 Ultimate design wind speed <140 mph	One story	1,800	1,800	1,800	NP	NP
	First of two stories	3,000	3,000	3,000	NP	NP

For SI: 1 inch = 25.4 mm, 1 foot = 304.8 mm, 1 pound = 4.45 N, 1 mile per hour = 0.447 m/s.
NP = Not Permitted.

❖ See the commentary to Section R602.10.6.1.

INTERNATIONAL CODE COUNCIL®
Copyright © 2015 ICC. ALL RIGHTS RESERVED. Accessed by David Dammon on Jun 21, 2017 12:30:52 PM pursuant to License Agreement with ICC. No further reproduction or distribution authorized. ANY UNAUTHORIZED REPRODUCTION OR DISTRIBUTION IS A VIOLATION OF THE FEDERAL COPYRIGHT ACT AND THE LICENSE AGREEMENT, AND SUBJECT TO CIVIL AND CRIMINAL PENALTIES THEREUNDER.

when bracing is needed in a wall area that is not long enough to accommodate a 4-foot (1219 mm) braced wall panel.

Method ABW is grouped with the intermittent wall bracing methods because it may be substituted on a one-for-one basis for a braced wall panel from any other bracing method, and, as such, it is used intermittently. Figure R602.10.6.1 clarifies the method.

For purposes of computing the required length of bracing, a single Method ABW panel is considered to be equivalent to 4 feet (1219 mm) of bracing, regardless of its actual length.

The maximum height and minimum length are given in Table R602.10.5 while the required hold-down force is given in Table R602.10.6.1.

R602.10.6.2 Method PFH: Portal frame with hold-downs. Method PFH *braced wall panel*s shall be constructed in accordance with Figure R602.10.6.2.

❖ Method PFH has been in the code since 2006 (where it was called "alternate braced wall panel adjacent to a door or window opening." This method was developed primarily to maintain the traditional look of narrow wall segments on either side of garage door openings. Method PFH is included in the code as an intermittent bracing method because it may be substituted on a one-for-one basis for a braced wall panel from any other bracing method and, as such, it is used intermittently.

In the 2015 code, the construction method of the intermittent portal frame with hold-downs has been updated as follows:

- Reduction of the 4,200-pound strap-type hold-downs to 3,500 pounds. The initial testing was conducted on the portal frames utilizing the 4,200 pounds per force (lbf) hold-down because that was what was readily available and in common use by the construction industry. At the time of initial testing, no attempt was made to determine the sensitivity of the system to such a reduction in tie-down capacity. As the initial prescriptive parameters of the portal frame were based on testing, there was no rationale for determining the impact of the industry-wide reduction to such tie-downs in response to the cracked-concrete provisions of ACI 318. As such, retesting of the portal frames with both 4,200 lbf and 3,500 lbf tie-downs was necessary to determine the impact on the performance of the system, if any. Portals with 24-inch-wide legs × 8-foot height as well as 16-inch wide × 10 feet high were tested by APA. Pairs of each size

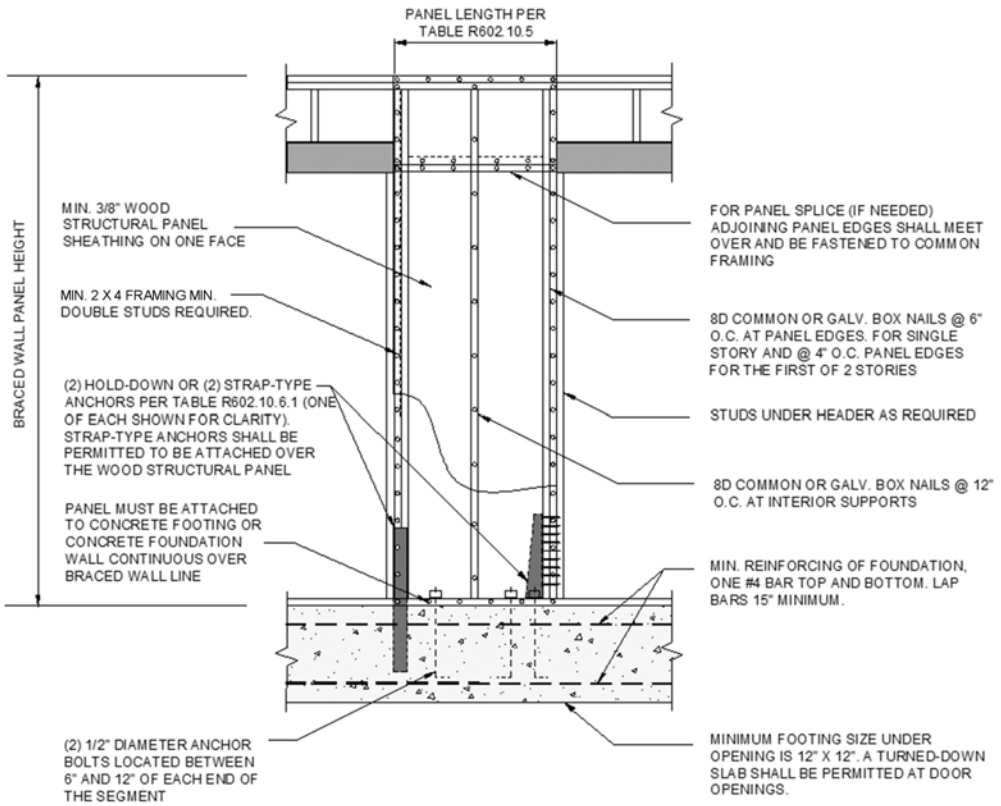

For SI: 1 inch = 25.4 mm.

FIGURE R602.10.6.1
METHOD ABW—ALTERNATE BRACED WALL PANEL

❖ See the commentary to Section R602.10.6.1.

INTERNATIONAL CODE COUNCIL®
Copyright © 2015 ICC. ALL RIGHTS RESERVED. Accessed by David Dammon on Jun 21, 2017 12:30:52 PM pursuant to License Agreement with ICC. No further reproduction or distribution authorized. ANY UNAUTHORIZED REPRODUCTION OR DISTRIBUTION IS A VIOLATION OF THE FEDERAL COPYRIGHT ACT AND THE LICENSE AGREEMENT, AND SUBJECT TO CIVIL AND CRIMINAL PENALTIES THEREUNDER.

were tested with 4,200 lbf tie-downs and then retested with 3,500 lbf tie-downs. Upon consultation with Simpson Strong-Tie technical personnel, it was determined that the 3,500 lbf capacity would be simulated by using 17 nails in the 4,200-pound strap. The 4,200-pound capacity of the strap was achieved by filling all 28 holes in the strap, even though 21 nails would yield the 4,200 lbf capacities. This was done to simulate actual field-installed conditions. The results of these tests indicate that the whole portal frame system was relatively insensitive to the reduction in tie-down capacity within the over-nailed 4,200 lbf to 3,500 lbf range. The APA—The Engineered Wood Association report, APA Report T2012L-24—*Bracing Method Alternative Attachment (IBC), Portal Frame with Hold Downs (Bracing Method PFH) (IRC)—Hold-Down Strap Capacity Variations*, describes the testing in detail.

- Reduction of the number of bottom plates from three to two. The original testing was conducted with the third plate in place. The third plate causes numerous difficulties in the field, not the least of which is that the normal length threaded anchors are too short to accommodate the third plate and provide the required depth of penetration into the foundation. This results in inadequate anchor depth of embedment or the use of threaded sleeves and all-thread to extend the bolt length to accommodate the third plate. When investigating the change to the 3,500 lbf hold-down, the tests were run with only double bottom plates. All subsequent testing was done without the third bottom plate. The results of this testing indicated that the third bottom plate has negligible impact on the performance of the portal frames.
- Clarification of the location of the panel splice edge on the portal leg.
- Added a note to clarify where a $^1/_2$-inch spacer is used; in a built-up header it must be put on the back side of the header. This placement allows the 8d nails used in the grid pattern at the top of the portal leg to adequately penetrate the back header to provide proper load distribution. As the spacer offers no structural advantage to the header, its placement behind the built-up header is of no structural consequence.
- Added a note to fasten king studs to the header with 6-16d nails. The assembly was developed and tested with these nails present and this should be reflected in the figure.

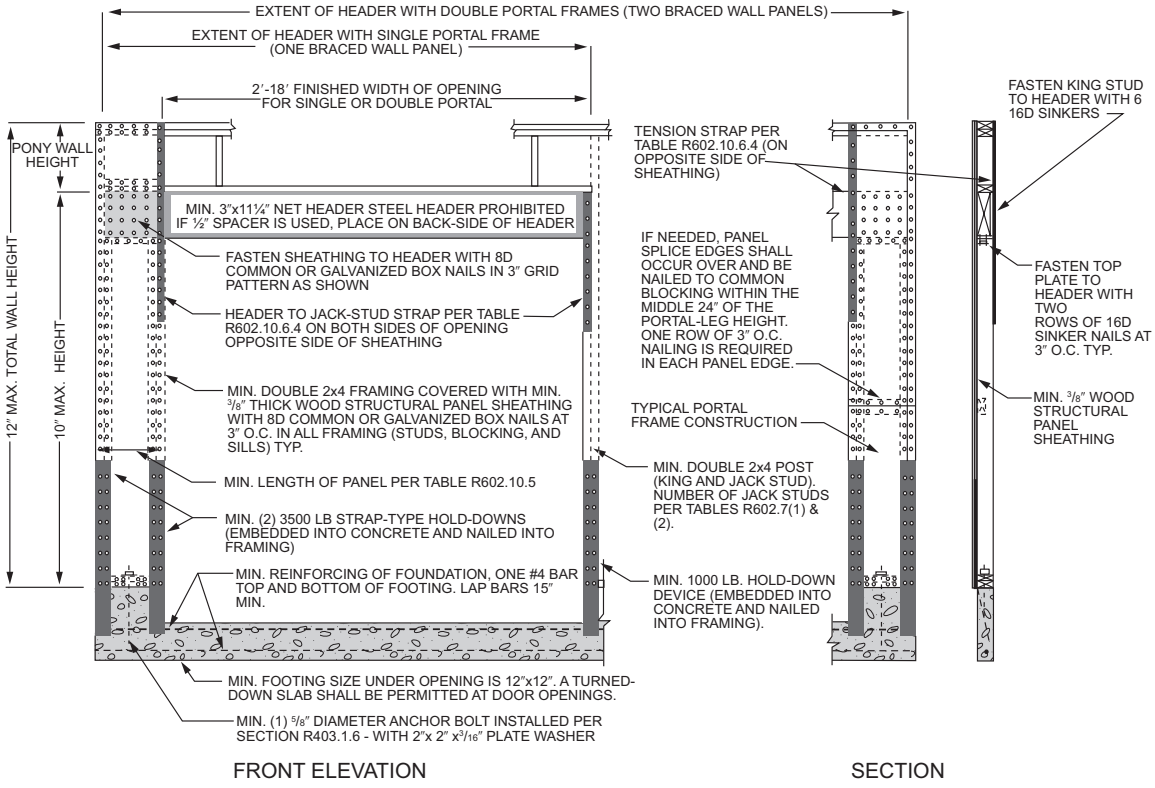

For SI: 1 inch = 25.4 mm, 1 foot = 304.8 mm.

FIGURE R602.10.6.2
METHOD PFH—PORTAL FRAME WITH HOLD-DOWNS

❖ See the commentary to Section R602.10.6.2.

INTERNATIONAL CODE COUNCIL®
Copyright © 2015 ICC. ALL RIGHTS RESERVED. Accessed by David Dammon on Jun 21, 2017 12:30:52 PM pursuant to License Agreement with ICC. No further reproduction or distribution authorized. ANY UNAUTHORIZED REPRODUCTION OR DISTRIBUTION IS A VIOLATION OF THE FEDERAL COPYRIGHT ACT AND THE LICENSE AGREEMENT, AND SUBJECT TO CIVIL AND CRIMINAL PENALTIES THEREUNDER.

For purposes of computing the required length of bracing, each leg of the portal frame is considered to be equivalent to 4 feet (1219 mm) of bracing. The portal frame can be built with one or two sides as required. This method can be used for wall heights up to 10 feet (3048 mm), or if a cripple wall (pony wall) is placed above the header, a total opening height may be 12 feet (3658 mm) tall. The top of the header is limited to a maximum height of 10 feet (3048 mm). Note that Method PFH is not aspect ratio based: all single-story applications are a minimum of 16 inches (406 mm) in length and all first of two-story applications are a minimum of 24 inches (610 mm) in length. If the wall height is greater than 10 feet (3048 mm) tall, then the required braced panel length increases (see Table R602.10.5).

R602.10.6.3 Method PFG: Portal frame at garage door openings in Seismic Design Categories A, B and C. Where supporting a roof or one story and a roof, a Method PFG *braced wall panel* constructed in accordance with Figure R602.10.6.3 shall be permitted on either side of garage door openings.

❖ Method PFG is a "light" variation of Method PFH that is limited to areas of low and moderate seismicity (SDC A, B and C). Like Method PFH, it is a portal frame bracing method, but it does not include hold-downs and is restricted to single story and first of two-story applications. Method PFG is a 4:1 aspect ratio-based system with a 24-inch (610 mm) minimum length requirement [e.g., for an 8-foot (2438 mm) wall, the minimum length is 96 inches (2438 mm)/4 = 24 inches (610 mm); for a 10-foot (3048 mm) wall, the minimum length is 120 inches (3048 mm)/4 = 30 inches (762 mm)]. For the purposes of computing, its bracing length is equal to 1.5 times the length (horizontal dimension) of the vertical leg. Note the nailing at the sheathing-to-header overlap is the same as Method PFH but without nailing the interior studs of the doubled 2 by 4s at either end of the vertical legs.

In the 2015 code, the construction method of intermittent portal frames at garage door openings has been updated as follows:

- Clarification of the location of the panel splice edge on the portal leg.
- Added a note to clarify where a $^1/_2$-inch spacer is used; in a built-up header it must be put on the back side of the header. This placement allows the 8d nails used in the grid pattern at the top of the portal leg to adequately penetrate the back header to provide proper load distribution. As the spacer offers no structural advantage to the header, its placement behind the built-up header is of no structural consequence.
- Added a note to fasten king studs to the header with 6-16d nails. The assembly was developed and tested with these nails present and this should be reflected in the figure.

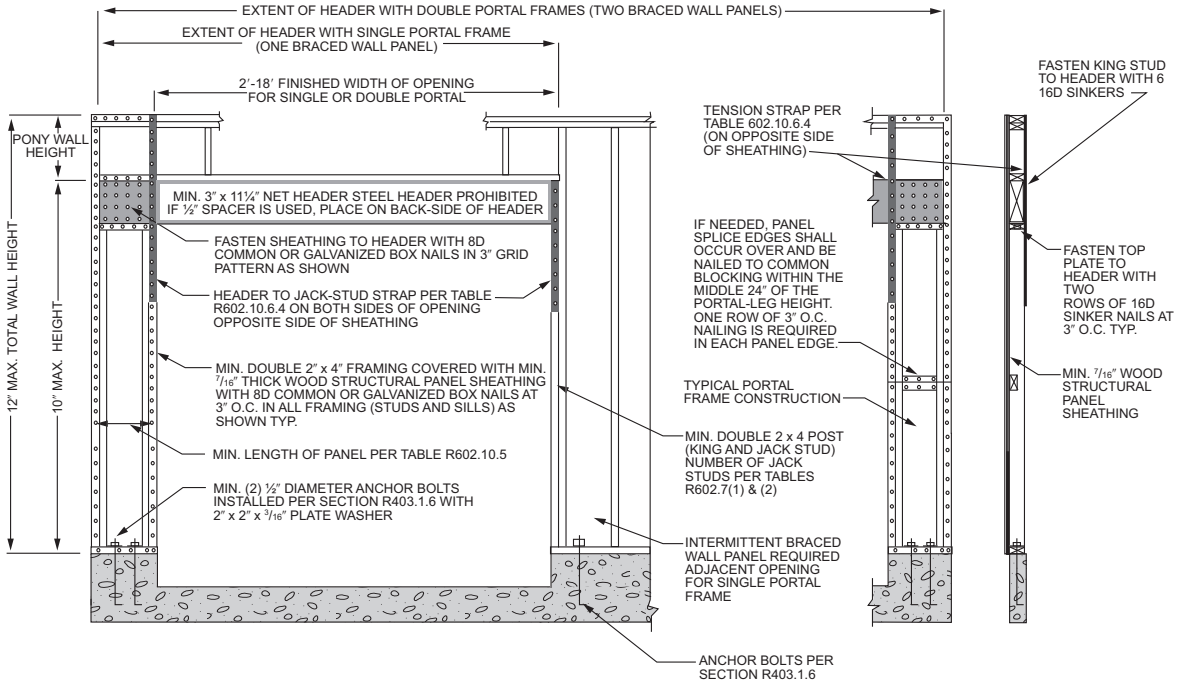

For SI: 1 inch = 25.4 mm, 1 foot = 304.8 mm.

FIGURE R602.10.6.3
METHOD PFG—PORTAL FRAME AT GARAGE DOOR OPENINGS IN SEISMIC DESIGN CATEGORIES A, B AND C

❖ See the commentary to Section R602.10.6.3.

INTERNATIONAL CODE COUNCIL®
Copyright © 2015 ICC. ALL RIGHTS RESERVED. Accessed by David Dammon on Jun 21, 2017 12:30:52 PM pursuant to License Agreement with ICC. No further reproduction or distribution authorized. ANY UNAUTHORIZED REPRODUCTION OR DISTRIBUTION IS A VIOLATION OF THE FEDERAL COPYRIGHT ACT AND THE LICENSE AGREEMENT, AND SUBJECT TO CIVIL AND CRIMINAL PENALTIES THEREUNDER.

R602.10.6.4 Method CS-PF: Continuously sheathed portal frame. Continuously sheathed portal frame *braced wall panel*s shall be constructed in accordance with Figure R602.10.6.4 and Table R602.10.6.4. The number of continuously sheathed portal frame panels in a single *braced wall line* shall not exceed four.

❖ Minimum thickness of wood structural panel sheathing for CS-PF is $^{7}/_{16}$ inch (11 mm) thickness.

The scope of this method, referred to as Method CS-PF, is for use on any floor and in any wind zone or SDC covered by the code.

For purposes of determining the length of bracing, the length of the vertical leg of the portal frame is used as the bracing length for the element. The minimum length is in Table R602.10.5. It is based on a 6:1 height-to-length ratio: for example: 16 inches (406 mm) minimum for 8-foot (2438 mm) height.

Method CS-PF can only be used with Method CS-WSP.

In the 2015 code, the construction method of the continuously sheathed portal frame has been updated as follows:

- Clarification of the location of the panel splice edge on the portal leg.
- Added a note to clarify, where a $^{1}/_{2}$-inch spacer is used; in a built-up header it must be put on

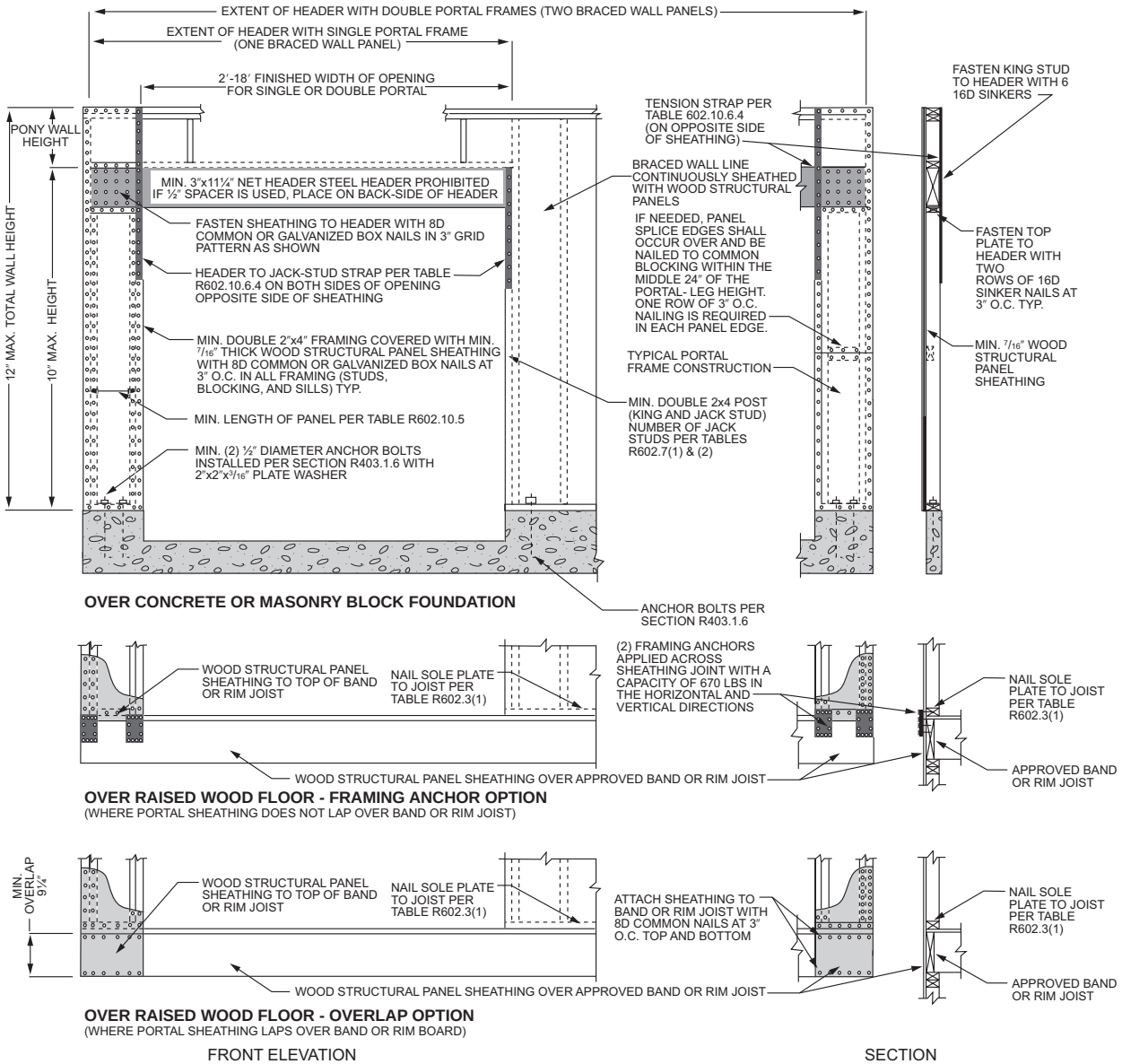

For SI: 1 inch = 25.4 mm, 1 foot = 304.8 mm.

FIGURE R602.10.6.4
METHOD CS-PF—CONTINUOUSLY SHEATHED PORTAL FRAME PANEL CONSTRUCTION

❖ See the commentary to Section R602.10.6.4.

INTERNATIONAL CODE COUNCIL®
Copyright © 2015 ICC. ALL RIGHTS RESERVED. Accessed by David Dammon on Jun 21, 2017 12:30:52 PM pursuant to License Agreement with ICC. No further reproduction or distribution authorized. ANY UNAUTHORIZED REPRODUCTION OR DISTRIBUTION IS A VIOLATION OF THE FEDERAL COPYRIGHT ACT AND THE LICENSE AGREEMENT, AND SUBJECT TO CIVIL AND CRIMINAL PENALTIES THEREUNDER.

the back side of the header. This placement allows the 8d nails used in the grid pattern at the top of the portal leg to adequately penetrate the back header to provide proper load distribution. As the spacer offers no structural advantage to the header, its placement behind the built-up header is of no structural consequence.

- Added a note to fasten king studs to the header with 6-16d nails. The assembly was developed and tested with these nails present and this should be reflected in the figure.

R602.10.6.5 Wall bracing for dwellings with stone and masonry veneer in Seismic Design Categories D_0, D_1 and D_2. Where stone and masonry veneer are installed in accordance with Section R703.8, wall bracing on exterior *braced wall lines* and *braced wall lines* on the interior of the building, backing or perpendicular to and laterally supporting veneered walls shall comply with this section.

Where dwellings in Seismic Design Categories D_0, D_1 and D_2 have stone or masonry veneer installed in accordance with Section R703.8, and the veneer does not exceed the first-story height, wall bracing shall be in accordance with Section R602.10.3.

Where detached one- or two-family dwellings in Seismic Design Categories D_0, D_1 and D_2 have stone or masonry veneer installed in accordance with Section R703.8, and the veneer exceeds the first-*story height*, wall bracing at exterior *braced wall lines* and *braced wall lines* on the interior of the building shall be constructed using Method BV-WSP in accordance with this section and Figure R602.10.6.5. Cripple walls shall not be permitted, and required interior *braced wall lines* shall be supported on continuous foundations.

Townhouses in Seismic Design Categories D_0, D_1 and D_2 with stone or masonry veneer exceeding the first-story height shall be designed in accordance with accepted engineering practice.

❖ This section includes provisions for wall bracing when stone or masonry veneer is installed as a wall covering. These provisions apply only to stone and masonry veneer, and not other wall coverings, because stone and masonry are heavy compared to other cladding materials. When ground motion from an earthquake puts the cladding in motion, the seismic weight (mass) of a cladding material produces load on the building's lateral-load-resisting structural elements. In the code, bracing panels are the structural elements that resist

TABLE R602.10.6.4
TENSION STRAP CAPACITY FOR RESISTING WIND PRESSURES PERPENDICULAR TO METHODS PFH, PFG AND CS-PF BRACED WALL PANELS

MINIMUM WALL STUD FRAMING NOMINAL SIZE AND GRADE	MAXIMUM PONY WALL HEIGHT (feet)	MAXIMUM TOTAL WALL HEIGHT (feet)	MAXIMUM OPENING WIDTH (feet)	TENSION STRAP CAPACITY REQUIRED (pounds)[a, b]					
				Ultimate Design Wind Speed V_{ult} (mph)					
				110	115	130	110	115	130
				Exposure B			Exposure C		
2 × 4 No. 2 Grade	0	10	18	1,000	1,000	1,000	1,000	1,000	1,050
	1	10	9	1,000	1,000	1,000	1,000	1,000	1,750
			16	1,000	1,025	2,050	2,075	2,500	3,950
			18	1,000	1,275	2,375	2,400	2,850	DR
	2	10	9	1,000	1,000	1,475	1,500	1,875	3,125
			16	1,775	2,175	3,525	3,550	4,125	DR
			18	2,075	2,500	3,950	3,975	DR	DR
	2	12	9	1,150	1,500	2,650	2,675	3,175	DR
			16	2,875	3,375	DR	DR	DR	DR
			18	3,425	3,975	DR	DR	DR	DR
	4	12	9	2,275	2,750	DR	DR	DR	DR
			12	3,225	3,775	DR	DR	DR	DR
2 × 6 Stud Grade	2	12	9	1,000	1,000	1,700	1,700	2,025	3,050
			16	1,825	2,150	3,225	3,225	3,675	DR
			18	2,200	2,550	3,725	3,750	DR	DR
	4	12	9	1,450	1,750	2,700	2,725	3,125	DR
			16	2,050	2,400	DR	DR	DR	DR
			18	3,350	3,800	DR	DR	DR	DR

For SI: 1 inch = 25.4 mm, 1 mile per hour = 0.447 m/s.

a. DR = Design Required.

b. Straps shall be installed in accordance with manufacturer's recommendations.

❖ See the commentary to Section R602.10.6.

INTERNATIONAL CODE COUNCIL®
Copyright © 2015 ICC. ALL RIGHTS RESERVED. Accessed by David Dammon on Jun 21, 2017 12:30:52 PM pursuant to License Agreement with ICC. No further reproduction or distribution authorized. ANY UNAUTHORIZED REPRODUCTION OR DISTRIBUTION IS A VIOLATION OF THE FEDERAL COPYRIGHT ACT AND THE LICENSE AGREEMENT, AND SUBJECT TO CIVIL AND CRIMINAL PENALTIES THEREUNDER.

the motion of the heavy cladding. The seismic lateral load on a building increases with cladding weight and ground motion intensity; therefore, the requirements for this provision are more stringent than for other bracing methods.

The intent of Section R602.10 is to permit full-height or less stone or masonry veneer on first-story walls using the bracing requirements of Table R602.10.3(3) and R602.10.3(4). Townhouses in SDC C have additional bracing for veneer required in Table R602.10.3(4). Detached one- and two-family dwellings in SDC D_0, D_1 and D_2 with veneer one story or less in height also have additional bracing provided by Table R602.10.3(4).

One- and two-family dwellings in SDC A, B and C and townhouses in SDC A and B are exempt from seismic requirements (in accordance with Section R301.2.2). No additional bracing is required due to the use of stone or masonry veneer in these seismic design categories.

Wall veneers of one story or less are thought to resist seismic forces independently from the braced walls to which they are attached. Once these wall veneers exceed one story, however, they are subject to additional bracing requirements.

For detached one- and two-family dwellings in SDC D_0, D_1 and D_2 with stone and masonry veneer taller than the first story, Section R602.10.6.5 must be used to determine required bracing material, length and hold-down size. This is consistent with Section R301.2.2.2.5, Item 7, Exception, which permits the use of masonry veneer as permitted elsewhere in the code. This exception specifies “masonry” veneer only; however, the intent of the code is to permit the use of both stone and masonry veneer, as the two are grouped together elsewhere in the code. For example, the title of Section R703.8 is “Anchored stone and masonry veneer, general.”

Since Section R602.10.6.5 does not extend “permission” for the installation of stone and masonry veneer to townhomes in SDC D_0, D_1 and D_2, townhouses would be categorized as “irregular” under Section R301.2.2.2.5, Item 7. Townhouses in SDC D_0, D_1 and D_2 must be engineered.

The amount of bracing required for one- and two-family dwellings in SDC D_0, D_1 and D_2 that have stone and masonry veneer above the top of the first story is provided in Table R602.10.6.5. Note that Table R602.10.6.5 has bracing requirements for single-story buildings but when the veneer is one story less in height, use Tables R602.10.3(3) and R602.10.3(4).

The bracing requirements for stone and masonry veneer apply to both the interior and exterior braced wall lines. These requirements define specific bracing materials (Method BV-WSP) and mechanical hold-down devices required at the ends of each braced wall panel.

Method BV-WSP is required to be attached with 8d nails spaced 4 inches (102 mm) on center at panel ends and edges, and hold-downs are required at ends of each continuous length of wood structural panel bracing in accordance with Table R602.10.4. Requiring BV-WSP effectively prohibits the use of continuous sheathing. For walls with stone or masonry veneer above the first story in high seismic regions, BV-WSP is the only bracing method allowed.

Continuous sheathing is prohibited because the capacities of Methods CS-WSP, CS-G and CS-PF are considerably lower than fully restrained, 48-inch-long (1219 mm) panels constructed with $^{7}/_{16}$-inch-thick (11 mm) wood structural panel sheathing, attached with 8d common nails at 4 inches (1029 mm) on center and hold-downs at the end of each braced wall panel.

The hold-downs are typically required to be nailed into two full-height studs at each end of the braced wall panel element. Designers used to working with the IBC will recognize that these bracing elements are similar to shear walls.

Hold-down location and capacity requirements are provided in Table R602.10.6.5 and Figure R602.10.6.5, respectively. As illustrated in Figure R602.10.6.5, the capacity of the hold-down is determined by the relationship of the ends of braced wall panels between stories. When BV-WSP panel ends are stacked above one another, the cumulative hold-down force from Table R602.10.6.5 is required for the lower braced wall panels.

When the ends of braced wall lines are not vertically aligned, i.e., one panel ends at a different location along the wall line than the panel below; the single-story hold-down capacity given in Table R602.10.6.5 is used.

When a BV-WSP occurs above the first story, the hold-down anchorage must be continued down to the foundation. For example, if a hold-down is installed on the second or third story, each story below must have a hold-down of the same capacity that is vertically aligned with the hold down on the story above. If a braced wall panel at the story below ends at the same location along the wall line, the hold-down capacity should be greater than or equal to the cumulative hold-down force.

Note that while wood structural panel sheathing may be used over the whole wall, above and below openings, hold-downs only need to be applied to the ends of those elements that are required for intermittent bracing. This is an important consideration when bracing lengths greater than 48 inches (1219 mm) are used. For example, if a wall line has a 6-foot (1829 mm) length of BV-WSP wall bracing, consisting of one 4-foot (1219 mm) and one 2-foot (610 mm) piece attached to a common stud, the hold-downs are only required at the start and end of the 6-foot (1829 mm) length and not at 4-foot (1219 mm) intervals.

The use of stone and masonry veneer in SDC D_0, D_1 and D_2 requires that interior braced wall lines be supported on continuous foundations regardless of plan dimension length. In addition, cripple walls are not permitted to be used.

INTERNATIONAL CODE COUNCIL®
Copyright © 2015 ICC. ALL RIGHTS RESERVED. Accessed by David Dammon on Jun 21, 2017 12:30:52 PM pursuant to License Agreement with ICC. No further reproduction or distribution authorized. ANY UNAUTHORIZED REPRODUCTION OR DISTRIBUTION IS A VIOLATION OF THE FEDERAL COPYRIGHT ACT AND THE LICENSE AGREEMENT, AND SUBJECT TO CIVIL AND CRIMINAL PENALTIES THEREUNDER.

TABLE R602.10.6.5
METHOD BV-WSP WALL BRACING REQUIREMENTS

SEISMIC DESIGN CATEGORY	STORY	BRACED WALL LINE LENGTH (FEET)					SINGLE-STORY HOLD-DOWN FORCE (pounds)[a]	CUMULATIVE HOLD-DOWN FORCE (pounds)[b]
		10	20	30	40	50		
		Minimum Total Length (feet) of Braced Wall Panels Required Along each Braced Wall Line						
D_0	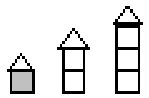	4.0	7.0	10.5	14.0	17.5	N/A	—
	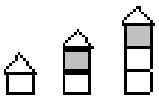	4.0	7.0	10.5	14.0	17.5	1900	—
		4.5	9.0	13.5	18.0	22.5	3500	5400
		6.0	12.0	18.0	24.0	30.0	3500	8900
D_1	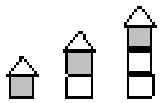	4.5	9.0	13.5	18.0	22.5	2100	—
		4.5	9.0	13.5	18.0	22.5	3700	5800
		6.0	12.0	18.0	24.0	30.0	3700	9500
D_2	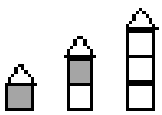	5.5	11.0	16.5	22.0	27.5	2300	—
		5.5	11.0	16.5	22.0	27.5	3900	6200
	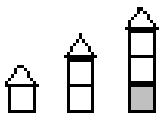	NP	NP	NP	NP	NP	N/A	N/A

For SI: 1 inch = 25.4 mm, 1 foot = 304.8 mm, 1 pound per square foot = 0.479 kPa, 1 pound-force = 4.448 N.

NP = Not Permitted.

N/A = Not Applicable.

a. Hold-down force is minimum allowable stress design load for connector providing uplift tie from wall framing at end of braced wall panel at the noted story to wall framing at end of braced wall panel at the story below, or to foundation or foundation wall. Use single-story hold-down force where edges of braced wall panels do not align; a continuous load path to the foundation shall be maintained.

b. Where hold-down connectors from stories above align with stories below, use cumulative hold-down force to size middle- and bottom-story hold-down connectors.

❖ See the commentary to Sections R602.10.6.5 and R602.10.6.5.1.

INTERNATIONAL CODE COUNCIL®
Copyright © 2015 ICC. ALL RIGHTS RESERVED. Accessed by David Dammon on Jun 21, 2017 12:30:52 PM pursuant to License Agreement with ICC. No further reproduction or distribution authorized. ANY UNAUTHORIZED REPRODUCTION OR DISTRIBUTION IS A VIOLATION OF THE FEDERAL COPYRIGHT ACT AND THE LICENSE AGREEMENT, AND SUBJECT TO CIVIL AND CRIMINAL PENALTIES THEREUNDER.

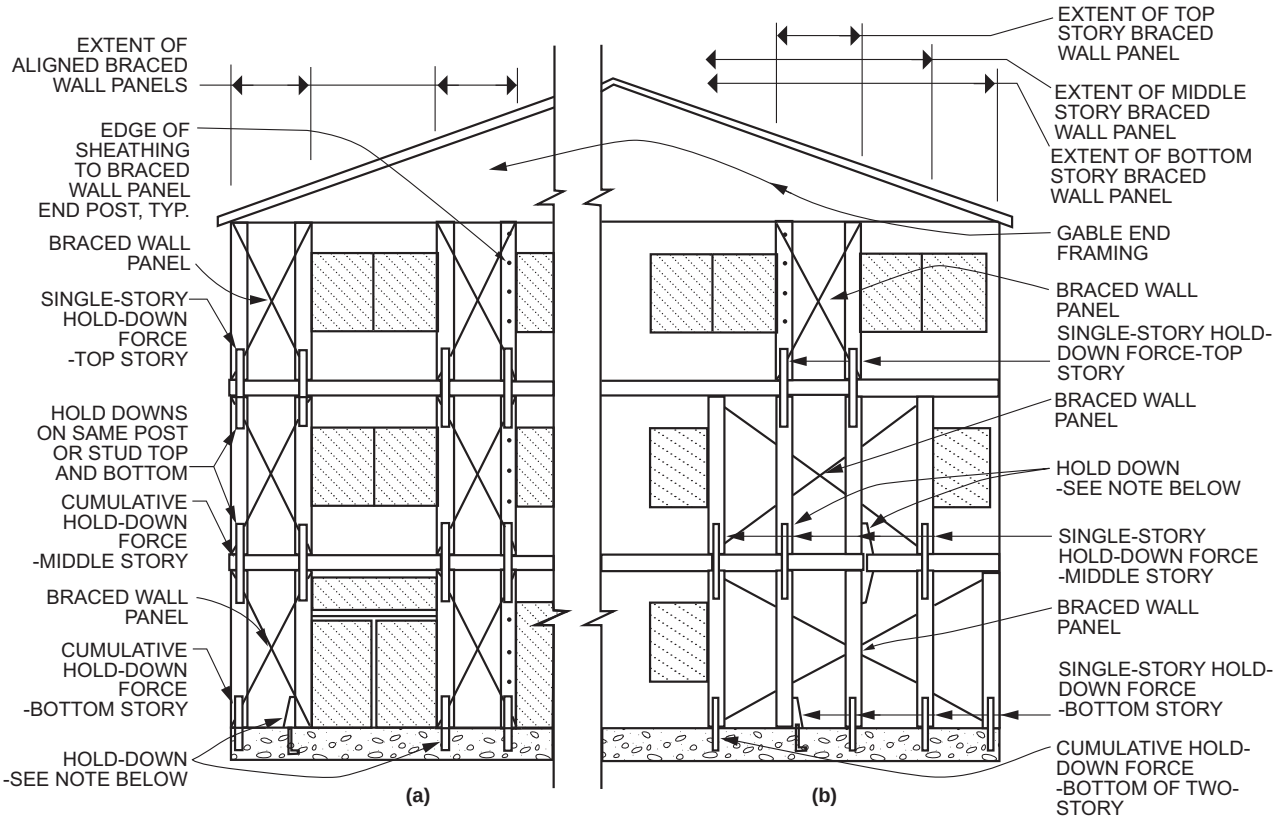

(a) Braced wall panels stacked (aligned story to story). Use cumulative hold-down force.

Braced wall panels mixed stacked and not stacked. Use hold-down force as noted.

Note: Hold downs should be strap ties, tension ties, or other approved hold-down devices and shall be installed in accordance with the manufacturer's instructions.

FIGURE R602.10.6.5
METHOD BV-WSP—WALL BRACING FOR DWELLINGS WITH STONE AND MASONRY VENEER IN SEISMIC DESIGN CATEGORIES D_0, D_1 and D_2

❖ See the commentary to Section R602.10.6.5.

R602.10.6.5.1 Length of bracing. The length of bracing along each *braced wall line* shall be the greater of that required by the ultimate design wind speed and *braced wall line* spacing in accordance with Table R602.10.3(1) as adjusted by the factors in Table R602.10.3(2) or the seismic design category and *braced wall line* length in accordance with Table R602.10.6.5. Angled walls shall be permitted to be counted in accordance with Section R602.10.1.4, and *braced wall panel* location shall be in accordance with Section R602.10.2.2. Spacing between *braced wall lines* shall be in accordance with Table R602.10.1.3. The seismic adjustment factors in Table R602.10.3(4) shall not be applied to the length of bracing determined using Table R602.10.6.5, except that the bracing amount increase for braced wall line spacing greater than 25 feet (7620 mm) in accordance with Table R602.10.1.3 shall be required. The minimum total length of bracing in a braced wall line, after all adjustments have been taken, shall not be less than 48 inches (1219 mm) total.

❖ The minimum bracing length is determined by Table R602.10.6.5. This length is required to resist the increased loads produced by seismic forces resulting from the stone and masonry veneer. Table R602.10.6.5 supersedes the use of Tables R602.10.3(3) and R602.10.3(4) only when stone or masonry veneer exceeds the first story height. The bracing amount must be increased where the braced wall line spacing is greater than 25 feet. Note that the wind bracing requirements of Tables R602.10.3(1) and R602.10.3(2) must also be considered, although it is unlikely that the wind will control in higher seismic areas.

Braced wall panels may begin up to 10 feet (3048 mm) from the end of the braced wall line. The required minimum length of a braced wall panel used in SDC D_0, D_1 and D_2 is 48 inches (1219 mm) with the hold-down capacity given in Table R602.10.6.5.

The intent of this bracing method is to prevent alternate braced wall panels or any method which reduces bracing length from being used for the purpose of reducing the required panel length or hold-down capacity.

INTERNATIONAL CODE COUNCIL®
Copyright © 2015 ICC. ALL RIGHTS RESERVED. Accessed by David Dammon on Jun 21, 2017 12:30:52 PM pursuant to License Agreement with ICC. No further reproduction or distribution authorized. ANY UNAUTHORIZED REPRODUCTION OR DISTRIBUTION IS A VIOLATION OF THE FEDERAL COPYRIGHT ACT AND THE LICENSE AGREEMENT, AND SUBJECT TO CIVIL AND CRIMINAL PENALTIES THEREUNDER.

R602.10.7 Ends of braced wall lines with continuous sheathing. Each end of a *braced wall line* with continuous sheathing shall have one of the conditions shown in Figure R602.10.7.

❖ For continuously sheathed bracing methods, a corner as shown in Figure R602.10.7 or some other method of anchoring the wall is required at each end of the braced wall line.

For End Condition 1, a 24-inch (610 mm) corner return is required for continuously sheathed wall lines with wood structural panel in accordance with Figure R602.10.7. For wall lines with CS-SFB, the minimum corner return length is 32 inches (813 mm).

The purpose of the corner attachment for the continuously sheathed bracing methods is to connect the intersecting walls together to create a stronger, box-like structure that will perform better during high wind or seismic events. In accordance with Table R602.3(1), the corner studs require a minimum of a single row of 16d nails at 12 inches (305 mm) on center. A double row of 16d nails at 24 inches (610 mm) on center, framing member orientation permitting, is con-

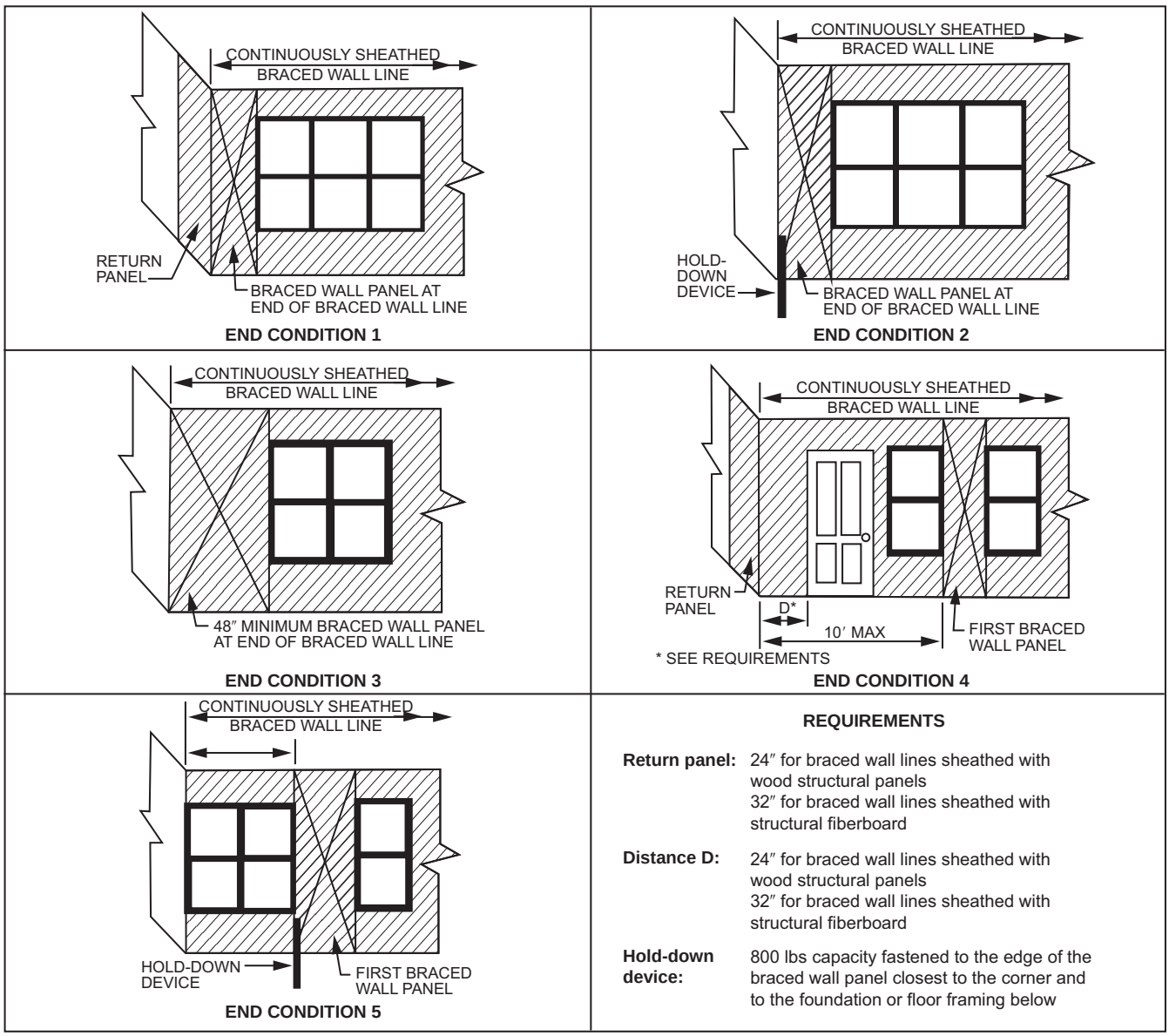

For SI: 1 inch = 25.4 mm, 1 foot = 304.8 mm, 1 pound = 4.45 N.

FIGURE R602.10.7
END CONDITIONS FOR BRACED WALL LINES WITH CONTINUOUS SHEATHING

❖ See the commentary to Section R602.10.7.

INTERNATIONAL CODE COUNCIL®
Copyright © 2015 ICC. ALL RIGHTS RESERVED. Accessed by David Dammon on Jun 21, 2017 12:30:52 PM pursuant to License Agreement with ICC. No further reproduction or distribution authorized. ANY UNAUTHORIZED REPRODUCTION OR DISTRIBUTION IS A VIOLATION OF THE FEDERAL COPYRIGHT ACT AND THE LICENSE AGREEMENT, AND SUBJECT TO CIVIL AND CRIMINAL PENALTIES THEREUNDER.

sidered equivalent. It is important to note that the intent of the nailing requirement is to provide the specified amount of nailing between the two studs, each on adjacent walls, to which the adjacent wall sheathing is attached.

An 800-pound (3560 N) hold-down device required to be attached between the stud at the edge of the braced wall panel closest to the corner and the foundation below-can be used in lieu of the return corner (see End Condition 2, Figure R602.10.7). If two continuously sheathed braced wall lines meet at a corner, and the first braced panel is spaced away from the corner on one of the wall lines, then both braced wall lines lose the structural effect of the corner return; therefore, both braced wall lines must be anchored with an 800-pound (3560 N) hold-down device at the edge adjacent to the corner.

When a minimum of 4 feet (1219 mm) of braced panel is placed at a corner in a braced wall line, a corner return is not required on the perpendicular wall line (see End Condition 3, Figure R602.10.7).

For continuously sheathed wall panel and corner construction, the first full-height braced wall segment of the continuously sheathed braced wall line is allowed to be spaced away from the end of the braced wall line, in accordance with the exception to Section R602.10.2.2.1 and End Conditions 4 and 5, Figure R602.10.7.

Note that if two continuously sheathed wall lines meet at a corner, and along one of the two wall lines, the first bracing panel is displaced from this common corner, then both braced wall lines are denied the structural effect of the corner return. In this case, both wall lines must be anchored with an 800-pound (3560 N) hold-down device or have return panels.

- In End Condition 1 there are return panels/ braced wall panels on each side of the corner.
- In End Condition 2 there is a braced wall panel and a hold-down replacing the return panel.
- In End Condition 3, no return panel is required.
- In End Condition 4, there is a return panel and a 24 or 32 inch panel at the corner.
- In End Condition 5, there is a hold-down on the braced wall line, there is also a hold-down at the first braced wall panel on the return wall to brace that end of the wall line.

R602.10.8 Braced wall panel connections. *Braced wall panel*s shall be connected to floor framing or foundations as follows:

1. Where joists are perpendicular to a *braced wall panel* above or below, a rim joist, band joist or blocking shall be provided along the entire length of the *braced wall panel* in accordance with Figure R602.10.8(1). Fastening of top and bottom wall plates to framing, rim joist, band joist and/or blocking shall be in accordance with Table R602.3(1).
2. Where joists are parallel to a *braced wall panel* above or below, a rim joist, end joist or other parallel framing

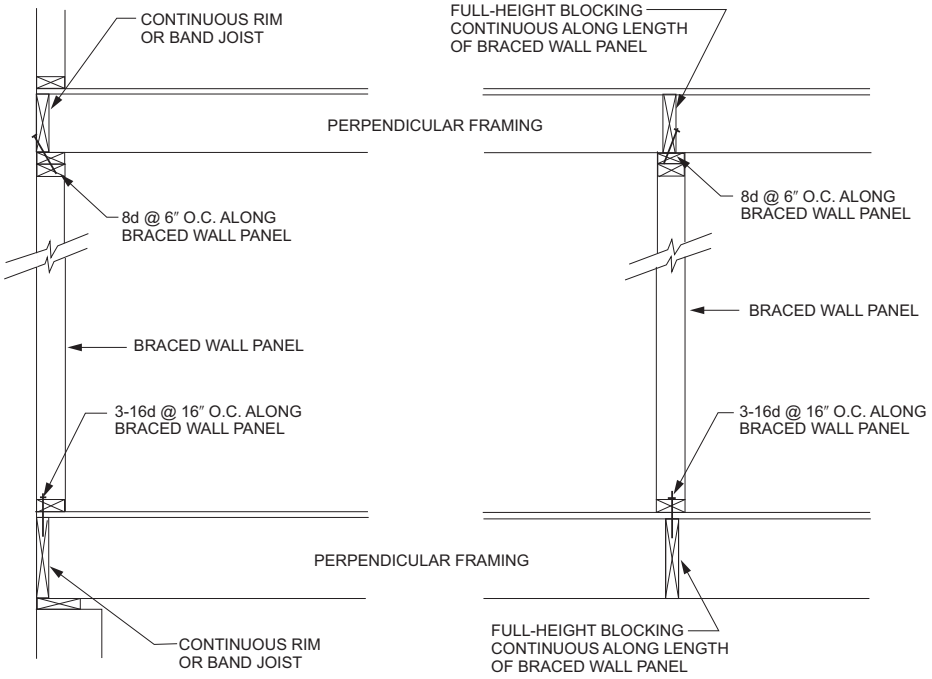

For SI: 1 inch = 25.4 mm.

FIGURE R602.10.8(1)
BRACED WALL PANEL CONNECTION WHEN PERPENDICULAR TO FLOOR/CEILING FRAMING

❖ See the commentary to Section R602.10.8.

INTERNATIONAL CODE COUNCIL®
Copyright © 2015 ICC. ALL RIGHTS RESERVED. Accessed by David Dammon on Jun 21, 2017 12:30:52 PM pursuant to License Agreement with ICC. No further reproduction or distribution authorized. ANY UNAUTHORIZED REPRODUCTION OR DISTRIBUTION IS A VIOLATION OF THE FEDERAL COPYRIGHT ACT AND THE LICENSE AGREEMENT, AND SUBJECT TO CIVIL AND CRIMINAL PENALTIES THEREUNDER.

member shall be provided directly above and below the *braced wall panel* in accordance with Figure R602.10.8(2). Where a parallel framing member cannot be located directly above and below the panel, full-depth blocking at 16-inch (406 mm) spacing shall be provided between the parallel framing members to each side of the *braced wall panel* in accordance with Figure R602.10.8(2). Fastening of blocking and wall plates shall be in accordance with Table R602.3(1) and Figure R602.10.8(2).

3. Connections of *braced wall panel*s to concrete or masonry shall be in accordance with Section R403.1.6.

❖ This section describes the code connection requirements between braced wall panels and the portions of the structure both above and below. Without the connections required to complete the lateral load path, the purpose of wall bracing will not be realized and the structure will not be able to resist lateral loads.

Table R602.3(1) provides the basic nailing schedule for attaching braced wall panels to the floor below and the ceiling or floor above. As an example, the sole plate (or bottom plate) of the braced wall panels is required to be nailed with three 16d nails every 16 inches (406 mm) on center into the joist or blocking below the braced wall panels [see Item 16 of Table R602.3(1)].

Note that the nails do not have to be clustered every 16 inches (406 mm) on center: there just has to be three nails in every 16 inch-length (406 mm) of braced wall panel. In fact, clustering the nails may not be a good idea if, for example, they are going into a rim board. In other cases, clustering may be needed, such as an interior braced wall parallel to and situated between floor framing: clustering is necessary to attach the braced wall to the blocking.

For a braced wall panel to provide lateral load resistance to the structure, it is essential that lateral loads transfer into the panel at its top and out to the framing members below at its bottom. Correct connections are necessary to complete this lateral load path and are as shown in Figures R602.10.8(1) and R602.10.8(2).

Braced wall panel connections to foundation or floor slab must be in accordance with Section R403.1.6.

R602.10.8.1 Braced wall panel connections for Seismic Design Categories D_0, D_1 and D_2. *Braced wall panel*s shall be fastened to required foundations in accordance with Section R602.11.1, and top plate lap splices shall be face-nailed with not less than eight 16d nails on each side of the splice.

❖ Structures in higher seismic zones need to have the capacity to withstand greater loads; therefore, additional provisions are required to ensure that these loads are transferred through the braced wall panels to the foundation. The requirements of Section R602.10.8.1 ensure the top plate lap splices and foundation connections have the needed higher load capacity.

The requirement for eight 16d nails on each side of the lap splice in SDC D_0, D_1 and D_2 is reiterated in Section R602.10.8.1. Note that Table R602.3(1), Item 14, requires a 24-inch (610 mm) overlap to provide sufficient length to put in the eight 16d nails.

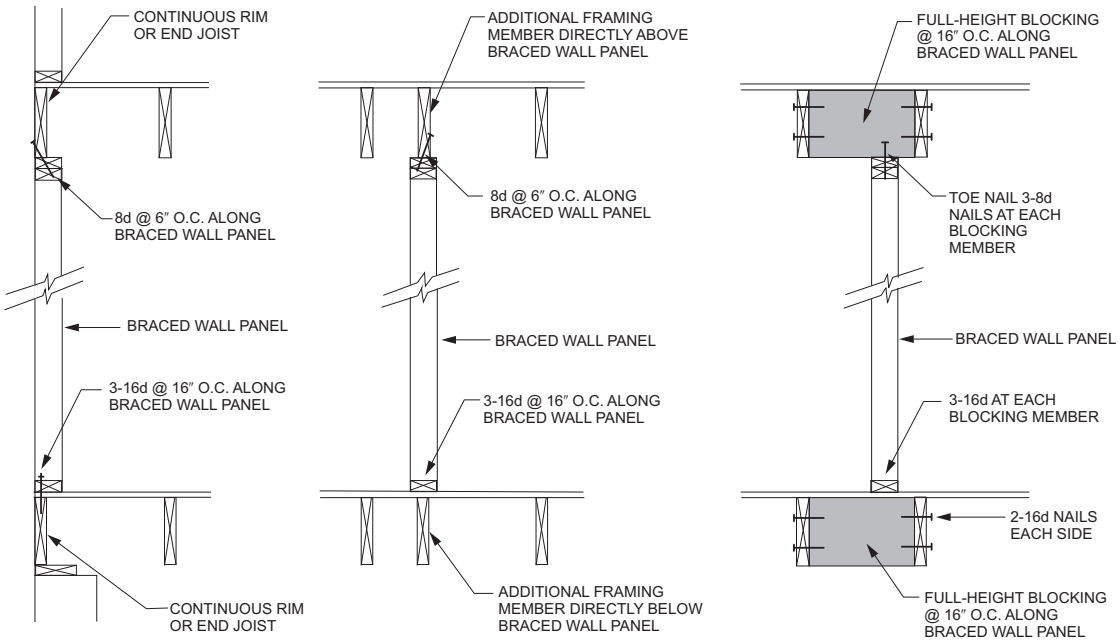

For SI: 1 inch = 25.4 mm.

FIGURE R602.10.8(2)
BRACED WALL PANEL CONNECTION WHEN PARALLEL TO FLOOR/CEILING FRAMING

❖ See the commentary to Section R602.10.8.

INTERNATIONAL CODE COUNCIL®
Copyright © 2015 ICC. ALL RIGHTS RESERVED. Accessed by David Dammon on Jun 21, 2017 12:30:52 PM pursuant to License Agreement with ICC. No further reproduction or distribution authorized. ANY UNAUTHORIZED REPRODUCTION OR DISTRIBUTION IS A VIOLATION OF THE FEDERAL COPYRIGHT ACT AND THE LICENSE AGREEMENT, AND SUBJECT TO CIVIL AND CRIMINAL PENALTIES THEREUNDER.

R602.10.8.2 Connections to roof framing. Top plates of exterior *braced wall panels* shall be attached to rafters or roof trusses above in accordance with Table R602.3(1) and this section. Where required by this section, blocking between rafters or roof trusses shall be attached to top plates of *braced wall panels* and to rafters and roof trusses in accordance with Table R602.3(1). A continuous band, rim or header joist or roof truss parallel to the *braced wall panels* shall be permitted to replace the blocking required by this section. Blocking shall not be required over openings in continuously sheathed *braced wall lines*. In addition to the requirements of this section, lateral support shall be provided for rafters and ceiling joists in accordance with Section R802.8 and for trusses in accordance with Section R802.10.3. Roof ventilation shall be provided in accordance with Section R806.1.

1. For Seismic Design Categories A, B and C where the distance from the top of the braced wall panel to the top of the rafters or roof trusses above is $9^1/_4$ inches (235 mm) or less, blocking between rafters or roof trusses shall not be required. Where the distance from the top of the braced wall panel to the top of the rafters or roof trusses above is between $9^1/_4$ inches (235 mm) and $15^1/_4$ inches (387 mm), blocking between rafters or roof trusses shall be provided above the braced wall panel in accordance with Figure R602.10.8.2(1).

   Exception: Where the outside edge of truss vertical web members aligns with the outside face of the wall studs below, wood structural panel sheathing extending above the top plate as shown in Figure R602.10.8.2(3) shall be permitted to be fastened to each truss web with three-8d nails ($2^1/_2$ inches × 0.131 inch) and blocking between the trusses shall not be required.

2. For Seismic Design Categories D_0, D_1 and D_2, where the distance from the top of the braced wall panel to the top of the rafters or roof trusses is $15^1/_4$ inches (387 mm) or less, blocking between rafters or roof trusses shall be provided above the braced wall panel in accordance with Figure R602.10.8.2(1).

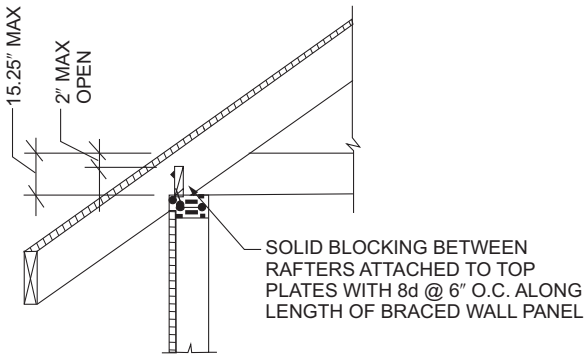

For SI: 1 inch = 25.4 mm.

FIGURE R602.10.8.2(1)
BRACED WALL PANEL CONNECTION TO PERPENDICULAR RAFTERS

❖ See the commentary to Section R602.10.8.2.

3. Where the distance from the top of the braced wall panel to the top of rafters or roof trusses exceeds $15^1/_4$ inches (387 mm), the top plates of the braced wall panel shall be connected to perpendicular rafters or roof trusses above in accordance with one or more of the following methods:

   3.1. Soffit blocking panels constructed in accordance with Figure R602.10.8.2(2).

   3.2. Vertical blocking panels constructed in accordance with Figure R602.10.8.2(3).

   3.3. Blocking panels provided by the roof truss manufacturer and designed in accordance with Section R802.

   3.4. Blocking, blocking panels or other methods of lateral load transfer designed in accordance with the AWC WFCM or accepted engineering practice.

❖ In the 2009 edition, new provisions were added for the connection between braced wall panels and roof framing. Although previous versions of the code did not address this connection, complex roof shapes used in modern design have necessitated prescriptive connection details to provide an effective load path.

The connection details of Section R602.10.8.2 represent a simple principle: braced wall lines extend from diaphragm to diaphragm and must be connected at both top and bottom. The roof and floor sheathing are the structural diaphragms of the building. Figures R602.10.8.2(1) through (3) illustrate the required connections and blocking between braced wall panels and roof framing, which are summarized in Commentary Figure R602.10.8.2(1).

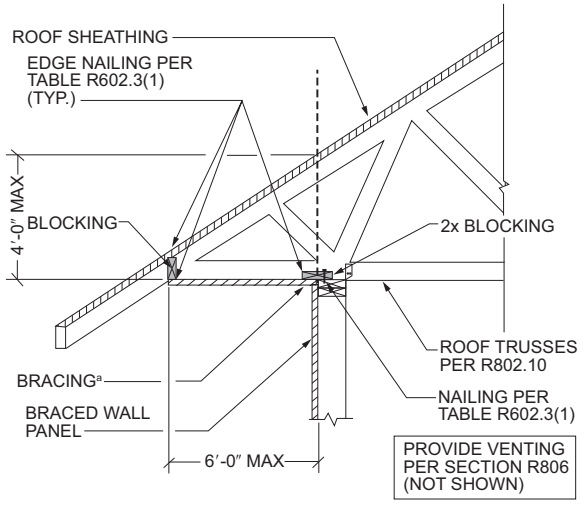

For SI: 1 inch = 25.4 mm, 1 foot = 304.8 mm.
a. Methods of bracing shall be as described in Section R602.10.4.

FIGURE R602.10.8.2(2)
BRACED WALL PANEL CONNECTION OPTION TO PERPENDICULAR RAFTERS OR ROOF TRUSSES

❖ See the commentary to Section R602.10.8.2.

INTERNATIONAL CODE COUNCIL®
Copyright © 2015 ICC. ALL RIGHTS RESERVED. Accessed by David Dammon on Jun 21, 2017 12:30:52 PM pursuant to License Agreement with ICC. No further reproduction or distribution authorized. ANY UNAUTHORIZED REPRODUCTION OR DISTRIBUTION IS A VIOLATION OF THE FEDERAL COPYRIGHT ACT AND THE LICENSE AGREEMENT, AND SUBJECT TO CIVIL AND CRIMINAL PENALTIES THEREUNDER.

Section R602.10.8.2, Item 1, provides what is essentially an exemption from required blocking for SDC A, B and C where the distance from the top of the rafters or roof trusses to the perpendicular top plates is 9.25 inches (235 mm) or less, provided the rafters or roof trusses are connected to the top plates of braced wall lines in accordance with Table R602.3(1).

Figure R602.10.8.2(1) illustrates the required detailing and connection for relatively low-heel trusses and rafters (less than or equal to 15.25 inches (387 mm) between the bottom of roof diaphragm sheathing and the top of double top plate). For such applications, the addition of solid lumber blocking is sufficient to prevent the trusses or conventional framing members from rolling over when subjected to wind and/or seismic loads. Attachment in accordance with Table R602.3(1), Items 1, 2 and 6—nailing at the bottom of the roof framing and blocking—is required to transfer the lateral forces (that push the roof framing along the top plate) from the roof sheathing (or diaphragm) into the braced wall line. The 2-inch (51 mm) gap at the top of the blocking permits required roof ventilation. The exception permits deleting the blocking in SDC A, B and C.

Figure R602.10.8.2(2) illustrates an alternate connection between a braced wall panel and roof sheathing (or diaphragm) that, while less direct, will provide adequate transfer of lateral forces from the roof diaphragm to the braced wall line. This detail does not provide lateral stability of the trusses at the bearing point (see truss installation diagrams) or the required roof venting. While the code permits various bracing methods for this application [see Figure R602.10.8(2), Note a], the user must be careful to specify only those methods that have sufficient weather resistance or provide a covering with an approved exterior finish. Note that the edge nailing requirement for the bracing method used at the soffit is provided in Table R602.10.4 and is not necessarily the same as the roof sheathing edge nailing, unless the same material is used for both applications.

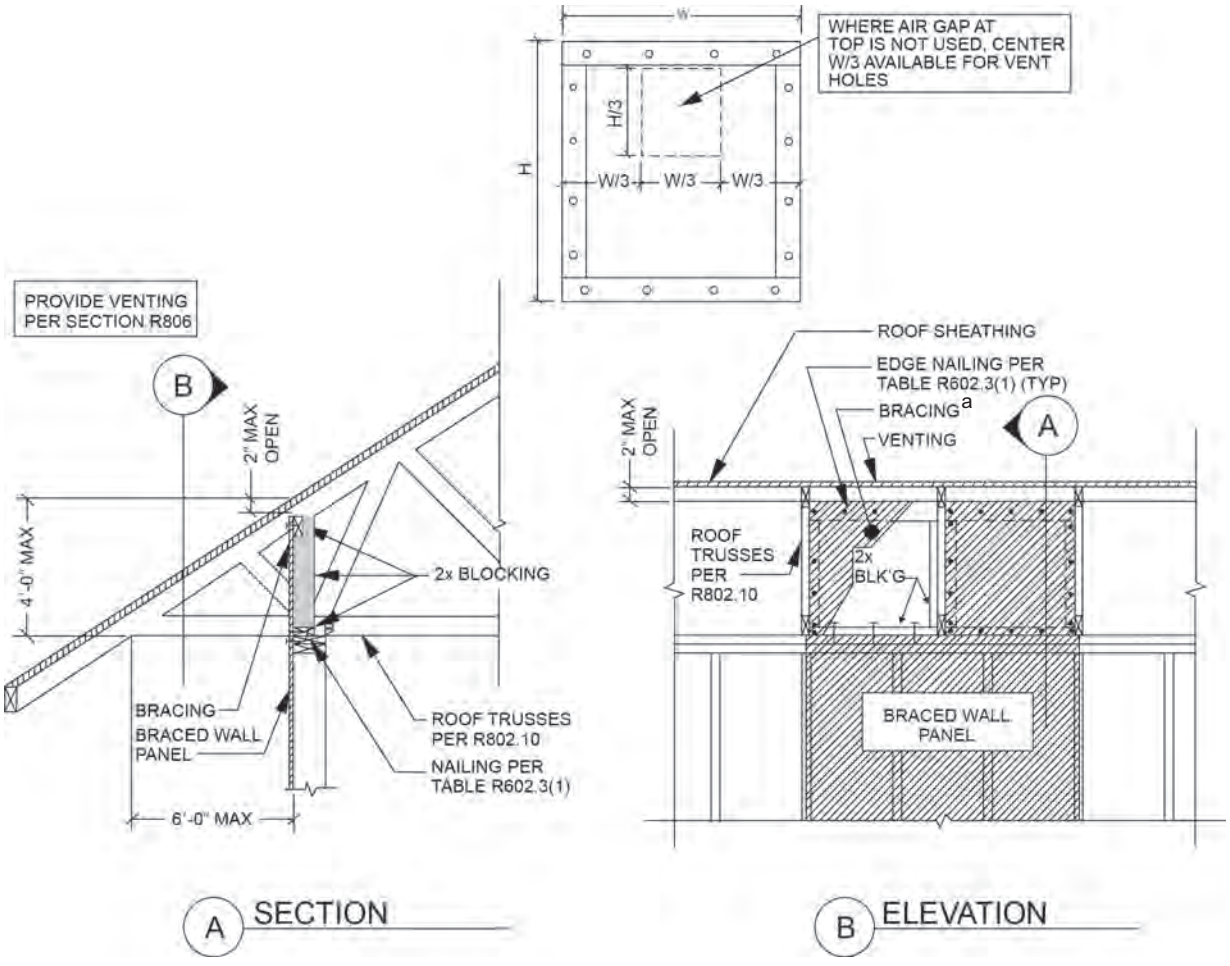

For SI: 1 inch = 25.4 mm, 1 foot = 304.8 mm.

a. Methods of bracing shall be as described in Section R602.10.4.

FIGURE R602.10.8.2(3)
BRACED WALL PANEL CONNECTION OPTION TO PERPENDICULAR RAFTERS OR ROOF TRUSSES

❖ See the commentary to Section R602.10.8.2.

INTERNATIONAL CODE COUNCIL®
Copyright © 2015 ICC. ALL RIGHTS RESERVED. Accessed by David Dammon on Jun 21, 2017 12:30:52 PM pursuant to License Agreement with ICC. No further reproduction or distribution authorized. ANY UNAUTHORIZED REPRODUCTION OR DISTRIBUTION IS A VIOLATION OF THE FEDERAL COPYRIGHT ACT AND THE LICENSE AGREEMENT, AND SUBJECT TO CIVIL AND CRIMINAL PENALTIES THEREUNDER.

Figure R602.10.8.2(3) illustrates a connection applicable for raised-heel trusses of up to 4 feet (1219 mm) in height. In addition to transferring the lateral load from the roof sheathing (or diaphragm) to the braced wall line, this method does address lateral stability of the trusses at the bearing point. Ventilation is provided by a gap of up to 2 inches (51 mm) at the top of braced panels between trusses. While the code permits various bracing methods for this application [see Figure R602.10.8(3), Note a], the user must be careful to specify only those methods that have sufficient weather resistance or provide a covering with an approved exterior finish. Closed soffit construction may also be used to protect bracing materials at this location. Note that the edge nailing requirement for the specific bracing method used to construct this option is provided in Table R602.10.4 and is not necessarily the same as the roof sheathing edge nailing, unless the same material is used for both applications.

R602.10.9 Braced wall panel support. *Braced wall panel* support shall be provided as follows:

1. Cantilevered floor joists complying with Section R502.3.3 shall be permitted to support *braced wall panel*s.
2. Raised floor system post or pier foundations supporting *braced wall panel*s shall be designed in accordance with accepted engineering practice.
3. Masonry stem walls with a length of 48 inches (1219 mm) or less supporting *braced wall panel*s shall be reinforced in accordance with Figure R602.10.9. Masonry stem walls with a length greater than 48 inches (1219 mm) supporting *braced wall panel*s shall be constructed in accordance with Section R403.1 Methods ABW and PFH shall not be permitted to attach to masonry stem walls.
4. Concrete stem walls with a length of 48 inches (1219 mm) or less, greater than 12 inches (305 mm) tall and

SEISMIC DESIGN CATEGORY AND WIND SPEED	DISTANCE (bottom of roof sheathing to top of top plate) [See Commentary Figure R602.10.8.2(2)]	BLOCKING[a]
SDC A, B, C	9.25" or less	Not required per Section R60210.8.2, Item 1. Roof framing attached per Section R602.3(1)
	Greater than 9.25" to 15.25"	Required per Section R602.10.8.2, Item 1 and Figure R602.10.8.2(1)
SDC D_0, D_1, D_2	15.25" or less	Required per Section R602.10.8.2, Item 2 and Figure R602.10.8.2(1)
All SDCs	15.25" to 48"	Required per Section R602.10.8.(2) or Item 3 or Figures R602.10.8.2(2) or R602.10.8.2(3)

For SI: 1 inch = 25.4 mm, 1 mile per hour = 0.45 m/s.

a. Rafter or truss connection to top plate per Table R602.3(1).

Figure R602.10.8.2(1)
CONNECTION AND BLOCKING BETWEEN BRACED WALL PANELS AND ROOF FRAMING

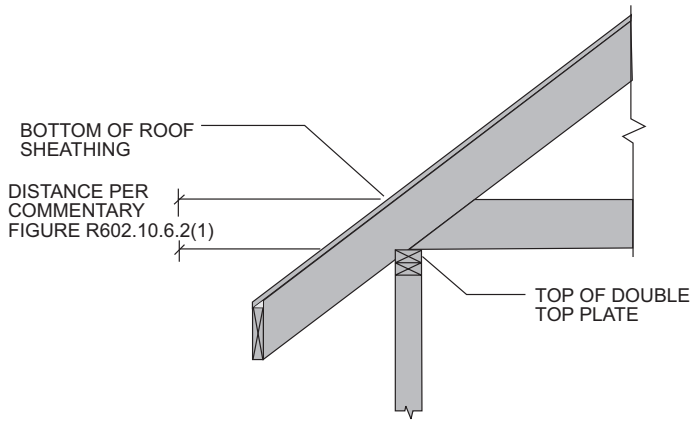

Figure R602.10.8.2(2)
DISTANCE FROM TOP PLATE TO BOTTOM OF ROOF SHEATHING FOR PROVIDING CONNECTION REQUIREMENTS AND BLOCKING PER COMMENTARY FIGURE R602.10.8.2(1)

INTERNATIONAL CODE COUNCIL®
Copyright © 2015 ICC. ALL RIGHTS RESERVED. Accessed by David Dammon on Jun 21, 2017 12:30:52 PM pursuant to License Agreement with ICC. No further reproduction or distribution authorized. ANY UNAUTHORIZED REPRODUCTION OR DISTRIBUTION IS A VIOLATION OF THE FEDERAL COPYRIGHT ACT AND THE LICENSE AGREEMENT, AND SUBJECT TO CIVIL AND CRIMINAL PENALTIES THEREUNDER.

less than 6 inches (152 mm) thick shall have reinforcement sized and located in accordance with Figure R602.10.9.

❖ Section R602.10.9 contains requirements for several braced wall line special circumstances. Included are provisions for cantilevered floor joists, elevated post and pier foundations, masonry stem walls and narrow concrete stem walls.

1. Floor cantilevers. Section R502.3.3 provides the basic cantilever requirements, and Section R602.10.9 further clarifies those requirements for use with braced walls.

   Section R502.3.3 restricts floor cantilevers for general use to the depth of the floor joist. Thus a 2 by 10 floor joist can cantilever out $9^1/_4$ inches (235 mm) for all cases covered by the code without other considerations. Table R502.3.3(1) permits greater length cantilevers if the structure above the cantilever is limited to a single light-frame wall and roof. The length of these cantilevers can be as long as 48 inches (1219 mm) under certain circumstances. Note g of Table R502.3.3(1) requires both the blocking at the support and the continuous full-height rim board at the end of the cantilever, regardless of the basic wind speed or SDC.

2. Raised floor system post and pier foundations. Raised floor system post and pier foundations generally provide little lateral support to the structure above. Lateral support instead typi-

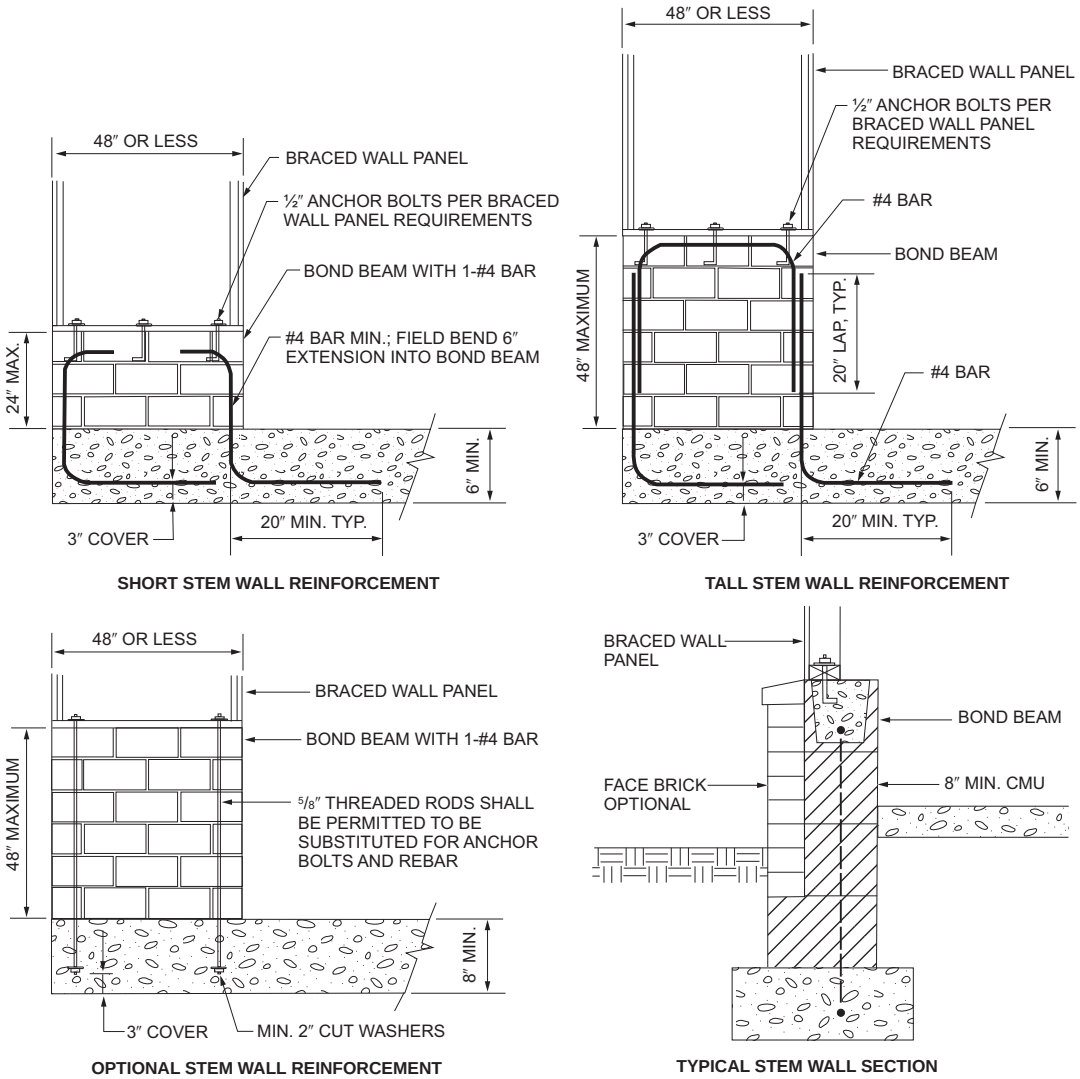

For SI: 1 inch = 25.4 mm.

FIGURE R602.10.9
MASONRY STEM WALLS SUPPORTING BRACED WALL PANELS

❖ See the commentary to Section R602.10.9.

INTERNATIONAL CODE COUNCIL®
Copyright © 2015 ICC. ALL RIGHTS RESERVED. Accessed by David Dammon on Jun 21, 2017 12:30:52 PM pursuant to License Agreement with ICC. No further reproduction or distribution authorized. ANY UNAUTHORIZED REPRODUCTION OR DISTRIBUTION IS A VIOLATION OF THE FEDERAL COPYRIGHT ACT AND THE LICENSE AGREEMENT, AND SUBJECT TO CIVIL AND CRIMINAL PENALTIES THEREUNDER.

cally comes from diagonal bracing or other elements of the foundation; however, there are ways of cantilevering the posts of the foundation by burying the ends deeply into the ground, so that they develop lateral-load-resisting characteristics.

It is difficult to accurately and fully present all of the post and pier lateral support methods in one set of prescriptive provisions. For this reason, post and pier foundations supporting braced wall panels must be engineered in accordance with the IBC or referenced documents, as stated in the Section R602.10.9, Item 2.

3. Masonry stem walls. Past field problems have made it clear that free-standing unreinforced masonry foundations adjacent to garage doors (or similar openings) may not perform well with narrow bracing options. The provisions are intended for masonry stem walls adjacent to garage doors or similar openings.

   The reinforcement details in Figure R602.10.9 are appropriate for masonry stem walls that are up to 4 feet (1219 mm) in length and not more than 4 feet (1219 mm) in height.

   - If the masonry stem walls are taller than 4 feet (1219 mm), an engineered design of the reinforcement is required.
   - If the masonry stem walls are longer than 4 feet (1219 mm), this specific reinforcement is not necessary (standard construction in accordance with Section R403.1 is sufficient).
   - Masonry stem walls are not permitted to support Method ABW and PFH bracing unless specifically engineered for such applications.

4. Concrete stem walls. Narrow concrete stem walls less than 48 inches (1219 mm) in length and more than 12 inches (305 mm) tall must be reinforced using Figure R602.10.9 when supporting braced wall panels. The provisions are intended for concrete stem walls adjacent to garage doors or similar openings.

   The additional reinforcement is not necessary (standard construction in accordance with Section R403.1 is sufficient) if the concrete stem walls are:

   - 6 inches (152 mm) or greater in thickness.
   - Less than 12 inches (305 mm) in height.
   - Longer than 4 feet (1219 mm).

R602.10.9.1 Braced wall panel support for Seismic Design Categories D_0, D_1 and D_2. In Seismic Design Categories D_0, D_1 and D_2, braced wall panel footings shall be as specified in Section R403.1.2.

❖ See the commentary to Section R403.1.2.

R602.10.10 Panel joints. Vertical joints of panel sheathing shall occur over, and be fastened to, common studs. Horizontal joints in *braced wall panels* shall occur over, and be fastened to, common blocking of a minimum $1^1/_2$ inch (38 mm) thickness.

Exceptions:

1. Vertical joints of panel sheathing shall be permitted to occur over double studs, where adjoining panel edges are attached to separate studs with the required panel edge fastening schedule, and the adjacent studs are attached together with two rows of 10d box nails [3 inches by 0.128 inch (76.2 mm by 3.25 mm)] at 10 inches o.c. (254 mm).
2. Blocking at horizontal joints shall not be required in wall segments that are not counted as *braced wall panels*.
3. Where the bracing length provided is not less than twice the minimum length required by Tables R602.10.3(1) and R602.10.3(3), blocking at horizontal joints shall not be required in *braced wall panels* constructed using Methods WSP, SFB, GB, PBS or HPS.
4. Where Method GB panels are installed horizontally, blocking of horizontal joints is not required.

❖ Section R602.10.10 requires that all vertical and horizontal joints in panel sheathing used for bracing occur over and be attached to common framing. This is to ensure that the bracing performs as intended when subjected to lateral loads.

The requirement for vertical panel edges to be fastened to a common stud has an exception:

- The first exception in the code provision allows vertical abutting panel sheathing placed over double studs to have each panel attached to separate studs when the studs are attached with two rows of 10d box nails spaced a maximum of 10 inches (254 mm) on center.

The requirement for horizontal joints to be blocked when they occur between the top and bottom plates has some exceptions:

- The second exception states that the horizontal joints of sheathing panels not used as braced panels do not have to be blocked. However, panel manufacturers or panel associations may recommend blocking the horizontal joints of sheathing panels regardless of whether they are used as braced panels. For example, brittle finishes (such as stucco) over panel wall sheathing may require blocked horizontal panel edges to prevent cracking, even when the panels are not used for wall bracing.
- When horizontal joints of braced wall panels are not blocked, the effectiveness of the bracing is reduced and additional bracing is required. Consequently, for Methods WSP, SFB, GB, PBS

INTERNATIONAL CODE COUNCIL®
Copyright © 2015 ICC. ALL RIGHTS RESERVED. Accessed by David Dammon on Jun 21, 2017 12:30:52 PM pursuant to License Agreement with ICC. No further reproduction or distribution authorized. ANY UNAUTHORIZED REPRODUCTION OR DISTRIBUTION IS A VIOLATION OF THE FEDERAL COPYRIGHT ACT AND THE LICENSE AGREEMENT, AND SUBJECT TO CIVIL AND CRIMINAL PENALTIES THEREUNDER.

and HPS, horizontal blocking of the braced wall panels may be eliminated, provided that twice the minimum required bracing length is used in the wall line. The purpose of this exception is to provide a construction alternative to installing horizontal blocking when circumstances permit.

- The required bracing length for Method GB is based on its vertical application with horizontal joints occurring over framing or blocking. Method GB bracing is considerably stronger when installed horizontally. The fourth exception permits Method GB bracing to be unblocked when it is installed horizontally.

R602.10.11 Cripple wall bracing. Cripple walls shall be constructed in accordance with Section R602.9 and braced in accordance with this section. Cripple walls shall be braced with the length and method of bracing used for the wall above in accordance with Tables R602.10.3(1) and R602.10.3(3), and the applicable adjustment factors in Table R602.10.3(2) or R602.10.3(4), respectively, except that the length of cripple wall bracing shall be multiplied by a factor of 1.15. Where gypsum wall board is not used on the inside of the cripple wall bracing, the length adjustments for the elimination of the gypsum wallboard, or equivalent, shall be applied as directed in Tables R602.10.3(2) and R602.10.3(4) to the length of cripple wall bracing required. This adjustment shall be taken in addition to the 1.15 increase.

❖ A cripple wall is a less-than-full-height wall that is used to raise the elevation of a floor above the foundation.

Cripple walls are also often used in conjunction with a stepped foundation to maintain a common plate elevation when the foundation drops away from the plate line, accommodating a sloped building site, as shown in Figure R602.11.2. In either case, a cripple wall has the same limitations as any other stud wall in that it has no lateral load capacity without bracing.

Even though they are less than full height, cripple walls are still a part of the load path and are subject to the same vertical and horizontal loads as full-height walls. In fact, because gravity and lateral loads get larger as building height increases, cripple walls are subject to even greater loads than the walls in stories above them. Because of these greater loads, the code permits cripple walls to be braced using any method in Tables R602.10.3(1) and (3) in any SDC, as long as the length of bracing used for the cripple wall is 15 percent greater (multiplied by a factor of 1.15). The 2015 IRC has been revised to no longer require the braced wall.

R602.10.11.1 Cripple wall bracing for Seismic Design Categories D_0 and D_1 and townhouses in Seismic Design Category C. In addition to the requirements in Section R602.10.11, the distance between adjacent edges of *braced wall panel*s for cripple walls along a *braced wall line* shall be 14 feet (4267 mm) maximum.

Where *braced wall lines* at interior walls are not supported on a continuous foundation below, the adjacent parallel cripple walls, where provided, shall be braced with Method WSP or Method CS-WSP in accordance with Section R602.10.4. The length of bracing required in accordance with Table R602.10.3(3) for the cripple walls shall be multiplied by 1.5. Where the cripple walls do not have sufficient length to provide the required bracing, the spacing of panel edge fasteners shall be reduced to 4 inches (102 mm) on center and the required bracing length adjusted by 0.7. If the required length can still not be provided, the cripple wall shall be designed in accordance with accepted engineering practice.

❖ In SDC D_0, D_1 and townhouses in SDC C, Section R602.10.11.1 requires increased exterior cripple wall bracing when interior braced walls are not supported by a continuous foundation. (Note that this requirement is in addition to the requirements of Section R602.10.11, discussed above.) Without direct interior foundation support, these interior braced wall lines transfer the lateral forces into the floor diaphragm instead of the foundation. The floor diaphragm, in turn, transfers these lateral forces into the exterior cripple walls. Therefore, the wall bracing at the exterior cripple walls [specified in Table R602.10.3(3)] must be increased to accommodate the increased load. This is done by multiplying the length of the required exterior cripple wall bracing parallel to the unsupported interior braced wall by a factor of 1.5 and using Method WSP or CS-WSP.

If the length of wall bracing cannot be increased by a factor of 1.5 because the wall line is not long enough to accommodate the increased bracing length, the nail spacing along the perimeter wood structural panel sheathing may be reduced from 6 inches (152 mm) to 4 inches (102 mm) on center, in accordance with Section R602.10.11.1. Note that in this case it is not necessary to also increase the length of bracing by the 1.5 factor; the provision recognizes that the shear capacity of wood structural panels (Method WSP or CS-WSP) is increased sufficiently by increasing the perimeter nailing.

If there is insufficient wall line length for the required cripple wall bracing, an engineered design or other alternative bracing approved by the building official must be incorporated.

R602.10.11.2 Cripple wall bracing for Seismic Design Category D_2. In Seismic Design Category D_2, cripple walls shall be braced in accordance with Tables R602.10.3(3) and R602.10.3(4).

❖ Cripple wall bracing for SDC D_2 is listed in Table R602.10.3(3). Appropriate adjustment factors from Table R602.10.3(4) must also be applied. Story height is limited to two stories with a cripple wall below.

R602.10.11.3 Redesignation of cripple walls. Where all cripple wall segments along a *braced wall line* do not exceed 48 inches (1219 mm) in height, the cripple walls shall be permitted to be redesignated as a first-*story* wall for purposes of determining wall bracing requirements. Where any cripple wall segment in a *braced wall line* exceeds 48 inches (1219 mm) in height, the entire cripple wall shall be counted as an additional *story*. If the cripple walls are redesignated, the sto-

INTERNATIONAL CODE COUNCIL®
Copyright © 2015 ICC. ALL RIGHTS RESERVED. Accessed by David Dammon on Jun 21, 2017 12:30:52 PM pursuant to License Agreement with ICC. No further reproduction or distribution authorized. ANY UNAUTHORIZED REPRODUCTION OR DISTRIBUTION IS A VIOLATION OF THE FEDERAL COPYRIGHT ACT AND THE LICENSE AGREEMENT, AND SUBJECT TO CIVIL AND CRIMINAL PENALTIES THEREUNDER.

ries above the redesignated *story* shall be counted as the second and third stories, respectively.

❖ In all wind or seismic applications, the building designer is permitted to redesignate or redefine the cripple wall as a story, when all segments are a maximum of 48 inches (1219 mm) tall, and then use the bracing requirements of Table R602.10.3(1) or (3) without the cripple wall adjustments required by Sections R602.10.11 and R602.10.11.1. When cripple wall segments are greater than 48 inches (1219 mm) tall, the entire cripple wall must be counted as an additional story.

When redesignation is used, the cripple walls are considered the first story, while the first full-height story becomes the second story, etc. Redesignation is optional ("shall be permitted" in code language) and the builder in any SDC may choose to exercise this option.

Note that in SDC D_2, Table R602.10.3(3) only permits buildings of up to two stories, thus limiting the redesignation option to one-story buildings. With redesignation, a one story becomes a two-story, which is the maximum number of stories permitted in SDC D_2. If a two-story structure is located above a redesignated cripple wall foundation, the second story would become the third story. A three-story structure in SDC D_2 is required to be designed in accordance with the IBC.

R602.11 Wall anchorage. *Braced wall line* sills shall be anchored to concrete or masonry foundations in accordance with Sections R403.1.6 and R602.11.1.

❖ When braced wall panels are supported directly by foundations (i.e., turned-down slab edge, thickened slab, masonry or concrete foundation wall), the wood sill plate must be anchored to the foundation with anchor bolts spaced a maximum of 6 feet (1829 mm) on center. There must be a minimum of two bolts per sill plate section, with a bolt located not more than 12 inches (305 mm) and not less than 7 bolt diameters (3.5 inches) (89 mm) from each end of the plate section (see Section R403.1.6). Bolts should be at least $^1/_2$ inch (13 mm) in diameter and should extend a minimum of 7 inches (178 mm) into the concrete or masonry foundation. A nut and washer are required on each bolt to hold the plate to the foundation.

Section R602.11 specifies how braced wall line sill plates are to be anchored to the foundation. Section R403.1.6 specifies the minimum number, size and spacing of anchor bolts.

R602.11.1 Wall anchorage for all buildings in Seismic Design Categories D_0, D_1 and D_2 and townhouses in Seismic Design Category C. Plate washers, not less than 0.229 inch by 3 inches by 3 inches (5.8 mm by 76 mm by 76 mm) in size, shall be provided between the foundation sill plate and the nut except where *approved* anchor straps are used. The hole in the plate washer is permitted to be diagonally slotted with a width of up to $^3/_{16}$ inch (5 mm) larger than the bolt diameter and a slot length not to exceed $1^3/_4$ inches (44 mm), provided a standard cut washer is placed between the plate washer and the nut.

❖ For one- and two-family dwellings in SDC A, B and C and townhouses in SDC A and B, braced wall lines are to be connected to the foundation with $^1/_2$-inch (12.7 mm) bolts using a nut and washer. For higher seismic requirements (townhouses in SDC C and all structures in SDC D_0, D_1 and D_2), braced wall lines are to be connected to the foundation with $^1/_2$-inch (12.7 mm) bolts using a 3-inch (76 mm) square plate washer and nut, in accordance with Section R602.11.1. The plate washer is permitted to have a slotted hole, which helps to locate the washer over the sill plate. If the plate washer has a slotted hole, a standard cut washer must be used between the plate washer and the nut. The slotted hole is permitted to be $^3/_{16}$ inch (5 mm) wider than the bolt diameter, and the slot length is limited to a maximum of $1^3/_4$ inches (44 mm).

Section R602.11.1 also permits the use of "approved anchor straps" in lieu of anchor bolts, washers and nuts.

The following provisions are required in Section R602.11.1, in addition to the requirements for SDC A, B and C as previously described:

- For all buildings in SDC D_0, D_1 and D_2 and townhouses in SDC C, the plate washers are required to be 0.229 inch by 3 inches by 3 inches (5.8 mm by 76 mm by 76 mm) between the nut and the sill plate except where approved anchor straps are used.
- The use of a diagonally slotted plate washer is permitted. The slot width is required to be equal to or less than $^3/_{16}$ inch (5 mm) larger than the bolt diameter and not more than $1^3/_4$ inches (44 mm) long. When a slotted plate washer is used, a standard cut washer must be used between the nut and plate washer.

R602.11.2 Stepped foundations in Seismic Design Categories D_0, D_1 and D_2. In all buildings located in Seismic Design Categories D_0, D_1 or D_2, where the height of a required *braced wall line* that extends from foundation to floor above varies more than 4 feet (1219 mm), the *braced wall line* shall be constructed in accordance with the following:

1. Where the lowest floor framing rests directly on a sill bolted to a foundation not less than 8 feet (2440 mm) in length along a line of bracing, the line shall be considered as braced. The double plate of the cripple stud wall beyond the segment of footing that extends to the lowest framed floor shall be spliced by extending the upper top plate not less than 4 feet (1219 mm) along the foundation. Anchor bolts shall be located not more than 1 foot and 3 feet (305 and 914 mm) from the step in the foundation. See Figure R602.11.2.

INTERNATIONAL CODE COUNCIL®
Copyright © 2015 ICC. ALL RIGHTS RESERVED. Accessed by David Dammon on Jun 21, 2017 12:30:52 PM pursuant to License Agreement with ICC. No further reproduction or distribution authorized. ANY UNAUTHORIZED REPRODUCTION OR DISTRIBUTION IS A VIOLATION OF THE FEDERAL COPYRIGHT ACT AND THE LICENSE AGREEMENT, AND SUBJECT TO CIVIL AND CRIMINAL PENALTIES THEREUNDER.

2. Where cripple walls occur between the top of the foundation and the lowest floor framing, the bracing requirements of Sections R602.10.11, R602.10.11.1 and R602.10.11.2 shall apply.
3. Where only the bottom of the foundation is stepped and the lowest floor framing rests directly on a sill bolted to the foundations, the requirements of Sections R403.1.6 and R602.11.1 shall apply.

❖ When a cripple wall in SDC, D_0, D_1 and D_2 is used in a stepped foundation with a vertical step exceeding 4 feet (1219 mm), the cripple wall must be constructed as follows:

Section R602.11.2, Item 1, contains multiple requirements:

- If 8 feet (2438 mm) or more of the lowest floor is anchored directly to the foundation (the cripple wall does not run under this 8-foot (2438 mm) portion of the wall line) as shown in Commentary Figure R602.11.2(1), the foundation provides complete bracing for the cripple wall, as

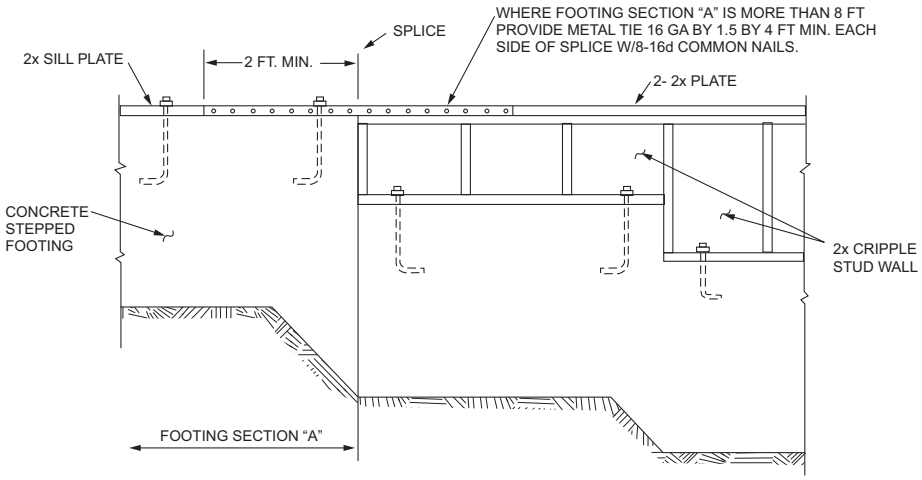

For SI: 1 inch = 25.4 mm, 1 foot = 304.8 mm.
Note: Where footing Section "A" is less than 8 feet long in a 25-foot-long wall, install bracing at cripple stud wall.

FIGURE R602.11.2
STEPPED FOUNDATION CONSTRUCTION

❖ See the commentary to Section R602.11.2.

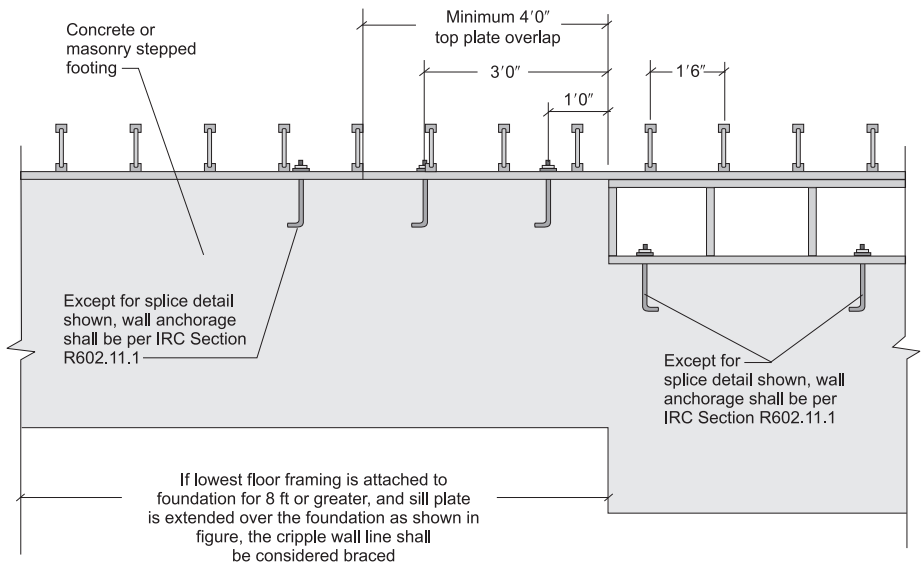

For SI: 1 inch = 25.4 mm, 1 foot = 304.8 mm.

Figure R602.11.2(1)
CRIPPLE WALL TOP PLATE EXTENDED 4 FEET OVER THE FOUNDATION

INTERNATIONAL CODE COUNCIL®
Copyright © 2015 ICC. ALL RIGHTS RESERVED. Accessed by David Dammon on Jun 21, 2017 12:30:52 PM pursuant to License Agreement with ICC. No further reproduction or distribution authorized. ANY UNAUTHORIZED REPRODUCTION OR DISTRIBUTION IS A VIOLATION OF THE FEDERAL COPYRIGHT ACT AND THE LICENSE AGREEMENT, AND SUBJECT TO CIVIL AND CRIMINAL PENALTIES THEREUNDER.

long as the wall above is not longer than 25 feet (7620 mm). In order to gain this benefit, the cripple wall top plate must extend over the foundation at least 4 feet (1219 mm) and be anchored with at least two bolts, as shown in Commentary Figure R602.11.2(1). Note that the first story wall must be braced in accordance with the requirements of Tables R602.10.3(1) and (3). The intent of the code provision is that, if the first story wall is anchored directly to the foundation for at least 8 feet (2438 mm) and the cripple wall top plate is extended and spliced as directed, then the first story braced wall line is sufficiently attached to the foundation to complete the load path and no additional bracing is required.

As shown in Figure R602.11.2, a metal tie can be used as an alternative to the cripple wall top plate's 4-foot (1219 mm) overlap of the foundation, if distance "A" is greater than 8 feet (2438 mm). No additional wall bracing is required in the cripple wall if the splice is properly made.

When the distance "A" is less than 8 feet (2438 mm) in a 25-foot-long (7620 mm) wall, there is insufficient attachment directly into the foundation to complete the lateral load path for the first-story braced wall line. As such, the total required length of bracing must be applied to the cripple wall end of the wall line for it to be considered braced. In this event, neither the metal splice plate nor the overlapping upper top plate is required, although either would be considered good practice.

R602.12 Simplified wall bracing. Buildings meeting all of the conditions listed below shall be permitted to be braced in accordance with this section as an alternate to the requirements of Section R602.10. The entire building shall be braced in accordance with this section; the use of other bracing provisions of Section R602.10, except as specified herein, shall not be permitted.

1. There shall be not more than three stories above the top of a concrete or masonry foundation or basement wall. Permanent wood foundations shall not be permitted.
2. Floors shall not cantilever more than 24 inches (607 mm) beyond the foundation or bearing wall below.
3. Wall height shall not be greater than 10 feet (3048 mm).
4. The building shall have a roof eave-to-ridge height of 15 feet (4572 mm) or less.
5. Exterior walls shall have gypsum board with a minimum thickness of $^1/_2$ inch (12.7 mm) installed on the interior side fastened in accordance with Table R702.3.5.
6. The structure shall be located where the ultimate design wind speed is less than or equal to 130 mph (58 m/s), and the exposure category is B or C.
7. The structure shall be located in Seismic Design Category A, B or C for detached one- and two-family dwellings or Seismic Design Category A or B for townhouses.
8. Cripple walls shall not be permitted in three-story buildings.

❖ Section R602.12 provides a prescriptive procedure for bracing wall lines in detached one- or two-family dwellings and townhouses with the following limits:

- Seismic Design Category A, B, or C for detached one- or two-family dwellings, SDC A or B for townhouses.
- Basic wind speeds of 130 mph (58 m/s) or less with Wind Exposure Category B or C.
- One-, two- or three-story structure.
- Wood structural panel or structural fiberboard sheathing is used on exterior walls with gypsum board fastened to the interior side.

When the requirements above are met, using the simplified method removes the need to check provisions for high seismic areas, to determine braced wall lines or braced wall line spacing.

A braced wall panel and its minimum length is a "bracing unit." The minimum number of bracing units is determined by drawing a rectangle around the building and then using the rectangle's dimensions to select the total bracing from Table R602.12.4.

Bracing units are required to be placed per the distribution requirements in Section R602.12.4 rather than along braced wall lines. When homes do not qualify or if the builder prefers, the traditional approach in Section R602.10 must be used.

See Section R602.10 for an explanation of lateral loads and the purpose of wall bracing. Failure of a braced wall line is evidenced by racking of the wall line. Racking occurs when a rectangular wall deforms to a parallelogram shape, in which the top and the bottom of the wall remain horizontal but the sides are no longer vertical. The purpose of wall bracing is to prevent such failures.

R602.12.1 Circumscribed rectangle. The bracing required for each building shall be determined by circumscribing a rectangle around the entire building on each floor as shown in Figure R602.12.1. The rectangle shall surround all enclosed offsets and projections such as sunrooms and attached garages. Open structures, such as carports and decks, shall be permitted to be excluded. The rectangle shall not have a side greater than 60 feet (18 288 mm), and the ratio between the long side and short side shall be not greater than 3:1.

❖ Required bracing length in the simplified wall bracing method is determined by drawing a rectangle around the building. Once the rectangle is drawn, all measurements for bracing are done down the length of the sides of the rectangle, not the length of the walls of the building.

Placement of braced wall lines is not necessary for this procedure. Rather, the drawing of the rectangle determines an equivalent "braced wall line." Note, this

INTERNATIONAL CODE COUNCIL®
Copyright © 2015 ICC. ALL RIGHTS RESERVED. Accessed by David Dammon on Jun 21, 2017 12:30:52 PM pursuant to License Agreement with ICC. No further reproduction or distribution authorized. ANY UNAUTHORIZED REPRODUCTION OR DISTRIBUTION IS A VIOLATION OF THE FEDERAL COPYRIGHT ACT AND THE LICENSE AGREEMENT, AND SUBJECT TO CIVIL AND CRIMINAL PENALTIES THEREUNDER.

procedure is conservative as it assumes a rectangle side length equal to or greater than the building wall line length.

Once the rectangle is drawn, the longer side will be referred to in the provisions as the "long side." The shorter side will be referred to as the "short side." If the rectangle's sides are equal in length, assign one side the label "short side" and the perpendicular walls the label "long side."

R602.12.2 Sheathing materials. The following sheathing materials installed on the exterior side of exterior walls shall be used to construct a bracing unit as defined in Section R602.12.3. Mixing materials is prohibited.

1. Wood structural panels with a minimum thickness of $^3/_8$ inch (9.5 mm) fastened in accordance with Table R602.3(3).
2. Structural fiberboard sheathing with a minimum thickness of $^1/_2$ inch (12.7 mm) fastened in accordance with Table R602.3(1).

❖ For the simplified wall bracing procedure, only wood structural panels and structural fiberboard sheathing may be used to brace the exterior walls. All exterior walls must have minimum $^1/_2$-inch (13 mm) gypsum board on the interior side of the walls fastened in accordance with Table R702.3.5.

When using wood structural panels, narrow bracing panels may be substituted for bracing units as permitted by Section R602.12.6.

R602.12.3 Bracing unit. A bracing unit shall be a full-height sheathed segment of the exterior wall without openings or vertical or horizontal offsets and a minimum length as specified herein. Interior walls shall not contribute toward the amount of required bracing. Mixing of Items 1 and 2 is prohibited on the same story.

1. Where all framed portions of all exterior walls are sheathed in accordance with Section R602.12.2, including wall areas between bracing units, above and below openings and on gable end walls, the minimum length of a bracing unit shall be 3 feet (914 mm).
2. Where the exterior walls are braced with sheathing panels in accordance with Section R602.12.2 and areas between bracing units are covered with other materials, the minimum length of a bracing unit shall be 4 feet (1219 mm).

❖ Bracing units are full-height sheathed wall segments similar to braced wall panels from Section R602.10. When buildings are continuously sheathed—sheathed over all wall areas—the minimum length of a braced unit is 3 feet (914 mm). When the bracing units are intermittent-placed along wall sections with other materials sheathing in between the bracing units—the minimum length of a braced unit is 4 feet (1219 mm).

Continuous and intermittent bracing units may be mixed from one story to another. For example, there may be intermittent sheathing on the top story and continuous sheathing on the bottom story of a building. Bracing unit methods may not be mixed within one story.

Mixing of wood structural panel and structural fiberboard sheathing in one building is not permitted in accordance with Section R602.12.2.

Commentary Figure R602.12.3 contains the two materials available and the requirements for each material and bracing unit length.

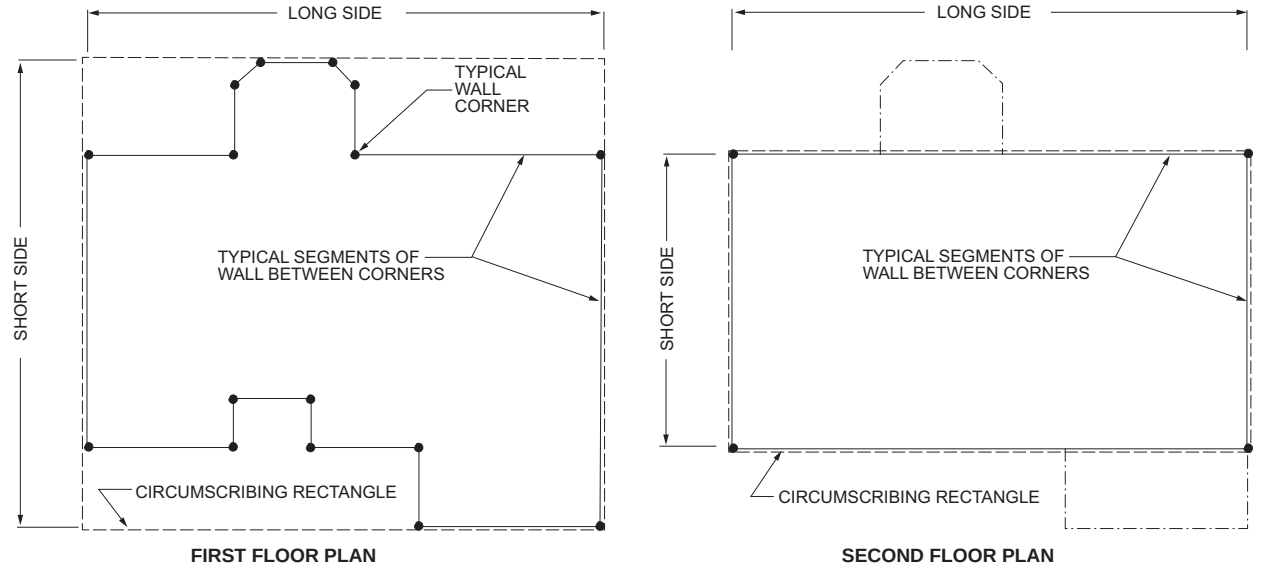

FIGURE R602.12.1
RECTANGLE CIRCUMSCRIBING AN ENCLOSED BUILDING

❖ See the commentary to Section R602.12.1.

INTERNATIONAL CODE COUNCIL®
Copyright © 2015 ICC. ALL RIGHTS RESERVED. Accessed by David Dammon on Jun 21, 2017 12:30:52 PM pursuant to License Agreement with ICC. No further reproduction or distribution authorized. ANY UNAUTHORIZED REPRODUCTION OR DISTRIBUTION IS A VIOLATION OF THE FEDERAL COPYRIGHT ACT AND THE LICENSE AGREEMENT, AND SUBJECT TO CIVIL AND CRIMINAL PENALTIES THEREUNDER.

MATERIAL	STUD SPACING AND FASTENER CRITERIA	FASTENER SPACING CRITERIA	BRACING UNIT METHOD	MINIMUM BRACING UNIT LENGTH (feet)
Wood structural panel	Table R602.3(3)	6" edge, 12" field	Continuous	3
			Intermittent	4
Structural fiberboard sheathing	Maximum 16" spacing Table R602.3(1)	3" edge, 6" field	Continuous	3
			Intermittent	4

Figure R602.12.3
AVAILABLE BRACING METHODS FOR SIMPLIFIED WALL BRACING

R602.12.3.1 Multiple bracing units. Segments of wall compliant with Section R602.12.3 and longer than the minimum bracing unit length shall be considered as multiple bracing units. The number of bracing units shall be determined by dividing the wall segment length by the minimum bracing unit length. Full-height sheathed segments of wall narrower than the minimum bracing unit length shall not contribute toward a bracing unit except as specified in Section R602.12.6.

❖ When bracing units are longer than the minimum required length, the total length of bracing along one side of a rectangle may be added and divided by the minimum required bracing length to calculate the number of braced units on one side of the rectangle.

For example, a building has been intermittently braced with wood structural panel. There are three sections of bracing, 8, 9, and 6 feet (2438, 3048, and 1829 mm) long. Divide each wall segment length by 4 feet (1219 mm) (the minimum bracing unit length) and add the total number of bracing units together.

8 ft/4 ft + 9 ft/4 ft + 6 ft/4 ft =
2 + 2.25 + 1.5 = 5.75 full bracing units

The wall line has an equivalent 5.75 bracing units. Use Section R602.12.4 to determine if that is a sufficient number of bracing units for the side of the rectangle.

R602.12.4 Number of bracing units. Each side of the circumscribed rectangle, as shown in Figure R602.12.1, shall have, at a minimum, the number of bracing units in accordance with Table R602.12.4 placed on the parallel exterior walls facing the side of the rectangle. Bracing units shall then be placed using the distribution requirements specified in Section R602.12.5.

❖ Section R602.12.4 defines the required number of bracing units for each side of the rectangle drawn around the building. Note the minimum number of bracing units for one side of the rectangle is based on the length of the perpendicular side of the rectangle. For example, to determine the number of bracing units required on the long sides of the rectangle, use the length of the short side of the rectangle.

Interpolation between rectangle side lengths is not permitted. Take the length of one side of the rectangle and round it up to the nearest 10 feet (3048 mm) of length. For example, if the side of a rectangle is 23 feet (7010 mm), use the 30-foot (9144 mm) column in Table R602.12.4 to find the required number of bracing units.

Cripple walls are assumed to be the first story when using Table R602.12.4. Three-story buildings above a cripple wall are not permitted. If the building has three stories and a cripple wall, it is a 4-story building and outside the scope of the code.

R602.12.5 Distribution of bracing units. The placement of bracing units on exterior walls shall meet all of the following requirements as shown in Figure R602.12.5.

1. A bracing unit shall begin not more than 12 feet (3658 mm) from any wall corner.
2. The distance between adjacent edges of bracing units shall be not greater than 20 feet (6096 mm).
3. Segments of wall greater than 8 feet (2438 mm) in length shall have not less than one bracing unit.

❖ Bracing units shall be placed so that the first unit's edge begins within 12 feet (3658 mm) of each end of a wall line. The bracing unit edges shall be a maximum of 20 feet (6096 mm) apart. All segments of wall longer than 8 feet (2438 mm) shall have one or more bracing units.

R602.12.6 Narrow panels. The bracing methods referenced in Section R602.10 and specified in Sections R602.12.6.1 through R602.12.6.3 shall be permitted when using simplified wall bracing.

❖ See Section R602.10.6 for commentary on narrow braced wall panels.

R602.12.6.1 Method CS-G. *Braced wall panels* constructed as Method CS-G in accordance with Tables R602.10.4 and R602.10.5 shall be permitted for one-story garages where all framed portions of all exterior walls are sheathed with wood structural panels. Each CS-G panel shall be equivalent to 0.5 of a bracing unit. Segments of wall that include a Method CS-G panel shall meet the requirements of Section R602.10.4.2.

❖ See Section R602.10.4 for commentary on Method CS-G.

R602.12.6.2 Method CS-PF. Braced wall panels constructed as Method CS-PF in accordance with Section R602.10.6.4 shall be permitted where all framed portions of all exterior walls are sheathed with wood structural panels. Each CS-PF panel shall equal 0.75 bracing units. Not more than four CS-PF panels shall be permitted on all segments of walls parallel to each side of the circumscribed rectangle. Segments of wall

INTERNATIONAL CODE COUNCIL®
Copyright © 2015 ICC. ALL RIGHTS RESERVED. Accessed by David Dammon on Jun 21, 2017 12:30:52 PM pursuant to License Agreement with ICC. No further reproduction or distribution authorized. ANY UNAUTHORIZED REPRODUCTION OR DISTRIBUTION IS A VIOLATION OF THE FEDERAL COPYRIGHT ACT AND THE LICENSE AGREEMENT, AND SUBJECT TO CIVIL AND CRIMINAL PENALTIES THEREUNDER.

that include a Method CS-PF panel shall meet the requirements of Section R602.10.4.2.

❖ See Sections R602.10.4 and R602.10.6.4 for commentary on Method CS-PF.

R602.12.6.3 Methods ABW, PFH and PFG. Braced wall panels constructed as Method ABW, PFH and PFG shall be permitted where bracing units are constructed using wood structural panels applied either continuously or intermittently. Each ABW and PFH panel shall equal one bracing unit and each PFG panel shall be equal to 0.75 bracing unit.

❖ See Sections R602.10.4 and R602.10.6.1 for commentary on Method ABW. See Sections R602.10.4

TABLE R602.12.4
MINIMUM NUMBER OF BRACING UNITS ON EACH SIDE OF THE CIRCUMSCRIBED RECTANGLE

ULTIMATE DESIGN WIND SPEED (mph)	STORY LEVEL	EAVE-TO-RIDGE HEIGHT (feet)	MINIMUM NUMBER OF BRACING UNITS ON EACH LONG SIDE[a, b, d]						MINIMUM NUMBER OF BRACING UNITS ON EACH SHORT SIDE[a, b, d]					
			Length of short side (feet)[c]						Length of long side (feet)[c]					
			10	20	30	40	50	60	10	20	30	40	50	60
115		10	1	2	2	2	3	3	1	2	2	2	3	3
			2	3	3	4	5	6	2	3	3	4	5	6
			2	3	4	6	7	8	2	3	4	6	7	8
		15	1	2	3	3	4	4	1	2	3	3	4	4
			2	3	4	5	6	7	2	3	4	5	6	7
			2	4	5	6	7	9	2	4	5	6	7	9
130		10	1	2	2	3	3	4	1	2	2	3	3	4
			2	3	4	5	6	7	2	3	4	5	6	7
			2	4	5	7	8	10	2	4	5	7	8	10
		15	2	3	3	4	4	6	2	3	3	4	4	6
			3	4	6	7	8	10	3	4	6	7	8	10
			3	6	7	10	11	13	3	6	7	10	11	13

For SI: 1 inch = 25.4 mm, 1 foot = 304.8 mm.

a. Interpolation shall not be permitted.

b. Cripple walls or wood-framed basement walls in a walk-out condition shall be designated as the first story and the stories above shall be redesignated as the second and third stories, respectively, and shall be prohibited in a three-story structure.

c. Actual lengths of the sides of the circumscribed rectangle shall be rounded to the next highest unit of 10 when using this table.

d. For Exposure Category C, multiply bracing units by a factor of 1.20 for a one-story building, 1.30 for a two-story building and 1.40 for a three-story building.

❖ See the commentary to Section R602.12.4.

INTERNATIONAL CODE COUNCIL®
Copyright © 2015 ICC. ALL RIGHTS RESERVED. Accessed by David Dammon on Jun 21, 2017 12:30:52 PM pursuant to License Agreement with ICC. No further reproduction or distribution authorized. ANY UNAUTHORIZED REPRODUCTION OR DISTRIBUTION IS A VIOLATION OF THE FEDERAL COPYRIGHT ACT AND THE LICENSE AGREEMENT, AND SUBJECT TO CIVIL AND CRIMINAL PENALTIES THEREUNDER.

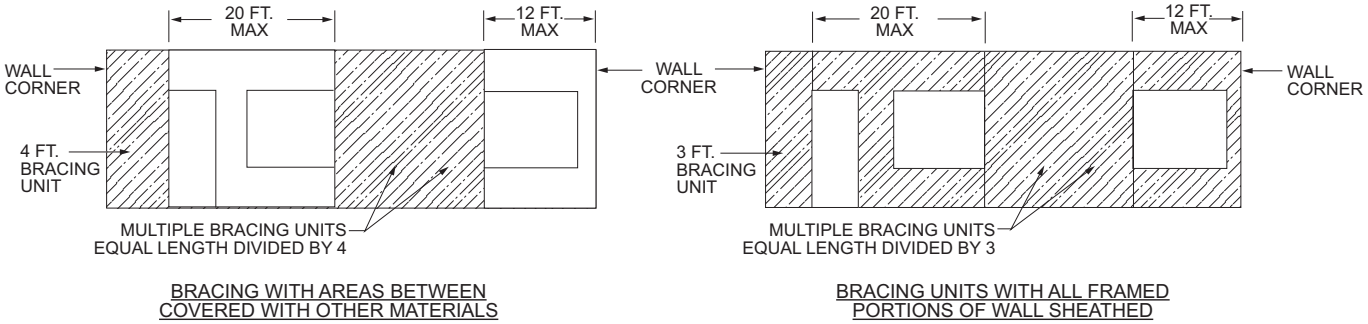

For SI: 1 foot = 304.8 mm.

FIGURE R602.12.5
BRACING UNIT DISTRIBUTION

❖ See the commentary to Section R602.12.5.

and R602.10.6.2 for commentary on Method PFH. See Sections R602.10.4 and R602.10.6.3 for commentary on Method PFG.

R602.12.7 Lateral support. For bracing units located along the eaves, the vertical distance from the outside edge of the top wall plate to the roof sheathing above shall not exceed 9.25 inches (235 mm) at the location of a bracing unit unless lateral support is provided in accordance with Section R602.10.8.2.

❖ See Section R602.10.8.2 for commentary on required lateral support above braced wall panels and bracing units at the roof.

R602.12.8 Stem walls. Masonry stem walls with a height and length of 48 inches (1219 mm) or less supporting a bracing unit or a Method CS-G, CS-PF or PFG *braced wall panel* shall be constructed in accordance with Figure R602.10.9. Concrete stem walls with a length of 48 inches (1219 mm) or less, greater than 12 inches (305 mm) tall and less than 6 inches (152 mm) thick shall be reinforced sized and located in accordance with Figure R602.10.9.

❖ See Section R602.10.9, Items 3 and 4 for commentary on required reinforcement of stem walls less than 48 inches (1219 mm) in length. Method PFH is not permitted on masonry stem walls.

SECTION R603
COLD-FORMED STEEL WALL FRAMING

R603.1 General. Elements shall be straight and free of any defects that would significantly affect structural performance. Cold-formed steel wall framing members shall be in accordance with the requirements of this section.

❖ The provisions of this section apply to the construction of load-bearing wall systems using cold-formed steel framing, which is that type of construction made up in part or entirely of steel structural members cold-formed to shape from sheet or strip steel. The framing members are generally in the form of the letter "C" (C-shape), which is described in further detail in Section R603.2.3. The use of cold-formed steel-framed designs not consistent with these provisions is beyond the scope of the code. In such cases, an analysis and design by a design professional is required.

R603.1.1 Applicability limits. The provisions of this section shall control the construction of exterior cold-formed steel wall framing and interior load-bearing cold-formed steel wall framing for buildings not more than 60 feet (18 288 mm) long perpendicular to the joist or truss span, not more than 40 feet (12 192 mm) wide parallel to the joist or truss span, and less than or equal to three stories above grade plane. Exterior walls installed in accordance with the provisions of this section shall be considered as load-bearing walls. Cold-formed steel walls constructed in accordance with the provisions of this section shall be limited to sites where the ultimate design wind speed is less than 139 miles per hour (62 m/s), Exposure Category B or C, and the ground snow load is less than or equal to 70 pounds per square foot (3.35 kPa).

❖ See the commentary to Section R505.1.1.

R603.1.2 In-line framing. Load-bearing cold-formed steel studs constructed in accordance with Section R603 shall be located in-line with joists, trusses and rafters in accordance with Figure R603.1.2 and the tolerances specified as follows:

1. The maximum tolerance shall be $^3/_4$ inch (19 mm) between the centerline of the horizontal framing member and the centerline of the vertical framing member.
2. Where the centerline of the horizontal framing member and bearing stiffener is located to one side of the centerline of the vertical framing member, the maximum tolerance shall be $^1/_8$ inch (3 mm) between the web of the horizontal framing member and the edge of the vertical framing member.

❖ In-line framing is the preferred framing method. The advantage is that it provides a direct load path for the transfer of forces from joists to studs. The $^3/_4$-inch (19 mm) tolerance in Item 1 is accepted industry practice, and addresses those conditions where two framing members (roof rafter and ceiling joist, for example) are to be aligned over a wall stud. The case of a bearing

INTERNATIONAL CODE COUNCIL®
Copyright © 2015 ICC. ALL RIGHTS RESERVED. Accessed by David Dammon on Jun 21, 2017 12:30:52 PM pursuant to License Agreement with ICC. No further reproduction or distribution authorized. ANY UNAUTHORIZED REPRODUCTION OR DISTRIBUTION IS A VIOLATION OF THE FEDERAL COPYRIGHT ACT AND THE LICENSE AGREEMENT, AND SUBJECT TO CIVIL AND CRIMINAL PENALTIES THEREUNDER.

stiffener located on the back side of the horizontal member where the centerlines of both are to one side of the stud centerline must meet the additional limit in Item 2, as Figure R603.1.2 illustrates.

In-line framing maximizes framing alignment to minimize secondary moments on the framing members, taking into account that the prescriptive track requirements do not consider it to be a load transfer member. In the absence of in-line framing within these tolerances, a load distribution member, such as a structural track, may be required for this force transfer.

R603.2 Structural framing. Load-bearing cold-formed steel wall framing members shall be in accordance with this section.

❖ Stud framing must comply with the dimensional and minimum thickness requirements specified in Table R603.2.3 and as shown in Figure R603.2.3(1). Note a to Table R603.2.3 explains the meaning of the alpha-numeric member designation used for all steel framing members in the code. This system replaces the varied designation approaches that had been produced by each individual manufacturer. In addition, the designation is used to identify not only a specific steel framing member but also the section properties of that same member through the use of the product technical information document.

Steel thickness is expressed in mils, which pertains to the base metal thickness measured prior to painting or the application of metallic (corrosion resistant) coatings. The base metal thickness is typically stamped or embossed on the member by the manufacturer. Table R603.2.3 also references the equivalent thickness in inches. The use of gage numbers to define the thickness (a specific mean decimal thickness for which rolling tolerances were established) of steel sheet is a practice that has been discontinued by the steel industry.

Steel track sections are to serve in nonload-bearing applications only and are shown in Figure R603.2.3(2). They must have a minimum flange width of $1^1/_4$ inches (32 mm).

R603.2.1 Material. Load-bearing cold-formed steel framing members shall be cold formed to shape from structural- quality sheet steel complying with the requirements of ASTM A1003: Structural Grades 33 Type H and 50 Type H.

❖ Load-bearing steel framing members must be cold-formed to shape from structural-quality sheet applicable material standards. The steel grades specified have the ductility and strength to meet the intent of these provisions.

R603.2.2 Corrosion protection. Load-bearing cold-formed steel framing shall have a metallic coating complying with ASTM A1003 and one of the following:

1. A minimum of G 60 in accordance with ASTM A653.
2. A minimum of AZ 50 in accordance with ASTM A792.

❖ The metallic coatings specified correspond to requirements in the referenced material standards. The minimum coating designations assume normal exposure conditions that are best defined as having the framing

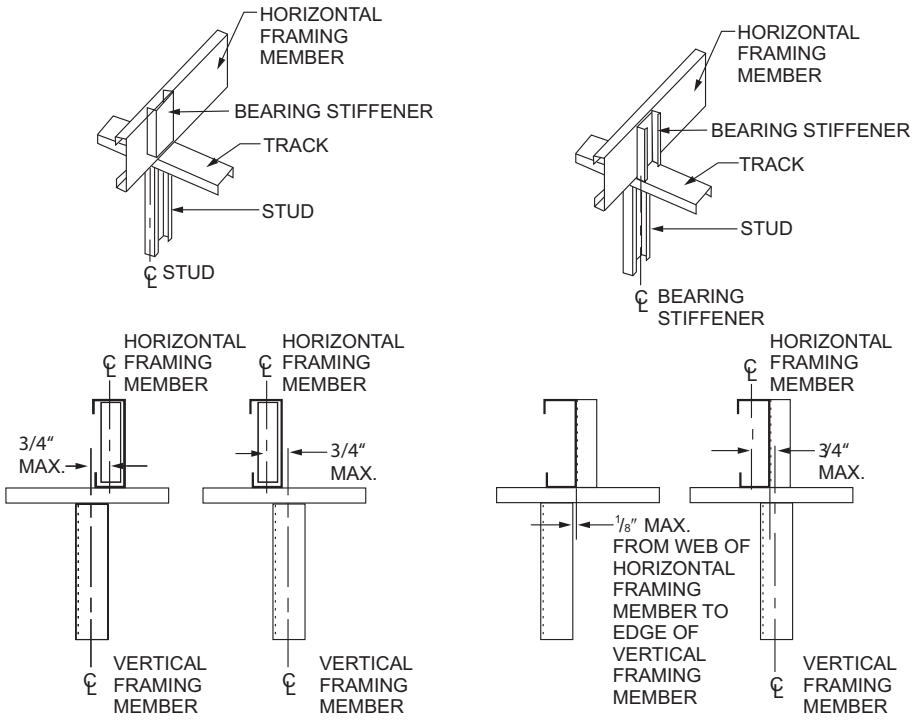

For SI: 1 inch = 25.4 mm.

FIGURE R603.1.2
IN-LINE FRAMING

INTERNATIONAL CODE COUNCIL®
Copyright © 2015 ICC. ALL RIGHTS RESERVED. Accessed by David Dammon on Jun 21, 2017 12:30:52 PM pursuant to License Agreement with ICC. No further reproduction or distribution authorized. ANY UNAUTHORIZED REPRODUCTION OR DISTRIBUTION IS A VIOLATION OF THE FEDERAL COPYRIGHT ACT AND THE LICENSE AGREEMENT, AND SUBJECT TO CIVIL AND CRIMINAL PENALTIES THEREUNDER.

members enclosed within a building envelope or wall assembly within a controlled environment. While not common under the code when more severe exposure conditions are encountered, consideration should be given to specifying a heavier coating.

R603.2.3 Dimension, thickness and material grade. Load-bearing cold-formed steel wall framing members shall comply with Figure R603.2.3(1) and with the dimensional and thickness requirements specified in Table R603.2.3. Additionally, C-shaped sections shall have a minimum flange width of $1^5/_8$ inches (41 mm) and a maximum flange width of 2 inches (51 mm). The minimum lip size for C-shaped sections shall be $^1/_2$ inch (12.7 mm). Track sections shall comply with Figure R603.2.3(2) and shall have a minimum flange width of $1^1/_4$ inches (32 mm). Minimum Grade 33 ksi steel shall be used wherever 33 mil and 43 mil thicknesses are specified. Minimum Grade 50 ksi steel shall be used wherever 54 and 68 mil thicknesses are specified.

❖ See the commentary to Section R603.2.

R603.2.4 Identification. Load-bearing cold-formed steel framing members shall have a legible label, stencil, stamp or embossment with the following information as a minimum:

1. Manufacturer's identification.
2. Minimum base steel thickness in inches (mm).
3. Minimum coating designation.
4. Minimum yield strength, in kips per square inch (ksi) (MPa).

❖ Load-bearing steel framing identification provides verification that materials installed are consistent with the design and meet the intent of the code.

R603.2.5 Fastening. Screws for steel-to-steel connections shall be installed with a minimum edge distance and center-to-center spacing of $^1/_2$ inch (12.7 mm), shall be self-drilling tapping and shall conform to ASTM C1513. Structural sheathing shall be attached to cold-formed steel studs with minimum No. 8 self-drilling tapping screws that conform to ASTM C1513. Screws for attaching structural sheathing to cold-formed steel wall framing shall have a minimum head diameter of 0.292 inch (7.4 mm) with countersunk heads and shall be installed with a minimum edge distance of $^3/_8$ inch (9.5 mm). Gypsum board shall be attached to cold-formed steel wall framing with minimum No. 6 screws conforming to ASTM C954 or ASTM C1513 with a bugle-head style and

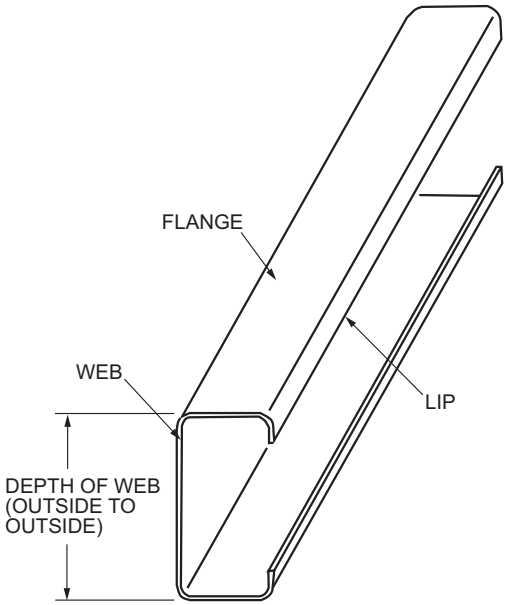

FIGURE R603.2.3(1)
C-SHAPED SECTION

❖ See the commentary to Section R603.2.

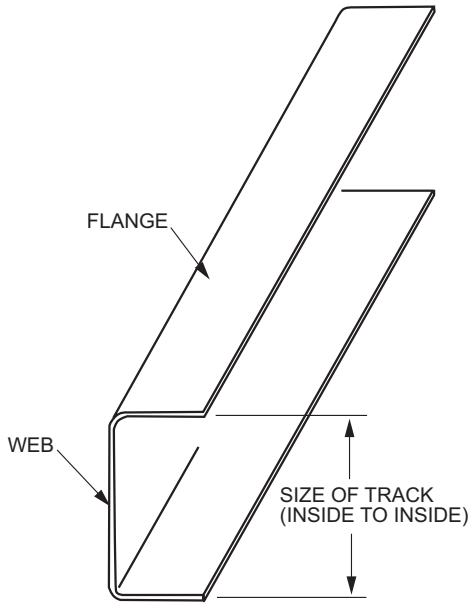

FIGURE R603.2.3(2)
TRACK SECTION

❖ See the commentary to Section R603.2.

TABLE R603.2.3
LOAD-BEARING COLD-FORMED STEEL STUD SIZES AND THICKNESSES

MEMBER DESIGNATION[a]	WEB DEPTH (inches)	MINIMUM BASE STEEL THICKNESS mil (inches)
350S162-t	3.5	33 (0.0329), 43 (0.0428), 54 (0.0538)
550S162-t	5.5	33 (0.0329), 43 (0.0428), 54 (0.0538), 68 (0.0677)

For SI: 1 inch = 25.4 mm; 1 mil = 0.0254 mm.

a. The member designation is defined by the first number representing the member depth in hundredths of an inch, "S" representing a stud or joist member, the second number representing the flange width in hundredths of an inch, and the letter "t" shall be a number representing the minimum base metal thickness in mils.

INTERNATIONAL CODE COUNCIL®
Copyright © 2015 ICC. ALL RIGHTS RESERVED. Accessed by David Dammon on Jun 21, 2017 12:30:52 PM pursuant to License Agreement with ICC. No further reproduction or distribution authorized. ANY UNAUTHORIZED REPRODUCTION OR DISTRIBUTION IS A VIOLATION OF THE FEDERAL COPYRIGHT ACT AND THE LICENSE AGREEMENT, AND SUBJECT TO CIVIL AND CRIMINAL PENALTIES THEREUNDER.

shall be installed in accordance with Section R702. For connections, screws shall extend through the steel a minimum of three exposed threads. Fasteners shall have rust-inhibitive coating suitable for the installation in which they are being used, or be manufactured from material not susceptible to corrosion.

❖ Fasteners meeting the referenced standards and installed in accordance with this section will provide a load capacity consistent with these prescriptive provisions.

R603.2.6 Web holes, web hole reinforcing and web hole patching. Web holes, web hole reinforcing and web hole patching shall be in accordance with this section.

❖ To allow for routing utilities, web holes (also referred to as "penetrations," "utility holes" and "punchouts") are permitted in the webs of studs. To avoid adversely affecting the strength of wall framing, web holes must meet the limits of Section R603.2.6.1.

R603.2.6.1 Web holes. Web holes in wall studs and other structural members shall comply with all of the following conditions:

1. Holes shall conform to Figure R603.2.6.1.
2. Holes shall be permitted only along the centerline of the web of the framing member.
3. Holes shall have a center-to-center spacing of not less than 24 inches (610 mm).
4. Holes shall have a web hole width not greater than 0.5 times the member depth, or $1^1/_2$ inches (38 mm).
5. Holes shall have a web hole length not exceeding $4^1/_2$ inches (114 mm).
6. Holes shall have a minimum distance between the edge of the bearing surface and the edge of the web hole of not less than 10 inches (254 mm).

Framing members with web holes not conforming to the above requirements shall be reinforced in accordance with Section R603.2.6.2, patched in accordance with Section R603.2.6.3 or designed in accordance with accepted engineering practice.

❖ Web holes are limited in size as well as to the locations along the centerline of the web of the framing member as illustrated in Figure R603.2.6.1. Otherwise, reinforcement or patching of the web hole is required.

R603.2.6.2 Web hole reinforcing. Web holes in gable endwall studs not conforming to the requirements of Section R603.2.6.1 shall be permitted to be reinforced if the hole is located fully within the center 40 percent of the span and the depth and length of the hole does not exceed 65 percent of the flat width of the web. The reinforcing shall be a steel plate or C-shape section with a hole that does not exceed the web hole size limitations of Section R603.2.6.1 for the member being reinforced. The steel reinforcing shall be the same thickness as the receiving member and shall extend not less than 1 inch (25 mm) beyond all edges of the hole. The steel reinforcing shall be fastened to the web of the receiving member with No. 8 screws spaced not more than 1 inch (25 mm) center-to-center along the edges of the patch with minimum edge distance of $^1/_2$ inch (12.7 mm).

❖ Web holes in gable endwall studs that do not meet the limitations stated in Section R603.2.6.1 may be reinforced in accordance with this section. It permits utility installations as long as the reinforcement is installed in accordance with this section and the finished opening meets the limits of Section R603.2.6.1.

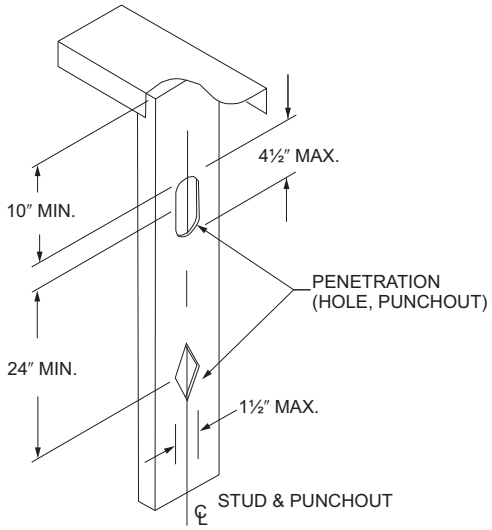

For SI: 1 inch = 25.4 mm.

FIGURE R603.2.6.1
WALL STUD WEB HOLES

R603.2.6.3 Hole patching. Web holes in wall studs and other structural members not conforming to the requirements in Section R603.2.6.1 shall be permitted to be patched in accordance with either of the following methods:

1. Framing members shall be replaced or designed in accordance with accepted engineering practice where web holes exceed the following size limits:
   1.1. The depth of the hole, measured across the web, exceeds 70 percent of the flat width of the web.
   1.2. The length of the hole measured along the web exceeds 10 inches (254 mm) or the depth of the web, whichever is greater.
2. Web holes not exceeding the dimensional requirements in Section R603.2.6.3, Item 1, shall be patched with a solid steel plate, stud section or track section in accordance with Figure R603.2.6.3. The steel patch shall, as a minimum, be the same thickness as the receiving member and shall extend not less than1 inch (25 mm) beyond all edges of the hole. The steel patch shall be fastened to the web of the receiving member with No. 8 screws spaced not more than 1 inch (25 mm) center-to-center along the edges of the patch with a minimum edge distance of $^1/_2$ inch (12.7 mm).

❖ Where web holes exceed the limits of Section R603.2.6.1 but are not greater than the size limits of Item 1 in this section, they may be patched as illus-

INTERNATIONAL CODE COUNCIL®
Copyright © 2015 ICC. ALL RIGHTS RESERVED. Accessed by David Dammon on Jun 21, 2017 12:30:52 PM pursuant to License Agreement with ICC. No further reproduction or distribution authorized. ANY UNAUTHORIZED REPRODUCTION OR DISTRIBUTION IS A VIOLATION OF THE FEDERAL COPYRIGHT ACT AND THE LICENSE AGREEMENT, AND SUBJECT TO CIVIL AND CRIMINAL PENALTIES THEREUNDER.

trated in Figure R603.2.6.3. Otherwise the patch must be designed or the framing member should be replaced.

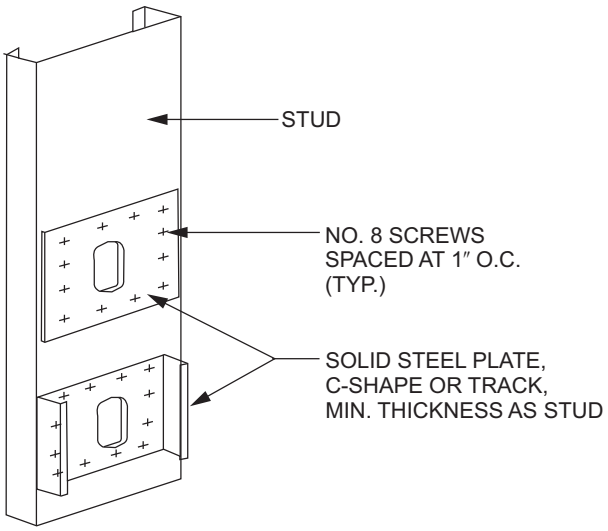

For SI: 1 inch = 25.4 mm.

FIGURE R603.2.6.3
WALL STUD WEB HOLE PATCH

R603.3 Wall construction. Exterior cold-formed steel framed walls and interior load-bearing cold-formed steel framed walls shall be constructed in accordance with the provisions of this section.

❖ The balance of this section consists of the prescriptive design provisions for steel-framed walls.

R603.3.1 Wall to foundation or floor connection. Cold-formed steel framed walls shall be anchored to foundations or floors in accordance with Table R603.3.1 and Figure R603.3.1(1), R603.3.1(2), R603.3.1(3) or R603.3.1(4). Anchor bolts shall be located not more than 12 inches (305 mm) from corners or the termination of bottom tracks. Anchor bolts shall extend not less than 15 inches (381 mm) into masonry or 7 inches (178 mm) into concrete. Foundation anchor straps shall be permitted, in lieu of anchor bolts, if spaced as required to provide equivalent anchorage to the required anchor bolts and installed in accordance with manufacturer's requirements.

❖ The bottom tracks of cold-formed steel walls should be attached to the floor as illustrated in Figure R603.3.1(1) and in accordance with Table R603.3.1. Steel-framed walls anchored directly to foundations must be in accordance with Figure R603.3.1(2) with $^1/_2$-inch diameter (12.7 mm) anchor bolts spaced as required by Table R603.3.1 based on the wind speed and the exposure category. Wall tracks connected to wood sills must be in accordance with Figure R603.3.1(3) and Table R603.3.1. Table R603.3.1 has been revised to include wind uplift connector strength and new Figure R603.3.1(4). This revision aligns the code with AISI S230-07 wind uplift connector requirements.

R603.3.1.1 Gable endwalls. Gable endwalls with heights greater than 10 feet (3048 mm) shall be anchored to foundations or floors in accordance with Table R603.3.1.1(1) or R603.3.1.1(2).

❖ The connection requirements for gable endwalls that are more than 10 feet (3048 mm) in height are tabulated in Tables R603.3.1.1(1) and R603.3.1.1(2) for floors and foundations, respectively. Gable endwalls up to 10 feet (3048 mm) in height are permitted to be connected in accordance with Section R603.3.1.

R603.3.2 Minimum stud sizes. Cold-formed steel walls shall be constructed in accordance with Figure R603.3.1(1), R603.3.1(2) or R603.3.1(3), as applicable. Exterior wall stud size and thickness shall be determined in accordance with the limits set forth in Tables R603.3.2(2) through R603.3.2(16). Interior load-bearing wall stud size and thickness shall be determined in accordance with the limits set forth in Tables R603.3.2(2) through R603.3.2(16) based upon an ultimate design wind speed of 115 miles per hour (51 m/s), Exposure Category B, and the building width, stud spacing and snow load, as appropriate. Fastening requirements shall be in accordance with Section R603.2.5 and Table R603.3.2(1). Top and bottom tracks shall have the same minimum thickness as the wall studs.

Exterior wall studs shall be permitted to be reduced to the next thinner size, as shown in Tables R603.3.2(2) through R603.3.2(16), but not less than 33 mils (0.84 mm), where both of the following conditions exist:

1. Minimum of $^1/_2$-inch (12.7 mm) gypsum board is installed and fastened on the interior surface in accordance with Section R702.
2. Wood structural sheathing panels of minimum $^7/_{16}$-inch-thick (11.1 mm) oriented strand board or $^{15}/_{32}$-inch-thick (12 mm) plywood are installed and fastened in accordance with Section R603.9.1 and Table R603.3.2(1) on the outside surface.

Interior load-bearing walls shall be permitted to be reduced to the next thinner size, as shown in Tables R603.3.2(2) through R603.3.2(16), but not less than 33 mils (0.84 mm), where not less than $^1/_2$-inch (12.7 mm) gypsum board is installed and fastened in accordance with Section R702 on both sides of the wall. The tabulated stud thickness for load-bearing walls shall be used when the attic load is 10 pounds per square foot (480 Pa) or less. A limited attic storage load of 20 pounds per square foot (960 Pa) shall be permitted provided that the next higher snow load column is used to select the stud size from Tables R603.3.2(2) through R603.3.2(16).

For two-story buildings, the tabulated stud thickness for walls supporting one floor, roof and ceiling shall be used when the second-floor live load is 30 pounds per square foot (1440 Pa). Second-floor live loads of 40 psf (1920 Pa) shall be permitted provided that the next higher snow load column is used to select the stud size from Tables R603.3.2(2) through R603.3.2(11).

For three-story buildings, the tabulated stud thickness for walls supporting one or two floors, roof and ceiling shall be used when the third-floor live load is 30 pounds per square

INTERNATIONAL CODE COUNCIL®
Copyright © 2015 ICC. ALL RIGHTS RESERVED. Accessed by David Dammon on Jun 21, 2017 12:30:52 PM pursuant to License Agreement with ICC. No further reproduction or distribution authorized. ANY UNAUTHORIZED REPRODUCTION OR DISTRIBUTION IS A VIOLATION OF THE FEDERAL COPYRIGHT ACT AND THE LICENSE AGREEMENT, AND SUBJECT TO CIVIL AND CRIMINAL PENALTIES THEREUNDER.

foot (1440 Pa). Third-floor live loads of 40 pounds per square foot (1920 Pa) shall be permitted provided that the next higher snow load column is used to select the stud size from Tables R603.3.2(12) through R603.3.2(16).

❖ Steel studs must comply with Tables R603.3.2(2) through R603.3.2(16). These tables specify the minimum steel stud thickness based on floor/ceilings supported, wall height, wind speed/exposure, ground snow load, building width and stud depth and spacing. These tables have been revised to combine Grade 33 ksi and 50 ksi tables into one table. This resulted in a reduction in the number of tables from 30 to 15. For tabulated thicknesses of 33 and 43 mil, Grade 33 ksi steel is to be used. For tabulated thicknesses of 54 and 68 mil, Grade 50 ksi steel is to be used. Also, 97 mil thickness has been deleted from the tables. Although the tabular values are calculated based on attic live loads of 10 psf (479 Pa) or less, values for attic live loads of up to 20 psf (958 Pa) may be determined by simply moving to the next higher snow load column. Similarly, although the tabular values are based on floor live loads of 30 psf (1436 Pa) or less, values for floor live loads of up to 40 psf (1915 Pa) may be determined by moving to the next higher snow load column.

In recognition of the stiffening effects of sheathing, the code allows the required stud thickness to be reduced to the next thinner size for exterior walls with minimum $^1/_2$-inch (12.7 mm) gypsum board installed on the interior surface and wood structural panels [minimum $^7/_{16}$-inch (11.1 mm) thick oriented strand board or $^{15}/_{32}$-inch (11.9 mm) thick plywood] installed on the exterior. Stud thickness must not be less than 33 mils (0.84 mm). Similarly, interior load-bearing walls with

TABLE R603.3.1
WALL TO FOUNDATION OR FLOOR CONNECTION REQUIREMENTS[a, b]

FRAMING CONDITION			ULTIMATE WIND SPEED AND EXPOSURE CATEGORY (mph)				
			115 B	126 B or 110 C	< 139 B or 115 C	126 C	< 139 C
Wall bottom track to floor per Figure R603.3.1(1)			1-No. 8 screw at 12″ o.c.	1-No. 8 screw at 12″ o.c.	1-No. 8 screw at 12″ o.c.	2-No. 8 screws at 12″ o.c.	2-No. 8 screws at 12″ o.c.
Wall bottom track to foundation per Figure R603.3.1(2)[d]			$^1/_2$″ minimum diameter anchor bolt at 6′ o.c.	$^1/_2$″ minimum diameter anchor bolt at 4′ o.c.	$^1/_2$″ minimum diameter anchor bolt at 4′ o.c.	$^1/_2$″ minimum diameter anchor bolt at 4′ o.c.	$^1/_2$″ minimum diameter anchor bolt at 4′ o.c.
Wall bottom track to wood sill per Figure R603.3.1(3)			Steel plate spaced at 4′ o.c., with 4-No. 8 screws and 4-10d or 6-8d common nails	Steel plate spaced at 3′ o.c., with 4-No. 8 screws and 4-10d or 6-8d common nails	Steel plate spaced at 3′ o.c., with 4-No. 8 screws and 4-10d or 6-8d common nails	Steel plate spaced at 2′ o.c., with 4-No. 8 screws and 4-10d or 6-8d common nails	Steel plate spaced at 2′ o.c., with 4-No. 8 screws and 4-10d or 6-8d common nails
Wind uplift connector strength (lbs)[c, e]	Stud Spacing (inches)	Roof Span (feet)					
	16	24	NR	NR	NR	124	209
		28	NR	NR	62	151	249
		32	NR	NR	79	179	289
		36	NR	NR	94	206	329
		40	NR	61	117	239	374
	24	24	NR	NR	69	186	314
		28	NR	NR	93	227	374
		32	NR	NR	117	268	434
		36	NR	64	141	309	494
		40	NR	92	176	359	562

For SI: 1 inch = 25.4 mm, 1 mile per hour = 0.447 m/s, 1 foot = 304.8 mm, 1 pound = 4.45 N.

a. Anchor bolts are to be located not more than 12 inches from corners or the termination of bottom tracks such as, at door openings or corners. Bolts are to extend not less than 15 inches into masonry or 7 inches into concrete.

b. All screw sizes shown are minimum.

c. NR = Uplift connector not required.

d. Foundation anchor straps are permitted in place of anchor bolts, if spaced as required to provide equivalent anchorage to the required anchor bolts and installed in accordance with manufacturer's requirements.

e. See Figure R603.3.1(4) for details.

❖ This table specifies connections for wall tracks, which will provide appropriate load capacity based on the basic wind speed and exposure category.

INTERNATIONAL CODE COUNCIL®
Copyright © 2015 ICC. ALL RIGHTS RESERVED. Accessed by David Dammon on Jun 21, 2017 12:30:52 PM pursuant to License Agreement with ICC. No further reproduction or distribution authorized. ANY UNAUTHORIZED REPRODUCTION OR DISTRIBUTION IS A VIOLATION OF THE FEDERAL COPYRIGHT ACT AND THE LICENSE AGREEMENT, AND SUBJECT TO CIVIL AND CRIMINAL PENALTIES THEREUNDER.

minimum $^1/_2$-inch (12.7 mm) gypsum board installed on both sides of the wall may use the next thinner stud, but not less than 33 mils (0.84 mm).

Fastening of studs to tracks and structural sheathing to studs must be as specified in Section R603.2.4 and Table R603.3.2(1). Track thickness must be no less than that of the wall studs.

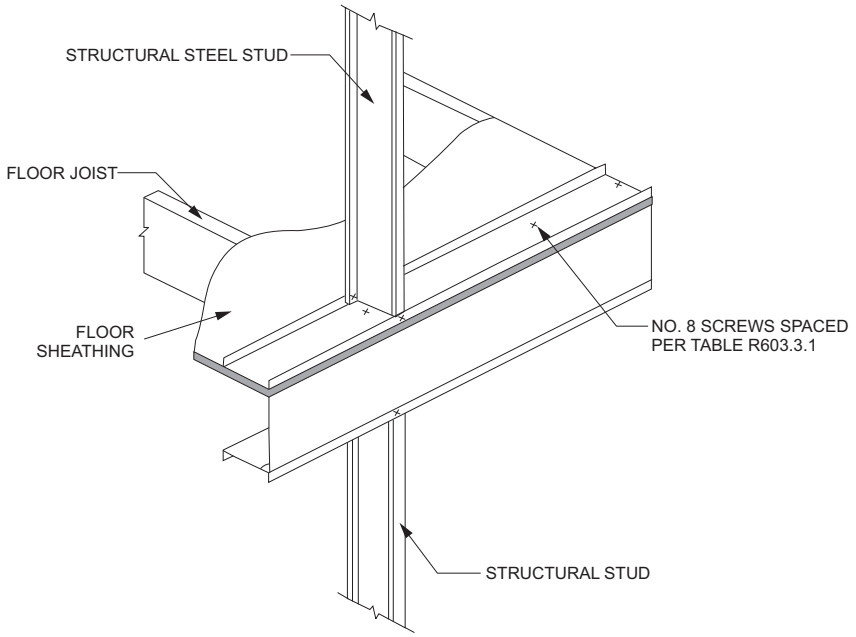

FIGURE R603.3.1(1)
WALL TO FLOOR CONNECTION

❖ This connection detail depicts the item on the first line of Table R603.3.1.

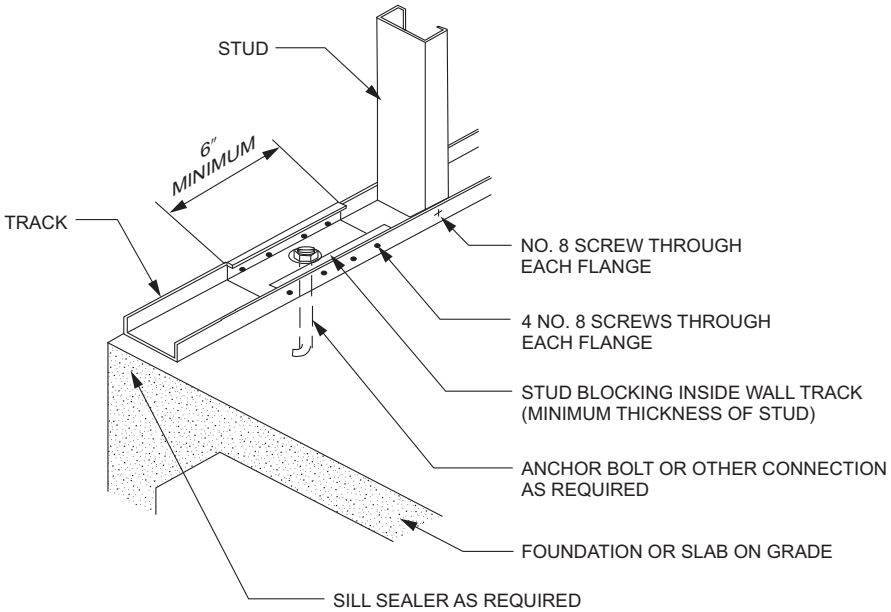

For SI: 1 inch = 25.4 mm.

FIGURE R603.3.1(2)
WALL TO FOUNDATION CONNECTION

❖ This connection detail depicts the item on the second line of Table R603.3.1.

INTERNATIONAL CODE COUNCIL®
Copyright © 2015 ICC. ALL RIGHTS RESERVED. Accessed by David Dammon on Jun 21, 2017 12:30:52 PM pursuant to License Agreement with ICC. No further reproduction or distribution authorized. ANY UNAUTHORIZED REPRODUCTION OR DISTRIBUTION IS A VIOLATION OF THE FEDERAL COPYRIGHT ACT AND THE LICENSE AGREEMENT, AND SUBJECT TO CIVIL AND CRIMINAL PENALTIES THEREUNDER.

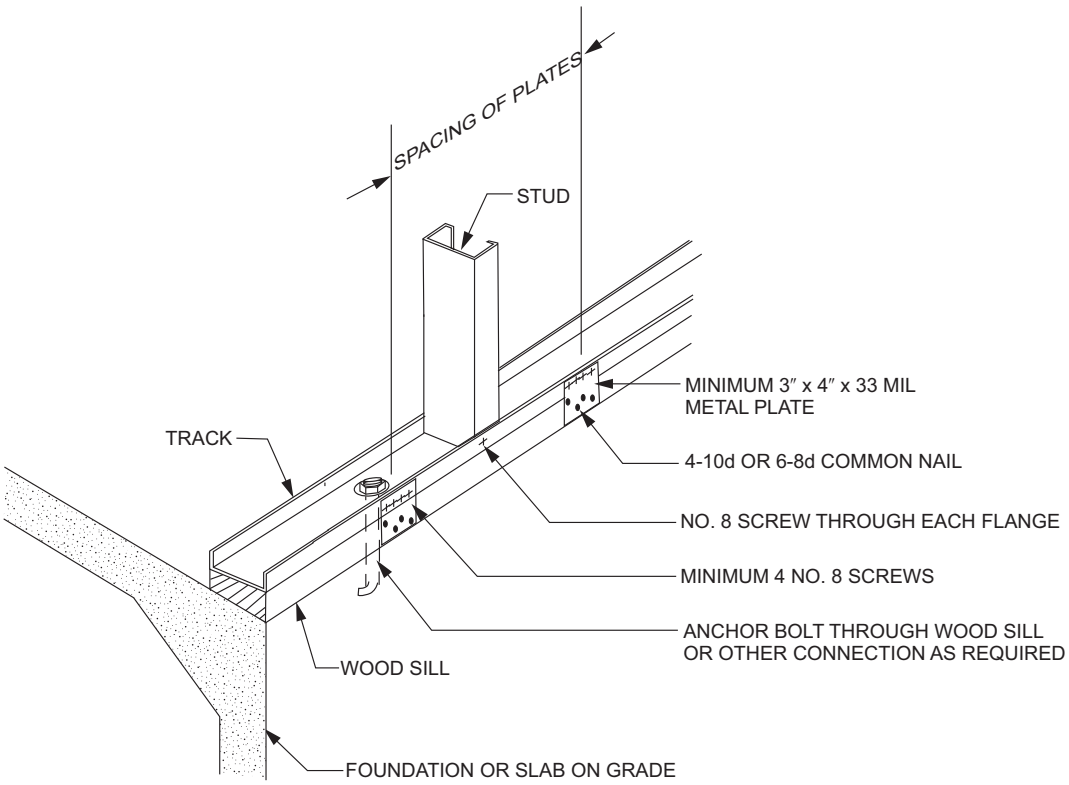

For SI: 1 mil = 0.0254 mm, 1 inch = 25.4 mm.

FIGURE R603.3.1(3)
WALL TO WOOD SILL CONNECTION

❖ This connection detail illustrates the item on the third line of Table R603.3.1.

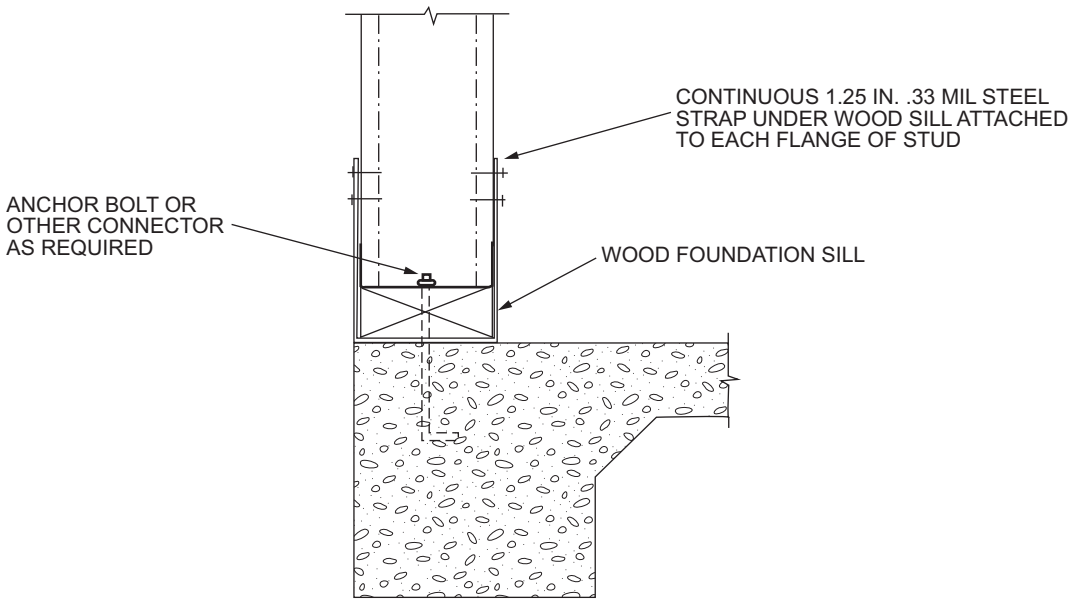

FIGURE R603.3.1(4)
WIND UPLIFT CONNECTOR

INTERNATIONAL CODE COUNCIL®
Copyright © 2015 ICC. ALL RIGHTS RESERVED. Accessed by David Dammon on Jun 21, 2017 12:30:52 PM pursuant to License Agreement with ICC. No further reproduction or distribution authorized. ANY UNAUTHORIZED REPRODUCTION OR DISTRIBUTION IS A VIOLATION OF THE FEDERAL COPYRIGHT ACT AND THE LICENSE AGREEMENT, AND SUBJECT TO CIVIL AND CRIMINAL PENALTIES THEREUNDER.

TABLE R603.3.1.1(1)
GABLE ENDWALL TO FLOOR CONNECTION REQUIREMENTS[a, b, c]

ULTIMATE WIND SPEED (mph)		WALL BOTTOM TRACK TO FLOOR JOIST OR TRACK CONNECTION		
Exposure Category		Stud height, *h* (feet)		
B	C	10 < *h* ≤ 14	14 < *h* ≤ 18	18 < *h* ≤ 22
115	—	1-No. 8 screw @ 12″ o.c.	1-No. 8 screw @ 12″ o.c.	1-No. 8 screw @ 12″ o.c.
126	110	1-No. 8 screw @ 12″ o.c.	1-No. 8 screw @ 12″ o.c.	1-No. 8 screw @ 12″ o.c.
< 139	115	1-No. 8 screw @ 12″ o.c.	1-No. 8 screw @ 12″ o.c.	2-No. 8 screws @ 12″ o.c.
—	126	1-No. 8 screw @ 12″ o.c.	2-No. 8 screws @ 12″ o.c.	1-No. 8 screw @ 8″ o.c.
—	< 139	2-No. 8 screws @ 12″ o.c.	1-No. 8 screw @ 8″ o.c.	2-No. 8 screws @ 8″ o.c.

For SI: 1 inch = 25.4 mm, 1 mile per hour = 0.447 m/s, 1 foot = 304.8 mm.

a. Refer to Table R603.3.1.1(2) for gable endwall bottom track to foundation connections.

b. Where attachment is not given, special design is required.

c. Stud height, *h*, is measured from wall bottom track to wall top track or brace connection height.

❖ This table specifies requirements for connecting wall tracks of gable endwalls to floors in order to provide appropriate load capacity based on the stud height as well as the basic wind speed and exposure category. Design is required for basic wind speeds exceeding 139 mph (62 m/s) in accordance with the general applicability limits of Section R603.1.1.

TABLE R603.3.1.1(2)
GABLE ENDWALL BOTTOM TRACK TO FOUNDATION CONNECTION REQUIREMENTS[a, b, c]

ULTIMATE WIND SPEED (mph)		MINIMUM SPACING FOR $^1/_2$-INCH-DIAMETER ANCHOR BOLTS[d]		
Exposure Category		Stud height, *h* (feet)		
B	C	10 < *h* ≤ 14	14 < *h* ≤ 18	18 < *h* ≤ 22
115	—	6′- 0″ o.c.	5′- 7″ o.c.	6′- 0″ o.c.
126	110	5′- 10″ o.c.	6′- 0″ o.c.	6′- 0″ o.c.
< 139	115	4′- 10″ o.c.	5′- 6″ o.c.	6′- 0″ o.c.
—	126	4′- 1″ o.c.	6′- 0″ o.c.	6′- 0″ o.c.
—	< 139	5′- 1″ o.c.	6′- 0″ o.c.	5′- 2″ o.c.

For SI: 1 inch = 25.4 mm, 1 mile per hour = 0.447 m/s, 1 foot = 304.8 mm.

a. Refer to Table R603.3.1.1(1) for gable endwall bottom track to floor joist or track connection connections.

b. Where attachment is not given, special design is required.

c. Stud height, *h*, is measured from wall bottom track to wall top track or brace connection height.

d. Foundation anchor straps are permitted in place of anchor bolts if spaced as required to provide equivalent anchorage to the required anchor bolts and installed in accordance with manufacturer's requirements.

❖ This table specifies requirements for connecting wall tracks of gable endwalls to foundations in order to provide appropriate load capacity based on the stud height as well as the basic wind speed and exposure category. Design is required for basic wind speeds exceeding 139 mph (62 m/s) in accordance with the general applicability limits of Section R603.1.1.

INTERNATIONAL CODE COUNCIL®
Copyright © 2015 ICC. ALL RIGHTS RESERVED. Accessed by David Dammon on Jun 21, 2017 12:30:52 PM pursuant to License Agreement with ICC. No further reproduction or distribution authorized. ANY UNAUTHORIZED REPRODUCTION OR DISTRIBUTION IS A VIOLATION OF THE FEDERAL COPYRIGHT ACT AND THE LICENSE AGREEMENT, AND SUBJECT TO CIVIL AND CRIMINAL PENALTIES THEREUNDER.

TABLE R603.3.2(1)
WALL FASTENING SCHEDULE[a]

DESCRIPTION OF BUILDING ELEMENT	NUMBER AND SIZE OF FASTENERS[a]	SPACING OF FASTENERS
Wall stud to top or bottom track	2-No. 8 screws	Each end of stud, one per flange
Structural sheathing to wall studs	No. 8 screws[b]	6″ o.c. on edges and 12″ o.c. at intermediate supports
$^1/_2$″ gypsum board to framing	No. 6 screws	12″ o.c.

For SI: 1 inch = 25.4 mm.

a. All screw sizes shown are minimum.

b. Screws for attachment of structural sheathing panels are to be bugle-head, flat-head, or similar head styles with a minimum head diameter of 0.29 inch.

❖ This table provides fastener size and spacing for various portions of steel stud walls. See Figure R603.9 for an illustration of sheathing fastener locations indicated as “edge” and “field.”

TABLE R603.3.2(2)
24-FOOT-WIDE BUILDING SUPPORTING ROOF AND CEILING ONLY[a, b, c, d]

ULTIMATE WIND SPEED AND EXPOSURE CATEGORY (mph)		MEMBER SIZE	STUD SPACING (inches)	MINIMUM STUD THICKNESS (mils)											
				8-foot Studs				9-foot Studs				10-foot Studs			
				Ground Snow Load (psf)											
Exp. B	Exp. C			20	30	50	70	20	30	50	70	20	30	50	70
115	—	350S162	16	33	33	33	33	33	33	33	33	33	33	33	33
			24	33	33	33	43	33	33	33	43	33	33	43	43
		550S162	16	33	33	33	33	33	33	33	33	33	33	33	33
			24	33	33	33	33	33	33	33	33	33	33	33	33
126	110	350S162	16	33	33	33	33	33	33	33	33	33	33	33	33
			24	33	33	33	43	33	33	33	43	43	43	43	43
		550S162	16	33	33	33	33	33	33	33	33	33	33	33	33
			24	33	33	33	43	33	33	33	33	33	33	33	43
< 139	115	350S162	16	33	33	33	33	33	33	33	33	33	33	33	33
			24	33	33	33	43	43	43	43	43	43	43	43	54
		550S162	16	33	33	33	33	33	33	33	33	33	33	33	33
			24	33	33	33	43	33	33	33	33	43	43	43	43
—	126	350S162	16	33	33	33	33	33	33	33	33	43	43	43	43
			24	43	43	43	43	43	43	43	43	54	54	54	54
		550S162	16	33	33	33	33	33	33	33	33	33	33	33	33
			24	33	33	33	43	43	43	43	43	43	43	43	43
—	< 139	350S162	16	33	33	33	33	43	43	43	43	43	43	43	43
			24	43	43	43	43	54	54	54	54	54	54	54	54
		550S162	16	33	33	33	33	33	33	33	33	33	33	33	33
			24	33	43	43	43	43	43	43	43	43	43	43	43

For SI: 1 inch = 25.4 mm, 1 foot = 304.8 mm, 1 mil = 0.0254 mm, 1 mile per hour = 0.447 m/s, 1 pound per square foot = 0.0479 kPa, 1 ksi = 1,000 psi = 6.895 MPa.

a. Deflection criterion: *L*/240.

b. Design load assumptions:
Second-floor dead load is 10 psf.
Second-floor live load is 30 psf.
Roof/ceiling dead load is 12 psf.
Attic live load is 10 psf.

c. Building width is in the direction of horizontal framing members supported by the wall studs.

d. Minimum Grade 33 ksi steel shall be used for 33 mil and 43 mil thicknesses. Minimum Grade 50 ksi steel shall be used for 54 and 68 mil thicknesses.

❖ See the commentary to Section R603.3.2.

INTERNATIONAL CODE COUNCIL®
Copyright © 2015 ICC. ALL RIGHTS RESERVED. Accessed by David Dammon on Jun 21, 2017 12:30:52 PM pursuant to License Agreement with ICC. No further reproduction or distribution authorized. ANY UNAUTHORIZED REPRODUCTION OR DISTRIBUTION IS A VIOLATION OF THE FEDERAL COPYRIGHT ACT AND THE LICENSE AGREEMENT, AND SUBJECT TO CIVIL AND CRIMINAL PENALTIES THEREUNDER.

TABLE R603.3.2(3)
28-FOOT-WIDE BUILDING SUPPORTING ROOF AND CEILING ONLY[a, b, c, d]

ULTIMATE WIND SPEED AND EXPOSURE CATEGORY (mph)		MEMBER SIZE	STUD SPACING (inches)	MINIMUM STUD THICKNESS (mils)											
				8-foot Studs				9-foot Studs				10-foot Studs			
				Ground Snow Load (psf)											
Exp. B	Exp. C			20	30	50	70	20	30	50	70	20	30	50	70
115	—	350S162	16	33	33	33	33	33	33	33	33	33	33	33	33
			24	33	33	43	43	33	33	43	43	33	33	43	54
		550S162	16	33	33	33	33	33	33	33	33	33	33	33	33
			24	33	33	33	43	33	33	33	43	33	33	33	43
126	110	350S162	16	33	33	33	33	33	33	33	33	33	33	33	33
			24	33	33	43	43	33	33	43	43	43	43	43	54
		550S162	16	33	33	33	33	33	33	33	33	33	33	33	33
			24	33	33	33	43	33	33	33	43	33	33	33	43
< 139	115	350S162	16	33	33	33	33	33	33	33	33	33	33	33	43
			24	33	33	43	43	43	43	43	43	43	43	43	54
		550S162	16	33	33	33	33	33	33	33	33	33	33	33	33
			24	33	33	33	43	33	33	33	43	43	43	43	43
—	126	350S162	16	33	33	33	33	33	33	33	33	43	43	43	43
			24	43	43	43	54	43	43	43	54	54	54	54	54
		550S162	16	33	33	33	33	33	33	33	33	33	33	33	33
			24	33	33	33	43	43	43	43	43	43	43	43	43
—	< 139	350S162	16	33	33	33	33	43	43	43	43	43	43	43	43
			24	43	43	43	54	54	54	54	54	54	54	54	54
		550S162	16	33	33	33	33	33	33	33	33	33	33	33	33
			24	43	43	43	43	43	43	43	43	43	43	43	43

For SI: 1 inch = 25.4 mm, 1 foot = 304.8 mm, 1 mil = 0.0254 mm, 1 mile per hour = 0.447 m/s, 1 pound per square foot = 0.0479 kPa, 1 ksi = 1,000 psi = 6.895 MPa.

a. Deflection criterion: *L*/240.

b. Design load assumptions:

Second-floor dead load is 10 psf.

Second-floor live load is 30 psf.

Roof/ceiling dead load is 12 psf.

Attic live load is 10 psf.

c. Building width is in the direction of horizontal framing members supported by the wall studs.

d. Minimum Grade 33 ksi steel shall be used for 33 mil and 43 mil thicknesses. Minimum Grade 50 ksi steel shall be used for 54 and 68 mil thicknesses.

❖ See the commentary to Section R603.3.2.

INTERNATIONAL CODE COUNCIL®

Copyright © 2015 ICC. ALL RIGHTS RESERVED. Accessed by David Dammon on Jun 21, 2017 12:30:52 PM pursuant to License Agreement with ICC. No further reproduction or distribution authorized. ANY UNAUTHORIZED REPRODUCTION OR DISTRIBUTION IS A VIOLATION OF THE FEDERAL COPYRIGHT ACT AND THE LICENSE AGREEMENT, AND SUBJECT TO CIVIL AND CRIMINAL PENALTIES THEREUNDER.

TABLE R603.3.2(4)
32-FOOT-WIDE BUILDING SUPPORTING ROOF AND CEILING ONLY[a, b, c, d]

ULTIMATE WIND SPEED AND EXPOSURE CATEGORY (mph)		MEMBER SIZE	STUD SPACING (inches)	MINIMUM STUD THICKNESS (mils)											
				8-foot Studs				9-foot Studs				10-foot Studs			
				Ground Snow Load (psf)											
Exp. B	Exp. C			20	30	50	70	20	30	50	70	20	30	50	70
115	—	350S162	16	33	33	33	33	33	33	33	33	33	33	33	43
			24	33	33	43	54	33	33	43	43	33	33	43	54
		550S162	16	33	33	33	33	33	33	33	33	33	33	33	33
			24	33	33	33	43	33	33	33	43	33	33	33	43
126	110	350S162	16	33	33	33	33	33	33	33	33	33	33	33	43
			24	33	33	43	54	33	33	43	54	43	43	43	54
		550S162	16	33	33	33	33	33	33	33	33	33	33	33	33
			24	33	33	33	43	33	33	33	43	33	33	33	43
< 139	115	350S162	16	33	33	33	43	33	33	33	33	33	33	33	43
			24	33	33	43	54	43	43	43	54	43	43	43	54
		550S162	16	33	33	33	33	33	33	33	33	33	33	33	33
			24	33	33	33	43	33	33	33	43	43	43	43	43
—	126	350S162	16	33	33	33	43	33	33	33	43	43	43	43	43
			24	43	43	43	54	43	43	43	54	54	54	54	54
		550S162	16	33	33	33	33	33	33	33	33	33	33	33	33
			24	33	33	43	43	43	43	43	43	43	43	43	43
—	< 139	350S162	16	33	33	33	43	43	43	43	43	43	43	43	43
			24	43	43	43	54	54	54	54	54	54	54	54	54
		550S162	16	33	33	33	33	33	33	33	33	33	33	33	33
			24	43	43	43	43	43	43	43	43	43	43	43	43

For SI: 1 inch = 25.4 mm, 1 foot = 304.8 mm, 1 mil = 0.0254 mm, 1 mile per hour = 0.447 m/s, 1 pound per square foot = 0.0479 kPa, 1 ksi = 1,000 psi = 6.895 MPa.

a. Deflection criterion: *L*/240.

b. Design load assumptions:
Second-floor dead load is 10 psf.
Second-floor live load is 30 psf.
Roof/ceiling dead load is 12 psf.
Attic live load is 10 psf.

c. Building width is in the direction of horizontal framing members supported by the wall studs.

d. Minimum Grade 33 ksi steel shall be used for 33 mil and 43 mil thicknesses. Minimum Grade 50 ksi steel shall be used for 54 and 68 mil thicknesses.

❖ See the commentary to Section R603.3.2.

INTERNATIONAL CODE COUNCIL®
Copyright © 2015 ICC. ALL RIGHTS RESERVED. Accessed by David Dammon on Jun 21, 2017 12:30:52 PM pursuant to License Agreement with ICC. No further reproduction or distribution authorized. ANY UNAUTHORIZED REPRODUCTION OR DISTRIBUTION IS A VIOLATION OF THE FEDERAL COPYRIGHT ACT AND THE LICENSE AGREEMENT, AND SUBJECT TO CIVIL AND CRIMINAL PENALTIES THEREUNDER.

TABLE R603.3.2(5)
36-FOOT-WIDE BUILDING SUPPORTING ROOF AND CEILING ONLY[a, b, c, d]

ULTIMATE WIND SPEED AND EXPOSURE CATEORY (mph)		MEMBER SIZE	STUD SPACING (inches)	MINIMUM STUD THICKNESS (mils)											
				8-foot Studs				9-foot Studs				10-foot Studs			
				Ground Snow Load (psf)											
Exp. B	Exp. C			20	30	50	70	20	30	50	70	20	30	50	70
115	—	350S162	16	33	33	33	43	33	33	33	43	33	33	33	43
			24	33	33	43	54	33	33	43	54	33	43	43	54
		550S162	16	33	33	33	33	33	33	33	33	33	33	33	33
			24	33	33	43	43	33	33	43	43	33	33	43	43
126	110	350S162	16	33	33	33	43	33	33	33	43	33	33	33	43
			24	33	33	43	54	33	33	43	54	43	43	54	54
		550S162	16	33	33	33	33	33	33	33	33	33	33	33	33
			24	33	33	43	43	33	33	43	43	33	33	43	43
< 139	115	350S162	16	33	33	33	43	33	33	33	33	33	33	33	43
			24	33	33	43	54	43	43	43	43	43	43	54	54
		550S162	16	33	33	33	33	33	33	33	33	33	33	33	33
			24	33	33	43	43	33	33	43	43	43	43	43	43
—	126	350S162	16	33	33	33	43	33	33	33	43	43	43	43	43
			24	43	43	43	54	43	43	43	54	54	54	54	54
		550S162	16	33	33	33	33	33	33	33	33	33	33	33	33
			24	33	33	43	43	43	43	43	43	43	43	43	43
—	< 139	350S162	16	33	33	33	43	43	43	43	43	43	43	43	43
			24	43	43	54	54	54	54	54	54	54	54	54	54
		550S162	16	33	33	33	33	33	33	33	33	33	33	33	33
			24	43	43	43	54	43	33	43	43	43	43	43	54

For SI: 1 inch = 25.4 mm, 1 foot = 304.8 mm, 1 mil = 0.0254 mm, 1 mile per hour = 0.447 m/s, 1 pound per square foot = 0.0479 kPa, 1 ksi = 1,000 psi = 6.895 MPa.

a. Deflection criterion: *L*/240.

b. Design load assumptions:
Second-floor dead load is 10 psf.
Second-floor live load is 30 psf.
Roof/ceiling dead load is 12 psf.
Attic live load is 10 psf.

c. Building width is in the direction of horizontal framing members supported by the wall studs.

d. Minimum Grade 33 ksi steel shall be used for 33 mil and 43 mil thicknesses. Minimum Grade 50 ksi steel shall be used for 54 and 68 mil thicknesses.

❖ See the commentary to Section R603.3.2.

INTERNATIONAL CODE COUNCIL®
Copyright © 2015 ICC. ALL RIGHTS RESERVED. Accessed by David Dammon on Jun 21, 2017 12:30:52 PM pursuant to License Agreement with ICC. No further reproduction or distribution authorized. ANY UNAUTHORIZED REPRODUCTION OR DISTRIBUTION IS A VIOLATION OF THE FEDERAL COPYRIGHT ACT AND THE LICENSE AGREEMENT, AND SUBJECT TO CIVIL AND CRIMINAL PENALTIES THEREUNDER.

TABLE R603.3.2(6)
40-FOOT-WIDE BUILDING SUPPORTING ROOF AND CEILING ONLY[a, b, c, d]

ULTIMATE WIND SPEED AND EXPOSURE CATEGORY (mph)		MEMBER SIZE	STUD SPACING (inches)	MINIMUM STUD THICKNESS (mils)											
				8-foot Studs				9-foot Studs				10-foot Studs			
				Ground Snow Load (psf)											
Exp. B	Exp. C			20	30	50	70	20	30	50	70	20	30	50	70
115	—	350S162	16	33	33	33	43	33	33	33	43	33	33	33	43
			24	33	33	43	54	33	33	43	54	43	43	54	54
		550S162	16	33	33	33	33	33	33	33	33	33	33	33	33
			24	33	33	43	54	33	33	43	43	33	33	43	54
126	110	350S162	16	33	33	33	43	33	33	33	43	33	33	43	43
			24	33	43	43	54	33	43	43	54	43	43	54	54
		550S162	16	33	33	33	43	33	33	33	33	33	33	33	33
			24	33	33	43	54	33	33	43	43	33	33	43	54
< 139	115	350S162	16	33	33	33	43	33	33	33	43	33	33	43	43
			24	33	43	43	54	43	43	43	54	43	43	54	54
		550S162	16	33	33	33	43	33	33	33	33	33	33	33	43
			24	33	33	43	54	33	33	43	43	43	43	43	54
—	126	350S162	16	33	33	33	43	33	33	33	43	43	43	43	43
			24	43	43	54	54	43	43	54	54	54	54	54	54
		550S162	16	33	33	33	43	33	33	33	33	33	33	33	43
			24	33	33	43	54	43	43	43	54	43	43	43	54
—	< 139	350S162	16	33	33	43	43	43	43	43	43	43	43	43	54
			24	43	43	54	54	54	54	54	54	54	54	54	68
		550S162	16	33	33	33	43	33	33	33	43	33	33	33	43
			24	43	43	43	54	43	43	43	54	43	43	43	54

For SI: 1 inch = 25.4 mm, 1 foot = 304.8 mm, 1 mil = 0.0254 mm, 1 mile per hour = 0.447 m/s, 1 pound per square foot = 0.0479 kPa, 1 ksi = 1,000 psi = 6.895 MPa.

a. Deflection criterion: *L*/240.

b. Design load assumptions:
Second-floor dead load is 10 psf.
Second-floor live load is 30 psf.
Roof/ceiling dead load is 12 psf.
Attic live load is 10 psf.

c. Building width is in the direction of horizontal framing members supported by the wall studs.

d. Minimum Grade 33 ksi steel shall be used for 33 mil and 43 mil thicknesses. Minimum Grade 50 ksi steel shall be used for 54 and 68 mil thicknesses.

❖ See the commentary to Section R603.3.2.

INTERNATIONAL CODE COUNCIL®
Copyright © 2015 ICC. ALL RIGHTS RESERVED. Accessed by David Dammon on Jun 21, 2017 12:30:52 PM pursuant to License Agreement with ICC. No further reproduction or distribution authorized. ANY UNAUTHORIZED REPRODUCTION OR DISTRIBUTION IS A VIOLATION OF THE FEDERAL COPYRIGHT ACT AND THE LICENSE AGREEMENT, AND SUBJECT TO CIVIL AND CRIMINAL PENALTIES THEREUNDER.

TABLE R603.3.2(7)
24-FOOT-WIDE BUILDING SUPPORTING ONE FLOOR, ROOF AND CEILING[a, b, c, d]

ULTIMATE WIND SPEED AND EXPOSURE CATEGORY (mph)		MEMBER SIZE	STUD SPACING (inches)	MINIMUM STUD THICKNESS (mils)											
				8-foot Studs				9-foot Studs				10-foot Studs			
				Ground Snow Load (psf)											
Exp. B	Exp. C			20	30	50	70	20	30	50	70	20	30	50	70
115	—	350S162	16	33	33	33	33	33	33	33	33	33	33	33	43
			24	33	33	43	43	33	43	43	43	43	43	43	54
		550S162	16	33	33	33	33	33	33	33	33	33	33	33	33
			24	33	33	33	43	33	33	33	43	33	33	33	43
126	110	350S162	16	33	33	33	33	33	33	33	33	33	33	33	43
			24	33	43	43	43	43	43	43	43	43	43	43	54
		550S162	16	33	33	33	33	33	33	33	33	33	33	33	33
			24	33	33	33	43	33	33	33	43	33	33	33	43
< 139	115	350S162	16	33	33	33	43	33	33	33	33	33	33	43	43
			24	43	43	43	43	43	43	43	43	54	54	54	54
		550S162	16	33	33	33	33	33	33	33	33	33	33	33	33
			24	33	33	33	43	33	33	33	43	43	43	43	43
—	126	350S162	16	33	33	33	43	33	33	33	43	43	43	43	43
			24	43	43	43	54	43	43	54	54	54	54	54	54
		550S162	16	33	33	33	33	33	33	33	33	33	33	33	33
			24	33	33	33	43	43	43	43	43	43	43	43	43
—	< 139	350S162	16	33	33	33	43	43	43	43	43	43	43	43	43
			24	43	43	43	54	54	54	54	54	54	54	54	54
		550S162	16	33	33	33	33	33	33	33	33	33	33	33	33
			24	43	43	43	43	43	43	43	43	43	43	43	43

For SI: 1 inch = 25.4 mm, 1 foot = 304.8 mm, 1 mil = 0.0254 mm, 1 mile per hour = 0.447 m/s, 1 pound per square foot = 0.0479 kPa, 1 ksi = 1,000 psi = 6.895 MPa.

a. Deflection criterion: *L*/240.

b. Design load assumptions:

Second-floor dead load is 10 psf.

Second-floor live load is 30 psf.

Roof/ceiling dead load is 12 psf.

Attic live load is 10 psf.

c. Building width is in the direction of horizontal framing members supported by the wall studs.

d. Minimum Grade 33 ksi steel shall be used for 33 mil and 43 mil thicknesses. Minimum Grade 50 ksi steel shall be used for 54 and 68 mil thicknesses.

❖ See the commentary to Section R603.3.2.

INTERNATIONAL CODE COUNCIL®

Copyright © 2015 ICC. ALL RIGHTS RESERVED. Accessed by David Dammon on Jun 21, 2017 12:30:52 PM pursuant to License Agreement with ICC. No further reproduction or distribution authorized. ANY UNAUTHORIZED REPRODUCTION OR DISTRIBUTION IS A VIOLATION OF THE FEDERAL COPYRIGHT ACT AND THE LICENSE AGREEMENT, AND SUBJECT TO CIVIL AND CRIMINAL PENALTIES THEREUNDER.

TABLE R603.3.2(8)
28-FOOT-WIDE BUILDING SUPPORTING ONE FLOOR, ROOF AND CEILING[a, b, c, d]

ULTIMATE WIND SPEED AND EXPOSURE CATEGORY (mph)		MEMBER SIZE	STUD SPACING (inches)	MINIMUM STUD THICKNESS (mils)											
				8-foot Studs				9-foot Studs				10-foot Studs			
				Ground Snow Load (psf)											
Exp. B	Exp. C			20	30	50	70	20	30	50	70	20	30	50	70
115	—	350S162	16	33	33	33	43	33	33	33	43	33	33	33	43
			24	43	43	43	54	43	43	43	54	43	43	43	54
		550S162	16	33	33	33	33	33	33	33	33	33	33	33	33
			24	33	33	43	43	33	33	43	43	33	33	43	43
126	110	350S162	16	33	33	33	43	33	33	33	43	33	33	43	43
			24	43	43	43	54	43	43	43	54	43	43	54	54
		550S162	16	33	33	33	33	33	33	33	33	33	33	33	33
			24	33	33	43	43	33	33	43	43	33	33	43	43
< 139	115	350S162	16	33	33	33	43	33	33	33	43	43	43	43	43
			24	43	43	43	54	43	43	43	54	54	54	54	54
		550S162	16	33	33	33	33	33	33	33	33	33	33	33	33
			24	33	33	43	43	33	33	43	43	43	43	43	43
—	126	350S162	16	33	33	33	43	33	33	43	43	43	43	43	43
			24	43	43	43	54	54	54	54	54	54	54	54	54
		550S162	16	33	33	33	33	33	33	33	33	33	33	33	33
			24	33	33	43	43	43	43	43	43	43	43	43	43
—	< 139	350S162	16	33	33	43	43	43	43	43	43	43	43	43	54
			24	43	43	54	54	54	54	54	54	54	54	54	54
		550S162	16	33	33	33	33	33	33	33	33	33	33	33	33
			24	43	43	43	43	43	43	43	43	43	43	43	43

For SI: 1 inch = 25.4 mm, 1 foot = 304.8 mm, 1 mil = 0.0254 mm, 1 mile per hour = 0.447 m/s, 1 pound per square foot = 0.0479 kPa, 1 ksi = 1,000 psi = 6.895 MPa.

a. Deflection criterion: *L*/240.

b. Design load assumptions:
Second-floor dead load is 10 psf.
Second-floor live load is 30 psf.
Roof/ceiling dead load is 12 psf.
Attic live load is 10 psf.

c. Building width is in the direction of horizontal framing members supported by the wall studs.

d. Minimum Grade 33 ksi steel shall be used for 33 mil and 43 mil thicknesses. Minimum Grade 50 ksi steel shall be used for 54 and 68 mil thicknesses.

❖ See the commentary to Section R603.3.2.

INTERNATIONAL CODE COUNCIL®
Copyright © 2015 ICC. ALL RIGHTS RESERVED. Accessed by David Dammon on Jun 21, 2017 12:30:52 PM pursuant to License Agreement with ICC. No further reproduction or distribution authorized. ANY UNAUTHORIZED REPRODUCTION OR DISTRIBUTION IS A VIOLATION OF THE FEDERAL COPYRIGHT ACT AND THE LICENSE AGREEMENT, AND SUBJECT TO CIVIL AND CRIMINAL PENALTIES THEREUNDER.

TABLE R603.3.2(9)
32-FOOT-WIDE BUILDING SUPPORTING ONE FLOOR, ROOF AND CEILING[a, b, c, d]

ULTIMATE WIND SPEED AND EXPOSURE CATEGORY (mph)		MEMBER SIZE	STUD SPACING (inches)	MINIMUM STUD THICKNESS (mils)											
				8-foot Studs				9-foot Studs				10-foot Studs			
				Ground Snow Load (psf)											
Exp. B	Exp. C			20	30	50	70	20	30	50	70	20	30	50	70
115	—	350S162	16	33	33	33	43	33	33	33	43	33	33	43	43
			24	43	43	43	54	43	43	43	54	43	43	54	54
		550S162	16	33	33	33	43	33	33	33	33	33	33	33	43
			24	33	43	43	54	33	33	43	43	33	33	43	43
126	110	350S162	16	33	33	33	43	33	33	33	43	33	43	43	43
			24	43	43	43	54	43	43	43	54	54	54	54	54
		550S162	16	33	33	33	43	33	33	33	33	33	33	33	43
			24	33	43	43	54	33	33	43	43	33	33	43	43
< 139	115	350S162	16	33	33	43	43	33	33	33	43	43	43	43	43
			24	43	43	54	54	43	43	54	54	54	54	54	54
		550S162	16	33	33	33	43	33	33	33	33	33	33	33	43
			24	33	43	43	54	33	33	43	43	43	43	43	54
—	126	350S162	16	33	33	43	43	43	43	43	43	43	43	43	43
			24	43	43	54	54	54	54	54	54	54	54	54	54
		550S162	16	33	33	33	43	33	33	33	33	33	33	33	43
			24	33	43	43	54	43	43	43	43	43	43	43	54
—	< 139	350S162	16	43	43	43	43	43	43	43	43	43	43	54	54
			24	54	54	54	54	54	54	54	54	54	54	54	54
		550S162	16	33	33	33	43	33	33	33	43	33	33	33	43
			24	43	43	43	54	43	43	43	43	43	43	43	54

For SI: 1 inch = 25.4 mm, 1 foot = 304.8 mm, 1 mil = 0.0254 mm, 1 mile per hour = 0.447 m/s, 1 pound per square foot = 0.0479 kPa, 1 ksi = 1,000 psi = 6.895 MPa.

a. Deflection criterion: *L*/240.

b. Design load assumptions:
Second-floor dead load is 10 psf.
Second-floor live load is 30 psf.
Roof/ceiling dead load is 12 psf.
Attic live load is 10 psf.

c. Building width is in the direction of horizontal framing members supported by the wall studs.

d. Minimum Grade 33 ksi steel shall be used for 33 mil and 43 mil thicknesses. Minimum Grade 50 ksi steel shall be used for 54 and 68 mil thicknesses.

❖ See the commentary to Section R603.3.2.

INTERNATIONAL CODE COUNCIL®
Copyright © 2015 ICC. ALL RIGHTS RESERVED. Accessed by David Dammon on Jun 21, 2017 12:30:52 PM pursuant to License Agreement with ICC. No further reproduction or distribution authorized. ANY UNAUTHORIZED REPRODUCTION OR DISTRIBUTION IS A VIOLATION OF THE FEDERAL COPYRIGHT ACT AND THE LICENSE AGREEMENT, AND SUBJECT TO CIVIL AND CRIMINAL PENALTIES THEREUNDER.

TABLE R603.3.2(10)
36-FOOT-WIDE BUILDING SUPPORTING ONE FLOOR, ROOF AND CEILING[a, b, c, d]

ULTIMATE WIND SPEED AND EXPOSURE CATEGORY (mph)		MEMBER SIZE	STUD SPACING (inches)	MINIMUM STUD THICKNESS (mils)											
				8-foot Studs				9-foot Studs				10-foot Studs			
				Ground Snow Load (psf)											
Exp. B	Exp. C			20	30	50	70	20	30	50	70	20	30	50	70
115	—	350S162	16	33	33	43	43	33	33	43	43	33	33	43	43
			24	43	43	54	54	43	43	54	54	54	54	54	54
		550S162	16	33	33	33	43	33	33	33	43	33	33	33	43
			24	43	43	43	54	43	43	43	54	43	43	43	54
126	110	350S162	16	33	33	43	43	33	33	43	43	43	43	43	43
			24	43	43	54	54	43	43	54	54	54	54	54	54
		550S162	16	33	33	33	43	33	33	33	43	33	33	33	43
			24	43	43	43	54	43	43	43	54	43	43	43	54
< 139	115	350S162	16	33	33	43	43	33	33	43	43	43	43	43	54
			24	43	43	54	54	54	54	54	54	54	54	54	54
		550S162	16	33	33	33	43	33	33	33	43	33	33	33	43
			24	43	43	43	54	43	43	43	54	43	43	43	54
—	126	350S162	16	33	33	43	43	43	43	43	43	43	43	43	54
			24	54	54	54	54	54	54	54	54	54	54	54	68
		550S162	16	33	33	33	43	33	33	33	43	33	33	33	43
			24	43	43	43	54	43	43	43	54	43	43	43	54
—	< 139	350S162	16	43	43	43	43	43	43	43	43	43	54	54	54
			24	54	54	54	54	54	54	54	54	54	54	54	68
		550S162	16	33	33	33	43	33	33	33	43	33	33	33	43
			24	43	43	43	54	43	43	43	54	43	43	43	54

For SI: 1 inch = 25.4 mm, 1 foot = 304.8 mm, 1 mil = 0.0254 mm, 1 mile per hour = 0.447 m/s, 1 pound per square foot = 0.0479 kPa, 1 ksi = 1,000 psi = 6.895 MPa.

a. Deflection criterion: *L*/240.

b. Design load assumptions:

Second-floor dead load is 10 psf.

Second-floor live load is 30 psf.

Roof/ceiling dead load is 12 psf.

Attic live load is 10 psf.

c. Building width is in the direction of horizontal framing members supported by the wall studs.

d. Minimum Grade 33 ksi steel shall be used for 33 mil and 43 mil thicknesses. Minimum Grade 50 ksi steel shall be used for 54 and 68 mil thicknesses.

❖ See the commentary to Section R603.3.2.

INTERNATIONAL CODE COUNCIL®
Copyright © 2015 ICC. ALL RIGHTS RESERVED. Accessed by David Dammon on Jun 21, 2017 12:30:52 PM pursuant to License Agreement with ICC. No further reproduction or distribution authorized. ANY UNAUTHORIZED REPRODUCTION OR DISTRIBUTION IS A VIOLATION OF THE FEDERAL COPYRIGHT ACT AND THE LICENSE AGREEMENT, AND SUBJECT TO CIVIL AND CRIMINAL PENALTIES THEREUNDER.

TABLE R603.3.2(11)
40-FOOT-WIDE BUILDING SUPPORTING ONE FLOOR, ROOF AND CEILING[a, b, c, d]

ULTIMATE WIND SPEED AND EXPOSURE CATEGORY (mph)		MEMBER SIZE	STUD SPACING (inches)	MINIMUM STUD THICKNESS (mils)											
				8-foot Studs				9-foot Studs				10-foot Studs			
				Ground Snow Load (psf)											
Exp. B	Exp. C			20	30	50	70	20	30	50	70	20	30	50	70
115	—	350S162	16	33	33	43	43	33	33	43	43	43	43	43	54
			24	43	43	54	54	43	43	54	54	54	54	54	54
		550S162	16	33	33	33	43	33	33	33	43	33	33	33	43
			24	43	43	54	54	43	43	43	54	43	43	43	54
126	110	350S162	16	33	33	43	43	33	33	43	43	43	43	43	54
			24	43	43	54	54	43	43	54	54	54	54	54	54
		550S162	16	33	33	33	43	33	33	33	43	33	33	33	43
			24	43	43	54	54	43	43	43	54	43	43	43	54
< 139	115	350S162	16	33	33	43	43	43	43	43	43	43	43	43	54
			24	43	43	54	54	54	54	54	54	54	54	54	68
		550S162	16	33	33	43	43	33	33	33	43	33	33	33	43
			24	43	43	54	54	43	43	43	54	43	43	43	54
—	126	350S162	16	43	43	43	54	43	43	43	54	43	43	54	54
			24	54	54	54	54	54	54	54	54	54	54	54	68
		550S162	16	33	33	43	43	33	33	33	43	33	33	43	43
			24	43	43	54	54	43	43	43	54	43	43	54	54
—	< 139	350S162	16	43	43	43	54	43	43	43	54	54	54	54	54
			24	54	54	54	68	54	54	54	54	54	54	54	68
		550S162	16	33	33	43	43	33	33	33	43	33	33	43	43
			24	43	43	54	54	43	43	43	54	43	43	54	54

For SI: 1 inch = 25.4 mm, 1 foot = 304.8 mm, 1 mil = 0.0254 mm, 1 mile per hour = 0.447 m/s, 1 pound per square foot = 0.0479 kPa, 1 ksi = 1,000 psi = 6.895 MPa.

a. Deflection criterion: *L*/240.

b. Design load assumptions:
Second-floor dead load is 10 psf.
Second-floor live load is 30 psf.
Roof/ceiling dead load is 12 psf.
Attic live load is 10 psf.

c. Building width is in the direction of horizontal framing members supported by the wall studs.

d. Minimum Grade 33 ksi steel shall be used for 33 mil and 43 mil thicknesses. Minimum Grade 50 ksi steel shall be used for 54 and 68 mil thicknesses.

❖ See the commentary to Section R603.3.2.

INTERNATIONAL CODE COUNCIL®
Copyright © 2015 ICC. ALL RIGHTS RESERVED. Accessed by David Dammon on Jun 21, 2017 12:30:52 PM pursuant to License Agreement with ICC. No further reproduction or distribution authorized. ANY UNAUTHORIZED REPRODUCTION OR DISTRIBUTION IS A VIOLATION OF THE FEDERAL COPYRIGHT ACT AND THE LICENSE AGREEMENT, AND SUBJECT TO CIVIL AND CRIMINAL PENALTIES THEREUNDER.

TABLE R603.3.2(12)
24-FOOT-WIDE BUILDING SUPPORTING TWO FLOORS, ROOF AND CEILING[a, b, c, d]

ULTIMATE WIND SPEED AND EXPOSURE CATEGORY (mph)		MEMBER SIZE	STUD SPACING (inches)	MINIMUM STUD THICKNESS (mils)											
				8-foot Studs				9-foot Studs				10-foot Studs			
				Ground Snow Load (psf)											
Exp. B	Exp. C			20	30	50	70	20	30	50	70	20	30	50	70
115	—	350S162	16	43	43	43	43	33	33	33	43	43	43	43	43
			24	54	54	54	54	43	43	54	54	54	54	54	54
		550S162	16	33	33	43	43	33	33	33	33	33	33	33	43
			24	43	43	54	54	43	43	43	43	43	43	43	54
126	110	350S162	16	43	43	43	43	33	33	33	43	43	43	43	43
			24	54	54	54	54	54	54	54	54	54	54	54	54
		550S162	16	33	33	43	43	33	33	33	33	33	33	33	43
			24	43	43	54	54	43	43	43	43	43	43	43	54
< 139	115	350S162	16	43	43	43	43	43	43	43	43	43	43	43	43
			24	54	54	54	54	54	54	54	54	54	54	54	54
		550S162	16	33	33	43	43	33	33	33	33	33	33	33	43
			24	43	43	54	54	43	43	43	43	43	43	43	54
—	126	350S162	16	43	43	43	43	43	43	43	43	43	43	43	54
			24	54	54	54	54	54	54	54	54	54	54	54	54
		550S162	16	33	33	43	43	33	33	33	33	33	33	33	43
			24	43	43	54	54	43	43	43	43	43	43	43	54
—	< 139	350S162	16	43	43	43	43	43	43	43	43	54	54	54	54
			24	54	54	54	54	54	54	54	54	54	54	54	68
		550S162	16	33	33	43	43	33	33	33	33	33	33	33	43
			24	43	43	54	54	43	43	43	43	43	43	43	54

For SI: 1 inch = 25.4 mm, 1 foot = 304.8 mm, 1 mil = 0.0254 mm, 1 mile per hour = 0.447 m/s, 1 pound per square foot = 0.0479 kPa, 1 ksi = 1,000 psi = 6.895 MPa.

a. Deflection criterion: *L*/240.

b. Design load assumptions:

Top- and middle-floor dead load is 10 psf.

Top-floor live load is 30 psf.

Middle-floor live load is 40 psf.

Roof/ceiling dead load is 12 psf.

Attic live load is 10 psf.

c. Building width is in the direction of horizontal framing members supported by the wall studs.

d. Minimum Grade 33 ksi steel shall be used for 33 mil and 43 mil thicknesses. Minimum Grade 50 ksi steel shall be used for 54 and 68 mil thicknesses.

❖ See the commentary to Section R603.3.2.

INTERNATIONAL CODE COUNCIL®
Copyright © 2015 ICC. ALL RIGHTS RESERVED. Accessed by David Dammon on Jun 21, 2017 12:30:52 PM pursuant to License Agreement with ICC. No further reproduction or distribution authorized. ANY UNAUTHORIZED REPRODUCTION OR DISTRIBUTION IS A VIOLATION OF THE FEDERAL COPYRIGHT ACT AND THE LICENSE AGREEMENT, AND SUBJECT TO CIVIL AND CRIMINAL PENALTIES THEREUNDER.

TABLE R603.3.2(13)
28-FOOT-WIDE BUILDING SUPPORTING TWO FLOORS, ROOF AND CEILING[a, b, c, d]

ULTIMATE WIND SPEED AND EXPOSURE CATEGORY (mph)		MEMBER SIZE	STUD SPACING (inches)	MINIMUM STUD THICKNESS (mils)											
				8-foot Studs				9-foot Studs				10-foot Studs			
				Ground Snow Load (psf)											
Exp. B	Exp. C			20	30	50	70	20	30	50	70	20	30	50	70
115	—	350S162	16	43	43	43	43	43	43	43	43	43	43	43	43
			24	54	54	54	54	54	54	54	54	54	54	54	54
		550S162	16	43	43	43	43	43	43	43	43	43	43	43	43
			24	54	54	54	54	54	54	54	54	54	54	54	54
126	110	350S162	16	43	43	43	43	43	43	43	43	43	43	43	43
			24	54	54	54	54	54	54	54	54	54	54	54	54
		550S162	16	43	43	43	43	43	43	43	43	43	43	43	43
			24	54	54	54	54	54	54	54	54	54	54	54	54
< 139	115	350S162	16	43	43	43	43	43	43	43	43	43	43	43	43
			24	54	54	54	54	54	54	54	54	54	54	54	54
		550S162	16	43	43	43	43	43	43	43	43	43	43	43	43
			24	54	54	54	54	54	54	54	54	54	54	54	54
—	126	350S162	16	43	43	43	43	43	43	43	43	43	43	54	54
			24	54	54	54	54	54	54	54	54	54	54	54	68
		550S162	16	43	43	43	43	43	43	43	43	43	43	43	43
			24	54	54	54	54	54	54	54	54	54	54	54	54
—	< 139	350S162	16	43	43	43	43	43	43	43	43	54	54	54	54
			24	54	54	54	54	54	54	54	54	68	68	68	68
		550S162	16	43	43	43	43	43	43	43	43	43	43	43	43
			24	54	54	54	54	54	54	54	54	54	54	54	54

For SI: 1 inch = 25.4 mm, 1 foot = 304.8 mm, 1 mil = 0.0254 mm, 1 mile per hour = 0.447 m/s, 1 pound per square foot = 0.0479 kPa, 1 ksi = 1,000 psi = 6.895 MPa.

a. Deflection criterion: *L*/240.

b. Design load assumptions:

Top- and middle-floor dead load is 10 psf.

Top-floor live load is 30 psf.

Middle-floor live load is 40 psf.

Roof/ceiling dead load is 12 psf.

Attic live load is 10 psf.

c. Building width is in the direction of horizontal framing members supported by the wall studs.

d. Minimum Grade 33 ksi steel shall be used for 33 mil and 43 mil thicknesses. Minimum Grade 50 ksi steel shall be used for 54 and 68 mil thicknesses.

❖ See the commentary to Section R603.3.2.

INTERNATIONAL CODE COUNCIL®
Copyright © 2015 ICC. ALL RIGHTS RESERVED. Accessed by David Dammon on Jun 21, 2017 12:30:52 PM pursuant to License Agreement with ICC. No further reproduction or distribution authorized. ANY UNAUTHORIZED REPRODUCTION OR DISTRIBUTION IS A VIOLATION OF THE FEDERAL COPYRIGHT ACT AND THE LICENSE AGREEMENT, AND SUBJECT TO CIVIL AND CRIMINAL PENALTIES THEREUNDER.

TABLE R603.3.2(14)
32-FOOT-WIDE BUILDING SUPPORTING TWO FLOORS, ROOF AND CEILING[a, b, c, d]

ULTIMATE WIND SPEED AND EXPOSURE CATEGORY (mph)		MEMBER SIZE	STUD SPACING (inches)	MINIMUM STUD THICKNESS (mils)											
				8-foot Studs				9-foot Studs				10-foot Studs			
				Ground Snow Load (psf)											
Exp. B	Exp. C			20	30	50	70	20	30	50	70	20	30	50	70
115	—	350S162	16	43	43	43	54	43	43	43	43	43	43	43	54
			24	54	54	54	68	54	54	54	54	54	54	54	68
		550S162	16	43	43	43	43	43	43	43	43	43	43	43	43
			24	54	54	54	54	54	54	54	54	54	54	54	54
126	110	350S162	16	43	43	43	54	43	43	43	43	43	43	43	54
			24	54	54	54	68	54	54	54	54	54	54	54	68
		550S162	16	43	43	43	43	43	43	43	43	43	43	43	43
			24	54	54	54	54	54	54	54	54	54	54	54	54
< 139	115	350S162	16	43	43	43	54	43	43	43	43	43	43	54	54
			24	54	54	54	68	54	54	54	54	54	54	54	68
		550S162	16	43	43	43	43	43	43	43	43	43	43	43	43
			24	54	54	54	54	54	54	54	54	54	54	54	54
—	126	350S162	16	43	43	43	54	43	43	43	43	54	54	54	54
			24	54	54	54	68	54	54	54	54	68	68	68	68
		550S162	16	43	43	43	43	43	43	43	43	43	43	43	43
			24	54	54	54	54	54	54	54	54	54	54	54	54
—	< 139	350S162	16	43	43	43	54	43	43	54	54	54	54	54	54
			24	54	54	54	68	54	54	54	54	68	68	68	68
		550S162	16	43	43	43	43	43	43	43	43	43	43	43	43
			24	54	54	54	54	54	54	54	54	54	54	54	54

For SI: 1 inch = 25.4 mm, 1 foot = 304.8 mm, 1 mil = 0.0254 mm, 1 mile per hour = 0.447 m/s, 1 pound per square foot = 0.0479 kPa, 1 ksi = 1,000 psi = 6.895 MPa.

a. Deflection criterion: *L*/240.

b. Design load assumptions:

Top- and middle-floor dead load is 10 psf.

Top-floor live load is 30 psf.

Middle-floor live load is 40 psf.

Roof/ceiling dead load is 12 psf.

Attic live load is 10 psf.

c. Building width is in the direction of horizontal framing members supported by the wall studs.

d. Minimum Grade 33 ksi steel shall be used for 33 mil and 43 mil thicknesses. Minimum Grade 50 ksi steel shall be used for 54 and 68 mil thicknesses.

❖ See the commentary to Section R603.3.2.

INTERNATIONAL CODE COUNCIL®
Copyright © 2015 ICC. ALL RIGHTS RESERVED. Accessed by David Dammon on Jun 21, 2017 12:30:52 PM pursuant to License Agreement with ICC. No further reproduction or distribution authorized. ANY UNAUTHORIZED REPRODUCTION OR DISTRIBUTION IS A VIOLATION OF THE FEDERAL COPYRIGHT ACT AND THE LICENSE AGREEMENT, AND SUBJECT TO CIVIL AND CRIMINAL PENALTIES THEREUNDER.

TABLE R603.3.2(15)
36-FOOT-WIDE BUILDING SUPPORTING TWO FLOORS, ROOF AND CEILING[a, b, c, d]

ULTIMATE WIND SPEED AND EXPOSURE CATEGORY (mph)		MEMBER SIZE	STUD SPACING (inches)	MINIMUM STUD THICKNESS (mils)											
				8-foot Studs				9-foot Studs				10-foot Studs			
				Ground Snow Load (psf)											
Exp. B	Exp. C			20	30	50	70	20	30	50	70	20	30	50	70
115	—	350S162	16	54	54	54	54	43	43	43	54	54	54	54	54
			24	68	68	68	68	54	54	54	68	68	68	68	68
		550S162	16	43	43	43	54	43	43	43	43	43	43	43	43
			24	54	54	54	54	54	54	54	54	54	54	54	54
126	110	350S162	16	54	54	54	54	43	43	43	54	54	54	54	54
			24	68	68	68	68	54	54	54	68	68	68	68	68
		550S162	16	43	43	43	54	43	43	43	43	43	43	43	43
			24	54	54	54	54	54	54	54	54	54	54	54	54
< 139	115	350S162	16	54	54	54	54	43	43	43	54	54	54	54	54
			24	68	68	68	68	54	54	54	68	68	68	68	68
		550S162	16	43	43	43	54	43	43	43	43	43	43	43	43
			24	54	54	54	54	54	54	54	54	54	54	54	54
—	126	350S162	16	54	54	54	54	43	43	54	54	54	54	54	54
			24	68	68	68	68	54	54	54	68	68	68	68	68
		550S162	16	43	43	43	54	43	43	43	43	43	43	43	43
			24	54	54	54	54	54	54	54	54	54	54	54	54
—	< 139	350S162	16	54	54	54	54	54	54	54	54	54	54	54	68
			24	68	68	68	68	54	54	68	68	68	68	68	68
		550S162	16	43	43	43	54	43	43	43	43	43	43	43	43
			24	54	54	54	54	54	54	54	54	54	54	54	54

For SI: 1 inch = 25.4 mm, 1 foot = 304.8 mm, 1 mil = 0.0254 mm, 1 mile per hour = 0.447 m/s, 1 pound per square foot = 0.0479 kPa, 1 ksi = 1,000 psi = 6.895 MPa.

a. Deflection criterion: *L*/240.

b. Design load assumptions:

Top- and middle-floor dead load is 10 psf.

Top-floor live load is 30 psf.

Middle-floor live load is 40 psf.

Roof/ceiling dead load is 12 psf.

Attic live load is 10 psf.

c. Building width is in the direction of horizontal framing members supported by the wall studs.

d. Minimum Grade 33 ksi steel shall be used for 33 mil and 43 mil thicknesses. Minimum Grade 50 ksi steel shall be used for 54 and 68 mil thicknesses.

❖ See the commentary to Section R603.3.2.

INTERNATIONAL CODE COUNCIL®
Copyright © 2015 ICC. ALL RIGHTS RESERVED. Accessed by David Dammon on Jun 21, 2017 12:30:52 PM pursuant to License Agreement with ICC. No further reproduction or distribution authorized. ANY UNAUTHORIZED REPRODUCTION OR DISTRIBUTION IS A VIOLATION OF THE FEDERAL COPYRIGHT ACT AND THE LICENSE AGREEMENT, AND SUBJECT TO CIVIL AND CRIMINAL PENALTIES THEREUNDER.

TABLE R603.3.2(16)
40-FOOT-WIDE BUILDING SUPPORTING TWO FLOORS, ROOF AND CEILING[a, b, c, d]

ULTIMATE WIND SPEED AND EXPOSURE CATEGORY (mph)		MEMBER SIZE	STUD SPACING (inches)	MINIMUM STUD THICKNESS (mils)											
				8-foot Studs				9-foot Studs				10-foot Studs			
				Ground Snow Load (psf)											
Exp. B	Exp. C			20	30	50	70	20	30	50	70	20	30	50	70
115	—	350S162	16	54	54	54	54	54	54	54	54	54	54	54	54
			24	68	68	68	68	68	68	68	68	68	68	68	68
		550S162	16	54	54	54	54	43	43	54	54	43	43	54	54
			24	54	54	54	68	54	54	54	54	54	54	54	54
126	110	350S162	16	54	54	54	54	54	54	54	54	54	54	54	54
			24	68	68	68	68	68	68	68	68	68	68	68	68
		550S162	16	54	54	54	54	43	43	54	54	43	43	54	54
			24	54	54	54	68	54	54	54	54	54	54	54	54
< 139	115	350S162	16	54	54	54	54	54	54	54	54	54	54	54	54
			24	68	68	68	68	68	68	68	68	68	68	68	68
		550S162	16	54	54	54	54	43	43	54	54	43	43	54	54
			24	54	54	54	68	54	54	54	54	54	54	54	54
—	126	350S162	16	54	54	54	54	54	54	54	54	54	54	54	54
			24	68	68	68	68	68	68	68	68	68	68	68	68
		550S162	16	54	54	54	54	43	43	54	54	43	43	54	54
			24	54	54	54	68	54	54	54	54	54	54	54	54
—	< 139	350S162	16	54	54	54	54	54	54	54	54	54	54	54	54
			24	68	68	68	68	68	68	68	68	68	68	68	—
		550S162	16	54	54	54	54	43	43	54	54	43	43	54	54
			24	54	54	54	68	54	54	54	54	54	54	54	54

For SI: 1 inch = 25.4 mm, 1 foot = 304.8 mm, 1 mil = 0.0254 mm, 1 mile per hour = 0.447 m/s, 1 pound per square foot = 0.0479 kPa, 1 ksi = 1,000 psi = 6.895 MPa.

a. Deflection criterion: *L*/240.

b. Design load assumptions:

Top and middle floor dead load is 10 psf.

Top floor live load is 30 psf.

Middle floor live load is 40 psf.

Roof/ceiling dead load is 12 psf.

Attic live load is 10 psf.

c. Building width is in the direction of horizontal framing members supported by the wall studs.

d. Minimum Grade 33 ksi steel shall be used for 33 mil and 43 mil thicknesses. Minimum Grade 50 ksi steel shall be used for 54 and 68 mil thicknesses.

❖ See the commentary to Section R603.3.2.

INTERNATIONAL CODE COUNCIL®
Copyright © 2015 ICC. ALL RIGHTS RESERVED. Accessed by David Dammon on Jun 21, 2017 12:30:52 PM pursuant to License Agreement with ICC. No further reproduction or distribution authorized. ANY UNAUTHORIZED REPRODUCTION OR DISTRIBUTION IS A VIOLATION OF THE FEDERAL COPYRIGHT ACT AND THE LICENSE AGREEMENT, AND SUBJECT TO CIVIL AND CRIMINAL PENALTIES THEREUNDER.

R603.3.2.1 Gable endwalls. The size and thickness of gable endwall studs with heights less than or equal to 10 feet (3048 mm) shall be permitted in accordance with the limits set forth in Table R603.3.2.1(1). The size and thickness of gable endwall studs with heights greater than 10 feet (3048 mm) shall be determined in accordance with the limits set forth in Table R603.3.2.1(2).

❖ The stud size for gable endwalls that are tabulated does not vary with the building width since the gable endwall is assumed to not provide support for the horizontal framing members. The tables provide requirements based on the stud spacing and height and they cover ultimate design wind speeds to less than 139 mph (62 m/s) for Exposure B or C. For stud heights up to 10 feet (3048 mm), the stud size is provided in Table R603.3.2.1(1). For stud heights greater than 10 feet (3048 mm) and up to 22 feet (6706 mm), the stud size is provided in Table R603.3.2.1(2). These tables have been revised to combine Grade 33 ksi and 50 ksi tables into one table. This resulted in a reduction in the number of tables from four to two. For tabulated thicknesses of 33 and 43 mil, Grade 33 ksi steel is to be used. For tabulated thicknesses of 54 and 68 mil, Grade 50 ksi steel is to be used. Also, 97 mil thickness has been deleted from the tables.

TABLE R603.3.2.1(1)
ALL BUILDING WIDTHS GABLE ENDWALLS 8, 9 OR 10 FEET IN HEIGHT[a, b, c, d]

ULTIMATE WIND SPEED AND EXPOSURE CATEGORY (mph)		MEMBER SIZE	STUD SPACING (inches)	MINIMUM STUD THICKNESS (mils)		
Exp. B	Exp. C			8-foot Studs	9-foot Studs	10-foot Studs
115	—	350S162	16	33	33	33
			24	33	33	33
		550S162	16	33	33	33
			24	33	33	33
126	110	350S162	16	33	33	33
			24	33	33	43
		550S162	16	33	33	33
			24	33	33	33
< 139	115	350S162	16	33	33	33
			24	33	33	43
		550S162	16	33	33	33
			24	33	33	33
—	126	350S162	16	33	33	43
			24	43	43	54
		550S162	16	33	33	33
			24	33	33	33
—	< 139	350S162	16	33	43	43
			24	43	54	54
		550S162	16	33	33	33
			24	33	33	43

For SI: 1 inch = 25.4 mm, 1 foot = 304.8 mm, 1 mil = 0.0254 mm, 1 mile per hour = 0.447 m/s, 1 pound per square foot = 0.0479 kPa, 1 ksi = 1,000 psi = 6.895 MPa.

a. Deflection criterion *L*/240.

b. Design load assumptions:
Ground snow load is 70 psf.
Roof/ceiling dead load is 12 psf.
Floor dead load is 10 psf.
Floor live load is 40 psf.
Attic dead load is 10 psf.

c. Building width is in the direction of horizontal framing members supported by the wall studs.

d. Minimum Grade 33 ksi steel shall be used for 33 mil and 43 mil thicknesses. Minimum Grade 50 ksi steel shall be used for 54 and 68 mil thicknesses.

❖ See the commentary to Section R603.3.2.1.

INTERNATIONAL CODE COUNCIL®
Copyright © 2015 ICC. ALL RIGHTS RESERVED. Accessed by David Dammon on Jun 21, 2017 12:30:52 PM pursuant to License Agreement with ICC. No further reproduction or distribution authorized. ANY UNAUTHORIZED REPRODUCTION OR DISTRIBUTION IS A VIOLATION OF THE FEDERAL COPYRIGHT ACT AND THE LICENSE AGREEMENT, AND SUBJECT TO CIVIL AND CRIMINAL PENALTIES THEREUNDER.

TABLE R603.3.2.1(2)
ALL BUILDING WIDTHS GABLE ENDWALLS OVER 10 FEET IN HEIGHT[a, b, c, d]

ULTIMATE WIND SPEED AND EXPOSURE CATEGORY (mph)		MEMBER SIZE	STUD SPACING (inches)	MINIMUM STUD THICKNESS (mils)					
				Stud Height, *h* (feet)					
Exp. B	Exp. C			$10 < h \leq 12$	$12 < h \leq 14$	$14 < h \leq 16$	$16 < h \leq 18$	$18 < h \leq 20$	$20 < h \leq 22$
115	—	350S162	16	33	43	68	—	—	—
			24	43	68	—	—	—	—
		550S162	16	33	33	33	43	54	54
			24	33	33	43	54	68	—
126	110	350S162	16	43	54	—	—	—	—
			24	54	—	—	—	—	—
		550S162	16	33	33	43	54	54	68
			24	33	43	54	54	—	—
< 139	115	350S162	16	43	68	—	—	—	—
			24	68	—	—	—	—	—
		550S162	16	33	43	43	54	68	—
			24	43	54	54	68	—	—
—	126	350S162	16	54	—	—	—	—	—
			24	—	—	—	—	—	—
		550S162	16	33	43	54	54	—	—
			24	43	54	54	—	—	—
—	< 139	350S162	16	54	—	—	—	—	—
			24	—	—	—	—	—	—
		550S162	16	43	54	54	68	—	—
			24	54	54	68	—	—	—

For SI: 1 inch = 25.4 mm, 1 foot = 304.8 mm, 1 mil = 0.0254 mm, 1 mile per hour = 0.447 m/s, 1 pound per square foot = 0.0479 kPa, 1 ksi = 1,000 psi = 6.895 MPa.

a. Deflection criterion *L*/240.

b. Design load assumptions:
Ground snow load is 70 psf.
Roof/ceiling dead load is 12 psf.
Floor dead load is 10 psf.
Floor live load is 40 psf.
Attic dead load is 10 psf.

c. Building width is in the direction of horizontal framing members supported by the wall studs.

d. Minimum Grade 33 ksi steel shall be used for 33 mil and 43 mil thicknesses. Minimum Grade 50 ksi steel shall be used for 54 and 68 mil thicknesses.

❖ See the commentary to Section R603.3.2.1.

R603.3.3 Stud bracing. The flanges of cold-formed steel studs shall be laterally braced in accordance with one of the following:

1. Gypsum board on both sides, structural sheathing on both sides, or gypsum board on one side and structural sheathing on the other side of load-bearing walls with gypsum board installed with minimum No. 6 screws in accordance with Section R702 and structural sheathing installed in accordance with Section R603.9 and Table R603.3.2(1).
2. Horizontal steel straps fastened in accordance with Figure R603.3.3(1) on both sides at mid-height for 8-foot (2438 mm) walls, and at one-third points for 9-foot and 10-foot (2743 mm and 3048 mm) walls. Horizontal steel straps shall be not less than $1^1/_2$ inches in width and 33 mils in thickness (38 mm by 0.84 mm). Straps shall be attached to the flanges of studs with one No. 8 screw. In-line blocking shall be installed between studs at the termination of straps and at 12-foot (3658 mm) intervals along the strap. Straps shall be fastened to the blocking with two No. 8 screws.
3. Sheathing on one side and strapping on the other side fastened in accordance with Figure R603.3.3(2). Sheathing shall be installed in accordance with Item 1. Steel straps shall be installed in accordance with Item 2.

❖ To provide resistance against buckling, lateral bracing of steel-stud flanges must be provided by gypsum

INTERNATIONAL CODE COUNCIL®
Copyright © 2015 ICC. ALL RIGHTS RESERVED. Accessed by David Dammon on Jun 21, 2017 12:30:52 PM pursuant to License Agreement with ICC. No further reproduction or distribution authorized. ANY UNAUTHORIZED REPRODUCTION OR DISTRIBUTION IS A VIOLATION OF THE FEDERAL COPYRIGHT ACT AND THE LICENSE AGREEMENT, AND SUBJECT TO CIVIL AND CRIMINAL PENALTIES THEREUNDER.

board installed according to Section R702, structural sheathing installed in accordance with Table R603.3.2(1), horizontal steel strapping as indicated in Figure R603.3.3(1) or sheathing in accordance with Item 1 on one side and steel straps in accordance with Item 2 on the other side [see Figure R603.3.3(2)]. Steel strap bracing must be installed at mid-height for 8-foot (2438 mm) walls and at one-third points for 9-foot (2743 mm) and 10-foot (3048 mm) walls (two rows of bracing). These straps must be attached to stud flanges with at least one No. 8 screw. In-line blocking must be installed between studs at the termination of all straps. Straps must be fastened to this blocking with at least two No. 8 screws.

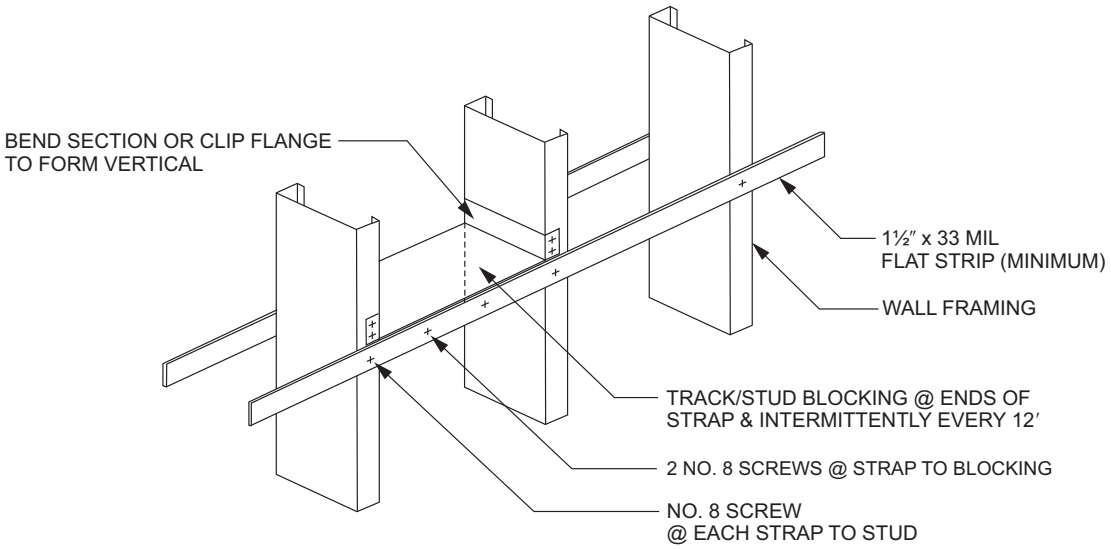

For SI: 1 mil = 0.0254 mm, 1 inch = 25.4 mm, 1 foot = 304.8 mm.

FIGURE R603.3.3(1)
STUD BRACING WITH STRAPPING ONLY

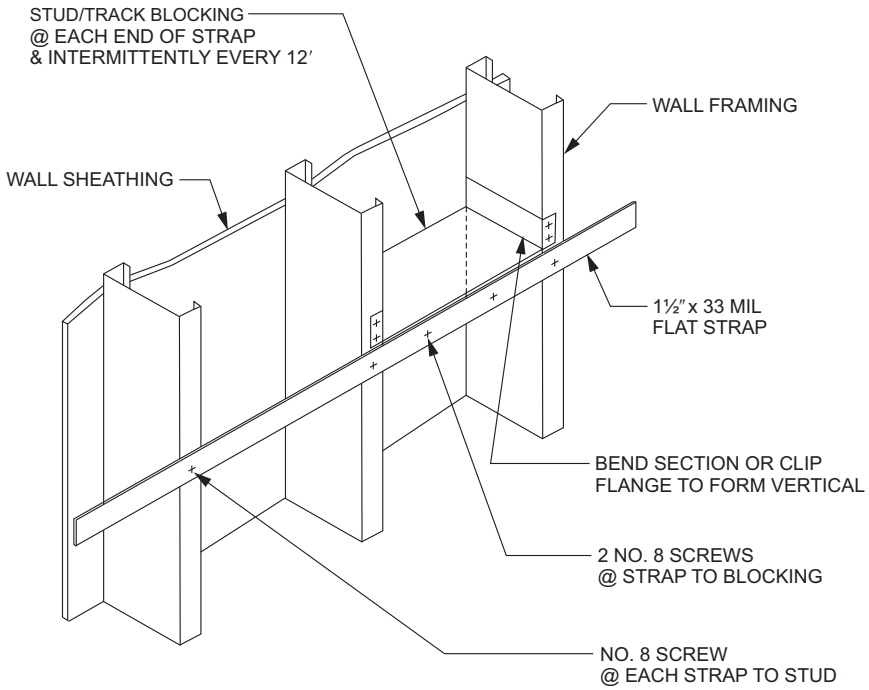

For SI: 1 mil = 0.0254 mm, 1 inch = 25.4 mm, 1 foot = 304.8 mm.

FIGURE R603.3.3(2)
STUD BRACING WITH STRAPPING AND SHEATHING MATERIAL

INTERNATIONAL CODE COUNCIL®
Copyright © 2015 ICC. ALL RIGHTS RESERVED. Accessed by David Dammon on Jun 21, 2017 12:30:52 PM pursuant to License Agreement with ICC. No further reproduction or distribution authorized. ANY UNAUTHORIZED REPRODUCTION OR DISTRIBUTION IS A VIOLATION OF THE FEDERAL COPYRIGHT ACT AND THE LICENSE AGREEMENT, AND SUBJECT TO CIVIL AND CRIMINAL PENALTIES THEREUNDER.

R603.3.4 Cutting and notching. Flanges and lips of cold-formed steel studs and headers shall not be cut or notched.

❖ Flanges and lips of load-bearing wall framing, to retain standard integrity, must not be cut or notched. The only holes permitted in steel wall framing are those conforming to Section R603.2.5.

R603.3.5 Splicing. Steel studs and other structural members shall not be spliced. Tracks shall be spliced in accordance with Figure R603.3.5.

❖ Splicing of structural members, such as studs, is not permitted. Splicing of tracks is allowed since they do not serve as gravity load-carrying members. The splice shown in Figure R603.3.5 provides nominal load-carrying capability; however, it is necessary to resist the lateral loads produced by moderate wind and earthquake loads. In these cases, the floor system must act as a diaphragm with the tracks serving as the diaphragm chords.

R603.4 Corner framing. In exterior walls, corner studs and the top tracks shall be installed in accordance with Figure R603.4.

❖ Figure R603.4 illustrates the required configurations of corner studs and overlapping of tracks at corners of exterior walls.

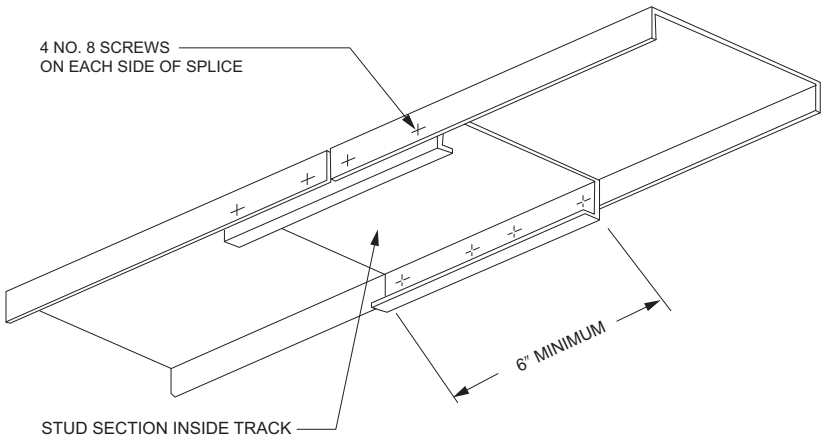

For SI: 1 inch = 25.4 mm.

FIGURE R603.3.5
TRACK SPLICE

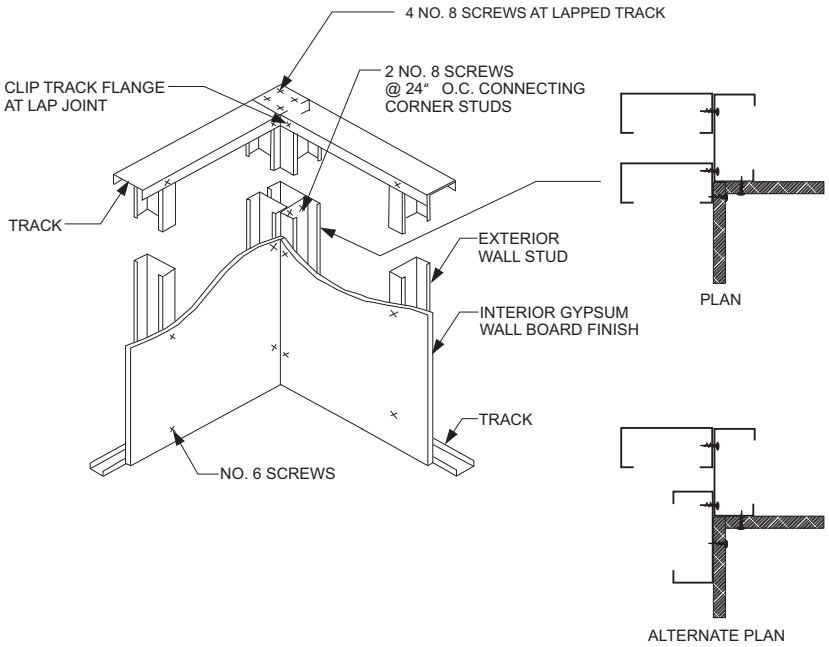

For SI: 1 inch = 25.4 mm.

FIGURE R603.4
CORNER FRAMING

INTERNATIONAL CODE COUNCIL®
Copyright © 2015 ICC. ALL RIGHTS RESERVED. Accessed by David Dammon on Jun 21, 2017 12:30:52 PM pursuant to License Agreement with ICC. No further reproduction or distribution authorized. ANY UNAUTHORIZED REPRODUCTION OR DISTRIBUTION IS A VIOLATION OF THE FEDERAL COPYRIGHT ACT AND THE LICENSE AGREEMENT, AND SUBJECT TO CIVIL AND CRIMINAL PENALTIES THEREUNDER.

R603.5 Exterior wall covering. The method of attachment of exterior wall covering materials to cold-formed steel stud wall framing shall conform to the manufacturer's installation instructions.

❖ Attachment of exterior wall coverings must be according to the manufacturer's instructions.

R603.6 Headers. Headers shall be installed above all wall openings in exterior walls and interior load-bearing walls. Box beam headers and back-to-back headers each shall be formed from two equal sized C-shaped members in accordance with Figures R603.6(1) and R603.6(2), respectively, and Tables R603.6(1) through R603.6(6). L-shaped headers shall be permitted to be constructed in accordance with AISI

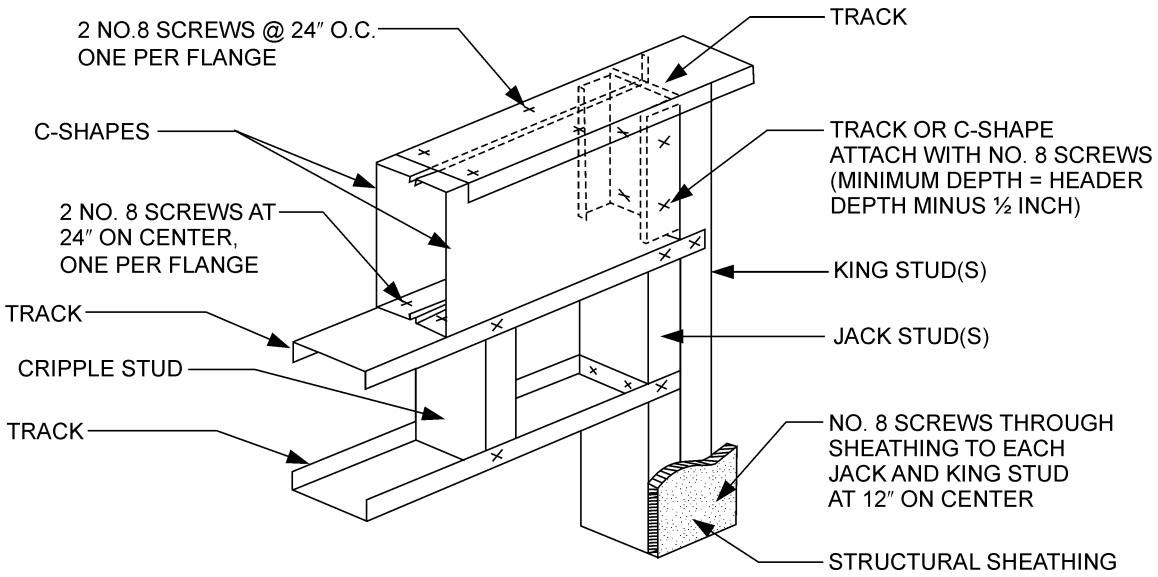

For SI: 1 inch = 25.4 mm.

FIGURE R603.6(1)
BOX BEAM HEADER

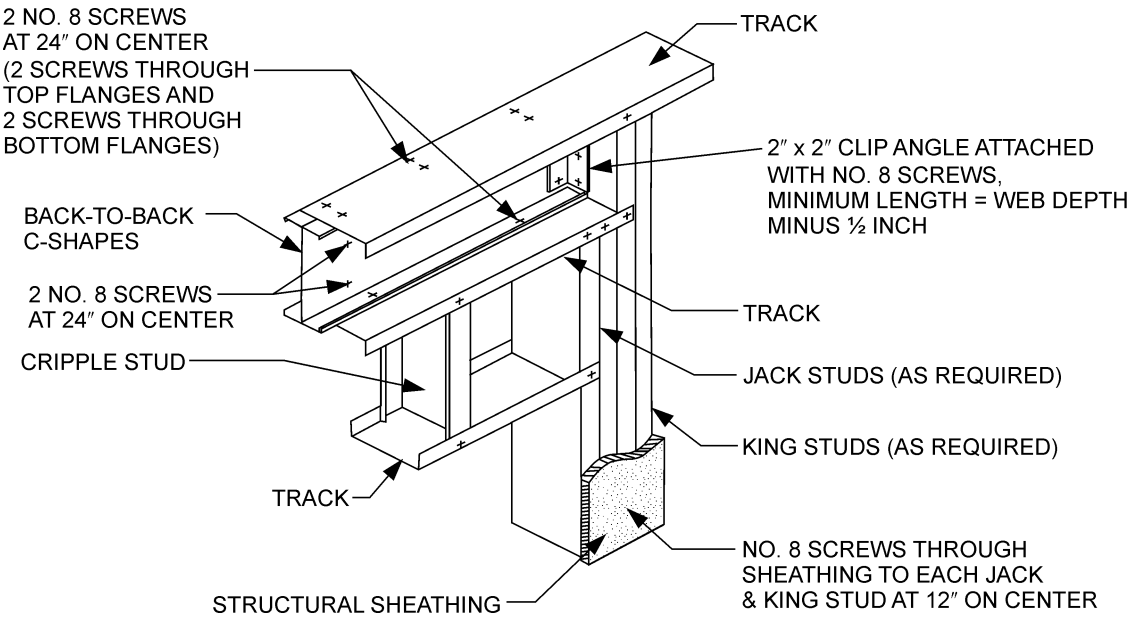

For SI: 1 inch = 25.4 mm.

FIGURE R603.6(2)
BACK-TO-BACK HEADER

INTERNATIONAL CODE COUNCIL®
Copyright © 2015 ICC. ALL RIGHTS RESERVED. Accessed by David Dammon on Jun 21, 2017 12:30:52 PM pursuant to License Agreement with ICC. No further reproduction or distribution authorized. ANY UNAUTHORIZED REPRODUCTION OR DISTRIBUTION IS A VIOLATION OF THE FEDERAL COPYRIGHT ACT AND THE LICENSE AGREEMENT, AND SUBJECT TO CIVIL AND CRIMINAL PENALTIES THEREUNDER.

S230. Alternately, headers shall be permitted to be designed and constructed in accordance with AISI S100, Section D4.

❖ Headers must be located immediately below the ceiling or roof framing (at the top track, for example) above wall openings in all exterior walls and interior load-bearing walls in accordance with Figures R603.6(1) and R603.6(2), which illustrate the two types of prescriptive header options—either a box beam or back-to-back. Tables R603.6(1) through R603.6(6) specify allowable header spans for various combinations of loading and header sizes. These tables have been revised to combine Grade 33 ksi and 50 ksi tables into one table and the back-to-back header tables have been deleted. This resulted in a reduction in the number of tables from 24 to six. For tabulated thicknesses of 33 and 43 mil, Grade 33 ksi steel is to be used. For tabulated thicknesses of 54 and 68 mil, Grade 50 ksi steel is to be used. Also, 97 mil thickness has been deleted from the tables. The back-to-back header tables did not provide significant improvement over the box header tables. The box beam header tables are now applicable to the back-to-back headers since the box beam header yields a conservative solution. Since these tables provide a somewhat limited range of design options, the code provides the option to design headers in accordance with AISI S100 or use AISI S230 for L-shaped headers.

TABLE R603.6(1)
BOX-BEAM AND BACK-TO-BACK HEADER SPANS
Headers Supporting Roof and Ceiling Only[a, b, d]

MEMBER DESIGNATION	GROUND SNOW LOAD (20 psf)					GROUND SNOW LOAD (30 psf)				
	Building width[c] (feet)					Building width[c] (feet)				
	24	28	32	36	40	24	28	32	36	40
2-350S162-33	3′-3″	2′-8″	2′-2″	—	—	2′-8″	2′-2″	—	—	—
2-350S162-43	4′-2″	3′-9″	3′-4″	2′-11″	2′-7″	3′-9″	3′-4″	2′-11″	2′-7″	2′-2″
2-350S162-54	6′-2″	5′-10″	5′-8″	5′-3″	4′-10″	5′-11″	5′-8″	5′-2″	4′-10″	4′-6″
2-350S162-68	6′-7″	6′-3″	6′-0″	5′-10″	5′-8″	6′-4″	6′-1″	5′-10″	5′-8″	5′-6″
2-550S162-33	4′-8″	4′-0″	3′-6″	3′-0″	2′-6″	4′-1″	3′-6″	3′-0″	2′-6″	—
2-550S162-43	6′-0″	5′-4″	4′-10″	4′-4″	3′-11″	5′-5″	4′-10″	4′-4″	3′-10″	3′-5″
2-550S162-54	8′-9″	8′-5″	8′-1″	7′-9″	7′-3″	8′-6″	8′-1″	7′-8″	7′-2″	6′-8″
2-550S162-68	9′-5″	9′-0″	8′-8″	8′-4″	8′-1″	9′-1″	8′-8″	8′-4″	8′-1″	7′-10″
2-800S162-33	4′-5″	3′-11″	3′-5″	3′-1″	2′-10″	3′-11″	3′-6″	3′-1″	2′-9″	2′-3″
2-800S162-43	7′-3″	6′-7″	5′-11″	5′-4″	4′-10″	6′-7″	5′-11″	5′-4″	4′-9″	4′-3″
2-800S162-54	10′-10″	10′-2″	9′-7″	9′-0″	8′-5″	10′-2″	9′-7″	8′-11″	8′-4″	7′-9″
2-800S162-68	12′-8″	11′-10″	11′-2″	10′-7″	10′-1″	11′-11″	11′-2″	10′-7″	10′-0″	9′-6″
2-1000S162-43	7′-10″	6′-10″	6′-1″	5′-6″	5′-0″	6′-11″	6′-1″	5′-5″	4′-11″	4′-6″
2-1000S162-54	12′-3″	11′-5″	10′-9″	10′-2″	9′-6″	11′-6″	10′-9″	10′-1″	9′-5″	8′-9″
2-1000S162-68	14′-5″	13′-5″	12′-8″	12′-0″	11′-6″	13′-6″	12′-8″	12′-0″	11′-5″	10′-10″
2-1200S162-54	12′-11″	11′-3″	10′-0″	9′-0″	8′-2″	11′-5″	10′-0″	9′-0″	8′-1″	7′-4″
2-1200S162-68	15′-11″	14′-10″	14′-0″	13′-4″	12′-8″	15′-0″	14′-0″	13′-3″	12′-7″	11′-11″

For SI: 1 inch = 25.4 mm, 1 foot = 304.8 mm, 1 pound per square foot = 0.0479 kPa, 1 pound per square inch = 6.895 kPa.

a. Deflection criteria: *L*/360 for live loads, *L*/240 for total loads.

b. Design load assumptions:
Roof/ceiling dead load is 12 psf.
Attic dead load is 10 psf.

c. Building width is in the direction of horizontal framing members supported by the header.

d. Minimum Grade 33 ksi steel shall be used for 33 mil and 43 mil thicknesses. Minimum Grade 50 ksi steel shall be used for 54 and 68 mil thicknesses.

❖ See the commentary to Section R603.6.

INTERNATIONAL CODE COUNCIL®
Copyright © 2015 ICC. ALL RIGHTS RESERVED. Accessed by David Dammon on Jun 21, 2017 12:30:52 PM pursuant to License Agreement with ICC. No further reproduction or distribution authorized. ANY UNAUTHORIZED REPRODUCTION OR DISTRIBUTION IS A VIOLATION OF THE FEDERAL COPYRIGHT ACT AND THE LICENSE AGREEMENT, AND SUBJECT TO CIVIL AND CRIMINAL PENALTIES THEREUNDER.

TABLE R603.6(2)
BOX-BEAM AND BACK-TO-BACK HEADER SPANS
Headers Supporting Roof and Ceiling Only[a, b, d]

MEMBER DESIGNATION	GROUND SNOW LOAD (50 psf)					GROUND SNOW LOAD (70 psf)				
	Building width[c] (feet)					Building width[c] (feet)				
	24	28	32	36	40	24	28	32	36	40
2-350S162-33	—	—	—	—	—	—	—	—	—	—
2-350S162-43	2′-4″	—	—	—	—	—	—	—	—	—
2-350S162-54	4′-8″	4′-2″	3′-9″	3′-5″	3′-1″	3′-7″	3′-2″	2′-9″	2′-5″	2′-0″
2-350S162-68	5′-7″	5′-2″	4′-9″	4′-4″	3′-11″	4′-7″	4′-1″	3′-7″	3′-2″	2′-10″
2-550S162-33	2′-2″	—	—	—	—	—	—	—	—	—
2-550S162-43	3′-8″	3′-1″	2′-6″	—	—	2′-3″	—	—	—	—
2-550S162-54	6′-11″	6′-3″	5′-9″	5′-3″	4′-9″	5′-6″	4′-11″	4′-5″	3′-11″	3′-5″
2-550S162-68	8′-0″	7′-6″	6′-11″	6′-5″	5′-11″	6′-9″	6′-1″	5′-6″	5′-0″	4′-7″
2-800S162-33	2′-7″	—	—	—	—	—	—	—	—	—
2-800S162-43	4′-6″	3′-9″	3′-1″	2′-5″	—	2′-10″	—	—	—	—
2-800S162-54	8′-0″	7′-3″	6′-8″	6′-1″	5′-7″	6′-5″	5′-9″	5′-1″	4′-7″	4′-0″
2-800S162-68	9′-9″	9′-0″	8′-3″	7′-8″	7′-1″	8′-0″	7′-3″	6′-7″	6′-0″	5′-6″
2-1000S162-43	4′-8″	4′-1″	3′-6″	2′-9″	—	3′-3″	2′-2″	—	—	—
2-1000S162-54	9′-1″	8′-2″	7′-3″	6′-7″	6′-0″	7′-0″	6′-2″	5′-6″	5′-0″	4′-6″
2-1000S162-68	11′-1″	10′-2″	9′-5″	8′-8″	8′-1″	9′-1″	8′-3″	7′-6″	6′-10″	6′-3″
2-1200S162-54	7′-8″	6′-9″	6′-1″	5′-6″	5′-0″	5′-10″	5′-1″	4′-7″	4′-1″	3′-9″
2-1200S162-68	12′-3″	11′-3″	10′-4″	9′-7″	8′-11″	10′-1″	9′-1″	8′-3″	7′-6″	6′-10″

For SI: 1 inch = 25.4 mm, 1 foot = 304.8 mm, 1 pound per square foot = 0.0479 kPa, 1 pound per square inch = 6.895 kPa.

a. Deflection criteria: *L*/360 for live loads, *L*/240 for total loads.

b. Design load assumptions:
Roof/ceiling dead load is 12 psf.
Attic dead load is 10 psf.

c. Building width is in the direction of horizontal framing members supported by the header.

d. Minimum Grade 33 ksi steel shall be used for 33 mil and 43 mil thicknesses. Minimum Grade 50 ksi steel shall be used for 54 and 68 mil thicknesses.

❖ See the commentary to Section R603.6.

INTERNATIONAL CODE COUNCIL®
Copyright © 2015 ICC. ALL RIGHTS RESERVED. Accessed by David Dammon on Jun 21, 2017 12:30:52 PM pursuant to License Agreement with ICC. No further reproduction or distribution authorized. ANY UNAUTHORIZED REPRODUCTION OR DISTRIBUTION IS A VIOLATION OF THE FEDERAL COPYRIGHT ACT AND THE LICENSE AGREEMENT, AND SUBJECT TO CIVIL AND CRIMINAL PENALTIES THEREUNDER.

TABLE R603.6(3)
BOX-BEAM AND BACK-TO-BACK HEADER SPANS
Headers Supporting One Floor, Roof and Ceiling[a, b, d]

MEMBER DESIGNATION	GROUND SNOW LOAD (20 psf)					GROUND SNOW LOAD (30 psf)				
	Building width[c] (feet)					Building width[c] (feet)				
	24	28	32	36	40	24	28	32	36	40
2-350S162-33	—	—	—	—	—	—	—	—	—	—
2-350S162-43	2′-2″	—	—	—	—	2′-1″	—	—	—	—
2-350S162-54	4′-4″	3′-10″	3′-5″	3′-1″	2′-9″	4′-3″	2′-9″	3′-4″	3′-0″	2′-8″
2-350S162-68	5′-0″	4′-9″	4′-7″	4′-2″	3′-9″	4′-11″	4′-8″	4′-6″	4′-1″	3′-9″
2-550S162-33	—	—	—	—	—	—	—	—	—	—
2-550S162-43	3′-5″	2′-9″	2′-1″	—	—	3′-3″	2′-7″	—	—	—
2-550S162-54	6′-6″	5′-10″	5′-3″	4′-9″	4′-4″	6′-4″	5′-9″	5′-2″	4′-8″	4′-3″
2-550S162-68	7′-2″	6′-10″	6′-5″	5′-11″	5′-6″	7′-0″	6′-9″	6′-4″	5′-10″	5′-4″
2-800S162-33	2′-1″	—	—	—	—	—	—	—	—	—
2-800S162-43	4′-2″	3′-4″	2′-7″	—	—	4′-0″	3′-3″	2′-5″	—	—
2-800S162-54	7′-6″	6′-9″	6′-2″	5′-7″	5′-0″	7′-5″	6′-8″	6′-0″	5′-5″	4′-11″
2-800S162-68	9′-3″	8′-5″	7′-8″	7′-1″	6′-6″	9′-1″	8′-3″	7′-7″	7′-0″	6′-5″
2-1000S162-43	4′-4″	3′-9″	2′-11″	—	—	4′-3″	3′-8″	2′-9″	—	—
2-1000S162-54	8′-6″	7′-6″	6′-8″	6′-0″	5′-5″	8′-4″	7′-4″	6′-6″	5′-10″	5′-4″
2-1000S162-68	10′-6″	9′-7″	8′-9″	8′-0″	7′-5″	10′-4″	9′-5″	8′-7″	7′-11″	7′-3″
2-1200S162-54	7′-1″	6′-2″	5′-6″	5′-0″	4′-6″	6′-11″	6′-1″	5′-5″	4′-10″	4′-5″
2-1200S162-68	11′-7″	10′-7″	9′-8″	8′-11″	8′-2″	11′-5″	10′-5″	9′-6″	8′-9″	8′-0″

For SI: 1 inch = 25.4 mm, 1 foot = 304.8 mm, 1 pound per square foot = 0.0479 kPa, 1 pound per square inch = 6.895 kPa.

a. Deflection criteria: *L*/360 for live loads, *L*/240 for total loads.

b. Design load assumptions:
Second-floor dead load is 10 psf.
Roof/ceiling dead load is 12 psf.
Second-floor live load is 30 psf.
Attic dead load is 10 psf.

c. Building width is in the direction of horizontal framing members supported by the header.

d. Minimum Grade 33 ksi steel shall be used for 33 mil and 43 mil thicknesses. Minimum Grade 50 ksi steel shall be used for 54 and 68 mil thicknesses.

❖ See the commentary to Section R603.6.

INTERNATIONAL CODE COUNCIL®
Copyright © 2015 ICC. ALL RIGHTS RESERVED. Accessed by David Dammon on Jun 21, 2017 12:30:52 PM pursuant to License Agreement with ICC. No further reproduction or distribution authorized. ANY UNAUTHORIZED REPRODUCTION OR DISTRIBUTION IS A VIOLATION OF THE FEDERAL COPYRIGHT ACT AND THE LICENSE AGREEMENT, AND SUBJECT TO CIVIL AND CRIMINAL PENALTIES THEREUNDER.

TABLE R603.6(4)
BOX-BEAM AND BACK-TO-BACK HEADER SPANS
Headers Supporting One Floor, Roof and Ceiling[a, b, d]

MEMBER DESIGNATION	GROUND SNOW LOAD (50 psf)					GROUND SNOW LOAD (70 psf)				
	Building width[c] (feet)					Building width[c] (feet)				
	24	28	32	36	40	24	28	32	36	40
2-350S162-33	—	—	—	—	—	—	—	—	—	—
2-350S162-43	—	—	—	—	—	—	—	—	—	—
2-350S162-54	3′-5″	3′-0″	2′-7″	2′-2″	—	2′-8″	2′-2″	—	—	—
2-350S162-68	4′-6″	4′-1″	3′-8″	3′-3″	2′-11″	3′-9″	3′-3″	2′-10″	2′-5″	2′-1″
2-550S162-33	—	—	—	—	—	—	—	—	—	—
2-550S162-43	2′-0″	—	—	—	—	—	—	—	—	—
2-550S162-54	5′-3″	3′-8″	4′-1″	3′-8″	3′-2″	4′-3″	3′-8″	3′-1″	2′-7″	2′-0″
2-550S162-68	6′-5″	5′-10″	5′-3″	4′-9″	4′-4″	5′-5″	4′-9″	4′-3″	3′-9″	3′-4″
2-800S162-33	—	—	—	—	—	—	—	—	—	—
2-800S162-43	2′-6″	—	—	—	—	—	—	—	—	—
2-800S162-54	6′-1″	5′-5″	4′-10″	4′-3″	3′-9″	4′-11″	4′-3″	3′-8″	3′-0″	2′-5″
2-800S162-68	7′-8″	6′-11″	6′-3″	5′-9″	5′-2″	6′-5″	5′-9″	5′-1″	4′-6″	4′-0″
2-1000S162-43	2′-10″	—	—	—	—	—	—	—	—	—
2-1000S162-54	6′-7″	5′-10″	5′-3″	4′-9″	4′-3″	5′-4″	4′-9″	4′-1″	3′-5″	2′-9″
2-1000S162-68	8′-8″	7′-10″	7′-2″	6′-6″	5′-11″	7′-4″	6′-6″	5′-9″	5′-1″	4′-6″
2-1200S162-54	5′-6″	4′-10″	4′-4″	3′-11″	3′-7″	4′-5″	3′-11″	3′-6″	3′-2″	2′-11″
2-1200S162-68	9′-7″	8′-8″	7′-11″	7′-2″	6′-6″	8′-1″	7′-2″	6′-4″	5′-8″	5′-0″

For SI: 1 inch = 25.4 mm, 1 foot = 304.8 mm, 1 pound per square foot = 0.0479 kPa, 1 pound per square inch = 6.895 kPa.

a. Deflection criteria: *L*/360 for live loads, *L*/240 for total loads.

b. Design load assumptions:
Second-floor dead load is 10 psf.
Roof/ceiling dead load is 12 psf.
Second-floor live load is 30 psf.
Attic dead load is 10 psf.

c. Building width is in the direction of horizontal framing members supported by the header.

d. Minimum Grade 33 ksi steel shall be used for 33 mil and 43 mil thicknesses. Minimum Grade 50 ksi steel shall be used for 54 and 68 mil thicknesses.

❖ See the commentary to Section R603.6.

INTERNATIONAL CODE COUNCIL®
Copyright © 2015 ICC. ALL RIGHTS RESERVED. Accessed by David Dammon on Jun 21, 2017 12:30:52 PM pursuant to License Agreement with ICC. No further reproduction or distribution authorized. ANY UNAUTHORIZED REPRODUCTION OR DISTRIBUTION IS A VIOLATION OF THE FEDERAL COPYRIGHT ACT AND THE LICENSE AGREEMENT, AND SUBJECT TO CIVIL AND CRIMINAL PENALTIES THEREUNDER.

TABLE R603.6(5)
BOX-BEAM AND BACK-TO-BACK HEADER SPANS
Headers Supporting Two Floors, Roof and Ceiling[a, b, d]

MEMBER DESIGNATION	GROUND SNOW LOAD (20 psf)					GROUND SNOW LOAD (30 psf)				
	Building width[c] (feet)					Building width[c] (feet)				
	24	28	32	36	40	24	28	32	36	40
2-350S162-33	—	—	—	—	—	—	—	—	—	—
2-350S162-43	—	—	—	—	—	—	—	—	—	—
2-350S162-54	2′-5″	—	—	—	—	2′-4″	—	—	—	—
2-350S162-68	3′-6″	3′-0″	2′-6″	2′-1″	—	3′-5″	2′-11″	2′-6″	2′-0″	—
2-550S162-33	—	—	—	—	—	—	—	—	—	—
2-550S162-43	—	—	—	—	—	—	—	—	—	—
2-550S162-54	3′-11″	3′-3″	2′-8″	2′-0″	—	3′-10″	3′-3″	2′-7″	—	—
2-550S162-68	5′-1″	4′-5″	3′-10″	3′-3″	2′-9″	5′-0″	4′-4″	3′-9″	3′-3″	2′-9″
2-800S162-33	—	—	—	—	—	—	—	—	—	—
2-800S162-43	—	—	—	—	—	—	—	—	—	—
2-800S162-54	4′-7″	3′-10″	3′-1″	2′-5″	—	4′-6″	3′-9″	3′-0″	2′-4″	—
2-800S162-68	6′-0″	5′-3″	4′-7″	3′-11″	3′-4″	6′-0″	5′-2″	4′-6″	3′-11″	3′-3″
2-1000S162-43	—	—	—	—	—	—	—	—	—	—
2-1000S162-54	5′-0″	4′-4″	3′-6″	2′-9″	—	4′-11″	4′-3″	3′-5″	2′-7″	—
2-1000S162-68	6′-10″	6′-0″	5′-3″	4′-6″	3′-10″	6′-9″	5′-11″	5′-2″	4′-5″	3′-9″
2-1200S162-54	4′-2″	3′-7″	3′-3″	2′-11″	—	4′-1″	3′-7″	3′-2″	2′-10″	—
2-1200S162-68	7′-7″	6′-7″	5′-9″	5′-0″	4′-2″	7′-6″	6′-6″	5′-8″	4′-10″	4′-1″

For SI: 1 inch = 25.4 mm, 1 foot = 304.8 mm, 1 pound per square foot = 0.0479 kPa, 1 pound per square inch = 6.895 kPa.

a. Deflection criteria: *L*/360 for live loads, *L*/240 for total loads.

b. Design load assumptions:
Second-floor dead load is 10 psf.
Roof/ceiling dead load is 12 psf.
Second-floor live load is 40 psf
Third-floor live load is 30 psf.
Attic live load is 10 psf.

c. Building width is in the direction of horizontal framing members supported by the header.

d. Minimum Grade 33 ksi steel shall be used for 33 mil and 43 mil thicknesses. Minimum Grade 50 ksi steel shall be used for 54 and 68 mil thicknesses.

❖ See the commentary to Section R603.6.

INTERNATIONAL CODE COUNCIL®
Copyright © 2015 ICC. ALL RIGHTS RESERVED. Accessed by David Dammon on Jun 21, 2017 12:30:52 PM pursuant to License Agreement with ICC. No further reproduction or distribution authorized. ANY UNAUTHORIZED REPRODUCTION OR DISTRIBUTION IS A VIOLATION OF THE FEDERAL COPYRIGHT ACT AND THE LICENSE AGREEMENT, AND SUBJECT TO CIVIL AND CRIMINAL PENALTIES THEREUNDER.

TABLE R603.6(6)
BOX-BEAM AND BACK-TO-BACK HEADER SPANS
Headers Supporting Two Floors, Roof and Ceiling[a, b, d]

MEMBER DESIGNATION	GROUND SNOW LOAD (50 psf)					GROUND SNOW LOAD (70 psf)				
	Building width[c] (feet)					Building width[c] (feet)				
	24	28	32	36	40	24	28	32	36	40
2-350S162-33	—	—	—	—	—	—	—	—	—	—
2-350S162-43	—	—	—	—	—	—	—	—	—	—
2-350S162-54	2′-2″	—	—	—	—	—	—	—	—	—
2-350S162-68	3′-3″	2′-9″	2′-3″	—	—	2′-11″	2′-5″	—	—	—
2-550S162-33	—	—	—	—	—	—	—	—	—	—
2-550S162-43	—	—	—	—	—	—	—	—	—	—
2-550S162-54	3′-7″	2′-11″	2′-3″	—	—	3′-3″	2′-7″	—	—	—
2-550S162-68	4′-9″	2′-1″	3′-6″	3′-0″	2′-5″	4′-4″	3′-9″	3′-2″	2′-8″	2′-1″
2-800S162-33	—	—	—	—	—	—	—	—	—	—
2-800S162-43	—	—	—	—	—	—	—	—	—	—
2-800S162-54	4′-3″	3′-5″	2′-8″	—	—	3′-9″	3′-0″	2′-3″	—	—
2-800S162-68	5′-8″	4′-11″	4′-2″	3′-7″	2′-11″	5′-3″	4′-6″	3′-10″	3′-3″	2′-7″
2-1000S162-43	—	—	—	—	—	—	—	—	—	—
2-1000S162-54	4′-8″	3′-11″	3′-1″	2′-2″	—	4′-3″	3′-5″	2′-7″	—	—
2-1000S162-68	6′-5″	5′-7″	4′-9″	4′-1″	3′-4″	5′-11″	5′-1″	4′-5″	3′-8″	2′-11″
2-1200S162-54	3′-11″	3′-5″	3′-0″	2′-4″	—	3′-7″	3′-2″	2′-10″	—	—
2-1200S162-68	7′-1″	6′-2″	5′-3″	4′-6″	3′-8″	6′-6″	5′-8″	4′-10″	4′-0″	3′-3″

For SI: 1 inch = 25.4 mm, 1 foot = 304.8 mm, 1 pound per square foot = 0.0479 kPa, 1 pound per square inch = 6.895 kPa.

a. Deflection criteria: *L*/360 for live loads, *L*/240 for total loads.

b. Design load assumptions:
Second-floor dead load is 10 psf.
Roof/ceiling dead load is 12 psf.
Second-floor live load is 40 psf
Third-floor live load is 30 psf.
Attic live load is 10 psf.

c. Building width is in the direction of horizontal framing members supported by the header.

d. Minimum Grade 33 ksi steel shall be used for 33 mil and 43 mil thicknesses. Minimum Grade 50 ksi steel shall be used for 54 and 68 mil thicknesses.

❖ See the commentary to Section R603.6.

INTERNATIONAL CODE COUNCIL®
Copyright © 2015 ICC. ALL RIGHTS RESERVED. Accessed by David Dammon on Jun 21, 2017 12:30:52 PM pursuant to License Agreement with ICC. No further reproduction or distribution authorized. ANY UNAUTHORIZED REPRODUCTION OR DISTRIBUTION IS A VIOLATION OF THE FEDERAL COPYRIGHT ACT AND THE LICENSE AGREEMENT, AND SUBJECT TO CIVIL AND CRIMINAL PENALTIES THEREUNDER.

R603.6.1 Headers in gable endwalls. Box beam and back-to-back headers in gable endwalls shall be permitted to be constructed in accordance with Section R603.6 or with the header directly above the opening in accordance with Figures R603.6.1(1) and R603.6.1(2) and the following provisions:

1. Two 362S162-33 for openings less than or equal to 4 feet (1219 mm).
2. Two 600S162-43 for openings greater than 4 feet (1219 mm) but less than or equal to 6 feet (1830 mm).
3. Two 800S162-54 for openings greater than 6 feet (1829 mm) but less than or equal to 9 feet (2743 mm).

❖ This section specifies the minimum size of box-beam and back-to-back headers in gable endwalls. Figures R603.6.1(1) and R603.6.1(2) illustrate these configurations and unlike Section R603.6 they may be installed directly above the opening. The required header size varies with the span and if the span exceeds 9 feet (2743 mm), the requirements of Section R603.6 should be applied.

R603.7 Jack and king studs. The number of jack and king studs installed on each side of a header shall comply with Table R603.7(1). King, jack and cripple studs shall be of the same dimension and thickness as the adjacent wall studs. Headers shall be connected to king studs in accordance with Table R603.7(2) and the following provisions:

1. For box beam headers, one-half of the total number of required screws shall be applied to the header and one-half to the king stud by use of C-shaped or track member in accordance with Figure R603.6(1). The track or

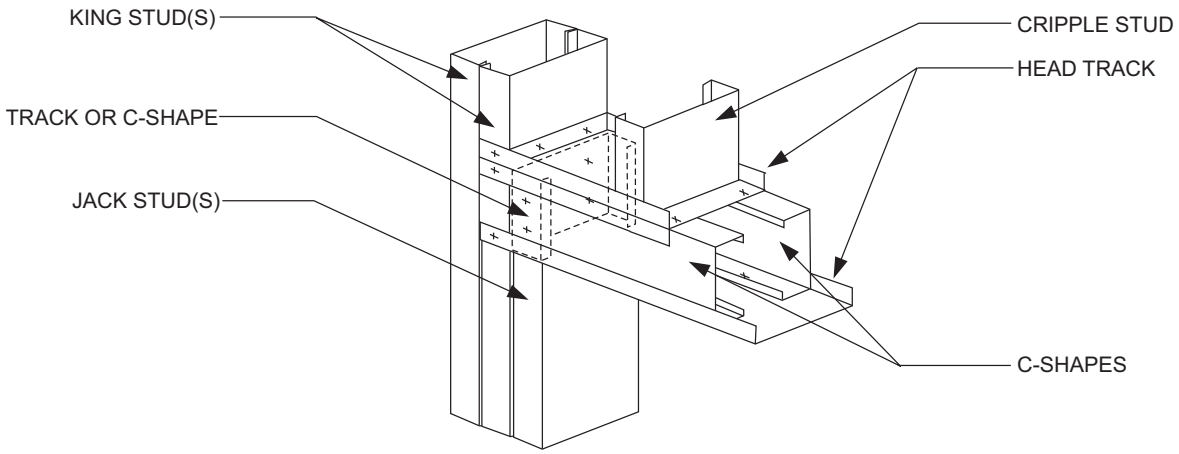

FIGURE R603.6.1(1)
BOX BEAM HEADER IN GABLE ENDWALL

❖ See the commentary to Section R603.6.1.

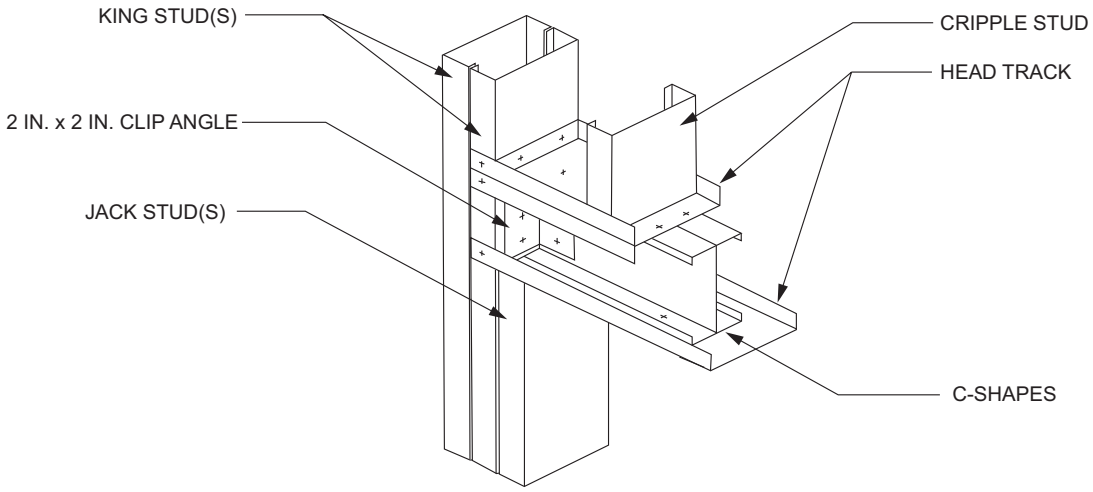

For SI: 1 inch = 25.4 mm.

FIGURE R603.6.1(2)
BACK-TO-BACK HEADER IN GABLE ENDWALL

❖ See the commentary to Section R603.6.1.

INTERNATIONAL CODE COUNCIL®
Copyright © 2015 ICC. ALL RIGHTS RESERVED. Accessed by David Dammon on Jun 21, 2017 12:30:52 PM pursuant to License Agreement with ICC. No further reproduction or distribution authorized. ANY UNAUTHORIZED REPRODUCTION OR DISTRIBUTION IS A VIOLATION OF THE FEDERAL COPYRIGHT ACT AND THE LICENSE AGREEMENT, AND SUBJECT TO CIVIL AND CRIMINAL PENALTIES THEREUNDER.

C-shaped sections shall extend the depth of the header minus $^1/_2$ inch (12.7 mm) and shall have a minimum thickness not less than that of the wall studs.

2. For back-to-back headers, one-half the total number of screws shall be applied to the header and one-half to the king stud by use of a minimum 2-inch by 2-inch (51 mm by 51 mm) clip angle in accordance with Figure R603.6(2). The clip angle shall extend the depth of the header minus $^1/_2$ inch (12.7 mm) and shall have a minimum thickness not less than that of the wall studs. Jack and king studs shall be interconnected with structural sheathing in accordance with Figures R603.6(1) and R603.6(2).

❖ Table R603.7(1) specifies the number of jack and king studs based on the header span. King and jack studs must be the same dimension as adjacent wall studs, with a steel thickness not less than that of the adjacent wall studs. The size and number of screws required for the header-to-king-stud connection are listed in Table R603.7(2). One-half of the screws are to be applied to the box-beam header and one-half to the king stud with a clip angle as shown in Figure R603.6.1(2). The clip angle must be a minimum 2-inch by 2-inch (51 mm by 51 mm) angle with a minimum steel thickness not less than the header members and the wall studs.

R603.8 Head and sill track. Head track spans above door and window openings and sill track spans beneath window openings shall comply with Table R603.8. For openings less than 4 feet (1219 mm) in height that have both a head track and a sill track, multiplying the spans by 1.75 shall be permitted in Table R603.8. For openings less than or equal to 6 feet (1829 mm) in height that have both a head track and a sill track, multiplying the spans in Table R603.8 by 1.50 shall be permitted.

❖ Head track spans must comply with Table R603.8 [see Figures R603.6.1(1) and R603.6.1(2) for illustrations]. Where both a top and a bottom track are provided, the tabular head track spans may be increased by the multipliers indicated.

TABLE R603.7(1)
TOTAL NUMBER OF JACK AND KING STUDS REQUIRED AT EACH END OF AN OPENING

SIZE OF OPENING (feet-inches)	24-INCH O.C. STUD SPACING		16-INCH O.C. STUD SPACING	
	No. of jack studs	No. of king studs	No. of jack studs	No. of king studs
Up to 3′-6″	1	1	1	1
> 3′-6″ to 5′-0″	1	2	1	2
> 5′-0″ to 5′-6″	1	2	2	2
> 5′-6″ to 8′-0″	1	2	2	2
> 8′-0″ to 10′-6″	2	2	2	3
> 10′-6″ to 12′-0″	2	2	3	3
> 12′-0″ to 13′-0″	2	3	3	3
> 13′-0″ to 14′-0″	2	3	3	4
> 14′-0″ to 16′-0″	2	3	3	4
> 16′-0″ to 18′-0″	3	3	4	4

For SI: 1 inch = 25.4 mm, 1 foot = 304.8 mm.

❖ See the commentary to Section R603.7.

TABLE R603.7(2)
HEADER TO KING STUD CONNECTION REQUIREMENTS[a, b, c, d]

HEADER SPAN (feet)	ULTIMATE WIND SPEED (mph), EXPOSURE CATEGORY	
	110, Exposure Category C or less than 139, Exposure Category B	Less than 139, Exposure Category C
≤ 4′	4-No. 8 screws	6-No. 8 screws
> 4′ to 8′	4-No. 8 screws	8-No. 8 screws
> 8′ to 12′	6-No. 8 screws	10-No. 8 screws
> 12′ to 16′	8-No. 8 screws	12-No. 8 screws

For SI: 1 inch = 25.4 mm, 1 foot = 304.8 mm, 1 mile per hour = 0.447 m/s, 1 pound = 4.448 N.

a. All screw sizes shown are minimum.

b. For headers located on the first floor of a two-story building or the first or second floor of a three-story building, the total number of screws is permitted to be reduced by 2 screws, but the total number of screws shall not be less than four.

c. For roof slopes of 6:12 or greater, the required number of screws shall be permitted to be reduced by half, but the total number of screws shall not be less than four.

d. Screws can be replaced by an uplift connector that has a capacity of the number of screws multiplied by 164 pounds.

❖ See the commentary to Section R603.7.

INTERNATIONAL CODE COUNCIL®
Copyright © 2015 ICC. ALL RIGHTS RESERVED. Accessed by David Dammon on Jun 21, 2017 12:30:52 PM pursuant to License Agreement with ICC. No further reproduction or distribution authorized. ANY UNAUTHORIZED REPRODUCTION OR DISTRIBUTION IS A VIOLATION OF THE FEDERAL COPYRIGHT ACT AND THE LICENSE AGREEMENT, AND SUBJECT TO CIVIL AND CRIMINAL PENALTIES THEREUNDER.

TABLE R603.8
HEAD AND SILL TRACK SPAN

ULTIMATE WIND SPEED AND EXPOSURE CATEGORY (mph)		ALLOWABLE HEAD AND SILL TRACK SPAN[a, b, c] (feet-inches)					
		TRACK DESIGNATION[d]					
B	C	350T125-33	350T125-43	350T125-54	550T125-33	550T125-43	550T125-54
115	—	4′-10″	5′-5″	6′-0″	5′-8″	6′-3″	6′-10″
126	110	4′-6″	5′-1″	5′-8″	5′-4″	5′-11″	6′-5″
< 139	115	4′-2″	4′-9″	5′-4″	5′-1″	5′-7″	6′-1″
—	126	3′-11″	4′-6″	5′-0″	4′-10″	5′-4″	5′-10″
—	< 139	3′-8″	4′-2″	4′-9″	4′-1″	5′-1″	5′-7″

For SI: 1 inch = 25.4 mm, 1 foot = 304.8 mm, 1 mile per hour = 0.447 m/s.

a. Deflection limit: *L*/240.

b. Head and sill track spans are based on components and cladding wind pressures and 48-inch tributary span.

c. For openings less than 4 feet in height that have both a head track and sill track, the spans are permitted to be multiplied by 1.75. For openings less than or equal to 6 feet in height that have both a head track and a sill track, the spans are permitted to be multiplied by a factor of 1.5.

d. Minimum Grade 33 ksi steel shall be used for 33 mil and 43 mil thicknesses. Minimum Grade 50 ksi steel shall be used for 54 and 68 mil thicknesses.

❖ See the commentary to Section R603.8.

R603.9 Structural sheathing. Structural sheathing shall be installed in accordance with Figure R603.9 and this section on all sheathable exterior wall surfaces, including areas above and below openings.

❖ Wood structural panel sheathing must be installed on all exterior wall surfaces as shown in Figure R603.9.

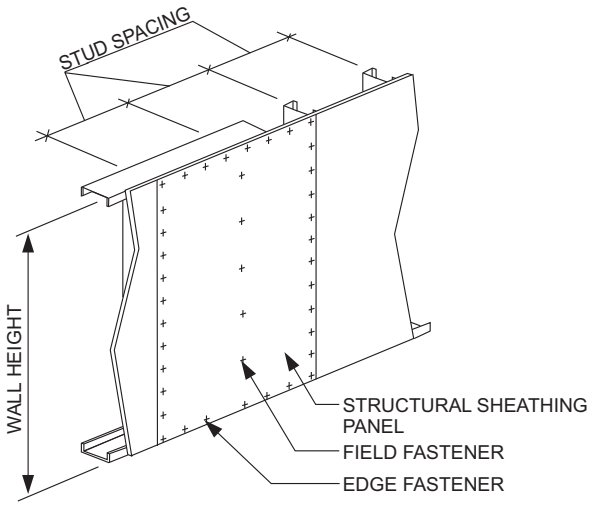

FIGURE R603.9
STRUCTURAL SHEATHING FASTENING PATTERN

❖ This illustrates the sheathing fastening and locations that are specified in Table R603.3.2(1) for structural sheathing (see the commentary to Section R603.9.3).

R603.9.1 Sheathing materials. Structural sheathing panels shall consist of minimum $^{7}/_{16}$-inch-thick (11 mm) oriented strand board or $^{15}/_{32}$-inch-thick (12 mm) plywood.

❖ Wood structural-panel sheathing must be a minimum $^{7}/_{16}$-inch-thick (11.1 mm) oriented strand board or $^{15}/_{32}$-inch-thick (11.9 mm) plywood fastened to studs and tracks in accordance with Table R603.3.2(1).

R603.9.2 Determination of minimum length of full- height sheathing. The minimum length of full-height sheathing on each *braced wall line* shall be determined by multiplying the length of the *braced wall line* by the percentage obtained from Table R603.9.2(1) and by the plan aspect-ratio adjustment factors obtained from Table R603.9.2(2). The minimum length of full-height sheathing shall be not less than 20 percent of the *braced wall line* length.

To be considered full-height sheathing, structural sheathing shall extend from the bottom to the top of the wall without interruption by openings. Only sheathed, full- height wall sections, uninterrupted by openings, which are not less than 48 inches (1219 mm) wide, shall be counted toward meeting the minimum percentages in Table R603.9.2(1). In addition, structural sheathing shall comply with all of the following requirements:

1. Be installed with the long dimension parallel to the stud framing and shall cover the full vertical height of wall from the bottom of the bottom track to the top of the top track of each *story*. Installing the long dimension perpendicular to the stud framing or using shorter segments shall be permitted provided that the horizontal joint is blocked as described in Item 2.
2. Be blocked where the long dimension is installed perpendicular to the stud framing. Blocking shall be not less than 33 mil (0.84 mm) thickness. Each horizontal structural sheathing panel shall be fastened with No. 8 screws spaced at 6 inches (152 mm) on center to the blocking at the joint.
3. Be applied to each end (corners) of each of the exterior walls with a minimum 48-inch-wide (1219 mm) panel.

Exception: Where stone or masonry veneer is installed, the required length of full-height sheathing and overturning anchorage required shall be determined in accordance with Section R603.9.5.

❖ The minimum length of full-height sheathing required on exterior walls is determined from Table R603.9.2(1).

INTERNATIONAL CODE COUNCIL®
Copyright © 2015 ICC. ALL RIGHTS RESERVED. Accessed by David Dammon on Jun 21, 2017 12:30:52 PM pursuant to License Agreement with ICC. No further reproduction or distribution authorized. ANY UNAUTHORIZED REPRODUCTION OR DISTRIBUTION IS A VIOLATION OF THE FEDERAL COPYRIGHT ACT AND THE LICENSE AGREEMENT, AND SUBJECT TO CIVIL AND CRIMINAL PENALTIES THEREUNDER.

The minimum tabulated lengths are expressed as a percentage of the wall length. Because the table is based on an 8-foot (2438 mm) wall height, the lengths must be increased by the appropriate multiplier in Section R603.9.2.1 for 9-foot- (2743 mm) and 10-foot-high (3048 mm) walls as well as the building aspect ratio found in Table R603.9.2(2). An additional adjustment is permitted for buildings where hold-down anchors are provided in accordance with Section R603.9.2.2. After all adjustments are applied to these tabulated values, the resulting minimum percentage of full-height sheathing must not be less than 20 percent of the wall length.

Only sheathed wall sections that are a minimum of 48 inches (1219 mm) wide and uninterrupted by openings may be considered in meeting the minimum length requirement. This structural sheathing must be installed with the long dimension parallel to the stud framing, and it must cover the full vertical height of studs, from the bottom of the bottom track to the top of the top track of each story. Additionally, structural sheathing must be applied to each end (corners) of all exterior walls with a minimum 48-inch-wide (1219 mm) panel.

The exception requires that where stone and masonry veneer is installed, full-height sheathing and overturn anchorage must be in accordance with Section R603.9.5.

R603.9.2.1 Full height sheathing. The minimum percentage of full-height structural sheathing shall be multiplied by 1.10 for 9-foot-high (2743 mm) walls and multiplied by 1.20 for 10-foot-high (3048 mm) walls.

❖ See the commentary to Section R603.9.2.

R603.9.2.2 Full-height sheathing in lowest story. In the lowest *story* of a *dwelling*, multiplying the percentage of full-height sheathing required in Table R603.9.2(1) by 0.6 shall be permitted provided hold- down anchors are provided in accordance with Section R603.9.4.2.

❖ See the commentary to Section R603.9.2.

TABLE R603.9.2(1)
MINIMUM PERCENTAGE OF FULL-HEIGHT STRUCTURAL SHEATHING ON EXTERIOR WALLS[a, b]

WALL SUPPORTING	ROOF SLOPE	ULTIMATE WIND SPEED AND EXPOSURE (mph)				
		115 B	126 B 110 C	< 139 B 115 C	126 C	< 139 C
Roof and ceiling only (one story or top floor of two- or three-story building).	3:12	9	9	12	16	20
	6:12	13	15	20	26	35
	9:12	23	25	30	50	58
	12:12	33	35	40	66	75
One story, roof and ceiling (first floor of a two-story building or second floor of a three-story building).	3:12	27	30	35	50	66
	6:12	28	30	40	58	74
	9:12	38	40	55	74	91
	12:12	45	50	65	100	115
Two stories, roof and ceiling (first floor of a three-story building).	3:12	45	51	58	84	112
	6:12	43	45	60	90	113
	9:12	53	55	80	98	124
	12:12	57	65	90	134	155

For SI: 1 mph = 0.447 m/s.

a. Linear interpolation is permitted.

b. For hip-roofed homes the minimum percentage of full-height sheathing, based upon wind, is permitted to be multiplied by a factor of 0.95 for roof slopes not exceeding 7:12 and a factor of 0.9 for roof slopes greater than 7:12.

❖ See the commentary to Section R603.9.2.

TABLE R603.9.2(2)
FULL-HEIGHT SHEATHING LENGTH ADJUSTMENT FACTORS

PLAN ASPECT RATIO	LENGTH ADJUSTMENT FACTORS	
	Short wall	Long wall
1:1	1.0	1.0
1.5:1	1.5	0.67
2:1	2.0	0.50
3:1	3.0	0.33
4:1	4.0	0.25

❖ See the commentary to Section R603.9.2.

INTERNATIONAL CODE COUNCIL®
Copyright © 2015 ICC. ALL RIGHTS RESERVED. Accessed by David Dammon on Jun 21, 2017 12:30:52 PM pursuant to License Agreement with ICC. No further reproduction or distribution authorized. ANY UNAUTHORIZED REPRODUCTION OR DISTRIBUTION IS A VIOLATION OF THE FEDERAL COPYRIGHT ACT AND THE LICENSE AGREEMENT, AND SUBJECT TO CIVIL AND CRIMINAL PENALTIES THEREUNDER.

R603.9.3 Structural sheathing fastening. Edges and interior areas of structural sheathing panels shall be fastened to framing members and tracks in accordance with Figure R603.9 and Table R603.3.2(1). Screws for attachment of structural sheathing panels shall be bugle-head, flat-head, or similar head style with a minimum head diameter of 0.29 inch (8 mm).

For continuously sheathed *braced wall lines* using wood structural panels installed with No. 8 screws spaced 4 inches (102 mm) on center at all panel edges and 12 inches (304.8 mm) on center on intermediate framing members, the following shall apply:

1. Multiplying the percentages of full-height sheathing in Table R603.9.2(1) by 0.72 shall be permitted.
2. For bottom track attached to foundations or framing below, the bottom track anchor or screw connection spacing in Tables R505.3.1(1) and R603.3.1 shall be multiplied by two-thirds

❖ The wall-fastening schedule [see Table R603.3.2(1)] specifies edge and field spacing requirements (see Figure R603.9). This section specifies the required type and size of screws for attaching structural sheathing to wall framing. A reduction in sheathing requirements is allowed where a reduced edge fastener spacing is utilized.

R603.9.4 Uplift connection requirements. Uplift connections shall be provided in accordance with this section.

❖ Uplift connections are required based on wind criteria in Section R603.9.4.1. When the optional sheathing reduction permitted by Section R603.9.2.2 is taken, a hold down must be provided in accordance with Section R603.9.4.2.

R603.9.4.1 Ultimate design wind speeds greater than 126 mph. Where ultimate design wind speeds exceed 126 miles per hour (56 m/s), Exposure Category C walls shall be provided with direct uplift connections in accordance with AISI S230, Section E13.3, and AISI S230, Section F7.2, as required for 139 miles per hour (62 m/s), Exposure Category C.

❖ Where the ultimate design wind speed is greater than 126 mph (56 m/s) and the exposure is C, the user is referred to AISI S230 in order to determine the uplift connection requirements.

R603.9.4.2 Hold-down anchor. Where the percentage of full-height sheathing is adjusted in accordance with Section R603.9.2.2, a hold-down anchor, with a strength of 4,300 pounds (19 kN), shall be provided at each end of each full-height sheathed wall section used to meet the minimum percent sheathing requirements of Section R603.9.2. Hold-down anchors shall be attached to back-to-back studs; structural sheathing panels shall have edge fastening to the studs, in accordance with Section R603.9.3 and AISI S230, Table E11-1.

A single hold-down anchor, installed in accordance with Figure R603.9.4.2, shall be permitted at the corners of buildings.

❖ Section R603.9.2.2 affords the option of using shorter braced-wall lengths and providing hold-down anchorage at the ends of the braced walls to resist uplift. The length of wall may be reduced by up to 40 percent where the hold-downs specified in this section are installed.

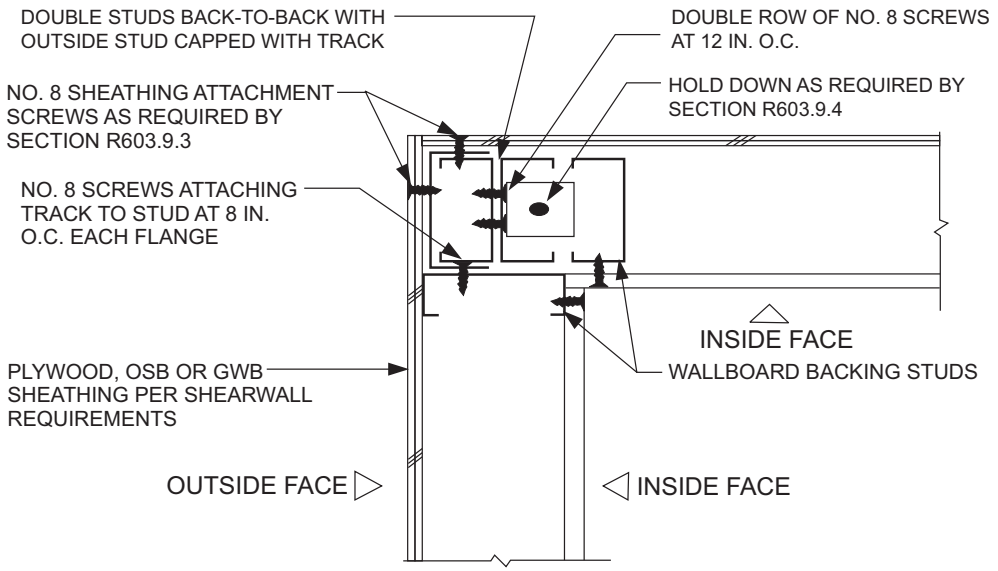

For SI: 1 inch = 25.4 mm.

FIGURE R603.9.4.2
CORNER STUD HOLD-DOWN DETAIL

INTERNATIONAL CODE COUNCIL®
Copyright © 2015 ICC. ALL RIGHTS RESERVED. Accessed by David Dammon on Jun 21, 2017 12:30:52 PM pursuant to License Agreement with ICC. No further reproduction or distribution authorized. ANY UNAUTHORIZED REPRODUCTION OR DISTRIBUTION IS A VIOLATION OF THE FEDERAL COPYRIGHT ACT AND THE LICENSE AGREEMENT, AND SUBJECT TO CIVIL AND CRIMINAL PENALTIES THEREUNDER.

R603.9.5 Structural sheathing for stone and masonry veneer. Where stone and masonry veneer are installed in accordance with Section R703.8, the length of full-height sheathing for exterior and interior wall lines backing or perpendicular to and laterally supporting walls with veneer shall comply with this section.

❖ This section provides the required bracing for cold-formed steel framing to resist the lateral loads associated with the use of masonry veneer in SDC C, D_0, D_1 and D_2. Where masonry veneer is used in SDC C, Section R603.9.5.1 requires greater of the amounts of bracing specified in Section R603.9.2, except the reduction specified in Section R603.9.2.2 is permitted.

The original provisions for anchoring masonry veneer to residential buildings were developed with the concept of anchoring to wood framing. Section R603.9.5 has been revised to include provisions for cold-formed steel framing to be used to support masonry veneer in high-seismic regions. Where masonry veneer is used in SDC D_0, D_1 or D_2, Section R603.9.5.2 requires the amount of bracing and overturning anchorage to be in accordance with Tables R603.9.5(1) through R603.9.5(4).

TABLE R603.9.5(1)
REQUIRED LENGTH OF FULL-HEIGHT SHEATHING AND ASSOCIATED OVERTURNING ANCHORAGE FOR WALLS SUPPORTING WALLS WITH STONE OR MASONRY VENEER AND USING 33-MIL COLD-FORMED STEEL FRAMING AND 6-INCH SCREW SPACING ON THE PERIMETER OF EACH PANEL OF STRUCTURAL SHEATHING

SEISMIC DESIGN CATEGORY	STORY	BRACED WALL LINE LENGTH (feet)						SINGLE-STORY HOLD-DOWN FORCE (pounds)	CUMULATIVE HOLD-DOWN FORCE (pounds)
		10	20	30	40	50	60		
		Minimum total length of braced wall panels required along each braced wall line (feet)							
D_0		3.3	4.7	6.1	7.4	8.8	10.2	3,360	—
		5.3	8.7	12.1	15.4	18.8	22.2	3,360	6,720
		7.3	12.7	18.0	23.4	28.8	34.2	3,360	10,080
D_1		4.1	5.8	7.5	9.2	10.9	12.7	3,360	—
		6.6	10.7	14.9	19.1	23.3	27.5	3,360	6,720
		9.0	15.7	22.4	29.0	35.7	42.2	3,360	10,080
D_2		5.7	8.2	10.6	13.0	15.4	17.8	3,360	—
		9.2	15.1	21.1	27.0	32.9	38.8	3,360	6,720
	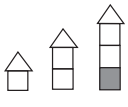	12.7	22.1	31.5	40.9	50.3	59.7	3,360	10,080

INTERNATIONAL CODE COUNCIL®
Copyright © 2015 ICC. ALL RIGHTS RESERVED. Accessed by David Dammon on Jun 21, 2017 12:30:52 PM pursuant to License Agreement with ICC. No further reproduction or distribution authorized. ANY UNAUTHORIZED REPRODUCTION OR DISTRIBUTION IS A VIOLATION OF THE FEDERAL COPYRIGHT ACT AND THE LICENSE AGREEMENT, AND SUBJECT TO CIVIL AND CRIMINAL PENALTIES THEREUNDER.

Values in the four tables are based on allowable design values provided in AISI S213-07, *North American Standard for Cold-Formed Steel Framing—Lateral Design*, including Supplement No. 1. The values are located in Table C2.1-3 for 33-mil and 43-mil stud thicknesses and 6-inch and 4-inch screw spacing around the perimeter. It is assumed that in-line framing concept of cold-formed steel light-frame construction provides the continuous load path required to transfer overturning loads to the foundation. Walls from one story to another must be aligned.

Assumptions for building configuration for the tables include:

1. 20 percent of the wall area has door and window openings.
2. Wall veneer seismic weight perpendicular to the direction of analysis contributes to lateral forces. The masonry veneer in-plane, on walls resisting the lateral load, supports its own seismic weight.
3. Maximum story height for each floor is 10 feet.
4. Masonry is 4-inch-thick clay masonry with 40 pounds per square foot (psf) dead load.

TABLE R603.9.5(2)
REQUIRED LENGTH OF FULL-HEIGHT SHEATHING AND ASSOCIATED OVERTURNING ANCHORAGE FOR WALLS SUPPORTING WALLS WITH STONE OR MASONRY VENEER AND USING 43-MIL COLD-FORMED STEEL FRAMING AND 6-INCH SCREW SPACING ON THE PERIMETER OF EACH PANEL OF STRUCTURAL SHEATHING

SEISMIC DESIGN CATEGORY	STORY	BRACED WALL LINE LENGTH (feet)						SINGLE-STORY HOLD-DOWN FORCE (pounds)	CUMULATIVE HOLD-DOWN FORCE (pounds)
		10	20	30	40	50	60		
		Minimum total length of braced wall panels required along each braced wall line (feet)							
D_0		2.8	4.0	5.1	6.3	7.5	8.7	3,960	—
		4.5	7.4	10.2	13.1	16.0	18.8	3,960	7,920
		6.2	10.7	15.3	19.9	24.4	29.0	3,960	11, 880
D_1		3.5	4.9	6.4	7.8	9.3	10.7	3,960	—
		5.6	9.1	12.7	16.2	19.8	23.3	3,960	7,920
		7.7	13.3	19.0	24.6	30.3	35.9	3,960	11, 880
D_2		4.9	6.9	9.0	11.0	13.1	15.1	3,960	—
		7.8	12.9	17.9	22.9	27.9	32.9	3,960	7,920
		10.8	18.8	26.7	34.7	42.7	50.7	3,960	11, 880

INTERNATIONAL CODE COUNCIL®
Copyright © 2015 ICC. ALL RIGHTS RESERVED. Accessed by David Dammon on Jun 21, 2017 12:30:52 PM pursuant to License Agreement with ICC. No further reproduction or distribution authorized. ANY UNAUTHORIZED REPRODUCTION OR DISTRIBUTION IS A VIOLATION OF THE FEDERAL COPYRIGHT ACT AND THE LICENSE AGREEMENT, AND SUBJECT TO CIVIL AND CRIMINAL PENALTIES THEREUNDER.

R603.9.5.1 Seismic Design Category C. In Seismic Design Category C, the length of structural sheathing for walls supporting one *story*, roof and ceiling shall be the greater of the amounts required by Section R603.9.2, except Section R603.9.2.2 shall be permitted.

❖ See the commentary to Section R603.9.5.

R603.9.5.2 Seismic Design Categories D_0, D_1 and D_2. In Seismic Design Categories D_0, D_1 and D_2, the required length of structural sheathing and overturning anchorage shall be determined in accordance with Tables R603.9.5(1), R603.9.5(2), R603.9.5(3), and R603.9.5(4). Overturning anchorage shall be installed on the doubled studs at the end of each full-height wall segment.

❖ See the commentary to Section R603.9.5.

TABLE R603.9.5(3)
REQUIRED LENGTH OF FULL-HEIGHT SHEATHING AND ASSOCIATED OVERTURNING ANCHORAGE FOR WALLS SUPPORTING WALLS WITH STONE OR MASONRY VENEER AND USING 33-MIL COLD-FORMED STEEL FRAMING AND 4-INCH SCREW SPACING ON THE PERIMETER OF EACH PANEL OF STRUCTURAL SHEATHING

SEISMIC DESIGN CATEGORY	STORY	BRACED WALL LINE LENGTH (feet)						SINGLE-STORY HOLD-DOWN FORCE (pounds)	CUMULATIVE HOLD-DOWN FORCE (pounds)
		10	20	30	40	50	60		
		Minimum total length of braced wall panels required along each braced wall line (feet)							
D_0		2.5	3.6	4.6	5.7	6.8	7.8	4,392	—
		4.0	6.6	9.2	11.8	14.4	17.0	4,392	8,784
		5.6	9.7	13.8	17.9	22.0	26.2	4,392	13,176
D_1		3.1	4.4	5.7	7.1	8.4	9.7	4,392	—
		5.0	8.2	11.4	14.6	17.8	21.0	4,392	8,784
	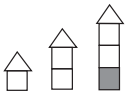	6.9	12.0	17.1	22.2	27.3	32.4	4,392	13,176
D_2		4.4	6.2	8.1	10.0	11.8	13.7	4,392	—
		7.1	11.6	16.1	20.6	25.1	29.7	4,392	8,784
	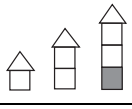	9.7	16.9	24.1	31.3	38.5	45.7	4,392	13,176

INTERNATIONAL CODE COUNCIL®
Copyright © 2015 ICC. ALL RIGHTS RESERVED. Accessed by David Dammon on Jun 21, 2017 12:30:52 PM pursuant to License Agreement with ICC. No further reproduction or distribution authorized. ANY UNAUTHORIZED REPRODUCTION OR DISTRIBUTION IS A VIOLATION OF THE FEDERAL COPYRIGHT ACT AND THE LICENSE AGREEMENT, AND SUBJECT TO CIVIL AND CRIMINAL PENALTIES THEREUNDER.

TABLE R603.9.5(4)
REQUIRED LENGTH OF FULL-HEIGHT SHEATHING AND ASSOCIATED OVERTURNING ANCHORAGE FOR WALLS SUPPORTING WALLS WITH STONE OR MASONRY VENEER AND USING 43-MIL COLD-FORMED STEEL FRAMING AND 4-INCH SCREW SPACING ON THE PERIMETER OF EACH PANEL OF STRUCTURAL SHEATHING

SEISMIC DESIGN CATEGORY	STORY	BRACED WALL LINE LENGTH (feet)						SINGLE-STORY HOLD-DOWN FORCE (pounds)	CUMULATIVE HOLD-DOWN FORCE (pounds)
		10	20	30	40	50	60		
		Minimum total length of braced wall panels required along each braced wall line (feet)							
D_0		1.9	2.7	3.4	4.2	5.0	5.8	5,928	—
		3.0	4.9	6.8	8.8	10.7	12.6	5,928	11,856
D_1		2.3	3.3	4.3	5.2	6.2	7.2	5,928	—
		3.7	6.1	8.5	10.8	13.2	15.6	5,928	11,856
D_2		3.3	4.6	6.0	7.4	8.7	10.1	5,928	—
		5.2	8.6	11.9	15.3	18.6	22.0	5,928	11,856

SECTION R604
WOOD STRUCTURAL PANELS

R604.1 Identification and grade. Wood structural panels shall conform to DOC PS 1, DOC PS 2 or ANSI/APA PRP 210, CSA O437 or CSA O325. Panels shall be identified by a grade mark or certificate of inspection issued by an *approved* agency.

❖ To verify the acceptability of wood structural panel products, this section requires labeling in accordance with the referenced standards. The purpose is the same as the purpose of Section R602.1 for dimension lumber. This label provides the inspector with the necessary information to determine the acceptability of the wood structural panel (see commentary, Sections R503.2 and R503.2.1).

R604.2 Allowable spans. The maximum allowable spans for wood structural panel wall sheathing shall not exceed the values set forth in Table R602.3(3).

❖ The allowable span for wood structural panel sheathing is a function of its thickness and grade. Table R602.3(3) in the code provides allowable spans based on the thickness and the panel index.

R604.3 Installation. Wood structural panel wall sheathing shall be attached to framing in accordance with Table R602.3(1) or R602.3(3).

❖ Table R602.3(1) of the code contains the fastening requirements for proper wood structural panel installation for interior walls. Table R602.3(3) contains the fastening requirements for proper wood structural panel installation for exterior walls.

SECTION R605
PARTICLEBOARD

R605.1 Identification and grade. Particleboard shall conform to ANSI A208.1 and shall be so identified by a grade mark or certificate of inspection issued by an *approved* agency. Particleboard shall comply with the grades specified in Table R602.3(4).

❖ As with wood structural panels, particleboard must be labeled in accordance with the referenced standard. Table R602.3.(4) provides prescriptive requirements relative to allowable spans. As with wood structural panel spans, these spans are a function of the thickness and grade (see commentary, Section R503.3).

SECTION R606
GENERAL MASONRY CONSTRUCTION

R606.1 General. Masonry construction shall be designed and constructed in accordance with the provisions of this section, TMS 403 or in accordance with the provisions of TMS 402/ACI 530/ASCE 5.

❖ Masonry wall construction under the code must comply with Section R606 or TMS 402/ACI 530/ASCE 5, *Building Code Requirements for Masonry Structures*.

INTERNATIONAL CODE COUNCIL®
Copyright © 2015 ICC. ALL RIGHTS RESERVED. Accessed by David Dammon on Jun 21, 2017 12:30:52 PM pursuant to License Agreement with ICC. No further reproduction or distribution authorized. ANY UNAUTHORIZED REPRODUCTION OR DISTRIBUTION IS A VIOLATION OF THE FEDERAL COPYRIGHT ACT AND THE LICENSE AGREEMENT, AND SUBJECT TO CIVIL AND CRIMINAL PENALTIES THEREUNDER.

The 2012 code provided masonry design and construction requirements throughout Section R606, R607, R608 and R609. For the 2015 code, Section R606 has been revised and reorganized to include the provisions of Sections R607, R608 and R609, providing requirements for masonry construction of one- and two-family dwellings and townhouses. Commentary Figure R606.1 summarizes the relocation of sections in the 2015 code and lists new sections.

SECTION TITLE	2015 IRC	2012 IRC
MASONRY CONSTRUCTION MATERIALS	R606.2	NEP
Concrete masonry units	R606.2.1	NEP
Clay or shale masonry units	R606.2.2	NEP
AAC masonry	R606.2.3	NEP
Stone masonry units	R606.2.4	NEP
Architectural cast stone	R606.2.5	NEP
Second-hand units	R606.2.6	NEP
Mortar	R606.2.7	R607.1
Foundation walls	R606.2.7.1	R607.1.1
Masonry in SDC A, B and C	R606.2.7.2	R607.1.2
Masonry in SDC D_0, D_1 and D_2	R606.2.7.3	R607.1.3
Mortar Proportions	Table R606.2.7	Table R607.1
Surface-bonding mortar	R606.2.8	NEP
Mortar for AAC masonry	R606.2.9	NEP
Mortar for adhered masonry veneer	R606.2.10	NEP
Grout	R606.2.11	R609.1.1
Grout Proportions by Volume for Masonry Construction	Table R606.2.11	TABLE R609.1.1
Metal Reinforcement and Accessories	R606.2.12	R606.15
CONSTRUCTION REQUIREMENTS	R606.3	NEP
Bed and head joints	R606.3.1	R607.2.1
Mortar joint thickness tolerance	—	R607.2.1.1
Masonry unit placement	R606.3.2	R607.2.2
Solid masonry	R606.3.2.1	R607.2.2.1
Hollow masonry	R606.3.2.2	R607.2.2.2
Installation of wall ties	R606.3.3	R607.3
Protection for reinforcement	R606.3.4	R606.13
Corrosion protection	R606.3.4.1	R606.15.1
Minimum Corrosion Protection	Table R606.3.4.1	Table R606.15.1
Grouting requirements	R606.3.5	R609.1.2
Grout placement	R606.3.5.1	R609.1.2,R609.1.4, R609.1.4.1
Grout Space Dimensions and Pour Heights	Table R606.3.5.1	Table R609.1.2
Cleanouts	R606.3.5.2	R609.1.3 R609.1.5
Construction	R606.3.5.3	R609.3.1, R609.4.1
Grouted multiple-wythe masonry	R606.3.6	R609.2
Bonding of backup wythe	R606.3.6.1	R609.2.1
Grout barriers	R606.3.6.2	R609.2.3

NEP = No equivalent provision, new to the 2015 IRC.

Figure R606.1
CROSS REFERENCE OF 2015 IRC MASONRY CONSTRUCTION TO 2012 IRC

(continued)

INTERNATIONAL CODE COUNCIL®
Copyright © 2015 ICC. ALL RIGHTS RESERVED. Accessed by David Dammon on Jun 21, 2017 12:30:52 PM pursuant to License Agreement with ICC. No further reproduction or distribution authorized. ANY UNAUTHORIZED REPRODUCTION OR DISTRIBUTION IS A VIOLATION OF THE FEDERAL COPYRIGHT ACT AND THE LICENSE AGREEMENT, AND SUBJECT TO CIVIL AND CRIMINAL PENALTIES THEREUNDER.

SECTION TITLE	2015 IRC	2012 IRC
Masonry bonding pattern	R606.3.7	R608.2
Masonry laid in running bond	R606.3.7.1	R608.2.1
Masonry laid in stack bond	R606.3.7.2	R608.2.2
THICKNESS OF MASONRY	R606.4	R606.2
Minimum thickness	R606.4.1	R606.2.1
Rubble stone masonry wall	R606.4.2	R606.2.2
Change in thickness	R606.4.3	R606.2.3
Parapet walls	R606.4.4	R606.2.4
CORBELED MASONRY	R606.5	R606.3
Units	R606.5.1	R606.3.1
Corbel projection	R606.5.2	R606.3.2
Corbeled masonry supporting floor or roof-framing members	R606.5.3	R606.3.3
SUPPORT CONDITIONS	R606.6	R606.4
Bearing on support	R606.6.1	R606.4.1
Support at foundation	R606.6.2	R606.4.2
Beam supports	R606.6.3	R606.14
Joist bearing	R606.6.3.1	R606.14.1
Lateral support	R606.6.4	R606.9
Spacing of Lateral Support for Masonry Walls	Table R606.6.4	Table R606.9
Horizontal lateral support	R606.6.4.1	R606.9.1
Bonding pattern	R606.6.4.1.1	R606.9.1.1
Metal reinforcement	R606.6.4.1.2	R606.9.1.2
Vertical lateral support	R606.6.4.2	R606.9.2
Roof structures	R606.6.4.2.1	R606.9.2.1
Floor diaphragms	R606.6.4.2.2	R606.9.2.2
PIERS	R606.7	R606.6
Pier cap	R606.7.1	R606.6.1
CHASES	R606.8	R606.7
ALLOWABLE STRESSES	R606.9	R606.5
Combined units	R606.9.1	R606.5.1
Allowable Compressive Stresses for Empirical Design of Masonry	Table R606.9	Table R606.5
LINTELS	R606.10	R606.10
ANCHORAGE	R606.11	R606.11
Anchorage requirements for masonry walls located in Seismic Design Category A, B or C and where wind loads are less than 30 psf	Figure R606.11(1)	Figure R606.11(1)
Requirements for reinforced grouted masonry construction in Seismic Design Category C	Figure R606.11(2)	Figure R606.11(2)
Requirements for reinforced masonry construction in Seismic Design Category D_0, D_1 or D_2	Figure R606.11(3)	Figure R606.11(3)
SEISMIC REQUIREMENTS	R606.12	R606.12
General	R606.12.1	R606.12.1

NEP = No equivalent provision, new to the 2015 IRC.

Figure R606.1—continued
CROSS REFERENCE OF 2015 IRC MASONRY CONSTRUCTION TO 2012 IRC

(continued)

INTERNATIONAL CODE COUNCIL®
Copyright © 2015 ICC. ALL RIGHTS RESERVED. Accessed by David Dammon on Jun 21, 2017 12:30:52 PM pursuant to License Agreement with ICC. No further reproduction or distribution authorized. ANY UNAUTHORIZED REPRODUCTION OR DISTRIBUTION IS A VIOLATION OF THE FEDERAL COPYRIGHT ACT AND THE LICENSE AGREEMENT, AND SUBJECT TO CIVIL AND CRIMINAL PENALTIES THEREUNDER.

SECTION TITLE	2015 IRC	2012 IRC
Floor and roof diaphragm construction	R606.12.1.1	R606.12.1.1
Seismic design category C	R606.12.2	R606.12.2
Minimum length of wall without openings	R606.12.2.1	R606.12.2.1
Minimum solid wall length along exterior wall lines	Table R606.12.2.1	Table R606.12.2.1
Design of elements not part of the lateral force resisting system	R606.12.2.2	R606.12.2.2
Load-bearing frames or columns	R606.12.2.2.1	R606.12.2.2.1
Masonry partition walls	R606.12.2.2.2	R606.12.2.2.2
Reinforcement requirements for masonry elements	R606.12.2.2.3	R606.12.2.2.3
Design of elements part of the lateral force-resisting system	R606.12.2.3	R606.12.2.3
Connections to masonry shear walls	R606.12.2.3.1	R606.12.2.3.1
Connections to masonry columns	R606.12.2.3.2	R606.12.2.3.2
Minimum reinforcement requirements for masonry shear walls	R606.12.2.3.3	R606.12.2.3.3
Seismic Design Category D_0 or D_1	R606.12.3	R606.12.3
Design requirements	606.12.3.1	606.12.3.1
Minimum reinforcement requirements for masonry walls	R606.12.3.2	R606.12.3.2
Minimum Distributed Wall Reinforcement For Building Assigned to Seismic Design Category D_0 or D_1	Table R606.12.3.2	Table R606.12.3.2
Shear wall reinforcement requirements	R606.12.3.2.1	R606.12.3.2.1
Minimum reinforcement for masonry columns	R606.12.3.3	R606.12.3.3
Material restrictions	R606.12.3.4	R606.12.3.4
Lateral tie anchorage	R606.12.3.5	R606.12.3.5
Seismic Design Category D_2	R606.12.4	R606.12.4
Design of elements not part of the lateral force-resisting system	R606.12.4.1	R606.12.4.1
Minimum Reinforcing For Stacked Bonded Masonry Walls In Seismic Design Category D_2	Table R606.12.4.1	Table R606.12.4.1
Design of elements part of the lateral force-resisting system	R606.12.4.2	R606.12.4.2
Minimum Reinforcing for Stacked Bonded Masonry Walls in Seismic Design Category D_2	Table R606.12.4.2	Table R606.12.4.2
MULTIPLE-WYTHE MASONRY	R606.13	R608.1
Bonding with masonry headers	R606.13.1	R608.1.1
Solid units	R606.13.1.1	R608.1.1.1
Hollow units	R606.13.1.2	R608.1.1.2
Bonding with wall ties or joint reinforcement	R606.13.2	R608.1.2
Bonding with wall ties	R606.13.2.1	R608.1.2.1
Bonding with adjustable wall ties	R606.13.2.2	R608.1.2.2
Bonding with prefabricated joint reinforcement	R606.13.2.3	R608.1.2.3
Bonding with natural or cast stone	R606.13.3	R608.1.3
Ashlar masonry	R606.13.3.1	R608.1.3.1
Rubble stone masonry	R606.13.3.2	R608.1.3.2
ANCHORED AND ADHERED MASONRY VENEER	R606.14	NEP
Anchored veneer	R606.14.1	NEP
Adhered veneer	R606.14.2	NEP

NEP = No equivalent provision, new to the 2015 IRC.

Figure R606.1—continued
CROSS REFERENCE OF 2015 IRC MASONRY CONSTRUCTION TO 2012 IRC

INTERNATIONAL CODE COUNCIL®
Copyright © 2015 ICC. ALL RIGHTS RESERVED. Accessed by David Dammon on Jun 21, 2017 12:30:52 PM pursuant to License Agreement with ICC. No further reproduction or distribution authorized. ANY UNAUTHORIZED REPRODUCTION OR DISTRIBUTION IS A VIOLATION OF THE FEDERAL COPYRIGHT ACT AND THE LICENSE AGREEMENT, AND SUBJECT TO CIVIL AND CRIMINAL PENALTIES THEREUNDER.

R606.1.1 Professional registration not required. When the empirical design provisions of Appendix A of TMS 402/ACI 530/ASCE 5, the provisions of TMS 403, or the provisions of this section are used to design masonry, project drawings, typical details and specifications are not required to bear the seal of the architect or engineer responsible for design, unless otherwise required by the state law of the *jurisdiction* having authority.

❖ These empirical provisions are meant for use without the services of a professional engineer or architect. State law, however, may dictate otherwise and would take precedence.

R606.2 Masonry construction materials.

❖ Section R606.2 has been added to the 2015 code to specify the minimum requirements for masonry materials. While the 2012 code addressed some materials, such as masonry and grout, others were not, such as masonry units. Sections R606.2.1 through R606.2.12 define the materials to be used for masonry wall construction. The provisions are consistent with the IBC requirements for masonry materials. Provisions for autoclaved areated concrete (AAC) masonry units have been added to Section R606.2.3. Requirements for re-use of masonry units have been added to Section R606.2.6.

R606.2.1 Concrete masonry units. Concrete masonry units shall conform to the following standards: ASTM C55 for concrete brick; ASTM C73 for calcium silicate face brick; ASTM C90 for load-bearing concrete masonry units; ASTM C744 for prefaced concrete and calcium silicate masonry units; or ASTM C1634 for concrete facing brick.

❖ Concrete masonry refers to solid and hollow concrete units, including concrete brick, concrete block, split-face block, slump block and other special units. This section requires conformance to ASTM International (ASTM) standards for each specific type of concrete masonry unit. The standards include requirements for materials; manufacture; physical properties; strength; absorption; minimum dimensions and permissible variations; inspection; testing and rejection.

Concrete masonry units are selected based on the desired use and appearance. Units are typically specified by density class and compressive strength.

Hollow load-bearing concrete masonry units are manufactured in accordance with the requirements of ASTM C90 using Portland cement, water and mineral aggregates. Other suitable materials, such as approved admixtures, are permitted in accordance with ASTM C90.

Hollow load-bearing concrete masonry units have three weight classifications: normal-weight units of 125 pounds per cubic foot (pcf) (2000 kg/m^3) or more; medium-weight units of between 105 pcf and 125 pcf (1680 and 2000 kg/m^3) and lightweight units of less than 105 pcf (1680 kg/m^3). Lightweight aggregates generally are expanded blast-furnace slag or similar suitable materials. Normal-weight units are made from sand, gravel, crushed stone or air-cooled, blast-furnace-slag aggregates.

Concrete brick is required to comply with ASTM C55. Concrete building brick and other solid concrete veneer and facing units are typically smaller than concrete masonry units conforming to ASTM C90. They are made from Portland cement, water and mineral aggregates, with or without inclusion of other approved materials.

Concrete brick is manufactured as lightweight, medium-weight and normal-weight units as described above for hollow concrete masonry units. Concrete brick is manufactured in two grades: Grade N and Grade S. Grade N units are used as architectural veneer and facing units in exterior walls, where high strength and resistance to moisture penetration and freeze-thaw cycling are required. Grade S units are used when moderate strength and resistance to freeze-thaw action and moisture penetration are required.

Calcium silicate face brick is a solid masonry unit complying with ASTM C73. These units are manufactured principally from silica sand, hydrated lime and water.

Calcium silicate face brick is manufactured in two grades: Grade SW and Grade MW. Grade SW is required where exposure to moisture in the presence of freezing temperatures is anticipated. Grade MW is permitted where the anticipated exposure has freezing temperatures, but without water saturation.

Grade SW units have a minimum permitted compressive strength on the gross area of 4,500 psi (31.0 MPa) (average of three units), but not less than 3,500 psi (24.1 MPa) for any individual unit. Grade MW units have a minimum permitted compressive strength on the gross area of 2,500 psi (17.2 MPa) (average of three units), but not less than 2,000 psi (13.8 MPa) for any individual unit.

ASTM C744 is referenced for the manufacture of prefaced concrete and calcium silicate masonry units, commonly referred to as “glazed” concrete masonry units. The specified exposed surfaces of these units are covered during their manufacture with resin, resin and inert filler, or cement and inert filler to produce a smooth, resinous, tile-like facing.

Facing requirements of that standard address resistance to chemicals; failure of adhesion of the facing material; abrasion surface-burning characteristics, color and color change; soiling and cleansability. The standard also covers dimensional tolerances, including face dimensions and distortions.

R606.2.2 Clay or shale masonry units. Clay or shale masonry units shall conform to the following standards: ASTM C34 for structural clay *load-bearing wall* tile; ASTM C56 for structural clay nonload-bearing wall tile; ASTM C62 for building brick (solid masonry units made from clay or shale); ASTM C1088 for solid units of thin veneer brick; ASTM C126 for ceramic-glazed structural clay facing tile, facing brick and solid masonry units; ASTM C212 for structural clay facing tile; ASTM C216 for facing brick (solid masonry units made from clay or shale); ASTM C652 for hol-

INTERNATIONAL CODE COUNCIL®
Copyright © 2015 ICC. ALL RIGHTS RESERVED. Accessed by David Dammon on Jun 21, 2017 12:30:52 PM pursuant to License Agreement with ICC. No further reproduction or distribution authorized. ANY UNAUTHORIZED REPRODUCTION OR DISTRIBUTION IS A VIOLATION OF THE FEDERAL COPYRIGHT ACT AND THE LICENSE AGREEMENT, AND SUBJECT TO CIVIL AND CRIMINAL PENALTIES THEREUNDER.

low brick (hollow masonry units made from clay or shale); or ASTM C1405 for glazed brick (single-fired solid brick units).

Exception: Structural clay tile for nonstructural use in fireproofing of structural members and in wall furring shall not be required to meet the compressive strength specifications. The fire-resistance rating shall be determined in accordance with ASTM E119 or UL 263 and shall comply with the requirements of Section R302.

❖ Section R606.2.2 requires conformance to ASTM standards for masonry units manufactured from clay or shale. The various standards also include requirements for materials; manufacture; physical properties; minimum dimensions and permissible variations; inspections and testing.

Clay or shale masonry units are manufactured from clay and shale, which are compounds of silica or alumina. Shale is simply a hardened clay. The raw materials are formed into the desired shape by extrusion and cutting, molding or pressing while in the plastic state. The units are then fired in a kiln. The raw materials and the manufacturing process influence the physical properties of the manufactured unit.

Clay or shale masonry units are selected for their intended use from a variety of shapes, sizes and strengths. Units are specified based on grades and type.

Solid face brick units are required to conform to ASTM C216. This standard covers clay brick intended to be used in masonry and supplying structural or facing components, or both, to the structure. These units are available in a variety of sizes, textures, colors and shapes.

ASTM C216 contains requirements for two grades of durability: Grade SW and Grade MW. Grade SW brick is intended for use where high and uniform resistance to damage caused by freeze-thaw cycling is desired and where the brick may be subjected to such cycling while saturated with water. Grade MW brick is intended for use where moderate resistance to cyclic freeze-thaw damage is permissible or where the brick may be damp, but not saturated with water, when such cycling occurs. ASTM C216 further classifies face brick into three types of appearance: Types FBS, FBX and FBA. Type FBS (face brick standard) units are permitted for general use in masonry. Type FBX (face brick select) units are also for general use, but have a higher degree of precision and lower permissible variation in size than Type FBS units. Type FBA (face brick architectural) units are also for general use, but are intentionally manufactured to produce characteristic architectural effects resulting from nonuniformity in size and texture of the units.

Solid units of building brick are required to conform to ASTM C62. This specification covers brick intended for use in both structural and nonstructural masonry where external appearance is not critical. This brick was formerly called "common brick," and the standard does not contain appearance requirements.

ASTM C62 contains requirements for three grades of durability: Grade SW, Grade MW and Grade NW. Grade SW brick is intended for use where high and uniform resistance to freeze-thaw damage is desired and where the brick may be subjected to such cycling while saturated with water. Grade MW brick is intended for use where moderate resistance to cyclic freeze-thaw damage is permissible or where the brick may be damp but not saturated with water when such cycling occurs. Grade NW is used where little resistance to cyclic freeze-thaw damage is required and is acceptable for applications protected from water absorption and freezing.

Hollow brick is required to conform to ASTM C652, which regulates hollow building and hollow facing brick. Hollow brick differs from structural clay tile in that it has more stringent physical property requirements, such as thicker shell and web dimensions, and higher minimum compressive strengths.

Hollow brick has two grades of durability: Grade SW and Grade MW. Grade SW is used where a high and uniform degree of resistance to freeze-thaw degradation and disintegration by weathering is desired and when the brick may be saturated while frozen. Grade MW is intended for use where a moderate and somewhat nonuniform degree of resistance to freeze-thaw degradation is permissible.

ASTM C652 also classifies hollow brick into four types of appearance: Types HBS, HBX, HBA and HBB. Type HBS (hollow brick standard) units are permitted for general use. Type HBX (hollow brick select) units are also for general use, but have a higher degree of dimensional precision than Type HBS units. Type HBA (hollow brick architectural) units are also for general use, but are intentionally manufactured to produce characteristic architectural effects resulting from nonuniformity in size and texture of the units. Type HBB (hollow building brick) units are for general use in masonry where a particular color, texture, finish, uniformity or limits on cracks, warpage or other imperfections detracting from their appearance are not a consideration.

ASTM C1088 regulates thin brick used in adhered veneer having a maximum actual thickness of $1^3/_4$ inches (44 mm). Thin veneer brick units are specified in three types of appearance and two grades of durability.

Exterior-grade units are for exposure to weather; interior-grade units are not. Type TBS (standard) units are permitted for general use. Type TBX (select) units are also for general use, but have a higher degree of precision and lower permissible variation in size than Type TBS units. Type TBA (architectural) units are also for general use, but are intentionally manufactured to produce characteristic effects in variations of size, color and texture.

ASTM C34 is referenced for the manufacture of structural clay load-bearing wall tile. This type of tile has two grades: Grade LBX and LB. Grade LBX is suitable for general use in masonry construction and can be used in masonry exposed to weathering, provided that the units meet durability requirements for Grade SW of ASTM C216 for solid units of face brick. This tile grade is also suitable for the direct application of stucco.

INTERNATIONAL CODE COUNCIL®
Copyright © 2015 ICC. ALL RIGHTS RESERVED. Accessed by David Dammon on Jun 21, 2017 12:30:52 PM pursuant to License Agreement with ICC. No further reproduction or distribution authorized. ANY UNAUTHORIZED REPRODUCTION OR DISTRIBUTION IS A VIOLATION OF THE FEDERAL COPYRIGHT ACT AND THE LICENSE AGREEMENT, AND SUBJECT TO CIVIL AND CRIMINAL PENALTIES THEREUNDER.

Grade LB is suitable for general use in masonry not exposed to freeze-thaw action, or for exposed masonry where protected with a minimum 3-inch (76 mm) facing of stone, brick or other masonry materials.

Fire-resistant tile intended for use in load-bearing masonry is required to conform to ASTM C34. Tile intended for use in fireproofing structural members is required to be of such sizes and shapes as to cover completely the exposed surfaces of the members.

ASTM C212, the referenced standard regulating structural clay facing tile, covers two types of structural clay load-bearing facing tile: Types FTX and FTS.

Type FTX clay facing tile is a smooth-face tile suitable for use in exposed exterior and interior masonry walls, and partitions where low absorption, easy cleaning and resistance to staining are required. The physical characteristics of this tile require a high degree of mechanical perfection, narrow color range and minimum variation in face dimensions.

Type FTS clay facing tile is a smooth- or rough-textured face tile suitable for general use in exposed exterior and interior masonry walls and partitions where moderate absorption, variation in face dimensions, minor defects in surface finish and moderate color variations are permissible.

There are two classes of tile for the types stated above: standard (for general use) and special duty (having superior resistance to impact and moisture transmission and supporting greater lateral and vertical loads).

ASTM C56 is the standard regulating the manufacture of nonload-bearing tile, which is made from the same materials as other types of tile previously mentioned and is used for partitions, fireproofing and furring.

ASTM C126 prescribes requirements for ceramic-glazed structural clay load-bearing facing tile and brick and other solid masonry units made from clay, shale, fire clay or combinations thereof. The standard specifies two grades and two types of ceramic-glazed masonry: Grade S is used with comparatively narrow mortar joints, while Grade SS is used where variations in face dimensions are very small; Type I units are used where only one finished face is to be exposed, while Type II units are used where both finished faces are to be exposed.

The finish of glazed units is important. Requirements and test methods are prescribed for imperviousness, opacity, resistance to fading and crazing, hardness, abrasion resistance and flame spread smoke density. Compressive strength requirements, dimensional tolerances and permissible distortions are also prescribed by the standard.

The exception to this section allows structural clay tile that does not meet the compressive strength specifications to be used as nonstructural fireproofing for structural members. The fire-resistance rating must be determined in accordance with ASTM E119.

R606.2.3 AAC masonry. AAC masonry units shall conform to ASTM C1386 for the strength class specified.

❖ AAC masonry units are a low-density cementitious product first introduced into the 2005 edition of the MSJC Code and MSJC Specification, although its use has been prevalent in other countries for several decades. AAC masonry units must comply with ASTM C1386 for the strength class specified.

R606.2.4 Stone masonry units. Stone masonry units shall conform to the following standards: ASTM C503 for marble building stone (exterior); ASTM C568 for limestone building stone; ASTM C615 for granite building stone; ASTM C 616 for sandstone building stone; or ASTM C629 for slate building stone.

❖ Many types of natural stone, including marble, granite, slate, limestone and sandstone, are used in building construction. This section covers natural stones that are sawed, cut, split or otherwise shaped for masonry purposes. Natural stones for building purposes are specified in various grades, textures and finishes, and are required to have physical properties appropriate to their intended use.

Where applicable to specific kinds of natural stone, the finished units are required to be sound and free from spalls, cracks, open seams, pits and other defects that would impair structural strength and durability and, when applicable, fire resistance.

This section requires conformance to the following ASTM standards for natural stone masonry: ASTM C503 for marble building stone (exterior); ASTM C568 for limestone building stone; ASTM C615 for granite building stone; ASTM C616 for sandstone building stone or ASTM C629 for slate building stone. The standards contain requirements for absorption, density (except for slate), compressive strength (except for slate), modulus of rupture, abrasion resistance (except for granite) and acid resistance (slate only).

R606.2.5 Architectural cast stone. Architectural cast stone shall conform to ASTM C1364.

❖ Architectural cast stone is a masonry product that provides ornamental or functional features to buildings and other structures. Cast stone is made from fine and coarse aggregates, Portland cement, mineral oxide color pigments, chemical admixtures and water. The products are available in virtually any color and can give the appearance of a variety of natural building stones, such as limestone, granite, slate, travertine or marble. Applications range from simple window sills to the most complicated architectural elements and features. When properly manufactured and installed, cast stone has similar strength and physical properties as most dimensional building stone. ASTM C1364 establishes the physical requirements, sampling, testing and visual inspection of architectural cast stone that may be made from facing and backup mixtures or from a homogeneous mixture, produced either by wet or dry casting. The standard requires the raw materials, such as Portland cement, aggregates, coloring pigment, reinforcement, chemical admixtures, air-entraining

INTERNATIONAL CODE COUNCIL®
Copyright © 2015 ICC. ALL RIGHTS RESERVED. Accessed by David Dammon on Jun 21, 2017 12:30:52 PM pursuant to License Agreement with ICC. No further reproduction or distribution authorized. ANY UNAUTHORIZED REPRODUCTION OR DISTRIBUTION IS A VIOLATION OF THE FEDERAL COPYRIGHT ACT AND THE LICENSE AGREEMENT, AND SUBJECT TO CIVIL AND CRIMINAL PENALTIES THEREUNDER.

admixtures, water-reducing and accelerating admixtures, ground slag, fly ash or natural pozzolan, and other constituents to be precisely observed. The product must also conform to specified physical and performance requirements such as compressive strength, cold water absorption, boiling water absorption, air content, field testing, resistance to freezing and thawing and linear drying shrinkage.

R606.2.6 Second hand units. Second hand masonry units shall not be reused unless they conform to the requirements of new units. The units shall be of whole, sound materials and free from cracks and other defects that will interfere with proper laying or use. Old mortar shall be cleaned from the unit before reuse.

❖ This section allows for the use of salvaged brick and other second-hand masonry units, provided that their quality and condition meet the requirements for new masonry units. Second-hand units must be whole, of sound material, clean and free from defects that would interfere with proper laying or use.

Most second-hand masonry units are salvaged from the demolition of old buildings. Masonry units manufactured in the past do not generally compare with the quality of masonry made by modern manufacturing methods under controlled conditions. Therefore, designers should expect salvaged masonry units to have lower strength and durability than new units.

Generally, the difference between walls laid up with new masonry units and second-hand units of the same type is the adhesion of the mortar to the masonry surfaces. When new masonry units are laid in fresh mortar, water and fine cementitious particles are absorbed into the masonry, thereby improving bond strength. In contrast, pores in the bed faces of second-hand masonry units, regardless of cleaning, are filled with particles of cement, lime and deleterious substances that impede adequate absorption, thereby adversely affecting bond between the mortar and the masonry.

R606.2.7 Mortar. Except for mortars listed in Sections R606.2.8, R606.2.9 and R606.2.10, mortar for use in masonry construction shall meet the proportion specifications of Table R606.2.7 or the property specifications of ASTM C270. The type of mortar shall be in accordance with Sections R606.2.7.1, R606.2.7.2 and R606.2.7.3.

❖ This section specifies the requirements for mortar used in masonry construction. Mortar is the bonding agent that separates masonry units while bonding them together. It is an integral part of any masonry wall and must be strong, durable and capable of keeping the wall intact. In addition, it should help to create a moisture-resistant barrier.

TABLE R606.2.7
MORTAR PROPORTIONS[a, b]

MORTAR	TYPE	PROPORTIONS BY VOLUME (cementitious materials)								Aggregate ratio (measured in damp, loose conditions)
		Portland cement or blended cement	Mortar cement			Masonry cement			Hydrated lime[c] or lime putty	
			M	S	N	M	S	N		
Cement-lime	M	1	—	—	—	—	—	—	1/4	Not less than 2 1/4 and not more than 3 times the sum of separate volumes of lime, if used, and cement
	S	1	—	—	—	—	—	—	over 1/4 to 1/2	
	N	1	—	—	—	—	—	—	over 1/2 to 1 1/4	
	O	1	—	—	—	—	—	—	over 1 1/4 to 2 1/2	
Mortar cement	M	1	—	—	1	—	—	—	—	
	M	—	1	—	—	—	—	—		
	S	1/2	—	—	1	—	—	—		
	S	—	—	1	—	—	—	—		
	N	—	—	—	1	—	—	—		
	O	—	—	—	1	—	—	—		
Masonry cement	M	1				—	—	1	—	
	M	—				1	—	—		
	S	1/2				—	—	1		
	S	—				—	1	—		
	N	—				—	—	1		
	O	—				—	—	1		

For SI: 1 cubic foot = 0.0283 m^3, 1 pound = 0.454 kg.

a. For the purpose of these specifications, the weight of 1 cubic foot of the respective materials shall be considered to be as follows:

Portland Cement	94 pounds	Masonry Cement	Weight printed on bag
Mortar Cement	Weight printed on bag	Hydrated Lime	40 pounds
Lime Putty (Quicklime)	80 pounds	Sand, damp and loose	80 pounds of dry sand

b. Two air-entraining materials shall not be combined in mortar.

c. Hydrated lime conforming to the requirements of ASTM C207.

❖ The mortar required by Sections R606.2.7.1 through R606.2.7.3 must be proportioned as shown in this table or ASTM C270. Type M mortar is suited for structures below or against grade such as retaining walls. It is also suited for masonry construction subject to high compressive loads, severe frost action or high lateral loads from earth pressures, hurricane winds or earthquakes. Type S mortar is appropriate for use in structures requiring high flexural bond strength that are subject to compressive and lateral loads. Type N mortar is meant for general use in above-grade masonry, residential basement construction, interior walls and partitions, masonry veneer and nonstructural masonry partitions.

INTERNATIONAL CODE COUNCIL®
Copyright © 2015 ICC. ALL RIGHTS RESERVED. Accessed by David Dammon on Jun 21, 2017 12:30:52 PM pursuant to License Agreement with ICC. No further reproduction or distribution authorized. ANY UNAUTHORIZED REPRODUCTION OR DISTRIBUTION IS A VIOLATION OF THE FEDERAL COPYRIGHT ACT AND THE LICENSE AGREEMENT, AND SUBJECT TO CIVIL AND CRIMINAL PENALTIES THEREUNDER.

Mortar makes up approximately 25 percent of a standard modular brick wall and about 10 percent of a block wall. It is therefore a significant part of the structure. ASTM C270 discusses the materials and methods for mixing mortar. For purposes of economy, a good rule of thumb is to specify the lowest strength mortar that will satisfy the structural requirements of the project. Mortar consists of cementitious materials and well-graded sand with sufficient fines. Mortar is used for the following purposes:

- It is a bedding or seating material for the masonry unit. It allows the unit to be leveled and properly placed.
- It bonds the units together.
- It provides compressive strength.
- It provides shear strength, particularly parallel to the wall.
- It allows some movement and elasticity between units.
- It seals irregularities of the masonry unit and provides a weather-tight wall, preventing penetration of wind and water into and through the wall. It can provide color to the wall when a mineral color additive is used.
- It can provide an architectural appearance by using various types of joints.

R606.2.7.1 Foundation walls. Mortar for masonry foundation walls constructed as set forth in Tables R404.1.1(1) through R404.1.1(4) shall be Type M or S mortar.

❖ This section specifies the applicable tables in Chapter 4 that apply to masonry foundation walls.

R606.2.7.2 Masonry in Seismic Design Categories A, B and C. Mortar for masonry serving as the lateral-force-resisting system in Seismic Design Categories A, B and C shall be Type M, S or N mortar.

❖ Masonry construction in buildings classified as SDC A, B or C must use Type M, S or N mortar.

R606.2.7.3 Masonry in Seismic Design Categories D_0, D_1 and D_2. Mortar for masonry serving as the lateral-force-resisting system in Seismic Design Categories D_0, D_1 and D_2 shall be Type M or S Portland cement-lime or mortar cement mortar.

❖ In buildings classified as Seismic Design Category D_0, D_1 or D_2, in walls which are intended to resist lateral forces, and in foundation walls in any building, only Type M or S mortar is acceptable.

R606.2.8 Surface-bonding mortar. Surface-bonding mortar shall comply with ASTM C887. Surface bonding of concrete masonry units shall comply with ASTM C946.

❖ Specifications for materials to be used in premixed surface-bonding mortar and for the properties of the mortar are contained in ASTM C887. Requirements for masonry units and other materials used in constructing dry-stacked, surface-bonded masonry for walls and for the construction itself are contained in ASTM C946.

In addition to its primary function of bonding masonry units, surface-bonding mortar can provide resistance to penetration by wind-driven rain.

R606.2.9 Mortar for AAC masonry. Thin-bed mortar for AAC masonry shall comply with Article 2.1 C.1 of TMS 602/ACI 530.1/ASCE 6. Mortar used for the leveling courses of AAC masonry shall comply with Article 2.1 C.2 of TMS 602/ACI 530.1/ASCE 6.

❖ Except for the initial leveling courses of AAC masonry, which uses Type M or S masonry mortar, a special thin-bed mortar is used to bind AAC masonry units.

R606.2.10 Mortar for adhered masonry veneer. Mortar for use with adhered masonry veneer shall conform to ASTM C270 Type S or Type N or shall comply with ANSI A118.4 for latex-modified portland cement mortar.

❖ This section lists the types of mortars that can be used for adhered masonry veneer. The general requirements for adhered masonry veneer can be found in Chapter 7.

R606.2.11 Grout. Grout shall consist of cementitious material and aggregate in accordance with ASTM C476 or the proportion specifications of Table R606.2.11. Type M or Type S mortar to which sufficient water has been added to produce pouring consistency shall be permitted to be used as grout.

❖ ASTM C476 contains the requirements for grout. The code identifies two types of grout for masonry construction: fine grout and coarse grout. They differ primarily in the maximum allowable size of aggregates. The proportions in Table R606.2.11 provide a minimum compressive strength of 2,000 psi (13 789 kPa). Type M or Type S mortar (see Section R607.1) may also be used as grout if sufficient water is added to produce a pouring consistency.

TABLE R606.2.11
GROUT PROPORTIONS BY VOLUME FOR MASONRY CONSTRUCTION

TYPE	PORTLAND CEMENT OR BLENDED CEMENT SLAG CEMENT	HYDRATED LIME OR LIME PUTTY	AGGREGATE MEASURED IN A DAMP, LOOSE CONDITION	
			Fine	Coarse
Fine	1	0 to 1/10	$2^1/_4$ to 3 times the sum of the volume of the cementitious materials	—
Coarse	1	0 to 1/10	$2^1/_4$ to 3 times the sum of the volume of the cementitious materials	1 to 2 times the sum of the volumes of the cementitious materials

INTERNATIONAL CODE COUNCIL®
Copyright © 2015 ICC. ALL RIGHTS RESERVED. Accessed by David Dammon on Jun 21, 2017 12:30:52 PM pursuant to License Agreement with ICC. No further reproduction or distribution authorized. ANY UNAUTHORIZED REPRODUCTION OR DISTRIBUTION IS A VIOLATION OF THE FEDERAL COPYRIGHT ACT AND THE LICENSE AGREEMENT, AND SUBJECT TO CIVIL AND CRIMINAL PENALTIES THEREUNDER.

R606.2.12 Metal reinforcement and accessories. Metal reinforcement and accessories shall conform to Article 2.4 of TMS 602/ACI 530.1/ASCE 6.

❖ The material requirements for metal reinforcement and accessories, such as joint reinforcement, anchor ties and wire fabric, must comply with Article 2.4 of the *Specification for Masonry Structures*.

R606.3 Construction requirements.

❖ Sections R606.3.1 through R606.3.7 provide the detail requirements of construction for masonry such as placement and joints of masonry units, wall tie installation, protection of metal reinforcement grouting and bonding patterns.

R606.3.1 Bed and head joints. Unless otherwise required or indicated on the project drawings, head and bed joints shall be $^3/_8$ inch (9.5 mm) thick, except that the thickness of the bed joint of the starting course placed over foundations shall be not less than $^1/_4$ inch (6.4 mm) and not more than $^3/_4$ inch (19.1 mm). Mortar joint thickness for load-bearing masonry shall be within the following tolerances from the specified dimensions:

1. Bed joint: + $^1/_8$ inch (3.2 mm).
2. Head joint: - $^1/_4$ inch (6.4 mm), + $^3/_8$ inch (9.5 mm).
3. Collar joints: - $^1/_4$ inch (6.4 mm), + $^3/_8$ inch (9.5 mm).

❖ The provisions of this section set forth specific requirements that are unique to construction using masonry units. Masonry units are to be laid and set in mortar.The properties of masonry walls, including strength and appearance, vary significantly depending on the thickness of the mortar joints. The initial bed joint, which is the bed joint between the first course of masonry and the foundation wall, is limited to a thickness of not less than $^1/_4$ inch (6.4 mm) and not greater than $^3/_4$ inch (19 mm). This larger variation is to allow for the inherent unevenness of concrete or concrete masonry foundation walls. The remainders of bed joints, which can be controlled by the mason, are limited to $^3/_8$ inch (9.5 mm), unless specified otherwise on the project drawings. Joint-thickness tolerances limit the eccentricity of applied loads and reflect typical industry practice. They also provide a more uniform appearance for exposed masonry. The bed joint is a horizontal joint; the head joint is a vertical joint.

R606.3.2 Masonry unit placement. The mortar shall be sufficiently plastic and units shall be placed with sufficient pressure to extrude mortar from the joint and produce a tight joint. Deep furrowing of bed joints that produces voids shall not be permitted. Any units disturbed to the extent that initial bond is broken after initial placement shall be removed and relaid in fresh mortar. Surfaces to be in contact with mortar shall be clean and free of deleterious materials.

❖ This section gives placement requirements meant to provide adequate bonding between mortar and masonry units. Mortar is the bonding agent that integrates masonry units into a wall; it is used to bind masonry units into a single element by developing a complete, strong, and durable bond. Mortar is usually placed between absorbent masonry units and loses water upon contact with the units. Mortars have a high water-cement ratio when mixed, but the ratio decreases when the mortar comes into contact with the absorbent unit.

Once the mortar has begun to set or harden, tapping or attempting to otherwise move masonry units can be detrimental to the bond. Movement at this time will break the bond between the masonry unit and mortar. The partially dried mortar will not have sufficient plasticity to re-adhere sufficiently to the masonry units. After the initial bond has been broken, the masonry units should be removed and replaced in fresh mortar.

R606.3.2.1 Solid masonry. *Solid masonry* units shall be laid with full head and bed joints and all interior vertical joints that are designed to receive mortar shall be filled.

❖ This section applies to solid masonry construction (see the definition in Section 202).

R606.3.2.2 Hollow masonry. For hollow masonry units, head and bed joints shall be filled solidly with mortar for a distance in from the face of the unit not less than the thickness of the face shell.

❖ See the definition for "Masonry unit, hollow" in Section R202. Normally, cross webs are not mortared. When individual cells are to be grouted, mortar should be placed on the webs on both sides of the cell to be grouted to prevent leakage of the grout.

R606.3.3 Installation of wall ties. The installation of wall ties shall be as follows:

1. The ends of wall ties shall be embedded in mortar joints. Wall ties shall have not less than $^5/_8$-inch (15.9 mm) mortar coverage from the exposed face.
2. Wall ties shall not be bent after being embedded in grout or mortar.
3. For solid masonry units, solid grouted hollow units, or hollow units in anchored masonry veneer, wall ties shall be embedded in mortar bed not less than $1^1/_2$ inches (38 mm).
4. For hollow masonry units in other than anchored masonry veneer, wall ties shall engage outer face shells by not less than $^1/_2$ inch (13 mm).

❖ Proper installation of masonry wall ties is necessary to achieve bonding of multiple wythes (also see Section R608.1.2.1). In addition, wall ties should not be bent after placement in the mortar joints. This can break the initial bond between the masonry unit and mortar and possibly lead to an increased amount of moisture infiltration into the wall assembly. Bending the wall ties after initial placement can also be detrimental to the strength of the wall system because the ties lose their ability to transfer lateral loads to the backing wall assembly.

Wall ties used with solid masonry units, solid grouted units and hollow units in anchored masonry veneer are embedded in the mortar bed at least $1^1/_2$ inches (38 mm) to ensure that there is adequate bond of the mortar to the veneer ties. Hollow units in anchored

INTERNATIONAL CODE COUNCIL®
Copyright © 2015 ICC. ALL RIGHTS RESERVED. Accessed by David Dammon on Jun 21, 2017 12:30:52 PM pursuant to License Agreement with ICC. No further reproduction or distribution authorized. ANY UNAUTHORIZED REPRODUCTION OR DISTRIBUTION IS A VIOLATION OF THE FEDERAL COPYRIGHT ACT AND THE LICENSE AGREEMENT, AND SUBJECT TO CIVIL AND CRIMINAL PENALTIES THEREUNDER.

masonry veneer have been added to this provision. In the 2009 edition, hollow units in anchored masonry veneer were not separated from other hollow unit applications.

Wall ties for hollow units used in applications other than anchored masonry veneer continue to require embedment of the face shell by no less than $^1/_2$ inch (13 mm). This allows the cells of the unit to be later filled with grout.

R606.3.4 Protection for reinforcement. Bars shall be completely embedded in mortar or grout. Joint reinforcement embedded in horizontal mortar joints shall not have less than $^5/_8$-inch (15.9 mm) mortar coverage from the exposed face. Other reinforcement shall have a minimum coverage of one bar diameter over all bars, but not less than $^3/_4$ inch (19 mm), except where exposed to weather or soil, in which case the minimum coverage shall be 2 inches (51 mm).

❖ Commentary Figure R606.3.4 shows placement restrictions for reinforcement relative to exposed faces and coverage.

R606.3.4.1 Corrosion protection. Minimum corrosion protection of joint reinforcement, anchor ties and wire fabric for use in masonry wall construction shall conform to Table R606.3.4.1.

❖ Table R606.3.4.1 contains reference standards for protecting metal accessories used in masonry wall construction.

The corrosion protection requirements are dependent on type of steel and exposure. Because of its high resistance to corrosion, stainless steel need not be coated. Joint reinforcement, anchors, ties and accessories of other than stainless steel must be protected by zinc coatings (galvanizing). The protective value of the zinc coating increases with increasing coating thickness; therefore, the amount of galvanizing required increases with the potential severity of exposure.

TABLE R606.3.4.1
MINIMUM CORROSION PROTECTION

MASONRY METAL ACCESSORY	STANDARD
Joint reinforcement, interior walls	ASTM A641, Class 1
Wire ties or anchors in exterior walls completely embedded in mortar or grout	ASTM A641, Class 3
Wire ties or anchors in exterior walls not completely embedded in mortar or grout	ASTM A153, Class B-2
Joint reinforcement in exterior walls or interior walls exposed to moist environment	ASTM A153, Class B-2
Sheet metal ties or anchors exposed to weather	ASTM A153, Class B-2
Sheet metal ties or anchors completely embedded in mortar or grout	ASTM A653, Coating Designation G60
Stainless steel hardware for any exposure	ASTM A167, Type 304

R606.3.5 Grouting requirements.

❖ With reorganization of the masonry wall provisions in the 2015 code, Section R606.3.5 covering provisions for grouting above-ground masonry walls now combines all the requirements for single-wythe, multiwythe and reinforced grouted masonry construction in one section. Sections R606.3.5.1 through R606.3.5.3

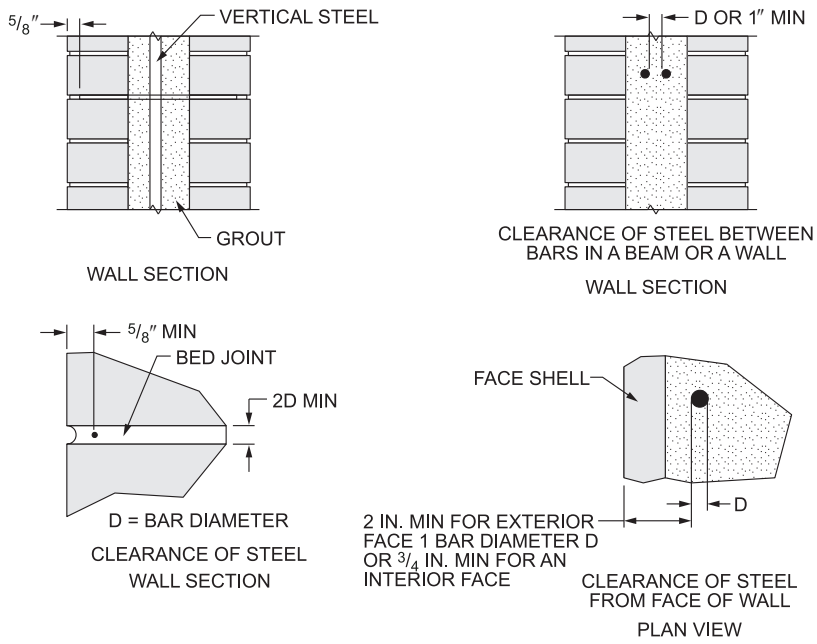

For SI: 1 inch = 25.4 mm.

Figure R606.3.4
REINFORCING STEEL CLEARANCES

INTERNATIONAL CODE COUNCIL®
Copyright © 2015 ICC. ALL RIGHTS RESERVED. Accessed by David Dammon on Jun 21, 2017 12:30:52 PM pursuant to License Agreement with ICC. No further reproduction or distribution authorized. ANY UNAUTHORIZED REPRODUCTION OR DISTRIBUTION IS A VIOLATION OF THE FEDERAL COPYRIGHT ACT AND THE LICENSE AGREEMENT, AND SUBJECT TO CIVIL AND CRIMINAL PENALTIES THEREUNDER.

address grout placement, cleanouts and construction for all three types of grouted masonry construction.

Section R606.3.5 provides the grouting requirements for single-wythe and multiwythe masonry. Grouted single-wythe and grouted multiwythe masonry are illustrated in Commentary Figure R606.3.5. To provide for an adequate bond between the masonry units and the grout, the units must be free of excessive dust or dirt. Grouted multiwythe masonry is a form of construction in which the space between the wythes is solidly filled with grout. It is not necessary for the cores of masonry units to be filled with grout. Grouted single-wythe masonry is a form of construction in which certain cells of hollow units are continuously filled with grout.

In the 2012 code there were several conflicts in the grouting requirements. Grout pour height triggering cleanouts varied depending on whether the masonry construction was single wythe, multiwythe or reinforced. Section R606.3.5.2 specifies the grout lift height triggering cleanouts as 64 inches for all masonry construction. This height is also consistent with IBC requirements. Similarly, Section R606.3.5.1 has increased grout lift requirements triggering special inspection from 60 to 64 inches for consistency.

In Section R606.3.5.1, grout placement, maximum grouting height and grout lift height are all addressed. Construction requirements for different masonry construction types are combined into Section R606.3.5.3 with four total requirements. Alignment of units, minimum reinforcement and minimum grout thickness are all addressed in Section R606.3.5.3.

R606.3.5.1 Grout placement. Grout shall be a plastic mix suitable for pumping without segregation of the constituents and shall be mixed thoroughly. Grout shall be placed by pumping or by an approved alternate method and shall be placed before any initial set occurs and not more than $1^1/_2$ hours after water has been added. Grout shall be consolidated by puddling or mechanical vibrating during placing and reconsolidated after excess moisture has been absorbed but before plasticity is lost. Grout shall not be pumped through aluminum pipes.

Maximum pour heights and the minimum dimensions of spaces provided for grout placement shall conform to Table R606.3.5.1. Grout shall be poured in lifts of 8-foot (2438 mm) maximum height. Where a total grout pour exceeds 8 feet (2438 mm) in height, the grout shall be placed in lifts not exceeding 64 inches (1626 mm) and special inspection during grouting shall be required. If the work is stopped for 1 hour or longer, the horizontal construction joints shall be formed by stopping all tiers at the same elevation and with the grout 1 inch (25 mm) below the top.

❖ The selection of fine or coarse grout is made based on the size of grout space and the height of grout pour. Table R606.3.5.1 covers requirements for selection of grout type. Fine grout is required where grout space is small, narrow or too congested with reinforcing steel. Fine grout also can be used where coarse grout is permitted. It is preferable, however, to use coarse grout, because it reduces shrinkage and is less expensive. See Commentary Figure R606.3.5.1 for an illustration of grout placement for multiple-wythe masonry (see also the commentary to Section R606.3.5).

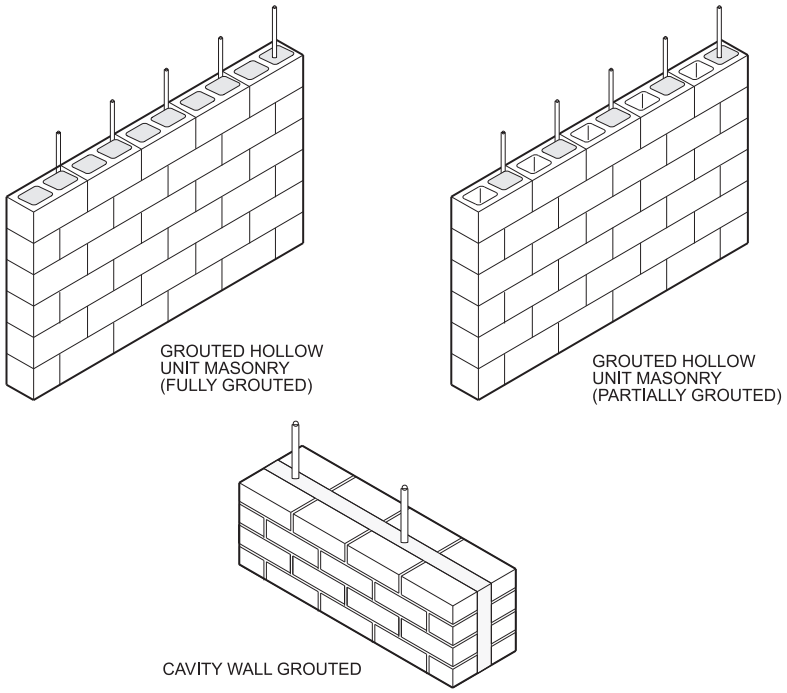

Figure R606.3.5
GROUTED SINGLE AND MULTIPLE-WYTHE MASONRY

INTERNATIONAL CODE COUNCIL®
Copyright © 2015 ICC. ALL RIGHTS RESERVED. Accessed by David Dammon on Jun 21, 2017 12:30:52 PM pursuant to License Agreement with ICC. No further reproduction or distribution authorized. ANY UNAUTHORIZED REPRODUCTION OR DISTRIBUTION IS A VIOLATION OF THE FEDERAL COPYRIGHT ACT AND THE LICENSE AGREEMENT, AND SUBJECT TO CIVIL AND CRIMINAL PENALTIES THEREUNDER.

The use of aluminum pipe for pumping grout is prohibited. Aluminum can adversely affect grout and unprotected reinforcing steel through galvanic action. This restriction protects against possible contamination during grout placement.

R606.3.5.2 Cleanouts. Provisions shall be made for cleaning the space to be grouted. Mortar that projects more than $^1/_2$ inch (12.7 mm) into the grout space and any other foreign matter shall be removed from the grout space prior to inspection and grouting. Where required by the building official, cleanouts shall be provided in the bottom course of masonry for each grout pour where the grout pour height exceeds 64 inches (1626 mm). In solid grouted masonry, cleanouts shall be spaced horizontally not more than 32 inches (813 mm) on center. The cleanouts shall be sealed before grouting and after inspection.

❖ This section specifies the requirements for cleanouts where required to aid in cleaning the grout spaces. Cleanouts should be furnished as described in this section (see the commentary to Section R606.3.5 and Commentary Figure R606.3.5.2).

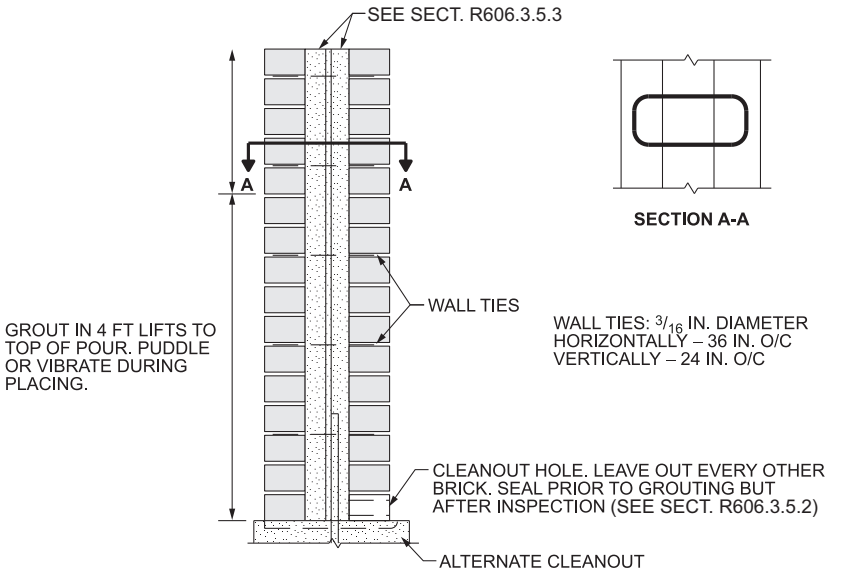

For SI: 1 inch = 25.4 mm, 1 foot = 304.8 mm, 1 square foot = 0.0.929 m^2.

Figure R606.3.5.1
GROUT PLACEMENT FOR GROUTED MULTIWYTHE MASONRY

TABLE R606.3.5.1
GROUT SPACE DIMENSIONS AND POUR HEIGHTS

GROUT TYPE	GROUT POUR MAXIMUM HEIGHT (feet)	MINIMUM WIDTH OF GROUT SPACES[a, b] (inches)	MINIMUM GROUT[b, c] SPACE DIMENSIONS FOR GROUTING CELLS OF HOLLOW UNITS (inches × inches)
Fine	1	0.75	1.5 × 2
	5	2	2 × 3
	12	2.5	2.5 × 3
	24	3	3 × 3
Coarse	1	1.5	1.5 × 3
	5	2	2.5 × 3
	12	2.5	3 × 3
	24	3	3 × 4

For SI: 1 inch = 25.4 mm, 1 foot = 304.8 mm.

a. For grouting between masonry wythes.

b. Grout space dimension is the clear dimension between any masonry protrusion and shall be increased by the horizontal projection of the diameters of the horizontal bars within the cross section of the grout space.

c. Area of vertical reinforcement shall not exceed 6 percent of the area of the grout space.

INTERNATIONAL CODE COUNCIL®
Copyright © 2015 ICC. ALL RIGHTS RESERVED. Accessed by David Dammon on Jun 21, 2017 12:30:52 PM pursuant to License Agreement with ICC. No further reproduction or distribution authorized. ANY UNAUTHORIZED REPRODUCTION OR DISTRIBUTION IS A VIOLATION OF THE FEDERAL COPYRIGHT ACT AND THE LICENSE AGREEMENT, AND SUBJECT TO CIVIL AND CRIMINAL PENALTIES THEREUNDER.

R606.3.5.3 Construction. Requirements for grouted masonry construction shall be as follows:

1. Masonry shall be built to preserve the unobstructed vertical continuity of the cells or spaces to be filled. In partially grouted construction, cross webs forming cells to be filled shall be full-bedded in mortar to prevent leakage of grout. Head and end joints shall be solidly filled with mortar for a distance in from the face of the wall or unit not less than the thickness of the longitudinal face shells.
2. Vertical reinforcement shall be held in position at top and bottom and at intervals not exceeding 200 diameters of the reinforcement.
3. Cells containing reinforcement shall be filled solidly with grout.
4. The thickness of grout or mortar between masonry units and reinforcement shall be not less than $^1/_4$ inch (6.4 mm), except that $^1/_4$-inch (6.4 mm) bars shall be permitted to be laid in horizontal mortar joints not less than $^1/_2$ inch (12.7 mm) thick, and steel wire reinforcement shall be permitted to be laid in horizontal mortar joints not less than twice the thickness of the wire diameter.

❖ The general purpose of the four requirements contained in Section R606.3.5.3 is to provide for the proper placement of reinforcing steel and the grouting of cells so that the construction will act structurally as a unit.

Item 1 provides for proper laying of hollow masonry units with appropriate mortar beds, which contain the grout (prevents leakage). The item also contains requirements for the grout space in which reinforcement may be placed [see Commentary Figure R606.3.5.3(1)]. The vertical continuity of the cells must be maintained to provide for sufficient space in which to place the grout [see Commentary Figure R606.3.5.3(2)].

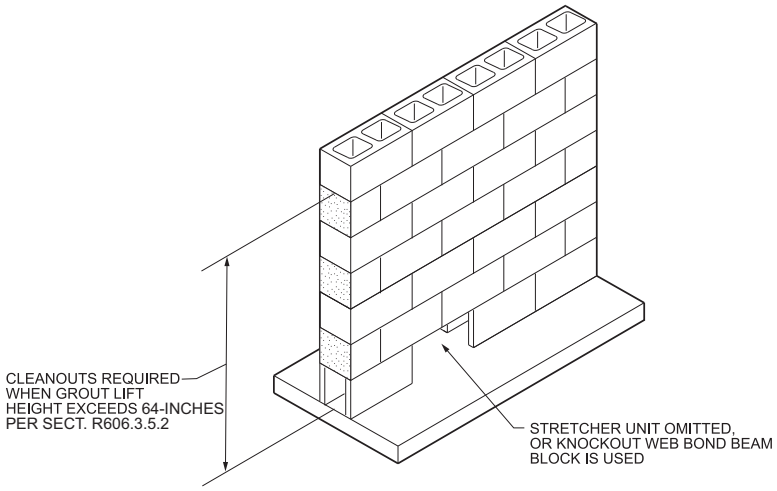

For SI: 1 inch = 25.4 mm, 1 foot = 304.8 mm.

Figure R606.3.5.2
REINFORCED HOLLOW UNIT MASONRY CLEANOUTS

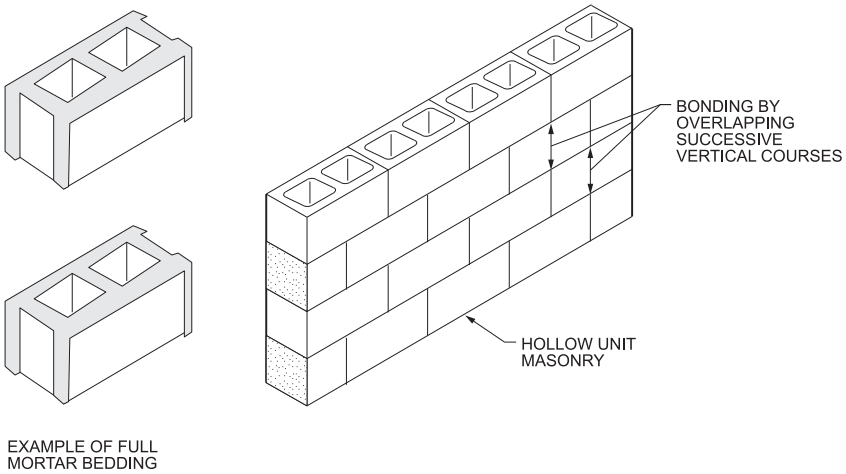

Figure R606.3.5.3(1)
REINFORCEMENT PLACEMENT LIMITATIONS

INTERNATIONAL CODE COUNCIL®
Copyright © 2015 ICC. ALL RIGHTS RESERVED. Accessed by David Dammon on Jun 21, 2017 12:30:52 PM pursuant to License Agreement with ICC. No further reproduction or distribution authorized. ANY UNAUTHORIZED REPRODUCTION OR DISTRIBUTION IS A VIOLATION OF THE FEDERAL COPYRIGHT ACT AND THE LICENSE AGREEMENT, AND SUBJECT TO CIVIL AND CRIMINAL PENALTIES THEREUNDER.

Following the provision in Item 2 is necessary in order to maintain the vertical alignment of reinforcing steel during the grout pour. Also, the reinforcement will be maintained in a proper position relative to the block thickness as required by the design if the vertical reinforcement is secured at the top, bottom, and intervening points so that the distance between such anchorage does not exceed 200 bar diameters. Commentary Figure R606.3.5.3(3) illustrates methods of securing the reinforcement.

Items 3 and 4 provide limitations on the method of grouting the cells containing reinforcement so that the cells to be grouted will be filled solidly and the grout will be reasonably consolidated around the reinforcing steel. When reinforcing is used in grouted masonry, the dimensional constraints given in Item 4 provide clearances necessary for the adequate placement of the grout within the cavity as well as the proper bond between the reinforcement and the grout [refer to Commentary Figures R606.3.5.3(4) and R606.3.5.3(5) for illustrations of the provisions].

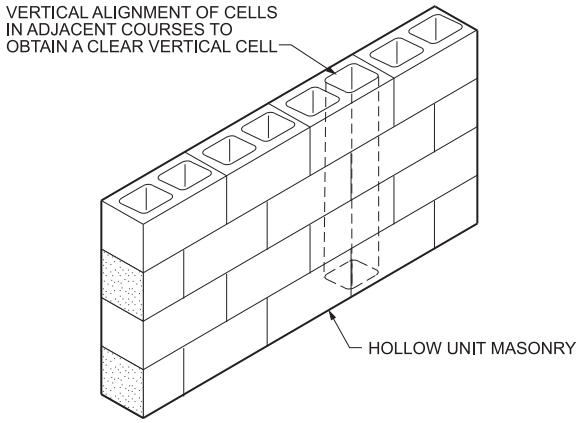

Figure R606.3.5.3(2)
REINFORCED HOLLOW UNIT MASONRY VERTICAL CELL ALIGNMENT

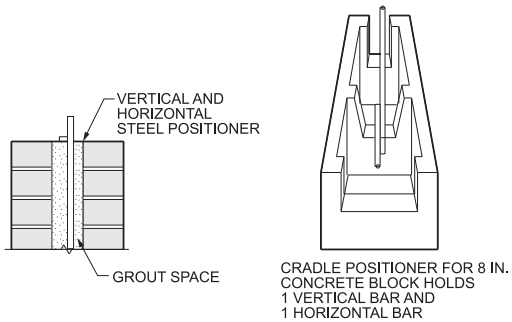

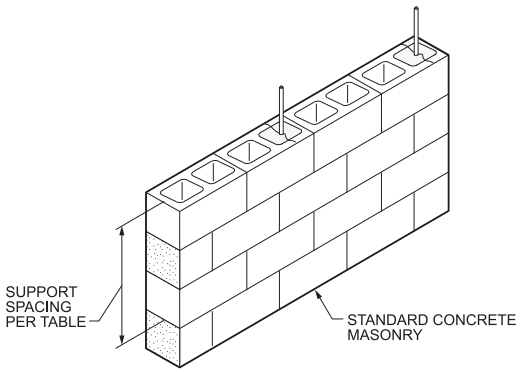

DISTANCE FOR SUPPORT OF VERTICAL STEEL

BAR NO.	BAR SIZE	200 BAR DIAM
3	$^3/_8$ IN.	75 IN.
4	$^1/_2$ IN.	100 IN.
5	$^5/_8$ IN.	125 IN.
6	$^3/_4$ IN.	150 IN.
7	$^7/_8$ IN.	175 IN.

For SI: 1 inch = 25.4 mm.

Figure R606.3.5.3(3)
MASONRY REINFORCING STEEL ALIGNMENT

INTERNATIONAL CODE COUNCIL®
Copyright © 2015 ICC. ALL RIGHTS RESERVED. Accessed by David Dammon on Jun 21, 2017 12:30:52 PM pursuant to License Agreement with ICC. No further reproduction or distribution authorized. ANY UNAUTHORIZED REPRODUCTION OR DISTRIBUTION IS A VIOLATION OF THE FEDERAL COPYRIGHT ACT AND THE LICENSE AGREEMENT, AND SUBJECT TO CIVIL AND CRIMINAL PENALTIES THEREUNDER.

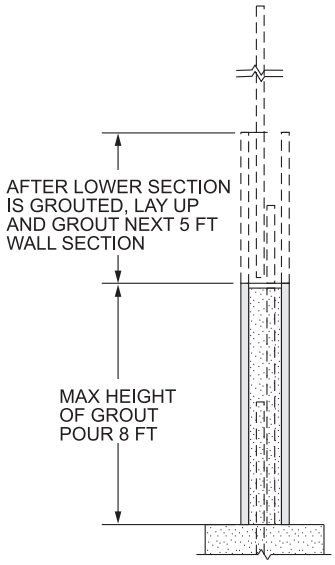

NOTE: PUDDLE ALL GROUT AFTER POURING

For SI: 1 foot = 304.8 mm.

Figure R606.3.5.3(4)
MASONRY REINFORCING STEEL ALIGNMENT

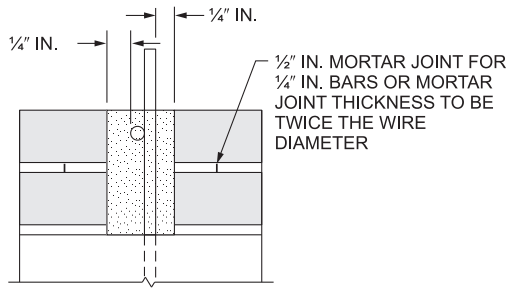

For SI: 1 inch = 25.4 mm.

Figure R606.3.5.3(5)
REINFORCEMENT PLACEMENT LIMITATIONS

R606.3.6 Grouted multiple-wythe masonry. Grouted multiple-wythe masonry shall conform to all the requirements specified in Section R606.3.5 and the requirements of this section.

❖ Grouted multiple-wythe masonry walls must comply with this section.

R606.3.6.1 Bonding of backup wythe. Where all interior vertical spaces are filled with grout in multiple-wythe construction, masonry headers shall not be permitted. Metal wall ties shall be used in accordance with Section R606.13.2 to prevent spreading of the wythes and to maintain the vertical alignment of the wall. Wall ties shall be installed in accordance with Section R606.13.2 where the backup wythe in multiple-wythe construction is fully grouted.

❖ Masonry headers are not permitted in double-wythe grouted masonry construction because they span across the wythes and would interfere with the placement of the grout. Metal ties in accordance with Section R606.13.2 of the code prevent the spreading of wythes and maintain alignment during the grouting process.

R606.3.6.2 Grout barriers. Vertical grout barriers or dams shall be built of *solid masonry* across the grout space the entire height of the wall to control the flow of the grout horizontally. Grout barriers shall be not more than 25 feet (7620 mm) apart. The grouting of any section of a wall between control barriers shall be completed in one day without interruptions greater than 1 hour.

❖ Grout barriers allow large walls to be properly grouted in sections.

R606.3.7 Masonry bonding pattern. Masonry laid in running and stack bond shall conform to Sections R606.3.7.1 and R606.3.7.2.

❖ Masonry must be laid in running bond (see the definition in Chapter 2) or be reinforced horizontally as specified in this section.

R606.3.7.1 Masonry laid in running bond. In each wythe of masonry laid in running bond, head joints in successive courses shall be offset by not less than one-fourth the unit length, or the masonry walls shall be reinforced longitudinally as required in Section R606.3.7.2.

❖ When masonry block is placed with an offset, it is called running bond [see Commentary Figure R606.13.2.1(1)]. Running bond is the most commonly used bonding pattern for masonry wall construction.

R606.3.7.2 Masonry laid in stack bond. Where unit masonry is laid with less head joint offset than in Section R606.3.7.1, the minimum area of horizontal reinforcement placed in mortar bed joints or in bond beams spaced not more than 48 inches (1219 mm) apart shall be 0.0007 times the vertical cross-sectional area of the wall.

❖ Blocks stacked vertically are in the stack bond pattern [Refer to the definition in Section R202 of the code and Commentary Figure R606.3.7.2(1)]. The amount of steel in this section is an arbitrary amount to provide continuity across the head joints. To control cracking where masonry units are placed in a stack bond and where the wall is of unreinforced masonry construction, longitudinal reinforcement must be used in the horizontal bed joints as shown in Commentary Figure R606.3.7.2(1). Premanufactured ladder or truss-type reinforcement as shown in Commentary Figure R606.3.7.2(2) is generally used to meet the requirements for longitudinal steel.

R606.4 Thickness of masonry. The nominal thickness of masonry walls shall conform to the requirements of Sections R606.4.1 through R606.4.4.

❖ This section establishes minimum thicknesses for various masonry wall constructions.

INTERNATIONAL CODE COUNCIL®
Copyright © 2015 ICC. ALL RIGHTS RESERVED. Accessed by David Dammon on Jun 21, 2017 12:30:52 PM pursuant to License Agreement with ICC. No further reproduction or distribution authorized. ANY UNAUTHORIZED REPRODUCTION OR DISTRIBUTION IS A VIOLATION OF THE FEDERAL COPYRIGHT ACT AND THE LICENSE AGREEMENT, AND SUBJECT TO CIVIL AND CRIMINAL PENALTIES THEREUNDER.

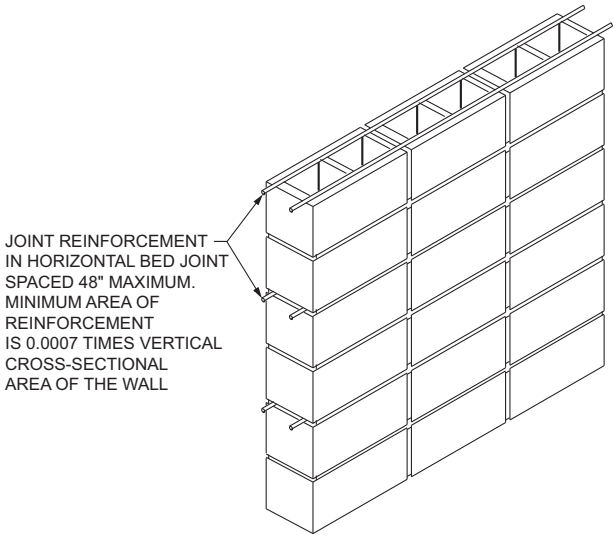

For SI: 1 square inch = 645.2 mm^2.

Figure R606.3.7.2(1)
MINIMUM HORIZONTAL JOINT REINFORCEMENT FOR STACK-BOND MASONRY

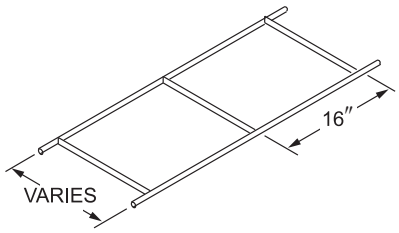

JOINT REINFORCEMENT LADDER TYPE

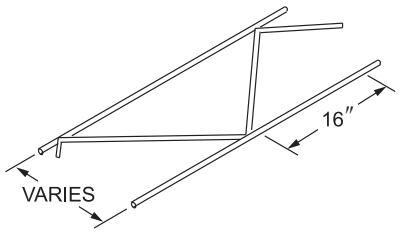

JOINT REINFORCEMENT TRUSS TYPE

For SI: 1 inch = 25.4 mm.

Figure R606.3.7.2(2)
HORIZONTAL JOINT REINFORCEMENT—LADDER AND TRUSS TYPES

R606.4.1 Minimum thickness. The minimum thickness of masonry bearing walls more than one story high shall be 8 inches (203 mm). *Solid masonry* walls of one-story dwellings and garages shall be not less than 6 inches (152 mm) in thickness where not greater than 9 feet (2743 mm) in height, provided that where gable construction is used, an additional 6 feet (1829 mm) is permitted to the peak of the gable. Masonry walls shall be laterally supported in either the horizontal or vertical direction at intervals as required by Section R606.6.4.

❖ The minimum thickness of bearing walls and exterior nonbearing walls of masonry construction more than one story high is limited to a nominal 8 inches (203 mm), which means a net thickness of not less than $7^1/_2$ inches (191 mm). A lesser thickness of 6-inch (152 mm) nominal or $5^1/_2$-inch (140 mm) net of solid masonry is permitted if the wall does not exceed 9 feet (2743 mm) in height other than at the peak of a gable, where such height may extend to 15 feet (4572 mm) as shown in Commentary Figure R606.4.1.

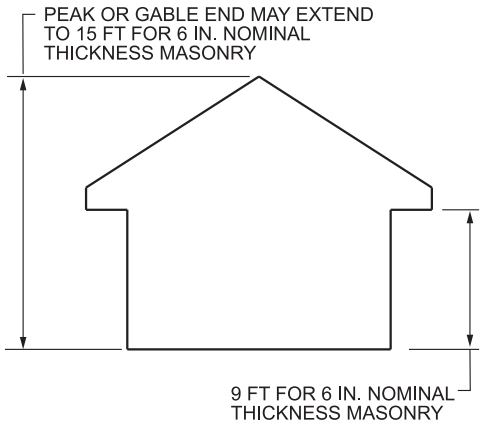

For SI: 1 inch = 25.4 mm, 1 foot = 304.8 mm.

Figure R606.4.1
MINIMUM THICKNESS—MASONRY BEARING AND EXTERIOR WALLS FOR A ONE-STORY DWELLING

R606.4.2 Rubble stone masonry wall. The minimum thickness of rough, random or coursed rubble stone masonry walls shall be 16 inches (406 mm).

❖ Rubble stone walls must be at least 16 inches (406 mm) thick (see commentary, Section R404.1.8).

R606.4.3 Change in thickness. Where walls of masonry of hollow units or masonry-bonded hollow walls are decreased in thickness, a course of solid masonry or masonry units filled with mortar or grout shall be constructed between the wall below and the thinner wall above, or special units or construction shall be used to transmit the loads from face shells or wythes above to those below.

❖ Where the thickness of hollow masonry wall construction is decreased, a solid masonry course or masonry units filled with mortar or grout provides bearing for the face shells of the thinner hollow unit above.

R606.4.4 Parapet walls. Unreinforced solid masonry parapet walls shall be not less than 8 inches (203 mm) thick and their height shall not exceed four times their thickness. Unreinforced hollow unit masonry parapet walls shall be not less than 8 inches (203 mm) thick, and their height shall not exceed three times their thickness. Masonry parapet walls in areas subject to wind loads of 30 pounds per square foot (1.44

INTERNATIONAL CODE COUNCIL®
Copyright © 2015 ICC. ALL RIGHTS RESERVED. Accessed by David Dammon on Jun 21, 2017 12:30:52 PM pursuant to License Agreement with ICC. No further reproduction or distribution authorized. ANY UNAUTHORIZED REPRODUCTION OR DISTRIBUTION IS A VIOLATION OF THE FEDERAL COPYRIGHT ACT AND THE LICENSE AGREEMENT, AND SUBJECT TO CIVIL AND CRIMINAL PENALTIES THEREUNDER.

kPa) located in Seismic Design Category D_0, D_1 or D_2, or on townhouses in Seismic Design Category C shall be reinforced in accordance with Section R606.12.

❖ A parapet is an extension of a wall that extends above the roof line. Generally, parapet walls are required to comply only with fire-resistance requirements of the code. Parapet walls are required to have a certain minimum thickness with height limitations based on the thickness and reinforcement in the wall.

R606.5 Corbeled masonry. Corbeled masonry shall be in accordance with Sections R606.5.1 through R606.5.3.

❖ This section prescribes the units, projection and conditions for supporting floor or roof framing for corbeled masonry.

R606.5.1 Units. *Solid masonry* units or masonry units filled with mortar or grout shall be used for corbeling.

❖ Units to be used for corbeling should include solid units or units filled with mortar or grout. Units filled solid with mortar or grout will enable the unit to act as a solid unit in supporting the corbel above. Solid units and units filled solid with mortar or grout will distribute the load adequately to the masonry wall or wythe below. Further, there are many instances where solid units are not available while units filled solid with mortar or grout can be readily made on the job site as they are needed.

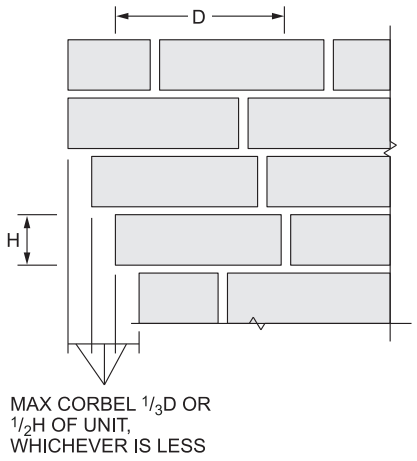

Figure R606.5.2(1)
MASONRY CORBELING LIMITATIONS PER COURSE

R606.5.2 Corbel projection. The maximum projection of one unit shall not exceed one-half the height of the unit or one-third the thickness at right angles to the wall. The maximum corbeled projection beyond the face of the wall shall not exceed:

1. One-half of the wall thickness for multiwythe walls bonded by mortar or grout and wall ties or masonry headers.
2. One-half the wythe thickness for single wythe walls, masonry-bonded hollow walls, multiwythe walls with open collar joints and veneer walls.

❖ Corbeling of masonry walls is permitted within certain limitations. The maximum projection for each unit is limited to one-third the unit bed depth (D) or one-half the unit height (H), whichever is less, as shown in Commentary Figure R606.5.2(1). The total horizontal projection of the corbeled courses is limited to one-half the thickness of a solid wall or one-half the thickness of a wythe of a cavity wall as shown in Commentary Figure R606.5.2(2).

R606.5.3 Corbeled masonry supporting floor or roof-framing members. Where corbeled masonry is used to support floor or roof-framing members, the top course of the corbel shall be a header course or the top course bed joint shall have ties to the vertical wall.

❖ The top course of the corbel must be a header course or the bed joints must have ties to the wall where a corbel is used to support floor or roof framing.

R606.6 Support conditions. Bearing and support conditions shall be in accordance with Sections R606.6.1 through R606.6.4.

❖ Masonry bearing and support conditions must be in accordance with the subsections of Section R606.6.

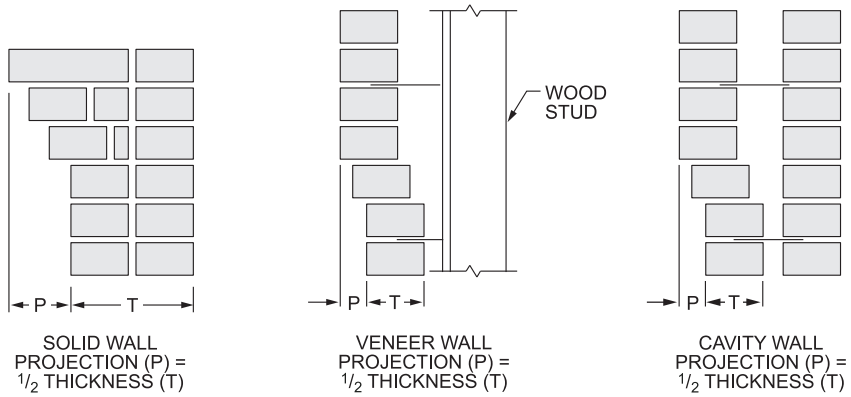

Figure R606.5.2(2)
MASONRY CORBELING LIMITATIONS PER COURSE

INTERNATIONAL CODE COUNCIL®
Copyright © 2015 ICC. ALL RIGHTS RESERVED. Accessed by David Dammon on Jun 21, 2017 12:30:52 PM pursuant to License Agreement with ICC. No further reproduction or distribution authorized. ANY UNAUTHORIZED REPRODUCTION OR DISTRIBUTION IS A VIOLATION OF THE FEDERAL COPYRIGHT ACT AND THE LICENSE AGREEMENT, AND SUBJECT TO CIVIL AND CRIMINAL PENALTIES THEREUNDER.

R606.6.1 Bearing on support. Each masonry wythe shall be supported by at least two-thirds of the wythe thickness.

❖ At least two-thirds the thickness of the bottom course of all masonry wythes must bear directly on the supporting construction (i.e., bear on the supporting foundation wall, lintel or header, etc.).

R606.6.2 Support at foundation. Cavity wall or masonry veneer construction shall be permitted to be supported on an 8-inch (203 mm) foundation wall, provided the 8-inch (203 mm) wall is corbeled to the width of the wall system above with masonry constructed of solid masonry units or masonry units filled with mortar or grout. The total horizontal projection of the corbel shall not exceed 2 inches (51 mm) with individual corbels projecting not more than one-third the thickness of the unit or one-half the height of the unit. The hollow space behind the corbeled masonry shall be filled with mortar or grout.

❖ Foundations supporting masonry cavity walls must be at least 8 inches (203 mm) thick, and where the wall supported is thicker, the foundation wall must be corbeled to attain a thickness at least equal to that of the wall supported. Corbeling limitations of this section are shown in Commentary Figure R606.6.2(1).

R606.6.3 Beam supports. Beams, girders or other concentrated loads supported by a wall or column shall have a bearing of not less than 3 inches (76 mm) in length measured parallel to the beam upon *solid masonry* not less than 4 inches (102 mm) in thickness, or upon a metal bearing plate of adequate design and dimensions to distribute the load safely, or upon a continuous reinforced masonry member projecting not less than 4 inches (102 mm) from the face of the wall.

❖ To provide for the transfer of vertical loads from beams, girders or other elements to the masonry wall or column, a minimum bearing as shown in Commentary Figure R606.6.3 is required. An alternative to the minimum bearing is the use of metal bearing plates that are based on structural design.

R606.6.3.1 Joist bearing. Joists shall have a bearing of not less than $1^1/_2$ inches (38 mm), except as provided in Section R606.6.3, and shall be supported in accordance with Figure R606.11(1).

❖ Where joists bear on masonry wall or column elements, the minimum bearings as shown in Figure R606.11(1) and Commentary Figure R606.6.3.1 are considered to be adequate. The code does not provide guidance distinguishing whether a member is a joist or a beam; however, joists are generally considered to be members that are a nominal 2 inches (51 mm) maximum in thickness and placed not more than 24 inches (610 mm) on center.

R606.6.4 Lateral support. Masonry walls shall be laterally supported in either the horizontal or the vertical direction. The maximum spacing between lateral supports shall not exceed the distances in Table R606.6.4. Lateral support shall be provided by cross walls, pilasters, buttresses or structural frame members where the limiting distance is taken horizontally, or by floors or roofs where the limiting distance is taken vertically.

❖ The limitations on the maximum unsupported height or length of masonry walls specified in Table R606.6.4 provides reasonable performance. For purposes of applying the unsupported height limitations, Figures R606.11(1), R606.11(2) and R606.11(3) provide details recognized as appropriate methods of anchorage. At the base of the wall, footings are a lateral support point. Thus, the unsupported height from the footing to the anchorage point at the floor or roof is the unsupported height, which must be limited to the values in Table R606.6.4.

Instead of unsupported height limitations being measured vertically from footing to supporting floor or roof,

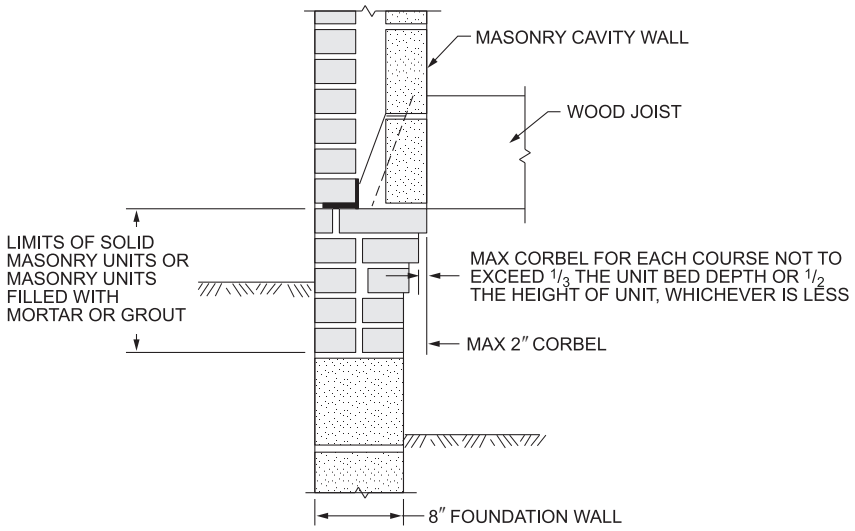

For SI: 1 inch = 25.4 mm.

Figure R606.6.2(1)
MASONRY CORBELING LIMITATIONS PER COURSE

INTERNATIONAL CODE COUNCIL®
Copyright © 2015 ICC. ALL RIGHTS RESERVED. Accessed by David Dammon on Jun 21, 2017 12:30:52 PM pursuant to License Agreement with ICC. No further reproduction or distribution authorized. ANY UNAUTHORIZED REPRODUCTION OR DISTRIBUTION IS A VIOLATION OF THE FEDERAL COPYRIGHT ACT AND THE LICENSE AGREEMENT, AND SUBJECT TO CIVIL AND CRIMINAL PENALTIES THEREUNDER.

the span limitations in Table R606.6.4 of the code may be met with the use of pilasters, columns, piers, cross walls or similar elements whose relative stiffness is greater than that of the wall. These elements are anchored to the roof or floor structural elements in a manner that transmits imposed lateral forces.

Commentary Figure R606.6.4 illustrates the lateral support limitations specified in the table.

Example:

The height or length limitation between lateral supports (see Commentary Figure R606.6.4) for a solid-grouted masonry bearing wall of 8-inch (203 mm) nominal units would be 8 × 20 = 160 inches (4064 mm). For a nonbearing interior wall using two wythes of 4-inch (102 mm) brick, the allowable limitation would be (4 + 4) × 36 = 288 inches (7315 mm).

TABLE R606.6.4
SPACING OF LATERAL SUPPORT FOR MASONRY WALLS

CONSTRUCTION	MAXIMUM WALL LENGTH TO THICKNESS OR WALL HEIGHT TO THICKNESS[a, b]
Bearing walls:	
Solid or solid grouted	20
All other	18
Nonbearing walls:	
Exterior	18
Interior	36

For SI: 1 foot = 304.8 mm.

a. Except for cavity walls and cantilevered walls, the thickness of a wall shall be its nominal thickness measured perpendicular to the face of the wall. For cavity walls, the thickness shall be determined as the sum of the nominal thicknesses of the individual wythes. For cantilever walls, except for parapets, the ratio of height to nominal thickness shall not exceed 6 for solid masonry, or 4 for hollow masonry. For parapets, see Section R606.4.4.

b. An additional unsupported height of 6 feet is permitted for gable end walls.

❖ Limitations on ratios of distance between lateral supports to wall thickness listed in this table are primarily traditional ratios based on successful performance. The thickness in this table is based on the nominal thickness of the wall for other than cavity wall construction and the sum of the nominal thickness of the wythes not including the cavity for cavity walls; see Note a. To allow for additional height at gable-end walls, Note b permits an additional 6 feet (1829 mm). This is similar to the allowance discussed in Commentary Figure R606.4.1.

R606.6.4.1 Horizontal lateral support. Lateral support in the horizontal direction provided by intersecting masonry walls shall be provided by one of the methods in Section R606.6.4.1.1 or R606.6.4.1.2.

❖ When masonry walls span horizontally between intersecting walls, anchorage is achieved using the method in either of the following sections.

R606.6.4.1.1 Bonding pattern. Fifty percent of the units at the intersection shall be laid in an overlapping masonry bonding pattern, with alternate units having a bearing of not less than 3 inches (76 mm) on the unit below.

❖ Using this method, anchorage is accomplished by off setting (overlapping) alternating courses of masonry.

R606.6.4.1.2 Metal reinforcement. Interior nonload- bearing walls shall be anchored at their intersections, at vertical intervals of not more than 16 inches (406 mm) with joint reinforcement of not less than 9 gage [0.148 inch (4mm)], or $^1/_4$-inch (6 mm) galvanized mesh hardware cloth. Intersecting masonry walls, other than interior nonloadbearing walls, shall be anchored at vertical intervals of not more than 8 inches (203 mm) with joint reinforcement of not less than 9 gage and shall extend not less than 30 inches (762 mm) in each direction at the intersection. Other metal ties, joint reinforcement or anchors, if used, shall be spaced to provide equivalent area of anchorage to that required by this section.

❖ See Commentary Figure R606.6.4.1.2.

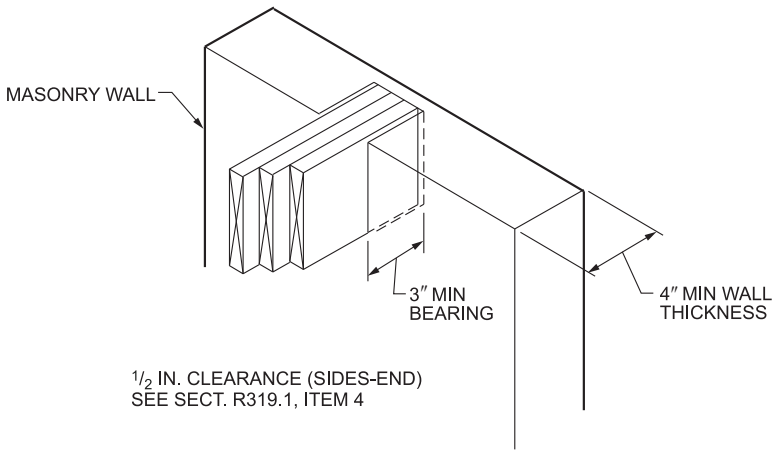

For SI: 1 inch = 25.4 mm.

Figure R606.6.3
BEAM OR GIRDER BEARING ON MASONRY

INTERNATIONAL CODE COUNCIL®
Copyright © 2015 ICC. ALL RIGHTS RESERVED. Accessed by David Dammon on Jun 21, 2017 12:30:52 PM pursuant to License Agreement with ICC. No further reproduction or distribution authorized. ANY UNAUTHORIZED REPRODUCTION OR DISTRIBUTION IS A VIOLATION OF THE FEDERAL COPYRIGHT ACT AND THE LICENSE AGREEMENT, AND SUBJECT TO CIVIL AND CRIMINAL PENALTIES THEREUNDER.

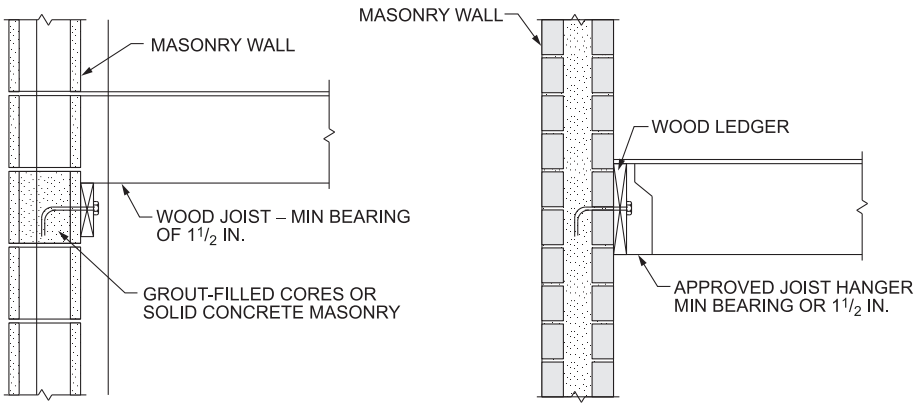

For SI: 1 inch = 25.4 mm.

Figure R606.6.3.1
JOIST-BEARING MINIMUMS

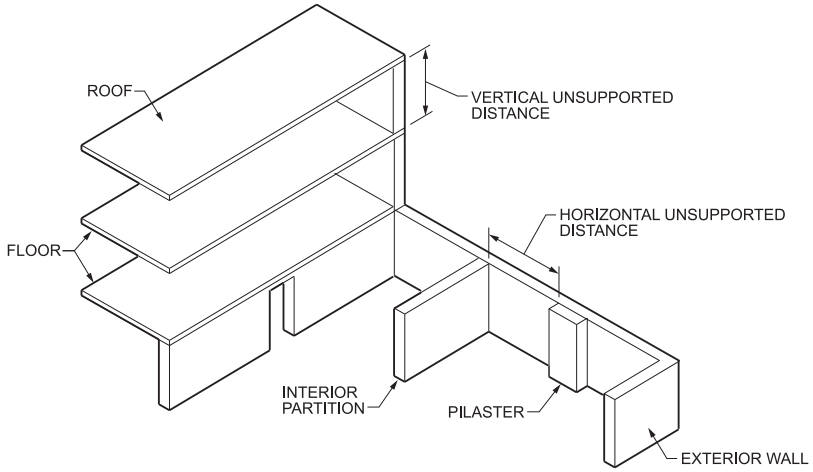

For SI: 1 inch = 25.4 mm.

Figure R606.6.4
BUILDING ELEMENTS PROVIDING LATERAL SUPPORT TO WALLS

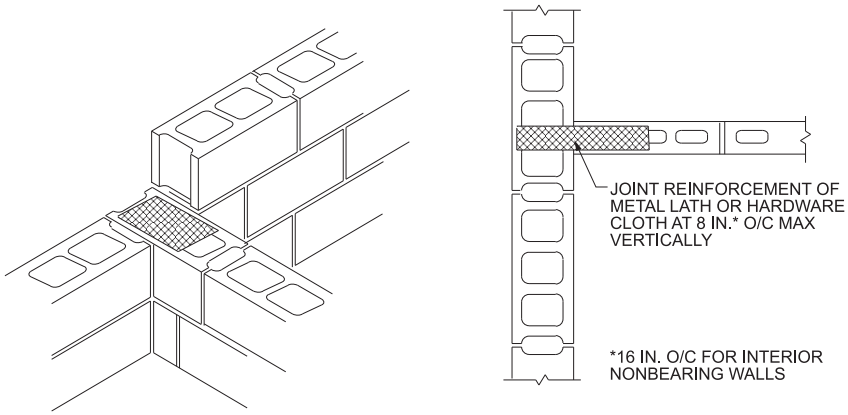

For SI: 1 inch = 25.4 mm.

Figure R606.6.4.1.2
INTERSECTING MASONRY WALLS

INTERNATIONAL CODE COUNCIL®
Copyright © 2015 ICC. ALL RIGHTS RESERVED. Accessed by David Dammon on Jun 21, 2017 12:30:52 PM pursuant to License Agreement with ICC. No further reproduction or distribution authorized. ANY UNAUTHORIZED REPRODUCTION OR DISTRIBUTION IS A VIOLATION OF THE FEDERAL COPYRIGHT ACT AND THE LICENSE AGREEMENT, AND SUBJECT TO CIVIL AND CRIMINAL PENALTIES THEREUNDER.

R606.6.4.2 Vertical lateral support. Vertical lateral support of masonry walls in Seismic Design Category A, B or C shall be provided in accordance with one of the methods in Section R606.6.4.2.1 or R606.6.4.2.2.

❖ Where walls span vertically in buildings classified as SDC A, B or C, masonry walls must be anchored to the floor and roof diaphragms to transmit the anticipated lateral forces. The unsupported height from the footing to the floor or roof must be within the limits of Table R606.6.4.

R606.6.4.2.1 Roof structures. Masonry walls shall be anchored to roof structures with metal strap anchors spaced in accordance with the manufacturer's instructions, $^1/_2$-inch (13 mm) bolts spaced not more than 6 feet (1829 mm) on center, or other *approved* anchors. Anchors shall be embedded not less than 16 inches (406 mm) into the masonry, or be hooked or welded to bond beam reinforcement placed not less than 6 inches (152 mm) from the top of the wall.

❖ If $^1/_2$-inch (12.7 mm) diameter anchor bolts are used, they must be spaced no farther apart than 6 feet (1829 mm) on center. Where approved metal strap anchors are used, the spacing must be in accordance with the manufacturer's recommendations. Anchors are embedded in the masonry wall and connected to the wooden ledger as illustrated in Commentary Figures R606.6.4.2.1(1) and R606.6.4.2.1(2).

R606.6.4.2.2 Floor diaphragms. Masonry walls shall be anchored to floor *diaphragm* framing by metal strap anchors spaced in accordance with the manufacturer's instructions, $^1/_2$-inch-diameter (13 mm) bolts spaced at intervals not to exceed 6 feet (1829 mm) and installed as shown in Figure R606.11(1), or by other *approved* methods.

❖ Masonry walls must be anchored to the floor diaphragm with bolts spaced no farther apart than 6 feet (1829 mm) on center. Fasteners may be either metal strap anchors installed per the manufacturer's recommendations or bolts that are embedded in the masonry walls and connected to the wooden ledger. Ledge fasteners transfer shear forces when loading is in the plane of the wall; when forces are out of plane, ledge fasteners prevent the wall and flooring system from separating.

R606.7 Piers. The unsupported height of masonry piers shall not exceed 10 times their least dimension. Where structural clay tile or hollow concrete masonry units are used for isolated piers to support beams and girders, the cellular spaces shall be filled solidly with grout or Type M or S mortar, except that unfilled hollow piers shall be permitted to be used if their unsupported height is not more than four times their least dimension. Where hollow masonry units are solidly filled with grout or Type M, S or N mortar, the allowable compressive stress shall be permitted to be increased as provided in Table R606.9.

❖ Isolated masonry piers conforming to this section may be used to support beams and girders. The minimum pier area should be based on the design load supported and the allowable stress of the construction in accordance with Table R606.9.

R606.7.1 Pier cap. Hollow piers shall be capped with 4 inches (102 mm) of *solid masonry* or concrete, a masonry cap block, or shall have cavities of the top course filled with concrete or grout.

❖ Beams and girders must be directly supported on a sill plate or the masonry piers to provide a complete load path to the foundation.

R606.8 Chases. Chases and recesses in masonry walls shall not be deeper than one-third the wall thickness, and the maximum length of a horizontal chase or horizontal projection shall not exceed 4 feet (1219 mm), and shall have not less than 8 inches (203 mm) of masonry in back of the chases and recesses and between adjacent chases or recesses and the jambs of openings. Chases and recesses in masonry walls shall be designed and constructed so as not to reduce the required strength or required fire resistance of the wall and in no case shall a chase

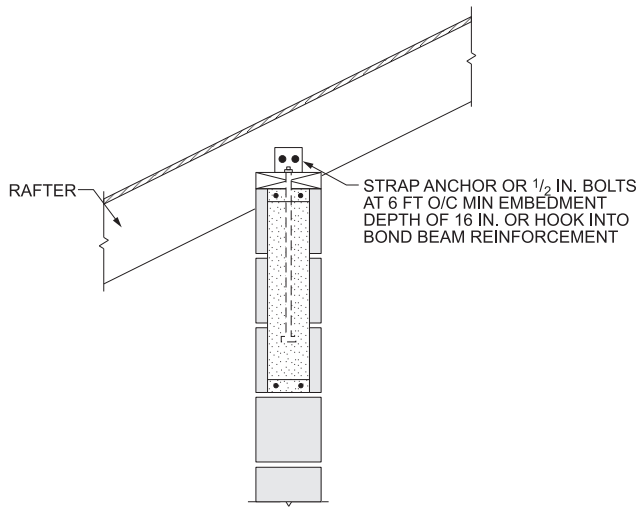

For SI: 1 inch = 25.4 mm, 1 foot = 304.8.

Figure R606.6.4.2.1(1)
ANCHORAGE OF ROOF STRUCTURES

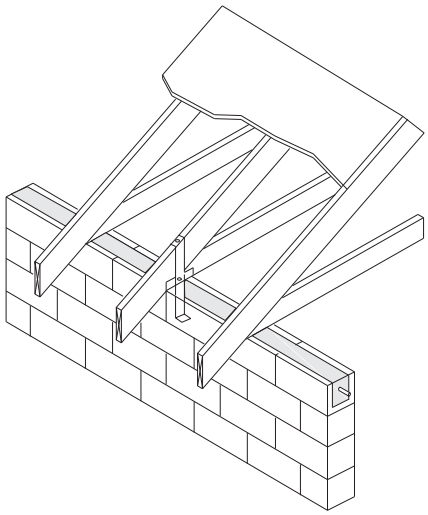

Figure R606.6.4.2.1(2)
ANCHORAGE OF ROOF STRUCTURES

INTERNATIONAL CODE COUNCIL®
Copyright © 2015 ICC. ALL RIGHTS RESERVED. Accessed by David Dammon on Jun 21, 2017 12:30:52 PM pursuant to License Agreement with ICC. No further reproduction or distribution authorized. ANY UNAUTHORIZED REPRODUCTION OR DISTRIBUTION IS A VIOLATION OF THE FEDERAL COPYRIGHT ACT AND THE LICENSE AGREEMENT, AND SUBJECT TO CIVIL AND CRIMINAL PENALTIES THEREUNDER.

or recess be permitted within the required area of a pier. Masonry directly above chases or recesses wider than 12 inches (305 mm) shall be supported on noncombustible lintels.

❖ A chase is a continuous recess in a masonry wall that receives a pipe, conduit, etc. Generally, chases are vertical. It is best to construct chases as the masonry wall is built so the strength of the wall is not reduced.

R606.9 Allowable stresses. Allowable compressive stresses in masonry shall not exceed the values prescribed in Table R606.9. In determining the stresses in masonry, the effects of all loads and conditions of loading and the influence of all forces affecting the design and strength of the several parts shall be taken into account.

❖ Masonry compressive stresses are determined from the type and compressive strength of the unit and the type of mortar used in construction. Table R606.9 lists the maximum permitted stresses. Stresses must be computed based on the actual dimensions of the masonry.

Example:

How does a Type S versus Type N mortar affect the allowable compressive stress in unit masonry for a wall composed of solid concrete brick having a unit compressive stress of 2,500 psi (17 237 kPa)?

Solution:

From Table R606.9, the allowable compressive strength is a function of the mortar and would be:

2,500 psi solid units (17 237 kPa): using Type S mortar = 160 psi (1103 kPa).

2,500 psi solid units (17 237 kPa): using Type N mortar = 140 psi (965 kPa).

R606.9.1 Combined units. In walls or other structural members composed of different kinds or grades of units, materials or mortars, the maximum stress shall not exceed the allowable stress for the weakest of the combination of units, materials and mortars of which the member is composed. The net thickness of any facing unit that is used to resist stress shall be not less than $1^1/_2$ inches (38 mm).

❖ Walls containing different grades of units, materials or mortars must be limited to the maximum compressive stresses for the weakest combination of units and mortar.

Example:

What is the allowable compressive stress in unit masonry for a wall constructed of 8,000 psi (55 152 kPa) solid brick units, 2,000 psi (13 788 kPa) hollow masonry units, and Type S mortar?

Solution:

From Table R606.9, the allowable compressive stress would be limited to the smaller of:

8,000 psi (55 158 kPa) solid brick units using Type S mortar = 350 psi (2413 kPa);

2,000 psi (13 789 kPa) hollow masonry units using Type S mortar = 140 psi (965 kPa).

The allowable unit masonry stress used in design would be the weaker of the two materials constructed with Type S mortar. Therefore, the allowable stress would be 140 psi (965 kPa).

TABLE R606.9
ALLOWABLE COMPRESSIVE STRESSES FOR EMPIRICAL DESIGN OF MASONRY

CONSTRUCTION; COMPRESSIVE STRENGTH OF UNIT, GROSS AREA	ALLOWABLE COMPRESSIVE STRESSES[a] GROSS CROSS-SECTIONAL AREA[b]	
	Type M or S mortar	Type N mortar
Solid masonry of brick and other solid units of clay or shale; sand-lime or concrete brick:		
8,000 + psi	350	300
4,500 psi	225	200
2,500 psi	160	140
1,500 psi	115	100
Grouted[c] masonry, of clay or shale; sand-lime or concrete:		
4,500 + psi	225	200
2,500 psi	160	140
1,500 psi	115	100
Solid masonry of solid concrete masonry units:		
3,000 + psi	225	200
2,000 psi	160	140
1,200 psi	115	100
Masonry of hollow load-bearing units:		
2,000 + psi	140	120
1,500 psi	115	100
1,000 psi	75	70
700 psi	60	55
Hollow walls (cavity or masonry bonded[d]) solid units:		
2,500 + psi	160	140
1,500 psi	115	100
Hollow units	75	70
Stone ashlar masonry:		
Granite	720	640
Limestone or marble	450	400
Sandstone or cast stone	360	320
Rubble stone masonry:		
Coarse, rough or random	120	100

For SI: 1 pound per square inch = 6.895 kPa.

a. Linear interpolation shall be used for determining allowable stresses for masonry units having compressive strengths that are intermediate between those given in the table.

b. Gross cross-sectional area shall be calculated on the actual rather than nominal dimensions.

c. See Section R606.13.

d. Where floor and roof loads are carried upon one wythe, the gross cross-sectional area is that of the wythe under load; if both wythes are loaded, the gross cross-sectional area is that of the wall minus the area of the cavity between the wythes. Walls bonded with metal ties shall be considered as cavity walls unless the collar joints are filled with mortar or grout.

❖ See the commentary to Section R606.9.

INTERNATIONAL CODE COUNCIL®
Copyright © 2015 ICC. ALL RIGHTS RESERVED. Accessed by David Dammon on Jun 21, 2017 12:30:52 PM pursuant to License Agreement with ICC. No further reproduction or distribution authorized. ANY UNAUTHORIZED REPRODUCTION OR DISTRIBUTION IS A VIOLATION OF THE FEDERAL COPYRIGHT ACT AND THE LICENSE AGREEMENT, AND SUBJECT TO CIVIL AND CRIMINAL PENALTIES THEREUNDER.

R606.10 Lintels. Masonry over openings shall be supported by steel lintels, reinforced concrete or masonry lintels or masonry arches, designed to support load imposed.

❖ Masonry wall openings require a structural member designed to support the masonry above. Note that wood is not permitted for a lintel supporting a masonry wall.

R606.11 Anchorage. Masonry walls shall be anchored to floor and roof systems in accordance with the details shown in Figure R606.11(1), R606.11(2) or R606.11(3). Footings shall be permitted to be considered as points of lateral support.

❖ Masonry walls depend on floors and roofs for out-of-plane lateral support. Inadequate anchorage of masonry walls in areas of high, and even moderate, seismicity can be problematic. The referenced figures show anchorage requirements that vary based on seismic design category. They illustrate details that provide adequate load transfer under lateral loads.

R606.12 Seismic requirements. The seismic requirements of this section shall apply to the design of masonry and the construction of masonry building elements located in Seismic Design Category D_0, D_1 or D_2. Townhouses in Seismic Design Category C shall comply with the requirements of Section R606.12.2. These requirements shall not apply to glass unit masonry conforming to Section R610, anchored masonry veneer conforming to Section R703.8 or adhered masonry veneer conforming to Section R703.12.

❖ Although the code generally permits unreinforced walls, this section requires reinforcement in walls of buildings classified as SDC C, D_0, D_1 or D_2.

R606.12.1 General. Masonry structures and masonry elements shall comply with the requirements of Sections R606.12.2 through R606.12.4 based on the seismic design category established in Table R301.2(1). Masonry structures and masonry elements shall comply with the requirements of Section R606.12 and Figures R606.11(1), R606.11(2) and R606.11(3) or shall be designed in accordance with TMS 402/ACI 530/ASCE 5 or TMS 403.

❖ Masonry walls must comply with this section unless a design is provided. The three cited figures show the reinforcing requirements as a function of the seismic design category and wind load.

R606.12.1.1 Floor and roof diaphragm construction. Floor and roof *diaphragms* shall be constructed of wood structural panels attached to wood framing in accordance with Table R602.3(1) or to cold-formed steel floor framing in accordance with Table R505.3.1(2) or to cold-formed steel roof framing in accordance with Table R804.3. Additionally, sheathing panel edges perpendicular to framing members shall be backed by blocking, and sheathing shall be connected to the blocking with fasteners at the edge spacing. For Seismic Design Categories C, D_0, D_1 and D_2, where the width-to-thickness dimension of the *diaphragm* exceeds 2-to-1, edge spacing of fasteners shall be 4 inches (102 mm) on center.

❖ This section reiterates the requirements of Chapters 5 and 8 for fastening structural wood sheathing to floor framing and roof framing. Additional blocking is specified for the structural wood sheathing edges perpendicular to the floor or roof framing, thus providing a blocked diaphragm. Edge fasteners as specified for panel edges must be used at this blocking. Furthermore, if a diaphragm's depth-to-span ratio is greater than 2 in a building classified as SDC C, D_0, D_1 or D_2, the edge nail spacing must be reduced to 4 inches (102 mm) on center. These requirements result in added strength and stiffness for diaphragms that support masonry walls.

R606.12.2 Seismic Design Category C. Townhouses located in Seismic Design Category C shall comply with the requirements of this section.

❖ Townhouses classified as SDC C must conform to the requirements of this section as well as Figures R606.11(1) and R606.11(2). The requirements are based on whether or not an element is part of the lateral-force-resisting system. They are aimed at providing ductility by specifying minimum reinforcement.

R606.12.2.1 Minimum length of wall without openings. Table R606.12.2.1 shall be used to determine the minimum required solid wall length without openings at each masonry exterior wall. The provided percentage of solid wall length shall include only those wall segments that are 3 feet (914 mm) or longer. The maximum clear distance between wall segments included in determining the solid wall length shall not exceed 18 feet (5486 mm). Shear wall segments required to meet the minimum wall length shall be in accordance with Section R606.12.2.2.3.

❖ The code prescribes length of bracing for wood, steel and concrete wall systems. Previous to the 2009 edition of the code, there was no regulation of the minimum length of bracing wall to be provided in masonry wall buildings. This section corrects this situation by basing the minimum wall length requirements on those developed for concrete walls, a comparable material both in terms of load requirements and capacity. These provisions are applicable to multistory construction without engineered design in SDC C and single story in SDC D_0, D_1 and D_2. The provisions are based on concrete requirements, providing interim guidance until more specific masonry requirements are developed.

R606.12.2.2 Design of elements not part of the lateral force-resisting system.

R606.12.2.2.1 Load-bearing frames or columns. Elements not part of the lateral force-resisting system shall be analyzed to determine their effect on the response of the system. The frames or columns shall be adequate for vertical load carrying capacity and induced moment caused by the design *story* drift.

❖ Load-bearing elements not part of a lateral-force-resisting system must be analyzed for their effect on the response of the system and must be capable of supporting all loads in combination with drift-induced bending stresses. These empirical masonry provisions do not cover the design of elements referred to in this section. They would require an engineering design using TMS 402/ACI 530/ASCE 5 (see the commentary to Section R606.12.2).

INTERNATIONAL CODE COUNCIL®
Copyright © 2015 ICC. ALL RIGHTS RESERVED. Accessed by David Dammon on Jun 21, 2017 12:30:52 PM pursuant to License Agreement with ICC. No further reproduction or distribution authorized. ANY UNAUTHORIZED REPRODUCTION OR DISTRIBUTION IS A VIOLATION OF THE FEDERAL COPYRIGHT ACT AND THE LICENSE AGREEMENT, AND SUBJECT TO CIVIL AND CRIMINAL PENALTIES THEREUNDER.

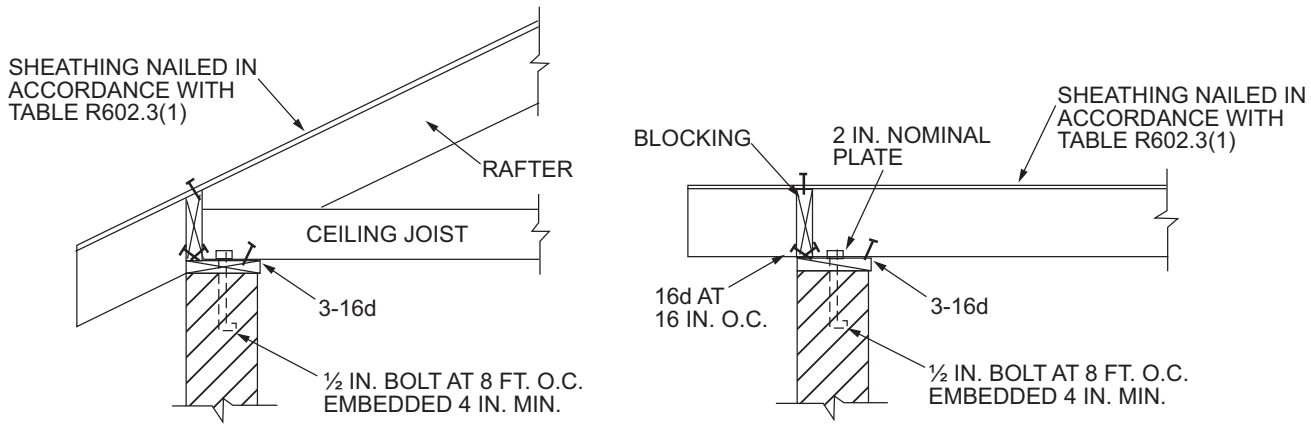

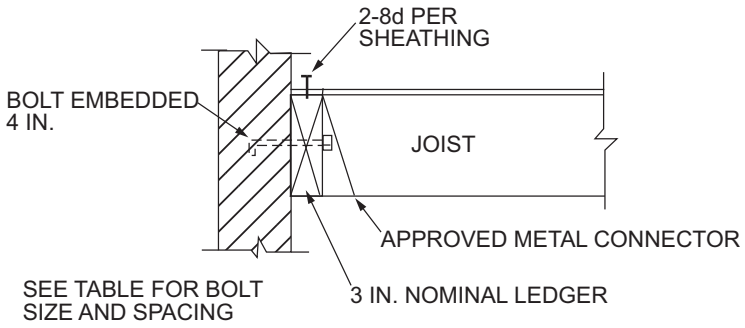

LEDGER BOLT SIZE AND SPACING

JOIST SPAN	BOLT SIZE AND SPACING	
	ROOF	FLOOR
10 FT.	1/2 AT 2 FT. 6 IN. 7/8 AT 3 FT. 6 IN.	1/2 AT 2 FT. 0 IN. 7/8 AT 2 FT. 9 IN.
10—15 FT.	1/2 AT 1 FT. 9 IN. 7/8 AT 2 FT. 6 IN.	1/2 AT 1 FT. 4 IN. 7/8 AT 2 FT. 0 IN.
15—20 FT.	1/2 AT 1 FT. 3 IN. 7/8 AT 2 FT. 0 IN.	1/2 AT 1 FT. 0 IN. 7/8 AT 1 FT. 6 IN.

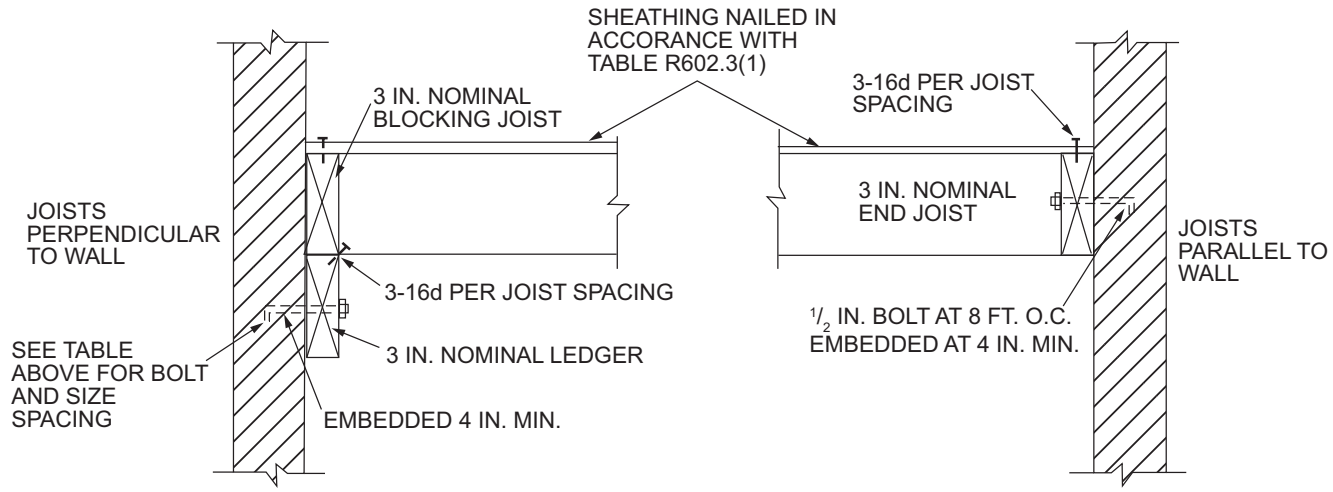

For SI: 1 inch = 25.4 mm, 1 foot = 304.8 mm, 1 pound per square foot = 0.0.479 kPa.

Note: Where bolts are located in hollow masonry, the cells in the courses receiving the bolt shall be grouted solid.

FIGURE R606.11(1)
ANCHORAGE REQUIREMENTS FOR MASONRY WALLS LOCATED IN SEISMIC DESIGN CATEGORY A, B OR C AND WHERE WIND LOADS ARE LESS THAN 30 PSF

❖ See the commentary to Section R606.11.

INTERNATIONAL CODE COUNCIL®
Copyright © 2015 ICC. ALL RIGHTS RESERVED. Accessed by David Dammon on Jun 21, 2017 12:30:52 PM pursuant to License Agreement with ICC. No further reproduction or distribution authorized. ANY UNAUTHORIZED REPRODUCTION OR DISTRIBUTION IS A VIOLATION OF THE FEDERAL COPYRIGHT ACT AND THE LICENSE AGREEMENT, AND SUBJECT TO CIVIL AND CRIMINAL PENALTIES THEREUNDER.

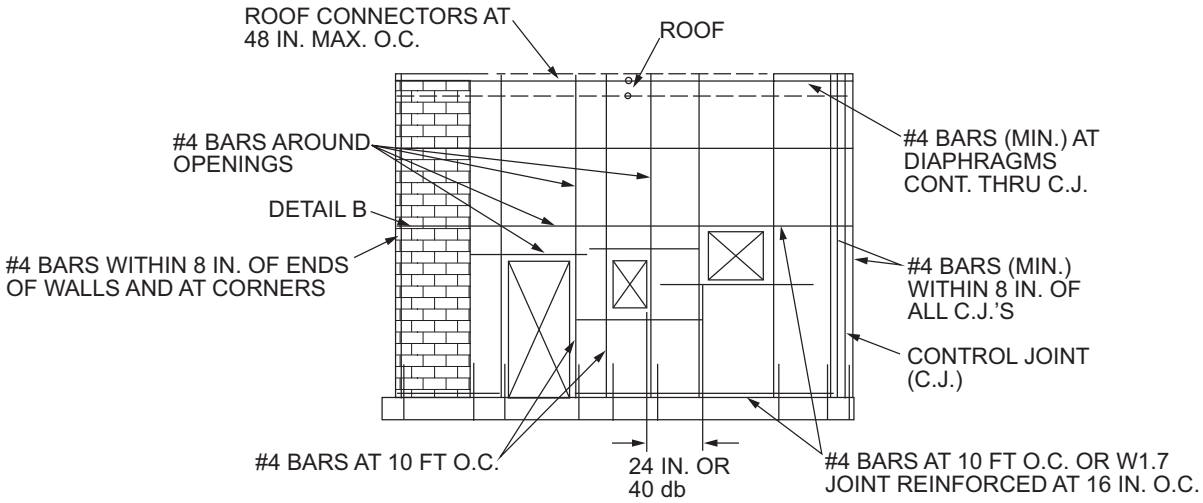

MINIMUM REINFORCEMENT FOR MASONRY WALLS

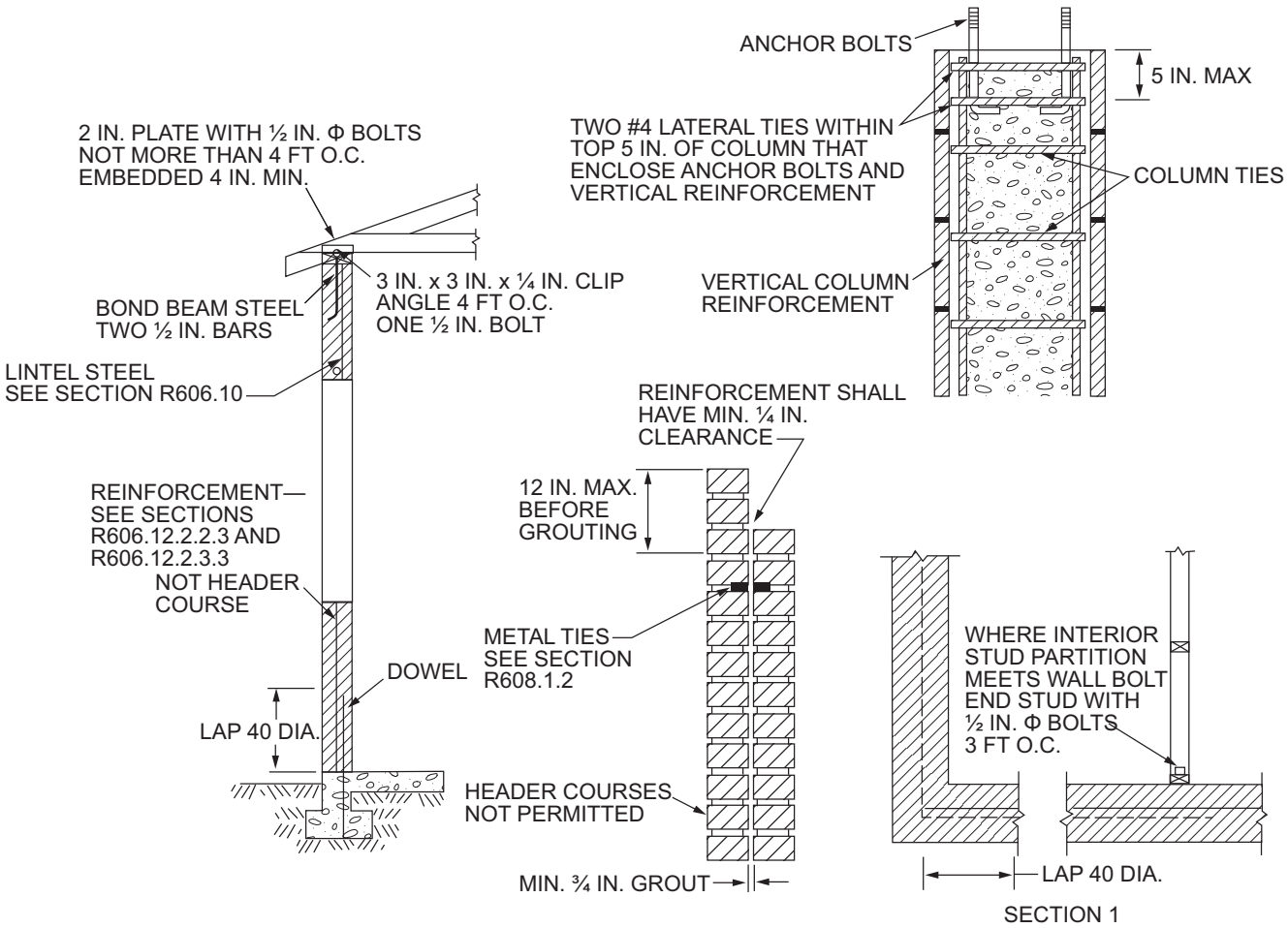

SECTION 1

For SI: 1 inch = 25.4 mm, 1 foot = 304.8 mm.

FIGURE R606.11(2)
REQUIREMENTS FOR REINFORCED GROUTED MASONRY CONSTRUCTION IN SEISMIC DESIGN CATEGORY C

❖ See the commentary to Section R606.11.

INTERNATIONAL CODE COUNCIL®
Copyright © 2015 ICC. ALL RIGHTS RESERVED. Accessed by David Dammon on Jun 21, 2017 12:30:52 PM pursuant to License Agreement with ICC. No further reproduction or distribution authorized. ANY UNAUTHORIZED REPRODUCTION OR DISTRIBUTION IS A VIOLATION OF THE FEDERAL COPYRIGHT ACT AND THE LICENSE AGREEMENT, AND SUBJECT TO CIVIL AND CRIMINAL PENALTIES THEREUNDER.

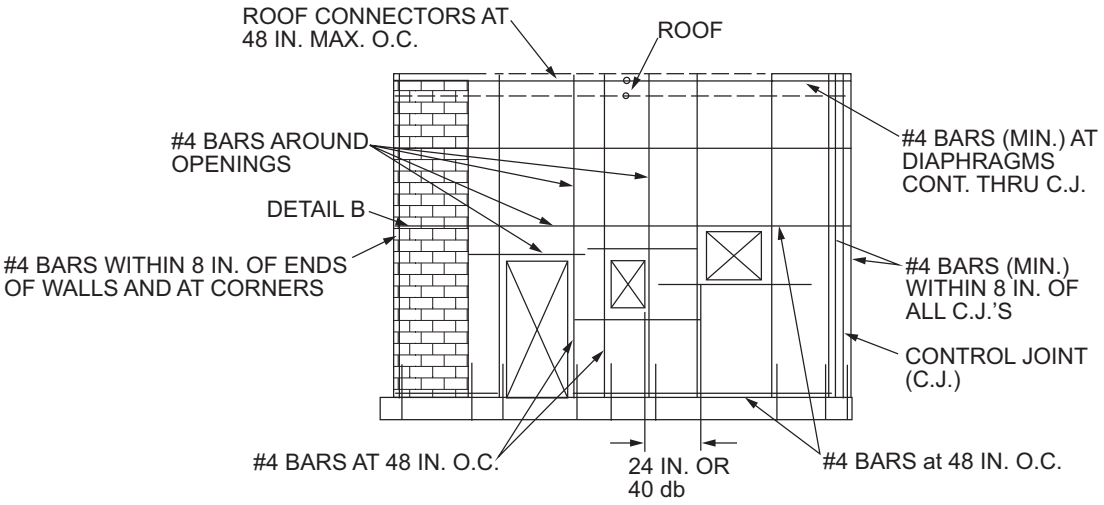

MINIMUM REINFORCEMENT FOR MASONRY WALLS

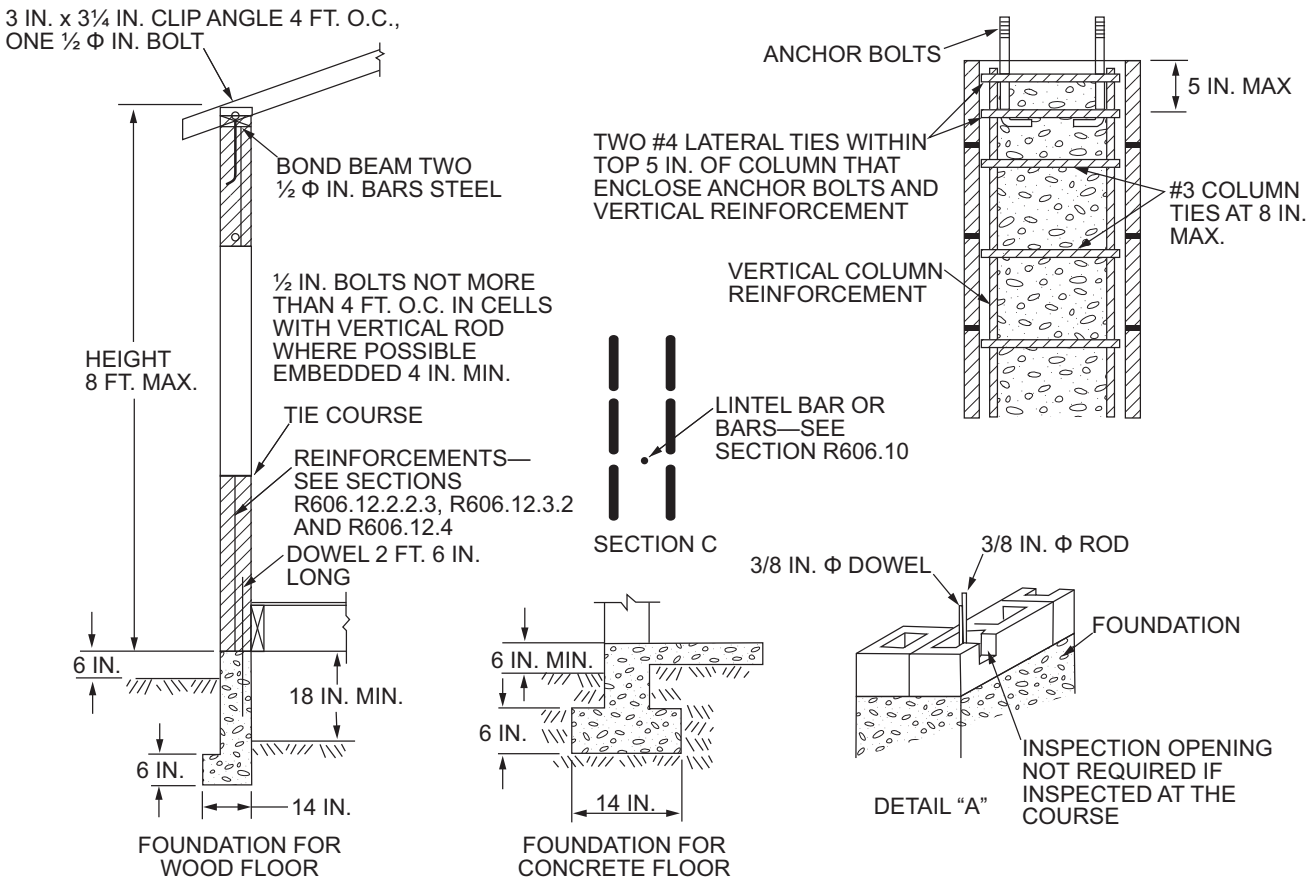

For SI: 1 inch = 25.4 mm, 1 foot = 304.8 mm.

Note: A full bed joint must be provided. Cells containing vertical bars are to be filled to the top of wall and provide inspection opening as shown on detail "A." Horizontal bars are to be laid as shown on detail "B." Lintel bars are to be laid as shown on Section C.

FIGURE R606.11(3)
REQUIREMENTS FOR REINFORCED MASONRY CONSTRUCTION IN SEISMIC DESIGN CATEGORY D_0, D_1 OR D_2

❖ See the commentary to Section R606.11.

INTERNATIONAL CODE COUNCIL®
Copyright © 2015 ICC. ALL RIGHTS RESERVED. Accessed by David Dammon on Jun 21, 2017 12:30:52 PM pursuant to License Agreement with ICC. No further reproduction or distribution authorized. ANY UNAUTHORIZED REPRODUCTION OR DISTRIBUTION IS A VIOLATION OF THE FEDERAL COPYRIGHT ACT AND THE LICENSE AGREEMENT, AND SUBJECT TO CIVIL AND CRIMINAL PENALTIES THEREUNDER.

TABLE R606.12.2.1
MINIMUM SOLID WALL LENGTH ALONG EXTERIOR WALL LINES

SESIMIC DESIGN CATEGORY	MINIMUM SOLID WALL LENGTH (percent)[a]		
	One story or top story of two story	Wall supporting light-framed second story and roof	Wall supporting masonry second story and roof
Townhouses in C	20	25	35
D_0 or D_1	25	NP	NP
D_2	30	NP	NP

NP = Not permitted, except with design in accordance with the *International Building Code*.

a. For all walls, the minimum required length of solid walls shall be based on the table percent multiplied by the dimension, parallel to the wall direction under consideration, of a rectangle inscribing the overall building plan.

❖ See the commentary to Section R606.12.2.1.

R606.12.2.2.2 Masonry partition walls. Masonry partition walls, masonry screen walls and other masonry elements that are not designed to resist vertical or lateral loads, other than those induced by their own weight, shall be isolated from the structure so that vertical and lateral forces are not imparted to these elements. Isolation joints and connectors between these elements and the structure shall be designed to accommodate the design *story* drift.

❖ Nonload-bearing elements that are not designed to resist vertical or lateral loads from earthquake effects on the building lateral force system must be isolated from the structure with isolation joints and connectors that can accommodate the design drift. The design story drift should be taken as 1 percent of the story height as allowed in Section 12.14.8.5 of ASCE 7 unless an analysis is performed.

R606.12.2.2.3 Reinforcement requirements for masonry elements. Masonry elements listed in Section R606.12.2.2.2 shall be reinforced in either the horizontal or vertical direction as shown in Figure R606.11(2) and in accordance with the following:

1. Horizontal reinforcement. Horizontal joint reinforcement shall consist of not less than two longitudinal W1.7 wires spaced not more than 16 inches (406 mm) for walls greater than 4 inches (102 mm) in width and not less than one longitudinal W1.7 wire spaced not more than 16 inches (406 mm) for walls not exceeding 4 inches (102 mm) in width; or not less than one No. 4 bar spaced not more than 48 inches (1219 mm). Where two longitudinal wires of joint reinforcement are used, the space between these wires shall be the widest that the mortar joint will accommodate. Horizontal reinforcement shall be provided within 16 inches (406 mm) of the top and bottom of these masonry elements.
2. Vertical reinforcement. Vertical reinforcement shall consist of not less than one No. 4 bar spaced not more than 48 inches (1219 mm). Vertical reinforcement shall be located within 16 inches (406 mm) of the ends of masonry walls.

❖ This section specifies reinforcement for masonry walls that are not part of the building lateral force system, as described in the previous section (see commentary, Section R606.12.2).

R606.12.2.3 Design of elements part of the lateral force-resisting system.

R606.12.2.3.1 Connections to masonry shear walls. Connectors shall be provided to transfer forces between masonry walls and horizontal elements in accordance with the requirements of Section 4.1.4 of TMS 402/ACI 530/ASCE 5. Connectors shall be designed to transfer horizontal design forces acting either perpendicular or parallel to the wall, but not less than 200 pounds per linear foot (2919 N/m) of wall. The maximum spacing between connectors shall be 4 feet (1219 mm). Such anchorage mechanisms shall not induce tension stresses perpendicular to grain in ledgers or nailers.

❖ The connection of horizontal elements such as diaphragms to masonry walls or columns must be designed in accordance with TMS 402/ACI 530/ASCE 5. These connections should also be in accordance with Figure R606.11(2) and meet the minimum requirements specified in this section. Because these connections have been a source of earthquake-related failures, the code does not allow diaphragm anchorage mechanisms that cause cross-grain bending. This addresses the problem of premature failure of wood ledgers (see commentary, Section R606.12.2).

R606.12.2.3.2 Connections to masonry columns. Connectors shall be provided to transfer forces between masonry columns and horizontal elements in accordance with the requirements of Section 4.1.4 of TMS 402/ACI 530/ASCE 5. Where anchor bolts are used to connect horizontal elements to the tops of columns, the bolts shall be placed within lateral ties. Lateral ties shall enclose both the vertical bars in the column and the anchor bolts. There shall be not less than two No. 4 lateral ties provided in the top 5 inches (127 mm) of the column.

❖ These empirical masonry provisions do not cover the design of masonry columns. A design in accordance with TMS 402/ACI 530/ASCE 5 must be provided. In that event, this section provides a reference to the appropriate section of the standard for the column-to-diaphragm connection design (see commentary, Section R606.12.2).

R606.12.2.3.3 Minimum reinforcement requirements for masonry shear walls. Vertical reinforcement of not less than one No. 4 bar shall be provided at corners, within 16 inches (406 mm) of each side of openings, within 8 inches (203 mm)

INTERNATIONAL CODE COUNCIL®
Copyright © 2015 ICC. ALL RIGHTS RESERVED. Accessed by David Dammon on Jun 21, 2017 12:30:52 PM pursuant to License Agreement with ICC. No further reproduction or distribution authorized. ANY UNAUTHORIZED REPRODUCTION OR DISTRIBUTION IS A VIOLATION OF THE FEDERAL COPYRIGHT ACT AND THE LICENSE AGREEMENT, AND SUBJECT TO CIVIL AND CRIMINAL PENALTIES THEREUNDER.

of each side of movement joints, within 8 inches (203 mm) of the ends of walls, and at a maximum spacing of 10 feet (3048 mm).

Horizontal joint reinforcement shall consist of not less than two wires of W1.7 spaced not more than 16 inches (406 mm); or bond beam reinforcement of not less than one No. 4 bar spaced not more than 10 feet (3048 mm) shall be provided. Horizontal reinforcement shall be provided at the bottom and top of wall openings and shall extend not less than 24 inches (610 mm) nor less than 40 bar diameters past the opening; continuously at structurally connected roof and floor levels; and within 16 inches (406 mm) of the top of walls.

❖ Masonry shear walls resist the lateral loads from wind or earthquakes. This section specifies reinforcing requirements, which are illustrated in Figure R606.11(2) (see commentary, Section R606.12.2).

R606.12.3 Seismic Design Category D_0 or D_1. Structures in Seismic Design Category D_0 or D_1 shall comply with the requirements of Seismic Design Category C and the additional requirements of this section. AAC masonry shall not be used for the design of masonry elements that are part of the lateral force-resisting system.

❖ Buildings classified as SDC D_0 or D_1 must conform to the requirements of this section as well as the requirements for SDC C [see Section R606.12.2 and Figure R606.11(2)]. AAC masonry is not permitted as part of the lateral force-resisting system.

R606.12.3.1 Design requirements. Masonry elements other than those covered by Section R606.12.2.2.2 shall be designed in accordance with the requirements of Chapters 1 through 7 and Sections 8.1 and 8.3 of TMS 402, ACI 530/ASCE 5 and shall meet the minimum reinforcement requirements contained in Sections R606.12.3.2 and R606.12.3.2.1. Otherwise, masonry shall be designed in accordance with TMS 403.

Exception: Masonry walls limited to one *story* in height and 9 feet (2743 mm) between lateral supports need not be designed provided they comply with the minimum reinforcement requirements of Sections R606.12.3.2 and R606.12.3.2.1.

❖ This section specifies the design criteria for masonry elements in SDC D_0 or D_1.

Except for nonload-bearing elements that are not part of the lateral-force-resisting system, masonry elements must be designed using TMS 402/ACI 530/ASCE 5. The exception allows certain one-story masonry walls to satisfy the specified prescriptive code requirements rather than being designed to other engineering standards.

R606.12.3.2 Minimum reinforcement requirements for masonry walls. Masonry walls other than those covered by Section R606.12.2.2.3 shall be reinforced in both the vertical and horizontal direction. The sum of the cross-sectional area of horizontal and vertical reinforcement shall be not less than 0.002 times the gross cross-sectional area of the wall, and the minimum cross-sectional area in each direction shall be not less than 0.0007 times the gross cross-sectional area of the wall. Reinforcement shall be uniformly distributed. Table R606.12.3.2 shows the minimum reinforcing bar sizes required for varying thicknesses of masonry walls. The maximum spacing of reinforcement shall be 48 inches (1219 mm) provided that the walls are solid grouted and constructed of hollow open-end units, hollow units laid with full head joints or two wythes of solid units. The maximum spacing of reinforcement shall be 24 inches (610 mm) for all other masonry.

❖ The sum of horizontal and vertical reinforcement must be at least 0.2 percent of the cross-sectional area of the wall, and the reinforcing should be distributed as shown in Table R606.12.3.2 [see commentary, Figure R606.11(3) and Section R606.12.3].

R606.12.3.2.1 Shear wall reinforcement requirements. The maximum spacing of vertical and horizontal reinforcement shall be the smaller of one-third the length of the shear wall, one-third the height of the shear wall, or 48 inches (1219 mm). The minimum cross-sectional area of vertical reinforcement shall be one-third of the required shear rein-

TABLE R606.12.3.2
MINIMUM DISTRIBUTED WALL REINFORCEMENT FOR BUILDINGS ASSIGNED TO SEISMIC DESIGN CATEGORY D_0 or D_1

NOMINAL WALL THICKNESS (inches)	MINIMUM SUM OF THE VERTICAL AND HORIZONTAL REINFORCEMENT AREAS[a] (square inches per foot)	MINIMUM REINFORCEMENT AS DISTRIBUTED IN BOTH HORIZONTAL AND VERTICAL DIRECTIONS[b] (square inches per foot)	MINUMUM BAR SIZE FOR REINFORCEMENT SPACED AT 48 INCHES
6	0.135	0.047	#4
8	0.183	0.064	#5
10	0.231	0.081	#6
12	0.279	0.098	#6

For SI: 1 inch = 25.4 mm, 1 foot = 304.8 mm, 1 square inch per foot = 2064 mm^2/m.

a. Based on the minimum reinforcing ratio of 0.002 times the gross cross-sectional area of the wall.

b. Based on the minimum reinforcing ratio each direction of 0.0007 times the gross cross-sectional area of the wall.

❖ This table lists the minimum reinforcement areas specified in Section R606.12.3.2. The minimum bar size shown in the far right column satisfies the requirement for 0.0007 times the gross cross-sectional area of the wall. This must be provided as a minimum in both the vertical and horizontal directions. Additional reinforcement is necessary in either direction to meet the requirement for a total of 0.002 times the gross cross-sectional area.

INTERNATIONAL CODE COUNCIL®
Copyright © 2015 ICC. ALL RIGHTS RESERVED. Accessed by David Dammon on Jun 21, 2017 12:30:52 PM pursuant to License Agreement with ICC. No further reproduction or distribution authorized. ANY UNAUTHORIZED REPRODUCTION OR DISTRIBUTION IS A VIOLATION OF THE FEDERAL COPYRIGHT ACT AND THE LICENSE AGREEMENT, AND SUBJECT TO CIVIL AND CRIMINAL PENALTIES THEREUNDER.

forcement. Shear reinforcement shall be anchored around vertical reinforcing bars with a standard hook.

❖ See the commentary to Section R606.12.3.

R606.12.3.3 Minimum reinforcement for masonry columns. Lateral ties in masonry columns shall be spaced not more than 8 inches (203 mm) on center and shall be not less than $^3/_8$-inch (9.5 mm) diameter. Lateral ties shall be embedded in grout.

❖ See Figure R606.11(3). Also see the commentary to Sections R606.12.2.2.2 and R606.12.3.

R606.12.3.4 Material restrictions. Type N mortar or masonry cement shall not be used as part of the lateral force-resisting system.

❖ This restates the requirement of Section R607.1.3.

R606.12.3.5 Lateral tie anchorage. Standard hooks for lateral tie anchorage shall be either a 135-degree (2.4 rad) standard hook or a 180-degree (3.2 rad) standard hook.

❖ Lateral ties (required by Section R606.12.3.3) must be anchored as specified. Also see the commentary to Section R606.12.3.

R606.12.4 Seismic Design Category D_2. Structures in Seismic Design Category D_2 shall comply with the requirements of Seismic Design Category D_1 and to the additional requirements of this section.

❖ Buildings classified as SDC D_2 must conform to the requirements of this section as well as all the requirements for SDC D_0 and D_1 and Figure R606.11(3).

R606.12.4.1 Design of elements not part of the lateral force-resisting system. Stack bond masonry that is not part of the lateral force-resisting system shall have a horizontal cross-sectional area of reinforcement of not less than 0.0015 times the gross cross-sectional area of masonry. Table R606.12.4.1 shows minimum reinforcing bar sizes for masonry walls. The maximum spacing of horizontal reinforcement shall be 24 inches (610 mm). These elements shall be solidly grouted and shall be constructed of hollow open-end units or two wythes of solid units.

❖ For elements that are not part of the lateral-force-resisting system, horizontal reinforcement must be at least 0.0015 times the cross-sectional area of the wall as shown in Table R606.12.4.1.

TABLE R606.12.4.1
MINIMUM REINFORCING FOR STACKED BONDED MASONRY WALLS IN SEISMIC DESIGN CATEGORY D_2

NOMINAL WALL THICKNESS (inches)	MINIMUM BAR SIZE SPACED AT 24 INCHES
6	#4
8	#5
10	#5
12	#6

For SI: 1 inch = 25.4 mm.

❖ See the commentary to Section R606.12.4.1.

R606.12.4.2 Design of elements part of the lateral force-resisting system. Stack bond masonry that is part of the lateral force-resisting system shall have a horizontal cross-sectional area of reinforcement of not less than 0.0025 times the gross cross-sectional area of masonry. Table R606.12.4.2 shows minimum reinforcing bar sizes for masonry walls. The maximum spacing of horizontal reinforcement shall be 16 inches (406 mm). These elements shall be solidly grouted and shall be constructed of hollow open-end units or two wythes of solid units.

❖ Elements that are part of the lateral-force-resisting system must have horizontal reinforcement of at least 0.0025 times the cross-sectional area of the wall as shown in Table R606.12.4.2. These elements may be constructed of solid grouted hollow open-end units or of two wythes of solid units solidly grouted.

TABLE R606.12.4.2
MINIMUM REINFORCING FOR STACKED BONDED MASONRY WALLS IN SEISMIC DESIGN CATEGORY D_2

NOMINAL WALL THICKNESS (inches)	MINIMUM BAR SIZE SPACED AT 16 INCHES
6	#4
8	#5
10	#5
12	#6

For SI: 1 inch = 25.4 mm.

❖ See the commentary to Section R606.12.4.2.

R606.13 Multiple-wythe masonry. The facing and backing of multiple-wythe masonry walls shall be bonded in accordance with Section R606.13.1, R606.13.2 or R606.13.3. In cavity walls, neither the facing nor the backing shall be less than 3 inches (76 mm) nominal in thickness and the cavity shall be not more than 4 inches (102 mm) nominal in width. The backing shall be not less than as thick as the facing.

Exception: Cavities shall be permitted to exceed the 4-inch (102 mm) nominal dimension provided tie size and tie spacing have been established by calculation.

❖ The provisions of Section R606.13 apply to masonry walls more than one masonry unit in thickness. In cases where a wall thickness is made up of multiple wythes of masonry units, bonding is required so that the wythes are tied together to act as a unit. Section R606.13 contains the specifics of what constitutes an acceptable bonding mechanism. Two basic types of bonding are permissible: the first involves various overlapping arrangements; the second is achieved by installation of corrosion-resistant metal ties as stipulated for cavity-wall masonry construction.

R606.13.1 Bonding with masonry headers. Bonding with solid or hollow masonry headers shall comply with Sections R606.13.1.1 and R606.13.1.2.

❖ There are two methods of bonding multiwythe walls through the use of headers. They can be solid or hollow unit, depending on the wall system in question.

R606.13.1.1 Solid units. Where the facing and backing (adjacent wythes) of *solid masonry* construction are bonded by means of masonry headers, not less than 4 percent of the wall surface of each face shall be composed of headers

INTERNATIONAL CODE COUNCIL®
Copyright © 2015 ICC. ALL RIGHTS RESERVED. Accessed by David Dammon on Jun 21, 2017 12:30:52 PM pursuant to License Agreement with ICC. No further reproduction or distribution authorized. ANY UNAUTHORIZED REPRODUCTION OR DISTRIBUTION IS A VIOLATION OF THE FEDERAL COPYRIGHT ACT AND THE LICENSE AGREEMENT, AND SUBJECT TO CIVIL AND CRIMINAL PENALTIES THEREUNDER.

extending not less than 3 inches (76 mm) into the backing. The distance between adjacent full-length headers shall not exceed 24 inches (610 mm) either vertically or horizontally. In walls in which a single header does not extend through the wall, headers from the opposite sides shall overlap not less than 3 inches (76 mm), or headers from opposite sides shall be covered with another header course overlapping the header below not less than 3 inches (76 mm).

❖ See the commentary to Section R606.13.1 and Commentary Figure R606.13.1.1.

R606.13.1.2 Hollow units. Where two or more hollow units are used to make up the thickness of a wall, the stretcher courses shall be bonded at vertical intervals not exceeding 34 inches (864 mm) by lapping not less than 3 inches (76 mm) over the unit below, or by lapping at vertical intervals not exceeding 17 inches (432 mm) with units that are not less than 50 percent thicker than the units below.

❖ See the commentary to Section R606.13.1 and Commentary Figure R606.13.1.2.

R606.13.2 Bonding with wall ties or joint reinforcement. Bonding with wall ties or joint reinforcement shall comply with Section R606.13.2.3.

❖ See the commentary to Section R606.13.

R606.13.2.1 Bonding with wall ties. Bonding with wall ties, except as required by Section R607, where the facing and backing (adjacent wythes) of masonry walls are bonded with $^{3}/_{16}$-inch-diameter (5 mm) wall ties embedded in the horizontal mortar joints, there shall be not less than one metal tie for each $4^{1}/_{2}$ square feet (0.418 m^2) of wall area. Ties in alternate courses shall be staggered. The maximum vertical distance between ties shall not exceed 24 inches (610 mm), and the maximum horizontal distance shall not exceed 36 inches (914 mm). Rods or ties bent to rectangular shape shall be used with hollow masonry units laid with the cells vertical. In other walls, the ends of ties shall be bent to 90-degree (0.79 rad) angles to provide hooks not less than 2 inches (51 mm) long. Additional bonding ties shall be provided at all openings, spaced not more than 3 feet (914 mm) apart around the perimeter and within 12 inches (305 mm) of the opening.

❖ Multiwythe walls can be bonded with wire-type ties. Generally, this type of tie consists of metal Z ties or rectangular ties. The code requires certain maximum spacing for wire tires similar to that for masonry headers. This section provides minimum wire diameters and requires spacing based on a square footage area of the wall in question. Additional bonding ties are required around wall openings, such as windows or doors. These wire ties are used to anchor wythes of masonry together to resist loads or to transfer loads across air spaces to the backing wall material [see Commentary Figures R606.13.2.1(1) and R606.13.2.1(2)].

R606.13.2.2 Bonding with adjustable wall ties. Where the facing and backing (adjacent wythes) of masonry are bonded with adjustable wall ties, there shall be not less than one tie for each 2.67 square feet (0.248 m^2) of wall area. Neither the vertical nor the horizontal spacing of the adjustable wall ties shall exceed 24 inches (610 mm). The maximum vertical offset of bed joints from one wythe to the other shall be 1.25 inches (32 mm). The maximum clearance between connecting parts of the ties shall be $^{1}/_{16}$ inch (2 mm). Where pintle legs are used, ties shall have not less than two $^{3}/_{16}$-inch-diameter (5 mm) legs.

❖ This section pertains to the use of adjustable ties for anchoring the facing to the backing. Reduced tie spacing is required when these types of ties are specified. Maximum vertical offsets are prescribed so that the adjustable tie will not disengage through use. Many forms of adjustable wall ties are available for masonry construction (see Commentary Figure R606.13.2.2).

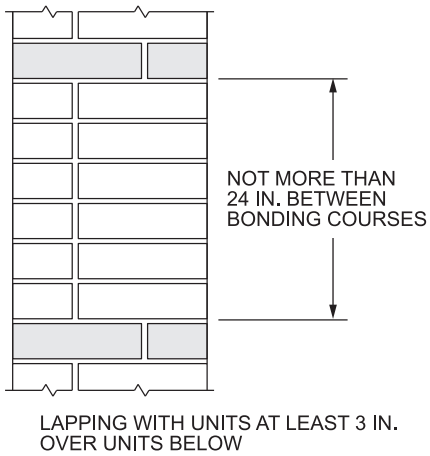

For SI: 1 inch = 25.4 mm.

Figure R606.13.1.1
BONDING WITH SOLID UNIT MASONRY

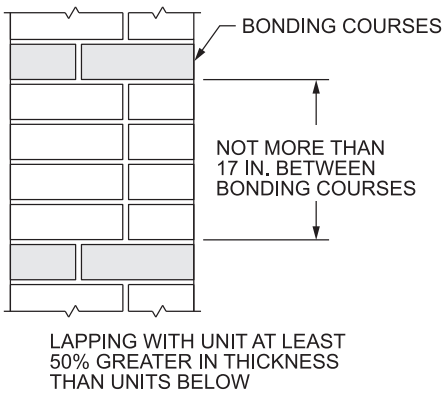

For SI: 1 inch = 25.4 mm.

Figure R606.13.1.2
BONDING WITH HOLLOW UNIT MASONRY

INTERNATIONAL CODE COUNCIL®
Copyright © 2015 ICC. ALL RIGHTS RESERVED. Accessed by David Dammon on Jun 21, 2017 12:30:52 PM pursuant to License Agreement with ICC. No further reproduction or distribution authorized. ANY UNAUTHORIZED REPRODUCTION OR DISTRIBUTION IS A VIOLATION OF THE FEDERAL COPYRIGHT ACT AND THE LICENSE AGREEMENT, AND SUBJECT TO CIVIL AND CRIMINAL PENALTIES THEREUNDER.

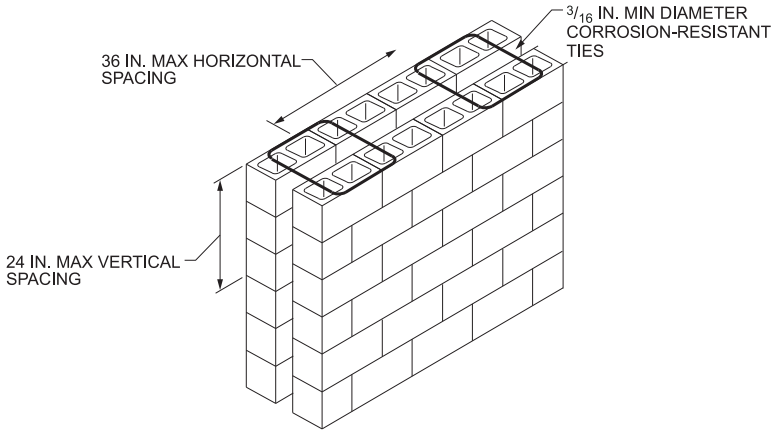

NOTE: TIES IN ALTERNATE COURSES TO BE STAGGERED. ONE METAL TIE FOR EACH $4^1/_2$ SQ FT OF WALL AREA

For SI: 1 inch = 25.4 mm, 1 square foot = 0.0929 m^2.

Figure R606.13.2.1(1)
MASONRY BONDING—METAL TIES

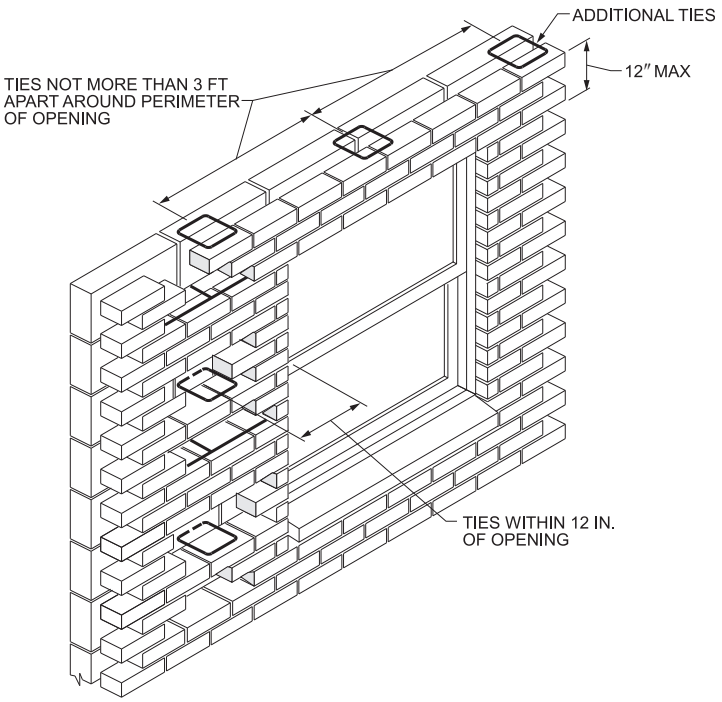

For SI: 1 inch = 25.4 mm, 1 foot = 304.8 mm.

Figure R606.13.2.1(2)
BONDING AROUND OPENING IN MASONRY WALLS

R606.13.2.3 Bonding with prefabricated joint reinforcement. Where the facing and backing (adjacent wythes) of masonry are bonded with prefabricated joint reinforcement, there shall be not less than one cross wire serving as a tie for each 2.67 square feet (0.248 m^2) of wall area. The vertical spacing of the joint reinforcement shall not exceed 16 inches (406 mm). Cross wires on prefabricated joint reinforcement shall not be smaller than No. 9 gage. The longitudinal wires shall be embedded in the mortar.

❖ Adjacent wythes of masonry could also be bonded with prefabricated joint reinforcements. They can be used in these wall types when air spaces exist between two wythes of masonry, or they can be used in double-wythe grouted-wall construction. Cross wires must be

INTERNATIONAL CODE COUNCIL®
Copyright © 2015 ICC. ALL RIGHTS RESERVED. Accessed by David Dammon on Jun 21, 2017 12:30:52 PM pursuant to License Agreement with ICC. No further reproduction or distribution authorized. ANY UNAUTHORIZED REPRODUCTION OR DISTRIBUTION IS A VIOLATION OF THE FEDERAL COPYRIGHT ACT AND THE LICENSE AGREEMENT, AND SUBJECT TO CIVIL AND CRIMINAL PENALTIES THEREUNDER.

of minimum size to provide proper load transfer. This reinforcement is placed in the bed joints. Commentary Figure R606.13.2.3 illustrates two of the more common types available.

R606.13.3 Bonding with natural or cast stone. Bonding with natural and cast stone shall conform to Sections R606.13.3.1 and R606.13.3.2.

❖ Ashlar masonry and rubble stone masonry require bonding through masonry headers. Although quite different from the usual masonry headers for clay or concrete masonry walls, bonder stones are required based on the square footage of wall area. Bonder stones must be embedded in mortar and have the proper extension into the wall surfaces on both sides. Each masonry type has separate bonding stone spacing requirements based on the construction. The bonding requirements in this section are primarily drawn from TMS 402/ACI 530/ASCE 5.

R606.13.3.1 Ashlar masonry. In ashlar masonry, bonder units, uniformly distributed, shall be provided to the extent of not less than 10 percent of the wall area. Such bonder units shall extend not less than 4 inches (102 mm) into the backing wall.

❖ When one or both of the wythes in a multiwythe masonry wall system are laid in an ashlar pattern, the wythes must be tied together with masonry bonder units spaced as prescribed in this section.

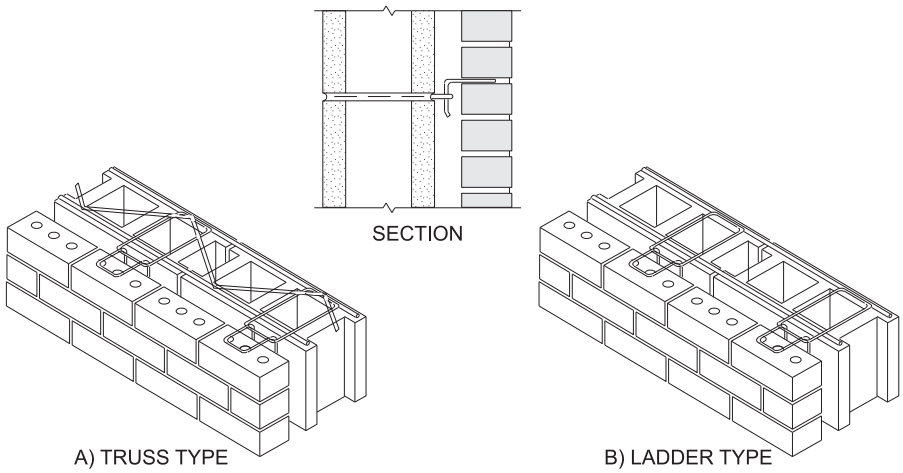

Figure R606.13.2.2
BONDING WITH ADJUSTABLE WALL TIES

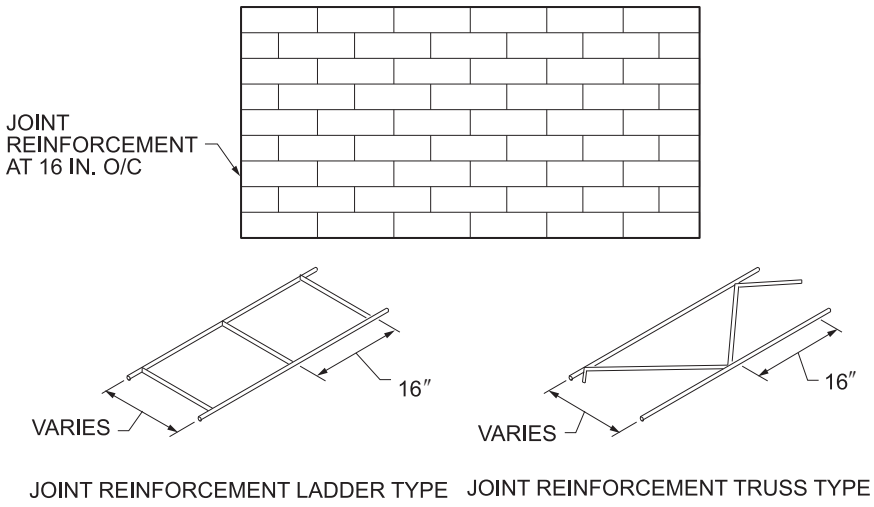

For SI: 1 inch = 25.4 mm.

Figure R606.13.2.3
BONDING WITH PREFABRICATED JOINT REINFORCEMENT

INTERNATIONAL CODE COUNCIL®
Copyright © 2015 ICC. ALL RIGHTS RESERVED. Accessed by David Dammon on Jun 21, 2017 12:30:52 PM pursuant to License Agreement with ICC. No further reproduction or distribution authorized. ANY UNAUTHORIZED REPRODUCTION OR DISTRIBUTION IS A VIOLATION OF THE FEDERAL COPYRIGHT ACT AND THE LICENSE AGREEMENT, AND SUBJECT TO CIVIL AND CRIMINAL PENALTIES THEREUNDER.

R606.13.3.2 Rubble stone masonry. Rubble stone masonry 24 inches (610 mm) or less in thickness shall have bonder units with a maximum spacing of 3 feet (914 mm) vertically and 3 feet (914 mm) horizontally, and if the masonry is of greater thickness than 24 inches (610 mm), shall have one bonder unit for each 6 square feet (0.557 m^2) of wall surface on both sides.

❖ See the commentary to Section R606.13.3.

R606.14 Anchored and adhered masonry veneer.

❖ Section R606 does not contain provisions for anchored or adhered veneer, which is located in Chapter 7.

Sections R606.14.1 and R606.14.4 provide a pointer to the anchored and adhered veneer provisions of Chapter 7.

R606.14.1 Anchored veneer. Anchored masonry veneer installed over a backing of wood or cold-formed steel shall meet the requirements of Section R703.8.

❖ See the commentary to Section R606.14.

R606.14.2 Adhered veneer. Adhered masonry veneer shall be installed in accordance with the requirements of Section R703.12.

❖ See the commentary to Section R606.14.

SECTION R607
GLASS UNIT MASONRY

R607.1 General. Panels of glass unit masonry located in load-bearing and nonload-bearing exterior and interior walls shall be constructed in accordance with this section.

❖ Code provisions for glass unit masonry are empirical. By definition (see the definition for "Masonry unit, glass" in Section R202) these units are nonload-bearing. Therefore, when they are used in a wall opening, a properly designed header or lintel must be installed. Furthermore, panels of glass unit masonry must be isolated from the structure so that in-plane loads are not transferred to the glass.

R607.2 Materials. Hollow glass units shall be partially evacuated and have a minimum average glass face thickness of $^3/_{16}$ inch (5 mm). The surface of units in contact with mortar shall be treated with a polyvinyl butyral coating or latex-based paint. The use of reclaimed units is prohibited.

❖ Glass masonry units may be hollow or solid. Hollow units must have the required minimum face thickness. The materials specified for treating edges in contact with mortar improve the bonding between glass blocks and mortar.

R607.3 Units. Hollow or solid glass block units shall be standard or thin units.

❖ Hollow or solid-glass units are classified as either standard units or thin units.

R607.3.1 Standard units. The specified thickness of standard units shall be not less than $3^7/_8$ inches (98 mm).

❖ See the commentary to Section R607.3.

R607.3.2 Thin units. The specified thickness of thin units shall be not less than $3^1/_8$ inches (79 mm) for hollow units and not less than 3 inches (76 mm) for solid units.

❖ See the commentary to Section R607.3.

R607.4 Isolated panels. Isolated panels of glass unit masonry shall conform to the requirements of this section.

❖ The code limits hollow glass unit masonry panel sizes based on structural and performance considerations. Height limits are more restrictive than length limits, primarily as a result of historical requirements rather than actual field experience or engineering principles. Exterior panels constructed of standard units may be up to 144 square feet (13.4 m^2). Exterior panels constructed of thin units are limited to 85 square feet (7.9 m^2). Interior panels are limited to 250 square feet (23.2 m^2) for standard units and 150 square feet (13.9 m^2) for thin units. These limitations are derived from TMS 402/ACI 530/ASCE 5.

R607.4.1 Exterior standard-unit panels. The maximum area of each individual standard-unit panel shall be 144 square feet (13.4 m^2) where the design wind pressure is 20 pounds per square foot (958 Pa). The maximum area of such panels subjected to design wind pressures other than 20 pounds per square foot (958 Pa) shall be in accordance with Figure R607.4.1. The maximum panel dimension between structural supports shall be 25 feet (7620 mm) in width or 20 feet (6096 mm) in height.

❖ The area limit specified in this section corresponds to a wind pressure of 20 psf (958 Pa). The area should be adjusted using Figure R607.4.1 for other values of wind pressure (see commentary, Section R607.4).

R607.4.2 Exterior thin-unit panels. The maximum area of each individual thin-unit panel shall be 85 square feet (7.9 m^2). The maximum dimension between structural supports shall be 15 feet (4572 mm) in width or 10 feet (3048 mm) in height. Thin units shall not be used in applications where the design wind pressure as stated in Table R301.2(1) exceeds 20 pounds per square foot (958 Pa).

❖ See the commentary to Section R607.4.

R607.4.3 Interior panels. The maximum area of each individual standard-unit panel shall be 250 square feet (23.2 m^2). The maximum area of each thin-unit panel shall be 150 square feet (13.9 m^2). The maximum dimension between structural supports shall be 25 feet (7620 mm) in width or 20 feet (6096 mm) in height.

❖ See the commentary to Section R607.4.

R607.4.4 Curved panels. The width of curved panels shall conform to the requirements of Sections R607.4.1, R607.4.2 and R607.4.3, except additional structural supports shall be provided at locations where a curved section joins a straight section, and at inflection points in multicurved walls.

❖ Support is required for standard and thin units, exterior and interior panels, at locations where a curved panel joins a straight section, and at inflection points (see the commentary to Section R607.4.

INTERNATIONAL CODE COUNCIL®
Copyright © 2015 ICC. ALL RIGHTS RESERVED. Accessed by David Dammon on Jun 21, 2017 12:30:52 PM pursuant to License Agreement with ICC. No further reproduction or distribution authorized. ANY UNAUTHORIZED REPRODUCTION OR DISTRIBUTION IS A VIOLATION OF THE FEDERAL COPYRIGHT ACT AND THE LICENSE AGREEMENT, AND SUBJECT TO CIVIL AND CRIMINAL PENALTIES THEREUNDER.

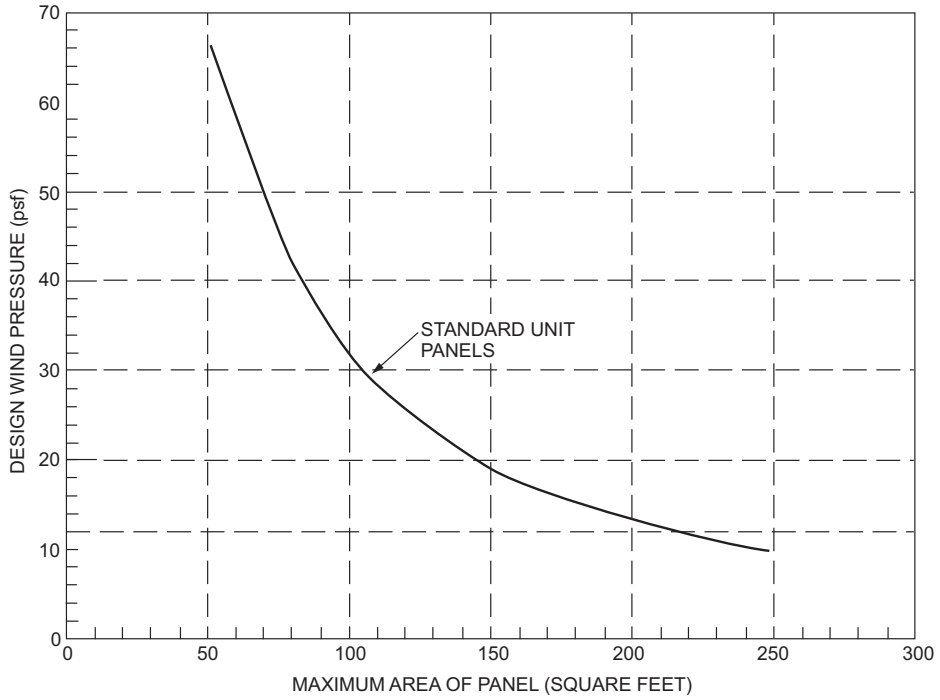

For SI: 1 square foot = 0.0929 m^2, 1 pound per square foot = 0.0479 kPa.

FIGURE R607.4.1
GLASS UNIT MASONRY DESIGN WIND LOAD RESISTANCE

R607.5 Panel support. Glass unit masonry panels shall conform to the support requirements of this section.

❖ Structural members supporting glass-unit masonry panels must meet the deflection limit of this section to minimize the potential for cracking in the glass panels. Lateral support is required for the top and sides of panels and may be accomplished by anchors or channel-type restraints.

R607.5.1 Deflection. The maximum total deflection of structural members that support glass unit masonry shall not exceed $^{1}/_{600}$.

❖ See the commentary to Section R607.5.

R607.5.2 Lateral support. Glass unit masonry panels shall be laterally supported along the top and sides of the panel. Lateral supports for glass unit masonry panels shall be designed to resist not less than 200 pounds per lineal feet (2918 N/m) of panel, or the actual applied loads, whichever is greater. Except for single unit panels, lateral support shall be provided by panel anchors along the top and sides spaced not greater than 16 inches (406 mm) on center or by channel-type restraints. Single unit panels shall be supported by channel-type restraints.

Exceptions:

1. Lateral support is not required at the top of panels that are one unit wide.
2. Lateral support is not required at the sides of panels that are one unit high.

❖ See the commentary to Section R607.5.

R607.5.2.1 Panel anchor restraints. Panel anchors shall be spaced not greater than 16 inches (406 mm) on center in both jambs and across the head. Panel anchors shall be embedded not less than 12 inches (305 mm) and shall be provided with two fasteners so as to resist the loads specified in Section R607.5.2.

❖ See Commentary Figure R607.5.2.1.

R607.5.2.2 Channel-type restraints. Glass unit masonry panels shall be recessed not less than 1 inch (25 mm) within channels and chases. Channel-type restraints shall be oversized to accommodate expansion material in the opening, packing and sealant between the framing restraints, and the glass unit masonry perimeter units.

❖ This type of lateral support is an option to the anchors described in the previous section. No specific material is specified for the channel, which means that any channel-type restraint providing the lateral support specified by Section R607.5.2 is acceptable.

R607.6 Sills. Before bedding of glass units, the sill area shall be covered with a water base asphaltic emulsion coating. The coating shall be not less than $^{1}/_{8}$ inch (3 mm) thick.

❖ Application of asphaltic emulsion is recommended by glass block manufacturers. See Commentary Figure R607.5.2.1.

R607.7 Expansion joints. Glass unit masonry panels shall be provided with expansion joints along the top and sides at all structural supports. Expansion joints shall be not less than $^{3}/_{8}$ inch (10 mm) in thickness and shall have sufficient thickness

INTERNATIONAL CODE COUNCIL®
Copyright © 2015 ICC. ALL RIGHTS RESERVED. Accessed by David Dammon on Jun 21, 2017 12:30:52 PM pursuant to License Agreement with ICC. No further reproduction or distribution authorized. ANY UNAUTHORIZED REPRODUCTION OR DISTRIBUTION IS A VIOLATION OF THE FEDERAL COPYRIGHT ACT AND THE LICENSE AGREEMENT, AND SUBJECT TO CIVIL AND CRIMINAL PENALTIES THEREUNDER.

to accommodate displacements of the supporting structure. Expansion joints shall be entirely free of mortar and other debris and shall be filled with resilient material.

❖ See Commentary Figure R607.5.2.1.

R607.8 Mortar. Glass unit masonry shall be laid with Type S or N mortar. Mortar shall not be retempered after initial set. Mortar unused within $1^1/_2$ hours after initial mixing shall be discarded.

❖ See the commentary to Section R606.2.7.

R607.9 Reinforcement. Glass unit masonry panels shall have horizontal joint reinforcement spaced not greater than 16 inches (406 mm) on center located in the mortar bed joint. Horizontal joint reinforcement shall extend the entire length of the panel but shall not extend across expansion joints. Longitudinal wires shall be lapped not less than 6 inches (152 mm) at splices. Joint reinforcement shall be placed in the bed joint immediately below and above openings in the panel. The reinforcement shall have not less than two parallel longitudinal wires of size W1.7 or greater, and have welded cross wires of size W1.7 or greater.

❖ See Commentary Figure R607.5.2.1.

R607.10 Placement. Glass units shall be placed so head and bed joints are filled solidly. Mortar shall not be furrowed. Head and bed joints of glass unit masonry shall be $^1/_4$ inch (6.4 mm) thick, except that vertical joint thickness of radial panels shall be not less than $^1/_8$ inch (3 mm) or greater than $^5/_8$ inch (16 mm). The bed joint thickness tolerance shall be minus $^1/_{16}$ inch (1.6 mm) and plus $^1/_8$ inch (3 mm). The head joint thickness tolerance shall be plus or minus $^1/_8$ inch (3 mm).

❖ This section specifies the joint thicknesses and tolerances consistent with TMS 402/ACI 530/ASCE 5.

SECTION R608
EXTERIOR CONCRETE WALL CONSTRUCTION

R608.1 General. Exterior concrete walls shall be designed and constructed in accordance with the provisions of this section or in accordance with the provisions of PCA 100 or ACI 318. Where PCA 100, ACI 318 or the provisions of this section are used to design concrete walls, project drawings, typical details and specifications are not required to bear the seal of the architect or engineer responsible for design, unless otherwise required by the state law of the jurisdiction having authority.

❖ These provisions are for exterior concrete walls which should be designed in accordance with this section or under one of the following design documents:

ACI 318: *Building Code Requirements for Structural Concrete*

PCA100: *Prescriptive Design of Exterior Concrete Walls for One- and Two-family Dwellings*

Exterior concrete walls are usually designed and constructed to carry the vertical loads from the structure above and to resist wind and seismic lateral forces. Walls must be cast-in-place using either removable or stay-in-place forming systems. This section provides requirements, primarily in tables and figures, that will permit the exterior wall of typical homes to be constructed of concrete without the added expense of hiring a registered design professional.

Most states do not require the seal of an architect or engineer for small residential buildings. Check with the state authorities in the location of the project for local regulations.

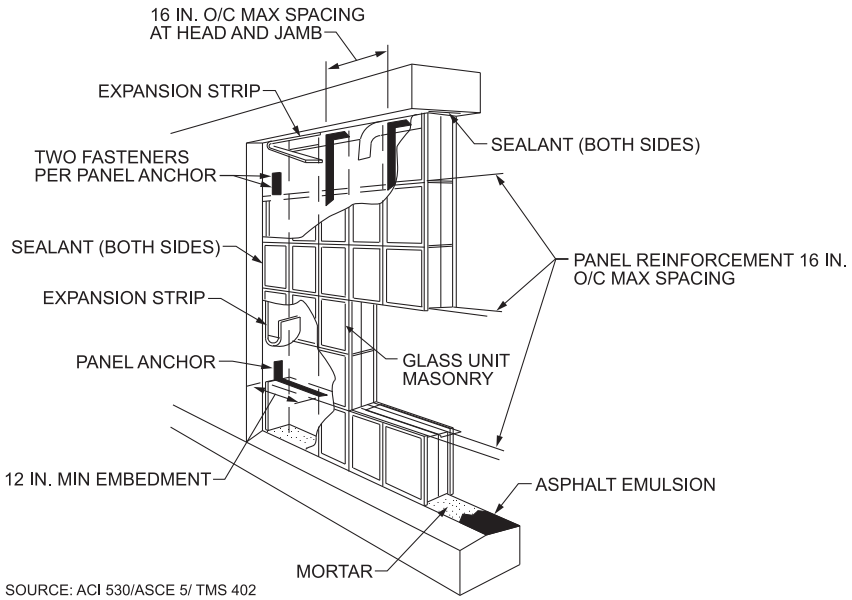

For SI: 1 inch = 25.4 mm.

Figure R607.5.2.1
GLASS UNIT MASONRY

INTERNATIONAL CODE COUNCIL®
Copyright © 2015 ICC. ALL RIGHTS RESERVED. Accessed by David Dammon on Jun 21, 2017 12:30:52 PM pursuant to License Agreement with ICC. No further reproduction or distribution authorized. ANY UNAUTHORIZED REPRODUCTION OR DISTRIBUTION IS A VIOLATION OF THE FEDERAL COPYRIGHT ACT AND THE LICENSE AGREEMENT, AND SUBJECT TO CIVIL AND CRIMINAL PENALTIES THEREUNDER.

R608.1.1 Interior construction. These provisions are based on the assumption that interior walls and partitions, both load-bearing and nonload-bearing, floors and roof/ceiling assemblies are constructed of *light-framed construction* complying with the limitations of this code and the additional limitations of Section R608.2. Design and construction of light-framed assemblies shall be in accordance with the applicable provisions of this code. Where second-story exterior walls are of *light-framed construction*, they shall be designed and constructed as required by this code.

Aspects of concrete construction not specifically addressed by this code, including interior concrete walls, shall comply with ACI 318.

❖ The provisions of Section R608 are based on the assumption that the exterior concrete walls would be used in combination with floors, roofs and interior walls of light-framed construction complying with the prescriptive requirements of the code. Light-framed construction includes members of wood or cold-formed steel.

While Section R608 does not address the use of interior walls of concrete construction, in some cases such walls can be used without adversely affecting the performance of buildings designed in accordance with this section. Interior concrete walls must be designed in accordance with the code or ACI 318.

R608.1.2 Other concrete walls. Exterior concrete walls constructed in accordance with this code shall comply with the shapes and minimum concrete cross-sectional dimensions of Table R608.3. Other types of forming systems resulting in concrete walls not in compliance with this section shall be designed in accordance with ACI 318.

❖ It is intended that portions of the building and aspects of concrete construction not specifically addressed by Section R608 be designed and constructed in accordance with ACI 318.

R608.2 Applicability limits. The provisions of this section shall apply to the construction of exterior concrete walls for buildings not greater than 60 feet (18 288 mm) in plan dimensions, floors with clear spans not greater than 32 feet (9754 mm) and roofs with clear spans not greater than 40 feet (12 192 mm). Buildings shall not exceed 35 feet (10 668 mm) in mean roof height or two stories in height above grade. Floor/ceiling dead loads shall not exceed 10 pounds per square foot (479 Pa), roof/ceiling dead loads shall not exceed 15 pounds per square foot (718 Pa) and *attic* live loads shall not exceed 20 pounds per square foot (958 Pa). Roof overhangs shall not exceed 2 feet (610 mm) of horizontal projection beyond the exterior wall and the dead load of the overhangs shall not exceed 8 pounds per square foot (383 Pa).

Walls constructed in accordance with the provisions of this section shall be limited to buildings subjected to a maximum design wind speed of 160 mph (72 m/s) Exposure B, 136 mph (61 m/s) Exposure C and 125 mph (56 m/s) Exposure D. Walls constructed in accordance with the provisions of this section shall be limited to detached one- and two-family *dwellings* and townhouses assigned to Seismic Design Category A or B, and detached one- and two-family *dwellings* assigned to Seismic Design Category C.

Buildings that are not within the scope of this section shall be designed in accordance with PCA 100 or ACI 318.

❖ The requirements set forth in Section R608 apply only to the construction of houses that meet the limits set forth in Section R608.2 (see Commentary Figure R608.2). The applicability limits are necessary for defining reasonable boundaries to the conditions that must be considered in developing prescriptive construction requirements. This section, however, does not limit the

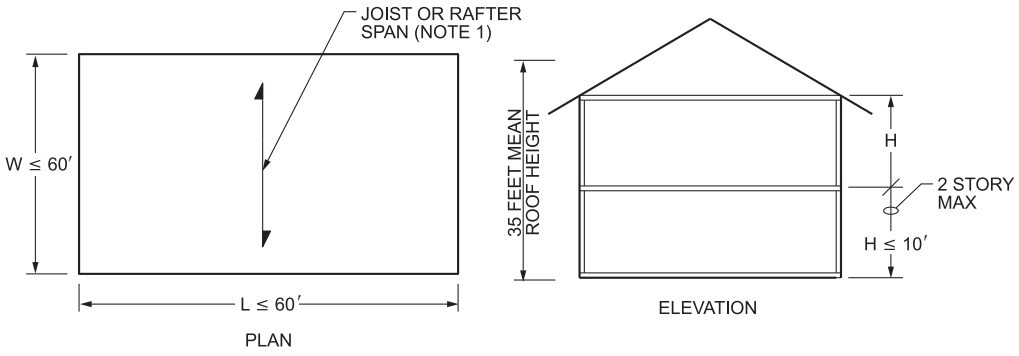

NOTES:

1. MAXIMUM CLEAR SPANS: 32 FT (FLOOR JOISTS), 40 FT (RAFTERS)
2. MAXIMUM GROUND SNOW 70 PSF
3. MAXIMUM WIND SPEED 160 MPH, EXPOSURE B, 136 mph, EXPOSURE C OR 125 mph, EXPOSURE D
4. SEISMIC DESIGN CATEGORY A, B OR C FOR DETACHED ONE- AND TWO-FAMILY DWELLINGS, A OR B FOR TOWNHOUSES

For SI: 1 foot = 304.8 mm, 1 psf = 0.0479 kPa, 1 mph = 0.447 m/s.

Figure R608.2
ICF APPLICABILITY LIMITS

INTERNATIONAL CODE COUNCIL®
Copyright © 2015 ICC. ALL RIGHTS RESERVED. Accessed by David Dammon on Jun 21, 2017 12:30:52 PM pursuant to License Agreement with ICC. No further reproduction or distribution authorized. ANY UNAUTHORIZED REPRODUCTION OR DISTRIBUTION IS A VIOLATION OF THE FEDERAL COPYRIGHT ACT AND THE LICENSE AGREEMENT, AND SUBJECT TO CIVIL AND CRIMINAL PENALTIES THEREUNDER.

application of alternative methods or materials through engineering design by a registered design professional.

The applicability limits are based on industry convention and experience. Detailed applicability limits were documented in the process of developing prescriptive design requirements for various elements of the structure. In some cases, engineering sensitivity analyses were performed to help define appropriate limits.

The applicability limits strike a reasonable balance among engineering theory, available test data and proven field practices for typical residential construction applications. They are intended to prevent misapplication while at the same time addressing a reasonably large percentage of new housing conditions.

The limits of Section R608.2 apply to detached one- or two-family dwellings, and townhouses, with maximum building plan dimensions of 60 feet (18 288 mm), that are not more than two stories in height above grade, excluding a basement that is not considered a story above grade plane.

The provisions for above-grade exterior concrete walls are limited to buildings where the maximum design wind speed is 160 miles per hour (72 m/s) Exposure B, 136 miles per hour (61 m/s) Exposure C and 125 miles per hour (56 m/s) Exposure D. Also, the provisions are limited to detached one- and two-family dwellings and townhouses in SDC A or B, and detached one- and two-family dwellings in SDC C. One- and two-family dwellings located in higher design wind speed regions and requiring seismic design will be required to be designed in accordance with PCA 100 or ACI 318. Townhouses in SDC C and all buildings in SDC D must meet the requirements in PCA Standard 100 or be designed in accordance with ACI 318.

R608.3 Concrete wall systems. Concrete walls constructed in accordance with these provisions shall comply with the shapes and minimum concrete cross-sectional dimensions of Table R608.3.

❖ The minimum thickness and cross-section dimension of concrete walls must comply with Table R608.3. This section prescribes the dimensional requirements of exterior concrete walls. The requirements for flat, waffle-grid and screen-gird wall systems are prescribed.

For flat wall systems refer to Figure R608.3(1). Unlike masonry units, which must be manufactured in accordance with an ASTM standard, there is no standard to require the minimum thickness of nominal 6-, 8-, 10-, or 12-inch (152, 203, 254 or 305 mm) flat concrete walls. The actual as-built minimum thickness is permitted to be no more than $^1/_2$ inch (12.7 mm) less than the nominal thickness (see Note d of Table R611.3).

The design strength of flat concrete walls is based on thicknesses of 5.5, 7.5, 9.5 and 11.5 inches (140, 191, 241 and 292 mm).

For waffle-grid and screen-grid systems, refer to Figures R608.3(2) and R608.3(3). For waffle-grid and screen-grid minimum thickness, see Notes e, f and g of Table R608.3.

R608.3.1 Flat wall systems. Flat concrete wall systems shall comply with Table R608.3 and Figure R608.3(1) and have a minimum nominal thickness of 4 inches (102 mm).

❖ See the commentary to Section R608.3.

R608.3.2 Waffle-grid wall systems. Waffle-grid wall systems shall comply with Table R608.3 and Figure R608.3(2) and shall have a minimum nominal thickness of 6 inches (152 mm) for the horizontal and vertical concrete members (cores). The core and web dimensions shall comply with Table R608. 3. The maximum weight of waffle-grid walls shall comply with Table R608.3.

❖ See the commentary to Section R608.3.

R608.3.3 Screen-grid wall systems. Screen-grid wall systems shall comply with Table R608.3 and Figure R608.3(3) and shall have a minimum nominal thickness of 6 inches (152 mm) for the horizontal and vertical concrete members (cores). The core dimensions shall comply with Table R608.3. The maximum weight of screen-grid walls shall comply with Table R608.3.

❖ See the commentary to Section R608.3.

R608.4 Stay-in-place forms. Stay-in-place concrete forms shall comply with this section.

❖ Materials that stay in place after concrete cures must be able to withstand the rigors of the environment. From a thermal standpoint, most stay-in-place form systems and some removable form systems that incorporate insulation into the wall before the concrete is placed provide enough insulating value to meet code requirements. However, some forming systems will require the addition of insulation to the interior or exterior of the concrete wall to meet code requirements for insulating value. The form material, except foam plastic, can be anything that meets the flame spread and smoke-developed indexes of Section R302.9. Foam plastic must comply with Section R316.3. Covering foam plastic that would otherwise be exposed to the interior of the building must comply with Sections R316.4 and R702.3.4. Adhesively attaching the gypsum board to the foam plastic as the only means of fastening is not permitted out of concern that when the adhesive is exposed to higher temperature expected in a fire, it may soften and allow the gypsum board to delaminate from the foam plastic.

It is generally accepted that a monolithic concrete wall is a solid wall through which water and air cannot readily flow; however, there is a possibility that the concrete wall may have drying shrinkage cracks through which water may enter. Small gaps between stay-in-place form blocks are inherent in current screen-grid stay-in-place form walls and may allow water to enter the structure. As a result, a moisture barrier on the exterior face of the stay-in-place form wall is generally required and should be considered minimum acceptable practice.

Flat wall insulating concrete form (ICF) systems must comply with ASTM E2634.

INTERNATIONAL CODE COUNCIL®
Copyright © 2015 ICC. ALL RIGHTS RESERVED. Accessed by David Dammon on Jun 21, 2017 12:30:52 PM pursuant to License Agreement with ICC. No further reproduction or distribution authorized. ANY UNAUTHORIZED REPRODUCTION OR DISTRIBUTION IS A VIOLATION OF THE FEDERAL COPYRIGHT ACT AND THE LICENSE AGREEMENT, AND SUBJECT TO CIVIL AND CRIMINAL PENALTIES THEREUNDER.

TABLE R608.3
DIMENSIONAL REQUIREMENTS FOR WALLS[a, b]

WALL TYPE AND NOMINAL THICKNESS	MAXIMUM WALL WEIGHT[c] (psf)	MINIMUM WIDTH, W, OF VERTICAL CORES (inches)	MINIMUM THICKNESS, T, OF VERTICAL CORES (inches)	MAXIMUM SPACING OF VERTICAL CORES (inches)	MAXIMUM SPACING OF HORIZONTAL CORES (inches)	MINIMUM WEB THICKNESS (inches)
4″ Flat[d]	50	N/A	N/A	N/A	N/A	N/A
6″ Flat[d]	75	N/A	N/A	N/A	N/A	N/A
8″ Flat[d]	100	N/A	N/A	N/A	N/A	N/A
10″ Flat[d]	125	N/A	N/A	N/A	N/A	N/A
6″ Waffle-grid	56	8[e]	5.5[e]	12	16	2
8″ Waffle-grid	76	8[f]	8[f]	12	16	2
6″ Screen-grid	53	6.25[g]	6.25[g]	12	12	N/A

For SI: 1 inch = 25.4 mm; 1 pound per square foot = 0.0479 kPa, 1 pound per cubic foot = 2402.77 kg/m^3, 1 square inch = 645.16 mm^2, 1 inch^4 = 42 cm^4.

a. Width “W,” thickness “T,” spacing and web thickness, refer to Figures R608.3(2) and R608.3(3).

b. N/A indicates not applicable.

c. Wall weight is based on a unit weight of concrete of 150 pcf. For flat walls the weight is based on the nominal thickness. The tabulated values do not include any allowance for interior and exterior finishes.

d. Nominal wall thickness. The actual as-built thickness of a flat wall shall not be more than $^1/_2$ inch less or more than $^1/_4$ inch more than the nominal dimension indicated.

e. Vertical core is assumed to be elliptical-shaped. Another shape core is permitted provided the minimum thickness is 5 inches, the moment of inertia, *I*, about the centerline of the wall (ignoring the web) is not less than 65 inch^4, and the area, *A*, is not less than 31.25 square inches. The width used to calculate *A* and *I* shall not exceed 8 inches.

f. Vertical core is assumed to be circular. Another shape core is permitted provided the minimum thickness is 7 inches, the moment of inertia, *I*, about the centerline of the wall (ignoring the web) is not less than 200 inch^4, and the area, *A*, is not less than 49 square inches. The width used to calculate *A* and *I* shall not exceed 8 inches.

g. Vertical core is assumed to be circular. Another shape core is permitted provided the minimum thickness is 5.5 inches, the moment of inertia, *I*, about the centerline of the wall is not less than 76 inch^4, and the area, *A*, is not less than 30.25 square inches. The width used to calculate *A* and *I* shall not exceed 6.25 inches.

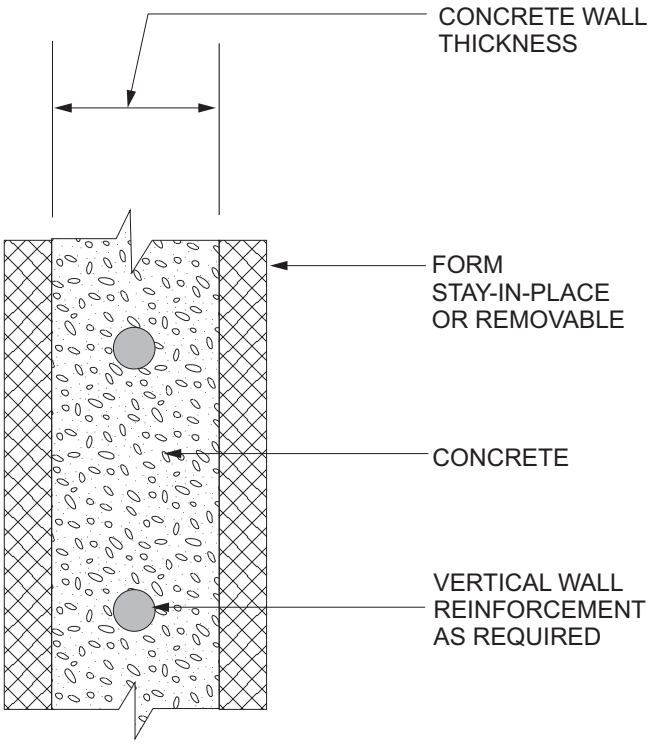

FIGURE R608.3(1)
FLAT WALL SYSTEM

INTERNATIONAL CODE COUNCIL®
Copyright © 2015 ICC. ALL RIGHTS RESERVED. Accessed by David Dammon on Jun 21, 2017 12:30:52 PM pursuant to License Agreement with ICC. No further reproduction or distribution authorized. ANY UNAUTHORIZED REPRODUCTION OR DISTRIBUTION IS A VIOLATION OF THE FEDERAL COPYRIGHT ACT AND THE LICENSE AGREEMENT, AND SUBJECT TO CIVIL AND CRIMINAL PENALTIES THEREUNDER.

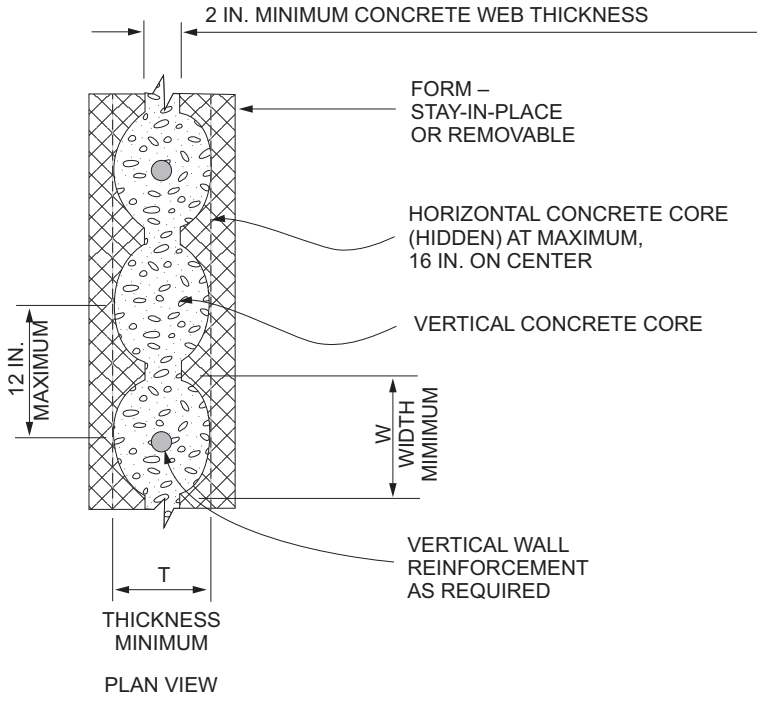

For SI: 1 inch = 25.4 mm.

FIGURE R6083(2)
WAFFLE-GRID WALL SYSTEM

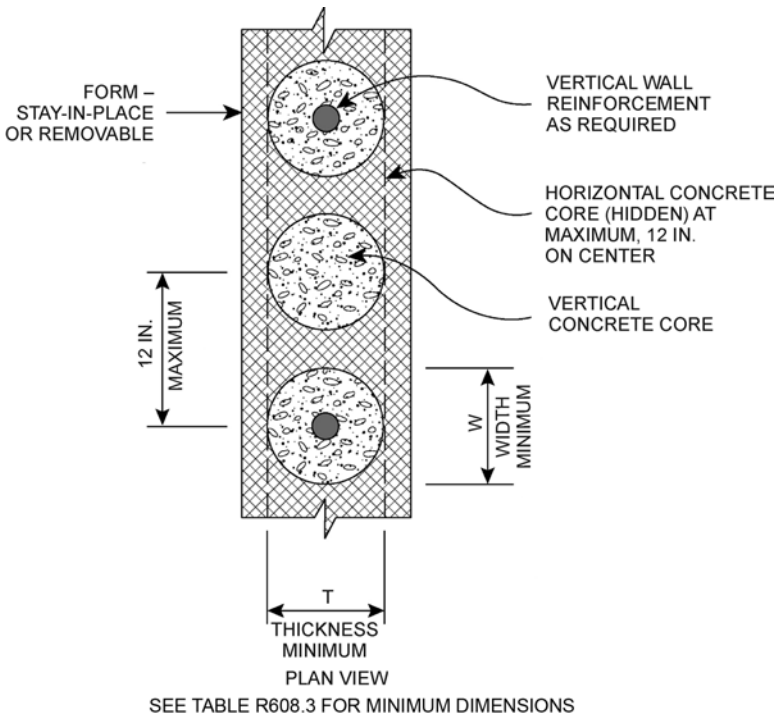

For SI: 1 inch = 25.4 mm.

FIGURE R608.3(3)
SCREEN-GRID WALL SYSTEM

INTERNATIONAL CODE COUNCIL®
Copyright © 2015 ICC. ALL RIGHTS RESERVED. Accessed by David Dammon on Jun 21, 2017 12:30:52 PM pursuant to License Agreement with ICC. No further reproduction or distribution authorized. ANY UNAUTHORIZED REPRODUCTION OR DISTRIBUTION IS A VIOLATION OF THE FEDERAL COPYRIGHT ACT AND THE LICENSE AGREEMENT, AND SUBJECT TO CIVIL AND CRIMINAL PENALTIES THEREUNDER.

R608.4.1 Surface burning characteristics. The flame spread index and smoke-developed index of forming material, other than foam plastic, left exposed on the interior shall comply with Section R302.9. The surface burning characteristics of foam plastic used in insulating concrete forms shall comply with Section R316.3.

❖ See the commentary to Section R608.4.

R608.4.2 Interior covering. Stay-in-place forms constructed of rigid foam plastic shall be protected on the interior of the building as required by Sections R316.4 and R702.3.4. Where gypsum board is used to protect the foam plastic, it shall be installed with a mechanical fastening system. Use of adhesives is permitted in addition to mechanical fasteners.

❖ See the commentary to Section R608.4.

R608.4.3 Exterior wall covering. Stay-in-place forms constructed of rigid foam plastics shall be protected from sunlight and physical damage by the application of an *approved* exterior wall covering complying with this code. Exterior surfaces of other stay-in-place forming systems shall be protected in accordance with this code.

Requirements for installation of masonry veneer, stucco and other finishes on the exterior of concrete walls and other construction details not covered in this section shall comply with the requirements of this code.

❖ See the commentary to Section R608.4.

R608.4.4 Flat ICF wall systems. Flat ICF wall system forms shall conform to ASTM E2634.

❖ See the commentary to Section R608.4.

R608.5 Materials. Materials used in the construction of concrete walls shall comply with this section.

❖ Concrete walls are composed of three basic materials: concrete, reinforcing steel for concrete and form materials. These materials must comply with this section or ACI 318.

R608.5.1 Concrete and materials for concrete. Materials used in concrete, and the concrete itself, shall conform to requirements of this section, PCA 100 or ACI 318.

❖ Concrete and materials for concrete must comply with this section, PCA 100 or ACI 318.

R608.5.1.1 Cements. The following standards as referenced in Chapter 44 shall be permitted to be used.

1. ASTM C150
2. ASTM C595
3. ASTM C1157

❖ This section lists the standards for cements that are permitted to be used for concrete specified in Section R608.5. The three types listed are for Portland cement, blended hydraulic cement and hydraulic cement (refer to Chapter 44 for the latest edition to use).

R608.5.1.2 Concrete mixing and delivery. Mixing and delivery of concrete shall comply with ASTM C94 or ASTM C685.

❖ Concrete must be mixed and delivered in accordance with requirements of *Specification for Ready-mixed Concrete*, ASTM C94 or ASTM C685, *Specification for Concrete Made by Volumetric Batching and Continuous Mixing*. Test methods for uniformity of mixing are given in ASTM C94.

R608.5.1.3 Maximum aggregate size. The nominal maximum size of coarse aggregate shall not exceed one-fifth the narrowest distance between sides of forms, or three-fourths the clear spacing between reinforcing bars or between a bar and the side of the form.

> **Exception:** When *approved*, these limitations shall not apply where removable forms are used and workability and methods of consolidation permit concrete to be placed without honeycombs or voids.

❖ The maximum aggregate size is based on requirements in ACI 318. These limitations on aggregate size are intended to result in concrete that can be placed such that it properly encases reinforcement and minimizes honeycombing and voids. The exception, which is also based on ACI 318, is limited to use with removable forms because proper placement and encasement of reinforcement can be verified through visual inspection after removal of forms.

R608.5.1.4 Proportioning and slump of concrete. Proportions of materials for concrete shall be established to provide workability and consistency to permit concrete to be worked readily into forms and around reinforcement under conditions of placement to be employed, without segregation or excessive bleeding. Slump of concrete placed in removable forms shall not exceed 6 inches (152 mm).

> **Exception:** When *approved*, the slump is permitted to exceed 6 inches (152 mm) for concrete mixtures that are resistant to segregation, and are in accordance with the form manufacturer's recommendations.

Slump of concrete placed in stay-in-place forms shall exceed 6 inches (152 mm). Slump of concrete shall be determined in accordance with ASTM C143.

❖ The maximum slump requirements are based on current practice. Considerations included in the prescribed maximums are ease of placement, ability to fill cavities thoroughly and limiting the pressures exerted on the form by fresh concrete.

Where removable wall forms are used, maximum slump of concrete is 6 inches (152 mm). The maximum slump is based on experience with ease of placement, ability to fill cavities thoroughly, and limiting the pressures exerted on the form by fresh concrete. The 6-inch (152 mm) maximum slump refers to the characteristics of the specified mixture proportions based on water/cementitious materials ratio only. The exception

INTERNATIONAL CODE COUNCIL®
Copyright © 2015 ICC. ALL RIGHTS RESERVED. Accessed by David Dammon on Jun 21, 2017 12:30:52 PM pursuant to License Agreement with ICC. No further reproduction or distribution authorized. ANY UNAUTHORIZED REPRODUCTION OR DISTRIBUTION IS A VIOLATION OF THE FEDERAL COPYRIGHT ACT AND THE LICENSE AGREEMENT, AND SUBJECT TO CIVIL AND CRIMINAL PENALTIES THEREUNDER.

envisions the use of mid-range or high-range water-reducing admixtures to increase the slump above 6 inches (152 mm), since their use does not adversely affect the tendency of the aggregate to segregate.

The minimum slump requirement for walls cast in stay-in-place forms must be greater than 6 inches (152 mm). It is important that the concrete mix design utilize proper materials in the proper proportions so that the specified strength is achieved at the specified slump [i.e., greater that 6 inches (152 mm)]. Ordering a concrete mix at a lower slump (e.g., 4 inches [102 mm]) and adding water at the job site to increase the slump to more than 6 inches (152 mm) will adversely affect the strength of the concrete, and possibly jeopardize the safety of the structure. Normally it would be expected that a concrete mixture with a specified slump in excess of 6 inches (152 mm) would contain mid-range or high-range water-reducing admixtures so as to mitigate the possibility of segregation of the aggregate.

R608.5.1.5 Compressive strength. The minimum specified compressive strength of concrete, f'_c, shall comply with Section R402.2 and shall be not less than 2,500 pounds per square inch (17.2 MPa) at 28 days.

❖ The minimum specified compressive strength of concrete of 2,500 psi (17.2 MPa) is based on the minimum current practice, which corresponds to minimum compressive strength permitted by ACI 318 and Section R402.2 of the code (see commentary, Section R402.2).

R608.5.1.6 Consolidation of concrete. Concrete shall be consolidated by suitable means during placement and shall be worked around embedded items and reinforcement and into corners of forms. Where stay-in-place forms are used, concrete shall be consolidated by internal vibration.

Exception: When *approved*, self-consolidating concrete mixtures with slumps equal to or greater than 8 inches (203 mm) that are specifically designed for placement without internal vibration need not be internally vibrated.

❖ Where stay-in-place forms are used, concrete must be consolidated by internal vibration. A study by Portland Cement Association (PCA) determined that internal vibration is required. The study showed that with standard mix design with a slump between 4 inches (102 mm) and 8 inches (203 mm) that internal vibration is required. Two of the mixtures were intended to be used without internal vibration and good results were obtained with both. One mixture utilized a high-range water-reducing admixture to achieve a slump between 8 inches (203 mm) and 10 inches (254 mm). The other contained a high-range water-reducing admixture and a viscosity-modifying admixture to achieve a self-consolidating concrete (SCC) with a slump in excess of 8 inches (203 mm). Slumps in excess of 8 inches (203 mm) should not be obtained by the use of water alone since segregation is likely.

R608.5.2 Steel reinforcement and anchor bolts.

❖ This section prescribes the requirements for the steel reinforcement for concrete walls. Also, this section contains the requirements for anchor bolts and tension straps for connection details.

R608.5.2.1 Steel reinforcement. Steel reinforcement shall comply with ASTM A615, ASTM A706, or ASTM A996. ASTM A996 bars produced from rail steel shall be Type R.

❖ The types of steel reinforcement permitted by this section are consistent with ACI 318. The wall reinforcement tables, in Section R608.6.2, are based on Grade 60 [minimum yield strength of 60,000 psi (414 mPa)]. However, Section R608.5.4.7 has provisions for use of alternate grades. Type R is specified for ASTM A996 (rail steel) because the ASTM standard permits two designations. The type designated R is specified because it is the only one of the two that complies with the more stringent bend requirements of ACI 318.

R608.5.2.2 Anchor bolts. Anchor bolts for use with connection details in accordance with Figures R608.9(1) through R608.9(12) shall be bolts with heads complying with ASTM A307 or ASTM F1554. ASTM A307 bolts shall be Grade A with heads. ASTM F1554 bolts shall be Grade 36 minimum. Instead of bolts with heads, it is permissible to use rods with threads on both ends fabricated from steel complying with ASTM A36. The threaded end of the rod to be embedded in the concrete shall be provided with a hex or square nut.

❖ All bolts in the prescriptive details of Figures R608.9(1) through R608.9(12) may be subject to tensile loading. Since the concrete breakout strength in tension is considerably greater for a headed bolt versus a hooked bolt of the same size and embedment depth, the prescriptive designs are based on the use of bolts with heads. In lieu of bolts with heads, the provisions permit the use of rods with threads on both ends with the end embedded in the concrete having a hex or square nut. ACI 318 requires that connections subjected to seismic forces be designed to fail in a ductile manner. Therefore, it is imperative that bolts with a higher yield strength or bolts larger than specified in the figures not be used in these connections since it is likely that in the event of a load being applied that is greater than that assumed in design, the concrete may fail prior to the bolt yielding.

R608.5.2.3 Sheet steel angles and tension tie straps. Angles and tension tie straps for use with connection details in accordance with Figures R608.9(1) through R608.9(12) shall be fabricated from sheet steel complying with ASTM A653 SS, ASTM A792 SS, or ASTM A875 SS. The steel shall be minimum Grade 33 unless a higher grade is required by the applicable figure.

❖ Grade 33 is the minimum grade of sheet steel specified for components of connections in Figures R608.9(1) through R608.9(12) because it is the lowest strength recognized under the standards for structural steel (Type SS). The requirement applies to angles and other

INTERNATIONAL CODE COUNCIL®
Copyright © 2015 ICC. ALL RIGHTS RESERVED. Accessed by David Dammon on Jun 21, 2017 12:30:52 PM pursuant to License Agreement with ICC. No further reproduction or distribution authorized. ANY UNAUTHORIZED REPRODUCTION OR DISTRIBUTION IS A VIOLATION OF THE FEDERAL COPYRIGHT ACT AND THE LICENSE AGREEMENT, AND SUBJECT TO CIVIL AND CRIMINAL PENALTIES THEREUNDER.

components of connections that are field fabricated and is not intended to apply to proprietary clip angles and other proprietary connectors that are available.

R608.5.3 Form materials and form ties. Forms shall be made of wood, steel, aluminum, plastic, a composite of cement and foam insulation, a composite of cement and wood chips, or other *approved* material suitable for supporting and containing concrete. Forms shall provide sufficient strength to contain concrete during the concrete placement operation.

Form ties shall be steel, solid plastic, foam plastic, a composite of cement and wood chips, a composite of cement and foam plastic, or other suitable material capable of resisting the forces created by fluid pressure of fresh concrete.

❖ The materials listed are based on currently available removable and stay-in-place forming systems. From a structural design standpoint, the material can be anything that has sufficient strength and durability to contain the concrete during pouring and curing.

R608.5.4 Reinforcement installation details.

❖ This section contains the requirements for concrete wall reinforcement support and cover, location, lap splices, development lengths, hooks and alternate grade.

R608.5.4.1 Support and cover. Reinforcement shall be secured in the proper location in the forms with tie wire or other bar support system such that displacement will not occur during the concrete placement operation. Steel reinforcement in concrete cast against the earth shall have a minimum cover of 3 inches (76 mm). Minimum cover for reinforcement in concrete cast in removable forms that will be exposed to the earth or weather shall be $1^1/_2$ inches (38 mm) for No. 5 bars and smaller, and 2 inches (50 mm) for No. 6 bars and larger. For concrete cast in removable forms that will not be exposed to the earth or weather, and for concrete cast in stay-in-place forms, minimum cover shall be $^3/_4$ inch (19 mm). The minus tolerance for cover shall not exceed the smaller of one-third the required cover and $^3/_8$ inch (10 mm). See Section R608.5.4.4 for cover requirements for hooks of bars developed in tension.

❖ Reinforcement should be adequately supported in the forms to prevent displacement by concrete placement or workers. Concrete cover as protection of reinforcement against weather and other effects is measured from the concrete surface to the outermost surface of the steel to which the cover requirement applies. The condition "concrete surfaces exposed to earth or weather" refers to direct exposure to moisture changes and not just to temperature changes. Stay-in-place forms provide an alternative method of protecting from earth or weather and the minimum cover for concrete not exposed to weather or earth is allowed. The tolerance for cover is based on ACI 318 requirements.

R608.5.4.2 Location of reinforcement in walls. For location of reinforcement in foundation walls and above-grade walls, see Sections R404.1.2.3.7.2 and R608.6.5, respectively.

❖ See the commentary to Section R608.6.5 for exterior concrete above-grade walls.

See the commentary to Section R404.1.2.3.7.2 for foundation walls.

R608.5.4.3 Lap splices. Vertical and horizontal wall reinforcement required by Sections R608.6 and R608.7 shall be the longest lengths practical. Where splices are necessary in reinforcement, the length of lap splices shall be in accordance with Table R608.5.4(1) and Figure R608.5.4(1). The maximum gap between noncontact parallel bars at a lap splice shall not exceed the smaller of one-fifth the required lap length and 6 inches (152 mm). See Figure R608.5.4(1).

❖ Where continuous bars are not provided, lap splices are necessary to allow forces to be transferred between sections of rebar. The length of lap splices in Table R608.5.4(1) is based on ACI 318 requirements. Noncontact lap splices are permitted provided the spacing of lapped bars does not exceed the smaller of one fifth the required lap length or 6 inches (152 mm). If individual bars in noncontact lap splices are too widely spaced, an unreinforced section is created. Forcing a potential crack to follow a zigzag line (5:1 slope) is considered a minimum precaution. These requirements are based on ACI 318. Figure R608.5.4(1) illustrates the code text requirements.

R608.5.4.4 Development of bars in tension. Where bars are required to be developed in tension by other provisions of this code, development lengths and cover for hooks and bar extensions shall comply with Table R608.5.4(1) and Figure R608.5.4(2). The development lengths shown in Table R608.5.4(1) shall apply to bundled bars in lintels installed in accordance with Section R608.8.2.2.

❖ Development lengths and cover for hooks and bar extensions must comply with Table R608.5.4(1) and Figure R608.5.4(2). These requirements are based on ACI 318.

R608.5.4.5 Standard hooks. Where reinforcement is required by this code to terminate with a standard hook, the hook shall comply with Figure R608.5.4(3).

❖ The hook requirements shown in Figure R608.5.4(3) are consistent with ACI 318 requirements.

R608.5.4.6 Webs of waffle-grid walls. Reinforcement, including stirrups, shall not be placed in webs of waffle-grid walls, including lintels. Webs are permitted to have form ties.

❖ Reinforcement must not be placed in the web of waffle-grid walls and lintels.

R608.5.4.7 Alternate grade of reinforcement and spacing. Where tables in Sections R404.1.3 and R608.6 specify vertical wall reinforcement based on minimum bar size and maximum spacing, which are based on Grade 60 (420 MPa) steel reinforcement, different size bars or bars made from a different grade of steel are permitted provided an equivalent area of steel per linear foot of wall is provided. Use of Table R608.5.4(2) is permitted to determine the maximum bar spacing for different bar sizes than specified in the tables and/or bars made from a different grade of steel. Bars shall not be spaced less than one-half the wall thickness, or more than 48 inches (1219 mm) on center.

❖ See the commentary to Section R608.5.2.1.

INTERNATIONAL CODE COUNCIL®
Copyright © 2015 ICC. ALL RIGHTS RESERVED. Accessed by David Dammon on Jun 21, 2017 12:30:52 PM pursuant to License Agreement with ICC. No further reproduction or distribution authorized. ANY UNAUTHORIZED REPRODUCTION OR DISTRIBUTION IS A VIOLATION OF THE FEDERAL COPYRIGHT ACT AND THE LICENSE AGREEMENT, AND SUBJECT TO CIVIL AND CRIMINAL PENALTIES THEREUNDER.

TABLE R608.5.4(1)
LAP SPLICE AND TENSION DEVELOPMENT LENGTHS

	BAR SIZE NO.	YIELD STRENGTH OF STEEL, f_y- psi (MPa)	
		40,000 (280)	60,000 (420)
		Splice length or tension development length (inches)	
Lap splice length-tension	4	20	30
	5	25	38
	6	30	45
Tension development length for straight bar	4	15	23
	5	19	28
	6	23	34
Tension development length for: a.90-degree and 180-degree standard hooks with not less than $2^1/_2$ inches of side cover perpendicular to plane of hook, and b.90-degree standard hooks with not less than 2 inches of cover on the bar extension beyond the hook.	4	6	9
	5	7	11
	6	8	13
Tension development length for bar with 90-degree or 180-degree standard hook having less cover than required above.	4	8	12
	5	10	15
	6	12	18

For SI: 1 inch = 25.4 mm.

❖ See the commentary to Sections R608.5.4.3 and R608.5.4.4.

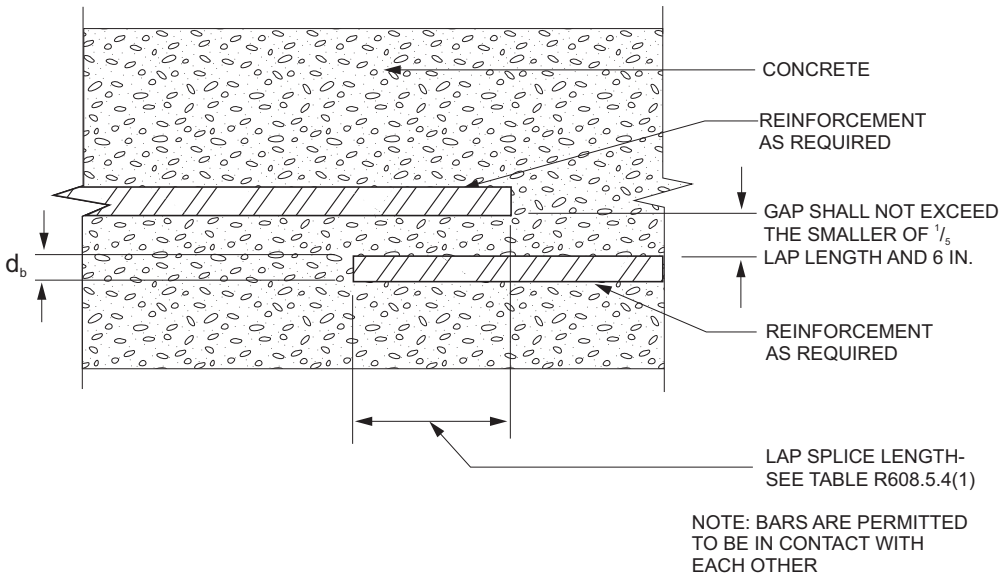

For SI: 1 inch = 25.4 mm.

FIGURE R608.5.4(1)
LAP SPLICES

❖ This figure illustrates the requirements of Section R608.5.4.3.

INTERNATIONAL CODE COUNCIL®
Copyright © 2015 ICC. ALL RIGHTS RESERVED. Accessed by David Dammon on Jun 21, 2017 12:30:52 PM pursuant to License Agreement with ICC. No further reproduction or distribution authorized. ANY UNAUTHORIZED REPRODUCTION OR DISTRIBUTION IS A VIOLATION OF THE FEDERAL COPYRIGHT ACT AND THE LICENSE AGREEMENT, AND SUBJECT TO CIVIL AND CRIMINAL PENALTIES THEREUNDER.

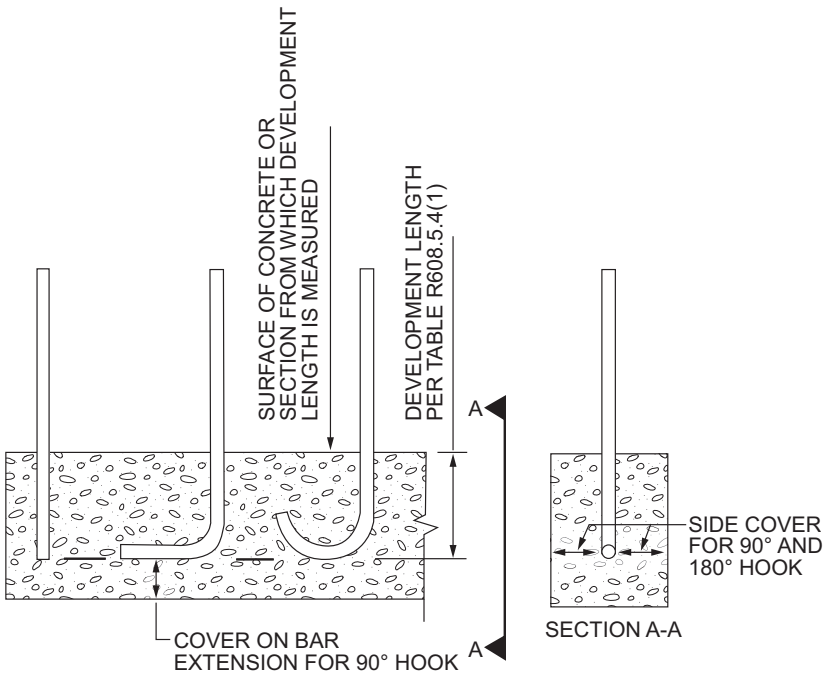

For SI: 1 degree = 0.0175 rad.

FIGURE R608.5.4(2)
DEVELOPMENT LENGTH AND COVER FOR HOOKS AND BAR EXTENSION

❖ See the commentary to Section R608.5.4.4.

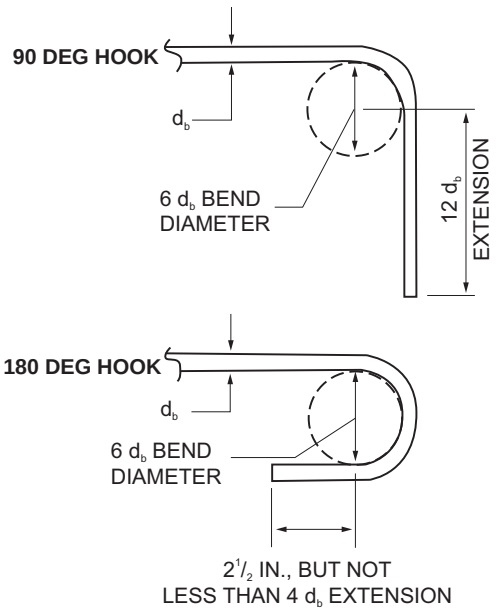

HOOKS FOR REINFORCEMENT IN WALLS AND FOUNDATIONS

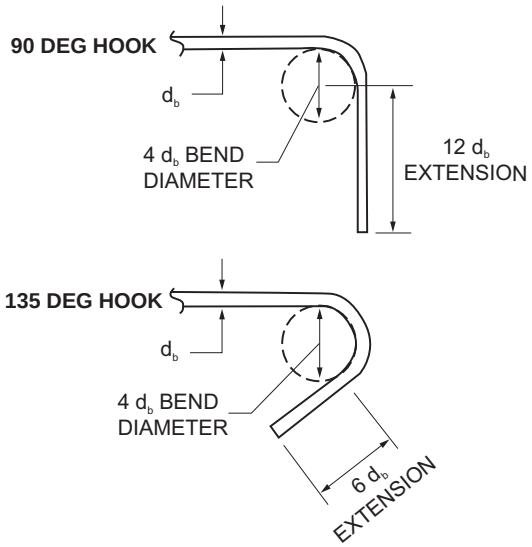

HOOKS FOR STIRRUPS IN LINTELS

For SI: 1 inch = 25.4 mm, 1 degree = 0.0175 rad.

FIGURE R608.5.4(3)
STANDARD HOOKS

❖ See the commentary to Section R608.5.4.5.

INTERNATIONAL CODE COUNCIL®
Copyright © 2015 ICC. ALL RIGHTS RESERVED. Accessed by David Dammon on Jun 21, 2017 12:30:52 PM pursuant to License Agreement with ICC. No further reproduction or distribution authorized. ANY UNAUTHORIZED REPRODUCTION OR DISTRIBUTION IS A VIOLATION OF THE FEDERAL COPYRIGHT ACT AND THE LICENSE AGREEMENT, AND SUBJECT TO CIVIL AND CRIMINAL PENALTIES THEREUNDER.

TABLE R608.5.4(2)
MAXIMUM SPACING FOR ALTERNATIVE BAR SIZE AND/OR ALTERNATIVE GRADE OF STEEL[a, b, c]

BAR SPACING FROM APPLICABLE TABLE IN SECTION R608.6 (inches)	BAR SIZE FROM APPLICABLE TABLE IN SECTION R608.6														
	#4					#5					#6				
	Alternate bar size and/or alternate grade of steel desired														
	Grade 60		Grade 40			Grade 60		Grade 40			Grade 60		Grade 40		
	#5	#6	#4	#5	#6	#4	#6	#4	#5	#6	#4	#5	#4	#5	#6
	Maximum spacing for alternate bar size and/or alternate grade of steel (inches)														
8	12	18	5	8	12	5	11	3	5	8	4	6	2	4	5
9	14	20	6	9	13	6	13	4	6	9	4	6	3	4	6
10	16	22	7	10	15	6	14	4	7	9	5	7	3	5	7
11	17	24	7	11	16	7	16	5	7	10	5	8	3	5	7
12	19	26	8	12	18	8	17	5	8	11	5	8	4	6	8
13	20	29	9	13	19	8	18	6	9	12	6	9	4	6	9
14	22	31	9	14	21	9	20	6	9	13	6	10	4	7	9
15	23	33	10	16	22	10	21	6	10	14	7	11	5	7	10
16	25	35	11	17	23	10	23	7	11	15	7	11	5	8	11
17	26	37	11	18	25	11	24	7	11	16	8	12	5	8	11
18	28	40	12	19	26	12	26	8	12	17	8	13	5	8	12
19	29	42	13	20	28	12	27	8	13	18	9	13	6	9	13
20	31	44	13	21	29	13	28	9	13	19	9	14	6	9	13
21	33	46	14	22	31	14	30	9	14	20	10	15	6	10	14
22	34	48	15	23	32	14	31	9	15	21	10	16	7	10	15
23	36	48	15	24	34	15	33	10	15	22	10	16	7	11	15
24	37	48	16	25	35	15	34	10	16	23	11	17	7	11	16
25	39	48	17	26	37	16	35	11	17	24	11	18	8	12	17
26	40	48	17	27	38	17	37	11	17	25	12	18	8	12	17
27	42	48	18	28	40	17	38	12	18	26	12	19	8	13	18
28	43	48	19	29	41	18	40	12	19	26	13	20	8	13	19
29	45	48	19	30	43	19	41	12	19	27	13	20	9	14	19
30	47	48	20	31	44	19	43	13	20	28	14	21	9	14	20
31	48	48	21	32	45	20	44	13	21	29	14	22	9	15	21
32	48	48	21	33	47	21	45	14	21	30	15	23	10	15	21
33	48	48	22	34	48	21	47	14	22	31	15	23	10	16	22
34	48	48	23	35	48	22	48	15	23	32	15	24	10	16	23
35	48	48	23	36	48	23	48	15	23	33	16	25	11	16	23
36	48	48	24	37	48	23	48	15	24	34	16	25	11	17	24
37	48	48	25	38	48	24	48	16	25	35	17	26	11	17	25
38	48	48	25	39	48	25	48	16	25	36	17	27	12	18	25
39	48	48	26	40	48	25	48	17	26	37	18	27	12	18	26
40	48	48	27	41	48	26	48	17	27	38	18	28	12	19	27
41	48	48	27	42	48	26	48	18	27	39	19	29	12	19	27
42	48	48	28	43	48	27	48	18	28	40	19	30	13	20	28
43	48	48	29	44	48	28	48	18	29	41	20	30	13	20	29
44	48	48	29	45	48	28	48	19	29	42	20	31	13	21	29
45	48	48	30	47	48	29	48	19	30	43	20	32	14	21	30
46	48	48	31	48	48	30	48	20	31	44	21	32	14	22	31
47	48	48	31	48	48	30	48	20	31	44	21	33	14	22	31
48	48	48	32	48	48	31	48	21	32	45	22	34	15	23	32

For SI: 1 inch = 25.4 mm.

a. This table is for use with tables in Section R608.6 that specify the minimum bar size and maximum spacing of vertical wall reinforcement for foundation walls and above-grade walls. Reinforcement specified in tables in Section R608.6 is based on Grade 60 (420 MPa) steel reinforcement.

b. Bar spacing shall not exceed 48 inches on center and shall be not less than one-half the nominal wall thickness.

c. For Grade 50 (350 MPa) steel bars (ASTM A996, Type R), use spacing for Grade 40 (280 MPa) bars or interpolate between Grade 40 (280 MPa) and Grade 60 (420 MPa).

❖ See the commentary to Section R608.5.2.1.

INTERNATIONAL CODE COUNCIL®
Copyright © 2015 ICC. ALL RIGHTS RESERVED. Accessed by David Dammon on Jun 21, 2017 12:30:52 PM pursuant to License Agreement with ICC. No further reproduction or distribution authorized. ANY UNAUTHORIZED REPRODUCTION OR DISTRIBUTION IS A VIOLATION OF THE FEDERAL COPYRIGHT ACT AND THE LICENSE AGREEMENT, AND SUBJECT TO CIVIL AND CRIMINAL PENALTIES THEREUNDER.

R608.5.5 Construction joints in walls. Construction joints shall be made and located to not impair the strength of the wall. Construction joints in plain concrete walls, including walls required to have not less than No. 4 bars at 48 inches (1219 mm) on center by Section R608.6, shall be located at points of lateral support, and not less than one No. 4 bar shall extend across the construction joint at a spacing not to exceed 24 inches (610 mm) on center. Construction joint reinforcement shall have not less than 12 inches (305 mm) embedment on both sides of the joint. Construction joints in reinforced concrete walls shall be located in the middle third of the span between lateral supports, or located and constructed as required for joints in plain concrete walls.

Exception: Vertical wall reinforcement required by this code is permitted to be used in lieu of construction joint reinforcement, provided the spacing does not exceed 24 inches (610 mm), or the combination of wall reinforcement and No. 4 bars described in Section R608.5.5 does not exceed 24 inches (610 mm).

❖ Construction joints must be located where they will cause the least weakness in the structure. The reinforcement required by this section is required to provide for transfer of shear and other forces through the construction joint. These provisions are consistent with ACI 318.

R608.6 Above-grade wall requirements.

❖ This section provides the following requirements for above-grade concrete walls:

- General requirements
- Wall reinforcement
- Continuity of vertical reinforcement between stories
- Termination of vertical reinforcement in the topmost story
- Location of reinforcement in the wall

R608.6.1 General. The minimum thickness of load-bearing and nonload-bearing above-grade walls and reinforcement shall be as set forth in the appropriate table in this section based on the type of wall form to be used. The wall shall be designed in accordance with ACI 318 where the wall or building is not within the limitations of Section R608.2, where design is required by the tables in this section or where the wall is not within the scope of the tables in this section.

Above-grade concrete walls shall be constructed in accordance with this section and Figure R608.6(1), R608.6(2), R608.6(3) or R608.6(4). Above-grade concrete walls that are continuous with stem walls and not laterally supported by the slab-on-ground shall be designed and constructed in accordance with this section. Concrete walls shall be supported on continuous foundation walls or slabs-on-ground that are monolithic with the footing in accordance with Section R403. The minimum length of solid wall without openings shall be in accordance with Section R608.7. Reinforcement around openings, including lintels, shall be in accordance with Section R608.8. Lateral support for above-grade walls in the out-of-plane direction shall be provided by connections to the floor framing system, if applicable, and to ceiling and roof framing systems in accordance with Section R608.9. The wall thickness shall be equal to or greater than the thickness of the wall in the *story* above.

❖ Section R608.6 provides reinforcement tables for load-bearing and nonload-bearing above-grade walls constructed within the applicability limits of Section R608.2. Section R608.6.2 provides the minimum required vertical and horizontal wall reinforcement for different design wind pressures and three wall heights. Vertical wall reinforcement tables are limited to one- and two-story buildings for nonload-bearing and load-bearing walls, in accordance with Figure R608.6(1), R608.6(2), R608.6(3) or R608.6(4).

Section R608.6 completely replaces the prescriptive technical provisions for exterior concrete walls from the 2006 edition of the code. The new provisions reflect changes made to ACI 318 and ASCE 7 since the provisions in the previous code were developed. The new provisions cover horizontal and vertical reinforcement in Section R608.6, reinforcement and shear wall (solid walls) requirements for wind loads in Section R608.7 and revised reinforcement requirements around openings and lintels over openings in Section R608.8. Additionally, the provisions providing revised details for connecting wood frame assemblies (floors, ceilings and roofs) to exterior concrete walls and added details for connecting cold-formed steel framing assemblies to the exterior concrete walls are contained in Section R608.9.

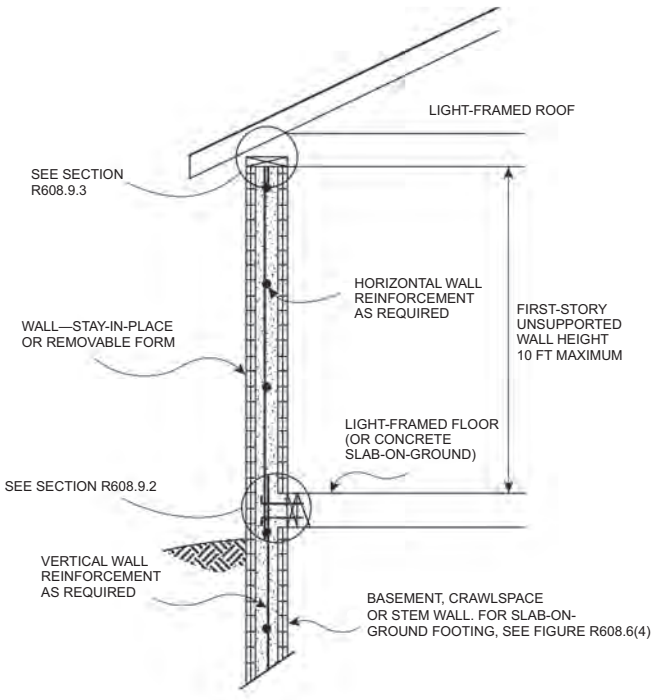

SECTION CUT THROUGH FLAT WALL FOR VERTICAL CORE OF A WAFFLE- OR SCREEN-GRID WALL

For SI: 1 foot = 304.8 mm.

FIGURE R608.6(1)
ABOVE-GRADE CONCRETE WALL CONSTRUCTION ONE STORY

❖ See the commentary to Section R608.6.1.

INTERNATIONAL CODE COUNCIL®
Copyright © 2015 ICC. ALL RIGHTS RESERVED. Accessed by David Dammon on Jun 21, 2017 12:30:52 PM pursuant to License Agreement with ICC. No further reproduction or distribution authorized. ANY UNAUTHORIZED REPRODUCTION OR DISTRIBUTION IS A VIOLATION OF THE FEDERAL COPYRIGHT ACT AND THE LICENSE AGREEMENT, AND SUBJECT TO CIVIL AND CRIMINAL PENALTIES THEREUNDER.

R608.6.2 Wall reinforcement for wind. Vertical wall reinforcement for resistance to out-of-plane wind forces shall be determined from Table R608.6(1), R608.6(2), R608.6(3) or R608.6(4). For the design of nonload-bearing walls, in Tables R608.6(1), R608.6(2) and R608.6(3) use the appropriate column labeled "Top." (see Sections R608.7.2.2.2 and R608.7.2.2.3). There shall be a vertical bar at corners of exterior walls. Unless more horizontal reinforcement is required by Section R608.7.2.2.1, the minimum horizontal reinforcement shall be four No. 4 bars [Grade 40 (280 MPa)] placed as follows: top bar within 12 inches (305 mm) of the top of the wall, bottom bar within 12 inches (305 mm) of the finish floor and one bar each at approximately one-third and two-thirds of the wall height.

❖ The wall reinforcement must be in accordance with this section and Tables R608.6(1), R608.6(2), R608.6(3) and R608.6(4).

The following design assumptions were used in developing these tables.

1. Walls are simply supported at each floor and roof that provides lateral support, or by the exterior finish ground level in the case where walls are continuous with stem walls.
2. Lateral support is provided for the wall by the floors and roof, and by the slab-on-ground where the wall is monolithic with or anchored to the slab.
3. Allowable deflection criterion is the laterally unsupported height of the wall, in inches (mm), divided by 240.
4. The minimum possible axial load is considered for each case. For "top" bearing walls, no axial load was considered. For "side" bearing walls, the moment induced by the eccentricity of the dead and live load of the floor construction supported by the ledger board or cold-formed steel track bolted to the side of the wall was considered since it is additive with the moment induced by the outward-acting wind load. The axial load on the wall due to the floor construction supported by the ledger board or cold-formed steel track was not considered.
5. Wind loads were calculated in accordance with ASCE 7 for enclosed buildings using components and cladding pressure coefficients for the wall interior zone (designated number 4 in Figure 30.4-1 of ASCE 7), effective wind area of 10 square feet (0.929 m^2) and mean roof height of 35 feet (10.7 m).

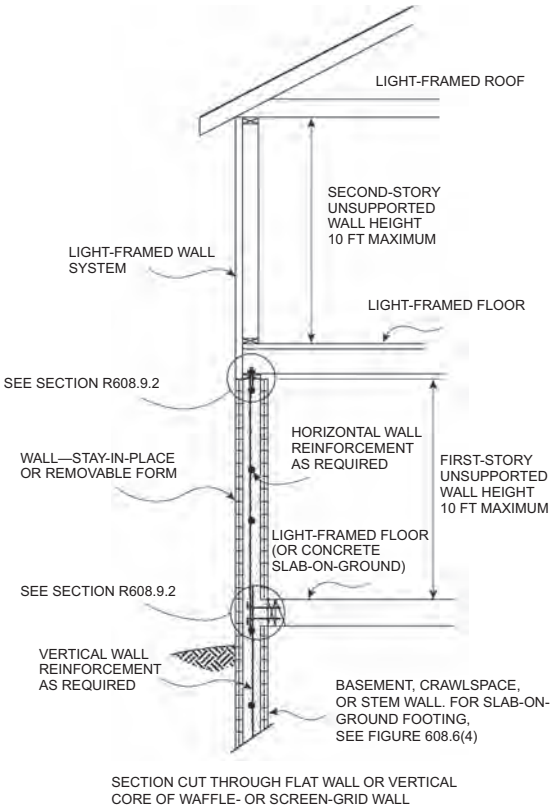

For SI: 1 foot = 304.8 mm.

FIGURE R608.6(2)
ABOVE-GRADE CONCRETE WALL CONSTRUCTION CONCRETE FIRST STORY AND LIGHT-FRAMED SECOND STORY

❖ See the commentary to Section R608.6.1.

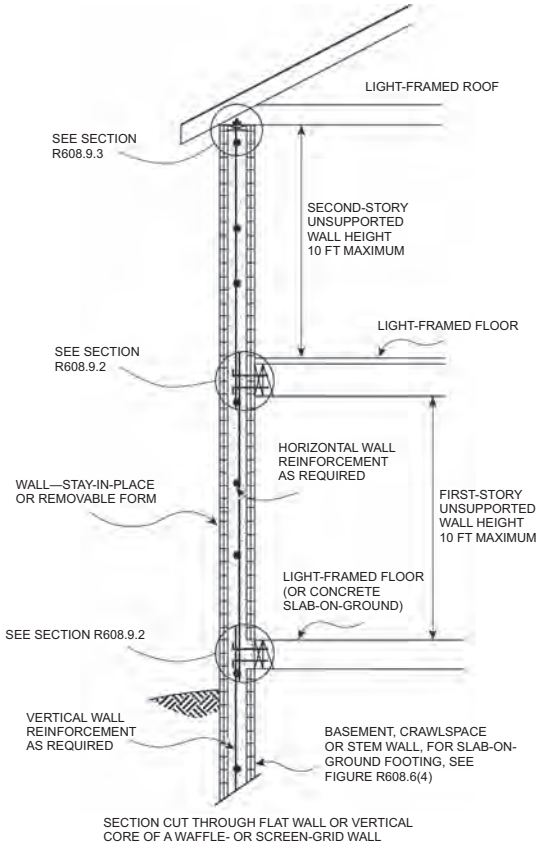

For SI: 1 foot = 304.8 mm.

FIGURE R608.6(3)
ABOVE-GRADE CONCRETE WALL CONSTRUCTION TWO-STORY

❖ See the commentary to Section R608.6.1.

INTERNATIONAL CODE COUNCIL®
Copyright © 2015 ICC. ALL RIGHTS RESERVED. Accessed by David Dammon on Jun 21, 2017 12:30:52 PM pursuant to License Agreement with ICC. No further reproduction or distribution authorized. ANY UNAUTHORIZED REPRODUCTION OR DISTRIBUTION IS A VIOLATION OF THE FEDERAL COPYRIGHT ACT AND THE LICENSE AGREEMENT, AND SUBJECT TO CIVIL AND CRIMINAL PENALTIES THEREUNDER.

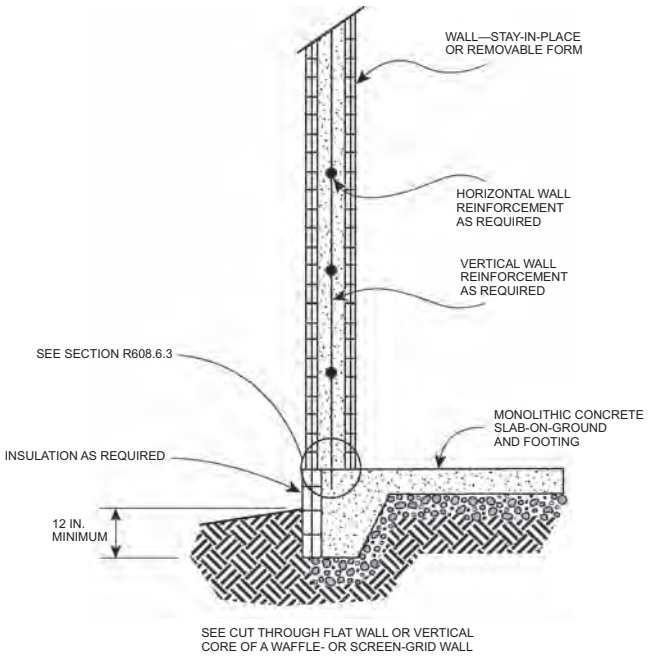

For SI: 1 inch = 25.4 mm.

FIGURE R608.6(4)
ABOVE-GRADE CONCRETE WALL SUPPORTED ON MONOLITHIC SLAB-ON-GROUND FOOTING

❖ See the commentary to Section R608.6.1.

R608.6.3 Continuity of wall reinforcement between stories. Vertical reinforcement required by this section shall be continuous between elements providing lateral support for the wall. Reinforcement in the wall of the *story* above shall be continuous with the reinforcement in the wall of the *story* below, or the foundation wall, if applicable. Lap splices, where required, shall comply with Section R608.5.4.3 and Figure R608.5.4(1). Where the above-grade wall is supported by a monolithic slab-on-ground and footing, dowel bars with a size and spacing to match the vertical above-grade concrete wall reinforcement shall be embedded in the monolithic slab-on-ground and footing the distance required to develop the dowel bar in tension in accordance with Section R608.5.4.4 and Figure R608.5.4(2) and lap-spliced with the above-grade wall reinforcement in accordance with Section R608.5.4.3 and Figure R608.5.4(1).

Exception: Where reinforcement in the wall above cannot be made continuous with the reinforcement in the wall below, the bottom of the reinforcement in the wall above shall be terminated in accordance with one of the following:

1. Extend below the top of the floor the distance required to develop the bar in tension in accordance with Section R608.5.4.4 and Figure R608.5.4(2).
2. Lap-spliced in accordance with Section R608.5.4.3 and Figure R608.5.4(1) with a dowel bar that extends into the wall below the distance required to develop the bar in tension in accordance with Section R608.5.4.4 and Figure R608.5.4(2).

Where a construction joint in the wall is located below the level of the floor and less than the distance required to develop the bar in tension, the distance required to develop the bar in tension shall be measured from the top of the concrete below the joint. See Section R608.5.5.

❖ The wall vertical reinforcement must be continuous through the basement, crawl space or stem wall and must be continuous through the stories above and terminate at the top of the top-most story.

Where there is no basement, crawl space or stem wall, the continuous vertical reinforcement must be doweled into a monolithic slab-on-ground footing in accordance with Section R608.5.4.4.

Where continuity cannot be made, the exception permits extending the wall reinforcing below the top of the floor to the required development length or lap-splice with a dowel bar in the wall below.

R608.6.4 Termination of reinforcement. Where indicated in Items 1 through 3, vertical wall reinforcement in the top-most *story* with concrete walls shall be terminated with a 90-degree (1.57 rad) standard hook complying with Section R608.5.4.5 and Figure R608.5.4(3).

1. Vertical bars adjacent to door and window openings required by Section R608.8.1.2.
2. Vertical bars at the ends of required solid wall segments (see Section R608.7.2.2.2).
3. Vertical bars (other than end bars, see Item 2) used as shear reinforcement in required solid wall segments where the reduction factor for design strength, R_3, used is based on the wall having horizontal and vertical shear reinforcement (see Section R608.7.2.2.3).

The bar extension of the hook shall be oriented parallel to the horizontal wall reinforcement and be within 4 inches (102 mm) of the top of the wall.

Horizontal reinforcement shall be continuous around the building corners by bending one of the bars and lap-splicing it with the bar in the other wall in accordance with Section R608.5.4.3 and Figure R608.5.4(1).

Exception: In lieu of bending horizontal reinforcement at corners, separate bent reinforcing bars shall be permitted provided that the bent bar is lap-spliced with the horizontal reinforcement in both walls in accordance with Section R608.5.4.3 and Figure R608.5.4(1).

In required solid wall segments where the reduction factor for design strength, R_3, is based on the wall having horizontal and vertical shear reinforcement in accordance with Section R608.7.2.2.1, horizontal wall reinforcement shall be terminated with a standard hook complying with Section R608.5.4.5 and Figure R608.5.4(3) or in a lap-splice, except at corners where the reinforcement shall be continuous as required.

❖ This section prescribes the required termination of the vertical reinforcement at the top of the top-most story and the termination of the horizontal reinforcement at the building corners.

The vertical wall reinforcement in the top-most story must terminate with a 90-degree (1.57 rad) standard hook oriented parallel to the horizontal wall reinforce-

INTERNATIONAL CODE COUNCIL®
Copyright © 2015 ICC. ALL RIGHTS RESERVED. Accessed by David Dammon on Jun 21, 2017 12:30:52 PM pursuant to License Agreement with ICC. No further reproduction or distribution authorized. ANY UNAUTHORIZED REPRODUCTION OR DISTRIBUTION IS A VIOLATION OF THE FEDERAL COPYRIGHT ACT AND THE LICENSE AGREEMENT, AND SUBJECT TO CIVIL AND CRIMINAL PENALTIES THEREUNDER.

ment and within 4 inches (102 mm) of the top of the wall. This applies to the following vertical bars:

1. The required minimum vertical wall reinforcement.
2. Vertical bars adjacent to door and window openings.
3. Vertical bars at the ends of required solid wall segments.
4. Vertical shear reinforcing bars (except other than end bars for solid wall segments) in accordance with Section R608.7.2.2.3.

The requirement that vertical wall reinforcement be terminated with a standard hook is based on current standards for conventional masonry construction. The requirement has proven very effective in masonry construction conditions with wind speeds of 110 mph (49 m/s) or greater where the wind speed is based on the previous edition of ASCE 7. In the 2006 code the requirement for hooks was triggered at a design wind pressure greater than 40 pounds per square foot (psf). The requirement for hooks in the 2015 code provides for a factored roof uplift force greater than 1000 plf. The hook allows the full tensile strength of the reinforcing bar to be developed and therefore provides additional tensile strength in the concrete wall to resist the large roof uplift forces in high wind areas.

The horizontal reinforcing must be continuous at the building corners. The continuity is achieved by bending the horizontal bar in one wall around the corner with sufficient length to lap splice with the horizontal bar in the other wall. The lap splice is to be in accordance with Section R608.5.4.3. The exception permits the use of a bent corner bar with sufficient length of each leg to lap splice with the horizontal bars in both walls.

R608.6.5 Location of reinforcement in wall. Except for vertical reinforcement at the ends of required solid wall segments, which shall be located as required by Section R608.7.2.2.2, the location of the vertical reinforcement shall not vary from the center of the wall by more than the greater of 10 percent of the wall thickness and $^3/_8$-inch (10 mm). Horizontal and vertical reinforcement shall be located to provide not less than the minimum cover required by Section R608.5.4.1.

❖ The amount of reinforcement required by the tables in Section R608.6 for a given condition of wall type, height, thickness and eccentricity of loads supported was computed based on the centroid of the vertical reinforcement being at the center of the wall. In engineering terms, the effective depth, d, was one-half the wall thickness. The 2006 code required the reinforcement to be located within the center one-third of the wall thickness. Depending on how this was interpreted, this allowed the centroid of the vertical reinforcement to vary by up to one-sixth the wall thickness from the location assumed in the calculations. This meant that the effective depth for a 6-inch (152 mm) wall was reduced 1 inch (25 mm) if the reinforcement was positioned toward the flexural compression side of the wall. This amounted to a reduction in d of approximately 33 percent. Since design moment strength is approximately proportional to the effective depth, this misplacement of the reinforcement from where it was assumed in the design resulted in an approximately 33-percent reduction in design moment strength.

Section R608.6.5 requires that the vertical reinforcement be placed at the center of the wall with a tolerance of the larger of 10 percent of the wall thickness and $^3/_8$-inch (9.5 mm). The latter criterion is based on the tolerance on d in ACI 318 for members with effective depth, d, less than or equal to 8 inches. The ACI 318 tolerance of $^3/_8$-inch (9.5 mm) is approximately 10 percent of the wall thickness of a $3^1/_2$-inch (89 mm) wall. Based on this, it was decided that if 10-percent tolerance was permitted for a very thin wall, then it should also be acceptable for thicker walls.

The location for vertical reinforcement at the ends of solid wall segments must be in accordance with Section R608.7.2.2.2.

R608.7 Solid walls for resistance to lateral forces.

❖ The tables in Section R608.6 are based on concrete walls without door or window openings. This simplified approach rarely arises in residential construction since walls generally contain windows and doors to meet functional needs. The amount of openings affects the lateral (racking) strength of the building parallel to the wall, which resists wind and seismic forces. Section R608.7 addresses the minimum amount of solid wall required to resist in-plane shear loads from wind and seismic forces.

This section prescribes the required length of solid wall, the solid wall segments, minimum length of solid wall segments, maximum spacing of segments, required reinforcement in solid wall segments and required solid wall segments at the ends (corners) of all exterior walls.

R608.7.1 Length of solid wall. Each exterior wall line in each *story* shall have a total length of solid wall required by Section R608.7.1.1. A solid wall is a section of flat, waffle-grid or screen-grid wall, extending the full *story height* without openings or penetrations, except those permitted by Section R608.7.2. Solid wall segments that contribute to the total length of solid wall shall comply with Section R608.7.2.

❖ This section defines a solid wall. A solid wall is permitted to have only openings or penetrations as allowed by Section R608.7.2.

INTERNATIONAL CODE COUNCIL®
Copyright © 2015 ICC. ALL RIGHTS RESERVED. Accessed by David Dammon on Jun 21, 2017 12:30:52 PM pursuant to License Agreement with ICC. No further reproduction or distribution authorized. ANY UNAUTHORIZED REPRODUCTION OR DISTRIBUTION IS A VIOLATION OF THE FEDERAL COPYRIGHT ACT AND THE LICENSE AGREEMENT, AND SUBJECT TO CIVIL AND CRIMINAL PENALTIES THEREUNDER.

TABLE R608.6(1)
MINIMUM VERTICAL REINFORCEMENT FOR FLAT ABOVE-GRADE WALLS[a, b, c, d, e]

MAXIMUM WIND SPEED (mph)			MAXIMUM UNSUPPORTED WALL HEIGHT PER STORY (feet)	MINIMUM VERTICAL REINFORCEMENT-BAR SIZE AND SPACING (inches)[f, g]							
				Nominal[h] wall thickness (inches)							
Exposure Category				4		6		8		10	
B	C	D		Top[i]	Side[i]	Top[i]	Side[i]	Top[i]	Side[i]	Top[i]	Side[i]
115			8	4@48	4@48	4@48	4@48	4@48	4@48	4@48	4@48
			9	4@48	4@39	4@48	4@48	4@48	4@48	4@48	4@48
			10	4@41	4@34	4@48	4@48	4@48	4@48	4@48	4@48
120			8	4@48	4@43	4@48	4@48	4@48	4@48	4@48	4@48
			9	4@48	4@36	4@48	4@48	4@48	4@48	4@48	4@48
			10	4@37	4@34	4@48	4@48	4@48	4@48	4@48	4@48
130	110		8	4@48	4@38	4@48	4@48	4@48	4@48	4@48	4@48
			9	4@39	4@34	4@48	4@48	4@48	4@48	4@48	4@48
			10	4@34	4@34	4@48	4@48	4@48	4@48	4@48	4@48
140	119	110	8	4@43	4@34	4@48	4@48	4@48	4@48	4@48	4@48
			9	4@34	4@34	4@48	4@48	4@48	4@48	4@48	4@48
			10	4@34	4@31	4@48	4@48	4@48	4@48	4@48	4@48
150	127	117	8	4@37	4@34	4@48	4@48	4@48	4@48	4@48	4@48
			9	4@34	4@33	4@48	4@48	4@48	4@48	4@48	4@48
			10	4@31	4@27	4@48	4@48	4@48	4@48	4@48	4@48
160	136	125	8	4@34	4@34	4@48	4@48	4@48	4@48	4@48	4@48
			9	4@34	4@29	4@48	4@48	4@48	4@48	4@48	4@48
			10	4@27	4@24	4@48	4@48	4@48	4@48	4@48	4@48

For SI: 1 inch = 25.4 mm, 1 foot = 304.8 mm, 1 mile per hour = 0.447 m/s, 1 pound per square inch = 1.895 kPa, 1 square foot = 0.0929 m^2.

a. Table is based on ASCE 7 components and cladding wind pressures for an enclosed building using a mean roof height of 35 feet, interior wall area 4, an effective wind area of 10 square feet, topographic factor, K_{zt}, equal to 1.0, and Risk Category II.

b. Table is based on concrete with a minimum specified compressive strength of 2,500 psi.

c. See Section R608.6.5 for location of reinforcement in wall.

d. Deflection criterion is $L/240$, where L is the unsupported height of the wall in inches.

e. Interpolation is not permitted.

f. Where No. 4 reinforcing bars at a spacing of 48 inches are specified in the table as indicated by shaded cells, use of bars with a minimum yield strength of 40,000 psi or 60,000 psi is permitted.

g. Other than for No. 4 bars spaced at 48 inches on center, table values are based on reinforcing bars with a minimum yield strength of 60,000 psi. Vertical reinforcement with a yield strength of less than 60,000 psi or bars of a different size than specified in the table are permitted in accordance with Section R608.5.4.7 and Table R608.5.4(2).

h. See Table R608.3 for tolerances on nominal thicknesses.

i. "Top" means gravity load from roof or floor construction bears on top of wall. "Side" means gravity load from floor construction is transferred to wall from a wood ledger or cold-formed steel track bolted to side of wall. For nonload-bearing walls where floor framing members span parallel to the wall, use of the "Top" bearing condition is permitted.

❖ See the commentary to Section R608.6.2. For flat walls, design strength (i.e., capacity) was based on thicknesses of 3.5, 5.5, 7.5 and 9.5 inches (89, 140, 196 and 241 mm). This approach will provide adequate strength regardless of whether the forms used are $^1/_2$-inch (12.7 mm) less than the stated nominal thickness of 4, 6, 8 or 10 inches (102, 152, 203 or 254 mm) or $^1/_4$-inch (6.4 mm) more than the stated nominal thickness.

INTERNATIONAL CODE COUNCIL®
Copyright © 2015 ICC. ALL RIGHTS RESERVED. Accessed by David Dammon on Jun 21, 2017 12:30:52 PM pursuant to License Agreement with ICC. No further reproduction or distribution authorized. ANY UNAUTHORIZED REPRODUCTION OR DISTRIBUTION IS A VIOLATION OF THE FEDERAL COPYRIGHT ACT AND THE LICENSE AGREEMENT, AND SUBJECT TO CIVIL AND CRIMINAL PENALTIES THEREUNDER.

TABLE R608.6(2)
MINIMUM VERTICAL REINFORCEMENT FOR WAFFLE-GRID ABOVE-GRADE WALLS[a, b, c, d, e]

MAXIMUM WIND SPEED (mph)			MAXIMUM UNSUPPORTED WALL HEIGHT PER STORY (feet)	MINIMUM VERTICAL REINFORCEMENT-BAR SIZE AND SPACING (inches)[f, g]			
				Nominal[h] wall thickness (inches)			
Exposure Category				6		8	
B	C	D		Top[i]	Side[i]	Top[i]	Side[i]
115			8	4@48	4@48	4@48	4@48
			9	4@48	5@43	4@48	4@48
			10	5@47	5@37	4@48	4@48
120			8	4@48	5@48	4@48	4@48
			9	4@48	5@40	4@48	4@48
			10	5@43	5@37	4@48	4@48
130	110		8	4@48	5@42	4@48	4@48
			9	5@45	5@37	4@48	4@48
			10	5@37	5@37	4@48	4@48
140	119	110	8	4@48	5@38	4@48	4@48
			9	5@39	5@37	4@48	4@48
			10	5@37	5@35	4@48	4@48
150	127	117	8	5@43	5@37	4@48	4@48
			9	5@37	5@37	4@48	4@48
			10	5@36	6@44	4@48	4@48
160	136	125	8	5@38	5@37	4@48	4@48
			9	5@37	6@47	4@48	4@48
			10	6@45	6@39	4@48	6@46

For SI: 1 inch = 25.4 mm, 1 foot = 304.8 mm, 1 mile per hour = 0.447 m/s, 1 pound per square inch = 6.895 kPa, 1 square foot = 0.0929 m^2.

a. Table is based on ASCE 7 components and cladding wind pressures for an enclosed building using a mean roof height of 35 feet, interior wall area 4, an effective wind area of 10 square feet, topographic factor, K_{zt}, equal to 1.0, and Risk Category II.

b. Table is based on concrete with a minimum specified compressive strength of 2,500 psi.

c. See Section R608.6.5 for location of reinforcement in wall.

d. Deflection criterion is $L/240$, where L is the unsupported height of the wall in inches.

e. Interpolation is not permitted.

f. Where No. 4 reinforcing bars at a spacing of 48 inches are specified in the table as indicated by shaded cells, use of bars with a minimum yield strength of 40,000 psi or 60,000 psi is permitted.

g. Other than for No. 4 bars spaced at 48 inches on center, table values are based on reinforcing bars with a minimum yield strength of 60,000 psi. Maximum spacings shown are the values calculated for the specified bar size. Where the bar used is Grade 60 and the size specified in the table, the actual spacing in the wall shall not exceed a whole-number multiple of 12 inches such as, 12, 24, 36 and 48, that is less than or equal to the tabulated spacing. Vertical reinforcement with a yield strength of less than 60,000 psi or bars of a different size than specified in the table are permitted in accordance with Section R608.5.4.7 and Table R608.5.4(2).

h. See Table R608.3 for minimum core dimensions and maximum spacing of horizontal and vertical cores.

i. "Top" means gravity load from roof or floor construction bears on top of wall. "Side" means gravity load from floor construction is transferred to wall from a wood ledger or cold-formed steel track bolted to side of wall. For nonload-bearing walls and where floor framing members span parallel to the wall, the "top" bearing condition is permitted to be used.

❖ See the commentary to Section R608.6.2. For 6-inch (152 mm) and 8-inch (203 mm) waffle-grid walls, rectangular cross sections with through-the-wall thicknesses of 5 inches (127 mm) and 7 inch (178 mm) respectively, were used. The lengths of the rectangles for 6-inch (152 mm) and 8-inch (203 mm) walls were 6.25 and 7 inches (159 and 178 mm), respectively. The web was ignored for computing section proportions and resisting out-of-plane shear.

INTERNATIONAL CODE COUNCIL®
Copyright © 2015 ICC. ALL RIGHTS RESERVED. Accessed by David Dammon on Jun 21, 2017 12:30:52 PM pursuant to License Agreement with ICC. No further reproduction or distribution authorized. ANY UNAUTHORIZED REPRODUCTION OR DISTRIBUTION IS A VIOLATION OF THE FEDERAL COPYRIGHT ACT AND THE LICENSE AGREEMENT, AND SUBJECT TO CIVIL AND CRIMINAL PENALTIES THEREUNDER.

TABLE R608.6(3)
MINIMUM VERTICAL REINFORCEMENT FOR 6-INCH SCREEN-GRID ABOVE-GRADE WALLS[a, b, c, d, e]

MAXIMUM WIND SPEED (mph)			MAXIMUM UNSUPPORTED WALL HEIGHT PER STORY (feet)	MINIMUM VERTICAL REINFORCEMENT-BAR SIZE AND SPACING (inches)[f, g]	
				Nominal[h] wall thickness (inches)	
Exposure Category				6	
B	C	D		Top[i]	Side[i]
115			8	4@48	4@48
			9	4@48	5@41
			10	4@48	6@48
120			8	4@48	4@48
			9	4@48	5@38
			10	5@42	6@48
130	110		8	4@48	5@41
			9	5@44	6@48
			10	5@35	6@48
140	119	110	8	4@48	5@36
			9	5@38	6@48
			10	6@48	6@48
150	127	117	8	5@42	6@48
			9	6@48	6@48
			10	6@48	6@42
160	136	125	8	5@37	6@48
			9	6@48	6@45
			10	6@44	6@38

For SI: 1 inch = 25.4 mm, 1 foot = 304.8 mm, 1 mile per hour = 0.447 m/s, 1 pound per square inch = 6.895 kPa, 1 square foot = 0.0929 m^2.

a. Table is based on ASCE 7 components and cladding wind pressures for an enclosed building using a mean roof height of 35 feet, interior wall area 4, an effective wind area of 10 square feet, topographic factor, K_{zt}, equal to 1.0, and Risk Category II.

b. Table is based on concrete with a minimum specified compressive strength of 2,500 psi.

c. See Section R608.6.5 for location of reinforcement in wall.

d. Deflection criterion is $L/240$, where L is the unsupported height of the wall in inches.

e. Interpolation is not permitted.

f. Where No. 4 reinforcing bars at a spacing of 48 inches are specified in the table as indicated by shaded cells, use of bars with a minimum yield strength of 40,000 psi or 60,000 psi is permitted.

g. Other than for No. 4 bars spaced at 48 inches on center, table values are based on reinforcing bars with a minimum yield strength of 60,000 psi. Maximum spacings shown are the values calculated for the specified bar size. Where the bar used is Grade 60 and the size specified in the table, the actual spacing in the wall shall not exceed a whole-number multiple of 12 inches such as, 12, 24, 36 and 48, that is less than or equal to the tabulated spacing. Vertical reinforcement with a yield strength of less than 60,000 psi or bars of a different size than specified in the table are permitted in accordance with Section R608.5.4.7 and Table R608.5.4(2).

h. See Table R608.3 for minimum core dimensions and maximum spacing of horizontal and vertical cores.

i. "Top" means gravity load from roof or floor construction bears on top of wall. "Side" means gravity load from floor construction is transferred to wall from a wood ledger or cold-formed steel track bolted to side of wall. For nonload-bearing wall and where floor framing members span parallel to the wall, use of the "Top" bearing condition is permitted.

❖ See the commentary to Section R608.6.2. For 6-inch (152 mm) screen-grid walls, a square cross section with 5.5-inch (140 mm) sides was used. The spacing of the rectangular resisting elements was 12 inches (305 mm) in all cases since this is the maximum spacing of vertical cores permitted by Table R608.3.

INTERNATIONAL CODE COUNCIL®
Copyright © 2015 ICC. ALL RIGHTS RESERVED. Accessed by David Dammon on Jun 21, 2017 12:30:52 PM pursuant to License Agreement with ICC. No further reproduction or distribution authorized. ANY UNAUTHORIZED REPRODUCTION OR DISTRIBUTION IS A VIOLATION OF THE FEDERAL COPYRIGHT ACT AND THE LICENSE AGREEMENT, AND SUBJECT TO CIVIL AND CRIMINAL PENALTIES THEREUNDER.

TABLE R608.6(4)
MINIMUM VERTICAL REINFORCEMENT FOR FLAT, WAFFLE- AND SCREEN-GRID ABOVE-GRADE WALLS DESIGNED CONTINUOUS WITH FOUNDATION STEM WALLS[a, b, c, d, e, k, l]

MAXIMUM WIND SPEED (mph)			HEIGHT OF STEM WALL[h, i] (feet)	MAXIMUM DESIGN LATERAL SOIL LOAD (psf/ft)	MAXIMUM UNSUPPORTED HEIGHT OF ABOVE-GRADE WALL (feet)	MINIMUM VERTICAL REINFORCEMENT-BAR SIZE AND SPACING (inches)[f, g]						
						Wall type and nominal thickness[j] (inches)						
Exposure Category						Flat				Waffle		Screen
B	C	D				4	6	8	10	6	8	6
115			3	30	8	4@30	4@48	4@48	4@48	4@22	4@26	4@21
					10	4@23	5@43	4@48	4@48	4@17	4@20	4@16
				60	10	4@19	5@37	4@48	4@48	4@14	4@17	4@14
			6	30	10	DR	5@21	6@35	4@48	DR	4@10	DR
				60	10	DR	5@12	6@25	6@28	DR	DR	DR
120			3	30	8	4@28	4@48	4@48	4@48	4@21	4@48	4@20
					10	4@22	5@41	4@48	4@48	4@16	4@19	4@15
				60	10	4@18	5@35	4@48	4@48	4@14	4@17	4@13
			6	30	10	DR	5@21	6@35	4@48	DR	4@10	DR
				60	10	DR	5@12	6@25	6@28	DR	DR	DR
130	110		3	30	8	4@25	4@48	4@48	4@48	4@18	4@22	4@18
					10	4@19	5@36	4@48	4@48	4@14	4@17	4@13
			6	60	10	4@16	5@34	4@48	4@48	4@12	4@17	4@12
				30	10	DR	5@19	6@35	4@48	DR	4@9	DR
				60	10	DR	5@12	6@24	6@28	DR	DR	DR
140	119	110	3	30	8	4@22	5@42	4@48	4@48	4@16	4@20	4@16
					10	4@17	5@34	4@48	4@48	4@21	4@17	4@12
				60	10	4@15	5@34	4@48	4@48	4@11	4@17	4@10
			6	30	10	DR	5@18	6@35	6@35	DR	4@48	DR
				60	10	DR	5@11	6@23	6@28	DR	DR	DR
150	127	117	3	30	8	4@20	5@37	4@48	4@48	4@15	4@18	4@14
					10	4@15	5@34	4@48	4@48	4@11	4@17	4@11
				60	10	4@13	5@34	4@48	4@48	4@10	4@16	4@9
			6	30	10	DR	5@17	6@33	6@32	DR	4@8	DR
				60	10	DR	DR	6@22	6@28	DR	DR	DR
160	136	125	3	30	8	4@18	5@34	4@48	4@48	4@13	4@17	4@13
					10	4@13	5@34	4@48	4@48	4@10	4@16	4@9
				60	10	4@11	5@31	6@45	4@48	4@9	4@14	4@8
			6	30	10	DR	5@15	6@31	6@30	DR	4@7	DR
				60	10	DR	DR	6@21	6@27	DR	DR	DR

For SI: 1 inch = 25.4 mm, 1 foot = 304.8 mm, 1 mile per hour = 0.447 m/s, 1 pound per square inch = 6.895 kPa, 1 square foot = 0.0929 m^2.

a. Table is based on ASCE 7 components and cladding wind pressures for an enclosed building using a mean roof height of 35 feet, interior wall area 4, an effective wind area of 10 square feet, topographic factor, K_{zt}, equal to 1.0, and Risk Category II.

b. Table is based on concrete with a minimum specified compressive strength of 2,500 psi.

c. See Section R608.6.5 for location of reinforcement in wall.

d. Deflection criterion is $L/240$, where L is the height of the wall in inches from the exterior finish ground level to the top of the above-grade wall.

e. Interpolation is not permitted. For intermediate values of basic wind speed, heights of stem wall and above-grade wall, and design lateral soil load, use next higher value.

f. Where No. 4 reinforcing bars at a spacing of 48 inches are specified in the table as indicated by shaded cells, use of bars with a minimum yield strength of 40,000 psi or 60,000 psi is permitted.

g. Other than for No. 4 bars spaced at 48 inches on center, table values are based on reinforcing bars with a minimum yield strength of 60,000 psi. Maximum spacings shown are the values calculated for the specified bar size. In waffle and screen-grid walls where the bar used is Grade 60 and the size specified in the table, the actual spacing in the wall shall not exceed a whole-number multiple of 12 inches such as, 12, 24, 36 and 48, that is less than or equal to the tabulated spacing. Vertical reinforcement with a yield strength of less than 60,000 psi and/or bars of a different size than specified in the table are permitted in accordance with Section R608.5.4.7 and Table R608.5.4(2).

h. Height of stem wall is the distance from the exterior finish ground level to the top of the slab-on-ground.

i. Where the distance from the exterior finish ground level to the top of the slab-on-ground is equal to or greater than 4 feet, the stem wall shall be laterally supported at the top and bottom before backfilling. Where the wall is designed and constructed to be continuous with the above-grade wall, temporary supports bracing the top of the stem wall shall remain in place until the above-grade wall is laterally supported at the top by floor or roof construction.

j. See Table R608.3 for tolerances on nominal thicknesses, and minimum core dimensions and maximum spacing of horizontal and vertical cores for waffle- and screen-grid walls.

(continued)

INTERNATIONAL CODE COUNCIL®
Copyright © 2015 ICC. ALL RIGHTS RESERVED. Accessed by David Dammon on Jun 21, 2017 12:30:52 PM pursuant to License Agreement with ICC. No further reproduction or distribution authorized. ANY UNAUTHORIZED REPRODUCTION OR DISTRIBUTION IS A VIOLATION OF THE FEDERAL COPYRIGHT ACT AND THE LICENSE AGREEMENT, AND SUBJECT TO CIVIL AND CRIMINAL PENALTIES THEREUNDER.

TABLE R608.6(4)—continued
MINIMUM VERTICAL REINFORCEMENT FOR FLAT, WAFFLE- AND SCREEN-GRID ABOVE-GRADE WALLS DESIGNED CONTINUOUS WITH FOUNDATION STEM WALLS[a, b, c, d, e, k, l]

k. Tabulated values are applicable to construction where gravity loads bear on top of wall, and conditions where gravity loads from floor construction are transferred to wall from a wood ledger or cold-formed steel track bolted to side of wall. See Tables R608.6(1), R608.6(2) and R608.6(3).

l. DR = Design Required.

❖ See the commentary to Section R608.6.2. In addition to the load combinations for dead, live and wind loads, also included is the lateral soil load [i.e., 30 and 60 psf/ft (4.7 and 9.4 kPa/m) of depth]. In addition, the floor live load, *L*, on the slab-on-ground [40 psf (1.9 kPa)] was included as a surcharge load. The surcharge load is the product of the floor live load and the coefficient of earth pressure, *K*, implied by the lateral soil load used in the design of the stem wall. Since lateral soil load is the product of *K* and the density of the soil, by assuming a soil density of 110 pcf (1762 kg/m^3), a value of *K* was computed for each soil class.

R608.7.1.1 Length of solid wall for wind. Buildings shall have solid walls in each exterior endwall line (the side of a building that is parallel to the span of the roof or floor framing) and sidewall line (the side of a building that is perpendicular to the span of the roof or floor framing) to resist lateral in-plane wind forces. The site-appropriate basic wind speed and exposure category shall be used in Tables R608.7(1A) through (1C) to determine the unreduced total length, *UR*, of solid wall required in each exterior endwall line and sidewall line. For buildings with a mean roof height of less than 35 feet (10 668 mm), the unreduced values determined from Tables R608.7(1A) though (1C) are permitted to be reduced by multiplying by the applicable factor, R_1, from Table R608.7(2); however, reduced values shall be not less than the minimum values in Tables R608.7(1A) through (1C). Where the floor-to-ceiling height of a *story* is less than 10 feet (3048 mm), the unreduced values determined from Tables R608.7(1A) through (C), including minimum values, are permitted to be reduced by multiplying by the applicable factor, R_2, from Table R608.7(3). To account for different design strengths than assumed in determining the values in Tables R608.7(1A) through (1C), the unreduced lengths determined from Tables R608.7(1A) through (1C), including minimum values, are permitted to be reduced by multiplying by the applicable factor, R_3, from Table R608.7(4). The reductions permitted by Tables R608.7(2), R608.7(3) and R608.7(4) are cumulative.

The total length of solid wall segments, *TL*, in a wall line that comply with the minimum length requirements of Section R608.7.2.1 [see Figure R608.7(1)] shall be equal to or greater than the product of the unreduced length of solid wall from Tables R608.7(1A) through (1C), *UR* and the applicable reduction factors, if any, from Tables R608.7(2), R608.7(3) and R608.7(4) as indicated by Equation R6-1.

$$TL \geq R_1 \cdot R_2 \cdot R_3 \cdot UR \qquad \textbf{(Equation R6-1)}$$

where:

TL = Total length of solid wall segments in a wall line that comply with Section R608.7.2.1 [see Figure R608.7(1)].

R_1 = 1.0 or reduction factor for mean roof height from Table R608.7(2).

R_2 = 1.0 or reduction factor for floor-to-ceiling wall height from Table R608.7(3).

R_3 = 1.0 or reduction factor for design strength from Table R608.7(4).

UR = Unreduced length of solid wall from Tables R608.7(1A) through (1C).

The total length of solid wall in a wall line, *TL*, shall be not less than that provided by two solid wall segments complying with the minimum length requirements of Section R608.7.2.1.

To facilitate determining the required wall thickness, wall type, number and *grade* of vertical bars at each end of each solid wall segment, and whether shear reinforcement is required, use of Equation R6-2 is permitted.

$$R \leq \frac{TL}{R_1 \cdot R_2 \cdot UR} \qquad \textbf{(Equation R6-2)}$$

After determining the maximum permitted value of the reduction factor for design strength, R_3, in accordance with Equation R6-2, select a wall type from Table R608.7(4) with R_3 less than or equal to the value calculated.

❖ All buildings must have minimum solid wall length as described in Figure R608.7(1).

Each endwall and sidewall [as shown in Figure R608.7(1)] must have solid walls to resist the lateral in-plane wind forces.

The unreduced length (UR) of solid wall is determined from Tables R608.7(1A), R608.7(1B) and R608.7(1C) and then reduced by the appropriate reduction factors from Tables R608.7(2), R608.7(3) and R608.7(4). The minimum length cannot be less than that required by Section R608.7.2.1. The minimum length must have two solid wall segments complying with Section R608.7.2.1.

Table R608.7(4) provides reduction factors for increased design strength of solid wall segments. Previous prescriptive methods do not recognize that different lengths of solid wall segments and different amounts of vertical reinforcement near the end of a segment of the same length generally increase the design strength with regard to the in-plane force the segment is capable of resisting. In order to recognize these benefits, solid wall segments of different lengths, thicknesses, number and size of bars at the ends of the segments, and presence or absence of horizontal shear reinforcement were evaluated. Segments were evaluated as cantilevered flexural elements fixed at the base with a height of 8 feet (2438 mm). It was felt that 8 feet (2438 mm) was a reasonable height to use for this calculation, even where the floor-to-ceiling wall height may be 10 feet (3048 mm), because the tops of

INTERNATIONAL CODE COUNCIL®
Copyright © 2015 ICC. ALL RIGHTS RESERVED. Accessed by David Dammon on Jun 21, 2017 12:30:52 PM pursuant to License Agreement with ICC. No further reproduction or distribution authorized. ANY UNAUTHORIZED REPRODUCTION OR DISTRIBUTION IS A VIOLATION OF THE FEDERAL COPYRIGHT ACT AND THE LICENSE AGREEMENT, AND SUBJECT TO CIVIL AND CRIMINAL PENALTIES THEREUNDER.

most wall openings are 8 feet (2438 mm) or less above the floor. Design moment strengths for solid wall segments in flat walls were computed based on the parameters listed below:

1. Solid wall segment length
2. Segment thickness (i.e., nominal thickness minus $^1/_2$ inch)
3. Number of reinforcing bars at end of segment and their location
4. Size of reinforcing bars at end of segment
5. Yield strength of reinforcement
6. Specified compressive strength of concrete

Using these parameters, design moment strengths were computed for each unique solid wall segment combination shown in Table R608.7(4).

For waffle and screen-grid walls, design moment strengths of solid wall segments were computed based on the assumption of a flanged section. The flange width in the through-the-wall dimension was assumed to be 5.5 inches (140 mm) for 6-inch (152 mm) waffle- and screen-grid walls, and 7.5 inches (191 mm) for 8-inch (203 mm) waffle-grid walls. The depth of the concrete compression zone, a, was computed to ensure that a sufficient depth of concrete (in the in-plane direction) is provided in the area of the segment under compression. Sufficient depth is ensured in the field by complying with Note e of Table R608.7(4). In the 2006 code, the design shear strength (based on concrete alone) of solid wall segments was computed based on the area of the vertical core of concrete. In Table R608.7(4), the design shear strength (based on concrete alone) of solid wall segments was computed based on an assumed web thickness of 2.6 inches (66 mm) for 6-inch and 8-inch (152 mm and 203 mm) nominal waffle-grid walls and 2.2 inches (56 mm) for 6-inch (152 mm) nominal screen-grid walls. These values, which are based on recommendations contained in *Testing and Design of Lintels Using Insulating Concrete Forms*, give some credit to the flanges for their contribution in resisting shear stresses that is not accounted for in the provisions of ACI 318.

Tables R608.7(1A), R608.7(1B) and R608.7(1C) are based on the Envelope Procedure (Part 2) Chapter 28 of the wind load provisions of ASCE 7 for low-rise buildings. ASCE 7 defines a low-rise building as an enclosed or partially enclosed building with a mean roof height of less than or equal to 60 feet (18 288 mm) in which the mean roof height does not exceed the least horizontal dimension. Commentary Figure R608.7.1.1 shows the velocity pressures for the various basic wind speeds and exposure categories and how they were grouped for purposes of designs in the table. The velocity pressures are based on a building with a mean roof height of 35 feet (10 668 mm). The basic wind speeds in the shaded cells were used to compute the velocity pressures to be resisted by solid walls in each of the two exterior wall lines parallel to the direction of the wind.

To compute the forces, external pressure coefficients, GCpf, from Figure 28.4-1 of ASCE 7 were used to calculate the design wind pressures for various building surfaces and these pressures were applied to the building as shown in Figure 28.4-1. The following assumptions were used to calculate the forces.

1. Floor-to-ceiling wall heights (all stories)—10 feet (3048 mm)
2. Thickness of second-floor assembly, if applicable—16 inches (406 mm)
3. Thickness of attic floor/ceiling assembly above the top story ceiling—12 inches (305 mm)
4. Width of roof overhang (when computing wind forces perpendicular to ridge)—24 inches (610 mm)

ASCE 7 requires that the main windforce-resisting system be designed for the larger of the forces computed as described above, and a force of 16 psf multiplied by the wall area of the building and 8 psf multiplied by the roof area of the building projected onto a vertical plane normal to the assumed wind direction. The minimum force generally governs for the design of buildings having lower sloped roofs [i.e., approximately 5 in 12 (23 degrees) or less] sited in areas with lower basic wind speeds, as illustrated by the shaded cells in Tables R608.7(1A), R608.7(1B) and R608.7(1C).

The unadjusted solid wall lengths are based on a design strength of 840 pounds per foot (132 kPa/m) of length of solid wall segment and the forces computed as described above were divided by 840 plf to obtain the unadjusted lengths of solid wall tabulated in Tables R608.7(1A), R608.7(1B) and R608.7(1C).

BASIC WIND SPEED (mph)			VELOCITY PRESSURE (psf)
Exposure Category			
B	C	D	
115			21.07
120			22.94
130	110		26.92
140	119	110	31.23
150	127	117	35.85
160	136	125	40.78
170	144	133	46.04
180	153	141	51.62
194	165	152	60.11
212	180	166	71.54
230	195	180	84.17

For SI: 1 mph = 0.4470 m/s, 1 psf = 0.0479 kN/m^2.

Figure R608.7.1.1
VELOCITY PRESSURES

INTERNATIONAL CODE COUNCIL®
Copyright © 2015 ICC. ALL RIGHTS RESERVED. Accessed by David Dammon on Jun 21, 2017 12:30:52 PM pursuant to License Agreement with ICC. No further reproduction or distribution authorized. ANY UNAUTHORIZED REPRODUCTION OR DISTRIBUTION IS A VIOLATION OF THE FEDERAL COPYRIGHT ACT AND THE LICENSE AGREEMENT, AND SUBJECT TO CIVIL AND CRIMINAL PENALTIES THEREUNDER.

TABLE R608.7(1A)
UNREDUCED LENGTH, *UR*, OF SOLID WALL REQUIRED IN EACH EXTERIOR ENDWALL FOR WIND PERPENDICULAR TO RIDGE ONE STORY OR TOP STORY OF TWO STORY[a, c, d, e, f, g]

SIDEWALL LENGTH (feet)	ENDWALL LENGTH (feet)	ROOF SLOPE	UNREDUCED LENGTH, *UR*, OF SOLID WALL REQUIRED IN ENDWALLS FOR WIND PERPENDICULAR TO RIDGE (feet)						
			Basic Wind Speed (mph) Exposure						
			115B	120B	130B	140B	150B	160B	Minimum[b]
					110C	119C	127C	136C	
						110D	117D	125D	
15	15	< 1:12	1.03	1.12	1.32	1.53	1.76	2.00	0.92
		5:12	1.43	1.56	1.83	2.12	2.43	2.77	1.15
		7:12	2.00	2.18	2.56	2.97	3.41	3.88	1.25
		12:12	3.20	3.48	4.09	4.74	5.44	6.19	1.54
	30	< 1:12	1.03	1.12	1.32	1.53	1.76	2.00	0.98
		5:12	1.43	1.56	1.83	2.12	2.43	2.77	1.43
		7:12	2.78	3.03	3.56	4.13	4.74	5.39	1.64
		12:12	5.17	5.63	6.61	7.67	8.80	10.01	2.21
	45	< 1:12	1.03	1.12	1.32	1.53	1.76	2.00	1.04
		5:12	1.43	1.56	1.83	2.12	2.43	2.77	1.72
		7:12	3.57	3.88	4.56	5.28	6.07	6.90	2.03
		12:12	7.15	7.78	9.13	10.59	12.16	13.84	2.89
	60	< 1:12	1.03	1.12	1.32	1.53	1.76	2.00	1.09
		5:12	1.43	1.56	1.83	2.12	2.43	2.77	2.01
		7:12	4.35	4.73	5.55	6.44	7.39	8.41	2.42
		12:12	9.12	9.93	11.66	13.52	15.52	17.66	3.57
30	15	< 1:12	1.84	2.01	2.35	2.73	3.13	3.57	1.82
		5:12	2.56	2.78	3.27	3.79	4.35	4.95	2.23
		7:12	3.61	3.93	4.61	5.34	6.13	6.98	2.42
		12:12	5.61	6.10	7.16	8.31	9.54	10.85	2.93
	30	< 1:12	1.84	2.01	2.35	2.73	3.13	3.57	1.93
		5:12	2.56	2.78	3.27	3.79	4.35	4.95	2.75
		7:12	4.92	5.35	6.28	7.29	8.37	9.52	3.12
		12:12	8.92	9.71	11.39	13.22	15.17	17.26	4.14
	45	< 1:12	1.84	2.01	2.35	2.73	3.13	3.57	2.03
		5:12	2.56	2.78	3.27	3.79	4.35	4.95	3.26
		7:12	6.23	6.78	7.96	9.23	10.60	12.06	3.82
		12:12	12.23	13.31	15.63	18.12	20.80	23.67	5.36
	60	< 1:12	1.84	2.01	2.35	2.73	3.13	3.57	2.14
		5:12	2.56	2.78	3.27	3.79	4.35	4.95	3.78
		7:12	7.54	8.21	9.64	11.17	12.83	14.60	4.52
		12:12	15.54	16.92	19.86	23.03	26.44	30.08	6.57

(continued)

INTERNATIONAL CODE COUNCIL®
Copyright © 2015 ICC. ALL RIGHTS RESERVED. Accessed by David Dammon on Jun 21, 2017 12:30:52 PM pursuant to License Agreement with ICC. No further reproduction or distribution authorized. ANY UNAUTHORIZED REPRODUCTION OR DISTRIBUTION IS A VIOLATION OF THE FEDERAL COPYRIGHT ACT AND THE LICENSE AGREEMENT, AND SUBJECT TO CIVIL AND CRIMINAL PENALTIES THEREUNDER.

TABLE R608.7(1A)—continued
UNREDUCED LENGTH, *UR*, OF SOLID WALL REQUIRED IN EACH EXTERIOR ENDWALL FOR WIND PERPENDICULAR TO RIDGE ONE STORY OR TOP STORY OF TWO STORY[a, c, d, e, f, g]

SIDEWALL LENGTH (feet)	ENDWALL LENGTH (feet)	ROOF SLOPE	UNREDUCED LENGTH, *UR*, OF SOLID WALL REQUIRED IN ENDWALLS FOR WIND PERPENDICULAR TO RIDGE (feet)						
			Basic Wind Speed (mph) Exposure						
			115B	120B	130B	140B	150B	160B	Minimum[b]
					110C	119C	127C	136C	
						110D	117D	125D	
60	15	< 1:12	3.42	3.72	4.36	5.06	5.81	6.61	3.63
		5:12	4.75	5.17	6.06	7.03	8.07	9.19	4.40
		7:12	6.76	7.36	8.64	10.02	11.51	13.09	4.75
		12:12	10.35	11.27	13.23	15.34	17.61	20.04	5.71
	30	< 1:12	3.42	3.72	4.36	5.06	5.81	6.61	3.83
		5:12	4.75	5.17	6.06	7.03	8.07	9.19	5.37
		7:12	9.12	9.93	11.66	13.52	15.52	17.66	6.07
		12:12	16.30	17.75	20.83	24.16	27.73	31.55	8.00
	45	< 1:12	3.55	3.87	4.54	5.27	6.05	6.88	4.03
		5:12	4.94	5.37	6.31	7.31	8.40	9.55	6.34
		7:12	11.71	12.75	14.97	17.36	19.93	22.67	7.39
		12:12	22.70	24.71	29.00	33.64	38.62	43.94	10.29
	60	< 1:12	3.68	4.01	4.71	5.46	6.27	7.13	4.23
		5:12	5.11	5.57	6.54	7.58	8.70	9.90	7.31
		7:12	14.38	15.66	18.37	21.31	24.46	27.83	8.71
		12:12	29.30	31.90	37.44	43.42	49.85	56.72	12.57

For SI: 1 inch = 25.4 mm, 1 foot = 304.8 mm, 1 mile per hour = 0.447 m/s, 1 pound-force per linear foot = 0.146 kN/m, 1 pound per square foot = 47.88 Pa.

a. Tabulated lengths were derived by calculating design wind pressures in accordance with Figure 28.4-1 of ASCE 7 for a building with a mean roof height of 35 feet, topographic factor, K_{zt} equal to 1.0, and Risk Category II. For wind perpendicular to the ridge, the effects of a 2-foot overhang on each endwall are included. The design pressures were used to calculate forces to be resisted by solid wall segments in each. The forces to be resisted by each wall line were then divided by the default design strength of 840 pounds per linear foot of length to determine the unreduced length, *UR*, of solid wall length required in each endwall. The actual mean roof height of the building shall not exceed the least horizontal dimension of the building.

b. Tabulated lengths in the "minimum" column are based on the requirement of Section 28.4.4 of ASCE 7 that the main windforce-resisting system be designed for a minimum pressure of 16 psf multiplied by the wall area of the building and 8 psf multiplied by the roof area of the building projected onto a vertical plane normal to the assumed wind direction. Tabulated lengths in shaded cells are less than the "minimum" value. Where the minimum controls, it is permitted to be reduced in accordance with Notes c, d and e. See Section R608.7.1.1.

c. For buildings with a mean roof height of less than 35 feet, tabulated lengths are permitted to be reduced by multiplying by the appropriate factor, R_1, from Table R608.7(2). The reduced length shall be not less than the "minimum" value shown in the table.

d. Tabulated lengths for "one story or top story of two story" are based on a floor-to-ceiling height of 10 feet. Tabulated lengths for "first story of two story" are based on floor-to-ceiling heights of 10 feet each for the first and second story. For floor-to-ceiling heights less than assumed, use the lengths in this table or Table R608.7 (1B) or (1C), or multiply the value in the table by the reduction factor, R_2, from Table R608.7(3).

e. Tabulated lengths are based on the default design shear strength of 840 pounds per linear foot of solid wall segment. The tabulated lengths are permitted to be reduced by multiplying by the applicable reduction factor for design strength, R_3, from Table R608.7(4).

f. The reduction factors, R_1, R_2 and R_3, in Tables R608.7(2), R608.7(3), and R608.7(4), respectively, are permitted to be compounded, subject to the limitations of Note b. However, the minimum number and minimum length of solid wall segments in each wall line shall comply with Sections R608.7.1 and R608.7.2.1, respectively.

g. For intermediate values of sidewall length, endwall length, roof slope and basic wind speed, use the next higher value, or determine by interpolation.

❖ See the commentary to Section R608.7.1.1.

INTERNATIONAL CODE COUNCIL®
Copyright © 2015 ICC. ALL RIGHTS RESERVED. Accessed by David Dammon on Jun 21, 2017 12:30:52 PM pursuant to License Agreement with ICC. No further reproduction or distribution authorized. ANY UNAUTHORIZED REPRODUCTION OR DISTRIBUTION IS A VIOLATION OF THE FEDERAL COPYRIGHT ACT AND THE LICENSE AGREEMENT, AND SUBJECT TO CIVIL AND CRIMINAL PENALTIES THEREUNDER.

TABLE R608.7(1B)
UNREDUCED LENGTH, *UR*, OF SOLID WALL REQUIRED IN EACH EXTERIOR ENDWALL FOR WIND PERPENDICULAR TO RIDGE FIRST STORY OF TWO STORY[a, c, d, e, f, g]

SIDEWALL LENGTH (feet)	ENDWALL LENGTH (feet)	ROOF SLOPE	UNREDUCED LENGTH, *UR*, OF SOLID WALL REQUIRED IN ENDWALLS FOR WIND PERPENDICULAR TO RIDGE (feet)						
			Basic Wind Speed (mph) Exposure						
			115B	120B	130B	140B	150B	160B	Minimum[b]
					110C	119C	127C	136C	
						110D	117D	125D	
15	15	< 1:12	2.98	3.25	3.81	4.42	5.07	5.77	2.54
		5:12	4.13	4.50	5.28	6.12	7.03	8.00	2.76
		7:12	4.31	4.70	5.51	6.39	7.34	8.35	2.87
		12:12	5.51	6.00	7.04	8.16	9.37	10.66	3.15
	30	< 1:12	2.98	3.25	3.81	4.42	5.07	5.77	2.59
		5:12	4.13	4.50	5.28	6.12	7.03	8.00	3.05
		7:12	5.09	5.55	6.51	7.55	8.67	9.86	3.26
		12:12	7.48	8.15	9.56	11.09	12.73	14.49	3.83
	45	< 1:12	2.98	3.25	3.81	4.42	5.07	5.77	2.65
		5:12	4.13	4.50	5.28	6.12	7.03	8.00	3.34
		7:12	5.88	6.40	7.51	8.71	10.00	11.37	3.65
		12:12	9.46	10.30	12.09	14.02	16.09	18.31	4.51
	60	< 1:12	2.98	3.25	3.81	4.42	5.07	5.77	2.71
		5:12	4.13	4.50	5.28	6.12	7.03	8.00	3.63
		7:12	6.66	7.25	8.51	9.87	11.32	12.89	4.04
		12:12	11.43	12.45	14.61	16.94	19.45	22.13	5.19
30	15	< 1:12	5.32	5.79	6.80	7.89	9.05	10.30	5.06
		5:12	7.39	8.04	9.44	10.95	12.57	14.30	5.47
		7:12	7.94	8.65	10.15	11.77	13.51	15.37	5.65
		12:12	9.94	10.82	12.70	14.73	16.91	19.24	6.17
	30	< 1:12	5.32	5.79	6.80	7.89	9.05	10.30	5.16
		5:12	7.39	8.04	9.44	10.95	12.57	14.30	5.98
		7:12	9.25	10.07	11.82	13.71	15.74	17.91	6.35
		12:12	13.25	14.43	16.93	19.64	22.54	25.65	7.38
	45	< 1:12	5.32	5.79	6.80	7.89	9.05	10.30	5.27
		5:12	7.39	8.04	9.44	10.95	12.57	14.30	6.50
		7:12	10.56	11.50	13.50	15.65	17.97	20.45	7.06
		12:12	16.56	18.03	21.16	24.55	28.18	32.06	8.60
	60	< 1:12	5.32	5.79	6.80	7.89	9.05	10.30	5.38
		5:12	7.39	8.04	9.44	10.95	12.57	14.30	7.01
		7:12	11.87	12.93	15.17	17.60	20.20	22.98	7.76
		12:12	19.87	21.64	25.40	29.45	33.81	38.47	9.81

(continued)

INTERNATIONAL CODE COUNCIL®
Copyright © 2015 ICC. ALL RIGHTS RESERVED. Accessed by David Dammon on Jun 21, 2017 12:30:52 PM pursuant to License Agreement with ICC. No further reproduction or distribution authorized. ANY UNAUTHORIZED REPRODUCTION OR DISTRIBUTION IS A VIOLATION OF THE FEDERAL COPYRIGHT ACT AND THE LICENSE AGREEMENT, AND SUBJECT TO CIVIL AND CRIMINAL PENALTIES THEREUNDER.

TABLE R608.7(1B)—continued
UNREDUCED LENGTH, *UR*, OF SOLID WALL REQUIRED IN EACH EXTERIOR ENDWALL FOR WIND PERPENDICULAR TO RIDGE FIRST STORY OF TWO STORY[a, c, d, e, f, g]

SIDEWALL LENGTH (feet)	ENDWALL LENGTH (feet)	ROOF SLOPE	UNREDUCED LENGTH, *UR*, OF SOLID WALL REQUIRED IN ENDWALLS FOR WIND PERPENDICULAR TO RIDGE (feet)						
			Basic Wind Speed (mph) Exposure						
			115B	120B	130B	140B	150B	160B	Minimum[b]
					110C	119C	127C	136C	
						110D	117D	125D	
60	15	< 1:12	9.87	10.74	12.61	14.62	16.79	19.10	10.10
		5:12	13.71	14.93	17.52	20.32	23.33	26.54	10.87
		7:12	15.08	16.42	19.27	22.35	25.66	29.20	11.22
		12:12	18.67	20.33	23.86	27.67	31.77	36.14	12.19
	30	< 1:12	9.87	10.74	12.61	14.62	16.79	19.10	10.30
		5:12	13.71	14.93	17.52	20.32	23.33	26.54	11.85
		7:12	17.44	18.99	22.29	25.85	29.67	33.76	12.54
		12:12	24.62	26.81	31.46	36.49	41.89	47.66	14.48
	45	< 1:12	10.27	11.18	13.12	15.21	17.47	19.87	10.50
		5:12	14.26	15.52	18.22	21.13	24.26	27.60	12.82
		7:12	20.21	22.01	25.83	29.95	34.39	39.12	13.86
		12:12	31.20	33.97	39.87	46.23	53.07	60.39	16.76
	60	< 1:12	10.64	11.59	13.60	15.77	18.11	20.60	10.70
		5:12	14.77	16.09	18.88	21.90	25.14	28.60	13.79
		7:12	23.05	25.09	29.45	34.15	39.21	44.61	15.18
		12:12	37.97	41.34	48.52	56.27	64.60	73.49	19.05

For SI: 1 inch = 25.4 mm, 1 foot = 304.8 mm, 1 mile per hour = 0.447 m/s, 1 pound force per linear foot = 0.146 kN/m, 1 pound per square foot = 47.88 Pa.

a. Tabulated lengths were derived by calculating design wind pressures in accordance with Figure 28.4-1 of ASCE 7 for a building with a mean roof height of 35 feet, topographic factor, K_{zt}, equal to 1.0, and Risk Category II. For wind perpendicular to the ridge, the effects of a 2-foot overhang on each endwall are included. The design pressures were used to calculate forces to be resisted by solid wall segments in each endwall. The forces to be resisted by each wall line were then divided by the default design strength of 840 pounds per linear foot of length to determine the unreduced length, *UR*, of solid wall length required in each endwall. The actual mean roof height of the building shall not exceed the least horizontal dimension of the building.

b. Tabulated lengths in the "minimum" column are based on the requirement of Section 28.4.4 of ASCE 7 that the main windforce-resisting system be designed for a minimum pressure of 1016 psf multiplied by the wall area of the building and 8 psf multiplied by the roof area of the building projected onto a vertical plane normal to the assumed wind direction. Tabulated lengths in shaded cells are less than the "minimum" value. Where the minimum controls, it is permitted to be reduced in accordance with Notes c, d and e. See Section R608.7.1.1.

c. For buildings with a mean roof height of less than 35 feet, tabulated lengths are permitted to be reduced by multiplying by the appropriate factor, R_1, from Table R608.7(2). The reduced length shall be not less than the "minimum" value shown in the table.

d. Tabulated lengths for "one story or top story of two story" are based on a floor-to-ceiling height of 10 feet. Tabulated lengths for "first story of two story" are based on floor-to-ceiling heights of 10 feet each for the first and second story. For floor-to-ceiling heights less than assumed, use the lengths in this table or Table R608.7(1A) or (1C), or multiply the value in the table by the reduction factor, R_2, from Table R608.7(3).

e. Tabulated lengths are based on the default design shear strength of 840 pounds per linear foot of solid wall segment. The tabulated lengths are permitted to be reduced by multiplying by the applicable reduction factor for design strength, R_3, from Table R608.7(4).

f. The reduction factors, R_1, R_2 and R_3, in Tables R608.7(2), R608.7(3), and R608.7(4), respectively, are permitted to be compounded, subject to the limitations of Note b. However, the minimum number and minimum length of solid wall segments in each wall line shall comply with Sections R608.7.1 and R608.7.2.1, respectively.

g. For intermediate values of sidewall length, endwall length, roof slope and basic wind speed, use the next higher value, or determine by interpolation.

❖ See the commentary to Section R608.7.1.1.

INTERNATIONAL CODE COUNCIL®
Copyright © 2015 ICC. ALL RIGHTS RESERVED. Accessed by David Dammon on Jun 21, 2017 12:30:52 PM pursuant to License Agreement with ICC. No further reproduction or distribution authorized. ANY UNAUTHORIZED REPRODUCTION OR DISTRIBUTION IS A VIOLATION OF THE FEDERAL COPYRIGHT ACT AND THE LICENSE AGREEMENT, AND SUBJECT TO CIVIL AND CRIMINAL PENALTIES THEREUNDER.

TABLE R608.7(1C)
UNREDUCED LENGTH, *UR*, OF SOLID WALL REQUIRED IN EACH EXTERIOR SIDEWALL FOR WIND PARALLEL TO RIDGE[a, c, d, e, f, g]

SIDEWALL LENGTH (feet)	ENDWALL LENGTH (feet)	ROOF SLOPE	UNREDUCED LENGTH, *UR*, OF SOLID WALL REQUIRED IN SIDEWALLS FOR WIND PARALLEL TO RIDGE (feet)						
			Basic Wind Speed (mph) Exposure						
			115B	120B	130B	140B	150B	160B	Minimum[b]
					110C	119C	127C	136C	
						110D	117D	125D	
			One story or top story of two story						
< 30	15	< 1:12	1.08	1.18	1.39	161	1.84	2.10	0.90
		5:12	1.29	1.40	1.65	1.91	2.19	2.49	1.08
		7:12	1.38	1.50	1.76	2.04	2.35	2.67	1.17
		12:12	1.63	1.78	2.09	2.42	2.78	3.16	1.39
	30	< 1:12	2.02	2.20	2.59	3.00	3.44	3.92	1.90
		5:12	2.73	2.97	3.48	4.04	4.64	5.28	2.62
		7:12	3.05	3.32	3.89	4.51	5.18	5.89	2.95
		12:12	3.93	4.27	5.02	5.82	6.68	7.60	3.86
	45	< 1:12	3.03	3.30	3.87	4.49	5.15	5.86	2.99
		5:12	4.55	4.96	5.82	6.75	7.74	8.81	4.62
		7:12	5.24	5.71	6.70	7.77	8.92	10.15	5.36
		12:12	7.16	7.79	9.14	10.61	12.17	13.85	7.39
	60	< 1:12	4.11	4.47	5.25	6.09	6.99	7.96	4.18
		5:12	6.78	7.39	8.67	10.05	11.54	13.13	7.07
		7:12	8.00	8.71	10.22	11.85	13.61	15.48	8.38
		12:12	11.35	12.36	14.51	16.82	19.31	21.97	12.00
60	45	< 1:12	3.17	3.46	4.06	4.70	5.40	6.14	2.99
		5:12	4.75	5.18	6.07	7.04	8.09	9.20	4.62
		7:12	5.47	5.96	6.99	8.11	9.31	10.59	5.36
		12:12	7.45	8.11	9.52	11.04	12.68	14.43	7.39
	60	< 1:12	4.41	4.81	5.64	6.54	7.51	8.54	4.18
		5:12	7.22	7.86	9.23	10.70	12.29	13.98	7.07
		7:12	8.50	9.25	10.86	12.59	14.46	16.45	8.38
		12:12	12.02	13.09	15.36	17.81	20.45	23.27	12.00

(continued)

INTERNATIONAL CODE COUNCIL®
Copyright © 2015 ICC. ALL RIGHTS RESERVED. Accessed by David Dammon on Jun 21, 2017 12:30:52 PM pursuant to License Agreement with ICC. No further reproduction or distribution authorized. ANY UNAUTHORIZED REPRODUCTION OR DISTRIBUTION IS A VIOLATION OF THE FEDERAL COPYRIGHT ACT AND THE LICENSE AGREEMENT, AND SUBJECT TO CIVIL AND CRIMINAL PENALTIES THEREUNDER.

TABLE R608.7(1C)—continued
UNREDUCED LENGTH, *UR*, OF SOLID WALL REQUIRED IN EACH EXTERIOR SIDEWALL FOR WIND PARALLEL TO RIDGE[a, c, d, e, f, g]

SIDEWALL LENGTH (feet)	ENDWALL LENGTH (feet)	ROOF SLOPE	UNREDUCED LENGTH, *UR*, OF SOLID WALL REQUIRED IN SIDEWALLS FOR WIND PARALLEL TO RIDGE (feet)						
			Basic Wind Speed Exposure (mph)						
			115B	120B	130B	140B	150B	160B	Minimum[b]
					110C	119C	127C	136C	
						110D	117D	125D	
			First story of two story						
< 30	15	< 1:12	3.03	3.30	3.88	4.49	5.16	5.87	2.52
		5:12	3.24	3.52	4.14	4.80	5.51	6.26	2.70
		7:12	3.33	3.62	4.25	4.93	5.66	6.44	2.79
		12:12	3.58	3.90	4.58	5.31	6.10	6.94	3.01
	30	< 1:12	5.50	5.99	7.03	8.16	9.36	10.65	5.14
		5:12	6.21	6.76	7.93	9.20	10.56	12.01	5.86
		7:12	6.52	7.10	8.34	9.67	11.10	12.63	6.19
		12:12	7.41	8.06	9.46	10.97	12.60	14.33	7.10
	45	< 1:12	8.00	8.71	10.22	11.85	13.61	15.48	7.85
		5:12	9.52	10.37	12.17	14.11	16.20	18.43	9.48
		7:12	10.21	11.12	13.05	15.14	17.38	19.77	10.21
		12:12	12.13	13.20	15.50	17.97	20.63	23.47	12.25
	60	< 1:12	10.56	11.50	13.50	15.65	17.97	20.44	10.65
		5:12	13.24	14.41	16.91	19.62	22.52	25.62	13.54
		7:12	14.45	15.73	18.46	21.41	24.58	27.97	14.85
		12:12	17.80	19.38	22.75	26.38	30.29	34.46	18.48
60	45	< 1:12	8.39	9.14	10.72	12.44	14.28	16.25	7.85
		5:12	9.97	10.86	12.74	14.78	16.97	19.30	9.48
		7:12	10.69	11.64	13.66	15.84	18.19	20.69	10.21
		12:12	12.67	13.80	16.19	18.78	21.56	24.53	12.25
	60	< 1:12	11.37	12.38	14.53	16.85	19.35	22.01	10.65
		5:12	14.18	15.44	18.12	21.02	24.13	27.45	13.54
		7:12	15.46	16.83	19.75	22.91	26.29	29.92	14.85
		12:12	18.98	20.66	24.25	28.13	32.29	36.74	18.48

For SI: 1 inch = 25.4 mm, 1 foot = 304.8 mm, 1 mile per hour = 0.447 m/s, 1 pound force per linear foot = 0.146 kN/m, 1 pound per square foot = 47.88 Pa.

a. Tabulated lengths were derived by calculating design wind pressures in accordance with Figure 28.4-1 of ASCE 7 for a building with a mean roof height of 35 feet, topographic factor, K_{zt}, equal to 1.0, and Risk Category II. The design pressures were used to calculate forces to be resisted by solid wall segments in each sidewall. The forces to be resisted by each wall line were then divided by the default design strength of 840 pounds per linear foot of length to determine the unreduced length, *UR*, of solid wall length required in each sidewall. The actual mean roof height of the building shall not exceed the least horizontal dimension of the building.

b. Tabulated lengths in the "minimum" column are based on the requirement of Section 28.4.4 of ASCE 7 that the main windforce-resisting system be designed for a minimum pressure of 16 psf multiplied by the wall area of the building and 8 psf multiplied by the roof area of the building projected onto a vertical plane normal to the assumed wind direction. Tabulated lengths in shaded cells are less than the "minimum" value. Where the minimum controls, it is permitted to be reduced in accordance with Notes c, d and e. See Section R608.7.1.1.

c. For buildings with a mean roof height of less than 35 feet, tabulated lengths are permitted to be reduced by multiplying by the appropriate factor, R_1, from Table R608.7(2). The reduced length shall be not less than the "minimum" value shown in the table.

d. Tabulated lengths for "one story or top story of two story" are based on a floor-to-ceiling height of 10 feet. Tabulated lengths for "first story of two story" are based on floor-to-ceiling heights of 10 feet each for the first and second story. For floor-to-ceiling heights less than assumed, use the lengths in this table or Table R608.7(1A) or (1B), or multiply the value in the table by the reduction factor, R_2, from Table R608.7(3).

e. Tabulated lengths are based on the default design shear strength of 840 pounds per linear foot of solid wall segment. The tabulated lengths are permitted to be reduced by multiplying by the applicable reduction factor for design strength, R_3, from Table R608.7(4).

f. The reduction factors, R_1, R_2 and R_3, in Tables R608.7(2), R608.7(3), and R608.7(4), respectively, are permitted to be compounded, subject to the limitations of Note b. However, the minimum number and minimum length of solid walls segments in each wall line shall comply with Sections R608.7.1 and R608.7.2.1, respectively.

g. For intermediate values of sidewall length, endwall length, roof slope and basic wind speed, use the next higher value, or determine by interpolation.

❖ See the commentary to Section R608.7.1.1.

INTERNATIONAL CODE COUNCIL®
Copyright © 2015 ICC. ALL RIGHTS RESERVED. Accessed by David Dammon on Jun 21, 2017 12:30:52 PM pursuant to License Agreement with ICC. No further reproduction or distribution authorized. ANY UNAUTHORIZED REPRODUCTION OR DISTRIBUTION IS A VIOLATION OF THE FEDERAL COPYRIGHT ACT AND THE LICENSE AGREEMENT, AND SUBJECT TO CIVIL AND CRIMINAL PENALTIES THEREUNDER.

TABLE R608.7(2)
REDUCTION FACTOR, R_1, FOR BUILDINGS WITH MEAN ROOF HEIGHT LESS THAN 35 FEET[a]

MEAN ROOF HEIGHT[b, c] (feet)	REDUCTION FACTOR R_1, FOR MEAN ROOF HEIGHT		
	Exposure category		
	B	C	D
< 15	0.96	0.84	0.87
20	0.96	0.89	0.91
25	0.96	0.93	0.94
30	0.96	0.97	0.98
35	1.00	1.00	1.00

For SI: 1 foot = 304.8 mm, 1 degree = 0.0175 rad.

a. See Section R608.7.1.1 and Note c to Table R608.7(1A) for application of reduction factors in this table. This reduction is not permitted for "minimum" values.

b. For intermediate values of mean roof height, use the factor for the next greater height, or determine by interpolation.

c. Mean roof height is the average of the roof eave height and height of the highest point on the roof surface, except that for roof slopes of less than or equal to $2^1/_8$:12 (10 degrees), the mean roof height is permitted to be taken as the roof eave height.

❖ See the commentary to Section R608.7.1.1.

TABLE R608.7(3)
REDUCTION FACTOR, R_2, FOR FLOOR-TO-CEILING WALL HEIGHTS LESS THAN 10 FEET[a, b]

STORY UNDER CONSIDERATION	FLOOR-TO-CEILING HEIGHT[c] (feet)	ENDWALL LENGTH (feet)	ROOF SLOPE	REDUCTION FACTOR, R_2
Endwalls—for wind perpendicular to ridge				
One story or top story of two story	8	15	< 5:12	0.83
			7:12	0.90
			12:12	0.94
		60	< 5:12	0.83
			7:12	0.95
			12:12	0.98
First story of two story	16 combined first and second story	15	< 5:12	0.83
			7:12	0.86
			12:12	0.89
		60	< 5:12	0.83
			7:12	0.91
			12:12	0.95
Sidewalls—for wind parallel to ridge				
One story or top story of two story	8	15	< 1:12	0.84
			5:12	0.87
			7:12	0.88
			12:12	0.89
		60	< 1:12	0.86
			5:12	0.92
			7:12	0.93
			12:12	0.95
First story of two story	16 combined first and second story	15	< 1:12	0.83
			5:12	0.84
			7:12	0.85
			12:12	0.86
		60	< 1:12	0.84
			5:12	0.87
			7:12	0.88
			12:12	0.90

For SI: 1 foot = 304.8 mm.

a. See Section R608.7.1.1 and Note d to Table R608.7(1A) for application of reduction factors in this table.

b. For intermediate values of endwall length, and/or roof slope, use the next higher value, or determine by interpolation.

c. Tabulated values in Table R608.7(1A) and (1C) for "one story or top story of two story" are based on a floor-to-ceiling height of 10 feet. Tabulated values in Table R608.7(1B) and (1C) for "first story of two story" are based on floor-to-ceiling heights of 10 feet each for the first and second story. For floor to ceiling heights between those shown in this table and those assumed in Table R608.7(1A), (1B) or (1C), use the solid wall lengths in Table R608.7(1A), (1B) or (1C), or determine the reduction factor by interpolating between 1.0 and the factor shown in this table.

❖ See the commentary to Section R608.7.1.1.

INTERNATIONAL CODE COUNCIL®
Copyright © 2015 ICC. ALL RIGHTS RESERVED. Accessed by David Dammon on Jun 21, 2017 12:30:52 PM pursuant to License Agreement with ICC. No further reproduction or distribution authorized. ANY UNAUTHORIZED REPRODUCTION OR DISTRIBUTION IS A VIOLATION OF THE FEDERAL COPYRIGHT ACT AND THE LICENSE AGREEMENT, AND SUBJECT TO CIVIL AND CRIMINAL PENALTIES THEREUNDER.

TABLE R608.7(4)
REDUCTION FACTOR FOR DESIGN STRENGTH, R_3, FOR FLAT, WAFFLE- AND SCREEN-GRID WALLS[a, c]

NOMINAL THICKNESS OF WALL (inches)	VERTICAL BARS AT EACH END OF SOLID WALL SEGMENT		VERTICAL REINFORCEMENT LAYOUT DETAIL [see Figure R608.7(2)]	REDUCTION FACTOR, R_3, FOR LENGTH OF SOLID WALL			
				Horizontal and vertical shear reinforcement provided			
				No		Yes[d]	
	Number of bars	Bar size		40,000[b]	60,000[b]	40,000[b]	60,000[b]
Flat walls							
4	2	4	1	0.74	0.61	0.74	0.50
	3	4	2	0.61	0.61	0.52	0.27
	2	5	1	0.61	0.61	0.48	0.25
	3	5	2	0.61	0.61	0.26	0.18
6	2	4	3	0.70	0.48	0.70	0.48
	3	4	4	0.49	0.38	0.49	0.33
	2	5	3	0.46	0.38	0.46	0.31
	3	5	4	0.38	0.38	0.32	0.16
8	2	4	3	0.70	0.47	0.70	0.47
	3	4	5	0.47	0.32	0.47	0.32
	2	5	3	0.45	0.31	0.45	0.31
	4	4	6	0.36	0.28	0.36	0.25
	3	5	5	0.31	0.28	0.31	0.16
	4	5	6	0.28	0.28	0.24	0.12
10	2	4	3	0.70	0.47	0.70	0.47
	2	5	3	0.45	0.30	0.45	0.30
	4	4	7	0.36	0.25	0.36	0.25
	6	4	8	0.25	0.22	0.25	0.13
	4	5	7	0.24	0.22	0.24	0.12
	6	5	8	0.22	0.22	0.12	0.08
Waffle-grid walls[e]							
6	2	4	3	0.78	0.78	0.70	0.48
	3	4	4	0.78	0.78	0.49	0.25
	2	5	3	0.78	0.78	0.46	0.23
	3	5	4	0.78	0.78	0.24	0.16
8	2	4	3	0.78	0.78	0.70	0.47
	3	4	5	0.78	0.78	0.47	0.24
	2	5	3	0.78	0.78	0.45	0.23
	4	4	6	0.78	0.78	0.36	0.18
	3	5	5	0.78	0.78	0.23	0.16
	4	5	6	0.78	0.78	0.18	0.13
Screen-grid walls[e]							
6	2	4	3	0.93	0.93	0.70	0.48
	3	4	4	0.93	0.93	0.49	0.25
	2	5	3	0.93	0.93	0.46	0.23
	3	5	4	0.93	0.93	0.24	0.16

For SI: 1 inch = 25.4 mm, 1,000 pounds per square inch = 6.895 MPa.

a. See Note e to Table R608.7(1A) for application of adjustment factors in this table.

b. Yield strength in pounds per square inch of vertical wall reinforcement at ends of solid wall segments.

c. Values are based on concrete with a specified compressive strength, f'_c, of 2,500 psi. Where concrete with f'_c of not less than 3,000 psi is used, values in shaded cells are permitted to be decreased by multiplying by 0.91.

d. Horizontal and vertical shear reinforcement shall be provided in accordance with Section R608.7.2.2.

e. Each end of each solid wall segment shall have rectangular flanges. In the through-the-wall dimension, the flange shall be not less than $5^1/_2$ inches for 6-inch-nominal waffle- and screen-grid walls, and not less than $7^1/_2$ inches for 8-inch-nominal waffle-grid walls. In the in-plane dimension, flanges shall be long enough to accommodate the vertical reinforcement required by the layout detail selected from Figure R608.7(2) and provide the cover required by Section R608.5.4.1. If necessary to achieve the required dimensions, form material shall be removed or use of flat wall forms is permitted.

❖ See the commentary to Sections R608.7.1.1, R608.7.2.2, R608.7.2.2.1 and R608.7.2.2.3.

INTERNATIONAL CODE COUNCIL®
Copyright © 2015 ICC. ALL RIGHTS RESERVED. Accessed by David Dammon on Jun 21, 2017 12:30:52 PM pursuant to License Agreement with ICC. No further reproduction or distribution authorized. ANY UNAUTHORIZED REPRODUCTION OR DISTRIBUTION IS A VIOLATION OF THE FEDERAL COPYRIGHT ACT AND THE LICENSE AGREEMENT, AND SUBJECT TO CIVIL AND CRIMINAL PENALTIES THEREUNDER.

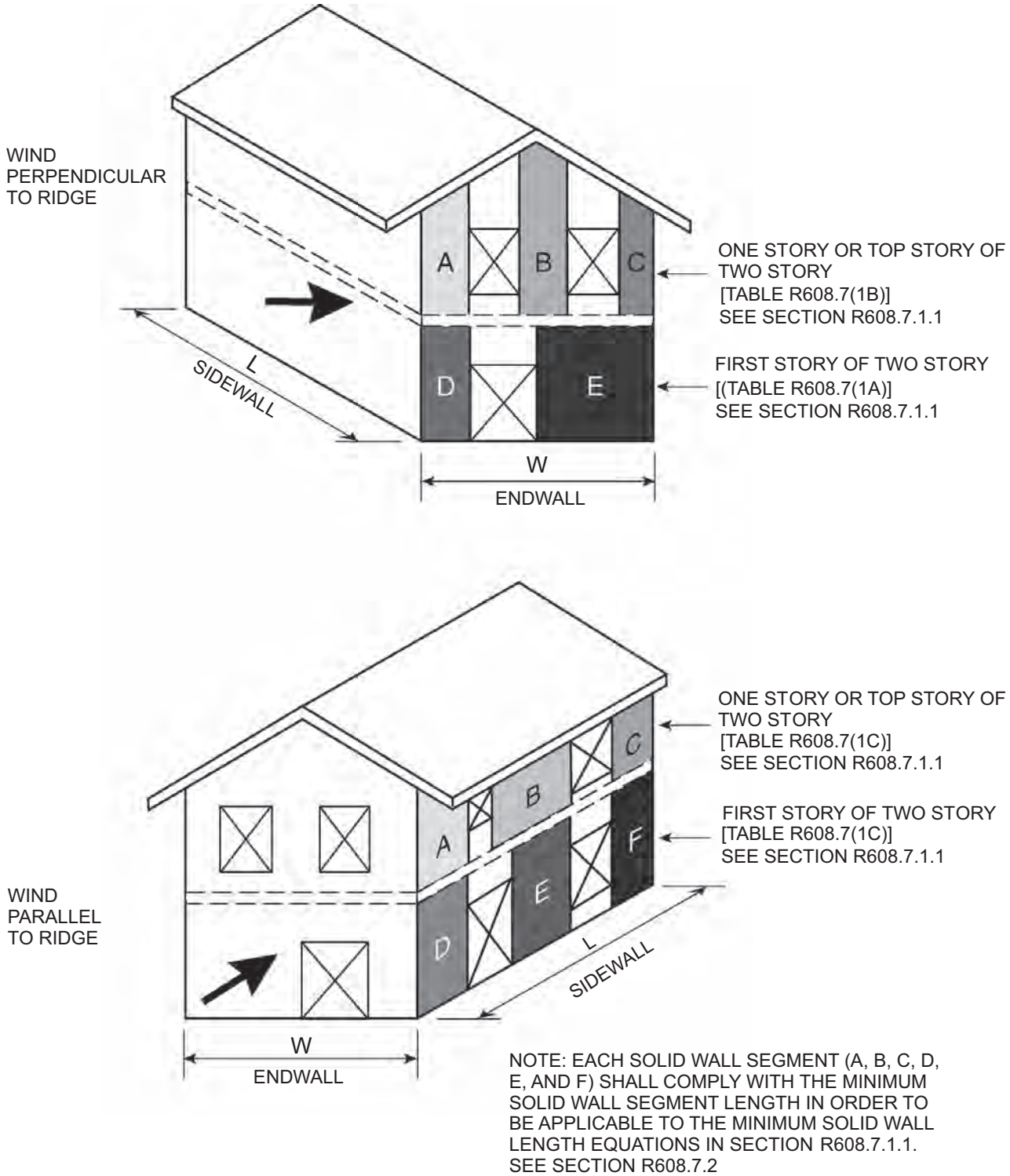

FIGURE R608.7(1)
MINIMUM SOLID WALL LENGTH

❖ See the commentary to Sections R608.7.1.1, R608.7.2.1 and R608.7.2.3.

INTERNATIONAL CODE COUNCIL®
Copyright © 2015 ICC. ALL RIGHTS RESERVED. Accessed by David Dammon on Jun 21, 2017 12:30:52 PM pursuant to License Agreement with ICC. No further reproduction or distribution authorized. ANY UNAUTHORIZED REPRODUCTION OR DISTRIBUTION IS A VIOLATION OF THE FEDERAL COPYRIGHT ACT AND THE LICENSE AGREEMENT, AND SUBJECT TO CIVIL AND CRIMINAL PENALTIES THEREUNDER.

R608.7.2 Solid wall segments. Solid wall segments that contribute to the required length of solid wall shall comply with this section. Reinforcement shall be provided in accordance with Section R608.7.2.2 and Table R608.7(4). Solid wall segments shall extend the full story-height without openings, other than openings for the utilities and other building services passing through the wall. In flat walls and waffle-grid walls, such openings shall have an area of less than 30 square inches (19 355 mm^2) without any dimension exceeding $6^1/_4$ inches (159 mm), and shall not be located within 6 inches (152 mm) of the side edges of the solid wall segment. In screen-grid walls, such openings shall be located in the portion of the solid wall segment between horizontal and vertical cores of concrete and opening size and location are not restricted provided there is not any concrete removed.

❖ Provisions for limited openings in solid wall segments recognize the reality that mandating a segment with no openings is not practical. Prohibiting the opening within 6 inches (152 mm) of the edge of a solid wall segment is intended to prevent holes from reducing the area of concrete in the compression zone.

R608.7.2.1 Minimum length of solid wall segment and maximum spacing. Only solid wall segments equal to or greater than 24 inches (610 mm) in length shall be included in the total length of solid wall required by Section R608.7.1. In addition, not more than two solid wall segments equal to or greater than 24 inches (610 mm) in length and less than 48 inches (1219 mm) in length shall be included in the required total length of solid wall. The maximum clear opening width shall be 18 feet (5486 mm). See Figure R608.7(1).

❖ A minimum of two solid wall segments is required for each solid wall line, as shown in Figure R608.7(1). Only solid wall segments that are a minimum of 24 inches (610 mm) in length are to be counted in the total required length of solid wall. No more than two solid wall segments are permitted to be less than 48 inches (1219 mm). The maximum spacing (clear opening width) between segments is 18 feet (5486 mm).

R608.7.2.2 Reinforcement in solid wall segments.

❖ This section contains the provisions for horizontal and vertical shear reinforcement in solid wall segments where the option to provide the shear reinforcement from Table R608.7(4) is chosen.

Also, this section prescribes the location and termination of the required vertical bars at the ends of the solid wall segments.

This section also contains the provisions for solid wall segments at corners.

R608.7.2.2.1 Horizontal shear reinforcement. Where reduction factors for design strength, R_3, from Table R608.7(4) based on horizontal and vertical shear reinforcement being provided are used, solid wall segments shall have horizontal reinforcement consisting of minimum No. 4 bars. Horizontal shear reinforcement shall be the same grade of steel required for the vertical reinforcement at the ends of solid wall segments by Section R608.7.2.2.2.

The spacing of horizontal reinforcement shall not exceed the smaller of one-half the length of the solid wall segment, minus 2 inches (51 mm), and 18 inches (457 mm). Horizontal shear reinforcement shall terminate in accordance with Section R608.6.4.

❖ There are two options with respect to horizontal shear reinforcement. If the option to use no horizontal and vertical shear reinforcement is assumed in selecting the reduction factor (R_3) for design strength from Table R608.7(4), horizontal reinforcement must be provided in accordance with Section R608.6.2. On the other hand, if the option to use horizontal and vertical shear reinforcement is assumed in selecting the reduction factor (R_3) for design strength from Table R608.7(4), horizontal reinforcement must be installed in accordance with Section R608.7.2.2.1.

R608.7.2.2.2 Vertical reinforcement. Vertical reinforcement applicable to the reduction factor(s) for design strength, R_3, from Table R608.7(4) that is used, shall be located at each end of each solid wall segment in accordance with the applicable detail in Figure R608.7(2). The No. 4 vertical bar required on each side of an opening by Section R608.8.1.2 is permitted to be used as reinforcement at the ends of solid wall segments where installed in accordance with the applicable detail in Figure R08.7(2). There shall be not less than two No. 4 bars at each end of solid wall segments located as required by the applicable detail in Figure R608.7(2). One of the bars at each end of solid wall segments shall be deemed to meet the requirements for vertical wall reinforcement required by Section R608.6.

The vertical wall reinforcement at each end of each solid wall segment shall be developed below the bottom of the adjacent wall opening [see Figure R608.7(3)] by one of the following methods:

1. Where the wall height below the bottom of the adjacent opening is equal to or greater than 22 inches (559 mm) for No. 4 or 28 inches (711 mm) for No. 5 vertical wall reinforcement, reinforcement around openings in accordance with Section R608.8.1 shall be sufficient.
2. Where the wall height below the bottom of the adjacent opening is less than required by Item 1 above, the vertical wall reinforcement adjacent to the opening shall extend into the footing far enough to develop the bar in tension in accordance with Section R608.5.4.4 and Figure R608.5.4(2), or shall be lap-spliced with a dowel that is embedded in the footing far enough to develop the dowel-bar in tension.

❖ Solid wall segments must have vertical rebars at each end of the segment. The location is to be in accordance with this section and Figure R608.7(2). The vertical rebars at each end of the segment must be developed below the adjacent opening in accordance with this section and Figure R608.7(3).

INTERNATIONAL CODE COUNCIL®
Copyright © 2015 ICC. ALL RIGHTS RESERVED. Accessed by David Dammon on Jun 21, 2017 12:30:52 PM pursuant to License Agreement with ICC. No further reproduction or distribution authorized. ANY UNAUTHORIZED REPRODUCTION OR DISTRIBUTION IS A VIOLATION OF THE FEDERAL COPYRIGHT ACT AND THE LICENSE AGREEMENT, AND SUBJECT TO CIVIL AND CRIMINAL PENALTIES THEREUNDER.

DETAIL NO.	NOM. WALL THICKNESS, IN.	REINFORCEMENT LAYOUT AT ENDS OF SOLID WALL SEGMENTS	NOTES
1	4	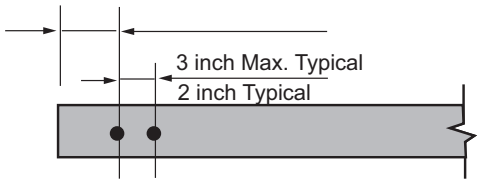	For SI: 1 inch = 25.4 mm. 1. See Table R608.7(4) for use of details.
2	4		2. Minimum length of solid wall segment and size and grade of reinforcement in each end of each solid wall segment shall be determined from Table R608.7(4).
3	6 8 10		3.. For minimum cover requirements, see Section R608.5.4.1.
4	6		4.. For details 3 - 8 where two or more bars are in the same row parallel to the end of the segment, place bars so that corner bars are as close to the sides of the wall segments as minimum cover requirements of Section R608.5.4.1 will permit.
5	8	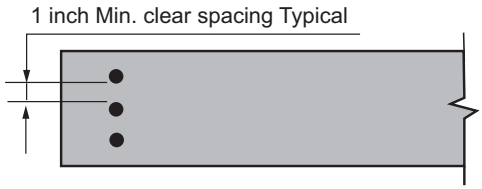	
6	8		5.. For waffle- and screen-grid walls, each end of each solid wall segment shall have rectangular flanges. In the through-the-wall dimension, the flange shall be not less than 5½ inches for 6-inch nominal waffle- and screen-grid forms, and not less than 7½ inches for 8-inch nominal waffle-grid forms. In the in-plane dimension, flanges shall be long enough to accommodate the vertical reinforcement required by the layout detail selected and provide the cover required by Section R608.5.4.1. If necessary to achieve the required dimensions, form material shall be removed or flat wall forms are permitted. See Table R608.7(4), Note e.
7	10		
8	10	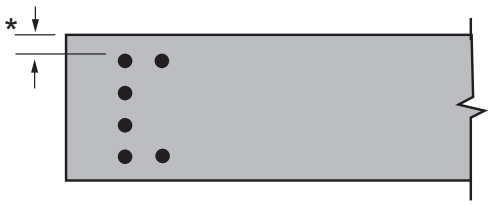 * For minimum cover see Section R608.5.4.1	

FIGURE R608.7(2)
VERTICAL REINFORCEMENT LAYOUT DETAIL

❖ See the commentary to Section R608.7.2.2.2.

INTERNATIONAL CODE COUNCIL®
Copyright © 2015 ICC. ALL RIGHTS RESERVED. Accessed by David Dammon on Jun 21, 2017 12:30:52 PM pursuant to License Agreement with ICC. No further reproduction or distribution authorized. ANY UNAUTHORIZED REPRODUCTION OR DISTRIBUTION IS A VIOLATION OF THE FEDERAL COPYRIGHT ACT AND THE LICENSE AGREEMENT, AND SUBJECT TO CIVIL AND CRIMINAL PENALTIES THEREUNDER.

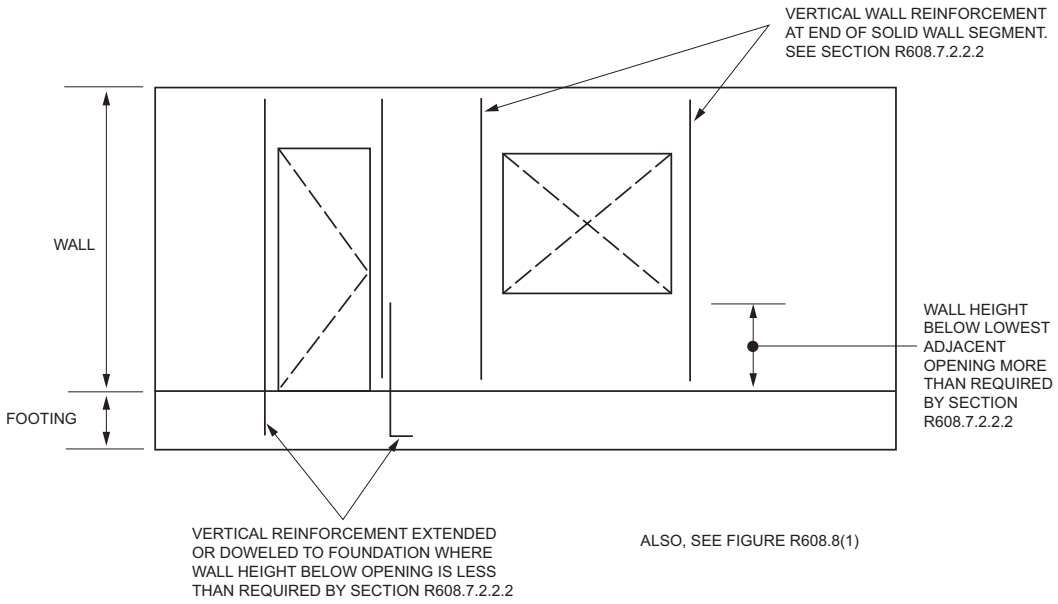

FIGURE R608.7(3)
VERTICAL WALL REINFORCEMENT ADJACENT TO WALL OPENINGS

❖ See the commentary to Section R608.7.2.2.2.

R608.7.2.2.3 Vertical shear reinforcement. Where reduction factors for design strength, R_3, from Table R608.7(4) based on horizontal and vertical shear reinforcement being provided are used, solid wall segments shall have vertical reinforcement consisting of minimum No. 4 bars. Vertical shear reinforcement shall be the same grade of steel required by Section R608.7.2.2.2 for the vertical reinforcement at the ends of solid wall segments. The spacing of vertical reinforcement throughout the length of the segment shall not exceed the smaller of one third the length of the segment, and 18 inches (457 mm). Vertical shear reinforcement shall be continuous between stories in accordance with Section R608.6.3, and shall terminate in accordance with Section R608.6.4. Vertical shear reinforcement required by this section is permitted to be used for vertical reinforcement required by Table R608.6(1), R608.6(2), R608.6(3) or R608.6(4), whichever is applicable.

❖ There are two options with respect to vertical shear reinforcement. If the option to use no horizontal and vertical shear reinforcement is assumed in selecting the reduction factor (R_3) for design strength from Table R608.7(4), vertical reinforcement must be provided in accordance with Sections R608.6.2 and R608.7.2.2.2. On the other hand, if the option to use horizontal and vertical shear reinforcement is assumed in selecting the reduction factor (R_3) for design strength from Table R608.7(4), vertical reinforcement must be installed in accordance with Sections R608.7.2.2.2 and R608.7.2.2.3.

R608.7.2.3 Solid wall segments at corners. At all interior and exterior corners of exterior walls, a solid wall segment shall extend the full height of each wall *story*. The segment shall have the length required to develop the horizontal reinforcement above and below the adjacent opening in tension in accordance with Section R608.5.4.4. For an exterior corner, the limiting dimension is measured on the outside of the wall, and for an interior corner the limiting dimension is measured on the inside of the wall. See Section R608.8.1. The length of a segment contributing to the required length of solid wall shall comply with Section R608.7.2.1.

The end of a solid wall segment complying with the minimum length requirements of Section R608.7.2.1 shall be located not more than 6 feet (1829 mm) from each corner.

❖ A full-height (story height) solid wall segment must be located at each corner (end) of an endwall line and each corner (end) of a sidewall line as shown in Figure R608.7(1).

The minimum length must be sufficient for the development length of the horizontal rebar above and below the adjacent opening and comply with Section R608.7.2.1.

The code permits the corner (end) segments, as shown in Figure R608.7(1), that comply with the minimum length requirements to be located no more than 6 feet (1829 mm) from each corner.

R608.8 Requirements for lintels and reinforcement around openings.

❖ This section contains the requirements for reinforcement around openings and lintels above openings as prescribed in Sections R608.8.1 and R608.8.2.

R608.8.1 Reinforcement around openings. Reinforcement shall be provided around openings in walls equal to or greater than 2 feet (610 mm) in width in accordance with this section and Figure R608.8(1), in addition to the minimum wall reinforcement required by Sections R404.1.3, R608.6 and R608.7. Vertical wall reinforcement required by this section is permitted to be used as reinforcement at the ends of solid wall segments required by Section R608.7.2.2.2 provided it is located in accordance with Section R608.8.1.2. Wall openings shall have a minimum depth of concrete over the width of the opening of 8 inches (203 mm) in flat walls and waffle-

INTERNATIONAL CODE COUNCIL®
Copyright © 2015 ICC. ALL RIGHTS RESERVED. Accessed by David Dammon on Jun 21, 2017 12:30:52 PM pursuant to License Agreement with ICC. No further reproduction or distribution authorized. ANY UNAUTHORIZED REPRODUCTION OR DISTRIBUTION IS A VIOLATION OF THE FEDERAL COPYRIGHT ACT AND THE LICENSE AGREEMENT, AND SUBJECT TO CIVIL AND CRIMINAL PENALTIES THEREUNDER.

grid walls, and 12 inches (305 mm) in screen-grid walls. Wall openings in waffle-grid and screen-grid walls shall be located such that not less than one-half of a vertical core occurs along each side of the opening.

❖ Reinforcement of openings less than 2 feet (610 mm) in width is not required. Only openings equal to or greater than 2 feet (610 mm) in width require reinforcement. The required opening reinforcement is in addition to the minimum wall reinforcement required for concrete foundation walls, above-grade walls and solid wall segments. See Figure R608.8(1) for the minimum reinforcement required at wall openings.

R608.8.1.1 Horizontal reinforcement. Lintels complying with Section R608.8.2 shall be provided above wall openings equal to or greater than 2 feet (610 mm) in width.

Exception: Continuous horizontal wall reinforcement placed within 12 inches (305 mm) of the top of the wall *story* as required in Sections R404.1.2.2 and R608.6.2 is permitted in lieu of top or bottom lintel reinforcement required by Section R608.8.2 provided that the continuous horizontal wall reinforcement meets the location requirements specified in Figures R608.8(2), R608.8(3), and R608.8(4) and the size requirements specified in Tables R608.8(2) through R608.8(10).

Openings equal to or greater than 2 feet (610 mm) in width shall have not less than one No. 4 bar placed within 12 inches (305 mm) of the bottom of the opening. See Figure R608.8(1).

Horizontal reinforcement placed above and below an opening shall extend beyond the edges of the opening the dimension required to develop the bar in tension in accordance with Section R608.5.4.4.

❖ Horizontal reinforcement is required both above and below all openings equal to or greater than 2 feet (610 mm) in width.

The reinforcement above the opening must be a lintel complying with Section R608.8.2. Lintels are horizontal members used to transfer wall, floor, roof, and attic dead loads, snow and live loads above opening in walls to the sides of the opening. The exception permits the continuous horizontal wall reinforcement required for foundation walls and above-grade walls to serve as the top or bottom lintel reinforcement provided it meets the requirement of Section R608.8.2. The reinforcement below the opening must be a No. 4 bar placed within 12 inches (305 mm) of the bottom of the opening [see Figure R608.8(1)].

R608.8.1.2 Vertical reinforcement. Not less than one No. 4 bar [Grade 40 (280 MPa)] shall be provided on each side of openings equal to or greater than 2 feet (610 mm) in width. The vertical reinforcement required by this section shall extend the

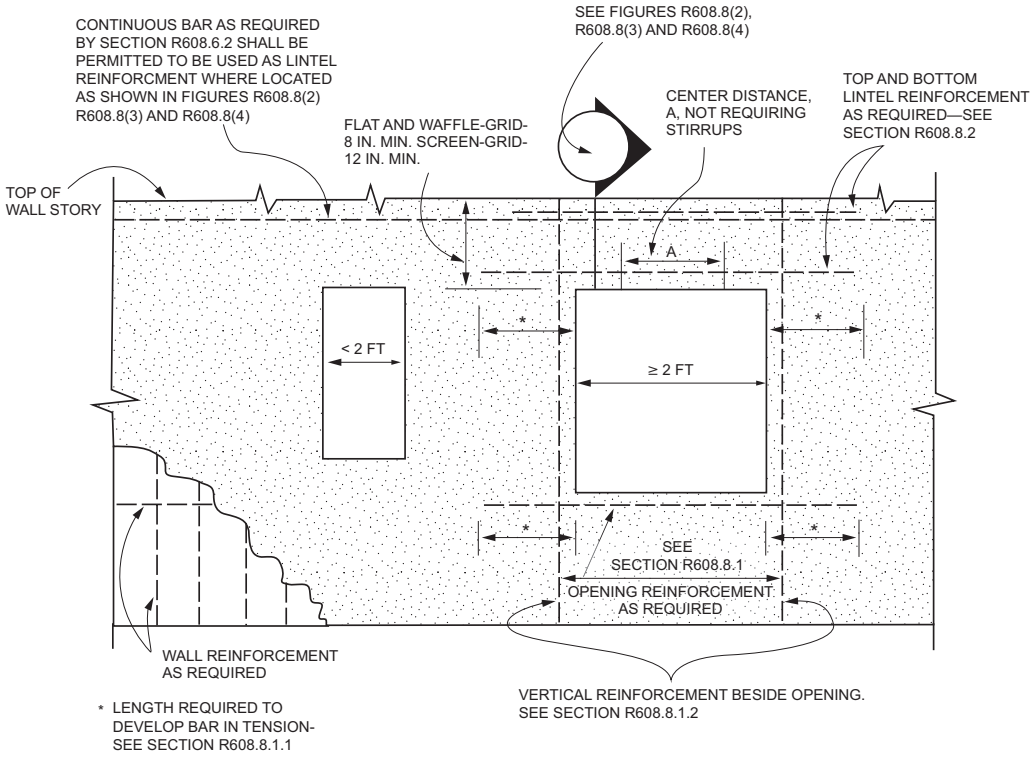

ELEVATION OF WALL

For SI: 1 inch = 25.4 mm, 1 foot = 304.8 mm.

FIGURE R608.8(1)
REINFORCEMENT OF OPENINGS

❖ See the commentary to Sections R608.8.1, R608.8.1.1 and R608.8.1.2.

INTERNATIONAL CODE COUNCIL®
Copyright © 2015 ICC. ALL RIGHTS RESERVED. Accessed by David Dammon on Jun 21, 2017 12:30:52 PM pursuant to License Agreement with ICC. No further reproduction or distribution authorized. ANY UNAUTHORIZED REPRODUCTION OR DISTRIBUTION IS A VIOLATION OF THE FEDERAL COPYRIGHT ACT AND THE LICENSE AGREEMENT, AND SUBJECT TO CIVIL AND CRIMINAL PENALTIES THEREUNDER.

full height of the wall story and shall be located within 12 inches (305 mm) of each side of the opening. The vertical reinforcement required on each side of an opening by this section is permitted to serve as reinforcement at the ends of solid wall segments in accordance with Section R608.7.2.2.2, provided it is located as required by the applicable detail in Figure R608.7(2). Where the vertical reinforcement required by this section is used to satisfy the requirements of Section R608.7.2.2.2 in waffle- and screen-grid walls, a concrete flange shall be created at the ends of the solid wall segments in accordance with Table R608.7(4), Note e. In the top-most story, the reinforcement shall terminate in accordance with Section R608.6.4.

❖ The minimum vertical reinforcement required on each side of the opening is to provide resistance to roof uplift loads. One No. 4 bar on each side of the opening is required and will resist roof uplift load based on the design wind speeds defined in Section R608.2. The vertical reinforcement must extend the full height of the wall story and be within 12 inches (305 mm) of each side of the opening as shown in Figure R608.8(1).

This minimum vertical reinforcement is permitted to serve as reinforcement at the ends of solid wall segments (see Section R608.7.2.2.2).

R608.8.2 Lintels. Lintels shall be provided over all openings equal to or greater than 2 feet (610 mm) in width. Lintels with uniform loading shall conform to Sections R608.8.2.1 and R608.8.2.2, or Section R608.8.2.3. Lintels supporting concentrated loads, such as from roof or floor beams or girders, shall be designed in accordance with ACI 318.

❖ To support the loads from above, any wall opening of 2 feet (610 mm) or more requires a lintel in accordance with Section R608.8.2. Figures R608.8(2) through R608.8(4) illustrate these requirements. Openings smaller than 2 feet (610 mm) can be installed without the use of a lintel to transfer loads from above as a beam. The referenced figures indicate the need for horizontal reinforcement and stirrups for transverse reinforcement depending on the type of wall being constructed and the size of the opening. Commentary Figure R608.8.2 provides a summary of the referenced figures and tables in Sections R608.8.2.1 through R608.8.2.3.

The requirements of Section R608.8.2 are for lintels subjected to uniform loading. Lintels are either load bearing (LB) or nonload bearing (NLB). Lintels subjected to concentrated loads must be designed in accordance with ACI 318.

TYPE OF WALL	APPLICABLE FIGURES	APPLICABLE TABLES
Flat	R608.8(2)	Load bearing: R608.8(2) through R608.8(5) Nonload bearing: R608.8(5)
Waffle-grid	R608.8(3)	Load bearing: R608.8(6) and R608.8(7) Nonload bearing: R608.8(10)
Screen-grid	R608.8(4)	Load bearing: R608.8(8) Nonload bearing: R608.8(10)

Figure R608.8.2
APPLICABLE REQUIREMENTS FOR LINTELS

R608.8.2.1 Lintels designed for gravity load-bearing conditions. Where a lintel will be subjected to gravity load condition 1 through 5 of Table R608.8(1), the clear span of the lintel shall not exceed that permitted by Tables R608.8(2) through R608.8(8). The maximum clear span of lintels with and without stirrups in flat walls shall be determined in accordance with Tables R608.8(2) through R608.8(5), and constructed in accordance with Figure R608.8(2). The maximum clear span of lintels with and without stirrups in waffle-grid walls shall be determined in accordance with Tables R608.8(6) and R608.8(7), and constructed in accordance with Figure R608.8(3). The maximum clear span of lintels with and without stirrups in screen-grid walls shall be determined in accordance with Table R608.8(8), and constructed in accordance with Figure R608.8(4).

Where required by the applicable table, No. 3 stirrups shall be installed in lintels at a maximum spacing of $d/2$ where d equals the depth of the lintel, D, less the cover of the concrete as shown in Figures R608.8(2) through R608.8(4). The smaller value of d computed for the top and bottom bar shall be used to determine the maximum stirrup spacing. Where stirrups are required in a lintel with a single bar or two bundled bars in the top and bottom, they shall be fabricated like the letter "c" or "s" with 135-degree (2.36 rad) standard hooks at each end that comply with Section R608.5.4.5 and Figure R608.5.4(3) and installed as shown in Figures R608.8(2) through R608.8(4). Where two bars are required in the top and bottom of the lintel and the bars are not bundled, the bars shall be separated by not less than 1 inch (25 mm). The free end of the stirrups shall be fabricated with 90- or 135-degree (1.57 or 2.36 rad) standard hooks that comply with Section R608.5.4.5 and Figure R608.5.4(3) and installed as shown in Figures R608.8(2) and R608.8(3). For flat, waffle-grid and screen-grid lintels, stirrups are not required in the center distance, A, portion of spans in accordance with Figure R608.8(1) and Tables R608.8(2) through R608.8(8). See Section R608.8.2.2, Item 5, for requirement for stirrups through out lintels with bundled bars.

❖ In developing the loading conditions of Table R608.8(1), arching action above the opening was considered. Based on this concept, the lintel only supports the weight of the concrete above the lintel bounded by a triangle with its base corresponding to the clear span of the lintel, and sides which start at the top of the lintel at the edges of the opening and extend upward and inward toward the center of the opening at an angle of 45 degrees (0.79 rad). Given this geometry, the apex of the triangle is on the centerline of the opening and the height of the triangle is one-half the opening width. Therefore, in order to consider arching action, the height of the wall above the top of the lintel must be greater than one-half the opening width. Where arching action can be considered and there are no loads introduced into the triangular area, Table R608.8(1) indicates that the lintel is to be designed for a nonload-bearing condition (NLB). If loads are imposed on the wall within the triangular area beneath the arch, such as from a floor ledger board bolted to the side of the

INTERNATIONAL CODE COUNCIL®
Copyright © 2015 ICC. ALL RIGHTS RESERVED. Accessed by David Dammon on Jun 21, 2017 12:30:52 PM pursuant to License Agreement with ICC. No further reproduction or distribution authorized. ANY UNAUTHORIZED REPRODUCTION OR DISTRIBUTION IS A VIOLATION OF THE FEDERAL COPYRIGHT ACT AND THE LICENSE AGREEMENT, AND SUBJECT TO CIVIL AND CRIMINAL PENALTIES THEREUNDER.

wall the lintel must be designed for load-bearing conditions (LB). Where a lintel is subjected to load-bearing conditions (LB) 1 through 5, as shown in Table R608.8(1), the lintel span and reinforcement must be in accordance with this section and Tables R608.8(2) through R608.8(8). The five (5) loading conditions can be summarized as follows:

1. Design for floor load only
2. Design for roof load only
3. Design for loads from roof, attic, light-framed second-story exterior wall and second floor
4. Design for loads from roof, attic, second-story exterior concrete wall and second floor, or in the case of a one-story house, design for loads from roof, attic, first-story exterior concrete wall and first floor
5. Design for loads from roof, attic, first- and second-story exterior concrete walls and first and second floor

Tables R608.8(2) through R608.8(8) provide designs for lintels with and without stirrups. Where stirrups are required, No. 3 stirrups must be installed in accordance with Section R608.8.2.1 and Figures R608.8(1) through R608.8(4). Where stirrups are required in a lintel with a single bar in the top and bottom, they are normally fabricated like the letter "c" or "s" with 135-degree (2.36 rad) standard hooks as shown in Figure R608.5.4(3) and installed as shown in Figures R608.8(2) through R608.8(4). Where two bars are required in the top and bottom of the lintel, stirrups must be fabricated with 90- or 135-degree (1.57 or 2.36 rad) standard hooks as shown in Figure R608.5.4(3) and installed as shown in Figures R608.8(2) and R608.8(3) unless the bars are bundled.

R608.8.2.2 Bundled bars in lintels. It is permitted to bundle two bars in contact with each other in lintels if all of the following are observed:

1. Bars equal to or less than No. 6 are bundled.
2. Where the wall thickness is not sufficient to provide not less than 3 inches (76 mm) of clear space beside bars (total on both sides) oriented horizontally in a bundle, the bundled bars shall be oriented in a vertical plane.
3. Where vertically oriented bundled bars terminate with standard hooks to develop the bars in tension beyond the support (see Section R608.5.4.4), the hook extensions shall be staggered to provide not less than 1 inch (25 mm) clear spacing between the extensions.
4. Bundled bars shall not be lap spliced within the lintel span and the length on each end of the lintel that is required to develop the bars in tension.
5. Bundled bars shall be enclosed within stirrups throughout the length of the lintel. Stirrups and the installation thereof shall comply with Section R608.8.2.1.

❖ Section 7.6.6 of ACI 318 permits bars to be bundled if provisions applicable to the bundled bars are followed. The number of bars being bundled is limited to two to increase the likelihood that the bundle will be properly encased by concrete, and to avoid having to increase development lengths required by Section 12.4.1 of ACI 318 for 3 or 4 bars in a bundle. The limitation on bar size in Item 1 is based on the maximum bar size shown in the lintel tables and is consistent with residential construction practices. The requirement in Item 2 that the wall be thick enough where horizontally oriented bundled bars are used to provide a minimum of 3 inches (76 mm) of clear space beside the bars is based on the use of two No. 4 bars bundled horizontally in a 4-inch (102 mm) wall. This requirement is to ensure that the bundle is properly encased in concrete and to facilitate getting concrete to portions of the lintel below the bundle. The requirement in Item 3 that hook extensions in vertically oriented bundles be separated by at least 1 inch (25 mm) is based on recommendations in Commentary Section R7.6.6 of ACI 318. The limitation in Item 4 on location of lap splices of bundled bars is to make sure that congestion due to the laps will not occur in the critical stress areas of the lintel. Item 5 is consistent with ACI 318 requirements.

R608.8.2.3 Lintels without stirrups designed for nonload-bearing conditions. The maximum clear span of lintels without stirrups designed for nonload-bearing conditions of Table R608.8(1).1 shall be determined in accordance with this section. The maximum clear span of lintels without stirrups in flat walls shall be determined in accordance with Table R608.8(9), and the maximum clear span of lintels without stirrups in walls of waffle-grid or screen-grid construction shall be determined in accordance with Table R608.8(10).

❖ Lintels in nonload-bearing walls are horizontal members used to transfer wall dead loads from above around openings. Lintels are divided into two categories as follows:

1. Lintels at the top of the wall in a one-story building or the second story of a two-story building where the gable portion of the endwall is light-framed construction (supporting light-framed gable); and
2. Lintels in concrete walls, including the gable (supporting concrete wall).

The following design assumptions were made in analyzing the lintels in nonload-bearing walls:

1. Lintels have fixed end restraints since the walls and lintels are cast monolithically. The negative moment at the support ($w/^{2}/_{12}$) is the governing moment.
2. In the case of waffle-grid and screen-grid walls, a vertical core occurs at each end of the lintel for proper bearing.
3. Lateral restraint (out-of-plane) is provided for the lintel by the floor or roof system above.
4. Allowable deflection criteria is the clear span of the lintel, in inches, divided by 240, or $^{1}/_{2}$-inch (12.7 mm), whichever is smaller.
5. Lintels support only dead loads from the wall above.

INTERNATIONAL CODE COUNCIL®
Copyright © 2015 ICC. ALL RIGHTS RESERVED. Accessed by David Dammon on Jun 21, 2017 12:30:52 PM pursuant to License Agreement with ICC. No further reproduction or distribution authorized. ANY UNAUTHORIZED REPRODUCTION OR DISTRIBUTION IS A VIOLATION OF THE FEDERAL COPYRIGHT ACT AND THE LICENSE AGREEMENT, AND SUBJECT TO CIVIL AND CRIMINAL PENALTIES THEREUNDER.

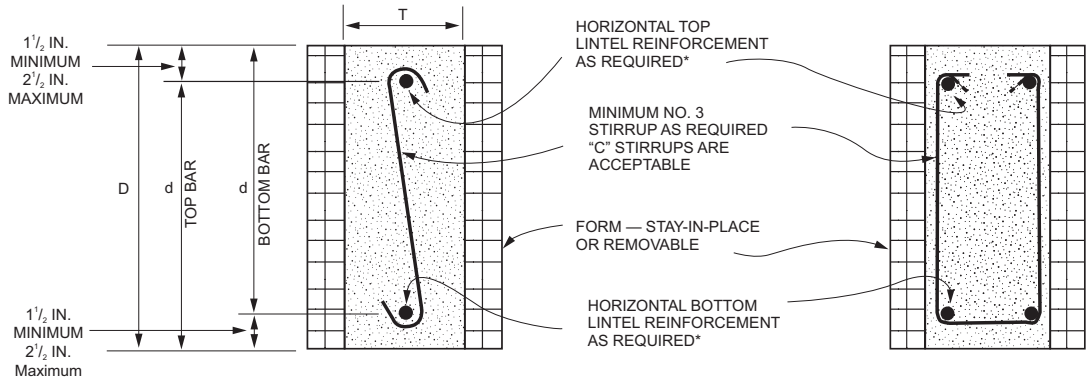

* FOR BUNDLED BARS, SEE SECTION R608.8.2.2.
SECTION CUT THROUGH FLAT WALL LINTEL

For SI: 1 inch = 25.4 mm.

FIGURE R608.8(2)
LINTEL FOR FLAT WALLS

❖ See the commentary to Sections R608.8.2 and R608.8.2.1.

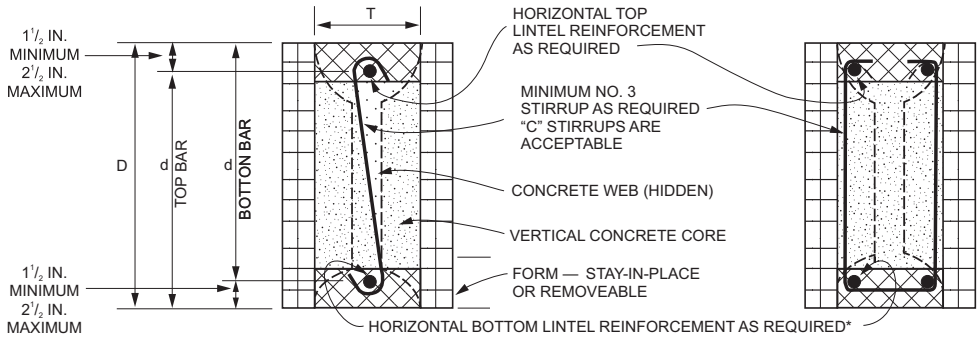

(a) SINGLE FORM HEIGHT SECTION CUT THROUGH VERTICAL CORE OF A WAFFLE-GRID LINTEL

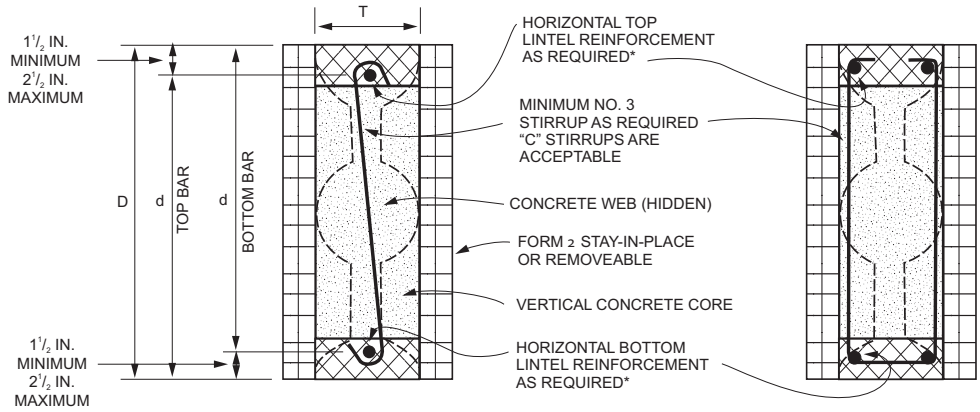

(b) DOUBLE FORM HEIGHT SECTION CUT THROUGH VERTICAL CORE OF A WAFFLE-GRID LINTEL

*FOR BUNDLED BARS, SEE SECTION R608.8.2.2.

NOTE: CROSS-HATCHING REPRESENTS THE AREA IN WHICH FORM MATERIAL SHALL BE REMOVED, IF NECESSARY, TO CREATE FLANGES CONTINUOUS THE LENGTH OF THE LINTEL. FLANGES SHALL HAVE A MINIMUM THICKNESS OF 3 IN., AND A MINIMUM WIDTH OF 5 IN. AND 7 IN. IN 6 IN. NOMINAL AND 8 IN. NOMINAL WAFFLE-GRID WALLS, RESPECTIVELY. SEE NOTE a TO TABLES R608.8(6) AND R608.8(10).

For SI: 1 inch = 25.4 mm.

FIGURE R608.8(3)
LINTELS FOR WAFFLE-GRID WALLS

❖ See the commentary to Sections R608.8.2 and R608.8.2.1.

INTERNATIONAL CODE COUNCIL®
Copyright © 2015 ICC. ALL RIGHTS RESERVED. Accessed by David Dammon on Jun 21, 2017 12:30:52 PM pursuant to License Agreement with ICC. No further reproduction or distribution authorized. ANY UNAUTHORIZED REPRODUCTION OR DISTRIBUTION IS A VIOLATION OF THE FEDERAL COPYRIGHT ACT AND THE LICENSE AGREEMENT, AND SUBJECT TO CIVIL AND CRIMINAL PENALTIES THEREUNDER.

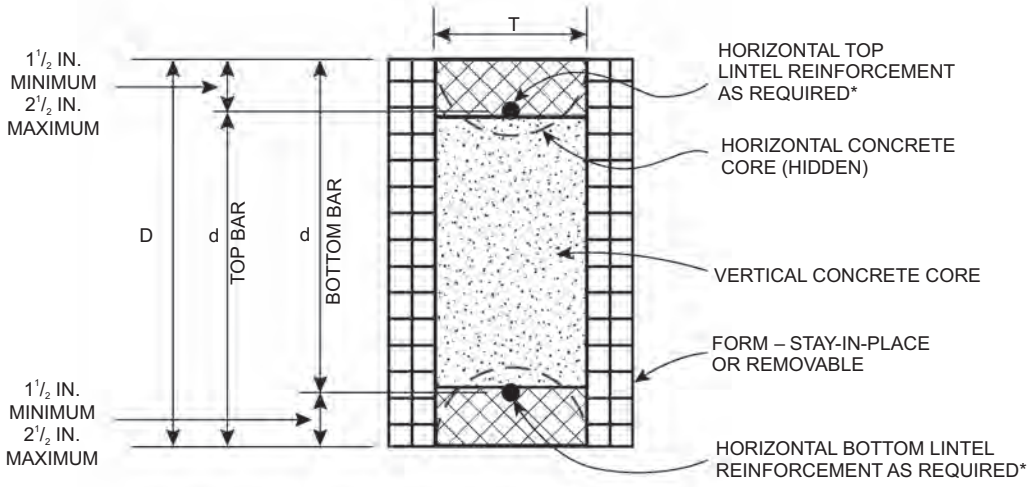

(a) SINGLE FORM HEIGHT SECTION CUT THROUGH VERTICAL CORE OF A SCREEN-GRID LINTEL

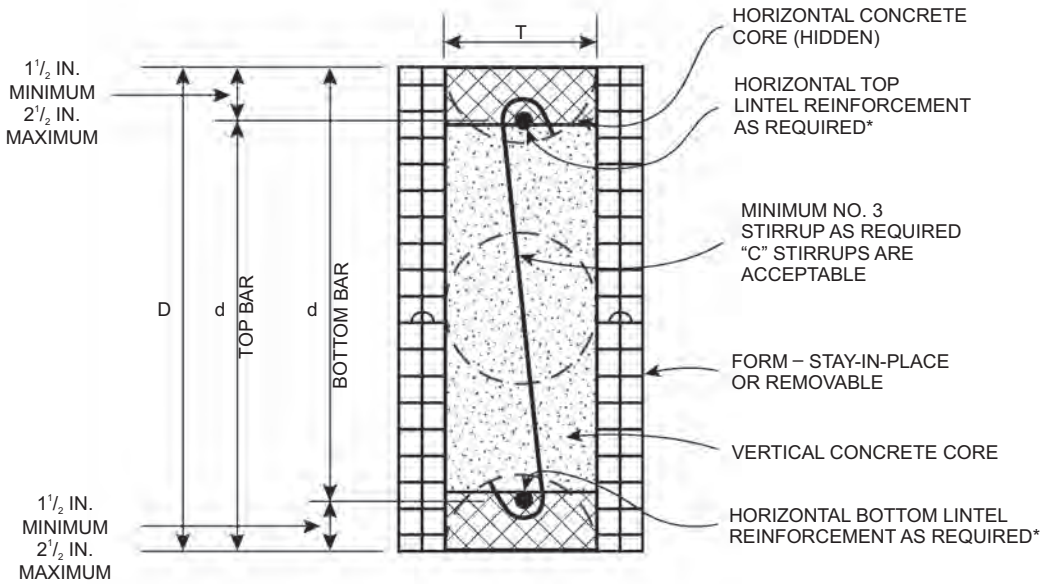

(b) DOUBLE FORM HEIGHT SECTION CUT THROUGH VERTICAL CORE OF A SCREEN-GRID LINTEL

*FOR BUNDLED BARS, SEE SECTION R608.8.2.2

NOTE: CROSS-HATCHING REPRESENTS THE AREA IN WHICH FORM MATERIAL SHALL BE REMOVED, IF NECESSARY, TO CREATE FLANGES CONTINUOUS THE LENGTH OF THE LINTEL. FLANGES SHALL HAVE A MINIMUM THICKNESS OF 2.5 IN. AND A MINIMUM WIDTH OF 5 IN. SEE NOTE a TO TABLES R608.8(8) AND R608.8(10).

For SI: 1 inch = 25.4 mm.

FIGURE R608.8(4)
LINTELS FOR SCREEN-GRID WALLS

❖ See the commentary to Sections R608.8.2 and R608.8.2.1.

INTERNATIONAL CODE COUNCIL®
Copyright © 2015 ICC. ALL RIGHTS RESERVED. Accessed by David Dammon on Jun 21, 2017 12:30:52 PM pursuant to License Agreement with ICC. No further reproduction or distribution authorized. ANY UNAUTHORIZED REPRODUCTION OR DISTRIBUTION IS A VIOLATION OF THE FEDERAL COPYRIGHT ACT AND THE LICENSE AGREEMENT, AND SUBJECT TO CIVIL AND CRIMINAL PENALTIES THEREUNDER.

TABLE R608.8(1)
LINTEL DESIGN LOADING CONDITIONS[a, b, d]

DESCRIPTION OF LOADS AND OPENINGS ABOVE INFLUENCING DESIGN OF LINTEL			DESIGN LOAD CONDITION[c]
Opening in wall of top story of two-story building, or first story of one-story building			
Wall supporting loads from roof, including attic floor, if applicable, and	Top of lintel equal to or less than W/2 below top of wall		2
	Top of lintel greater than W/2 below top of wall		NLB
Wall not supporting loads from roof or attic floor			NLB
Opening in wall of first story of two-story building where wall immediately above is of concrete construction, or opening in basement wall of one-story building where wall immediately above is of concrete construction			
LB ledger board mounted to side of wall with bottom of ledger less than or equal to W/2 above top of lintel, and	Top of lintel greater than W/2 below bottom of opening in story above		1
	Top of lintel less than or equal to W/2 below bottom of opening in story above, and	Opening is entirely within the footprint of the opening in the story above	1
		Opening is partially within the footprint of the opening in the story above	4
LB ledger board mounted to side of wall with bottom of ledger more than W/2 above top of lintel			NLB
NLB ledger board mounted to side of wall with bottom of ledger less than or equal to W/2 above top of lintel, or no ledger board, and	Top of lintel greater than W/2 below bottom of opening in story above		NLB
	Top of lintel less than or equal to W/2 below bottom of opening in story above, and	Opening is entirely within the footprint of the opening in the story above	NLB
		Opening is partially within the footprint of the opening in the story above	1
Opening in basement wall of two-story building where walls of two stories above are of concrete construction			
LB ledger board mounted to side of wall with bottom of ledger less than or equal to W/2 above top of lintel, and	Top of lintel greater than W/2 below bottom of opening in story above		1
	Top of lintel less than or equal to W/2 below bottom of opening in story above, and	Opening is entirely within the footprint of the opening in the story above	1
		Opening is partially within the footprint of the opening in the story above	5
LB ledger board mounted to side of wall with bottom of ledger more than W/2 above top of lintel			NLB
NLB ledger board mounted to side of wall with bottom of ledger less than or equal to W/2 above top of lintel, or no ledger board, and	Top of lintel greater than W/2 below bottom of opening in story above		NLB
	Top of lintel less than or equal to W/2 below bottom of opening in story above, and	Opening is entirely within the footprint of the opening in the story above	NLB
		Opening is partially within the footprint of the opening in the story above	1
Opening in wall of first story of two-story building where wall immediately above is of light-framed construction, or opening in basement wall of one-story building where wall immediately above is of light-framed construction			
Wall supporting loads from roof, second floor and top-story wall of light-framed construction, and	Top of lintel equal to or less than W/2 below top of wall		3
	Top of lintel greater than W/2 below top of wall		NLB
Wall not supporting loads from roof or second floor			NLB

a. LB means load bearing, NLB means nonload bearing, and W means width of opening.
b. Footprint is the area of the wall below an opening in the story above, bounded by the bottom of the opening and vertical lines extending downward from the edges of the opening.
c. For design loading condition "NLB" see Tables R608.8(9) and R608.8(10). For all other design loading conditions, see Tables R608.8(2) through R608.8(8).
d. A NLB ledger board is a ledger attached to a wall that is parallel to the span of the floor, roof or ceiling framing that supports the edge of the floor, ceiling or roof.

❖ See the commentary to Section R608.8.2.1.

INTERNATIONAL CODE COUNCIL®
Copyright © 2015 ICC. ALL RIGHTS RESERVED. Accessed by David Dammon on Jun 21, 2017 12:30:52 PM pursuant to License Agreement with ICC. No further reproduction or distribution authorized. ANY UNAUTHORIZED REPRODUCTION OR DISTRIBUTION IS A VIOLATION OF THE FEDERAL COPYRIGHT ACT AND THE LICENSE AGREEMENT, AND SUBJECT TO CIVIL AND CRIMINAL PENALTIES THEREUNDER.

TABLE R608.8(2)
MAXIMUM ALLOWABLE CLEAR SPANS FOR 4-INCH-NOMINAL THICK FLAT LINTELS IN LOAD-BEARING WALLS[a, b, c, d, e, f, m]
ROOF CLEAR SPAN 40 FEET AND FLOOR CLEAR SPAN 32 FEET

LINTEL DEPTH, D[g] (inches)	NUMBER OF BARS AND BAR SIZE IN TOP AND BOTTOM OF LINTEL	STEEL YIELD STRENGTH[h], f_y (psi)	DESIGN LOADING CONDITION DETERMINED FROM TABLE R608.8(1)								
			1	2		3		4		5	
			Maximum ground snow load (psf)								
			—	30	70	30	70	30	70	30	70
			Maximum clear span of lintel (feet - inches)								
8	Span without stirrups[i, j]		3-2	3-4	2-4	2-6	2-2	2-1	2-0	2-0	2-0
	1-#4	40,000	5-2	5-5	4-1	4-3	3-10	3-7	3-4	2-9	2-9
		60,000	6-2	6-5	4-11	5-1	4-6	4-2	3-8	2-11	2-10
	1-#5	40,000	6-3	6-7	5-0	5-2	4-6	4-2	3-8	2-11	2-10
		60,000	DR	DR	DR	DR	DR	DR	DR	DR	DR
	Center distance A[k, l]		1-1	1-2	0-8	0-9	0-7	0-6	0-5	0-4	0-4
12	Span without stirrups[i, j]		3-4	3-7	2-9	2-11	2-8	2-6	2-5	2-2	2-2
	1-#4	40,000	6-7	7-0	5-4	5-7	5-0	4-9	4-4	3-8	3-7
		60,000	7-11	8-6	6-6	6-9	6-0	5-9	5-3	4-5	4-4
	1-#5	40,000	8-1	8-8	6-7	6-10	6-2	5-10	5-4	4-6	4-5
		60,000	9-8	10-4	7-11	8-2	7-4	6-11	6-2	4-10	4-8
	2-#4 1-#6	40,000	9-1	9-8	7-4	7-8	6-10	6-6	6-0	4-10	4-8
		60,000	DR	DR	DR	DR	DR	DR	DR	DR	DR
	Center distance A[k, l]		1-8	1-11	1-1	1-3	1-0	0-11	0-9	0-6	0-6
16	Span without stirrups[i, j]		4-7	5-0	3-11	4-0	3-8	3-7	3-4	3-1	3-0
	1-#4	40,000	6-8	7-3	5-6	5-9	5-2	4-11	4-6	3-10	3-8
		60,000	9-3	10-1	7-9	8-0	7-2	6-10	6-3	5-4	5-2
	1-#4	40,000	9-6	10-4	7-10	8-2	7-4	6-11	6-5	5-5	5-3
		60,000	11-5	12-5	9-6	9-10	8-10	8-4	7-9	6-6	6-4
	2-#4 1-#6	40,000	10-7	11-7	8-10	9-2	8-3	7-9	7-2	6-1	5-11
		60,000	12-9	13-10	10-7	11-0	9-10	9-4	8-7	6-9	6-6
	2-#5	40,000	13-0	14-1	10-9	11-2	9-11	9-2	8-2	6-6	6-3
		60,000	DR	DR	DR	DR	DR	DR	DR	DR	DR
	Center distance[k, l]		2-3	2-8	1-7	1-8	1-4	1-3	1-0	0-9	0-8
20	Span without stirrups[i, j]		5-9	6-5	5-0	5-2	4-9	4-7	4-4	3-11	3-11
	1-#4	40,000	7-5	8-2	6-3	6-6	5-10	5-7	5-1	4-4	4-2
		60,000	9-0	10-0	7-8	7-11	7-1	6-9	6-3	5-3	5-1
	1-#5	40,000	9-2	10-2	7-9	8-1	7-3	6-11	6-4	5-4	5-2
		60,000	12-9	14-2	10-10	11-3	10-1	9-7	8-10	7-5	7-3
	2-#4 1-#6	40,000	11-10	13-2	10-1	10-5	9-4	8-11	8-2	6-11	6-9
		60,000	14-4	15-10	12-1	12-7	11-3	10-9	9-11	8-4	8-1
	2-#5	40,000	14-7	16-2	12-4	12-9	11-4	10-6	9-5	7-7	7-3
		60,000	17-5	19-2	14-9	15-3	13-5	12-4	11-0	8-8	8-4
	2-#6	40,000	16-4	18-11	12-7	13-3	11-4	10-6	9-5	7-7	7-3
		60,000	DR	DR	DR	DR	DR	DR	DR	DR	DR
	Center distance A[k, l]		2-9	3-5	2-0	2-2	1-9	1-7	1-4	0-11	0-11

(continued)

INTERNATIONAL CODE COUNCIL®
Copyright © 2015 ICC. ALL RIGHTS RESERVED. Accessed by David Dammon on Jun 21, 2017 12:30:52 PM pursuant to License Agreement with ICC. No further reproduction or distribution authorized. ANY UNAUTHORIZED REPRODUCTION OR DISTRIBUTION IS A VIOLATION OF THE FEDERAL COPYRIGHT ACT AND THE LICENSE AGREEMENT, AND SUBJECT TO CIVIL AND CRIMINAL PENALTIES THEREUNDER.

TABLE R608.8(2)—continued
MAXIMUM ALLOWABLE CLEAR SPANS FOR 4-INCH-NOMINAL THICK FLAT LINTELS IN LOAD-BEARING WALLS[a, b, c, d, e, f, m]
ROOF CLEAR SPAN 40 FEET AND FLOOR CLEAR SPAN 32 FEET

LINTEL DEPTH, D [g] (inches)	NUMBER OF BARS AND BAR SIZE IN TOP AND BOTTOM OF LINTEL	STEEL YIELD STRENGTH[h], f_y (psi)	DESIGN LOADING CONDITION DETERMINED FROM TABLE R608.8(1)								
			1	2		3		4		5	
			Maximum ground snow load (psf)								
			—	30	70	30	70	30	70	30	70
			Maximum clear span of lintel (feet - inches)								
24	Span without stirrups[i, j]		6-11	7-9	6-1	6-3	5-9	5-7	5-3	4-9	4-8
	1-#4	40,000	8-0	9-0	6-11	7-2	6-5	6-2	5-8	4-9	4-8
		60,000	9-9	11-0	8-5	8-9	7-10	7-6	6-11	5-10	5-8
	1-#5	40,000	10-0	11-3	8-7	8-11	8-0	7-7	7-0	5-11	5-9
		60,000	13-11	15-8	12-0	12-5	11-2	10-7	9-10	8-3	8-0
	2-#4 1-#6	40,000	12-11	14-6	11-2	11-6	10-5	9-10	9-1	7-8	7-5
		60,000	15-7	17-7	13-6	13-11	12-7	11-11	11-0	9-3	9-0
	2-#5	40,000	15-11	17-11	13-7	14-3	12-8	11-9	10-8	8-7	8-4
		60,000	19-1	21-6	16-5	17-1	15-1	14-0	12-6	9-11	9-7
	2-#6	40,000	17-7	21-1	14-1	14-10	12-8	11-9	10-8	8-7	8-4
		60,000	DR	DR	DR	DR	DR	DR	DR	DR	DR
	Center distance A[k, l]		3-3	4-1	2-5	2-7	2-1	1-11	1-7	1-2	1-1

For SI: 1 inch = 25.4 mm, 1 foot = 304.8 mm, 1 pound per square foot = 0.0479 kPa, Grade 40 = 280 MPa, Grade 60 = 420 MPa.

a. See Table R608.3 for tolerances permitted from nominal thickness.

b. Table values are based on concrete with a minimum specified compressive strength of 2,500 psi. See Note j.

c. Table values are based on uniform loading. See Section R608.8.2 for lintels supporting concentrated loads.

d. Deflection criterion is $L/240$, where L is the clear span of the lintel in inches, or $^1/_2$-inch, whichever is less.

e. Linear interpolation is permitted between ground snow loads and between lintel depths.

f. DR indicates design required.

g. Lintel depth, D, is permitted to include the available height of wall located directly above the lintel, provided that the increased lintel depth spans the entire length of the lintel.

h. Stirrups shall be fabricated from reinforcing bars with the same yield strength as that used for the main longitudinal reinforcement.

i. Allowable clear span without stirrups applicable to all lintels of the same depth, D. Top and bottom reinforcement for lintels without stirrups shall be not less than the least amount of reinforcement required for a lintel of the same depth and loading condition with stirrups. All other spans require stirrups spaced at not more than $d/2$.

j. Where concrete with a minimum specified compressive strength of 3,000 psi is used, clear spans for lintels without stirrups shall be permitted to be multiplied by 1.05. If the increased span exceeds the allowable clear span for a lintel of the same depth and loading condition with stirrups, the top and bottom reinforcement shall be equal to or greater than that required for a lintel of the same depth and loading condition that has an allowable clear span that is equal to or greater than that of the lintel without stirrups that has been increased.

k. Center distance, A, is the center portion of the clear span where stirrups are not required. This is applicable to all longitudinal bar sizes and steel yield strengths.

l. Where concrete with a minimum specified compressive strength of 3,000 psi is used, center distance, A, shall be permitted to be multiplied by 1.10.

m. The maximum clear opening width between two solid wall segments shall be 18 feet. See Section R608.7.2.1. Lintel clear spans in the table greater than 18 feet are shown for interpolation and information only.

❖ See the commentary to Section R608.8.2.1.

INTERNATIONAL CODE COUNCIL®
Copyright © 2015 ICC. ALL RIGHTS RESERVED. Accessed by David Dammon on Jun 21, 2017 12:30:52 PM pursuant to License Agreement with ICC. No further reproduction or distribution authorized. ANY UNAUTHORIZED REPRODUCTION OR DISTRIBUTION IS A VIOLATION OF THE FEDERAL COPYRIGHT ACT AND THE LICENSE AGREEMENT, AND SUBJECT TO CIVIL AND CRIMINAL PENALTIES THEREUNDER.

TABLE R608.8(3)
MAXIMUM ALLOWABLE CLEAR SPANS FOR 6-INCH-NOMINAL THICK FLAT LINTELS IN LOAD-BEARING WALLS[a, b, c, d, e, f, m]
ROOF CLEAR SPAN 40 FEET AND FLOOR CLEAR SPAN 32 FEET

LINTEL DEPTH, D[g] (inches)	NUMBER OF BARS AND BAR SIZE IN TOP AND BOTTOM OF LINTEL	STEEL YIELD STRENGTH[h], f_y (psi)	DESIGN LOADING CONDITION DETERMINED FROM TABLE R608.8(1)								
			1	2		3		4		5	
			Maximum ground snow load (psf)								
			—	30	70	30	70	30	70	30	70
			Maximum clear span of lintel (feet - inches)								
8	Span without stirrups[i, j]		4-2	4-8	3-1	3-3	2-10	2-6	2-3	2-0	2-0
	1-#4	40,000	5-1	5-5	4-2	4-3	3-10	3-6	3-3	2-8	2-7
		60,000	6-2	6-7	5-0	5-2	4-8	4-2	3-11	3-3	3-2
	1-#5	40,000	6-3	6-8	5-1	5-3	4-9	4-3	4-0	3-3	3-2
		60,000	7-6	8-0	6-1	6-4	5-8	5-1	4-9	3-8	3-6
	2-#4 1-#6	40,000	7-0	7-6	5-8	5-11	5-3	4-9	4-5	3-8	3-6
		60,000	DR	DR	DR	DR	DR	DR	DR	DR	DR
	Center distance A[k, l]		1-7	1-10	1-1	1-2	0-11	0-9	0-8	0-5	0-5
12	Span without stirrups[i, j]		4-2	4-8	3-5	3-6	3-2	2-11	2-9	2-5	2-4
	1-#4	40,000	5-7	6-1	4-8	4-10	4-4	3-11	3-8	3-0	2-11
		60,000	7-9	8-6	6-6	6-9	6-1	5-6	5-1	4-3	4-1
	1-#5	40,000	7-11	8-8	6-8	6-11	6-2	5-7	5-2	4-4	4-2
		60,000	9-7	10-6	8-0	8-4	7-6	6-9	6-3	5-2	5-1
	2-#4 1-#6	40,000	8-11	9-9	7-6	7-9	6-11	6-3	5-10	4-10	4-8
		60,000	10-8	11-9	8-12	9-4	8-4	7-6	7-0	5-10	5-8
	2-#5	40,000	10-11	12-0	9-2	9-6	8-6	7-8	7-2	5-6	5-3
		60,000	12-11	14-3	10-10	11-3	10-1	9-0	8-1	6-1	5-10
	2-#6	40,000	12-9	14-0	10-8	11-1	9-7	8-1	7-3	5-6	5-3
		60,000	DR	DR	DR	DR	DR	DR	DR	DR	DR
	Center distance A[k, l]		2-6	3-0	1-9	1-10	1-6	1-3	1-1	0-9	0-8
16	Span without stirrups[i, j]		5-7	6-5	4-9	4-11	4-5	4-0	3-10	3-4	3-4
	1-#4	40,000	6-5	7-2	5-6	5-9	5-2	4-8	4-4	3-7	3-6
		60,000	7-10	8-9	6-9	7-0	6-3	5-8	5-3	4-4	4-3
	1-#5	40,000	7-11	8-11	6-10	7-1	6-5	5-9	5-4	4-5	4-4
		60,000	11-1	12-6	9-7	9-11	8-11	8-0	7-6	6-2	6-0
	2-#4 1-#6	40,000	10-3	11-7	8-10	9-2	8-3	7-6	6-11	5-9	5-7
		60,000	12-5	14-0	10-9	11-1	10-0	9-0	8-5	7-0	6-9
	2-#5	40,000	12-8	14-3	10-11	11-4	10-2	9-2	8-7	6-9	6-6
		60,000	15-2	17-1	13-1	13-7	12-3	11-0	10-3	7-11	7-7
	2-#6	40,000	14-11	16-9	12-8	13-4	11-4	9-8	8-8	6-9	6-6
		60,000	DR	DR	DR	DR	DR	DR	DR	DR	DR
	Center distance A[k, l]		3-3	4-1	2-5	2-7	2-1	1-9	1-6	1-0	1-0

(continued)

INTERNATIONAL CODE COUNCIL®
Copyright © 2015 ICC. ALL RIGHTS RESERVED. Accessed by David Dammon on Jun 21, 2017 12:30:52 PM pursuant to License Agreement with ICC. No further reproduction or distribution authorized. ANY UNAUTHORIZED REPRODUCTION OR DISTRIBUTION IS A VIOLATION OF THE FEDERAL COPYRIGHT ACT AND THE LICENSE AGREEMENT, AND SUBJECT TO CIVIL AND CRIMINAL PENALTIES THEREUNDER.

TABLE R608.8(3)—continued
MAXIMUM ALLOWABLE CLEAR SPANS FOR 6-INCH-NOMINAL THICK FLAT LINTELS IN LOAD-BEARING WALLS[a, b, c, d, e, f, m]
ROOF CLEAR SPAN 40 FEET AND FLOOR CLEAR SPAN 32 FEET

LINTEL DEPTH, *D*[g] (inches)	NUMBER OF BARS AND BAR SIZE IN TOP AND BOTTOM OF LINTEL	STEEL YIELD STRENGTH[h], f_y (psi)	DESIGN LOADING CONDITION DETERMINED FROM TABLE R608.8(1)								
			1	2		3		4		5	
			Maximum ground snow load (psf)								
			—	30	70	30	70	30	70	30	70
			Maximum clear span of lintel (feet - inches)								
20	Span without stirrups[i, j]		6-11	8-2	6-1	6-3	5-8	5-2	4-11	4-4	4-3
	1-#5	40,000	8-9	10-1	7-9	8-0	7-3	6-6	6-1	5-1	4-11
		60,000	10-8	12-3	9-5	9-9	8-10	8-0	7-5	6-2	6-0
	2-#4 1-#6	40,000	9-11	11-4	8-9	9-1	8-2	7-4	6-10	5-8	5-7
		60,000	13-9	15-10	12-2	12-8	11-5	10-3	9-7	7-11	7-9
	2-#5	40,000	14-0	16-2	12-5	12-11	11-7	10-6	9-9	7-11	7-8
		60,000	16-11	19-6	15-0	15-6	14-0	12-7	11-9	9-1	8-9
	2-#6	40,000	16-7	19-1	14-7	15-3	13-1	11-3	10-2	7-11	7-8
		60,000	19-11	22-10	17-4	18-3	15-6	13-2	11-10	9-1	8-9
	Center distance A[k, l]		3-11	5-2	3-1	3-3	2-8	2-2	1-11	1-4	1-3
24	Span without stirrups[i, j]		8-2	9-10	7-4	7-8	6-11	6-4	5-11	5-3	5-2
	1-#5	40,000	9-5	11-1	8-7	8-10	8-0	7-3	6-9	5-7	5-5
		60,000	11-6	13-6	10-5	10-9	9-9	8-9	8-2	6-10	6-8
	2-#4 1-#6	40,000	10-8	12-6	9-8	10-0	9-0	8-2	7-7	6-4	6-2
		60,000	12-11	15-2	11-9	12-2	11-0	9-11	9-3	7-8	7-6
	2-#5	40,000	15-2	17-9	13-9	14-3	12-10	11-7	10-10	9-0	8-9
		60,000	18-4	21-6	16-7	17-3	15-6	14-0	13-1	10-4	10-0
	2-#6	40,000	18-0	21-1	16-4	16-11	14-10	12-9	11-8	9-2	8-11
		60,000	21-7	25-4	19-2	20-4	17-2	14-9	13-4	10-4	10-0
	Center distance A[k, l]		4-6	6-2	3-8	4-0	3-3	2-8	2-3	1-7	1-6

For SI: 1 inch = 25.4 mm, 1 foot = 304.8 mm, 1 pounds per square foot = 0.0479 kPa, Grade 40 = 280 MPa, Grade 60 = 420 MPa.

a. See Table R608.3 for tolerances permitted from nominal thickness.
b. Table values are based on concrete with a minimum specified compressive strength of 2,500 psi. See Note j.
c. Table values are based on uniform loading. See Section R608.8.2 for lintels supporting concentrated loads.
d. Deflection criterion is $L/240$, where L is the clear span of the lintel in inches, or $^1/_2$-inch, whichever is less.
e. Linear interpolation is permitted between ground snow loads and between lintel depths.
f. DR indicates design required.
g. Lintel depth, D, is permitted to include the available height of wall located directly above the lintel, provided that the increased lintel depth spans the entire length of the lintel.
h. Stirrups shall be fabricated from reinforcing bars with the same yield strength as that used for the main longitudinal reinforcement.
i. Allowable clear span without stirrups applicable to all lintels of the same depth, D. Top and bottom reinforcement for lintels without stirrups shall be not less than the least amount of reinforcement required for a lintel of the same depth and loading condition with stirrups. All other spans require stirrups spaced at not more than $d/2$.
j. Where concrete with a minimum specified compressive strength of 3,000 psi is used, clear spans for lintels without stirrups shall be permitted to be multiplied by 1.05. If the increased span exceeds the allowable clear span for a lintel of the same depth and loading condition with stirrups, the top and bottom reinforcement shall be equal to or greater than that required for a lintel of the same depth and loading condition that has an allowable clear span that is equal to or greater than that of the lintel without stirrups that has been increased.
k. Center distance, A, is the center portion of the clear span where stirrups are not required. This is applicable to all longitudinal bar sizes and steel yield strengths.
l. Where concrete with a minimum specified compressive strength of 3,000 psi is used, center distance, A, shall be permitted to be multiplied by 1.10.
m. The maximum clear opening width between two solid wall segments shall be 18 feet. See Section R608.7.2.1. Lintel clear spans in the table greater than 18 feet are shown for interpolation and information only.

❖ See the commentary to Section R608.8.2.1.

INTERNATIONAL CODE COUNCIL®
Copyright © 2015 ICC. ALL RIGHTS RESERVED. Accessed by David Dammon on Jun 21, 2017 12:30:52 PM pursuant to License Agreement with ICC. No further reproduction or distribution authorized. ANY UNAUTHORIZED REPRODUCTION OR DISTRIBUTION IS A VIOLATION OF THE FEDERAL COPYRIGHT ACT AND THE LICENSE AGREEMENT, AND SUBJECT TO CIVIL AND CRIMINAL PENALTIES THEREUNDER.

TABLE R608.8(4)
MAXIMUM ALLOWABLE CLEAR SPANS FOR 8-INCH-NOMINAL THICK FLAT LINTELS IN LOAD-BEARING WALLS[a, b, c, d, e, f, m]
ROOF CLEAR SPAN 40 FEET AND FLOOR CLEAR SPAN 32 FEET

LINTEL DEPTH, D[g] (inches)	NUMBER OF BARS AND BAR SIZE IN TOP AND BOTTOM OF LINTEL	STEEL YIELD STRENGTH[h], f_y (psi)	DESIGN LOADING CONDITION DETERMINED FROM TABLE R608.8(1)								
			1	2		3		4		5	
			Maximum ground snow load (psf)								
			—	30	70	30	70	30	70	30	70
			Maximum clear span of lintel (feet - inches)								
8	Span without stirrups[i, j]		4-4	4-9	3-7	3-9	3-4	2-10	2-7	2-1	2-0
	1-#4	40,000	4-4	4-9	3-7	3-9	3-4	2-11	2-9	2-3	2-2
		60,000	6-1	6-7	5-0	5-3	4-8	4-0	3-9	3-1	3-0
	1-#5	40,000	6-2	6-9	5-2	5-4	4-9	4-1	3-10	3-2	3-1
		60,000	7-5	8-1	6-2	6-5	5-9	4-11	4-7	3-9	3-8
	2-#4 1-#6	40,000	6-11	7-6	5-9	6-0	5-4	4-7	4-4	3-6	3-5
		60,000	8-3	9-0	6-11	7-2	6-5	5-6	5-2	4-2	4-1
	2-#5	40,000	8-5	9-2	7-0	7-3	6-6	5-7	5-3	4-2	4-0
		60,000	DR	DR	DR	DR	DR	DR	DR	DR	DR
	Center distance A[k, l]		2-1	2-6	1-5	1-6	1-3	0-11	0-10	0-6	0-6
12	Span without stirrups[i, j]		4-10	5-8	4-0	4-2	3-9	3-2	3-0	2-7	2-6
	1-#4	40,000	5-5	6-1	4-8	4-10	4-4	3-9	3-6	2-10	2-10
		60,000	6-7	7-5	5-8	5-11	5-4	4-7	4-3	3-6	3-5
	1-#5	40,000	6-9	7-7	5-9	6-0	5-5	4-8	4-4	3-7	3-6
		60,000	9-4	10-6	8-1	8-4	7-6	6-6	6-1	5-0	4-10
	2-#4 1-#6	40,000	8-8	9-9	7-6	7-9	7-0	6-0	5-8	4-7	4-6
		60,000	10-6	11-9	9-1	9-5	8-5	7-3	6-10	5-7	5-5
	2-#5	40,000	10-8	12-0	9-3	9-7	8-7	7-5	6-11	5-6	5-4
		60,000	12-10	14-5	11-1	11-6	10-4	8-11	8-4	6-7	6-4
	2-#6	40,000	12-7	14-2	10-10	11-3	10-2	8-3	7-6	5-6	5-4
		60,000	DR	DR	DR	DR	DR	DR	DR	DR	DR
	Center distance A[k, l]		3-2	4-0	2-4	2-6	2-0	1-6	1-4	0-11	0-10
16	Span without stirrups[i, j]		6-5	7-9	5-7	5-10	5-2	4-5	4-2	3-7	3-6
	1-#4	40,000	6-2	7-1	5-6	5-8	5-1	4-5	4-2	3-5	3-4
		60,000	7-6	8-8	6-8	6-11	6-3	5-5	5-1	4-2	4-0
	1-#5	40,000	7-8	8-10	6-10	7-1	6-4	5-6	5-2	4-3	4-1
		60,000	9-4	10-9	8-4	8-7	7-9	6-8	6-3	5-2	5-0
	2-#4 1-#6	40,000	8-8	10-0	7-8	8-0	7-2	6-2	5-10	4-9	4-8
		60,000	12-0	13-11	10-9	11-2	10-0	8-8	8-1	6-8	6-6
	2-#5	40,000	12-3	14-2	11-0	11-4	10-3	8-10	8-3	6-9	6-7
		60,000	14-10	17-2	13-3	13-8	12-4	10-8	10-0	7-11	7-8
	2-#6	40,000	14-6	16-10	13-0	13-5	12-1	10-1	9-2	6-11	6-8
		60,000	17-5	20-2	15-7	16-1	14-6	11-10	10-8	7-11	7-8
	Center distance[k, l]		4-1	5-5	3-3	3-6	2-10	2-1	1-10	1-3	1-2

(continued)

INTERNATIONAL CODE COUNCIL®
Copyright © 2015 ICC. ALL RIGHTS RESERVED. Accessed by David Dammon on Jun 21, 2017 12:30:52 PM pursuant to License Agreement with ICC. No further reproduction or distribution authorized. ANY UNAUTHORIZED REPRODUCTION OR DISTRIBUTION IS A VIOLATION OF THE FEDERAL COPYRIGHT ACT AND THE LICENSE AGREEMENT, AND SUBJECT TO CIVIL AND CRIMINAL PENALTIES THEREUNDER.

TABLE R608.8(4)—continued
MAXIMUM ALLOWABLE CLEAR SPANS FOR 8-INCH-NOMINAL THICK FLAT LINTELS IN LOAD-BEARING WALLS[a, b, c, d, e, f, m]
ROOF CLEAR SPAN 40 FEET AND FLOOR CLEAR SPAN 32 FEET

LINTEL DEPTH, *D*[g] (inches)	NUMBER OF BARS AND BAR SIZE IN TOP AND BOTTOM OF LINTEL	STEEL YIELD STRENGTH[h], f_y (psi)	DESIGN LOADING CONDITION DETERMINED FROM TABLE R608.8(1)								
			1	2		3		4		5	
			Maximum ground snow load (psf)								
			—	30	70	30	70	30	70	30	70
			Maximum clear span of lintel (feet - inches)								
20	Span without stirrups[i, j]		7-10	9-10	7-1	7-5	6-7	5-8	5-4	4-7	4-6
	1-#5	40,000	8-4	9-11	7-8	8-0	7-2	6-3	5-10	4-9	4-8
		60,000	10-2	12-1	9-5	9-9	8-9	7-7	7-1	5-10	5-8
	2-#4 1-#6	40,000	9-5	11-3	8-8	9-0	8-1	7-0	6-7	5-5	5-3
		60,000	11-6	13-8	10-7	11-0	9-11	8-7	8-0	6-7	6-5
	2-#5	40,000	11-9	13-11	10-10	11-2	10-1	8-9	8-2	6-8	6-7
		60,000	16-4	19-5	15-0	15-7	14-0	12-2	11-4	9-3	9-0
	2-#6	40,000	16-0	19-0	14-9	15-3	13-9	11-10	10-10	8-3	8-0
		60,000	19-3	22-11	17-9	18-5	16-7	13-7	12-4	9-3	9-0
	Center distance $A^{k, l}$		4-10	6-10	4-1	4-5	3-7	2-8	2-4	1-7	1-6
24	Span without stirrups[i, j]		9-2	11-9	8-7	8-11	8-0	6-11	6-6	5-7	5-6
	1-#5	40,000	8-11	10-10	8-6	8-9	7-11	6-10	6-5	5-3	5-2
		60,000	10-11	13-3	10-4	10-8	9-8	8-4	7-10	6-5	6-3
	2-#4 1-#6	40,000	10-1	12-3	9-7	9-11	8-11	7-9	7-3	6-0	5-10
		60,000	12-3	15-0	11-8	12-1	10-11	9-5	8-10	7-3	7-1
	2-#5	40,000	12-6	15-3	11-11	12-4	11-1	9-7	9-0	7-5	7-3
		60,000	17-6	21-3	16-7	17-2	15-6	13-5	12-7	10-4	10-1
	2-#6	40,000	17-2	20-11	16-3	16-10	15-3	13-2	12-4	9-7	9-4
		60,000	20-9	25-3	19-8	20-4	18-5	15-4	14-0	10-7	10-3
	Center distance $A^{k, l}$		5-6	8-1	4-11	5-3	4-4	3-3	2-10	1-11	1-10

For SI: 1 inch = 25.4 mm, 1 foot = 304.8 mm, 1 pound per square foot = 0.0479 kPa, Grade 40 = 280 MPa; Grade 60 = 420 MPa.

Note: Top and bottom reinforcement for lintels without stirrups shown in shaded cells shall be equal to or greater than that required for lintel of the same depth and loading condition that has an allowable clear span that is equal to or greater than that of the lintel without stirrups.

a. See Table R608.3 for tolerances permitted from nominal thickness.

b. Table values are based on concrete with a minimum specified compressive strength of 2,500 psi. See Note j.

c. Table values are based on uniform loading. See Section R608.8.2 for lintels supporting concentrated loads.

d. Deflection criterion is $L/240$, where L is the clear span of the lintel in inches, or $^1/_2$-inch, whichever is less.

e. Linear interpolation is permitted between ground snow loads and between lintel depths.

f. DR indicates design required.

g. Lintel depth, *D*, is permitted to include the available height of wall located directly above the lintel, provided that the increased lintel depth spans the entire length of the lintel.

h. Stirrups shall be fabricated from reinforcing bars with the same yield strength as that used for the main longitudinal reinforcement.

i. Allowable clear span without stirrups applicable to all lintels of the same depth, *D*. Top and bottom reinforcement for lintels without stirrups shall be not less than the least amount of reinforcement required for a lintel of the same depth and loading condition with stirrups. All other spans require stirrups spaced at not more than *d/2*.

j. Where concrete with a minimum specified compressive strength of 3,000 psi is used, clear spans for lintels without stirrups shall be permitted to be multiplied by 1.05. If the increased span exceeds the allowable clear span for a lintel of the same depth and loading condition with stirrups, the top and bottom reinforcement shall be equal to or greater than that required for a lintel of the same depth and loading condition that has an allowable clear span that is equal to or greater than that of the lintel without stirrups that has been increased.

k. Center distance, *A*, is the center portion of the clear span where stirrups are not required. This is applicable to all longitudinal bar sizes and steel yield strengths.

l. Where concrete with a minimum specified compressive strength of 3,000 psi is used, center distance, *A*, shall be permitted to be multiplied by 1.10.

m. The maximum clear opening width between two solid wall segments shall be 18 feet. See Section R608.7.2.1. Lintel clear spans in the table greater than 18 feet are shown for interpolation and information only.

❖ See the commentary to Section R608.8.2.1.

INTERNATIONAL CODE COUNCIL®
Copyright © 2015 ICC. ALL RIGHTS RESERVED. Accessed by David Dammon on Jun 21, 2017 12:30:52 PM pursuant to License Agreement with ICC. No further reproduction or distribution authorized. ANY UNAUTHORIZED REPRODUCTION OR DISTRIBUTION IS A VIOLATION OF THE FEDERAL COPYRIGHT ACT AND THE LICENSE AGREEMENT, AND SUBJECT TO CIVIL AND CRIMINAL PENALTIES THEREUNDER.

TABLE R608.8(5)
MAXIMUM ALLOWABLE CLEAR SPANS FOR 10-INCH-NOMINAL THICK FLAT LINTELS IN LOAD-BEARING WALLS[a, b, c, d, e, f, m]
ROOF CLEAR SPAN 40 FEET AND FLOOR CLEAR SPAN 32 FEET

LINTEL DEPTH, D[g] (inches)	NUMBER OF BARS AND BAR SIZE IN TOP AND BOTTOM OF LINTEL	STEEL YIELD STRENGTH[h], f_y (psi)	DESIGN LOADING CONDITION DETERMINED FROM TABLE R608.8(1)								
			1	2		3		4		5	
			Maximum ground snow load (psf)								
			—	30	70	30	70	30	70	30	70
			Maximum clear span of lintel (feet - inches)								
8	Span without stirrups[i, j]		6-0	7-2	4-7	4-10	4-1	3-1	2-11	2-3	2-2
	1-#4	40,000	4-3	4-9	3-7	3-9	3-4	2-9	2-7	2-1	2-1
		60,000	5-11	6-7	5-0	5-3	4-8	3-10	3-8	2-11	2-11
	1-#5	40,000	6-1	6-9	5-2	5-4	4-9	3-11	3-9	3-0	2-11
		60,000	7-4	8-1	6-3	6-5	5-9	4-9	4-6	3-7	3-7
	2-#4 1-#6	40,000	6-10	7-6	5-9	6-0	5-5	4-5	4-2	3-4	3-4
		60,000	8-2	9-1	6-11	7-2	6-6	5-4	5-0	4-1	4-0
	2-#5	40,000	8-4	9-3	7-1	7-4	6-7	5-5	5-1	4-1	4-0
		60,000	9-11	11-0	8-5	8-9	7-10	6-6	6-1	4-8	4-6
	2-#6	40,000	9-9	10-10	8-3	8-7	7-9	6-4	5-10	4-1	4-0
		60,000	DR	DR	DR	DR	DR	DR	DR	DR	DR
	Center distance A[k, l]		2-6	3-1	1-10	1-11	1-7	1-1	0-11	0-7	0-7
12	Span without stirrups[i, j]		5-5	6-7	4-7	4-10	4-3	3-5	3-3	2-8	2-8
	1-#4	40,000	5-3	6-0	4-8	4-10	4-4	3-7	3-4	2-9	2-8
		60,000	6-5	7-4	5-8	5-10	5-3	4-4	4-1	3-4	3-3
	1-#5	40,000	6-6	7-6	5-9	6-0	5-5	4-5	4-2	3-5	3-4
		60,000	7-11	9-1	7-0	7-3	6-7	5-5	5-1	4-2	4-0
	2-#4 1-#6	40,000	7-4	8-5	6-6	6-9	6-1	5-0	4-9	3-10	3-9
		60,000	10-3	11-9	9-1	9-5	8-6	7-0	6-7	5-4	5-3
	2-#5	40,000	10-5	12-0	9-3	9-7	8-8	7-2	6-9	5-5	5-4
		60,000	12-7	14-5	11-2	11-6	10-5	8-7	8-1	6-6	6-4
	2-#6	40,000	12-4	14-2	10-11	11-4	10-2	8-5	7-8	5-7	5-5
		60,000	14-9	17-0	13-1	13-6	12-2	10-0	9-1	6-6	6-4
	Center distance A[k, l]		3-9	4-11	2-11	3-2	2-7	1-9	1-7	1-0	1-0
16	Span without stirrups[i, j]		7-1	9-0	6-4	6-8	5-10	4-9	4-6	3-9	3-8
	1-#4	40,000	5-11	7-0	5-5	5-8	5-1	4-3	4-0	3-3	3-2
		60,000	7-3	8-7	6-8	6-11	6-3	5-2	4-10	3-11	3-10
	1-#5	40,000	7-4	8-9	6-9	7-0	6-4	5-3	4-11	4-0	3-11
		60,000	9-0	10-8	8-3	8-7	7-9	6-5	6-0	4-11	4-9
	2-#4 1-#6	40,000	8-4	9-11	7-8	7-11	7-2	5-11	5-7	4-6	4-5
		60,000	10-2	12-0	9-4	9-8	8-9	7-3	6-10	5-6	5-5
	2-#5	40,000	10-4	12-3	9-6	9-10	8-11	7-4	6-11	5-8	5-6
		60,000	14-4	17-1	13-3	13-8	12-4	10-3	9-8	7-10	7-8
	2-#6	40,000	14-1	16-9	13-0	13-5	12-2	10-1	9-6	7-0	6-10
		60,000	17-0	20-2	15-8	16-2	14-7	12-0	10-11	8-0	7-9
	Center distance[k, l]		4-9	6-8	4-0	4-4	3-6	2-5	2-2	1-5	1-4

(continued)

INTERNATIONAL CODE COUNCIL®
Copyright © 2015 ICC. ALL RIGHTS RESERVED. Accessed by David Dammon on Jun 21, 2017 12:30:52 PM pursuant to License Agreement with ICC. No further reproduction or distribution authorized. ANY UNAUTHORIZED REPRODUCTION OR DISTRIBUTION IS A VIOLATION OF THE FEDERAL COPYRIGHT ACT AND THE LICENSE AGREEMENT, AND SUBJECT TO CIVIL AND CRIMINAL PENALTIES THEREUNDER.

TABLE R608.8(5)—continued
MAXIMUM ALLOWABLE CLEAR SPANS FOR 10-INCH-NOMINAL THICK FLAT LINTELS IN LOAD-BEARING WALLS[a, b, c, d, e, f, m]
ROOF CLEAR SPAN 40 FEET AND FLOOR CLEAR SPAN 32 FEET

LINTEL DEPTH, D[g] (inches)	NUMBER OF BARS AND BAR SIZE IN TOP AND BOTTOM OF LINTEL	STEEL YIELD STRENGTH[h], f_y (psi)	DESIGN LOADING CONDITION DETERMINED FROM TABLE R608.8(1)								
			1	2		3		4		5	
			Maximum ground snow load (psf)								
			—	30	70	30	70	30	70	30	70
			Maximum clear span of lintel (feet - inches)								
20	Span without stirrups[i, j]		8-7	11-4	8-1	8-5	7-5	6-1	5-9	4-10	4-9
	1-#4	40,000	6-5	7-10	6-2	6-4	5-9	4-9	4-6	3-8	3-7
		60,000	7-10	9-7	7-6	7-9	7-0	5-10	5-6	4-5	4-4
	1-#5	40,000	8-0	9-9	7-8	7-11	7-2	5-11	5-7	4-6	4-5
		60,000	9-9	11-11	9-4	9-8	8-9	7-3	6-10	5-6	5-5
	2-#4 1-#6	40,000	9-0	11-1	8-8	8-11	8-1	6-9	6-4	5-2	5-0
		60,000	11-0	13-6	10-6	10-11	9-10	8-2	7-9	6-3	6-2
	2-#5	40,000	11-3	13-9	10-9	11-1	10-0	8-4	7-10	6-5	6-3
		60,000	15-8	19-2	15-0	15-6	14-0	11-8	11-0	8-11	8-9
	2-#6	40,000	15-5	18-10	14-8	15-2	13-9	11-5	10-9	8-6	8-3
		60,000	18-7	22-9	17-9	18-5	16-7	13-10	12-9	9-5	9-2
	Center distance A[k, l]		5-7	8-4	5-1	5-5	4-5	3-1	2-9	1-10	1-9
24	Span without stirrups[i, j]		9-11	13-7	9-9	10-2	9-0	7-5	7-0	5-10	5-9
	1-#5	40,000	8-6	10-8	8-5	8-8	7-10	6-6	6-2	5-0	4-11
		60,000	10-5	13-0	10-3	10-7	9-7	8-0	7-6	6-1	6-0
	2-#4 1-#6	40,000	9-7	12-1	9-6	9-9	8-10	7-5	7-0	5-8	5-6
		60,000	11-9	14-9	11-7	11-11	10-10	9-0	8-6	6-11	6-9
	2-#5	40,000	12-0	15-0	11-9	12-2	11-0	9-2	8-8	7-1	6-11
		60,000	14-7	18-3	14-4	14-10	13-5	11-2	10-7	8-7	8-5
	2-#6	40,000	14-3	17-11	14-1	14-7	13-2	11-0	10-4	8-5	8-3
		60,000	19-11	25-0	19-7	20-3	18-4	15-3	14-5	10-10	10-7
	Center distance A[k, l]		6-3	9-11	6-1	6-6	5-4	3-9	3-4	2-2	2-1

For SI: 1 inch = 25.4 mm, 1 foot = 304.8 mm, 1 pound per square foot = 0.0479 kPa, Grade 40 = 280 MPa, Grade 60 = 420 MPa.

Note: Top and bottom reinforcement for lintels without stirrups shown in shaded cells shall be equal to or greater than that required for lintel of the same depth and loading condition that has an allowable clear span that is equal to or greater than that of the lintel without stirrups.

a. See Table R608.3 for tolerances permitted from nominal thickness.

b. Table values are based on concrete with a minimum specified compressive strength of 2,500 psi. See Note j.

c. Table values are based on uniform loading. See Section R608.8.2 for lintels supporting concentrated loads.

d. Deflection criterion is $L/240$, where L is the clear span of the lintel in inches, or $^1/_2$-inch, whichever is less.

e. Linear interpolation is permitted between ground snow loads and between lintel depths.

f. DR indicates design required.

g. Lintel depth, D, is permitted to include the available height of wall located directly above the lintel, provided that the increased lintel depth spans the entire length of the lintel.

h. Stirrups shall be fabricated from reinforcing bars with the same yield strength as that used for the main longitudinal reinforcement.

i. Allowable clear span without stirrups applicable to all lintels of the same depth, D. Top and bottom reinforcement for lintels without stirrups shall be not less than the least amount of reinforcement required for a lintel of the same depth and loading condition with stirrups. All other spans require stirrups spaced at not more than $d/2$.

j. Where concrete with a minimum specified compressive strength of 3,000 psi is used, clear spans for lintels without stirrups shall be permitted to be multiplied by 1.05. If the increased span exceeds the allowable clear span for a lintel of the same depth and loading condition with stirrups, the top and bottom reinforcement shall be equal to or greater than that required for a lintel of the same depth and loading condition that has an allowable clear span that is equal to or greater than that of the lintel without stirrups that has been increased.

k. Center distance, A, is the center portion of the clear span where stirrups are not required. This is applicable to all longitudinal bar sizes and steel yield strengths.

l. Where concrete with a minimum specified compressive strength of 3,000 psi is used, center distance, A, shall be permitted to be multiplied by 1.10.

m. The maximum clear opening width between two solid wall segments shall be 18 feet. See Section R608.7.2.1. Lintel clear spans in the table greater than 18 feet are shown for interpolation and information only.

❖ See the commentary to Section R608.8.2.1.

INTERNATIONAL CODE COUNCIL®
Copyright © 2015 ICC. ALL RIGHTS RESERVED. Accessed by David Dammon on Jun 21, 2017 12:30:52 PM pursuant to License Agreement with ICC. No further reproduction or distribution authorized. ANY UNAUTHORIZED REPRODUCTION OR DISTRIBUTION IS A VIOLATION OF THE FEDERAL COPYRIGHT ACT AND THE LICENSE AGREEMENT, AND SUBJECT TO CIVIL AND CRIMINAL PENALTIES THEREUNDER.

TABLE R608.8(6)
MAXIMUM ALLOWABLE CLEAR SPANS FOR 6-INCH-THICK WAFFLE-GRID LINTELS IN LOAD-BEARING WALLS[a, b, c, d, e, f, o]
MAXIMUM ROOF CLEAR SPAN 40 FEET AND MAXIMUM FLOOR SPAN 32 FEET

LINTEL DEPTH, *D*[g] (inches)	NUMBER OF BARS AND BAR SIZE IN TOP AND BOTTOM OF LINTEL	STEEL YIELD STRENGTH[h], f_y (psi)	DESIGN LOADING CONDITION DETERMINED FROM TABLE R608.8(1)								
			1	2		3		4		5	
			Maximum ground snow load (psf)								
			—	30	70	30	70	30	70	30	70
			Maximum clear span of lintel (feet - inches)								
8[i]	Span without stirrups[k, l]		2-7	2-9	2-0	2-1	2-0	2-0	2-0	2-0	2-0
	1-#4	40,000	5-2	5-5	4-0	4-3	3-7	3-3	2-11	2-4	2-3
		60,000	5-9	6-3	4-0	4-3	3-7	3-3	2-11	2-4	2-3
	1-#5	40,000	5-9	6-3	4-0	4-3	3-7	3-3	2-11	2-4	2-3
		60,000	5-9	6-3	4-0	4-3	3-7	3-3	2-11	2-4	2-3
	2-#4 1-#6	40,000	5-9	6-3	4-0	4-3	3-7	3-3	2-11	2-4	2-3
		60,000	DR	DR	DR	DR	DR	DR	DR	DR	DR
	Center distance $A^{m, n}$		0-9	0-10	0-6	0-6	0-5	0-5	0-4	STL	STL
12[i]	Span without stirrups[k, l]		2-11	3-1	2-6	2-7	2-5	2-4	2-3	2-1	2-0
	1-#4	40,000	5-9	6-2	4-8	4-10	4-4	4-1	3-9	3-2	3-1
		60,000	8-0	8-7	6-6	6-9	6-0	5-5	4-11	3-11	3-10
	1-#5	40,000	8-1	8-9	6-8	6-11	6-0	5-5	4-11	3-11	3-10
		60,000	9-1	10-3	6-8	7-0	6-0	5-5	4-11	3-11	3-10
	2-#4 1-#6	40,000	9-1	9-9	6-8	7-0	6-0	5-5	4-11	3-11	3-10
	Center distance $A^{m, n}$		1-3	1-5	0-10	0-11	0-9	0-8	0-6	STL	STL
	Span without stirrups[k, l]		4-0	4-4	3-6	3-7	3-4	3-3	3-1	2-10	2-10
16[i]	1-#4	40,000	6-7	7-3	5-6	5-9	5-2	4-10	4-6	3-9	3-8
		60,000	8-0	8-10	6-9	7-0	6-3	5-11	5-5	4-7	4-5
	1-#5	40,000	8-2	9-0	6-11	7-2	6-5	6-0	5-7	4-8	4-6
		60,000	11-5	12-6	9-3	9-9	8-4	7-7	6-10	5-6	5-4
	2-#4 1-#6	40,000	10-7	11-7	8-11	9-3	8-3	7-7	6-10	5-6	5-4
		60,000	12-2	14-0	9-3	9-9	8-4	7-7	6-10	5-6	5-4
	2-#5	40,000	12-2	14-2	9-3	9-9	8-4	7-7	6-10	5-6	5-4
		60,000	DR	DR	DR	DR	DR	DR	DR	DR	DR
	Center distance $A^{m, n}$		1-8	2-0	1-2	1-3	1-0	0-11	0-9	STL	STL
20[i]	Span without stirrups[k, l]		5-0	5-6	4-6	4-7	4-3	4-1	4-0	3-8	3-8
	1-#4	40,000	7-2	8-2	6-3	6-6	5-10	5-6	5-1	4-3	4-2
		60,000	8-11	9-11	7-8	7-11	7-1	6-8	6-2	5-2	5-0
	1-#5	40,000	9-1	10-2	7-9	8-1	7-3	6-10	6-4	5-4	5-2
		60,000	12-8	14-2	10-11	11-3	10-2	9-6	8-9	7-1	6-10
	2-#4 1-#6	40,000	10-3	11-5	8-9	9-1	8-2	7-8	7-1	6-0	5-10
		60,000	14-3	15-11	11-9	12-5	10-8	9-9	8-9	7-1	6-10
	2-#5	40,000	14-6	16-3	11-6	12-1	10-4	9-6	8-6	6-11	6-8
		60,000	DR	DR	DR	DR	DR	DR	DR	DR	DR
	Center distance $A^{m, n}$		2-0	2-6	1-6	1-7	1-3	1-1	1-0	STL	STL

(continued)

INTERNATIONAL CODE COUNCIL®
Copyright © 2015 ICC. ALL RIGHTS RESERVED. Accessed by David Dammon on Jun 21, 2017 12:30:52 PM pursuant to License Agreement with ICC. No further reproduction or distribution authorized. ANY UNAUTHORIZED REPRODUCTION OR DISTRIBUTION IS A VIOLATION OF THE FEDERAL COPYRIGHT ACT AND THE LICENSE AGREEMENT, AND SUBJECT TO CIVIL AND CRIMINAL PENALTIES THEREUNDER.

TABLE R608.8(6)—continued
MAXIMUM ALLOWABLE CLEAR SPANS FOR 6-INCH-THICK WAFFLE-GRID LINTELS IN LOAD-BEARING WALLS[a, b, c, d, e, f, o]
MAXIMUM ROOF CLEAR SPAN 40 FEET AND MAXIMUM FLOOR SPAN 32 FEET

LINTEL DEPTH, D[g] (inches)	NUMBER OF BARS AND BAR SIZE IN TOP AND BOTTOM OF LINTEL	STEEL YIELD STRENGTH[h], f_y (psi)	DESIGN LOADING CONDITION DETERMINED FROM TABLE R608.8(1)								
			1	2		3		4		5	
			Maximum ground snow load (psf)								
			—	30	70	30	70	30	70	30	70
			Maximum clear span of lintel (feet - inches)								
24w[j]	Span without stirrups[k, l]		6-0	6-8	5-5	5-7	5-3	5-0	4-10	4-6	4-5
	1-#4	40,000	7-11	9-0	6-11	7-2	6-5	6-0	5-7	4-8	4-7
		60,000	9-8	10-11	8-5	8-9	7-10	7-4	6-10	5-9	5-7
	1-#5	40,000	9-10	11-2	8-7	8-11	8-0	7-6	7-0	5-10	5-8
		60,000	12-0	13-7	10-6	10-10	9-9	9-2	8-6	7-2	6-11
	2-#4 1-#6	40,000	11-1	12-7	9-8	10-1	9-1	8-6	7-10	6-7	6-5
		60,000	15-6	17-7	13-6	14-0	12-8	11-10	10-8	8-7	8-4
	2-#5	40,000	15-6	17-11	12-8	13-4	11-6	10-7	9-7	7-10	7-7
		60,000	DR	DR	DR	DR	DR	DR	DR	DR	DR
	Center distance A[m, n]		2-4	3-0	1-9	1-11	1-6	1-4	1-2	STL	STL

For SI: 1 inch = 25.4 mm, 1 pound per square foot = 0.0479 kPa, 1 foot = 304.8 mm, Grade 40 = 280 MPa, Grade 60 = 420 MPa.

a. Where lintels are formed with waffle-grid forms, form material shall be removed, if necessary, to create top and bottom flanges of the lintel that are not less than 3 inches in depth (in the vertical direction), are not less than 5 inches in width for 6-inch-nominal waffle-grid forms and not less than 7 inches in width for 8-inch-nominal waffle-grid forms. See Figure R608.8(3). Flat form lintels shall be permitted in place of waffle-grid lintels. See Tables R608.8(2) through R608.8(5).

b. See Table R608.3 for tolerances permitted from nominal thicknesses and minimum dimensions and spacing of cores.

c. Table values are based on concrete with a minimum specified compressive strength of 2,500 psi. See Notes l and n. Table values are based on uniform loading. See Section R608.8.2 for lintels supporting concentrated loads.

d. Deflection criterion is $L/240$, where L is the clear span of the lintel in inches, or $^1/_2$-inch, whichever is less.

e. Linear interpolation is permitted between ground snow loads.

f. DR indicates design required. STL - stirrups required throughout lintel.

g. Lintel depth, D, is permitted to include the available height of wall located directly above the lintel, provided that the increased lintel depth spans the entire length of the lintel.

h. Stirrups shall be fabricated from reinforcing bars with the same yield strength as that used for the main longitudinal reinforcement.

i. Lintels less than 24 inches in depth with stirrups shall be formed from flat-walls forms [see Tables R608.8(2) through R608.8(5)], or, if necessary, form material shall be removed from waffle-grid forms so as to provide the required cover for stirrups. Allowable spans for lintels formed with flat-wall forms shall be determined from Tables R608.8(2) through R608.8(5).

j. Where stirrups are required for 24-inch deep lintels, the spacing shall not exceed 12 inches on center.

k. Allowable clear span without stirrups applicable to all lintels of the same depth, D. Top and bottom reinforcement for lintels without stirrups shall be not less than the least amount of reinforcement required for a lintel of the same depth and loading condition with stirrups. All other spans require stirrups spaced at not more than $d/2$.

l. Where concrete with a minimum specified compressive strength of 3,000 psi is used, clear spans for lintels without stirrups shall be permitted to be multiplied by 1.05. If the increased span exceeds the allowable clear span for a lintel of the same depth and loading condition with stirrups, the top and bottom reinforcement shall be equal to or greater than that required for a lintel of the same depth and loading condition that has an allowable clear span that is equal to or greater than that of the lintel without stirrups that has been increased.

m. Center distance, A, is the center portion of the span where stirrups are not required. This is applicable to all longitudinal bar sizes and steel yield strengths.

n. Where concrete with a minimum specified compressive strength of 3,000 psi is used, center distance, A, shall be permitted to be multiplied by 1.10.

o. The maximum clear opening width between two solid wall segments shall be 18 feet. See Section R608.7.2.1. Lintel spans in the table greater than 18 feet are shown for interpolation and information only.

❖ See the commentary to Section R608.8.2.1.

INTERNATIONAL CODE COUNCIL®
Copyright © 2015 ICC. ALL RIGHTS RESERVED. Accessed by David Dammon on Jun 21, 2017 12:30:52 PM pursuant to License Agreement with ICC. No further reproduction or distribution authorized. ANY UNAUTHORIZED REPRODUCTION OR DISTRIBUTION IS A VIOLATION OF THE FEDERAL COPYRIGHT ACT AND THE LICENSE AGREEMENT, AND SUBJECT TO CIVIL AND CRIMINAL PENALTIES THEREUNDER.

TABLE R608.8(7)
MAXIMUM ALLOWABLE CLEAR SPANS FOR 8-INCH-THICK WAFFLE-GRID LINTELS IN LOAD-BEARING WALLS[a, b, c, d, e, f, o]
MAXIMUM ROOF CLEAR SPAN 40 FEET AND MAXIMUM FLOOR CLEAR SPAN 32 FEET

LINTEL DEPTH, *D*[g] (inches)	NUMBER OF BARS AND BAR SIZE IN TOP AND BOTTOM OF LINTEL	STEEL YIELD STRENGTH[h], f_y (psi)	DESIGN LOADING CONDITION DETERMINED FROM TABLE R608.8(1)								
			1	2		3		4		5	
				Maximum ground snow load (psf)							
				30	70	30	70	30	70	30	70
			Maximum clear span of lintel (feet - inches)								
8[i]	Span with stirrups[k, l]		2-6	2-9	2-0	2-1	2-0	2-0	2-0	2-0	2-0
	1-#4	40,000	4-5	4-9	3-7	3-9	3-4	3-0	2-10	2-3	2-2
		60,000	5-6	6-2	4-0	4-3	3-7	3-1	2-10	2-3	2-2
	1-#5	40,000	5-6	6-2	4-0	4-3	3-7	3-1	2-10	2-3	2-2
	Center distance *A*[m, n]		0-9	0-10	0-6	0-6	0-5	0-4	0-4	STL	STL
12[i]	Span without stirrups[k, l]		2-10	3-1	2-6	2-7	2-5	2-3	2-2	2-0	2-0
	1-#4	40,000	5-7	6-1	4-8	4-10	4-4	3-11	3-8	3-0	2-11
		60,000	6-9	7-5	5-8	5-11	5-4	4-9	4-5	3-8	3-7
	1-#5	40,000	6-11	7-7	5-10	6-0	5-5	4-10	4-6	3-9	3-7
		60,000	8-8	10-1	6-7	7-0	5-11	5-2	4-8	3-9	3-7
	2-#4 1-#6	40,000	8-8	9-10	6-7	7-0	5-11	5-2	4-8	3-9	3-7
		60,000	8-8	10-1	6-7	7-0	5-11	5-2	4-8	3-9	3-7
	Center distance *A*[m, n]		1-2	1-5	0-10	0-11	0-9	0-7	0-6	STL	STL
16[i]	Span without stirrups[k, l]		3-10	4-3	3-6	3-7	3-4	3-2	3-0	2-10	2-9
	1-#4	40,000	6-5	7-2	5-6	5-9	5-2	4-8	4-4	3-7	3-6
		60,000	7-9	8-9	6-9	7-0	6-3	5-8	5-3	4-4	4-3
	1-#5	40,000	7-11	8-11	6-10	7-1	6-5	5-9	5-4	4-5	4-4
		60,000	9-8	10-11	8-4	8-8	7-10	7-0	6-6	5-2	5-1
	2-#4 1-#6	40,000	9-0	10-1	7-9	8-0	7-3	6-6	6-1	5-0	4-11
		60,000	11-5	13-10	9-2	9-8	8-3	7-2	6-6	5-2	5-1
	Center distance *A*[m, n]		1-6	1-11	1-2	1-3	1-0	0-10	0-8	STL	STL
20[i]	Span without stirrups[k, l]		4-10	5-5	4-5	4-7	4-3	4-0	3-11	3-7	3-7
	1-#4	40,000	7-0	8-1	6-3	6-5	5-10	5-3	4-11	4-1	3-11
		60,000	8-7	9-10	7-7	7-10	7-1	6-5	6-0	4-11	4-10
	1-#5	40,000	8-9	10-1	7-9	8-0	7-3	6-6	6-1	5-1	4-11
		60,000	10-8	12-3	9-6	9-10	8-10	8-0	7-5	6-2	6-0
	2-#4 1-#6	40,000	9-10	11-4	8-9	9-1	8-2	7-4	6-10	5-8	5-7
		60,000	12-0	13-10	10-8	11-0	9-11	9-0	8-4	6-8	6-6
	2-#5	40,000	12-3	14-1	10-10	11-3	10-2	8-11	8-1	6-6	6-4
		60,000	14-0	17-6	11-8	12-3	10-6	9-1	8-4	6-8	6-6
	Center distance *A*[m, n]		1-10	2-5	1-5	1-7	1-3	1-0	0-11	STL	STL

(continued)

INTERNATIONAL CODE COUNCIL®
Copyright © 2015 ICC. ALL RIGHTS RESERVED. Accessed by David Dammon on Jun 21, 2017 12:30:52 PM pursuant to License Agreement with ICC. No further reproduction or distribution authorized. ANY UNAUTHORIZED REPRODUCTION OR DISTRIBUTION IS A VIOLATION OF THE FEDERAL COPYRIGHT ACT AND THE LICENSE AGREEMENT, AND SUBJECT TO CIVIL AND CRIMINAL PENALTIES THEREUNDER.

TABLE R608.8(7)—continued
MAXIMUM ALLOWABLE CLEAR SPANS FOR 8-INCH-THICK WAFFLE-GRID LINTELS IN LOAD-BEARING WALLS[a, b, c, d, e, f, o]
MAXIMUM ROOF CLEAR SPAN 40 FEET AND MAXIMUM FLOOR CLEAR SPAN 32 FEET

LINTEL DEPTH, *D*[g] (inches)	NUMBER OF BARS AND BAR SIZE IN TOP AND BOTTOM OF LINTEL	STEEL YIELD STRENGTH[h], f_y (psi)	DESIGN LOADING CONDITION DETERMINED FROM TABLE R608.8(1)								
			1	2		3		4		5	
				Maximum ground snow load (psf)							
				30	70	30	70	30	70	30	70
			Maximum clear span of lintel (feet - inches)								
24[j]	Span without stirrups[k, l]		5-9	6-7	5-5	5-6	5-2	4-11	4-9	4-5	4-4
	1-#4	40,000	7-6	8-10	6-10	7-1	6-5	5-9	5-5	4-6	4-4
		60,000	9-2	10-9	8-4	8-8	7-10	7-1	6-7	5-6	5-4
	1-#5	40,000	9-5	11-0	8-6	8-10	8-0	7-2	6-8	5-7	5-5
		60,000	11-5	13-5	10-5	10-9	9-9	8-9	8-2	6-10	6-8
	2-#4 1-#6	40,000	10-7	12-5	9-8	10-0	9-0	8-1	7-7	6-3	6-2
		60,000	12-11	15-2	11-9	12-2	11-0	9-11	9-3	7-8	7-6
	2-#5	40,000	13-2	15-6	12-0	12-5	11-2	9-11	9-2	7-5	7-3
		60,000	16-3	21-0	14-1	14-10	12-9	11-1	10-1	8-1	7-11
	2-#6	40,000	14-4	18-5	12-6	13-2	11-5	9-11	9-2	7-5	7-3
	Center distance *A*[m, n]		2-1	2-11	1-9	1-10	1-6	1-3	1-1	STL	STL

For SI: 1 inch = 25.4 mm, 1 pound per square foot = 0.0479 kPa, 1 foot = 304.8 mm, Grade 40 = 280 MPa, Grade 60 = 420 MPa.

a. Where lintels are formed with waffle-grid forms, form material shall be removed, if necessary, to create top and bottom flanges of the lintel that are not less than 3 inches in depth (in the vertical direction), are not less than 5 inches in width for 6-inch-nominal waffle-grid forms and not less than 7 inches in width for 8-inch-nominal waffle-grid forms. See Figure R608.8(3). Flat form lintels shall be permitted in lieu of waffle-grid lintels. See Tables R608.8(2) through R608.8(5).

b. See Table R608.3 for tolerances permitted from nominal thicknesses and minimum dimensions and spacing of cores.

c. Table values are based on concrete with a minimum specified compressive strength of 2,500 psi. See Notes l and n. Table values are based on uniform loading. See Section R608.8.2 for lintels supporting concentrated loads.

d. Deflection criterion is *L*/240, where *L* is the clear span of the lintel in inches, or $^1/_2$-inch, whichever is less.

e. Linear interpolation is permitted between ground snow loads.

f. DR indicates design required. STL - stirrups required throughout lintel.

g. Lintel depth, *D*, is permitted to include the available height of wall located directly above the lintel, provided that the increased lintel depth spans the entire length of the lintel.

h. Stirrups shall be fabricated from reinforcing bars with the same yield strength as that used for the main longitudinal reinforcement.

i. Lintels less than 24 inches in depth with stirrups shall be formed from flat-walls forms [see Tables R608.8(2) through R608.8(5)], or, if necessary, form material shall be removed from waffle-grid forms so as to provide the required cover for stirrups. Allowable spans for lintels formed with flat-wall forms shall be determined from Tables R608.8(2) through R608.8(5).

j. Where stirrups are required for 24-inch deep lintels, the spacing shall not exceed 12 inches on center.

k. Allowable clear span without stirrups applicable to all lintels of the same depth, *D*. Top and bottom reinforcement for lintels without stirrups shall be not less than the least amount of reinforcement required for a lintel of the same depth and loading condition with stirrups. All other spans require stirrups spaced at not more than *d/2*.

l. Where concrete with a minimum specified compressive strength of 3,000 psi is used, clear spans for lintels without stirrups shall be permitted to be multiplied by 1.05. If the increased span exceeds the allowable clear span for a lintel of the same depth and loading condition with stirrups, the top and bottom reinforcement shall be equal to or greater than that required for a lintel of the same depth and loading condition that has an allowable clear span that is equal to or greater than that of the lintel without stirrups that has been increased.

m. Center distance, *A*, is the center portion of the span where stirrups are not required. This is applicable to all longitudinal bar sizes and steel yield strengths.

n. Where concrete with a minimum specified compressive strength of 3,000 psi is used, center distance, *A*, shall be permitted to be multiplied by 1.10.

o. The maximum clear opening width between two solid wall segments shall be 18 feet. See Section R608.7.2.1. Lintel spans in the table greater than 18 feet are shown for interpolation and information only.

❖ See the commentary to Section R608.8.2.1.

INTERNATIONAL CODE COUNCIL®
Copyright © 2015 ICC. ALL RIGHTS RESERVED. Accessed by David Dammon on Jun 21, 2017 12:30:52 PM pursuant to License Agreement with ICC. No further reproduction or distribution authorized. ANY UNAUTHORIZED REPRODUCTION OR DISTRIBUTION IS A VIOLATION OF THE FEDERAL COPYRIGHT ACT AND THE LICENSE AGREEMENT, AND SUBJECT TO CIVIL AND CRIMINAL PENALTIES THEREUNDER.

TABLE R608.8(8)
MAXIMUM ALLOWABLE CLEAR SPANS FOR 6-INCH-THICK SCREEN-GRID LINTELS IN LOAD-BEARING WALLS[a, b, c, d, e, f, p]
ROOF CLEAR SPAN 40 FEET AND FLOOR CLEAR SPAN 32 FEET

LINTEL DEPTH, *D* [g] (inches)	NUMBER OF BARS AND BAR SIZE IN TOP AND BOTTOM OF LINTEL	STEEL YIELD STRENGTH[h], f_y (psi)	DESIGN LOADING CONDITION DETERMINED FROM TABLE R608.8(1)								
			1	2		3		4		5	
				Maximum ground snow load (psf)							
				30	70	30	70	30	70	30	70
			Maximum clear span of lintel (feet - inches)								
12[i,j]	Span without stirrups		2-9	2-11	2-4	2-5	2-3	2-3	2-2	2-0	2-0
16[i,j]	Span without stirrups		3-9	4-0	3-4	3-5	3-2	3-1	3-0	2-9	2-9
20[i,j]	Span without stirrups		4-9	5-1	4-3	4-4	4-1	4-0	3-10	3-7	3-7
24[k]	Span without stirrups[l, m]		5-8	6-3	5-2	5-3	5-0	4-10	4-8	4-4	4-4
	1-#4	40,000	7-11	9-0	6-11	7-2	6-5	6-1	5-8	4-9	4-7
		60,000	9-9	11-0	8-5	8-9	7-10	7-5	6-10	5-9	5-7
	1-#5	40,000	9-11	11-2	8-7	8-11	8-0	7-7	7-0	5-11	5-9
		60,000	12-1	13-8	10-6	10-10	9-9	9-3	8-6	7-2	7-0
	2-#4 1-#6	40,000	11-2	12-8	9-9	10-1	9-1	8-7	7-11	6-8	6-6
		60,000	15-7	17-7	12-8	13-4	11-6	10-8	9-8	7-11	7-8
	2-#5	40,000	14-11	18-0	12-2	12-10	11-1	10-3	9-4	7-8	7-5
		60,000	DR	DR	DR	DR	DR	DR	DR	DR	DR
	Center distance *A*[n, o]		2-0	2-6	1-6	1-7	1-4	1-2	1-0	STL	STL

For SI: 1 inch = 25.4 mm, 1 pound per square foot = 0.0479 kPa, 1 foot = 304.8 mm, Grade 40 = 280 MPa, Grade 60 = 420 MPa.

a. Where lintels are formed with screen-grid forms, form material shall be removed if necessary to create top and bottom flanges of the lintel that are not less than 5 inches in width and not less than 2.5 inches in depth (in the vertical direction). See Figure R608.8(4). Flat form lintels shall be permitted in lieu of screen-grid lintels. See Tables R608.8(2) through R608.8(5).

b. See Table R608.3 for tolerances permitted from nominal thickness and minimum dimensions and spacings of cores.

c. Table values are based on concrete with a minimum specified compressive strength of 2,500 psi. See Notes m and o. Table values are based on uniform loading. See Section R608.7.2.1 for lintels supporting concentrated loads.

d. Deflection criterion is *L*/240, where *L* is the clear span of the lintel in inches, or $^1/_2$-inch, whichever is less.

e. Linear interpolation is permitted between ground snow loads.

f. DR indicates design required. STL indicates stirrups required throughout lintel.

g. Lintel depth, *D*, is permitted to include the available height of wall located directly above the lintel, provided that the increased lintel depth spans the entire length of the lintel.

h. Stirrups shall be fabricated from reinforcing bars with the same yield strength as that used for the main longitudinal reinforcement.

i. Stirrups are not required for lintels less than 24 inches in depth fabricated from screen-grid forms. Top and bottom reinforcement shall consist of a No. 4 bar having a yield strength of 40,000 psi or 60,000 psi.

j. Lintels between 12 and 24 inches in depth with stirrups shall be formed from flat-wall forms [see Tables R608.8(2) through R608.8(5)], or form material shall be removed from screen-grid forms to provide a concrete section comparable to that required for a flat wall. Allowable spans for flat lintels with stirrups shall be determined from Tables R608.8(2) through R608.8(5).

k. Where stirrups are required for 24-inch deep lintels, the spacing shall not exceed 12 inches on center.

l. Allowable clear span without stirrups applicable to all lintels of the same depth, *D*. Top and bottom reinforcement for lintels without stirrups shall be not less than the least amount of reinforcement required for a lintel of the same depth and loading condition with stirrups. All other spans require stirrups spaced at not more than 12 inches.

m. Where concrete with a minimum specified compressive strength of 3,000 psi is used, clear spans for lintels without stirrups shall be permitted to be multiplied by 1.05. If the increased span exceeds the allowable clear span for a lintel of the same depth and loading condition with stirrups, the top and bottom reinforcement shall be equal to or greater than that required for a lintel of the same depth and loading condition that has an allowable clear span that is equal to or greater than that of the lintel without stirrups that has been increased.

n. Center distance, *A*, is the center portion of the span where stirrups are not required. This is applicable to all longitudinal bar sizes and steel yield strengths.

o. Where concrete with a minimum specified compressive strength of 3,000 psi is used, center distance, *A*, shall be permitted to be multiplied by 1.10.

p. The maximum clear opening width between two solid wall segments shall be 18 feet. See Section R608.7.2.1. Lintel spans in the table greater than 18 feet are shown for interpolation and information only.

❖ See the commentary to Section R608.8.2.1.

INTERNATIONAL CODE COUNCIL®
Copyright © 2015 ICC. ALL RIGHTS RESERVED. Accessed by David Dammon on Jun 21, 2017 12:30:52 PM pursuant to License Agreement with ICC. No further reproduction or distribution authorized. ANY UNAUTHORIZED REPRODUCTION OR DISTRIBUTION IS A VIOLATION OF THE FEDERAL COPYRIGHT ACT AND THE LICENSE AGREEMENT, AND SUBJECT TO CIVIL AND CRIMINAL PENALTIES THEREUNDER.

TABLE R608.8(9)
MAXIMUM ALLOWABLE CLEAR SPANS FOR FLAT LINTELS WITHOUT STIRRUPS IN NONLOAD-BEARING WALLS[a, b, c, d, e, g, h]

LINTEL DEPTH, D [f] (inches)	NUMBER OF BARS AND BAR SIZE	STEEL YIELD STRENGTH, f_y (psi)	NOMINAL WALL THICKNESS (inches)							
			4		6		8		10	
			Lintel Supporting							
			Concrete Wall	Light-framed Gable	Concrete Wall	Light-framed Gable	Concrete Wall	Light-framed Gable	Concrete Wall	Light-framed Gable
			Maximum Clear Span of Lintel (feet - inches)							
8	1-#4	40,000	10-11	11-5	9-7	11-2	7-10	9-5	7-3	9-2
		60,000	12-5	11-7	10-11	13-5	9-11	13-2	9-3	12-10
	1-#5	40,000	12-7	11-7	11-1	13-8	10-1	13-5	9-4	13-1
		60,000	DR	DR	12-7	16-4	11-6	14-7	10-9	14-6
	2-#4 1-#6	40,000	DR	DR	12-0	15-3	10-11	15-0	10-2	14-8
		60,000	DR	DR	DR	DR	12-2	15-3	11-7	15-3
	2-#5	40,000	DR	DR	DR	DR	12-7	16-7	11-9	16-7
		60,000	DR	DR	DR	DR	DR	DR	13-3	16-7
	2-#6	40,000	DR	DR	DR	DR	DR	DR	13-2	17-8
		60,000	DR	DR	DR	DR	DR	DR	DR	DR
12	1-#4	40,000	11-5	9-10	10-6	12-0	9-6	11-6	8-9	11-1
		60,000	11-5	9-10	11-8	13-3	10-11	14-0	10-1	13-6
	1-#5	40,000	11-5	9-10	11-8	13-3	11-1	14-4	10-3	13-9
		60,000	11-5	9-10	11-8	13-3	11-10	16-0	11-9	16-9
	2-#4 1-#6	40,000	DR	DR	11-8	13-3	11-10	16-0	11-2	15-6
		60,000	DR	DR	11-8	13-3	11-10	16-0	11-11	18-4
	2-#5	40,000	DR	DR	11-8	13-3	11-10	16-0	11-11	18-4
		60,000	DR	DR	11-8	13-3	11-10	16-0	11-11	18-4
16	1-#4	40,000	13-6	13-0	11-10	13-8	10-7	12-11	9-11	12-4
		60,000	13-6	13-0	13-8	16-7	12-4	15-9	11-5	15-0
	1-#5	40,000	13-6	13-0	13-10	17-0	12-6	16-1	11-7	15-4
		60,000	13-6	13-0	13-10	17-1	14-0	19-7	13-4	18-8
	2-#4 1-#6	40,000	13-6	13-0	13-10	17-1	13-8	18-2	12-8	17-4
		60,000	13-6	13-0	13-10	17-1	14-0	20-3	14-1	—
	2-#5	40,000	13-6	13-0	13-10	17-1	14-0	20-3	14-1	—
		60,000	DR	DR	13-10	17-1	14-0	20-3	14-1	—
20	1-#4	40,000	14-11	15-10	13-0	14-10	11-9	13-11	10-10	13-2
		60,000	15-3	15-10	14-11	18-1	13-6	17-0	12-6	16-2
	1-#5	40,000	15-3	15-10	15-2	18-6	13-9	17-5	12-8	16-6
		60,000	15-3	15-10	15-8	20-5	15-9	—	14-7	20-1
	2-#4 1-#6	40,000	15-3	15-10	15-8	20-5	14-11	—	13-10	—
		60,000	15-3	15-10	15-8	20-5	15-10	—	15-11	—
	2-#5	40,000	15-3	15-10	15-8	20-5	15-10	—	15-11	—
		60,000	15-3	15-10	15-8	20-5	15-10	—	15-11	—

(continued)

INTERNATIONAL CODE COUNCIL®
Copyright © 2015 ICC. ALL RIGHTS RESERVED. Accessed by David Dammon on Jun 21, 2017 12:30:52 PM pursuant to License Agreement with ICC. No further reproduction or distribution authorized. ANY UNAUTHORIZED REPRODUCTION OR DISTRIBUTION IS A VIOLATION OF THE FEDERAL COPYRIGHT ACT AND THE LICENSE AGREEMENT, AND SUBJECT TO CIVIL AND CRIMINAL PENALTIES THEREUNDER.

TABLE R608.8(9)—continued
MAXIMUM ALLOWABLE CLEAR SPANS FOR FLAT LINTELS WITHOUT STIRRUPS IN NONLOAD-BEARING WALLS[a, b, c, d, e, g, h]

LINTEL DEPTH, *D* [f] (inches)	NUMBER OF BARS AND BAR SIZE	STEEL YIELD STRENGTH, f_y (psi)	NOMINAL WALL THICKNESS (inches)							
			4		6		8		10	
			Lintel Supporting							
			Concrete Wall	Light-framed Gable	Concrete Wall	Light-framed Gable	Concrete Wall	Light-framed Gable	Concrete Wall	Light-framed Gable
			Maximum Clear Span of Lintel (feet - inches)							
24	1-#4	40,000	16-1	17-1	13-11	15-10	12-7	14-9	11-8	13-10
		60,000	16-11	18-5	16-1	19-3	14-6	18-0	13-5	17-0
	1-#5	40,000	16-11	18-5	16-3	19-8	14-9	18-5	13-8	17-4
		60,000	16-11	18-5	17-4	—	17-0	—	15-8	—
	2-#4 1-#6	40,000	16-11	18-5	17-4	—	16-1	—	14-10	—
		60,000	16-11	18-5	17-4	—	17-6	—	17-1	—
	2-#5	40,000	16-11	18-5	17-4	—	17-6	—	17-4	—
		60,000	16-11	18-5	17-4	—	17-6	—	17-8	—

For SI: 1 inch = 25.4 mm, 1 foot = 304.8 mm, Grade 40 = 280 MPa, Grade 60 = 420 MPa.

a. See Table R608.3 for tolerances permitted from nominal thickness.

b. Table values are based on concrete with a minimum specified compressive strength of 2,500 psi. See Note e.

c. Deflection criterion is $L/240$, where L is the clear span of the lintel in inches, or $^1/_2$ inch, whichever is less.

d. Linear interpolation between lintels depths, *D*, is permitted provided the two cells being used to interpolate are shaded.

e. Where concrete with a minimum specified compressive strength of 3,000 psi is used, spans in cells that are shaded shall be permitted to be multiplied by 1.05.

f. Lintel depth, *D*, is permitted to include the available height of wall located directly above the lintel, provided that the increased lintel depth spans the entire length of the lintel.

g. DR indicates design required.

h. The maximum clear opening width between two solid wall segments shall be 18 feet. See Section R608.7.2.1. Lintel spans in the table greater than 18 feet are shown for interpolation and information purposes only.

❖ See the commentary to Section R608.8.2.3.

TABLE R608.8(10)
MAXIMUM ALLOWABLE CLEAR SPANS FOR WAFFLE-GRID AND SCREEN-GRID LINTELS WITHOUT STIRRUPS IN NONLOAD-BEARING WALLS[c, d, e, f, g]

LINTEL DEPTH[h], *D* (inches)	FORM TYPE AND NOMINAL WALL THICKNESS (inches)					
	6-inch Waffle-grid[a]		8-inch Waffle-grid[a]		6-inch Screen-grid[b]	
	Lintel supporting					
	Concrete Wall	Light-framed Gable	Concrete Wall	Light-framed Gable	Concrete Wall	Light-framed Gable
	Maximum Clear Span of Lintel (feet - inches)					
8	10-3	8-8	8-8	8-3	—	—
12	9-2	7-6	7-10	7-1	8-8	6-9
16	10-11	10-0	9-4	9-3	—	—
20	12-5	12-2	10-7	11-2	—	—
24	13-9	14-2	11-10	12-11	13-0	12-9

For SI: 1 inch = 25.4 mm, 1 foot = 304.8 mm, Grade 40 = 280 MPa, Grade 60 = 420 MPa.

a. Where lintels are formed with waffle-grid forms, form material shall be removed, if necessary, to create top and bottom flanges of the lintel that are not less than 3 inches in depth (in the vertical direction), are not less than 5 inches in width for 6-inch waffle-grid forms and not less than 7 inches in width for 8-inch waffle-grid forms. See Figure R608.8(3). Flat form lintels shall be permitted in lieu of waffle-grid lintels. See Tables R608.8(2) through R608.8(5).

b. Where lintels are formed with screen-grid forms, form material shall be removed if necessary to create top and bottom flanges of the lintel that are not less than 5 inches in width and not less than 2.5 inches in depth (in the vertical direction). See Figure R608.8(4). Flat form lintels shall be permitted in lieu of screen-grid lintels. See Tables R608.8(2) through R608.8(5).

c. See Table R608.3 for tolerances permitted from nominal thickness and minimum dimensions and spacing of cores.

d. Table values are based on concrete with a minimum specified compressive strength of 2,500 psi. See Note g.

e. Deflection criterion is $L/240$, where L is the clear span of the lintel in inches, or $^1/_2$-inch, whichever is less.

f. Top and bottom reinforcement shall consist of a No. 4 bar having a minimum yield strength of 40,000 psi.

g. Where concrete with a minimum specified compressive strength of 3,000 psi is used, spans in shaded cells shall be permitted to be multiplied by 1.05.

h. Lintel depth, *D*, is permitted to include the available height of wall located directly above the lintel, provided that the increased lintel depth spans the entire length of the lintel.

❖ See the commentary to Section R608.8.2.3.

INTERNATIONAL CODE COUNCIL®
Copyright © 2015 ICC. ALL RIGHTS RESERVED. Accessed by David Dammon on Jun 21, 2017 12:30:52 PM pursuant to License Agreement with ICC. No further reproduction or distribution authorized. ANY UNAUTHORIZED REPRODUCTION OR DISTRIBUTION IS A VIOLATION OF THE FEDERAL COPYRIGHT ACT AND THE LICENSE AGREEMENT, AND SUBJECT TO CIVIL AND CRIMINAL PENALTIES THEREUNDER.

R608.9 Requirements for connections–general. Concrete walls shall be connected to footings, floors, ceilings and roofs in accordance with this section.

❖ This section prescribes the required connections between concrete walls and light-framed floor, ceiling and roof systems. The concrete wall connection to the footing must be in accordance with Sections R608.6 and R608.7.

R608.9.1 Connections between concrete walls and light-framed floor, ceiling and roof systems. Connections between concrete walls and light-framed floor, ceiling and roof systems using the prescriptive details of Figures R608.9(1) through R608.9(12) shall comply with this section and Sections R608.9.2 and R608.9.3.

❖ This section prescribes the anchor bolt requirements for face-mounted wall ledger board or cold-formed steel tracks and sill plates as shown in Figures R608.9(1) through R608.9(12). The anchor bolts must be headed bolts or threaded rod with hex or square nut. J- or S-hooks are not permitted.

Stay-in-place form material at each anchor bolt for face-mounted wood ledger board and cold-formed steel tracks must be removed such that each wood ledger board or steel track is in direct contact with the concrete at each bolt location. The exception permits a vapor retarder to be installed between the concrete and the wood or cold-formed steel.

R608.9.1.1 Anchor bolts. Anchor bolts used to connect light-framed floor, ceiling and roof systems to concrete walls in accordance with Figures R608.9(1) through R608.9(12) shall have heads, or shall be rods with threads on both ends with a hex or square nut on the end embedded in the concrete. Bolts and threaded rods shall comply with Section R608.5.2.2. Anchor bolts with J- or L-hooks shall not be used where the connection details in these figures are used.

❖ See the commentary to Section R608.9.1.

R608.9.1.2 Removal of stay-in-place form material at bolts. Holes in stay-in-place forms for installing bolts for attaching face-mounted wood ledger boards to the wall shall be not less than 4 inches (102 mm) in diameter for forms not greater than $1^1/_2$ inches (38 mm) in thickness, and increased 1 inch (25 mm) in diameter for each $^1/_2$-inch (12.7 mm) increase in form thickness. Holes in stay-in-place forms for installing bolts for attaching face-mounted cold-formed steel tracks to the wall shall be not less than 4 inches (102 mm) square. The wood ledger board or steel track shall be in direct contact with the concrete at each bolt location.

Exception: A vapor retarder or other material less than or equal to $^1/_{16}$ inch (1.6 mm) in thickness is permitted to be installed between the wood ledger or cold-formed track and the concrete.

❖ See the commentary to Section R608.9.1.

R608.9.2 Connections between concrete walls and light-framed floor systems. Connections between concrete walls and light-framed floor systems shall be in accordance with one of the following:

1. For floor systems of wood frame construction, the provisions of Section R608.9.1 and the prescriptive details of Figures R608.9(1) through R608.9(4), where permitted by the tables accompanying those figures. Portions of connections of wood-framed floor systems not noted in the figures shall be in accordance with Section R502, or AWC WFCM, if applicable. Wood framing members shall be of a species having a specific gravity equal to or greater than 0.42.
2. For floor systems of cold-formed steel construction, the provisions of Section R608.9.1 and the prescriptive details of Figures R608.9(5) through R608.9(8), where permitted by the tables accompanying those figures. Portions of connections of cold-formed-steel framed floor systems not noted in the figures shall be in accordance with Section R505, or AISI S230, if applicable.
3. Proprietary connectors selected to resist loads and load combinations in accordance with Appendix A (ASD) or Appendix B (LRFD) of PCA 100.
4. An engineered design using loads and load combinations in accordance with Appendix A (ASD) or Appendix B (LRFD) of PCA 100.
5. An engineered design using loads and material design provisions in accordance with this code, or in accordance with ASCE 7, ACI 318, and AWC NDS for wood frame construction or AISI S100 for cold-formed steel frame construction.

❖ Section R608.9.2 provides four approaches for designing anchorages between concrete walls and light-framed floor construction. First, prescriptive details are provided in Figures R608.9(1) through R608.9(4) for floors of wood frame construction and in Figures R608.9(5) through R608.9(8) for cold-formed-steel framed floor systems. The wood framing members must have a specific gravity equal to or greater than 0.42. Each prescriptive detail may only be used where permitted by the table accompanying that figure. The prescriptive details are based on LRFD loads in Appendix B of PCA 100 and addresses loads in three directions occurring simultaneously (horizontal in the plane of the wall, horizontal out-of-plane and vertical). The second approach (Item 3) allows selection of proprietary connection hardware based on loads given in Appendix A or Appendix B of PCA 100. The third approach (Item 4) allows engineered anchorage design to meet the loads tabulated in Appendix A or Appendix B of PCA 100. The fourth approach (Item 5) involves an engineered design for the specific building configuration.

INTERNATIONAL CODE COUNCIL®
Copyright © 2015 ICC. ALL RIGHTS RESERVED. Accessed by David Dammon on Jun 21, 2017 12:30:52 PM pursuant to License Agreement with ICC. No further reproduction or distribution authorized. ANY UNAUTHORIZED REPRODUCTION OR DISTRIBUTION IS A VIOLATION OF THE FEDERAL COPYRIGHT ACT AND THE LICENSE AGREEMENT, AND SUBJECT TO CIVIL AND CRIMINAL PENALTIES THEREUNDER.

R608.9.3 Connections between concrete walls and light-framed ceiling and roof systems. Connections between concrete walls and light-framed ceiling and roof systems shall be in accordance with one of the following:

1. For ceiling and roof systems of wood frame construction, the provisions of Section R608.9.1 and the prescriptive details of Figures R608.9(9) and R608.9(10), where permitted by the tables accompanying those figures. Portions of connections of wood-framed ceiling and roof systems not noted in the figures shall be in accordance with Section R802, or AWC WFCM, if applicable. Wood framing members shall be of a species having a specific gravity equal to or greater than 0.42.
2. For ceiling and roof systems of cold-formed-steel construction, the provisions of Section R608.9.1 and the prescriptive details of Figures R608.9(11) and R608.9(12), where permitted by the tables accompanying those figures. Portions of connections of cold-formed-steel framed ceiling and roof systems not noted in the figures shall be in accordance with Section R804, or AISI S230, if applicable.
3. Proprietary connectors selected to resist loads and load combinations in accordance with Appendix A (ASD) or Appendix B (LRFD) of PCA 100.
4. An engineered design using loads and load combinations in accordance with Appendix A (ASD) or Appendix B (LRFD) of PCA 100.
5. An engineered design using loads and material design provisions in accordance with this code, or in accordance with ASCE 7, ACI 318, and AWC NDS for wood-frame construction or AISI S100 for cold-formed-steel frame construction.

❖ Section R611.9.3 provides four approaches for designing anchorages between concrete walls and light-framed ceiling and roof construction. First, prescriptive details are provided in Figures R608.9(9) and R608.9(10) for roofs of wood framed construction and in Figures R608.9(11) and R608.9(12) for cold-formed steel framed roof systems. The wood framing members must have a specific gravity equal to or greater than 0.42. Each prescriptive detail may only be used where permitted by the table accompanying that figure. The prescriptive details are based on the tabulated LRFD loads in Appendix B of PCA 100 and address loads in three directions occurring simultaneously (horizontal in the plane of the wall, horizontal out-of-plane and vertical). The second approach (Item 3) allows selection of proprietary connection hardware based on loads given in Appendix A or B of PCA 100. The fourth approach (Item 5) involves an engineered design for the specific building configuration.

R608.10 Floor, roof and ceiling diaphragms. Floors and roofs in buildings with exterior walls of concrete shall be designed and constructed as diaphragms. Where gable-end walls occur, ceilings shall be designed and constructed as diaphragms. The design and construction of floors, roofs and ceilings of wood framing or cold-formed-steel framing serving as diaphragms shall comply with the applicable requirements of this code, or AWC WFCM or AISI S230, if applicable. Wood framing members shall be of a species having a specific gravity equal to or greater than 0.42.

❖ Resistance for wind and seismic forces relies on wood structural panel diaphragms at the roof and floors. In some cases, blocked diaphragms are necessary in order to develop the shear strength required. Where gable endwalls occur, wood structural panel ceiling diaphragms are relied on to support the top of the concrete gable endwall, in addition to the support provided by the roof diaphragm. In addition to basic diaphragm construction, wood structural panel sheathing needs to be fastened at the noted edge-nail or edge-screw spacing to the framing members to which tension ties are attached.

INTERNATIONAL CODE COUNCIL®
Copyright © 2015 ICC. ALL RIGHTS RESERVED. Accessed by David Dammon on Jun 21, 2017 12:30:52 PM pursuant to License Agreement with ICC. No further reproduction or distribution authorized. ANY UNAUTHORIZED REPRODUCTION OR DISTRIBUTION IS A VIOLATION OF THE FEDERAL COPYRIGHT ACT AND THE LICENSE AGREEMENT, AND SUBJECT TO CIVIL AND CRIMINAL PENALTIES THEREUNDER.

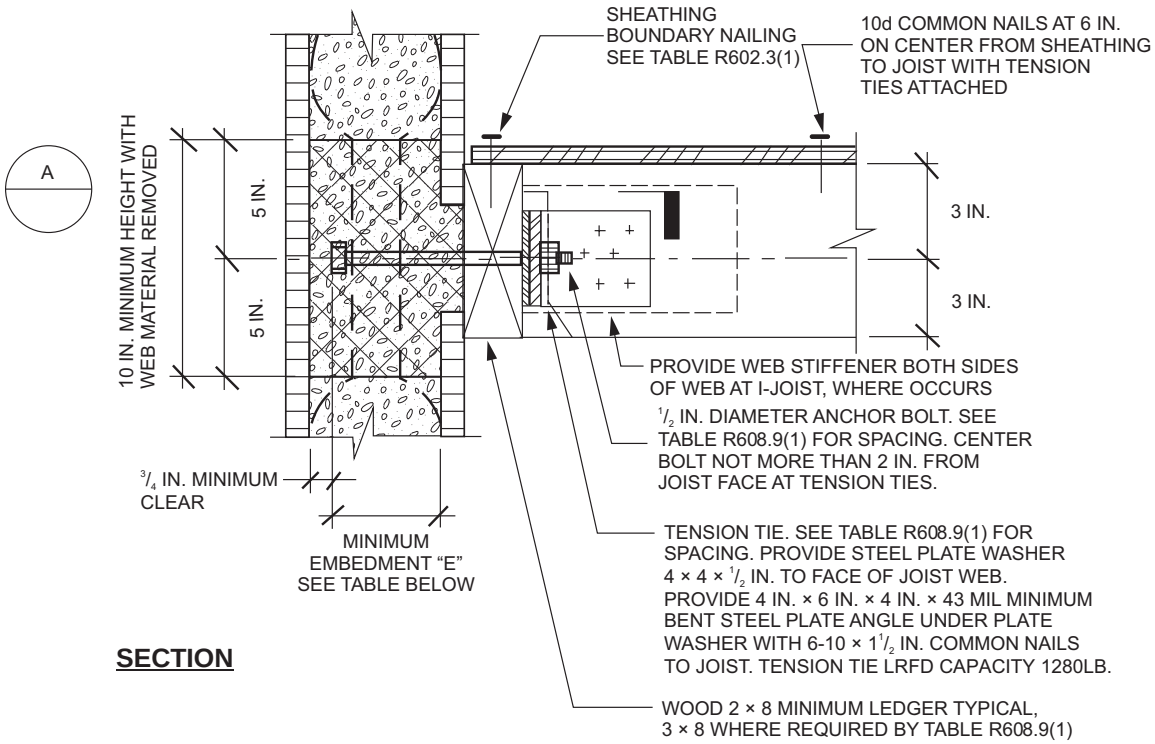

SECTION

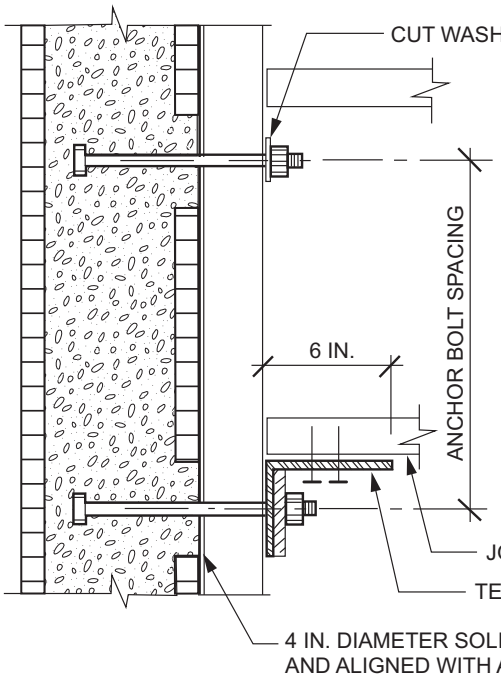

E (in)	wall type
2 3/4 in.	4 in. flat
4 3/4 in.	6 in. flat 6 in. waffle-grid 6 in. screen-grid
6 3/4 in.	8 in. flat 10 in. flat 8 in. waffle-grid

DETAIL A – PLAN VIEW

For SI: 1 mil = 0.0254 mm, 1 inch = 25.4 mm, 1 pound-force = 4.448 N.

FIGURE R608.9(1)
WOOD-FRAMED FLOOR TO SIDE OF CONCRETE WALL, FRAMING PERPENDICULAR

❖ See the commentary to Sections R608.9.1 and R608.9.2.

INTERNATIONAL CODE COUNCIL®
Copyright © 2015 ICC. ALL RIGHTS RESERVED. Accessed by David Dammon on Jun 21, 2017 12:30:52 PM pursuant to License Agreement with ICC. No further reproduction or distribution authorized. ANY UNAUTHORIZED REPRODUCTION OR DISTRIBUTION IS A VIOLATION OF THE FEDERAL COPYRIGHT ACT AND THE LICENSE AGREEMENT, AND SUBJECT TO CIVIL AND CRIMINAL PENALTIES THEREUNDER.

TABLE R608.9(1)
WOOD-FRAMED FLOOR TO SIDE OF CONCRETE WALL, FRAMING PERPENDICULAR[a, b]

ANCHOR BOLT SPACING (inches)	TENSION TIE SPACING (inches)	BASIC WIND SPEED (mph)					
		115B	120B	130B	140B	150B	160B
				110C	119C	127C	136C
					110D	117D	125D
12	12						
12	24						
12	36						
12	48						
16	16						
16	32						
16	48						
19.2	19.2						
19.2	38.4						

For SI: 1 inch = 25.4 mm, 1 mile per hour = 0.447 m/s.

a. This table is for use with the detail in Figure R608.9(1). Use of this detail is permitted where a cell is not shaded and prohibited where shaded.

b. Wall design per other provisions of Section R608 is required.

❖ See the commentary to Sections R608.9.1 and R608.9.2.

INTERNATIONAL CODE COUNCIL®
Copyright © 2015 ICC. ALL RIGHTS RESERVED. Accessed by David Dammon on Jun 21, 2017 12:30:52 PM pursuant to License Agreement with ICC. No further reproduction or distribution authorized. ANY UNAUTHORIZED REPRODUCTION OR DISTRIBUTION IS A VIOLATION OF THE FEDERAL COPYRIGHT ACT AND THE LICENSE AGREEMENT, AND SUBJECT TO CIVIL AND CRIMINAL PENALTIES THEREUNDER.

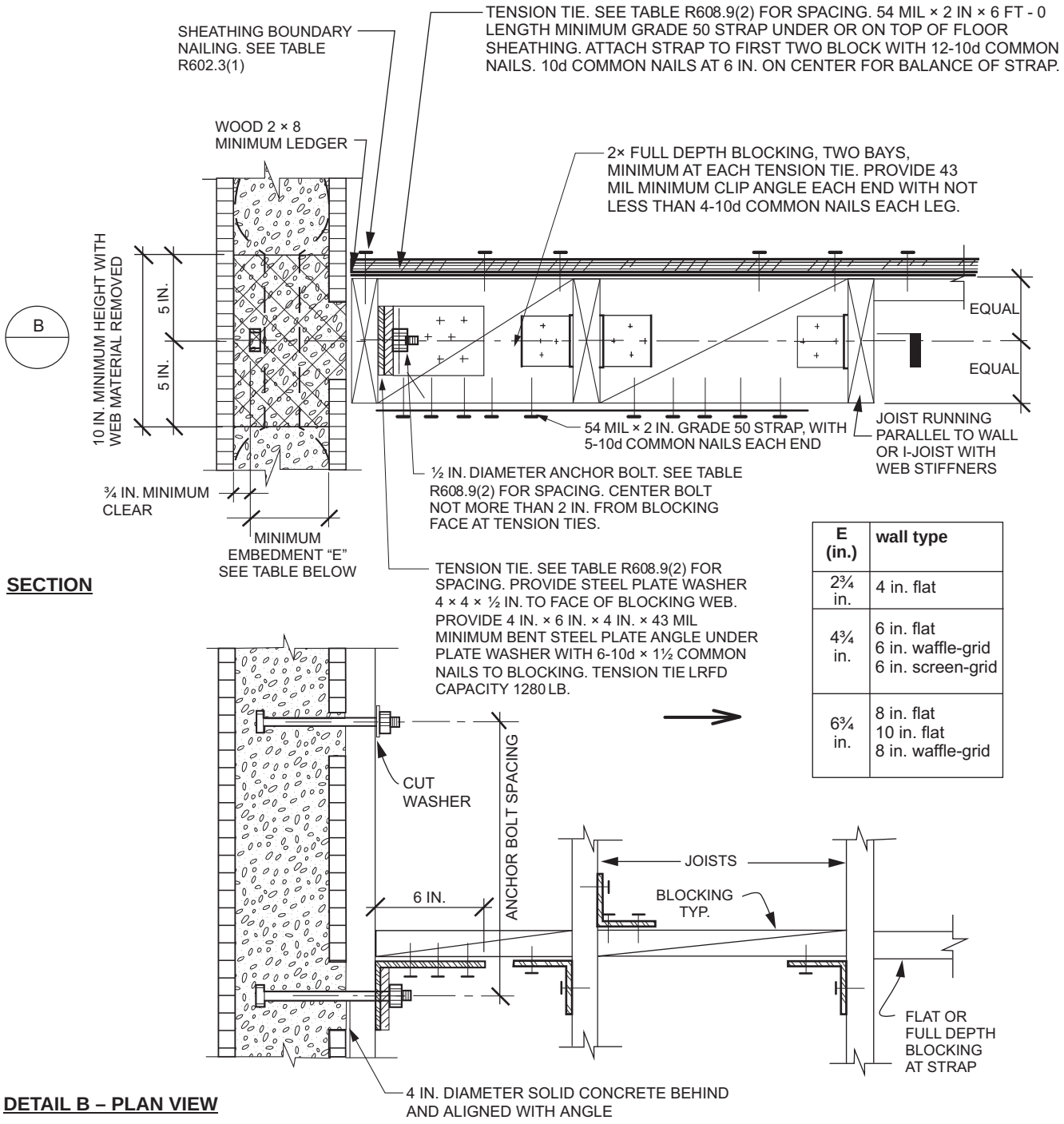

SECTION

E (in.)	wall type
2¾ in.	4 in. flat
4¾ in.	6 in. flat 6 in. waffle-grid 6 in. screen-grid
6¾ in.	8 in. flat 10 in. flat 8 in. waffle-grid

DETAIL B – PLAN VIEW

For SI: 1 mil = 0.0254 mm, 1 inch = 25.4 mm, 1 foot = 304.8 mm, 1 pound-force = 4.448 N.

FIGURE R608.9(2)
WOOD-FRAMED FLOOR TO SIDE OF CONCRETE WALL, FRAMING PARALLEL

❖ See the commentary to Sections R608.9.1 and R608.9.2.

INTERNATIONAL CODE COUNCIL®
Copyright © 2015 ICC. ALL RIGHTS RESERVED. Accessed by David Dammon on Jun 21, 2017 12:30:52 PM pursuant to License Agreement with ICC. No further reproduction or distribution authorized. ANY UNAUTHORIZED REPRODUCTION OR DISTRIBUTION IS A VIOLATION OF THE FEDERAL COPYRIGHT ACT AND THE LICENSE AGREEMENT, AND SUBJECT TO CIVIL AND CRIMINAL PENALTIES THEREUNDER.

TABLE R608.9(2)
WOOD-FRAMED FLOOR TO SIDE OF CONCRETE WALL, FRAMING PARALLEL[a, b]

ANCHOR BOLT SPACING (inches)	TENSION TIE SPACING (inches)	BASIC WIND SPEED (mph) AND WIND EXPOSURE CATEGORY					
		115b	120B	130B	140B	150B	160B
				110C	119C	127C	136C
					110D	117D	125D
12	12						
12	24						
12	36						
12	48						
16	16						
16	32						
16	48						
19.2	19.2						
19.2	38.4						
24	24						
24	48						

For SI: 1 inch = 25.4 mm, 1 mile per hour = 0.447 m/s.

a. This table is for use with the detail in Figure R608.9(2). Use of this detail is permitted where a cell is not shaded and prohibited where shaded.

b. Wall design per other provisions of Section R608 is required.

❖ See the commentary to Sections R608.9.1 and R608.9.2.

INTERNATIONAL CODE COUNCIL®
Copyright © 2015 ICC. ALL RIGHTS RESERVED. Accessed by David Dammon on Jun 21, 2017 12:30:52 PM pursuant to License Agreement with ICC. No further reproduction or distribution authorized. ANY UNAUTHORIZED REPRODUCTION OR DISTRIBUTION IS A VIOLATION OF THE FEDERAL COPYRIGHT ACT AND THE LICENSE AGREEMENT, AND SUBJECT TO CIVIL AND CRIMINAL PENALTIES THEREUNDER.

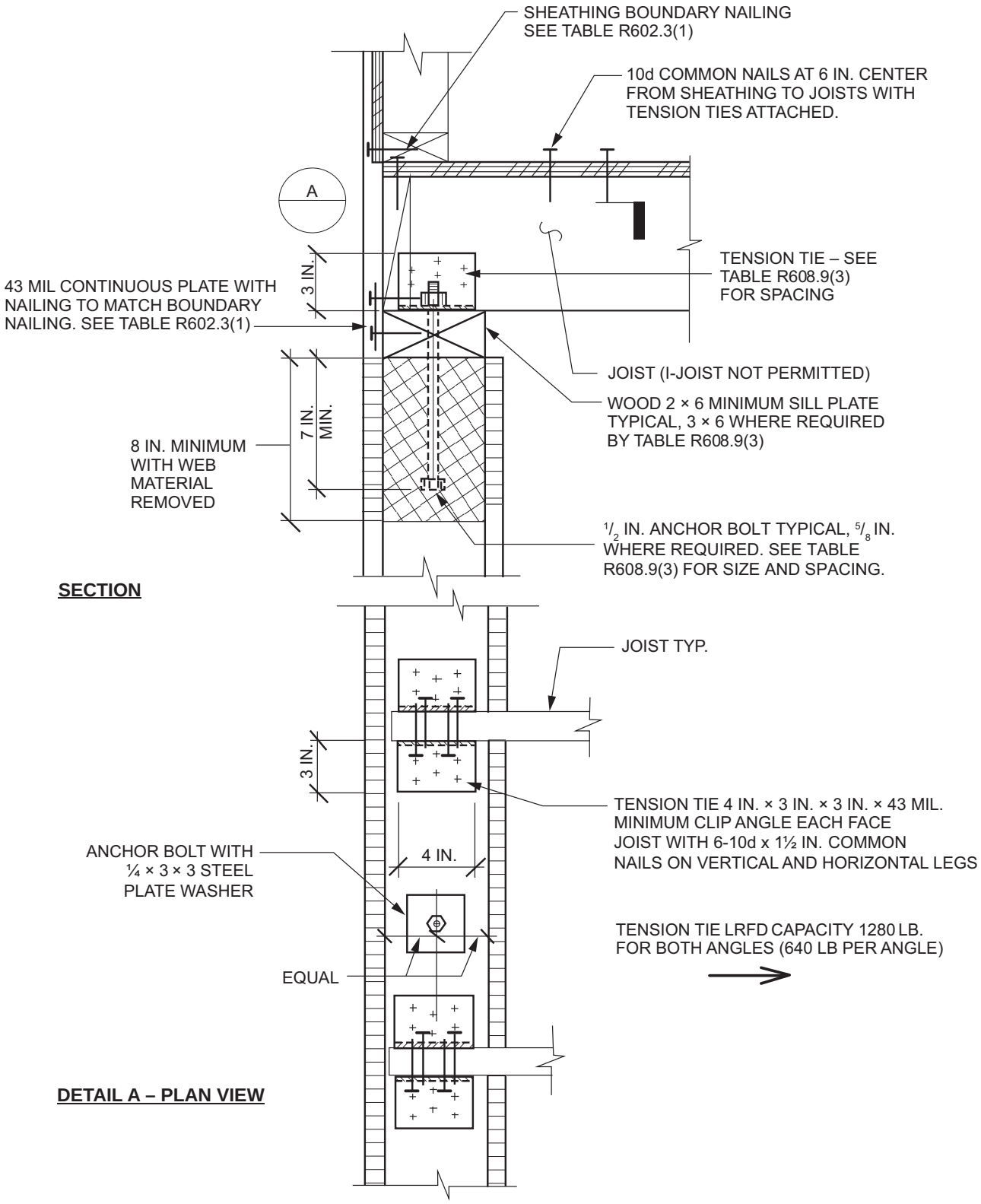

For SI: 1 mil = 0.0254 mm, 1 inch = 25.4 mm, 1 pound-force = 4.448 N.

FIGURE R608.9(3)
WOOD-FRAMED FLOOR TO TOP OF CONCRETE WALL FRAMING, PERPENDICULAR

❖ See the commentary to Sections R608.9.1 and R608.9.2.

INTERNATIONAL CODE COUNCIL®
Copyright © 2015 ICC. ALL RIGHTS RESERVED. Accessed by David Dammon on Jun 21, 2017 12:30:52 PM pursuant to License Agreement with ICC. No further reproduction or distribution authorized. ANY UNAUTHORIZED REPRODUCTION OR DISTRIBUTION IS A VIOLATION OF THE FEDERAL COPYRIGHT ACT AND THE LICENSE AGREEMENT, AND SUBJECT TO CIVIL AND CRIMINAL PENALTIES THEREUNDER.

TABLE R608.9(3)
WOOD-FRAMED FLOOR TO TOP OF CONCRETE WALL, FRAMING PERPENDICULAR[a, b, c, d, e]

ANCHOR BOLT SPACING (inches)	TENSION TIE SPACING (inches)	BASIC WIND SPEED (mph) AND WIND EXPOSURE CATEGORY					
		115B	120B	130B	140B	150B	160B
				110C	119C	127C	136C
					110D	117D	125D
12	12						6
12	24					6	6
12	36					6	6
12	48				6	6	6
16	16					6	6A
16	32				6	6	6A
16	48			6	6	6	6A
19.2	19.2				6A	6A	6B
19.2	38.4			6	6A	6A	6B
24	24			6A	6B	6B	6B
24	48		6	6A	6B	6B	8B

For SI: 1 inch = 25.4 mm, 1 mile per hour = 0.447 m/s.

a. This table is for use with the detail in Figure R608.9(3). Use of this detail is permitted where cell is not shaded.

b. Wall design per other provisions in Section R608 is required.

c. For wind design, minimum 4-inch-nominal wall is permitted in unshaded cells that do not contain a number.

d. Numbers 6 and 8 indicate minimum permitted nominal wall thickness in inches necessary to develop required strength (capacity) of connection. As a minimum, this nominal thickness shall occur in the portion of the wall indicated by the cross-hatching in Figure R608.9(3). For the remainder of the wall, see Note b.

e. Letter "A" indicates that a minimum nominal 3 × 6 sill plate is required. Letter "B" indicates that a $^{5}/_{8}$-inch-diameter anchor bolt and a minimum nominal 3 × 6 sill plate are required.

❖ See the commentary to Sections R608.9.1 and R608.9.2.

INTERNATIONAL CODE COUNCIL®
Copyright © 2015 ICC. ALL RIGHTS RESERVED. Accessed by David Dammon on Jun 21, 2017 12:30:52 PM pursuant to License Agreement with ICC. No further reproduction or distribution authorized. ANY UNAUTHORIZED REPRODUCTION OR DISTRIBUTION IS A VIOLATION OF THE FEDERAL COPYRIGHT ACT AND THE LICENSE AGREEMENT, AND SUBJECT TO CIVIL AND CRIMINAL PENALTIES THEREUNDER.

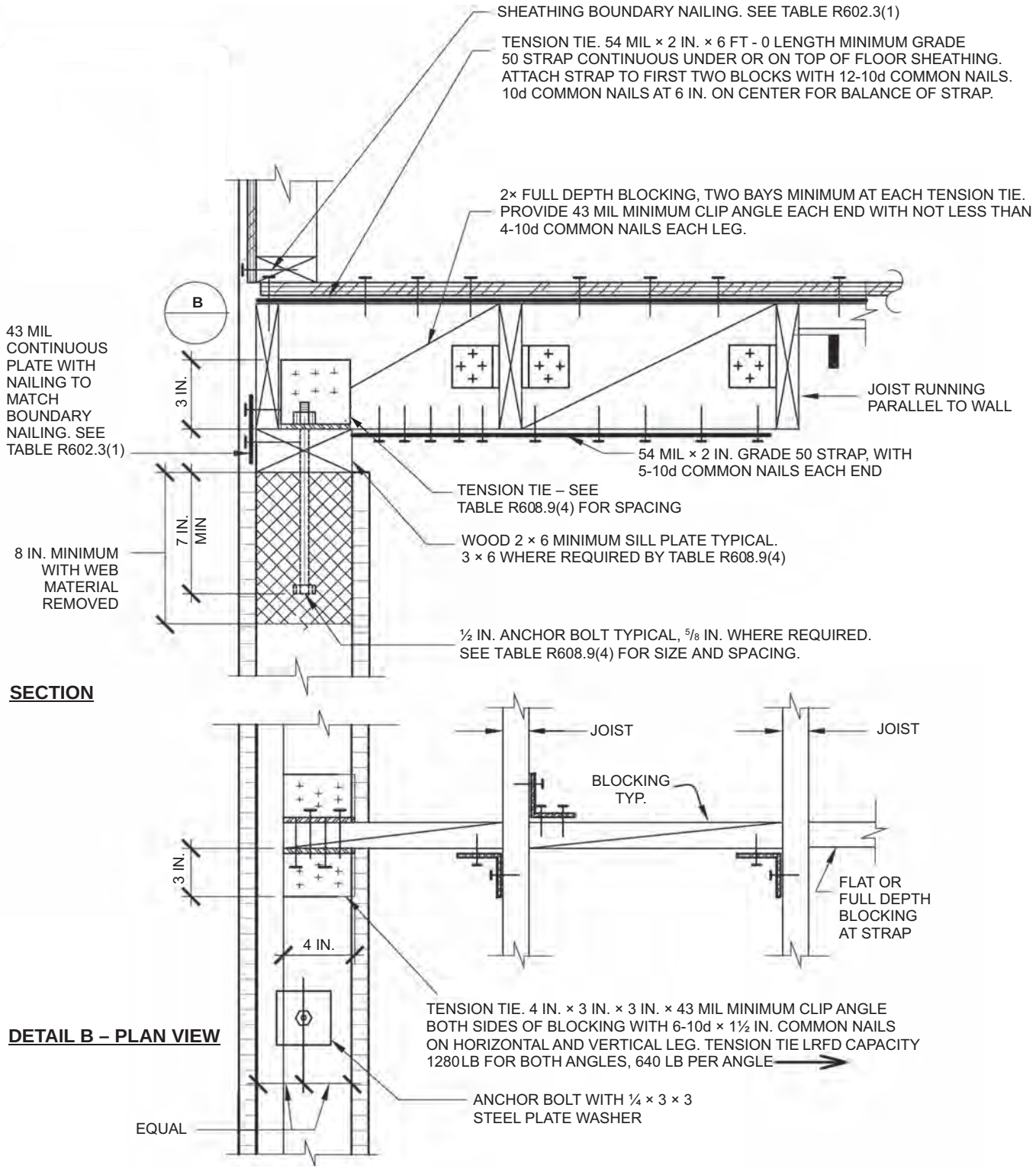

For SI: 1 mil = 0.0254 mm, 1 inch = 25.4 mm, 1 foot = 304.8 mm, 1 pound-force = 4.448 N.

FIGURE R608.9(4)
WOOD-FRAMED FLOOR TO TOP OF CONCRETE WALL, FRAMING PARALLEL

❖ See the commentary to Sections R608.9.1 and R608.9.2.

INTERNATIONAL CODE COUNCIL®
Copyright © 2015 ICC. ALL RIGHTS RESERVED. Accessed by David Dammon on Jun 21, 2017 12:30:52 PM pursuant to License Agreement with ICC. No further reproduction or distribution authorized. ANY UNAUTHORIZED REPRODUCTION OR DISTRIBUTION IS A VIOLATION OF THE FEDERAL COPYRIGHT ACT AND THE LICENSE AGREEMENT, AND SUBJECT TO CIVIL AND CRIMINAL PENALTIES THEREUNDER.

TABLE R608.9(4)
WOOD-FRAMED FLOOR TO TOP OF CONCRETE WALL, FRAMING PARALLEL[a, b, c, d, e]

ANCHOR BOLT SPACING (inches)	TENSION TIE SPACING (inches)	BASIC WIND SPEED (mph) AND WIND EXPOSURE CATEGORY					
		115B	120B	130B	140B	150B	160B
				110C	119C	127C	136C
					110D	117D	125D
12	12						6
12	24					6	6
12	36					6	6
12	48				6	6	6
16	16					6	6A
16	32				6	6	6A
16	48			6	6	6	6A
19.2	19.2				6A	6A	6B
19.2	38.4			6	6A	6A	6B
24	24			6A	6B	6B	6B
24	48		6	6A	6B	6B	8B

For SI: 1 inch = 25.4 mm, 1 mile per hour = 0.447 m/s.

a. This table is for use with the detail in Figure R608.9(4). Use of this detail is permitted where a cell is not shaded.

b. Wall design per other provisions of Section R608 is required.

c. For wind design, minimum 4-inch-nominal wall is permitted in unshaded cells that do not contain a number.

d. Numbers 6 and 8 indicate minimum permitted nominal wall thickness in inches necessary to develop required strength (capacity) of connection. As a minimum, this nominal thickness shall occur in the portion of the wall indicated by the cross-hatching in Figure R608.9(4). For the remainder of the wall, see Note b.

e. Letter "A" indicates that a minimum nominal 3 × 6 sill plate is required. Letter "B" indicates that a $^{5}/_{8}$-inch-diameter anchor bolt and a minimum nominal 3 × 6 sill plate are required.

❖ See the commentary to Sections R608.9.1 and R608.9.2.

INTERNATIONAL CODE COUNCIL®
Copyright © 2015 ICC. ALL RIGHTS RESERVED. Accessed by David Dammon on Jun 21, 2017 12:30:52 PM pursuant to License Agreement with ICC. No further reproduction or distribution authorized. ANY UNAUTHORIZED REPRODUCTION OR DISTRIBUTION IS A VIOLATION OF THE FEDERAL COPYRIGHT ACT AND THE LICENSE AGREEMENT, AND SUBJECT TO CIVIL AND CRIMINAL PENALTIES THEREUNDER.

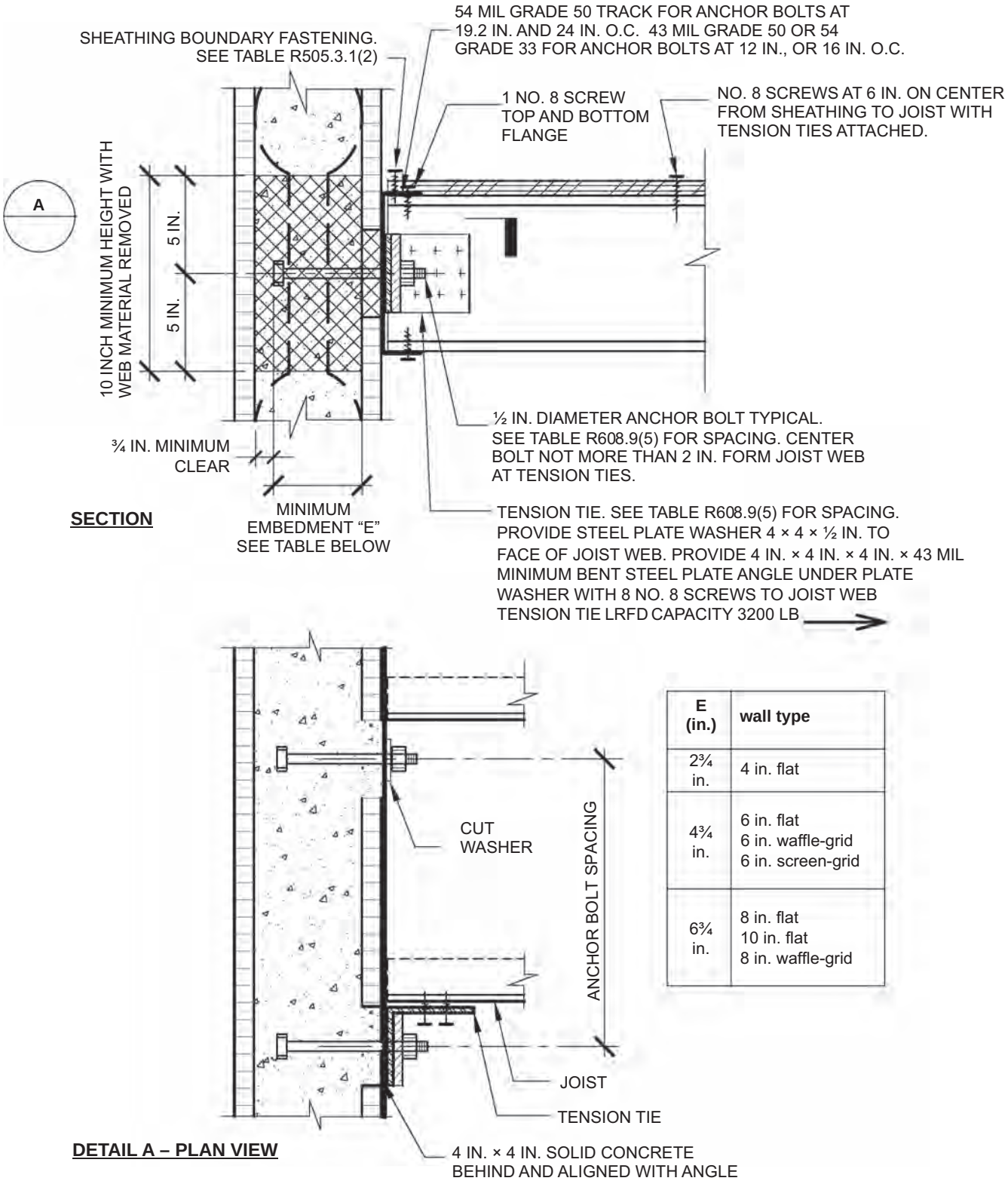

E (in.)	wall type
2¾ in.	4 in. flat
4¾ in.	6 in. flat 6 in. waffle-grid 6 in. screen-grid
6¾ in.	8 in. flat 10 in. flat 8 in. waffle-grid

For SI: 1 mil = 0.0254 mm, 1 inch = 25.4 mm, 1 pound-force = 4.448 N.

FIGURE R608.9(5)
COLD-FORMED STEEL FLOOR TO SIDE OF CONCRETE WALL, FRAMING PERPENDICULAR

❖ See the commentary to Sections R608.9.1 and R608.9.2.

INTERNATIONAL CODE COUNCIL®
Copyright © 2015 ICC. ALL RIGHTS RESERVED. Accessed by David Dammon on Jun 21, 2017 12:30:52 PM pursuant to License Agreement with ICC. No further reproduction or distribution authorized. ANY UNAUTHORIZED REPRODUCTION OR DISTRIBUTION IS A VIOLATION OF THE FEDERAL COPYRIGHT ACT AND THE LICENSE AGREEMENT, AND SUBJECT TO CIVIL AND CRIMINAL PENALTIES THEREUNDER.

TABLE R608.9(5)
COLD-FORMED STEEL-FRAMED FLOOR TO SIDE OF CONCRETE WALL, FRAMING PERPENDICULAR[a, b, c]

ANCHOR BOLT SPACING (inches)	TENSION TIE SPACING (inches)	BASIC WIND SPEED (mph) AND WIND EXPOSURE CATEGORY					
		115B	120B	130B	140B	150B	160B
				110C	119C	127C	136C
					110D	117D	125D
12	12						
12	24						
12	36						
12	48						
16	16						
16	32						
16	48						
19.2	19.2						
19.2	38.4						
24	24						
24	48						

For SI: 1 inch = 25.4 mm, 1 mile per hour = 0.4470 m/s.

a. This table is for use with the detail in Figure R608.9(5). Use of this detail is permitted where a cell is not shaded.

b. Wall design per other provisions of Section R608 is required.

c. For wind design, minimum 4-inch-nominal wall is permitted in unshaded cells that do not contain a number.

❖ See the commentary to Sections R608.9.1 and R608.9.2.

INTERNATIONAL CODE COUNCIL®
Copyright © 2015 ICC. ALL RIGHTS RESERVED. Accessed by David Dammon on Jun 21, 2017 12:30:52 PM pursuant to License Agreement with ICC. No further reproduction or distribution authorized. ANY UNAUTHORIZED REPRODUCTION OR DISTRIBUTION IS A VIOLATION OF THE FEDERAL COPYRIGHT ACT AND THE LICENSE AGREEMENT, AND SUBJECT TO CIVIL AND CRIMINAL PENALTIES THEREUNDER.

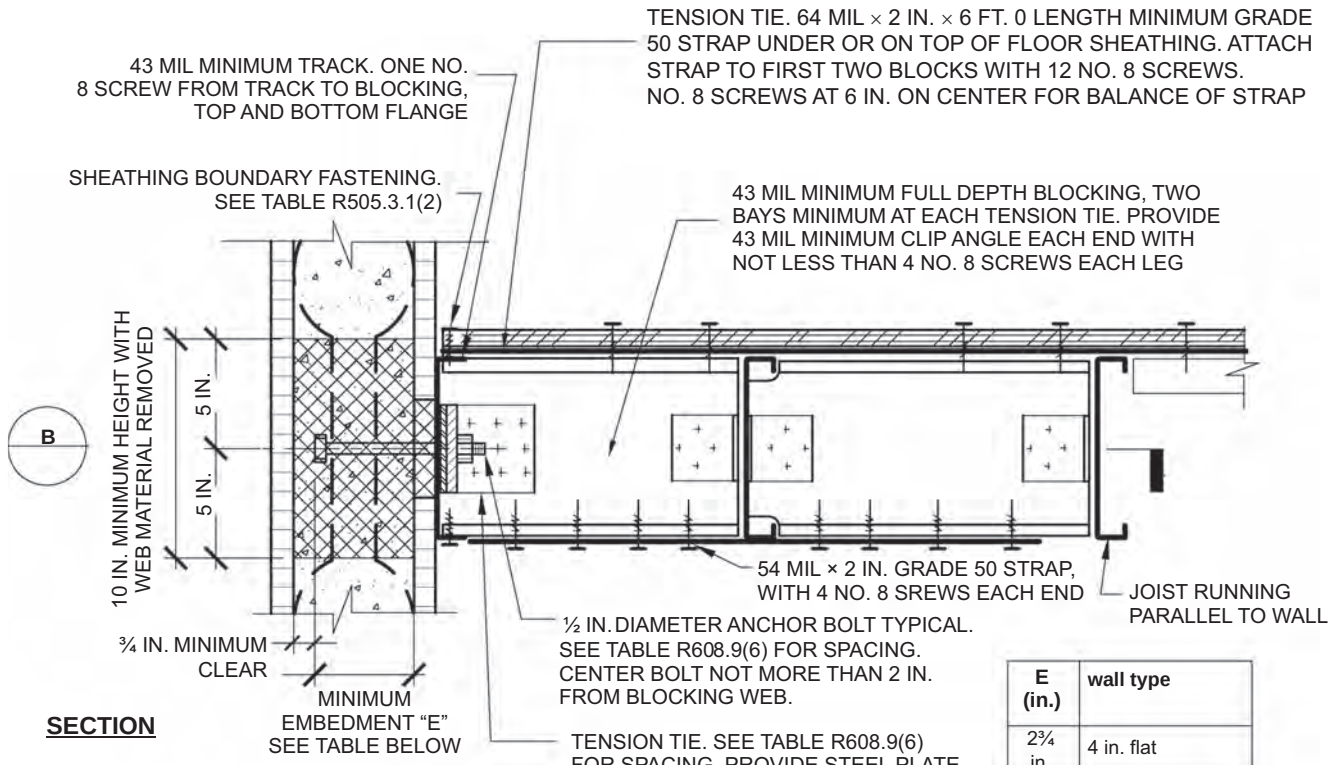

SECTION

E (in.)	wall type
2¾ in.	4 in. flat
4¾ in.	6 in. flat 6 in. waffle-grid 6 in. screen-grid
6¾ in.	8 in. flat 10 in. flat 8 in. waffle-grid

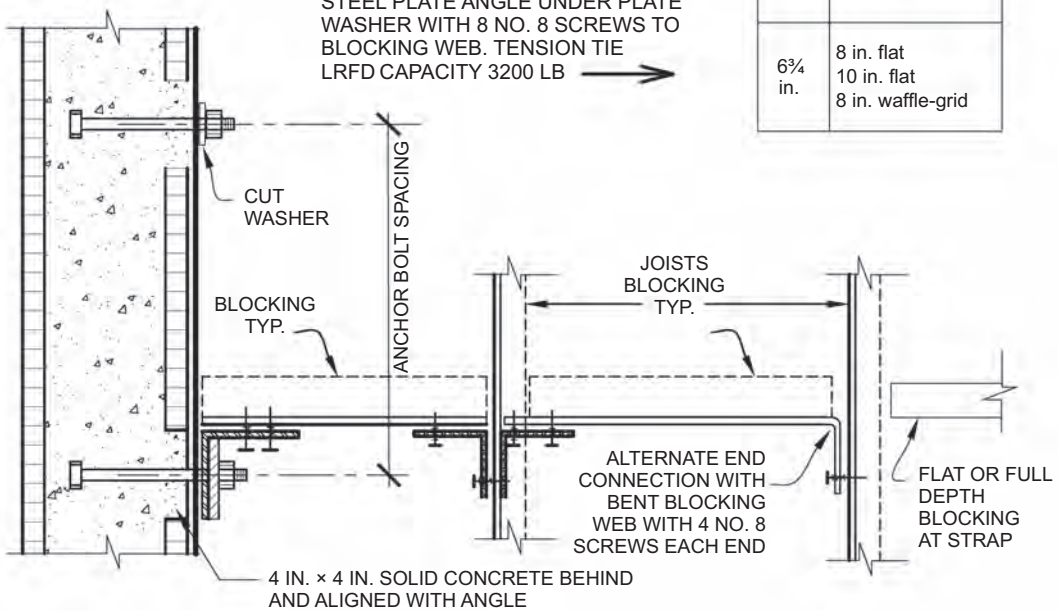

DETAIL B – PLAN VIEW

For SI: 1 mil = 0.0254 mm, 1 inch = 25.4 mm, 1 pound-force = 4.448 N.

FIGURE R608.9(6)
COLD-FORMED STEEL FLOOR TO SIDE OF CONCRETE WALL, FRAMING PARALLEL

❖ See the commentary to Sections R608.9.1 and R608.9.2.

INTERNATIONAL CODE COUNCIL®
Copyright © 2015 ICC. ALL RIGHTS RESERVED. Accessed by David Dammon on Jun 21, 2017 12:30:52 PM pursuant to License Agreement with ICC. No further reproduction or distribution authorized. ANY UNAUTHORIZED REPRODUCTION OR DISTRIBUTION IS A VIOLATION OF THE FEDERAL COPYRIGHT ACT AND THE LICENSE AGREEMENT, AND SUBJECT TO CIVIL AND CRIMINAL PENALTIES THEREUNDER.

TABLE R608.9(6)
COLD-FORMED STEEL-FRAMED FLOOR TO SIDE OF CONCRETE WALL, FRAMING PARALLEL[a, b, c]

ANCHOR BOLT SPACING (inches)	TENSION TIE SPACING (inches)	BASIC WIND SPEED (mph) AND WIND EXPOSURE CATEGORY					
		115B	120B	130B	140B	150B	160B
				110C	119C	127C	136C
					110D	117D	125D
12	12						
12	24						
12	36						
12	48						
16	16						
16	32						
16	48						
19.2	19.2						
19.2	38.4						
24	24						
24	48						

For SI: 1 inch = 25.4 mm, 1 mile per hour = 0.447 m/s.

a. This table is for use with the detail in Figure R608.9(6). Use of this detail is permitted where a cell is not shaded.

b. Wall design per other provisions of Section R608 is required.

c. For wind design, minimum 4-inch-nominal wall is permitted in unshaded cells that do not contain a number.

❖ See the commentary to Sections R608.9.1 and R608.9.2.

INTERNATIONAL CODE COUNCIL®
Copyright © 2015 ICC. ALL RIGHTS RESERVED. Accessed by David Dammon on Jun 21, 2017 12:30:52 PM pursuant to License Agreement with ICC. No further reproduction or distribution authorized. ANY UNAUTHORIZED REPRODUCTION OR DISTRIBUTION IS A VIOLATION OF THE FEDERAL COPYRIGHT ACT AND THE LICENSE AGREEMENT, AND SUBJECT TO CIVIL AND CRIMINAL PENALTIES THEREUNDER.

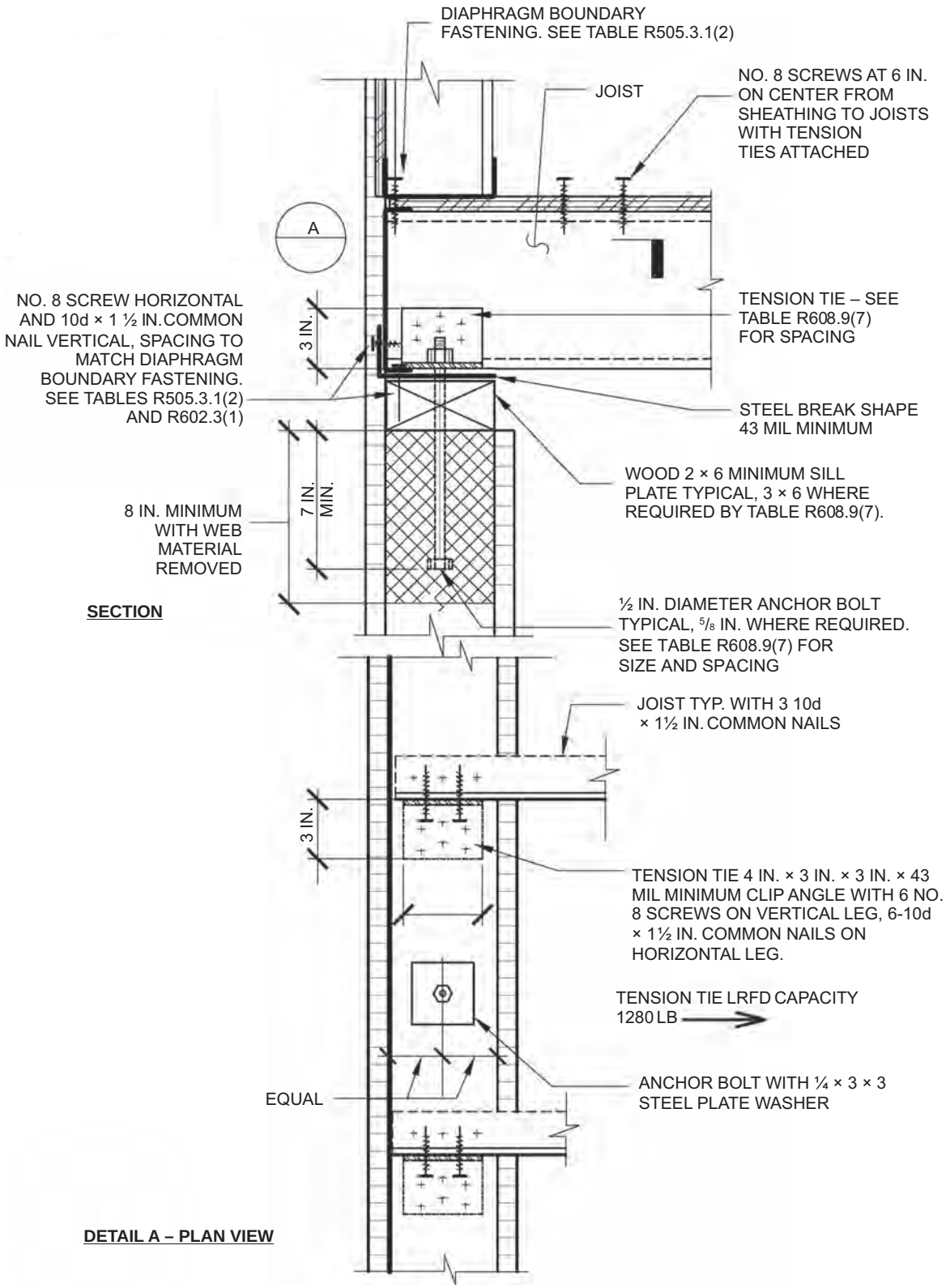

For SI: 1 mil = 0.0254 mm, 1 inch = 25.4 mm, 1 pound-force = 4.448 N.

FIGURE R608.9(7)
COLD-FORMED STEEL FLOOR TO TOP OF CONCRETE WALL, FRAMING PERPENDICULAR

❖ See the commentary to Sections R608.9.1 and R608.9.2.

INTERNATIONAL CODE COUNCIL®
Copyright © 2015 ICC. ALL RIGHTS RESERVED. Accessed by David Dammon on Jun 21, 2017 12:30:52 PM pursuant to License Agreement with ICC. No further reproduction or distribution authorized. ANY UNAUTHORIZED REPRODUCTION OR DISTRIBUTION IS A VIOLATION OF THE FEDERAL COPYRIGHT ACT AND THE LICENSE AGREEMENT, AND SUBJECT TO CIVIL AND CRIMINAL PENALTIES THEREUNDER.

TABLE R608.9(7)
COLD-FORMED STEEL-FRAMED FLOOR TO TOP OF CONCRETE WALL, FRAMING PERPENDICULAR[a, b, c, d, e]

ANCHOR BOLT SPACING (inches)	TENSION TIE SPACING (inches)	BASIC WIND SPEED AND WIND EXPOSURE CATEGORY (mph)					
		115B	120B	130B	140B	150B	160B
				110C	119C	127C	136C
					110D	117D	125D
12	12						6
12	24					6	6
16	16					6	6A
16	32				6	6	6A
19.2	19.2				6A	6A	6B
19.2	38.4			6	6A	6A	6B
24	24			6A	6B	6B	6B

For SI: 1 inch = 25.4 mm, 1 mile per hour = 0.447 m/s.

a. This table is for use with the detail in Figure R608.9(7). Use of this detail is permitted where a cell is not shaded.

b. Wall design per other provisions of Section R608 is required.

c. For wind design, minimum 4-inch-nominal wall is permitted in unshaded cells that do not contain a number.

d. Number 6 indicates minimum permitted nominal wall thickness in inches necessary to develop required strength (capacity) of connection. As a minimum, this nominal thickness shall occur in the portion of the wall indicated by the cross-hatching in Figure R608.9(7). For the remainder of the wall, see Note b.

e. Letter "A" indicates that a minimum nominal 3 × 6 sill plate is required. Letter "B" indicates that a $^{5}/_{8}$-inch-diameter anchor bolt and a minimum nominal 3 × 6 sill plate are required.

❖ See the commentary to Sections R608.9.1 and R608.9.2.

INTERNATIONAL CODE COUNCIL®
Copyright © 2015 ICC. ALL RIGHTS RESERVED. Accessed by David Dammon on Jun 21, 2017 12:30:52 PM pursuant to License Agreement with ICC. No further reproduction or distribution authorized. ANY UNAUTHORIZED REPRODUCTION OR DISTRIBUTION IS A VIOLATION OF THE FEDERAL COPYRIGHT ACT AND THE LICENSE AGREEMENT, AND SUBJECT TO CIVIL AND CRIMINAL PENALTIES THEREUNDER.

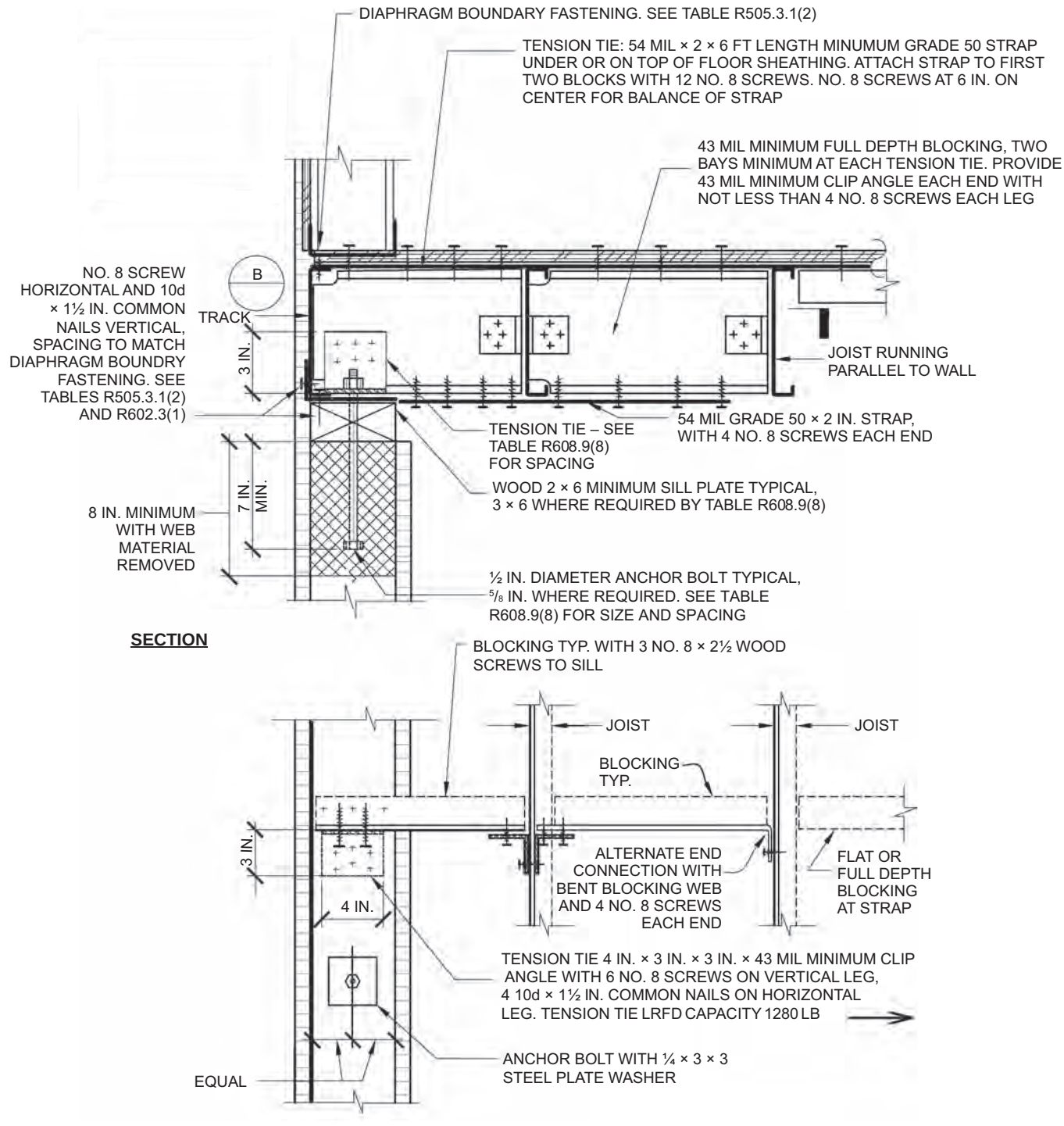

For SI: 1 mil = 0.0254 mm, 1 inch = 25.4 mm, 1 pound-force = 4.448 N.

FIGURE R608.9(8)
COLD-FORMED STEEL FLOOR TO TOP OF CONCRETE WALL, FRAMING PARALLEL

❖ See the commentary to Sections R608.9.1 and R608.9.2.

INTERNATIONAL CODE COUNCIL®
Copyright © 2015 ICC. ALL RIGHTS RESERVED. Accessed by David Dammon on Jun 21, 2017 12:30:52 PM pursuant to License Agreement with ICC. No further reproduction or distribution authorized. ANY UNAUTHORIZED REPRODUCTION OR DISTRIBUTION IS A VIOLATION OF THE FEDERAL COPYRIGHT ACT AND THE LICENSE AGREEMENT, AND SUBJECT TO CIVIL AND CRIMINAL PENALTIES THEREUNDER.

TABLE R608.9(8)
COLD-FORMED STEEL-FRAMED FLOOR TO TOP OF CONCRETE WALL, FRAMING PARALLEL[a, b, c, d, e]

ANCHOR BOLT SPACING (inches)	TENSION TIE SPACING (inches)	BASIC WIND SPEED AND WIND EXPOSURE CATEGORY (mph)					
		115B	120B	130B	140B	150B	160B
				110C	119C	127C	136C
					110D	117D	125D
12	12						6
12	24					6	6
16	16					6	6A
16	32				6	6	6A
19.2	19.2				6A	6A	6B
19.2	38.4			6	6A	6A	6B
24	24			6A	6B	6B	6B

For SI: 1 inch = 25.4 mm, 1 mile per hour = 0.447 m/s.

a. This table is for use with the detail in Figure R608.9(8). Use of this detail is permitted where a cell is not shaded.

b. Wall design per other provisions of Section R608 is required.

c. For wind design, minimum 4-inch-nominal wall is permitted in unshaded cells that do not contain a number.

d. Number 6 indicates minimum permitted nominal wall thickness in inches necessary to develop required strength (capacity) of connection. As a minimum, this nominal thickness shall occur in the portion of the wall indicated by the cross-hatching in Figure R608.9(8). For the remainder of the wall, see Note b.

e. Letter "A" indicates that a minimum nominal 3 × 6 sill plate is required. Letter "B" indicates that a $^{5}/_{8}$-inch-diameter anchor bolt and a minimum nominal 3 × 6 sill plate are required.

❖ See the commentary to Sections R608.9.1 and R608.9.2.

INTERNATIONAL CODE COUNCIL®
Copyright © 2015 ICC. ALL RIGHTS RESERVED. Accessed by David Dammon on Jun 21, 2017 12:30:52 PM pursuant to License Agreement with ICC. No further reproduction or distribution authorized. ANY UNAUTHORIZED REPRODUCTION OR DISTRIBUTION IS A VIOLATION OF THE FEDERAL COPYRIGHT ACT AND THE LICENSE AGREEMENT, AND SUBJECT TO CIVIL AND CRIMINAL PENALTIES THEREUNDER.

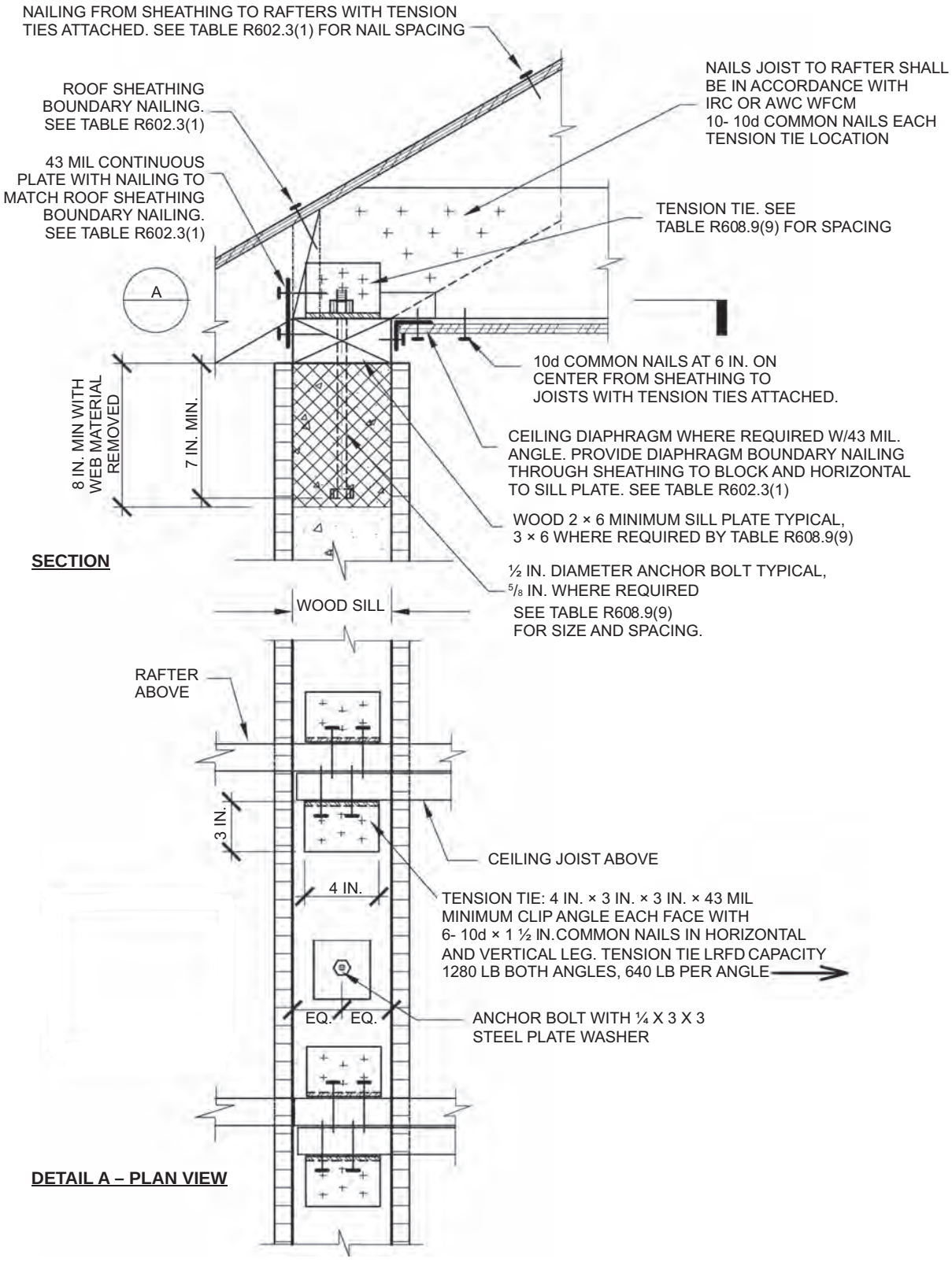

For SI: 1 mil = 0.0254 mm, 1 inch = 25.4 mm, 1 pound-force = 4.448 N.

FIGURE R608.9(9)
WOOD-FRAMED ROOF TO TOP OF CONCRETE WALL, FRAMING PERPENDICULAR

❖ See the commentary to Sections R608.9.1 and R608.9.3.

INTERNATIONAL CODE COUNCIL®
Copyright © 2015 ICC. ALL RIGHTS RESERVED. Accessed by David Dammon on Jun 21, 2017 12:30:52 PM pursuant to License Agreement with ICC. No further reproduction or distribution authorized. ANY UNAUTHORIZED REPRODUCTION OR DISTRIBUTION IS A VIOLATION OF THE FEDERAL COPYRIGHT ACT AND THE LICENSE AGREEMENT, AND SUBJECT TO CIVIL AND CRIMINAL PENALTIES THEREUNDER.

TABLE R608.9(9)
WOOD-FRAMED ROOF TO TOP OF CONCRETE WALL, FRAMING PERPENDICULAR[a, b, c, d, e]

ANCHOR BOLT SPACING (inches)	TENSION TIE SPACING (inches)	BASIC WIND SPEED (mph) AND WIND EXPOSURE CATEGORY					
		115B	120B	130B	140B	150B	160B
				110C	119C	127C	136C
					110D	117D	125D
12	12						6
12	24						6
12	36					6	6
12	48				6	6	6
16	16					6	6
16	32					6	6
16	48				6	6	6
19.2	19.2					6	6
19.2	38.4				6	6	
24	24				6		
24	48			6	8B		

For SI: 1 inch = 25.4 mm, 1 mile per hour = 0.447 m/s.

a. This table is for use with the detail in Figure R608.9(9). Use of this detail is permitted where cell a is not shaded, prohibited where shaded.

b. Wall design per other provisions of Section R608 is required.

c. For wind design, minimum 4-inch-nominal wall is permitted in unshaded cells that do not contain a number.

d. Numbers 6 and 8 indicate minimum permitted nominal wall thickness in inches necessary to develop required strength (capacity) of connection. As a minimum, this nominal thickness shall occur in the portion of the wall indicated by the cross-hatching in Figure R608.9(9). For the remainder of the wall, see Note b.

e. Letter "B" indicates that a $^5/_8$-inch-diameter anchor bolt and a minimum nominal 3 × 6 sill plate are required.

❖ See the commentary to Sections R608.9.1 and R608.9.3.

INTERNATIONAL CODE COUNCIL®
Copyright © 2015 ICC. ALL RIGHTS RESERVED. Accessed by David Dammon on Jun 21, 2017 12:30:52 PM pursuant to License Agreement with ICC. No further reproduction or distribution authorized. ANY UNAUTHORIZED REPRODUCTION OR DISTRIBUTION IS A VIOLATION OF THE FEDERAL COPYRIGHT ACT AND THE LICENSE AGREEMENT, AND SUBJECT TO CIVIL AND CRIMINAL PENALTIES THEREUNDER.

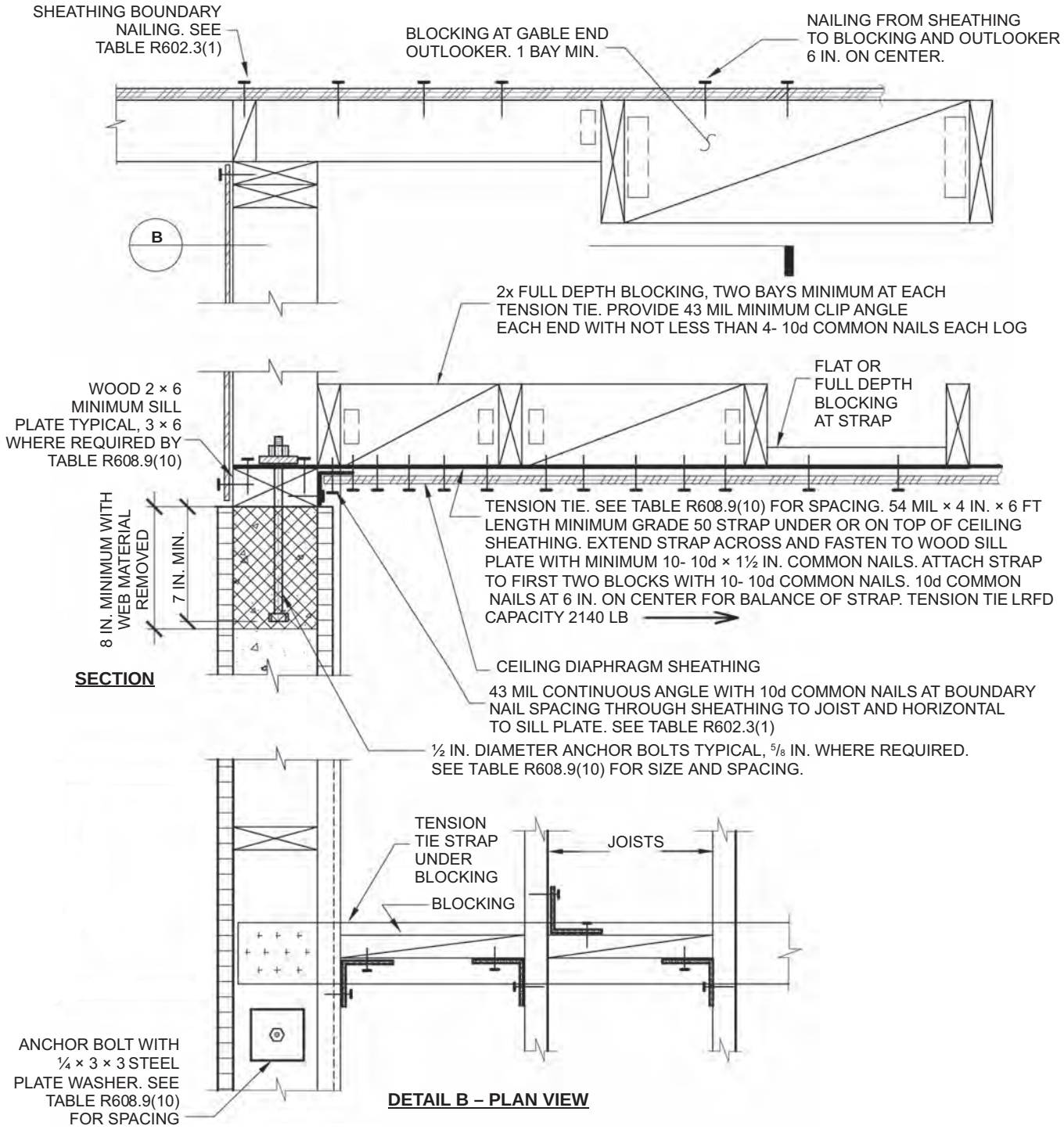

For SI: 1 mil = 0.0254 mm, 1 inch = 25.4 mm, 1 pound-force = 4.448 N.

FIGURE R608.9(10)
WOOD-FRAMED ROOF TO TOP OF CONCRETE WALL, FRAMING PARALLEL

❖ See the commentary to Sections R608.9.1 and R608.9.3.

INTERNATIONAL CODE COUNCIL®
Copyright © 2015 ICC. ALL RIGHTS RESERVED. Accessed by David Dammon on Jun 21, 2017 12:30:52 PM pursuant to License Agreement with ICC. No further reproduction or distribution authorized. ANY UNAUTHORIZED REPRODUCTION OR DISTRIBUTION IS A VIOLATION OF THE FEDERAL COPYRIGHT ACT AND THE LICENSE AGREEMENT, AND SUBJECT TO CIVIL AND CRIMINAL PENALTIES THEREUNDER.

TABLE R608.9(10)
WOOD-FRAMED ROOF TO TOP OF CONCRETE WALL, FRAMING PARALLEL[a, b, c, d, e]

ANCHOR BOLT SPACING (inches)	TENSION TIE SPACING (inches)	BASIC WIND SPEED (mph) AND WIND EXPOSURE CATEGORY					
		115B	120B	130B	140B	150B	160B
				110C	119C	127C	136C
					110D	117D	125D
12	12						6
12	24						6
12	36					6	6
12	48				6	6	6
16	16					6	6
16	32					6	6
16	48				6	6	6
19.2	19.2					6	6
19.2	38.4				6	6	
24	24				6		
24	48			6	8B		

For SI: 1 inch = 25.4 mm, 1 mile per hour = 0.447 m/s.

a. This table is for use with the detail in Figure R608.9(10). Use of this detail is permitted where a cell is not shaded, prohibited where shaded.

b. Wall design per other provisions of Section R608 is required.

c. For wind design, minimum 4-inch-nominal wall is permitted in cells that do not contain a number.

d. Numbers 6 and 8 indicate minimum permitted nominal wall thickness in inches necessary to develop required strength (capacity) of connection. As a minimum, this nominal thickness shall occur in the portion of the wall indicated by the cross-hatching in Figure R608.9(10). For the remainder of the wall, see Note b.

e. Letter "B" indicates that a $^{5}/_{8}$-inch-diameter anchor bolt and a minimum nominal 3 × 6 sill plate are required.

❖ See the commentary to Sections R608.9.1 and R608.9.3.

INTERNATIONAL CODE COUNCIL®
Copyright © 2015 ICC. ALL RIGHTS RESERVED. Accessed by David Dammon on Jun 21, 2017 12:30:52 PM pursuant to License Agreement with ICC. No further reproduction or distribution authorized. ANY UNAUTHORIZED REPRODUCTION OR DISTRIBUTION IS A VIOLATION OF THE FEDERAL COPYRIGHT ACT AND THE LICENSE AGREEMENT, AND SUBJECT TO CIVIL AND CRIMINAL PENALTIES THEREUNDER.

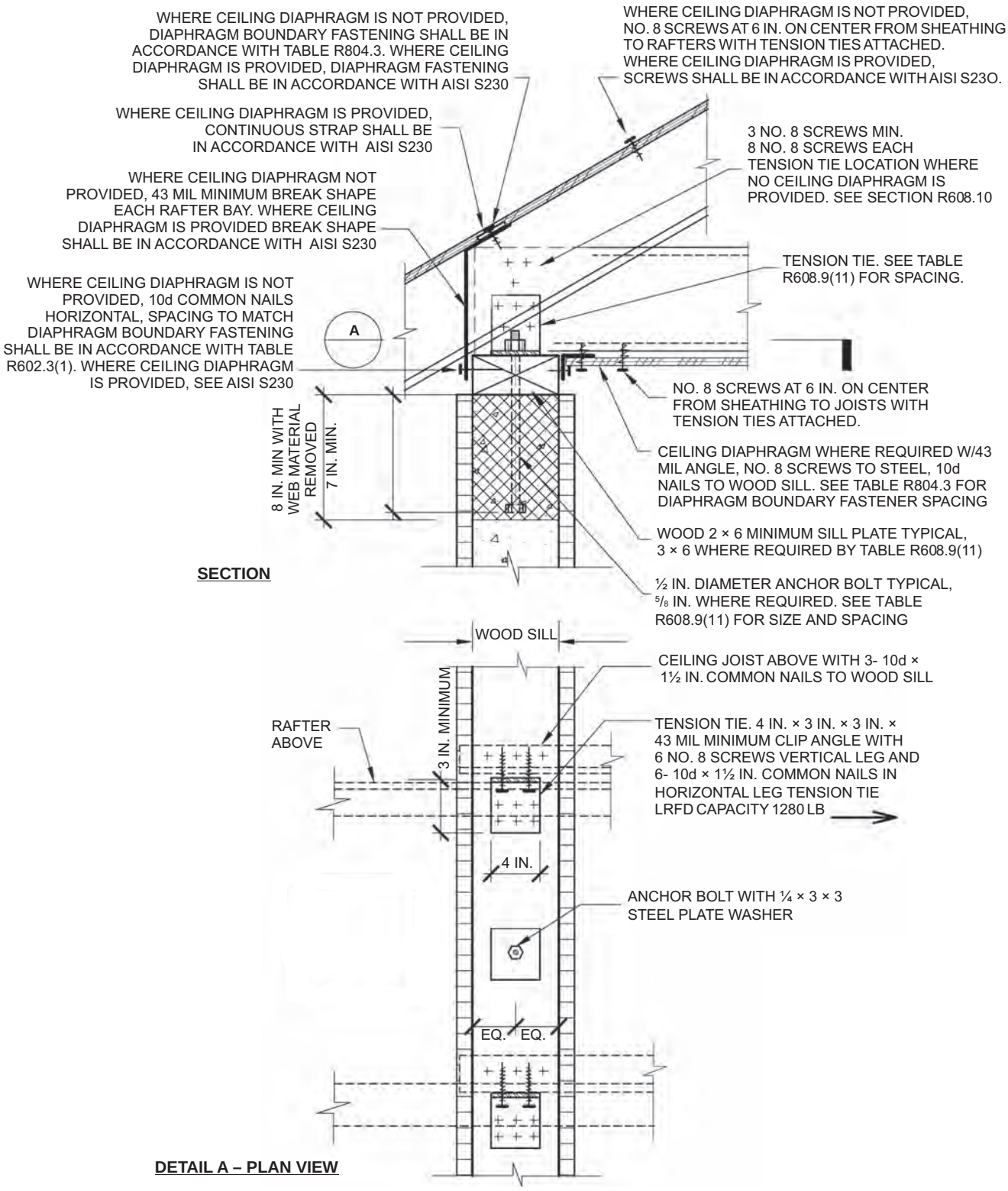

For SI: 1 mil = 0.0254 mm, 1 inch = 25.4 mm, 1 foot = 304.8 mm, 1 pound-force = 4.448 N.

FIGURE R608.9(11)
COLD-FORMED STEEL ROOF TO TOP OF CONCRETE WALL, FRAMING PERPENDICULAR

❖ See the commentary to Sections R608.9.1 and R608.9.3.

INTERNATIONAL CODE COUNCIL®
Copyright © 2015 ICC. ALL RIGHTS RESERVED. Accessed by David Dammon on Jun 21, 2017 12:30:52 PM pursuant to License Agreement with ICC. No further reproduction or distribution authorized. ANY UNAUTHORIZED REPRODUCTION OR DISTRIBUTION IS A VIOLATION OF THE FEDERAL COPYRIGHT ACT AND THE LICENSE AGREEMENT, AND SUBJECT TO CIVIL AND CRIMINAL PENALTIES THEREUNDER.

TABLE R608.9(11)
WOOD-FRAMED ROOF TO TOP OF CONCRETE WALL, FRAMING PERPENDICULAR[a, b, c, d, e]

ANCHOR BOLT SPACING (inches)	TENSION TIE SPACING (inches)	BASIC WIND SPEED (mph) AND WIND EXPOSURE CATEGORY					
		115B	120B	130B	140B	150B	160B
				110C	119C	127C	136C
					110D	117D	125D
12	12						6
12	24						6
16	16					6	6
16	32					6	6
19.2	19.2					6	6
19.2	38.4				6	6	6
24	24				6	6A	6B

For SI: 1 inch = 25.4 mm, 1 mile per hour = 0.447 m/s.

a. This table is for use with the detail in Figure R608.9(11). Use of this detail is permitted where a cell is not shaded.

b. Wall design per other provisions of Section R608 is required.

c. For wind design, minimum 4-inch-nominal wall is permitted in unshaded cells that do not contain a number.

d. Number 6 indicates minimum permitted nominal wall thickness in inches necessary to develop required strength (capacity) of connection. As a minimum, this nominal thickness shall occur in the portion of the wall indicated by the cross-hatching in Figure R608.9(11). For the remainder of the wall, see Note b.

e. Letter "A" indicates that a minimum nominal 3 × 6 sill plate is required. Letter "B" indicates that a $^{5}/_{8}$-inch-diameter anchor bolt and a minimum nominal 3 × 6 sill plate are required.

❖ See the commentary to Sections R608.9.1 and R608.9.3.

INTERNATIONAL CODE COUNCIL®
Copyright © 2015 ICC. ALL RIGHTS RESERVED. Accessed by David Dammon on Jun 21, 2017 12:30:52 PM pursuant to License Agreement with ICC. No further reproduction or distribution authorized. ANY UNAUTHORIZED REPRODUCTION OR DISTRIBUTION IS A VIOLATION OF THE FEDERAL COPYRIGHT ACT AND THE LICENSE AGREEMENT, AND SUBJECT TO CIVIL AND CRIMINAL PENALTIES THEREUNDER.

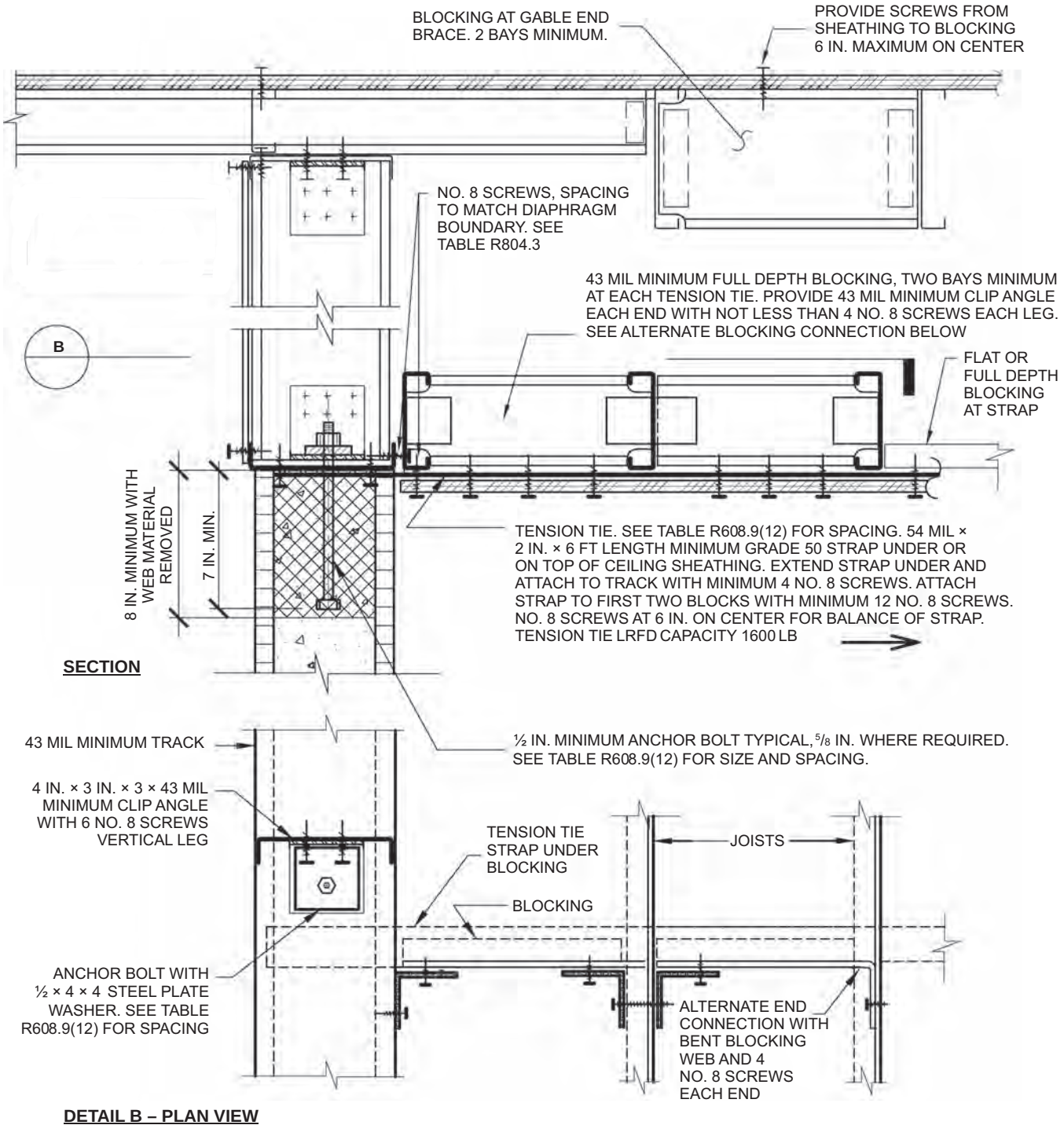

For SI: 1 mil = 0.0254 mm, 1 inch = 25.4 mm, 1 pound-force = 4.448 N.

FIGURE R608.9(12)
COLD-FORMED STEEL ROOF TO TOP OF CONCRETE WALL, FRAMING PARALLEL

❖ See the commentary to Sections R608.9.1 and R608.9.3.

INTERNATIONAL CODE COUNCIL®
Copyright © 2015 ICC. ALL RIGHTS RESERVED. Accessed by David Dammon on Jun 21, 2017 12:30:52 PM pursuant to License Agreement with ICC. No further reproduction or distribution authorized. ANY UNAUTHORIZED REPRODUCTION OR DISTRIBUTION IS A VIOLATION OF THE FEDERAL COPYRIGHT ACT AND THE LICENSE AGREEMENT, AND SUBJECT TO CIVIL AND CRIMINAL PENALTIES THEREUNDER.

TABLE R608.9(12)
COLD-FORMED STEEL ROOF TO TOP OF CONCRETE WALL, FRAMING PARALLEL[a, b, c, d, e]

ANCHOR BOLT SPACING (inches)	TENSION TIE SPACING (inches)	BASIC WIND SPEED (mph) AND WIND EXPOSURE CATEGORY					
		115B	120B	130B	140B	150B	160B
				110C	119C	127C	136C
					110D	117D	125D
12	12						6
12	24						6
16	16					6	6
16	32					6	6
19.2	19.2					6	6
19.2	38.4				6	6	6
24	24				6	6	6B

For SI: 1 inch = 25.4 mm, 1 mile per hour = 0.447 m/s.

a. This table is for use with the detail in Figure R608.9(12). Use of this detail is permitted where a cell is not shaded.

b. Wall design per other provisions of Section R608 is required.

c. For wind design, minimum 4-inch-nominal wall is permitted in cells that do not contain a number.

d. Number 6 indicates minimum permitted nominal wall thickness in inches necessary to develop required strength (capacity) of connection. As a minimum, this nominal thickness shall occur in the portion of the wall indicated by the cross-hatching in Figure R608.9(12). For the remainder of the wall, see Note b.

e. Letter "B" indicates that a $^{5}/_{8}$-inch-diameter anchor bolt is required.

❖ See the commentary to Sections R608.9.1 and R608.9.3.

INTERNATIONAL CODE COUNCIL®
Copyright © 2015 ICC. ALL RIGHTS RESERVED. Accessed by David Dammon on Jun 21, 2017 12:30:52 PM pursuant to License Agreement with ICC. No further reproduction or distribution authorized. ANY UNAUTHORIZED REPRODUCTION OR DISTRIBUTION IS A VIOLATION OF THE FEDERAL COPYRIGHT ACT AND THE LICENSE AGREEMENT, AND SUBJECT TO CIVIL AND CRIMINAL PENALTIES THEREUNDER.

SECTION R609
EXTERIOR WINDOWS AND DOORS

R609.1 General. This section prescribes performance and construction requirements for exterior windows and doors installed in walls. Windows and doors shall be installed and flashed in accordance with the fenestration manufacturer's written instructions. Window and door openings shall be flashed in accordance with Section R703.4. Written installation instructions shall be provided by the fenestration manufacturer for each window or door.

❖ Doors and windows are components of the exterior wall. Accordingly, this section specifies performance criteria for exterior windows and doors as well as their supporting elements to protect against high wind pressure and water intrusion.

R609.2 Performance. Exterior windows and doors shall be designed to resist the design wind loads specified in Table R301.2(2) adjusted for height and exposure in accordance with Table R301.2(3) or determined in accordance with ASCE 7 using the allowable stress design load combinations of ASCE 7. Design wind loads for exterior glazing not part of a labeled assembly shall be permitted to be determined in accordance with Chapter 24 of the *International Building Code*.

❖ Exterior windows and doors (with or without glazing) are subject to wind loading as specified in Section R301.2.1. The code requires use of the component and cladding pressures of Table R301.2(2), illustrated in Figure R301.2(7). As an alternative, the code permits design wind loads in accordance with ASCE 7 using ASD load combinations. Exterior glazing not part of a labeled assembly is allowed to have its design wind load determined in accordance with Chapter 24 of the IBC.

R609.3 Testing and labeling. Exterior windows and sliding doors shall be tested by an *approved* independent laboratory, and bear a *label* identifying manufacturer, performance characteristics and *approved* inspection agency to indicate compliance with AAMA/WDMA/CSA 101/I.S.2/A440. Exterior side-hinged doors shall be tested and *labeled* as conforming to AAMA/WDMA/CSA 101/I.S.2/A440 or AMD 100, or comply with Section R609.5.

Exception: Decorative glazed openings.

❖ Section R609.3 requires exterior windows and sliding doors to be tested and labeled in accordance with AAMA/WDMA/CSA 101/I.S.2/A440. Section R609.3 requires exterior side-hinged doors to be tested and labeled in accordance with one of the following:

1. AAMA standard
2. AMD 100

Where side-hinged doors are not included within the scope of the standards listed in the options above, then compliance with Section R609.5 is required.

Within the AAMA standard there are additional performance levels for air leakage, water penetration resistance, forced entry resistance and operating force. Therefore, in order to be labeled in accordance with the AAMA standard, the performance levels must also be met.

AMD 100 uses ASTM E330 to obtain a full exterior door system design pressure rating. Once rated, the standard defines methods for qualifying door system components for substitution in the rated system, such as door frames, hinges, locking systems, door slabs, doorglass assemblies, sidelights, transoms, mullions, astragals and thresholds.

Compliance with Section R609.5 (ASTM E330) only determines the structural performance under uniform static air pressure differences and does not address the additional performance levels within the AAMA standard.

R609.3.1 Comparative analysis. Structural wind load design pressures for window and door units different than the size tested in accordance with Section R609.3 shall be permitted to be different than the design value of the tested unit where determined in accordance with one of the following comparative analysis methods:

1. Structural wind load design pressures for window and door units smaller than the size tested in accordance with Section R609.3 shall be permitted to be higher than the design value of the tested unit provided such higher pressures are determined by accepted engineering analysis. Components of the smaller unit shall be the same as those of the tested unit. Where such calculated design pressures are used, they shall be validated by an additional test of the window or door unit having the highest allowable design pressure.
2. In accordance with WDMA I.S.11.

❖ Comparative analysis based on accepted engineering methods provides a proven, accurate and reliable means for determining design pressures (DP) of different sized products within a fenestration product line based on testing of specimen unit(s) from the respective line. This alleviates the need for costly testing of all sizes within the line, saving considerable construction costs and providing greater design flexibility, especially for specialty/custom products. Section R609.3.1 provides for two methods of comparative analysis.

Method 1 is limited only to comparative analysis for units smaller than the unit tested. Where a window or door is tested in accordance with the requirements of Section R609.3, smaller units of identical construction need not be tested. Instead, their properties may be determined by comparison to the tested unit and the application of accepted engineering analysis. However, where the analysis determines that the smaller units have a higher allowable design pressure, the unit with the highest allowable calculated design pressure must be tested to validate the findings, or the design pressure of the largest tested unit must be used.

Method 2 can be used as comparative analysis to accurately determine DP ratings for fenestration products that are larger in width and/or height than the actual tested specimen provided proper analytical methods are followed. WDMA I.S. 11—*Industry Stan-*

INTERNATIONAL CODE COUNCIL®
Copyright © 2015 ICC. ALL RIGHTS RESERVED. Accessed by David Dammon on Jun 21, 2017 12:30:52 PM pursuant to License Agreement with ICC. No further reproduction or distribution authorized. ANY UNAUTHORIZED REPRODUCTION OR DISTRIBUTION IS A VIOLATION OF THE FEDERAL COPYRIGHT ACT AND THE LICENSE AGREEMENT, AND SUBJECT TO CIVIL AND CRIMINAL PENALTIES THEREUNDER.

dard for Analytical Method for Design Pressure (DP) Ratings of Fenestration Products, provides more comprehensive alternative methods appropriate for using comparative analysis to determine the DP of units different in size, both smaller and larger, than that of the tested unit(s) within a product line The comparative analysis methods included in WDMA I.S. 11 are based on accepted engineering analysis which must also be sealed by a licensed professional engineer (PE).

R609.4 Garage doors. Garage doors shall be tested in accordance with either ASTM E330 or ANSI/DASMA 108, and shall meet the acceptance criteria of ANSI/DASMA 108.

❖ Garage doors must be tested in accordance with either one of the standards indicated. In addition, they must also meet the acceptance criteria of ANSI/DASMA 108. See Section R609.5 for garage doors not within the scope of Section R609.4.

R609.5 Other exterior window and door assemblies. Exterior windows and door assemblies not included within the scope of Section R609.3 or R609.4 shall be tested in accordance with ASTM E330. Glass in assemblies covered by this exception shall comply with Section R308.5.

❖ Where exterior windows, sliding doors and side-hinged doors are not included within the scope of Section R609.3 and AAMA/WDMA/CSA 101/I.S.2/A440, they must be tested in accordance with ASTM E330. Excluded from the AAMA Standard are products such as, but not limited to, site-built assemblies, garage doors, sloped glazing, storm windows and doors and sunrooms. Where garage doors are not within the scope of Section R609.4 and ANSI/DASMA 108 they must be tested in accordance with ASTM E330. The user should verify whether ANSI/DASMA 108 is limited to sectional garage doors. Solid garage doors may be outside the scope of ANSI/DASMA 108.

R609.6 Wind-borne debris protection. Protection of exterior windows and glass doors in buildings located in wind-borne debris regions shall be in accordance with Section R301.2.1.2.

❖ See the commentary to Sections R301.2.1.2 and R609.6.1.

R609.6.1 Fenestration testing and labeling. Fenestration shall be tested by an *approved* independent laboratory, listed by an *approved* entity, and bear a *label* identifying manufacturer, performance characteristics, and *approved* inspection agency to indicate compliance with the requirements of the following specification(s):

1. ASTM E1886 and ASTM E1996; or
2. AAMA 506.

❖ In buildings located in wind-borne debris regions as established in accordance with Section R301.2.1, exterior windows, skylights and doors must be protected in accordance with Section R301.2.1.2, which mirrors some of the requirements of Section R609.6.1. Fenestration regulated by Section R609.6.1 includes storm shutters not in accordance with the prescriptive requirements of the exception to Section R301.2.1.2, and exterior windows, skylights and doors not equipped with storm shutters. Such fenestrations must bear a label indicating that they have been tested in accordance with AAMA 506, or both ASTM E1886 and ASTM E1996. These tests determine the ability of the fenestration to resist cyclic pressures and impact by wind-borne debris (also see commentary, Section R301.2.1.2).

R609.7 Anchorage methods. The methods cited in this section apply only to anchorage of window and glass door assemblies to the main force-resisting system.

❖ These requirements provide a mechanism for transferring the wind forces from the door or window to a lateral-force-resisting element. Anchorage should be according to the manufacturer's recommendations. Variations should provide equal or greater anchorage performance.

R609.7.1 Anchoring requirements. Window and glass door assemblies shall be anchored in accordance with the published manufacturer's recommendations to achieve the design pressure specified. Substitute anchoring systems used for substrates not specified by the fenestration manufacturer shall provide equal or greater anchoring performance as demonstrated by accepted engineering practice.

❖ See the commentary to Section R609.7.

R609.7.2 Anchorage details. Products shall be anchored in accordance with the minimum requirements illustrated in Figures R609.7.2(1), R609.7.2(2), R609.7.2(3), R609.7.2(4), R609.7.2(5), R609.7.2(6), R609.7.2(7) and R609.7.2(8).

❖ The code incorporates prescriptive anchorage methods that provide for transfer of wind loads to the supporting construction (see commentary, Section R609.7).

R609.7.2.1 Masonry, concrete or other structural substrate. Where the wood shim or buck thickness is less than $1^1/_2$ inches (38 mm), window and glass door assemblies shall be anchored through the jamb, or by jamb clip and anchors shall be embedded directly into the masonry, concrete or other substantial substrate material. Anchors shall adequately transfer load from the window or door frame into the rough opening substrate [see Figures R609.7.2(1) and R6097.2(2)].

Where the wood shim or buck thickness is $1^1/_2$ inches (38 mm) or more, the buck is securely fastened to the masonry, concrete or other substantial substrate, and the buck extends beyond the interior face of the window or door frame, window and glass door assemblies shall be anchored through the jamb, or by jamb clip, or through the flange to the secured wood buck. Anchors shall be embedded into the secured wood buck to adequately transfer load from the window or door frame assembly [see Figures R609.7.2(3), R6097.2(4) and R609.7.2(5)].

❖ When a wood member at least 1.5 inches (38 mm) thick is used as a shim, it must be anchored to the substrate. Otherwise window and door assemblies must be anchored directly to the substrate [see Figures R609.7.2(1) through R609.7.2(5)].

INTERNATIONAL CODE COUNCIL®
Copyright © 2015 ICC. ALL RIGHTS RESERVED. Accessed by David Dammon on Jun 21, 2017 12:30:52 PM pursuant to License Agreement with ICC. No further reproduction or distribution authorized. ANY UNAUTHORIZED REPRODUCTION OR DISTRIBUTION IS A VIOLATION OF THE FEDERAL COPYRIGHT ACT AND THE LICENSE AGREEMENT, AND SUBJECT TO CIVIL AND CRIMINAL PENALTIES THEREUNDER.

R609.7.2.2 Wood or other approved framing material. Where the framing material is wood or other *approved* framing material, window and glass door assemblies shall be anchored through the frame, or by frame clip, or through the flange. Anchors shall be embedded into the frame construction to adequately transfer load [see Figures R609.7.2(6), R609.7.2(7) and R609.7.2(8)].

❖ Door and window assemblies must be anchored directly to wood framing [see Figures R609.7.2(6) through R609.7.2(8)].

R609.8 Mullions. Mullions shall be tested by an *approved* testing laboratory in accordance with AAMA 450, or be engineered in accordance with accepted engineering practice. Mullions tested as stand-alone units or qualified by engineering shall use performance criteria cited in Sections R609.8.1, R609.8.2 and R609.8.3. Mullions qualified by an actual test of an entire assembly shall comply with Sections R609.8.1 and R609.8.3.

❖ Mullions provide support for adjacent window and/or door assemblies. Generally, they must be tested and perform as required for windows and doors. Deflection limits and a factor of safety maintain serviceability and provide minimum strength.

R609.8.1 Load transfer. Mullions shall be designed to transfer the design pressure loads applied by the window and door assemblies to the rough opening substrate.

❖ See the commentary to Section R609.8.

R609.8.2 Deflection. Mullions shall be capable of resisting the design pressure loads applied by the window and door assemblies to be supported without deflecting more than $L/175$, where L is the span of the mullion in inches.

❖ See the commentary to Section R609.8.

R609.8.3 Structural safety factor. Mullions shall be capable of resisting a load of 1.5 times the design pressure loads applied by the window and door assemblies to be supported without exceeding the appropriate material stress levels. If tested by an *approved* laboratory, the 1.5 times the design pressure load shall be sustained for 10 seconds, and the permanent deformation shall not exceed 0.4 percent of the mullion span after the 1.5 times design pressure load is removed.

❖ See the commentary to Section R609.8.

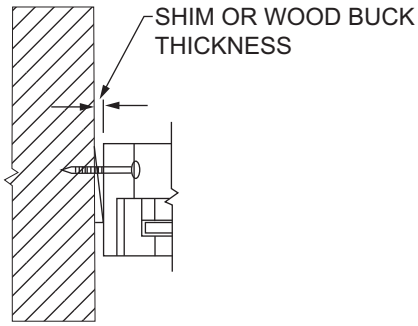

**FIGURE R609.7.2(1)
THROUGH THE FRAME**

❖ See the commentary to Sections R609.7 and R609.7.2.1.

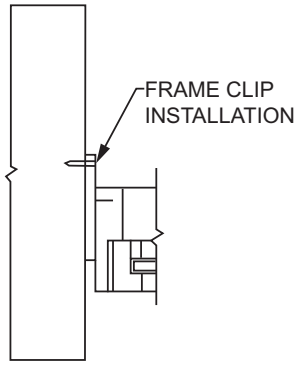

**FIGURE R609.7.2(2)
FRAME CLIP**

❖ See the commentary to Sections R609.7 and R609.7.2.1.

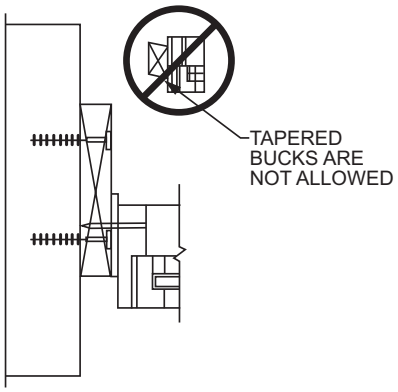

**FIGURE R609.7.2(3)
THROUGH THE FRAME**

❖ See the commentary to Sections R609.7 and R609.7.2.1.

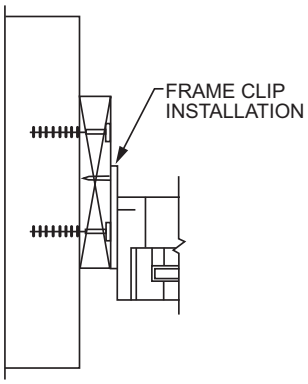

**FIGURE R609.7.2(4)
FRAME CLIP**

❖ See the commentary to Sections R609.7 and R609.7.2.1.

INTERNATIONAL CODE COUNCIL®
Copyright © 2015 ICC. ALL RIGHTS RESERVED. Accessed by David Dammon on Jun 21, 2017 12:30:52 PM pursuant to License Agreement with ICC. No further reproduction or distribution authorized. ANY UNAUTHORIZED REPRODUCTION OR DISTRIBUTION IS A VIOLATION OF THE FEDERAL COPYRIGHT ACT AND THE LICENSE AGREEMENT, AND SUBJECT TO CIVIL AND CRIMINAL PENALTIES THEREUNDER.

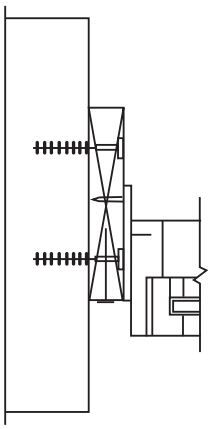

**FIGURE R609.7.2(5)
THROUGH THE FLANGE**

❖ See the commentary to Sections R609.7 and R609.7.2.1.

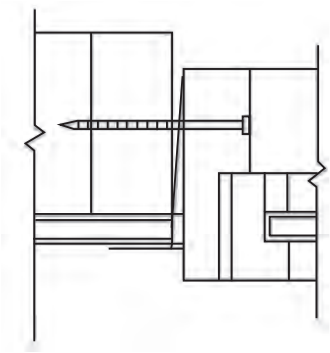

**FIGURE R609.7.2(6)
THROUGH THE FLANGE**

❖ See the commentary to Sections R609.7 and R609.7.2.1.

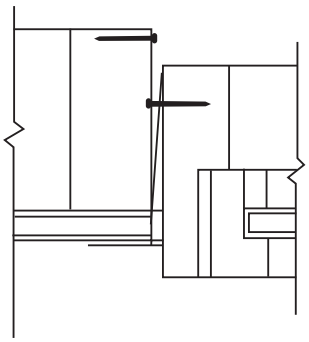

**FIGURE R609.7.2(7)
FRAME CLIP**

❖ See the commentary to Sections R609.7 and R609.7.2.1.

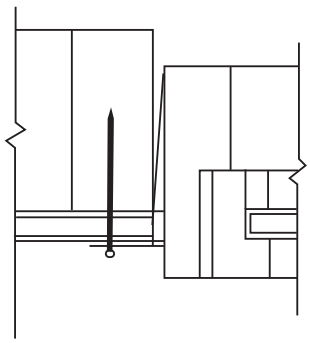

**FIGURE R609.7.2(8)
THROUGH THE FLANGE**

❖ See the commentary to Sections R609.7 and R609.7.2.1.

SECTION R610
STRUCTURAL INSULATED PANEL WALL CONSTRUCTION

R610.1 General. Structural insulated panel (SIP) walls shall be designed in accordance with the provisions of this section. Where the provisions of this section are used to design structural insulated panel walls, project drawings, typical details and specifications are not required to bear the seal of the architect or engineer responsible for design, unless otherwise required by the state law of the *jurisdiction* having authority.

❖ The purpose of Section R610 is to provide a prescriptive method for the design and installation of structural insulated panel (SIP) walls, which otherwise would require an engineered design. It establishes minimum requirements for the component materials such as the facing, core and adhesive (see the typical panel illustrated in Figure R610.4). SIPs consist primarily of a foam plastic core laminated between wood structural panel facings. Structurally, SIPs can be thought of as analogous to a steel wide-flange beam, with the facing serving as the beam flanges and the core serving as the web with the composite assembly producing the desired strength and stiffness. In engineering design of such panels, axial forces are carried by the facings and bending is resisted by the internal force couple in the facings.

The benefits that can be provided by SIP construction include improved thermal efficiency and reduced air infiltration. Manufacturing SIPs in a factory-controlled environment provides improved tolerances when compared to conventional wood wall framing. SIPs also minimize the amount of wood framing required for wall construction. The less framing that is necessary, the lower the framing factor and the result is that less energy is lost due to thermal bridging.

R610.2 Applicability limits. The provisions of this section shall control the construction of exterior structural insulated panel walls and interior load-bearing structural insulated panel walls for buildings not greater than 60 feet (18 288 mm) in

INTERNATIONAL CODE COUNCIL®
Copyright © 2015 ICC. ALL RIGHTS RESERVED. Accessed by David Dammon on Jun 21, 2017 12:30:52 PM pursuant to License Agreement with ICC. No further reproduction or distribution authorized. ANY UNAUTHORIZED REPRODUCTION OR DISTRIBUTION IS A VIOLATION OF THE FEDERAL COPYRIGHT ACT AND THE LICENSE AGREEMENT, AND SUBJECT TO CIVIL AND CRIMINAL PENALTIES THEREUNDER.

length perpendicular to the joist or truss span, not greater than 40 feet (12 192 mm) in width parallel to the joist or truss span and not greater than two stories in height with each wall not greater than 10 feet (3048 mm) high. Exterior walls installed in accordance with the provisions of this section shall be considered as load-bearing walls. Structural insulated panel walls constructed in accordance with the provisions of this section shall be limited to sites where the ultimate design wind speed (V_{ult}) is not greater than 155 miles per hour (69 m/s), Exposure B or 140 miles per hour (63 m/s) Exposure C, the ground snow load is not greater than 70 pounds per foot (3.35 kPa), and the seismic design category is A, B or C.

❖ This section establishes the bounds for these prescriptive SIP walls. SIP construction that exceeds these limits should be substantiated as an alternative method of design and construction in accordance with Section R104.11. These limits for snow load and wind speed as well as the building plan dimensions, wall height and number of stories are all reflected in the required wall construction that is determined under Section R610.5. Also note that for earthquake concerns these provisions are restricted to SDC A, B or C.

R610.3 Materials. SIPs shall comply with the following criteria:

❖ This section establishes minimum requirements for the component materials such as the facing, core, adhesive, lumber and fasteners. For a manufacturer's product to be covered by this section of the code, all materials used in SIP production must meet or exceed these criteria. Using these minimum material properties, the capacity of SIP walls was established by testing which was then used to develop the wall construction requirements in Section R610.5.

R610.3.1 Core. The core material shall be composed of foam plastic insulation meeting one of the following requirements:

1. ASTM C578 and have a minimum density of 0.90 pounds per cubic feet (14.4 kg/m^3).
2. Polyurethane meeting the physical properties shown in Table R610.3.1.
3. An *approved* alternative.

All cores shall meet the requirements of Section R316.

❖ The middle section of the SIP is referred to as the core and it consists of light-weight foam plastic insulation. Two types of foam plastic insulation are recognized. For either type a minimum density requirement provides for a continuous, uniform layer of insulation. Item 1 refers to rigid, cellular polystyrene that complies with ASTM C578 and Item 2 allows polyurethane insulation that complies with the material criteria listed in Table R610.3.1. The cross reference to Section R316 points to the provisions governing all foam plastic insulation which provide other necessary material criteria such as flame spread and smoke-developed indexes.

R610.3.2 Facing. Facing materials for SIPs shall be wood structural panels conforming to DOC PS 1 or DOC PS 2, each having a minimum nominal thickness of $^7/_{16}$ inch (11 mm) and shall meet the additional minimum properties specified in Table R610.3.2. Facing shall be identified by a grade mark or certificate of inspection issued by an *approved* agency.

❖ In addition to conforming to DOC PS 1 or DOC PS 2, additional wood structural panel properties are listed in Table R610.3.2. It should be noted that these properties exceed DOC PS 1 and DOC PS 2. Thus, the wood structural panel supplier should provide verification that their product meets these enhanced requirements for SIP facing in order to comply with this section.

R610.3.3 Adhesive. Adhesives used to structurally laminate the foam plastic insulation core material to the structural wood facers shall conform to ASTM D2559 or *approved* alternative specifically intended for use as an adhesive used in the lamination of structural insulated panels. Each container of adhesive shall bear a *label* with the adhesive manufacturer's name, adhesive name and type and the name of the quality assurance agency.

❖ Structural adhesive bonds the foam plastic insulation to the wood structural panel facing in the lamination process and it is key to the SIP performance. This section recognizes ASTM D2559 for this purpose which provides an adhesive rated for exterior use as is appropriate for exterior walls. This section also brings up "approved alternatives." Under Section R104.11, an alternative design may be based on ICC ES AC05 *Acceptance Criteria for Sandwich Panel Adhesives*, which would require a classification of Type II, Class 2, in order to provide high moisture resistance in a load-bearing application.

R610.3.4 Lumber. The minimum lumber framing material used for SIPs prescribed in this document is NLGA graded No. 2 Spruce-pine-fir. Substitution of other wood species/grades that meet or exceed the mechanical properties and specific gravity of No. 2 Spruce-pine-fir shall be permitted.

❖ This section establishes the minimum requirements for wood framing that is utilized in SIP wall construction.

R610.3.5 SIP screws. Screws used for the erection of SIPs as specified in Section R610.5 shall be fabricated from steel, shall be provided by the SIP manufacturer and shall be sized to penetrate the wood member to which the assembly is being attached by not less than 1 inch (25 mm). The screws shall be corrosion resistant and have a minimum shank diameter of 0.188 inch (4.7 mm) and a minimum head diameter of 0.620 inch (15.5 mm).

❖ SIP screws must be steel and be corrosion resistant. The only required use of this fastener type is in the corner detail that is illustrated in Figure R610.9.

R610.3.6 Nails. Nails specified in Section R610 shall be common or galvanized box unless otherwise stated.

❖ Nailing of SIP wall assemblies is specified in Figures R610.5(3), R610.5(4), R610.5(5), R610.5.2, R610.8 and R610.9. This section clarifies the style of nail that must be used in these connections. For additional fastening requirements, see Section R610.5.

INTERNATIONAL CODE COUNCIL®
Copyright © 2015 ICC. ALL RIGHTS RESERVED. Accessed by David Dammon on Jun 21, 2017 12:30:52 PM pursuant to License Agreement with ICC. No further reproduction or distribution authorized. ANY UNAUTHORIZED REPRODUCTION OR DISTRIBUTION IS A VIOLATION OF THE FEDERAL COPYRIGHT ACT AND THE LICENSE AGREEMENT, AND SUBJECT TO CIVIL AND CRIMINAL PENALTIES THEREUNDER.

TABLE R610.3.1
MINIMUM PROPERTIES FOR POLYURETHANE INSULATION USED AS SIPS CORE

PHYSICAL PROPERTY	POLYURETHANE
Density, core nominal (ASTM D1622)	2.2 lb/ft^3
Compressive resistance at yield or 10% deformation, whichever occurs first (ASTM D1621)	19 psi (perpendicular to rise)
Flexural strength, min. (ASTM C203)	30 psi
Tensile strength, min. (ASTM D1623)	35 psi
Shear strength, min. (ASTM C273)	25 psi
Substrate adhesion, min. (ASTM D1623)	22 psi
Water vapor permeance of 1.00-in. thickness, max. (ASTM E96)	2.3 perm
Water absorption by total immersion, max. (ASTM C272)	4.3% (volume)
Dimensional stability (change in dimensions), max. [ASTM D2126 (7 days at 158°F/100% humidity and 7 days at -20°F)]	2%

For SI: 1 pound per cubic foot = 16.02 kg/m^3, 1 pound per square inch = 6.895 kPa, °C = [(°F) - 32]1.8.

❖ This table contains the specific material properties that must be met in order to qualify polyurethane as a core material for SIPs.

TABLE R610.3.2
MINIMUM PROPERTIES[a] FOR ORIENTED STRAND BOARD FACER MATERIAL IN SIP WALLS

THICKNESS (in.)	PRODUCT	FLATWISE STIFFNESS[b] (lbf-in^2/ft)		FLATWISE STRENGTH[c] (lbf-in/ft)		TENSION[c] (lbf/ft)		DENSITY[d] (pcf)
		Along	Across	Along	Across	Along	Across	
$^7/_{16}$	Sheathing	55,600	16,500	1,040	460	7,450	5,800	34

For SI: 1 inch = 25.4 mm, 1 lbf-in^2/ft = 9.415 × 10^{-6} kPa/m, 1 lbf-in/ft = 3.707 × 10^{-4} kN/m, 1 lbf/ft = 0.0146 N/mm, 1 pound per cubic foot = 16.018 kg/m^3.

a. Values listed in Table R610.3.2 are qualification test values and are not to be used for design purposes.

b. Mean test value shall be in accordance with Section 7.6 of DOC PS 2.

c. Characteristic test value (5th percent with 75% confidence).

d. Density shall be based on oven-dry weight and oven-dry volume.

❖ The minimum properties for facing materials in Table R610.3.2 were established by the SIPs industry with a specific grade of wood structural panels. Panel properties for the wood structural panel facing materials in the 2009 IRC do not reflect the facing materials commonly available in the marketplace, which typically have higher properties in the along direction and lower properties in the across direction.

As a result, the Structural Insulated Panel Association (SIPA) worked with APA - The Engineered Wood Association to re-evaluate the performance of SIPs using readily available facing materials. Results of this re-evaluation are documented in APA Report T2009P-28, which shows no performance difference for SIP applications covered in IRC Section R610 when using the new facing materials with higher properties in the along direction and lower properties in the across direction, as compared to the 2009 IRC.

The facer material table has therefore been updated to reflect material properties of the wood structural panels currently used in the production of SIPs.

R610.4 SIP wall panels. SIPs shall comply with Figure R610.4 and shall have minimum panel thickness in accordance with Tables R610.5(1) and R610.5(2) for above-grade walls. SIPs shall be identified by grade mark or certificate of inspection issued by an *approved* agency.

❖ Figure R610.4 illustrates the primary components of the SIP wall panel. Manufacturing these panels in a factory-controlled environment provides improved tolerances when compared to conventional wood wall framing. SIP panels minimize the amount of wood framing required in wall construction. Also, the core may be recessed as necessary around the panel edges to accept dimension lumber, such as at the top plate connection (see Section R610.5.1). In order to verify a SIP wall panel's suitability in a particular application it must be identified by either a grade mark or certificate of inspection.

R610.4.1 Labeling. Panels shall be identified by grade mark or certificate of inspection issued by an *approved* agency. Each (SIP) shall bear a stamp or *label* with the following minimum information:

1. Manufacturer name/logo.
2. Identification of the assembly.
3. Quality assurance agency.

❖ Third-party labeling is required for the entire SIP assembly once fabrication is completed. This requirement provides the ability to verify the panel's suitability

INTERNATIONAL CODE COUNCIL®
Copyright © 2015 ICC. ALL RIGHTS RESERVED. Accessed by David Dammon on Jun 21, 2017 12:30:52 PM pursuant to License Agreement with ICC. No further reproduction or distribution authorized. ANY UNAUTHORIZED REPRODUCTION OR DISTRIBUTION IS A VIOLATION OF THE FEDERAL COPYRIGHT ACT AND THE LICENSE AGREEMENT, AND SUBJECT TO CIVIL AND CRIMINAL PENALTIES THEREUNDER.

for a particular application. The label must identify the quality assurance agency. This agency provides inspections to verify adequate quality control in the manufacturing process.

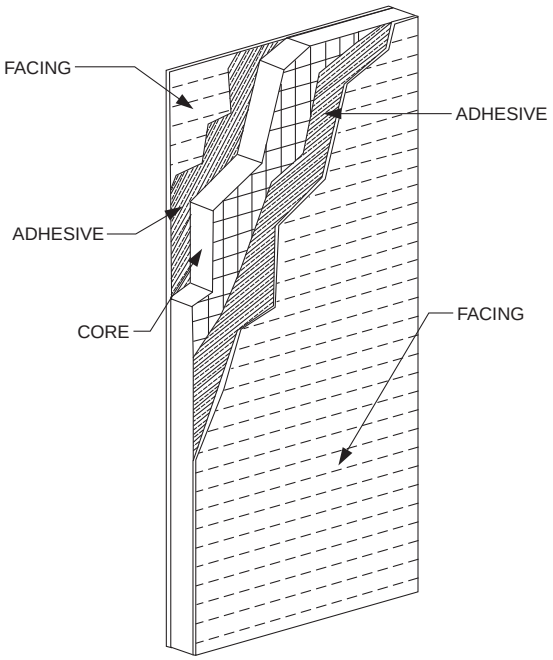

FIGURE R610.4
SIP WALL PANEL

❖ See the commentary to Section R610.4.

R610.5 Wall construction. Exterior walls of SIP construction shall be designed and constructed in accordance with the provisions of this section and Tables R610.5(1) and R610.5(2) and Figures R610.5(1) through R610.5(5). SIP walls shall be fastened to other wood building components in accordance with Tables R602.3(1) through R602.3(4).

Framing shall be attached in accordance with Table R602.3(1) unless otherwise provided for in Section R610.

❖ Based on the minimum material properties established in Section R610.3, the capacity of SIP walls was established by testing which was then used to develop the tabulated wall thickness requirements of this section. Other than the specific nailing requirements in Section R610, the fastening of wood components must be in accordance with the fastening schedule of Table R602.3(1). This section also makes it clear that the connection of the SIP wall assembly to other wood elements must be in accordance with the applicable requirements for fastening wood members. Figures R610.5(3), R610.5(4), R610.5(5), R610.8 and R610.9 indicate where SIP connections require sealant. With no particular sealant criteria given in this section, sealants should be according to the panel manufacturer's recommendations.

Because SIP walls do not contain stud framing, an adjusted fastener schedule for attaching an exterior wall covering may be necessary unless the manufacturer of the wall covering provides recommendations for attaching their product to SIP walls. A design may be required to determine the appropriate fastening requirements when a wall covering manufacturer does not provide attachment recommendations.

R610.5.1 Top plate connection. SIP walls shall be capped with a double top plate installed to provide overlapping at corner, intersections and splines in accordance with Figure R610.5.1. The double top plates shall be made up of a single 2 by top plate having a width equal to the width of the panel core, and shall be recessed into the SIP below. Over this top plate a cap plate shall be placed. The cap plate width shall match the SIP thickness and overlap the facers on both sides of the panel. End joints in top plates shall be offset not less than 24 inches (610 mm).

❖ The double top plate consists of a cap plate which is sized to match the width of the SIP and a lower plate which is sized to match the width of the core allowing it to be recessed into the top edge of the panel. By matching the width of the panel, the cap plate delivers loads to the panel facings rather than the core of the panel. This double top plate configuration is depicted in Figures R610.5(3) and R610.5(4).

R610.5.2 Bottom (sole) plate connection. SIP walls shall have full bearing on a sole plate having a width equal to the nominal width of the foam core. Where SIP walls are supported directly on continuous foundations, the wall wood sill plate shall be anchored to the foundation in accordance with Figure R610.5.2 and Section R403.1.

❖ Like the lower top plate, the bottom (sole) plate must match the width of the core so that it can be recessed within the panel as shown in Figures R610.5(4) and R610.5(5). Figure R610.5.2 illustrates a bottom plate connection to a foundation.

R610.5.3 Wall bracing. SIP walls shall be braced in accordance with Section R602.10. SIP walls shall be considered continuous wood structural panel sheathing for purposes of computing required bracing. SIP walls shall meet the requirements of Section R602.10.4.2 except that SIP corners shall be fabricated as shown in Figure R610.9. Where SIP walls are used for wall bracing, the SIP bottom plate shall be attached to wood framing below in accordance with Table R602.3(1).

❖ This section clarifies that the wood frame wall bracing requirements apply and where the SIP wall construction is used as wall bracing, it must be evaluated as a continuously sheathed braced wall line. When the SIP wall is required to serve as wall bracing, this section also makes it clear that the connection of the bottom (sole) plate must be in accordance with braced wall panel requirements in the general fastening schedule for wood construction.

R610.6 Interior load-bearing walls. Interior load-bearing walls shall be constructed as specified for exterior walls.

❖ This section directs the reader to exterior wall construction (see Section R610.5) for determining requirements for interior load-bearing walls.

INTERNATIONAL CODE COUNCIL®
Copyright © 2015 ICC. ALL RIGHTS RESERVED. Accessed by David Dammon on Jun 21, 2017 12:30:52 PM pursuant to License Agreement with ICC. No further reproduction or distribution authorized. ANY UNAUTHORIZED REPRODUCTION OR DISTRIBUTION IS A VIOLATION OF THE FEDERAL COPYRIGHT ACT AND THE LICENSE AGREEMENT, AND SUBJECT TO CIVIL AND CRIMINAL PENALTIES THEREUNDER.

TABLE R610.5(1)
MINIMUM THICKNESS FOR SIP WALL SUPPORTING SIP OR LIGHT-FRAME ROOF ONLY (inches)[a]

BUILDING WIDTH (ft)																	
ULTIMATE DESIGN WIND SPEED V_{ult} (mph)		SNOW LOAD (psf)	24			28			32			36			40		
Exp. B	Exp. C		Wall Height (feet)			Wall Height (feet)			Wall Height (feet)			Wall Height (feet)			Wall Height (feet)		
			8	9	10	8	9	10	8	9	10	8	9	10	8	9	10
110	—	20	4.5	4.5	4.5	4.5	4.5	4.5	4.5	4.5	4.5	4.5	4.5	4.5	4.5	4.5	4.5
		30	4.5	4.5	4.5	4.5	4.5	4.5	4.5	4.5	4.5	4.5	4.5	4.5	4.5	4.5	4.5
		50	4.5	4.5	4.5	4.5	4.5	4.5	4.5	4.5	4.5	4.5	4.5	4.5	4.5	4.5	4.5
		70	4.5	4.5	4.5	4.5	4.5	4.5	4.5	4.5	4.5	4.5	4.5	6.5	4.5	4.5	6.5
115	—	20	4.5	4.5	4.5	4.5	4.5	4.5	4.5	4.5	4.5	4.5	4.5	4.5	4.5	4.5	4.5
		30	4.5	4.5	4.5	4.5	4.5	4.5	4.5	4.5	4.5	4.5	4.5	4.5	4.5	4.5	4.5
		50	4.5	4.5	4.5	4.5	4.5	4.5	4.5	4.5	4.5	4.5	4.5	4.5	4.5	4.5	6.5
		70	4.5	4.5	4.5	4.5	4.5	4.5	4.5	4.5	6.5	4.5	4.5	DR	4.5	4.5	DR
130	110	20	4.5	4.5	6.5	4.5	4.5	6.5	4.5	4.5	6.5	4.5	4.5	DR	4.5	4.5	DR
		30	4.5	4.5	6.5	4.5	4.5	6.5	4.5	4.5	DR	4.5	4.5	DR	4.5	4.5	DR
		50	4.5	4.5	DR	4.5	4.5	DR	4.5	4.5	DR	4.5	6.5	DR	4.5	DR	DR
		70	4.5	4.5	DR	4.5	DR	DR	4.5	DR	DR	4.5	DR	DR	DR	DR	DR
140	120	20	4.5	6.5	DR	4.5	6.5	DR	4.5	DR	DR	4.5	DR	DR	4.5	DR	DR
		30	4.5	6.5	DR	4.5	DR	DR	4.5	DR	DR	4.5	DR	DR	4.5	DR	DR
		50	4.5	DR	DR	4.5	DR	DR	DR	DR	DR	DR	DR	DR	DR	DR	DR
		70	4.5	DR	DR	DR	DR	DR	DR	DR	DR	DR	DR	DR	DR	DR	DR

For SI: 1 inch = 25.4 mm, 1 foot = 304.8 mm, 1 pound per square foot = 0.0479 kPa, 1 mile per hour = 0.447 m/s.

DR = design required.

a. Design assumptions:

Maximum deflection criteria: *L*/240.
Maximum roof dead load: 10 psf.
Maximum roof live load: 70 psf.
Maximum ceiling dead load: 5 psf.
Maximum ceiling live load: 20 psf.
Wind loads based on Table R301.2 (2).
Strength axis of facing material applied vertically.

❖ The tabulated SIP wall thicknesses are given based on specific values of snow load and wind criteria as well as the building plan dimensions, wall height and number of stories all of which reflect the applicability limits of Section R610.2. Additional criteria such as deflection limit, dead loads, ceiling and floor live loads are noted under the table. Typical wall heights of up to 10 feet (305 mm) per story are provided for as this is the limit that is established in Section R610.2. Note that the story height allows an additional 16 inches (406 mm) for the depth of floor framing (see Section R301.3).

While there were no performance issues, the assumptions used in generating Tables R610.5(1) and R610.5(2) were also reviewed by the SIPA Technical Advisory Committee, which suggested more stringent criteria by not allowing any load duration increase, including wind load, for SIPs.

INTERNATIONAL CODE COUNCIL®
Copyright © 2015 ICC. ALL RIGHTS RESERVED. Accessed by David Dammon on Jun 21, 2017 12:30:52 PM pursuant to License Agreement with ICC. No further reproduction or distribution authorized. ANY UNAUTHORIZED REPRODUCTION OR DISTRIBUTION IS A VIOLATION OF THE FEDERAL COPYRIGHT ACT AND THE LICENSE AGREEMENT, AND SUBJECT TO CIVIL AND CRIMINAL PENALTIES THEREUNDER.

TABLE R610.5(2)
MINIMUM THICKNESS FOR SIP WALL SUPPORTING SIP OR LIGHT-FRAME ONE STORY AND ROOF ONLY (inches)[a]

BUILDING WIDTH (ft)																	
ULTIMATE DESIGN WIND SPEED V_{ult} (mph)		SNOW LOAD (psf)	24			28			32			36			40		
Exp. B	Exp. C		Wall Height (feet)			Wall Height (feet)			Wall Height (feet)			Wall Height (feet)			Wall Height (feet)		
			8	9	10	8	9	10	8	9	10	8	9	10	8	9	10
110	—	20	4.5	4.5	4.5	4.5	4.5	4.5	4.5	4.5	6.5	4.5	4.5	DR	4.5	4.5	DR
		30	4.5	4.5	4.5	4.5	4.5	4.5	4.5	4.5	6.5	4.5	4.5	DR	4.5	6.5	DR
		50	4.5	4.5	4.5	4.5	4.5	6.5	4.5	4.5	DR	4.5	DR	DR	DR	DR	DR
		70	4.5	4.5	6.5	4.5	4.5	DR	4.5	DR	DR	DR	DR	DR	DR	DR	DR
115	—	20	4.5	4.5	4.5	4.5	4.5	6.5	4.5	4.5	DR	4.5	4.5	DR	4.5	DR	DR
		30	4.5	4.5	4.5	4.5	4.5	6.5	4.5	4.5	DR	4.5	6.5	DR	4.5	DR	DR
		50	4.5	4.5	6.5	4.5	4.5	DR	4.5	DR	DR	4.5	DR	DR	DR	DR	DR
		70	4.5	4.5	DR	4.5	DR	DR	DR	DR	DR	DR	DR	DR	DR	DR	DR
120	—	20	4.5	4.5	6.5	4.5	4.5	DR	4.5	4.5	DR	4.5	DR	DR	4.5	DR	DR
		30	4.5	4.5	DR	4.5	4.5	DR	4.5	6.5	DR	4.5	DR	DR	DR	DR	DR
		50	4.5	4.5	DR	4.5	DR	DR	4.5	DR	DR	DR	DR	DR	DR	DR	DR
		70	4.5	DR	DR	4.5	DR	DR	DR	DR	DR	DR	DR	DR	DR	DR	DR
130	110	20	4.5	6.5	DR	4.5	DR	DR	4.5	DR	DR	DR	DR	DR	DR	DR	DR
		30	4.5	DR	DR	4.5	DR	DR	DR	DR	DR	DR	DR	DR	DR	DR	DR
		50	4.5	DR	DR	DR	DR	DR	DR	DR	DR	DR	DR	DR	DR	DR	DR
		70	DR	DR	DR	DR	DR	DR	DR	DR	DR	DR	DR	DR	DR	DR	DR

For SI: 1 Inch = 25.4 mm, 1 foot = 304.8 mm, 1 pound per square foot = 0.0479 kPa, 1 mile per hour = 0.447 m/s.
DR = Design required.
a. Design assumptions:
Maximum deflection criteria: *L*/240.
Maximum roof dead load: 10 psf.
Maximum roof live load: 70 psf.
Maximum ceiling dead load: 5 psf.
Maximum ceiling live load: 20 psf.
Maximum second-floor dead load: 10 psf.
Maximum second-floor live load: 30 psf.
Maximum second-floor dead load from walls: 10 psf.
Maximum first-floor dead load: 10 psf.
Maximum first-floor live load: 40 psf.
Wind loads based on Table R301.2 (2).
Strength axis of facing material applied vertically.

❖ See the commentary to Table R610.5(1).

INTERNATIONAL CODE COUNCIL®
Copyright © 2015 ICC. ALL RIGHTS RESERVED. Accessed by David Dammon on Jun 21, 2017 12:30:52 PM pursuant to License Agreement with ICC. No further reproduction or distribution authorized. ANY UNAUTHORIZED REPRODUCTION OR DISTRIBUTION IS A VIOLATION OF THE FEDERAL COPYRIGHT ACT AND THE LICENSE AGREEMENT, AND SUBJECT TO CIVIL AND CRIMINAL PENALTIES THEREUNDER.

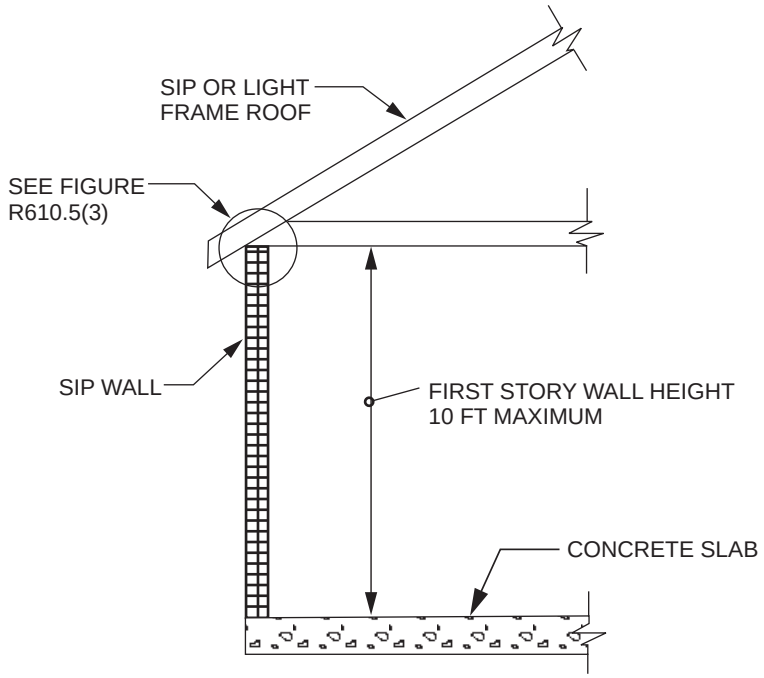

For SI: 1 foot = 304.8 mm.

FIGURE R610.5(1)
MAXIMUM ALLOWABLE HEIGHT OF SIP WALLS

❖ See the commentary to Table R610.5(1).

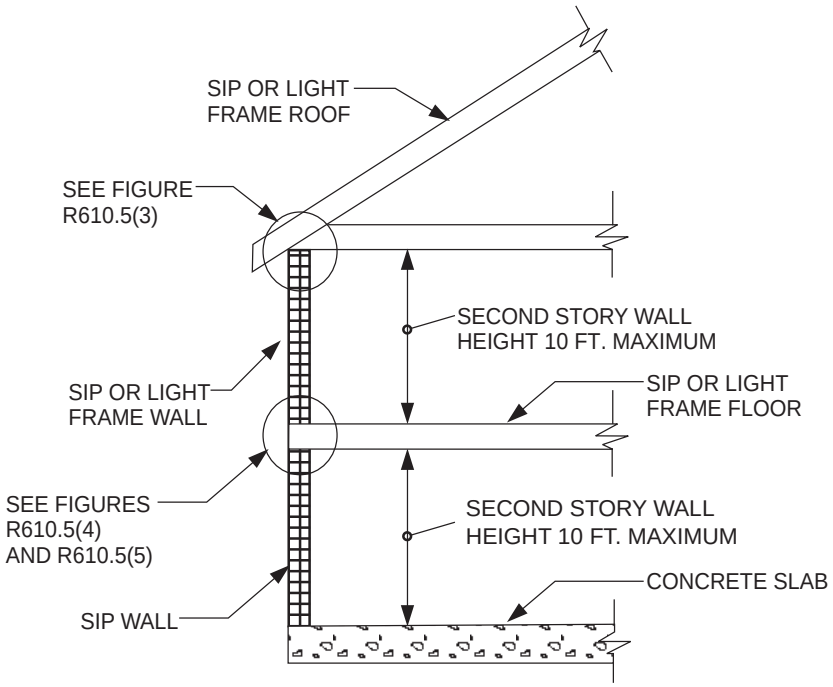

For SI: 1 foot = 304.8 mm.

FIGURE R610.5(2)
MAXIMUM ALLOWABLE HEIGHT OF SIP WALLS

❖ See the commentary to Table R610.5(1).

INTERNATIONAL CODE COUNCIL®
Copyright © 2015 ICC. ALL RIGHTS RESERVED. Accessed by David Dammon on Jun 21, 2017 12:30:52 PM pursuant to License Agreement with ICC. No further reproduction or distribution authorized. ANY UNAUTHORIZED REPRODUCTION OR DISTRIBUTION IS A VIOLATION OF THE FEDERAL COPYRIGHT ACT AND THE LICENSE AGREEMENT, AND SUBJECT TO CIVIL AND CRIMINAL PENALTIES THEREUNDER.

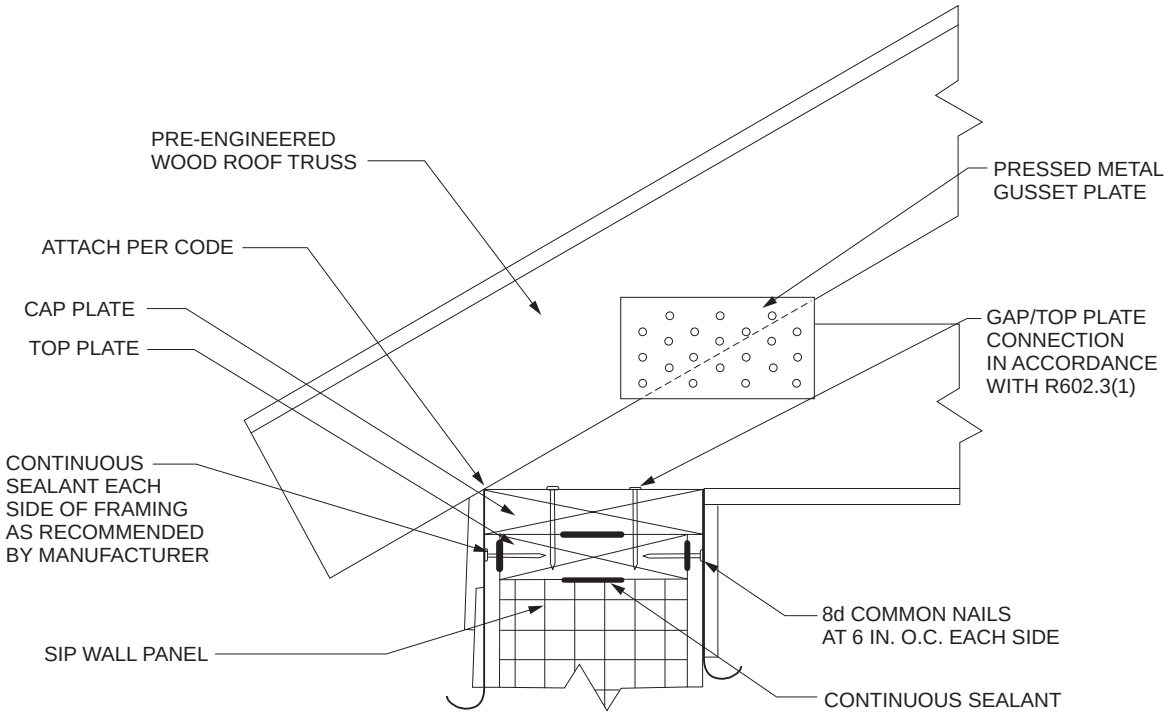

For SI: 1 inch = 25.4 mm.

FIGURE R610.5(3)
TRUSSED ROOF TO TOP PLATE CONNECTION

❖ See the commentary to Sections R610.3.6 and R610.5.

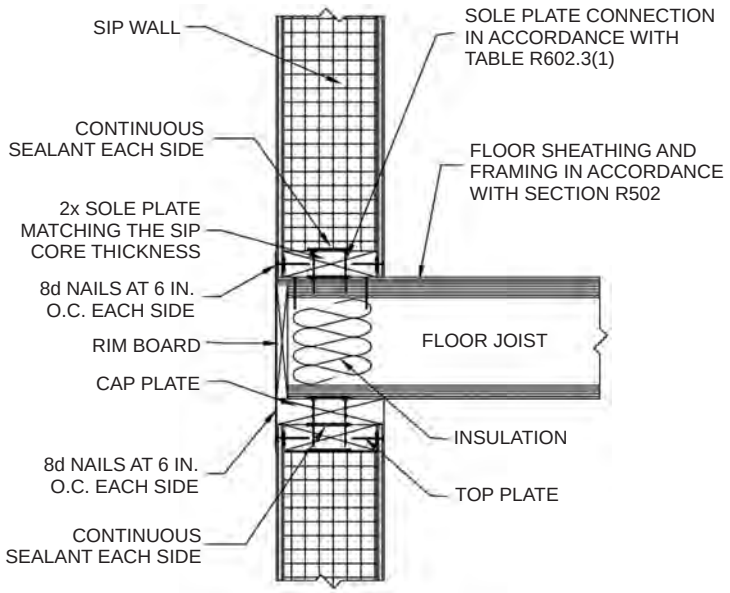

For SI: 1 inch = 25.4 mm.
Note: Figures illustrate SIP-specific attachment requirements. Other connections shall be made in accordance with Tables R602.3(1) and (2) as appropriate.

FIGURE R610.5(4)
SIP WALL-TO-WALL PLATFORM FRAME CONNECTION

❖ As the note cautions, only the fastening for the SIP installation is illustrated, and other applicable fastening requirements for wood framing must be satisfied. Also see the commentary to Sections R610.3.6 and R610.5.

INTERNATIONAL CODE COUNCIL®
Copyright © 2015 ICC. ALL RIGHTS RESERVED. Accessed by David Dammon on Jun 21, 2017 12:30:52 PM pursuant to License Agreement with ICC. No further reproduction or distribution authorized. ANY UNAUTHORIZED REPRODUCTION OR DISTRIBUTION IS A VIOLATION OF THE FEDERAL COPYRIGHT ACT AND THE LICENSE AGREEMENT, AND SUBJECT TO CIVIL AND CRIMINAL PENALTIES THEREUNDER.

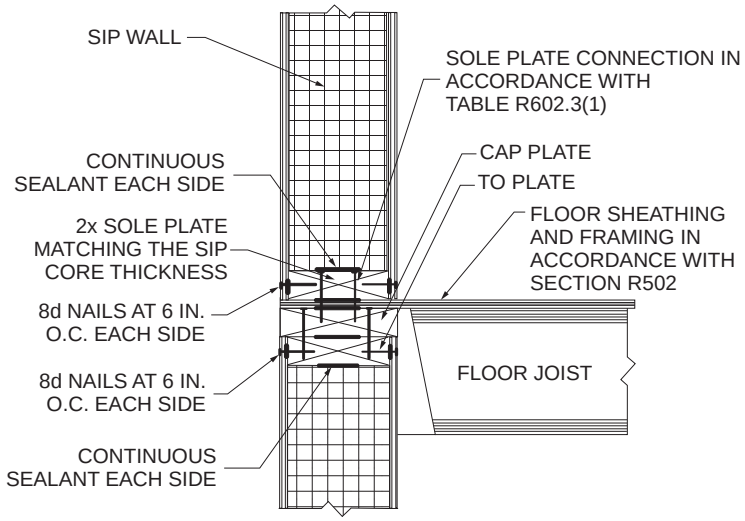

For SI: 1 inch = 25.4 mm.

Note: Figures illustrate SIP-specific attachment requirements. Other connections shall be made in accordance with Tables R602.3(1) and (2), as appropriate.

FIGURE R610.5(5)
SIP WALL-TO-WALL BALLOON FRAME CONNECTION (I-Joist floor shown for Illustration only)

❖ As the note cautions, only the fastening for the SIP installation is illustrated, and other applicable fastening requirements for wood framing must be satisfied. Also see the commentary to Sections R610.3.6 and R610.5.

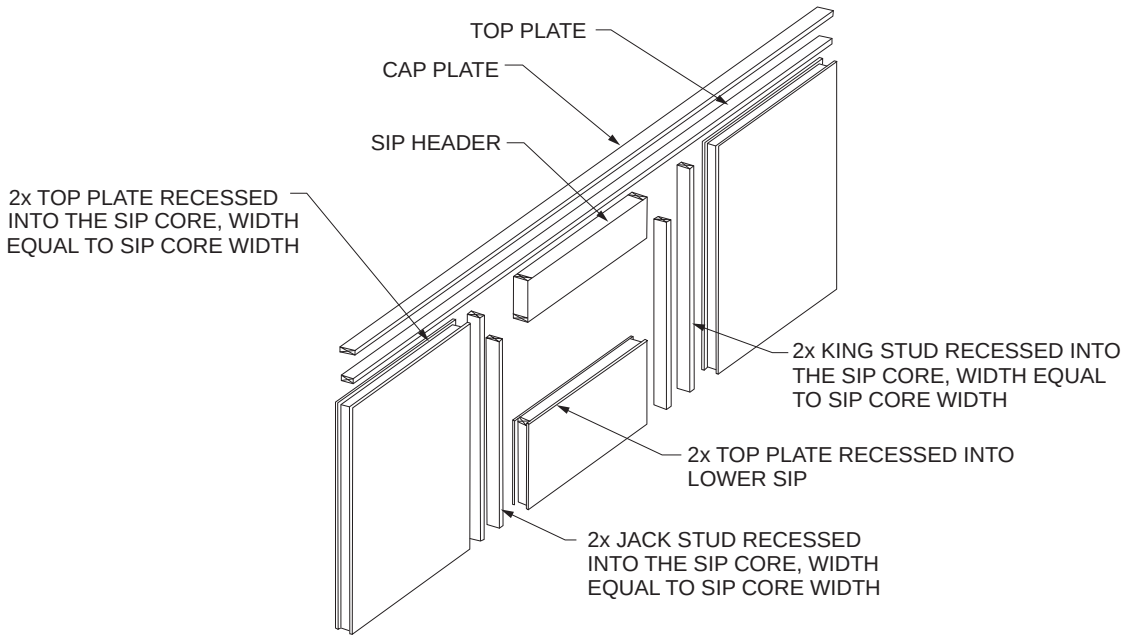

For SI: 1 inch = 25.4 mm.

Notes:

1. Top plates shall be continuous over header.
2. Lower 2x top plate shall have a width equal to the SIP core width and shall be recessed into the top edge of the panel. Cap plate shall be placed over the recessed top plate and shall have a width equal to the SIPs width.
3. SIP facing surfaces shall be nailed to framing and cripples with 8d common or galvanized box nails spaced 6 inches on center.
4. Galvanized nails shall be hot-dipped or tumbled. Framing shall be attached in accordance to Section R602.3(1) unless otherwise provide for in Section R610.

FIGURE R610.5.1
SIP WALL FRAMING CONFIGURATION

❖ Note 2 clarifies that the cap plate is placed over the recessed lower top plate. This figure also illustrates the requirements for headers (see Section R610.10).

INTERNATIONAL CODE COUNCIL®
Copyright © 2015 ICC. ALL RIGHTS RESERVED. Accessed by David Dammon on Jun 21, 2017 12:30:52 PM pursuant to License Agreement with ICC. No further reproduction or distribution authorized. ANY UNAUTHORIZED REPRODUCTION OR DISTRIBUTION IS A VIOLATION OF THE FEDERAL COPYRIGHT ACT AND THE LICENSE AGREEMENT, AND SUBJECT TO CIVIL AND CRIMINAL PENALTIES THEREUNDER.

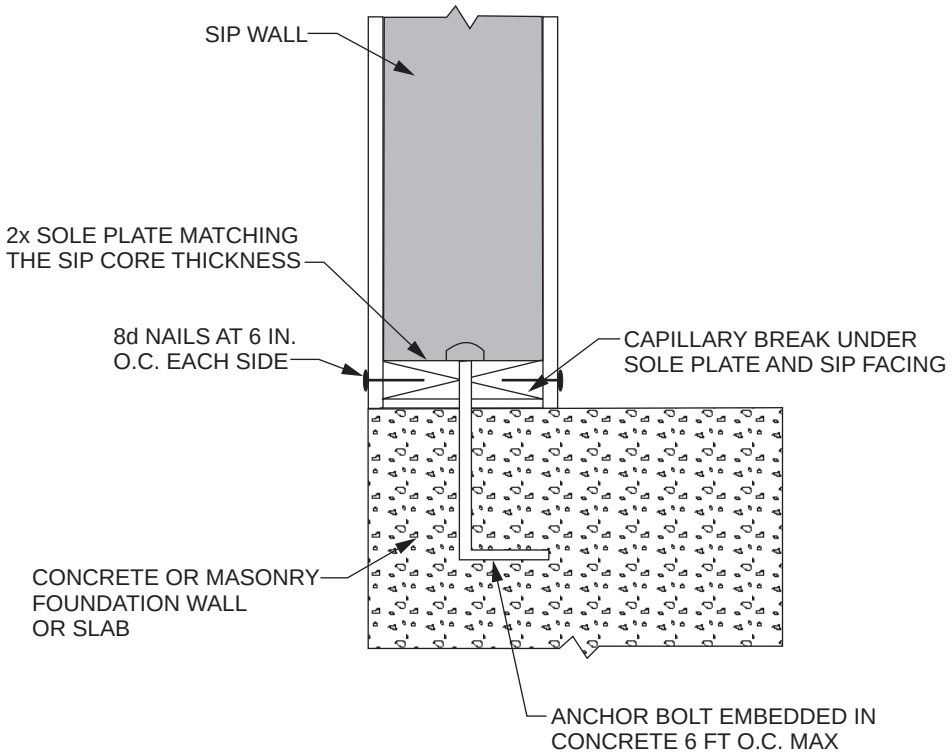

For SI: 1 inch = 25.4 mm, 1 foot = 304.8 mm.

FIGURE R610.5.2
SIP WALL TO CONCRETE SLAB FOR FOUNDATION WALL ATTACHMENT

❖ See the commentary to Section R610.5.2.

R610.7 Drilling and notching. The maximum vertical chase penetration in SIPs shall have a maximum side dimension of 2 inches (51 mm) centered in the panel. Vertical chases shall have a minimum spacing of 24 inches (610 mm) on center. A maximum of two horizontal chases shall be permitted in each wall panel—one at 14 inches (360 mm) plus or minus 2 inches (51 mm) from the bottom of the panel and one at 48 inches (1220 mm) plus or minus 2 inches (51 mm) from the bottom edge of the SIPs panel. Additional penetrations are permitted where justified by analysis.

❖ This section permits SIP manufacturers to form chases in the panel core both horizontally and vertically within the stated location and dimensional limits. Doing so during the fabrication process enables utilities to be installed in the finished walls without compressing insulation or having to field-drill through framing members.

R610.8 Connection. SIPs shall be connected at vertical in-plane joints in accordance with Figure R610.8 or by other *approved* methods.

❖ Prescriptive details for joining adjacent panels are provided in Figure R610.8. This connection is required for serviceability purposes and it is not intended to provide load transfer between the panels.

R610.9 Corner framing. Corner framing of SIP walls shall be constructed in accordance with Figure R610.9.

❖ The corner connection of SIP wall panels requires the use of SIP screws (see Section R610.3.5) as illustrated in Figure R610.9. Where SIP walls are used as wall bracing (see Section R610.5.3) this connection supersedes the corner details for continuously sheathed wall bracing in Table R602.3(1) and Figure R602.10.7.

R610.10 Headers. SIP headers shall be designed and constructed in accordance with Table R610.10 and Figure R610.5.1. SIP headers shall be continuous sections without splines. Headers shall be not less than $11^{7}/_{8}$ inches (302 mm) deep. Headers longer than 4 feet (1219 mm) shall be constructed in accordance with Section R602.7.

❖ The minimum depth of SIP headers is given and the permitted spans are tabulated. Where greater header spans are desired, the general requirements for wood headers are applicable, including those for wood structural panel box headers.

R610.10.1 Wood structural panel box headers. Wood structural panel box headers shall be allowed where SIP headers are not applicable. Wood structural panel box headers shall be constructed in accordance with Figure R602.7.3 and Table R602.7.3.

❖ See the commentary to Sections R602.7.3 and R610.10.

INTERNATIONAL CODE COUNCIL®
Copyright © 2015 ICC. ALL RIGHTS RESERVED. Accessed by David Dammon on Jun 21, 2017 12:30:52 PM pursuant to License Agreement with ICC. No further reproduction or distribution authorized. ANY UNAUTHORIZED REPRODUCTION OR DISTRIBUTION IS A VIOLATION OF THE FEDERAL COPYRIGHT ACT AND THE LICENSE AGREEMENT, AND SUBJECT TO CIVIL AND CRIMINAL PENALTIES THEREUNDER.

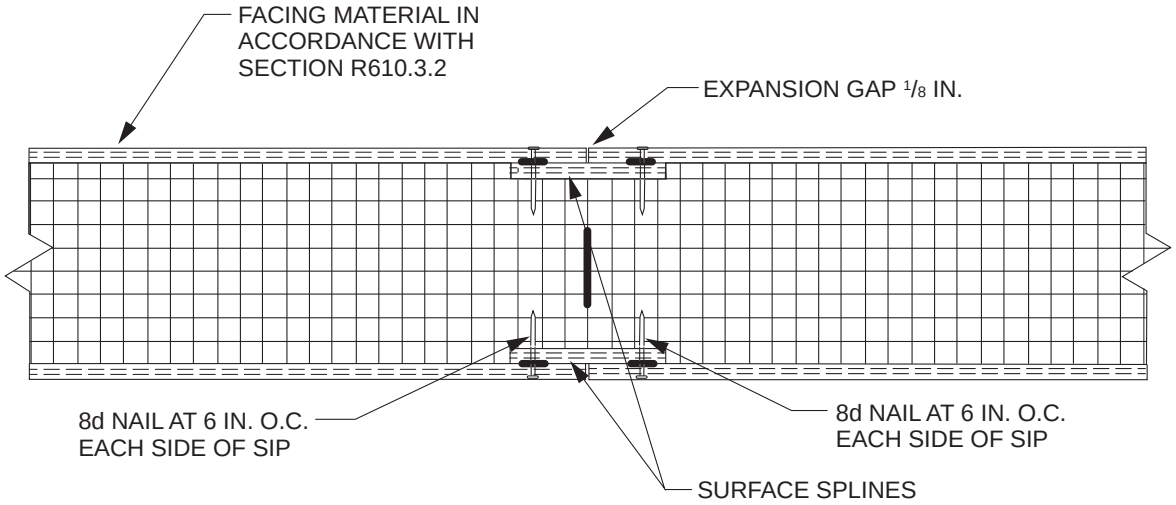

SURFACE SPLINE CONNECTION

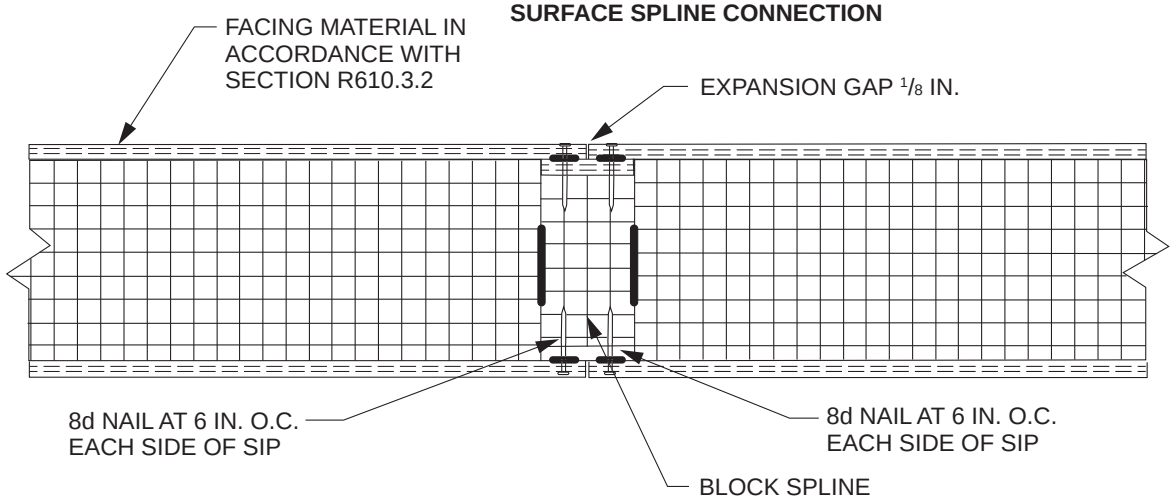

BLOCK SPLINE CONNECTION

For SI: 1 inch = 25.4 mm.

FIGURE R610.8
TYPICAL SIP CONNECTION DETAILS FOR VERTICAL IN-PLANE JOINTS

❖ Two types of connection details for joining adjacent panels are furnished in the figure. These connections are intended primarily for serviceability purposes and are not designed to transfer stresses between the panels.

INTERNATIONAL CODE COUNCIL®
Copyright © 2015 ICC. ALL RIGHTS RESERVED. Accessed by David Dammon on Jun 21, 2017 12:30:52 PM pursuant to License Agreement with ICC. No further reproduction or distribution authorized. ANY UNAUTHORIZED REPRODUCTION OR DISTRIBUTION IS A VIOLATION OF THE FEDERAL COPYRIGHT ACT AND THE LICENSE AGREEMENT, AND SUBJECT TO CIVIL AND CRIMINAL PENALTIES THEREUNDER.

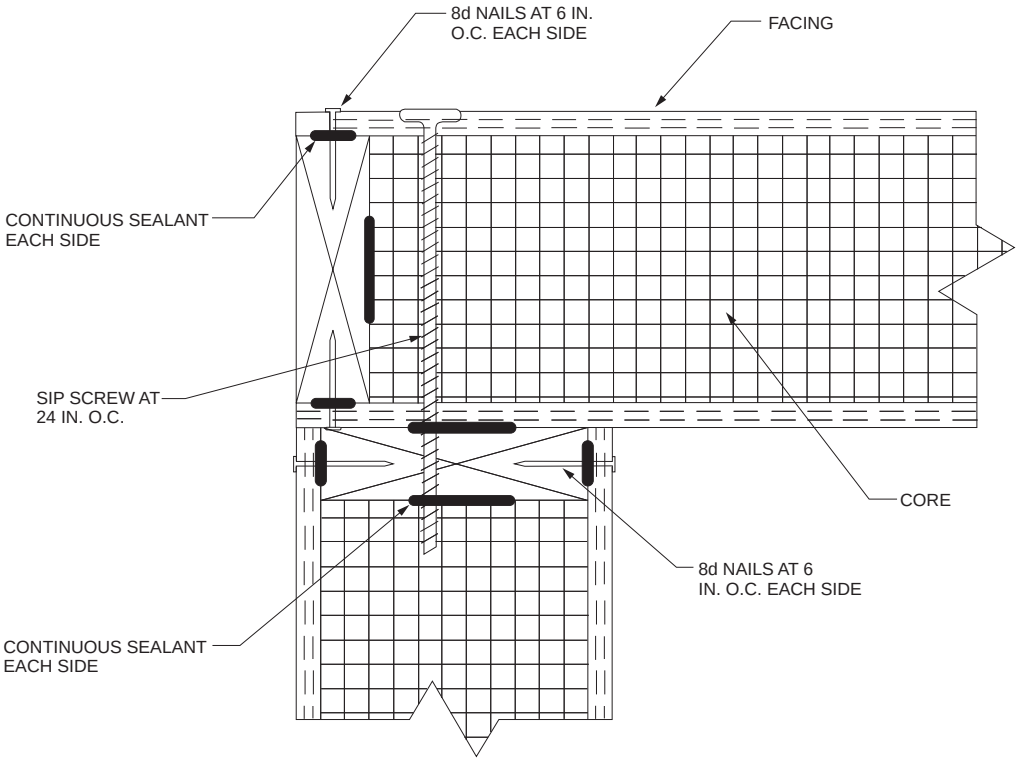

For SI: 1 inch = 25.4 mm.

FIGURE R610.9
SIP CORNER FRAMING DETAIL

❖ See the commentary to Section R610.9.

TABLE R610.10
MAXIMUM SPANS FOR $11^{7}/_{8}$-INCH-DEEP SIP HEADERS (feet)[a]

LOAD CONDITION	SNOW LOAD (psf)	BUILDING width (feet)				
		24	28	32	36	40
Supporting roof only	20	4	4	4	4	2
	30	4	4	4	2	2
	50	2	2	2	2	2
	70	2	2	2	N/A	N/A
Supporting roof and one-story	20	2	2	N/A	N/A	N/A
	30	2	2	N/A	N/A	N/A
	50	2	N/A	N/A	N/A	N/A
	70	N/A	N/A	N/A	N/A	N/A

For SI: 1 inch = 25.4 mm, 1 foot = 304.8 mm, 1 pound per square foot = 0.0479 kPa.
N/A = Not Applicable.
a. Design assumptions:
Maximum deflection criterion: *L*/360.
Maximum roof dead load: 10 psf.
Maximum ceiling load: 5 psf.
Maximum second-floor live load: 30 psf.
Maximum second-floor dead load: 10 psf.
Maximum second-floor dead load from walls: 10 psf.

❖ See the commentary to Section R610.10.

INTERNATIONAL CODE COUNCIL®
Copyright © 2015 ICC. ALL RIGHTS RESERVED. Accessed by David Dammon on Jun 21, 2017 12:30:52 PM pursuant to License Agreement with ICC. No further reproduction or distribution authorized. ANY UNAUTHORIZED REPRODUCTION OR DISTRIBUTION IS A VIOLATION OF THE FEDERAL COPYRIGHT ACT AND THE LICENSE AGREEMENT, AND SUBJECT TO CIVIL AND CRIMINAL PENALTIES THEREUNDER.

Bibliography

The following resource materials were used in the preparation of the commentary for this chapter of the code:

AAMA/WDMA/CSA 101/I.S.2/A440–11, *North American Fenestration Standard/Specification for Windows, Doors and Skylights*. Schaumburg, IL: American Architectural Manufacturers Association, 2011.

AAMA 506–11, *Voluntary Specifications for Hurricane Impact and Cycle Testing of Fenestration Products*. Schaumburg, IL: American Architectural Manufacturers Association, 2011.

ACI 318–14, *Building Code Requirements for Structural Concrete*. Farmington Hills, MI: American Concrete Institute, 2014.

ACI 530–13, *Building Code Requirements for Masonry Structures*. Farmington Hills, MI: American Concrete Institute, 2013.

AISI S100–12, *North American Specification for the Design of Cold-formed Steel Structural Members*. Washington, DC: American Iron and Steel Institute, 2012.

AISI S213–07/S1–09 (2012), *North American Standard for Cold-Formed Steel Framing-Lateral Design*, *with Supplement 1*, dated 2009, (Reaffirmed 2012). Washington, DC: American Iron and Steel Institute, 2012.

AISI S230–07/S3–12(2012), *Standard for Cold-formed Steel Framing-prescriptive Method for One- and Two-family Dwellings with Supplement 3*, dated 2012 (Reaffirmed 2012). Washington, DC: American Iron and Steel Institute, 2012.

AMD 100–2013, *Structural Performance Ratings of Side Hinged Exterior Door Systems and Procedures for Component Substitution*. New Port Richey, FL: Association of Millwork Distributors, 2013.

ANSI/APA PRG 320–2012, *Standard for Performance-rated Cross Laminated Timber*. Tacoma, WA: APA - The Engineered Wood Association, 2012.

ANSI/APA PRR 410–2011, *Standard for Performance-rated Engineered Wood Rim Boards*. Tacoma, WA: APA - The Engineered Wood Association, 2011.

APA Report T2009P-28, *Testing of Structural Insulated Panels (SIPs) with New Facer Design Properties for the Structural Insulated Panel Association, Gig Harbor, Washington*. Tacoma, WA: APA - The Engineered Wood Association, 2009.

APA Report T2012L-24, *Bracing Method Alternative Attachment (IBC), Portal Frame with Hold Downs (Bracing Method PFH) (IRC)—Hold-Down Strap Capacity Variations*. Tacoma, WA: APA - The Engineered Wood Association, 2012.

ASCE/SEI 5–13, *Building Code Requirements for Masonry Structures*. Reston, VA: American Society of Civil Engineers, 2013.

ASCE/SEI 7–10, *Minimum Design Loads for Buildings and Other Structures*. Reston, VA: American Society of Civil Engineers, 2010.

ASTM A996/A 996M–2009b, *Standard Specification for Rail-steel and Axle-steel Deformed Bars for Concrete Reinforcement*. West Conshohocken, PA: ASTM International, 2009.

ASTM C34–12, *Specification for Structural Clay Load-bearing Wall Tile*. West Conshohocken, PA: ASTM International, 2012.

ASTM C55–2011, *Specification for Concrete Building Brick*. West Conshohocken, PA: ASTM International, 2011.

ASTM C56–12, *Standard Specification for Structural Clay Nonloadbearing Tile*. West Conshohocken, PA: ASTM International, 2012.

ASTM C62–13, *Standard Specification for Building Brick (Solid Masonry Units Made from Clay or Shale)*. West Conshohocken, PA: ASTM International, 2013.

ASTM C73–10, *Specification for Calcium Silicate Face Brick (Sand Lime Brick)*. West Conshohocken, PA: ASTM International, 2010.

ASTM C90–13, *Specification for Load-bearing Concrete Masonry Units*. West Conshohocken, PA: ASTM International, 2013.

ASTM C94/C94M–13, *Standard Specification for Ready-mixed Concrete*. West Conshohocken, PA: ASTM International, 2013.

ASTM C126–13, *Standard Specification for Ceramic Glazed Structural Clay Facing Tile, Facing Brick, and Solid Masonry Units*. West Conshohocken, PA: ASTM International, 2013.

ASTM C208–12, *Specification for Cellulosic Fiber Insulating Board*. West Conshohocken, PA: ASTM International, 2010.

ASTM C212–10, *Standard Specification for Structural Clay Facing Tile*. West Conshohocken, PA: ASTM International, 2010.

ASTM C216–13, *Specification for Facing Brick (Solid Masonry Units Made from Clay or Shale)*. West Conshohocken, PA: ASTM International, 2013.

ASTM C270–12a, *Standard Specification for Mortar for Unit Masonry*. West Conshohocken, PA: ASTM International, 2012.

ASTM C476–10, *Specification for Grout for Masonry*. West Conshohocken, PA: ASTM International, 2010.

ASTM C503–10, *Standard Specification for Marble Dimension Stone*. West Conshohocken, PA: ASTM International, 2010.

ASTM C568–10, *Standard Specification for Limestone Dimension Stone*. West Conshohocken, PA: ASTM International, 2010.

INTERNATIONAL CODE COUNCIL®
Copyright © 2015 ICC. ALL RIGHTS RESERVED. Accessed by David Dammon on Jun 21, 2017 12:30:52 PM pursuant to License Agreement with ICC. No further reproduction or distribution authorized. ANY UNAUTHORIZED REPRODUCTION OR DISTRIBUTION IS A VIOLATION OF THE FEDERAL COPYRIGHT ACT AND THE LICENSE AGREEMENT, AND SUBJECT TO CIVIL AND CRIMINAL PENALTIES THEREUNDER.

ASTM C578–12b, *Standard Specification for Rigid, Cellular Polystyrene Thermal Insulation*. West Conshohocken, PA: ASTM International, 2012.

ASTM C615/C615M–11, *Standard Specification for Granite Dimension Stone*. West Conshohocken, PA: ASTM International, 2011.

ASTM C629–10, *Standard Specification for Slate Dimension Stone*. West Conshohocken, PA: ASTM International, 2010.

ASTM C652–13, *Specification for Hollow Brick (Hollow Masonry Units Made from Clay or Shale).* West Conshohocken, PA: ASTM International, 2013.

ASTM C685–11, *Standard Specification for Concrete Made by Volumetric Batching and Continuous Mixing*. West Conshohocken, PA: ASTM International, 2011.

ASTM C744–11, *Standard Specification for Prefaced Concrete and Calcium Silicate Masonry Units*. West Conshohocken, PA: ASTM International, 2011.

ASTM C887–05 (2010), *Specification for Packaged, Dry, Combined Materials for Surface Bonding Mortar*. West Conshohocken, PA: ASTM International, 2010.

ASTM C946–10, *Standard Practice for Construction of Dry-Stacked, Surface-Bonded Walls*. West Conshohocken, PA: ASTM International, 2010.

ASTM C1088–13, *Standard Specification for Thin Veneer Brick Units Made from Clay or Shale*. West Conshohocken, PA: ASTM International, 2013.

ASTM C1364–10B, *Standard Specification for Architectural Cast Stone*. West Conshohocken, PA: ASTM International, 2010.

ASTM C1386–07, *Standard Specification for Precast Autoclaved Aerated Concrete (AAC) Wall Construction Units*. West Conshohocken, PA: ASTM International, 2007.

ASTM D2559–12A, *Standard Specification for Adhesives for Structural Laminated Wood Products for Use Under Exterior (West Use) Exposure Conditions*. West Conshohocken, PA: ASTM International, 2012.

ASTM D5456–2013, *Standard Specification for Evaluation of Structural Composite Lumber Products*. West Conshohocken, PA: ASTM International, 2013.

ASTM D7672–2012, *Standard Specification for Evaluating Structural Capacities of Rim Board Products and Assemblies*. West Conshohocken, PA: ASTM International, 2013.

ASTM E330–02, *Standard Test Method for Structural Performance of Exterior Windows, Curtain Walls, Doors, Skylights by Uniform Static Air Pressure Difference*. West Conshohocken, PA: ASTM International, 2002.

ASTM E1886–05, *Standard Test Method for Performance of Exterior Windows, Curtain Walls, Doors, and Impact Protective Systems Impacted by Missile(s) and Exposed to Cyclic Pressure Differentials*. West Conshohocken, PA: ASTM International, 2005.

ASTM E1996–2012a, *Standard Specification for Performance of Exterior Windows, Curtain Walls, Doors and Impact Protective Systems Impacted by Windborne Debris in Hurricanes.* West Conshohocken, PA: ASTM International, 2012.

ASTM E2634–11, *Standard Specification for Flat Wall Insulating Concrete Form (ICF) Systems*. West Conshohocken, PA: ASTM International, 2011.

ANSI/AWC NDS–2015, *National Design Specification (NDS) for Wood Construction—with 2015 NDS Supplement*. Leesburg, VA: American Wood Council, 2015.

AWC WFCM–2015, *Wood Frame Construction Manual for One- and Two-family Dwellings*. Leesburg, VA: American Wood Council, 2015.

DASMA 108–12, *Standard Method for Testing Garage Doors: Determination of Structural Performance Under Uniform Static Air Pressure Difference*. Cleveland, OH: Door and Access Systems Manufacturers Association International, 2012.

DOC PS 1–09, *Structural Plywood.* Washington, DC: United States Department of Commerce, 2009.

DOC PS 2–10, *Performance Standard for Wood-based Structural-use Panels*. Washington, DC: United States Department of Commerce, 2010.

ICC/APA-The Engineered Wood Association, *A Guide to the 2015 IRC Wood Wall Bracing Provisions*. Washington, DC: International Code Council, Inc., 2015.

ICC ES AC 05, *Acceptance Criteria for Sandwich Panel Adhesives*. Country Club Hills, IL: ICC Evaluation Service, Inc., 2010.

ICC IBC–15, *International Building Code*. Washington, DC: International Code Council, Inc., 2014.

ICC 400–12, *Standard on the Design and Construction of Log Structures*. Washington, DC: International Code Council, Inc., 2012.

PCA 100–12, *Prescriptive Design of Exterior Concrete Walls for One- and Two-family Dwellings (Pub. No. EB241)*. Skokie, IL: Portland Cement Association, 2012.

TMS 402–2013, *Building Code Requirements for Masonry Structures*. Boulder, CO: The Masonry Society, 2013.

WDMA I.S. 11–13 *Industry Standard Analytical Method for Design Pressure (DP) Ratings of Fenestration Products*. Washington, DC: Window & Door Manufacturers Association, 2013.

INTERNATIONAL CODE COUNCIL®

Copyright © 2015 ICC. ALL RIGHTS RESERVED. Accessed by David Dammon on Jun 21, 2017 12:30:52 PM pursuant to License Agreement with ICC. No further reproduction or distribution authorized. ANY UNAUTHORIZED REPRODUCTION OR DISTRIBUTION IS A VIOLATION OF THE FEDERAL COPYRIGHT ACT AND THE LICENSE AGREEMENT, AND SUBJECT TO CIVIL AND CRIMINAL PENALTIES THEREUNDER.

Chapter 7: Wall Covering

General Comments

Interior wall coverings are used for a variety of purposes. Often designed simply as an aesthetic element to finish the interior of the building, these wall coverings may also protect structural elements from impact or moisture damage. Exterior wall coverings, in great part, provide the weather-resistant exterior envelope that protects the building's interior from the elements. As evidenced by the common use of exterior insulation and finish systems (EIFS) in various regions of the country, new methods and materials are constantly introduced to provide different appearances, improved insulating quality, sound transmission control and fire resistance. The code has developed prescriptive and performance regulations to control these aspects and the types and thickness of exterior wall coverings.

This chapter contains provisions for the design and construction of interior and exterior wall coverings. In addition to identifying the various types of wall coverings regulated by the code, Chapter 7 references a number of material standards related to the specific types of wall covering materials. Of primary consideration are the application methods prescribed by the code for those wall covering materials conforming to their applicable referenced standard.

Section R701 establishes the scope of the chapter and a general requirement dealing with weather protection for wall covering materials sensitive to adverse weather conditions. Section R702 establishes the various types of materials—including interior plaster, gypsum board, ceramic tile, wood veneer paneling, hardboard paneling, wood shakes and wood shingles— material standards and methods of application permitted when installing interior coverings. The requirements for the use of vapor retarders for wall moisture control are included in this section. Section R703 addresses exterior wall coverings as well as the water-resistive barrier required beneath the exterior materials. Exterior wall coverings regulated by this section include aluminum, stone and masonry veneer, wood, hardboard, particle- board, wood structural panel siding, wood shakes and shingles, exterior plaster, steel, vinyl, fiber cement, exterior insulation finish, insulated vinyl siding and polypropylene siding.

Purpose

This chapter provides the minimum requirements applicable to wall covering materials used both in exterior and interior applications. It specifies the types of wall coverings addressed by the code, including such common materials as gypsum board and ceramic tile used on a building's interior, as well as horizontal siding and wood structural panel siding installed as the exterior membrane.

SECTION R701 GENERAL

R701.1 Application. The provisions of this chapter shall control the design and construction of the interior and exterior wall covering for buildings.

❖ Chapter 7 deals with both interior and exterior wall coverings. A variety of interior coverings are regulated, including interior plaster, gypsum board, ceramic tile, wood veneer paneling, hardboard paneling, wood shakes and wood shingles. Aluminum, stone and masonry veneer, wood, hardboard, particleboard, wood structural panel siding, wood shakes and shingles, exterior plaster, steel, vinyl, fiber cement, exterior insulation finish, insulated vinyl siding and polypropylene siding are addressed where used as exterior wall coverings.

R701.2 Installation. Products sensitive to adverse weather shall not be installed until adequate weather protection for the installation is provided. Exterior sheathing shall be dry before applying exterior cover.

❖ Because many materials are subject to deterioration from the effects of moisture or other adverse weather conditions, the code limits the installation of such materials until proper weather protection is in place. Gypsum plaster systems, gypsum board and interior-grade plywood are particularly sensitive to moisture. It is also critical that exterior sheathing be dry prior to installation of the surface cover materials. Entrapment of moisture in the exterior wall assembly can result in reduced effectiveness of the wall over time.

To assist in the application of the provisions of this chapter, it is important to understand the terminology that is used. Commentary Figures R701.2(1) and R701.2(2) provide pictorial descriptions of several of these terms.

SECTION R702 INTERIOR COVERING

R702.1 General. Interior coverings or wall finishes shall be installed in accordance with this chapter and Table R702.1(1), Table R702.1(2), Table R702.1(3) and Table R702.3.5. Interior masonry veneer shall comply with the requirements of Section R703.7.1 for support and Section R703.7.4 for anchorage, except an airspace is not required. Interior finishes

INTERNATIONAL CODE COUNCIL®
Copyright © 2015 ICC. ALL RIGHTS RESERVED. Accessed by David Dammon on Jun 21, 2017 12:30:52 PM pursuant to License Agreement with ICC. No further reproduction or distribution authorized. ANY UNAUTHORIZED REPRODUCTION OR DISTRIBUTION IS A VIOLATION OF THE FEDERAL COPYRIGHT ACT AND THE LICENSE AGREEMENT, AND SUBJECT TO CIVIL AND CRIMINAL PENALTIES THEREUNDER.

and materials shall conform to the flame spread and smoke-development requirements of Section R302.9.

❖ This section contains the installation requirements for interior wall coverings. Interior wall coverings of plaster and gypsum board must be installed in accordance with the applicable tables. The installation requirements include material orientation, backing support, spacing and size as well as method of attachment to supports. These requirements can result in wall coverings that will perform as intended in regard to durability and appearance. Interior wall coverings of masonry veneer must be supported in accordance with Section R703.8.1 and anchored in accordance with Section R703.8.4. No airspace is required for interior masonry veneer since it is not required to be weather resistant. All interior finishes must meet the flame spread and smoke-development provisions of Section R302.9.

R702.2 Interior plaster.

❖ Multicoat plastering has been commonplace for the past century. The industry generally views multicoat work as necessary for control of plaster thickness and density, particularly when applied by hand. Because of the uniformity created where plaster is applied in thin, successive layers, the code requires three-coat plastering over metal lath and two-coat work over other plaster bases approved for use by the code. Reducing the requirement for plaster bases other than metal lath depends on the rigidity of the plaster base itself. More-rigid plaster bases are not as susceptible to variations in thickness and flatness of the surface. In fact, the first coat applied in three-coat work on a flexible base, such as metal lath, is used to stiffen that base to provide the rigidity necessary to attain uniform thickness and surface flatness.

Both a gypsum plaster and a cement plaster interior wall covering system are shown in Commentary Figure R702.2(1). The finished thicknesses for both plastering methods, determined by the type of base materials, are set forth in Table R702.1(1). Commentary Figure R702.2(2) illustrates the veneer plaster interior wall covering system. This section also cites the material standards to which gypsum plaster and cement plaster must conform.

R702.2.1 Gypsum plaster. Gypsum plaster materials shall conform to ASTM C5, C22, C28, C35, C59, C61, C587, C631, C847, C933, C1032 and C1047, and shall be installed or applied in compliance with ASTM C843 and C844. Gypsum lath or gypsum base for veneer plaster shall conform to ASTM C1396. Plaster shall be not less than three coats where applied over metal lath and not less than two coats where applied over other bases permitted by this section, except that veneer plaster shall be applied in one coat not to exceed $^{3}/_{16}$ inch (4.76 mm) thickness, provided the total thickness is in accordance with Table R702.1(1).

❖ This section sets forth the standards applicable to gypsum plaster materials. These materials are to be installed according to ASTM C843 and C844. The minimum number of coats of gypsum plaster is established according to the type of base upon which they are installed.

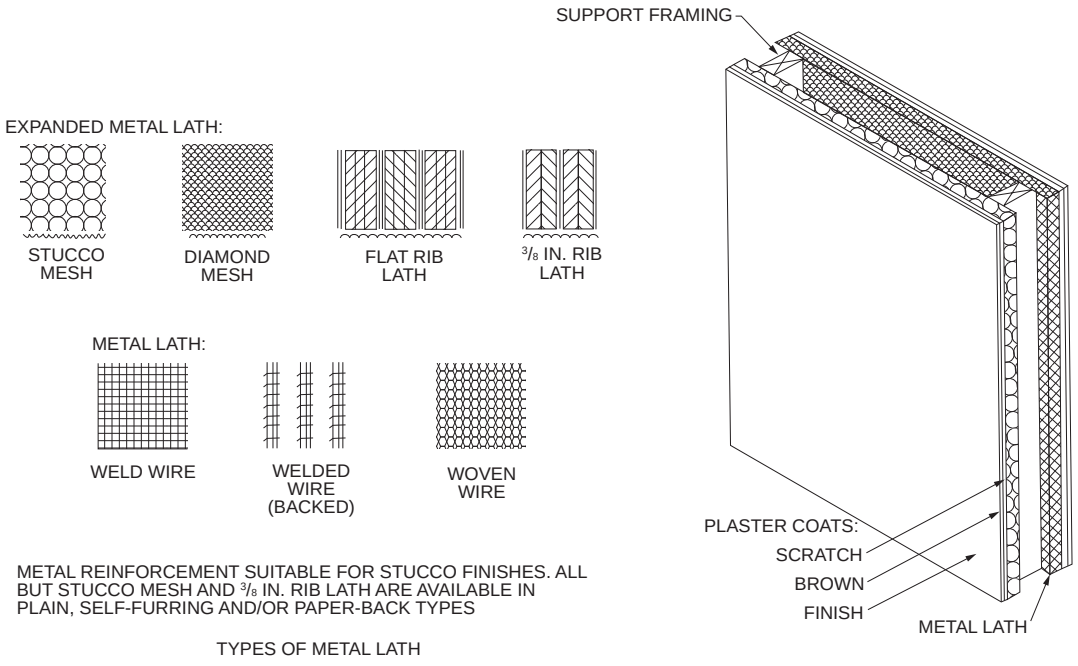

For SI: 1 inch = 25.4 mm.

Figure R701.2(1)
PLASTER WALL COVERING—APPLICABLE TERMS

INTERNATIONAL CODE COUNCIL®
Copyright © 2015 ICC. ALL RIGHTS RESERVED. Accessed by David Dammon on Jun 21, 2017 12:30:52 PM pursuant to License Agreement with ICC. No further reproduction or distribution authorized. ANY UNAUTHORIZED REPRODUCTION OR DISTRIBUTION IS A VIOLATION OF THE FEDERAL COPYRIGHT ACT AND THE LICENSE AGREEMENT, AND SUBJECT TO CIVIL AND CRIMINAL PENALTIES THEREUNDER.

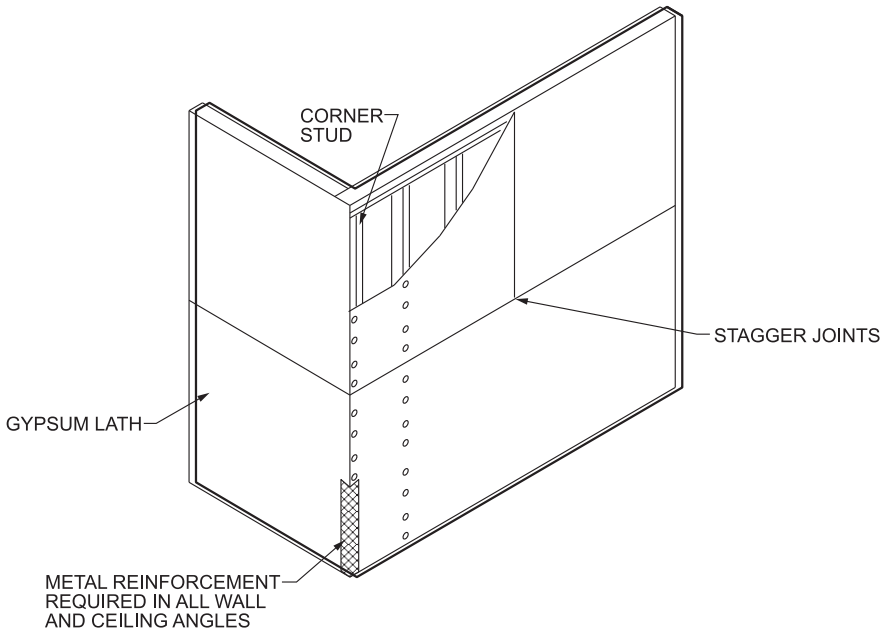

Figure R701.2(2)
GYPSUM APPLICATION—TERMS

TABLE R702.1(1)
THICKNESS OF PLASTER

PLASTER BASE	FINISHED THICKNESS OF PLASTER FROM FACE OF LATH, MASONRY, CONCRETE (inches)	
	Gypsum Plaster	Cement Plaster
Expanded metal lath	$^5/_8$, minimum[a]	$^5/_8$, minimum[a]
Wire lath	$^5/_8$, minimum[a]	$^3/_4$, minimum (interior)[b] $^7/_8$, minimum (exterior)[b]
Gypsum lath[g]	$^1/_2$, minimum	$^3/_4$, minimum (interior)[b]
Masonry walls[c]	$^1/_2$, minimum	$^1/_2$, minimum
Monolithic concrete walls[c, d]	$^5/_8$, maximum	$^7/_8$, maximum
Monolithic concrete ceilings[c, d]	$^3/_8$, maximum[e]	$^1/_2$, maximum
Gypsum veneer base[f, g]	$^1/_{16}$, minimum	$^3/_4$, minimum (interior)[b]
Gypsum sheathing[g]	—	$^3/_4$, minimum (interior)[b] $^7/_8$, minimum (exterior)[b]

For SI: 1 inch = 25.4 mm.

a. Where measured from back plane of expanded metal lath, exclusive of ribs, or self-furring lath, plaster thickness shall be $^3/_4$ inch minimum.
b. Where measured from face of support or backing.
c. Because masonry and concrete surfaces vary in plane, thickness of plaster need not be uniform.
d. Where applied over a liquid bonding agent, finish coat shall be permitted to be applied directly to concrete surface.
e. Approved acoustical plaster shall be permitted to be applied directly to concrete or over base coat plaster, beyond the maximum plaster thickness shown.
f. Attachment shall be in accordance with Table R702.3.5.
g. Where gypsum board is used as a base for cement plaster, a water-resistive barrier complying with Section R703.2 shall be provided.

❖ Based on several variables, this table sets forth the required plaster thickness measured from the face of the lath, masonry or concrete to the plaster surface. Both gypsum plaster and Portland cement mortar are addressed, with the option of the plaster application occurring over a variety of plaster bases. In most cases, the minimum plaster thickness is mandated; however, the maximum thickness is regulated where plaster is applied over a monolithic concrete wall or ceiling.

INTERNATIONAL CODE COUNCIL®
Copyright © 2015 ICC. ALL RIGHTS RESERVED. Accessed by David Dammon on Jun 21, 2017 12:30:52 PM pursuant to License Agreement with ICC. No further reproduction or distribution authorized. ANY UNAUTHORIZED REPRODUCTION OR DISTRIBUTION IS A VIOLATION OF THE FEDERAL COPYRIGHT ACT AND THE LICENSE AGREEMENT, AND SUBJECT TO CIVIL AND CRIMINAL PENALTIES THEREUNDER.

TABLE R702.1(2)
GYPSUM PLASTER PROPORTIONS[a]

NUMBER	COAT	PLASTER BASE OR LATH	MAXIMUM VOLUME AGGREGATE PER 100 POUNDS NEAT PLASTER[b] (cubic feet)	
			Damp Loose Sand[a]	Perlite or Vermiculite[c]
Two-coat work	Base coat	Gypsum lath	2.5	2
	Base coat	Masonry	3	3
Three-coat work	First coat	Lath	2[d]	2
	Second coat	Lath	3[d]	2[e]
	First and second coats	Masonry	3	3

For SI: 1 inch = 25.4 mm, 1 cubic foot = 0.0283 m^3, 1 pound = 0.454 kg.

a. Wood-fibered gypsum plaster shall be mixed in the proportions of 100 pounds of gypsum to not more than 1 cubic foot of sand where applied on masonry or concrete.

b. Where determining the amount of aggregate in set plaster, a tolerance of 10 percent shall be allowed.

c. Combinations of sand and lightweight aggregate shall be permitted to be used, provided the volume and weight relationship of the combined aggregate to gypsum plaster is maintained.

d. If used for both first and second coats, the volume of aggregate shall be permitted to be 2.5 cubic feet.

e. Where plaster is 1 inch or more in total thickness, the proportions for the second coat may be increased to 3 cubic feet.

❖ This table covers the maximum permitted amount of aggregate for gypsum plaster, measured in cubic feet per 100 pounds (16 oz kg/m). Applicable for damp, loose sand, perlite and vermiculite, the limits vary based on the type of plaster base or lath. The maximum proportions for each coat of both two-coat and three-coat plaster systems are identified.

TABLE R702.1(3)
CEMENT PLASTER PROPORTIONS, PARTS BY VOLUME

COAT	CEMENT PLASTER TYPE	CEMENTITIOUS MATERIALS				VOLUME OF AGGREGATE PER SUM OF SEPARATE VOLUMES OF CEMENTITIOUS MATERIALS[b]
		Portland Cement Type I, II or III or Blended Cement Type IP, I (PM), IS or I (SM)	Plastic Cement	Masonry Cement Type M, S or N	Lime	
First	Portland or blended	1			$^3/_4$ - $1^1/_2$[a]	$2^1/_2$ - 4
	Masonry			1		$2^1/_2$ - 4
	Plastic		1			$2^1/_2$ - 4
Second	Portland or blended	1			$^3/_4$ - $1^1/_2$	3 - 5
	Masonry			1		3 - 5
	Plastic		1			3 - 5
Finish	Portland or blended	1			$^3/_4$ - 2	$1^1/_2$ - 3
	Masonry			1		$1^1/_2$ - 3
	Plastic		1			$1^1/_2$ - 3

For SI: 1 inch = 25.4 mm, 1 pound = 0.454 kg.

a. Lime by volume of 0 to $^3/_4$ shall be used where the plaster will be placed over low-absorption surfaces such as dense clay tile or brick.

b. The same or greater sand proportion shall be used in the second coat than used in the first coat.

❖ Where cement plaster is used rather than gypsum plaster, this table is applicable for determining the maximum permitted volume of Portland, blended, plastic or masonry cement, lime and aggregate. In addition, the minimum period for moist curing of interior cement plaster and the minimum required interval between coats are established.

INTERNATIONAL CODE COUNCIL®
Copyright © 2015 ICC. ALL RIGHTS RESERVED. Accessed by David Dammon on Jun 21, 2017 12:30:52 PM pursuant to License Agreement with ICC. No further reproduction or distribution authorized. ANY UNAUTHORIZED REPRODUCTION OR DISTRIBUTION IS A VIOLATION OF THE FEDERAL COPYRIGHT ACT AND THE LICENSE AGREEMENT, AND SUBJECT TO CIVIL AND CRIMINAL PENALTIES THEREUNDER.

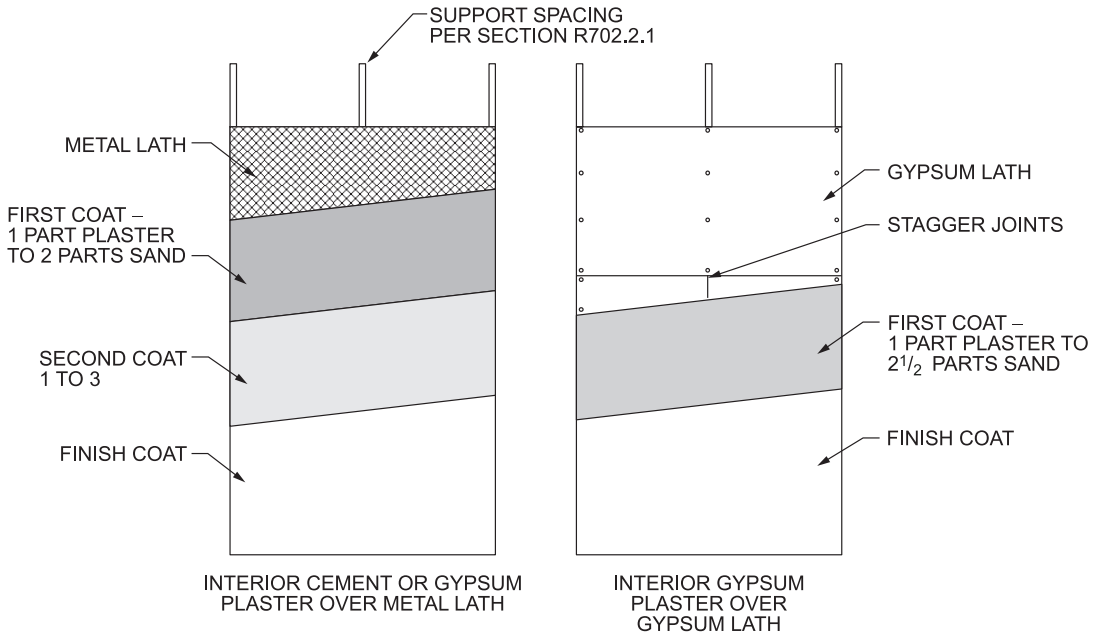

Figure R702.2(1)
INTERIOR PLASTERING SYSTEM

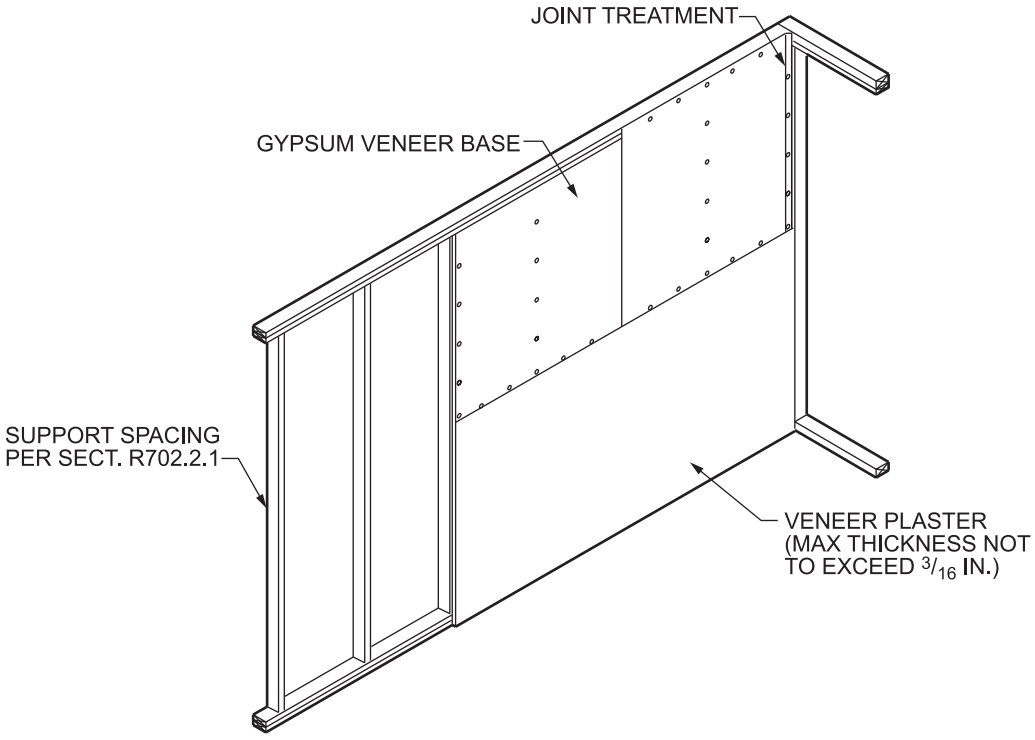

For SI: 1 inch = 25.4 mm.

Figure R702.2(2)
VENEER PLASTER SYSTEM

INTERNATIONAL CODE COUNCIL®
Copyright © 2015 ICC. ALL RIGHTS RESERVED. Accessed by David Dammon on Jun 21, 2017 12:30:52 PM pursuant to License Agreement with ICC. No further reproduction or distribution authorized. ANY UNAUTHORIZED REPRODUCTION OR DISTRIBUTION IS A VIOLATION OF THE FEDERAL COPYRIGHT ACT AND THE LICENSE AGREEMENT, AND SUBJECT TO CIVIL AND CRIMINAL PENALTIES THEREUNDER.

R702.2.2 Cement plaster. Cement plaster materials shall conform to ASTM C91 (Type M, S or N), C150 (Type I, II and III), C595 [Type IP, I (PM), IS and I (SM), C847, C897, C926, C933, C1032, C1047 and C1328, and shall be installed or applied in compliance with ASTM C1063. Gypsum lath shall conform to ASTM C1396. Plaster shall be not less than three coats where applied over metal lath and not less than two coats where applied over other bases permitted by this section, except that veneer plaster shall be applied in one coat not to exceed $^3/_{16}$ inch (4.76 mm) thickness, provided the total thickness is in accordance with Table R702.1(1).

❖ This section sets forth the standards applicable to cement plaster materials. These materials are to be installed according to ASTM C1063. The minimum number of coats of cement plaster is established according to the type of base upon which they are installed.

R702.2.2.1 Application. Each coat shall be kept in a moist condition for not less than 24 hours prior to application of the next coat.

Exception: Applications installed in accordance with ASTM C926.

❖ This section establishes the minimum amount of time the previous coat of plaster must remain moist before applying another coat.

R702.2.2.2 Curing. The finish coat for two-coat cement plaster shall not be applied sooner than 48 hours after application of the first coat. For three-coat cement plaster, the second coat shall not be applied sooner than 24 hours after application of the first coat. The finish coat for three-coat cement plaster shall not be applied sooner than 48 hours after application of the second coat.

❖ This section establishes the minimum amount of time the previous coat of plaster must cure before applying another coat.

R702.2.3 Support. Support spacing for gypsum or metal lath on walls or ceilings shall not exceed 16 inches (406 mm) for $^3/_8$-inch-thick (9.5 mm) or 24 inches (610 mm) for $^1/_2$-inch-thick (12.7 mm) plain gypsum lath. Gypsum lath shall be installed at right angles to support framing with end joints in adjacent courses staggered by not less than one framing space.

❖ To provide a relatively firm base for the first layer of plaster, the code mandates a maximum span between supporting elements of the lath. Applicable to both gypsum and metal lath for either wall or ceiling installations, the maximum spacing of supports is based on the lath thickness. Gypsum lath must be installed perpendicular to the direction of the support framing, with the end joints staggered in adjacent courses.

R702.3 Gypsum board and gypsum panel products.

❖ Gypsum board and gypsum panel products are by far the most commonly used interior coverings and are available in a variety of types and sizes. This section sets forth the criteria for the application of gypsum board and gypsum panel products in wall and ceiling applications.

R702.3.1 Materials. Gypsum board and gypsum panel product materials and accessories shall conform to ASTM C22, C475, C514, C1002, C1047, C1177, C1178, C1278, C1396 or C1658 and shall be installed in accordance with the provisions of this section. Adhesives for the installation of gypsum board and gypsum panel products shall conform to ASTM C557.

❖ This section sets forth the standards applicable to gypsum board materials and accessories. Included in the list of standards is ASTM C557, which deals with the use of adhesives to attach gypsum board to wood framing members.

R702.3.2 Wood framing. Wood framing supporting gypsum board and gypsum panel products shall be not less than 2 inches (51 mm) nominal thickness in the least dimension except that wood furring strips not less than 1-inch by 2-inch (25 mm by 51 mm) nominal dimension shall be permitted to be used over solid backing or framing spaced not more than 24 inches (610 mm) on center.

❖ For adequate structural backing, vertical support for gypsum board or gypsum panel products used as an interior wall covering is required to be no less than 2 inches (51 mm) nominal thickness. Dimensional lumber meeting this 2-inch (51 mm) nominal dimension would have an actual thickness of approximately $1^1/_2$ inches (38 mm).

Wood stripping used as furring over vertical supports on which the interior wall covering is to be applied is also required to meet the 2-inch (51 mm) nominal dimension in any direction unless the framing members are spaced at 24 inches (610 mm) on center or less. Where the spacing of the framing does not exceed 24 inches (610 mm) or where the furring strips are placed on solid backing, the minimum size requirements are reduced to 1 inch by 2 inches (25.4 mm by 51 mm).

Commentary Figures R702.3.2(1), R702.3.2(2) and R702.3.2(3) illustrate the dimensional constraints.

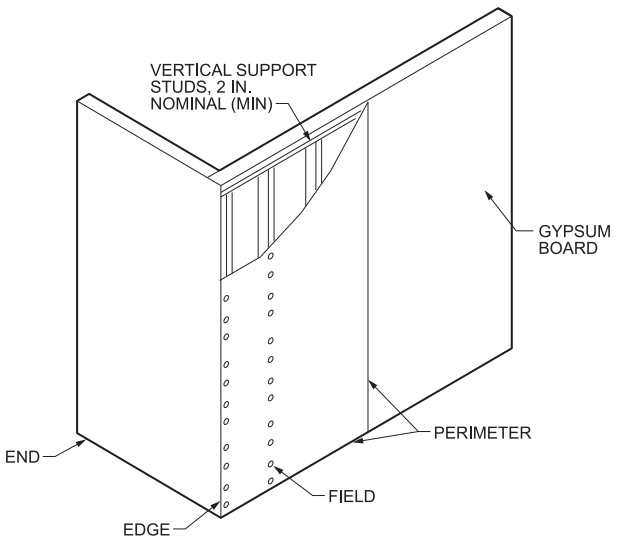

For SI: 1 inch = 25.4 mm.

Figure R702.3.2(1)
INTERIOR WALL COVERING—DIRECT APPLICATION

INTERNATIONAL CODE COUNCIL®
Copyright © 2015 ICC. ALL RIGHTS RESERVED. Accessed by David Dammon on Jun 21, 2017 12:30:52 PM pursuant to License Agreement with ICC. No further reproduction or distribution authorized. ANY UNAUTHORIZED REPRODUCTION OR DISTRIBUTION IS A VIOLATION OF THE FEDERAL COPYRIGHT ACT AND THE LICENSE AGREEMENT, AND SUBJECT TO CIVIL AND CRIMINAL PENALTIES THEREUNDER.

R702.3.3 Cold-formed steel framing. Cold-formed steel framing supporting gypsum board and gypsum panel products shall be not less than $1^1/_4$ inches (32 mm) wide in the least dimension. Nonload-bearing cold-formed steel framing shall comply with AISI S220 and ASTM C645, Section 10. Load-bearing cold-formed steel framing shall comply with AISI S200 and ASTM C 955, Section 8.

❖ In the same manner as wood framing, cold-formed steel framing must be of a minimum cross-sectional dimension where used to support gypsum board or gypsum panel products. For cold-formed steel members, the minimum dimension must be $1^1/_4$ inches (32 mm).

This section also references two standards covering cold-formed steel framing members. ASTM C645 addresses nonstructural cold-formed steel framing members, while ASTM C955 addresses load-bearing cold-formed steel studs, tracks and bracing for gypsum panels.

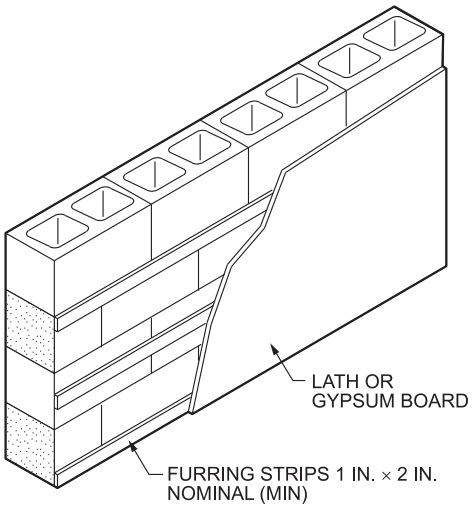

For SI: 1 inch = 1 inch = 25.4 mm.

Figure R702.3.2(2)
INTERIOR WALL COVERING—FURRED APPLICATION OVER MASONRY OR CONCRETE

R702.3.4 Insulating concrete form walls. Foam plastics for insulating concrete form walls constructed in accordance with Sections R404.1.2 and R608 on the interior of *habitable spaces* shall be protected in accordance with Section R316.4. Use of adhesives in conjunction with mechanical fasteners is permitted. Adhesives used for interior and exterior finishes shall be compatible with the insulating form materials.

❖ Reinforcing the provisions of Section R316.4 regarding the thermal barrier requirement for foam plastic insulation, this section references the requirements in Chapters 4 and 6 regulating foundation walls and insulating concrete form (ICF) wall systems. Foam plastic insulation used in these wall applications must be separated from the interior of the building by a minimum $^1/_2$-inch (12.7 mm) gypsum board or equivalent material.

Adhesives may be used to fasten the protective membrane (typically gypsum board) over the ICF wall. In all cases, however, mechanical fasteners must supplement the adhesive. Total reliance on the adhesive to provide the continued protection afforded by the gypsum board during a fire is misguided. Where used in conjunction with mechanical fasteners, adhesives must also be compatible with the insulating form materials.

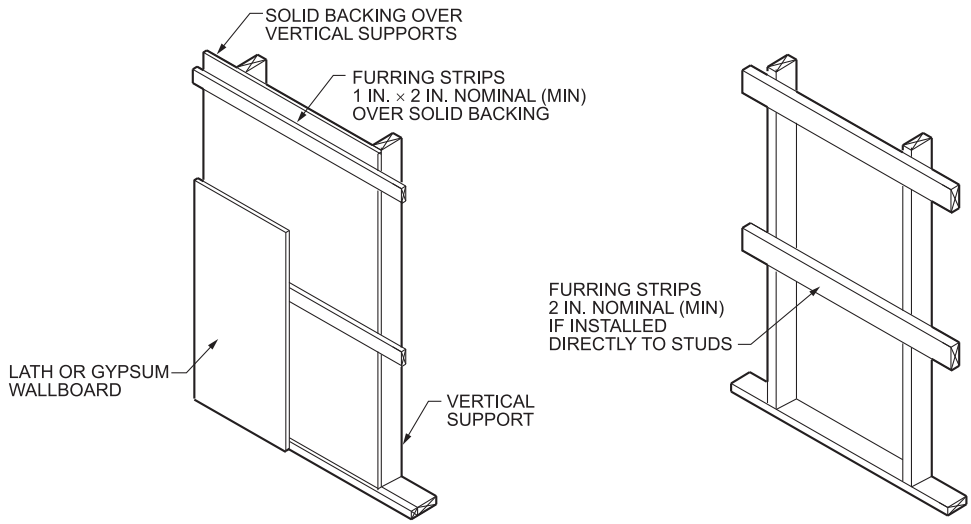

For SI: 1 inch = 25.4 mm.

Figure R702.3.2(3)
INTERIOR WALL COVERING—FURRED APPLICATION OVER SOLID BACKING OR OVER STUDS

INTERNATIONAL CODE COUNCIL®
Copyright © 2015 ICC. ALL RIGHTS RESERVED. Accessed by David Dammon on Jun 21, 2017 12:30:52 PM pursuant to License Agreement with ICC. No further reproduction or distribution authorized. ANY UNAUTHORIZED REPRODUCTION OR DISTRIBUTION IS A VIOLATION OF THE FEDERAL COPYRIGHT ACT AND THE LICENSE AGREEMENT, AND SUBJECT TO CIVIL AND CRIMINAL PENALTIES THEREUNDER.

R702.3.5 Application. Supports and fasteners used to attach gypsum board and gypsum panel products shall comply with Table R702.3.5. Gypsum sheathing shall be attached to exterior walls in accordance with Table R602.3(1). Gypsum board and gypsum panel products shall be applied at right angles or parallel to framing members. All edges and ends of gypsum board and gypsum panel products shall occur on the framing members, except those edges and ends that are perpendicular to the framing members. Interior gypsum board shall not be installed where it is directly exposed to the weather or to water.

❖ To provide adequate backing for nailing the gypsum board or gypsum panel products to the support framing, all edges and ends, except those that are perpendicular to framing support members, must occur on framing members. Gypsum board may be installed in either a perpendicular or parallel manner. This is illustrated in Commentary Figure R702.3.5(1). Already addressed in a general sense in Section R701.2, the installation of interior gypsum board and gypsum panel products must not be done while the interior of the building is exposed to weather. Direct exposure of interior gypsum board and gypsum panel products to weather or water is not permitted.

R702.3.5.1 Screw fastening. Screws for attaching gypsum board and gypsum panel products to wood framing shall be Type W or Type S in accordance with ASTM C1002 and shall penetrate the wood not less than $^5/_8$ inch (15.9 mm). Gypsum board and gypsum panel products shall be attached to cold-formed steel framing with minimum No. 6 screws. Screws for attaching gypsum board and gypsum panel products to cold-formed steel framing less than 0.033 inch (1 mm) thick shall be Type S in accordance with ASTM C1002 or bugle head style in accordance with ASTM C1513 and shall penetrate the steel not less than $^3/_8$ inch (9.5 mm). Screws for attaching gypsum board and gypsum panel products to cold-formed steel framing 0.033 inch to 0.112 inch (1 mm to 3 mm) thick shall be in accordance with ASTM C954 or bugle head style in accordance with ASTM C1513. Screws for attaching gypsum board and gypsum panel products to structural insulated panels shall penetrate the wood structural panel facing not less than $^7/_{16}$ inch (11.1 mm).

❖ Screws may be used in place of nails in the application of gypsum board and gypsum panel products. This section restates the provisions of Table R702.3.5 regarding the use of screws. Where gypsum board is attached to wood framing members, screws complying with ASTM C1002 Type S or W are to be spaced in accordance with the table and must penetrate wood framing members a minimum of $^5/_8$ inch (15.9 mm). Where attaching gypsum board or gypsum panel products to cold-formed steel framing members, a minimum No. 6 screw is required. For cold-formed steel framing members less than 0.033 inch (1 mm) thick, screws must comply with either ASTM C1002 Type S or ASTM C1513 bugle-head style and must penetrate a minimum of $^3/_8$ inch (9.5 mm) into the framing. For cold-formed steel framing members 0.033 inch to 0.112 inch (1 mm to 3 mm) thick, screws must comply with either ASTM C1002 Type S or ASTM C1513 bugle-head style. Where attaching gypsum board or gypsum panel products to wood structural panels, the screws must penetrate a minimum of $^7/_{16}$ inch (11 mm) into the panel.

R702.3.6 Horizontal gypsum board diaphragm ceilings. Gypsum board and gypsum panel products shall be permitted on wood joists to create a horizontal *diaphragm* in accordance with Table R702.3.6. Gypsum board and gypsum panel products shall be installed perpendicular to ceiling framing members. End joints of adjacent courses of board and panels shall not occur on the same joist. The maximum allowable *diaphragm* proportions shall be $1^1/_2$:1 between shear resisting elements. Rotation or cantilever conditions shall not be permitted. Gypsum board or gypsum panel products shall not be used in *diaphragm* ceilings to resist lateral forces imposed by masonry or concrete construction. Perimeter edges shall be blocked using wood members not less than 2-inch by 6-inch (51 mm by 152 mm) nominal dimension. Blocking material shall be installed flat over the top plate of the wall to provide a nailing surface not less than 2 inches (51 mm) in width for the attachment of the gypsum board or gypsum panel product.

❖ Generally a gypsum board or gypsum panel product ceiling does not serve as a load-carrying structural element for other than its own weight. This section provides installation requirements [refer to Commentary Figure R702.3.7(1)] that allow gypsum board and gypsum panel products to be used as membranes in horizontal diaphragm ceilings. When installed according to this section, it provides an economical and aesthetically pleasing finished surface that can also resist horizontal shear and wind forces.

Table R702.3.6 provides the shear capacity, maximum fastener spacing and minimum edge distance that is to be used in designing a horizontal gypsum board or gypsum panel product ceiling diaphragm. Because the material thickness and fastener size do not vary, the capacity is strictly a function of the framing member spacing. Further qualifications on the tabulated shear capacities that are stated in the footnotes include: ceiling diaphragm capacities are not cumulative with other diaphragm capacities; the capacities given are only for "short-term" loads due to wind and earthquakes; in structures classified as Seismic Design Category D_0, D_1, D_2, or E the capacities must be reduced by 50 percent.

Limiting diaphragm proportions and prohibiting cantilevers and rotation control the deflection and distortion of the ceiling diaphragm [see Commentary Figure R702.3.6(1)].

The use of a gypsum board or gypsum panel product ceiling diaphragm to resist lateral loads from masonry or concrete is prohibited.

All perimeter edges must be blocked [see Commentary Figure R702.3.6(2)].

INTERNATIONAL CODE COUNCIL®
Copyright © 2015 ICC. ALL RIGHTS RESERVED. Accessed by David Dammon on Jun 21, 2017 12:30:52 PM pursuant to License Agreement with ICC. No further reproduction or distribution authorized. ANY UNAUTHORIZED REPRODUCTION OR DISTRIBUTION IS A VIOLATION OF THE FEDERAL COPYRIGHT ACT AND THE LICENSE AGREEMENT, AND SUBJECT TO CIVIL AND CRIMINAL PENALTIES THEREUNDER.

TABLE R702.3.5
MINIMUM THICKNESS AND APPLICATION OF GYPSUM BOARD AND GYPSUM PANEL PRODUCTS

THICKNESS OF GYPSUM BOARD OR GYPSUM PANEL PRODUCTS (inches)	APPLICATION	ORIENTATION OF GYPSUM BOARD OR GYPSUM PANEL PRODUCTS TO FRAMING	MAXIMUM SPACING OF FRAMING MEMBERS (inches o.c.)	MAXIMUM SPACING OF FASTENERS (inches)		SIZE OF NAILS FOR APPLICATION TO WOOD FRAMING[c]
				Nails[a]	Screws[b]	
Application without adhesive						
3/8	Ceiling[d]	Perpendicular	16	7	12	13 gage, 1 1/4″ long, 19/64″ head; 0.098″ diameter, 1 1/4″ long, annular-ringed; or 4d cooler nail, 0.080″ diameter, 1 3/8″ long, 7/32″ head.
	Wall	Either direction	16	8	16	
1/2	Ceiling	Either direction	16	7	12	13 gage, 1 3/8″ long, 19/64″ head; 0.098″ diameter, 1 1/4″ long, annular-ringed; 5d cooler nail, 0.086″ diameter, 1 5/8″ long, 15/64″ head; or gypsum board nail, 0.086″ diameter, 1 5/8″ long, 9/32″ head.
	Ceiling[d]	Perpendicular	24	7	12	
	Wall	Either direction	24	8	12	
	Wall	Either direction	16	8	16	
5/8	Ceiling	Either direction	16	7	12	13 gage, 1 5/8″ long, 19/64″ head; 0.098″ diameter, 1 3/8″ long, annular-ringed; 6d cooler nail, 0.092″ diameter, 1 7/8″ long, 1/4″ head; or gypsum board nail, 0.0915″ diameter, 1 7/8″ long, 19/64″ head.
	Ceiling	Perpendicular	24	7	12	
	Type X at garage ceiling beneath habitable rooms	Perpendicular	24	6	6	1 7/8″ long 6d coated nails or equivalent drywall screws. Screws shall comply with Section R702.3.5.1
	Wall	Either direction	24	8	12	13 gage, 1 5/8″ long, 19/64″ head; 0.098″ diameter, 1 3/8″ long, annular-ringed; 6d cooler nail, 0.092″ diameter, 1 7/8″ long, 1/4″ head; or gypsum board nail, 0.0915″ diameter, 1 7/8″ long, 19/64″ head.
	Wall	Either direction	16	8	16	
Application with adhesive						
3/8	Ceiling[d]	Perpendicular	16	16	16	Same as above for 3/8″ gypsum board and gypsum panel products.
	Wall	Either direction	16	16	24	
1/2 or 5/8	Ceiling	Either direction	16	16	16	Same as above for 1/2″ and 5/8″ gypsum board and gypsum panel products, respectively.
	Ceiling[d]	Perpendicular	24	12	16	
	Wall	Either direction	24	16	24	
Two 3/8 layers	Ceiling	Perpendicular	16	16	16	Base ply nailed as above for 1/2″ gypsum board and gypsum panel products; face ply installed with adhesive.
	Wall	Either direction	24	24	24	

For SI: 1 inch = 25.4 mm.

a. For application without adhesive, a pair of nails spaced not less than 2 inches apart or more than 2 1/2 inches apart shall be permitted to be used with the pair of nails spaced 12 inches on center.

b. Screws shall be in accordance with Section R702.3.6. Screws for attaching gypsum board or gypsum panel products to structural insulated panels shall penetrate the wood structural panel facing not less than 7/16 inch.

c. Where cold-formed steel framing is used with a clinching design to receive nails by two edges of metal, the nails shall be not less than 5/8 inch longer than the gypsum board or gypsum panel product thickness and shall have ringed shanks. Where the cold-formed steel framing has a nailing groove formed to receive the nails, the nails shall have barbed shanks or be 5d, 13 1/2 gage, 1 5/8 inches long, 15/64-inch head for 1/2-inch gypsum board or gypsum panel product; and 6d, 13 gage, 1 7/8 inches long, 15/64-inch head for 5/8-inch gypsum board or gypsum panel product.

d. Three-eighths-inch-thick single-ply gypsum board or gypsum panel product shall not be used on a ceiling where a water-based textured finish is to be applied, or where it will be required to support insulation above a ceiling. On ceiling applications to receive a water-based texture material, either hand or spray applied, the gypsum board or gypsum panel product shall be applied perpendicular to framing. Where applying a water-based texture material, the minimum gypsum board thickness shall be increased from 3/8 inch to 1/2 inch for 16-inch on center framing, and from 1/2 inch to 5/8 inch for 24-inch on center framing or 1/2-inch sag-resistant gypsum ceiling board shall be used.

❖ Table R702.3.5 is a comprehensive table identifying the minimum thickness and fastening requirements for gypsum board. The gypsum board thickness [3/8-inch, 1/2-inch or 5/8-inch (10 mm, 12.7 mm or 16 mm)], location of the gypsum board (wall or ceiling), orientation of the gypsum board to the framing members (parallel or perpendicular), spacing of framing members [16 inches or 24 inches (406 mm or 610 mm)] on center and type of fasteners (nails or screws) are all set forth in the table. Where gypsum sheathing is to be attached to exterior walls, the provisions of Table R602.3(1) apply. Commentary Figure R702.3.5(2) shows a single-nailing method of attachment; however, Note a of Table R702.3.5 permits a double-nailing method as illustrated in Commentary Figure 702.3.5(3).

INTERNATIONAL CODE COUNCIL®
Copyright © 2015 ICC. ALL RIGHTS RESERVED. Accessed by David Dammon on Jun 21, 2017 12:30:52 PM pursuant to License Agreement with ICC. No further reproduction or distribution authorized. ANY UNAUTHORIZED REPRODUCTION OR DISTRIBUTION IS A VIOLATION OF THE FEDERAL COPYRIGHT ACT AND THE LICENSE AGREEMENT, AND SUBJECT TO CIVIL AND CRIMINAL PENALTIES THEREUNDER.

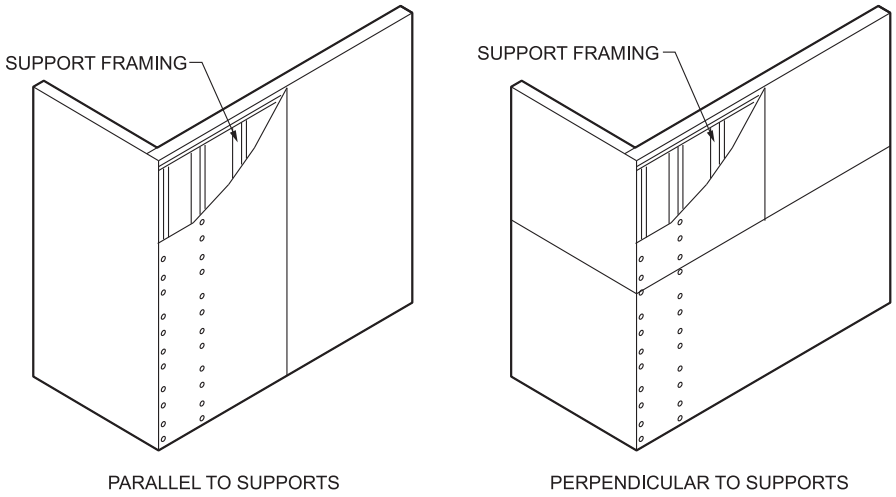

Figure R702.3.5(1)
GYPSUM BOARD APPLICATION

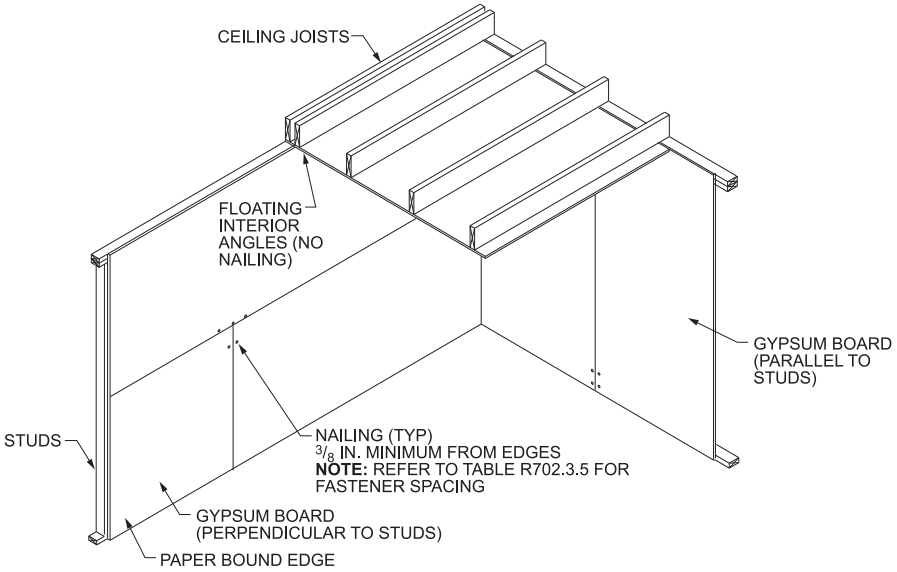

Figure R702.3.5(2)
GYPSUM BOARD—SINGLE-NAILING APPLICATION

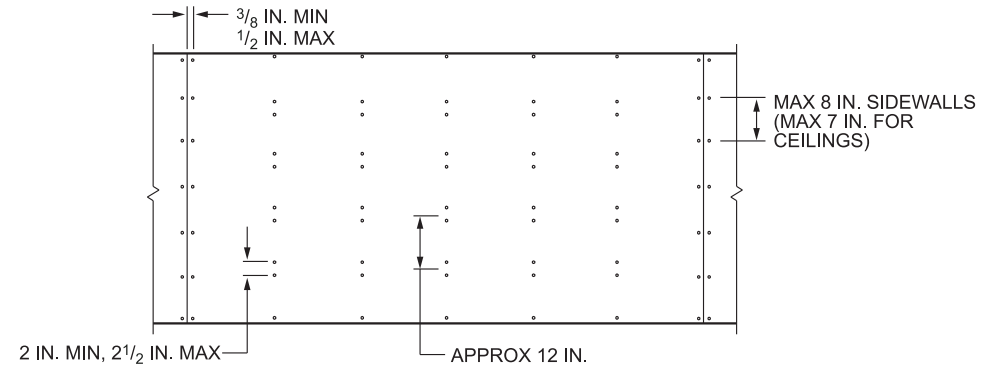

For SI: 1 inch = 25.4 mm.

Figure R702.3.5(3)
GYPSUM BOARD—DOUBLE-NAILING APPLICATION

INTERNATIONAL CODE COUNCIL®
Copyright © 2015 ICC. ALL RIGHTS RESERVED. Accessed by David Dammon on Jun 21, 2017 12:30:52 PM pursuant to License Agreement with ICC. No further reproduction or distribution authorized. ANY UNAUTHORIZED REPRODUCTION OR DISTRIBUTION IS A VIOLATION OF THE FEDERAL COPYRIGHT ACT AND THE LICENSE AGREEMENT, AND SUBJECT TO CIVIL AND CRIMINAL PENALTIES THEREUNDER.

TABLE R702.3.6
SHEAR CAPACITY FOR HORIZONTAL WOOD-FRAMED GYPSUM BOARD DIAPHRAGM CEILING ASSEMBLIES

MATERIAL	THICKNESS OF MATERIAL (min.) (inch)	SPACING OF FRAMING MEMBERS (max.) (inch)	SHEAR VALUE[a, b] (plf of ceiling)	MINIMUM FASTENER SIZE[c, d]
Gypsum board or gypsum panel product	$^1/_2$	16 o.c.	90	5d cooler or wallboard nail; $1^5/_8$-inch long; 0.086-inch shank; $^{15}/_{64}$-inch head
Gypsum board or gypsum panel product	$^1/_2$	24 o.c.	70	5d cooler or wallboard nail; $1^5/_8$-inch long; 0.086-inch shank; $^{15}/_{64}$-inch head

For SI: 1 inch = 25.4 mm, 1 pound per linear foot = 1.488 kg/m.

a. Values are not cumulative with other horizontal diaphragm values and are for short-term loading caused by wind or seismic loading. Values shall be reduced 25 percent for normal loading.

b. Values shall be reduced 50 percent in Seismic Design Categories D_0, D_1, D_2 and E.

c. $1^1/_4$-inch, No. 6 Type S or W screws shall be permitted to be substituted for the listed nails.

d. Fasteners shall be spaced not more than 7 inches on center at all supports, including perimeter blocking, and not less than $^3/_8$ inch from the edges and ends of the gypsum board.

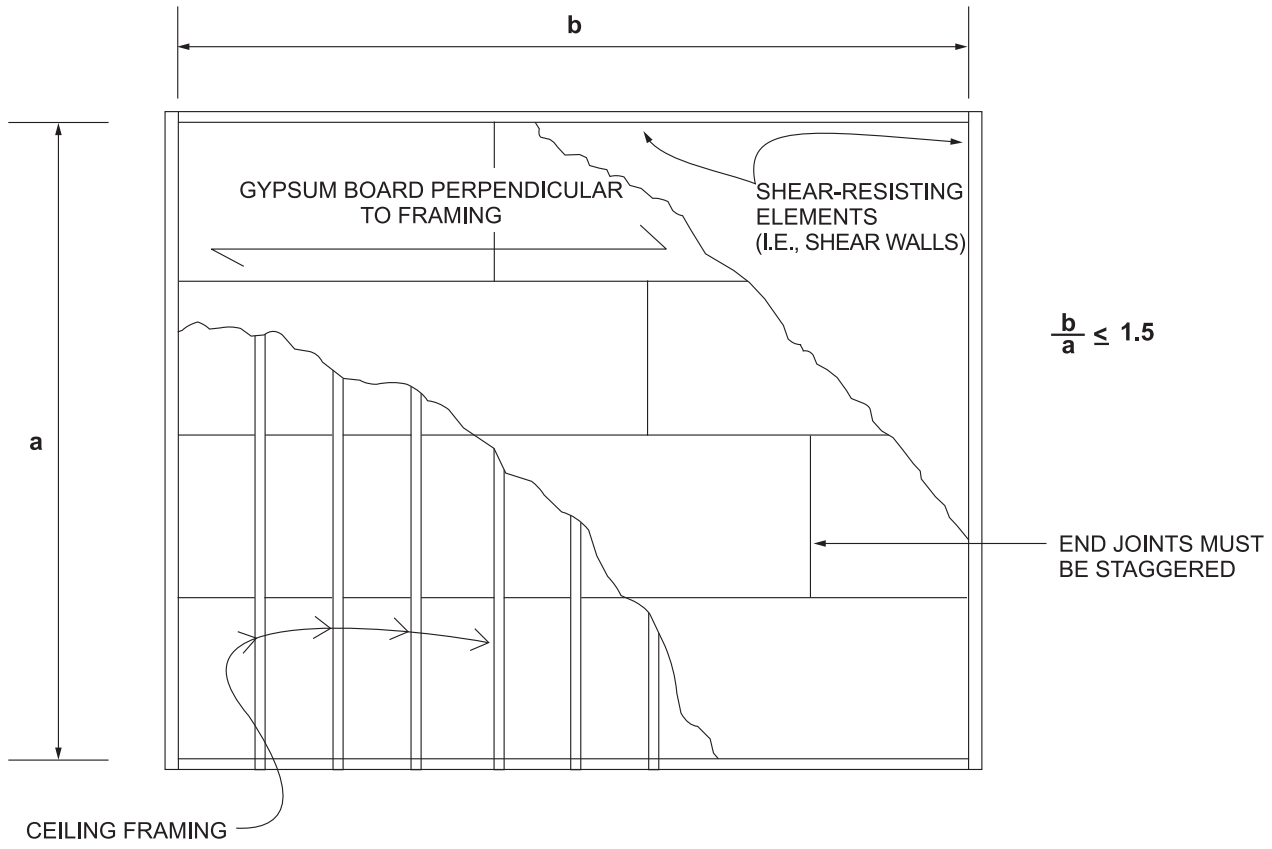

Figure R702.3.6(1)
HORIZONTAL GYPSUM BOARD CEILING DIAPHRAGM CONSTRUCTION

INTERNATIONAL CODE COUNCIL®
Copyright © 2015 ICC. ALL RIGHTS RESERVED. Accessed by David Dammon on Jun 21, 2017 12:30:52 PM pursuant to License Agreement with ICC. No further reproduction or distribution authorized. ANY UNAUTHORIZED REPRODUCTION OR DISTRIBUTION IS A VIOLATION OF THE FEDERAL COPYRIGHT ACT AND THE LICENSE AGREEMENT, AND SUBJECT TO CIVIL AND CRIMINAL PENALTIES THEREUNDER.

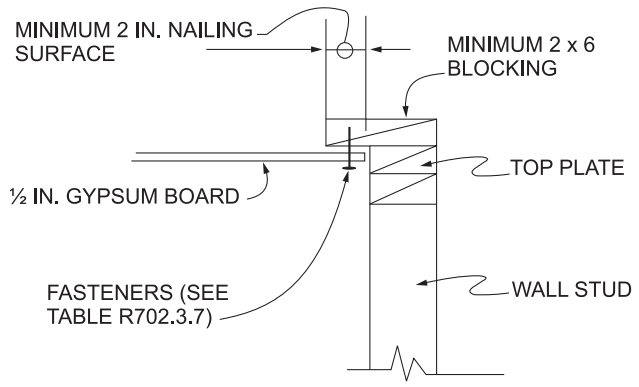

For SI: 1 inch = 25.4 mm.

Figure R702.3.6(2)
PERIMETER BLOCKING

R702.3.7 Water-resistant gypsum backing board. Gypsum board used as the base or backer for adhesive application of ceramic tile or other required nonabsorbent finish material shall conform to ASTM C1396, C1178 or C1278. Use of water-resistant gypsum backing board shall be permitted on ceilings. Water-resistant gypsum board shall not be installed over a Class I or II vapor retarder in a shower or tub compartment. Cut or exposed edges, including those at wall intersections, shall be sealed as recommended by the manufacturer.

❖ Water-resistant gypsum backing board must be used as a base for ceramic tile or other required nonabsorbent finish materials where attached with an adhesive. It must be used in conjunction with the tile or wall panels because of its moisture-resistant qualities.

Gypsum board installed on the walls and ceilings at shower and bathtub areas must be finished to prevent moisture from penetrating the wall or ceiling finish and contacting the gypsum board. The finish applied to the exposed face of the gypsum board must create a water-resistant barrier that not only stops water from getting to the gypsum board but also prevents the release of moisture from within the wall or the gypsum board itself. For this reason, gypsum board must not be installed over the outboard side of any vapor barrier or retarder. This will create a waterproof membrane on both faces of the gypsum board, causing moisture to be trapped in the gypsum board that will ultimately cause it to decompose and fail.

R702.3.7.1 Limitations. Water-resistant gypsum backing board shall not be used where there will be direct exposure to water, or in areas subject to continuous high humidity.

❖ Although many gypsum board sheet products are manufactured and approved for use in wet areas or areas exposed to moisture or humidity, there are still some extreme conditions where even water-resistant gypsum board will not provide the level of moisture protection necessary.

Water-resistant gypsum board is not to be used in areas that will be subject to a continuous exposure to moisture or humidity at locations such as saunas, steam rooms, gang showers or indoor pools. Gypsum board products, including the water-resistant type, are not intended for these extreme conditions and will not perform satisfactorily. Nongypsum wall and ceiling materials such as concrete masonry, ceramic tile on cement backer board, cement plaster (stucco) or other materials designed and recommended for high-moisture exposure must be used in these locations.

R702.4 Ceramic tile.

❖ Based on the code's requirement for nonabsorbent surfaces in bathtub and shower areas, ceramic tile is one of several materials used in such areas subject to water splash. Ceramic tile is regulated wherever installed, particularly when gypsum board is used as a base or backer board. This section regulates the installation of ceramic tile in residential construction.

R702.4.1 General. Ceramic tile surfaces shall be installed in accordance with ANSI A108.1, A108.4, A108.5, A108.6, A108.11, A118.1, A118.3, A136.1 and A137.1.

❖ This section references a number of ANSI standards that apply to the installation of ceramic tile. Commentary Figure R702.4.1 illustrates two possible methods of ceramic tile application.

R702.4.2 Backer boards. Materials used as backers for wall tile in tub and shower areas and wall panels in shower areas shall be of materials listed in Table R702.4.2, and installed in accordance with the manufacturer's recommendations.

❖ Tile can be installed in a wet area with one of the backing materials as listed in Table 702.4.2 and as illustrated in Commentary Figure R702.4.2. Paper-faced gypsum board (i.e. green board) must not be used in areas that are in direct contact with water. When this material gets wet through cracks in the grout joints, deteriorated caulking between the tile and tub assembly or improper flashing between the tub and tile interface, the water is absorbed into the material and can cause the paper facing to delaminate. The delamination can cause damage to the tile surface. In addition, water trapped in paper-faced gypsum board can create mold problems.

TABLE R702.4.2
BACKER BOARD MATERIALS

MATERIAL	STANDARD
Glass mat gypsum backing panel	ASTM C1178
Fiber-reinforced gypsum panels	ASTM C1278
Nonasbestos fiber-cement backer board	ASTM C1288 or ISO 8336, Category C
Nonasbestos fiber mat reinforced cementitious backer units	ASTM C1325

INTERNATIONAL CODE COUNCIL®
Copyright © 2015 ICC. ALL RIGHTS RESERVED. Accessed by David Dammon on Jun 21, 2017 12:30:52 PM pursuant to License Agreement with ICC. No further reproduction or distribution authorized. ANY UNAUTHORIZED REPRODUCTION OR DISTRIBUTION IS A VIOLATION OF THE FEDERAL COPYRIGHT ACT AND THE LICENSE AGREEMENT, AND SUBJECT TO CIVIL AND CRIMINAL PENALTIES THEREUNDER.

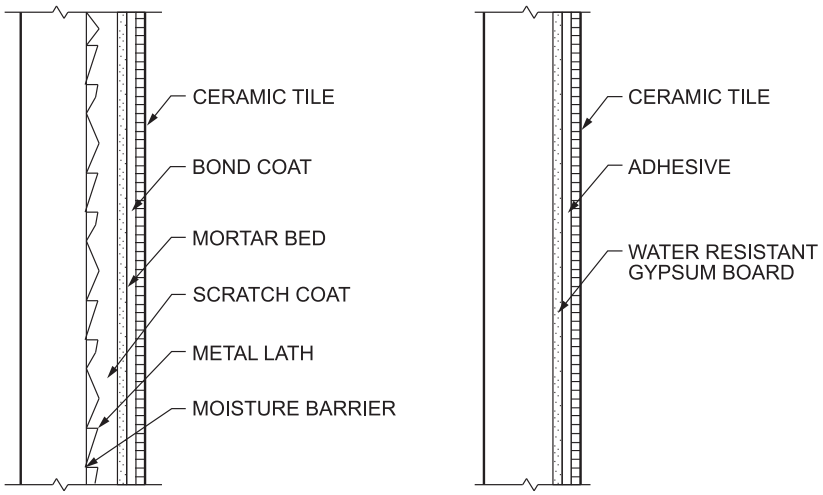

Figure R702.4.1
INTERIOR WALL TILE INSTALLATION

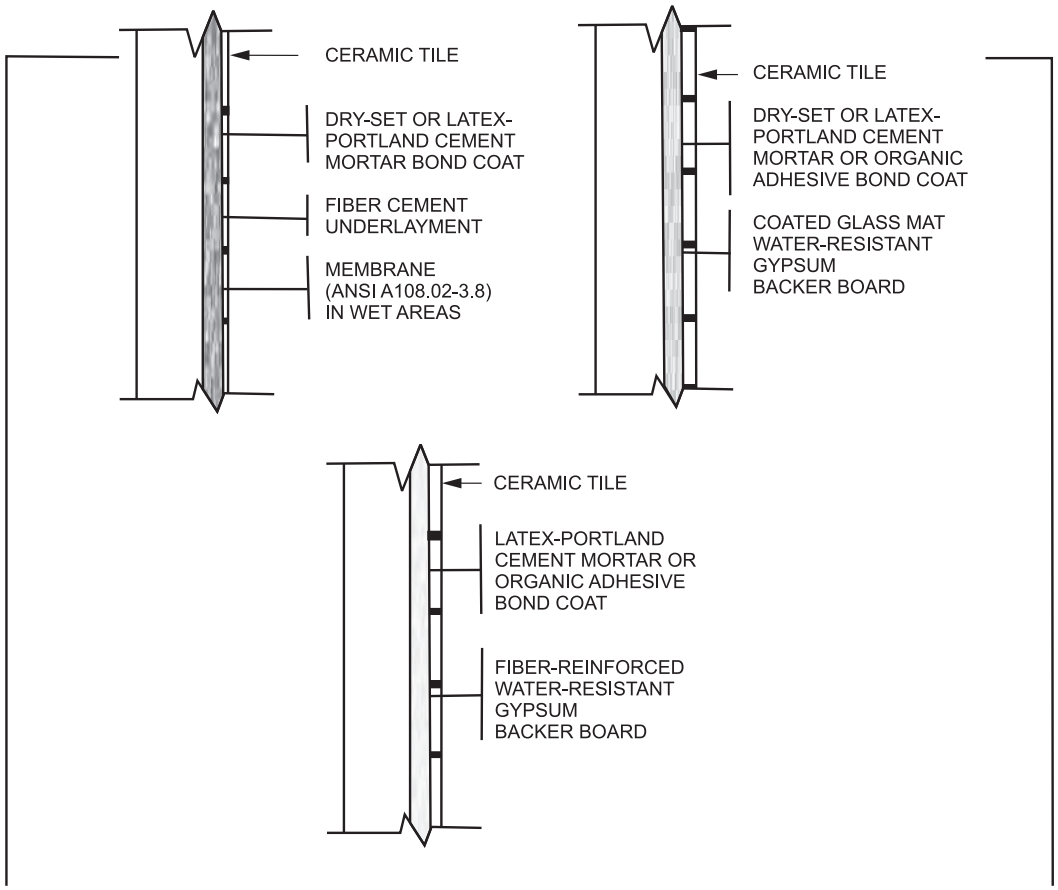

Figure R702.4.2
EXAMPLE OF WALL TILE INSTALLATION TUB AND SHOWER AREA

INTERNATIONAL CODE COUNCIL®
Copyright © 2015 ICC. ALL RIGHTS RESERVED. Accessed by David Dammon on Jun 21, 2017 12:30:52 PM pursuant to License Agreement with ICC. No further reproduction or distribution authorized. ANY UNAUTHORIZED REPRODUCTION OR DISTRIBUTION IS A VIOLATION OF THE FEDERAL COPYRIGHT ACT AND THE LICENSE AGREEMENT, AND SUBJECT TO CIVIL AND CRIMINAL PENALTIES THEREUNDER.

R702.5 Other finishes. Wood veneer paneling and hardboard paneling shall be placed on wood or cold-formed steel framing spaced not more than 16 inches (406 mm) on center. Wood veneer and hard board paneling less than $^1/_4$-inch (6 mm) nominal thickness shall not have less than a $^3/_8$-inch (10 mm) gypsum board or gypsum panel product backer. Wood veneer paneling not less than $^1/_4$-inch (6 mm) nominal thickness shall conform to ANSI/HPVA HP-1. Hardboard paneling shall conform to CPA/ANSI A135.5.

❖ This section contains requirements for wood veneer and hardboard paneling that are not addressed in previous sections. Modular home construction will generally use hardboard paneling applied directly to the studs. For this reason, there are specific provisions for wood veneer and hardboard siding. Wall finishes with adequate thickness will resist excessive bending and possible failure.

R702.6 Wood shakes and shingles. Wood shakes and shingles shall conform to CSSB *Grading Rules for Wood Shakes and Shingles* and shall be permitted to be installed directly to the studs with maximum 24 inches (610 mm) on-center spacing.

❖ Complying wood shakes and shingles may be attached directly to the studs in an interior application provided the studs are spaced at no more than 24 inches (610 mm) on center. The shakes and shingles must conform to the appropriate grading rules set forth by the Cedar Shake and Shingle Bureau.

R702.6.1 Attachment. Nails, staples or glue are permitted for attaching shakes or shingles to the wall, and attachment of the shakes or shingles directly to the surface shall be permitted provided the fasteners are appropriate for the type of wall surface material. Where nails or staples are used, two fasteners shall be provided and shall be placed so that they are covered by the course above.

❖ Because there is no concern for weather protection, the shakes or shingles may be attached directly to the surface with nails, staples or glue. At least two fasteners are required per shake or shingle where nails or staples are used, located so that the course above will cover the fasteners.

R702.6.2 Furring strips. Where furring strips are used, they shall be 1 inch by 2 inches or 1 inch by 3 inches (25 mm by 51 mm or 25 mm by 76 mm), spaced a distance on center equal to the desired exposure, and shall be attached to the wall by nailing through other wall material into the studs.

❖ In addition to direct attachment of wood shakes and shingles to studs or a wall surface, the use of furring strips is permitted under specific conditions. Furring strips should be either 1 inch by 2 inches (25 mm by 51 mm) or 1 inch by 3 inches (25 mm by 76 mm). The spacing of the strips is determined by the desired exposure of the shake or shingle, attached by nailing through other wall surface materials into the studs.

R702.7 Vapor retarders. Class I or II vapor retarders are required on the interior side of frame walls in Climate Zones 5, 6, 7, 8 and Marine 4.

Exceptions:

1. Basement walls.
2. Below-grade portion of any wall.
3. Construction where moisture or its freezing will not damage the materials.

❖ The purpose of this section is to provide prescriptive methods for moisture control. The code contains three different vapor retarder classes, based upon the vapor permeability of the material. These are defined in Chapter 2 of the code. The basic requirement is for Class I or II vapor retarders to be installed on the interior side of framed walls in Climate Zones 5, 6, 7 and 8 and Marine 4. These climate zones are defined in Chapter 11 of the code. Figure N1101.7 and Table N1101.7 of Chapter 11 provide information regarding the climate zones for all geographic locations in the United States.

In cold climates, warm, moist air inside the building can migrate through the building envelope and condense on building surfaces or within building component cavities as the migrating air is cooled. Vapor retarders can help protect insulation and building materials from moisture damage, degradation and decay by preventing water vapor from entering the external building envelope component cavities.

As can be seen by studying Figure N1101.7, Climate Zones 5, 6, 7 and 8 and Marine 4 are in the middle to northern portions of the continental United States and Alaska. These are areas where colder winter temperatures cause moisture from the interior of the building to form condensate in the exterior walls of the building. A Class I or II vapor retarder is therefore called for on the interior side of the exterior wall. See the example as shown in Commentary Figure R702.7. A portion of the southern United States (along the Gulf of Mexico and the lower Atlantic coast) is a humid climate. In these locations, identified as Climate Zones 1 through 4 in Table N1101.7, no vapor retarder is required, as the exterior weather/water-resistant barrier provides the necessary protection.

R702.7.1 Class III vapor retarders. Class III vapor retarders shall be permitted where any one of the conditions in Table R702.7.1 is met.

❖ Wall assemblies can be designed and constructed to dry inward, outward and to both sides in all climate zones. This section allows more flexibility in the design and construction of moisture-forgiving wall systems. These requirements recognize that many common materials function to various degrees to slow the passage of moisture. In many situations, common materials such as the kraft facing on a fiberglass batt or latex paint may serve to retard moisture sufficiently. In particular, the “standard” sheet of polyethylene is usually not required as a vapor retarder in walls. This section therefore allows the use of Class III vapor retarders in lieu of the Class I or II otherwise specified in Section R702.7. Classes of vapor retarders are defined in Chapter 2.

INTERNATIONAL CODE COUNCIL®
Copyright © 2015 ICC. ALL RIGHTS RESERVED. Accessed by David Dammon on Jun 21, 2017 12:30:52 PM pursuant to License Agreement with ICC. No further reproduction or distribution authorized. ANY UNAUTHORIZED REPRODUCTION OR DISTRIBUTION IS A VIOLATION OF THE FEDERAL COPYRIGHT ACT AND THE LICENSE AGREEMENT, AND SUBJECT TO CIVIL AND CRIMINAL PENALTIES THEREUNDER.

The Class III vapor retarders allow more moisture vapor to pass through them. These are allowed to be used with exterior wall assemblies described in Table R702.7.1 because those assemblies can be expected to dry. Section R702.7.2 describes materials that are deemed to be Class III vapor retarders, and Section R702.7.3 describes the attributes of cladding that make it "vented" as called out in Table R702.7.1.

TABLE R702.7.1
CLASS III VAPOR RETARDERS

CLIMATE ZONE	CLASS III VAPOR RETARDERS PERMITTED FOR:[a]
Marine 4	Vented cladding over wood structural panels. Vented cladding over fiberboard. Vented cladding over gypsum. Continuous insulation with *R*-value ≥ 2.5 over 2 × 4 wall. Continuous insulation with *R*-value ≥ 3.75 over 2 × 6 wall.
5	Vented cladding over wood structural panels. Vented cladding over fiberboard. Vented cladding over gypsum. Continuous insulation with *R*-value ≥ 5 over 2 × 4 wall. Continuous insulation with *R*-value ≥ 7.5 over 2 × 6 wall.
6	Vented cladding over fiberboard. Vented cladding over gypsum. Continuous insulation with *R*-value ≥ 7.5 over 2 × 4 wall. Continuous insulation with *R*-value ≥ 11.25 over 2 × 6 wall.
7 and 8	Continuous insulation with *R*-value ≥ 10 over 2 × 4 wall. Continuous insulation with *R*-value ≥ 15 over 2 × 6 wall.

For SI: 1 pound per cubic foot = 16 kg/m^3.

a. Spray foam with a maximum permeance of 1.5 perms at the installed thickness, applied to the interior cavity side of wood structural panels, fiberboard, insulating sheathing or gypsum is deemed to meet the continuous insulation requirement where the spray foam *R*-value meets or exceeds the specified continuous insulation *R*-value.

❖ This table describes the situations where it is permissible to use Class III vapor retarders instead of Class I or II. Class III vapor retarders allow more moisture vapor to pass through them. These are allowed to be used with exterior wall assemblies described in Table R702.7.1 because those assemblies can be expected to dry. The table provides types of wall assemblies that can be used with Class III vapor retarders in different climate zones. The climate zones are determined from Chapter 11 of the code.

R702.7.2 Material vapor retarder class. The vapor retarder class shall be based on the manufacturer's certified testing or a tested assembly.

The following shall be deemed to meet the class specified:

Class I: Sheet polyethylene, unperforated aluminum foil.

Class II: Kraft-faced fiberglass batts.

Class III: Latex or enamel paint.

❖ The vapor retarder class is defined in Section 202 of the code in terms of vapor permeability. The test method called out for determination of the perm value is ASTM E96. However, this section provides a list of materials that can be used for each class of vapor retarder and are deemed to comply with the test standard. No testing is required for these materials. All other materials are required to be tested.

R702.7.3 Minimum clear airspaces and vented openings for vented cladding. For the purposes of this section, vented cladding shall include the following minimum clear airspaces. Other openings with the equivalent vent area shall be permitted.

1. Vinyl lap or horizontal aluminum siding applied over a weather-resistive barrier as specified in Table R703.3(1).
2. Brick veneer with a clear airspace as specified in Table R703.8.4.
3. Other approved vented claddings.

❖ The purpose of this section is to define what is intended by "vented cladding" as called out in Table R702.7.1. As can be seen, vented cladding is material commonly used in the code, including vinyl siding, aluminum siding, and brick with a clear airspace.

By "other approved vented claddings," the code intends materials that can be shown to allow drying of the components behind them in the same manner and at the same rate that the specific items in No. 1 or 2 would allow drying.

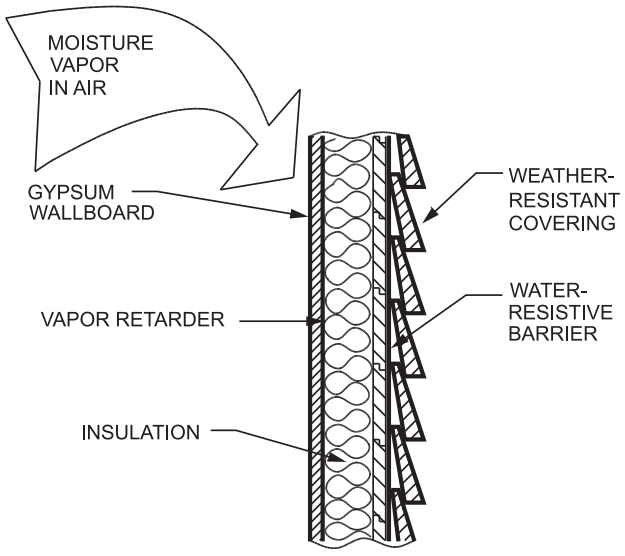

Figure R702.7
TYPICAL WOOD STUD WALL CONSTRUCTION

INTERNATIONAL CODE COUNCIL®
Copyright © 2015 ICC. ALL RIGHTS RESERVED. Accessed by David Dammon on Jun 21, 2017 12:30:52 PM pursuant to License Agreement with ICC. No further reproduction or distribution authorized. ANY UNAUTHORIZED REPRODUCTION OR DISTRIBUTION IS A VIOLATION OF THE FEDERAL COPYRIGHT ACT AND THE LICENSE AGREEMENT, AND SUBJECT TO CIVIL AND CRIMINAL PENALTIES THEREUNDER.

SECTION R703
EXTERIOR COVERING

R703.1 General. Exterior walls shall provide the building with a weather-resistant exterior wall envelope. The exterior wall envelope shall include flashing as described in Section R703.4.

Exception: Log walls designed and constructed in accordance with the provisions of ICC 400.

❖ Exterior walls of buildings must be protected against damage caused by precipitation, wind and other weather conditions. This section requires that flashing be installed in the exterior wall at penetrations and terminations of the exterior wall covering. Section R703.4 is referenced for flashing requirements (see commentary, Section R703.4).

R703.1.1 Water resistance. The exterior wall envelope shall be designed and constructed in a manner that prevents the accumulation of water within the wall assembly by providing a water-resistant barrier behind the exterior veneer as required by Section R703.2 and a means of draining to the exterior water that enters the assembly. Protection against condensation in the exterior wall assembly shall be provided in accordance with Section R702.7 of this code.

Exceptions:

1. A weather-resistant exterior wall envelope shall not be required over concrete or masonry walls designed in accordance with Chapter 6 and flashed in accordance with Section R703.4 or R703.8.
2. Compliance with the requirements for a means of drainage, and the requirements of Sections R703.2 and R703.4, shall not be required for an exterior wall envelope that has been demonstrated to resist wind-driven rain through testing of the exterior wall envelope, including joints, penetrations and intersections with dissimilar materials, in accordance with ASTM E331 under the following conditions:
   2.1. Exterior wall envelope test assemblies shall include at least one opening, one control joint, one wall/eave interface and one wall sill. All tested openings and penetrations shall be representative of the intended end-use configuration.
   2.2. Exterior wall envelope test assemblies shall be at least 4 feet by 8 feet (1219 mm by 2438 mm) in size.
   2.3. Exterior wall assemblies shall be tested at a minimum differential pressure of 6.24 pounds per square foot (299 Pa).
   2.4. Exterior wall envelope assemblies shall be subjected to the minimum test exposure for a minimum of 2 hours.

   The exterior wall envelope design shall be considered to resist wind-driven rain where the results of testing indicate that water did not penetrate control joints in the exterior wall envelope, joints at the perimeter of openings penetration or intersections of terminations with dissimilar materials.

❖ As part of providing a weather-resistant exterior envelope, exterior walls are required to provide water resistance. This section prescribes two basic components of providing water resistance for an exterior wall assembly: a water-resistive barrier installed between the covering and substrate of the exterior wall, and a means of draining moisture that may penetrate behind the exterior wall assembly back to the exterior. Section R703.2 is referenced for the requirements of the water-resistive barrier (see commentary, Section R703.2). This section does not, however, contain a prescriptive requirement for the means of drainage. The method to provide the means of drainage is a performance criterion and must be evaluated based on the ability to allow moisture that may penetrate behind the exterior wall covering to effectively drain back to the exterior. This can be achieved in many ways, including, but not limited to, providing a rain-screen pressure-equalized type of exterior assembly, or providing discontinuities or gaps between the surface of the substrate and the back side of the finish, such as through the use of noncorrodible furring or two layers of Grade D paper.

For common types of construction, such as vinyl siding or brick veneer, the typical practice of installing building paper, flashing and weeps will comply with the intent of this section. For stucco or adhered masonry veneer, installing two layers of Grade D paper and flashing will comply with the intent of this section. Discontinuities between the exterior wall covering and substrate must be such that they encourage the flow of moisture via gravity or capillary action to a location where the water may exit, such as at flashings and weeps. The absence of a means of drainage may result in the accumulation of moisture that becomes trapped between the wall covering and the substrate. Over time, extended exposure to moisture may contribute to the degradation of the wall covering, building substrate or even the structural elements of the exterior wall.

Exception 1 states that where the exterior wall envelope is designed and constructed of concrete or masonry materials in accordance with the requirements of Chapter 6 and flashed in accordance with Section R703.4 or R703.8, the water-resistive barrier and a means of drainage may be omitted. This is because the penetration of moisture behind the exterior wall covering is not detrimental to concrete and masonry substrates.

Exception 2 permits the use of exterior wall coverings that do not have a means of draining water or meet the prescriptive requirements of Sections R703.2 and R703.4 provided that the exterior wall envelope, with penetration details, demonstrates wind-driven rain resistance when tested. The test specimen(s) must incorporate the penetration and termination details intended for use. Only details that

INTERNATIONAL CODE COUNCIL®
Copyright © 2015 ICC. ALL RIGHTS RESERVED. Accessed by David Dammon on Jun 21, 2017 12:30:52 PM pursuant to License Agreement with ICC. No further reproduction or distribution authorized. ANY UNAUTHORIZED REPRODUCTION OR DISTRIBUTION IS A VIOLATION OF THE FEDERAL COPYRIGHT ACT AND THE LICENSE AGREEMENT, AND SUBJECT TO CIVIL AND CRIMINAL PENALTIES THEREUNDER.

have not allowed water to penetrate will be permitted to be used in the exterior wall envelope. The minimum panel size specified represents that which is commonly used in testing to ASTM E331; however, this does not preclude the testing of larger panels if desired. The modifications to the test pressure differential and test duration are intended to represent more closely conditions that will be encountered in service. The pass/fail criterion is based on the visual observation of moisture on the interior side of the wall assembly. For frame-type wall assemblies, such as stud walls, this requires the observation of locations such as the interior face of the exterior wall sheathing and wall framing members for the presence of moisture during the test. The test method is intended to assess the performance of the method(s) and material(s) used to seal the interface between the termination of the exterior wall covering and the penetrating item(s) or abutting construction. The test is not necessarily intended to test the performance of the penetrating item.

Walls designed and constructed in accordance with this chapter must also comply with the requirements of Section R702.7 of the code. This requires that frame-type wall assemblies be protected from moisture infiltration from the building interior through the use of a vapor retarder (see Commentary Figure R702.7) or by the ventilation of the wall cavity within a frame-type wall assembly.

R703.1.2 Wind resistance. Wall coverings, backing materials and their attachments shall be capable of resisting wind loads in accordance with Tables R301.2(2) and R301.2(3). Wind-pressure resistance of the siding and backing materials shall be determined by ASTM E330 or other applicable standard test methods. Where wind-pressure resistance is determined by design analysis, data from approved design standards and analysis conforming to generally accepted engineering practice shall be used to evaluate the siding and backing material and its fastening. All applicable failure modes including bending rupture of siding, fastener withdrawal and fastener head pull-through shall be considered in the testing or design analysis. Where the wall covering and the backing material resist wind load as an assembly, use of the design capacity of the assembly shall be permitted.

❖ All components in an exterior wall assembly must be able to resist wind loads. This includes the exterior wall covering as well as the substrate backing portion of the wall assembly. This section references component and cladding wind loads and height and exposure adjustment factors for those loads given in Tables R301.2(2) and R301.2(3), respectively. The resistance of the exterior wall assembly can be determined by testing or design analysis. Testing should conform with ASTM E330 or other applicable standard test methods. Design analysis should be conducted in accordance with design standards and generally accepted engineering principles. Testing or design analysis should consider all failure modes including flexural failure of wall covering, fastener withdrawal and head pull-through. When the entire exterior wall assembly, consisting of the wall covering and the substrate, contributes to its ability to resist wind loads, the structural design capacity of the assembly is permitted to be taken into account.

R703.2 Water-resistive barrier. One layer of No. 15 asphalt felt, free from holes and breaks, complying with ASTM D226 for Type 1 felt or other approved water-resistive barrier shall be applied over studs or sheathing of all exterior walls. Such felt or material shall be applied horizontally, with the upper layer lapped over the lower layer not less than 2 inches (51 mm). Where joints occur, felt shall be lapped not less than 6 inches (152 mm). The felt or other approved material shall be continuous to the top of walls and terminated at penetrations and building appendages in a manner to meet the requirements of the exterior wall envelope as described in Section R703.1. The water-resistive barrier is not required for detached accessory buildings.

❖ Asphalt-saturated felt or any other approved water-resistive material is required behind all types of materials used as exterior wall coverings because of the possibility of moisture penetrating the substrate behind it. This felt or other material protects the wall construction from potential rotting.

The water-resistive membrane may be omitted for detached accessory buildings.

R703.3 Nominal thickness and attachments. The nominal thickness and attachment of exterior wall coverings shall be in accordance with Table R703.3(1), the wall covering material requirements of this section, and the wall covering manufacturer's installation instructions. Cladding attachment over foam sheathing shall comply with the additional requirements and limitations of Sections R703.15 through R703.17. Nominal material thicknesses in Table R703.3(1) are based on a maximum stud spacing of 16 inches (406 mm) on center. Where specified by the siding manufacturer's instructions and supported by a test report or other documentation, attachment to studs with greater spacing is permitted. Fasteners for exterior wall coverings attached to wood framing shall be in accordance with Section R703.3.2 and Table R703.3(1). Exterior wall coverings shall be attached to cold-formed steel light frame construction in accordance with the cladding manufacturer's installation instructions, the requirements of Table R703.3(1) using screw fasteners substituted for the nails specified in accordance with Table R703.3(2), or an approved design.

❖ New Section R703.3 replaces the 2012 *International Residential Code*® (IRC®) Table R703.4 with Table R703.3(1). Table R703.3(1) is simplified and former notes and column text are moved to Sections R703.3, R703.3.1, R703.3.2 and R703.3.3.

Section R703.3 covers nominal thickness and attachment of siding. Nominal thickness is based on 16-inch on-center stud spacing. Table R703.3(1) is referenced for nail specifications that have been reformatted to match Table R602.3(1). Minimum fastener size and penetration requirements, along with other installation details, are in Table R703.3(1) and mirror current Western Wood Products Association (WWPA) and Western Red Cedar Lumber Associa-

INTERNATIONAL CODE COUNCIL®
Copyright © 2015 ICC. ALL RIGHTS RESERVED. Accessed by David Dammon on Jun 21, 2017 12:30:52 PM pursuant to License Agreement with ICC. No further reproduction or distribution authorized. ANY UNAUTHORIZED REPRODUCTION OR DISTRIBUTION IS A VIOLATION OF THE FEDERAL COPYRIGHT ACT AND THE LICENSE AGREEMENT, AND SUBJECT TO CIVIL AND CRIMINAL PENALTIES THEREUNDER.

tion (WRCLA) installation guides. Screws must be used for attachment to cold-formed steel framing. Where screw fasteners are used, the requirements of Table R703.3.(1) are modified by the screw fastener substitution Table R703.3(2). The *water-resistive barrier required* column is deleted in Table R703.3(1). All products in Table R703.3(1) require a water-resistive barrier except for detached accessory buildings as prescribed in Section R703.2.

Section R703.3.1 prescribes the wind limitations for wall covering attachment in accordance with Table R703.3(1). Table R703.3.1 simplifies the determination of whether prescriptive fastening provisions of Table R703.3(1) apply to a specific building. Fasteners are limited to a maximum design pressure of 30 psf. The limits in Table R703.3.1 indicate where component and cladding pressures exceed 30 psf as a function of wind speed exposure and mean roof height. In most cases, especially in areas with lower wind speeds, the prescriptive fastening requirements in Table R703.3(1) will be applicable. According to Table R301.2(2), for Zone 5 and an effective wind area of 10 square feet, the maximum negative pressure for an ultimate design wind speed of 140 mph is 28.0 psf (this is approximately equal to the old 110 mph basic wind speed). This value—less than 30 psf—correlates directly with the 140-mph limitation in Table R703.3.1. However, the tabulated pressures in Table R301.2(2) are for an assumed Exposure B site condition and a mean roof height of 30 feet. For residential buildings with a ultimate design wind speed of 140 mph and Exposure C or D, or a mean roof height greater than 30 feet, the maximum negative pressure is substantially higher than 30 psf. While mean roof heights of 50 feet and 60 feet are listed in the table as upper limits for the wind pressures, the IRC limit of three stories (Section R102.1) also applies.

Where the prescribed wind limitations are exceeded, the wall covering attachment must be designed to resist the component and cladding loads of Table R301.2(2). The design wind pressures must be determined using an effective wind area of 10 square feet. For wall cladding, the effective wind area will be governed by the effective wind area of an individual fastener, which is less than 10 square feet.

Notes b, c, d, g and r from the 2012 IRC Table R703.4 have been combined to form the text of Section R703.3.2. Due to the exterior wall covering fasteners being exposed to moisture in the atmosphere, Section R703.3.2 requires the exterior wall covering to be fastened with approved corrosion-resistant fasteners such as aluminum, galvanized, stainless steel, or rust-preventative coated. This section requires all nails and staples to comply with ASTM F1667. Where sheathing is used as backing for exterior wall covering, the wall covering fasteners must be driven into the studs. However, where wood or wood structural panel is used as the backing, the exterior wall covering fasteners are permitted to be driven into the backing in accordance with Table R703.3.2.

Section R703.3.3 prescribes the minimum length and penetration of fasteners for attaching the exterior wall covering. The penetration requirements of Notes m, o, v, y and z from 2012 IRC Table R703.4 have been moved to the items in this section.

TABLE R703.3(2)
SCREW FASTENER SUBSTITUTION FOR SIDING ATTACHMENT TO COLD-FORMED STEEL LIGHT FRAME CONSTRUCTION[a, b, c, d, e]

NAIL DIAMETER PER TABLE R703.3(1)	MINIMUM SCREW FASTENER SIZE
0.099″	No. 6
0.113″	No. 7
0.120″	No. 8

For SI: 1 inch = 25.4 mm

a. Screws shall comply with ASTM C1513 and shall penetrate a minimum of three threads through minimum 33 mil (20 gage) cold-formed steel frame construction.

b. Screw head diameter shall be not less than the nail head diameter required by Table R703.3(1).

c. Number and spacing of screw fasteners shall comply with Table R703.3(1).

d. Pan head, hex washer head, modified truss head or other screw head types with a flat attachment surface under the head shall be used for vinyl siding attachment.

R703.3.1 Wind limitations. Where the design wind pressure exceeds 30 psf or where the limits of Table R703.3.1 are exceeded, the attachment of wall coverings shall be designed to resist the component and cladding loads specified in Table R301.2(2), adjusted for height and exposure in accordance with Table R301.2(3). For the determination of wall covering attachment, component and cladding loads shall be determined using an effective wind area of 10 square feet (0.93 m^2).

❖ See the commentary to Section R703.3.

TABLE R703.3.1
LIMITS FOR ATTACHMENT PER TABLE R703.3(1)

MAXIMUM MEAN ROOF HEIGHT			
Ultimate Wind Speed (mph 3-second gust)	Exposure		
	B	C	D
115	NL	50′	20′
120	NL	30′	DR
130	60′	15′	DR
140	35′	DR	DR

For SI: 1 foot = 304.8 mm, 1 mile per hour = 0.447 m/s.
NL = Not limited by Table R703.3.1, DR = Design required.

INTERNATIONAL CODE COUNCIL®
Copyright © 2015 ICC. ALL RIGHTS RESERVED. Accessed by David Dammon on Jun 21, 2017 12:30:52 PM pursuant to License Agreement with ICC. No further reproduction or distribution authorized. ANY UNAUTHORIZED REPRODUCTION OR DISTRIBUTION IS A VIOLATION OF THE FEDERAL COPYRIGHT ACT AND THE LICENSE AGREEMENT, AND SUBJECT TO CIVIL AND CRIMINAL PENALTIES THEREUNDER.

TABLE R703.3(1)
SIDING MINIMUM ATTACHMENT AND MINIMUM THICKNESS

SIDING MATERIAL		NOMINAL THICKNESS (inches)	JOINT TREATMENT	TYPE OF SUPPORTS FOR THE SIDING MATERIAL AND FASTENERS					
				Wood or wood structural panel sheathing into stud	Fiberboard sheathing into stud	Gypsum sheathing into stud	Foam plastic sheathing into stud[l]	Direct to studs	Number or spacing of fasteners
Anchored veneer: brick, concrete, masonry or stone (see Section R703.8)		2	Section R703.8	Section R703.8					
Adhered veneer: concrete, stone or masonry (see Section R703.12)		—	Section R703.12	Section R703.12					
Fiber cement siding	Panel siding (see Section R703.10.1)	$^5/_{16}$	Section R703.10.1	6d common (2″ × 0.113″)	6d common (2″ × 0.113″)	6d common (2″ × 0.113″)	6d common (2″ × 0.113″)	4d common ($1^1/_2$″ × 0.099″)	6″ panel edges 12″ inter. sup.
	Lap siding (see Section R703.10.2)	$^5/_{16}$	Section R703.10.2	6d common (2″ × 0.113″)	6d common (2″ × 0.113″)	6d common (2″ × 0.113″)	6d common (2″ × 0.113″)	6d common (2″ × 0.113″) or 11 gage roofing nail	Note f
Hardboard panel siding (see Section R703.5)		$^7/_{16}$	—	0.120″ nail (shank) with 0.225″ head	0.120″ nail (shank) with 0.225″ head	0.120″ nail (shank) with 0.225″ head	0.120″ nail (shank) with 0.225″ head	0.120″ nail (shank) with 0.225″ head	6″ panel edges 12″ inter. sup.[d]
Hardboard lap siding (see Section R703.5)		$^7/_{16}$	Note e	0.099″ nail (shank) with 0.240″ head	0.099″ nail (shank) with 0.240″ head	0.099″ nail (shank) with 0.240″ head	0.099″ nail (shank) with 0.240″ head	0.099″ nail (shank) with 0.240″ head	Same as stud spacing 2 per bearing
Horizontal aluminum[a]	Without insulation	0.019[b]	Lap	Siding nail $1^1/_2$″ × 0.120″	Siding nail 2″ × 0.120″	Siding nail 2″ × 0.120″	Siding nail[h] $1^1/_2$″ × 0.120″	Not allowed	Same as stud spacing
		0.024	Lap	Siding nail $1^1/_2$″ × 0.120″	Siding nail 2″ × 0.120″	Siding nail 2″ × 0.120″	Siding nail[h] $1^1/_2$″ × 0.120″	Not allowed	
	With insulation	0.019	Lap	Siding nail $1^1/_2$″ × 0.120″	Siding nail $2^1/_2$″ × 0.120″	Siding nail $2^1/_2$″ × 0.120″	Siding nail[h] $1^1/_2$″ × 0.120″	Siding nail $1^1/_2$″ × 0.120″	
Insulated vinyl siding[j]		0.035 (vinyl siding layer only)	Lap	0.120 nail (shank) with a 0.313 head or 16-gage crown[h, i]	0.120 nail (shank) with a 0.313 head or 16-gage crown[h]	0.120 nail (shank) with a 0.313 head or 16-gage crown[h]	0.120 nail (shank) with a 0.313 head Section R703.11.2	Not allowed	16 inches on center or specified by manufacturer instructions, test report or other sections of this code
Particleboard panels		$^3/_8$	—	6d box nail (2″ × 0.099″)	6d box nail (2″ × 0.099″)	6d box nail (2″ × 0.099″)	6d box nail (2″ × 0.099″)	Not allowed	6″ panel edges 12″ inter. sup.
		$^1/_2$	—	6d box nail (2″ × 0.099″)	6d box nail (2″ × 0.099″)	6d box nail (2″ × 0.099″)	6d box nail (2″ × 0.099″)	6d box nail (2″ × 0.099″)	
		$^5/_8$	—	6d box nail (2″ × 0.099″)	8d box nail ($2^1/_2$″ × 0.113″)	8d box nail ($2^1/_2$″ × 0.113″)	6d box nail (2″ × 0.099″)	6d box nail (2″ × 0.099″)	
Polypropylene siding[k]		Not applicable	Lap	Section 703.14.1	Section 703.14.1	Section 703.14.1	Section 703.14.1	Not allowed	As specified by the manufacturer instructions, test report or other sections of this code

(continued)

INTERNATIONAL CODE COUNCIL®
Copyright © 2015 ICC. ALL RIGHTS RESERVED. Accessed by David Dammon on Jun 21, 2017 12:30:52 PM pursuant to License Agreement with ICC. No further reproduction or distribution authorized. ANY UNAUTHORIZED REPRODUCTION OR DISTRIBUTION IS A VIOLATION OF THE FEDERAL COPYRIGHT ACT AND THE LICENSE AGREEMENT, AND SUBJECT TO CIVIL AND CRIMINAL PENALTIES THEREUNDER.

TABLE R703.3(1)—continued
SIDING MINIMUM ATTACHMENT AND MINIMUM THICKNESS

SIDING MATERIAL		NOMINAL THICKNESS (inches)	JOINT TREATMENT	TYPE OF SUPPORTS FOR THE SIDING MATERIAL AND FASTENERS					
				Wood or wood structural panel sheathing into stud	Fiberboard sheathing into stud	Gypsum sheathing into stud	Foam plastic sheathing into stud[l]	Direct to studs	Number or spacing of fasteners
Steel[c]		29 ga.	Lap	Siding nail ($1^3/_4$″ × 0.113″) Staple–$1^3/_4$″	Siding nail ($2^3/_4$″ × 0.113″) Staple–$2^1/_2$″	Siding nail ($2^1/_2$″ × 0.113″) Staple–$2^1/_4$″	Siding nail ($1^3/_4$″ x 0.113″) Staple–$1^3/_4$″	Not allowed	Same as stud spacing
Vinyl siding (see Section R703.11)		0.035	Lap	0.120″ nail (shank) with a 0.313″ head or 16-gage staple with $^3/_8$- to $^1/_2$-inch crown[h, i]	0.120″ nail (shank) with a 0.313″ head or 16-gage staple with $^3/_8$- to $^1/_2$-inch crown[h]	0.120″ nail (shank) with a 0.313″ head or 16- gage staple with $^3/_8$- to $^1/_2$-inch crown[h]	0.120″ nail (shank) with a 0.313 head Section R703.11.2	Not allowed	16 inches on center or as specified by the manufacturer instructions or test report
Wood siding (see Section R703.5)	Wood rustic, drop	$^3/_8$ min.	Lap	6d box or siding nail (2″ × 0.099″)	6d box or siding nail (2″ × 0.099″)	6d box or siding nail (2″ × 0.099″)	6d box or siding nail (2″ × 0.099″)	8d box or siding nail ($2^1/_2$″ × 0.113″) Staple–2″	Face nailing up to 6″ widths, 1 nail per bearing; 8″ widths and over, 2 nails per bearing
	Shiplap	$^{19}/_{32}$ average	Lap						
	Bevel	$^7/_{16}$							
	Butt tip	$^3/_{16}$	Lap						
Wood structural panel ANSI/APA PRP-210 siding (exterior grade) (see Section R703.5)		$^3/_8 – ^1/_2$	Note e	2″ × 0.099″ siding nail	$2^1/_2$″ × 0.113″ siding nail	$2^1/_2$″ × 0.113″ siding nail	$2^1/_2$″ × 0.113″ siding nail	2″ × 0.099″ siding nail	6″ panel edges 12″ inter. sup.
Wood structural panel lap siding (see Section R703.5)		$^3/_8 – ^1/_2$	Note e Note g	2″ × 0.099″ siding nail	$2^1/_2$″ × 0.113″ siding nail	$2^1/_2$″ × 0.113″ siding nail	$2^1/_2$″ × 0.113″ siding nail	2″ × 0.099″ siding nail	8″ along bottom edge

For SI: 1 inch = 25.4 mm.

a. Aluminum nails shall be used to attach aluminum siding.
b. Aluminum (0.019 inch) shall be unbacked only where the maximum panel width is 10 inches and the maximum flat area is 8 inches. The tolerance for aluminum siding shall be +0.002 inch of the nominal dimension.
c. Shall be of approved type.
d. Where used to resist shear forces, the spacing must be 4 inches at panel edges and 8 inches on interior supports.
e. Vertical end joints shall occur at studs and shall be covered with a joint cover or shall be caulked.
f. Face nailing: one 6d common nail through the overlapping planks at each stud. Concealed nailing: one 11-gage $1^1/_2$-inch-long galv. roofing nail through the top edge of each plank at each stud in accordance with the manufacturer's installation instructions.
g. Vertical joints, if staggered, shall be permitted to be away from studs if applied over wood structural panel sheathing.
h. Minimum fastener length must be sufficient to penetrate sheathing other nailable substrate and framing a total of a minimum of $1^1/_4$ inches or in accordance with the manufacturer's installation instructions.
i. Where specified by the manufacturer's instructions and supported by a test report, fasteners are permitted to penetrate into or fully through nailable sheathing or other nailable substrate of minimum thickness specified by the instructions or test report, without penetrating into framing.
j. Insulated vinyl siding shall comply with ASTM D7793.
k. Polypropylene siding shall comply with ASTM D7254.
l. Cladding attachment over foam sheathing shall comply with the additional requirements and limitations of Sections R703.15, R703.16 and R703.17.

INTERNATIONAL CODE COUNCIL®
Copyright © 2015 ICC. ALL RIGHTS RESERVED. Accessed by David Dammon on Jun 21, 2017 12:30:52 PM pursuant to License Agreement with ICC. No further reproduction or distribution authorized. ANY UNAUTHORIZED REPRODUCTION OR DISTRIBUTION IS A VIOLATION OF THE FEDERAL COPYRIGHT ACT AND THE LICENSE AGREEMENT, AND SUBJECT TO CIVIL AND CRIMINAL PENALTIES THEREUNDER.

R703.3.2 Fasteners. Exterior wall coverings shall be securely fastened with aluminum, galvanized, stainless steel or rust-preventative coated nails or staples in accordance with Table R703.3(1) or with other approved corrosion-resistant fasteners in accordance with the wall covering manufacturer's installation instructions. Nails and staples shall comply with ASTM F1667. Nails shall be T-head, modified round head, or round head with smooth or deformed shanks. Staples shall have a minimum crown width of $^{7}/_{16}$ inch (11.1 mm) outside diameter and be manufactured of minimum 16-gage wire. Where fiberboard, gypsum, or foam plastic sheathing backing is used, nails or staples shall be driven into the studs. Where wood or wood structural panel sheathing is used, fasteners shall be driven into studs unless otherwise permitted to be driven into sheathing in accordance with either the siding manufacturer's installation instructions or Table R703.3.2.

❖ See the commentary to Section R703.3.

R703.3.3 Minimum fastener length and penetration. Fasteners shall have the greater of the minimum length specified in Table R703.3(1) or as required to provide a minimum penetration into framing as follows:

1. Fasteners for horizontal aluminum siding, steel siding, particleboard panel siding, wood structural panel siding in accordance with ANSI/APA-PRP 210, fiber-cement panel siding and fiber-cement lap siding installed over foam plastic sheathing shall penetrate not less than $1^{1}/_{2}$ inches (38 mm) into framing or shall be in accordance with the manufacturer's installation instructions.
2. Fasteners for hardboard panel and lap siding shall penetrate not less than $1^{1}/_{2}$ inches (38 mm) into framing.
3. Fasteners for vinyl siding and insulated vinyl siding installed over wood or wood structural panel sheathing shall penetrate not less than $1^{1}/_{4}$ inches (32 mm) into sheathing and framing combined. Vinyl siding and insulated vinyl siding shall be permitted to be installed with fasteners penetrating into or through wood or wood structural sheathing of minimum thickness as specified by the manufacturer's instructions or test report, with or without penetration into the framing. Where the fastener penetrates fully through the sheathing, the end of the fastener shall extend not less than $^{1}/_{4}$ inch (6.4 mm) beyond the opposite face of the sheathing. Fasteners for vinyl siding and insulated vinyl siding installed over foam plastic sheathing shall be in accordance with Section R703.11.2. Fasteners for vinyl siding and insulated vinyl siding installed over fiberboard or gypsum sheathing shall penetrate not less than $1^{1}/_{4}$ inches (32 mm) into framing.
4. Fasteners for vertical or horizontal wood siding shall penetrate not less than $1^{1}/_{2}$ inches (38 mm) into studs, studs and wood sheathing combined, or blocking.
5. Fasteners for siding material installed over foam plastic sheathing shall have sufficient length to accommodate foam plastic sheathing thickness and to penetrate framing or sheathing and framing combined, as specified in Items 1 through 4.

❖ See the commentary to Section R703.3.

R703.4 Flashing. Approved corrosion-resistant flashing shall be applied shingle-fashion in a manner to prevent entry of water into the wall cavity or penetration of water to the building structural framing components. Self-adhered membranes used as flashing shall comply with AAMA 711. Fluid-applied membranes used as flashing in exterior walls shall comply with AAMA 714. The flashing shall extend to the surface of the exterior wall finish. Approved corrosion-resistant flashings shall be installed at the following locations:

1. Exterior window and door openings. Flashing at exterior window and door openings shall extend to the surface of the exterior wall finish or to the water-resistive barrier complying with Section 703.2 for subsequent drainage. Mechanically attached flexible flashings shall comply with AAMA 712. Flashing at exterior window and door openings shall be installed in accordance with one or more of the following:
   1.1. The fenestration manufacturer's installation and flashing instructions, or for applications not addressed in the fenestration manufacturer's instructions, in accordance with the flashing manufacturer's instructions. Where flashing instructions or details are not provided, pan flashing shall be installed at the sill of exterior window and door openings. Pan flashing shall be sealed or sloped in such a manner as to direct water to the surface of the exterior wall finish or to the water-resistive barrier for subsequent drainage. Openings using pan flashing shall incorporate flashing or protection at the head and sides.
   1.2. In accordance with the flashing design or method of a registered design professional.

TABLE R703.3.2
OPTIONAL SIDING ATTACHMENT SCHEDULE FOR FASTENERS WHERE NO STUD PENETRATION NECESSARY

APPLICATION	NUMBER AND TYPE OF FASTENER	SPACING OF FASTENERS[b]
Exterior wall covering (weighing 3 psf or less) attachment to wood structural panel sheathing, either direct or over foam sheathing a maximum of 2 inches thick.[a] Note: Does not apply to vertical siding.	Ring shank roofing nail (0.120″ min. dia.)	12″ o.c.
	Ring shank nail (0.148″ min. dia.)	15″ o.c.
	No. 6 screw (0.138″ min. dia.)	12″ o.c.
	No. 8 screw (0.164″ min. dia.)	16″ o.c.

For SI: 1 inch = 25.4 mm.

a. Fastener length shall be sufficient to penetrate back side of the wood structural panel sheathing by at least $^{1}/_{4}$ inch. The wood structural panel sheathing shall be not less than $^{7}/_{16}$ inch in thickness.

b. Spacing of fasteners is per 12 inches of siding width. For other siding widths, multiply "Spacing of Fasteners" above by a factor of 12/s, where "s" is the siding width in inches. Fastener spacing shall never be greater than the manufacturer's minimum recommendations.

INTERNATIONAL CODE COUNCIL®
Copyright © 2015 ICC. ALL RIGHTS RESERVED. Accessed by David Dammon on Jun 21, 2017 12:30:52 PM pursuant to License Agreement with ICC. No further reproduction or distribution authorized. ANY UNAUTHORIZED REPRODUCTION OR DISTRIBUTION IS A VIOLATION OF THE FEDERAL COPYRIGHT ACT AND THE LICENSE AGREEMENT, AND SUBJECT TO CIVIL AND CRIMINAL PENALTIES THEREUNDER.

1.3. In accordance with other approved methods.

2. At the intersection of chimneys or other masonry construction with frame or stucco walls, with projecting lips on both sides under stucco copings.
3. Under and at the ends of masonry, wood or metal copings and sills.
4. Continuously above all projecting wood trim.
5. Where exterior porches, decks or stairs attach to a wall or floor assembly of wood-frame construction.
6. At wall and roof intersections.
7. At built-in gutters.

❖ The code requires all points subject to the entry of moisture to be appropriately flashed. Roof and wall intersections and parapets create significant challenges, as do exterior wall openings exposed to the weather. Where wind-driven rain is expected, the concerns are even greater. Self-adhered flashing is required to comply with AAMA 711. Window and door manufacturers are required by Section R609.1 of the code to provide installation instructions for each window and door. Most window and door manufacturers require installation per their instructions and many window and door manufacturers are incorporating a pan flashing in their window and door installation instructions. Window and door manufacturers create installation and flashing instructions for a wide variety of wall conditions, but are unable to create installation instructions for every conceivable wall condition. Items 1.2 and 1.3 of the flashing methods allow necessary flexibility while retaining the performance requirements of Section R703.4. Although the code identifies a number of locations where flashing is specifically required, the entire exterior envelope must be weather tight to protect the interior from weather. Therefore, any location on the exterior envelope that provides a route for the admission of water or moisture into the building must be properly protected. Commentary Figure R703.4 illustrates examples of flashing.

R703.5 Wood, hardboard and wood structural panel siding. Wood, hardboard, and wood structural panel siding shall be installed in accordance with this section and Table R703.3(1). Hardboard siding shall comply with CPA/ANSI A135.6. Hardboard siding used as architectural trim shall comply with CPA/ANSI A 135.7.

❖ This section addresses the use of wood siding products as exterior wall coverings.Vertical, panel and horizontal siding are regulated.

R703.5.1 Vertical wood siding. Wood siding applied vertically shall be nailed to horizontal nailing strips or blocking set not more than 24 inches (610 mm) on center.

❖ Vertical wood siding must be attached to supports spaced not more than 24 inches on center.

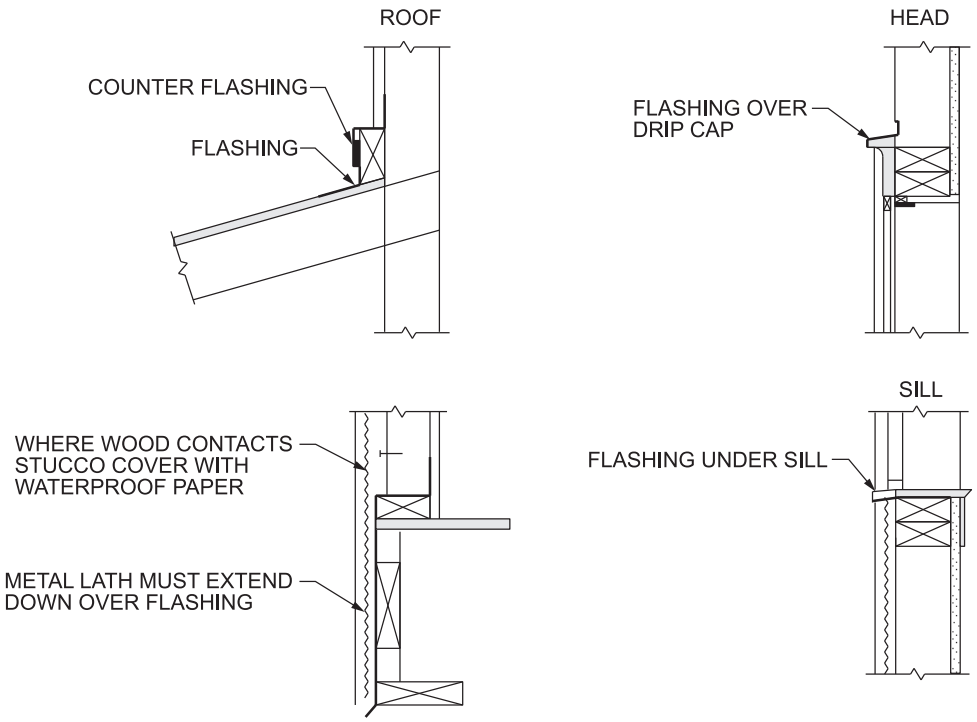

Figure R703.4
FLASHING EXAMPLES

INTERNATIONAL CODE COUNCIL®
Copyright © 2015 ICC. ALL RIGHTS RESERVED. Accessed by David Dammon on Jun 21, 2017 12:30:52 PM pursuant to License Agreement with ICC. No further reproduction or distribution authorized. ANY UNAUTHORIZED REPRODUCTION OR DISTRIBUTION IS A VIOLATION OF THE FEDERAL COPYRIGHT ACT AND THE LICENSE AGREEMENT, AND SUBJECT TO CIVIL AND CRIMINAL PENALTIES THEREUNDER.

R703.5.2 Panel siding. $^{3}/_{8}$-inch (9.5 mm) wood structural panel siding shall not be applied directly to studs spaced more than 16 inches (406 mm) on center where long dimension is parallel to studs. Wood structural panel siding $^{7}/_{16}$ inch (11.1 mm) or thinner shall not be applied directly to studs spaced more than 24 inches (610 mm) on center. The stud spacing shall not exceed the panel span rating provided by the manufacturer unless the panels are installed with the face grain perpendicular to the studs or over sheathing approved for that stud spacing.

Joints in wood, hardboard or wood structural panel siding shall be made as follows unless otherwise approved. Vertical joints in panel siding shall occur over framing members, unless wood or wood structural panel sheathing is used, and shall be shiplapped or covered with a batten. Horizontal joints in panel siding shall be lapped not less than 1 inch (25 mm) or shall be shiplapped or flashed with Z-flashing and occur over solid blocking, wood or wood structural panel sheathing.

❖ The prescriptive requirements for stud spacing for wood structural panel siding from Note i of the 2012 IRC Table R704.3 have been moved into this section. Plywood is acceptable as an exterior wall covering if the plywood is approved for use in an exterior location and the joints are made waterproof. Typical joint treatments include lapping joints horizontally, having the joints occur over framing and protecting those joints with a continuous wood batten using approved caulking, flashing or vertical or horizontal shiplaps [see Commentary Figures R703.5.2(1) and R703.5.2(2) for illustrations of joint treatment].

R703.5.3 Horizontal wood siding. Horizontal lap siding shall be installed in accordance with the manufacturer's recommendations. Where there are no recommendations the siding shall be lapped not less than 1 inch (25 mm), or $^{1}/_{2}$ inch (12.7 mm) if rabbeted, and shall have the ends caulked, covered with a batten or sealed and installed over a strip of flashing.

❖ To maintain the necessary weather protection, horizontal siding is required to be installed using the manufacturer's recommendations. Where a manufacturer does not provide installation recommendations, horizontal siding must have a minimum lap of at least 1 inch (25 mm), unless the siding is rabbeted, in which case the joint need be only $^{1}/_{2}$ inch (12.7 mm). Various methods can be used to protect the ends of horizontal siding, including the use of flashing, caulking or battens.

R703.6 Wood shakes and shingles. Wood shakes and shingles shall conform to CSSB *Grading Rules for Wood Shakes and Shingles*.

❖ Grading rules established by the Cedar Shake and Shingle Bureau are applicable to wood shakes and shingles used as exterior wall covering materials. The provisions of this section deal with the specific application and attachment of wood shakes and shingles to the exterior of a building.

R703.6.1 Application. Wood shakes or shingles shall be applied either single course or double course over nominal $^{1}/_{2}$-inch (12.7 mm) wood-based sheathing or to furring strips over $^{1}/_{2}$-inch (12.7 mm) nominal nonwood sheathing. A water-resistive barrier shall be provided over all sheathing, with horizontal overlaps in the membrane of not less than 2 inches (51 mm) and vertical overlaps of not less than 6 inches (152 mm). Where horizontal furring strips are used, they shall be 1 inch by 3 inches or 1 inch by 4 inches (25 mm by 76 mm or 25 mm by 102 mm) and shall be fastened to the studs with minimum 7d or 8d box nails and shall be spaced a distance on center equal to the actual weather exposure of the shakes or shingles, not to exceed the maximum exposure specified in

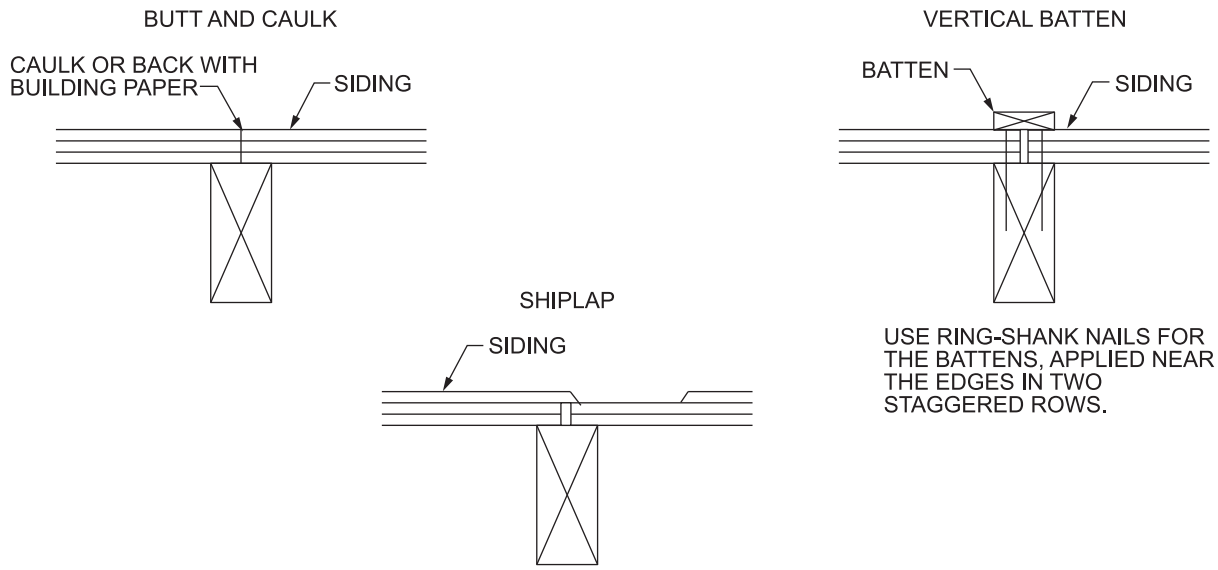

Figure R703.5.2(1)
VERTICAL JOINT TREATMENT OF PANEL SIDING

INTERNATIONAL CODE COUNCIL®
Copyright © 2015 ICC. ALL RIGHTS RESERVED. Accessed by David Dammon on Jun 21, 2017 12:30:52 PM pursuant to License Agreement with ICC. No further reproduction or distribution authorized. ANY UNAUTHORIZED REPRODUCTION OR DISTRIBUTION IS A VIOLATION OF THE FEDERAL COPYRIGHT ACT AND THE LICENSE AGREEMENT, AND SUBJECT TO CIVIL AND CRIMINAL PENALTIES THEREUNDER.

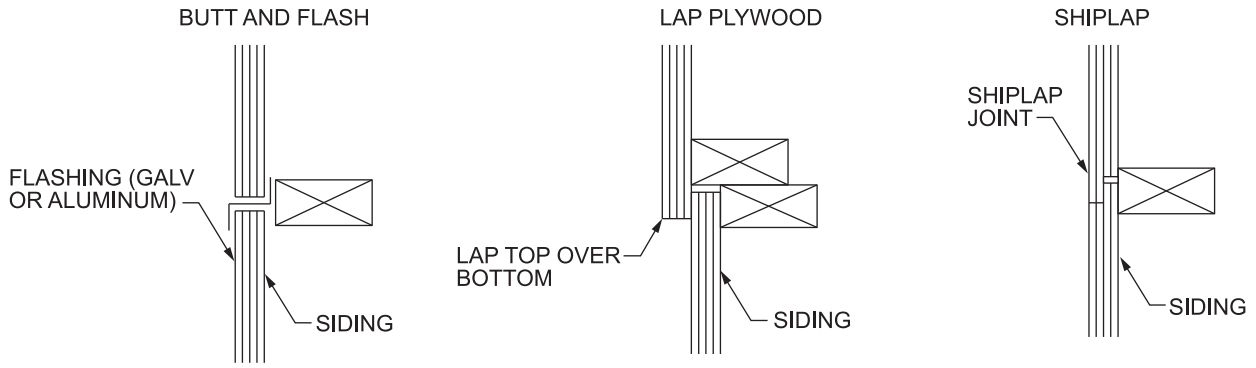

Figure R703.5.2(2)
HORIZONTAL JOINT TREATMENT OF PANEL SIDING

Table R703.6.1. When installing shakes or shingles over a nonpermeable water-resistive barrier, furring strips shall be placed first vertically over the barrier and in addition, horizontal furring strips shall be fastened to the vertical furring strips prior to attaching the shakes or shingles to the horizontal furring strips. The spacing between adjacent shingles to allow for expansion shall be $^1/_8$ inch (3.2 mm) to $^1/_4$ inch (6.4 mm) apart, and between adjacent shakes shall be $^3/_8$ inch (9.5 mm) to $^1/_2$ inch (12.7 mm) apart. The offset spacing between joints in adjacent courses shall be not less than $1^1/_2$ inches (38 mm).

❖ Where wood shakes and shingles are applied as an exterior wall covering, the sheathing must be covered with a water-resistive barrier prior to shingle or shake installation. The application of wood shakes and shingles may be over either solid sheathing or horizontal furring strips applied directly to the studs. Both vertical and horizontal furring strips must be used where applied over a nonpermeable water-resistive barrier. The minimum sheathing thickness and furring strip size and fastening are prescribed by the code. The spacing of the horizontal furring strips must not exceed the maximum weather exposure specified in Table R703.6.1. Wood shakes and shingles must not be applied with the vertical edges tight together. Tightly applied shakes and shingles do not leave room for expansion causing fish-mouthing, cupping and curling. The code prescribes minimum and maximum spacing for shingles and shakes. To allow for expansion, a small space should be established between each shake or shingle. The spacing is limited to $^1/_4$ inch (6.4 mm) between adjacent shingles and $^1/_2$ inch (12.7 mm) between adjacent shakes. To avoid channels between the shakes or shingles where water penetration might occur, joints must be offset at least $1^1/_2$ inches (38 mm) in adjacent courses.

TABLE R703.6.1
MAXIMUM WEATHER EXPOSURE FOR WOOD SHAKES AND SHINGLES ON EXTERIOR WALLS[a, b, c]
(Dimensions are in inches)

LENGTH	EXPOSURE FOR SINGLE COURSE	EXPOSURE FOR DOUBLE COURSE
Shingles[a]		
16	7	12[b]
18	8	14[c]
24	$10^1/_2$	16[d]
Shakes[a]		
18	8	14
24	$10^1/_2$	18

For SI: 1 inch = 25.4 mm.

a. Dimensions given are for No. 1 grade.

b. A maximum 9-inch exposure is permitted for No. 2 grade.

c. A maximum 10-inch exposure is permitted for No. 2 grade.

d. A maximum 14-inch exposure is permitted for No. 2 grade.

R703.6.2 Weather exposure. The maximum weather exposure for shakes and shingles shall not exceed that specified in Table 703.6.1.

❖ Table R703.6.1 specifies the maximum weather exposure permitted for wood shakes and shingles installed on exterior walls. The exposure length for a single course of shingles and shakes is reduced from that specified in the 2012 code. The reduction was made because the longer exposure lengths previously allowed in the code are no longer considered practical. Exposure lengths have been decreased in accordance with manufacturer's installation requirements. Depending on the length of the shingle and the number of courses, the table specifies the maximum length of exposure for weathering purposes. Shingles are available in three different lengths, while shakes are regulated for two lengths. Both single-course and double-course applications are addressed.

INTERNATIONAL CODE COUNCIL®
Copyright © 2015 ICC. ALL RIGHTS RESERVED. Accessed by David Dammon on Jun 21, 2017 12:30:52 PM pursuant to License Agreement with ICC. No further reproduction or distribution authorized. ANY UNAUTHORIZED REPRODUCTION OR DISTRIBUTION IS A VIOLATION OF THE FEDERAL COPYRIGHT ACT AND THE LICENSE AGREEMENT, AND SUBJECT TO CIVIL AND CRIMINAL PENALTIES THEREUNDER.

Where a single course of wood shingles is used, the maximum exposure varies from 7 inches to $10^1/_2$ inches, depending on the length of the shingles. Maximum wood shake exposures are either 8 inches or $10^1/_2$ inches for a single-course application. In double-course applications, the maximum exposures are increased for both shingles and shakes.

R703.6.3 Attachment. Wood shakes or shingles shall be installed according to this chapter and the manufacturer's instructions. Each shake or shingle shall be held in place by two stainless steel Type 304, Type 316 or hot-dipped zinc-coated galvanized corrosion-resistant box nails in accordance with Table R703.6.3(1) or R703.6.3(2). The hot-dipped zinc-coated galvanizing shall conform to minimum standard ASTM A153D, 1.0 ounce per square foot. Alternatively, 16-gage stainless steel Type 304 or Type 316 staples with crown widths $^7/_{16}$ inch (11 mm) minimum, $^3/_4$ inch (19 mm) maximum, shall be used and the crown of the staple shall be placed parallel with the butt of the shake or the shingle. In single-course application, the fasteners shall be concealed by the course above and shall be driven approximately 1 inch (25 mm) above the butt line of the succeeding course and $^3/_4$ inch (19 mm) from the edge. In double-course applications, the exposed shake or shingle shall be face-nailed with two fasteners, driven approximately 2 inches (51 mm) above the butt line and $^3/_4$ inch (19 mm) from each edge. Fasteners installed within 15 miles (24 km) of salt water coastal areas shall be stainless steel Type 316. Fasteners for fire-retardant-treated shakes or shingles in accordance with Section R902 or pressure-impregnated-preservative-treated shakes or shingles in accordance with AWPA U1 shall be stainless steel Type 316. The fasteners shall penetrate the sheathing or furring strips by not less than $^1/_2$ inch (13 mm) and shall not be overdriven. Fasteners for untreated (natural) and treated products shall comply with ASTM F1667.

❖ The general provisions of this chapter apply to the installation of wood shakes or shingles, as do the installation instructions of the manufacturer. In addition, this section sets forth specific requirements regulating the attachment methods for wood shakes or shingles. This section describes in detail the proper attachment of either staples or nails where used as fasteners for wood shakes and shingles applied to exterior walls. Both single-course and double-course application methods are described Fasteners must be box nails in accordance with Tables R703.6.3(1) and R703.6.3(2). Fasteners must comply with ASTM F1667. Stainless steel staples are permitted in lieu of box nails. Fasteners for applying wood shakes or shingles must be stainless steel or hot-dipped galvanized. Only stainless steel fasteners are allowed for the following conditions:

1. Where wood shakes or shingles are located within 15 miles of salt water coastal areas.
2. Where wood shakes or shingles are fire-retardant treated.
3. Where wood shakes or shingles are preservative treated.

Only two nails or staples are to be used for each shake or shingle, and they must be placed in accordance with this section and the manufacturer's installation instructions. The depth of fastener penetration must be a minimum of $^1/_2$ inch into the sheathing or furring strips. Care in spacing and driving the fasteners is necessary to provide maximum service from the wood shakes or shingles [see Commentary Figure R905.7.5 (2)].

R703.6.4 Bottom courses. The bottom courses shall be doubled.

❖ In all cases, the bottom course of shakes and shingles in an exterior wall application is to be doubled.

TABLE R703.6.3(1)
SINGLE COURSE SIDEWALL FASTENERS

SINGLE COURSE SIDEWALL FASTENERS			
Product type	**Nail type and minimum length (inches)**	**Minimum head diameter (inches)**	**Minimum shank thickness (inches)**
R & R and sanded shingles	**Type**		
16″ and 18″ shingles	3d box $1^1/_4$	0.19	0.08
24″ shingles	4d box $1^1/_2$	0.19	0.08
Grooved shingles	**Type**		
16″ and 18″ shingles	3d box $1^1/_4$	0.19	0.08
24″ shingles	4d box $1^1/_2$	0.19	0.08
Split and sawn shakes	**Type**		
18″ straight-split shakes	5d box $1^3/_4$	0.19	0.08
18″ and 24″ handsplit shakes	6d box 2	0.19	0.0915
24″ tapersplit shakes	5d box $1^3/_4$	0.19	0.08
18″ and 24″ tapersawn shakes	6d box 2	0.19	0.0915

For SI: 1 inch = 25.4 mm.

INTERNATIONAL CODE COUNCIL®
Copyright © 2015 ICC. ALL RIGHTS RESERVED. Accessed by David Dammon on Jun 21, 2017 12:30:52 PM pursuant to License Agreement with ICC. No further reproduction or distribution authorized. ANY UNAUTHORIZED REPRODUCTION OR DISTRIBUTION IS A VIOLATION OF THE FEDERAL COPYRIGHT ACT AND THE LICENSE AGREEMENT, AND SUBJECT TO CIVIL AND CRIMINAL PENALTIES THEREUNDER.

TABLE R703.6.3(2)
DOUBLE COURSE SIDEWALL FASTENERS

DOUBLE COURSE SIDEWALL FASTENERS			
Product type	**Nail type and minimum length**	**Minimum head diameter (inches)**	**Minimum shank thickness (inches)**
R & R and sanded shingles			
16,″ 8″ and 24″ shingles	5d box $1^3/_4$ or same size casing nails	0.19	0.08
Grooved shingles			
16,″ 18″ and 24″shingles	5d box $1^3/_4$	0.19	0.08
Split and sawn shakes			
18″ straight-split shakes	7d box $2^1/_4$ or 8d $2^1/_2$	0.19	0.099
18″ and 24″ handsplit shakes	7d box $2^1/_4$ or 8d $2^1/_2$	0.19	0.099
24″ tapersplit shakes	7d box $2^1/_4$ or 8d $2^1/_2$	0.19	0.099
18″ and 24″ tapersawn shakes	7d box $2^1/_4$ or 8d $2^1/_2$	0.19	0.099

For SI: 1 inch = 25.4 mm.

R703.7 Exterior plaster. Installation of these materials shall be in compliance with ASTM C926, ASTM C1063 and the provisions of this code.

❖ Portland cement plaster is the only material approved by the code for exterior plaster. Gypsum plaster deteriorates under conditions of weather and moisture, which are prevalent on the exterior surfaces of buildings. Commentary Figures R703.7(1) and R703.7(2) illustrate exterior plastering systems. ASTM C926 is the standard specification for the installation of Portland-cement-based plaster. ASTM C926 provides the minimum requirements for the application of Portland cement-based plaster for exterior stucco) along with the tables necessary for proportioning various plaster mixes and thicknesses. ASTM C1063 is the standard specification for exterior lathing and furring for Portland-cement-based plastering, as specified in ASTM C926. Installation of exterior plaster must also comply with the provisions of this code.

R703.7.1 Lath. Lath and lath attachments shall be of corrosion-resistant materials. Expanded metal or woven wire lath shall be attached with $1^1/_2$-inch-long (38 mm), 11 gage nails having a $^7/_{16}$-inch (11.1 mm) head, or $^7/_8$-inch-long (22.2 mm), 16 gage staples, spaced not more than 6 inches (152 mm), or as otherwise approved.

❖ Lath and its attachments must be of corrosion-resistant materials. Unless another fastening method is approved, lath must be attached to framing members with the nails or staples specified in this section and spaced at a maximum of 6 inches (152 mm) on center along the framing member.

R703.7.2 Plaster. Plastering with portland cement plaster shall be not less than three coats where applied over metal lath or wire lath and shall be not less than two coats where applied over masonry, concrete, pressure-preservative-treated wood or decay-resistant wood as specified in Section R317.1 or gypsum backing. If the plaster surface is completely covered by veneer or other facing material or is completely concealed, plaster application need be only two coats, provided the total thickness is as set forth in Table R702.1(1).

On wood-frame construction with an on-grade floor slab system, exterior plaster shall be applied to cover, but not extend below, lath, paper and screed.

The proportion of aggregate to cementitious materials shall be as set forth in Table R702.1(3).

❖ The code requires that exterior Portland cement plaster be applied in not less than three coats when applied over metal or wire-fabric lath, for the same reasons as discussed for interior plaster. Where the Portland cement plaster is applied over other approved plaster bases, the code requires only two-coat work. The code permits plaster work that is completely concealed to be of only two coats provided the total thickness is that required by Table R702.1(1), because the finish coat of plaster is to provide a surface for exterior finishes and to provide an aesthetic appearance. Thus, where the plaster surface is to be completely concealed, it is not necessary to apply a finish coat.

The code requires that the exterior plaster be installed to completely cover, but not extend below, the lath and paper-on-wood exterior wall construction supported by an on-grade concrete slab. This requirement, combined with the presence of a weep screed, prevents the entrapment of free moisture and the subsequent channeling of the moisture to the interior of the building.

R703.7.2.1 Weep screeds. A minimum 0.019-inch (0.5 mm) (No. 26 galvanized sheet gage), corrosion-resistant weep screed or plastic weep screed, with a minimum vertical attachment flange of $3^1/_2$ inches (89 mm) shall be provided at or below the foundation plate line on exterior stud walls in accordance with ASTM C926. The weep screed shall be placed not less than 4 inches (102 mm) above the earth or 2 inches (51 mm) above paved areas and shall be of a type that will allow trapped water to drain to the exterior of the building. The weather-resistant barrier shall lap the attachment

INTERNATIONAL CODE COUNCIL®
Copyright © 2015 ICC. ALL RIGHTS RESERVED. Accessed by David Dammon on Jun 21, 2017 12:30:52 PM pursuant to License Agreement with ICC. No further reproduction or distribution authorized. ANY UNAUTHORIZED REPRODUCTION OR DISTRIBUTION IS A VIOLATION OF THE FEDERAL COPYRIGHT ACT AND THE LICENSE AGREEMENT, AND SUBJECT TO CIVIL AND CRIMINAL PENALTIES THEREUNDER.

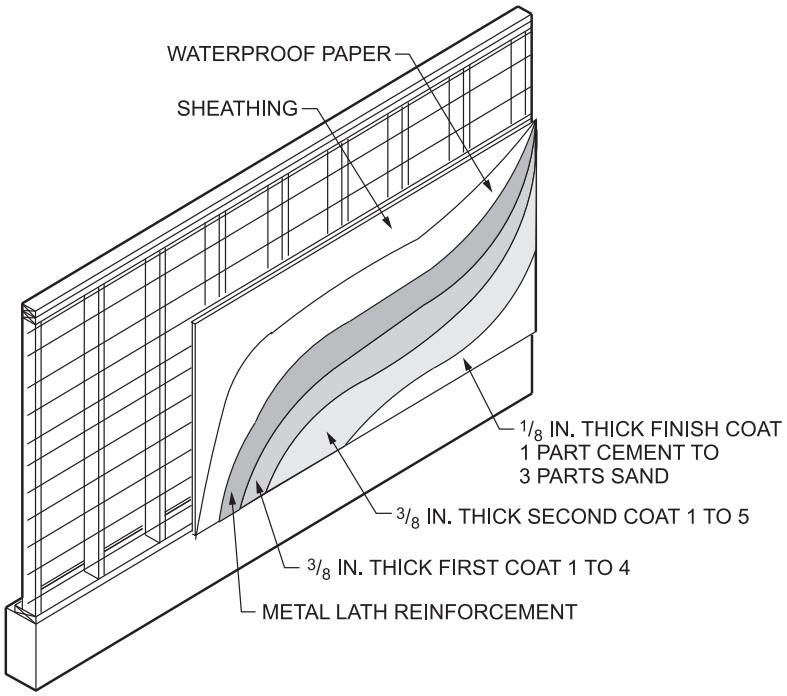

For SI: 1 inch = 25.4 mm.

Figure R703.7(1)
EXTERIOR PLASTERING SYSTEM

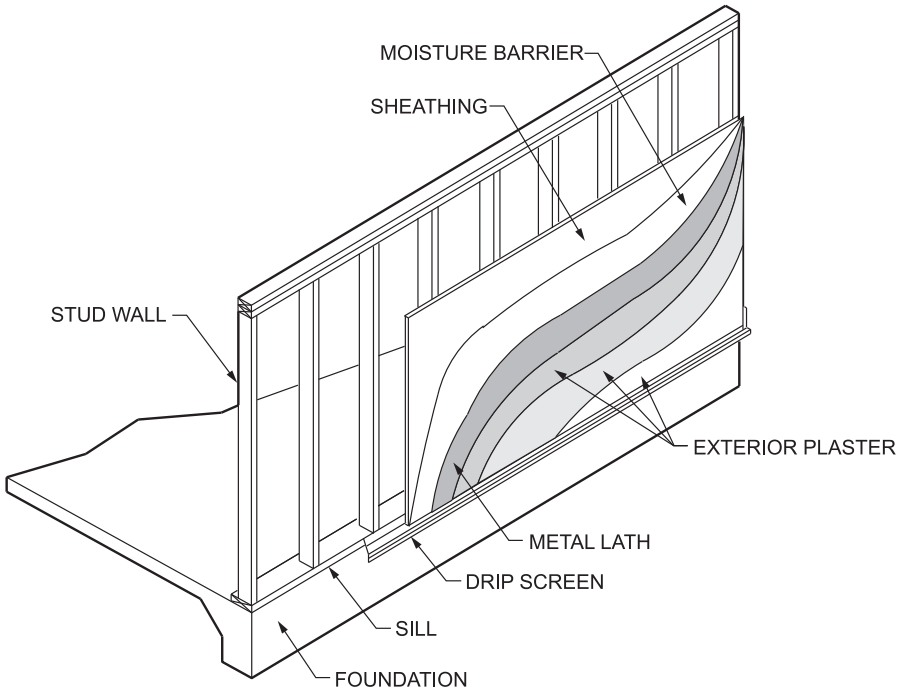

Figure R703.7(2)
EXTERIOR PLASTER—WOOD FRAME ON CONCRETE FLOOR SLAB

INTERNATIONAL CODE COUNCIL®
Copyright © 2015 ICC. ALL RIGHTS RESERVED. Accessed by David Dammon on Jun 21, 2017 12:30:52 PM pursuant to License Agreement with ICC. No further reproduction or distribution authorized. ANY UNAUTHORIZED REPRODUCTION OR DISTRIBUTION IS A VIOLATION OF THE FEDERAL COPYRIGHT ACT AND THE LICENSE AGREEMENT, AND SUBJECT TO CIVIL AND CRIMINAL PENALTIES THEREUNDER.

flange. The exterior lath shall cover and terminate on the attachment flange of the weep screed.

❖ Water and moisture can penetrate an exterior plaster wall for a variety of reasons and in a number of ways. Some moisture will penetrate the plaster in an exterior wall; therefore, the design of the wall should include a weep screed, which will provide a way to release the moisture [see Commentary Figure R703.7.2.1]. Once water or moisture penetrates the plaster, it will migrate down the exterior face of the weather-resistive barrier until it reaches the sill plate or mud sill. At this point, the water will seek a way out of the wall. If the exterior plaster system is not detailed and constructed with provisions to allow the moisture to escape to the exterior, it will find its own way out. This exit will almost certainly be through the interior of the wall and cause leaking, and therefore damage, to the interior of the building. For this reason, the code requires a continuous weep screed at the bottom of exterior walls to permit the moisture to escape to the exterior of the building.

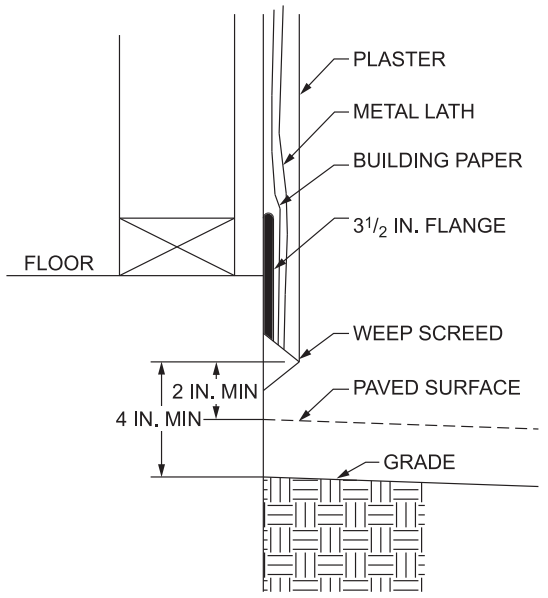

Figure R703.7.2.1
WEEP SCREED FOR EXTERIOR PLASTER ON STUD

R703.7.3 Water-resistive barriers. Water-resistive barriers shall be installed as required in Section R703.2 and, where applied over wood-based sheathing, shall include a water-resistive vapor-permeable barrier with a performance at least equivalent to two layers of Grade D paper. The individual layers shall be installed independently such that each layer provides a separate continuous plane and any flashing (installed in accordance with Section R703.4) intended to drain to the water-resistive barrier is directed between the layers.

Exception: Where the water-resistive barrier that is applied over wood-based sheathing has a water resistance equal to or greater than that of 60-minute Grade D paper and is separated from the stucco by an intervening, substantially nonwater-absorbing layer or designed drainage space.

❖ The code requires that a water-resistive barrier be installed behind exterior plaster for the reasons provided in Section R703.2. The code also requires that when the barrier is applied over wood-based sheathing such as plywood, the barrier is to be two layers of Grade D building paper.

This requirement is based on the observed problems that occur when one layer is applied over wood sheathing. The wood sheathing eventually exhibits dry rot due to the penetration of moisture. Cracking is then created in the plaster due to movement of the sheathing caused by alternate expansion and contraction. Field experience has shown that where two layers of building paper are used, the penetration of moisture is considerably decreased, as is the cracking of the plaster due to movement of the sheathing caused by the wet and dry cycles.

The code also requires each layer of the water-resistive barrier to be independently installed in a manner that provides a continuous drainage plane. The primary function of the inboard layer is to keep water away from the sheathing and also from penetrating into the stud cavity. This layer should be integrated with window and door flashings, the weep screed at the bottom of the wall as well as any through-wall flashing or expansion joints. The primary function of the outboard layer that comes in contact with the stucco is to separate the stucco from the inboard layer of the water-resistive barrier. This layer is at times referred to as a "sacrificial layer," an "intervening layer" or a "bond break layer."

This provision includes a reference to "Grade D paper" without defining the term or providing a reference to a standard. The reference to Grade D paper actually refers to Federal Specification UU-B-790a, *Federal Specifications for Building Paper, Vegetable Fiber—Kraft, Waterproofed, Water Repellent, and Fire Resistant*. This reference can be traced back to the *Uniform Building Code*® (UBC®) and UBC Standard 14-1, which was based on Federal Specification UU-B-790a. In Section 3.6.4 of that specification, the physical properties for Grade D paper are established. The reference to Kraft waterproof building paper is used because it has the appropriate water vapor permeability to prevent entrapment of moisture between the paper and the sheathing.

The exception permits the application of alternative standard practices by recognizing stucco systems in which one of the two layers of water-resistive barrier is replaced by a layer that although not a "Grade D paper" provides separation from the wet stucco application and provides a barrier to moisture from the stucco to the water-resistive barrier.

INTERNATIONAL CODE COUNCIL®
Copyright © 2015 ICC. ALL RIGHTS RESERVED. Accessed by David Dammon on Jun 21, 2017 12:30:52 PM pursuant to License Agreement with ICC. No further reproduction or distribution authorized. ANY UNAUTHORIZED REPRODUCTION OR DISTRIBUTION IS A VIOLATION OF THE FEDERAL COPYRIGHT ACT AND THE LICENSE AGREEMENT, AND SUBJECT TO CIVIL AND CRIMINAL PENALTIES THEREUNDER.

R703.7.4 Application. Each coat shall be kept in a moist condition for at least 48 hours prior to application of the next coat.

Exception: Applications installed in accordance with ASTM C926.

❖ Plaster should be kept moist prior to the application of the next coat. This is usually accomplished by fogging the surface with water at the start and again at the end of the workday. If it is excessively hot, dry and windy, more frequent moistening and covering with polyethylene plastic may be required to keep the plaster in a moist condition.

R703.7.5 Curing. The finish coat for two-coat cement plaster shall not be applied sooner than seven days after application of the first coat. For three-coat cement plaster, the second coat shall not be applied sooner than 48 hours after application of the first coat. The finish coat for three-coat cement plaster shall not be applied sooner than seven days after application of the second coat.

❖ Plaster must be allowed to cure sufficiently between coats. This promotes more intimate contact between the coats and allows a more complete curing of the coats already applied beneath. The finish plaster coat should only be applied after allowing the previous coat to cure seven days.

R703.8 Anchored stone and masonry veneer, general. Anchored stone and masonry veneer shall be installed in accordance with this chapter, Table R703.3(1) and Figure R703.8. These veneers installed over a backing of wood or cold-formed steel shall be limited to the first story above grade plane and shall not exceed 5 inches (127 mm) in thick-

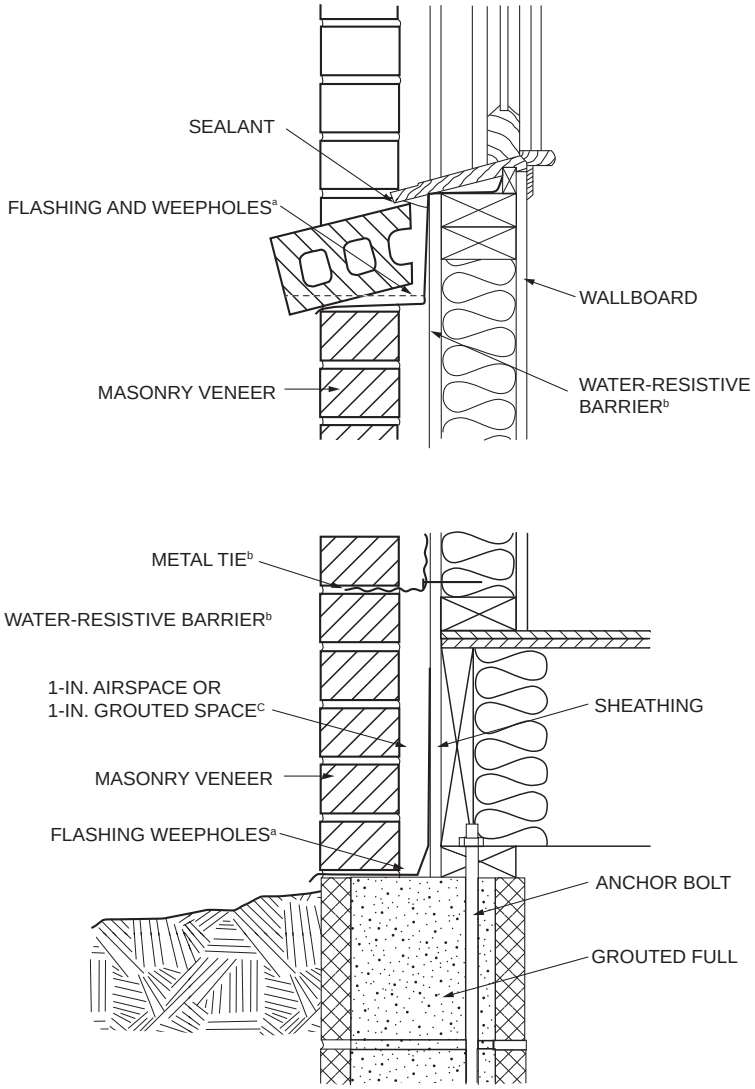

For SI: 1 inch = 25.4 mm.

FIGURE R703.8
TYPICAL MASONRY VENEER WALL DETAILS

(continued)

INTERNATIONAL CODE COUNCIL®
Copyright © 2015 ICC. ALL RIGHTS RESERVED. Accessed by David Dammon on Jun 21, 2017 12:30:52 PM pursuant to License Agreement with ICC. No further reproduction or distribution authorized. ANY UNAUTHORIZED REPRODUCTION OR DISTRIBUTION IS A VIOLATION OF THE FEDERAL COPYRIGHT ACT AND THE LICENSE AGREEMENT, AND SUBJECT TO CIVIL AND CRIMINAL PENALTIES THEREUNDER.

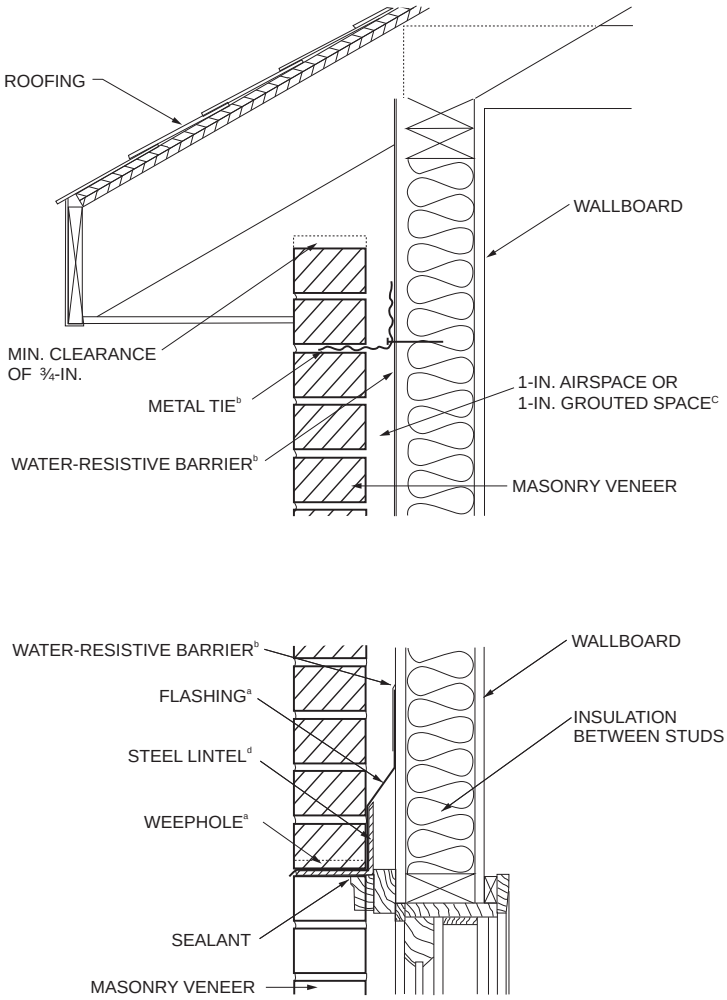

For SI: 1 inch = 25.4 mm.

a. See Sections R703.8.5, R703.8.6 and R703.4.

b. See Sections R703.2 and R703.8.4.

c. See Section R703.8.4.2 and Table 703.8.4.

d. See Section R703.8.3.

e. Figure R703.8 illustrates typical construction details for a masonry veneer wall. For the actual mandatory requirements of this code, see the indicated sections of text. Other details of masonry veneer wall construction shall be permitted provided the requirements of the indicated sections of text are met.

FIGURE R703.8—continued
TYPICAL MASONRY VENEER WALL DETAILS[e]

ness. See Section R602.10 for wall bracing requirements for masonry veneer for wood-framed construction and Section R603.9.5 for wall bracing requirements for masonry veneer for cold-formed steel construction.

Exceptions:

1. For buildings in Seismic Design Categories A, B and C, exterior stone or masonry veneer, as specified in Table R703.8(1), with a backing of wood or steel framing shall be permitted to the height specified in Table R703.8(1) above a noncombustible foundation.
2. For detached one- or two-family dwellings in Seismic Design Categories D_0, D_1 and D_2, exterior stone or masonry veneer, as specified in Table R703.8(2), with a backing of wood framing shall be permitted to the height specified in Table R703.8(2) above a noncombustible foundation.

❖ For the purposes of this section, stone and masonry veneers are nonstructural facing materials of natural or manufactured stone or clay or concrete brick installed as an anchored veneer providing ornamentation, protection or insulation. To be considered a veneer, the material cannot act structurally with the backing insofar as the structural strength of the assembly is concerned. Stone and masonry veneers can be used as either interior or exterior wall finishes. In addition to the provisions of this section, Table R703.3(1) and Figure R703.8 provide details for the installation of stone or masonry veneer. Because

INTERNATIONAL CODE COUNCIL®
Copyright © 2015 ICC. ALL RIGHTS RESERVED. Accessed by David Dammon on Jun 21, 2017 12:30:52 PM pursuant to License Agreement with ICC. No further reproduction or distribution authorized. ANY UNAUTHORIZED REPRODUCTION OR DISTRIBUTION IS A VIOLATION OF THE FEDERAL COPYRIGHT ACT AND THE LICENSE AGREEMENT, AND SUBJECT TO CIVIL AND CRIMINAL PENALTIES THEREUNDER.

of their weight, stone and masonry veneer can impose lateral loads upon the structure from seismic events that are more than the prescriptive loading permitted by Section R301.2.2.2.1 for wood or cold-formed steel construction. For this reason, stone or masonry veneer installed with a backing of wood or cold-formed steel is limited to the first story above grade and a maximum thickness of 5 inches (127 mm) unless it meets Exception 1 or 2.

Exception 1 allows stone or masonry veneer to be constructed to either two or three stories above grade on structures located in Seismic Design Category A, B, or C when installed with wood or cold-formed steel backing and with increased wall bracing [see Table R703.8(1) and Sections R602.10 and R603.9.5].

Exception 1 applies to townhouses or detached one- or two-family dwellings with a backing of wood or cold-formed steel frame that include a stone or masonry veneer.

Exception 2 applies only to detached one- and two-family dwellings with a backing of wood framing that include a stone or masonry veneer. Exception 2 allows stone or masonry veneer with wood backing, up to three stories above grade on structures located in Seismic Design Category D_0 or D_1, and two stories above grade for structures located in Seismic Design Category D_2 under certain conditions that include increasing the amount of wall bracing and providing hold-down connectors [see Table R703.8(2) and Sections R602.10 and R603.9.5].

TABLE R703.8(1)
STONE OR MASONRY VENEER LIMITATIONS AND REQUIREMENTS, WOOD OR STEEL FRAMING, SEISMIC DESIGN CATEGORIES A, B AND C

SEISMIC DESIGN CATEGORY	NUMBER OF WOOD- OR STEEL-FRAMED STORIES	MAXIMUM HEIGHT OF VENEER ABOVE NONCOMBUSTIBLE FOUNDATION[a] (feet)	MAXIMUM NOMINAL THICKNESS OF VENEER (inches)	MAXIMUM WEIGHT OF VENEER (psf)[b]	WOOD- OR STEEL-FRAMED STORY
A or B	Steel: 1 or 2 Wood: 1, 2 or 3	30	5	50	all
C	1	30	5	50	1 only
	2	30	5	50	top
					bottom
	Wood only: 3	30	5	50	top
					middle
					bottom

For SI: 1 inch = 25.4 mm, 1 foot = 304.8 mm, 1 pound per square foot = 0.479 kPa.

a. An additional 8 feet is permitted for gable end walls. See also story height limitations of Section R301.3.

b. Maximum weight is installed weight and includes weight of mortar, grout, lath and other materials used for installation. Where veneer is placed on both faces of a wall, the combined weight shall not exceed that specified in this table.

TABLE R703.8(2)
STONE OR MASONRY VENEER LIMITATIONS AND REQUIREMENTS, ONE- AND TWO-FAMILY DETACHED DWELLINGS, SEISMIC DESIGN CATEGORIES D_0, D_1 AND D_2

SEISMIC DESIGN CATEGORY	NUMBER OF WOOD-FRAMED STORIES[a]	MAXIMUM HEIGHT OF VENEER ABOVE NONCOMBUSTIBLE FOUNDATION OR FOUNDATION WALL (feet)	MAXIMUM NOMINAL THICKNESS OF VENEER (inches)	MAXIMUM WEIGHT OF VENEER (psf)[b]
D_0	1	20[c]	4	40
	2	20[c]	4	40
	3	30[d]	4	40
D_1	1	20[c]	4	40
	2	20[c]	4	40
	3	20[c]	4	40
D_2	1	20[c]	3	30
	2	20[c]	3	30

For SI: 1 inch = 25.4 mm, 1 foot = 304.8 mm, 1 pound per square foot = 0.479 kPa, 1 pound-force = 4.448 N.

a. Cripple walls are not permitted in Seismic Design Categories D_0, D_1 and D_2.

b. Maximum weight is installed weight and includes weight of mortar, grout and lath, and other materials used for installation.

c. The veneer shall not exceed 20 feet in height above a noncombustible foundation, with an additional 8 feet permitted for gable end walls, or 30 feet in height with an additional 8 feet for gable end walls where the lower 10 feet have a backing of concrete or masonry wall. See story height limitations of Section R301.3.

d. The veneer shall not exceed 30 feet in height above a noncombustible foundation, with an additional 8 feet permitted for gable end walls. See story height limitations of Section R301.3.

INTERNATIONAL CODE COUNCIL®
Copyright © 2015 ICC. ALL RIGHTS RESERVED. Accessed by David Dammon on Jun 21, 2017 12:30:52 PM pursuant to License Agreement with ICC. No further reproduction or distribution authorized. ANY UNAUTHORIZED REPRODUCTION OR DISTRIBUTION IS A VIOLATION OF THE FEDERAL COPYRIGHT ACT AND THE LICENSE AGREEMENT, AND SUBJECT TO CIVIL AND CRIMINAL PENALTIES THEREUNDER.

R703.8.1 Interior veneer support. Veneers used as interior wall finishes shall be permitted to be supported on wood or cold-formed steel floors that are designed to support the loads imposed.

❖ Where designed to support the weight of the veneer, a wood-framed or cold-formed steel floor system may be used to support stone or masonry veneer used in an interior application.

R703.8.2 Exterior veneer support. Except in Seismic Design Categories D_0, D_1 and D_2, exterior masonry veneers having an installed weight of 40 pounds per square foot (195 kg/m^2) or less shall be permitted to be supported on wood or cold-formed steel construction. Where masonry veneer supported by wood or cold-formed steel construction adjoins masonry veneer supported by the foundation, there shall be a movement joint between the veneer supported by the wood or cold-formed steel construction and the veneer supported by the foundation. The wood or cold-formed steel construction supporting the masonry veneer shall be designed to limit the deflection to $^1/_{600}$ of the span for the supporting members. The design of the wood or cold-formed steel construction shall consider the weight of the veneer and any other loads.

❖ Two criteria must be met to support exterior masonry veneer directly on wood or cold-formed steel construction rather than on a concrete or masonry foundation wall. First, the construction must be located in Seismic Design Category A, B or C. Second, the total installed weight of the veneer must not exceed 40 pounds per square foot (psf) (195 kg/m^2). A movement joint must be provided between the exterior veneer supported by wood or steel and the adjacent exterior veneer supported by the foundation. The wood or cold-formed steel members supporting the masonry veneer are to be designed to have a maximum deflection of $^1/_{600}$ of the span of the supporting members.

R703.8.2.1 Support by steel angle. A minimum 6-inch by 4-inch by $^5/_{16}$-inch (152 mm by 102 mm by 8 mm) steel angle, with the long leg placed vertically, shall be anchored to double 2-inch by 4-inch (51 mm by 102 mm) wood studs or double 350S162 cold-formed steel studs at a maximum on-center spacing of 16 inches (406 mm). Anchorage of the steel angle at every double stud spacing shall be not less than two $^7/_{16}$-inch-diameter (11 mm) by 4-inch (102 mm) lag screws for wood construction or two $^7/_{16}$-inch (11.1 mm) bolts with washers for cold-formed steel construction. The steel angle shall have a minimum clearance to underlying construction of $^1/_{16}$ inch (1.6 mm). Not less than two-thirds the width of the masonry veneer thickness shall bear on the steel angle. Flashing and weep holes shall be located in the masonry veneer in accordance with Figure R703.8.2.1. The maximum height of masonry veneer above the steel angle support shall be 12 feet 8 inches (3861 mm). The airspace separating the masonry veneer from the wood backing shall be in accordance with Sections R703.8.4 and R703.8.4.2. The method of support for the masonry veneer on wood construction shall be constructed in accordance with Figure R703.8.2.1

The maximum slope of the roof construction without stops shall be 7:12. Roof construction with slopes greater than 7:12 but not more than 12:12 shall have stops of a minimum 3-inch by 3-inch by $^1/_4$-inch (76 mm by 76 mm by 6.4 mm) steel plate welded to the angle at 24 inches (610 mm) on center along the angle or as *approve*d by the *building official*.

❖ As illustrated in Figure R703.8.2.1, a steel angle may be used to support exterior masonry veneer in wood-frame construction. The minimum size of the angle is specified, as are the details of anchorage and the minimum bearing length. Two limits are placed on this method of veneer support: the maximum veneer height bearing on the steel angle must be 12 feet, 8 inches (3861 mm), and the roof slope is limited to 7:12. A roof slope greater than 7:12 is permitted if stops are welded to the steel angle to prevent the veneer from sliding down the angle.

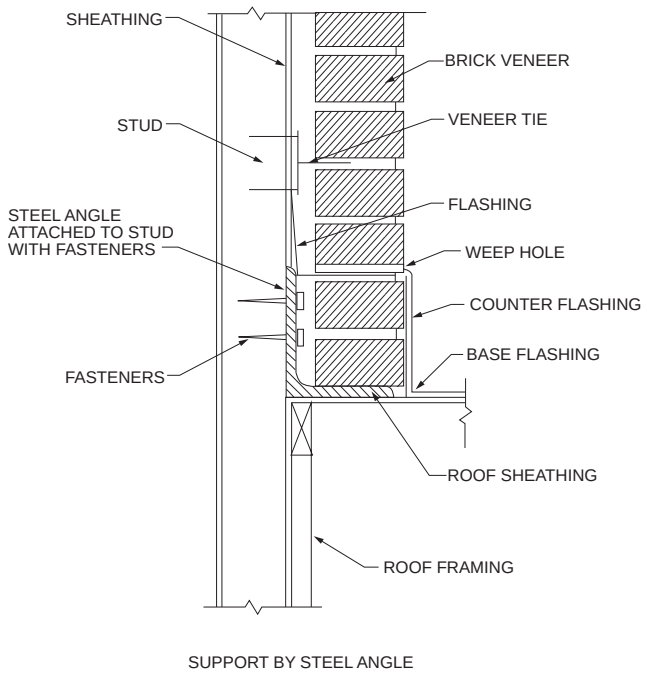

FIGURE R703.8.2.1
EXTERIOR MASONRY VENEER SUPPORT BY STEEL ANGLES

R703.8.2.2 Support by roof construction. A steel angle shall be placed directly on top of the roof construction. The roof supporting construction for the steel angle shall consist of not fewer than three 2-inch by 6-inch (51 mm by 152 mm) wood members for wood construction or three 550S162 cold-formed steel members for cold-formed steel light frame construction. A wood member abutting the vertical wall stud construction shall be anchored with not fewer than three $^5/_8$-inch (15.9 mm) diameter by 5-inch (127 mm) lag screws to every wood stud spacing. Each additional wood roof member shall be anchored by the use of two 10d nails at every wood stud spacing. A cold-formed steel member abutting the vertical wall stud shall be anchored with not fewer than nine No. 8 screws to every cold-formed steel stud. Each additional cold-formed steel roof member shall be anchored to the adjoining roof member using two No. 8 screws at every stud spacing. Not less than two-thirds the width of the masonry veneer

INTERNATIONAL CODE COUNCIL®
Copyright © 2015 ICC. ALL RIGHTS RESERVED. Accessed by David Dammon on Jun 21, 2017 12:30:52 PM pursuant to License Agreement with ICC. No further reproduction or distribution authorized. ANY UNAUTHORIZED REPRODUCTION OR DISTRIBUTION IS A VIOLATION OF THE FEDERAL COPYRIGHT ACT AND THE LICENSE AGREEMENT, AND SUBJECT TO CIVIL AND CRIMINAL PENALTIES THEREUNDER.

thickness shall bear on the steel angle. Flashing and weep holes shall be located in the masonry veneer wythe in accordance with Figure R703.8.2.2. The maximum height of the masonry veneer above the steel angle support shall be 12 feet 8 inches (38.61 mm). The airspace separating the masonry veneer from the wood backing shall be in accordance with Sections R703.8.4 and R703.8.4.2. The support for the masonry veneer shall be constructed in accordance with Figure R703.8.2.2.

The maximum slope of the roof construction without stops shall be 7:12. Roof construction with slopes greater than 7:12 but not more than 12:12 shall have stops of a minimum 3-inch by 3-inch by $^1/_4$-inch (76 mm by 76 mm by 6.4 mm) steel plate welded to the angle at 24 inches (610 mm) on center along the angle or as *approved* by the *building official*.

❖ In addition to the option of having a steel angle support exterior masonry veneer, the code also permits the wood roof construction itself to support the exterior veneer. As detailed in Figure R703.8.2.2, the masonry veneer must be supported by a steel angle that in turn distributes the veneer load to at least three 2-inch by 6-inch (51 mm by 152 mm) wood members. This section also addresses the attachment details and bearing conditions. As described for masonry veneer supported by steel angles, the maximum veneer height and maximum roof slope are also regulated. The roof slope is limited to 7:12; however, a roof slope greater than 7:12 is permitted if stops are welded to the steel angle to prevent the veneer from sliding down the angle.

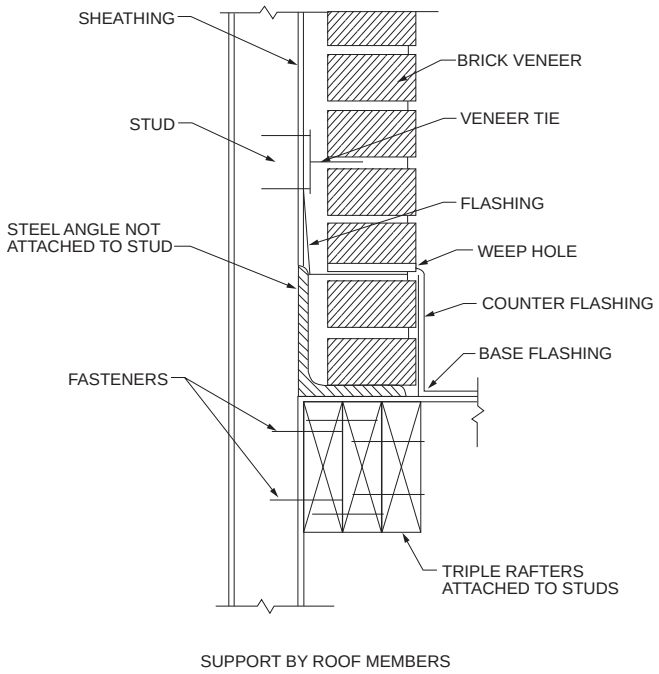

FIGURE R703.8.2.2
EXTERIOR MASONRY VENEER SUPPORT BY ROOF MEMBERS

R703.8.3 Lintels. Masonry veneer shall not support any vertical load other than the dead load of the veneer above. Veneer above openings shall be supported on lintels of noncombustible materials. The lintels shall have a length of bearing not less than 4 inches (102 mm). Steel lintels shall be shop coated with a rust-inhibitive paint, except for lintels made of corrosion-resistant steel or steel treated with coatings to provide corrosion resistance. Construction of openings shall comply with either Section R703.8.3.1 or 703.8.3.2.

❖ Masonry veneer, like all veneers, is a nonload-bearing wall covering. It is not intended to support any loads, except for the dead load of the masonry veneer above. A noncombustible lintel is required above an opening through the masonry veneer. The lintel must be protected from rust. Lintels must be sized and installed in accordance with Section R703.8.3.1 or R703.8.3.2.

R703.8.3.1 Allowable span. The allowable span shall not exceed the values set forth in Table R703.8.3.1.

❖ A lintel meeting the requirements of this section must meet the requirements of Table R703.8.3.1. This table lists the maximum-size opening a certain lintel size is allowed to span based on the number of stories above the lintel. Note c stipulates that other steel members can be used as long as they meet the structural design requirements using standard engineering practice.

R703.8.3.2 Maximum span. The allowable span shall not exceed 18 feet 3 inches (5562 mm) and shall be constructed to comply with Figure R703.8.3.2 and the following:

1. Provide a minimum length of 18 inches (457 mm) of masonry veneer on each side of opening as shown in Figure R703.8.3.2.
2. Provide a minimum 5-inch by $3^1/_2$-inch by $^5/_{16}$-inch (127 mm by 89 mm by 7.9 mm) steel angle above the opening and shore for a minimum of 7 days after installation.
3. Provide double-wire joint reinforcement extending 12 inches (305 mm) beyond each side of the opening. Lap splices of joint reinforcement not less than 12 inches (305 mm). Comply with one of the following:
   - 3.1. Double-wire joint reinforcement shall be $^3/_{16}$-inch (4.8 mm) diameter and shall be placed in the first two bed joints above the opening.
   - 3.2. Double-wire joint reinforcement shall be 9 gauge (0.144 inch or 3.66 mm diameter) and shall be placed in the first three bed joints above the opening.
4. Provide the height of masonry veneer above opening, in accordance with Table R703.8.3.2.

❖ A lintel meeting the requirements of this section can span an opening no longer than 18 feet 3 inches (5563 mm). Such openings are generally installed to accommodate a two-car garage door. A minimum-size steel angle must be installed with the long leg in the vertical position below the masonry veneer and a minimum size and amount of joint reinforcement must be

INTERNATIONAL CODE COUNCIL®
Copyright © 2015 ICC. ALL RIGHTS RESERVED. Accessed by David Dammon on Jun 21, 2017 12:30:52 PM pursuant to License Agreement with ICC. No further reproduction or distribution authorized. ANY UNAUTHORIZED REPRODUCTION OR DISTRIBUTION IS A VIOLATION OF THE FEDERAL COPYRIGHT ACT AND THE LICENSE AGREEMENT, AND SUBJECT TO CIVIL AND CRIMINAL PENALTIES THEREUNDER.

TABLE R703.8.3.1
ALLOWABLE SPANS FOR LINTELS SUPPORTING MASONRY VENEER[a, b, c, d]

SIZE OF STEEL ANGLE[a, c, d] (inches)	NO STORY ABOVE	ONE STORY ABOVE	TWO STORIES ABOVE	NO. OF $^1/_2$-INCH OR EQUIVALENT REINFORCING BARS IN REINFORCED LINTEL[b, d]
$3 \times 3 \times {}^1/_4$	6′-0″	4′-6″	3′-0″	1
$4 \times 3 \times {}^1/_4$	8′-0″	6′-0″	4′-6″	1
$5 \times 3^1/_2 \times {}^5/_{16}$	10′-0″	8′-0″	6′-0″	2
$6 \times 3^1/_2 \times {}^5/_{16}$	14′-0″	9′-6″	7′-0″	2
$2\text{-}6 \times 3^1/_2 \times {}^5/_{16}$	20′-0″	12′-0″	9′-6″	4

For SI: 1 inch = 25.4 mm, 1 foot = 304.8 mm.

a. Long leg of the angle shall be placed in a vertical position.

b. Depth of reinforced lintels shall be not less than 8 inches and all cells of hollow masonry lintels shall be grouted solid. Reinforcing bars shall extend not less than 8 inches into the support.

c. Steel members indicated are adequate typical examples; other steel members meeting structural design requirements shall be permitted to be used.

d. Either steel angle or reinforced lintel shall span opening.

installed in the courses above the veneer. In addition, the masonry veneer opening must comply with the requirements in Figure R703.8.3.2. The limits for the maximum and minimum height of masonry veneer as shown in Figure R703.8.3.2 must be in accordance with Table R703.8.3.2.

TABLE R703.8.3.2
HEIGHT OF MASONRY VENEER ABOVE OPENING

MINIMUM HEIGHT OF MASONRY VENEER ABOVE OPENING (INCH)	MAXIMUM HEIGHT OF MASONRY VENEER ABOVE OPENING (FEET)
13	< 5
24	5 to < 12
60	12 to height above support allowed by Section R703.8

For SI: 1 inch = 25.4 mm, 1 foot = 304.8 mm.

R703.8.4 Anchorage. Masonry veneer shall be anchored to the supporting wall studs with corrosion-resistant metal ties embedded in mortar or grout and extending into the veneer a minimum of $1^1/_2$ inches (38 mm), with not less than $^5/_8$-inch (15.9 mm) mortar or grout cover to outside face. Masonry veneer shall conform to Table R703.8.4.

❖ To maintain the attachment of the masonry veneer to the wall studs, proper anchorage must be provided. In all cases, corrosion-resistant metal ties must be used and be embedded into the back of the veneer a minimum distance. A minimum extent of mortar or grout is required to cover the tie from the outside face of the wall. As specified in Table R703.8.4, two types of ties are addressed for attachment to wood construction: corrugated sheet metal ties and metal strand wire ties. The distance between the veneer and the sheathing is limited and varies with the type of tie used. For corrugated sheet metal ties, this dimension is given as nominal since the back of the masonry veneer may not be true to a line due to the variation in masonry unit width allowed within most masonry unit standards and the alignment of the wall elements within the backing wall. Only adjustable metal strand wire ties may be used where the backing is of cold-formed steel studs. The distance between the steel backing and the masonry veneer is also limited.

Table R703.8.4 also specifies the fastening requirements of metal ties to the studs. Nails are not permitted for fastening of the ties in Seismic Design Categories D_0, D_1 or D_2. This is based on full-scale building shaking-table testing conducted at the University of California, San Diego. The report by Richard E. Klinger, published in the *TMS Journal*, found that "fasteners on one side of the specimen failed by extraction of nails under dynamic tensile loads, at levels of shaking less than the Design Basis Earthquake (DBE)."

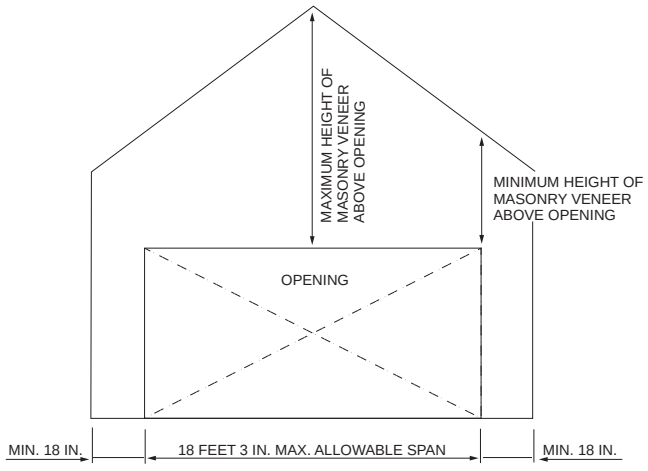

For SI: 1 inch = 25.4 mm, 1 foot = 304.8 mm.

FIGURE R703.8.3.2
MASONRY VENEER OPENING

INTERNATIONAL CODE COUNCIL®
Copyright © 2015 ICC. ALL RIGHTS RESERVED. Accessed by David Dammon on Jun 21, 2017 12:30:52 PM pursuant to License Agreement with ICC. No further reproduction or distribution authorized. ANY UNAUTHORIZED REPRODUCTION OR DISTRIBUTION IS A VIOLATION OF THE FEDERAL COPYRIGHT ACT AND THE LICENSE AGREEMENT, AND SUBJECT TO CIVIL AND CRIMINAL PENALTIES THEREUNDER.

TABLE R703.8.4
TIE ATTACHMENT AND AIRSPACE REQUIREMENTS

BACKING AND TIE	MINIMUM TIE	MINIMUM TIE FASTENER[a]	AIRSPACE	
Wood stud backing with corrugated sheet metal	22 U.S. gage (0.0299 in.) × $^7/_8$ in. wide	8d common nail [b] ($2^1/_2$ in. × 0.131 in.)	Nominal 1 in. between sheathing and veneer	
Wood stud backing with metal strand wire	W1.7 (No. 9 U.S. gage; 0.148 in.) with hook embedded in mortar joint	8d common nail [b] ($2^1/_2$ in. × 0.131 in.)	Minimum nominal 1 in. between sheathing and veneer	Maximum $4^1/_2$ in. between backing and veneer
Cold-formed steel stud backing with adjustable metal strand wire	W1.7 (No. 9 U.S. gage; 0.148 in.) with hook embedded in mortar joint	No. 10 screw extending through the steel framing a minimum of three exposed threads	Minimum nominal 1 in. between sheathing and veneer	Maximum $4^1/_2$ in. between backing and veneer

For SI: 1 inch = 25.4 mm.

a. In Seismic Design Category D_0, D_1 or D_2, the minimum tie fastener shall be an 8d ring-shank nail ($2^1/_2$ in. × 0.131 in.) or a No. 10 screw extending through the steel framing a minimum of three exposed threads.

b. All fasteners shall have rust-inhibitive coating suitable for the installation in which they are being used, or be manufactured from material not susceptible to corrosion.

R703.8.4.1 Size and spacing. Veneer ties, if strand wire, shall be not less in thickness than No. 9 U.S. gage [(0.148 inch) (4 mm)] wire and shall have a hook embedded in the mortar joint, or if sheet metal, shall be not less than No. 22 U.S. gage by [(0.0299 inch) (0.76 mm)] $^7/_8$ inch (22 mm) corrugated. Each tie shall support not more than 2.67 square feet (0.25 m^2) of wall area and shall be spaced not more than 32 inches (813 mm) on center horizontally and 24 inches (635 mm) on center vertically.

> **Exception:** In Seismic Design Category D_0, D_1 or D_2 or townhouses in Seismic Design Category C or in wind areas of more than 30 pounds per square foot pressure (1.44 kPa), each tie shall support not more than 2 square feet (0.2 m^2) of wall area.

❖ This section sets forth the minimum size of metal veneer ties for use with masonry veneer applications. The maximum amount of wall area that can be supported by a veneer tie is 2.67 square feet (0.248 m^2). The spacing between the ties is also limited to a maximum horizontal distance of 32 inches (813 mm) and vertical distance of 24 inches (610 mm). An increased number of ties are required for buildings constructed in a high seismic design category or where a high wind load exists.

R703.8.4.1.1 Veneer ties around wall openings. Additional metal ties shall be provided around wall openings greater than 16 inches (406 mm) in either dimension. Metal ties around the perimeter of openings shall be spaced not more than 3 feet (9144 mm) on center and placed within 12 inches (305 mm) of the wall opening.

❖ When an opening with at least one dimension larger than 16 inches (406 mm) is located through a masonry veneer, an increase in the number of metal ties around the opening is required. Openings of this size are often for windows and doors. This section contains requirements for the maximum spacing between ties and the maximum distance from the opening to the ties adjacent to it. Openings less than 16 inches (406 mm) in either dimension are exempt from these provisions.

R703.8.4.2 Grout fill. As an alternative to the airspace required by Table R703.8.4, grout shall be permitted to fill the airspace. Where the airspace is filled with grout, a water-resistive barrier is required over studs or sheathing. Where the airspace is filled, replacing the sheathing and water-resistive barrier with a wire mesh and *approved* water-resistive barrier or an *approved* water-resistive barrier-backed reinforcement attached directly to the studs is permitted.

❖ The airspace required by Section R703.8.4 is permitted to be filled with grout when a water-resistive barrier is applied over studs and sheathing and the airspace is completely filled with the grout. The sheathing and water-resistive barrier are permitted to be replaced with a wire mesh and approved water-resistive barrier or an approved water-resistive barrier-backed reinforcement that is attached directly to the studs.

R703.8.5 Flashing. Flashing shall be located beneath the first course of masonry above finished ground level above the foundation wall or slab and at other points of support, including structural floors, shelf angles and lintels where masonry veneers are designed in accordance with Section R703.8. See Section R703.4 for additional requirements.

❖ Flashing is necessary to direct moisture in the air space behind the masonry veneer toward the exterior. Flashing is required to be located at the first course of masonry above the finished ground level, as well as at other points of support such as at shelf angles and lintels. Flashing beneath the first course of masonry above the finished ground level is also necessary to prevent water entry into the wall below. Flashing must be made from an approved corrosion-resistant material and comply with Section R703.4.

R703.8.6 Weepholes. Weepholes shall be provided in the outside wythe of masonry walls at a maximum spacing of 33 inches (838 mm) on center. Weepholes shall be not less than $^3/_{16}$ inch (5 mm) in diameter. Weepholes shall be located immediately above the flashing.

❖ Weepholes must be provided directly above the flashing mandated by Section R703.8.5 to allow for the escape of any moisture that may have penetrated the masonry veneer. Because moisture will adversely affect the integrity of the wall if not removed from the wall assembly, weep holes must be installed within the maximum spacing specified in this section. The minimum diameter of the weep holes is also stipulated.

INTERNATIONAL CODE COUNCIL®
Copyright © 2015 ICC. ALL RIGHTS RESERVED. Accessed by David Dammon on Jun 21, 2017 12:30:52 PM pursuant to License Agreement with ICC. No further reproduction or distribution authorized. ANY UNAUTHORIZED REPRODUCTION OR DISTRIBUTION IS A VIOLATION OF THE FEDERAL COPYRIGHT ACT AND THE LICENSE AGREEMENT, AND SUBJECT TO CIVIL AND CRIMINAL PENALTIES THEREUNDER.

R703.9 Exterior insulation and finish system (EIFS)/EIFS with drainage. Exterior insulation and finish systems (EIFS) shall comply with this chapter and Section R703.9.1. EIFS with drainage shall comply with this chapter and Section R703.9.2.

❖ This section provides the requirements for exterior insulation and finish systems (EIFS) and exterior insulation and finish systems with drainage (EIFS with drainage) (see Section R202 for the definition for both).

- EIFS must comply with ASTM E2568. EIFS with drainage must comply with ASTM E2568 and ASTM E2273 in accordance with Section R703.9.2.
- EIFS and EIFS with drainage must be installed in accordance with manufacturers' instructions.
- EIFS with drainage require a water-resistive barrier in accordance with Section R703.9.2.
- EIFS and EIFS with drainage must not be located within 6 inches (152 mm) of the finished ground level. Additionally, decorative trim must not be face nailed through the EIFS or EIFS with drainage.

R703.9.1 Exterior insulation and finish systems (EIFS). EIFS shall comply with the following:

1. ASTM E2568.
2. EIFS shall be limited to applications over substrates of concrete or masonry wall assemblies.
3. Flashing of EIFS shall be provided in accordance with the requirements of Section R703.4.
4. EIFS shall be installed in accordance with the manufacturer's instructions.
5. EIFS shall terminate not less than 6 inches (152 mm) above the finished ground level.
6. Decorative trim shall not be face-nailed through the EIFS.

❖ See the commentary to Section R703.9.

R703.9.2 Exterior insulation and finish system (EIFS) with drainage. EIFS with drainage shall comply with the following:

1. ASTM E2568.
2. EIFS with drainage shall be required over all wall assemblies with the exception of substrates of concrete or masonry wall assemblies.
3. EIFS with drainage shall have an average minimum drainage efficiency of 90 percent when tested in accordance with ASTM E2273.
4. The water-resistive barrier shall comply with Section R703.2 or ASTM E2570.
5. The water-resistive barrier shall be applied between the EIFS and the wall sheathing.
6. Flashing of EIFS with drainage shall be provided in accordance with the requirements of Section R703.4.
7. EIFS with drainage shall be installed in accordance with the manufacturer's instructions.
8. EIFS with drainage shall terminate not less than 6 inches (152 mm) above the finished ground level.
9. Decorative trim shall not be face-nailed through the EIFS with drainage.

❖ See the commentary to Section R703.9.

R703.10 Fiber cement siding.

❖ Fiber cement siding is manufactured from fiber-reinforced cement and is permitted as a weather-resistant siding in either panel or horizontal lap form.

R703.10.1 Panel siding. Fiber-cement panels shall comply with the requirements of ASTM C1186, Type A, minimum Grade II or ISO 8336, Category A, minimum Class 2. Panels shall be installed with the long dimension either parallel or perpendicular to framing. Vertical and horizontal joints shall occur over framing members and shall be protected with caulking, or with battens or flashing, or be vertical or horizontal shiplap, or otherwise designed to comply with Section R703.1. Panel siding shall be installed with fasteners in accordance with Table R703.3(1) or the approved manufacturer's instructions.

❖ Panel siding of fiber cement must meet the requirements of ASTM C1186, Type A, minimum Grade II or ISO 8336, Category A, minimum Class 2. Panels can be installed vertically or horizontally. All joints are required to be located over framing members. Joints must be sealed with caulking and covered with continuous battens or otherwise installed to comply with Section R703.1 to result in a weather-resistant exterior wall envelope. Panel fasteners must meet the requirements of Table R703.3 (1) or manufacturers' installation instructions.

R703.10.2 Lap siding. Fiber-cement lap siding having a maximum width of 12 inches (305 mm) shall comply with the requirements of ASTM C1186, Type A, minimum Grade II or ISO 8336, Category A, minimum Class 2. Lap siding shall be lapped a minimum of $1^1/_4$ inches (32 mm) and lap siding not having tongue-and-groove end joints shall have the ends protected with caulking, covered with an H-section joint cover, located over a strip of flashing, or shall be designed to comply with Section R703.1. Lap siding courses shall be installed with the fastener heads exposed or concealed, in accordance with Table R703.3(1) or approved manufacturer's instructions.

❖ To maintain the necessary weather protection, horizontal siding must have a minimum lap of at least $1^1/_4$ inches (32 mm). Lap siding without tongue-and-groove end joints must be treated with one of the following methods: sealed with caulk; covered with an H-section joint cover; or otherwise installed to comply with Section R703.1 to result in a weather-resistant exterior wall envelope. Fastener heads may be exposed or concealed in accordance with approved manufacturers' installation instructions.

INTERNATIONAL CODE COUNCIL®
Copyright © 2015 ICC. ALL RIGHTS RESERVED. Accessed by David Dammon on Jun 21, 2017 12:30:52 PM pursuant to License Agreement with ICC. No further reproduction or distribution authorized. ANY UNAUTHORIZED REPRODUCTION OR DISTRIBUTION IS A VIOLATION OF THE FEDERAL COPYRIGHT ACT AND THE LICENSE AGREEMENT, AND SUBJECT TO CIVIL AND CRIMINAL PENALTIES THEREUNDER.

R703.11 Vinyl siding. Vinyl siding shall be certified and *labeled* as conforming to the requirements of ASTM D3679 by an *approved* quality control agency.

❖ Polyvinyl chloride (PVC) siding is specifically addressed here as an exterior wall covering. PVC siding must conform to the provisions of ASTM D3679. The vinyl siding must bear a label, which means that the manufacturer must have regular inspections by a third-party quality control agency.

R703.11.1 Installation. Vinyl siding, soffit and accessories shall be installed in accordance with the manufacturer's instructions.

❖ Vinyl siding must be applied to conform to the water-resistive barrier requirements of Sections R703.1 and R703.2 and the attachment requirements of Section R703.3 (see commentary, Sections R703.1, R703.2 and R703.3).

The installation must also comply with the manufacturer's instructions. ASTM D3679 requires installation of the siding in accordance with Practice D4756 (ASTM D4756) and the manufacturer's instructions. These instructions are necessary for compliance with the performance requirements of this chapter.

In the 2012 code, information on vinyl siding fastener specifications, penetration, and spacing was found only in Table R703.4 and its notes. These requirements are moved into new Sections R703.11.1.1, R703.11.1.2 and R703.11.1.3. This places the requirements into the text of the code provision where they are easily located and more clearly stated.

Vinyl siding can be used in conjunction with a variety of sheathing types, some of which contribute to resisting fastener withdrawal. It is necessary to ensure that, regardless of the sheathing type, the total penetration into a material capable of holding fasteners is equivalent to what was used during testing of the siding. For typical siding installations, this is $^3/_4$-inch penetration into framing plus approximately $^1/_2$ inch through wood sheathing, for a total of $1^1/_4$ inches of penetration into "nailable" material. This minimum penetration is required unless a different penetration is specified in the manufacturer's instructions. A definition of "nailable substrate" is added to define what is considered to be "nailable."

Where the siding is used over a nonnailable material, the total penetration must still be achieved, in this case by using a fastener long enough to accommodate the thickness of nonnailable material and penetrate the full $1^1/_4$ inches into framing or a combination of framing and other nailable material. By stating the requirement in terms of the total required penetration, it is clear what penetration is needed for all installations.

In addition, new Section R703.11.1.3 provides the maximum fastener spacing for both horizontal and vertical siding. The code previously had no provision for fastener spacing for vertical siding; the new requirement mirrors provisions in the *International Building Code*® (IBC®).

Polyvinyl chloride (PVC) may be used to cover the soffit. The material must be installed as panels and fastened to a supporting component or in accordance with the manufacturer's installation instructions.

R703.11.1.1 Fasteners. Unless specified otherwise by the manufacturer's instructions, fasteners for vinyl siding shall be 0.120-inch (3 mm) shank diameter nail with a 0.313-inch (8 mm) head or 16-gage staple with a $^3/_8$-inch (9.5 mm) to $^1/_2$-inch (12.7 mm) crown.

❖ See the commentary to Section R703.11.1.

R703.11.1.2 Penetration depth. Unless specified otherwise by the manufacturer's instructions, fasteners shall penetrate into building framing. The total penetration into sheathing, furring framing or other nailable substrate shall be a minimum $1^1/_4$ inches (32 mm). Where specified by the manufacturer's instructions and supported by a test report, fasteners are permitted to penetrate into or fully through nailable sheathing or other nailable substrate of minimum thickness specified by the instructions or test report without penetrating into framing. Where the fastener penetrates fully through the sheathing, the end of the fastener shall extend a minimum of $^1/_4$ inch (6.4 mm) beyond the opposite face of the sheathing or nailable substrate.

❖ See the commentary to Section R703.11.1.

R703.11.1.3 Spacing. Unless specified otherwise by the manufacturer's instructions, the maximum spacing between fasteners for horizontal siding shall be 16 inches (406 mm), and for vertical siding 12 inches (305 mm) both horizontally and vertically. Where specified by the manufacturer's instructions and supported by a test report, greater fastener spacing is permitted.

❖ See the commentary to Section R703.11.1.

R703.11.1.4 Vinyl soffit panels. Soffit panels shall be individually fastened to a supporting component such as a nailing strip, fascia or subfascia component or as specified by the manufacturer's instructions.

❖ See the commentary to Section R703.11.1.

R703.11.2 Foam plastic sheathing. Vinyl siding and insulated vinyl siding used with foam plastic sheathing shall be installed in accordance with Section R703.11.2.1, R703.11.2.2 or R703.11.2.3.

Exception: Where the foam plastic sheathing is applied directly over wood structural panels, fiberboard, gypsum sheathing or other *approved* backing capable of independently resisting the design wind pressure, the vinyl siding shall be installed in accordance with Section R703.11.1.

❖ This section establishes a proper basis for vinyl siding and insulated vinyl siding applications with foam sheathing by applying appropriate adjustment factors to vinyl siding wind pressure ratings to address this specific assembly condition. Because the vinyl and foam sheathing assembly serve as the primary weather barrier or envelope for the building (when no additional structural sheathing is applied), the vinyl siding pressure rating values have been factored to provide a net safety factor of 2.0 instead of 1.5 as required

INTERNATIONAL CODE COUNCIL®
Copyright © 2015 ICC. ALL RIGHTS RESERVED. Accessed by David Dammon on Jun 21, 2017 12:30:52 PM pursuant to License Agreement with ICC. No further reproduction or distribution authorized. ANY UNAUTHORIZED REPRODUCTION OR DISTRIBUTION IS A VIOLATION OF THE FEDERAL COPYRIGHT ACT AND THE LICENSE AGREEMENT, AND SUBJECT TO CIVIL AND CRIMINAL PENALTIES THEREUNDER.

by ASTM D3679 for applications of vinyl siding over "solid walls." The adjustment factors specified in Section R703.11.2.2 also account for difference in pressure equalization effects addressed in ASTM D3679, Annex A for the specific wall assembly conditions where vinyl siding is used with a foam sheathing backing material.

The requirements of Section R703.11.2 are intended to improve the wind-resistant performance of combinations of foam sheathing and vinyl siding commonly used to meet or exceed energy code requirements and newer green building guidelines or standards. The prescriptive requirements and adjustment factors are based on certified testing of various combinations of foam sheathing and vinyl siding products conducted at the NAHB Research Center, Inc., and testing serving as the basis for the wind pressure rating method for vinyl siding as explained in ASTM D3679, Annex A.

An exception exempts foam plastic sheathing from having to contribute to resisting wind if the backing behind it can resist the wind load by itself. If it cannot, then the foam plastic sheathing and vinyl siding together must comply with one of the following three provisions:

1. If the structure is located where the ultimate design wind speed does not exceed 115 mph and is in an Exposure Category B or less, the installation must meet Section R703.11.2.1.
2. If the structure is located where the ultimate design wind speed exceeds 115 mph or is in an Exposure Category C or D or otherwise cannot fully comply with all the requirements of Section R703.11.2.1, the installation must meet Section R703.11.2.2.
3. If the vinyl siding manufacturer's product specifications indicate that an approved design wind pressure rating when installed over foam plastic sheathing is provided, the vinyl siding and foam plastic sheathing are permitted to be installed in accordance with the manufacturer's instructions as stipulated by Section R703.11.2.3.

R703.11.2.1 Basic wind speed not exceeding 115 miles per hour and Exposure Category B. Where the ultimate design wind speed does not exceed 115 miles per hour (51 m/s), the exposure category is B and gypsum board, gypsum panel product or equivalent is installed on the side of the wall opposite the foam plastic sheathing, the minimum siding fastener penetration into wood framing shall be $1^1/_4$ inches (32 mm) using minimum 0.120-inch-diameter (3 mm) nail (shank) with a minimum 0.313-inch-diameter head, 16 inches (406 mm) on center. The foam plastic sheathing shall be minimum $^1/_2$-inch-thick (12.7 mm) (nominal) extruded polystyrene in accordance with ASTM C578, $^1/_2$-inch-thick (12.7 mm) (nominal) polyisocyanurate in accordance with ASTM C1289 or 1-inch-thick (25 mm) (nominal) expanded polystyrene in accordance with ASTM C578.

❖ See the commentary to Section R703.11.2.

R703.11.2.2 Basic wind speed exceeding 115 miles per hour or Exposure Categories C and D. Where the ultimate design wind speed exceeds 115 miles per hour (51 m/s), the exposure category is C or D, or all conditions of Section R703.11.2.1 are not met, the adjusted design pressure rating for the assembly shall meet or exceed the loads listed in Table R301.2(2) adjusted for height and exposure using Table R301.2(3). The design wind pressure rating of the vinyl siding for installation over solid sheathing as provided in the vinyl siding manufacturer's product specifications shall be adjusted for the following wall assembly conditions:

1. For wall assemblies with foam plastic sheathing on the exterior side and gypsum wall board, gypsum panel product or equivalent on the interior side of the wall, the vinyl siding's design wind pressure rating shall be multiplied by 0.39.
2. For wall assemblies with foam plastic sheathing on the exterior side and without gypsum wall board, gypsum panel product or equivalent on the interior side of wall, the vinyl siding's design wind pressure rating shall be multiplied by 0.27.

❖ See the commentary to Section R703.11.2.

R703.11.2.3 Manufacturer specification. Where the vinyl siding manufacturer's product specifications provide an *approved* design wind pressure rating for installation over foam plastic sheathing, use of this design wind pressure rating shall be permitted and the siding shall be installed in accordance with the manufacturer's instructions.

❖ See the commentary to Section R703.11.2.

R703.12 Adhered masonry veneer installation. Adhered masonry veneer shall comply with the requirements of Section R703.7.3 and the requirements in Sections 12.1 and 12.3 of TMS 402/ACI 530/ASCE 5. Adhered masonry veneer shall be installed in accordance with Section R703.7.1, Article 3.3C of TMS 602/ACI 530.1/ASCE 6 or the manufacturer's instructions.

❖ In the 2012 code, information on adhered masonry veneer installation was found only in Table R703.4 and its notes. These requirements were moved into this section and new Section R703.12.3, This places the requirements into the text of the code provision where they are easily located and more clearly stated. Adhered masonry veneer must be installed according to this section or the instructions of the manufacturer. A water-resistive barrier must be installed to comply with Sections R703.2 and R703.7.3 and the requirements of Sections 12.1 and 12.3 of TMS 402/ACI 530/ASCE 5. Where no instructions from the manufacturer are provided, adhered masonry veneer must be supported and fastened in accordance with the lath requirements in Section R703.7.1 or Article 3.3C of TMS 602/ACI 530.1/ASCE 6.

R703.12.1 Clearances. On exterior stud walls, adhered masonry veneer shall be installed:

1. Minimum of 4 inches (102 mm) above the earth;
2. Minimum of 2 inches (51 mm) above paved areas; or

INTERNATIONAL CODE COUNCIL®
Copyright © 2015 ICC. ALL RIGHTS RESERVED. Accessed by David Dammon on Jun 21, 2017 12:30:52 PM pursuant to License Agreement with ICC. No further reproduction or distribution authorized. ANY UNAUTHORIZED REPRODUCTION OR DISTRIBUTION IS A VIOLATION OF THE FEDERAL COPYRIGHT ACT AND THE LICENSE AGREEMENT, AND SUBJECT TO CIVIL AND CRIMINAL PENALTIES THEREUNDER.

3. Minimum of $^1/_2$ inch (12.7 mm) above exterior walking surfaces that are supported by the same foundation that supports the exterior wall.

❖ The clearance requirements for adhered masonry veneer installed on exterior stud walls are consistent with stucco applications, but goes one step further by specifying a minimum $^1/_2$-inch (12.7 mm) clearance to exterior walking surfaces supported by the same foundation that supports the wall to which the exterior veneer is adhered. The requirement that both the wall and the walking surface be supported by the same foundation, along with the flashing performance requirements of Section R703.4 for exterior wall intersections with porches, decks or stairs, limits this $^1/_2$-inch (12.7 mm) clearance to building elements stable to each other and required to be flashed to manage water. This $^1/_2$-inch (12.7 mm) clearance requirement allows for architectural and aesthetic improvements in the installation of adhered masonry veneer.

R703.12.2 Flashing at foundation. A corrosion-resistant screed or flashing of a minimum 0.019-inch (0.48 mm) or 26-gage galvanized or plastic with a minimum vertical attachment flange of $3^1/_2$ inches (89 mm) shall be installed to extend a minimum of 1 inch (25 mm) below the foundation plate line on exterior stud walls in accordance with Section R703.4.

❖ The requirements for flashing at the foundation for adhered masonry veneer are similar to the weep screed requirements for stucco and complement the flashing performance requirements of Section R703.4, while at the same time allowing for effective alternatives to the stucco-specific weep screed.

R703.12.3 Water-resistive barrier. A water-resistive barrier shall be installed as required by Section R703.2 and shall comply with the requirements of Section R703.7.3. The water-resistive barrier shall lap over the exterior of the attachment flange of the screed or flashing provided in accordance with Section R703.12.2.

❖ See the commentary to Section R703.12.

R703.13 Insulated vinyl siding. Insulated vinyl siding shall be certified and labeled as conforming to the requirements of ASTM D7793 by an approved quality control agency.

❖ Sections R703.13 and R703.13.1 set requirements based on the manufacturer's instructions and the current ASTM standard for insulated vinyl siding: ASTM D7793. Insulated vinyl siding is certified to an ASTM standard by an approved third-party quality control agency. Performance requirements are specified by the ASTM standard, verifying that insulated vinyl siding meets minimum requirements as a cladding insulation. Insulated vinyl siding is vinyl siding with rigid foam insulation laminated or permanently attached to the panel.

This change provides a method for building officials to verify that insulated vinyl siding is code compliant. In energy codes and energy efficiency programs, insulated siding is recognized as a form of "continuous insulation," or insulation installed on the exterior of the building that helps reduce energy loss through framing or other building material.

The insulated siding provides a supplemental rain screen that reduces the amount of water reaching the underlying water-resistive barrier. With a properly applied water-resistive barrier, insulated siding minimizes moisture penetration from the exterior into a wall assembly and provides a way for moisture to readily drain and dry. The presence of a layer of thermal insulation filling the space between insulated siding and wall sheathing also aids in moisture management

R703.13.1 Insulated vinyl siding and accessories. Insulated vinyl siding and accessories shall be installed in accordance with manufacturer's instructions.

❖ See the commentary to Section R703.13.

R703.14 Polypropylene siding. Polypropylene siding shall be certified and labeled as conforming to the requirements of ASTM D7254 by an approved quality control agency.

❖ Section R703.14 introduces a new exterior wall covering material into the code. Polypropylene siding is not vinyl siding and a definition has been added to Section R202 that explains the difference. The definition conforms to the definition in ASTM D7254. Section R703.14 sets minimum performance requirements for polypropylene siding and requires a third-party quality control agency to verify compliance with an internationally accepted ASTM standard. Additionally, appropriate installation and use of polypropylene siding are detailed. Use of polypropylene siding is limited to walls with a fire separation distance of 5 feet or more and that are also 10 feet or more from a building on another lot.

The Vinyl Siding Institute (VSI) Product Certification Program added certification of polypropylene siding in 2010. Additionally, several manufacturers have code-compliant evaluation reports for their products. The VSI Product Certification Program allows manufacturers to certify, with independent third-party verification by an approved quality control agency, that certain polypropylene siding meets or exceeds the ASTM D7254, *Standard Specification for Polypropylene (PP) Siding*. The program is not exclusive to VSI members and any manufacturer can participate. It has been in place since 1998, when vinyl siding certification began.

Polypropylene siding certified through the program is verified by a third-party, approved quality control agency to meet or exceed the ASTM D7254 Standard Specification for Polypropylene (PP) Siding. Certified polypropylene siding is tested to:

- Weather the elements over time without cracking, chipping, flaking, pitting, or peeling.
- Meet impact-resistance requirements.
- Withstand wind pressures commensurate with wind speeds of 110 mph or more.
- Demonstrate flame spread performance equivalent to or better than wood materials commonly used in building construction.

INTERNATIONAL CODE COUNCIL®
Copyright © 2015 ICC. ALL RIGHTS RESERVED. Accessed by David Dammon on Jun 21, 2017 12:30:52 PM pursuant to License Agreement with ICC. No further reproduction or distribution authorized. ANY UNAUTHORIZED REPRODUCTION OR DISTRIBUTION IS A VIOLATION OF THE FEDERAL COPYRIGHT ACT AND THE LICENSE AGREEMENT, AND SUBJECT TO CIVIL AND CRIMINAL PENALTIES THEREUNDER.

Although polypropylene siding panels are specific to each manufacturer, there is general consensus among manufacturers on several installation requirements, including:

- Use of a water-resistive barrier.
- Substrate installed with polypropylene siding panels, typically OSB or plywood, must have a minimum fastener withdrawal resistance because fastener spacing varies from 5 inches to 12 inches. The fasteners must have a substrate to penetrate as they will not penetrate studs in most cases because of the typical 16-inch on center spacing.
- No attachment directly over studs.
- Fastener size and length are specified; staples are not allowed.
- Manufacturer-specified fastener spacing.

Specifications for installation, including underlayment and fasteners, are necessary for polypropylene siding, so building officials and specifiers recognize the differences between installation of vinyl siding and polypropylene siding.

For more information on polypropylene siding, go to www.vinylsiding.org/polypropylene-siding/.

R703.14.1 Polypropylene siding and accessories. Polypropylene siding and accessories shall be installed in accordance with manufacturer's installation instructions.

❖ See the commentary to Section R703.14.

R703.14.1.1 Installation. Polypropylene siding shall be installed over and attached to wood structural panel sheathing with minimum thickness of $^{7}/_{16}$ inch (11.1 mm), or other substrate, composed of wood or wood-based material and fasteners having equivalent withdrawal resistance.

❖ See the commentary to Section R703.14.

R703.14.1.2 Fastener requirements. Unless otherwise specified in the approved manufacturer's instructions, nails shall be corrosion resistant, with a minimum 0.120-inch (3 mm) shank and minimum 0.313-inch (8 mm) head diameter. Nails shall be a minimum of $1^{1}/_{4}$ inches (32 mm) long or as necessary to penetrate sheathing or substrate not less than $^{3}/_{4}$ inch (19.1 mm). Where the nail fully penetrates the sheathing or nailable substrate, the end of the fastener shall extend not less than $^{1}/_{4}$ inch (6.4 mm) beyond the opposite face of the sheathing or substrate. Staples are not permitted.

❖ See the commentary to Section R703.14.

R703.14.2 Fire separation. Polypropylene siding shall not be installed on walls with a fire separation distance of less than 5 feet (1524 mm) and walls closer than 10 feet (3048 mm) to a building on another lot.

Exception: Walls perpendicular to the line used to determine the fire separation distance.

❖ See the commentary to Section R703.14.

R703.15 Cladding attachment over foam sheathing to wood framing. Cladding shall be specified and installed in accordance with Section R703, the cladding manufacturer's approved instructions, including any limitations for use over foam plastic sheathing, or an approved design. In addition, the cladding or furring attachments through foam sheathing to framing shall meet or exceed the minimum fastening requirements of Section R703.15.1, Section R703.15.2, or an approved design for support of cladding weight.

Exceptions:

1. Where the cladding manufacturer has provided approved installation instructions for application over foam sheathing, those requirements shall apply.
2. For exterior insulation and finish systems, refer to Section R703.9.
3. For anchored masonry or stone veneer installed over foam sheathing, refer to Section R703.7.

❖ Where exterior siding (cladding) is attached over foam sheathing ranging in thickness up to 4 inches, the fastening method must be adequate to support the cladding weight or dead load. Section R703.15 provides attachment provisions for cladding over foam plastic sheathing to wood framing members. Section R703.16 provides attachment provisions for cladding over foam plastic sheathing to cold-formed steel framing. Section R703.17 contains provisions for cladding attachment over foam sheathing to concrete or masonry walls.

Tables R703.15.1 and R703.16.1 provide the attachment requirements for cladding installed over foam sheathing without furring strips. Tables R703.15.2 and R703.16.2 provide the attachment requirements where furring strips are used over the foam plastic sheathing for cladding attachment.

Tables R703.15.1, R703.15.2, R703.16.1 and R703.16.2 were developed based on data from a project sponsored by the New York State Energy Research and Development Agency (NYSERDA).

The project report, "10-11 Fastening Systems for Continuous Insulation Final Report," is available for download at: http://www.nyserda.ny.gov/Publications/Research-and-Development-Technical-Reports/Other-Technical-Reports.aspx. The report explains the technical basis for the requirements, which have been modified for these provisions, to increase the reduction factor to control deflection from 1.5 to 3 (fastener strength halved) to provide better long-term deflection control. For comparison, the reduction factor used in the NDS provisions for fastener-shear-resistance calculation is 2.2.

The purpose of the NYSERDA project was to develop prescriptive fastening requirements that provide adequate performance of cladding materials installed over foam sheathing. The project included testing of cladding attachments through various thicknesses of foam sheathing using various fastener types on steel frame wall assemblies. Supplemental testing also was sponsored by the Foam Sheathing Coalition (lab report available at http://fsc.americanchemistry.com/Building-Code/Installation-of-Cladding) to address attachments to wood framing. The resulting data is included in the data set analyzed and presented in the

INTERNATIONAL CODE COUNCIL®
Copyright © 2015 ICC. ALL RIGHTS RESERVED. Accessed by David Dammon on Jun 21, 2017 12:30:52 PM pursuant to License Agreement with ICC. No further reproduction or distribution authorized. ANY UNAUTHORIZED REPRODUCTION OR DISTRIBUTION IS A VIOLATION OF THE FEDERAL COPYRIGHT ACT AND THE LICENSE AGREEMENT, AND SUBJECT TO CIVIL AND CRIMINAL PENALTIES THEREUNDER.

NYSERDA project report. The proposed cladding attachment requirements and foam sheathing thickness limits are based on rational analysis verified by the extensive test data to limit cladding connection movement to no more than 0.015-inch slip under cladding weight or dead load. This deflection controlled approach resulted in safety factors commonly in the range of 5 to 8 relative to average shear capacity. Similar tests by other independent parties, such as Wiss, Janney, Elstner (unpublished data) and also Building Science Corporation for the U.S. Department of Energy's (DOE's) Building America Program have shown similar results and have contributed to the verification of these attachment methods.

Section R703.17 requires an engineered design of cladding attachment through foam sheathing to masonry or concrete wall construction because a prescriptive solution for attachment of cladding to masonry or concrete walls through foam sheathing has not been developed. Research is not yet available to develop prescriptive "off-the-shelf" solutions with standardized types of concrete or masonry fasteners. In fact, many fasteners best suited for this application are proprietary and engineered design is required. The exceptions recognize cases where appropriate attachment solutions may already exist.

R703.15.1 Direct attachment. Where cladding is installed directly over foam sheathing without the use of furring, cladding minimum fastening requirements to support the cladding weight shall be as specified in Table R703.15.1.

❖ See the commentary to Section R703.15.

R703.15.2 Furred cladding attachment. Where wood furring is used to attach cladding over foam sheathing, furring minimum fastening requirements to support the cladding weight shall be as specified in Table R703.15.2. Where placed horizontally, wood furring shall be preservative-treated wood in accordance with Section R317.1 or naturally durable wood and fasteners shall be corrosion resistant in accordance Section R317.3.

❖ See the commentary to Section R703.15.

R703.16 Cladding attachment over foam sheathing to cold-formed steel framing. Cladding shall be specified and installed in accordance with Section R703, the cladding manufacturer's approved instructions, including any limitations for use over foam plastic sheathing, or an approved design. In addition, the cladding or furring attachments through foam sheathing to framing shall meet or exceed the minimum fastening requirements of Section R703.16.1, Section R703.16.2 or an approved design for support of cladding weight.

Exceptions:

1. Where the cladding manufacturer has provided approved installation instructions for application over foam sheathing, those requirements shall apply.
2. For exterior insulation and finish systems, refer to Section R703.9.
3. For anchored masonry or stone veneer installed over foam sheathing, refer to Section R703.7.

❖ See the commentary to Section R703.15.

TABLE R703.15.1
CLADDING MINIMUM FASTENING REQUIREMENTS FOR DIRECT ATTACHMENT OVER FOAM PLASTIC SHEATHING TO SUPPORT CLADDING WEIGHT[a]

CLADDING FASTENER THROUGH FOAM SHEATHING	CLADDING FASTENER TYPE AND MINIMUM SIZE[b]	CLADDING FASTENER VERTICAL SPACING (inches)	MAXIMUM THICKNESS OF FOAM SHEATHING[c] (inches)					
			16″ o.c. Fastener Horizontal Spacing			24″ o.c. Fastener Horizontal Spacing		
			Cladding Weight:			Cladding Weight:		
			3 psf	11 psf	25 psf	3 psf	11 psf	25 psf
Wood Framing (minimum $1^1/_4$-inch penetration)	0.113″ diameter nail	6	2	1	DR	2	0.75	DR
		8	2	1	DR	2	0.5	DR
		12	2	0.5	DR	2	DR	DR
	0.120″ diameter nail	6	3	1.5	0.5	3	0.75	DR
		8	3	1	DR	3	0.5	DR
		12	3	0.5	DR	2	DR	DR
	0.131″ diameter nail	6	4	2	0.75	4	1	DR
		8	4	1.5	0.5	4	0.75	DR
		12	4	0.75	DR	2	0.5	DR
	0.162″ diameter nail	6	4	4	1.5	4	2	1
		8	4	3	1	4	1.5	0.75
		12	4	2	0.75	4	1	DR

For SI: 1 inch = 25.4 mm, 1 pound per square foot = 0.0479 kPa, 1 pound per square inch = 6.895 kPa.

DR = Design required.

o.c. = On center.

a. Wood framing shall be Spruce-pine-fir or any wood species with a specific gravity of 0.42 or greater in accordance with AWC NDS.

b. Nail fasteners shall comply with ASTM F1667, except nail length shall be permitted to exceed ASTM F1667 standard lengths.

c. Foam sheathing shall have a minimum compressive strength of 15 psi in accordance with ASTM C578 or ASTM C1289.

INTERNATIONAL CODE COUNCIL®
Copyright © 2015 ICC. ALL RIGHTS RESERVED. Accessed by David Dammon on Jun 21, 2017 12:30:52 PM pursuant to License Agreement with ICC. No further reproduction or distribution authorized. ANY UNAUTHORIZED REPRODUCTION OR DISTRIBUTION IS A VIOLATION OF THE FEDERAL COPYRIGHT ACT AND THE LICENSE AGREEMENT, AND SUBJECT TO CIVIL AND CRIMINAL PENALTIES THEREUNDER.

TABLE R703.15.2
FURRING MINIMUM FASTENING REQUIREMENTS FOR APPLICATION OVER FOAM PLASTIC SHEATHING TO SUPPORT CLADDING WEIGHT[a, b]

FURRING MATERIAL	FRAMING MEMBER	FASTENER TYPE AND MINIMUM SIZE	MINIMUM PENETRATION INTO WALL FRAMING (inches)	FASTENER SPACING IN FURRING (inches)	MAXIMUM THICKNESS OF FOAM SHEATHING[d] (inches)					
					16″ o.c. Furring[e]			24″ o.c. Furring[e]		
					Siding Weight:			Siding Weight:		
					3 psf	11 psf	25 psf	3 psf	11 psf	25 psf
Minimum 1× Wood Furring[c]	Minimum 2× Wood Stud	0.131″ diameter nail	$1^1/_4$	8	4	2	1	4	1.5	DR
				12	4	1.5	DR	3	1	DR
				16	4	1	DR	3	0.5	DR
		0.162″ diameter nail	$1^1/_4$	8	4	4	1.5	4	2	0.75
				12	4	2	0.75	4	1.5	DR
				16	4	1.5	DR	4	1	DR
		No.10 wood screw	1	12	4	2	0.75	4	1.5	DR
				16	4	1.5	DR	4	1	DR
				24	4	1	DR	3	DR	DR
		$^1/_4$″ lag screw	$1^1/_2$	12	4	3	1	4	2	0.5
				16	4	1.5	DR	4	1.5	DR
				24	4	1.5	DR	4	0.75	DR

For SI: 1 inch = 25.4 mm, 1 pound per square foot = 0.0479 kPa, 1 pound per square inch = 6.895 kPa.

DR = Design required.

o.c. = On center.

a. Wood framing and furring shall be Spruce-pine-fir or any wood species with a specific gravity of 0.42 or greater in accordance with AWC NDS.

b. Nail fasteners shall comply with ASTM F1667, except nail length shall be permitted to exceed ASTM F1667 standard lengths.

c. Where the required cladding fastener penetration into wood material exceeds $^3/_4$ inch and is not more than $1^1/_2$ inches, a minimum 2× wood furring or an approved design shall be used.

d. Foam sheathing shall have a minimum compressive strength of 15 psi in accordance with ASTM C578 or ASTM C1289.

e. Furring shall be spaced not more than 24 inches on center, in a vertical or horizontal orientation. In a vertical orientation, furring shall be located over wall studs and attached with the required fastener spacing. In a horizontal orientation, the indicated 8-inch and 12-inch fastener spacing in furring shall be achieved by use of two fasteners into studs at 16 inches and 24 inches on center, respectively.

R703.16.1 Direct attachment. Where cladding is installed directly over foam sheathing without the use of furring, cladding minimum fastening requirements to support the cladding weight shall be as specified in Table R703.16.1.

❖ See the commentary to Section R703.15.

R703.16.2 Furred cladding attachment. Where steel or wood furring is used to attach cladding over foam sheathing, furring minimum fastening requirements to support the cladding weight shall be as specified in Table R703.16.2. Where placed horizontally, wood furring shall be preservative-treated wood in accordance with Section R317.1 or naturally durable wood and fasteners shall be corrosion resistant in accordance with Section R317.3. Steel furring shall have a minimum G60 galvanized coating.

❖ See the commentary to Section R703.15.

R703.17 Cladding attachment over foam sheathing to masonry or concrete wall construction. Cladding shall be specified and installed in accordance with Section 703.3 and the cladding manufacturer's instructions or an approved design. Foam sheathing shall be attached to masonry or concrete construction in accordance with the insulation manufacturer's installation instructions or an approved design. Furring and furring attachments through foam sheathing into concrete or masonry substrate shall be designed to resist design loads determined in accordance with Section R301, including support of cladding weight as applicable. Fasteners used to attach cladding or furring through foam sheathing to masonry or concrete substrates shall be approved for application into masonry or concrete material and shall be installed in accordance with the fastener manufacturer's instructions.

Exceptions:

1. Where the cladding manufacturer has provided approved installation instructions for application over foam sheathing and connection to a masonry or concrete substrate, those requirements shall apply.
2. For exterior insulation and finish systems, refer to Section R703.9.
3. For anchored masonry or stone veneer installed over foam sheathing, refer to Section R703.7

❖ See the commentary to Section R703.15.

INTERNATIONAL CODE COUNCIL®
Copyright © 2015 ICC. ALL RIGHTS RESERVED. Accessed by David Dammon on Jun 21, 2017 12:30:52 PM pursuant to License Agreement with ICC. No further reproduction or distribution authorized. ANY UNAUTHORIZED REPRODUCTION OR DISTRIBUTION IS A VIOLATION OF THE FEDERAL COPYRIGHT ACT AND THE LICENSE AGREEMENT, AND SUBJECT TO CIVIL AND CRIMINAL PENALTIES THEREUNDER.

TABLE R703.16.1
CLADDING MINIMUM FASTENING REQUIREMENTS FOR DIRECT ATTACHMENT OVER FOAM PLASTIC SHEATHING TO SUPPORT CLADDING WEIGHT[a]

CLADDING FASTENER THROUGH FOAM SHEATHING INTO:	CLADDING FASTENER TYPE AND MINIMUM SIZE[b]	CLADDING FASTENER VERTICAL SPACING (inches)	MAXIMUM THICKNESS OF FOAM SHEATHING[c] (inches)					
			16″ o.c. Fastener Horizontal Spacing			24" o.c. Fastener Horizontal Spacing		
			Cladding Weight:			Cladding Weight:		
			3 psf	11 psf	25 psf	3 psf	11 psf	25 psf
Steel Framing (minimum penetration of steel thickness + 3 threads)	No. 8 screw into 33 mil steel or thicker	6	3	3	1.5	3	2	DR
		8	3	2	0.5	3	1.5	DR
		12	3	1.5	DR	3	0.75	DR
	No. 10 screw into 33 mil steel	6	4	3	2	4	3	0.5
		8	4	3	1	4	2	DR
		12	4	2	DR	3	1	DR
	No. 10 screw into 43 mil steel or thicker	6	4	4	3	4	4	2
		8	4	4	2	4	3	1.5
		12	4	3	1.5	4	3	DR

For SI: 1 inch = 25.4 mm, 1 mil = 0.0254 mm, 1 pound per square foot = 0.0479 kPa, 1 pound per square inch = 6.895 kPa.

DR = Design required.

o.c. = On center.

a. Steel framing shall be minimum 33 ksi steel for 33 mil and 43 mil steel, and 50 ksi steel for 54 mil steel or thicker.

b. Screws shall comply with the requirements of ASTM C1513.

c. Foam sheathing shall have a minimum compressive strength of 15 psi in accordance with ASTM C578 or ASTM C1289.

TABLE R703.16.2
FURRING MINIMUM FASTENING REQUIREMENTS FOR APPLICATION OVER FOAM PLASTIC SHEATHING TO SUPPORT CLADDING WEIGHT[a]

FURRING MATERIAL	FRAMING MEMBER	FASTENER TYPE AND MINIMUM SIZE[b]	MINIMUM PENETRATION INTO WALL FRAMING (inches)	FASTENER SPACING IN FURRING (inches)	MAXIMUM THICKNESS OF FOAM SHEATHING[d] (inches)					
					16″ o.c. Furring[e]			24″ o.c. Furring[e]		
					Cladding Weight:			Cladding Weight:		
					3 psf	11 psf	25 psf	3 psf	11 psf	25 psf
Minimum 33 mil Steel Furring or Minimum 1× Wood Furring[c]	33 mil Steel Stud	No. 8 screw	Steel thickness + 3 threads	12	3	1.5	DR	3	0.5	DR
				16	3	1	DR	2	DR	DR
				24	2	DR	DR	2	DR	DR
		No. 10 screw	Steel thickness + 3 threads	12	4	2	DR	4	1	DR
				16	4	1.5	DR	3	DR	DR
				24	3	DR	DR	2	DR	DR
	43 mil or thicker Steel Stud	No. 8 Screw	Steel thickness + 3 threads	12	3	1.5	DR	3	0.5	DR
				16	3	1	DR	2	DR	DR
				24	2	DR	DR	2	DR	DR
		No. 10 screw	Steel thickness + 3 threads	12	4	3	1.5	4	3	DR
				16	4	3	0.5	4	2	DR
				24	4	2	DR	4	0.5	DR

For SI: 1 inch = 25.4 mm, 1 mil = 0.0254 mm, 1 pound per square foot = 0.0479 kPa, 1 pound per square inch = 6.895 kPa.

DR = Design required.

o.c. = On center.

a. Wood furring shall be Spruce-pine-fir or any softwood species with a specific gravity of 0.42 or greater. Steel furring shall be minimum 33 ksi steel. Steel studs shall be minimum 33 ksi steel for 33mil and 43 mil thickness, and 50 ksi steel for 54 mil steel or thicker.

b. Screws shall comply with the requirements of ASTM C1513.

c. Where the required cladding fastener penetration into wood material exceeds $^3/_4$ inch and is not more than $1^1/_2$ inches, a minimum 2-inch nominal wood furring or an approved design shall be used.

d. Foam sheathing shall have a minimum compressive strength of 15 psi in accordance with ASTM C578 or ASTM C1289.

e. Furring shall be spaced not more than 24 inches (610 mm) on center, in a vertical or horizontal orientation. In a vertical orientation, furring shall be located over wall studs and attached with the required fastener spacing. In a horizontal orientation, the indicated 8-inch and 12-inch fastener spacing in furring shall be achieved by use of two fasteners into studs at 16 inches and 24 inches on center, respectively.

INTERNATIONAL CODE COUNCIL®
Copyright © 2015 ICC. ALL RIGHTS RESERVED. Accessed by David Dammon on Jun 21, 2017 12:30:52 PM pursuant to License Agreement with ICC. No further reproduction or distribution authorized. ANY UNAUTHORIZED REPRODUCTION OR DISTRIBUTION IS A VIOLATION OF THE FEDERAL COPYRIGHT ACT AND THE LICENSE AGREEMENT, AND SUBJECT TO CIVIL AND CRIMINAL PENALTIES THEREUNDER.

Bibliography

The following resource materials were used in the preparation of the commentary for this chapter of the code:

ASTM C557–03 (2009)e01, *Specification for Adhesives for Fastening Gypsum Wallboard to Wood Framing*. West Conshohocken, PA: ASTM International, 2009.

ASTM C645–13, *Specification for Nonstructural Steel Framing Members*. West Conshohocken, PA: ASTM International, 2013.

ASTM C843–99 (2012), *Specification for Application of Gypsum Veneer Plaster*. West Conshohocken, PA: ASTM International, 2012.

ASTM C844–04 (2010), *Specification for Application of Gypsum Base to Receive Gypsum Veneer Plaster*. West Conshohocken, PA: ASTM International, 2010.

ASTM C926–13, *Specification for Application of Portland Cement Based-Plaster*. West Conshohocken, PA: ASTM International, 2013.

ASTM C955–11C, *Specification for Load-bearing (Transverse and Axial) Steel Studs, Runners (Tracks), and Bracing or Bridging for Screw Application of Gypsum Panel Products and Metal Plaster Bases*. West Conshohocken, PA: ASTM International, 2011.

ASTM C1002–07, *Specification for Steel Drill Screws for the Application of Gypsum Panel Products or Metal Plaster Bases*. West Conshohocken, PA: ASTM International, 2007.

ASTM C1063–12, *Specification for Installation of Lathing and Furring to Receive Interior and Exterior Portland Cement-Based Plaster*. West Conshohocken, PA: ASTM International, 2012.

ASTM C1186–08 (2012), *Specification for Flat Nonasbestos Fiber Cement Sheets*. West Conshohocken, PA: ASTM International, 2012.

ASTM C1513–2013, *Standard Specification for Steel Tapping Screws for Cold-formed Steel Framing Connections*. West Conshohocken, PA: ASTM International, 2013.

ASTM D3679–11, *Specification for Rigid Poly (Vinyl Chloride) (PVC) Siding*. West Conshohocken, PA: ASTM International, 2011.

ASTM D4756–06, *Practice for the Installation of Rigid Poly (Vinyl-Chloride) (PVC) Siding and Soffits*. West Conshohocken, PA: ASTM International, 2006.

ASTM D7254–07, *Standard Specification for Polypropylene (PP) Siding*. West Conshohocken, PA: ASTM International, 2007.

ASTM D7793–13, *Standard Specification for Insulated Vinyl Siding.* West Conshohocken, PA: ASTM International, 2013.

ASTM E96/E 96M–2013, *Standard Test Methods for Water Vapor Transmission of Materials*. West Conshohocken, PA: ASTM International, 2013.

ASTM E330–02, *Test Method for Structural Performance of Exterior Windows, Curtain Walls and Doors by Uniform Static Air Pressure Difference*. West Conshohocken, PA: ASTM International, 2002.

ASTM E331–00 (2009), *Test Method for Water Penetration of Exterior Windows, Skylights, Doors and Curtain Walls by Uniform Static Air Pressure Difference*. West Conshohocken, PA: ASTM International, 2009.

ASTM E2273–03 (2011), *Standard Test Method for Determining the Drainage Efficiency of Exterior Insulation and Finish Systems (EIFS) Clad Wall Assemblies*. West Conshohocken, PA: ASTM International, 2011.

ASTM F1667–11Ae1, *Specification for Driven Fasteners, Nails, Spikes and Staples*. West Conshohocken, PA: ASTM International, 2011.

ASTM E2568–09e1, *Standard Specification for PB Exterior Insulation and Finish Systems (EIFS)*. West Conshohocken, PA: ASTM International, 2009.

CSSB–97, *Grading and Packing Rules for Western Red Cedar Shakes and Western Red Shingles of the Cedar Shake and Shingle Bureau*. Sumas, WA: Cedar Shake & Shingle Bureau, 1997.

Federal Specification UU-B–790a, *Specifications for Building Paper, Vegetable Fiber (Kraft, Waterproofed, Water Repellent, and Fire Resistant*. Washington, DC: United States General Services Administration, 1992.

Klinger, Richard E. "Behavior of Anchored Masonry Veneer with Light Wood Stud-framing or Masonry Backing in Full-Scale Whole-building Shaking Table Test." *TMS Journal.* Boulder, CO: The Masonry Society, June 2009.

TMS 402/ACI 530/ASCE 5–2013, *Building Code Requirements for Masonry Structures*. Longmont, CO: The Masonry Society, 2013.

TMS 602/ACI 630/ASCE 6–2013, *Specification for Masonry Construction*. Longmont, CO: The Masonry Society, 2013.

INTERNATIONAL CODE COUNCIL®

Copyright © 2015 ICC. ALL RIGHTS RESERVED. Accessed by David Dammon on Jun 21, 2017 12:30:52 PM pursuant to License Agreement with ICC. No further reproduction or distribution authorized. ANY UNAUTHORIZED REPRODUCTION OR DISTRIBUTION IS A VIOLATION OF THE FEDERAL COPYRIGHT ACT AND THE LICENSE AGREEMENT, AND SUBJECT TO CIVIL AND CRIMINAL PENALTIES THEREUNDER.

Chapter 8:
Roof-ceiling Construction

General Comments

Section R801 establishes the scope of the chapter as well as performance requirements for roof and ceiling construction. There are two types of roof-ceiling framing systems: wood framing and cold-formed steel framing. Section R802 addresses wood roof and ceiling framing, while Section R804 deals with cold-formed steel roof and ceiling framing. Section R803 specifies requirements for roof sheathing to be used with either of these framing systems. Other topics covered in this chapter are the application of ceiling finishes in Section R805, the proper ventilation of concealed spaces in roofs (e.g., enclosed attics and enclosed rafter spaces) and unvented attics and rafter spaces in Section R806, and the "access into attic" criteria in Section R807.

Purpose

Chapter 8 regulates the design and construction of roof-ceiling systems. Proper roof-member design provides for the support of the required design live and snow loads as well as providing for the transfer of these loads to supporting walls. Attics must be identified as "no storage" or "limited storage" zones so that ceiling joists can be appropriately sized. Allowable span tables are provided to simplify the selection of rafter and ceiling joist size for wood roof framing and cold-formed steel framing.

Roof systems must resist wind uplift, and tiedowns must be installed when necessary. Also, a roof system composed of sheathing fastened to either wood or cold-formed steel framing serves as a diaphragm, which is a key lateral load path element in resisting the forces of wind and earthquakes.

Chapter 8 also provides requirements for the application of ceiling finishes, the proper ventilation of concealed spaces in roofs (e.g., enclosed attics and enclosed rafter spaces), unvented attics and rafter spaces and attic access.

SECTION R801
GENERAL

R801.1 Application. The provisions of this chapter shall control the design and construction of the roof-ceiling system for buildings.

❖ The provisions of Chapter 8 address conventionally framed roof-ceiling construction.

R801.2 Requirements. Roof and ceiling construction shall be capable of accommodating all loads imposed in accordance with Section R301 and of transmitting the resulting loads to the supporting structural elements.

❖ This section states the performance expectations for roof and ceiling construction.

R801.3 Roof drainage. In areas where expansive or collapsible soils are known to exist, all *dwellings* shall have a controlled method of water disposal from roofs that will collect and discharge roof drainage to the ground surface not less than 5 feet (1524 mm) from foundation walls or to an *approved* drainage system.

❖ Saturated expansive or collapsible soils can lead to foundation failures because their additional loads are imposed on the foundation wall. To minimize the potential for the soil adjacent to the foundation wall to become saturated by roof drainage, the code requires that the roofs drain 5 feet (1524 mm) from the foundation. This requirement applies to foundation walls only and does not apply to slab-on-grade foundations.

Although this section is specific to discharging the roof drainage away from foundation walls, discharging the roof drainage away from other types of foundations, such as slab-on-grade on expansive or collapsible soil, may need consideration. Industry standards and/or the engineered design for other types of foundations may also require roof drainage.

SECTION R802
WOOD ROOF FRAMING

R802.1 General. Wood and wood-based products used for load-supporting purposes shall conform to the applicable provisions of this section.

❖ Sections R802.1.1 through R802.1.7 contain the prescriptive requirements for wood and wood-based products used in wood roof framing.

R802.1.1 Sawn lumber. Sawn lumber shall be identified by a grade mark of an accredited lumber grading or inspection agency and have design values certified by an accreditation body that complies with DOC PS 20. In lieu of a grade mark, a certificate of inspection issued by a lumber grading or inspection agency meeting the requirements of this section shall be accepted.

❖ See the commentaries to Section R502.1.1 and Figure R502.1.

INTERNATIONAL CODE COUNCIL®
Copyright © 2015 ICC. ALL RIGHTS RESERVED. Accessed by David Dammon on Jun 21, 2017 12:30:52 PM pursuant to License Agreement with ICC. No further reproduction or distribution authorized. ANY UNAUTHORIZED REPRODUCTION OR DISTRIBUTION IS A VIOLATION OF THE FEDERAL COPYRIGHT ACT AND THE LICENSE AGREEMENT, AND SUBJECT TO CIVIL AND CRIMINAL PENALTIES THEREUNDER.

R802.1.1.1 End-jointed lumber. *Approved* end-jointed lumber identified by a grade mark conforming to Section R802.1.1 shall be permitted to be used interchangeably with solid-sawn members of the same species and grade. End-jointed lumber used in an assembly required elsewhere in this code to have a fire-resistance rating shall have the designation "Heat-Resistant Adhesive" or "HRA" included in its grade mark.

❖ See the commentary to Section R502.1.1.2.

R802.1.2 Structural glued laminated timbers. Glued laminated timbers shall be manufactured and identified as required in ANSI/AITC A190.1 and ASTM D3737.

❖ This section states that glulam timbers must be manufactured following ANSI/AITC A190.1 and ASTM D3737. Knowing the standard these products must meet makes it easier to determine that the product found in the field will meet the design requirements.

R802.1.3 Structural log members. Structural log members shall comply with the provisions of ICC 400.

❖ The material requirements for structural logs, such as stress grading, grade mark or Certificate of Inspection, must be in accordance with ICC 400, *Standard on the Design and Construction of Log Structures.*

R802.1.4 Structural composite lumber. Structural capacities for structural composite lumber shall be established and monitored in accordance with ASTM D5456.

❖ See the commentary to Section R502.1.5.

R802.1.5 Fire-retardant-treated wood. Fire-retardant-treated wood (FRTW) is any wood product that, when impregnated with chemicals by a pressure process or other means during manufacture, shall have, when tested in accordance with ASTM E84 or UL 723, a listed flame spread index of 25 or less and shows no evidence of significant progressive combustion where the test is continued for an additional 20-minute period. In addition, the flame front shall not progress more than 10.5 feet (3200 mm) beyond the center line of the burners at any time during the test.

❖ Fire-retardant-treated wood (FRTW) is plywood and lumber that has been pressure impregnated with chemicals to improve its flame spread characteristics beyond those of untreated wood. The effectiveness of the pressure-impregnated fire-retardant treatment is determined by subjecting the material to tests conducted in accordance with ASTM E84 or UL 723, with the modification that the test is extended to 30 minutes rather than 15 minutes. Using this procedure, a flame spread index is established during the standard 10-minute test period. The test is continued for an additional 20 minutes. During this added time period, there must not be any significant flame spread. At no time must the flame spread more than $10^1/_2$ feet (3200 mm) past the centerline of the burners.

The result of impregnating wood with fire-retardant chemicals is a chemical reaction at certain temperature ranges. This reaction reduces the release of certain intermediate products that contribute to the flaming of wood, and the reaction also results in the formation of a greater percentage of charcoal and water. Some chemicals are effective in reducing the oxidation rate for charcoal residue. Fire-retardant chemicals also reduce the heat release rate of FRTW when it is burning over a wide range of temperatures. This section gives provisions for the treatment and use of FRTW.

R802.1.5.1 Pressure process. For wood products impregnated with chemicals by a pressure process, the process shall be performed in closed vessels under pressures not less than 50 pounds per square inch gauge (psig) (344.7 kPa).

❖ This section elaborates on the requirements of treatment using a pressure process.

R802.1.5.2 Other means during manufacture. For wood products produced by other means during manufacture the treatment shall be an integral part of the manufacturing process of the wood product. The treatment shall provide permanent protection to all surfaces of the wood product.

❖ This section elaborates on the requirements of treatment using other means during manufacture.

R802.1.5.3 Testing. For wood products produced by other means during manufacture, other than a pressure process, all sides of the wood product shall be tested in accordance with and produce the results required in Section R802.1.3. Testing of only the front and back faces of wood structural panels shall be permitted.

❖ This section provides for added testing of wood products with treatments that are not impregnated by a pressure process. Requiring equivalent performance from all sides of the wood product eliminates any concern over the orientation when it is installed.

R802.1.5.4 Labeling. Fire-retardant-treated lumber and wood structural panels shall be *labeled*. The *label* shall contain:

1. The identification *mark* of an *approved agency* in accordance with Section 1703.5 of the *International Building Code.*
2. Identification of the treating manufacturer.
3. The name of the fire-retardant treatment.
4. The species of wood treated.
5. Flame spread index and smoke-developed index.
6. Method of drying after treatment.
7. Conformance to applicable standards in accordance with Sections R802.1.5.5 through R802.1.5.10.
8. For FRTW exposed to weather, or a damp or wet location, the words "No increase in the listed classification when subjected to the Standard Rain Test" (ASTM D2898).

❖ For continued quality, each piece of fire-retardant-treated wood must be identified by an approved agency having a reinspection service. The identification must show the performance rating of the material, including the 30-minute ASTM E84 or UL 723 test results determined in Section R802.1.5 and the design adjustment values determined in Section R802.1.5.5.

INTERNATIONAL CODE COUNCIL®
Copyright © 2015 ICC. ALL RIGHTS RESERVED. Accessed by David Dammon on Jun 21, 2017 12:30:52 PM pursuant to License Agreement with ICC. No further reproduction or distribution authorized. ANY UNAUTHORIZED REPRODUCTION OR DISTRIBUTION IS A VIOLATION OF THE FEDERAL COPYRIGHT ACT AND THE LICENSE AGREEMENT, AND SUBJECT TO CIVIL AND CRIMINAL PENALTIES THEREUNDER.

The third-party agency that provides the FRTW label is also required to state on the label that the FRTW complies with the requirements of Section R802.1.5 and that design adjustment values have been determined for the FRTW in compliance with the provisions of Section R802.1.5.5.

The FRTW label must be distinct from the grading label to avoid confusion between the two. The grading label provides information about the properties of wood before it is fire-retardant treated; the FRTW label shows properties of the wood after FRTW treatment. It is imperative that the FRTW label be presented in a manner that complements the grading label and does not create confusion over which label takes precedence.

R802.1.5.5 Strength adjustments. Design values for untreated lumber and wood structural panels as specified in Section R802.1 shall be adjusted for fire-retardant-treated wood. Adjustments to design values shall be based upon an *approved* method of investigation that takes into consideration the effects of the anticipated temperature and humidity to which the fire-retardant-treated wood will be subjected, the type of treatment and redrying procedures.

❖ Experience has shown that certain factors can affect the physical properties of FRTW. Among these factors are the pressure treatment and redrying processes used and the extremes of temperature and humidity that the FRTW will be subjected to once installed. The design values for all FRTW must be adjusted for the effects of the treatment and environmental conditions, such as high temperature and humidity in attic installations. This section requires the determination of these design adjustment values, based on an investigation procedure that includes subjecting the FRTW to similar temperatures and humidities and that has been approved by the code official. The FRTW tested must be identical to that which is produced. Items to be considered by the code official reviewing the test procedure include species and grade of the untreated wood and conditioning of the wood, such as drying before the fire-retardant treatment process. A fire-retardant wood treater may choose to have its treatment process evaluated by model code evaluation services.

The FRTW is required by Section R802.1.5.4 to be labeled with the design adjustment values. These can take the form of factors that are multiplied by the original design values of the untreated wood to determine its allowable stresses or new allowable stresses that have already been factored down in consideration of the FRTW treatment.

R802.1.5.6 Wood structural panels. The effect of treatment and the method of redrying after treatment, and exposure to high temperatures and high humidities on the flexure properties of fire-retardant-treated softwood plywood shall be determined in accordance with ASTM D5516. The test data developed by ASTM D5516 shall be used to develop adjustment factors, maximum loads and spans, or both for untreated plywood design values in accordance with ASTM D6305. Each manufacturer shall publish the allowable maximum loads and spans for service as floor and roof sheathing for their treatment.

❖ This section references the test standard developed to evaluate the flexural properties of fire-retardant-treated plywood that is exposed to high temperatures. Note that while the section title refers to wood structural panels, the standard is specifically for softwood plywood. Therefore, judgment is required in determining the effects of elevated temperature and humidity on other types of wood structural panels.

R802.1.5.7 Lumber. For each species of wood treated, the effect of the treatment and the method of redrying after treatment and exposure to high temperatures and high humidities on the allowable design properties of fire-retardant-treated lumber shall be determined in accordance with ASTM D5664. The test data developed by ASTM D5664 shall be used to develop modification factors for use at or near room temperature and at elevated temperatures and humidity in accordance with ASTM D6841. Each manufacturer shall publish the modification factors for service at temperatures of not less than 80°F (27°C) and for roof framing. The roof framing modification factors shall take into consideration the climatological location.

❖ This section references the test standards developed to determine the necessary adjustments to design values for lumber that has been fire-retardant treated and includes the effects of elevated temperatures and humidity.

R802.1.5.8 Exposure to weather. Where fire-retardant-treated wood is exposed to weather or damp or wet locations, it shall be identified as "Exterior" to indicate there is not an increase in the listed flame spread index as defined in Section R802.1.5 when subjected to ASTM D2898.

❖ Some fire-retardant treatments are soluble when exposed to the weather or used under high-humidity conditions. The humidity threshold established for interior applications in Section R802.1.5.9 is 92 percent. Therefore, FRTW used in an interior location that will exceed this threshold must comply with this section. When an FRTW product is to be exposed to any of the conditions noted in this section, it must be further tested in accordance with ASTM D2898. Testing requires the material to meet the performance criteria listed in Section R802.1.5. The material is then subjected to the ASTM weathering test and retested after drying. There must not be any significant differences in the performance recorded before and after the weathering test.

R802.1.5.9 Interior applications. Interior fire-retardant-treated wood shall have a moisture content of not over 28 percent when tested in accordance with ASTM D3201 procedures at 92-percent relative humidity. Interior fire-retardant-treated wood shall be tested in accordance with Section R802.1.5.6 or R802.1.5.7. Interior fire-retardant-treated wood designated as Type A shall be tested in accordance with the provisions of this section.

❖ The environment in which the FRTW is used can affect its performance. To make sure that performance will

INTERNATIONAL CODE COUNCIL®
Copyright © 2015 ICC. ALL RIGHTS RESERVED. Accessed by David Dammon on Jun 21, 2017 12:30:52 PM pursuant to License Agreement with ICC. No further reproduction or distribution authorized. ANY UNAUTHORIZED REPRODUCTION OR DISTRIBUTION IS A VIOLATION OF THE FEDERAL COPYRIGHT ACT AND THE LICENSE AGREEMENT, AND SUBJECT TO CIVIL AND CRIMINAL PENALTIES THEREUNDER.

be adequate in a humid interior condition, testing in accordance with ASTM D3201 as well as testing specified in Section R802.1.5.6 or R802.1.5.7 is required for all interior wood. Requiring all interior wood to be tested for the effects of high temperature and humidity reduces the chance of a premature failure resulting from improper use of FRTW.

R802.1.5.10 Moisture content. Fire-retardant-treated wood shall be dried to a moisture content of 19 percent or less for lumber and 15 percent or less for wood structural panels before use. For wood kiln dried after treatment (KDAT) the kiln temperatures shall not exceed those used in kiln drying the lumber and plywood submitted for the tests described in Section R802.1.5.6 for plywood and R802.1.5.7 for lumber.

❖ These moisture content thresholds are necessary to prevent leaching of the fire retardant from the wood. Section R802.1.5.5 requires that the strength adjustments consider the redrying procedure, and this section clarifies that the drying temperatures for wood kiln dried after treatment must be consistent with those on which the adjustment factors were based.

R802.1.6 Cross-laminated timber. Cross-laminated timber shall be manufactured and identified as required by ANSI/APA PRG 320.

❖ Cross-laminated timber (CLT) was first developed in Europe nearly 20 years ago, where it has been used extensively. It is generally analogous to large section members currently associated with heavy timber. Although the primary use is for nonresidential construction, it's currently being used in some residential applications. As a new product in North America, ANSI/APA PRG 320 provides a consensus manufacturing standard for CLT.

R802.1.7 Engineered wood rim board. Engineered wood rim boards shall conform to ANSI/APA PRR 410 or shall be evaluated in accordance with ASTM D7672. Structural capacities shall be in accordance with ANSI/APA PRR 410 or established in accordance with ASTM D7672. Rim boards conforming to ANSI/APA PRR 410 shall be marked in accordance with that standard.

❖ Engineered rim board is a key structural element in wood floor construction where both structural load path through the perimeter member and dimensional change compatibility are design considerations. Both ANSI/APA PRR 410 and ASTM D7672 address the fundamental requirements for testing and evaluation of engineered rim board. PRR 410 also includes performance categories for engineered wood products used in engineered rim board applications. Under PRR 410, products are assigned a grade based on performance category (e.g., categories based on structural capacity) and will bear a mark in accordance with the grade. In contrast, ASTM D7672 is applicable for determination of product-specific rim board performance (i.e., structural capacities) for engineered wood products that may be recognized in manufacturers' literature or product evaluation reports.

R802.2 Design and construction. The framing details required in Section R802 apply to roofs having a minimum slope of three units vertical in 12 units horizontal (25-percent slope) or greater. Roof-ceilings shall be designed and constructed in accordance with the provisions of this chapter and Figures R606.11(1), R606.11(2) and R606.11(3) or in accordance with AWC NDS. Components of roof-ceilings shall be fastened in accordance with Table R602.3(1).

❖ The prescriptive framing requirements of Section R802 apply only to roofs having a minimum slope of 3 units vertical in 12 units horizontal (25-percent slope). Wood roof-ceiling construction must comply with Section R802 or AWC NDS, *National Design Specification for Wood Construction*. The references to Chapter 6 figures are meant for buildings using masonry wall construction.

R802.3 Framing details. Rafters shall be framed not more than $1^1/_2$-inches (38 mm) offset from each other to ridge board or directly opposite from each other with a gusset plate as a tie. Ridge board shall be not less than 1-inch (25 mm) nominal thickness and not less in depth than the cut end of the rafter. At valleys and hips there shall be a valley or hip rafter not less than 2-inch (51 mm) nominal thickness and not less in depth than the cut end of the rafter. Hip and valley rafters shall be supported at the ridge by a brace to a bearing partition or be designed to carry and distribute the specific load at that point. Where the roof pitch is less than three units vertical in 12 units horizontal (25-percent slope), structural members that support rafters and ceiling joists, such as ridge beams, hips and valleys, shall be designed as beams.

❖ Traditional practice is to provide a ridgeboard between opposite rafters as a nailing base and to provide a full bearing for the rafter. Rafters must be placed directly opposite each other, with an offset tolerance of $1^1/_2$ inches, and the ridgeboard must have a depth equal to the end of the rafter as illustrated in Commentary Figure R802.3(1). Commentary Figure R802.3(2) shows an option for framing opposing rafters using a gusset plate.

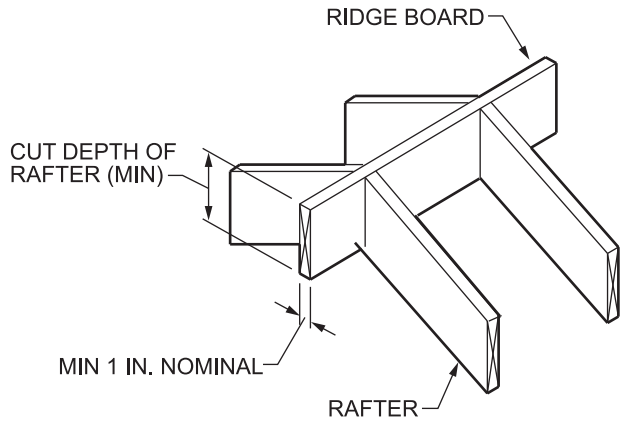

For SI: 1 inch = 25.4 mm.

Figure R802.3(1)
RIDGE BOARD

INTERNATIONAL CODE COUNCIL®
Copyright © 2015 ICC. ALL RIGHTS RESERVED. Accessed by David Dammon on Jun 21, 2017 12:30:52 PM pursuant to License Agreement with ICC. No further reproduction or distribution authorized. ANY UNAUTHORIZED REPRODUCTION OR DISTRIBUTION IS A VIOLATION OF THE FEDERAL COPYRIGHT ACT AND THE LICENSE AGREEMENT, AND SUBJECT TO CIVIL AND CRIMINAL PENALTIES THEREUNDER.

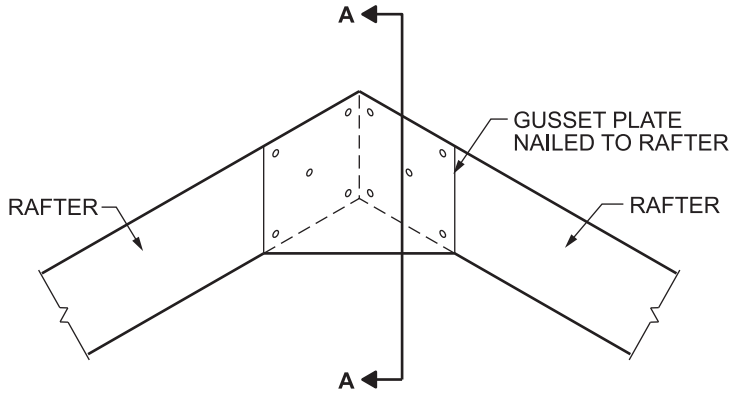

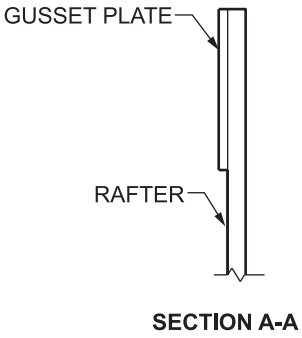

Figure R802.3(2)
RIDGE ALTERNATIVE—GUSSET PLATE TIE

R802.3.1 Ceiling joist and rafter connections. Ceiling joists and rafters shall be nailed to each other in accordance with Table R802.5.1(9), and the rafter shall be nailed to the top wall plate in accordance with Table R602.3(1). Ceiling joists shall be continuous or securely joined in accordance with Table R802.5.1(9) where they meet over interior partitions and are nailed to adjacent rafters to provide a continuous tie across the building where such joists are parallel to the rafters.

Where ceiling joists are not connected to the rafters at the top wall plate, joists connected higher in the *attic* shall be installed as rafter ties, or rafter ties shall be installed to provide a continuous tie. Where ceiling joists are not parallel to rafters, rafter ties shall be installed. Rafter ties shall be not less than 2 inches by 4 inches (51 mm by 102 mm) (nominal), installed in accordance with the connection requirements in Table R802.5.1(9), or connections of equivalent capacities shall be provided. Where ceiling joists or rafter ties are not provided, the ridge formed by these rafters shall be supported by a wall or girder designed in accordance with accepted engineering practice.

Collar ties or ridge straps to resist wind uplift shall be connected in the upper third of the *attic* space in accordance with Table R602.3(1).

Collar ties shall be not less than 1 inch by 4 inches (25 mm by 102 mm) (nominal), spaced not more than 4 feet (1219 mm) on center.

❖ The requirements of this section describe connections to resist horizontal thrust from gravity loads and ridge uplift from wind loads. Ceiling joists or rafter ties are the framing members used to resist the horizontal thrust from gravity loads. A ceiling joist or rafter tie is required at every rafter. Collar ties or ridge straps are used to resist the ridge uplift caused by the wind load. Collar ties or ridge straps must be spaced not further than every 4 feet (1219 mm) on center.

Ceiling joists located at the top plate and parallel to the rafters must be connected as shown in Commentary Figure R802.3.1(1). The connection must be in accordance with Table R802.5.1(9).

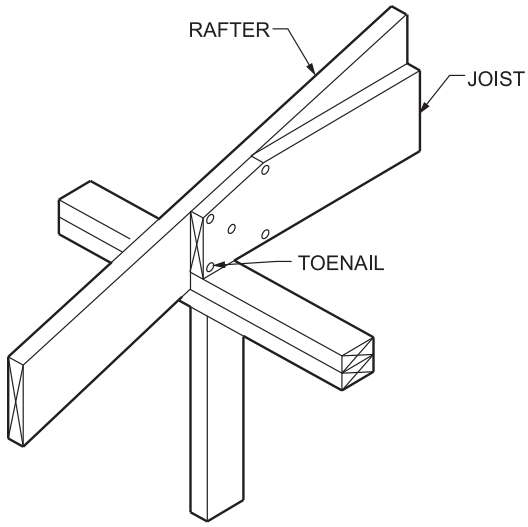

Figure R802.3.1(1)
CEILING JOIST AT SUPPORTS

Ceiling joists located at the top plate and parallel to the rafters must be continuous or lap joined as shown in Commentary Figures R802.3.1(3) and R802.3.2(1). The lap splice connection must be in accordance with Table R802.5.1(9), Note e.

Where ceiling joists or rafter ties are located above the top plate or the ceiling joists are not parallel to the rafters, as shown in Commentary Figure R802.3.1(2), the connections must be in accordance with Table R802.5.1(9).

Cathedral ceilings (where ceiling joists or rafter ties are not installed) must be designed so the wall or ridge beam carries the full load of the roof. This would require the walls to be supported by a continuous foundation and/or beams and girders. The ridge beam must also be capable of supporting the full load exerted by the tributary area of the rafters. The ridge beam must be stiff enough to minimize the deflection from the raf-

INTERNATIONAL CODE COUNCIL®
Copyright © 2015 ICC. ALL RIGHTS RESERVED. Accessed by David Dammon on Jun 21, 2017 12:30:52 PM pursuant to License Agreement with ICC. No further reproduction or distribution authorized. ANY UNAUTHORIZED REPRODUCTION OR DISTRIBUTION IS A VIOLATION OF THE FEDERAL COPYRIGHT ACT AND THE LICENSE AGREEMENT, AND SUBJECT TO CIVIL AND CRIMINAL PENALTIES THEREUNDER.

ter loads so that rafter thrust does not displace the walls.

Collar ties or ridge straps must be located in the upper one-third of the attic space, be a minimum of 1 inch by 4 inches (25 mm by 102 mm), be spaced not more than 4 feet (1219 mm) on center and connected in accordance with Table R602.3(1). The minimum prescriptive connections in Table R602.3(1) for collar ties and ridge straps apply to roofs having a minimum slope of 3:12, a maximum wind speed of 100 mph and a maximum roof span of 36 feet. The minimum prescriptive connections were determined using the 2001 *Wood Frame Construction Manual* [see Commentary Figures R802.3.1(2) and R802.3.1(3)].

R802.3.2 Ceiling joists lapped. Ends of ceiling joists shall be lapped not less than 3 inches (76 mm) or butted over bearing partitions or beams and toenailed to the bearing member. Where ceiling joists are used to provide resistance to rafter thrust, lapped joists shall be nailed together in accordance with Table R802.5.1(9) and butted joists shall be tied together in a manner to resist such thrust. Joists that do not resist thrust shall be permitted to be nailed in accordance with Table R602.3(1).

❖ Where ceiling joists function as a structural element, providing resistance to rafter thrust, proper connection through a lapped joint or butted joint connection to form a continuous tie is required [see Commentary Figures R802.3.2(1) and R802.3.2(2)].

The lap splice nailing of Table R602.3(1) applies only if the ceiling joist is not attached to parallel rafters. For a ceiling joist attached parallel to the rafter, the connection must be in accordance with Note e of Table R802.5.1(9) (see commentary, Section R802.3.1).

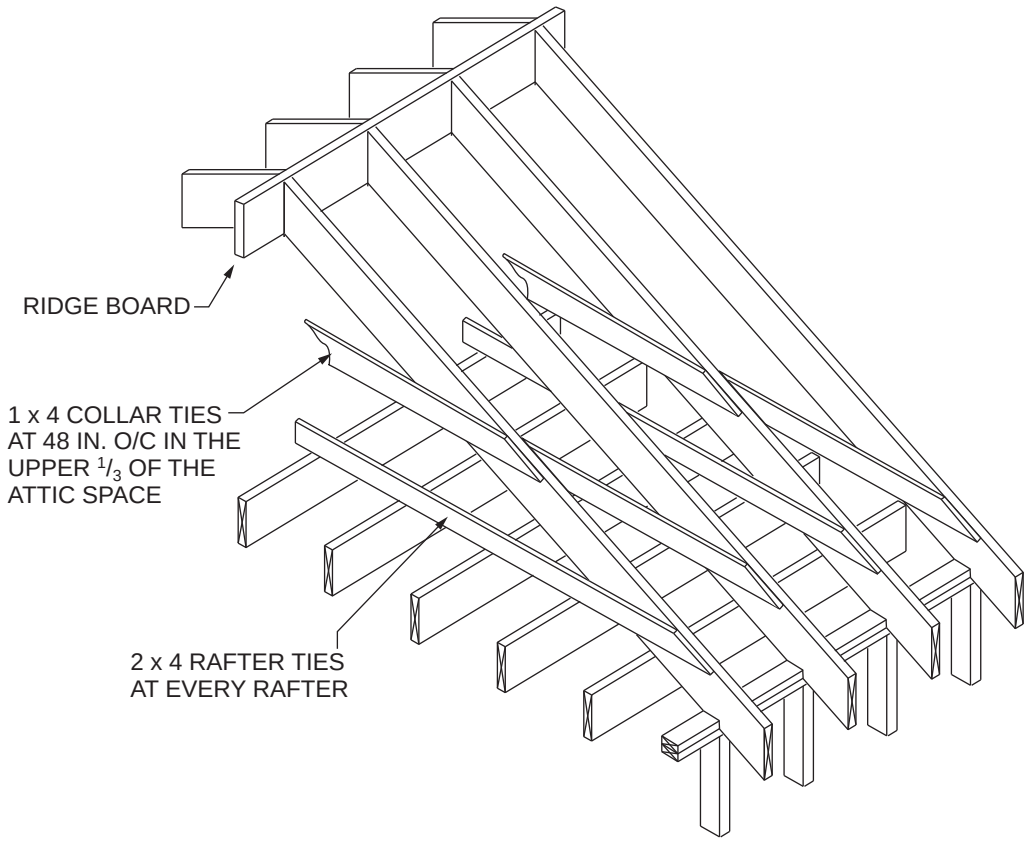

For SI: 1 inch = 25.4 mm.

Figure R802.3.1(2)
ROOF FRAMING WITH CEILING JOISTS NOT PARALLEL TO RAFTERS

INTERNATIONAL CODE COUNCIL®
Copyright © 2015 ICC. ALL RIGHTS RESERVED. Accessed by David Dammon on Jun 21, 2017 12:30:52 PM pursuant to License Agreement with ICC. No further reproduction or distribution authorized. ANY UNAUTHORIZED REPRODUCTION OR DISTRIBUTION IS A VIOLATION OF THE FEDERAL COPYRIGHT ACT AND THE LICENSE AGREEMENT, AND SUBJECT TO CIVIL AND CRIMINAL PENALTIES THEREUNDER.

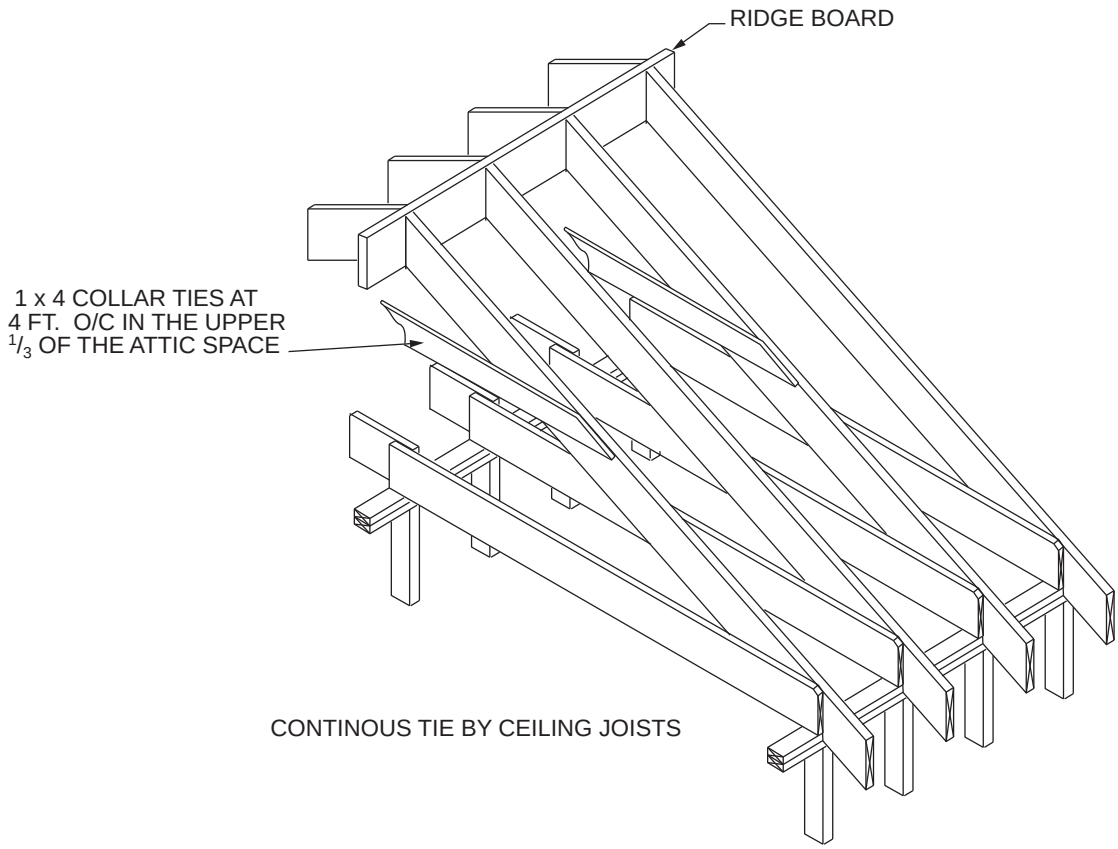

Figure R802.3.1(3)
ROOF FRAMING WITH CEILING JOISTS PARALLEL TO RAFTERS

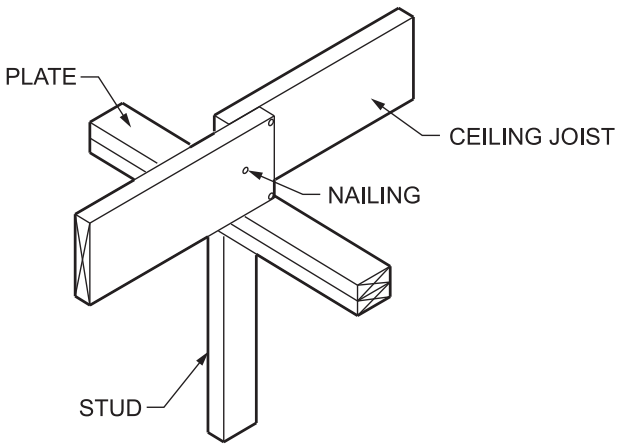

Figure R802.3.2(1)
LAPPED CEILING JOIST CONNECTION PROVIDING RESISTANCE TO RAFTER THRUST

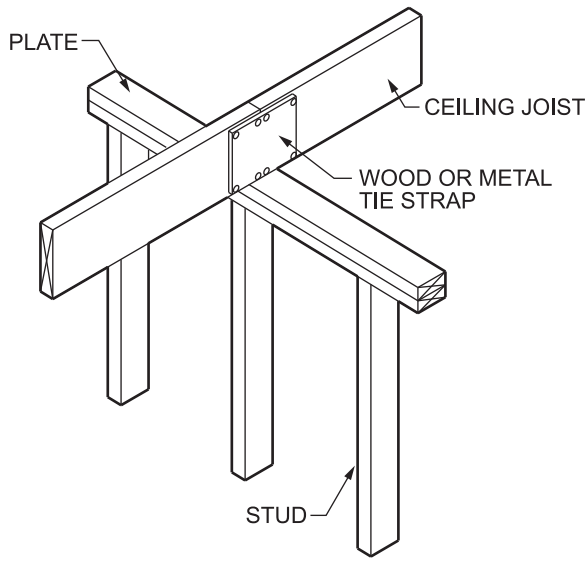

Figure R802.3.2(2)
BUTTED CEILING JOIST CONNECTION PROVIDING RESISTANCE TO RAFTER THRUST

INTERNATIONAL CODE COUNCIL®
Copyright © 2015 ICC. ALL RIGHTS RESERVED. Accessed by David Dammon on Jun 21, 2017 12:30:52 PM pursuant to License Agreement with ICC. No further reproduction or distribution authorized. ANY UNAUTHORIZED REPRODUCTION OR DISTRIBUTION IS A VIOLATION OF THE FEDERAL COPYRIGHT ACT AND THE LICENSE AGREEMENT, AND SUBJECT TO CIVIL AND CRIMINAL PENALTIES THEREUNDER.

R802.3.3 Blocking. Blocking shall be a minimum of utility grade lumber.

❖ Because blocking is a less demanding task than load carrying, the code permits the use of utility-grade lumber.

R802.4 Allowable ceiling joist spans. Spans for ceiling joists shall be in accordance with Tables R802.4(1) and R802.4(2). For other grades and species and for other loading conditions, refer to the AWC STJR.

❖ Tables R802.4(1) and R802.4(2) list allowable ceiling joist spans for common lumber sizes, species and grades based on spacing and design loads. The span tables have been updated from the 2012 *International Residential Code*® (IRC®) to account for changes in design values for Douglas fir-larch, Hem-fir and Southern pine (see the commentary to Section R802.5). The tables provide ceiling joist spans for live loads of 10 and 20 pounds per square foot (psf) (479 Pa and 958 Pa) and dead loads of 5 and 10 psf (239 and 479 Pa). The weight of the ceiling joist is included in the 5 or 10 psf (239 or 479 Pa) dead load.

The dead load of the combined roof and ceiling assemblies must not exceed 15 psf (718.2 Pa) for townhouses in Seismic Design Category C and all structures in Seismic Design Categories D_0, D_1 and D_2. Section R301.2.2.2.1 provides an exception for exceeding the 15 psf restriction (see commentary, Section R301.2.2.2.1).

R802.5 Allowable rafter spans. Spans for rafters shall be in accordance with Tables R802.5.1(1) through R802.5.1(8). For other grades and species and for other loading conditions, refer to the AWC STJR. The span of each rafter shall be measured along the horizontal projection of the rafter.

❖ Tables R802.5.1(1) through R802.5.1(8) list allowable rafter spans for common lumber sizes, species and grades based on spacing and design loads. The span tables have been updated from the 2012 IRC to account for changes in design values for Douglas fir-larch, Hem-fir and Southern pine. The allowable spans for some grades of Southern pine have been reduced from that in the 2012 IRC. The allowable spans for some grades of Douglas fir-larch and Hem-fir have been increased from that in the 2012 IRC.

The reduced design values for visually-graded Southern pine lumber were approved by the American Lumber Standards Committee (ALSC) in 2013. Values are a result of 2 years of testing current lumber available on the market to identify what changes had occurred in the strength of the Southern pine lumber inventory.

Although the increased design values for Douglas fir-larch and Hem-fir were approved in the 1990s, the values were never incorporated into the *International Building Code*® (IBC®) and IRC allowable span tables. Recent testing of current stock has validated the 1990s values.

The 2015 IRC span tables are now in agreement with the wood standards' span tables with the revisions for Southern pine, Douglas fir-larch and Hemlock fir. The new design values apply only to new construction. The integrity of existing structures designed and built using design values meeting the applicable building codes in effect at the time of permitting does not change

Tables R802.5.1(3) through R802.5.1(8) are based on ground snow loads of 30 psf (1.44 kPa), 50 psf (2.39 kPa) and 70 psf (3.35 kPa). The snow loads are based on ASCE 7-95 criteria as follows:

a. for balanced condition:

$p_s = C_s \times p_f$

where $p_f = 0.7\ C_e \times C_t \times C_s \times p_g$

$C_s = 1.0$

$C_e = 1.0$

$C_t = 1.1$

Thus $p_s = 0.77 \times p_g$

b. for unbalanced condition:

$p_s = 1.3\ (C_s p_f)\ / C_e$

where $p_f = 0.7\ C_e \times C_t \times p_g$

$C_s = 1.0$

$C_e = 1.0$

$C_t = 1.1$

Thus $p_s = 1.00 \times p_g$

The unbalanced condition controls. By inspection, the unbalanced condition is equal to the ground snow load.

Tables R802.5.1(1) through R802.5.1(8) provide rafter spans for dead loads of 10 and 20 psf (479 Pa and 958 Pa). The weight of the rafter is included in the 10 or 20 psf (479 Pa or 958 Pa) dead load.

The dead load of the combined roof and ceiling assemblies must not exceed 15 psf (718 Pa) for townhouses in Seismic Design Category C and all structures in Seismic Design Categories D_0, D_1 and D_2. Section R301.2.2.2.1 provides an exception for exceeding the 15 psf (718 Pa) restriction (see commentary, Section R301.2.2.2.1).

Example 1 in the commentary for Table R802.5.1(1) explains the allowable spans for clear-span roof rafters using the code tables. As illustrated in Figure R802.5.1, the horizontal projection of the rafter must be used for the span length rather than using the true length of the rafter measured along the slope of the roof.

INTERNATIONAL CODE COUNCIL®
Copyright © 2015 ICC. ALL RIGHTS RESERVED. Accessed by David Dammon on Jun 21, 2017 12:30:52 PM pursuant to License Agreement with ICC. No further reproduction or distribution authorized. ANY UNAUTHORIZED REPRODUCTION OR DISTRIBUTION IS A VIOLATION OF THE FEDERAL COPYRIGHT ACT AND THE LICENSE AGREEMENT, AND SUBJECT TO CIVIL AND CRIMINAL PENALTIES THEREUNDER.

TABLE R802.4(1)
CEILING JOIST SPANS FOR COMMON LUMBER SPECIES
(Uninhabitable attics without storage, live load = 10 psf, L/Δ = 240)

CEILING JOIST SPACING (inches)	SPECIES AND GRADE		DEAD LOAD = 5 psf			
			2 × 4	2 × 6	2 × 8	2 × 10
			Maximum ceiling joist spans			
			(feet - inches)	(feet - inches)	(feet - inches)	(feet - inches)
12	Douglas fir-larch	SS	13-2	20-8	Note a	Note a
	Douglas fir-larch	#1	12-8	19-11	Note a	Note a
	Douglas fir-larch	#2	12-5	19-6	25-8	Note a
	Douglas fir-larch	#3	11-1	16-3	20-7	25-2
	Hem-fir	SS	12-5	19-6	25-8	Note a
	Hem-fir	#1	12-2	19-1	25-2	Note a
	Hem-fir	#2	11-7	18-2	24-0	Note a
	Hem-fir	#3	10-10	15-10	20-1	24-6
	Southern pine	SS	12-11	20-3	Note a	Note a
	Southern pine	#1	12-5	19-6	25-8	Note a
	Southern pine	#2	11-10	18-8	24-7	Note a
	Southern pine	#3	10-1	14-11	18-9	22-9
	Spruce-pine-fir	SS	12-2	19-1	25-2	Note a
	Spruce-pine-fir	#1	11-10	18-8	24-7	Note a
	Spruce-pine-fir	#2	11-10	18-8	24-7	Note a
	Spruce-pine-fir	#3	10-10	15-10	20-1	24-6
16	Douglas fir-larch	SS	11-11	18-9	24-8	Note a
	Douglas fir-larch	#1	11-6	18-1	23-10	Note a
	Douglas fir-larch	#2	11-3	17-8	23-4	Note a
	Douglas fir-larch	#3	9-7	14-1	17-10	21-9
	Hem-fir	SS	11-3	17-8	23-4	Note a
	Hem-fir	#1	11-0	17-4	22-10	Note a
	Hem-fir	#2	10-6	16-6	21-9	Note a
	Hem-fir	#3	9-5	13-9	17-5	21-3
	Southern pine	SS	11-9	18-5	24-3	Note a
	Southern pine	#1	11-3	17-8	23-10	Note a
	Southern pine	#2	10-9	16-11	21-7	25-7
	Southern pine	#3	8-9	12-11	16-3	19-9
	Spruce-pine-fir	SS	11-0	17-4	22-10	Note a
	Spruce-pine-fir	#1	10-9	16-11	22-4	Note a
	Spruce-pine-fir	#2	10-9	16-11	22-4	Note a
	Spruce-pine-fir	#3	9-5	13-9	17-5	21-3

(continued)

INTERNATIONAL CODE COUNCIL®
Copyright © 2015 ICC. ALL RIGHTS RESERVED. Accessed by David Dammon on Jun 21, 2017 12:30:52 PM pursuant to License Agreement with ICC. No further reproduction or distribution authorized. ANY UNAUTHORIZED REPRODUCTION OR DISTRIBUTION IS A VIOLATION OF THE FEDERAL COPYRIGHT ACT AND THE LICENSE AGREEMENT, AND SUBJECT TO CIVIL AND CRIMINAL PENALTIES THEREUNDER.

TABLE R802.4(1)—continued
CEILING JOIST SPANS FOR COMMON LUMBER SPECIES
(Uninhabitable attics without storage, live load = 10 psf, L/Δ = 240)

CEILING JOIST SPACING (inches)	SPECIES AND GRADE		DEAD LOAD = 5 psf			
			2 × 4	2 × 6	2 × 8	2 × 10
			Maximum ceiling joist spans			
			(feet - inches)	(feet - inches)	(feet - inches)	(feet - inches)
19.2	Douglas fir-larch	SS	11-3	17-8	23-3	Note a
	Douglas fir-larch	#1	10-10	17-0	22-5	Note a
	Douglas fir-larch	#2	10-7	16-8	21-4	26-0
	Douglas fir-larch	#3	8-9	12-10	16-3	19-10
	Hem-fir	SS	10-7	16-8	21-11	Note a
	Hem-fir	#1	10-4	16-4	21-6	Note a
	Hem-fir	#2	9-11	15-7	20-6	25-3
	Hem-fir	#3	8-7	12-6	15-10	19-5
	Southern pine	SS	11-0	17-4	22-10	Note a
	Southern pine	#1	10-7	16-8	22-0	Note a
	Southern pine	#2	10-2	15-7	19-8	23-5
	Southern pine	#3	8-0	11-9	14-10	18-0
	Spruce-pine-fir	SS	10-4	16-4	21-6	Note a
	Spruce-pine-fir	#1	10-2	15-11	21-0	25-8
	Spruce-pine-fir	#2	10-2	15-11	21-0	25-8
	Spruce-pine-fir	#3	8-7	12-6	15-10	19-5
24	Douglas fir-larch	SS	10-5	16-4	21-7	Note a
	Douglas fir-larch	#1	10-0	15-9	20-1	24-6
	Douglas fir-larch	#2	9-10	15-0	19-1	23-3
	Douglas fir-larch	#3	7-10	11-6	14-7	17-9
	Hem-fir	SS	9-10	15-6	20-5	Note a
	Hem-fir	#1	9-8	15-2	19-10	24-3
	Hem-fir	#2	9-2	14-5	18-6	22-7
	Hem-fir	#3	7-8	11-2	14-2	17-4
	Southern pine	SS	10-3	16-1	21-2	Note a
	Southern pine	#1	9-10	15-6	20-5	24-0
	Southern pine	#2	9-3	13-11	17-7	20-11
	Southern pine	#3	7-2	10-6	13-3	16-1
	Spruce-pine-fir	SS	9-8	15-2	19-11	25-5
	Spruce-pine-fir	#1	9-5	14-9	18-9	22-11
	Spruce-pine-fir	#2	9-5	14-9	18-9	22-11
	Spruce-pine-fir	#3	7-8	11-2	14-2	17-4

Check sources for availability of lumber in lengths greater than 20 feet.
For SI: 1 inch = 25.4 mm, 1 foot = 304.8 mm, 1 pound per square foot = 0.0479 kPa.
a. Span exceeds 26 feet in length.

INTERNATIONAL CODE COUNCIL®
Copyright © 2015 ICC. ALL RIGHTS RESERVED. Accessed by David Dammon on Jun 21, 2017 12:30:52 PM pursuant to License Agreement with ICC. No further reproduction or distribution authorized. ANY UNAUTHORIZED REPRODUCTION OR DISTRIBUTION IS A VIOLATION OF THE FEDERAL COPYRIGHT ACT AND THE LICENSE AGREEMENT, AND SUBJECT TO CIVIL AND CRIMINAL PENALTIES THEREUNDER.

TABLE R802.4(2)
CEILING JOIST SPANS FOR COMMON LUMBER SPECIES
(Uninhabitable attics with limited storage, live load = 20 psf, L/Δ = 240)

CEILING JOIST SPACING (inches)	SPECIES AND GRADE		DEAD LOAD = 10 psf			
			2 × 4	2 × 6	2 × 8	2 × 10
			Maximum ceiling joist spans			
			(feet - inches)	(feet - inches)	(feet - inches)	(feet - inches)
12	Douglas fir-larch	SS	10-5	16-4	21-7	Note a
	Douglas fir-larch	#1	10-0	15-9	20-1	24-6
	Douglas fir-larch	#2	9-10	15-0	19-1	23-3
	Douglas fir-larch	#3	7-10	11-6	14-7	17-9
	Hem-fir	SS	9-10	15-6	20-5	Note a
	Hem-fir	#1	9-8	15-2	19-10	24-3
	Hem-fir	#2	9-2	14-5	18-6	22-7
	Hem-fir	#3	7-8	11-2	14-2	17-4
	Southern pine	SS	10-3	16-1	21-2	Note a
	Southern pine	#1	9-10	15-6	20-5	24-0
	Southern pine	#2	9-3	13-11	17-7	20-11
	Southern pine	#3	7-2	10-6	13-3	16-1
	Spruce-pine-fir	SS	9-8	15-2	19-11	25-5
	Spruce-pine-fir	#1	9-5	14-9	18-9	22-11
	Spruce-pine-fir	#2	9-5	14-9	18-9	22-11
	Spruce-pine-fir	#3	7-8	11-2	14-2	17-4
16	Douglas fir-larch	SS	9-6	14-11	19-7	25-0
	Douglas fir-larch	#1	9-1	13-9	17-5	21-3
	Douglas fir-larch	#2	8-11	13-0	16-6	20-2
	Douglas fir-larch	#3	6-10	9-11	12-7	15-5
	Hem-fir	SS	8-11	14-1	18-6	23-8
	Hem-fir	#1	8-9	13-7	17-2	21-0
	Hem-fir	#2	8-4	12-8	16-0	19-7
	Hem-fir	#3	6-8	9-8	12-4	15-0
	Southern pine	SS	9-4	14-7	19-3	24-7
	Southern pine	#1	8-11	14-0	17-9	20-9
	Southern pine	#2	8-0	12-0	15-3	18-1
	Southern pine	#3	6-2	9-2	11-6	14-0
	Spruce-pine-fir	SS	8-9	13-9	18-1	23-1
	Spruce-pine-fir	#1	8-7	12-10	16-3	19-10
	Spruce-pine-fir	#2	8-7	12-10	16-3	19-10
	Spruce-pine-fir	#3	6-8	9-8	12-4	15-0

(continued)

INTERNATIONAL CODE COUNCIL®
Copyright © 2015 ICC. ALL RIGHTS RESERVED. Accessed by David Dammon on Jun 21, 2017 12:30:52 PM pursuant to License Agreement with ICC. No further reproduction or distribution authorized. ANY UNAUTHORIZED REPRODUCTION OR DISTRIBUTION IS A VIOLATION OF THE FEDERAL COPYRIGHT ACT AND THE LICENSE AGREEMENT, AND SUBJECT TO CIVIL AND CRIMINAL PENALTIES THEREUNDER.

TABLE R802.4(2)—continued
CEILING JOIST SPANS FOR COMMON LUMBER SPECIES
(Uninhabitable attics with limited storage, live load = 20 psf, L/Δ = 240)

CEILING JOIST SPACING (inches)	SPECIES AND GRADE		DEAD LOAD = 10 psf			
			2 × 4	2 × 6	2 × 8	2 × 10
			Maximum ceiling joist spans			
			(feet - inches)	(feet - inches)	(feet - inches)	(feet - inches)
19.2	Douglas fir-larch	SS	8-11	14-0	18-5	23-7
	Douglas fir-larch	#1	8-7	12-6	15-10	19-5
	Douglas fir-larch	#2	8-2	11-11	15-1	18-5
	Douglas fir-larch	#3	6-2	9-1	11-6	14-1
	Hem-fir	SS	8-5	13-3	17-5	22-3
	Hem-fir	#1	8-3	12-4	15-8	19-2
	Hem-fir	#2	7-10	11-7	14-8	17-10
	Hem-fir	#3	6-1	8-10	11-3	13-8
	Southern pine	SS	8-9	13-9	18-2	23-1
	Southern pine	#1	8-5	12-9	16-2	18-11
	Southern pine	#2	7-4	11-0	13-11	16-6
	Southern pine	#3	5-8	8-4	10-6	12-9
	Spruce-pine-fir	SS	8-3	12-11	17-1	21-8
	Spruce-pine-fir	#1	8-0	11-9	14-10	18-2
	Spruce-pine-fir	#2	8-0	11-9	14-10	18-2
	Spruce-pine-fir	#3	6-1	8-10	11-3	13-8
24	Douglas fir-larch	SS	8-3	13-0	17-2	21-3
	Douglas fir-larch	#1	7-8	11-2	14-2	17-4
	Douglas fir-larch	#2	7-3	10-8	13-6	16-5
	Douglas fir-larch	#3	5-7	8-1	10-3	12-7
	Hem-fir	SS	7-10	12-3	16-2	20-6
	Hem-fir	#1	7-7	11-1	14-0	17-1
	Hem-fir	#2	7-1	10-4	13-1	16-0
	Hem-fir	#3	5-5	7-11	10-0	12-3
	Southern pine	SS	8-1	12-9	16-10	21-6
	Southern pine	#1	7-8	11-5	14-6	16-11
	Southern pine	#2	6-7	9-10	12-6	14-9
	Southern pine	#3	5-1	7-5	9-5	11-5
	Spruce-pine-fir	SS	7-8	12-0	15-10	19-5
	Spruce-pine-fir	#1	7-2	10-6	13-3	16-3
	Spruce-pine-fir	#2	7-2	10-6	13-3	16-3
	Spruce-pine-fir	#3	5-5	7-11	10-0	12-3

Check sources for availability of lumber in lengths greater than 20 feet.

For SI: 1 inch = 25.4 mm, 1 foot = 304.8 mm, 1 pound per square foot = 0.0479 kPa.

a. Span exceeds 26 feet in length.

INTERNATIONAL CODE COUNCIL®
Copyright © 2015 ICC. ALL RIGHTS RESERVED. Accessed by David Dammon on Jun 21, 2017 12:30:52 PM pursuant to License Agreement with ICC. No further reproduction or distribution authorized. ANY UNAUTHORIZED REPRODUCTION OR DISTRIBUTION IS A VIOLATION OF THE FEDERAL COPYRIGHT ACT AND THE LICENSE AGREEMENT, AND SUBJECT TO CIVIL AND CRIMINAL PENALTIES THEREUNDER.

R802.5.1 Purlins. Installation of purlins to reduce the span of rafters is permitted as shown in Figure R802.5.1. Purlins shall be sized not less than the required size of the rafters that they support. Purlins shall be continuous and shall be supported by 2-inch by 4-inch (51 mm by 102 mm) braces installed to bearing walls at a slope not less than 45 degrees (0.79 rad) from the horizontal. The braces shall be spaced not more than 4 feet (1219 mm) on center and the unbraced length of braces shall not exceed 8 feet (2438 mm).

❖ This section contains specific instructions for the installation of purlins that will provide intermediate support for the rafters and thus reduce the rafter span. The purlins must be at least the same size as the rafters that they support. The rafters must bear on the purlin to provide proper support for the rafters. See Commentary Figure R802.5.1(1) for an example of typical installation of purlins. Example 2 in the commentary for Table R802.5.1(1) shows the effect on rafter design and roof purlin requirements when braces to interior bearing walls support the roof purlins.

TABLE R802.5.1(1). See page 8-15.

❖ Adjustment factors, listed in Note a of rafter span Tables R802.5(1-8), are limited to cases where the ceiling joists or rafter ties are in the lower third of the attic space. When the ceiling joist or rafter ties are located higher in the attic space, lateral deflection of the rafter below the rafter ties can become excessive and require additional engineering analysis. The following examples assume that the ceiling joists are located at the top plate.

Example 1:

You wish to design a rafter system using Douglas fir-larch #2 lumber for a 20 psf (958 Pa) live load, with rafters spaced 24 inches (610 mm) on center and having a horizontal projection of the rafter span of 14 feet, 6 inches (4420 mm). The rafters do not support a ceiling, and the roof slope is 3 units vertical in 12 units horizontal. Assume the roof dead load is 10 psf (479 Pa).

Solution:

The object is to locate a tabulated span value of 14 feet, 6 inches (4420 mm) or more. Going to Table R802.5.1(1) under the portion headed "DEAD LOAD = 10 psf," note that 2-inch by 8-inch (51 mm by 208 mm) rafters at 24 inches (610 mm) on center will span 15 feet, 1 inch (4521 mm).

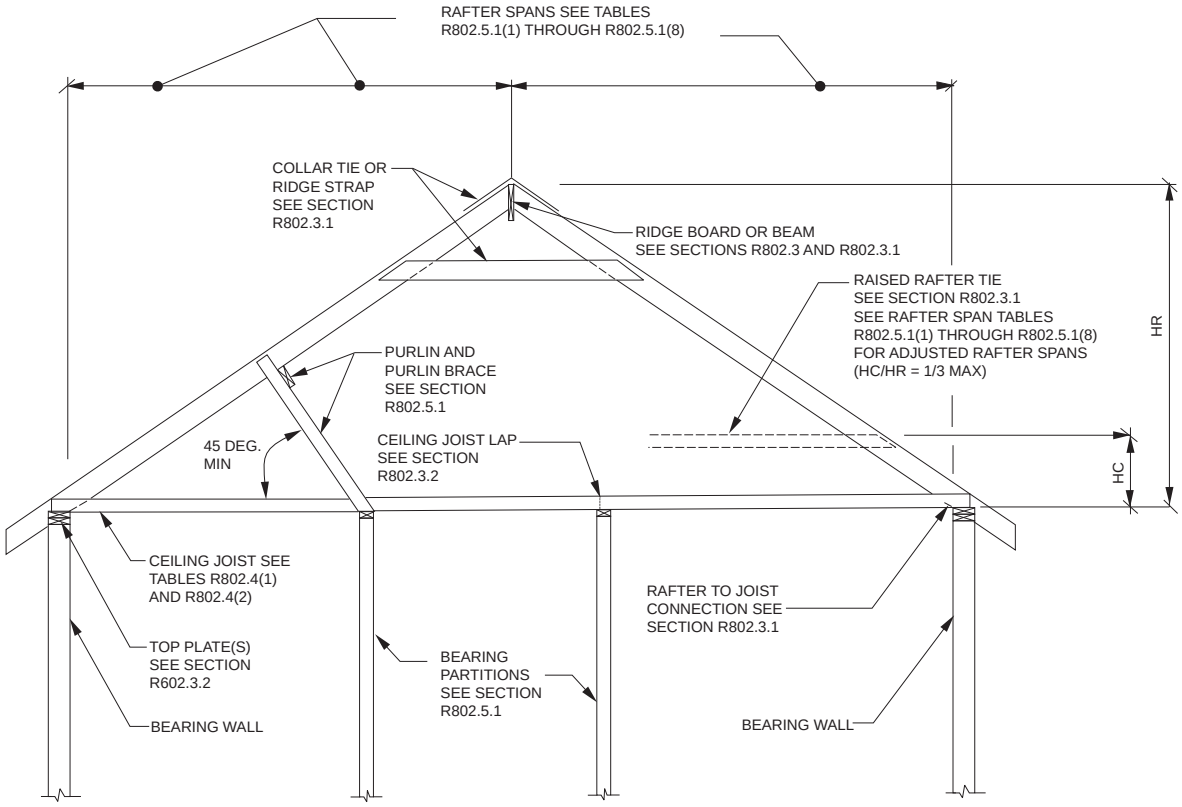

For SI: 1 inch = 25.4 mm, 1 foot = 305 mm, 1 degree = 0.018 rad.

Note: Where ceiling joists run perpendicular to the rafter, rafter ties shall be installed in accordance with **Section** R802.3.1.

H_C = Height of ceiling joists or rafter ties measured vertically above the top of rafter support walls.

H_R = Height of roof ridge measured vertically above the top of the rafter support walls.

FIGURE R802.5.1
BRACED RAFTER CONSTRUCTION

INTERNATIONAL CODE COUNCIL®
Copyright © 2015 ICC. ALL RIGHTS RESERVED. Accessed by David Dammon on Jun 21, 2017 12:30:52 PM pursuant to License Agreement with ICC. No further reproduction or distribution authorized. ANY UNAUTHORIZED REPRODUCTION OR DISTRIBUTION IS A VIOLATION OF THE FEDERAL COPYRIGHT ACT AND THE LICENSE AGREEMENT, AND SUBJECT TO CIVIL AND CRIMINAL PENALTIES THEREUNDER.

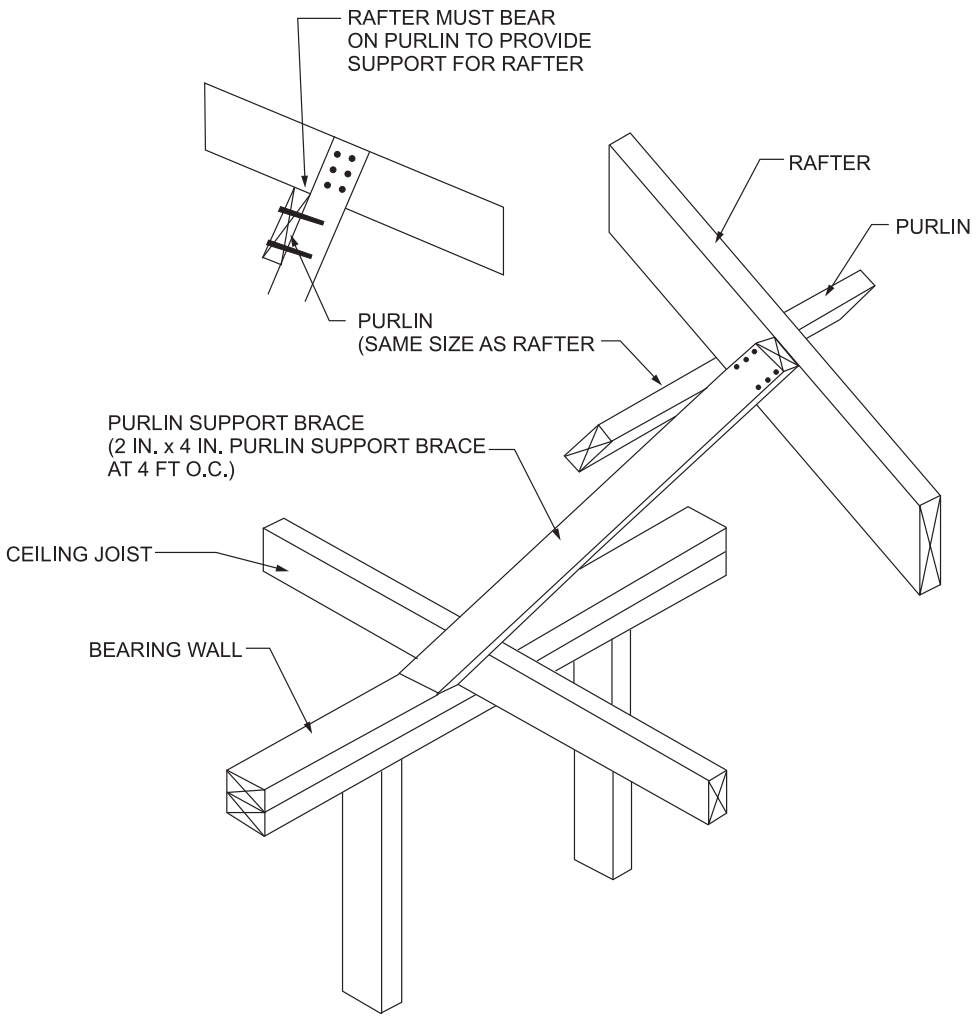

Figure R802.5.1(1)
EXAMPLE OF PURLIN INSTALLATION

Example 2:

To find a substitute for the 2-inch by 8-inch (51 mm by 208 mm) rafters of Example 1, determine the required rafter size for a condition that uses a purlin and 2-inch by 4-inch (51 mm by 102 mm) braces (located at mid span of the rafters) at 4 feet (1219 mm) on center as depicted in Figure R802.5.1. Assume the same loads, rafter spacing, and 14-foot, 6-inch (4420 mm) horizontal rafter projection. Between the exterior wall and ridge, use Hem-fir #3 lumber.

Solution:

The rafter span, identified in Figure R802.5.1, is reduced to 7 feet, 3 inches (2210 mm) by adding the purlin at mid span. In Table R802.5.1(1), 2-inch by 6-inch (51 mm by 152 mm) rafters at 24 inches (610 mm) on center will span 8 feet, 10 inches (2692 mm).

R802.6 Bearing. The ends of each rafter or ceiling joist shall have not less than $1^1/_2$ inches (38 mm) of bearing on wood or metal and not less than 3 inches (76 mm) on masonry or concrete. The bearing on masonry or concrete shall be direct, or a sill plate of 2-inch (51 mm) minimum nominal thickness shall be provided under the rafter or ceiling joist. The sill plate shall provide a minimum nominal bearing area of 48 square inches (30 865 mm^2).

❖ The requirements for roof rafters and ceiling joists bearing on wood, metal and masonry are similar to the requirements for floor joists. See the commentary to Section R502.6 relative to the bearing requirements for wood, metal and masonry.

INTERNATIONAL CODE COUNCIL®
Copyright © 2015 ICC. ALL RIGHTS RESERVED. Accessed by David Dammon on Jun 21, 2017 12:30:52 PM pursuant to License Agreement with ICC. No further reproduction or distribution authorized. ANY UNAUTHORIZED REPRODUCTION OR DISTRIBUTION IS A VIOLATION OF THE FEDERAL COPYRIGHT ACT AND THE LICENSE AGREEMENT, AND SUBJECT TO CIVIL AND CRIMINAL PENALTIES THEREUNDER.

TABLE R802.5.1(1)
RAFTER SPANS FOR COMMON LUMBER SPECIES
(Roof live load = 20 psf, ceiling not attached to rafters, L/Δ = 180)

RAFTER SPACING (inches)	SPECIES AND GRADE		DEAD LOAD = 10 psf					DEAD LOAD = 20 psf				
			2 × 4	2 × 6	2 × 8	2 × 10	2 × 12	2 × 4	2 × 6	2 × 8	2 × 10	2 × 12
			Maximum rafter spans[a]									
			(feet - inches)	(feet - inches)	(feet - inches)	(feet - inches)	(feet - inches)	(feet - inches)	(feet - inches)	(feet - inches)	(feet - inches)	(feet - inches)
12	Douglas fir-larch	SS	11-6	18-0	23-9	Note b	Note b	11-6	18-0	23-9	Note b	Note b
	Douglas fir-larch	#1	11-1	17-4	22-5	Note b	Note b	10-6	15-4	19-5	23-9	Note b
	Douglas fir-larch	#2	10-10	16-10	21-4	26-0	Note b	10-0	14-7	18-5	22-6	26-0
	Douglas fir-larch	#3	8-9	12-10	16-3	19-10	23-0	7-7	11-1	14-1	17-2	19-11
	Hem-fir	SS	10-10	17-0	22-5	Note b	Note b	10-10	17-0	22-5	Note b	Note b
	Hem-fir	#1	10 -7	16-8	22-0	Note b	Note b	10-4	15-2	19-2	23-5	Note b
	Hem-fir	#2	10-1	15-11	20-8	25-3	Note b	9-8	14-2	17-11	21-11	25-5
	Hem-fir	#3	8-7	12-6	15-10	19-5	22-6	7-5	10-10	13-9	16-9	19-6
	Southern pine	SS	11-3	17-8	23-4	Note b	Note b	11-3	17-8	23-4	Note b	Note b
	Southern pine	#1	10-10	17-0	22-5	Note b	Note b	10-6	15-8	19-10	23-2	Note b
	Southern pine	#2	10-4	15-7	19-8	23-5	Note b	9-0	13-6	17-1	20-3	23-10
	Southern pine	#3	8-0	11-9	14-10	18-0	21-4	6-11	10-2	12-10	15-7	18-6
	Spruce-pine-fir	SS	10-7	16-8	21-11	Note b	Note b	10-7	16-8	21-9	Note b	Note b
	Spruce-pine-fir	#1	10-4	16-3	21-0	25-8	Note b	9-10	14-4	18-2	22-3	25-9
	Spruce-pine-fir	#2	10-4	16-3	21-0	25-8	Note b	9-10	14-4	18-2	22-3	25-9
	Spruce-pine-fir	#3	8-7	12-6	15-10	19-5	22-6	7-5	10-10	13-9	16-9	19-6
16	Douglas fir-larch	SS	10-5	16-4	21-7	Note b	Note b	10-5	16-3	20-7	25-2	Note b
	Douglas fir-larch	#1	10-0	15-4	19-5	23-9	Note b	9-1	13-3	16-10	20-7	23-10
	Douglas fir-larch	#2	9-10	14-7	18-5	22-6	26-0	8-7	12-7	16-0	19-6	22-7
	Douglas fir-larch	#3	7-7	11-1	14-1	17-2	19-11	6-7	9-8	12-12	14-11	17-3
	Hem-fir	SS	9-10	15-6	20-5	Note b	Note b	9-10	15-6	19-11	24-4	Note b
	Hem-fir	#1	9-8	15-2	19-2	23-5	Note b	9-0	13-1	16-7	20-4	23-7
	Hem-fir	#2	9-2	14-2	17-11	21-11	25-5	8-5	12-3	15-6	18-11	22-0
	Hem-fir	#3	7-5	10-10	13-9	16-9	19-6	6-5	9-5	11-11	14-6	16-10
	Southern pine	SS	10-3	16-1	21-2	Note b	Note b	10-3	16-1	21-2	25-7	Note b
	Southern pine	#1	9-10	15-6	19-10	23-2	Note b	9-1	13-7	17-2	20-1	23-10
	Southern pine	#2	9-0	13-6	17-1	20-3	23-10	7-9	11-8	14-9	17-6	20-8
	Southern pine	#3	6-11	10-2	12-10	15-7	18-6	6-0	8-10	11-2	13-6	16-0
	Spruce-pine-fir	SS	9-8	15-2	19-11	25-5	Note b	9-8	14-10	18-10	23-0	Note b
	Spruce-pine-fir	#1	9-5	14-4	18-2	22-3	25-9	8-6	12-5	15-9	19-3	22-4
	Spruce-pine-fir	#2	9-5	14-4	18-2	22-3	25-9	8-6	12-5	15-9	19-3	22-4
	Spruce-pine-fir	#3	7-5	10-10	13-9	16-9	19-6	6-5	9-5	11-11	14-6	16-10
19.2	Douglas fir-larch	SS	9-10	15-5	20-4	25-11	Note b	9-10	14-10	18-10	23-0	Note b
	Douglas fir-larch	#1	9-5	14-0	17-9	21-8	25-2	8-4	12-2	15-4	18-9	21-9
	Douglas fir-larch	#2	9-1	13-3	16-10	20-7	23-10	7-10	11-6	14-7	17-10	20-8
	Douglas fir-larch	#3	6-11	10-2	12-10	15-8	18-3	6-0	8-9	11-2	12-7	15-9
	Hem-fir	SS	9-3	14-7	19-2	24-6	Note b	9-3	14-4	18-2	22-3	25-9
	Hem-fir	#1	9-1	13-10	17-6	21-5	24-10	8-2	12-0	15-2	18-6	21-6
	Hem-fir	#2	8-8	12-11	16-4	20-0	23-2	7-8	11-2	14-2	17-4	20-1
	Hem-fir	#3	6-9	9-11	12-7	15-4	17-9	5-10	8-7	10-10	13-3	15-5
	Southern pine	SS	9-8	15-2	19-11	25-5	Note b	9-8	15-2	19-7	23-4	Note b
	Southern pine	#1	9-3	14-3	18-1	21-2	25-2	8-4	12-4	15-8	18-4	21-9
	Southern pine	#2	8-2	12-3	15-7	18-6	21-9	7-1	10-8	13-6	16-0	18-10
	Southern pine	#3	6-4	9-4	11-9	14-3	16-10	5-6	8-1	10-2	12-4	14-7
	Spruce-pine-fir	SS	9-1	14-3	18-9	23-11	Note b	9-1	13-7	17-2	21-0	24-4
	Spruce-pine-fir	#1	8-10	13-1	16-7	20-3	23-6	7-9	11-4	14-4	17-7	20-4
	Spruce-pine-fir	#2	8-10	13-1	16-7	20-3	23-6	7-9	11-4	14-4	17-7	20-4
	Spruce-pine-fir	#3	6-9	9-11	12-7	15-4	17-9	5-10	8-7	10-10	13-3	15-5

(continued)

INTERNATIONAL CODE COUNCIL®
Copyright © 2015 ICC. ALL RIGHTS RESERVED. Accessed by David Dammon on Jun 21, 2017 12:30:52 PM pursuant to License Agreement with ICC. No further reproduction or distribution authorized. ANY UNAUTHORIZED REPRODUCTION OR DISTRIBUTION IS A VIOLATION OF THE FEDERAL COPYRIGHT ACT AND THE LICENSE AGREEMENT, AND SUBJECT TO CIVIL AND CRIMINAL PENALTIES THEREUNDER.

TABLE R802.5.1(1)—continued
RAFTER SPANS FOR COMMON LUMBER SPECIES
(Roof live load = 20 psf, ceiling not attached to rafters, L/Δ = 180)

RAFTER SPACING (inches)	SPECIES AND GRADE		DEAD LOAD = 10 psf					DEAD LOAD = 20 psf				
			2 × 4	2 × 6	2 × 8	2 × 10	2 × 12	2 × 4	2 × 6	2 × 8	2 × 10	2 × 12
			Maximum rafter spans[a]									
			(feet - inches)	(feet - inches)	(feet - inches)	(feet - inches)	(feet - inches)	(feet - inches)	(feet - inches)	(feet - inches)	(feet - inches)	(feet - inches)
24	Douglas fir-larch	SS	9-1	14-4	18-10	23-9	Note b	9-1	13-3	16-10	20-7	23-10
	Douglas fir-larch	#1	8-7	12-6	15-10	19-5	22-6	7-5	10-10	13-9	16-9	19-6
	Douglas fir-larch	#2	8-2	11-11	15-1	18-5	21-4	7-0	10-4	13-0	15-11	18-6
	Douglas fir-larch	#3	6-2	9-1	11-6	14-1	16-3	5-4	7-10	10-0	12-2	14-1
	Hem-fir	SS	8-7	13-6	17-10	22-9	Note b	8-7	12-10	16-3	19-10	23-0
	Hem-fir	#1	8-5	12-4	15-8	19-2	22-2	7-4	10-9	13-7	16-7	19-3
	Hem-fir	#2	7-11	11-7	14-8	17-10	20-9	6-10	10-0	12-8	15-6	17-11
	Hem-fir	#3	6-1	8-10	11-3	13-8	15-11	5-3	7-8	9-9	11-10	13-9
	Southern pine	SS	8-11	14-1	18-6	23-8	Note b	8-11	13-10	17-6	20-10	24-8
	Southern pine	#1	8-7	12-9	16-2	18-11	22-6	7-5	11-1	14-0	16-5	19-6
	Southern pine	#2	7-4	11-0	10-11	16-6	19-6	6-4	9-6	12-1	14-4	16-10
	Southern pine	#3	5-8	8-4	10-6	12-9	15-1	4-11	7-3	9-1	11-0	13-1
	Spruce-pine-fir	SS	8-5	13-3	17-5	21-8	25-2	8-4	12-2	15-4	18-9	21-9
	Spruce-pine-fir	#1	8-0	11-9	14-10	18-2	21-0	6-11	10-2	12-10	15-8	18-3
	Spruce-pine-fir	#2	8-0	11-9	14-10	18-2	21-0	6-11	10-2	12-10	15-8	18-3
	Spruce-pine-fir	#3	6-1	8-10	11-3	13-8	15-11	5-3	7-8	9-9	11-10	13-9

Check sources for availability of lumber in lengths greater than 20 feet.

For SI: 1 inch = 25.4 mm, 1 foot = 304.8 mm, 1 pound per square foot = 0.0479 kPa.

a. The tabulated rafter spans assume that ceiling joists are located at the bottom of the attic space or that some other method of resisting the outward push of the rafters on the bearing walls, such as rafter ties, is provided at that location. Where ceiling joists or rafter ties are located higher in the attic space, the rafter spans shall be multiplied by the following factors:

H_C/H_R	Rafter Span Adjustment Factor
1/3	0.67
1/4	0.76
1/5	0.83
1/6	0.90
1/7.5 or less	1.00

where:

H_C = Height of ceiling joists or rafter ties measured vertically above the top of the rafter support walls.

H_R = Height of roof ridge measured vertically above the top of the rafter support walls.

b. Span exceeds 26 feet in length.

INTERNATIONAL CODE COUNCIL®
Copyright © 2015 ICC. ALL RIGHTS RESERVED. Accessed by David Dammon on Jun 21, 2017 12:30:52 PM pursuant to License Agreement with ICC. No further reproduction or distribution authorized. ANY UNAUTHORIZED REPRODUCTION OR DISTRIBUTION IS A VIOLATION OF THE FEDERAL COPYRIGHT ACT AND THE LICENSE AGREEMENT, AND SUBJECT TO CIVIL AND CRIMINAL PENALTIES THEREUNDER.

TABLE R802.5.1(2)
RAFTER SPANS FOR COMMON LUMBER SPECIES
(Roof live load = 20 psf, ceiling attached to rafters, L/Δ = 240)

RAFTER SPACING (inches)	SPECIES AND GRADE		DEAD LOAD = 10 psf					DEAD LOAD = 20 psf				
			2 × 4	2 × 6	2 × 8	2 × 10	2 × 12	2 × 4	2 × 6	2 × 8	2 × 10	2 × 12
			Maximum rafter spans[a]									
			(feet - inches)	(feet - inches)	(feet - inches)	(feet - inches)	(feet - inches)	(feet - inches)	(feet - inches)	(feet - inches)	(feet - inches)	(feet - inches)
12	Douglas fir-larch	SS	10-5	16-4	21-7	Note b	Note b	10-5	16-4	21-7	Note b	Note b
	Douglas fir-larch	#1	10-0	15-9	20-10	Note b	Note b	10-0	15-4	19-5	23-9	Note b
	Douglas fir-larch	#2	9-10	15-6	20-5	26-0	Note b	9-10	14-7	18-5	22-6	26-0
	Douglas fir-larch	#3	8-9	12-10	16-3	19-10	23-0	7-7	11-1	14-1	17-2	19-11
	Hem-fir	SS	9-10	15-6	20-5	Note b	Note b	9-10	15-6	20-5	Note b	Note b
	Hem-fir	#1	9-8	15-2	19-11	25-5	Note b	9-8	15-2	19-2	23-5	Note b
	Hem-fir	#2	9-2	14-5	19-0	24-3	Note b	9-2	14-2	17-11	21-11	25-5
	Hem-fir	#3	8-7	12-6	15-10	19-5	22-6	7-5	10-10	13-9	16-9	19-6
	Southern pine	SS	10-3	16-1	21-2	Note b	Note b	10-3	16-1	21-2	Note b	Note b
	Southern pine	#1	9-10	15-6	20-5	Note b	Note b	9-10	15-6	19-10	23-2	Note b
	Southern pine	#2	9-5	14-9	19-6	23-5	Note b	9-0	13-6	17-1	20-3	23-10
	Southern pine	#3	8-0	11-9	14-10	18-0	21-4	6-11	10-2	12-10	15-7	18-6
	Spruce-pine-fir	SS	9-8	15-2	19-11	25-5	Note b	9-8	15-2	19-11	25-5	Note b
	Spruce-pine-fir	#1	9-5	14-9	19-6	24-10	Note b	9-5	14-4	18-2	22-3	25-9
	Spruce-pine-fir	#2	9-5	14-9	19-6	24-10	Note b	9-5	14-4	18-2	22-3	25-9
	Spruce-pine-fir	#3	8-7	12-6	15-10	19-5	22-6	7-5	10-10	13-9	16-9	19-6
16	Douglas fir-larch	SS	9-6	14-11	19-7	25-0	Note b	9-6	14-11	19-7	25-0	Note b
	Douglas fir-larch	#1	9-1	14-4	18-11	23-9	Note b	9-1	13-3	16-10	20-7	23-10
	Douglas fir-larch	#2	8-11	14-1	18-5	22-6	26-0	8-7	12-7	16-0	19-6	22-7
	Douglas fir-larch	#3	7-7	11-1	14-1	17-2	19-11	6-7	9-8	12-2	14-11	17-3
	Hem-fir	SS	8-11	14-1	18-6	23-8	Note b	8-11	14-1	18-6	23-8	Note b
	Hem-fir	#1	8-9	13-9	18-1	23-1	Note b	8-9	13-1	16-7	20-4	23-7
	Hem-fir	#2	8-4	13-1	17-3	21-11	25-5	8-4	12-3	15-6	18-11	22-0
	Hem-fir	#3	7-5	10-10	13-9	16-9	19-6	6-5	9-5	11-11	14-6	16-10
	Southern pine	SS	9-4	14-7	19-3	24-7	Note b	9-4	14-7	19-3	24-7	Note b
	Southern pine	#1	8-11	14-1	18-6	23-2	Note b	8-11	13-7	17-2	20-1	23-10
	Southern pine	#2	8-7	13-5	17-1	20-3	23-10	7-9	11-8	14-9	17-6	20-8
	Southern pine	#3	6-11	10-2	12-10	15-7	18-6	6-0	8-10	11-2	13-6	16-0
	Spruce-pine-fir	SS	8-9	13-9	18-1	23-1	Note b	8-9	13-9	18-1	23-0	Note b
	Spruce-pine-fir	#1	8-7	13-5	17-9	22-3	25-9	8-6	12-5	15-9	19-3	22-4
	Spruce-pine-fir	#2	8-7	13-5	17-9	22-3	25-9	8-6	12-5	15-9	19-3	22-4
	Spruce-pine-fir	#3	7-5	10-10	13-9	16-9	19-6	6-5	9-5	11-11	14-6	16-10
19.2	Douglas fir-larch	SS	8-11	14-0	18-5	23-7	Note b	8-11	14-0	18-5	23-0	Note b
	Douglas fir-larch	#1	8-7	13-6	17-9	21-8	25-2	8-4	12-2	15-4	18-9	21-9
	Douglas fir-larch	#2	8-5	13-3	16-10	20-7	23-10	7-10	11-6	14-7	17-10	20-8
	Douglas fir-larch	#3	6-11	10-2	12-10	15-8	18-3	6-0	8-9	11-2	13-7	15-9
	Hem-fir	SS	8-5	13-3	17-5	22-3	Note b	8-5	13-3	17-5	22-3	25-9
	Hem-fir	#1	8-3	12-11	17-1	21-5	24-10	8-2	12-0	15-2	18-6	21-6
	Hem-fir	#2	7-10	12-4	16-3	20-0	23-2	7-8	11-2	14-2	17-4	20-1
	Hem-fir	#3	6-9	9-11	12-7	15-4	17-9	5-10	8-7	10-10	13-3	15-5

(continued)

INTERNATIONAL CODE COUNCIL®
Copyright © 2015 ICC. ALL RIGHTS RESERVED. Accessed by David Dammon on Jun 21, 2017 12:30:52 PM pursuant to License Agreement with ICC. No further reproduction or distribution authorized. ANY UNAUTHORIZED REPRODUCTION OR DISTRIBUTION IS A VIOLATION OF THE FEDERAL COPYRIGHT ACT AND THE LICENSE AGREEMENT, AND SUBJECT TO CIVIL AND CRIMINAL PENALTIES THEREUNDER.

TABLE R802.5.1(2)—continued
RAFTER SPANS FOR COMMON LUMBER SPECIES
(Roof live load = 20 psf, ceiling attached to rafters, L/Δ = 240)

RAFTER SPACING (inches)	SPECIES AND GRADE		DEAD LOAD = 10 psf					DEAD LOAD = 20 psf				
			2 × 4	2 × 6	2 × 8	2 × 10	2 × 12	2 × 4	2 × 6	2 × 8	2 × 10	2 × 12
			Maximum rafter spans[a]									
			(feet - inches)	(feet - inches)	(feet - inches)	(feet - inches)	(feet - inches)	(feet - inches)	(feet - inches)	(feet - inches)	(feet - inches)	(feet - inches)
19.2	Southern pine	SS	8-9	13-9	18-2	23-1	Note b	8-9	13-9	18-2	23-1	Note b
	Southern pine	#1	8-5	13-3	17-5	21-2	25-2	8-4	12-4	15-8	18-4	21-9
	Southern pine	#2	8-1	12-3	15-7	18-6	21-9	7-1	10-8	13-6	16-0	18-10
	Southern pine	#3	6-4	9-4	11-9	14-3	16-10	5-6	8-1	10-2	12-4	14-7
	Spruce-pine-fir	SS	8-3	12-11	17-1	21-9	Note b	8-3	12-11	17-1	21-0	24-4
	Spruce-pine-fir	#1	8-1	12-8	16-7	20-3	23-6	7-9	11-4	14-4	17-7	20-4
	Spruce-pine-fir	#2	8-1	12-8	16-7	20-3	23-6	7-9	11-4	14-4	17-7	20-4
	Spruce-pine-fir	#3	6-9	9-11	12-7	15-4	17-9	5-10	8-7	10-10	13-3	15-5
24	Douglas fir-larch	SS	8-3	13-0	17-2	21-10	Note b	8-3	13-0	16-10	20-7	23-10
	Douglas fir-larch	#1	8-0	12-6	15-10	19-5	22-6	7-5	10-10	13-9	16-9	19-6
	Douglas fir-larch	#2	7-10	11-11	15-1	18-5	21-4	7-0	10-4	13-0	15-11	18-6
	Douglas fir-larch	#3	6-2	9-1	11-6	14-1	16-3	5-4	7-10	10-0	12-2	14-1
	Hem-fir	SS	7-10	12-3	16-2	20-8	25-1	7-10	12-3	16-2	19-10	23-0
	Hem-fir	#1	7-8	12-0	15-8	19-2	22-2	7-4	10-9	13-7	16-7	19-3
	Hem-fir	#2	7-3	11-5	14-8	17-10	20-9	6-10	10-0	12-8	15-6	17-11
	Hem-fir	#3	6-1	8-10	11-3	13-8	15-11	5-3	7-8	9-9	11-10	13-9
	Southern pine	SS	8-1	12-9	16-10	21-6	Note b	8-1	12-9	16-10	20-10	24-8
	Southern pine	#1	7-10	12-3	16-2	18-11	22-6	7-5	11-1	14-0	16-5	19-6
	Southern pine	#2	7-4	11-0	13-11	16-6	19-6	6-4	9-6	12-1	14-4	16-10
	Southern pine	#3	5-8	8-4	10-6	12-9	15-1	4-11	7-3	9-1	11-0	13-1
	Spruce-pine-fir	SS	7-8	12-0	15-10	20-2	24-7	7-8	12-0	15-4	18-9	21-9
	Spruce-pine-fir	#1	7-6	11-9	14-10	18-2	21-0	6-11	10-2	12-10	15-8	18-3
	Spruce-pine-fir	#2	7-6	11-9	14-10	18-2	21-0	6-11	10-2	12-10	15-8	18-3
	Spruce-pine-fir	#3	6-1	8-10	11-3	13-8	15-11	5-3	7-8	9-9	11-10	13-9

Check sources for availability of lumber in lengths greater than 20 feet.

For SI: 1 inch = 25.4 mm, 1 foot = 304.8 mm, 1 pound per square foot = 0.0479 kPa.

a. The tabulated rafter spans assume that ceiling joists are located at the bottom of the attic space or that some other method of resisting the outward push of the rafters on the bearing walls, such as rafter ties, is provided at that location. Where ceiling joists or rafter ties are located higher in the attic space, the rafter spans shall be multiplied by the following factors:

H_C/H_R	Rafter Span Adjustment Factor
1/3	0.67
1/4	0.76
1/5	0.83
1/6	0.90
1/7.5 or less	1.00

where:

H_C = Height of ceiling joists or rafter ties measured vertically above the top of the rafter support walls.

H_R = Height of roof ridge measured vertically above the top of the rafter support walls.

b. Span exceeds 26 feet in length.

INTERNATIONAL CODE COUNCIL®
Copyright © 2015 ICC. ALL RIGHTS RESERVED. Accessed by David Dammon on Jun 21, 2017 12:30:52 PM pursuant to License Agreement with ICC. No further reproduction or distribution authorized. ANY UNAUTHORIZED REPRODUCTION OR DISTRIBUTION IS A VIOLATION OF THE FEDERAL COPYRIGHT ACT AND THE LICENSE AGREEMENT, AND SUBJECT TO CIVIL AND CRIMINAL PENALTIES THEREUNDER.

TABLE R802.5.1(3)
RAFTER SPANS FOR COMMON LUMBER SPECIES
(Ground snow load = 30 psf, ceiling not attached to rafters, L/Δ = 180)

RAFTER SPACING (inches)	SPECIES AND GRADE		DEAD LOAD = 10 psf					DEAD LOAD = 20 psf				
			2 × 4	2 × 6	2 × 8	2 × 10	2 × 12	2 × 4	2 × 6	2 × 8	2 × 10	2 × 12
			Maximum rafter spans[a]									
			(feet - inches)	(feet - inches)	(feet - inches)	(feet - inches)	(feet - inches)	(feet - inches)	(feet - inches)	(feet - inches)	(feet - inches)	(feet - inches)
12	Douglas fir-larch	SS	10-0	15-9	20-9	Note b	Note b	10-0	15-9	20-5	24-11	Note b
	Douglas fir-larch	#1	9-8	14-9	18-8	22-9	Note b	9-0	13-2	16-8	20-4	23-7
	Douglas fir-larch	#2	9-6	14-0	17-8	21-7	25-1	8-6	12-6	15-10	19-4	22-5
	Douglas fir-larch	#3	7-3	10-8	13-6	16-6	19-2	6-6	9-6	12-1	14-9	17-1
	Hem-fir	SS	9-6	14-10	19-7	25-0	Note b	9-6	14-10	19-7	24-1	Note b
	Hem-fir	#1	9-3	14-6	18-5	22-6	26-0	8-11	13-0	16-6	20-1	23-4
	Hem-fir	#2	8-10	13-7	17-2	21-0	24-4	8-4	12-2	15-4	18-9	21-9
	Hem-fir	#3	7-1	10-5	13-2	16-1	18-8	6-4	9-4	11-9	14-5	16-8
	Southern pine	SS	9-10	15-6	20-5	Note b	Note b	9-10	15-6	20-5	25-4	Note b
	Southern pine	#1	9-6	14-10	19-0	22-3	Note b	9-0	13-5	17-0	19-11	23-7
	Southern pine	#2	8-7	12-11	16-4	19-5	22-10	7-8	11-7	14-8	17-4	20-5
	Southern pine	#3	6-7	9-9	12-4	15-0	17-9	5-11	8-9	11-0	13-5	15-10
	Spruce-pine-fir	SS	9-3	14-7	19-2	24-6	Note b	9-3	14-7	18-8	22-9	Note b
	Spruce-pine-fir	#1	9-1	13-9	17-5	21-4	24-8	8-5	12-4	15-7	19-1	22-1
	Spruce-pine-fir	#2	9-1	13-9	17-5	21-4	24-8	8-5	12-4	15-7	19-1	22-1
	Spruce-pine-fir	#3	7-1	10-5	13-2	16-1	18-8	6-4	9-4	11-9	14-5	16-8
16	Douglas fir-larch	SS	9-1	14-4	18-10	24-1	Note b	9-1	14-0	17-8	21-7	25-1
	Douglas fir-larch	#1	8-9	12-9	16-2	19-9	22-10	7-10	11-5	14-5	17-8	20-5
	Douglas fir-larch	#2	8-3	12-1	15-4	18-9	21-8	7-5	10-10	13-8	16-9	19-5
	Douglas fir-larch	#3	6-4	9-3	11-8	14-3	16-7	5-8	8-3	10-6	12-9	14-10
	Hem-fir	SS	8-7	13-6	17-10	22-9	Note b	8-7	13-6	17-1	20-10	24-2
	Hem-fir	#1	8-5	12-7	15-11	19-6	22-7	7-8	11-3	14-3	17-5	20-2
	Hem-fir	#2	8-0	11-9	14-11	18-2	21-1	7-2	10-6	13-4	16-3	18-10
	Hem-fir	#3	6-2	9-0	11-5	13-11	16-2	5-6	8-1	10-3	12-6	14-6
	Southern pine	SS	8-11	14-1	18-6	23-8	Note b	8-11	14-1	18-5	1-11	25-11
	Southern pine	#1	8-7	13-0	16-6	19-3	22-10	7-10	11-7	14-9	17-3	20-5
	Southern pine	#2	7-6	11-2	14-2	16-10	19-10	6-8	10-0	12-8	15-1	17-9
	Southern pine	#3	5-9	8-6	10-8	13-0	15-4	5-2	7-7	9-7	11-7	13-9
	Spruce-pine-fir	SS	8-5	13-3	17-5	22-1	25-7	8-5	12-9	16-2	19-9	22-10
	Spruce-pine-fir	#1	8-2	11-11	15-1	18-5	21-5	7-3	10-8	13-6	16-6	19-2
	Spruce-pine-fir	#2	8-2	11-11	15-1	18-5	21-5	7-3	10-8	13-6	16-6	19-2
	Spruce-pine-fir	#3	6-2	9-0	11-5	13-11	16-2	5-6	8-1	10-3	12-6	14-6
19.2	Douglas fir-larch	SS	8-7	13-6	17-9	22-1	25-7	8-7	12-9	16-2	19-9	22-10
	Douglas fir-larch	#1	7-11	11-8	14-9	18-0	20-11	7-1	10-5	13-2	16-1	18-8
	Douglas fir-larch	#2	7-7	11-0	14-0	17-1	19-10	6-9	9-10	12-6	15-3	17-9
	Douglas fir-larch	#3	5-9	8-5	10-8	13-1	15-2	5-2	7-7	9-7	11-8	13-6
	Hem-fir	SS	8-1	12-9	16-9	21-4	24-8	8-1	12-4	15-7	19-1	22-1
	Hem-fir	#1	7-10	11-6	14-7	17-9	20-7	7-0	10-3	13-0	15-11	18-5
	Hem-fir	#2	7-4	10-9	13-7	16-7	19-3	6-7	9-7	12-2	14-10	17-3
	Hem-fir	#3	5-7	8-3	10-5	12-9	14-9	5-0	7-4	9-4	11-5	13-2

(continued)

INTERNATIONAL CODE COUNCIL®
Copyright © 2015 ICC. ALL RIGHTS RESERVED. Accessed by David Dammon on Jun 21, 2017 12:30:52 PM pursuant to License Agreement with ICC. No further reproduction or distribution authorized. ANY UNAUTHORIZED REPRODUCTION OR DISTRIBUTION IS A VIOLATION OF THE FEDERAL COPYRIGHT ACT AND THE LICENSE AGREEMENT, AND SUBJECT TO CIVIL AND CRIMINAL PENALTIES THEREUNDER.

TABLE R802.5.1(3)—continued
RAFTER SPANS FOR COMMON LUMBER SPECIES
(Ground snow load = 30 psf, ceiling not attached to rafters, L/Δ = 180)

RAFTER SPACING (inches)	SPECIES AND GRADE		DEAD LOAD = 10 psf					DEAD LOAD = 20 psf				
			2 × 4	2 × 6	2 × 8	2 × 10	2 × 12	2 × 4	2 × 6	2 × 8	2 × 10	2 × 12
			Maximum rafter spans[a]									
			(feet - inches)	(feet - inches)	(feet - inches)	(feet - inches)	(feet - inches)	(feet - inches)	(feet - inches)	(feet - inches)	(feet - inches)	(feet - inches)
19.2	Southern pine	SS	8-5	13-3	17-5	22-3	Note b	8-5	13-3	16-10	20-0	23-7
	Southern pine	#1	8-0	11-10	15-1	17-7	20-11	7-1	10-7	13-5	15-9	18-8
	Southern pine	#2	6-10	10-2	12-11	15-4	18-1	6-1	9-2	11-7	13-9	16-2
	Southern pine	#3	5-3	7-9	9-9	11-10	14-0	4-8	6-11	8-9	10-7	12-6
	Spruce-pine-fir	SS	7-11	12-5	16-5	20-2	23-4	7-11	11-8	14-9	18-0	20-11
	Spruce-pine-fir	#1	7-5	10-11	13-9	16-10	19-6	6-8	9-9	12-4	15-1	17-6
	Spruce-pine-fir	#2	7-5	10-11	13-9	16-10	19-6	6-8	9-9	12-4	15-1	17-6
	Spruce-pine-fir	#3	5-7	8-3	10-5	12-9	14-9	5-0	7-4	9-4	11-5	13-2
24	Douglas fir-larch	SS	8-0	12-6	16-2	19-9	22-10	7-10	11-5	14-5	17-8	20-5
	Douglas fir-larch	#1	7-1	10-5	13-2	16-1	18-8	6-4	9-4	11-9	14-5	16-8
	Douglas fir-larch	#2	6-9	9-10	12-6	15-3	17-9	6-0	8-10	11-2	13-8	15-10
	Douglas fir-larch	#3	5-2	7-7	9-7	11-8	13-6	4-7	6-9	8-7	10-5	12-1
	Hem-fir	SS	7-6	11-10	15-7	19-1	22-1	7-6	11-0	13-11	17-0	19-9
	Hem-fir	#1	7-0	10-3	13-0	15-11	18-5	6-3	9-2	11-8	14-3	16-6
	Hem-fir	#2	6-7	9-7	12-2	14-10	17-3	5-10	8-7	10-10	13-3	15-5
	Hem-fir	#3	5-0	7-4	9-4	11-5	13-2	4-6	6-7	8-4	10-2	11-10
	Southern pine	SS	7-10	12-3	16-2	20-0	23-7	7-10	11-10	15-0	17-11	21-2
	Southern pine	#1	7-1	10-7	13-5	15-9	18-8	6-4	9-6	12-0	14-1	16-8
	Southern pine	#2	6-1	9-2	11-7	13-9	16-2	5-5	8-2	10-4	12-3	14-6
	Southern pine	#3	4-8	6-11	8-9	10-7	12-6	4-2	6-2	7-10	9-6	11-2
	Spruce-pine-fir	SS	7-4	11-7	14-9	18-0	20-11	7-1	10-5	13-2	16-1	18-8
	Spruce-pine-fir	#1	6-8	9-9	12-4	15-1	17-6	5-11	8-8	11-0	13-6	15-7
	Spruce-pine-fir	#2	6-8	9-9	12-4	15-1	17-6	5-11	8-8	11-0	13-6	15-7
	Spruce-pine-fir	#3	5-0	7-4	9-4	11-5	13-2	4-6	6-7	8-4	10-2	11-10

Check sources for availability of lumber in lengths greater than 20 feet.

For SI: 1 inch = 25.4 mm, 1 foot = 304.8 mm, 1 pound per square foot = 0.0479 kPa.

a. The tabulated rafter spans assume that ceiling joists are located at the bottom of the attic space or that some other method of resisting the outward push of the rafters on the bearing walls, such as rafter ties, is provided at that location. Where ceiling joists or rafter ties are located higher in the attic space, the rafter spans shall be multiplied by the following factors:

H_C/H_R	Rafter Span Adjustment Factor
1/3	0.67
1/4	0.76
1/5	0.83
1/6	0.90
1/7.5 or less	1.00

where:

H_C = Height of ceiling joists or rafter ties measured vertically above the top of the rafter support walls.

H_R = Height of roof ridge measured vertically above the top of the rafter support walls.

b. Span exceeds 26 feet in length.

INTERNATIONAL CODE COUNCIL®
Copyright © 2015 ICC. ALL RIGHTS RESERVED. Accessed by David Dammon on Jun 21, 2017 12:30:52 PM pursuant to License Agreement with ICC. No further reproduction or distribution authorized. ANY UNAUTHORIZED REPRODUCTION OR DISTRIBUTION IS A VIOLATION OF THE FEDERAL COPYRIGHT ACT AND THE LICENSE AGREEMENT, AND SUBJECT TO CIVIL AND CRIMINAL PENALTIES THEREUNDER.

TABLE R802.5.1(4)
RAFTER SPANS FOR COMMON LUMBER SPECIES
(Ground snow load = 50 psf, ceiling not attached to rafters, L/Δ = 180)

RAFTER SPACING (inches)	SPECIES AND GRADE		DEAD LOAD = 10 psf					DEAD LOAD = 20 psf				
			2 × 4	2 × 6	2 × 8	2 × 10	2 × 12	2 × 4	2 × 6	2 × 8	2 × 10	2 × 12
			Maximum rafter spans[a]									
			(feet - inches)	(feet - inches)	(feet - inches)	(feet - inches)	(feet - inches)	(feet - inches)	(feet - inches)	(feet - inches)	(feet - inches)	(feet - inches)
12	Douglas fir-larch	SS	8-5	13-3	17-6	22-4	26-0	8-5	13-3	17-3	21-1	24-5
	Douglas fir-larch	#1	8-2	12-0	15-3	18-7	21-7	7-7	11-2	14-1	17-3	20-0
	Douglas fir-larch	#2	7-10	11-5	14-5	17-8	20-5	7-3	10-7	13-4	16-4	18-11
	Douglas fir-larch	#3	6-0	8-9	11-0	13-6	15-7	5-6	8-1	10-3	12-6	14-6
	Hem-fir	SS	8-0	12-6	16-6	21-1	25-6	8-0	12-6	16-6	20-4	23-7
	Hem-fir	#1	7-10	11-10	15-0	18-4	21-3	7-6	11-0	13-11	17-0	19-9
	Hem-fir	#2	7-5	11-1	14-0	17-2	19-11	7-0	10-3	13-0	15-10	18-5
	Hem-fir	#3	5-10	8-6	10-9	13-2	15-3	5-5	7-10	10-0	12-2	14-1
	Southern pine	SS	8-4	13-1	17-2	21-11	Note b	8-4	13-1	17-2	21-5	25-3
	Southern pine	#1	8-0	12-3	15-6	18-2	21-7	7-7	11-4	14-5	16-10	20-0
	Southern pine	#2	7-0	10-6	13-4	15-10	18-8	6-6	9-9	12-4	14-8	17-3
	Southern pine	#3	5-5	8-0	10-1	12-3	14-6	5-0	7-5	9-4	11-4	13-5
	Spruce-pine-fir	SS	7-10	12-3	16-2	20-8	24-1	7-10	12-3	15-9	19-3	22-4
	Spruce-pine-fir	#1	7-8	11-3	14-3	17-5	20-2	7-1	10-5	13-2	16-1	18-8
	Spruce-pine-fir	#2	7-8	11-3	14-3	17-5	20-2	7-1	10-5	13-2	16-1	18-8
	Spruce-pine-fir	#3	5-10	8-6	10-9	13-2	15-3	5-5	7-10	10-0	12-2	14-1
16	Douglas fir-larch	SS	7-8	12-1	15-11	19-9	22-10	7-8	11-10	14-11	18-3	21-2
	Douglas fir-larch	#1	7-1	10-5	13-2	16-1	18-8	6-7	9-8	12-2	14-11	17-3
	Douglas fir-larch	#2	6-9	9-10	12-6	15-3	17-9	6-3	9-2	11-7	14-2	16-5
	Douglas fir-larch	#3	5-2	7-7	9-7	11-18	13-6	4-9	7-0	8-10	10-10	12-6
	Hem-fir	SS	7-3	11-5	15-0	19-1	22-1	7-3	11-5	14-5	17-8	20-5
	Hem-fir	#1	7-0	10-3	13-0	15-11	18-5	6-6	9-6	12-1	14-9	17-1
	Hem-fir	#2	6-7	9-7	12-2	14-10	17-3	6-1	8-11	11-3	13-9	15-11
	Hem-fir	#3	5-0	7-4	9-4	11-5	13-2	4-8	6-10	8-8	10-6	12-3
	Southern pine	SS	7-6	11-10	15-7	19-11	23-7	7-6	11-10	15-7	18-6	21-10
	Southern pine	#1	7-1	10-7	13-5	15-9	18-8	6-7	9-10	12-5	14-7	17-3
	Southern pine	#2	6-1	9-2	11-7	13-9	16-2	5-8	8-5	10-9	12-9	15-0
	Southern pine	#3	4-8	6-11	8-9	10-7	12-6	4-4	6-5	8-1	9-10	11-7
	Spruce-pine-fir	SS	7-1	11-2	14-8	18-0	20-11	7-1	10-9	13-8	15-11	19-4
	Spruce-pine-fir	#1	6-8	9-9	12-4	15-1	17-6	6-2	9-0	11-5	13-11	16-2
	Spruce-pine-fir	#2	6-8	9-9	12-4	15-1	17-6	6-2	9-0	11-5	13-11	16-2
	Spruce-pine-fir	#3	5-0	7-4	9-4	11-5	13-2	4-8	6-10	8-8	10-6	12-3
19.2	Douglas fir-larch	SS	7-3	11-4	14-9	18-0	20-11	7-3	10-9	13-8	16-8	19-4
	Douglas fir-larch	#1	6-6	9-6	12-0	14-8	17-1	6-0	8-10	11-2	13-7	15-9
	Douglas fir-larch	#2	6-2	9-0	11-5	13-11	16-2	5-8	8-4	10-9	12-11	15-0
	Douglas fir-larch	#3	4-8	6-11	8-9	10-8	12-4	4-4	6-4	8-1	9-10	11-5
	Hem-fir	SS	6-10	10-9	14-2	17-5	20-2	6-10	10-5	13-2	16-1	18-8
	Hem-fir	#1	6-5	9-5	11-11	14-6	16-10	8-11	8-8	11-0	13-5	15-7
	Hem-fir	#2	6-0	8-9	11-1	13-7	15-9	5-7	8-1	10-3	12-7	14-7
	Hem-fir	#3	4-7	6-9	8-6	10-5	12-1	4-3	6-3	7-11	9-7	11-2

(continued)

INTERNATIONAL CODE COUNCIL®
Copyright © 2015 ICC. ALL RIGHTS RESERVED. Accessed by David Dammon on Jun 21, 2017 12:30:52 PM pursuant to License Agreement with ICC. No further reproduction or distribution authorized. ANY UNAUTHORIZED REPRODUCTION OR DISTRIBUTION IS A VIOLATION OF THE FEDERAL COPYRIGHT ACT AND THE LICENSE AGREEMENT, AND SUBJECT TO CIVIL AND CRIMINAL PENALTIES THEREUNDER.

TABLE R802.5.1(4)—continued
RAFTER SPANS FOR COMMON LUMBER SPECIES
(Ground snow load = 50 psf, ceiling not attached to rafters, L/Δ = 180)

RAFTER SPACING (inches)	SPECIES AND GRADE		DEAD LOAD = 10 psf					DEAD LOAD = 20 psf				
			2 × 4	2 × 6	2 × 8	2 × 10	2 × 12	2 × 4	2 × 6	2 × 8	2 × 10	2 × 12
			Maximum rafter spans[a]									
			(feet - inches)	(feet - inches)	(feet - inches)	(feet - inches)	(feet - inches)	(feet - inches)	(feet - inches)	(feet - inches)	(feet - inches)	(feet - inches)
19.2	Southern pine	SS	7-1	11-2	14-8	18-3	21-7	7-1	11-2	14-2	16-11	20-0
	Southern pine	#1	6-6	9-8	12-3	14-4	17-1	6-0	9-0	11-4	13-4	15-9
	Southern pine	#2	5-7	8-4	10-7	12-6	14-9	5-2	7-9	9-9	11-7	13-8
	Southern pine	#3	4-3	6-4	8-0	9-8	11-5	4-0	5-10	7-4	8-11	10-7
	Spruce-pine-fir	SS	6-8	10-6	13-5	16-5	19-1	6-8	9-10	12-5	15-3	17-8
	Spruce-pine-fir	#1	6-1	8-11	11-3	13-9	15-11	5-7	8-3	10-5	12-9	14-9
	Spruce-pine-fir	#2	6-1	8-11	11-3	13-9	15-11	5-7	8-3	10-5	12-9	14-9
	Spruce-pine-fir	#3	4-7	6-9	8-6	10-5	12-1	4-3	6-3	7-11	9-7	11-2
24	Douglas fir-larch	SS	6-8	10-5	13-2	16-1	18-8	6-7	9-8	12-2	14-11	17-3
	Douglas fir-larch	#1	5-10	8-6	10-9	13-2	15-3	5-5	7-10	10-0	12-2	14-1
	Douglas fir-larch	#2	5-6	8-1	10-3	12-6	14-6	5-1	7-6	9-5	11-7	13-5
	Douglas fir-larch	#3	4-3	6-2	7-10	9-6	11-1	3-11	5-8	7-3	8-10	10-3
	Hem-fir	SS	6-4	9-11	12-9	15-7	18-0	6-4	9-4	11-9	14-5	16-8
	Hem-fir	#1	5-9	8-5	10-8	13-0	15-1	8-4	7-9	9-10	12-0	13-11
	Hem-fir	#2	5-4	7-10	9-11	12-1	14-1	4-11	7-3	9-2	11-3	13-0
	Hem-fir	#3	4-1	6-0	7-7	9-4	10-9	3-10	5-7	7-1	8-7	10-0
	Southern pine	SS	6-7	10-4	13-8	16-4	19-3	6-7	10-0	12-8	15-2	17-10
	Southern pine	#1	5-10	8-8	11-0	12-10	15-3	5-5	8-0	10-2	11-11	14-1
	Southern pine	#2	5-0	7-5	9-5	11-3	13-2	4-7	6-11	8-9	10-5	12-3
	Southern pine	#3	3-10	5-8	7-1	8-8	10-3	3-6	5-3	6-7	8-0	9-6
	Spruce-pine-fir	SS	6-2	9-6	12-0	14-8	17-1	6-0	8-10	11-2	13-7	15-9
	Spruce-pine-fir	#1	5-5	7-11	10-1	12-4	14-3	5-0	7-4	9-4	11-5	13-2
	Spruce-pine-fir	#2	5-5	7-11	10-1	12-4	14-3	5-0	7-4	9-4	11-5	13-2
	Spruce-pine-fir	#3	4-1	6-0	7-7	9-4	10-9	3-10	5-7	7-1	8-7	10-0

Check sources for availability of lumber in lengths greater than 20 feet.

For SI: 1 inch = 25.4 mm, 1 foot = 304.8 mm, 1 pound per square foot = 0.0479 kPa

a. The tabulated rafter spans assume that ceiling joists are located at the bottom of the attic space or that some other method of resisting the outward push of the rafters on the bearing walls, such as rafter ties, is provided at that location. Where ceiling joists or rafter ties are located higher in the attic space, the rafter spans shall be multiplied by the following factors:

H_C/H_R	Rafter Span Adjustment Factor
1/3	0.67
1/4	0.76
1/5	0.83
1/6	0.90
1/7.5 or less	1.00

where:

H_C = Height of ceiling joists or rafter ties measured vertically above the top of the rafter support walls.

H_R = Height of roof ridge measured vertically above the top of the rafter support walls.

b. Span exceeds 26 feet in length.

INTERNATIONAL CODE COUNCIL®
Copyright © 2015 ICC. ALL RIGHTS RESERVED. Accessed by David Dammon on Jun 21, 2017 12:30:52 PM pursuant to License Agreement with ICC. No further reproduction or distribution authorized. ANY UNAUTHORIZED REPRODUCTION OR DISTRIBUTION IS A VIOLATION OF THE FEDERAL COPYRIGHT ACT AND THE LICENSE AGREEMENT, AND SUBJECT TO CIVIL AND CRIMINAL PENALTIES THEREUNDER.

TABLE R802.5.1(5)
RAFTER SPANS FOR COMMON LUMBER SPECIES
(Ground snow load = 30 psf, ceiling attached to rafters, L/Δ = 240)

RAFTER SPACING (inches)	SPECIES AND GRADE		DEAD LOAD = 10 psf					DEAD LOAD = 20 psf				
			2 × 4	2 × 6	2 × 8	2 × 10	2 × 12	2 × 4	2 × 6	2 × 8	2 × 10	2 × 12
			Maximum rafter spans[a]									
			(feet - inches)	(feet - inches)	(feet - inches)	(feet - inches)	(feet - inches)	(feet - inches)	(feet - inches)	(feet - inches)	(feet - inches)	(feet - inches)
12	Douglas fir-larch	SS	9-1	14-4	18-10	24-1	Note b	9-1	14-4	18-10	24-1	Note b
	Douglas fir-larch	#1	8-9	13-9	18-2	22-9	Note b	8-9	13-2	16-8	20-4	23-7
	Douglas fir-larch	#2	8-7	13-6	17-8	21-7	25-1	8-6	12-6	15-10	19-4	22-5
	Douglas fir-larch	#3	7-3	10-8	13-6	16-6	19-2	6-6	9-6	12-1	14-9	17-1
	Hem-fir	SS	8-7	13-6	17-10	22-9	Note b	8-7	13-6	17-10	22-9	Note b
	Hem-fir	#1	8-5	13-3	17-5	22-3	26-0	8-5	13-0	16-6	20-1	23-4
	Hem-fir	#2	8-0	12-7	16-7	21-0	24-4	8-0	12-2	15-4	18-9	21-9
	Hem-fir	#3	7-1	10-5	13-2	16-1	18-8	6-4	9-4	11-9	14-5	16-8
	Southern pine	SS	8-11	14-1	18-6	23-8	Note b	8-11	14-1	18-6	23-8	Note b
	Southern pine	#1	8-7	13-6	17-10	22-3	Note b	8-7	13-5	17-0	19-11	23-7
	Southern pine	#2	8-3	12-11	16-4	19-5	22-10	7-8	11-7	14-8	17-4	20-5
	Southern pine	#3	6-7	9-9	12-4	15-0	17-9	5-11	8-9	11-0	13-5	15-10
	Spruce-pine-fir	SS	8-5	13-3	17-5	22-3	Note b	8-5	13-3	17-5	22-3	Note b
	Spruce-pine-fir	#1	8-3	12-11	17-0	21-4	24-8	8-3	12-4	15-7	19-1	22-1
	Spruce-pine-fir	#2	8-3	12-11	17-0	21-4	24-8	8-3	12-4	15-7	19-1	22-1
	Spruce-pine-fir	#3	7-1	10-5	13-2	16-1	18-8	6-4	9-4	11-9	14-5	16-8
16	Douglas fir-larch	SS	8-3	13-0	17-2	21-10	Note b	8-3	13-0	17-2	21-7	25-1
	Douglas fir-larch	#1	8-0	12-6	16-2	19-9	22-10	7-10	11-5	14-5	17-8	20-5
	Douglas fir-larch	#2	7-10	12-1	15-4	18-9	21-8	7-5	10-10	13-8	16-9	19-5
	Douglas fir-larch	#3	6-4	9-3	11-8	14-3	16-7	5-8	8-3	10-6	12-9	14-10
	Hem-fir	SS	7-10	12-3	16-2	20-8	25-1	7-10	12-3	16-2	20-8	24-2
	Hem-fir	#1	7-8	12-0	15-10	19-6	22-7	7-8	11-3	14-3	17-5	20-2
	Hem-fir	#2	7-3	11-5	14-11	18-2	21-1	7-2	10-6	13-4	16-3	18-10
	Hem-fir	#3	6-2	9-0	11-5	13-11	16-2	5-6	8-1	10-3	12-6	14-6
	Southern pine	SS	8-1	12-9	16-10	21-6	Note b	8-1	12-9	16-10	21-6	25-11
	Southern pine	#1	7-10	12-3	16-2	19-3	22-10	7-10	11-7	14-9	17-3	20-5
	Southern pine	#2	7-6	11-2	14-2	16-10	19-10	6-8	10-0	12-8	15-1	17-9
	Southern pine	#3	5-9	8-6	10-8	13-0	15-4	5-2	7-7	9-7	11-7	13-9
	Spruce-pine-fir	SS	7-8	12-0	15-10	20-2	24-7	7-8	12-0	15-10	19-9	22-10
	Spruce-pine-fir	#1	7-6	11-9	15-1	18-5	21-5	7-3	10-8	13-6	16-6	19-2
	Spruce-pine-fir	#2	7-6	11-9	15-1	18-5	21-5	7-3	10-8	13-6	16-6	19-2
	Spruce-pine-fir	#3	6-2	9-0	11-5	13-11	16-2	5-6	8-1	10-3	12-6	14-6
19.2	Douglas fir-larch	SS	7-9	12-3	16-1	20-7	25-0	7-9	12-3	16-1	19-9	22-10
	Douglas fir-larch	#1	7-6	11-8	14-9	18-0	20-11	7-1	10-5	13-2	16-1	18-8
	Douglas fir-larch	#2	7-4	11-0	14-0	17-1	19-10	6-9	9-1	12-6	15-3	17-9
	Douglas fir-larch	#3	5-9	8-5	10-8	13-1	15-2	5-2	7-7	9-7	11-8	13-6
	Hem-fir	SS	7-4	11-7	15-3	19-5	23-7	7-4	11-7	15-3	19-1	22-1
	Hem-fir	#1	7-2	11-4	14-7	17-9	20-7	7-0	16-3	13-0	15-11	18-5
	Hem-fir	#2	6-10	10-9	13-7	16-7	19-3	6-7	9-7	12-2	14-10	17-3
	Hem-fir	#3	5-7	8-3	10-5	12-9	14-9	5-0	7-4	9-4	11-5	13-2

(continued)

INTERNATIONAL CODE COUNCIL®
Copyright © 2015 ICC. ALL RIGHTS RESERVED. Accessed by David Dammon on Jun 21, 2017 12:30:52 PM pursuant to License Agreement with ICC. No further reproduction or distribution authorized. ANY UNAUTHORIZED REPRODUCTION OR DISTRIBUTION IS A VIOLATION OF THE FEDERAL COPYRIGHT ACT AND THE LICENSE AGREEMENT, AND SUBJECT TO CIVIL AND CRIMINAL PENALTIES THEREUNDER.

TABLE R802.5.1(5)—continued
RAFTER SPANS FOR COMMON LUMBER SPECIES
(Ground snow load = 30 psf, ceiling attached to rafters, L/Δ = 240)

RAFTER SPACING (inches)	SPECIES AND GRADE		DEAD LOAD = 10 psf					DEAD LOAD = 20 psf				
			2 × 4	2 × 6	2 × 8	2 × 10	2 × 12	2 × 4	2 × 6	2 × 8	2 × 10	2 × 12
			Maximum rafter spans[a]									
			(feet - inches)	(feet - inches)	(feet - inches)	(feet - inches)	(feet - inches)	(feet - inches)	(feet - inches)	(feet - inches)	(feet - inches)	(feet - inches)
19.2	Southern pine	SS	7-8	12-0	15-10	20-2	24-7	7-8	12-0	15-10	20-0	23-7
	Southern pine	#1	7-4	11-7	15-1	17-7	20-11	7-1	10-7	13-5	15-9	18-8
	Southern pine	#2	6-10	10-2	12-11	15-4	18-1	6-1	9-2	11-7	13-9	16-2
	Southern pine	#3	5-3	7-9	9-9	11-10	14-0	4-8	6-11	8-9	10-7	12-6
	Spruce-pine-fir	SS	7-2	11-4	14-11	19-0	23-1	7-2	11-4	14-9	18-0	20-11
	Spruce-pine-fir	#1	7-0	10-11	13-9	16-10	19-6	6-8	9-9	12-4	15-1	17-6
	Spruce-pine-fir	#2	7-0	10-11	13-9	16-10	19-6	6-8	9-9	12-4	15-1	17-6
	Spruce-pine-fir	#3	5-7	8-3	10-5	12-9	14-9	5-0	7-4	9-4	11-5	13-2
24	Douglas fir-larch	SS	7-3	11-4	15-0	19-1	22-10	7-3	11-4	14-5	17-8	20-5
	Douglas fir-larch	#1	7-0	10-5	13-2	16-1	18-8	6-4	9-4	11-9	14-5	16-8
	Douglas fir-larch	#2	6-9	9-10	12-6	15-3	17-9	6-0	8-10	11-2	13-8	15-10
	Douglas fir-larch	#3	5-2	7-7	9-7	11-8	13-6	4-7	6-9	8-7	10-5	12-1
	Hem-fir	SS	6-10	10-9	14-2	18-0	21-11	6-10	10-9	13-11	17-0	19-9
	Hem-fir	#1	6-8	10-3	13-0	15-11	18-5	6-3	9-2	11-8	14-3	16-6
	Hem-fir	#2	6-4	9-7	12-2	14-10	17-3	5-10	8-7	10-10	13-3	15-5
	Hem-fir	#3	5-0	7-4	9-4	11-5	13-2	4-6	6-7	8-4	10-2	11-10
	Southern pine	SS	7-1	11-2	14-8	18-9	22-10	7-1	11-2	14-8	17-11	21-2
	Southern pine	#1	6-10	10-7	13-5	15-9	18-8	6-4	9-6	12-0	14-1	16-8
	Southern pine	#2	6-1	9-2	11-7	13-9	16-2	5-5	8-2	10-4	12-3	14-6
	Southern pine	#3	4-8	6-11	8-9	10-7	12-6	4-2	6-2	7-10	9-6	11-2
	Spruce-pine-fir	SS	6-8	10-6	13-10	17-8	20-11	6-8	10-5	13-2	16-1	18-8
	Spruce-pine-fir	#1	6-6	9-9	12-4	15-1	17-6	5-11	8-8	11-0	13-6	15-7
	Spruce-pine-fir	#2	6-6	9-9	12-4	15-1	17-6	5-11	8-8	11-0	13-6	15-7
	Spruce-pine-fir	#3	5-0	7-4	9-4	11-5	13-2	4-6	6-7	8-4	10-2	11-10

Check sources for availability of lumber in lengths greater than 20 feet.

For SI: 1 inch = 25.4 mm, 1 foot = 304.8 mm, 1 pound per square foot = 0.0479 kPa.

a. The tabulated rafter spans assume that ceiling joists are located at the bottom of the attic space or that some other method of resisting the outward push of the rafters on the bearing walls, such as rafter ties, is provided at that location. Where ceiling joists or rafter ties are located higher in the attic space, the rafter spans shall be multiplied by the following factors:

H_C/H_R	Rafter Span Adjustment Factor
1/3	0.67
1/4	0.76
1/5	0.83
1/6	0.90
1/7.5 or less	1.00

where:

H_C = Height of ceiling joists or rafter ties measured vertically above the top of the rafter support walls.

H_R = Height of roof ridge measured vertically above the top of the rafter support walls.

b. Span exceeds 26 feet in length.

INTERNATIONAL CODE COUNCIL®
Copyright © 2015 ICC. ALL RIGHTS RESERVED. Accessed by David Dammon on Jun 21, 2017 12:30:52 PM pursuant to License Agreement with ICC. No further reproduction or distribution authorized. ANY UNAUTHORIZED REPRODUCTION OR DISTRIBUTION IS A VIOLATION OF THE FEDERAL COPYRIGHT ACT AND THE LICENSE AGREEMENT, AND SUBJECT TO CIVIL AND CRIMINAL PENALTIES THEREUNDER.

TABLE R802.5.1(6)
RAFTER SPANS FOR COMMON LUMBER SPECIES
(Ground snow load = 50 psf, ceiling attached to rafters, L/Δ = 240)

RAFTER SPACING (inches)	SPECIES AND GRADE		DEAD LOAD = 10 psf					DEAD LOAD = 20 psf				
			2 × 4	2 × 6	2 × 8	2 × 10	2 × 12	2 × 4	2 × 6	2 × 8	2 × 10	2 × 12
			Maximum rafter spans[a]									
			(feet-inches)	(feet-inches)	(feet-inches)	(feet-inches)	(feet-inches)	(feet-inches)	(feet-inches)	(feet-inches)	(feet-inches)	(feet-inches)
12	Douglas fir-larch	SS	7-8	12-1	15-11	20-3	24-8	7-8	12-1	15-11	20-3	24-5
	Douglas fir-larch	#1	7-5	11-7	15-3	18-7	21-7	7-5	11-2	14-1	17-3	20-0
	Douglas fir-larch	#2	7-3	11-5	14-5	17-8	20-5	7-3	10-7	13-4	16-4	18-11
	Douglas fir-larch	#3	6-0	8-9	11-0	13-6	15-7	5-6	8-1	10-3	12-6	14-6
	Hem-fir	SS	7-3	11-5	15-0	19-2	23-4	7-3	11-5	15-0	19-2	23-4
	Hem-fir	#1	7-1	11-2	14-8	18-4	21-3	7-1	11-0	13-11	17-0	19-9
	Hem-fir	#2	6-9	10-8	14-0	17-2	19-11	6-9	10-3	13-0	15-10	18-5
	Hem-fir	#3	5-10	8-6	10-9	13-2	15-3	5-5	7-10	10-0	12-2	14-1
	Southern pine	SS	7-6	11-10	15-7	19-11	24-3	7-6	11-10	15-7	19-11	24-3
	Southern pine	#1	7-3	11-5	15-0	18-2	21-7	7-3	11-4	14-5	16-10	20-0
	Southern pine	#2	6-11	10-6	13-4	15-10	18-8	6-6	9-9	12-4	14-8	17-3
	Southern pine	#3	5-5	8-0	10-1	12-3	14-6	5-0	7-5	9-4	11-4	13-5
	Spruce-pine-fir	SS	7-1	11-2	14-8	18-9	22-10	7-1	11-2	14-8	18-9	22-4
	Spruce-pine-fir	#1	6-11	10-11	14-3	17-5	20-2	6-11	10-5	13-2	16-1	18-8
	Spruce-pine-fir	#2	6-11	10-11	14-3	17-5	20-2	6-11	10-5	13-2	16-1	18-8
	Spruce-pine-fir	#3	5-10	8-6	10-9	13-2	15-3	5-5	7-10	10-0	12-2	14-1
16	Douglas fir-larch	SS	7-0	11-0	14-5	18-5	22-5	7-0	11-0	14-5	18-3	21-2
	Douglas fir-larch	#1	6-9	10-5	13-2	16-1	18-8	6-7	9-8	12-2	14-11	17-3
	Douglas fir-larch	#2	6-7	9-10	12-6	15-3	17-9	6-3	9-2	11-7	14-2	16-5
	Douglas fir-larch	#3	5-2	7-7	9-7	11-8	13-6	4-9	7-0	8-10	10-10	12-6
	Hem-fir	SS	6-7	10-4	13-8	17-5	21-2	6-7	10-4	13-8	17-5	20-5
	Hem-fir	#1	6-5	10-2	13-0	15-11	18-5	6-5	9-6	12-1	14-9	17-1
	Hem-fir	#2	6-2	9-7	12-2	14-10	17-3	6-1	8-11	11-3	13-9	15-11
	Hem-fir	#3	5-0	7-4	9-4	11-5	13-2	4-8	6-10	8-8	10-6	12-3
	Southern pine	SS	6-10	10-9	14-2	18-1	22-0	6-10	10-9	14-2	18-1	21-10
	Southern pine	#1	6-7	10-4	13-5	15-9	18-8	6-7	9-10	12-5	14-7	17-3
	Southern pine	#2	6-1	9-2	11-7	13-9	16-2	5-8	8-5	10-9	12-9	15-0
	Southern pine	#3	4-8	6-11	8-9	10-7	12-6	4-4	6-5	8-1	9-10	11-7
	Spruce-pine-fir	SS	6-5	10-2	13-4	17-0	20-9	6-5	10-2	13-4	16-8	19-4
	Spruce-pine-fir	#1	6-4	9-9	12-4	15-1	17-6	6-2	9-0	11-5	13-11	16-2
	Spruce-pine-fir	#2	6-4	9-9	12-4	15-1	17-6	6-2	9-0	11-5	13-11	16-2
	Spruce-pine-fir	#3	5-0	7-4	9-4	11-5	13-2	4-8	6-10	8-8	10-6	12-3
19.2	Douglas fir-larch	SS	6-7	10-4	13-7	17-4	20-11	6-7	10-4	13-7	16-8	19-4
	Douglas fir-larch	#1	6-4	9-6	12-0	14-8	17-1	6-0	8-10	11-2	13-7	15-9
	Douglas fir-larch	#2	6-2	9-0	11-5	13-11	16-2	5-8	8-4	10-7	12-11	15-0
	Douglas fir-larch	#3	4-8	6-11	8-9	10-8	12-4	4-4	6-4	8-1	9-10	11-5
	Hem-fir	SS	6-2	9-9	12-10	16-5	19-11	6-2	9-9	12-10	16-1	18-8
	Hem-fir	#1	6-1	9-5	11-11	14-6	16-10	5-11	8-8	11-0	13-5	15-7
	Hem-fir	#2	5-9	8-9	11-1	13-7	15-9	5-7	8-1	10-3	12-7	14-7
	Hem-fir	#3	4-7	6-9	8-6	10-5	12-1	4-3	6-3	7-11	9-7	11-2

(continued)

INTERNATIONAL CODE COUNCIL®
Copyright © 2015 ICC. ALL RIGHTS RESERVED. Accessed by David Dammon on Jun 21, 2017 12:30:52 PM pursuant to License Agreement with ICC. No further reproduction or distribution authorized. ANY UNAUTHORIZED REPRODUCTION OR DISTRIBUTION IS A VIOLATION OF THE FEDERAL COPYRIGHT ACT AND THE LICENSE AGREEMENT, AND SUBJECT TO CIVIL AND CRIMINAL PENALTIES THEREUNDER.

TABLE R802.5.1(6)—continued
RAFTER SPANS FOR COMMON LUMBER SPECIES
(Ground snow load = 50 psf, ceiling attached to rafters, L/Δ = 240)

RAFTER SPACING (inches)	SPECIES AND GRADE		DEAD LOAD = 10 psf					DEAD LOAD = 20 psf				
			2 × 4	2 × 6	2 × 8	2 × 10	2 × 12	2 × 4	2 × 6	2 × 8	2 × 10	2 × 12
			Maximum rafter spans[a]									
			(feet-inches)	(feet-inches)	(feet-inches)	(feet-inches)	(feet-inches)	(feet-inches)	(feet-inches)	(feet-inches)	(feet-inches)	(feet-inches)
19.2	Southern pine	SS	6-5	10-2	13-4	17-0	20-9	6-5	10-2	13-4	16-11	20-0
	Southern pine	#1	6-2	9-8	12-3	14-4	17-1	6-0	9-0	11-4	13-4	15-9
	Southern pine	#2	5-7	8-4	10-7	12-6	14-9	5-2	7-9	9-9	11-7	13-8
	Southern pine	#3	4-3	6-4	8-0	9-8	11-5	4-0	5-10	7-4	8-11	10-7
	Spruce-pine-fir	SS	6-1	9-6	12-7	16-0	19-1	6-1	9-6	12-5	15-3	17-8
	Spruce-pine-fir	#1	5-11	8-11	11-3	13-9	15-11	5-7	8-3	10-5	12-9	14-9
	Spruce-pine-fir	#2	5-11	8-11	11-3	13-9	15-11	5-7	8-3	10-5	12-9	14-9
	Spruce-pine-fir	#3	4-7	6-9	8-6	10-5	12-1	4-3	6-3	7-11	9-7	11-2
24	Douglas fir-larch	SS	6-1	9-7	12-7	16-1	18-8	6-1	9-7	12-2	14-11	17-3
	Douglas fir-larch	#1	5-10	8-6	10-9	13-2	15-3	5-5	7-10	10-0	12-2	14-1
	Douglas fir-larch	#2	5-6	8-1	10-3	12-6	14-6	5-1	7-6	9-5	11-7	13-5
	Douglas fir-larch	#3	4-3	6-2	7-10	9-6	11-1	3-11	5-8	7-3	8-10	10-3
	Hem-fir	SS	5-9	9-1	11-11	15-2	18-0	5-9	9-1	11-9	14-5	15-11
	Hem-fir	#1	5-8	8-5	10-8	13-0	15-1	5-4	7-9	9-10	12-0	13-11
	Hem-fir	#2	5-4	7-10	9-11	12-1	14-1	4-11	7-3	9-2	11-3	13-0
	Hem-fir	#3	4-1	6-0	7-7	9-4	10-9	3-10	5-7	7-1	8-7	10-0
	Southern pine	SS	6-0	9-5	12-5	15-10	19-3	6-0	9-5	12-5	15-2	17-10
	Southern pine	#1	5-9	8-8	11-0	12-10	15-3	5-5	8-0	10-2	11-11	14-1
	Southern pine	#2	5-0	7-5	9-5	11-3	13-2	4-7	6-11	8-9	10-5	12-3
	Southern pine	#3	3-10	5-8	7-1	8-8	10-3	3-6	5-3	6-7	8-0	9-6
	Spruce-pine-fir	SS	5-8	8-10	11-8	14-8	17-1	5-8	8-10	11-2	13-7	15-9
	Spruce-pine-fir	#1	5-5	7-11	10-1	12-4	14-3	5-0	7-4	9-4	11-5	13-2
	Spruce-pine-fir	#2	5-5	7-11	10-1	12-4	14-3	5-0	7-4	9-4	11-5	13-2
	Spruce-pine-fir	#3	4-1	6-0	7-7	9-4	10-9	3-10	5-7	7-1	8-7	10-0

Check sources for availability of lumber in lengths greater than 20 feet.

For SI: 1 inch = 25.4 mm, 1 foot = 304.8 mm, 1 pound per square foot = 0.0479 kPa.

a. The tabulated rafter spans assume that ceiling joists are located at the bottom of the attic space or that some other method of resisting the outward push of the rafters on the bearing walls, such as rafter ties, is provided at that location. Where ceiling joists or rafter ties are located higher in the attic space, the rafter spans shall be multiplied by the following factors:

H_C/H_R	Rafter Span Adjustment Factor
1/3	0.67
1/4	0.76
1/5	0.83
1/6	0.90
1/7.5 or less	1.00

where:

H_C = Height of ceiling joists or rafter ties measured vertically above the top of the rafter support walls.

H_R = Height of roof ridge measured vertically above the top of the rafter support walls.

INTERNATIONAL CODE COUNCIL®
Copyright © 2015 ICC. ALL RIGHTS RESERVED. Accessed by David Dammon on Jun 21, 2017 12:30:52 PM pursuant to License Agreement with ICC. No further reproduction or distribution authorized. ANY UNAUTHORIZED REPRODUCTION OR DISTRIBUTION IS A VIOLATION OF THE FEDERAL COPYRIGHT ACT AND THE LICENSE AGREEMENT, AND SUBJECT TO CIVIL AND CRIMINAL PENALTIES THEREUNDER.

TABLE R802.5.1(7)
RAFTER SPANS FOR 70 PSF GROUND SNOW LOAD
(Ceiling not attached to rafters, L/Δ = 180)

RAFTER SPACING (inches)	SPECIES AND GRADE		DEAD LOAD = 10 psf					DEAD LOAD = 20 psf				
			2 × 4	2 × 6	2 × 8	2 × 10	2 × 12	2 × 4	2 × 6	2 × 8	2 × 10	2 × 12
			Maximum Rafter Spans[a]									
			(feet-inches)	(feet-inches)	(feet-inches)	(feet-inches)	(feet-inches)	(feet-inches)	(feet-inches)	(feet-inches)	(feet-inches)	(feet-inches)
12	Douglas fir-larch	SS	7-7	11-10	15-8	19-9	22-10	7-7	11-10	15-3	18-7	21-7
	Douglas fir-larch	#1	7-1	10-5	13-2	16-1	18-8	6-8	9-10	12-5	15-2	17-7
	Douglas fir-larch	#2	6-9	9-10	12-6	15-3	17-9	6-4	9-4	11-9	14-5	16-8
	Douglas fir-larch	#3	5-2	7-7	9-7	11-8	13-6	4-10	7-1	9-0	11-0	12-9
	Hem-fir	SS	7-2	11-3	14-9	18-10	22-1	7-2	11-3	14-8	18-0	20-10
	Hem-fir	#1	7-0	10-3	13-0	15-11	18-5	6-7	9-8	12-3	15-0	17-5
	Hem-fir	#2	6-7	9-7	12-2	14-10	17-3	6-2	9-1	11-5	14-0	16-3
	Hem-fir	#3	5-0	7-4	9-4	11-5	13-2	4-9	6-11	8-9	10-9	12-5
	Southern pine	SS	7-5	11-8	15-4	19-7	23-7	7-5	11-8	15-4	18-10	22-3
	Southern pine	#1	7-1	10-7	13-5	15-9	18-8	6-9	10-0	12-8	14-10	17-7
	Southern pine	#2	6-1	9-2	11-7	13-9	16-2	5-9	8-7	10-11	12-11	15-3
	Southern pine	#3	4-8	6-11	8-9	10-7	12-6	4-5	6-6	8-3	10-0	11-10
	Spruce-pine-fir	SS	7-0	11-0	14-6	18-0	20-11	7-0	11-0	13-11	17-0	19-8
	Spruce-pine-fir	#1	6-8	9-9	12-4	15-1	17-6	6-3	9-2	11-8	14-2	16-6
	Spruce-pine-fir	#2	6-8	9-9	12-4	15-1	17-6	6-3	9-2	11-8	14-2	16-6
	Spruce-pine-fir	#3	5-0	7-4	9-4	11-5	13-2	4-9	6-11	8-9	10-9	12-5
16	Douglas fir-larch	SS	6-10	10-9	14-0	17-1	19-10	6-10	10-5	13-2	16-1	18-8
	Douglas fir-larch	#1	6-2	9-0	11-5	13-11	16-2	5-10	8-6	10-9	13-2	15-3
	Douglas fir-larch	#2	5-10	8-7	10-10	13-3	15-4	5-6	8-1	10-3	12-6	14-6
	Douglas fir-larch	#3	4-6	6-6	8-3	10-1	11-9	4-3	6-2	7-10	9-6	11-1
	Hem-fir	SS	6-6	10-2	13-5	16-6	19-2	6-6	10-1	12-9	15-7	18-0
	Hem-fir	#1	6-1	8-11	11-3	13-9	16-0	5-9	8-5	10-8	13-0	15-1
	Hem-fir	#2	5-8	8-4	10-6	12-10	14-11	5-4	7-10	9-11	12-1	14-1
	Hem-fir	#3	4-4	6-4	8-1	9-10	11-5	4-1	6-0	7-7	9-4	10-9
	Southern pine	SS	6-9	10-7	14-0	17-4	20-5	6-9	10-7	13-9	16-4	19-3
	Southern pine	#1	6-2	9-2	11-8	13-8	16-2	5-10	8-8	11-0	12-10	15-3
	Southern pine	#2	5-3	7-11	10-0	11-11	14-0	5-0	7-5	9-5	11-3	13-2
	Southern pine	#3	4-1	6-0	7-7	9-2	10-10	3-10	5-8	7-1	8-8	10-3
	Spruce-pine-fir	SS	6-4	10-0	12-9	15-7	18-1	6-4	9-6	12-0	14-8	17-1
	Spruce-pine-fir	#1	5-9	8-5	10-8	13-1	15-2	5-5	7-11	10-1	12-4	14-3
	Spruce-pine-fir	#2	5-9	8-5	10-8	13-1	15-2	5-5	7-11	10-1	12-4	14-3
	Spruce-pine-fir	#3	4-4	6-4	8-1	9-10	11-5	4-1	6-0	7-7	9-4	10-9
19.2	Douglas fir-larch	SS	6-6	10-1	12-9	15-7	18-1	6-6	9-6	12-0	14-8	17-1
	Douglas fir-larch	#1	5-7	8-3	10-5	12-9	14-9	5-4	7-9	9-10	12-0	13-11
	Douglas fir-larch	#2	5-4	7-10	9-11	12-1	14-0	5-0	7-4	9-4	11-5	13-2
	Douglas fir-larch	#3	4-1	6-0	7-7	9-3	10-8	3-10	5-7	7-1	8-8	10-1
	Hem-fir	SS	6-1	9-7	12-4	15-1	17-4	6-1	9-2	11-8	14-2	15-5
	Hem-fir	#1	5-7	8-2	10-3	12-7	14-7	5-3	7-8	9-8	11-10	13-9
	Hem-fir	#2	5-2	7-7	9-7	11-9	13-7	4-11	7-2	9-1	11-1	12-10
	Hem-fir	#3	4-0	5-10	7-4	9-0	10-5	3-9	5-6	6-11	8-6	9-10

(continued)

INTERNATIONAL CODE COUNCIL®
Copyright © 2015 ICC. ALL RIGHTS RESERVED. Accessed by David Dammon on Jun 21, 2017 12:30:52 PM pursuant to License Agreement with ICC. No further reproduction or distribution authorized. ANY UNAUTHORIZED REPRODUCTION OR DISTRIBUTION IS A VIOLATION OF THE FEDERAL COPYRIGHT ACT AND THE LICENSE AGREEMENT, AND SUBJECT TO CIVIL AND CRIMINAL PENALTIES THEREUNDER.

TABLE R802.5.1(7)—continued
RAFTER SPANS FOR 70 PSF GROUND SNOW LOAD
(Ceiling not attached to rafters, L/Δ = 180)

RAFTER SPACING (inches)	SPECIES AND GRADE		DEAD LOAD = 10 psf					DEAD LOAD = 20 psf				
			2 × 4	2 × 6	2 × 8	2 × 10	2 × 12	2 × 4	2 × 6	2 × 8	2 × 10	2 × 12
			Maximum Rafter Spans[a]									
			(feet-inches)	(feet-inches)	(feet-inches)	(feet-inches)	(feet-inches)	(feet-inches)	(feet-inches)	(feet-inches)	(feet-inches)	(feet-inches)
19.2	Southern pine	SS	6-4	10-0	13-2	15-10	18-8	6-4	9-10	12-6	14-11	17-7
	Southern pine	#1	5-8	8-5	10-8	12-5	14-9	5-4	7-11	10-0	11-9	13-11
	Southern pine	#2	4-10	7-3	9-2	10-10	12-9	4-6	6-10	8-8	10-3	12-1
	Southern pine	#3	3-8	5-6	6-11	8-4	9-11	3-6	5-2	6-6	7-11	9-4
	Spruce-pine-fir	SS	6-0	9-2	11-8	14-3	16-6	5-11	8-8	11-0	13-5	15-7
	Spruce-pine-fir	#1	5-3	7-8	9-9	11-11	13-10	5-0	7-3	9-2	11-3	13-0
	Spruce-pine-fir	#2	5-3	7-8	9-9	11-11	13-10	5-0	7-3	9-2	11-3	13-0
	Spruce-pine-fir	#3	4-0	5-10	7-4	9-0	10-5	3-9	5-6	6-11	8-6	9-10
24	Douglas fir-larch	SS	6-0	9-0	11-5	13-11	16-2	5-10	8-6	10-9	13-2	15-3
	Douglas fir-larch	#1	5-0	7-4	9-4	11-5	13-2	4-9	6-11	8-9	10-9	12-5
	Douglas fir-larch	#2	4-9	7-0	8-10	10-10	12-6	4-6	6-7	8-4	10-2	11-10
	Douglas fir-larch	#3	3-8	5-4	6-9	8-3	9-7	3-5	5-0	6-4	7-9	9-10
	Hem-fir	SS	5-8	8-8	11-0	13-6	13-11	5-7	8-3	10-5	12-4	12-4
	Hem-fir	#1	5-0	7-3	9-2	11-3	13-0	4-8	6-10	8-8	10-7	12-4
	Hem-fir	#2	4-8	6-9	8-7	10-6	12-2	4-4	6-5	8-1	9-11	11-6
	Hem-fir	#3	3-7	5-2	6-7	8-1	9-4	3-4	4-11	6-3	7-7	8-10
	Southern pine	SS	5-11	9-3	11-11	14-2	16-8	5-11	8-10	11-2	13-4	15-9
	Southern pine	#1	5-0	7-6	9-6	11-1	13-2	4-9	7-1	9-0	10-6	12-5
	Southern pine	#2	4-4	6-5	8-2	9-9	11-5	4-1	6-1	7-9	9-2	10-9
	Southern pine	#3	3-4	4-11	6-2	7-6	8-10	3-1	4-7	5-10	7-1	8-4
	Spruce-pine-fir	SS	5-6	8-3	10-5	12-9	14-9	5-4	7-9	9-10	12-0	12-11
	Spruce-pine-fir	#1	4-8	6-11	8-9	10-8	12-4	4-5	6-6	8-3	10-0	11-8
	Spruce-pine-fir	#2	4-8	6-11	8-9	10-8	12-4	4-5	6-6	8-3	10-0	11-8
	Spruce-pine-fir	#3	3-7	5-2	6-7	8-1	9-4	3-4	4-11	6-3	7-7	8-10

Check sources for availability of lumber in lengths greater than 20 feet.

For SI: 1 inch = 25.4 mm, 1 foot = 304.8 mm, 1 pound per square foot = 0.0479 kPa.

a. The tabulated rafter spans assume that ceiling joists are located at the bottom of the attic space or that some other method of resisting the outward push of the rafters on the bearing walls, such as rafter ties, is provided at that location. Where ceiling joists or rafter ties are located higher in the attic space, the rafter spans shall be multiplied by the following factors:

H_C/H_R	Rafter Span Adjustment Factor
1/3	0.67
1/4	0.76
1/5	0.83
1/6	0.90
1/7.5 or less	1.00

where:

H_C = Height of ceiling joists or rafter ties measured vertically above the top of the rafter support walls.

H_R = Height of roof ridge measured vertically above the top of the rafter support walls.

INTERNATIONAL CODE COUNCIL®
Copyright © 2015 ICC. ALL RIGHTS RESERVED. Accessed by David Dammon on Jun 21, 2017 12:30:52 PM pursuant to License Agreement with ICC. No further reproduction or distribution authorized. ANY UNAUTHORIZED REPRODUCTION OR DISTRIBUTION IS A VIOLATION OF THE FEDERAL COPYRIGHT ACT AND THE LICENSE AGREEMENT, AND SUBJECT TO CIVIL AND CRIMINAL PENALTIES THEREUNDER.

TABLE R802.5.1(8)
RAFTER SPANS FOR 70 PSF GROUND SNOW LOAD
(Ceiling attached to rafters, L/Δ = 240)

RAFTER SPACING (inches)	SPECIES AND GRADE		DEAD LOAD = 10 psf					DEAD LOAD = 20 psf				
			2 × 4	2 × 6	2 × 8	2 × 10	2 × 12	2 × 4	2 × 6	2 × 8	2 × 10	2 × 12
			Maximum rafter spans[a]									
			(feet - inches)	(feet - inches)	(feet - inches)	(feet - inches)	(feet - inches)	(feet - inches)	(feet - inches)	(feet - inches)	(feet - inches)	(feet - inches)
12	Douglas fir-larch	SS	6-10	10-9	14-3	18-2	22-1	6-10	10-9	14-3	18-2	21-7
	Douglas fir-larch	#1	6-7	10-5	13-2	16-1	18-8	6-7	9-10	12-5	15-2	17-7
	Douglas fir-larch	#2	6-6	9-10	12-6	15-3	17-9	6-4	9-4	11-9	14-5	16-8
	Douglas fir-larch	#3	5-2	7-7	9-7	11-8	13-6	4-10	7-1	9-0	11-0	12-9
	Hem-fir	SS	6-6	10-2	13-5	17-2	20-10	6-6	10-2	13-5	17-2	20-10
	Hem-fir	#1	6-4	10-0	13-0	15-11	18-5	6-4	9-8	12-3	15-0	17-5
	Hem-fir	#2	6-1	9-6	12-2	14-10	17-3	6-1	9-1	11-5	14-0	16-3
	Hem-fir	#3	5-0	7-4	9-4	11-5	13-2	4-9	6-11	8-9	10-9	12-5
	Southern pine	SS	6-9	10-7	14-0	17-10	21-8	6-9	10-7	14-0	17-10	21-8
	Southern pine	#1	6-6	10-2	13-5	15-9	18-8	6-6	10-0	12-8	14-10	17-7
	Southern pine	#2	6-1	9-2	11-7	13-9	16-2	5-9	8-7	10-11	12-11	15-3
	Southern pine	#3	4-8	6-11	8-9	10-7	12-6	4-5	6-6	8-3	10-0	11-10
	Spruce-pine-fir	SS	6-4	10-0	13-2	16-9	20-5	6-4	10-0	13-2	16-9	19-8
	Spruce-pine-fir	#1	6-2	9-9	12-4	15-1	17-6	6-2	9-2	11-8	14-2	16-6
	Spruce-pine-fir	#2	6-2	9-9	12-4	15-1	17-6	6-2	9-2	11-8	14-2	16-6
	Spruce-pine-fir	#3	5-0	7-4	9-4	11-5	13-2	4-9	6-11	8-9	10-9	12-5
16	Douglas fir-larch	SS	6-3	9-10	12-11	16-6	19-10	6-3	9-10	12-11	16-1	18-8
	Douglas fir-larch	#1	6-0	9-0	11-5	13-11	16-2	5-10	8-6	10-9	13-2	15-3
	Douglas fir-larch	#2	5-10	8-7	10-10	13-3	15-4	5-6	8-1	10-3	12-6	14-6
	Douglas fir-larch	#3	4-6	6-6	8-3	10-1	11-9	4-3	6-2	7-10	9-6	11-1
	Hem-fir	SS	5-11	9-3	12-2	15-7	18-11	5-11	9-3	12-2	15-7	18-0
	Hem-fir	#1	5-9	8-11	11-3	13-9	16-0	5-9	8-5	10-8	13-0	15-1
	Hem-fir	#2	5-6	8-4	10-6	12-10	14-11	5-4	7-10	9-11	12-1	14-1
	Hem-fir	#3	4-4	6-4	8-1	9-10	11-5	4-1	6-0	7-7	9-4	10-9
	Southern pine	SS	6-1	9-7	12-8	16-2	19-8	6-1	9-7	12-8	16-2	19-3
	Southern pine	#1	5-11	9-2	11-8	13-8	16-2	5-10	8-8	11-0	12-10	15-3
	Southern pine	#2	5-3	7-11	10-0	11-11	14-0	5-0	7-5	9-5	11-3	13-2
	Southern pine	#3	4-1	6-0	7-7	9-2	10-10	3-10	5-8	7-1	8-8	10-3
	Spruce-pine-fir	SS	5-9	9-1	11-11	15-3	18-1	5-9	9-1	11-11	14-8	17-1
	Spruce-pine-fir	#1	5-8	8-5	10-8	13-1	15-2	5-5	7-11	10-1	12-4	14-3
	Spruce-pine-fir	#2	5-8	8-5	10-8	13-1	15-2	5-5	7-11	10-1	12-4	14-3
	Spruce-pine-fir	#3	4-4	6-4	8-1	9-10	11-5	4-1	6-0	7-7	9-4	10-9
19.2	Douglas fir-larch	SS	5-10	9-3	12-2	15-6	18-1	5-10	9-3	12-0	14-8	17-1
	Douglas fir-larch	#1	5-7	8-3	10-5	12-9	14-9	5-4	7-9	9-10	12-0	13-11
	Douglas fir-larch	#2	5-4	7-10	9-11	12-1	14-0	5-0	7-4	9-4	11-5	13-2
	Douglas fir-larch	#3	4-1	6-0	7-7	9-3	10-8	3-10	5-7	7-1	8-8	10-1
	Hem-fir	SS	5-6	8-8	11-6	14-8	17-4	5-6	8-8	11-6	14-2	15-5
	Hem-fir	#1	5-5	8-2	10-3	12-7	14-7	5-3	7-8	9-8	11-10	13-9
	Hem-fir	#2	5-2	7-7	9-7	11-9	13-7	4-11	7-2	9-1	11-1	12-10
	Hem-fir	#3	4-0	5-10	7-4	9-0	10-5	3-9	5-6	6-11	8-6	9-10

(continued)

INTERNATIONAL CODE COUNCIL®
Copyright © 2015 ICC. ALL RIGHTS RESERVED. Accessed by David Dammon on Jun 21, 2017 12:30:52 PM pursuant to License Agreement with ICC. No further reproduction or distribution authorized. ANY UNAUTHORIZED REPRODUCTION OR DISTRIBUTION IS A VIOLATION OF THE FEDERAL COPYRIGHT ACT AND THE LICENSE AGREEMENT, AND SUBJECT TO CIVIL AND CRIMINAL PENALTIES THEREUNDER.

TABLE R802.5.1(8)—continued
RAFTER SPANS FOR 70 PSF GROUND SNOW LOAD
(Ceiling attached to rafters, L/Δ = 240)

RAFTER SPACING (inches)	SPECIES AND GRADE		DEAD LOAD = 10 psf					DEAD LOAD = 20 psf				
			2 × 4	2 × 6	2 × 8	2 × 10	2 × 12	2 × 4	2 × 6	2 × 8	2 × 10	2 × 12
			Maximum rafter spans[a]									
			(feet - inches)	(feet - inches)	(feet - inches)	(feet - inches)	(feet - inches)	(feet - inches)	(feet - inches)	(feet - inches)	(feet - inches)	(feet - inches)
19.2	Southern pine	SS	5-9	9-1	11-11	15-3	18-6	5-9	9-1	11-11	14-11	17-7
	Southern pine	#1	5-6	8-5	10-8	12-5	14-9	5-4	7-11	10-0	11-9	13-11
	Southern pine	#2	4-10	7-3	9-2	10-10	12-9	4-6	6-10	8-8	10-3	12-1
	Southern pine	#3	3-8	5-6	6-11	8-4	9-11	3-6	5-2	6-6	7-11	9-4
	Spruce-pine-fir	SS	5-5	8-6	11-3	14-3	16-6	5-5	8-6	11-0	13-5	15-7
	Spruce-pine-fir	#1	5-3	7-8	9-9	11-11	13-10	5-0	7-3	9-2	11-3	13-0
	Spruce-pine-fir	#2	5-3	7-8	9-9	11-11	13-10	5-0	7-3	9-2	11-3	13-0
	Spruce-pine-fir	#3	4-0	5-10	7-4	9-0	10-5	3-9	5-6	6-11	8-6	9-10
24	Douglas fir-larch	SS	5-5	8-7	11-3	13-11	16-2	5-5	8-6	10-9	13-2	15-3
	Douglas fir-larch	#1	5-0	7-4	9-4	11-5	13-2	4-9	6-11	8-9	10-9	12-5
	Douglas fir-larch	#2	4-9	7-0	8-10	10-10	12-6	4-6	6-7	8-4	10-2	11-10
	Douglas fir-larch	#3	3-8	5-4	6-9	8-3	9-7	3-5	5-0	6-4	7-9	9-0
	Hem-fir	SS	5-2	8-1	10-8	13-6	13-11	5-2	8-1	10-5	12-4	12-4
	Hem-fir	#1	5-0	7-3	9-2	11-3	13-0	4-8	6-10	8-8	10-7	12-4
	Hem-fir	#2	4-8	6-9	8-7	10-6	12-2	4-4	6-5	8-1	9-11	11-6
	Hem-fir	#3	3-7	5-2	6-7	8-1	9-4	3-4	4-11	6-3	7-7	8-10
	Southern pine	SS	5-4	8-5	11-1	14-2	16-8	5-4	8-5	11-1	13-4	15-9
	Southern pine	#1	5-0	7-6	9-6	11-1	13-2	4-9	7-1	9-0	10-6	12-5
	Southern pine	#2	4-4	6-5	8-2	9-9	11-5	4-1	6-1	7-9	9-2	10-9
	Southern pine	#3	3-4	4-11	6-2	7-6	8-10	3-1	4-7	5-10	7-1	8-4
	Spruce-pine-fir	SS	5-0	7-11	10-5	12-9	14-9	5-0	7-9	9-10	12-0	12-11
	Spruce-pine-fir	#1	4-8	6-11	8-9	10-8	12-4	4-5	6-6	8-3	10-0	11-8
	Spruce-pine-fir	#2	4-8	6-11	8-9	10-8	12-4	4-5	6-6	8-3	10-0	11-8
	Spruce-pine-fir	#3	3-7	5-2	6-7	8-1	9-4	3-4	4-11	6-3	7-7	8-10

Check sources for availability of lumber in lengths greater than 20 feet.

For SI: 1 inch = 25.4 mm, 1 foot = 304.8 mm, 1 pound per square foot = 0.0479 kPa.

a. The tabulated rafter spans assume that ceiling joists are located at the bottom of the attic space or that some other method of resisting the outward push of the rafters on the bearing walls, such as rafter ties, is provided at that location. Where ceiling joists or rafter ties are located higher in the attic space, the rafter spans shall be multiplied by the following factors:

H_C/H_R	Rafter Span Adjustment Factor
1/3	0.67
1/4	0.76
1/5	0.83
1/6	0.90
1/7.5 or less	1.00

where:

H_C = Height of ceiling joists or rafter ties measured vertically above the top of the rafter support walls.

H_R = Height of roof ridge measured vertically above the top of the rafter support walls.

INTERNATIONAL CODE COUNCIL®
Copyright © 2015 ICC. ALL RIGHTS RESERVED. Accessed by David Dammon on Jun 21, 2017 12:30:52 PM pursuant to License Agreement with ICC. No further reproduction or distribution authorized. ANY UNAUTHORIZED REPRODUCTION OR DISTRIBUTION IS A VIOLATION OF THE FEDERAL COPYRIGHT ACT AND THE LICENSE AGREEMENT, AND SUBJECT TO CIVIL AND CRIMINAL PENALTIES THEREUNDER.

TABLE R802.5.1(9)
RAFTER/CEILING JOIST HEEL JOINT CONNECTIONS[a, b, c, d, e, f, h]

RAFTER SLOPE	RAFTER SPACING (inches)	GROUND SNOW LOAD (psf)															
		20[g]				30				50				70			
		Roof span (feet)															
		12	20	28	36	12	20	28	36	12	20	28	36	12	20	28	36
		Required number of 16d common nails[a, b] per heel joint splices[c, d, e, f]															
3:12	12	4	6	8	10	4	6	8	11	5	8	12	15	6	11	15	20
	16	5	8	10	13	5	8	11	14	6	11	15	20	8	14	20	26
	24	7	11	15	19	7	11	16	21	9	16	23	30	12	21	30	39
4:12	12	3	5	6	8	3	5	6	8	4	6	9	11	5	8	12	15
	16	4	6	8	10	4	6	8	11	5	8	12	15	6	11	15	20
	24	5	8	12	15	5	9	12	16	7	12	17	22	9	16	23	29
5:12	12	3	4	5	6	3	4	5	7	3	5	7	9	4	7	9	12
	16	3	5	6	8	3	5	7	9	4	7	9	12	5	9	12	16
	24	4	7	9	12	4	7	10	13	6	10	14	18	7	13	18	23
7:12	12	3	4	4	5	3	3	4	5	3	4	5	7	3	5	7	9
	16	3	4	5	6	3	4	5	6	3	5	7	9	4	6	9	11
	24	3	5	7	9	3	5	7	9	4	7	10	13	5	9	13	17
9:12	12	3	3	4	4	3	3	3	4	3	3	4	5	3	4	5	7
	16	3	4	4	5	3	3	4	5	3	4	5	7	3	5	7	9
	24	3	4	6	7	3	4	6	7	3	6	8	10	4	7	10	13
12:12	12	3	3	3	3	3	3	3	3	3	3	3	4	3	3	4	5
	16	3	3	4	4	3	3	3	4	3	3	4	5	3	4	5	7
	24	3	4	4	5	3	3	4	6	3	4	6	8	3	6	8	10

For SI: 1 inch = 25.4 mm, 1 foot = 304.8 mm, 1 pound per square foot = 0.0479 kPa.

a. 40d box nails shall be permitted to be substituted for 16d common nails.

b. Nailing requirements shall be permitted to be reduced 25 percent if nails are clinched.

c. Heel joint connections are not required where the ridge is supported by a load-bearing wall, header or ridge beam.

d. Where intermediate support of the rafter is provided by vertical struts or purlins to a load-bearing wall, the tabulated heel joint connection requirements shall be permitted to be reduced proportionally to the reduction in span.

e. Equivalent nailing patterns are required for ceiling joist to ceiling joist lap splices.

f. Where rafter ties are substituted for ceiling joists, the heel joint connection requirement shall be taken as the tabulated heel joint connection requirement for two-thirds of the actual rafter slope.

g. Applies to roof live load of 20 psf or less.

h. Tabulated heel joint connection requirements assume that ceiling joists or rafter ties are located at the bottom of the attic space. Where ceiling joists or rafter ties are located higher in the attic, heel joint connection requirements shall be increased by the following factors:

H_C/H_R	Heel Joint Connection Adjustment Factor
1/3	1.5
1/4	1.33
1/5	1.25
1/6	1.2
1/10 or less	1.11

❖ This table contains requirements for the connection between roof rafters and ceiling joists to be used in areas with ground snow loads of 20 psf (1.44 kPa) up to 70 psf (3.35 kPa). The connection is essential to resist the thrust in the roof rafter where the ridge board does not provide vertical support of the roof rafter. Section R802.3 requires a designed ridge beam if the roof slope is less than 3:12. The 20 psf (1.44 kPa) ground snow load connection must also be used where the minimum roof live load is 20 psf (1.44 kPa) or less. See Note g of this table. Adjustment factors for the heel joint connection in Note h are limited to cases where the ceiling joists or rafter ties are in the lower third of the attic space. When the ceiling joists or rafter ties are located higher in the attic space, lateral deflection of the rafter below the rafter ties can become excessive and require additional engineering analysis (see commentary, Section R802.3.1).

INTERNATIONAL CODE COUNCIL®
Copyright © 2015 ICC. ALL RIGHTS RESERVED. Accessed by David Dammon on Jun 21, 2017 12:30:52 PM pursuant to License Agreement with ICC. No further reproduction or distribution authorized. ANY UNAUTHORIZED REPRODUCTION OR DISTRIBUTION IS A VIOLATION OF THE FEDERAL COPYRIGHT ACT AND THE LICENSE AGREEMENT, AND SUBJECT TO CIVIL AND CRIMINAL PENALTIES THEREUNDER.

R802.6.1 Finished ceiling material. If the finished ceiling material is installed on the ceiling prior to the attachment of the ceiling to the walls, such as in construction at a factory, a compression strip of the same thickness as the finished ceiling material shall be installed directly above the top plate of bearing walls if the compressive strength of the finished ceiling material is less than the loads it will be required to withstand. The compression strip shall cover the entire length of such top plate and shall be not less than one-half the width of the top plate. It shall be of material capable of transmitting the loads transferred through it.

❖ In prefabricated (panelized) construction where the finished ceiling material is attached to the roof assembly before it is attached to the walls, care must be taken to provide a compression strip to line up with the top plate of the supporting walls in order to have an adequate bearing surface.

R802.7 Cutting, drilling and notching. Structural roof members shall not be cut, bored or notched in excess of the limitations specified in this section.

❖ The limitations on cutting and notching roof rafters and ceiling joists are similar to those for cutting and notching floor joists (see commentary, Section R502.8).

R802.7.1 Sawn lumber. Cuts, notches and holes in solid lumber joists, rafters, blocking and beams shall comply with the provisions of Section R502.8.1 except that cantilevered portions of rafters shall be permitted in accordance with Section R802.7.1.1.

❖ Figure R502.8 illustrates cutting and notching limitations. The tension side of a member 4 inches (102 mm) or more in thickness can be notched only at the ends (also see commentary, Section R502.8).

R802.7.1.1 Cantilevered portions of rafters. Notches on cantilevered portions of rafters are permitted provided the dimension of the remaining portion of the rafter is not less than $3^1/_2$ inches (89 mm) and the length of the cantilever does not exceed 24 inches (610 mm) in accordance with Figure R802.7.1.1.

❖ Where a cantilevered rafter is notched at the top plate, the rafter must have a minimum depth at the notch of $3^1/_2$ inches (89 mm), as shown in Figure R802.7.1.1.

R802.7.1.2 Ceiling joist taper cut. Taper cuts at the ends of the ceiling joist shall not exceed one-fourth the depth of the member in accordance with Figure R802.7.1.2.

❖ The depth of the taper at the ends of ceiling joists is measured at the inside face of the support, as shown in Figure R802.7.1.2.

R802.7.2 Engineered wood products. Cuts, notches and holes bored in trusses, structural composite lumber, structural glue-laminated members, cross-laminated timber members or I-joists are prohibited except where permitted by the manufacturer's recommendations or where the effects of such alterations are specifically considered in the design of the member by a registered design professional.

❖ The cutting and notching limitations for sawn lumber do not apply to engineered wood products. Structural composite lumber is a generic term that encompasses a variety of engineered composite wood products, including laminated veneer lumber (LVL). Also included in the term are laminated strand lumber (LSL), parallel strand lumber (PSL) and oriented strand lumber (OSL). The prohibitions in this section apply to all of these products.

Engineered wood products must not be cut, notched or bored unless those alterations are considered in the

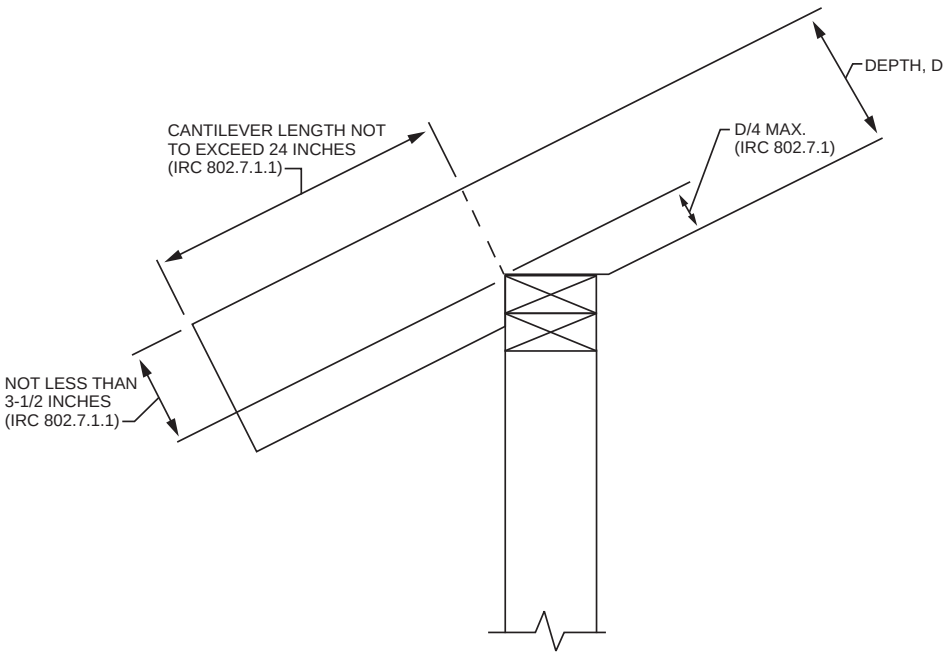

For SI: 1 inch = 25.4 mm.

FIGURE R802.7.1.1
RAFTER NOTCH

INTERNATIONAL CODE COUNCIL®
Copyright © 2015 ICC. ALL RIGHTS RESERVED. Accessed by David Dammon on Jun 21, 2017 12:30:52 PM pursuant to License Agreement with ICC. No further reproduction or distribution authorized. ANY UNAUTHORIZED REPRODUCTION OR DISTRIBUTION IS A VIOLATION OF THE FEDERAL COPYRIGHT ACT AND THE LICENSE AGREEMENT, AND SUBJECT TO CIVIL AND CRIMINAL PENALTIES THEREUNDER.

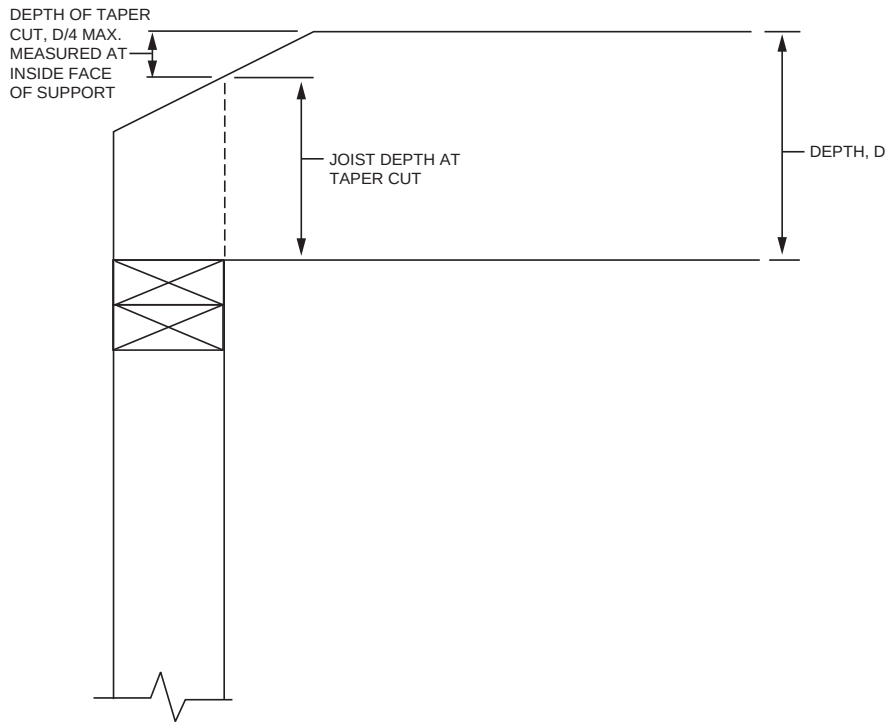

FIGURE R802.7.1.2
CEILING JOIST TAPER CUT

design of the member. That consideration is to be made either by the manufacturer and reflected in use recommendations (which is common in I-joists, permitting some limited alterations to webs) or by a registered design professional.

R802.8 Lateral support. Roof framing members and ceiling joists having a depth-to-thickness ratio exceeding 5 to 1 based on nominal dimensions shall be provided with lateral support at points of bearing to prevent rotation. For roof rafters with ceiling joists attached in accordance with Table R602.3(1), the depth-to-thickness ratio for the total assembly shall be determined using the combined thickness of the rafter plus the attached ceiling joist.

Exception: Roof trusses shall be braced in accordance with Section R802.10.3.

❖ Rafters and ceiling joists must be laterally supported to prevent twisting at the supports. See the commentary to Section R802.10.3 for bracing for roof trusses.

R802.8.1 Bridging. Rafters and ceiling joists having a depth-to-thickness ratio exceeding 6 to 1 based on nominal dimensions shall be supported laterally by solid blocking, diagonal bridging (wood or metal) or a continuous 1-inch by 3-inch (25 mm by 76 mm) wood strip nailed across the rafters or ceiling joists at intervals not exceeding 8 feet (2438 mm).

❖ Bridging must be installed for rafters and ceiling joists. This is similar to the requirements for floor joists in Section R502.7.1.

R802.9 Framing of openings. Openings in roof and ceiling framing shall be framed with header and trimmer joists. Where the header joist span does not exceed 4 feet (1219 mm), the header joist shall be permitted to be a single member the same size as the ceiling joist or rafter. Single trimmer joists shall be permitted to be used to carry a single header joist that is located within 3 feet (914 mm) of the trimmer joist bearing. Where the header joist span exceeds 4 feet (1219 mm), the trimmer joists and the header joist shall be doubled and of sufficient cross section to support the ceiling joists or rafter framing into the header. *Approved* hangers shall be used for the header joist to trimmer joist connections where the header joist span exceeds 6 feet (1829 mm). Tail joists over 12 feet (3658 mm) long shall be supported at the header by framing anchors or on ledger strips not less than 2 inches by 2 inches (51 mm by 51 mm).

❖ Requirements for framing at roof openings are similar to those of Section R502.10 for floor openings.

R802.10 Wood trusses.

R802.10.1 Truss design drawings. Truss design drawings, prepared in conformance to Section R802.10.1, shall be provided to the *building official* and *approved* prior to installation. Truss design drawings shall be provided with the shipment of trusses delivered to the job site. Truss design drawings shall include, at a minimum, the following information:

1. Slope or depth, span and spacing.
2. Location of all joints.
3. Required bearing widths.
4. Design loads as applicable.

INTERNATIONAL CODE COUNCIL®
Copyright © 2015 ICC. ALL RIGHTS RESERVED. Accessed by David Dammon on Jun 21, 2017 12:30:52 PM pursuant to License Agreement with ICC. No further reproduction or distribution authorized. ANY UNAUTHORIZED REPRODUCTION OR DISTRIBUTION IS A VIOLATION OF THE FEDERAL COPYRIGHT ACT AND THE LICENSE AGREEMENT, AND SUBJECT TO CIVIL AND CRIMINAL PENALTIES THEREUNDER.

4.1. Top chord live load (as determined from Section R301.6).

4.2. Top chord dead load.

4.3. Bottom chord live load.

4.4. Bottom chord dead load.

4.5. Concentrated loads and their points of application.

4.6. Controlling wind and earthquake loads.

5. Adjustments to lumber and joint connector design values for conditions of use.
6. Each reaction force and direction.
7. Joint connector type and description such as size, thickness or gage and the dimensioned location of each joint connector except where symmetrically located relative to the joint interface.
8. Lumber size, species and *grade for each member*.
9. Connection requirements for:

   9.1. Truss to girder-truss.

   9.2. Truss ply to ply.

   9.3. Field splices.

10. Calculated deflection ratio and/or maximum description for live and total load.
11. Maximum axial compression forces in the truss members to enable the building designer to design the size, connections and anchorage of the permanent continuous lateral bracing. Forces shall be shown on the truss design drawing or on supplemental documents.
12. Required permanent truss member bracing location.

❖ See the definition in Chapter 2 of "Truss design drawing." Also see the commentary to Section R802.10.2.

R802.10.2 Design. Wood trusses shall be designed in accordance with accepted engineering practice. The design and manufacture of metal-plate-connected wood trusses shall comply with ANSI/TPI 1. The truss design drawings shall be prepared by a registered professional where required by the statutes of the *jurisdiction* in which the project is to be constructed in accordance with Section R106.1.

❖ The code contains no prescriptive provisions for the design and installation of wood trusses. A design is required in accordance with accepted engineering practice. For snow load, the truss design must be checked for both the balanced and unbalanced condition. Although the unbalanced condition controls for rafter design, that is not necessarily the case for truss design. The balanced condition could control. See the commentary to Section R802.5 for the snow load criteria. In recognition of the extensive use of trusses in residential construction, the code references ANSI/TPI 1, *National Design Standard for Metal-plate-connected Wood Truss Construction*. This standard provides regulations for the design and installation of metal-plate-connected wood trusses, including the procedures for full-scale tests and testing methods for evaluating metal-plate connectors. In addition to adequate design, the trusses must be handled and erected properly so the performance capabilities of the trusses are not compromised. A truss member should never be cut without approval from the design engineer.

Usually trusses are delivered in bundles, which reduces the potential for damage. Sufficient slings and spreader bars should be used to reduce stresses caused by sway and bending.

Shop drawings showing the lumber schedule, design loads and panel point details (size, location and attachment of plates) should be filed with the building permit application and should be available at the time of inspection.

R802.10.2.1 Applicability limits. The provisions of this section shall control the design of truss roof framing when snow controls for buildings, not greater than 60 feet (18 288 mm) in length perpendicular to the joist, rafter or truss span, not greater than 36 feet (10 973 mm) in width parallel to the joist, rafter or truss span, not more than three stories above grade plane in height, and roof slopes not smaller than 3:12 (25 percent slope) or greater than 12:12 (100-percent slope). Truss roof framing constructed in accordance with the provisions of this section shall be limited to sites subjected to a maximum design wind speed of 140 miles per hour (63 m/s), Exposure B or C, and a maximum ground snow load of 70 psf (3352 Pa). For consistent loading of all truss types, roof snow load is to be computed as: $0.7\ p_g$.

❖ This section defines the applicability limits of the snow load for wood trusses to be consistent with the snow load applicable to wood or steel rafters.

The roof snow load is based on a maximum ground snow load of 70 pounds per square foot (3.35 kPa). The roof snow load is taken as $0.7\ p_g$, where p_g is equal to the ground snow load.

Applied roof snow loads were calculated by multiplying the ground snow load by an 0.7 conversion factor in accordance with ASCE 7 (ASCE, 1998). No further reductions were made for special cases.

The sloped roof snow load, from ASCE 7 is: $p_s = C_s \times p_f$, where p_f is the flat roof snow load. $p_f = 0.7 \times C_e \times C_t \times I \times p_g$.

Unbalanced snow loads, sliding snow loads, and snow drifts on lower roofs were not considered due to the lack of evidence for damage from unbalanced loads on homes and the lack of data to typify the statistical uncertainties associated with this load pattern on residential structures. Rain-on-snow surcharge load was also not considered in the calculations. Roof slopes in this document exceed the $^1/_2$ inch (12.7 mm) per foot requirement by ASCE 7 for the added load to be considered. Therefore, roof snow load was computed as: $1.0 \times 0.7 \times 1.0 \times 1.0 \times p_g = 0.7\ p_g$.

R802.10.3 Bracing. Trusses shall be braced to prevent rotation and provide lateral stability in accordance with the requirements specified in the *construction documents* for the building and on the individual truss design drawings. In the

INTERNATIONAL CODE COUNCIL®
Copyright © 2015 ICC. ALL RIGHTS RESERVED. Accessed by David Dammon on Jun 21, 2017 12:30:52 PM pursuant to License Agreement with ICC. No further reproduction or distribution authorized. ANY UNAUTHORIZED REPRODUCTION OR DISTRIBUTION IS A VIOLATION OF THE FEDERAL COPYRIGHT ACT AND THE LICENSE AGREEMENT, AND SUBJECT TO CIVIL AND CRIMINAL PENALTIES THEREUNDER.

absence of specific bracing requirements, trusses shall be braced in accordance with accepted industry practice such as the SBCA *Building Component Safety Information (BCSI) Guide to Good Practice for Handling, Installing & Bracing of Metal Plate Connected Wood Trusses*.

❖ To prevent their collapse during construction, and until permanent bracing is installed, trusses should be adequately braced temporarily. When braced for use, trusses should be positioned as close to vertical as possible; tilted trusses will not perform as required.

The construction documents and the individual truss design drawings should specify the bracing.

R802.10.4 Alterations to trusses. Truss members shall not be cut, notched, drilled, spliced or otherwise altered in any way without the approval of a registered *design professional*. Alterations resulting in the addition of load such as HVAC equipment water heater that exceeds the design load for the truss shall not be permitted without verification that the truss is capable of supporting such additional loading.

❖ The addition of loads in excess of the design load is allowed only if the truss is shown to have the additional capacity. See the commentary to Section R502.8.2.

R802.11 Roof tie-down.

❖ Because roof uplift caused by wind can be a significant factor in roof-system damage, the code requires roof-to-wall connections capable of resisting this force.

R802.11.1 Uplift resistance. Roof assemblies shall have uplift resistance in accordance with Sections R802.11.1.1 and R802.11.1.2.

Where the uplift force does not exceed 200 pounds (90.8 kg), rafters and trusses spaced not more than 24 inches (610 mm) on center shall be permitted to be attached to their supporting wall assemblies in accordance with Table R602.3(1).

Where the basic wind speed does not exceed 115 mph, the wind exposure category is B, the roof pitch is 5:12 or greater, and the roof span is 32 feet (9754 mm) or less, rafters and trusses spaced not more than 24 inches (610 mm) on center shall be permitted to be attached to their supporting wall assemblies in accordance with Table R602.3(1).

❖ In Table R602.3(1), the nailing of the rafter or roof truss to the top plate provides a 200-pound maximum uplift capacity where the rafter or truss is spaced not more than 24 inches (610 mm) on center. The basis of the capacity of this nailing is calculated from AWC NDS. The 200-pound uplift capacity is adequate for an ultimate design speed of 115 miles per hour, Exposure B, with a 32-foot (9754 mm) roof span and a 5:12 or greater pitch.

For trusses, there are three options provided for determining the roof uplift: the truss design drawings, Table R802.11 or an engineered design. In many jurisdictions (particularly rural ones), an engineered truss design is not required and the local truss fabricator will run the software from the plate company. These jurisdictions may also have limited or no plan review. Thus, there is less opportunity to ensure that the proper wind speed, building dimensions, mean roof height, etc., are used, and a possibility that overly conservative roof uplift loads will be generated on the truss design drawing. Hence, the ability to determine an uplift load from Table R802.11, even when there are truss drawings, is provided; however, use of Table R802.11 is limited to roof rafters and single-ply trusses within the applicability limits of Section R802.10.1.2. Girder trusses and roof beams require engineered connections and/or use of the truss design drawing values.

For rafters, there are two options provided for determining the roof uplift: Table R802.11 or an engineered design.

Table R802.11 is based on Table 2.2A of the AWC WFCM, which is based on the latest ASCE 7 wind-load provisions. The new table expands upon the AWC WFCM table by incorporating values for high-slope roofs. These factors were derived using the ASCE 7 wind provisions and the calculation method used to develop Table 2.2A of the AWC WFCM. A factor for hip roofs is also added, as hip roofs have seen similar improved performance in high-wind events.

Determination of the uplift connection forces is as follows: Ultimate design wind speed is as set forth in Table R301.2(1) and the wind exposure category is determined in accordance with Section R301.2.1.4. Using this wind speed and exposure, the designer selects the uplift forces from Table R802.11 based on the rafter or truss spacing, roof span and pitch. The uplift connection of the rafter or truss to the wall must have the capacity to resist the uplift force specified in Table R802.11.

R802.11.1.1 Truss uplift resistance. Trusses shall be attached to supporting wall assemblies by connections capable of resisting uplift forces as specified on the truss design drawings for the ultimate design wind speed as determined by Figure R301.2(4)A and listed in Table R301.2(1) or as shown on the construction documents. Uplift forces shall be permitted to be determined as specified by Table R802.11, if applicable, or as determined by accepted engineering practice.

❖ See the commentary to Section R802.11.1.

R802.11.1.2 Rafter uplift resistance. Individual rafters shall be attached to supporting wall assemblies by connections capable of resisting uplift forces as determined by Table R802.11 or as determined by accepted engineering practice. Connections for beams used in a roof system shall be designed in accordance with accepted engineering practice.

❖ See the commentary to Section R802.11.1.

INTERNATIONAL CODE COUNCIL®
Copyright © 2015 ICC. ALL RIGHTS RESERVED. Accessed by David Dammon on Jun 21, 2017 12:30:52 PM pursuant to License Agreement with ICC. No further reproduction or distribution authorized. ANY UNAUTHORIZED REPRODUCTION OR DISTRIBUTION IS A VIOLATION OF THE FEDERAL COPYRIGHT ACT AND THE LICENSE AGREEMENT, AND SUBJECT TO CIVIL AND CRIMINAL PENALTIES THEREUNDER.

TABLE R802.11
RAFTER OR TRUSS UPLIFT CONNECTION FORCES FROM WIND (ASD) (POUNDS PER CONNECTION)[a, b, c, d, e, f, g, h]

RAFTER OR TRUSS SPACING	ROOF SPAN (feet)	EXPOSURE B									
		Ultimate Design Wind Speed V_{ULT} (mph)									
		110		115		120		130		140	
		Roof Pitch		Roof Pitch		Roof Pitch		Roof Pitch		Roof Pitch	
		< 5:12	≥ 5:12	< 5:12	≥ 5:12	< 5:12	≥ 5:12	< 5:12	≥ 5:12	< 5:12	≥ 5:12
12″ o.c.	12	48	43	59	53	70	64	95	88	122	113
	18	59	52	74	66	89	81	122	112	157	146
	24	71	62	89	79	108	98	149	137	192	178
	28	79	69	99	88	121	109	167	153	216	200
	32	86	75	109	97	134	120	185	170	240	222
	36	94	82	120	106	146	132	203	186	264	244
	42	106	92	135	120	166	149	230	211	300	278
	48	118	102	151	134	185	166	258	236	336	311
16″ o.c.	12	64	57	78	70	93	85	126	117	162	150
	18	78	69	98	88	118	108	162	149	209	194
	24	94	82	118	105	144	130	198	182	255	237
	28	105	92	132	117	161	145	222	203	287	266
	32	114	100	145	129	178	160	246	226	319	295
	36	125	109	160	141	194	176	270	247	351	325
	42	141	122	180	160	221	198	306	281	399	370
	48	157	136	201	178	246	221	343	314	447	414
24″ o.c.	12	96	86	118	106	140	128	190	176	244	226
	18	118	104	148	132	178	162	244	224	314	292
	24	142	124	178	158	216	196	298	274	384	356
	28	158	138	198	176	242	218	334	306	432	400
	32	172	150	218	194	268	240	370	340	480	444
	36	188	164	240	212	292	264	406	372	528	488
	42	212	184	270	240	332	298	460	422	600	556
	48	236	204	302	268	370	332	516	472	672	622

(continued)

INTERNATIONAL CODE COUNCIL®
Copyright © 2015 ICC. ALL RIGHTS RESERVED. Accessed by David Dammon on Jun 21, 2017 12:30:52 PM pursuant to License Agreement with ICC. No further reproduction or distribution authorized. ANY UNAUTHORIZED REPRODUCTION OR DISTRIBUTION IS A VIOLATION OF THE FEDERAL COPYRIGHT ACT AND THE LICENSE AGREEMENT, AND SUBJECT TO CIVIL AND CRIMINAL PENALTIES THEREUNDER.

TABLE R802.11—continued
RAFTER OR TRUSS UPLIFT CONNECTION FORCES FROM WIND (POUNDS PER CONNECTION)[a, b, c, d, e, f, g, h]

RAFTER OR TRUSS SPACING	ROOF SPAN (feet)	EXPOSURE C									
		Ultimate Design Wind Speed V_{ULT} (mph)									
		110		115		120		130		140	
		Roof Pitch		Roof Pitch		Roof Pitch		Roof Pitch		Roof Pitch	
		< 5:12	≥ 5:12	< 5:12	≥ 5:12	< 5:12	≥ 5:12	< 5:12	≥ 5:12	< 5:12	≥ 5:12
12″ o.c.	12	95	88	110	102	126	118	161	151	198	186
	18	121	111	141	131	163	151	208	195	257	242
	24	148	136	173	160	200	185	256	239	317	298
	28	166	152	195	179	225	208	289	269	358	335
	32	184	168	216	199	249	231	321	299	398	373
	36	202	185	237	219	274	254	353	329	438	411
	42	229	210	269	248	312	289	402	375	499	468
	48	256	234	302	278	349	323	450	420	560	524
16″ o.c.	12	126	117	146	136	168	157	214	201	263	247
	18	161	148	188	174	217	201	277	259	342	322
	24	197	181	230	213	266	246	340	318	422	396
	28	221	202	259	238	299	277	384	358	476	446
	32	245	223	287	265	331	307	427	398	529	496
	36	269	246	315	291	364	338	469	438	583	547
	42	305	279	358	330	415	384	535	499	664	622
	48	340	311	402	370	464	430	599	559	745	697
24″ o.c.	12	190	176	220	204	252	236	322	302	396	372
	18	242	222	282	262	326	302	416	390	514	484
	24	296	272	346	320	400	370	512	478	634	596
	28	332	304	390	358	450	416	578	538	716	670
	32	368	336	432	398	498	462	642	598	796	746
	36	404	370	474	438	548	508	706	658	876	822
	42	458	420	538	496	624	578	804	750	998	936
	48	512	468	604	556	698	646	900	840	1120	1048

For SI: 1 inch = 25.4 mm, 1 foot = 304.8 mm, 1 mile per hour = 0.447 m/s, 1 pound = 0.454 kg, 1 pound per square foot = 47.9 N/m^2, 1 plf = 14.6 N/m.

a. The uplift connection forces are based on a maximum 33-foot mean roof height and Wind Exposure Category B or C. For Exposure D, the uplift connection force shall be selected from the Exposure C portion of the table using the next highest tabulated ultimate design wind speed. The adjustment coefficients in Table R301.2(3) shall not be used to multiply the tabulated forces for Exposures C and D or for other mean roof heights.

b. The uplift connection forces include an allowance for roof and ceiling assembly dead load of 15 psf.

c. The tabulated uplift connection forces are limited to a maximum roof overhang of 24 inches.

d. The tabulated uplift connection forces shall be permitted to be multiplied by 0.75 for connections not located within 8 feet of building corners.

e. For buildings with hip roofs with 5:12 and greater pitch, the tabulated uplift connection forces shall be permitted to be multiplied by 0.70. This reduction shall not be combined with any other reduction in tabulated forces.

f. For wall-to-wall and wall-to-foundation connections, the uplift connection force shall be permitted to be reduced by 60 plf for each full wall above.

g. Linear interpolation between tabulated roof spans and wind speeds shall be permitted.

h. The tabulated forces for a 12-inch on-center spacing shall be permitted to be used to determine the uplift load in pounds per linear foot.

INTERNATIONAL CODE COUNCIL®
Copyright © 2015 ICC. ALL RIGHTS RESERVED. Accessed by David Dammon on Jun 21, 2017 12:30:52 PM pursuant to License Agreement with ICC. No further reproduction or distribution authorized. ANY UNAUTHORIZED REPRODUCTION OR DISTRIBUTION IS A VIOLATION OF THE FEDERAL COPYRIGHT ACT AND THE LICENSE AGREEMENT, AND SUBJECT TO CIVIL AND CRIMINAL PENALTIES THEREUNDER.

SECTION R803
ROOF SHEATHING

R803.1 Lumber sheathing. Allowable spans for lumber used as roof sheathing shall conform to Table R803.1. Spaced lumber sheathing for wood shingle and shake roofing shall conform to the requirements of Sections R905.7 and R905.8. Spaced lumber sheathing is not allowed in Seismic Design Category D_2.

❖ Table R803.1 specifies the minimum thickness of lumber roof sheathing based on rafter spacing. Spaced lumber sheathing used in conjunction with wood shingle or shake roofs is permitted when installed in accordance with Section R905. Because spaced lumber sheathing does not provide a roof diaphragm capable of transferring high in-plane loads to the supporting shear walls or braced wall lines, it is prohibited in structures classified as Seismic Design Category D_2.

TABLE R803.1
MINIMUM THICKNESS OF LUMBER ROOF SHEATHING

RAFTER OR BEAM SPACING (inches)	MINIMUM NET THICKNESS (inches)
24	$^5/_8$
48[a]	$1^1/_2$ T & G
60[b]	
72[c]	

For SI: 1 inch = 25.4 mm.
a. Minimum 270 F_b, 340,000 E.
b. Minimum 420 F_b, 660,000 E.
c. Minimum 600F_b, 1,150,000 E.

❖ See the commentary to Section R803.1.

R803.2 Wood structural panel sheathing.

R803.2.1 Identification and grade. Wood structural panels shall conform to DOC PS 1, DOC PS 2, CSA O437 or CSA O325, and shall be identified for grade, bond classification and performance category by a grade mark or certificate of inspection issued by an *approved* agency. Wood structural panels shall comply with the grades specified in Table R503.2.1.1(1).

❖ Span rating and installation requirements for wood structural panels used as roof sheathing are similar to those of Section R503.2 for floor sheathing.

R803.2.1.1 Exposure durability. Wood structural panels, when designed to be permanently exposed in outdoor applications, shall be of an exterior exposure durability. Wood structural panel roof sheathing exposed to the underside shall be permitted to be of interior type bonded with exterior glue, identified as Exposure 1.

❖ Exterior-type wood structural panels are required when the wood structural panels are exposed to the environment. Exterior wood structural panels use a moisture-resistant glue that may penetrate the outer veneer lamination. Additionally, exterior wood structural panels typically use a higher grade of veneer for the inner plies, which are compatible with the exterior glue-line performance. Wood structural panel roof sheathing exposed only on the underside, such as eave overhangs, is permitted to be of the interior type with exterior glue because of the decrease in exposure hazard relative to moisture.

R803.2.1.2 Fire-retardant-treated plywood. The allowable unit stresses for fire-retardant-treated plywood, including fastener values, shall be developed from an *approved* method of investigation that considers the effects of anticipated temperature and humidity to which the fire-retardant-treated plywood will be subjected, the type of treatment and redrying process. The fire-retardant-treated plywood shall be graded by an *approved agency.*

❖ See the commentary to Section R802.1.5.

R803.2.2 Allowable spans. The maximum allowable spans for wood structural panel roof sheathing shall not exceed the values set forth in Table R503.2.1.1(1), or APA E30.

❖ Table 503.2.1.1(1) and APA E30 list allowable spans and loads for wood structural panel roof sheathing (also see commentary, Section R503.2.2).

R803.2.3 Installation. Wood structural panel used as roof sheathing shall be installed with joints staggered or not staggered in accordance with Table R602.3(1), APA E30 for wood roof framing or with Table R804.3 for cold-formed steel roof framing.

❖ This section refers to the fastening schedule in Chapter 6 for attachment to wood roof framing. Note f to Table R602.3(1) establishes zones requiring increased nailing based on criteria such as ultimate design wind speed. APA E30, *APA Design and Construction Guide,* is referenced as an alternative to the Chapter 6 fastening schedule.

This section also gives a cross reference to the Roof Framing Fastening Schedule, Table R804.3, for attachments to cold-formed steel roof framing.

SECTION R804
COLD-FORMED STEEL ROOF FRAMING

R804.1 General. Elements shall be straight and free of any defects that would significantly affect their structural performance. Cold-formed steel roof framing members shall be in accordance with the requirements of this section.

❖ The provisions of this section govern cold-formed steel roof and ceiling framing.

R804.1.1 Applicability limits. The provisions of this section shall control the construction of cold-formed steel roof framing for buildings not greater than 60 feet (18 288 mm) perpendicular to the joist, rafter or truss span, not greater than 40 feet (12 192 mm) in width parallel to the joist span or truss, less than or equal to three stories above *grade* plane and with roof slopes not less than 3:12 (25-percent slope) or greater than 12:12 (100-percent slope). Cold-formed steel roof framing constructed in accordance with the provisions of this section shall be limited to sites where the ultimate design wind speed is less than 139 miles per hour (62 m/s), Exposure Cat-

INTERNATIONAL CODE COUNCIL®
Copyright © 2015 ICC. ALL RIGHTS RESERVED. Accessed by David Dammon on Jun 21, 2017 12:30:52 PM pursuant to License Agreement with ICC. No further reproduction or distribution authorized. ANY UNAUTHORIZED REPRODUCTION OR DISTRIBUTION IS A VIOLATION OF THE FEDERAL COPYRIGHT ACT AND THE LICENSE AGREEMENT, AND SUBJECT TO CIVIL AND CRIMINAL PENALTIES THEREUNDER.

egory B or C, and the ground snow load is less than or equal to 70 pounds per square foot (3350 Pa).

❖ Other than providing roof slope limits, this section is identical to Section R505.1.1 and the limitations illustrated in Commentary Figure R505.1.1.

R804.1.2 In-line framing. Cold-formed steel roof framing constructed in accordance with Section R804 shall be located in line with load-bearing studs in accordance with Figure R804.1.2 and the tolerances specified as follows:

1. The maximum tolerance shall be $^3/_4$ inch (19.1 mm) between the centerline of the horizontal framing member and the centerline of the vertical framing member.
2. Where the centerline of the horizontal framing member and bearing stiffener are located to one side of the centerline of the vertical framing member, the maximum tolerance shall be $^1/_8$ inch (3.2 mm) between the web of the horizontal framing member and the edge of the vertical framing member.

❖ The code does not anticipate loads on the top plate of a wall that would cause bending of the top plate. Therefore, roof-framing members must be located directly in line with load-bearing studs of the supporting steel-framed walls as indicated in Figure R804.1.2. The permitted offset provides some tolerance for rafter location while not adversely affecting the top plate (see commentary, Section R505.1.2).

R804.2 Structural framing. Load-bearing, cold-formed steel roof framing members shall be in accordance with this section.

❖ Sections R804.2.1 through R804.2.6 specify the requirements for cold-formed steel sections used for ceiling joists and roof rafters.

R804.2.1 Material. Load-bearing, cold-formed steel framing members shall be cold formed to shape from structural quality sheet steel complying with the requirements of ASTM A1003, Structural Grades 33 Type H and 50 Type H.

❖ Load-bearing steel framing members must be cold formed to shape from structural quality sheet steel complying with the applicable material standards. The steel grades specified have the ductility and strength to meet the intent of these provisions.

R804.2.2 Corrosion protection. Load-bearing, cold-formed steel framing shall have a metallic coating complying with ASTM A1003 and one of the following:

1. A minimum of G 60 in accordance with ASTM A653.
2. A minimum of AZ 50 in accordance with ASTM A792.

❖ The specified metallic coatings correspond to requirements in the referenced material standards. The minimum coating designations assume normal exposure conditions that are best defined as having the framing members enclosed within a building envelope or wall assembly within a controlled environment. When more severe exposure conditions are probable, such as industrial or marine atmospheres, consideration should be given to specifying a heavier coating.

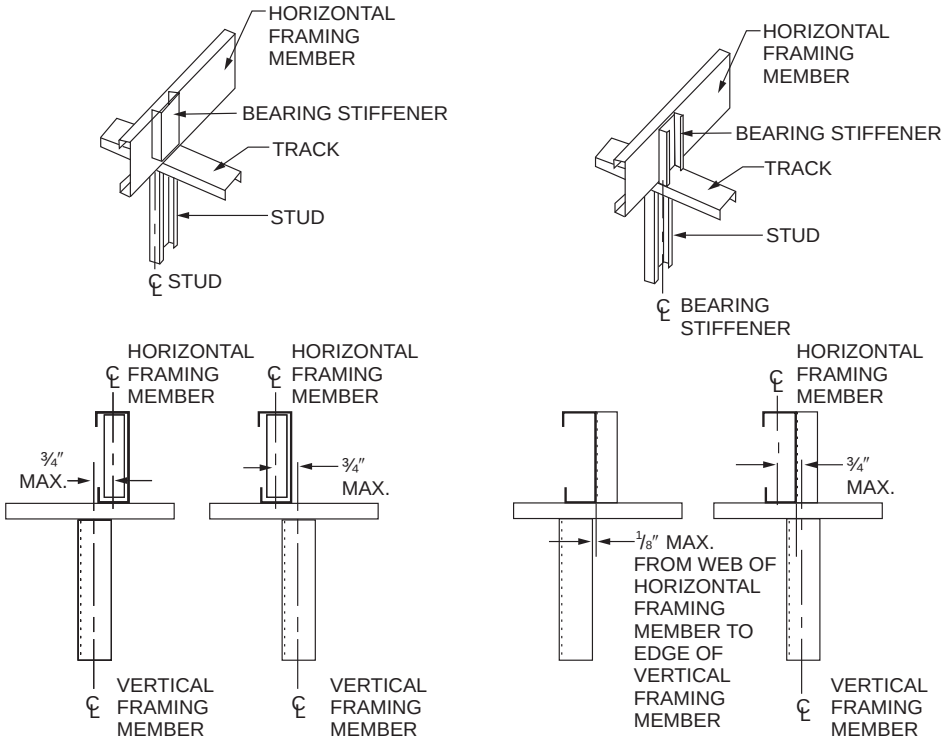

For SI: 1 inch = 25.4 mm.

FIGURE R804.1.2
IN-LINE FRAMING

INTERNATIONAL CODE COUNCIL®
Copyright © 2015 ICC. ALL RIGHTS RESERVED. Accessed by David Dammon on Jun 21, 2017 12:30:52 PM pursuant to License Agreement with ICC. No further reproduction or distribution authorized. ANY UNAUTHORIZED REPRODUCTION OR DISTRIBUTION IS A VIOLATION OF THE FEDERAL COPYRIGHT ACT AND THE LICENSE AGREEMENT, AND SUBJECT TO CIVIL AND CRIMINAL PENALTIES THEREUNDER.

R804.2.3 Dimension, thickness and material grade. Load-bearing, cold-formed steel roof framing members shall comply with Figure R804.2.3(1) and with the dimensional and thickness requirements specified in Table R804.2.3. Additionally, C-shaped sections shall have a minimum flange width of 1.625 inches (41 mm) and a maximum flange width of 2 inches (51 mm). The minimum lip size for C-shaped sections shall be $^1/_2$ inch (12.7 mm). Tracks shall comply with Figure R804.2.3(2) and shall have a minimum flange width of $1^1/_4$ inches (32 mm). Minimum Grade 33 ksi steel shall be used wherever 33 mil and 43 mil thicknesses are specified. Minimum Grade 50 ksi steel shall be used wherever 54 and 68 mil thicknesses are specified.

❖ C-shaped sections must comply with Figure R804.2.3(1) and the dimensional and minimum thickness requirements of Table R804.2.3. Note a to Table R804.2.3 explains the meaning of the alphanumeric member designation used for all steel framing members in the code. This system replaces the varied designation approaches that were used by each individual manufacturer. In addition, the designation is used to identify not only a specific steel framing member, but also the section properties of that same member through the use of the product technical information document. The flange width of C-shaped sections must be from $1^1/_2$ inches to 2 inches with a minimum lip of $^1/_2$ inch.

Steel track sections are to serve in nonload-bearing applications only and are shown in Figure R804.2.3(2). They must have a minimum flange width of $1^1/_4$ inches (32 mm).

TABLE R804.2.3
LOAD-BEARING COLD-FORMED STEEL ROOF FRAMING MEMBER SIZES AND THICKNESSES

MEMBER DESIGNATION[a]	WEB DEPTH (inches)	MINIMUM BASE STEEL THICKNESS mil (inches)
350S162-t	3.5	33 (0.0329), 43 (0.0428), 54 (0.0538)
550S162-t	5.5	33 (0.0329), 43 (0.0428), 54 (0.0538), 68 (0.0677)
800S162-t	8	33 (0.0329), 43 (0.0428), 54 (0.0538), 68 (0.0677)
1000S162-t	10	43 (0.0428), 54 (0.0538), 68 (0.0677)
1200S162-t	12	43 (0.0428), 54 (0.0538), 68 (0.0677)

For SI: 1 inch = 25.4 mm

a. The member designation is defined by the first number representing the member depth in hundredths of an inch, the letter "s" representing a stud or joist member, the second number representing the flange width in hundredths of an inch and the letter "t" shall be a number representing the minimum base metal thickness in mils.

❖ See the commentary to Section R804.2.3

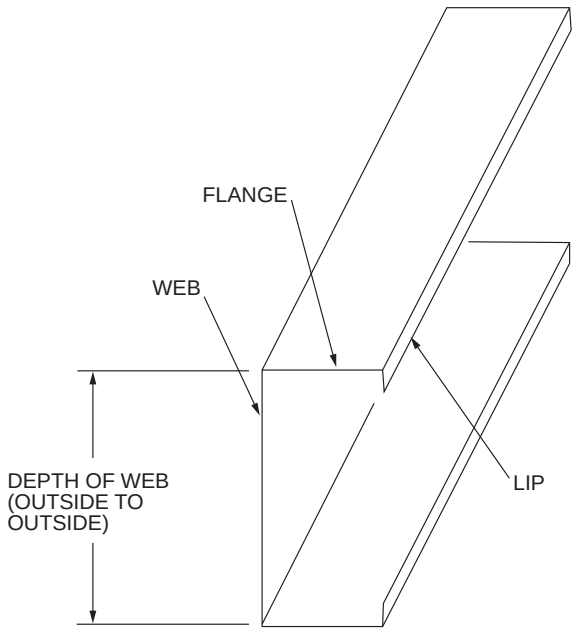

FIGURE R804.2.3(1)
C-SHAPED SECTION

❖ See the commentary to Section R804.2.3

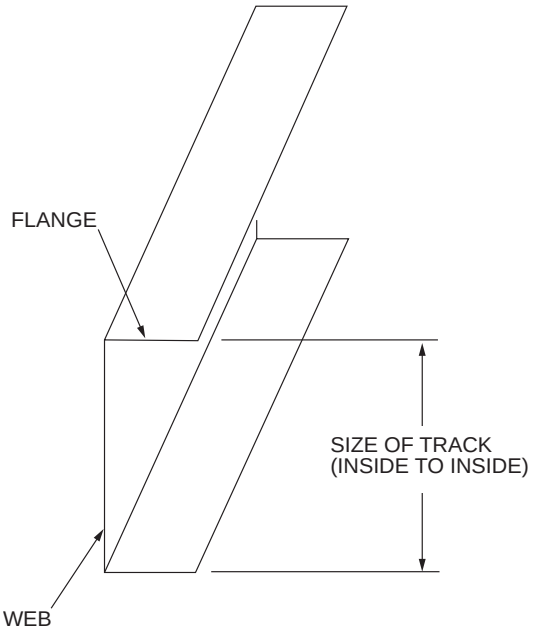

FIGURE R804.2.3(2)
TRACK SECTION

❖ See the commentary to Section R804.2.3

INTERNATIONAL CODE COUNCIL®
Copyright © 2015 ICC. ALL RIGHTS RESERVED. Accessed by David Dammon on Jun 21, 2017 12:30:52 PM pursuant to License Agreement with ICC. No further reproduction or distribution authorized. ANY UNAUTHORIZED REPRODUCTION OR DISTRIBUTION IS A VIOLATION OF THE FEDERAL COPYRIGHT ACT AND THE LICENSE AGREEMENT, AND SUBJECT TO CIVIL AND CRIMINAL PENALTIES THEREUNDER.

Steel thickness is expressed in mils, measuring the base metal thickness prior to painting or the application of metallic (corrosion-resistant) coatings. The base metal thickness is typically stamped or embossed on the member by the manufacturer. Table R804.2.3 also references the equivalent thickness in inches.

Minimum Grade 33 ksi steel must be used where the thickness is 33 or 43 mil. Where the thickness is 54 or 68 mil, the minimum grade must be Grade 50 ksi steel.

R804.2.4 Identification. Load-bearing, cold-formed steel framing members shall have a legible *label*, stencil, stamp or embossment with the following information as a minimum:

1. Manufacturer's identification.
2. Minimum base steel thickness in inches (mm).
3. Minimum coating designation.
4. Minimum yield strength, in kips per square inch (ksi) (MPa).

❖ Load-bearing steel framing members must have a legible label, stencil, stamp or embossment. This identification allows for verification that installed materials are consistent with the design and meet the intent of the code.

R804.2.5 Fastening requirements. Screws for steel-to-steel connections shall be installed with a minimum edge distance and center-to-center spacing of $^1/_2$ inch (12.7 mm), shall be self-drilling tapping and shall conform to ASTM C1513. Structural sheathing shall be attached to cold-formed steel roof rafters with minimum No. 8 self-drilling tapping screws that conform to ASTM C1513. Screws for attaching structural sheathing to cold-formed steel roof framing shall have a minimum head diameter of 0.292 inch (7.4 mm) with countersunk heads and shall be installed with a minimum edge distance of $^3/_8$ inch (9.5 mm). Gypsum board ceilings shall be attached to cold-formed steel joists with minimum No. 6 screws conforming to ASTM C954 or ASTM C1513 with a bugle-head style and shall be installed in accordance with Section R805. For all connections, screws shall extend through the steel a minimum of three exposed threads. Fasteners shall have rust-inhibitive coating suitable for the installation in which they are being used, or be manufactured from material not susceptible to corrosion.

❖ Fasteners meeting the referenced standards and installed in accordance with this section will provide a load capacity consistent with these prescriptive provisions. This section specifies self-drilling tapping screws conforming to ASTM C1513, *Specification for Steel Tapping Screws for Cold-formed Steel Framing Connection,* for all steel-to-steel connections as well as for fastening floor sheathing to steel joists. All fasteners must have rust-inhibitive coating or be manufactured from material not susceptible to corrosion. Gypsum board must be attached to steel joists with No. 6 screws (minimum) conforming to ASTM C954, *Standard Specification for Steel Drill Screws for the Application of Gypsum Panel Products or Metal Plaster Bases to Steel Studs from 0.033 in. (0.84 mm) to 0.112 in. (2.84 mm) in Thickness,* or ASTM C1513 (see Section R702 for installation). For all connections, screws must extend through the steel a minimum of three exposed threads.

R804.2.6 Web holes, web hole reinforcing and web hole patching. Web holes, web hole reinforcing and web hole patching shall be in accordance with this section.

❖ Sections R804.2.6.1 through R804.2.6.3 specify the criteria for web holes, web hole reinforcing and web hole patching in roof framing members.

R804.2.6.1 Web holes. Web holes in roof framing members shall comply with all of the following conditions:

1. Holes shall conform to Figure R804.2.6.1.
2. Holes shall be permitted only along the centerline of the web of the framing member.
3. Center-to-center spacing of holes shall not be less than 24 inches (610 mm).
4. The web hole width shall be not greater than one-half the member depth, or $2^1/_2$ inches (64 mm).
5. Holes shall have a web hole length not exceeding $4^1/_2$ inches (114 mm).
6. The minimum distance between the edge of the bearing surface and the edge of the web hole shall be not less than 10 inches (254 mm).

Framing members with web holes not conforming to Items 1 though 6 shall be reinforced in accordance with Section R804.2.6.2, patched in accordance with Section R804.2.6.3 or designed in accordance with accepted engineering practices.

❖ To allow for routing utilities through steel-framed roof framing members, holes (also referred to as penetrations, utility holes and punchouts) are permitted in the webs of roof framing members. To avoid adversely affecting the strength of roof framing members, the web holes are limited to the locations along the centerline of the web of the framing member as illustrated in Figure R804.2.6.1.

To avoid overstressing the joist web through high shear, these web holes must occur more than 10 inches (254 mm) from the edge of a load-bearing surface. Patching of web holes must extend at least 1 inch (25 mm) beyond all edges of the hole, and it must be fastened to the web with No. 8 screws having a minimum edge distance of $^1/_2$ inch (12.7 mm). Framing members with web holes exceeding these limits must be reinforced, patched or designed in accordance with accepted engineering practice (see commentary, Sections R804.2.6.2 and R804.2.6.3).

R804.2.6.2 Web hole reinforcing. Reinforcement of web holes in ceiling joists not conforming to the requirements of Section R804.2.6.1 shall be permitted if the hole is located fully within the center 40 percent of the span and the depth and length of the hole do not exceed 65 percent of the flat width of the web. The reinforcing shall be a steel plate or C-shaped section with a hole that does not exceed the web hole

INTERNATIONAL CODE COUNCIL®
Copyright © 2015 ICC. ALL RIGHTS RESERVED. Accessed by David Dammon on Jun 21, 2017 12:30:52 PM pursuant to License Agreement with ICC. No further reproduction or distribution authorized. ANY UNAUTHORIZED REPRODUCTION OR DISTRIBUTION IS A VIOLATION OF THE FEDERAL COPYRIGHT ACT AND THE LICENSE AGREEMENT, AND SUBJECT TO CIVIL AND CRIMINAL PENALTIES THEREUNDER.

size limitations of Section R804.2.6.1 for the member being reinforced. The steel reinforcing shall be the same thickness as the receiving member and shall extend not less than 1 inch (25 mm) beyond all edges of the hole. The steel reinforcing shall be fastened to the web of the receiving member with No. 8 screws spaced not greater than 1 inch (25 mm) center to center along the edges of the patch with minimum edge distance of $^1/_2$ inch (12.7 mm).

❖ Web holes that are not within the criteria of Section R804.2.6.1 are permitted if they are reinforced and comply with the criteria of this section.

The reinforcing provisions of this section were developed based on engineering judgement and accepted engineering practice and confirmed by testing.

R804.2.6.3 Hole patching. Patching of web holes in roof framing members not conforming to the requirements in Section R804.2.6.1 shall be permitted in accordance with either of the following methods:

1. Framing members shall be replaced or designed in accordance with accepted engineering practices where web holes exceed either of the following size limits:
   1.1. The depth of the hole, measured across the web, exceeds 70 percent of the flat width of the web.
   1.2. The length of the hole measured along the web, exceeds 10 inches (254 mm) or the depth of the web, whichever is greater.
2. Web holes not exceeding the dimensional requirements in Section R804.2.6.3, Item 1, shall be patched with a solid steel plate, stud section or track section in accordance with Figure R804.2.6.3. The steel patch shall, as a minimum, be the same thickness as the receiving member and shall extend not less than 1 inch (25 mm) beyond all edges of the hole. The steel patch shall be fastened to the web of the receiving member with No. 8 screws spaced not greater than 1 inch (25 mm) center-to-center along the edges of the patch with minimum edge distance of $^1/_2$ inch (12.7 mm).

❖ Framing members with web holes exceeding the limits outlined in Item 1 of this section must be replaced or designed in accordance with accepted engineering practice. Framing members with web holes within the limits of Item 1, but exceeding the limits of Section R804.2.6.1, must be patched in accordance with Item 2 of this section (see commentary, Section R804.2.6.1).

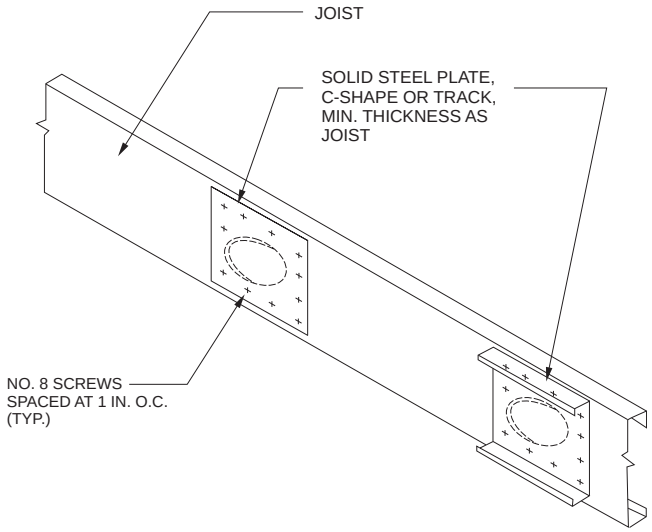

For SI: 1 inch = 25.4 mm.

FIGURE R804.2.6.3
ROOF FRAMING MEMBER WEB HOLE PATCH

❖ See the commentary to Section R804.2.6.3.

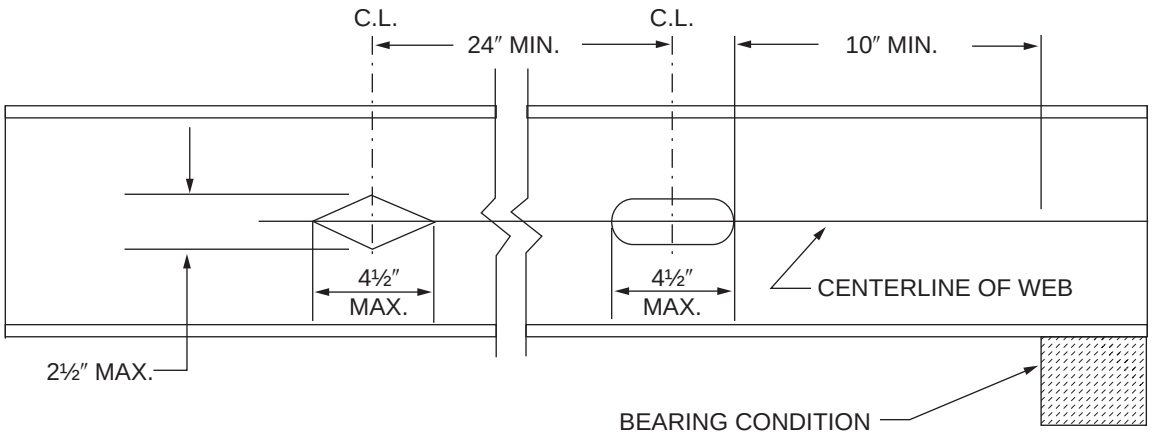

For SI: 1 inch = 25.4 mm.

FIGURE R804.2.6.1
ROOF FRAMING MEMBER WEB HOLES

❖ See the commentary to Section R804.2.6.1.

INTERNATIONAL CODE COUNCIL®
Copyright © 2015 ICC. ALL RIGHTS RESERVED. Accessed by David Dammon on Jun 21, 2017 12:30:52 PM pursuant to License Agreement with ICC. No further reproduction or distribution authorized. ANY UNAUTHORIZED REPRODUCTION OR DISTRIBUTION IS A VIOLATION OF THE FEDERAL COPYRIGHT ACT AND THE LICENSE AGREEMENT, AND SUBJECT TO CIVIL AND CRIMINAL PENALTIES THEREUNDER.

R804.3 Roof construction. Cold-formed steel roof systems constructed in accordance with the provisions of this section shall consist of both ceiling joists and rafters in accordance with Figure R804.3 and fastened in accordance with Table R804.3.

❖ Figure R804.3 illustrates steel roof system components. The roof framing fastening schedule in Table R804.3 specifies the minimum connection requirements for components of the roof framing system.

R804.3.1 Ceiling joists. Cold-formed steel ceiling joists shall be in accordance with this section.

❖ Sections R804.3.1.1 through R804.3.1.4 provide the requirements for ceiling joist size, bearing stiffeners, bottom flange bracing, top flange bracing, and splicing.

R804.3.1.1 Minimum ceiling joist size. Ceiling joist size and thickness shall be determined in accordance with the limits set forth in Tables R804.3.1.1(1) and R804.3.1.1(2). When determining the size of ceiling joists, the lateral support of the top flange shall be classified as unbraced, braced at midspan or braced at third points in accordance with Section R804.3.1.4. Where sheathing material is attached to the top flange of ceiling joists or where the bracing is spaced closer than third point of the joists, the "third point" values from Tables R804.3.1.1(1) and R804.3.1.1(2) shall be used.

Ceiling joists shall have a bearing support length of not less than $1^1/_2$ inches (38 mm) and shall be connected to roof rafters (heel joint) with No. 10 screws in accordance with Figure R804.3.1.1 and Table 804.3.1.1(3).

Where continuous joists are framed across interior bearing supports, the interior bearing supports shall be located within 24 inches (610 mm) of midspan of the ceiling joist, and the individual spans shall not exceed the applicable spans in Tables R804.3.1.1(1) and R804.3.1.1(2).

Where the *attic* is to be used as an occupied space, the ceiling joists shall be designed in accordance with Section R505.

❖ Allowable spans for ceiling joists are given in Table R804.3.1.1(1) for live loads of 10 psf (479 Pa) and Table R804.3.1.1(2) for live loads of 20 psf (958 Pa). An attic with occupied space requires the use of higher design live loads, and the ceiling joists must be designed in accordance with Section R505.3.2. Ceiling

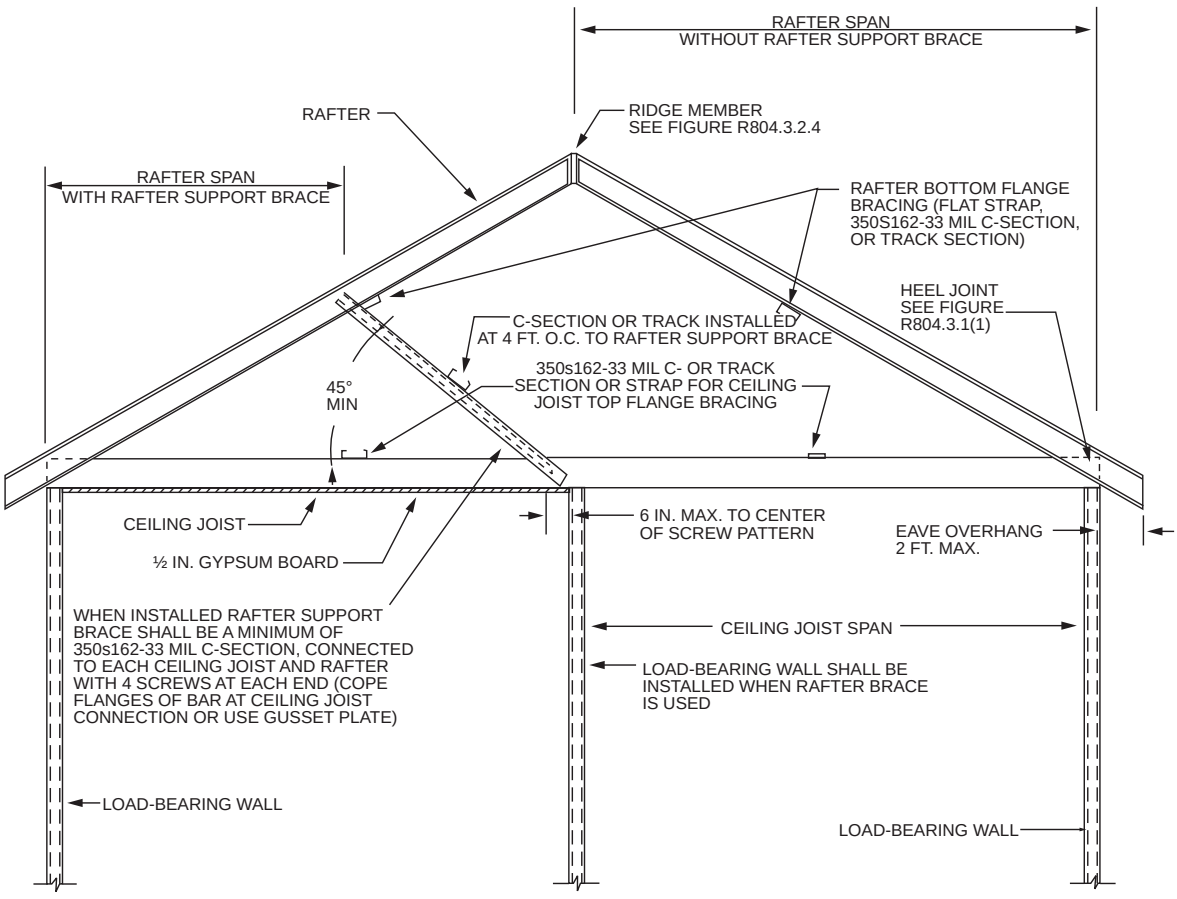

For SI: 1 inch = 25.4 mm, 1 foot = 304.8 mm, 1 mil = 0.0254 mm.

FIGURE R804.3
COLD-FORMED STEEL ROOF CONSTRUCTION

INTERNATIONAL CODE COUNCIL®
Copyright © 2015 ICC. ALL RIGHTS RESERVED. Accessed by David Dammon on Jun 21, 2017 12:30:52 PM pursuant to License Agreement with ICC. No further reproduction or distribution authorized. ANY UNAUTHORIZED REPRODUCTION OR DISTRIBUTION IS A VIOLATION OF THE FEDERAL COPYRIGHT ACT AND THE LICENSE AGREEMENT, AND SUBJECT TO CIVIL AND CRIMINAL PENALTIES THEREUNDER.

TABLE R804.3
ROOF FRAMING FASTENING SCHEDULE[a, b]

DESCRIPTION OF BUILDING ELEMENTS			NUMBER AND SIZE OF FASTENERS[a]				SPACING OF FASTENERS
Roof sheathing (oriented strand board or plywood) to rafter			No. 8 screws				6″ o.c. on edges and 12″ o.c. at interior supports. 6″ o.c. at gable end truss
Gable end truss to end wall top track			No. 10 screws				12″ o.c.
Rafter to ceiling joist			Minimum No. 10 screws, in accordance with Table R804.3.1.1(3)				Evenly spaced, not less than $^1/_2$″ from all edges.
Ceiling joist or roof truss to top track of bearing wall[b]	Ceiling Joist Spacing (in.)	Roof Span (ft)	Ultimate Design Wind Speed (mph) and Exposure Category				Each ceiling joist or roof truss
			126 B 110 C	<139 B 115 C	126 C	<139 C	
	16	24	2	2	2	3	
		28	2	2	3	3	
		32	2	2	3	4	
		36	2	2	3	4	
		40	2	2	3	4	
	24	24	2	2	3	4	
		28	2	2	4	5	
		32	2	3	4	5	
		36	2	3	4	6	
		40	2	3	5	6	

For SI: 1 inch = 25.4 mm, 1 foot = 304.8 mm, 1 pound per square foot = 0.0479 kPa, 1 mil = 0.0254 mm.

a. Screws are a minimum No. 10 unless noted otherwise.

b. Indicated number of screws shall be applied through the flanges of the truss or ceiling joist or through each leg of a 54 mil clip angle. See **Section** R804.3.8 for additional requirements to resist uplift forces.

joists must be connected to rafters in accordance with Figure R804.3.1.1 and Table R804.3.1.1(3). The use of the allowable span tables is illustrated below.

Example:

Steel ceiling joists at 16 inches (406 mm) on center support a ceiling with limited attic storage and are braced at mid span. Their span is 17 feet, 6 inches (5334 mm) in a 35-foot-wide (10 668 mm) building with a roof slope of 8:12 and 30 psf (1436 Pa) snow load. Determine the required joist size, minimum grade of steel and the required connection to rafters.

Solution:

The live load is 20 psf (958 Pa) for limited attic storage. In Table R804.3.1.1(2), under the column headed "Mid-span Bracing," look under 16-inch joist spacing. Note that 800S162-68 has an allowable span of 18 feet, 5 inches (5613 mm), which is greater than the required span. Since the thickness is 68 mil, the steel must be minimum Grade 50 ksi.

The joist-rafter connection in Table R804.3.1.1(3) requires four No. 10 screws fastened in accordance with Figure R804.3.1.1.

Where continuous joists are framed across interior bearing supports, such supports must be located within 24 inches (610 mm) of mid span of the ceiling joist, and the individual spans must not exceed the applicable spans in Table R804.3.1.1(1) or R804.3.1.1(2).

The tables provide ceiling joist spans for a ceiling dead load of 5 psf (239 Pa).

The dead load of the combined roof and ceiling assemblies must not exceed 15 psf for townhouses in Seismic Design Category C and all structures in Seismic Design Categories D_0, D_1 and D_2. Section R301.2.2.2.1 provides an exception for exceeding the 15 psf (718 Pa) restriction (see commentary, Section R301.2.2.2.1).

INTERNATIONAL CODE COUNCIL®
Copyright © 2015 ICC. ALL RIGHTS RESERVED. Accessed by David Dammon on Jun 21, 2017 12:30:52 PM pursuant to License Agreement with ICC. No further reproduction or distribution authorized. ANY UNAUTHORIZED REPRODUCTION OR DISTRIBUTION IS A VIOLATION OF THE FEDERAL COPYRIGHT ACT AND THE LICENSE AGREEMENT, AND SUBJECT TO CIVIL AND CRIMINAL PENALTIES THEREUNDER.

TABLE R804.3.1.1(1)
CEILING JOIST SPANS
10 PSF LIVE LOAD (NO ATTIC STORAGE)[a, b, c]

MEMBER DESIGNATION	ALLOWABLE SPAN (feet - inches)					
	Lateral Support of Top (Compression) Flange					
	Unbraced		Midspan Bracing		Third-point Bracing	
	Ceiling Joist Spacing (inches)					
	16	24	16	24	16	24
350S162-33	9′-5″	8′-6″	12′-2″	10′-4″	12′-2″	10′-7″
350S162-43	10′-3″	9′-12″	13′-2″	11′-6″	13′-2″	11′-6″
350S162-54	11′-1″	9′-11″	13′-9″	12′-0″	13′-9″	12′-0″
350S162-68	12′-1″	10′-9″	14′-8″	12′-10″	14′-8″	12′-10″
550S162-33	10′-7″	9′-6″	14′-10″	12′-10″	15′-11″	13′-4″
550S162-43	11′-8″	10′-6″	16′-4″	14′-3″	17′-10″	15′-3″
550S162-54	12′-6″	11′-2″	17′-7″	15′-7″	19′-5″	16′-10″
550S162-68	13′-6″	12′-1″	19′-2″	17′-0″	21′-0″	18′-4″
800S162-33	—	—	—	—	—	—
800S162-43	13′-0″	11′-9″	18′-10″	17′-0″	21′-6″	19′-0″
800S162-54	13′-10″	12′-5″	20′-0″	18′-0″	22′-9″	20′-4″
800S162-68	14′-11″	13′-4″	21′-3″	19′-1″	24′-1″	21′-8″
1000S162-43	—	—	—	—	—	—
1000S162-54	14′-9″	13′-3″	21′-4″	19′-3″	24′-4″	22′-0″
1000S162-68	15′-10″	14′-2″	22′-8″	20′-5″	25′-9″	23′-2″
1200S162-43	—	—	—	—	—	—
1200S162-54	—	—	—	—	—	—
1200S162-68	16′-8″	14′-11″	23′-11″	21′-6″	27′-2″	24′-6″

For SI: 1 inch = 25.4 mm, 1 foot = 304.8 mm, 1 mil = 0.0254 mm, 1 pound per square foot = 0.0479 kPa.

a. Deflection criterion: *L*/240 for total loads.

b. Ceiling dead load = 5 psf.

c. Minimum Grade 33 ksi steel shall be used for 33 mil and 43 mil thicknesses. Minimum Grade 50 ksi steel shall be used for 54 and 68 mil thicknesses.

R804.3.1.2 Ceiling joist bottom flange bracing. The bottom flanges of ceiling joists shall be laterally braced by the application of gypsum board or continuous steel straps installed perpendicular to the joist run in accordance with one of the following:

1. Gypsum board shall be fastened with No. 6 screws in accordance with Section R702.
2. Steel straps with a minimum size of $1^1/_2$ inches by 33 mils (38 mm by 0.84 mm) shall be installed at a maximum spacing of 4 feet (1219 mm). Straps shall be fastened to the bottom flange at each joist with one No. 8 screw and shall be fastened to blocking with two No. 8 screws. Blocking shall be installed between joists at a maximum spacing of 12 feet (3658 mm) measured along a line of continuous strapping (perpendicular to the joist run). Blocking shall also be located at the termination of all straps.

❖ Steel ceiling joists must have the bottom flanges laterally braced either with gypsum board or continuous steel strapping. Strap bracing requires the installation of solid blocking in line with the straps at the termination of all straps and at a maximum spacing of 12 feet (3658 mm) measured perpendicular to the joist run.

R804.3.1.3 Ceiling joist top flange bracing. The top flanges of ceiling joists shall be laterally braced as required by Tables R804.3.1.1(1) and R804.3.1.1(2), in accordance with one of the following:

1. Minimum 33-mil (0.84 mm) C-shaped member in accordance with Figure R804.3.1.3(1).
2. Minimum 33-mil (0.84 mm) track section in accordance with Figure R804.3.1.3(1).
3. Minimum 33-mil (0.84 mm) hat section in accordance with Figure R804.3.1.3(1).
4. Minimum 54-mil (1.37 mm) $1^1/_2$-inch (38 mm) cold-rolled channel section in accordance with Figure R804.3.1.3(1).

INTERNATIONAL CODE COUNCIL®
Copyright © 2015 ICC. ALL RIGHTS RESERVED. Accessed by David Dammon on Jun 21, 2017 12:30:52 PM pursuant to License Agreement with ICC. No further reproduction or distribution authorized. ANY UNAUTHORIZED REPRODUCTION OR DISTRIBUTION IS A VIOLATION OF THE FEDERAL COPYRIGHT ACT AND THE LICENSE AGREEMENT, AND SUBJECT TO CIVIL AND CRIMINAL PENALTIES THEREUNDER.

TABLE R804.3.1.1(2)
CEILING JOIST SPANS
20 PSF LIVE LOAD (LIMITED ATTIC STORAGE)[a, b, c]

MEMBER DESIGNATION	ALLOWABLE SPAN (feet - inches)					
	Lateral Support of Top (Compression) Flange					
	Unbraced		Midspan Bracing		Third-point Bracing	
	Ceiling Joist Spacing (inches)					
	16	24	16	24	16	24
350S162-33	8′-2″	6′-10″	9′-9″	6′-10″	9′-11″	6′-10″
350S162-43	8′-10″	7′-10″	11′-0″	9′-5″	11′-0″	9′-7″
350S162-54	9′-6″	8′-6″	11′-9″	10′-3″	11′-9″	10′-3″
350S162-68	10′-4″	9′-2″	12′-7″	11′-0″	12′-7″	11′-0″
550S162-33	9′-2″	8′-3″	12′-2″	8′-5″	12′-6″	8′-5″
550S162-43	10′-1″	9′-1″	13′-7″	11′-8″	14′-5″	12′-2″
550S162-54	10′-9″	9′-8″	14′-10″	12′-10″	15′-11″	13′-6″
550S162-68	11′-7″	10′-4″	16′-4″	14′-0″	17′-5″	14′-11″
800S162-33	—	—	—	—	—	—
800S162-43	11′-4″	10′-1″	16′-5″	13′-6″	18′-1″	13′-6″
800S162-54	20′-0″	10′-9″	17′-4″	15′-6″	19′-6″	27′-0″
800S162-68	12′-10″	11′-6″	18′-5″	16′-6″	20′-10″	18′-3″
1000S162-43	—	—	—	—	—	—
1000S162-54	12′-10″	11′-6″	18′-7″	16′-9″	21′-2″	15′-5″
1000S162-68	13′-8″	12′-3″	19′-8″	17′-8″	22′-4″	20′-1″
1200S162-43	—	—	—	—	—	—
1200S162-54	—	—	—	—	—	—
1200S162-68	14′-4″	12′-11″	20′-9″	18′-8″	23′-7″	21′-3″

For SI: 1 inch = 25.4 mm, 1 foot = 304.8 mm, 1 mil = 0.0254 mm, 1 pound per square foot = 0.0479 kPa.

a. Deflection criterion: L/240 for total loads.

b. Ceiling deal load = 5 psf.

c. Minimum Grade 33 ksi steel shall be used for 33 mil and 43 mil thicknesses. Minimum Grade 50 ksi steel shall be used for 54 and 68 mil thicknesses.

5. Minimum $1^1/_2$-inch by 33-mil (38 mm by 0.84 mm) continuous steel strap in accordance with Figure R804.3.1.3(2).

Lateral bracing shall be installed perpendicular to the ceiling joists and shall be fastened to the top flange of each joist with one No. 8 screw. Blocking shall be installed between joists in line with bracing at a maximum spacing of 12 feet (3658 mm) measured perpendicular to the joists. Ends of lateral bracing shall be attached to blocking or anchored to a stable building component with two No. 8 screws.

❖ The application of lateral support to the top flanges of the ceiling joists, at mid span or at third-point of the span will permit longer spans in accordance with Tables R804.3.1.1(1) and R804.3.1.1(2). This section permits the top flange bracing to be C-section, track section, hat section, cold-rolled channel section or steel strap [see Figures R804.3.1.3(1) and R804.3.1.3(2) for details]. In addition to the top flange, bracing blocking must be installed in line with the bracing at a maximum spacing of 12 feet (3658 mm) measured perpendicular to the joist run. Splice for the steel strap bracing must occur at blocking [see Figure R804.3.1.3(2)].

R804.3.1.4 Ceiling joist splicing. Splices in ceiling joists shall be permitted, if ceiling joist splices are supported at interior bearing points and are constructed in accordance with Figure R804.3.1.4. The number of screws on each side of the splice shall be the same as required for the heel joint connection in Table R804.3.1.1(3).

❖ Steel ceiling joists are permitted to be spliced only at supports at interior bearing points (see Figure R804.3.1.4).

R804.3.2 Roof rafters. Cold-formed steel roof rafters shall be in accordance with this section.

❖ Sections R804.3.2.1 through R804.3.2.5 provide the requirements for roof rafter size, support brace, splice, connection to ceiling joist and ridge and bottom flange bracing.

INTERNATIONAL CODE COUNCIL®
Copyright © 2015 ICC. ALL RIGHTS RESERVED. Accessed by David Dammon on Jun 21, 2017 12:30:52 PM pursuant to License Agreement with ICC. No further reproduction or distribution authorized. ANY UNAUTHORIZED REPRODUCTION OR DISTRIBUTION IS A VIOLATION OF THE FEDERAL COPYRIGHT ACT AND THE LICENSE AGREEMENT, AND SUBJECT TO CIVIL AND CRIMINAL PENALTIES THEREUNDER.

TABLE R804.3.1.1(3)
NUMBER OF SCREWS REQUIRED FOR CEILING JOIST TO ROOF RAFTER CONNECTION[a]

ROOF SLOPE	NUMBER OF SCREWS																			
	Building width (feet)																			
	24				28				32				36				40			
	Ground snow load (psf)																			
	20	30	50	70	20	30	50	70	20	30	50	70	20	30	50	70	20	30	50	70
3/12	5	6	9	11	5	7	10	13	6	8	11	15	7	8	13	17	8	9	14	19
4/12	4	5	7	9	4	5	8	10	5	6	9	12	5	7	10	13	6	7	11	14
5/12	3	4	6	7	4	4	6	8	4	5	7	10	5	5	8	11	5	6	9	12
6/12	3	3	5	6	3	4	6	7	4	4	6	8	4	5	7	9	4	5	8	10
7/12	3	3	4	6	3	3	5	7	3	4	6	7	4	4	6	8	4	5	7	9
8/12	2	3	4	5	3	3	5	6	3	4	5	7	3	4	6	8	4	4	6	8
9/12	2	3	4	5	3	3	4	6	3	3	5	6	3	4	5	7	3	4	6	8
10/12	2	2	4	5	2	3	4	5	3	3	5	6	3	3	5	7	3	4	6	7
11/12	2	2	3	4	2	3	4	5	3	3	4	6	3	3	5	6	3	4	5	7
12/12	2	2	3	4	2	3	4	5	2	3	4	5	3	3	5	6	3	4	5	7

For SI: 1 inch = 25.4 mm, 1 foot = 304.8 mm, 1 pound per square foot = 0.0479kPa.
a. Screws shall be No. 10.

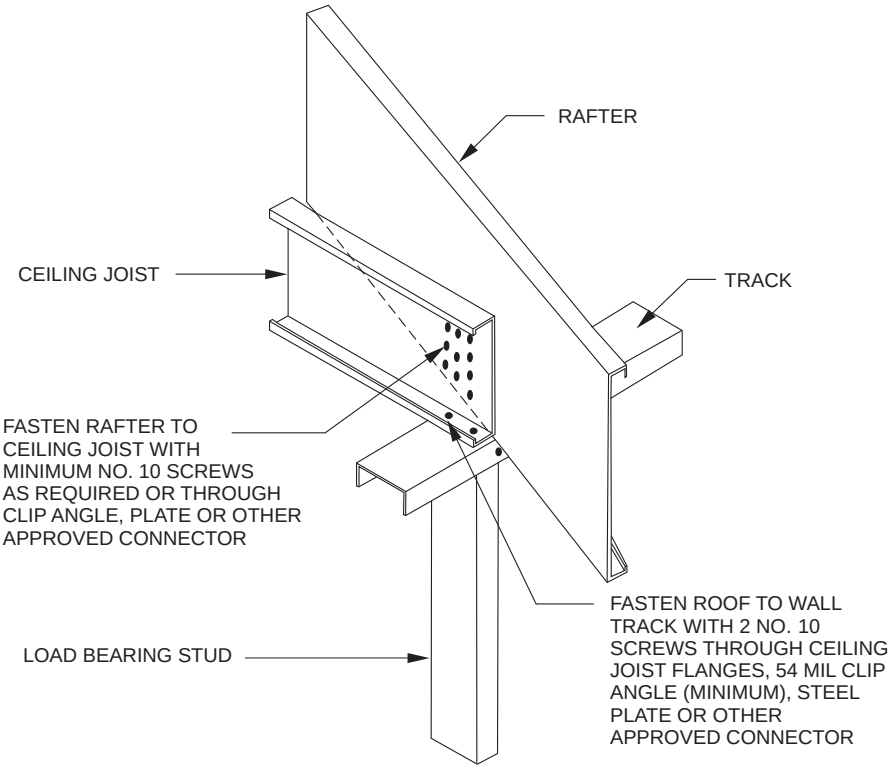

For SI: 1 mil = 0.0254 mm.

FIGURE R804.3.1.1
JOIST TO RAFTER CONNECTION

INTERNATIONAL CODE COUNCIL®
Copyright © 2015 ICC. ALL RIGHTS RESERVED. Accessed by David Dammon on Jun 21, 2017 12:30:52 PM pursuant to License Agreement with ICC. No further reproduction or distribution authorized. ANY UNAUTHORIZED REPRODUCTION OR DISTRIBUTION IS A VIOLATION OF THE FEDERAL COPYRIGHT ACT AND THE LICENSE AGREEMENT, AND SUBJECT TO CIVIL AND CRIMINAL PENALTIES THEREUNDER.

R804.3.2.1 Minimum roof rafter sizes. Roof rafter size and thickness shall be determined in accordance with the limits set forth in Table R804.3.2.1(1) based on the horizontal projection of the roof rafter span. For determination of roof rafter sizes, reduction of roof spans shall be permitted where a roof rafter support brace is installed in accordance with Section R804.3.2.2. The reduced roof rafter span shall be taken as the larger of the distances from the roof rafter support brace to the ridge or to the heel measured horizontally.

For the purpose of determining roof rafter sizes in Table R804.3.2.1(1), ultimate design wind speeds shall be converted to equivalent ground snow loads in accordance with Table R804.3.2.1(2). Roof rafter sizes shall be based on the higher of the ground snow load or the equivalent snow load converted from the ultimate design wind speed.

❖ Table R804.3.2.1(1) lists allowable rafter spans based on ground snow loads. To account for wind loading on rafters, Table R804.3.2.1(2) must be used to convert ultimate design wind speed to an equivalent ground snow load. Then, the allowable rafter span is determined from Table R804.3.2.1(1) based on the larger of either the ground snow load or the equivalent snow load converted from the wind speed. The rafter span is permitted to be reduced when a support brace is installed (see Section R804.3.2.2). The reduced rafter span is the larger of the distance from the ridge to the support brace or from the support brace to the heel.

Table R804.3.2.1(1) provides rafter spans for a roof dead load of 12 psf (575 Pa).

The dead load of the combined roof and ceiling assemblies must not exceed 15 psf (718 Pa) for townhouses in Seismic Design Category C and all structures in Seismic Design Categories D_0, D_1 and D_2. Section R301.2.2.2.1 provides an exception for exceeding the 15 psf (718 Pa) restriction (see commentary, Section R301.2.2.2.1).

Use of the allowable span table is illustrated below.

Example 1:

You wish to design a rafter system for a 20-psf (958 Pa) ground snow load, and ultimate design wind speed of 100 mph, Exposure B. The rafter spacing is 24 inches (610 mm) on center with a horizontal projection of the rafter span of 16 feet, 4 inches. The roof slope is 12 units vertical in 12 units horizontal (100-percent slope).

Solution 1:

Convert the wind speed to an equivalent ground snow load from Table R804.3.2.1(2). For an ultimate design wind speed of 100 mph (44 m/s), Exposure B and a roof slope of 12:12, the equivalent ground snow load is 50 psf (2.4 kPa). The 50 psf (2.4 kPa) snow load is greater than the 20 psf (0.96 kPa); therefore you must use the 50-psf ground snow load.

The object is to locate a tabulated span value of 16 feet, 4 inches or more. Going to Table R804.3.2.1(1), under the portion headed "Ground snow load 50" and "Rafter spacing 24" note that rafter size 800S162-68 will span 16 feet, 8 inches (4978 mm), which is greater than the required span. Since the thickness is 68 mil, the steel must be minimum Grade 50 ksi.

Example 2:

To find a substitute for the 800S162-68 rafters of Example 1, determine the required rafter size for a condition that uses a rafter brace located at mid span of each rafter as depicted in Figure R804.3. Assume the same loads, rafter spacing, and 16-foot, 4-inch (4978 mm) horizontal rafter span between the exterior wall and ridge.

Solution 2:

The rafter span, identified in Figure R804.3, is reduced to 8 feet, 2 inches (2489 mm) by adding the rafter brace at mid span.

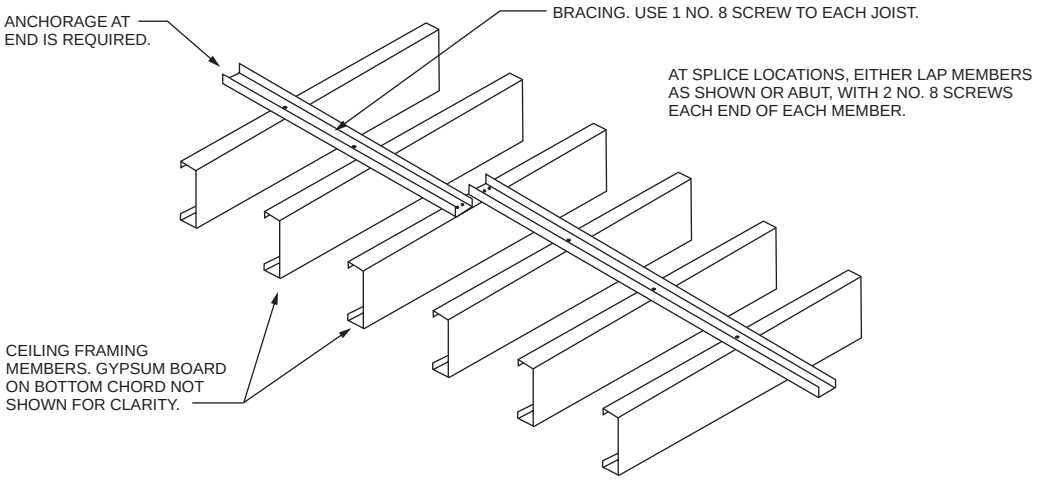

FIGURE R804.3.1.3(1)
CEILING JOIST TOP FLANGE BRACING WITH C-SHAPED, TRACK OR COLD-ROLLED CHANNEL

INTERNATIONAL CODE COUNCIL®
Copyright © 2015 ICC. ALL RIGHTS RESERVED. Accessed by David Dammon on Jun 21, 2017 12:30:52 PM pursuant to License Agreement with ICC. No further reproduction or distribution authorized. ANY UNAUTHORIZED REPRODUCTION OR DISTRIBUTION IS A VIOLATION OF THE FEDERAL COPYRIGHT ACT AND THE LICENSE AGREEMENT, AND SUBJECT TO CIVIL AND CRIMINAL PENALTIES THEREUNDER.

The object is to locate a tabulated span value of 8 feet, 2 inches (51 mm) or more. Going to Table R804.3.2.1(1) under the portion headed "Ground snow load 50" and "Rafter spacing 24," note that rafter size 550S162-43 will span 9 feet, 5 inches, which is greater than the required span. Since the thickness is 43 mil, the steel must be minimum Grade 33 ksi.

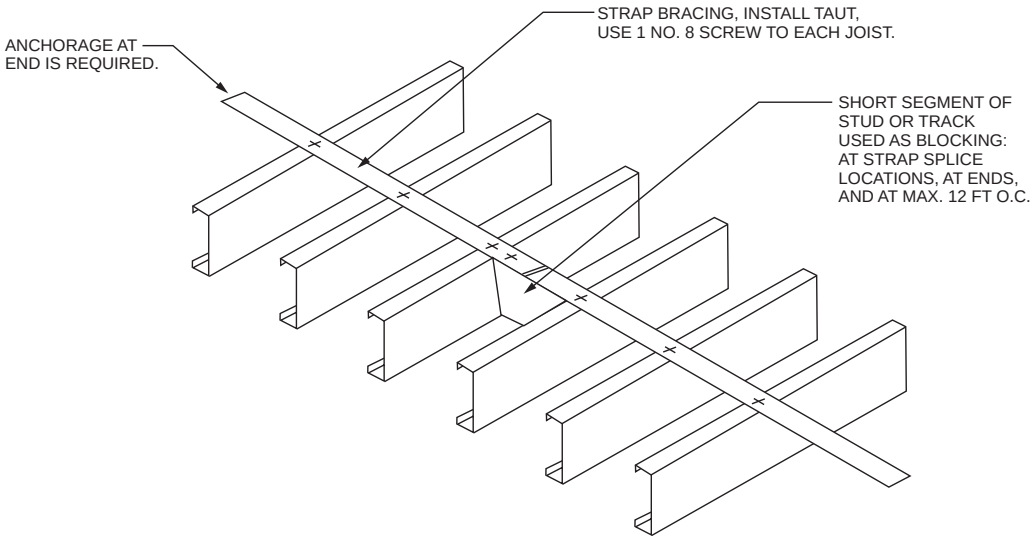

For SI: 1 foot = 304.8 mm.

FIGURE R804.3.1.3(2)
CEILING JOIST TOP FLANGE BRACING WITH CONTINUOUS STEEL STRAP AND BLOCKING

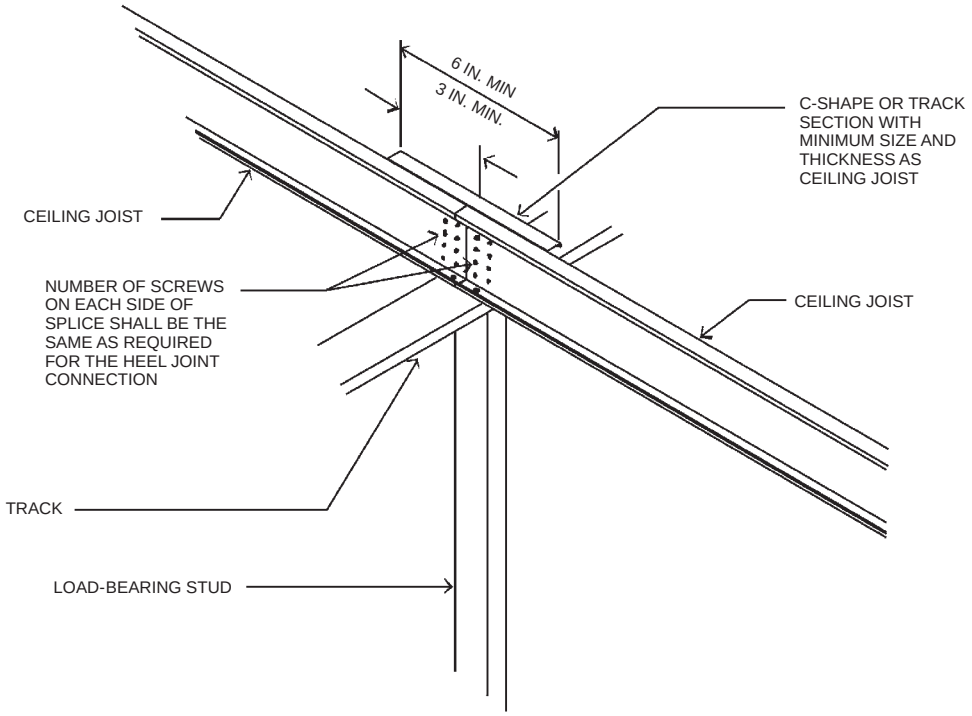

For SI: 1 inch = 25.4 mm.

FIGURE R804.3.1.4
SPLICED CEILING JOISTS

INTERNATIONAL CODE COUNCIL®
Copyright © 2015 ICC. ALL RIGHTS RESERVED. Accessed by David Dammon on Jun 21, 2017 12:30:52 PM pursuant to License Agreement with ICC. No further reproduction or distribution authorized. ANY UNAUTHORIZED REPRODUCTION OR DISTRIBUTION IS A VIOLATION OF THE FEDERAL COPYRIGHT ACT AND THE LICENSE AGREEMENT, AND SUBJECT TO CIVIL AND CRIMINAL PENALTIES THEREUNDER.

TABLE R804.3.2.1(1)
ROOF RAFTER SPANS[a, b, c, d]

MEMBER DESIGNATION	ALLOWABLE SPAN MEASURED HORIZONTALLY (feet - inches)							
	Ground snow load (psf)							
	20		30		50		70	
	Rafter spacing (inches)							
	16	24	16	24	16	24	16	24
550S162-33	14′-0″	11′-6″	11′-11″	9′-7″	9′-6″	7′-9″	8′-2″	6′-8″
550S162-43	16′-8″	13′-11″	14′-5″	11′-9″	11′-6″	9′-5″	9′-10″	8′-0″
550S162-54	17′-11″	15′-7″	15′-7″	13′-8″	13′-2″	11′-6″	11′-9″	10′-3″
550S162-68	19′-2″	16′-9″	16′-9″	14′-7″	14′-1″	12′-4″	12′-7″	11′-0″
800S162-33	16′-5″	13′-5″	13′-11″	11′-4″	11′-1″	8′-2″	9′-0″	6′-0″
800S162-43	19′-9″	16′-1″	16′-8″	13′-7″	13′-4″	10′-10″	11′-5″	9′-4″
800S162-54	24′-2″	21′-2″	21′-1″	18′-5″	17′-10″	14′-8″	15′-5″	12′-7″
800S162-68	25′-11″	22′-8″	22′-8″	19′-9″	19′-1″	16′-8″	17′-1″	14′-9″
1000S162-43	22′-3″	18′-2″	18′-9″	15′-8″	15′-0″	12′-3″	12′-10″	10′-6″
1000S162-54	29′-0″	24′-6″	25′-4″	20′-9″	20′-3″	16′-7″	17′-5″	14′-2″
1000S162-68	31′-2″	27′-3″	27′-3″	23′-9″	20′-0″	19′-6″	20′-6″	16′-8″
1200S162-54	33′-2″	27′-1″	28′-1″	22′-11″	22′-5″	18′-4″	19′-3″	15′-8″
1200S162-68	36′-4″	31′-9″	31′-9″	27′-0″	26′-5″	21′-6″	22′-6″	18′-6″

For SI: 1 inch = 25.4 mm, 1 foot = 304.8 mm, 1 pound per square foot = 0.0479 kPa.

a. Table provides maximum horizontal rafter spans in feet and inches for slopes between 3:12 and 12:12.

b. Deflection criteria: L/240 for live loads and L/180 for total loads.

c. Roof dead load = 12 psf.

d. Grade 33 ksi steel is permitted to be used for 33 mil and 43 mil thicknesses. Grade 50 ksi steel shall be used for 54 and 68 mil thicknesses.

TABLE R804.3.2.1(2)
ULTIMATE DESIGN WIND SPEED TO EQUIVALENT SNOW LOAD CONVERSION

BASIC WIND SPEED AND EXPOSURE		EQUIVALENT GROUND SNOW LOAD (psf)									
		Roof slope									
Exp. B	Exp. C	3:12	4:12	5:12	6:12	7:12	8:12	9:12	10:12	11:12	12:12
85 mph	—	20	20	20	20	20	20	30	30	30	30
100 mph	85 mph	20	20	20	20	30	30	30	30	50	50
110 mph	100 mph	20	20	20	20	30	50	50	50	50	50
—	110 mph	30	30	30	50	50	50	70	70	70	—

For SI: 1 mile per hour = 0.447 m/s, 1 pound per square foot = 0.0479 kPa.

R804.3.2.1.1 Eave overhang. Eave overhangs shall not exceed 24 inches (610 mm) measured horizontally.

❖ Figure R804.3 shows the permitted eave overhang. In addition to limiting the gravity load, this provision places a cap on the amount of wind uplift on the eave overhang that must be considered when determining the roof tie-down.

R804.3.2.1.2 Rake overhangs. Rake overhangs shall not exceed 12 inches (305 mm) measured horizontally. Outlookers at gable endwalls shall be installed in accordance with Figure R804.3.2.1.2.

❖ Rake overhang at cable endwalls is limited to 12 inches (305 mm) and must be constructed as outlook rafters as shown in Option 1 or Option 2 in Figure R804.3.2.1.2.

R804.3.2.2 Roof rafter support brace. When used to reduce roof rafter spans in determining roof rafter sizes, a roof rafter support brace shall meet all of the following conditions:

1. Minimum 350S162-33 C-shaped brace member with maximum length of 8 feet (2438 mm).
2. Minimum brace member slope of 45 degrees (0.785 rad) to the horizontal.
3. Minimum connection of brace to a roof rafter and ceiling joist with four No.10 screws at each end.
4. Maximum 6 inches (152 mm) between brace/ceiling joist connection and load-bearing wall below.

INTERNATIONAL CODE COUNCIL®
Copyright © 2015 ICC. ALL RIGHTS RESERVED. Accessed by David Dammon on Jun 21, 2017 12:30:52 PM pursuant to License Agreement with ICC. No further reproduction or distribution authorized. ANY UNAUTHORIZED REPRODUCTION OR DISTRIBUTION IS A VIOLATION OF THE FEDERAL COPYRIGHT ACT AND THE LICENSE AGREEMENT, AND SUBJECT TO CIVIL AND CRIMINAL PENALTIES THEREUNDER.

5. Each roof rafter support brace greater than 4 feet (1219 mm) in length, shall be braced with a supplemental brace having a minimum size of 350S162-33 or 350T162-33 such that the maximum unsupported length of the roof rafter support brace is 4 feet (1219 mm). The supplemental brace shall be continuous and shall be connected to each roof rafter support brace using two No. 8 screws.

❖ This section provides the requirements and installation details of a rafter support brace. The rafter support brace is to be installed at each rafter and must be no greater than 8 feet (2438 mm) in length. Each rafter support brace that is greater than 4 feet (1219 mm) in length must have a continuous horizontal brace (purlin) perpendicular to the rafter support brace span such that the maximum unsupported length of the rafter support brace is 4 feet (1219 mm) (see Figure R804.3).

R804.3.2.3 Roof rafter splice. Roof rafters shall not be spliced.

❖ Splicing of roof rafters is not permitted.

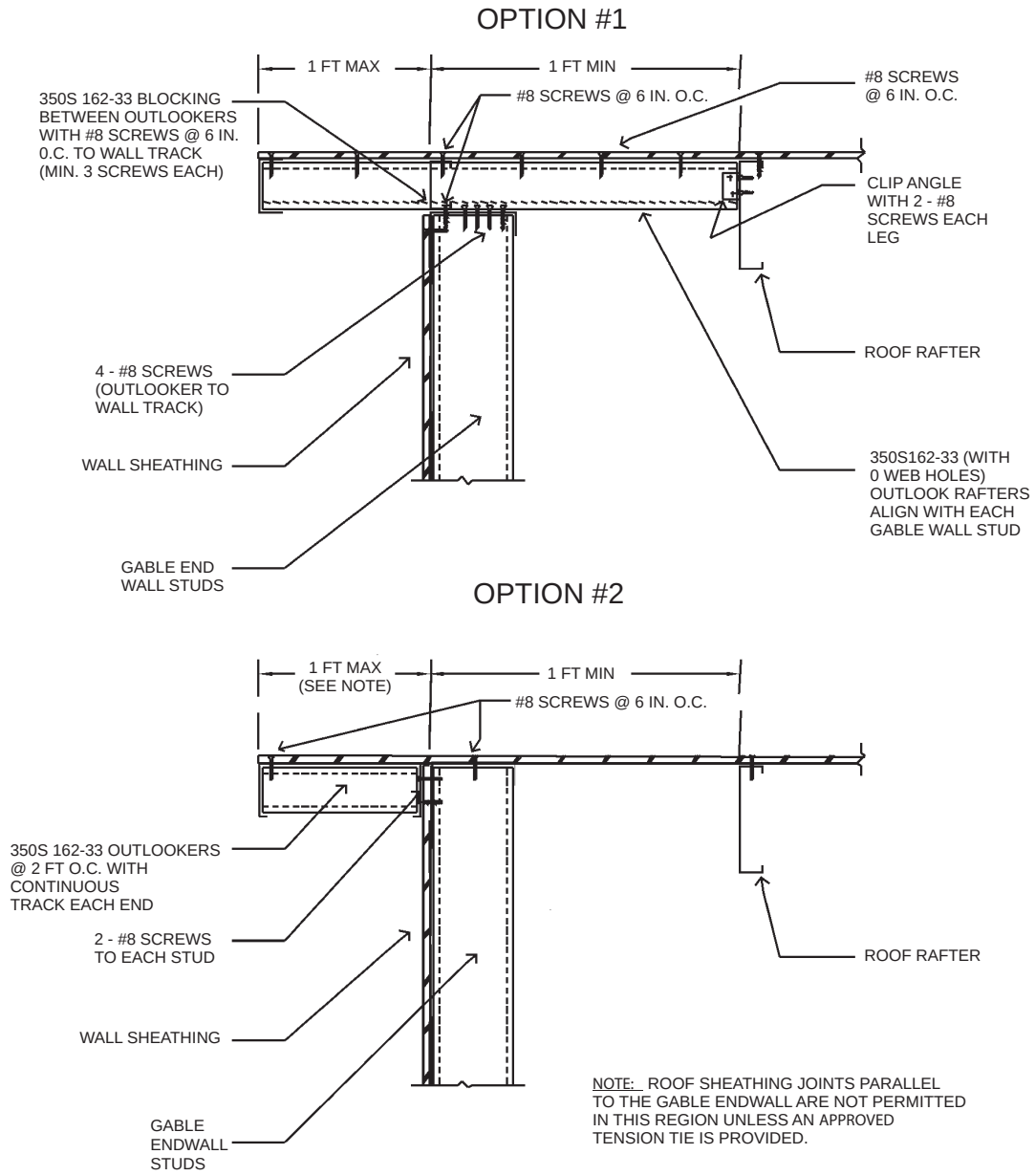

For SI: 1 inch = 25.4 mm, 1 foot = 304.8 mm.

FIGURE R804.3.2.1.2
GABLE ENDWALL OVERHANG DETAILS

INTERNATIONAL CODE COUNCIL®
Copyright © 2015 ICC. ALL RIGHTS RESERVED. Accessed by David Dammon on Jun 21, 2017 12:30:52 PM pursuant to License Agreement with ICC. No further reproduction or distribution authorized. ANY UNAUTHORIZED REPRODUCTION OR DISTRIBUTION IS A VIOLATION OF THE FEDERAL COPYRIGHT ACT AND THE LICENSE AGREEMENT, AND SUBJECT TO CIVIL AND CRIMINAL PENALTIES THEREUNDER.

R804.3.2.4 Roof rafter to ceiling joist and ridge member connection. Roof rafters shall be connected to a parallel ceiling joist to form a continuous tie between exterior walls in accordance with Figure R804.3.1.1 and Table R804.3.1.1(3). Ceiling joists shall be connected to the top track of the load-bearing wall in accordance with Table R804.3, either with the required number of No. 10 screws applied through the flange of the ceiling joist or by using a 54-mil (1.37 mm) clip angle with the required number of No.10 screws in each leg. Roof rafters shall be connected to a ridge member with a minimum 2-inch by 2-inch (51 mm by 51 mm) clip angle fastened with No. 10 screws to the ridge member in accordance with Figure R804.3.2.4 and Table R804.3.2.4. The clip angle shall have a steel thickness equivalent to or greater than the roof rafter thickness and shall extend the depth of the roof rafter member to the extent possible. The ridge member shall be fabricated from a C-shaped member and a track section that shall have a minimum size and steel thickness equivalent to or greater than that of adjacent roof rafters and shall be installed in accordance with Figure R804.3.2.4. The ridge member shall extend the full depth of the sloped roof rafter cut.

❖ The requirements of this section describe connections to resist horizontal thrust from gravity loads and ridge uplift from wind loads. Ceiling joists or rafter ties are the framing members used to resist the horizontal thrust from gravity loads. The ridge member connections are used to resist the ridge uplift caused by the wind load.

Ceiling joists must be located at the top track of the exterior walls and parallel to the rafters.

A ceiling joist or rafter tie is required to be connected to the top track and to each rafter (see Figure R804.3.1.1). Each rafter must be connected to a ridge member. The ridge member depth must equal or exceed the depth of the sloped rafter cut (see Figure R804.3.2.4).

TABLE R804.3.2.4
SCREWS REQUIRED AT EACH LEG OF CLIP ANGLE FOR ROOF RAFTER TO RIDGE MEMBER CONNECTION[a]

BUILDING WIDTH (feet)	NUMBER OF SCREWS			
	Ground snow load (psf)			
	0 to 20	21 to 30	31 to 50	51 to 70
24	2	2	3	4
28	2	3	4	5
32	2	3	4	5
36	3	3	5	6
40	3	4	5	7

For SI: 1 inch = 25.4 mm, 1 foot = 304.8 mm, 1 pound per square foot = 0.0479 kPa.
a. Screws shall be No. 10 minimum.

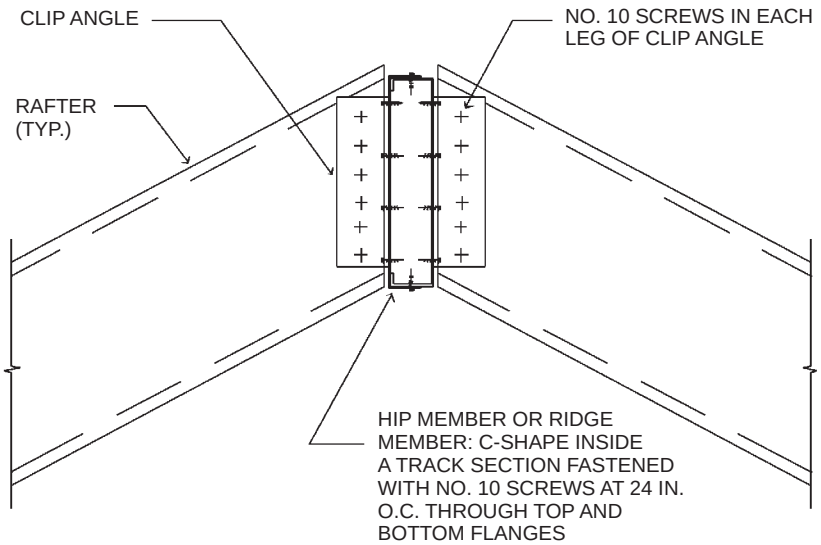

For SI: 1 inch = 25.4 mm.

FIGURE R804.3.2.4
RIDGE MEMBER CONNECTION

INTERNATIONAL CODE COUNCIL®
Copyright © 2015 ICC. ALL RIGHTS RESERVED. Accessed by David Dammon on Jun 21, 2017 12:30:52 PM pursuant to License Agreement with ICC. No further reproduction or distribution authorized. ANY UNAUTHORIZED REPRODUCTION OR DISTRIBUTION IS A VIOLATION OF THE FEDERAL COPYRIGHT ACT AND THE LICENSE AGREEMENT, AND SUBJECT TO CIVIL AND CRIMINAL PENALTIES THEREUNDER.

R804.3.2.5 Roof rafter bottom flange bracing. The bottom flanges of roof rafters shall be continuously braced, at a maximum spacing of 8 feet (2440 mm) as measured parallel to the roof rafters, with one of the following members:

1. Minimum 33-mil (0.84 mm) C-shaped member.
2. Minimum 33-mil (0.84 mm) track section.
3. Minimum $1^1/_2$-inch by 33-mil (38 mm by 0.84 mm) steel strap.

The bracing element shall be fastened to the bottom flange of each roof rafter with one No. 8 screw and shall be fastened to blocking with two No. 8 screws. Blocking shall be installed between roof rafters in-line with the continuous bracing at a maximum spacing of 12 feet (3658 mm) measured perpendicular to the roof rafters. The ends of continuous bracing shall be fastened to blocking or anchored to a stable building component with two No. 8 screws.

❖ Installation of bracing to the rafter bottom flange is necessary to provide resistance to twisting and/or lateral displacement of the rafters. The rafter bottom flange bracing must be spaced no greater than 8 feet (2440 mm) as measured parallel to the rafter. The rafter bottom flange bracing is permitted to be either a C-section, track section or steel strap. In addition to the bottom flange bracing, blocking must be installed in line with the bracing, at the termination of all bracing and at a maximum spacing of 12 feet (3658 mm), measured perpendicular to the joist run.

R804.3.3 Cutting and notching. Flanges and lips of load-bearing, cold-formed steel roof framing members shall not be cut or notched.

❖ Flanges and lips of load-bearing steel roof framing members must not be cut or notched because this would affect their structural integrity.

R804.3.4 Headers. Roof-ceiling framing above wall openings shall be supported on headers. The allowable spans for headers in load-bearing walls shall not exceed the values set forth in Section R603.6 and Tables R603.6(1) through R603.6(6).

❖ Headers must be located immediately below the ceiling or roof framing (for example, at the top of the track), above wall openings, in all exterior walls and in interior load-bearing walls in accordance with Section R603.6. Tables R603.6(1) through R603.6.1(6) gives the allowable spans for headers in bearing walls. See the commentary to Section R603.6.

R804.3.5 Framing of openings in roofs and ceilings. Openings in roofs and ceilings shall be framed with header and trimmer joists. Header joist spans shall not exceed 4 feet (1219 mm) in length. Header and trimmer joists shall be fabricated from joist and track members having a minimum size and thickness equivalent to the adjacent ceiling joists or roof rafters and shall be installed in accordance with Figures R804.3.5(1) and R804.3.5(2). Each header joist shall be connected to trimmer joists with not less than four 2-inch by 2-inch (51 by 51 mm) clip angles. Each clip angle shall be fastened to both the header and trimmer joists with four No. 8 screws, evenly spaced, through each leg of the clip angle. The steel thickness of the clip angles shall be not less than that of the ceiling joist or roof rafter. Each track section for a built-up header or trimmer joist shall extend the full length of the joist (continuous).

❖ Roof openings must be framed as illustrated in Figures R804.3.5(1) and R804.3.5(2). Each header joist must be connected to the trimmer joists with a minimum of four 2-inch by 2-inch (51 mm by 51 mm) clip angles, which must be fastened to both the header and trimmer joists with four No. 8 screws, evenly spaced, through each leg. The clip angle's thickness must not be less than that of the ceiling joist or roof rafter.

R804.3.6 Roof trusses. Cold-formed steel trusses shall be designed and installed in accordance with AISI S100, Section D4. In the absence of specific bracing requirements, trusses shall be braced in accordance with accepted industry practices, such as the SBCA *Cold-Formed Steel Building Component Safety Information (CFSBCSI) Guide to Good Practice for Handling, Installing & Bracing of Cold-Formed Steel Trusses*. Trusses shall be connected to the top track of the load-bearing wall in accordance with Table R804.3, either with two No. 10 screws applied through the flange of the truss or by using a 54-mil (1.37 mm) clip angle with two No. 10 screws in each leg.

❖ The code contains no prescriptive provisions for the design and installation of cold-formed steel trusses. A design is required that complies with accepted engineering practice. Recognizing the extensive use of trusses in residential construction, the code references AISI S100, Section D4. Section D4 of AISI S100 specifies the criteria for the design of cold-formed steel light-frame construction and requires trusses to be designed in accordance with AISI S214. The standard provides regulations for the design and installation of cold-formed steel trusses, including quality assurance and the procedures for full-scale tests. In addition to adequate design, it is important that the handling and erection of the trusses be performed properly so that the performance capability of the trusses is not compromised. A truss member must never be cut, notched or altered without approval from the design professional.

R804.3.7 Ceiling and roof diaphragms. Ceiling and roof diaphragms shall be in accordance with this section.

❖ This section provides the prescriptive requirements for ceiling and roof diaphragms. Sections R804.3.7.1 and R804.3.7.2 provide the details for ceiling diaphragms of gypsum board or wood structural panel and roof diaphragms of wood structural panel.

INTERNATIONAL CODE COUNCIL®
Copyright © 2015 ICC. ALL RIGHTS RESERVED. Accessed by David Dammon on Jun 21, 2017 12:30:52 PM pursuant to License Agreement with ICC. No further reproduction or distribution authorized. ANY UNAUTHORIZED REPRODUCTION OR DISTRIBUTION IS A VIOLATION OF THE FEDERAL COPYRIGHT ACT AND THE LICENSE AGREEMENT, AND SUBJECT TO CIVIL AND CRIMINAL PENALTIES THEREUNDER.

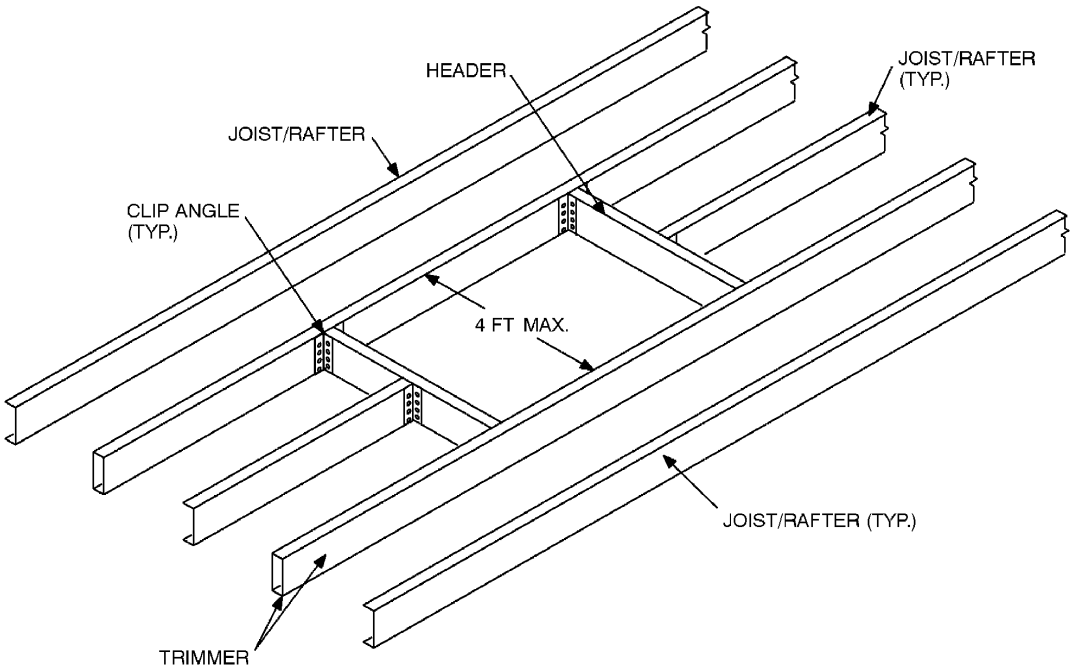

For SI: 1 foot = 304.8 mm.

FIGURE R804.3.5(1)
ROOF OR CEILING OPENING

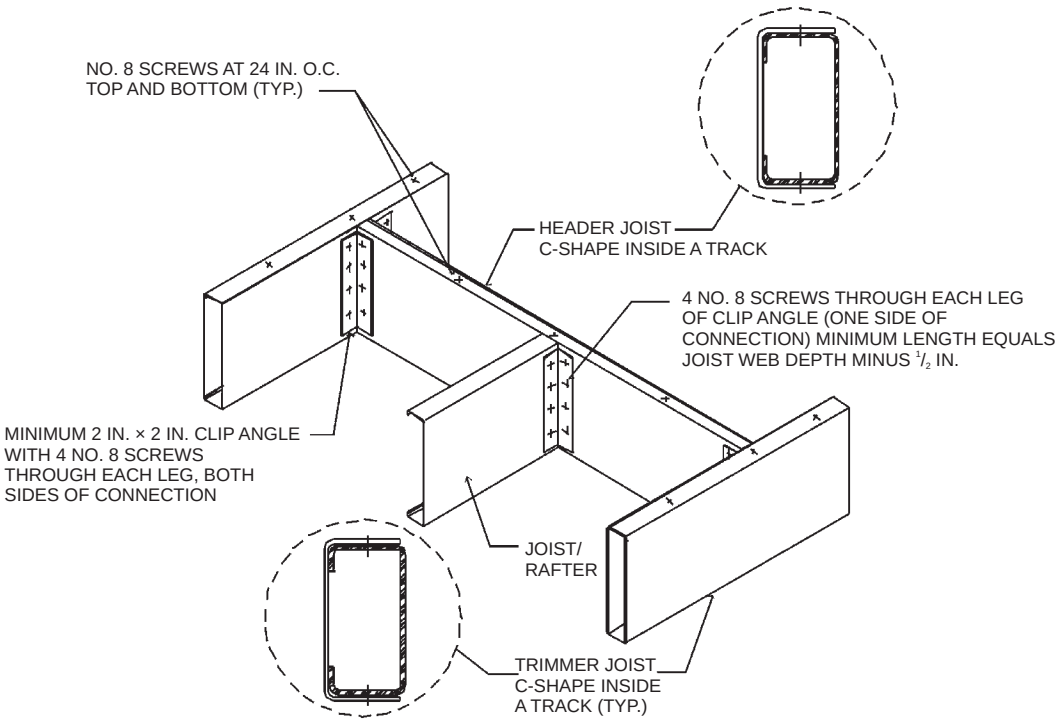

For SI: 1 inch = 25.4 mm.

FIGURE R804.3.5(2)
HEADER TO TRIMMER CONNECTION

INTERNATIONAL CODE COUNCIL®
Copyright © 2015 ICC. ALL RIGHTS RESERVED. Accessed by David Dammon on Jun 21, 2017 12:30:52 PM pursuant to License Agreement with ICC. No further reproduction or distribution authorized. ANY UNAUTHORIZED REPRODUCTION OR DISTRIBUTION IS A VIOLATION OF THE FEDERAL COPYRIGHT ACT AND THE LICENSE AGREEMENT, AND SUBJECT TO CIVIL AND CRIMINAL PENALTIES THEREUNDER.

R804.3.7.1 Ceiling diaphragms. At gable endwalls a ceiling *diaphragm* shall be provided by attaching a minimum $^1/_2$-inch (12.7 mm) gypsum board or a minimum $^3/_8$-inch (9.5 mm) wood structural panel sheathing, that complies with Section R803, to the bottom of ceiling joists or roof trusses and connected to wall framing in accordance with Figures R804.3.7.1(1) and R804.3.7.1(2), unless studs are designed as full height without bracing at the ceiling. Flat blocking shall consist of C-shaped or track section with a minimum thickness of 33 mils (0.84 mm). For a gypsum board sheathed ceiling, the diaphragm length shall be in accordance with Table R804.3.7.1. For a wood structural panel sheathed ceiling, the diaphragm length shall be not less than 12 feet (3658 mm) for building widths less than 36 feet (10 973 mm), or not less than 14 feet (4267 mm) for building widths greater than or equal to 36 feet (10 973 mm).

The ceiling diaphragm shall be secured with screws spaced at a maximum 6 inches (152 mm) o.c. at panel edges and a maximum 12 inches (305 mm) o.c. in the field. The required lengths in Table R804.3.7.1 for gypsum board sheathed ceiling diaphragms shall be permitted to be multiplied by 0.35 if all panel edges are blocked. Multiplying the required lengths in Table R804.3.7.1 for gypsum board sheathed ceiling diaphragms by 0.9 shall be permitted if all panel edges are secured with screws spaced at 4 inches (102 mm) o.c.

❖ A ceiling diaphragm is required unless the gable endwall studs are designed to extend full height to the roof without bracing at the ceiling line. The ceiling diaphragm is constructed of either gypsum board or wood panel sheathing. See Figures R804.3.7.1(1) and R804.3.7.1(2) for connection to the gable endwall and sidewall.

The required length of gypsum board ceiling diaphragm is specified in Table R804.3.7.1.

The required length of gypsum board ceiling diaphragm is permitted to be reduced, to 35 percent of that specified in the tables, if all panel edges are blocked.

The required length of gypsum board ceiling diaphragm is permitted to be reduced to 90 percent of that specified in the tables, if panel edge screws are spaced at 4 inches (102 mm).

TABLE R804.3.7.1
REQUIRED LENGTHS FOR CEILING DIAPHRAGMS AT GABLE ENDWALLS
GYPSUM BOARD SHEATHED, CEILING HEIGHT = 8 FEET[a, b, c, d, e, f, g]

EXPOSURE CATEGORY		ULTIMATE DESIGN WIND SPEED (mph)			
B		126	< 139	—	—
C		110	—	126	< 139
Roof pitch	Building endwall width (feet)	Minimum diaphragm length (feet)			
3:12 to 6:12	24 - 28	20	22	28	32
	> 28 - 32	22	28	32	38
	> 32 - 36	26	32	38	44
	> 36 - 40	30	36	44	50
6:12 to 9:12	> 24 - 28	22	26	32	36
	> 28 - 32	26	32	38	44
	> 32 - 36	32	38	44	52
	> 36 - 40	36	44	52	60
9:12 to 12:12	> 24 - 28	26	30	36	42
	> 28 - 32	30	36	42	50
	> 32 - 36	36	42	50	60
	> 36 - 40	42	50	60	70

For SI: 1 inch = 25.4 mm, 1 pound per square foot = 0.0479 kPa, 1 mile per hour = 0.447 m/s, 1 foot = 304.8 mm, 1 mil = 0.0254 mm.

a. Ceiling diaphragm is composed of $^1/_2$-inch gypsum board (min. thickness) secured with screws spaced at 6 inches o.c. at panel edges and 12 inches o.c. infield. Use No. 8 screws (min.) where framing members have a designation thickness of 54 mils or less and No. 10 screws (min.) where framing members have a designation thickness greater than 54 mils.

b. Maximum aspect ratio (length/width) of diaphragms is 2:1.

c. Building width is in the direction of horizontal framing members supported by the wall studs.

d. Required diaphragm lengths are to be provided at each end of the structure.

e. Multiplying required diaphragm lengths by 0.35 is permitted if all panel edges are blocked.

f. Multiplying required diaphragm lengths by 0.9 is permitted if all panel edges are secured with screws spaced at 4 inches o.c.

g. To determine the minimum diaphragm length for buildings with ceiling heights of 9 feet or 10 feet values in the table above shall be multiplied by 1.15.

INTERNATIONAL CODE COUNCIL®
Copyright © 2015 ICC. ALL RIGHTS RESERVED. Accessed by David Dammon on Jun 21, 2017 12:30:52 PM pursuant to License Agreement with ICC. No further reproduction or distribution authorized. ANY UNAUTHORIZED REPRODUCTION OR DISTRIBUTION IS A VIOLATION OF THE FEDERAL COPYRIGHT ACT AND THE LICENSE AGREEMENT, AND SUBJECT TO CIVIL AND CRIMINAL PENALTIES THEREUNDER.

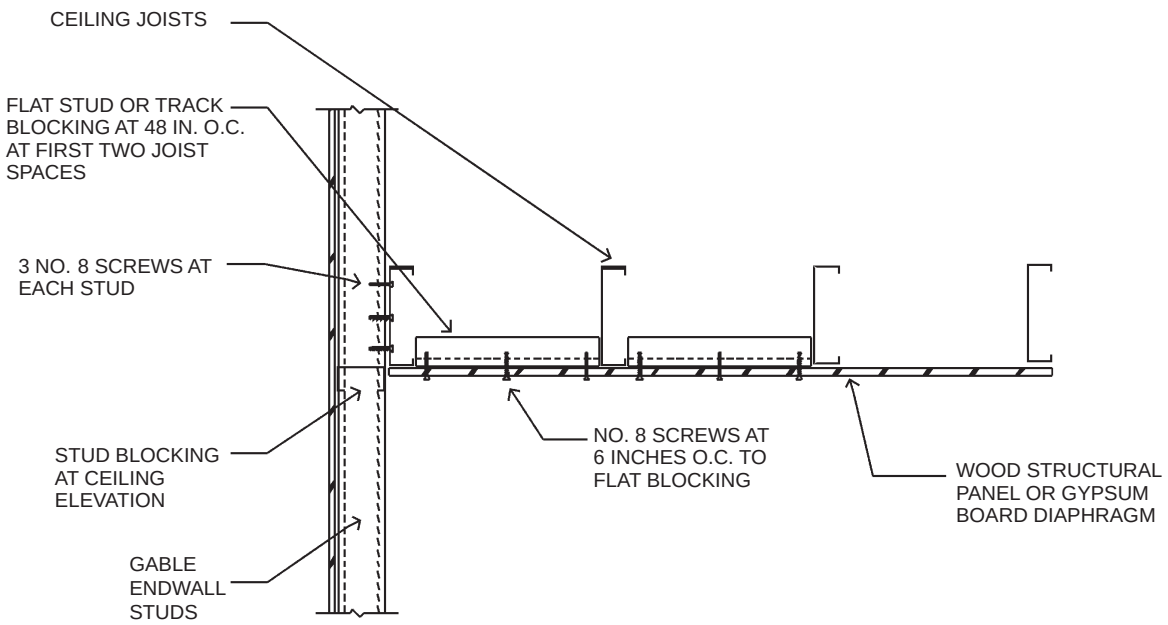

For SI: 1 inch = 25.4 mm.

FIGURE R804.3.7.1(1)
CEILING DIAPHRAGM TO GABLE ENDWALL DETAIL

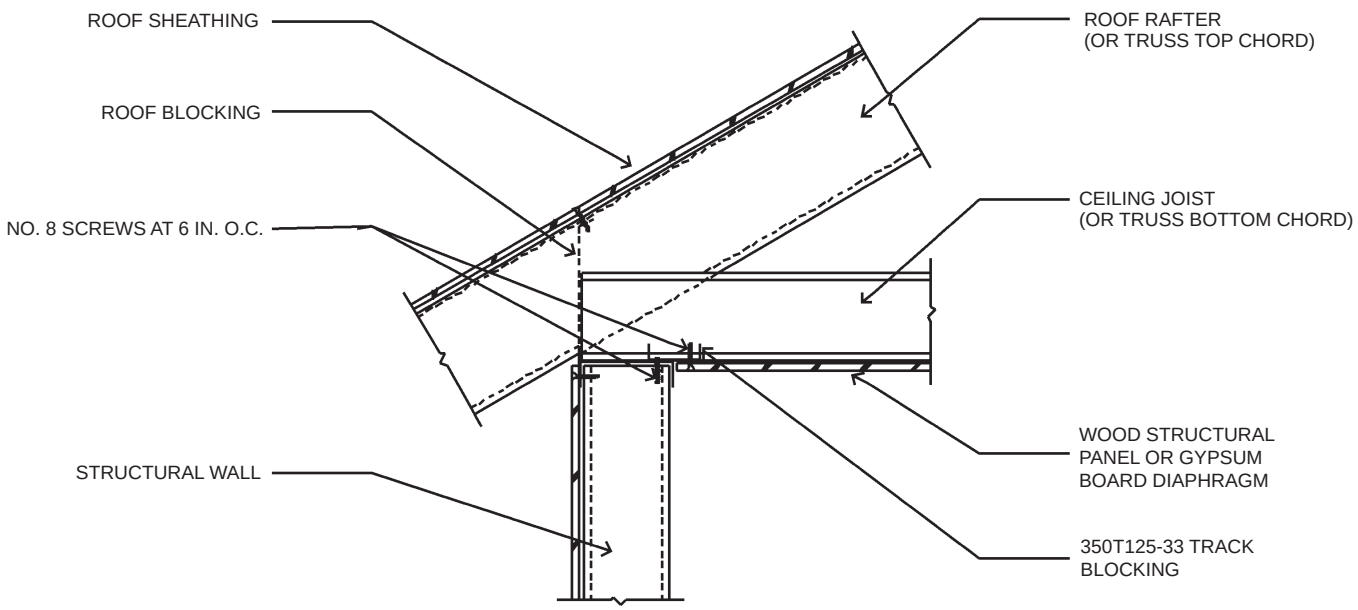

For SI: 1 inch = 25.4 mm.

FIGURE R804.3.7.1(2)
CEILING DIAPHRAGM TO SIDEWALL DETAIL

INTERNATIONAL CODE COUNCIL®
Copyright © 2015 ICC. ALL RIGHTS RESERVED. Accessed by David Dammon on Jun 21, 2017 12:30:52 PM pursuant to License Agreement with ICC. No further reproduction or distribution authorized. ANY UNAUTHORIZED REPRODUCTION OR DISTRIBUTION IS A VIOLATION OF THE FEDERAL COPYRIGHT ACT AND THE LICENSE AGREEMENT, AND SUBJECT TO CIVIL AND CRIMINAL PENALTIES THEREUNDER.

R804.3.7.2 Roof diaphragm. A roof *diaphragm* shall be provided by attaching a minimum of $^3/_8$-inch (9.5 mm) wood structural panel which complies with Section R803 to roof rafters or truss top chords in accordance with Table R804.3. Buildings with 3:1 or larger plan *aspect ratio* and with roof rafter slope (pitch) of 9:12 or larger shall have the roof rafters and ceiling joists blocked in accordance with Figure R804.3.7(2).

❖ A roof diaphragm consisting of minimum $^3/_8$-inch-thick (9.5 mm) wood structural panel sheathing is required in accordance with this section. Roof blocking is required where the building plan aspect ratio is equal to or greater than 3:1 and the roof pitch is equal to or greater than 9:12 [see Figure R804.3.7(2) for roof blocking details].

R804.3.8 Roof tie-down. Roof assemblies shall be connected to walls below in accordance with Table R804.3. A continuous load path shall be provided to transfer uplift loads to the foundation.

❖ Steel-framed roof assemblies require rafter-to-bearing wall ties with a capacity determined in the manner described in Section R802.11.

SECTION R805
CEILING FINISHES

R805.1 Ceiling installation. Ceilings shall be installed in accordance with the requirements for interior wall finishes as provided in Section R702.

❖ This section provides a reference to the ceiling installation requirements found in Section R702.

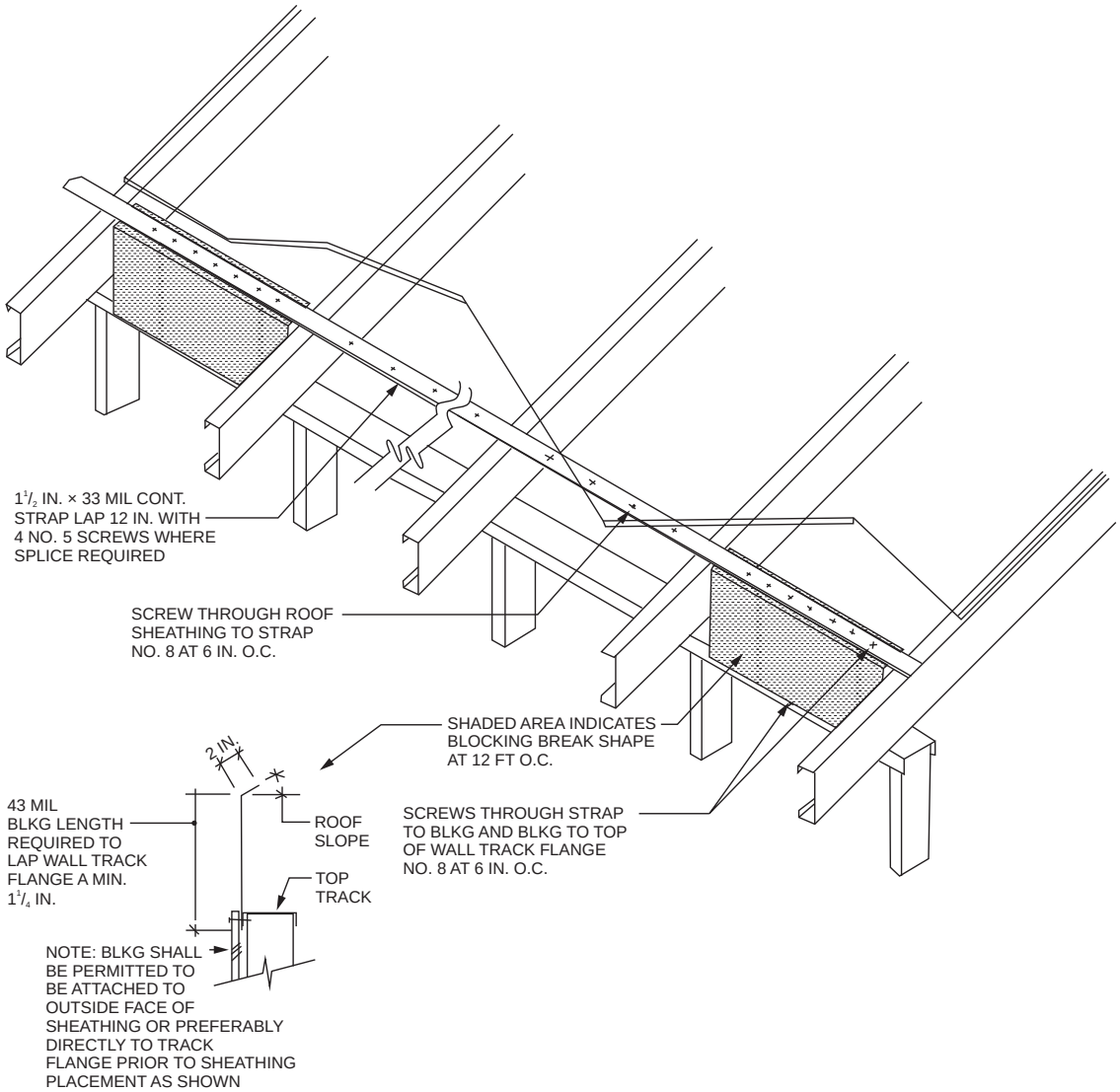

For SI: 1 mil = 0.0254 mm, 1 inch = 25.4 mm.

FIGURE R804.3.7(2)
ROOF BLOCKING DETAIL

INTERNATIONAL CODE COUNCIL®
Copyright © 2015 ICC. ALL RIGHTS RESERVED. Accessed by David Dammon on Jun 21, 2017 12:30:52 PM pursuant to License Agreement with ICC. No further reproduction or distribution authorized. ANY UNAUTHORIZED REPRODUCTION OR DISTRIBUTION IS A VIOLATION OF THE FEDERAL COPYRIGHT ACT AND THE LICENSE AGREEMENT, AND SUBJECT TO CIVIL AND CRIMINAL PENALTIES THEREUNDER.

SECTION R806
ROOF VENTILATION

R806.1 Ventilation required. Enclosed attics and enclosed rafter spaces formed where ceilings are applied directly to the underside of roof rafters shall have cross ventilation for each separate space by ventilating openings protected against the entrance of rain or snow. Ventilation openings shall have a least dimension of $^1/_{16}$ inch (1.6 mm) minimum and $^1/_4$ inch (6.4 mm) maximum. Ventilation openings having a least dimension larger than $^1/_4$ inch (6.4 mm) shall be provided with corrosion-resistant wire cloth screening, hardware cloth or similar material with openings having a least dimension of $^1/_{16}$ inch (1.6 mm) minimum and $^1/_4$ inch (6.4 mm) maximum. Openings in roof framing members shall conform to the requirements of Section R802.7. Required ventilation openings shall open directly to the outside air.

❖ Large amounts of water vapor migrate by air movement or diffusion through the building envelope materials because of a vapor pressure difference. The sources of water vapor include cooking, laundering, bathing and human breathing and perspiration. These can account for an average daily production of 25 pounds (11.3 kg) of water vapor in a typical family-of-four dwelling. The average can be much higher where appliances such as humidifiers, washers and dryers are used.

As the vapor moves into the attic, it may reach its dew point, condensing on wood roof components. This wetting and drying action will cause rotting and decay. To avoid this, the attic must be ventilated to prevent the accumulation of water on building components. The installation of a vapor retarder acts to prevent the passage of moisture to the attic, and an effective vapor retarder allows a decrease in ventilation. Vapor retarders are ineffective when openings in the barrier allow moisture to be carried by air into the attic. This is also the reason exhaust fans must terminate outdoors and not in the attic. Care should be exercised to assure that attic vent openings remain unobstructed.

To minimize condensation problems within attic and enclosed rafter spaces, free-flow ventilation of such spaces is required. Ventilation openings must be screened to prevent the entry of animals. Ventilation openings requiring cutting or notching of the roof framing member must comply with Section R802.7.

R806.2 Minimum vent area. The minimum net free ventilating area shall be $^1/_{150}$ of the area of the vented space.

Exception: The minimum net free ventilation area shall be $^1/_{300}$ of the vented space provided one or more of the following conditions are met:

1. In Climate Zones 6, 7 and 8, a Class I or II vapor retarder is installed on the warm-in-winter side of the ceiling.
2. Not less than 40 percent and not more than 50 percent of the required ventilating area is provided by ventilators located in the upper portion of the attic or rafter space. Upper ventilators shall be located not more than 3 feet (914 mm) below the ridge or highest point of the space, measured vertically, with the balance of the required ventilation provided by eave or cornice vents. Where the location of wall or roof framing members conflicts with the installation of upper ventilators, installation more than 3 feet (914 mm) below the ridge or highest point of the space shall be permitted.

❖ The attic vent size required by the code should not be overlooked. The net-free area can be as much as 50 percent less than the gross opening area. For example, one manufacturer's 24-inch square (610 mm) gable vent [gross area equals 576 square inches (0.37 m^2)] is listed in its catalog as having a net free area of 308 square inches (0.20 m^2), which is about 53 percent of the gross area. The manufacturer's literature should be consulted to obtain free-area information.

The exception permits a reduction in the required venting area if one of the two conditions is met. Condition 1 recognizes that in cold climates, a vapor retarder is required and permits a reduction based on the vapor retarder being installed on the warm-in-winter side of the ceiling. Condition 2 allows a reduction, provided cross ventilation is supplied as specified.

R806.3 Vent and insulation clearance. Where eave or cornice vents are installed, insulation shall not block the free flow of air. Not less than a 1-inch (25 mm) space shall be provided between the insulation and the roof sheathing and at the location of the vent.

❖ Vent openings must be maintained clear, and they must not block the free flow of air; therefore, the code requires that insulation be held back from the vent opening a minimum of 1 inch (25 mm). The 1-inch (25 mm) clearance must be maintained not only at the vent but throughout the attic and rafter spaces.

R806.4 Installation and weather protection. Ventilators shall be installed in accordance with manufacturer's instructions. Installation of ventilators in roof systems shall be in accordance with the requirements of Section R903. Installation of ventilators in wall systems shall be in accordance with the requirements of Section R703.1.

❖ The section requires that ventilators be installed in accordance with the manufacturer's instructions. This is essential so that ventilators provide the proper cross ventilation and perform as intended. Additionally, this section requires roof or wall ventilator installations to comply with the proper code-required weather protection, including flashing.

R806.5 Unvented attic and unvented enclosed rafter assemblies. Unvented *attics* and unvented enclosed roof framing assemblies created by ceilings that are applied directly to the underside of the roof framing members and structural roof sheathing applied directly to the top of the roof framing members/rafters, shall be permitted where all the following conditions are met:

1. The unvented *attic* space is completely within the *building thermal envelope*.

INTERNATIONAL CODE COUNCIL®
Copyright © 2015 ICC. ALL RIGHTS RESERVED. Accessed by David Dammon on Jun 21, 2017 12:30:52 PM pursuant to License Agreement with ICC. No further reproduction or distribution authorized. ANY UNAUTHORIZED REPRODUCTION OR DISTRIBUTION IS A VIOLATION OF THE FEDERAL COPYRIGHT ACT AND THE LICENSE AGREEMENT, AND SUBJECT TO CIVIL AND CRIMINAL PENALTIES THEREUNDER.

2. No interior Class I vapor retarders are installed on the ceiling side (*attic* floor) of the unvented *attic* assembly or on the ceiling side of the unvented enclosed roof framing assembly.
3. Where wood shingles or shakes are used, a minimum $^1/_4$-inch (6.4 mm) vented airspace separates the shingles or shakes and the roofing underlayment above the structural sheathing.
4. In Climate Zones 5, 6, 7 and 8, any *air-impermeable insulation* shall be a Class II vapor retarder, or shall have a Class II vapor retarder coating or covering in direct contact with the underside of the insulation.
5. Insulation shall be located in accordance with the following:

   5.1. Item 5.1.1, 5.1.2, 5.1.3 or 5.1.4 shall be met, depending on the air permeability of the insulation directly under the structural roof sheathing.

      5.1.1. Where only *air-impermeable insulation* is provided, it shall be applied in direct contact with the underside of the structural roof sheathing.

      5.1.2. Where *air-permeable insulation* is provided inside the building thermal envelope, it shall be installed in accordance with Section 5.1. In addition to the *air-permeable insulation* installed directly below the structural sheathing, rigid board or sheet insulation shall be installed directly above the structural roof sheathing in accordance with the *R*-values in Table R806.5 for condensation control.

      5.1.3. Where both *air-impermeable* and *air-permeable insulation* are provided, the *air-impermeable insulation* shall be applied in direct contact with the underside of the structural roof sheathing in accordance with Item 5.1.1 and shall be in accordance with the *R*-values in Table R806.5 for condensation control. The *air-permeable insulation* shall be installed directly under the *air-impermeable insulation*.

      5.1.4. Alternatively, sufficient rigid board or sheet insulation shall be installed directly above the structural roof sheathing to maintain the monthly average temperature of the underside of the structural roof sheathing above 45°F (7°C). For calculation purposes, an interior air temperature of 68°F (20°C) is assumed and the exterior air temperature is assumed to be the monthly average outside air temperature of the three coldest months.

   5.2. Where preformed insulation board is used as the air-impermeable insulation layer, it shall be sealed at the perimeter of each individual sheet interior surface to form a continuous layer.

❖ Unvented attics are attics where the insulation and air barrier boundary are directly above the attic space, instead of on top of the ceiling. Unvented attics eliminate the extreme temperatures of the attic, thereby placing the HVAC, ducts, pipes, and anything in the attic space into a more favorable environment. Unvented attics increase energy efficiency and decrease wear and tear on equipment in the attic. This section describes such attics, where conditions are similar to the conditions of the residential space below. The primary benefit of having the insulation and air barrier above the attic is that ducts and/or HVAC equipment in the attic are not delivering cooled air through a hot summer attic and heated air through a cold winter attic. Another benefit is to eliminate the attic vents that sometimes allow moisture to condense inside the attic, admit rain during extreme weather and possibly admit sparks in fires.

Because this space is inside the building's thermal envelope, the traditional attic ventilation required by Sections R806.1 and R806.2 is not required. Unvented attics require water/moisture control. Water moves in (or out) of buildings three main ways. The greatest amount of moisture is moved as bulk water (rain or any kind of water flow). Less moisture is moved by moving moist air, such as with infiltration. The least amount of moisture is moved by moisture migration through materials. As with any attic, the roof itself is the main barrier for keeping water from entering the attic.

Unvented cathedral ceilings (enclosed roof framing assemblies) are permitted under this section. Unvented attics and unvented cathedral ceilings are similar. The governing physics are identical so these requirements work for both.

The provisions of this section can be applied to any attic area that is in compliance with this section. The attic is a traditional attic space, with the exception that it need not be ventilated and it will not get as hot or as cold as an attic that is open to the exterior.

It is very important that all of the five listed conditions be reviewed and considered for each building that uses the provisions of this section.

Item 1 requires that the attic space be completely contained within the building thermal envelope.

Item 2, which applies to all climate zones, prohibits the installation of a Class I vapor retarder where it is typically installed at the ceiling level (attic floor) of a traditional ventilated attic. This ensures that no barrier is installed that would separate the conditioned attic area from the remaining portion of the home. This requirement gives the attic space a limited potential to dry into the space beneath the attic so that small amounts of excess moisture can be removed from the attic.

Item 3 applies to all climate zones and contains special requirements that apply to wood shingles and shakes roof coverings. Wood shakes and shingles require a vented space under them to allow the wood to dry after it gets wet from rain.

Item 4 applies only to Climate Zones 5 or higher. The air-impermeable insulation must qualify as a Class II vapor retarder or have a Class II vapor retarder coating or covering in direct contact with the

INTERNATIONAL CODE COUNCIL®
Copyright © 2015 ICC. ALL RIGHTS RESERVED. Accessed by David Dammon on Jun 21, 2017 12:30:52 PM pursuant to License Agreement with ICC. No further reproduction or distribution authorized. ANY UNAUTHORIZED REPRODUCTION OR DISTRIBUTION IS A VIOLATION OF THE FEDERAL COPYRIGHT ACT AND THE LICENSE AGREEMENT, AND SUBJECT TO CIVIL AND CRIMINAL PENALTIES THEREUNDER.

insulation on the underside (interior) face of the insulation.

Item 5 requires sufficient insulation to keep moisture from condensing on the "condensing surface" inside the attic in "average conditions." The insulation works to prevent condensation by keeping the condensing surface above the temperature where condensation will occur. Small amounts of condensation may occasionally occur at more extreme conditions; however, this is not a concern. The condensing surface is the interior side of the roof deck for air-permeable insulation and the interior of the insulation for air-impermeable insulation. The condensing surfaces differ because attic air can circulate through air-permeable insulation to contact the roof deck but can get only to the interior of air-impermeable insulation. The requirement for "air-impermeable" insulation will ensure that air and the moisture it can contain will not pass through the insulation to reach a point where it could condense because of the temperature. Item 5 specifies that air-impermeable insulation be in direct contact with the interior side of the roof deck. Air-impermeable insulation prevents the movement of moist air that comes in as infiltration through the roof into the interior of the attic. Air-impermeable insulation is defined as having an air permanence of 0.02 L/s-m^2 (at 75 Pa pressure) or less. Expanding spray foams and insulated sheathing (hard-foam sheathing board) are common types of air-impermeable insulation. When using insulated sheathing, attention to the details of completing the air sealing is required as the sheathing is installed in the roof. Fiberglass and cellulose are common types of air-permeable insulation.

Note that the insulation required by Item 5 may be more or less than the insulation required for energy efficiency in Chapter 11. If the amount of insulation required by Item 5 varies from the amount specified in Chapter 11, the provisions of Section R1102 would apply, and the higher insulation value would be required. The insulation provided to comply with Item 5 may be considered as contributing to the insulation required in Chapter 11.

It is important to realize that this section cannot be viewed as modifying or eliminating requirements found elsewhere in the code. Examples of sections that still affect these attic areas include Sections R302.10, R302.13, R316, R807, N1102.1 and others. Because the insulation typically used with this provision is some type of foam plastic, the requirements of Section R316 must be applied. The provisions of Section R806.4 do not in any way modify or eliminate the requirements for a thermal barrier (Section R316.4) or protection from ignition (Section R316.5.3). See the commentary to Sections R302.10 and R316 for a complete discussion regarding these requirements and the options available. Ducts in this unvented attic construction would be considered as being inside the building thermal envelope and would not require insulation (see Section N1103.3.1).

The provisions of this section consider the attic assembly as a "conditioned" space; there is no requirement for the space to be provided with conditioned air supply. The attic space is considered indirectly conditioned because of omission of the air barrier, insulation at the ceiling and leakage around the attic access opening. An attic assembly complying with Section R806.5 will generally fall within the temperature ranges specified in the definition of "Conditioned space."

The key concept of this section is to move the thermal envelope (insulation) above the attic, resulting in the attic being in a conditioned (or sometimes semi-conditioned) space. Direct air supply to the attic is not required if the attic floor is not insulated; the attic temperature would be similar to interior conditioned spaces. Ducts and/or HVAC equipment in the attic also help moderate the attic conditions.

TABLE R806.5
INSULATION FOR CONDENSATION CONTROL

CLIMATE ZONE	MINIMUM RIGID BOARD ON AIR-IMPERMEABLE INSULATION *R*-VALUE[a, b]
2B and 3B tile roof only	0 (none required)
1, 2A, 2B, 3A, 3B, 3C	R-5
4C	R-10
4A, 4B	R-15
5	R-20
6	R-25
7	R-30
8	R-35

a. Contributes to but does not supersede the requirements in Section N1102.

b. Alternatively, sufficient continuous insulation shall be installed directly above the structural roof sheathing to maintain the monthly average temperature of the underside of the structural roof sheathing above 45°F (7°C). For calculation purposes, an interior air temperature of 68°F (20°C) is assumed and the exterior air temperature is assumed to be the monthly average outside air temperature of the three coldest months.

❖ Section R806.5 provides three options for installing insulation at the roof line for unvented attics and unvented rafter spaces: air-impermeable insulation (typically foam plastic) installed directly below the roof sheathing; a combination of air-impermeable and air-permeable insulation installed below the roof sheathing; and air-impermeable insulation (rigid board or sheet insulation) installed above the structural roof sheathing. In the last case, the minimum *R*-value for the rigid board or sheet insulation is determined from Table R806.5 based on climate zone to prevent condensation on the underside of the structural roof sheathing. Note b provides a calculation procedure to determine necessary rigid board or air-impermeable insulation *R*-values for roof assemblies that do not meet the requirements of Table R806.5.

INTERNATIONAL CODE COUNCIL®
Copyright © 2015 ICC. ALL RIGHTS RESERVED. Accessed by David Dammon on Jun 21, 2017 12:30:52 PM pursuant to License Agreement with ICC. No further reproduction or distribution authorized. ANY UNAUTHORIZED REPRODUCTION OR DISTRIBUTION IS A VIOLATION OF THE FEDERAL COPYRIGHT ACT AND THE LICENSE AGREEMENT, AND SUBJECT TO CIVIL AND CRIMINAL PENALTIES THEREUNDER.

SECTION R807
ATTIC ACCESS

R807.1 Attic access. Buildings with combustible ceiling or roof construction shall have an *attic* access opening to *attic* areas that have a vertical height of 30 inches (762 mm) or greater over an area of not less than 30 square feet (2.8 m^2). The vertical height shall be measured from the top of the ceiling framing members to the underside of the roof framing members.

The rough-framed opening shall be not less than 22 inches by 30 inches (559 mm by 762 mm) and shall be located in a hallway or other readily accessible location. Where located in a wall, the opening shall be not less than 22 inches wide by 30 inches high (559 mm wide by 762 mm high). Where the access is located in a ceiling, minimum unobstructed headroom in the *attic* space shall be 30 inches (762 mm) at some point above the access measured vertically from the bottom of ceiling framing members. See Section M1305.1.3 for access requirements where mechanical *equipment* is located in *attics*.

❖ The requirement for an attic access is predicated on the likelihood that during the life of the structure, access to an attic space for repair of piping, electrical and mechanical systems will be required.

Bibliography

The following resource materials were used in the preparation of the commentary for this chapter of the code:

AISI S100–12, *North American Specification for Design of Cold-formed Steel Structural Members.* Washington, DC: American Iron and Steel Institute, 2012.

AISI S214–12, *North American Standard for Cold-formed Steel Framing-Truss Design.* Washington, DC: American Iron and Steel Institute, 2012.

ANSI/AITC A 190.1–07, *Structural Glued Laminated Timber*. Centennial, CO: American Institute of Timber Construction, 2007.

ANSI/APA PRG 320–2012, *Standard for Performance-rated Cross Laminated Timber*. Tacoma, WA: APA-The Engineered Wood Association, 2012.

ANSI/APA PRR 410–2011, *Standard for Performance-rated Engineered Wood Rim Boards.* Tacoma, WA: APA-The Engineered Wood Association, 2011.

ANSI/AWC NDS–2015, *National Design Specification for Wood Construction with 2015 NDS Supplement*. Leesburg, VA: American Wood Council, 2015.

APA E30–11, *Engineered Wood Construction Guide.* Tacoma, WA: APA-The Engineered Wood Association, 2011.

ASCE 7–10, *Minimum Design Loads for Buildings and Other Structure with Supplement No. 1.* Reston, VA: American Society of Civil Engineers/Structural Engineering Institute, 2010.

ASTM C954–11, *Specification for Steel Drill Screws for the Application of Gypsum Panel Products or Metal Plaster Bases to Steel Studs from 0.033 in. (0.84 mm) to 0.112 in. (2.84 mm) in Thickness.* West Conshohocken, PA: ASTM International, 2011.

ASTM C1513–2013, *Standard Specification for Steel Tapping Screws for Cold-formed Steel Framing Connections.* West Conshohocken, PA: ASTM International, 2013.

ASTM D2898–10, *Test Methods for Accelerated Weathering of Fire-retardant-treated Wood for Fire Testing*. West Conshohocken, PA: ASTM International, 2010.

ASTM D3201–2013, *Test Method for Hygroscopic Properties of Fire-retardant Wood and Wood-base Products*. West Conshohocken, PA: ASTM International, 2013.

ASTM D3737–2012, *Practice for Establishing Allowable Properties for Structural Glued Laminated Timber (Glulam).* West Conshohocken, PA: ASTM International, 2012.

ASTM D7672–2012, *Standard Specification for Evaluating Structural Capacities of Rim Board Products and Assemblies*. West Conshohocken, PA: ASTM International, 2012.

ASTM E84–2013a, *Test Method for Surface Burning Characteristics of Building Materials*. West Conshohocken, PA: ASTM International, 2013.

AWC WFCM–2015, *Wood Frame Construction Manual for One- and Two-family Dwellings*. Leesburg, VA: American Wood Council, 2015.

ICC 400–2012, *Standard on the Design and Construction of Log Structures.* Washington, DC: International Code Council, 2011.

TPI 1–2014, *National Design Standard for Metal-plate-connected Wood Truss Construction.* Madison, WI: Truss Plate Institute, 2014.

UL 723–08, *Standard for Test for Surface Burning Characteristics of Building Materials—with revisions through September 2010*. Northbrook, IL: UL LLC, 2010.

INTERNATIONAL CODE COUNCIL®
Copyright © 2015 ICC. ALL RIGHTS RESERVED. Accessed by David Dammon on Jun 21, 2017 12:30:52 PM pursuant to License Agreement with ICC. No further reproduction or distribution authorized. ANY UNAUTHORIZED REPRODUCTION OR DISTRIBUTION IS A VIOLATION OF THE FEDERAL COPYRIGHT ACT AND THE LICENSE AGREEMENT, AND SUBJECT TO CIVIL AND CRIMINAL PENALTIES THEREUNDER.

INTERNATIONAL CODE COUNCIL®
Copyright © 2015 ICC. ALL RIGHTS RESERVED. Accessed by David Dammon on Jun 21, 2017 12:30:52 PM pursuant to License Agreement with ICC. No further reproduction or distribution authorized. ANY UNAUTHORIZED REPRODUCTION OR DISTRIBUTION IS A VIOLATION OF THE FEDERAL COPYRIGHT ACT AND THE LICENSE AGREEMENT, AND SUBJECT TO CIVIL AND CRIMINAL PENALTIES THEREUNDER.

Chapter 9: Roof Assemblies

General Comments

Although a small portion of this chapter regulates the fire classification of roof covering materials, the major emphasis is on the materials and installation methods that will result in a weather-tight exterior envelope. The code limits the requirements for fire-retardant roof coverings to two scenarios: where the local or state ordinances in effect mandate a classified roof covering; and where the edge of the roof is in close proximity to a property line. Otherwise, the provisions of the chapter focus on the weather-protection features of a roof assembly.

The chapter contains a number of specific code requirements for various types of roof covering materials. These requirements may place limitations on roof slope, identify the proper attachment methods, mandate the use of underlayment and address flashing at appropriate points. In addition, the code often references a specification or installation standard for a particular type of roof covering. In all cases, it is important that the manufacturer's installation instructions be followed.

This chapter contains provisions for the design and construction of roof assemblies, primarily focusing on the materials and installation of roof coverings. The general requirements for roof assemblies found in the code deal with the role of the roof as a portion of the exterior envelope that provides weather protection for the building. Fire classifications, roof drainage, roof insulation, rooftop-mounted photovoltaic systems and reroofing operations are also addressed.

Section R901 states the scope of the chapter, including both the materials and the quality of roof construction. Section R902 deals with fire-classification requirements for roof covering materials where the roof extends very close to an adjoining property line. Section R903 establishes the general requirements for weather protection, including provisions for flashing and roof drainage.

Section R904 establishes general requirements for roofing materials. Section R905 discusses the many different types of roof covering materials regulated by the code, including asphalt shingles, clay and concrete tile, metal roof shingles, mineral-surfaced roll roofing, wood shakes and shingles, slate and slate-type shingles, built-up roofs, metal roof panels, modified bitumen roofing, thermoset and thermoplastic single-ply roofing, sprayed polyurethane foam roofing, liquid-applied coatings and photovoltaic modules/shingles. Section R906 allows the installation of above-deck thermal installation where appropriately listed. Section R907 addresses the installation requirements for rooftop-mounted photovoltaic panels and modules. Section R908 establishes the methods and materials acceptable for recovering or replacing an existing roof. Section R909 specifies the structural and installation requirements for rooftop-mounted photovoltaic panel systems.

Purpose

Chapter 9 regulates the design and construction of roof assemblies. A roof assembly includes the roof deck, vapor retarder, substrate or thermal barrier, insulation, vapor retarder and roof covering. This chapter provides the requirement for wind resistance of roof coverings.

Roof assemblies fulfill a variety of functions; however, this chapter deals primarily with roof coverings for weather protection. The requirements address the design and construction of roof assemblies, with a focus on the materials and quality of installation. Although a number of requirements are specified directly from the code, the majority of the regulations applicable to roof coverings come from the material standards. In addition, the manufacturer's installation instructions should always be followed for the specific roof covering material under consideration. Flashing and roof drainage criteria are also important aspects of weather-protection features. Many common roof coverings are addressed by detailed provisions regulating the roof deck, roof slope, underlayment, application and attachment. Where a new roof is required for an existing building, the code sets specific guidelines for either recovering or replacing the existing roof covering.

SECTION R901 GENERAL

R901.1 Scope. The provisions of this chapter shall govern the design, materials, construction and quality of roof assemblies.

❖ The focus of this chapter is on roof coverings. A variety of roof-covering materials are included, such as asphalt shingles, clay and concrete tile, metal roof shingles, wood shingles and shakes and metal roof panels. Roof classification, drainage, insulation and flashing are also regulated, as is the reroofing of an existing roof.

INTERNATIONAL CODE COUNCIL®
Copyright © 2015 ICC. ALL RIGHTS RESERVED. Accessed by David Dammon on Jun 21, 2017 12:30:52 PM pursuant to License Agreement with ICC. No further reproduction or distribution authorized. ANY UNAUTHORIZED REPRODUCTION OR DISTRIBUTION IS A VIOLATION OF THE FEDERAL COPYRIGHT ACT AND THE LICENSE AGREEMENT, AND SUBJECT TO CIVIL AND CRIMINAL PENALTIES THEREUNDER.

SECTION R902
FIRE CLASSIFICATION

R902.1 Roofing covering materials. Roofs shall be covered with materials as set forth in Sections R904 and R905. Class A, B or C roofing shall be installed in jurisdictions designated by law as requiring their use or where the edge of the roof is less than 3 feet (914 mm) from a lot line. Class A, B and C roofing required by this section to be listed shall be tested in accordance with UL 790 or ASTM E108.

Exceptions:

1. Class A roof assemblies include those with coverings of brick, masonry and exposed concrete roof deck.
2. Class A roof assemblies include ferrous or copper shingles or sheets, metal sheets and shingles, clay or concrete roof tile, or slate installed on noncombustible decks.
3. Class A roof assemblies include minimum 16 ounces per square foot copper sheets installed over combustible decks.
4. Class A roof assemblies include slate installed over underlayment over combustible decks.

❖ The code identifies two conditions under which roof assembly classifications A, B, or C are required. First, where local, state or other governing ordinance requires the use of Class A, B or C roofing, it must be installed as designated by the law. Second, on roofs that project within 3 feet (914 mm) of the lot line, a Class A, B or C roof must be installed. Testing for such roofing must be in accordance with either ASTM E108 or UL 790.

Roof coverings classified as Class A, B or C have been shown through testing to provide protection of the roof against severe, moderate and light fire exposures, respectively. These exposures are external and are generally created by fires in adjoining structures, wild fires and fires from the subject building that extend up the exterior and onto the top surface of the roof. Wild fires and some structure fires create flying and flaming brands that can ignite nonclassified roof coverings.

By their nature, roof coverings composed of brick, masonry, exposed concrete roof deck, slate, clay tile, concrete tile, ferrous or copper shingles or sheets and metal sheets or shingles are considered excellent materials for resisting fire spread. The exceptions permit these materials to be considered Class A and exempt from testing to UL 790 or ASTM E108. The materials in Exception 2 must be installed on noncombustible decks to be considered Class A and exempt from testing.

Where installed on a combustible deck, during brush fire conditions in the field, roof coverings can be exposed to burning brands that may break slate or clay or concrete roof tile, since they are brittle materials, and expose the roof deck to the fire. Further, high winds caused by a brush fire can lift the butt ends of slate or concrete or clay roof tiles, allowing the entry of embers under the roof covering and igniting the combustible deck.

These materials in Exception 2 must be tested if installed on a combustible deck.

Exception 3 permits 16 ounce/square foot copper sheets to be considered Class A and exempt from testing where installed over combustible decks. Exception 4 will allow slate to be considered Class A where the slate is installed over underlayment on a combustible deck.

R902.2 Fire-retardant-treated shingles and shakes. Fire-retardant-treated wood shakes and shingles shall be treated by impregnation with chemicals by the full-cell vacuum-pressure process, in accordance with AWPA C1. Each bundle shall be marked to identify the manufactured unit and the manufacturer, and shall be *labeled* to identify the classification of the material in accordance with the testing required in Section R902.1, the treating company and the quality control agency.

❖ This section recognizes the process of impregnating wood shakes and shingles with chemicals in order to make them fire retardant. AWPA C1, regulating the preservative treatment of timber products by pressure processes, is the referenced standard. During the impregnation process the cells of wood shakes and shingles are exposed to a vacuum that draws all of the air and moisture from the material. Fire-retardant chemicals are then impregnated into the shakes and shingles by pressurization. After proper curing, the shakes and shingles are then classified. The fire classification must be marked on each bundle of materials, along with other manufacturing information. Identification will also include the name of the company performing the pressure-treatment process, as well as the quality control agency reviewing for compliance with the test standard.

R902.3 Building-integrated photovoltaic product. Building-integrated photovoltaic products installed as the roof covering shall be tested, listed and labeled for fire classification in accordance with Section R902.1.

❖ Photovoltaic products used as roof covering must be tested to comply with Section R902.1.

R902.4 Rooftop-mounted photovoltaic panels and modules. Rooftop-mounted photovoltaic panels and modules installed on or above the roof covering shall be tested, listed and identified with a fire classification in accordance with UL 1703. Class A, B or C photovoltaic panels and modules shall be installed in jurisdictions designated by law as requiring their use or where the edge of the roof is less than 3 feet (914 mm) from a lot line.

❖ Rooftop-mounted photovoltaic panels and modules must have a fire classification of Class A, B or C in accordance with UL 1703.

INTERNATIONAL CODE COUNCIL®
Copyright © 2015 ICC. ALL RIGHTS RESERVED. Accessed by David Dammon on Jun 21, 2017 12:30:52 PM pursuant to License Agreement with ICC. No further reproduction or distribution authorized. ANY UNAUTHORIZED REPRODUCTION OR DISTRIBUTION IS A VIOLATION OF THE FEDERAL COPYRIGHT ACT AND THE LICENSE AGREEMENT, AND SUBJECT TO CIVIL AND CRIMINAL PENALTIES THEREUNDER.

SECTION R903
WEATHER PROTECTION

R903.1 General. Roof decks shall be covered with *approved* roof coverings secured to the building or structure in accordance with the provisions of this chapter. Roof assemblies shall be designed and installed in accordance with this code and the *approved* manufacturer's instructions such that the roof assembly shall serve to protect the building or structure.

❖ In all cases, a roof must be designed to provide protection from the elements. For the roof to adequately perform this function, it must be designed in accordance with this chapter. This section requires flashing where the roof intersects vertical elements such as walls, chimneys, dormers, plumbing stacks, plumbing vents and other penetrations of the weather-protective barrier. Roof drainage to remove water from the roof to an approved location is also regulated.

Materials and installation methods for roof decks and supporting elements are regulated by Chapter 8 of the code. A complying roof deck must then be covered in an approved manner to provide the necessary weather protection mandated by the code. This chapter includes the necessary provisions for such a weatherproof barrier. In addition, and just as important, the approved manufacturer's installation instructions must be adhered to.

R903.2 Flashing. Flashings shall be installed in a manner that prevents moisture from entering the wall and roof through joints in copings, through moisture permeable materials and at intersections with parapet walls and other penetrations through the roof plane.

❖ As with flashing required for other locations at the building's exterior, it is critical that locations where moisture may penetrate the exterior membrane at the roof be adequately protected. General locations identified include joints at the coping, intersections with parapet walls and other penetrations through the roof plane.

R903.2.1 Locations. Flashings shall be installed at wall and roof intersections, wherever there is a change in roof slope or direction and around roof openings. A flashing shall be installed to divert the water away from where the eave of a sloped roof intersects a vertical sidewall. Where flashing is of metal, the metal shall be corrosion resistant with a thickness of not less than 0.019 inch (0.5 mm) (No. 26 galvanized sheet).

❖ This section identifies specific roof locations for the installation of flashings. In those cases where metal is used as the flashing material, it must be corrosion resistant and a minimum No. 26 galvanized sheet.

R903.2.2 Crickets and saddles. A cricket or saddle shall be installed on the ridge side of any chimney or penetration more than 30 inches (762 mm) wide as measured perpendicular to the slope. Cricket or saddle coverings shall be sheet metal or of the same material as the roof covering.

Exception: Unit skylights installed in accordance with Section R308.6 and flashed in accordance with the manufacturer's instructions shall be permitted to be installed without a cricket or saddle.

❖ Where a chimney is more than 30 inches (762 mm) wide, as measured perpendicular to the slope, a cricket or saddle must be installed on the ridge side of the chimney to divert water away from the chimney penetration of the roof. A chimney of such width creates the potential for standing water that, despite appropriate flashing, can be detrimental to the roof's performance.

The exception permits engineered skylights that are designed to prevent water infiltration without the use of a cricket.

R903.3 Coping. Parapet walls shall be properly coped with noncombustible, weatherproof materials of a width not less than the thickness of the parapet wall.

❖ The top of an exterior wall, typically a masonry parapet wall, must have a coping. It is typically sloped to prevent standing water, and it must be of noncombustible, weatherproof materials. To maintain protection at the top of the wall, the coping must extend the full thickness of the parapet wall.

R903.4 Roof drainage. Unless roofs are sloped to drain over roof edges, roof drains shall be installed at each low point of the roof.

❖ In most residential construction, drainage water from the roof simply flows down the roof's slope and over the roof edge, often to a gutter and downspout system that carries the water away from the building. In situations where the roof design does not allow for water flow over the roof edges, roof drains must be installed in the roof surface. The drains will be at the low points of the roof, sized and located to remove all roof water. In a case where the low points occur at parapets of the exterior walls, scuppers through the parapets must be provided, constructed with the flow points level with the roof surface at the low points and located based on the roof slope and contributing roof area.

R903.4.1 Secondary (emergency overflow) drains or scuppers. Where roof drains are required, secondary emergency overflow roof drains or scuppers shall be provided where the roof perimeter construction extends above the roof in such a manner that water will be entrapped if the primary drains allow buildup for any reason. Overflow drains having the same size as the roof drains shall be installed with the inlet flow line located 2 inches (51 mm) above the low point of the roof, or overflow scuppers having three times the size of the roof drains and having a minimum opening height of 4 inches (102 mm) shall be installed in the adjacent parapet walls with the inlet flow located 2 inches (51 mm) above the low point of the roof served. The installation and sizing of overflow drains, leaders and conductors shall comply with Sections 1106 and 1108 of the *International Plumbing Code*, as applicable.

Overflow drains shall discharge to an *approved* location and shall not be connected to roof drain lines.

❖ It is quite possible that roof drains may become clogged or blocked by debris, resulting in insufficient

INTERNATIONAL CODE COUNCIL®
Copyright © 2015 ICC. ALL RIGHTS RESERVED. Accessed by David Dammon on Jun 21, 2017 12:30:52 PM pursuant to License Agreement with ICC. No further reproduction or distribution authorized. ANY UNAUTHORIZED REPRODUCTION OR DISTRIBUTION IS A VIOLATION OF THE FEDERAL COPYRIGHT ACT AND THE LICENSE AGREEMENT, AND SUBJECT TO CIVIL AND CRIMINAL PENALTIES THEREUNDER.

drainage. This could cause structural failure of portions of the roof system resulting from the increased weight on the roof caused by the impounded water. This section addresses such concerns by requiring overflow drains or overflow scuppers for those roofs that do not drain over the roof edges.

Although the required roof drains must be located at the low points of the roof, the overflow drain inlets need to be located 2 inches (51 mm) vertically above the low points. The same criterion applies where overflow scuppers are provided. In addition, overflow scuppers must be sized with a minimum opening height of 4 inches (102 mm) and have an opening area at least three times that of the roof drains. The *International Plumbing Code*® (IPC®) sets forth the specific details for the installation and sizing of overflow drains, leaders and conductors.

The overflow drains must not be connected to the roof drains. In the event a blockage occurs in the drainage line beyond the point of connection, both the roof drain and the overflow drain would be affected. The overflow drain should discharge to an approved location, typically a highly visible location that would indicate the overflow system is in use. This will provide an alert that there is some sort of blockage in the primary roof drain system.

SECTION R904
MATERIALS

R904.1 Scope. The requirements set forth in this section shall apply to the application of roof covering materials specified herein. Roof assemblies shall be applied in accordance with this chapter and the manufacturer's installation instructions. Installation of roof assemblies shall comply with the applicable provisions of Section R905.

❖ Roof assemblies and roof covering materials must conform to the provisions of this chapter, the applicable referenced standards listed in Chapter 44 and the manufacturer's installation instructions. This section provides general conditions for the application of roof covering materials referenced elsewhere in Chapter 9. A cross reference to Section R905 is provided for requirements dealing with the installation of specific roof coverings.

R904.2 Compatibility of materials. Roof assemblies shall be of materials that are compatible with each other and with the building or structure to which the materials are applied.

❖ The materials used in a roof assembly must be compatible in order to avoid a decrease or failure in the performance of the roof. Not only must the roofing materials be compatible with each other, they must also be suitable for the building as a whole.

R904.3 Material specifications and physical characteristics. Roof covering materials shall conform to the applicable standards listed in this chapter.

❖ Materials used as roof coverings are regulated by an applicable standard. Roof covering materials are identified in this chapter, and also listed in Chapter 44.

R904.4 Product identification. Roof covering materials shall be delivered in packages bearing the manufacturer's identifying marks and *approved* testing agency *labels* required. Bulk shipments of materials shall be accompanied by the same information issued in the form of a certificate or on a bill of lading by the manufacturer.

❖ Identification of roof covering materials provides much of the information necessary for acceptance of the materials by the building official. Because it is often difficult, if not impossible, to identify complying roof covering materials by visual observation, other proper identification of the materials is mandatory. Packaging of roof covering materials must include the manufacturer's identification marks. If the code or applicable standard requires review by an approved testing agency, the identifying marks of the testing agency must also be shown. The code also addresses the identification requirements for bulk shipments of materials.

SECTION R905
REQUIREMENTS FOR ROOF COVERINGS

R905.1 Roof covering application. Roof coverings shall be applied in accordance with the applicable provisions of this section and the manufacturer's installation instructions. Unless otherwise specified in this section, roof coverings shall be installed to resist the component and cladding loads specified in Table R301.2(2), adjusted for height and exposure in accordance with Table R301.2(3).

❖ In addition to the minimum requirements specified for roof coverings in the code, manuals published by various associations provide detailed discussions of the proper methods of installing roof coverings. These methods have been established based on many years of experience with the materials and their performance. Although the provisions in these documents are not specific code requirements, this section mandates the use of the manufacturer's installation instructions. It is important that roof coverings remain intact and in place when subjected to wind. Without an intact roof covering, the building would be subjected to either water damage, which could reduce its structural stability, or to higher wind pressures than the building is designed for. Unless Section R905 specifies otherwise, roof coverings must be installed to resist the wind pressures determined from Table R301.2(2) [see commentaries, Tables R301.2(2) and R301.2(3)].

INTERNATIONAL CODE COUNCIL®
Copyright © 2015 ICC. ALL RIGHTS RESERVED. Accessed by David Dammon on Jun 21, 2017 12:30:52 PM pursuant to License Agreement with ICC. No further reproduction or distribution authorized. ANY UNAUTHORIZED REPRODUCTION OR DISTRIBUTION IS A VIOLATION OF THE FEDERAL COPYRIGHT ACT AND THE LICENSE AGREEMENT, AND SUBJECT TO CIVIL AND CRIMINAL PENALTIES THEREUNDER.

R905.1.1 Underlayment. Underlayment for asphalt shingles, clay and concrete tile, metal roof shingles, mineral-surfaced roll roofing, slate and slate-type shingles, wood shingles, wood shakes and metal roof panels shall conform to the applicable standards listed in this chapter. Underlayment materials required to comply with ASTM D226, D1970, D4869 and D6757 shall bear a label indicating compliance to the standard designation and, if applicable, type classification indicated in Table R905.1.1(1). Underlayment shall be applied in accordance with Table R905.1.1(2). Underlayment shall be attached in accordance with Table R905.1.1(3).

Exceptions:

1. As an alternative, self-adhering polymer-modified bitumen underlayment complying with ASTM D1970 installed in accordance with both the underlayment manufacturer's and roof covering manufacturer's instructions for the deck material, roof ventilation configuration and climate exposure for the roof covering to be installed, shall be permitted.
2. As an alternative, a minimum 4-inch-wide (102 mm) strip of self-adhering polymer-modified bitumen membrane complying with ASTM D1970, installed in accordance with the manufacturer's instructions for the deck material, shall be applied over all joints in the roof decking. An approved underlayment for the applicable roof covering for maximum ultimate design wind speeds, V_{ult}, less than 140 miles per hour shall be applied over the entire roof over the 4-inch-wide (102 mm) membrane strips.

❖ Section R905.1.1 reorganizes the underlayment provisions contained in the *International Residential Code*® (IRC®). In the 2012 IRC, underlayment provisions were specified individually for each type of roof covering. Many of the roof covering provisions contained identical requirements for underlayment type, application, and attachment. The underlayment requirements for roof covering have been relocated to Section R905.1.1. There are three new tables that address underlayment type [Table R905.1.1(1)], application [Table R905.1.1(2)], and attachment [Table R905.1.1(3)] for each roof covering in the code that requires underlayment. Consolidating the underlayment requirements into a single section makes provisions easier to locate and highlights key differences between requirements for underlayment for different types of roof coverings. The exceptions permit the use of self-adhering underlayment. The exceptions clarify the permitted installations of the self-adhering membrane that would provide an equivalent or better level of water intrusion prevention to the underlayment requirements for high wind. The criteria specified are consistent with the Insurance Institute for Business and Home Safety FORTIFIED® program requirements for creating a "sealed roof deck." Additionally, the provisions of this proposal are the most widely accepted methods recognized by insurance companies for providing discounts and credits in high-wind regions.

Table R905.1.1(1) specifies the underlayment material types required for the various roof coverings listed. Where the ultimate design wind speed is equal to or greater than 140 mph, Table R905.1.1(1) requires a more robust underlayment. For example, tests and studies have shown that ASTM D226, Type I (No. 15) underlayment performs very poorly in areas subject to wind speeds of 120 mph or greater. Observations of roof underlayment performance following Hurricane Ike in Texas and in two sets of tests conducted at the University of Florida and Florida International University demonstrated that ASTM D226, Type I underlayment performed poorly when subjected to wind over about 110 mph. In laboratory tests, specimens covered with ASTM D226, Type I and Type II underlayment performed dramatically differently. ASTM D226, Type I felt (No.15) material completely blew off some portions of the specimen as winds exceeded 110 mph and pulled over the plastic caps on other parts of the specimen. In contrast, the ASTM D226, Type II (No. 30) material remained in place and showed very few signs of distress. Plastic caps deformed more than the metal caps in several installations

Table R905.1.1(2) specifies the underlayment application for both low-slope and high-slope roofs. Low-slope roofs present a potential problem because water drains slowly, and this creates the opportunity for water backup. Wind-driven rain can also pose a problem. Therefore, a special underlayment application method is used so that the roof remains weather tight. All portions of the roof will be protected by a minimum of two layers of underlayment if the installer follows the instructions found in Table R905.1.1(2). Commentary Figure R905.1.1 illustrates the required application of underlayment for a low-slope application. Only one layer of underlayment, applied in shingle fashion in accordance with this section, is mandated for high-slope roofs.

Table R905.1.1(3) specifies the required underlayment attachment. Where located in low-wind regions (maximum ultimate design wind speed less than 140 mph), the underlayment must be fastened sufficiently to hold in place and in accordance with the manufacturer's installation instruction. Where located in high-wind regions (ultimate design wind speed of 140 mph or greater) the underlayment must be attached with corrosion-resistant fasteners in a grid pattern. Metal or plastic cap nails or cap staples must be used to attach the underlayment to the roof sheathing.

INTERNATIONAL CODE COUNCIL®
Copyright © 2015 ICC. ALL RIGHTS RESERVED. Accessed by David Dammon on Jun 21, 2017 12:30:52 PM pursuant to License Agreement with ICC. No further reproduction or distribution authorized. ANY UNAUTHORIZED REPRODUCTION OR DISTRIBUTION IS A VIOLATION OF THE FEDERAL COPYRIGHT ACT AND THE LICENSE AGREEMENT, AND SUBJECT TO CIVIL AND CRIMINAL PENALTIES THEREUNDER.

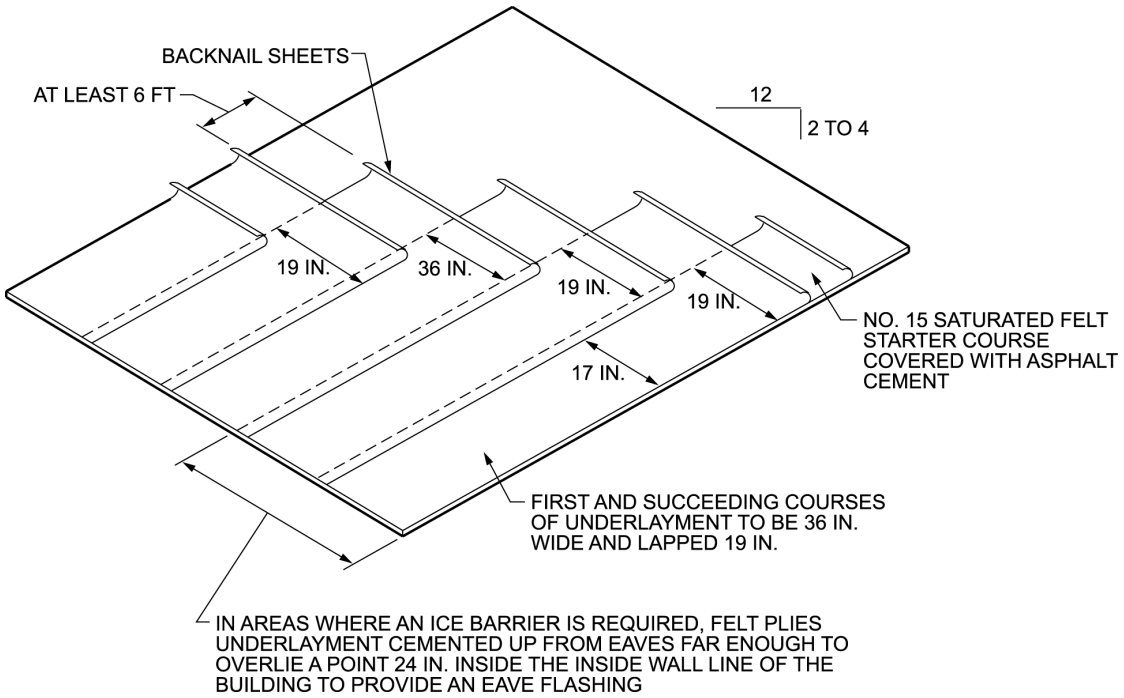

For SI: 1inch = 25.4 mm, 1 foot = 304.8 mm.

Figure R905.1.1
LOW-SLOPE DOUBLE-PLY UNDERLAYMENT APPICATION

TABLE R905.1.1(1)
UNDERLAYMENT TYPES

ROOF COVERING	SECTION	MAXIMUM ULTIMATE DESIGN WIND SPEED, V_{ult} < 140 MPH	MAXIMUM ULTIMATE DESIGN WIND SPEED, V_{ult} ≥ 140 MPH
Asphalt shingles	R905.2	ASTM D226 Type I ASTM D4869 Type I, II, III or IV ASTM D6757	ASTM D226 Type II ASTM D4869 Type IV ASTM D6757
Clay and concrete tile	R905.3	ASTM D226 Type II ASTM D2626 Type I ASTM D6380 Class M mineral-surfaced roll roofing	ASTM D226 Type II ASTM D2626 Type I ASTM D6380 Class M mineral-surfaced roll roofing
Metal roof shingles	R905.4	ASTM D226 Type I or II ASTM D4869 Type I, II, III or IV	ASTM D226 Type II ASTM D4869 Type IV
Mineral-surfaced roll roofing	R905.5	ASTM D226 Type I or II ASTM D4869 Type I, II, III or IV	ASTM D226 Type II ASTM D4869 Type IV
Slate and slate-type shingles	R905.6	ASTM D226 Type I ASTM D4869 Type I, II, III or IV	ASTM D226 Type II ASTM D4869 Type IV
Wood shingles	R905.7	ASTM D226 Type I or II ASTM D4869 Type I, II, III or IV	ASTM D226 Type II ASTM D4869 Type IV
Wood shakes	R905.8	ASTM D226 Type I or II ASTM D4869 Type I, II, III or IV	ASTM D226 Type II ASTM D4869 Type IV
Metal panels	R905.10	Manufacturer’s instructions	ASTM D226 Type II ASTM D4869 Type IV

INTERNATIONAL CODE COUNCIL®
Copyright © 2015 ICC. ALL RIGHTS RESERVED. Accessed by David Dammon on Jun 21, 2017 12:30:52 PM pursuant to License Agreement with ICC. No further reproduction or distribution authorized. ANY UNAUTHORIZED REPRODUCTION OR DISTRIBUTION IS A VIOLATION OF THE FEDERAL COPYRIGHT ACT AND THE LICENSE AGREEMENT, AND SUBJECT TO CIVIL AND CRIMINAL PENALTIES THEREUNDER.

TABLE R905.1.1(2)
UNDERLAYMENT APPLICATION

ROOF COVERING	SECTION	MAXIMUM ULTIMATE DESIGN WIND SPEED, V_{ult} < 140 MPH	MAXIMUM ULTIMATE DESIGN WIND SPEED, V_{ult} ≥ 140 MPH
Asphalt shingles	R905.2	For roof slopes from two units vertical in 12 units horizontal (2:12), up to four units vertical in 12 units horizontal (4:12), underlayment shall be two layers applied in the following manner: apply a 19-inch strip of underlayment felt parallel to and starting at the eaves. Starting at the eave, apply 36-inch-wide sheets of underlayment, overlapping successive sheets 19 inches. Distortions in the underlayment shall not interfere with the ability of the shingles to seal. For roof slopes of four units vertical in 12 units horizontal (4:12) or greater, underlayment shall be one layer applied in the following manner: underlayment shall be applied shingle fashion, parallel to and starting from the eave and lapped 2 inches, Distortions in the underlayment shall not interfere with the ability of the shingles to seal. End laps shall be 4 inches and shall be offset by 6 feet.	Same as Maximum Ultimate Design Wind Speed, V_{ult} < 140 mph except all laps shall be not less than 4 inches.
Clay and concrete tile	R905.3	For roof slopes from two and one-half units vertical in 12 units horizontal ($2^1/_2$:12), up to four units vertical in 12 units horizontal (4:12), underlayment shall be a minimum of two layers applied as follows: starting at the eave, apply a 19-inch strip of underlayment parallel with the eave. Starting at the eave, apply 36-inch-wide strips of underlayment felt, overlapping successive sheets 19 inches. For roof slopes of four units vertical in 12 units horizontal (4:12) or greater, underlayment shall be a minimum of one layer of underlayment felt applied shingle fashion, parallel to and starting from the eaves and lapped 2 inches. End laps shall be 4 inches and shall be offset by 6 feet.	Same as Maximum Ultimate Design Wind Speed, V_{ult} < 140 mph except all laps shall be not less than 4 inches.
Metal roof shingles	R905.4	Apply in accordance with the manufacturer's installation instructions.	For roof slopes from two units vertical in 12 units horizontal (2:12), up to four units vertical in 12 units horizontal (4:12), underlayment shall be two layers applied in the following manner: apply a 19-inch strip of underlayment felt parallel to and starting at the eaves. Starting at the eave, apply 36-inch-wide sheets of underlayment, overlapping successive sheets 19 inches, and fastened sufficiently to hold in place. For roof slopes of four units vertical in 12 units horizontal (4:12) or greater, underlayment shall be one layer applied in the following manner: underlayment shall be applied shingle fashion, parallel to and starting from the eave and lapped 4 inches. End laps shall be 4 inches and shall be offset by 6 feet.
Mineral-surfaced roll roofing	R905.5		
Slate and slate-type shingles	R905.6		
Wood shingles	R905.7		
Wood shakes	R905.8		
Metal panels	R905.10		

For SI: 1 inch = 25.4 mm, 1 foot = 304.8 mm.

INTERNATIONAL CODE COUNCIL®
Copyright © 2015 ICC. ALL RIGHTS RESERVED. Accessed by David Dammon on Jun 21, 2017 12:30:52 PM pursuant to License Agreement with ICC. No further reproduction or distribution authorized. ANY UNAUTHORIZED REPRODUCTION OR DISTRIBUTION IS A VIOLATION OF THE FEDERAL COPYRIGHT ACT AND THE LICENSE AGREEMENT, AND SUBJECT TO CIVIL AND CRIMINAL PENALTIES THEREUNDER.

TABLE R905.1.1(3)
UNDERLAYMENT ATTACHMENT

ROOF COVERING	SECTION	MAXIMUM ULTIMATE DESIGN WIND SPEED, V_{ult} < 140 MPH	MAXIMUM ULTIMATE DESIGN WIND SPEED, V_{ult} ≥ 140 MPH
Asphalt shingles	R905.2	Fastened sufficiently to hold in place	The underlayment shall be attached with corrosion-resistant fasteners in a grid pattern of 12 inches between side laps with a 6-inch spacing at the side laps. Underlayment shall be attached using metal or plastic cap nails or cap staples with a nominal cap diameter of not less than 1 inch. Metal caps shall have a thickness of not less than 32-gage sheet metal. Power-driven metal caps shall have a minimum thickness of 0.010 inch. Minimum thickness of the outside edge of plastic caps shall be 0.035 inch. The cap nail shank shall be not less than 0.083 inch for ring shank cap nails and 0.091 inch for smooth shank cap nails. Staples shall be not less than 21 gage. Cap nail shank and cap staple legs shall have a length sufficient to penetrate through the roof sheathing or not less than $^3/_4$ inch into the roof sheathing.
Clay and concrete tile	R905.3		
Metal roof shingles	R905.4	Manufacturer's installation instructions.	The underlayment shall be attached with corrosion-resistant fasteners in a grid pattern of 12 inches between side laps with a 6-inch spacing at the side laps. Underlayment shall be attached using metal or plastic cap nails or cap staples with a nominal cap diameter of not less than 1 inch. Metal caps shall have a thickness of at least 32-gage sheet metal. Power-driven metal caps shall have a minimum thickness of 0.010 inch. Minimum thickness of the outside edge of plastic caps shall be 0.035 inch. The cap nail shank shall be not less than 0.083 inch for ring shank cap nails and 0.091 inch for smooth shank cap nails. Staples shall be not less than 21 gage. Cap nail shank and cap staple legs shall have a length sufficient to penetrate through the roof sheathing or not less than $^3/_4$ inch into the roof sheathing.
Mineral-surfaced roll roofing	R905.5		
Slate and slate-type shingles	R905.6		
Wood shingles	R905.7		
Wood shakes	R905.8		
Metal panels	R905.10		

For SI: 1 inch = 25.4 mm.

INTERNATIONAL CODE COUNCIL®
Copyright © 2015 ICC. ALL RIGHTS RESERVED. Accessed by David Dammon on Jun 21, 2017 12:30:52 PM pursuant to License Agreement with ICC. No further reproduction or distribution authorized. ANY UNAUTHORIZED REPRODUCTION OR DISTRIBUTION IS A VIOLATION OF THE FEDERAL COPYRIGHT ACT AND THE LICENSE AGREEMENT, AND SUBJECT TO CIVIL AND CRIMINAL PENALTIES THEREUNDER.

R905.1.2 Ice barriers. In areas where there has been a history of ice forming along the eaves causing a backup of water as designated in Table R301.2(1), an ice barrier shall be installed for asphalt shingles, metal roof shingles, mineral-surfaced roll roofing, slate and slate-type shingles, wood shingles and wood shakes. The ice barrier shall consist of not fewer than two layers of underlayment cemented together, or a self-adhering polymer-modified bitumen sheet shall be used in place of normal underlayment and extend from the lowest edges of all roof surfaces to a point not less than 24 inches (610 mm) inside the exterior wall line of the building. On roofs with slope equal to or greater than 8 units vertical in 12 units horizontal, the ice barrier shall also be applied not less than 36 inches (914 mm) measured along the roof slope from the eave edge of the building.

Exception: Detached accessory structures not containing conditioned floor area.

❖ Where ice dams may be formed along the eave because snow continually freezes and thaws or frozen slush backs up in gutters, the underlayment application must be modified to prevent ice dams from forcing water under the roof covering, which could damage ceilings, walls and insulation [see Commentary Figure R905.1.2(1)]. Two layers of underlayment should be cemented together with asphalt cement from the lowest edge of the roof up the roof to a point that is at least 24 inches (610 mm) inside the interior wall line of the building, as shown in Commentary Figure R905.1.2(2). The environment within the envelope of the building provides adequate warmth to prevent ice dams from forming above the heated space; therefore, the two layers of cemented underlayment are permitted to terminate 24 inches (610 mm) inside the interior wall line of the building. The local jurisdiction is responsible for determining whether the ice barrier is required based on weather records, and it must so indicate in Table R301.2(1). Section R905.1.2 applies only to roof coverings of asphalt shingles, metal roof shingles, mineral-surfaced roll roofing, slate shingles, wood shingles and wood shakes.

An exception to this section exempts unheated accessory buildings from such restrictions because they are unheated structures where the need for protection against ice dams is unnecessary.

R905.2 Asphalt shingles. The installation of asphalt shingles shall comply with the provisions of this section.

❖ This section regulates asphalt shingles composed of organic felt or glass felt and coated with mineral granules. Provisions address requirements for sheathing, roof slope, underlayment, fasteners and attachment.

R905.2.1 Sheathing requirements. Asphalt shingles shall be fastened to solidly sheathed decks.

❖ The code requires a solid roof surface for the installation of asphalt shingles. Section R803 regulates solid sheathing.

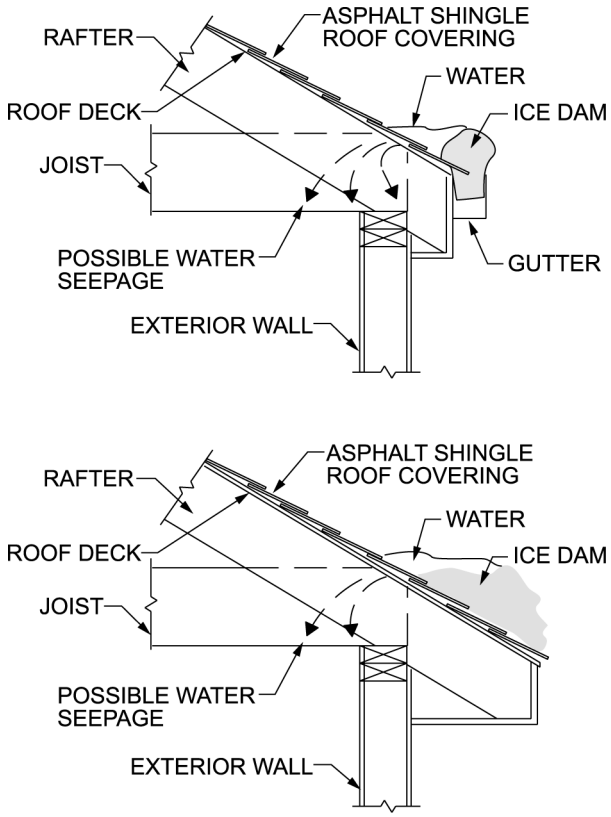

Figure R905.1.2(1)
POSSIBLE WATER DAMAGE FROM AN ICE DAM

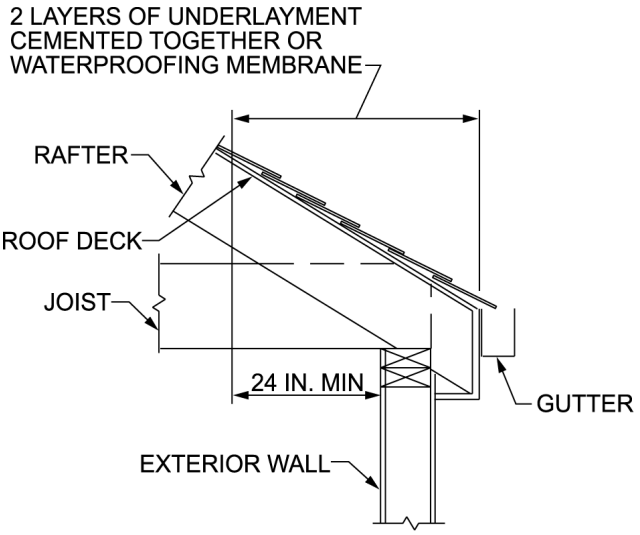

For SI: 1 inch = 25.4 mm.

Figure R905.1.2(2)
PROTECTIVE ICE BARRIER

INTERNATIONAL CODE COUNCIL®
Copyright © 2015 ICC. ALL RIGHTS RESERVED. Accessed by David Dammon on Jun 21, 2017 12:30:52 PM pursuant to License Agreement with ICC. No further reproduction or distribution authorized. ANY UNAUTHORIZED REPRODUCTION OR DISTRIBUTION IS A VIOLATION OF THE FEDERAL COPYRIGHT ACT AND THE LICENSE AGREEMENT, AND SUBJECT TO CIVIL AND CRIMINAL PENALTIES THEREUNDER.

R905.2.2 Slope. Asphalt shingles shall be used only on roof slopes of two units vertical in 12 units horizontal (2:12) or greater. For roof slopes from two units vertical in 12 units horizontal (2:12) up to four units vertical in 12 units horizontal (4:12), double underlayment application is required in accordance with Section R905.1.1.

❖ The performance of all roof coverings is based in part on the slope of the roof surface. As the slope of the roof decreases, water drainage is slowed, and the potential for water intrusion increases because of the greater potential of water backup under the roofing. Asphalt shingles, because of their configuration and installation methods, are restricted to use on roofs having a minimum slope of 2:12. Where the slope is no steeper than 4:12, the underlayment must be doubled to provide a greater barrier to leakage. Section R905.2.7 specifies the method of such double underlayment. Commentary Figure R905.2.2(1) shows an example of asphalt roof shingles installed on a high-slope roof (4:12 minimum), while Commentary Figure R905.2.2(2) depicts a low-slope roof installation (between 2:12 and 4:12).

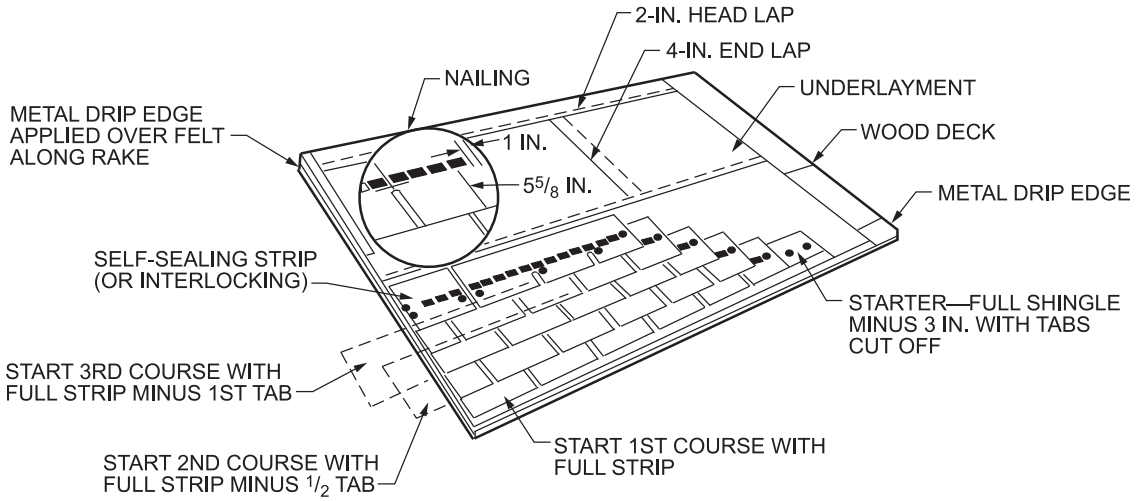

For SI: 1 inch = 25.4 mm.

Figure R905.2.2(1)
ASPHALT ROOFING SHINGLE APPLICATION HIGH SLOPE (4:12 MINIMUM)
(Source NRCA)

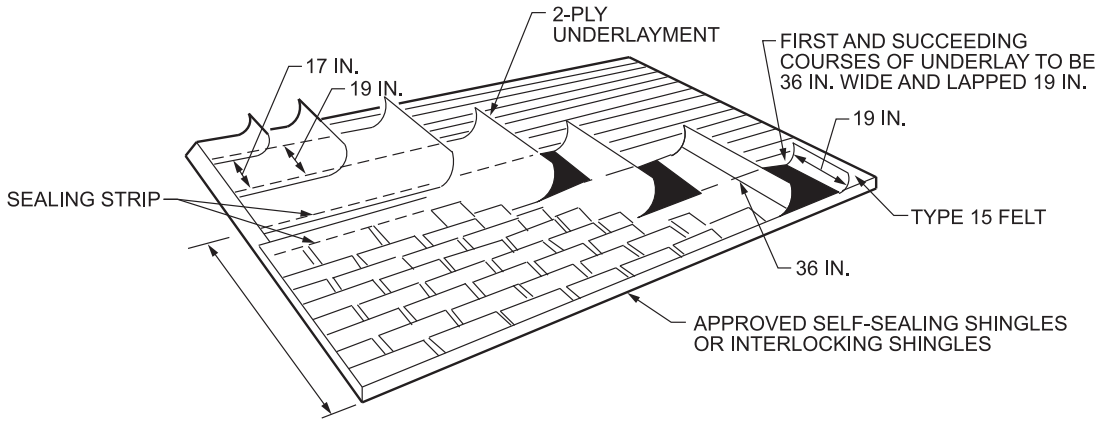

NOTE: IN AREAS WHERE AN ICE BARRIER IS REQUIRED, FELT PLIES OF UNDERLAYMENT SHOULD BE CEMENTED UP FROM EAVES FAR ENOUGH TO OVERLIE A POINT 24 IN. INSIDE THE INSIDE WALL LINE OF THE BUILDING.

For SI: 1 inch = 25.4 mm.

Figure R905.2.2(2)
APPLICATION OF ASPHALT SHINGLE SLOPES BETWEEN 2:12 AND 4:12
(Source NRCA)

INTERNATIONAL CODE COUNCIL®
Copyright © 2015 ICC. ALL RIGHTS RESERVED. Accessed by David Dammon on Jun 21, 2017 12:30:52 PM pursuant to License Agreement with ICC. No further reproduction or distribution authorized. ANY UNAUTHORIZED REPRODUCTION OR DISTRIBUTION IS A VIOLATION OF THE FEDERAL COPYRIGHT ACT AND THE LICENSE AGREEMENT, AND SUBJECT TO CIVIL AND CRIMINAL PENALTIES THEREUNDER.

R905.2.3 Underlayment. Underlayment shall comply with Section R905.1.1.

❖ See the commentary to Section R905.1.1.

R905.2.4 Asphalt shingles. Asphalt shingles shall comply with ASTM D3462.

❖ Asphalt shingles must comply with ASTM D3462. ASTM D3462 is the standard specification for asphalt shingles made from glass felt and surfaced with mineral granules.

R905.2.4.1 Wind resistance of asphalt shingles. Asphalt shingles shall be tested in accordance with ASTM D7158. Asphalt shingles shall meet the classification requirements of Table R905.2.4.1 for the appropriate ultimate design wind speed. Asphalt shingle packaging shall bear a label to indicate compliance with ASTM D7158 and the required classification in Table R905.2.4.1.

Exception: Asphalt shingles not included in the scope of ASTM D7158 shall be tested and labeled to indicate compliance with ASTM D3161 and the required classification in Table R905.2.4.1.

❖ This section provides requirements for the testing, classification and labeling of asphalt shingles to demonstrate resistance to wind forces. The asphalt shingles must meet the classification requirement for the appropriate ultimate design wind speed and comply with the appropriate product standard. The required standard is ASTM D7158 with an exception for products outside the scope of ASTM D7158. ASTM D7158 provides a method of testing that is appropriate for sealed asphalt shingles. The exception references ASTM D3161 and is necessary for unsealed shingles. Table R905.2.4.1 provides the proper application of the two standards. The table will assist in the selection of asphalt shingles based upon the appropriate ultimate design wind speed and the applicable standard.

R905.2.5 Fasteners. Fasteners for asphalt shingles shall be galvanized steel, stainless steel, aluminum or copper roofing nails, minimum 12-gage [0.105 inch (3 mm)] shank with a minimum $^3/_8$-inch-diameter (9.5 mm) head, complying with ASTM F1667, of a length to penetrate through the roofing materials and not less than $^3/_4$ inch (19.1 mm) into the roof sheathing. Where the roof sheathing is less than $^3/_4$ inch (19.1 mm) thick, the fasteners shall penetrate through the sheathing.

❖ Roofing nails must be of a corrosion-resistant material, specified in this section as either galvanized steel, stainless steel, aluminum or copper. A roofing nail must have a minimum 12-gage shank with a head at least $^3/_8$ inch (9.5 mm) in diameter. To provide the necessary holding power, roofing nails must penetrate the roof sheathing a minimum of $^3/_4$ inch (19.1 mm). For roof sheathing having a thickness less than $^3/_4$ inch (19.1 mm), the nails must penetrate completely through the sheathing. The material specification standard for roofing nails is ASTM F1667.

R905.2.6 Attachment. Asphalt shingles shall have the minimum number of fasteners required by the manufacturer, but not less than four fasteners per strip shingle or two fasteners per individual shingle. Where the roof slope exceeds 21 units vertical in 12 units horizontal (21:12, 175-percent slope), shingles shall be installed as required by the manufacturer.

❖ Section R905.2.4.1 requires the wind resistance of asphalt shingles to be determined by ASTM D7158 or ASTM D3161.The ASTM D7158 test method covers the procedure for calculating the wind resistance of asphalt shingles when applied in accordance with the manufacturer's instruction and sealed under defined conditions. The ASTM D3161 test method covers the procedure for testing asphalt shingles that are resistant to wind blow-up or blow-off when applied on low slopes in accordance with the manufacturer's instructions. This test method may be used to test self-sealing or interlocked shingles.

TABLE R905.2.4.1
CLASSIFICATION OF ASPHALT ROOF SHINGLES

MAXIMUM ULTIMATE DESIGN WIND SPEED, V_{ult} FROM FIGURE R301.2(4)A (mph)	MAXIMUM BASIC WIND SPEED, V_{ASD} FROM TABLE R301.2.1.3 (mph)	ASTM D7158[a] SHINGLE CLASSIFICATION	ASTM D3161 SHINGLE CLASSIFICATION
110	85	D, G or H	A, D or F
116	90	D, G or H	A, D or F
129	100	G or H	A, D or F
142	110	G or H	F
155	120	G or H	F
168	130	H	F
181	140	H	F
194	150	H	F

For SI: 1 foot = 304.8 mm; 1 mph = 0.447 m/s.

a. The standard calculations contained in ASTM D7158 assume Exposure Category B or C and building height of 60 feet or less. Additional calculations are required for conditions outside of these assumptions.

❖ See the commentary to Section 905.2.4.1.

INTERNATIONAL CODE COUNCIL®
Copyright © 2015 ICC. ALL RIGHTS RESERVED. Accessed by David Dammon on Jun 21, 2017 12:30:52 PM pursuant to License Agreement with ICC. No further reproduction or distribution authorized. ANY UNAUTHORIZED REPRODUCTION OR DISTRIBUTION IS A VIOLATION OF THE FEDERAL COPYRIGHT ACT AND THE LICENSE AGREEMENT, AND SUBJECT TO CIVIL AND CRIMINAL PENALTIES THEREUNDER.

Neither of these tests is a test of the fasteners. However, fastening in accordance with the manufacturer's instruction is required for shingles that pass these tests.

The minimum number of fasteners for asphalt shingles must be the number required by the manufacturer's instructions. Except for steep roof slopes, the minimum quantity of fasteners per shingle is four for strip shingles and two for individual shingles.

For steep roof slopes (slopes greater than 21:12), the manufacturer's installation instructions and minimum quantity of fasteners per shingles must be followed.

R905.2.7 Ice barrier. Where required, ice barriers shall comply with Section R905.1.2.

❖ See the commentary to Section R905.1.2.

R905.2.8 Flashing. Flashing for asphalt shingles shall comply with this section.

❖ This section sets forth the special conditions for flashing installed as a part of an asphalt shingle roof system. Specific flashing locations addressed include base and cap flashing, valleys, crickets and saddles and sidewall flashing.

R905.2.8.1 Base and cap flashing. Base and cap flashing shall be installed in accordance with manufacturer's instructions. Base flashing shall be of either corrosion-resistant metal of minimum nominal 0.019-inch (0.5 mm) thickness or mineral-surfaced roll roofing weighing not less than 77 pounds per 100 square feet (4 kg/m^2). Cap flashing shall be corrosion-resistant metal of minimum nominal 0.019-inch (0.5 mm) thickness.

❖ If metal is used as cap or base flashing, it must be corrosion resistant and have a minimum nominal thickness of 0.019 inch (0.483 mm). Mineral-surfaced roll roofing may also be used as base flashing, if it has a minimum weight of 77 pounds per 100 square feet (4 kg/m^2).

R905.2.8.2 Valleys. Valley linings shall be installed in accordance with the manufacturer's instructions before applying shingles. Valley linings of the following types shall be permitted:

1. For open valleys (valley lining exposed) lined with metal, the valley lining shall be not less than 24 inches (610 mm) wide and of any of the corrosion-resistant metals in Table R905.2.8.2.
2. For open valleys, valley lining of two plies of mineral-surfaced roll roofing, complying with ASTM D3909 or ASTM D6380 Class M, shall be permitted. The bottom layer shall be 18 inches (457 mm) and the top layer not less than 36 inches (914 mm) wide.
3. For closed valleys (valley covered with shingles), valley lining of one ply of smooth roll roofing complying with ASTM D6380 and not less than 36 inches wide (914 mm) or valley lining as described in Item 1 or 2 shall be permitted. Self-adhering polymer modified bitumen underlayment complying with ASTM D1970 shall be permitted in lieu of the lining material.

❖ Open valley linings may be of either metal or mineral-surfaced roll roofing as set forth in this section. Closed valleys are also permitted with a number of lining alternatives available. Commentary Figures R905.2.8.2(1) and R905.2.8.2(2) illustrate typical valley flashings for open and closed (woven) valleys, respectively.

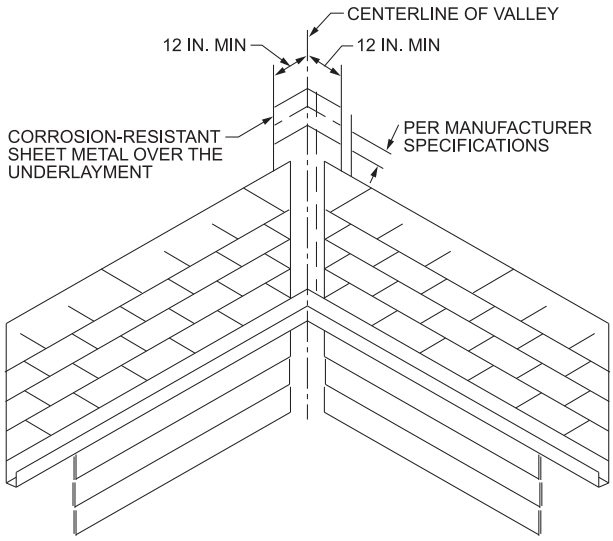

For SI: 1 inch = 25.4 mm.

Figure R905.2.8.2(1)
FLASHING FOR OPEN ROOF VALLEY

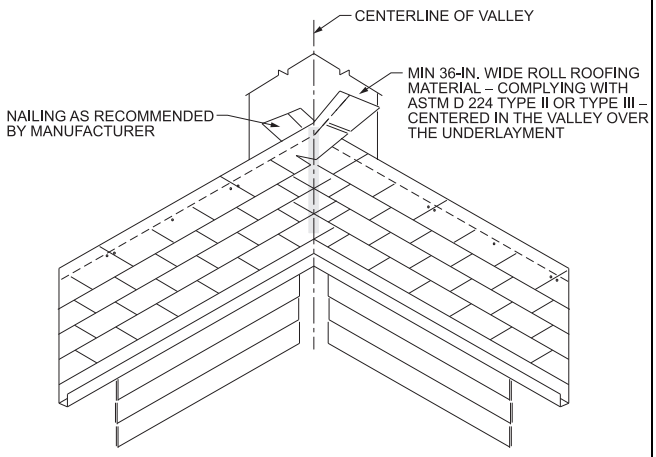

For SI: 1 inch = 25.4 mm.

Figure R905.2.8.2(2)
FLASHING FOR WOVEN VALLEY

INTERNATIONAL CODE COUNCIL®
Copyright © 2015 ICC. ALL RIGHTS RESERVED. Accessed by David Dammon on Jun 21, 2017 12:30:52 PM pursuant to License Agreement with ICC. No further reproduction or distribution authorized. ANY UNAUTHORIZED REPRODUCTION OR DISTRIBUTION IS A VIOLATION OF THE FEDERAL COPYRIGHT ACT AND THE LICENSE AGREEMENT, AND SUBJECT TO CIVIL AND CRIMINAL PENALTIES THEREUNDER.

TABLE R905.2.8.2
VALLEY LINING MATERIAL

MATERIAL	MINIMUM THICKNESS (inches)	GAGE	WEIGHT (pounds)
Cold-rolled copper	0.0216 nominal	—	ASTM B370, 16 oz. per square foot
Lead-coated copper	0.0216 nominal	—	ASTM B101, 16 oz. per square foot
High-yield copper	0.0162 nominal	—	ASTM B370, 12 oz. per square foot
Lead-coated high-yield copper	0.0162 nominal	—	ASTM B101, 12 oz. per square foot
Aluminum	0.024	—	—
Stainless steel	—	28	—
Galvanized steel	0.0179	26 (zinc coated G90)	—
Zinc alloy	0.027	—	—
Lead	—	—	$2^1/_2$
Painted terne	—	—	20

For SI: 1 inch = 25.4 mm, 1 pound = 0.454 kg.

❖ If exposed corrosion-resistant metal materials are used as valley linings, they are regulated by this table. The table identifies a variety of acceptable metal linings, including copper, aluminum, stainless steel, galvanized steel, zinc alloy, lead and painted terne. The materials are regulated by their thickness, gage or weight.

R905.2.8.3 Sidewall flashing. Base flashing against a vertical sidewall shall be continuous or step flashing and shall be not less than 4 inches (102 mm) in height and 4 inches (102 mm) in width and shall direct water away from the vertical sidewall onto the roof or into the gutter. Where siding is provided on the vertical sidewall, the vertical leg of the flashing shall be continuous under the siding. Where anchored masonry veneer is provided on the vertical sidewall, the base flashing shall be provided in accordance with this section and counterflashing shall be provided in accordance with Section R703.7.2.2. Where exterior plaster or adhered masonry veneer is provided on the vertical sidewall, the base flashing shall be provided in accordance with this section and Section R703.6.3.

❖ Continuous or step flashing must be used to flash along the intersection of a roof and a vertical sidewall. Commentary Figure R905.2.8.3 shows an example of flashing at a sidewall.

R905.2.8.4 Other flashing. Flashing against a vertical front wall, as well as soil stack, vent pipe and chimney flashing, shall be applied in accordance with the asphalt shingle manufacturer's printed instructions.

❖ The installation of flashing at vertical roof penetrations such as chimneys, soil stacks and vent pipes must conform to the instructions provided by the asphalt shingle manufacturer. Commentary Figure R905.2.8.4 shows an example of chimney flashing.

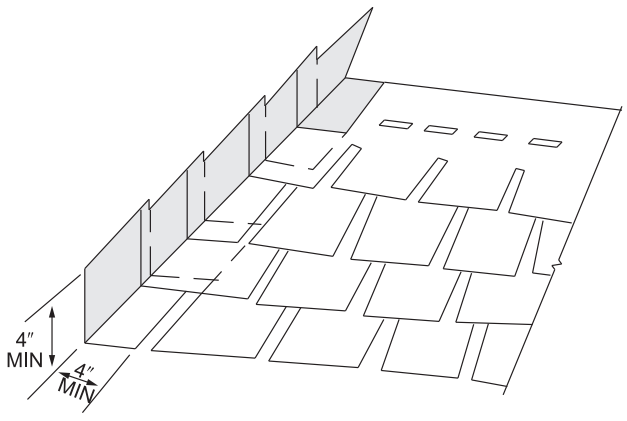

For SI: 1 inch = 25.4 mm.

Figure R905.2.8.3
FLASHING AT SIDE WALL

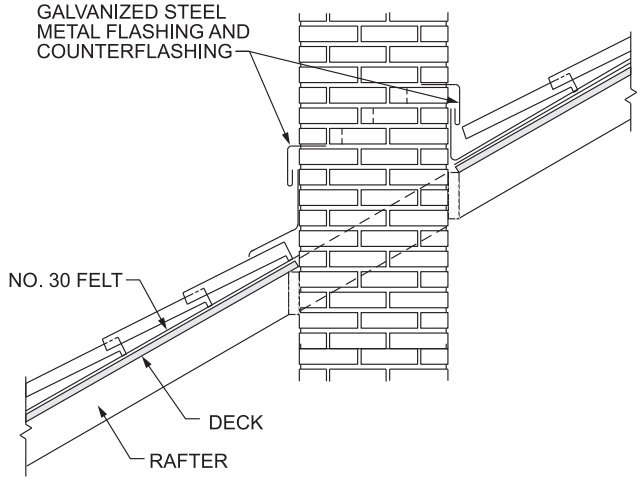

Figure R905.2.8.4
CHIMNEY FLASHING DETAIL

INTERNATIONAL CODE COUNCIL®
Copyright © 2015 ICC. ALL RIGHTS RESERVED. Accessed by David Dammon on Jun 21, 2017 12:30:52 PM pursuant to License Agreement with ICC. No further reproduction or distribution authorized. ANY UNAUTHORIZED REPRODUCTION OR DISTRIBUTION IS A VIOLATION OF THE FEDERAL COPYRIGHT ACT AND THE LICENSE AGREEMENT, AND SUBJECT TO CIVIL AND CRIMINAL PENALTIES THEREUNDER.

R905.2.8.5 Drip edge. A drip edge shall be provided at eaves and rake edges of shingle roofs. Adjacent segments of drip edge shall be overlapped not less than 2 inches (51 mm). Drip edges shall extend not less than $^1/_4$ inch (6.4 mm) below the roof sheathing and extend up back onto the roof deck not less than 2 inches (51 mm). Drip edges shall be mechanically fastened to the roof deck at not more than 12 inches (305 mm) o.c. with fasteners as specified in Section R905.2.5. Underlayment shall be installed over the drip edge along eaves and under the drip edge along rake edges.

❖ Drip edge is a metal flashing or other overhanging component applied at the roof edge that is intended to control the direction of dripping water and help protect the underlying building components. Drip edge has an outward projecting lower edge to direct the water away from the building. It is also used to break the continuity of contact between the roof perimeter and the wall components to help prevent capillary action.

Metal drip edge is a formed metal flashing that extends back from and bends down over the roof edge. Along the roof eave, the drip edge is applied under the underlayment. Along the roof rake, the drip edge is applied over the underlayment.

R905.3 Clay and concrete tile. The installation of clay and concrete tile shall comply with the provisions of this section.

❖ This section addresses both concrete tile and clay tile. Commentary Figure R905.3 depicts several examples of clay and concrete roof tile.

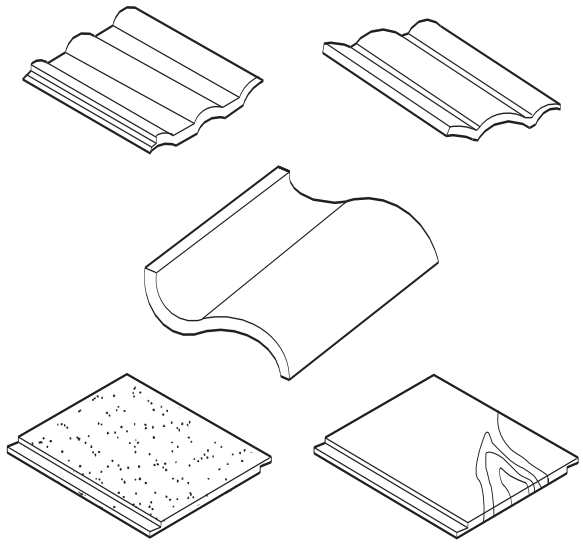

Figure R905.3
ROLL AND FLAT TILE EXAMPLES

R905.3.1 Deck requirements. Concrete and clay tile shall be installed only over solid sheathing or spaced structural sheathing boards.

❖ Both solid sheathing and spaced structural sheathing boards are permitted as a base for the installation of clay or concrete roof tile.

R905.3.2 Deck slope. Clay and concrete roof tile shall be installed on roof slopes of two and one-half units vertical in 12 units horizontal ($2^1/_2$:12) or greater. For roof slopes from two and one-half units vertical in 12 units horizontal ($2^1/_2$:12) to four units vertical in 12 units horizontal (4:12), double underlayment application is required in accordance with Section R905.3.3.

❖ To keep the roof covering weather tight and promote proper drainage, clay and concrete tile cannot be installed on a roof having a slope of less than $2^1/_2$:12. The application of two layers of underlayment is mandated on roofs of 4:12 and less. The provisions of Section R905.3.3 address the full requirements for underlayment on concrete or clay tile roofs.

R905.3.3 Underlayment. Underlayment shall comply with Section R905.1.1.

❖ See the commentary to Section R905.1.1.

R905.3.4 Clay tile. Clay roof tile shall comply with ASTM C1167.

❖ ASTM C1167 regulates clay roof tiles manufactured from clay, shale or similar natural earthy substances. The standard addresses a variety of performance requirements, including durability, strength and permeability.

R905.3.5 Concrete tile. Concrete roof tile shall comply with ASTM C1492.

❖ ASTM C1492 regulates concrete roof tiles manufactured from Portland cement, water and mineral aggregates with or without the inclusion of other materials. Lightweight or normal-weight aggregates or both are used in the manufacture of concrete tiles. The tiles are shaped during manufacturing by molding, pressing or extrusion. The tiles are usually planar or undulating rectangular shapes available in a variety of cross-sectional areas, profiles, shapes, sizes, surface textures and colors. The standard addresses a variety of performance tests including dimensional tolerances, freeze/thaw, transverse strength, permeability and water absorption.

R905.3.6 Fasteners. Nails shall be corrosion resistant and not less than 11 gage, $^5/_{16}$-inch (11 mm) head, and of sufficient length to penetrate the deck not less than $^3/_4$ inch (19 mm) or through the thickness of the deck, whichever is less. Attaching wire for clay or concrete tile shall not be smaller than 0.083 inch (2 mm). Perimeter fastening areas include three tile courses but not less than 36 inches (914 mm) from either side of hips or ridges and edges of eaves and gable rakes.

❖ Roofing nails for fastening clay or concrete tiles must be corrosion resistant. A roofing nail must have a minimum 11-gage shank with a head at least $^5/_{16}$ inch (10.6 mm) in diameter. To provide the necessary holding power, roofing nails must penetrate the roof sheathing a minimum of $^3/_4$ inch (19.1 mm). For roof sheathing having a thickness less than $^3/_4$ inch (19.1 mm), the nails must penetrate completely through the sheathing. The portions of the roof considered as

INTERNATIONAL CODE COUNCIL®
Copyright © 2015 ICC. ALL RIGHTS RESERVED. Accessed by David Dammon on Jun 21, 2017 12:30:52 PM pursuant to License Agreement with ICC. No further reproduction or distribution authorized. ANY UNAUTHORIZED REPRODUCTION OR DISTRIBUTION IS A VIOLATION OF THE FEDERAL COPYRIGHT ACT AND THE LICENSE AGREEMENT, AND SUBJECT TO CIVIL AND CRIMINAL PENALTIES THEREUNDER.

perimeter fastening areas include a minimum of three tile courses, but in no case are they less than 36 inches (914 mm) from the edges of eaves and gable rakes or from either side of hips and ridges.

R905.3.7 Application. Tile shall be applied in accordance with this chapter and the manufacturer's installation instructions, based on the following:

1. Climatic conditions.
2. Roof slope.
3. Underlayment system.
4. Type of tile being installed.

Clay and concrete roof tiles shall be fastened in accordance with this section and the manufacturer's installation instructions. Perimeter tiles shall be fastened with not less than one fastener per tile. Tiles with installed weight less than 9 pounds per square foot (0.4 kg/m^2) require not less than one fastener per tile regardless of roof slope. Clay and concrete roof tile attachment shall be in accordance with the manufacturer's installation instructions where applied in areas where the ultimate design wind speed exceeds 130 miles per hour (58 m/s) and on buildings where the roof is located more than 40 feet (12 192 mm) above grade. In areas subject to snow, not less than two fasteners per tile are required. In other areas, clay and concrete roof tiles shall be attached in accordance with Table R905.3.7.

❖ This section identifies four key issues that must be taken into consideration when using the code and the manufacturer's installation instructions in the proper application of clay and concrete roof tile. At least one fastener is required for each roof tile for those tiles at the perimeter of the roof, as well as any tiles weighing less than 9 pounds per square foot (0.4 kg/m^2). In areas where the roof is exposed to a roof snow load, at least two fasteners are required for each tile. Because of the special concerns in high-wind areas, or where the roof height is well above grade, the manufacturer's installation instructions must be referred to in the determination of the minimum number of fasteners.

If none of the above-mentioned conditions occur, Table R905.3.7 must be used to determine proper fastening. The type of sheathing (spaced or solid), the presence of battens and the slope of the roof all impact the minimum number of fasteners required. Commentary Figures R905.3.7(1) through (4) illustrate some of the common shapes of tile and installation techniques.

TABLE R905.3.7
CLAY AND CONCRETE TILE ATTACHMENT

SHEATHING	ROOF SLOPE	NUMBER OF FASTENERS
Solid without battens	All	One per tile
Spaced or solid with battens and slope < 5:12	Fasteners not required	—
Spaced sheathing without battens	5:12 ≤ slope < 12:12	One per tile/every other row
	12:12 ≤ slope < 24:12	One per tile

❖ This table sets forth the number of fasteners required to attach clay or concrete tile to various types of sheathing. The table is not applicable where the ultimate design wind speed exceeds 130 mph (58 m/s), where the building's roof is located more than 40 feet (12 192 mm) above grade or in locales subject to snow. Under all other conditions, the table indicates the number of fasteners required based on the type of sheathing and, in some cases, the slope of the roof.

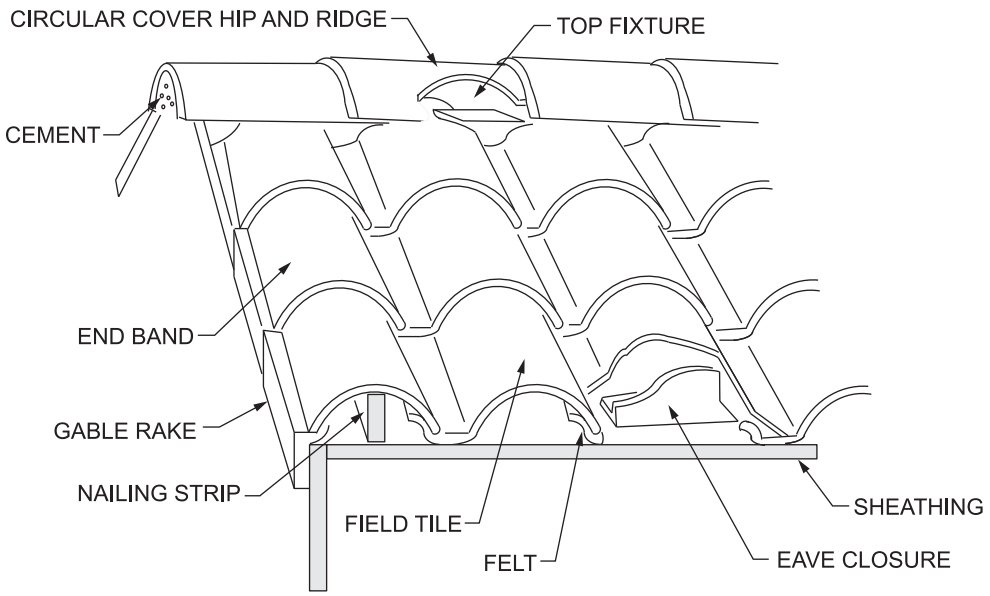

Figure R905.3.7(1)
APPLICATION OF ROLL TILE

INTERNATIONAL CODE COUNCIL®
Copyright © 2015 ICC. ALL RIGHTS RESERVED. Accessed by David Dammon on Jun 21, 2017 12:30:52 PM pursuant to License Agreement with ICC. No further reproduction or distribution authorized. ANY UNAUTHORIZED REPRODUCTION OR DISTRIBUTION IS A VIOLATION OF THE FEDERAL COPYRIGHT ACT AND THE LICENSE AGREEMENT, AND SUBJECT TO CIVIL AND CRIMINAL PENALTIES THEREUNDER.

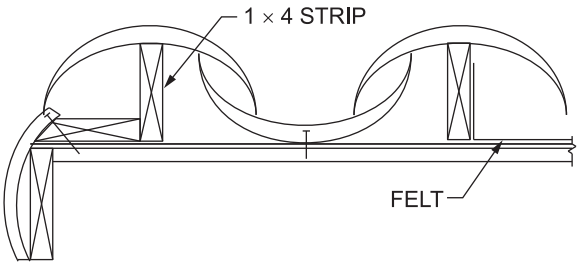

For SI: 1 inch = 25.4 mm.

Figure R905.3.7(2)
TILE ROOF GABLE RAKE SECTION

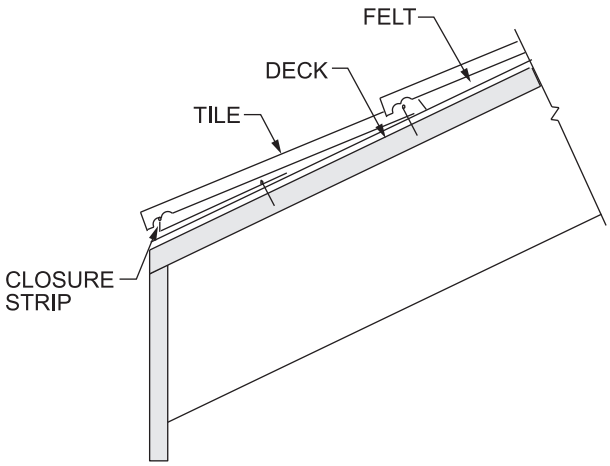

Figure R905.3.7(3)
TILE ROOF EAVE SECTION

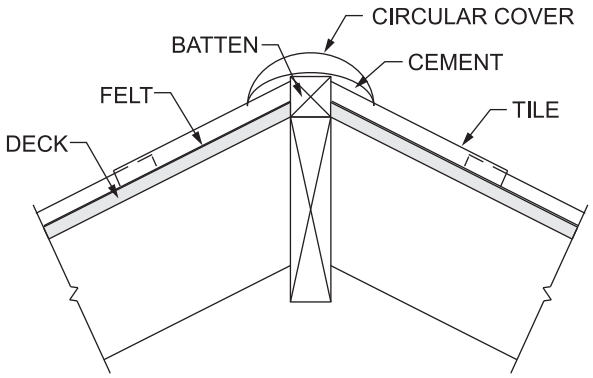

Figure R905.3.7(4)
TILE ROOF RIDGE SECTION

INTERNATIONAL CODE COUNCIL®
Copyright © 2015 ICC. ALL RIGHTS RESERVED. Accessed by David Dammon on Jun 21, 2017 12:30:52 PM pursuant to License Agreement with ICC. No further reproduction or distribution authorized. ANY UNAUTHORIZED REPRODUCTION OR DISTRIBUTION IS A VIOLATION OF THE FEDERAL COPYRIGHT ACT AND THE LICENSE AGREEMENT, AND SUBJECT TO CIVIL AND CRIMINAL PENALTIES THEREUNDER.

R905.3.8 Flashing. At the juncture of roof vertical surfaces, flashing and counterflashing shall be provided in accordance with this chapter and the manufacturer's installation instructions and, where of metal, shall be not less than 0.019 inch (0.5 mm) (No. 26 galvanized sheet gage) corrosion-resistant metal. The valley flashing shall extend not less than 11 inches (279 mm) from the centerline each way and have a splash diverter rib not less than 1 inch (25 mm) in height at the flow line formed as part of the flashing. Sections of flashing shall have an end lap of not less than 4 inches (102 mm). For roof slopes of three units vertical in 12 units horizontal (25-percent slope) and greater, valley flashing shall have a 36-inch-wide (914 mm) underlayment of one layer of Type I underlayment running the full length of the valley, in addition to other required underlayment. In areas where the average daily temperature in January is 25°F (-4°C) or less, metal valley flashing underlayment shall be solid-cemented to the roofing underlayment for slopes less than seven units vertical in 12 units horizontal (58-percent slope) or be of self-adhering polymer modified bitumen sheet.

❖ Flashing for clay and concrete roof tile is important because the shape of the tile may terminate 2 or 3 inches (51 or 76 mm) above the roof sheathing. Flashing details, therefore, must be constructed in accordance with the code and the manufacturer's installation instructions for the tile shape being used. Some common methods of providing flashing at different locations are illustrated in Commentary Figures R905.3.8(1) through (4).

R905.4 Metal roof shingles. The installation of metal roof shingles shall comply with the provisions of this section.

❖ Metal roof shingles differ from the metal roof panels regulated by Section R905.10. By definition, a metal roof shingle must have an installed weather exposure of less than 3 square feet (0.28 m^2) per shingle or sheet. While decking and slope limitations differ to some degree, the provisions for underlayment and flashing are very similar to those for other types of shingle applications.

R905.4.1 Deck requirements. Metal roof shingles shall be applied to a solid or closely fitted deck, except where the roof covering is specifically designed to be applied to spaced sheathing.

❖ Unless manufacturers of metal shingles indicate that their particular shingle may be placed over a roof deck having spaced sheathing, metal roof shingles must be installed on a solid or closely fitted deck.

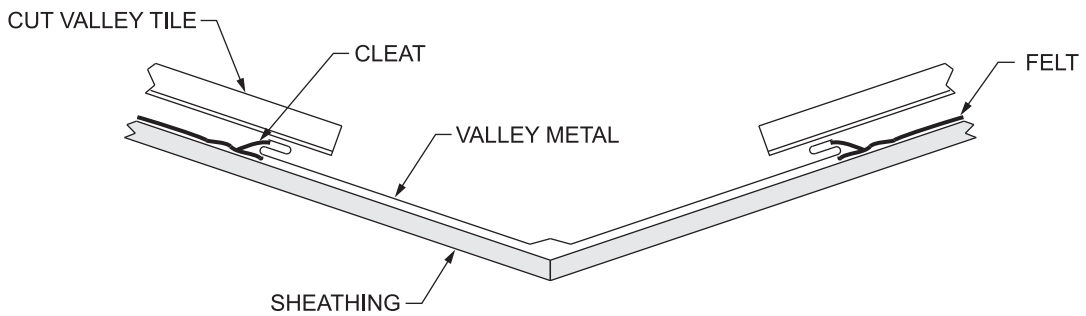

Figure R905.3.8(1)
TILE ROOF FLASHING AT VALLEY

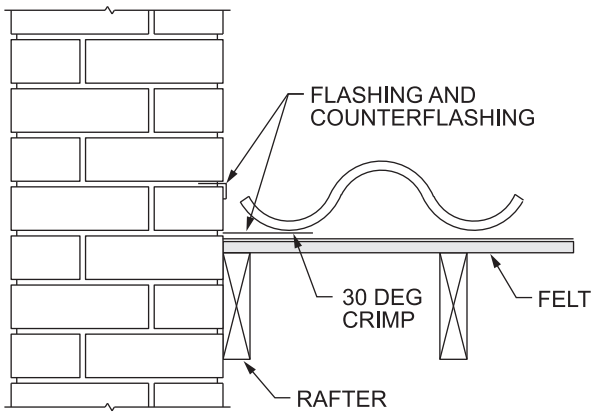

For SI: 1 degree = 0.01745 rad.

Figure R905.3.8(2)
TILE ROOF FLASHING AT ROOF ABUTTING CHIMNEY/WALL

INTERNATIONAL CODE COUNCIL®
Copyright © 2015 ICC. ALL RIGHTS RESERVED. Accessed by David Dammon on Jun 21, 2017 12:30:52 PM pursuant to License Agreement with ICC. No further reproduction or distribution authorized. ANY UNAUTHORIZED REPRODUCTION OR DISTRIBUTION IS A VIOLATION OF THE FEDERAL COPYRIGHT ACT AND THE LICENSE AGREEMENT, AND SUBJECT TO CIVIL AND CRIMINAL PENALTIES THEREUNDER.

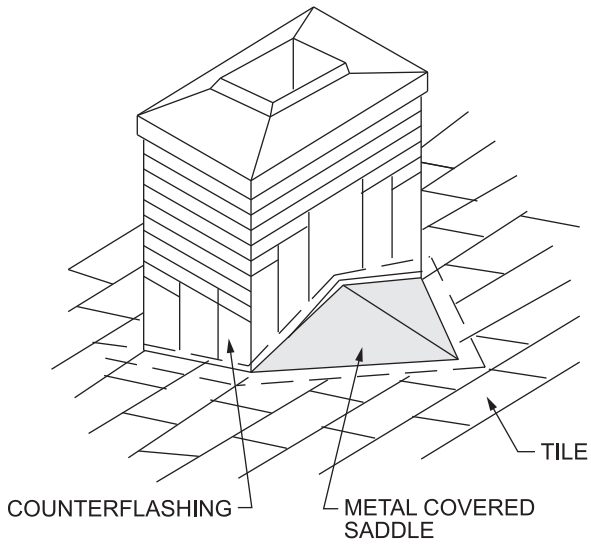

Figure R905.3.8(3)
TILE ROOF CHIMNEY FLASHING DETAIL

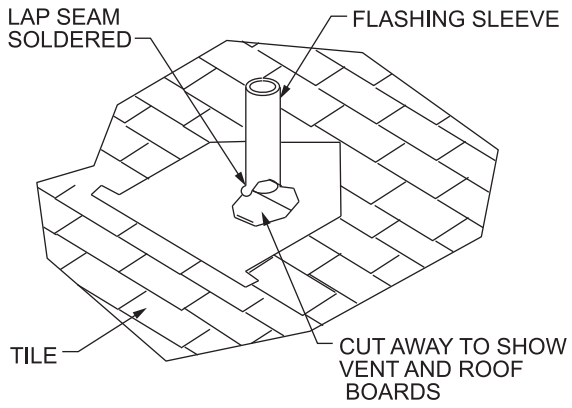

Figure R905.3.8(4)
TILE ROOF FLASHING FOR A VENT PIPE

R905.4.2 Deck slope. Metal roof shingles shall not be installed on roof slopes below three units vertical in 12 units horizontal (25-percent slope).

❖ Based on the characteristics of shape, size and method of attachment, metal roof shingles must not be applied to roofs having a slope of less than 3:12. A lesser slope increases the potential for leakage to an unacceptable level.

R905.4.3 Underlayment. Underlayment shall comply with Section R905.1.1.

❖ See the commentary to Section R905.1.1.

R905.4.3.1 Ice barrier. Where required, ice barriers shall comply with Section R905.1.2.

❖ See the commentary to Section R905.1.2.

R905.4.4 Material standards. Metal roof shingle roof coverings shall comply with Table R905.10.3(1). The materials used for metal roof shingle roof coverings shall be naturally corrosion resistant or be made corrosion resistant in accordance with the standards and minimum thicknesses listed in Table R905.10.3(2).

❖ Table R905.10.3(1) lists the metal roof covering types and their material standards. Many of the materials listed are inherently corrosion resistant, such as aluminum, copper and lead. For these materials, listing a material standard for the base material is sufficient. However, for steel roofing products, coatings are added to the base material to provide the necessary corrosion resistance.

Table R905.10.3(2) lists the minimum coating thickness required to provide minimum corrosion resistance for the base steel. Note a to Table R905.10.3(2) specifies that the paint systems are intended to be applied to steel having one of the corrosion-resistant coatings listed.

R905.4.5 Application. Metal roof shingles shall be secured to the roof in accordance with this chapter and the *approved* manufacturer's installation instructions.

❖ The proper application of metal roof shingles is typically based on the installation instructions of the shingle manufacturer. Where the code sets forth specific requirements for the attachment of metal shingles, those requirements must be met.

R905.4.6 Flashing. Roof valley flashing shall be of corrosion-resistant metal of the same material as the roof covering or shall comply with the standards in Table R905.10.3(1). The valley flashing shall extend not less than 8 inches (203 mm) from the centerline each way and shall have a splash diverter rib not less than $^{3}/_{4}$ inch (19 mm) in height at the flow line formed as part of the flashing. Sections of flashing shall have an end lap of not less than 4 inches (102 mm). The metal valley flashing shall have a 36-inch-wide (914 mm) underlayment directly under it consisting of one layer of underlayment running the full length of the valley, in addition to underlayment required for metal roof shingles. In areas where the average daily temperature in January is 25°F (-4°C) or less, the metal valley flashing underlayment shall be solid cemented to the roofing underlayment for roof slopes under seven units vertical in 12 units horizontal (58-percent slope) or self-adhering polymer modified bitumen sheet.

❖ This section specifies two approaches to roof valley flashing for metal-shingle roofs. The first is the use of material consistent with that of the shingles for the flashing. As an option, the flashing must be accomplished in compliance with the applicable material standard listed in Table R905.10.3. This table identifies the various types of metal roof covering and the corresponding application standard. This section specifies installation details for the valley flashing as well as the requirement for underlayment running the

INTERNATIONAL CODE COUNCIL®
Copyright © 2015 ICC. ALL RIGHTS RESERVED. Accessed by David Dammon on Jun 21, 2017 12:30:52 PM pursuant to License Agreement with ICC. No further reproduction or distribution authorized. ANY UNAUTHORIZED REPRODUCTION OR DISTRIBUTION IS A VIOLATION OF THE FEDERAL COPYRIGHT ACT AND THE LICENSE AGREEMENT, AND SUBJECT TO CIVIL AND CRIMINAL PENALTIES THEREUNDER.

full length of the valley. In cold-weather areas, the special underlayment techniques to eliminate ice dams apply to valley flashing underlayment.

R905.5 Mineral-surfaced roll roofing. The installation of mineral-surfaced roll roofing shall comply with this section.

❖ This section addresses the decking requirements and slope, underlayment, materials standards and application methods for mineral-surfaced roll roofing.

R905.5.1 Deck requirements. Mineral-surfaced roll roofing shall be fastened to solidly sheathed roofs.

❖ The deck must be solidly sheathed for mineral-surfaced roll roofing to be installed.

R905.5.2 Deck slope. Mineral-surfaced roll roofing shall not be applied on roof slopes below one unit vertical in 12 units horizontal (8-percent slope).

❖ Although mineral-surfaced roll roofing provides a virtually weather-tight roof surface, it is still necessary that water flow be positive toward the drainage points. Therefore, a minimum slope of 1:12 is mandated for roof decks that are covered with mineral-surfaced roll roofing.

R905.5.3 Underlayment. Underlayment shall comply with Section R905.1.1.

❖ See the commentary to Section R905.1.1.

R905.5.3.1 Ice barrier. Where required, ice barriers shall comply with Section R905.1.2.

❖ See the commentary to Section R905.1.2.

R905.5.4 Material standards. Mineral-surfaced roll roofing shall conform to ASTM D3909 or ASTM D6380, Class M.

❖ The code recognizes two materials standards for the regulation of mineral-surfaced roll roofing: ASTM D3909 for asphalt roll roofing of glass felt surfaced with mineral granules and ASTM D6380, Class M for asphalt roll roofing of organic felt surfaced with mineral granules.

R905.5.5 Application. Mineral-surfaced roll roofing shall be installed in accordance with this chapter and the manufacturer's instructions.

❖ The general provisions of this chapter apply to the installation of mineral-surfaced roll roofing, as do the installation instructions of the manufacturer of the specific roofing system.

R905.6 Slate shingles. The installation of slate shingles shall comply with the provisions of this section.

❖ This section establishes the materials standards and installation criteria for shingles of slate materials. It includes specific provisions related to deck slope, underlayment, shingle application and flashing.

R905.6.1 Deck requirements. Slate shingles shall be fastened to solidly sheathed roofs.

❖ Only solidly-sheathed roofs can be used as the deck for the installation of slate and slate-type shingles.

R905.6.2 Deck slope. Slate shingles shall be used only on slopes of four units vertical in 12 units horizontal (33-percent slope) or greater.

❖ Shingles of slate materials pose special problems because of the inconsistency of the shingles' shape and size. To keep the roof covering weather tight and promote proper drainage, slate and slate-type shingles cannot be installed on a roof having a slope of less than 4:12. Lower-sloped roofs present a potential problem because water drains slowly and, thus, creates the opportunity for water backup. Wind-driven rain can also pose a problem.

R905.6.3 Underlayment. Underlayment shall comply with Section R905.1.1.

❖ See the commentary to Section R905.1.1.

R905.6.3.1 Ice barrier. Where required, ice barriers shall comply with Section R905.1.2.

❖ See the commentary to Section R905.1.2.

R905.6.4 Material standards. Slate shingles shall comply with ASTM C406.

❖ The standard applicable to roofing slate is ASTM C406.

R905.6.5 Application. Minimum headlap for slate shingles shall be in accordance with Table R905.6.5. Slate shingles shall be secured to the roof with two fasteners per slate. Slate shingles shall be installed in accordance with this chapter and the manufacturer's instructions.

❖ The general provisions of this chapter apply to the installation of slate and slate-type shingles, as do the manufacturer's installation instructions for the specific roofing materials. In addition, this section sets forth two requirements specific to slate roofing. First, two fasteners must be used to secure each slate shingle in place. Second, Table R905.6.5 mandates the minimum headlap at each shingle course. Taking into account the effects of both water traveling down the roof's surface and wind-driven rain, the minimum headlap is reduced as the slope of the roof increases.

TABLE R905.6.5
SLATE SHINGLE HEADLAP

SLOPE	HEADLAP (inches)
4:12 ≤ slope < 8:12	4
8:12 ≤ slope < 20:12	3
Slope ≤ 20:12	2

For SI: 1 inch = 25.4 mm.

❖ If slate shingles are installed, they must have a minimum lap at each course as required by this table. Because of the potential for water infiltration, as the slope of the roof decreases, the minimum headlap increases. The extended lap aids in resisting the effects of slow-traveling water and wind-driven rain.

INTERNATIONAL CODE COUNCIL®
Copyright © 2015 ICC. ALL RIGHTS RESERVED. Accessed by David Dammon on Jun 21, 2017 12:30:52 PM pursuant to License Agreement with ICC. No further reproduction or distribution authorized. ANY UNAUTHORIZED REPRODUCTION OR DISTRIBUTION IS A VIOLATION OF THE FEDERAL COPYRIGHT ACT AND THE LICENSE AGREEMENT, AND SUBJECT TO CIVIL AND CRIMINAL PENALTIES THEREUNDER.

R905.6.6 Flashing. Flashing and counterflashing shall be made with sheet metal. Valley flashing shall be not less than 15 inches (381 mm) wide. Valley and flashing metal shall be a minimum uncoated thickness of 0.0179-inch (0.5 mm) zinc coated G90. Chimneys, stucco or brick walls shall have not less than two plies of felt for a cap flashing consisting of a 4-inch-wide (102 mm) strip of felt set in plastic cement and extending 1 inch (25 mm) above the first felt and a top coating of plastic cement. The felt shall extend over the base flashing 2 inches (51 mm).

❖ Special requirements are necessary for the sheet metal flashing and counterflashing of roofs covered with slate shingles. The provisions address flashing for roof valleys and for the roof intersections with chimneys and stucco or brick walls.

R905.7 Wood shingles. The installation of wood shingles shall comply with the provisions of this section.

❖ Wood shingles differ from wood shakes in that wood shingles are sawed materials and have a uniform butt thickness across the individual shingle length. Wood shakes are split from logs, shaped by the manufacturer, and have varying butt thicknesses. This section establishes the material standards and installation criteria for wood shingles. Also included are specific provisions related to deck requirements and slope, underlayment, shingle application and valley flashing.

R905.7.1 Deck requirements. Wood shingles shall be installed on solid or spaced sheathing. Where spaced sheathing is used, sheathing boards shall be not less than 1-inch by 4-inch (25 mm by 102 mm) nominal dimensions and shall be spaced on centers equal to the weather exposure to coincide with the placement of fasteners.

❖ Either solid or spaced sheathing is permitted as a deck for the installation of wood shingles. If spaced sheathing is used, the minimum 1-inch by 4-inch (25.4 mm by 102 mm) sheathing boards are required. The placement of the spaced sheathing is important, with the center-to-center spacing of the sheathing boards equivalent to the weather exposure of the wood shingles. This method allows a consistent fastening pattern for applying the wood-shingle roof covering materials. Table R905.7.5(1) contains the maximum permitted weather exposure for wood shingles.

R905.7.1.1 Solid sheathing required. In areas where the average daily temperature in January is 25°F (-4°C) or less, solid sheathing is required on that portion of the roof requiring the application of an ice barrier.

❖ In cold-weather climates where an ice shield is required in accordance with Section R905.7.3, solid sheathing must be installed for decking. The solid sheathing need be located only where the ice shield is applied, typically a point from the eave's edge to at least 24 inches (610 mm) inside the exterior wall line of the building.

R905.7.2 Deck slope. Wood shingles shall be installed on slopes of three units vertical in 12 units horizontal (25-percent slope) or greater.

❖ Wood shingle roofs pose special problems for weather protection because of the texture of the materials. To keep the roof covering weather tight and to promote proper drainage, wood shingles cannot be installed on a roof having a slope of less than 3:12. Lower-sloped roofs present a potential problem because water drains slowly, creating an opportunity for water backup. Wind-driven rain can also pose a problem.

R905.7.3 Underlayment. Underlayment shall comply with Section R905.1.1.

❖ See the commentary to Section R905.1.1.

R905.7.3.1 Ice barrier. Where required, ice barriers shall comply with Section R905.1.2.

❖ See the commentary to Section R905.1.2.

R905.7.4 Material standards. Wood shingles shall be of naturally durable wood and comply with the requirements of Table R905.7.4.

❖ Wood shingles are manufactured in 24-, 18- and 16-inch (610, 457 and 406 mm) lengths and are graded into three categories: 1, 2 and 3. The Cedar Shake and Shingle Bureau establishes grading rules for wood shingles. Table R905.7.4 describes each grade. Commentary Figure R905.7.4 shows an example label.

TABLE R905.7.4
WOOD SHINGLE MATERIAL REQUIREMENTS

MATERIAL	MINIMUM GRADES	APPLICABLE GRADING RULES
Wood shingles of naturally durable wood	1, 2 or 3	Cedar Shake and Shingle Bureau

❖ This table identifies the basic material requirements for wood roof shingles. It states that the shingles must be of naturally durable wood; graded as No. 1, 2 or 3; and subject to the applicable grading rules of the Cedar Shake and Shingle Bureau. Each grade is mentioned in Table R905.7.4. Commentary Figure R905.7.4 is an example of the required identification label of an approved grading or inspection bureau or agency.



Figure R905.7.4
WOOD SHINGLE GRADE DESCRIPTION AND EXAMPLE LABEL

INTERNATIONAL CODE COUNCIL®
Copyright © 2015 ICC. ALL RIGHTS RESERVED. Accessed by David Dammon on Jun 21, 2017 12:30:52 PM pursuant to License Agreement with ICC. No further reproduction or distribution authorized. ANY UNAUTHORIZED REPRODUCTION OR DISTRIBUTION IS A VIOLATION OF THE FEDERAL COPYRIGHT ACT AND THE LICENSE AGREEMENT, AND SUBJECT TO CIVIL AND CRIMINAL PENALTIES THEREUNDER.

R905.7.5 Application. Wood shingles shall be installed in accordance with this chapter and the manufacturer's instructions. Wood shingles shall be laid with a side lap not less than $1^1/_2$ inches (38 mm) between joints in courses, and two joints shall not be in direct alignment in any three adjacent courses. Spacing between shingles shall be not less than $^1/_4$ inch to $^3/_8$ inch (6.4 mm to 9.5 mm). Weather exposure for wood shingles shall not exceed those set in Table R905.7.5(1). Fasteners for untreated (naturally durable) wood shingles shall be box nails in accordance with Table R905.7.5(2). Nails shall be stainless steel Type 304 or 316 or hot-dipped galvanized with a coating weight of ASTM A153 Class D (1.0 oz/ft^2). Alternatively, two 16-gage stainless steel Type 304 or 316 staples with crown widths $^7/_{16}$ inch (11.1 mm) minimum, $^3/_4$ inch (19.1 mm) maximum, shall be used. Fasteners installed within 15 miles (24 km) of salt water coastal areas shall be stainless steel Type 316. Fasteners for fire-retardant-treated shingles in accordance with Section R902 or pressure-impregnated-preservative-treated shingles of naturally durable wood in accordance with AWPA U1 shall be stainless steel Type 316. All fasteners shall have a minimum penetration into the sheathing of $^3/_4$ inch (19.1 mm). For sheathing less than $^3/_4$ inch in (19.1 mm) thickness, each fastener shall penetrate through the sheathing. Wood shingles shall be attached to the roof with two fasteners per shingle, positioned in accordance with the manufacturer's installation instructions. Fastener packaging shall bear a label indicating the appropriate grade material or coating weight.

❖ The general provisions of this chapter apply to the installation of wood shingles, as do the installation instructions of the manufacturer of the specific roofing materials. In addition, this section sets forth specific requirements regulating the installation method for wood shingles. Many of these requirements are shown in Commentary Figure R905.7.5(1).

Fasteners must be box nails in accordance with Table R905.7.5 (2). Stainless steel staples are permitted in lieu of box nails. Fasteners for applying wood shingles must be stainless steel or hot-dipped galvanized. Only stainless steel fasteners are allowed for the following conditions:

1. Where wood shingles are located within 15 miles of salt water coastal areas.
2. Where wood shingles are fire-retardant treated.
3. Where wood shingles are preservative treated.

Only two nails or staples are to be used for each shingle, and they must be placed in accordance with the manufacturer's installation instructions. The depth of fastener penetration must be a minimum of $^3/_4$ inch into the sheathing or completely through sheathing less than $^3/_4$ inch thick. Care in spacing and driving the fasteners is necessary to provide maximum service from the roof covering [see Commentary Figure R905.7.5(2)].

TABLE R905.7.5(1)
WOOD SHINGLE WEATHER EXPOSURE AND ROOF SLOPE

ROOFING MATERIAL	LENGTH (inches)	GRADE	EXPOSURE (inches)	
			3:12 pitch to < 4:12	4:12 pitch or steeper
Shingles of naturally durable wood	16	No. 1	$3^3/_4$	5
		No. 2	$3^1/_2$	4
		No. 3	3	$3^1/_2$
	18	No. 1	$4^1/_4$	$5^1/_2$
		No. 2	4	$4^1/_2$
		No. 3	$3^1/_2$	4
	24	No. 1	$5^3/_4$	$7^1/_2$
		No. 2	$5^1/_2$	$6^1/_2$
		No. 3	5	$5^1/_2$

For SI: 1 inch = 25.4 mm.

❖ Table R905.7.5(1) specifies wood shingle exposure. Depending on the grade of the material, the total shingle length and the slope of the roof deck, the table specifies the maximum length of exposure for weathering purposes. The grade of the shingle is listed on the label required for wood shingles. Each of the three different grades is available in three different lengths. For lower-sloped roofs (3:12 to 4:12) where wind uplift is more significant, the maximum weather exposure is always less than for the steeper sloped roofs (4:12 and greater).

TABLE R905.7.5(2)
NAIL REQUIREMENTS FOR WOOD SHAKES AND WOOD SHINGLES

SHAKES	NAIL TYPE AND MINIMUM LENGTH	MINIMUM HEAD SIZE	MINIMUM SHANK DIAMETER
18″ straight-split	5d box $1^3/_4$″	0.19″	.080″
18″ and 24″ handsplit and resawn	6d box 2″	0.19″	.0915″
24″ taper-split	5d box $1^3/_4$″	0.19″	.080″
18″ and 24″ tapersawn	6d box 2″	0.19″	.0915″
Shingles	**Nail Type and Minimum Length**		
16″ and 18″	3d box $1^1/_4$″	0.19″	.080″
24″	4d box $1^1/_2$″	0.19″	.080″

R905.7.6 Valley flashing. Roof flashing shall be not less than No. 26 gage [0.019 inches (0.5 mm)] corrosion-resistant sheet metal and shall extend 10 inches (254 mm) from the centerline each way for roofs having slopes less than 12 units vertical in 12 units horizontal (100-percent slope), and 7 inches (178 mm) from the centerline each way for slopes of 12 units vertical in 12 units horizontal and greater. Sections of flashing shall have an end lap of not less than 4 inches (102 mm).

❖ Valleys formed by the intersection of two sloping roofs are vulnerable to leakage because of the high concen-

INTERNATIONAL CODE COUNCIL®
Copyright © 2015 ICC. ALL RIGHTS RESERVED. Accessed by David Dammon on Jun 21, 2017 12:30:52 PM pursuant to License Agreement with ICC. No further reproduction or distribution authorized. ANY UNAUTHORIZED REPRODUCTION OR DISTRIBUTION IS A VIOLATION OF THE FEDERAL COPYRIGHT ACT AND THE LICENSE AGREEMENT, AND SUBJECT TO CIVIL AND CRIMINAL PENALTIES THEREUNDER.

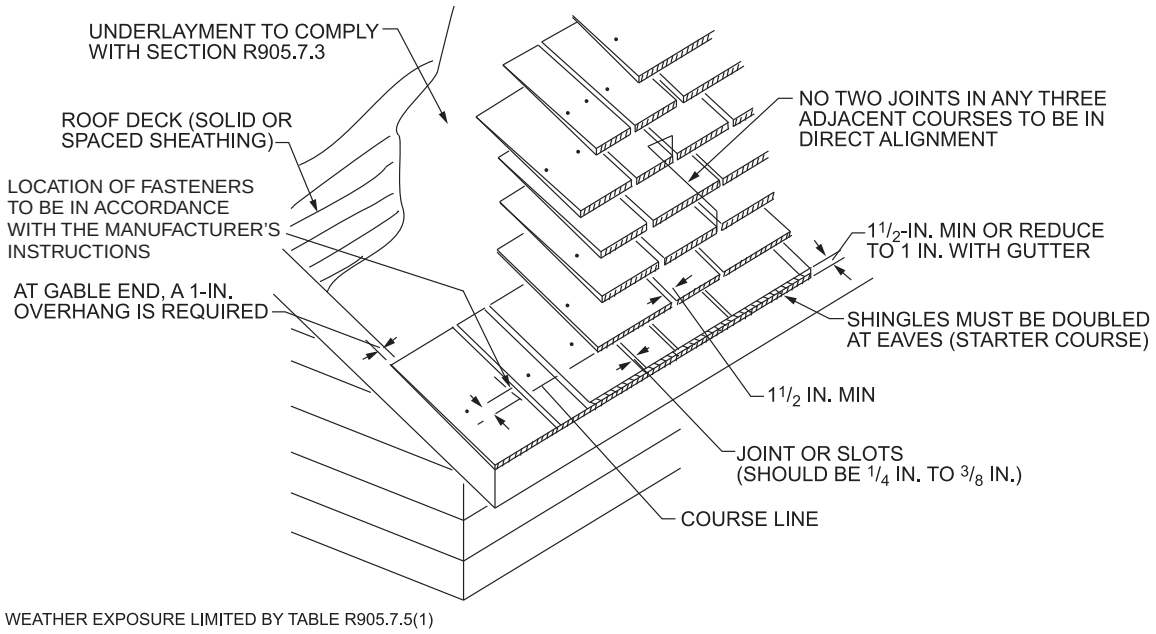

For SI: 1 inch = 25.4 mm.

Figure R905.7.5(1)
WOOD SHINGLE APPLICATION

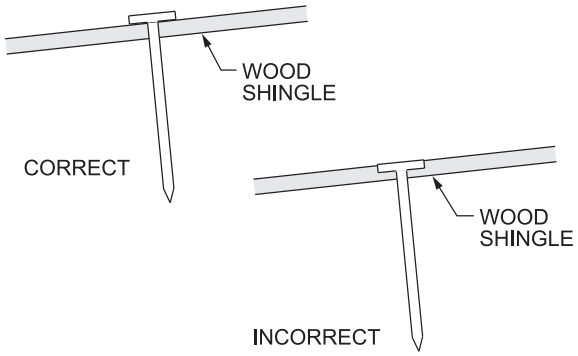

Figure R905.7.5(2)
FASTENER PENETRATION

tration of water; therefore, valley flashing must be maintained to prevent blockage. This section requires the use of minimum No. 26 gage (0.019 inch/0.48 mm) corrosion-resistant sheet metal for this purpose. Commentary Figure R905.7.6 illustrates the code provisions for valley flashing.

R905.7.7 Label required. Each bundle of shingles shall be identified by a *label* of an *approved* grading or inspection bureau or agency.

❖ To verify compliance with the material standards set forth in Section R905.7.4, every bundle of wood shingles must be labeled. The label, a sample of which is shown in Commentary Figure R905.7.4, must indicate the name of the approved grading or inspection bureau or agency.

R905.8 Wood shakes. The installation of wood shakes shall comply with the provisions of this section.

❖ Wood shakes differ from wood shingles in that wood shakes are split from logs, shaped by the manufacturer and have varying butt thicknesses. Wood shingles are sawed materials and have a uniform butt thickness across the individual shingle length. This section establishes the materials standards and installation criteria for wood shakes. Also included are specific provisions related to deck requirements and slope, underlayment, interlayment, shingle application and valley flashing.

INTERNATIONAL CODE COUNCIL®
Copyright © 2015 ICC. ALL RIGHTS RESERVED. Accessed by David Dammon on Jun 21, 2017 12:30:52 PM pursuant to License Agreement with ICC. No further reproduction or distribution authorized. ANY UNAUTHORIZED REPRODUCTION OR DISTRIBUTION IS A VIOLATION OF THE FEDERAL COPYRIGHT ACT AND THE LICENSE AGREEMENT, AND SUBJECT TO CIVIL AND CRIMINAL PENALTIES THEREUNDER.

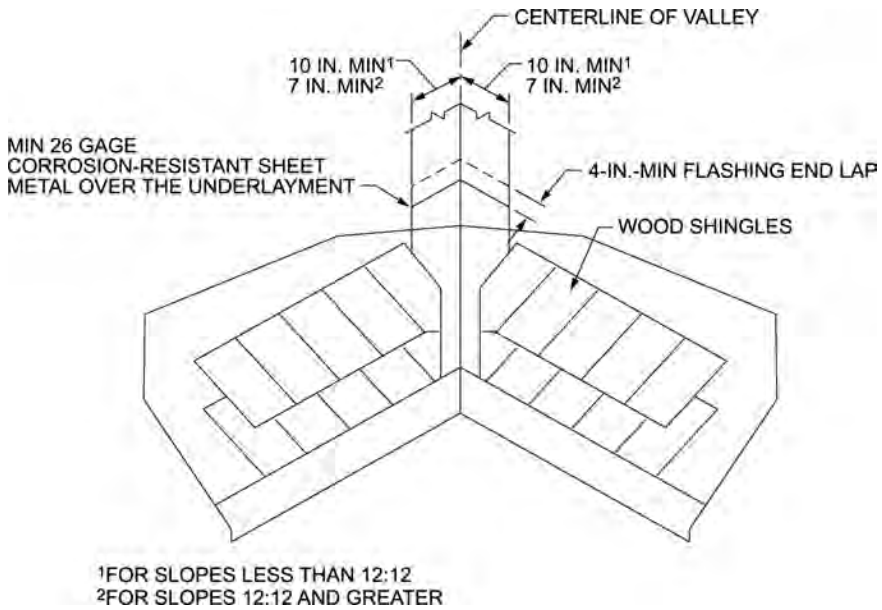

For SI: 1 inch = 25.4 mm.

Figure R905.7.6
WOOD SHINGLE VALLEY FLASHING

R905.8.1 Deck requirements. Wood shakes shall be used only on solid or spaced sheathing. Where spaced sheathing is used, sheathing boards shall be not less than 1-inch by 4-inch (25 mm by 102 mm) nominal dimensions and shall be spaced on centers equal to the weather exposure to coincide with the placement of fasteners. Where 1-inch by 4-inch (25 mm by 102 mm) spaced sheathing is installed at 10 inches (254 mm) on center, additional 1-inch by 4-inch (25 mm by 102 mm) boards shall be installed between the sheathing boards.

❖ Either solid or spaced sheathing is permitted as a deck for the installation of wood shakes. If spaced sheathing is used, the minimum 1-inch by 4-inch (25 mm by 102 mm) sheathing boards are required. The placement of the spaced sheathing is important, with the center-to-center spacing of the sheathing boards equivalent to the weather exposure of the wood shakes. This method allows for a consistent fastening pattern for applying wood shake roof covering materials. Table R905.8.6 contains the maximum permitted weather exposure for wood shakes. If the greatest allowable exposure of 10 inches (254 mm) is used in accordance with Table R905.8.6, an additional 1-inch by 4-inch (25 mm by 102 mm) board must be installed between the sheathing boards.

R905.8.1.1 Solid sheathing required. In areas where the average daily temperature in January is 25°F (-4°C) or less, solid sheathing is required on that portion of the roof requiring an ice barrier.

❖ In cold-weather climates where an ice barrier is required in accordance with Section R905.8.3.1, solid sheathing must be installed for decking. The solid sheathing need be located only where the ice shield is applied, typically a point from the eave's edge to at least 24 inches (610 mm) inside the exterior wall line of the building.

R905.8.2 Deck slope. Wood shakes shall only be used on slopes of three units vertical in 12 units horizontal (25-percent slope) or greater.

❖ Wood shake roofs pose special problems for weather protection because of the texture of the materials. To keep the roof covering weather tight and to promote proper drainage, wood shakes cannot be installed on a roof having a slope of less than 3:12. Lower-sloped roofs present a potential problem because water drains slowly, creating an opportunity for water backup. Wind-driven rain can also pose a problem. The use of an interlayment as installed in accordance with Section R905.8.7 also plays an important part in maintaining the weathertightness of the roof.

R905.8.3 Underlayment. Underlayment shall comply with Section R905.1.1.

❖ See the commentary to Section R905.1.1.

R905.8.3.1 Ice barrier. Where required, ice barriers shall comply with Section R905.1.2.

❖ See the commentary to Section R905.1.2.

R905.8.4 Interlayment. Interlayment shall comply with ASTM D226, Type I.

❖ Wood shakes must be installed with an interlayment of minimum No. 30 felt shingled between each course in the manner described by Section R905.8.7. The inter-

INTERNATIONAL CODE COUNCIL®
Copyright © 2015 ICC. ALL RIGHTS RESERVED. Accessed by David Dammon on Jun 21, 2017 12:30:52 PM pursuant to License Agreement with ICC. No further reproduction or distribution authorized. ANY UNAUTHORIZED REPRODUCTION OR DISTRIBUTION IS A VIOLATION OF THE FEDERAL COPYRIGHT ACT AND THE LICENSE AGREEMENT, AND SUBJECT TO CIVIL AND CRIMINAL PENALTIES THEREUNDER.

layment must be in compliance with ASTM D226, Type I, for asphalt-saturated organic felt.

R905.8.5 Material standards. Wood shakes shall comply with the requirements of Table R905.8.5.

❖ Wood shakes are divided into five material classifications in the code, identified in Table R905.8.5. There are two grades of wood shakes: No. 1 and No. 2. The shakes are cut into 18-inch (457 mm) and 24-inch (610 mm) lengths.

TABLE R905.8.5
WOOD SHAKE MATERIAL REQUIREMENTS

MATERIAL	MINIMUM GRADES	APPLICABLE GRADING RULES
Wood shakes of naturally durable wood	1	Cedar Shake and Shingle Bureau
Tapersawn shakes of naturally durable wood	1 or 2	Cedar Shake and Shingle Bureau
Preservative-treated shakes and shingles of naturally durable wood	1	Cedar Shake and Shingle Bureau
Fire-retardant-treated shakes and shingles of naturally durable wood	1	Cedar Shake and Shingle Bureau
Preservative-treated tapersawn shakes of Southern pine treated in accordance with AWPA Standard U1 (Commodity Specification A, Use Category 3B and Section 5.6)	1 or 2	Forest Products Laboratory of the Texas Forest Services

❖ Wood shakes are regulated based on the type of shake material, the treatment applied to the shake and the cut of the shake. Most of the grading rules applicable to wood shakes come from the Cedar Shake and Shingle Bureau. If preservative-treated tapersawn Southern Yellow Pine wood shakes are to be installed, they are governed under the grading rules of the Forest Products Laboratory of the Texas Forest Services. The minimum grade required by the table must be shown on the approved label required on each bundle of wood shakes.

R905.8.6 Application. Wood shakes shall be installed in accordance with this chapter and the manufacturer's installation instructions. Wood shakes shall be laid with a side lap not less than $1^1/_2$ inches (38 mm) between joints in adjacent courses. Spacing between shakes in the same course shall be $^3/_8$ inch to $^5/_8$ inch (9.5 mm to 15.9 mm) including tapersawn shakes. Weather exposures for wood shakes shall not exceed those set in Table R905.8.6. Fasteners for untreated (naturally durable) wood shakes shall be box nails in accordance with Table R905.7.5(2). Nails shall be stainless steel Type 304, or Type 316 or hot-dipped with a coating weight of ASTM A153 Class D (1.0 oz/ft^2). Alternatively, two 16-gage Type 304 or Type 316 stainless steel staples, with crown widths $^7/_{16}$ inch (11.1 mm) minimum, $^3/_4$ inch (19.1 mm) maximum, shall be used. Fasteners installed within 15 miles (24 km) of salt water coastal areas shall be stainless steel Type 316. Wood shakes shall be attached to the roof with two fasteners per shake positioned in accordance with the manufacturer's installation instructions Fasteners for fire-retardant-treated (as defined in Section R902) shakes or pressure-impregnated-preservative-treated shakes of naturally durable wood in accordance with AWPA U1 shall be stainless steel Type 316. All fasteners shall have a minimum penetration into the sheathing of $^3/_4$ inch (19.1 mm). Where the sheathing is less than $^3/_4$ inch (19.1 mm) thick, each fastener shall penetrate through the sheathing. Fastener packaging shall bear a label indicating the appropriate grade material or coating weight.

❖ The general provisions of this chapter apply to the installation of wood shakes, as do the manufacturer's installation instructions for the specific roofing materials. In addition, this section sets forth specific requirements regulating the installation method for wood shakes. The minimum spacing of $^3/_8$ inch between shakes is necessary to prevent the accumulation of leaves and/or needles from evergreen trees in the spaces. A smaller space would cause accumulation and premature aging of the shakes. Commentary Figure R905.8.6 shows many of these requirements.

Fasteners must be box nails in accordance with Table R905.7.5(2). Stainless steel staples are permitted in lieu of box nails. Fasteners for applying wood shakes must be stainless steel or hot-dipped galvanized. Only stainless steel fasteners are allowed for the following conditions:

1. Where wood shakes are located within 15 miles of salt water coastal areas.
2. Where wood shakes are fire-retardant treated.
3. Where wood shakes are preservative treated.

Only two nails or staples are to be used for each shake, and they must be placed in accordance with the manufacturer's installation instructions. The depth of fastener penetration must be a minimum of $^3/_4$ inch into the sheathing or completely through sheathing less than $^3/_4$ inch thick. Care in spacing and driving the fasteners is necessary to provide maximum service from the roof covering [see Commentary Figure R905.7.5(2)].

R905.8.7 Shake placement. The starter course at the eaves shall be doubled and the bottom layer shall be either 15-inch (381 mm), 18-inch (457 mm) or 24-inch (610 mm) wood shakes or wood shingles. Fifteen-inch (381 mm) or 18-inch (457 mm) wood shakes shall be permitted to be used for the final course at the ridge. Shakes shall be interlaid with 18-inch-wide (457 mm) strips of not less than No. 30 felt shingled between each course in such a manner that no felt is exposed to the weather by positioning the lower edge of each felt strip above the butt end of the shake it covers a distance equal to twice the weather exposure.

❖ To provide as weather tight a roof as possible where using wood shakes as the roof covering material, a special installation method is described in this section. At the eaves, the starter course must be two layers of shakes. Going up the roof toward the ridge, the shakes must be supplemented with 18-inch (457 mm) interlayment strips of minimum No. 30 felt. The manner of interlayment must prevent any felt being exposed to the weather. This is illustrated in Commentary Figure R905.8.7.

INTERNATIONAL CODE COUNCIL®
Copyright © 2015 ICC. ALL RIGHTS RESERVED. Accessed by David Dammon on Jun 21, 2017 12:30:52 PM pursuant to License Agreement with ICC. No further reproduction or distribution authorized. ANY UNAUTHORIZED REPRODUCTION OR DISTRIBUTION IS A VIOLATION OF THE FEDERAL COPYRIGHT ACT AND THE LICENSE AGREEMENT, AND SUBJECT TO CIVIL AND CRIMINAL PENALTIES THEREUNDER.

TABLE R905.8.6
WOOD SHAKE WEATHER EXPOSURE AND ROOF SLOPE

ROOFING MATERIAL	LENGTH (inches)	GRADE	EXPOSURE (inches)
			4:12 pitch or steeper
Shakes of naturally durable wood	18	No. 1	$7^1/_2$
	24	No. 1	10[a]
Preservative-treated tapersawn shakes of Southern Yellow Pine	18	No. 1	$7^1/_2$
	24	No. 1	10
	18	No. 2	$5^1/_2$
	24	No. 2	$7^1/_2$
Taper-sawn shakes of naturally durable wood	18	No. 1	$7^1/_2$
	24	No. 1	10
	18	No. 2	$5^1/_2$
	24	No. 2	$7^1/_2$

For SI: 1 inch = 25.4 mm.

a. For 24-inch by $^3/_8$-inch handsplit shakes, the maximum exposure is $7^1/_2$ inches.

❖ Table R905.8.6 specifies wood shake exposure. Depending on the grade of the material and the total shingle length, the table specifies the maximum length of exposure for weathering purposes. The grade of the shingle will be listed in the label required for wood shingles.

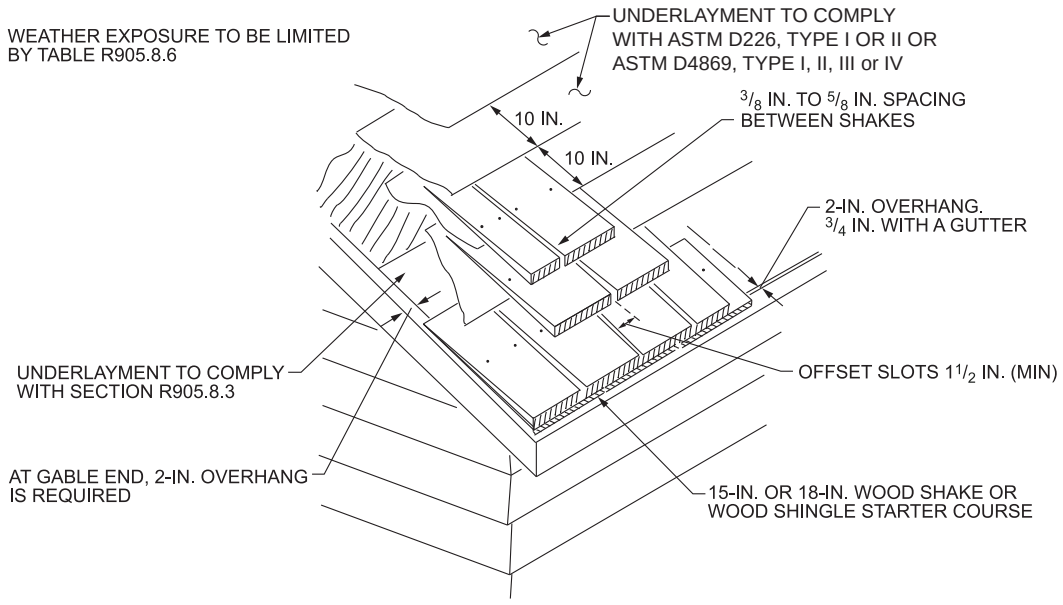

For SI: 1 inch = 25.4 mm.

Figure R905.8.6
WOOD SHAKE APPLICATION

INTERNATIONAL CODE COUNCIL®
Copyright © 2015 ICC. ALL RIGHTS RESERVED. Accessed by David Dammon on Jun 21, 2017 12:30:52 PM pursuant to License Agreement with ICC. No further reproduction or distribution authorized. ANY UNAUTHORIZED REPRODUCTION OR DISTRIBUTION IS A VIOLATION OF THE FEDERAL COPYRIGHT ACT AND THE LICENSE AGREEMENT, AND SUBJECT TO CIVIL AND CRIMINAL PENALTIES THEREUNDER.

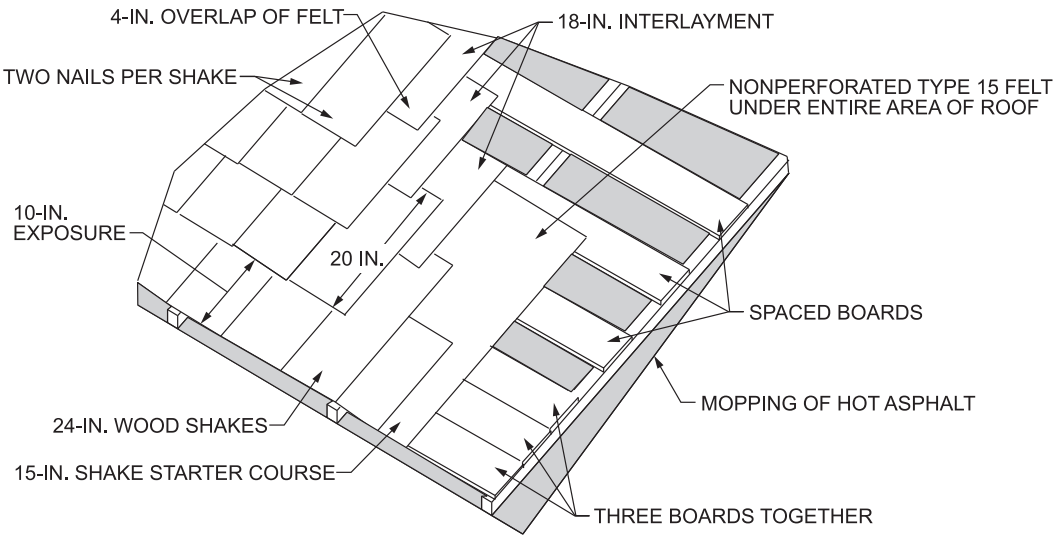

For SI: 1 inch = 25.4 mm.

Figure R905.8.7
WOOD SHAKE APPLICATION ON ROOFS WITH SLOPES NOT LESS THAN 3 IN 12

R905.8.8 Valley flashing. Roof valley flashing shall be not less than No. 26 gage [0.019 inch (0.5 mm)] corrosion-resistant sheet metal and shall extend not less than 11 inches (279 mm) from the centerline each way. Sections of flashing shall have an end lap of not less than 4 inches (102 mm).

❖ Valleys formed by the intersection of two sloping roofs are vulnerable to leakage because of the high concentration of water; therefore, valley flashing must be maintained to prevent blockage. This section requires the use of minimum No. 26 gage (0.019 inch/0.48 mm) corrosion-resistant sheet metal for this purpose.

R905.8.9 Label required. Each bundle of shakes shall be identified by a *label* of an *approved* grading or inspection bureau or agency.

❖ To verify compliance with the material standards set forth in Section R905.7.4, every bundle of wood shakes must be labeled. The label, a sample of which is shown in Commentary Figure R905.8.9, must show the name of the approved grading or inspection bureau or agency.

R905.9 Built-up roofs. The installation of built-up roofs shall comply with the provisions of this section.

❖ A built-up roof is a roof covering system built at the job site. The provisions of this section deal with the fundamental requirements for such roofs. With all of the different products available, the possible combinations of built-up roof systems are almost endless.

Asphalt and coal tar are the bitumens used for a built-up roof. They become fluid when heated and bond the felt layers together. To fuse the roof felts properly, the bitumens must be applied at the proper temperature. Too low a temperature will cause inadequate fusion, and overheating may change the properties of the bitumens or cause a fire hazard.

R905.9.1 Slope. Built-up roofs shall have a design slope of not less than one-fourth unit vertical in 12 units horizontal (2-percent slope) for drainage, except for coal-tar built-up roofs, which shall have a design slope of a minimum one-eighth unit vertical in 12 units horizontal (1-percent slope).

❖ Built-up roofs are often chosen for very low-slope applications because they can be installed on roof decks having a minimum slope of $^1/_4$ inch per foot ($^1/_4$:12), just enough to allow positive drainage. Only where coal-tar built-up roofs are installed must the roof deck slope to a greater degree. A minimum roof slope of 1:12 is required for coal-tar built-up roofs.

R905.9.2 Material standards. Built-up roof covering materials shall comply with the standards in Table R905.9.2 or UL 55A.

❖ Table R905.9.2 sets forth the appropriate material standards for the various types of built-up roofs. Eighteen different types of roofing systems are identified, and the corresponding specification standard for each is noted.

Also, as an alternative to the material standards in Table R905.9.2, the code permits compliance with UL 55A. UL 55A has been in use since 1919 and is still used to evaluate the following materials used in the construction of built-up roof coverings: hot-mopping asphalt; asphalt-saturated and organic felt; coal-tar pitch; coal-tar saturated organic felt; and asphalt-coated glass-fire mat (felt). Several listed roofing systems, evaluated to UL 790 or ASTM E108, are based on compliance with UL 55A.

INTERNATIONAL CODE COUNCIL®
Copyright © 2015 ICC. ALL RIGHTS RESERVED. Accessed by David Dammon on Jun 21, 2017 12:30:52 PM pursuant to License Agreement with ICC. No further reproduction or distribution authorized. ANY UNAUTHORIZED REPRODUCTION OR DISTRIBUTION IS A VIOLATION OF THE FEDERAL COPYRIGHT ACT AND THE LICENSE AGREEMENT, AND SUBJECT TO CIVIL AND CRIMINAL PENALTIES THEREUNDER.





Figure R905.8.9
WOOD SHAKE DESCRIPTION AND EXAMPLE LABELS

TABLE R905.9.2. See page 28.

❖ The types of materials used in built-up roofing must comply with the following standards:

- ASTM D6083, which covers a liquid-applied water-dispersed 100-percent acrylic elastomeric latex coating used as a protective coating for roofs.
- ASTM D1863, which covers the quality and grading of crushed stone, crushed slag and water-worn gravel suitable for use as aggregate surfacing on built-up roofs.
- ASTM D3747, which covers emulsified asphalt adhesive for use in adhering preformed roof insulation to steel roof decks with inclines up to 33 percent. When applied as a continuous film over an acceptable deck surface, the emulsion functions as both an adhesive and a vapor retarder.
- ASTM D3019, D2822 and D4586, which cover asphalt cements used in roofing:
  - ASTM D3019 covers lap cement consisting of asphalt dissolved in a volatile petroleum solvent with or without mineral or other stabilizers, or both, for use with roll roofing.
  - ASTM D2822 covers asphalt roof cement used for trowel application to roofings and flashings.
  - ASTM D4586 covers asbestos-free asphalt roof cement suitable for trowel application to roofings and flashings.
- ASTM D4601, which covers asphalt-impregnated and coated glass fiber base sheet, with or without perforations, for use as the first ply of the built-up roofing. When not perforated, this sheet may be used as a vapor retarder under or between roof insulation with a solid top coating of asphaltic material.
- ASTM D1227, D2823, D2824 and D4479, which cover asphalt coatings used in roofing:
  - ASTM D1227 covers emulsified asphalt suitable for use as a protective coating for built-up roofs and other exposed surfaces with inclines of not less than 4 percent.
  - ASTM D2823 covers asphalt roof coatings of brushing or spraying consistency.
  - ASTM D2824 covers aluminum-pigmented asphalt roof coating, including nonfibered, asbestos-fibered and fibered without asbestos.
  - ASTM D4479 covers asbestos-free asphalt roof coating of brushing or spraying consistency.
- ASTM D2178, which covers glass felt impregnated to varying degrees with asphalt, which may be used with asphalts conforming to the requirements of ASTM D312 in the construction of built-up roofs, and with asphalts conforming to the requirements of ASTM D449 in the membrane system of waterproofing.
- ASTM D41, which covers asphaltic primer suitable for use with asphalt in roofing, dampproofing and waterproofing below or above ground level, for application to concrete, masonry, metal and asphalt surfaces.
- ASTM D2626, which covers base sheet with fine mineral surfacing on the top side, with or without perforations, for use as the first ply of a built-up roof. When not perforated, this sheet may be used as a vapor retarder under roof insulation.
- ASTM D226, which covers asphalt-saturated organic felts, with perforations, that may be used with asphalts conforming to the requirements of ASTM D312 in the construction of built-up roofs, and with asphalts conforming to the requirements

INTERNATIONAL CODE COUNCIL®
Copyright © 2015 ICC. ALL RIGHTS RESERVED. Accessed by David Dammon on Jun 21, 2017 12:30:52 PM pursuant to License Agreement with ICC. No further reproduction or distribution authorized. ANY UNAUTHORIZED REPRODUCTION OR DISTRIBUTION IS A VIOLATION OF THE FEDERAL COPYRIGHT ACT AND THE LICENSE AGREEMENT, AND SUBJECT TO CIVIL AND CRIMINAL PENALTIES THEREUNDER.

TABLE R905.9.2
BUILT-UP ROOFING MATERIAL STANDARDS

MATERIAL STANDARD	STANDARD
Acrylic coatings used in roofing	ASTM D6083
Aggregate surfacing	ASTM D1863
Asphalt adhesive used in roofing	ASTM D3747
Asphalt cements used in roofing	ASTM D2822; D3019; D4586
Asphalt-coated glass fiber base sheet	ASTM D4601
Asphalt coatings used in roofing	ASTM D1227; D2823; D2824; D4479
Asphalt glass felt	ASTM D2178
Asphalt primer used in roofing	ASTM D41
Asphalt-saturated and asphalt-coated organic felt base sheet	ASTM D2626
Asphalt-saturated organic felt (perforated)	ASTM D226
Asphalt used in roofing	ASTM D312
Coal-tar cements used in roofing	ASTM D4022; D5643
Coal-tar primer used in roofing, dampproofing and waterproofing	ASTM D43
Coal-tar saturated organic felt	ASTM D227
Coal-tar used in roofing	ASTM D450, Type I or II
Glass mat, coal tar	ASTM D4990
Glass mat, venting type	ASTM D4897
Mineral-surfaced inorganic cap sheet	ASTM D3909
Thermoplastic fabrics used in roofing	ASTM D5665; D5726

of ASTM D449 in the membrane system of waterproofing.

- ASTM D312, which covers four types of asphalt intended for use in built-up roof construction. The specification is for general classification purposes only and does not imply restrictions on the slope at which an asphalt must be used. There are four classifications:
  - Type I includes asphalts that are relatively susceptible to flow at roof temperatures with good adhesive and self-sealing properties.
  - Type II includes asphalts that are moderately susceptible to flow at roof temperatures.
  - Type III includes asphalts that are relatively not susceptible to flow at roof temperatures for use in built-up roof construction on slope inclines from 8.3 percent to 25 percent.
  - Type IV includes asphalts that are generally not susceptible to flow at roof temperatures for use in built-up roof construction on slope inclines from approximately 16.7 percent to 50 percent.
- ASTM D4022 and D5643, which cover coal-tar cements used in roofing:
  - ASTM D4022 covers coal-tar roof cement suitable for trowel application in coal-tar roofing and flashing systems.
  - ASTM D5643 covers asbestos-free coal-tar roof cement suitable for trowel application in coal-tar roofing and flashing systems.
- ASTM D227, which covers coal-tar saturated organic felt that may be used with coal-tar pitches conforming to the requirements of ASTM D450 in the construction of built-up roofs and in the membrane system of waterproofing.
- ASTM D43 covers coal-tar primer suitable for use with coal-tar pitch in roofing, dampproofing and waterproofing below or above ground level for application to concrete, masonry and coal tar surfaces.
- ASTM D450, Types I and II, which cover coal-tar pitch suitable for use in the construction of built-up roofing, dampproofing and membrane waterproofing systems:
  - Type I is suitable for use in built-up roofing systems with felts conforming to the requirements of ASTM D227 or as specified by the manufacturer.
  - Type II is suitable for use in dampproofing and in membrane waterproofing systems.
- ASTM D4990, which covers glass felt impregnated with coal tar intended to be used with coal-tar pitch conforming to the requirements of ASTM D450 in construction of built-up roofs and waterproofing systems.

INTERNATIONAL CODE COUNCIL®
Copyright © 2015 ICC. ALL RIGHTS RESERVED. Accessed by David Dammon on Jun 21, 2017 12:30:52 PM pursuant to License Agreement with ICC. No further reproduction or distribution authorized. ANY UNAUTHORIZED REPRODUCTION OR DISTRIBUTION IS A VIOLATION OF THE FEDERAL COPYRIGHT ACT AND THE LICENSE AGREEMENT, AND SUBJECT TO CIVIL AND CRIMINAL PENALTIES THEREUNDER.

- ASTM D4897, which covers asphalt-impregnated and coated glass fiber base sheet with mineral surfacing on the top side and coarse mineral granules on the bottom side for use as the first ply of a roofing membrane. These base sheets provide for the lateral release of pressure in roofing systems because they are not solidly attached, and the coarse granular surface provides an open, porous channel in the horizontal plane beneath the membrane. The base sheets can be with or without perforations or embossings.
- ASTM D3909, which covers asphalt-impregnated and coated glass felt roll roofing surfaced on the weather side with mineral granules, for use as a cap sheet in the construction of built-up roofs.
- ASTM D5665 and D5726, which cover thermoplastic fabrics used in roofing:
  - ASTM D5665 covers thermoplastic fabrics such as polyester, polyester/polyamide bicomponent or composites with fiberglass or polyester scrims that can be used during the construction of cold-applied roofing and waterproofing.
  - ASTM D5726 covers thermoplastic fabrics such as polyester, polyester/polyamide bicomponent or composites with fiberglass or polyester scrims that can be used during the construction of hot-applied roofing and waterproofing.

R905.9.3 Application. Built-up roofs shall be installed in accordance with this chapter and the manufacturer's instructions.

❖ The general provisions of this chapter apply to the installation of built-up roofs, as do the installation instructions of the manufacturer of the specific roofing system. Commentary Figures R905.9.3(1) through (3) illustrate examples of the application of the base ply to nailable and nonnailable decks.

R905.10 Metal roof panels. The installation of metal roof panels shall comply with the provisions of this section.

❖ Metal roof panels differ from metal roof shingles regulated by Section R905.4. By definition, a metal roof panel must have an installed weather exposure of at least 3 square feet (0.28 m^2) per shingle or sheet. This section addresses the deck requirements, deck slope and attachment requirements for metal roof panels.

R905.10.1 Deck requirements. Metal roof panel roof coverings shall be applied to solid or spaced sheathing, except where the roof covering is specifically designed to be applied to spaced supports.

❖ Unless specifically limited, metal roof panels may be applied to either solidly sheathed decks or spaced sheathing. In cases where specific metal panels are designed to be installed only on spaced supports, the manufacturer's instructions govern.

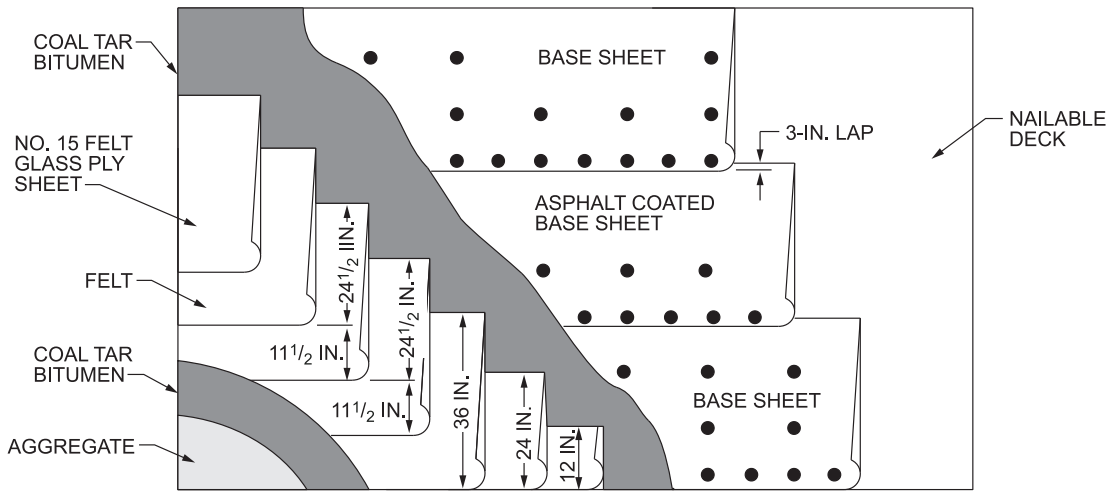

For SI: 1 inch = 25.4 mm.

Figure R905.9.3(1)
BUILT-UP ROOF—NAILABLE DECK APPLICATION

INTERNATIONAL CODE COUNCIL®
Copyright © 2015 ICC. ALL RIGHTS RESERVED. Accessed by David Dammon on Jun 21, 2017 12:30:52 PM pursuant to License Agreement with ICC. No further reproduction or distribution authorized. ANY UNAUTHORIZED REPRODUCTION OR DISTRIBUTION IS A VIOLATION OF THE FEDERAL COPYRIGHT ACT AND THE LICENSE AGREEMENT, AND SUBJECT TO CIVIL AND CRIMINAL PENALTIES THEREUNDER.

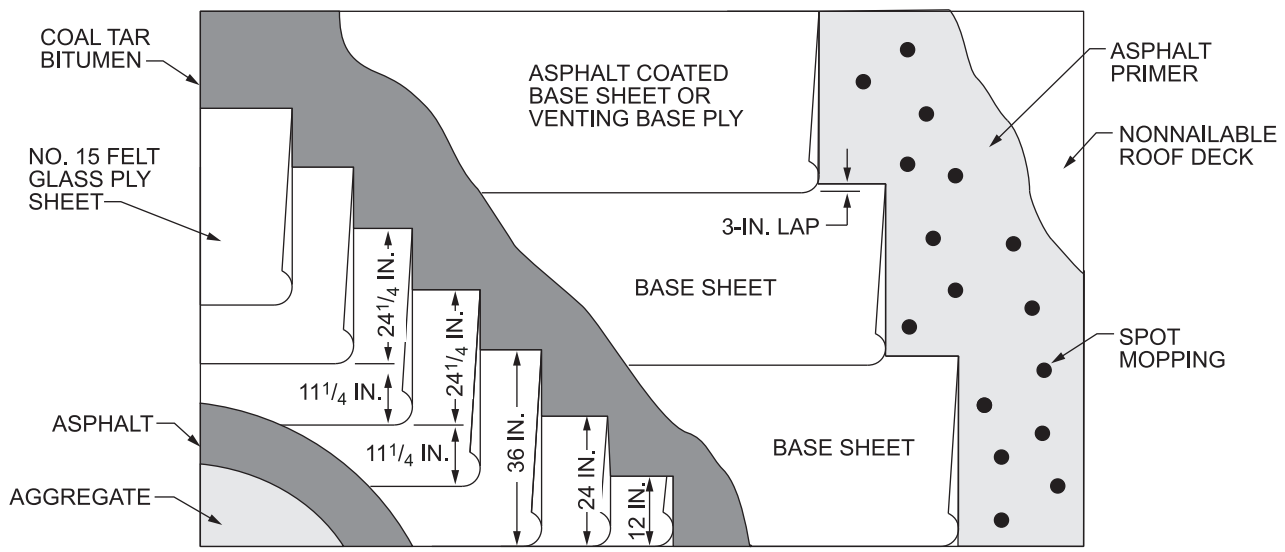

For SI: 1 inch = 25.4 mm.

Figure R905.9.3(2)
BUILT-UP ROOF—APPLICATION TO NONNAILABLE DECK BY SPOT MOPPING

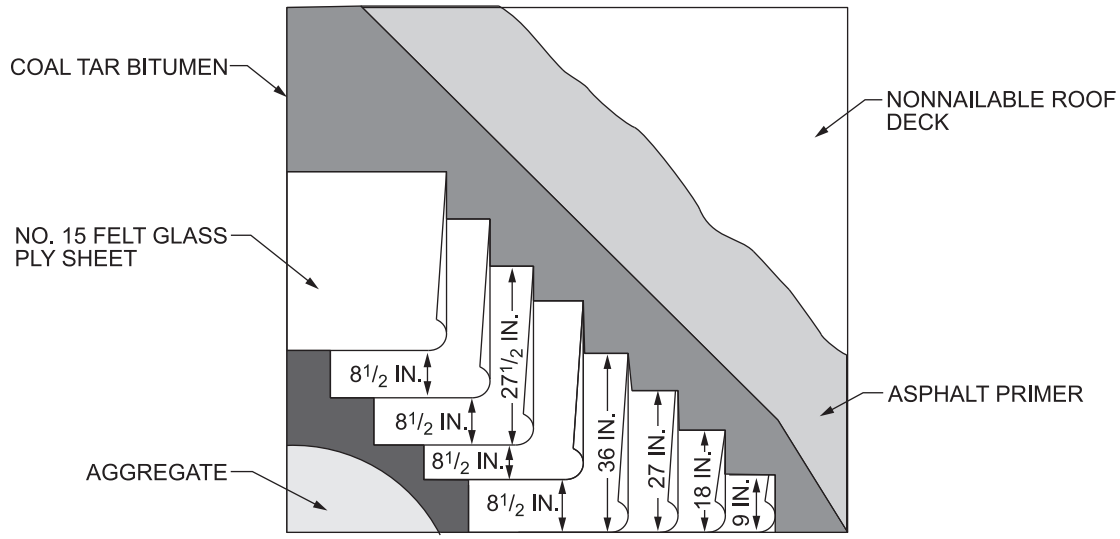

For SI: 1 inch = 25.4 mm.

Figure R905.9.3(3)
BUILT-UP-APPLICATION TO NONNAILABLE DECK SOLID MOPPING

INTERNATIONAL CODE COUNCIL®
Copyright © 2015 ICC. ALL RIGHTS RESERVED. Accessed by David Dammon on Jun 21, 2017 12:30:52 PM pursuant to License Agreement with ICC. No further reproduction or distribution authorized. ANY UNAUTHORIZED REPRODUCTION OR DISTRIBUTION IS A VIOLATION OF THE FEDERAL COPYRIGHT ACT AND THE LICENSE AGREEMENT, AND SUBJECT TO CIVIL AND CRIMINAL PENALTIES THEREUNDER.

R905.10.2 Slope. Minimum slopes for metal roof panels shall comply with the following:

1. The minimum slope for lapped, nonsoldered-seam metal roofs without applied lap sealant shall be three units vertical in 12 units horizontal (25-percent slope).
2. The minimum slope for lapped, nonsoldered-seam metal roofs with applied lap sealant shall be one-half unit vertical in 12 units horizontal (4-percent slope). Lap sealants shall be applied in accordance with the *approved* manufacturer's installation instructions.
3. The minimum slope for standing-seam roof systems shall be one-quarter unit vertical in 12 units horizontal (2-percent slope).

❖ The minimum slope permitted for a roof deck supporting metal roof panels varies based on the type of panels being installed. Three different types of metal roof panel systems are regulated: lapped, nonsoldered seam metal roofs without applied lap sealant; lapped, nonsoldered seam metal roofs with applied lap sealant; and standing seam metal roof systems. The slope limitations vary based on the ability of the metal panel roof system to shed water without water intrusion. This section allows lower minimum roof slopes for lapped nonsoldered seam metal roofs when lap sealants are used. To help ensure that lap sealants perform as part of the overall roofing system, the lap sealant must be installed in accordance with the approved manufacturer's instructions.

R905.10.3 Material standards. Metal-sheet roof covering systems that incorporate supporting structural members shall be designed in accordance with the *International Building Code*. Metal-sheet roof coverings installed over structural decking shall comply with Table R905.10.3(1). The materials used for metal-sheet roof coverings shall be naturally corrosion resistant or provided with corrosion resistance in accordance with the standards and minimum thicknesses shown in Table R905.10.3(2).

❖ If the metal roof panel system uses the structural members of the roof construction for support, it is necessary to design the roof system is accordance with the *International Building Code*® (IBC®). Only where the metal roof coverings are installed and supported by structural decking may the provisions of the code be used. Under such conditions, Tables R905.10.3(1) and R905.10.3(2) must be consulted.

Table R905.10.3(1) lists the metal roof covering types and their material standards. Many of the materials listed are inherently corrosion resistant, such as aluminum, copper and lead. For these materials, listing a material standard for the base material is sufficient. However, for steel roofing products, coatings are added to the base material to provide the necessary corrosion resistance.

Table R905.10.3(2) lists the minimum coating thickness required to provide minimum corrosion resistance for the base steel. Note a to Table R905.10.3(2) specifies that the paint systems are intended to be applied to steel having one of the corrosion-resistant coatings listed.

TABLE R905.10.3(1)
METAL ROOF COVERING STANDARDS

ROOF COVERING TYPE	STANDARD APPLICATION RATE/THICKNESS
Galvanized steel	ASTM A653 G90 Zinc coated
Stainless steel	ASTM A240, 300 Series alloys
Steel	ASTM A924
Lead-coated copper	ASTM B101
Cold-rolled copper	ASTM B370 minimum 16 oz/sq ft and 12 oz/sq ft high-yield copper for metal-sheet roof covering systems; 12 oz/sq ft for preformed metal shingle systems.
Hard lead	2 lb/sq ft
Soft lead	3 lb/sq ft
Aluminum	ASTM B209, 0.024 minimum thickness for roll-formed panels and 0.019-inch minimum thickness for pressformed shingles.
Terne (tin) and terne-coated stainless	Terne coating of 40 lb per double base box, field painted where applicable in accordance with manufacturer's installation instructions.
Zinc	0.027 inch minimum thickness: 99.995% electrolytic high-grade zinc with alloy additives of copper (0.08 - 0.20%), titanium (0.07% - 0.12%) and aluminum (0.015%).

For SI: 1 ounce per square foot = 0.305 kg/m^2, 1 pound per square foot = 4.214 kg/m^2, 1 inch = 25.4 mm, 1 pound = 0.454 kg.

❖ See the commentaries to Sections R905.10.3 and R905.4.4. CDA 4115-1929, *Copper in Architecture—Design Handbook,* is no longer listed as a reference for copper roof covering; however, the provisions of CDA 41155-1929 may be useful as a guideline.

INTERNATIONAL CODE COUNCIL®
Copyright © 2015 ICC. ALL RIGHTS RESERVED. Accessed by David Dammon on Jun 21, 2017 12:30:52 PM pursuant to License Agreement with ICC. No further reproduction or distribution authorized. ANY UNAUTHORIZED REPRODUCTION OR DISTRIBUTION IS A VIOLATION OF THE FEDERAL COPYRIGHT ACT AND THE LICENSE AGREEMENT, AND SUBJECT TO CIVIL AND CRIMINAL PENALTIES THEREUNDER.

TABLE R905.10.3(2)
MINIMUM CORROSION RESISTANCE

55% aluminum-zinc alloy coated steel	ASTM A792 AZ 50
5% aluminum alloy-coated steel	ASTM A875 GF60
Aluminum-coated steel	ASTM A463 T2 65
Galvanized steel	ASTM A653 G-90
Prepainted steel	ASTM A755[a]

a. Paint systems in accordance with ASTM A755 shall be applied over steel products with corrosion-resistant coatings complying with ASTM A792, ASTM A875, ASTM A463, or ASTM A653.

❖ See the commentaries to Sections R905.10.3 and R905.4.4.

R905.10.4 Attachment. Metal roof panels shall be secured to the supports in accordance with this chapter and the manufacturer's installation instructions. In the absence of manufacturer's installation instructions, the following fasteners shall be used:

1. Galvanized fasteners shall be used for steel roofs.
2. Copper, brass, bronze, copper alloy and 300-series stainless steel fasteners shall be used for copper roofs.
3. Stainless steel fasteners are acceptable for metal roofs.

❖ The general provisions of this chapter apply to the installation of metal panel roofing, as do the manufacturer's installation instructions for the specific roofing system. The code requires various types of fasteners based on specific types of metal roofs unless the manufacturer's installation instructions specify otherwise.

R905.10.5 Underlayment. Underlayment shall comply with Section R905.1.1.

❖ See the commentary to Section R905.1.1.

R905.11 Modified bitumen roofing. The installation of modified bitumen roofing shall comply with the provisions of this section.

❖ This section establishes the materials standards and installation criteria for modified bitumen roofing systems.

R905.11.1 Slope. Modified bitumen membrane roofs shall have a design slope of not less than one-fourth unit vertical in 12 units horizontal (2-percent slope) for drainage.

❖ Where a modified bitumen roofing system is to be installed, the roof design slope must be a minimum of 1:48, more often recognized as $^1/_4$ inch per foot.

R905.11.2 Material standards. Modified bitumen roof coverings shall comply with the standards in Table R905.11.2.

❖ Table R905.11.2 must be referenced for the installer to determine the appropriate specification standard for various materials that may be used in the application of modified bitumen roofing. The table identifies referenced standards for the membrane, primer, cement, adhesive and coatings that may be a part of the roof installation.

TABLE R905.11.2
MODIFIED BITUMEN ROOFING MATERIAL STANDARDS

MATERIAL	STANDARD
Acrylic coating	ASTM D6083
Asphalt adhesive	ASTM D3747
Asphalt cement	ASTM D3019
Asphalt coating	ASTM D1227; D2824
Asphalt primer	ASTM D41
Modified bitumen roof membrane	ASTM D6162; D6163; D6164; D6222; D6223; D6298; CGSB 37-GP-56M

❖ The materials used in modified bitumen roof coverings must comply with the following standards: ASTM D6162, D6163, D6164, D6222, D6223, D6298 and CGSB 37-56M, which cover modified bitumen roof membranes.

- ASTM D6162 covers prefabricated modified bituminous sheet materials reinforced with a combination of polyester fabric and glass fiber, with or without granules, which use styrene-butadiene-styrene (SBS) thermoplastic elastomer as the primary modifier and are intended for use in the fabrication of multiple-ply roofing and waterproofing membranes.
- ASTM D6163 covers prefabricated modified bituminous sheet materials with glass fiber reinforcement, with or without granules, which use SBS thermoplastic elastomer as the primary modifier and are intended for use in the fabrication of multiple-ply roofing and waterproofing membranes.
- ASTM D6164 covers prefabricated modified bituminous sheet materials reinforced with polyester fabric, with or without granules, which use SBS thermoplastic elastomer as the primary modifier and are intended for use in the fabrication of multiple-ply roofing and waterproofing membranes.
- ASTM D6222 covers atactic polypropylene (APP) modified bituminous sheet materials using polyester reinforcement.
- ASTM D6223 covers APP modified bituminous sheet materials using a combination of polyester and glass fiber reinforcement.
- ASTM D6298 covers fiberglass reinforced modified bituminous sheet materials that use SBS thermoplastic elastomer as the primary modifier and are surfaced with a factory-applied continuous metal foil.
- CGSB 37-56M covers prefabricated modified bituminous membrane reinforced for roofing applications.
- ASTM D41 covers asphaltic primer suitable for use with asphalt in roofing, dampproofing and waterproofing below or above ground level, for

INTERNATIONAL CODE COUNCIL®
Copyright © 2015 ICC. ALL RIGHTS RESERVED. Accessed by David Dammon on Jun 21, 2017 12:30:52 PM pursuant to License Agreement with ICC. No further reproduction or distribution authorized. ANY UNAUTHORIZED REPRODUCTION OR DISTRIBUTION IS A VIOLATION OF THE FEDERAL COPYRIGHT ACT AND THE LICENSE AGREEMENT, AND SUBJECT TO CIVIL AND CRIMINAL PENALTIES THEREUNDER.

application to concrete, masonry, metal and asphalt surfaces.

- ASTM D3019 covers lap cement consisting of asphalt dissolved in a volatile petroleum solvent with or without mineral or other stabilizers, or both, for use with roll roofing.
- ASTM D3747 covers emulsified asphalt adhesive for use in adhering preformed roof insulation to steel roof decks with inclines up to 33 percent. When applied as a continuous film over an acceptable deck surface, the emulsion functions as both an adhesive and a vapor retarder.
- ASTM D1227 and D2824 cover asphalt roof coatings:
  - ASTM D1227 covers emulsified asphalt suitable for use as a protective coating for built-up roofs and other exposed surfaces with inclines of not less than 4 percent.
  - ASTM D2824 covers aluminum-pigmented asphalt roof coatings, including nonfibered, asbestos-fibered, and asbestos-free fibered materials.
- ASTM D6083 covers a liquid-applied water-dispersed 100-percent acrylic elastomeric latex coating used as a protective coating for roofs.

R905.11.3 Application. Modified bitumen roofs shall be installed in accordance with this chapter and the manufacturer's instructions.

❖ The general provisions of this chapter apply to the installation of modified bitumen roofing, as do the installation instructions of the manufacturer of the specific roofing materials or system.

R905.12 Thermoset single-ply roofing. The installation of thermoset single-ply roofing shall comply with the provisions of this section.

❖ This section establishes the materials standards and installation criteria for thermoset single-ply roofing systems.

R905.12.1 Slope. Thermoset single-ply membrane roofs shall have a design slope of not less than one-fourth unit vertical in 12 units horizontal (2-percent slope) for drainage.

❖ If a thermoset single-ply roof system is to be installed, the roof design slope must be a minimum of 1:48, more often recognized as $^1/_4$ inch per foot.

R905.12.2 Material standards. Thermoset single-ply roof coverings shall comply with ASTM D4637, ASTM D5019 or CGSB 37-GP-52M.

❖ The code recognizes three materials standards for the regulation of thermoset single-ply membrane roofs. The standards include ASTM D4637 for ethylene-propylene-diene-terpolymer (EPDM) sheets, ASTM D5019 for reinforced nonvulcanized polymeric sheet made from chlorosulfonated polyethylene (CSPE) and polyisobutylene (PIB) and CGSB 37-GP-52M for sheet-applied elastomeric roofing and waterproofing membrane.

R905.12.3 Application. Thermoset single-ply roofs shall be installed in accordance with this chapter and the manufacturer's instructions.

❖ The general provisions of this chapter apply to the installation of thermoset single-ply roofing, as do the installation instructions of the manufacturer of the specific roofing system.

R905.13 Thermoplastic single-ply roofing. The installation of thermoplastic single-ply roofing shall comply with the provisions of this section.

❖ This section sets forth the materials standards and installation criteria for single-ply roof systems consisting of polyvinyl chloride material.

R905.13.1 Slope. Thermoplastic single-ply membrane roofs shall have a design slope of not less than one-fourth unit vertical in 12 units horizontal (2-percent slope).

❖ If a thermoplastic single-ply roof system is to be installed, the roof design slope must be a minimum of 1:48, more often recognized as $^1/_4$ inch per foot (21 mm/m).

R905.13.2 Material standards. Thermoplastic single-ply roof coverings shall comply with ASTM D4434, ASTM D6754, ASTM D6878 or CGSB CAN/CGSB 37.54.

❖ Four materials standards, ASTM D4434, ASTM D6754, ASTM D6878 and CGSB CAN/CGSB 37.54, are recognized for the regulation of thermoplastic single-ply membrane roofs and are acceptable standards in determining the appropriateness of the roofing system.

R905.13.3 Application. Thermoplastic single-ply roofs shall be installed in accordance with this chapter and the manufacturer's instructions.

❖ The general provisions of this chapter apply to the installation of thermoplastic single-ply roofing, as do the installation instructions of the manufacturer of the roofing system.

R905.14 Sprayed polyurethane foam roofing. The installation of sprayed polyurethane foam roofing shall comply with the provisions of this section.

❖ This section establishes the materials standards and installation criteria for sprayed polyurethane foam roofing systems.

R905.14.1 Slope. Sprayed polyurethane foam roofs shall have a design slope of not less than one-fourth unit vertical in 12 units horizontal (2-percent slope) for drainage.

❖ Where a sprayed polyurethane foam roof system is to be installed, the roof design slope must be a minimum of 1:48, more often recognized as $^1/_4$ inch per foot (21 mm/m).

R905.14.2 Material standards. Spray-applied polyurethane foam insulation shall comply with ASTM C1029, Type III or IV or ASTM D7425.

❖ ASTM C1029, Type III or IV and ASTM D7425 are the standards for the regulation of spray-applied rigid cellular polyurethane thermal insulation.

INTERNATIONAL CODE COUNCIL®
Copyright © 2015 ICC. ALL RIGHTS RESERVED. Accessed by David Dammon on Jun 21, 2017 12:30:52 PM pursuant to License Agreement with ICC. No further reproduction or distribution authorized. ANY UNAUTHORIZED REPRODUCTION OR DISTRIBUTION IS A VIOLATION OF THE FEDERAL COPYRIGHT ACT AND THE LICENSE AGREEMENT, AND SUBJECT TO CIVIL AND CRIMINAL PENALTIES THEREUNDER.

R905.14.3 Application. Foamed-in-place roof insulation shall be installed in accordance with this chapter and the manufacturer's instructions. A liquid-applied protective coating that complies with Table R905.14.3 shall be applied not less than 2 hours nor more than 72 hours following the application of the foam.

❖ The general provisions of this chapter address the installation of spray-applied rigid cellular polyurethane thermal membrane roofing, as do the installation instructions of the manufacturer of the roofing system. In addition, a liquid-applied protective coating must be provided to protect the exterior surface of the foam. The protective coating specified in Table R905.14.3 must be applied between 2 and 72 hours following the installation of the foam insulation.

TABLE R905.14.3
PROTECTIVE COATING MATERIAL STANDARDS

MATERIAL	STANDARD
Acrylic coating	ASTM D6083
Silicone coating	ASTM D6694
Moisture-cured polyurethane coating	ASTM D6947

❖ See the commentary to Section 905.14.3.

R905.14.4 Foam plastics. Foam plastic materials and installation shall comply with Section R316.

❖ The foam-plastics provisions of Section R316, particularly those of Section R316.5.2 specific to roof covering assemblies, are applicable to roof assemblies containing sprayed polyurethane foam. The use of wood structural-panel roof sheathing is permitted in lieu of a thermal barrier for separating the interior of the building from the sprayed polyurethane foam-plastic roofing material. Sections R316.5.2 and R803 contain specific requirements for wood structural-panel sheathing.

R905.15 Liquid-applied roofing. The installation of liquid-applied roofing shall comply with the provisions of this section.

❖ This section establishes the material standards and installation criteria for liquid-applied roofing.

R905.15.1 Slope. Liquid-applied roofing shall have a design slope of not less than one-fourth unit vertical in 12 units horizontal (2-percent slope).

❖ If a liquid-applied roofing is to be installed, the roof design slope must be a minimum of 1:48, more often recognized as $^1/_4$ inch per foot (21 mm/m).

R905.15.2 Material standards. Liquid-applied roofing shall comply with ASTM C836, C957, D1227, D3468, D6083, D6694 or D6947.

❖ The code recognizes several materials standards for the regulation of liquid-applied roofing. They include ASTM C836 for cold-liquid-applied elastomeric waterproofing membranes that require the installation of separate wearing surfaces, ASTM C957 for cold-liquid-applied elastomeric waterproofing membranes that provide integral wearing surfaces, ASTM D1227 for emulsified asphalt used as a protective coating for built-up roofing systems, ASTM D3468 for liquid-applied neoprene and chlorosulfanated polyethylene materials used in roofing and waterproofing, ASTM D6083 for liquid-applied acrylic roof coatings, ASTM D6694 for silicone-based elastomeric coating for spray polyethylene foam insulation and ASTM D6947 for liquid-applied moisture-cured polyurethane.

R905.15.3 Application. Liquid-applied roofing shall be installed in accordance with this chapter and the manufacturer's instructions.

❖ The general provisions of this chapter apply to the installation of liquid-applied roofing, as do the installation instructions of the manufacturer of the roofing system.

R905.16 Photovoltaic shingles. The installation of photovoltaic shingles shall comply with the provisions of this section, Section R324 and NFPA 70.

❖ The section provides guidance for installers and code officials regarding the installation of photovoltaic shingles. These shingles are integrated with the building and provide both a roof covering and source of electrical power. The installation must also comply with the applicable portions of Section R324 and the NFPA 70. These provisions supply requirements and limitations for roof decks, roof deck slope, underlayment, underlayment application, ice barriers and underlayment attachment in high-wind regions that are considered appropriate for the installation of photovoltaic shingles. The specific requirements included here have been adapted from and are intended to be consistent with similar attributes for other shingle-type roof coverings. Section 905.16.1 is adapted from Section R905.4.1; Section R905.16.2 is adapted from Section R905.2.2; Sections R905.16.3, R905.16.4 and R905.16.4.2 are adapted from Section R905.1.1 and Section R905.16.4.1 is adapted from Section R905.1.2.

R905.16.1 Deck requirements. Photovoltaic shingles shall be applied to a solid or closely-fitted deck, except where the roof covering is specifically designed to be applied over spaced sheathing.

❖ See the commentary to Section R905.16.

R905.16.2 Deck slope. Photovoltaic shingles shall be used only on roof slopes of two units vertical in 12 units horizontal (2:12) or greater.

❖ See the commentary to Section R905.16.

R905.16.3 Underlayment. Unless otherwise noted, required underlayment shall conform to ASTM D4869 or ASTM D6757.

❖ See the commentary to Section R905.16.

R905.16.4 Underlayment application. Underlayment shall be applied shingle fashion, parallel to and starting from the eave, lapped 2 inches (51 mm) and fastened sufficiently to hold in place.

❖ See the commentary to Section R905.16.

INTERNATIONAL CODE COUNCIL®
Copyright © 2015 ICC. ALL RIGHTS RESERVED. Accessed by David Dammon on Jun 21, 2017 12:30:52 PM pursuant to License Agreement with ICC. No further reproduction or distribution authorized. ANY UNAUTHORIZED REPRODUCTION OR DISTRIBUTION IS A VIOLATION OF THE FEDERAL COPYRIGHT ACT AND THE LICENSE AGREEMENT, AND SUBJECT TO CIVIL AND CRIMINAL PENALTIES THEREUNDER.

R905.16.4.1 Ice barrier. In areas where there has been a history of ice forming along the eaves causing a backup of water, as designated in Table R301.2(1), an ice barrier that consists of not less than two layers of underlayment cemented together or of a self-adhering polymer modified bitumen sheet shall be used in lieu of normal underlayment and extend from the lowest edges of all roof surfaces to a point not less than 24 inches (610 mm) inside the exterior wall line of the building.

Exception: Detached accessory structures that contain no conditioned floor area.

❖ See the commentary to Section R905.16.

R905.16.4.2 Underlayment and high winds. Underlayment applied in areas subject to high winds [above 140 mph (63 m/s), in accordance with Figure R301.2(4)A] shall be applied with corrosion-resistant fasteners in accordance with the manufacturer's installation instructions. Fasteners are to be applied along the overlap not farther apart than 36 inches (914 mm) on center.

Underlayment installed where the ultimate design wind speed equals or exceeds 150 mph (67 m/s) shall comply with ASTM D4869 Type IV, or ASTM D6757. The underlayment shall be attached in a grid pattern of 12 inches (305 mm) between side laps with a 6-inch (152 mm) spacing at the side laps. Underlayment shall be applied as required for asphalt shingles in accordance with Table R905.1.1(2). Underlayment shall be attached using metal or plastic cap nails with a head diameter of not less than 1 inch (25 mm) with a thickness of not less than 32-gage sheet metal. The cap-nail shank shall be not less than 12 gage (0.105 inches) with a length to penetrate through the roof sheathing or not less than $^3/_4$ inch (19 mm) into the roof sheathing.

Exception: As an alternative, adhered underlayment complying with ASTM D1970 shall be permitted.

❖ See the commentary to Section R905.16.

R905.16.5 Material standards. Photovoltaic shingles shall be listed and labeled in accordance with UL 1703.

❖ This section references UL 1703 as the standard used for determining code compliance of photovoltaic shingles.

R905.16.6 Attachment. Photovoltaic shingles shall be attached in accordance with the manufacturer's installation instructions.

❖ Referring to the manufacturer's instructions is appropriate since the required slope and fastening of the photovoltaic shingles are different for each manufacturer's product.

R905.16.7 Wind resistance. Photovoltaic shingles shall be tested in accordance with procedures and acceptance criteria in ASTM D3161. Photovoltaic shingles shall comply with the classification requirements of Table R905.2.4.1 for the appropriate maximum basic wind speed. Photovoltaic shingle packaging shall bear a label to indicate compliance with the procedures in ASTM D3161 and the required classification from Table R905.2.4.1.

❖ For wind resistance, the procedures and acceptance criteria used in ASTM D3161 for asphalt shingles are appropriate when adapted for photovoltaic shingles.

SECTION R906
ROOF INSULATION

R906.1 General. The use of above-deck thermal insulation shall be permitted provided such insulation is covered with an *approved* roof covering and complies with FM 4450 or UL 1256.

❖ During these days of energy consciousness, roof insulation has become increasingly prevalent. It has distinct benefits not only in energy conservation but also in building-occupant comfort. Insulation also provides a smooth, uniform substrate for application of the roofing materials. The code requires that above-deck thermal insulation be covered by an approved roof covering and be in compliance with FM 4450 or UL 1256. Although UL 1256 specifies the testing methods for determining the fire resistance of roof covering materials, FM 4450 deals with Class I insulated steel deck roofs only.

R906.2 Material standards. Above-deck thermal insulation board shall comply with the standards in Table R906.2.

❖ The referenced material standards provide additional guidance on the physical properties of roof insulation when used as above-deck components of roof assemblies.

TABLE R906.2
MATERIAL STANDARDS FOR ROOF INSULATION

Cellular glass board	ASTM C552
Composite boards	ASTM C1289, Type III, IV, V or VI
Expanded polystyrene	ASTM C578
Extruded polystyrene board	ASTM C578
Perlite board	ASTM C728
Polyisocyanurate board	ASTM C1289, Type I or II
Wood fiberboard	ASTM C208
Fiber-reinforced gypsum board	ASTM C1278
Glass-faced gypsum board	ASTM C1177

❖ This table incorporates industry-recognized material standards into the code for materials commonly used in above-roof deck insulation practices.

INTERNATIONAL CODE COUNCIL®
Copyright © 2015 ICC. ALL RIGHTS RESERVED. Accessed by David Dammon on Jun 21, 2017 12:30:52 PM pursuant to License Agreement with ICC. No further reproduction or distribution authorized. ANY UNAUTHORIZED REPRODUCTION OR DISTRIBUTION IS A VIOLATION OF THE FEDERAL COPYRIGHT ACT AND THE LICENSE AGREEMENT, AND SUBJECT TO CIVIL AND CRIMINAL PENALTIES THEREUNDER.

SECTION R907
ROOFTOP-MOUNTED PHOTOVOLTAIC SYSTEMS

R907.1 Rooftop-mounted photovoltaic systems. Rooftop-mounted photovoltaic panels or modules shall be installed in accordance with this section, Section R324 and NFPA 70.

❖ Rooftop-mounted photovoltaic (PV) systems are designed to convert light energy into direct current (DC) electricity. They have no moving parts and do not contain fluids. The light-to-electricity conversion begins at the PV cell, which is commonly a semiconductor device that generates electricity when exposed to light. To be effective, PV cells are assembled into PV modules, which are then assembled into PV panels. These panels are assembled onto a frame or a flexible substrate that can be affixed to the roof of buildings to create a PV array. PV arrays and modules are wired together and generally operate in a series electrical circuit. An inverter is used to convert the DC power into alternating current (AC) that can be used to power the electrical loads in the dwelling.

Section R907 provides guidance for installers and code officials regarding the installation of rooftop-mounted PV panels or modules. Section R907 provides requirements and limitations for wind resistance, fire classification, installation and listing and labeling that are considered appropriate for the installation of rooftop-mounted PV panels or modules. The installation must also comply with the applicable portions of Section R324 and NFPA 70. PV panels and modules must be listed and labeled to show that they meet the requirements of UL 1703.

R907.2 Wind resistance. Rooftop-mounted photovoltaic panel or modules systems shall be installed to resist the component and cladding loads specified in Table R301.2(2), adjusted for height and exposure in accordance with Table R301.2(3).

❖ See the commentary to Section R907.1.

R907.3 Fire classification. Rooftop-mounted photovoltaic panels or modules shall have the same fire classification as the roof assembly required in Section R902.

❖ See the commentary to Section R907.1.

R907.4 Installation. Rooftop-mounted photovoltaic panels or modules shall be installed in accordance with the manufacturer's instructions.

❖ See the commentary to Section R907.1.

R907.5 Photovoltaic panels and modules. Rooftop-mounted photovoltaic panels and modules shall be listed and labeled in accordance with UL 1703 and shall be installed in accordance with the manufacturer's printed instructions.

❖ See the commentary to Section R907.1.

SECTION R908
REROOFING

R908.1 General. Materials and methods of application used for re-covering or replacing an existing roof covering shall comply with the requirements of Chapter 9.

Exceptions:

1. Reroofing shall not be required to meet the minimum design slope requirement of one-quarter unit vertical in 12 units horizontal (2-percent slope) in Section R905 for roofs that provide positive roof drainage.
2. For roofs that provide positive drainage, re-covering or replacing an existing roof covering shall not require the secondary (emergency overflow) drains or scuppers of Section R903.4.1 to be added to an existing roof.

❖ This section addresses the concerns associated with unregulated reroofing operations. The provisions require that when an existing building is reroofed, the existing roof be structurally sound and in a proper condition to receive the new roofing. It is often necessary to remove the existing roof covering prior to installing the new roofing materials. This section identifies those situations where the reroofing cannot occur over an existing roof covering.

If new roof covering materials are to be installed as a replacement for an existing roof covering, or if the new roof covering is applied directly over an existing roof, the roof covering materials and the application process must conform to the provisions for a new roof covering installation.

There may be occasions where only a small portion of the existing roof covering is in need of replacement or a limited amount of the roof is in need of repair. Appendix J of the code addresses those situations, in particular Section AJ301. This section of Appendix J permits repair of nonstructural elements using the same materials that are already in place. In other words, repair of the existing roof covering may be made using the same materials and methods found on the existing roof. It is assumed that the repairs will not cause the building to be reduced in code compliance from the previous level.

R908.2 Structural and construction loads. The structural roof components shall be capable of supporting the roof covering system and the material and equipment loads that will be encountered during installation of the roof covering system.

❖ A fundamental requirement throughout the code is the recognition of the impact of any new repair or replacement work on the structural system. If a new roof covering system is installed, the structural members of the roof and any additional structural members that carry

INTERNATIONAL CODE COUNCIL®
Copyright © 2015 ICC. ALL RIGHTS RESERVED. Accessed by David Dammon on Jun 21, 2017 12:30:52 PM pursuant to License Agreement with ICC. No further reproduction or distribution authorized. ANY UNAUTHORIZED REPRODUCTION OR DISTRIBUTION IS A VIOLATION OF THE FEDERAL COPYRIGHT ACT AND THE LICENSE AGREEMENT, AND SUBJECT TO CIVIL AND CRIMINAL PENALTIES THEREUNDER.

roof loads must be reviewed for their ability to support the loads that will be imposed during the installation process. This includes the weight of the new roof covering materials as well as any installation equipment that is placed on the roof.

R908.3 Roof replacement. Roof replacement shall include the removal of existing layers of roof coverings down to the roof deck.

Exception: Where the existing roof assembly includes an ice barrier membrane that is adhered to the roof deck, the existing ice barrier membrane shall be permitted to remain in place and covered with an additional layer of ice barrier membrane in accordance with Section R905.

❖ This section requires that all existing layers of the roof covering materials must be removed prior to the installation of new roof covering. The base for application of new roofing materials must provide a sound and consistent installation surface. The code will not permit the installation of new roof coverings over existing roof coverings where there is a potential for future problems with the roof's effectiveness. The exception permits an adhered ice barrier membrane to remain in place. In roof-removal situations where an existing ice barrier membrane is adhered to the existing roof deck, it is oftentimes difficult, if not impossible, to remove the existing layer of the adhered ice barrier membrane without damaging or replacing the roof deck. This exception is intended to account for this situation by allowing the existing adhered ice barrier membrane to remain in place and be covered with a new ice barrier membrane as required in Section R905.1.2 followed by the installation of the new primary roof covering material.

R908.3.1 Roof re-cover. The installation of a new roof covering over an existing roof covering shall be permitted where any of the following conditions occur:

1. Where the new roof covering is installed in accordance with the roof covering manufacturer's approved instructions.
2. Complete and separate roofing systems, such as standing-seam metal roof systems, that are designed to transmit the roof loads directly to the building's structural system and do not rely on existing roofs and roof coverings for support, shall not require the removal of existing roof coverings.
3. Metal panel, metal shingle and concrete and clay tile roof coverings shall be permitted to be installed over existing wood shake roofs where applied in accordance with Section R908.4.
4. The application of a new protective coating over an existing spray polyurethane foam roofing system shall be permitted without tear-off of existing roof coverings.

❖ This section permits a new roof covering to be installed over an existing roof cover where certain conditions exist. Condition 1 permits re-cover where allowed by the approved manufacturer's instructions. Condition 2 states that new roofing systems designed to transmit all roof loads directly to the structural supports of the building do not necessitate that the existing roofing system be removed. Condition 3 permits the installation of a new roof covering over wood shakes or shingle roofs only if the surface below the new roofing is properly protected in accordance with Section R908.4. Condition 4 permits recoating of an existing spray polyurethane foam roofing system without removal of the spray polyurethane foam roof covering. Recoating does not add significant weight to the roof assembly or compromise the long-term performance of the roofing assembly. Industry practices for the recoat of an existing spray polyurethane foam roofing system are detailed in ASTM D6705, *Standard Guide for the Repair and Recoat of Spray Polyurethane Foam Roofing Systems.*

R908.3.1.1 Roof re-cover not allowed. A *roof re-cover* shall not be permitted where any of the following conditions occur:

1. Where the existing roof or roof covering is water soaked or has deteriorated to the point that the existing roof or roof covering is not adequate as a base for additional roofing.
2. Where the existing roof covering is slate, clay, cement or asbestos-cement tile.
3. Where the existing roof has two or more applications of any type of roof covering.

❖ Section R908.3.1.1 prohibits installation of a new roof covering over an existing roof covering where certain conditions exist.

If the existing roof or roof covering is water soaked, the concealment of the existing roof in such a condition will lead to problems of deterioration and failure in the future. Any situation where the existing roof construction does not provide for an acceptable base is reason to remove all existing roof-covering materials prior to reroofing. In addition, roofing materials such as wood shakes, clay tiles and similar materials are not generally acceptable as a base for a new roof covering because of the variation in their surfaces.

A maximum of two roof coverings is permitted by the code, based primarily on the dead load weight that is accumulated on the roof for every layer of roofing materials. Where two or more applications of any roof covering are present, the existing materials must be removed prior to installation of the new roof covering.

R908.4 Roof re-covering. Where the application of a new roof covering over wood shingle or shake roofs creates a combustible concealed space, the entire existing surface shall be covered with gypsum board, mineral fiber, glass fiber or other *approved* materials securely fastened in place.

❖ A new roof covering can be applied over the top of an existing roof of wood shakes or shingles only if the existing roof surface is protected to address the concern of concealed combustible spaces. The application of a new roof over wood shakes or shingles creates an extensive amount of concealed area, all with a high degree of combustible materials. By using gypsum board, mineral fiber, glass fiber or other simi-

INTERNATIONAL CODE COUNCIL®
Copyright © 2015 ICC. ALL RIGHTS RESERVED. Accessed by David Dammon on Jun 21, 2017 12:30:52 PM pursuant to License Agreement with ICC. No further reproduction or distribution authorized. ANY UNAUTHORIZED REPRODUCTION OR DISTRIBUTION IS A VIOLATION OF THE FEDERAL COPYRIGHT ACT AND THE LICENSE AGREEMENT, AND SUBJECT TO CIVIL AND CRIMINAL PENALTIES THEREUNDER.

lar materials in the reroofing installation, the combustible shakes or shingles will be protected by materials suitable for fireblocking.

R908.5 Reinstallation of materials. Existing slate, clay or cement tile shall be permitted for reinstallation, except that damaged, cracked or broken slate or tile shall not be reinstalled. Any existing flashings, edgings, outlets, vents or similar devices that are a part of the assembly shall be replaced where rusted, damaged or deteriorated. Aggregate surfacing materials shall not be reinstalled.

❖ Because all roofing materials should make a building weathertight, their reuse is strictly limited. Unless damaged, existing tile of cement, slate or clay may be reused. The reuse of all other roofing materials is prohibited. Roof accessories, such as metal edgings, flashing, drain outlets and collars, may be reinstalled only if they are in a suitable condition.

R908.6 Flashings. Flashings shall be reconstructed in accordance with *approved* manufacturer's installation instructions. Metal flashing to which bituminous materials are to be adhered shall be primed prior to installation.

❖ During reroofing operations, all flashings that are to remain must be reconstructed in a manner consistent with the manufacturer's instructions. In those cases where bituminous materials are applied to any existing metal flashing, a primer must be applied to the flashing to increase adhesion to the surface.

SECTION R909
ROOFTOP-MOUNTED PHOTOVOLTAIC PANEL SYSTEMS

R909.1 General. The installation of photovoltaic panel systems that are mounted on or above the roof covering shall comply with this section, Section R324 and NFPA 70.

❖ Rooftop-mounted photovoltaic (PV) panel systems can be mounted on or above the roof covering. The PV panel system must comply with Section R909, the applicable portions of Section R324 and NFPA 70 and the manufacturer's installation instructions. PV panel systems installed on or above the roof covering must be securely fastened to the roof/rafter system. Often, solar collector systems are installed with manufactured metal mounting brackets that can be attached to the roofing system or wood blocking, or with sleepers using lag bolts or other secure mounting systems. The manufacturer's mounting specifications must be followed so that the panels are properly mounted. This is especially important in areas with high wind loads. Also, the weight of the collector system must be checked to confirm that the roof structure is designed to meet the increased load. Roof penetrations must be sealed during and after installation of the PV panel systems. At a minimum, there will be roof penetrations for the electrical conduits connecting to the panels. PV panel systems mounted above the roof covering will require penetrations into the rafter system or blocking to attach the collectors to the roof, and care must be taken to seal the penetrations.

R909.2 Structural requirements. Rooftop-mounted photovoltaic panel systems shall be designed to structurally support the system and withstand applicable gravity loads in accordance with Chapter 3. The roof upon which these systems are installed shall be designed and constructed to support the loads imposed by such systems in accordance with Chapter 8.

❖ See the commentary to Section R909.1.

R909.3 Installation. Rooftop-mounted photovoltaic systems shall be installed in accordance with the manufacturer's instructions. Roof penetrations shall be flashed and sealed in accordance with this chapter.

❖ See the commentary to Section R909.1.

Bibliography

The following resource materials were used in the preparation of the commentary for this chapter of the code:

ASTM C1167–11, *Specification for Clay Roof Tiles*. West Conshohocken, PA: ASTM International, 2011.

ASTM D41–05, *Specification for Asphalt Primer Used in Roofing, Dampproofing, and Waterproofing*. West Conshohocken, PA: ASTM International, 2005.

ASTM D43–00 (2006), *Specification for Coal Tar Primer Used in Roofing, Dampproofing and Waterproofing*. West Conshohocken, PA: ASTM International, 2006.

ASTM D226/D226M–09, *Specification for Asphalt-saturated (Organic Felt) Used in Roofing and Waterproofing*. West Conshohocken, PA: ASTM International, 2009.

ASTM D312–00 (2006), *Specification for Asphalt Used in Roofing*. West Conshohocken, PA: ASTM International, 2006.

ASTM D450–07, *Specification for Coal-tar Pitch Used in Roofing, Dampproofing and Waterproofing*. West Conshohocken, PA: ASTM International, 2007.

ASTM D2822/D2822M–05 (2011)e1, *Specification for Asphalt Roof Cement, Asbestos Containing*. West Conshohocken, PA: ASTM International, 2011.

ASTM D3019–08, *Specification for Lap Cement Used with Asphalt Roll Roofing, Nonfibered, Asbestos Fibered, and Nonasbestos Fibered*. West Conshohocken, PA: ASTM International, 2008.

ASTM D3161/D3161M–2013, *Test Method for Wind Resistance of Asphalt Shingles (Fan Induced Method)*. West Conshohocken, PA: ASTM International, 2013.

ASTM D3747–79 (2007), *Specification for Emulsified Asphalt Adhesive for Adhering Roof Insulation*. West Conshohocken, PA: ASTM International, 2007.

INTERNATIONAL CODE COUNCIL®
Copyright © 2015 ICC. ALL RIGHTS RESERVED. Accessed by David Dammon on Jun 21, 2017 12:30:52 PM pursuant to License Agreement with ICC. No further reproduction or distribution authorized. ANY UNAUTHORIZED REPRODUCTION OR DISTRIBUTION IS A VIOLATION OF THE FEDERAL COPYRIGHT ACT AND THE LICENSE AGREEMENT, AND SUBJECT TO CIVIL AND CRIMINAL PENALTIES THEREUNDER.

ASTM D4586/D4586M–07 (2012)e1, *Specification for Asphalt Roof Cement, Asbestos-free*. West Conshohocken, PA: ASTM International, 2012.

ASTM D4601/D4601M–04 (2012)e1, *Specification for Asphalt-Coated Glass Fiber Base Sheet Used in Roofing*. West Conshohocken, PA: ASTM International, 2012.

ASTM D4897/D4897M–01 (2009), *Specification for Asphalt Coated Glass-fiber Venting Base Sheet Used in Roofing*. West Conshohocken, PA: ASTM International, 2009.

ASTM D4990–97a (2005)e01, *Specification for Coal Tar Glass Felt Used in Roofing and Waterproofing*. West Conshohocken, PA: ASTM International, 2005.

ASTM D5665–99a (2006), *Specification for Thermoplastic Fabrics Used in Cold-applied Roofing and Waterproofing.* West Conshohocken, PA: ASTM International, 2006.

ASTM D5726–98 (2005), *Specification for Thermoplastic Fabrics Used in Hot-applied Roofing and Waterproofing*. West Conshohocken, PA: ASTM International, 2005.

ASTM D6705/D6705M–04 (2011)e1, *Standard Guide for Repair and Recoat of Spray Polyurethane Foam Roofing Systems.* West Conshohocken, PA: ASTM International, 2011.

ASTM D7158/D7158M–2011, *Standard Test Method for Wind Resistance of Sealed Asphalt Shingles (Uplift Force/Uplift Resistance Method)*. West Conshohocken, PA: ASTM International, 2011.

ASTM E108–2011, *Test Method for Fire Tests of Roof Coverings*. West Conshohocken, PA: ASTM International, 2011.

AWPA C1–03, *All Timber Products—Preservative Treatment by Pressure Processes*. Birmingham, AL: American Wood-Preservers' Association, 2003.

CDA 4115–1929, *Copper in Architecture—Design Handbook*. United Kingdom: The Copper Development Association, 1929.

CSSB–97, *Grading and Packing Rules for Western Red Cedar Shakes and Western Red Shingles of the Cedar Shake and Shingle Bureau*. Sumas, WA: Cedar Shake & Shingle Bureau, 1997.

IBC–15, *International Building Code*. Washington, DC: International Code Council, 2014.

IPC–15, *International Plumbing Code*. Washington, DC: International Code Council, 2014.

UL 55A–04, *Materials for Built-Up Roof Coverings*. Northbrook, IL: UL LLC, 2004.

UL 790–04, *Standard Test Methods for Fire Tests of Roof Coverings with Revisions through October 2008*. Northbrook, IL: UL LLC, 2004.

UL 1256–02, *Fire Test of Roof Deck Construction*. Northbrook, IL: UL LLC, 2002.

INTERNATIONAL CODE COUNCIL®
Copyright © 2015 ICC. ALL RIGHTS RESERVED. Accessed by David Dammon on Jun 21, 2017 12:30:52 PM pursuant to License Agreement with ICC. No further reproduction or distribution authorized. ANY UNAUTHORIZED REPRODUCTION OR DISTRIBUTION IS A VIOLATION OF THE FEDERAL COPYRIGHT ACT AND THE LICENSE AGREEMENT, AND SUBJECT TO CIVIL AND CRIMINAL PENALTIES THEREUNDER.

INTERNATIONAL CODE COUNCIL®
Copyright © 2015 ICC. ALL RIGHTS RESERVED. Accessed by David Dammon on Jun 21, 2017 12:30:52 PM pursuant to License Agreement with ICC. No further reproduction or distribution authorized. ANY UNAUTHORIZED REPRODUCTION OR DISTRIBUTION IS A VIOLATION OF THE FEDERAL COPYRIGHT ACT AND THE LICENSE AGREEMENT, AND SUBJECT TO CIVIL AND CRIMINAL PENALTIES THEREUNDER.

Chapter 10: Chimneys and Fireplaces

General Comments

Chapter 10 regulates two basic types of chimneys and fireplaces: factory-built and those constructed on site of masonry and other approved materials. Chimneys and fireplaces constructed of masonry rely on prescriptive requirements for the details of their construction; the factory-built type rely on the listing and labeling method of approval. This chapter also contains provisions for unvented gas log heaters. Seismic issues related to fireplaces and chimneys, including reinforcing requirements, are also addressed in Chapter 10.

Section R1001 regulates the construction of masonry fireplaces. Section R1002 establishes the standards for the use and installation of masonry heaters. Section R1003 regulates the construction of masonry chimneys.

Section R1004 establishes the standards for the use and installation of factory-built fireplaces including the use of unvented gas log heaters. Section R1005 establishes the standards for the use and installation of factory-built chimneys. Section R1006 requires the installation of an exterior air supply for use with both factory-built and masonry fireplaces.

Purpose

Chapter 10 contains requirements for the safe construction of masonry chimneys and fireplaces and establishes the standards for the use and installation of factory-built chimneys, fireplaces and masonry heaters. Chimneys and fireplaces constructed of masonry rely on prescriptive requirements for the details of their construction; the factory-built type relies on the listing and labeling method of approval. This chapter also provides the requirements for seismic reinforcing and anchorage of masonry fireplaces and chimneys.

SECTION R1001 MASONRY FIREPLACES

R1001.1 General. Masonry fireplaces shall be constructed in accordance with this section and the applicable provisions of Chapters 3 and 4.

❖ This section covers details for masonry fireplaces. Table R1001.1 and Figure R1001.1 show details for masonry fireplaces and chimneys.

R1001.2 Footings and foundations. Footings for masonry fireplaces and their chimneys shall be constructed of concrete or *solid masonry* not less than 12 inches (305 mm) thick and shall extend not less than 6 inches (152 mm) beyond the face of the fireplace or foundation wall on all sides. Footings shall be founded on natural, undisturbed earth or engineered fill below frost depth. In areas not subjected to freezing, footings shall be not less than 12 inches (305 mm) below finished *grade*.

❖ The dead-load bearing pressure for a building structure, particularly if it is a light wood-frame building, is usually quite low, even though the bearing pressure on the foundation for a masonry or concrete fireplace and chimney can be several times higher. It is good practice to proportion the foundation of a masonry fireplace and chimney to have approximately the same bearing pressure as is present under the building structure itself, although the codes do not require such a design. Where the soil is compressible, differential settlements between the fireplace and chimney and its surrounding structure can cause cracking of the finish materials in the vicinity of the fireplace and chimney. Also, firestopping may be displaced so that a draft opening is created.

R1001.2.1 Ash dump cleanout. Cleanout openings located within foundation walls below fireboxes, when provided, shall be equipped with ferrous metal or masonry doors and frames constructed to remain tightly closed except when in use. Cleanouts shall be accessible and located so that ash removal will not create a hazard to combustible materials.

❖ Noncombustible, tightly sealed cleanout doors must reduce the danger of fire spread through the cleanout openings. Cleanout openings must be easily accessible to allow ash removal. The ashes and other materials left in the fireplace may remain hot for some time. Cleanout doors must be tight closing to prevent air from entering the firebox and causing the unburned materials to reignite. The cleanout door must be located so that ashes and other unburned materials that may still be hot can be removed without creating a hazard to combustible materials.

R1001.3 Seismic reinforcing. Masonry or concrete chimneys in Seismic Design Category D_0, D_1 or D_2 shall be reinforced. Reinforcing shall conform to the requirements set forth in Table R1001.1 and Section R606.

❖ Masonry and concrete have inherently brittle natures, and they are therefore weak when subjected to tensile forces. Using steel, an inherently ductile material, provides ductility in masonry and concrete construction. Chimneys, in general, and unreinforced masonry and concrete chimneys, in particular, do not perform well in earthquakes because of their tall and slender geometry. Observation of buildings after earthquakes has shown that chimneys suffered severe damage and sometimes completely collapsed. To improve the performance of masonry and concrete chimneys under

INTERNATIONAL CODE COUNCIL®
Copyright © 2015 ICC. ALL RIGHTS RESERVED. Accessed by David Dammon on Jun 21, 2017 12:30:52 PM pursuant to License Agreement with ICC. No further reproduction or distribution authorized. ANY UNAUTHORIZED REPRODUCTION OR DISTRIBUTION IS A VIOLATION OF THE FEDERAL COPYRIGHT ACT AND THE LICENSE AGREEMENT, AND SUBJECT TO CIVIL AND CRIMINAL PENALTIES THEREUNDER.

severe earthquake loading, steel-reinforcing bars are required as shown in Table R1001.1. This reinforcement is required in Seismic Design Categories D_0, D_1 and D_2 only. Reinforcement is not required in Seismic Design Categories A, B and C, and buildings in seismic design categories higher than D must be designed in accordance with the *International Building Code*® (IBC®) (see Section R301.2.2).

R1001.3.1 Vertical reinforcing. For chimneys up to 40 inches (1016 mm) wide, four No. 4 continuous vertical bars shall be placed between wythes of *solid masonry* or within the cells of hollow unit masonry and grouted in accordance with Section R606. Grout shall be prevented from bonding with the flue liner so that the flue liner is free to move with thermal expansion. For chimneys more than 40 inches (1016 mm) wide, two additional No. 4 vertical bars shall be provided for each additional flue incorporated into the chimney or for each additional 40 inches (1016 mm) in width or fraction thereof.

❖ To keep the chimney structure together and prevent severe damage or fracture, four No. 4 bars, continu-

TABLE R1001.1
SUMMARY OF REQUIREMENTS FOR MASONRY FIREPLACES AND CHIMNEYS

ITEM	LETTER[a]	REQUIREMENTS
Hearth slab thickness	A	4″
Hearth extension (each side of opening)	B	8″ fireplace opening < 6 square foot. 12″ fireplace opening ≥ 6 square foot.
Hearth extension (front of opening)	C	16″ fireplace opening < 6 square foot. 20″ fireplace opening ≥ 6 square foot.
Hearth slab reinforcing	D	Reinforced to carry its own weight and all imposed loads.
Thickness of wall of firebox	E	10″ solid brick or 8″ where a firebrick lining is used. Joints in firebrick $^1/_4$″ maximum.
Distance from top of opening to throat	F	8″
Smoke chamber wall thickness Unlined walls	G	6″ 8″
Chimney Vertical reinforcing[b]	H	Four No. 4 full-length bars for chimney up to 40″ wide. Add two No. 4 bars for each additional 40″ or fraction of width or each additional flue.
Horizontal reinforcing	J	$^1/_4$″ ties at 18″ and two ties at each bend in vertical steel.
Bond beams	K	No specified requirements.
Fireplace lintel	L	Noncombustible material.
Chimney walls with flue lining	M	Solid masonry units or hollow masonry units grouted solid with not less than 4-inch nominal thickness.
Distances between adjacent flues	—	See Section R1003.13.
Effective flue area (based on area of fireplace opening)	P	See Section R1003.15.
Clearances Combustible material Mantel and trim Above roof	R	 See Sections R1001.11 and R1003.18. See Section R1001.11, Exception 4. 3′ at roofline and 2′ at 10′.
Anchorage[b] Strap Number Embedment into chimney Fasten to Bolts	S	 $^3/_{16}$″ × 1″ Two 12″ hooked around outer bar with 6″ extension. 4 joists Two $^1/_2$″ diameter.
Footing Thickness Width	T	 12″ min. 6″ each side of fireplace wall.

For SI: 1 inch = 25.4 mm, 1 foot = 304.8 mm, 1 square foot = 0.0929 m^2.

Note: This table provides a summary of major requirements for the construction of masonry chimneys and fireplaces. Letter references are to Figure R1001.1, which shows examples of typical construction. This table does not cover all requirements, nor does it cover all aspects of the indicated requirements. For the actual mandatory requirements of the code, see the indicated section of text.

a. The letters refer to Figure R1001.1.

b. Not required in Seismic Design Category A, B or C.

❖ This table provides a summary of the requirements for masonry fireplaces and chimneys directly correlated to Figure R1001.1. The first column lists various parts of the fireplace. The second column shows a letter designation corresponding to the item in the figure with the same letter. The third column contains the requirements for that particular fireplace or chimney.

INTERNATIONAL CODE COUNCIL®
Copyright © 2015 ICC. ALL RIGHTS RESERVED. Accessed by David Dammon on Jun 21, 2017 12:30:52 PM pursuant to License Agreement with ICC. No further reproduction or distribution authorized. ANY UNAUTHORIZED REPRODUCTION OR DISTRIBUTION IS A VIOLATION OF THE FEDERAL COPYRIGHT ACT AND THE LICENSE AGREEMENT, AND SUBJECT TO CIVIL AND CRIMINAL PENALTIES THEREUNDER.

ous from bottom to top, are required. The bars are typically placed at the four corners, similar to the placement of vertical bars in concrete columns. The hollow cells in hollow unit masonry are used for placement of vertical bars, and if solid masonry is used, the reinforcing steel must be placed between the wythes.

For wider chimneys or chimneys with more than one flue, four No. 4 bars are not adequate, and reinforcing bars in increments of two are added for each additional flue or each additional 40 inches (1016 mm) of chimney width.

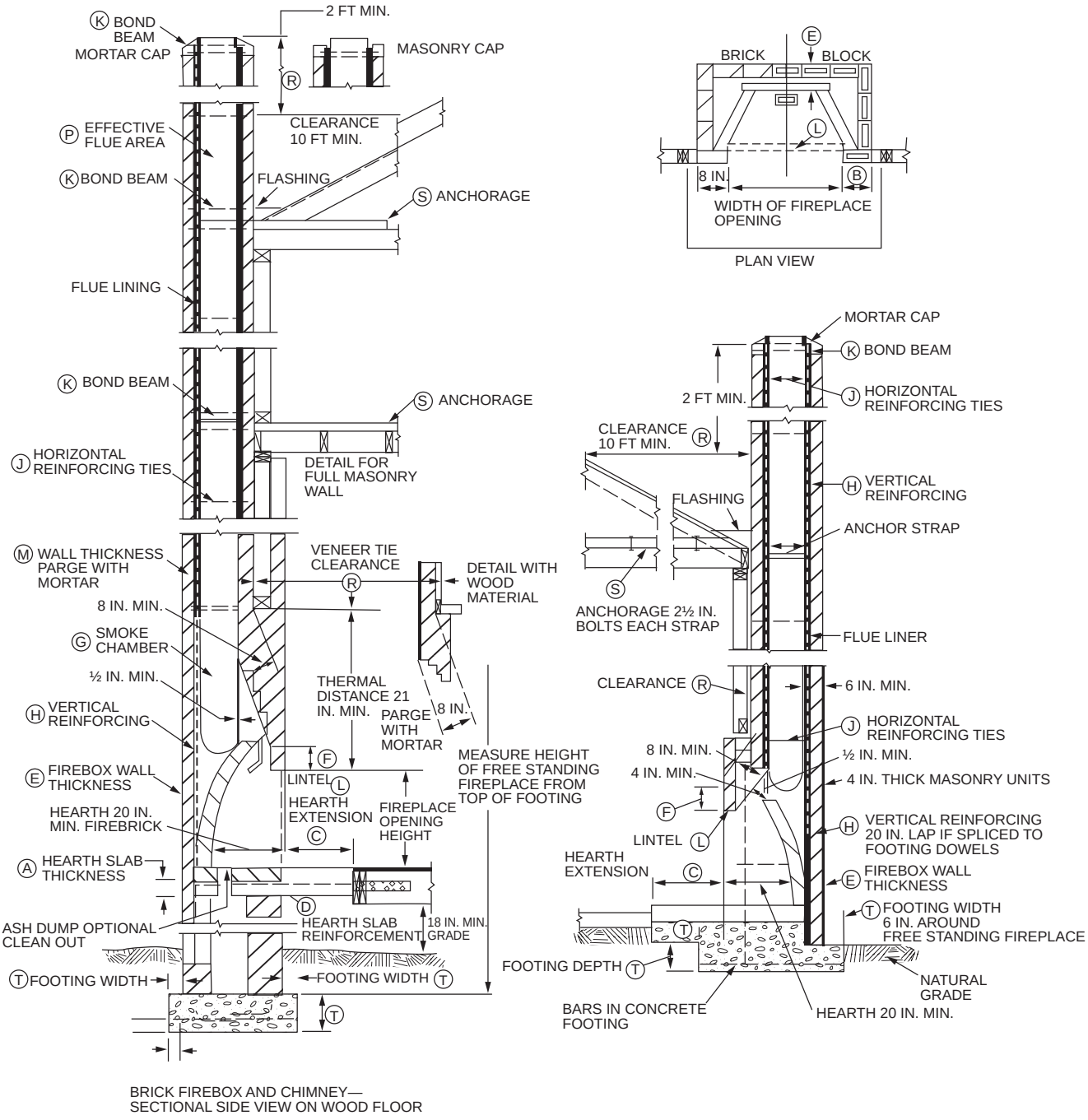

For SI: 1 inch = 25.4 mm, 1 foot = 304.8 mm.

FIGURE R1001.1
FIREPLACE AND CHIMNEY DETAILS

INTERNATIONAL CODE COUNCIL®
Copyright © 2015 ICC. ALL RIGHTS RESERVED. Accessed by David Dammon on Jun 21, 2017 12:30:52 PM pursuant to License Agreement with ICC. No further reproduction or distribution authorized. ANY UNAUTHORIZED REPRODUCTION OR DISTRIBUTION IS A VIOLATION OF THE FEDERAL COPYRIGHT ACT AND THE LICENSE AGREEMENT, AND SUBJECT TO CIVIL AND CRIMINAL PENALTIES THEREUNDER.

R1001.3.2 Horizontal reinforcing. Vertical reinforcement shall be placed within $^1/_4$-inch (6.4 mm) ties, or other reinforcing of equivalent net cross-sectional area, placed in the bed joints in accordance with Section R606 at not less than every 18 inches (457 mm) of vertical height. Two such ties shall be installed at each bend in the vertical bars.

❖ Vertical reinforcement under high seismic loading tends to buckle, then burst out of the concrete or masonry. To prevent this action, the vertical reinforcing required under Section R1001.3.1 must be placed in $^1/_4$-inch (6.4 mm) ties that are placed in the bed joints in accordance with Section R607. The ties are required at no more than 18-inch (457 mm) vertical intervals to form an effective cage for the vertical reinforcement. Where the vertical reinforcing bars have bends and abrupt changes in direction as a result of changes in sections of the chimney, two horizontal ties are required at each bend to handle the additional effects of stress concentration.

R1001.4 Seismic anchorage. Masonry or concrete chimneys in Seismic Design Category D_0, D_1 or D_2 shall be anchored at each floor, ceiling or roof line more than 6 feet (1829 mm) above *grade*, except where constructed completely within the exterior walls. Anchorage shall conform to the requirements of Section R1001.4.1.

❖ The sway of a chimney under earthquake lateral movement may cause it to impact the roof and floor framing and ultimately pull away from the framing. To control or prevent this action in Seismic Design Categories D_0, D_1 and D_2, masonry and concrete chimneys must be anchored at each floor, ceiling or roof line to provide lateral bracing. Such anchorage is not required in three situations: 1. In Seismic Design Categories A, B and C; 2. At floor, ceiling or roof lines 6 feet (1829 mm) or less above grade; and 3. Where the chimney is constructed completely within the exterior walls and is therefore braced by the building elements surrounding it.

In Seismic Design Categories E and F, the reinforcing and anchorage must be designed in accordance with the IBC.

R1001.4.1 Anchorage. Two $^3/_{16}$-inch by 1-inch (5 mm by 25 mm) straps shall be embedded not less than 12 inches (305 mm) into the chimney. Straps shall be hooked around the outer bars and extend 6 inches (152 mm) beyond the bend. Each strap shall be fastened to not less than four floor ceiling or floor joists or rafters with two $^1/_2$-inch (12.7 mm) bolts.

❖ The anchors required under Section R1001.4 consist of a minimum of two straps, each $^3/_{16}$ inch by 1 inch (4.8 mm by 25 mm). The straps must be firmly connected to the building framing and chimney to control or prevent the chimney from pulling away or buckling. To accomplish this firm connection, the straps must be bolted to at least four joists or rafters using $^1/_2$-inch (12.7 mm) bolts. At the other end, they must be embedded at least 12 inches (305 mm) into the chimney and hooked around the outer vertical reinforcing bars. Short hooks might pull out in earthquakes, and for this reason the minimum length of the hook around the vertical bar is 6 inches (152 mm).

R1001.4.1.1 Cold-formed steel framing. Where cold-formed steel framing is used, the location where the $^1/_2$-inch (12.7 mm) bolts are used to attach the straps to the framing shall be reinforced with not less than a 3-inch × 3-inch × 0.229-inch (76 mm × 76 mm × 5.8 mm) steel plate on top of the strap that is screwed to the framing with not fewer than seven No. 6 screws for each bolt.

❖ The provisions in Section R1001.4.1 for anchoring masonry chimneys to residential buildings were developed with the concept of anchoring to wood framing. Cold-formed steel framing can function equivalently in this respect to wood framing, except that the bearing area between the bolt and the cold-formed steel framing is small and therefore needs to be reinforced to prevent the local failure of the steel. The 0.229-inch (essentially $^1/_4$-inch) steel plate will provide this reinforcement and spread the load from the bolt to a wider area in the framing to prevent the localized failure of the framing. The minimum of seven No. 6 screws (a total shear capacity transfer of 1,050 pounds in 33-mil cold-formed steel) provide the transfer mechanism to spread the force in the bolt (a maximum of 933 pounds for a $^1/_2$-inch A307 bolt in 2-inch nominal Douglas-fir lumber with a $^1/_4$-inch-thick-steel side member).

R1001.5 Firebox walls. Masonry fireboxes shall be constructed of *solid masonry* units, hollow masonry units grouted solid, stone or concrete. Where a lining of firebrick not less than 2 inches (51 mm) thick or other *approved* lining is provided, the minimum thickness of back and sidewalls shall each be 8 inches (203 mm) of *solid masonry*, including the lining. The width of joints between firebricks shall not be greater than $^1/_4$ inch (6.4 mm). Where a lining is not provided, the total minimum thickness of back and side walls shall be 10 inches (254 mm) of *solid masonry*. Firebrick shall conform to ASTM C27 or C1261 and shall be laid with medium duty refractory mortar conforming to ASTM C199.

❖ This section specifies the minimum thicknesses of refractory brick or solid masonry necessary to contain the generated heat.

Solid masonry walls forming the firebox must have a minimum total thickness of 8 inches (204 mm), including the refractory lining.

The refractory lining is to consist of a low-duty, fireclay refractory brick with a minimum thickness of 2 inches (51 mm), laid with medium-duty refractory mortar. Mortar joints are generally $^1/_{16}$ to $^3/_{16}$ inch (1.6 to 4.8 mm) thick, but not thicker than $^1/_4$ inch (6.4 mm), to reduce thermal movements and prevent joint deterioration.

Where a firebrick lining is not used in firebox construction, the wall thickness is not to be less than 10 inches (254 mm) of solid masonry. Firebrick must conform to ASTM C27 or ASTM C1261 and must be laid with medium-duty refractory mortar conforming to ASTM C199.

INTERNATIONAL CODE COUNCIL®
Copyright © 2015 ICC. ALL RIGHTS RESERVED. Accessed by David Dammon on Jun 21, 2017 12:30:52 PM pursuant to License Agreement with ICC. No further reproduction or distribution authorized. ANY UNAUTHORIZED REPRODUCTION OR DISTRIBUTION IS A VIOLATION OF THE FEDERAL COPYRIGHT ACT AND THE LICENSE AGREEMENT, AND SUBJECT TO CIVIL AND CRIMINAL PENALTIES THEREUNDER.

R1001.5.1 Steel fireplace units. Installation of steel fireplace units with *solid masonry* to form a masonry fireplace is permitted when installed either in accordance with the requirements of their listing or the requirements of this section. Steel fireplace units incorporating a steel firebox lining shall be constructed with steel not less than $^1/_4$ inch (6.4 mm) thick, and an air-circulating chamber that is ducted to the interior of the building. The firebox lining shall be encased with *solid masonry* to provide a total thickness at the back and sides of not less than 8 inches (203 mm), of which not less than 4 inches (102 mm) shall be of *solid masonry* or concrete. Circulating air ducts used with steel fireplace units shall be constructed of metal or masonry.

❖ Steel fireplace units and an air chamber may be used as part of the required thickness of masonry fireplaces so that the combined thickness of the masonry and steel is 8 inches (203 mm). The steel may not be less than $^1/_4$ inch (6.4 mm) thick, and the masonry must be at least 4 inches thick. Where ducts are used as part of a steel fireplace unit to circulate warm air, they must be constructed of metal or masonry.

R1001.6 Firebox dimensions. The firebox of a concrete or masonry fireplace shall have a minimum depth of 20 inches (508 mm). The throat shall not be less than 8 inches (203 mm) above the fireplace opening. The throat opening shall not be less than 4 inches (102 mm) deep. The cross-sectional area of the passageway above the firebox, including the throat, damper and smoke chamber, shall not be less than the cross-sectional area of the flue.

Exception: Rumford fireplaces shall be permitted provided that the depth of the fireplace is not less than 12 inches (305 mm) and not less than one-third of the width of the fireplace opening, that the throat is not less than 12 inches (305 mm) above the lintel and is not less than $^1/_{20}$ the cross-sectional area of the fireplace opening.

❖ The proper functioning of the fireplace depends on the size of the face opening and the chimney dimensions, which in turn are related to the room size [see Commentary Figure R1001.6(1)]. This section specifies a minimum depth of 20 inches (508 mm) for the combustion chamber because that depth influences the draft requirement. The dimensions of the firebox (depth, opening size and shape) are usually based on two considerations: aesthetics and the need to prevent the room from overheating. Suggested dimensions for single-opening fireboxes are given in technical publications of the Brick Institute of America (BIA) and the National Concrete Masonry Association (NCMA).

This section also contains additional criteria for the throat's location and minimum cross-sectional area. Those criteria are based on many years of construction of successfully functioning fireplaces. The exception permits the use of Rumford fireplaces, which are tall, shallow fireplaces that can radiate a large amount of heat into a room.

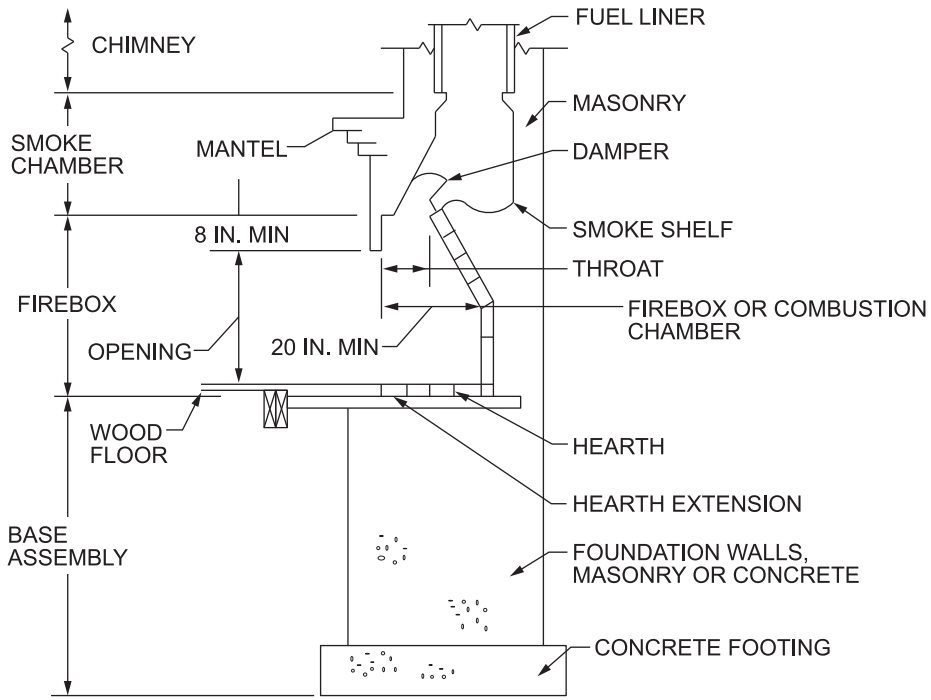

For SI: 1 inch = 25.4 mm.

Figure R1001.6(1)
SECTION THROUGH FIREPLACE

INTERNATIONAL CODE COUNCIL®
Copyright © 2015 ICC. ALL RIGHTS RESERVED. Accessed by David Dammon on Jun 21, 2017 12:30:52 PM pursuant to License Agreement with ICC. No further reproduction or distribution authorized. ANY UNAUTHORIZED REPRODUCTION OR DISTRIBUTION IS A VIOLATION OF THE FEDERAL COPYRIGHT ACT AND THE LICENSE AGREEMENT, AND SUBJECT TO CIVIL AND CRIMINAL PENALTIES THEREUNDER.

The code reference to "depth of fireplace" is interpreted as the depth of the firebox [see Commentary Figure R1001.6(2)]. The throat must be made at least 12 inches (305 mm) above the lintel and must be at least 5 percent ($^1/_{20}$) of the cross-sectional area of the fireplace opening. Smoke chambers and flues for Rumford fireplaces should be sized and built like those of other masonry fireplaces. Even though those who build Rumford fireplaces do not totally agree about how they work, many books and guides address their construction.

R1001.7 Lintel and throat. Masonry over a fireplace opening shall be supported by a lintel of noncombustible material. The minimum required bearing length on each end of the fireplace opening shall be 4 inches (102 mm). The fireplace throat or damper shall be located not less than 8 inches (203 mm) above the lintel.

❖ A noncombustible lintel with a minimum bearing length of 4 inches (102 mm) on each end must be provided to support masonry above the fireplace opening. Provisions should be made to allow for expansion of the steel lintels when they are heated.

R1001.7.1 Damper. Masonry fireplaces shall be equipped with a ferrous metal damper located not less than 8 inches (203 mm) above the top of the fireplace opening. Dampers shall be installed in the fireplace or the chimney venting the fireplace, and shall be operable from the room containing the fireplace.

❖ A damper is used to close the chimney flue when the fireplace is not in use. This section provides guidance on its location and construction.

R1001.8 Smoke chamber. Smoke chamber walls shall be constructed of *solid masonry* units, hollow masonry units grouted solid, stone or concrete. The total minimum thickness of front, back and side walls shall be 8 inches (203 mm) of *solid masonry*. The inside surface shall be parged smooth with refractory mortar conforming to ASTM C199. Where a lining of firebrick not less than 2 inches (51 mm) thick, or a lining of vitrified clay not less than $^5/_8$ inch (16 mm) thick, is provided, the total minimum thickness of front, back and side walls shall be 6 inches (152 mm) of *solid masonry*, including the lining. Firebrick shall conform to ASTM C1261 and shall be laid with medium duty refractory mortar conforming to ASTM C199. Vitrified clay linings shall conform to ASTM C315.

❖ The smoke chamber is located directly above the firebox and must be constructed of solid masonry. A smoke shelf located behind the damper deflects downdrafts. As the downdraft hits the smoke shelf, it is turned upward by the damper assembly. Curved smoke shelves perform better; however, flat smoke shelves are acceptable.

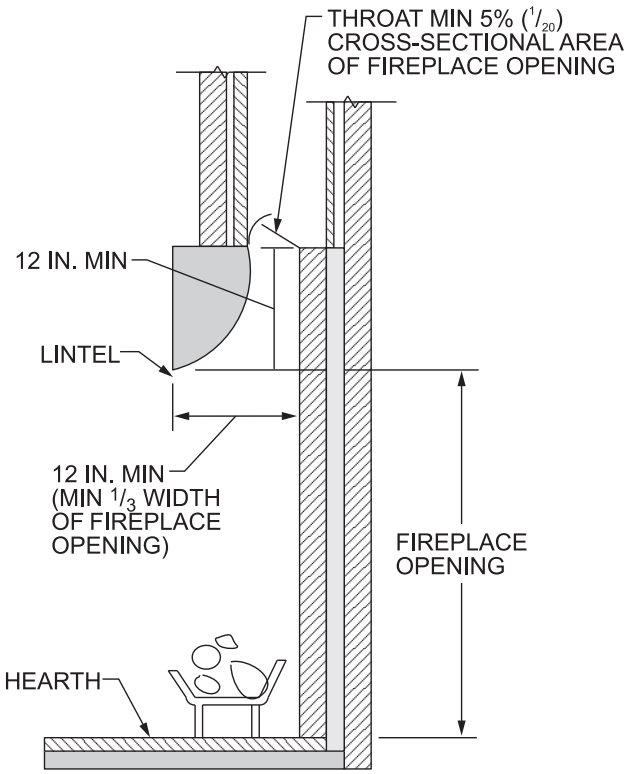

For SI: 1 inch = 25.4 mm.

Figure R1001.6(2)
RUMFORD FIREPLACE

INTERNATIONAL CODE COUNCIL®
Copyright © 2015 ICC. ALL RIGHTS RESERVED. Accessed by David Dammon on Jun 21, 2017 12:30:52 PM pursuant to License Agreement with ICC. No further reproduction or distribution authorized. ANY UNAUTHORIZED REPRODUCTION OR DISTRIBUTION IS A VIOLATION OF THE FEDERAL COPYRIGHT ACT AND THE LICENSE AGREEMENT, AND SUBJECT TO CIVIL AND CRIMINAL PENALTIES THEREUNDER.

Parging the inside surface smooth with refractory mortar meeting ASTM C199 will provide a liner with the ability to withstand temperatures up to 1800°F (983°C), as required for other lining materials.

R1001.8.1 Smoke chamber dimensions. The inside height of the smoke chamber from the fireplace throat to the beginning of the flue shall not be greater than the inside width of the fireplace opening. The inside surface of the smoke chamber shall not be inclined more than 45 degrees (0.79 rad) from vertical where prefabricated smoke chamber linings are used or where the smoke chamber walls are rolled or sloped rather than corbeled. Where the inside surface of the smoke chamber is formed by corbeled masonry, the walls shall not be corbeled more than 30 degrees (0.52 rad) from vertical.

❖ This section provides specific dimensions for the smoke chamber of masonry fireplaces, which are necessary to provide proper flow of the smoke and products of combustion out of the fireplace and through the chimney. The height of the smoke chamber cannot exceed the inside width of the fireplace opening. The inside surface of the smoke chamber may be sloped 45 degrees (0.79 rad) from the vertical when constructed of a prefabricated smoke chamber lining or the smoke chamber walls are rolled or sloped. If the smoke chamber is sloped using corbeled masonry, the slope is limited to be no more than 30 degrees (0.52 rad) from the vertical. The slope is restricted more when using corbeled masonry because the surface is not smooth and will tend to create turbulence within the smoke chambers, thus affecting the flow of smoke to the flue.

R1001.9 Hearth and hearth extension. Masonry fireplace hearths and hearth extensions shall be constructed of concrete or masonry, supported by noncombustible materials, and reinforced to carry their own weight and all imposed loads. Combustible material shall not remain against the underside of hearths and hearth extensions after construction.

❖ The hearth includes both the floor of the firebox and the projection in front of it. The hearth extension protects wood, carpet and combustible materials from being ignited by sparks, hot embers or ashes that may fall from the fire box.

R1001.9.1 Hearth thickness. The minimum thickness of fireplace hearths shall be 4 inches (102 mm).

❖ The minimum thickness of fireplace hearths is 4 inches (102 mm).

R1001.9.2 Hearth extension thickness. The minimum thickness of hearth extensions shall be 2 inches (51 mm).

Exception: Where the bottom of the firebox opening is raised not less than 8 inches (203 mm) above the top of the hearth extension, a hearth extension of not less than $^3/_8$-inch-thick (10 mm) brick, concrete, stone, tile or other *approved* noncombustible material is permitted.

❖ The hearth extension must be 2 inches (51 mm) thick unless the bottom of the fireplace opening is raised at least 8 inches (203 mm) above the top of the hearth extension. Where the bottom of the fireplace opening is raised at least 8 inches (203 mm) above the hearth extension, the hearth extension can be reduced to a thickness of $^3/_8$-inch-thick (9.5 mm) brick, concrete, stone, tile or other approved noncombustible material.

R1001.10 Hearth extension dimensions. Hearth extensions shall extend not less than 16 inches (406 mm) in front of and not less than 8 inches (203 mm) beyond each side of the fireplace opening. Where the fireplace opening is 6 square feet (0.6 m^2) or larger, the hearth extension shall extend not less than 20 inches (508 mm) in front of and not less than 12 inches (305 mm) beyond each side of the fireplace opening.

❖ The hearth must extend in front of and to the side of the firebox opening a sufficient dimension to prevent burning embers from landing on combustible surfaces.

R1001.11 Fireplace clearance. Wood beams, joists, studs and other combustible material shall have a clearance of not less than 2 inches (51 mm) from the front faces and sides of masonry fireplaces and not less than 4 inches (102 mm) from the back faces of masonry fireplaces. The airspace shall not be filled, except to provide fireblocking in accordance with Section R1001.12.

Exceptions:

1. Masonry fireplaces *listed* and *labeled* for use in contact with combustibles in accordance with UL 127 and installed in accordance with the manufacturer's instructions are permitted to have combustible material in contact with their exterior surfaces.
2. Where masonry fireplaces are part of masonry or concrete walls, combustible materials shall not be in contact with the masonry or concrete walls less than 12 inches (306 mm) from the inside surface of the nearest firebox lining.
3. Exposed combustible trim and the edges of sheathing materials such as wood siding, flooring and gypsum board shall be permitted to abut the masonry fireplace sidewalls and hearth extension in accordance with Figure R1001.11, provided such combustible trim or sheathing is not less than 12 inches (305 mm) from the inside surface of the nearest firebox lining.
4. Exposed combustible mantels or trim may be placed directly on the masonry fireplace front surrounding the fireplace opening providing such combustible materials are not placed within 6 inches (152 mm) of a fireplace opening. Combustible material within 12 inches (306 mm) of the fireplace opening shall not project more than $^1/_8$ inch (3 mm) for each 1-inch (25 mm) distance from such an opening.

❖ A 2-inch (51 mm) clearance is required from the front and side surfaces of the fireplace. A 4-inch (102 mm) clearance is required from the back of the fireplace. This airspace created around the fireplace cannot be filled, except for approved fireblocking (see Figure R1001.11).

There are four exceptions to this section that allow combustible materials to come in contact with the fireplace. The first allows factory-built fireplaces con-

INTERNATIONAL CODE COUNCIL®
Copyright © 2015 ICC. ALL RIGHTS RESERVED. Accessed by David Dammon on Jun 21, 2017 12:30:52 PM pursuant to License Agreement with ICC. No further reproduction or distribution authorized. ANY UNAUTHORIZED REPRODUCTION OR DISTRIBUTION IS A VIOLATION OF THE FEDERAL COPYRIGHT ACT AND THE LICENSE AGREEMENT, AND SUBJECT TO CIVIL AND CRIMINAL PENALTIES THEREUNDER.

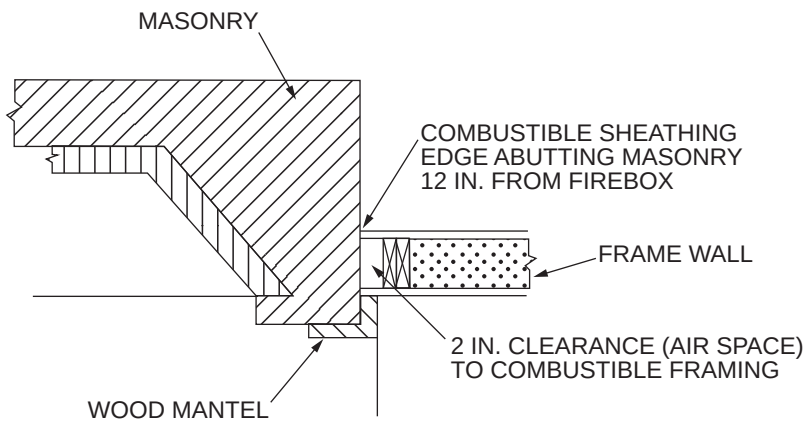

For SI: 1 inch = 25.4 mm.

FIGURE R1001.11
CLEARANCE FROM COMBUSTIBLES

structed in accordance with UL 127 to be in contact with combustibles. The installation must carefully follow the manufacturer's instructions.

The second exception applies to masonry fireplaces constructed in concrete or masonry walls. In this case combustible materials must keep at least 12 inches (305 mm) from the inside surface of the firebox lining because of the conductive nature of the concrete or masonry walls.

Exception 3 permits combustible trim and edges of certain sheathing materials to abut the fireplace in accordance with Figure R1001.11. This exception permits the combustible trim to cover openings that would otherwise occur between the fireplace and other construction.

Exception 4 provides specific dimensions that protect combustible trim from radiant heat.

R1001.12 Fireplace fireblocking. Fireplace fireblocking shall comply with the provisions of Section R602.8.

❖ See the commentary to Section R602.8.

SECTION R1002
MASONRY HEATERS

R1002.1 Definition. A masonry heater is a heating *appliance* constructed of concrete or *solid masonry*, hereinafter referred to as masonry, that is designed to absorb and store heat from a solid-fuel fire built in the firebox by routing the exhaust gases through internal heat exchange channels in which the flow path downstream of the firebox includes flow in a horizontal or downward direction before entering the chimney and that delivers heat by radiation from the masonry surface of the heater.

❖ Masonry heaters are appliances designed to absorb and store heat from a relatively small fire and to radiate that heat into a building interior. They are thermally more efficient than traditional fireplaces because of their design. Interior passageways through the heater allow hot exhaust gases from the fire to transfer heat into the masonry, which then radiates into the building.

R1002.2 Installation. Masonry heaters shall be installed in accordance with this section and comply with one of the following:

1. Masonry heaters shall comply with the requirements of ASTM E1602.
2. Masonry heaters shall be *listed* and *labeled* in accordance with UL 1482 or CEN 15250 and installed in accordance with the manufacturer's instructions.

❖ ASTM E1602, UL 1482 and CEN 15250 contain guidelines for the installation of masonry heaters.

R1002.3 Footings and foundation. The firebox floor of a masonry heater shall be a minimum thickness of 4 inches (102 mm) of noncombustible material and be supported on a noncombustible footing and foundation in accordance with Section R1003.2.

❖ This section prescribes the minimum foundation requirements that will adequately support a masonry heating appliance. Section R1003.2 goes into specific detail on footings and foundations for masonry chimneys.

R1002.4 Seismic reinforcing. In Seismic Design Categories D_0, D_1 and D_2, masonry heaters shall be anchored to the masonry foundation in accordance with Section R1003.3. Seismic reinforcing shall not be required within the body of a masonry heater whose height is equal to or less than 3.5 times its body width and where the masonry chimney serving the heater is not supported by the body of the heater. Where the masonry chimney shares a common wall with the facing of the masonry heater, the chimney portion of the structure shall be reinforced in accordance with Section R1003.

❖ Because of the large bulk and squat geometry of these heaters, seismic reinforcement is not typically required. Flexural tensile stresses, which typically cause damage to unreinforced masonry, rarely occur. Where chimneys extend above these heaters, however, seismic reinforcement is required by Section R1003.3. See the commentary to Sections R1003.3 and R1003.4 for seismic reinforcements and anchorage for chimneys.

INTERNATIONAL CODE COUNCIL®
Copyright © 2015 ICC. ALL RIGHTS RESERVED. Accessed by David Dammon on Jun 21, 2017 12:30:52 PM pursuant to License Agreement with ICC. No further reproduction or distribution authorized. ANY UNAUTHORIZED REPRODUCTION OR DISTRIBUTION IS A VIOLATION OF THE FEDERAL COPYRIGHT ACT AND THE LICENSE AGREEMENT, AND SUBJECT TO CIVIL AND CRIMINAL PENALTIES THEREUNDER.

R1002.5 Masonry heater clearance. Combustible materials shall not be placed within 36 inches (914 mm) of the outside surface of a masonry heater in accordance with NFPA 211 Section 8-7 (clearances for solid-fuel-burning *appliances*), and the required space between the heater and combustible material shall be fully vented to permit the free flow of air around all heater surfaces.

Exceptions:

1. Where the masonry heater wall is not less than 8 inches (203 mm) thick of *solid masonry* and the wall of the heat exchange channels is not less than 5 inches (127 mm) thick of *solid masonry*, combustible materials shall not be placed within 4 inches (102 mm) of the outside surface of a masonry heater. A clearance of not less than 8 inches (203 mm) shall be provided between the gas-tight capping slab of the heater and a combustible ceiling.
2. Masonry heaters listed and labeled in accordance with UL 1482 or CEN 15250 shall be installed in accordance with the listing specifications and the manufacturer's written instructions.

❖ Heat conducted through masonry heater walls can ignite combustible structural materials in contact with these walls. For this reason, a minimum required clearance to combustibles from masonry heaters has been established. Because masonry heaters typically generate more heat for a longer period of time than traditional fireplaces, greater clearances to combustible materials are needed to reduce the risk of fire.

SECTION R1003
MASONRY CHIMNEYS

R1003.1 Definition. A masonry chimney is a chimney constructed of *solid masonry* units, hollow masonry units grouted solid, stone or concrete, hereinafter referred to as masonry. Masonry chimneys shall be constructed, anchored, supported and reinforced as required in this chapter.

❖ A masonry chimney is a field-constructed assembly that can consist of solid masonry units, hollow masonry units grouted solid, concrete or rubble stone. A masonry chimney is permitted to serve residential (low-heat), medium-heat and high-heat appliances. This section outlines the general code requirements regarding construction details for all masonry chimneys, including those serving masonry fireplaces regulated by Section R1001.

R1003.2 Footings and foundations. Footings for masonry chimneys shall be constructed of concrete or *solid masonry* not less than 12 inches (305 mm) thick and shall extend not less than 6 inches (152 mm) beyond the face of the foundation or support wall on all sides. Footings shall be founded on natural undisturbed earth or engineered fill below frost depth. In areas not subjected to freezing, footings shall be not less than 12 inches (305 mm) below finished *grade*.

❖ Masonry fireplaces and chimneys must be supported on adequate foundations because of their weight and the forces imposed on them by wind, earthquakes and other effects. This section prescribes minimum foundation requirements that are typically adequate to support a standard chimney (see Commentary Figure R1003.2).

R1003.3 Seismic reinforcing. Masonry or concrete chimneys shall be constructed, anchored, supported and reinforced as required in this chapter. In Seismic Design Category D_0, D_1 or D_2 masonry and concrete chimneys shall be reinforced and anchored as detailed in Sections R1003.3.1, R1003.3.2 and R1003.4. In Seismic Design Category A, B or C, reinforcement and seismic anchorage are not required.

❖ Unreinforced fireplaces and chimneys subjected to strong ground motion have been severely damaged in past earthquakes. The requirements in this section provide minimum reinforcement in an effort to keep these structures together during such events. More substantial reinforcement, however, may be required in areas of high seismicity or for atypical chimneys.

R1003.3.1 Vertical reinforcing. For chimneys up to 40 inches (1016 mm) wide, four No. 4 continuous vertical bars, anchored in the foundation, shall be placed in the concrete, or between wythes of *solid masonry*, or within the cells of hollow unit masonry, and grouted in accordance with Section R609.1.1. Grout shall be prevented from bonding with the flue liner so that the flue liner is free to move with thermal expansion. For chimneys more than 40 inches (1016 mm) wide, two additional No. 4 vertical bars shall be installed for each additional 40 inches (1016 mm) in width or fraction thereof.

❖ These requirements are traditional minimum prescriptive provisions to help maintain the structural integrity of fireplaces and chimneys during earthquakes. More reinforcement may be required in areas of high seismicity or for atypical chimneys.

R1003.3.2 Horizontal reinforcing. Vertical reinforcement shall be placed enclosed within $^1/_4$-inch (6.4 mm) ties, or other reinforcing of equivalent net cross-sectional area, spaced not to exceed 18 inches (457 mm) on center in concrete, or placed in the bed joints of unit masonry, at not less than every 18 inches (457 mm) of vertical height. Two such ties shall be installed at each bend in the vertical bars.

❖ These requirements are traditional minimum prescriptive provisions to help maintain the structural integrity of fireplaces and chimneys during earthquakes. The vertical reinforcement required by Section R1003.3.1 must be enclosed within the horizontal reinforcement required by this section. More reinforcement may be required in areas of high seismicity or for atypical chimneys.

R1003.4 Seismic anchorage. Masonry and concrete chimneys and foundations in Seismic Design Category D_0, D_1 or D_2 shall be anchored at each floor, ceiling or roof line more than 6 feet (1829 mm) above *grade*, except where constructed completely within the exterior walls. Anchorage shall conform to the requirements in Section R1003.4.1.

❖ Fireplaces and chimneys must be connected to floor and roof diaphragms to prevent overturning during

INTERNATIONAL CODE COUNCIL®
Copyright © 2015 ICC. ALL RIGHTS RESERVED. Accessed by David Dammon on Jun 21, 2017 12:30:52 PM pursuant to License Agreement with ICC. No further reproduction or distribution authorized. ANY UNAUTHORIZED REPRODUCTION OR DISTRIBUTION IS A VIOLATION OF THE FEDERAL COPYRIGHT ACT AND THE LICENSE AGREEMENT, AND SUBJECT TO CIVIL AND CRIMINAL PENALTIES THEREUNDER.

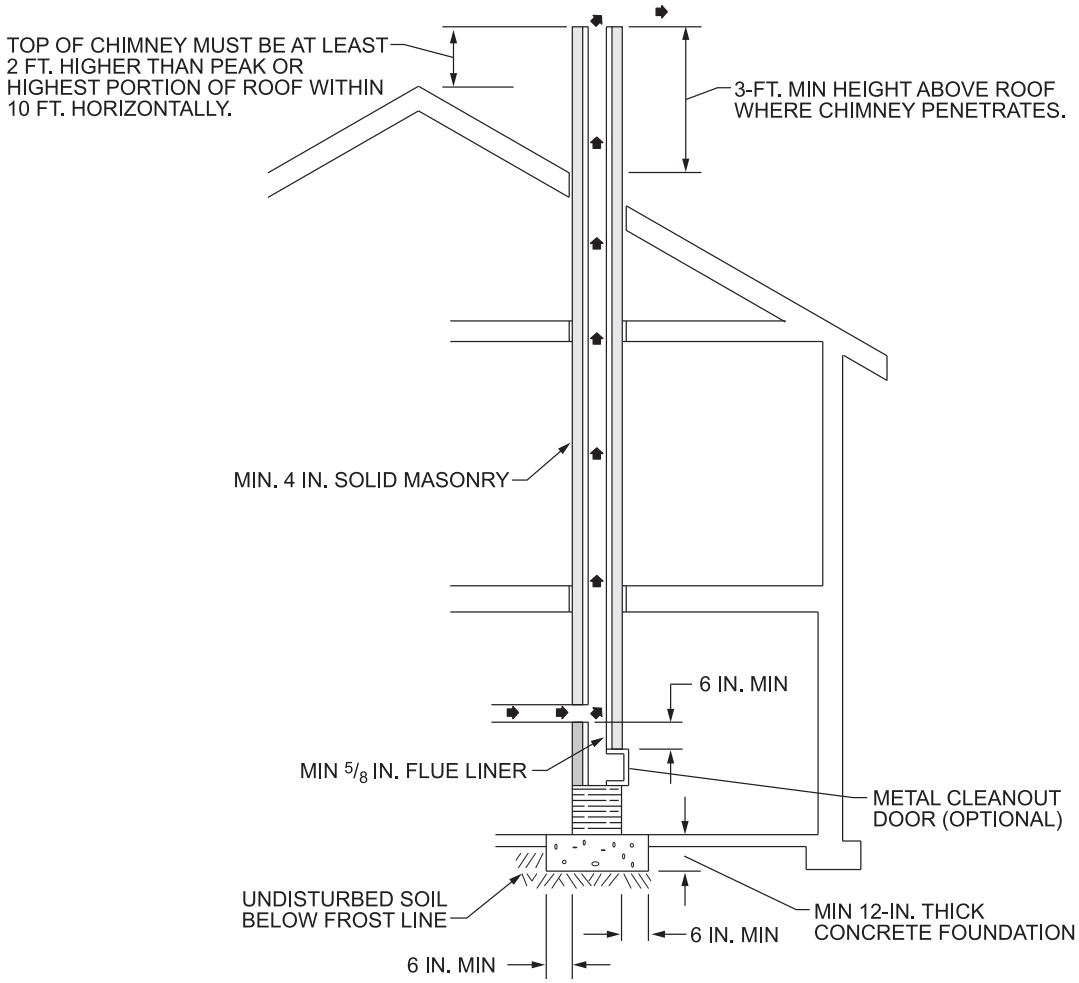

For SI: 1 inch = 25.4 mm, 1 foot = 304.8 mm.

Figure R1003.2
TYPICAL MASONRY CHIMNEY

earthquakes. Chimneys must be anchored at the ceiling line of roof and ceiling assemblies and at floor levels below the roof. Such anchorage is of lesser importance where the floor assembly is 6 feet (1829 mm) or less above grade.

R1003.4.1 Anchorage. Two $^{3}/_{16}$-inch by 1-inch (5 mm by 25 mm) straps shall be embedded not less than 12 inches (305 mm) into the chimney. Straps shall be hooked around the outer bars and extend 6 inches (152 mm) beyond the bend. Each strap shall be fastened to not less than four floor joists with two $^{1}/_{2}$-inch (12.7 mm) bolts.

❖ The prescriptive requirements in this section are traditional for typical fireplaces and chimneys. More substantial anchorage may be required in areas of high seismicity, for large fireplaces or where the distance between floor and roof diaphragms is large.

R1003.4.1.1 Cold-formed steel framing. Where cold-formed steel framing is used, the location where the $^{1}/_{2}$-inch (12.7 mm) bolts are used to attach the straps to the framing shall be reinforced with not less than a 3-inch × 3-inch × 0.229-inch (76 mm × 76 mm × 5.8 mm) steel plate on top of a strap that is screwed to the framing with not fewer than seven No. 6 screws for each bolt.

❖ The provisions in Section R1003.4.1 for anchoring masonry chimneys to residential buildings were developed with the concept of anchoring to wood framing. Cold-formed steel framing can function equivalently in this respect to wood framing, except that the bearing area between the bolt and the cold-formed steel framing is small and therefore needs to be reinforced to prevent the local failure of the steel. The 0.229-inch (essentially $^{1}/_{4}$-inch) steel plate will provide this reinforcement and spread the load from the bolt to a wider area in the framing to prevent the localized failure of the framing. The minimum of seven No. 6 screws (a total shear capacity transfer of 1,050 pounds in 33-mil cold-formed steel) provide the transfer mechanism to spread the force in the bolt (a maximum of 933 pounds for a $^{1}/_{2}$-inch A307 bolt in 2-inch nominal Douglas-fir lumber with $^{1}/_{4}$-inch-thick-steel side member).

INTERNATIONAL CODE COUNCIL®
Copyright © 2015 ICC. ALL RIGHTS RESERVED. Accessed by David Dammon on Jun 21, 2017 12:30:52 PM pursuant to License Agreement with ICC. No further reproduction or distribution authorized. ANY UNAUTHORIZED REPRODUCTION OR DISTRIBUTION IS A VIOLATION OF THE FEDERAL COPYRIGHT ACT AND THE LICENSE AGREEMENT, AND SUBJECT TO CIVIL AND CRIMINAL PENALTIES THEREUNDER.

R1003.5 Corbeling. Masonry chimneys shall not be corbeled more than one-half of the chimney's wall thickness from a wall or foundation, nor shall a chimney be corbeled from a wall or foundation that is less than 12 inches (305 mm) thick unless it projects equally on each side of the wall, except that on the second *story* of a two-story *dwelling*, corbeling of chimneys on the exterior of the enclosing walls may equal the wall thickness. The projection of a single course shall not exceed one-half the unit height or one-third of the unit bed depth, whichever is less.

❖ Corbeling is the projection of masonry from the surface of the wall or fireplace in small increments for each course of masonry. The chimney should not be corbeled more than one-half of its wall thickness from the wall or foundation. A single course is not permitted to project more than one-half of the individual unit height or more than one-third of the individual unit depth. Exceeding these amounts could cause the unit to fail because it might not be able to carry the intended load [see Commentary Figure R1003.5(1)].

Additionally, masonry walls are not to be corbeled more than one-half of the chimney's wall thickness from the wall or foundation unless it projects equally on each side of the wall. If the corbeling is not equal on each side, the chimney might overturn or crack [see Commentary Figure R1003.5(2)].

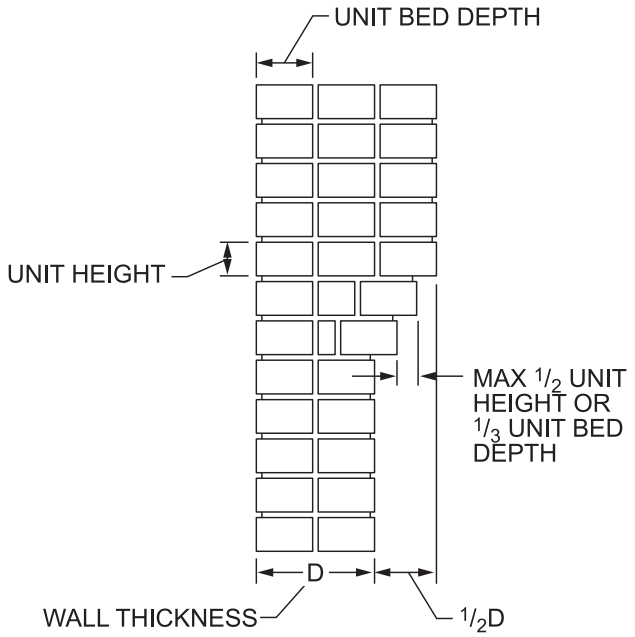

Figure R1003.5(1)
INDIVIDUAL CORBELS

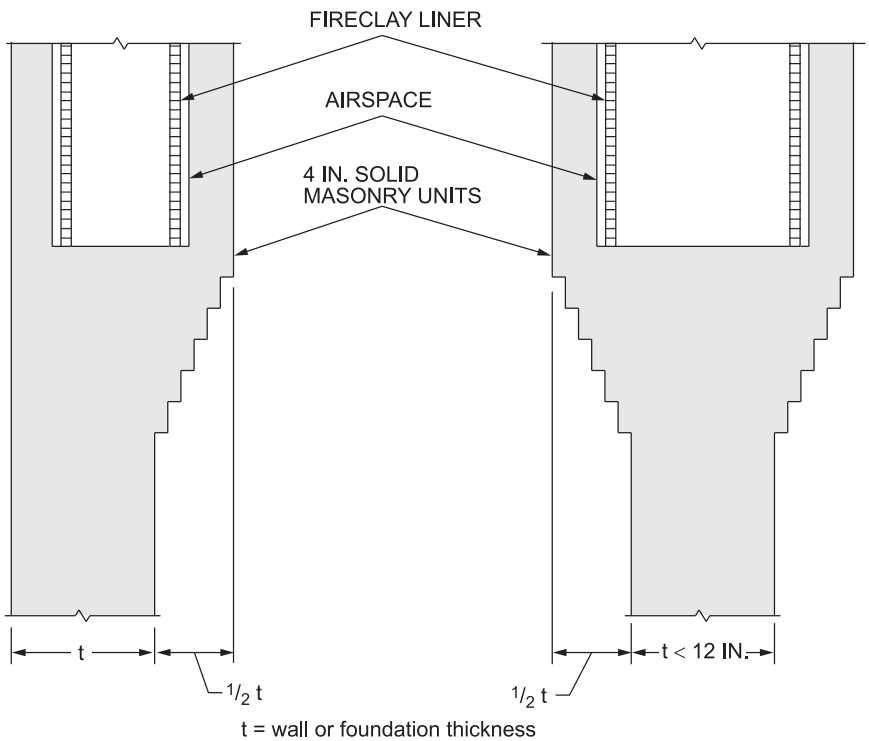

For SI: 1 inch = 25.4 mm.

Figure R1003.5(2)
CORBELING FROM FOUNDATION WALL

INTERNATIONAL CODE COUNCIL®
Copyright © 2015 ICC. ALL RIGHTS RESERVED. Accessed by David Dammon on Jun 21, 2017 12:30:52 PM pursuant to License Agreement with ICC. No further reproduction or distribution authorized. ANY UNAUTHORIZED REPRODUCTION OR DISTRIBUTION IS A VIOLATION OF THE FEDERAL COPYRIGHT ACT AND THE LICENSE AGREEMENT, AND SUBJECT TO CIVIL AND CRIMINAL PENALTIES THEREUNDER.

R1003.6 Changes in dimension. The chimney wall or chimney flue lining shall not change in size or shape within 6 inches (152 mm) above or below where the chimney passes through floor components, ceiling components or roof components.

❖ Changes in the size or shape of a chimney change the stiffness of the chimney, and these areas have more potential for leaks or cracks in the chimney. The code prohibits these changes within 6 inches (152 mm) of where the chimney passes through the floor, ceiling or roof components.

R1003.7 Offsets. Where a masonry chimney is constructed with a fireclay flue liner surrounded by one wythe of masonry, the maximum offset shall be such that the centerline of the flue above the offset does not extend beyond the center of the chimney wall below the offset. Where the chimney offset is supported by masonry below the offset in an *approved* manner, the maximum offset limitations shall not apply. Each individual corbeled masonry course of the offset shall not exceed the projection limitations specified in Section R1003.5.

❖ Limitations on chimney offsets provide a gradual transition to prevent critical stress concentrations at the bottom of the offset. The maximum offset of the centerline of the flue to the centerline of the wall of the chimney below maintains structural stability for vertical loads. The slope of the offset is limited to that permitted for corbels in Section R1003.5. The offset limitation does not apply in cases where the offset is supported by masonry below the offset and in a manner approved by the building official.

R1003.8 Additional load. Chimneys shall not support loads other than their own weight unless they are designed and constructed to support the additional load. Construction of masonry chimneys as part of the masonry walls or reinforced concrete walls of the building shall be permitted.

❖ Chimneys are subject to considerable stresses resulting from thermal effects and therefore should not support any structural load other than their own weight, unless specifically designed as a supporting member for the additional load. Also, because of its heavy mass, a chimney will tend to settle more than the building structures. As a consequence, the chimney and any part of the building that it supports will settle at a greater rate and to a greater degree than the rest of the building, resulting in damage. If a chimney is subject to structural loads for which it is not designed, the additional stresses created could lead to cracks in the chimney. Thus, the chimney would become a hazard because of the potential of flames from the firebox penetrating the cracks and igniting combustible construction. Moreover, buildups of the products of combustion that leak through the cracks create hazardous conditions inside the building.

R1003.9 Termination. Chimneys shall extend not less than 2 feet (610 mm) higher than any portion of a building within 10 feet (3048 mm), but shall be not less than 3 feet (914 mm) above the highest point where the chimney passes through the roof.

❖ The provisions for the termination height of chimneys above the roof provide for the necessary upward draft in the chimney. Experience has indicated that the required heights produce satisfactory operation of the chimney (see Commentary Figure R1003.2).

R1003.9.1 Chimney caps. Masonry chimneys shall have a concrete, metal or stone cap, a drip edge and a caulked bond break around any flue liners in accordance with ASTM C1283. The concrete, metal or stone cap shall be sloped to shed water.

❖ The section requires masonry chimneys to have caps and references ASTM C1283, which covers the minimum requirements for installing a clay flue lining for residential concrete or masonry chimneys. A chimney cap protects the top of the masonry surrounding the flue. Although masonry chimneys typically have some type of weatherproof cap, this code section specifically requires a chimney cap and prescribes the minimum criteria for its construction. The cap must be sloped to the outside, overhang the face of the masonry chimney and provide a drip edge. The prescribed caulking of the joint between the masonry and the flue serves as both a sealant and a bond break for any differential movement. The requirements for chimney caps are consistent with the referenced standards ASTM C1283, *Standard Practice for Installing Clay Flue Lining,* and ASTM C 315, *Standard Specification for Clay Flue Liners and Chimney Pots*.

R1003.9.2 Spark arrestors. Where a spark arrestor is installed on a masonry chimney, the spark arrestor shall meet all of the following requirements:

1. The net free area of the arrestor shall be not less than four times the net free area of the outlet of the chimney flue it serves.
2. The arrestor screen shall have heat and corrosion resistance equivalent to 19-gage galvanized steel or 24-gage stainless steel.
3. Openings shall not permit the passage of spheres having a diameter greater than $^1/_2$ inch (12.7 mm) nor block the passage of spheres having a diameter less than $^3/_8$ inch (9.5 mm).
4. The spark arrestor shall be accessible for cleaning and the screen or chimney cap shall be removable to allow for cleaning of the chimney flue.

❖ This section contains specifications for spark arrestors, if they are provided. Their use is not mandated by the code, but owners and builders often install them.

R1003.9.3 Rain caps. Where a masonry or metal rain cap is installed on a masonry chimney, the net free area under the cap shall be not less than four times the net free area of the outlet of the chimney flue it serves.

❖ Rain caps are installed a prescribed distance above a chimney flue termination to limit the amount of rain entering the flue. Because an improperly designed chimney rain cap can reduce the draft of a chimney, this section requires the net free area under the rain cap to be at least four times the area of the outlet of the flue opening. Rain caps are also used to keep animals such as rodents and birds from nesting in the chimney

INTERNATIONAL CODE COUNCIL®
Copyright © 2015 ICC. ALL RIGHTS RESERVED. Accessed by David Dammon on Jun 21, 2017 12:30:52 PM pursuant to License Agreement with ICC. No further reproduction or distribution authorized. ANY UNAUTHORIZED REPRODUCTION OR DISTRIBUTION IS A VIOLATION OF THE FEDERAL COPYRIGHT ACT AND THE LICENSE AGREEMENT, AND SUBJECT TO CIVIL AND CRIMINAL PENALTIES THEREUNDER.

or fireplace. As the language indicates, rain caps are not required by the code, but when they are installed they must have the minimum clearance above the flue termination to provide the minimum net free area required by this section.

R1003.10 Wall thickness. Masonry chimney walls shall be constructed of *solid masonry* units or hollow masonry units grouted solid with not less than a 4-inch (102 mm) nominal thickness.

❖ Masonry chimney walls must have a minimum nominal thickness of 4 inches (102 mm) of either solid masonry units or hollow masonry grouted solid for structural stability.

R1003.10.1 Masonry veneer chimneys. Where masonry is used to veneer a frame chimney, through-flashing and weep holes shall be installed as required by Section R703.

❖ Masonry veneer is a nonstructural facing material that provides ornamentation, protection or insulation. To be considered a veneer, the material cannot act structurally with the backing insofar as the structural strength of the assembly is concerned.

R1003.11 Flue lining (material). Masonry chimneys shall be lined. The lining material shall be appropriate for the type of *appliance* connected, in accordance with the terms of the *appliance* listing and manufacturer's instructions.

❖ Masonry chimneys must be properly lined to allow for the smooth flow of products of combustion. This section regulates specific flue linings.

R1003.11.1 Residential-type appliances (general). Flue lining systems shall comply with one of the following:

1. Clay flue lining complying with the requirements of ASTM C315.
2. Listed and labeled chimney lining systems complying with UL 1777.
3. Factory-built chimneys or chimney units listed for installation within masonry chimneys.
4. Other *approved* materials that will resist corrosion, erosion, softening or cracking from flue gases and condensate at temperatures up to 1,800°F (982°C).

❖ Flue linings must comply with one of the standards listed in this section or be listed for installation within masonry chimneys. Other materials may be used, provided they will resist flue gases and condensate at temperatures up to 1,800°F (982°C) and will not crack, soften or corrode.

R1003.11.2 Flue linings for specific appliances. Flue linings other than these covered in Section R1003.11.1, intended for use with specific types of *appliances*, shall comply with Sections R1003.11.3 through R1003.11.6.

❖ Except as provided in Section R1003.11.1, flue linings for use with specific types of appliances must comply with Sections R1003.11.3 through R1003.11.6.

R1003.11.3 Gas appliances. Flue lining systems for gas *appliances* shall be in accordance with Chapter 24.

❖ Chapter 24 of the code covers flue linings for gas appliances.

R1003.11.4 Pellet fuel-burning appliances. Flue lining and vent systems for use in masonry chimneys with pellet fuel-burning *appliances* shall be limited to the following:

1. Flue lining systems complying with Section R1003.11.1.
2. Pellet vents listed for installation within masonry chimneys (see Section R1003.11.6 for marking).

❖ This section's provisions limit flue lining and vent systems.

R1003.11.5 Oil-fired appliances approved for use with Type L vent. Flue lining and vent systems for use in masonry chimneys with oil-fired *appliances approved* for use with Type L vent shall be limited to the following:

1. Flue lining systems complying with Section R1003.11.1.
2. Listed chimney liners complying with UL 641 (see Section R1003.11.6 for marking).

❖ Flue lining and vent systems for use in masonry chimneys with oil-fired appliances approved for use with a Type L vent are limited to either flue lining systems complying with Section R1003.11.1 or listed chimney liners complying with UL 641.

R1003.11.6 Notice of usage. When a flue is relined with a material not complying with Section R1003.11.1, the chimney shall be plainly and permanently identified by a *label* attached to a wall, ceiling or other conspicuous location adjacent to where the connector enters the chimney. The *label* shall include the following message or equivalent language:

THIS CHIMNEY FLUE IS FOR USE ONLY WITH [TYPE OR CATEGORY OF *APPLIANCE*] *APPLIANCES* THAT BURN [TYPE OF FUEL]. DO NOT CONNECT OTHER TYPES OF *APPLIANCES.*

❖ Flues relined with materials not conforming to Section R1003.11.1 must be permanently identified in a conspicuous location adjacent to the connector's entrance into the building. Thus, current and future occupants of the building will know the type of appliance that may be attached to the flue.

R1003.12 Clay flue lining (installation). Clay flue liners shall be installed in accordance with ASTM C1283 and extend from a point not less than 8 inches (203 mm) below the lowest inlet or, in the case of fireplaces, from the top of the smoke chamber to a point above the enclosing walls. The lining shall be carried up vertically, with a maximum slope not greater than 30 degrees (0.52 rad) from the vertical.

Clay flue liners shall be laid in medium-duty water insoluble refractory mortar conforming to ASTM C199 with tight

INTERNATIONAL CODE COUNCIL®
Copyright © 2015 ICC. ALL RIGHTS RESERVED. Accessed by David Dammon on Jun 21, 2017 12:30:52 PM pursuant to License Agreement with ICC. No further reproduction or distribution authorized. ANY UNAUTHORIZED REPRODUCTION OR DISTRIBUTION IS A VIOLATION OF THE FEDERAL COPYRIGHT ACT AND THE LICENSE AGREEMENT, AND SUBJECT TO CIVIL AND CRIMINAL PENALTIES THEREUNDER.

mortar joints left smooth on the inside and installed to maintain an airspace or insulation not to exceed the thickness of the flue liner separating the flue liners from the interior face of the chimney masonry walls. Flue liners shall be supported on all sides. Only enough mortar shall be placed to make the joint and hold the liners in position.

❖ Clay flue linings must be installed so there is no leakage through the liner to adjacent spaces, which would result in contaminated air. Flue linings must be installed in accordance with ASTM C1283, beginning at least 8 inches (203 mm) below the lowest inlet and extending to a point above the top of the chimney walls. Masonry chimneys atop masonry fireplaces should have the lining start at the top of the smoke chamber of the fireplace. If the chimney is corbeled, the lining may not slope more than 30 degrees (0.52 rad) from the vertical. A vent space is required around the lining and is not to be obstructed by the mortar used to set the liner. Only the amount of mortar needed to set the liners and hold them in place should be used. The mortar used must be water insoluble since it will be exposed to weather. This airspace will help limit the transfer of the heat buildup in the chimney to the masonry wall. This air space cannot be used for venting other appliances (see Commentary Figure R1003.12).

R1003.12.1 Listed materials. *Listed* materials used as flue linings shall be installed in accordance with the terms of their listings and manufacturer's instructions.

❖ Materials used as flue liners must be installed in accordance with the manufacturer's listing and instructions so the flue gases will be properly removed from the structure and not leak back in.

R1003.12.2 Space around lining. The space surrounding a chimney lining system or vent installed within a masonry chimney shall not be used to vent any other *appliance*.

Exception: This shall not prevent the installation of a separate flue lining in accordance with the manufacturer's instructions.

❖ The open space around a chimney lining system or vent that is installed within a masonry chimney is not to be used to vent any other appliance. This unused space is not designed or constructed to vent flue gases.

R1003.13 Multiple flues. Where two or more flues are located in the same chimney, masonry wythes shall be built between adjacent flue linings. The masonry wythes shall be not less than 4 inches (102 mm) thick and bonded into the walls of the chimney.

Exception: Where venting only one *appliance*, two flues shall be permitted to adjoin each other in the same chimney with only the flue lining separation between them. The joints of the adjacent flue linings shall be staggered not less than 4 inches (102 mm).

❖ Each separate fireplace should have its own flue. Even outdoor barbecues connected to a chimney should have their own separate flue. Flues in the same chimney must be separated by a 4-inch (102 mm) masonry wythe bonded into the walls of the chimney. Failure to properly separate flues within a common chimney could result in transfer of smoke or other products of combustion from one flue to the other as a result of the downdraft created by interior suction of the inactive flue. The draft could also be created by external wind effects forcing the smoke down the inactive flues as it exhausts the active flue. Two flues in the same chimney venting only one appliance need not be separated from each other; however, the flue joints must be staggered at least 4 inches (102 mm) (see Commentary Figure R1003.12).

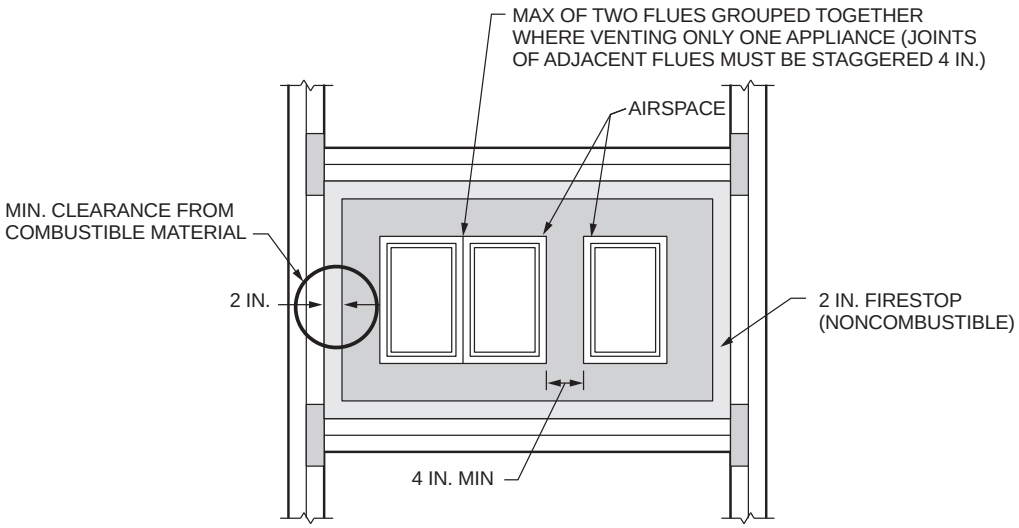

For SI: 1 inch = 25.4 mm.

Figure R1003.12
MULTIPLE FLUES

INTERNATIONAL CODE COUNCIL®
Copyright © 2015 ICC. ALL RIGHTS RESERVED. Accessed by David Dammon on Jun 21, 2017 12:30:52 PM pursuant to License Agreement with ICC. No further reproduction or distribution authorized. ANY UNAUTHORIZED REPRODUCTION OR DISTRIBUTION IS A VIOLATION OF THE FEDERAL COPYRIGHT ACT AND THE LICENSE AGREEMENT, AND SUBJECT TO CIVIL AND CRIMINAL PENALTIES THEREUNDER.

R1003.14 Flue area (appliance). Chimney flues shall not be smaller in area than that of the area of the connector from the *appliance* [see Tables R1003.14(1) and R1003.14(2)]. The sizing of a chimney flue to which multiple *appliance* venting systems are connected shall be in accordance with Section M1805.3.

❖ Tables R1003.14(1) and R1003.14(2) determine the sizes of chimney flues for appliances. In no case may the flue of the chimney have a smaller area than the area of the connector from the appliance. If the appliance is connected to a flue smaller than the appliance's flue, a backdraft can occur, which will result in the appliance not operating properly and the products of combustion not being vented to the outside.

R1003.15 Flue area (masonry fireplace). Flue sizing for chimneys serving fireplaces shall be in accordance with Section R1003.15.1 or R1003.15.2.

❖ There are two methods for determining the flue size for masonry fireplaces. Option 1 uses a fraction of the area of the fireplace opening. Option 2 allows the use of a chart in determining the flue size.

R1003.15.1 Option 1. Round chimney flues shall have a minimum net cross-sectional area of not less than $^1/_{12}$ of the fireplace opening. Square chimney flues shall have a minimum net cross-sectional area of $^1/_{10}$ of the fireplace opening. Rectangular chimney flues with an *aspect ratio* less than 2 to 1 shall have a minimum net cross-sectional area of $^1/_{10}$ of the fireplace opening. Rectangular chimney flues with an *aspect ratio* of 2 to 1 or more shall have a minimum net cross-sectional area of $^1/_8$ of the fireplace opening. Cross-sectional areas of clay flue linings are shown in Tables R1003.14(1) and R1003.14(2) or as provided by the manufacturer or as measured in the field.

❖ Option 1 indicates the use of different fractional amounts of the fireplace opening depending on the shape of the flue. Round chimney flues must have a net cross-sectional area of $^1/_{12}$ of the fireplace opening, and square flues must have a net cross-sectional area of $^1/_{12}$ of the fireplace opening. Rectangular flues need either $^1/_8$ or $^1/_{10}$ of the net cross-sectional area of the fireplace opening depending on the aspect ratio of the flue. These fractional amounts vary because the effective flue area (EFA) of a square, smooth flue is equal to that of a smooth, round flue where the diameter of the round flue is the same as one side of the square flue (see Commentary Figure R1003.15.1). The cross-hatched areas within the flue of the square or rectangular vent provide no draft.

R1003.15.2 Option 2. The minimum net cross-sectional area of the chimney flue shall be determined in accordance with Figure R1003.15.2. A flue size providing not less than the equivalent net cross-sectional area shall be used. Cross-sectional areas of clay flue linings are shown in Tables R1003.14(1) and R1003.14(2) or as provided by the manufacturer or as measured in the field. The height of the chimney shall be measured from the firebox floor to the top of the chimney flue.

❖ Option 2 entails using the chart in Figure R1003.15.2 to determine the required flue area. The flue must

TABLE R1003.14(1)
NET CROSS-SECTIONAL AREA OF ROUND FLUE SIZES[a]

FLUE SIZE, INSIDE DIAMETER (inches)	CROSS-SECTIONAL AREA (square inches)
6	28
7	38
8	50
10	78
$10^3/_4$	90
12	113
15	176
18	254

For SI: 1 inch = 25.4 mm, 1 square inch = 645.16 mm^2.
a. Flue sizes are based on ASTM C315.

❖ Table R1003.14(1) lists the net cross-sectional area of round flues. The first column provides the interior flue diameter; the second column provides the cross-sectional area. For example, an 8-inch (203 mm) round flue requires a cross-sectional area of at least 50 square inches (32 258 mm^2). Flue sizes are based on ASTM C315.

TABLE R1003.14(2)
NET CROSS-SECTIONAL AREA OF SQUARE AND RECTANGULAR FLUE SIZES

FLUE SIZE, OUTSIDE NOMINAL DIMENSIONS (inches)	CROSS-SECTIONAL AREA (square inches)
4.5 × 8.5	23
4.5 × 13	34
8 × 8	42
8.5 × 8.5	49
8 × 12	67
8.5 × 13	76
12 × 12	102
8.5 × 18	101
13 × 13	127
12 × 16	131
13 × 18	173
16 × 16	181
16 × 20	222
18 × 18	233
20 × 20	298
20 × 24	335
24 × 24	431

For SI: 1 inch = 25.4 mm, 1 square inch = 645.16 mm^2.

❖ Table R1003.14(2) lists the net cross-sectional area of rectangular flues. The first column provides the outside nominal dimensions of the flue. The second column provides the cross-sectional area for the flue. For example, a rectangular flue with an exterior nominal dimension of 12 inches by 16 inches (305 mm by 406 mm) requires a net cross-sectional area of at least 131 square inches (84 516 mm^2).

INTERNATIONAL CODE COUNCIL®
Copyright © 2015 ICC. ALL RIGHTS RESERVED. Accessed by David Dammon on Jun 21, 2017 12:30:52 PM pursuant to License Agreement with ICC. No further reproduction or distribution authorized. ANY UNAUTHORIZED REPRODUCTION OR DISTRIBUTION IS A VIOLATION OF THE FEDERAL COPYRIGHT ACT AND THE LICENSE AGREEMENT, AND SUBJECT TO CIVIL AND CRIMINAL PENALTIES THEREUNDER.

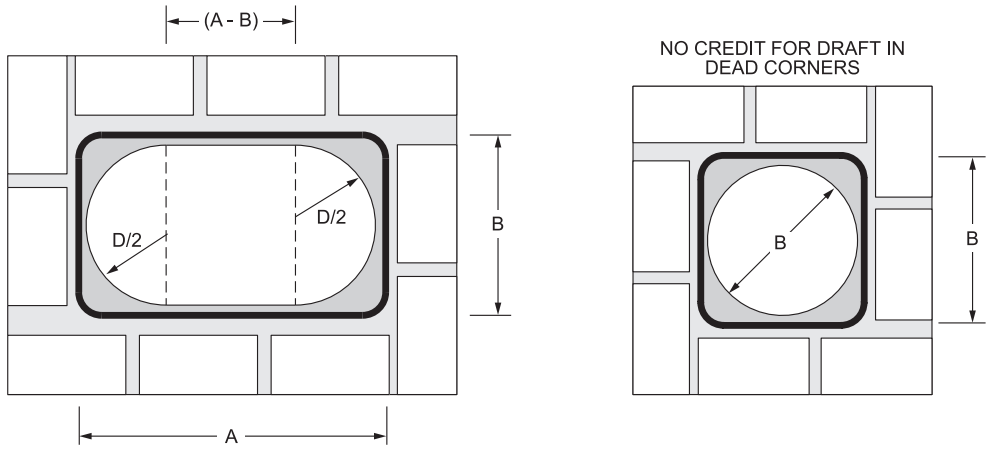

Figure R1003.15.1
MULTIPLE FLUES

have the equivalent net cross-sectional area as determined by the chart. The cross-sectional area of clay flue linings is given in Tables R1003.14(1) and R1003.14(2) or as provided by the manufacturer. Alternatively, the cross-sectional area of the flue may be field measured.

R1003.16 Inlet. Inlets to masonry chimneys shall enter from the side. Inlets shall have a thimble of fireclay, rigid refractory material or metal that will prevent the connector from pulling out of the inlet or from extending beyond the wall of the liner.

❖ Chimney inlet thimbles must not project into the flue. Inlets must have a thimble of fire clay, rigid refractory material or other metal. Thimbles must be installed so they will not dislodge from the inlet opening (see Commentary Figure R1003.16).

R1003.17 Masonry chimney cleanout openings. Cleanout openings shall be provided within 6 inches (152 mm) of the base of each flue within every masonry chimney. The upper edge of the cleanout shall be located not less than 6 inches (152 mm) below the lowest chimney inlet opening. The height of the opening shall be not less than 6 inches (152 mm). The cleanout shall be provided with a noncombustible cover.

Exception: Chimney flues serving masonry fireplaces where cleaning is possible through the fireplace opening.

❖ The code requires that cleanout openings be provided within 6 inches (152 mm) of the base of the flue. Additionally, the upper edge of the cleanout opening must be at least 6 inches (152 mm) below the lowest chimney outlet. The cleanout openings should be at least 6 inches (152 mm) high and have a noncombustible cover. The interior of the chimney may become coated with carbonaceous deposits and acids, and as a result the brick in the mortar will be chemically attacked, causing a gradual deterioration. The deposits will fall to the bottom of the chimney, and a cleanout will be necessary to remove them. Additionally, chimney-cleaning operations, which should be done periodically, will result in the accumulation of deposits at the base of the chimney, necessitating a cleanout opening. In the case of a fireplace chimney, the fireplace opening itself provides the cleanout, and no further opening is required.

R1003.18 Chimney clearances. Any portion of a masonry chimney located in the interior of the building or within the exterior wall of the building shall have a minimum airspace clearance to combustibles of 2 inches (51 mm). Chimneys located entirely outside the exterior walls of the building, including chimneys that pass through the soffit or cornice, shall have a minimum airspace clearance of 1 inch (25 mm). The airspace shall not be filled, except to provide fire blocking in accordance with Section R1003.19.

Exceptions:

1. Masonry chimneys equipped with a chimney lining system listed and *labeled* for use in chimneys in contact with combustibles in accordance with UL 1777 and installed in accordance with the manufacturer's instructions are permitted to have combustible material in contact with their exterior surfaces.
2. Where masonry chimneys are constructed as part of masonry or concrete walls, combustible materials shall not be in contact with the masonry or concrete wall less than 12 inches (305 mm) from the inside surface of the nearest flue lining.
3. Exposed combustible trim and the edges of sheathing materials, such as wood siding and flooring, shall be permitted to abut the masonry chimney side walls, in accordance with Figure R1003.18, provided such combustible trim or sheathing is not less than 8 inches (203 mm) from the inside surface of the nearest flue lining.

❖ Because of the passage of hot gases and products of combustion, the chimney becomes heated. The code requires that combustibles not be placed directly

INTERNATIONAL CODE COUNCIL®
Copyright © 2015 ICC. ALL RIGHTS RESERVED. Accessed by David Dammon on Jun 21, 2017 12:30:52 PM pursuant to License Agreement with ICC. No further reproduction or distribution authorized. ANY UNAUTHORIZED REPRODUCTION OR DISTRIBUTION IS A VIOLATION OF THE FEDERAL COPYRIGHT ACT AND THE LICENSE AGREEMENT, AND SUBJECT TO CIVIL AND CRIMINAL PENALTIES THEREUNDER.

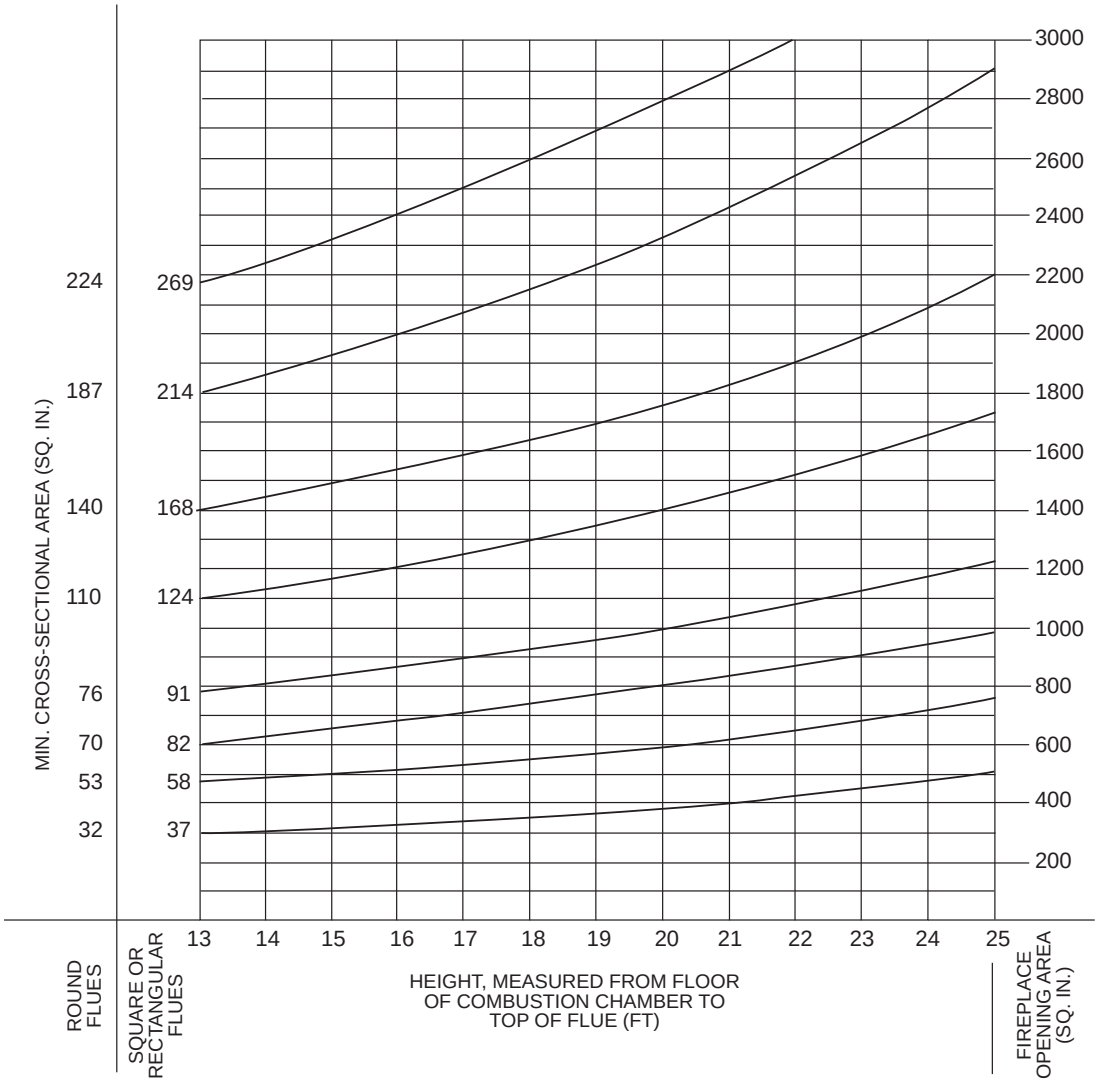

For SI: 1 foot = 304.8 mm, 1 square inch = 645.16 mm^2.

FIGURE R1003.15.2
FLUE SIZES FOR MASONRY CHIMNEYS

against the chimney to avoid potential heat transfer and eventual combustion of the combustibles. Masonry chimneys located on the interior of a structure or within an exterior wall require a 2-inch (51 mm) airspace clearance to combustibles. Masonry chimneys located entirely outside of the exterior walls are permitted to have a 1-inch (25 mm) clearance to combustibles (see Figure R1003.18). Three exceptions permit reduced clearances.

R1003.19 Chimney fireblocking. Spaces between chimneys and floors and ceilings through which chimneys pass shall be fireblocked with noncombustible material securely fastened in place. The fireblocking of spaces between chimneys and wood joists, beams or headers shall be self-supporting or be placed on strips of metal or metal lath laid across the spaces between combustible material and the chimney.

❖ As in concealed spaces in wood frame construction, spaces such as floors and ceilings that chimneys pass through must be fireblocked. Section R1003.18 prohibits chimneys from abutting combustible material. Therefore, the 1-inch (25 mm) to 2-inch (51 mm) airspace required to separate the chimney from combustible material must be fireblocked. The fireblocking must be of noncombustible material to a depth of 1 inch (25 mm) and be supported by noncombustible material such as metal lath.

INTERNATIONAL CODE COUNCIL®
Copyright © 2015 ICC. ALL RIGHTS RESERVED. Accessed by David Dammon on Jun 21, 2017 12:30:52 PM pursuant to License Agreement with ICC. No further reproduction or distribution authorized. ANY UNAUTHORIZED REPRODUCTION OR DISTRIBUTION IS A VIOLATION OF THE FEDERAL COPYRIGHT ACT AND THE LICENSE AGREEMENT, AND SUBJECT TO CIVIL AND CRIMINAL PENALTIES THEREUNDER.

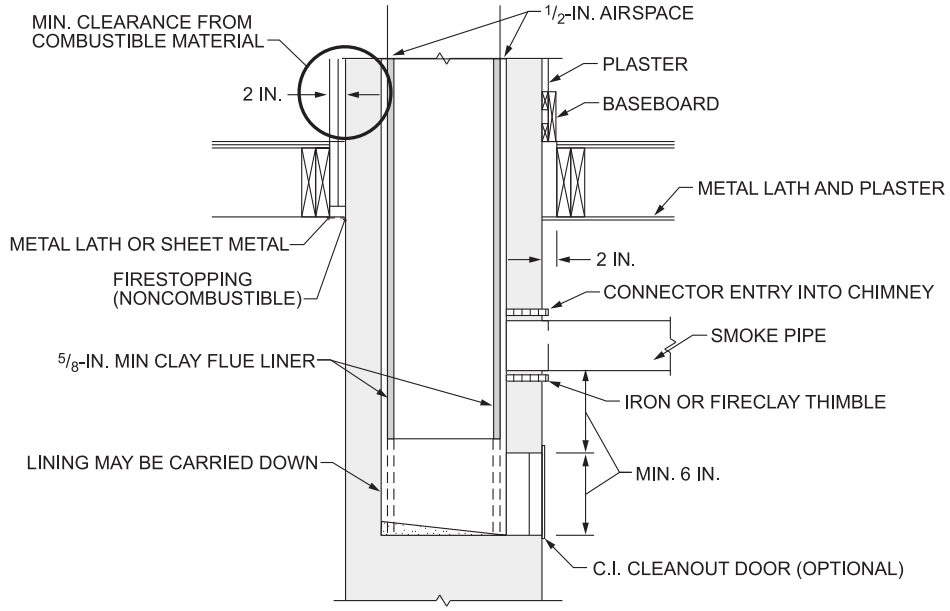

For SI: 1 inch = 25.4 mm.

Figure R1003.16
CHIMNEY WITH INLET—MINIMUM CLEARANCES TO COMBUSTIBLE FIRESTOPPING

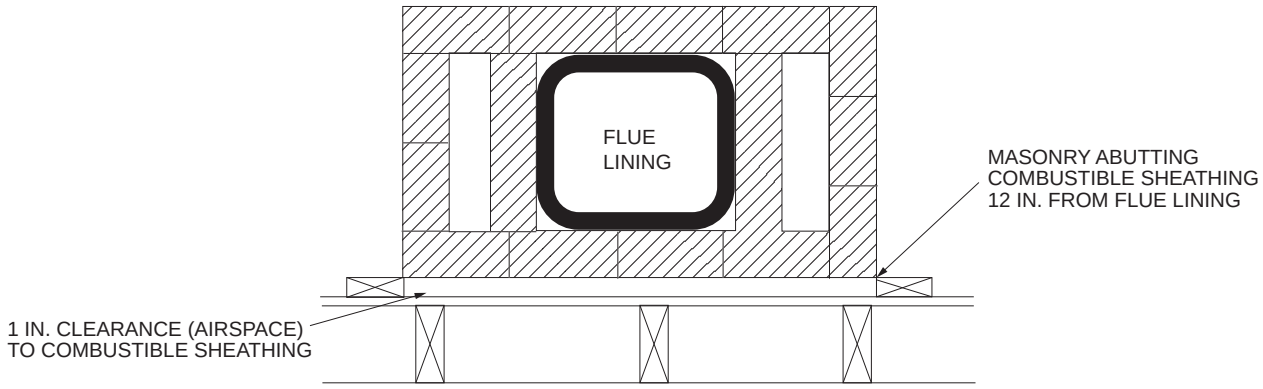

For SI: 1 inch = 25.4 mm.

FIGURE R1003.18
CLEARANCE FROM COMBUSTIBLES

R1003.20 Chimney crickets. Chimneys shall be provided with crickets where the dimension parallel to the ridgeline is greater than 30 inches (762 mm) and does not intersect the ridgeline. The intersection of the cricket and the chimney shall be flashed and counterflashed in the same manner as normal roof-chimney intersections. Crickets shall be constructed in compliance with Figure R1003.20 and Table R1003.20.

❖ Chimney crickets are required when the chimney width parallel to the ridgeline is more than 30 inches (762 mm), provided the chimney does not intersect the ridgeline. The cricket diverts the flow of water from the roof around the chimney. Flashing is required between the cricket and the chimney, as it is in other roof-chimney intersections.

TABLE R1003.20
CRICKET DIMENSIONS

ROOF SLOPE	H
12 - 12	1/2 of W
8 - 12	1/3 of W
6 - 12	1/4 of W
4 - 12	1/6 of W
3 - 12	1/8 of W

❖ Table R1003.20 establishes the height of chimney crickets as depicted in Figure R1003.20. For example, a cricket installed at the face of a chimney that is 4 feet wide (1219 mm) on a 6:12 roof slope, would need to be 1 foot high (305 mm) (1/4 of 4 feet).

INTERNATIONAL CODE COUNCIL®
Copyright © 2015 ICC. ALL RIGHTS RESERVED. Accessed by David Dammon on Jun 21, 2017 12:30:52 PM pursuant to License Agreement with ICC. No further reproduction or distribution authorized. ANY UNAUTHORIZED REPRODUCTION OR DISTRIBUTION IS A VIOLATION OF THE FEDERAL COPYRIGHT ACT AND THE LICENSE AGREEMENT, AND SUBJECT TO CIVIL AND CRIMINAL PENALTIES THEREUNDER.

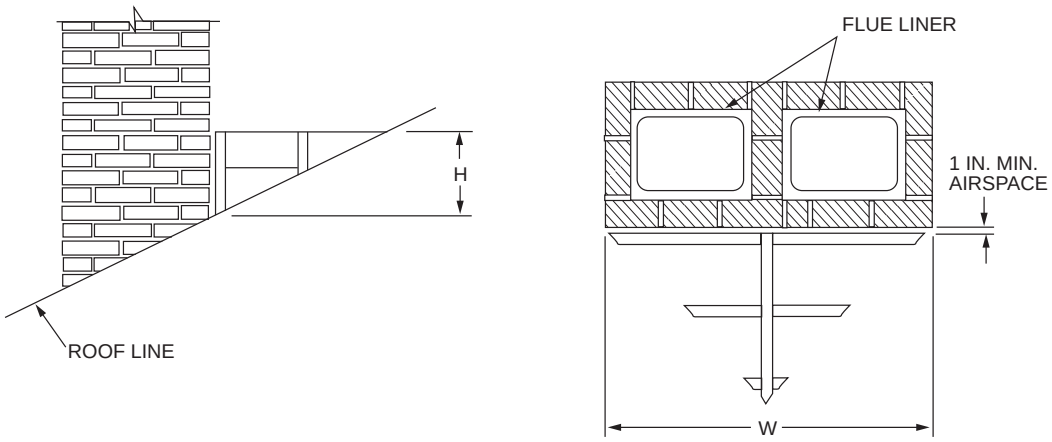

For SI: 1 inch = 25.4 mm.

FIGURE R1003.20
CHIMNEY CRICKET

SECTION R1004
FACTORY-BUILT FIREPLACES

R1004.1 General. Factory-built fireplaces shall be *listed* and *labeled* and shall be installed in accordance with the conditions of the *listing*. Factory-built fireplaces shall be tested in accordance with UL 127.

❖ The code requires that factory-built fireplaces be listed and labeled. In addition, factory-built fireplaces must be tested by an approved testing lab in accordance with UL 127 (see commentary, Section R1005).

R1004.2 Hearth extensions. Hearth extensions of *approved* factory-built fireplaces shall be installed in accordance with the *listing* of the fireplace. The hearth extension shall be readily distinguishable from the surrounding floor area. Listed and labeled hearth extensions shall comply with UL 1618.

❖ The primary requirements here are that the hearth extension must be installed in accordance with the listing of the fireplace, and it must be easily distinguished from the surrounding floor areas. In lieu of a site-built hearth extension, a listed and labeled hearth extension complying with UL 1618 may be used. UL 1618 includes a comprehensive set of construction and performance requirements for the hearth extension.

R1004.3 Decorative shrouds. Decorative shrouds shall not be installed at the termination of chimneys for factory-built fireplaces except where the shrouds are listed and *labeled* for use with the specific factory-built fireplace system and installed in accordance with the manufacturer's instructions.

❖ These provisions are the same as found in Section R1005.2 (see commentary, Section R1005.2).

R1004.4 Unvented gas log heaters. An unvented gas log heater shall not be installed in a factory-built fireplace unless the fireplace system has been specifically tested, *listed* and *labeled* for such use in accordance with UL 127.

❖ Unvented gas log heaters must not be installed in factory-built fireplaces if the fireplace has not been specifically tested, listed, and labeled for such use. Without such testing, there is no way to know how the unvented gas log heater will function in the fireplace, and it may cause harm to both the appliance and the occupants of the building.

R1004.5 Gasketed fireplace doors. A gasketed fireplace door shall not be installed on a factory-built fireplace except where the fireplace system has been specifically tested, listed and labeled for such use in accordance with UL 127.

❖ The *International Energy Conservation Code*® (IECC®) has stated that fireplaces must be provided with doors that prevent air from escaping up the fireplace chimney when the fireplace is not in use. The IECC recognizes that factory-built fireplaces must be listed for use with gasketed glass doors. A substantial energy loss is attributed to such air loss. The intent of the IECC was to prevent air loss by using sealed (gasketed) glass doors on the face of the fireplace. The IECC did not intend for glass doors to be installed where such installation violates the listing of a factory-built fireplace. It is not known what effect glass doors would have on masonry fireplaces, but it is highly suspected that factory-built fireplaces would be affected by the restriction of cooling and dilution airflow, thus producing abnormally high temperatures in and on the fireplace components. UL 127 tests factory-built fireplaces for this situation. Most factory-built fireplaces are not tested for use with tight-fitting (gasketed) doors, but some have been. Tight-fitting doors are considered to be a potential fire hazard if installed on fireplaces that have not been specifically tested and listed to UL127 and found to be safe for use with such doors. The intent to prevent the constant loss of conditioned air up a chimney can also be accomplished with tight-fitting dampers, which are likely to be far more effective than glass doors.

INTERNATIONAL CODE COUNCIL®
Copyright © 2015 ICC. ALL RIGHTS RESERVED. Accessed by David Dammon on Jun 21, 2017 12:30:52 PM pursuant to License Agreement with ICC. No further reproduction or distribution authorized. ANY UNAUTHORIZED REPRODUCTION OR DISTRIBUTION IS A VIOLATION OF THE FEDERAL COPYRIGHT ACT AND THE LICENSE AGREEMENT, AND SUBJECT TO CIVIL AND CRIMINAL PENALTIES THEREUNDER.

SECTION R1005
FACTORY-BUILT CHIMNEYS

R1005.1 Listing. Factory-built chimneys shall be *listed* and *labeled* and shall be installed and terminated in accordance with the manufacturer's instructions.

❖ Factory-built fireplaces can be used if they are listed and labeled and are installed following the manufacturer's installation instructions. "Listed" and "Labeled" are defined in Chapter 2.

R1005.2 Decorative shrouds. Decorative shrouds shall not be installed at the termination of factory-built chimneys except where the shrouds are *listed* and *labeled* for use with the specific factory-built chimney system and installed in accordance with the manufacturer's instructions.

❖ In general, decorative shrouds are not permitted on top of factory-built chimneys. Installing a shroud on top of a chimney that is not designed for one may result in improper venting of the appliance attached to the chimney. Decorative shrouds are permitted if they are listed and labeled for use with the specific chimney and are installed in accordance with the manufacturers' installation instructions.

R1005.3 Solid-fuel appliances. Factory-built chimneys installed in *dwelling units* with solid-fuel-burning *appliances* shall comply with the Type HT requirements of UL 103 and shall be marked "Type HT and "Residential Type and Building Heating *Appliance* Chimney."

Exception: Chimneys for use with open combustion chamber fireplaces shall comply with the requirements of UL 103 and shall be marked "Residential Type and Building Heating *Appliance* Chimney."

Chimneys for use with open combustion chamber *appliances* installed in buildings other than *dwelling units* shall comply with the requirements of UL 103 and shall be marked "Building Heating *Appliance* Chimney" or "Residential Type and Building Heating *Appliance* Chimney."

❖ Factory-built chimneys must withstand the high temperatures associated with solid fuel burning. For that reason the chimney must be clearly marked as Type HT (High Temperature) with the language "Residential Type and Building Heating Appliance Chimney." Factory-built chimneys for use with solid-fuel-burning appliances must comply with Type HT requirements of UL 103. The exception allows these chimneys to be used with open combustion chamber fireplace stoves that comply with UL 103.

R1005.4 Factory-built fireplaces. Chimneys for use with factory-built fireplaces shall comply with the requirements of UL 127.

❖ Chimneys installed and used for factory-built fireplaces must comply with UL 127.

R1005.5 Support. Where factory-built chimneys are supported by structural members, such as joists and rafters, those members shall be designed to support the additional load.

❖ Joists and rafters supporting factory-built chimneys must be designed to carry the load of the chimney in addition to other loads that the members carry.

R1005.6 Medium-heat appliances. Factory-built chimneys for medium-heat *appliances* producing flue gases having a temperature above 1,000°F (538°C), measured at the entrance to the chimney, shall comply with UL 959.

❖ Factory-built chimneys for medium-heat appliances that produce flue gases with a temperature above 1,000°F (538°C) at the entry to the chimney must comply with UL 959.

Factory-built fireplaces are permitted when they are listed and labeled and are installed in accordance with the manufacturer's instructions. The word "approved" is defined in Chapter 2. Both factory-built fireplaces and chimneys for solid-fuel-burning appliances must meet the applicable UL standard as listed in the code. Agencies such as UL provide listing services for factory-built fireplaces and chimneys. The listing includes a description of the manufactured unit and requirements for clearance from combustible materials, hearth details if necessary, and other limitations placed on the unit to result in a safe installation. Factory-built fireplaces are installed in conjunction with factory-built chimneys; thus, the complete installation of fireplace and chimney is factory built (see Commentary Figure R1005.6).

R1005.7 Factory-built chimney offsets. Where a factory-built chimney assembly incorporates offsets, no part of the chimney shall be at an angle of more than 30 degrees (0.52 rad) from vertical at any point in the assembly and the chimney assembly shall not include more than four elbows.

❖ Section R1005.3 requires factory-built chimneys for solid-fuel-burning appliances to be listed and labeled in accordance with UL 103, *Factory-Built Chimneys for Residential Type and Building Heating Appliances,* and installed in accordance with the manufacturer's instructions. Ideally, factory-built chimneys should be vertical for the entire length from the fireplace to the roof termination; however, offsets often are necessary to avoid structural components or to place the termination in the preferred location. Typically, the manufacturer's installation instructions include limitations on the maximum offset from vertical and the maximum number of elbows in the entire length of the chimney in accordance with UL 103. Section R1005.7 comes directly from UL 103 and intends to make this information readily available to the inspector, who may not have access to the standard or the manufacturer's installation instructions. This section also serves to emphasize that specific limitations apply to factory-built chimneys that

INTERNATIONAL CODE COUNCIL®
Copyright © 2015 ICC. ALL RIGHTS RESERVED. Accessed by David Dammon on Jun 21, 2017 12:30:52 PM pursuant to License Agreement with ICC. No further reproduction or distribution authorized. ANY UNAUTHORIZED REPRODUCTION OR DISTRIBUTION IS A VIOLATION OF THE FEDERAL COPYRIGHT ACT AND THE LICENSE AGREEMENT, AND SUBJECT TO CIVIL AND CRIMINAL PENALTIES THEREUNDER.

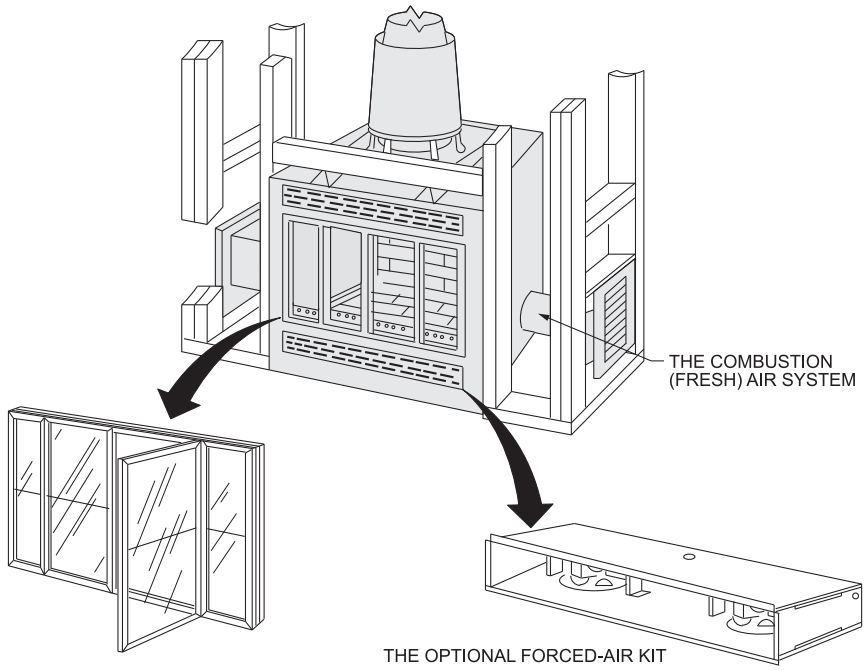

Figure R1005.6
EXAMPLE OF FACTORY-BUILT FIREPLACE AND CHIMNEY

are different from common venting systems such as Type B gas vents. To safely vent combustion products, factory-built chimneys must be installed so that no portion of the chimney exceeds an angle of 30 degrees from vertical. The code also limits the number of offsets by setting the maximum number of elbow fittings to four.

SECTION R1006
EXTERIOR AIR SUPPLY

R1006.1 Exterior air. Factory-built or masonry fireplaces covered in this chapter shall be equipped with an exterior air supply to ensure proper fuel combustion unless the room is mechanically ventilated and controlled so that the indoor pressure is neutral or positive.

❖ An adequate supply of combustion air must be provided for the fireplace. The code requires that both masonry and factory-built fireplaces have an exterior air supply. The air ducts used in either type of fireplace must be listed.

R1006.1.1 Factory-built fireplaces. Exterior *combustion air* ducts for factory-built fireplaces shall be a *listed* component of the fireplace and shall be installed in accordance with the fireplace manufacturer's instructions.

❖ An exterior combustion air supply for factory-built fireplaces must be listed components, and the ducts must be installed in accordance with the manufacturer's instructions.

R1006.1.2 Masonry fireplaces. *Listed combustion air* ducts for masonry fireplaces shall be installed in accordance with the terms of their *listing* and the manufacturer's instructions.

❖ If a masonry fireplace uses a listed combustion air duct, the air duct must be installed in accordance with its listing.

R1006.2 Exterior air intake. The exterior air intake shall be capable of supplying all *combustion air* from the exterior of the *dwelling* or from spaces within the *dwelling* ventilated with outdoor air such as nonmechanically ventilated crawl or *attic* spaces. The exterior air intake shall not be located within the garage or basement of the dwelling. The exterior air intake, for other than listed factory-built fireplaces, shall not be located at an elevation higher than the firebox. The exterior air intake shall be covered with a corrosion-resistant screen of $^1/_4$-inch (6.4 mm) mesh.

❖ The exterior air supply must be capable of providing all of the necessary combustion air. This air must be taken from the exterior of the building or from spaces such as crawl or attic spaces that are adequately ventilated. The crawl or attic spaces cannot be mechanically ventilated. Attic and/or crawl space mechanical ventilating systems are primarily used to remove air from those areas.

They do this by exhausting the unwanted air or creating a negative pressure in those areas. If an air intake for a fireplace terminates in a crawl or attic space that has a mechanical ventilation system there is a potential for the air intake to perform exactly opposite of its designed intent. The exterior air intake cannot be in the garage or basement of the dwelling unit.

INTERNATIONAL CODE COUNCIL®
Copyright © 2015 ICC. ALL RIGHTS RESERVED. Accessed by David Dammon on Jun 21, 2017 12:30:52 PM pursuant to License Agreement with ICC. No further reproduction or distribution authorized. ANY UNAUTHORIZED REPRODUCTION OR DISTRIBUTION IS A VIOLATION OF THE FEDERAL COPYRIGHT ACT AND THE LICENSE AGREEMENT, AND SUBJECT TO CIVIL AND CRIMINAL PENALTIES THEREUNDER.

For other than listed factory-built fireplaces, the air intake must be lower than the firebox so that the firebox will properly draw in the combustion air. Where combustion air openings are located inside the firebox, the air intake opening on the outside of the dwelling cannot be located higher than the firebox. Such an installation could create a chimney effect, drawing the products of combustion up through the combustion air ducts. These ducts are not generally constructed of materials that can withstand the heat and sparks that could be drawn through them. Interior combustion air openings located outside the firebox are not subject to this requirement. The exterior air intake must be covered with a corrosion-resistant screen of $^1/_4$-inch (6.4 mm) mesh.

R1006.3 Clearance. Unlisted *combustion air* ducts shall be installed with a minimum 1-inch (25 mm) clearance to combustibles for all parts of the duct within 5 feet (1524 mm) of the duct outlet.

❖ Where masonry fireplaces use unlisted combustion air ducts, the ducts must be installed with a minimum clearance of 1 inch (25 mm) to combustibles for all parts of the ducts within 5 feet (1524 mm) of the outlets.

R1006.4 Passageway. The *combustion air* passageway shall be not less than 6 square inches (3870 mm^2) and not more than 55 square inches (0.035 m^2), except that *combustion air* systems for listed fireplaces shall be constructed in accordance with the fireplace manufacturer's instructions.

❖ The combustion air passageway must be a minimum of 6 square inches (3870 mm^2) and no more than 55 square inches (0.035 m^2). Combustion air systems for listed fireplaces must have combustion air passageways in a size that is established by the manufacturer, which may be different from the dimensions indicated in this section. Air passageways supply combustion air to the firebox without relying on the air within the structure. Without this combustion air, the oxygen in the structure could be depleted to a level unacceptable for the occupants of the building.

R1006.5 Outlet. The exterior air outlet shall be located in the back or side of the firebox chamber or shall be located outside of the firebox, at the level of the hearth and not greater than 24 inches (610 mm) from the firebox opening. The outlet shall be closable and designed to prevent burning material from dropping into concealed combustible spaces.

❖ The combustion air opening may be located in the back or sides of the firebox chamber, or it may be located within 24 inches (610 mm) of the firebox opening on or near the floor. If the opening is on or near the floor, the outlet must be closeable and designed to prevent burning material from dropping into concealed combustible spaces. A noncombustible screen could be used for this purpose, if the mesh is fine enough to prevent burning embers from penetrating the screen.

Bibliography

The following resource materials were used in the preparation of the commentary for this chapter of the code:

ASTM C27–98 (2008), *Specification for Standard Classification of Fireclay and High-Alumina Refractory Brick*. West Conshohocken, PA: ASTM International, 2008.

ASTM C199–84 (2011), *Test Method for Pier Test for Refractory Mortar.* West Conshohocken, PA: ASTM International, 2011.

ASTM C315–07 (2011), *Specification for Clay Flue Linings and Chimney Pots*. West Conshohocken, PA: ASTM International, 2011.

ASTM C1261–10, *Specification for Firebox Brick for Residential Fireplaces.* West Conshohocken, PA: ASTM International, 2010.

ASTM C1283–11, *Practice for Installing Clay Flue Lining.* West Conshohocken, PA: ASTM International, 2011.

ASTM E1602–03 (2010)e1, *Guide for Construction of Solid Fuel Burning Masonry Heaters.* West Conshohocken, PA: ASTM International, 2010.

CEN 15250–2007, *Slow Heat Release Appliances Fired by Solid Fuel Requirements and Test Methods.* Brussels, Belgium: European Committee for Standardization, 2007.

IBC–15, *International Building Code.* Washington, DC: International Code Council, 2014.

IECC–15 *International Energy Conservation Code.* Washington, DC: International Code Council, 2014.

UL 103–2010, *Factory-built Chimneys for Residential Type and Building Heating Appliances.* Northbrook, IL: UL LLC, 2010.

UL 127–2011, *Factory-built Fireplaces*. Northbrook, IL: UL LLC, 2008.

UL 641–2010, *Type L, Low-temperature Venting Systems—with Revisions through May, 2013.* Northbrook, IL: UL LLC, 2005.

UL 959–2010, *Medium-heat Appliance Factory-Built Chimneys.* Northbrook, IL: UL LLC, 2010.

UL 1482–2011, *Solid-fuel Type Room Heaters.* Northbrook, IL: UL LLC, 2011.

UL 1618–09, *Wall Protectors, Floor Protectors, and Hearth Extension—with revisions through May, 2013.* Northbrook, IL: UL LLC, 2013.

INTERNATIONAL CODE COUNCIL®

Copyright © 2015 ICC. ALL RIGHTS RESERVED. Accessed by David Dammon on Jun 21, 2017 12:30:52 PM pursuant to License Agreement with ICC. No further reproduction or distribution authorized. ANY UNAUTHORIZED REPRODUCTION OR DISTRIBUTION IS A VIOLATION OF THE FEDERAL COPYRIGHT ACT AND THE LICENSE AGREEMENT, AND SUBJECT TO CIVIL AND CRIMINAL PENALTIES THEREUNDER.

Part IV—Energy Conservation

Chapter 11 [RE]: Energy Efficiency

General Comments

Chapter 11 contains the energy efficiency-related requirements for the design and construction of buildings regulated under the code. The applicable portions of the building must comply with the provisions within this chapter for energy efficiency.

Section N1101 contains the scope and application of the chapter and also regulates material identification and labeling. Section N1102 contains the insulation *R*-value requirements and window *U*-factor requirements for the building envelope, which includes the roof/ceiling, wall and floor assembly. Section N1103 contains the requirements for heating and cooling systems, and includes requirements for equipment efficiency, duct installation, piping insulation and the requirements for service water heating performance. Section N1104 deals with lighting equipment.

Purpose

This chapter defines requirements for the portions of the building and building systems that impact energy use in new construction and promote the effective use of energy. The provisions in the chapter promote energy efficiency in the building envelope, the heating and cooling system, and the service water heating system of the building. Compliance with this chapter will provide a minimum level of energy efficiency for new construction. Greater levels of efficiency can be installed to decrease the energy use of new construction.

SECTION N1101 GENERAL

N1101.1 Scope. This chapter regulates the energy efficiency for the design and construction of buildings regulated by this code.

Note: *The text of the following Sections N1101.2 through N1105 is extracted from the 2015 edition of the* International Energy Conservation Code—Residential Provisions *and has been editorially revised to conform to the scope and application of this code. The section numbers appearing in parenthesis after each section number are the section numbers of the corresponding text in the* International Energy Conservation Code—Residential Provisions.

❖ Chapter 11 applies to portions of the building thermal envelope that enclose conditioned space, as shown in Commentary Figure N1101.1(1). Conditioned space is the area provided with heating or cooling either directly, through a positive heating/cooling supply system (such as registers located in the space), or indirectly through an opening that allows heated or cooled air to communicate directly with the space. For example, a walk-in closet connected to a master bedroom suite may not contain a positive heating supply through a register, but it would be conditioned indirectly by the free passage of heated or cooled air into the space from the bedroom.

A good example of the exception would be an unconditioned garage or attic space. In the case of a garage, if the unconditioned garage area is separated from the conditioned portions of the residence by an assembly that meets the "building envelope" criteria (meaning that the wall between them is insulated), the exterior walls of the garage would not need to be insulated to separate the garage from the exterior climate.

The building thermal envelope consists of the wall, roof/ceiling and floor assemblies that surround the conditioned space. Raised floors over a crawl space or garage, or directly exposed to the outside air are considered to be part of the floor assembly. Walls surrounding a conditioned basement (in addition to surrounding conditioned spaces above grade) are part of the building envelope. The code defines above-grade walls surrounding conditioned spaces as exterior walls. This definition includes walls between the conditioned space and unconditioned garage; roof and basement knee, dormer, gable-end walls; and walls enclosing a mansard roof and basement walls with an average below-grade area that is less than 50 percent of the total basement gross wall area. This definition would not include walls separating an unconditioned garage from the outdoors. The roof/ceiling assembly is the surface where insulation will be installed, typically on top of the gypsum board [see Commentary Figure N1101.1(2)].

INTERNATIONAL CODE COUNCIL®
Copyright © 2015 ICC. ALL RIGHTS RESERVED. Accessed by David Dammon on Jun 21, 2017 12:30:52 PM pursuant to License Agreement with ICC. No further reproduction or distribution authorized. ANY UNAUTHORIZED REPRODUCTION OR DISTRIBUTION IS A VIOLATION OF THE FEDERAL COPYRIGHT ACT AND THE LICENSE AGREEMENT, AND SUBJECT TO CIVIL AND CRIMINAL PENALTIES THEREUNDER.

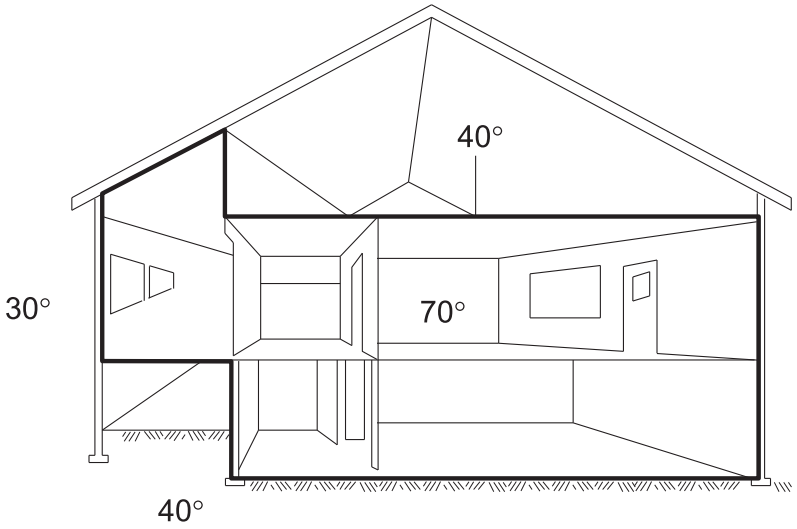

For SI: °C = [(°F) - 32]/1.8.

Figure N1101.1(1)
CONDITIONED ENVELOPE

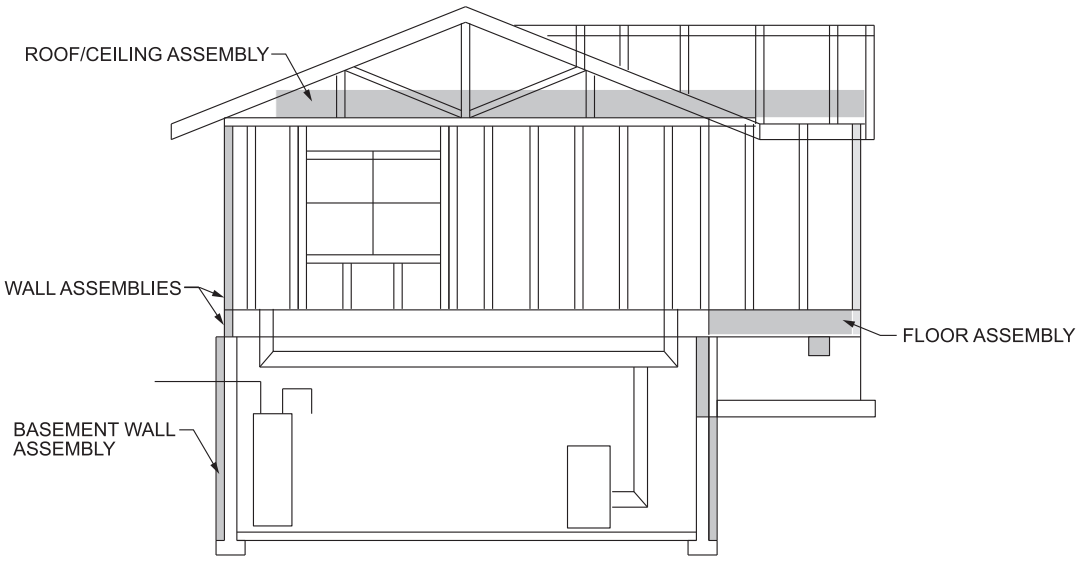

Figure N1101.1(2)
BUILDING ENVELOPE

N1101.2 (R101.3) Intent. This chapter shall regulate the design and construction of buildings for the effective use and conservation of energy over the useful life of each *building*. This chapter is intended to provide flexibility to permit the use of innovative approaches and techniques to achieve this objective. This chapter is not intended to abridge safety, health or environmental requirements contained in other applicable codes or ordinances.

❖ This chapter is broad in its application, yet specific to regulating the use of energy in buildings where that energy is used primarily for human comfort or heating and cooling to protect the contents. In general, the requirements of the code address the design of all building systems that affect the visual and thermal comfort of the occupants, including:

- Lighting systems and controls.
- Wall, roof and floor insulation.
- Windows and skylights.
- Cooling equipment (air conditioners, chillers and cooling towers).
- Heating equipment (boilers, furnaces and heat pumps).
- Pumps, piping and liquid circulation systems.

INTERNATIONAL CODE COUNCIL®
Copyright © 2015 ICC. ALL RIGHTS RESERVED. Accessed by David Dammon on Jun 21, 2017 12:30:52 PM pursuant to License Agreement with ICC. No further reproduction or distribution authorized. ANY UNAUTHORIZED REPRODUCTION OR DISTRIBUTION IS A VIOLATION OF THE FEDERAL COPYRIGHT ACT AND THE LICENSE AGREEMENT, AND SUBJECT TO CIVIL AND CRIMINAL PENALTIES THEREUNDER.

- Supply and return fans.
- Service hot water systems (kitchens and lavatories).

The intent of the chapter is to define requirements for the portions of a building and building systems that affect energy use in new construction and to promote the effective use of energy. Where a code application for a specific situation is in question, the authority having jurisdiction for the building should favor the action that will promote the effective use of energy. The code official may also consider the cost of the required action compared to the energy that will be saved over the life of that action.

This section of the code supports flexibility in application of the code requirements. Although many of the requirements are given in a prescriptive format for ease of use, it is not the intent of the code to stifle innovation—especially innovative techniques that conserve energy. Innovative approaches that lead to energy efficiency should be encouraged, even if the approach is not specifically listed in the code or does not meet the strict letter of the code. This principle should be applied to methods for determining compliance with the code and the building construction techniques used to meet the code.

Any design should first be evaluated to see whether it meets the code requirements directly. If an innovative approach is preferred, the applicant is responsible for demonstrating that the innovative concept promotes energy efficiency. Where the literal code requirements have not been satisfied but the applicant claims to meet the intent, the code official will likely have to exercise professional judgment to determine whether the proposed design meets the intent of the code in the interest of energy efficiency (see commentary, Section R103).

N1101.3 (R101.5.1) Compliance materials. The *building official* shall be permitted to approve specific computer software, worksheets, compliance manuals and other similar materials that meet the intent of this code.

❖ The code intends to permit the use of innovative approaches and techniques, provided that they result in the effective use of energy. This section simply recognizes that there are many federal, state and local programs as well as computer software that deal with energy efficiency. Therefore, the code simply states that the code official does have the authority to accept those methods of compliance, provided that they meet the intent of the code. Some of the easiest examples to illustrate this provision are the REScheck™ and COMcheck™ software that are put out by the U.S. Department of Energy (DOE). An example of another program that may be deemed acceptable by the code official is the ENERGY STAR program.

N1101.4 (R102.1.1) Above code programs. The *building official* or other authority having jurisdiction shall be permitted to deem a national, state or local energy-efficiency program to exceed the energy efficiency required by this code. Buildings *approved* in writing by such an energy-efficiency program shall be considered in compliance with this code. The requirements identified as "mandatory" in this chapter, as applicable, shall be met.

❖ The purpose of this section is to specifically state that the code official does have the authority to review and accept compliance with another energy program that may exceed that required by the code, as long as the minimum "mandatory" requirements of this code are met. This provision is really a continuation of the provision stated in Section N1101.2 and the fact that the code does intend to accept alternatives as long as the end result is an energy-efficient building that is comparable to or better than that required by the code.

This is also a good section to help reinforce the fact that this code as a model code is a "minimum" code. Therefore, it establishes the minimum requirement that must be met and that anything that exceeds the level is permitted.

While "above code programs" are acceptable because they do exceed the "minimum" requirements of the code, it would not be proper to require compliance with such "above code programs." Besides the code being the minimum level of acceptable energy efficiency, it is also the maximum efficiency that the code official can require. A building built to the absolute minimum requirement is also the maximum that the code official can demand. It is perfectly acceptable for a designer or builder to exceed the code requirements, but it is not proper for the code official to demand such higher performance.

This section also contains language to ensure that the "mandatory" requirements of the code, such as sealing the building envelope (Section N1102.4) and sealing ducts (Section N1103.3.2), are complied with for all buildings. Since the code has deemed that the mandatory requirements should apply to all buildings, it is reasonable that "above code programs" not be allowed to bypass these requirements.

N1101.5 (R103.2) Information on construction documents. Construction documents shall be drawn to scale upon suitable material. Electronic media documents are permitted to be submitted when *approved* by the *building official*. Construction documents shall be of sufficient clarity to indicate the location, nature and extent of the work proposed, and show in sufficient detail pertinent data and features of the building, systems and equipment as herein governed. Details shall include, but are not limited to, as applicable:

1. Insulation materials and their *R*-values.
2. Fenestration *U*-factors and SHGCs.
3. Area-weighted *U*-factor and SHGC calculations.
4. Mechanical system design criteria.

INTERNATIONAL CODE COUNCIL®
Copyright © 2015 ICC. ALL RIGHTS RESERVED. Accessed by David Dammon on Jun 21, 2017 12:30:52 PM pursuant to License Agreement with ICC. No further reproduction or distribution authorized. ANY UNAUTHORIZED REPRODUCTION OR DISTRIBUTION IS A VIOLATION OF THE FEDERAL COPYRIGHT ACT AND THE LICENSE AGREEMENT, AND SUBJECT TO CIVIL AND CRIMINAL PENALTIES THEREUNDER.

5. Mechanical and service water heating system and equipment types, sizes and efficiencies.
6. Equipment and system controls.
7. Duct sealing, duct and pipe insulation and location.
8. Air sealing details.

❖ For a comprehensive plan review, all code requirements should be incorporated in the design and construction documents. All of the project information, including specifications, project scope, calculations, and detailed drawings, should be submitted to the code official so that code compliance can be verified. All parties should clearly understand what the project entails. A good plan review is essential to ensure code compliance and a successful project. A statement on the construction documents, such as, "All insulation levels shall comply with the 2012 edition of the *International Energy Conservation Code*® (IECC®)" is not an acceptable substitute for showing the required information. Note also that the code official is authorized to require additional project and code-related information as necessary.

For example, insulation *R*-values and glazing and door *U*-factors must be clearly marked on the building plans, specifications or forms used to show compliance. Where two or more different insulation levels exist for the same component (two insulation levels are used in ceilings), the permit applicant must record each level separately on the plans or specifications and clarify where in the building each level of insulation will be installed.

The following discussion is presented for the benefit of both the applicant and the plans examiner. This is not an all-inclusive list, but rather is intended to reflect the minimum scope of information needed to determine energy code compliance:

Permit Applicant's Responsibilities. At permit application, the goal of the applicant is to provide all necessary information to show compliance with the code. If the plans examiner is able to verify compliance in a single review, the permit can be issued and construction may be started without delay.

Depending on whether the prescriptive or performance methods of compliance are used, the amount and detail of the required information may vary. For example, if using the prescriptive method of compliance, the *U*-factor and SHGC may be the only information that is needed to verify fenestration compliance. If the "total UA alternative" (Section N1102.1.4) or the performance option (Section N1105) is used, then additional information, such as the fenestration sizes and orientation, may be needed to demonstrate compliance. The envelope information that needs to be on the plans can be presented in a number of ways:

- *On the drawings.* Include elevations that indicate window, door and skylight areas and sections that show insulation position and thickness.
- *On sections and in schedules.* For instance, list *R*-values of insulation on sections and include *U*-factors, shading coefficient, visible light transmittance and air infiltration on fenestration and opaque door schedules.
- *Through notes and callouts.* Note that all exterior joints are to be caulked, gasketed, weatherstripped or otherwise sealed.
- *Through supplementary worksheets or calculations.* Provide area-weighted calculations where required, such as for projection factors and heat capacity. The permit applicant may include these calculations on the drawings, incorporate as additional columns in the schedule or submit completed code compliance worksheets provided by the jurisdiction.

Incorrect information may be caused by a lack of understanding of the code. More likely, it indicates that the code has changed since the last project. The applicant can use a correction list as a reminder to update the office specifications to avoid receiving this same correction again in the future.

Plans Examiner's Responsibilities. The plans examiner must review each permit application for code compliance before a permit is issued. By letting the designer and contractor know what is expected of them early in the process, the building department can increase the likelihood that the approved drawings will comply with the code. This helps the inspector avoid the headache of correcting a contractor who is following drawings that do not meet the code requirements.

The biggest challenge for the plans examiner is often determining where the necessary information is and whether the drawings are complete. The plans examiner should make sure the applicant includes a summary or checklist as part of the submittal package. When building envelope information is provided on the construction documents, it makes the job of the plans examiner easier, generally making for a more thorough review and reducing turnaround time.

A complete building envelope plan review covers all the requirements specific to the architectural building shell, but the electrical drawings may also need to be included and reviewed if the applicant seeks credit for automatic daylighting control for skylights or fenestration.

- Check that duct insulation thickness and conductivity (*k*-value) are on the drawings and comply with the code.
- Check that the duct insulation *R*-value is on the drawings and complies with the code.
- Check that there is a note indicating that ducts are to be constructed and sealed in accordance with the *International Mechanical Code*® (IMC®).
- Check that there is a note indicating that operating and equipment maintenance manuals will be supplied to the owner, that air and hydronic sys-

INTERNATIONAL CODE COUNCIL®
Copyright © 2015 ICC. ALL RIGHTS RESERVED. Accessed by David Dammon on Jun 21, 2017 12:30:52 PM pursuant to License Agreement with ICC. No further reproduction or distribution authorized. ANY UNAUTHORIZED REPRODUCTION OR DISTRIBUTION IS A VIOLATION OF THE FEDERAL COPYRIGHT ACT AND THE LICENSE AGREEMENT, AND SUBJECT TO CIVIL AND CRIMINAL PENALTIES THEREUNDER.

tems will be balanced and that the control system will be tested and calibrated.

N1101.5.1 (R103.2.1) Thermal envelope depiction. The building's thermal envelope shall be represented on the construction drawings.

❖ The single most important energy and performance aspect of the home is the buildings thermal envelope and the alignment of the air barrier and thermal barrier systems. It is crucial that the design professional demonstrate an understanding of location of the thermal envelope and that they make an effort to draw its location so that the construction personnel can successfully implement the construction of the building in accordance with the code and the specifications that have been drawn. The air sealing details help make this possible but understanding where the details will be implemented helps ensure better implementation and enforcement.

N1101.6 (R202) Defined terms. The following words and terms shall, for the purposes of this chapter, have the meanings shown herein.

❖ For the purposes of this code, certain abbreviations, terms, phrases, words and their derivatives have the meanings given in Chapter 2 or in this section. The code, with its broad scope of applicability, includes terms used in a variety of construction and energy-related disciplines. These terms can often have multiple meanings, depending on their context or discipline. Therefore, Chapter 2 and this section establish specific meanings for these terms.

ABOVE-GRADE WALL. A wall more than 50 percent above grade and enclosing *conditioned space*. This includes between-floor spandrels, peripheral edges of floors, roof and basement knee walls, dormer walls, gable end walls, walls enclosing a mansard roof and skylight shafts.

❖ This definition provides the details of which walls must be treated as above-grade walls. This will help to make the distinction between these walls and basement walls (see definition and commentary, "Basement wall"). These two wall types face a different amount of energy transfer and, therefore, have different insulation requirements. In order to determine the proper insulation requirements for the various walls, both of the definitions should be reviewed. The definition includes any wall that is a part of the building thermal envelope ("enclosing conditioned space") and meets the area requirements. For example, the wall between a dwelling and an unconditioned garage would be included within this definition (see commentary, "Building thermal envelope").

ACCESSIBLE. Admitting close approach as a result of not being guarded by locked doors, elevation or other effective means (see "Readily *accessible*").

❖ Providing access to mechanical equipment and appliances is necessary to facilitate inspection, observation, maintenance, adjustment, repair or replacement. Access to equipment means the equipment can be physically reached without having to remove a permanent portion of the structure. It is acceptable, for example, to install equipment in an interstitial space that would require removal of lay-in suspended ceiling panels to gain access. Equipment would not be considered accessible if it were necessary to remove or open any portion of a structure other than panels, doors, covers or similar obstructions intended to be removed or opened (see the definition of "Readily accessible"). Access can be described as the capability of being reached or approached for the purpose of inspection, observation, maintenance, adjustment, repair or replacement. Achieving access may first require the removal or opening of a panel, door or similar obstruction, and may require the overcoming of an obstacle such as elevation.

ADDITION. An extension or increase in the *conditioned space* floor area or height of a building or structure.

❖ The code uses this term to reflect new construction that is being added to an existing building. This definition is important when determining the applicability of the code provisions (see Section R101.4.3 of the IECC).

AIR BARRIER. Material(s) assembled and joined together to provide a barrier to air leakage through the building envelope. An air barrier may be a single material or a combination of materials.

❖ Building tightness against air infiltration is an important aspect of energy conservation. The term "air barrier" is defined to support the provisions of Section N1102.4 regarding air leakage and building tightness. Note that an air barrier is not a single membrane, but rather the system of sealants, seals, insulation and wall sheathing that prevent air infiltration. Although the evaluation and report are prepared by International Code Council® (ICC®), the code official is not obligated to accept or approve the product based on the evaluation report. The term "approved" is always tied to the code official's approval of the product or project. ICC's publishing of an evaluation report does not take away the fact that the approval of the code official is still needed for the material or method described in the report.

ALTERATION. Any construction, retrofit or renovation to an existing structure other than repair or addition that requires a permit. Also, a change in a building, electrical, gas, mechanical or plumbing system that involves an extension, addition or change to the arrangement, type or purpose of the original installation that requires a permit.

❖ This definition actually includes two separate definitions: one that applies to building construction and the other to mechanical systems. An alteration is any modification or change made to an existing installation. For example, changing refrigerant types or heat transfer fluids in a system would be considered alterations. This definition specifically excludes additions or repairs and also ties the term to situations where a permit is required. See Chapter 1 of the *International Building Code*® (IBC®) and IMC for the information regarding when a permit is required.

INTERNATIONAL CODE COUNCIL®
Copyright © 2015 ICC. ALL RIGHTS RESERVED. Accessed by David Dammon on Jun 21, 2017 12:30:52 PM pursuant to License Agreement with ICC. No further reproduction or distribution authorized. ANY UNAUTHORIZED REPRODUCTION OR DISTRIBUTION IS A VIOLATION OF THE FEDERAL COPYRIGHT ACT AND THE LICENSE AGREEMENT, AND SUBJECT TO CIVIL AND CRIMINAL PENALTIES THEREUNDER.

AUTOMATIC. Self-acting, operating by its own mechanism when actuated by some impersonal influence, as, for example, a change in current strength, pressure, temperature or mechanical configuration (see "Manual").

❖ Operation or control devices or systems operating automatically, as opposed to manually, are designed to operate safely with only periodic human intervention or supervision. A thermostat would be an example of something that is automatic. While a person would set the thermostat to the desired temperature, the thermostat would cycle the heating or cooling system on or off on its own once the temperature hits the established set points.

BASEMENT WALL. A wall 50 percent or more below grade and enclosing *conditioned space*.

❖ Because basement walls are in contact with the ground and ground temperatures differ from air temperatures, the amount of energy transferred through a basement wall is different than the energy transfer through a wall predominantly above grade. Therefore, the code provides different thermal requirements for basement walls and above-grade walls. An individual wall enclosing conditioned space is classified as a "basement wall" where the gross wall area is 50 percent or more below grade and is bounded by soil; otherwise, the wall is classified as an "above-grade wall." This definition includes a below-grade interior wall separating a basement from a crawl space that meets the percentage requirement. This basement wall classification applies to the whole wall area, even if a portion of the individual wall is not below grade. Therefore, the above-grade portion of the wall is considered as part of the basement wall where the total wall is 50 percent or more below grade. Both sections of the wall (above grade and below grade) are then insulated as a "basement wall." Likewise, where an exterior wall is less than 50-percent below grade, the whole wall area is classified as an above-grade wall, including the portion underground. For example, the wall of a walk-out basement that is entirely above grade is not considered a basement wall. The wall area of the walk-out wall must be considered as an above-grade wall and compared to the code requirements for above-grade walls. Thus, where the average below-grade depth of the side walls is 50 percent or greater, they are basement walls. If not, they are above-grade walls. The intent of this definition is to apply the provision to each wall enclosing the space. It is not intended to be applied to the aggregate of all of the walls of the basement. Therefore, this classification is done for each individual wall segment and not on an aggregate basis. The basement wall requirements apply only to the opaque basement wall area, excluding windows and doors. For purposes of meeting the code requirements, windows and doors in a basement wall are regulated as any other fenestration opening.

BUILDING. Any structure used or intended for supporting or sheltering any use or occupancy, including any mechanical systems, service water heating systems and electric power and lighting systems located on the building site and supporting the building.

❖ This definition indicates that where this term is used in the code, it means a structure that is intended to provide shelter or support for some activity or occupancy. Though not addressed in the code, it is important to note that the IBC does permit that a fire wall forms a demarcation in between two separate, structurally independent buildings. Therefore, the code provisions could be applied to each building separately or to the structure as a whole. This would be a designer's decision to make.

BUILDING SITE. A continguous area of land that is under the ownership or control of one entity.

❖ "Building site" is a key term used throughout this chapter. It is the area of land that is under the ownership of one entity.

BUILDING THERMAL ENVELOPE. The basement walls, exterior walls, floor, roof and any other building elements that enclose *conditioned space* or provide a boundary between *conditioned space* and exempt or unconditioned space.

❖ The "building thermal envelope" is a key term and resounding theme used throughout the code. It defines what portions of the building form a structurally bound conditioned space and are thereby covered by the insulation and infiltration (air leakage) requirements of the code. The building thermal envelope includes all building components separating conditioned spaces (see commentary, "Conditioned space") from unconditioned spaces or outside ambient conditions and through which heat is transferred. For example, the walls and doors separating an unheated garage (unconditioned space) from a living area (conditioned space) are part of the building thermal envelope. The walls and doors separating an unheated garage from the outdoors are not part of the building thermal envelope. Walls, floors and other building components separating two conditioned spaces are not part of the building thermal envelope. For example, interior partition walls, the common or party walls separating dwelling units in multiple-family buildings and the wall between a new conditioned addition and the existing conditioned space are not considered part of the building thermal envelope. Unconditioned spaces (areas having no heating or cooling sources) are placed outside the building envelope. A space is conditioned if it is heated or cooled directly or where a space is indirectly supplied with heating or cooling through uninsulated walls, floors or uninsulated ducts or HVAC piping. Boundaries that define the building envelope include the following:

- Building assemblies separating a conditioned space from outdoor ambient weather conditions.

INTERNATIONAL CODE COUNCIL®
Copyright © 2015 ICC. ALL RIGHTS RESERVED. Accessed by David Dammon on Jun 21, 2017 12:30:52 PM pursuant to License Agreement with ICC. No further reproduction or distribution authorized. ANY UNAUTHORIZED REPRODUCTION OR DISTRIBUTION IS A VIOLATION OF THE FEDERAL COPYRIGHT ACT AND THE LICENSE AGREEMENT, AND SUBJECT TO CIVIL AND CRIMINAL PENALTIES THEREUNDER.

- Building assemblies separating a conditioned space from the ground under or around that space, such as the ground around the perimeter of a slab or the soil at the exterior of a conditioned basement wall. Note that the code does not specify requirements for insulating basement floors or underneath slab floors (except at the perimeter edges).
- Building assemblies separating a conditioned space from an unconditioned garage, unconditioned sunroom or similar unheated/cooled area.

The code specifies requirements for ceiling, wall, floor, basement wall, slab-edge and crawl space wall components of the building envelope. In some cases, it may be unclear how to classify a particular part of a building. For example, skylight shafts have properties of a wall assembly but are located in the ceiling assembly. Table 202(1) shows some examples or suggestions of how building envelope components are generally classified and can be used to help determine which code requirement applies to a given building envelope component. Because many of these items are not addressed specifically within the code, the code official should make the determination as to the appropriate classification and construction. When no distinction exists between roof and wall, such as in an A-frame structure, the code official should determine the appropriate classification. Historically, some codes have designated a wall as having a slope of 60 degrees or greater from the horizontal plane. In such situations, if the wall slope is less than 60 degrees, then classification as a "roof" is appropriate. Because the code is silent on this issue, other options such as stating that the roof could be considered to begin at a point 8 feet (2439 mm) above the floor surface of the uppermost story could be used. The reference to "exempted spaces" in the definition of "Building thermal envelope" refers to spaces identified as exempt from this scope of the code.

***C*-FACTOR (THERMAL CONDUCTANCE).** The coefficient of heat transmission (surface to surface) through a building component or assembly, equal to the time rate of heat flow per unit area and the unit temperature difference between the warm side and cold side surfaces (Btu/h · ft^2 · °F) [W/(m^2 · K)].

❖ This definition is included to define a term needed in the provisions of the code for the *U*-factor alternative given in Section N1102.1.2. The term appears in Table N1102.1.2.

CIRCULATING HOT WATER SYSTEM. A specifically designed water distribution system where one or more pumps are operated in the service hot water piping to circulate heated water from the water-heating equipment to fixtures and back to the water-heating equipment.

❖ In order to ensure hot water is available immediately at a faucet, circulating hot water systems can be installed to circulate hot water when the hot water supply system is not in use.

CLIMATE ZONE. A geographical region based on climatic criteria as specified in this code.

❖ See the commentary to Section N1101.7.

CONDITIONED FLOOR AREA. The horizontal projection of the floors associated with the *conditioned space*.

❖ The conditioned floor area is the total area of all floors in the conditioned space of the building.

CONDITIONED SPACE. An area, room or space that is enclosed within the building thermal envelope and that is directly heated or cooled or indirectly heated or cooled. Spaces are indirectly heated or cooled where they communicate through openings with conditioned spaces, where they are separated from conditioned spaces by uninsulated walls, floors or ceilings, or where they contain uninsulated ducts, piping or other sources of heating or cooling.

❖ A conditioned space is typically any space that does not communicate directly to the outside; that is, a space not directly ventilated to the outdoors and meets one of the following criteria:

1. The space has a heating or cooling supply register.
2. The space has heating or cooling equipment designed to heat or cool the space, or both, such as a radiant heater built into the ceiling, a baseboard heater or a wall-mounted gas heater.
3. The space contains uninsulated ducts or uninsulated hydronic heating surfaces.
4. The space is inside the building thermal envelope. For example:
   - A basement with insulated walls but without insulation on the basement ceiling;
   - A closet on a home's exterior wall that is insulated on the exterior surface of the closet wall;
   - A space adjacent to and not physically separated from a conditioned space (such as a room adjacent to another room with a heating duct but without a door that can be closed between the rooms); or
   - A room completely surrounded by conditioned spaces.

The builder/designer has some flexibility in defining the bounds of the conditioned space as long as the building envelope requirements are met. Spaces that are not conditioned directly but have uninsulated surfaces separating them from conditioned spaces are included within the insulated envelope of the building. For example, an unventilated crawl space below an uninsulated floor is considered part of the conditioned space, even where no heat is directly supplied to the

INTERNATIONAL CODE COUNCIL®
Copyright © 2015 ICC. ALL RIGHTS RESERVED. Accessed by David Dammon on Jun 21, 2017 12:30:52 PM pursuant to License Agreement with ICC. No further reproduction or distribution authorized. ANY UNAUTHORIZED REPRODUCTION OR DISTRIBUTION IS A VIOLATION OF THE FEDERAL COPYRIGHT ACT AND THE LICENSE AGREEMENT, AND SUBJECT TO CIVIL AND CRIMINAL PENALTIES THEREUNDER.

crawl space area. Where the crawl space is included as a conditioned space, the builder must insulate the exterior crawl space walls instead of the floor above. The task of defining the building envelope is left to the permit applicant.

Examples of unconditioned spaces include garages and basements that are neither heated nor cooled if all duct surfaces running through these spaces are insulated; attached sunrooms that are neither heated nor cooled and have insulated/weatherstripped doors to separate the sun space from the conditioned space; attics and ventilated crawl spaces. Note that the boundary between the conditioned and unconditioned space is subject to the infiltration control requirements of the code (see commentary, Section N1102.4).

Historically, the code tied this definition to "conditioning for human comfort" or by specifying that the conditioning fall within a specific range. Starting with the 2006 edition, the code considers any type of conditioning as creating a "conditioned space." Therefore, providing heating within a storage building to keep the stock from freezing would still be considered as creating a conditioned space (see Section R101.5.2, Item 2 of the IECC).

CONTINUOUS AIR BARRIER. A combination of materials and assemblies that restrict or prevent the passage of air through the building thermal envelope.

❖ This term is used throughout the code and the language was modified to clarify the options for meeting the continuous air-barrier requirements.

CONTINUOUS INSULATION (ci). Insulating material that is continuous across all structural members without thermal bridges other than fasteners and service openings. It is installed on the interior or exterior, or is integral to any opaque surface, of the building envelope.

❖ The need for more insulation on exterior walls has created the need to specify continuous insulation on the exterior side of the wall.

CRAWL SPACE WALL. The opaque portion of a wall that encloses a crawl space and is partially or totally below grade.

❖ Because exterior crawl space walls may be in contact with the ground, crawl spaces exhibit different heat transfer properties than those of exterior above-grade walls or even basement walls. Thus, the code includes different thermal requirements for exterior crawl space walls.

This definition and distinction is also to help coordinate with Section N1102.2.8. While a basement is defined as a "conditioned space," crawl spaces may be designed to be either conditioned or unconditioned spaces.

CURTAIN WALL. Fenestration products used to create an external nonload-bearing wall that is designed to separate the exterior and interior environments.

❖ This is essential in the code to add a water distribution system that is insulated to retain the heated water upon demand for hot water and conserve energy usage.

DEMAND RECIRCULATION WATER SYSTEM. A water distribution system where pump(s) prime the service hot water piping with heated water upon demand for hot water.

❖ This is essential in the code to add a water distribution system that is insulated to retain the heated water on demand for hot water and conserve energy usage.

DUCT. A tube or conduit utilized for conveying air. The air passages of self-contained systems are not to be construed as air ducts.

❖ Ducts can be factory manufactured or field constructed of sheet metal, gypsum board, fibrous glass board or other approved materials. Ducts are used in air distribution systems, exhaust systems, smoke control systems and combustion air-supply systems. Air passageways that are integral parts of an air handler, packaged air-conditioning unit or similar piece of self-contained, factory-built equipment are not considered ducts in the context of the code.

DUCT SYSTEM. A continuous passageway for the transmission of air that, in addition to ducts, includes duct fittings, dampers, plenums, fans and accessory air-handling equipment and appliances.

❖ Duct systems are part of an air distribution system and include supply, return, transfer and relief/exhaust air systems.

ENERGY ANALYSIS. A method for estimating the annual energy use of the *proposed design* and *standard reference design* based on estimates of energy use.

❖ Designs founded on total building performance (see Section N1105) use energy analysis when the design professional requires more flexibility for a sophisticated or innovative design. Using the total-building-performance design methodology, the proposed design is evaluated based on the cost of various types of energy used rather than the units of energy used (Btu, kWh). That cost must be established using an hour-by-hour, full-year (8760 hours) simulation tool capable of simulating the performance of both the proposed and standard designs (see commentary, "Energy simulation tool"). The simulation must be capable of converting calculated energy demand and consumption into utility costs using the actual utility rate schedules rather than the average cost of electricity or gas.

ENERGY COST. The total estimated annual cost for purchased energy for the building functions regulated by this code, including applicable demand charges.

❖ The total annual cost for purchased energy includes demand, power and fuel adjustment charges and the impact of special rate programs for large-volume customers. A thorough evaluation of existing tariffs and fee schedules may uncover substantial savings opportunities. In some states, for example, manufacturing customers are exempt from sales taxes for energy. In other states, utilities may have multiple tariff options.

INTERNATIONAL CODE COUNCIL®
Copyright © 2015 ICC. ALL RIGHTS RESERVED. Accessed by David Dammon on Jun 21, 2017 12:30:52 PM pursuant to License Agreement with ICC. No further reproduction or distribution authorized. ANY UNAUTHORIZED REPRODUCTION OR DISTRIBUTION IS A VIOLATION OF THE FEDERAL COPYRIGHT ACT AND THE LICENSE AGREEMENT, AND SUBJECT TO CIVIL AND CRIMINAL PENALTIES THEREUNDER.

ENERGY SIMULATION TOOL. An *approved* software program or calculation-based methodology that projects the annual energy use of a building.

❖ An energy simulation tool is typically a software package incorporating, among other features, an hour-by-hour, full-year (8760 hours), multiple-zone program to simulate the performance of both proposed and standard design buildings. It is possible to use other types of simulation tools that approximate the dynamics of the hourly energy programs, which can be shown to produce equivalent results for the type of building and HVAC systems under consideration. However, the simulation must be capable of converting calculated energy demand and consumption into utility costs using the actual utility rate schedules (rather than average cost of electricity or gas). Some examples of when an hour-by-hour, full-year type of program is required are:

- When the features intended to reduce energy consumption require time-of-day interactions between weather, loads and operating criteria. Examples include: night ventilation or building thermal storage; chilled water or ice storage; heat recovery; daylighting and water economizer cooling.
- When utility rates are time-of-day sensitive and the proposed design uses time-of-day load shifting between different types of mechanical plant components.

Another distinguishing feature among simulation tools is their sophistication in modeling HVAC systems and plant equipment. Basically, three levels of complexity are used: constant efficiency models; models with simple part-load efficiency adjustment and models with complex part-load efficiency adjustment. Simulation tools in the first category simply calculate hourly equipment input power requirements at part load by applying the full-load efficiency at any given hour. These programs should be avoided for all but constant load applications. Simulated tools with simple part-load efficiency adjustments use a profile of percent-rated input power versus percent-rated load. At each hour, these programs calculate input power to each piece of equipment. These tools are far more accurate than the constant-efficiency models, but still lack accurate compensation for environmental variables.

Building energy simulation tools, available for analyzing daylighting, passive solar design and solar systems, are described in more detail at www.eere.energy.gov/buildings/tools_directory/. This is a portion of the U.S. DOE's Energy Efficiency and Renewable Energy website.

The information includes program uses, computer hardware required, price and contact information. The most sophisticated simulation tools incorporate a number of profiles for each and every piece of equipment. For variable flow fans, this might be as simple as a single profile of percent-rated input power versus percent-rated airflow. For more complex equipment, such as a cooling tower, the program considers such variables as the wet-bulb temperature, the approach (difference between the condenser water supply temperature and the wet-bulb temperature) and the range (difference between the condenser water entering and leaving temperatures). Each of these variables is used to adjust both the hourly capacity of the tower and the hourly operation (one fan, two fans or no fans). For all but the simplest systems, programs of this category must be used to obtain accurate results. Questions regarding a particular tool's ability to model the building on an hour-by-hour, full-year basis should be addressed to the proprietor or distributor.

ERI REFERENCE DESIGN. A version of the rated design that meets the minimum requirements of the 2006 *International Energy Conservation Code*.

❖ The Energy Rating Index (ERI) compliance alternative utilizes the ERI Reference Design (see Section N1106).

EXTERIOR WALL. Walls including both above-grade walls and basement walls.

❖ Wall insulation requirements defined within the code include almost all opaque exterior construction-bounding conditioned space. Depending on the compliance method, the wall type, glazing percentage and whether the wall is on the exterior or just separating conditioned from unconditioned space can affect the wall insulation requirement. Note also that doors (both glazed and opaque) are considered fenestration (see commentary, "Fenestration").

In earlier editions, the code included the limitation that an exterior wall is vertical or sloped at an angle of 60 degrees (1.1 rad) or greater from the horizontal. This limitation may still be helpful to consider if dealing with unusual situations such as an A-frame building. Where a determination is needed to decide whether the roof or wall provisions are appropriate, this limitation could be helpful.

FENESTRATION. Products classified as either *vertical fenestration* or *skylights*.

❖ The term "fenestration" refers both to opaque and glazed doors and the light-transmitting areas of a wall or roof, but primarily windows and skylights. The code sets performance requirements for fenestration by establishing separate requirements that differ from the wall and roof requirements based on the type of fenestration and, in the case of the prescriptive commercial requirements, by limiting the fenestration area. In some of the compliance options, the fenestration type and area allowed depends on the shading coefficient, the size of overhangs, the thermal performance (*U*-factor) and whether daylighting controls are installed.

Site-built windows, doors, and skylights are exempt from the air leakage testing requirements given in Section N1102.4.3. This definition provides information on what exactly site-built means, to define the scope of the exception given in Section N1102.4.3.

INTERNATIONAL CODE COUNCIL®
Copyright © 2015 ICC. ALL RIGHTS RESERVED. Accessed by David Dammon on Jun 21, 2017 12:30:52 PM pursuant to License Agreement with ICC. No further reproduction or distribution authorized. ANY UNAUTHORIZED REPRODUCTION OR DISTRIBUTION IS A VIOLATION OF THE FEDERAL COPYRIGHT ACT AND THE LICENSE AGREEMENT, AND SUBJECT TO CIVIL AND CRIMINAL PENALTIES THEREUNDER.

FENESTRATION PRODUCT, SITE-BUILT. A fenestration designed to be made up of field-glazed or field-assembled units using specific factory cut or otherwise factory-formed framing and glazing units. Examples of site-built fenestration include storefront systems, curtain walls, and atrium roof systems.

❖ Fenestration products can be site built, not to be confused with field-fabricated fenestration products. This definition is meant to make that distinction.

FENESTRATION, VERTICAL. Windows (fixed or moveable), opaque doors, glazed doors, glazed block and combination opaque/glazed doors composed of glass or other transparent or translucent glazing materials and installed at a slope of a least 60 degrees (1.05 rad) from horizontal.

HEATED SLAB. Slab-on-grade construction in which the heating elements, hydronic tubing, or hot air distribution system is in contact with, or placed within or under, the slab.

❖ The space above a heated slab is always conditioned (heated). The definition clarifies that certain slabs are the heating source and, as covered in the code, may require more insulation than unheated slabs. The installation of a radiant heat source in a space does not, in and of itself, qualify a slab as heated.

HIGH-EFFICACY LAMPS. Compact fluorescent lamps, T-8 or smaller diameter linear fluorescent lamps, or lamps with a minimum efficacy of:

1. 60 lumens per watt for lamps over 40 watts;
2. 50 lumens per watt for lamps over 15 watts to 40 watts; and
3. 40 lumens per watt for lamps 15 watts or less.

❖ The code contains requirements that a percentage of permanent lighting fixtures have high-efficacy lamps. Therefore, this definition is necessary to indicate what is required to qualify as a high-efficacy lamp.

HISTORIC BUILDING. Buildings that are listed in or eligible for listing in the National Register of Historic Places, or designated as historic under an appropriate state or local law.

❖ Historic buildings are given some relief from the requirements of the code (see Section N1107.6).

INFILTRATION. The uncontrolled inward air leakage into a building caused by the pressure effects of wind or the effect of differences in the indoor and outdoor air density or both.

❖ Air leakage is random movement of air into and out of a building through cracks and holes in the building envelope. In technical terms, air leakage is called "infiltration" (air moving into a building) or "exfiltration" (air moving out of a building). In nontechnical terms, air leaks are often referred to as "drafts." Infiltration may be reduced by either reducing the sources of air leakage (joints, penetrations and holes in the building envelope) or by reducing the pressures driving the airflow.

INSULATED SIDING. A type of continuous insulation with manufacturer-installed insulating material as an integral part of the cladding product having a minimum *R*-value of R-2.

INSULATING SHEATHING. An insulating board with a core material having a minimum *R*-value of R-2.

❖ Some exterior hardboard and vinyl siding products are not recommended for use in direct contact with aluminum-foil-faced sheathing products (check with the product manufacturer). Other sheathing products are uniquely designed for use in direct contact with wood, brick, vinyl, aluminum and hardboard-based sidings. To be considered insulating sheathing, the product must have an *R*-value no less than R-2.

LOW-VOLTAGE LIGHTING. Lighting equipment powered through a transformer such as a cable conductor, a rail conductor and track lighting.

❖ Track lighting is a form of low-voltage lighting featuring a continuous-powered track that accepts fixtures (called heads) anywhere along its length. The heads and the wide variety of lamps (bulbs) they accept suit virtually every lighting situation and most heads are also adjustable. One-, two-, three- and four-circuit tracks let the lighting design professional mix standard and low-voltage heads or have multiple switching options. Track systems are easily modified or added to as lighting needs change. Although tracks can be recessed flush with a ceiling surface or suspended from posts, they are typically fastened to the surface either directly or with mounting clips. Controls ranging from a simple on/off switch to elaborate programmable dimming devices are widely available, making the system extremely flexible.

MANUAL. Capable of being operated by personal intervention (see "Automatic").

❖ Devices, systems or equipment having manual controls or overrides are designed to operate safely with only human intervention instead of having an automatic operation or control system (see commentary, "Automatic").

A typical light switch would be an example of a manual device. The lights that the switch controls would stay either off or on until a person took the action of flipping the switch to the appropriate position.

PROPOSED DESIGN. A description of the proposed building used to estimate annual energy use for determining compliance based on total building performance.

❖ The proposed design is simply a description of the proposed building that is being used to estimate annual energy costs for determining compliance based on total building performance. The proposed design is effectively the subject building intended to be built. The performance of the proposed design (the building exactly as it is anticipated to be constructed) is then compared to the standard reference design (a similar building that is assumed to be built to a prescriptive set of minimum code requirements). Although the simulated performance alternative method permits tradeoffs in energy use between different systems, the proposed design must still comply with the mandatory requirements. General ("mandatory") requirements are separately specified in this chapter. For instance,

INTERNATIONAL CODE COUNCIL®
Copyright © 2015 ICC. ALL RIGHTS RESERVED. Accessed by David Dammon on Jun 21, 2017 12:30:52 PM pursuant to License Agreement with ICC. No further reproduction or distribution authorized. ANY UNAUTHORIZED REPRODUCTION OR DISTRIBUTION IS A VIOLATION OF THE FEDERAL COPYRIGHT ACT AND THE LICENSE AGREEMENT, AND SUBJECT TO CIVIL AND CRIMINAL PENALTIES THEREUNDER.

the air-leakage requirements are general requirements that apply, even if the project uses any one of the two performance methods referenced above.

RATED DESIGN. A description of the proposed *building* used to determine the energy rating index.

❖ See Section 406 for application.

READILY ACCESSIBLE. Capable of being reached quickly for operation, renewal or inspection without requiring those to whom ready access is requisite to climb over or remove obstacles or to resort to portable ladders or access equipment (see "*Accessible*").

❖ Readily accessible can be described as the capability of being quickly reached or approached for operation, inspection, observation or emergency action. Ready access does not require the removal or movement of any door panel or similar obstruction or overcoming physical obstructions or obstacles, including differential elevation.

REPAIR. The reconstruction or renewal of any part of an existing building for the purpose of its maintenance or to correct damage. For definitions applicable in Chapter 11, see Section N1101.9.

❖ The repair of an item, appliance, energy-using subsystem or other piece of equipment typically does not require a permit. This definition makes it clear that a repair is limited to work on the item and does not include its replacement or other new work.

This definition is important when applying the provisions of Section N1107.1.1 and determining how the code will apply to existing buildings and installations.

REROOFING. The process of recovering or replacing an existing *roof covering*. See "Roof recover" and "Roof replacement."

RESIDENTIAL BUILDING. For this chapter, includes detached one- and two-family dwellings and multiple single-family dwellings (townhouses) as well as Group R-2, R-3 and R-4 buildings three stories or less in height above grade plane.

❖ The definition of a residential building is important not only for what it does include, but also for what it does not. One of the primary limitations of this definition is the fact that this term will only include the Group R-2 and R-4 occupancies when they are three stories or less in height. Therefore, if a Group R-2 or R-4 occupancy is over three stories in height, it would be defined as a "Commercial building" (see definition, "Commercial building") and be required to comply with the requirements of IECC Chapter 4[CE] instead of the residential provisions of IECC Chapter 4[RE]. Detached one and two-family dwellings as well as townhouses are considered Residential Buildings regardless of the number of stories. However, the Group R-3 category as outlined in Section 310.5 includes uses in addition to those containing only one or two dwelling units and townhouses. These other R-3 uses (e.g., boarding houses, congregate living facilities, lodging houses and small care facilities (five or fewer care recipients) if over three stories would fall into the Commercial Building category.

R-1 building is not included within this definition. Therefore, any hotel, motel or similar use classified as a Group R-1 occupancy would need to comply with the Commercial Building requirements. This would apply even if the hotel or motel was three stories or less in height.

Though not specifically addressed within this definition, any building that is built under the provisions of the *International Residential Code*® (IRC®) also would be considered as being a "Residential Building."

The Group R-2 classification of residential buildings includes apartments and condominiums where three or more units are physically attached. In addition, it includes certain boarding houses, convents, dormitories, fraternities or other such similar facilities. The code defines a dwelling unit as a single housekeeping unit of one or more rooms providing complete independent living facilities, including permanent provisions for living, sleeping, cooking and sanitation (see commentary, "Dwelling unit"). Many of the code provisions address dwelling units specifically. All of the elements listed in the definition must be present for a dwelling unit to exist. Guest rooms (sleeping units) in hotels and motels, patient care rooms in nursing homes and larger group care facilities do not meet these criteria. Therefore, these buildings are considered commercial uses, even if they are three stories or less in height (see the IBC for additional information on dwelling units). Although this definition closely follows the Group R-2 occupancy classification of the IBC, it is important to note there are differences. The main distinction is the three-story limitation, which is found only in the code.

The Group R-4 classification is included in order to coordinate the provisions of the code with the IBC. Group R-4 includes facilities where between 6 and 16 people reside in a supervised residential environment and receive custodial care.This distinction is important because larger facilities are classified by the IBC as Group I occupancies and, therefore, would be considered commercial buildings by the code (see "Commercial building").

As mentioned earlier, it is important to note the application of the three-story limitation, which is found only in the code. This issue of defining a residential building over three stories in height as a commercial building coordinates the code with ANSI/ASHRAE/IESNA 90.1.

ROOF RECOVER. The process of installing an additional *roof covering* over a prepared existing *roof covering* without removing the existing *roof covering*.

❖ Roof recover is considered an alteration to the building. In the application of Section N1109, roof recover is exempt from the code requirements.

ROOF REPAIR. Reconstruction or renewal of any part of an existing roof for the purposes of its maintenance.

❖ See Section N1110 for application.

INTERNATIONAL CODE COUNCIL®
Copyright © 2015 ICC. ALL RIGHTS RESERVED. Accessed by David Dammon on Jun 21, 2017 12:30:52 PM pursuant to License Agreement with ICC. No further reproduction or distribution authorized. ANY UNAUTHORIZED REPRODUCTION OR DISTRIBUTION IS A VIOLATION OF THE FEDERAL COPYRIGHT ACT AND THE LICENSE AGREEMENT, AND SUBJECT TO CIVIL AND CRIMINAL PENALTIES THEREUNDER.

ROOF REPLACEMENT. The process of removing the existing *roof covering*, repairing any damaged substrate and installing a new *roof covering*.

❖ This is a form of alteration to a building and may or may not require additional energy conservation measures such as insulation in the roof cavity, depending on the extent of work (see Section N1109).

R-VALUE (THERMAL RESISTANCE). The inverse of the time rate of heat flow through a body from one of its bounding surfaces to the other surface for a unit temperature difference between the two surfaces, under steady state conditions, per unit area ($h \cdot ft^2 \cdot °F/Btu$) [$(m^2 \cdot K)/W$].

❖ Thermal resistance measures how well a material or series of materials retards heat flow. Insulation thermal resistance is rated using *R*-values. As the *R*-value of an element or assembly increases, the heat loss or gain through that element or assembly decreases. Thus, a higher *R*-value is considered better than a lower *R*-value.

SERVICE WATER HEATING. Supply of hot water for purposes other than comfort heating.

❖ Although the definition makes it clear that the code requirement applies to equipment used to produce and distribute hot water for purposes other than comfort heating, the definition also applies to energy-efficient process water heating systems and equipment. Equipment providing or distributing hot water for uses such as restrooms; showers; laundries; kitchens; pools and spas; defrosting of sidewalks and driveways; carwashes; beauty salons and other commercial enterprises are included. Space-conditioning boilers and distribution systems are not considered service water heating components.

SKYLIGHT. Glass or other transparent or translucent glazing material installed at a slope of less than 60 degrees (1.05 rad) from horizontal. Glazing material in skylights, including unit skylights, solariums, sunrooms, roofs and sloped walls is included in this definition.

❖ A skylight is a glazed opening in a roof that admits daylight. Skylights are often the only method of bringing natural light into an interior, enclosed area. Unfortunately, these fixtures often do their job too well. Installing too many skylights or ones too large for the room can lead to overheating during warm-weather months. Also, choosing the most energy-efficient models can compromise light transmission—the reason people buy skylights in the first place.

Skylights are available in a variety of sizes and shapes, though rectangular units are the most common. Although most skylights are fixed or inoperable, others can be opened and shut like a window or have hidden ventilating systems. Large operable skylights designed for the sloping ceilings of attic rooms are even marketed as "roof windows." These approaches help cool the room in warm weather by venting hot air. The IBC requires either tempered or laminated glass in skylights. Both types are designed to stand up to snow loads and provide protection against falling objects. Tempered glass breaks into small pieces, rather than large shards, if damaged. Laminated glass, which is fused with a thin layer of plastic, stays in place for added safety if broken. Laminated glass is also better at keeping out sound and is slightly more energy efficient, though also slightly more expensive. Skylights are not energy efficient. They collect little heat during the winter, which is when it is needed most—when the sun is low in the sky. Worse yet, because they're located where the pressure difference between the inside and outside of the house is greatest, skylights are an easy escape route for heated air. Also, in the summer they can heat up the home quickly—when it is not needed.

Like windows, skylights offer a variety of energy-efficient glazing options, including low-E and tinted glass. Green tints are better than bronze tints for reducing solar heat gain while letting in plenty of visible light. And because skylights usually are not visible from the street, tinted glazings are less likely to affect aesthetics.

It is important to note that the term "skylight" can also include glazed roofs and sloped walls. This distinction can affect the proper application of the code requirements. To help determine the appropriate *U*-factor, this definition includes the slope limitation. If the slope of the roof or sloped wall is 60 degrees or less from the horizontal, then the skylight *U*-factor is appropriate. If the slope is greater than 60 degrees, then the glazing would be considered as a fenestration in a wall. As an example using the requirements of Table N1102.1.2 for Climate Zone 1, a skylight would require a *U*-factor of 0.75, while the fenestration in a wall would require a *U*-factor of 1.20. Both the skylight and the more vertical wall fenestration would require an SHGC of 0.30 (see Table N1102.1.2, Note b).

SOLAR HEAT GAIN COEFFICIENT (SHGC). The ratio of the solar heat gain entering the space through the fenestration assembly to the incident solar radiation. Solar heat gain includes directly transmitted solar heat and absorbed solar radiation that is then reradiated, conducted or convected into the space.

❖ The SHGC is the fraction of incident solar radiation admitted through a window or skylight. This includes the solar radiation that is both directly transmitted and that which is absorbed and subsequently released inward. Therefore, the SHGC measures how well a window blocks the heat from sunlight. The SHGC is the fraction of the heat from the sun that enters through a window. SHGC is expressed as a number between 0 and 1. The lower a window's SHGC, the less solar heat it transmits.

In the warmer climate zones, where cooling is the dominant requirement, the code will generally impose a limitation on the amount of solar heat gain permitted. In colder climate zones, the code will generally not place any SHGC requirement on the fenestration. Thus, it will depend upon the climate zone as to whether a higher or lower SHGC is best. While windows with lower SHGC values reduce summer cooling and overheating, they also reduce free winter solar heat gain.

INTERNATIONAL CODE COUNCIL®
Copyright © 2015 ICC. ALL RIGHTS RESERVED. Accessed by David Dammon on Jun 21, 2017 12:30:52 PM pursuant to License Agreement with ICC. No further reproduction or distribution authorized. ANY UNAUTHORIZED REPRODUCTION OR DISTRIBUTION IS A VIOLATION OF THE FEDERAL COPYRIGHT ACT AND THE LICENSE AGREEMENT, AND SUBJECT TO CIVIL AND CRIMINAL PENALTIES THEREUNDER.

STANDARD REFERENCE DESIGN. A version of the *proposed design* that meets the minimum requirements of this code and is used to determine the maximum annual energy use requirement for compliance based on total building performance.

❖ The standard reference design is simply the same building design as that intended to be built (see commentary, "Proposed design"), except the energy conservation features required by the code (insulation, windows, infiltration, mechanical, lighting and service water heating systems) are modified to meet the minimum prescriptive requirements, as applicable. Note that the standard reference design is not truly a separate building and it is never actually built. It is the baseline against which the proposed design is measured.

The performance of the proposed design (the building exactly as it is anticipated to be constructed) is then compared to the standard reference design (a similar building that is assumed to be built to a prescriptive set of minimum code requirements). Under the performance paths, if the energy efficiency of the proposed design is equal to or better than that of the standard reference design, then the proposed design is acceptable and in compliance with the code requirements.

SUNROOM. A one-story structure attached to a dwelling with a glazing area in excess of 40 percent of the gross area of the structure's exterior walls and roof.

❖ Sunrooms are unique rooms that create a space that differs in character from that provided by conventional portions of a dwelling. Sunrooms and other highly glazed structures are sometimes called conservatories or solariums. These sunrooms are often added onto an existing building, but there is nothing in the code that would prohibit them from being constructed as a part of a new dwelling.

This definition distinguishes sunrooms from other conventional spaces because they are limited to one story in height and the total glazing area needs to be at least 40 percent of the exterior wall and roof area of the sunroom. This definition and its use in Sections N1102.2.2 and N1102.3.5 are important since most dwellings do not have such large amounts of glazing.

Many of these sunrooms are constructed to be unconditioned spaces and will not have any type of heating or cooling. Other sunrooms may be conditioned either indirectly by openings from the adjacent conditioned space of the dwelling, be provided with a separate space conditioning system or they can be served as a separate zone from the dwelling's space-conditioning system. Due to the large amount of glazing and, therefore, the probability that the sunroom will either be hot in the summer or cold in the winter and may be unused during such times, the code provisions address the thermal isolation of these spaces (see definition, "Thermal isolation").

When addressing the thermal isolation of the sunrooms, the provisions of Sections N1102.2.13 and N1102.3.5 need to be reviewed and code users need to realize how they coordinate with Section N1107.1.1. Section N1102.3.5 will require that "new walls" that separate a sunroom from a conditioned space must comply with the building thermal envelope requirements. Therefore, if a sunroom is built as an addition to an existing dwelling, the existing wall between the sunroom and any conditioned space is not regulated. The same concept applies to the provisions of Section N1102.3.6. Any "new windows and doors" between the sunroom and the dwelling will be regulated, but existing fenestration could remain unchanged.

THERMAL ISOLATION. Physical and space conditioning separation from *conditioned space(s)*. The *conditioned space*(s) shall be controlled as separate zones for heating and cooling or conditioned by separate equipment.

❖ This term is somewhat conceptually similar to the separation provided by the building envelope, but instead of being between the conditioned space and the exterior or conditioned space and unconditioned space, this separation occurs between two conditioned spaces. In this situation it is the separation between the dwelling and the sunroom. Therefore, where the sunroom is an addition, the existing exterior wall of the dwelling will generally provide the thermal isolation between the dwelling and the sunroom at the point where the sunroom addition is attached. If a new door or window opening is added to permit passage between or to provide a connection with the dwelling and the sunroom, that new door or window is required to comply with the fenestration *U*-factor specified in Table N1102.1.2. By requiring the maximum *U*-factor, it ensures a reasonable level of energy conservation between the dwelling and the sunroom so they would not need to be brought into compliance with the *U*-factor specified in the table.

This exemption for the existing doors and windows is based not only on the language in this definition, but also on the scoping requirements found in Sections N1102.3.5. Since these existing doors and windows would be serving as a part of the building envelope for the dwelling prior to the addition of the sunroom, they may be accepted as a part of the thermal isolation between the dwelling and any new sunroom addition (see commentary, "Sunroom" and Section N1102.3.5).

This definition is also important due to the restriction that it places on the heating and cooling system for the various spaces. In order to be thermally isolated, the two spaces are either served by separate systems or as separate zones on a common system.

THERMOSTAT. An automatic control device used to maintain temperature at a fixed or adjustable set point.

❖ Thermostats combine control and sensing functions in a single device. Thermostats may signal other control devices to trigger an action when certain temperatures are reached or surpassed. Because thermostats are so prevalent, the various types and their operating characteristics are described here.

The occupied/unoccupied or dual-temperature room thermostat reduces temperature at night. It may be

INTERNATIONAL CODE COUNCIL®
Copyright © 2015 ICC. ALL RIGHTS RESERVED. Accessed by David Dammon on Jun 21, 2017 12:30:52 PM pursuant to License Agreement with ICC. No further reproduction or distribution authorized. ANY UNAUTHORIZED REPRODUCTION OR DISTRIBUTION IS A VIOLATION OF THE FEDERAL COPYRIGHT ACT AND THE LICENSE AGREEMENT, AND SUBJECT TO CIVIL AND CRIMINAL PENALTIES THEREUNDER.

indexed (changed from occupied to unoccupied operation or vice versa) individually from a remote point or in a group by a manual or time switch. Some types have an individual clock and switch built in.

The pneumatic day-night thermostat uses a two-pressure air-supply system, where changing the pressure at a central point from one value to the other actuates switching devices in the thermostat and indexes it.

The heating/cooling or summer/winter thermostat can have its action reversed and its set point changed in response to outdoor and comfort conditions. It is used to actuate controlled devices, such as valves or dampers, that regulate a heating source at one time and a cooling source at another.

The pneumatic heating-cooling thermostat uses a two-pressure air supply similar to that described for occupied/unoccupied thermostats.

Multistage thermostats are arranged to operate two or more successive steps in sequence.

A submaster thermostat has its set point raised or lowered over a predetermined range, in accordance with variations in output from a master controller. The master controller can be a thermostat, manual switch, pressure controller or similar device. For example, a master thermostat measuring outdoor air temperature can be used to readjust the set point of a submaster thermostat that controls the water temperature in a heating system.

A wet-bulb thermostat is often used (in combination with a dry-bulb thermostat) for humidity control. Using a wick or another means of keeping the bulb wet with pure (distilled) water and rapid air motion to ensure a true wet-bulb measurement is essential. Wet-bulb thermostats are seldom used.

A dew-point thermostat is designed to control dew-point temperatures.

***U*-FACTOR (THERMAL TRANSMITTANCE).** The coefficient of heat transmission (air to air) through a building component or assembly, equal to the time rate of heat flow per unit area and unit temperature difference between the warm side and cold side air films (Btu/h · ft^2 · °F) [W/(m^2 · K)].

❖ Thermal transmittance (*U*-factor) is a measure of how well a material or series of materials conducts heat. *U*-factors for window and door assemblies are the reciprocal of the assembly *R*-value:

$$U\text{-factor} = \frac{1}{R\text{-value}}$$

For other building assemblies, such as a wall or roof/ceiling, the *R*-value used in the above equation is the *R*-value of the entire assembly, not just the insulation. This distinction is important and reflects the provisions of Sections N1102.1.4 and N1102.1.5. It also explains why there are differences between the comparable values of Tables N1102.1.2 and N1102.1.4.

The *U*-factors will be used in a number of locations of the code. When using the performance options or the "total UA alternative" (see Section N1102.1.4), the individual thermal transmittance (*U*-factor) of each element is multiplied by the area of each envelope component (walls, floors and ceilings) and the area of each fenestration element (doors, windows and skylights). Therefore, the UA is simply the *U*-factor times the area. For example, a 400-square-foot (37 m^2) wall with a *U*-factor of 0.082 would result in a UA of 32.8 (400 × 0.082 = 32.8). The total UA would simply be the sum of all of the individual UAs for each building element (walls, floors, ceilings, doors, windows and skylights).

VENTILATION AIR. That portion of supply air that comes from outside (outdoors) plus any recirculated air that has been treated to maintain the desired quality of air within a designated space.

❖ Ventilation air can be used for comfort cooling, control of air contaminants, equipment cooling and replenishing oxygen levels (see commentary, "Ventilation").

VISIBLE TRANSMITTANCE [VT]. The ratio of visible light entering the space through the fenestration product assembly to the incident visible light, Visible Transmittance, includes the effects of glazing material and frame and is expressed as a number between 0 and 1.

❖ The required SHGC rating for glazed fenestration has been continuously lowered such that the amount of light admitted by the glazing is lower. With the advent of requirements for daylighting, the need is for fenestration to admit light; thus, there are opposing needs in the code. The visible transmittance of glazing is now an issue and is therefore defined in the code.

WHOLE HOUSE MECHANICAL VENTILATION SYSTEM. An exhaust system, supply system, or combination thereof that is designed to mechanically exchange indoor air with outdoor air when operating continuously or through a programmed intermittent schedule to satisfy the whole house ventilation rates.

❖ Because the construction of buildings is increasingly more air tight, the IMC now requires whole house mechanical ventilation when the measured air leakage rate is lower than a threshold amount. The IECC contains requirements for fan efficacy.

ZONE. A space or group of spaces within a building with heating or cooling requirements that are sufficiently similar so that desired conditions can be maintained throughout using a single controlling device.

❖ The simplest all-air system is a supply unit serving a single-temperature control zone. Ideally, this system responds completely to the space needs and well-designed control systems maintain temperature and humidity closely and efficiently. Single-zone systems can be shut down when not required without affecting the operation of adjacent areas. Thus, the concept of "zoning" for temperature control requires discussion.

Exterior Zoning. Exterior zones are affected by varying weather conditions—wind, temperature and sun—and, depending on the geographic area and season, require both heating and cooling. This variation gives the designer considerable flexibility in choosing a sys-

INTERNATIONAL CODE COUNCIL®
Copyright © 2015 ICC. ALL RIGHTS RESERVED. Accessed by David Dammon on Jun 21, 2017 12:30:52 PM pursuant to License Agreement with ICC. No further reproduction or distribution authorized. ANY UNAUTHORIZED REPRODUCTION OR DISTRIBUTION IS A VIOLATION OF THE FEDERAL COPYRIGHT ACT AND THE LICENSE AGREEMENT, AND SUBJECT TO CIVIL AND CRIMINAL PENALTIES THEREUNDER.

tem and results in the greatest advantages. The need for separate perimeter zone heating is determined by:

- Severity of the heating load (i.e., geographic location).
- Nature and orientation of the building envelope.
- Effects of downdraft at windows and the radiant effect of the cold glass surface (type of glass, area, height and *U*-factor).
- Type of occupancy (sedentary versus transient).
- Operating costs (in buildings such as offices and schools that are occupied for considerable periods). Fan-operating costs can be reduced by heating with perimeter radiation during unoccupied periods, rather than operating the main supply fans or local unit fans.

Interior Zoning. Conditions in interior spaces are relatively constant because they are isolated from external influences. Usually, interior spaces require cooling throughout the year. Interior spaces with a roof exposure, however, may require similar treatment to perimeter spaces requiring heat. To summarize, zone control is required when the conditions at the thermostat are not representative of all the rooms or the entire exposure. This situation will almost certainly occur if any of the following conditions exist:

- The building has more than one level.
- One or more spaces are used for entertaining large groups.
- One or more spaces have large glass areas.
- The building has an indoor swimming pool or hot tub.
- The building has a solarium or atrium. In addition, zoning may be required when several rooms or spaces are isolated from each other and from the thermostat.
- The building spreads out in many directions (wings). Some spaces are distinctly isolated from the rest of the building.
- The envelope only has one or two exposures.
- The building has a room or rooms in a basement.
- The building has a room or rooms in an attic space.
- The building has one or more rooms with a slab or exposed floor.
- There are discrete heating/cooling duct systems for each zone requiring control.
- There are automatic zone damper systems in a single heating/cooling duct system.

N1101.7 (R301.1) Climate zones. Climate zones from Figure N1101.7 or Table N1101.7 shall be used in determining the applicable requirements in Sections N1101 through N1111. Locations not in Table N1101.7 (outside the United States) shall be assigned a climate zone based on Section N1101.10.2.

❖ Climate involves temperature, moisture, wind and sun and also includes both daily and seasonal patterns of variation of the parameters. To account for these variations, the code establishes climate zones that serve as the basis for the code provisions.

This section serves as the starting point for determining virtually all of the code requirements, especially under the prescriptive compliance paths. Because of their easy-to-understand graphic nature, maps have proven useful over the years as an effective way to enable code users to determine climate-dependent requirements. Therefore, for the United States, the climate zones are shown in the map in Figure N1101.7. Because of the limited size of the map, the code also includes a listing of the climate zones by states and counties in Table N1101.7. Table N1101.7 will allow users to positively identify climate-zone assignments in those few locations for which the map interpretation may be difficult. Whether the map or the county list is used, the climate classification for each area will be the same.

When dealing with the prescriptive compliance paths, the code user would simply look at the map or listing and select the proper climate zone based on the location of the building. When using a performance approach, additional climatic data may be needed.

Virtually every building energy code that has been developed for use in the United States has included a performance-based compliance path, which allows users to perform an energy analysis and demonstrate compliance based on equivalence with the prescriptive requirements. To perform these analyses, users must select appropriate weather data for their given project's location. The selection of appropriate weather data is straightforward for any project located in or around one of the various weather stations within the United States. For other locations, selecting the most appropriate weather site can be problematic. The codes themselves provide little guidance to help with this selection process. During the development of the new climate zones, the developers mapped every county in the United States to the most appropriate SAMSON station (National Climatic Data Center "Solar and Meteorological Surface Observation Network" station) for each county as a whole. This mapping is not included within the code but may be used in some compliance software. Designating an appropriate SAMSON station should not be considered to be the only climate data permitted for a given county. It could, however, be used in the absence of better information. Where local data better reflects regional or microclimatic conditions of an area, they would be appropriate to use. For example, elevation has a large impact on climate and can vary dramatically within individual counties, especially in the western United States. Where elevation differences are significant, code officials may require use of sites that differ from the sites designated as being the most appropriate for the county. For additional information on this topic, review the paper "Climate Classification for Building Energy Codes and Standards."

INTERNATIONAL CODE COUNCIL®
Copyright © 2015 ICC. ALL RIGHTS RESERVED. Accessed by David Dammon on Jun 21, 2017 12:30:52 PM pursuant to License Agreement with ICC. No further reproduction or distribution authorized. ANY UNAUTHORIZED REPRODUCTION OR DISTRIBUTION IS A VIOLATION OF THE FEDERAL COPYRIGHT ACT AND THE LICENSE AGREEMENT, AND SUBJECT TO CIVIL AND CRIMINAL PENALTIES THEREUNDER.

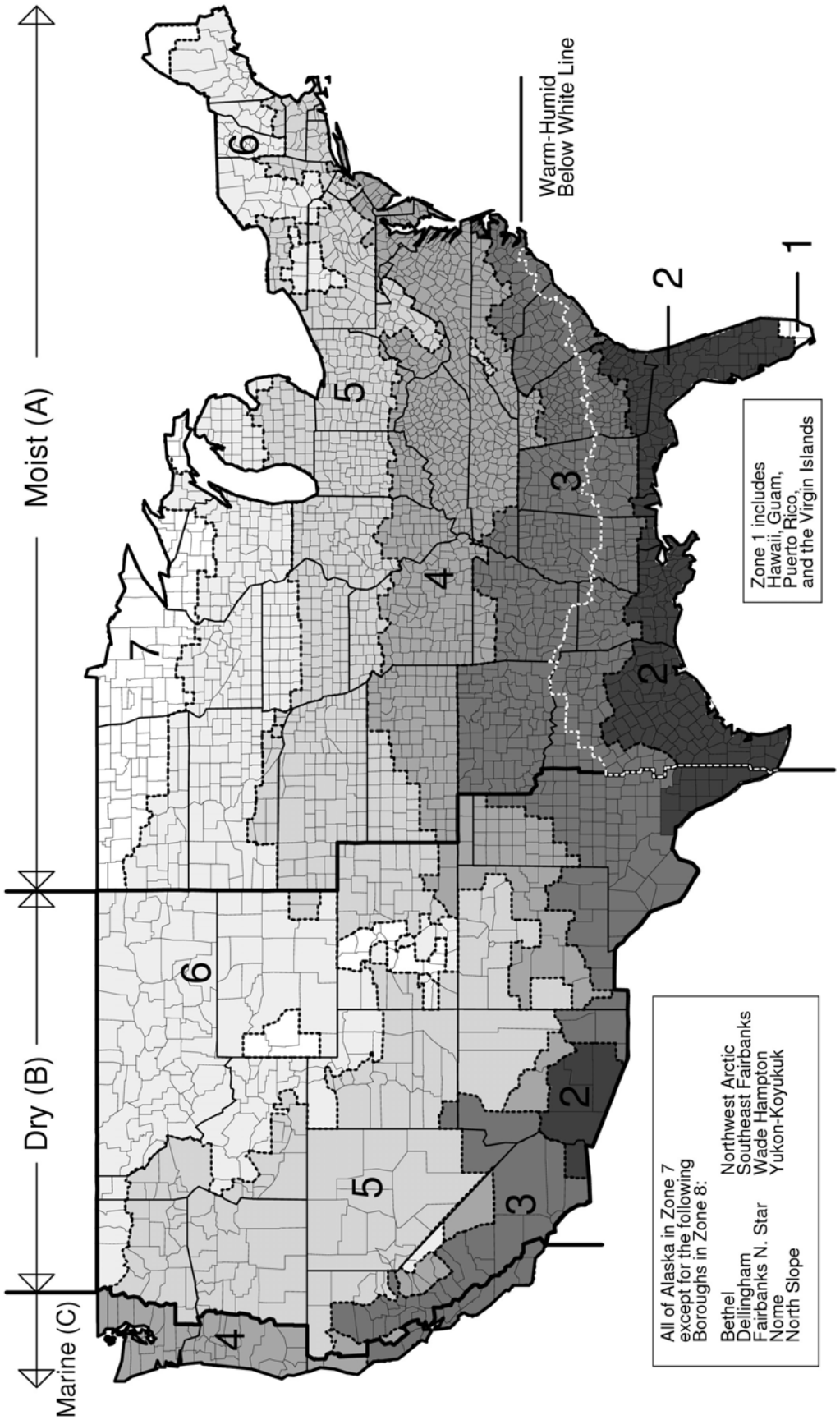

FIGURE N1101.7 (R301.1)
CLIMATE ZONES

INTERNATIONAL CODE COUNCIL®
Copyright © 2015 ICC. ALL RIGHTS RESERVED. Accessed by David Dammon on Jun 21, 2017 12:30:52 PM pursuant to License Agreement with ICC. No further reproduction or distribution authorized. ANY UNAUTHORIZED REPRODUCTION OR DISTRIBUTION IS A VIOLATION OF THE FEDERAL COPYRIGHT ACT AND THE LICENSE AGREEMENT, AND SUBJECT TO CIVIL AND CRIMINAL PENALTIES THEREUNDER.

TABLE N1101.7 (R301.1)
CLIMATE ZONES, MOISTURE REGIMES, AND WARM-HUMID DESIGNATIONS BY STATE, COUNTY AND TERRITORY

Key: A – Moist, B – Dry, C – Marine. Absence of moisture designation indicates moisture regime is irrelevant. Asterisk (*) indicates a warm-humid location.

US STATES

ALABAMA

3A Autauga*
2A Baldwin*
3A Barbour*
3A Bibb
3A Blount
3A Bullock*
3A Butler*
3A Calhoun
3A Chambers
3A Cherokee
3A Chilton
3A Choctaw*
3A Clarke*
3A Clay
3A Cleburne
3A Coffee*
3A Colbert
3A Conecuh*
3A Coosa
3A Covington*
3A Crenshaw*
3A Cullman
3A Dale*
3A Dallas*
3A DeKalb
3A Elmore*
3A Escambia*
3A Etowah
3A Fayette
3A Franklin
3A Geneva*
3A Greene
3A Hale
3A Henry*
3A Houston*
3A Jackson
3A Jefferson
3A Lamar
3A Lauderdale
3A Lawrence
3A Lee
3A Limestone
3A Lowndes*
3A Macon*
3A Madison
3A Marengo*
3A Marion
3A Marshall
2A Mobile*
3A Monroe*
3A Montgomery*
3A Morgan
3A Perry*
3A Pickens
3A Pike*
3A Randolph
3A Russell*
3A Shelby
3A St. Clair
3A Sumter
3A Talladega
3A Tallapoosa
3A Tuscaloosa
3A Walker
3A Washington*
3A Wilcox*
3A Winston

ALASKA

7 Aleutians East
7 Aleutians West
7 Anchorage
8 Bethel
7 Bristol Bay
7 Denali
8 Dillingham
8 Fairbanks North Star
7 Haines
7 Juneau
7 Kenai Peninsula
7 Ketchikan Gateway
7 Kodiak Island
7 Lake and Peninsula
7 Matanuska-Susitna
8 Nome
8 North Slope
8 Northwest Arctic
7 Prince of Wales Outer Ketchikan
7 Sitka
7 Skagway-Hoonah-Angoon
8 Southeast Fairbanks
7 Valdez-Cordova
8 Wade Hampton
7 Wrangell-Petersburg
7 Yakutat
8 Yukon-Koyukuk

ARIZONA

5B Apache
3B Cochise
5B Coconino
4B Gila
3B Graham
3B Greenlee
2B La Paz
2B Maricopa
3B Mohave
5B Navajo
2B Pima
2B Pinal
3B Santa Cruz
4B Yavapai
2B Yuma

ARKANSAS

3A Arkansas
3A Ashley
4A Baxter
4A Benton
4A Boone
3A Bradley
3A Calhoun
4A Carroll
3A Chicot
3A Clark
3A Clay
3A Cleburne
3A Cleveland
3A Columbia*
3A Conway
3A Craighead
3A Crawford
3A Crittenden
3A Cross
3A Dallas
3A Desha
3A Drew
3A Faulkner
3A Franklin
4A Fulton
3A Garland
3A Grant
3A Greene
3A Hempstead*
3A Hot Spring
3A Howard
3A Independence
4A Izard
3A Jackson
3A Jefferson
3A Johnson
3A Lafayette*
3A Lawrence
3A Lee
3A Lincoln
3A Little River*
3A Logan
3A Lonoke
4A Madison
4A Marion
3A Miller*
3A Mississippi
3A Monroe
3A Montgomery
3A Nevada
4A Newton
3A Ouachita
3A Perry
3A Phillips
3A Pike
3A Poinsett
3A Polk
3A Pope
3A Prairie
3A Pulaski
3A Randolph
3A Saline
3A Scott
4A Searcy
3A Sebastian
3A Sevier*
3A Sharp
3A St. Francis
4A Stone
3A Union*
3A Van Buren
4A Washington
3A White
3A Woodruff
3A Yell

CALIFORNIA

3C Alameda
6B Alpine
4B Amador
3B Butte
4B Calaveras
3B Colusa
3B Contra Costa
4C Del Norte
4B El Dorado
3B Fresno
3B Glenn

(continued)

INTERNATIONAL CODE COUNCIL®
Copyright © 2015 ICC. ALL RIGHTS RESERVED. Accessed by David Dammon on Jun 21, 2017 12:30:52 PM pursuant to License Agreement with ICC. No further reproduction or distribution authorized. ANY UNAUTHORIZED REPRODUCTION OR DISTRIBUTION IS A VIOLATION OF THE FEDERAL COPYRIGHT ACT AND THE LICENSE AGREEMENT, AND SUBJECT TO CIVIL AND CRIMINAL PENALTIES THEREUNDER.

TABLE N1101.7 (R301.1)—continued
CLIMATE ZONES, MOISTURE REGIMES, AND WARM-HUMID DESIGNATIONS BY STATE, COUNTY AND TERRITORY

4C Humboldt
2B Imperial
4B Inyo
3B Kern
3B Kings
4B Lake
5B Lassen
3B Los Angeles
3B Madera
3C Marin
4B Mariposa
3C Mendocino
3B Merced
5B Modoc
6B Mono
3C Monterey
3C Napa
5B Nevada
3B Orange
3B Placer
5B Plumas
3B Riverside
3B Sacramento
3C San Benito
3B San Bernardino
3B San Diego
3C San Francisco
3B San Joaquin
3C San Luis Obispo
3C San Mateo
3C Santa Barbara
3C Santa Clara
3C Santa Cruz
3B Shasta
5B Sierra
5B Siskiyou
3B Solano
3C Sonoma
3B Stanislaus
3B Sutter
3B Tehama
4B Trinity
3B Tulare
4B Tuolumne
3C Ventura
3B Yolo
3B Yuba

COLORADO

5B Adams
6B Alamosa
5B Arapahoe
6B Archuleta
4B Baca
5B Bent
5B Boulder
5B Broomfield
6B Chaffee
5B Cheyenne
7 Clear Creek
6B Conejos
6B Costilla
5B Crowley
6B Custer
5B Delta
5B Denver
6B Dolores
5B Douglas
6B Eagle
5B Elbert
5B El Paso
5B Fremont
5B Garfield
5B Gilpin
7 Grand
7 Gunnison
7 Hinsdale
5B Huerfano
7 Jackson
5B Jefferson
5B Kiowa
5B Kit Carson
7 Lake
5B La Plata
5B Larimer
4B Las Animas
5B Lincoln
5B Logan
5B Mesa
7 Mineral
6B Moffat
5B Montezuma
5B Montrose
5B Morgan
4B Otero
6B Ouray
7 Park
5B Phillips
7 Pitkin
5B Prowers
5B Pueblo
6B Rio Blanco
7 Rio Grande
7 Routt
6B Saguache
7 San Juan
6B San Miguel
5B Sedgwick
7 Summit
5B Teller
5B Washington
5B Weld
5B Yuma

CONNECTICUT

5A (all)

DELAWARE

4A (all)

DISTRICT OF COLUMBIA

4A (all)

FLORIDA

2A Alachua*
2A Baker*
2A Bay*
2A Bradford*
2A Brevard*
1A Broward*
2A Calhoun*
2A Charlotte*
2A Citrus*
2A Clay*
2A Collier*
2A Columbia*
2A DeSoto*
2A Dixie*
2A Duval*
2A Escambia*
2A Flagler*
2A Franklin*
2A Gadsden*
2A Gilchrist*
2A Glades*
2A Gulf*
2A Hamilton*
2A Hardee*
2A Hendry*
2A Hernando*
2A Highlands*
2A Hillsborough*
2A Holmes*
2A Indian River*
2A Jackson*
2A Jefferson*
2A Lafayette*
2A Lake*
2A Lee*
2A Leon*
2A Levy*
2A Liberty*
2A Madison*
2A Manatee*
2A Marion*
2A Martin*
1A Miami-Dade*
1A Monroe*
2A Nassau*
2A Okaloosa*
2A Okeechobee*
2A Orange*
2A Osceola*
2A Palm Beach*
2A Pasco*
2A Pinellas*
2A Polk*
2A Putnam*
2A Santa Rosa*
2A Sarasota*
2A Seminole*
2A St. Johns*
2A St. Lucie*
2A Sumter*
2A Suwannee*
2A Taylor*
2A Union*
2A Volusia*
2A Wakulla*
2A Walton*
2A Washington*

GEORGIA

2A Appling*
2A Atkinson*
2A Bacon*
2A Baker*
3A Baldwin
4A Banks
3A Barrow
3A Bartow
3A Ben Hill*
2A Berrien*
3A Bibb
3A Bleckley*
2A Brantley*
2A Brooks*
2A Bryan*
3A Bulloch*
3A Burke
3A Butts
3A Calhoun*
2A Camden*
3A Candler*
3A Carroll
4A Catoosa
2A Charlton*
2A Chatham*
3A Chattahoochee*
4A Chattooga
3A Cherokee
3A Clarke
3A Clay*
3A Clayton
2A Clinch*
3A Cobb
3A Coffee*
2A Colquitt*
3A Columbia
2A Cook*
3A Coweta

(continued)

INTERNATIONAL CODE COUNCIL®
Copyright © 2015 ICC. ALL RIGHTS RESERVED. Accessed by David Dammon on Jun 21, 2017 12:30:52 PM pursuant to License Agreement with ICC. No further reproduction or distribution authorized. ANY UNAUTHORIZED REPRODUCTION OR DISTRIBUTION IS A VIOLATION OF THE FEDERAL COPYRIGHT ACT AND THE LICENSE AGREEMENT, AND SUBJECT TO CIVIL AND CRIMINAL PENALTIES THEREUNDER.

TABLE N1101.7 (R301.1)—continued
CLIMATE ZONES, MOISTURE REGIMES, AND WARM-HUMID DESIGNATIONS BY STATE, COUNTY AND TERRITORY

3A Crawford
3A Crisp*
4A Dade
4A Dawson
2A Decatur*
3A DeKalb
3A Dodge*
3A Dooly*
3A Dougherty*
3A Douglas
3A Early*
2A Echols*
2A Effingham*
3A Elbert
3A Emanuel*
2A Evans*
4A Fannin
3A Fayette
4A Floyd
3A Forsyth
4A Franklin
3A Fulton
4A Gilmer
3A Glascock
2A Glynn*
4A Gordon
2A Grady*
3A Greene
3A Gwinnett
4A Habersham
4A Hall
3A Hancock
3A Haralson
3A Harris
3A Hart
3A Heard
3A Henry
3A Houston*
3A Irwin*
3A Jackson
3A Jasper
2A Jeff Davis*
3A Jefferson
3A Jenkins*
3A Johnson*
3A Jones
3A Lamar
2A Lanier*
3A Laurens*
3A Lee*
2A Liberty*
3A Lincoln
2A Long*
2A Lowndes*
4A Lumpkin
3A Macon*
3A Madison
3A Marion*
3A McDuffie
2A McIntosh*
3A Meriwether
2A Miller*
2A Mitchell*
3A Monroe
3A Montgomery*
3A Morgan
4A Murray
3A Muscogee
3A Newton
3A Oconee
3A Oglethorpe
3A Paulding
3A Peach*
4A Pickens
2A Pierce*
3A Pike
3A Polk
3A Pulaski*
3A Putnam
3A Quitman*
4A Rabun
3A Randolph*
3A Richmond
3A Rockdale
3A Schley*
3A Screven*
2A Seminole*
3A Spalding
4A Stephens
3A Stewart*
3A Sumter*
3A Talbot
3A Taliaferro
2A Tattnall*
3A Taylor*
3A Telfair*
3A Terrell*
2A Thomas*
3A Tift*
2A Toombs*
4A Towns
3A Treutlen*
3A Troup
3A Turner*
3A Twiggs*
4A Union
3A Upson
4A Walker
3A Walton
2A Ware*
3A Warren
3A Washington
2A Wayne*
3A Webster*
3A Wheeler*
4A White
4A Whitfield
3A Wilcox*
3A Wilkes
3A Wilkinson
3A Worth*

HAWAII

1A (all)*

IDAHO

5B Ada
6B Adams
6B Bannock
6B Bear Lake
5B Benewah
6B Bingham
6B Blaine
6B Boise
6B Bonner
6B Bonneville
6B Boundary
6B Butte
6B Camas
5B Canyon
6B Caribou
5B Cassia
6B Clark
5B Clearwater
6B Custer
5B Elmore
6B Franklin
6B Fremont
5B Gem
5B Gooding
5B Idaho
6B Jefferson
5B Jerome
5B Kootenai
5B Latah
6B Lemhi
5B Lewis
5B Lincoln
6B Madison
5B Minidoka
5B Nez Perce
6B Oneida
5B Owyhee
5B Payette
5B Power
5B Shoshone
6B Teton
5B Twin Falls
6B Valley
5B Washington

ILLINOIS

5A Adams
4A Alexander
4A Bond
5A Boone
5A Brown
5A Bureau
5A Calhoun
5A Carroll
5A Cass
5A Champaign
4A Christian
5A Clark
4A Clay
4A Clinton
5A Coles
5A Cook
4A Crawford
5A Cumberland
5A DeKalb
5A De Witt
5A Douglas
5A DuPage
5A Edgar
4A Edwards
4A Effingham
4A Fayette
5A Ford
4A Franklin
5A Fulton
4A Gallatin
5A Greene
5A Grundy
4A Hamilton
5A Hancock
4A Hardin
5A Henderson
5A Henry
5A Iroquois
4A Jackson
4A Jasper
4A Jefferson
5A Jersey
5A Jo Daviess
4A Johnson
5A Kane
5A Kankakee
5A Kendall
5A Knox
5A Lake
5A La Salle
4A Lawrence
5A Lee
5A Livingston
5A Logan
5A Macon
4A Macoupin
4A Madison
4A Marion
5A Marshall
5A Mason
4A Massac
5A McDonough
5A McHenry

(continued)

INTERNATIONAL CODE COUNCIL®
Copyright © 2015 ICC. ALL RIGHTS RESERVED. Accessed by David Dammon on Jun 21, 2017 12:30:52 PM pursuant to License Agreement with ICC. No further reproduction or distribution authorized. ANY UNAUTHORIZED REPRODUCTION OR DISTRIBUTION IS A VIOLATION OF THE FEDERAL COPYRIGHT ACT AND THE LICENSE AGREEMENT, AND SUBJECT TO CIVIL AND CRIMINAL PENALTIES THEREUNDER.

TABLE N1101.7 (R301.1)—continued
CLIMATE ZONES, MOISTURE REGIMES, AND WARM-HUMID DESIGNATIONS BY STATE, COUNTY AND TERRITORY

5A McLean
5A Menard
5A Mercer
4A Monroe
4A Montgomery
5A Morgan
5A Moultrie
5A Ogle
5A Peoria
4A Perry
5A Piatt
5A Pike
4A Pope
4A Pulaski
5A Putnam
4A Randolph
4A Richland
5A Rock Island
4A Saline
5A Sangamon
5A Schuyler
5A Scott
4A Shelby
5A Stark
4A St. Clair
5A Stephenson
5A Tazewell
4A Union
5A Vermilion
4A Wabash
5A Warren
4A Washington
4A Wayne
4A White
5A Whiteside
5A Will
4A Williamson
5A Winnebago
5A Woodford

INDIANA

5A Adams
5A Allen
5A Bartholomew
5A Benton
5A Blackford
5A Boone
4A Brown
5A Carroll
5A Cass
4A Clark
5A Clay
5A Clinton
4A Crawford
4A Daviess
4A Dearborn
5A Decatur
5A De Kalb
5A Delaware
4A Dubois
5A Elkhart
5A Fayette
4A Floyd
5A Fountain
5A Franklin
5A Fulton
4A Gibson
5A Grant
4A Greene
5A Hamilton
5A Hancock
4A Harrison
5A Hendricks
5A Henry
5A Howard
5A Huntington
4A Jackson
5A Jasper
5A Jay
4A Jefferson
4A Jennings
5A Johnson
4A Knox
5A Kosciusko
5A Lagrange
5A Lake
5A La Porte
4A Lawrence
5A Madison
5A Marion
5A Marshall
4A Martin
5A Miami
4A Monroe
5A Montgomery
5A Morgan
5A Newton
5A Noble
4A Ohio
4A Orange
5A Owen
5A Parke
4A Perry
4A Pike
5A Porter
4A Posey
5A Pulaski
5A Putnam
5A Randolph
4A Ripley
5A Rush
4A Scott
5A Shelby
4A Spencer
5A Starke
5A Steuben
5A St. Joseph
4A Sullivan
4A Switzerland
5A Tippecanoe
5A Tipton
5A Union
4A Vanderburgh
5A Vermillion
5A Vigo
5A Wabash
5A Warren
4A Warrick
4A Washington
5A Wayne
5A Wells
5A White
5A Whitley

IOWA

5A Adair
5A Adams
6A Allamakee
5A Appanoose
5A Audubon
5A Benton
6A Black Hawk
5A Boone
6A Bremer
6A Buchanan
6A Buena Vista
6A Butler
6A Calhoun
5A Carroll
5A Cass
5A Cedar
6A Cerro Gordo
6A Cherokee
6A Chickasaw
5A Clarke
6A Clay
6A Clayton
5A Clinton
5A Crawford
5A Dallas
5A Davis
5A Decatur
6A Delaware
5A Des Moines
6A Dickinson
5A Dubuque
6A Emmet
6A Fayette
6A Floyd
6A Franklin
5A Fremont
5A Greene
6A Grundy
5A Guthrie
6A Hamilton
6A Hancock
6A Hardin
5A Harrison
5A Henry
6A Howard
6A Humboldt
6A Ida
5A Iowa
5A Jackson
5A Jasper
5A Jefferson
5A Johnson
5A Jones
5A Keokuk
6A Kossuth
5A Lee
5A Linn
5A Louisa
5A Lucas
6A Lyon
5A Madison
5A Mahaska
5A Marion
5A Marshall
5A Mills
6A Mitchell
5A Monona
5A Monroe
5A Montgomery
5A Muscatine
6A O'Brien
6A Osceola
5A Page
6A Palo Alto
6A Plymouth
6A Pocahontas
5A Polk
5A Pottawattamie
5A Poweshiek
5A Ringgold
6A Sac
5A Scott
5A Shelby
6A Sioux
5A Story
5A Tama
5A Taylor
5A Union
5A Van Buren
5A Wapello
5A Warren
5A Washington
5A Wayne
6A Webster
6A Winnebago

(continued)

INTERNATIONAL CODE COUNCIL®
Copyright © 2015 ICC. ALL RIGHTS RESERVED. Accessed by David Dammon on Jun 21, 2017 12:30:52 PM pursuant to License Agreement with ICC. No further reproduction or distribution authorized. ANY UNAUTHORIZED REPRODUCTION OR DISTRIBUTION IS A VIOLATION OF THE FEDERAL COPYRIGHT ACT AND THE LICENSE AGREEMENT, AND SUBJECT TO CIVIL AND CRIMINAL PENALTIES THEREUNDER.

TABLE N1101.7 (R301.1)—continued
CLIMATE ZONES, MOISTURE REGIMES, AND WARM-HUMID DESIGNATIONS BY STATE, COUNTY AND TERRITORY

6A Winneshiek
5A Woodbury
6A Worth
6A Wright

KANSAS

4A Allen
4A Anderson
4A Atchison
4A Barber
4A Barton
4A Bourbon
4A Brown
4A Butler
4A Chase
4A Chautauqua
4A Cherokee
5A Cheyenne
4A Clark
4A Clay
5A Cloud
4A Coffey
4A Comanche
4A Cowley
4A Crawford
5A Decatur
4A Dickinson
4A Doniphan
4A Douglas
4A Edwards
4A Elk
5A Ellis
4A Ellsworth
4A Finney
4A Ford
4A Franklin
4A Geary
5A Gove
5A Graham
4A Grant
4A Gray
5A Greeley
4A Greenwood
5A Hamilton
4A Harper
4A Harvey
4A Haskell
4A Hodgeman
4A Jackson
4A Jefferson
5A Jewell
4A Johnson
4A Kearny
4A Kingman
4A Kiowa
4A Labette
5A Lane
4A Leavenworth
4A Lincoln
4A Linn
5A Logan
4A Lyon
4A Marion
4A Marshall
4A McPherson
4A Meade
4A Miami
5A Mitchell
4A Montgomery
4A Morris
4A Morton
4A Nemaha
4A Neosho
5A Ness
5A Norton
4A Osage
5A Osborne
4A Ottawa
4A Pawnee
5A Phillips
4A Pottawatomie
4A Pratt
5A Rawlins
4A Reno
5A Republic
4A Rice
4A Riley
5A Rooks
4A Rush
4A Russell
4A Saline
5A Scott
4A Sedgwick
4A Seward
4A Shawnee
5A Sheridan
5A Sherman
5A Smith
4A Stafford
4A Stanton
4A Stevens
4A Sumner
5A Thomas
5A Trego
4A Wabaunsee
5A Wallace
4A Washington
5A Wichita
4A Wilson
4A Woodson
4A Wyandotte

KENTUCKY

4A (all)

LOUISIANA

2A Acadia*
2A Allen*
2A Ascension*
2A Assumption*
2A Avoyelles*
2A Beauregard*
3A Bienville*
3A Bossier*
3A Caddo*
2A Calcasieu*
3A Caldwell*
2A Cameron*
3A Catahoula*
3A Claiborne*
3A Concordia*
3A De Soto*
2A East Baton Rouge*
3A East Carroll
2A East Feliciana*
2A Evangeline*
3A Franklin*
3A Grant*
2A Iberia*
2A Iberville*
3A Jackson*
2A Jefferson*
2A Jefferson Davis*
2A Lafayette*
2A Lafourche*
3A La Salle*
3A Lincoln*
2A Livingston*
3A Madison*
3A Morehouse
3A Natchitoches*
2A Orleans*
3A Ouachita*
2A Plaquemines*
2A Pointe Coupee*
2A Rapides*
3A Red River*
3A Richland*
3A Sabine*
2A St. Bernard*
2A St. Charles*
2A St. Helena*
2A St. James*
2A St. John the Baptist*
2A St. Landry*
2A St. Martin*
2A St. Mary*
2A St. Tammany*
2A Tangipahoa*
3A Tensas*
2A Terrebonne*
3A Union*
2A Vermilion*
3A Vernon*
2A Washington*
3A Webster*
2A West Baton Rouge*
3A West Carroll
2A West Feliciana*
3A Winn*

MAINE

6A Androscoggin
7 Aroostook
6A Cumberland
6A Franklin
6A Hancock
6A Kennebec
6A Knox
6A Lincoln
6A Oxford
6A Penobscot
6A Piscataquis
6A Sagadahoc
6A Somerset
6A Waldo
6A Washington
6A York

MARYLAND

4A Allegany
4A Anne Arundel
4A Baltimore
4A Baltimore (city)
4A Calvert
4A Caroline
4A Carroll
4A Cecil
4A Charles
4A Dorchester
4A Frederick
5A Garrett
4A Harford
4A Howard
4A Kent
4A Montgomery
4A Prince George's
4A Queen Anne's
4A Somerset
4A St. Mary's
4A Talbot
4A Washington
4A Wicomico
4A Worcester

MASSACHSETTS

5A (all)

MICHIGAN

6A Alcona
6A Alger

(continued)

INTERNATIONAL CODE COUNCIL®
Copyright © 2015 ICC. ALL RIGHTS RESERVED. Accessed by David Dammon on Jun 21, 2017 12:30:52 PM pursuant to License Agreement with ICC. No further reproduction or distribution authorized. ANY UNAUTHORIZED REPRODUCTION OR DISTRIBUTION IS A VIOLATION OF THE FEDERAL COPYRIGHT ACT AND THE LICENSE AGREEMENT, AND SUBJECT TO CIVIL AND CRIMINAL PENALTIES THEREUNDER.

TABLE N1101.7 (R301.1)—continued
CLIMATE ZONES, MOISTURE REGIMES, AND WARM-HUMID DESIGNATIONS BY STATE, COUNTY AND TERRITORY

5A Allegan
6A Alpena
6A Antrim
6A Arenac
7 Baraga
5A Barry
5A Bay
6A Benzie
5A Berrien
5A Branch
5A Calhoun
5A Cass
6A Charlevoix
6A Cheboygan
7 Chippewa
6A Clare
5A Clinton
6A Crawford
6A Delta
6A Dickinson
5A Eaton
6A Emmet
5A Genesee
6A Gladwin
7 Gogebic
6A Grand Traverse
5A Gratiot
5A Hillsdale
7 Houghton
6A Huron
5A Ingham
5A Ionia
6A Iosco
7 Iron
6A Isabella
5A Jackson
5A Kalamazoo
6A Kalkaska
5A Kent
7 Keweenaw
6A Lake
5A Lapeer
6A Leelanau
5A Lenawee
5A Livingston
7 Luce
7 Mackinac
5A Macomb
6A Manistee
6A Marquette
6A Mason
6A Mecosta
6A Menominee
5A Midland
6A Missaukee
5A Monroe
5A Montcalm
6A Montmorency
5A Muskegon
6A Newaygo
5A Oakland
6A Oceana
6A Ogemaw
7 Ontonagon
6A Osceola
6A Oscoda
6A Otsego
5A Ottawa
6A Presque Isle
6A Roscommon
5A Saginaw
6A Sanilac
7 Schoolcraft
5A Shiawassee
5A St. Clair
5A St. Joseph
5A Tuscola
5A Van Buren
5A Washtenaw
5A Wayne
6A Wexford

MINNESOTA

7 Aitkin
6A Anoka
7 Becker
7 Beltrami
6A Benton
6A Big Stone
6A Blue Earth
6A Brown
7 Carlton
6A Carver
7 Cass
6A Chippewa
6A Chisago
7 Clay
7 Clearwater
7 Cook
6A Cottonwood
7 Crow Wing
6A Dakota
6A Dodge
6A Douglas
6A Faribault
6A Fillmore
6A Freeborn
6A Goodhue
7 Grant
6A Hennepin
6A Houston
7 Hubbard
6A Isanti
7 Itasca
6A Jackson
7 Kanabec
6A Kandiyohi
7 Kittson
7 Koochiching
6A Lac qui Parle
7 Lake
7 Lake of the Woods
6A Le Sueur
6A Lincoln
6A Lyon
7 Mahnomen
7 Marshall
6A Martin
6A McLeod
6A Meeker
7 Mille Lacs
6A Morrison
6A Mower
6A Murray
6A Nicollet
6A Nobles
7 Norman
6A Olmsted
7 Otter Tail
7 Pennington
7 Pine
6A Pipestone
7 Polk
6A Pope
6A Ramsey
7 Red Lake
6A Redwood
6A Renville
6A Rice
6A Rock
7 Roseau
6A Scott
6A Sherburne
6A Sibley
6A Stearns
6A Steele
6A Stevens
7 St. Louis
6A Swift
6A Todd
6A Traverse
6A Wabasha
7 Wadena
6A Waseca
6A Washington
6A Watonwan
7 Wilkin
6A Winona
6A Wright
6A Yellow Medicine

MISSISSIPPI

3A Adams*
3A Alcorn
3A Amite*
3A Attala
3A Benton
3A Bolivar
3A Calhoun
3A Carroll
3A Chickasaw
3A Choctaw
3A Claiborne*
3A Clarke
3A Clay
3A Coahoma
3A Copiah*
3A Covington*
3A DeSoto
3A Forrest*
3A Franklin*
3A George*
3A Greene*
3A Grenada
2A Hancock*
2A Harrison*
3A Hinds*
3A Holmes
3A Humphreys
3A Issaquena
3A Itawamba
2A Jackson*
3A Jasper
3A Jefferson*
3A Jefferson Davis*
3A Jones*
3A Kemper
3A Lafayette
3A Lamar*
3A Lauderdale
3A Lawrence*
3A Leake
3A Lee
3A Leflore
3A Lincoln*
3A Lowndes
3A Madison
3A Marion*
3A Marshall
3A Monroe
3A Montgomery
3A Neshoba
3A Newton
3A Noxubee
3A Oktibbeha
3A Panola
2A Pearl River*
3A Perry*
3A Pike*

(continued)

INTERNATIONAL CODE COUNCIL®
Copyright © 2015 ICC. ALL RIGHTS RESERVED. Accessed by David Dammon on Jun 21, 2017 12:30:52 PM pursuant to License Agreement with ICC. No further reproduction or distribution authorized. ANY UNAUTHORIZED REPRODUCTION OR DISTRIBUTION IS A VIOLATION OF THE FEDERAL COPYRIGHT ACT AND THE LICENSE AGREEMENT, AND SUBJECT TO CIVIL AND CRIMINAL PENALTIES THEREUNDER.

TABLE N1101.7 (R301.1)—continued
CLIMATE ZONES, MOISTURE REGIMES, AND WARM-HUMID DESIGNATIONS BY STATE, COUNTY AND TERRITORY

3A Pontotoc
3A Prentiss
3A Quitman
3A Rankin*
3A Scott
3A Sharkey
3A Simpson*
3A Smith*
2A Stone*
3A Sunflower
3A Tallahatchie
3A Tate
3A Tippah
3A Tishomingo
3A Tunica
3A Union
3A Walthall*
3A Warren*
3A Washington
3A Wayne*
3A Webster
3A Wilkinson*
3A Winston
3A Yalobusha
3A Yazoo

MISSOURI

5A Adair
5A Andrew
5A Atchison
4A Audrain
4A Barry
4A Barton
4A Bates
4A Benton
4A Bollinger
4A Boone
5A Buchanan
4A Butler
5A Caldwell
4A Callaway
4A Camden
4A Cape Girardeau
4A Carroll
4A Carter
4A Cass
4A Cedar
5A Chariton
4A Christian
5A Clark
4A Clay
5A Clinton
4A Cole
4A Cooper
4A Crawford
4A Dade
4A Dallas
5A Daviess
5A DeKalb
4A Dent
4A Douglas
4A Dunklin
4A Franklin
4A Gasconade
5A Gentry
4A Greene
5A Grundy
5A Harrison
4A Henry
4A Hickory
5A Holt
4A Howard
4A Howell
4A Iron
4A Jackson
4A Jasper
4A Jefferson
4A Johnson
5A Knox
4A Laclede
4A Lafayette
4A Lawrence
5A Lewis
4A Lincoln
5A Linn
5A Livingston
5A Macon
4A Madison
4A Maries
5A Marion
4A McDonald
5A Mercer
4A Miller
4A Mississippi
4A Moniteau
4A Monroe
4A Montgomery
4A Morgan
4A New Madrid
4A Newton
5A Nodaway
4A Oregon
4A Osage
4A Ozark
4A Pemiscot
4A Perry
4A Pettis
4A Phelps
5A Pike
4A Platte
4A Polk
4A Pulaski
5A Putnam
5A Ralls
4A Randolph
4A Ray
4A Reynolds
4A Ripley
4A Saline
5A Schuyler
5A Scotland
4A Scott
4A Shannon
5A Shelby
4A St. Charles
4A St. Clair
4A Ste. Genevieve
4A St. Francois
4A St. Louis
4A St. Louis (city)
4A Stoddard
4A Stone
5A Sullivan
4A Taney
4A Texas
4A Vernon
4A Warren
4A Washington
4A Wayne
4A Webster
5A Worth
4A Wright

MONTANA

6B (all)

NEBRASKA

5A (all)

NEVADA

5B Carson City (city)
5B Churchill
3B Clark
5B Douglas
5B Elko
5B Esmeralda
5B Eureka
5B Humboldt
5B Lander
5B Lincoln
5B Lyon
5B Mineral
5B Nye
5B Pershing
5B Storey
5B Washoe
5B White Pine

NEW HAMPSHIRE

6A Belknap
6A Carroll
5A Cheshire
6A Coos
6A Grafton
5A Hillsborough
6A Merrimack
5A Rockingham
5A Strafford
6A Sullivan

NEW JERSEY

4A Atlantic
5A Bergen
4A Burlington
4A Camden
4A Cape May
4A Cumberland
4A Essex
4A Gloucester
4A Hudson
5A Hunterdon
5A Mercer
4A Middlesex
4A Monmouth
5A Morris
4A Ocean
5A Passaic
4A Salem
5A Somerset
5A Sussex
4A Union
5A Warren

NEW MEXICO

4B Bernalillo
5B Catron
3B Chaves
4B Cibola
5B Colfax
4B Curry
4B DeBaca
3B Dona Ana
3B Eddy
4B Grant
4B Guadalupe
5B Harding
3B Hidalgo
3B Lea
4B Lincoln
5B Los Alamos
3B Luna
5B McKinley
5B Mora
3B Otero
4B Quay
5B Rio Arriba
4B Roosevelt
5B Sandoval
5B San Juan
5B San Miguel
5B Santa Fe
4B Sierra
4B Socorro

(continued)

INTERNATIONAL CODE COUNCIL®
Copyright © 2015 ICC. ALL RIGHTS RESERVED. Accessed by David Dammon on Jun 21, 2017 12:30:52 PM pursuant to License Agreement with ICC. No further reproduction or distribution authorized. ANY UNAUTHORIZED REPRODUCTION OR DISTRIBUTION IS A VIOLATION OF THE FEDERAL COPYRIGHT ACT AND THE LICENSE AGREEMENT, AND SUBJECT TO CIVIL AND CRIMINAL PENALTIES THEREUNDER.

TABLE N1101.7 (R301.1)—continued
CLIMATE ZONES, MOISTURE REGIMES, AND WARM-HUMID DESIGNATIONS BY STATE, COUNTY AND TERRITORY

5B Taos
5B Torrance
4B Union
4B Valencia

NEW YORK

5A Albany
6A Allegany
4A Bronx
6A Broome
6A Cattaraugus
5A Cayuga
5A Chautauqua
5A Chemung
6A Chenango
6A Clinton
5A Columbia
5A Cortland
6A Delaware
5A Dutchess
5A Erie
6A Essex
6A Franklin
6A Fulton
5A Genesee
5A Greene
6A Hamilton
6A Herkimer
6A Jefferson
4A Kings
6A Lewis
5A Livingston
6A Madison
5A Monroe
6A Montgomery
4A Nassau
4A New York
5A Niagara
6A Oneida
5A Onondaga
5A Ontario
5A Orange
5A Orleans
5A Oswego
6A Otsego
5A Putnam
4A Queens
5A Rensselaer
4A Richmond
5A Rockland
5A Saratoga
5A Schenectady
6A Schoharie
6A Schuyler
5A Seneca
6A Steuben
6A St. Lawrence
4A Suffolk
6A Sullivan
5A Tioga
6A Tompkins
6A Ulster
6A Warren
5A Washington
5A Wayne
4A Westchester
6A Wyoming
5A Yates

NORTH CAROLINA

4A Alamance
4A Alexander
5A Alleghany
3A Anson
5A Ashe
5A Avery
3A Beaufort
4A Bertie
3A Bladen
3A Brunswick*
4A Buncombe
4A Burke
3A Cabarrus
4A Caldwell
3A Camden
3A Carteret*
4A Caswell
4A Catawba
4A Chatham
4A Cherokee
3A Chowan
4A Clay
4A Cleveland
3A Columbus*
3A Craven
3A Cumberland
3A Currituck
3A Dare
3A Davidson
4A Davie
3A Duplin
4A Durham
3A Edgecombe
4A Forsyth
4A Franklin
3A Gaston
4A Gates
4A Graham
4A Granville
3A Greene
4A Guilford
4A Halifax
4A Harnett
4A Haywood
4A Henderson
4A Hertford
3A Hoke
3A Hyde
4A Iredell
4A Jackson
3A Johnston
3A Jones
4A Lee
3A Lenoir
4A Lincoln
4A Macon
4A Madison
3A Martin
4A McDowell
3A Mecklenburg
5A Mitchell
3A Montgomery
3A Moore
4A Nash
3A New Hanover*
4A Northampton
3A Onslow*
4A Orange
3A Pamlico
3A Pasquotank
3A Pender*
3A Perquimans
4A Person
3A Pitt
4A Polk
3A Randolph
3A Richmond
3A Robeson
4A Rockingham
3A Rowan
4A Rutherford
3A Sampson
3A Scotland
3A Stanly
4A Stokes
4A Surry
4A Swain
4A Transylvania
3A Tyrrell
3A Union
4A Vance
4A Wake
4A Warren
3A Washington
5A Watauga
3A Wayne
4A Wilkes
3A Wilson
4A Yadkin
5A Yancey

NORTH DAKOTA

6A Adams
7 Barnes
7 Benson
6A Billings
7 Bottineau
6A Bowman
7 Burke
6A Burleigh
7 Cass
7 Cavalier
6A Dickey
7 Divide
6A Dunn
7 Eddy
6A Emmons
7 Foster
6A Golden Valley
7 Grand Forks
6A Grant
7 Griggs
6A Hettinger
7 Kidder
6A LaMoure
6A Logan
7 McHenry
6A McIntosh
6A McKenzie
7 McLean
6A Mercer
6A Morton
7 Mountrail
7 Nelson
6A Oliver
7 Pembina
7 Pierce
7 Ramsey
6A Ransom
7 Renville
6A Richland
7 Rolette
6A Sargent
7 Sheridan
6A Sioux
6A Slope
6A Stark
7 Steele
7 Stutsman
7 Towner
7 Traill
7 Walsh
7 Ward
7 Wells
7 Williams

OHIO

4A Adams
5A Allen

(continued)

INTERNATIONAL CODE COUNCIL®
Copyright © 2015 ICC. ALL RIGHTS RESERVED. Accessed by David Dammon on Jun 21, 2017 12:30:52 PM pursuant to License Agreement with ICC. No further reproduction or distribution authorized. ANY UNAUTHORIZED REPRODUCTION OR DISTRIBUTION IS A VIOLATION OF THE FEDERAL COPYRIGHT ACT AND THE LICENSE AGREEMENT, AND SUBJECT TO CIVIL AND CRIMINAL PENALTIES THEREUNDER.

TABLE N1101.7 (R301.1)—continued
CLIMATE ZONES, MOISTURE REGIMES, AND WARM-HUMID DESIGNATIONS BY STATE, COUNTY AND TERRITORY

5A Ashland
5A Ashtabula
5A Athens
5A Auglaize
5A Belmont
4A Brown
5A Butler
5A Carroll
5A Champaign
5A Clark
4A Clermont
5A Clinton
5A Columbiana
5A Coshocton
5A Crawford
5A Cuyahoga
5A Darke
5A Defiance
5A Delaware
5A Erie
5A Fairfield
5A Fayette
5A Franklin
5A Fulton
4A Gallia
5A Geauga
5A Greene
5A Guernsey
4A Hamilton
5A Hancock
5A Hardin
5A Harrison
5A Henry
5A Highland
5A Hocking
5A Holmes
5A Huron
5A Jackson
5A Jefferson
5A Knox
5A Lake
4A Lawrence
5A Licking
5A Logan
5A Lorain
5A Lucas
5A Madison
5A Mahoning
5A Marion
5A Medina
5A Meigs
5A Mercer
5A Miami
5A Monroe
5A Montgomery
5A Morgan
5A Morrow
5A Muskingum
5A Noble
5A Ottawa
5A Paulding
5A Perry
5A Pickaway
4A Pike
5A Portage
5A Preble
5A Putnam
5A Richland
5A Ross
5A Sandusky
4A Scioto
5A Seneca
5A Shelby
5A Stark
5A Summit
5A Trumbull
5A Tuscarawas
5A Union
5A Van Wert
5A Vinton
5A Warren
4A Washington
5A Wayne
5A Williams
5A Wood
5A Wyandot

OKLAHOMA

3A Adair
3A Alfalfa
3A Atoka
4B Beaver
3A Beckham
3A Blaine
3A Bryan
3A Caddo
3A Canadian
3A Carter
3A Cherokee
3A Choctaw
4B Cimarron
3A Cleveland
3A Coal
3A Comanche
3A Cotton
3A Craig
3A Creek
3A Custer
3A Delaware
3A Dewey
3A Ellis
3A Garfield
3A Garvin
3A Grady
3A Grant
3A Greer
3A Harmon
3A Harper
3A Haskell
3A Hughes
3A Jackson
3A Jefferson
3A Johnston
3A Kay
3A Kingfisher
3A Kiowa
3A Latimer
3A Le Flore
3A Lincoln
3A Logan
3A Love
3A Major
3A Marshall
3A Mayes
3A McClain
3A McCurtain
3A McIntosh
3A Murray
3A Muskogee
3A Noble
3A Nowata
3A Okfuskee
3A Oklahoma
3A Okmulgee
3A Osage
3A Ottawa
3A Pawnee
3A Payne
3A Pittsburg
3A Pontotoc
3A Pottawatomie
3A Pushmataha
3A Roger Mills
3A Rogers
3A Seminole
3A Sequoyah
3A Stephens
4B Texas
3A Tillman
3A Tulsa
3A Wagoner
3A Washington
3A Washita
3A Woods
3A Woodward

OREGON

5B Baker
4C Benton
4C Clackamas
4C Clatsop
4C Columbia
4C Coos
5B Crook
4C Curry
5B Deschutes
4C Douglas
5B Gilliam
5B Grant
5B Harney
5B Hood River
4C Jackson
5B Jefferson
4C Josephine
5B Klamath
5B Lake
4C Lane
4C Lincoln
4C Linn
5B Malheur
4C Marion
5B Morrow
4C Multnomah
4C Polk
5B Sherman
4C Tillamook
5B Umatilla
5B Union
5B Wallowa
5B Wasco
4C Washington
5B Wheeler
4C Yamhill

PENNSYLVANIA

5A Adams
5A Allegheny
5A Armstrong
5A Beaver
5A Bedford
5A Berks
5A Blair
5A Bradford
4A Bucks
5A Butler
5A Cambria
6A Cameron
5A Carbon
5A Centre
4A Chester
5A Clarion
6A Clearfield
5A Clinton
5A Columbia
5A Crawford
5A Cumberland
5A Dauphin
4A Delaware
6A Elk
5A Erie
5A Fayette
5A Forest
5A Franklin
5A Fulton
5A Greene

(continued)

INTERNATIONAL CODE COUNCIL®
Copyright © 2015 ICC. ALL RIGHTS RESERVED. Accessed by David Dammon on Jun 21, 2017 12:30:52 PM pursuant to License Agreement with ICC. No further reproduction or distribution authorized. ANY UNAUTHORIZED REPRODUCTION OR DISTRIBUTION IS A VIOLATION OF THE FEDERAL COPYRIGHT ACT AND THE LICENSE AGREEMENT, AND SUBJECT TO CIVIL AND CRIMINAL PENALTIES THEREUNDER.

TABLE N1101.7 (R301.1)—continued
CLIMATE ZONES, MOISTURE REGIMES, AND WARM-HUMID DESIGNATIONS BY STATE, COUNTY AND TERRITORY

5A Huntingdon
5A Indiana
5A Jefferson
5A Juniata
5A Lackawanna
5A Lancaster
5A Lawrence
5A Lebanon
5A Lehigh
5A Luzerne
5A Lycoming
6A McKean
5A Mercer
5A Mifflin
5A Monroe
4A Montgomery
5A Montour
5A Northampton
5A Northumberland
5A Perry
4A Philadelphia
5A Pike
6A Potter
5A Schuylkill
5A Snyder
5A Somerset
5A Sullivan
6A Susquehanna
6A Tioga
5A Union
5A Venango
5A Warren
5A Washington
6A Wayne
5A Westmoreland
5A Wyoming
4A York

RHODE ISLAND

5A (all)

SOUTH CAROLINA

3A Abbeville
3A Aiken
3A Allendale*
3A Anderson
3A Bamberg*
3A Barnwell*
3A Beaufort*
3A Berkeley*
3A Calhoun
3A Charleston*
3A Cherokee
3A Chester
3A Chesterfield
3A Clarendon
3A Colleton*
3A Darlington
3A Dillon
3A Dorchester*
3A Edgefield
3A Fairfield
3A Florence
3A Georgetown*
3A Greenville
3A Greenwood
3A Hampton*
3A Horry*
3A Jasper*
3A Kershaw
3A Lancaster
3A Laurens
3A Lee
3A Lexington
3A Marion
3A Marlboro
3A McCormick
3A Newberry
3A Oconee
3A Orangeburg
3A Pickens
3A Richland
3A Saluda
3A Spartanburg
3A Sumter
3A Union
3A Williamsburg
3A York

SOUTH DAKOTA

6A Aurora
6A Beadle
5A Bennett
5A Bon Homme
6A Brookings
6A Brown
6A Brule
6A Buffalo
6A Butte
6A Campbell
5A Charles Mix
6A Clark
5A Clay
6A Codington
6A Corson
6A Custer
6A Davison
6A Day
6A Deuel
6A Dewey
5A Douglas
6A Edmunds
6A Fall River
6A Faulk
6A Grant
5A Gregory
6A Haakon
6A Hamlin
6A Hand
6A Hanson
6A Harding
6A Hughes
5A Hutchinson
6A Hyde
5A Jackson
6A Jerauld
6A Jones
6A Kingsbury
6A Lake
6A Lawrence
6A Lincoln
6A Lyman
6A Marshall
6A McCook
6A McPherson
6A Meade
5A Mellette
6A Miner
6A Minnehaha
6A Moody
6A Pennington
6A Perkins
6A Potter
6A Roberts
6A Sanborn
6A Shannon
6A Spink
6A Stanley
6A Sully
5A Todd
5A Tripp
6A Turner
5A Union
6A Walworth
5A Yankton
6A Ziebach

TENNESSEE

4A Anderson
4A Bedford
4A Benton
4A Bledsoe
4A Blount
4A Bradley
4A Campbell
4A Cannon
4A Carroll
4A Carter
4A Cheatham
3A Chester
4A Claiborne
4A Clay
4A Cocke
4A Coffee
3A Crockett
4A Cumberland
4A Davidson
4A Decatur
4A DeKalb
4A Dickson
3A Dyer
3A Fayette
4A Fentress
4A Franklin
4A Gibson
4A Giles
4A Grainger
4A Greene
4A Grundy
4A Hamblen
4A Hamilton
4A Hancock
3A Hardeman
3A Hardin
4A Hawkins
3A Haywood
3A Henderson
4A Henry
4A Hickman
4A Houston
4A Humphreys
4A Jackson
4A Jefferson
4A Johnson
4A Knox
3A Lake
3A Lauderdale
4A Lawrence
4A Lewis
4A Lincoln
4A Loudon
4A Macon
3A Madison
4A Marion
4A Marshall
4A Maury
4A McMinn
3A McNairy
4A Meigs
4A Monroe
4A Montgomery
4A Moore
4A Morgan
4A Obion
4A Overton
4A Perry
4A Pickett
4A Polk
4A Putnam
4A Rhea

(continued)

INTERNATIONAL CODE COUNCIL®
Copyright © 2015 ICC. ALL RIGHTS RESERVED. Accessed by David Dammon on Jun 21, 2017 12:30:52 PM pursuant to License Agreement with ICC. No further reproduction or distribution authorized. ANY UNAUTHORIZED REPRODUCTION OR DISTRIBUTION IS A VIOLATION OF THE FEDERAL COPYRIGHT ACT AND THE LICENSE AGREEMENT, AND SUBJECT TO CIVIL AND CRIMINAL PENALTIES THEREUNDER.

TABLE N1101.7 (R301.1)—continued
CLIMATE ZONES, MOISTURE REGIMES, AND WARM-HUMID DESIGNATIONS BY STATE, COUNTY AND TERRITORY

4A Roane
4A Robertson
4A Rutherford
4A Scott
4A Sequatchie
4A Sevier
3A Shelby
4A Smith
4A Stewart
4A Sullivan
4A Sumner
3A Tipton
4A Trousdale
4A Unicoi
4A Union
4A Van Buren
4A Warren
4A Washington
4A Wayne
4A Weakley
4A White
4A Williamson
4A Wilson

TEXAS

2A Anderson*
3B Andrews
2A Angelina*
2A Aransas*
3A Archer
4B Armstrong
2A Atascosa*
2A Austin*
4B Bailey
2B Bandera
2A Bastrop*
3B Baylor
2A Bee*
2A Bell*
2A Bexar*
3A Blanco*
3B Borden
2A Bosque*
3A Bowie*
2A Brazoria*
2A Brazos*
3B Brewster
4B Briscoe
2A Brooks*
3A Brown*
2A Burleson*
3A Burnet*
2A Caldwell*
2A Calhoun*
3B Callahan
2A Cameron*
3A Camp*
4B Carson
3A Cass*
4B Castro
2A Chambers*
2A Cherokee*
3B Childress
3A Clay
4B Cochran
3B Coke
3B Coleman
3A Collin*
3B Collingsworth
2A Colorado*
2A Comal*
3A Comanche*
3B Concho
3A Cooke
2A Coryell*
3B Cottle
3B Crane
3B Crockett
3B Crosby
3B Culberson
4B Dallam
3A Dallas*
3B Dawson
4B Deaf Smith
3A Delta
3A Denton*
2A DeWitt*
3B Dickens
2B Dimmit
4B Donley
2A Duval*
3A Eastland
3B Ector
2B Edwards
3A Ellis*
3B El Paso
3A Erath*
2A Falls*
3A Fannin
2A Fayette*
3B Fisher
4B Floyd
3B Foard
2A Fort Bend*
3A Franklin*
2A Freestone*
2B Frio
3B Gaines
2A Galveston*
3B Garza
3A Gillespie*
3B Glasscock
2A Goliad*
2A Gonzales*
4B Gray
3A Grayson
3A Gregg*
2A Grimes*
2A Guadalupe*
4B Hale
3B Hall
3A Hamilton*
4B Hansford
3B Hardeman
2A Hardin*
2A Harris*
3A Harrison*
4B Hartley
3B Haskell
2A Hays*
3B Hemphill
3A Henderson*
2A Hidalgo*
2A Hill*
4B Hockley
3A Hood*
3A Hopkins*
2A Houston*
3B Howard
3B Hudspeth
3A Hunt*
4B Hutchinson
3B Irion
3A Jack
2A Jackson*
2A Jasper*
3B Jeff Davis
2A Jefferson*
2A Jim Hogg*
2A Jim Wells*
3A Johnson*
3B Jones
2A Karnes*
3A Kaufman*
3A Kendall*
2A Kenedy*
3B Kent
3B Kerr
3B Kimble
3B King
2B Kinney
2A Kleberg*
3B Knox
3A Lamar*
4B Lamb
3A Lampasas*
2B La Salle
2A Lavaca*
2A Lee*
2A Leon*
2A Liberty*
2A Limestone*
4B Lipscomb
2A Live Oak*
3A Llano*
3B Loving
3B Lubbock
3B Lynn
2A Madison*
3A Marion*
3B Martin
3B Mason
2A Matagorda*
2B Maverick
3B McCulloch
2A McLennan*
2A McMullen*
2B Medina
3B Menard
3B Midland
2A Milam*
3A Mills*
3B Mitchell
3A Montague
2A Montgomery*
4B Moore
3A Morris*
3B Motley
3A Nacogdoches*
3A Navarro*
2A Newton*
3B Nolan
2A Nueces*
4B Ochiltree
4B Oldham
2A Orange*
3A Palo Pinto*
3A Panola*
3A Parker*
4B Parmer
3B Pecos
2A Polk*
4B Potter
3B Presidio
3A Rains*
4B Randall
3B Reagan
2B Real
3A Red River*
3B Reeves
2A Refugio*
4B Roberts
2A Robertson*
3A Rockwall*
3B Runnels
3A Rusk*
3A Sabine*
3A San Augustine*
2A San Jacinto*
2A San Patricio*

(continued)

INTERNATIONAL CODE COUNCIL®
Copyright © 2015 ICC. ALL RIGHTS RESERVED. Accessed by David Dammon on Jun 21, 2017 12:30:52 PM pursuant to License Agreement with ICC. No further reproduction or distribution authorized. ANY UNAUTHORIZED REPRODUCTION OR DISTRIBUTION IS A VIOLATION OF THE FEDERAL COPYRIGHT ACT AND THE LICENSE AGREEMENT, AND SUBJECT TO CIVIL AND CRIMINAL PENALTIES THEREUNDER.

TABLE N1101.7 (R301.1)—continued
CLIMATE ZONES, MOISTURE REGIMES, AND WARM-HUMID DESIGNATIONS BY STATE, COUNTY AND TERRITORY

3A San Saba*
3B Schleicher
3B Scurry
3B Shackelford
3A Shelby*
4B Sherman
3A Smith*
3A Somervell*
2A Starr*
3A Stephens
3B Sterling
3B Stonewall
3B Sutton
4B Swisher
3A Tarrant*
3B Taylor
3B Terrell
3B Terry
3B Throckmorton
3A Titus*
3B Tom Green
2A Travis*
2A Trinity*
2A Tyler*
3A Upshur*
3B Upton
2B Uvalde
2B Val Verde
3A Van Zandt*
2A Victoria*
2A Walker*
2A Waller*
3B Ward
2A Washington*
2B Webb
2A Wharton*
3B Wheeler
3A Wichita
3B Wilbarger
2A Willacy*
2A Williamson*
2A Wilson*
3B Winkler
3A Wise
3A Wood*
4B Yoakum
3A Young
2B Zapata
2B Zavala

UTAH

5B Beaver
6B Box Elder
6B Cache
6B Carbon
6B Daggett
5B Davis
6B Duchesne
5B Emery
5B Garfield
5B Grand
5B Iron
5B Juab
5B Kane
5B Millard
6B Morgan
5B Piute
6B Rich
5B Salt Lake
5B San Juan
5B Sanpete
5B Sevier
6B Summit
5B Tooele
6B Uintah
5B Utah
6B Wasatch
3B Washington
5B Wayne
5B Weber

VERMONT

6A (all)

VIRGINIA

4A (all)

WASHINGTON

5B Adams
5B Asotin
5B Benton
5B Chelan
4C Clallam
4C Clark
5B Columbia
4C Cowlitz
5B Douglas
6B Ferry
5B Franklin
5B Garfield
5B Grant
4C Grays Harbor
4C Island
4C Jefferson
4C King
4C Kitsap
5B Kittitas
5B Klickitat
4C Lewis
5B Lincoln
4C Mason
6B Okanogan
4C Pacific
6B Pend Oreille
4C Pierce
4C San Juan
4C Skagit
5B Skamania
4C Snohomish
5B Spokane
6B Stevens
4C Thurston
4C Wahkiakum
5B Walla Walla
4C Whatcom
5B Whitman
5B Yakima

WEST VIRGINIA

5A Barbour
4A Berkeley
4A Boone
4A Braxton
5A Brooke
4A Cabell
4A Calhoun
4A Clay
5A Doddridge
5A Fayette
4A Gilmer
5A Grant
5A Greenbrier
5A Hampshire
5A Hancock
5A Hardy
5A Harrison
4A Jackson
4A Jefferson
4A Kanawha
5A Lewis
4A Lincoln
4A Logan
5A Marion
5A Marshall
4A Mason
4A McDowell
4A Mercer
5A Mineral
4A Mingo
5A Monongalia
4A Monroe
4A Morgan
5A Nicholas
5A Ohio
5A Pendleton
4A Pleasants
5A Pocahontas
5A Preston
4A Putnam
5A Raleigh
5A Randolph
4A Ritchie
4A Roane
5A Summers
5A Taylor
5A Tucker
4A Tyler
5A Upshur
4A Wayne
5A Webster
5A Wetzel
4A Wirt
4A Wood
4A Wyoming

WISCONSIN

6A Adams
7 Ashland
6A Barron
7 Bayfield
6A Brown
6A Buffalo
7 Burnett
6A Calumet
6A Chippewa
6A Clark
6A Columbia
6A Crawford
6A Dane
6A Dodge
6A Door
7 Douglas
6A Dunn
6A Eau Claire
7 Florence
6A Fond du Lac
7 Forest
6A Grant
6A Green
6A Green Lake
6A Iowa
7 Iron
6A Jackson
6A Jefferson
6A Juneau
6A Kenosha
6A Kewaunee
6A La Crosse
6A Lafayette
7 Langlade
7 Lincoln
6A Manitowoc
6A Marathon
6A Marinette
6A Marquette
6A Menominee
6A Milwaukee
6A Monroe
6A Oconto
7 Oneida
6A Outagamie

(continued)

INTERNATIONAL CODE COUNCIL®
Copyright © 2015 ICC. ALL RIGHTS RESERVED. Accessed by David Dammon on Jun 21, 2017 12:30:52 PM pursuant to License Agreement with ICC. No further reproduction or distribution authorized. ANY UNAUTHORIZED REPRODUCTION OR DISTRIBUTION IS A VIOLATION OF THE FEDERAL COPYRIGHT ACT AND THE LICENSE AGREEMENT, AND SUBJECT TO CIVIL AND CRIMINAL PENALTIES THEREUNDER.

TABLE N1101.7 (R301.1)—continued
CLIMATE ZONES, MOISTURE REGIMES, AND WARM-HUMID DESIGNATIONS BY STATE, COUNTY AND TERRITORY

6A Ozaukee
6A Pepin
6A Pierce
6A Polk
6A Portage
7 Price
6A Racine
6A Richland
6A Rock
6A Rusk
6A Sauk
7 Sawyer
6A Shawano
6A Sheboygan
6A St. Croix
7 Taylor
6A Trempealeau
6A Vernon
7 Vilas
6A Walworth
7 Washburn
6A Washington
6A Waukesha
6A Waupaca
6A Waushara
6A Winnebago
6A Wood

WYOMING

6B Albany
6B Big Horn
6B Campbell
6B Carbon
6B Converse
6B Crook
6B Fremont
5B Goshen
6B Hot Springs
6B Johnson
6B Laramie
7 Lincoln
6B Natrona
6B Niobrara
6B Park
5B Platte
6B Sheridan
7 Sublette
6B Sweetwater
7 Teton
6B Uinta
6B Washakie
6B Weston

US TERRITORIES

AMERICAN SAMOA

1A (all)*

GUAM

1A (all)*

NORTHERN MARIANA ISLANDS

1A (all)*

PUERTO RICO

1A (all)*

VIRGIN ISLANDS

1A (all)*

TABLE N1101.7.2(1) [R302.3(1)]
INTERNATIONAL CLIMATE ZONE DEFINITIONS

MAJOR CLIMATE TYPE DEFINITIONS
Marine (C) Definition—Locations meeting all four criteria: 1. Mean temperature of coldest month between -3°C (27°F) and 18°C (65°F). 2. Warmest month mean < 22°C (72°F). 3. At least four months with mean temperatures over 10°C (50°F). 4. Dry season in summer. The month with the heaviest precipitation in the cold season has at least three times as much precipitation as the month with the least precipitation in the rest of the year. The cold season is October through March in the Northern Hemisphere and April through September in the Southern Hemisphere.
Dry (B) Definition—Locations meeting the following criteria: Not marine and $P_{in} < 0.44 \times (TF - 19.5)$ [$P_{cm} < 2.0 \times (TC + 7)$ in SI units] where: P_{in} = Annual precipitation in inches (cm) T = Annual mean temperature in °F (°C)
Moist (A) Definition—Locations that are not marine and not dry.
Warm-humid Definition—Moist (A) locations where either of the following wet-bulb temperature conditions shall occur during the warmest six consecutive months of the year: 1. 67°F (19.4°C) or higher for 3,000 or more hours; or 2. 73°F (22.8°C) or higher for 1,500 or more hours.

For SI: °C = [(°F)-32]/1.8, 1 inch = 2.54 cm.

INTERNATIONAL CODE COUNCIL®
Copyright © 2015 ICC. ALL RIGHTS RESERVED. Accessed by David Dammon on Jun 21, 2017 12:30:52 PM pursuant to License Agreement with ICC. No further reproduction or distribution authorized. ANY UNAUTHORIZED REPRODUCTION OR DISTRIBUTION IS A VIOLATION OF THE FEDERAL COPYRIGHT ACT AND THE LICENSE AGREEMENT, AND SUBJECT TO CIVIL AND CRIMINAL PENALTIES THEREUNDER.

N1101.7.1 (R301.2) Warm humid counties. Warm humid counties are identified in Table N1101.7 by an asterisk.

❖ Table N1101.7 provides a listing of the counties within the southeastern United States that fall below the white-dashed line that appears in the map in Figure N1101.7. The warm-humid climate designation includes parts of eight states and also covers all of Florida, Hawaii and the U.S. territories. Table N1101.7.2(1) provides the details that were used to determine the classification of the warm-humid designation for the counties.

There currently are very few requirements within the code that are specifically tied to the warm-humid climate criteria. Although not tied directly to the warm-humid designation, many other code sections, such as those addressing moisture control and energy recovery ventilation systems, do take these climatic features into account.

N1101.7.2 (R301.3) International climate zones. The climate zone for any location outside the United States shall be determined by applying Table N1101.7.2(1) and then Table N1101.7.2(2).

❖ Although the code and the new climate zone classifications it includes are predominately used within the United States, they can be used in any location. Because the mapping and decisions that were made during the development of the new climate zones focused primarily on the United States, this section provides the details of how to properly classify the climate zones based upon the thermal criteria [Table N1101.7.2(2)], the major climate types [Table N1101.7.2(1)] and the warm-humid criteria for locations outside of the United States.

N1101.8 (R301.4) Tropical climate zone. The tropical climate zone shall be defined as:

1. Hawaii, Puerto Rico, Guam, American Samoa, US Virgin Islands, Commonwealth of Northern Mariana Islands; and
2. Islands in the area between the Tropic of Cancer and the Tropic of Capricorn.

❖ Tropical areas are quite different from the U.S. mainland in climate, construction techniques, traditional construction and energy prices. Prior to the installation of these new provisions, the IECC treated tropical climates as if they were simply a southern extension of the U.S. mainland. In traditional residences, especially less expensive residences, inexpensive ways to work with the tropical climates have evolved to provide comfortable interior spaces without the need for substantial space conditioning. Tropical electrical prices, usually over 20 cents per kWh, provide a substantial incentive for energy conservation. Solar water heating works particularly well in tropical climates.

This section provides a simple option for a newly defined climate zone, the “tropical zone.” The area between the Tropic of Cancer and the Tropic of Capricorn is the area between 23.5 degrees north and south of the equator.

Traditional construction, especially with solar water heating, is usually more energy efficient than the construction style usually assumed in the IECC, as is shown by an analysis done for Puerto Rico. Using energy-efficient versions of traditional construction saves more energy and is much more cost-effective than pushing those in tropical climates to adopt mainland construction practices. Traditional tropical construction focuses on greatly reducing or eliminating the need for space conditioning by making a living space that is comfortable without space conditioning.

These requirements are based on informal conversations with those who live in tropical regions.

N1101.9 (R302.1) Interior design conditions. The interior design temperatures used for heating and cooling load calculations shall be a maximum of 72°F (22°C) for heating and minimum of 75°F (24°C) for cooling.

❖ While the previous sections of IECC Chapter 3 address outdoor design conditions, this section provides the interior conditions that will be used for properly sizing the mechanical equipment. The proper sizing of mechanical equipment (see Section N1103.7) can vary depending on the selected design

TABLE N1101.7.2(2) [R301.3(2)]
INTERNATIONAL CLIMATE ZONE DEFINITIONS

ZONE NUMBER	THERMAL CRITERIA	
	IP Units	SI Units
1	9000 < CDD50°F	5000 < CDD10°C
2	6300 < CDD50°F ≤ 9000	3500 < CDD10°C ≤ 5000
3A and 3B	4500 < CDD50°F ≤ 6300 AND HDD65°F ≤ 5400	2500 < CDD10°C ≤ 3500 AND HDD18°C ≤ 3000
4A and 4B	CDD50°F ≤ 4500 AND HDD65°F ≤ 5400	CDD10°C ≤ 2500 AND HDD18°C ≤ 3000
3C	HDD65°F ≤ 3600	HDD18°C ≤ 2000
4C	3600 < HDD65°F ≤ 5400	2000 < HDD18°C ≤ 3000
5	5400 < HDD65°F ≤ 7200	3000 < HDD18°C ≤ 4000
6	7200 < HDD65°F ≤ 9000	4000 < HDD18°C ≤ 5000
7	9000 < HDD65°F ≤ 12600	5000 < HDD18°C ≤ 7000
8	12600 < HDD65°F	7000 < HDD18°C

For SI: °C = [(°F)-32]/1.8.

INTERNATIONAL CODE COUNCIL®
Copyright © 2015 ICC. ALL RIGHTS RESERVED. Accessed by David Dammon on Jun 21, 2017 12:30:52 PM pursuant to License Agreement with ICC. No further reproduction or distribution authorized. ANY UNAUTHORIZED REPRODUCTION OR DISTRIBUTION IS A VIOLATION OF THE FEDERAL COPYRIGHT ACT AND THE LICENSE AGREEMENT, AND SUBJECT TO CIVIL AND CRIMINAL PENALTIES THEREUNDER.

conditions. While the code does address oversizing equipment, it is not enforceable without establishing the exact design parameters. This section is included in the code only for system sizing, and it does not affect the interior design temperatures required by other codes such as Section 1204 of the IBC or Section 602.2 of the *International Property Maintenance Code*® (IPMC®).

The 75°F (24°C) design temperature for cooling was used in the code so that it coordinated with both the ASHRAE *Handbook of Fundamentals* and the Air Conditioning Contractors of America (ACCA) Manuals S and J, established standards that deal with equipment sizing.

N1101.10 (R303.1) Identification. Materials, systems and equipment shall be identified in a manner that will allow a determination of compliance with the applicable provisions of this code.

❖ The intent of this section is to make certain that sufficient information exists to determine compliance with the code during the plan review and field inspection phases. The permittee can submit the required equipment and materials information on the building plans, specification sheets or schedules or in any other way that allows the code official to clearly identify which specifications apply to which portions of the building; that is, which parts of the building are insulated to the levels listed. Materials information includes envelope insulation levels, glazing assembly *U*-factors and duct and piping insulation levels. Equipment information includes heating and cooling equipment and appliance efficiencies where high-efficiency equipment is claimed to meet code requirements.

This section contains specific material, equipment and system identification requirements for the approval and installation of the items required by the code. Although the means for permanent marking (tag, stencil, label, stamp, sticker, bar code, etc.) is often determined and applied by the manufacturer, if there is any uncertainty about the product, the mark is subject to the approval of the code official.

N1101.10.1 (R303.1.1) Building thermal envelope insulation. An *R*-value identification mark shall be applied by the manufacturer to each piece of *building thermal envelope* insulation 12 inches (305 mm) or greater in width. Alternately, the insulation installers shall provide a certification listing the type, manufacturer and *R*-value of insulation installed in each element of the *building thermal envelope*. For blown or sprayed insulation (fiberglass and cellulose), the initial installed thickness, settled thickness, settled *R*-value, installed density, coverage area and number of bags installed shall be *listed* on the certification. For insulated siding, the *R*-value shall be labeled on the product's package and shall be *listed* on the certification. The insulation installer shall sign, date and post the certification in a conspicuous location on the job site.

❖ The thermal performance of insulation is rated in terms of *R*-value. For products lacking an *R*-value identification, the installer (or builder) must provide the insulation performance data. For example, some insulation materials, such as foamed-in-place urethane, can be installed in wall, floor and cathedral ceiling cavities. These products are not labeled, as is batt insulation, nor is it appropriate for them to be evaluated as required in the code for blown or sprayed insulation; however, the installer must certify the type, thickness and *R*-value of these materials.

The *R*-value of loose-fill insulation (blown or sprayed) is dependent on both the installed thickness and density (number of bags used). Therefore, loose-fill insulation cannot be directly labeled by the manufacturer. Many blown insulation products carry a manufacturer's *R*-value guarantee when installed to a designated thickness, "inches = *R*-value." Blown insulation products lacking this manufacturer's guarantee can be subjected to special inspection and testing; what is referred to as "cookie cutting." Cookie cutting involves extracting a column of insulation with a cylinder to determine its density. The insulation depth and density must yield the specified *R*-value according to the manufacturer's bag label specification.

The code and Federal Trade Commission Rule 460 require that installers of insulation in homes, apartments and manufactured housing units report this information to the authority having jurisdiction in the form of a certification posted in a conspicuous location.

N1101.10.1.1 (R303.1.1.1) Blown or sprayed roof/ceiling insulation. The thickness of blown-in or sprayed roof/ceiling insulation (fiberglass or cellulose) shall be written in inches (mm) on markers that are installed at least one for every 300 square feet (28 m^2) throughout the attic space. The markers shall be affixed to the trusses or joists and marked with the minimum initial installed thickness with numbers not less than 1 inch (25 mm) in height. Each marker shall face the attic access opening. Spray polyurethane foam thickness and installed *R*-value shall be *listed* on certification provided by the insulation installer.

❖ To help verify the installed *R*-value of blown-in or spray-applied insulation, the installer must certify the following information in a signed statement posted in a conspicuous place (see Section N1101.10.1):

- The type of insulation used and manufacturer.
- The insulation's coverage per bag (the number of bags required to result in a given *R*-value for a given area), as well as the settled *R*-value.
- The initial and settled thickness.
- The number of bags installed.

Under circumstances where the insulation *R*-value is guaranteed, only the initial thickness is required on the certification.

This section helps demonstrate compliance and enforcement of the provisions found in Section N1101.10.1. To assist with application and enforcement, loose-fill ceiling insulation also requires thickness markers that are attached to the framing and face the attic access.

In a large space, markers placed evenly about every 17 feet (5182 mm) (with some markers at the

INTERNATIONAL CODE COUNCIL®
Copyright © 2015 ICC. ALL RIGHTS RESERVED. Accessed by David Dammon on Jun 21, 2017 12:30:52 PM pursuant to License Agreement with ICC. No further reproduction or distribution authorized. ANY UNAUTHORIZED REPRODUCTION OR DISTRIBUTION IS A VIOLATION OF THE FEDERAL COPYRIGHT ACT AND THE LICENSE AGREEMENT, AND SUBJECT TO CIVIL AND CRIMINAL PENALTIES THEREUNDER.

edge of the space) will meet this requirement. For sprayed polyurethane, such markers are not effective. When using this product, the code requires that the measured thickness and *R*-value be recorded on the certificate.

N1101.10.2 (R303.1.2) Insulation mark installation. Insulating materials shall be installed such that the manufacturer's *R*-value mark is readily observable upon inspection.

❖ For batt insulation, manufacturers' *R*-value designations and stripe codes are often printed directly on the insulation. Where possible, the insulation must be installed so these designations are readable. Backed floor batts can be installed with the designation against the underfloor, which means it would not be visible. In those cases, the *R*-value must be certified by the installer or be validated by some other means (see commentary, Section N1101.10.1).

N1101.10.3 (R303.1.3) Fenestration product rating. *U*-factors of fenestration products (windows, doors and skylights) shall be determined in accordance with NFRC 100.

Exception: Where required, garage door *U*-factors shall be determined in accordance with either NFRC 100 or ANSI/DASMA 105.

U-factors shall be determined by an accredited, independent laboratory, and labeled and certified by the manufacturer.

Products lacking such a labeled *U*-factor shall be assigned a default *U*-factor from Table N1101.10.3(1) or N1101.10.3(2). The solar heat gain coefficient (SHGC) and visible transmittance (VT) of glazed fenestration products (windows, glazed doors and skylights) shall be determined in accordance with NFRC 200 by an accredited, independent laboratory, and labeled and certified by the manufacturer. Products lacking such a labeled SHGC or VT shall be assigned a default SHGC or VT from Table N1101.10.3(3).

❖ Until recently, the buyers of fenestration products received energy performance information in a variety of ways. Some manufacturers described performance by showing *R*-values of the glass. While the glass might have been a good performer, the rating did not include the effects of the frame. Other manufacturers touted the insulating value of different window components, but these, too, did not reflect the total window system performance. When manufacturers rated the entire product, some used test laboratory measurements and others used computer calculations. Even among those using test laboratory reports, the test laboratories often tested the products under different procedures, making an "apples-to-apples" comparison difficult. The different rating methods confused builders and consumers. They also created headaches for manufacturers trying to differentiate the performance of their products from the performance of their competitors' products.

The NFRC has developed a fenestration energy rating system based on whole-product performance. This accurately accounts for the energy-related effects of all the product's component parts and prevents information about a single component from being compared in a misleading way to other whole-product properties. With energy ratings based on whole-product performance, NFRC helps builders, designers and consumers directly compare products with different construction details and attributes.

Products that have been rated by NFRC-approved testing laboratories and certified by NFRC-accredited independent certification and inspection agencies carry a temporary and permanent label featuring the "NFRC-certified" mark. With this mark, the manufacturer stipulates that the energy performance of the product was determined according to NFRC rules and procedures.

By certifying and labeling their products, manufacturers are demonstrating their commitment to providing accurate energy and energy-related performance information. The code purposely sets the default values fairly high. This helps to encourage the use of products that have been tested and also ensures that products that have little energy-saving values are not used inappropriately in the various climate zones. By setting the default value so high, it will also prevent someone from removing the label from a tested window and then using the default values. Therefore, the default values are most representative of the lower end of the energy-efficient products.

Products that are not NFRC certified and do not exactly match the specifications in Tables N1101.10.3(1) and N1101.10.3(2) must use the tabular specification for the product most closely resembling it. In the absence of tested *U*-factors, the default *U*-factor for doors containing glazing can be a combination of the glazing and door *U*-factor as described in the definition for "*U*-factor" (see commentary, Section 202, "*U*-factor"). The NFRC procedures determine *U*-factor and SHGC ratings based on the whole fenestration assembly [untested fenestration products have default *U*-factors and SHGCs assigned as described in the commentary to Tables N1101.10.3(1) through N1101.10.3(3)]. During construction inspection, the label on each glazing assembly should be checked for conformance to the *U*-factor specified on the approved plans. These labels must be left on the glazing until after the building has been inspected for compliance. A sample NFRC label is shown in Commentary Figure N1101.10.3(1).

Products certified according to NFRC procedures are listed in the *Certified Products Directory*. The directory is published annually and contains energy performance information for over 1.4 million fenestration product options listed by over 450 manufacturers. When using the directory or shopping for NFRC-certified products, it is important to note:

1. A product is considered to be NFRC certified only if it carries the NFRC label. Simply being listed in this directory is not enough.

INTERNATIONAL CODE COUNCIL®
Copyright © 2015 ICC. ALL RIGHTS RESERVED. Accessed by David Dammon on Jun 21, 2017 12:30:52 PM pursuant to License Agreement with ICC. No further reproduction or distribution authorized. ANY UNAUTHORIZED REPRODUCTION OR DISTRIBUTION IS A VIOLATION OF THE FEDERAL COPYRIGHT ACT AND THE LICENSE AGREEMENT, AND SUBJECT TO CIVIL AND CRIMINAL PENALTIES THEREUNDER.

2. The NFRC-certified mark does not signify that the product meets any energy-efficiency standards or criteria.
3. NFRC neither sets minimum performance standards nor mandates specific performance levels. Rather, NFRC ratings can be used to determine whether a product meets a state or local code or other performance requirement and to compare the energy performance of different products during plan review. For questions about NFRC and its rating and labeling system, more information is available on the organization's website at www.nfrc.org. NFRC adopted a new energy performance label in 2005. It lists the manufacturer, describes the product, provides a source for additional information and includes ratings for one or more energy performance characteristics.

The IECC offers an alternative to NFRC-certified glazed fenestration product *U*-factor ratings. In the absence of *U*-factors based on NFRC test procedures, the default *U*-factors in Table N1101.10.3(1) must be used. When a composite of materials from two different product types is used, the code official should be consulted regarding how the product will be rated. Generally, the product must be assigned the higher *U*-factor, although an average based on the *U*-factors and areas may be acceptable in some cases.

The product cannot receive credit for a feature that cannot be seen. Because performance features such as argon fill and low-emissivity coatings for glass are not visually verifiable, they do not receive credit in the default tables. Tested *U*-factors for these windows are often lower, so using tested *U*-factors is to the applicant's advantage. Commentary Figure N1101.10.3(2) illustrates visually verifiable window characteristics, among other various window performance, function and cost considerations.

A single-glazed window with an installed storm window may be considered a double-glazed assembly and use the corresponding *U*-factor from the default table. For example, the *U*-factor 0.80 in Table N1101.10.3(1) applies to a single-glazed, metal window without a thermal break (but with an installed storm window). If the storm window was not installed, the *U*-factor would be 1.20.

TABLE N1101.10.3(1) [R303.1.3(1)]
DEFAULT GLAZED FENESTRATION *U*-FACTORS

FRAME TYPE	SINGLE PANE	DOUBLE PANE	SKYLIGHT	
			Single	Double
Metal	1.20	0.80	2.00	1.30
Metal with Thermal Break	1.10	0.65	1.90	1.10
Nonmetal or Metal Clad	0.95	0.55	1.75	1.05
Glazed Block	0.60			

TABLE N1101.10.3(2) [R303.1.3(2)]
DEFAULT DOOR *U*-FACTORS

DOOR TYPE	*U*-FACTOR
Uninsulated Metal	1.20
Insulated Metal	0.60
Wood	0.50
Insulated, nonmetal edge, max 45% glazing, any glazing double pane	0.35

❖ Door *U*-factors in Table N1101.10.3(2) should be used wherever NFRC-certified ratings are not available.

There are a few other aspects to note about doors. Opaque door *U*-factors must include the effects of the door edge and the frame. Calculating *U*-factors based on a cross section through the insulated portion is not acceptable. To take credit for a thermal break, the door must have one in both the door slab and in the frame. The values in the table are founded on principles established in the 1997 *ASHRAE Handbook of Fundamentals*.

TABLE N1101.10.3(3) [R303.1.3(3)]
DEFAULT GLAZED FENESTRATION SHGC AND VT

	SINGLE GLAZED		DOUBLE GLAZED		GLAZED BLOCK
	Clear	Tinted	Clear	Tinted	
SHGC	0.8	0.7	0.7	0.6	0.6
VT	0.6	0.3	0.6	0.3	0.6

❖ This table offers an alternative to NFRC-certified SHGC and visible transmittance (VT) values based on visually verifiable characteristics of the fenestration product. The SHGC is the fraction of incident solar radiation absorbed and directly transmitted by the window area, then subsequently reradiated, conducted or convected inward. SHGC is a ratio, expressed as a number between 0 and 1. The lower a window's SHGC, the less solar heat it transmits. The VT is the ratio of visible light entering the space through the fenestration product assembly to the incident visible light. Visible transmittance includes the effects of glazing material and frame and is expressed as a number between 0 and 1.

An SHGC of 0.40 or less is recommended in cooling-dominated climates (Climate Zones 1-3). In heating-dominated climates, a high SHGC increases passive solar gain for the heating but reduces cooling-season performance. A low SHGC improves cooling-season performance but reduces passive solar gains for heating.

N1101.10.4 (R303.1.4) Insulation product rating. The thermal resistance (*R*-value) of insulation shall be determined in accordance with the U.S. Federal Trade Commission *R*-value rule (CFR Title 16, Part 460) in units of h × ft^2 × °F/Btu at a mean temperature of 75°F (24°C).

❖ This section brings two important requirements to the code.

INTERNATIONAL CODE COUNCIL®
Copyright © 2015 ICC. ALL RIGHTS RESERVED. Accessed by David Dammon on Jun 21, 2017 12:30:52 PM pursuant to License Agreement with ICC. No further reproduction or distribution authorized. ANY UNAUTHORIZED REPRODUCTION OR DISTRIBUTION IS A VIOLATION OF THE FEDERAL COPYRIGHT ACT AND THE LICENSE AGREEMENT, AND SUBJECT TO CIVIL AND CRIMINAL PENALTIES THEREUNDER.

First, the Federal Trade Commission *R*-value rule details specific test standards for insulation. The test standards are specific to the type of insulation and intended use. This clarifies any questions on the rating conditions to be used for insulation materials.

Second, the text above specifies the rating temperature to be used when evaluating the *R*-value of the product, providing consistency not currently in the code. Insulation products sometimes list several *R*-values based on different test temperatures. This eliminates any question as to which *R*-value to use. The temperature selected is a standard rating condition.

N1101.10.4.1 (R303.1.4.1) Insulated siding. The thermal resistance (*R*-value) of insulated siding shall be determined in accordance with ASTM C1363. Installation for testing shall be in accordance with the manufacturer's installation instructions.

❖ Insulated siding is a unique product that requires a special test method for determination of *R*-value. This test method is ASTM C1363, *Standard Test Method for Thermal Performance of Building Materials and Envelope Assemblies by Means of a Hot Box Apparatus*.

N1101.11 (R303.2) Installation. All materials, systems and equipment shall be installed in accordance with the manufacturer's instructions and this code.

❖ Manufacturer's installation instructions are thoroughly evaluated by the listing agency, verifying that a safe installation is prescribed. When an appliance is tested to obtain a listing and label, the approval agency installs the appliance in accordance with the manufacturer's instructions. The appliance is tested under these conditions; thus, the installation instructions become an integral part of the labeling process. The listing agency can require that the manufacturer alter, delete or add information to the instructions as necessary to achieve compliance with applicable standards and code requirements.

Manufacturers' installation instructions are an enforceable extension of the code and must be in the hands of the code official when an inspection takes place. Inspectors must carefully and completely read and comprehend the manufacturer's instructions in order to properly perform an installation inspection. In some cases, the code will specifically address an installation requirement that is also addressed in the

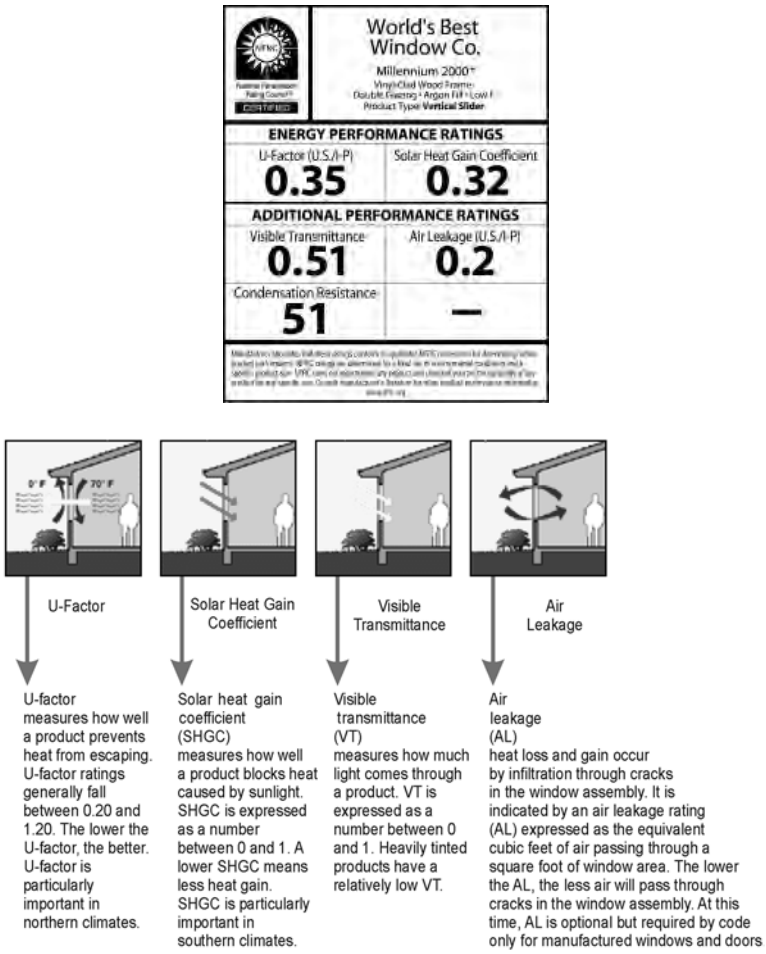

Figure N1101.10.3(1)
SAMPLE NATIONAL FENESTRATION RATING COUNCIL (NFRC) LABEL

INTERNATIONAL CODE COUNCIL®
Copyright © 2015 ICC. ALL RIGHTS RESERVED. Accessed by David Dammon on Jun 21, 2017 12:30:52 PM pursuant to License Agreement with ICC. No further reproduction or distribution authorized. ANY UNAUTHORIZED REPRODUCTION OR DISTRIBUTION IS A VIOLATION OF THE FEDERAL COPYRIGHT ACT AND THE LICENSE AGREEMENT, AND SUBJECT TO CIVIL AND CRIMINAL PENALTIES THEREUNDER.

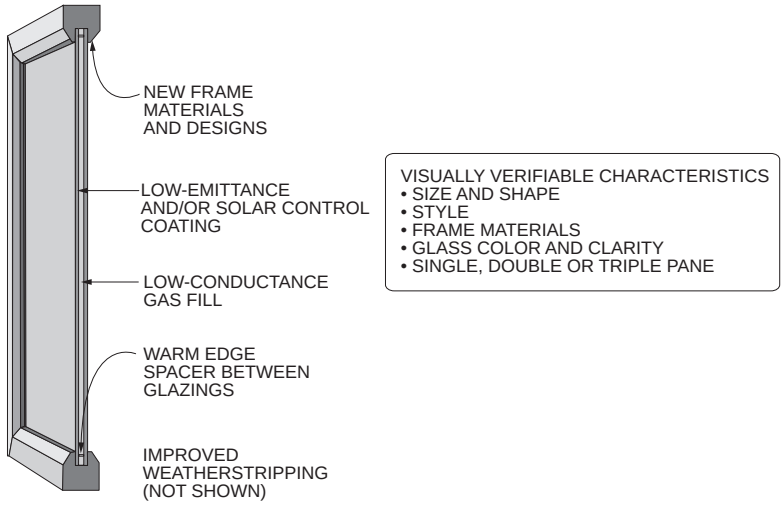

Figure N1101.10.3(2)
VISUALLY VERIFIABLE WINDOW CHARACTERISTICS

manufacturer's installation instructions. The code requirement may be the same or may exceed the requirement in the manufacturer's installation instructions. The manufacturer's installation instructions could contain requirements that exceed those in the code. In such cases, the more restrictive requirements would apply (see commentary, Section 106).

Even if an installation appears to be in compliance with the manufacturer's instructions, the installation cannot be completed or approved until all associated components, connections and systems that serve the appliance or equipment are also in compliance with the requirements of the applicable *International Codes*® (I-Codes®) of reference. For example, a gas-fired boiler installation must not be approved if the boiler is connected to a deteriorated, undersized or otherwise unsafe chimney or vent. Likewise, the same installation must not be approved if the existing gas piping has insufficient capacity to supply the boiler load or if the electrical supply circuit is inadequate or unsafe.

Manufacturer's installation instructions are often updated and changed for various reasons, such as changes in the appliance, equipment or material design; revisions to the product standards and as a result of field experiences related to existing installations. The code official should stay abreast of any changes by reviewing the manufacturer's instructions for every installation.

N1101.11.1 (R303.2.1) Protection of exposed foundation insulation. Insulation applied to the exterior of basement walls, crawlspace walls and the perimeter of slab-on-grade floors shall have a rigid, opaque and weather-resistant protective covering to prevent the degradation of the insulation's thermal performance. The protective covering shall cover the exposed exterior insulation and extend not less than 6 inches (153 mm) below grade.

❖ The ultimate performance of insulation material is directly proportional to the workmanship involved in the materials' initial installation, as well as the materials' integrity over the life of the structure. Accordingly, foundation wall and slab-edge insulation materials installed in the vicinity of the exterior grade line require protection from damage that could occur from contact by lawn-mowing and maintenance equipment, garden hoses, garden tools, perimeter landscape materials, etc. In addition, the long-term thermal performance of foam-plastic insulation materials is adversely affected by direct exposure to the sun. To protect the insulation from sunlight and physical damage, it must have a protective covering that is inflexible, puncture resistant, opaque and weather resistant.

N1101.12 (R303.3) Maintenance information. Maintenance instructions shall be furnished for equipment and systems that require preventive maintenance. Required regular maintenance actions shall be clearly stated and incorporated on a readily accessible label. The label shall include the title or publication number for the operation and maintenance manual for that particular model and type of product.

❖ This section establishes an owner's responsibility for maintaining the building in accordance with the requirements of the code and other referenced standards. This section requires, among others, that mechanical and service water heating equipment and appliance maintenance information be made available to the owner/operator. This section does not require that labels be added to existing equipment; having the manufacturer's maintenance literature is usually sufficient to meet this requirement. During final occupancy inspection, the mechanical equipment and water heater should be inspected to verify that the information is taped to each unit or referenced on a label mounted in a conspicuous location on the units.

The code official has the authority to rule on the performance of maintenance work when equipment functions would be affected by such work. He or she

INTERNATIONAL CODE COUNCIL®
Copyright © 2015 ICC. ALL RIGHTS RESERVED. Accessed by David Dammon on Jun 21, 2017 12:30:52 PM pursuant to License Agreement with ICC. No further reproduction or distribution authorized. ANY UNAUTHORIZED REPRODUCTION OR DISTRIBUTION IS A VIOLATION OF THE FEDERAL COPYRIGHT ACT AND THE LICENSE AGREEMENT, AND SUBJECT TO CIVIL AND CRIMINAL PENALTIES THEREUNDER.

also has the authority to require a building and its energy-using systems to be maintained in compliance with the public health and safety provisions required by other I-Codes.

N1101.13 (R401.2) Compliance. Projects shall comply with one of the following:

1. Sections N1101.14 through N1104.
2. Section N1105 and the provisions of Sections N1101.14 through N1104 labeled "Mandatory."
3. An energy rating index (ERI) approach in Section N1106.

❖ This section allows residential buildings to comply with either the prescriptive requirements of Sections N1101 through N1104, the performance options that are provided in Section N1105, or the energy rating index option in Section N1106. Under all options, the building must comply with the mandatory requirements that are found in Sections N1101.3, N1102.4, N1102.5, N1103.1, N1103.1.2, N1103.3.2, N1103.3.3, N1103.3.5, N1103.4, N1103.6, N1103.7, N1103.8, N1103.9 and N1104. A code user may evaluate both options and use the one that fits the project best, as these two differing methods can result in different requirements. Most requirements are given prescriptively. Alternative trade-offs are specified for many requirements, such as the building thermal envelope requirements. For requirements specified by *U*-factors, an overall UA (*U*-factor times the area) can be used to show equivalence. A performance-based annual energy calculation also can be met by showing overall energy equivalence.

The majority of the requirements of this chapter are based on the climate zone where the project is being built. The appropriate climate zone can be found in Section N1101.7 of the code. Climate Zones 1 through 7 apply to various parts of the continental United States and are defined by county lines. Climate Zones 7 and 8 apply to various parts of Alaska, and Hawaii is classified as Climate Zone 1. The climate zones have been divided into marine, dry and moist to deal with levels of humidity. For more details and background on the development of the new climate zones, see the commentary to Section N1101.7.

N1101.13.1 (R401.2.1) Tropical zone. *Residential buildings* in the tropical zone at elevations below 2,400 feet (731.5 m) above sea level shall be deemed to comply with this chapter where the following conditions are met:

1. Not more than one-half of the *occupied* space is air conditioned.
2. The *occupied* space is not heated.
3. Solar, wind or other renewable energy source supplies not less than 80 percent of the energy for service water heating.
4. Glazing in *conditioned* space has a *solar heat gain coefficient* of less than or equal to 0.40, or has an overhang with a projection factor equal to or greater than 0.30.
5. Permanently installed lighting is in accordance with Section N1104.
6. The exterior roof surface complies with one of the options in Table C402.2.1.1 of the *International Energy Conservation Code*, or the roof/ceiling has insulation with an *R*-value of R-15 or greater. If present, attics above the insulation are vented and attics below the insulation are unvented.
7. Roof surfaces have a minimum slope of $^1/_4$ inch (6.4 mm) per foot of run. The finished roof does not have water accumulation areas.
8. Operable fenestration provides ventilation area equal to not less than 14 percent of the floor area in each room. Alternatively, equivalent ventilation is provided by a ventilation fan.
9. Bedrooms with exterior walls facing two different directions have operable fenestration on exterior walls facing two directions.
10. Interior doors to bedrooms are capable of being secured in the open position.
11. A ceiling fan or ceiling fan rough-in is provided for bedrooms and the largest space that is not used as a bedroom.

❖ This section provides an alternative for residences in the tropical climates, a simple option for a newly defined climate zone, the "tropical zone." The area between the Tropic of Cancer and the Tropic of Capricorn is the area between 23.5 degrees north and south of the equator. A zone that recognizes the unusually constant and unique climate of this region would help make the I-Codes more of an "international code."

Tropical areas are quite different from the U.S. mainland in climate, construction techniques, traditional construction and energy prices. This chapter, and the IECC heretofore, have treated tropical climates as if they were simply a southern extension of the U.S. mainland. In traditional residences, especially less expensive residences, inexpensive ways to work with the tropical climates have evolved to provide comfortable interior spaces without the need for substantial space conditioning. Tropical electrical prices, usually over 20 cents per kWh, provide a substantial incentive for energy conservation. Solar water heating works particularly well in tropical climates.

Traditional construction, especially with solar water heating, is usually more energy efficient than the construction style assumed in the IECC, as is shown by an analysis done for Puerto Rico. Using energy-efficient versions of traditional construction saves more energy and is much more cost-effective than pushing those in tropical climates to adopt mainland construction practices. Traditional tropical construction focuses on greatly reducing or eliminating the need for space con-

INTERNATIONAL CODE COUNCIL®
Copyright © 2015 ICC. ALL RIGHTS RESERVED. Accessed by David Dammon on Jun 21, 2017 12:30:52 PM pursuant to License Agreement with ICC. No further reproduction or distribution authorized. ANY UNAUTHORIZED REPRODUCTION OR DISTRIBUTION IS A VIOLATION OF THE FEDERAL COPYRIGHT ACT AND THE LICENSE AGREEMENT, AND SUBJECT TO CIVIL AND CRIMINAL PENALTIES THEREUNDER.

ditioning by making a living space that is comfortable without space conditioning.

The following are explanations, by item:

1. Air conditioning only a portion of the residence is common in some residences and saves energy compared to air conditioning the whole occupied space.
2. Heating is seldom needed.
3. Consistently warm temperatures and high power costs make solar water heating very attractive. Solar water heating is widely used. Water heating is often 35 percent or more of the residential energy use. Substantial energy savings come from solar water heating.
4. Limiting solar gains and providing ventilation is the energy focus for windows. Window *U*-factor has little impact. Window air tightness is of little value when the important feature of the windows is their ability to be operable and provide ventilation.
5. High-efficiency lighting makes sense with tropical energy prices.
6. This references the "cool roof" provisions. This is similar to an option in Hawaii's code and the Puerto Rico Energy Center's analysis. Insulation is less valuable in mild climates where the outside temperature is often comfortable as an inside temperature.
7. Even flat roofs need to drain.
8. Ventilation provided by tropical winds makes occupied spaces more comfortable. At least 14 percent of the floor area of the room is an option for unconditioned residences in Hawaii's new energy code.
9. When bedroom walls facing two directions are available, ventilation on both walls will be more effective.
10. Interior doors should not block bedroom ventilation. This is similar to Hawaii's new energy code and recommended by the Puerto Rico Energy Center.
11. Ceiling fans increase comfort without conditioning the air. This is similar to Hawaii's new energy code and recommended by the Puerto Rico Energy Center.

N1101.14 (R401.3) Certificate (Mandatory). A permanent certificate shall be completed by the builder or registered design professional and posted on a wall in the space where the furnace is located, a utility room or an approved location inside the building. Where located on an electrical panel, the certificate shall not cover or obstruct the visibility of the circuit directory label, service disconnect label or other required labels. The certificate shall list the predominant *R*-values of insulation installed in or on ceiling/roof, walls, foundation (slab, *basement wall*, crawl space wall and/or floor) and ducts outside conditioned spaces; *U*-factors for fenestration and the solar heat gain coefficient (SHGC) of fenestration, and the results from any required duct system and building envelope air leakage testing done on the building. Where there is more than one value for each component, the certificate shall list the value covering the largest area. The certificate shall list the types and efficiencies of heating, cooling and service water heating equipment. Where a gas-fired unvented room heater, electric furnace, or baseboard electric heater is installed in the residence, the certificate shall list "gas-fired unvented room heater," "electric furnace" or "baseboard electric heater," as appropriate. An efficiency shall not be *listed* for gas-fired unvented room heaters, electric furnaces or electric baseboard heaters**.**

❖ This section is intended to increase the consumer's awareness of the energy-efficiency ratings for the various building elements in his or her home. The builder or registered design professional has to complete the certificate and place it on or inside the electrical panel (see Commentary Figure N1101.14). The permanent certificate shall not cover or obstruct the visibility of the circuit directory label, service disconnect label or other required labels.

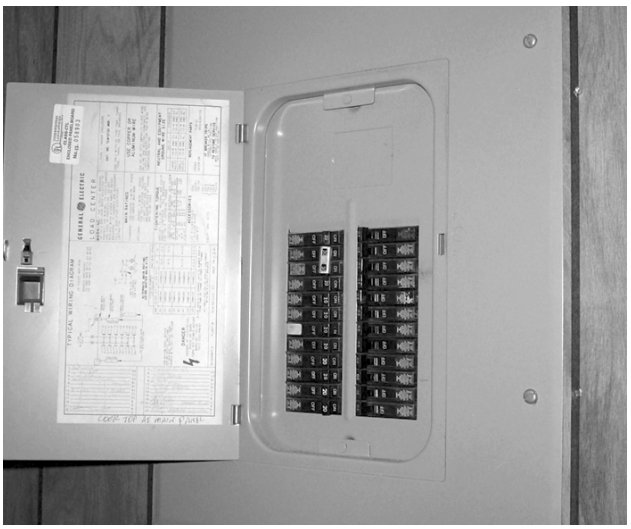

Figure N1101.14
CERTIFICATE

The certificate must disclose the building's *R*-values, fenestration *U*-factors and fenestration SHGC, HVAC equipment types and efficiencies. The energy efficiency of a building as a system is a function of many elements considered as separate parts of the whole. It is difficult to have a proper identification and analysis of a building's energy efficiency once the building is completed because many of the elements may not be readily accessible.

This information is also valuable for existing structures undergoing alterations and additions to help determine the appropriate sizing for the mechanical systems. This is meant to be a simple certificate that is easy to read. The certificate does not contain all the information required for compliance and cannot be

INTERNATIONAL CODE COUNCIL®
Copyright © 2015 ICC. ALL RIGHTS RESERVED. Accessed by David Dammon on Jun 21, 2017 12:30:52 PM pursuant to License Agreement with ICC. No further reproduction or distribution authorized. ANY UNAUTHORIZED REPRODUCTION OR DISTRIBUTION IS A VIOLATION OF THE FEDERAL COPYRIGHT ACT AND THE LICENSE AGREEMENT, AND SUBJECT TO CIVIL AND CRIMINAL PENALTIES THEREUNDER.

substituted for information on the required construction documents. Instead, the certificate is meant to provide the housing owner, occupant or buyer with a simple-to-understand overview of the home's energy efficiency. Where there is a mixture of insulation and fenestration values, the value applying to the largest area is specified. For example, if most of the wall insulation was R-19, but a limited area bordering the garage was R-13, the certificate would specify R-19 for the walls. (In contrast, plans and overall compliance would need to account for both *R*-values.)

The code specifies the minimum information on the certificate, but does not prohibit additional information being added so long as the required information is clearly visible. For example, a builder might choose to list energy-efficiency features beyond those required by the code.

SECTION N1102 (R402) BUILDING THERMAL ENVELOPE

N1102.1 (R402.1) General (Prescriptive). The *building thermal envelope* shall meet the requirements of Sections N1102.1.1 through N1102.1.4.

Exception: The following low energy buildings, or portions thereof, separated from the remainder of the building by *building thermal envelope* assemblies complying with this section shall be exempt from the *building thermal envelope* provisions of Section N1102.

1. Those with a peak design rate of energy usage less than 3.4 Btu/h · ft^2 (10.7 W/m^2) or 1.0 watt/ft^2 of floor area for space conditioning purposes.
2. Those that do not contain *conditioned space*.

❖ The provisions of Section N1102 are the detailed requirements of the levels of insulation, the performance of openings (fenestrations) and air-leakage and moisture-control provisions that serve to establish the building's energy efficiency. When combined with the "systems" requirements (Section N1103 and the electrical power requirements in Section N1104), these three sections will provide the total package of energy conservation that the code requires.

The term "building thermal envelope" is defined in Section N1101.6 as being "the basement walls, exterior walls, floor, roof and any other building elements that enclose conditioned spaces. This boundary also includes the boundary between conditioned space or provides a boundary between conditioned space and exempt or unconditioned space." Therefore, when combined with the definition of "Conditioned space," the code has defined the boundaries of the building that will be regulated by this section. The building thermal envelope is a key term and resounding theme used throughout the energy requirements. It defines what portions of the building structure bound conditioned space and are thereby covered by the insulation and infiltration (air leakage) requirements of the code. The building thermal envelope includes all building components separating conditioned spaces (see commentary, "Conditioned space") from unconditioned spaces or outside ambient conditions and through which heat is transferred. For example, the walls and doors separating an unheated garage (unconditioned space) from a living area (conditioned space) are part of the building envelope. The walls and doors separating an unheated garage from the outdoors are not part of the building thermal envelope. Walls, floors and other building components separating two conditioned spaces are not part of the building envelope. For example, interior partition walls, the common or party walls separating dwelling units in multiple-family buildings and the wall between a new conditioned addition and the existing conditioned space are not considered part of the building envelope.

Unconditioned spaces (areas having no heating or cooling sources) are considered outside the building thermal envelope and are exempt from these requirements (see Section N1101.6). A space is conditioned if it is heated or cooled directly; communicates directly with a conditioned space or where a space is indirectly supplied with heating, cooling or both through uninsulated walls, floors or uninsulated ducts or HVAC piping. Boundaries that define the building envelope include the following:

- Building assemblies separating a conditioned space from outdoor ambient weather conditions.
- Building assemblies separating a conditioned space from the ground under or around that space, such as the ground around the perimeter of a slab or the soil at the exterior of a conditioned basement wall. Note that the code does not specify requirements for insulating basement floors or underneath slab floors (except at the perimeter edges).
- Building assemblies separating a conditioned space from an unconditioned garage, unconditioned sunroom or similar unheated/cooled area.

The code specifies requirements for ceiling, wall, floor, basement wall, slab-edge and crawl space wall components of the building envelope. In some cases, it may be unclear how to classify a particular part of a building. For example, skylight shafts have properties of a wall assembly but are located in the ceiling assembly. In these situations, a determination needs to be made and approved by the code official prior to construction so that the proper level of insulation can be installed to complete the building thermal envelope. Generally, skylight shafts and other items that are vertical or at an angle of greater than 60 degrees (1.1 rad) from the horizontal would typically use the wall insulation value.

The exception exempts certain buildings from the thermal envelope requirements of Section N1102. The obvious one is any building that does not contain a conditioned space. The other type of building is a low-energy building (design rate of energy usage less than 1 watt/ft^2). For these spaces, insulation and rated fenestration are not cost effective.

INTERNATIONAL CODE COUNCIL®
Copyright © 2015 ICC. ALL RIGHTS RESERVED. Accessed by David Dammon on Jun 21, 2017 12:30:52 PM pursuant to License Agreement with ICC. No further reproduction or distribution authorized. ANY UNAUTHORIZED REPRODUCTION OR DISTRIBUTION IS A VIOLATION OF THE FEDERAL COPYRIGHT ACT AND THE LICENSE AGREEMENT, AND SUBJECT TO CIVIL AND CRIMINAL PENALTIES THEREUNDER.

N1102.1.1 (R402.1.1) Vapor retarder. Wall assemblies in the *building thermal envelope* shall comply with the vapor retarder requirements of Section R702.7.

❖ The code provides a pointer to the vapor retarder requirements in either Chapter 14 of the IBC or Chapter 7 of the code. Moisture issues are not directly related to energy issues. However, the materials used for the air infiltration barrier are often capable of serving the vapor barrier requirements. Therefore, this pointer is installed in the code to clarify that the vapor retarder requirements are elsewhere.

N1102.1.2 (R402.1.2) Insulation and fenestration criteria. The *building thermal envelope* shall meet the requirements of Table N1102.1.2 based on the climate zone specified in Section N1101.7.

❖ This section serves as the basis for the code's general insulation and fenestration requirements. Therefore, this is the first place to determine what the requirements for the building thermal envelope will be. There are specific requirements for certain assemblies and locations that are addressed in Sections N1102.2 and N1102.3. This section begins by establishing the requirements for the building thermal envelope by requiring compliance with the proper component insulation and fenestration requirements of Table N1102.1.2. However, once that general requirement is established, Sections N1102.1.3, N1102.1.4 and N1102.1.5 will provide three possible means of showing that the building thermal envelope will comply. Any of the three methods may be used at the discretion of the designer. The three options and their advantages are discussed in the commentary with the subsections. In general, the later subsections will provide the designer with more options and flexibility, but they are also more complex than using Table N1102.1.2 on an individual component basis.

Table N1102.1.2 lists the minimum *R*-value and maximum *U*-factor and SHGC requirements for different portions of the building thermal envelope, including basement and exterior walls, floor, ceiling and any other building elements that enclose conditioned space. Using the table begins with determining the climate zone for the proposed location from Table N1101.7 or Figure N1101.7. Once the climate zone has been determined, each of the *R*-value, *U*-factor or SHGC requirements must be met for the applicable component (e.g., ceilings, walls, floors, etc.).

Maximum fenestration *U*-factor is the first column in Table N1102.1.2 that must be complied with (see definition for "Fenestration" in Chapter 2). Except as modified or exempted by Section N1102.3, each fenestration product in the proposed building must not exceed the maximum *U*-factor requirement presented in the table for a particular climate zone. For example, a single-family residence located in Climate Zone 5 would require installation of glazed fenestration products with a maximum *U*-factor of 0.32. This would include all glazing in the walls of the building thermal envelope (e.g., vertical windows) and skylights in the roof would be limited to a maximum *U*-factor of 0.55. The proposed glazing *U*-factor should be called out in the building plans either on the floor plan or within a window schedule. This will provide the necessary information to the field inspector, who will then need to verify that what is on the plans is installed in the field.

Fenestration products that do not have labels on them must use the default *U*-factors contained in Table N1101.10.3(1) or N1101.10.3(3) (see commentary, Section N1101.10.3). Note that the lowest default *U*-factor included in the table for glazed fenestration is listed at 0.55 for a "nonmetal or metal-clad double-pane window." This *U*-factor will not meet the requirements of the code in Climate Zones 2 and higher.

TABLE N1102.1.2. See page 11-40.

❖ Table N1102.1.2 serves as the basis for establishing the building thermal envelope requirements based on the text of Section N1102.1.2 and sets the performance level for each of the individual components listed. See the commentary to Sections N1102.1.2, N1102.2 and N1102.3 for additional discussion related to the components in the table. The simplest compliance approach is to meet these requirements directly. Note that the requirements do not change based on the area of the components of the residence. These same requirements apply to changes in existing buildings; for example, additions.

A few specifics of Table N1102.1.2 may benefit from clarification.

When applying the fenestration requirements of this table, it is important to remember the definition of "Fenestration" and that it does include items such as doors, glass blocks and other items as well as windows. Therefore, any door located in the building thermal envelope would still be subject to these limitations. Although vertical fenestration (vertical windows and doors) and skylights have a separate column for *U*-factor, the SHGC applies to both. This is reinforced by the provisions of Note b.

The ceiling *R*-value requirements are precalculated for insulation only and already assume a credible *R*-value for other building materials such as air films, interior sheathing and exterior sheathing. The only *R*-value for ceiling insulation that may be used to meet the requirements is that installed between the conditioned space and the vented airspace in the roof/ceiling assembly. This is typically not an issue because most insulation is installed directly on top of the gypsum board ceiling and the ceiling location represents the building thermal envelope. Insulation installed in the ceiling must meet or exceed the required insulation level. The "conditioned attic" requirements of the code may be viewed as an acceptable alternative if approved by the code official. These minimum ceiling *R*-values would still be applicable where the provisions of Section R806.4 of the code were used to create a conditioned attic assembly. In those cases, the location of the insulation and air barrier (building thermal envelope) are simply located at the roof instead of at

INTERNATIONAL CODE COUNCIL®
Copyright © 2015 ICC. ALL RIGHTS RESERVED. Accessed by David Dammon on Jun 21, 2017 12:30:52 PM pursuant to License Agreement with ICC. No further reproduction or distribution authorized. ANY UNAUTHORIZED REPRODUCTION OR DISTRIBUTION IS A VIOLATION OF THE FEDERAL COPYRIGHT ACT AND THE LICENSE AGREEMENT, AND SUBJECT TO CIVIL AND CRIMINAL PENALTIES THEREUNDER.

the ceiling line. See the commentary to Sections N1102.2.1 and N1102.2.2 for additional information regarding ceiling insulation requirements.

The *R*-values presented under the "Walls" column represent the sum of the insulation materials installed between the framing cavity and, if used, the insulating sheathing. See Section N1102.1.2 regarding how to compute the *R*-value. Insulating sheathing must have an *R*-value of at least R-2 to be considered. The R-2 limitation comes from the definition of "Insulating sheathing." The *R*-value of noninsulative interior finishes, such as sheet rock, or exterior coverings like wood structural panel siding is not considered when determining whether the proposed wall assembly meets the requirements. For example, in Commentary Figure N1102.1.2, the *R*-value of the cavity insulation installed between framing (R-13) is added to the insulating sheathing installed on the outside of the studs (R-6) resulting in an R-19 wall. The R-19 total insulation value can then be compared to the *R*-value requirement for the specific climate zone in Table N1102.1.2 to determine compliance.

The insulation *R*-value requirement for exterior walls assumes wood framing. Walls framed using steel studs or constructed of materials such as a concrete masonry unit (CMU) are addressed in Sections N1102.2.5 and N1102.2.6. Whenever a residence has more than one type of wall (frame or mass) or more than one type of below-grade wall (conditioned basement or crawl space), the requirement for each component is taken from the appropriate column in Table N1102.1.2.

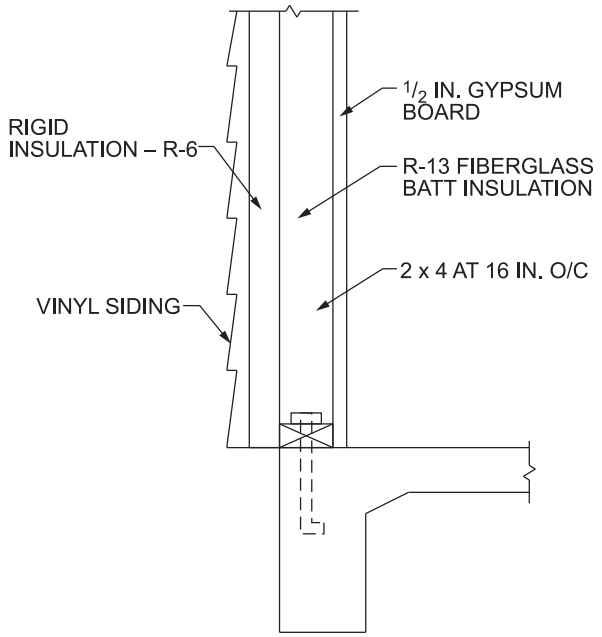

For SI: 1 inch = 25.4 mm.

Figure N1102.1.2
EXTERIOR *R*-VALUES

TABLE N1102.1.2 (R402.1.2)
INSULATION AND FENESTRATION REQUIREMENTS BY COMPONENT[a]

CLIMATE ZONE	FENESTRATION *U*-FACTOR[b]	SKYLIGHT[b] *U*-FACTOR	GLAZED FENESTRATION SHGC[b, e]	CEILING *R*-VALUE	WOOD FRAME WALL *R*-VALUE	MASS WALL *R*-VALUE[i]	FLOOR *R*-VALUE	BASEMENT[c] WALL *R*-VALUE	SLAB[d] *R*-VALUE & DEPTH	CRAWL SPACE[c] WALL *R*-VALUE
1	NR	0.75	0.25	30	13	3/4	13	0	0	0
2	0.40	0.65	0.25	38	13	4/6	13	0	0	0
3	0.35	0.55	0.25	38	20 or 13 + 5[h]	8/13	19	5/13[f]	0	5/13
4 except Marine	0.35	0.55	0.40	49	20 or 13 + 5[h]	8/13	19	10 /13	10, 2 ft	10/13
5 and Marine 4	0.32	0.55	NR	49	20 or 13 + 5[h]	13/17	30[g]	15/19	10, 2 ft	15/19
6	0.32	0.55	NR	49	20 + 5 or 13 + 10[h]	15/20	30[g]	15/19	10, 4 ft	15/19
7 and 8	0.32	0.55	NR	49	20 + 5 or 13 + 10[h]	19/21	38[g]	15/19	10, 4 ft	15/19

For SI: 1 foot = 304.8 mm.

a. *R*-values are minimums. *U*-factors and SHGC are maximums. When insulation is installed in a cavity which is less than the label or design thickness of the insulation, the installed *R*-value of the insulation shall not be less than the *R*-value specified in the table.

b. The fenestration *U*-factor column excludes skylights. The SHGC column applies to all glazed fenestration.
Exception: Skylights may be excluded from glazed fenestration SHGC requirements in Climate Zones 1 through 3 where the SHGC for such skylights does not exceed 0.30.

c. "15/19" means R-15 continuous insulation on the interior or exterior of the home or R-19 cavity insulation at the interior of the basement wall. "15/19" shall be permitted to be met with R-13 cavity insulation on the interior of the basement wall plus R-5 continuous insulation on the interior or exterior of the home. "10/13" means R-10 continuous insulation on the interior or exterior of the home or R-13 cavity insulation at the interior of the basement wall.

d. R-5 shall be added to the required slab edge *R*-values for heated slabs. Insulation depth shall be the depth of the footing or 2 feet, whichever is less in Zones 1 through 3 for heated slabs.

e. There are no SHGC requirements in the Marine Zone.

f. Basement wall insulation is not required in warm-humid locations as defined by Figure N1101.10 and Table N1101.10.

g. Or insulation sufficient to fill the framing cavity, R-19 minimum.

h. The first value is cavity insulation, the second value is continuous insulation, so "13+5" means R-13 cavity insulation plus R-5 continuous insulation.

i. The second *R*-value applies when more than half the insulation is on the interior of the mass wall.

INTERNATIONAL CODE COUNCIL®
Copyright © 2015 ICC. ALL RIGHTS RESERVED. Accessed by David Dammon on Jun 21, 2017 12:30:52 PM pursuant to License Agreement with ICC. No further reproduction or distribution authorized. ANY UNAUTHORIZED REPRODUCTION OR DISTRIBUTION IS A VIOLATION OF THE FEDERAL COPYRIGHT ACT AND THE LICENSE AGREEMENT, AND SUBJECT TO CIVIL AND CRIMINAL PENALTIES THEREUNDER.

Mass walls are defined and have additional requirements in Section N1102.2.5. Mass walls are intended to be above-grade walls and do not include basement walls, which have a separate entry in the table.

Note a reminds the code user which level of performance is required. Therefore, when dealing with *R*-values, a higher number would be better. When dealing with *U*-factors, the lower the number, the better the performance.

In accordance with Note c, for basement walls and crawl space walls, the two numbers separated by a "/" represent the values for continuous and cavity insulation; either will meet the code's requirements. For example, in Climate Zone 6, the wall can either be covered with continuous insulation to a minimum level of R-15 or, if some type of framing is used (such as a wood-frame wall used to finish out a basement), R-19 insulation must be installed within the cavity. This higher level of cavity insulation adjusts for the bridging or reduction in energy efficiency that the framing elements would create.

In accordance with Note d, heated slabs require R-5 insulation in Climate Zones 1, 2 and 3 and R-15 slab edge insulation in Climate Zones 4 and above. This R-15 insulation is the result of R-5 being "added" to the R-10 insulation level specified in the table for Climate Zones 4 through 8.

In accordance with Note g, where R-30 under-floor insulation is required, less insulation may be used if the framing cavity is filled, down to a minimum of R-19. This recognizes that extending the framing solely to hold more insulation can cost more than it is worth.

N1102.1.3 (R402.1.3) *R*-value computation. Insulation material used in layers, such as framing cavity insulation, or continuous insulation shall be summed to compute the corresponding component *R*-value. The manufacturer's settled *R*-value shall be used for blown insulation. Computed *R*-values shall not include an *R*-value for other building materials or air films. Where insulated siding is used for the purpose of complying with the continuous insulation requirements of Table N1102.1.2, the manufacturer's labeled *R*-value for insulated siding shall be reduced by R-0.6.

❖ This section indicates how the *R*-value in Table N1102.1.2 is to be determined. Table N1102.1.2 specifies the required *R*-values for the insulation products, the nominal *R*-value. This is the *R*-value of the insulation products only. Although other products and features such as finish materials, air films and airspaces may contribute to overall energy efficiency, when determining the *R*-value in the code, these additional items are not considered and do not contribute to the nominal *R*-value. For example, if a wall had R-13 cavity insulation, gypsum board with an *R*-value of almost R-1 and exterior siding that has an *R*-value of R-1, the overall wall *R*-value is simply R-13 because the gypsum board and the exterior siding do not contribute to the *R*-value for purposes of determining code compliance. Where there is more than one layer of insulation, the *R*-values for the layers are summed. For example, a wall with R-13 batts within the framing cavity and R-4 insulated sheathing would be treated as an R-17 wall (13 + 4 = 17). It is only insulation materials that may be summed to determine the component's *R*-value.

N1102.1.4 (R402.1.4) *U*-factor alternative. An assembly with a *U*-factor equal to or less than that specified in Table N1102.1.4 shall be permitted as an alternative to the *R*-value in Table N1102.1.2.

❖ For residences built with common insulation products, the most direct method of compliance is often the *R*-values in Table N1102.1.2. As an alternative, compliance can be demonstrated by calculating the *U*-factor for a component. Table N1102.1.4 gives *U*-factors that are deemed to be equivalent to the *R*-values in the prescriptive tables. Unlike the *R*-values in Table N1102.1.2, which consider only the insulation, *U*-factors consider all the parts of the construction. *U*-factors for a wall might include exterior siding, gypsum board and air films, all of which would be excluded from the *R*-value computation by Section N1102.1.2; for example, whether wall framing is 16 or 24 inches (406 or 610 mm) on center matters in computing the *U*-factor. Whether framing is metal or wood can also have a significant impact on *U*-factor.

U-factors are well suited to several applications. Construction types that limit the amount of framing or include thermal breaks as part of their design may benefit from *U*-factor calculations. Components with complex or nonuniform geometries can use testing to establish *U*-factors. Compliance with the "total UA alternative" or tradeoff approach in Section N1102.1.4 requires the use of the *U*-factor tables.

Example of *U*-factor calculation in Table N1102.1.4:

WALL COMPONENT	CAVITY	STUDS, PLATES	HEADERS
	R-value	*R*-value	*R*-value
Outside air film	0.25	0.25	0.25
Plywood siding	0.59	0.59	0.59
Continuous insulation	5	5	5
Plywood sheathing	0.83	0.83	0.83
Wood studs	—	4.38	4.38
Cavity insulation	13	—	—
$^1/_2$″ Gypsum board	0.45	0.45	0.45
Inside air film	0.68	0.68	0.68
Sum of thermal resistance	20.8	12.18	12.18

The above table includes the *R*-values for the cavity and framing (studs, plates and headers). The *U*-factor is 1/*R*-value. To calculate the *U*-factor for the combination of the cavity and framing at 16 inches on-center spacing, calculate the *U*-factor based on the weighting factors of 75-percent cavity, 21-percent studs and plates, and 4-percent headers (78-percent cavity, 18-percent studs and plates and 4-percent headers for 24 inch on-center spacing). An assembly with a *U*-factor equal to or less than that calculated in this table must

INTERNATIONAL CODE COUNCIL®
Copyright © 2015 ICC. ALL RIGHTS RESERVED. Accessed by David Dammon on Jun 21, 2017 12:30:52 PM pursuant to License Agreement with ICC. No further reproduction or distribution authorized. ANY UNAUTHORIZED REPRODUCTION OR DISTRIBUTION IS A VIOLATION OF THE FEDERAL COPYRIGHT ACT AND THE LICENSE AGREEMENT, AND SUBJECT TO CIVIL AND CRIMINAL PENALTIES THEREUNDER.

be permitted as an alternative to an assembly in IECC Table R402.1.2.

The *U*-factor for the above assembly may be calculated as shown below:

$$U = \frac{0.75}{20.8} + \frac{0.21}{12.18} + \frac{0.04}{12.18} = 0.057$$

Example of *U*-factor alternative:

WALL COMPONENT	CAVITY	STUDS, PLATES	HEADERS
	R-value	*R*-value	*R*-value
Outside air film	0.25	0.25	0.25
Plywood siding	0.59	0.59	0.59
Continuous insulation	13.1	13.1	31.1
Plywood sheathing	0.83	0.83	0.83
Wood studs	—	4.38	4.38
Cavity insulation	0.91	—	—
$^1/_2$″ Gypsum board	0.45	0.45	0.45
Inside air film	0.68	0.68	0.68
Sum of thermal resistance	16.81	20.28	20.28

In the above assembly, the R-13 cavity insulation is removed and a value of 0.91 is assumed for the airspace in the stud cavity. The continuous insulation is increased to 13.1. The framing spacing is increased to 24 inches (610 mm) on center.

The *U*-factor for the above assembly may be calculated as shown below:

$$U = \frac{0.78}{16.81} + \frac{0.18}{20.28} + \frac{0.04}{20.28} = 0.057$$

The *U*-factor from the above assembly is equal to or less than that specified in Table N1102.1.4.

It should be noted that the *U*-factor alternative could be used for all or part of a wall. Thus, the prescriptive *R*-values in Section N1102.1.2 can be applied to one segment of the wall, and the *U*-factors in this section can be used to determine the construction of another segment of the wall. One possible combination would be to apply the prescriptive requirements of Table N1102.1.2 for a portion of the exterior wall thermal envelope with structural sheathing and the *U*-factor alternative (see Table N1102.1.4) for the portion of the exterior wall thermal envelope that does not have structural sheathing. Note h of Table N1102.1.2 could be applied to 40 percent of the wall when structural sheathing is present, allowing a reduction in the *R*-value of R-3 for this segment.

When approved by the code official based on equivalency and intent of the code in accordance with Section R104.11, alternative methods of construction, materials and insulation systems also may be used as an alternative to the prescriptive *R*-values of Table N1102.1.2. For example, designers may substitute greater stud spacing, insulated plates and insulated headers in walls as an alternative to the prescribed cavity or continuous insulation.

N1102.1.5 (R402.1.5) Total UA alternative. If the total *building thermal envelope* UA (sum of *U*-factor times assembly area) is less than or equal to the total UA resulting from using the *U*-factors in Table N1102.1.4 (multiplied by the same assembly area as in the proposed building), the building shall be considered in compliance with Table N1102.1.2. The UA calculation shall be done using a method consistent with the ASHRAE *Handbook of Fundamentals* and shall include the thermal bridging effects of framing materials. The SHGC requirements shall be met in addition to UA compliance.

❖ This alternative allows one portion of the building to make up for another. It recognizes that there may be reasons for less insulation in some parts of the building, which can be compensated for by more insulation in other parts of the residence. The key concept is that the overall building thermal flow (UA) meets the code. This concept could allow a ceiling to make up for a wall

TABLE N1102.1.4 (R402.1.4)
EQUIVALENT *U*-FACTORS[a]

CLIMATE ZONE	FENESTRATION *U*-FACTOR	SKYLIGHT *U*-FACTOR	CEILING *U*-FACTOR	FRAME WALL *U*-FACTOR	MASS WALL *U*-FACTOR[b]	FLOOR *U*-FACTOR	BASEMENT WALL *U*-FACTOR	CRAWL SPACE WALL *U*-FACTOR
1	0.50	0.75	0.035	0.084	0.197	0.064	0.360	0.477
2	0.40	0.65	0.030	0.084	0.165	0.064	0.360	0.477
3	0.35	0.55	0.030	0.060	0.098	0.047	0.091[c]	0.136
4 except Marine	0.35	0.55	0.026	0.060	0.098	0.047	0.059	0.065
5 and Marine 4	0.32	0.55	0.026	0.060	0.082	0.033	0.050	0.055
6	0.32	0.55	0.026	0.045	0.060	0.033	0.050	0.055
7 and 8	0.32	0.55	0.026	0.045	0.057	0.028	0.050	0.055

a. Nonfenestration *U*-factors shall be obtained from measurement, calculation or an approved source.

b. When more than half the insulation is on the interior, the mass wall *U*-factors shall be a maximum of 0.17 in Zone 1, 0.14 in Zone 2, 0.12 in Zone 3, 0.087 in Zone 4 except Marine, 0.065 in Zone 5 and Marine 4, and 0.057 in Zones 6 through 8.

c. Basement wall *U*-factor of 0.360 in warm-humid locations as defined by Figure N1101.10 (R301.1) and Table N1101.10 (R301.1).

❖ This table provides the equivalent *U*-factors that may be used under Sections N1102.1.3 and N1102.1.4. See the commentary to Section N1102.1.3 for discussion related to this table.

INTERNATIONAL CODE COUNCIL®
Copyright © 2015 ICC. ALL RIGHTS RESERVED. Accessed by David Dammon on Jun 21, 2017 12:30:52 PM pursuant to License Agreement with ICC. No further reproduction or distribution authorized. ANY UNAUTHORIZED REPRODUCTION OR DISTRIBUTION IS A VIOLATION OF THE FEDERAL COPYRIGHT ACT AND THE LICENSE AGREEMENT, AND SUBJECT TO CIVIL AND CRIMINAL PENALTIES THEREUNDER.

or vice versa. As a practical matter, whether a building will comply with this method can sometimes be estimated quickly. A large area that is significantly over the required *R*-value will make up for a small area only mildly under the required *R*-value. Likewise, it will sometimes be obvious that a small area that mildly exceeds the requirement will not make up for a large area well below the requirement.

This section will allow for such tradeoffs but only if the total UA for the proposed building is below the aggregate UA calculation using the required values in Table N1102.1.4 and the same assembly areas as the actual building. In other words, under this alternative, components with varying insulating values can be "traded off" with one another as the builder sees fit just as long as the total UA calculation for the entire building complies with a calculation for that same house that uses the same assembly areas and the maximum UA values from Table N1102.1.4.

The UA is the sum of the component *U*-factors times each assembly area. The maximum allowable UA is the UA for a proposed design as if it was insulated to meet exactly the individual component *U*-factor requirements. This tradeoff provision allows the type of insulation and installed fenestration to vary, which permits significant design flexibility. The desire for tradeoffs in construction is common because of unexpected problems or design conflicts, and a UA tradeoff analysis is usually calculated with the assistance of electronic compliance tools, depending on the jurisdiction. (For example, the DOE has online compliance software for the code called REScheck, which can be downloaded from the DOE website at www.energycodes.gov. REScheck, if approved by the jurisdiction as compliant with the code, can be used to perform a UA tradeoff analysis.)

This section explicitly prohibits the tradeoff of SHGC requirements, requiring that the "SHGC requirements be met in addition to UA compliance." As a result, glazed fenestration must comply with the SHGC values shown in Table N1102.1.2 even if the *U*-factor is modified by trading off against some other component.

The requirements of this section establish specific additional requirements for any tradeoff. First, the baseline house must have the same assembly areas as the proposed house (e.g., the same area of each assembly—fenestration, skylights, ceiling, wall and floor). Second, the calculation should be done consistent with the *ASHRAE Handbook of Fundamentals*. Third, the calculation must include the thermal bridging effects of framing materials. To meet these requirements, the calculation method must either specifically combine the actual framing and insulation paths (with their specific areas and *U*-values) or use framing factors such as those found in the *ASHRAE Handbook of Fundamentals* for all framed building components (Note: this is not necessary for fenestration, which is a whole product value). To illustrate this approach, assume 1,000 square feet (93 m^2) of wall, of which 250 square feet (23 m^2) is framing (assuming 0.81 *U*-factor) and 750 square feet (70 m^2) is cavity (R-13 insulation). The baseline (general code requirement) and proposed opaque wall UAs are computed as follows:

- Baseline Opaque Wall for Climate Zone 2 = (0.082 x 1000) = 82. (The 0.082 value used in the calculation is taken from Table N1102.1.4.)
- Proposed Opaque Wall UA = (0.81 x 250) + (0.077 x 750) = 78. (The 0.81 value used in the calculation was given above as an assumption. The 0.077 value is determined based on the *R*-value of 13; that is, 1 ÷ 13 = 0.077.)

Similar computations would be done for each assembly (such as fenestration or ceilings) and the baseline and proposed values then totaled and compared. If the baseline is greater than or equal to the proposed values, the house satisfies the UA alternative. The home will still need to meet all other prescriptive requirements, including the fenestration SHGC in Table N1102.1.2, the air leakage requirements of Section N1102.4 and the moisture-control requirements of Section N1102.5.

It also should be noted that this alternative is limited to UA tradeoffs for the building's thermal envelope. The 2015 code does not authorize or establish any basis for HVAC tradeoffs associated with its UA tradeoff option. HVAC performance is simply not addressed under the code prescriptive or UA tradeoff paths. It is addressed only in Section 405 under the "Simulated Performance Alternative." As a result, the code elected to limit these simplified tradeoffs to UA envelope tradeoffs and defer any more complex tradeoffs exclusively to the "Simulated Performance Alternative" in Section N1105. If the builder wishes to factor in HVAC performance for tradeoffs, Section N1105 can be used and is permitted based on Section N1101.2, accepting Section N1105 as a compliance option.

Documentation acceptable to the local building department generally must be submitted to the appropriate authority to certify acceptable component UA tradeoffs.

UA alternative example (for calculating standard and proposed designs):

Building areas and *U*-factors (for single-family, Zone 5 from Table N1102.1.4)

Standard (Code) Design	Proposed Design
Exterior Wall 1050 ft^2 U_w = -0.057	Exterior Wall 1050 ft^2 *U* = 0.0451
Glazed doors and windows 192 ft^2 U_g = 0.32	Glazed doors and windows 192 ft^2 *U* = 0.40
Opaque exterior door 38 ft^2 U_g = 0.32	Opaque exterior door 38 ft^2 *U* = 0.35

INTERNATIONAL CODE COUNCIL®
Copyright © 2015 ICC. ALL RIGHTS RESERVED. Accessed by David Dammon on Jun 21, 2017 12:30:52 PM pursuant to License Agreement with ICC. No further reproduction or distribution authorized. ANY UNAUTHORIZED REPRODUCTION OR DISTRIBUTION IS A VIOLATION OF THE FEDERAL COPYRIGHT ACT AND THE LICENSE AGREEMENT, AND SUBJECT TO CIVIL AND CRIMINAL PENALTIES THEREUNDER.

Roof 1500 ft^2 U_r = 0.026	Roof 1500 ft^2 U_r = 0.026
Floor (slab) 1500 ft^2 U = 0.033	Floor (slab) 1500 ft^2 U_{fe} = 0.033

UA Standard = (0.057 × 1050) + (0.32 × 192) + (0.32 × 38) + (0.026 × 1500) + (0.033 × 1500) = 222

UA Proposed = (0.0451 × 1050) + (0.40 × 192) + (0.35 × 38) + (0.026 × 1500) + (0.033 × 1500) = 225

UA Proposed > UA Standard; therefore design fails to meet code requirements.

N1102.2 (R402.2) Specific insulation requirements (Prescriptive). In addition to the requirements of Section N1102.1, insulation shall meet the specific requirements of Sections N1102.2.1 through N1102.2.13.

❖ This section contains specific requirements to be followed for the individual items listed within the subsections. Although Section N1102.1 and Tables N1102.1.2 and N1102.1.4 provide the general basis for complying with the energy requirements of this chapter, Section N1102.2 provides additional details regarding the actual construction of the assemblies or modifications that may affect the general requirements. Relying on the principle that specific requirements apply over general requirements will help ensure that these specific provisions are properly followed.

N1102.2.1 (R402.2.1) Ceilings with attic spaces. Where Section R1102.1.2 would require R-38 insulation in the ceiling, installing R-30 over 100 percent of the ceiling area requiring insulation shall be deemed to satisfy the requirement for R-38 wherever the full height of uncompressed R-30 insulation extends over the wall top plate at the eaves. Similarly, where Section R1102.1.2 would require R-49 insulation in the ceiling, installing R-38 over 100 percent of the ceiling area requiring insulation shall be deemed to satisfy the requirement for R-49 insulation wherever the full height of uncompressed R-38 insulation extends over the wall top plate at the eaves. This reduction shall not apply to the *U*-factor alternative approach in Section R1102.1.4 and the total UA alternative in Section R1102.1.5.

❖ The required ceiling *R*-value found in the code is based on the assumption that standard truss or rafter construction was being used. When raised-heel trusses or other methods of framing that would not permit the ceiling insulation to be installed to its full depth over the entire area are used, then the code would permit the installation of a lower *R*-value insulation. The general assumption is that ceiling insulation will be compressed at the edges and, if the special construction techniques are used, that the level of insulation required can be reduced.

Insulation installed in a typical roof assembly will be full height throughout the center portions of the assembly and will taper (be compressed) at the edges as the roof nears the top plate of the exterior wall system [see Commentary Figure N1102.2.1(1)]. The slope of the roof causes this tapering, which is further amplified by any baffling installed to direct ventilation air from the eave vents up and over the insulation. Because of this tapering, the installed *R*-value near the plate lines will be less than the rated *R*-value for the insulation. This is caused by compression (compressed insulation has a lower *R*-value than insulation installed to its full thickness) and the limited space between the floor of the attic and the roof sheathing near the exterior plate line. Thus, a typical installation, on average, will have a lower *R*-value than that of the rated insulation. Because of this, the code will allow installation of a lower insulation value if it can be installed full thick-

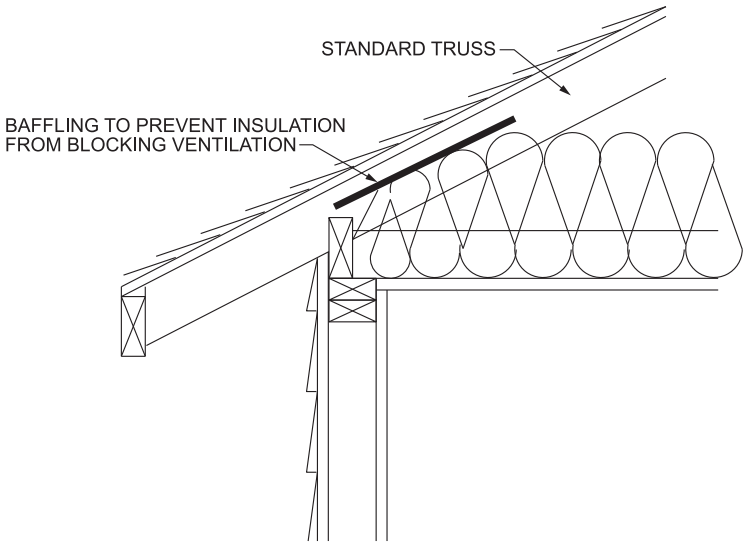

Figure N1102.2.1(1)
TYPICAL ROOF ASSEMBLY

INTERNATIONAL CODE COUNCIL®
Copyright © 2015 ICC. ALL RIGHTS RESERVED. Accessed by David Dammon on Jun 21, 2017 12:30:52 PM pursuant to License Agreement with ICC. No further reproduction or distribution authorized. ANY UNAUTHORIZED REPRODUCTION OR DISTRIBUTION IS A VIOLATION OF THE FEDERAL COPYRIGHT ACT AND THE LICENSE AGREEMENT, AND SUBJECT TO CIVIL AND CRIMINAL PENALTIES THEREUNDER.

ness, to its rated *R*-value, over the plate line of the exterior wall. This allowance recognizes that a partial thermal "bypass" has been made more efficient by using insulation with the full *R*-value at the eaves. The full insulation *R*-value is sometimes achieved by what is termed an "energy truss" or "advanced framing." This can be achieved by using an oversized truss or raised-heel truss as shown in Commentary Figure N1102.2.1(2). Another way to achieve the full *R*-value would be by use of insulation with a higher *R*-value per inch at the eaves. The use of the options permitted by this section allows substituting R-30 for R-38 insulation, and R-38 may be substituted for R-49 insulation to meet the requirements of the code. When using the conditioned attic requirements of the code, the same option of using a reduced *R*-value would apply if the insulation was installed directly under the roof deck, rather than on the attic floor (see commentary, Section R806.4). The insulation would be permitted to meet the lesser *R*-value, presuming the full *R*-value was met over the eaves. Of course, this situation would also presume that the attic space beneath the insulation was not vented.

Note that this text applies only to the *R*-value portion of the code; there is no reduction in requirements if the *U*-factor alternative or the total UA alternative is used. In those cases, the reduced thickness must be accounted for in the calculations. In addition, if the residence had more than one separate attic space, it is possible this section could apply to one attic space, but not another.

N1102.2.2 (R402.2.2) Ceilings without attic spaces. Where Section N1102.1.2 would require insulation levels above R-30 and the design of the roof/ceiling assembly does not allow sufficient space for the required insulation, the minimum required insulation for such roof/ceiling assemblies shall be R-30. This reduction of insulation from the requirements of Section N1102.1.2 shall be limited to 500 square feet (46 m^2) or 20 percent of the total insulated ceiling area, whichever is less. This reduction shall not apply to the *U*-factor alternative approach in Section N1102.1.4 and the total UA alternative in Section N1102.1.5.

❖ In situations where the ceiling is installed directly onto the roof rafters and no attic space is created, this section will allow a reduced level of ceiling insulation for a limited area. This section addresses the construction of what is typically called "cathedral" or "vaulted" ceilings, which therefore result in that portion of the home not having an attic area above the ceiling. See the definition of "Attic" in Chapter 2 of the code. Based on the use of solid sawn lumber (2 × 8, 2 × 10 or 2 × 12) in conventional construction, as the ceiling *R*-value requirement increases, it may be impossible to install the required ceiling insulation from Table N1102.1.2 within the available cavity depth. In addition, the ventilation requirements of Section R806.3 will further reduce the available space by requiring a minimum space of 1 inch (25 mm) between the insulation and the roof sheathing. Therefore, when the depth of the cavity will not permit the required insulation level, this section permits a reduction to R-30 ceiling insulation instead of the normally required R-38 or R-49 requirement from Table N1102.1.1. This will generally result in reducing the required insulation level instead of having to increase the depth of the framing members. This section in the code recognizes that increases in framing size done only to accommodate higher *R*-values are an expensive way to achieve a limited increase in *R*-value.

It is important to note that this section applies only to areas that have a required insulation level above R-30 (Climate Zones 4 through 8). Further, the reduction is limited to portions of ceiling assemblies that do not exceed 500 square feet (46 m^2) or 20 percent of the ceiling area. The intent is that the 500-square-foot (46 m^2) or 20-percent limitation be the total aggregate exempted amount of the building's thermal envelope (ceiling) that can use this reduction. It is not the intent that a home could have multiple areas that were each

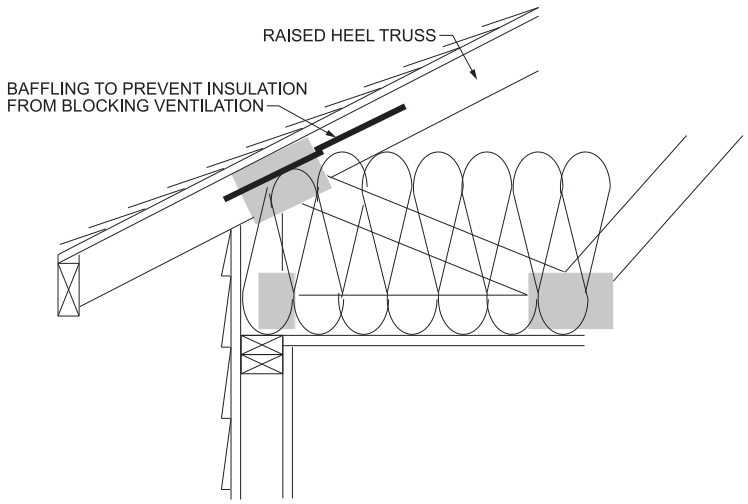

Figure N1102.2.1(2)
RAISED-HEEL TRUSS

INTERNATIONAL CODE COUNCIL®
Copyright © 2015 ICC. ALL RIGHTS RESERVED. Accessed by David Dammon on Jun 21, 2017 12:30:52 PM pursuant to License Agreement with ICC. No further reproduction or distribution authorized. ANY UNAUTHORIZED REPRODUCTION OR DISTRIBUTION IS A VIOLATION OF THE FEDERAL COPYRIGHT ACT AND THE LICENSE AGREEMENT, AND SUBJECT TO CIVIL AND CRIMINAL PENALTIES THEREUNDER.

under the 500-square-foot (46 m^2) or 20-percent limit but would aggregate to more than that amount. In situations that cannot meet these limitations [homes in Climate Zones 1 through 3 or homes needing more than 500 square feet (46 m^2) of reduced ceiling insulation], the depth of the rafters would have to be increased to meet the table's required insulation level or other design changes or means of compliance would be necessary. This provision does not apply if the *U*-factor alternative or the total UA alternative is being used. In those cases, the reduced insulation level might be accomplished, but it would be accounted for with additional insulating components in the case of the *U*-factor alternative or with added insulation elsewhere in the case of the total UA alternative.

N1102.2.3 (R402.2.3) Eave baffle. For air-permeable insulations in vented attics, a baffle shall be installed adjacent to soffit and eave vents. Baffles shall maintain an opening equal or greater than the size of the vent. The baffle shall extend over the top of the attic insulation. The baffle shall be permitted to be any solid material.

❖ For air-permeable insulations in vented attics, a baffle shall be installed adjacent to soffit and eave vents. This will help prevent wind from degrading the attic insulation performance. Baffles serve to keep vents open, insulation in place and keep the wind from blowing through the insulation and reducing its effectiveness.

N1102.2.4 (R402.2.4) Access hatches and doors. Access doors from conditioned spaces to unconditioned spaces such as attics and crawl spaces shall be weatherstripped and insulated to a level equivalent to the insulation on the surrounding surfaces. Access shall be provided to all equipment that prevents damaging or compressing the insulation. A wood-framed or equivalent baffle or retainer is required to be provided when loose-fill insulation is installed, the purpose of which is to prevent the loose-fill insulation from spilling into the living space when the attic access is opened, and to provide a permanent means of maintaining the installed *R*-value of the loose-fill insulation.

Exception: Vertical doors that provide access from conditioned to unconditioned spaces shall be permitted to meet the fenestration requirements of Table R1102.1.2 based on the applicable climate zone specified in Chapter 3.

❖ The portion of a ceiling used for an attic access door is a weak part of the building thermal envelope. The purpose of this provision is to ensure that measures are taken to prevent large loss of energy through this opening.

N1102.2.5 (R402.2.5) Mass walls. Mass walls for the purposes of this chapter shall be considered above-grade walls of concrete block, concrete, insulated concrete form (ICF), masonry cavity, brick (other than brick veneer), earth (adobe, compressed earth block, rammed earth) and solid timber/logs, or any other walls having a heat capacity greater than or equal to 6 Btu/ft^2 × °F (123 kJ/m^2 × K).

❖ The code uses a simple definition for mass walls. Walls made of the specified materials and mass are mass walls. Mass walls may meet the lower mass wall *R*-value (as compared to frame wall values) specified in their respective climate zones because of the energy-conserving characteristics of mass walls. Note that the difference between the wood-frame *R*-value is greatest in southern climates. This recognizes that the thermal "averaging" provided by mass walls is most effective in warmer climates. In the very northern climates where there is almost continual heating during parts of the year, the thermal mass is of limited value. The code simply lists the types of walls that are considered as being "mass" walls. There is no additional limitation or characteristic specified for the walls that would be applicable when using the code.

In general terms, the heat capacity is a measure of how well a material stores heat. The higher the heat capacity, the greater the amount of heat stored in the material. For example, a 6-inch (152 mm) heavyweight concrete wall has a heat capacity of 14 Btu/ft^2 × °F (620 J/m^2 × K) compared to a conventional 2 by 4 wood-framed wall with a heat capacity of approximately 3 Btu/ft^2 × °F (138 J/m^2 × K). Tables N1102.1.2 and N1102.1.4 are used to determine the insulation or equivalent *U*-factor requirements for mass walls. To use the tables, first consult either Table R301.1 or Figure R301.1 to determine the climate zone of the proposed project. The *R*-value for the assembly is then given for the mass wall in Table N1102.1.2 or the *U*-factor is given in Table N1102.1.4.

When dealing with the mass walls, the insulation location is important. Note i of Table N1102.1.2 indicates that the second *R*-value, which is the higher *R*-value for mass walls in each climate zone, is applicable when more than half of the insulation is on the interior of the mass wall. The first values listed in Table N1102.1.2 are, therefore, based on the installation of the majority of the insulation ("at least 50 percent") being located on the exterior side of the wall or being integral to the wall. Likewise, Note b of Table N1102.1.4 provides lower maximum *U*-factors for mass walls with more than 50 percent of the insulation on the interior of the wall.

For an example of a wall assembly that has insulation on the exterior of the wall (between the mass wall and the exterior), see Commentary Figure N1102.2.5(1). Concrete masonry units with insulated cores or masonry cavity walls are examples of integral insulation. For mass walls with the insulation installed on the interior (an insulated furred wall located between the conditioned space and the mass wall), see Commentary Figure N1102.2.5(2). As shown,

INTERNATIONAL CODE COUNCIL®
Copyright © 2015 ICC. ALL RIGHTS RESERVED. Accessed by David Dammon on Jun 21, 2017 12:30:52 PM pursuant to License Agreement with ICC. No further reproduction or distribution authorized. ANY UNAUTHORIZED REPRODUCTION OR DISTRIBUTION IS A VIOLATION OF THE FEDERAL COPYRIGHT ACT AND THE LICENSE AGREEMENT, AND SUBJECT TO CIVIL AND CRIMINAL PENALTIES THEREUNDER.

these two figures would be examples of mass walls that meet or exceed the general requirements of this section and Table N1102.1.2 for Climate Zones 1 through 4, except for those in Marine Zone 4.

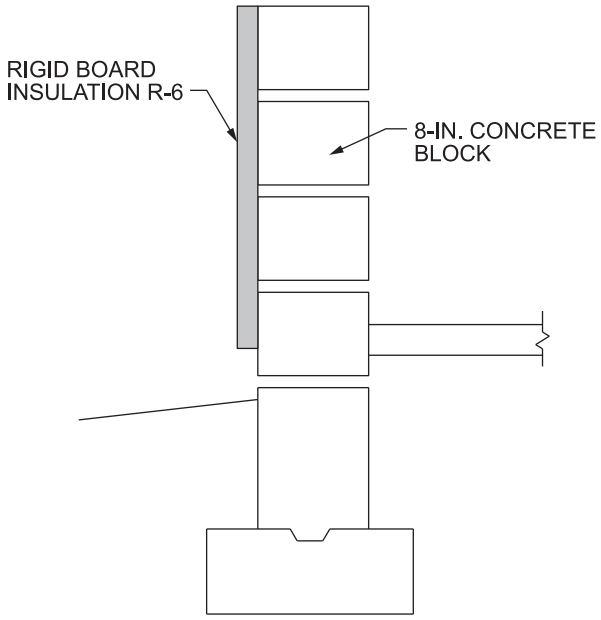

For SI: 1 inch = 25.4 mm.

Figure 1102.2.5(1)
EXTERIOR INSULATION

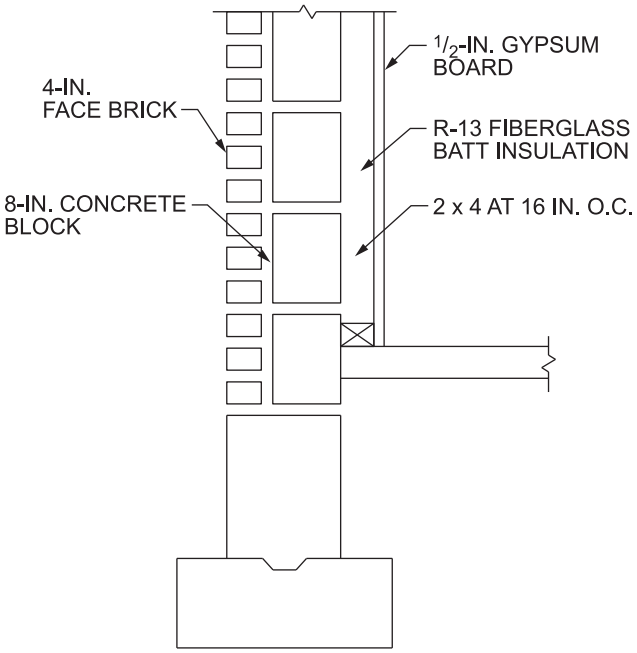

For SI: 1 inch = 25.4 mm.

Figure 1102.2.5(2)
INTERIOR INSULATION

N1102.2.6 (R402.2.6) Steel-frame ceilings, walls, and floors. Steel-frame ceilings, walls, and floors shall meet the insulation requirements of Table N1102.2.6 or shall meet the *U*-factor requirements of Table N1102.1.4. The calculation of the *U*-factor for a steel-frame envelope assembly shall use a series-parallel path calculation method.

❖ The insulation requirements of Table N1102.1.2 are based on conventional wood-frame construction methods. Because the code also includes provisions applicable to steel-framing methods, this chapter has been written to include this material. Table N1102.2.6 specifies combinations of cavity and continuous insulation for steel framing that are equivalent to the specified wood-frame component *R*-values in Table N1102.1.2.

Table N1102.1.2 cannot be used directly for steel-frame components. When using Table N1102.2.6, all listed options comply; the code user can choose any option on the list that corresponds to the correct *R*-value in the left-hand column. Steel has a much higher thermal conductivity (ability to transfer heat) than wood. Therefore, steel-frame cavities require a higher *R*-value or include a requirement for insulated sheathing that acts as a thermal break or both.

Instead of using this table, the code user could choose to calculate or measure a *U*-factor for a building component and show compliance based on meeting the *U*-factor requirement in Table N1102.1.4. The code user could use the total UA tradeoff in Section N1102.1.4 or even the performance-based approach in Section N1105 to show compliance based on the overall building, even if the steel-frame wall did not meet the code requirements directly. Other combinations of cavity insulation and continuous insulation not shown in Table N1102.2.6 would also be allowed; however, if a combination from the table is used, no additional calculation is necessary.

N1102.2.7 (R402.2.7) Walls with partial structural sheathing. Where Section R1102.1.2 would require continuous insulation on exterior walls and structural sheathing covers 40 percent or less of the gross area of all exterior walls, the continuous insulation *R*-value shall be permitted to be reduced by an amount necessary to result in a consistent total sheathing thickness, but not more than R-3, on areas of the walls covered by structural sheathing. This reduction shall not apply to the *U*-factor alternative approach in Section R1102.1.4 and the total UA alternative in Section R1102.1.5.

❖ The provisions of this section are intended to address a practical situation that occurs when structural sheathing is used over a portion of the outside wall, such as at the corners for horizontal bracing. In those cases, the thickness of the portion of the wall with structural sheathing could be different than the portion of the wall without sheathing. The code therefore allows a reduction of R-3 in the required insulation of the sheathed portion to facilitate some flexibility in the choice of insulation. This option is only allowed in the application of the prescriptive table, Table N1102.1.2, and not when utilizing the *U*-factor alternative or the UA alternative.

INTERNATIONAL CODE COUNCIL®
Copyright © 2015 ICC. ALL RIGHTS RESERVED. Accessed by David Dammon on Jun 21, 2017 12:30:52 PM pursuant to License Agreement with ICC. No further reproduction or distribution authorized. ANY UNAUTHORIZED REPRODUCTION OR DISTRIBUTION IS A VIOLATION OF THE FEDERAL COPYRIGHT ACT AND THE LICENSE AGREEMENT, AND SUBJECT TO CIVIL AND CRIMINAL PENALTIES THEREUNDER.

TABLE N1102.2.6 (R402.2.6)
STEEL-FRAME CEILING, WALL AND FLOOR INSULATION (*R*-VALUE)

WOOD FRAME *R*-VALUE REQUIREMENT	COLD-FORMED STEEL EQUIVALENT *R*-VALUE[a]
Steel Truss Ceilings[b]	
R-30	R-38 or R-30 + 3 or R-26 + 5
R-38	R-49 or R-38 + 3
R-49	R-38 + 5
Steel Joist Ceilings[b]	
R-30	R-38 in 2 × 4 or 2 × 6 or 2 × 8 R-49 in any framing
R-38	R-49 in 2 × 4 or 2 × 6 or 2 × 8 or 2 × 10
Steel-Framed Wall, 16″ on center	
R-13	R-13 + 4.2 or R-19 + 2.1 or R-21 + 2.8 or R-0 + 9.3 or R-15 + 3.8 or R-21 + 3.1
R-13 + 3	R-0 + 11.2 or R-13 + 6.1 or R-15 + 5.7 or R-19 + 5.0 or R-21 + 4.7
R-20	R-0 + 14.0 or R-13 + 8.9 or R-15 + 8.5 or R-19 + 7.8 or R-19 + 6.2 or R-21 + 7.5
R-20 + 5	R-13 + 12.7 or R-15 + 12.3 or R-19 + 11.6 or R-21 + 11.3 or R-25 + 10.9
R-21	R-0 + 14.6 or R-13 + 9.5 or R-15 + 9.1 or R-19 + 8.4 or R-21 + 8.1 or R-25 + 7.7
Steel-Framed Wall, 24″ on center	
R-13	R-0 + 9.3 or R-13 + 3.0 or R-15 + 2.4
R-13 + 3	R-0 + 11.2 or R-13 + 4.9 or R-15 + 4.3 or R-19 + 3.5 or R-21 + 3.1
R-20	R-0 + 14.0 or R-13 + 7.7 or R-15 + 7.1 or R-19 + 6.3 or R-21 + 5.9
R-20 + 5	R-13 + 11.5 or R-15 + 10.9 or R-19 + 10.1 or R-21 + 9.7 or R-25 + 9.1
R-21	R-0 + 14.6 or R-13 + 8.3 or R-15 + 7.7 or R-19 + 6.9 or R-21 + 6.5 or R-25 + 5.9
Steel Joist Floor	
R-13	R-19 in 2 × 6, or R-19 + 6 in 2 × 8 or 2 × 10
R-19	R-19 + 6 in 2 × 6, or R-19 + 12 in 2 × 8 or 2 × 10

a. Cavity insulation *R*-value is listed first, followed by continuous insulation *R*-value.

b. Insulation exceeding the height of the framing shall cover the framing.

N1102.2.8 (R402.2.8) Floors. Floor framing-cavity insulation shall be installed to maintain permanent contact with the underside of the subfloor decking.

Exception: The floor framing-cavity insulation shall be permitted to be in contact with the topside of sheathing or continuous insulation installed on the bottom side of floor framing where combined with insulation that meets or exceeds the minimum wood frame wall *R*-value in Table 1102.1.2 and that extends from the bottom to the top of all perimeter floor framing members.

❖ Floors that are a part of the building thermal envelope, such as those over a crawl space or an unconditioned garage, are required to meet or exceed the floor *R*-value requirements listed in Table N1102.1.2. The insulation *R*-value requirements range from R-13 in warm climates to R-38 in extremely cold climates. Insulation must be installed between the floor joists and must be well supported with netting, wire, wood strips or another method of support so that the insulation does not droop or fall out of the joist cavities over time. Some floor insulation has a tendency to sag or drop with time. This sag or drop exposes the subfloor directly to the temperature beneath the floor. Sagging also has a tendency to open airflow paths to parts of the floor, producing cold spots and negating the value of the floor insulation in the effected section of the floor. Even small areas that lack insulation or allow air circulation between the floor insulation and the subfloor can have a marked effect on the energy efficiency of the floor. This section specifies that floor insulation must be installed so it will maintain "permanent contact" with the subfloor (meaning over the useful life of the residence).

If a floor of a building extends over outside air, such as over an open carport, the floor is still insulated to the "floor" requirement of Table N1102.1.2 rather than being treated as part of the exterior envelope card meeting the same *R*-value as for ceilings.

The exception provides a specific configuration for insulating a floor. Requiring insulation in floors to be in direct contact with the underside of subfloor decking is one insulating option. Another option is to have an airspace between the floor sheathing and the top of the cavity insulation where this cavity insulation is in direct contact with the topside of sheathing or continuous insulation installed on the underside of the floor framing and is combined with perimeter insulation that meets or exceeds the *R*-value requirements for walls. This second option leads to fewer cold spots yet does not change the heat loss as long as the cavity insulation is in direct contact with a sheathing below it or continuous insulation below it. It also facilitates services to be enclosed within the thermal envelope. An example of this configuration is illustrated in Commentary Figure N1102.2.8.

N1102.2.9 (R402.2.9) Basement walls. Walls associated with conditioned basements shall be insulated from the top of the *basement wall* down to 10 feet (3048 mm) below grade or to the basement floor, whichever is less. Walls associated with unconditioned basements shall meet this requirement unless the floor overhead is insulated in accordance with Sections N1102.1.2 and N1102.2.8.

❖ The walls of conditioned basements must be insulated to meet the requirements of Table N1102.1.2. Each wall of a basement must be considered separately to determine whether it is a basement wall or an exterior wall. It is a basement wall if it has an average below-grade wall area of 50 percent or more. A wall that is less than 50-percent below grade is an exterior wall and must meet the insulation requirements for walls. Most walls associated with basements will be at least

INTERNATIONAL CODE COUNCIL®
Copyright © 2015 ICC. ALL RIGHTS RESERVED. Accessed by David Dammon on Jun 21, 2017 12:30:52 PM pursuant to License Agreement with ICC. No further reproduction or distribution authorized. ANY UNAUTHORIZED REPRODUCTION OR DISTRIBUTION IS A VIOLATION OF THE FEDERAL COPYRIGHT ACT AND THE LICENSE AGREEMENT, AND SUBJECT TO CIVIL AND CRIMINAL PENALTIES THEREUNDER.

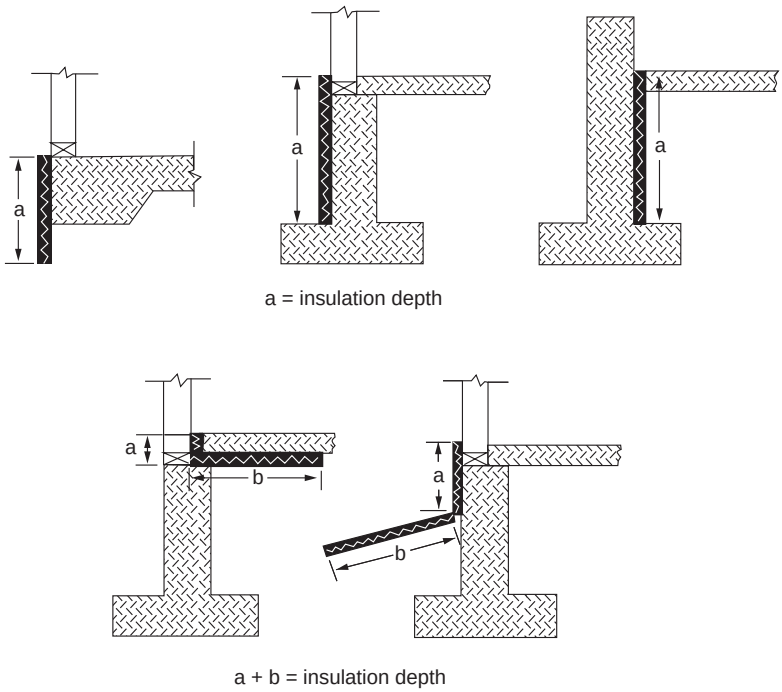

Figure N1102.2.8
SLAB INSULATION METHODS

50-percent below grade and, therefore, must meet basement wall requirements.

Walkout basements offer a challenge in determining compliance with the code. A walkout basement [see Commentary Figures N1102.2.9(1) and (2)] may have a back wall that is entirely below grade, a front wall or the walkout portion that is entirely above grade and two sidewalls with a grade line running diagonally. In this case, the back wall must meet the requirements for basement walls, the front wall would need to meet the requirements for walls (either framed wall or mass wall, as applicable) and the side walls would need to be evaluated to determine whether they were 50 percent or more below grade and, therefore, basement walls.

Basement insulation must extend up to 10 feet (3048 mm) under the ground, or at least as far as the basement wall extends under the ground. Heat flow into the ground occurs all along the buried portion of the wall, as well as along the above-ground portion of the wall. Heat flow below 10 feet (3048 mm) is greatly diminished so the code requires basement insulation only down to 10 feet (3048 mm), or the depth of the basement wall.

The code does not specify whether the insulation is to be placed on the inside or outside of a basement wall. In some localities moisture considerations may suggest the type and location for insulation.

The last part of this section allows insulating unconditioned basement walls as an alternative to insulating the floor above the unconditioned basement. Therefore, it essentially shifts the location of the building thermal envelope from the floor to the basement walls. Although not required, insulating the unconditioned basement walls makes a good deal of sense if a basement is likely to be conditioned at some time after construction.

Because the rim joist between floors is a part of the building envelope, this must be insulated also if the basement is conditioned.

When applying the provisions of this section, it is important to review the definitions for both "Above-grade wall" and "Basement wall" in Section N1101.9. For code users who also deal with commercial buildings, remember that the rule for residential buildings is 50 percent above or below grade and not the 85-percent minimum below grade with 15-percent maximum above-grade area that is applicable under Section C402.2.2 of the IECC for commercial construction.

N1102.2.10 (R402.2.10) Slab-on-grade floors. Slab-on-grade floors with a floor surface less than 12 inches (305 mm) below grade shall be insulated in accordance with Table N1102.1.2. The insulation shall extend downward from the top of the slab on the outside or inside of the foundation wall. Insulation located below grade shall be extended the distance provided in Table N1102.1.2 by any combination of vertical insulation, insulation extending under the slab or insulation extending out from the building. Insulation extending away from the building shall be protected by pavement or by not less than 10 inches (254 mm) of soil. The top edge of the insulation installed between the *exterior wall* and the edge of the interior slab shall be permitted to be cut at a 45-degree

INTERNATIONAL CODE COUNCIL®
Copyright © 2015 ICC. ALL RIGHTS RESERVED. Accessed by David Dammon on Jun 21, 2017 12:30:52 PM pursuant to License Agreement with ICC. No further reproduction or distribution authorized. ANY UNAUTHORIZED REPRODUCTION OR DISTRIBUTION IS A VIOLATION OF THE FEDERAL COPYRIGHT ACT AND THE LICENSE AGREEMENT, AND SUBJECT TO CIVIL AND CRIMINAL PENALTIES THEREUNDER.

(0.79 rad) angle away from the *exterior wall*. Slab-edge insulation is not required in jurisdictions designated by the *building official* as having a very heavy termite infestation.

❖ The perimeter edges of slab-on-grade floors must be insulated to the *R*-values listed in Table N1102.1.2. These requirements apply only to slabs 12 inches (305 mm) or less below grade. The listed *R*-value requirements in the table are for unheated slabs. A heated slab must add another R-5 to the required insulation levels based on Note d of Table N1102.1.2.

The insulation must extend downward from the top of the slab or downward to the bottom of the slab and then horizontally in either direction until the distance listed in Table N1102.1.2 is reached. See Commentary Figure N1102.2.8 for examples on how the distance is measured. Most of the heat loss from a slab will occur in the edge that is exposed directly to the outside air. The insulation must be installed to the top of the slab edge to prevent this heat loss. Slab insulation may be installed on the exterior of the slab edge or between the interior wall and the edge of the interior

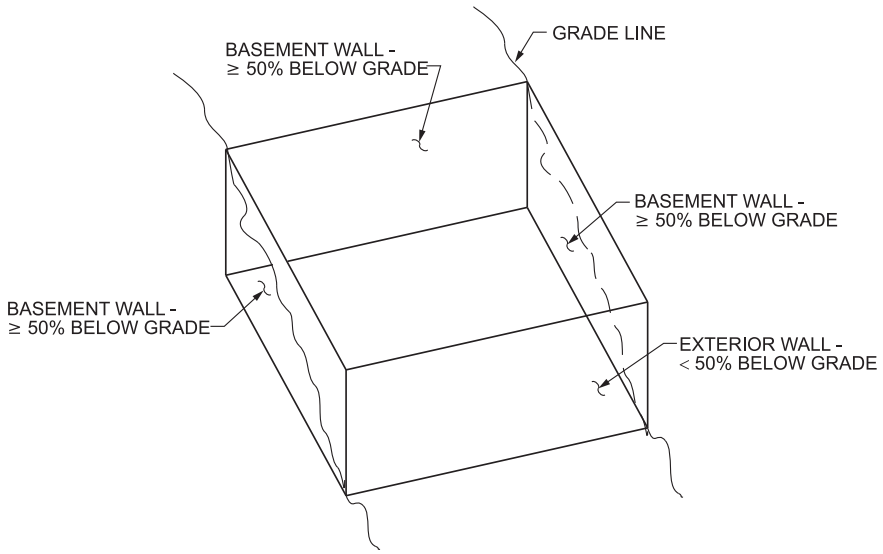

Figure N1102.2.9(1)
WALK-OUT BASEMENT



Figure N1102.2.9(2)
WALK-OUT BASEMENT

INTERNATIONAL CODE COUNCIL®
Copyright © 2015 ICC. ALL RIGHTS RESERVED. Accessed by David Dammon on Jun 21, 2017 12:30:52 PM pursuant to License Agreement with ICC. No further reproduction or distribution authorized. ANY UNAUTHORIZED REPRODUCTION OR DISTRIBUTION IS A VIOLATION OF THE FEDERAL COPYRIGHT ACT AND THE LICENSE AGREEMENT, AND SUBJECT TO CIVIL AND CRIMINAL PENALTIES THEREUNDER.

slab as in a nonmonolithic slab. In this type of installation, the exposed insulation could cause problems with tack strips for carpeting. Therefore, the insulation is allowed to be cut at a 45-degree angle away from the exterior of the wall. If a monolithic slab and foundation is being used, the required insulation would obviously need to be installed on the exterior and then either extended to the required depth or turned out to the exterior and be protected by either some type of pavement or a minimum of 10 inches (254 mm) of soil. Insulation that is exposed on or near the surface is easily damaged. This protection method ensures that the insulation remains in place and provides the intended energy savings.

In areas with very heavy termite infestation, slab perimeter insulation need not be installed in accordance with Table N1102.1.2. These areas are identified in Figure R301.2(3) or the jurisdiction may base its determination on the local history and situation. It is important to understand that this exemption from the slab insulation provisions is for any area with heavy termite infestations. The fact that this is an exemption and does not contain any requirement for a compensating increase of insulation at other locations is important.

The requirements of Section N1102.1.4 could still be used in areas that do not have a heavy termite infestation to eliminate the slab edge insulation if desired. Typically, slab perimeter insulation can be traded off entirely in these climates by increasing the ceiling or wall insulation *R*-values or by using glazing with a lower *U*-factor.

N1102.2.11 (R402.2.11) Crawl space walls. As an alternative to insulating floors over crawl spaces, crawl space walls shall be permitted to be insulated when the crawl space is not vented to the outside. Crawl space wall insulation shall be permanently fastened to the wall and extend downward from the floor to the finished grade level and then vertically and/or horizontally for at least an additional 24 inches (610 mm). Exposed earth in unvented crawl space foundations shall be covered with a continuous Class I vapor retarder in accordance with this code. All joints of the vapor retarder shall overlap by 6 inches (153 mm) and be sealed or taped. The edges of the vapor retarder shall extend not less than 6 inches (153 mm) up the stem wall and shall be attached to the stem wall.

❖ The code allows for the insulation of crawl space walls in crawl spaces instead of insulating the floor between the crawl space and the conditioned space. In essence, the code user is defining the thermal boundary as either the floor or the crawl space wall. Because the ground under the crawl space is tempered by the thermal mass of the dirt, the temperature of the crawl space is usually more favorable than the outside temperature. This is a popular practice for freeze protection of plumbing pipes in colder climates because it is common to install plumbing in the crawl space. The heat transferred through the uninsulated floor to the crawl space helps keep the crawl space temperature above freezing when the outside air temperature drops below freezing. To comply with this provision, the crawl space must be mechanically vented or supplied with conditioned air from the living space. Section 1203.3 of the IBC and its subsections address this crawl space ventilation requirement.

The code also requires installation of insulation from the sill plate downward to the exterior finished grade level and then an additional 24 inches (610 mm) either vertically or horizontally (see Commentary Figure N1102.2.10). Under this insulation scenario, the rim joist is considered part of the conditioned envelope and must be insulated to the same level as the exterior wall. The insulation must be attached securely to the crawl

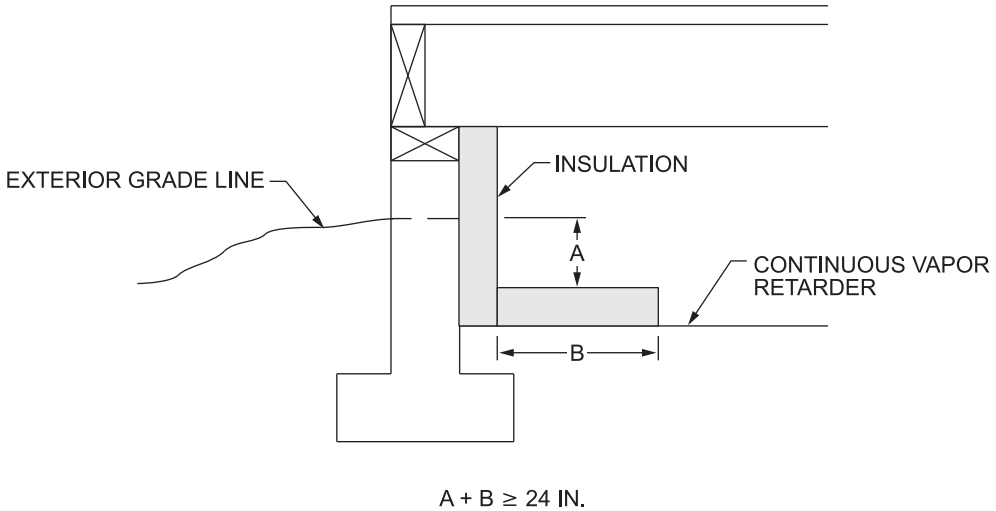

For SI: 1 inch = 25.4 mm.

Figure N1102.2.10
CRAWL SPACE WALL INSULATION

INTERNATIONAL CODE COUNCIL®
Copyright © 2015 ICC. ALL RIGHTS RESERVED. Accessed by David Dammon on Jun 21, 2017 12:30:52 PM pursuant to License Agreement with ICC. No further reproduction or distribution authorized. ANY UNAUTHORIZED REPRODUCTION OR DISTRIBUTION IS A VIOLATION OF THE FEDERAL COPYRIGHT ACT AND THE LICENSE AGREEMENT, AND SUBJECT TO CIVIL AND CRIMINAL PENALTIES THEREUNDER.

space wall so that it does not fall off. The code also requires installing a continuous Class I vapor retarder on the floor of the crawl space to prevent ground-water vapor from entering the crawl space. A Class I vapor retarder is defined in the IBC as a material with a permeance of 0.1 perm or less (see the definition of "Vapor retarder class" in the IBC). The vapor retarder is to be installed with all joints overlapped and sealed or taped to provide continuity. Also, the vapor retarder must extend up the crawl space wall and be secured to the wall with an appropriate attachment, such as either an approved mastic or a treated wood nailer.

N1102.2.12 (R402.2.12) Masonry veneer. Insulation shall not be required on the horizontal portion of the foundation that supports a masonry veneer.

❖ For exterior foundation insulation, the horizontal portion of the foundation that supports a masonry veneer need not be insulated. For slab-edge insulation installed on the exterior of the slab, the code allows the insulation to start at the bottom of the masonry veneer and extend downward. This is essentially a matter of practicality and accommodates the construction of a "brick ledge" without the need for insulating the foundation at the point where the masonry would bear on it.

N1102.2.13 (R402.2.13) Sunroom insulation. S*unrooms* enclosing conditioned spaces shall meet the insulation requirements of this code.

Exception: For *sunrooms* with *thermal isolation*, and enclosing conditioned spaces, the following exceptions to the insulation *requirements* of this code shall apply:

1. The minimum ceiling insulation *R*-values shall be R-19 in Zones 1 through 4 and R-24 in Zones 5 through 8.
2. The minimum wall *R*-value shall be R-13 in all *climate zones*. Walls separating a *sunroom* with a *thermal isolation* from *conditioned space* shall meet the *building thermal envelope* requirements of this code.

❖ With the amount of glass in sunrooms, it is imperative the insulation requirements of the code be adhered to ensure minimal current requirements. The exceptions also tighten the requirements per zone to minimize energy usage.

N1102.3 (R402.3) Fenestration (Prescriptive). In addition to the requirements of Section N1102, fenestration shall comply with Sections N1102.3.1 through N1102.3.5.

❖ This section contains specific requirements that affect the requirements for the individual items listed within the subsections. Although Section N1102.1 and Tables N1102.1.2 and N1102.1.4 provide the general basis for complying with the energy requirements of this chapter, Section N1102.3 provides additional details regarding the application of the provisions or modifications that may affect the general fenestration requirements. Relying on the general code policy that specific requirements apply over general requirements will help ensure that these specific provisions are properly applied.

The term "fenestration" in this section refers to opaque doors and the light-transmitting areas of a residential building's wall, floor or roof, generally window, skylight and nonopaque door products (see the definition of "Fenestration" in Chapter 2). Prior to the 2006 edition, the residential energy provisions of the code applied only to buildings with 15 percent or less of glazing areas (fenestration). The code's prescriptive requirements varied depending on the type of residential occupancy, but did include limitations on the amount of fenestration (maximum of 25 percent for one- and two-family dwellings and 30 percent for R-2, R-4 or townhouses). These earlier versions of the code established whole building performance requirements, with fenestration performance requirements as a derivative value dependent on window area, overall envelope area and the performance of other assemblies (e.g., walls, ceilings, floors). The code establishes specific simplified prescriptive requirements (without area considerations) for fenestration products in Table N1102.1.2—specifically, fenestration *U*-factors, skylight *U*-factors and glazed fenestration SHGCs. The elimination of these fenestration area limitations helped to greatly simplify the application of the code's envelope requirements.

The fenestration requirements of the code are critical to the overall energy efficiency of the residence. First, unlike opaque assemblies, glazed fenestration can transmit a substantial amount of heat through the glazing into the living space in both the summer and winter, resulting in a unique concern about solar heat gain (and, as a result, necessitating SHGC requirements). Second, the insulating value (*U*-factor) of typical fenestration is much higher than that of a typical wall. For example, a good low emissivity (low-E), insulated glass wood or vinyl fenestration product will have less than one-fourth the insulating value of an equivalent area of R-13 insulated opaque wall. These issues have an effect not only on energy use, but overall occupant comfort, condensation and other issues.

In accordance with Section N1101.10.3, the *U*-factor and SHGC for each fenestration product must be obtained from a label attached to the product certifying that the values were determined in accordance with NFRC procedures by an accredited, independent lab or from a limited default table.

N1102.3.1 (R402.3.1) *U*-factor. An area-weighted average of fenestration products shall be permitted to satisfy the *U*-factor requirements.

❖ Section N1102.3.1 permits using the calculated area-weighted average *U*-factor of all fenestration products in the building to satisfy the fenestration *U*-factor requirements set by Table N1102.1.2 or N1102.1.4. As a result, if all fenestration products (window, door or skylight) do not meet the specific value, the user can still achieve compliance if the weighted average of all products is equal to or less than the specified value.

This option permits the use of some windows that have values lower than the prescriptive general requirement, as long as these poorly performing windows are

INTERNATIONAL CODE COUNCIL®
Copyright © 2015 ICC. ALL RIGHTS RESERVED. Accessed by David Dammon on Jun 21, 2017 12:30:52 PM pursuant to License Agreement with ICC. No further reproduction or distribution authorized. ANY UNAUTHORIZED REPRODUCTION OR DISTRIBUTION IS A VIOLATION OF THE FEDERAL COPYRIGHT ACT AND THE LICENSE AGREEMENT, AND SUBJECT TO CIVIL AND CRIMINAL PENALTIES THEREUNDER.

offset by windows with values better than the requirement.

When applying this area-weighted option, it is important to remember that the term "fenestration" includes windows, skylights, doors with glazing and opaque doors, all of which would be included in the average calculation.

Using the *U*-factor requirement of 0.35 for Climate Zone 6 as an illustration, this section provides two options for compliance. The simplest option is to ensure that all windows and doors have labeled NFRC values of 0.35 or less. This approach is also more likely to ensure adequate performance and comfort throughout the home. Alternatively, a weighted average may be taken of the values from all windows and doors to see if the weighted average is less than or equal to 0.35.

As a simple example, assume 100 square feet (9.3 m^2) of 0.32 windows, 100 square feet (9.3 m^2) of 0.36 windows and one 20-square-foot (1.8 m^2) 0.40 *U*-factor door [(100 $\times$ 0.32) + (100 $\times$ 0.36) + (20 $\times$ 0.40)]/ (100 + 100 + 20) = 0.345 (weighted average *U*-factor). Therefore, because the weighted average *U*-factor is less than the required 0.35, the fenestration in this example would be in compliance with the code.

In accordance with Section N1101.10.2, the *U*-factor for each fenestration product must be obtained from a label attached to the product certifying that the *U*-factor was determined in accordance with NFRC procedures by an accredited, independent lab. In the absence of an NFRC-labeled *U*-factor, a value from the limited default tables [Tables N1101.10.3(1) and N1101.10.3(2)] must be used. The provisions of Section N1102.4.5 should be reviewed when using the area-weighted average in the tradeoff options (see commentary, Section N1102.5).

N1102.3.2 (R402.3.2) Glazed fenestration SHGC. An area-weighted average of fenestration products more than 50-percent glazed shall be permitted to satisfy the SHGC requirements.

Dynamic glazing shall be permitted to satisfy the SHGC requirements of Table R1102.1.2 provided the ratio of the higher to lower labeled SHGC is greater than or equal to 2.4, and the *dynamic glazing* is automatically controlled to modulate the amount of solar gain into the space in multiple steps. *Dynamic glazing* shall be considered separately from other fenestration, and area-weighted averaging with other fenestration that is not dynamic glazing shall not be permitted.

Exception: *Dynamic glazing* is not required to comply with this section when both the lower and higher labeled SHGC already comply with the requirements of Table N1102.1.2.

❖ Under Table N1102.1.2, all glazed fenestration products in Climate Zones 1 through 3 must have an SHGC equal to or less than 0.30 (there is no requirement in Climate Zones 4 through 8). This requirement is intended to control unwanted solar gain in cooling-dominated climates to increase comfort, reduce air-conditioning energy and peaks, reduce HVAC sizing and reduce energy costs.

Similar to Section N1102.3.1, Section N1102.3.2 allows some latitude for individual product variability by permitting this performance requirement to be met using an area-weighted average of all of the fenestration products that are more than 50-percent glazed. The 50-percent glazing threshold is established to exclude doors or other fenestration products that are either completely or largely opaque from the equation. The reason for this exclusion is that opaque elements do not allow solar heat gain as glazing does. The area-weighted calculation approach is explained in an example with Section N1102.3.1. An additional example for SHGC is as follows:

Window 1	SHGC - 0.24	200 ft^2
Window 2	SHGC - 0.32	100 ft^2
Window 3	SHGC - 0.30	100 ft^2
Sliding glass door	SHGC - 0.40	40 ft^2

[(200 ft^2 $\times$ 0.24) + (100 ft^2 $\times$ 0.32) + (100 ft^2 $\times$ 0.30) + (40 ft^2 $\times$ 0.40)]/440 ft^2

440 ft^2 = SHGC - 0.29 Average

Using the figures in the example, even though Window 2 and the sliding glass door both have SHGC values that exceed the 0.25 limitation of Table N1102.1.2 for Climate Zones 1 through 3, this design will comply because the weighted average is 0.34.

In accordance with Section R303.1.3, the SHGC for each glazed fenestration product must be obtained from a label attached to the product certifying that the SHGC was determined in accordance with NFRC procedures by an accredited, independent lab. In the absence of an NFRC-labeled SHGC, a value from the limited default table [Table N1101.10.3(1)] must be used.

It is important to note that the SHGC requirement must be met by the fenestration product on a stand-alone basis. The code does not permit the alternative of a "permanent solar shading device" such as eave overhangs or awnings, as was permitted by other energy codes and previous versions of the code, to assist in code compliance.

N1102.3.3 (R402.3.3) Glazed fenestration exemption. Up to 15 square feet (1.4 m^2) of glazed fenestration per dwelling unit shall be permitted to be exempt from *U*-factor and SHGC requirements in Section N1102.1.2. This exemption shall not apply to the *U*-factor alternative approach in Section N1102.1.4 and the total UA alternative in Section N1102.1.5.

❖ In addition to using the area-weighted average approach (Sections N1102.3.1 and N1102.3.2) to allow maximum compliance flexibility for builders, the code allows up to 15 square feet (1.4 m^2) of the building's total glazed fenestration area to be exempt from the *U*-factor and SHGC requirements listed in Table N1102.1.1. All other glazing must meet or exceed the designated *U*-factor and SHGC requirements. The exempted glazing area should be designated on the

INTERNATIONAL CODE COUNCIL®
Copyright © 2015 ICC. ALL RIGHTS RESERVED. Accessed by David Dammon on Jun 21, 2017 12:30:52 PM pursuant to License Agreement with ICC. No further reproduction or distribution authorized. ANY UNAUTHORIZED REPRODUCTION OR DISTRIBUTION IS A VIOLATION OF THE FEDERAL COPYRIGHT ACT AND THE LICENSE AGREEMENT, AND SUBJECT TO CIVIL AND CRIMINAL PENALTIES THEREUNDER.

building plan, either on the floor plan or within a window schedule. This will give the necessary information to the field inspector who will then need to verify that what is on the plans is installed in the field. This exemption allows the use of ornate or unique window, skylight or glazed door assemblies in a building without going to another compliance approach. The area, the *U*-factor and SHGC of the exempt product(s) should be excluded from the area-weighted calculations that may be performed under Sections N1102.3.1 and N1102.3.2. In addition, the exception provided by this section would also allow this 15 square feet (1.4 m^2) of glazing to be excluded from the limits of Section N1102.5. Note that this exemption does not apply where the basis for the thermal envelope was the *U*-factor alternative in Section N1102.1.4 or the total UA alternative in Section N1102.1.4. In these cases, the amount of insulation does not need to be exempted.

N1102.3.4 (R402.3.4) Opaque door exemption. One side-hinged opaque door assembly up to 24 square feet (2.22 m^2) in area is exempted from the *U*-factor requirement in Section N1102.1.2. This exemption shall not apply to the *U*-factor alternative approach in Section N1102.1.4 and the total UA alternative in Section N1102.1.5.

❖ Similar to the exemption provided in Section N1102.3.3 to enhance design flexibility, the code allows one side-hinged opaque door to be exempt from fenestration *U*-factor requirements as contained in Table N1102.1.2, as well as the limitations of Section N1102.5. Although the code does not define it, an opaque door is generally considered to be a fenestration product with an overall glazing area of less than 50 percent. The opaque door exemption allows builders to use an ornate or otherwise *U*-factor noncompliant entrance door assembly in a building without going to another compliance approach. The area and the *U*-factor of the exempt product should be excluded from the area-weighted calculations under Section N1102.4.1.

N1102.3.5 (R402.3.5) Sunroom fenestration. S*unrooms* enclosing *conditioned space* shall meet the fenestration requirements of this code.

Exception: For *sunrooms* with *thermal isolation* and enclosing *conditioned space* in *Climate Zones* 2 through 8, the maximum fenestration *U*-factor shall be 0.45 and the maximum skylight *U*-factor shall be 0.70.

New fenestration separating the *sunroom* with *thermal isolation* from *conditioned space* shall meet the *building thermal envelope* requirements of this code.

❖ This section simply reminds the user that sunrooms enclosing conditioned spaces are subject to code requirements. The exception tightens the maximum fenestration *U*-factor for Climate Zones 4 through 8. The maximum skylight *U*-factor shall be 0.70. Given the amount of glass in a sunroom, this section of the code tightens up the fenestration requirements and minimizes energy usage.

N1102.4 (R402.4) Air leakage (Mandatory). The *building thermal envelope* shall be constructed to limit air leakage in accordance with the requirements of Sections R1102.4.1 through R1102.4.4.

❖ Sealing the building envelope is critical to good thermal performance of the building. The seal will prevent warm, conditioned air from leaking out around doors, windows and other cracks during the heating season, thereby reducing the cost of heating the residence. During hot summer months, a proper seal will stop hot air from entering the residence, helping to reduce the air-conditioning load on the building. Any penetration in the building envelope must be thoroughly sealed during the construction process, including holes made for the installation of plumbing, electrical and heating and cooling systems (see Commentary Figure N1102.4). The code lists several areas that must be caulked, gasketed, weatherstripped, wrapped or otherwise sealed to limit uncontrolled air movement. Most of the air sealing will be done prior to the installation of an interior wall covering because any penetration will be noticeable and accessible at this time. The code allows the use of airflow retarders (house wraps) or other solid materials as an acceptable method to meet this requirement. To be effective, the building thermal envelope seal must be:

- Impermeable to airflow.
- Continuous over the entire building envelope.
- Able to withstand the forces that may act on it during and after construction.
- Durable over the expected lifetime of the building.

It is unlikely that the same type of barrier will be used on all portions of the building's thermal envelope. Therefore, joints between the various elements, as well as joints or splices within products (such as the overlap in separate pieces of house wrap), must be effectively addressed to provide the continuity needed to perform as desired.

N1102.4.1 (R402.4.1) Building thermal envelope. The *building thermal envelope* shall comply with Sections N1102.4.1.1 and N1102.4.1.2. The sealing methods between dissimilar materials shall allow for differential expansion and contraction.

❖ Air infiltration is a major source of energy use because the incoming air usually requires conditioning. The uncontrolled introduction of outside air (infiltration) creates a load that varies with time. Ventilation, the controlled introduction of fresh air, is more manageable and provides a more controlled air quality. Uncontrolled infiltration also has a tendency to create or aggravate moisture problems, providing an additional reason to limit infiltration.

INTERNATIONAL CODE COUNCIL®
Copyright © 2015 ICC. ALL RIGHTS RESERVED. Accessed by David Dammon on Jun 21, 2017 12:30:52 PM pursuant to License Agreement with ICC. No further reproduction or distribution authorized. ANY UNAUTHORIZED REPRODUCTION OR DISTRIBUTION IS A VIOLATION OF THE FEDERAL COPYRIGHT ACT AND THE LICENSE AGREEMENT, AND SUBJECT TO CIVIL AND CRIMINAL PENALTIES THEREUNDER.

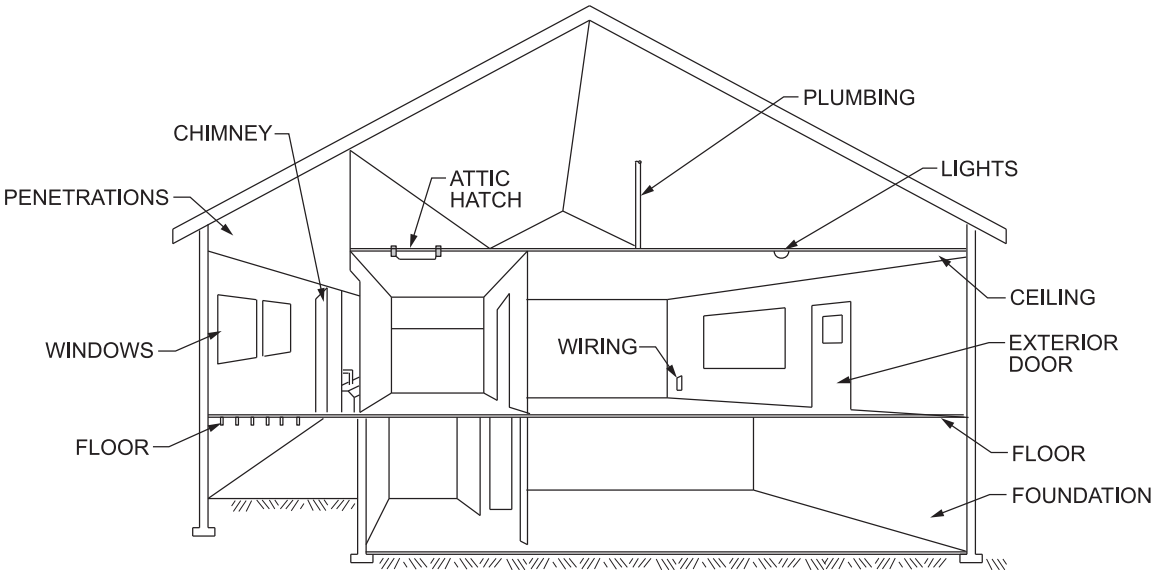

Figure N1102.4
TYPICAL SOURCES OF AIR LEAKAGE

N1102.4.1.1 (R402.4.1.1) Installation. The components of the *building thermal envelope* as listed in Table N1102.4.1.1 shall be installed in accordance with the manufacturer's instructions and the criteria listed in Table N1102.4.1.1, as applicable to the method of construction. Where required by the *building official*, an *approved* third party shall inspect all components and verify compliance.

❖ The provisions of this section are intended to reduce the energy loss due to infiltration and to improve insulation installation.

The code allows all materials that are commonly used as sheathing to be part of the thermal envelope, including interior drywall. By the definition of an air barrier, gypsum board should be considered, as should exterior sheathing. The solid sheathing is not enough —for the air barrier to be effective the joints and openings must be sealed. The code does not require the air barrier on the inside of the air permeable insulation.

In some cases, inspection of the air barrier is better performed by individuals with more expertise than the staff of the authority having jurisdiction might have. Therefore, the code gives the code official authority to require third-party inspectors.

Note that the line item in the table regarding fireplaces requires gaskets on fireplace doors. All wood-burning fireplaces are a source of air leakage. Loss of energy through these units can be reduced with gasketed doors and a requirement that combustion air be brought directly from the outdoors to the firebox. Gaskets on the fireplace doors will help to minimize air leakage into the firebox. Air that leaks past a poorly gasketed fireplace door, or a door that is simply left open, will flow up the chimney aided by the chimney draft. During the majority of the year the fireplace will not be operating. The combination of well-gasketed doors and a well-sealed flue damper will prevent air leakage through what is effectively an enormous hole in the thermal envelope of the building.

However, it should be noted that the difficulty with this requirement is that most factory-built fireplaces tested in accordance with the code required test standard for factory-built fireplaces, UL127, are not tested and listed with doors. Therefore, there is a significant safety hazard in adding gasketed doors to a factory-built fireplace tested and manufactured in accordance with UL127, without doors. That hazard would be overheating of the unit and high likelihood of causing fires. This provision in Table N1102.4.1.1 for gasketed fireplace doors is a general provision to prevent air leakage and was not intended to prohibit the use of factory-built fireplaces listed for use without doors, in violation of that listing. The specific requirements of the test standard UL127, the product listing and the manufacturer's instructions would prevail for factory-built fireplaces. Keep in mind that Section N1102.4.3 requires tight fitting dampers for all fireplaces as well, which will prevent air leakage.

INTERNATIONAL CODE COUNCIL®
Copyright © 2015 ICC. ALL RIGHTS RESERVED. Accessed by David Dammon on Jun 21, 2017 12:30:52 PM pursuant to License Agreement with ICC. No further reproduction or distribution authorized. ANY UNAUTHORIZED REPRODUCTION OR DISTRIBUTION IS A VIOLATION OF THE FEDERAL COPYRIGHT ACT AND THE LICENSE AGREEMENT, AND SUBJECT TO CIVIL AND CRIMINAL PENALTIES THEREUNDER.

TABLE N1102.4.1.1 (402.4.1.1)
AIR BARRIER AND INSULATION INSTALLATION

COMPONENT	AIR BARRIER CRITERIA	INSULATION INSTALLATION CRITERIA
General requirements	A continuous air barrier shall be installed in the building envelope. The exterior thermal envelope contains a continuous air barrier. Breaks or joints in the air barrier shall be sealed.	Air-permeable insulation shall not be used as a sealing material.
Ceiling/attic	The air barrier in any dropped ceiling/soffit shall be aligned with the insulation and any gaps in the air barrier sealed. Access openings, drop down stairs or knee wall doors to unconditioned attic spaces shall be sealed.	The insulation in any dropped ceiling/soffit shall be aligned with the air barrier.
Walls	The junction of the foundation and sill plate shall be sealed. The junction of the top plate and the top of exterior walls shall be sealed. Knee walls shall be sealed.	Cavities within corners and headers of frame walls shall be insulated by completely filling the cavity with a material having a thermal resistance of R-3 per inch minimum. Exterior thermal envelope insulation for framed walls shall be installed in substantial contact and continuous alignment with the air barrier.
Windows, skylights and doors	The space between window/door jambs and framing, and skylights and framing shall be sealed.	
Rim joists	Rim joists shall include the air barrier.	Rim joists shall be insulated.
Floors (including above garage and cantilevered floors)	The air barrier shall be installed at any exposed edge of insulation.	Floor framing cavity insulation shall be installed to maintain permanent contact with the underside of subfloor decking, or floor framing cavity insulation shall be permitted to be in contact with the top side of sheathing, or continuous insulation installed on the underside of floor framing; and extends from the bottom to the top of all perimeter floor framing members.
Crawl space walls	Exposed earth in unvented crawl spaces shall be covered with a Class I vapor retarder with overlapping joints taped.	Where provided instead of floor insulation, insulation shall be permanently attached to the crawl space walls.
Shafts, penetrations	Duct shafts, utility penetrations, and flue shafts opening to exterior or unconditioned space shall be sealed.	
Narrow cavities		Batts in narrow cavities shall be cut to fit, or narrow cavities shall be filled by insulation that on installation readily conforms to the available cavity space.
Garage separation	Air sealing shall be provided between the garage and conditioned spaces.	
Recessed lighting	Recessed light fixtures installed in the building thermal envelope shall be sealed to the drywall.	Recessed light fixtures installed in the building thermal envelope shall be air tight and IC rated.
Plumbing and wiring		Batt insulation shall be cut neatly to fit around wiring and plumbing in exterior walls, or insulation that on installation readily conforms to available space shall extend behind piping and wiring.
Shower/tub on exterior wall	The air barrier installed at exterior walls adjacent to showers and tubs shall separate them from the showers and tubs.	Exterior walls adjacent to showers and tubs shall be insulated.
Electrical/phone box on exterior walls	The air barrier shall be installed behind electrical or communication boxes or air-sealed boxes shall be installed.	
HVAC register boots	HVAC register boots that penetrate building thermal envelope shall be sealed to the subfloor or drywall.	
Concealed sprinklers	When required to be sealed, concealed fire sprinklers shall only be sealed in a manner that is recommended by the manufacturer. Caulking or other adhesive sealants shall not be used to fill voids between fire sprinkler cover plates and walls or ceilings.	

a. In addition, inspection of log walls shall be in accordance with the provisions of ICC 400.

❖ This table contains the list of items that are required to be visually inspected if the visual inspection option for demonstrating building air tightness given in Section N1102.4.1.1 is chosen.

INTERNATIONAL CODE COUNCIL®
Copyright © 2015 ICC. ALL RIGHTS RESERVED. Accessed by David Dammon on Jun 21, 2017 12:30:52 PM pursuant to License Agreement with ICC. No further reproduction or distribution authorized. ANY UNAUTHORIZED REPRODUCTION OR DISTRIBUTION IS A VIOLATION OF THE FEDERAL COPYRIGHT ACT AND THE LICENSE AGREEMENT, AND SUBJECT TO CIVIL AND CRIMINAL PENALTIES THEREUNDER.

N1102.4.1.2 (R402.4.1.2) Testing. The building or dwelling unit shall be tested and verified as having an air leakage rate of not exceeding five air changes per hour in Climate Zones 1 and 2, and three air changes per hour in Climate Zones 3 through 8. Testing shall be conducted in accordance with ASTM E779 or ASTM E1827 and reported at a pressure of 0.2 inches w.g. (50 Pascals). Where required by the *code official*, testing shall be conducted by an *approved* third party. A written report of the results of the test shall be signed by the party conducting the test and provided to the *code official*. Testing shall be performed at any time after creation of all penetrations of the *building thermal envelope*.

During testing:

1. Exterior windows and doors, fireplace and stove doors shall be closed, but not sealed, beyond the intended weatherstripping or other infiltration control measures.
2. Dampers including exhaust, intake, makeup air, backdraft and flue dampers shall be closed, but not sealed beyond intended infiltration control measures.
3. Interior doors, if installed at the time of the test, shall be open.
4. Exterior doors for continuous ventilation systems and heat recovery ventilators shall be closed and sealed.
5. Heating and cooling systems, if installed at the time of the test, shall be turned off.
6. Supply and return registers, if installed at the time of the test, shall be fully open.

❖ The purpose of this code section is to test the building or dwelling unit to demonstrate the building's air tightness. A blower door test, which is a house pressurization test, should be done with a blower door at a pressure of 0.2 inches water gauge [50 Pascals (1psf)]. The building or dwelling unit shall be tested and verified as having an air leakage rate of not exceeding 5 ACH50, or five air changes per hour at 50 Pascals (1 psf) in Climate Zones 1 and 2 and 3 ACH50, or three air changes per hour at 50 Pascals (1 psf), in Climate Zones 3 through 8. The ACH50 is a common measurement made when doing air infiltration tests and, therefore, a reasonable metric for use in the code. Testing can be conducted by an approved third party, if allowed by the code official. Section N1102.4.2.1 requires that HVAC ducts not be sealed during the test. In this context, "sealed" is intended to mean sealed off from the interior of the house. The maximum is 5ACH50, or five air changes per hour at 50 Pascals (1 psf).

N1102.4.2 (R402.4.2) Fireplaces. New wood-burning fireplaces shall have tight-fitting flue dampers or doors, and outdoor combustion air. Where using tight-fitting doors on factory-built fireplaces listed and labeled in accordance with UL 127, the doors shall be tested and listed for the fireplace. Where using tight-fitting doors on masonry fireplaces, the doors shall be listed and labeled in accordance with UL 907.

❖ All wood-burning fireplaces are a source of air leakage. Loss of energy through these units can be reduced with gasketed doors and a requirement that combustion air be brought directly from the outdoors to the firebox. Gaskets on the fireplace doors will help to minimize air leakage into the firebox. Air that leaks past a poorly fitted fireplace door, or a door that is simply left open, will flow up the chimney aided by the chimney draft. During the majority of times throughout the year, the fireplace will not be in use. The combination of tight-fitting doors; and a tight flue damper will prevent air leakage through what is effectively an enormous hole in the thermal envelope of the building. However, not all factory-built fireplaces are tested for use with doors; therefore, in some cases, installing doors on the fireplace would violate the unit's listing and could create a fire hazard. Doors on factory-built fireplaces are required to be tested and listed for the fireplace in accordance with UL 127. The manufacturer's instructions for factory-built fireplaces should be followed and such instructions could prohibit the installation of doors. Doors on masonry fireplaces are required to be listed and labeled in accordance with UL 907. The code also allows tight-fitting flue dampers for fireplaces to deal with the issue of air loss.

Lastly, this section and Section R1006 of the code require factory-built and masonry fireplaces to be equipped with a direct outdoor combustion supply. The provisions of Section R1006.2 would prevent the installation of a fireplace with the firebox floor below finished grade.

N1102.4.3 (R402.4.3) Fenestration air leakage. Windows, skylights and sliding glass doors shall have an air infiltration rate of no more than 0.3 cfm per square foot (1.5 L/s/m^2), and swinging doors no more than 0.5 cfm per square foot (2.6 L/s/m^2), when tested according to NFRC 400 or AAMA/WDMA/CSA 101/I.S.2/A440 by an accredited, independent laboratory and *listed* and *labeled* by the manufacturer.

Exception: Site-built windows, skylights and doors.

❖ Windows, skylights and doors should be tested and labeled by the manufacturer as meeting the air infiltration requirements. The intent of this section is to effectively complete the sealing of the building's thermal envelope by providing specific testing and performance criteria for windows, skylights and doors. This testing and labeling requirement provides an easy method for both the builder and the inspector to demonstrate compliance with the code. While "site built" fenestration is exempted from these requirements, units would have to be "durably sealed" to limit infiltration according to the requirements in Section N1102.4.1.

INTERNATIONAL CODE COUNCIL®
Copyright © 2015 ICC. ALL RIGHTS RESERVED. Accessed by David Dammon on Jun 21, 2017 12:30:52 PM pursuant to License Agreement with ICC. No further reproduction or distribution authorized. ANY UNAUTHORIZED REPRODUCTION OR DISTRIBUTION IS A VIOLATION OF THE FEDERAL COPYRIGHT ACT AND THE LICENSE AGREEMENT, AND SUBJECT TO CIVIL AND CRIMINAL PENALTIES THEREUNDER.

N1102.4.4 (R402.4.4) Rooms containing fuel-burning appliances. In Climate Zones 3 through 8, where open combustion air ducts provide combustion air to open combustion fuel-burning appliances, the appliances and combustion air opening shall be located outside the building thermal envelope or enclosed in a room, isolated from inside the thermal envelope. Such rooms shall be sealed and insulated in accordance with the envelope requirements of Table N1102.1.2, where the walls, floors and ceilings shall meet a minimum of the basement wall *R*-value requirement. The door into the room shall be fully gasketed and any water lines and ducts in the room insulated in accordance with Section N1103. The combustion air duct shall be insulated where it passes through conditioned space to a minimum of R-8.

Exceptions:

1. Direct vent appliances with both intake and exhaust pipes installed continuous to the outside.
2. Fireplaces and stoves complying with Sections N1102.4.2 and R1006.

❖ The entire set of provisions in the code for air leakage are of little value when a combustion air duct is installed, open to the conditioned space, virtually placing a large hole through the thermal envelope. Blower door testing as now required by the code cannot be accomplished with a combustion air opening inside the thermal envelope. Testers regularly block these openings as this is the only way they can pressurize the home, only to be opened after the test is completed. Ideally, direct vent, sealed combustion appliances solve the problem. Where less efficient, open combustion fuel-burning appliances are used, it is reasonable and proper to isolate the appliances and the required combustion air from inside the thermal envelope.

N1102.4.5 (R402.4.5) Recessed lighting. Recessed luminaires installed in the *building thermal envelope* shall be sealed to limit air leakage between conditioned and unconditioned spaces. All recessed luminaires shall be IC-rated and *labeled* as having an air leakage rate not more than 2.0 cfm (0.944 L/s) when tested in accordance with ASTM E283 at a 1.57 psf (75 Pa) pressure differential. All recessed luminaires shall be sealed with a gasket or caulk between the housing and the interior wall or ceiling covering.

❖ To correctly apply this provision, it is important to realize that it deals only with recessed lights that are installed in the building thermal envelope. Therefore, lights that are located so that all sides of the luminaire are surrounded by conditioned space would not fall under this section's requirements. For example, a light located in a soffit would not be regulated if the soffit was below a ceiling that served as the building's thermal envelope. Additionally, a light installed in the floor/ceiling assembly between a first-floor living room and a bedroom above it would be exempted.

Because of their typical location of installation, recessed lighting fixtures pose a potential fire hazard if incorrectly covered with insulation. In addition, the ceiling or a barrier directly above it often serves as the air leakage or moisture barrier for the home.

Therefore, holes cut through the ceiling to install these fixtures also act as chimneys that transfer heat loss and moisture through the building envelope into attic spaces. The heat loss resulting from improperly insulated recessed lighting fixtures can be significant.

Recessed lighting fixtures must be insulation contact (IC)-rated lights, which are typically double-can fixtures, with one can inside another (see Commentary Figure N1102.4.5). The outer can (in contact with the insulation) is tested to make sure it remains cool enough to avoid a fire hazard. An IC-rated fixture should have the IC rating stamped on the fixture or printed on an attached label.

Recessed lights must also be tightly sealed or gasketed to prevent air leakage through the fixture into the ceiling cavity.

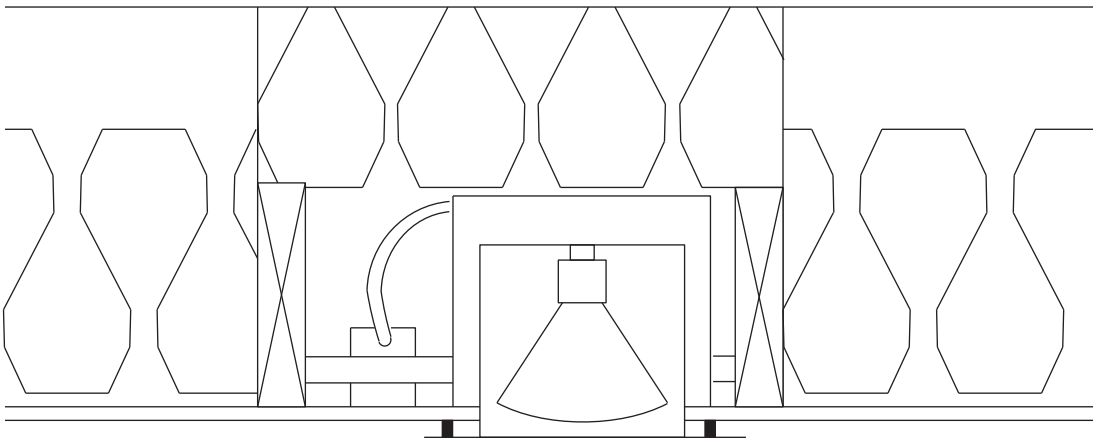

Figure N1102.4.5
IC-RATED RECESSED LIGHT

INTERNATIONAL CODE COUNCIL®
Copyright © 2015 ICC. ALL RIGHTS RESERVED. Accessed by David Dammon on Jun 21, 2017 12:30:52 PM pursuant to License Agreement with ICC. No further reproduction or distribution authorized. ANY UNAUTHORIZED REPRODUCTION OR DISTRIBUTION IS A VIOLATION OF THE FEDERAL COPYRIGHT ACT AND THE LICENSE AGREEMENT, AND SUBJECT TO CIVIL AND CRIMINAL PENALTIES THEREUNDER.

N1102.5 (R402.5) Maximum fenestration *U*-factor and SHGC (Mandatory). The area-weighted average maximum fenestration *U*-factor permitted using tradeoffs from Section N1102.1.5 or N1105 shall be 0.48 in Climate Zones 4 and 5 and 0.40 in Climate Zones 6 through 8 for vertical fenestration, and 0.75 in Climate Zones 4 through 8 for skylights. The area-weighted average maximum fenestration SHGC permitted using tradeoffs from Section N1105 in Climate Zones 1 through 3 shall be 0.50.

❖ This section is intended to clarify the application of the fenestration performance maximums and to set reasonable performance levels for these products when using the tradeoffs of Section N1102.1.5 or N1105.

This section does not define the minimum code requirements for fenestration *U*-factors that are set in Table N1102.1.2. Rather, this section sets limits on the tradeoffs allowed based on the total UA calculations (see Section N1102.1.4) or the simulated performance option found in Section N1105. This section is in contrast to the basic principle used in Section N1102.1.5. Although that section will allow a *U*-factor that does not meet the general code requirements offset by the increased efficiency of another part of the residence, this section establishes a limitation on the level of efficiency that can be compensated for.

Note that this section does not set a limit on individual products because Sections N1102.3.1 and N1102.3.2 are not affected. Rather, this section sets an overall limit on the weighted average of those products. These limits are often called "hard limits" or "maximum tradeoff" limits.

In situations where the code is applied to only a portion of the residence, such as only to the addition but not the existing residence, the weighted average could be calculated for just the addition (see commentary, Sections N1102.3.1 and N1102.3.2).

The thermal properties (*U*-factor) of skylights are uniquely different from window products. After installation they perform differently than windows and are, therefore, rated differently. As a result, even the highest rated skylights cannot achieve the same level of *U*-factor performance as windows and glass doors. Therefore, the code provides different values for these "maximum" limits in the tradeoff.

The SHGC provisions are limited in the cooling-dominated climate zones. Therefore, where solar heat gain through the fenestration can affect the cooling load, comfort and efficiency, a "hard limit" of 0.5 would be applied when using Section N1105.

SECTION N1103 (R403) SYSTEMS

N1103.1 (R403.1) Controls (Mandatory). At least one thermostat shall be provided for each separate heating and cooling system.

❖ This provision ensures that a separate thermostat is installed for each system. As an example, if separate systems are installed so that one serves the downstairs and one serves the upstairs of a two-story residence, two separate thermostats would be required, one regulating each level. This allows for greater flexibility, control and energy savings than would be possible if both systems were controlled by a single thermostat.

N1103.1.1 (R403.1.1) Programmable thermostat. The thermostat controlling the primary heating or cooling system of the dwelling unit shall be capable of controlling the heating and cooling system on a daily schedule to maintain different temperature set points at different times of the day. This thermostat shall include the capability to set back or temporarily operate the system to maintain *zone* temperatures down to 55°F (13°C) or up to 85°F (29°C). The thermostat shall initially be programmed by the manufacturer with a heating temperature set point no higher than 70°F (21°C) and a cooling temperature set point no lower than 78°F (26°C).

❖ This code section provides a requirement that gives each household an opportunity for energy savings by requiring a programmable thermostat that allows changing the temperature setpoints automatically throughout the day.

N1103.1.2 (R403.1.2) Heat pump supplementary heat (Mandatory). Heat pumps having supplementary electric-resistance heat shall have controls that, except during defrost, prevent supplemental heat operation when the heat pump compressor can meet the heating load.

❖ Heat pump systems must have controls that prevent supplementary electric resistance heater operation when the heating load can be met by the heat pump alone. Typically, these controls will be thermostats that will have a "heat pump" designation on them. The make and model of the thermostat should be called out on the building plans so the inspector can verify that what is installed in the field matches the plans. Because change-outs in the field are common, the instructions that come with the thermostat can also be checked to verify that the thermostat is designed for use with a particular heat pump. To limit the hours of use of the electric-resistance heating unit and provide the most cost-efficient operation of the equipment, the specific control language is included in this section.

N1103.2 (R403.2) Hot water boiler outdoor temperature setback. Hot water boilers that supply heat to the building through one- or two-pipe heating systems shall have an outdoor setback control that lowers the boiler water temperature based on the outdoor temperature.

❖ This section provides a requirement that gives each household with a hot water boiler an opportunity for energy savings by requiring a setback that will lower the temperature of the water based on ambient conditions.

N1103.3 (R403.3) Ducts. Ducts and air handlers shall be in accordance with Sections N1103.3.1 through N1103.3.5.

❖ The five subsections of Section N1103.3 provide the requirements of this chapter, which apply to the ducts and air handlers used in residential buildings.

INTERNATIONAL CODE COUNCIL®
Copyright © 2015 ICC. ALL RIGHTS RESERVED. Accessed by David Dammon on Jun 21, 2017 12:30:52 PM pursuant to License Agreement with ICC. No further reproduction or distribution authorized. ANY UNAUTHORIZED REPRODUCTION OR DISTRIBUTION IS A VIOLATION OF THE FEDERAL COPYRIGHT ACT AND THE LICENSE AGREEMENT, AND SUBJECT TO CIVIL AND CRIMINAL PENALTIES THEREUNDER.

N1103.3.1 (R403.3.1) Insulation (Prescriptive). Supply and return ducts in attics shall be insulated to a minimum of R-8 where 3 inches (76.2 mm) in diameter and greater and R-6 where less than 3 inches (76.2 mm) in diameter. Supply and return ducts in other portions of the building shall be insulated to a minimum of R-6 where 3 inches (76.2 mm) in diameter or greater and R-4.2 where less than 3 inches (76.2 mm) in diameter.

Exception: Ducts or portions thereof located completely inside the *building thermal envelope.*

❖ HVAC ductwork located outside of the conditioned space must have insulation with minimum *R*-values of R-8 or R-6, depending on the size of the duct. This includes both supply and return ducts. For areas other than attics, the values are R-6 and R-4.2. Energy losses are less in smaller ducts; therefore, the *R*-value of the insulation is lower for ducts less than 3 inches in diameter.

The exception addresses the fact that ductwork within the thermal envelope is already protected from energy loss by virtue of being within the thermal envelope.

N1103.3.2 (R403.3.2) Sealing (Mandatory). Ducts, air handlers and filter boxes shall be sealed. Joints and seams shall comply with either the *International Mechanical Code* or Section M1601.4.1 of this code, as applicable.

Exceptions:

1. Air-impermeable spray foam products shall be permitted to be applied without additional joint seals.
2. For ducts having a static pressure classification of less than 2 inches of water column (500 Pa), additional closure systems shall not be required for continuously welded joints and seams, and locking-type joints and seams of other than the snap-lock and button-lock types.

❖ Ducts must be sealed in accordance with the duct sealing requirements of either the IMC or the code. Joints and seams that fail in a duct system can result in increased energy use because the conditioned air will be delivered to an unconditioned space or into a building space where it is not needed, such as a wall or floor assembly, crawl space or attic, instead of to a room or area inside the conditioned envelope. Return-air ductwork installed in basements or concealed building spaces may conduct chemicals or other products that produce potentially harmful fumes. Because the return air operates under negative pressure, any leaks could draw fumes, moisture, soil gases or odors from the surrounding area and direct them into the house. Therefore, sealing of return-air ductwork is also a requirement.

Duct tightness must be checked by leakage testing of the ducts at the end of construction or at the time of rough-in. The pass/fail criteria for leakage rate is more stringent if the rough-in test time is chosen. This is simply because it is probably that some of the ductwork will be disturbed during subsequent construction and, therefore, have a higher leakage rate than what was tested.

N1103.3.2.1 (R403.3.2.1) Sealed air handler. Air handlers shall have a manufacturer's designation for an air leakage of no more than 2 percent of the design air flow rate when tested in accordance with ASHRAE 193.

❖ This section of the code requires that air handlers have a manufacturer's designation for an air leakage of no more than 2 percent of the design flow rate when tested in accordance with ASHRAE 193. Energy conservation measures in the air-conditioning industry have driven the manufacturers of systems and components to establish compliance with leakage limits in ducts and air-handling units. The standards set by the American Society of Heating, Refrigerating and Air-conditioning Engineers (ASHRAE) form the basis for testing. Establishing an air-handler leakage rate, given the availability of a uniform test procedure, is prudent since any leakage in the air-handling unit contributes to waste of energy. The magnitude of leakage has a direct bearing on energy use and indoor air quality.

N1103.3.3 (R403.3.3) Duct testing (Mandatory). Ducts shall be pressure tested to determine air leakage by one of the following methods:

1. Rough-in test: Total leakage shall be measured with a pressure differential of 0.1 inch w.g. (25 Pa) across the system, including the manufacturer's air handler enclosure if installed at the time of the test. All registers shall be taped or otherwise sealed during the test.
2. Postconstruction test: Total leakage shall be measured with a pressure differential of 0.1 inch w.g. (25 Pa) across the entire system, including the manufacturer's air handler enclosure. Registers shall be taped or otherwise sealed during the test.

   Exception: A duct air leakage test shall not be required where the ducts and air handlers are located entirely within the building thermal envelope.

A written report of the results of the test shall be signed by the party conducting the test and provided to the *code official*.

❖ Duct tightness must be checked by leakage testing at the end of construction or at the time of rough-in. This affords some flexibility to the builder. The test at the end of construction, if failed, could be more difficult to correct; however, the test after rough-in is more stringent as noted in the commentary to Section N1103.3.4.

N1103.3.4 (R403.3.4) Duct leakage (Prescriptive). The total leakage of the ducts, where measured in accordance with Section R403.3.3, shall be as follows:

1. Rough-in test: The total leakage shall be less than or equal to 4 cubic feet per minute (113.3 L/min) per 100 square feet (9.29 m^2) of conditioned floor area where the air handler is installed at the time of the test. Where the air handler is not installed at the time of the test, the total leakage shall be less than or equal to 3 cubic feet per minute (85 L/min) per 100 square feet (9.29 m^2) of conditioned floor area.

INTERNATIONAL CODE COUNCIL®
Copyright © 2015 ICC. ALL RIGHTS RESERVED. Accessed by David Dammon on Jun 21, 2017 12:30:52 PM pursuant to License Agreement with ICC. No further reproduction or distribution authorized. ANY UNAUTHORIZED REPRODUCTION OR DISTRIBUTION IS A VIOLATION OF THE FEDERAL COPYRIGHT ACT AND THE LICENSE AGREEMENT, AND SUBJECT TO CIVIL AND CRIMINAL PENALTIES THEREUNDER.

2. Postconstruction test: Total leakage shall be less than or equal to 4 cubic feet per minute (113.3 L/min) per 100 square feet (9.29 m^2) of conditioned floor area.

❖ The pass/fail criteria for the tested duct leakage rate is more stringent if the rough-in test time is chosen. This is simply because it is probable that some of the ductwork will be disturbed during subsequent construction and, therefore, have a higher leakage rate than what was tested.

N1103.3.5 (R403.3.5) Building cavities (Mandatory). Building framing cavities shall not be used as ducts or plenums.

❖ Building framing cavities should not be used as ducts or plenums. Stud bays and other building cavities that are exposed to the differing outside temperatures cannot be used as supply air ducts. In addition, these spaces are limited to use for return air only because the negative pressures within the return air plenum with respect to surrounding spaces will decrease the likelihood of spreading smoke to other spaces via the plenum. In addition, for many of the same reasons that sealing (see Section N1103.2.2) is required, building cavities are a very inefficient means of distributing air.

N1103.4 (R403.4) Mechanical system piping insulation (Mandatory). Mechanical system piping capable of carrying fluids above 105°F (41°C) or below 55°F (13°C) shall be insulated to a minimum of R-3.

❖ Heat losses during mechanical fluid distribution impact building energy use both in the energy required to make up for the lost heat and in the additional load that can be placed on the space-cooling system if the heat is released to air-conditioned space. These losses can be effectively limited by insulating the mechanical system piping that conveys fluids at extreme temperatures.

N1103.4.1 (R403.4.1) Protection of piping insulation. Piping insulation exposed to weather shall be protected from damage, including that caused by sunlight, moisture, equipment maintenance and wind, and shall provide shielding from solar radiation that can cause degradation of the material. Adhesive tape shall not be permitted.

❖ Proper protection of exposed piping insulation to the weather elements is necessary to protect it from damage, including that due to sunlight, moisture, equipment maintenance and wind.

N1103.5 (R403.5) Service hot water systems. Energy conservation measures for service hot water systems shall be in accordance with Sections N1103.5.1 and N1103.5.4.

❖ A review of the definition of "Service water heating" in Chapter 2 is appropriate before applying these requirements. Any time the system is set up to circulate the water through it, the piping is required to be insulated as listed in Section N1103.4.2.

N1103.5.1 (R403.5.1) Heated water circulation and temperature maintenance systems (Mandatory). Heated water circulation systems shall be in accordance with Section R1103.5.1.1. Heat trace temperature maintenance systems shall be in accordance with Section R1103.5.1.2. Automatic controls, temperature sensors and pumps shall be accessible. Manual controls shall be readily *accessible*.

❖ When the distribution piping is heated to maintain usage temperatures, such as in circulating hot water systems or systems using pipe heating cable, the system pump or heat trace cable must have conveniently located manual or automatic switches or other controls that can be set to optimize system operation or turn off the system during periods of reduced demand. The simplest of these devices is an automatic time clock. Notice, however, that the code will accept either a readily accessible manual switch or an automatic means to turn off the circulating pump.

N1103.5.1.1 (R403.5.1.1) Circulation systems. Heated water circulation systems shall be provided with a circulation pump. The system return pipe shall be a dedicated return pipe or a cold water supply pipe. Gravity and thermo-syphon circulation systems shall be prohibited. Controls for circulating hot water system pumps shall start the pump based on the identification of a demand for hot water within the occupancy. The controls shall automatically turn off the pump when the water in the circulation loop is at the desired temperature and when there is no demand for hot water.

❖ Demand-activated circulation is an efficient energy conservation strategy, given that the *International Plumbing Code*® (IPC®), IECC and IRC require that the hot water piping in automatic temperature maintenance systems in new buildings be insulated with pipe insulation. This means the water in the circulation loop will stay hot for a very long time—up to 45 minutes for $^3/_4$-inch nominal pipe and up to 2 hours for 2-inch nominal pipe—even if the circulating pump is shut off. If this is the case, there is no reason to run the pump when the water is still hot and no reason to run the pump when no one is in the building or when no one is demanding hot water. The only time it makes sense to run the pump is shortly before hot water is needed, hence the requirement that the pump be controlled on demand.

N1103.5.1.2 (R403.5.1.2) Heat trace systems. Electric heat trace systems shall comply with IEEE 515.1 or UL 515. Controls for such systems shall automatically adjust the energy input to the heat tracing to maintain the desired water temperature in the piping in accordance with the times when heated water is used in the occupancy.

❖ The requirements for heat trace are partly to ensure that the systems can be operated in the most energy-efficient manner consistent with providing heated water to the occupancy. The referenced standards are included to ensure that installed systems are safe for the intended application. The energy consequences of using heat trace are very reasonable. An example is an analysis of a small loop—100 feet long. The energy requirements of keeping the trunk line hot, which is the same as keeping the supply portion of the loop hot in a circulating system, are 701 kWh per year, assuming 12 hours at high temp (115°F) and 12 hours at economy temp (105°F). This is equivalent to operating the

INTERNATIONAL CODE COUNCIL®
Copyright © 2015 ICC. ALL RIGHTS RESERVED. Accessed by David Dammon on Jun 21, 2017 12:30:52 PM pursuant to License Agreement with ICC. No further reproduction or distribution authorized. ANY UNAUTHORIZED REPRODUCTION OR DISTRIBUTION IS A VIOLATION OF THE FEDERAL COPYRIGHT ACT AND THE LICENSE AGREEMENT, AND SUBJECT TO CIVIL AND CRIMINAL PENALTIES THEREUNDER.

loop about 3 hours per day, but with hot water available 24 hours a day/7 days a week in the supply trunk. This is a significant savings when water heating is done electrically or with a similarly expensive fuel. If the branches are also traced, heated water can be delivered even more quickly to the fixtures using only 1,682 kWh per year, which is the same energy as running the loop a little more than 6 hours a day.

N1103.5.2 (R403.5.2) Demand recirculation systems. A water distribution system having one or more recirculation pumps that pump water from a heated water supply pipe back to the heated water source through a cold water supply pipe shall be a *demand recirculation water system*. Pumps shall have controls that comply with both of the following:

1. The control shall start the pump upon receiving a signal from the action of a user of a fixture or appliance, sensing the presence of a user of a fixture or sensing the flow of hot or tempered water to a fixture fitting or appliance.
2. The control shall limit the temperature of the water entering the cold water piping to 104ºF (40ºC).

❖ The purpose of this section is to clarify the requirements for installing circulation pumps in applications that use a cold water supply pipe to circulate the water back to the water heater. Demand recirculation water systems are significantly more energy efficient than other recirculation systems and are inherently safer when the cold water supply is used as the return. The greater safety comes from the fact that the controls specified for demand recirculation water systems limit the flow of water from the hot water supply into the cold water supply to only minutes a day and because they limit the temperature of the water that is allowed to go into the cold water supply.

N1103.5.3 (R403.5.3) Hot water pipe insulation (Prescriptive). Insulation for hot water pipe with a minimum thermal resistance (*R*-value) of R-3 shall be applied to the following:

1. Piping $^{3}/_{4}$ inch (19 mm) and larger in nominal diameter.
2. Piping serving more than one dwelling unit.
3. Piping located outside the conditioned space.
4. Piping from the water heater to a distribution manifold.
5. Piping located under a floor slab.
6. Buried piping.
7. Supply and return piping in recirculation systems other than demand recirculation systems.

❖ This section simply prescribes conditions where hot water piping needs to be provided with a minimum R-3 insulation.

N1103.5.4 (R403.5.4) Drain water heat recovery units. Drain water heat recovery units shall comply with CSA 55.2. Drain water heat recovery units shall be tested in accordance with CSA 55.1. Potable water-side pressure loss of drain water heat recovery units shall be less than 3 psi (20.7 kPa) for individual units connected to one or two showers. Potable water-side pressure loss of drain water heat recovery units shall be less than 2 psi (13.8 kPa) for individual units connected to three or more showers.

❖ Drain water heat recovery is often a cost-effective way to add to energy efficiency by recapturing hot water energy that is literally "going down the drain." The proposed standards have already been in use by designers for 10 years and the resulting ratings are in use by a variety of energy efficiency programs. Commercial (i.e., nonmultiunit residential) applications are engineered systems while multiunit residential applications are nonengineered and straightforward.

CSA B55.2 standard is for fabrication and material quality of DWHR units. CSA B55.1 standard is for testing and labeling of DWHR units efficiency and pressure loss at 2.5 gpm (9.5 lpm).

N1103.6 (R403.6) Mechanical ventilation (Mandatory). The building shall be provided with ventilation that meets the requirements of Section M1507 of this code or the *International Mechanical Code*, as applicable, or with other approved means of ventilation. Outdoor air intakes and exhausts shall have automatic or gravity dampers that close when the ventilation system is not operating.

❖ Mechanical ventilation is the alternative to having natural ventilation. Both natural and mechanical ventilation can be provided to a space. Unlike natural ventilation, mechanical ventilation does not depend on unpredictable air pressure differentials between the indoors and outdoors to create airflow. The volume of air supplied to a space must be approximately equal to the volume of the air removed from the space. Otherwise, the space will be either positively or negatively pressurized and the actual ventilation flow rate will be equivalent to the lower rate of either the air supply or air exhaust.

The requirements of this section are intended to reduce infiltration into the building when ventilation systems are off. Infiltration speeds up natural cooling or warming of the space during off-hours and can increase the energy use required to maintain normal temperatures.

Any outdoor air inlets or outlets serving fans, boilers and other HVAC systems equipped with an on/off switch that either introduces outside air into a building or exhaust air outside of a building must have dampers that automatically close when the fan is shut off. These dampers may be either gravity type or motorized, regardless of whether the fan is supplying or exhausting air. One of the most common such damper that is seen on homes is the gravity-type backdraft damper on a clothes dryer exhaust duct.

N1103.6.1 (R403.6.1) Whole-house mechanical ventilation system fan efficacy. Mechanical ventilation system fans shall meet the efficacy requirements of Table N1103.6.1.

Exception: Where mechanical ventilation fans are integral to tested and listed HVAC equipment, they shall be powered by an electronically commutated motor.

❖ This section of the code is applicable to whole-house mechanical ventilation systems that meet the efficacy

INTERNATIONAL CODE COUNCIL®
Copyright © 2015 ICC. ALL RIGHTS RESERVED. Accessed by David Dammon on Jun 21, 2017 12:30:52 PM pursuant to License Agreement with ICC. No further reproduction or distribution authorized. ANY UNAUTHORIZED REPRODUCTION OR DISTRIBUTION IS A VIOLATION OF THE FEDERAL COPYRIGHT ACT AND THE LICENSE AGREEMENT, AND SUBJECT TO CIVIL AND CRIMINAL PENALTIES THEREUNDER.

TABLE N1103.6.1 (R403.6.1)
MECHANICAL VENTILATION SYSTEM FAN EFFICACY

FAN LOCATION	AIR FLOW RATE MINIMUM (CFM)	MINIMUM EFFICACY (CFM/WATT)	AIR FLOW RATE MAXIMUM (CFM)
Range hoods	Any	2.8 cfm/watt	Any
In-line fan	Any	2.8 cfm/watt	Any
Bathroom, utility room	10	1.4 cfm/watt	< 90
Bathroom, utility room	90	2.8 cfm/watt	Any

For SI: 1 cubic foot per minute = 28.3 L/min.

requirements of Table N1103.6.1. Findings from a recent study commissioned by the U.S. DOE and the California Energy Commission identified that energy consumption of whole-house mechanical ventilation systems is significant. The study revealed that large disparities exist in the energy consumption and associated operating costs of whole-house mechanical ventilation systems no matter what the climate is. To reduce the amount of energy consumed by residential mechanical ventilation systems is to address the power consumption of the fans that are powering the system. This is important because these fans will operate many hours per day. The table offers energy efficacy levels for exhaust fans that are the same levels as the current ENERGY STAR ventilation fan specifications.

N1103.7 (R403.7) Equipment sizing and efficiency rating (Mandatory). Heating and cooling equipment shall be sized in accordance with ACCA Manual S based on building loads calculated in accordance with ACCA Manual J or other *approved* heating and cooling calculation methodologies. New or replacement heating and cooling equipment shall have an efficiency rating equal to or greater than the minimum required by federal law for the geographic location where the equipment is installed.

❖ Once the building's thermal envelope is properly insulated and sealed, it will oftentimes allow for the reduction of equipment size from what has typically been installed using a "rule-of-thumb" method or other means of estimating. A properly sized system will operate more efficiently and help to improve the occupant comfort and extend the equipment's service life. Section M1401.3 stipulates that the heating and cooling equipment must be sized based on the building loads calculated in accordance with the ACCA Manual J. This manual contains a simplified method of calculating heating and cooling loads. It includes a room-by-room calculation method that allows the designer to determine the required capacity of the heating and cooling equipment. In addition, it provides a means to estimate the airflow requirements for each of the areas in the house. This estimate can be used in sizing the duct system for the types of heating and cooling units that use air as the medium for heat transfer. Other approved methods may be used with the code official's approval.

Though not required by the code, the calculated airflows would provide a means to evaluate the installation of the mechanical system. By providing the proper airflow to the various portions of the building, the system can operate more efficiently and can help prevent spaces being too hot or too cold.

N1103.8 (R403.8) Systems serving multiple dwelling units (Mandatory). Systems serving multiple dwelling units shall comply with Sections C403 and C404 of the IECC—Commercial Provisions in lieu of Section N1103.

❖ The criteria in Section N1103 primarily address standalone mechanical systems in single-family houses. However, Chapter 11 also includes townhouses up to three stories. Some of these building projects will have more complicated mechanical systems that may consist of a single system serving multiple dwelling units.

N1103.9 (R403.9) Snow melt system controls (Mandatory). Snow- and ice-melting systems, supplied through energy service to the building, shall include automatic controls capable of shutting off the system when the pavement temperature is above 50°F (10°C), and no precipitation is falling and an automatic or manual control that will allow shutoff when the outdoor temperature is above 40°F (4.8°C).

❖ Snow melt equipment is being installed at a greater frequency in residential projects in communities with a high snow accumulation. Previously, the code only required that the building be built to a certain level of efficiency; however, there was no limit placed on the energy use for snow melt, which can be twice the energy use per square foot of the building.

This section does not restrict the use or sizing of snow melt, but it does require that controls be installed on the equipment so that the system will operate more efficiently. The automatic controls provide efficient operation by keeping the system in an idle mode until light snow begins to fall and allowing adequate warm-up before a heavy snowfall. Systems that only use manual controls require the building owner to manually turn on the system when it starts to snow or to leave the system running in the snow-melting mode, using significantly more energy. Chapter 50, Snow Melting and Freeze Protection, 2003 *ASHRAE Applications Handbook* states that using a manual switch to operate snow melt equipment may not melt snow effectively; thus, snow will accumulate. This requirement is also referenced in ANSI/ASHRAE/IESNA Standard 90.1, Section 6.4.3.8, Freeze Protection and Snow/Ice Melting Systems.

INTERNATIONAL CODE COUNCIL®
Copyright © 2015 ICC. ALL RIGHTS RESERVED. Accessed by David Dammon on Jun 21, 2017 12:30:52 PM pursuant to License Agreement with ICC. No further reproduction or distribution authorized. ANY UNAUTHORIZED REPRODUCTION OR DISTRIBUTION IS A VIOLATION OF THE FEDERAL COPYRIGHT ACT AND THE LICENSE AGREEMENT, AND SUBJECT TO CIVIL AND CRIMINAL PENALTIES THEREUNDER.

N1103.10 (R403.10) Pools and permanent spa energy consumption (Mandatory). The energy consumption of pools and permanent spas shall be in accordance with Sections N1103.10.1 through N1103.10.3.

❖ Because of the heating and filtering operations involved with pools and inground permanently installed spas, they provide a good opportunity to save energy by limiting heat loss or pump operation. This section provides the scoping requirements for the pool and spa heaters, time switches and pool covers that can make the operation more energy efficient. These features would be able to provide energy savings for residential pools if their owners wish to use them. The requirements of this section were added into the code in order to help coordinate with requirements found within ASHRAE 90.1 and to help reduce the energy used by these pools and inground permanently installed spa systems.

N1103.10.1 (R403.10.1) Heaters. The electric power to heaters shall be controlled by a readily *accessible* on-off switch that is an integral part of the heater mounted on the exterior of the heater, or external to and within 3 feet (914 mm) of the heater. Operation of such switch shall not change the setting of the heater thermostat. Such switches shall be in addition to a circuit breaker for the power to the heater. Gas-fired heaters shall not be equipped with continuously burning ignition pilots.

❖ The accessible on-off switch allows the heaters to be completely turned off where there are periods that the heat is not needed or when the pool or spa may not be used for a period of time.

N1103.10.2 (R403.10.2) Time switches. Time switches or other control methods that can automatically turn off and on according to a preset schedule shall be installed for heaters and pump motors. Heaters and pump motors that have built-in time switches shall be in compliance with this section.

Exceptions:

1. Where public health standards require 24-hour pump operation.
2. Pumps that operate solar- and waste-heat-recovery pool heating systems.

❖ The use of a time switch or other control method to control the heater and pumps provides an easy system for pool and spa operations and energy savings. The application of Exception 1 is dependent on the requirements of the local health department in the jurisdiction. Because these are often public pools and spas, the health department may require continuous filtering or circulation. Exception 2 grants a credit for using other systems that help the pool and spa operate more efficiently. Therefore, when solar- and waste-heat recovery systems are used to heat the pool, the exception eliminates the time-switch requirement.

N1103.10.3 (R403.10.3) Covers. Outdoor heated pools and outdoor permanent spas shall be provided with a vapor-retardant cover or other *approved* vapor-retardant means.

Exception: Where more than 70 percent of the energy for heating, computed over an operation season, is from site-recovered energy, such as from a heat pump or solar energy source, covers or other vapor-retardant means shall not be required.

❖ When energy is used to heat a pool or a spa, a cover is required to help hold in the heat and keep it from being lost to the surrounding air. The level of protection or insulation that the cover must provide depends upon the temperature that the pool is heated to. Any time a pool or spa is heated, the code will require a vapor-retardant pool cover. This type of cover is not required to provide any minimum level of insulation value. It simply will help hold some of the heat in, much like placing a lid on a pot. In situations where the pool is heated above 90°F (32°C), the cover must be insulated to the specified R-12 level. The exception is similar to that found in Section N1103.9.2.

N1103.11 (R403.11) Portable spas (Mandatory). The energy consumption of electric-powered portable spas shall be controlled by the requirements of APSP-14.

❖ This section coordinates this code with the *International Swimming Pool and Spa Code*® (ISPSC®). Both codes rely on ASPS-14 for energy conservation requirements for portable spas. The standard addresses efficiency requirements for water heating equipment and water circulation pumps.

N1103.12 (R403.12) Residential pools and permanent residential spas. Residential swimming pools and permanent residential spas that are accessory to detached one- and two-family dwellings and townhouses 3 stories or less in height above grade plane and that are available only to the household and its guests shall be in accordance with APSP-15.

❖ This section coordinates this code with the ISPSC. Both codes rely on ASPS-15 for energy conservation requirements for residential pools and permanent residential spas. The standard addresses efficiency requirements for water heating equipment and water circulation pumps.

SECTION N1104 (R404)
ELECTRICAL POWER AND LIGHTING SYSTEMS (MANDATORY)

N1104.1 (R404.1) Lighting equipment (Mandatory). Not less than 75 percent of the lamps in permanently installed lighting fixtures shall be high-efficacy lamps or not less than 75 percent of the permanently installed lighting fixtures shall contain only high-efficacy lamps.

Exception: Low-voltage lighting.

❖ Lighting comprises about 12 percent of primary residential energy, making this requirement a substantial

INTERNATIONAL CODE COUNCIL®
Copyright © 2015 ICC. ALL RIGHTS RESERVED. Accessed by David Dammon on Jun 21, 2017 12:30:52 PM pursuant to License Agreement with ICC. No further reproduction or distribution authorized. ANY UNAUTHORIZED REPRODUCTION OR DISTRIBUTION IS A VIOLATION OF THE FEDERAL COPYRIGHT ACT AND THE LICENSE AGREEMENT, AND SUBJECT TO CIVIL AND CRIMINAL PENALTIES THEREUNDER.

energy saver. The overwhelming majority of residential lighting is incandescent—the least energy efficient of all light types. More efficient lighting options are available.

One more efficient lighting option is the compact fluorescent light (CFL). CFLs use about 80 percent less energy than standard incandescent lighting. Limiting this requirement to 75 percent of the lamps in a residence ensures there will be plenty of exceptions for situations where a CFL might not work as well, such as dimmable fixtures.

N1104.1.1 (R404.1.1) Lighting equipment (Mandatory). Fuel gas lighting systems shall not have continuously burning pilot lights.

❖ Continuously burning pilots waste energy; therefore, the code does not use them.

SECTION N1105 (R405) SIMULATED PERFORMANCE ALTERNATIVE (PERFORMANCE)

❖ Section N1105 describes an alternative way to meet the code's goal of effective use of energy based on showing that the predicted annual energy use of a proposed design is less than or equal to that of the same home if it had been built to meet the prescriptive criteria in Sections N1102 and N1103. Section N1106 does not prescribe a single set of requirements; rather, it provides a process to reach the energy-efficiency goal based on establishing equivalence with the intent of the code. Because of the level of detail required in the analysis, this method of design is not often used for residential buildings; however, with the changes that have been made in Section N1102 and in newer editions of the DOE's REScheck software, Section N1105 may become a more popular means of demonstrating code compliance. This section may allow designers to show that many of their current plans meet the overall code requirements even though individual components of the home fall below the required code compliance levels.

When using this section and other performance options, the term "standard reference design" and "proposed design" are used extensively. These terms can create confusion for some users, but really are very easy to understand. The "proposed design" is exactly that. It is the building as it is proposed to be built, including building size and room configurations, window and wall assemblies, mechanical equipment, orientation, etc. It is essentially the building as it is shown on the construction documents (plans and specifications). The "standard reference design" is the same building configuration and orientation as the proposed design, but instead of matching the plans for the building as it will actually be built, the standard design is shown to only meet the minimum requirements of the code. For example, the standard reference design building in Climate Zone 4 would require that the walls and roof be insulated to a level of R-13 and R-38, respectively, based on the requirements in Table N1102.1.2 (*U*-factors of 0.082 and 0.030 in accordance with Table N1102.1.4). On the other hand, the proposed design may show that the intent is to install R-19 insulation in the walls and R-49 in the roof. Therefore, if everything else in the two buildings was identical, it would be easy to see in this example that the proposed design does exceed what is required by the code in the standard reference design.

There are two fundamental requirements for using this code. First, Section N1105 compliance is based on total estimated annual energy usage across the major energy-using systems in a residential building: envelope, mechanical and service water heating. Note that Section N1105 does not include lighting within the analysis process. Second, Section N1105 compares the energy use of the proposed design to that of a standard reference design. As mentioned above, the standard reference design is the same building design as that proposed, except that the energy features required by the code (insulation, windows, HVAC, infiltration) are modified to meet the minimum prescriptive requirements in Sections N1102 and N1103. The standard reference design is used only for comparison and is never actually built.

Section N1105 sets both general principles and specific guidelines for use in computing the estimated annual energy cost of the proposed and standard reference designs.

These guidelines constitute a large portion of Section N1105 and are easily seen in Table N1105.5.2(1), but are necessary to maintain fairness and consistency between the proposed and standard designs. Although the simulated performance alternative method is the most complex method, it gives the design professional the flexibility to introduce exterior walls, roof/ceiling components, etc., that do not meet the requirements of the prescriptive performance approach in Sections N1102 and N1103, but are considered acceptable where the annual energy use of the proposed building is equal to or less than that of the standard reference design building. Envelope features that lower energy consumption (window orientation, passive-solar features or the use of "cool" reflective roofing products in cooling-dominated climates) and mechanical and service water heating systems that are more efficient than those required by the minimum prescriptive requirements in Sections N1102 and N1103 are used to offset the potentially high thermal transmittance of an innovative exterior envelope design in this instance.

The simulated performance alternative also allows energy supplied by renewable energy sources on the building site to be discounted from the total energy consumption of the proposed design building. Because renewable energy obtained on the site comes from nondepletable sources such as solar radiation, wind, plant byproducts and geothermal sources, its use is not counted as part of the proposed building's energy use. The definition of "Energy cost" in Section

INTERNATIONAL CODE COUNCIL®
Copyright © 2015 ICC. ALL RIGHTS RESERVED. Accessed by David Dammon on Jun 21, 2017 12:30:52 PM pursuant to License Agreement with ICC. No further reproduction or distribution authorized. ANY UNAUTHORIZED REPRODUCTION OR DISTRIBUTION IS A VIOLATION OF THE FEDERAL COPYRIGHT ACT AND THE LICENSE AGREEMENT, AND SUBJECT TO CIVIL AND CRIMINAL PENALTIES THEREUNDER.

N1101.9 and the provisions of Section N1106.3 should be reviewed when dealing with renewable energy. Renewable energy that is purchased from an off-site source cannot be excluded and would be included within the definition of "energy cost."

N1105.1 (R405.1) Scope. This section establishes criteria for compliance using simulated energy performance analysis. Such analysis shall include heating, cooling and service water heating energy only.

❖ This section simply indicates that the performance analysis can include not only the building envelope performance (as is limited in Section N1102.1.4) but that the tradeoffs can also include the energy that is used for heating, cooling and service water heating. The provisions of this section do not include an allowance for the lighting energy to be included. If a designer wished to include lighting, it would be done under the alternative materials and method provisions of Section R104.11 (see commentary, Section R104.11).

Section N1105.1 establishes the terms of performance-based comparison for residential buildings. Under the Section 1105 Simulated Performance approach, the candidate building (proposed design) is evaluated based on the cost of energy used. In simple terms, Section N1106 states: build the residence any way as long as it is designed to use no more energy than a home built exactly to the minimum requirements in Sections N1102 and N1103.

This performance option can also be used to take advantage of energy-efficiency improvements that are only partly reflected in the total UA (sum of *U*-factor times the assembly area) of the residence, which is found in Section N1102.1.4. For example, in a cooling climate, reduction in ceiling UA will save more energy than an equal reduction in slab UA. This energy savings occurs because cooling climates have ground temperatures that approach comfortable indoor temperatures, diminishing the value of slab insulation for such climates. In contrast, the ceiling insulation in cooling climates usually receives higher solar loads during the warmest part of the day, increasing the value of ceiling insulation. Therefore, in cooling climates, a change in ceiling UA (perhaps adding more ceiling insulation) may have a substantially greater impact on energy use than the same UA change in slab-edge insulation.

A variety of calculation methods can be used to show compliance under the simulated performance alternative approach. The calculations can be complex; for example, a detailed building energy simulation tool covering all aspects of building energy use. Much of Section N1105 deals with establishing guidelines for defining aspects of the various sophisticated calculations that form the basis of the annual energy-use comparison. Alternatively, the analysis can be a simple calculation or correlation focused on one aspect of energy use. Where a method of analysis does not calculate, model or estimate a specific energy-using feature, it cannot be used for tradeoffs based on that specific feature. For example, software using degree-day-based climate and building envelope calculations does not specifically account for water heater energy use. Therefore, this type of software cannot be used to take credit for a high-efficiency water heater. Note, however, that software using degree-day-based climate and building envelope calculations does account for changes in insulation levels; therefore, it could be used for an insulation tradeoff under the simulated performance approach.

The use of Section N1105 to show compliance is not required by all homes with special features designed to save energy. Very energy-efficient designs may not give credit for all of the design's features to show compliance. For example, a highly energy-efficient, passive solar home may be so well insulated and have such low glazing *U*-factors that those items alone may be sufficient to show compliance with the energy-related requirements in the code by using only UA computations or by meeting the prescriptive requirements of Sections N1102 and N1103. Because of these very efficient elements, compliance may be shown by using the prescriptive provisions or the easier UA computations instead of a more complex evaluation, which would include the other energy-using subsystems in the building.

N1105.2 (R405.2) Mandatory requirements. Compliance with this section requires that the mandatory provisions identified in Section N1101.13 be met. All supply and return ducts not completely inside the *building thermal envelope* shall be insulated to a minimum of R-6.

❖ This section serves as a reminder of the requirements found within Section N1101.2. When using Section N1105, compliance with the various mandatory provisions in this chapter is still required. The sections that must be complied with separately include items that often cannot be effectively modeled as well. When using Section N1105, it is important to review the provisions of Section N1102.5, which place "hard limits" on the fenestration *U*-factors and SHGC that may be used for tradeoffs (see commentary, Section N1102.5).

N1105.3 (R405.3) Performance-based compliance. Compliance based on simulated energy performance requires that a proposed residence (*proposed design)* be shown to have an annual energy cost that is less than or equal to the annual energy cost of the *standard reference design.* Energy prices shall be taken from a source *approved* by the *building official*, such as the Department of Energy, Energy Information Administration's *State Energy Price and Expenditure Report. Building officials* shall be permitted to require time-of-use pricing in energy cost calculations.

Exception: The energy use based on source energy expressed in Btu (J) or Btu per square foot (J/m^2) of *conditioned floor area* shall be permitted to be substituted for

INTERNATIONAL CODE COUNCIL®
Copyright © 2015 ICC. ALL RIGHTS RESERVED. Accessed by David Dammon on Jun 21, 2017 12:30:52 PM pursuant to License Agreement with ICC. No further reproduction or distribution authorized. ANY UNAUTHORIZED REPRODUCTION OR DISTRIBUTION IS A VIOLATION OF THE FEDERAL COPYRIGHT ACT AND THE LICENSE AGREEMENT, AND SUBJECT TO CIVIL AND CRIMINAL PENALTIES THEREUNDER.

the energy cost. The source energy multiplier for electricity shall be 3.16. The source energy multiplier for fuels other than electricity shall be 1.1.

❖ The general procedure is to show that the annual energy cost for the building is less than the annual energy cost of a building that just meets the prescriptive requirements. The applicant must estimate the annual energy cost for two buildings: the one to be built and the standard reference design building. Because the two are compared on the basis of annual energy costs, designs that have lower demand charges or use energy when rates are lower may be able to gain an advantage using Section N1105. It is also common to equate energy sources on the basis of cost because energy bills are the principal motivator for energy efficiency. An annual energy analysis could be used to compare a wide variety of energy-using features and conservation opportunities for the candidate building. The annual energy use can be used to trade off insulation; window/door areas; *U*-factors; HVAC equipment efficiency; water heating efficiency; infiltration control measures; duct insulation and sealing; pipe insulation and renewable energy technologies or new energy technologies. Appliances not regulated by the code (refrigerators, dishwashers, clothes-washing machines, residential lighting) are not eligible for tradeoffs under this chapter.

The approach in this section is targeted for use in residences with energy-saving features that are not reflected in the UA or overall *U*-factor. Examples of features that lower energy consumption but not *U*-factor include high-efficiency HVAC systems; windows predominantly oriented toward the south; passive solar features; highly reflective ("cool") roofing products in cooling-dominated climates or renewable energy sources such as photovoltaic, geothermal heat pumps and wind farms.

A building will comply with the requirements of the code and be acceptable when the annual energy cost of the proposed design is less than or equal to the annual energy cost of the standard design. The following sections will provide additional information and guidance related to the standard reference design and the design that it is compared to.

The purpose of the exception is to allow the use of source energy as an alternative metric to energy cost for compliance with the performance provisions.

Adding source energy as an alternative to energy cost offers many benefits to compliance, as follows:

- Using cost will be a liability to the home builder if home buyers do not achieve the savings listed in the compliance documentation.
- Energy cost changes frequently. This means that a home that complies today may not comply a few months from now if costs change.
- Energy cost focuses attention on first-year energy costs, which misses the point of an energy code where features that are generally life-cycle cost effective to the homeowner are added to save energy and make homes more comfortable over the life of the home, not to reduce first cost.

The source multipliers of 3.16 and 1.1 are from the 2002 *DOE Core Databook*. One way to think of this is that electric energy utilized at the site requires 3.16 times the source energy to produce the electricity at power plants and distribute via power lines to homes. This is because the efficiency of power plants is much less than 100 percent and there are losses in transmission and distribution as well. Other fuels, such as natural gas and fuel oil, have less source energy losses and a lower source energy multiplier.

Standard Reference Design

This section reiterates the simulated performance approach's strong reliance on principles established in Sections N1102 and N1103 as the foundation for the baseline level of energy efficiency established in the code. Therefore, all tradeoffs are judged against the prescriptive requirements of the standard reference design. Accordingly, insulation levels for the standard design building are set by the prescriptive requirements in Section N1102 and are generally based on the values in Table N1102.1.4. To avoid gaming of the proposed versus standard comparison, general principles and specific guidelines are given for various energy-using systems of the building [see Table N1105.5.2(1)].

The entries in Table N1105.5.2(1) for the envelope and fenestration requirements assist the code user in defining the standard reference design without bias. This is especially true in southern climates, where air-conditioning requirements are significant. In these cooling-dominated climates, where *U*-factor requirements are relatively high, residences with very large window areas and virtually no wall insulation can comply with the code through the use of windows with very low *U*-factors. This results in excessive air-conditioning costs in these climates because unshaded windows, dominated by solar heat gain, are required to meet only the code thermal-resistance and solar heat gain requirements. As a result, it is possible to construct residences in these climates with limited wall insulation, as long as windows with high thermal resistance and low SHGC are used.

The Table N1105.5.2(1) entries for the building's thermal envelope components and fenestration are necessary to pin down the overall energy consumption of the standard design as described in Section N1102. Without the guidance provided by these entries, the areas and *U*-factors of the windows and building thermal envelope could assume a multitude of different values and still satisfy Section N1102 requirements. Furthermore, different values for these components would result in different overall energy cost levels for the standard design. The annual energy cost of the standard design represents the maximum "budget" the proposed design must

INTERNATIONAL CODE COUNCIL®
Copyright © 2015 ICC. ALL RIGHTS RESERVED. Accessed by David Dammon on Jun 21, 2017 12:30:52 PM pursuant to License Agreement with ICC. No further reproduction or distribution authorized. ANY UNAUTHORIZED REPRODUCTION OR DISTRIBUTION IS A VIOLATION OF THE FEDERAL COPYRIGHT ACT AND THE LICENSE AGREEMENT, AND SUBJECT TO CIVIL AND CRIMINAL PENALTIES THEREUNDER.

meet. Without specific details of the standard reference design's features and components, this budget becomes a moving target and will result in "gaming"; that is, picking a combination for the standard design that results in a very large energy budget, thus permitting the proposed design to easily comply with Section N1105.

Proposed Design

In general, the proposed design is the building that will be constructed exactly as it is shown in the plans and construction documents. Therefore, most of the entries for Table N1105.5.2(1) will be "as proposed." There are, however, some sections that must match what is required or used for the standard reference design. The proposed design must be similar in many characteristics to the standard design. Otherwise, it may not provide an "apples-to-apples" comparison, thereby limiting the value of this method in demonstrating that the proposed design truly is more efficient. Some of the items that must be comparable include:

1. The standard and proposed designs must use the same energy sources (fuels) for the same function. For example, a gas-heated standard design cannot be compared to an electrically heated proposed design.
2. The areas of the building components (ceiling, wall and floor), including the building's shape, configuration and orientation, must all remain the same in both the standard and proposed designs.
3. Both the standard and proposed designs must assume the same outdoor and comfort indoor climate conditions.
4. Both the standard and proposed designs must assume the same occupant diversity and usage patterns; for example, the same thermostat set points, water usage, internal gains, etc.

The exception within Section N1105.3 is important to understand because some jurisdictions may require that comparison be done on the basis of "site energy" versus "annual energy cost." Because of the fact that the utility charges for various types of energy can change over time, some code officials may prefer that the comparison be made based on the amount of energy delivered to the home instead of the cost of that energy.

The code establishes the effective use of site energy as opposed to primary (a.k.a., source) energy as a goal and then delineates specific criteria, both prescriptive and performance based, for meeting that goal. Primary energy is defined as the amount of energy delivered to a sector adjusted to account for the energy sources used to produce the energy; for example, energy used to generate electricity. Included also is the energy lost in delivering the fuel to a customer; for instance, the electricity lost in the transmission and distribution of electricity. Site (delivered) energy is the amount of energy delivered to a household. Energy generation, transmission and distribution losses are not included. Primary energy is useful to show the ultimate resource impact of sectoral energy demand with respect to global particulate contributions of carbon dioxide, for example. Site energy is necessary if one wants to know what is going on inside the building. In this case, fuel choice does matter; oil-heated homes may consume more site energy than electrically heated homes, for instance.

From an economist's perspective, using energy cost instead of primary or site energy is preferable. Deregulation will affect the choice of fuels and households will decide what to consume. This view assumes that competitive pressures will ultimately equalize prices. This primary-versus-site debate centers on electricity, but losses are also associated with other energy sources. For example, one could take distillate fuel oil all the way back to the refinery, even factoring in energy losses in the fuel delivery trucks. So while Section N1105 will generally require the comparison to be based on the annual energy cost for the homeowner, some jurisdictions prefer to know the amount of energy delivered and not the cost. Regardless of which comparison basis is used, it is clearly the intent of Section N1105 to require the effective use of energy.

This exception permits equating different energy sources on the basis of the site energy. Site energy is energy use measured at the building boundary. For designs under Section N1105, site energy is input to the heating, cooling-service and water-heating equipment.

As mentioned earlier, it is common to equate energy sources on the basis of cost because energy bills are the principal motivator for energy efficiency and, over time, the market will move to the more economical energy source. The results of using either energy cost or delivered "site energy" tend to be similar. The use of tradeoffs based on energy costs may be preferable in cooling-dominated climates. The cost of a unit of gas is commonly much less than the same unit of electricity; therefore, equating fossil fuels and electricity in terms of heat content may not reflect the interest of the building owner based primarily on the applicable utility rate structures and tariffs. In southern climates, the use of site-energy-based tradeoffs tends to overcredit changes in heating energy use and undercredit changes in cooling energy use. The intent of the code to "achieve the effective use of energy" (see Section R101.3) can be preserved through the use of an annual energy cost or site-energy-based comparison. The use of site energy, or delivered energy, as the basis for the comparison under Section N1105 requires the approval of the code official.

N1105.4 (R405.4) Documentation. Documentation of the software used for the performance design and the parameters for the building shall be in accordance with Sections N1105.4.1 through N1105.4.3.

❖ This section provides a list of the minimum information that is required to demonstrate compliance with the

INTERNATIONAL CODE COUNCIL®
Copyright © 2015 ICC. ALL RIGHTS RESERVED. Accessed by David Dammon on Jun 21, 2017 12:30:52 PM pursuant to License Agreement with ICC. No further reproduction or distribution authorized. ANY UNAUTHORIZED REPRODUCTION OR DISTRIBUTION IS A VIOLATION OF THE FEDERAL COPYRIGHT ACT AND THE LICENSE AGREEMENT, AND SUBJECT TO CIVIL AND CRIMINAL PENALTIES THEREUNDER.

code requirements. The three subsections within Section N1105.4 list the minimum level of information that is needed for this purpose. Because much of the information and software used for the performance option must be approved by the code official, the jurisdiction should be consulted to see if any additional information may be required (see commentary, Section N1105.6.2).

A review of the code requirements of Section R104 of the IECC should also be included when looking at Section N1105.4. The construction documents must contain the data necessary to confirm that the results of the design have been incorporated into the construction documents and also to allow assessment of compliance. This is of particular importance when coupled with performing a comprehensive plan review given the sometimes very lengthy and sophisticated submittals required by the energy-efficiency method (see commentary, Section R104 of the IECC). Though not listed in the code, some state laws may require that the design of the building construction, and in this case, the development of a comparative building-energy analysis, be done by a registered design professional in accordance with the licensing laws of the state where the work takes place.

In such states, the code official should consider and enforce the requirement to coordinate with state licensing laws that often establish thresholds for when the services of a registered design professional are required.

N1105.4.1 (R405.4.1) Compliance software tools. Documentation verifying that the methods and accuracy of the compliance software tools conform to the provisions of this section shall be provided to the *building official.*

❖ This section is essentially a general requirement that where software is used to demonstrate compliance under Section N1105, the software be shown to provide accurate comparisons and results. Many of the software systems that may be used will be familiar and readily acceptable to the code official. Where a less commonly used software is proposed for use, the code official will need to be shown that the software does perform its intended function and that it is accurately comparing the standard reference and proposed designs.

N1105.4.2 (R405.4.2) Compliance report. Compliance software tools shall generate a report that documents that the *proposed design* complies with Section N1105.3. A compliance report on the *proposed design* shall be submitted with the application for the building permit. Upon completion of the building, a compliance report based on the as-built condition of the building shall be submitted to the *code official* before a certificate of occupancy is issued. Batch sampling of buildings to determine energy code compliance for all buildings in the batch shall be prohibited.

Compliance reports shall include information in accordance with Sections N1105.4.2.1 and N1105.4.2.2. Where the *proposed design* of a building could be built on different sites where the cardinal orientation of the building on each site is different, compliance of the *proposed design* for the purposes of the application for the building permit shall be based on the worst-case orientation, worst-case configuration, worst-case building air leakage and worst-case duct leakage. Such worst-case parameters shall be used as inputs to the compliance software for energy analysis.

❖ The approved software should be able to demonstrate that the proposed design truly does have an annual energy cost that is either less than or equal to that of the standard reference design. The code requires that a compliance report be submitted on two occasions: 1. At the time of permit application to verify that the proposed design complies with the code; and 2. At the end of the project, before the certificate of occupancy is issued, to verify that the "as-built" building complies with the code.

N1105.4.2.1 (R405.4.2.1) Compliance report for permit application. A compliance report submitted with the application for building permit shall include the following:

1. Building street address, or other building site identification.
2. A statement indicating that the *proposed design* complies with Section N1105.3.
3. An inspection checklist documenting the building component characteristics of the *proposed design* as indicated in Table N1105.5.2(1). The inspection checklist shall show results for both the *standard reference design* and the *proposed design* with user inputs to the compliance software to generate the results.
4. A site-specific energy analysis report that is in compliance with Section N1105.3.
5. The name of the individual performing the analysis and generating the report.
6. The name and version of the compliance software tool.

❖ Providing the address of the project will not only help in the tracking of the project and various permits, but it also ensures that the calculations that were run were for the intended project and are not simply based on a project that may not be applicable. While it may be possible to run a calculation based on a stock set of plans [see orientation provisions in Table R405.5.2(1)], the best way to provide a truly accurate comparison is to provide a site-specific evaluation, as required in Item 4.

Item 2 provides the primary information upon which approval will be granted. A summary must be submitted showing how the annual energy cost of the proposed design compares to the annual energy cost of the standard design. The comparison summary must include, as a minimum, annual energy cost by design (standard versus proposed) and could possibly include the fuel type (electric versus gas versus renewable sources) if it was a part of a tradeoff.

Besides showing the actual comparison between the two designs, Item 3 requires an inspection checklist that can be used by the inspector to ensure that the proposed design matches what is actually constructed in the field. This checklist will address the details of the construction upon which the comparison was con-

INTERNATIONAL CODE COUNCIL®
Copyright © 2015 ICC. ALL RIGHTS RESERVED. Accessed by David Dammon on Jun 21, 2017 12:30:52 PM pursuant to License Agreement with ICC. No further reproduction or distribution authorized. ANY UNAUTHORIZED REPRODUCTION OR DISTRIBUTION IS A VIOLATION OF THE FEDERAL COPYRIGHT ACT AND THE LICENSE AGREEMENT, AND SUBJECT TO CIVIL AND CRIMINAL PENALTIES THEREUNDER.

ducted. See Section R405.4.3, Item 1, for the equivalent requirement for the standard reference design. These two sections will not only ensure that the accuracy of the comparison is fair, but also will provide information so that the comparison can be run again and verified if needed. While it would be best if the checklist did include information for all of the items listed in Table R405.5.2(1), it is really only necessary that the information is provided for items that are compared or for which trade-offs are based or taken.

Because various versions of software can include different inputs or evaluations, it is important that both the name and version of the software be provided. Changes between the software or various editions of it could often provide different results. Listing the software edition helps the code official evaluate the report and also provides the information to conduct a verification review if necessary.

N1105.4.2.2 (R405.4.2.2) Compliance report for certificate of occupancy. A compliance report submitted for obtaining the certificate of occupancy shall include the following:

1. Building street address, or other building site identification.
2. A statement indicating that the as-built building complies with Section N1105.3.
3. A certificate indicating that the building passes the performance matrix for code compliance and listing the energy saving features of the buildings.
4. A site-specific energy analysis report that is in compliance with Section N1105.3.
5. The name of the individual performing the analysis and generating the report.
6. The name and version of the compliance software tool.

❖ The items required for the compliance report for obtaining the certificate of occupancy are basically the same as those required for the permit application, except that the report is based on the "as-built" condition of the building. During the course of construction, changes in the windows, type of insulation, equipment or building dimensions are all required to be documented and approved. The changes must be approved based on compliance with the code and the original design. At the end of the day, however, one must verify that the changes made did not have a negative impact on the performance of the building, as analyzed before the permit application.

N1105.4.3 (R405.4.3) Additional documentation. The *building official* shall be permitted to require the following documents:

1. Documentation of the building component characteristics of the *standard reference design.*
2. A certification signed by the builder providing the building component characteristics of the *proposed design* as given in Table N1105.5.2(1).
3. Documentation of the actual values used in the software calculations for the *proposed design.*

❖ The items in this section are not automatically required as those of Sections N1105.4.1 and N1105.4.2, but are instead only required when the code official wishes them to be. Item 1 provides information related to the standard reference design similar to what Section N1105.4.2.2, Item 2, provides for the proposed design. Having this information allows the code official or designer to easily replicate the calculations if additional verification reviews or changes are needed.

Item 2 can be useful in a couple of ways. It cannot only be used by the inspector similar to the checklist in Section N1105.2, Item 2, but it helps to ensure that items that may not be seen or visible to the inspector have been installed as proposed. This certification can essentially be considered the same as the builder stating the as-built structure complies with the proposed and originally approved design plans.

Item 3 provides for a possible need to check input values for computer programs utilized. This enables the plan checker to readily verify compliance with the basic requirements of the code.

N1105.5 (R405.5) Calculation procedure. Calculations of the performance design shall be in accordance with Sections N1105.5.1 and N1105.5.2.

❖ The provisions of this section simply ensure that the comparisons between the standard reference design and the proposed design are accurate and that it reflects an "apples-to-apples" comparison.

N1105.5.1 (R405.5.1) General. Except as specified by this section, the *standard reference design* and *proposed design* shall be configured and analyzed using identical methods and techniques.

❖ Items that are not involved in the tradeoffs must be comparable between the standard reference design and the proposed design. This helps to ensure that the energy savings is truly based on the differences from Table N1105.5.2(1) that are being evaluated. Though it should go without saying, the same calculation method or software must be used to estimate the annual energy usage for space heating and cooling of the standard design and the proposed design. The calculation tool must be approved by the code official. A jurisdiction may want to make known the methods it prefers for comparing annual energy use. The code official retains the authority to determine whether a specific set of computations for a particular residence is acceptable. The use of Section N1105 is optional; therefore, the applicant is free to choose the method for achieving compliance (see commentary, Sections R101.3 and N1101.2). Regardless, whatever calculation procedure is used to evaluate the standard design must also be used to evaluate the proposed design.

N1105.5.2 (R405.5.2) Residence specifications. The *standard reference design* and *proposed design* shall be configured and analyzed as specified by Table N1105.5.2(1). Table

INTERNATIONAL CODE COUNCIL®
Copyright © 2015 ICC. ALL RIGHTS RESERVED. Accessed by David Dammon on Jun 21, 2017 12:30:52 PM pursuant to License Agreement with ICC. No further reproduction or distribution authorized. ANY UNAUTHORIZED REPRODUCTION OR DISTRIBUTION IS A VIOLATION OF THE FEDERAL COPYRIGHT ACT AND THE LICENSE AGREEMENT, AND SUBJECT TO CIVIL AND CRIMINAL PENALTIES THEREUNDER.

N1105.5.2(1) shall include, by reference, all notes contained in Table N1102.1.2.

❖ While the majority of Section N1105 addresses the process to evaluate the standard design and proposed design, this section serves as the backbone of Section N1105 and the information upon which the comparisons are conducted. Tables N1105.5.2(1) and N1105.5.2(2) provide the list of items that are compared and establish not only the requirements for the standard design but also give a good view of what items may be included and evaluated for tradeoffs. The determination of requirements and application of the various items is fairly easy to follow due to the way the components are listed in separate rows of the table. Under Section N1105, it is only these items that may differ between the proposed and standard reference design. As discussed in the commentary to Section N1105.1, if there are any additional components or features for which a designer wishes to compare and make a tradeoff, the approval of such items would need to be based on Section R104.11.

The information that is determined for Tables N1105.5.2(1) and N1105.5.2(2) would be the type of information that is needed for both Sections N1105.4.2.2, Item 2, and N1105.4.3, Item 1.

TABLE N1105.5.2(1). See page 11-74.

❖ As discussed in the commentary to Section N1105.5.2, this table serves as the backbone of the requirements for Section N1105. By comparing the annual energy cost of a standard reference design to that of a proposed design home may trade off the efficiency of one element or component for an increased efficiency in another.

The column dealing with "building components" helps to distinguish what building elements may be considered and included in the performance option of Section N1105. The column labeled "Standard Reference Design" provides the details that are used as the basis for determining the annual energy cost that will serve as the maximum energy cost that the proposed design could use. This column simply states how the standard designed home is to be configured and treated in the simulations that will compare it to the proposed design home. This column simply ensures that comparisons between the two designs truly are based on a plan that meets the intended performance of the code. The "Proposed Design" column simply represents the home for which compliance is trying to be determined. As indicated, most of the items in a proposed design will be "as proposed." There are a few entries in this column where the proposed design must use the same values as the standard design. These items are restricted so that a fair comparison is provided and so that the design parameters may not simply be changed in an attempt to show improved efficiency. Additional comments about the table or specific component requirements are as follows:

Walls, roofs and fenestration: Similar to Sections N1102.1 and N1102.3, this table separates the impact of solar gains for fenestration such as windows or energy loss through windows and doors from the impact of the wall *U*-factors. The provisions simply ensure that each component of the building's thermal envelope is evaluated separately.

Walls, floors, ceilings and roofs: To avoid gaming the comparison, the areas of these items must be the same in both designs. No valid comparison of the proposed and standard designs can be made if the size of the two designs is not equal.

Foundations: This section explicitly requires the foundation and on-grade floor type be the same for both designs. Without this provision, the possibility for the designer to select a less energy-efficient foundation or floor type (including modeling a floor system over a heated space) for the standard design and a more energy-efficient foundation type for the proposed design is left open. Under this circumstance, heat loss for the proposed design would be much less significant because of the lower heat loss through the foundation. The resulting loss "credit" results in less insulation being required for the proposed design. This type of credit is prohibited because the designer may not have intended to use the unfavorable foundation in the first place.

Doors: The amount of door area and the orientation for the door are specified. Whether the door is glazed or opaque is not a consideration for the standard design because the area of glazing is dealt with under a separate entry. By requiring the door to be on the north orientation, the effects of SHGC on a glazed door are minimized.

Glazing: This requirement exists in response to strong evidence showing that glazing area and geometry have some impact on the building's overall thermal transmittance, and that solar heat gain through windows constitutes a large portion of the air-conditioning load (typically 25 percent) in southern climates.

The area limitations help to ensure that the glazing areas are not manipulated to affect the efficiency of the various designs. The proposed glazing area limitation of 18 percent of the conditioned floor area of the residence is identical to the requirement of the Home Energy Rating System Council Guidelines (Version 2) for its standard design, and is equal to the maximum window area that was allowed by ASHRAE Standard 90.2-1993 for its standard design.

The code language, found in Note a, indicating that the glazing area includes the sash, framing and glazing is needed for completeness and clarification. The NFRC guidelines on window labeling require that window performance ratings be based on the full window system product. In other words, the *U*-factor, SHGC, visible light transmittance, air leakage and other properties of the window must be based on the combined impacts of both the glazing and its associated opaque constituents (defined here as "sash").

Orientation significantly affects the annual energy consumption on a building and is critical to achieving an optimum passive solar design. This section recog-

INTERNATIONAL CODE COUNCIL®
Copyright © 2015 ICC. ALL RIGHTS RESERVED. Accessed by David Dammon on Jun 21, 2017 12:30:52 PM pursuant to License Agreement with ICC. No further reproduction or distribution authorized. ANY UNAUTHORIZED REPRODUCTION OR DISTRIBUTION IS A VIOLATION OF THE FEDERAL COPYRIGHT ACT AND THE LICENSE AGREEMENT, AND SUBJECT TO CIVIL AND CRIMINAL PENALTIES THEREUNDER.

nizes that building energy consumption is affected by orientation and that an orientation change of the glazing could be a way to manipulate the standard reference design so that it uses an increased amount of energy or gains an increased advantage by limiting solar heat gain.

Experimental evidence using eight cardinal exposures with equal glazing areas for the standard design as input for simulation programs shows that the procedure is inconvenient with very small increases in accuracy. Due to this, the four cardinal exposures are sufficient for achieving solar neutrality on the standard design. Because the percentage of glass-area facing in a particular orientation can vary significantly on a proposed design, the actual orientations are needed for accuracy. The difference in a large amount of glazing facing directly south, versus southwest, will significantly increase annual energy use, peak loads and the time the peak loads occur. The trend is that the more passive solar techniques are applied to the building, the more important the orientation becomes.

The section establishes an SHGC standard of 0.4 for glazed fenestration products in climates with significant cooling loads. Specifically, this requirement applies to warmer climates (Climate Zones 1 through 3). As a result, this requirement applies throughout much of the southern region of the United States in Oklahoma, Arkansas, Tennessee and North Carolina and extending as far north as the warmer parts of California and Nevada. Although Table N1102.1.2 does not require an SHGC in Climate Zones 4 through 8, this table establishes a requirement of 0.40 for these climate zones. When applying the SHGC provisions of the standard design, remember the application of Note e in Table N1102.1.2 for Climate Zone 3, Marine.

The table addresses interior shading and allows for contribution to the SHGC rating of a window by providing a simple equation to account for interior shading, based on the SHGC of the window's glazing. The "Interior shade fraction" in IECC Section 405, Performance Compliance Path, is used in simulating the performance of the building as a multiplier to reduce effective SHGC and its impact on the conditioned space. This approach is intended to simulate the effects of interior shades on solar heat gain transmitted through the glazing. As a result, this multiplier is important because it can affect the choice of appropriate fenestration. This section provides a simplified equation for determining interior shading fraction depending on the SHGC of the glazed fenestration product (this equation is based on the assumption of a specific type of interior shade, recognizing that the code has no control over the type of shade ultimately employed). This section is based on the assumption that shades are closed 50 percent of the time throughout the entire year, rather than assuming twice the shade usage in the summer than the winter.

The equation is based on ASHRAE Research Project 1311-RP, that produced a 95-page final report on the effects of various shading devices on building loads resulting from solar heat gain; specifically, Wright, J., et.al., *Improved Cooling Load Calculations for Fenestration with Shading Devices (dated January 14, 2009)*. This report publishes tables of modifiers for 56 glass products and 34 types of interior shading devices. Shade combinations studied in the report included:

1. Louvered shades
   - Three colors (dark, medium, light).
   - Five positions (rotated from closed down to open to closed up).
2. Fabric drape
   - Three colors.
   - Four weave densities (closed, semi-open, open, sheer).
3. Roller shades
   - Three colors.
   - Two densities (opaque, translucent).
4. Insect screen

According to the report, the shading values vary remarkably depending on the type of shade and the type of glass. In fact, one could reasonably conclude that it is impossible to set any meaningful shade fraction without reference to a specific shade and a specific window in each case. Reference to specific shades and window combinations in the code obviously would be complex at best, and would certainly be impractical, since the type of interior shades for each window is typically not controlled by the builder and would require a separate calculation for each window with a different shade. For this section, the equation is based on an assumption to use the most effective drape (from a shade fraction perspective), which is a light-colored tight-weave fabric drape.

Permanent, exterior-mounted shading devices for the standard design are considered atypical and, therefore, are not required or allowed to be included. Where credit is taken in the proposed design for these devices, the code official must approve and confirm the installation of the actual shading device proposed.

Skylights: This intends to reduce the complexity of the design requirements as applied to skylight areas in the standard design. If this section was not included, ceilings and skylights would also require detailed treatment as in Section 402.3 and the glazing section above to fully specify the standard design.

Air exchange rate: This section establishes conditions under which air-leakage reduction can be claimed reliably. Without using an actual measurement, it often is not practical to document infiltration reduction measures beyond those in the standard design because the code (see Section N1102.4) already assumes a fairly comprehensive air-sealing regimen. Where the test reports that the anticipated building infiltration performance is not achieved as was assumed in the permit application, infiltration must be lowered or some other means must be used

INTERNATIONAL CODE COUNCIL®
Copyright © 2015 ICC. ALL RIGHTS RESERVED. Accessed by David Dammon on Jun 21, 2017 12:30:52 PM pursuant to License Agreement with ICC. No further reproduction or distribution authorized. ANY UNAUTHORIZED REPRODUCTION OR DISTRIBUTION IS A VIOLATION OF THE FEDERAL COPYRIGHT ACT AND THE LICENSE AGREEMENT, AND SUBJECT TO CIVIL AND CRIMINAL PENALTIES THEREUNDER.

to make up the increased energy use attributable to the deficiency in infiltration rates. Note that "tight" buildings may require mechanical ventilation to improve occupant comfort. Controlling ventilation rates reduces cooking odors, damp musty smells, stale air and elevated levels of carbon dioxide. Ventilation also helps reduce concentrations of air-borne contaminants off-gassed from building materials and related to other household activities.

Internal gains: The calculations for both the standard and proposed designs must assume the same internal loads. Where the simulation tool allows specification of internal gains, the total heat gains (sensible + latent) are to be calculated based on this equation in both the standard and proposed designs (the code does not distinguish between sensible and latent gains). This equation makes internal gains a function of the conditioned area and the number of bedrooms.

Heating systems: This section simply requires that the heating and cooling equipment in the standard design meet the minimum efficiency requirements that are currently required at the time of the evaluation.

This section contains general guidelines for the proposed design for any annual energy analysis under Section N1105. The standard and proposed designs must use the same energy sources (fuels) for the same function. For example, a gas-heated standard design cannot be compared to an electrically heated proposed design. For a fossil-fuel-heated building, the standard design must assume the applicable minimum efficiency as dictated by the code and the National Appliance Energy Conservation Act (NAECA).

Service water heating: Where the simulation tool or calculation models water heating energy, domestic service water-heating calculations must assume a set point of 120°F (49°C), with a daily usage of 30 gallons (113 L) per unit plus 10 gallons (37.8 L) per bedroom.

Thermal distribution systems [see Table N1105.5.2(2)]: Research and practice in the past few years has shown that the major component of heating and cooling system efficiency stems from air leakage in hot and cold air distribution systems (primarily ducts, but also air-handler cabinets). The research has been conducted by ASHRAE; Lawrence-Berkley National Laboratory; Brookhaven National Laboratory; Electric Power Research Institute; Gas Research Institute; Florida Solar Energy Center and numerous other research organizations and national utilities. Many, if not most, utilities in the nation now operate duct-leakage diagnosis and repair efforts as part of their energy conservation and demand side management programs to assist their customers. The Sheet Metal and Air-Conditioning Contractors National Association (SMACNA) has published test procedures in outlining the methods and air distribution systems through duct-system pressurization testing (see the SMACNA *HVAC Air Duct Leakage Test Manual*) and a number of calibrated pressurization test equipment manufacturers are now producing equipment for sale in the market.

Technical questions regarding the specific energy impacts and mechanisms of specific leak types in certain locations remain; however, there is no question the elimination of air leakage results in energy inefficiency in duct systems being limited to conduction gains and losses through the ducts themselves.

The virtual elimination of these leaks also results in much improved heating and cooling system efficiencies (on the order of 95- to 99-percent efficient as opposed to 75- to 80-percent efficient). There is no technical disagreement that, once air leakage is no longer in question, air distribution system efficiency can be determined through straightforward engineering calculations using conduction heat-transfer equations, unencumbered by the complexities of air-leakage flows. A conservative assumption is that the ductwork in the standard design is 50-percent inside and 50-percent outside the conditioned space; however, the arrangement of ductwork in the standard design must be representative of that proposed.

Unless directly heated and cooled, attics and crawl spaces are unconditioned spaces. The specified distribution system efficiency (DSE) is to be used in the standard design where the designer wishes to take advantage of the impacts from improved DSEs in the proposed design and the entire distribution system is substantially leak free. The proposed designs use the specified system efficiencies with the proportion of the ducts inside and outside the conditioned system that is substantially leak free. The proposed designs use the specified system efficiencies with the proportion of the ducts inside and outside the conditioned space determined by the duct length and placement in the proposed design. It is acceptable for the proposed design to use system efficiencies other than those given where such factors result from a code-official-approved, post-construction duct system performance test. [Note that Table N1105.5.2(2) is titled "Default Distribution System Efficiencies" and that Note a of that table indicates that the values are for untested distribution systems.] The provisions in this section are a mechanism that allows builders to take credit for substantially leak-free duct systems where they are installed.

INTERNATIONAL CODE COUNCIL®
Copyright © 2015 ICC. ALL RIGHTS RESERVED. Accessed by David Dammon on Jun 21, 2017 12:30:52 PM pursuant to License Agreement with ICC. No further reproduction or distribution authorized. ANY UNAUTHORIZED REPRODUCTION OR DISTRIBUTION IS A VIOLATION OF THE FEDERAL COPYRIGHT ACT AND THE LICENSE AGREEMENT, AND SUBJECT TO CIVIL AND CRIMINAL PENALTIES THEREUNDER.

TABLE N1105.5.2(1) [R405.5.2(1)]
SPECIFICATIONS FOR THE STANDARD REFERENCE AND PROPOSED DESIGNS

BUILDING COMPONENT	STANDARD REFERENCE DESIGN	PROPOSED DESIGN
Above-grade walls	Type: mass wall if proposed wall is mass; otherwise wood frame.	As proposed
	Gross area: same as proposed	As proposed
	U-factor: as specified in Table N1102.1.4	As proposed
	Solar absorptance = 0.75	As proposed
	Emittance = 0.90	As proposed
Basement and crawl space walls	Type: same as proposed	As proposed
	Gross area: same as proposed	As proposed
	U-factor: from Table N1102.1.4, with insulation layer on interior side of walls	As proposed
Above-grade floors	Type: wood frame	As proposed
	Gross area: same as proposed	As proposed
	U-factor: as specified in Table N1102.1.4	As proposed
Ceilings	Type: wood frame	As proposed
	Gross area: same as proposed	As proposed
	U-factor: as specified in Table N1102.1.4	As proposed
Roofs	Type: composition shingle on wood sheathing	As proposed
	Gross area: same as proposed	As proposed
	Solar absorptance = 0.75	As proposed
	Emittance = 0.90	As proposed
Attics	Type: vented with aperture = 1 ft^2 per 300 ft^2 ceiling area	As proposed
Foundations	Type: same as proposed	As proposed
	Foundation wall area above and below grade and soil characteristics: same as proposed	As proposed
Opaque doors	Area: 40 ft^2	As proposed
	Orientation: North	As proposed
	U-factor: same as fenestration from Table N1102.1.4	As proposed
Vertical fenestration other than opaque doors	Total area[b] = (a) The proposed glazing area, where the proposed glazing area is less than 15 percent of the conditioned floor area (b) 15 percent of the conditioned floor area, where the proposed glazing area is 15 percent or more of the conditioned floor area	As proposed
	Orientation: equally distributed to four cardinal compass orientations (N, E, S & W).	As proposed
	U-factor: as specified in Table N1102.1.4	As proposed
	SHGC: as specified in Table N1102.1.2 except that for climates with no requirement (NR) SHGC = 0.40 shall be used.	As proposed
	Interior shade fraction: 0.92-(0.21 × SHGC for the standard reference design)	0.92-(0.21 × SHGC as proposed)
	External shading: none	As proposed
Skylights	None	As proposed
Thermally isolated sunrooms	None	As proposed
Air exchange rate	Air leakage rate of 5 air changes per hour in Climate Zones 1 and 2, and 3 air changes per hour in Climate Zones 3 through 8 at a pressure of 0.2 inches w.g (50 Pa). The mechanical ventilation rate shall be in addition to the air leakage rate and the same as in the proposed design, but no greater than $0.01 \times CFA + 7.5 \times (N_{br} + 1)$ where: *CFA* = conditioned floor area N_{br} = number of bedrooms Energy recovery shall not be assumed for mechanical ventilation.	For residences that are not tested, the same air leakage rate as the standard reference design. For tested residences, the measured air exchange rate[a]. The mechanical ventilation rate[b] shall be in addition to the air leakage rate and shall be as proposed.

(continued)

INTERNATIONAL CODE COUNCIL®
Copyright © 2015 ICC. ALL RIGHTS RESERVED. Accessed by David Dammon on Jun 21, 2017 12:30:52 PM pursuant to License Agreement with ICC. No further reproduction or distribution authorized. ANY UNAUTHORIZED REPRODUCTION OR DISTRIBUTION IS A VIOLATION OF THE FEDERAL COPYRIGHT ACT AND THE LICENSE AGREEMENT, AND SUBJECT TO CIVIL AND CRIMINAL PENALTIES THEREUNDER.

TABLE N1105.5.2(1) [R405.5.2(1)]—continued
SPECIFICATIONS FOR THE STANDARD REFERENCE AND PROPOSED DESIGNS

BUILDING COMPONENT	STANDARD REFERENCE DESIGN	PROPOSED DESIGN
Mechanical ventilation	None, except where mechanical ventilation is specified by the proposed design, in which case: Annual vent fan energy use: kWh/yr = 0.03942 × *CFA* + 29.565 × (N_{br} +1) where: *CFA* = conditioned floor area N_{br} = number of bedrooms	As proposed
Internal gains	IGain = 17,900 + 23.8 × *CFA* + 4104 × N_{br} (Btu/day per dwelling unit)	Same as standard reference design.
Internal mass	An internal mass for furniture and contents of 8 pounds per square foot of floor area.	Same as standard reference design, plus any additional mass specifically designed as a thermal storage element[c] but not integral to the building envelope or structure.
Structural mass	For masonry floor slabs, 80 percent of floor area covered by R-2 carpet and pad, and 20 percent of floor directly exposed to room air.	As proposed
	For masonry basement walls, as proposed, but with insulation required by Table R402.1.4 located on the interior side of the walls	As proposed
	For other walls, for ceilings, floors, and interior walls, wood frame construction	As proposed
Heating systems[d, e]	As proposed for other than electric heating without a heat pump, where the proposed design utilizes electric heating without a heat pump the standard reference design shall be an air source heat pump meeting the requirements of Section C403 of the IECC-Commercial Provisions. Capacity: sized in accordance with Section N1103.7	As proposed
Cooling systems[d, f]	As proposed Capacity: sized in accordance with Section N1103.7.	As proposed
Service water heating[d, e, f]	As proposed Use: same as proposed design	As proposed gal/day = 30 + (10 × N_{br})
Thermal distribution systems	Duct insulation: From Section N1103.2.1 A thermal distribution system efficiency (DSE) of 0.88 shall be applied to both the heating and cooling system efficiencies for all systems other than tested duct systems. For tested duct systems, the leakage rate shall be 4 cfm (113.3 L/min) per 100 ft^2 (9.29 m^2) of *conditioned floor* area at a pressure of differential of 0.1 inches w.g. (25 Pa).	As tested or as specified in Table R405.5.2(2) if not tested. Duct insulation shall be as proposed.
Thermostat	Type: Manual, cooling temperature setpoint = 75°F; Heating temperature setpoint = 72°F	Same as standard reference

For SI: 1 square foot = 0.93 m^2, 1 British thermal unit = 1055 J, 1 pound per square foot = 4.88 kg/m^2, 1 gallon (US) = 3.785 L, °C = (°F-**32**)/1.8, 1 degree = 0.79 rad.

a. Where required by the *code official*, testing shall be conducted by an *approved* party. Hourly calculations as specified in the ASHRAE *Handbook of Fundamentals*, or the equivalent shall be used to determine the energy loads resulting from infiltration.

b. The combined air exchange rate for infiltration and mechanical ventilation shall be determined in accordance with Equation 43 of 2001 ASHRAE *Handbook of Fundamentals*, page 26.24 and the "Whole-house Ventilation" provisions of 2001 ASHRAE *Handbook of Fundamentals*, page 26.19 for intermittent mechanical ventilation.

c. Thermal storage element shall mean a component not part of the floors, walls or ceilings that is part of a passive solar system, and that provides thermal storage such as enclosed water columns, rock beds, or phase-change containers. A thermal storage element must be in the same room as fenestration that faces within 15 degrees (0.26 rad) of true south, or must be connected to such a room with pipes or ducts that allow the element to be actively charged.

d. For a proposed design with multiple heating, cooling or water heating systems using different fuel types, the applicable standard reference design system capacities and fuel types shall be weighted in accordance with their respective loads as calculated by accepted engineering practice for each equipment and fuel type present.

e. For a proposed design without a proposed heating system, a heating system with the prevailing federal minimum efficiency shall be assumed for both the standard reference design and proposed design.

f. For a proposed design home without a proposed cooling system, an electric air conditioner with the prevailing federal minimum efficiency shall be assumed for both the standard reference design and the proposed design.

g. For a proposed design with a nonstorage-type water heater, a 40-gallon storage-type water heater with the prevailing federal minimum energy factor for the same fuel as the predominant heating fuel type shall be assumed. For the case of a proposed design without a proposed water heater, a 40-gallon storage-type water heater with the prevailing federal minimum efficiency for the same fuel as the predominant heating fuel type shall be assumed for both the proposed design and standard reference design.

INTERNATIONAL CODE COUNCIL®
Copyright © 2015 ICC. ALL RIGHTS RESERVED. Accessed by David Dammon on Jun 21, 2017 12:30:52 PM pursuant to License Agreement with ICC. No further reproduction or distribution authorized. ANY UNAUTHORIZED REPRODUCTION OR DISTRIBUTION IS A VIOLATION OF THE FEDERAL COPYRIGHT ACT AND THE LICENSE AGREEMENT, AND SUBJECT TO CIVIL AND CRIMINAL PENALTIES THEREUNDER.

TABLE N1105.5.2(2) [R405.5.2(2)]
DEFAULT DISTRIBUTION SYSTEM EFFICIENCIES FOR PROPOSED DESIGNS[a]

DISTRIBUTION SYSTEM CONFIGURATION AND CONDITION	FORCED AIR SYSTEMS	HYDRONIC SYSTEMS[b]
Distribution system components located in unconditioned space	—	0.95
Untested distribution systems entirely located in conditioned space[c]	0.88	1
"Ductless" systems[d]	1	—

For SI: 1 cubic foot per minute = 0.47 L/s, 1 square foot = 0.093m^2, 1 pound per square inch = 6895 Pa, 1 inch water gauge = 1250 Pa.

a. Default values given by this table are for untested distribution systems, which must still meet minimum requirements for duct system insulation.

b. Hydronic systems shall mean those systems that distribute heating and cooling energy directly to individual spaces using liquids pumped through closed-loop piping and that do not depend on ducted, forced airflow to maintain space temperatures.

c. Entire system in conditioned space shall mean that no component of the distribution system, including the air handler unit, is located outside of the conditioned space.

d. Ductless systems shall be allowed to have forced airflow across a coil but shall not have any ducted airflow external to the manufacturer's air handler enclosure.

❖ See the commentary to Section N1105.5.2.

N1105.6 (R405.6) Calculation software tools. Calculation software, where used, shall be in accordance with Sections N1105.6.1 through N1105.6.3.

❖ See the commentary to Section N1105.6.1.

N1105.6.1 (R405.6.1) Minimum capabilities. Calculation procedures used to comply with this section shall be software tools capable of calculating the annual energy consumption of all building elements that differ between the *standard reference design* and the *proposed design* and shall include the following capabilities:

1. Computer generation of the *standard reference design* using only the input for the *proposed design.* The calculation procedure shall not allow the user to directly modify the building component characteristics of the *standard reference design.*
2. Calculation of whole-building (as a single *zone)* sizing for the heating and cooling equipment in the *standard reference design* residence in accordance with Section N1103.6.
3. Calculations that account for the effects of indoor and outdoor temperatures and part-load ratios on the performance of heating, ventilating and air-conditioning equipment based on climate and equipment sizing.
4. Printed *building official* inspection checklist listing each of the *proposed design* component characteristics from Table N1105.5.2(1) determined by the analysis to provide compliance, along with their respective performance ratings (*R*-value, *U*-factor, SHGC, HSPF, AFUE, SEER, EF are some examples).

❖ This section states the general capabilities for the calculation software and its ability to evaluate the effects of building parametrics, system design, climatic factors, operational characteristics and mechanical equipment on annual energy usage.

There are a number of different software programs that are available to perform these calculations. The complexity of the programs will often depend on the amount of parameters that may be varied between the designs. The phrase within the base section that the software must be capable of evaluating the consumption of "all building elements that differ" between the two designs is important because it is the differences between the standard design and the proposed design that determine whether the proposed design is acceptable.

To ensure that the comparisons are made only on the items that are being traded, Item 1 looks to keep the software from allowing any manipulation that would help to reduce the energy costs of the standard design.

N1105.6.2 (R405.6.2) Specific approval. Performance analysis tools meeting the applicable provisions of Section N1105 shall be permitted to be *approved.* Tools are permitted to be *approved* based on meeting a specified threshold for a jurisdiction. The *building official* shall be permitted to approve tools for a specified application or limited scope.

❖ Though this section may be viewed as accepting a reduced level of efficiency, the intent is really more in line with the provisions of Section R104.11. An alternative program for evaluating the energy efficiency of a building using performance criteria can be substituted here. However, that alternative must meet the performance criteria of Section N1105.

N1105.6.3 (R405.6.3) Input values. When calculations require input values not specified by Sections N1102, N1103, N1104 and N1105, those input values shall be taken from an *approved* source.

❖ This section simply requires that any additional input information that may be required by the calculation software be approved by the code official. Through the use of the phrase "approved source," the code official would be able to review the source of the information that is being used for inputting information. This will help to ensure that the selected values are reasonable for the situation and not just an estimate.

INTERNATIONAL CODE COUNCIL®
Copyright © 2015 ICC. ALL RIGHTS RESERVED. Accessed by David Dammon on Jun 21, 2017 12:30:52 PM pursuant to License Agreement with ICC. No further reproduction or distribution authorized. ANY UNAUTHORIZED REPRODUCTION OR DISTRIBUTION IS A VIOLATION OF THE FEDERAL COPYRIGHT ACT AND THE LICENSE AGREEMENT, AND SUBJECT TO CIVIL AND CRIMINAL PENALTIES THEREUNDER.

SECTION N1106 (R406)
ENERGY RATING INDEX
COMPLIANCE ALTERNATIVE

N1106.1 (R406.1) Scope. This section establishes criteria for compliance using an Energy Rating Index (ERI) analysis.

❖ The residential provisions of the IECC allow for varying methods for demonstrating compliance with the code. This includes a prescriptive and simulated performance option in addition to allowing efficiency programs that are designed to go above the minimum code levels, as "deemed to comply" programs. These above code programs must be approved by the code official to be used in the jurisdiction. Alternative programs that depend on an Energy Rating Index (ERI) have been approved as an alternative code or above code program in at least six states and in over 130 jurisdictions. These types of programs typically take the form of a Home Energy Rating System (HERS) program. Under the current code there is no guidance on setting ERI scores, which will lead to inconsistent application of these types of programs based on climate zones.

This section provides an ERI with established rating numbers to allow alternative programs using an ERI to be designed to meet these criteria. The section provides guidelines for the development of the index, requirements for documentation to be provided to ensure compliance and a requirement that an approved third party verify that the building complies with the applicable ERI.

N1106.2 (R406.2) Mandatory requirements. Compliance with this section requires that the mandatory provisions identified in Sections N1101.2 and N1103.5.3 be met. The building thermal envelope shall be greater than or equal to levels of efficiency and Solar Heat Gain Coefficient in Table 402.1.2 or 402.1.4 of the 2009 *International Energy Conservation Code*.

Exception: Supply and return ducts not completely inside the building thermal envelope shall be insulated to a minimum of R-6.

❖ As with Section 405.2 of the code for the Performance Based Alternative, minimum requirements have been established in the code for all buildings. The sections that must be complied with separately include items that often cannot be effectively modeled as well. When using Section N1106, it is important to review the provisions of Section N1102.5, which place "hard limits" on the fenestration *U*-factors and SHGC that may be used for tradeoffs (see commentary, Section N1102.5).

N1106.3 (R406.3) Energy rating index. The Energy Rating Index (ERI) shall be a numerical integer value that is based on a linear scale constructed such that the *ERI reference design* has an Index value of 100 and a *residential building* that uses no net purchased energy has an Index value of 0. Each integer value on the scale shall represent a 1 percent change in the total energy use of the rated design relative to the total energy use of the *ERI reference design*. The ERI shall consider all energy used in the *residential building*.

❖ To avoid confusion in the application of different ERI programs, the parameters for the index are established here. The reason is simple and logical—to allow a clear understanding of the meaning of the index and to be able to uniformly apply the requirements of the code.

N1106.3.1 (R406.3.1) ERI reference design. The *ERI reference design* shall be configured such that it meets the minimum requirements of the 2006 *International Energy Conservation Code* prescriptive requirements.

The proposed *residential building* shall be shown to have an annual total normalized modified load less than or equal to the annual total loads of the *ERI reference design.*

❖ The reference house is based on a home built to the 2006 IECC, which is consistent with ERI-based programs that are used today.

N1106.4 (R406.4) ERI-based compliance. Compliance based on an ERI analysis requires that the *rated design* be shown to have an ERI less than or equal to the appropriate value listed in Table N1106.4 when compared to the *ERI reference design.*

TABLE N1106.4 (R406.4)
MAXIMUM ENERGY RATING INDEX

CLIMATE ZONE	ENERGY RATING INDEX
1	52
2	52
3	51
4	54
5	55
6	54
7	53
8	53

❖ Based on the energy conservation levels set by the 2015 IECC, the ERI required for the rated design (i.e., the proposed building) is set as shown.

N1106.5 (R406.5) Verification by approved agency. Verification of compliance with Section N1106 shall be completed by an *approved* third party.

❖ In order to ensure proper application of the parameters of the ERI chosen and the proper use of computer software, this option for energy conservation requires a third party to review the proposed design to ensure compliance with the code. The approved third party should be knowledgeable in the energy code, the ERI system and the use of computer software for design. By stating the agency or individual must be a "third party," the code is requiring financial independence, with no possible conflicts of interest.

N1106.6 (R406.6) Documentation. Documentation of the software used to determine the ERI and the parameters for the residential building shall be in accordance with Sections N1106.6.1 through N1106.6.3.

❖ See the commentary to Section N1105.4.

INTERNATIONAL CODE COUNCIL®
Copyright © 2015 ICC. ALL RIGHTS RESERVED. Accessed by David Dammon on Jun 21, 2017 12:30:52 PM pursuant to License Agreement with ICC. No further reproduction or distribution authorized. ANY UNAUTHORIZED REPRODUCTION OR DISTRIBUTION IS A VIOLATION OF THE FEDERAL COPYRIGHT ACT AND THE LICENSE AGREEMENT, AND SUBJECT TO CIVIL AND CRIMINAL PENALTIES THEREUNDER.

N1106.6.1 (R406.6.1) Compliance software tools. Documentation verifying that the methods and accuracy of the compliance software tools conform to the provisions of this section shall be provided to the *code official*.

❖ See the commentary to Section N1105.4.1.

N1106.6.2 (R406.6.2) Compliance report. Compliance software tools shall generate a report that documents that the ERI of the *rated design* complies with Sections N1106.3 and N1106.4. The compliance documentation shall include the following information:

1. Address or other identification of the residential building.
2. An inspection checklist documenting the building component characteristics of the *rated design*. The inspection checklist shall show results for both the *ERI reference design* and the *rated design*, and shall document all inputs entered by the user necessary to reproduce the results.
3. Name of individual completing the compliance report.
4. Name and version of the compliance software tool.

Exception: Multiple orientations. Where an otherwise identical building model is offered in multiple orientations, compliance for any orientation shall be permitted by documenting that the building meets the performance requirements in each of the four (north, east, south and west) cardinal orientations.

❖ See the commentary to Section N1105.4.2.

N1106.6.3 (R406.6.3) Additional documentation. The *code official* shall be permitted to require the following documents:

1. Documentation of the building component characteristics of the *ERI reference design.*
2. A certification signed by the builder providing the building component characteristics of the *rated design.*
3. Documentation of the actual values used in the software calculations for the *rated design.*

❖ See the commentary to Section N1105.4.3.

N1106.7 (R406.7) Calculation software tools. Calculation software, where used, shall be in accordance with Sections N1106.7.1 through N1106.7.3.

❖ See the commentary to Sections N1105.6.1 through N1105.6.3.

N1106.7.1 R(406.7.1) Minimum capabilities. Calculation procedures used to comply with this section shall be software tools capable of calculating the ERI as described in Section N1106.3, and shall include the following capabilities:

1. Computer generation of the *ERI reference design* using only the input for the *rated design.*

The calculation procedure shall not allow the user to directly modify the building component characteristics of the *ERI reference design.*

2. Calculation of whole-building, as a single *zone*, sizing for the heating and cooling equipment in the *ERI reference design* residence in accordance with Section N1103.7.
3. Calculations that account for the effects of indoor and outdoor temperatures and part-load ratios on the performance of heating, ventilating and air-conditioning equipment based on climate and equipment sizing.
4. Printed *code official* inspection checklist listing each of the *rated design* component characteristics determined by the analysis to provide compliance, along with their respective performance ratings.

❖ See the commentary to Sections N1105.6.1 through N1105.6.3.

N1106.7.2 (406.7.2) Specific approval. Performance analysis tools meeting the applicable sections of Section N1106 shall be *approved*. Tools are permitted to be *approved* based on meeting a specified threshold for a jurisdiction. The *code official* shall approve tools for a specified application or limited scope.

❖ See the commentary to Sections N1105.6.1 through N1105.6.3.

N1106.7.3 (R406.7.3) Input values. When calculations require input values not specified by Sections N1102, N1103, N1104 and N1105, those input values shall be taken from an approved source.

❖ See the commentary to Sections N1105.6.1 through N1105.6.3.

SECTION N1107 (R501)
EXISTING BUILDINGS—GENERAL

N1107.1 (R501.1) Scope. The provisions of Sections N1107 through N1111 shall control the *alteration*, repair, addition and change of occupancy of existing buildings and structures.

❖ The scope of this chapter is to deal with the specific circumstances related to changes to existing buildings. This chapter provides a roadmap when dealing with different types of projects—alterations, repairs, additions and changes of occupancy.

N1107.1.1 (R501.1.1) Additions, alterations, or repairs: General. Additions, alterations, or repairs to an existing building, building system or portion thereof shall comply with Section N1108, N1109 or N1110. Unaltered portions of the existing building or building supply system shall not be required to comply with this chapter.

❖ For commentary on additions, see Section N1108; for alterations, see Section N1109; and for repairs, see Section N1109.

N1107.2 (R501.2) Existing buildings. Except as specified in this chapter, this code shall not be used to require the removal, *alteration* or abandonment of, nor prevent the continued use and maintenance of, an existing building or building system lawfully in existence at the time of adoption of this code.

❖ This section addresses the fact that, in general, the code does not affect existing buildings. It will permit an addition to be made to an existing building without

INTERNATIONAL CODE COUNCIL®
Copyright © 2015 ICC. ALL RIGHTS RESERVED. Accessed by David Dammon on Jun 21, 2017 12:30:52 PM pursuant to License Agreement with ICC. No further reproduction or distribution authorized. ANY UNAUTHORIZED REPRODUCTION OR DISTRIBUTION IS A VIOLATION OF THE FEDERAL COPYRIGHT ACT AND THE LICENSE AGREEMENT, AND SUBJECT TO CIVIL AND CRIMINAL PENALTIES THEREUNDER.

requiring the existing building to conform to the code. In such a case, the addition is expected to comply with the current code, but it will not require changes for the existing portion. Therefore, the code does not apply retroactively to existing buildings. When an existing building is modified by an addition, alteration, renovation or repair, Section N1108 or N1109 will provide the guidance and requirements for such changes.

N1107.3 (R501.3) Maintenance. Buildings and structures, and parts thereof, shall be maintained in a safe and sanitary condition. Devices and systems that are required by this code shall be maintained in conformance with the code edition under which installed. The owner or the owner's authorized agent shall be responsible for the maintenance of buildings and structures. The requirements of this chapter shall not provide the basis for removal or abrogation of energy conservation, fire protection and safety systems and devices in existing structures.

❖ The code is designed to regulate new construction and new work and is not intended to be applied retroactively to existing buildings except where existing envelope, lighting, mechanical or service water heating systems are specifically affected by Section 502, 503 or 504. Maintenance of building systems and components is required, but the code does not intend that upgrade or modification to meet this code is applied when maintenance is dealt with.

N1107.4 (R501.4) Compliance. *Alterations*, *repairs*, *additions* and changes of occupancy to, or relocation of, existing buildings and structures shall comply with the provisions for *alterations*, *repairs*, *additions* and changes of occupancy or relocation, respectively, in this code and the *International Building Code*, *International Fire Code*, *International Fuel Gas Code*, *International Mechanical Code*, *International Plumbing Code*, *International Property Maintenance Code*, *International Private Sewage Disposal Code* and NFPA 70.

❖ This code does not intend that compliance with the provisions of other I-Codes, such as the IBC, be ignored. The I-Codes are intended to be a coordinated set of construction codes. This section clarifies the relationship between this chapter of the code and the IRC, IBC, *International Fire Code*® (IFC®), *International Fuel Gas Code*® (IFGC®), IMC, IPC, *International Property Maintenance Code*® (IPMC®), *International Private Sewage Disposal Code*® (IPSDC®) and NFPA 70.

When alterations and repairs are made to existing mechanical and plumbing systems, the provisions of the I-Codes and NFPA 70 for alterations and repairs must be followed. Those codes indicate the extent to which existing systems must comply with the stated requirements. Where portions of existing building systems, such as plumbing, mechanical and electrical systems, are not being altered or repaired, those systems may continue to exist without being upgraded as long as they are not hazardous or unsafe to the building occupants.

N1107.5 (R501.5) New and replacement materials. Except as otherwise required or permitted by this code, materials permitted by the applicable code for new construction shall be used. Like materials shall be permitted for repairs, provided no hazard to life, health or property is created. Hazardous materials shall not be used where the code for new construction would not permit their use in buildings of similar occupancy, purpose and location.

❖ There are two options for materials used in repairs to an existing building. Generally, the materials used for repairs should be those that are presently required or permitted for new construction under the I-Codes. It is also acceptable to use materials consistent with those that are already present, except where those materials pose a hazard. This allowance follows the general concept that any repair should not make a building more hazardous than it was prior to the repair. It is generally possible to repair a structure, its components and its systems with materials consistent with those materials that were used previously. However, where materials that are now deemed hazardous are involved in the repair work, they may no longer be used. For example, the code identifies asbestos and lead-based paint as two common hazardous building materials that cannot be used in the repair process. Certain materials previously considered acceptable for building construction are now a threat to the health of the occupants.

N1107.6 (R501.6) Historic buildings. No provision of this chapter relating to the construction, *repair*, *alteration*, restoration and movement of structures, and *change of occupancy* shall be mandatory for *historic buildings* provided a report has been submitted to the code official and signed by the owner, a registered *design professional*, or a representative of the State Historic Preservation Office or the historic preservation authority having jurisdiction, demonstrating that compliance with that provision would threaten, degrade or destroy the historic form, fabric or function of the *building*.

❖ In some aspects, this is a bit of a continuation of the "existing building" provisions but it goes even further—historic buildings are exempt. In earlier editions of the code, this exemption applied only to the exterior envelope of such buildings, and to the interior only in those cases where the ordinance explicitly designated elements of the interior. With the current text, historic buildings are exempt from all aspects of the code. This exemption, however, is not without conditions. The most important criterion for application of this section is that the building must be specifically classified as being of historic significance by a qualified party or agency. Usually this is done by a state or local authority after considerable scrutiny of the historical value of the building. Most, if not all, states have authorities, such as a landmark commission, as do many local jurisdictions.

Because of the unique issues involved, historic buildings are exempt from the requirements of the code. This exemption could be extended to include all

INTERNATIONAL CODE COUNCIL®
Copyright © 2015 ICC. ALL RIGHTS RESERVED. Accessed by David Dammon on Jun 21, 2017 12:30:52 PM pursuant to License Agreement with ICC. No further reproduction or distribution authorized. ANY UNAUTHORIZED REPRODUCTION OR DISTRIBUTION IS A VIOLATION OF THE FEDERAL COPYRIGHT ACT AND THE LICENSE AGREEMENT, AND SUBJECT TO CIVIL AND CRIMINAL PENALTIES THEREUNDER.

parts that are "historic," including additions, alterations and repairs, that would normally be addressed by Section N1108 or N1109. If the proposed addition, alteration or renovation is not "historic," then the provisions of Section N1108 or N1109 should be applied. Consideration of energy conservation and compliance with the code is still of value in historic buildings. In exempting historic buildings, the code is simply recognizing that energy efficiency may be difficult to accomplish while maintaining the "historic" nature of the building.

SECTION N1108 (R502) ADDITIONS

N1108.1 (R502.1) General. Additions to an existing building, building system or portion thereof shall conform to the provisions of this chapter as they relate to new construction without requiring the unaltered portion of the existing building or building system to comply with this chapter. Additions shall not create an unsafe or hazardous condition or overload existing building systems. An addition shall be deemed to comply with this chapter where the addition alone complies, where the existing building and addition comply with this chapter as a single building, or where the building with the addition uses no more energy than the existing building. Additions shall be in accordance with Section N1108.1.1 or N1108.1.2.

❖ When an addition is added to an existing building, only the addition is required to comply with the requirements of the code, as outlined in Section N1108.1.1, Prescriptive Requirements. However, this section now provides another option—to use performance requirements on the entire building, with the addition, as stated in Section N1108.1.2. Compliance in this manner was always implicit in the code. This section now provides a roadmap for the available alternatives.

N1108.1.1 (R502.1.1) Prescriptive compliance. Additions shall comply with Sections N1108.1.1.1 through N1108.1.1.4.

❖ The basic premise of this section is that the addition alone, and not the remainder of the building, must comply with the code.

N1108.1.1.1 (R502.1.1.1) Building envelope. New building envelope assemblies that are part of the addition shall comply with Sections N1102.1, N1102.2, N1102.3.1 through N1102.3.5, and N1102.4.

Exception: Where nonconditioned space is changed to conditioned space, the building envelope of the addition shall comply where the UA, as determined in Section N1102.1.4, of the existing building and the addition, and any alterations that are part of the project, is less than or equal to UA generated for the existing building.

❖ The exception is the key to this section. Again, the insulation, sealing and air infiltration barriers required in the code for new construction apply to the addition. However, the exception provides some guidance regarding the circumstance where nonconditioned space becomes conditioned space. A typical example of this would be enclosing an attached garage to become a family room. The baseline for the entire building including the existing building would be the UA of the existing building. That is the sum of the *U*-values for the walls, windows and doors multiplied times the respective areas of each of those components. Accordingly, the total sum of the UA for the completed building including the newly conditioned garage must be less than the UA for the existing building. This ensures that, regardless of how well insulated the existing building is, the addition will not make the building envelope less energy efficient.

Example: An existing house has a total UA of 222. (Using the "Standard" Design as the existing house from the example in commentary Section 402.1.4. A 20-foot by 10-foot garage is proposed to be converted to a family room. For the example, assume the newly renovated garage has a 20-square-foot window.

EXISTING BUILDING	EXISTING BUILDING PLUS NEW FAMILY ROOM
Exterior Wall: 1050 ft^2 $U_w = 0.057$ Glazed doors and windows: 192 ft^2 $U_g = 0.32$	Exterior Wall: 1170 ft^2 850 ft^2 @ $U_w = 0.057$ 320 ft^2 @ $U_w = 0.032$ Glazed doors and windows: 222 ft^2 @ $U_g = 0.32$
Opaque Exterior Door: 38 ft^2 $U_g = 0.32$ Roof: 1500 ft^2 $U_r = 0.026$ Floor (slab): 1500 ft^2 $U_s = 0.033$	Opaque Exterior Door: 19 ft^2 $U_g = 0.32$ Roof: 1700 ft^2 1500 ft^2 @ $U_r = 0.026$ 200 ft^2 @ Ur = 0.022 Floor: 1700 ft^2 1500 @ $U_s = 0.033$ 200 ft^2 @ Us = 0.028

The total UA of the existing building is 222 as calculated in Section R402.1.4. For the building with the new family room, we are using R-20 wall insulation in the cavity, with R-13 continuous insulation. Floor insulation is increased to R-38. The total UA for that combination of exterior wall values is 234, which is greater than 222. Therefore, some additional insulation will be required in order for the newly created conditioned space to meet the code.

N1108.1.1.2 (R502.1.1.2) Heating and cooling systems. New heating, cooling and duct systems that are part of the addition shall comply with Sections N1103.1, N1103.2, N1103.3, N1103.5 and N1103.6.

Exception: Where ducts from an existing heating and cooling system are extended to an addition, duct systems with less than 40 linear feet (12.19 m) in unconditioned

INTERNATIONAL CODE COUNCIL®
Copyright © 2015 ICC. ALL RIGHTS RESERVED. Accessed by David Dammon on Jun 21, 2017 12:30:52 PM pursuant to License Agreement with ICC. No further reproduction or distribution authorized. ANY UNAUTHORIZED REPRODUCTION OR DISTRIBUTION IS A VIOLATION OF THE FEDERAL COPYRIGHT ACT AND THE LICENSE AGREEMENT, AND SUBJECT TO CIVIL AND CRIMINAL PENALTIES THEREUNDER.

spaces shall not be required to be tested in accordance with Section N1103.2.2.

❖ Heating and cooling systems for additions are required to meet the present day code for additions. The key to this section, again, is the exception that allows relaxation on duct testing requirements. This accommodates a simple addition where there is a short reach with the ductwork in an attic or crawl space to the conditioned spaces in the addition.

N1108.1.1.3 (R502.1.1.3) Service hot water systems. New service hot water systems that are part of the addition shall comply with Section N1103.4.

❖ There is no relaxation of requirements for new construction for service hot water systems provided for additions.

N1108.1.1.4 (R502.1.1.4) Lighting. New lighting systems that are part of the addition shall comply with Section N1104.1.

❖ There is no relaxation of requirements for new construction for lighting systems provided for additions.

N1108.1.2 (R502.1.2) Existing plus addition compliance (Simulated Performance Alternative). Where nonconditioned space is changed to conditioned space, the addition shall comply where the annual energy cost or energy use of the addition and the existing building, and any alterations that are part of the project, is less than or equal to the annual energy cost of the existing building when modeled in accordance with Section N1105. The addition and any alterations that are part of the project shall comply with Section N1105 in its entirety.

❖ Section R405 provides the performance alternative for compliance with the code. This section simply states that this performance alternative can be used in the design of an addition as well. The difference here is that the "Standard Design" is the existing building, rather than the standard building modeled from compliance with the code as used in Section R405.

SECTION N1109 (R503) ALTERATIONS

N1109.1 (R503.1) General. *Alterations* to any building or structure shall comply with the requirements of the code for new construction. *Alterations* shall be such that the existing building or structure is no less conforming with the provisions of this chapter than the existing building or structure was prior to the *alteration*.

Alterations to an existing building, building system or portion thereof shall conform to the provisions of this chapter as they relate to new construction without requiring the unaltered portions of the existing building or building system to comply with this chapter. Alterations shall not create an unsafe or hazardous condition or overload existing building systems. *Alterations* shall be such that the existing building or structure uses no more energy than the existing building or structure prior to the *alteration*. Alterations to existing buildings shall comply with Sections N1109.1.1 through N1109.2.

❖ Alterations include renovations, which implies that something is changed in the structure. For example, the removal, rearranagement or replacement of partition walls in an office building is an alteration because, in part, of possible impact on the means of egress, fire resistance or other life safety features of the building. Conversely, the replacement of damaged trim pieces on a door frame is considered a repair, not an alteration.

Basically, alterations are to conform to the requirements for a new structure, except as specifically stated in this section. For example, a new window installed where there was none will be required to have the *U*-factor rating and SHGC rating required for fenestration in the code, even if the insulation in the walls is not in conformance with the code. With this basic intent in mind, Sections 503.1.1, 503.1.2, 503.1.3, 503.1.4 and 503.2 address specific systems in the energy code that could be part of an alteration.

N1109.1.1 (R503.1.1) Building envelope. Building envelope assemblies that are part of the alteration shall comply with Section N1102.1.2 or N1102.1.4, Sections N1102.2.1 through N1102.2.12, N1102.3.1, N1102.3.2, N1102.4.3 and N1102.4.4.

Exception: The following alterations need not comply with the requirements for new construction provided the energy use of the building is not increased:

1. Storm windows installed over existing fenestration.
2. Existing ceiling, wall or floor cavities exposed during construction provided that these cavities are filled with insulation.
3. Construction where the existing roof, wall or floor cavity is not exposed.
4. Roof recover.
5. Roofs without insulation in the cavity and where the sheathing or insulation is exposed during reroofing shall be insulated either above or below the sheathing.
6. Surface applied window film installed on existing single pane fenestration assemblies to reduce solar heat gain provided the code does not require the glazing or fenestration assembly to be replaced.

❖ The exceptions to this section are the key to these provisions. Alterations involving exterior walls and roofs are required to meet the requirements for a new building unless one of these exceptions apply.

The exceptions address situations where the alteration or repair of a structure or element is not required to comply with the provisions of the code. Some of these situations are typically either a normal part of ongoing maintenance of the building, would improve the performance or would not present an opportunity for improved energy savings. All of these exceptions are tied to the fact that they are permitted, provided "the energy use of the building is not increased."

Exception 1 is a fairly self-evident provision. Because of the limited nature of the work, there is little

INTERNATIONAL CODE COUNCIL®
Copyright © 2015 ICC. ALL RIGHTS RESERVED. Accessed by David Dammon on Jun 21, 2017 12:30:52 PM pursuant to License Agreement with ICC. No further reproduction or distribution authorized. ANY UNAUTHORIZED REPRODUCTION OR DISTRIBUTION IS A VIOLATION OF THE FEDERAL COPYRIGHT ACT AND THE LICENSE AGREEMENT, AND SUBJECT TO CIVIL AND CRIMINAL PENALTIES THEREUNDER.

opportunity to make additional changes. This helps to reinforce the statement from the main paragraph that the intent is not to make "the unaltered portions(s) of the existing building or building system" comply with the code. In this case, the addition of a storm window over an existing window will only improve performance of the existing fenestration.

Exception 2 is important for a couple of the limitations that it contains. The provision only applies when the ceiling, wall or floor cavity is "exposed during construction." If the cavity is not opened up, then there is no requirement to do anything. If the cavity is exposed, the requirement will only be to "fill" it with insulation. Therefore, the level of insulation is not required to comply with the building thermal envelope requirements, but is instead only required to be "filled" with any type of insulation and not to any specific *R*-value.

Exception 3 will exempt the need to make changes to the building thermal envelope because the building cavities are not exposed.

Exception 4 is straightforward. A roof recover is an alteration, but does not impact the building envelope.

Exception 5 applies to roofs that are part of the building envelope and typically would have below-deck or above-deck insulation. The second sentence of Exception 4 permits the code-required insulation to be above or below the deck. For a typical single-family home (with nonconditioned space), the ceiling is the building thermal envelope and the roof is not; therefore, Exception 5 would not apply. However, if during reroofing the existing ceiling cavities are exposed, then Exception 3 would apply.

Exception 6 is straightforward as well. Surface film used to provide a lower SHGC rating is acceptable for windows that do not otherwise need to be replaced.

N1109.1.1.1 (R503.1.1.1) Replacement fenestration. Where some or all of an existing fenestration unit is replaced with a new fenestration product, including sash and glazing, the replacement fenestration unit shall meet the applicable requirements for *U*-factor and SHGC as provided in Table N1102.1.4.

❖ Replacement windows and doors are required to meet the requirements of the code for new construction, with no exceptions.

Replacing only a glass pane in an existing sash and frame would not fall under this provision if the *U*-factor and SHGC are equal to or lower than the values prior to the replacement. In situations where the existing values are not known or where the replacement is more than just replacing the glass pane, the provisions may be applicable. It is often common practice when fenestration is replaced to remove only the sash and glazing of an existing window and replace them with an entirely new fenestration product. Sometimes the existing frame also is removed but, many times, the new fenestration product is custom made to fit in the existing space left after the sash and glazed portions are removed. In essence, the new fenestration is installed in or over the existing frame. Whether the existing frame is removed or not, these types of replacements are regulated by this section.

Section R402.3.6 requires that each fenestration unit replaced in a residence not exceed the maximum fenestration *U*-factor and SHGC for the applicable climate zone. This requirement applies to all replacement windows, even if the existing frame is not removed (e.g., the new window is placed inside the old frame), so long as the sash and glazing are replaced. In addition, remember that the definition of "Fenestration" includes doors, which must meet the same *U*-factor requirements as windows. Therefore, the replacement of a door also would have to meet these requirements.

When dealing with replacement fenestration, the code official should be consulted to explain how this requirement will be applied. For simple ease of application for both the code official and the installer, the *U*-factor and SHGC requirements could be applied to each fenestration unit. Therefore, the *U*-factor and SHGC required for each unit would be the values listed directly in Table R402.1.1. However, if acceptable to the code official and additional information is available regarding the performance of the remaining existing windows in the home, it may be reasonable to permit the use of the area-weighted values of Sections R402.3.1 and R402.3.2, or even the exemptions of Sections R402.3.3 and R402.3.4 to the replaced fenestration unit.

In accordance with Section R102.1, the *U*-factor and SHGC for each replacement fenestration product must be obtained from a label attached to the product certifying that the values were determined in accordance with NFRC procedures by an accredited, independent laboratory. In the absence of an NFRC-labeled *U*-factor or SHGC, a value from the limited default tables [see Tables R303.1.3(1) through R303.1.3(3)] must be used. The NFRC procedures do include applicable methods to test various replacement products.

N1109.1.2 (R503.1.2) Heating and cooling systems. New heating, cooling and duct systems that are part of the alteration shall comply with Sections N1103.1, N1103.2, N1103.3 and N1103.6.

Exception: Where ducts from an existing heating and cooling system are extended, duct systems with less than 40 linear feet (12.19 m) in unconditioned spaces shall not be required to be tested in accordance with Section N1103.3.3.

❖ Heating and cooling systems for additions are required to meet the code requirements for new construction for alterations. The key to this section is the exception that allows relaxation on duct testing requirements. This simply accommodates a simple alteration where there is a short reach with the ductwork in an attic or crawl space to the conditioned spaces in the alteration.

INTERNATIONAL CODE COUNCIL®
Copyright © 2015 ICC. ALL RIGHTS RESERVED. Accessed by David Dammon on Jun 21, 2017 12:30:52 PM pursuant to License Agreement with ICC. No further reproduction or distribution authorized. ANY UNAUTHORIZED REPRODUCTION OR DISTRIBUTION IS A VIOLATION OF THE FEDERAL COPYRIGHT ACT AND THE LICENSE AGREEMENT, AND SUBJECT TO CIVIL AND CRIMINAL PENALTIES THEREUNDER.

N1109.1.3 (R503.1.3) Service hot water systems. New service hot water systems that are part of the alteration shall comply with Section N1103.5.

❖ Service hot water systems in an alteration are required to meet the requirements of the code for new construction, with no exceptions.

N1109.1.4 (R503.1.4) Lighting. New lighting systems that are part of the alteration shall comply with Section N1104.1.

> **Exception:** Alterations that replace less than 50 percent of the luminaires in a space, provided that such alterations do not increase the installed interior lighting power.

❖ Alterations involving the lighting systems can be relaxed somewhat when fewer than 50 percent of the luminaires are being replaced. However, in keeping with the primary intent of the code for alterations, the final product cannot use more energy than the building that is being renovated. The code does not allow an increase in lighting power.

N1109.2 (R503.2) Change in space conditioning. Any nonconditioned or low energy space that is altered to become *conditioned space* shall be required to be brought into full compliance with this chapter.

> **Exception:** Where the simulated performance option in Section N1105 is used to comply with this section, the annual energy cost of the proposed design is permitted to be 110 percent of the annual energy cost otherwise allowed by Section N1105.3.

❖ The exception recognizes the fact that full compliance with the code for existing buildings is extremely difficult and costly. Conditions such as slab edges, structural thermal bridges and window configurations cannot, in many cases, be practically remedied. Therefore, an alternate compliance path allowing a 10 percent higher total building performance value. This could result in the preservation and adaptive reuse of more existing buildings, which is a significant energy conservation measure.

SECTION N1110 (R504) REPAIRS

N1110.1 (R504.1) General. Buildings, structures and parts thereof shall be repaired in compliance with Section N1107.3 and this section. Work on nondamaged components necessary for the required *repair* of damaged components shall be considered part of the *repair* and shall not be subject to the requirements for *alterations* in this chapter. Routine maintenance required by Section N1107.3, ordinary repairs exempt from *permit*, and abatement of wear due to normal service conditions shall not be subject to the requirements for *repairs* in this section.

❖ This section and Section N1110.2 provide details for the user of the code as to what a repair is. A repair is work that would not be required to be in compliance with the alterations provisions of the code. Section N1109.2 provides some specific work that are considered repairs. This is done simply to clarify the code on these specific issues; the list is not intended to be comprehensive—other work could also be considered repairs, as described in this section.

N1110.2 (R504.2) Application. For the purposes of this code, the following shall be considered repairs:

1. Glass-only replacements in an existing sash and frame.
2. Roof repairs.
3. Repairs where only the bulb and/or ballast within the existing luminaires in a space are replaced provided that the replacement does not increase the installed interior lighting power.

❖ See the commentary to Section N1110.1.

SECTION N1111 (R505) CHANGE OF OCCUPANCY OR USE

N1111.1 (R505.1) General. Spaces undergoing a change in occupancy that would result in an increase in demand for either fossil fuel or electrical energy shall comply with this code.

❖ When a building undergoes a change of occupancy, energy-using systems (envelope, mechanical, service water heating, electrical distribution or illumination) must be evaluated to determine the effect the change of occupancy has on system performance and energy use. For example, if a mercantile building were converted to a restaurant, additional ventilation would be required for the public based on the increased occupant load. If an existing system serves an occupancy that is different from the occupancy it served when the code went into effect, the mechanical system must comply with the applicable code requirements for a mechanical system serving the newer occupancy. Depending on the nature of the previous occupancy, changing a building's occupancy classification could result in a change to the mechanical, service water heating, electrical distribution or illumination systems or any combination of these.

Buildings undergoing a change of occupancy must meet the applicable requirements of the code when peak demand is increased. For example, if a hotel is converted to multiple-family residential use and the conversion results in an increase in the building's peak connected load (space conditioning, lighting or service water heating), the entire building must be brought into compliance.

When the occupancy changes in a portion of an existing building (residential or commercial) and the new occupancy results in an increase in the peak demand for either fossil fuel or electrical energy supply, the portion of the building associated with the new occupancy must meet the code.

When a permittee claims that a change in occupancy will not increase the peak design rate of energy use for the building, it is the applicant's responsibility to demonstrate that the peak load of the converted building will not exceed the peak load of the original building. Without supporting documentation, the peak load

INTERNATIONAL CODE COUNCIL®
Copyright © 2015 ICC. ALL RIGHTS RESERVED. Accessed by David Dammon on Jun 21, 2017 12:30:52 PM pursuant to License Agreement with ICC. No further reproduction or distribution authorized. ANY UNAUTHORIZED REPRODUCTION OR DISTRIBUTION IS A VIOLATION OF THE FEDERAL COPYRIGHT ACT AND THE LICENSE AGREEMENT, AND SUBJECT TO CIVIL AND CRIMINAL PENALTIES THEREUNDER.

generally must be assumed to increase with a change in occupancy.

It is also important that users realize that under the code there can be a difference between the change of occupancy (the way a building is used) and what the IBC deals with when a change of occupancy classification occurs. Therefore, if a storage building that has no heating or cooling is modified so that the building is heated to prevent the stock items from freezing, the IBC would not consider this as a change of occupancy because the occupancy classification would still be Group S-1. This code, however, would consider this a change in occupancy because the way the building is used would change and it would result in an increase in the demand for energy.

N1111.2 (R505.2) General. Any space that is converted to a dwelling unit or portion thereof from another use or occupancy shall comply with this code.

Exception: Where the simulated performance option in Section N1105 is used to comply with this section, the annual energy cost of the proposed design is permitted to be 110 percent of the annual energy cost otherwise allowed by Section N1105.3.

❖ This is a specific example of a change in occupancy (see commentary, Section N1111.1).

The exception recognizes the fact that full compliance with the code for existing buildings is extremely difficult and costly. Conditions such as slab edges, structural thermal bridges and window configurations cannot be practically remedied in many cases. Therefore, an alternate compliance path allowing a 10 percent higher total building performance value is needed. This could result in the preservation and adaptive reuse of more existing buildings, which itself is a significant energy conservation measure.

Bibliography

The following resource materials were used in the preparation of the commentary for this chapter of the code:

Briggs, Robert S., Robert G. Lucas, and Z. Todd Taylor. *Climate Classification for Building Energy Codes and Standards*. Richland, WA: United States Department of Energy, Pacific Northwest National Laboratory (PNNL), 2002.

DOE–00, *The Basics of Efficient Lighting*. Washington, DC: United States Department of Energy, Office of Building Technology, State and Community Programs, 2000.

DOE–95, 90.1 *Code-compliance Manual*. Washington, DC: United States Department of Energy, Office of Codes and Standards, 1995.

Lindeburg, Michael R. *Mechanical Engineering Reference Manual for the PE Exam*. Belmont, CA: Professional Publications, Inc.,1998.

Malavé, A. J. and C. G. Morales. "Energy Modeling of Low Income Residencies." http://library.witpress.com/pages/PaperInfo.asp?PaperID=22547.

2002 *DOE Core Data Book.* Washington, DC: United States Department of Energy, Office of Energy Efficiency and Renewable Energy, 2003.

2006 *Buildings Energy Data Book.* Washington, DC: United States Department of Energy. Under contract to Oak Ridge National Laboratory. September, 2006.

"Typical Hawaiian Energy Use for Hot Water." http://www.hawaiianenergy.com/16/water-heating.

INTERNATIONAL CODE COUNCIL®

Copyright © 2015 ICC. ALL RIGHTS RESERVED. Accessed by David Dammon on Jun 21, 2017 12:30:52 PM pursuant to License Agreement with ICC. No further reproduction or distribution authorized. ANY UNAUTHORIZED REPRODUCTION OR DISTRIBUTION IS A VIOLATION OF THE FEDERAL COPYRIGHT ACT AND THE LICENSE AGREEMENT, AND SUBJECT TO CIVIL AND CRIMINAL PENALTIES THEREUNDER.

Index

A

ABSORPTION COOLING EQUIPMENT M1412
ACCESS
To appliances M1305
To attic R807
To crawl space R408.4
To equipment M1401.2
To floor furnace M1408.4
To plumbing connections P2704
To plumbing fixtures P2705
To whirlpool pumps P2720.1
ACCESSIBLE
Definition R202
Readily accessible, definition R202
ACCESSORY STRUCTURE
Definition R202
ADDRESS (SITE) R319
ADMINISTRATIVE . . . . . Chapter 1
Authority R104
Entry R104.6
Inspections R109
Permits R105
Purpose R101.3
Violations R113
AIR
Combustion . . . . . Chapter 17, G2407
Combustion air, definition R202
Return M1602
AIR CONDITIONERS
Branch circuits E3702.11
Room air conditioners E3702.12
ALLOWABLE SPANS
Of floor joists R502.3, R505.3.2
Of headers R602.7, R603.6, R610.10
Of rafters and ceiling joists R802.4, R802.5, R804.3.1, R804.3.2
ALTERNATIVE MATERIALS (see MATERIALS) R104.11
AMPACITY E3501
ANCHOR BOLTS R403.1.6
APPEAL
Board of R112.1
Right of R112
APPLIANCE
Access to M1305
Attic M1305.1.3
Clearance for M1306
Connectors, fuel-gas . . . . . Chapter 24
Definition R202
Definition applied to electrical equipment E3501
Electrical appliance disconnection means E4101.5
Electrical appliance installation E4101
Equipment (general) . . . . . Chapter 14
Floor furnace M1408
Flue area R1003.14
Fuel-burning . . . . . Chapter 24
Heating and cooling . . . . . Chapter 14
Installation M1307
Labeling M1303
Open-top broiler units M1505.1
Outdoor G2454
Ranges M1901
Room heaters M1410
Special fuel-burning equipment . . . . . Chapter 19
Vented (decorative) . . . . . Chapter 24
Wall furnace M1409
Warm-air furnace M1402
Water heaters . . . . . Chapter 20, Chapter 24
APPLICATION
Plywood R703.3
APPROVAL
Mechanical M1302
APPROVED
Definition R202
Definition applied to electrical equipment E3501
ARC-FAULT CIRCUIT-INTERRUPTER E3902
AREA
Disposal, private sewage disposal P2602
Flue (appliances) R1003.14
Flue masonry R1003.15
ARMORED CABLE . . . . . Table E3801.2
ASPHALT SHINGLES R905.2
ATTACHMENT PLUG (PLUG CAP) (CAP)
Definition E3501
ATTIC
Access R807
AUTOMATIC FIRE SPRINKLER SYSTEMS . . . R313

B

BACKFILL
For piping P2604

INTERNATIONAL CODE COUNCIL®
Copyright © 2015 ICC. ALL RIGHTS RESERVED. Accessed by David Dammon on Jun 21, 2017 12:30:52 PM pursuant to License Agreement with ICC. No further reproduction or distribution authorized. ANY UNAUTHORIZED REPRODUCTION OR DISTRIBUTION IS A VIOLATION OF THE FEDERAL COPYRIGHT ACT AND THE LICENSE AGREEMENT, AND SUBJECT TO CIVIL AND CRIMINAL PENALTIES THEREUNDER.

BACKFLOW, DRAINAGE
Definition R202
BACKWATER VALVE R202
BASEMENT WALL
Definition R202
BATH AND SHOWER SPACES R307
BATHROOM
Exhaust M1507.4
Group . . . . . R202, Table P3004.1
BATHTUB
Enclosure P2713.2
Hydromassage E4209
Outlets for P2713.1
Whirlpool P2720
BEAM SUPPORTS R606.14
BEARING
Of joists R502.6
BIDETS P2721
BOILER
Definition R202
Requirements . . . . . Chapter 20
BONDING E3609, E4204
Definition applied to electrical installations E3501
BONDING JUMPER E3501
Bonding of service equipment E3609.2
Bonding to other systems E3609.3
Main bonding jumper E3607.5
Metal water piping bonding E3608.1.1
Sizing bonding jumpers E3609.5
BORED HOLES (see NOTCHING)
BOXES E3906
Nonmetallic boxes E3905.3
Support of boxes E3904.3
Where required E3905.1
BRANCH CIRCUIT . . . . . E3501, Chapter 37
Branch circuit ampacity E3701.2
Branch circuit ratings E3702
Branch circuits required E3703
BUILDING
Definition R202
Drain, definition R202
Existing, definition R202
Sewer, definition R202
BUILDING OFFICIAL
Definition R202
Inspection and tests of fuel-gas piping . . . . . Chapter 24
BUILDING PLANNING
Automatic fire sprinkler systems R313
Carbon monoxide alarms R315
Ceiling height R305
Decay protection R317
Design criteria R301
Emergency escape R310
Exterior wall R302.1
Fire-resistant construction R302
Foam plastic R316
Garages and carports R309
Glazing R308
Guardrails R312
Handrails R311.7.8, R311.8.3
Insulation R302.10
Landing R311.3, R311.3.1, R311.3.2, R311.5.1
Light, ventilation and heating R303
Means of egress R311
Minimum room area R304
Planning . . . . . Chapter 3
Plumbing fixture clearances R307
Radon protection . . . . . Appendix F
Ramps R311.8
Sanitation R306
Site address R319
Smoke alarms R314
Stairways R311.7
Storm shelters R323
Termite protection R318
BUILDING THERMAL ENVELOPE
Definition R202
BUILT-UP GIRDERS (see GIRDERS)
BUILT-UP ROOFING (see ROOFING)

C

CABINETS AND PANELBOARDS E3907
CAPACITY
Expansion tank M2003.2
CARBON MONOXIDE ALARMS R315
CARPORT R309.4
CEILING
Finishes R805
Height R305
CEILING FANS E4203.4
CENTRAL FURNACES (see FURNACES)
CHASES R606.8
CHIMNEYS
And fireplaces . . . . . Chapter 10
Caps R1003.9.1
Clearance R1003.18
Corbeling R1003.5
Crickets R1003.20
Design (masonry) R1003.1

INTERNATIONAL CODE COUNCIL®
Copyright © 2015 ICC. ALL RIGHTS RESERVED. Accessed by David Dammon on Jun 21, 2017 12:30:52 PM pursuant to License Agreement with ICC. No further reproduction or distribution authorized. ANY UNAUTHORIZED REPRODUCTION OR DISTRIBUTION IS A VIOLATION OF THE FEDERAL COPYRIGHT ACT AND THE LICENSE AGREEMENT, AND SUBJECT TO CIVIL AND CRIMINAL PENALTIES THEREUNDER.

Factory-built R1005
Fireblocking R1003.19
Flue area R1003.14, R1003.15
Flue lining R100311
Load R1003.8
Masonry and factory built, size M1805
Multiple flue R1003.14
Rain caps 1003.9.3
Spark arrestors R1003.9.2
Termination R1003.9
Wall thickness R1003.10

CIRCUIT BREAKER
Definition E3501

CLASS 2 CIRCUITS
Class 2 remote-control, signaling and power-limited circuits . . . . . Chapter 43

CLAY
Tiles R905.3

CLEANOUT
Definition R202
Drainage P3005.2
Masonry chimney R1003.17

CLEARANCE
Above cooking top M1901.1
For appliances M1306.1
For chimneys R1003.18
Reduction methods M1306.2
Vent connector M1803.3.4

CLEARANCES
Around electrical equipment E3405.1, E3604.1, E3604.2, E3604.3

CLOTHES CLOSETS
Lighting fixtures E4003.12

CLOTHES DRYERS . . . . . M1502, Chapter 24

CLOTHES WASHING MACHINES P2718

COLUMNS R407

COMBUSTIBLE
Materials R202

COMBUSTION AIR
Air . . . . . Chapter 17
Definition R202

COMMON VENT
Definition R202
Requirements M1801.11

CONCRETE
Compressive Strength R402.2
Floors (on ground) R506
Tile (roof) R905.3
Weathering . . . . . Figure R301.2(3), R402.2

CONCRETE-ENCASED ELECTRODE E3608.1.2

CONDUCTOR E3406
Ampacity E3705.1
Definition E3501
Identification E3407
Insulation E3406.5
Material E3406.2
Parallel E3406.6
Size E3406.3, E3704.1
Ungrounded E3603.1

CONDUIT BODY
Definition E3501

CONNECTION
Access to connections P2704
For fuel-burning appliances . . . . . Chapter 24
For fuel-oil piping M2202
Joints P2904
Plumbing fixture P2601.2
To water supply P2902.1

CONNECTIONS
Aluminum E3406.8
Device E3406.11.2

CONNECTOR
Chimney and vent M1803
Vent, definition R202

CONNECTOR, PRESSURE (SOLDERLESS)
Definition E3501

CONSTRUCTION
Cavity wall masonry R608
Flood-resistant R322
Floors . . . . . Chapter 5
Footings R403
Foundation material R402
Foundation walls R404
Foundations . . . . . Chapter 4
Masonry R606, R607, R608, R610
Roofs . . . . . Chapter 8
Steel framing R505, R603, R804
Wood framing R502, R602, R802
Walls . . . . . Chapter 6

CONTINUOUS LOAD
Definition E3501

CONTINUOUS WASTE
Definition R202

CONTROL
Devices . . . . . Chapter 24

CONTROLS
For forced-air furnaces . . . . . Chapter 24

COOKING UNIT, COUNTER-MOUNTED
Definition E3501

INTERNATIONAL CODE COUNCIL®
Copyright © 2015 ICC. ALL RIGHTS RESERVED. Accessed by David Dammon on Jun 21, 2017 12:30:52 PM pursuant to License Agreement with ICC. No further reproduction or distribution authorized. ANY UNAUTHORIZED REPRODUCTION OR DISTRIBUTION IS A VIOLATION OF THE FEDERAL COPYRIGHT ACT AND THE LICENSE AGREEMENT, AND SUBJECT TO CIVIL AND CRIMINAL PENALTIES THEREUNDER.

COOLING
Absorption cooling equipment M1412
Access to equipment M1401.2
Evaporative cooling equipment M1413
Installation M1401.1
Refrigeration cooling equipment M1404
Return air-supply source M1602
COPPER-CLAD ALUMINUM CONDUCTORS
Definition E3501
CORDS
Flexible E4101.3, E4202.2
CORROSION
Protection of metallic piping P2603.3
COURT
Definition R202
COVER REQUIREMENTS E3803.1
COVERING
Exterior R703
Interior R702
Roof . . . . . Chapter 9
Wall . . . . . Chapter 7
CRAWL SPACE R408
CRITERIA
Design R301
CROSS CONNECTION
Definition R202

D

DAMPER, VOLUME
Definition R202
DECAY
Protection against R317
DECK
Supported by exterior wall R507
Wood/plastic composite boards R507.3
DECORATIVE APPLIANCES
Outdoor G2454
Vented . . . . . Chapter 24
DEFINITIONS
Building R202
Electrical E3501
Mechanical system R202
Plumbing R202
DESIGN
Criteria R301
DIRECTIONAL
Fittings, plumbing P2707
DISCONNECTING MEANS
Definition E3501
DISHWASHING MACHINES P2717
DOORS
Egress R311.2
Exterior R311.3.2, R609
DRAFT HOOD
Definition R202
DRAFTSTOPPING R302.12, R502.12
DRAIN
Floor P2719
Shower receptors P2709
DRAINAGE
Cleanouts P3005.2
Foundation R405
Inspection and tests P2503
Storm drainage . . . . . Chapter 33
DRILLING AND NOTCHING (see NOTCHING)
DRINKING WATER TREATMENT P2909
DRIP LOOPS E3605.9.5
DRYERS
Domestic clothes M1502
DUCTS . . . . . Chapter 16
Installation M1601.4
Insulation N1103.2, M1601.3
Material M1601
System, definition R202
DWELLING
Definition R202, E3501
DWELLING UNIT
Definition R202, E3501
Separation R302.2, R302.3

E

EJECTORS (see SUMPS AND EJECTORS)
ELECTRICAL
Appliance (labeling) M1303
Inspection E3403
Vehicle charging E3702.13
ELECTRICAL METALLIC TUBING . . . . Table E3904.6
ELECTRICAL NONMETALLIC TUBING . . . . . Table E3904.6
ELECTRICAL RESISTANCE HEATERS
Baseboard convectors M1405
Duct heaters M1407
Radiant heating M1406
ELECTRODES
Grounding E3608
EMERGENCY ESCAPE R202, R310
ENCLOSURE
Definition E3501
ENERGY CONSERVATION . . . . . Chapter 11
ENTRY R104.6

INTERNATIONAL CODE COUNCIL®
Copyright © 2015 ICC. ALL RIGHTS RESERVED. Accessed by David Dammon on Jun 21, 2017 12:30:52 PM pursuant to License Agreement with ICC. No further reproduction or distribution authorized. ANY UNAUTHORIZED REPRODUCTION OR DISTRIBUTION IS A VIOLATION OF THE FEDERAL COPYRIGHT ACT AND THE LICENSE AGREEMENT, AND SUBJECT TO CIVIL AND CRIMINAL PENALTIES THEREUNDER.

EQUIPMENT
Definition applied to electrical equipment E3501
General, mechanical . . . . . Chapter 14
Heating and cooling . . . . . Chapter 14
EXCAVATIONS
For appliance installation M1305.1.4.2
EXISTING PLUMBING SYSTEMS P2502
EXTERIOR
Covering R703
Insulation finish systems R703.9
Lath R703.7.1
Plaster R703.7
EXTERIOR WALL
Construction R302.1
Definition R202
Fire-resistance rating R302.1

F

FACEPLATES E4001.11, E4002.4
FACTORY BUILT
Chimneys R1005, M1805
Fireplace stoves R1005.3
Fireplaces R1004
FASTENING . . . . . Table R602.3(1)
FAUCETS P2701
FAUCETS
Handle orientation P2722.2
Requirements P2701
FEEDER
Ampacity E3704.5
Conductor size E3704.1
Feeder neutral load E3704.3
Loads E3704.2
Requirements E3704
FENESTRATION
Definition R202
FINISHES
Flame spread and smoke density R302.9
For ceilings R805
Interior R302.9, R315, R702
FIRE-RESISTANT CONSTRUCTION R302
FIRE SPRINKLER SYSTEM
Inspections of P2904.8
Sizing of P2904.6
Sprinkler location P2904.1.1
FIREBLOCKING
Barrier between stories R302.11, R602.8
Chimney R1003.19
Fireplace R1001.12
FIREPLACES . . . . . Chapter 10
Clearance R1001.11
Corbeling R1001.8
Factory-built R1004
Fireblocking R1001.12
Walls R1001.5
FITTING
Definition applied to electrical installations E3501
FITTINGS
DWV piping P3002.3
Prohibited joints P3003.2
Water supply P2906.6
FIXTURE UNIT
Drainage, definition R202
Unit valves P2903.9.3
Water supply, definition R202
FIXTURES
Plumbing fixture, definition R202
Plumbing fixture, general . . . . . Chapter 27
Trap seals P3201.2
FLAME SPREAD INDEX R302.9, R302.10
FLASHING R703.8.5, R703.4, R903.2, R905
FLEXIBLE CORDS E3909, E4101.3, E4202.2
FLEXIBLE METAL CONDUIT E3801.1, E3908.8.1
FLOOD HAZARD AREA
Construction R322
Plumbing systems P2601.3
FLOOR DRAIN P2719
FLOOR FURNACE M1408
FLOORS
Concrete (on ground) R506
Steel framing R505
Treated-wood (on ground) R504
Wood framing R502
FLUE
Area R1003.14, R1003.15
Lining R1003.11, R1003.12
Multiple R1003.13
FOAM PLASTICS R316
FOOD-WASTE DISPOSERS
General P2716
Discharge connection to sink tailpiece P2707.1
FOOTINGS
Excavation for piping near P2604.4
Requirements R403
FORCED MAIN SEWER
Materials P3002.2
Testing P2503.4
FOOTINGS R403

INTERNATIONAL CODE COUNCIL®
Copyright © 2015 ICC. ALL RIGHTS RESERVED. Accessed by David Dammon on Jun 21, 2017 12:30:52 PM pursuant to License Agreement with ICC. No further reproduction or distribution authorized. ANY UNAUTHORIZED REPRODUCTION OR DISTRIBUTION IS A VIOLATION OF THE FEDERAL COPYRIGHT ACT AND THE LICENSE AGREEMENT, AND SUBJECT TO CIVIL AND CRIMINAL PENALTIES THEREUNDER.

FOUNDATIONS . . . . . Chapter 4
Cripple walls R602.9, R602.10.9, R602.11.2
Frost protection R403.1.4.1
Inspection R109.1.1
Walls R404
FRAME
Inspection R109.1.4
FREEZE PROTECTION OF PLUMBING P2603.6
FUEL-BURNING APPLIANCES (see APPLIANCE, definition)
Identification. . . . . Chapter 24
FUEL GAS . . . . . Chapter 24
FUEL OIL
Oil tanks. M2201
Piping, fittings and connections M2202
Pumps and valves M2204
FURNACES
Clearance of warm-air furnaces. M1402.2
Exterior M1401.4
Floor (see Floor Furnace)
Wall (see Wall Furnace)
Warm-air . . . . . M1402, Chapter 24
FUSES E3705.6

G

GARAGES R309
GAS
Appliance labeling . . . . . Chapter 24
GAS PIPING SYSTEM NOT TO BE USED AS GROUNDING ELECTRODE. . . . . Chapter 24
GIRDERS R502.5
GLAZING R308
Aggregate R303.1
Protection of openings. R301.2.1.2
GRADE
Definition R202
Of lumber. R502.1.1, R602.1.1, R802.1.1
Plane, definition. R202
Slope of piping, definition. R202
GRAYWATER
For subsurface irrigation P3009
Identification for P2901.2
Supply to fixtures. P2901.1
GROUND
Definition of electrical. E3501
Floors (on ground) R504, R506
Joint connection. P2906.8
GROUND-FAULT CIRCUIT-INTERRUPTER PROTECTION. E3902, E4203, E4206, E4207.2, E4208
GROUND SOURCE HEAT PUMP M2105
GROUNDED
Definition E3501
GROUNDED CONDUCTOR
Definition E3501
Identification. E3407
GROUNDED, EFFECTIVELY
Definition E3501
GROUNDING
Effective grounding path E3611.3
Of equipment E3908, E4205.1
GROUNDING CONDUCTOR
Definition E3501
Equipment E3501, E3607.3.1, E3908
GROUNDING ELECTRODE CONDUCTOR E3607.4
Connection. E3607.2, E3611
Definition E3501
Size E3603.4
GROUNDING ELECTRODE SYSTEM. E3608
GROUNDING ELECTRODES E3608, E3608.1
Resistance of E3608
GUARDED
Definition applied to electrical equipment E3501
GUARDING OF ENERGIZED PARTS E3404.9
GUARDS. R312
Definition R202
GYPSUM
Wallboard. R702.3

H

HABITABLE SPACE
Definition R202
HALLWAYS R311.6
HANDRAILS R311.7.8, R311.8.3
Definition R202
HAND SHOWER (see SHOWER)
HEADERS
SIP R610.10
Steel. R603.6
Wood R602.7
HEARTH R1001.9
Extension R1001.9, R1001.10
HEATERS
Baseboard M1405
Central furnaces. M1402
Duct M1407
Heat pumps M1403
Masonry R1002
Pool . . . . . .M2006, Chapter 24

INTERNATIONAL CODE COUNCIL®
Copyright © 2015 ICC. ALL RIGHTS RESERVED. Accessed by David Dammon on Jun 21, 2017 12:30:52 PM pursuant to License Agreement with ICC. No further reproduction or distribution authorized. ANY UNAUTHORIZED REPRODUCTION OR DISTRIBUTION IS A VIOLATION OF THE FEDERAL COPYRIGHT ACT AND THE LICENSE AGREEMENT, AND SUBJECT TO CIVIL AND CRIMINAL PENALTIES THEREUNDER.

Radiant M1406
Sauna . . . . . Chapter 24
Unvented G2445
Vented room . . . . . .M1410, Chapter 24
Water . . . . . Chapter 20, Chapter 28
HEATING R303.9
HEATING EQUIPMENT . . . . . Chapter 14
HEIGHT
Ceiling R305
HOLLOW-UNIT MASONRY (see MASONRY) R606.3.2.2, 606.13.1.2
HORIZONTAL
Pipe, definition R202
Vent length M1803.3.2
HOT TUBS . . . . . E4201, Appendix G
HOT WATER
Definition R202
Distribution pipe rating P2906.5
Distribution systems P2905
Heaters . . . . . .M2005, Chapter 24
Supplied to bathtubs P2713
Temperature actuated valves for P2724
HUB DRAIN (See WASTE RECEPTOR)
HYDROGEN GENERATING AND REFUELING M1307.4
HYDRONIC HEATING SYSTEMS
Baseboard convectors M2102
Boilers M2001
Expansion tanks M2003
Floor heating systems M2103
Operating and safety controls M2002
Piping systems installation M2101

I

IDENTIFIED
Definition applied to electrical equipment E3501
INDIVIDUAL
Branch circuit, definition E3501
Sewage disposal systems R202, P2602
Water supply and sewage disposal systems P2602
INLET
To masonry chimneys R1003.16
INLINE SANITARY WASTE VALVE P3101.2.1, P3201.6.1
INSPECTION
Card AE305.3
Excavation for piping P2604.1
Fuel-supply system . . . . . Chapter 24
Of plumbing system P2503
On site R109.1
INSTALLATION
Existing . . . . . Appendix J
Of appliances M1307
Of cooling and heating equipment M1401.1
Of ducts M1601.4
Of flue liners R1003.12
Of plumbing fixtures P2705
Of wall furnaces M1409.3
INSULATION R302.10
INTERIOR
Lath R702.2.3
Other finishes R702.5
Plaster R702.2
Wall covering . . . . . Chapter 7
INTERMEDIATE METAL CONDUIT . . . E3801, E3904
INTERRUPTING RATING E3404.2
Definition E3501
IRRIGATION (see SUBSURFACE IRRIGATION)

J

JOINTS, PIPE
And connections P2906, P3003
Slip P2704.1, P3005.2.9
JOIST
Bearing R502.6, R606.6.3.1
JUMPERS
Bonding E3609
JUNCTION BOXES E3905, E4206.9.1

K

KITCHEN
Definition R202
KITCHEN RECEPTACLES E3703.2, E3901

L

L VENT TERMINATION M1804.2.4
LABELED
Definition R202
Definition applied to electrical equipment E3501
LABELING
Appliances M1303
Definition R202
LAMPHOLDERS E4003, E4004
LANDINGS R311.3, R311.3.1, R311.7.6, R311.8.2
LATERAL SUPPORT . . . R502.7, R606.6.4, R607.5.2
LATH
Exterior R703.7.1
Interior R702.2.3

INTERNATIONAL CODE COUNCIL®
Copyright © 2015 ICC. ALL RIGHTS RESERVED. Accessed by David Dammon on Jun 21, 2017 12:30:52 PM pursuant to License Agreement with ICC. No further reproduction or distribution authorized. ANY UNAUTHORIZED REPRODUCTION OR DISTRIBUTION IS A VIOLATION OF THE FEDERAL COPYRIGHT ACT AND THE LICENSE AGREEMENT, AND SUBJECT TO CIVIL AND CRIMINAL PENALTIES THEREUNDER.

LAUNDRY CIRCUIT E3703.3
LAUNDRY TUBS
Drain connection to standpipe P2706.1.2.1
Requirements P2715
LAVATORIES P2711
Clearances R307
Waste outlets P2711.3
LEAD
Allowable amount, potable water components P2906.2
Bends and traps P3002.4.2
Caulked joints P3003.6.1
Flashing P3002.4.1
LIABILITY R104.8
LIGHT, VENTILATION AND HEATING R303
LIGHTING
Luminaire in clothes closets E4003.12
Luminaire installation E4004
Luminaries E4003, E4004, E4206
LIGHTING OUTLETS
Definition E3501
Required lighting outlets E3903
LINING
Flue R1003.11, R1003.12
LINTEL R606.10, R608.8, R703.8.3, R1001.7
LIQUID-TIGHT FLEXIBLE CONDUIT E3801.4, E3908.8.2
LISTED
Definition applied to electrical equipment E3501
LISTED AND LISTING
Definition applied to building and mechanical provisions R202
Mechanical appliances M1302.1
Potable water components P2609
LOAD
Additional R1003.8
Roof R301.6
Seismic risk map . . . . . Figure R301.2(2)
Snow load map . . . . . Figure R301.2(5)
Wind speed map . . . . . Figure R301.2(4)A
LOADS
Branch circuit loads E3702, E3703.6
Dead load R301.4
Feeder load E3704.2
Feeder neutral load E3704.3
Horizontal load AE602.1
Live load R301.5
Service load E3602.2
LOADS, LIVE AND DEAD
Definition R202
LOCATION
Of furnaces M1408.3, M1409.2
LOCATION (DAMP) (DRY) (WET)
Definitions E3501
LUMBER
Grade R502.1.1, R602.1.1, R802.1.1
LUMINAIRE E4004
Clearances E4004.8

M

MACERATING TOILET P2723
MAKEUP AIR M1503.4
MANUFACTURED HOME
Definition R202
Provisions . . . . . Appendix E
MASONRY
Anchorage R606.11
Cavity wall R606.13
Chases R606.8
General R606
Hollow unit R202, R606.3.2.2, R606.13.1.2
Inspection R109.1.4
Seismic requirements R606.12
Solid, definition R202
Veneer R703.8
Veneer attachment R703.3
MATERIALS
Alternative R104.11
Combustible R202, R1001.11, R1001.12, R1003.18, R1003.19
For ducts M1601
For fixture accessories P2702
For flue liners R1003.11
For fuel-supply systems . . . . . Chapter 24
For hearth extension R1001.9
For siding R703.5
Hydronic pipe M2101, M2103, M2104
Plumbing pipe P2906, P3002
MECHANICAL
Inspection R109.1.2
System requirements . . . . . Chapter 13
MEDIUM PRESSURE FUEL-GAS PIPING SYSTEM . . . . . Chapter 24
MEMBRANE
Penetration R302.4.2
Polyethylene R504.2.2, R506.2.3
Water-resistive R703.2
Waterproofing R406.2
METAL
Ducts . . . . . Chapter 16
Roof panels R905.10
Roof shingles R905.4

INTERNATIONAL CODE COUNCIL®
Copyright © 2015 ICC. ALL RIGHTS RESERVED. Accessed by David Dammon on Jun 21, 2017 12:30:52 PM pursuant to License Agreement with ICC. No further reproduction or distribution authorized. ANY UNAUTHORIZED REPRODUCTION OR DISTRIBUTION IS A VIOLATION OF THE FEDERAL COPYRIGHT ACT AND THE LICENSE AGREEMENT, AND SUBJECT TO CIVIL AND CRIMINAL PENALTIES THEREUNDER.

METAL-CLAD CABLE . . . . . Table E3701.2
METHODS
Water distribution pipe sizing . . . . . .Appendix P
MODIFICATIONS R104.10
MOISTURE CONTROL R702.7
MORTAR
Joints R606.3.1
MOTORS
Motor branch circuits E3702.6, E3702.7
MULTIPLE
Appliance venting systems M1801.11
Flues R1003.13
MULTIWIRE BRANCH CIRCUITS E3701.5

N

NONCOMBUSTIBLE MATERIAL
Definition R202
NONMETALLIC BOXES E3905.3, E3908.16
NONMETALLIC RIGID CONDUIT E3801.4
NONMETALLIC-SHEATHED CABLE E3705.4.4, E3801.4, E3905.3.1, E3908.8.3
NONPOTABLE WATER SYSTEMS . . . P2910, P2911, P2912, P2913
NOTCHING
Electrical E3402.1
For mechanical systems M1308
For plumbing piping P2603.2
Steel joists R505.2.5, R505.3.5, R804.2.5, R804.3.3
Steel studs R603.2.6, R603.3.4
Wood joists R502.8, R802.7.1
Wood studs R602.6
Wood top plates R602.6.1

O

OCCUPIED SPACE
Definition R202
OIL
Piping and connections M2202
Supply pumps and valves M2204
Tanks M2201
OPEN-TOP GAS BROILER UNITS M1505.1
OPENING
Requirements, combustion air . . . . . Chapter 17, Chapter 24
Waterproofing of piping penetrations P2606.1
OUTLET
Definition . . . . . .Chapter 24, E3501
OVEN, WALL-MOUNTED
Definition applied to electrical provisions E3501
OVERCURRENT
Definition E3501
OVERCURRENT PROTECTION E3705
OVERCURRENT-PROTECTION RATING E3705
OVERLOAD
Definition E3501

P

PANELBOARD
Definition E3501
PANELBOARDS E3706
Clearance and dedicated space E3405.2, E3405.3
Headroom E3405.3
PARALLEL PATH CONNECTION N1102.2.6 (R402.2.6)
PARAPETS R302.2.2, R606.4.4
PARTICLEBOARD
Floor R503.3
Walls R605
PERMITS R105
PIERS R606.7
Masonry R404.1.9
PIPE
Fittings P2702.2
Materials listing . . . . . .Table M2101.1, P2609
Protection P2603
Standards, drain, waste and vent. . . . . Table P3002.1(1), Table P3002.1(2)
Standards, sewer . . . . . Table P3002.2
Standards, water supply P2906
PIPING
Connections and materials . . .Table M2101.1, P2905
Drain, waste and vent P3002.1
Excavations next to footings P2604.4
Fuel-gas size determination . . . . . Chapter 24
Penetrations P2606
Protection P2603
Sizing methods, water distribution P2903.7
Support . . . . . .M2101.9, Chapter 24, P2605
PLANNING
Building . . . . . Chapter 3
PLANS R106
PLASTER
Exterior R703.7
Interior R702.2

INTERNATIONAL CODE COUNCIL®
Copyright © 2015 ICC. ALL RIGHTS RESERVED. Accessed by David Dammon on Jun 21, 2017 12:30:52 PM pursuant to License Agreement with ICC. No further reproduction or distribution authorized. ANY UNAUTHORIZED REPRODUCTION OR DISTRIBUTION IS A VIOLATION OF THE FEDERAL COPYRIGHT ACT AND THE LICENSE AGREEMENT, AND SUBJECT TO CIVIL AND CRIMINAL PENALTIES THEREUNDER.

PLENUM
Definition R202
Definition, electrical installations E3501
PLUMBING
Fixture clearances R307
Fixtures . . . . . Chapter 27
Inspection R109.1.2
Materials P2702.2, P2905, P3002
Requirements and definitions R202
System, definition R202
Third-party certification P2609.4
Traps . . . . . Chapter 32
Vents . . . . . Chapter 31
PLYWOOD
Application R703.5
Materials, walls R604
POTABLE WATER
Definition R202
Piping listing. P2609.4
PRECAST CONCRETE
Footings R403.4
Foundation material R402.3.1
Foundation walls R404.5
PRESSURE, WATER SUPPLY
Maximum P2903.3.1
Minimum P2903.3
PRIVATE
Sewage disposal system . . . . . Appendix I
PROHIBITED
Receptors P2706.3
Return air sources M1602.2
Traps P3201.5
Valves below grade P2903.9.5
Water closets P2712.1
PROTECTION
Against decay and termites R319, R320
Against radon. . . . . Appendix F
Of backflow preventers P2902.6
Of ferrous gas piping . . . . . Chapter 24
Of potable water supply P2902
PURLINS R802.5.1
PURPOSE. R101.3

R

***R*-VALUE**
Definition R202
RACEWAY
Definition E3501
Raceway installations E3904
Raceway seals E3601.5, E3803.6
Raceways as means of support E3904.4
RADON
Map . . . . . Appendix F
RAFTERS
Grade of lumber R802.1
Spans . . . . . R802.1.1, Tables R802.5.1(1) – R802.5.1(8)
RAIN TIGHT
Definition applied to electrical provisions E3501
RAINPROOF
Definition applied to electrical provisions E3501
RAINWATER
Identification for P2901.2
Supply to fixtures P2901.1
RAMPS R311.8
RANGES
Branch circuits for ranges E3702.9
RANGES AND OVENS
Vertical clearance above cooking top M1901.1
READILY ACCESSIBLE
Definition R202
Definition, electrical installations E3501
RECEPTACLE
Definition E3501
RECEPTACLE OUTLET
Definition E3501
Required outlets E3901
RECEPTACLES
Rating, type and installation E4002
RECEPTORS
Plumbing fixtures and traps . . . . . Chapter 27
Site-built materials P2709.2
Waste P2706
RECESSED LUMINAIRES E4003.5, E4003.12, E4004.8, E4004.9
RECLAIMED WATER
Identification for P2901.2
Supply to fixtures P2901.1
REQUIREMENTS
Connections for fuel-burning appliances. . . . . Chapter 24
Return air M1602
RESISTANCE TO GROUND
Electrodes E3608.4
RESISTANT SIDING MATERIAL (see MATERIALS)
RETURN-AIR M1602
RIDGE BOARD R802.3

INTERNATIONAL CODE COUNCIL®
Copyright © 2015 ICC. ALL RIGHTS RESERVED. Accessed by David Dammon on Jun 21, 2017 12:30:52 PM pursuant to License Agreement with ICC. No further reproduction or distribution authorized. ANY UNAUTHORIZED REPRODUCTION OR DISTRIBUTION IS A VIOLATION OF THE FEDERAL COPYRIGHT ACT AND THE LICENSE AGREEMENT, AND SUBJECT TO CIVIL AND CRIMINAL PENALTIES THEREUNDER.

RIGID METALLIC CONDUIT E3908
RIGID NONMETALLIC CONDUIT E3801.4
ROOF
Coverings R905
Drainage R903.4
Flashing R703.4, R903.2, R905
Steel framing R804
Wood framing R802
ROOF-CEILING CONSTRUCTION (see CONSTRUCTION) . . . . . Chapter 8
Wind uplift R802.11, R804.3.8
ROOFING
Built-up R905.9
Liquid-applied coating R905.15
Modified bitumen R905.11
Sprayed polyurethane foam R905.14
Thermoplastic single-ply R905.13
Thermoset single-ply R905.12
ROOM
Heaters, vented . . . . . M1410, Chapter 24
Minimum Sizes R304

S

SANITATION R306
SEISMIC RISK MAP . . . . . Figure R301.2(2)
SEPTIC TANK
Definition R202
SERVICE
Definition E3501
SERVICE CABLE
Definition E3501
SERVICE CONDUCTORS
Definition E3501
Drip loops E3605.9.5
Insulation E3605.1
Overload protection E3603.3
Rating of ungrounded service conductors E3602.1
Size E3603.1
SERVICE DISCONNECT
Location E3601.6.2
Marking of E3601.6.1
Maximum number of E3601.7
Rating of E3602.3
Required E3601.6
SERVICE DROP
Clearances E3604.1, E3604.2
Definition E3501
Point of attachment E3604.3
SERVICE-ENTRANCE CONDUCTORS, OVERHEAD SYSTEM
Definition E3501
SERVICE-ENTRANCE CONDUCTORS, UNDERGOUND SYSTEM
Definition E3501
SERVICE EQUIPMENT
Definition E3501
SERVICE LATERAL
Definition E3501
SERVICE LOAD E3602.2
SERVICE POINT
Definition E3501
SERVICE VOLTAGE RATING E3602.4
SERVICES . . . . . Chapter 36
SEWAGE
Disposal, private P2602
SEWER, BUILDING
Definition R202
Separation from water service . . P2604.2, P2906.4.1
Size P3005.4.2
Testing P2503.4
SHAKES
Wood R702.6, R703.6, R905.8
SHINGLE
Asphalt shingles R905.2
Metal R905.4
Slate R905.6
Wood R905.7
SHOWER
Control valve P2708.4
Control valve riser to shower head P2708.3
Compartment R307.2
Drain size P2708.2
Hand P2708.5
Receptor P2709
Stall dimensions P2708
Walls P2710
SHUTOFF VALVE (see VALVES)
SIDING
Exterior coverings R703
SINKS P2714
SITE
Address R319
Preparation R408.5, R504.2, R506.2
SIZE
Of combustion air openings . . . . . Chapter 17
Of rooms R304
Of trap P3201.7

INTERNATIONAL CODE COUNCIL®
Copyright © 2015 ICC. ALL RIGHTS RESERVED. Accessed by David Dammon on Jun 21, 2017 12:30:52 PM pursuant to License Agreement with ICC. No further reproduction or distribution authorized. ANY UNAUTHORIZED REPRODUCTION OR DISTRIBUTION IS A VIOLATION OF THE FEDERAL COPYRIGHT ACT AND THE LICENSE AGREEMENT, AND SUBJECT TO CIVIL AND CRIMINAL PENALTIES THEREUNDER.

SIZING METHODS
Water piping P2903.7
SKYLIGHTS R308.6
SLATE SHINGLES R905.6
SMOKE ALARMS R314
SMOKE-DEVELOPED INDEX R302.9, R302.10
SNOW LOAD MAP . . . . . Figure R301.2(5)
SOLAR ENERGY SYSTEMS M2301
SPANS
Steel (allowable) R505.3.2, R804.3.2.1
Wood (allowable) R502.3, R802.5
SPAS E4208
SPLICES E3406.11
SPLICES AND TAPS E3803.4
SPRINKLER (see FIRE SPRINKLER SYSTEMS)
STAIRWAYS R311.7
STANDARDS . . . . . Chapter 44, Appendix G
STANDPIPE (see WASTE RECEPTOR)
STEEL
Fireplace units R1001.5.1
Floor construction R505
Roof-ceiling construction R804
Walls R603
STORM SHELTERS R323
STORY
Definition R202
STOVES
Factory-built fireplace M1414
STRUCTURAL AND PIPING PROTECTION . . . P2603
STRUCTURAL INSULATED PANEL (SIP) R610
STUDS
Wood R602.2, R602.3
Spacing R602.3.1
Steel R603.2, R603.3
SUBSURFACE IRRIGATION SYSTEMS P3009
SUMPS AND EJECTORS P3007
SUMP PUMPS P3007.3.2, P3303
SUPPLY
Combustion air . . . . . Chapter 17, Chapter 24
Fuel systems . . . . . Chapter 24
Oil supply pumps and valves M2204
Required gas . . . . . Chapter 24
Return air M1602
Water . . . . . Chapter 29
SUPPORT
Of decks R507.2.2.1
Of ducts M1601.4.4
Of floor joists R502.6, R505.3.2
Of masonry chimneys R1003.2, R1003.3, R1003.4
Of pipe . . . . . M2101.9, Chapter 24, P2605
SUPPORT REQUIREMENTS FOR WIRING METHODS E3802.1
SWIMMING POOLS . . . . . R326, Chapter 42
SWITCHES
Definition E3501
Rating and application E4001
SYSTEMS
Mechanical venting . . . . . Chapter 18, Chapter 24
Plumbing, drainage, waste and venting . . . . . Chapter 25, Chapter 30, Chapter 31, Chapter 33

T

TAIL PIECES, PLUMBING FIXTURE P2703
TANK
For fuel oil-burning appliances M2201
Septic, definition R202
TEMPERATURE ISOLINES . . . . . Figure R301.2(1)
TEMPERATURE LIMITATIONS E3705.4
TERMINALS E3406.10
TERMINATION
Of chimneys R1003.9
Of vents (general) M1804.2
TERMITES
Infestation probability map . . . . . Figure R301.2(6)
Protection R318
TEST
For leaks in supply piping . . . . . Chapter 24
Of backflow preventers P2503.8
Of building sewers P2503.4
Of plumbing systems P2503
Of shower liner P2503.6
THICKNESS
Of chimney walls R1003.10
TIES
Veneer R703.8.4
TILE
Shingles (clay and concrete) R905.3
TOWNHOUSE
Definition R202
Scope R101.2
Separation R302.2
TRACK LIGHTING E4005
TRAP . . . . . Chapter 32
Arm, definition R202
Building P3201.1
Seal protection P3201.2.1
TRENCHING AND BACKFILLING P2604
TRUSSES
Steel R505.1.3, R804.3.6
Wood R502.11, R802.10

INTERNATIONAL CODE COUNCIL®
Copyright © 2015 ICC. ALL RIGHTS RESERVED. Accessed by David Dammon on Jun 21, 2017 12:30:52 PM pursuant to License Agreement with ICC. No further reproduction or distribution authorized. ANY UNAUTHORIZED REPRODUCTION OR DISTRIBUTION IS A VIOLATION OF THE FEDERAL COPYRIGHT ACT AND THE LICENSE AGREEMENT, AND SUBJECT TO CIVIL AND CRIMINAL PENALTIES THEREUNDER.

TYPE OF VENTING SYSTEMS REQUIRED . . . . Chapter 18, Chapter 24

U

***U*-FACTOR**
Definition R202
UNDER FLOOR
Access to furnaces M1305.1.4
Plenums M1601.5
Space R408
UNDERGROUND INSTALLATION REQUIREMENTS
Duct systems M1601.1.2
Electrical cable E3803
Wiring E4203.7
UNVENTED ATTIC ASSEMBLIES R806.5
UTILIZATION EQUIPMENT
Definition E3401

V

VALVES
Backwater P3008
Meter . . . . . Chapter 24
Oil-supply M2204
Relief, water heater P2804
Shutoff, fuel-gas . . . . . Chapter 24
Shutoff, fuel-oil M2204.2
Water heaters P2903.9.2
Water supply P2903.9
VAPOR RETARDERS R702.7
Definition R202
VENEER
Masonry R703.7
VENT
B or BW vent . . . . . Chapter 24
Definition . . . . . Chapter 24
L vent . . . . . M1804.2.4, Chapter 24
Plumbing system, definition R202
Termination M1804.2, M2203.5, P3103.5
VENTED
Decorative appliances . . . . . Chapter 24
Floor furnaces M1408
Room heaters M1410
Wall furnaces M1409
VENTILATION
Bathroom and kitchen M1507
For hydrogen systems M1307.4
Roof R806
Under floor R408.1
Whole house M1507.3
VENTING (MECHANICAL)
Chimney and vent connectors . . M1803, Chapter 24
Components . . . . . M1802, Chapter 24
General . . . . . M1801, Chapter 24
Required . . . . . M1801, M2203.4, Chapter 24
Systems . . . . . Chapter 18, Chapter 24
VENTING (PLUMBING)
Air admittance valves P3114
Circuit P3110
Combination waste and vent system P3111
Common P3107
Connections and grades P3104
Fixture P3105
Individual P3106
Island fixture P3112
Pipe sizing P3113
Stacks and stack vents P3102
Systems P3101
Terminals P3103
Waste stack P3109
Wet P3108
VERTICAL
Clearances above cooking top M1901.1
Pipe, definition R202
VIOLATIONS
And penalties R113
VOLTAGE
Definition E3501
VOLTAGE RATING (SERVICES) E3602.4
VOLTAGE TO GROUND
Definition E3501
VOLTAGES E3404.1

W

WALL FURNACE (see APPLIANCE)
General M1409.1
Installation M1409.3
Location M1409.2
WALLBOARD
Gypsum R702.3
WALLS
Bathtub compartments P2710
Bracing, steel R603.9
Bracing, wood R602.10
Construction . . . . . Chapter 6
Covering . . . . . Chapter 7
Cripple R602.9
Deflection R301.7

INTERNATIONAL CODE COUNCIL®
Copyright © 2015 ICC. ALL RIGHTS RESERVED. Accessed by David Dammon on Jun 21, 2017 12:30:52 PM pursuant to License Agreement with ICC. No further reproduction or distribution authorized. ANY UNAUTHORIZED REPRODUCTION OR DISTRIBUTION IS A VIOLATION OF THE FEDERAL COPYRIGHT ACT AND THE LICENSE AGREEMENT, AND SUBJECT TO CIVIL AND CRIMINAL PENALTIES THEREUNDER.

Exterior covering R703
Finishes R302.9, R702
Fireplace R1001.5
Foundation. R404
Insulating concrete form R608.3, R608.4, R608.5.3
Shower compartments. P2710
Steel framing R603
Structural insulated panels (SIP) R610
Thickness, masonry chimneys. R1003.10
Wood framing R602
WARM-AIR FURNACES M1402
Access to M1401.2
Clearance from M1402.2
WASTE
Clear water P2792.1
Continuous, definition R202
WASTE RECEPTOR
Hub drain P2706.1
Standpipe. P2706.1
Prohibited types P2706.3
WATER
Distribution system, definition R202
Heater, definition R202
Heaters . . . . . .Chapter 20, Chapter 24, Chapter 28
Individual supply and sewage disposal P2602
Piping sizing methods P2903
Pressure P2903.3
Service, separation from sewer P2604.2, P905.4.1
Supply and distribution . . . . . Chapter 29
Supply system, definition. R202
WATER CLOSET
Carriers for wall hung. P2702.4
Clearances for R306.1
Dual flushing P2712.1
Personal hygiene devices P2722.5
Seats P2712.7
Standards P2712.1
WATER HEATER
Drain water heater heat recovery units P2903.11
In garages P2801.5.2
Location P2801.3, P2801.4, P2801.5
Pan P2801.5
Plumbing requirements . . . . . Chapter 28
Relief valves P2804
Seismic bracing P2801.7
Solar thermal P2802, P2902.5.5
Thermal expansion from P2903.4
Used for space heating P2803
WATER TIGHT
Definition applied to electrical provisions E3501
WATERPROOFING
And dampproofing R406
Of openings through roofs and walls P2607
WEATHERPROOF
Definition applied to electrical provisions E3501
WELLS (see INDIVIDUAL WATER SUPPLY)
WHIRLPOOL BATHTUBS P2720
WHOLE-HOUSE VENTILATION M1507.3
WIND SPEED MAP. . . . . Figure R301.2(4)A
WINDOW. R609
Fall prevention R312.2
Opening limiting devices R312.2.2
WIRING METHODS . . . . . Chapter 37
WOOD
Floor construction. R502
Foundation walls R404.2
Roof-ceiling construction R802
Shakes R905.8
Shingles R905.7
Trusses R502.11, R802.10
Walls R602
WORKING SPACE E3606.2
Around electrical equipment. E3405.1, E3405.2
WORKMANSHIP, PLUMBING P2608

Y

YARD
Definition R202

INTERNATIONAL CODE COUNCIL®
Copyright © 2015 ICC. ALL RIGHTS RESERVED. Accessed by David Dammon on Jun 21, 2017 12:30:52 PM pursuant to License Agreement with ICC. No further reproduction or distribution authorized. ANY UNAUTHORIZED REPRODUCTION OR DISTRIBUTION IS A VIOLATION OF THE FEDERAL COPYRIGHT ACT AND THE LICENSE AGREEMENT, AND SUBJECT TO CIVIL AND CRIMINAL PENALTIES THEREUNDER.

ICC INTERNATIONAL CODE COUNCIL®

People Helping People Build a Safer World®

GET IMMEDIATE DOWNLOADS OF THE STANDARDS YOU NEED

Browse hundreds of industry standards adopted by reference. Available to you 24/7!

Count on ICC for standards from a variety of publishers, including:

ACI	CPSC	GYPSUM
AISC	CSA	HUD
ANSI	DOC	ICC
APA	DOJ	ISO
APSP	DOL	NSF
ASHRAE	DOTn	SMACNA
ASTM	FEMA	USC
AWC	GBI	

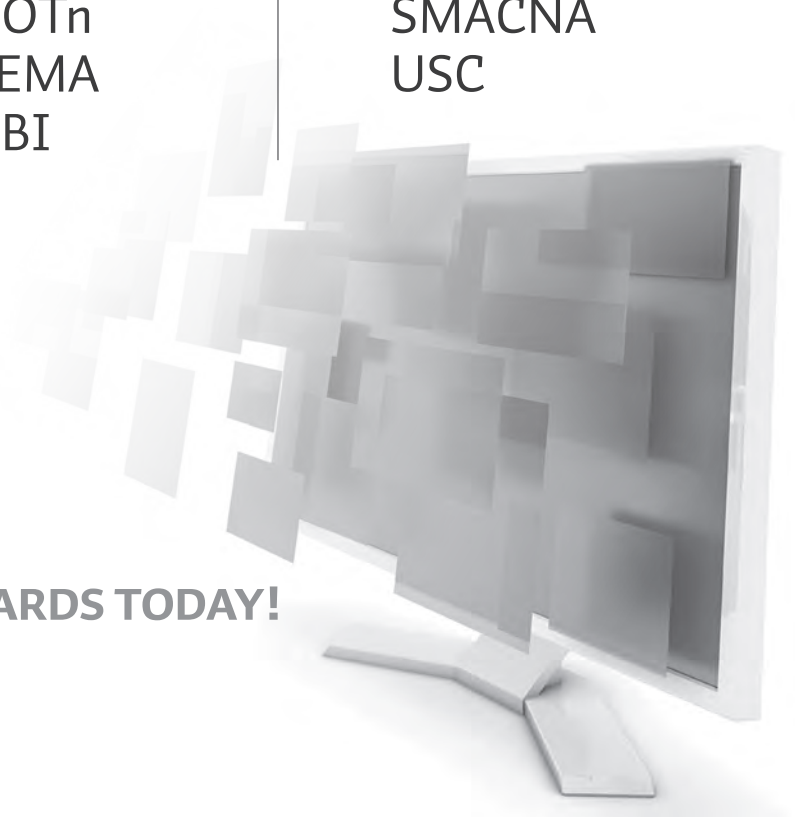

DOWNLOAD YOUR STANDARDS TODAY!
SHOP.ICCSAFE.ORG

15-11221

INTERNATIONAL CODE COUNCIL®

Copyright © 2015 ICC. ALL RIGHTS RESERVED. Accessed by David Dammon on Jun 21, 2017 12:30:52 PM pursuant to License Agreement with ICC. No further reproduction or distribution authorized. ANY UNAUTHORIZED REPRODUCTION OR DISTRIBUTION IS A VIOLATION OF THE FEDERAL COPYRIGHT ACT AND THE LICENSE AGREEMENT, AND SUBJECT TO CIVIL AND CRIMINAL PENALTIES THEREUNDER.

ICC INTERNATIONAL CODE COUNCIL®

People Helping People Build a Safer World®

Valuable Guides to Changes in the 2015 I-Codes®

NEW!

FULL COLOR! HUNDREDS OF PHOTOS AND ILLUSTRATIONS!

SIGNIFICANT CHANGES TO THE 2015 INTERNATIONAL CODES®

Practical resources that offer a comprehensive analysis of the critical changes made between the 2012 and 2015 editions of the codes. Authored by ICC code experts, these useful tools are "must-have" guides to the many important changes in the 2015 International Codes.



SIGNIFICANT CHANGES TO THE IBC, 2015 EDITION
#7024S15

SIGNIFICANT CHANGES TO THE IRC, 2015 EDITION
#7101S15

SIGNIFICANT CHANGES TO THE IFC, 2015 EDITION
#7404S15

SIGNIFICANT CHANGES TO THE IPC/IMC/IFGC, 2015 EDITION
#7202S15

Changes are identified then followed by in-depth discussion of how the change affects real world application. Photos, tables and illustrations further clarify application.

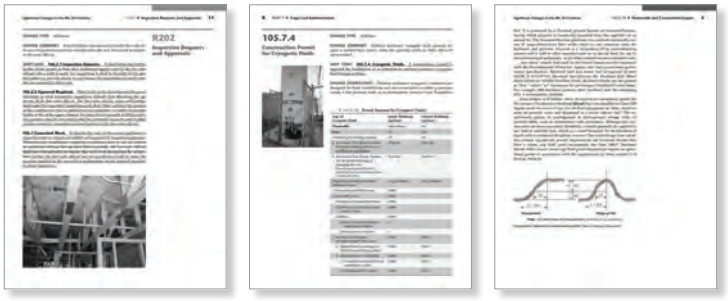

ORDER YOUR HELPFUL GUIDES TODAY!
1-800-786-4452 | www.iccsafe.org/books

HIRE ICC TO TEACH

Want your group to learn the Significant Changes to the I-Codes from an ICC expert instructor? Schedule a seminar today!

email: **ICCTraining@iccsafe.org** | phone: **1-888-422-7233 ext. 33818**

14-09379

INTERNATIONAL CODE COUNCIL®

Copyright © 2015 ICC. ALL RIGHTS RESERVED. Accessed by David Dammon on Jun 21, 2017 12:30:52 PM pursuant to License Agreement with ICC. No further reproduction or distribution authorized. ANY UNAUTHORIZED REPRODUCTION OR DISTRIBUTION IS A VIOLATION OF THE FEDERAL COPYRIGHT ACT AND THE LICENSE AGREEMENT, AND SUBJECT TO CIVIL AND CRIMINAL PENALTIES THEREUNDER.

ICC INTERNATIONAL CODE COUNCIL®

People Helping People Build a Safer World®

The International Code Council's Training and Education Department

Industry professionals look to ICC to provide the critical knowledge and experiences necessary to excel in today's challenging world. ICC's educational programs cover a broad spectrum of code and construction related topics, offering some of the highest quality instruction direct from the source.

INSTITUTES

Acquire Skills, Share Experiences, Earn CEUs

ICC's training institutes offer a comprehensive education experience and a great way to earn much needed CEUs. Learn best practices from the leading experts in the field, build your network of professional contacts and share experiences. Institutes are held across the country throughout the year. To see the full schedule go to www.iccsafe.org/training.

HIRE ICC TO TEACH

Bring ICC On-Site and Earn CEUs

Give your group the confidence they need to meet tough challenges head-on so they can reach their full potential. ICC's course catalog contains a wide variety of educational topics that are available for contract at a location of your choice. Customized training is also available to fit your needs. For our full course catalogue go to www.iccsafe.org/hireicc.

ICC ONLINE CAMPUS

Earn CEUs at Your Own Pace

Online courses offer access to a comprehensive training and education portal, providing you with an effective and convenient tool to enhance your professional skills. Courses are available anytime for 99 days following registration. Go to www.iccsafe.org/onlinecampus for our full offerings.

For more information about ICC's Training please contact us at **888-ICC-SAFE (422-7233) ext. 33818** or email us at **icctraining@iccsafe.org**.

15-10915

INTERNATIONAL CODE COUNCIL®

Copyright © 2015 ICC. ALL RIGHTS RESERVED. Accessed by David Dammon on Jun 21, 2017 12:30:52 PM pursuant to License Agreement with ICC. No further reproduction or distribution authorized. ANY UNAUTHORIZED REPRODUCTION OR DISTRIBUTION IS A VIOLATION OF THE FEDERAL COPYRIGHT ACT AND THE LICENSE AGREEMENT, AND SUBJECT TO CIVIL AND CRIMINAL PENALTIES THEREUNDER.

ICC INTERNATIONAL CODE COUNCIL®

People Helping People Build a Safer World®

2015 I-Code Essentials

This helpful series uses a straightforward, focused approach to explore code requirements with non-code language, allowing readers to gain confidence in their understanding of the material. Each book is an invaluable companion guide to the 2015 IBC, IRC, IFC or IECC for both new and experienced code users.

- **Detailed full-color illustrations enhance comprehension of code provisions**
- **A focused, concise approach facilitates understanding of the essential code provisions**
- **References to corresponding code sections provide added value as companion guides to the 2015 I-Codes**
- **Glossary of code and construction terms clarifies their meaning in the context of the code**



A

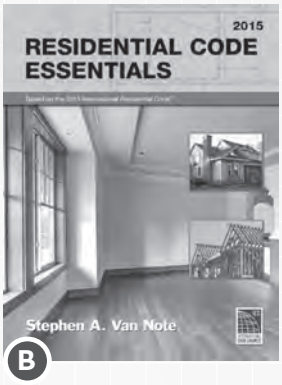

B

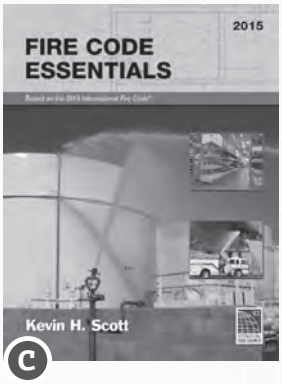

C

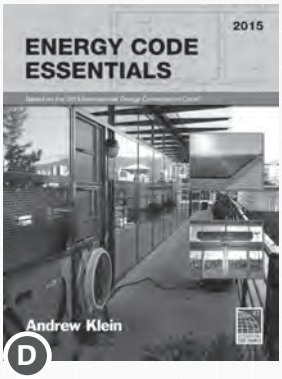

D

A. BUILDING CODE ESSENTIALS: BASED ON THE 2015 INTERNATIONAL BUILDING CODE

Explores those code provisions essential to understanding the application of the IBC in an easy-to-read format. The user-friendly approach of the text simplifies critical concepts so users can achieve a more complete understanding of the code's intent. Full-color illustrations, examples and simplified tables assist the reader in visualizing the code requirements. This up-to-date, step-by-step guide's topic organization reflects the intent of the IBC and facilitates understanding and application of the code provisions.

SOFT COVER #4031S15
PDF DOWNLOAD #8950P596

B. RESIDENTIAL CODE ESSENTIALS: BASED ON THE 2015 INTERNATIONAL RESIDENTIAL CODE

Explains those code provisions essential to understanding the application of the IRC to the most commonly encountered building practices. The information is presented in a user-friendly manner with an emphasis on technical accuracy and clear non-code language. Full-color illustrations, examples and simplified tables assist the reader in visualizing the code requirements.

SOFT COVER #4131S15
PDF DOWNLOAD #8950P59

C. FIRE CODE ESSENTIALS: BASED ON THE 2015 INTERNATIONAL FIRE CODE

Focuses on the essential provisions of the IFC for controlling ignition sources and fire hazards, fire department access to buildings, building uses and processes, fire protection and life safety systems, special processes and uses and hazardous materials.

SOFT COVER #4431S15
PDF DOWNLOAD #8950P59

D. ENERGY CODE ESSENTIALS: BASED ON THE 2015 INTERNATIONAL ENERGY CONSERVATION CODE®

Designed to provide a straightforward, easy-to-read companion guide to the IECC for both beginning and experienced code users. The text provides accurate information on critical energy code applications in the office and in the field for residential and commercial construction. The focused coverage examines those code provisions essential to understanding the application of the IECC to the most commonly encountered building practices and discusses the reasons behind the requirements.

SOFT COVER #4831S15
PDF DOWNLOAD #8950P651

ORDER YOUR I-CODE ESSENTIALS TODAY! 1-800-786-4452 | www.iccsafe.org/books

14-10387

INTERNATIONAL CODE COUNCIL®

Copyright © 2015 ICC. ALL RIGHTS RESERVED. Accessed by David Dammon on Jun 21, 2017 12:30:52 PM pursuant to License Agreement with ICC. No further reproduction or distribution authorized. ANY UNAUTHORIZED REPRODUCTION OR DISTRIBUTION IS A VIOLATION OF THE FEDERAL COPYRIGHT ACT AND THE LICENSE AGREEMENT, AND SUBJECT TO CIVIL AND CRIMINAL PENALTIES THEREUNDER.

2015 IRC®

CODE AND COMMENTARY

VOLUME 2

The complete IRC with commentary after each section

INTERNATIONAL CODE COUNCIL®

Copyright © 2015 ICC. ALL RIGHTS RESERVED. Accessed by David Dammon on Jun 21, 2017 12:30:52 PM pursuant to License Agreement with ICC. No further reproduction or distribution authorized. ANY UNAUTHORIZED REPRODUCTION OR DISTRIBUTION IS A VIOLATION OF THE FEDERAL COPYRIGHT ACT AND THE LICENSE AGREEMENT, AND SUBJECT TO CIVIL AND CRIMINAL PENALTIES THEREUNDER.

2015 IRC®

CODE AND COMMENTARY

VOLUME 2

The complete IRC with commentary after each section

INTERNATIONAL CODE COUNCIL®

Copyright © 2015 ICC. ALL RIGHTS RESERVED. Accessed by David Dammon on Jun 21, 2017 12:30:52 PM pursuant to License Agreement with ICC. No further reproduction or distribution authorized. ANY UNAUTHORIZED REPRODUCTION OR DISTRIBUTION IS A VIOLATION OF THE FEDERAL COPYRIGHT ACT AND THE LICENSE AGREEMENT, AND SUBJECT TO CIVIL AND CRIMINAL PENALTIES THEREUNDER.

2015 International Residential Code® Commentary—Volume II

First Printing: August 2015

ISBN: 978-1-60983-285-8 (soft-cover edition)

COPYRIGHT © 2015
by
INTERNATIONAL CODE COUNCIL, INC.

ALL RIGHTS RESERVED. This 2015 *International Residential Code® Commentary—Volume II* is a copyrighted work owned by the International Code Council, Inc. Without advance written permission from the copyright owner, no part of this book may be reproduced, distributed or transmitted in any form or by any means, including, without limitation, electronic, optical or mechanical means (by way of example, and not limitation, photocopying, or recording by or in an information storage retrieval system). For information on permission to copy material exceeding fair use, please contact: Publications, 4051 Flossmoor Road, Country Club Hills, IL 60478. Phone 1-888-ICC-SAFE (422-7233).

Trademarks: "International Code Council," the "International Code Council" logo and the "International Residential Code" are trademarks of the International Code Council, Inc.

PRINTED IN THE U.S.A.

INTERNATIONAL CODE COUNCIL®

Copyright © 2015 ICC. ALL RIGHTS RESERVED. Accessed by David Dammon on Jun 21, 2017 12:30:52 PM pursuant to License Agreement with ICC. No further reproduction or distribution authorized. ANY UNAUTHORIZED REPRODUCTION OR DISTRIBUTION IS A VIOLATION OF THE FEDERAL COPYRIGHT ACT AND THE LICENSE AGREEMENT, AND SUBJECT TO CIVIL AND CRIMINAL PENALTIES THEREUNDER.

PREFACE

The principal purpose of the Commentary is to provide a basic volume of knowledge and facts relating to building construction as it pertains to the regulations set forth in the 2015 *International Residential Code®*. The person who is serious about effectively designing, constructing and regulating buildings and structures will find the Commentary to be a reliable data source and reference to almost all components of the built environment.

As a follow-up to the *International Residential Code*, we offer a companion document, the *International Residential Code® Commentary—Volume II*. Volume II covers Chapters 12 through Appendix Q of the 2015 *International Residential Code*. The basic appeal of the Commentary is thus: it provides, in a small package and at reasonable cost, thorough coverage of many issues likely to be dealt with when using the *International Residential Code* — and then supplements that coverage with historical and technical background. Reference lists, information sources and bibliographies are also included.

Throughout all of this, strenuous effort has been made to keep the vast quantity of material accessible and its method of presentation useful. With a comprehensive yet concise summary of each section, the Commentary provides a convenient reference for regulations applicable to the construction of buildings and structures. In the chapters that follow, discussions focus on the full meaning and implications of the code text. Guidelines suggest the most effective method of application, and the consequences of not adhering to the code text. Illustrations are provided to aid understanding; they do not necessarily illustrate the only methods of achieving code compliance.

The format of the Commentary includes the full text of each section, table and figure in the code, followed immediately by the commentary applicable to that text. At the time of printing, the Commentary reflects the most up-to-date text of the 2015 *International Residential Code*. Each section's narrative includes a statement of its objective and intent, and usually includes a discussion about why the requirement commands the conditions set forth. Code text and commentary text are easily distinguished from each other. All code text is shown as it appears in the *International Residential Code*, and all commentary is indented below the code text and begins with the symbol ❖. All code figures and tables are reproduced as they appear in the IRC. Commentary figures and tables are identified in the text by the word "Commentary" (as in "see Commentary Figure 704.3"), and each has a full border.

Readers should note that the Commentary is to be used in conjunction with the *International Residential Code* and not as a substitute for the code. **The Commentary is advisory only;** the code official alone possesses the authority and responsibility for interpreting the code.

Comments and recommendations are encouraged, for through your input, we can improve future editions. Please direct your comments to the Codes and Standards Development Department at the Central Regional Office.

INTERNATIONAL CODE COUNCIL®

Copyright © 2015 ICC. ALL RIGHTS RESERVED. Accessed by David Dammon on Jun 21, 2017 12:30:52 PM pursuant to License Agreement with ICC. No further reproduction or distribution authorized. ANY UNAUTHORIZED REPRODUCTION OR DISTRIBUTION IS A VIOLATION OF THE FEDERAL COPYRIGHT ACT AND THE LICENSE AGREEMENT, AND SUBJECT TO CIVIL AND CRIMINAL PENALTIES THEREUNDER.

INTERNATIONAL CODE COUNCIL®
Copyright © 2015 ICC. ALL RIGHTS RESERVED. Accessed by David Dammon on Jun 21, 2017 12:30:52 PM pursuant to License Agreement with ICC. No further reproduction or distribution authorized. ANY UNAUTHORIZED REPRODUCTION OR DISTRIBUTION IS A VIOLATION OF THE FEDERAL COPYRIGHT ACT AND THE LICENSE AGREEMENT, AND SUBJECT TO CIVIL AND CRIMINAL PENALTIES THEREUNDER.

TABLE OF CONTENTS

Part V—Mechanical

CHAPTER 12 MECHANICAL ADMINISTRATION . . . . . 12-1 – 12-2

CHAPTER 13 GENERAL MECHANICAL SYSTEM REQUIREMENTS . . . . . 13-1 – 13-18

CHAPTER 14 HEATING AND COOLING EQUIPMENT AND APPLIANCES . . . . . 14-1 – 14-16

CHAPTER 15 EXHAUST SYSTEMS . . . . . 15-1 – 15-14

CHAPTER 16 DUCT SYSTEMS . . . . . 16-1 – 16-20

CHAPTER 17 COMBUSTION AIR . . . . . 17-1 – 17-2

CHAPTER 18 CHIMNEYS AND VENTS . . . . . 18-1 – 18-14

CHAPTER 19 SPECIAL APPLIANCES, EQUIPMENT AND SYSTEMS . . . . . 19-1 – 19-4

CHAPTER 20 BOILERS AND WATER HEATERS . . . . . 20-1 – 20-8

CHAPTER 21 HYDRONIC PIPING . . . . . 21-1 – 21-10

CHAPTER 22 SPECIAL PIPING AND STORAGE SYSTEMS . . . . . 22-1 – 22-4

CHAPTER 23 SOLAR THERMAL ENERGY SYSTEMS . . . . . 23-1 – 23-8

Part VI—Fuel Gas

CHAPTER 24 FUEL GAS . . . . . 24-1 – 24-264

Part VII—Plumbing

CHAPTER 25 PLUMBING ADMINISTRATION . . . . . 25-1 – 25-6

CHAPTER 26 GENERAL PLUMBING REQUIREMENTS . . . . . 26-1 – 26-22

CHAPTER 27 PLUMBING FIXTURES . . . . . 27-1 – 27-24

CHAPTER 28 WATER HEATERS . . . . . 28-1 – 28-12

CHAPTER 29 WATER SUPPLY AND DISTRIBUTION . . . . . 29-1 – 29-78

CHAPTER 30 SANITARY DRAINAGE . . . . . 30-1 – 30-38

CHAPTER 31 VENTS . . . . . 31-1 – 31-26

INTERNATIONAL CODE COUNCIL®

Copyright © 2015 ICC. ALL RIGHTS RESERVED. Accessed by David Dammon on Jun 21, 2017 12:30:52 PM pursuant to License Agreement with ICC. No further reproduction or distribution authorized. ANY UNAUTHORIZED REPRODUCTION OR DISTRIBUTION IS A VIOLATION OF THE FEDERAL COPYRIGHT ACT AND THE LICENSE AGREEMENT, AND SUBJECT TO CIVIL AND CRIMINAL PENALTIES THEREUNDER.

CHAPTER 32 TRAPS . . . . . 32-1 – 32-4

CHAPTER 33 STORM DRAINAGE . . . . . 33-1 – 33-4

Part VIII—Electrical

CHAPTER 34 GENERAL REQUIREMENTS . . . . . 34-1 – 34-20

CHAPTER 35 ELECTRICAL DEFINITIONS . . . . . 35-1 – 35-18

CHAPTER 36 SERVICES . . . . . 36-1 – 36-32

CHAPTER 37 BRANCH CIRCUIT AND FEEDER REQUIREMENTS . . . . . 37-1 – 37-22

CHAPTER 38 WIRING METHODS . . . . . 38-1 – 38-10

CHAPTER 39 POWER AND LIGHTING DISTRIBUTION . . . . . 39-1 – 39-48

CHAPTER 40 DEVICES AND LUMINAIRES . . . . . 40-1 – 40-14

CHAPTER 41 APPLIANCE INSTALLATION . . . . . 41-1 – 41-6

CHAPTER 42 SWIMMING POOLS . . . . . 42-1 – 42-18

CHAPTER 43 CLASS 2 REMOTE-CONTROL, SIGNALING AND POWER-LIMITED CIRCUITS . . . . . 43-1 – 43-4

Part IX—Referenced Standards

CHAPTER 44 REFERENCED STANDARDS . . . . . 44-1 – 44-28

APPENDIX A SIZING AND CAPACITIES OF GAS PIPING . . . . . A1 – A12

APPENDIX B SIZING OF VENTING SYSTEMS SERVING APPLIANCES EQUIPPED WITH DRAFT HOODS, CATEGORY I APPLIANCES, AND APPLIANCES LISTED FOR USE WITH TYPE B VENTS . . . . . B-1 – B-10

APPENDIX C EXIT TERMINALS OF MECHANICAL DRAFT AND DIRECT-VENT VENTING SYSTEMS . . . . . C-1 – C-2

APPENDIX D RECOMMENDED PROCEDURE FOR SAFETY INSPECTION OF AN EXISTING APPLIANCE INSTALLATION . . . . . D-1 – D-6

APPENDIX E MANUFACTURED HOUSING USED AS DWELLINGS . . . . . E-1 – E-14

APPENDIX F PASSIVE RADON GAS CONTROLS . . . . . F-1 – F-10

APPENDIX G PIPING STANDARDS FOR VARIOUS APPLICATIONS . . . . . G-1 – G-6

INTERNATIONAL CODE COUNCIL®

Copyright © 2015 ICC. ALL RIGHTS RESERVED. Accessed by David Dammon on Jun 21, 2017 12:30:52 PM pursuant to License Agreement with ICC. No further reproduction or distribution authorized. ANY UNAUTHORIZED REPRODUCTION OR DISTRIBUTION IS A VIOLATION OF THE FEDERAL COPYRIGHT ACT AND THE LICENSE AGREEMENT, AND SUBJECT TO CIVIL AND CRIMINAL PENALTIES THEREUNDER.

APPENDIX H PATIO COVERS . . . . . H-1 – H-6

APPENDIX I PRIVATE SEWAGE DISPOSAL. . . . . I-1 – I-2

APPENDIX J EXISTING BUILDINGS AND STRUCTURES . . . . . J-1 – J-10

APPENDIX K SOUND TRANSMISSION . . . . . K-1 – K-2

APPENDIX L PERMIT FEES. . . . . L-1 – L-2

APPENDIX M HOME DAY CARE—R-3 OCCUPANCY . . . . . M-1 – M-2

APPENDIX N VENTING METHODS . . . . . N-1 – N-6

APPENDIX O AUTOMATIC VEHICULAR GATES. . . . . O-1 – O-2

APPENDIX P SIZING OF WATER PIPING SYSTEM. . . . . P-1 – P-20

APPENDIX Q RESERVED . . . . . Q1 – Q-2

APPENDIX R LIGHT STRAW-CLAY CONSTRUCTION. . . . . R1 – R10

APPENDIX S STRAWBALE CONSTRUCTION. . . . . S1 – S28

APPENDIX T RECOMMENDED PROCEDURE FOR WORST-CASE TESTING OF ATMOSPHERIC VENTING SYSTEMS UNDER N1102.4 OR N1105 CONDITIONS < 5ACH$_{50}$ . . . . . T1 – T4

APPENDIX U SOLAR-READY PROVISIONS—DETACHED ONE- AND TWO-FAMILY DWELLINGS, MULTIPLE SINGLE-FAMILY DWELLINGS (TOWNHOUSES). . . . . U1 – U2

INDEX . . . . . INDEX-1 – INDEX-14

INTERNATIONAL CODE COUNCIL®

Copyright © 2015 ICC. ALL RIGHTS RESERVED. Accessed by David Dammon on Jun 21, 2017 12:30:52 PM pursuant to License Agreement with ICC. No further reproduction or distribution authorized. ANY UNAUTHORIZED REPRODUCTION OR DISTRIBUTION IS A VIOLATION OF THE FEDERAL COPYRIGHT ACT AND THE LICENSE AGREEMENT, AND SUBJECT TO CIVIL AND CRIMINAL PENALTIES THEREUNDER.

INTERNATIONAL CODE COUNCIL®
Copyright © 2015 ICC. ALL RIGHTS RESERVED. Accessed by David Dammon on Jun 21, 2017 12:30:52 PM pursuant to License Agreement with ICC. No further reproduction or distribution authorized. ANY UNAUTHORIZED REPRODUCTION OR DISTRIBUTION IS A VIOLATION OF THE FEDERAL COPYRIGHT ACT AND THE LICENSE AGREEMENT, AND SUBJECT TO CIVIL AND CRIMINAL PENALTIES THEREUNDER.

Part V—Mechanical

Chapter 12: Mechanical Administration

General Comments

Chapter 12 provides regulations for the administration of the mechanical provisions of the code. Though this may be the smallest chapter in the code, it is very important in that it defines the application of the mechanical provisions to both existing and new construction. It also relates this chapter to the administrative provisions in Chapter 1.

Section M1201 addresses this set of mechanical regulations' relationship with Chapter 1 and the validity of the standards that are referenced. Section M1202 provides the applicability to existing mechanical systems. While the code mainly deals with new systems, this section indicates that some existing situations may fall under the requirements in the chapter.

Purpose

A set of mechanical regulations is intended to be adopted as a legally enforceable document that can safeguard health, safety, property and public welfare. Such regulations cannot be effective without adequate provisions for their administration and enforcement. The official charged with the administration and enforcement of mechanical regulations has a great responsibility, and with this responsibility goes authority. No matter how detailed the mechanical regulations may be, the building official must, to some extent, exercise judgement in determining code compliance. She or he has the responsibility to establish that the homes in which the citizens of the community reside are designed and constructed to be reasonably free from hazards associated with the presence and use of mechanical equipment, appliances and systems.

SECTION M1201 GENERAL

M1201.1 Scope. The provisions of Chapters 12 through 24 shall regulate the design, installation, maintenance, *alteration* and inspection of mechanical systems that are permanently installed and used to control environmental conditions within buildings. These chapters shall also regulate those mechanical systems, system components, *equipment* and *appliances* specifically addressed in this code.

❖ This section lists the chapters in the code that regulate mechanical systems. It indicates that the design, installation, and maintenance of mechanical equipment used to control the environmental conditions within the building are regulated by these chapters. It also states that other mechanical systems specifically addressed within these chapters are so regulated. Other provisions in the code reference the *International Mechanical Code*® (IMC®) and the *International Fuel Gas Code*® (IFGC®). This regulates virtually all mechanical systems and equipment within a dwelling in some form or another.

M1201.2 Application. In addition to the general administration requirements of Chapter 1, the administrative provisions of this chapter shall also apply to the mechanical requirements of Chapters 13 through 24.

❖ This section makes reference to the administrative requirements of Chapter 1 to include those administrative provisions and make them applicable to the mechanical chapters.

SECTION M1202 EXISTING MECHANICAL SYSTEMS

M1202.1 Additions, alterations or repairs. *Additions, alterations,* renovations or repairs to a mechanical system shall conform to the requirements for a new mechanical system without requiring the existing mechanical system to comply with all of the requirements of this code. *Additions, alterations* or repairs shall not cause an existing mechanical system to become unsafe, hazardous or overloaded. Minor *additions, alterations* or repairs to existing mechanical systems shall meet the provisions for new construction, unless such work is done in the same manner and arrangement as was in the existing system, is not hazardous, and is *approved*.

❖ Major alterations or additions to existing mechanical systems must comply with the provisions of the code. However, the code does not require existing systems to be upgraded to comply with new requirements unless the alteration or addition renders the existing system unsafe, overloaded or hazardous.

INTERNATIONAL CODE COUNCIL®
Copyright © 2015 ICC. ALL RIGHTS RESERVED. Accessed by David Dammon on Jun 21, 2017 12:30:52 PM pursuant to License Agreement with ICC. No further reproduction or distribution authorized. ANY UNAUTHORIZED REPRODUCTION OR DISTRIBUTION IS A VIOLATION OF THE FEDERAL COPYRIGHT ACT AND THE LICENSE AGREEMENT, AND SUBJECT TO CIVIL AND CRIMINAL PENALTIES THEREUNDER.

Minor additions, alterations or repairs to existing mechanical systems may be made following the same manner and arrangement as was found for the existing systems, as long as the work does not render the existing and new system unsafe, hazardous or overloaded. The building official has to make a judgement call on the extent of the addition, alteration or repair and determine whether the work is "minor," thereby allowing the use of the provisions of the old code, or that it is "major," thereby requiring the new work to be in compliance with the new code. Only when the new work makes the existing system overloaded, unsafe or hazardous does the building official need to require bringing the existing system up to the new provisions of the code.

M1202.2 Existing installations. Except as otherwise provided for in this code, a provision in this code shall not require the removal, *alteration* or abandonment of, nor prevent the continued use and maintenance of, an existing mechanical system lawfully in existence at the time of the adoption of this code.

❖ An existing mechanical system is generally "grandfathered" with code adoption, provided that the system meets a minimum level of safety. Frequently the criteria for determining this level of safety are the regulations (or code) under which the existing building was originally constructed. If there are no previous code criteria that apply, the building official is to apply those provisions of the code that are reasonably applicable to existing buildings. Provisions dealing with hazard abatement in existing buildings and provisions dealing with maintenance, as contained in the property maintenance and fire prevention codes, dictate a specific level of safety.

M1202.3 Maintenance. Mechanical systems, both existing and new, and parts thereof shall be maintained in proper operating condition in accordance with the original design and in a safe and sanitary condition. Devices or safeguards that are required by this code shall be maintained in compliance with the code edition under which installed. The owner or the owner's designated agent shall be responsible for maintenance of the mechanical systems. To determine compliance with this provision, the *building official* shall have the authority to require a mechanical system to be reinspected.

❖ This section allows the continued use of an existing mechanical system if it was originally lawfully permitted and installed. Periodic adoption of new codes or new provisions that may affect an existing system does not require upgrading the system to comply with the new provisions. However, this is predicated on the system being maintained by the owner in proper operating condition, in accordance with the manufacturer's requirements. The building official has the authority, as provided for in this section, to require the inspection of a mechanical system to determine whether work was performed to maintain the equipment in a safe operating condition. If the system becomes hazardous or unsafe, the building official has the authority to require repair, modification or even replacement to render the installation safe.

Bibliography

The following resource materials were used in the preparation of the commentary for this chapter of the code:

IFGC–15, *International Fuel Gas Code*. Washington, DC: International Code Council, 2014.

IMC–15, *International Mechanical Code*. Washington, DC: International Code Council, 2014.

Legal Aspects of Code Administration. Washington, DC: International Code Council, 2002.

INTERNATIONAL CODE COUNCIL®

Copyright © 2015 ICC. ALL RIGHTS RESERVED. Accessed by David Dammon on Jun 21, 2017 12:30:52 PM pursuant to License Agreement with ICC. No further reproduction or distribution authorized. ANY UNAUTHORIZED REPRODUCTION OR DISTRIBUTION IS A VIOLATION OF THE FEDERAL COPYRIGHT ACT AND THE LICENSE AGREEMENT, AND SUBJECT TO CIVIL AND CRIMINAL PENALTIES THEREUNDER.

Chapter 13:
General Mechanical System Requirements

General Comments

This chapter contains the provisions that apply to various types of mechanical appliances. The approval of appliances and their proper installation is the main theme. Section M1301 states the scope of the chapter and addresses its relationship with the *International Mechanical Code*® (IMC®) and the *International Fuel Gas Code*® (IFGC®). Section M1302 indicates that all mechanical appliances must be listed and labeled by an approved agency. Section M1303 addresses the information that is needed on the labels. Section M1304 discusses the proper design of appliances considering the appliances' type of fuel and the geographical location of the installed appliance. Section M1305 addresses access to installed appliances for servicing and potential replacement. Section M1306 contains the allowance for reduced clearances between appliances and combustible construction. Section M1307 contains the criteria for the safe installation of appliances. Section M1308 is a cross reference to the proper sections in the building portion of the code for the drilling and notching of structural members of the building.

Purpose

This chapter contains requirements for the safe and proper installation of mechanical equipment and appliances.

SECTION M1301
GENERAL

M1301.1 Scope. The provisions of this chapter shall govern the installation of mechanical systems not specifically covered in other chapters applicable to mechanical systems. Installations of mechanical *appliances, equipment* and systems not addressed by this code shall comply with the applicable provisions of the *International Mechanical Code* and the *International Fuel Gas Code.*

❖ This section provides general requirements for mechanical systems not specifically covered in other chapters of the code. In addition, it refers to the IMC and the IFGC for regulations governing equipment not addressed by the code.

M1301.1.1 Flood-resistant installation. In flood hazard areas as established by Table R301.2(1), mechanical *appliances, equipment* and systems shall be located or installed in accordance with Section R322.1.6.

❖ The local jurisdiction must fill in Table R301.2(1) upon adoption of the code, including the flood hazards information. Mechanical appliances, equipment, and systems that are located in flood hazard areas must be installed above the design flood elevation or must be designed and installed to prevent the entrance of water into the components and to resist the forces of the flood waters on the components (see commentary, Section R322.1.6).

M1301.2 Identification. Each length of pipe and tubing and each pipe fitting utilized in a mechanical system shall bear the identification of the manufacturer.

❖ The manufacturer is given the option of determining the type of marking for the material. If there is no applicable standard or the applicable standard does not require that the material be identified, identification of the manufacturer is still required by the code. Where the code indicates compliance with an approved standard, the manufacturer must comply with the requirements for marking in accordance with the applicable standard.

M1301.3 Installation of materials. Materials shall be installed in strict accordance with the standards under which the materials are accepted and approved. In the absence of such installation procedures, the manufacturer's instructions shall be followed. Where the requirements of referenced standards or manufacturer's instructions do not conform to minimum provisions of this code, the provisions of this code shall apply.

❖ Mechanical components and materials are to be installed in accordance with the installation requirements of the applicable standard listed in the code. Where a standard is not provided, the manufacturer's instructions must be followed. For example, because there are very few standards available that regulate the installation of valves, the manufacturer's instructions must be used to install these components. The code trumps where a referenced standard or manufacturer's instructions are less stringent than the code. It is rare, but the code may contain requirements that are more restrictive than the installation instructions or product listing.

M1301.4 Plastic pipe, fittings and components. Plastic pipe, fittings and components shall be third-party certified as conforming to NSF 14.

❖ Plastic piping, fittings and plastic pipe-related components, including solvent cements, primers, tapes, lubricants and seals used in mechanical systems, must be tested and certified as conforming to NSF 14. This

INTERNATIONAL CODE COUNCIL®
Copyright © 2015 ICC. ALL RIGHTS RESERVED. Accessed by David Dammon on Jun 21, 2017 12:30:52 PM pursuant to License Agreement with ICC. No further reproduction or distribution authorized. ANY UNAUTHORIZED REPRODUCTION OR DISTRIBUTION IS A VIOLATION OF THE FEDERAL COPYRIGHT ACT AND THE LICENSE AGREEMENT, AND SUBJECT TO CIVIL AND CRIMINAL PENALTIES THEREUNDER.

includes hydronic piping and fittings and plastic piping system components including but not limited to pipes, fittings, valves, joining materials, gaskets and appurtenances. This section does not apply to components that only include plastic parts such as brass valves with a plastic stem.

M1301.5 Third-party testing and certification. Piping, tubing and fittings shall comply with the applicable referenced standards, specifications and performance criteria of this code and shall be identified in accordance with Section M1301.2. Piping, tubing and fittings shall either be tested by an approved third-party testing agency or certified by an approved third-party certification agency.

❖ This section requires that all piping, tubing and fittings comply with the referenced standards. However, the provisions contained in Section 104.11 regarding the evaluation and approval of alternative materials, methods and equipment are still applicable (see commentary, Section 104.11). Additionally, the code has been revised to include requirements for third-party certification and testing of such products. "Third-party certified" indicates that the minimum level of quality required by the applicable standard is maintained and the product is often referred to as "listed." "Third-party tested" indicates a product that has been tested by an approved testing laboratory and found to be in compliance with the standard. Although the code does not specifically state the identification or marking requirements, except for the manufacturer's identification, the applicable referenced standard states the minimum information required. The identification or marking requirements typically include the name of the manufacturer, product name or serial number, installation specifications, applicable tests and standards, testing agency and labeling agency.

SECTION M1302
APPROVAL

M1302.1 Listed and labeled. *Appliances* regulated by this code shall be *listed* and *labeled* for the application in which they are installed and used, unless otherwise *approved* in accordance with Section R104.11.

❖ Mechanical appliances must be listed and labeled by an approved agency to show that they comply with applicable national standards. The code requires listing and labeling for appliances such as boilers, furnaces, space heaters, cooking appliances and clothes dryers. The code also requires listing for system components. The label is the primary, if not the only, assurance to the installer, the inspector and the end user that a similar appliance has been tested and evaluated by an approved agency and performed safely and efficiently when installed and operated in accordance with its listing.

The label is part of the information that the code official is to consider in the approval of appliances. The only exception to the labeling requirement occurs when the code official approves a specific appliance in accordance with the authority granted in Section R104.11.

The requirement that appliances are to be used only in accordance with their listing is intended to prevent the use of products that have a listing for some application but are being used in a different application for which they have not been tested. An example would be a fan that is listed for use only as a bathroom exhaust fan but is installed for use as a kitchen exhaust hood fan or as a clothes dryer booster fan. Another potential misapplication could be an appliance that has been tested and listed for indoor installation only, but is installed outdoors. Such misapplications have the potential to create hazardous situations.

The code official should exercise extreme caution when considering the approval of unlisted appliances.

Approval of unlisted appliances must be based on some form of documentation that demonstrates compliance with the applicable standards or equivalence with an appliance that is listed and labeled to the applicable standards. Where no product standards exist, documentation must be provided to demonstrate that the appliance is appropriate for the intended use and will provide the same level of performance as would be expected from a similar appliance that is listed and labeled. Sometimes appliances are listed in the field on a case-by-case basis using requirements or outlines of investigation derived from relative appliance standards. One fundamental principle of the code is the reliance on the listing and labeling process to ensure appliance performance. Approvals granted in accordance with Section R104.11 must be justified with supporting documentation. To the code official, installer and end-user very little is known about the performance of an appliance that is not tested and built to an appliance standard.

SECTION M1303
LABELING OF APPLIANCES

M1303.1 Label information. A permanent factory-applied nameplate(s) shall be affixed to *appliances* on which shall appear, in legible lettering, the manufacturer's name or trademark, the model number, a serial number and the seal or *mark* of the testing agency. A *label* also shall include the following:

1. Electrical *appliances*. Electrical rating in volts, amperes and motor phase; identification of individual electrical components in volts, amperes or watts and motor phase; and in Btu/h (W) output and required clearances.
2. Absorption units. Hourly rating in Btu/h (W), minimum hourly rating for units having step or automatic modulating controls, type of fuel, type of refrigerant, cooling capacity in Btu/h (W) and required clearances.
3. Fuel-burning units. Hourly rating in Btu/h (W), type of fuel *approved* for use with the *appliance* and required clearances.
4. Electric comfort-heating appliances. The electric rating in volts, amperes and phase; Btu/h (W) output rating; individual marking for each electrical component in

INTERNATIONAL CODE COUNCIL®
Copyright © 2015 ICC. ALL RIGHTS RESERVED. Accessed by David Dammon on Jun 21, 2017 12:30:52 PM pursuant to License Agreement with ICC. No further reproduction or distribution authorized. ANY UNAUTHORIZED REPRODUCTION OR DISTRIBUTION IS A VIOLATION OF THE FEDERAL COPYRIGHT ACT AND THE LICENSE AGREEMENT, AND SUBJECT TO CIVIL AND CRIMINAL PENALTIES THEREUNDER.

amperes or watts, volts and phase; and required clearances from combustibles.

5. Maintenance instructions. Required regular maintenance actions and title or publication number for the operation and maintenance manual for that particular model and type of product.

❖ This section requires that appliances have a label that is a permanent nameplate. In general, labels other than metal tags or plates usually consist of material that is similar in appearance to a decal, and the label, its adhesive and the printed information are all durable and water resistant. Because of the important information on a label, the label must be permanent, not susceptible to damage and legible for the life of the appliance. The standards appliances are tested to usually specify the required label material, the method of attachment and the required label information. The code requires that the label be affixed permanently and prominently on the appliance or equipment and specifies the information that must appear on the label. The manufacturer may be required by the relevant standard or may voluntarily provide additional information on the label (see Commentary Figure M1303.1).

SECTION M1304
TYPE OF FUEL

M1304.1 Fuel types. Fuel-fired *appliances* shall be designed for use with the type of fuel to which they will be connected and the altitude at which they are installed. *Appliances* that comprise parts of the building mechanical system shall not be converted for the use of a different fuel, except where *approved* and converted in accordance with the manufacturer's instructions. The fuel input rate shall not be increased or decreased beyond the limit rating for the altitude at which the *appliance* is installed.

❖ An element of information used for the approval of appliances is the label, which ensures that the appliance has been tested in accordance with a valid standard and performed acceptably when installed and operated in accordance with the appliance listing. Manufacturers usually design mechanical appliances to

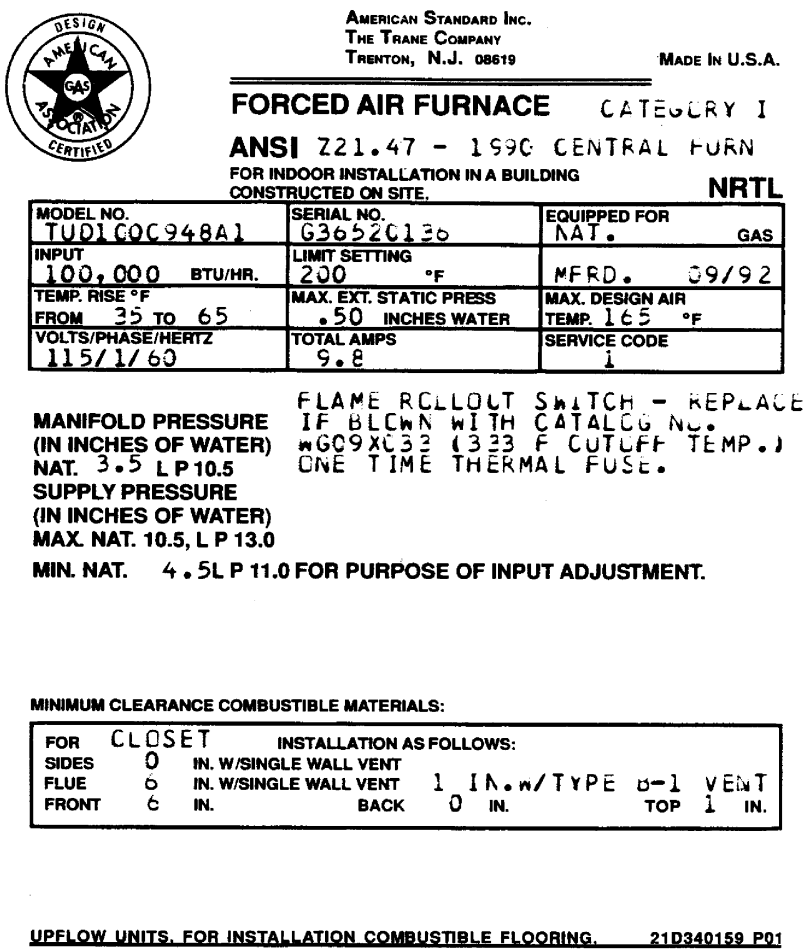

Figure M1303.1
TYPICAL LABEL FOR A CATEGORY I GAS-FIRED FURNACE
(Courtesy of The Trane Company and American Standard Company)

INTERNATIONAL CODE COUNCIL®
Copyright © 2015 ICC. ALL RIGHTS RESERVED. Accessed by David Dammon on Jun 21, 2017 12:30:52 PM pursuant to License Agreement with ICC. No further reproduction or distribution authorized. ANY UNAUTHORIZED REPRODUCTION OR DISTRIBUTION IS A VIOLATION OF THE FEDERAL COPYRIGHT ACT AND THE LICENSE AGREEMENT, AND SUBJECT TO CIVIL AND CRIMINAL PENALTIES THEREUNDER.

operate on a specific type of fuel. Thus, the fuel used in the appliance test must be the type of fuel specified by the manufacturer on the label. When an appliance is converted to a different type of fuel, the original label that appears on the appliance is no longer valid. Because the original approval of the appliance was based in part on the label, the appliance is no longer approved for use.

Field conversions will more likely allow for the safe operation of the appliance if, as required, the conversion is approved by the code official and done in accordance with the manufacturer's installation instructions. Fuel conversions that are not performed correctly can cause serious malfunctions and hazardous operation. Before a fuel conversion is performed, the manufacturer must be contacted for installation instructions outlining the procedures to follow for proper operation of the appliance. In most cases, conversion kits from the manufacturer are available along with the installation instructions. Once a conversion has been completed, a supplemental label must be installed to update the information contained on the original label, thereby alerting any service personnel of the modifications that have been made.

All fuel-fired appliances are designed to operate with a maximum and minimum British thermal units per hour (Btu/h) input capacity. This capacity is field adjusted to suit the elevation because of the change in air density at different elevations. Alteration of Btu/h input beyond the allowable limits can result in hazardous over-firing or under-firing. Either condition can cause operation problems that include overheating, vent failure, corrosion, poor draft and poor combustion.

SECTION M1305
APPLIANCE ACCESS

M1305.1 Appliance access for inspection service, repair and replacement. *Appliances* shall be accessible for inspection, service, repair and replacement without removing permanent construction, other *appliances,* or any other piping or ducts not connected to the *appliance* being inspected, serviced, repaired or replaced. A level working space not less than 30 inches deep and 30 inches wide (762 mm by 762 mm) shall be provided in front of the control side to service an *appliance*.

❖ Because mechanical equipment and appliances require routine maintenance, repair and possible replacement, access is required. Additionally, manufacturer's installation instructions usually contain access recommendations or requirements. As a result, the provisions stated herein supplement the manufacturer's installation instructions.

The provisions of this section specify that access must be provided to components that require observation, inspection, adjustment, servicing, repair or replacement. Access is also necessary for operating procedures such as startup or shutdown. The level working space in front of the control side of the appliance must be 30 inches (762 mm) wide and 30 inches (762 mm) deep to provide adequate space for the technician or inspector to safely perform the work.

The code states that "accessible" means "access that might require the removal of an access panel or similar removable obstruction." An appliance or piece of equipment is not accessible if any portion of the structure's permanent finish materials, such as drywall, plaster, paneling, built-in furniture or cabinets or any other similar permanently affixed building component, must be removed before access is achieved. In addition, removal of all or part of another appliance or the piping or duct or serving other appliances must not be necessary to perform the service, replacement or inspection of an appliance. Such an installation could result in unnecessarily high costs to the homeowner and improper or unsafe reassembly of other appliance and system components. This could also result in service personnel having to perform disassembly and reassembly of appliances and system components that are not within the personnel's area of expertise or licensed work.

The intent is to provide access to all components such as controls, gauges, burners, filters, blowers and motors that require observation, inspection, adjustment, servicing, repair or replacement.

M1305.1.1 Furnaces and air handlers. Furnaces and air handlers within compartments or alcoves shall have a minimum working space clearance of 3 inches (76 mm) along the sides, back and top with a total width of the enclosing space being not less than 12 inches (305 mm) wider than the furnace or air handler. Furnaces having a firebox open to the atmosphere shall have not less than a 6-inch (152 mm) working space along the front combustion chamber side. Combustion air openings at the rear or side of the compartment shall comply with the requirements of Chapter 17.

Exception: This section shall not apply to replacement *appliances* installed in existing compartments and alcoves where the working space clearances are in accordance with the *equipment* or *appliance* manufacturer's installation instructions.

❖ Furnaces and air handlers installed in compartments or alcoves must have clearances from the enclosure so that they can be removed, maintained or repaired as necessary. The minimum clearances specified in the code apply even though the manufacturer's instructions might permit a lesser clearance. Clearances provide access, ventilation, cooling of the appliance and equipment and protection for surrounding combustibles. The front (firebox) clearance helps protect combustibles against flame rollout and allows free movement of combustion air. The exception exempts replacement appliances and equipment installed in existing compartments or alcoves if the installation complies with the manufacturer's instructions. The manufacturer's installation instructions usually contain minimum workspace requirements and minimum clearances to surrounding construction that must be maintained.

INTERNATIONAL CODE COUNCIL®
Copyright © 2015 ICC. ALL RIGHTS RESERVED. Accessed by David Dammon on Jun 21, 2017 12:30:52 PM pursuant to License Agreement with ICC. No further reproduction or distribution authorized. ANY UNAUTHORIZED REPRODUCTION OR DISTRIBUTION IS A VIOLATION OF THE FEDERAL COPYRIGHT ACT AND THE LICENSE AGREEMENT, AND SUBJECT TO CIVIL AND CRIMINAL PENALTIES THEREUNDER.

M1305.1.2 Appliances in rooms. *Appliances* installed in a compartment, alcove, *basement* or similar space shall be accessed by an opening or door and an unobstructed passageway measuring not less than 24 inches (610 mm) wide and large enough to allow removal of the largest *appliance* in the space, provided there is a level service space of not less than 30 inches (762 mm) deep and the height of the *appliance*, but not less than 30 inches (762 mm), at the front or service side of the *appliance* with the door open.

❖ This section specifies an access opening and passageway to afford service personnel reasonable access to appliances and to allow for the passage of system components. Quite often appliances such as furnaces, boilers and water heaters are installed in spaces with little or no forethought about future access for maintenance or replacement.

M1305.1.3 Appliances in attics. *Attics* containing *appliances* shall be provided with an opening and a clear and unobstructed passageway large enough to allow removal of the largest *appliance*, but not less than 30 inches (762 mm) high and 22 inches (559 mm) wide and not more than 20 feet (6096 mm) long measured along the centerline of the passageway from the opening to the *appliance*. The passageway shall have continuous solid flooring in accordance with Chapter 5 not less than 24 inches (610 mm) wide. A level service space not less than 30 inches (762 mm) deep and 30 inches (762 mm) wide shall be present along all sides of the *appliance* where access is required. The clear access opening dimensions shall be not less than of 20 inches by 30 inches (508 mm by 762 mm), and large enough to allow removal of the largest appliance.

Exceptions:

1. The passageway and level service space are not required where the *appliance* can be serviced and removed through the required opening.
2. Where the passageway is unobstructed and not less than 6 feet (1829 mm) high and 22 inches (559 mm) wide for its entire length, the passageway shall be not more than 50 feet (15 250 mm) long.

❖ There is not always sufficient room for mechanical equipment and appliances to be installed in spaces such as basements, alcoves, utility rooms and furnace rooms. In an effort to save floor space or simplify an installation, designers often locate appliances and mechanical equipment on roofs, in attics or in similar remote locations. Access to appliances and equipment could be difficult because of roof slope, stone roof ballast or the lack of a walking surface, such as might occur in an attic or similar space with exposed ceiling joists. The intent of this section is to require a suitable access opening, passageway and workspace that will allow reasonably easy access without endangering the service person (see Commentary Figure M1305.1.3).

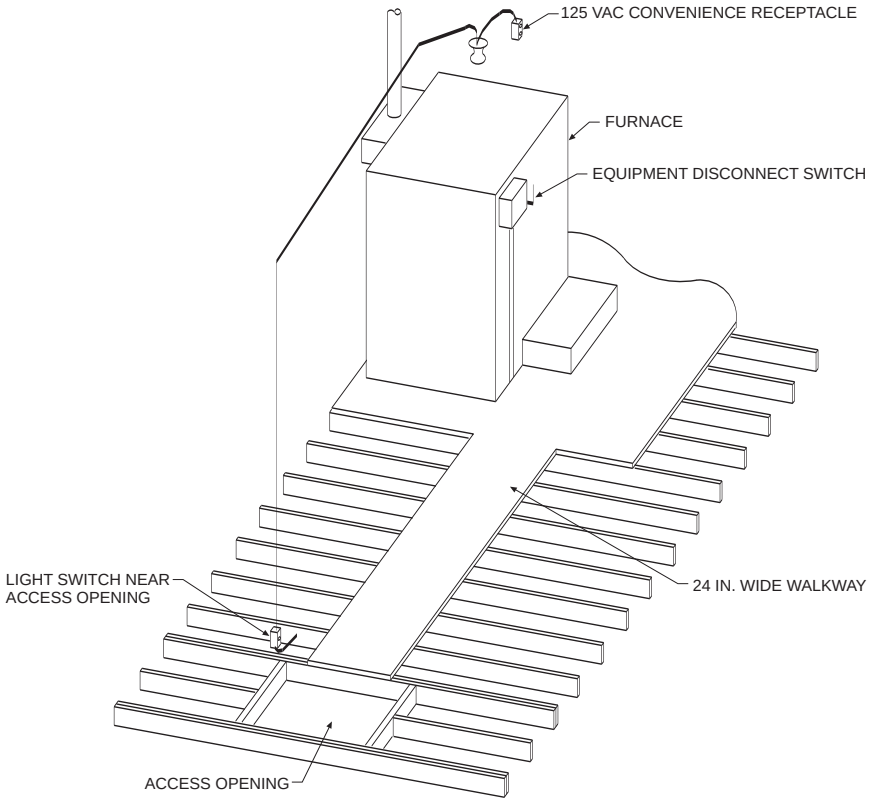

For SI: 1 inch = 25.4 mm.

Figure M1305.1.3
REMOTE LOCATION REQUIREMENTS (ATTIC INSTALLATION)

INTERNATIONAL CODE COUNCIL®
Copyright © 2015 ICC. ALL RIGHTS RESERVED. Accessed by David Dammon on Jun 21, 2017 12:30:52 PM pursuant to License Agreement with ICC. No further reproduction or distribution authorized. ANY UNAUTHORIZED REPRODUCTION OR DISTRIBUTION IS A VIOLATION OF THE FEDERAL COPYRIGHT ACT AND THE LICENSE AGREEMENT, AND SUBJECT TO CIVIL AND CRIMINAL PENALTIES THEREUNDER.

The longer the attic passageway, the more the service person will be exposed to extreme temperatures and the risk of injury. The attic access opening (typically a scuttle) must be large enough to allow the largest appliance in the attic to pass through such opening. For example, if an attic furnace is the largest appliance, the furnace itself should be able to be removed from the attic without having to disassemble the furnace. Of course, it is understood that ducts, plenums, cooling coil cabinets and other attachments might have to be disconnected from the furnace before removal is possible.

The first exception allows the passageway and level service space to be eliminated if the technician can reach the appliance through the access opening without having to step into the attic. The second exception allows the length of the passageway to be extended to 50 feet (15 250 mm) if there is at least 6 feet (1829 mm) of clear headroom for the entire length of the passageway. This is allowed because there is less danger of lengthy exposure to extreme temperatures if the service personnel can walk erect and unimpeded to the equipment rather than crawling.

Note that some appliances might not be listed for attic installation or might otherwise be unsuitable for such conditions.

M1305.1.3.1 Electrical requirements. A luminaire controlled by a switch located at the required passageway opening and a receptacle outlet shall be installed at or near the *appliance* location in accordance with Chapter 39. Exposed lamps shall be protected from damage by location or lamp guards.

❖ An appliance located in an attic is generally not easy to access. A lighting outlet and receptacle outlet encourage and facilitate appliance maintenance. The receptacle will accommodate power tools, drop lights and diagnostic instruments. Also, these provisions negate the need for extension cords, which can be hazardous to service personnel. The lighting outlet is to allow the attic space to be safely navigated and is not intended to provide the necessary lighting for servicing and repair of the appliances. Where exposed lamps (naked light bulbs) are installed as the required lighting outlets, they must be located out of harm's way or must be provided with a suitable lamp guard. If service personnel hit and break the lamp with their bodies, tools, parts or other objects, the result could be a shock and/or fire hazard, with the additional hazard of sudden darkness in a dangerous location.

M1305.1.4 Appliances under floors. Underfloor spaces containing *appliances* shall be provided with an unobstructed passageway large enough to remove the largest *appliance*, but not less than 30 inches (762 mm) high and 22 inches (559 mm) wide, nor more than 20 feet (6096 mm) long measured along the centerline of the passageway from the opening to the *appliance*. A level service space not less than 30 inches (762 mm) deep and 30 inches (762 mm) wide shall be present at the front or service side of the *appliance*. If the depth of the passageway or the service space exceeds 12 inches (305 mm) below the adjoining grade, the walls of the passageway shall be lined with concrete or masonry extending 4 inches (102 mm) above the adjoining grade in accordance with Chapter 4. The rough-framed access opening dimensions shall be not less than 22 inches by 30 inches (559 mm by 762 mm), and large enough to remove the largest *appliance*.

Exceptions:

1. The passageway is not required where the level service space is present when the access is open, and the *appliance* can be serviced and removed through the required opening.
2. Where the passageway is unobstructed and not less than 6 feet high (1929 mm) and 22 inches (559 mm) wide for its entire length, the passageway shall not be limited in length.

❖ This section, which applies to crawl spaces, has concepts similar to those of Section M1305.1.3. The more difficult the access to appliances and equipment is, the less likely that the appliance or equipment will be inspected and serviced on a regular basis. Attic and crawl space installations suffer from the "out-of-sight, out-of-mind" syndrome.

The first exception has the same intent as the first exception of Section M1305.1.3. The second exception allows unlimited length of the passageway if there is at least 6 feet (1829 mm) of clear headroom for the entire length of the passageway (see commentary, Section M1305.1.3).

M1305.1.4.1 Ground clearance. *Equipment* and *appliances* supported from the ground shall be level and firmly supported on a concrete slab or other *approved* material extending not less than 3 inches (76 mm) above the adjoining ground. Such support shall be in accordance with the manufacturer's installation instructions. *Appliances* suspended from the floor shall have a clearance of not less than 6 inches (152 mm) from the ground.

❖ This section's requirement provides a buffer from the corrosive effects of an appliance's contact with the ground. If supported on the ground, the appliance is to rest on a material that will be a barrier between the appliance and the ground. Concrete is the material that is prescribed, but other approved materials could be used if they provide the same level of protection as the concrete. If the appliance is suspended from the floor assembly above the ground, a minimum separation of 6 inches (152 mm) is called out.

The slab or other support surface must be at least 3 inches (76 mm) above grade so that the appliance being supported will be well above grade and protected from prolonged exposure to moisture and soil. The 3-inch (76 mm) minimum also provides some protection against settling of the slab or support base.

M1305.1.4.2 Excavations. Excavations for *appliance* installations shall extend to a depth of 6 inches (152 mm) below the *appliance* and 12 inches (305 mm) on all sides, except that the control side shall have a clearance of 30 inches (762 mm).

❖ This section allows for appliances to be located below the level of the ground surface in underfloor areas.

INTERNATIONAL CODE COUNCIL®
Copyright © 2015 ICC. ALL RIGHTS RESERVED. Accessed by David Dammon on Jun 21, 2017 12:30:52 PM pursuant to License Agreement with ICC. No further reproduction or distribution authorized. ANY UNAUTHORIZED REPRODUCTION OR DISTRIBUTION IS A VIOLATION OF THE FEDERAL COPYRIGHT ACT AND THE LICENSE AGREEMENT, AND SUBJECT TO CIVIL AND CRIMINAL PENALTIES THEREUNDER.

Again, the concern is to provide a separation from the ground itself. Minimum clearances are provided in this section. The 30-inch-deep (762 mm) workspace is required for adequate access for servicing the appliance.

M1305.1.4.3 Electrical requirements. A luminaire controlled by a switch located at the required passageway opening and a receptacle outlet shall be installed at or near the *appliance* location in accordance with Chapter 39. Exposed lamps shall be protected from damage by location or lamp guards.

❖ This is the same requirement as found in Section M1305.1.3.1. Lighting and a power supply are required for the service of mechanical appliances. Note that Section E3902 requires ground fault circuit interrupter (GFCI) protection for crawl space receptacle outlets. Where exposed lamps (naked light bulbs) are installed as the required lighting outlets, they must be located out of harm's way or must be provided with a suitable lamp guard. If service personnel hit and break the lamp with their bodies, tools, parts or other objects, the result could be a shock and/or fire hazard, with the additional hazard of sudden darkness in a dangerous location.

SECTION M1306
CLEARANCES FROM COMBUSTIBLE CONSTRUCTION

M1306.1 Appliance clearance. *Appliances* shall be installed with the clearances from unprotected combustible materials as indicated on the *appliance label* and in the manufacturer's installation instructions.

❖ Requirements for clearances to combustibles are emphasized because of the potential fire hazard posed when those clearances are not observed. Maintaining an appropriate distance from the outer surface of an appliance or piece of equipment to combustible materials reduces the possibility of ignition of combustible materials. This section requires appliances to be installed with clearances from unprotected combustibles as indicated on the label for the listed appliance and the manufacturer's installation instructions. The minimum clearances to combustibles are specified in the manufacturer's installation instructions for a labeled appliance. Because an approved agency tests appliances in accordance with these instructions, the clearances required are necessary for the correct installation and operation of the appliance. Note, however, that this section does not include provisions or guidelines for the installation of unlisted appliances. Figure M1306.1 is a graphic image of the reduced clearances allowed by the code. It works in conjunction with Table M1306.2.

M1306.2 Clearance reduction. The reduction of required clearances to combustible assemblies or combustible materials shall be based on Section M1306.2.1 or Section M1306.2.2.

❖ See the commentary to Sections M1306.2.1 and M1306.2.2.

M1306.2.1 Labeled assemblies. The allowable clearance shall be based on an approved reduced clearance protective assembly that is listed and labeled in accordance with UL 1618.

❖ Listed and labeled clearance reduction assemblies are available that can be used to reduce clearances based on the testing and listing of the assemblies. Such assemblies may or may not require some field assembly. The manufacturer's instructions must be closely followed for assembly and installation in order to safely achieve the desired clearance reduction.

M1306.2.2 Reduction table. Reduction of clearances shall be in accordance with the *appliance* manufacturer's instructions and Table M1306.2. Forms of protection with ventilated air space shall conform to the following requirements:

1. Not less than 1-inch (25 mm) air space shall be provided between the protection and combustible wall surface.
2. Air circulation shall be provided by having edges of the wall protection open not less than 1 inch (25 mm).
3. If the wall protection is mounted on a single flat wall away from corners, air circulation shall be provided by having the bottom and top edges, or the side and top edges not less than 1 inch (25 mm).
4. Wall protection covering two walls in a corner shall be open at the bottom and top edges not less than 1 inch (25 mm).

❖ Heat-producing appliances and mechanical equipment must be installed with the required minimum clearances to combustible materials indicated by their listing label. It is not uncommon to encounter practical or structural difficulties in maintaining clearances. Therefore, clearance-reduction methods have been developed to allow, in some cases, reduction of the minimum prescribed clearance distance while achieving equivalent protection. An important understanding is that all prescribed clearances to combustibles are airspace clearances measured from the heat source to the face of the nearest combustible surface, even if that combustible surface is not visible. An example of that would be a wood stud wall located behind a metal panel. If installation of an appliance with the required clearances from combustibles is not possible, this section allows reduction of the clearances in accordance with Table M1306.2 if the appliance manufacturer's instructions allow the reductions to the extent desired. The table includes several forms of protection, depending on the extent of reduction. This section requires that a 1-inch (25 mm) air space be maintained between the protection and the combustible wall surface to allow unimpeded circulation of convection air needed to keep the temperature rise within acceptable limits. Most of the methods in Table M1306.2 depend on convective cooling as an essential part of the system (see Commentary Figure G2409.2).

When using the assemblies described in Table M1306.2, the clearance is measured as described in Note b. The required clearances are intended to be clear airspace, and therefore the space is not to be

INTERNATIONAL CODE COUNCIL®
Copyright © 2015 ICC. ALL RIGHTS RESERVED. Accessed by David Dammon on Jun 21, 2017 12:30:52 PM pursuant to License Agreement with ICC. No further reproduction or distribution authorized. ANY UNAUTHORIZED REPRODUCTION OR DISTRIBUTION IS A VIOLATION OF THE FEDERAL COPYRIGHT ACT AND THE LICENSE AGREEMENT, AND SUBJECT TO CIVIL AND CRIMINAL PENALTIES THEREUNDER.

filled with insulation or any other material other than an assembly intended to allow clearance reduction. This is especially important where clearances are required from appliances and equipment that rely on the airspace for convection cooling to maintain their proper operating temperature.

The provisions contained in this section are based on the principles of heat transfer. Mechanical equipment or appliances producing heat can become hot, and many appliances have hot exterior surfaces by design. The heat energy is then radiated to objects surrounding the appliances or equipment. When mechanical equipment and appliances are tested, the minimum clearances are established so that radiant and, to a lesser extent, convective heat transfer do not represent an ignition hazard to adjacent surfaces and objects. This distance is called the "required clearance" to combustible materials. Appliance and equipment labels must specify minimum clearances in all directions.

This section permits the use of materials and systems as radiation shields, decreasing the amount of heat energy transferred to surrounding objects and reducing the required clearances between mechanical appliances and equipment to combustibles.

Plaster and gypsum by themselves are classified as noncombustible materials. Under continued exposure to heat, however, these materials will gradually decompose as water molecules are driven out of the material. Plaster on wood lath, plasterboard, sheetrock and drywall are all considered to be combustible materials when the code provisions are applied.

Additionally, gypsum wallboard has a paper face that has a flame spread index that is measurable in the ASTM E84 test. This alone identifies the need to classify gypsum wallboard as a combustible material for the purpose of requiring a separation from heat-producing equipment and appliances.

TABLE M1306.2. See page 13-9.

❖ The column headings of Table M1306.2 list required clearances without protection. The numbers to the right of each method indicate the permissible reduced clearance measured from the heat-producing appliances to the face of the combustible surface.

The rationale behind the methods of protection listed in Table M1306.2 is based on the ability of the protection to reduce radiant heat transmission from the appliance and equipment to the combustible material so that the temperature rise of the combustible material will remain below the maximum allowed.

Although the materials referred to in Table M1306.2 are common construction materials, confusion often arises over what satisfies the requirement for "insulation board" (Item 6 in the table), sometimes referred to as inorganic insulating board, noncombustible mineral board or noncombustible insulating board. These products are not made of carbon-based compounds.

Carbon-based compounds are those found in cellulose (wood), plastics and other materials manufactured from raw materials that once existed in living organisms. Cement board materials must have a specified maximum "C" (conductance) value in addition to being noncombustible.

Note h specifies a maximum thermal conductivity of Btu/(h · ft · °F). Conductivity is the amount of heat in Btus that will flow each hour through a 1-foot-square (0.0929 m^2) slab of material, 1-inch (25 mm) thick with a 1°F temperature difference between both sides and is usually identified by the symbol k. Tables of k values usually do not include the area term in the dimensions for conductivity, and it must be understood that the value must be multiplied by the area to obtain the total Btu value.

Thermal conductance (overall) is the time rate of heat flow through a body not taking thickness into account and is usually identified by the symbol C Btu/(h · ft^2 · °F).

Thermal resistance (overall) is the reciprocal of overall thermal conductance and is usually identified by the symbol R (hour · ft^2 · °F/Btu).

This translates into a minimum required insulation *R*-value of 1.0 (square foot · hour · °F)/Btu per inch of insulating material. The methods in Table M1306.2 control heat transmission by reflecting heat radiation, retarding thermal conductance and providing convective cooling. Where sheet metal materials or metal plates are specified, the effectiveness of the protection can be enhanced by the reflective surface of the metal. Painting or otherwise covering the surface would reduce the metal's ability to reflect radiant heat and, depending on the color, could increase heat absorption. The airspace between the protected surface and the clearance-reduction assembly allows convection air currents to cool the protection assembly by carrying away heat that has been conducted through the assembly. Where a clearance-reduction assembly must be spaced 1 inch (25 mm) off the wall, the top, bottom and sides of the assembly must remain open as required by Notes d and f to permit unrestricted airflow (convection currents). If the openings were not provided, the air-cooling effect would not take place, and the protection assembly would not be as effective in limiting the temperature rise on the protected surfaces. Ideally, the protection assembly should be open on all sides to provide maximum ventilation.

Spacers must be noncombustible. Spacers should not be placed directly behind the heat source because the location would increase the amount of heat conduction through the spacer, thus creating a "hot spot." Figure M1306.2 specifically shows a noncombustible spacer arrangement.

The performance of a protective assembly when applied to a horizontal surface, such as a ceiling, will differ substantially from the same assembly placed in a vertical plane. Obviously, temperatures at a ceiling surface will be higher because of natural convection and because the air circulation between the method of protection and the protected ceiling surface will be substantially reduced or nonexistent. It is for these reasons that Table M1306.2 is divided into two application groups.

INTERNATIONAL CODE COUNCIL®
Copyright © 2015 ICC. ALL RIGHTS RESERVED. Accessed by David Dammon on Jun 21, 2017 12:30:52 PM pursuant to License Agreement with ICC. No further reproduction or distribution authorized. ANY UNAUTHORIZED REPRODUCTION OR DISTRIBUTION IS A VIOLATION OF THE FEDERAL COPYRIGHT ACT AND THE LICENSE AGREEMENT, AND SUBJECT TO CIVIL AND CRIMINAL PENALTIES THEREUNDER.

The manufacturer's instructions or label for many appliances will state an absolute minimum clearance, regardless of any clearance reduction method used. Those clearance requirements take precedence over Table M1306.2. For example, a typical wood-burning room heater will require in all cases an airspace clearance of at least 12 inches (305 mm), with no further reduction allowed.

The methods in Table M1306.2 are intended to be permanent installations properly supported to prevent displacement or deformation. Movement could adversely affect the performance of the protection method, thus posing a potential fire hazard.

TABLE M1306.2
REDUCTION OF CLEARANCES WITH SPECIFIED FORMS OF PROTECTION[a, c, d, e, f, g, h, i, j, k, l]

TYPE OF PROTECTION APPLIED TO AND COVERING ALL SURFACES OF COMBUSTIBLE MATERIAL WITHIN THE DISTANCE SPECIFIED AS THE REQUIRED CLEARANCE WITH NO PROTECTION (See Figures M1306.1 and M1306.2)	WHERE THE REQUIRED CLEARANCE WITHOUT PROTECTION FROM APPLIANCE, VENT CONNECTOR, OR SINGLE WALL METAL PIPE IS:									
	36 inches		18 inches		12 inches		9 inches		6 inches	
	Allowable clearances with specified protection (Inches)[b]									
	Use column 1 for clearances above an appliance or horizontal connector. Use column 2 for clearances from an appliance, vertical connector and single-wall metal pipe.									
	Above column 1	Sides and rear column 2	Above column 1	Sides and rear column 2	Above column 1	Sides and rear column 2	Above column 1	Sides and rear column 2	Above column 1	Sides and rear column 2
$3^1/_2$-inch-thick masonry wall without ventilated air space	—	24	—	12	—	9	—	6	—	5
$^1/_2$-inch insulation board over 1-inch glass fiber or mineral wool batts	24	18	12	9	9	6	6	5	4	3
Galvanized sheet steel having a minimum thickness of 0.0236-inch (No. 24 gage) over 1-inch glass fiber or mineral wool batts reinforced with wire or rear face with a ventilated air space	18	12	9	6	6	4	5	3	3	3
$3^1/_2$-inch-thick masonry wall with ventilated air space	—	12	—	6	—	6	—	6	—	6
Galvanized sheet steel having a minimum thickness of 0.0236-inch (No. 24 gage) with a ventilated air space 1-inch off the combustible assembly	18	12	9	6	6	4	5	3	3	2
$^1/_2$-inch-thick insulation board with ventilated air space	18	12	9	6	6	4	5	3	3	3
Galvanized sheet steel having a minimum thickness of 0.0236-inch (No. 24 gage) with ventilated air space over 24 gage sheet steel with a ventilated space	18	12	9	6	6	4	5	3	3	3
1-inch glass fiber or mineral wool batts sandwiched between two sheets of galvanized sheet steel having a minimum thickness of 0.0236-inch (No. 24 gage) with a ventilated air space	18	12	9	6	6	4	5	3	3	3

For SI: 1 inch = 25.4 mm, 1 pound per cubic foot = 16.019 kg/m^3, °C = [(°F)-32/1.8], 1 Btu/(h × ft^2 × °F/in.) = 0.001442299 (W/cm^2 × °C/cm).

a. Reduction of clearances from combustible materials shall not interfere with combustion air, draft hood clearance and relief, and accessibility of servicing.

b. Clearances shall be measured from the surface of the heat producing appliance or equipment to the outer surface of the combustible material or combustible assembly.

c. Spacers and ties shall be of noncombustible material. Spacers and ties shall not be used directly opposite appliance or connector.

d. Where all clearance reduction systems use a ventilated air space, adequate provision for air circulation shall be provided as described. (See Figures M1306.1 and M1306.2.)

e. There shall be not less than 1 inch between clearance reduction systems and combustible walls and ceilings for reduction systems using ventilated air space.

f. If a wall protector is mounted on a single flat wall away from corners, adequate air circulation shall be permitted to be provided by leaving only the bottom and top edges or only the side and top edges open with not less than a 1-inch air gap.

g. Mineral wool and glass fiber batts (blanket or board) shall have a minimum density of 8 pounds per cubic foot and a minimum melting point of 1,500°F.

h. Insulation material used as part of a clearance reduction system shall have a thermal conductivity of 1.0 Btu inch per square foot per hour °F or less. Insulation board shall be formed of noncombustible material.

i. There shall be not less than 1 inch between the appliance and the protector. The clearance between the appliance and the combustible surface shall not be reduced below that allowed in this table.

j. All clearances and thicknesses are minimum; larger clearances and thicknesses are acceptable.

k. Listed single-wall connectors shall be permitted to be installed in accordance with the terms of their listing and the manufacturer's instructions.

l. For limitations on clearance reduction for solid-fuel-burning appliances see Section M1306.2.3.

INTERNATIONAL CODE COUNCIL®
Copyright © 2015 ICC. ALL RIGHTS RESERVED. Accessed by David Dammon on Jun 21, 2017 12:30:52 PM pursuant to License Agreement with ICC. No further reproduction or distribution authorized. ANY UNAUTHORIZED REPRODUCTION OR DISTRIBUTION IS A VIOLATION OF THE FEDERAL COPYRIGHT ACT AND THE LICENSE AGREEMENT, AND SUBJECT TO CIVIL AND CRIMINAL PENALTIES THEREUNDER.

The assemblies in Table M1306.2 are the product of experience and testing. To achieve predictable and dependable performance, the components of the various assemblies cannot be mixed, matched, combined, substituted or otherwise rearranged to comprise new assemblies, and materials cannot be substituted for those prescribed in the table. Any alterations or substitutions could have an effect on the assembly, and its performance would have to be tested and approved.

As stated in Note b to the table, the reduced clearance is measured from the heat source to the combustible material, disregarding any intervening protection assembly.

Note l serves to remind the table user that Section M1306.2.1 puts severe limitations on reducing clearances to solid-fuel appliances.

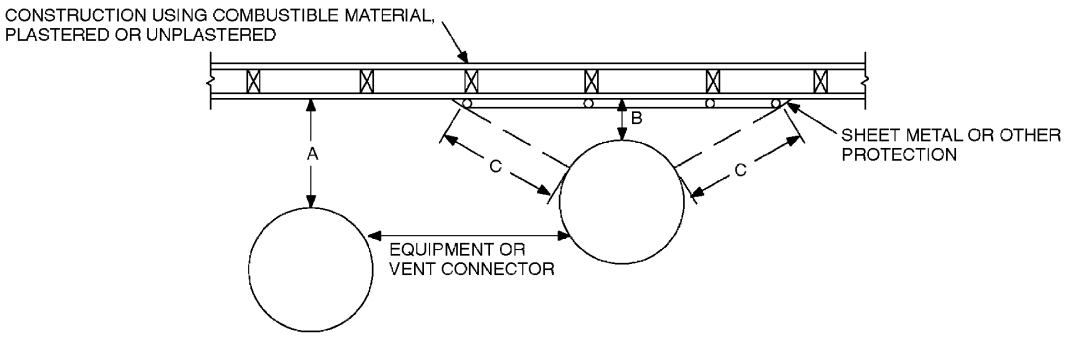

Note: "A" equals the required clearance with no protection. "B" equals the reduced clearance permitted in accordance with Table M1306.2. The protection applied to the construction using combustible material shall extend far enough in each direction to make "C" equal to "A."

FIGURE M1306.1
REDUCED CLEARANCE DIAGRAM

❖ Figure M1306.1 is a graphic image of the reduced clearances allowed by the code. It works in conjunction with Table M1306.2.

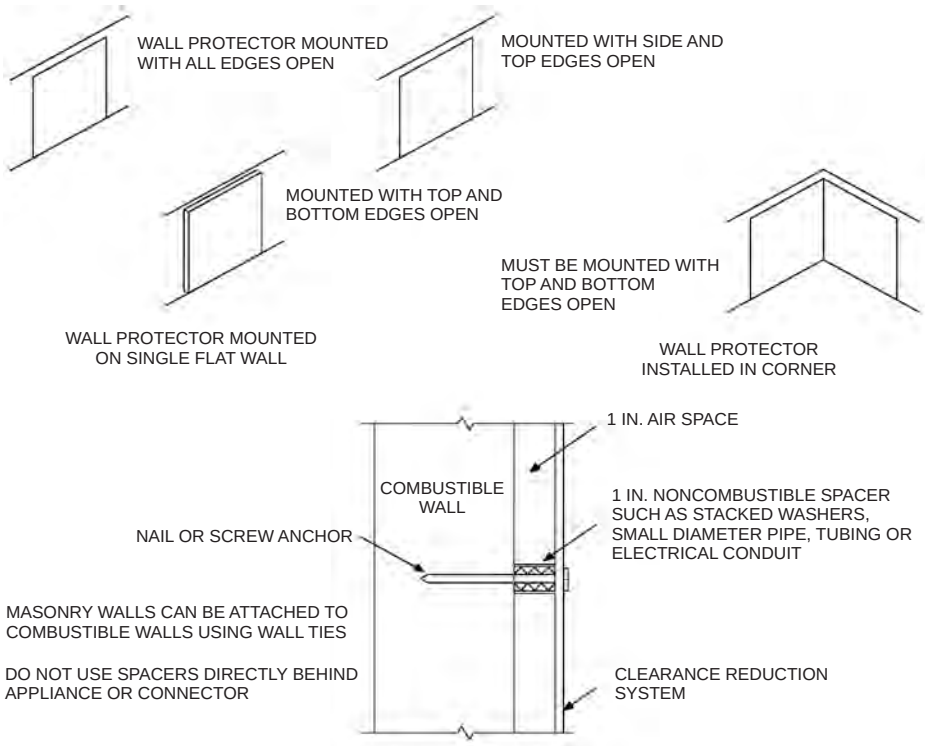

For SI: 1 inch = 25.4 mm.

FIGURE M1306.2
WALL PROTECTOR CLEARANCE REDUCTION SYSTEM

❖ See the commentary to Section M1306.2.

INTERNATIONAL CODE COUNCIL®
Copyright © 2015 ICC. ALL RIGHTS RESERVED. Accessed by David Dammon on Jun 21, 2017 12:30:52 PM pursuant to License Agreement with ICC. No further reproduction or distribution authorized. ANY UNAUTHORIZED REPRODUCTION OR DISTRIBUTION IS A VIOLATION OF THE FEDERAL COPYRIGHT ACT AND THE LICENSE AGREEMENT, AND SUBJECT TO CIVIL AND CRIMINAL PENALTIES THEREUNDER.

M1306.2.3 Solid-fuel appliances. Table M1306.2 shall not be used to reduce the clearance required for solid-fuel *appliances* listed for installation with minimum clearances of 12 inches (305 mm) or less. For *appliances listed* for installation with minimum clearances greater than 12 inches (305 mm), Table M1306.2 shall not be used to reduce the clearance to less than 12 inches (305 mm).

❖ Because solid-fuel-burning appliances can produce high-intensity radiant heat and have wide variations in heat output, this section restricts the use of Table M1306.2 for types of solid-fuel-burning appliances that are listed for clearances of 12 inches (305 mm) or less. With small clearances, the protection method could be inadequate because of the radiation intensity, reradiation from the protection assembly and inability of the protection method to dissipate the heat energy at the rate received from the appliance. If the listed clearance is greater than 12 inches (305 mm), Table M1306.2 is applicable provided that the clearance is not reduced to less than 12 inches (305 mm). The bottom line is that clearance for solid-fuel appliances can never be less than 12 inches (305 mm).

SECTION M1307
APPLIANCE INSTALLATION

M1307.1 General. Installation of *appliances* shall conform to the conditions of their *listing* and *label* and the manufacturer's instructions. The manufacturer's operating and installation instructions shall remain attached to the *appliance*.

❖ Manufacturer's installation instructions are thoroughly evaluated by the listing agency verifying that a safe installation is prescribed. The listing agency can require that the manufacturer alter, delete or add information to the instructions as necessary to achieve compliance with applicable standards and code requirements. Manufacturer's installation instructions are an enforceable extension of the code and must be in the hands of the code official when an inspection takes place. Without access to the instructions, the code official would be unable to complete an inspection.

When an appliance is tested to obtain a listing and label, the approved agency installs the appliance in accordance with the manufacturer's installation instructions. The appliance is tested under these conditions; thus, the installation instructions become an integral part of the labeling.

The listing and labeling process ensures that the appliance and its installation instructions are in compliance with applicable standards. Therefore, an installation in accordance with the manufacturer's instructions is required, except where the code requirements are more stringent. An inspector must carefully and completely read and comprehend the manufacturer's instructions to properly perform an installation inspection.

In some cases, the code will specifically address an installation requirement that is also addressed in the manufacturer's installation instructions. The code requirements may be the same or may exceed the requirements in the manufacturer's installation instructions or the manufacturer's installation instructions could contain requirements that exceed those in the code. In all cases, the more restrictive requirements would apply.

Even if an installation appears to be in compliance with the manufacturer's instructions, the installation cannot be complete or approved until all associated components, connections and systems that serve the appliance or equipment are also in compliance with the applicable provisions of the code. For example, an oil-fired boiler installation must not be approved if the boiler is connected to a deteriorated, undersized or otherwise unsafe chimney or vent. Likewise, the same installation must not be approved if the existing oil piping is in poor condition or if the electrical supply circuit is inadequate or unsafe.

In the case of replacement installations, the intent of this section is to require new work associated with the installation to comply with the code without necessarily requiring full compliance for the existing, unchanged portions of the related ductwork, piping, electrical, venting and similar mechanical systems. For example, if a furnace is replaced in an existing building, the new work and connections involved with the replacement would be treated as new construction and the existing unaltered system components would be considered as existing mechanical systems. Existing mechanical systems are accepted on the basis that they are free from hazard although not necessarily compliant with current codes. The code is not retroactive except where specifically stated that it applies to existing systems.

Manufacturer's installation instructions are often updated and changed for various reasons, such as changes in the appliance or equipment design, revisions to the product standard and as a result of field experience related to existing installations. The code official should stay abreast of any changes by reviewing the manufacturer's instructions for every installation.

Equipment and appliances must be installed in accordance with the manufacturer's installation instructions. The manufacturer's label and installation instructions must be consulted in determining whether or not an appliance or piece of equipment can be installed and operated in a particular hazardous location. The manufacturer's installation instructions must be available on the job site when the equipment is being inspected.

M1307.2 Anchorage of appliances. *Appliances* designed to be fixed in position shall be fastened or anchored in an *approved* manner. In Seismic Design Categories D_0, D_1 and D_2, and in townhouses in Seismic Design Category C, water heaters and thermal storage units shall be anchored or strapped to resist horizontal displacement caused by earthquake motion in accordance with one of the following:

1. Anchorage and strapping shall be designed to resist a horizontal force equal to one-third of the operating

INTERNATIONAL CODE COUNCIL®
Copyright © 2015 ICC. ALL RIGHTS RESERVED. Accessed by David Dammon on Jun 21, 2017 12:30:52 PM pursuant to License Agreement with ICC. No further reproduction or distribution authorized. ANY UNAUTHORIZED REPRODUCTION OR DISTRIBUTION IS A VIOLATION OF THE FEDERAL COPYRIGHT ACT AND THE LICENSE AGREEMENT, AND SUBJECT TO CIVIL AND CRIMINAL PENALTIES THEREUNDER.

weight of the water heater storage tank, acting in any horizontal direction. Strapping shall be at points within the upper one-third and lover one-third of the *appliance's* vertical dimensions. At the lower point, the strapping shall maintain a minimum distance of 4 inches (102 mm) above the controls.

2. The anchorage strapping shall be in accordance with the appliance manufacturer's recommendations.

❖ This section requires the anchorage of fixed appliances to prevent movement or the possible tipping over of the appliance. In areas of high seismic risk, water heaters must be secured directly to the building. Water heaters can weigh several hundred pounds, and if not properly secured, the water, gas and electrical connections may be damaged or severed, creating a hazardous situation. For example, a 40 gallon water heater will have a total weight that includes the weight of the empty heater plus the weight of the water (40 x 8.333 pounds). Commentary Figure M1307.2 shows a method of anchorage of a residential water heater that is known to have been used. Note that the required strapping must be substantial to resist lateral movement. Water heater manufacturers can provide details for such support and possibly support kits. The use of plumber's perforated hanger strap, also known as "holy iron," is commonly encountered and is probably quite inadequate.

M1307.3 Elevation of ignition source. *Appliances* having an *ignition source* shall be elevated such that the source of ignition is not less than 18 inches (457 mm) above the floor in garages. For the purpose of this section, rooms or spaces that are not part of the *living space* of a *dwelling unit* and that communicate with a private garage through openings shall be considered to be part of the garage.

Exception: Elevation of the ignition source is not required for appliances that are listed as flammable-vapor-ignition resistant.

❖ To reduce the hazard of fire or explosion from gasoline and other chemical vapors that are likely to be stored in a garage, appliances having an ignition source must be elevated to keep the ignition source a safe distance above garage floors (see Commentary Figure M1307.3). It is not the intent of this section for the installer to measure the elevation from the surface of a dedicated appliance stand or other structure built to support the appliance where that stand or structure does not afford room for the storage of flammable liquids. Some flammable and combustible liquids typically associated with hazardous locations give off vapors that are denser than air and tend to collect near the floor. The 18-inch (457 mm) height requirement is intended to reduce the possibility of flammable vapor ignition by keeping the ignition sources elevated above the anticipated level of accumulated vapors. The 18-inch (457 mm) value is a minimum requirement and must be increased when required by the manufacturer's installation instructions.

This section will effectively prohibit the installation of most furnaces, boilers, space heaters, clothes dryers and water heaters directly on the floor of residential garages.

The accumulation of flammable vapors more than 18 inches (457 mm) deep is unlikely in most ventilated locations; therefore, maintaining all possible sources

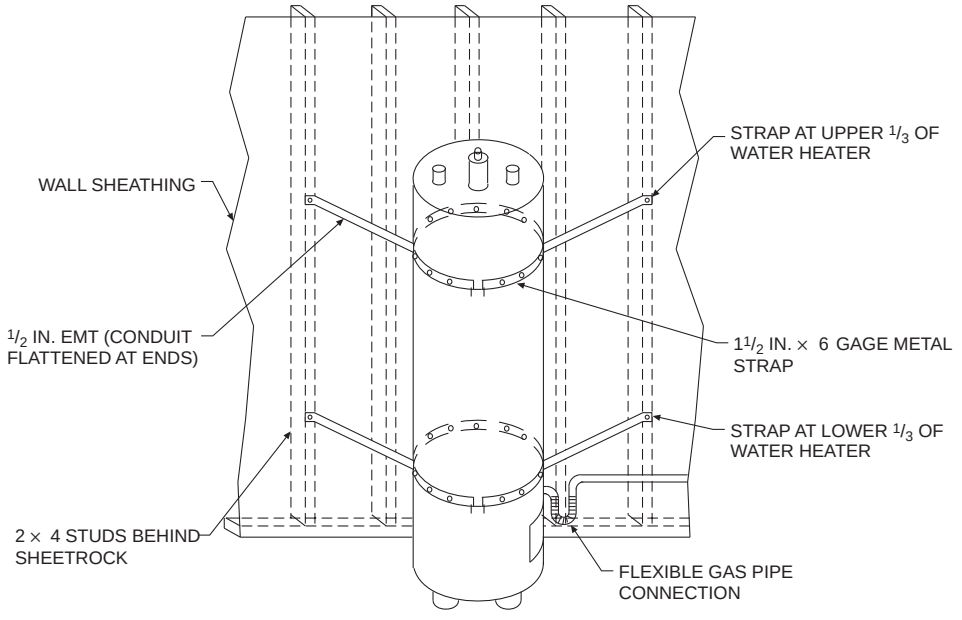

NOTE: A MINIMUM 4-INCH CLEARANCE MUST BE MAINTAINED ABOVE THE WATER HEATER CONTROLS.

For SI: 1 inch = 25.4 mm.

Figure M1307.2
ANCHORAGE OF WATER HEATER

INTERNATIONAL CODE COUNCIL®
Copyright © 2015 ICC. ALL RIGHTS RESERVED. Accessed by David Dammon on Jun 21, 2017 12:30:52 PM pursuant to License Agreement with ICC. No further reproduction or distribution authorized. ANY UNAUTHORIZED REPRODUCTION OR DISTRIBUTION IS A VIOLATION OF THE FEDERAL COPYRIGHT ACT AND THE LICENSE AGREEMENT, AND SUBJECT TO CIVIL AND CRIMINAL PENALTIES THEREUNDER.

of ignition at least 18 inches (457 mm) above the floor will substantially reduce the risk of explosion and fire [see Commentary Figures G2408.2(1) and G2408.2(2)].

In the context of this section, a source of ignition could be a pilot flame, burner, burner igniter or electrical component capable of producing a spark. The term "ignition source" is defined and can be interpreted as meaning an intentional source of ignition in a fuel-fired appliance or an unintentional source of ignition for any flammable vapors that may be present in the space (see the definition of "Ignition source").

An appliance installed in a closet or room that is accessible only from the garage must be considered as part of the garage for application of this section. Even though the room may be separated from the garage by walls and a door, there are no practical means of making the door vapor tight nor is there any assurance that the door will remain closed during normal use. An appliance room that is accessed only from the outdoors or only from the living space would not be considered as part of the garage. Rooms such as utility rooms and laundry rooms that communicate with both the garage and the living space and that are part of the living space, are not considered to be part of the garage (see definition of "Living space").

Appliances in the garage must be protected from impact by automobiles and elevation of the appliance may not be sufficient to guard against damage from impact unless the code official determines that the appliance platform is of substantial construction and the necessary height to be capable of protecting the appliance from impact.

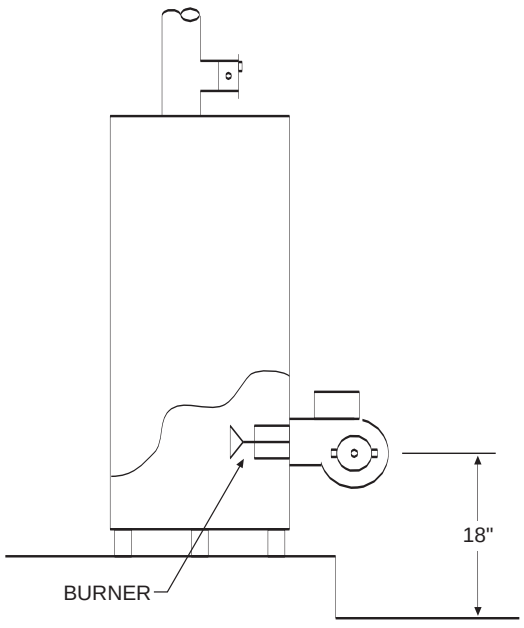

For SI: 1 inch = 25.4 mm.

Figure M1307.3
OIL-FIRED WATER HEATER INSTALLATION IN A GARAGE

The exception recognizes that new technology exists that allows appliances, such as water heaters, to be tested and listed as being flammable-vapor-ignition resistant and suitable for installation without the 18-inch (457 mm) elevation requirement. Note that while new gas-fired water heaters have flammable vapor ignition-resistant technology that allows them to be installed on the floor without the 18-inch (457 mm) elevation (see commentary, Section G2408.2), to the author's knowledge, oil-fired and electric water heaters are not listed as flammable-vapor-ignition resistant.

M1307.3.1 Protection from impact. *Appliances* shall not be installed in a location subject to vehicle damage except where protected by *approved* barriers.

❖ Mechanical appliances installed in garages, carports and any other location where motorized vehicles are present must be protected from vehicular impact.

Although the code does not specify methods of protection, the most apparent method would be to locate the appliance where it could not be struck by a vehicle. A practical method of protection would be to place a formidable and permanent barrier between the motor vehicles and the appliance. This barrier could include such items as an effectively located vehicle wheel stop that is anchored in place, an elevated platform higher than the vehicle's bumpers or one or more concrete-filled steel pipes. Final approval of the method of protection is left to the local code official. See Commentary Figure M1307.3.1 for some commonly used methods of protection.

M1307.4 Hydrogen generating and refueling operations. *Ventilation* shall be required in accordance with Section M1307.4.1, M1307.4.2 or M1307.4.3 in private garages that contain hydrogen-generating *appliances* or refueling systems. For the purpose of this section, rooms or spaces that are not part of the *living space* of a *dwelling unit* and that communicate directly with a private garage through openings shall be considered to be part of the private garage.

❖ The use of hydrogen to fuel vehicles and generate electricity in fuel cell appliances to replace petroleum-based fuels is a rapidly developing technology. Key factors in the increased use of hydrogen are the reduced atmospheric emissions associated with hydrogen and the nation's shift to renewable sources of energy.

Typically, the code official will encounter two classes of equipment—those that generate hydrogen for use by other equipment, such as vehicles, and those that use hydrogen as their energy input, such as fuel cell appliances. This section intends to minimize the potential for explosions by limiting the source of hydrogen gas and by requiring sufficient ventilation to dissipate any leakage.

INTERNATIONAL CODE COUNCIL®
Copyright © 2015 ICC. ALL RIGHTS RESERVED. Accessed by David Dammon on Jun 21, 2017 12:30:52 PM pursuant to License Agreement with ICC. No further reproduction or distribution authorized. ANY UNAUTHORIZED REPRODUCTION OR DISTRIBUTION IS A VIOLATION OF THE FEDERAL COPYRIGHT ACT AND THE LICENSE AGREEMENT, AND SUBJECT TO CIVIL AND CRIMINAL PENALTIES THEREUNDER.

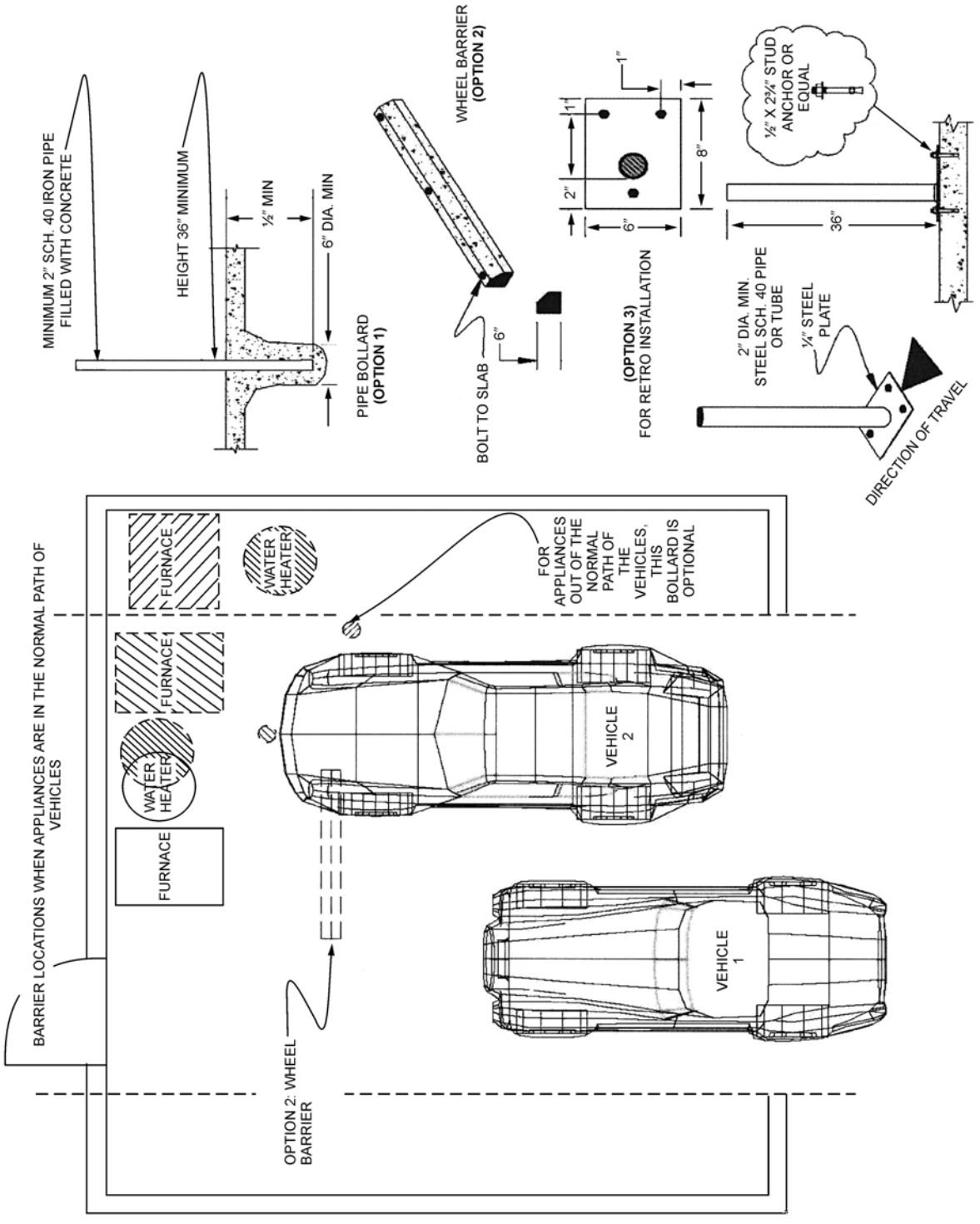

Figure M1307.3.1
TYPICAL MOTOR VEHICLE IMPACT PROTECTION

For SI: 1 inch = 25.4 mm.

INTERNATIONAL CODE COUNCIL®
Copyright © 2015 ICC. ALL RIGHTS RESERVED. Accessed by David Dammon on Jun 21, 2017 12:30:52 PM pursuant to License Agreement with ICC. No further reproduction or distribution authorized. ANY UNAUTHORIZED REPRODUCTION OR DISTRIBUTION IS A VIOLATION OF THE FEDERAL COPYRIGHT ACT AND THE LICENSE AGREEMENT, AND SUBJECT TO CIVIL AND CRIMINAL PENALTIES THEREUNDER.

M1307.4.1 Natural ventilation. Indoor locations intended for hydrogen-generating or refueling operations shall be limited to a maximum floor area of 850 square feet (79 m^2) and shall communicate with the outdoors in accordance with Sections M1307.4.1.1 and M1307.4.1.2. The maximum rated output capacity of hydrogen-generating *appliances* shall not exceed 4 standard cubic feet per minute (1.9 L/s) of hydrogen for each 250 square feet (23 m^2) of floor area in such spaces. The minimum cross-sectional dimension of air openings shall be 3 inches (76 mm). Where ducts are used, they shall be of the same cross-sectional area as the free area of the openings to which they connect. In those locations, *equipment* and *appliances* having an *ignition source* shall be located so that the source of ignition is not within 12 inches (305 mm) of the ceiling.

❖ The 850-square-foot (79 m^2) maximum floor space used for hydrogen generation or refueling and the maximum rated output capacity of such appliances are intended to limit the amount of hydrogen gas that can accumulate in the space, thus minimizing the potential for explosions.

The location of an ignition source parallels the intent of Section M1307.3, but with respect to the ceiling instead of the floor. This section does not apply to spaces that house only vehicles and that do not contain hydrogen-generating or refueling operations. Because it is more buoyant, hydrogen will dissipate more quickly than natural gas and much more quickly than either propane or gasoline, both of which have vapors that are heavier than air and will linger at an accident site. However, hydrogen and natural gas can both accumulate in unventilated pockets at the top of indoor structures and could represent a risk in such situations.

Similarly, gasoline fumes can accumulate at the floor level in unventilated spaces, posing a different risk. Thus, ignition sources must be avoided at the top of any unventilated spaces for hydrogen gas. Also, hydrogen is odorless, colorless and burns with a flame that is not generally visible to the human eye. This means that it is unlikely that people will be able to detect unsafe conditions without appropriate instrumentation [similar to carbon monoxide (CO) accumulation in a structure].

M1307.4.1.1 Two openings. Two permanent openings shall be constructed within the garage. The upper opening shall be located entirely within 12 inches (305 mm) of the ceiling of the garage. The lower opening shall be located entirely within 12 inches (305 mm) of the floor of the garage. Both openings shall be constructed in the same exterior wall. The openings shall communicate directly with the outdoors and shall have a minimum free area of $^1/_2$ square foot per 1,000 cubic feet (1.7 m^2/1000 m^3) of garage volume.

❖ The location requirement will prevent the openings from being more than 12 inches (305 mm) tall because the required openings must be entirely within the 12 inches (305 mm) of wall space measured down from the ceiling and up from the floor. The openings must be in the same wall to help create a gravity flow of gases driven by the natural buoyancy of hydrogen gas. The bottom opening is an air inlet and the top opening is an air outlet.

M1307.4.1.2 Louvers and grilles. In calculating free area required by Section M1307.4.1, the required size of openings shall be based on the net free area of each opening. If the free area through a design of louver or grille is known, it shall be used in calculating the size opening required to provide the free area specified. If the design and free area are not known, it shall be assumed that wood louvers will have a 25-percent free area and metal louvers and grilles will have a 75-percent free area. Louvers and grilles shall be fixed in the open position.

❖ This section recognizes that louvers and grilles are usually installed over air inlets and outlets to prevent rain, snow and animals from entering the building. When louvers or grilles are used, the solid portion of the louver or grille must be considered when determining the unobstructed (net clear) area of the opening.

Air openings are sized based on a free, unobstructed area for the passage of air. Louvers or grilles placed over these openings reduce the area of the openings because of the area occupied by the solid portions of the grille or louver. The reduction in area must be considered because only the unobstructed area can be credited toward the required opening size.

The reduction in opening area caused by the presence of grilles or louvers will always require openings to be larger than determined from the sizing ratios of this chapter and larger than any duct of the minimum required size that might connect to these openings.

M1307.4.2 Mechanical ventilation. Indoor locations intended for hydrogen-generating or refueling operations shall be ventilated in accordance with Section 502.16 of the *International Mechanical Code*. In these locations, *equipment* and *appliances* having an *ignition source* shall be located so that the source of ignition is below the mechanical *ventilation* outlet(s).

❖ Section 502.16 of the IMC provides criteria for the design and operation of a mechanical ventilation system in repair garages for natural-gas-fueled and hydrogen-fueled vehicles. This section makes Section 502.16 of the IMC applicable to indoor spaces containing hydrogen-generating and/or refueling operations. Although the IMC does not specify that the outlet must be within 12 inches (305 mm) of the ceiling as is required for natural ventilation, it does require the opening to be located at the high point of the space. This section requires that any ignition source be located below the mechanical exhaust outlet opening.

M1307.4.3 Specially engineered installations. As an alternative to the provisions of Sections M1307.4.1 and M1307.4.2, the necessary supply of air for *ventilation* and dilution of flammable gases shall be provided by an *approved* engineered system.

❖ The code is not intended to inhibit innovative ideas or technological advances. A comprehensive regulatory document such as a fuel gas code cannot envision and

INTERNATIONAL CODE COUNCIL®
Copyright © 2015 ICC. ALL RIGHTS RESERVED. Accessed by David Dammon on Jun 21, 2017 12:30:52 PM pursuant to License Agreement with ICC. No further reproduction or distribution authorized. ANY UNAUTHORIZED REPRODUCTION OR DISTRIBUTION IS A VIOLATION OF THE FEDERAL COPYRIGHT ACT AND THE LICENSE AGREEMENT, AND SUBJECT TO CIVIL AND CRIMINAL PENALTIES THEREUNDER.

then address all future innovations in the industry. As a result, a code must be applicable to and provide a basis for the approval of an increasing number of newly developed, innovative materials, systems and methods for which no code text or referenced standards yet exist. The fact that a material, product or method of construction is not addressed in the code is not an indication that prohibition of the material, product or method is intended. The code official is expected to apply sound technical judgment in accepting materials, systems or methods that, while not anticipated by the drafters of the current code text, can be demonstrated to offer equivalent performance. By virtue of its text, the code regulates new and innovative construction practices while addressing the relative safety of building occupants. The code official is responsible for determining whether a requested alternative provides a level of protection of the public health, safety and welfare as required by the code.

M1307.5 Electrical appliances. Electrical *appliances* shall be installed in accordance with Chapters 14, 15, 19, 20 and 34 through 43 of this code.

❖ Electrical appliances must be installed in accordance with the electrical provisions of Chapters 34 through 43 and the installation requirements for specific appliances in Chapters 14, 15, 19 and 20.

M1307.6 Plumbing connections. Potable water and drainage system connections to *equipment* and *appliances* regulated by this code shall be in accordance with Chapters 29 and 30.

❖ Many appliances addressed in the mechanical part of the code have potable water connections and/or drain connections. Chapters 29 and 30 contain provisions for such connections to protect the potable water supply from contamination and to protect the occupants from health hazards associated with improper connections to the sanitary drainage system.

SECTION M1308
MECHANICAL SYSTEMS INSTALLATION

M1308.1 Drilling and notching. Wood-framed structural members shall be drilled, notched or altered in accordance with the provisions of Sections R502.8, R602.6, R602.6.1 and R802.7. Holes in load-bearing members of cold-formed steel light-frame construction shall be permitted only in accordance with Sections R505.2.6, R603.2.6 and R804.2.6. In accordance with the provisions of Sections R505.3.5, R603.3.4 and R804.3.3, cutting and notching of flanges and lips of load-bearing members of cold-formed steel light frame construction shall not be permitted. Structural insulated panels (SIPs) shall be drilled and notched or altered in accordance with the provisions of Section R610.7.

❖ During mechanical system installation, it is usually necessary to penetrate structural members. The building chapters of the code regulate how these penetrations should be made so as not to weaken the structural members. The provisions of this section refer to those requirements, which are especially strict regarding the cutting and notching of steel members and prohibit the cutting and notching of flanges and lips of cold-formed, steel-framed, load-bearing members. See the commentary to the sections listed in the code text and also to Section P2603.2.

M1308.2 Protection against physical damage. Where piping will be concealed within light-frame construction assemblies, the piping shall be protected against penetration by fasteners in accordance with Sections M1308.2.1 through M1308.2.3.

Exception: Cast iron piping and galvanized steel piping shall not be required to be protected.

❖ This section is intended to minimize the possibility of damage to refrigerant piping and other mechanical system piping from nails, screws or other fasteners. Because nails and screws sometimes miss the stud, rafter joist or top or sole plate, the shield must protect the pipe through the full width of the member and must extend not less than 2 inches (51 mm) above the sole plates and 2 inches (51 mm) below the top plates. Commentary Figure M1308.2 shows typical shield plates. Cast-iron and galvanized steel pipe have wall thicknesses greater than the required thickness of the shield plate, which makes them inherently resistant to nail and screw penetrations. The same requirement exists in Section P2603.2.1 for plumbing piping and Section G2415.7 for gas piping (see commentary, Sections P2603.2.1 and G2415.7). Piping such as refrigerant and gas piping should not be run in close proximity to the underside of roof deck sheathing because there have been cases where roofing nails have penetrated such piping, especially during reroofing. See Section M1411.7.

M1308.2.1 Piping through bored holes or notches. Where *piping* is installed through holes or notches in framing members and is located less than $1^1/_2$ inches (38 mm) from the framing member face to which wall, ceiling or floor membranes will be attached, the pipe shall be protected by shield plates that cover the width of the pipe and the framing member and that extend 2 inches (51 mm) to each side of the framing member. Where the framing member that the piping passes through is a bottom plate, bottom track, top plate or top track, the shield plates shall cover the framing member and extend 2 inches (51 mm) above the bottom framing member and 2 inches (51 mm) below the top framing member.

❖ See the commentary to Section G2415.7.1.

M1308.2.2 Piping in other locations. Where piping is located within a framing member and is less than $1^1/_2$ inches (38 mm) from the framing member face to which wall, ceiling or floor membranes will be attached, the piping shall be protected by shield plates that cover the width and length of the piping. Where piping is located outside of a framing member and is located less than $1^1/_2$ inches (38 mm) from the nearest edge of the face of the framing member to which the membrane will be attached, the piping shall be protected by shield plates that cover the width and length of the piping.

❖ See the commentary to Section G2415.7.2.

INTERNATIONAL CODE COUNCIL®
Copyright © 2015 ICC. ALL RIGHTS RESERVED. Accessed by David Dammon on Jun 21, 2017 12:30:52 PM pursuant to License Agreement with ICC. No further reproduction or distribution authorized. ANY UNAUTHORIZED REPRODUCTION OR DISTRIBUTION IS A VIOLATION OF THE FEDERAL COPYRIGHT ACT AND THE LICENSE AGREEMENT, AND SUBJECT TO CIVIL AND CRIMINAL PENALTIES THEREUNDER.

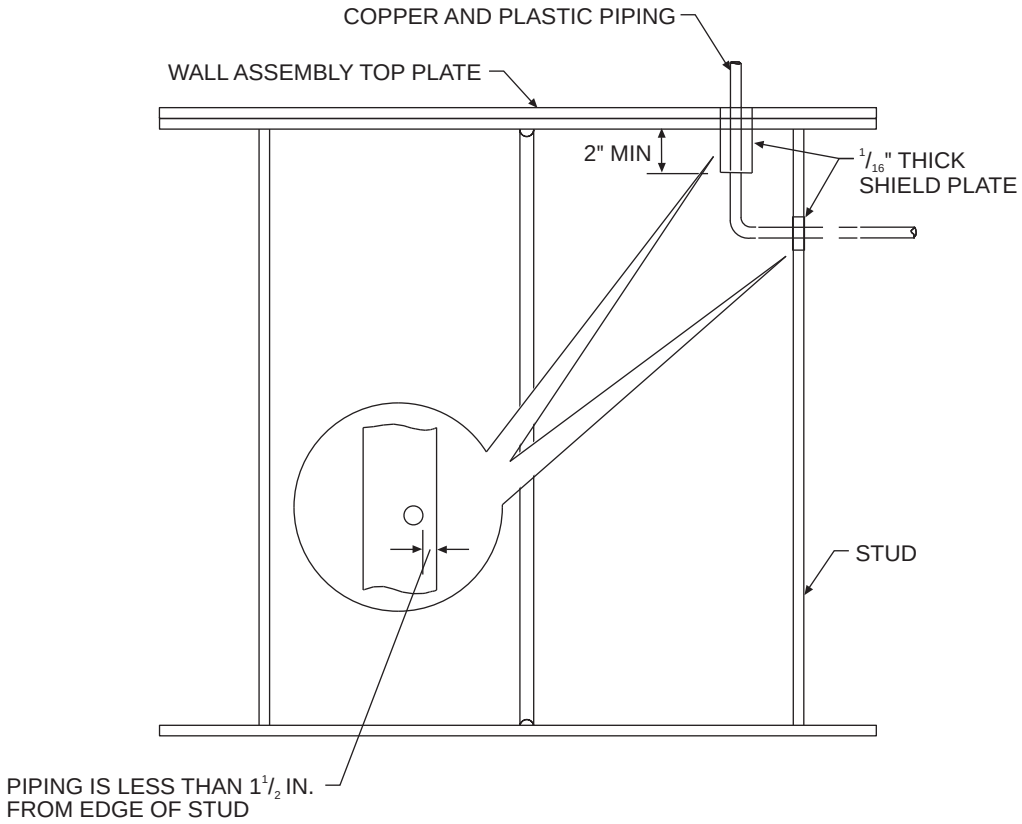

For SI: 1 inch = 25.4 mm.

Figure M1308.2
PIPE PROTECTION

M1308.2.3 Shield plates. Shield plates shall be of steel material having a thickness of not less than 0.0575 inch (1.463 mm) (No. 16 gage).

❖ See the commentary to Section G2415.7.3.

Bibliography

The following resource materials were used in the preparation of the commentary for this chapter of the code:

IFGC–15, *International Fuel Gas Code*. Washington, DC: International Code Council, 2014.

NFPA 70–14, *National Electrical Code*. Quincy, MA: National Fire Protection Association, 2013.

INTERNATIONAL CODE COUNCIL®
Copyright © 2015 ICC. ALL RIGHTS RESERVED. Accessed by David Dammon on Jun 21, 2017 12:30:52 PM pursuant to License Agreement with ICC. No further reproduction or distribution authorized. ANY UNAUTHORIZED REPRODUCTION OR DISTRIBUTION IS A VIOLATION OF THE FEDERAL COPYRIGHT ACT AND THE LICENSE AGREEMENT, AND SUBJECT TO CIVIL AND CRIMINAL PENALTIES THEREUNDER.

INTERNATIONAL CODE COUNCIL®
Copyright © 2015 ICC. ALL RIGHTS RESERVED. Accessed by David Dammon on Jun 21, 2017 12:30:52 PM pursuant to License Agreement with ICC. No further reproduction or distribution authorized. ANY UNAUTHORIZED REPRODUCTION OR DISTRIBUTION IS A VIOLATION OF THE FEDERAL COPYRIGHT ACT AND THE LICENSE AGREEMENT, AND SUBJECT TO CIVIL AND CRIMINAL PENALTIES THEREUNDER.

Chapter 14: Heating and Cooling Equipment and Appliances

General Comments

This chapter is concerned with the installation and hazards associated with heating and cooling appliances and equipment. These types of appliances and equipment have risks either because of the potential for fire or the accidental release of refrigerants. Both situations are undesirable in dwellings that are covered by the code.

The chapter is a collection of requirements for various heating and cooling appliances, dedicated to single topics by section. The common theme is that all of these types of appliances use energy in one form or another, and the improper installation of the appliances would present a hazard to the occupants of the dwellings.

Section M1401 consists of the general requirements that apply to all such appliances and equipment. Section M1402 contains the provisions for central furnaces. Section M1403 addresses heat pump equipment. Section M1404 refers the reader to Section M1411 for the criteria for refrigeration cooling equipment. Section M1405 contains the provisions for baseboard convectors. Section M1406 addresses radiant heating systems. Section M1407 consists of the criteria for duct heaters. Section M1408 contains the provisions for vented floor furnaces. Section M1409 contains provisions for vented wall furnaces. Section M1410 addresses vented room heaters. Section M1411 consists of the provisions for refrigeration cooling equipment. Section M1412 contains the provisions for absorption cooling equipment. Section M1413 addresses evaporative cooling equipment, and Section M1414 contains the provisions for fireplace stoves.

Purpose

This chapter provides, in a simple format, the requirements for heating and cooling appliances and equipment commonly found in dwellings covered by the code. These regulations pertain to the safety of the occupants by establishing minimum requirements for the design, construction, installation and operation of these systems.

SECTION M1401 GENERAL

M1401.1 Installation. Heating and cooling *equipment* and *appliances* shall be installed in accordance with the manufacturer's instructions and the requirements of this code.

❖ As discussed in the commentary to Section M1307.1, the manufacturer's installation instructions are an enforceable extension of the code. The manufacturer's instructions must be available at the job site when the equipment and appliances are being inspected.

M1401.2 Access. Heating and cooling *equipment* and appliances shall be located with respect to building construction and other *equipment* and appliances to permit maintenance, servicing and replacement. Clearances shall be maintained to permit cleaning of heating and cooling surfaces; replacement of filters, blowers, motors, controls and vent connections; lubrication of moving parts; and adjustments.

Exception: Access shall not be required for ducts, piping, or other components approved for concealment.

❖ Because mechanical equipment and appliances require routine maintenance, repairs and possible replacement, access is required. Additionally, access recommendations or requirements are usually stated in the manufacturer's installation instructions. As a result, the provisions stated here are intended to supplement the manufacturer's installation instructions. The intent is that clearances be sufficient to permit cleaning of the heating and cooling heat exchange surfaces and permit replacement and maintenance of filters, motors, controls, etc. Section M1305.1 contains similar requirements.

The exception recognizes that providing access to some components is not necessary or practical. This is especially true for ducts and piping which are often concealed in walls, floors and ceilings. Components that do not require observation, inspection, adjustment, servicing, repair or replacement are not required to be provided with access when approved by the code official.

M1401.3 Equipment and appliance sizing. Heating and cooling *equipment* and *appliances* shall be sized in accordance with ACCA Manual S or other approved sizing methodologies based on building loads calculated in accordance with ACCA Manual J or other *approved* heating and cooling calculation methodologies.

Exception: Heating and cooling equipment and appliance sizing shall not be limited to the capacities determined in accordance with Manual S where either of the following conditions applies:

INTERNATIONAL CODE COUNCIL®
Copyright © 2015 ICC. ALL RIGHTS RESERVED. Accessed by David Dammon on Jun 21, 2017 12:30:52 PM pursuant to License Agreement with ICC. No further reproduction or distribution authorized. ANY UNAUTHORIZED REPRODUCTION OR DISTRIBUTION IS A VIOLATION OF THE FEDERAL COPYRIGHT ACT AND THE LICENSE AGREEMENT, AND SUBJECT TO CIVIL AND CRIMINAL PENALTIES THEREUNDER.

1. The specified equipment or appliance utilizes multistage technology or variable refrigerant flow technology and the loads calculated in accordance with the approved heating and cooling calculation methodology are within the range of the manufacturer's published capacities for that equipment or appliance.
2. The specified equipment or appliance manufacturer's published capacities cannot satisfy both the total and sensible heat gains calculated in accordance with the approved heating and cooling calculation methodology and the next larger standard size unit is specified.

❖ The Air Conditioning Contractors of America's Manual J, *Load Calculations for Residential Winter and Summer Air Conditioning*, contains a simplified method of calculating heating and cooling loads. It includes a room-by-room calculation method that allows the designer to determine the required capacity of the heating and cooling equipment. In addition, it provides for an estimate of the airflow requirements for each of the areas in the house. The estimate can be used in sizing the duct system for the types of heating and cooling units that use air as the medium for heat transfer. Other approved methods may be used with the code official's approval.

ACCA Manual S or an approved equivalent is used to accurately choose the size of HVAC equipment after the building's heat gains and losses are determined in accordance with Manual J. Manual S takes into account the varying performance of cooling equipment based on the climate zone it will be installed in. The manual also allows calculation of heating equipment output British thermal units per hour (Btu/h) based on the manufacturer's given input ratings. Fuel-fired heating equipment is typically rated based on Btu/h input, but the input rating cannot be used alone to size the appliance. The actual output rating must be known to match the output to the heat loss of the building. Actual appliance output depends on the efficiency of the appliance and the altitude at which the appliance is installed. For example, an 80 percent efficient appliance with an input rating of 100,000 Btu/h will have an output of 80,000 Btu/h at sea level and that output will decrease as the appliance is elevated above sea level. Appliances must be derated based on the altitude at which they are installed in accordance with the manufacturer's instructions. At higher elevations, the air is less dense and this will affect the fuel and oxygen mixture entering the burners. Some appliances will require adjustments to the burner manifold gas pressure, replacement of orifices and possibly other modifications to the burners, controls and/or venting components. A commonly used derating prescription calls for the input rating to be reduced 4 percent for each 1,000 feet (304 800 mm) that the appliance is elevated above sea level with no reduction required for an elevation of up to 2,000 feet (609 600 mm) above sea level.

The exception, condition 1 addresses variable capacity equipment and would allow the equipment capacity to exceed the calculated equipment size. The calculated equipment size must fall within the range of the specified (chosen) variable capacity equipment. Condition 2 would allow the next larger standard size of the specified (chosen) equipment where the calculated size of the equipment is inadequate for both the sensible and the sensible and latent heat gains. In other words, if XYZ brand of equipment is specified and the size calculated in accordance with this section won't handle the loads, the next larger size of that specific equipment can be used.

M1401.4 Exterior installations. *Equipment* and *appliances* installed outdoors shall be *listed* and *labeled* for outdoor installation. Supports and foundations shall prevent excessive vibration, settlement or movement of the *equipment*. Supports and foundations shall be in accordance with Section M1305.1.4.1.

❖ Appliances installed outdoors must be specifically listed and labeled for outdoor installation. The concern is for weather and ambient temperatures. The manufacturer's instructions and listing must be consulted to determine whether a particular appliance is designed for or can be made suitable for outdoor installation. For example, furnaces cannot be installed outdoors in cold climates regardless of any weatherproof enclosure, unless the heat exchanger, burner assemblies and venting system are designed for exposure to temperatures below normal indoor temperatures. Cold ambient temperatures can cause harmful condensation to occur on heat exchanger surfaces of fuel-fired appliances.

Additionally, there may be local ordinances that govern the outdoor installation of appliances. Before installing an appliance outdoors, consult local zoning regulations, ordinances and subdivision covenants. Many of these regulations strictly limit the location of outdoor mechanical equipment and appliances.

Supports and foundations must be adequate for the loads imposed such that there is no movement that could put stress and strains on connections and attachments to the equipment and appliances. Supports and foundations must also comply with the requirements in Section M1305.1.4.1 (see commentary, Section M1305.1.4.1).

M1401.5 Flood hazard. In flood hazard areas as established by Table R301.2(1), heating and cooling *equipment* and *appliances* shall be located or installed in accordance with Section R322.1.6.

❖ Mechanical appliances, equipment and systems for dwellings that are located in flood hazard areas must be installed at or above the elevation required by the code or must be designed and installed to prevent the entry of water into the components and to resist the forces of the flood waters on the components (see commentary, Section R322.1.6).

INTERNATIONAL CODE COUNCIL®
Copyright © 2015 ICC. ALL RIGHTS RESERVED. Accessed by David Dammon on Jun 21, 2017 12:30:52 PM pursuant to License Agreement with ICC. No further reproduction or distribution authorized. ANY UNAUTHORIZED REPRODUCTION OR DISTRIBUTION IS A VIOLATION OF THE FEDERAL COPYRIGHT ACT AND THE LICENSE AGREEMENT, AND SUBJECT TO CIVIL AND CRIMINAL PENALTIES THEREUNDER.

SECTION M1402
CENTRAL FURNACES

M1402.1 General. Oil-fired central furnaces shall conform to ANSI/UL 727. Electric furnaces shall conform to UL 1995.

❖ The term "central furnace" refers to a furnace in a central location of the home that heats the air and then distributes it through ducts to the rooms of the home. The term originates from the days when homes were heated by local sources within a room such as a fireplace or a stove. This section requires oil-fired central furnaces to meet the requirements in UL 727, and it requires electric furnaces to meet the requirements of UL 1995. Furnaces can come in many configurations, including upflow, counterflow (downflow), horizontal flow and indoor and outdoor units (see Chapter 24 for gas-fired furnaces).

M1402.2 Clearances. Clearances shall be provided in accordance with the *listing* and the manufacturer's installation instructions.

❖ The clearances indicated on the equipment label and in the manufacturer's installation instructions must always be followed, as indicated throughout these mechanical provisions.

M1402.3 Combustion air. *Combustion air* shall be supplied in accordance with Chapter 17. *Combustion air* openings shall be unobstructed for a distance of not less than 6 inches (152 mm) in front of the openings.

❖ This section refers to Chapter 17 for combustion air requirements and specifically requires a minimum 6-inch (152 mm) unobstructed clearance in front of the firebox to ensure adequate distribution of combustion air to the appliance. Fuel-gas-fired furnaces must meet the combustion air requirements in Section G2407.

SECTION M1403
HEAT PUMP EQUIPMENT

M1403.1 Heat pumps. Electric heat pumps shall be listed and labeled in accordance with UL 1995 or UL/CSA/ANCE 60335-2-40.

❖ Heat pumps are central heating units that use the rejection heat from the condenser of a refrigeration circuit to heat the conditioned space. They are often backed up by auxiliary electric resistance heating elements which supplement the heat pump during defrost cycles and during times of very low outdoor ambient temperatures. The source of heat energy is the outdoor air for air-to-air units and bodies of water or wells for water-to-air units. Heat pumps utilize reversing valves that cause the evaporator to become a condenser and vice versa, thus allowing the unit to both heat and cool conditioned spaces.

SECTION M1404
REFRIGERATION COOLING EQUIPMENT

M1404.1 Compliance. Refrigeration cooling *equipment* shall comply with Section M1411.

❖ This section is a cross reference to the actual provisions found in Section M1411.

SECTION M1405
BASEBOARD CONVECTORS

M1405.1 General. Electric baseboard convectors shall be installed in accordance with the manufacturer's instructions and Chapters 34 through 43 of this code. Electric baseboard heaters shall be listed and labeled in accordance with UL 1042.

❖ Electric baseboard convectors must be listed and labeled in accordance with UL 1042 and be installed in accordance with manufacturers' installation instructions and with the electrical requirements of the code. The latter are based on the electrical provisions of the *National Electrical Code*, published by the National Fire Protection Association. See Commentary Figure M1405.1 for an illustration of a typical electric baseboard convector.

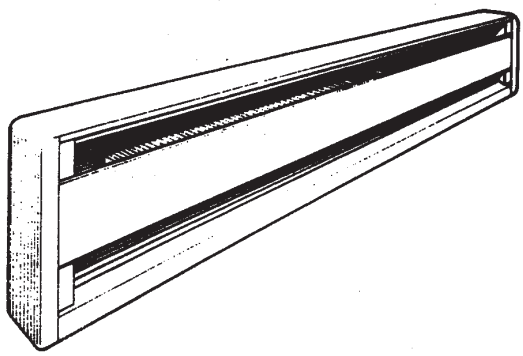

Figure M1405.1
TYPICAL ELECTRIC BASEBOARD CONVECTOR

SECTION M1406
RADIANT HEATING SYSTEMS

M1406.1 General. Electric radiant heating systems shall be installed in accordance with the manufacturer's instructions and Chapters 34 through 43 of this code and shall be listed for the application.

❖ Radiant heating systems contain electrical elements that create heat when an electric current passes through them. Radiant heating systems consist of heating cables and radiant heating panels that have been evaluated for contact with specific surfaces. If the system is not installed properly, electricity and the heat emitted could create hazards for the occupants of the

INTERNATIONAL CODE COUNCIL®
Copyright © 2015 ICC. ALL RIGHTS RESERVED. Accessed by David Dammon on Jun 21, 2017 12:30:52 PM pursuant to License Agreement with ICC. No further reproduction or distribution authorized. ANY UNAUTHORIZED REPRODUCTION OR DISTRIBUTION IS A VIOLATION OF THE FEDERAL COPYRIGHT ACT AND THE LICENSE AGREEMENT, AND SUBJECT TO CIVIL AND CRIMINAL PENALTIES THEREUNDER.

dwelling. This section refers to the manufacturer's instructions and the electrical provisions in Chapters 34 through 43 for safe installations. The manufacturer's installation instructions will have details on the different type of surfaces and the temperature limits for each surface. These requirements are in addition to the requirements found in Sections M1406.2 through M1406.5.

M1406.2 Clearances. Clearances for radiant heating panels or elements to any wiring, outlet boxes and junction boxes used for installing electrical devices or mounting luminaires shall comply with Chapters 34 through 43 of this code.

❖ This section references certain minimum clearances located in the electrical chapters of the code so that the heating elements are not damaged or the electrical circuit continuity is not interrupted, thus rendering portions or all of the radiant heating systems inoperable. This section is also intended to protect the electrical systems, equipment, and components from damage from the heating elements.

M1406.3 Installation of radiant panels. Radiant panels installed on wood framing shall conform to the following requirements:

1. Heating panels shall be installed parallel to framing members and secured to the surface of framing members or mounted between framing members.
2. Mechanical fasteners shall penetrate only the unheated portions provided for this purpose. Panels shall not be fastened at any point closer than $^1/_4$ inch (6.4 mm) to an element. Other methods of attachment of the panels shall be in accordance with the panel manufacturer's instructions.
3. Unless *listed* and *labeled* for field cutting, heating panels shall be installed as complete units.

❖ Radiant heat panels mounted on wood framing may act as an ignition source if improperly installed. Because these systems generate heat, they must be mounted to wood framing by fastening through the unheated portions of each panel. Metallic fasteners, such as nails or screws, are excellent conductors of heat as well as electricity; therefore, they must not be driven through any portion of a panel closer than $^1/_4$ inch (6.4 mm) to a heating element. The manufacturer's installation instructions may contain additional methods that can be used to attach the panels.

M1406.4 Installation in concrete or masonry. Radiant heating systems installed in concrete or masonry shall conform to the following requirements:

1. Radiant heating systems shall be identified as being suitable for the installation, and shall be secured in place as specified in the manufacturer's installation instructions.
2. Radiant heating panels or radiant heating panel sets shall not be installed where they bridge expansion joints unless protected from expansion and contraction.

❖ Fire hazards created by electric radiant heating systems installed in masonry construction are minimal, but these installations require special mounting hardware and must be installed in accordance with the manufacturer's instructions. Radiant panels must be protected from expansion and contraction when mounted over masonry expansion joints to avoid structural damage.

M1406.5 Finish surfaces. Finish materials installed over radiant heating panels or systems shall be installed in accordance with the manufacturer's instructions. Surfaces shall be secured so that nails or other fastenings do not pierce the radiant heating elements.

❖ Finish materials must be carefully installed over electric radiant heating systems so that nails or screws do not penetrate the heating elements. Fasteners that are accidentally driven through these elements could cause short circuits, ground faults, destroy the elements or cause the surfaces to overheat and start a fire. The finish surfaces must be installed in accordance with the instructions supplied by the manufacturer of the radiant heating system.

SECTION M1407
DUCT HEATERS

M1407.1 General. Electric duct heaters shall be installed in accordance with the manufacturer's instructions and Chapters 34 through 43 of this code. Electric duct heaters shall comply with UL 1996.

❖ Electric duct heaters are designed to be installed "in-line" in an air duct system and use electric resistance heating elements to heat the air passing through them. The code requires that their installation comply with the manufacturer's instructions and the electrical provisions in the code.

M1407.2 Installation. Electric duct heaters shall be installed so that they will not create a fire hazard. Class 1 ducts, duct coverings and linings shall be interrupted at each heater to provide the clearances specified in the manufacturer's installation instructions. Such interruptions are not required for duct heaters *listed* and *labeled* for zero clearance to combustible materials. Insulation installed in the immediate area of each heater shall be classified for the maximum temperature produced on the duct surface.

❖ These heaters could be installed in ducts that have combustible components, coverings or insulating materials. This section requires that these heaters be listed for zero clearance to combustible material or that the duct materials be kept at the specified distance from the heaters.

M1407.3 Installation with heat pumps and air conditioners. Duct heaters located within 4 feet (1219 mm) of a heat pump or air conditioner shall be *listed* and *labeled* for such installations. The heat pump or air conditioner shall additionally be *listed* and *labeled* for such duct heater installations.

❖ Heat pumps are typically unable to provide all of the heat required in a building at design temperature and also may have to shut down periodically for a defrost cycle. Thus, they are usually supplemented with elec-

INTERNATIONAL CODE COUNCIL®
Copyright © 2015 ICC. ALL RIGHTS RESERVED. Accessed by David Dammon on Jun 21, 2017 12:30:52 PM pursuant to License Agreement with ICC. No further reproduction or distribution authorized. ANY UNAUTHORIZED REPRODUCTION OR DISTRIBUTION IS A VIOLATION OF THE FEDERAL COPYRIGHT ACT AND THE LICENSE AGREEMENT, AND SUBJECT TO CIVIL AND CRIMINAL PENALTIES THEREUNDER.

trical resistance heating to meet the occasional periods of peak load requirements and carry the load during defrost.

M1407.4 Access. Duct heaters shall be accessible for servicing, and clearance shall be maintained to permit adjustment, servicing and replacement of controls and heating elements.

❖ Section M1305 has additional criteria for access to the installations of appliances in specific locations.

M1407.5 Fan interlock. The fan circuit shall be provided with an interlock to prevent heater operation when the fan is not operating.

❖ A fan interlock is required to prevent the duct heater from operating when there is no air flow. Without air flow, the duct heater would overheat, possibly creating a fire hazard.

SECTION M1408
VENTED FLOOR FURNACES

M1408.1 General. Oil-fired vented floor furnaces shall comply with UL 729 and shall be installed in accordance with their *listing*, the manufacturer's instructions and the requirements of this code.

❖ Oil-fired floor furnaces are vented appliances that are installed in an opening in the floor. Such units supply heat to the room by gravity convection and direct radiation and typically serve as the sole source of space heating. Such furnaces are common in cottages, small homes, seasonally occupied structures and rural homes. Because the floor grille can become very hot, extreme care must be exercised to prevent occupants, especially children, from contacting the grille by walking or falling on it. Also, care must be taken to avoid a fire hazard caused by placement of materials or furnishings on or near the furnace floor grille.

M1408.2 Clearances. Vented floor furnaces shall be installed in accordance with their listing and the manufacturer's instructions.

❖ Vented floor furnaces must be installed in accordance with the manufacturer's instructions, which are an enforceable extension of the code.

M1408.3 Location. Location of floor furnaces shall conform to the following requirements:

1. Floor registers of floor furnaces shall be installed not less than 6 inches (152 mm) from a wall.
2. Wall registers of floor furnaces shall be installed not less than 6 inches (152 mm) from the adjoining wall at inside corners.
3. The furnace register shall be located not less than 12 inches (305 mm) from doors in any position, draperies or similar combustible objects.
4. The furnace register shall be located not less than 5 feet (1524 mm) below any projecting combustible materials.
5. The floor furnace burner assembly shall not project into an occupied under-floor area.
6. The floor furnace shall not be installed in concrete floor construction built on grade.
7. The floor furnace shall not be installed where a door can swing within 12 inches (305 mm) of the grille opening.

❖ Because of the heat generated in the combustion chamber that is emitted through the floor register, minimum clearances are necessary from the face of the air registers to surrounding walls, overhead projections and other combustible items, such as doors and draperies. See Commentary Figure M1408.3 for required clearances.

M1408.4 Access. An opening in the foundation not less than 18 inches by 24 inches (457 mm by 610 mm), or a trap door not less than 22 inches by 30 inches (559 mm by 762 mm) shall be provided for access to a floor furnace. The opening and passageway shall be large enough to allow replacement of any part of the *equipment*.

❖ Either a floor opening (trap door) or a foundation opening must be provided to allow for maintenance or replacement of the furnace. Without such access, appliances are not as likely to receive the maintenance necessary for efficient and safe operation.

M1408.5 Installation. Floor furnace installations shall conform to the following requirements:

1. Thermostats controlling floor furnaces shall be located in the room in which the register of the floor furnace is located.
2. Floor furnaces shall be supported independently of the furnace floor register.
3. Floor furnaces shall be installed not closer than 6 inches (152 mm) to the ground. The minimum clearance shall be 2 inches (51 mm), where the lower 6 inches (152 mm) of the furnace is sealed to prevent water entry.
4. Where excavation is required for a floor furnace installation, the excavation shall extend 30 inches (762 mm) beyond the control side of the floor furnace and 12 inches (305 mm) beyond the remaining sides. Excavations shall slope outward from the perimeter of the base of the excavation to the surrounding *grade* at an angle not exceeding 45 degrees (0.79 rad) from horizontal.
5. Floor furnaces shall not be supported from the ground.

❖ Floor furnaces must have supports independent of the floor register and the ground below. A 6-inch (152 mm) clearance must also be maintained from the ground to protect against moisture, rust and corrosion of the furnace casing. This may be reduced to 2 inches (51 mm) if the unit is sealed against flooding. When the ground must be excavated to provide space for a floor furnace, a 30-inch (762 mm) clearance must be provided for access to the control side and a 12-inch (305 mm) clearance is required on all other sides.

INTERNATIONAL CODE COUNCIL®
Copyright © 2015 ICC. ALL RIGHTS RESERVED. Accessed by David Dammon on Jun 21, 2017 12:30:52 PM pursuant to License Agreement with ICC. No further reproduction or distribution authorized. ANY UNAUTHORIZED REPRODUCTION OR DISTRIBUTION IS A VIOLATION OF THE FEDERAL COPYRIGHT ACT AND THE LICENSE AGREEMENT, AND SUBJECT TO CIVIL AND CRIMINAL PENALTIES THEREUNDER.

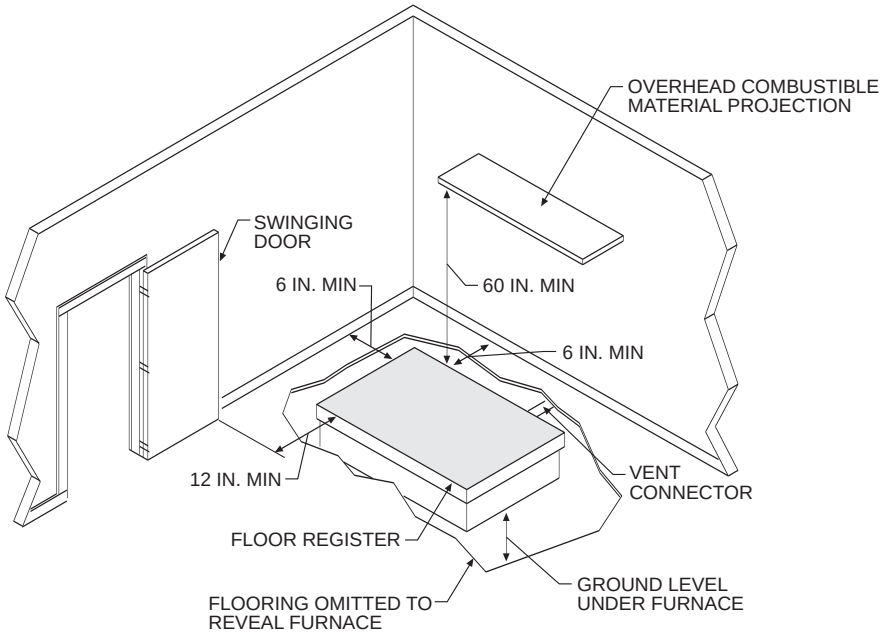

Figure M1408.3
FLOOR FURNACE CLEARANCES

SECTION M1409
VENTED WALL FURNACES

M1409.1 General. Oil-fired vented wall furnaces shall comply with UL 730 and shall be installed in accordance with their *listing*, the manufacturer's instructions and the requirements of this code.

❖ Vented, oil-fired wall furnaces are a type of room heater typically designed to be installed within a 2 × 4 stud cavity in frame construction. Wall furnaces are typically used in cottages, room additions and homes in mild climates. Some units are designed to serve a single room, and others are designed as through-the-wall units to serve adjacent rooms. Wall furnaces are ductless; however, some units are listed for use with a surface-mounted supply outlet extension. Wall furnaces can be either gravity or forced-air type.

M1409.2 Location. The location of vented wall furnaces shall conform to the following requirements:

1. Vented wall furnaces shall be located where they will not cause a fire hazard to walls, floors, combustible furnishings or doors. Vented wall furnaces installed between bathrooms and adjoining rooms shall not circulate air from bathrooms to other parts of the building.
2. Vented wall furnaces shall not be located where a door can swing within 12 inches (305 mm) of the furnace air inlet or outlet measured at right angles to the opening. Doorstops or door closers shall not be installed to obtain this clearance.

❖ Wall furnaces, like all room heaters, can present a fire hazard if improperly located. The heat discharged or directly radiated from such units can ignite nearby wall or floor surfaces, furniture, trim items, window treatments and doors. A through-the-wall unit serving both a bathroom and an adjacent room must not recirculate air be-tween the two spaces. A combustible door that swings close to a wall furnace could be a fire hazard if at some position the door would be within 12 inches (305 mm) of an air inlet or outlet. A door could also interfere with air-flow through the furnace, thereby causing appliance overheating. Because door closures and doorstops are easily defeated, they must not be depended on to secure the required clearance. If the door swing cannot comply with this section, the door would have to be removed or rehung to change its swing direction.

M1409.3 Installation. Vented wall furnace installations shall conform to the following requirements:

1. Required wall thicknesses shall be in accordance with the manufacturer's installation instructions.
2. Ducts shall not be attached to a wall furnace. Casing extensions or boots shall be installed only where listed as part of a *listed* and *labeled appliance*.
3. A manual shut off valve shall be installed ahead of all controls.

❖ Most wall furnaces are not designed to force air through ducts, especially the gravity types that do not use fans. Attachment of ducts would add resistance to the flow of air through the furnace, thereby causing abnormally high temperature rises across the heat exchanger and abnormally high temperatures on furnace surfaces. Some wall furnaces are listed and designed for use with supply duct extensions designed for wall mounting that are intended to improve heat distribution. Such duct extensions are factory-built and supplied only by the furnace manufacturer.

INTERNATIONAL CODE COUNCIL®
Copyright © 2015 ICC. ALL RIGHTS RESERVED. Accessed by David Dammon on Jun 21, 2017 12:30:52 PM pursuant to License Agreement with ICC. No further reproduction or distribution authorized. ANY UNAUTHORIZED REPRODUCTION OR DISTRIBUTION IS A VIOLATION OF THE FEDERAL COPYRIGHT ACT AND THE LICENSE AGREEMENT, AND SUBJECT TO CIVIL AND CRIMINAL PENALTIES THEREUNDER.

The fuel-line connection to every appliance must be equipped with an individual shutoff valve to permit maintenance, repair or replacement of the appliance or its components.

M1409.4 Access. Vented wall furnaces shall be provided with access for cleaning of heating surfaces; removal of burners; replacement of sections, motors, controls, filters and other working parts; and for adjustments and lubrication of parts requiring such attention. Panels, grilles and access doors that must be removed for normal servicing operations shall not be attached to the building construction.

❖ Proper access for servicing and replacement of vented wall furnaces is very important, as it is with the other mechanical appliances regulated by the code (see commentary, Section M1408.4).

SECTION M1410
VENTED ROOM HEATERS

M1410.1 General. Vented room heaters shall be tested in accordance with ASTM E1509 for pellet-fuel burning, UL 896 for oil-fired or UL 1482 for solid fuel-fired and installed in accordance with their *listing*, the manufacturer's installation instructions and the requirements of this code.

❖ This section addresses vented space/room heaters, including direct-vent and vent-connected or chimney-connected appliances. As required by the appliance standard, such appliances are equipped with safety controls that will prevent fuel flow to the burners in the event of ignition system failure. UL 896 is the governing standard for oil-fired room heaters, UL 1432 is the standard for solid-fuel heaters and ASTM E1509 is the standard for pellet-fuel-burning heaters. Solid-fuel-burning room heaters in accordance with UL 1482 address solid fuel-burning, free-standing fire chamber assemblies that heat space by direct radiation, circulated heated air or a combination of both. Solid-fuel room heaters are chimney connected, and are designed for operation with the fire chamber (firebox) closed (see commentary, Section M1414.1). Mechanical appliances and equipment must be installed in accordance with the manufacturer's instructions. This is important because the manufacturer's instructions are used by the testing agency when the test installation is constructed. Therefore, a unit tested in compliance with the specified standard and installed in accordance with the manufacturer's instructions is expected to perform the same as the representative sample unit that was tested.

M1410.2 Floor mounting. Room heaters shall be installed on noncombustible floors or *approved* assemblies constructed of noncombustible materials that extend not less than 18 inches (457 mm) beyond the *appliance* on all sides.

Exceptions:

1. *Listed* room heaters shall be installed on noncombustible floors, assemblies constructed of noncombustible materials or floor protectors *listed* and *labeled* in accordance with UL 1618. The materials and dimensions shall be in accordance with the *appliance* manufacturer's instructions.
2. Room heaters *listed* for installation on combustible floors without floor protection shall be installed in accordance with the *appliance* manufacturer's instructions.

❖ Room heaters must be installed on noncombustible floors or approved floor assemblies constructed of noncombustible materials that extend 18 inches (457 mm) beyond the appliance on all sides or installed on assemblies or listed protectors in accordance with the appliance listing and instructions, or they must be listed for installation on combustible floors. They must also be installed following the manufacturer's instructions.

SECTION M1411
HEATING AND COOLING EQUIPMENT

M1411.1 Approved refrigerants. Refrigerants used in direct refrigerating systems shall conform to the applicable provisions of ANSI/ASHRAE 34.

❖ The classification of refrigerants is based on ASHRAE 34, which numbers and classifies refrigerants in accordance with their potential hazards. Refrigerants are identified by their number preceded by the letter R, for example, R-134a. Manufacturer trademark names such as "Freon" are not used in the code.

M1411.2 Refrigeration coils in warm-air furnaces. Where a cooling coil is located in the supply plenum of a warm-air furnace, the furnace blower shall be rated at not less than 0.5-inch water column (124 Pa) static pressure unless the furnace is *listed* and *labeled* for use with a cooling coil. Cooling coils shall not be located upstream from heat exchangers unless *listed* and *labeled* for such use. Conversion of existing furnaces for use with cooling coils shall be permitted provided the furnace will operate within the temperature rise specified for the furnace.

❖ If a cooling coil is not a part of a listed furnace or air conditioning system and is added to a warm-air furnace, the following requirements must be met:

1. The furnace blower must be rated at 0.5-inch (12.7 mm) of water-column minimum static pressure. The furnace blower must be capable of moving the larger flow rates of air required for cooling.
2. Unless the furnace heat exchanger is corrosion resistant (usually stainless steel), the cooling coil unit must be installed downstream of the heat exchanger.

Moisture in the air could condense on the surface of a heat exchanger that is cooled by being downstream of a cooling coil and such condensation can corrode metal parts.

INTERNATIONAL CODE COUNCIL®
Copyright © 2015 ICC. ALL RIGHTS RESERVED. Accessed by David Dammon on Jun 21, 2017 12:30:52 PM pursuant to License Agreement with ICC. No further reproduction or distribution authorized. ANY UNAUTHORIZED REPRODUCTION OR DISTRIBUTION IS A VIOLATION OF THE FEDERAL COPYRIGHT ACT AND THE LICENSE AGREEMENT, AND SUBJECT TO CIVIL AND CRIMINAL PENALTIES THEREUNDER.

M1411.3 Condensate disposal. Condensate from cooling coils and evaporators shall be conveyed from the drain pan outlet to an *approved* place of disposal. Such piping shall maintain a minimum horizontal slope in the direction of discharge of not less than $^1/_8$ unit vertical in 12 units horizontal (1-percent slope). Condensate shall not discharge into a street, alley or other areas where it would cause a nuisance.

❖ Appliances and equipment containing evaporators or cooling coils, including refrigeration, dehumidification and comfort cooling equipment, can produce condensate from the water vapor in the atmosphere. A drainage system is necessary to dispose of the condensate and prevent damage to the structure. Condensate disposal is a local issue dependent on specific local conditions such as soil conditions, contour of the area, sewer loading and water treatment plant capacity. Because of this, the approval of the disposal place is the responsibility of the local jurisdiction. Some of the locations that could be accepted are storm or sanitary sewers, rooftops, French drains, drainage ditches, collection ponds or simply into the yard, as is typical for most homes.

Some water treatment facilities operate near maximum capacity and do not allow condensate disposal into the sanitary sewer because condensate does not require treatment. If connected to the sanitary sewer, the connection must be indirect in compliance with the plumbing provisions of the code to prevent sewage and gases from entering the equipment or system. French drains, or seepage pits, are effective depending on the permeability of the soil, the rate of discharge and the size of the pit.

The piping conveying the condensate to its disposal point must be properly sloped to ensure drainage just the same as any drainage system. Sagging pipe could trap water and air that would impede the flow of the condensate.

M1411.3.1 Auxiliary and secondary drain systems. In addition to the requirements of Section M1411.3, a secondary drain or auxiliary drain pan shall be required for each cooling or evaporator coil where damage to any building components will occur as a result of overflow from the *equipment* drain pan or stoppage in the condensate drain piping. Such piping shall maintain a minimum horizontal slope in the direction of discharge of not less than $^1/_8$ unit vertical in 12 units horizontal (1-percent slope). Drain piping shall be not less than $^3/_4$-inch (19 mm) nominal pipe size. One of the following methods shall be used:

1. An auxiliary drain pan with a separate drain shall be installed under the coils on which condensation will occur. The auxiliary pan drain shall discharge to a conspicuous point of disposal to alert occupants in the event of a stoppage of the primary drain. The pan shall have a minimum depth of 1.5 inches (38 mm), shall be not less than 3 inches (76 mm) larger than the unit or the coil dimensions in width and length and shall be constructed of corrosion-resistant material. Galvanized sheet steel pans shall have a minimum thickness of not less than 0.0236-inch (0.6010 mm) (No. 24 Gage). Nonmetallic pans shall have a minimum thickness of not less than 0.0625 inch (1.6 mm).
2. A separate overflow drain line shall be connected to the drain pan installed with the *equipment*. This overflow drain shall discharge to a conspicuous point of disposal to alert occupants in the event of a stoppage of the primary drain. The overflow drain line shall connect to the drain pan at a higher level than the primary drain connection.
3. An auxiliary drain pan without a separate drain line shall be installed under the coils on which condensation will occur. This pan shall be equipped with a water level detection device conforming to UL 508 that will shut off the *equipment* served prior to overflow of the pan. The pan shall be equipped with a fitting to allow for drainage. The auxiliary drain pan shall be constructed in accordance with Item 1 of this section.
4. A water level detection device conforming to UL 508 shall be installed that will shut off the *equipment* served in the event that the primary drain is blocked. The device shall be installed in the primary drain line, the overflow drain line or the *equipment*-supplied drain pan, located at a point higher than the primary drain line connection and below the overflow rim of such pan.

❖ An auxiliary (redundant) drain pan or a secondary drain is required for equipment locations where condensate overflow would cause damage to any building components. The auxiliary drain pan is installed to catch condensate spilling from the primary condensate removal system in the equipment. This backup pan protects the building from structural and finish damage. A secondary (overflow) drain is a second drain connection to the primary pan and is at a higher elevation than the primary drain. These “back-up provisions” help protect the building from structural and finish damage.

Condensate drains are notorious for clogging because of debris (lint, dust) from air-handling systems and the natural affinity to produce slime growths in drain pans and pipes. It is relatively common for condensate overflows to cause damage to buildings. The specified minimum horizontal slope is intended to maintain flow to prevent the blockage of the condensate pipe. However, properly sloping the drain will not ensure that blockage will not occur, therefore, this section provides four options for preventing such damage where the equipment is located in spaces such as attics, above suspended ceilings and furred spaces and locations on upper stories. One of the four methods must be used.

The first method uses an auxiliary drain pan below the coils on which condensate will occur with an independent drain line that discharges to a location that is easily observable to notify the building occupants that a problem with the primary pan exists. The code prescribes the depth of the pan and specific material thicknesses to ensure that the pan will be corrosion resistant and will have sufficient holding capacity and capture ability.

INTERNATIONAL CODE COUNCIL®
Copyright © 2015 ICC. ALL RIGHTS RESERVED. Accessed by David Dammon on Jun 21, 2017 12:30:52 PM pursuant to License Agreement with ICC. No further reproduction or distribution authorized. ANY UNAUTHORIZED REPRODUCTION OR DISTRIBUTION IS A VIOLATION OF THE FEDERAL COPYRIGHT ACT AND THE LICENSE AGREEMENT, AND SUBJECT TO CIVIL AND CRIMINAL PENALTIES THEREUNDER.

The second method uses an independent overflow drain line connected to the primary drain pan at a point higher than the primary drain line. Most evaporator coil pans are factory provided with an overflow drain tapping that can be used for this purpose. As in the first method, the point of discharge must be readily observable.

The third method uses a water-level detection device, usually a float switch or electronic sensor that must conform to the requirements of UL 508, located in the auxiliary drain pan [see Commentary Figure M1411.3.1(1)]. These detection devices will shutdown the equipment before the pan can overflow. There is no requirement for a separate drain line for the auxiliary pan in this method; however, there is a requirement for a drain fitting with a plug or cap that can be used to manually drain water from the pan to prevent water from standing in the pan for long periods of time.



Photo courtesy of SMD Research, Inc.

Figure M1411.3.1(1)
CONDENSATE OVERFLOW SHUTOFF SWITCH INSTALLED IN A PAN

The fourth method uses a water-level detection device installed in the primary drain line, in the overflow drain tapping on the primary pan or in the primary drain pan supplied by the manufacturer [see Commentary Figures M1411.3.1(2) and (3)]. This detection device shuts down the equipment before the pan can overflow. It also serves as a very noticeable warning to the homeowner that there is a problem with the HVAC system. Note that Item 4 is an acceptable method of protection, despite the fact that the main paragraph speaks only of secondary drains and auxiliary drain pans and Item 4 is neither.



Photo courtesy of SMD Research, Inc.

Figure M1411.3.1(2)
CONDENSATE OVERFLOW SHUTOFF SWITCH INSTALLED IN THE OUTLET OF THE AUXILIARY PAN



Photo courtesy of SMD Research, Inc.

Figure M1411.3.1(3)
CONDENSATE OVERFLOW SHUTOFF SWITCH INSTALLED IN THE OVERFLOW DRAIN LINE

M1411.3.1.1 Water-level monitoring devices. On downflow units and other coils that do not have secondary drain or provisions to install a secondary or auxiliary drain pan, a water-level monitoring device shall be installed inside the primary drain pan. This device shall shut off the equipment served in the event that the primary drain becomes restricted. Devices shall not be installed in the drain line.

❖ The intent of this section is to provide adequate overflow protection on all coils that do not have a secondary drain and have no provisions for providing a secondary

INTERNATIONAL CODE COUNCIL®
Copyright © 2015 ICC. ALL RIGHTS RESERVED. Accessed by David Dammon on Jun 21, 2017 12:30:52 PM pursuant to License Agreement with ICC. No further reproduction or distribution authorized. ANY UNAUTHORIZED REPRODUCTION OR DISTRIBUTION IS A VIOLATION OF THE FEDERAL COPYRIGHT ACT AND THE LICENSE AGREEMENT, AND SUBJECT TO CIVIL AND CRIMINAL PENALTIES THEREUNDER.

or auxiliary drain pan. Typical down-flow appliances and equipment used in dwelling units will have cooling coil primary drain pans that are equipped with secondary over-flow drain outlets; therefore, this section would rarely have to be applied in residential occupancies. The addition of a water level detection device inside the drain pan [see Commentary Figure M1411.3.1(1)] will prevent overflow caused by stoppages that occur anywhere in the drain, including at the site of the drain opening inside the primary drain pan provided by the manufacturer. When algae, airborne debris and sometimes foreign objects create a stoppage at the drain opening of the primary pan, overflow will not be prevented by a device that is installed externally in the drain line. Devices installed in the drain lines can only monitor stoppages that occur downstream of such devices and are in no way affected by the rising water level from a blockage inside the drain pan provided with the equipment.

When the water overflows from the pan, it typically runs into the duct, causing mold and mildew problems. It will eventually leak out through the joints or seams and cause damage to the building structure.

M1411.3.2 Drain pipe materials and sizes. Components of the condensate disposal system shall be ABS, cast iron, copper, cross-linked polyethylene, CPVC, galvanized steel, PE-RT, polyethylene, polypropylene or PVC pipe or tubing. Components shall be selected for the pressure and temperature rating of the installation. Joints and connections shall be made in accordance with the applicable provisions of Chapter 30. Condensate waste and drain line size shall be not less than $^3/_4$-inch (19 mm) nominal diameter from the drain pan connection to the place of condensate disposal. Where the drain pipes from more than one unit are manifolded together for condensate drainage, the pipe or tubing shall be sized in accordance with an *approved* method.

❖ Condensate drains must be constructed of one of the materials listed in this section, which are corrosion resistant. Such drains must be straight runs of pipe without sags or dips that would trap liquid. If coiled stock tubing is used, it would be difficult to maintain a uniform slope, and the low points (dips) in the tubing would trap water, causing the drain to be air bound, thereby blocking flow. When drains are merged, the piping must be properly sized for the aggregate flow. Note that the minimum size drain is required to be $^3/_4$-inch (19 mm) nominal diameter (I.D.) meaning that the drain line would be referred to or labeled as $^3/_4$-inch size, even though the actual diameter will be slightly more or less than $^3/_4$ inch, depending on the material. The $^3/_4$ inch refers to the trade size of the material, not an actual dimension.

M1411.3.3 Drain line maintenance. Condensate drain lines shall be configured to permit the clearing of blockages and performance of maintenance without requiring the drain line to be cut.

❖ Drains that convey condensate water from cooling coils and evaporators are known to develop blockages as a result of debris and biological growth in the system. These drains are commonly cleared of blockages by a compressed gas such as air or nitrogen being forced through the drain. It is inherently hazardous to pressurize plastic piping such as PVC and CPVC with a compressed gas because of the potential for violent rupture and propelled shards of plastic. The drains are seldom large enough to accommodate mechanical drain cleaning (rodding) equipment. The code permits any arrangement that provides access to the drain interior without the drain being severed or cut. This includes capped or plugged tees and cross fittings, unions, removable mechanical couplings and specialty devices made specifically for the attachment of compressed-gas hoses. The intent is to prevent the spillage of condensate that would cause damage to the structure (see Commentary Figure M1411.3.3).

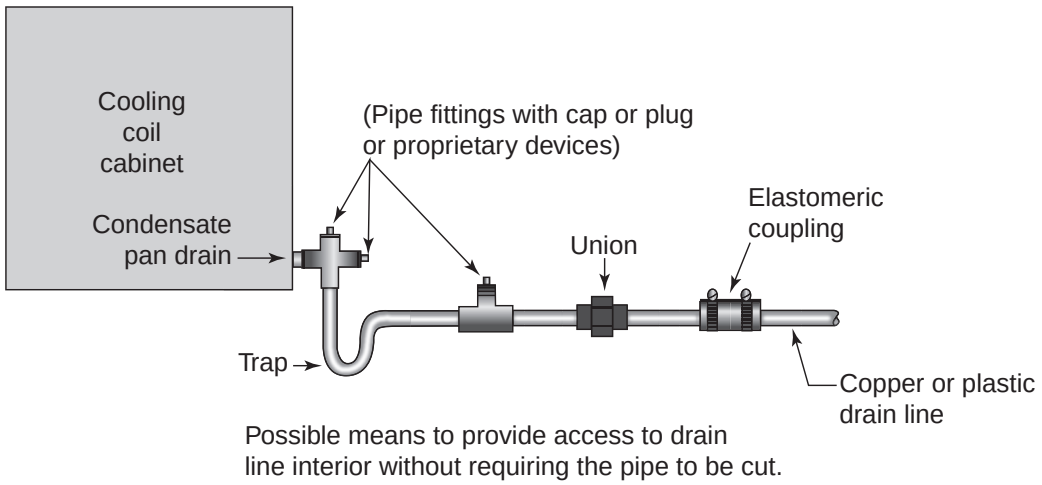

Figure M1411.3.3
CONDENSATE DRAIN LINE MAINTENANCE

INTERNATIONAL CODE COUNCIL®
Copyright © 2015 ICC. ALL RIGHTS RESERVED. Accessed by David Dammon on Jun 21, 2017 12:30:52 PM pursuant to License Agreement with ICC. No further reproduction or distribution authorized. ANY UNAUTHORIZED REPRODUCTION OR DISTRIBUTION IS A VIOLATION OF THE FEDERAL COPYRIGHT ACT AND THE LICENSE AGREEMENT, AND SUBJECT TO CIVIL AND CRIMINAL PENALTIES THEREUNDER.

M1411.3.4 Appliances, equipment and insulation in pans. Where *appliances, equipment* or insulation are subject to water damage when auxiliary drain pans fill, those portions of the *appliances, equipment* and insulation shall be installed above the flood level rim of the pan. Supports located inside of the pan to support the *appliance* or *equipment* shall be water resistant and *approved*.

❖ If an auxiliary pan receives water and the appliance/equipment is sitting directly on the bottom of the pan, water damage can occur to the appliance/equipment. Electrical components, metal items subject to corrosion and insulation within the appliance are examples of items that are subject to damage when submerged in water. This must be prevented by elevating the appliance/equipment above the rim of the pan such that the pan would overflow before any water reached the appliance/equipment. The means of elevating the appliance/equipment must be unaffected by repeated wettings [see Commentary Figures M1411.3.4(1) and M1411.3.4(2)].

M1411.4 Condensate pumps. Condensate pumps located in uninhabitable spaces, such as attics and crawl spaces, shall be connected to the appliance or equipment served such that when the pump fails, the appliance or equipment will be prevented from operating. Pumps shall be installed in accordance with the manufacturer's instructions.

❖ Condensate pumps are often located in attics and crawl spaces and above ceilings where they are not readily observable. If they fail, the condensate overflow can cause structural damage to the building, especially where the overflow will not be noticed immediately. The majority of such pumps are equipped with simple float controls that can be wired in series with the appliance/equipment control circuit. When the pump system fails, the float will rise in the reservoir and open a switch before the condensate starts to overflow the reservoir. These float controls are commonly not connected, and in other cases the pump might not be equipped with an overflow switch. This new code section requires the installation of condensate pumps that have this overflow shutoff capability and requires that the appliance/equipment served be connected to take advantage of that feature (see Commentary Figure M1411.4).

M1411.5 Auxiliary drain pan. Category IV condensing *appliances* shall have an auxiliary drain pan where damage to any building component will occur as a result of stoppage in the condensate drainage system. These pans shall be installed in accordance with the applicable provisions of Section M1411.3.

Exception: Fuel-fired *appliances* that automatically shut down operation in the event of a stoppage in the condensate drainage system.

❖ Evaporators and cooling coils are not the only appliances/equipment that produce condensate. Condensing-type fuel-fired appliances such as Category IV furnaces, boilers and condensing water heaters produce water condensate from the combustion of fuel and are considered to be high-efficiency appliances.



Figure M1411.3.4(1)
UNACCEPTABLE APPLIANCE AND PAN INSTALLATION

INTERNATIONAL CODE COUNCIL®
Copyright © 2015 ICC. ALL RIGHTS RESERVED. Accessed by David Dammon on Jun 21, 2017 12:30:52 PM pursuant to License Agreement with ICC. No further reproduction or distribution authorized. ANY UNAUTHORIZED REPRODUCTION OR DISTRIBUTION IS A VIOLATION OF THE FEDERAL COPYRIGHT ACT AND THE LICENSE AGREEMENT, AND SUBJECT TO CIVIL AND CRIMINAL PENALTIES THEREUNDER.

Manufacturers of condensing appliances may recommend that a pan be installed under their appliances; however, this section requires it where leakage would result in damage. The exception allows installation of appliances without an auxiliary drain pan if the appliances will automatically shut down in the event of a condensate drain stoppage. In accordance with the appliance standards, if a drain blockage occurs, some appliances have the option of continuing to operate safely or automatically shutting down.



Figure M1411.3.4(2)
ACCEPTABLE APPLIANCE AND PAN INSTALLATION

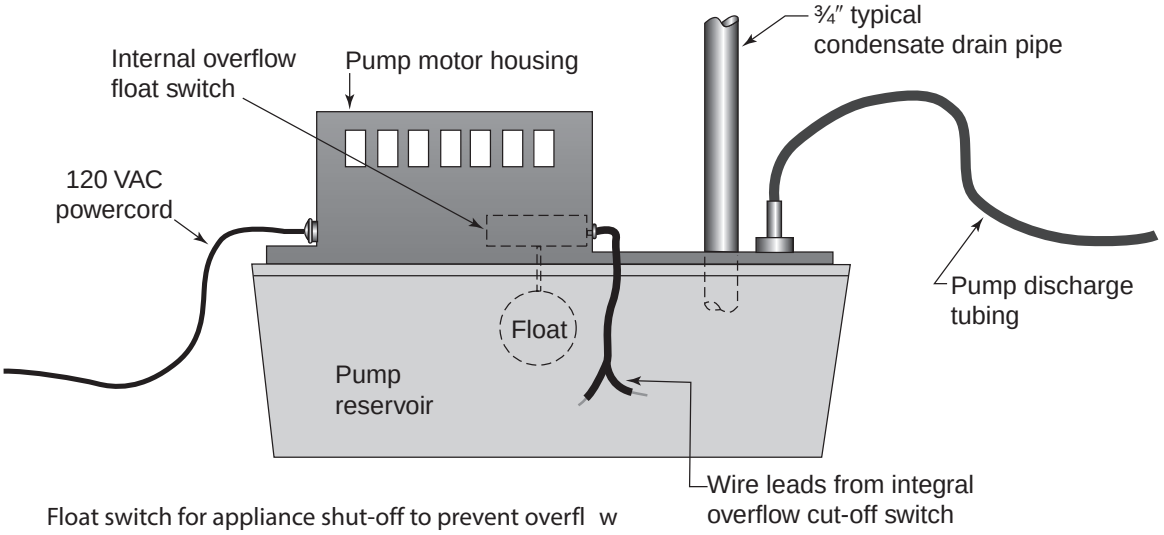

Figure M1411.4
CONDENSATE PUMPS IN UNINHABITABLE SPACES

INTERNATIONAL CODE COUNCIL®
Copyright © 2015 ICC. ALL RIGHTS RESERVED. Accessed by David Dammon on Jun 21, 2017 12:30:52 PM pursuant to License Agreement with ICC. No further reproduction or distribution authorized. ANY UNAUTHORIZED REPRODUCTION OR DISTRIBUTION IS A VIOLATION OF THE FEDERAL COPYRIGHT ACT AND THE LICENSE AGREEMENT, AND SUBJECT TO CIVIL AND CRIMINAL PENALTIES THEREUNDER.

M1411.6 Insulation of refrigerant piping. Piping and fittings for refrigerant vapor (suction) lines shall be insulated with insulation having a thermal resistivity of not less than R-4 and having external surface permeance not exceeding 0.05 perm [2.87 ng/(s · m^2 · Pa)] when tested in accordance with ASTM E 96.

❖ To improve the efficiency of the refrigeration cycle, to allow for proper compressor cooling and to control the formation of condensation on the piping, the refrigerant vapor (suction) lines must be insulated. Premade refrigerant line sets are commonly used and the suction line is factory insulated. Great care must be taken during installation to prevent the insulation from being torn, ripped or compressed. Damaged insulation will allow condensation to form on the tubing, so the insulation must be repaired or replaced.

M1411.7 Location and protection of refrigerant piping. Refrigerant piping installed within $1^1/_2$ inches (38 mm) of the underside of roof decks shall be protected from damage caused by nails and other fasteners.

❖ Refrigerant line sets for cooling systems and heat pumps are often routed up exterior walls and into attic spaces, which results in the lines being close to the roof deck at some points. When the roof covering is applied initially or during a reroofing installation, roofing nails and staples have been known to pierce the refrigerant lines. This results in loss of the system's refrigerant charge and results in environmental harm. The system will have to be repaired, evacuated (vacuum pumped) and recharged at significant expense. Protection of such lines is difficult to achieve; therefore, the best approach is to keep the lines away from the roof deck for a distance greater than $1^1/_2$ inches.

M1411.8 Locking access port caps. Refrigerant circuit access ports located outdoors shall be fitted with locking-type tamper-resistant caps or shall be otherwise secured to prevent unauthorized access.

❖ This provision intends to address a relatively new type and method of substance abuse where people intentionally inhale refrigerant gases for the intoxicating effect. In some cases, this inhalant abuse has resulted in the death of the individual. The typical condensing unit or heat pump unit is located outdoors and is equipped with access ports on the vapor and liquid refrigerant lines. These access ports are necessary for several purposes, such as to allow the connection of diagnostic gauges and to allow refrigerant to be added to or taken from the unit during servicing of the unit. Some of these access ports require back-seated valves to be opened with a wrench to allow refrigerant to escape and many of these access ports are equipped with simple "Schraeder" valves that are similar to the valve cores used on car and truck tires. All access ports are provided with threaded caps to keep out debris and moisture and to also guard against valve leakage. Individuals intent on inhaling refrigerants have found that they can withdraw refrigerant from these units by using simple hand tools or their bare hands to remove the caps and open the valves.

The purpose of this section is to prevent this dangerous form of substance abuse by making it difficult if not impossible to remove these access port caps. Some of the available locking-type caps are designed such that wrenches, pliers and fingers cannot be used to remove the caps without a special tool/key.

All newly installed equipment, including replacement equipment, must be fitted with locking-type caps as part of such installations or other means must be provided to prevent access to the service ports. Such other means might include locked cages, locked access panels and locating the service access ports where they would be inaccessible to unauthorized persons [see Commentary Figures M1411.8(1) through M1411.8(4)].



Photo courtesy of Novent L.L.C. and Airtec Products Corporation Inc.

Figure M1411.8(1)
INSTALLATION OF LOCKING CAPS FOR REFRIGERANT ACCESS PORT



Photo courtesy of Novent L.L.C and Airtec Products Corporation Inc.

Figure M1411.8(2)
REFRIGERANT LOCKING CAPS AND TOOLS

INTERNATIONAL CODE COUNCIL®
Copyright © 2015 ICC. ALL RIGHTS RESERVED. Accessed by David Dammon on Jun 21, 2017 12:30:52 PM pursuant to License Agreement with ICC. No further reproduction or distribution authorized. ANY UNAUTHORIZED REPRODUCTION OR DISTRIBUTION IS A VIOLATION OF THE FEDERAL COPYRIGHT ACT AND THE LICENSE AGREEMENT, AND SUBJECT TO CIVIL AND CRIMINAL PENALTIES THEREUNDER.



Photo courtesy of Novent L.L.C and Airtec Products Corporation, Inc.

Figure M1411.8(3)
REFRIGERANT LABELS FOR LOCKING CAPS



Photo courtesy of Novent L.L.C and Airtec Products Corporation Inc.

Figure M1411.8(4)
SPECIAL REMOVAL TOOLS FOR REFRIGERANT LOCKING CAPS

SECTION M1412
ABSORPTION COOLING EQUIPMENT

M1412.1 Approval of equipment. Absorption systems shall be installed in accordance with the manufacturer's instructions. Absorption equipment shall comply with UL 1995 or UL/CSA/ANCE 60335-2-40.

❖ Absorption refrigeration systems use two fluids (an absorbent and a refrigerant) and a heat source to remove heat through evaporation at a lower pressure and then reject the heat through condensation at a higher pressure. Typical absorption systems use ammonia as the refrigerant and water as the absorbent or lithium bromide as the absorbent and water as the refrigerant.

This section states that absorption systems must be installed in accordance with manufacturers' installation instructions, which are an enforceable extension of the code. Absorption equipment must be in compliance with UL 1995.

M1412.2 Condensate disposal. Condensate from the cooling coil shall be disposed of as provided in Section M1411.3.

❖ This section and Section M1411.3 provide for the proper and safe disposal of condensate.

M1412.3 Insulation of piping. Refrigerant piping, brine piping and fittings within a building shall be insulated to prevent condensation from forming on piping.

❖ Condensation will deteriorate piping and cause serious damage to other parts of buildings, so the piping must be insulated. Note that insulation alone cannot prevent condensation on piping, because a vapor barrier is necessary to prevent moisture from reaching the pipe surface. Some insulation materials also function as vapor barriers.

M1412.4 Pressure-relief protection. Absorption systems shall be protected by a pressure-relief device. Discharge from the pressure-relief device shall be located where it will not create a hazard to persons or property.

❖ In addition to requiring that the installation of this type of equipment be in compliance with the manufacturer's instructions, this section specifically requires the installation of pressure-relief devices that are to be discharged to a safe location.

SECTION M1413
EVAPORATIVE COOLING EQUIPMENT

M1413.1 General. Evaporative cooling equipment and appliances shall comply with UL 1995 or UL/CSA/ANCE 60335-2-40 and shall be installed:

1. In accordance with the manufacturer's instructions.
2. On level platforms in accordance with Section M1305.1.4.1.
3. So that openings in exterior walls are flashed in accordance with Section R703.4.
4. So as to protect the potable water supply in accordance with Section P2902.
5. So that air intake opening locations are in accordance with Section R303.5.1.

❖ This section requires installation of exterior equipment on a level platform at least 3 inches (76 mm) above the surrounding grade to protect the equipment from corrosion. This section states that evaporative cooling equipment must be installed in accordance with the manufacturer's instructions, which are an enforceable extension of the code.

INTERNATIONAL CODE COUNCIL®
Copyright © 2015 ICC. ALL RIGHTS RESERVED. Accessed by David Dammon on Jun 21, 2017 12:30:52 PM pursuant to License Agreement with ICC. No further reproduction or distribution authorized. ANY UNAUTHORIZED REPRODUCTION OR DISTRIBUTION IS A VIOLATION OF THE FEDERAL COPYRIGHT ACT AND THE LICENSE AGREEMENT, AND SUBJECT TO CIVIL AND CRIMINAL PENALTIES THEREUNDER.

SECTION M1414
FIREPLACE STOVES

M1414.1 General. Fireplace stoves shall be *listed*, *labeled* and installed in accordance with the terms of the listing. Fireplace stoves shall be tested in accordance with UL 737.

❖ A fireplace stove is a free-standing, chimney-connected, solid-fuel-burning heater designed to be operated with the fire chamber doors in either the open or closed position. The difference between a fireplace stove and a solid-fuel-type room heater is that a room heater is chimney connected and designed for operation with the fire chamber (firebox) closed. A fireplace stove must be tested in accordance with UL 737 whereas a solid-fuel-type room heater is tested in accordance with UL 1482 (see Section M1410). Note that some appliances are listed as both a stove and a room heater and, therefore, can be operated with the fire chamber in either the open or closed position. Fireplace stoves must be installed in accordance with the manufacturer's instructions. Such instructions are an integral part of the product listing since these instructions are used by the testing agency when the test installation is constructed. Therefore, a unit tested in compliance with UL 737 and installed in accordance with the manufacturer's instructions is expected to perform the same as the representative sample unit that was tested.

M1414.2 Hearth extensions. Hearth extensions for fireplace stoves shall be installed in accordance with the *listing* of the fireplace stove. The supporting structure for a hearth extension for a fireplace stove shall be at the same level as the supporting structure for the fireplace unit. The hearth extension shall be readily distinguishable from the surrounding floor area.

❖ Fireplace stoves must be installed in strict accordance with the manufacturer's instructions. These instructions will include specifications for the materials, dimensions and installation of a hearth extension. The hearth extension must be of noncombustible materials and must be supported at the same level as the fireplace stove. The floor supporting the hearth extension can be of combustible construction. Because a fireplace stove is a free-standing heater, in most installations the fireplace stove will be installed on the hearth extension. The dimensions of the hearth extension will be dictated by the manufacturer's installation instructions and will include distances that the hearth extension must extend beyond the sides, back and front of the fireplace stove.

A fireplace stove can be operated with the firebox doors in the open position, similar to a traditional masonry fireplace. The hearth extension will protect the floor structure on all sides from radiant heat, and it will protect the floor structure in front of the stove from sparks, embers, coals and burning solid fuel that might escape from the firebox. The nature of solid fuel can cause burning material to be expelled from the fire box, and large pieces of the fuel can fall from the grate or roll out of the firebox. In addition to the required hearth extensions, screens should be used as the initial and primary protection against sparks and embers from the firebox.

SECTION M1415
MASONRY HEATERS

M1415.1 General. Masonry heaters shall be constructed in accordance with Section R1002.

❖ Masonry heaters are a type of solid-fuel-burning appliance and are covered in Section R1002, which requires installation in accordance with ASTM E1602 or the terms of the listing. Such heaters are assembled on the job site from locally obtained raw materials or from factory components shipped to the job site. Masonry heaters are designed to be much more efficient than conventional fireplaces by incorporating immense thermal mass (masonry) and multiple pass flueways that provide greater heat exchange surface area and longer combustion gas retention time. Masonry heaters provide heat to the conditioned space by direct radiation of the heat energy stored in the immense thermal mass. In addition to having high thermal efficiencies, masonry heaters have the ability to provide space heating for many hours after the fire has burned out. Some factory-built kits are listed. Clearances to combustibles and convection cooling airflow are extremely important because these heaters store heat at high temperatures for long periods of time.

Bibliography

The following resource materials were used in the preparation of the commentary for this chapter of the code:

NFPA 70–14, *National Electrical Code*. Quincy, MA: National Fire Protection Association, 2013.

INTERNATIONAL CODE COUNCIL®
Copyright © 2015 ICC. ALL RIGHTS RESERVED. Accessed by David Dammon on Jun 21, 2017 12:30:52 PM pursuant to License Agreement with ICC. No further reproduction or distribution authorized. ANY UNAUTHORIZED REPRODUCTION OR DISTRIBUTION IS A VIOLATION OF THE FEDERAL COPYRIGHT ACT AND THE LICENSE AGREEMENT, AND SUBJECT TO CIVIL AND CRIMINAL PENALTIES THEREUNDER.

INTERNATIONAL CODE COUNCIL®
Copyright © 2015 ICC. ALL RIGHTS RESERVED. Accessed by David Dammon on Jun 21, 2017 12:30:52 PM pursuant to License Agreement with ICC. No further reproduction or distribution authorized. ANY UNAUTHORIZED REPRODUCTION OR DISTRIBUTION IS A VIOLATION OF THE FEDERAL COPYRIGHT ACT AND THE LICENSE AGREEMENT, AND SUBJECT TO CIVIL AND CRIMINAL PENALTIES THEREUNDER.

Chapter 15: Exhaust Systems

General Comments

As the title states, this chapter is a compilation of all exhaust system-related code requirements applicable to those uses covered by the code. The code regulates the materials used for constructing and installing such duct systems. Air brought into the building for ventilation, combustion or makeup is protected from contamination by the provisions found in this chapter.

Section M1501 requires that all mechanically exhausted air must discharge to the outdoors. Section M1502 pertains to the exhaust ducts from clothes dryers. Section M1503 has the criteria for exhaust ducts for range hoods. Section M1504 requires that microwave ovens be listed and labeled and properly installed. Section M1505 contains the regulations for exhausting domestic open-top broilers, and Section M1506 indicates that if a particular exhaust duct construction is not found in this chapter, the reader must use the criteria for ducts in Chapter 16. Section M1507 contains the minimum ventilation rates for bathroom and kitchen exhaust systems and some restrictions on recirculation of exhaust air.

The code official must be aware of the effect that exhaust systems can have on space conditioning and ventilation systems. For example, improperly designed exhaust systems can create negative pressure conditions, which can adversely affect the operation of fuel-burning appliances and the operation of other exhaust systems.

Purpose

Chapter 15 presents provisions associated with exhaust systems so hazards associated with exhaust systems and air contaminants can be avoided.

SECTION M1501 GENERAL

M1501.1 Outdoor discharge. The air removed by every mechanical exhaust system shall be discharged to the outdoors in accordance with Section M1506.3. Air shall not be exhausted into an attic, soffit, ridge vent or crawl space.

Exception: Whole-house *ventilation*-type *attic* fans that discharge into the *attic* space of *dwelling units* having private *attics* shall be permitted.

❖ The primary intent of this section is to avoid exhausting contaminants into areas that may be occupied by people or into concealed spaces such as attics and crawl spaces where moisture can damage the building components. To prevent the introduction of contaminants into the ventilation air of a building, exhaust openings must not direct exhaust so that it could be readily drawn in by a ventilating system. To achieve this, the requirement for termination points for exhaust ducts must be in accordance with the location and placement of intake and exhaust openings in accordance with Section M1506.3.

Attics and crawl spaces are not considered to be outdoors. Exhaust ducts cannot terminate in these spaces. Exhaust ducts must connect directly to terminals that pass through the building envelope to the outside atmosphere. Pointing, aiming or similarly directing an exhaust duct at an opening in the envelope of the building such as an attic louver, ridge vent, gable vent, roof vent, eave vent or soffit vent, in no way ensures that all or any of the exhaust will reach the outdoors. In fact, it is possible that the majority, if not all, of the exhaust vapors and gases will discharge to the attic space rather than to the outdoors (see Commentary Figure M1501.1).

In the case of a duct that terminates in a ventilated soffit, the exhaust can rise into the attic as opposed to falling through the perforated soffit. The flow of air through an opening for attic ventilation is dependent on attic temperature, wind direction, wind speed and opening configuration and location, making attic air movement unpredictable and often in a direction not intended. Additionally, grilles and louvers offer resistance and interfere with the exhaust flow directed at them. This may cause deflection of exhaust back into the attic.

The exception addresses a mechanical alternative to natural ventilation of a dwelling unit. A whole-house ventilation-type attic fan is less source-specific than a dryer, bathroom or kitchen exhaust system. Whole-house ventilation systems are installed to provide a fresh air flow for the occupants either continuously or at timed intervals. The exception is specific to whole-house “ventilation-type” attic fans that create an airflow through open windows. Source-specific fans (bathroom exhaust or kitchen exhaust) would not qualify for the exception because their primary function is to exhaust moisture, odors, vapors or products of combustion. The contaminants associated with these functions might be harmful to the occupants, detrimental to the structural integrity of the building or even impact the fire safety performance of the building, and must discharge directly outdoors. The exception applies only to whole-house fans dedicated solely to ventila-

INTERNATIONAL CODE COUNCIL®
Copyright © 2015 ICC. ALL RIGHTS RESERVED. Accessed by David Dammon on Jun 21, 2017 12:30:52 PM pursuant to License Agreement with ICC. No further reproduction or distribution authorized. ANY UNAUTHORIZED REPRODUCTION OR DISTRIBUTION IS A VIOLATION OF THE FEDERAL COPYRIGHT ACT AND THE LICENSE AGREEMENT, AND SUBJECT TO CIVIL AND CRIMINAL PENALTIES THEREUNDER.

tion and comfort cooling. Within the context of the code, a "private attic" is one in which air discharged from one dwelling unit cannot enter another dwelling unit's attic space. The exception is not related to the whole-house ventilation systems covered in Sections R303.4 and M1507.

SECTION M1502
CLOTHES DRYER EXHAUST

M1502.1 General. Clothes dryers shall be exhausted in accordance with the manufacturer's instructions.

❖ Clothes dryers must be exhausted in compliance with the dryer manufacturer's installation instructions. The manufacturer's installation instructions apply and where the code provisions are more strict, the code applies. Note that some of the provisions in the code are redundant with the appliance installation instructions. Dryers are designed and built to meet industry safety standards. The manufacturer's installation instructions are evaluated by the agency responsible for testing the appliance and, therefore, those instructions will prescribe an installation that is consistent with the appliance installation that was tested. This requirement is consistent with Section M1307.1, which addresses the installation of all appliances. The correct terminology is "dryer exhaust duct," as the term "vent" is used in a different context elsewhere in the code.

M1502.2 Independent exhaust systems. Dryer exhaust systems shall be independent of all other systems and shall convey the moisture to the outdoors.

Exception: This section shall not apply to *listed* and *labeled* condensing (ductless) clothes dryers.

❖ Clothes dryer exhaust systems are a potential fire hazard because of the combustible lint and debris that can accumulate in the duct and the heat source of the appliance. This combination of combustible lint and elevated temperature has been the cause of fires. The dryer exhaust system must be independent of other systems to prevent the hazard associated with one exhaust entering into or affecting other systems or areas in the building.

Clothes dryer exhaust systems must convey the moisture and any products of combustion directly to the exterior of the building (outdoors); therefore, any devices that allow all or part of the exhaust to discharge to the indoors are in violation of the code. The requirement to convey the exhaust to the outdoors applies to both fuel-fired and nonfuel-fired (i.e., electric) appliances. Clothes dryer exhaust systems cannot terminate in or discharge to any enclosed space, such as an attic or crawl space, regardless of whether or not the space is ventilated through openings to the outdoors. The high levels of moisture in the exhaust air can cause condensation to form on exposed surfaces or in insulation materials. Water vapor condensation can cause structural damage, deterioration of building materials and contribute to the growth of mold and fun-



Figure M1501.1
PROHIBITED EXHAUST TERMINATION

INTERNATIONAL CODE COUNCIL®
Copyright © 2015 ICC. ALL RIGHTS RESERVED. Accessed by David Dammon on Jun 21, 2017 12:30:52 PM pursuant to License Agreement with ICC. No further reproduction or distribution authorized. ANY UNAUTHORIZED REPRODUCTION OR DISTRIBUTION IS A VIOLATION OF THE FEDERAL COPYRIGHT ACT AND THE LICENSE AGREEMENT, AND SUBJECT TO CIVIL AND CRIMINAL PENALTIES THEREUNDER.

gus. Clothes dryer exhausts that discharge to enclosed spaces will also cause an accumulation of combustible lint and debris, creating a significant fire hazard. An improperly installed clothes dryer exhaust system not only reduces dryer efficiency and increases running time, but also can cause a significant increase in exhaust temperature, causing the dryer to cycle on its high limit control, which is an unsafe operating condition.

The exception specifically excludes condensing clothes dryers from the requirement to exhaust to the outdoors. Condensing dryers are electrically heated and recirculate the same air through the clothes drum. An air-to-air heat exchanger condenses the water vapor in the clothes drum air by using room air as the condensing medium. The condensate is collected in a reservoir that is either manually emptied or automatically emptied by an integral condensate pump. These dryers do not discharge heated air to the outdoors and have the effect of slightly elevating the indoor ambient temperature.

These "ductless" dryers must be listed for this application and installed to comply with the listing. They are commonly installed in applications where a conventional dryer exhaust duct cannot be used because of distance or aesthetics problems.

M1502.3 Duct termination. Exhaust ducts shall terminate on the outside of the building. Exhaust duct terminations shall be in accordance with the dryer manufacturer's installation instructions. If the manufacturer's instructions do not specify a termination location, the exhaust duct shall terminate not less than 3 feet (914 mm) in any direction from openings into buildings. Exhaust duct terminations shall be equipped with a backdraft damper. Screens shall not be installed at the duct termination.

❖ The clothes dryer exhaust discharge must terminate outdoors because of the high levels of moisture, combustible lint and, for gas-fired units, combustion products in the exhaust. If discharged indoors, such exhaust could present a health and fire hazard, could cause structural damage and deterioration of building material and could contribute to the growth of mold and fungus. The exhaust also contains highly combustible clothes fibers and, in the case of gas-fired units, products of combustion.

The requirement to locate the exhaust outlet at least 3 feet (914 mm) from any openings into the building is intended to minimize the possibility of drawing the dryer exhaust into the house through windows, doors or fresh air intake openings. Note that the dryer installation instructions may specify a greater distance. The 3-foot (914 mm) dimension is consistent with similar requirements in the *International Mechanical Code*® (IMC®) and has been successfully used in the housing industry for years.

Backdraft dampers must be installed in dryer exhaust ducts to avoid outdoor air infiltration during periods when the dryer is not operating and to prevent the entry of animals. These dampers should be designed and installed to provide an adequate seal when in a closed position to minimize air leakage (infiltration). Backdraft dampers are typically of the gravity type, which are opened by the energy of the exhaust discharge. Some dryer manufacturers prohibit the use of magnetically held backdraft dampers because of the extra resistance that the exhaust flow must overcome.

Exhaust terminal opening size is also governed by the dryer manufacturer's instructions. Full opening terminals present less resistance to flow and might be mandated by the dryer manufacturer. A "full opening" is considered to be an opening having no dimension less than the diameter of the exhaust duct. Screens are prohibited on the duct termination because lint from the dryer will clog the screen creating flow resistance and eventually a complete blockage. This will result in a fire hazard. Consider that the filter screen integral with the appliance becomes restricted with lint in each cycle of operation. The code does not recognize any type or size of screen as being acceptable. Some dryer exhaust terminals are manufactured with a "basket" type of animal screen and the code makes no exception for such screens. Clothes fibers have the ability to coalesce and clog any screen.

M1502.4 Dryer exhaust ducts. Dryer exhaust ducts shall conform to the requirements of Sections M1502.4.1 through M1502.4.7.

❖ See the commentary to subsequent sections.

M1502.4.1 Material and size. Exhaust ducts shall have a smooth interior finish and be constructed of metal having a minimum thickness of 0.0157 inches (0.3950 mm) (No. 28 gage). The duct shall be 4 inches (102 mm) nominal in diameter.

❖ This section requires that the diameter of the exhaust duct be 4 inches (102 mm), no larger and no smaller. A 4-inch (102 mm) duct is the basis for the design of the appliance exhaust system. Ducts that are too small would restrict air movement and would cause the dryer to consume more energy because of the longer drying time. They could also cause appliance overheating. Ducts that are too large will cause a decrease in the flow velocity, causing lint and debris to drop out of the exhaust air stream. For example, increasing the duct size from 4 inches to 5 inches (102 mm to 127 mm) will result in a reduction of duct velocity of approximately 37 percent for the typical dryer. The exhaust duct material must be smooth-wall metal with the specified minimum wall thickness. Plastic ducts, corrugated ducts and flexible ducts are all prohibited with the exception of transition ducts in accordance with Section M1502.4.3.

M1502.4.2 Duct installation. Exhaust ducts shall be supported at intervals not to exceed 12 feet (3658 mm) and shall be secured in place. The insert end of the duct shall extend into the adjoining duct or fitting in the direction of airflow. Exhaust duct joints shall be sealed in accordance with Section

INTERNATIONAL CODE COUNCIL®
Copyright © 2015 ICC. ALL RIGHTS RESERVED. Accessed by David Dammon on Jun 21, 2017 12:30:52 PM pursuant to License Agreement with ICC. No further reproduction or distribution authorized. ANY UNAUTHORIZED REPRODUCTION OR DISTRIBUTION IS A VIOLATION OF THE FEDERAL COPYRIGHT ACT AND THE LICENSE AGREEMENT, AND SUBJECT TO CIVIL AND CRIMINAL PENALTIES THEREUNDER.

M1601.4.1 and shall be mechanically fastened. Ducts shall not be joined with screws or similar fasteners that protrude more than $^1/_8$ inch (3.2 mm) into the inside of the duct.

❖ Clothes dryer ducts must be well supported to prevent deformation and joint separation. The male end of the duct and fittings must point in the direction of airflow to lessen flow resistance, joint leakage and collection of lint. This is common practice for all ducts, regardless of application. Previous editions of the code did not permit duct fasteners to protrude into the inside of the ducts. This created a problem since all ducts have been required by tradition, codes or installation standards to be mechanically fastened at all joints and joint sealing is not equivalent to or a substitute for mechanical fastening (see Section M1601.4.1 applicable to HVAC ducts). This also created a problem when duct cleaning firms attempted to clean dryer exhaust ducts and they would come apart within concealed wall and ceiling spaces. The code permits mechanical fasteners to penetrate up to $^1/_8$ inch (3.2 mm) into the inside of the dryer exhaust duct. A maximum penetration of $^1/_8$ inch (3.2 mm) is expected to create only an insignificant amount of lint buildup. The $^1/_8$-inch (3.2 mm) limitation was intended to allow the use of short pop-rivets and $^1/_8$-inch-long (3.2 mm) screws. Dryer exhaust ducts must be exceptionally well supported and sealed so that the joints will not separate. This is especially important where the ducts are to be concealed within the building construction and where they will be mechanically cleaned by duct cleaning apparatus.

M1502.4.3 Transition duct. Transition ducts used to connect the dryer to the exhaust *duct system* shall be a single length that is *listed* and *labeled* in accordance with UL 2158A. Transition ducts shall be not greater than 8 feet (2438 mm) in length. Transition ducts shall not be concealed within construction.

❖ Within the context of this section, a transition duct is a flexible connector used as a transition between the dryer outlet and the connection point to the exhaust duct system. Transition duct connectors must be listed and labeled as transition ducts for clothes dryer application. Transition ducts must be listed to comply with UL 2158A. Such transition ducts are not considered as flexible air ducts or flexible air connectors.

Transition ducts are flexible ducts constructed of a metalized (foil) laminated fabric supported on a spiral wire frame. They are more fire resistant than the typical plastic spiral duct. Transition duct connectors are necessary for domestic dryers because of appliance movement, vibration and outlet location. In many cases, connecting a domestic clothes dryer directly to rigid duct would be difficult.

Transition duct connectors are limited to 8 feet (2438 mm) in length and must be installed in accordance with their listing and the manufacturer's instructions. These duct connectors must not be concealed by any portion of the structure's permanent finish materials, such as drywall, plaster, paneling, built-in furniture or cabinets or any other similar permanently affixed building component; they must remain entirely within the room in which the appliance is installed. Transition duct connectors cannot be joined to extend beyond the 8-foot (2438 mm) maximum length limit. Transition ducts are to be cut to length as needed to avoid excess duct and unnecessary bends. Note that in the application of Section M1502.4.5.1, the length of the transition duct is not counted in the overall duct system length, despite the fact that the transition duct does contribute considerable airflow resistance to the exhaust duct system.

M1502.4.4 Dryer exhaust duct power ventilators. Domestic dryer exhaust duct power ventilators shall conform to UL 705 for use in dryer exhaust duct systems. The dryer exhaust duct power ventilator shall be installed in accordance with the manufacturer's instructions.

❖ The previous code editions did not recognize dryer exhaust duct power ventilators (DEDPVs) as an option for clothes dryer installations. DEDPVs are loosely referred to as "dryer booster fans" in the marketplace. Prior to the 2015 code, the designer's choices for exhaust duct length were: 1. To limit the duct length to 35 feet; 2. To follow the length limits in the clothes dryer manufacturer's instructions; or, if neither of those choices work, 3. To relocate the dryer. A fourth option was to get the code official to approve the installation of a DEDPV under the alternative approval provision in Section 105. Exhaust ducts that exceed the developed length allowed by the code are a potential fire hazard, create maintenance problems, increase drying times and cause the dryer to be inefficient and waste energy. Dryer exhaust systems are commonly installed improperly with excessive lengths, too many elbows and the wrong duct materials. Because of the high incidence of reported dryer fires, the code strictly regulates the installation. DEDPVs are listed to a revised version of UL 705 that now contains tests and construction requirements that are specific to these devices. DEDPVs have been around for years but until recently were not listed to a national consensus standard that was specific to these devices. The UL 705 standard contains requirements for the construction, testing and installation of DEDPVs and requires them to be equipped with features such as interlocks, limit controls, monitoring controls and enunciator devices to make certain that the dryers or dryer operators are aware of the operating status of the DEDPVs (see Commentary Figure M1502.4.4).

M1502.4.5 Duct length. The maximum allowable exhaust duct length shall be determined by one of the methods specified in Sections M1502.4.5.1 through M1502.4.5.3.

❖ The duct length, the number and angle of fittings and the smoothness of the duct interior all contribute to the total friction loss of the airflow. When the friction loss is excessive, a reduction of the air velocity occurs, allowing lint and debris to accumulate in the duct and thus creating a fire hazard. Impeded airflow will also increase drying time, decrease appliance efficiency and raise system temperatures. The manufacturer's instructions and the code limitations concerning duct length,

INTERNATIONAL CODE COUNCIL®
Copyright © 2015 ICC. ALL RIGHTS RESERVED. Accessed by David Dammon on Jun 21, 2017 12:30:52 PM pursuant to License Agreement with ICC. No further reproduction or distribution authorized. ANY UNAUTHORIZED REPRODUCTION OR DISTRIBUTION IS A VIOLATION OF THE FEDERAL COPYRIGHT ACT AND THE LICENSE AGREEMENT, AND SUBJECT TO CIVIL AND CRIMINAL PENALTIES THEREUNDER.

the number of elbows installed and the type of termination fittings must be adhered to in order to help prevent a fire hazard and allow proper appliance operation.

Note that this section introduces two distinct choices in its two subsections.

M1502.4.5.1 Specified length. The maximum length of the exhaust duct shall be 35 feet (10 668 mm) from the connection to the transition duct from the dryer to the outlet terminal. Where fittings are used, the maximum length of the exhaust duct shall be reduced in accordance with Table M1502.4.5.1. The maximum length of the exhaust duct does not include the transition duct.

❖ The maximum exhaust duct length of 35 feet (7620 mm) is the requirement for domestic clothes dryers. The 35-foot (7620 mm) limit is based on the worst case scenario where the dryer is rated for a maximum duct length of 35 feet (7620 mm). The intent was to ensure that the least capable dryer available would be compatible with a 35-foot (7620 mm) duct system. If the exhaust duct system is designed for worst case, it should work properly in all cases. Note that there may be some dryers on the market that specify a duct length of less than 35 feet (10 668 mm), and the manufacturer's instructions would prevail in such case.

Because the maximum length is based on equivalent length, all fittings must be accounted for in accordance with Table M1502.4.5.1. The length is measured from the point where the transition duct (if used) connects to the rigid exhaust duct system to the



Figure M1502.4.4
DRYER EXHAUST DUCT POWER VENTILATOR

TABLE M1502.4.5.1
DRYER EXHAUST DUCT FITTING EQUIVALENT LENGTH

DRYER EXHAUST DUCT FITTING TYPE	EQUIVALENT LENGTH
4 inch radius mitered 45 degree elbow	2 feet 6 inches
4 inch radius mitered 90 degree elbow	5 feet
6 inch radius smooth 45 degree elbow	1 foot
6 inch radius smooth 90 degree elbow	1 foot 9 inches
8 inch radius smooth 45 degree elbow	1 foot
8 inch radius smooth 90 degree elbow	1 foot 7 inches
10 inch radius smooth 45 degree elbow	9 inches
10 inch radius smooth 90 degree elbow	1 foot 6 inches

For SI: 1 inch = 25.4 mm, 1 foot = 304.8 mm, 1 degree = 0.0175 rad.

INTERNATIONAL CODE COUNCIL®
Copyright © 2015 ICC. ALL RIGHTS RESERVED. Accessed by David Dammon on Jun 21, 2017 12:30:52 PM pursuant to License Agreement with ICC. No further reproduction or distribution authorized. ANY UNAUTHORIZED REPRODUCTION OR DISTRIBUTION IS A VIOLATION OF THE FEDERAL COPYRIGHT ACT AND THE LICENSE AGREEMENT, AND SUBJECT TO CIVIL AND CRIMINAL PENALTIES THEREUNDER.

terminal outdoors (see Table M1502.4.5.1). The transition duct is excluded from the calculation of equivalent length of the duct system.

Table M1502.4.5.1 assigns an equivalent length to the various types of elbow fittings that are available. The first two rows of the table cover the traditional elbows that the code and dryer manufacturer's installation instructions have always addressed. The other rows in the table cover newer, high-performance elbows that have longer turning radii and smoother walls (i.e., no mitered joints); thus, the equivalent length is substantially reduced. When an installer discovers that the length of an exhaust duct will exceed the limits of the code, he or she may find that using higher performance elbows will keep the length within the allowable limits.

M1502.4.5.2 Manufacturer's instructions. The size and maximum length of the exhaust duct shall be determined by the dryer manufacturer's installation instructions. The code official shall be provided with a copy of the installation instructions for the make and model of the dryer at the concealment inspection. In the absence of fitting equivalent length calculations from the clothes dryer manufacturer, Table M1502.4.5.1 shall be used.

❖ This section allows the 35-foot (7620 mm) limit of the previous section to be exceeded where longer exhaust duct lengths are allowed by the appliance manufacturer's instructions. Today's appliances often, but not always, permit longer distances, therefore this section allows the installer to take advantage of those longer distances where specified by the manufacturer. The make and model of the dryer must be provided to the code official, along with the respective installation instructions, to permit the code official to inspect the duct installation based on the manufacturer's instructions. Because the installation is specific to and dependent on a certain appliance make and model, the code official must follow through to make sure that the appliance did get installed. Remember that the prime objective is to prevent a dangerous mismatch between a dryer and its exhaust system.

Where not otherwise specified by the dryer manufacturer, the flow resistance contributed by fittings installed in the duct system must be in accordance with Table M1502.4.5.1. Each type of fitting and its angle is equated to a certain length of straight duct and this "equivalent length" is added to the actual straight duct length in the system to obtain the total length. The table recognizes newer fitting designs that have smooth bore interiors and much larger turning radii than traditionally used fittings. Such designs greatly reduce friction loss as can be seen by their much smaller equivalent lengths. If an installer is unable to stay within the allowable length on a particular job, he or she may find that substituting better fittings will correct the problem (see Section M1502.4.6).

M1502.4.5.3 Dryer exhaust duct power ventilator. The maximum length of the exhaust duct shall be determined in accordance with the manufacturer's instructions for the dryer exhaust duct power ventilator.

❖ See the commentary to Section M1502.4.4.

M1502.4.6 Length identification. Where the exhaust duct equivalent length exceeds 35 feet (10 668 mm), the equivalent length of the exhaust duct shall be identified on a permanent label or tag. The label or tag shall be located within 6 feet (1829 mm) of the exhaust duct connection.

❖ A point to consider is the situation that will exist when the original dryer is replaced or the original occupant moves out and the new occupant installs a different dryer. In either case, the replacement dryer might not be compatible with the existing duct length. If the duct system equivalent length is not identified in a conspicuous manner, the new resident will be unaware of the potentially hazardous situation that has been created by the dryer and exhaust duct mismatch. It is assumed that the installer will be aware of the equivalent length of exhaust ducts that are entirely exposed and observable (see Commentary Figure M1502.4.6). If the exhaust duct equivalent length is 35 feet or less, there is no point in identifying it because it is assumed to be compatible with all dryers. See Section M1502.4.5.1.

M1502.4.7 Exhaust duct required. Where space for a clothes dryer is provided, an exhaust *duct system* shall be installed. Where the clothes dryer is not installed at the time of occupancy the exhaust duct shall be capped or plugged in the space in which it originates and identified and marked "future use."

Exception: Where a *listed* condensing clothes dryer is installed prior to occupancy of the structure.

❖ Where a space is provided for the future installation of a clothes dryer, an exhaust duct system must be installed so that such system can be inspected and approved (see Commentary Figure M1502.4.7). Otherwise, it is likely that the dryer and exhaust duct system will be installed later without the code official's knowledge and it will not be inspected for proper installation. Note that Section M1502.4.5.2 does not appear to be an option when an exhaust duct system is "roughed-in" for future use because the make, model and exhaust capability of the dryer will be unknown. The code official could approve identifying the equivalent length in accordance with Section M1502.4.6 under the alternative approval provisions of Section R104.11.

The requirement to cap the exhaust duct where a dryer is not installed at the time of occupancy is intended to keep the duct from becoming a conduit for air to travel between the inside of the structure and the outdoors. While a backdraft damper is required at the outdoor termination, capping the duct further reduces the chance of air movement. The capping will also prevent the entry of debris and foreign objects. The cap is

INTERNATIONAL CODE COUNCIL®
Copyright © 2015 ICC. ALL RIGHTS RESERVED. Accessed by David Dammon on Jun 21, 2017 12:30:52 PM pursuant to License Agreement with ICC. No further reproduction or distribution authorized. ANY UNAUTHORIZED REPRODUCTION OR DISTRIBUTION IS A VIOLATION OF THE FEDERAL COPYRIGHT ACT AND THE LICENSE AGREEMENT, AND SUBJECT TO CIVIL AND CRIMINAL PENALTIES THEREUNDER.

required inside at the future dryer's location so that it will be readily apparent when the future dryer is installed. Requiring that a listed condensing dryer be installed prior to occupancy will prevent someone from taking advantage of this exception to avoid installing an exhaust duct system by indicating that a future condensing dryer will be installed (see the commentary for the exception to Section M1502.2).



Sample of typical placard to be placed behind all future dryer installation locations.
Approximate size 8″ × 6″ (heavy plastic-like laminate material).
Type: 0.014″ poly carbonate label with area for length display to be punched out with typical hole punch and exhibit a paint-resistant laminate coating.
Permanent pressure-sensitive 3M adhesive and 4 holes $^{3}/_{32}$″.
Provided and installed by HVAC or sheet metal tradesman at trim-out.

Figure M1502.4.6
EXAMPLE OF A DRYER EXHAUST LENGTH LABEL



Figure M1502.4.7
SPACE FOR CLOTHES DRYER INSTALLATION

INTERNATIONAL CODE COUNCIL®
Copyright © 2015 ICC. ALL RIGHTS RESERVED. Accessed by David Dammon on Jun 21, 2017 12:30:52 PM pursuant to License Agreement with ICC. No further reproduction or distribution authorized. ANY UNAUTHORIZED REPRODUCTION OR DISTRIBUTION IS A VIOLATION OF THE FEDERAL COPYRIGHT ACT AND THE LICENSE AGREEMENT, AND SUBJECT TO CIVIL AND CRIMINAL PENALTIES THEREUNDER.

M1502.5 Protection required. Protective shield plates shall be placed where nails or screws from finish or other work are likely to penetrate the clothes dryer exhaust duct. Shield plates shall be placed on the finished face of framing members where there is less than $1^1/_4$ inches (32 mm) between the duct and the finished face of the framing member. Protective shield plates shall be constructed of steel, shall have a minimum thickness of 0.062-inch (1.6 mm) and shall extend not less than 2 inches (51 mm) above sole plates and below top plates.

❖ Protection from nail and screw penetration has been required for wiring, vent systems, plumbing piping, fuel piping, hydronic piping and refrigerant piping for some time in the code, and now it is also required for dryer exhaust ducts (see Commentary Figure M1502.5). Depending on the depth of penetration, a nail or screw could create a serious obstruction problem and potential fire hazard.

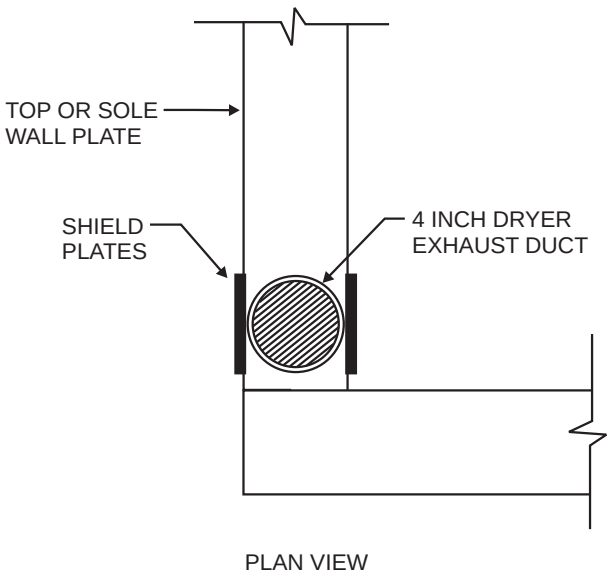

Figure M1502.5
DRYER EXHAUST DUCT PROTECTION

SECTION M1503
RANGE HOODS

M1503.1 General. Range hoods shall discharge to the outdoors through a duct. The duct serving the hood shall have a smooth interior surface, shall be air tight, shall be equipped with a back-draft damper and shall be independent of all other exhaust systems. Ducts serving range hoods shall not terminate in an attic or crawl space or areas inside the building.

Exception: Where installed in accordance with the manufacturer's instructions, and where mechanical or natural *ventilation* is otherwise provided, *listed* and *labeled* ductless range hoods shall not be required to discharge to the outdoors.

❖ A domestic kitchen exhaust system is one that serves appliances typically found in residential occupancies such as within dwelling units. When compared to commercial cooking operations, residential cooking operations are far less frequent, of shorter duration, have lower heat output and produce fewer grease-laden vapors. However, airborne contaminant control may be even more important in residential cooking operations because of the lower or nonexistent ventilation rates typical of dwelling units. If natural or mechanical ventilation is otherwise provided for a space, this section does not require that the range hoods discharge to the outdoors. This section does not require range hoods to be installed, but regulates their installation. Section M1505.1 does require hoods for open-top broiler units and requires them to exhaust to the outdoors.

By requiring the ducts to have smooth inner walls, this section prohibits the use of flexible and semirigid corrugated ducts for range hood exhaust. As with all exhaust systems, the exhaust must discharge to the outdoors, not to an attic or crawl space or ridge, soffit, gable or roof vent (see commentary, Section M1501.1).

The ducts must be sealed air tight to prevent leakage of air and grease into wall and ceiling cavities. Ducts should be sealed with a material that is suitable for long-term exposure to elevated temperatures. Backdraft dampers prevent the infiltration of outdoor air when the exhaust system is not operating. The hood manufacturer's instructions may require that the ducts be installed with a minimum clearance to combustibles (see commentary, Section M1307.1).

The exception to this section allows the use of listed ductless (recirculating) range hoods as an alternative to the ducted type. However, exhaust to the outdoors would be required if natural or mechanical ventilation was not provided for the kitchen area. Note that many residential-type range hoods are designed to be exhausted to the outdoors and are also designed to be used as recirculating hoods, depending on how they are installed. Ductless residential hoods can remove some grease particulate by means of filters, but otherwise discharge the cooking effluent and combustion products back into the living space.

M1503.2 Duct material. Ducts serving range hoods shall be constructed of galvanized steel, stainless steel or copper.

Exception: Ducts for domestic kitchen cooking *appliances* equipped with down-draft exhaust systems shall be permitted to be constructed of schedule 40 PVC pipe and

INTERNATIONAL CODE COUNCIL®
Copyright © 2015 ICC. ALL RIGHTS RESERVED. Accessed by David Dammon on Jun 21, 2017 12:30:52 PM pursuant to License Agreement with ICC. No further reproduction or distribution authorized. ANY UNAUTHORIZED REPRODUCTION OR DISTRIBUTION IS A VIOLATION OF THE FEDERAL COPYRIGHT ACT AND THE LICENSE AGREEMENT, AND SUBJECT TO CIVIL AND CRIMINAL PENALTIES THEREUNDER.

fittings provided that the installation complies with all of the following:

1. The duct is installed under a concrete slab poured on grade.
2. The underfloor trench in which the duct is installed is completely backfilled with sand or gravel.
3. The PVC duct extends not more than 1 inch (25 mm) above the indoor concrete floor surface.
4. The PVC duct extends not more than 1 inch (25 mm) above grade *outside of the building.*
5. The PVC ducts are solvent cemented.

❖ Ducts used for dwelling unit kitchen exhaust must be constructed of noncombustible materials to reduce the potential fire hazard associated with the collection of grease or the absorption of grease into a more porous duct material. This section requires domestic kitchen exhaust ducts to be constructed of galvanized or stainless steel or copper. Section M1503.1 effectively requires rigid ducts.

The exception allows the use of plastic ducts to exhaust the downdraft-type domestic kitchen cooking appliances if all five of the specified installation criteria are met. Plastic ducts are not allowed in above-ground applications because the plastic cannot contain fire within the confines of the duct. This exception allows plastic for the duct material because the duct must be below a slab on grade, and the trench for the duct must be completely backfilled with sand or gravel to: 1. Limit the amount of combustion air available to sustain a duct fire; and 2. Prevent a fire within the duct from spreading to the rest of the building. Additionally, the combustion gases and particulate from the burning plastic will be exhausted to the outdoors, not introduced into the occupied space. The plastic material also has the advantage of corrosion resistance. Metal ducts below a slab are susceptible to deterioration.

M1503.3 Kitchen exhaust rates. Where domestic kitchen cooking *appliances* are equipped with ducted range hoods or down-draft exhaust systems, the fans shall be sized in accordance with Section M1507.4.

❖ This section does not require installation of a hood that exhausts to the outdoors for domestic kitchen cooking appliances. It only provides guidance for sizing the exhaust fans for hoods that do exhaust to the outdoors. Mechanical ventilation would be required only where natural ventilation is not provided (see Section R303).

M1503.4 Makeup air required. Exhaust hood systems capable of exhausting in excess of 400 cubic feet per minute (0.19 m^3/s) shall be mechanically or naturally provided with makeup air at a rate approximately equal to the exhaust air rate. Such makeup air systems shall be equipped with not less than one damper. Each damper shall be a gravity damper or an electrically operated damper that automatically opens when the exhaust system operates. Dampers shall be accessible for inspection, service, repair and replacement without removing permanent construction or any other ducts not connected to the damper being inspected, serviced, repaired or replaced.

❖ It is becoming more common for residential kitchens to resemble commercial kitchens, both aesthetically and functionally. As a result, much larger-capacity range hoods are being installed which aggravates the already existing problem of a lack of adequate makeup air for all exhaust systems in the dwelling. Homes typically suffer multiple ills because of indoor negative pressures caused by an imbalance of exhaust air to makeup air. The typical home relies solely on infiltration for makeup air and homes are being built much more airtight than in the past. Compounding this issue is the trend for much larger exhaust fans, and the pressure imbalance problem has a very real safety concern. The primary concern is depressurization that can cause chimneys and vents to fail. This section requires a makeup air supply system at the prescribed threshold and further requires it to be tied to the exhaust system controls such that both systems operate simultaneously. The intent is to not allow the homeowner the option of operating the exhaust fan without also operating the makeup air system.

This section states that the makeup air system can be a passive or active system (i.e., natural or mechanical). The makeup air is supposed to be provided "at a rate approximately equal to the exhaust air rate," which implies an active makeup air system that utilizes a fan; however, the text specifically allows a natural means of providing makeup air. The typical natural means is an opening to the outdoors with a motorized damper that operates in parallel with the exhaust fan. Whether active or passive (mechanical or natural), the makeup supply must have a damper to close the opening when not in use. This section allows a gravity-type damper that opens by the force of air entering the building caused by the negative pressure created by the exhaust fan. In other words, gravity dampers depend on a negative pressure in the building with respect to the outdoors. This negative pressure must overcome the resistance of the inlet opening/duct and also the resistance created by the weight of the damper and its support bearings. The primary concern of this section is that negative pressures in a home invite unwanted infiltration air and can cause natural draft fuel-fired appliances to backdraft and spill combustion products into the home. If the dwelling is allowed to depressurize because of exhaust fans that lack sufficient makeup air, the drafting forces in the vents for natural draft fuel-fired appliances will be overwhelmed and the vents will flow backwards, bringing in makeup air from the outdoors instead of conveying combustion products to the outdoors. Opening a window or relying on infiltration is not an acceptable means of providing makeup air.

INTERNATIONAL CODE COUNCIL®
Copyright © 2015 ICC. ALL RIGHTS RESERVED. Accessed by David Dammon on Jun 21, 2017 12:30:52 PM pursuant to License Agreement with ICC. No further reproduction or distribution authorized. ANY UNAUTHORIZED REPRODUCTION OR DISTRIBUTION IS A VIOLATION OF THE FEDERAL COPYRIGHT ACT AND THE LICENSE AGREEMENT, AND SUBJECT TO CIVIL AND CRIMINAL PENALTIES THEREUNDER.

M1503.4.1 Location. Kitchen exhaust makeup air shall be discharged into the same room in which the exhaust system is located or into rooms or *duct systems* that communicate through one or more permanent openings with the room in which such exhaust system is located. Such permanent openings shall have a net cross-sectional area not less than the required area of the makeup air supply openings.

❖ This section simply clarifies how makeup air is delivered to the kitchen area. Some readers have interpreted the code to require the makeup air to be delivered directly to the kitchen; however, this has never been required by the code. The makeup air can be delivered to any space that freely communicates with the kitchen as well as to the kitchen or any combination of such locations.

SECTION M1504
INSTALLATION OF MICROWAVE OVENS

M1504.1 Installation of a microwave oven over a cooking appliance. The installation of a *listed* and *labeled* cooking *appliance* or microwave oven over a *listed* and *labeled* cooking *appliance* shall conform to the terms of the upper *appliance's listing* and *label* and the manufacturer's installation instructions. The microwave oven shall conform to UL 923.

❖ A cooking appliance or microwave oven installed above other cooking appliances must be listed for use above the lower appliance. This section addresses the fire hazard created by having hot surfaces, open flames and, possibly, a cooking fire located under a cooking appliance or microwave oven. Installation clearances must comply with the manufacturer's instructions for the upper appliance. UL 923 is the standard applicable to microwave ovens. Combination units consisting of an oven with an integral exhaust hood are commonly installed above ranges and cooktops.

SECTION M1505
OVERHEAD EXHAUST HOODS

M1505.1 General. Domestic open-top broiler units shall have a metal exhaust hood, having a minimum thickness of 0.0157-inch (0.3950 mm) (No. 28 gage) with $^1/_4$ inch (6.4 mm) clearance between the hood and the underside of combustible material or cabinets. A clearance of not less than 24 inches (610 mm) shall be maintained between the cooking surface and the combustible material or cabinet. The hood shall be not less than the width of the broiler unit, extend over the entire unit, discharge to the outdoors and be equipped with a backdraft damper or other means to control infiltration/exfiltration when not in operation. Broiler units incorporating an integral exhaust system, and *listed* and *labeled* for use without an exhaust hood, need not have an exhaust hood.

❖ The surface material of the hood must not come in direct contact with combustible material, therefore, a $^1/_4$-inch (6.4 mm) clearance between the hood and the underside of combustible material and cabinets is required. Otherwise, a grease fire or hot gases from the broiler unit may heat the hood to temperatures that could cause ignition of combustible material mounted above the hood.

A clearance of at least 24 inches (610 mm) must be maintained between the cooking surface and overhead cabinets constructed of combustible materials. These clearances help ensure that combustible material will not be ignited in the event of a fire on the broiler. Note that this section mandates that the hood exhaust to the outdoors and there is no option for recirculating-type hoods.

SECTION M1506
EXHAUST DUCTS AND EXHAUST OPENINGS

M1506.1 Duct construction. Where exhaust duct construction is not specified in this chapter, construction shall comply with Chapter 16.

❖ This section refers the reader to Chapter 16 for any exhaust duct construction not specified in Chapter 15. For example, clothes dryer exhaust duct construction is specified in this chapter, but toilet/bathroom exhaust duct construction is addressed only in Chapter 16.

M1506.2 Duct length. The length of exhaust and supply ducts used with ventilating equipment shall not exceed the lengths determined in accordance with Table M1506.2.

> **Exception:** Duct length shall not be limited where the duct system complies with the manufacturer's design criteria or where the flow rate of the installed ventilating equipment is verified by the installer or approved third party using a flow hood, flow grid or other airflow measuring device.

❖ Commonly, exhaust fans, especially bathroom exhaust fans, are installed and ducts are run from the fans to the outlet terminals with little regard for the pressure losses in the duct run. A fan rated at 100 cfm, for example, will not move 100 cfm of air if the exhaust duct creates a static pressure drop greater than that for which the fan was rated. Flexible duct offers greater flow resistance than smooth-wall duct, making the problem worse in many cases. The use of duct fittings greatly adds to the flow resistance. Section M1507.4 sets the required exhaust rates and fans are chosen to satisfy that section, however, poorly designed exhaust ducts can prevent the systems from complying with the intent of Section M1507.4 because the fans cannot deliver the required airflow through poorly designed ducts. The exception allows the ducts to be designed by the fan manufacturer, where such information is provided. Often the manufacturer of the fan is silent on the allowable length of duct and number of fittings. Compliance can also be achieved by field testing the installed system and verifying the actual airflow rates.

The table addresses smooth-wall and flexible ducts and sets the maximum duct length based on the diameter of the duct. Looking at the table, one can quickly see that many commonly installed fan and duct combi-

INTERNATIONAL CODE COUNCIL®
Copyright © 2015 ICC. ALL RIGHTS RESERVED. Accessed by David Dammon on Jun 21, 2017 12:30:52 PM pursuant to License Agreement with ICC. No further reproduction or distribution authorized. ANY UNAUTHORIZED REPRODUCTION OR DISTRIBUTION IS A VIOLATION OF THE FEDERAL COPYRIGHT ACT AND THE LICENSE AGREEMENT, AND SUBJECT TO CIVIL AND CRIMINAL PENALTIES THEREUNDER.

TABLE M1506.2
DUCT LENGTH

DUCT TYPE	FLEX DUCT								SMOOTH-WALL DUCT							
Fan airflow rating (CFM @ 0.25 inch wc[a])	50	80	100	125	150	200	250	300	50	80	100	125	150	200	250	300
Diameter[b] (inches)	Maximum length[c, d, e] (feet)															
3	X	X	X	X	X	X	X	X	5	X	X	X	X	X	X	X
4	56	4	X	X	X	X	X	X	114	31	10	X	X	X	X	X
5	NL	81	42	16	2	X	X	X	NL	152	91	51	28	4	X	X
6	NL	NL	158	91	55	18	1	X	NL	NL	NL	168	112	53	25	9
7	NL	NL	NL	NL	161	78	40	19	NL	NL	NL	NL	NL	148	88	54
8 and above	NL	NL	NL	NL	NL	189	111	69	NL	NL	NL	NL	NL	NL	198	133

For SI: 1 foot = 304.8 mm.

a. Fan airflow rating shall be in accordance with ANSI/AMCA 210-ANSI/ASHRAE 51.

b. For noncircular ducts, calculate the diameter as four times the cross-sectional area divided by the perimeter.

c. This table assumes that elbows are not used. Fifteen feet of allowable duct length shall be deducted for each elbow installed in the duct run.

d. NL = no limit on duct length of this size.

e. X = not allowed. Any length of duct of this size with assumed turns and fittings will exceed the rated pressure drop.

nations are substandard and will not perform as intended. For example, the common 50 cfm fan can never utilize 3-inch flex duct and can use 3-inch smooth-wall duct only in 5-foot runs with no elbows. The size of the fan outlet cannot dictate the size of the duct as, quite often, the duct will have to be larger than the fan outlet. Note c in Table M1506.2 explains how duct fittings are addressed in the table. For example, a 4-inch flexible duct with an 80 cfm fan could not have any elbows, and a 4-inch smooth-wall duct with an 80 cfm fan could have only two elbows and 1 foot of duct, or one elbow and 16 feet of duct.

Note that Table M1506.2 states that the fans were rated with an assumed static pressure loss of 0.25 inch water column in the duct. Some fans might be rated with an assumed static pressure of 0.10 inch w.c. and if they are, the table would allow ducts that are too long for such fans, resulting in fans not meeting their design airflow rate. When using the table, the static pressure at which the fan was tested should be taken into consideration.

M1506.3 Exhaust openings. Air exhaust openings shall terminate not less than 3 feet (914 mm) from property lines; 3 feet (914 mm) from operable and nonoperable openings into the building and 10 feet (3048 mm) from mechanical air intakes except where the opening is located 3 feet (914 mm) above the air intake. Openings shall comply with Sections R303.5.2 and R303.6.

❖ These provisions for termination points are for air that is exhausted from a dwelling unit. Such air will include kitchen exhaust, bathroom exhaust and clothes dryer exhaust and these exhaust terminations would be required to be 3 feet (914 mm) from operable openings into a building (i.e., windows and doors). The exhaust terminations that penetrate through the exterior walls or roof will need to be located 3 feet (914 mm) from windows that are providing the natural ventilation to the dwelling unit. Considering that the exhaust from a dwelling unit is not considered to be hazardous or noxious and is of low volume, the 3-foot (914 mm) separation from windows is deemed to be reasonable. Mechanical air intakes must be located not less than 10 feet (3048 mm) from exhaust from a bathroom, kitchen and domestic clothes dryer. In the case where the required 10-foot (3048 mm) separation cannot be met, the intake must be located at least 3 feet (914 mm) below the exhaust termination. It is assumed that the exhaust that is present will be buoyant in air because of its temperature or specific gravity and such exhaust will rise above and away from the intake opening.

SECTION M1507
MECHANICAL VENTILATION

M1507.1 General. Where local exhaust or whole-house mechanical ventilation is provided, the equipment shall be designed in accordance with this section.

❖ Mechanical ventilation can consist of either local exhaust or whole-house mechanical ventilation. Local exhaust is defined as an exhaust system that uses one or more fans to exhaust air from a specific room or rooms within a dwelling. Examples of local exhaust include bathroom and kitchen exhaust. Section R303 requires either natural or mechanical ventilation of toilet rooms and bathrooms. This section brings mechanical ventilation into the exhaust chapter for convenience. It should be noted that the choice of using either natural or mechanical ventilation is one the designer must make except as required by Section R303.4.

Whole-house mechanical ventilation is defined as an exhaust system, supply system or combination thereof, that is designed to mechanically exchange indoor air for outdoor air. The system can either operate continuously or it can be programmed to operate intermittently.

INTERNATIONAL CODE COUNCIL®
Copyright © 2015 ICC. ALL RIGHTS RESERVED. Accessed by David Dammon on Jun 21, 2017 12:30:52 PM pursuant to License Agreement with ICC. No further reproduction or distribution authorized. ANY UNAUTHORIZED REPRODUCTION OR DISTRIBUTION IS A VIOLATION OF THE FEDERAL COPYRIGHT ACT AND THE LICENSE AGREEMENT, AND SUBJECT TO CIVIL AND CRIMINAL PENALTIES THEREUNDER.

M1507.2 Recirculation of air. Exhaust air from bathrooms and toilet rooms shall not be recirculated within a residence or to another *dwelling unit* and shall be exhausted directly to the outdoors. Exhaust air from bathrooms and toilet rooms shall not discharge into an *attic*, crawl space or other areas inside the building.

❖ This section prohibits the recirculation of exhaust air from toilet rooms and bathrooms within a dwelling or to another dwelling. In some cases, installers connect the outlets of bathroom exhaust fans together to a common duct to avoid multiple roof, wall or soffit penetrations. This will result in some exhaust air flowing backwards through the fan that is not running because the backdraft dampers in such fans will allow some leakage. This problem is much worse where the common duct serves fans that are located in different dwelling units, such as for a duplex. The code does not expressly prohibit the discharge side of exhaust fans from being connected to a common duct, but the fan manufacturer might prohibit such installations. Recirculating (ductless) exhaust fans are not allowed if mechanical ventilation of a space is required, but such fans are allowed in naturally ventilated spaces.

Recirculation to other dwelling units is prohibited because odors, disease-causing organisms, tobacco smoke, moisture and other contaminants could be transported from one dwelling unit to another.

The requirement for directing air exhausted from bathrooms directly to the outdoors is the same fundamental requirement as expressed in Section M1501 (see commentary, Section M1501.1).

M1507.3 Whole-house mechanical ventilation system. Whole-house mechanical ventilation systems shall be designed in accordance with Sections M1507.3.1 through M1507.3.3.

❖ All habitable rooms are required by Section 303.1 to be provided with natural ventilation through windows, doors or other approved openings, with an option for mechanical ventilation in accordance with this section. For years natural ventilation has been used which relied on the occupants to open windows and doors to provide ventilation to dwellings. While natural ventilation is still allowed, concerns over indoor air quality have raised questions over the effectiveness of naturally ventilating a dwelling. There are provisions in the code that allow mechanical ventilation to be provided instead of natural ventilation, and, in some cases, require mechanical ventilation to be provided. Section R303.4 will require a dwelling to be provided with whole-house mechanical ventilation when natural ventilation alone is not sufficient for dwellings that are tightly sealed such that their infiltration rate is 5 or fewer air changes per hour at an indoor/outdoor pressure differential of 50 Pa (ACH_{50}) (see commentary, Section R303.4).

In the case where the air infiltration is 5 ACH or greater, these provisions are not mandatory, but they can be used by the designer as another tool or option to provide ventilation for a home in lieu of using natural ventilation.

M1507.3.1 System design. The whole-house ventilation system shall consist of one or more supply or exhaust fans, or a combination of such, and associated ducts and controls. Local exhaust or supply fans are permitted to serve as such a system. Outdoor air ducts connected to the return side of an air handler shall be considered as providing supply ventilation.

❖ The proponent of the change that is responsible for the whole-house mechanical ventilation requirements indicated that these provisions came from the 2004 edition of ASHRAE 62.2. The intent was to reduce the standard down to the nuts and bolts of mechanical ventilation and provide requirements that are simple and straight forward. Therefore, if a mechanical ventilation system is installed in a dwelling, the designer or builder will have prescriptive requirements on which the system can be based and the code official has provisions on which he or she can evaluate the system for compliance.

The system is made up of supply or exhaust fans or a combination of supply and exhaust fans along with associated ducts and controls for the system. Local bathroom exhaust fans and kitchen fans can be used as part of the system and outdoor air can be brought in through passive openings, dedicated supply fans or outdoor air ducts connected to the return side of the air-handling unit. Note that if the dwelling's air-handling unit or furnace is used to supply outdoor air, the unit must run continuously or have controls to operate intermittently in accordance with Section M1507.3.3. If the outdoor air duct is connected to the air-handler return air duct system and exhaust fans are used as the whole-house mechanical ventilation system (WHMVS), it would not matter if the airhandler is running because the outdoor air will be able to move through the duct system because of the negative pressure created by the exhaust fans. This scenario has the advantage of mixing the outdoor air with indoor air and distributing it in a manner that will not cause discomfort for the occupants.

There are generally three types of whole-house exhaust systems consisting of exhaust ventilation, supply ventilation and balanced ventilation. Exhaust ventilation systems are better suited for cold climates since they work by depressurizing the dwelling. Positively pressurizing a dwelling in a cold climate can force moist air into wall cavities causing condensation to occur in the wall assemblies. In warmer climates with high humidity, reducing the inside pressure will cause air to migrate from the outdoors to inside the dwelling units' wall cavities, which can cause moisture damage if it condenses. Exhaust fans are used to remove air from the dwelling, usually in bathrooms and the kitchen where the most contaminates are located, and then makeup air replaces the air that is exhausted. While infiltration might account for some of the makeup air, outdoor air connections to the return side of the air-handling unit can be used to supply the outdoor makeup air. Since the dwelling is under negative pressure, extreme care must be taken to make sure that fuel-fired appliances and appliance vents are not affected (see Sections M1503.4 and G2407.4).

INTERNATIONAL CODE COUNCIL®
Copyright © 2015 ICC. ALL RIGHTS RESERVED. Accessed by David Dammon on Jun 21, 2017 12:30:52 PM pursuant to License Agreement with ICC. No further reproduction or distribution authorized. ANY UNAUTHORIZED REPRODUCTION OR DISTRIBUTION IS A VIOLATION OF THE FEDERAL COPYRIGHT ACT AND THE LICENSE AGREEMENT, AND SUBJECT TO CIVIL AND CRIMINAL PENALTIES THEREUNDER.

Supply ventilation systems are better suited for warmer climates since they work by pressurizing the dwelling. In colder climates, when the dwelling is pressurized, warm air can migrate from inside the dwelling into the building cavities which could cause condensation and structural damage to the dwelling. Supply fans are used to supply air to the dwelling with outdoor air into areas of the dwelling which are usually occupied (i.e., family rooms and bedrooms). For this reason, the air should be located so that it mixes with the conditioned air so that it does not create drafts and make the occupants uncomfortable. Relief vents and kitchen and bath fan ducts are used to relieve air from the dwelling.

Balanced ventilation systems consist of supply and exhaust fans which provide approximately equal amounts of outdoor air and exhaust air. Exhaust is usually taken from bathrooms and kitchen areas and the outdoor air is usually supplied to the occupied areas of the dwelling, like family rooms and the bedrooms. A balanced ventilation system using supply and exhaust fans in combination is well suited for an energy recovery ventilation system, thus allowing the energy penalty associated with ventilation to be minimized.

M1507.3.2 System controls. The whole-house mechanical ventilation system shall be provided with controls that enable manual override.

❖ The whole-house mechanical ventilation system must run continuously or have controls to operate intermittently in accordance with Section M1507.3.3. A manual override switch/control must be provided to allow the occupants an option to override the system. Note that an override function could mean manually turning off the system or manually turning on the system. Many systems are also designed with a "vacation" setting which allows the occupants to shut down the system when they will be away. See Section M1507.3.3 for more discussion on system control schemes.

M1507.3.3 Mechanical ventilation rate. The whole-house mechanical ventilation system shall provide outdoor air at a continuous rate of not less than that determined in accordance with Table M1507.3.3(1).

Exception: The whole-house mechanical ventilation system is permitted to operate intermittently where the system has controls that enable operation for not less than 25-percent of each 4-hour segment and the ventilation rate prescribed in Table M1507.3.3(1) is multiplied by the factor determined in accordance with Table M1507.3.3(2).

❖ The amount of continuous outdoor air required for a WHMVS is indicated in Table M1507.3.3(1). The rates in this table are based on ASHRAE 62.2 and are tied to the area of the conditioned space and the number of bedrooms. Basements, utility areas, laundry rooms, and similar rooms would be considered as part of the dwelling unit's floor area if these spaces are conditioned. For example, a 2,500-square-foot dwelling with four bedrooms would require 75 cfm of continuous outdoor airflow based on Table M1507.3.3(1).

Intermittent operation is permitted in accordance with the exception. The exception permits intermittent operation based on the run time percentage in each 4-hour time segment. When there is anything less than 100-percent continuous operation, the amount of outdoor air required in Table M1507.3.3(1) is multiplied by the factors in Table M1507.3.3(2). The factors are based on the percentage of time that the system runs in every 4-hour segment of a day. While intermittent operation is permitted, the tradeoff is that more outdoor air is required. For example, in the 2,500-square-foot

TABLE M1507.3.3(1)
CONTINUOUS WHOLE-HOUSE MECHANICAL VENTILATION SYSTEM AIRFLOW RATE REQUIREMENTS

DWELLING UNIT FLOOR AREA (square feet)	NUMBER OF BEDROOMS				
	0 – 1	2 – 3	4 – 5	6 – 7	> 7
	Airflow in CFM				
< 1,500	30	45	60	75	90
1,501 – 3,000	45	60	75	90	105
3,001 – 4,500	60	75	90	105	120
4,501 – 6,000	75	90	105	120	135
6,001 – 7,500	90	105	120	135	150
> 7,500	105	120	135	150	165

For SI: 1 square foot = 0.0929 m^2, 1 cubic foot per minute = 0.0004719 m^3/s.

TABLE M1507.3.3(2)
INTERMITTENT WHOLE-HOUSE MECHANICAL VENTILATION RATE FACTORS[a, b]

RUN-TIME PERCENTAGE IN EACH 4-HOUR SEGMENT	25%	33%	50%	66%	75%	100%
Factor[a]	4	3	2	1.5	1.3	1.0

a. For ventilation system run time values between those given, the factors are permitted to be determined by interpolation.
b. Extrapolation beyond the table is prohibited.

INTERNATIONAL CODE COUNCIL®
Copyright © 2015 ICC. ALL RIGHTS RESERVED. Accessed by David Dammon on Jun 21, 2017 12:30:52 PM pursuant to License Agreement with ICC. No further reproduction or distribution authorized. ANY UNAUTHORIZED REPRODUCTION OR DISTRIBUTION IS A VIOLATION OF THE FEDERAL COPYRIGHT ACT AND THE LICENSE AGREEMENT, AND SUBJECT TO CIVIL AND CRIMINAL PENALTIES THEREUNDER.

dwelling with four bedrooms, 75 cfm of continuous outdoor air is required. If intermittent operation was used and 50 percent operation during a 4-hour period was chosen, then the amount of airflow would have to be multiplied by a factor of 2. That would mean that in each 4-hour segment of a day, the ventilation system must run for 2 hours (50 percent of 4 hours) and the amount of airflow provided would be 150 cfm (75 cfm $\times$ 2). The minimum run time permitted is 25 percent or 1 hour of run time, which would require the amount of outdoor air to be multiplied by 4. In the above example, for 1 hour of operation in a 4-hour period, 300 cfm of outdoor air is required. The only option to having a timed control system is to run the fans continuously.

Where fans are designed to run continuously, such fans should not be controlled by the typical wall switch to which all occupants are accustomed because the occupants will inadvertently turn off the fans when they leave the room, as they have done most of their lives. For example, bathroom/toilet room exhaust fans can be used as a component of the WHMVS in a dwelling. The occupants of such dwelling would turn off the fans when they left the bathroom if they were provided with the typical wall switch that they are accustomed to using, thus disabling the WHMVS. Although not explicitly stated in the code, the implied intent is to require the WHMVS to have controls that the occupants will recognize as being part of a WHMVS. For example, a wall switch can be located and labeled such that it is obviously not intended to be turned off unless an occupant purposely intends to shut off the WHMVS. Alternatively, the fans could be controlled solely by the branch circuit breaker that supplies them, with the circuit identified as bath fans for the WHMVS.

M1507.4 Local exhaust rates. *Local exhaust* systems shall be designed to have the capacity to exhaust the minimum air flow rate determined in accordance with Table M1507.4.

❖ The mechanical ventilation rates for kitchens, toilet rooms and bathrooms are specified in Table M1507.4. See Section G2407.4 regarding required makeup air where appliance operation can be affected by negative building pressures.

TABLE M1507.4
MINIMUM REQUIRED LOCAL EXHAUST RATES FOR ONE- AND TWO-FAMILY DWELLINGS

AREA TO BE EXHAUSTED	EXHAUST RATES
Kitchens	100 cfm intermittent or 25 cfm continuous
Bathrooms-Toilet Rooms	Mechanical exhaust capacity of 50 cfm intermittent or 20 cfm continuous

For SI: 1 cubic foot per minute = 0.0004719 m^3/s.

❖ The exhaust rates specified in this table are identical to those in Table 403.3.1.1 of the IMC. The continuous rates are lower than the intermittent rates, reflecting the fact that an exhaust fan that runs continuously will provide some degree of overventilation during periods in which contaminants are not being produced. An intermittent exhaust fan will run for short periods of time only, requiring a higher exhaust rate to effectively control odors, cooking effluent and moisture.

Bibliography

The following resource materials were used in the preparation of the commentary for this chapter of the code:

IMC–15, *International Mechanical Code*. Washington, DC: International Code Council, 2014.

NFPA 70–14, *National Electrical Code*. Quincy, MA: National Fire Protection Association, 2013.

INTERNATIONAL CODE COUNCIL®
Copyright © 2015 ICC. ALL RIGHTS RESERVED. Accessed by David Dammon on Jun 21, 2017 12:30:52 PM pursuant to License Agreement with ICC. No further reproduction or distribution authorized. ANY UNAUTHORIZED REPRODUCTION OR DISTRIBUTION IS A VIOLATION OF THE FEDERAL COPYRIGHT ACT AND THE LICENSE AGREEMENT, AND SUBJECT TO CIVIL AND CRIMINAL PENALTIES THEREUNDER.

Chapter 16: Duct Systems

General Comments

This chapter addresses duct systems by instituting requirements for the protection of the occupants of the building and the building itself. This chapter regulates the materials and methods of construction. Duct construction affects the performance of the entire air distribution system.

Section M1601 contains the material requirements that are generally applied to all duct construction and installation. Section M1602 contains regulations for return air.

Purpose

Chapter 16 contains requirements for the installation of supply, return and exhaust air systems. The chapter contains no information on the design of these systems from the standpoint of air movement, but it is concerned with the structural integrity of the systems and the overall impact of the systems on the fire-safety performance of the building. Design considerations such as duct sizing, maximum efficiency, cost effectiveness, occupant comfort and convenience are the responsibility of the designer.

SECTION M1601 DUCT CONSTRUCTION

M1601.1 Duct design. *Duct systems* serving heating, cooling and *ventilation equipment* shall be installed in accordance with the provisions of this section and ACCA Manual D, the appliance manufacturer's installation instructions or other *approved* methods.

❖ Material and construction requirements for duct systems can be divided into two major categories: those for above-ground ducts and those for underground ducts. The demands placed on each of these types of duct systems are different; therefore, they are treated separately in the code and in the following commentary.

Adequately sized supply air and return air ductwork is essential for efficient and proper circulation of conditioned air. Ducts must be large enough to allow sufficient airflow through appliances to satisfy refrigerant coil airflow demands and to avoid excessive temperature rise. As a practical matter, restriction of the supply duct system is an infrequently encountered problem. However, inadequately sized return systems are often found in the field, particularly on heat pump installations. The code does not provide specific requirements for sizing duct systems, but relies on ACCA *Manual D*, the appliance manufacturer or other sizing criteria approved by the code official.

M1601.1.1 Above-ground duct systems. Above-ground *duct systems* shall conform to the following:

1. *Equipment* connected to *duct systems* shall be designed to limit discharge air temperature to not greater than 250°F (121°C).
2. Factory-made ducts shall be listed and labeled in accordance with UL 181 and installed in accordance with the manufacturer's instructions.
3. Fibrous glass duct construction shall conform to the SMACNA *Fibrous Glass Duct Construction Standards* or NAIMA *Fibrous Glass Duct Construction Standards*.
4. Field-fabricated and shop-fabricated metal and flexible duct constructions shall conform to the SMACNA HVAC *Duct Construction Standards—Metal and Flexible* except as allowed by Table M1601.1.1. Galvanized steel shall conform to ASTM A653.
5. The use of gypsum products to construct return air ducts or plenums is permitted, provided that the air temperature does not exceed 125°F (52°C) and exposed surfaces are not subject to condensation.
6. *Duct systems* shall be constructed of materials having a flame spread index of not greater than 200.
7. Stud wall cavities and the spaces between solid floor joists to be used as air plenums shall comply with the following conditions:
   - 7.1. These cavities or spaces shall not be used as a plenum for supply air.
   - 7.2. These cavities or spaces shall not be part of a required fire-resistance-rated assembly.
   - 7.3. Stud wall cavities shall not convey air from more than one floor level.
   - 7.4. Stud wall cavities and joist-space plenums shall be isolated from adjacent concealed spaces by tight-fitting fireblocking in accordance with Section R602.8.
   - 7.5. Stud wall cavities in the outside walls of building envelope assemblies shall not be utilized as air plenums.

❖ Metal ducts are usually constructed of galvanized sheet steel. Duct size is based on required airflow, system pressure, flow velocity and pressure losses caused by friction. Duct material thickness is determined by duct size, static pressure of the system, dis-

INTERNATIONAL CODE COUNCIL®
Copyright © 2015 ICC. ALL RIGHTS RESERVED. Accessed by David Dammon on Jun 21, 2017 12:30:52 PM pursuant to License Agreement with ICC. No further reproduction or distribution authorized. ANY UNAUTHORIZED REPRODUCTION OR DISTRIBUTION IS A VIOLATION OF THE FEDERAL COPYRIGHT ACT AND THE LICENSE AGREEMENT, AND SUBJECT TO CIVIL AND CRIMINAL PENALTIES THEREUNDER.

tance between supports and whether the duct is reinforced. Metal ducts must be constructed with the minimum thicknesses specified in Table M1601.1.1, which bases the minimum required duct thickness on the geometry of the duct, the material used and the major dimension of the duct (the diameter for round ducts and the widest side for rectangular ducts).

Metallic ducts must be constructed to comply with the requirements contained in SMACNA *HVAC Duct Construction Standards - Metal and Flexible*. This standard contains information on duct reinforcement, joints, fittings, hangers and supports and other pertinent design information needed to achieve a stable, efficient and durable installation of ductwork. While this standard contains the minimum required thickness of duct materials, ducts that are installed within a single dwelling are allowed to be constructed with the minimum thicknesses specified in Table M1601.1.1.

Factory-made ducts must be tested and classified in accordance with the provisions of UL 181. Only Class 0 and Class 1 are recognized by UL 181. Class 0 indicates flame spread and smoke-developed indices of zero; Class 1 indicates a flame spread index not greater than 25 and a smoke-developed index not greater than 50, when tested to ASTM E84. The exception to the 25 flame spread index for nonmetallic ducts is Item 6 of this section, which is intended to allow the installation of plastic ducts above ground where such ducts have a flame spread index of 200 or less. However, it should be noted that there is an ICC committee formal interpretation that opines that plastic ducts are allowed to be installed above ground only if they meet the Class I flame spread index requirement of 25 and smoke development index of 50. Plastic rigid ducts are typically made of PVC that cannot meet a smoke development index of 50.

UL 181 requires that a nonmetallic duct be tested to determine its fire-performance characteristics, corrosion resistance, mold-growth resistance, humidity resistance, leakage resistance, temperature resistance, erosion resistance and structural performance. Air ducts that conform to the requirements of UL 181 are identified by the manufacturer's or vendor's name, rated velocity, negative and positive pressure classification and duct material class.

Fibrous ducts are constructed of a composite material of rigid (high-density) fiberglass board and a factory-applied facing, typically reinforced aluminum. The surface of the fibrous duct that is exposed to the airflow is sealed with a fiber-bonding adhesive that prevents erosion of the fiberglass material. The factory-applied exterior duct-board facing contributes to the strength and rigidity of the composite material, acts as a heat reflector, serves as a vapor barrier and is an integral component of the joining method used to construct fibrous ducts. The material is available in board form for shop or field fabrication into rectangular sections or into 10-sided duct form, which approximates a circular cross section. Factory-built round fibrous glass ducts are also available.

Fibrous ducts take advantage of the inherent insulating qualities of the glass fiber material. The air friction factors for fibrous ducts are higher than those for sheet metal because of the relatively rough surface finish of the former.

Construction of fibrous glass ducts must conform to the requirements of the SMACNA Fibrous Glass Duct Construction Standards or NAIMA Fibrous Glass Duct Construction Standards, which provides details for the design and fabrication of air distribution systems using fibrous glass ducts. The SMACNA and NAIMA standards referenced in this section and the previous section are enforceable extensions of the code.

The maximum discharge temperature permitted by industry standards for warm-air heating systems is 250°F (121°C). This section prohibits nonmetallic ducts from being used in applications in which the air temperature would exceed this maximum because the material has not been tested to withstand higher temperatures, and high temperatures will cause accelerated aging of the duct material.

Gypsum board is a composite material commonly used for the construction of air plenums and shafts. Gypsum board can reduce construction costs because it is a common component of building construction assemblies. By serving a dual purpose, gypsum board eliminates the need for independent duct construction. The use of gypsum board to form ducts and plenums is specifically regulated to prevent deterioration of the gypsum board material. Air temperatures that exceed 125°F (52°C) will, over time, dry both the paper facing and the gypsum of the gypsum board, leading to deterioration of the panel.

Gypsum board can also deteriorate when exposed to moisture, which will happen if the surface temperature of the gypsum board is lower than the airstream dew-point temperature, causing water to condense on the surface of the gypsum board. For these reasons, gypsum board cannot be used for air distribution systems using evaporative cooling equipment. It is further restricted to return-air system applications only, a maximum airstream temperature of 125°F (52° C) and an airstream dew-point temperature continuously below the temperature of the gypsum board surface. Evaporative cooling equipment, such as "swamp coolers," uses water as a refrigerant. The resulting addition of moisture to the airstream could cause deterioration of the gypsum board.

Stud spaces and joist spaces have commonly been used as plenums in residential construction (see Section N1103.3.5). These spaces are limited to return air plenums because the negative pressures within the return air plenum with respect to surrounding spaces will decrease the likelihood of spreading smoke to other spaces via the plenum. Also, the temperature and moisture content of heated, cooled and conditioned supply air could cause a fire hazard or deterioration of the construction materials exposed in the spaces.

Note that Section N1103.3.5 prohibits the use of all framing cavities as ducts or plenums.

INTERNATIONAL CODE COUNCIL®
Copyright © 2015 ICC. ALL RIGHTS RESERVED. Accessed by David Dammon on Jun 21, 2017 12:30:52 PM pursuant to License Agreement with ICC. No further reproduction or distribution authorized. ANY UNAUTHORIZED REPRODUCTION OR DISTRIBUTION IS A VIOLATION OF THE FEDERAL COPYRIGHT ACT AND THE LICENSE AGREEMENT, AND SUBJECT TO CIVIL AND CRIMINAL PENALTIES THEREUNDER.

The space must not be a part of a fire-resistance-rated assembly because the ASTM E119 test does not consider the impact of air movement within the assembly on the fire-resistance rating. This restriction is a concession to the convenience and cost-saving potential of this method of moving air. The use of stud spaces inherently means the interconnection of different floor levels by the concealed space. Because of the hazard of such an interconnection, the use of this type of plenum is limited to return air from one floor level only for each independent stud cavity. All cavities not used for air movement must be isolated from the plenum by fireblocking constructed and installed in accordance with the code. The use of stud wall cavities as a plenum in outside walls is prohibited due to the difficulty in sealing the space to prevent outdoor air from infiltrating the cavity, which would increase the heating and cooling loads on the system. Note that Section N1103.3.5 prohibits the use of all framing cavities as ducts or plenums.

Commentary Figure M1601.1.1(1) shows an example of an acceptable stud and joist space installation. The bottom plate of the wall is cut away for the plenum to function, and fireblocking is installed in the joist and stud space to limit communication of the plenum with other spaces. The stud cavity shown is being used to return air from one floor level only, conducting it to the space below, where the air-handling equipment is located. Commentary Figure M1601.1.1(2) shows an example of an unacceptable stud and joist space installation.

Whether viewed as a shaft or as a duct, a stud-cavity plenum penetrates floor assemblies and is, therefore, subject to the floor penetration protection requirements of Section R302.4.1.

Because air is returned from more than one floor level through the same stud cavity, this section prohibits this type of installation because it creates a direct connection from one floor level to another by means of a concealed cavity. Such direct connections would act as a chase or chimney, allowing fire and smoke to spread quickly upward through the building. Thus, stud-cavity return-air plenums are subject to the same restrictions and requirements as floor openings and penetrations regulated by Section R302.4. Stud-space and joist-space plenums must be viewed as an exception to the fireblocking provisions of Section R302.11 because one or more fireblocks (wall plates) must be removed or relocated to construct the plenums. The code does not mention the type of materials allowed for "panning" the bottom of open joists to create joist-space plenums. Traditionally, sheet metal has been used; however, composite materials are also used. The building official must determine what materials are acceptable for joist panning.

Table M1601.1.1.

❖ The minimum thicknesses indicated are the low end of the tolerance range for the nominal thicknesses of commonly available sheet materials according to SMACNA *HVAC Duct Construction Standards*. The minimum thickness allows the code official to verify

TABLE M1601.1.1
DUCT CONSTRUCTION MINIMUM SHEET METAL THICKNESS FOR SINGLE DWELLING UNITS[a]

ROUND DUCT DIAMETER (inches)	STATIC PRESSURE			
	1/2 inch water gage		1 inch water gage	
	Thickness (inches)		Thickness (inches)	
	Galvanized	Aluminum	Galvanized	Aluminum
≤ 12	0.013	0.018	0.013	0.018
12 to 14	0.013	0.018	0.016	0.023
15 to 17	0.016	0.023	0.019	0.027
18	0.016	0.023	0.024	0.034
19 to 20	0.019	0.027	0.024	0.034
RECTANGULAR DUCT DIMENSION (inches)	STATIC PRESSURE			
	1/2 inch water gage		1 inch water gage	
	Thickness (inches)		Thickness (inches)	
	Galvanized	Aluminum	Galvanized	Aluminum
≤ 8	0.013	0.018	0.013	0.018
9 to 10	0.013	0.018	0.016	0.023
11 to 12	0.016	0.023	0.019	0.027
13 to 16	0.019	0.027	0.019	0.027
17 to 18	0.019	0.027	0.024	0.034
19 to 20	0.024	0.034	0.024	0.034

For SI: 1 inch = 25.4 mm, 1 inch water gage = 249 Pa.

a. Ductwork that exceeds 20 inches by dimension or exceeds a pressure of 1 inch water gage (250 Pa) shall be constructed in accordance with SMACNA *HVAC Duct Construction Standards—Metal and Flexible*.

INTERNATIONAL CODE COUNCIL®
Copyright © 2015 ICC. ALL RIGHTS RESERVED. Accessed by David Dammon on Jun 21, 2017 12:30:52 PM pursuant to License Agreement with ICC. No further reproduction or distribution authorized. ANY UNAUTHORIZED REPRODUCTION OR DISTRIBUTION IS A VIOLATION OF THE FEDERAL COPYRIGHT ACT AND THE LICENSE AGREEMENT, AND SUBJECT TO CIVIL AND CRIMINAL PENALTIES THEREUNDER.

that the proper nominal thickness of material is being used. The dimension indicated for rectangular sizes is the largest dimension. The indicated thicknesses for aluminum sheet are for aluminum alloy 3003-H 14. Note a was added to the table to indicate that for ducts having static pressures greater than 1-inch water gauge, and for ducts with a dimension greater than 20 inches (508 mm), the ducts must be designed in accordance with the material thickness and reinforcing requirements of the SMACNA *HVAC Duct Construction Standard*.

M1601.1.2 Underground duct systems. Underground *duct systems* shall be constructed of *approved* concrete, clay, metal or plastic. The maximum duct temperature for plastic ducts shall not be greater than 150°F (66°C). Metal ducts shall be protected from corrosion in an *approved* manner or shall be completely encased in concrete not less than 2 inches (51 mm) thick. Nonmetallic ducts shall be installed in accordance with the manufacturer's instructions. Plastic pipe and fitting materials shall conform to cell classification 12454-B of ASTM D1248 or ASTM D1784 and external loading properties of ASTM D2412. Ducts shall slope to an accessible point for drainage. Where encased in concrete, ducts shall be sealed and secured prior to any concrete being poured. Metallic ducts having an *approved* protective coating and nonmetallic ducts shall be installed in accordance with the manufacturer's instructions.

❖ Ducts installed underground must be able to resist the forces imposed on them by the materials that encase them, the forces created by floodwaters in and around them and corrosion. The ASHRAE *Handbook of HVAC Systems and Equipment* recommends that all underground ducts and fittings be round to provide optimum structural performance. Unlike round ducts, square or rectangular ducts offer little resistance to deformation or collapse caused by the structural loads associated with burial.

Metal ducts must have either a protective coating to resist corrosion or be completely encased in concrete a minimum of 2 inches (52 mm) thick all around. Concrete-encased ducts may eventually corrode; however, the air passageway will be maintained because of the remaining concrete enclosure. All nonmetallic ducts and metallic ducts with factory-applied protective coatings must be approved, and all such duct installations must be in accordance with the manufacturer's installation instructions. Application of any field-applied protective coating must be approved. Great care must be taken to protect underground ducts from damage prior to placing the concrete or installing the permanent structure above them. Plastic duct and fitting systems designed for underground applications are available and allow corrosion-resistant and waterproof installations.

Plastic ducts have the advantage of being corrosion resistant. The required external loading properties of ASTM D2412 ensure that the pipe has the ability to resist deformation from the loads associated with direct burial. Plastic ducts rapidly lose strength as their temperature approaches their maximum service temperature. At temperatures above 150°F (65.5°C), PVC pipe is substantially weakened and deformation/collapse is possible.

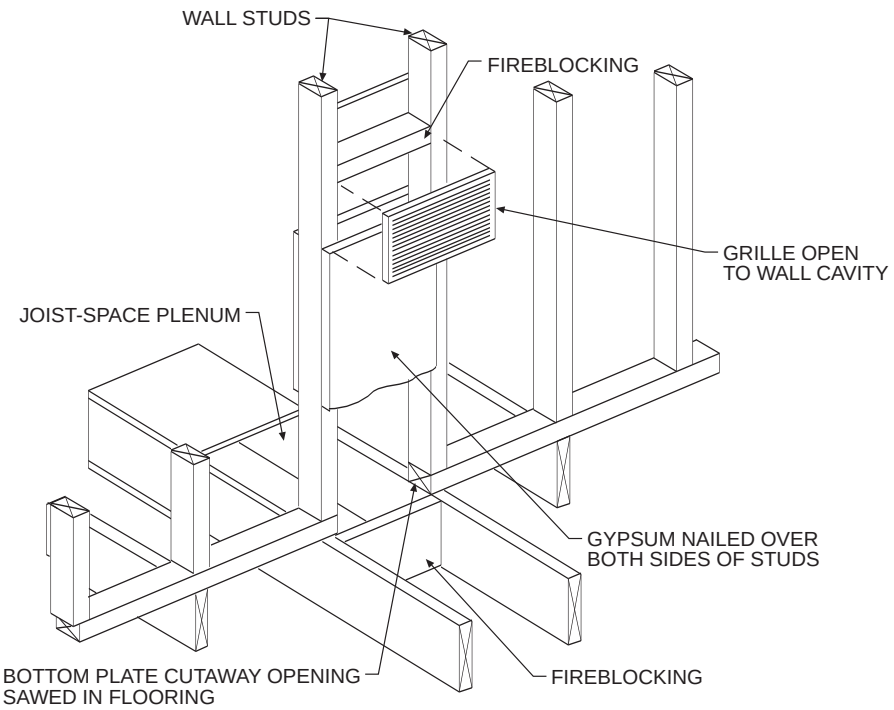

Figure M1601.1.1(1)
ACCEPTABLE STUD AND JOIST-SPACE INSTALLATION

INTERNATIONAL CODE COUNCIL®
Copyright © 2015 ICC. ALL RIGHTS RESERVED. Accessed by David Dammon on Jun 21, 2017 12:30:52 PM pursuant to License Agreement with ICC. No further reproduction or distribution authorized. ANY UNAUTHORIZED REPRODUCTION OR DISTRIBUTION IS A VIOLATION OF THE FEDERAL COPYRIGHT ACT AND THE LICENSE AGREEMENT, AND SUBJECT TO CIVIL AND CRIMINAL PENALTIES THEREUNDER.

Underground ducts must be sloped to drain to an accessible point in the event that water enters the duct through duct openings or from the subsoil. Water can cause corrosion, deterioration of duct materials and duct blockages; therefore, sloping the duct to drain to a collection point will allow removal of water. The code does not require that ducts be watertight. This section requires that the duct be sealed before the concrete is poured to prevent concrete from entering the duct.

M1601.2 Vibration isolators. Vibration isolators installed between mechanical *equipment* and metal ducts shall be fabricated from *approved* materials and shall not exceed 10 inches (254 mm) in length.

❖ Isolators must be built from materials that will withstand the temperatures and pressures of typical conditioned air passing through the duct. The 10-inch (254 mm) length limitation prevents installation of long lengths of nonrigid duct material, which could adversely affect the integrity of the duct system.

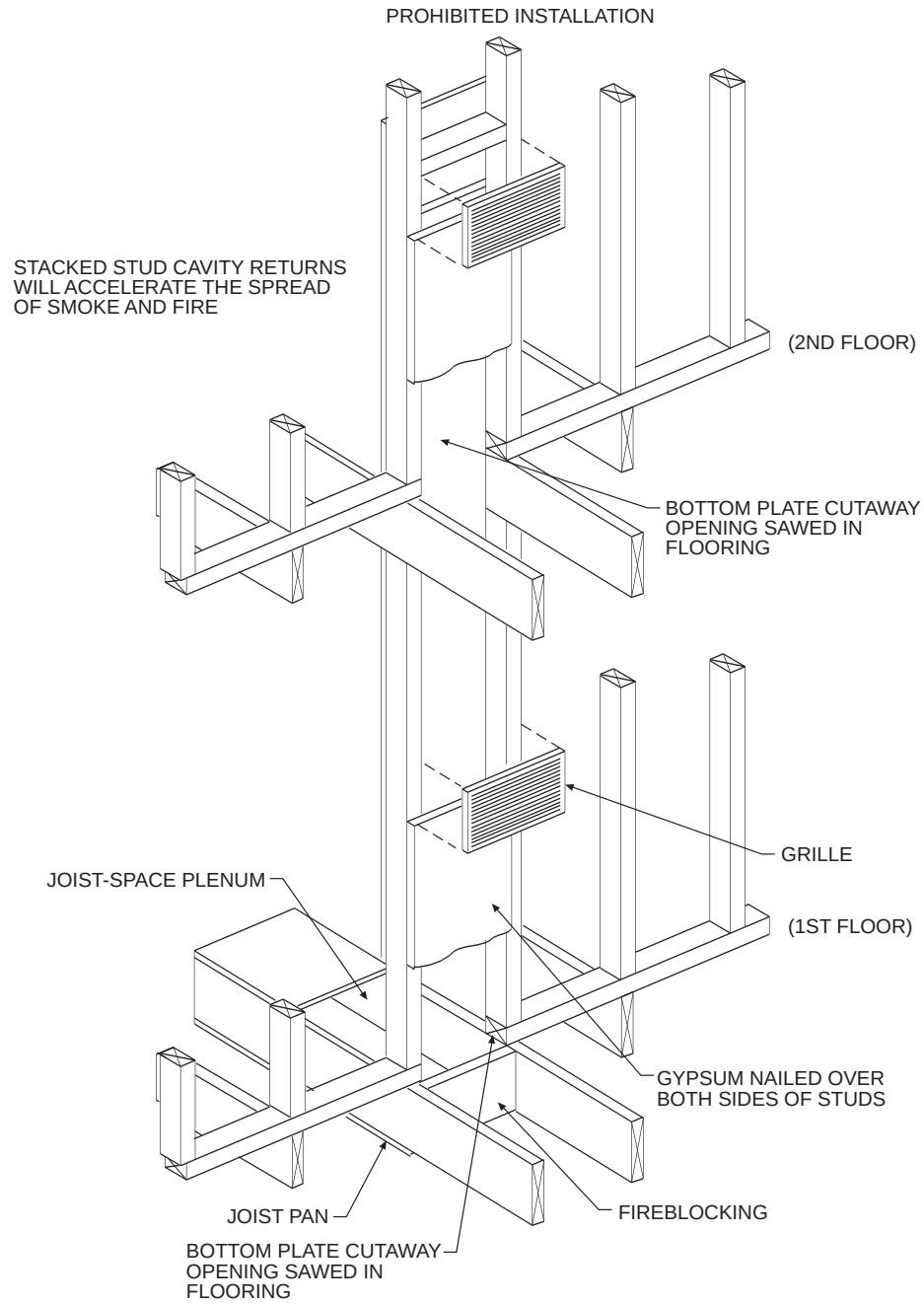

Figure M1601.1.1(2)
UNACCEPTABLE STUD AND JOIST-SPACE PLENUM INSTALLATION

INTERNATIONAL CODE COUNCIL®
Copyright © 2015 ICC. ALL RIGHTS RESERVED. Accessed by David Dammon on Jun 21, 2017 12:30:52 PM pursuant to License Agreement with ICC. No further reproduction or distribution authorized. ANY UNAUTHORIZED REPRODUCTION OR DISTRIBUTION IS A VIOLATION OF THE FEDERAL COPYRIGHT ACT AND THE LICENSE AGREEMENT, AND SUBJECT TO CIVIL AND CRIMINAL PENALTIES THEREUNDER.

M1601.3 Duct insulation materials. Duct insulation materials shall conform to the following requirements:

1. Duct coverings and linings, including adhesives where used, shall have a flame spread index not higher than 25, and a smoke-developed index not over 50 when tested in accordance with ASTM E84 or UL 723, using the specimen preparation and mounting procedures of ASTM E2231.

   Exception: Spray application of polyurethane foam to the exterior of ducts in *attics* and crawl spaces shall be permitted subject to all of the following:

   1. The flame spread index is not greater than 25 and the smoke-developed index is not greater than 450 at the specified installed thickness.
   2. The foam plastic is protected in accordance with the ignition barrier requirements of Sections R316.5.3 and R316.5.4.
   3. The foam plastic complies with the requirements of Section R316.

2. Duct coverings and linings shall not flame, glow, smolder or smoke when tested in accordance with ASTM C411 at the temperature to which they are exposed in service. The test temperature shall not fall below 250°F (121°C). Coverings and linings shall be listed and labeled.
3. External reflective duct insulation shall be legibly printed or identified at intervals not greater than 36 inches (914 mm) with the name of the manufacturer, the product *R*-value at the specified installed thickness and the flame spread and smoke-developed indices. The installed thickness of the external duct insulation shall include the enclosed air space(s). The product *R*-value for external reflective duct insulation shall be determined in accordance with ASTM C1668.
4. External duct insulation and factory-insulated flexible ducts shall be legibly printed or identified at intervals not longer than 36 inches (914 mm) with the name of the manufacturer, the thermal resistance *R*-value at the specified installed thickness and the flame spread and smoke-developed indexes of the composite materials. Spray polyurethane foam manufacturers shall provide the same product information and properties, at the nominal installed thickness, to the customer in writing at the time of foam application. Nonreflective duct insulation product *R*-values shall be based on insulation only, excluding air films, vapor retarders or other duct components, and shall be based on tested C-values at 75°F (24°C) mean temperature at the installed thickness, in accordance with recognized industry procedures. The installed thickness of duct insulation used to determine its *R*-value shall be determined as follows:

   4.1. For duct board, duct liner and factory-made rigid ducts not normally subjected to compression, the nominal insulation thickness shall be used.

   4.2. For ductwrap, the installed thickness shall be assumed to be 75 percent (25-percent compression) of nominal thickness.

   4.3. For factory-made flexible air ducts, The installed thickness shall be determined by dividing the difference between the actual outside diameter and nominal inside diameter by two.

   4.4. For spray polyurethane foam, the aged *R*-value per inch measured in accordance with recognized industry standards shall be provided to the customer in writing at the time of foam application. In addition, the total *R*-value for the nominal application thickness shall be provided.

❖ Because duct systems connect most rooms in a building, they can provide a path for fire and smoke to travel throughout that building. Duct coverings and linings are exposed to the surrounding environment and to the airstream in the duct. To reduce the possible spread of fire and smoke, duct coverings and linings must be tested to ASTM E84 or UL 723. These materials are limited to a maximum flame spread index of 25 and a smoke-developed index of 50, which correspond to Class 1 material. In addition, duct coverings and linings must be rated for the air temperatures expected; this avoids degradation of these materials.

An exception to the requirement for meeting the flame spread and smoke-developed indices was added to allow spray polyurethane insulation to be applied on the exterior of ducts in attics and crawl spaces as long as all of the requirements of the exception are met. Although the exception requires this foam plastic to be protected by an ignition barrier, Sections 316.5.3 and 316.5.4 allow for deletion of the ignition barrier if the foam plastic material is specifically approved in accordance with Section 316.6.

To verify that duct coverings and linings will not present a fire hazard, these materials must be tested in the form in which they will be installed at their rated temperatures but to not less than 250°F (121°C) in accordance with the procedures of ASTM C411. This minimum temperature for testing represents the maximum temperature that industry standards will permit in the airstream of a warm-air heating appliance. It is important that the duct coverings and linings are tested in their composite form rather than having tests conducted on each component that comprises the product (i.e., the insulation, the facing and the adhesive). Each component could pass the ASTM E84 or UL 723 tests individually, but could fail when combined into the final assembly to be installed in the field. Requiring the product to be listed and labeled ensures that the product installed is the same one that was tested.

ASTM E84 and UL 723 indicate the test methods required for duct coverings and linings, including a requirement for testing of systems representative of the actual field installation. ASTM E2231 was added to the code because it contains the specimen preparation and mounting procedures necessary to ensure that the specimen tested in the laboratory is as close as possible to the actual field installation. This will result in a safer field installation where the actual performance of the material can be more accurately predicted.

INTERNATIONAL CODE COUNCIL®
Copyright © 2015 ICC. ALL RIGHTS RESERVED. Accessed by David Dammon on Jun 21, 2017 12:30:52 PM pursuant to License Agreement with ICC. No further reproduction or distribution authorized. ANY UNAUTHORIZED REPRODUCTION OR DISTRIBUTION IS A VIOLATION OF THE FEDERAL COPYRIGHT ACT AND THE LICENSE AGREEMENT, AND SUBJECT TO CIVIL AND CRIMINAL PENALTIES THEREUNDER.

To assist inspectors, the code requires that duct insulation have a label with the manufacturer's name, thermal resistance (*R*), and the flame/smoke indexes. However, because labeling of the exterior of spray polyurethane insulation is not feasible, the code requires that the same information be given, in writing, to the customer at the time of application.

A third-party agency must provide quality control inspections at the manufacturer's facility in accordance with the requirements for labeling. Testing performed by an independent agency must determine the insulating *R*-value, the flame spread index and the smoke-developed index. The 36-inch (914 mm) label intervals are intended to increase the likelihood that every cut piece of insulation and flexible duct will have a label.

Reflective duct insulation is a defined term in Chapter 2. It is typically constructed of aluminum foil or metalized film membranes having closed air cells sandwiched between the membranes. The air cells provide *R*-value and the foil or metalized film acts as a reflector of radiant energy. *Reflective duct insulation* is often installed with spacers that create an airspace (not to be confused with air films) between the duct surface and the inside surface of the insulation, thereby increasing the overall *R*-value of the assembly. Items 4.1 through 4.4 of Item 4 do not apply to *reflective duct insulation*.

The thermal performance of duct insulation is dependent on its "installed" condition including the compressed condition, as is the case for duct wrap insulations other than *reflective duct insulation*. This section is intended to provide manufacturers, installers and inspectors with specific guidance for meeting the intent of the code. For example, installed fiberglass duct wrap is assumed to have a thickness of 75 percent of the nominal uninstalled thickness. The *R*-value reduction for the product will account for the decreased thermal resistance caused by compression of the product.

M1601.4 Installation. Duct installation shall comply with Sections M1601.4.1 through M1601.4.10.

❖ See Sections M1601.4.1 through M1601.4.10.

M1601.4.1 Joints, seams and connections. Longitudinal and transverse joints, seams and connections in metallic and nonmetallic ducts shall be constructed as specified in SMACNA HVAC *Duct Construction Standards—Metal and Flexible* and NAIMA *Fibrous Glass Duct Construction Standards*. Joints, longitudinal and transverse seams, and connections in ductwork shall be securely fastened and sealed with welds, gaskets, mastics (adhesives), mastic-plus-embedded-fabric systems, liquid sealants or tapes. Tapes and mastics used to seal fibrous glass ductwork shall be *listed* and *labeled* in accordance with UL 181A and shall be marked "181A-P" for pressure-sensitive tape, "181 A-M" for mastic or "181 A-H" for heat-sensitive tape.

Tapes and mastics used to seal metallic and flexible air ducts and flexible air connectors shall comply with UL 181B and shall be marked "181 B-FX" for pressure-sensitive tape or "181 BM" for mastic. Duct connections to flanges of air distribution system equipment shall be sealed and mechanically fastened. Mechanical fasteners for use with flexible nonmetallic air ducts shall comply with UL 181B and shall be marked 181B-C. Crimp joints for round metallic ducts shall have a contact lap of not less than 1 inch (25 mm) and shall be mechanically fastened by means of not less than three sheet-metal screws or rivets equally spaced around the joint.

Closure systems used to seal all ductwork shall be installed in accordance with the manufacturers' instructions.

Exceptions:

1. Spray polyurethane foam shall be permitted to be applied without additional joint seals.
2. Where a duct connection is made that is partially inaccessible, three screws or rivets shall be equally spaced on the exposed portion of the joint so as to prevent a hinge effect.
3. For ducts having a static pressure classification of less than 2 inches of water column (500 Pa), additional closure systems shall not be required for continuously welded joints and seams and locking-type joints and seams of other than the snap-lock and button-lock types.

❖ Duct sealing is commonly overlooked or poorly performed. The U.S. Environmental Protection Agency (EPA) estimates that 20 percent of the energy efficiency of heating and cooling systems can be lost due to duct air leaks located outside of the conditioned space. With the increased focus on lowering energy use in all types of buildings, substantial gains in energy efficiency can be obtained by making sure that ducts are "substantially" airtight. While approved duct materials have low permeability, the joints in these materials as well as the joints in the connections of these materials to fittings/equipment must be carefully sealed to achieve a "substantially" air-tight condition.

Field experience has shown that poor workmanship and failure to follow manufacturer's instructions has resulted in a high incidence of joint failure in attics and crawl spaces. It is not uncommon to find that air is supplied to or air is returned from an attic because of a separated duct joint. This is obviously a tremendous waste of energy.

In general, joints must be sealed using tapes, mastics, liquid sealants, gasketing or other approved closure systems. A "closure system" consists of the materials and an installation method used to make the joint substantially airtight. This section specifically addresses sealing for three types of duct material which can be accomplished as follows:

- Rigid fibrous glass ductwork must be sealed in accordance with UL 181A. Where pressure-sensitive tape is used, the exterior of the tape must be factory marked with the designation "181 A-P." Where mastic is used, the container label must indicate "181 A-M." Where heat-sensitive tape is used, the exterior of the tape must be factory marked with the designation "181 A-H."

INTERNATIONAL CODE COUNCIL®
Copyright © 2015 ICC. ALL RIGHTS RESERVED. Accessed by David Dammon on Jun 21, 2017 12:30:52 PM pursuant to License Agreement with ICC. No further reproduction or distribution authorized. ANY UNAUTHORIZED REPRODUCTION OR DISTRIBUTION IS A VIOLATION OF THE FEDERAL COPYRIGHT ACT AND THE LICENSE AGREEMENT, AND SUBJECT TO CIVIL AND CRIMINAL PENALTIES THEREUNDER.

- Metallic ducts, flexible air ducts and flexible air connectors must be sealed in accordance with UL 181B. Where pressure-sensitive tape is used, the exterior of the tape must be factory marked with the designation "181B F-X." Where mastic is used, the container label must indicate "181 B-M."

In addition to sealing, joints must also be mechanically fastened. In other words, sealing by itself is not a substitute for the mechanical fastening of a duct joint. Two examples are taping a flexible air duct to a fitting and "gluing" a round metal duct joint with caulking. Both practices are not acceptable fastening methods. Mechanical fasteners must be used. This section specifically addresses the mechanical fastening of three types of duct material as follows:

- Rigid fibrous glass ductwork must be mechanically attached to flanges of air distribution equipment or sheet metal fittings. For example, where a rigid fibrous glass duct connects to a sheet metal flange of an air handler, sheet metal screws (with flat washers) can be used to attach the duct board to the metal flange. Where fittings for other ducts must attach to the duct, a "spin in," "twist lock" or "tabbed" collar provides for the required mechanical fastening of the joint.
- Flexible air ducts and flexible air connectors must be fastened to collar stubs or duct connector sleeves. Worm gear band clamps and plastic cable ties are most commonly used for fastening. Where cable ties are used, they must comply with UL 181B and be marked "181-C." The collar stubs should have a convex bead formed on the circumference of the fitting to prevent the flexible duct from being pulled off of the connector. Commentary Figure M1601.4.1 shows installation guidelines for flexible air ducts and flexible air connectors.
- Round metal duct with crimp joints must have an overlap of at least 1 inch (25.4 mm). At least three sheet metal screws or rivets must be installed, equally spaced around the duct, for mechanical fastening of the joint. A minimum of 3 fasteners creates a rigid joint that will not allow a hinge movement.

Exception 1 allows spray polyurethane foam insulation to serve as a duct joint sealing method. Spray foam insulation has strong adhesive properties and low porosity such that its application provides an equivalent air-tight condition as compared to other closure systems. Exception 2 allows the spacing of the screws or rivets on round metal ducts to be equally spaced on the portion of duct joint that can be accessed, if the entire perimeter of the joint cannot be accessed. The installation of duct work in close quarters such as in joint spaces and chases, often limits access to the complete circumference of the joint. The installation of three screws or rivets in the portion of joint that can be accessed is a reasonable accommodation for such conditions. For air systems with a static pressure of less than 2 inches water column (0.50 kPa), Exception 3 allows for longitudinal (including spiral-type) welded joints and locking-type joints and seams to not be sealed. A welded or locking-type (e.g., Pittsburgh lock) joint is sufficiently air tight at low pressures such that joint sealing would be of limited value. Snap-lock and button-lock type joints do not fall under Exception 3 and must be sealed because such joints will leak. Note that some duct manufacturers provide snap-lock joints that contain a factory-applied sealant in the locking groove that serves to seal the joint when assembled. S-slip joints and lap joints must always be sealed.

M1601.4.2 Duct lap. Crimp joints for round and oval metal ducts shall be lapped not less than 1 inch (25 mm) and the male end of the duct shall extend into the adjoining duct in the direction of airflow.

❖ The crimped end of a round duct is the male end and it points in the direction of flow. The minimum required lap creates joint stability and allows for proper mechanical fastening. Crimped joints can be exceptionally leaky depending on the length of lap. Section M1601.4.1 requires such joints to be sealed.

M1601.4.3 Plastic duct joints. Joints between plastic ducts and plastic fittings shall be made in accordance with the manufacturer's installation instructions.

❖ Plastic ducts are typically installed underground. If plastic ducts are installed, this section requires the installer to follow the duct manufacturer's instructions for making joints in the duct. Some manufacturers require joints to be solvent cemented while others require the joints to be caulked. Section M1601.4.1 does not address plastic ducts.

M1601.4.4 Support. Factory-made ducts listed in accordance with UL 181 shall be supported in accordance with the manufacturer's installation instructions. Field- and shop-fabricated fibrous glass ducts shall be supported in accordance with the SMACNA *Fibrous Glass Duct Construction Standards* or the NAIMA *Fibrous Glass Duct Construction Standards*. Field- and shop-fabricated metal and flexible ducts shall be supported in accordance with the SMACNA HVAC *Duct Construction Standards—Metal and Flexible*.

❖ These material requirements and the 10-foot (3048 mm) maximum spacing requirement prescribe structural support for metal ductwork to limit deflection and maintain alignment. Nonmetallic ducts must be supported in accordance with the manufacturer's installation instructions because these ducts are produced in various configurations. See Commentary Figure M1601.4.1 for information on nonmetallic duct support.

M1601.4.5 Fireblocking. Duct installations shall be fireblocked in accordance with Section R602.8.

❖ Section R602.8 refers to Section R302.11 and requires that all openings around ducts at ceiling and floor levels must be fireblocked. Fireblocking retards the spread of fire to other areas in the dwelling.

INTERNATIONAL CODE COUNCIL®
Copyright © 2015 ICC. ALL RIGHTS RESERVED. Accessed by David Dammon on Jun 21, 2017 12:30:52 PM pursuant to License Agreement with ICC. No further reproduction or distribution authorized. ANY UNAUTHORIZED REPRODUCTION OR DISTRIBUTION IS A VIOLATION OF THE FEDERAL COPYRIGHT ACT AND THE LICENSE AGREEMENT, AND SUBJECT TO CIVIL AND CRIMINAL PENALTIES THEREUNDER.

4

Installation Guidelines

4.1 Code Reference

The "authority having jurisdiction" should be referenced to determine what law, ordinance or code shall apply in the use of flexible duct.

Ducts conforming to NFPA 90A or 90B shall meet the following requirements:

a. Shall be tested in accordance with Sections 5-21 of Underwriters Laboratories Standard for Factory-Made Air Ducts and Air Connectors, UL 181.
b. Shall be installed in accordance with the conditions of their listing.
c. Shall be installed within the limitations of the applicable NFPA 90A or 90B Standard.

4.2 General

The routing of flexible duct, the number of bends, the number or degrees in each bend and the amount of sag allowed between support joints will have serious effects on system performance due to the increased resistance each introduces. Use the minimum length of flexible duct to make connections. It is not recommended that excess length of ducts be installed to allow for possible future relocations of air terminal devices.

Avoid installations where exposure to direct sunlight can occur, e.g. turbine vents, sky lights, canopy windows, etc. Prolonged exposure to sunlight will cause degradation of the vapor barrier. Direct exposure to UV light from a source lamp installed within the HVAC system will cause degradation of some inner core/liner materials.

Terminal devices shall be supported independently of the flexible duct.

Repair torn or damaged vapor barrier/jacket with duct tape listed and labeled to Standard UL 181B. If internal core is penetrated, replace flexible duct or treat as a connection.

4.3 Installation and Usage

Install duct fully extended, do not install in the compressed state or use excess lengths. This will noticeably increase friction losses.

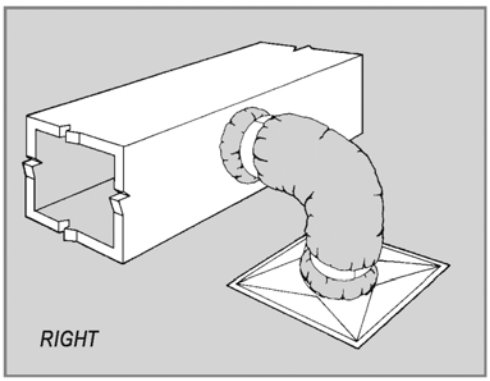

Figure 6

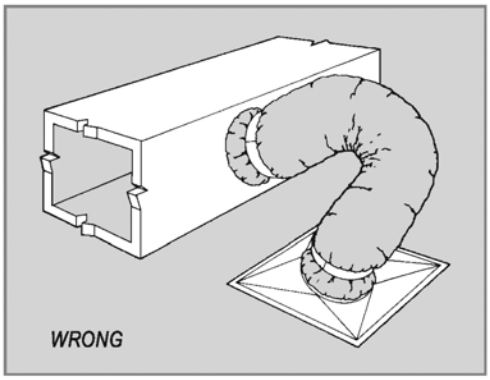

Figure 7

12

ADC Flexible Duct Performance & Installation Standards, 4th Edition

Figure M1601.4.1
INSTALLATION INSTRUCTIONS FOR FLEXIBLE AIR DUCTS AND AIR CONNECTORS
(Courtesy of Air Diffusion Council)

(continued)

INTERNATIONAL CODE COUNCIL®
Copyright © 2015 ICC. ALL RIGHTS RESERVED. Accessed by David Dammon on Jun 21, 2017 12:30:52 PM pursuant to License Agreement with ICC. No further reproduction or distribution authorized. ANY UNAUTHORIZED REPRODUCTION OR DISTRIBUTION IS A VIOLATION OF THE FEDERAL COPYRIGHT ACT AND THE LICENSE AGREEMENT, AND SUBJECT TO CIVIL AND CRIMINAL PENALTIES THEREUNDER.

Avoid bending ducts across sharp corners or incidental contact with metal fixtures, pipes or conduits. Radius at center line shall not be less than one duct diameter.

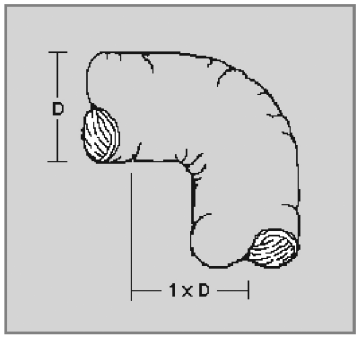

Figure 8

Do not install near hot equipment (e.g. furnaces, boilers, steam pipes, etc.) that is above the recommended flexible duct use temperature.

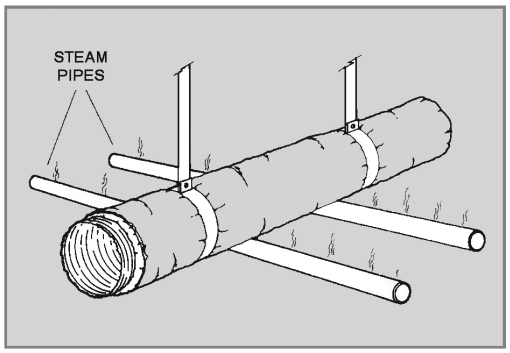

Figure 9

4.4 Connecting, Joining and Splicing Flexible Ducts

All connections, joints and splices shall be made in accordance with the manufacturer's installation instructions.

For flexible ducts with plain ends, standardized installation instructions conforming to this standard are shown in Sections 4.5 "Nonmetallic With Plain Ends" (uses tape and clamp to seal/secure the core to the fitting), 4.6 "Alternate Nonmetallic With Plain Ends" (uses mastic and clamp to seal/secure the core to the fitting), and 4.7 "Metallic With Plain Ends (optional use of tape or mastic and metal screws to seal/secure the core to the fitting).

Due to the wide variety of ducts and duct assemblies with special end treatments, e.g. factory installed fittings, taped ends, crimped metal ends, etc., no standardized installation instructions are shown. Reference manufacturer's installation instructions.

All tapes, mastics, and nonmetallic clamps used for field installation of flexible ducts shall be listed and labeled to Standard UL 181B - Closure Systems for Use With Flexible Air Ducts and Air Connectors.

Sheet metal fittings to which flexible ducts with plain ends are attached shall be beaded and have a minimum of 2 inches [50 mm] collar length. Beads are optional for fittings when attaching *metallic* flexible ducts.

Sheet metal sleeves used for joining two sections of flexible duct with plain ends shall be a minimum of 4 inches [100 mm] in length and beaded on each end. Beads are optional for sleeves when joining *metallic* flexible ducts.

Flexible ducts secured with nonmetallic clamps shall be limited to 6 inches w.g. [1500 Pa] positive pressure.

Figure M1601.4.1—continued
INSTALLATION INSTRUCTIONS FOR FLEXIBLE AIR DUCTS AND AIR CONNECTORS
(Courtesy of Air Diffusion Council)

(continued)

INTERNATIONAL CODE COUNCIL®
Copyright © 2015 ICC. ALL RIGHTS RESERVED. Accessed by David Dammon on Jun 21, 2017 12:30:52 PM pursuant to License Agreement with ICC. No further reproduction or distribution authorized. ANY UNAUTHORIZED REPRODUCTION OR DISTRIBUTION IS A VIOLATION OF THE FEDERAL COPYRIGHT ACT AND THE LICENSE AGREEMENT, AND SUBJECT TO CIVIL AND CRIMINAL PENALTIES THEREUNDER.

Installation Guidelines . . . continued

4.5 Installation Instructions for Air Ducts and Air Connectors - Nonmetallic with Plain Ends

Connections

1. After desired length is determined, cut completely around and through duct with knife or scissors. Cut wire with wire cutters. Fold back jacket and insulation.

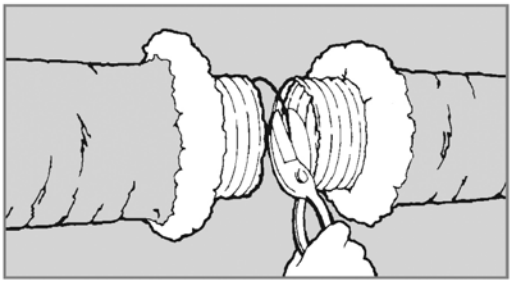

2. Slide at least 1" [25 mm] of core over fitting and past the bead. Seal core to collar with at least 2 wraps of duct tape. Secure connection with clamp placed over the core and tape and past the bead.

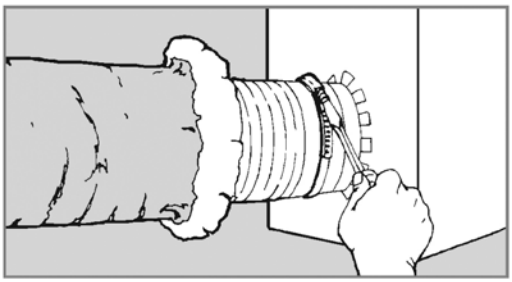

3. Pull jacket and insulation back over core. Tape jacket with at least 2 wraps of duct tape. A clamp may be used in place of or in combination with the duct tape.

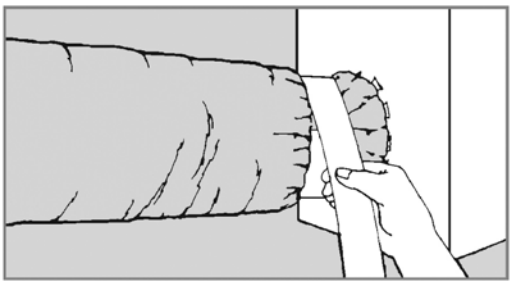

Splices

1. Fold back jacket and insulation from core. Butt two cores together on a 4" [100 mm] length metal sleeve.

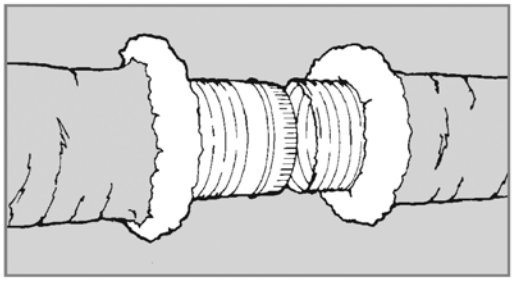

2. Tape cores together with at least 2 wraps of duct tape. Secure connection with 2 clamps placed over the taped core ends and past the beads.

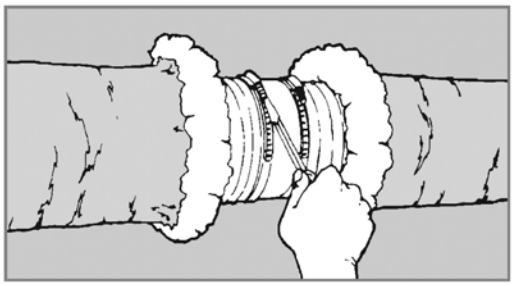

3. Pull jacket and insulation back over cores. Tape jackets together with at least 2 wraps of duct tape.

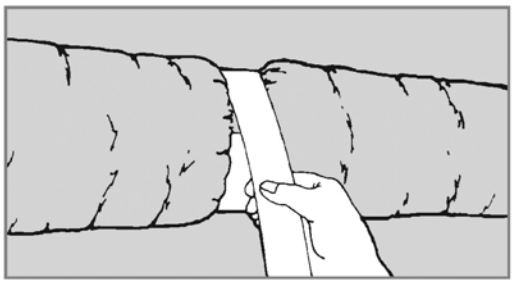

NOTES:
1. For uninsulated air ducts and air connectors, disregard references to insulation and jacket.
2. Use beaded sheet metal fittings and sleeves.
3. Use tapes listed and labeled in accordance with Standard UL 181B and marked "181B-FX".
4. Nonmetallic clamps shall be listed and labeled in accordance with Standard UL 181B and marked "181B-C". Use of nonmetallic clamps shall be limited to 6 in. w.g. [1500 Pa] positive pressure.

14

ADC Flexible Duct Performance & Installation Standards, 4th Edition

Figure M1601.4.1—continued
INSTALLATION INSTRUCTIONS FOR FLEXIBLE AIR DUCTS AND AIR CONNECTORS
(Courtesy of Air Diffusion Council)

(continued)

INTERNATIONAL CODE COUNCIL®
Copyright © 2015 ICC. ALL RIGHTS RESERVED. Accessed by David Dammon on Jun 21, 2017 12:30:52 PM pursuant to License Agreement with ICC. No further reproduction or distribution authorized. ANY UNAUTHORIZED REPRODUCTION OR DISTRIBUTION IS A VIOLATION OF THE FEDERAL COPYRIGHT ACT AND THE LICENSE AGREEMENT, AND SUBJECT TO CIVIL AND CRIMINAL PENALTIES THEREUNDER.

Installation Guidelines . . . continued

4.6 Alternate Installation Instructions for Air Ducts and Air Connectors - Nonmetallic with Plain Ends

Connections and Splices

Step 1
After desired length is determined, cut completely around and through duct with knife or scissors. Cut wire with wire cutters. Pull back jacket and insulation from core.

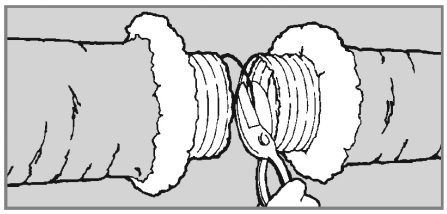

Step 2
Apply mastic approximately 2" [50 mm] wide uniformly around the collar of the metal fitting or over the ends of a 4" [100 mm] metal sleeve. Reference data on mastic container for application rate, application thickness, cure times and handling information.

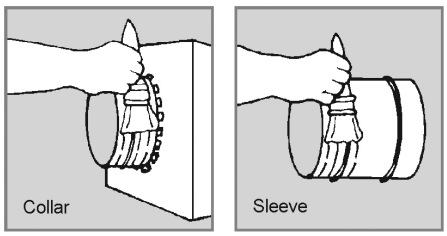

Step 3
Slide at least 2" [50 mm] of core over the fitting or sleeve ends and past the bead.

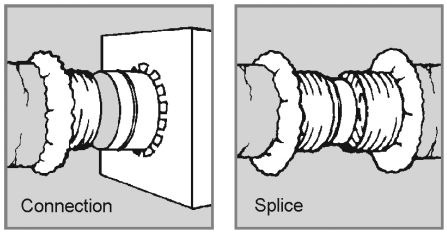

Step 4
Secure core to collar with a clamp applied past the bead. Secure cores to sleeve ends with 2 clamps applied past the beads.

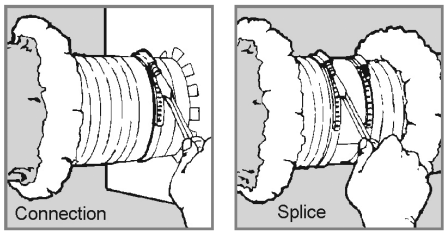

Step 5
Pull jacket and insulation back over core ends. Tape jacket(s) with at least 2 wraps of duct tape. A clamp may be used in place of or in combination with the duct tape.

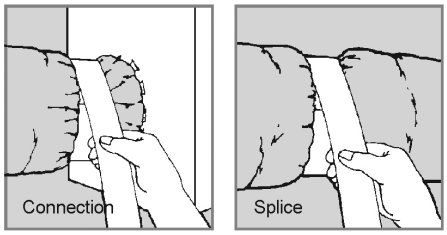

NOTES:
1. For uninsulated air ducts and air connectors, disregard references to insulation and jacket.
2. Use beaded sheet metal fittings and sleeves.
3. Use mastics listed and labeled in accordance with Standard UL 181B and marked “181B-M” on container.
4. Use tapes listed and labeled in accordance with Standard UL 181B and marked “181B-FX”.
5. Nonmetallic clamps shall be listed and labeled in accordance with standard UL 181B and marked “181B-C”. Use of nonmetallic clamps shall be limited to 6 in. w.g. [1500 Pa] positive pressure.

Figure M1601.4.1—continued
INSTALLATION INSTRUCTIONS FOR FLEXIBLE AIR DUCTS AND AIR CONNECTORS
(Courtesy of Air Diffusion Council)

(continued)

INTERNATIONAL CODE COUNCIL®
Copyright © 2015 ICC. ALL RIGHTS RESERVED. Accessed by David Dammon on Jun 21, 2017 12:30:52 PM pursuant to License Agreement with ICC. No further reproduction or distribution authorized. ANY UNAUTHORIZED REPRODUCTION OR DISTRIBUTION IS A VIOLATION OF THE FEDERAL COPYRIGHT ACT AND THE LICENSE AGREEMENT, AND SUBJECT TO CIVIL AND CRIMINAL PENALTIES THEREUNDER.

Installation Guidelines . . . continued

4.7 Installation Instruction for Air Ducts and Air Connectors - Metallic with Plain Ends

Connections and Splices

1. After cutting duct to desired length, fold back jacket and insulation exposing core. Trim core ends squarely using suitable metal shears. Determine optional sealing method (Steps 2 or 5) before proceeding.

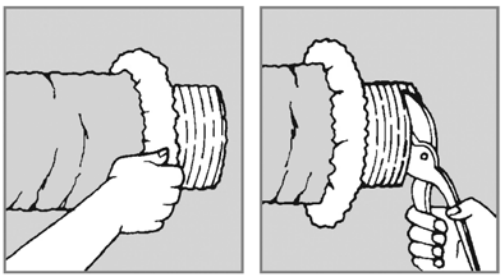

2. When mastics are required and for pressures 4" w.g. [1000 Pa] and over, seal joint with mastic applied uniformly to the outside surface of collar/sleeve. (Disregard this step when not using mastics and proceed to Step 3).

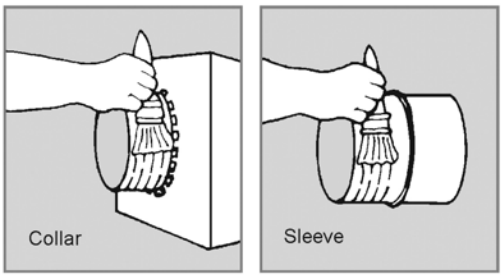

3. Slide at least 1" [25 mm] of core over metal collar for attaching duct to take off or over ends of a 4" [100 mm] metal sleeve for splicing 2 lengths of duct.

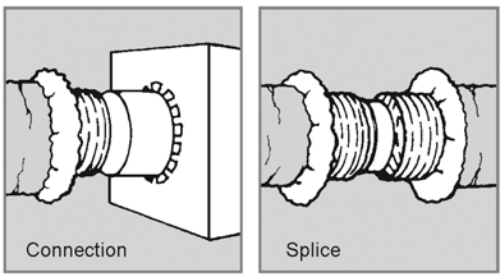

4. Secure to collar/sleeve using #8 sheet metal screws spaced equally around circumference. Use 3 screws for diameters under 12" [300 mm] and 5 screws for diameters 12" [300 mm] and over.

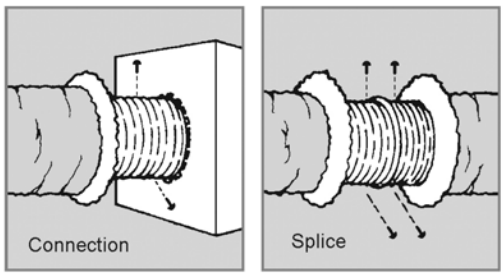

5. For pressures under 4" w.g. [1000 Pa] seal joint using 2 wraps of duct tape applied over screw heads and spirally lapping tape to collar/sleeve. (Disregard this step when using mastics per Step 2).

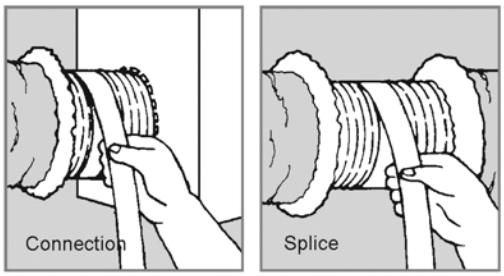

6. Pull jacket and insulation back over core. Tape jacket with 2 wraps of duct tape. A clamp may be used in place of or in combination with the duct tape.

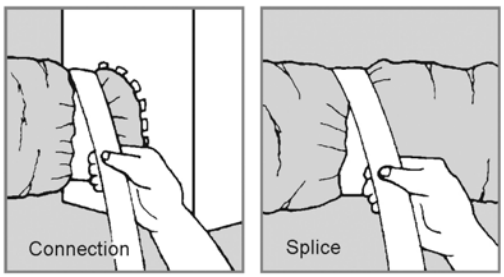

NOTES:
1. For uninsulated air ducts and air connectors, disregard references to insulation and jacket.
2. Use mastics listed and labeled to Standard UL 181B and marked"181B-M" on container.
3. Use tapes listed and labeled to Standard UL 181B and marked "181B-FX".
4. Nonmetallic clamps shall be listed and labeled in accordance with Standard UL 181B and marked "181B-C".

Figure M1601.4.1—continued
INSTALLATION INSTRUCTIONS FOR FLEXIBLE AIR DUCTS AND AIR CONNECTORS
(Courtesy of Air Diffusion Council)

(continued)

INTERNATIONAL CODE COUNCIL®
Copyright © 2015 ICC. ALL RIGHTS RESERVED. Accessed by David Dammon on Jun 21, 2017 12:30:52 PM pursuant to License Agreement with ICC. No further reproduction or distribution authorized. ANY UNAUTHORIZED REPRODUCTION OR DISTRIBUTION IS A VIOLATION OF THE FEDERAL COPYRIGHT ACT AND THE LICENSE AGREEMENT, AND SUBJECT TO CIVIL AND CRIMINAL PENALTIES THEREUNDER.

Installation Guidelines . . . continued

4.8 Supporting Flexible Duct

Flexible duct shall be supported at manufacturer's recommended intervals, but at no greater distance than 5' [1.5 m]. Maximum permissible sag is ½" per foot [42 mm per meter] of spacing between supports.

A connection to rigid duct or equipment shall be considered a support joint. Long horizontal duct runs with sharp bends shall have additional supports before and after the bend approximately one duct diameter from the center line of the bend.

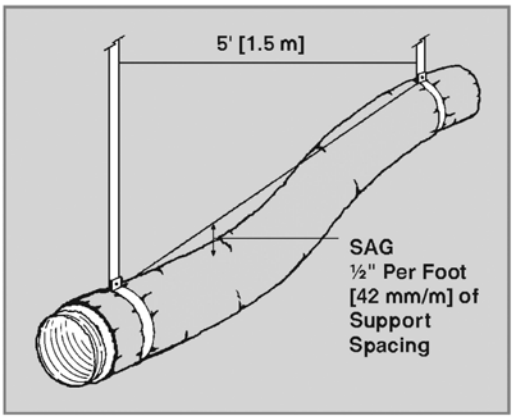

Figure 10

Hanger or saddle material in contact with the flexible duct shall be of sufficient width to prevent any restriction of the internal diameter of the duct when the weight of the supported section rests on the hanger or saddle material. In no case will the material contacting the flexible duct be less than 1½" [38 mm] wide.

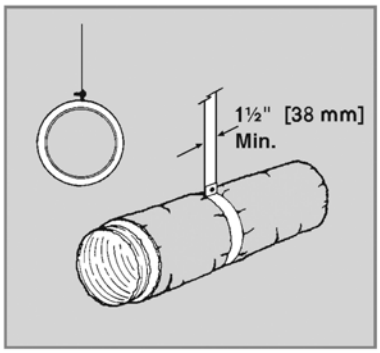

Figure 11

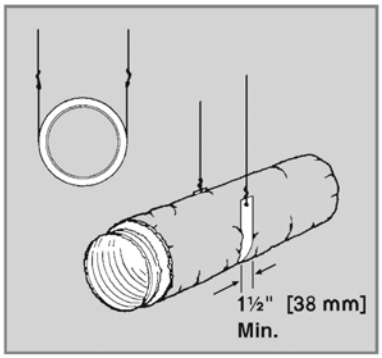

Figure 12

18 | ADC Flexible Duct Performance & Installation Standards, 4th Edition

Figure M1601.4.1—continued
INSTALLATION INSTRUCTIONS FOR FLEXIBLE AIR DUCTS AND AIR CONNECTORS
(Courtesy of Air Diffusion Council)

(continued)

INTERNATIONAL CODE COUNCIL®
Copyright © 2015 ICC. ALL RIGHTS RESERVED. Accessed by David Dammon on Jun 21, 2017 12:30:52 PM pursuant to License Agreement with ICC. No further reproduction or distribution authorized. ANY UNAUTHORIZED REPRODUCTION OR DISTRIBUTION IS A VIOLATION OF THE FEDERAL COPYRIGHT ACT AND THE LICENSE AGREEMENT, AND SUBJECT TO CIVIL AND CRIMINAL PENALTIES THEREUNDER.

Installation Guidelines . . . continued

Factory installed suspension systems integral to the flexible duct are an acceptable alternative hanging method when manufacturer's recommended procedures are followed.

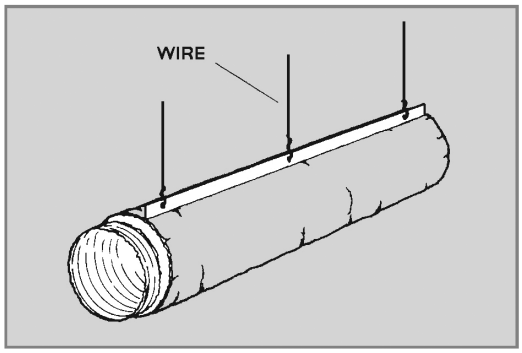

Figure 13

Flexible ducts may rest on ceiling joists or truss supports. Maximum spacing between supports shall not exceed the maximum spacing per manufacturer's installation instruction.

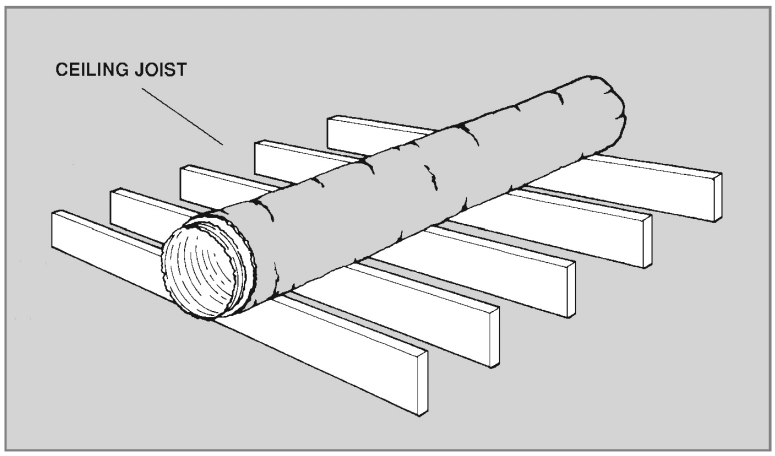

Figure 14

Support the duct between a metal connection and bend by allowing the duct to extend straight for a few Inches before making the bend. This will avoid possible damage of the flexible duct by the edge of the metal collar.

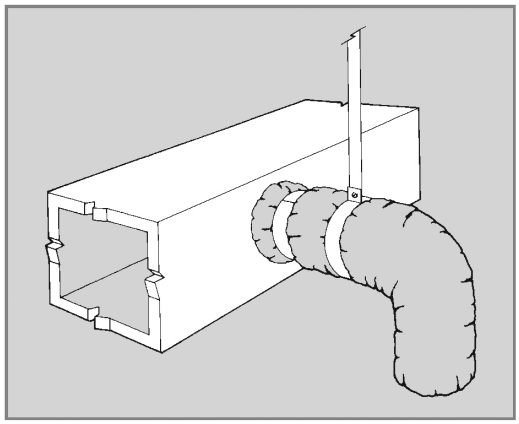

Figure 15

Vertically installed duct shall be stabilized by support straps at a max. of 6' [1.8 m] on center.

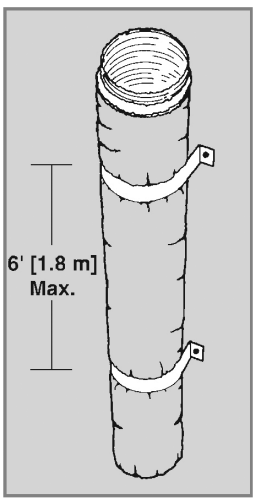

Figure 16

Note:
Factory-made air ducts may not be used for vertical risers in air duct systems serving more than two stories.

Figure M1601.4.1—continued
INSTALLATION INSTRUCTIONS FOR FLEXIBLE AIR DUCTS AND AIR CONNECTORS
(Courtesy of Air Diffusion Council)

INTERNATIONAL CODE COUNCIL®
Copyright © 2015 ICC. ALL RIGHTS RESERVED. Accessed by David Dammon on Jun 21, 2017 12:30:52 PM pursuant to License Agreement with ICC. No further reproduction or distribution authorized. ANY UNAUTHORIZED REPRODUCTION OR DISTRIBUTION IS A VIOLATION OF THE FEDERAL COPYRIGHT ACT AND THE LICENSE AGREEMENT, AND SUBJECT TO CIVIL AND CRIMINAL PENALTIES THEREUNDER.

M1601.4.6 Duct insulation. Duct insulation shall be installed in accordance with the following requirements:

1. A vapor retarder having a maximum permeance of 0.05 perm [2.87 ng/(s · m^2 · Pa)] in accordance with ASTM E96, or aluminum foil with a minimum thickness of 2 mils (0.05 mm), shall be installed on the exterior of insulation on cooling supply ducts that pass through unconditioned spaces conducive to condensation except where the insulation is spray polyurethane foam with a maximum water vapor permeance of 3 perm per inch [1722 ng/(s · m^2 · Pa)] at the installed thickness.
2. Exterior *duct systems* shall be protected against the elements.
3. Duct coverings shall not penetrate a fireblocked wall or floor.

❖ Where a duct is installed outdoors or in an unconditioned area (such as an attic or crawl space), it can be exposed to humidity and temperature differentials that can create condensation on the outside of the duct. A vapor retarder must be installed on the exterior of the duct to protect the duct and/or insulation from damage caused by moisture. Duct insulation and coverings must not penetrate fireblocked assemblies. If the exterior insulation and vapor retarder burn in a fire, a pathway will open for the fire to spread through the penetration in the structure for the duct.

The exterior of cooling supply ducts that are insulated with spray polyurethane foam which has a maximum water vapor permeance of 3 perm per inch does not require a vapor retarder or aluminum foil. Spray polyurethane foam has been successfully used without a vapor barrier in other applications, such as exterior walls. The natural low permeance of the installed material makes a vapor barrier over the spray foam insulation redundant.

M1601.4.7 Factory-made air ducts. Factory-made air ducts shall not be installed in or on the ground, in tile or metal pipe, or within masonry or concrete.

❖ Factory-made air ducts must be listed and labeled for underground installations. Ducts not listed for in-ground installations might not have sufficient strength to withstand the loads applied by these types of installations and might not be suitable for high-moisture areas.

M1601.4.8 Duct separation. Ducts shall be installed with not less than 4 inches (102 mm) separation from earth except where they meet the requirements of Section M1601.1.2.

❖ A physical separation from earth is the best method of protecting metallic and nonmetallic ducts from the effects of corrosion and moisture.

M1601.4.9 Ducts located in garages. Ducts in garages shall comply with the requirements of Section R302.5.2.

❖ Ducts in garages and ducts penetrating separation walls or ceilings between garages and living spaces must be designed to prevent fire and smoke from easily entering the living spaces (see commentary, Sections R302.5.2 and M1601.6). Section R302.5.2 is intended to protect the penetration of the fire separation between a dwelling and an attached garage. The code assumes that the 26-gage steel ductwork and the furnace/air-handler casing will offer a significant impediment to the spread of fire from the garage to the dwelling interior. Placing furnaces, airhandlers and ductwork in unconditioned spaces is becoming less common because of energy saving efforts. Concern has been expressed by some that having a furnace/air-handler with nonmetallic access doors to the blower or filter compartments creates a weak spot in the steel duct barrier. The code official can approve materials other than steel in accordance with Sections R302.5.2 and R104.11.

M1601.4.10 Flood hazard areas. In flood hazard areas as established by Table R301.2(1), *duct systems* shall be located or installed in accordance with Section R322.1.6.

❖ In buildings and structures located in flood hazard areas, ducts must be installed above the design flood elevation or must be capable of preventing water from entering the ducts and capable of withstanding the forces of buoyancy and moving water (see commentary, Section R322.1.6).

M1601.5 Under-floor plenums. Under-floor plenums shall be prohibited in new structures. Modification or repairs to under-floor plenums in existing structures shall conform to the requirements of this section.

❖ New structures must not be designed to use crawl spaces as plenums. This practice is quite rare and such arrangements can waste energy and negatively affect indoor air quality. Because some existing structures might still utilize under-floor plenums, this section allows those arrangements to continue to exist even if modifications or repairs are performed to those systems. See Commentary Figure M1601.5 for an example of an under-floor plenum system.

M1601.5.1 General. The space shall be cleaned of loose combustible materials and scrap, and shall be tightly enclosed. The ground surface of the space shall be covered with a moisture barrier having a minimum thickness of 4 mils (0.1 mm). Plumbing waste cleanouts shall not be located within the space.

Exception: Plumbing waste cleanouts shall be permitted to be located in unvented crawl spaces that receive *conditioned air* in accordance with Section R408.3.

❖ Loose combustible scrap must be removed from an under-floor space used as a plenum. The space must be substantially air tight because the furnace will place the plenum under a slight positive pressure to force conditioned air out of the registers into the rooms above. If there are leaks in the plenum walls, the conditioned air will escape to the outdoors and result in energy loss and the creation of negative pressure in the living space.

Efforts to rod drains through cleanouts located in under-floor plenums could create spills and splashes of sewage in the plenum and cleanout openings might be carelessly left open allowing sewer gases to enter the plenum. Because this would create an insanitary

INTERNATIONAL CODE COUNCIL®
Copyright © 2015 ICC. ALL RIGHTS RESERVED. Accessed by David Dammon on Jun 21, 2017 12:30:52 PM pursuant to License Agreement with ICC. No further reproduction or distribution authorized. ANY UNAUTHORIZED REPRODUCTION OR DISTRIBUTION IS A VIOLATION OF THE FEDERAL COPYRIGHT ACT AND THE LICENSE AGREEMENT, AND SUBJECT TO CIVIL AND CRIMINAL PENALTIES THEREUNDER.

air condition for the building occupants, plumbing cleanouts are prohibited in these spaces. An issue that often comes up is whether fuel gas piping is prohibited in under-floor plenums. Chapter 24 contains the requirements for fuel-gas piping and does not prohibit gas piping in such spaces.

M1601.5.2 Materials. The under-floor space, including the sidewall insulation, shall be formed by materials having flame spread index values not greater than 200 when tested in accordance with ASTM E84 or UL 723.

❖ The enclosing materials of an under-floor plenum, including the sidewall insulation, are limited to materials having a flame spread index less than or equal to 200 because the plenum space could introduce smoke and fire to the living space.

M1601.5.3 Furnace connections. A duct shall extend from the furnace supply outlet to not less than 6 inches (152 mm) below the combustible framing. This duct shall comply with the provisions of Section M1601.1. A noncombustible receptacle shall be installed below any floor opening into the plenum in accordance with the following requirements:

1. The receptacle shall be securely suspended from the floor members and shall be not more than 18 inches (457 mm) below the floor opening.
2. The area of the receptacle shall extend 3 inches (76 mm) beyond the opening on all sides.
3. The perimeter of the receptacle shall have a vertical lip not less than 1 inch (25 mm) in height at the open sides.

❖ A noncombustible receptacle, (i.e., a pan) must be installed below each of the supply openings in the floor. This receptacle (pan) must be suspended from the floor members and must be located not greater than 18 inches (457 mm) below the floor opening so that items and debris dropped into floor openings can be easily retrieved by reaching down through the opening. The receptacle (pan) must extend 3 inches (76 mm) beyond the opening on all sides and have a vertical lip at least 1-inch (25 mm) high to keep items from sliding or rolling off the edges of the pan. The requirement for the pan material to be noncombustible anticipates the potential for burning material being dropped into the opening.

M1601.5.4 Access. Access to an under-floor plenum shall be provided through an opening in the floor with minimum dimensions of 18 inches by 24 inches (457 mm by 610 mm).

❖ An 18-inch by 24-inch (457 mm by 610 mm) or larger opening in the floor is required to provide access to the under-floor plenum to permit maintenance and repairs in the crawl space.

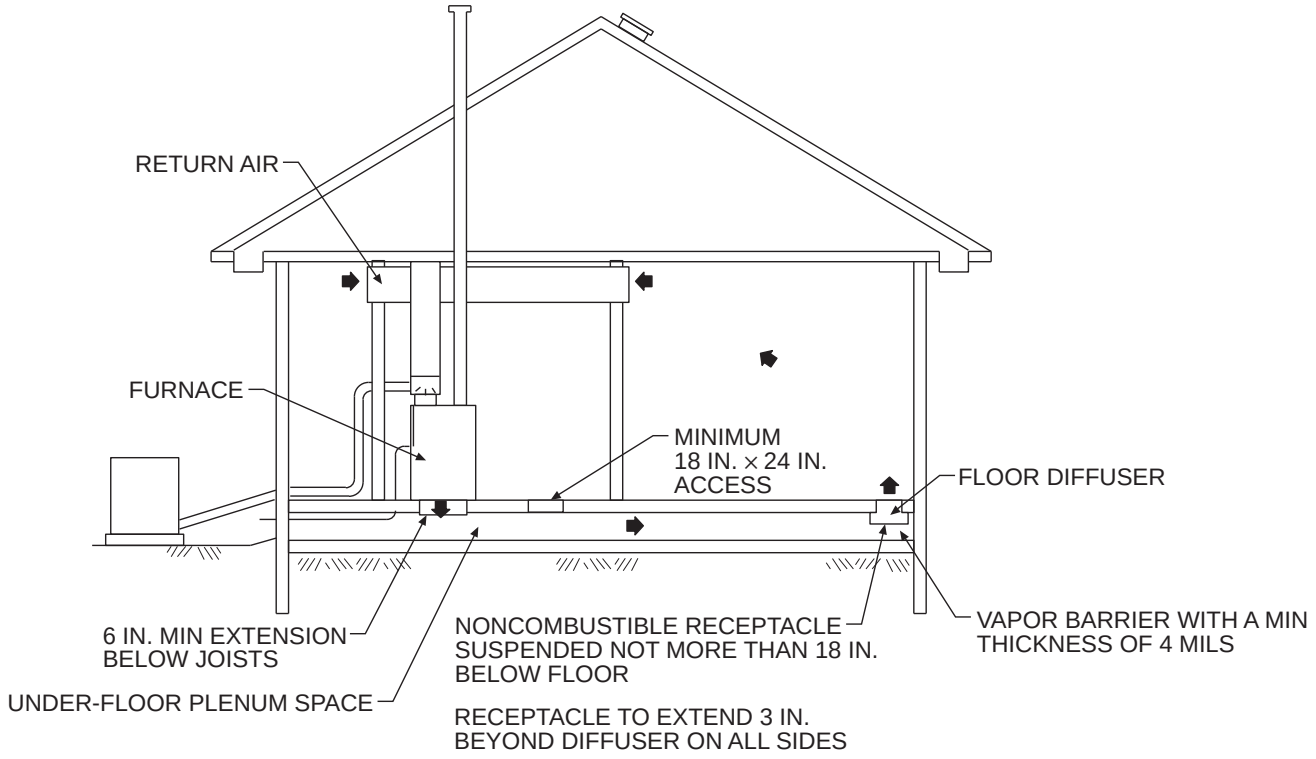

For SI: 1 inch = 25.4 mm.

Figure M1601.5
UNDER-FLOOR PLENUM

INTERNATIONAL CODE COUNCIL®
Copyright © 2015 ICC. ALL RIGHTS RESERVED. Accessed by David Dammon on Jun 21, 2017 12:30:52 PM pursuant to License Agreement with ICC. No further reproduction or distribution authorized. ANY UNAUTHORIZED REPRODUCTION OR DISTRIBUTION IS A VIOLATION OF THE FEDERAL COPYRIGHT ACT AND THE LICENSE AGREEMENT, AND SUBJECT TO CIVIL AND CRIMINAL PENALTIES THEREUNDER.

M1601.5.5 Furnace controls. The furnace shall be equipped with an automatic control that will start the air-circulating fan when the air in the furnace bonnet reaches a temperature not higher than 150°F (66°C). The furnace shall additionally be equipped with an *approved* automatic control that limits the outlet air temperature to 200°F (93°C).

❖ Because exposed wood joists and flooring often form under-floor plenums, the outlet air temperature from the furnace must be limited to 200°F (93°C).

Furnaces must also be equipped with an automatic control that starts the air circulation fan before the air temperature in the furnace at the heat exchanger exceeds 150°F (66°C). This requirement serves to limit plenum air temperature. Note that replacement furnaces will not likely be available that can meet these control requirements and altering the furnaces would violate the listing of the appliance.

M1601.6 Independent garage HVAC systems. Furnaces and air-handling systems that supply air to living spaces shall not supply air to or return air from a garage.

❖ This section prohibits a furnace or air-handler from serving both living spaces and garages. If a garage is conditioned, it must be done so by an independent system. For example, if a furnace supplies air to a garage and also to a dwelling interior, the air to the garage will be lost because return air cannot be taken from a garage. The result will be negative pressure in the dwelling with respect to the garage, and the condition will cause contaminants in the garage to migrate into the dwelling (see M1602.2, Item 4).

Garages could contain contaminants that would negatively affect air quality in the living spaces. Pressure differentials and duct leakage could cause contaminants to migrate into the living space. Requiring that the living space system be completely separate ensures that contaminants will not be introduced into the living spaces.

SECTION M1602
RETURN AIR

M1602.1 Outdoor air openings. Outdoor intake openings shall be located in accordance with Section R303.5.1. Opening protection shall be in accordance with Section R303.6.

❖ See Sections R303.5.1 and R303.6.

M1602.2 Return air openings. Return air openings for heating, ventilation and air conditioning systems shall comply with all of the following:

1. Openings shall not be located less than 10 feet (3048 mm) measured in any direction from an open combustion chamber or draft hood of another appliance located in the same room or space.
2. The amount of return air taken from any room or space shall be not greater than the flow rate of supply air delivered to such room or space.
3. Return and transfer openings shall be sized in accordance with the appliance or equipment manufacturers' installation instructions, Manual D or the design of the registered design professional.
4. Return air shall not be taken from a closet, bathroom, toilet room, kitchen, garage, mechanical room, boiler room, furnace room or unconditioned attic.

   Exceptions:

   1. Taking return air from a kitchen is not prohibited where such return air openings serve the kitchen only, and are located not less than 10 feet (3048 mm) from the cooking appliances.
   2. Dedicated forced-air systems serving only the garage shall not be prohibited from obtaining return air from the garage.
5. Taking return air from an unconditioned crawl space shall not be accomplished through a direct connection to the return side of a forced-air furnace. Transfer openings in the crawl space enclosure shall not be prohibited.
6. Return air from one dwelling unit shall not be discharged into another dwelling unit.

❖ Return air is defined and is typically partially or completely recirculated, thus it is important to control the locations from which return air is taken to prevent contamination. Item 1 expresses the concern for drawing combustion products into the return air intakes. Item 4 addresses locations where contaminants would be expected to be present. Item 2 is intended to prevent the creation of negative pressures that would interfere with the function of vents, chimneys and fuel-fired appliances. Such interference can cause appliance malfunction, unsafe operation and spillage of combustion products into the space served by the return air system. Item 3 defers the sizing of return air openings and transfer openings to the design professional, the appliance manufacturer or the ACCA *Manual D* for residential duct systems. The aggregate area of all ducts or openings that convey return air back to the furnace must be adequate to allow the required airflow through the furnace. A furnace that is "starved" for return air will produce an abnormal temperature rise across the heat exchanger, which is a fire hazard and likely detrimental to the furnace. Item 6 prohibits a return system from serving more than one dwelling unit. Any arrangement in which dwelling units share all or part of an air distribution system would allow a communication of atmospheres in the units. This communication would spread odors, smoke, contaminants and disease-causing organisms from one dwelling unit to another and therefore must be avoided. Item 5 addresses the practice of indirectly conditioning a crawl space to the extent that it is considered to be within the thermal envelope of the building. Transfer openings are allowed for this purpose, but locating a ducted return air opening in the crawl space is prohibited because of the potential for contaminants such as moisture, dust, radon, mold, etc., to be present in such space. Item 4 addresses potential sources of air contaminants, and the creation of pressure differentials that can draw

INTERNATIONAL CODE COUNCIL®
Copyright © 2015 ICC. ALL RIGHTS RESERVED. Accessed by David Dammon on Jun 21, 2017 12:30:52 PM pursuant to License Agreement with ICC. No further reproduction or distribution authorized. ANY UNAUTHORIZED REPRODUCTION OR DISTRIBUTION IS A VIOLATION OF THE FEDERAL COPYRIGHT ACT AND THE LICENSE AGREEMENT, AND SUBJECT TO CIVIL AND CRIMINAL PENALTIES THEREUNDER.

combustion products and contaminants from garages, chimneys, vents and appliances. Return air openings might interfere with the ability of exhaust systems and hoods to capture the target contaminants or effluent. Taking return air from an unconditioned attic would also cause significant energy waste.

Exception 1 recognizes that return air could be necessary for conditioning a kitchen and contamination of the return air is avoided by the required minimum separation from cooking appliances. Exception 2 recognizes that return air from a garage cannot be avoided where the return system is part of a space conditioning system that serves the garage.

INTERNATIONAL CODE COUNCIL®
Copyright © 2015 ICC. ALL RIGHTS RESERVED. Accessed by David Dammon on Jun 21, 2017 12:30:52 PM pursuant to License Agreement with ICC. No further reproduction or distribution authorized. ANY UNAUTHORIZED REPRODUCTION OR DISTRIBUTION IS A VIOLATION OF THE FEDERAL COPYRIGHT ACT AND THE LICENSE AGREEMENT, AND SUBJECT TO CIVIL AND CRIMINAL PENALTIES THEREUNDER.

INTERNATIONAL CODE COUNCIL®
Copyright © 2015 ICC. ALL RIGHTS RESERVED. Accessed by David Dammon on Jun 21, 2017 12:30:52 PM pursuant to License Agreement with ICC. No further reproduction or distribution authorized. ANY UNAUTHORIZED REPRODUCTION OR DISTRIBUTION IS A VIOLATION OF THE FEDERAL COPYRIGHT ACT AND THE LICENSE AGREEMENT, AND SUBJECT TO CIVIL AND CRIMINAL PENALTIES THEREUNDER.

Chapter 17: Combustion Air

General Comments

Complete combustion of fuel is essential for the proper operation of appliances, for control of harmful emissions and for achieving maximum fuel efficiency. Combustion air supplies, among other things, the oxygen necessary for the complete and efficient burning of fuel. If insufficient quantities of oxygen are supplied, the combustion process will be incomplete, creating dangerous byproducts and wasting energy in the form of unburned fuel (hydrocarbons). The byproducts of incomplete combustion are poisonous, corrosive and combustible and can cause serious appliance or equipment malfunctions that pose fire or explosion hazards.

Combustion air also serves other purposes in addition to supplying oxygen. It ventilates and cools appliances and the rooms or spaces that enclose them, and it plays an important role in producing and controlling draft in vents and chimneys. An insufficient combustion air supply could cause an appliance to overheat and discharge combustion byproducts into the building.

A combustion air supply is also necessary to prevent oxygen depletion, which threatens the safety of the building occupants. Both building-occupant respiration and the combustion process of fuel-burning appliances consume the available oxygen in a room or space. The depletion of available oxygen promotes incomplete fuel combustion.

Adequate combustion air supply is extremely important, but it is one aspect of mechanical installation that is often overlooked, ignored or compromised. Depending on the appliance type, location and building construction, supplying combustion air can be easy, or it can involve complex designs and extraordinary methods. In any case, the importance of a proper combustion air supply cannot be overemphasized.

This chapter does not actually contain any combustion air requirements. It was recognized in previous editions of the code that the requirements in this chapter were based on combustion air requirements that were developed for fuel-gas burning appliances. Liquid and solid fuel-burning appliances do not have the same requirements for combustion air. Therefore, all of the requirements in this chapter were deleted and replaced with instructions on where to find fuel-specific combustion air requirements for solid, liquid and fuel gas-fired appliances. Chapter 24 covers gas appliances.

Purpose

This chapter directs the reader to appropriate combustion air requirements provided in other publications or chapters of the code.

SECTION M1701 GENERAL

M1701.1 Scope. Solid fuel-burning *appliances* shall be provided with *combustion air* in accordance with the *appliance* manufacturer's installation instructions. Oil-fired *appliances* shall be provided with *combustion air* in accordance with NFPA 31. The methods of providing *combustion air* in this chapter do not apply to fireplaces, fireplace stoves and direct-vent *appliances*. The requirements for combustion and dilution air for gas-fired *appliances* shall be in accordance with Chapter 24.

❖ Combustion air is necessary for complete fuel combustion. In some situations, air is necessary for ventilation of the appliance enclosure. A lack of combustion air results in incomplete fuel combustion, which causes soot production, increased carbon monoxide production, serious appliance malfunction and the risk of fire or explosion. Incomplete fuel combustion and improper draft and venting compound each other and greatly increase the risk of the release of carbon monoxide, thereby endangering the occupants of the space or building. Lack of the air necessary for ventilation of the appliance enclosure can result in excessive temperatures in that enclosure, thus introducing the risks of overheating the appliance and fire.

Potential sources of combustion air are (1) the indoor atmosphere in which the appliance is located, (2) outdoor openings and ducts, (3) a combination of the two and (4) any other approved arrangement for the dependable introduction of outdoor air into the building or directly to the fuel-burning appliance.

Combustion air requirements for a fuel-burning appliance are dependent on the type of fuel burned by the appliance. As such, this section directs the reader to other publications or Chapter 24 of the code for the requirements specific to the type of fuel that the appliance burns.

As stated in the general comments at the beginning of this chapter, this combustion air chapter in previous code editions did not specifically address the combustion air requirements for solid and liquid fuel burning appliances as this chapter was originally developed long ago (1992 CABO, *One- and Two-family Dwelling*

INTERNATIONAL CODE COUNCIL®
Copyright © 2015 ICC. ALL RIGHTS RESERVED. Accessed by David Dammon on Jun 21, 2017 12:30:52 PM pursuant to License Agreement with ICC. No further reproduction or distribution authorized. ANY UNAUTHORIZED REPRODUCTION OR DISTRIBUTION IS A VIOLATION OF THE FEDERAL COPYRIGHT ACT AND THE LICENSE AGREEMENT, AND SUBJECT TO CIVIL AND CRIMINAL PENALTIES THEREUNDER.

Code) based on the combustion air requirements for gas-fired appliances. Up until the 2000 edition (first edition) of the code, this chapter was applicable to liquid, solid and gas-fired appliances. In the 2000 edition of the code, a new fuel gas chapter was introduced which included combustion air requirements for gas-fired appliances. With the introduction of the new fuel gas chapter, it was intended that the combustion air chapter be applicable only to liquid and solid fired appliances. Even though the first section of Chapter 17 from the 2000 edition forward did attempt to redefine the scope of the chapter to be only for liquid and solid fuel-fired appliances, many users of the code continued to apply this chapter to gas-fired appliance installations. As subsequent revisions to Chapter 24 occurred (and those same revisions were not carried over into Chapter 17), the requirements of the two chapters began to diverge creating confusion for code users who attempted to apply both chapters to gas-fired appliances. Replacing all of the combustion air requirements in Chapter 17 with instructions on where to find combustion air requirements for the specific type of fuel-burning appliance eliminated the confusion about gas-fired appliance combustion air requirements and provided the location for appropriate combustion air requirements for solid and liquid fuel-fired appliances.

Because of the unique configurations and variety of solid fuel-burning appliances (e.g., wood, pellet, biomass), no one set of combustion air requirements could adequately cover all solid fuel-fired appliance installations. Therefore, the best information must be obtained from the manufacturer's installation instructions for the specific appliance.

NFPA 31, *Installation of Oil-burning Equipment*, has long been recognized for many aspects of oil-fired appliance installations that were not covered by the code. Because NFPA 31 has combustion air requirements, the standard is the appropriate source for this information. The reader is advised to consult NFPA 31 directly.

M1701.2 Opening location. In flood hazard areas as established in Table R301.2(1), *combustion air* openings shall be located at or above the elevation required in Section R322.2.1 or R322.3.2.

❖ Appropriately locating ventilation and combustion air openings in buildings that are subject to flooding will substantially reduce the amount of damage to appliances as well as to the building structure in the event of flooding.

INTERNATIONAL CODE COUNCIL®

Copyright © 2015 ICC. ALL RIGHTS RESERVED. Accessed by David Dammon on Jun 21, 2017 12:30:52 PM pursuant to License Agreement with ICC. No further reproduction or distribution authorized. ANY UNAUTHORIZED REPRODUCTION OR DISTRIBUTION IS A VIOLATION OF THE FEDERAL COPYRIGHT ACT AND THE LICENSE AGREEMENT, AND SUBJECT TO CIVIL AND CRIMINAL PENALTIES THEREUNDER.

Chapter 18: Chimneys and Vents

General Comments

Chapter 18 regulates the design, construction, installation, maintenance, repair and approval of chimneys, vents and their connections to fuel-burning appliances. A properly designed chimney or vent system is needed to conduct the flue gases produced by a fuel-burning appliance to the outdoors. In the case of natural draft appliances, the chimney or vent system serving the appliance is expected to produce a draft at the appliance connection. This chapter does not cover venting requirements for fuel gas-fired appliances (see Chapter 24).

Draft is produced by the temperature difference between combustion gases (flue gases) and the ambient atmosphere. It is measured as pressure in inches of water column (kPa) and is a negative pressure-meaning that it is less than the atmospheric pressure at the point of measurement. Because hotter gases are less dense, they are buoyant and will rise in the chimney, causing negative pressures to develop that are directly proportional to the height of the chimney or vent and directly proportional to the temperature difference between the flue gases and the ambient air. Draft produced by a chimney or vent is the motivating force that conveys combustion products from natural draft appliances to the outside atmosphere.

The type of vent or chimney used in a given installation is generally based on the type of fuel burned by the appliance, the temperature of the flue gases produced by the combustion process and the appliance category. Because the code classifies appliances into three temperature categories (low, medium and high heat), the fuel type and characteristics of the flue gas must be analyzed for the design of a chimney or vent system. Higher efficiency appliances continue to produce lower flue gas temperatures, and the diversity of mechanical venting systems continues to expand.

Because of new technology and higher efficiency appliances/equipment, venting means are becoming increasingly diversified and complex. Many of today's appliances are designed to be vented by more than one type of venting system.

Purpose

This chapter contains provisions that would minimize the hazards associated with the products of combustion from fuel-burning appliances.

SECTION M1801 GENERAL

M1801.1 Venting required. Fuel-burning *appliances* shall be vented to the outdoors in accordance with their *listing* and *label* and manufacturer's installation instructions except *appliances* listed and *labeled* for unvented use. Venting systems shall consist of *approved* chimneys or vents, or venting assemblies that are integral parts of *labeled appliances*. Gas-fired *appliances* shall be vented in accordance with Chapter 24.

❖ Every fuel-burning appliance must be vented by a chimney or vent, unless the appliance is listed and labeled for unvented use. This chapter does not apply to unvented fuel gas-fired appliances or vented fuel gas-fired appliances. Quite often there is confusion resulting from users of the code trying to apply this chapter to gas-fired appliances. This chapter does not apply to gas-fired appliances.

M1801.2 Draft requirements. A venting system shall satisfy the draft requirements of the *appliance* in accordance with the manufacturer's installation instructions, and shall be constructed and installed to develop a positive flow to convey combustion products to the outside atmosphere.

❖ Every fuel-burning appliance must be vented by a chimney or vent unless the appliance is direct vented, integrally vented or mechanically vented. Although chimneys and vents share a basic purpose, they are different creatures with different code requirements. Some code sections pertain to chimneys only, some to vents only and some to both. The code is frequently misapplied because people refer to vents as chimneys and vice versa.

The combustion byproducts produced by the burning of fuels consist primarily of carbon dioxide; nitrogen; water vapor and small amounts of carbon monoxide, nitric oxide, nitrogen dioxide and other compounds that vary with the type and purity of the fuel. Some of the compounds, especially carbon monoxide (CO), are poisonous, and some are corrosive. The amount of carbon monoxide in combustion gases varies with the type of fuel, the type of burner and the condition and adjustment of the burner.

Carbon monoxide poisoning as a result of malfunctioning fuel-burning appliances or malfunctioning chimneys or vents, or the lack thereof, has caused many fatalities. The products of combustion must be conducted to the outdoors so that operation of the appliance does not pose a threat to the building occu-

INTERNATIONAL CODE COUNCIL®
Copyright © 2015 ICC. ALL RIGHTS RESERVED. Accessed by David Dammon on Jun 21, 2017 12:30:52 PM pursuant to License Agreement with ICC. No further reproduction or distribution authorized. ANY UNAUTHORIZED REPRODUCTION OR DISTRIBUTION IS A VIOLATION OF THE FEDERAL COPYRIGHT ACT AND THE LICENSE AGREEMENT, AND SUBJECT TO CIVIL AND CRIMINAL PENALTIES THEREUNDER.

pants. Fuel-burning appliances have widely varying operating characteristics; the method of venting the combustion byproducts must therefore be designed for the particular type of appliance served. Flue gases produced by appliances differ primarily in temperature and chemical composition. Methods of venting differ in the temperature and pressure ranges over which they operate and whether or not they can accommodate condensation.

A mismatch between an appliance and a chimney or vent can result in a hazardous operating condition. For example, an appliance that produces high-temperature flue gases can cause vent material to degrade or melt. It can also cause excessively high temperatures on the outer surface of the vent. On the other hand, an appliance that produces low-temperature flue gases can cause vent material to corrode and deteriorate because of condensation.

M1801.3 Existing chimneys and vents. Where an *appliance* is permanently disconnected from an existing chimney or vent, or where an *appliance* is connected to an existing chimney or vent during the process of a new installation, the chimney or vent shall comply with Sections M1801.3.1 through M1801.3.4.

❖ Existing chimneys and vents must be reevaluated for continued suitability whenever the "conditions of use change." A "condition of use change" is the permanent removal of one appliance or the installation of an appliance (either an additional appliance or the replacement for an existing appliance). Such changes could result in failure of the venting system to produce adequate draft for the appliances and could also cause the venting system to produce harmful condensation. The chimney or vent reevaluation must be in accordance with the following four code sections. First, the size of the existing chimney or vent must be verified (see Section M1801.3.1). Second, if the existing chimney or vent is of the proper size, the exterior of the chimney or vent must be inspected to verify that there is proper clearance to combustibles (see Section M1801.3.4). Third, the internal flue passageway must be inspected and cleaned (see Section M1801.3.2). Finally, masonry chimneys that are to be reused must have a cleanout installed if one does not already exist (see Section M1801.3.3).

M1801.3.1 Size. The chimney or vent shall be resized as necessary to control flue gas condensation in the interior of the chimney or vent and to provide the *appliance*, or *appliances* served, with the required draft. For the venting of oil-fired *appliances* to masonry chimneys, the resizing shall be done in accordance with NFPA 31.

❖ The combined input from multiple appliances, especially older lower efficiency appliances, can maintain chimney or vent temperatures that are high enough to provide the necessary draft and avoid harmful condensation. Changing an existing configuration by disconnecting and eliminating an appliance or by substituting a higher efficiency appliance can cause a decrease in flue gas temperature, resulting in poor draft and/or condensation. The elimination of one or more draft hood equipped appliances will reduce the amount of dilution air in a venting system, increasing the likelihood of condensation.

The requirements of the code for the design of a new chimney or vent must be used to determine the required chimney/vent size to serve all of the appliances that will be connected. If the required size is different (either smaller or larger) than the existing system, the dimensions of the chimney or vent will likely need to be changed. If the required size is smaller, a liner system complying with UL 1777 could be installed in an existing chimney or vent (see the exception for Section M1801.3.4). If the required size is larger, the existing chimney or vent must be replaced with one of the proper size; or abandoned, if a new chimney or vent system is to be installed in another location.

Where a masonry chimney vents an oil-fired appliance, the requirements of NFPA 31 must be followed when resizing a masonry chimney.

A common scenario involves removing a chimney-vented furnace or boiler and leaving a water heater as the only appliance vented to the chimney. In such cases, the chimney is grossly oversized for the water heater which typically results in poor draft and the production of continuous condensation within the chimney. This scenario has received much attention and has caused those in the industry to use the phrase "orphaned water heater" to describe the arrangement.

M1801.3.2 Flue passageways. The flue gas passageway shall be free of obstructions and combustible deposits and shall be cleaned if previously used for venting a solid or liquid fuel-burning *appliance* or fireplace. The flue liner, chimney inner wall or vent inner wall shall be continuous and free of cracks, gaps, perforations, or other damage or deterioration that would allow the escape of combustion products, including gases, moisture and creosote.

❖ The chimney or vent must be inspected, cleaned (if needed), reinspected (if cleaned), and repaired or replaced (if needed). Where a chimney or vent previously conveyed flue gases from solid or liquid fuel, the inside surfaces of the flue gas passageway must be cleaned regardless of what an initial inspection reveals. Cleaning after solid or liquid fuel flue gas exposure is the only way to ensure proper conditions for a thorough examination of the flue gas passageway. The cleaning also eliminates fuel deposits that might cause a chimney or vent fire, reduces frictional resistance to flow and prevents any residual deposits from falling into lower parts of the venting system.

Use of a chimney or vent without proper inspection (and cleaning, if required) is a code violation. If the inspection shows that the flue gas passageway of the vent or chimney is incapable of preventing leakage of combustion gases and liquids, the chimney or vent must be either repaired or relined (see commentary, Section M1801.3.1). Where an oil-fired appliance is vented through the chimney, flue repairs must comply with the requirements of NFPA 31.

INTERNATIONAL CODE COUNCIL®
Copyright © 2015 ICC. ALL RIGHTS RESERVED. Accessed by David Dammon on Jun 21, 2017 12:30:52 PM pursuant to License Agreement with ICC. No further reproduction or distribution authorized. ANY UNAUTHORIZED REPRODUCTION OR DISTRIBUTION IS A VIOLATION OF THE FEDERAL COPYRIGHT ACT AND THE LICENSE AGREEMENT, AND SUBJECT TO CIVIL AND CRIMINAL PENALTIES THEREUNDER.

M1801.3.3 Cleanout. Masonry chimneys shall be provided with a cleanout opening complying with Section R1003.17.

❖ If an existing masonry chimney is to be reused but is found to not have a cleanout, a cleanout must be installed.

M1801.3.4 Clearances. Chimneys and vents shall have airspace clearance to combustibles in accordance with this code and the chimney or vent manufacturer's installation instructions.

Exception: Masonry chimneys equipped with a chimney lining system tested and *listed* for installation in chimneys in contact with combustibles in accordance with UL 1777, and installed in accordance with the manufacturer's instructions, shall not be required to have a clearance between combustible materials and exterior surfaces of the masonry chimney. Noncombustible firestopping shall be provided in accordance with this code.

❖ An existing chimney or vent that is to be reused must be inspected to verify that proper external clearances to combustibles exist for the entire length of the chimney or vent, as required by the code for a new chimney or vent installation. If proper clearances do not exist, either the building structure (within allowable structural limitations) must be altered to provide the required clearances or the chimney/vent system realigned to provide the required clearances. Where proper clearances cannot be provided by either method, the chimney/vent system must be replaced with a system installed with the proper clearances. Note that where a chimney/vent system passes through floors or ceilings of a building, the code requires the installation of noncombustible fireblocking between the exterior of the chimney/vent system and the structure (see Chapter 10).

Clearances for vents and factory-built chimneys are typically indicated on the exterior of the vent or chimney. If the required clearances are not indicated on the vent or chimney, the manufacturer must be contacted and the original installation instructions consulted.

Existing masonry chimneys commonly do not have the proper external clearances to combustibles required by the code, especially if the structure is fairly old. The exception allows for listed chimney lining systems to be installed in masonry chimneys. Listed chimney liners are designed to provide insulation value to compensate for the lack of clearance of the masonry chimney to combustibles. Such chimney liner systems must comply with the requirements of UL 1777.

M1801.4 Space around lining. The space surrounding a flue lining system or other vent installed within a masonry chimney shall not be used to vent any other *appliance*. This shall not prevent the installation of a separate flue lining in accordance with the manufacturer's installation instructions and this code.

❖ When a chimney lining system is installed within a chimney, an annular space will be created between the liner and the chimney. Such a space usually has an irregular shape and is not conducive to the proper flow of flue gases. Also, vent gases could degrade the lining system.

M1801.5 Mechanical draft systems. A mechanical draft system shall be used only with *appliances listed* and *labeled* for such use. Provisions shall be made to prevent the flow of fuel to the *equipment* when the draft system is not operating. Forced draft systems and portions of induced draft systems under positive pressure during operation shall be designed and installed to prevent leakage of flue gases into a building.

❖ Commonly used chimney and vent systems are not designed for positive pressure (above atmospheric pressure). Such chimneys and vents are intended to produce a draft and thus operate with negative (below atmospheric) internal pressures. Specialized vents and chimneys are available that are designed for positive pressure applications. The misapplication of chimney and venting materials can result in leakage of combustion gases and can cause chimney or vent deterioration due to condensation corrosion.

M1801.6 Direct-vent appliances. Direct-vent *appliances* shall be installed in accordance with the manufacturer's instructions.

❖ Direct-vent appliances must be listed and labeled and installed in accordance with the manufacturer's instructions. These appliances are designed to draw combustion air through a duct that is connected directly to the outdoors and expel combustion products though another duct to the outdoors. Some direct vent systems operate by natural draft while others are blower assisted. The vent and intake pipes are often terminated outdoors in a single vent/air intake assembly constructed in a concentric arrangement.

M1801.7 Support. Venting systems shall be adequately supported for the weight of the material used.

❖ Vent manufacturers supply support parts, and manufacturers' instructions provide detailed requirements for support of vent systems. Improper support can cause strain on vent components, appliance connectors and fittings resulting in vent, appliance or connector damage and loss of required clearance to combustibles and proper pitch. Frequently, venting installations suffer from lack of or improperly installed supports, brackets and hangers (see Commentary Figure M1801.7).

M1801.8 Duct penetrations. Chimneys, vents and vent connectors shall not extend into or through supply and return air ducts or plenums.

❖ In residential construction, stud and joist spaces are sometimes used instead of ducts for return air and combustion air. Areas under a floor are sometimes used as plenums. A combustion products vent, vent connector or exhaust duct is not permitted to extend into or through an air plenum or space used as an air duct. The combustion vent could leak flue gases into the circulating air, creating a health hazard. The restriction does not apply to a space that is being used to convey combustion air.

INTERNATIONAL CODE COUNCIL®
Copyright © 2015 ICC. ALL RIGHTS RESERVED. Accessed by David Dammon on Jun 21, 2017 12:30:52 PM pursuant to License Agreement with ICC. No further reproduction or distribution authorized. ANY UNAUTHORIZED REPRODUCTION OR DISTRIBUTION IS A VIOLATION OF THE FEDERAL COPYRIGHT ACT AND THE LICENSE AGREEMENT, AND SUBJECT TO CIVIL AND CRIMINAL PENALTIES THEREUNDER.

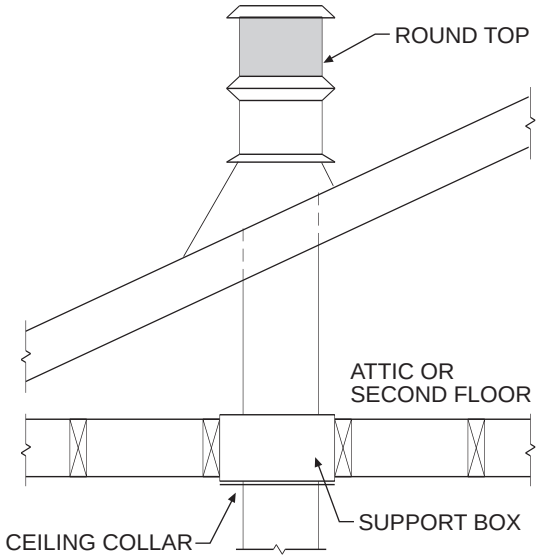

Figure M1801.7
VENT SUPPORT

M1801.9 Fireblocking. Vent and chimney installations shall be fireblocked in accordance with Section R602.8.

❖ Fireblocking with noncombustible materials must be installed in wood-frame construction at all openings around vents, pipes, ducts, chimneys and fireplaces at ceiling and floor levels. See the commentary to Section R602.8 (R302.11).

M1801.10 Unused openings. Unused openings in any venting system shall be closed or capped.

❖ Unused openings in chimneys or vents can allow vent gases to escape into the building, cause loss of draft or allow the entry of birds and rodents. The method used to close an unused opening must not create a protrusion that can restrict flow through the vent or chimney passageway.

M1801.11 Multiple-appliance venting systems. Two or more *listed* and *labeled appliances* connected to a common natural draft venting system shall comply with the following requirements:

1. *Appliances* that are connected to common venting systems shall be located on the same floor of the *dwelling*.

   Exception: Engineered systems as provided for in Section G2427.

2. Inlets to common venting systems shall be offset such that no portion of an inlet is opposite another inlet.
3. Connectors serving *appliances* operating under a natural draft shall not be connected to any portion of a mechanical draft system operating under positive pressure.

❖ If there is more than one opening into a single chimney or vent passageway, the openings must be located at different heights or otherwise be arranged so that the flow of combustion products from one connector cannot enter another connector instead of going up the flueway. This provision intends to prevent the flow or spilling of flue gases back into the building through an adjacent appliance flue connection.

Each solid-fuel-burning appliance or fireplace must have a dedicated independent chimney or vent. Solid-fuel appliances cannot share a common chimney with any other appliance or fireplace. Solid-fuel-burning appliances produce creosote deposits on the interior walls of chimney liners. The creosote is highly combustible. In the event of a chimney fire, other connections to the chimney could allow fire to break out of the chimney and into the building. Also, chimney passageways can become partially blocked by creosote formation, thus forcing vent gases from other appliances to discharge back into the building.

M1801.12 Multiple solid fuel prohibited. A solid fuel-burning *appliance* or fireplace shall not connect to a chimney passageway venting another *appliance*.

❖ Each solid-fuel-burning appliance or fireplace must have a dedicated independent chimney or vent. Solid-fuel appliances cannot share a common chimney with any other appliance or fire-place. Solid-fuel-burning appliances produce creosote deposits on the interior walls of chimney liners. The creosote is highly combustible. In the event of a chimney fire, other connections to the chimney could allow fire to break out of the chimney and into the building. Also, chimney passageways can become partially blocked by creosote formation, thus forcing vent gases from other appliances to discharge back into the building.

INTERNATIONAL CODE COUNCIL®
Copyright © 2015 ICC. ALL RIGHTS RESERVED. Accessed by David Dammon on Jun 21, 2017 12:30:52 PM pursuant to License Agreement with ICC. No further reproduction or distribution authorized. ANY UNAUTHORIZED REPRODUCTION OR DISTRIBUTION IS A VIOLATION OF THE FEDERAL COPYRIGHT ACT AND THE LICENSE AGREEMENT, AND SUBJECT TO CIVIL AND CRIMINAL PENALTIES THEREUNDER.

SECTION M1802
VENT COMPONENTS

M1802.1 Draft hoods. Draft hoods shall be located in the same room or space as the *combustion air* openings for the *appliances*.

❖ Draft hoods are installed in gas-venting systems to regulate the draft intensity and to prevent downdrafts from entering gas appliances. Draft hoods also allow dilution air to be drawn into the vents, inhibiting the formation of moisture condensed from the flue gases. Air drawn into the venting system must be replaced to prevent a negative pressure that could produce spillage of vent gases into the dwelling. Draft hoods must therefore be located in the same room or space as combustion air openings. This provision will ensure that the venting system will be in the same pressure zone as the combustion chamber.

M1802.2 Vent dampers. Vent dampers shall comply with Sections M1802.2.1 and M1802.2.2.

❖ Dampers control the rate of combustion by regulating the amount of draft. When the appliance is not operating, they allow flue gas passageways to be closed to reduce the loss of conditioned air through the chimney. This section addresses the use of both manually operated and automatic dampers.

M1802.2.1 Manually operated. Manually operated dampers shall not be installed except in connectors or chimneys serving solid fuel-burning *appliances*.

❖ Manual dampers can be installed only in solid-fuel-burning appliances. Such dampers control the rate of combustion by regulating the amount of draft and also reduce the loss of conditioned air through the vent or chimney when the appliance is not operating by allowing the vent or chimney to be closed. The damper is usually opened manually during the process of starting a fire. If the damper is not opened, smoke will spill back into the room, alerting the user. For gas- or liquid-fuel-fired appliances, however, the user may not be aware of a partially or completely closed damper, and a hazardous condition could develop. The code therefore prohibits the use of manual dampers for all but solid-fuel-burning appliances. Note that this section does not prohibit the use of fixed baffles that are components of approved appliance venting systems.

M1802.2.2 Automatically operated. Automatically operated dampers shall conform to UL 17 and be installed in accordance with the terms of their *listing* and *label*. The installation shall prevent firing of the burner when the damper is not opened to a safe position.

❖ Automatic dampers can be used with gas- or liquid-fuel-fired natural draft appliances. Because damper failure can result in a hazardous condition, automatic dampers must be listed and labeled, and installed in strict accordance with the manufacturer's installation instructions and the terms of the listing. An improperly installed or malfunctioning damper can cause the appliance to malfunction and discharge the combustion products back into the building. Automatic dampers are designed to prove that they are in the open position before allowing the appliance burners to fire.

M1802.3 Draft regulators. Draft regulators shall be provided for oil-fired *appliances* that must be connected to a chimney. Draft regulators provided for solid fuel-burning *appliances* to reduce draft intensity shall be installed and set in accordance with the manufacturer's installation instructions.

❖ Oil-fired appliances must be fitted with a draft regulator unless the appliance is listed and labeled for use without the draft regulator. Draft regulators may be installed on solid-fuel-burning appliances to reduce the draft intensity. When required, draft regulators must be installed in the same room or enclosure as the appliance so that no difference in pressure between the air at the regulator and the combustion air supply will exist. Draft regulators are of the barometric type and are somewhat comparable to the draft hood used with gas appliances. See Commentary Figure M1802.3 for illustrations of draft hoods and draft regulators.

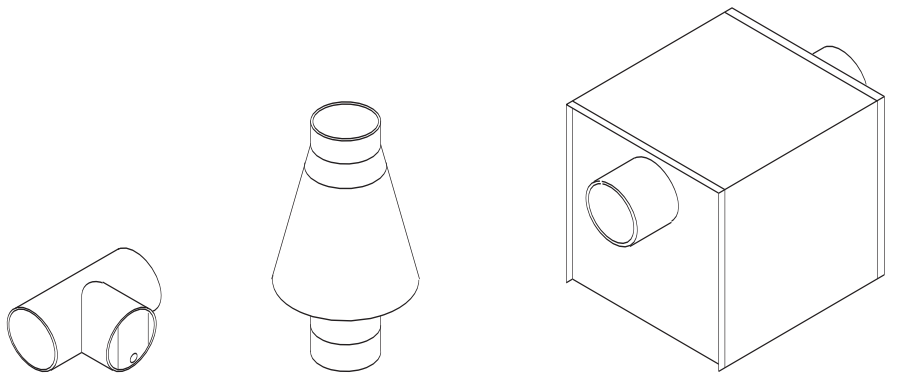

Figure M1802.3
DRAFT HOODS AND DRAFT REGULATORS

INTERNATIONAL CODE COUNCIL®
Copyright © 2015 ICC. ALL RIGHTS RESERVED. Accessed by David Dammon on Jun 21, 2017 12:30:52 PM pursuant to License Agreement with ICC. No further reproduction or distribution authorized. ANY UNAUTHORIZED REPRODUCTION OR DISTRIBUTION IS A VIOLATION OF THE FEDERAL COPYRIGHT ACT AND THE LICENSE AGREEMENT, AND SUBJECT TO CIVIL AND CRIMINAL PENALTIES THEREUNDER.

M1802.3.1 Location. Where required, draft regulators shall be installed in the same room or enclosure as the *appliance* so that a difference in pressure will not exist between the air at the regulator and the *combustion air* supply.

❖ See the commentary to Section M1802.1.

SECTION M1803
CHIMNEY AND VENT CONNECTORS

M1803.1 General. Connectors shall be used to connect fuel-burning *appliances* to a vertical chimney or vent except where the chimney or vent is attached directly to the *appliance*.

❖ Unless the chimney or vent is connected directly to the appliance, a connector is necessary. A connector is piping or a factory-built assembly that is used to connect a fuel-burning appliance to a vent or chimney, including any necessary fittings to make the connection or a change in direction.

M1803.2 Connectors for oil and solid fuel appliances. Connectors for oil and solid fuel-burning *appliances* shall be constructed of factory-built chimney material, Type L vent material or single-wall metal pipe having resistance to corrosion and heat and thickness not less than that of galvanized steel as specified in Table M1803.2.

❖ Connectors for oil- and solid-fuel-burning appliances must be constructed of the materials listed in this section to ensure that they are capable of tolerating the high temperatures and corrosive nature of the vent gases being conveyed.

TABLE M1803.2
THICKNESS FOR SINGLE-WALL METAL PIPE CONNECTORS

DIAMETER OF CONNECTOR (inches)	GALVANIZED SHEET METAL GAGE NUMBER	MINIMUM THICKNESS (inch)
Less than 6	26	0.019
6 to 10	24	0.024
Over 10 through 16	22	0.029

For SI: 1 inch = 25.4 mm.

M1803.3 Installation. Vent and chimney connectors shall be installed in accordance with the manufacturer's instructions and within the space where the *appliance* is located. *Appliances* shall be located as close as practical to the vent or chimney. Connectors shall be as short and straight as possible and installed with a slope of not less than $^1/_4$ inch (6 mm) rise per foot of run. Connectors shall be securely supported and joints shall be fastened with sheet metal screws or rivets. Devices that obstruct the flow of flue gases shall not be installed in a connector unless *listed* and *labeled* or *approved* for such installations.

❖ A connector must be supported for the design and weight of the material used. Proper support is necessary to maintain the clearances required by Section M1803.3.4, to maintain the required pitch, and to prevent physical damage and separation of joints. The joints between connectors and appliance draft hood outlets and flue collars must be secured with screws, rivets or other approved means. The joints between pipe sections also must be secured with screws, rivets or other approved means. Some connectors are available with a proprietary-type fastening method. The special proprietary joints do not require screws, rivets or other fasteners if they provide equivalent resistance to disengagement or displacement. This section addresses connectors, not chimneys and vents, and most chimney and vent manufacturers do not require or might even prohibit the use of screws or rivets for securing joints for chimney and vent pipe sections and fittings.

The ideal chimney or vent configuration is a vertical system, even though it is not always practical. This section requires all portions of a chimney or vent connector to rise vertically a minimum $^1/_4$ inch per each foot (0.02 mm/m) of its horizontal length. The connector slope is intended to induce the flow of flue gases by taking advantage of the natural buoyancy of the hot gases. Connector slope can promote the priming of a cold venting system and can partially compensate for short connector vertical rise.

M1803.3.1 Floor, ceiling and wall penetrations. A chimney connector or vent connector shall not pass through any floor or ceiling. A chimney connector or vent connector shall not pass through a wall or partition unless the connector is *listed* and *labeled* for wall pass-through, or is routed through a device *listed* and *labeled* for wall pass-through and is installed in accordance with the conditions of its *listing* and *label*. Connectors for oil-fired *appliances listed* and *labeled* for Type L vents, passing through walls or partitions shall be in accordance with the following:

1. Type L vent material for oil *appliances* shall be installed with not less than *listed* and *labeled* clearances to combustible material.
2. Single-wall metal pipe shall be *guarded* by a ventilated metal thimble not less than 4 inches (102 mm) larger in diameter than the vent connector. A minimum 6 inches (152 mm) of clearance shall be maintained between the thimble and combustibles.

❖ Walls and partitions in dwellings are often constructed of combustible materials and must be protected from exposure to high temperatures from venting components. Type B and Type L vents must be installed with clearances to combustibles in accordance with their listing and label. Because single-wall metal pipe does not have the insulating qualities of Type B and Type L vents, it must be installed within a ventilated metal thimble when passing through combustible walls and partitions. The thimble must be at least 4 inches (102 mm) larger in diameter than the connector. Note that this section prohibits all penetrations of ceilings and floors.

M1803.3.2 Length. The horizontal run of an uninsulated connector to a natural draft chimney shall not exceed 75 percent of the height of the vertical portion of the chimney above the connector. The horizontal run of a *listed* connector to a natural draft chimney shall not exceed 100 percent of the

INTERNATIONAL CODE COUNCIL®
Copyright © 2015 ICC. ALL RIGHTS RESERVED. Accessed by David Dammon on Jun 21, 2017 12:30:52 PM pursuant to License Agreement with ICC. No further reproduction or distribution authorized. ANY UNAUTHORIZED REPRODUCTION OR DISTRIBUTION IS A VIOLATION OF THE FEDERAL COPYRIGHT ACT AND THE LICENSE AGREEMENT, AND SUBJECT TO CIVIL AND CRIMINAL PENALTIES THEREUNDER.

height of the vertical portion of the chimney above the connector.

❖ The appliance and its chimney or vent should be located in close proximity to keep the connector length to a minimum. A connector must be limited in length because of flow resistance of the connector and heat loss through the connector wall. A listed connector is assumed to be an air insulated double-wall type, therefore a longer length is permitted because it will help maintain sufficiently high vent gas temperatures to produce draft.

M1803.3.3 Size. A connector shall not be smaller than the flue collar of the *appliance*.

Exception: Where installed in accordance with the *appliance* manufacturer's instructions.

❖ Unless otherwise specified in the manufacturer's instructions, the size of the connector must be at least equal to the diameter of the appliance flue collar. A lesser size could restrict the flow of flue gases and result in spillage of flue gases into the dwelling.

M1803.3.4 Clearance. Connectors shall be installed with clearance to combustibles as set forth in Table M1803.3.4. Reduced clearances to combustible materials shall be in accordance with Table M1306.2 and Figure M1306.1.

❖ Connectors, vents and chimneys must be installed with minimum clearances to combustibles. These clearances can be reduced if the combustible material is protected by one of the methods of protection given in Table M1306.2. The clearance requirements in Table M1803.3.4 apply to unlabeled single-wall connectors serving a listed appliance. Connectors that are listed and labeled must be installed with the clearance to combustibles required by the connector manufacturer's installation instructions. If the appliance or connector manufacturer's installation instructions specify larger clearances than those prescribed by this section, the manufacturer's installation instructions govern.

TABLE M1803.3.4
CHIMNEY AND VENT CONNECTOR CLEARANCES TO COMBUSTIBLE MATERIALS[a]

TYPE OF CONNECTOR	MINIMUM CLEARANCE (inches)
Single-wall metal pipe connectors:	
Oil and solid-fuel appliances	18
Oil appliances listed for use with Type L vents	9
Type L vent piping connectors:	
Oil and solid-fuel appliances	9
Oil appliances listed for use with Type L vents	3[b]

For SI: 1 inch = 25.4 mm.

a. These minimum clearances apply to unlisted single-wall chimney and vent connectors. Reduction of required clearances is permitted as in Table M1306.2.

b. Where listed Type L vent piping is used, the clearance shall be in accordance with the vent listing.

M1803.3.5 Access. The entire length of a connector shall be accessible for inspection, cleaning and replacement.

❖ Because connectors are exposed to high temperatures and possible condensation, the entire length of the connector must be accessible to allow observation of any degradation of the connector or lack of clearances and to allow replacement.

M1803.4 Connection to fireplace flue. Connection of *appliances* to chimney flues serving fireplaces shall comply with Sections M1803.4.1 through M1803.4.4.

❖ This section regulates installations where fireplace chimneys are used to vent appliances, such as room heaters and fireplace-insert heaters.

M1803.4.1 Closure and accessibility. A noncombustible seal shall be provided below the point of connection to prevent entry of room air into the flue. Means shall be provided for access to the flue for inspection and cleaning.

❖ Without an air-tight connection between the chimney flue and the appliance chimney connector, chimney draft will draw room air into the flue, thus weakening the draft drawn through the appliance. Because the chimney flue is no longer open to the fireplace firebox, the chimney connection must be designed to provide access to the chimney for inspection and cleaning.

M1803.4.2 Connection to factory-built fireplace flue. A different *appliance* shall not be connected to a flue serving a factory-built fireplace unless the *appliance* is specifically *listed* for such an installation. The connection shall be made in conformance with the *appliance* manufacturer's instructions.

❖ Factory-built fireplaces may or may not be tested for uses other than as a traditional fire-place. Connecting an appliance or fireplace-insert heater could result in abnormally high fire-place or chimney temperatures, leading to component deterioration and hazardous operation. The fireplace manufacturer will provide specific details stating what appliance connections are allowed. Usually, the manufacturer's instructions will prohibit any modifications and any use of the fireplace other than that for which it was designed.

M1803.4.3 Connection to masonry fireplace flue. A connector shall extend from the *appliance* to the flue serving a masonry fireplace to convey the flue gases directly into the flue. The connector shall be accessible or removable for inspection and cleaning of both the connector and the flue. *Listed* direct-connection devices shall be installed in accordance with their *listing*.

❖ The appliance chimney connector must extend up through the fireplace damper and smoke chamber and terminate in the chimney flue. This helps produce an adequate draft and reduces the possibility of combustible creosote deposits forming within the fireplace throat and smoke chamber.

INTERNATIONAL CODE COUNCIL®
Copyright © 2015 ICC. ALL RIGHTS RESERVED. Accessed by David Dammon on Jun 21, 2017 12:30:52 PM pursuant to License Agreement with ICC. No further reproduction or distribution authorized. ANY UNAUTHORIZED REPRODUCTION OR DISTRIBUTION IS A VIOLATION OF THE FEDERAL COPYRIGHT ACT AND THE LICENSE AGREEMENT, AND SUBJECT TO CIVIL AND CRIMINAL PENALTIES THEREUNDER.

M1803.4.4 Size of flue. The size of the fireplace flue shall be in accordance with Section M1805.3.1.

❖ The size of the connector must be equal to the diameter of the appliance to prevent a restriction in the flow of the flue gases. See the commentary to Section M1805.3.1.

SECTION M1804
VENTS

M1804.1 Type of vent required. *Appliances* shall be provided with a *listed* and *labeled* venting system as set forth in Table M1804.1.

❖ Vents and chimneys are distinct systems. The provisions of this section apply only to vents. The vents addressed in this section are natural draft venting systems that produce draft using the same principles that produce draft in chimneys.

Vents regulated by this section are factory fabricated and must be listed and labeled. The labeling requirement applies to all components of the system, including the sections of pipe, fittings, terminal caps, supports and spacers.

A vent system can be used only with oil-burning and pellet-burning appliances that are listed and labeled for use with a vent. Solid-fuel-burning appliances must not be connected to a vent system, because such appliances produce flue gas temperatures that are much higher than the temperatures for which vents are designed. The burning of solid fuels also produces creosote. Creosote formation leaves a combustible deposit on the surface of the flue passageway that, if ignited, can produce a fire with temperatures higher than 2,000°F (1093°C). Such temperatures far exceed the maximum safe temperature of a vent system.

Type L vents and pellet vents must be tested in accordance with UL 641 and are designed to vent oil-burning and pellet-fuel-burning appliances. Oil-burning appliances produce a higher flue gas temperature than gas-fired appliances. Type L vents are typically double-wall, air-insulated vent piping systems constructed of galvanized and stainless steel. They are designed for natural draft applications only and must not be used to convey combustion gases under a positive pressure. For example, a Type L vent must not be used with Category III or IV gas-fired appliances and must not be used on the discharge side of an exhauster or power-vented appliance. Positive pressures will cause a Type L vent to leak combustion gases into the building, and the leakage can cause condensation to form within the vent system pipe, fittings and joints, resulting in corrosion damage to the vent and eventual vent failure.

TABLE M1804.1
VENT SELECTION CHART

VENT TYPES	APPLIANCE TYPES
Type L oil vents	Oil-burning appliances listed and labeled for venting with Type L vents
Pellet vents	Pellet fuel-burning appliances listed and labeled for use with pellet vents

M1804.2 Termination. Vent termination shall comply with Sections M1804.2.1 through M1804.2.6.

❖ The standards for vents and appliances require that venting instructions be supplied by the manufacturer of the appliance and the manufacturer of the vent system. Such instructions are part of the labeling requirements. Any deviation from them is a violation of the code.

The clearance to combustibles for a vent system is determined by the testing agency and stated on the component labels and in the manufacturer's instructions. Not all vents have the same required clearances to combustibles. The clearances are determined by vent performance during testing in accordance with the applicable standard. Different vent materials and designs impact the vent's ability to control the amount of heat transmitted to surrounding combustibles. Installation of the vent system in accordance with the clearances listed on the vent's label and in the manufacturer's installation instructions is critical.

The termination of a natural draft vent must comply with the requirements of the manufacturer's installation instructions and Sections M1804.2.1 through M1804.2.5. A vent used in conjunction with a mechanical exhauster must meet the termination requirements established in Section M1804.2.6.

The vent system must be physically protected to prevent damage to the vent and to prevent combustibles from coming into contact with or being placed too close to the vents. This protection is usually provided by enclosing the vent in chases, shafts or cavities during building construction. Physical protection is not required in the room or space where the vent originates (at the appliance connection) and is not required in such locations as attics that are not occupied or used for storage. For example, assume that a vent is installed in an existing building and that it extends from the basement, through a first-floor closet, through the attic and through the roof. The portion of the vent passing through the closet must be protected from damage. The means of physical damage protection must also be designed to maintain separation between the vent and any combustible storage. To prevent the passage of fire and smoke through the annular space around a vent penetration through a floor or ceiling, the vent

INTERNATIONAL CODE COUNCIL®
Copyright © 2015 ICC. ALL RIGHTS RESERVED. Accessed by David Dammon on Jun 21, 2017 12:30:52 PM pursuant to License Agreement with ICC. No further reproduction or distribution authorized. ANY UNAUTHORIZED REPRODUCTION OR DISTRIBUTION IS A VIOLATION OF THE FEDERAL COPYRIGHT ACT AND THE LICENSE AGREEMENT, AND SUBJECT TO CIVIL AND CRIMINAL PENALTIES THEREUNDER.

must be fireblocked with a noncombustible material in accordance with the code. Vent manufacturers provide factory-built components and installation instructions for fireblocking penetrations.

M1804.2.1 Through the roof. Vents passing through a roof shall extend through flashing and terminate in accordance with the manufacturer's installation requirements.

❖ Manufacturers' installation instructions contain the requirements for the termination of vents through the roof (see Commentary Figure M1804.2.1).

M1804.2.2 Decorative shrouds. Decorative shrouds shall not be installed at the termination of vents except where the shrouds are *listed* and *labeled* for use with the specific venting system and are installed in accordance with the manufacturer's instructions.

❖ Decorative shrouds have become a popular architectural feature that, in some cases, have proven to be a fire hazard. They are designed to be aesthetically pleasing and to hide chimney and vent terminations. These shrouds have caused fires resulting from overheated combustible construction and the accumulation of debris and animal nesting. Shrouds can also interfere with the function of a chimney or vent system. Shrouds are allowed only where they are listed and labeled for use with a specific factory-built chimney system. Unlisted, field-constructed shrouds are prohibited.

M1804.2.3 Natural draft appliances. Vents for natural draft *appliances* shall terminate not less than 5 feet (1524 mm) above the highest connected *appliance* outlet, and natural draft gas vents serving wall furnaces shall terminate at an elevation not less than 12 feet (3658 mm) above the bottom of the furnace.

❖ To develop and maintain adequate venting action (draft), the termination of gravity vents must be at least 5 feet (1524 mm) above the vent collar of the appliance and at least 12 feet (3658 mm) above the bottom of a wall furnace.

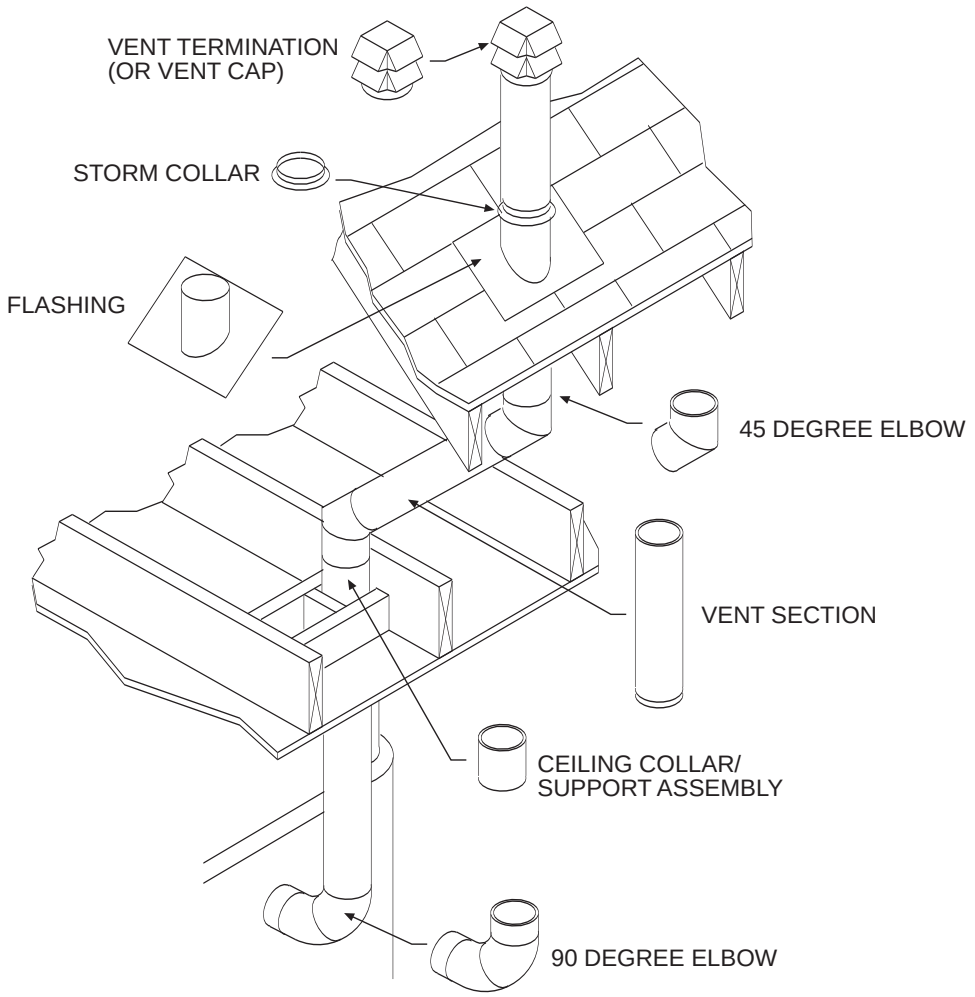

For SI: 1 degree = 0.0175 rad.

Figure M1804.2.1
VENT TERMINATION THROUGH A ROOF

INTERNATIONAL CODE COUNCIL®
Copyright © 2015 ICC. ALL RIGHTS RESERVED. Accessed by David Dammon on Jun 21, 2017 12:30:52 PM pursuant to License Agreement with ICC. No further reproduction or distribution authorized. ANY UNAUTHORIZED REPRODUCTION OR DISTRIBUTION IS A VIOLATION OF THE FEDERAL COPYRIGHT ACT AND THE LICENSE AGREEMENT, AND SUBJECT TO CIVIL AND CRIMINAL PENALTIES THEREUNDER.

M1804.2.4 Type L vent. Type L venting systems shall conform to UL 641 and shall terminate with a *listed* and *labeled* cap in accordance with the vent manufacturer's installation instructions not less than 2 feet (610 mm) above the roof and not less than 2 feet (610 mm) above any portion of the building within 10 feet (3048 mm).

❖ The termination heights are consistent with the requirements of NFPA 31.

Consideration must be given to vent location in the design/installation phase of a building so that the vent termination will not require long extensions of vent pipe exposed to the outdoors. Vent piping exposed to the outdoors encourages condensation in cold weather, could require guy wires or braces depending on height, and is considered aesthetically unattractive. Another good reason to plan for vent location during the design phase of a building is to allow straight vertical runs of vent and avoid difficult offsets. Good planning can also prevent vents from passing through the roof on the street side of the building. Quite often, difficult vent offsets in attics are needed for vents to penetrate the roof on the back side of a building.

M1804.2.5 Direct vent terminations. Vent terminals for direct-vent *appliances* shall be installed in accordance with the manufacturer's instructions.

❖ Direct-vent appliances include appliances that have a closed combustion chamber and a conduit for bringing all combustion air directly from the outdoors. Direct-vent appliances are often referred to as "sealed combustion" or "separated combustion" appliances.

The code does not provide prescriptive termination requirements for these appliances and relies on the manufacturer's installation instructions.

M1804.2.6 Mechanical draft systems. Mechanical draft systems shall comply with UL 378 and shall be installed in accordance with their *listing*, the manufacturer's instructions and, except for direct-vent *appliances*, the following requirements:

1. The vent terminal shall be located not less than 3 feet (914 mm) above a forced air inlet located within 10 feet (3048 mm).
2. The vent terminal shall be located not less than 4 feet (1219 mm) below, 4 feet (1219 mm) horizontally from, or 1 foot (305 mm) above any door, window or gravity air inlet into a *dwelling*.
3. The vent termination point shall be located not closer than 3 feet (914 mm) to an interior corner formed by two walls perpendicular to each other.
4. The bottom of the vent terminal shall be located not less than 12 inches (305 mm) above finished ground level.
5. The vent termination shall not be mounted directly above or within 3 feet (914 mm) horizontally of an oil tank vent or gas meter.
6. Power exhauster terminations shall be located not less than 10 feet (3048 mm) from *lot lines* and adjacent buildings.
7. The discharge shall be directed away from the building.

❖ Mechanical draft systems must be listed to UL 378 which contains a comprehensive set of construction and performance requirements that are used to evaluate and list draft equipment. The appliance installations addressed in this section use auxiliary or integral fans and blowers to force the flow of combustion products to the outdoors. This section applies to nonintegral power exhausters, integrally power-exhausted appliances, and venting systems equipped with draft inducers. This section does not address direct-vent appliances.

The seven requirements in this section provide guidance in locating the vent terminal to prevent drawing the vented products of combustion back into the building and creating a hazardous condition.

M1804.3 Installation. Type L and pellet vents shall be installed in accordance with the terms of their *listing* and *label* and the manufacturer's instructions.

❖ The standards for vents and appliances require that venting instructions be supplied by the manufacturer of the appliance and the manufacturer of the vent system. Such instructions are part of the labeling requirements. Any deviation from them is a violation of the code.

The clearance to combustibles for a vent system is determined by the testing agency and stated on the component labels and in the manufacturer's instructions. Not all vents have the same required clearances to combustibles. The clearances are determined by vent performance during the testing in accordance with the applicable standard. Different vent materials and designs impact the vent's ability to control the amount of heat transmitted to surrounding combustibles. Installation of the vent system in accordance with the clearances listed on the vent's label and in the manufacturer's installation instructions is critical.

Physical protection of the vent system is required to prevent damage to the vent and to prevent combustibles from coming into contact with or being placed too close to the vents. This protection is typically provided by enclosing the vent in chases, shafts or cavities in the building construction. Physical protection is not required in the room or space where the vent originates (at the appliance connection) and would not be required in locations such as attics that are not occupied or used for storage. For example, assume that a vent is installed in an existing building and that it extends from the basement, through a first-floor closet, through the attic and through the roof. The portion of the vent passing through the closet must be protected from damage. The means of physical damage protection must also be designed to maintain separation between the vent and any combustible storage. To prevent the passage of fire and smoke through annular space around a vent penetration through a floor or ceiling, the vent must be fireblocked with a noncombustible material in accordance with the code. Vent manufacturers provide installation instructions and factory-built components for fireblocking penetrations.

INTERNATIONAL CODE COUNCIL®
Copyright © 2015 ICC. ALL RIGHTS RESERVED. Accessed by David Dammon on Jun 21, 2017 12:30:52 PM pursuant to License Agreement with ICC. No further reproduction or distribution authorized. ANY UNAUTHORIZED REPRODUCTION OR DISTRIBUTION IS A VIOLATION OF THE FEDERAL COPYRIGHT ACT AND THE LICENSE AGREEMENT, AND SUBJECT TO CIVIL AND CRIMINAL PENALTIES THEREUNDER.

M1804.3.1 Size of single-appliance venting systems. An individual vent for a single *appliance* shall have a cross-sectional area equal to or greater than the area of the connector to the *appliance*, but not less than 7 square inches (4515 mm^2) except where the vent is an integral part of a *listed* and *labeled appliance*.

❖ This section sets the minimum vent area allowed on gravity vent appliances at 7 square inches (4515 mm^2) [which calculates to a minimum 3-inch (76 mm) diameter vent]. Obviously, if the vent is an integral part of the listed appliance, lesser sizes may be accepted. Section M1803.3.3 requires that the size of the vent or connector be not less than the appliance flue collar. Therefore, when the appliance flue collar is larger than 3 inches (76 mm) in diameter, the connector and vent must be increased in size accordingly.

M1804.4 Door swing. Appliance and equipment vent terminals shall be located such that doors cannot swing within 12 inches (305 mm) horizontally of the vent terminals. Door stops or closers shall not be installed to obtain this clearance.

❖ Vent terminals for sidewall-vented appliances (such as direct-vent gas fireplaces and fireplace heaters, direct-vent room heaters, direct-vent water heaters, furnaces and boilers and also nondirect-vent appliances) are sometimes located where a side-swinging door can impact the vent terminal or swing close to the terminal. The results can be damage to the vent terminal, a fire hazard and interference with the appliance venting and combustion air intake. Also, if the door blocks or deflects the vent discharge such that the combustion products are pulled back into the combustion air intake, the result would be excessive CO production and serious appliance malfunction and sooting.

A damaged vent terminal could cause appliance malfunction and carbon monoxide poisoning. It could also cause damage to nearby combustible surfaces and create a fire hazard. Door stops and closer devices cannot be depended on because they are easily defeated or removed [see Commentary Figures G1804.4(1) and G1804.4(2)].

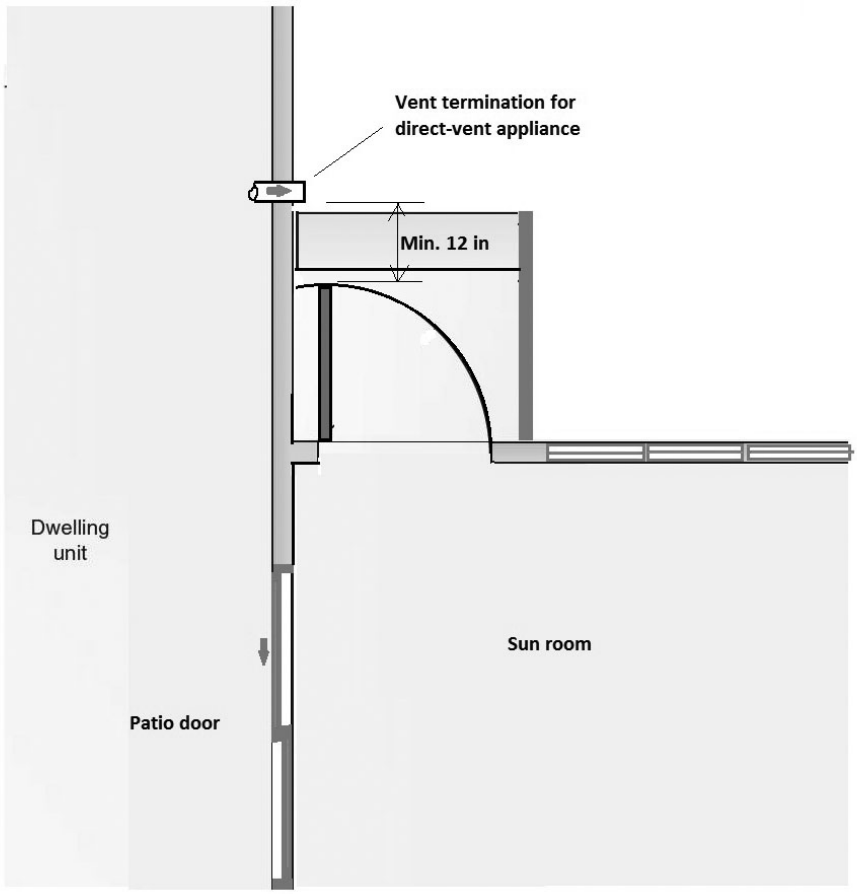

Figure 1804.4(1)
DOOR SWING

INTERNATIONAL CODE COUNCIL®
Copyright © 2015 ICC. ALL RIGHTS RESERVED. Accessed by David Dammon on Jun 21, 2017 12:30:52 PM pursuant to License Agreement with ICC. No further reproduction or distribution authorized. ANY UNAUTHORIZED REPRODUCTION OR DISTRIBUTION IS A VIOLATION OF THE FEDERAL COPYRIGHT ACT AND THE LICENSE AGREEMENT, AND SUBJECT TO CIVIL AND CRIMINAL PENALTIES THEREUNDER.



Figure G1804.4(2)
DOOR SWING

SECTION M1805
MASONRY AND FACTORY-BUILT CHIMNEYS

M1805.1 General. Masonry and factory-built chimneys shall be built and installed in accordance with Sections R1003 and R1005, respectively. Flue lining for masonry chimneys shall comply with Section R1003.11.

❖ See Sections R1003, R1003.11 and R1005.

M1805.2 Masonry chimney connection. A chimney connector shall enter a masonry chimney not less than 6 inches (152 mm) above the bottom of the chimney. Where it is not possible to locate the connector entry at least 6 inches (152 mm) above the bottom of the chimney flue, a cleanout shall be provided by installing a capped tee in the connector next to the chimney. A connector entering a masonry chimney shall extend through, but not beyond, the wall and shall be flush with the inner face of the liner. Connectors, or thimbles where used, shall be firmly cemented into the masonry.

❖ The 6-inch space below the bottom of the chimney connector serves as a trap to collect debris from within the chimney that falls into the chimney. Connectors must not extend beyond the inner face of the chimney liner to prevent complete or partial obstruction of the chimney. Connectors must be sealed and attached to the chimney to prevent leakage and dislocation of the connector.

M1805.3 Size of chimney flues. The effective area of a natural draft chimney flue for one *appliance* shall be not less than the area of the connector to the *appliance*. The area of chimney flues connected to more than one *appliance* shall be not less than the area of the largest connector plus 50 percent of the areas of additional chimney connectors.

Exception: Chimney flues serving oil-fired *appliances* sized in accordance with NFPA 31.

❖ This section requires a chimney or vent serving a single appliance to have a minimum cross-sectional area equal to the cross-sectional area of the appliance outlet connection. The maximum size of a chimney or vent is also an important design consideration. Oversized chimneys and vents can fail to produce sufficient draft and can cause condensation of the flue gases. Existing chimneys and vents might become oversized if an appliance that was previously connected is removed. In excessively large chimneys and vents, the flue gases are cooled by expansion and because of increased heat loss through the larger flue passage surface area. The cooling effect reduces the temperature differences necessary to produce draft and can cause the flue gases to reach the dew point temperature. The resulting condensation is highly corrosive and can cause deterioration of the chimney, vent, connected appliances and the building.

INTERNATIONAL CODE COUNCIL®
Copyright © 2015 ICC. ALL RIGHTS RESERVED. Accessed by David Dammon on Jun 21, 2017 12:30:52 PM pursuant to License Agreement with ICC. No further reproduction or distribution authorized. ANY UNAUTHORIZED REPRODUCTION OR DISTRIBUTION IS A VIOLATION OF THE FEDERAL COPYRIGHT ACT AND THE LICENSE AGREEMENT, AND SUBJECT TO CIVIL AND CRIMINAL PENALTIES THEREUNDER.

For connection to more than one appliance, this section requires that the area of the flue be increased by 50 percent of the area of the additional connector. The reason is based on a diversity factor arising from the fact that all appliances are not likely to be firing simultaneously at their maximum rate. Any design conflicting with the sizing criteria of this section must be considered as an engineered system. Note that this sizing rule does not apply to gas-fired appliances, however, an extremely limited version of the rule is found in Sections G2427.5.4 and G2427.6.8.1.

M1805.3.1 Size of chimney flue for solid-fuel appliance. Except where otherwise specified in the manufacturer's installation instructions, the cross-sectional area of a flue connected to a solid-fuel-burning *appliance* shall be not less than the area of the flue collar or connector, and not larger than three times the area of the flue collar.

❖ So that flue gases exhaust properly, the cross-sectional area of the flue connected to a solid-fuel-burning appliance must not be less than the area of the flue collar or connector. For proper draft, and to allow the chimney to be heated sufficiently to produce and maintain this draft, this section puts a maximum size limitation on the chimney, not to exceed three times the area of the flue collar (see commentary, Section M1805.3). As with all chimneys and all vents, they can fail from being too small and from being too big. In either case, the chimney or vent can fail to convey the combustion products to the outdoors and can fail to prevent condensation damage within the chimney or vent.

INTERNATIONAL CODE COUNCIL®
Copyright © 2015 ICC. ALL RIGHTS RESERVED. Accessed by David Dammon on Jun 21, 2017 12:30:52 PM pursuant to License Agreement with ICC. No further reproduction or distribution authorized. ANY UNAUTHORIZED REPRODUCTION OR DISTRIBUTION IS A VIOLATION OF THE FEDERAL COPYRIGHT ACT AND THE LICENSE AGREEMENT, AND SUBJECT TO CIVIL AND CRIMINAL PENALTIES THEREUNDER.

INTERNATIONAL CODE COUNCIL®
Copyright © 2015 ICC. ALL RIGHTS RESERVED. Accessed by David Dammon on Jun 21, 2017 12:30:52 PM pursuant to License Agreement with ICC. No further reproduction or distribution authorized. ANY UNAUTHORIZED REPRODUCTION OR DISTRIBUTION IS A VIOLATION OF THE FEDERAL COPYRIGHT ACT AND THE LICENSE AGREEMENT, AND SUBJECT TO CIVIL AND CRIMINAL PENALTIES THEREUNDER.

Chapter 19: Special Appliances, Equipment and Systems

General Comments

This chapter regulates the installation of fuel-burning appliances that are not covered in other chapters. Section M1901 covers the installation of and clearances to ranges and ovens. Section M1902 addresses the proper installation and controls necessary for safe operation of sauna heaters. Section M1903 addresses the testing and installation of stationary fuel cell power plants. Section M1904 directs the reader to the sections of the code and other *International Codes*® (I-Codes®) that have installation requirements for hydrogen systems.

The chapters of the code are dedicated to single subjects, however, because the two subjects in this chapter do not contain the volume of text necessary to warrant individual chapters, they have been combined into a single chapter. This chapter is a collection of requirements for various appliances. The only commonality is that the subjects use energy to perform some task or function.

Purpose

This chapter provides regulations for the proper installation of ranges, ovens, fuel cells and sauna heaters. The intent is to provide a reasonable level of protection for the occupants of the dwelling.

SECTION M1901
RANGES AND OVENS

M1901.1 Clearances. Freestanding or built-in ranges shall have a vertical clearance above the cooking top of not less than 30 inches (762 mm) to unprotected combustible material. Reduced clearances are permitted in accordance with the *listing* and *labeling* of the range hoods or *appliances*. The installation of a listed and labeled cooking appliance or microwave oven over a listed and labeled cooking appliance shall be in accordance with Section M1504.1. The clearances for a domestic open-top broiler unit shall be in accordance with Section M1505.1.

❖ Freestanding and built-in ranges must be located for required clearances to unprotected combustible materials. Cooking range tops can produce intense heat. The vertical clearance called out will help prevent the ignition of any unprotected combustible materials that are commonly found in residential kitchens. A cooking appliance or microwave oven and an open top broiler unit have additional requirements found in Sections M1504.1 and M1505.1, respectively (see commentary, Sections M1503, M1507, M1504.1, M1505.1 and G2447.5).

Ducted or ductless range hoods are often installed over ranges. Note, however, that the code does not require such hoods. When installed, range hoods must conform to the manufacturer's installation instructions. Reduced clearances to these hoods are allowed if the hoods are listed and labeled for such.

M1901.2 Cooking appliances. Cooking *appliances* shall be *listed* and *labeled* for household use and shall be installed in accordance with the manufacturer's instructions. The installation shall not interfere with *combustion air* or access for operation and servicing. Electric cooking appliances shall comply with UL 1026 or UL 858. Solid-fuel-fired fireplace stoves shall comply with UL 737.

❖ This section requires the listing and labeling of all cooking appliances and installation in accordance with the manufacturer's installation instructions. Cooking appliances listed only for commercial use must not be installed in residential kitchens. Sections G2447.2 and G2447.3 prohibit gas-fired commercial cooking appliances from being installed in dwelling units, except where the appliances are listed as both commercial and domestic (household) types. Commercial cooking appliances do not have the same safety features as residential appliances, such as push-to turn safety knobs and insulated doors. Commercial appliances allow much higher surface temperatures on the enclosure components, have higher energy output, higher effluent output and higher clearances to combustibles, all of which can be unsuitable or unsafe for domestic environments. There are cooking appliances on the market that have the size, features and appearance of commercial appliances, but they are listed for domestic/residential installation or are listed for both commercial and domestic use. The referenced standards listed contain a comprehensive set of construction and performance requirements that are used to evaluate and list cooking equipment specifically for use in dwelling units.

SECTION M1902
SAUNA HEATERS

M1902.1 Locations and protection. Sauna heaters shall be protected from accidental contact by persons with a guard of

INTERNATIONAL CODE COUNCIL®
Copyright © 2015 ICC. ALL RIGHTS RESERVED. Accessed by David Dammon on Jun 21, 2017 12:30:52 PM pursuant to License Agreement with ICC. No further reproduction or distribution authorized. ANY UNAUTHORIZED REPRODUCTION OR DISTRIBUTION IS A VIOLATION OF THE FEDERAL COPYRIGHT ACT AND THE LICENSE AGREEMENT, AND SUBJECT TO CIVIL AND CRIMINAL PENALTIES THEREUNDER.

material having a low thermal conductivity, such as wood. The guard shall not have a substantial effect on the transfer of heat from the heater to the room.

❖ Sauna heaters produce steam by evaporating water that passes through or over a heating element. Guards must be installed around the source of steam because occupants of the space of the sauna are usually unclothed. These guards must be made of a material that has low thermal conductivity, such as wood, to protect the occupants from burns.

M1902.2 Installation. Sauna heaters shall be installed in accordance with the manufacturer's instructions. Sauna heaters shall comply with UL 875.

❖ Sauna heaters must be listed, labeled and installed in accordance with the manufacturer's installation instructions. The listing and label must indicate compliance with UL 875, which contains construction and performance requirements that are used to evaluate sauna heaters.

M1902.3 Combustion air. *Combustion air* and venting for a nondirect vent-type heater shall be provided in accordance with Chapters 17 and 18, respectively.

❖ Combustion air for fuel-burning appliances must not be taken from within the sauna room itself. Sauna rooms are usually very small, confined spaces that do not contain an adequate volume of combustion air. For other than direct vent appliances, combustion air must be supplied in accordance with Chapter 17.

M1902.4 Controls. Sauna heaters shall be equipped with a thermostat that will limit room temperature to not greater than 194°F (90°C). Where the thermostat is not an integral part of the heater, the heat-sensing element shall be located within 6 inches (152 mm) of the ceiling.

❖ The room must be kept at a temperature not to exceed 194°F (90°C). This temperature has been determined to be the maximum safe level, beyond which occupants can be injured. So that the thermostat will measure the highest temperature of the room and thus maintain an acceptable and safe temperature range throughout the space, the thermostat for the appliance must either be integral with the heater or be installed within the top 6 inches (76 mm) of the room.

SECTION M1903
STATIONARY FUEL CELL POWER PLANTS

M1903.1 General. Stationary fuel cell power plants having a power output not exceeding 1,000 kW, shall comply with ANSI/CSA America FC 1 and shall be installed in accordance with the manufacturer's instructions and NFPA 853.

❖ The private generation of electricity for commercial and residential use is an emerging technology that is expected to gain widespread acceptance as future technological improvements result in lower costs. Fuel cells have been included in the code to provide guidance to the building community for those future installations.

The code requires that fuel cell power plants with an output of 1,000 kW or less be listed in accordance with ANSI/CSA America FC 1, and requires that the units be installed in accordance with the manufacturer's instructions and NFPA 853. NFPA 853 provides guidance on location of the power plants, fuel system supplies, ventilation and exhaust of the space containing the unit and fire protection requirements. Although fuel cell technology has been available since the 1800s, its first practical use was by NASA to generate electricity and water for the Gemini and Apollo spacecraft and the space shuttles. Because the installation of fuel cells in privately owned buildings is relatively new, the following discussion of the fuel cell process is included to provide a basic understanding of the technology.

A fuel cell is an electrochemical device that converts the chemical energy of a hydrocarbon fuel (hydrogen, natural gas, coal-bed methane, methanol, gasoline, etc.) and an oxidant (air or oxygen) into useable electricity. The fuel cell consists of a fuel electrode (anode) and an oxidant electrode (cathode) separated by an ion-conducting membrane (electrolyte). When a hydrocarbon fuel is introduced into the fuel cell, the catalyst surface of the membrane converts the hydrogen gas molecules into hydrogen ions and electrons. The hydrogen ions pass through the membrane to react with oxygen and electrons to form water as a reaction byproduct. The electrons, which cannot pass through the membrane, must travel around it through an external circuit, thereby creating direct current (dc) electricity [see Commentary Figure M1903.1(1)].

When fueled by pure hydrogen, the only byproducts of the fuel cell process are heat and water. Low levels of CO_2 are produced when other fuels are used. Unlike traditional fossil-fuel electric generating stations that burn the fuels, the electrochemical fuel cell process produces no particulate matter, nitrogen oxides or sulfur oxides.

When the waste heat is captured for use in heating water or a cogeneration process, fuel cell efficiency can reach 80 percent.

A typical fuel cell consists of three sections: a fuel processor, a fuel stack (power generator) and a power conditioner [see Commentary Figure M1903.1(2)].

The fuel processor section has two components: (1) the fuel reformer, which processes a hydrocarbon fuel, such as methane, into a hydrogen-rich formate gas and (2) a carbon monoxide cleanup system to reduce CO concentrations to acceptable levels.

The fuel cell stack consists of many individual fuel cells that operate as previously described to generate electricity and usable heat. The power output of the unit increases based on the number and arrangement of individual cells stacked in series and/or in parallel in the unit. There are several types of fuel cell technologies, including phosphoric acid (PA), molten carbonate (MC), solid oxide (SO) and proton exchange membrane (PEM), which are named based on the type of electrolyte used in the membrane section of the cell.

INTERNATIONAL CODE COUNCIL®
Copyright © 2015 ICC. ALL RIGHTS RESERVED. Accessed by David Dammon on Jun 21, 2017 12:30:52 PM pursuant to License Agreement with ICC. No further reproduction or distribution authorized. ANY UNAUTHORIZED REPRODUCTION OR DISTRIBUTION IS A VIOLATION OF THE FEDERAL COPYRIGHT ACT AND THE LICENSE AGREEMENT, AND SUBJECT TO CIVIL AND CRIMINAL PENALTIES THEREUNDER.

The power conditioner (inverter) section converts the direct current (dc) produced in the fuel cell stack into alternating current (ac). Batteries are used to smooth out power surge demands, such as HVAC start-ups, and to supply additional power when demand exceeds the peak out-put of the cell stack.

Although currently available, fuel cell units are not cost competitive with established electricity suppliers, but the initial and operating costs are expected to decrease as more manufacturers enter the market. Where there are constraints on transmission expansion, in remote locations or in areas where reduced emission of pollutants is critical, fuel cells could be seriously considered as an energy source. Fuel cells can also be attractive where the quality and dependability of commercial power is a concern.

SECTION M1904
GASEOUS HYDROGEN SYSTEMS

M1904.1 Installation. Gaseous hydrogen systems shall be installed in accordance with the applicable requirements of Sections M1307.4 and M1903.1 and the *International Fuel Gas Code*, the *International Fire Code* and the *International Building Code*.

❖ Systems that use or produce hydrogen gas can create potentially explosive situations where installation and ventilation instructions are not adhered to properly. Chapter 7 of the *International Fuel Gas Code*® (IFGC®) is the primary source of regulations related to gaseous hydrogen systems, but the *International Building Code*® (IBC®), the *International Fire Code*® (IFC®) and Sections M1307.4 and M1903.1 of this code also con-

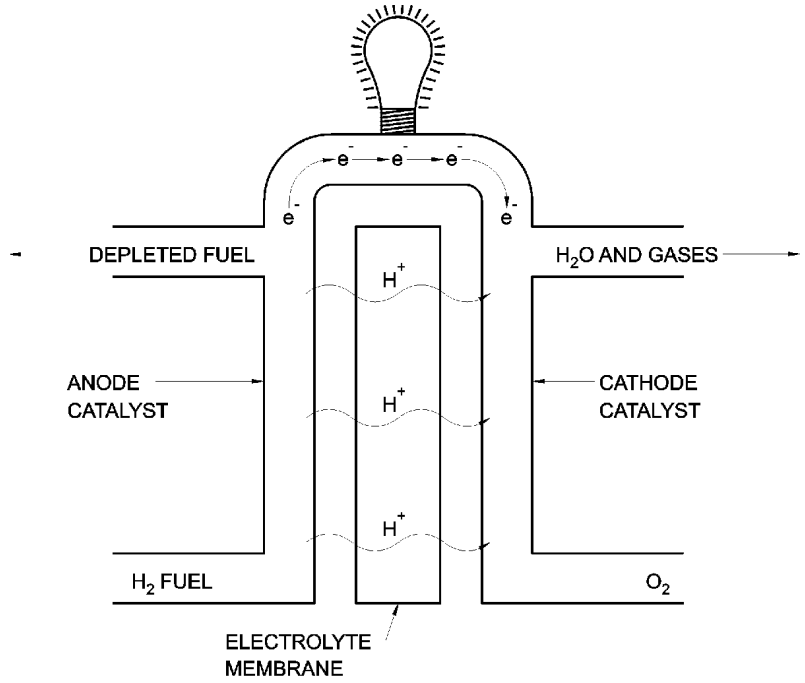

Figure M1903.1(1)
TYPICAL FUEL CELL COMPONENTS

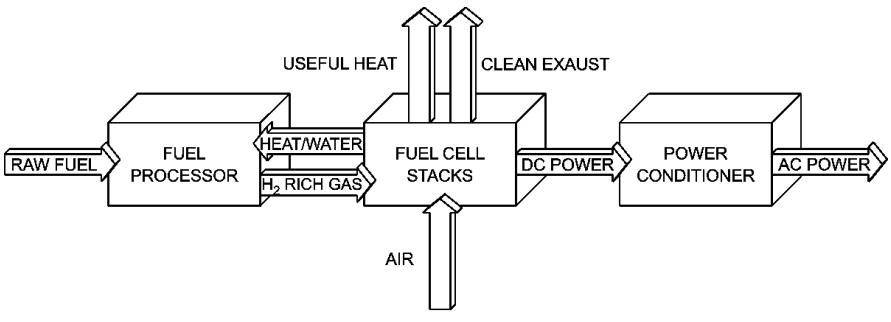

Figure M1903.1(2)
TYPICAL FUEL CELL COMPONENTS

INTERNATIONAL CODE COUNCIL®
Copyright © 2015 ICC. ALL RIGHTS RESERVED. Accessed by David Dammon on Jun 21, 2017 12:30:52 PM pursuant to License Agreement with ICC. No further reproduction or distribution authorized. ANY UNAUTHORIZED REPRODUCTION OR DISTRIBUTION IS A VIOLATION OF THE FEDERAL COPYRIGHT ACT AND THE LICENSE AGREEMENT, AND SUBJECT TO CIVIL AND CRIMINAL PENALTIES THEREUNDER.

tain code requirements. Chapters 4 and 5 of the IBC state requirements for hydrogen cut-off rooms and Chapter 23 of the IFC provide requirements for hydrogen fueling stations.

Bibliography

The following resource materials were used in the preparation of the commentary for this chapter of the code:

IBC–15, *International Building Code*. Washington, DC: International Code Council, 2014.

IFC–15, *International Fire Code*. Washington, DC: International Code Council, 2014.

IFGC–15, *International Fuel Gas Code*. Washington, DC: International Code Council, 2014.

INTERNATIONAL CODE COUNCIL®

Copyright © 2015 ICC. ALL RIGHTS RESERVED. Accessed by David Dammon on Jun 21, 2017 12:30:52 PM pursuant to License Agreement with ICC. No further reproduction or distribution authorized. ANY UNAUTHORIZED REPRODUCTION OR DISTRIBUTION IS A VIOLATION OF THE FEDERAL COPYRIGHT ACT AND THE LICENSE AGREEMENT, AND SUBJECT TO CIVIL AND CRIMINAL PENALTIES THEREUNDER.

Chapter 20: Boilers and Water Heaters

General Comments

This chapter applies to all boilers and water heaters. A water heater is any appliance that heats potable water and supplies it to the plumbing hot water distribution system. However, some water heaters are also used for space heating. These are listed for combination potable water heating and space heating applications. A boiler either heats water or generates steam for space heating and is generally a closed system.

Purpose

This chapter regulates the installation of boilers and water heaters. Its purpose is to protect the occupants of the dwelling from the potential hazards associated with such appliances.

SECTION M2001 BOILERS

M2001.1 Installation. In addition to the requirements of this code, the installation of boilers shall conform to the manufacturer's instructions. The manufacturer's rating data, the nameplate and operating instructions of a permanent type shall be attached to the boiler. Boilers shall have their controls set, adjusted and tested by the installer. A complete control diagram together with complete boiler operating instructions shall be furnished by the installer. Solid and liquid fuel-burning boilers shall be provided with *combustion air* as required by Chapter 17.

❖ This section governs the installation and commissioning of boilers and their control systems. The mechanical equipment requirements for approval, labeling, installation, maintenance, repair and alteration are regulated by Chapters 12 and 13.

A durable copy of the complete operating instructions must be attached to the boiler upon completion of installation by the contractor. Boiler systems can be complex and generally require coordinated operation among several pieces of equipment. The proper operating procedures, set points, etc., must be specified in the operating instructions. The control system design documentation in the operating instructions typically includes diagrams, system schematics and control sequence descriptions.

M2001.1.1 Standards. Packaged oil-fired boilers shall be listed and labeled in accordance with UL 726. Packaged electric boilers shall be listed and labeled in accordance with UL 834. Solid fuel-fired boilers shall be listed and labeled in accordance with UL 2523. Boilers shall be designed, constructed and certified in accordance with the ASME *Boiler and Pressure Vessel Code*, Section I or IV. Controls and safety devices for boilers with fuel input ratings of 12,500,000 Btu/hr (3 663 388 watts) or less shall meet the requirements of ASME CSD-1. Gas-fired boilers shall conform to the requirements listed in Chapter 24.

❖ The history of boiler accidents shows that they are potentially dangerous if not properly designed, constructed and installed. Along with the code, several industry standards are referenced for the design and construction of boilers, and equipment manufacturers produce boilers in accordance with these referenced standards. The design and construction of boilers are regulated by these references. ASME CSD-1 specifies what safety devices and controls are required for boilers, such as pressure and temperature limit controls and low-water cutoffs. Design and construction requirements for specific types of boilers are found in the applicable sections of these referenced standards.

M2001.2 Clearance. Boilers shall be installed in accordance with their *listing* and *label*.

❖ Because boilers, related appliances and mechanical equipment require inspection, observation, routine maintenance, repairs and possible replacement, working clearance around such equipment and appliances is required. The manufacturer's installation instructions state the access requirements and clearances to combustibles. See Commentary Figure M2001.2 for an illustration of a typical installation.

M2001.3 Valves. Every boiler or modular boiler shall have a shutoff valve in the supply and return piping. For multiple boiler or multiple modular boiler installations, each boiler or modular boiler shall have individual shutoff valves in the supply and return piping.

Exception: Shutoff valves are not required in a system having a single low-pressure steam boiler.

❖ Shutoff valves are required to facilitate maintenance and repairs by isolating a boiler from the system that it serves. Without isolation valves, the entire system of piping and components would have to be taken out of service, relieved of pressure and drained before a boiler or water-side/steam-side component could be removed for servicing, repair or replacement. Where systems have multiple boilers, isolation valves permit

INTERNATIONAL CODE COUNCIL®
Copyright © 2015 ICC. ALL RIGHTS RESERVED. Accessed by David Dammon on Jun 21, 2017 12:30:52 PM pursuant to License Agreement with ICC. No further reproduction or distribution authorized. ANY UNAUTHORIZED REPRODUCTION OR DISTRIBUTION IS A VIOLATION OF THE FEDERAL COPYRIGHT ACT AND THE LICENSE AGREEMENT, AND SUBJECT TO CIVIL AND CRIMINAL PENALTIES THEREUNDER.

one or more boilers to be removed from service without affecting the remaining units, thus preserving partial system operation. A modular boiler unit is a field-assembled boiler composed of multiple interdependent modules. Modular units are designed to permit close matching of boiler capacity to building loads and to allow for future expansion of capacity by the addition of modules to a boiler "package." Each independent boiler or modular boiler, whether single or in groups, must have individual shutoff valves (see Commentary Figure M2001.3).

The exception states that shutoff valves are not required for systems with a single low-pressure steam boiler. Shutoff valves would not be of value for a single low-pressure steam boiler installation because of a negligible amount of heat transfer medium to relieve from the system. Also, maintaining a partial capacity system operation is impossible with only a single unit.

M2001.4 Flood-resistant installation. In flood hazard areas established in Table R301.2(1), boilers, water heaters and their control systems shall be located or installed in accordance with Section R322.1.6.

❖ The local jurisdiction must fill in Table R301.2(1) upon adoption of the code, including the flood hazards information. Boilers, water heaters and associated control systems that are located in flood hazard areas must be installed above the design flood elevation or must be designed and installed to prevent the entrance of water into the components and to resist the forces of the flood waters on the components (see commentary, Section R322.1.6).

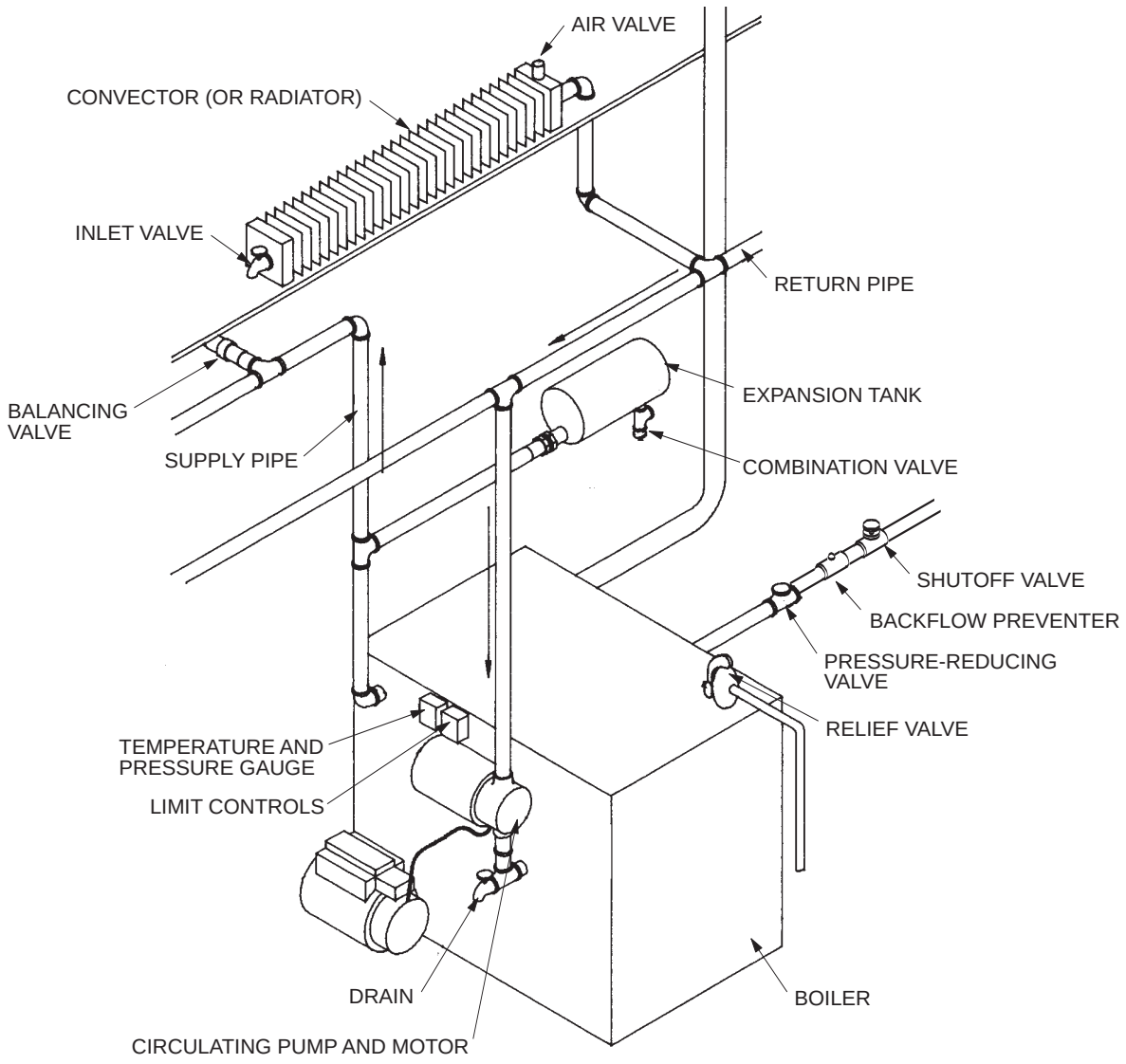

Figure M2001.2
RESIDENTIAL BOILER AND ASSOCIATED EQUIPMENT

INTERNATIONAL CODE COUNCIL®
Copyright © 2015 ICC. ALL RIGHTS RESERVED. Accessed by David Dammon on Jun 21, 2017 12:30:52 PM pursuant to License Agreement with ICC. No further reproduction or distribution authorized. ANY UNAUTHORIZED REPRODUCTION OR DISTRIBUTION IS A VIOLATION OF THE FEDERAL COPYRIGHT ACT AND THE LICENSE AGREEMENT, AND SUBJECT TO CIVIL AND CRIMINAL PENALTIES THEREUNDER.

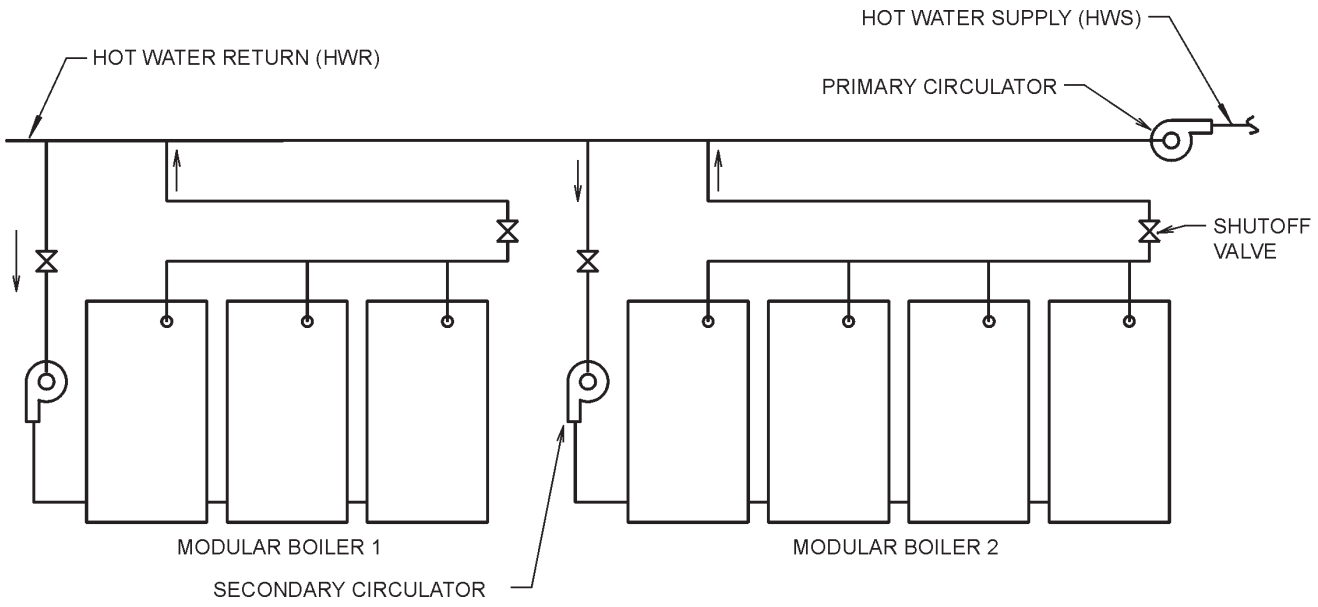

Figure M2001.3
MULTIPLE MODULAR UNITS

SECTION M2002
OPERATING AND SAFETY CONTROLS

M2002.1 Safety controls. Electrical and mechanical operating and safety controls for boilers shall be *listed* and *labeled*.

❖ This section requires the listing and labeling of electrical and mechanical operating and safety controls to help ensure their safety and dependability.

M2002.2 Hot water boiler gauges. Every hot water boiler shall have a pressure gauge and a temperature gauge, or combination pressure and temperature gauge. The gauges shall indicate the temperature and pressure within the normal range of the system's operation.

❖ All boilers operate within certain pressure and temperature limitations. Problems and hazards can develop if these limitations are exceeded. Pressure and temperature gauges are necessary to allow boiler owners and service technicians to check and monitor system operating conditions. Gauges indicate hazardous conditions and causes of problems or malfunctions. They also help prevent future hazards or problems from developing by signaling the need for system repairs and service. To allow reasonably accurate readings, gauges must have a range and scale of values that are proportioned to the boiler's normal operating range. For example, a pressure gauge with a range of 0 to 250 psi (0 to 1724 kPa) would barely deflect the needle when installed on a 10-psi (69 kPa) system, and pressure readings are inaccurate and not readily discerned at the extreme ends of a gauge's range. The gauges must have the resolution and increments to allow an accurate reading to be taken. Hot water boiler gauges are often equipped with combination pressure and temperature gauges (see Commentary Figure M2002.2).

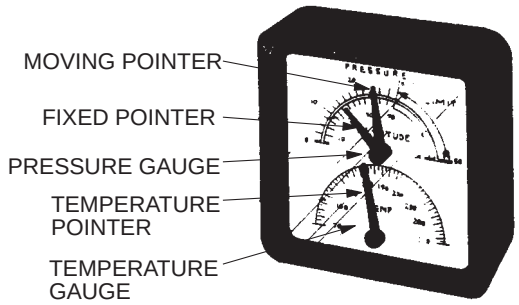

Figure M2002.2
BOILER TEMPERATURE AND PRESSUIRE GAUGE

M2002.3 Steam boiler gauges. Every steam boiler shall have a water-gauge glass and a pressure gauge. The pressure gauge shall indicate the pressure within the normal range of the system's operation. The gauge glass shall be installed so that the midpoint is at the normal water level.

❖ All steam boilers operate within certain pressure and water level limits that must be observed. However, unlike with hot water boilers, water temperature is not a concern for steam systems. Whenever steam is present, the water temperature in a steam boiler will be a function of steam pressure and is easily determined when the steam pressure is known. A steam pressure gauge indicates both normal and abnormal operating conditions and the presence of a hazardous condition and is necessary to observe and monitor boiler opera-

INTERNATIONAL CODE COUNCIL®
Copyright © 2015 ICC. ALL RIGHTS RESERVED. Accessed by David Dammon on Jun 21, 2017 12:30:52 PM pursuant to License Agreement with ICC. No further reproduction or distribution authorized. ANY UNAUTHORIZED REPRODUCTION OR DISTRIBUTION IS A VIOLATION OF THE FEDERAL COPYRIGHT ACT AND THE LICENSE AGREEMENT, AND SUBJECT TO CIVIL AND CRIMINAL PENALTIES THEREUNDER.

tion. The water level in a boiler fluctuates within a narrow margin between too low and too high. Because proper boiler operation is dependent on the water level being maintained within the high and low parameters, a water-gauge glass is necessary to visually indicate the actual water level in the boiler.

A water-gauge glass, commonly referred to as a "sight glass," indicates the following: boiler flooding, low water conditions, condensate return operation, unstable water levels resulting from foaming and surging, boiler water condition and the amount of automatic or manual makeup water feed (see Commentary Figure M2002.3). If either or both of the gauge-glass cocks are closed, the water-level reading will be erroneous, and the boiler could be empty even though the gauge glass reads "normal."

Ideally, a steam boiler pressure gauge should indicate the normal system operating pressure at approximately the first quarter to midpoint of the scale. For example, a 0 to 100 psi (0 to 690 kPa) pressure gauge would be a very poor indicator for a low-pressure [15 psi (103 kPa) or less] steam heating boiler (see commentary, Section M2002.2). Low-pressure steam gauges are often designed to read both pressure and vacuum because some steam systems will develop a partial vacuum as steam condenses in the distribution system.

A water-gauge glass is always installed on a boiler with the bottom of the glass connected below the normal water level and the top of the glass connected above the normal water level. When connected in this manner, the boiler water level will be accurately represented in the column of water in the gauge glass. It has been an industry tradition to equate the midpoint of a gauge glass with the "normal" water level in a boiler. The coincidence of the gauge-glass mid-point and normal water level also allows the greatest amount of indicator range above and below normal, thus allowing clear indication of abnormal water levels.

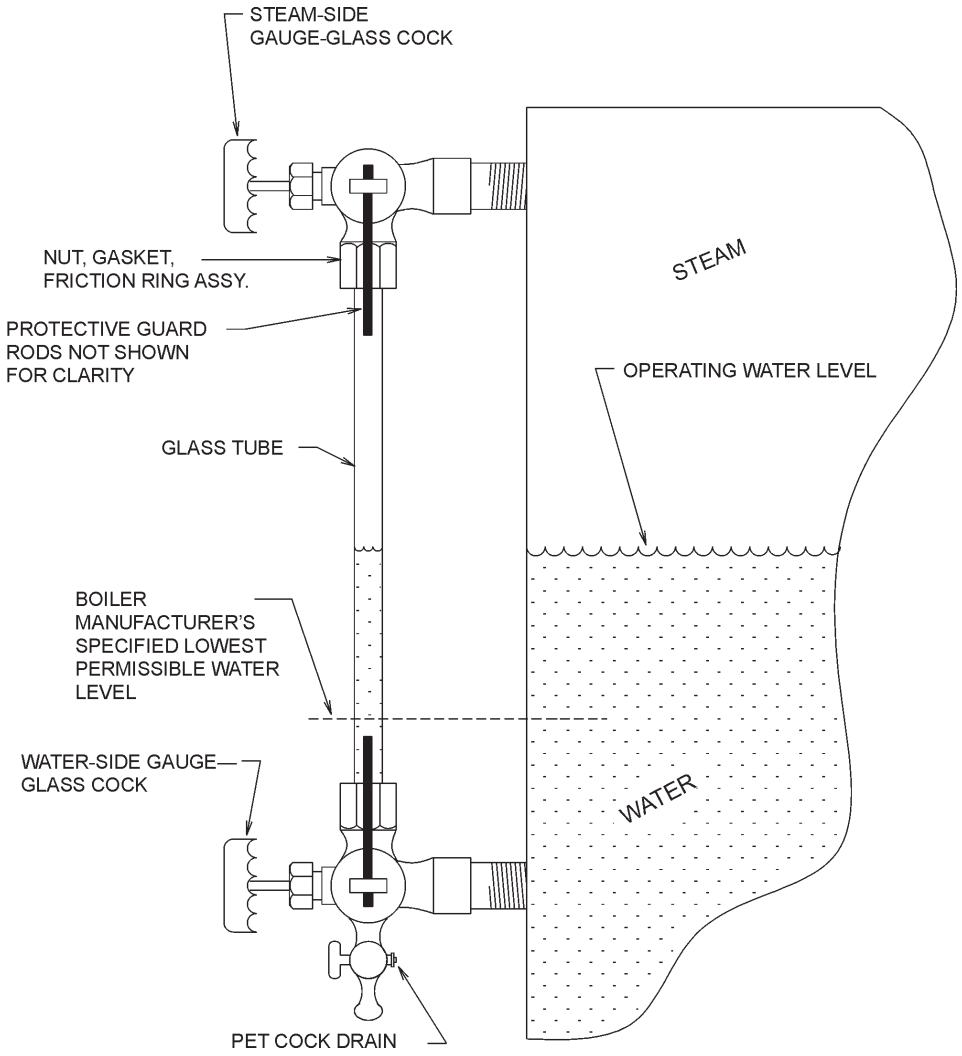

Figure M2002.3
STEAM BOILER SIGHT GLASS

INTERNATIONAL CODE COUNCIL®
Copyright © 2015 ICC. ALL RIGHTS RESERVED. Accessed by David Dammon on Jun 21, 2017 12:30:52 PM pursuant to License Agreement with ICC. No further reproduction or distribution authorized. ANY UNAUTHORIZED REPRODUCTION OR DISTRIBUTION IS A VIOLATION OF THE FEDERAL COPYRIGHT ACT AND THE LICENSE AGREEMENT, AND SUBJECT TO CIVIL AND CRIMINAL PENALTIES THEREUNDER.

M2002.4 Pressure-relief valve. Boilers shall be equipped with pressure-relief valves with minimum rated capacities for the *equipment* served. Pressure-relief valves shall be set at the maximum rating of the boiler. Discharge shall be piped to drains by gravity to within 18 inches (457 mm) of the floor or to an open receptor.

❖ Boilers must be protected from overpressure by one or more relief valves. A relief valve is designed to open in direct proportion to the boiler pressure force acting on its closure disk. The higher the pressure, the greater the force, and the wider the valve opens. Boilers installed without a relief valve can produce devastating explosions and have been responsible for loss of life and damage to property. Relief valves also play an important role in protecting aging equipment that may have deteriorated or weakened because of prolonged use. Relief valves must be installed directly into the openings provided for that purpose by the boiler manufacturer and must be discharged to a safe location. The discharge is a threat to the occupants and the building because of the high temperature produced when the valves discharge. Because relief valve discharge is a symptom of a boiler malfunction, the discharge must be observable to provide a warning to initiate remedial action. Relief valve discharge piping must never be located where it is subject to freezing or installed in a such a way that it functions as a "trap" by allowing discharge water to remain in the pipe.

M2002.5 Boiler low-water cutoff. Steam and hot water boilers shall be protected with a low-water cutoff control.

Exception: A low-water cutoff is not required for coil-type and water-tube type boilers that require forced circulation of water through the boiler and that are protected with a flow sensing control.

❖ If a steam or hot water boiler is operated (fired) without water or with water below the minimum level, overheating and severe boiler damage can occur. In addition to damage or destruction of the boiler, a severe fire or explosion hazard can result from the overheating or failure of the combustion chamber enclosure. Burner malfunction can also occur as a result of leakage and destruction of the boiler heat exchange surfaces. The heat exchange surfaces of fuel-fired boilers absorb radiated heat from the flames and, by conduction, absorb heat from the combustion gases produced by the combustion of fuel. This heat is conducted to the water at a rate that prevents the temperature of the heat exchanger material from exceeding the maximum for which it was designed. As the water level drops in a boiler, a greater area of heat exchange surface becomes dry and thus subject to overheating. All boiler manufacturers specify and mark on the unit the minimum water level to be maintained in the boiler, below which damage would be possible. All boilers are subject to a loss of water. A leak anywhere in the piping system or in the boiler itself can result in a dangerous condition caused by water loss. This is especially true for steam boilers because they are dependent on the timely return of condensate water and the proper operation and sequencing of controls for the return and makeup water feed systems.

A low-water cutoff is an essential control device designed to prevent boiler operation when the water level is too low. Because steam boilers (as opposed to hot water boilers, which are completely filled) maintain a water level, a low-water condition is much more likely to occur in a steam system. However, the hazards resulting from low water levels are the same for both boilers. Also, a flash steam explosion can occur if makeup water is introduced into an over-heated steam or hot water boiler. For these reasons, hot water boilers are also required to be protected by a low-water cutoff control. This section requires low-water cutoffs without regard to heat energy input. Some low-water cutoff controls are intended to be field installed as part of the boiler "trim" (appurtenances), and others are factory installed directly into tapped openings provided on the boiler.

Traditional low-water cutoff controls use float-actuated mechanisms. Electronic probe-type controls, which are commonly used for hot water boiler protection, detect the water level with an electrode that relies on the slight conductivity of the boiler water to complete a relay circuit (see Commentary Figure M2002.5). In the case of coil-type (water-tube) boilers requiring forced circulation to prevent coil or tube overheating, a flow-sensing device, which detects flow and verifies that the boiler and system are full of water, is required. Low-water cutoff controls do not sense flow and, therefore, cannot protect a forced circulation coil-type/water-tube boiler from overheating caused by loss of circulation.



Photo courtesy of the Hydro Level Company

Figure M2002.5
BOILER LOW-WATER CUTOFF CONTROL DEVICE

INTERNATIONAL CODE COUNCIL®
Copyright © 2015 ICC. ALL RIGHTS RESERVED. Accessed by David Dammon on Jun 21, 2017 12:30:52 PM pursuant to License Agreement with ICC. No further reproduction or distribution authorized. ANY UNAUTHORIZED REPRODUCTION OR DISTRIBUTION IS A VIOLATION OF THE FEDERAL COPYRIGHT ACT AND THE LICENSE AGREEMENT, AND SUBJECT TO CIVIL AND CRIMINAL PENALTIES THEREUNDER.

Electric boilers are generally protected with factory-installed water-level sensing devices to prevent heating element failure, which could occur if the elements were not submerged.

The sole purpose of a low-water cutoff control is to stop (cut off) the heat input to the boiler whenever the water level is dangerously low. These devices automatically interrupt the power supply to the burner controls or heating elements to cause boiler shutdown. For forced-circulation boilers, such as hot water, water-tube-type boilers, the flow-sensing control must shut off the energy input when circulation has stopped or is less than the required flow rate as established by the manufacturer of the boiler.

M2002.6 Operation. Low-water cutoff controls and flow sensing controls required by Section M2002.5 shall automatically stop the combustion operation of the appliance when the water level drops below the lowest safe water level as established by the manufacturer or when the water circulation flow is less than that required for safe operation of the appliance, respectively.

❖ See the commentary to Section M2002.5.

SECTION M2003
EXPANSION TANKS

M2003.1 General. Hot water boilers shall be provided with expansion tanks. Nonpressurized expansion tanks shall be securely fastened to the structure or boiler and supported to carry twice the weight of the tank filled with water. Provisions shall be made for draining nonpressurized tanks without emptying the system.

❖ Hot water heating systems are closed systems that are completely filled with water. When the water is heated, it expands and, because it is in a closed system, quickly develops hydrostatic pressure. Expansion tanks are used to absorb additional system water volume caused by expansion, thus avoiding wide variation in system pressure and possible discharge of pressure relief valves. Expansion tanks are either open tank reservoirs (nonpressurized) or sealed vessels (pressurized).

M2003.1.1 Pressurized expansion tanks. Pressurized expansion tanks shall be consistent with the volume and capacity of the system. Tanks shall be capable of withstanding a hydrostatic test pressure of two and one-half times the allowable working pressure of the system.

❖ Because they are subjected to the same pressures as the boiler system, closed-type expansion tanks must have a pressure rating equal to or exceeding that of the boiler system operating pressure. The code requires that pressurized tanks withstand a hydrostatic test pressure of $2^1/_2$ times the allowable working pressure of the system. Closed-type expansion tanks contain a cushion of air that compresses as water expands into the tank. The pressure in a hot water system will increase several pounds per square inch as the temperature increases. However, the compression of the air in a properly sized expansion tank will prevent the pressure from exceeding the maximum system operating pressure. Open-type expansion tanks are elevated reservoirs holding the expanded hot water at atmospheric pressure.

M2003.2 Minimum capacity. The minimum capacity of expansion tanks shall be determined from Table M2003.2.

❖ The capacity of nonpressurized and pressurized expansion tanks is very important to the proper operation of the boiler system. Refer to the table showing minimum capacities of expansion tanks as they relate to the hot water system volume. Note that the system volume in gallons includes the volume of the water in the boiler, piping, radiators and convectors. The volume of expansion tanks is not included in the system volume.

TABLE M2003.2
EXPANSION TANK MINIMUM CAPACITY[a]
FOR FORCED HOT-WATER SYSTEMS

SYSTEM VOLUME[b] (gallons)	PRESSURIZED DIAPHRAGM TYPE	NONPRESSURIZED TYPE
10	1.0	1.5
20	1.5	3.0
30	2.5	4.5
40	3.0	6.0
50	4.0	7.5
60	5.0	9.0
70	6.0	10.5
80	6.5	12.0
90	7.5	13.5
100	8.0	15.0

For SI: 1 gallon = 3.785 L, 1 pound per square inch gauge = 6.895 kPa, °C = [(°F)-32]/1.8.

a. Based on average water temperature of 195°F (91°C), fill pressure of 12 psig and a maximum operating pressure of 30 psig.

b. System volume includes volume of water in boiler, convectors and piping, not including the expansion tank.

❖ This table gives the minimum capacities of two types of expansion tanks. One is the pressurized diaphragm type, which is described in Section M2003.1.1. The other is the nonpressurized type. The capacities of the tanks vary depending on the volume of the system under consideration.

SECTION M2004
WATER HEATERS USED FOR SPACE HEATING

M2004.1 General. Water heaters used to supply both potable hot water and hot water for space heating shall be installed in accordance with this chapter, Chapter 24, Chapter 28 and the manufacturer's instructions.

❖ Water heaters serving the dual purpose of supplying potable hot water and being a heat source for a hot water space-heating system must be listed and labeled for that dual application. This section does not address water heaters used solely for space-heating applications, but rather addresses water heaters that

INTERNATIONAL CODE COUNCIL®
Copyright © 2015 ICC. ALL RIGHTS RESERVED. Accessed by David Dammon on Jun 21, 2017 12:30:52 PM pursuant to License Agreement with ICC. No further reproduction or distribution authorized. ANY UNAUTHORIZED REPRODUCTION OR DISTRIBUTION IS A VIOLATION OF THE FEDERAL COPYRIGHT ACT AND THE LICENSE AGREEMENT, AND SUBJECT TO CIVIL AND CRIMINAL PENALTIES THEREUNDER.

serve a primary purpose of domestic water heating and a secondary purpose of space heating. Water heater labels indicate whether or not the appliance is suitable for space heating. Water heaters are listed and labeled as water heaters which are defined in Chapter 2. A water heater used solely for space heating applications would not meet the definition of a water heater and would likely violate the conditions of its listing.

Chapter 28 contains additional requirements for the proper installation of such water heaters.

SECTION M2005
WATER HEATERS

M2005.1 General. Water heaters shall be installed in accordance with Chapter 28, the manufacturer's instructions and the requirements of this code. Water heaters installed in an attic shall comply with the requirements of Section M1305.1.3. Gas-fired water heaters shall comply with the requirements in Chapter 24. Domestic electric water heaters shall comply with UL 174. Oiled-fired water heaters shall comply with UL 732. Thermal solar water heaters shall comply with Chapter 23 and UL 174. Solid fuel-fired water heaters shall comply with UL 2523.

❖ This section recognizes that water heaters and hot water storage tanks must be considered as both mechanical appliances (equipment) and plumbing appliances; therefore, they must comply with both the mechanical and plumbing sections of this code. Manufacturer's installation instructions are thoroughly evaluated by the listing and labeling agency to establish that a safe installation is prescribed. The listing and labeling agency can require the manufacturer to alter, delete or add information in the installation instructions as necessary to achieve compliance with the applicable standards and code requirements.

When a water heater is tested to obtain a listing and label, the approved agency installs the water heater in accordance with the manufacturer's installation instructions. The water heater is then tested under these conditions; thus, the installation instructions become an integral part of the listing and labeling process.

The manufacturer's installation instructions must be available to the code official because they are an enforceable extension of the code and are necessary for determining that the water heater has been properly installed. Simply put, the listing and labeling process indicates that the water heater and its installation instructions are in compliance with applicable standards. Therefore, an installation in accordance with the manufacturer's installation instructions is required, except where the code requirements are more stringent. It is necessary for an inspector to carefully and completely read and comprehend the manufacturer's instructions in order to properly perform an installation inspection.

Even if an installation appears to be in compliance with the manufacturer's instructions, the installation cannot be complete or approved until all associated components, connections and systems that serve the water heater are also in compliance with the applicable code provisions.

A water heater installation is complex in that it has a fuel or power supply; a chimney or vent connection, if fuel fired; a combustion air supply, if fuel fired; connections to the plumbing potable water distribution system; and controls and devices to prevent a multitude of potential hazards from conditions such as excessively high temperatures, pressures and ignition failure. In addition to the requirements of Section M1305.1.3, the structural provisions of the code must be observed for attic installations because of the large point load contributed by the water heater. The typical 40-gallon water heater will weigh over 400 pounds when filled with water.

M2005.2 Prohibited locations. Fuel-fired water heaters shall not be installed in a room used as a storage closet. Water heaters located in a bedroom or bathroom shall be installed in a sealed enclosure so that *combustion air* will not be taken from the living space. Installation of direct-vent water heaters within an enclosure is not required.

❖ The intent of this section is to prevent fuel-fired appliances from being installed in rooms and spaces where the combustion process could pose a threat to the occupants. Potential threats include depleted oxygen levels; elevated levels of carbon dioxide, nitrogen oxides and carbon monoxide, and other combustion gases; ignition of combustibles; and elevated levels of flammable vapors. See Section G2406.2 for the same concerns regarding gas-fired water heaters.

In small rooms such as bedrooms and bathrooms, the doors are usually closed when the room is occupied, and combustion gases could build up to life-threatening levels. Occupants would not be aware of impending danger. The last sentence of this section relates only to the second sentence.

M2005.2.1 Water heater access. Access to water heaters that are located in an *attic* or underfloor crawl space is permitted to be through a closet located in a sleeping room or bathroom where *ventilation* of those spaces is in accordance with this code.

❖ Mechanical equipment and appliances require regular maintenance. Proper access to enable repairs or replacement of equipment is a must. See Sections M2005.2 and G2406.2.

All water heaters have a far shorter working life than the building in which they are located; therefore, they must be replaced one or more times during the lifetime of the building. This future need has often been overlooked, and water heaters have been installed in locations that would necessitate the dismantling or destruction of a permanent portion of the structure to install a new water heater.

INTERNATIONAL CODE COUNCIL®
Copyright © 2015 ICC. ALL RIGHTS RESERVED. Accessed by David Dammon on Jun 21, 2017 12:30:52 PM pursuant to License Agreement with ICC. No further reproduction or distribution authorized. ANY UNAUTHORIZED REPRODUCTION OR DISTRIBUTION IS A VIOLATION OF THE FEDERAL COPYRIGHT ACT AND THE LICENSE AGREEMENT, AND SUBJECT TO CIVIL AND CRIMINAL PENALTIES THEREUNDER.

M2005.3 Electric water heaters. Electric water heaters shall also be installed in accordance with the applicable provisions of Chapters 34 through 43.

❖ This section refers the user back to the electrical chapters in the code for electric water heaters.

M2005.4 Supplemental water-heating devices. Potable water heating devices that use refrigerant-to-water heat exchangers shall be *approved* and installed in accordance with the manufacturer's instructions.

❖ Waste heat from refrigeration systems can be used to heat potable water and can provide substantial energy savings overtime. This section allows the use of such systems if the equipment is approved and installed in accordance with the manufacturer's installation instructions. Heat pump water heaters are becoming more common and provide a high coefficient of performance and also provide the beneficial side effect of free space cooling in the location of the heat pump appliance.

SECTION M2006
POOL HEATERS

M2006.1 General. Pool and spa heaters shall be installed in accordance with the manufacturer's installation instructions. Oil-fired pool heaters shall comply with UL 726. Electric pool and spa heaters shall comply with UL 1261.

❖ This section addresses specialized types of water heaters used with swimming pools, recreational or therapeutic spas and hot tubs. Pool and spa heaters are similar in design to hot water boilers. Usually, these heaters are of the water-tube type, are open nonpressurized systems and are designed for either indoor or outdoor installation.

M2006.2 Clearances. The clearances shall not interfere with *combustion air*, draft hood or flue terminal relief, or accessibility for servicing.

❖ The manufacturer's installation instructions can contain recommendations that are either more or less restrictive than the code for combustion air requirements, draft hood or terminal relief and accessibility for servicing the appliance. In either case, the more restrictive requirement governs.

M2006.3 Temperature-limiting devices. Pool heaters shall have temperature-relief valves.

❖ Temperature relief devices must be installed on pool heaters to protect against the development of high temperatures that could cause scalding injuries. Pool heaters are defined by ANSI Z2.56 as "An appliance designed for heating non-potable water stored at atmospheric pressure, such as water in swimming pools, spas, hot tubs and similar applications." This section is not specific as to the type of pool heater, thus it would appear to apply to electric, fuel-fired and heat pump type pool heaters. The code is silent on the set-point of the relief device, therefore such temperature needs to be approved by the code official and also be consistent with the heater manufacturer's instructions.

M2006.4 Bypass valves. Where an integral bypass system is not provided as a part of the pool heater, a bypass line and valve shall be installed between the inlet and outlet piping for use in adjusting the flow of water through the heater.

❖ Unless a similar system is integrated within the heater, a bypass line and valve must be installed to allow control of the flow rate of water through the heater, which in turn allows control of the temperature rise of the water circulated through the unit.

INTERNATIONAL CODE COUNCIL®
Copyright © 2015 ICC. ALL RIGHTS RESERVED. Accessed by David Dammon on Jun 21, 2017 12:30:52 PM pursuant to License Agreement with ICC. No further reproduction or distribution authorized. ANY UNAUTHORIZED REPRODUCTION OR DISTRIBUTION IS A VIOLATION OF THE FEDERAL COPYRIGHT ACT AND THE LICENSE AGREEMENT, AND SUBJECT TO CIVIL AND CRIMINAL PENALTIES THEREUNDER.

Chapter 21: Hydronic Piping

General Comments

Hydronic piping includes piping, fittings and valves used in building space conditioning systems. Applications include hot water, chilled water, steam, steam condensate, brines and water/antifreeze mixtures. This chapter regulates installation, alteration and repair of all hydronic piping systems.

Section M2101 contains the installation requirements that apply to all hydronic systems. Section M2102 discusses baseboard convectors. Section M2103 addresses floor heating systems. Section M2104 covers low temperature piping applications. Section M2105 contains the provisions for ground source heat pump system loop piping.

Purpose

The requirements herein are intended to affect the reliability, serviceability, energy efficiency and safety of hydronic systems.

SECTION M2101
HYDRONIC PIPING SYSTEMS INSTALLATION

M2101.1 General. Hydronic piping shall conform to Table M2101.1. *Approved* piping, valves, fittings and connections shall be installed in accordance with the manufacturer's instructions. Pipe and fittings shall be rated for use at the operating temperature and pressure of the hydronic system. Used pipe, fittings, valves or other materials shall be free of foreign materials.

❖ Table M2101.1 lists the piping materials that are permitted for use in hydronic systems. This section does not prohibit the use of other materials that provide equivalent performance as approved by the building official. Materials that have previously been used for other than hydronic applications can contain residual contaminants that are harmful to the hydronic system. Before any used pipe, fitting, valve or other material is used, it must be examined to determine that its performance will be equivalent to that required for new materials for the intended application.

M2101.2 System drain down. Hydronic piping systems shall be installed to permit draining of the system. Where the system drains to the plumbing drainage system, the installation shall conform to the requirements of Chapters 25 through 32 of this code.

Exception: The buried portions of systems embedded underground or under floors.

❖ To facilitate system repairs and maintenance, hydronic piping systems must be sloped and arranged to allow the transfer-medium fluids or condensate to be drained from the system. Each trapped section of the system piping must be fitted with drain cocks, unions or some other means of opening the system for draining. Drainage discharge to the plumbing system must be by indirect connection in accordance with the code.

Where portions of hydronic systems are buried below grade or installed below floors, such as a slab on grade, for which there is no access to drain piping by gravity, an exception allows those portions to not have a gravity drain point. System fluid can be removed by other means such as vacuuming or blowing out with compressed air.

M2101.3 Protection of potable water. The potable water system shall be protected from backflow in accordance with the provisions listed in Section P2902.

❖ Hydronic systems require means of supplying initial fill water and makeup water to replace any water lost because of evaporation, leakage or intentional draining. Where direct connections are made to the potable water supply, the connections must be isolated from the potable water source in compliance with the plumbing provisions of the code. This provision protects the potable water system from contamination where a direct connection is made to a hydronic system. Because hydronic systems are usually pressurized and can contain nonpotable water and fluids, antifreeze and conditioning or cleaning chemicals, the potable water system must be protected so that backflow does not occur.

M2101.4 Pipe penetrations. Openings through concrete or masonry building elements shall be sleeved.

❖ Concrete and masonry penetrations must be sleeved to protect the pipe from abrasion.

M2101.5 Contact with building material. A hydronic piping system shall not be in direct contact with any building material that causes the piping material to degrade or corrode.

❖ Piping must be protected to avoid external degradation resulting from corrosion, abrasion and chemical reactions. Allowing the pipe to come into contact with certain materials can cause corrosion or degradation. For example, some plastic pipe materials can interact with petroleum-based materials, and concrete can be corrosive to some metals. If hydronic piping is to be installed in an environment or soils that are corrosive, the piping must be protected. Coating, wrappings and sleeves are forms of protection for piping installed in such an environment.

INTERNATIONAL CODE COUNCIL®
Copyright © 2015 ICC. ALL RIGHTS RESERVED. Accessed by David Dammon on Jun 21, 2017 12:30:52 PM pursuant to License Agreement with ICC. No further reproduction or distribution authorized. ANY UNAUTHORIZED REPRODUCTION OR DISTRIBUTION IS A VIOLATION OF THE FEDERAL COPYRIGHT ACT AND THE LICENSE AGREEMENT, AND SUBJECT TO CIVIL AND CRIMINAL PENALTIES THEREUNDER.

TABLE M2101.1
HYDRONIC PIPING MATERIALS

MATERIAL	USE CODE[a]	STANDARD[b]	JOINTS	NOTES
Acrylonitrile butadiene styrene (ABS) plastic pipe	1, 5	ASTM D1527; ASTM F2806; ASTM F2969	Solvent cement joints	
Brass pipe	1	ASTM B43	Brazed, welded, threaded, mechanical and flanged fittings	
Brass tubing	1	ASTM B135	Brazed, soldered and mechanical fittings	
Chlorinated poly (vinyl chloride) (CPVC) pipe and tubing	1, 2, 3	ASTM D2846	Solvent cement joints, compression joints and threaded adapters	
Copper pipe	1	ASTM B42, B302	Brazed, soldered and mechanical fittings threaded, welded and flanged	
Copper tubing (type K, L or M)	1, 2	ASTM B75, B88, B251, B306	Brazed, soldered and flared mechanical fittings	Joints embedded in concrete
Cross-linked polyethylene (PEX)	1, 2, 3	ASTM F876, F877	(See PEX fittings)	Install in accordance with manufacturer's instructions
Cross-linked polyethylene/ aluminum/cross-linked polyethylene-(PEX-AL-PEX) pressure pipe	1, 2	ASTM F1281 or CAN/ CSA B137.10	Mechanical, crimp/insert	Install in accordance with manufacturer's instructions
PEX fittings		ASTM F877 ASTM F1807 ASTM F1960 ASTM F2098 ASTM F2159 ASTM F2735	Copper-crimp/insert fittings, cold expansion fittings, stainless steel clamp, insert fittings	Install in accordance with manufacturer's instructions
Polybutylene (PB) pipe and tubing	1, 2, 3	ASTM D3309	Heat-fusion, crimp/insert and compression	Joints in concrete shall be heat-fused
Polyethylene/aluminum/polyethylene (PE-AL-PE) pressure pipe	1, 2, 3	ASTM F1282 CSA B 137.9	Mechanical, crimp/insert	
Polypropylene (PP)	1, 2, 3	ISO 15874 ASTM F2389	Heat-fusion joints, mechanical fittings, threaded adapters, compression joints	
Raised temperature polyethylene (PE-RT)	1, 2, 3	ASTM F2623 ASTM F2769	Copper crimp/insert fitting stainless steel clamp, insert fittings	
Raised temperature polyethylene (PE-RT) fittings	1, 2,3	ASTM F1807 ASTM F2159 ASTM F2735 ASTM F2769 ASTM F2098	Copper crimp/insert fitting stainless steel clamp, insert fittings	
Steel pipe	1, 2	ASTM A53, A106	Brazed, welded, threaded, flanged and mechanical fittings	Joints in concrete shall be welded. Galvanized pipe shall not be welded or brazed.
Steel tubing	1	ASTM A254	Mechanical fittings, welded	

For SI: °C = [(°F)-32]/1.8.

a. Use code:
   1. Above ground.
   2. Embedded in radiant systems.
   3. Temperatures below 180°F only.
   4. Low temperature (below 130°F) applications only.
   5. Temperatures below 160°F only.

b. Standards as listed in Chapter 44.

INTERNATIONAL CODE COUNCIL®
Copyright © 2015 ICC. ALL RIGHTS RESERVED. Accessed by David Dammon on Jun 21, 2017 12:30:52 PM pursuant to License Agreement with ICC. No further reproduction or distribution authorized. ANY UNAUTHORIZED REPRODUCTION OR DISTRIBUTION IS A VIOLATION OF THE FEDERAL COPYRIGHT ACT AND THE LICENSE AGREEMENT, AND SUBJECT TO CIVIL AND CRIMINAL PENALTIES THEREUNDER.

M2101.6 Drilling and notching. Wood-framed structural members shall be drilled, notched or altered in accordance with the provisions of Sections R502.8, R602.6, R602.6.1 and R802.7. Holes in load bearing members of cold-formed steel light-frame construction shall be permitted only in accordance with Sections R505.2.6, R603.2.6 and R804.2.6. In accordance with the provisions of Sections R505.3.5, R603.3.4 and R804.3.3, cutting and notching of flanges and lips of load-bearing members of cold-formed steel light-frame construction shall not be permitted. Structural insulated panels (SIPs) shall be drilled and notched or altered in accordance with the provisions of Section R610.7.

❖ The code recognizes that cutting or notching framing members may sometimes be necessary. Experience and testing has shown that proper drilling and notching techniques must be followed when mechanical equipment, ducts, piping and related electrical wiring and cables are installed through framing members. Notches that are too deep or holes that are too large or too close together will significantly weaken these members. The code refers to the building chapters (Chapters 5: Floors, 6: Wall Construction, and 8: Roof/Ceiling Construction) that elaborate on such requirements and limitations. Reference to these sections is imperative for these installations so that the structure will not be weakened beyond its design parameters. This section is limited in scope to those framing members cited in the code and does not cover engineered framing members, such as trusses, laminated veneer beams and premanufactured I-joists.

M2101.7 Prohibited tee applications. Fluid in the supply side of a hydronic system shall not enter a tee fitting through the branch opening.

❖ Commentary Figure M2101.7 depicts a prohibited "bullhead" tee arrangement. Installation of such a connection creates excessive pressure drop, poor system performance and possible cavitation (air bubbles) that cause erosion of metal pipes. Supply side flow must not enter a tee from the branch opening. This section does not apply to tees in return piping arrangements because the flow entering a tee branch opening merges with the unidirectional flow in the run of the tee.

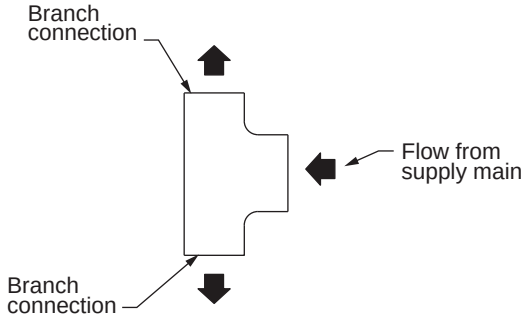

Figure M2101.7
PROHIBITED BULLHEAD TEE ARRANGEMENT

M2101.8 Expansion, contraction and settlement. Piping shall be installed so that piping, connections and *equipment* shall not be subjected to excessive strains or stresses. Provisions shall be made to compensate for expansion, contraction, shrinkage and structural settlement.

❖ Changes in temperatures cause dimensional changes in all materials to varying degrees. The greatest amount of expansion and contraction in piping occurs along its length. For systems operating at high temperatures, such as steam and hot water, the amount of expansion is substantial, and significant movements can occur even in short runs of piping. Larger movements can be expected in longer lengths of piping. Accordingly, larger forces can develop in restrained piping. Piping systems must be capable of accommodating the forces resulting from thermal expansion and contraction. Inadequate provisions to accommodate these forces can result in failure of pipe and supports, joint damage and leakage.

M2101.9 Piping support. Hangers and supports shall be of material of sufficient strength to support the piping, and shall be fabricated from materials compatible with the piping material. Piping shall be supported at intervals not exceeding the spacing specified in Table M2101.9.

❖ As with all piping systems, the support of the piping is as important as any other part of the overall design. Proper supports are necessary to maintain piping alignment and slope, to support the weight of the piping and fluid within, to control movement and to resist imposed loads. Table M2101.9 provides hanger spacing intervals required for different types of piping material.

TABLE M2101.9
HANGER SPACING INTERVALS

PIPING MATERIAL	MAXIMUM HORIZONTAL SPACING (feet)	MAXIMUM VERTICAL SPACING (feet)
ABS	4	10[a]
CPVC ≤ 1-inch pipe or tubing	3	5[a]
CPVC ≥ $1^1/_4$ inches	4	10[a]
Copper or copper alloy pipe	12	10
Copper or copper alloy tubing	6	10
PB pipe or tubing	2.67	4
PE pipe or tubing	2.67	4
PE-RT ≤ 1 inch	2.67	10[a]
PE-RT ≥ $1^1/_4$ inches	4	10[a]
PEX tubing	2.67	4
PP < 1-inch pipe or tubing	2.67	4
PP > $1^1/_4$ inches	4	10[a]
PVC	4	10[a]
Steel pipe	12	15
Steel tubing	8	10

For SI: 1 inch = 25.4 mm, 1 foot = 304.8 mm.

a. For sizes 2 inches and smaller, a guide shall be installed midway between required vertical supports. Such guides shall prevent pipe movement in a direction perpendicular to the axis of the pipe.

❖ See the commentary to Section M2101.9. Note a requires a guide to be installed to prevent lateral move-

INTERNATIONAL CODE COUNCIL®
Copyright © 2015 ICC. ALL RIGHTS RESERVED. Accessed by David Dammon on Jun 21, 2017 12:30:52 PM pursuant to License Agreement with ICC. No further reproduction or distribution authorized. ANY UNAUTHORIZED REPRODUCTION OR DISTRIBUTION IS A VIOLATION OF THE FEDERAL COPYRIGHT ACT AND THE LICENSE AGREEMENT, AND SUBJECT TO CIVIL AND CRIMINAL PENALTIES THEREUNDER.

ment of vertical plastic piping. The axis of the pipe is along its length and movement perpendicular to that axis is lateral movement in a horizontal plane. Where the piping is plastic and the distance between vertical supports is allowed to be up to 10 feet, it is expected that the pipe will need the guide to maintain alignment and help prevent stress, abrasion and noise.

M2101.10 Tests. Hydronic piping systems shall be tested hydrostatically at a pressure of one and one-half times the maximum system design pressure, but not less than 100 pounds per square inch (689 kPa). The duration of each test shall be not less than 15 minutes and not more than 20 minutes.

❖ Hydronic piping systems must be tested to determine that the system is leak free and capable of withstanding system operating pressures. The piping under test must be isolated from any component that cannot safely tolerate the test pressure. The prescribed test pressure of 100 psi (690 kPa) will typically exceed the maximum operating pressure of boilers and related components as well as the setting of the system's pressure relief devices. The code official will normally observe required tests. Maintaining the test pressure for at least 15 minutes allows time for any leaks to be detected.

SECTION M2102
BASEBOARD CONVECTORS

M2102.1 General. Baseboard convectors shall be installed in accordance with the manufacturer's instructions. Convectors shall be supported independently of the hydronic piping.

❖ Convectors must be installed in accordance with the manufacturer's installation instructions. This section requires that convectors be supported independently of the hydronic piping to prevent strain on the piping system and to allow for independent expansion and contraction.

SECTION M2103
FLOOR HEATING SYSTEMS

M2103.1 Piping materials. Piping for embedment in concrete or gypsum materials shall be standard-weight steel pipe, copper and copper alloy pipe and tubing, cross-linked polyethylene/aluminum/cross-linked polyethylene (PEX-AL-PEX) pressure pipe, chlorinated polyvinyl chloride (CPVC), polybutylene, cross-linked polyethylene (PEX) tubing, polyethylene of raised temperature (PE-RT) or polypropylene (PP) with a minimum rating of 100 psi at 180°F (690 kPa at 82°C).

❖ Piping embedded in concrete or covered by permanent construction materials or assemblies is not accessible. Therefore, this section is more restrictive than Section M2101.1, in that it allows only specific materials for embedded hydronic piping.

M2103.2 Thermal barrier required. Radiant floor heating systems shall have a thermal barrier in accordance with Sections M2103.2.1 through M2103.2.4.

Exception: Insulation shall not be required in engineered systems where it can be demonstrated that the insulation will decrease the efficiency or have a negative effect on the installation.

❖ In order for the maximum amount of heat to be transferred to the space intended to be heated, the hydronic piping system must be insulated to limit the amount of heat transferred to spaces or materials that are not intended to be heated. Sections M2103.2.1 and M2103.2.2 describe two applications where this is a concern and provides the insulation requirements.

M2103.2.1 Slab-on-grade installation. Radiant piping used in slab-on-grade applications shall have insulating materials having a minimum *R*-value of 5 installed beneath the piping.

❖ Typically, rigid foam board insulation is used for insulating slabs on grade that will be heated by hydronic systems. For most manufacturers of this product, an *R*-value of 5 equates to 1-inch (25 mm) material thickness. Other types of insulation products that are suitable for under-slab installation are also available and can be used if marked in accordance with Section M2103.2.4.

M2103.2.2 Suspended floor installation. In suspended floor applications, insulation shall be installed in the joist bay cavity serving the heating space above and shall consist of materials having a minimum *R*-value of 11.

❖ Typically, fiberglass insulation is used for insulating hydronically heated floors that are above an unheated space, such as a crawl space or basement. Insulation is placed between the joists (or floor trusses) and should be held in place.

M2103.2.3 Thermal break required. A thermal break consisting of asphalt expansion joint materials or similar insulating materials shall be provided at a point where a heated slab meets a foundation wall or other conductive slab.

❖ The exterior edges of heated concrete slabs must be protected against heat loss. Placement of a thermal barrier at the edge of the slab where it would contact the foundation wall breaks the heat conduction path to the exterior.

M2103.2.4 Thermal barrier material marking. Insulating materials used in thermal barriers shall be installed so that the manufacturer's *R*-value mark *is readily observable upon inspection.*

❖ Insulation materials must be marked so that the inspector can verify that the correct *R*-value is being used for the application. "Readily observable" means that the inspector will not be required to remove insulation in order to see the marking. The *R*-value marking requirement might be a problem where unfaced fiberglass insulation is used or where the facing of the fiberglass insulation is required to be located such that the marking is not observable without removal of the insulation.

M2103.3 Piping joints. Copper and copper alloy systems shall be soldered in accordance with ASTM B828. Fluxes for soldering shall be in accordance with ASTM B813. Brazing fluxes shall be in accordance with AWS A5.31. Piping joints

INTERNATIONAL CODE COUNCIL®
Copyright © 2015 ICC. ALL RIGHTS RESERVED. Accessed by David Dammon on Jun 21, 2017 12:30:52 PM pursuant to License Agreement with ICC. No further reproduction or distribution authorized. ANY UNAUTHORIZED REPRODUCTION OR DISTRIBUTION IS A VIOLATION OF THE FEDERAL COPYRIGHT ACT AND THE LICENSE AGREEMENT, AND SUBJECT TO CIVIL AND CRIMINAL PENALTIES THEREUNDER.

that are embedded shall be installed in accordance with the following requirements:

1. Steel pipe joints shall be welded.
2. Copper tubing shall be joined by brazing complying with Section P3003.6.1.
3. Polybutylene pipe and tubing joints shall be installed with socket-type heat-fused polybutylene fittings.
4. CPVC tubing shall be joined using solvent cement joints.
5. Polypropylene pipe and tubing joints shall be installed with socket-type heat-fused polypropylene fittings.
6. Cross-linked polyethylene (PEX) tubing shall be joined using cold expansion, insert or compression fittings.
7. Raised temperature polyethylene (PE-RT) tubing shall be joined using insert or compression fittings.

❖ Joints for these types of installations must be of the type that is least susceptible to failures. For that reason, steel pipe joints must be welded, copper pipe joints brazed, polypropylene heat-fused, etc.

M2103.4 Testing. Piping or tubing to be embedded shall be tested by applying a hydrostatic pressure of not less than 100 psi (690 kPa). The pressure shall be maintained for 30 minutes, during which, the joints shall be visually inspected for leaks.

❖ Hydronic piping systems must be tested to determine that the system is leak free and capable of withstanding the pressures to which it will be subjected. It is customary for the code official to observe required tests. This testing is especially important where the piping is to be encased and inaccessible. See Section M2101.10.

SECTION M2104
LOW TEMPERATURE PIPING

M2104.1 Piping materials. Low temperature piping for embedment in concrete or gypsum materials shall be as indicated in Table M2101.1.

❖ Table M2101.1 lists piping materials that can be used in low temperature piping, along with their applicable standards. This section does not prohibit the use of other approved materials that provide equivalent performance.

M2104.2 Piping joints. Piping joints, other than those in Section M2103.3, that are embedded shall comply with the following requirements:

1. Cross-linked polyethylene (PEX) tubing shall be installed in accordance with the manufacturer's instructions.
2. Polyethylene tubing shall be installed with heat fusion joints.
3. Polypropylene (PP) tubing shall be installed in accordance with the manufacturer's instructions.
4. Raised temperature polyethylene (PE-RT) shall be installed in accordance with the manufacturer's instructions.

❖ All joining methods for PEX tubing are considered to be mechanical joints that must be installed in accordance with the manufacturer's installation instructions. Polyethylene pipe and fittings are joined by heat-fusion joining methods, which provide dependability for underground piping. Embedded polypropylene tubing must be installed in accordance with the manufacturer's instructions for underground installations. Heat-fusion joining methods are considered to be highly dependable.

M2104.3 Raised temperature polyethylene (PE-RT) plastic tubing. Joints between raised temperature polyethylene tubing and fittings shall conform to Sections M2104.3.1, M2104.3.2 and M2104.3.3. Mechanical joints shall be installed in accordance with the manufacturer's instructions.

❖ The fitting manufacturer's installation instructions must be followed when making connections of raised temperature polyethylene (PE-RT) tubing.

M2104.3.1 Compression-type fittings. Where compression-type fittings include inserts and ferrules or O-rings, the fittings shall be installed without omitting such inserts and ferrules or O-rings.

❖ All parts of a fitting assembly must be utilized as intended by the manufacturer.

M2104.3.2 PE-RT-to-metal connections. Solder joints in a metal pipe shall not occur within 18 inches (457 mm) of a transition from such metal pipe to PE-RT pipe.

❖ The required heat for soldering fittings to copper pipe could damage the PE-RT pipe if the soldering operation was performed too close to a PE-RT-to-copper transition. This section applies to solder joints that occur in the same section of pipe as a PE-RT-to-copper transition joint.

M2104.3.3 PE-RT insert fittings. PE-RT insert fittings shall be installed in accordance with the manufacturer's instructions.

❖ Insert fittings are mechanical joints that involve a metal insert and a crimp ring or that involve a compression nut assembly. The piping manufacturer will specify what fittings are to be used with their product.

M2104.4 Polyethylene/Aluminum/Polyethylene (PE-AL-PE) pressure pipe. Joints between polyethylene/aluminum/polyethylene pressure pipe and fittings shall conform to Sections M2104.4.1 and M2104.4.2. Mechanical joints shall be installed in accordance with the manufacturer's instructions.

❖ The fitting manufacturer's installation instructions must be followed when making connections of polyethylene/aluminum/polyethylene (PE-AL-PE) tubing.

M2104.4.1 Compression-type fittings. Where compression-type fittings include inserts and ferrules or O-rings, the fittings shall be installed without omitting such inserts and ferrules or O-rings.

❖ All parts of a fitting assembly must be utilized as intended by the manufacturer. It is hard to imagine that an installer would purposely omit parts of a fitting assembly, but, this code text is testament to the fact that this must have been an issue for some types of fittings.

INTERNATIONAL CODE COUNCIL®
Copyright © 2015 ICC. ALL RIGHTS RESERVED. Accessed by David Dammon on Jun 21, 2017 12:30:52 PM pursuant to License Agreement with ICC. No further reproduction or distribution authorized. ANY UNAUTHORIZED REPRODUCTION OR DISTRIBUTION IS A VIOLATION OF THE FEDERAL COPYRIGHT ACT AND THE LICENSE AGREEMENT, AND SUBJECT TO CIVIL AND CRIMINAL PENALTIES THEREUNDER.

M2104.4.2 PE-AL-PE to metal connections. Solder joints in a metal pipe shall not occur within 18 inches (457 mm) of a transition from such metal pipe to PE-AL-PE pipe.

❖ The required heat for soldering fittings to copper pipe could damage the PE-AL-PE pipe if the soldering operation was performed too close to a PE-AL-PE-to-copper transition. This section applies to solder joints that occur in the same section of pipe as a PE-AL-PE-to-copper transition joint.

SECTION M2105
GROUND-SOURCE HEAT-PUMP SYSTEM LOOP PIPING

M2105.1 Plastic ground-source heat-pump loop piping. Plastic piping and tubing material used in water-based ground-source heat-pump ground-loop systems shall conform to the standards specified in this section.

❖ Section M2105 applies to ground-source heat-pump loop systems, specifically, the piping for the loops. These systems are mistakenly referred to as Geo-thermal systems, but Geo-thermal systems involve underground sources of heat associated with hot springs, lava domes and other areas in the earth's crust where inner earth heat energy rises close the earth's surface. Ground-source heat-pump systems simply use the soil, water wells and surface bodies of water as a heat source and as a heat sink. See Sections M2105.4 and M2105.5.

M2105.2 Used materials. Reused pipe, fittings, valves, and other materials shall not be used in ground-source heat-pump loop systems.

❖ For the greatest reliability, the piping system must be constructed of new (unused) materials.

M2105.3 Material rating. Pipe and tubing shall be rated for the operating temperature and pressure of the ground-source heat-pump loop system. Fittings shall be suitable for the pressure applications and recommended by the manufacturer for installation with the pipe and tubing material installed. Where used underground, materials shall be suitable for burial.

❖ All materials must be rated for the pressures and temperatures to which they will be exposed. Fittings have to be a type that is specifically recommended by the fitting manufacturer for use with the piping being installed. Components that are to be buried must be intended for burial.

M2105.4 Piping and tubing materials standards. Ground-source heat-pump ground-loop pipe and tubing shall conform to the standards listed in Table M2105.4.

❖ See Table M2105.4.

M2105.5 Fittings. Ground-source heat-pump pipe fittings shall be approved for installation with the piping materials to be installed, shall conform to the standards listed in Table M2105.5 and, where installed underground, shall be suitable for burial.

❖ See Table M2105.5.

M2105.6 Joints and connections. Joints and connections shall be of an approved type. Joints and connections shall be tight for the pressure of the ground-source loop system. Joints used underground shall be approved for such applications.

❖ This section requires code official approval of the types of joints and connections. Such approval would be based on the compliance with Table M2105.5, fitting manufacturer's instructions and recommendations, product literature and consideration for the conditions to which the joints and connections will be exposed.

M2105.6.1 Joints between different piping materials. Joints between different piping materials shall be made with approved transition fittings.

❖ See Section M2105.6.

M2105.7 Preparation of pipe ends. Pipe shall be cut square, reamed, and shall be free of burrs and obstructions. CPVC, PE and PVC pipe shall be chamfered. Pipe ends shall have full-bore openings and shall not be undercut.

❖ This section requires proper workmanship for preparing pipe to be joined. These requirements are very often disregarded. Cutting pipe ends squarely, deburring and chamfering are necessary to achieve a reliable joint for many reasons related to structural strength and leak-tightness. With some types of joints, it is possible to inspect for compliance, but with others, inspection is not possible without disassembling the

TABLE M2105.4
GROUND-SOURCE LOOP PIPE

MATERIAL	STANDARD
Chlorinated polyvinyl chloride (CPVC)	ASTM D2846; ASTM F437; ASTM F438; ASTM F439; ASTM F441; ASTM F442; CSA B137.6
Cross-linked polyethylene (PEX)	ASTM F876; ASTM F877 CSA B137.5
Polyethylene/aluminum/polyethylene (PE-AL-PE) pressure pipe	ASTM F1282; CSA B137.9; AWWA C 903
High-density polyethylene (HDPE)	ASTM D2737; ASTM D3035; ASTM F714; AWWA C901; CSA B137.1; CSA C448; NSF 358-1
Polypropylene (PP-R)	ASTM F2389; CSA B137.11
Polyvinyl chloride (PVC)	ASTM D1785; ASTM D2241; CSA 137.3
Raised temperature polyethylene (PE-RT)	ASTM F2623; ASTM F2769

INTERNATIONAL CODE COUNCIL®
Copyright © 2015 ICC. ALL RIGHTS RESERVED. Accessed by David Dammon on Jun 21, 2017 12:30:52 PM pursuant to License Agreement with ICC. No further reproduction or distribution authorized. ANY UNAUTHORIZED REPRODUCTION OR DISTRIBUTION IS A VIOLATION OF THE FEDERAL COPYRIGHT ACT AND THE LICENSE AGREEMENT, AND SUBJECT TO CIVIL AND CRIMINAL PENALTIES THEREUNDER.

joint or connection. The inspector may determine compliance by requiring a sample joint to be opened, by observing discarded parts of joints that have been removed or by interviewing the installers about their procedures. There are requirements for installation that are very difficult to inspect and this sort of difficulty has led to code requirements such as purple primer for PVC pipe joints. The purple color is used because the use of a primer cannot be visually verified without the distinguishing color.

M2105.8 Joint preparation and installation. Where required by Sections M2105.9 through M2105.11, the preparation and installation of mechanical and thermoplastic-welded joints shall comply with Sections M2105.8.1 and M2015.8.2.

❖ Some of the material specific subsections could refer back to Sections M2105.8.1 and M1205.8.2 relative to mechanical and thermoplastic welded joints where necessary. Thermoplastic welding is similar to metal welding and involves a heat source and welding rod (spline). The plastic pipe and fittings and the welding rod (spline) are heated typically by hot air and the materials fuse together.

M2105.8.1 Mechanical joints. Mechanical joints shall be installed in accordance with the manufacturer's instructions.

❖ Mechanical joints can be of many different types. See the definition of "Mechanical joint."

M2105.8.2 Thermoplastic-welded joints. Joint surfaces for thermoplastic-welded joints shall be cleaned by an approved procedure. Joints shall be welded in accordance with the manufacturer's instructions.

❖ See section M2105.8.

M2105.9 CPVC plastic pipe. Joints between CPVC plastic pipe or fittings shall be solvent-cemented in accordance with Section P2906.9.1.2. Threaded joints between fittings and CPVC plastic pipe shall be in accordance with Section M2105.9.1.

❖ See Sections M2105.9.1 and P2906.9.1.2.

M2105.9.1 Threaded joints. Threads shall conform to ASME B1.20.1. The pipe shall be Schedule 80 or heavier plastic pipe and shall be threaded with dies specifically designed for plastic pipe. Thread lubricant, pipe-joint compound or tape shall be applied on the male threads only and shall be approved for application on the piping material.

❖ Schedule 40 pipe cannot be threaded because the pipe wall is too thin to provide the necessary strength. It is very important to make sure that pipe thread compounds (pipe dope) are compatible with the pipe material. Some compounds can degrade plastic piping.

M2105.10 Cross-linked polyethylene (PEX) plastic tubing. Joints between cross-linked polyethylene plastic tubing and fittings shall comply with Sections M2105.10.1 and M2105.10.2. Mechanical joints shall comply with Section M2105.8.1.

❖ See Sections M2105.8.1, M2105.10.1 and M2105.10.2.

M2105.10.1 Compression-type fittings. Where compression-type fittings include inserts and ferrules or O-rings, the fittings shall be installed without omitting the inserts and ferrules or O-rings.

❖ See Section M2104.3.1.

M2105.10.2 Plastic-to-metal connections. Solder joints in a metal pipe shall not occur within 18 inches (457 mm) of a transition from such metal pipe to plastic pipe or tubing.

❖ Solder joints involve temperatures of 400°F and higher. Copper pipe is an excellent conductor of heat and the heat of soldering could be conducted to nearby plastic piping, possibly damaging the plastic pipe and fittings. Where plastic pipe connects to metal pipe, soldering must occur at a safe distance from the plastic components.

M2105.11 Polyethylene plastic pipe and tubing. Joints between polyethylene plastic pipe and tubing or fittings for ground-source heat-pump loop systems shall be heat-fusion joints complying with Section M2105.11.1, electrofusion

TABLE M2105.5
GROUND-SOURCE LOOP PIPE FITTINGS

PIPE MATERIAL	STANDARD
Chlorinated polyvinyl chloride (CPVC)	ASTM D2846; ASTM F437; ASTM F438; ASTM F439; ASTM F1970; CSA B137.6
Cross-linked polyethylene (PEX)	ASTM F877; ASTM F1807; ASTM F1960; ASTM F2080; ASTM F2159; ASTM F2434; CSA B137.5
Polyethylene/aluminum/polyethylene (PE-AL-PE)	ASTM F2434; ASTM F1282; CSA B137.9
High-density polyethylene (HDPE)	ASTM D2683; ASTM D3261; ASTM F1055; CSA B137.1; CSA C448; NSF 358-1
Polypropylene (PP-R)	ASTM F2389; CSA B137.11; NSF 358-2
Polyvinyl chloride (PVC)	ASTM D2464; ASTM D2466; ASTM D2467; ASTM F1970, CSA B137.2; CSA B137.3
Raised temperature polyethylene (PE-RT)	ASTM D3261; ASTM F1807; ASTM F2159; F2769; B137.1

INTERNATIONAL CODE COUNCIL®
Copyright © 2015 ICC. ALL RIGHTS RESERVED. Accessed by David Dammon on Jun 21, 2017 12:30:52 PM pursuant to License Agreement with ICC. No further reproduction or distribution authorized. ANY UNAUTHORIZED REPRODUCTION OR DISTRIBUTION IS A VIOLATION OF THE FEDERAL COPYRIGHT ACT AND THE LICENSE AGREEMENT, AND SUBJECT TO CIVIL AND CRIMINAL PENALTIES THEREUNDER.

joints complying with Section M2105.11.2, or stab-type insertion joints complying with Section M2105.11.3.

❖ See Sections M2105.11.1, M2105.11.2 and M2105.11.3.

M2105.11.1 Heat-fusion joints. Joints shall be of the socket-fusion, saddle-fusion or butt-fusion type, and joined in accordance with ASTM D2657. Joint surfaces shall be clean and free of moisture. Joint surfaces shall be heated to melt temperatures and joined. The joint shall be undisturbed until cool. Fittings shall be manufactured in accordance with ASTM D2683 or ASTM D3261.

❖ Heat fusion joints are very reliable if created using the proper procedures and using the proper tools.

M2105.11.2 Electrofusion joints. Joints shall be of the electrofusion type. Joint surfaces shall be clean and free of moisture, and scoured to expose virgin resin. Joint surfaces shall be heated to melt temperatures for the period of time specified by the manufacturer. The joint shall be undisturbed until cool. Fittings shall be manufactured in accordance with ASTM F1055.

❖ Electrofusion joining utilizes special fittings that have integral heating elements. The fittings are connected to a power supply that provides the necessary current for the correct amount of time to heat the mating parts to the fusion temperature.

M2105.11.3 Stab-type insert fittings. Joint surfaces shall be clean and free of moisture. Pipe ends shall be chamfered and inserted into the fittings to full depth. Fittings shall be manufactured in accordance with ASTM F1924.

❖ Stab-type fittings are referred to as such because of the action that inserts (roughly analogous to stabbing) the tubing into the fitting. Such fittings utilize O-rings and gripping devices that retain the tubing in the fitting. Chamfering is necessary to remove the sharp angular outside edge that could damage the O-ring seals when the tubing is inserted.

M2105.12 Polypropylene (PP) plastic. Joints between PP plastic pipe and fittings shall comply with Sections M2105.12.1 and M2105.12.2.

❖ See Sections M2105.12.1 and M2105.12.2.

M2105.12.1 Heat-fusion joints. Heat-fusion joints for polypropylene (PP) pipe and tubing joints shall be installed with socket-type heat-fused polypropylene fittings, electrofusion polypropylene fittings or by butt fusion. Joint surfaces shall be clean and free from moisture. The joint shall be undisturbed until cool. Joints shall be made in accordance with ASTM F2389.

❖ Heat fusion and mechanical joints are used with polypropylene (PP) because it cannot be solvent welded. Specialized tools must be used to heat the pipe/tubing and the fittings to the point where the mating parts fuse together.

M2105.12.2 Mechanical and compression sleeve joints. Mechanical and compression sleeve joints shall be installed in accordance with the manufacturer's instructions.

❖ Mechanical joints come in many varieties and they all rely on sealing elements and mechanical compression. Strict compliance with the manufacturer's instructions is imperative to create dependable joints.

M2105.13 Raised temperature polyethylene (PE-RT) plastic tubing. Joints between raised temperature polyethylene tubing and fittings shall comply with Sections M2105.13.1 and M2105.13.2. Mechanical joints shall comply with Section M2105.8.1.

❖ See Sections M2105.8.1, M2105.13.1 and M2105.13.2.

M2105.13.1 Compression-type fittings. Where compression-type fittings include inserts and ferrules or O-rings, the fittings shall be installed without omitting the inserts and ferrules or O-rings.

❖ See Section M2104.3.1.

M2105.13.2 PE-RT-to-metal connections. Solder joints in a metal pipe shall not occur within 18 inches (457 mm) of a transition from such metal pipe to PE-RT pipe or tubing.

❖ See Section M2105.10.2.

M2105.14 PVC plastic pipe. Joints between PVC plastic pipe or fittings shall be solvent-cemented in accordance with Section P2906.9.1.4. Threaded joints between fittings and PVC plastic pipe shall be in accordance with Section M2105.9.1.

❖ See Section M2105.9.1. Solvent welding is performed as dictated in Chapter 29 for water service piping.

M2105.15 Shutoff valves. Shutoff valves shall be installed in ground-source loop piping systems in the locations indicated in Sections M2105.15.1 through M2105.15.6.

❖ Shutoff valves are required to allow the system to be serviced and repaired and to allow components and buildings to be isolated from the system.

M2105.15.1 Heat exchangers. Shutoff valves shall be installed on the supply and return side of a heat exchanger.

> **Exception:** Shutoff valves shall not be required where heat exchangers are integral with a boiler or are a component of a manufacturer's boiler and heat exchanger packaged unit and are capable of being isolated from the hydronic system by the supply and return valves required by Section M2001.3.

❖ Heat exchangers include water-to-air, refrigerant-to-water and water-to-water coils. Heat exchangers are sometimes integral to storage tanks and heat pump units.

INTERNATIONAL CODE COUNCIL®
Copyright © 2015 ICC. ALL RIGHTS RESERVED. Accessed by David Dammon on Jun 21, 2017 12:30:52 PM pursuant to License Agreement with ICC. No further reproduction or distribution authorized. ANY UNAUTHORIZED REPRODUCTION OR DISTRIBUTION IS A VIOLATION OF THE FEDERAL COPYRIGHT ACT AND THE LICENSE AGREEMENT, AND SUBJECT TO CIVIL AND CRIMINAL PENALTIES THEREUNDER.

M2105.15.2 Central systems. Shutoff valves shall be installed on the building supply and return of a central utility system.

❖ Multiple buildings could be served by a single heat pump system and each building must be capable of being isolated.

M2105.15.3 Pressure vessels. Shutoff valves shall be installed on the connection to any pressure vessel.

❖ Pressure vessels include expansion tanks and storage tanks.

M2105.15.4 Pressure-reducing valves. Shutoff valves shall be installed on both sides of a pressure-reducing valve.

❖ Pressure-reducing valves need to be isolated to allow replacement and repair.

M2105.15.5 Equipment and appliances. Shutoff valves shall be installed on connections to mechanical equipment and appliances. This requirement does not apply to components of ground-source loop systems such as pumps, air separators, metering devices, and similar equipment.

❖ This section exempts water pumps; however, replacing or servicing a water pump without pump isolation valves can be difficult. Heat pump equipment isolation valves facilitate servicing and replacement, and can also allow specific equipment to be taken in and out of service.

M2105.15.6 Expansion tanks. Shutoff valves shall be installed at connections to nondiaphragm-type expansion tanks.

❖ Diaphragm-type expansion tanks do not require maintenance or servicing, so isolation valves are required only for tanks that do not have a diaphragm membrane. Not having a shutoff valve makes it impossible to inadvertently isolate the piping system from the expansion tank.

M2105.16 Reduced pressure. A pressure relief valve shall be installed on the low-pressure side of a hydronic piping system that has been reduced in pressure. The relief valve shall be set at the maximum pressure of the system design. The valve shall be installed in accordance with Section M2002.

❖ A relief valve must be installed downstream of a pressure reducing valve (PRV) to protect the lower pressure system from pressure excursions or PRV failure.

M2105.17 Installation. Piping, valves, fittings, and connections shall be installed in accordance with the manufacturer's instructions.

❖ See Sections M1301.3, M1307.1 and M1401.1.

M2105.18 Protection of potable water. Where ground-source heat-pump ground-loop systems have a connection to a potable water supply, the potable water system shall be protected from backflow in accordance with Section P2902.

❖ The potable water system must be protected against backflow because the heat pump system contains nonpotable water and can contain antifreeze mixtures and other chemicals.

M2105.19 Pipe penetrations. Openings for pipe penetrations in walls, floors and ceilings shall be larger than the penetrating pipe. Openings through concrete or masonry building elements shall be sleeved. The annular space surrounding pipe penetrations shall be protected in accordance with Section P2606.1.

❖ See Section P2606.1. Larger openings and sleeves protect the piping against abrasion damage caused by expansion, contraction and vibration.

M2105.20 Clearance from combustibles. A pipe in a ground-source heat pump piping system having an exterior surface temperature exceeding 250°F (121°C) shall have a clearance of not less than 1 inch (25 mm) from combustible materials.

❖ Such temperature would be unlikely in a heat pump system, even where a supplemental source of heat such as a boiler might be involved.

M2105.21 Contact with building material. A ground-source heat-pump ground-loop piping system shall not be in direct contact with building materials that cause the piping or fitting material to degrade or corrode, or that interfere with the operation of the system.

❖ Piping must be separated or otherwise protected from contact with building materials that can cause detrimental chemical reactions with the piping.

M2105.22 Strains and stresses. Piping shall be installed so as to prevent detrimental strains and stresses in the pipe. Provisions shall be made to protect piping from damage resulting from expansion, contraction and structural settlement. Piping shall be installed so as to avoid structural stresses or strains within building components.

❖ Piping must be supported such that stresses are not created in the piping. Offsets, loops and expansion fitting must be provided as necessary to compensate for the expansion and contraction of the piping. Plastic piping, in general, has a high coefficient of expansion and the forces generated are substantial.

M2105.22.1 Flood hazard. Piping located in a flood hazard area shall be capable of resisting hydrostatic and hydrodynamic loads and stresses, including the effects of buoyancy, during the occurrence of flooding to the *design flood elevation*.

❖ Buried ground-source loop piping that is filled with liquid is likely to be immune from damage caused by area flooding, however, such immunity must be demonstrated.

M2105.23 Pipe support. Pipe shall be supported in accordance with Section M2101.9.

❖ See Section M2101.9.

M2105.24 Velocities. Ground-source heat-pump ground-loop systems shall be designed so that the flow velocities do not exceed the maximum flow velocity recommended by the pipe and fittings manufacturer. Flow velocities shall be controlled to reduce the possibility of water hammer.

❖ The flow velocity in piping of all materials (plastic and metal) must be kept within the recommendations of the

INTERNATIONAL CODE COUNCIL®
Copyright © 2015 ICC. ALL RIGHTS RESERVED. Accessed by David Dammon on Jun 21, 2017 12:30:52 PM pursuant to License Agreement with ICC. No further reproduction or distribution authorized. ANY UNAUTHORIZED REPRODUCTION OR DISTRIBUTION IS A VIOLATION OF THE FEDERAL COPYRIGHT ACT AND THE LICENSE AGREEMENT, AND SUBJECT TO CIVIL AND CRIMINAL PENALTIES THEREUNDER.

material manufacturer to protect the piping from erosion and cavitation damage. Water hammer results from the sudden deceleration of flow velocity and the forces generated can be destructive to piping and system components.

M2105.25 Labeling and marking. Ground-source heat-pump ground-loop system piping shall be marked with tape, metal tags or other methods where it enters a building. The marking shall state the following words: "GROUND-SOURCE HEAT-PUMP LOOP SYSTEM." The marking shall indicate if antifreeze is used in the system and shall indicate the chemicals by name and concentration.

❖ Proper labeling will help prevent mistaken identity of piping systems when any system in the building is to be worked on. The nature of the heat transfer medium must be identified to help prevent the introduction of the wrong chemicals and incompatible chemicals, and to maintain the required freeze protection. The label also serves as a warning about potentially toxic chemicals.

M2105.26 Chemical compatibility. Antifreeze and other materials used in the system shall be chemically compatible with the pipe, tubing, fittings and mechanical systems.

❖ Plastic pipe manufacturers publish chemical compatibility information for their products. Chemicals must not be introduced into a piping system without verifying that the chemicals and the piping system materials are compatible. Damage to underground piping would be quite expensive to repair and could result in hazardous operation of equipment in the building.

M2105.27 Makeup water. The transfer fluid shall be compatible with the makeup water supplied to the system.

❖ Makeup water is water added to the system to replace any fluid that is lost through leakage and intentional draining for repairs and maintenance. Makeup water is limited to the amount absolutely necessary to maintain a completely filled system because makeup water contains dissolved minerals and gasses that are undesirable in the system.

M2105.28 Testing. Before connection header trenches are backfilled, the assembled loop system shall be pressure tested with water at 100 psi (689 kPa) for 15 minutes without observed leaks. Flow and pressure loss testing shall be performed and the actual flow rates and pressure drops shall be compared to the calculated design values. If actual flow rate or pressure drop values differ from calculated design values by more than 10 percent, the cause shall be identified and corrective action taken.

❖ Groundwater heat pump systems are either closed loop or open loop. Closed-loop systems circulate water or an antifreeze solution through plastic pipes buried in the ground. Some loop systems, although not as common, use surface water bodies or underground water as the source of heat energy. The heat-transfer fluid absorbs heat from the ground (earth) and transfers it to the building in the heating season, then reverses to absorb heat from the building and transfer it to the ground in the cooling season.

Ground source loop systems use significant lengths of piping installed in multiple circuits (loops) to provide the required area of heat-exchange surface. Also, multiple loops have the advantage over a single loop system because a single piping failure will not cause failure of the entire heat pump system.

The significant difference between testing ground source loop systems and other hydronic systems is that ground source loops are allowed to be buried prior to testing. The connection headers (manifolds) that connect the loops (circuits) of piping must remain exposed until completion of testing. Because loops (circuits) are typically installed without joints, all of the potential sources of leaks will likely be located at the point of connection between the ends of the loops and the header. For this reason, the loops can be covered during testing while the headers remain exposed. Also, it is difficult to dig trenches for large loop fields without backfilling each trench before digging the adjacent trenches.

Depending on the lot, it may be necessary to backfill "as you go" to allow room for the excavator machine.

Requiring that each loop be inspected prior to covering could require time-consuming multiple inspections at the same property if the excavator had to backfill each trench before digging the next.

M2105.29 Embedded piping. Ground-source heat-pump ground-loop piping to be embedded in concrete shall be pressure tested prior to pouring concrete. During pouring, the pipe shall be maintained at the proposed operating pressure.

❖ Embedding piping in concrete is generally avoided because the loop piping will be inaccessible and because the piping is easily damaged during the concrete placement process. If the piping is damaged during the concrete pour, the leak will be apparent if the system is kept under pressure.

INTERNATIONAL CODE COUNCIL®
Copyright © 2015 ICC. ALL RIGHTS RESERVED. Accessed by David Dammon on Jun 21, 2017 12:30:52 PM pursuant to License Agreement with ICC. No further reproduction or distribution authorized. ANY UNAUTHORIZED REPRODUCTION OR DISTRIBUTION IS A VIOLATION OF THE FEDERAL COPYRIGHT ACT AND THE LICENSE AGREEMENT, AND SUBJECT TO CIVIL AND CRIMINAL PENALTIES THEREUNDER.

Chapter 22:
Special Piping and Storage Systems

General Comments

This chapter regulates the design and installation of fuel oil storage and piping systems. The regulations include reference to construction standards for above-ground and underground storage tanks, material standards for piping systems (both above-ground and underground) and extensive requirements for the proper assembly of system piping and components.

The importance of adequate regulations for the storage, handling and use of combustible liquid fuel cannot be overstated. A fuel-oil piping system includes piping, valves and fittings. If installed, pumps, reservoirs, regulators, strainers, filters, relief valves, oil preheaters, controls and gauges are also included in the fuel-oil piping system. The piping materials and the method of joining sections of pipe must be approved, and all other components included in the piping system must be labeled and installed in accordance with the manufacturer's instructions. Over the past 10 years, public scrutiny of flammable and combustible liquid storage installations has increased with the public's awareness of the consequences of release of these liquids into the environment. Environmental studies have shown that improper installation of these storage systems is a major contributing factor in system failure. Improper use of such systems also accounts for many fire losses. Although the hazards are well known, accidents involving combustible liquids remain one of the most common fire scenarios in the United States.

Fuel oil is considered a Class II combustible liquid, having a flash point of 100°F (38°C) or higher. Though the classification boundaries are somewhat arbitrary, flammable and combustible liquids are distinguished by their flash points. The flash point is that temperature at which the liquid produces sufficient vapor to form an ignitable vapor-air mixture above its surface. Because Class I flammable liquids all have a flash point below 100°F (38°C), it is prudent to assume that such liquids may be capable of igniting when unconfined under normal environmental conditions. On the other hand, combustible liquids, including fuel oil, are materials with flash points above 100°F (38°C) and must usually be heated above their flash points or, in the case of extremely high flash-point liquids, above their boiling points before they will ignite.

Combustible liquids possess significant characteristics other than their flash points. These include ignition temperature, autoignition temperature, flammable (explosive) range, viscosity, vapor density, vapor pressure, boiling point, evaporation rate, specific gravity and water solubility. Once the liquid is ignited, these variables have little influence over the material's heat release rate. Factors such as evaporation rate, viscosity and water solubility may profoundly affect how these fires are extinguished.

Generally, combustible liquids have low specific gravities, high vapor densities and narrow flammable ranges. These characteristics mean that liquids usually float on water, vapors most often hug the ground and ignitable vapor-air mixtures are generally confined to a range between 6 and 15 percent in air. Thus, smothering is difficult and ignition sources near the ground are more likely to pose a hazard.

Purpose

The requirements in this chapter are intended to prevent fires, leaks and spills involving fuel oil storage and piping systems, whether inside or outside structures and above or below ground.

SECTION M2201
OIL TANKS

M2201.1 Materials. Supply tanks shall be *listed* and *labeled* and shall conform to UL 58 for underground tanks and UL 80 for indoor tanks.

❖ Shop-fabricated tank(s) must be listed and labeled by an approved agency. The code specifies the national standards applicable to the manufacture of these tanks.

M2201.2 Above-ground tanks. The maximum amount of fuel oil stored above ground or inside of a building shall be 660 gallons (2498 L). The supply tank shall be supported on rigid noncombustible supports to prevent settling or shifting.

Exception: The storage of fuel oil, used for space or water heating, above ground or inside buildings in quantities exceeding 660 gallons (2498 L) shall comply with NFPA 31.

❖ The quantity of fuel oil is limited to lessen the hazard associated with leakage and storage system failures. Tanks must have good support bases to support large point loads and to prevent the tanks from moving and stressing piping connected to the tanks.

M2201.2.1 Tanks within buildings. Supply tanks for use inside of buildings shall be of such size and shape to permit installation and removal from *dwellings* as whole units. Supply tanks larger than 10 gallons (38 L) shall be placed not less than 5 feet (1524 mm) from any fire or flame either within or external to any fuel-burning *appliance*.

❖ This section limits the size of a tank, in addition to the capacity limitation of Section M2201.2, by taking into

INTERNATIONAL CODE COUNCIL®
Copyright © 2015 ICC. ALL RIGHTS RESERVED. Accessed by David Dammon on Jun 21, 2017 12:30:52 PM pursuant to License Agreement with ICC. No further reproduction or distribution authorized. ANY UNAUTHORIZED REPRODUCTION OR DISTRIBUTION IS A VIOLATION OF THE FEDERAL COPYRIGHT ACT AND THE LICENSE AGREEMENT, AND SUBJECT TO CIVIL AND CRIMINAL PENALTIES THEREUNDER.

consideration the maintenance aspect of replacing a tank. If a tank must be cut apart to be removed from a residence, it could create a hazardous condition.

In addition, this section limits the location of a tank with respect to an open flame to prevent ignition of spilled or leaking fuel.

M2201.2.2 Outside above-ground tanks. Tanks installed outdoors above ground shall be not less than 5 feet (1524 mm) from an adjoining property line. Such tanks shall be suitably protected from the weather and from physical damage.

❖ This section takes into account the location of tanks installed outside of a building and above ground. Protection of a tank from physical damage and deterioration caused by local weather conditions is the main concern. The location of the tank must be evaluated with respect to possible impact damage (vehicles, equipment, etc.) and protected in an approved manner. Such protection usually consists of high-quality exterior grade paint. In areas subject to extreme weather conditions, additional protection may be required.

M2201.3 Underground tanks. Excavations for underground tanks shall not undermine the foundations of existing structures. The clearance from the tank to the nearest wall of a *basement,* pit or property line shall be not less than 1 foot (305 mm). Tanks shall be set on and surrounded with noncorrosive inert materials such as clean earth, sand or gravel well tamped in place. Tanks shall be covered with not less than 1 foot (305 mm) of earth. Corrosion protection shall be provided in accordance with Section M2203.7.

❖ These requirements exist so that a tank will not shift or move because of settlement of the surrounding earth. Shifting stresses a tank and piping and can cause leakage of oil.

M2201.4 Multiple tanks. Cross connection of two supply tanks shall be permitted in accordance with Section M2203.6.

❖ A maximum of two interconnected tanks are allowed in place of one, as long as the total capacity does not exceed 660 gallons (2498 L). See the commentary to Section M2203.6.

M2201.5 Oil gauges. Inside tanks shall be provided with a device to indicate when the oil in the tank has reached a predetermined safe level. Glass gauges or a gauge subject to breakage that could result in the escape of oil from the tank shall not be used. Liquid-level indicating gauges shall comply with UL 180.

❖ This section applies to indoor tanks and prohibits the use of any gauging device, including sight glasses, that would release tank contents in the event of the gauging device breaking. This helps prevent a hazardous material spill and possible fuel oil vapor ignition. Liquid-level gauges must be in compliance with UL 180, which contains construction and performance requirements for gauges used in fuel-oil storage systems. A predetermined safe level is related to the filling of tanks.

M2201.6 Flood-resistant installation. In flood hazard areas as established by Table R301.2(1), tanks shall be installed in accordance with Section R322.2.4 or Section R322.3.7.

❖ The local jurisdiction must fill in Table R301.2(1) upon adoption of the code, including the "Flood Hazards" information. Tanks that are located in flood hazard areas must be installed above the design flood elevation or must be designed and installed to resist the lateral and buoyant forces of the flood waters. See the commentary to Sections 322.1.6, R322.2.4 and R322.3.7.

M2201.7 Tanks abandoned or removed. Exterior above-grade fill piping shall be removed when tanks are abandoned or removed. Tank abandonment and removal shall be in accordance with the *International Fire Code*.

❖ The *International Fire Code*® (IFC®) contains the requirements for abandoning or removing fuel oil tanks. The IFC does not, however, require the removal of the above-grade fill piping associated with the tanks. Exterior fill and vent piping has to be removed because of the potential danger that hundreds of gallons of fuel oil could be accidentally delivered to the wrong address. There have been instances of accidental filling where tanks have been removed but the fill pipe has remained. The oil delivery service sees only the exterior connection and may not be aware that the tank has been removed or disconnected. Piping must be removed, not just capped off; accidental filling has occurred when piping systems have been "capped off." When fuel oil contamination occurs, the cost of repairs and cleanup is extremely high and in some cases contamination has led to condemnation of such structures.

SECTION M2202
OIL PIPING, FITTING AND CONNECTIONS

M2202.1 Materials. Piping shall consist of steel pipe, copper and copper alloy pipe and tubing or steel tubing conforming to ASTM A539. Aluminum tubing shall not be used between the fuel-oil tank and the burner units.

❖ Aluminum is prohibited because it corrodes more readily when it is exposed to moisture or is adjacent to some types of construction material.

M2202.2 Joints and fittings. Piping shall be connected with standard fittings compatible with the piping material. Cast iron fittings shall not be used for oil piping. Unions requiring gaskets or packings, right or left couplings, and sweat fittings employing solder having a melting point less than 1,000°F (538°C) shall not be used for oil piping. Threaded joints and connections shall be made tight with a lubricant or pipe thread compound.

❖ Joining and connecting methods and materials must be compatible with the pipe and the fuel oil used. Lubricants and tape are designed to lubricate the threads for proper mating and to fill in small imperfections within these threads. Lubricants must be compatible with the pipe and fuel oil used or they will deteriorate and allow fuel oil leaks. Gaskets and packing materials

INTERNATIONAL CODE COUNCIL®
Copyright © 2015 ICC. ALL RIGHTS RESERVED. Accessed by David Dammon on Jun 21, 2017 12:30:52 PM pursuant to License Agreement with ICC. No further reproduction or distribution authorized. ANY UNAUTHORIZED REPRODUCTION OR DISTRIBUTION IS A VIOLATION OF THE FEDERAL COPYRIGHT ACT AND THE LICENSE AGREEMENT, AND SUBJECT TO CIVIL AND CRIMINAL PENALTIES THEREUNDER.

in unions can lose their resiliency and deteriorate over time, which can also lead to fuel oil leaks. Solder with a low melting point can quickly fail in a fire. Cast-iron fittings are very brittle and can be damaged by impact.

M2202.3 Flexible connectors. Flexible metallic hoses shall be *listed* and *labeled* in accordance with UL 536 and shall be installed in accordance with their *listing* and *labeling* and the manufacturer's installation instructions. Connectors made from combustible materials shall not be used inside of buildings or above ground outside of buildings.

❖ Flexible metal hoses are used to reduce the transfer of vibrations and to compensate for movements in the system. These connectors must be listed and labeled in accordance with UL 536 for their intended use so that they are compatible with the environment and the type of fuel used. Combustible connectors are prohibited for installations inside the building and are also prohibited anywhere above ground because of concern for fire damage and longevity of the material.

SECTION M2203
INSTALLATION

M2203.1 General. Piping shall be installed in a manner to avoid placing stresses on the piping, and to accommodate expansion and contraction of the piping system.

❖ Changes in temperatures can result in substantial longitudinal movement of piping, especially in long runs. Provisions must be made to allow expansion or contraction without creating stresses on the system. Otherwise, leakage or failure of pipe, pipe supports and pipe joints can occur.

M2203.2 Supply piping. Supply piping used in the installation of oil burners and *appliances* shall be not smaller than $^3/_8$-inch (9 mm) pipe or $^3/_8$-inch (9 mm) outside diameter tubing. Copper tubing and fittings shall be a minimum of Type L.

❖ This section requires that the fuel oil supply piping be of a size capable of delivering the maximum fuel demand of the appliance it supplies at the recommended working pressure of the appliance burner. For purposes of flow volume and pressure control, pumps may supply more fuel oil than an appliance consumes, in which case the excess oil must be routed back to the tank through a return line. Because the amount returning to the tank is less than what was supplied, the return line pipe diameter may be smaller than that of the supply pipe.

M2203.3 Fill piping. Fill piping shall terminate outside of buildings at a point not less than 2 feet (610 mm) from any building opening at the same or lower level. Fill openings shall be equipped with a tight metal cover.

❖ Requiring fill pipe terminations to be outside buildings and at least 2 feet (610 mm) from building openings that are at the same level or lower than the fill pipe reduces the possibility that liquid or vapor spillage during delivery will enter the building and come into contact with a source of ignition. Likewise, fill pipes must be arranged to reduce the possibility of liquid spilling onto the ground or pavement upon completion of the filling operation, which could result in vapors traveling to an ignition source. One method of managing such spills is to install a spill containment device at the end of the fill pipe. These devices are usually equipped with a water-tight cover and are essentially reservoirs designed to catch any spilled fuel oil and retain it for proper disposal. Some models of these devices have a manual drain valve that allows the captured liquid to drain through the fill pipe and into the tank. Other models have a liquid level alarm to warn responsible parties on the premises that the reservoir needs to be emptied.

M2203.4 Vent piping. Vent piping shall be not smaller than $1^1/_4$-inch (32 mm) pipe. Vent piping shall be laid to drain toward the tank without sags or traps in which the liquid can collect. Vent pipes shall not be cross connected with fill pipes, lines from burners or overflow lines from auxiliary tanks. The lower end of a vent pipe shall enter the tank through the top and shall extend into the tank not more than 1 inch (25 mm).

❖ Because vent piping can have oil in it under certain circumstances, this section requires that it be laid to drain back to the tank without sags or traps. If oil reaches the vent, it can drain back to the tank without leaving pockets of oil that could block the vent. The vent must enter the tank through the top and not extend more than 1 inch (25.4 mm) into the tank, again to protect against the vent being blocked by fuel oil.

M2203.5 Vent termination. Vent piping shall terminate outside of buildings at a point not less than 2 feet (610 mm), measured vertically or horizontally, from any building opening. Outer ends of vent piping shall terminate in a weatherproof cap or fitting having an unobstructed area at least equal to the cross-sectional area of the vent pipe, and shall be located sufficiently above the ground to avoid being obstructed by snow and ice.

❖ The 2-foot (610 mm) minimum clearance reduces the possibility of vapors entering the building. Protection of the open end of the vent pipe with an approved vent cap or fitting is necessary to prevent rainwater from entering the tank through the vent.

The vent pipe must terminate above ground at a level that will reduce the possibility of the opening being obstructed by snow accumulation.

M2203.6 Cross connection of tanks. Cross connection of two supply tanks, not exceeding 660 gallons (2498 L) aggregate capacity, with gravity flow from one tank to another, shall be acceptable providing that the two tanks are on the same horizontal plane.

❖ Cross connection of two supply tanks, with gravity flow from one tank to another, is acceptable if the two tanks are installed on the same horizontal plane. The capacity of both tanks combined must not exceed 660 gallons (2498 L). Two smaller supply tanks connected together, instead of a single larger tank, allow more flexibility of location, such as with indoor storage tanks.

INTERNATIONAL CODE COUNCIL®
Copyright © 2015 ICC. ALL RIGHTS RESERVED. Accessed by David Dammon on Jun 21, 2017 12:30:52 PM pursuant to License Agreement with ICC. No further reproduction or distribution authorized. ANY UNAUTHORIZED REPRODUCTION OR DISTRIBUTION IS A VIOLATION OF THE FEDERAL COPYRIGHT ACT AND THE LICENSE AGREEMENT, AND SUBJECT TO CIVIL AND CRIMINAL PENALTIES THEREUNDER.

M2203.7 Corrosion protection. Underground tanks and buried piping shall be protected by corrosion-resistant coatings or special alloys or fiberglass-reinforced plastic.

❖ To minimize the possibility of a hazardous fuel oil spill, underground tanks and buried piping must be protected by corrosion-resistant coating, use of special alloys or fiberglass-reinforced plastic. Materials installed underground and left unprotected are subject to moisture, soil chemistry and stresses that can cause rapid deterioration.

SECTION M2204
OIL PUMPS AND VALVES

M2204.1 Pumps. Oil pumps shall be positive displacement types that automatically shut off the oil supply when stopped. Automatic pumps shall be *listed* and *labeled* in accordance with UL 343 and shall be installed in accordance with their *listing*.

❖ Pumps must be of the positive-displacement type to prevent gravity or siphon delivery of oil when the pump is not operating. Otherwise, oil could drain through the pump and burner and into the combustion chamber, creating a hazard.

M2204.2 Shutoff valves. A *readily accessible* manual shutoff valve shall be installed between the oil supply tank and the burner. Where the shutoff valve is installed in the discharge line of an oil pump, a pressure-relief valve shall be incorporated to bypass or return surplus oil. Valves shall comply with UL 842.

❖ Valves can be used to stop the flow of oil if a leak occurs and can also be used during maintenance or repair of the burners. When the shutoff valve is installed downstream of a pump, the pump becomes capable of overpressurizing the piping system if it pumps against a closed valve. Therefore, if the pump has no built-in bypass, a pressure relief valve must be installed. The fuel oil discharged by the relief valve must be routed back to the tank through a return line to prevent a spill.

M2204.3 Maximum pressure. Pressure at the oil supply inlet to an *appliance* shall be not greater than 3 pounds per square inch (20.7 kPa).

❖ Higher pressures could cause malfunctioning of the appliance and/or leaks if the internal parts of the appliance are not designed to withstand higher pressures.

M2204.4 Relief valves. Fuel-oil lines incorporating heaters shall be provided with relief valves that will discharge to a return line when excess pressure exists.

❖ Fuel-oil systems are sometimes designed to incorporate a heater that decreases the viscosity of the oil and improves flow within the system. Because oil will expand when heated, it can reach pressures beyond those of the design operating pressure. Relief valves are necessary to prevent overpressures.

INTERNATIONAL CODE COUNCIL®
Copyright © 2015 ICC. ALL RIGHTS RESERVED. Accessed by David Dammon on Jun 21, 2017 12:30:52 PM pursuant to License Agreement with ICC. No further reproduction or distribution authorized. ANY UNAUTHORIZED REPRODUCTION OR DISTRIBUTION IS A VIOLATION OF THE FEDERAL COPYRIGHT ACT AND THE LICENSE AGREEMENT, AND SUBJECT TO CIVIL AND CRIMINAL PENALTIES THEREUNDER.

Chapter 23:
Solar Thermal Energy Systems

General Comments

Chapter 14 contains requirements for the construction, alteration and repair of all systems and components of solar energy systems used for space heating or cooling and domestic hot water heating or processing. The provisions of this chapter are limited to those necessary to achieve safe installations that are relatively hazard free.

A solar energy system can be designed to handle 100 percent of the energy load of a building, although this is rarely accomplished. Because solar energy is a low-intensity energy source and dependent on the weather, it is usually necessary to supplement a solar energy system with traditional energy sources.

Solar heating and cooling systems are classified as either passive or active systems. A passive solar energy system uses solar collectors, a gas or liquid heat-transfer medium and distribution piping or ductwork. This system does not use circulators or fans but relies on natural (gravity) flow. The flow of energy (heat) is by natural convection, conduction, and radiation. Commentary Figures 23(1) and 23(2) show typical passive solar heating applications.

A complete active solar energy system includes solar collectors, a gas or liquid heat transfer medium, piping, ducts, circulators, fans and controls to move the medium to the load or to an energy storage system. Commentary Figure 23(3) shows a typical active solar system used for space and domestic water heating, supplemented by an auxiliary furnace and water heater.

Many design variations exist, such as hybrid systems with components of both active and passive systems. Solar systems can act in harmony with the architectural features of the building and can be very complex, or they can be as simple as glazing [see Commentary Figure 23(4)]. Solar designs can be used to work with, and improve the performance of, conventional space heating systems. For example, a simple passive collection system can greatly improve the performance of an air-to-air or water-to-air heat pump system.

The energy collected by a solar system can be used as it is collected or transferred to some form of thermal storage system. Typical thermal storage systems consist of large quantities of a dense mass, such as stone, masonry or water. Storage mass can also consist of materials in which a phase change occurs, such as chemical compounds that store the latent heat required to liquefy the compounds that are solid at room temperature.

If the energy collected by a solar system is not used or stored for later use, and unless the collection system is designed to withstand the higher temperatures and pressures resulting from the static (no-flow) mode of operation, the collection system must either stop collecting or dump the energy to the building exterior.

The structural loading effect that the collectors and supports have on the building's roof system also must be considered. Collectors can add considerable weight, affect snow accumulation and increase wind loads and uplift forces. As with any roof-mounted equipment or appliances, the installation also must comply with the applicable provisions of the building portions of this code.

Purpose

This chapter establishes provisions for the safe installation, operation and repair of solar energy systems. Although these systems use components similar to those of conventional mechanical equipment, many of these provisions are unique to solar energy systems.

SECTION M2301
THERMAL SOLAR ENERGY SYSTEMS

M2301.1 General. This section provides for the design, construction, installation, *alteration* and repair of *equipment* and systems using thermal solar energy to provide space heating or cooling, hot water heating and swimming pool heating.

❖ The provisions within the this section cover the design, installation, construction, alteration and repair of equipment for thermal solar systems that heat water for domestic hot water use, space heating and, on rare occasions, space cooling. The *International Residential Code*® (IRC®) also covers the installation of collector systems that provide hot water for swimming pools.

There are five major components in active solar heating systems:

- Collector(s) to capture solar energy. Usually, systems used for space heating will have many more collectors than systems designed for domestic water heating only.
- Circulation system to move a fluid between the collectors to a storage tank. The circulation system will either be a direct (open loop) system or an indirect (closed loop) system. A direct system pumps domestic water directly from the storage tank (usually a hot water heater) through the collectors and back to the storage tank. An indirect system circulates an antifreeze fluid, oil, refriger-

INTERNATIONAL CODE COUNCIL®
Copyright © 2015 ICC. ALL RIGHTS RESERVED. Accessed by David Dammon on Jun 21, 2017 12:30:52 PM pursuant to License Agreement with ICC. No further reproduction or distribution authorized. ANY UNAUTHORIZED REPRODUCTION OR DISTRIBUTION IS A VIOLATION OF THE FEDERAL COPYRIGHT ACT AND THE LICENSE AGREEMENT, AND SUBJECT TO CIVIL AND CRIMINAL PENALTIES THEREUNDER.

ant or other fluid with a high boiling temperature and low freezing temperature through the collectors and back through a heat exchanger. The heat exchanger keeps the collection fluid separate from the domestic water.

- Storage tank(s) to collect heated water. This may be a standard water heater or a separate unfired hot water storage tank located next to the water heater.
- Backup heating system. For domestic water heating this will usually be a hot water heater. Backup space-heating systems may consist of electric baseboard heating or a gas or electric heater.
- Control system to regulate overall system operation. The control system will include valves and shutoff devices to protect from excessively high temperatures.

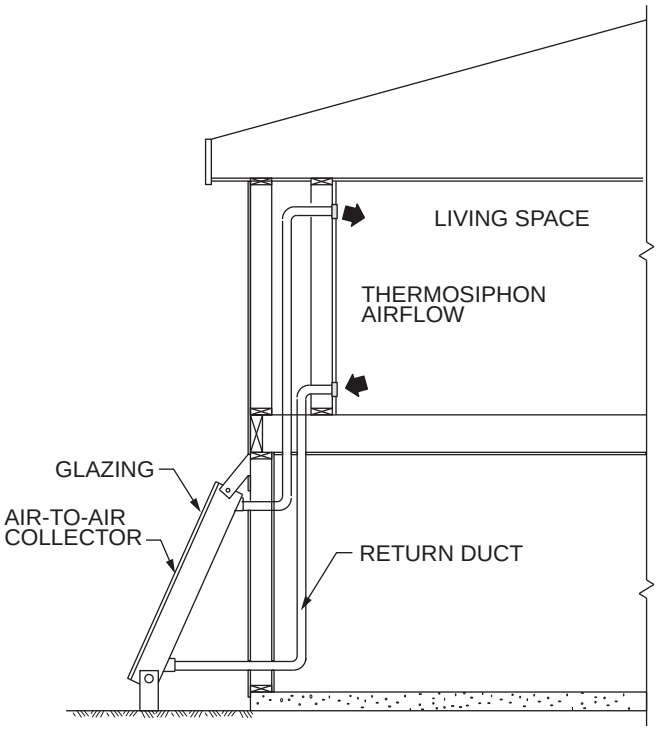

Figure 23(1)
PASSIVE SOLAR SPACE HEATING

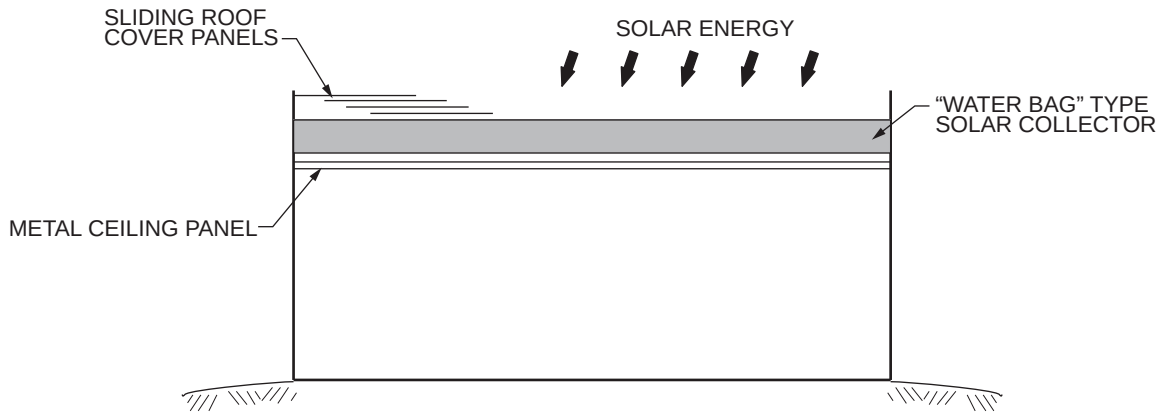

Figure 23(2)
PASSIVE SOLAR HEATING AND COOLING APPLICATIONS

INTERNATIONAL CODE COUNCIL®
Copyright © 2015 ICC. ALL RIGHTS RESERVED. Accessed by David Dammon on Jun 21, 2017 12:30:52 PM pursuant to License Agreement with ICC. No further reproduction or distribution authorized. ANY UNAUTHORIZED REPRODUCTION OR DISTRIBUTION IS A VIOLATION OF THE FEDERAL COPYRIGHT ACT AND THE LICENSE AGREEMENT, AND SUBJECT TO CIVIL AND CRIMINAL PENALTIES THEREUNDER.

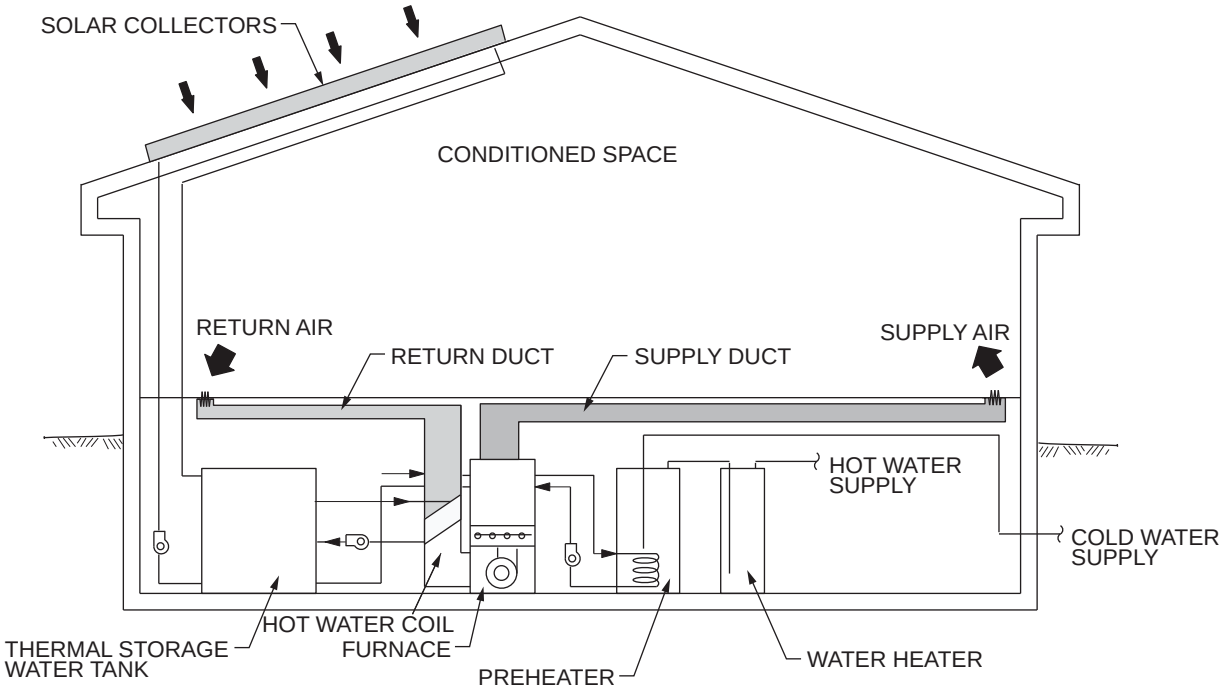

Figure 23(3)
ACTIVE SPACE AND DOMESTIC WATER HEATING SYSTEM

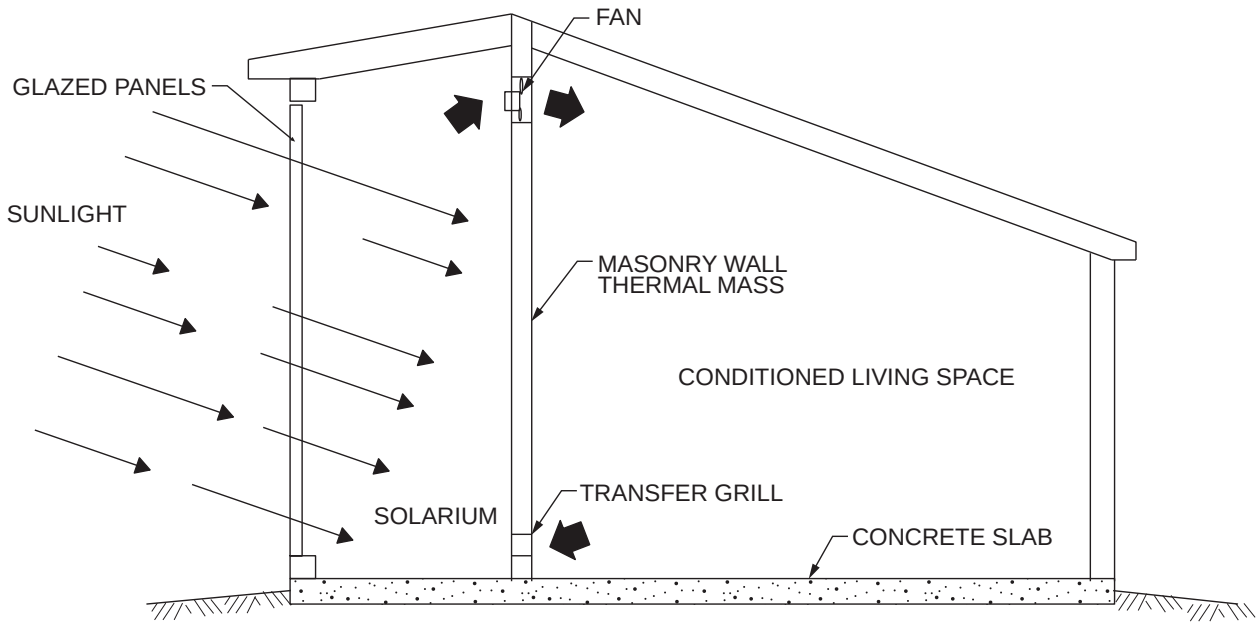

Figure 23(4)
PASSIVE COLLECTION WITH MECHANICAL DISTRIBUTION

INTERNATIONAL CODE COUNCIL®
Copyright © 2015 ICC. ALL RIGHTS RESERVED. Accessed by David Dammon on Jun 21, 2017 12:30:52 PM pursuant to License Agreement with ICC. No further reproduction or distribution authorized. ANY UNAUTHORIZED REPRODUCTION OR DISTRIBUTION IS A VIOLATION OF THE FEDERAL COPYRIGHT ACT AND THE LICENSE AGREEMENT, AND SUBJECT TO CIVIL AND CRIMINAL PENALTIES THEREUNDER.

M2301.2 Design and installation. The design and installation of thermal solar energy systems shall comply with Sections M2301.2.1 through M2301.2.13.

❖ The requirements of this chapter address the potential hazards to life and property associated with solar installations. The systems must be installed in accordance with the manufacturer's installation instructions. Components of the solar system must also conform to other applicable sections of the code.

M2301.2.1 Access. Solar energy collectors, controls, dampers, fans, blowers and pumps shall be accessible for inspection, maintenance, repair and replacement.

❖ This section requires that solar collectors, controls, dampers, fans, blowers and pumps associated with the solar system be accessible for inspection, maintenance, repair and replacement. The collection system pumps and controls are often located in the garage or pool equipment building, allowing easy access for the inspector, and are mounted in close proximity to each other. While not a code requirement, it is beneficial to have operation and maintenance manuals available to the owner once the system is installed.

M2301.2.2 Collectors and panels. Solar collectors and panels shall comply with Sections M2301.2.2.1 and M2301.2.2.2.

❖ See Sections M2301.2.2.1 and M2301.2.2.2.

M2301.2.2.1 Roof-mounted collectors. The roof shall be constructed to support the loads imposed by roof-mounted solar collectors. Roof-mounted solar collectors that serve as a roof covering shall conform to the requirements for roof coverings in Chapter 9 of this code. Where mounted on or above the roof coverings, the collectors and supporting structure shall be constructed of noncombustible materials or fire-retardant-treated wood equivalent to that required for the roof construction.

❖ Roof mounted solar collectors can be designed to be installed integral with the roof, thereby serving as the roof covering. They can also be mounted on or above the roof covering. Systems that are installed as a roof covering must be watertight and properly flashed, in addition to meeting the other requirements applicable to the installation in Chapter 9 of this code. Systems installed on or above the roof covering must be securely fastened to the roof/rafter system. Often, solar collector systems are installed with manufactured metal mounting brackets that can be attached to the roofing system or wood blocking, or with sleepers using lag bolts or other secure mounting systems. The manufacturer's mounting specifications must be followed so that the panels are properly mounted. This is especially important in areas with high wind loads. Also, the weight of the collector system must be checked (when operational and filled with fluid) to confirm that the roof structure is designed to meet the increased load.

Most manufactured panel systems used for domestic hot water are constructed using a metal housing to hold the collection system. This housing must meet the requirements for noncombustible materials. Panel systems constructed on site by the owner/builder that use a housing made of wood may or may not meet the requirements for noncombustible materials.

M2301.2.2.2 Collector sensors. Collector sensor installation, sensor location and the protection of exposed sensor wires from ultraviolet light shall be in accordance with SRCC 300.

❖ The referenced standard contains installation instructions for sensor devices used in collectors and collector arrays. Sunlight will degrade many materials, especially certain plastics.

M2301.2.3 Pressure and temperature relief valves and system components. System components containing fluids shall be protected with temperature and pressure relief valves or pressure relief valves. Relief devices shall be installed in sections of the system so that a section cannot be valved off or isolated from a relief device. Direct systems and the potable water portion of indirect systems shall be equipped with a relief valve in accordance with Section P2804. For indirect systems, pressure relief valves in solar loops shall comply with SRCC 300. System components shall have a working pressure rating of not less than the setting of the pressure relief device.

❖ Pressure and temperature relief valves are required to prevent collector, piping and equipment failures caused by excessive temperatures and pressures. Such failures could involve violent explosions, similar to those associated with boilers and water heaters. The collection surface, or absorber plate, can easily heat up to 200°F (93°C) on a freezing winter day and up to 400°F (204°C) on a summer day when the water is stagnant and not circulated through the collector. These relief valves are often installed as part of the collector system. Multiple relief valves could be necessary where there are separate piping system circuits.

M2301.2.4 Vacuum relief. System components that might be subjected to pressure drops below atmospheric pressure during operation or shutdown shall be protected by a vacuum-relief valve.

❖ System components that are subjected to pressure drops below atmospheric pressure during operation or shutdown can be damaged by the force of atmospheric pressure acting on the external side. Partial vacuums can also interfere with system drain-down. Vacuum relief valves can be used in conjunction with freeze protection valves that drain the collector panels when the temperature reaches close to 32°F (0°C) or a drain-down system that automatically drains the collector fluid when the system is shut off.

M2301.2.5 Piping insulation. Piping shall be insulated in accordance with the requirements of Chapter 11. Exterior insulation shall be protected from ultraviolet degradation. The entire solar loop shall be insulated. Where split-style insulation is used, the seam shall be sealed. Fittings shall be fully insulated.

Exceptions:

1. Those portions of the piping that are used to help prevent the system from overheating shall not be required to be insulated.

INTERNATIONAL CODE COUNCIL®
Copyright © 2015 ICC. ALL RIGHTS RESERVED. Accessed by David Dammon on Jun 21, 2017 12:30:52 PM pursuant to License Agreement with ICC. No further reproduction or distribution authorized. ANY UNAUTHORIZED REPRODUCTION OR DISTRIBUTION IS A VIOLATION OF THE FEDERAL COPYRIGHT ACT AND THE LICENSE AGREEMENT, AND SUBJECT TO CIVIL AND CRIMINAL PENALTIES THEREUNDER.

2. Those portions of piping that are exposed to solar radiation, made of the same material as the solar collector absorber plate and are covered in the same manner as the solar collector absorber, or that are used to collect additional solar energy, shall not be required to be insulated.
3. Piping in thermal solar systems using unglazed solar collectors to heat a swimming pool shall not be required to be insulated.

❖ Piping insulation will improve the efficiency of the system. Sunlight will degrade many types of pipe insulation, such as closed cell plastic insulation. Split-type insulation refers to insulation tubes that are split down their length to allow them to be fitted over installed piping. The split seam must be permanently sealed. The exceptions recognize portions of the piping that are meant to absorb solar energy or dissipate heat energy.

M2301.2.6 Protection from freezing. System components shall be protected from damage resulting from freezing of heat-transfer liquids at the winter design temperature provided in Table R301.2(1). Freeze protection shall be provided by heating, insulation, thermal mass and heat transfer fluids with freeze points lower than the winter design temperature, heat tape or other *approved* methods, or combinations thereof.

Exception: Where the winter design temperature is greater than 32°F (0°C).

❖ In climates where the design winter temperature is 32°F (0°C) or less, the system must be protected from freezing. The greatest damage that can occur to the collector system is for water to freeze in the collection system, causing the collectors, components and piping to rupture. To meet the intent of the code, an indirect system can be protected with antifreeze heat transfer fluids or the system can be a type that drains the outdoor system components when the temperature drops to a specific temperature.

M2301.2.7 Storage tank sensors. Storage tank sensors shall comply with SRCC 300.

❖ Storage tanks store the energy collected from the sun for eventual use external to the storage tank. The storage might be domestic potable water or it might be nonpotable heat transfer fluid. Tank sensors communicate the storage temperatures to the system's pumps and controllers.

M2301.2.8 Expansion tanks. Expansion tanks in solar energy systems shall be installed in accordance with Section M2003 in solar collector loops that contain pressurized heat transfer fluid. Where expansion tanks are used, the system shall be designed in accordance with SRCC 300 to provide an expansion tank that is sized to withstand the maximum operating pressure of the system.

Exception: Expansion tanks shall not be required in *drain-back systems*.

❖ This section requires the installation of pressure expansion tanks in closed loop systems. The text is stating two different requirements; one being that an expansion tank must be installed and the other being that the installation must comply with Section M2003. Closed loop systems cannot accommodate the increased volume of expanded liquid that results from a rise in temperature. Without an expansion tank, the expanding fluid would rupture a system component or a pressure relief device would have to routinely open and discharge heat transfer fluid. Manufactured systems that are preengineered based on the number of panels in the system, storage tank size and circulation pump size often come with a specified expansion tank engineered for the system. The expansion tank is usually installed next to the pumps, storage tank and controls. Expansion tanks are installed in closed loop hydronic heating systems for the same reasons.

M2301.2.9 Roof and wall penetrations. Roof and wall penetrations shall be flashed and sealed in accordance with Chapter 9 of this code to prevent entry of water, rodents and insects.

❖ Roof and wall penetrations must be sealed during and after installation of the solar systems. At a minimum, there will be roof penetrations for the supply and return piping going to and from the collector panels. Systems mounted above the roof covering will require penetrations into the rafter system or blocking to attach the collectors to the roof, and care must be taken to seal the holes with a waterproof sealant. Chapter 9 states flashing and waterproofing requirements for several roof types. Wall penetrations must also be sealed to prevent the entry of water, rodents and insects.

M2301.2.10 Description and warning labels. Solar thermal systems shall comply with description label and warning label requirements of Section M2301.2.11.2 and SRCC 300.

❖ Labeling of system components provides valuable guidance to homeowners, occupants and service personnel and also provides necessary warnings relative to high temperatures and pressures and required actions to prevent hazards.

M2301.2.11 Solar loop. Solar loops shall be in accordance with Sections M2301.2.11.1 and M2301.2.11.2.

❖ See Sections M2301.2.11.1 and M2301.2.11.2.

M2301.2.11.1 Solar loop isolation. Valves shall be installed to allow the solar collectors to be isolated from the remainder of the system.

❖ Isolation of the collectors could be necessary for servicing, repair or replacement. A loop is a circuit of piping and components that circulates a fluid in a closed circuit (loop). In an indirect system, the collector loop circulates between the collectors and a heat exchanger or storage tank. This section requires isolation of the collector loop, not necessarily isolation of the collectors from their collector loop. If the collectors themselves were isolated from loop piping, they might be isolated from the required expansion tanks and pressure and temperature relief devices, thereby creating a serious hazard.

INTERNATIONAL CODE COUNCIL®
Copyright © 2015 ICC. ALL RIGHTS RESERVED. Accessed by David Dammon on Jun 21, 2017 12:30:52 PM pursuant to License Agreement with ICC. No further reproduction or distribution authorized. ANY UNAUTHORIZED REPRODUCTION OR DISTRIBUTION IS A VIOLATION OF THE FEDERAL COPYRIGHT ACT AND THE LICENSE AGREEMENT, AND SUBJECT TO CIVIL AND CRIMINAL PENALTIES THEREUNDER.

M2301.2.11.2 Drain and fill valve labels and caps. Drain and fill valves shall be labeled with a description and warning that identifies the fluid in the solar loop and a warning that the fluid might be discharged at high temperature and pressure. Drain caps shall be installed at drain and fill valves.

❖ Access points into a collector loop, such as fill valve ports and drain valve ports, must be labeled to warn of the potential hazards relative to chemical content of the loop and the pressures and temperatures in the loop. Personnel and occupants could be injured by opening valves if they are unaware of the dangers and fail to take the necessary precautions. All access valves, such as hose bibb drain valves, must be capped to prevent accidental discharge. Discharge of system fluid would require two actions; removing a cap and opening one or more valves.

M2301.2.12 Maximum temperature limitation. Systems shall be equipped with means to limit the maximum water temperature of the system fluid entering or exchanging heat with any pressurized vessel inside the *dwelling* to 180°F (82°C). This protection is in addition to the required temperature- and pressure-relief valves required by Section M2301.2.3.

❖ To prevent potential problems with clearances to combustibles, to prevent burn injuries resulting from human contact with piping or pressure vessels and to prevent overheating of the loads served by the solar system, the system fluid temperature is limited to 180°F (82°C) where the fluid enters or conveys heat energy to any pressurized vessel inside of a dwelling. The method of limiting the temperature is to be determined by the designer or system installer. Possible methods include a system to bypass the solar collectors and/or a rejection heat exchanger outside of the dwelling.

M2301.2.13 Thermal storage unit seismic bracing. In Seismic Design Categories D_0, D_1 and D_2 and in townhouses in Seismic Design Category C, thermal storage units shall be anchored in accordance with Section M1307.2.

❖ See the commentary to Section M1307.2.

M2301.3 Labeling. *Labeling* shall comply with Sections M2301.3.1 and M2301.3.2.

❖ The designer, installer, owner and building official must know the quality, design and application limitations of the collectors and thermal storage units. This section requires that they be labeled. The label is a form of quality assurance and lists specifications that apply to the equipment, as well as any necessary information for its installation and application.

M2301.3.1 Collectors and panels. Solar thermal collectors and panels shall be listed and labeled in accordance with SRCC 100 or SRCC 600. Collectors and panels shall be *listed* and *labeled* to show the manufacturer's name, model number, serial number, collector weight, collector maximum allowable temperatures and pressures, and the type of heat transfer fluids that are compatible with the collector or panel. The *label* shall clarify that these specifications apply only to the collector or panel.

❖ Solar collectors must be listed and labeled to the specified standards and must be labeled to indicate the manufacturer's name, model number, serial number, collector weight, collector maximum allowable temperatures and pressures and the type of heat transfer fluids that are compatible with the collector. The label must state that the specifications on the label do not apply to components external to the collectors, otherwise, dangerous assumptions could be implied about the other portions of the solar system. The Solar Rating and Certification Corporation (SRCC) is one entity that provides a third party certification that will meet the requirements of this provision. The *Directory of SRCC Certified Solar Collector System Ratings, Directory of SRCC Certified Water Heating System Ratings*, and *Summary of SRCC Certified Solar Collector and Water Heating System Ratings* are published by the SRCC annually and list all the information required for this provision except for the serial number, which can be found on the collector.

M2301.3.2 Thermal storage units. Pressurized thermal storage units shall be *listed* and *labeled* to show the manufacturer's name, model number, serial number, storage unit maximum and minimum allowable operating temperatures and pressures, and the type of heat transfer fluids that are compatible with the storage unit. The *label* shall clarify that these specifications apply only to the thermal storage unit.

❖ Pressurized thermal storage units must bear a listing and label that discloses the manufacturer's name, model, serial number and important operating characteristics such as operating temperatures and pressures, and the type of heat transfer fluid. The information is important for installation, application, servicing, repairs and inspection. The label must state that the specifications on the label do not apply to components external to the thermal storage unit, otherwise dangerous assumptions could be implied about the other portions of the solar system.

M2301.4 Heat transfer gasses or liquids and heat exchangers. *Essentially toxic transfer fluids*, ethylene glycol, flammable gases and flammable liquids shall not be used as heat transfer fluids. Heat transfer gasses and liquids shall be rated to withstand the system's maximum design temperature under operating conditions without degradation. Heat exchangers used in solar thermal systems shall comply with Section P2902.5.2 and SRCC 300.

Heat transfer fluids shall be in accordance with SRCC 300. The flash point of the heat transfer fluids utilized in solar thermal systems shall be not less than 50°F (28°C) above the design maximum nonoperating or no-flow temperature attained by the fluid in the collector.

❖ Flammable gases, flammable liquids, toxic chemicals and ethylene glycol must not be used as heat transfer fluids because they each pose significant risks. Ethylene glycol is automotive antifreeze, is very toxic and is

INTERNATIONAL CODE COUNCIL®
Copyright © 2015 ICC. ALL RIGHTS RESERVED. Accessed by David Dammon on Jun 21, 2017 12:30:52 PM pursuant to License Agreement with ICC. No further reproduction or distribution authorized. ANY UNAUTHORIZED REPRODUCTION OR DISTRIBUTION IS A VIOLATION OF THE FEDERAL COPYRIGHT ACT AND THE LICENSE AGREEMENT, AND SUBJECT TO CIVIL AND CRIMINAL PENALTIES THEREUNDER.

an unacceptable risk as a heat transfer fluid. Chemicals introduced into a solar system must be compatible with the piping and system components and must also be capable of tolerating, without degradation, the temperatures to which they will be exposed.

M2301.5 Backflow protection. Connections from the potable water supply to solar systems shall comply with Section P2902.5.5.

❖ The potable water supply connected to a solar system must be protected from backflow because this is a direct connection between a potable and a nonpotable piping system, which poses significant health risks. See Section P2902.5.5.

M2301.6 Filtering. Air provided to occupied spaces that passes through thermal mass storage systems by mechanical means shall be filtered for particulates at the outlet of the thermal mass storage system.

❖ Some thermal storage systems utilize mass, such as stone aggregate, to store heat energy and force air through the stone bed to condition the air. Before such conditioned air is delivered to an occupied space, it must filtered to remove any particulate matter picked up from the mass, whatever the mass may be.

M2301.7 Solar thermal systems for heating potable water. Where a solar thermal system heats potable water to supply a potable hot water distribution system, the solar thermal system shall be in accordance with Sections M2301.7.1, M2301.7.2 and P2902.5.5.

❖ See Sections M2301.7.1, M2301.7.2 and P2902.5.5.

M2301.7.1 Indirect systems. Heat exchangers that are components of indirect solar thermal heating systems shall comply with Section P2902.5.2.

❖ See Section P2902.5.2. Indirect systems consist of a collector loop that conveys the energy from the collectors to a heat exchanger that transfers that energy to the potable water. It is considered as indirect because there is a heat exchange coil or plate type exchanger that isolates the potable water system from the solar collector system. A direct system would pass the potable water through the collectors without a heat exchanger. See Section M2301.7.2.

M2301.7.2 Direct systems. Where potable water is directly heated by a solar thermal system, the pipe, fittings, valves and other components that are in contact with the potable water in the solar heating system shall comply with the requirements of Chapter 29.

❖ Because a direct solar system heats the potable water without an isolating heat exchanger, the potable water is in contact with the collectors, the collector loop piping, the pumps, expansion tanks, etc. Anything in contact with the potable water must not contaminate the water, therefore, the components of a direct system have to meet the same requirements as potable water piping and potable water system components. See Chapter 29.

INTERNATIONAL CODE COUNCIL®
Copyright © 2015 ICC. ALL RIGHTS RESERVED. Accessed by David Dammon on Jun 21, 2017 12:30:52 PM pursuant to License Agreement with ICC. No further reproduction or distribution authorized. ANY UNAUTHORIZED REPRODUCTION OR DISTRIBUTION IS A VIOLATION OF THE FEDERAL COPYRIGHT ACT AND THE LICENSE AGREEMENT, AND SUBJECT TO CIVIL AND CRIMINAL PENALTIES THEREUNDER.

INTERNATIONAL CODE COUNCIL®
Copyright © 2015 ICC. ALL RIGHTS RESERVED. Accessed by David Dammon on Jun 21, 2017 12:30:52 PM pursuant to License Agreement with ICC. No further reproduction or distribution authorized. ANY UNAUTHORIZED REPRODUCTION OR DISTRIBUTION IS A VIOLATION OF THE FEDERAL COPYRIGHT ACT AND THE LICENSE AGREEMENT, AND SUBJECT TO CIVIL AND CRIMINAL PENALTIES THEREUNDER.

Part VI—Fuel Gas

Chapter 24: Fuel Gas

The text of this chapter is extracted from the 2015 edition of the *International Fuel Gas Code* and has been modified where necessary to conform to the scope of application of the *International Residential Code for One- and Two-Family Dwellings*. The section numbers appearing in parentheses after each section number are the section numbers of the corresponding text in the *International Fuel Gas Code.*

General Comments

This chapter covers all installations of gas piping, gas appliance installation and gas appliance venting systems. It is extracted from the *International Fuel Gas Code*® (IFGC®) and is identical in intent. This chapter contains its own gas-specific coverage of combustion air, clearance reduction methods, chimneys and vents, and appliance installation. The dual section numbering system allows this text to be cross-referenced with the IFGC. Chapters 12, 13, 14 and 20 also contain requirements applicable to gas appliance installations.

The IFGC itself is segregated by section number into two categories: code and standard. In that document, code sections are identified as IFGC; standards sections are identified as IFGS. The IFGS is a copyrighted work of the American Gas Association.

The commentary text of this chapter is produced and copyrighted by the International Code Council® (ICC®).

Purpose

Chapter 24 intends to protect occupants and their property from fire, explosion and health hazards that could result from the improper installation of gas piping systems, gas appliances and appliance venting systems.

SECTION G2401 (101) GENERAL

G2401.1 (101.2) Application. This chapter covers those fuel gas *piping systems*, fuel-gas *appliances* and related accessories, *venting systems* and *combustion air* configurations most commonly encountered in the construction of one- and two-family dwellings and structures regulated by this *code.*

Coverage of *piping systems* shall extend from the *point of delivery* to the outlet of the *appliance* shutoff *valves* (see definition of *"Point of delivery"*). *Piping systems* requirements shall include design, materials, components, fabrication, assembly, installation, testing, inspection, operation and maintenance. Requirements for gas *appliances* and related accessories shall include installation, combustion and ventilation air and venting and connections to *piping systems*.

The omission from this chapter of any material or method of installation provided for in the *International Fuel Gas Code* shall not be construed as prohibiting the use of such material or method of installation. Fuel-gas *piping systems*, fuel-gas *appliances* and related accessories, *venting systems* and *combustion air* configurations not specifically covered in these chapters shall comply with the applicable provisions of the *International Fuel Gas Code*.

Gaseous hydrogen systems shall be regulated by Chapter 7 of the *International Fuel Gas Code.*

This chapter shall not apply to the following:

1. Liquified natural gas (LNG) installations.
2. Temporary LP-*gas piping* for buildings under construction or renovation that is not to become part of the permanent *piping system*.
3. Except as provided in Section G2412.1.1, gas *piping*, meters, gas pressure regulators, and other appurtenances used by the serving gas supplier in the distribution of gas, other than undiluted LP-gas.
4. Portable LP-gas *appliances* and *equipment* of all types that is not connected to a fixed fuel *piping system*.
5. Portable fuel cell *appliances* that are neither connected to a fixed *piping system* nor interconnected to a power grid.
6. Installation of hydrogen gas, LP-gas and compressed natural gas (CNG) systems on vehicles.

❖ This section describes the types of fuel gas systems to which the code is intended to apply and specifically lists those systems to which the code does not apply.

The applicability of the code spans from the initial design of fuel gas systems, through the installation and construction phases, and into the maintenance of operating systems. Chapter 24 of the *International Residential Code*® (IRC®) covers fuel gas systems and is a duplication of the applicable IFGC text. The provisions of Chapter 24 of the IRC are identical to those in

INTERNATIONAL CODE COUNCIL®
Copyright © 2015 ICC. ALL RIGHTS RESERVED. Accessed by David Dammon on Jun 21, 2017 12:30:52 PM pursuant to License Agreement with ICC. No further reproduction or distribution authorized. ANY UNAUTHORIZED REPRODUCTION OR DISTRIBUTION IS A VIOLATION OF THE FEDERAL COPYRIGHT ACT AND THE LICENSE AGREEMENT, AND SUBJECT TO CIVIL AND CRIMINAL PENALTIES THEREUNDER.

the IFGC. Chapter 24 contains only the IFGC text that is applicable to one- and two-family dwellings and townhouses. If something is encountered on plans or in the field that is not covered by Chapter 24, the provisions of the IFGC take over. Note that each Chapter 24 section number is followed by the corresponding IFGC section number. This makes it easy to cross-reference Chapter 24 to its source, the IFGC.

SECTION G2402 (201) GENERAL

G2402.1 (201.1) Scope. Unless otherwise expressly stated, the following words and terms shall, for the purposes of this chapter, have the meanings indicated in this chapter.

❖ In the application of the code, the terms used have the meanings given in Section G2403.

G2402.2 (201.2) Interchangeability. Words used in the present tense include the future; words in the masculine gender include the feminine and neuter; the singular number includes the plural and the plural, the singular.

❖ Although the definitions contained in Section G2403 are to be taken literally, gender and tense are considered to be interchangeable; thus, any grammatical inconsistencies within the code text will not hinder the understanding or enforcement of the requirements.

G2402.3 (201.3) Terms defined in other codes. Where terms are not defined in this code and are defined in the *International Building Code*, *International Fire Code*, *International Mechanical Code*, *International Fuel Gas Code* or *International Plumbing Code*, such terms shall have meanings ascribed to them as in those *codes*.

❖ When a word or term appears in the code that is not defined in this chapter, other references may be used to find its definition. These include the *International Building Code*® (IBC®), the *International Fire Code*® (IFC®), the *International Mechanical Code*® (IMC®) and the *International Plumbing Code*® (IPC®). These codes contain additional definitions (some parallel and duplicative) that may be used in the enforcement of this code or in the enforcement of the other codes by reference.

SECTION G2403 (202) GENERAL DEFINITIONS

❖ Definitions of terms can help in the understanding and application of the code requirements. The purpose for including here those definitions that are most closely associated with the subject matter of this chapter is to provide more convenient access to them without having to refer back to Chapter 2. For convenience, these terms are also listed in Chapter 2 with a cross reference to this section. The use and application of all defined terms, including those defined in this section, are set forth in Section 201.

ACCESS (TO). That which enables a device, *appliance* or *equipment* to be reached by ready *access* or by a means that first requires the removal or movement of a panel, door or similar obstruction (see also "Ready *access*").

AIR CONDITIONER, GAS-FIRED. A gas-burning, automatically operated *appliance* for supplying cooled and/or dehumidified air or chilled liquid.

❖ Gas-fired air conditioners are not specifically referred to in the code, but would include systems fueled with natural or propane gas including absorption type units and reciprocating units powered by internal combustion engines.

AIR CONDITIONING. The treatment of air so as to control simultaneously the temperature, humidity, cleanness and distribution of the air to meet the requirements of a conditioned space.

AIR, EXHAUST. Air being removed from any space or piece of *equipment* or *appliance* and conveyed directly to the atmosphere by means of openings or ducts.

❖ Exhaust air may be from a space, an appliance or a piece of equipment. Exhaust air systems are terminated outside of the building, in some cases after the exhaust air has been treated to remove any harmful emissions. Exhaust air is not recirculated.

AIR-HANDLING UNIT. A blower or fan used for the purpose of distributing supply air to a room, space or area.

❖ In addition to blowers, air-handling units may contain heat exchangers, filters and means to control air volume.

AIR, MAKEUP. Any combination of outdoor and transfer air intended to replace exhaust air and exfiltration.

❖ Makeup air is not to be confused with combustion air. Makeup air replaces the air being exhausted through such systems as bathroom and toilet exhausts, kitchen exhaust hoods, and clothes dryer exhaust systems. Refer to Section G2439.5 for specific requirements for makeup air. Exhaust systems cannot function at design capacity without adequate volumes of makeup air to replace the air being exhausted.

ALTERATION. A change in a system that involves an extension, addition or change to the arrangement, type or purpose of the original installation.

❖ An alteration is any modification or change made to an existing installation. For example, increasing the size of piping for a portion of the system to accommodate different appliances would be an alteration.

ANODELESS RISER. A transition assembly in which plastic *piping* is installed and terminated above ground outside of a building.

❖ As the name implies, these riser assemblies protect the steel riser from corrosion by means other than cathodic protection that involves a sacrificial anode. Some anodeless risers allow the termination of plastic piping above ground by encasing the piping in a steel conduit equipped with a plastic-to-steel transition fitting [see Commentary Figure 2403(1)].

INTERNATIONAL CODE COUNCIL®
Copyright © 2015 ICC. ALL RIGHTS RESERVED. Accessed by David Dammon on Jun 21, 2017 12:30:52 PM pursuant to License Agreement with ICC. No further reproduction or distribution authorized. ANY UNAUTHORIZED REPRODUCTION OR DISTRIBUTION IS A VIOLATION OF THE FEDERAL COPYRIGHT ACT AND THE LICENSE AGREEMENT, AND SUBJECT TO CIVIL AND CRIMINAL PENALTIES THEREUNDER.



Photo courtesy of Perfection Corporation

Figure G2403(1)
ANODELESS RISERS

APPLIANCE. Any apparatus or device that utilizes a fuel or raw material to produce light, heat, power, refrigeration or air conditioning.

❖ An appliance is a manufactured component or assembly of components that converts one source of energy into a different form of energy to serve a specific purpose. The term "appliance" generally refers to residential- and commercial-type utilization equipment that is manufactured in standardized sizes or types. The term "appliance" is generally not associated with industrial-type equipment. For the application of the code provisions, the terms "appliance" and "equipment" are not interchangeable.

Examples of appliances regulated by the code include furnaces; boilers; water heaters; room heaters; decorative gas log sets; cooking equipment; clothes dryers; pool, spa and hot tub heaters; unit heaters; ovens and similar gas-fired appliances (see the definition of "Equipment"). Note that the definition intends to state that a fuel can be used as a raw material to produce energy rather than the apparent statement that an appliance utilizes raw materials that are not fuels. For example, a fuel-cell system could use natural gas as a raw material for the production of hydrogen for use in the fuel cell. The definition was revised to recognize that in a few instances in the code, the term "appliance" is used to describe appliances that are fueled by other than gaseous fuels, whereas generally, the term describes gas-fired appliances.

APPLIANCE, AUTOMATICALLY CONTROLLED. Appliances equipped with an automatic *burner* ignition and safety shut-off device and other automatic devices, which accomplish complete turn-on and shut-off of the gas to the *main burner* or *burners*, and graduate the gas supply to the *burner* or *burners*, but do not affect complete shut-off of the gas.

❖ With respect to the code, an automatically controlled appliance is an appliance that is cycled through its operation by controls, such as thermostats, pressure switches and timers, without manual intervention. A residential water heater is automatically controlled: a four-burner cooktop is not.

APPLIANCE, FAN-ASSISTED COMBUSTION. An *appliance* equipped with an integral mechanical means to either draw or force products of combustion through the combustion chamber or heat exchanger.

❖ Fan-assisted appliances are a specific type of Category I appliance, typically furnaces and boilers. They are not to be confused with Category II, III or IV appliances; power-vented appliances; or appliances served by exhausters. As the name implies, these appliances use a fan (blower) to "assist" the combustion process by helping the flue gases to overcome the internal flow resistance of the appliance heat exchanger. Some fan-assisted appliances are field-convertible to Category III appliances.

APPLIANCE, UNVENTED. An *appliance* designed or installed in such a manner that the products of combustion are not conveyed by a vent or *chimney* directly to the outside atmosphere.

❖ Direct-fired makeup air heaters, gas-fired infrared radiant unit heaters, gas-fired cooking equipment and

INTERNATIONAL CODE COUNCIL®
Copyright © 2015 ICC. ALL RIGHTS RESERVED. Accessed by David Dammon on Jun 21, 2017 12:30:52 PM pursuant to License Agreement with ICC. No further reproduction or distribution authorized. ANY UNAUTHORIZED REPRODUCTION OR DISTRIBUTION IS A VIOLATION OF THE FEDERAL COPYRIGHT ACT AND THE LICENSE AGREEMENT, AND SUBJECT TO CIVIL AND CRIMINAL PENALTIES THEREUNDER.

small gas-fired room heaters are examples of appliances that are sometimes unvented. With the exception of direct-fired equipment, the appliances listed herein can also be of the vented type, depending on the design and type of appliance and the particular application. Unvented appliances must be designed, installed and operated to avoid both the depletion of the oxygen supply and the accumulation of toxic combustion by products (see Sections G2425.8, G2445 and G2451).

APPLIANCE, VENTED. An *appliance* designed and installed in such a manner that all of the products of combustion are conveyed directly from the *appliance* to the outside atmosphere through an *approved chimney* or vent system.

❖ Most fuel-fired appliances are designed to vent the products of combustion to the outdoors through one or more specific types of vent or chimney (see Section G2425.2).

APPROVED. Acceptable to the *code official*.

❖ As related to the process of acceptance of fuel gas related installations, including materials, equipment and construction systems, this definition identifies where ultimate authority rests. Whenever this term is used, it means that only the enforcing authority can accept a specific installation or component as complying with the code. Research reports prepared and published by the ICC may be used by code officials to aid in their review and approval of the material or method described in the report. Publishing a report does not indicate automatic "approval" for the material or method described in the report. When the code states that an item or method "shall be approved," it does not mean that the code official is obligated to allow or accept it. Rather, it means that the code official must determine whether the item or method is acceptable; that is, the code official must make the decision to allow or disallow; accept or reject.

APPROVED AGENCY. An established and recognized agency that is regularly engaged in conducting tests or furnishing inspection services, where such agency has been approved by the *code official*.

ATMOSPHERIC PRESSURE. The pressure of the weight of air and water vapor on the surface of the earth, approximately 14.7 pounds per square inch (psia) (101 kPa absolute) at sea level.

❖ This is the "standard" atmospheric pressure at sea level. The actual atmospheric pressure varies with climate conditions. Barometric pressure is a measure of the actual atmospheric pressure, usually given as inches of mercury. One standard atmosphere (14.7 psi) is equal to 29.9 inches of mercury (101.4 kPa) at 32°F (0°C). Absolute pressure includes atmospheric pressure. Gauge pressure is the pressure above atmospheric pressure. If not otherwise defined, stated pressure is the pressure above atmospheric pressure (gauge pressure). A vacuum (partial or complete) is a pressure below atmospheric pressure.

AUTOMATIC IGNITION. Ignition of gas at the *burner(s)* when the gas controlling device is turned on, including reignition if the flames on the *burner(s)* have been extinguished by means other than by the closing of the gas controlling device.

❖ As opposed to manual ignition, automatic ignition is accomplished by pilot burners, spark ignitors, hot surface ignitors and similar means.

BAROMETRIC DRAFT REGULATOR. A balanced *damper* device attached to a *chimney,* vent *connector,* breeching or flue gas manifold to protect combustion *appliances* by controlling *chimney draft*. A double-acting *barometric draft regulator* is one whose balancing *damper* is free to move in either direction to protect combustion *appliances* from both excessive *draft* and backdraft.

❖ These units automatically open or close depending on the difference between the internal vent pressure and the atmospheric pressure. See the commentary to the definition of "Atmospheric pressure." Excessive negative pressure in the vent will cause excessive draft; therefore, the draft regulator will open as a result of the higher atmospheric pressure on the exterior of the damper, allowing air to enter the vent and thereby increase the internal vent pressure. With excessive positive internal vent pressure, a double-acting regulator will open to relieve the pressure, lowering the vent internal pressure [see Commentary Figure G2403(2)].



Photo courtesy of Tjernlund Products, Inc.

FIGURE G2403(2)
BAROMETRIC DRAFT REGULATOR

BOILER, LOW-PRESSURE. A self-contained *appliance* for supplying steam or hot water.

❖ Low-pressure boilers operate at pressures less than or equal to 15 pounds per square inch (psi) (103 kPa) for

INTERNATIONAL CODE COUNCIL®
Copyright © 2015 ICC. ALL RIGHTS RESERVED. Accessed by David Dammon on Jun 21, 2017 12:30:52 PM pursuant to License Agreement with ICC. No further reproduction or distribution authorized. ANY UNAUTHORIZED REPRODUCTION OR DISTRIBUTION IS A VIOLATION OF THE FEDERAL COPYRIGHT ACT AND THE LICENSE AGREEMENT, AND SUBJECT TO CIVIL AND CRIMINAL PENALTIES THEREUNDER.

steam and 160 psi (1103 kPa) for water. High-pressure boilers operate at pressures exceeding those pressures.

Boilers are usually manufactured of steel, cast iron or copper and are used to transfer heat from the combustion of a fuel or from an electric-resistance element to water to make steam or pressurized hot water for heating or other process or power purposes.

Boilers are usually installed in closed systems where the heat transfer medium is recirculated and retained within the system.

Boilers must be labeled and installed in accordance with the manufacturer's installation instructions and the applicable sections of the code. Boilers are rated in accordance with standards published by the American Society of Mechanical Engineers (ASME), the Hydronics Institute, the Steel Boiler Institute (SBI), the Canadian Standards Association (CSA) and the American Boiler Manufacturers Association (ABMA). Boilers can be classified by working temperature, working pressure, type of fuel used (or electric boilers), materials of construction and whether or not the heat transfer medium changes phase from a liquid to a vapor [see Commentary Figure G2403(3)].

Hot water heating boiler. A boiler in which no steam is generated, from which hot water is circulated for heating purposes and then returned to the boiler, and that operates at water pressures not exceeding 160 pounds per square inch gauge (psig) (1100 kPa gauge) and at water temperatures not exceeding 250ºF (121ºC) at or near the boiler outlet.

❖ Hot water heating boilers are normally part of a closed system in which the heated water is circulated through

WEIL-McLAIN
MODEL LGB SERIES 2 BOILER

TO DETERMINE BOILER SIZE, COUNT THE NUMBER OF SECTIONS OR MEASURE THE JACKET LENGTH. CHECK BOX NEXT TO BOILER SIZE INSTALLED.

MODEL NUMBER	NUMBER OF SECTIONS	JACKET LENGTH INCHES	MIN. RELIEF VALVE CAP. LBS/HR OR MBH	INPUT BTU/HR	MINIMUM INPUT BTU/HR	CSA GROSS OUTPUT BTU/HR	NET I=B=R OUTPUT		
							Steam Sq. Ft.	Steam MBH	Water MBH
☐ LGB-4	4	21	325	400,000	---	324,000	1013	243	282
☐ LGB-5	5	26	422	520,000	---	421,200	1317	316	366
☐ LGB-6	6	31	527	650,000	325,000	526,500	1646	395	458
☐ LGB-7	7	36	632	780,000	390,000	631,800	1975	474	549
☐ LGB-8	8	41	738	910,000	455,000	737,100	2304	553	641
☐ LGB-9	9	46	843	1,040,000	520,000	842,400	2633	632	733
☐ LGB-10	10	51	948	1,170,000	585,000	947,700	2965	711	824
☐ LGB-11	11	56	1053	1,300,000	650,000	1,053,000	3292	790	916
☐ LGB-12	12	61	1159	1,430,000	715,000	1,158,300	3621	869	1007
☐ LGB-13	13	66	1264	1,560,000	780,000	1,263,600	3954	949	1099
☐ LGB-14	14	71	1369	1,690,000	845,000	1,368,900	4313	1035	1190
☐ LGB-15	15	76	1475	1,820,000	910,000	1,474,200	4679	1123	1282
☐ LGB-16	16	81	1580	1,950,000	975,000	1,579,500	5046	1211	1373
☐ LGB-17	17	86	1685	2,080,000	1,040,000	1,684,800	5408	1298	1465
☐ LGB-18	18	91	1791	2,210,000	1,105,000	1,790,100	5775	1386	1557
☐ LGB-19	19	96	1896	2,340,000	1,170,000	1,895,400	6125	1470	1648
☐ LGB-20	20	101	2001	2,470,000	1,235,000	2,000,700	6471	1553	1740
☐ LGB-21	21	106	2106	2,600,000	1,300,000	2,106,000	6813	1635	1831
☐ LGB-22	22	111	2212	2,730,000	1,365,000	2,211,300	7155	1717	1923
☐ LGB-23	23	116	2317	2,860,000	1,430,000	2,316,600	7496	1799	2014

CERTIFIED BY
WEIL-McLAIN
523 S New Street
Eden, North Carolina
27288-3623

MAWP, WATER 50 PSI
MAWP, STEAM 15 PSI
MAX. WATER TEMP. 250°F

Electrical Input Less Than
12 Amperes, 120 Volts, & 60 Hertz.
Canadian Registration No. H7268.51234679T
MEA Number: 333-85-E
Design Certified Under ANSI Z21.13a 2005• CSA 4.9a 2005
Low Pressure Boiler

IMPORTANT
Installation not complete unless gas information label attached here.
Labels are attached to gas train in gas control carton.

- For installation on noncombustible flooring.
- Provide service clearances and minimum 24" between jacket and any combustible wall(s) and ceiling. Install in space large in comparison to size of boiler.
- Vent Category I.

550-223-880 (0606)

Figure courtesy of Weil-McLain

Figure G2403(3)
LABEL FOR LOW-PRESSURE BOILER

INTERNATIONAL CODE COUNCIL®
Copyright © 2015 ICC. ALL RIGHTS RESERVED. Accessed by David Dammon on Jun 21, 2017 12:30:52 PM pursuant to License Agreement with ICC. No further reproduction or distribution authorized. ANY UNAUTHORIZED REPRODUCTION OR DISTRIBUTION IS A VIOLATION OF THE FEDERAL COPYRIGHT ACT AND THE LICENSE AGREEMENT, AND SUBJECT TO CIVIL AND CRIMINAL PENALTIES THEREUNDER.

fan coils or radiators of various types, including convectors, finned tube units, radiant floor tubing systems and baseboard units.

Hot water supply boiler. A boiler, completely filled with water, which furnishes hot water to be used externally to itself, and that operates at water pressures not exceeding 160 psig (1100 kPa gauge) and at water temperatures not exceeding 250ºF (121ºC) at or near the boiler outlet.

❖ Hot water supply boilers are normally part of open systems in which the heated water is supplied and used externally to the boiler. Large domestic (potable) water heating systems often use hot water supply boilers. Such boilers will not likely be found in dwellings.

Steam heating boiler. A boiler in which steam is generated and that operates at a steam pressure not exceeding 15 psig (100 kPa gauge).

❖ Steam heating boilers are normally part of a closed system in which low-pressure steam can be circulated through a variety of terminal units, including natural convection units, forced-convection units and radiant panel systems.

BONDING JUMPER. A conductor installed to electrically connect metallic gas *piping* to the grounding electrode system.

❖ This term is used in subsections of G2411.1.1 relative to the bonding of gas piping systems. It is a number 6 AWG or larger copper conductor or equivalent that is used to electrically bond gas piping to the grounding electrodes that are a part of the electrical service for the structure.

BRAZING. A metal-joining process wherein coalescence is produced by the use of a nonferrous filler metal having a melting point above 1,000ºF (538ºC), but lower than that of the base metal being joined. The filler material is distributed between the closely fitted surfaces of the joint by capillary action.

❖ Brazing is the act of producing a brazed joint and is often referred to as silver soldering. Silver soldering is more accurately described as silver brazing and uses high-silver-bearing alloys primarily composed of silver, copper and zinc. Silver soldering (brazing) typically requires temperatures in excess of 1,000°F (538°C), and these solders are classified as "hard" solders.

Confusion has always existed concerning the distinction between "silver solder" and "silver-bearing solder." Silver solders are unique and can be further subdivided into soft and hard categories that are determined by the percentages of silver and the other component elements of the particular alloy. The distinction is that silver-bearing solders [melting point below 600°F (316°C)] are used in soft-soldered joints, and silver solders [melting point above 1,000°F (538°C)] are used in silver-brazed joints.

Brazed joints are considered to have superior strength and stress resistance and, because of the high melting point, are less likely to fail when exposed to fire.

Brazing with a filler metal conforming to AWS A5.8 produces a strong joint that will perform under extreme service conditions. The surfaces to be brazed must be cleaned to be free from oxides and impurities. Flux should be applied as soon as possible after the surfaces have been cleaned. Flux helps to remove residual traces of oxides, to promote wetting and to protect the surfaces from oxidation during heating. Care should be taken to prevent flux from entering the piping system during the brazing operation because flux that remains may corrode the pipe or contaminate the system.

Air and any other residual products should be removed from the pipe being brazed by purging the piping with a nonflammable gas such as carbon dioxide or nitrogen. Purging the system has several benefits, such as preventing oxidation from occurring on the inside of the pipe and preventing the creation of toxic gases that can result from the chemical breakdown of other products. Additionally, purging will eliminate the possibility of an explosion from any other flammable gas in the pipe that could ignite when mixed with air.

BTU. Abbreviation for British thermal unit, which is the quantity of heat required to raise the temperature of 1 pound (454 g) of water 1ºF (0.56ºC) (1 *Btu* = 1055 J).

BURNER. A device for the final conveyance of the gas, or a mixture of gas and air, to the combustion zone.

❖ There are several types of burners that vary in the method of providing combustion air and the pressures of fuel/air mixtures. Burner types include atmospheric ribbon, ported, porous ceramic, slotted and cone types and atmospheric or powered inshot and upshot gun burners.

Induced-draft. A *burner* that depends on *draft* induced by a fan that is an integral part of the *appliance* and is located downstream from the *burner*.

❖ See the commentary to the definition of "Draft/mechanical or induced draft."

Power. A *burner* in which gas, air or both are supplied at pressures exceeding, for gas, the line pressure, and for air, atmospheric pressure, with this added pressure being applied at the *burner*.

❖ Power burners are typically used on very large nonresidential-type appliances and use a blower to introduce combustion air under pressure and mix it with the fuel.

CHIMNEY. A primarily vertical structure containing one or more flues, for the purpose of carrying gaseous products of *combustion* and air from an *appliance* to the outside atmosphere.

❖ Chimneys differ from vents in their materials of construction and the type of appliance they are designed to serve. Chimneys are capable of venting much higher temperature flue gases than vents [see Commentary Figure G2403(4)].

Factory-built chimney. A *listed* and *labeled* chimney composed of factory-made components, assembled in the

INTERNATIONAL CODE COUNCIL®
Copyright © 2015 ICC. ALL RIGHTS RESERVED. Accessed by David Dammon on Jun 21, 2017 12:30:52 PM pursuant to License Agreement with ICC. No further reproduction or distribution authorized. ANY UNAUTHORIZED REPRODUCTION OR DISTRIBUTION IS A VIOLATION OF THE FEDERAL COPYRIGHT ACT AND THE LICENSE AGREEMENT, AND SUBJECT TO CIVIL AND CRIMINAL PENALTIES THEREUNDER.

field in accordance with manufacturer's instructions and the conditions of the listing.

❖ A factory-built chimney is a manufactured listed and labeled chimney that has been tested by an approved agency to determine its performance characteristics. Factory-built chimneys are manufactured in two basic designs: a double-wall mineral fiber insulated design and a triple-wall air-cooled design. Some chimneys use both convection cooling and mineral-fiber insulation. Both designs use stainless steel inner liners to resist the corrosive effects of combustion products [see Commentary Figure G2403(5)].

Masonry chimney. A field-constructed chimney composed of solid masonry units, bricks, stones or concrete.

❖ Masonry chimneys can have one or more flues within them and are field constructed of brick, stone, concrete or fire-clay materials. Masonry chimneys can stand alone or be part of a masonry fireplace.

CLEARANCE. The minimum distance through air measured between the heat-producing surface of the mechanical *appliance*, device or *equipment* and the surface of the *combustible material* or *assembly*.

❖ Clearances between sources of heat and combustibles are always airspace clearances.

CLOTHES DRYER. An *appliance* used to dry wet laundry by means of heated air.

❖ Type 1 clothes dryers are used in dwelling units and in residential settings.

Type 1. Factory-built package, multiple production. Primarily used in the family living environment. Usually the smallest unit physically and in function output.

❖ Type 1 clothes dryers are used in dwelling units and in residential settings.

CODE. These regulations, subsequent amendments thereto, or any emergency rule or regulation that the administrative authority having jurisdiction has lawfully adopted.

❖ The adopted regulations are generally referred to as "the code" and include not only this code, but also any adopted modifications to the code and all other related rules and regulations promulgated and enacted by the jurisdiction.

CODE OFFICIAL. The officer or other designated authority charged with the administration and enforcement of this code, or a duly authorized representative.

❖ The statutory power to enforce the code is normally vested in a building department (or the like) of a state, county or municipality whose designated enforcement officer is termed the "code official."

COMBUSTIBLE ASSEMBLY. Wall, floor, ceiling or other assembly constructed of one or more component materials that are not defined as noncombustible.

❖ A combustible assembly is made up of one or more combustible components. For example, a wall assembly with wood studs is combustible regardless of the nature of the sheathing attached to the studs. Likewise, a metal stud wall with gypsum board sheathing is a combustible assembly because the gypsum board is not noncombustible. A noncombustible assembly has



Photo courtesy of Selkirk L.L.C.

Figure G2403(4)
FACTORY-BUILT CHIMNEYS

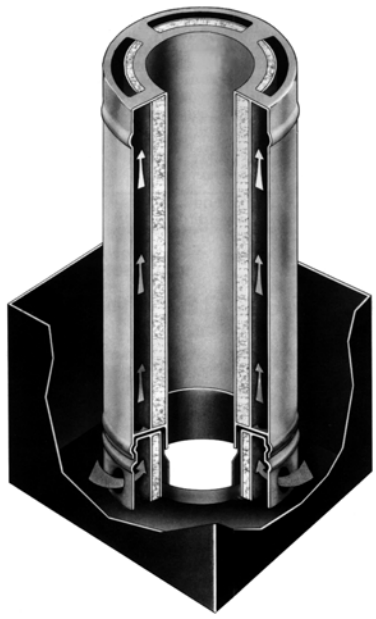

Figure courtesy of Simpson Dura-Vent Co., Inc.

Figure G2403(5)
AIR-COOLED FACTORY-BUILT CHIMNEY SECTION

INTERNATIONAL CODE COUNCIL®
Copyright © 2015 ICC. ALL RIGHTS RESERVED. Accessed by David Dammon on Jun 21, 2017 12:30:52 PM pursuant to License Agreement with ICC. No further reproduction or distribution authorized. ANY UNAUTHORIZED REPRODUCTION OR DISTRIBUTION IS A VIOLATION OF THE FEDERAL COPYRIGHT ACT AND THE LICENSE AGREEMENT, AND SUBJECT TO CIVIL AND CRIMINAL PENALTIES THEREUNDER.

no combustible elements (see the definition of "Noncombustible materials").

COMBUSTIBLE MATERIAL. Any material not defined as noncombustible.

❖ See the definition of "Noncombustible materials."

COMBUSTION. In the context of this code, refers to the rapid oxidation of fuel accompanied by the production of heat or heat and light.

❖ The primary components of combustion are fuel, oxygen and heat. The code regulates many aspects of combustion technology, including the process of combustion and providing sufficient air; the use of energy produced from combustion; the safe venting of the products of combustion; combustion efficiency; the containment and control of combustion; and the fuel supplies for combustion equipment and appliances.

COMBUSTION AIR. Air necessary for complete combustion of a fuel, including theoretical air and excess air.

❖ The process of combustion requires a specific amount of oxygen to initiate and sustain the combustion reaction. Combustion air includes primary air, secondary air, draft hood dilution air and excess air. Combustion air includes the amount of atmospheric air required for complete combustion of a fuel and is related to the molecular composition of the fuel being burned, the design of the fuel-burning equipment and the percentage of oxygen in the combustion air. Too little combustion air will result in incomplete combustion of a fuel and the possible formation of carbon deposits (soot), carbon monoxide, toxic alcohols, ketones, aldehydes, nitrous oxides and other by-products. The required amount of combustion air is usually stated in terms of cubic feet per minute (m^3/s) or pounds per hour (kg/h).

COMBUSTION CHAMBER. The portion of an *appliance* within which combustion occurs.

❖ Combustion chambers are either open to the atmosphere or are isolated (sealed) from the atmosphere in which the appliance is installed. Combustion chambers are often referred to as "fireboxes."

COMBUSTION PRODUCTS. Constituents resulting from the combustion of a fuel with the oxygen of the air, including the inert gases, but excluding excess air.

❖ Such products include water, carbon dioxide, carbon monoxide, nitrous oxides and various trace compounds.

CONCEALED LOCATION. A location that cannot be accessed without damaging permanent parts of the building structure or finish surface. Spaces above, below or behind readily removable panels or doors shall not be considered as concealed.

❖ The space above a "drop-in" tile suspended ceiling system, for example, would not be considered as a concealed location.

CONCEALED PIPING. *Piping* that is located in a *concealed location* (see *"Concealed location"*).

❖ This refers to gas piping in locations meeting the definition of "Concealed location."

CONDENSATE. The liquid that condenses from a gas (including flue gas) caused by a reduction in temperature or increase in pressure.

❖ Condensate forms when the temperature of a vapor is lowered to its dew point temperature. Air conditioning systems produce condensate when an airstream contacts cooling coils. The moisture in the air condenses on the cold surface of the coils and the air is "dehumidified." High-efficiency (84 percent and up) fuel burning appliances produce condensate from the combustion gases. Condensate also forms within improperly designed chimneys and vents when the products of combustion (which contain water vapor) contact the colder inner walls of the vent or chimney. If the temperature of the products of combustion is lowered to the dew point temperature of the water vapor, condensate will form on the inside walls of the vent or chimney. Condensed steam in hydronic systems is also referred to as "condensate."

CONNECTOR, APPLIANCE (Fuel). Rigid metallic *pipe* and fittings, semirigid metallic *tubing* and fittings or a *listed* and *labeled* device that connects an *appliance* to the *gas piping system*.

❖ An appliance fuel connector is the piping, tubing or factory-built device that is installed downstream of the equipment shutoff to connect the appliance to the gas piping system. See the definition of "Piping system." Section G2422.1 lists the types of appliance connectors which include both factory-built assemblies and field-constructed assemblies of pipe, tube and fittings. Note that rigid metallic piping, such as Schedule 40 black steel, used to connect an appliance to the gas piping system is considered to be an appliance connector because it is placed between the appliance and the piping system, downstream of the appliance shutoff valve. As defined, the gas piping ends at the appliance/equipment shutoff valve, therefore, everything downstream of that point is defined, sized and installed as a connector except as required by Sections G2420.5.2, G2420.5.3 and the exception to Section G2422.1.2.1.

CONNECTOR, CHIMNEY OR VENT. The *pipe* that connects an *appliance* to a chimney or vent.

❖ In most cases, appliances are not located directly in line with the vertically rising chimney or vent; therefore, a vent or chimney connector is necessary to connect the appliance flue outlet to the vent or chimney. Vent and chimney connectors can be single- or double-wall pipes and are usually made from steel, galvanized steel, stainless steel or aluminum sheet metal, depending on the application. Vent connectors are also made of corrugated aluminum. In many installa-

INTERNATIONAL CODE COUNCIL®
Copyright © 2015 ICC. ALL RIGHTS RESERVED. Accessed by David Dammon on Jun 21, 2017 12:30:52 PM pursuant to License Agreement with ICC. No further reproduction or distribution authorized. ANY UNAUTHORIZED REPRODUCTION OR DISTRIBUTION IS A VIOLATION OF THE FEDERAL COPYRIGHT ACT AND THE LICENSE AGREEMENT, AND SUBJECT TO CIVIL AND CRIMINAL PENALTIES THEREUNDER.

tions, the vent connectors must be constructed of the same material as the vent, as is typically done with Type B vent systems. There are many requirements in the code (Sections G2427 and G2428) regulating the location, length, size and type of connector.

CONTROL. A manual or automatic device designed to regulate the gas, air, water or electrical supply to, or operation of, a mechanical system.

❖ A control is a device designed to respond to changes in temperature, pressure, liquid or gas flow rates, current, voltage, resistance, humidity or liquid levels.

CONVERSION BURNER. A unit consisting of a *burner* and its *controls* for installation in an *appliance* originally utilizing another fuel.

❖ Typical conversion burners are designed to convert an appliance, such as a boiler, from solid-fuel fired to oil fired or from oil fired to gas fired.

CUBIC FOOT. The amount of gas that occupies 1 cubic foot (0.02832 m^3) when at a temperature of 60ºF (16ºC), saturated with water vapor and under a pressure equivalent to that of 30 inches of mercury (101 kPa).

❖ This definition applies specifically to a measurement of fuel gas.

DAMPER. A manually or automatically controlled device to regulate *draft* or the rate of flow of air or combustion gases.

❖ Dampers act as restrictors or valves in a gaseous flow stream (see Section G2427).

DECORATIVE APPLIANCE, VENTED. A *vented appliance* wherein the primary function lies in the aesthetic effect of the flames.

❖ Such appliances include so-called "gas fireplaces" that are designed to simulate a wood-burning fireplace. The title of the standard for vented decorative gas-fired appliances (ANSI Z21.50) has been changed to "Vented Gas Fireplaces."

DECORATIVE APPLIANCES FOR INSTALLATION IN VENTED FIREPLACES. A *vented appliance* designed for installation within the fire chamber of a vented *fireplace*, wherein the primary function lies in the aesthetic effect of the flames.

❖ These appliances include gas log sets for installation in solid-fuel-burning fireplaces.

DEMAND. The maximum amount of gas input required per unit of time, usually expressed in cubic feet per hour, or *Btu*/h (1 *Btu*/h = 0.2931 W).

❖ Demand refers to the load that appliances place on the fuel-gas distribution system.

DESIGN FLOOD ELEVATION. The elevation of the "design flood," including wave height, relative to the datum specified on the community's legally designated flood hazard map. In areas designated as Zone AO, the *design flood elevation* shall be the elevation of the highest existing grade of the *building's* perimeter plus the depth number, in feet, specified on the flood hazard map. In areas designated as Zone AO where a depth number is not specified on the map, the depth number shall be taken as being equal to 2 feet (610 mm).

❖ This term is used in Section G2404.7. See the commentary to Sections R322.1.4 and R322.1.4.1.

DILUTION AIR. Air that is introduced into a *draft hood* and is mixed with the *flue gases*.

❖ Dilution air is associated only with draft-hood equipped Category I appliances. Fan-assisted Category I appliances do not involve dilution air because all of the air brought in by the fan passes directly through the combustion chamber of the appliance. Dilution air lowers the dew point of vent gases, reducing the possibility that condensation will occur inside the vent or chimney.

DIRECT-VENT APPLIANCES. *Appliances* that are constructed and installed so that all air for combustion is derived directly from the outside atmosphere and all *flue gases* are discharged directly to the outside atmosphere.

❖ These appliances have independent exhaust and intake pipes or have concentric pipes that vent combustion gases through the inner pipe and convey combustion air in the annular space between the inner and outer pipe walls [see Commentary Figures G2403(6) and G2403(7)].

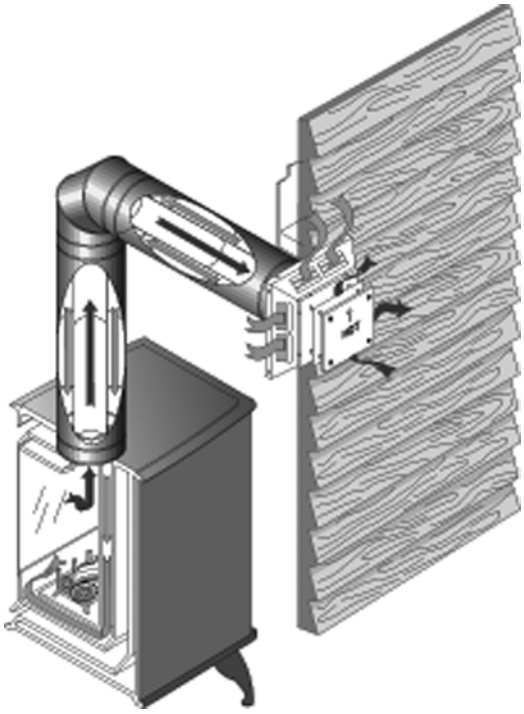

Figure courtesy of Simpson Dura-Vent Co., Inc.

Figure G2403(6)
DIRECT-VENT APPLIANCE

INTERNATIONAL CODE COUNCIL®
Copyright © 2015 ICC. ALL RIGHTS RESERVED. Accessed by David Dammon on Jun 21, 2017 12:30:52 PM pursuant to License Agreement with ICC. No further reproduction or distribution authorized. ANY UNAUTHORIZED REPRODUCTION OR DISTRIBUTION IS A VIOLATION OF THE FEDERAL COPYRIGHT ACT AND THE LICENSE AGREEMENT, AND SUBJECT TO CIVIL AND CRIMINAL PENALTIES THEREUNDER.

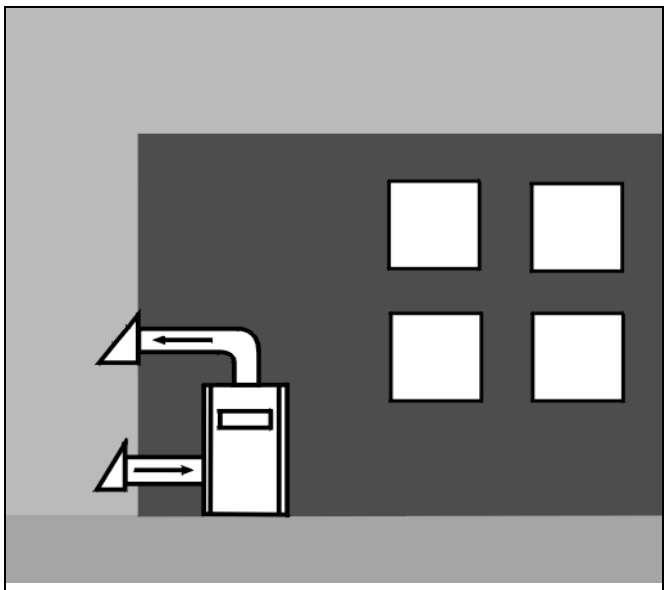

Figure courtesy of Simpson Dura-Vent Co., Inc.

Figure G2403(7)
DIRECT-VENT APPLIANCE

DRAFT. The pressure difference existing between the *appliance* or any component part and the atmosphere, that causes a continuous flow of air and products of combustion through the gas passages of the *appliance* to the atmosphere.

❖ Draft is the negative static pressure measured relative to atmospheric pressure that is developed in chimneys and vents and in the flue-ways of fuel-burning appliances. Draft can be produced by hot flue-gas buoyancy ("stack effect"), mechanically by fans and exhausters or by a combination of both natural and mechanical means.

Mechanical or induced draft. The pressure difference created by the action of a fan, blower or ejector that is located between the *appliance* and the chimney or vent termination.

❖ Induced draft systems use a fan or blower to boost or "induce" draft in a venting system that produces insufficient natural draft. Draft induction implies that the combustion gases are "pulled" through a passageway or conduit. Draft inducers produce negative pressures on the inlet (upstream) side of the fan or blower. They are separate field-installed units located between an appliance and its venting system. Draft inducers are used with natural draft venting systems to overcome the resistance of vent or chimney connectors and to compensate for the inability of the chimney or vent to produce sufficient and reliable draft.

Draft induction is also a design principle used in many fan-assisted appliances. Draft-inducer fans or blowers that are integral with fuel-fired appliances are necessary to overcome the internal resistance of the heat exchanger flue passageways. To attain higher thermal transfer efficiencies, some heat exchanger designs use flue passageways that retain the combustion gases longer over a greater surface area, thus extracting more heat. Such heat exchanger designs cannot rely on natural (gravity) venting to overcome the higher resistance to flow and, therefore, must rely on mechanical means to pull the combustion gases through the heat exchanger.

Induced draft systems are not to be confused with systems using power exhausters or other self-venting equipment.

Mechanical draft systems produce positive pressures on the discharge side of the fan or blower and can be said to "push" combustion gases through a passageway or conduit.

Natural draft. The pressure difference created by a vent or chimney because of its height, and the temperature difference between the *flue gases* and the atmosphere.

❖ Natural draft systems do not use mechanical devices such as fans or blowers, but instead rely on the principle of buoyancy to carry the products of combustion to the atmosphere. Because of the difference in temperature and the resultant difference in density between the hot products of combustion and the ambient atmosphere, the gases within the chimney or flue will rise, creating a buoyant "draft." The phenomenon of natural draft is sometimes referred to as "stack effect" and is measured in inches of water column (kPa). The amount of draft is affected by the height of the chimney or vent and also by the ability of the chimney or vent to maintain the temperature differential between the combustion gases and the ambient air.

DRAFT HOOD. A nonadjustable device built into an *appliance*, or made as part of the *vent connector* from an *appliance*, that is designed to (1) provide for ready escape of the *flue gases* from the *appliance* in the event of no *draft*, backdraft, or stoppage beyond the *draft hood*, (2) prevent a backdraft from entering the *appliance*, and (3) neutralize the effect of stack action of the chimney or gas vent upon operation of the *appliance*.

❖ Draft hoods are integral to or supplied with natural draft atmospheric-burner gas-fired appliances other than fan-assisted appliances. When classified, appliances equipped with draft hoods are classified by the manufacturer as Category I appliances. Because of minimum efficiency standards and the popularity of mechanical and other special proprietary venting systems, draft-hood-equipped appliances are becoming increasingly rare in the marketplace [see Commentary Figure G2403(8)].

INTERNATIONAL CODE COUNCIL®
Copyright © 2015 ICC. ALL RIGHTS RESERVED. Accessed by David Dammon on Jun 21, 2017 12:30:52 PM pursuant to License Agreement with ICC. No further reproduction or distribution authorized. ANY UNAUTHORIZED REPRODUCTION OR DISTRIBUTION IS A VIOLATION OF THE FEDERAL COPYRIGHT ACT AND THE LICENSE AGREEMENT, AND SUBJECT TO CIVIL AND CRIMINAL PENALTIES THEREUNDER.



Photo courtesy of A. O. Smith Water Products

Figure G2403(8)
DRAFT-HOOD-EQUIPPED APPLIANCE

DRAFT REGULATOR. A device that functions to maintain a desired *draft* in the *appliance* by automatically reducing the *draft* to the desired value.

❖ Excessive draft reduces the combustion and thermal efficiency of an appliance. Draft regulators automatically adjust the draft by admitting air into the vent, thereby reducing the draft [see Commentary Figure G2403(2)].

DRIP. The container placed at a low point in a system of *piping* to collect *condensate* and from which the *condensate* is removable.

❖ These reservoirs, also referred to as "drip legs," are made up of pipe and fittings and are intended to collect liquid in piping systems where condensables are possible. A "drip leg" is distinct from a "sediment trap" even though they may be constructed identically.

DUCT FURNACE. A warm-air *furnace* normally installed in an air-distribution duct to supply warm air for heating. This definition shall apply only to a warm-air heating *appliance* that depends for air circulation on a blower not furnished as part of the *furnace*.

❖ Duct furnaces are vented appliances and consist of burners, heat exchangers and related controls. Duct furnaces depend on an external air handler or blower.

DWELLING UNIT. A single unit providing complete, independent living facilities for one or more persons, including permanent provisions for living, sleeping, eating, cooking and sanitation.

❖ Contrast this definition with the definition of "Sleeping unit." All of the listed provisions must be present for the occupancy to be considered as a dwelling unit.

EQUIPMENT. Apparatus and devices other than *appliances*.

❖ The term "equipment" does not refer to or describe anything that is defined as an "Appliance," despite the fact that some appliances are commonly referred to in the field as "pieces of equipment." The term "equipment" includes control devices, pressure regulators, valves, appliance appurtenances, gas connectors, power exhausters, fans, air handlers and a multitude of other devices that do not fit the description of "appliance."

EXCESS FLOW VALVE (EFV). A valve designed to activate when the fuel gas passing through it exceeds a prescribed flow rate.

❖ Some utility companies install excess flow valves (EFVs) in gas service lines to provide protection against high-pressure leaks resulting from damage to the piping caused by excavation, hole boring or hand digging. The device is a type of shutoff valve that abruptly closes when the gas flow through it reaches an abnormal flow rate corresponding to its design setting. The excess flow pushes a spring-loaded element against a seat in the EFV body. The upstream gas pressure holds the valve in the closed position. After the gas line is repaired and closed off on the load end, the EFV will reset itself by allowing a small flow of gas to pass through an orifice in the valve into the downstream piping, thereby equalizing the pressure on both sides of the valve and allowing the valve to reopen by the force of the spring. Service line EFVs do not fall within the scope of the code because the service line is upstream of the point of delivery. Appliance-type EFVs are addressed by the code, are designed to protect individual appliances and are installed in the supply piping to the appliance. Some types are installed on the supply end of a gas appliance connector. The basic operating principle is the same for all types, although some do not allow bypass gas flow and are, therefore, not self-resetting. The moving component of EFVs, depending on the type, is held open by gravity, a spring or a magnet. The gravity type must be installed in a vertical position.

INTERNATIONAL CODE COUNCIL®
Copyright © 2015 ICC. ALL RIGHTS RESERVED. Accessed by David Dammon on Jun 21, 2017 12:30:52 PM pursuant to License Agreement with ICC. No further reproduction or distribution authorized. ANY UNAUTHORIZED REPRODUCTION OR DISTRIBUTION IS A VIOLATION OF THE FEDERAL COPYRIGHT ACT AND THE LICENSE AGREEMENT, AND SUBJECT TO CIVIL AND CRIMINAL PENALTIES THEREUNDER.

EFVs can be compared to electrical circuit breakers in that they stop gas flow when a predetermined flow rate is exceeded, just as circuit breakers interrupt electrical current flow when the amperage setting is exceeded. Imagine a scenario where an appliance gas connector is severed or a gas line breaks loose at a fitting and gas would be flowing into the space at a high rate. An EFV device installed upstream of the point of leakage would recognize the abnormal flow and either shut off the gas flow completely or reduce the flow to a small bypass flow (see Section G2421.4 and Figure G2421.4).

EXTERIOR MASONRY CHIMNEYS. Masonry chimneys exposed to the outdoors on one or more sides below the roof line.

❖ The part of a chimney that extends above the roof will obviously be exposed to the outdoors, but the sizing methods in Section G2428 are based on the chimney being indoors below the roof. If any one wall or multiple walls of a chimney are exposed to the outdoors, the chimney will lose heat more rapidly, will likely produce condensation internally and may fail to produce the required draft.

Exterior masonry chimneys are not addressed in Chapter 24 because such chimneys are rarely used to vent gas appliances today and the code attempts to limit its coverage to those installations that are common and relevant. These chimneys are addressed in the IFGC and if one is encountered on a job site, the provisions of the IFGC would apply (see Section G2401.1).

FIREPLACE. A fire chamber and hearth constructed of *noncombustible material* for use with solid fuels and provided with a chimney.

❖ Fireplaces burn solid fuels (wood, coal, etc.) and are not referred to as appliances in the code. The IBC and the code cover construction of masonry fireplaces.

Factory-built fireplace. A *fireplace* composed of *listed* factory-built components assembled in accordance with the terms of listing to form the completed *fireplace.*

❖ Factory-built fireplaces are solid-fuel-burning units having a fire chamber that is intended to be either open to the room or, if equipped with doors, operated with the doors either open or closed. Fireplaces are not referred to as appliances. The term "fireplace" describes a complete assembly that includes the hearth, the fire chamber and a chimney. A factory-built fireplace is composed of factory-built components representative of the prototypes tested and is installed in accordance with the manufacturer's installation instructions to form the completed fireplace.

Masonry fireplace. A hearth and fire chamber of solid masonry units such as bricks, stones, *listed* masonry units or reinforced concrete, provided with a suitable chimney.

❖ Masonry fireplaces must be constructed in accordance with the requirements found in Chapter 10. These specific requirements are based on tradition and field experience and describe the conventional fireplace that has proven to be reliable where properly constructed, used and maintained.

FLAME SAFEGUARD. A device that will automatically shut off the fuel supply to a *main burner* or group of *burners* when the means of ignition of such *burners* becomes inoperative, and when flame failure occurs on the *burner* or group of *burners.*

❖ These devices are primary safety controls and are provided on all automatically operated fuel-fired appliances.

FLASHBACK ARRESTOR CHECK VALVE. A device that will prevent the backflow of one gas into the supply system of another gas and prevent the passage of flame into the gas supply system.

❖ See the commentary to Section G2421.5.

FLOOD HAZARD AREA. The greater of the following two areas:

1. The area within a floodplain subject to a 1 percent or greater chance of flooding in any given year.
2. This area designated as a *flood hazard area* on a community's flood hazard map, or otherwise legally designated.

❖ See the commentary to Sections R322.1.4 and R322.1.4.1.

FLOOR FURNACE. A completely self-contained *furnace* suspended from the floor of the space being heated, taking air for combustion from outside such space and with means for observing flames and lighting the *appliance* from such space.

❖ These units supply heat through a floor grille placed directly over the unit's heat exchanger.

FLUE, APPLIANCE. The passage(s) within an *appliance* through which *combustion products* pass from the *combustion chamber* of the *appliance* to the *draft hood* inlet opening on an *appliance* equipped with a *draft hood* or to the outlet of the *appliance* on an *appliance* not equipped with a *draft hood.*

❖ Appliance flues are the passages through an appliance from the combustion chamber, through the heat exchanger and through the vent outlet.

FLUE COLLAR. That portion of an *appliance* designed for the attachment of a *draft hood*, *vent connector* or venting system.

❖ The flue collar size will be a determining factor in vent connector sizing.

FLUE GASES. Products of combustion plus excess air in *appliance flues* or heat exchangers.

❖ The exact composition of flue gases will depend on the fuel being burned. The primary components of flue gases are nitrogen, carbon dioxide, water vapor, particulates and a myriad of compounds and trace elements that vary with the nature of the fuel and purity of the combustion air. Carbon monoxide is also a component of flue gas.

INTERNATIONAL CODE COUNCIL®
Copyright © 2015 ICC. ALL RIGHTS RESERVED. Accessed by David Dammon on Jun 21, 2017 12:30:52 PM pursuant to License Agreement with ICC. No further reproduction or distribution authorized. ANY UNAUTHORIZED REPRODUCTION OR DISTRIBUTION IS A VIOLATION OF THE FEDERAL COPYRIGHT ACT AND THE LICENSE AGREEMENT, AND SUBJECT TO CIVIL AND CRIMINAL PENALTIES THEREUNDER.

FLUE LINER (LINING). A system or material used to form the inside surface of a flue in a *chimney* or vent, for the purpose of protecting the surrounding structure from the effects of *combustion products* and for conveying *combustion products* without leakage to the atmosphere.

❖ Flue liners must be resistant to heat and the corrosive action of the products of combustion. They provide insulation value to retard the transfer of heat to the chimney structure and limit exposure of the chimney structure to the harmful effects of combustion products. Flue liners are generally made of fire-clay tile, refractory brick, poured-in-place refractory materials, stainless steel alloys and aluminum. Flue liners used with gas-fired appliances are typically made of stainless steel or aluminum [see Commentary Figure G2403(9)].

FUEL GAS. A natural gas, manufactured gas, *liquefied petroleum gas* or mixtures of these gases.

❖ The nature of fuel gases makes proper design, installation and selection of materials and devices necessary to minimize the possibility of fire or explosion. Bringing fuel gases into a building is in itself a risk. The provisions of the code are intended to reduce that risk to a level comparable to that associated with other energy sources such as electricity.

The two most commonly used fuel gases are natural gas and liquefied petroleum gas (LP-gas or LPG). These fuel gases have the following characteristics or properties.

Natural gas: The principal constituent of natural gas is methane (CH4). It can also contain small quantities of nitrogen, carbon dioxide, hydrogen sulfide, water vapor, other hydrocarbons (such as ethane and propane) and various trace elements. Natural gas is colorless, tasteless and odorless; however, an odorant (methyl mercaptan) is added to the gas so that it can be readily detected. Natural gas is lighter than air (specific gravity of 0.60 typical) and has the tendency to rise when escaping to the atmosphere.

Natural gas has a rather narrow flammability range (approximately 3 to 15 percent volume in air) above and below which the gas-to-air mixture ratio will be too rich or too lean to support combustion. The heating value of natural gas is approximately 1,050 Btu per cubic foot (39 MJ/m^3).

LP-gas: Liquefied petroleum gases include commercial propane and commercial butane. LP-gas vapors are heavier than air (specific gravity of 1.52 typical) and tend to accumulate in low areas and near the floor; however, a gas-air mixture that is within the flammability range will have a specific gravity very close to that of air. The ranges of flammability for LP-gases are narrower than those of natural gas (approximately 2 to 10 percent volume in air). Like natural gas, LP-gases are odorized to make them detectable. The heating value of propane is approximately 2,500 Btu per cubic foot (93 MJ/m^3) of gas. The heating value of butane is approximately 3,300 Btu per cubic foot (123 MJ/m^3) of gas.

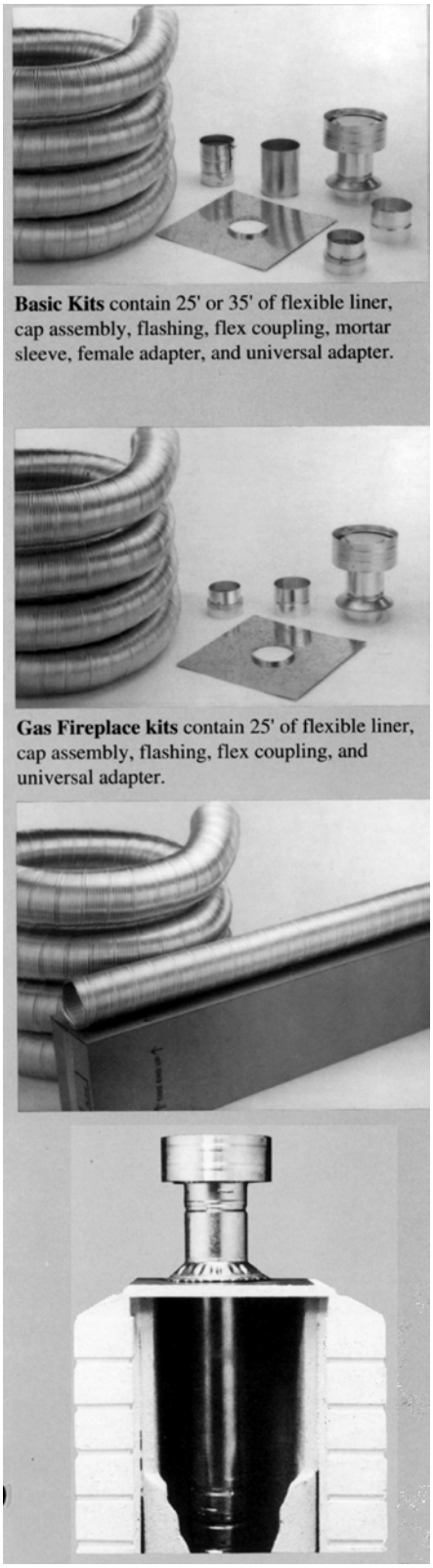

Photos courtesy of Simpson Dura-Vent Company
For SI: 1 foot = 304.8 mm.

Figure G2403(9)
CHIMNEY FLUE LINER SYSTEM FOR GAS APPLIANCE

INTERNATIONAL CODE COUNCIL®
Copyright © 2015 ICC. ALL RIGHTS RESERVED. Accessed by David Dammon on Jun 21, 2017 12:30:52 PM pursuant to License Agreement with ICC. No further reproduction or distribution authorized. ANY UNAUTHORIZED REPRODUCTION OR DISTRIBUTION IS A VIOLATION OF THE FEDERAL COPYRIGHT ACT AND THE LICENSE AGREEMENT, AND SUBJECT TO CIVIL AND CRIMINAL PENALTIES THEREUNDER.

FURNACE. A completely self-contained heating unit that is designed to supply heated air to spaces remote from or adjacent to the *appliance* location.

❖ The single most distinguishing characteristic of furnaces is that they use air as the heat transfer medium. Furnaces can be fueled by gas, oil, solid fuel or electricity and use fans, blowers or gravity (convection) to circulate air to and from the unit. In the context of the code, the primary usage of the term "furnace" refers to heating appliances that combine a combustion chamber with related burner and control components, one or more heat exchangers, a flue gas conveying system and air-handling fans/blowers.

FURNACE, CENTRAL. A self-contained *appliance* for heating air by transfer of heat of *combustion* through metal to the air, and designed to supply heated air through ducts to spaces remote from or adjacent to the *appliance* location.

❖ The term "central furnace" has been adopted to identify a furnace that supplies conditioned air to remote locations from a central location. There are many types of furnaces. Most of these variations are a result of architectural design related to available space, desired location of the unit and size of the area to be conditioned.

FURNACE PLENUM. An air compartment or chamber to which one or more ducts are connected and which forms part of an air distribution system.

❖ The term "plenum" is no longer defined or used in this chapter. A furnace plenum is a box made of sheet metal or other duct material. Such a box is attached directly to a furnace to facilitate connection of supply and return ducts to the furnace air inlet and outlet. This term does not refer to cavities within a building, such as stud and joist spaces and spaces above dropped ceilings.

GAS CONVENIENCE OUTLET. A permanently mounted, manually operated device that provides the means for connecting an *appliance* to, and disconnecting an *appliance* from, the supply *piping*. The device includes an integral, manually operated valve with a nondisplaceable valve member and is designed so that disconnection of an *appliance* only occurs when the manually operated valve is in the closed position.

❖ These devices are listed and labeled and designed to mate with specialized appliance connectors. A gas outlet is the point at which the gas distribution system connects to a gas appliance. The outlets are intended for use with portable appliances such as space heaters and outdoor cooking appliances [see Commentary Figures G2403(10) and G2403(11)].

GAS PIPING. An installation of pipe, valves or fittings installed on a premises or in a building and utilized to convey fuel gas.

❖ Gas piping includes all the components, fittings and piping needed to deliver the fuel gas from the point of delivery to the appliance or equipment connection. The point of delivery may be a regulator or meter that is typically installed by the gas utility. The point of delivery may be located at the user's property line, immediately outside the structure or in some instances in the structure.

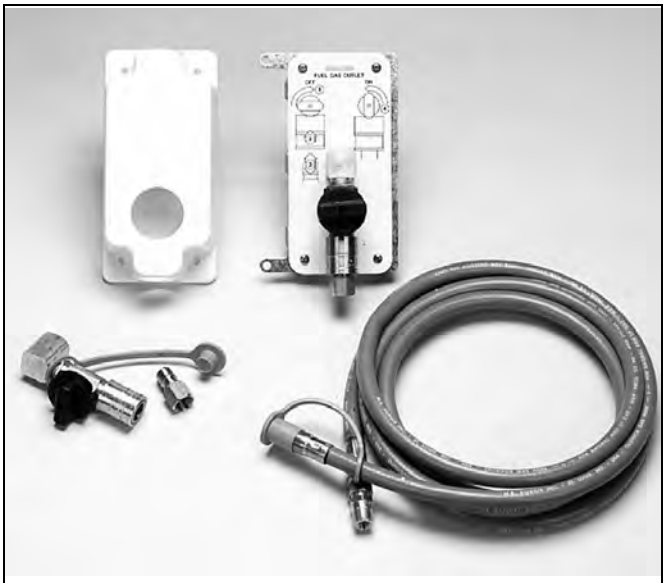

Photo courtesy of Gastite Division/Titflex Corporation

Figure G2403(10)
GAS CONVENIENCE OUTLET



Photo courtesy of Maxitrol Company

Figure G2403(11)
GAS CONVENIENCE OUTLET

INTERNATIONAL CODE COUNCIL®
Copyright © 2015 ICC. ALL RIGHTS RESERVED. Accessed by David Dammon on Jun 21, 2017 12:30:52 PM pursuant to License Agreement with ICC. No further reproduction or distribution authorized. ANY UNAUTHORIZED REPRODUCTION OR DISTRIBUTION IS A VIOLATION OF THE FEDERAL COPYRIGHT ACT AND THE LICENSE AGREEMENT, AND SUBJECT TO CIVIL AND CRIMINAL PENALTIES THEREUNDER.

HAZARDOUS LOCATION. Any location considered to be a fire hazard for flammable vapors, dust, combustible fibers or other highly combustible substances. The location is not necessarily categorized in the *International Building Code* as a high-hazard use group classification.

❖ The environment in which mechanical equipment and appliances operate plays a significant role in the safe performance of the equipment installation. Locations that may contain ignitable or explosive atmospheres are classified as hazardous locations for the installation of mechanical equipment and appliances. For example, repair garages can be classified as hazardous locations because they can contain gasoline vapors from vehicles stored within them as well as other volatile chemicals. Public and private garages are not considered hazardous locations even though the presence of motor vehicles and the storage of fuel, paint, varnish, thinner, lawn- and home-maintenance products and other chemicals are a concern, as evidenced by Sections G2408.2 and G2408.3.

HOUSE PIPING. See *"Piping system."*

❖ House piping is the distribution piping downstream of the point of delivery. House piping is an antiquated term.

IGNITION PILOT. A *pilot* that operates during the lighting cycle and discontinues during *main burner* operation.

❖ Commonly referred to as "interrupted pilots," such pilots are ignited by a spark or hot surface device. Generally an electronic circuit controls the ignition system. When main burner ignition has been proven, the ignition pilot is shut off, and the main burner flame is supervised for the entire burn cycle.

IGNITION SOURCE. A flame spark or hot surface capable of igniting flammable vapors or fumes. Such sources include *appliance burners, burner* ignitors and electrical switching devices.

❖ This definition is important in the application of Section G2408.2 regarding the elevation of ignition sources. By means of this definition, Section G2408.2 applies to unintentional ignition sources, such as electrical switching devices, as well as intentional ignition sources, such as pilot lights, spark ignitors and hot surface ignitors.

In the context of Section G2408.2, an "ignition source" is something capable of igniting flammable vapors that are present in the atmosphere in the locations listed in Section G2408.2.

INFRARED RADIANT HEATER. A heater which directs a substantial amount of its energy output in the form of infrared radiant energy into the area to be heated. Such heaters are of either the vented or unvented type.

❖ These heaters include low-intensity tubular types and high-intensity ceramic burner element types. They heat objects (such as people) by direct radiation and do not heat the ambient air.

JOINT, FLARED. A metal-to-metal compression joint in which a conical spread is made on the end of a tube that is compressed by a flare nut against a mating flare.

❖ Because the pipe end is expanded in a flared joint, only annealed and bending-tempered soft-drawn copper tubing may be flared. Commonly used flaring tools use a screw yoke and block assembly or an expander tool that is driven into the tube with a hammer. The flared tubing end is compressed between a fitting seat and a threaded nut to form a metal-to-metal seal.

JOINT, MECHANICAL. A general form of gas-tight joints obtained by the joining of metal parts through a positive-holding mechanical construction, such as press joint, flanged joint, threaded joint, flared joint or compression joint.

❖ Mechanical joints can take many forms, but most share a common characteristic, which is applying a radial pressure to the pipes or fittings they join. Mechanical joining means can be proprietary, meaning that they are specific to one manufacturer of the fittings and devices and such manufacturer must provide adequate instructions for assembling the joint. Press-joint fittings must be assembled with a special tool that is unique to the fitting. Press joints are irreversible because the fitting and pipe are permanently deformed by the pressing operation. Some press-joint systems are manufactured for use with copper piping and some are manufactured for use with steel piping.

JOINT, PLASTIC ADHESIVE. A joint made in thermoset plastic *piping* by the use of an adhesive substance which forms a continuous bond between the mating surfaces without dissolving either one of them.

❖ Unlike solvent welded joints, adhesive (glue) joints are surface bonded. Often, people refer to solvent welded joints, such as used for PVC, CPVC and ABS piping, as "glued" joints, when actually they are chemically welded, not glued.

LABELED. Equipment, materials or products to which have been affixed a label, seal, symbol or other identifying mark of a nationally recognized testing laboratory, inspection agency or other organization concerned with product evaluation that maintains periodic inspection of the production of the above-labeled items and whose labeling indicates either that the *equipment*, material or product meets identified standards or has been tested and found suitable for a specified purpose.

❖ When a product is labeled, the label indicates that the material has been tested for conformance to an applicable standard and that the component is subject to third-party inspection to verify that the minimum level of quality required by the standard is maintained. Labeling provides a readily available source of information that is useful for field inspection of installed products. The label identifies the product or material and provides other information that can be further investigated if there is question concerning the suitability of the product or material for the specific installation.

INTERNATIONAL CODE COUNCIL®
Copyright © 2015 ICC. ALL RIGHTS RESERVED. Accessed by David Dammon on Jun 21, 2017 12:30:52 PM pursuant to License Agreement with ICC. No further reproduction or distribution authorized. ANY UNAUTHORIZED REPRODUCTION OR DISTRIBUTION IS A VIOLATION OF THE FEDERAL COPYRIGHT ACT AND THE LICENSE AGREEMENT, AND SUBJECT TO CIVIL AND CRIMINAL PENALTIES THEREUNDER.

The labeling agency performing the third-party inspection must be approved by the code official. The basis for this approval may include, but is not necessarily limited to, the capacity and capability of the agency to perform the specific testing and inspection.

The referenced standard often states the minimum identifying information that must be on a label. The data contained on a label typically includes, but is not necessarily limited to, name of the manufacturer; product name or serial number; installation specifications; applicable tests and standards; and the approved testing and labeling agency.

LEAK CHECK. An operation performed on a gas *piping system* to verify that the system does not leak.

❖ A leak check is not the same as the pressure test required by Sections G2417.1 through G2417.5.2 (see Section G2417.6).

LIQUEFIED PETROLEUM GAS or LPG (LP-GAS). *Liquefied petroleum gas* composed predominately of propane, propylene, butanes or butylenes, or mixtures thereof that is gaseous under normal atmospheric conditions, but is capable of being liquefied under moderate pressure at normal temperatures.

❖ LP-gases are usually obtained as a by product of oil refinery operations or by stripping natural gas and are commercially available as butane, propane or a mixture of the two. Propane has a boiling point of -40°F (-40°C) at atmospheric pressure and a heating value of approximately 2,500 Btu per cubic foot (93 MJ/m^2). Butane has a boiling point of 32°F (0°C) at atmospheric pressure and a heating value of approximately 3,300 Btu per cubic foot (123 MJ/m^3). LP-gas is odorized so that gas leakage can be detected.

LISTED. Equipment, materials, products or services included in a list published by an organization acceptable to the code official and concerned with evaluation of products or services that maintains periodic inspection of production of *listed equipment* or materials or periodic evaluation of services and whose listing states either that the *equipment*, material, product or service meets identified standards or has been tested and found suitable for a specified purpose.

❖ When a product is listed, it indicates that it has been tested for conformance to an applicable standard and is subject to a third-party inspection quality assurance (QA) program. The QA verifies that the minimum level of quality required by the appropriate standard is maintained. The agency performing the third-party inspection must be approved by the code official, and the basis for this approval may include, but is not limited to, the capacity and capability of the agency to perform the specified testing and inspection.

LIVING SPACE. Space within a *dwelling unit* utilized for living, sleeping, eating, cooking, bathing, washing and sanitation purposes.

❖ The code uses this term to define locations that are not to be considered as part of a private garage for the purpose of requiring the elevation of ignition sources (see Section G2408.2).

LOG LIGHTER. A manually operated solid-fuel ignition *appliance* for installation in a vented solid-fuel-burning *fireplace*.

❖ Log lighters are simple, manually operated burners used to start wood fires. Log lighters are not considered as decorative but rather as functional appliances. The heat produced by the log lighter flame raises the temperature of the wood fuel to its ignition temperature. A log lighter is designed to be turned off manually after the wood fire is capable of sustaining combustion.

MAIN BURNER. A device or group of devices essentially forming an integral unit for the final conveyance of gas or a mixture of gas and air to the combustion zone, and on which combustion takes place to accomplish the function for which the *appliance* is designed.

❖ With the exception of small amounts of fuel for the pilot or ignition burners, the main burner consumes the entire fuel input into an appliance. Common types of atmospheric burners are the drilled port, slotted port, ribbon and single port.

METER. The instrument installed to measure the volume of gas delivered through it.

❖ The meter is the actual point of commerce and is usually associated with the point of delivery. This code does not require or regulate meters. The gas-supplying utility generally installs meters for natural gas. Occasionally in locations where there are several tenants (large office buildings, mobile home parks and apartment complexes, for example), the gas utility installs one meter for the property owner and the owner installs individual tenant meters. Liquefied petroleum may be metered to individual tenants from a storage tank in the same manner [see Commentary Figure G2403(12)].

MODULATING. Modulating or throttling is the action of a *control* from its maximum to minimum position in either predetermined steps or increments of movement as caused by its actuating medium.

❖ In the context of this code, modulating is associated with burner control valves. One type of automatic control is a modulating control that can infinitely vary the controlled variable over the range being controlled. Another common type of control is a two-position action control, which simply turns the variable being controlled, such as fuel gas, on and off. Another type of control is the floating action control. It regulates the controlled device by adjusting the controlled variable between the open or closed position using a sensing element, which must react faster than the actuating drive time or the system would be essentially the same as a two-position control.

INTERNATIONAL CODE COUNCIL®
Copyright © 2015 ICC. ALL RIGHTS RESERVED. Accessed by David Dammon on Jun 21, 2017 12:30:52 PM pursuant to License Agreement with ICC. No further reproduction or distribution authorized. ANY UNAUTHORIZED REPRODUCTION OR DISTRIBUTION IS A VIOLATION OF THE FEDERAL COPYRIGHT ACT AND THE LICENSE AGREEMENT, AND SUBJECT TO CIVIL AND CRIMINAL PENALTIES THEREUNDER.



Photo courtesy of Washington Gas

Figure G2403(12)
TYPICAL RESIDENTIAL GAS METER SETTING

NONCOMBUSTIBLE MATERIALS. Materials that, when tested in accordance with ASTM E136, have at least three of four specimens tested meeting all of the following criteria:

1. The recorded temperature of the surface and interior thermocouples shall not at any time during the test rise more than 54ºF (30ºC) above the furnace temperature at the beginning of the test.
2. There shall not be flaming from the specimen after the first 30 seconds.
3. If the weight loss of the specimen during testing exceeds 50 percent, the recorded temperature of the surface and interior thermocouples shall not at any time during the test rise above the furnace air temperature at the beginning of the test, and there shall not be flaming of the specimen.

❖ If the material is not determined to be noncombustible, it is, by default, a combustible material. ASTM E136 is a test standard used to determine the combustion characteristics of building materials. This test method in the standard is intended to indicate whether a material will assist in combustion or add appreciable heat to an ambient fire. The three listed criteria are taken from ASTM E136. Items 1 and 2 are applicable if the weight loss of the specimen during the test is 50 percent or less and Item 3 applies if such weight loss is greater than 50 percent. The standard intends for three out of four samples to comply with either Items 1 and 2 or Item 3.

OFFSET (VENT). A combination of *approved* bends that make two changes in direction bringing one section of the vent out of line, but into a line parallel with the other section.

❖ An offset results in the lateral displacement of a vertical vent. Vent offsets are measured in degrees of angle from vertical and are limited in venting systems because they restrict the flow of flue gas. An offset angle is measured between a line that is an extension of the original vertical vent and the new line of direction of the vent [see Commentary Figure G2403(13)]. Note that an offset is more than just a single change in direction and always involves two or more fittings and two changes of direction.



Photo courtesy of Selkirk L.L.C.

Figure G2403(13)
VENT OFFSET

OUTLET. The point at which a gas-fired *appliance* connects to the gas *piping system*.

❖ A gas outlet is analogous to an electrical receptacle outlet. See Section G2415.13 for requirements covering the location of gas piping outlets.

OXYGEN DEPLETION SAFETY SHUTOFF SYSTEM (ODS). A system designed to act to shut off the gas supply to the main and *pilot burners* if the oxygen in the surrounding atmosphere is reduced below a predetermined level.

❖ An oxygen depletion safety shutoff system (ODS) is intended to protect the occupants from carbon monox-

INTERNATIONAL CODE COUNCIL®
Copyright © 2015 ICC. ALL RIGHTS RESERVED. Accessed by David Dammon on Jun 21, 2017 12:30:52 PM pursuant to License Agreement with ICC. No further reproduction or distribution authorized. ANY UNAUTHORIZED REPRODUCTION OR DISTRIBUTION IS A VIOLATION OF THE FEDERAL COPYRIGHT ACT AND THE LICENSE AGREEMENT, AND SUBJECT TO CIVIL AND CRIMINAL PENALTIES THEREUNDER.

ide build-up. The ODS measures the oxygen level in the air and shuts off the appliance if the level falls below a preset level, typically 18 percent. Monitoring oxygen levels will inversely monitor carbon monoxide levels because of the natural relationship between a decreasing oxygen level and an increasing carbon monoxide level [see Commentary Figure G2403(14)].



Photo courtesy of D.F. Noyes Studios, courtesy of DESA International

Figure G2403(14)
OXYGEN DEPLETION SAFETY SHUTOFF

PILOT. A small flame that is utilized to ignite the gas at the *main burner* or *burners*.

❖ Pilot burners (pilot lights) can be continuously burning or can be intermittent or interrupted depending upon the type of appliance. Continuously burning (standing) pilots are becoming more rare and are typically found only in certain hearth appliances, water heaters and commercial ranges. Intermittent pilots burn only while the main burner(s) are firing and interrupted pilots burn only until the main burner(s) are ignited and proven.

PIPING. Where used in this code, *"piping"* refers to either *pipe* or *tubing*, or both.

Pipe. A rigid conduit of iron, steel, copper, brass or plastic.

Tubing. Semirigid conduit of copper, aluminum, plastic or steel.

❖ Piping includes tubing and pipe used to convey fuel gases (see definition of "Piping system").

PIPING SYSTEM. All fuel *piping*, valves and fittings from the outlet of the *point of delivery* to the outlets of the *appliance* shutoff valves.

❖ A piping system includes tubing, pipe, fittings, valves and line pressure regulators used to convey fuel gas from the point of delivery to the appliance. This definition was revised to state that the piping system ends at the outlets of the appliance shutoff valves. This revision allows the last 6 feet (1829 mm) or less of gas conduit between the shutoff valve and the appliance inlet connection to be sized as a connector (see Section 409.5 and the definition for "Point of delivery").

PLASTIC, THERMOPLASTIC. A plastic that is capable of being repeatedly softened by increase of temperature and hardened by decrease of temperature.

❖ Polyvinyl chloride (PVC) is a type of thermoplastic.

POINT OF DELIVERY. For natural gas systems, the *point of delivery* is the outlet of the service meter assembly or the outlet of the service regulator or service shutoff valve where a meter is not provided. Where a valve is provided at the outlet of the service meter assembly, such valve shall be considered to be downstream of the *point of delivery*. For undiluted liquefied petroleum gas systems, the point of delivery shall be considered to be the outlet of the service pressure regulator, exclusive of line gas regulators, in the system.

❖ It is necessary to understand where the point of delivery begins with respect to fuel gas systems because that is the location where the enforcement of Chapter 24 begins. The point of delivery is a point of demarcation that determines what is or is not covered by this chapter. For natural gas systems, the utility-owned service piping, service shutoff valve, service pressure regulator and meter are all upstream of the point of delivery and thus are not covered by the code. Any valve located on the outlet of the service meter assembly is considered to be part of the piping system and under the scope of the code.

For LP-gas applications, the point of delivery is the outlet of the service pressure regulator (see definition). NFPA 58 regulates the piping and components upstream of the outlet of the service pressure regulator, including the regulator itself. In typical two-stage LP-gas systems, the service pressure regulator is the second-stage regulator. Two-stage systems use a first-stage regulator located at the tank to reduce tank pressure down to 10 psig, and a second-stage regulator to reduce the 10 psig pressure down to 11 inches water column (w.c.). Some two-stage systems use separate first- and second-stage regulators and some use integral two-stage regulators, located at the tank, in which both the first- and second-stage regulators are contained within a single unit. Two-psig systems are becoming more popular in LP-gas applications and these systems use three stages of regulation, which include a first-stage regulator to reduce tank pressure to 10 psig, a 2-psi regulator (the service pressure regulator) to reduce the 10 psig pressure to 2 psig and line gas pressure regulators (see definition) used to reduce the 2-psig pressure to 11 inches w.c. for delivery to the appliances. In these systems, the point of delivery is the outlet of the 2-psi regulator.

PRESSURE DROP. The loss in pressure due to friction or obstruction in pipes, valves, fittings, *regulators* and *burners*.

❖ The pressure in a fuel gas system is reduced as the gas flows in the system. This is caused by a loss of energy resulting from friction and turbulence. Fuel gas systems are designed so that the pressure drop does not result in the system pressure falling below the minimum pressure required for proper equipment operation.

INTERNATIONAL CODE COUNCIL®
Copyright © 2015 ICC. ALL RIGHTS RESERVED. Accessed by David Dammon on Jun 21, 2017 12:30:52 PM pursuant to License Agreement with ICC. No further reproduction or distribution authorized. ANY UNAUTHORIZED REPRODUCTION OR DISTRIBUTION IS A VIOLATION OF THE FEDERAL COPYRIGHT ACT AND THE LICENSE AGREEMENT, AND SUBJECT TO CIVIL AND CRIMINAL PENALTIES THEREUNDER.

PRESSURE TEST. An operation performed to verify the gas-tight integrity of *gas piping* following its installation or modification.

❖ Installed piping systems are tested on the job site to verify that the system is free of leaks.

PURGE. To free a gas conduit of air or gas, or a mixture of gas and air.

❖ See Section G2417.7.

READY ACCESS (TO). That which enables a device, *appliance* or *equipment* to be directly reached, without requiring the removal or movement of any panel, door or similar obstruction. (See "Access.")

❖ Ready access can be described as the capability of being quickly reached or approached for the purpose of operation, inspection, observation or emergency action. Ready access does not require the removal or movement of any access door, panel or similar obstruction, nor does it require surmounting physical obstructions or obstacles, including differences in elevation. Note that this definition does not refer to the egress/ingress door through which a person enters a room or building.

REGULATOR. A device for controlling and maintaining a uniform gas supply pressure, either pounds-to-inches water column (MP regulator) or inches-to-inches water column (*appliance regulator*).

❖ In the context of the code, these devices are fuel-gas pressure regulating devices that reduce a higher pressure to a lower pressure.

REGULATOR, GAS APPLIANCE. A *pressure regulator* for controlling pressure to the manifold of the gas *appliance*.

❖ These regulators are integral to the appliance and serve to stabilize the appliance input pressure and supply fuel gas to the appliance at the desired pressure. Most appliances come equipped with appliance regulators because the appliances are designed to operate at a pressure lower than the delivery pressure, even when low pressure gas [0.5 psig or lower (3.4 kPa)] is supplied. Commonly, appliance regulators reduce a pressure of 5 to 8 inches w.c. down to a manifold pressure of 3.5 inches w.c.

REGULATOR, LINE GAS PRESSURE. A device placed in a gas line between the *service pressure regulator* and the *appliance* for controlling, maintaining or reducing the pressure in that portion of the *piping system* downstream of the device.

❖ Line gas pressure regulators are used to reduce the gas pressure supplied by the service (point of delivery) regulator. They are typically located at the connection to each gas appliance and are commonly used as "pounds to inches" regulators in systems having elevated [14 inches w.c. (3.5 kPa) to 5 psi typical (34.5 kPa)] supply pressures.

REGULATOR, MEDIUM-PRESSURE (MP Regulator). A line *pressure regulator* that reduces gas pressure from the range of greater than 0.5 psig (3.4 kPa) and less than or equal to 5 psig (34.5 kPa) to a lower pressure.

❖ With the increased use of high-pressure gas distribution systems, systems are designed with one or more regulators in addition to the service regulators. Medium-pressure regulators (MP regulators) are most commonly associated with 2 psi manifold distribution systems used with copper tubing or corrugated stainless steel tubing (CSST) systems. Appliances are also equipped with factory-installed regulators that control burner input (manifold) pressure. MP regulators are used to reduce the service pressure to a pressure suitable for delivery to the gas appliances where the appliance regulator may further reduce the pressure (see Section G2421.2). MP regulators are used where the distribution line pressure is in the range of 5 psig (34.5 kPa) down to 0.5 psig (3.4 kPa) and such pressure needs to be reduced to be compatible with the input pressure needs of the load.

REGULATOR, PRESSURE. A device placed in a gas line for reducing, controlling and maintaining the pressure in that portion of the *piping system* downstream of the device.

❖ See the definition and commentary to "Regulator."

REGULATOR, SERVICE PRESSURE. For natural gas systems, a device installed by the serving gas supplier to reduce and limit the service line pressure to delivery pressure. For undiluted liquefied petroleum gas systems, the regulator located upstream from all line gas pressure regulators, where installed, and downstream from any first stage or a high pressure regulator in the system.

❖ The utility company (gas supplier) installs this regulator to reduce the gas pressure from the utility distribution mains to that required for delivery to the meter and customer. For the typical house service, the pressure is reduced from 60 psig to 2 psig or less. The devices are usually located near the meter and outdoors [see Commentary Figure G2403(15)]. For LP-gas systems, the service regulator is the regulator between the first-stage regulator and the line-pressure regulators or between the first-stage regulator and the appliances served where there are no line-pressure regulators. The service regulator is upstream of the point of delivery for natural and LP-gases (see the definition of "Point of delivery").

RELIEF OPENING. The opening provided in a *draft hood* to permit the ready escape to the atmosphere of the flue products from the *draft hood* in the event of no *draft*, backdraft or stoppage beyond the *draft hood*, and to permit air into the *draft hood* in the event of a strong chimney updraft.

❖ Dilution air, a component of combustion air, enters the venting system through the draft hood opening. Combustion gases spilling from (exiting) a draft hood relief opening create an abnormal and potentially hazardous condition except for brief periods of spillage that might occur at the start of an appliance firing cycle. Typical periods of spillage at start-up last only a few seconds.

INTERNATIONAL CODE COUNCIL®
Copyright © 2015 ICC. ALL RIGHTS RESERVED. Accessed by David Dammon on Jun 21, 2017 12:30:52 PM pursuant to License Agreement with ICC. No further reproduction or distribution authorized. ANY UNAUTHORIZED REPRODUCTION OR DISTRIBUTION IS A VIOLATION OF THE FEDERAL COPYRIGHT ACT AND THE LICENSE AGREEMENT, AND SUBJECT TO CIVIL AND CRIMINAL PENALTIES THEREUNDER.

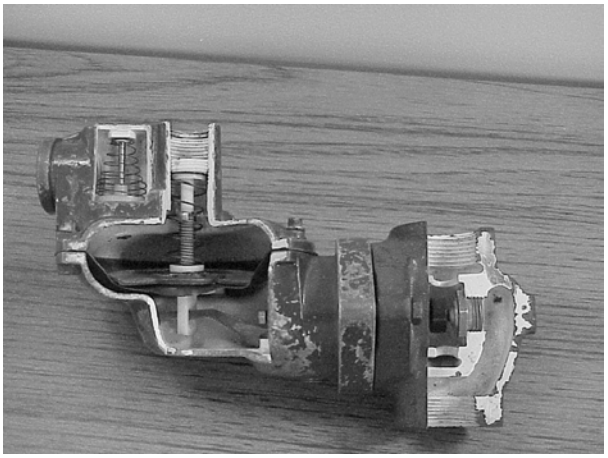

Photo courtesy of Washington Gas

Figure G2403(15)
SERVICE REGULATOR

RELIEF VALVE (DEVICE). A safety valve designed to forestall the development of a dangerous condition by relieving either pressure, temperature or vacuum in the hot water supply system.

❖ A relief valve is a safety device designed to prevent the development of a potentially damaging or dangerous condition in a closed system. This is usually associated with a closed system that has a heat source as part of the system. Requirements for the installation of relief valves in water distribution systems and water heaters are given in Section 504 of the IPC.

RELIEF VALVE, PRESSURE. An *automatic valve* that opens and closes a relief vent, depending on whether the pressure is above or below a predetermined value.

❖ Pressure relief valves are intended to prevent harm to life and property. These valves are safety devices used to relieve abnormal pressures and to prevent the overpressurization of the vessel or system to which the valves are connected. Pressure relief valves are designed to operate (discharge) only when an abnormal pressure exists in a system. They are not to be used as regulating valves, nor are they intended to control or regulate flow or pressure. Pressure relief valves are set at the factory to begin opening at a predetermined pressure and are rated according to the maximum energy discharge per unit of time, usually in units of British thermal units per hour (Btu/h) (W).

Pressure relief valves must be properly sized and rated for the boiler, pressure vessel or system served; otherwise, a system malfunction could cause the pressure within the system to continue to rise, thereby creating a hazardous condition. Pressure relief valves do not open fully when they reach the factory-preset pressure; rather, the valves open an amount proportional to the forces produced by the pressure in the system. The valves open fully at a certain percentage above the preset pressure, then close when the pressure drops below the preset pressure. Pressure relief valves are sometimes combined in the same body with temperature relief valves, creating combination temperature and pressure relief valves.

RELIEF VALVE, TEMPERATURE.

Manual reset type. A valve that automatically opens a *relief* vent at a predetermined temperature and that must be manually returned to the closed position.

Reseating or self-closing type. An *automatic valve* that opens and closes a relief vent, depending on whether the temperature is above or below a predetermined value.

❖ Temperature relief valves are designed to open in response to excessive temperatures and to discharge heated water to limit the temperature of the water in the vessel, tank or system. Water heater control failure or improper adjustments could allow excessive temperature rises, which can heat water above the temperature at which it would vaporize at atmospheric pressure. Water heated to above 212°F (100°C) is referred to as superheated water and will flash to steam when the pressure is reduced below its vapor pressure. Very hot water and the presence of steam are hazardous; however, more importantly, higher temperatures produce higher pressures and superheated water increases the potential for and the magnitude of an explosion.

RELIEF VALVE, VACUUM. A valve that automatically opens and closes a vent for relieving a vacuum within the hot water supply system, depending on whether the vacuum is above or below a predetermined value.

❖ The vacuum relief valve is intended to prevent the possible reduction in pressure within the system (water heater tanks being of main concern) to below atmospheric pressure (that is, a partial vacuum). Many tanks are not designed to resist external pressures exceeding internal pressures; therefore, a vacuum relief valve is necessary to prevent atmospheric pressure from possibly collapsing or otherwise damaging the tank. A partial vacuum could also cause water to be siphoned from the tank, thereby creating an overheating hazard in a water heater.

The vacuum relief valve operates by automatically opening the system to the atmosphere when a partial vacuum is created, thereby permitting air to enter and maintaining the internal pressure at atmospheric pressure.

RISER, GAS. A vertical *pipe* supplying fuel gas.

❖ A vertical gas pipe that distributes gas from a building main to upper floor levels is commonly referred to as a "riser."

ROOM HEATER, UNVENTED. See *"Unvented room heater."*

❖ See the commentary to "Unvented room heater" and Commentary Figure G2403(16).

INTERNATIONAL CODE COUNCIL®
Copyright © 2015 ICC. ALL RIGHTS RESERVED. Accessed by David Dammon on Jun 21, 2017 12:30:52 PM pursuant to License Agreement with ICC. No further reproduction or distribution authorized. ANY UNAUTHORIZED REPRODUCTION OR DISTRIBUTION IS A VIOLATION OF THE FEDERAL COPYRIGHT ACT AND THE LICENSE AGREEMENT, AND SUBJECT TO CIVIL AND CRIMINAL PENALTIES THEREUNDER.



Photo courtesy of Empire Comfort Systems, Inc.

Figure G2403(16)
UNVENTED ROOM HEATER

ROOM HEATER, VENTED. A free-standing heating unit used for direct heating of the space in and adjacent to that in which the unit is located. (See also "Vented room heater.")

❖ These heaters are typically small space-heating appliances designed to heat a single room.

SAFETY SHUTOFF DEVICE. See "Flame safeguard."

❖ See the commentary to "Flame safeguard."

SHAFT. An enclosed space extending through one or more stories of a building, connecting vertical openings in successive floors, or floors and the roof.

❖ A shaft is an enclosed, vertical passage that passes through stories and floor levels within a building. Shafts are sometimes referred to as "chases" and are usually constructed of fire-resistance-rated assemblies.

SPECIFIC GRAVITY. As applied to gas, *specific gravity* is the ratio of the weight of a given volume to that of the same volume of air, both measured under the same condition.

❖ Analogous to density, specific gravity values are used to describe how a gaseous substance will behave in, for example, air or piping systems. "Specific gravity" indicates the density of a gas with respect to air, with air being assigned a value of 1. For example, natural gas has a specific gravity of less than 1; therefore, it is less dense and lighter than air. LP-gas has a specific gravity of 1.5; therefore, it is one and one-half times the density of air.

THERMOSTAT.

Electric switch type. A device that senses changes in temperature and controls electrically, by means of separate components, the flow of gas to the *burner(s)* to maintain selected temperatures.

Integral gas valve type. An automatic device, actuated by temperature changes, designed to control the gas supply to the *burner(s)* in order to maintain temperatures between predetermined limits, and in which the thermal actuating element is an integral part of the device.

1. Graduating thermostat. A thermostat in which the motion of the *valve* is approximately in direct proportion to the effective motion of the thermal element induced by temperature change.
2. Snap-acting thermostat. A thermostat in which the thermostatic valve travels instantly from the closed to the open position, and vice versa.

❖ Thermostats most often consist of one or more thermally actuated on/off switches, but also include types that transmit varying voltage and signals. A thermostat is also referred to as a controller. The set point or desired unit of temperature is adjusted or set at the thermostat. The thermostat transmits a signal to the controlled device or appliance.

THIRD-PARTY CERTIFICATION AGENCY. An approved agency operating a product or material certification system that incorporates initial product testing, assessment and surveillance of a manufacturer's quality control system.

❖ These agencies evaluate products, verify compliance with specific standards or criteria and conduct periodic inspections of the manufacturer's production facilities to verify ongoing compliance with such standards or criteria (see Section 401.10).

THIRD-PARTY CERTIFIED. Certification obtained by the manufacturer indicating that the function and performance characteristics of a product or material have been determined by testing and ongoing surveillance by an approved third-party certification agency. Assertion of certification is in the form of identification in accordance with the requirements of the third-party certification agency.

❖ A third-party certification agency certifies that a product meets specific standards or criteria and identifies the product with a certification mark. This mark is an indication to the installer and inspector that the product has been evaluated and tested and the manufacturing process has been monitored so as to verify compliance with the relative product standards or criteria. Additionally, the agency typically provides a list of the products that it certifies, which provides information relative to the certification (see Section 401.10).

THIRD-PARTY TESTED. Procedure by which an approved testing laboratory provides documentation that a product, material or system conforms to specified requirements.

❖ A third-party testing laboratory or agency tests a product to verify that it meets specific standards or criteria

INTERNATIONAL CODE COUNCIL®
Copyright © 2015 ICC. ALL RIGHTS RESERVED. Accessed by David Dammon on Jun 21, 2017 12:30:52 PM pursuant to License Agreement with ICC. No further reproduction or distribution authorized. ANY UNAUTHORIZED REPRODUCTION OR DISTRIBUTION IS A VIOLATION OF THE FEDERAL COPYRIGHT ACT AND THE LICENSE AGREEMENT, AND SUBJECT TO CIVIL AND CRIMINAL PENALTIES THEREUNDER.

and provides documentation to that fact. Having a product tested is not the same as having it listed, as listing entails additional requirements such as ongoing monitoring of the manufacturing process. Third-party tested products can be marked to indicate the testing agency.

TRANSITION FITTINGS, PLASTIC TO STEEL. An adapter for joining plastic *pipe* to steel *pipe*. The purpose of this fitting is to provide a permanent, pressure-tight connection between two materials that cannot be joined directly one to another.

❖ Joining of piping of dissimilar materials such as plastic and steel requires specialized transition fittings. For example, such fittings are used with underground plastic fuel-gas piping and steel meter setting risers [see Commentary Figure G2403(17)].



Photo courtesy of Perfection Corporation

Figure G2403(17)
TRANSITION FITTINGS

UNIT HEATER.

High-static pressure type. A self-contained, automatically controlled, vented *appliance* having integral means for circulation of air against 0.2 inch w.c. (50 Pa) or greater static pressure. Such *appliance* is equipped with provisions for attaching an outlet air duct and, where the *appliance* is for indoor installation remote from the space to be heated, is also equipped with provisions for attaching an inlet air duct.

Low-static pressure type. A self-contained, automatically controlled, vented *appliance*, intended for installation in the space to be heated without the use of ducts, having integral means for circulation of air. Such units are allowed to be equipped with louvers or face extensions made in accordance with the manufacturer's specifications.

❖ Unit heaters are similar to warm-air furnaces, except that ducts are not usually associated with unit heaters. These heaters are typically suspended from ceilings or roof structures.

UNVENTED ROOM HEATER. An unvented heating *appliance* designed for stationary installation and utilized to provide comfort heating. Such *appliances* provide radiant heat or convection heat by gravity or fan circulation directly from the heater and do not utilize ducts.

❖ As opposed to vented heaters, unvented heaters discharge all products of combustion into the space being heated [see Commentary Figure G2403(16)].

VALVE. A device used in *piping* to control the gas supply to any section of a system of *piping* or to an *appliance*.

❖ The code requires valves to perform various functions in a fuel-gas system as described in the definitions below. These valves are designed for the specific use intended and many are factory installed on equipment and are part of the listed equipment. However, there are valves that are not listed or manufactured in accordance with the standards listed in the code and if allowed must be evaluated in accordance with Section R104.11.

Appliance shutoff. A *valve* located in the *piping system*, used to isolate individual *appliances* for purposes such as service or replacement.

❖ The definition makes it clear that the primary purpose of an appliance shutoff valve is not related to the emergency shutoff of the appliance.

Automatic. An automatic or semiautomatic device consisting essentially of a *valve* and an operator that control the gas supply to the *burner(s)* during operation of an *appliance*. The operator shall be actuated by application of gas pressure on a flexible diaphragm, by electrical means, by mechanical means or by other *approved* means.

Automatic gas shutoff. A *valve* used in conjunction with an automatic gas shutoff device to shut off the gas supply to a water-heating system. It shall be constructed integrally with the gas shutoff device or shall be a separate assembly.

Individual main burner. A *valve* that controls the gas supply to an individual *main burner*.

Main burner control. A *valve* that controls the gas supply to the *main burner* manifold.

Manual main gas-control. A manually operated *valve* in the gas line for the purpose of completely turning on or shutting off the gas supply to the *appliance*, except to *pilot* or pilots that are provided with independent shutoff.

Manual reset. An automatic shutoff valve installed in the gas supply *piping* and set to shut off when unsafe conditions occur. The device remains closed until manually reopened.

Service shutoff. A valve, installed by the serving gas supplier between the service meter or source of supply and the customer *piping system*, to shut off the entire *piping system.*

INTERNATIONAL CODE COUNCIL®
Copyright © 2015 ICC. ALL RIGHTS RESERVED. Accessed by David Dammon on Jun 21, 2017 12:30:52 PM pursuant to License Agreement with ICC. No further reproduction or distribution authorized. ANY UNAUTHORIZED REPRODUCTION OR DISTRIBUTION IS A VIOLATION OF THE FEDERAL COPYRIGHT ACT AND THE LICENSE AGREEMENT, AND SUBJECT TO CIVIL AND CRIMINAL PENALTIES THEREUNDER.

VENT. A *pipe* or other conduit composed of factory-made components, containing a passageway for conveying *combustion products* and air to the atmosphere, *listed* and *labeled* for use with a specific type or class of *appliance*.

❖ In code terminology, vents are distinguished from chimneys and usually are constructed of factory-made listed and labeled components intended to function as a system. Type B and BW vents are constructed of galvanized steel and aluminum sheet metal and are double wall and air insulated. Such vents are designed to vent gas-fired appliances and equipment that are equipped with draft hoods or are specifically listed (labeled) for use with Type B or BW vents. Type L vents are typically constructed of sheet steel and stainless steel. They are double wall and air insulated and are designed to vent gas- and oil-fired appliances and equipment. Some appliances are designed for use with corrosion-resistant special vents, such as those made of plastic pipe and special alloys of stainless steel [see Commentary Figure G2403(18)].



Photo courtesy of Selkirk, L.L.C.

Figure G2403(18)
TYPE B VENT

Special gas vent. A vent *listed* and *labeled* for use with *listed* Category II, III and IV gas *appliances*.

❖ These vents include high-temperature plastic pipe, stainless steel pipe and low-temperature (PVC and CPVC) plastic pipes.

Type B vent. A vent *listed* and *labeled* for use with *appliances* with *draft hoods* and other Category I *appliances* that are *listed* for use with Type B vents.

❖ See the commentary to "Vent."

Type BW vent. A vent *listed* and *labeled* for use with wall *furnaces.*

❖ See the commentary to "Vent."

Type L vent. A vent *listed* and *labeled* for use with *appliances* that are *listed* for use with Type L or Type B vents.

❖ See the commentary to "Vent."

VENT CONNECTOR. See "Connector."

❖ See the commentary to "Connector."

VENT PIPING.

Breather. *Piping* run from a pressure-regulating device to the outdoors, designed to provide a reference to *atmospheric pressure*. If the device incorporates an integral pressure *relief* mechanism, a breather vent can also serve as a *relief* vent.

❖ A breather vent is distinct from a relief vent and allows the cavity on the air side of the regulator diaphragm to "breathe" by letting air in and out as the diaphragm moves within the regulator housing (see commentary, Section G2421.3). Although not addressed in the definition, breather vents are also part of diaphragm-operated gas controls such as high- and low-pressure gas cutoffs.

Relief. *Piping* run from a pressure-regulating or pressure-limiting device to the outdoors, designed to provide for the safe venting of gas in the event of excessive pressure in the *gas piping system.*

❖ Relief-vent piping discharges fuel gas from a pressure relief valve or pressure regulator with an integral relief valve. Unlike breather vents that would discharge fuel gas only in the event of diaphragm failure, relief vents will always discharge fuel gas, if they discharge at all. Relief devices release fuel gas under emergency conditions to prevent overpressurizing the piping system being monitored and protected.

VENTED APPLIANCE CATEGORIES. *Appliances* that are categorized for the purpose of vent selection are classified into the following four categories:

❖ Gas appliances are categorized for the purpose of matching the appliance to the required type of venting. Not all gas appliances are assigned a category.

Category I. An *appliance* that operates with a nonpositive vent static pressure and with a vent gas temperature that avoids excessive *condensate* production in the vent.

❖ These appliances include draft-hood-equipped and fan-assisted types.

Category II. An *appliance* that operates with a nonpositive *vent* static pressure and with a vent gas temperature that is capable of causing excessive *condensate* production in the vent.

❖ The condition of nonpositive pressure (draft dependent) combined with low flue-gas temperatures makes it difficult to design such an appliance. At the time of this publication, no such appliances are known to exist in the marketplace.

INTERNATIONAL CODE COUNCIL®
Copyright © 2015 ICC. ALL RIGHTS RESERVED. Accessed by David Dammon on Jun 21, 2017 12:30:52 PM pursuant to License Agreement with ICC. No further reproduction or distribution authorized. ANY UNAUTHORIZED REPRODUCTION OR DISTRIBUTION IS A VIOLATION OF THE FEDERAL COPYRIGHT ACT AND THE LICENSE AGREEMENT, AND SUBJECT TO CIVIL AND CRIMINAL PENALTIES THEREUNDER.

Category III. An *appliance* that operates with a positive vent static pressure and with a vent gas temperature that avoids excessive *condensate* production in the vent.

❖ These appliances include mid-efficiency (approximately 78 to 83 percent) appliances that are typically side-wall-vented with stainless steel special vents.

Category IV. An *appliance* that operates with a positive vent static pressure and with a vent gas temperature that is capable of causing excessive *condensate* production in the vent.

❖ These appliances include high-efficiency (84 percent and higher) condensing-type furnaces, boilers and water heaters.

VENTED ROOM HEATER. A vented self-contained, freestanding, nonrecessed *appliance* for furnishing warm air to the space in which it is installed, directly from the heater without duct connections.

❖ These appliances are typically small space heaters that discharge all products of combustion to the outdoors.

VENTED WALL FURNACE. A self-contained vented *appliance* complete with grilles or equivalent, designed for incorporation in or permanent attachment to the structure of a building, mobile home or travel trailer, and furnishing heated air circulated by gravity or by a fan directly into the space to be heated through openings in the casing. This definition shall exclude *floor furnaces, unit heaters* and *central furnaces* as herein defined.

❖ Wall furnaces are designed to occupy very little area of the room and provide space heating for one or more rooms in small occupancies such as dwelling units, cottages and the like.

VENTING SYSTEM. A continuous open passageway from the *flue collar* or *draft hood* of an *appliance* to the outdoor atmosphere for the purpose of removing flue or vent gases. A venting system is usually composed of a vent or a chimney and *vent connector*, if used, assembled to form the open passageway.

❖ Venting systems fall into one of two categories: natural draft or mechanical draft systems. Natural draft chimneys and vents do not rely on any mechanical means to convey combustion products to the outdoors. Draft is produced by the temperature difference between the vent gases (combustion gases) and the ambient atmosphere. Hot gases are less dense and more buoyant; therefore, they are displaced by cooler (more dense) ambient gases, causing the hotter gases to rise and produce a draft.

Mechanical draft systems use fans or other mechanical means to cause the removal of flue or vent gases and also fall into one of two categories, based on positive or nonpositive static vent pressure. The positive vent pressure systems are referred to as forced-draft or power venting systems, and the nonpositive vent pressure systems are referred to as induced-draft venting systems.

WALL HEATER, UNVENTED TYPE. A room heater of the type designed for insertion in or attachment to a wall or partition. Such heater does not incorporate concealed venting arrangements in its construction and discharges all products of *combustion* through the front into the room being heated.

❖ See the definition and commentary to "Unvented room heater."

WATER HEATER. Any heating *appliance* or *equipment* that heats potable water and supplies such water to the potable hot water distribution system.

❖ A water heater is a closed pressure vessel or heat exchanger that has a heat source and that supplies potable (drinkable) water to the building's hot water distribution system. Large commercial water heaters are sometimes referred to as "hot water supply boilers." Water heaters can be of the storage type with an integral storage vessel, circulating type for use with an external storage vessel, tankless instantaneous type without storage capacity and point-of-use type with or without storage capacity. This chapter and the plumbing chapters regulate water heaters because these appliances have elements and installation requirements related to both mechanical and plumbing systems (see Chapter 28).

SECTION G2404 (301)
GENERAL

G2404.1 (301.1) Scope. This section shall govern the approval and installation of all *equipment* and *appliances* that comprise parts of the installations regulated by this *code* in accordance with Section G2401.

❖ This section states that this chapter governs the approval and installation of all gas-fired equipment and appliances that are regulated by the code. Section G2401.1 establishes the scope of application of the code (see commentary, Section G2401.1).

G2404.2 (301.1.1) Other fuels. The requirements for *combustion* and *dilution air* for gas-fired *appliances* shall be governed by Section G2407. The requirements for *combustion* and *dilution air* for *appliances* operating with fuels other than fuel gas shall be regulated by Chapter 17.

❖ Chapters 17 and 24 each have combustion air provisions that are specific to the fuels addressed in the respective chapters.

G2404.3 (301.3) Listed and labeled. *Appliances* regulated by this *code* shall be *listed* and *labeled* for the application in which they are used unless otherwise *approved* in accordance with Section R104.11. The approval of unlisted *appliances* in accordance with Section R104.11 shall be based upon *approved* engineering evaluation.

❖ Gas-fired appliances must be listed and labeled by an approved agency to show that they comply with the applicable national standards. The code requires listing and labeling for appliances such as boilers, furnaces, space heaters, direct-fired heaters, cooking appliances, clothes dryers, rooftop heating, ventilating

INTERNATIONAL CODE COUNCIL®
Copyright © 2015 ICC. ALL RIGHTS RESERVED. Accessed by David Dammon on Jun 21, 2017 12:30:52 PM pursuant to License Agreement with ICC. No further reproduction or distribution authorized. ANY UNAUTHORIZED REPRODUCTION OR DISTRIBUTION IS A VIOLATION OF THE FEDERAL COPYRIGHT ACT AND THE LICENSE AGREEMENT, AND SUBJECT TO CIVIL AND CRIMINAL PENALTIES THEREUNDER.

and air-conditioning (HVAC) units, etc. The code also requires listing for system components as specifically stated in the text addressing those components. The label is the primary, if not the only, assurance to the installer, the inspector and the end user that a representative sample of an appliance model has been tested and evaluated by an approved agency and has been determined to perform safely and efficiently when installed and operated in accordance with its listing.

Appliances must be listed and labeled for the application in which they are used, otherwise the installation would be a misapplication of the appliance. For example, if an appliance is listed for indoor use only and is installed outdoors, this installation is a misapplication of the appliance and serious malfunctions and/or conditions could result. An appliance might be marketed and installed for a particular purpose for which it was not tested and listed and this is what this section intends to prohibit. Verifying that an appliance has a testing agency label is only part of the code official's responsibility. He or she must also verify that the listing from the testing agency includes the application at hand. The bottom line is, the use of an appliance must match the use for which the appliance was tested.

The presence of a label is part of the information that the code official is to consider in the approval of appliances. The only exception to the labeling requirement occurs when the code official approves a specific appliance in accordance with the authority granted in Section R104.11.

Approval of unlabeled appliances must be based on documentation that demonstrates compliance with applicable standards or, where no product standards exist, that the appliance is appropriate for the intended use and will provide the same level of performance as would be provided by listed and labeled appliances. A fundamental principle of the code is the reliance on the listing and labeling process to ensure appliance performance; approvals granted in accordance with Section 105 must be well justified with supporting documentation. To the code official, the installer and the end-user, very little is known about the performance of an appliance that is not tested and built to an appliance standard.

G2404.4 (301.8) Vibration isolation. Where means for isolation of vibration of an *appliance* is installed, an *approved* means for support and restraint of that *appliance* shall be provided.

❖ Where vibration isolation connections are used in ducts and piping and where equipment is mounted with vibration dampers, support is required for the ducts, piping and equipment to maintain positioning and alignment and to prevent stress and strain on the vibration connectors and dampers.

G2404.5 (301.9) Repair. Defective material or parts shall be replaced or repaired in such a manner so as to preserve the original approval or listing.

❖ Repair work must not alter the nature of appliances and equipment in a way that would invalidate the listing or conditions of approval. For example, replacement of safety control devices with different devices could alter the design and operation of an appliance from that intended by the manufacturer and the listing agency.

G2404.6 (301.10) Wind resistance. *Appliances* and supports that are exposed to wind shall be designed and installed to resist the wind pressures determined in accordance with this *code*.

❖ Installations of equipment and appliances that are subject to wind forces must be designed to resist those forces. The wind pressures must be based on the wind provisions in this code. The wind pressure requirements are based on the exposure of the building and wind speeds for that region.

G2404.7 (301.11) Flood hazard. For structures located in flood hazard areas, the appliance, equipment and system installations regulated by this code shall be located at or above the elevation required by Section R322 for utilities and attendant equipment.

Exception: The appliance, equipment and system installations regulated by this code are permitted to be located below the elevation required by Section R322 for utilities and attendant equipment provided that they are designed and installed to prevent water from entering or accumulating within the components and to resist hydrostatic and hydrodynamic loads and stresses, including the effects of buoyancy, during the occurrence of flooding to such elevation.

❖ Fuel gas appliances, equipment and installations in flood hazard areas must be installed at or above the elevation specified in the code or must be designed and installed to prevent the entry of water into components and to resist flood loads on the components (see commentary, Section R322.1.6). Exposure to water can cause deterioration of system components and serious appliance and equipment malfunctions. For example, most appliance manufacturers require the replacement of appliances that have been submerged in floodwaters. Components such as pressure regulators, gas controls, motors and electronic circuitry can be ruined by exposure to water. The exception allows appliances and system components to be located below the design flood elevation if they are designed for submersion in floodwaters. Appliances and system components designed for submersion might be difficult or impossible to obtain and it might be extremely difficult to install effective barriers to keep out floodwaters.

G2404.8 (301.12) Seismic resistance. When earthquake loads are applicable in accordance with this code, the supports shall be designed and installed for the seismic forces in accordance with this code.

❖ This code requires building systems to be designed for specified seismic forces. This section references the detailed equipment and component seismic support requirements contained in this code to bring these requirements to the attention of the design professional and the permit applicant.

INTERNATIONAL CODE COUNCIL®
Copyright © 2015 ICC. ALL RIGHTS RESERVED. Accessed by David Dammon on Jun 21, 2017 12:30:52 PM pursuant to License Agreement with ICC. No further reproduction or distribution authorized. ANY UNAUTHORIZED REPRODUCTION OR DISTRIBUTION IS A VIOLATION OF THE FEDERAL COPYRIGHT ACT AND THE LICENSE AGREEMENT, AND SUBJECT TO CIVIL AND CRIMINAL PENALTIES THEREUNDER.

Equipment piping must be braced for earthquake loads as stated in this code. The failure of the supports for these components has been shown to be a threat to health and safety in geographical areas where moderate- to high-magnitude earthquakes occur. The code specifies the geographical locations where earthquake design is required for certain piping and equipment and the size of the components that must be braced.

G2404.9 (301.14) Rodentproofing. Buildings or structures and the walls enclosing habitable or occupiable rooms and spaces in which persons live, sleep or work, or in which feed, food or foodstuffs are stored, prepared, processed, served or sold, shall be constructed to protect against the entry of rodents.

❖ This section states the requirements to prevent rodent infestation of a building. Efforts must be made to protect the annular spaces around openings in exterior walls. The annular spaces can be sealed by any effective method, but the primary methods used are to fill the annular space with a sealant material or to place a metal collar around the penetrating pipe, duct, etc. The collar material must be durable for the weather exposure and strong enough to prevent the rodents from chewing through and entering the building.

Effort must also be made to cover ventilation and combustion air openings with wire cloth to prevent the entry of rodents through the opening.

G2404.10 (307.5) Auxiliary drain pan. Category IV condensing *appliances* shall be provided with an auxiliary drain pan where damage to any building component will occur as a result of stoppage in the *condensate* drainage system. Such pan shall be installed in accordance with the applicable provisions of Section M1411.

Exception: An auxiliary drain pan shall not be required for *appliances* that automatically shut down operation in the event of a stoppage in the *condensate* drainage system.

❖ This section treats condensing (Category IV) appliances the same as the mechanical chapters treat appliances and equipment having evaporators and cooling coils. Category IV appliances produce condensate and, like cooling equipment and evaporators, can cause structural damage to a building if the condensate drainage system fails. This section parallels Section M1411.3. Section M1411.3.1 is applicable; however, only Items 1 and 3 apply because this section requires an auxiliary pan in all cases. In many cases, this provision will require nothing more than what is already being provided for the cooling coil or evaporator that is part of the gas appliance installation (e.g., the typical gas-fired furnace with cooling coil/evaporator). For example, an up-flow Category IV furnace with an "A" coil on its outlet is installed in an attic and it is sitting in an auxiliary drain pan. This pan can also serve as protection for the furnace, therefore, no additional installation is required because the furnace happened to be a condensing type (see Commentary Figure G2404.10).

The exception recognizes that some condensing appliances are designed to shut down automatically upon failure of the condensate drainage system. For example, the design/test standards for some appliances allow a choice of appliance reaction to a failed condensate drain. The appliance may either continue to function safely with a failed condensate drain or the appliance must shut down upon failure of the condensate drain.

G2404.11 (307.6) Condensate pumps. Condensate pumps located in uninhabitable spaces, such as attics and crawl spaces, shall be connected to the *appliance* or *equipment* served such that when the pump fails, the *appliance* or *equipment* will be prevented from operating. Pumps shall be installed in accordance with the manufacturer's instructions.

❖ Condensate pumps are often located in attics and crawl spaces and above ceilings, where they are not readily observable. If they fail, the condensate overflow can cause structural damage to the building, especially where the overflow will not be immediately noticed. The majority of such pumps are equipped with simple float controls that can be wired in series with the appliance/equipment control circuit. When the pump system fails, the float will rise in the reservoir and open a switch before the condensate starts to overflow the reservoir. These float controls are commonly not connected, and in other cases the pump might not be equipped with an overflow switch. This new code section requires the installation of condensate pumps that have this overflow shutoff capability and requires that the appliance/equipment served be connected to take advantage of that feature (see Commentary Figure G2404.11).

SECTION G2405 (302) STRUCTURAL SAFETY

G2405.1 (302.1) Structural safety. The building shall not be weakened by the installation of any gas *piping*. In the process of installing or repairing any gas *piping*, the finished floors, walls, ceilings, tile work or any other part of the building or premises which is required to be changed or replaced shall be left in a safe structural condition in accordance with the requirements of this code.

❖ The installation of fuel-gas systems must not adversely affect the structural integrity of the building components. This code dictates the structural safety requirements that must be applied to any structural portion of the building that is penetrated, altered or removed during the installation, replacement or repair of fuel-gas systems.

G2405.2 (302.4) Alterations to trusses. Truss members and components shall not be cut, drilled, notched, spliced or otherwise altered in any way without the written concurrence and approval of a registered design professional. *Alterations* resulting in the addition of loads to any member, such as HVAC equipment and water heaters, shall not be permitted

INTERNATIONAL CODE COUNCIL®
Copyright © 2015 ICC. ALL RIGHTS RESERVED. Accessed by David Dammon on Jun 21, 2017 12:30:52 PM pursuant to License Agreement with ICC. No further reproduction or distribution authorized. ANY UNAUTHORIZED REPRODUCTION OR DISTRIBUTION IS A VIOLATION OF THE FEDERAL COPYRIGHT ACT AND THE LICENSE AGREEMENT, AND SUBJECT TO CIVIL AND CRIMINAL PENALTIES THEREUNDER.

without verification that the truss is capable of supporting such additional loading.

❖ A truss is an engineered system of components that function as a structural unit. Trusses are susceptible to weakening by almost any type of alteration, such as boring, notching and cutting. Unlike dimensional solid lumber members, such as studs, rafters and joists, trusses cannot be altered in a code-prescribed way. The only exception is obtaining written approval of a specific alteration from a registered design professional.

The placement of a water heater in an attic, for example, can result in abnormal loads on roof trusses that must be accounted for structurally. A simple 40-gallon water heater weighs well over 400 pounds and is a point load. Subjecting trusses to loads that they were not designed to carry is considered to be an alteration and is prohibited without a structural analysis to verify that the truss can bear the additional weight.

G2405.3 (302.3.1) Engineered wood products. Cuts, notches and holes bored in trusses, structural composite lumber, structural glued-laminated members and I-joists are prohibited except where permitted by the manufacturer's recommendations or where the effects of such *alterations* are specifically considered in the design of the member by a registered design professional.

❖ This section applies to engineered lumber products which are manufactured structural members. These products often have installation instructions that specifically state if, where and how the member can be altered, drilled, notched, etc. What appears to be a harmless cut, notch or boring might actually be structurally damaging to the member (see Section G2405.2).

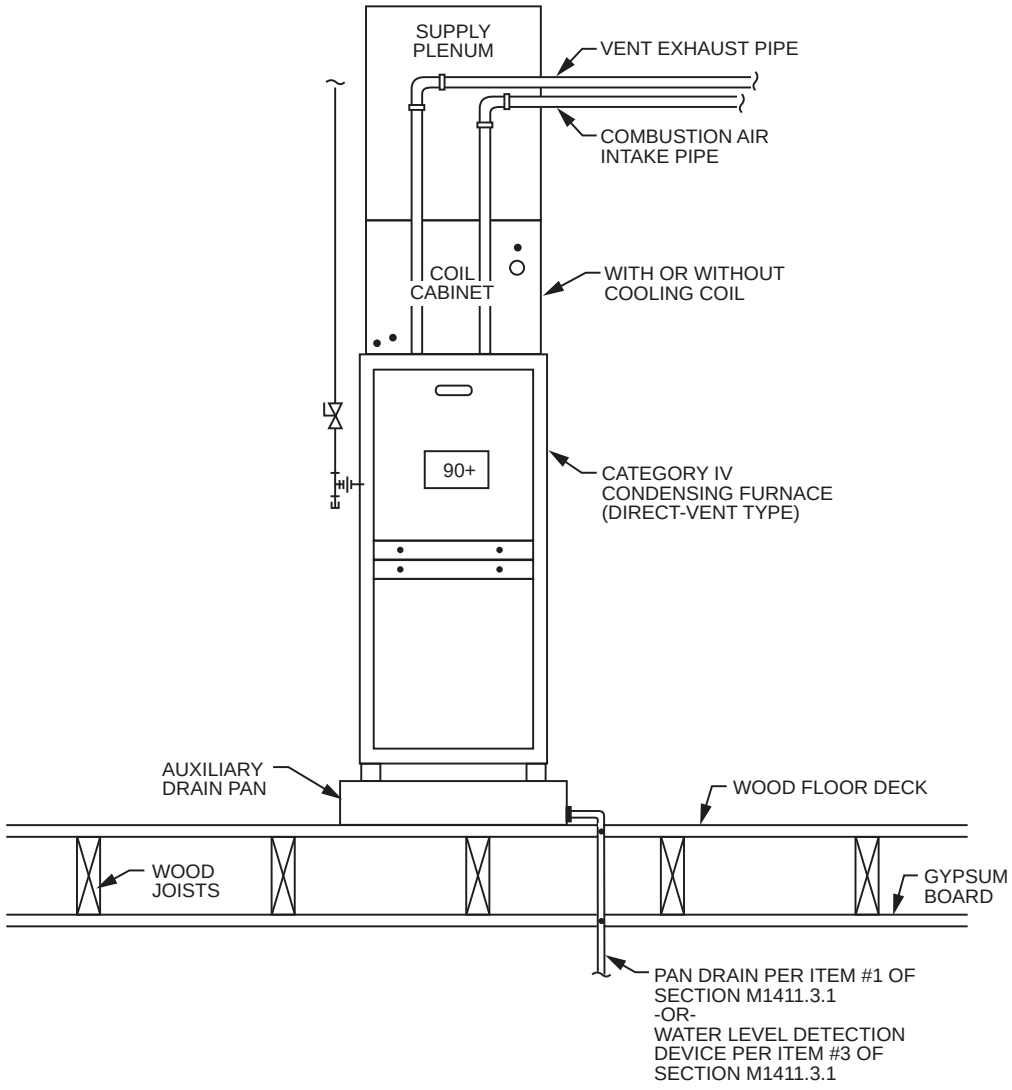

Figure G2404.10
AUXILIARY DRAIN PAN REQUIRED (WITH OR WITHOUT COOLING COIL)

INTERNATIONAL CODE COUNCIL®
Copyright © 2015 ICC. ALL RIGHTS RESERVED. Accessed by David Dammon on Jun 21, 2017 12:30:52 PM pursuant to License Agreement with ICC. No further reproduction or distribution authorized. ANY UNAUTHORIZED REPRODUCTION OR DISTRIBUTION IS A VIOLATION OF THE FEDERAL COPYRIGHT ACT AND THE LICENSE AGREEMENT, AND SUBJECT TO CIVIL AND CRIMINAL PENALTIES THEREUNDER.

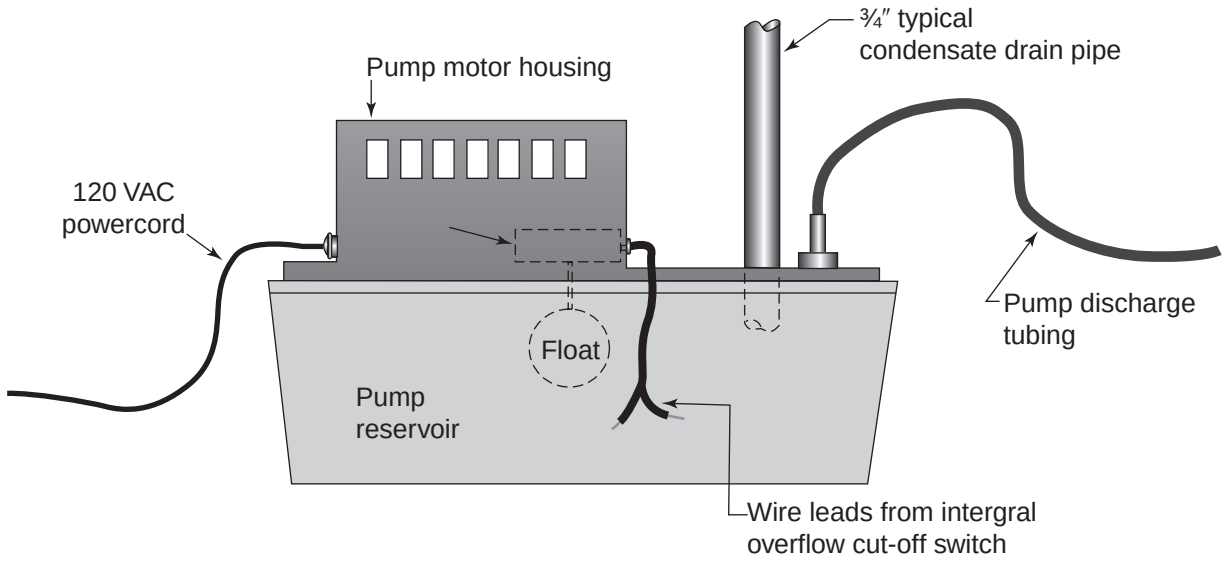

For SI: 1 inch = 25.4 mm, 1 foot = 304.8 mm.

Figure G2404.11
CONDENSATE PUMP

SECTION G2406 (303)
APPLIANCE LOCATION

G2406.1 (303.1) General. *Appliances* shall be located as required by this section, specific requirements elsewhere in this code and the conditions of the *equipment* and *appliance* listing.

❖ Section G2406 is a consolidation of the code's generally applicable location requirements and limitations. The listing for an appliance or equipment will often contain location requirements parallel with or in addition to these sections.

G2406.2 (303.3) Prohibited locations. *Appliances* shall not be located in sleeping rooms, bathrooms, toilet rooms, storage closets or surgical rooms, or in a space that opens only into such rooms or spaces, except where the installation complies with one of the following:

1. The *appliance* is a direct-vent *appliance* installed in accordance with the conditions of the listing and the manufacturer's instructions.
2. *Vented room heaters*, wall *furnaces*, vented decorative *appliances*, vented gas *fireplaces*, vented gas *fireplace* heaters and decorative *appliances* for installation in vented solid fuel-burning *fireplaces* are installed in rooms that meet the required volume criteria of Section G2407.5.
3. A single wall-mounted *unvented room heater* is installed in a bathroom and such *unvented room heater* is equipped as specified in Section G2445.6 and has an input rating not greater than 6,000 *Btu*/h (1.76 kW). The bathroom shall meet the required volume criteria of Section G2407.5.
4. A single wall-mounted *unvented room heater* is installed in a bedroom and such *unvented room heater* is equipped as specified in Section G2445.6 and has an input rating not greater than 10,000 *Btu*/h (2.93 kW). The bedroom shall meet the required volume criteria of Section G2407.5.
5. The *appliance* is installed in a room or space that opens only into a bedroom or bathroom, and such room or space is used for no other purpose and is provided with a solid weather-stripped door equipped with an *approved* self-closing device. All *combustion air* shall be taken directly from the outdoors in accordance with Section G2407.6.

❖ The intent of this section is to prevent fuel-fired appliances from being installed in rooms and spaces where the combustion process could pose a threat to the occupants. Potential threats include depleted oxygen levels; elevated levels of carbon dioxide, nitrous oxides, carbon monoxide, and other combustion gases; ignition of combustibles and elevated levels of flammable gases.

In small rooms such as bedrooms and bathrooms, the doors are typically closed when the room is occupied, which could allow combustion gases to build up to life-threatening levels. In bedrooms, sleeping occupants would not be alert to or aware of impending danger.

If an appliance obtains combustion air from a room or space, it communicates with the atmosphere in that room or space whether or not it is installed in that room or space. An appliance might be in a room, closet or alcove and obtain combustion air from an adjacent room, so Section G2406.2 is worded to address the

INTERNATIONAL CODE COUNCIL®
Copyright © 2015 ICC. ALL RIGHTS RESERVED. Accessed by David Dammon on Jun 21, 2017 12:30:52 PM pursuant to License Agreement with ICC. No further reproduction or distribution authorized. ANY UNAUTHORIZED REPRODUCTION OR DISTRIBUTION IS A VIOLATION OF THE FEDERAL COPYRIGHT ACT AND THE LICENSE AGREEMENT, AND SUBJECT TO CIVIL AND CRIMINAL PENALTIES THEREUNDER.

location of an appliance in the rooms listed and in spaces that open only into such rooms. In other words, an appliance in a closet accessed from a bedroom is no different from an appliance located within the bedroom. It is not the intent of this section to prevent combustion air from being taken from a bedroom, bathroom, etc., as evidenced in Items 2, 3 and 4. For example, the volume of a bedroom could be added to the volume of other rooms for the purpose of providing indoor combustion air for an appliance not installed in a location prohibited by this section if openings are installed to conjoin the space volumes in accordance with Section G2407.5.3. If an appliance obtains combustion air from a room, the appliance combustion chamber would be open to the room and the appliance must be considered to be in that room.

Item 1 recognizes that direct-vent appliances have sealed combustion chambers and obtain all combustion air directly from the outdoors. The appliance combustion chambers do not communicate with the room atmosphere.

Item 2 requires that the room be able to supply the necessary combustion air by infiltration as specified in Section G2407.5. Note that Item 2 includes both vented decorative appliances and vented gas fireplaces which are both addressed by ANSI Z21.50 and are essentially the same appliance, known by different names. Vented gas fireplace heaters (ANSI Z21.88) were also added to Item 2.

Items 3 and 4 allow the installation of a single wall-mounted unvented room heater in bathrooms and bedrooms if the heaters are equipped with oxygen depletion safety shutoff systems, are limited in Btu input rating and the space is capable of supplying indoor combustion air in accordance with Section G2407.5. These exceptions specify "wall-mounted" heaters, which are fully enclosed and less susceptible to tampering and other conditions that might affect the combustion process. Items 3 and 4 would not apply to room heaters that stand on the floor or fasten to a fireplace hearth or ventless firebox hearth [see Commentary Figure G2406.2(1)].

Item 5 would allow installation of fuel-fired appliances within a separate dedicated space that is accessed from the rooms and spaces listed in this section. A separated space containing the appliance must be open to the outdoors in accordance with Section G2407.6, and the access door to the space must be solid and weather-stripped to prevent communication between atmospheres in the separated spaces. The door must also be self-closing and not rely on occupants to keep it closed. The enclosure must not be used for storage or any other purpose. The intent is to isolate the appliance(s) from the rooms listed in this section and to obtain all combustion air directly from the outdoors [see Commentary Figure G2406.2(2)]. This item can be used to avoid relocating an appliance when an existing appliance installed in a prohibited location needs to be replaced [see Commentary Figure G2406.2(2)].

G2406.3 (303.6) Outdoor locations. *Appliances* installed in outdoor locations shall be either listed for outdoor installation or provided with protection from outdoor environmental factors that influence the operability, durability and safety of the *appliance*.

❖ Appliances installed outdoors must be specifically listed for outdoor installation or be protected from outdoor conditions that will affect the "operability, durability and safety of the equipment."

The concern is for weather and ambient temperatures. The manufacturer's instructions and listing must be consulted to determine whether a particular appliance is designed for or can be made suitable for outdoor installation. For example, furnaces cannot be installed outdoors in cold climates regardless of any weather-proof enclosure, unless the heat exchanger, burner assemblies and venting system are designed for exposure to temperatures below normal indoor temperatures. Cold ambient temperatures can cause harmful condensation to occur on heat exchanger surfaces of fuel-fired appliances.

Additionally, there may be local ordinances that govern the outdoor installation of appliances. Before installing an appliance outdoors, consult local zoning regulations, ordinances and subdivision covenants. Many of these regulations strictly limit the location of outdoor mechanical equipment and appliances. Also, for roof installations, the roof structure must be able to support all imposed static and dynamic structural loads. Substantiating data on the structural adequacy of the entire installation must be submitted and approved.



Photo by D.F. Noyes Studios, courtesy of DESA International

Figure G2406.2(1)
UNVENTED WALL-MOUNTED ROOM HEATER

INTERNATIONAL CODE COUNCIL®
Copyright © 2015 ICC. ALL RIGHTS RESERVED. Accessed by David Dammon on Jun 21, 2017 12:30:52 PM pursuant to License Agreement with ICC. No further reproduction or distribution authorized. ANY UNAUTHORIZED REPRODUCTION OR DISTRIBUTION IS A VIOLATION OF THE FEDERAL COPYRIGHT ACT AND THE LICENSE AGREEMENT, AND SUBJECT TO CIVIL AND CRIMINAL PENALTIES THEREUNDER.

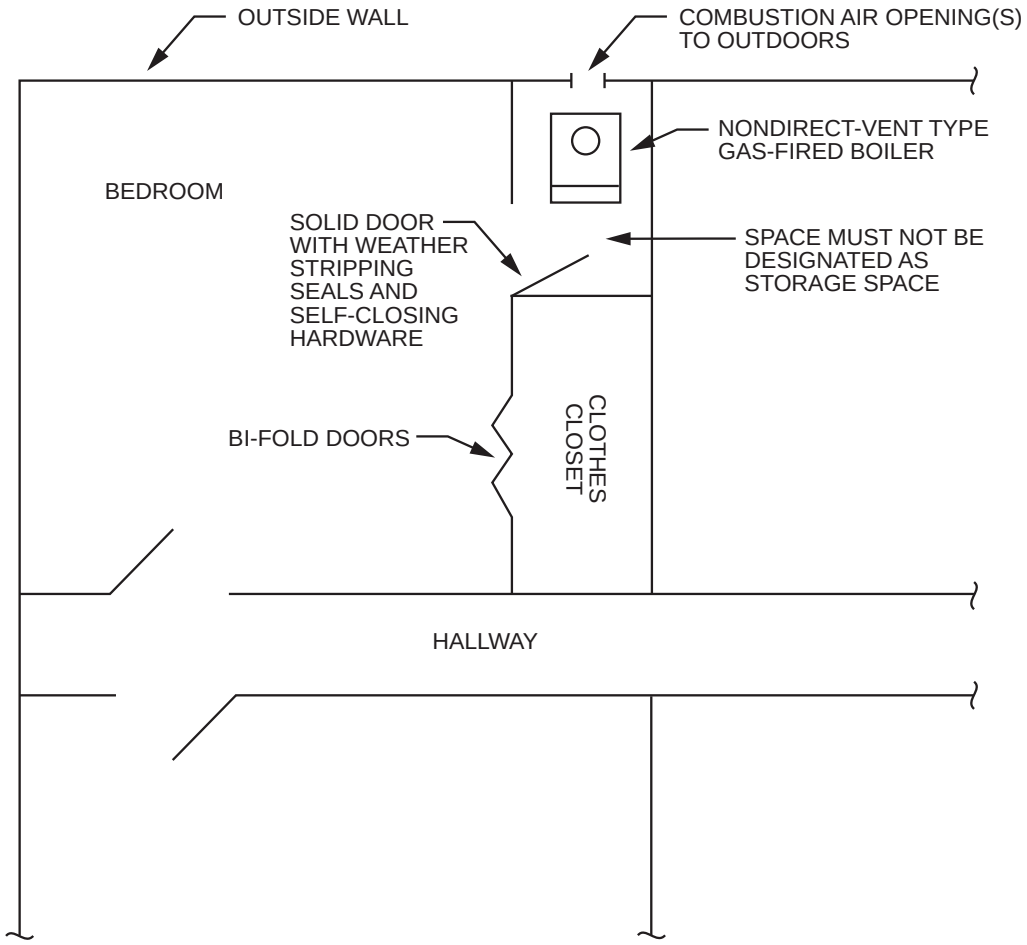

Figure G2406.2(2)
APPLIANCE ENCLOSURE

SECTION G2407 (304)
COMBUSTION, VENTILATION AND DILUTION AIR

G2407.1 (304.1) General. Air for *combustion*, ventilation and dilution of *flue gases* for *appliances* installed in buildings shall be provided by application of one of the methods prescribed in Sections G2407.5 through G2407.9. Where the requirements of Section G2407.5 are not met, outdoor air shall be introduced in accordance with one of the methods prescribed in Sections G2407.6 through G2407.9. *Direct-vent appliances*, gas *appliances* of other than *natural draft* design, vented gas *appliances* not designated as Category I and *appliances* equipped with power burners, shall be provided with *combustion*, ventilation and *dilution air* in accordance with the *appliance* manufacturer's instructions.

Exception: *Type 1 clothes dryers* that are provided with *makeup air* in accordance with Section G2439.5.

❖ The provisions of Section G2407 describe requirements for the combustion air necessary for the complete combustion of fuel gas, dilution of flue gases, and ventilation of gas-fired appliances and the space in which they are installed. An inadequate combustion air supply to gas-fired appliances can compromise safety by causing in-complete combustion, resulting in appliance malfunction and production of excess carbon monoxide.

Complete combustion of fuel gas is essential for the proper operation of gas-fired appliances. If insufficient quantities of oxygen are supplied, the combustion process will be incomplete, creating hazardous by-products [see Commentary Figures G2407.1(1) and G2407.1(2)].

Although not implied in the term, combustion air also serves other purposes in addition to supplying oxygen. Combustion air ventilates and cools appliances and the rooms or spaces that enclose them. Combustion air also plays an important role in producing and controlling draft in vents and chimneys.

Despite the fact that an adequate combustion air supply is extremely important, it is one aspect of gas-fired equipment installations that is often overlooked, ignored or compromised. Depending on the appliance type, location and building construction, supplying combustion air can either be easy or can involve com-

INTERNATIONAL CODE COUNCIL®
Copyright © 2015 ICC. ALL RIGHTS RESERVED. Accessed by David Dammon on Jun 21, 2017 12:30:52 PM pursuant to License Agreement with ICC. No further reproduction or distribution authorized. ANY UNAUTHORIZED REPRODUCTION OR DISTRIBUTION IS A VIOLATION OF THE FEDERAL COPYRIGHT ACT AND THE LICENSE AGREEMENT, AND SUBJECT TO CIVIL AND CRIMINAL PENALTIES THEREUNDER.

plex designs and extraordinary methods. In any case, the importance of a proper combustion air supply cannot be overemphasized.

The methods of supplying combustion air range from simple (inherently more dependable) methods to more complex methods. This section offers five methods for providing combustion air [see Commentary Figure G2407.1(3)]:

1. All indoor air.
2. All outdoor air.
3. Combination indoor and outdoor air.
4. Mechanical combustion air supply.
5. Engineered design.

The last sentence of this section clarifies that the section is intended to apply only to natural-draft atmospheric-burner-design appliances, Category I appliances, nondirect-vent appliances and appliances not equipped with power burners (see commentary, Section G2407.8). For example, the application of Section G2407.6 with large power-burner-equipped (nonnatural draft, nonatmospheric-burner designs) boilers could result in excessively large openings in an outside wall, causing environmental problems within the boiler room.

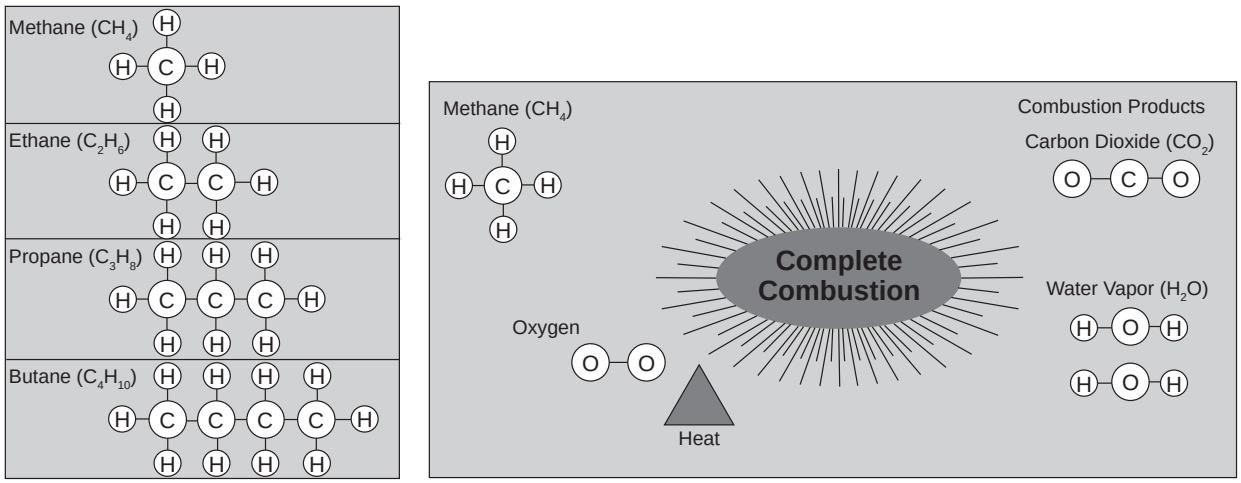

Figure courtesy of Reznor/Thomas & Betts Corporation

Figure G2407.1(1)
THE CHEMISTRY OF IDEAL COMBUSTION

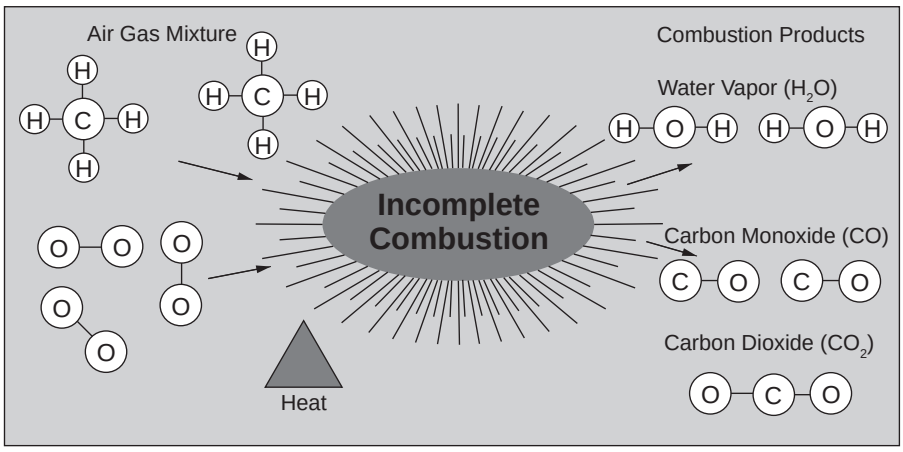

Figure courtesy of Reznor/Thomas & Betts Corporation

Figure G2407.1(2)
THE CHEMISTRY OF INCOMPLETE COMBUSTION

INTERNATIONAL CODE COUNCIL®
Copyright © 2015 ICC. ALL RIGHTS RESERVED. Accessed by David Dammon on Jun 21, 2017 12:30:52 PM pursuant to License Agreement with ICC. No further reproduction or distribution authorized. ANY UNAUTHORIZED REPRODUCTION OR DISTRIBUTION IS A VIOLATION OF THE FEDERAL COPYRIGHT ACT AND THE LICENSE AGREEMENT, AND SUBJECT TO CIVIL AND CRIMINAL PENALTIES THEREUNDER.

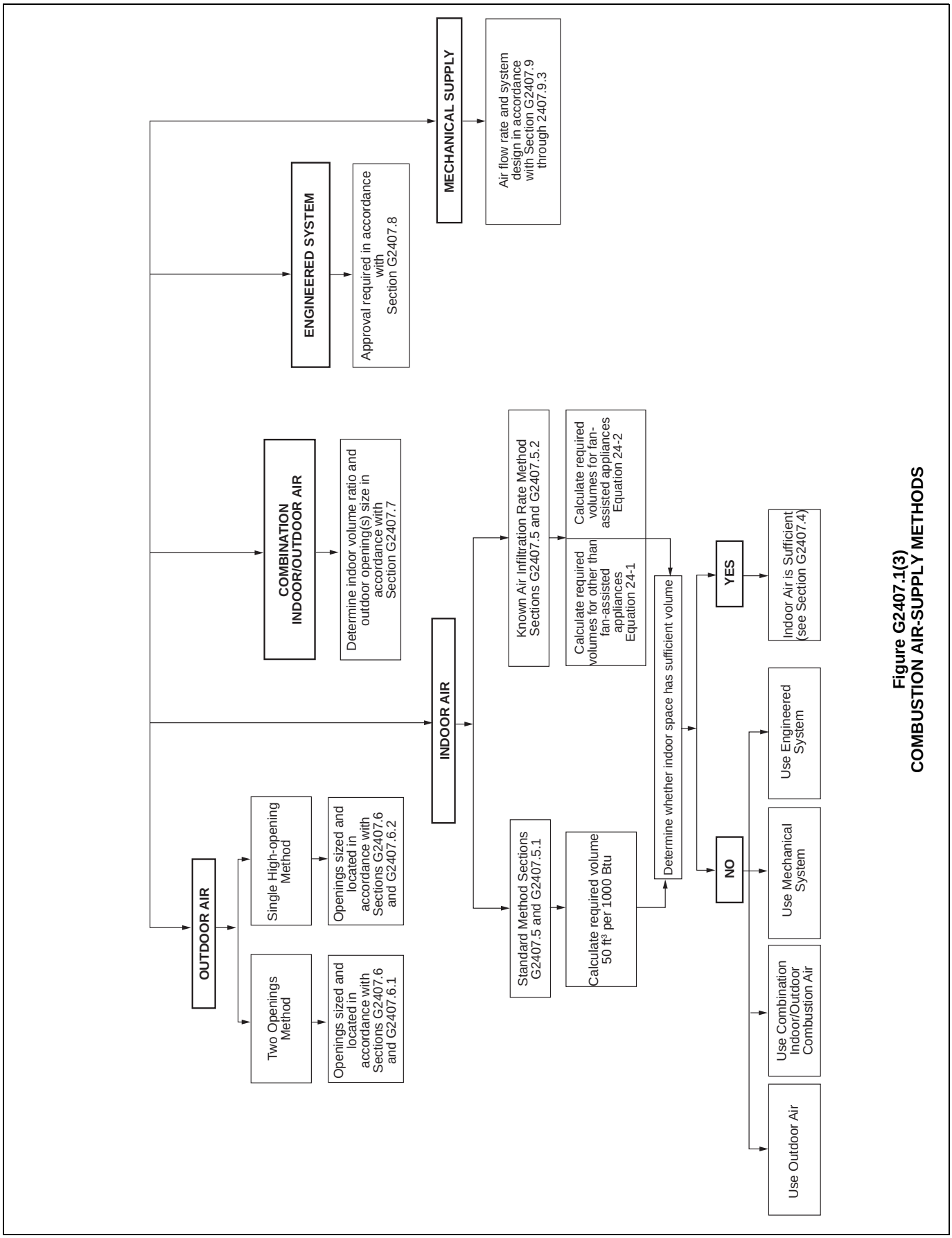

Figure G2407.1(3)
COMBUSTION AIR-SUPPLY METHODS

INTERNATIONAL CODE COUNCIL®
Copyright © 2015 ICC. ALL RIGHTS RESERVED. Accessed by David Dammon on Jun 21, 2017 12:30:52 PM pursuant to License Agreement with ICC. No further reproduction or distribution authorized. ANY UNAUTHORIZED REPRODUCTION OR DISTRIBUTION IS A VIOLATION OF THE FEDERAL COPYRIGHT ACT AND THE LICENSE AGREEMENT, AND SUBJECT TO CIVIL AND CRIMINAL PENALTIES THEREUNDER.

Section G2407.1 states that the methods of providing combustion air as prescribed in Sections G2407.5 through G2407.9 are applicable only to certain types of appliances, namely natural-draft appliances with draft hoods and fan-assisted appliances. The other types of appliances, including direct-vent appliances (direct-vent appliances can be natural-draft type but have no draft hoods), power-vented appliances and Categories II, III and IV appliances, must be provided with combustion air as dictated in the appliance manufacturer's instructions. Another type of appliance has been added to the types that are subject only to the requirements in the manufacturer's instructions—appliances equipped with power burners. Power burners pull in combustion air under fan power and mix it with the fuel gas before conveying it to the burner.

Natural-draft appliances take in combustion air by means of the weak force produced by the natural draft in the venting system only. Clearly there is a significant difference between the mechanical force of power burners with combustion air fans and natural-draft appliances that must rely on the venting system draft to cause combustion air to enter the appliance. The methods in Sections G2407.5 through G2407.9 were based on the physics of natural-draft, fan-assisted and Category I appliances and therefore failed to account for the nature of powered systems like power burners. This fact has perplexed designers for many years as they tried to design combustion air openings for large input boilers and similar appliances that are commonly equipped with power burners. When they used the sizing rules in the code for combustion air openings in the exterior wall of a boiler room, for example, the opening size would be so large that it would be impossible to prevent the freezing of pipes and equipment in colder climates. The openings to the outdoors were prohibitively large for such large input power-burner appliances and out of proportion with the need when considering that power burners mechanically draw in combustion air. When natural draft is depended on, larger openings are necessary to reduce the pressure drop across the openings, but power burners can tolerate much larger pressure drops, thus allowing smaller openings. The manufacturer's instructions for large input power-burner appliances specify the size of combustion air openings by their own methods. Typically those methods result in much smaller openings than prescribed in the code; however, some manufacturers simply refer back to the code instead of offering their own method. A research study demonstrated that the code-prescribed opening sizing methods were overkill for power-burner appliances [see Commentary Figure G2407.1(6)]. Direct-vent appliances supply their own combustion air through an outdoor air intake pipe or duct [see Commentary Figures G2407.1(4) and G2407.1(5)].

The exception recognizes that clothes dryers receive the required combustion air from the makeup air that compensates for the exhaust air flow from the appliance.

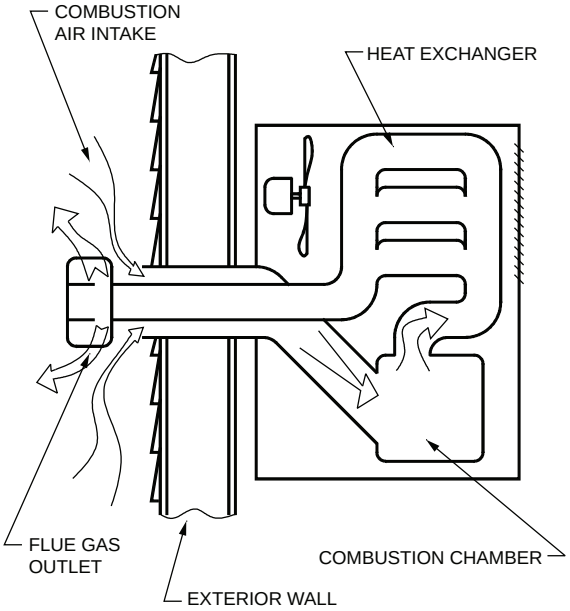

Figure G2407.1(4)
DIRECT-VENT APPLIANCE

G2407.2 (304.2) Appliance location. *Appliances* shall be located so as not to interfere with proper circulation of *combustion,* ventilation and *dilution air*.

❖ The provisions of Section G2407 rely on the natural (gravity) movement of air; therefore, installations must allow unimpeded flow of combustion air from the source to the appliances being supplied. Other mechanical systems, appliances or equipment in the same room or building can adversely affect the combustion air supply. For example, when placed too close to the combustion air openings, gas-fired appliances or equipment will restrict the free circulation of air.

G2407.3 (304.3) Draft hood/regulator location. Where used, a *draft hood* or a *barometric draft regulator* shall be installed in the same room or enclosure as the *appliance* served to prevent any difference in pressure between the hood or regulator and the *combustion air* supply.

❖ It is important that draft hoods and barometric draft regulators be located in the same pressure zone as the appliance combustion chamber.

Draft hoods and barometric regulators both serve to stabilize draft through an appliance and in some cases act to relieve backpressure/downdraft in the venting system. It is the draft in a Category I appliance that moves combustion air into the appliance and conveys the combustion gases to the venting system. Pressure differences between the atmospheres in which the draft hood/regulator and the combustion chamber are located could interfere with the function of the draft hood/regulator, resulting in poor combustion, excess draft, insufficient draft, combustion gas spillage and/or hazardous appliance operation. A draft hood/regulator is installed under the assumption that the combustion

INTERNATIONAL CODE COUNCIL®
Copyright © 2015 ICC. ALL RIGHTS RESERVED. Accessed by David Dammon on Jun 21, 2017 12:30:52 PM pursuant to License Agreement with ICC. No further reproduction or distribution authorized. ANY UNAUTHORIZED REPRODUCTION OR DISTRIBUTION IS A VIOLATION OF THE FEDERAL COPYRIGHT ACT AND THE LICENSE AGREEMENT, AND SUBJECT TO CIVIL AND CRIMINAL PENALTIES THEREUNDER.

chamber it serves sees the same atmospheric pressure.

G2407.4 (304.4) Makeup air provisions. Where exhaust fans, *clothes dryers* and kitchen ventilation systems interfere with the operation of *appliances, makeup air* shall be provided.

❖ The introduction of makeup air is critical to the proper operation of all fuel-burning appliances located in areas subject to the effects of exhaust systems. Too little makeup air will cause excessive negative pressures to develop, not only reducing the exhaust airflow but also interfering with appliance venting. Too little makeup air can cause loss of draft in appliance vents and chimneys or cause combustion byproducts to discharge into the building. It is the draft produced in an appliance that causes combustion air to enter the combustion chamber of natural-draft atmospheric-burner appliances. It is the draft in the venting system that causes the combustion gases and dilution air to move through the venting system toward the vent terminal. A lack of combustion air can result in incomplete fuel combustion, appliance malfunction and flue gas spillage.

A significant reduction in building pressure could be created by fireplaces, exhaust fans, ventilation systems, clothes dryers and similar appliances and equipment. Gas-fired appliances are often in competition

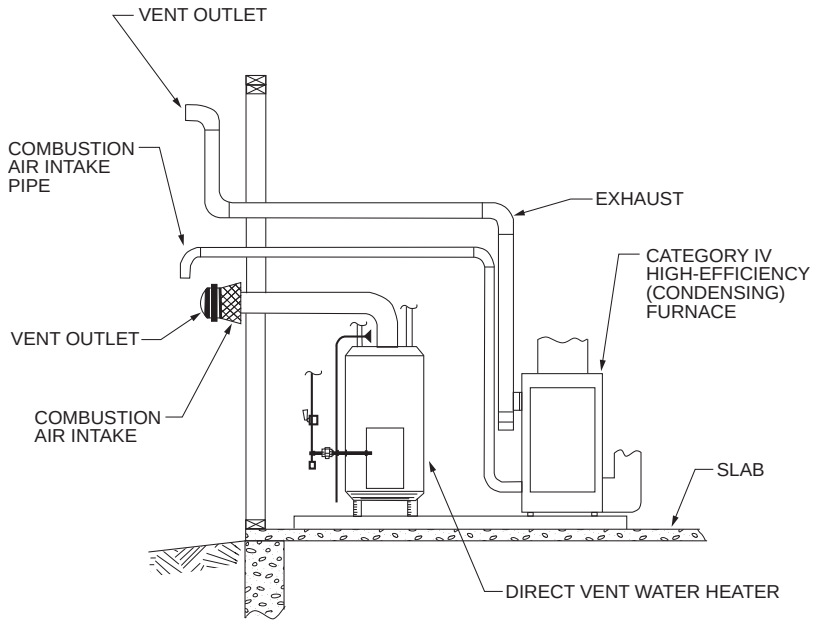

Figure G2407.1(5)
DIRECT COMBUSTION AIR CONNECTION TO THE OUTDOORS

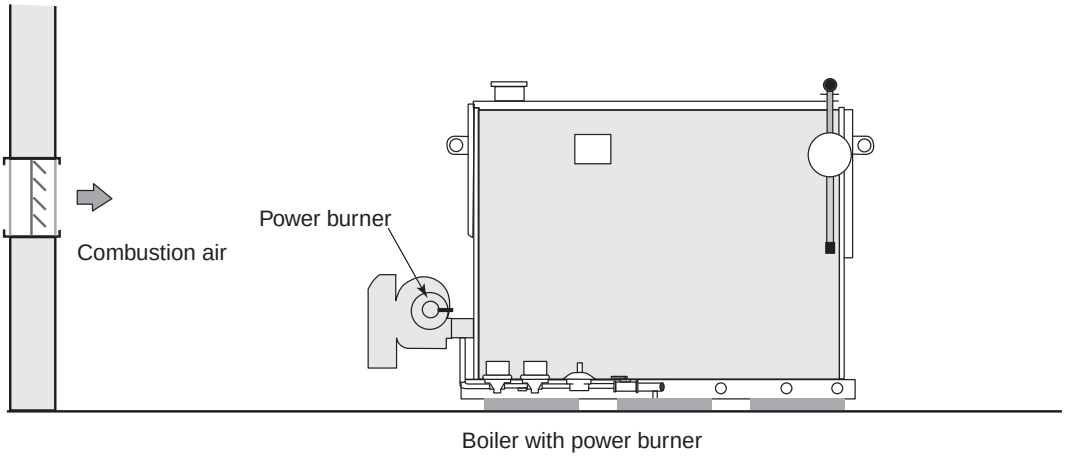

Figure G2407.1(6)
POWER BURNER

(Combustion air is provided to power burners in accordance with the appliance manufacturer's instructions.)

INTERNATIONAL CODE COUNCIL®
Copyright © 2015 ICC. ALL RIGHTS RESERVED. Accessed by David Dammon on Jun 21, 2017 12:30:52 PM pursuant to License Agreement with ICC. No further reproduction or distribution authorized. ANY UNAUTHORIZED REPRODUCTION OR DISTRIBUTION IS A VIOLATION OF THE FEDERAL COPYRIGHT ACT AND THE LICENSE AGREEMENT, AND SUBJECT TO CIVIL AND CRIMINAL PENALTIES THEREUNDER.

with other equipment or systems for the available combustion air and makeup air that flows through (infiltrates) the building envelope or is otherwise introduced into a building, room or space. The competition between powered exhaust equipment and natural-draft gas-fired appliance venting systems is an unfair contest at best. Eventually, the powered equipment will starve the natural-draft appliances unless provisions are made to compensate for the effect of the powered exhaust equipment/appliances. Supplying makeup air will prevent negative pressures within a space, thus negating the effect of exhaust fans and clothes dryers. In many cases, makeup air will be required because this is the only way to prevent exhaust systems from negatively affecting the appliance venting systems that draw combustion air from the same space from which the exhaust systems remove air.

Natural draft appliances also compete among themselves for combustion air. The appliance venting system that produces the strongest draft, such as a solid-fuel appliance or fireplace, can cause combustion air shortages for the appliance venting systems that produce a weaker draft.

Exhaust fans and similar equipment and appliances can produce significant negative building pressures that can interfere with the operation of vents and chimneys. This interference can cause reverse flow as outdoor air enters the building through the vents and chimneys be cause of the pressure difference. Any such interference with vents or chimneys could cause products of combustion to be discharged into the building and, therefore, must be avoided. The provisions of Section G2407 could be woefully inadequate or nullified where compensating features are not installed to mitigate the effect of appliances or equipment removing air from any room or space.

When any system depends on infiltration as the source of combustion air, it will probably be necessary to supply makeup air to offset the deficiency in many buildings. It is obvious that natural draft appliance installations cannot compete with exhaust fans and clothes dryers for the available infiltration air. Without makeup air, the gas-fired appliance venting systems and the mechanical exhaust systems will indeed compete for the same infiltration air, which could be insufficient to satisfy either need (see Commentary Figure G2407.4). Note that exhaust fans, clothes dryers and similar equipment that remove air from a space will have no negative impact on unvented appliances because unvented appliances have no venting system. Direct-vent appliances are also immune in most cases.

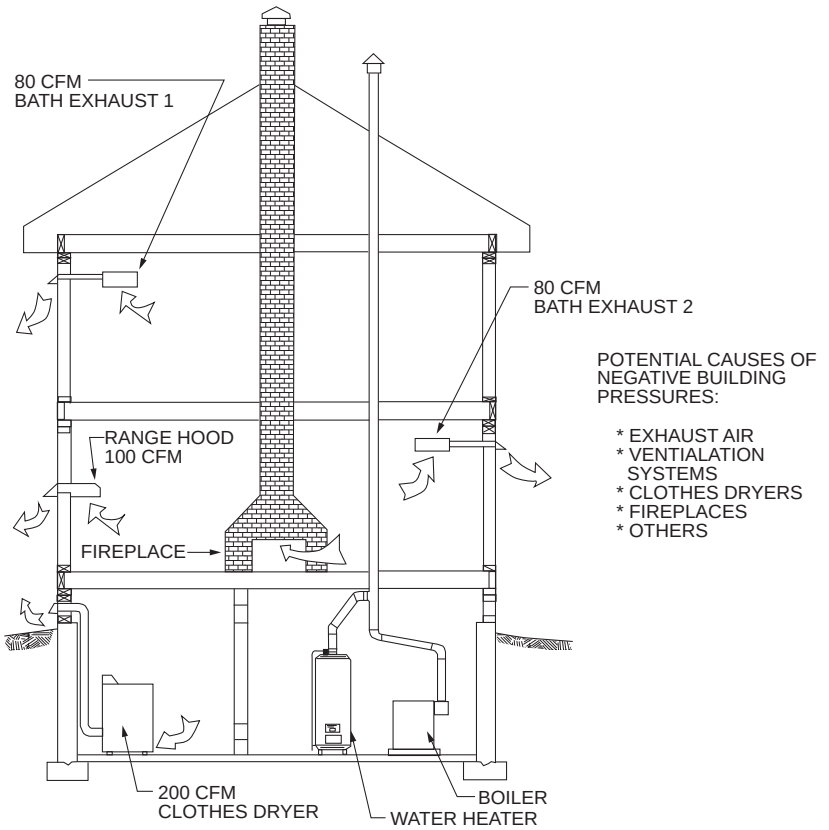

For SI: 1 cubic foot per minute = 0.000471 m^3/s.

Figure G2407.4
DEPLETION OF COMBUSTION AIR

INTERNATIONAL CODE COUNCIL®
Copyright © 2015 ICC. ALL RIGHTS RESERVED. Accessed by David Dammon on Jun 21, 2017 12:30:52 PM pursuant to License Agreement with ICC. No further reproduction or distribution authorized. ANY UNAUTHORIZED REPRODUCTION OR DISTRIBUTION IS A VIOLATION OF THE FEDERAL COPYRIGHT ACT AND THE LICENSE AGREEMENT, AND SUBJECT TO CIVIL AND CRIMINAL PENALTIES THEREUNDER.

G2407.5 (304.5) Indoor combustion air. The required volume of indoor air shall be determined in accordance with Section G2407.5.1 or G2407.5.2, except that where the air infiltration rate is known to be less than 0.40 air changes per hour (ACH), Section G2407.5.2 shall be used. The total required volume shall be the sum of the required volume calculated for all *appliances* located within the space. Rooms communicating directly with the space in which the *appliances* are installed through openings not furnished with doors, and through *combustion air* openings sized and located in accordance with Section G2407.5.3, are considered to be part of the required volume.

❖ The terms "confined space," "unconfined space" and "unusually tight construction" are no longer used in the code. The required room volume is determined by two methods: one method based on the actual air infiltration rate of the building and the other based on the familiar fixed ratio of 50 ft^3 per 1000 Btu/h (4.8 m^3/kW). Air taken directly from inside the building is an acceptable source of combustion air if a sufficient volume of air is available for the appliances served and the building construction allows sufficient infiltration. The provisions of this section rely on building envelope infiltration as the only source of combustion air.

The method given in Section G2407.5.1 is based on a conservative assumed air infiltration rate of at least 0.40 air change per hour (ACH); therefore, if the ACH is known to be less than 0.40, this method cannot be used. The air infiltration rate for most buildings is not known, and it is possible for the ACH rate of a building to be actually less than 0.40; however, research suggests that buildings having less than 0.40 ACH are rare. It is believed that 80 to 95 percent of U.S. homes have infiltration rates of 0.35 ACH or greater; however, those numbers are changing because of more stringent energy codes and sustainable "green" building practices. A rate of 0.40 ACH or less is the quantitative expression of "tight construction." Testing also indicates that the 50 ft^3/1 000 Btu/h (4.8 m^3/kW) convention is somewhat liberal; thus, a built-in safety factor exists. If the designer suspects that the building in question is extraordinarily tight (less than 0.40 ACH), calculations and/or testing should be done to verify the ACH rate. A conservative approach could be to use the method in Section G2407.5.2 with a conservative ACH rate such as 0.25, 0.30 or 0.35. Commentary Figure G2407.5.2 shows calculated required volumes for appliances up to 300,000 Btu/h (87.9 kW) input rating based on the standard method and known ACH method for multiple ACH rates.

The standard method can be calculated for each appliance and then all the volumes are added or can be calculated by adding all of the appliance inputs first and then calculating the total volume. The known ACH-rate method must be performed in at least two distinct calculations where both fan-assisted and draft-hood-equipped appliances are present.

To increase the available volume, the code allows rooms and spaces to be coupled together by doorways without doors and by openings installed in accordance with Section G2407.5.3.

G2407.5.1 (304.5.1) Standard method. The minimum required volume shall be 50 cubic feet per 1,000 *Btu*/h (4.8 m^3/kW) of the appliance input rating.

❖ This is the optional default method intended for use when the ACH rate is unknown. If the actual ACH rate is known to be greater than 0.40, the method of Section G2407.5.2 will yield smaller required volumes.

If the ACH rate is known to be less than 0.40, this method must not be used because it is based on an assumed ACH rate of at least 0.40. The rate of 50 ft^3/1,000 Btu/h (4.8 m^3/kW) is a carryover from the previous editions of the code and was used for buildings that were not of unusually tight construction.

G2407.5.2 (304.5.2) Known air-infiltration-rate method. Where the air infiltration rate of a structure is known, the minimum required volume shall be determined as follows:

For *appliances* other than fan-assisted, calculate volume using Equation 24-1.

$$Required\ Volume_{other} \geq \frac{21 ft^3}{ACH}\left(\frac{I_{other}}{1{,}000\ \text{Btu/h}}\right) \quad \textbf{(Equation 24-1)}$$

For fan-assisted *appliances*, calculate volume using Equation 24-2.

$$Required\ Volume_{fan} \geq \frac{15 ft^3}{ACH}\left(\frac{I_{fan}}{1{,}000\ \text{Btu/hr}}\right) \quad \textbf{(Equation 24-2)}$$

where:

I_{other} = All *appliances* other than fan assisted (input in *Btu*/h).

I_{fan} = Fan-assisted *appliance* (input in *Btu*/h).

ACH = Air change per hour (percent of volume of space exchanged per hour, expressed as a decimal).

For purposes of this calculation, an infiltration rate greater than 0.60 *ACH* shall not be used in Equations 24-1 and 24-2.

❖ This method considers the actual or calculated ACH rate and requires space volumes to be commensurate with that rate. This method can also be used when the ACH rate is unknown by simply picking a conservative ACH rate (0.40 ACH or less) representing the lowest anticipated ACH rate for the given building. Equation 24-1 is for draft-hood-equipped appliances and reflects recent research and test results that show that such appliances need less air flow than previously assumed. The standard ratio of 50 ft^3/1,000 Btu/h (4.8 m^3/kW) that has been in codes for many years was based on an assumed combustion air flow need of 25 ft^3/1,000 Btu/h (2.4 m^3/kW) with an assumed ACH rate of 0.50. The 25 ft^3/1,000 Btu/h air flow consisted of the air required for stoichiometric combustion [10 ft^3/ft^3 of natural gas] plus excess air to assure complete combustion, draft hood dilution air and a safety factor

INTERNATIONAL CODE COUNCIL®
Copyright © 2015 ICC. ALL RIGHTS RESERVED. Accessed by David Dammon on Jun 21, 2017 12:30:52 PM pursuant to License Agreement with ICC. No further reproduction or distribution authorized. ANY UNAUTHORIZED REPRODUCTION OR DISTRIBUTION IS A VIOLATION OF THE FEDERAL COPYRIGHT ACT AND THE LICENSE AGREEMENT, AND SUBJECT TO CIVIL AND CRIMINAL PENALTIES THEREUNDER.

allowance. The volume of 25 cubic feet (0.7 m3) divided by an ACH rate of 0.50 yields the familiar 50 ft3/1,000 Btu/h ratio. Equation 24-1 is based on a total airflow need of 21 cubic feet (0.6 m3) instead of 25(0.7 m3) because research supports a less conservative revised volume.

Equation 24-2 is for fan-assisted appliances only and accounts for the fact that fan-assisted appliances have no draft hood and, therefore, do not need dilution air. Fan-assisted appliances need only air for stoichiometic combustion [(10 ft^3/ft^3) of natural gas] and excess air [5 ft^3/ft^3 of natural gas]. Dividing by the ACH rate adjusts the required volume to correspond to the available infiltration rate.

For example, if the ACH rate is 0.35, 42.8 cubic feet (1.2 m^3) would be required for each 1,000 Btu/h (ft^3 natural gas), and if the ACH rate is 0.50, 30 cubic feet (0.8 m^3) would be required for each 1,000 Btu/h. The greater the ACH rate, the lower the room volume needed.

Research and testing results indicate that the absolute minimum volume for draft-hood-equipped appliances must be 35 ft^3/1,000 Btu/h (3.4 m^3/kW) and for fan-assisted appliances it must be 25 ft^3/1,000 Btu/h (2.4 m^3/kW). This is why this section limits the infiltration rate to a maximum of 0.60 ACH. Limiting the ACH rate to 0.60 results in a lower limit safety factor for the required volume, thereby preventing appliances from being installed in exceedingly small spaces. Commentary Figure G2407.5.2 is based on the methodology of Sections G2407.5.1 and G2407.5.2 and is provided for convenience.

G2407.5.3 (304.5.3) Indoor opening size and location. Openings used to connect indoor spaces shall be sized and located in accordance with Sections G2407.5.3.1 and G2407.5.3.2 (see Figure G2407.5.3).

❖ Sections G2407.5.3.1 and G2407.5.3.2 prescribe the size and location of openings used to conjoin (couple) spaces for the purpose of increasing the available volume. The last sentence of Section G2407.5 speaks of this. These openings must be permanently open, except where interlocked motorized dampers are used in accordance with Section G2407.10.

G2407.5.3.1 (304.5.3.1) Combining spaces on the same story. Each opening shall have a minimum free area of 1 square inch per 1,000 *Btu*/h (2,200 mm^2/kW) of the total input rating of all *appliances* in the space, but not less than 100 square inches (0.06 m^2). One opening shall commence within 12 inches (305 mm) of the top and one opening shall commence within 12 inches (305 mm) of the bottom of the enclosure. The minimum dimension of air openings shall be not less than 3 inches (76 mm).

❖ This section is applicable to adjacent spaces on the same floor level and provides for the familiar high and low openings. The opening configuration creates a thermosiphon air flow with the bottom opening acting as an inlet and the top opening acting as an outlet. This provision originated as a means to conjoin a small appliance enclosure (such as a furnace or boiler room) with other spaces, thereby effectively increasing the volume of the enclosures.

G2407.5.3.2 (304.5.3.2) Combining spaces in different stories. The volumes of spaces in different stories shall be considered as communicating spaces where such spaces are connected by one or more openings in doors or floors having a total minimum free area of 2 square inches per 1,000 *Btu*/h (4402 mm^2/kW) of total input rating of all *appliances*.

❖ This section is a new concept that allows spaces on different floor levels to be conjoined, thereby effectively increasing the available volume for supplying combustion air. Installing a high and low opening configuration in accordance with the previous section would serve no purpose when vertically connecting adjacent stories; thus, a single opening is permitted. The opening or openings can be in a floor or in a door opening to an unenclosed stairway that connects the two stories. This method of conjoining spaces is particularly useful for dwelling units where the volume of a basement in which the appliances are located can be conjoined with the open spaces on upper stories by means of a louvered door at the basement stairs. The opening size requirement is simply the addition of the areas of the two openings required by Section G2407.5.3.1. A combustion air opening in a floor would be considered as a transfer opening in a horizontal assembly.

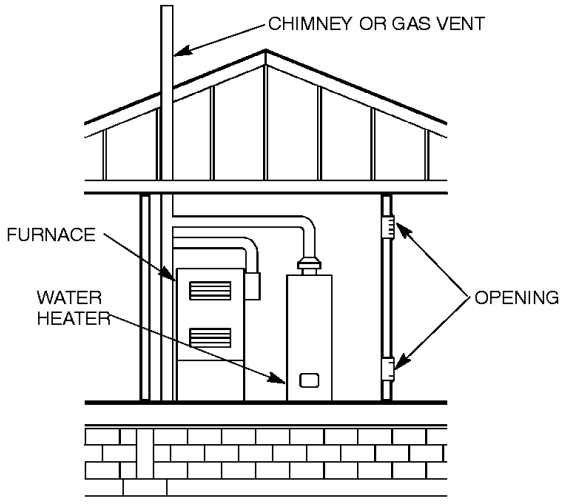

FIGURE G2407.5.3 (304.5.3)
ALL AIR FROM INSIDE THE BUILDING
(see Section G2407.5.3)

INTERNATIONAL CODE COUNCIL®
Copyright © 2015 ICC. ALL RIGHTS RESERVED. Accessed by David Dammon on Jun 21, 2017 12:30:52 PM pursuant to License Agreement with ICC. No further reproduction or distribution authorized. ANY UNAUTHORIZED REPRODUCTION OR DISTRIBUTION IS A VIOLATION OF THE FEDERAL COPYRIGHT ACT AND THE LICENSE AGREEMENT, AND SUBJECT TO CIVIL AND CRIMINAL PENALTIES THEREUNDER.

Standard Method Required Volume All Appliances		Known Air Infiltration Rate Method, Minimum Space Volume for Appliance Other Than Fan-Assisted, For Specified Infiltration Rates (ACH*)				Known Air Infiltration Rate Method, Minimum Space Volume for Fan-Assisted Appliance, For Specified Infiltration Rates (ACH*)			
Appliance Input Btu/h	Space Volume (ft^3)	Appliance Input Btu/h	Space Volume (ft^3) 0.25 ACH	Space Volume (ft^3) 0.30 ACH	Space Volume (ft^3) 0.35 ACH	Appliance Input Btu/h	Space Volume (ft^3) 0.25 ACH	Space Volume (ft^3) 0.30 ACH	Space Volume (ft^3) 0.35 ACH
5,000	250	5,000	420	350	300	5,000	300	250	214
10,000	500	10,000	840	700	600	10,000	600	500	429
15,000	750	15,000	1,260	1,050	900	15,000	900	750	643
20,000	1,000	20,000	1,680	1,400	1,200	20,000	1,200	1,000	857
25,000	1,250	25,000	2,100	1,750	1,500	25,000	1,500	1,250	1,071
30,000	1,500	30,000	2,520	2,100	1,800	30,000	1,800	1,500	1,286
35,000	1,750	35,000	2,940	2,450	2,100	35,000	2,100	1,750	1,500
40,000	2,000	40,000	3,360	2,800	2,400	40,000	2,400	2,000	1,714
45,000	2,250	45,000	3,780	3,150	2,700	45,000	2,700	2,250	1,929
50,000	2,500	50,000	4,200	3,500	3,000	50,000	3,000	2,500	2,143
55,000	2,750	55,000	4,620	3,850	3,300	55,000	3,300	2,750	2,357
60,000	3,000	60,000	5,040	4,200	3,600	60,000	3,600	3,000	2,571
65,000	3,250	65,000	5,460	4,550	3,900	65,000	3,900	3,250	2,786
70,000	3,500	70,000	5,800	4,900	4,200	70,000	4,200	3,500	3,000
75,000	3,750	75,000	6,300	5,250	4,500	75,000	4,500	3,750	3,214
80,000	4,000	80,000	6,720	5,600	4,800	80,000	4,800	4,000	3,429
85,000	4,250	85,000	7,140	5,950	5,100	85,000	5,100	4,250	3,643
90,000	4,500	90,000	7,500	6,300	5,400	90,000	5,400	4,500	3,857
95,000	4,750	95,000	7,900	6,650	5,700	95,000	5,700	4,750	4,071
100,000	5,000	100,000	8,400	7,000	6,000	100,000	6,000	5,000	4,286
105,000	5,250	105,000	8,820	7,350	6,300	105,000	6,300	5,250	4,500
110,000	5,500	110,000	9,240	7,700	6,600	110,000	6,600	5,500	4,714
115,000	5,750	115,000	9,660	8,050	6,900	115,000	6,900	5,750	4,929
120,000	6,000	120,000	10,080	8,400	7,200	120,000	7,200	6,000	5,143
125,000	6,250	125,000	10,500	8,750	7,500	125,000	7,500	6,250	5,357
130,000	6,500	130,000	10,920	9,100	7,800	130,000	7,800	6,500	5,571
135,000	6,750	135,000	11,340	9,450	8,100	135,000	8,100	6,750	5,786
140,000	7,000	140,000	11,760	9,800	8,400	140,000	8,400	7,000	6,000
145,000	7,250	145,000	12,180	10,150	8,700	145,000	8,700	7,250	6,214
150,000	7,500	150,000	12,600	10,500	9,000	150,000	9,000	7,500	6,429
160,000	8,000	160,000	13,440	11,200	9,600	160,000	9,600	8,000	6,857
170,000	8,500	170,000	14,280	11,900	10,200	170,000	10,200	8,500	7,286
180,000	9,000	180,000	15,120	12,600	10,800	180,000	10,800	9,000	7,714
190,000	9,500	190,000	15,960	13,300	11,400	190,000	11,400	9,500	8,143
200,000	10,000	200,000	16,800	14,000	12,000	200,000	12,000	10,000	8,571
210,000	10,500	210,000	17,640	14,700	12,600	210,000	12,600	10,500	9,000
220,000	11,000	220,000	18,480	15,400	13,200	220,000	13,200	11,000	9,429
230,000	11,500	230,000	19,320	16,100	13,800	230,000	13,800	11,500	9,857
240,000	12,000	240,000	20,160	16,800	14,400	240,000	14,400	12,000	10,286
250,000	12,500	250,000	21,000	17,500	15,000	250,000	15,000	12,500	10,714
260,000	13,000	260,000	21,840	18,200	15,600	260,000	15,600	13,000	11,143
270,000	13,500	270,000	22,680	18,900	16,200	270,000	16,200	13,500	11,571
280,000	14,000	280,000	23,520	19,600	16,800	280,000	16,800	14,000	12,000
290,000	14,500	290,000	24,360	20,300	17,400	290,000	17,400	14,500	12,429
300,000	15,000	300,000	25,200	21,000	18,000	300,000	18,000	15,000	12,857

***ACH=Air Change per Hour**

For SI: 1 British thermal unit per hour = 0.293 W, 1 cubic foot = 0.028 m^3.

Table courtesy of American Gas Association.

Figure G2407.5.2
CALCULATED VOLUMES

INTERNATIONAL CODE COUNCIL®
Copyright © 2015 ICC. ALL RIGHTS RESERVED. Accessed by David Dammon on Jun 21, 2017 12:30:52 PM pursuant to License Agreement with ICC. No further reproduction or distribution authorized. ANY UNAUTHORIZED REPRODUCTION OR DISTRIBUTION IS A VIOLATION OF THE FEDERAL COPYRIGHT ACT AND THE LICENSE AGREEMENT, AND SUBJECT TO CIVIL AND CRIMINAL PENALTIES THEREUNDER.

G2407.6 (304.6) Outdoor combustion air. Outdoor *combustion* air shall be provided through opening(s) to the outdoors in accordance with Section G2407.6.1 or G2407.6.2. The minimum dimension of air openings shall be not less than 3 inches (76 mm).

❖ This section describes two methods for supplying combustion air from the outdoors: the traditional method of two direct openings or ducts to the outdoors and a newer method using one opening or duct to the outdoors.

Openings to spaces that are naturally ventilated with outdoor air, such as attic or crawl spaces, are considered as an acceptable alternative to a direct connection to the outdoors. Attic and crawl spaces can be acceptable sources of combustion air only where such spaces have adequate natural ventilation openings directly to the outdoors. Attic and crawl spaces ventilated by mechanical means are not an acceptable source of combustion air.

Combustion air ducts and openings that penetrate components of wall, floor, ceiling and roof assemblies must be installed as required by this code.

When designing combustion air installations, the effect that openings to the outdoors can have on appliances, plumbing systems and building occupants must be considered. For example, depending on the location, openings to the outdoors can:

- Cause drafts that can blow out pilot lights or otherwise interfere with appliance ignition and operation.
- Cause freezing of plumbing piping or other water-containing components.
- Cause objectionable cold drafts that encourage the occupants to block or cover the openings.

In all cases, combustion air openings should be located to reduce the likelihood they will be accidentally or intentionally blocked or covered. A ceiling transfer opening that connects a furnace room with an attic is an example of a combustion air opening that is likely to be intentionally blocked by an occupant because of the drafts that can occur in cold climates.

Building occupants typically do not understand the need for or the importance of combustion air openings.

No side dimension of a square or rectangular opening and no diameter of a round opening can be less than 3 inches (76 mm). The smallest allowed square opening area would be 9 square inches (5806 mm^2) and the smallest allowed round opening area would be 7 square inches (4516 mm^2) (see commentary, Section G2407.10).

G2407.6.1 (304.6.1) Two-permanent-openings method. Two permanent openings, one commencing within 12 inches (305 mm) of the top and one commencing within 12 inches (305 mm) of the bottom of the enclosure, shall be provided. The openings shall communicate directly or by ducts with the outdoors or spaces that freely communicate with the outdoors.

Where directly communicating with the outdoors, or where communicating with the outdoors through vertical ducts, each opening shall have a minimum free area of 1 square inch per 4,000 *Btu*/h (550 mm^2/kW) of total input rating of all *appliances* in the enclosure [see Figures G2407.6.1(1) and G2407.6.1(2)].

Where communicating with the outdoors through horizontal ducts, each opening shall have a minimum free area of not less than 1 square inch per 2,000 *Btu*/h (1,100 mm^2/kW) of total input rating of all *appliances* in the enclosure [see Figure G2407.6.1(3)].

❖ Two openings located as prescribed in this section are intended to induce a convective air current in the room or space by admitting cooler, denser air in the lower opening and allowing the escape of warmer, less dense air through the upper opening. The farther apart the openings, the greater the temperature differential and the greater the convective force behind the current. A component of combustion air is cooling (ventilation) air for the appliance enclosure. The two-opening method was created to ventilate the appliance enclosure in addition to supplying combustion air. This ventilation cools the appliances and would help remove any combustion gases that spilled from the appliances.

G2407.6.2 (304.6.2) One-permanent-opening method. One permanent opening, commencing within 12 inches (305 mm) of the top of the enclosure, shall be provided. The *appliance* shall have *clearances* of at least 1 inch (25 mm) from the sides and back and 6 inches (152 mm) from the front of the *appliance*. The opening shall directly communicate with the outdoors or through a vertical or horizontal duct to the outdoors, or spaces that freely communicate with the outdoors (see Figure G2407.6.2) and shall have a minimum free area of 1 square inch per 3,000 *Btu*/h (734 mm^2/kW) of the total input rating of all *appliances* located in the enclosure and not less than the sum of the areas of all *vent connectors* in the space.

❖ Research has shown that for modern appliances, a single opening to the outdoors will perform as well as the traditional two-opening method. The one-opening method described in this section depends on a reduced pressure being created in the enclosure by the draft created by the venting system. This reduced pressure causes combustion air to enter the enclosure through the single opening. The opening must be properly sized considering both sizing criteria: the square-inch-area-per-Btu/h ratio and the area minimum based on the sum of the areas of all vent connectors in the enclosure. This method allows for fewer openings, fewer ducts and fewer objections by the owners/occupants.

INTERNATIONAL CODE COUNCIL®
Copyright © 2015 ICC. ALL RIGHTS RESERVED. Accessed by David Dammon on Jun 21, 2017 12:30:52 PM pursuant to License Agreement with ICC. No further reproduction or distribution authorized. ANY UNAUTHORIZED REPRODUCTION OR DISTRIBUTION IS A VIOLATION OF THE FEDERAL COPYRIGHT ACT AND THE LICENSE AGREEMENT, AND SUBJECT TO CIVIL AND CRIMINAL PENALTIES THEREUNDER.

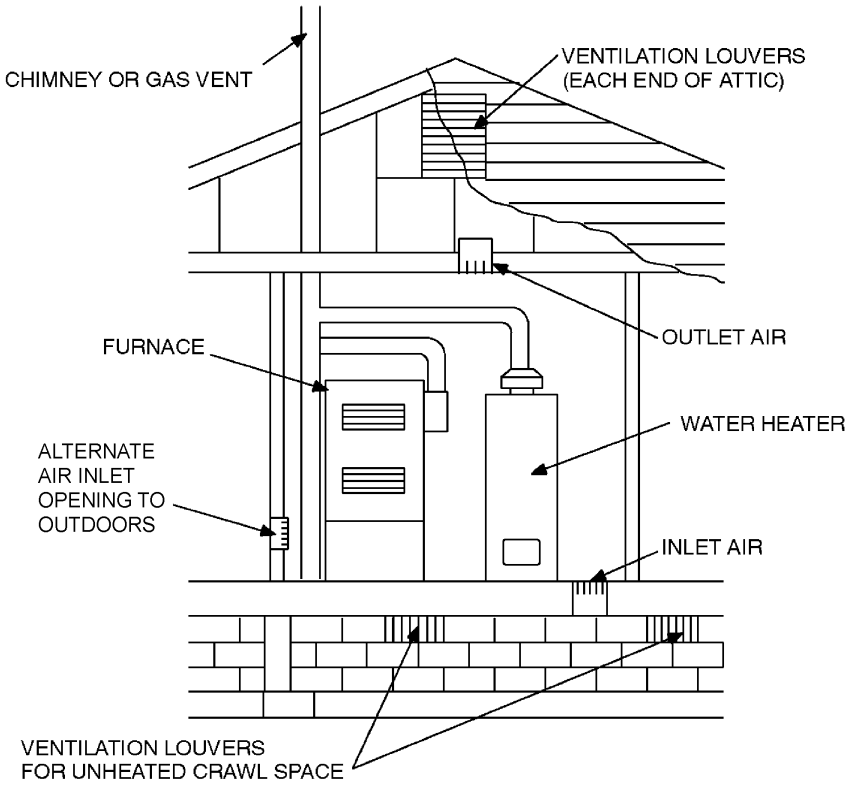

FIGURE G2407.6.1(1) [304.6.1(1)]
ALL AIR FROM OUTDOORS—INLET AIR FROM VENTILATED CRAWL SPACE AND OUTLET AIR TO VENTILATED ATTIC
(see Section G2407.6.1)

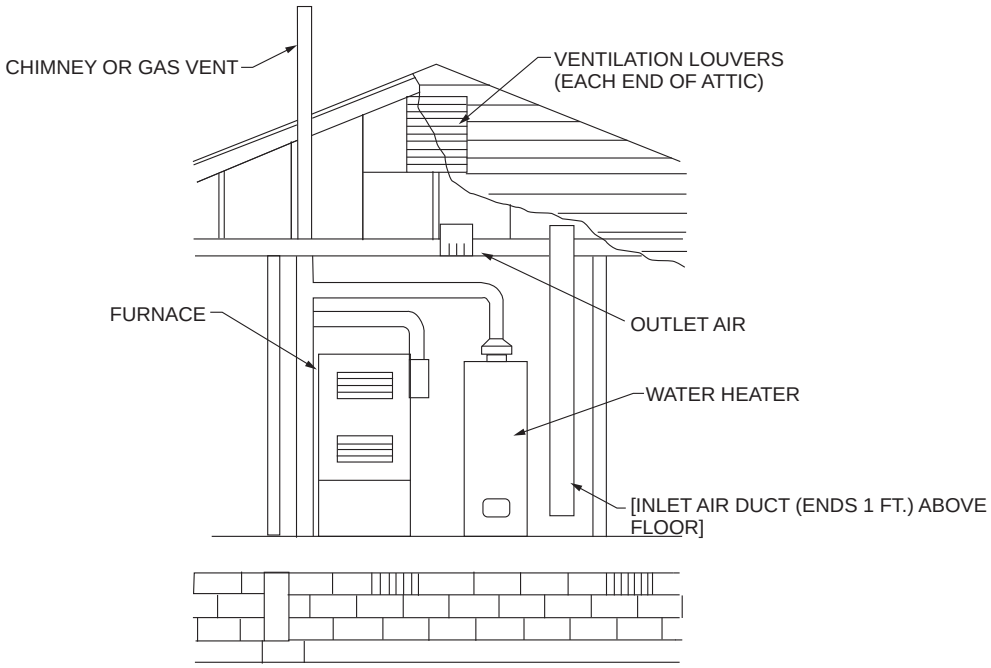

For SI: 1 foot = 304.8 mm.

FIGURE G2407.6.1(2) [304.6.1(2)]
ALL AIR FROM OUTDOORS THROUGH VENTILATED ATTIC
(see Section G2407.6.1)

INTERNATIONAL CODE COUNCIL®
Copyright © 2015 ICC. ALL RIGHTS RESERVED. Accessed by David Dammon on Jun 21, 2017 12:30:52 PM pursuant to License Agreement with ICC. No further reproduction or distribution authorized. ANY UNAUTHORIZED REPRODUCTION OR DISTRIBUTION IS A VIOLATION OF THE FEDERAL COPYRIGHT ACT AND THE LICENSE AGREEMENT, AND SUBJECT TO CIVIL AND CRIMINAL PENALTIES THEREUNDER.

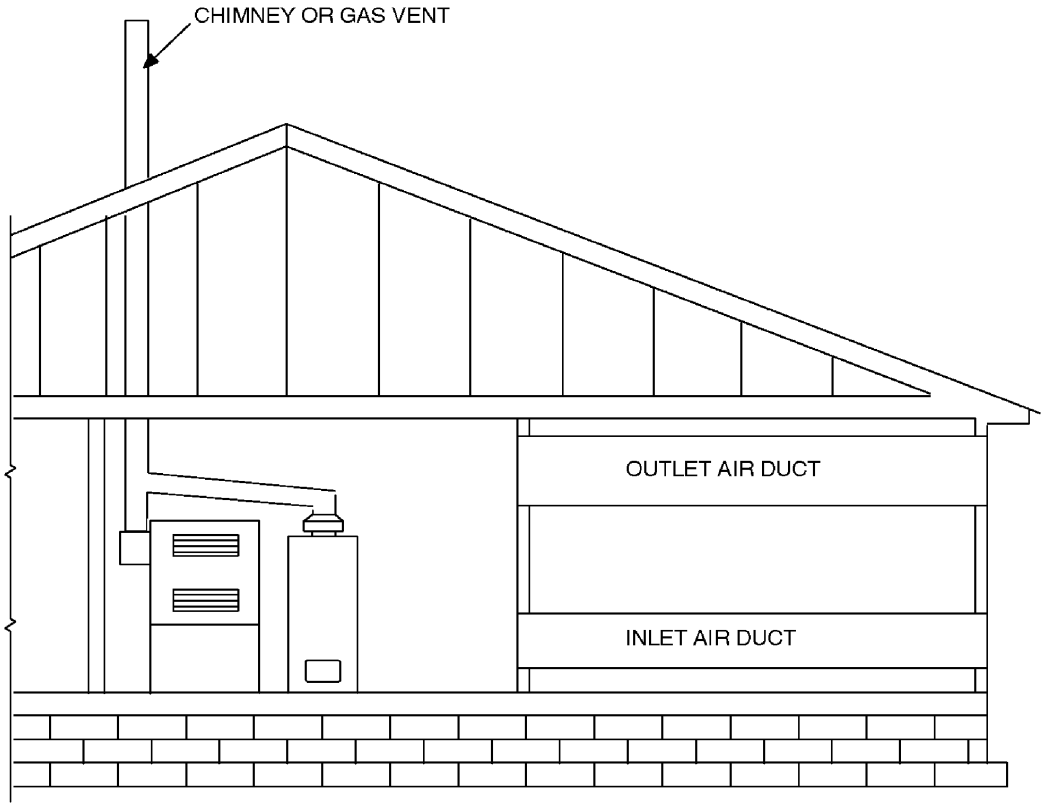

FIGURE G2407.6.1(3) [304.6.1(3)]
ALL AIR FROM OUTDOORS (see Section G2407.6.1)

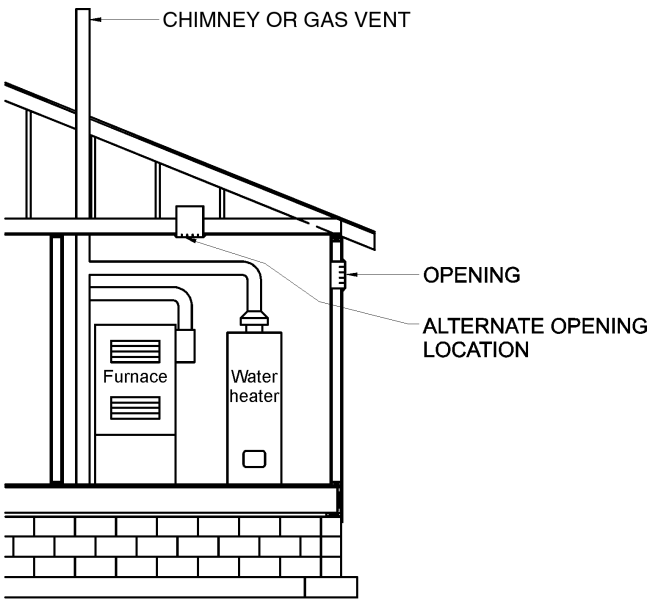

FIGURE G2407.6.2 (304.6.2)
SINGLE COMBUSTION AIR OPENING, ALL AIR FROM OUTDOORS

G2407.7 (304.7) Combination indoor and outdoor combustion air. The use of a combination of indoor and outdoor *combustion air* shall be in accordance with Sections G2407.7.1 through G2407.7.3.

❖ This method of supplying combustion air is a combined application of Section G2407.5 and Section G2407.6. This method allows credit for the amount of infiltration that exists and makes up for the shortage with supplemental outdoor air. In other words, in addition to obtaining combustion air directly from the outdoors, this method relies on building infiltration for a portion of the total combustion air. In spaces where the volume is insufficient to satisfy the method of Section G2407.5 or where smaller outdoor air openings than required by Section G2407.6 are desired, this method allows infiltration and outdoor openings to supplement each other. If the appliances are enclosed in a small room such as a closet, openings to adjacent spaces as prescribed by Section G2407.5.3 must be provided to couple the appliance room volume with any other space volume counted on to provide combustion air. Frequently, sufficient volume cannot be obtained in the appliance enclosure or by opening the appliance enclosure to adjacent spaces. This method of combining indoor and outdoor air is an alternative solution. Simply stated, this section uses ratios of what is required to what is actually supplied so that when com-

INTERNATIONAL CODE COUNCIL®
Copyright © 2015 ICC. ALL RIGHTS RESERVED. Accessed by David Dammon on Jun 21, 2017 12:30:52 PM pursuant to License Agreement with ICC. No further reproduction or distribution authorized. ANY UNAUTHORIZED REPRODUCTION OR DISTRIBUTION IS A VIOLATION OF THE FEDERAL COPYRIGHT ACT AND THE LICENSE AGREEMENT, AND SUBJECT TO CIVIL AND CRIMINAL PENALTIES THEREUNDER.

bined, the indoor air component and the outdoor air component add up to the whole required.

G2407.7.1 (304.7.1) Indoor openings. Where used, openings connecting the interior spaces shall comply with Section G2407.5.3.

❖ See the commentary to Section G2407.5.3.

G2407.7.2 (304.7.2) Outdoor opening location. Outdoor opening(s) shall be located in accordance with Section G2407.6.

❖ See the commentary to Section G2407.6.

G2407.7.3 (304.7.3) Outdoor opening(s) size. The outdoor opening(s) size shall be calculated in accordance with the following:

1. The ratio of interior spaces shall be the available volume of all communicating spaces divided by the required volume.
2. The outdoor size reduction factor shall be one minus the ratio of interior spaces.
3. The minimum size of outdoor opening(s) shall be the full size of outdoor opening(s) calculated in accordance with Section G2407.6, multiplied by the reduction factor. The minimum dimension of air openings shall be not less than 3 inches (76 mm).

❖ Although the principle has not changed, this method has been simplified compared to the same provision in previous editions of the code. The intent is still the same; that is, the fraction of the required indoor volume plus the fraction of outdoor openings must be equal to or greater than 1. The indoor volume method and the out-door air method can both be stand-alone methods; therefore, half of one and half of the other will work, as will three fourths of one and a quarter of the other, etc.

This section is expressed in the following equation:

$$\left[1 - \left(\frac{\text{available indoor volume}}{\text{volume required by Section G2407.5}}\right)\right] \times \begin{matrix}\text{full size opening}\\ \text{required by}\\ \text{Section G2407.6}\end{matrix} = \begin{matrix}\text{reduced size}\\ \text{outdoor air}\\ \text{openings}\end{matrix}$$

Example:

Given:

7,500 ft^3 of indoor volume is required if all indoor air is to be used.

4,950 ft^3 of indoor volume is available.

One opening to the outdoors is desired and must be 50 $in.^2$ if all outdoor air is to be used.

$$\left[1 - \left(\frac{4{,}950\ ft^3}{7{,}500\ ft^3}\right)\right] \times 50\ in.^2 = \text{reduced outdoor opening size}$$

$0.34 \times 50\ in^2 = 17\ in^2$ outdoor opening size

Either of the provisions of Section G2407.6 when combined with the provision of this section can be used to satisfy the equation.

Example 1:

Room A is within a dwelling unit and contains a fuel-fired furnace and a fuel-fired water heater with input ratings of 150,000 and 50,000 Btu/h, respectively.

The size of Room A is 20 feet by 30 feet, and adjacent Room B is also 20 feet by 30 feet. Both rooms have 8-foot-high ceilings. Rooms A and B communicate through two openings located in accordance with Section G2407.5.3, each having dimensions of 10 inches by 20 inches. Two 3-inch-diameter (round) direct openings to the outdoors are installed in Room A and are located in accordance with Section G2407.6.1.

Question: Do the openings to the outdoors, when combined with the volumes of Rooms A and B, meet the combustion air demand of the appliances?

For SI: 1 inch = 25.4 mm, 1 foot = 305 mm, 1 Btu/h = 0.2931 W, 1 cubic foot = 0.0283 m^3, 1 square inch = 645 mm^2.

Given:

The air infiltration rate of the building is unknown.

Volume of Room A = 4,800 ft^3

Volume of Room B = 4,800 ft^3

Area of 3-inch-diameter direct openings = 7.07 in^2

Area of each opening between Rooms A and B = 200 in^2

Total input rating of appliances = 200,000 Btu/h

Step 1: Determine whether Rooms A and B meet the volume requirements of Section G2407.5.

Available volume of Rooms A and B = 4,800 ft^3 + 4,800 ft^3 = 9,600 ft^3

The required volume is:

$$\frac{200{,}000\ \text{Btu/h}}{1{,}000\ \text{Btu/h}} \times 50\ ft^3 = 10{,}000\ ft^3$$

Rooms A and B combined do not meet the volume requirements of Section G2407.5.

Step 2: Determine whether the openings between Rooms A and B meet the requirements of Section G2407.5.3.

The minimum required area is:

$$\frac{200{,}000\ \text{Btu/h}}{1{,}000\ \text{Btu/h}} \times 1\ in^2 = 200\ in^2$$

Actual area of each opening = 200 in^2

The area of each opening meets the size requirement of Section G2407.5.3.

Step 3: Determine the required area of each direct outdoor opening in accordance with Section G2407.6.1.

INTERNATIONAL CODE COUNCIL®
Copyright © 2015 ICC. ALL RIGHTS RESERVED. Accessed by David Dammon on Jun 21, 2017 12:30:52 PM pursuant to License Agreement with ICC. No further reproduction or distribution authorized. ANY UNAUTHORIZED REPRODUCTION OR DISTRIBUTION IS A VIOLATION OF THE FEDERAL COPYRIGHT ACT AND THE LICENSE AGREEMENT, AND SUBJECT TO CIVIL AND CRIMINAL PENALTIES THEREUNDER.

Required area of each opening:

$$\frac{200{,}000 \text{ Btu/h}}{4{,}000 \text{ Btu/h}} \times 1 \text{ in}^2 = 50 \text{ in}^2$$

Step 4: Determine whether the 3-inch-diameter direct openings combined with the volumes of Rooms A and B comply with:

$$\left[1 - \left(\frac{9{,}600 \text{ ft}^3}{10{,}000 \text{ ft}^3}\right)\right] \times 50 = (1 - 0.96) \times 50 = 0.04 \times 50 = 2 \text{ in.}^2$$

The actual area of each direct opening (7.07 in^2) exceeds the required area of 2 in^2.

Therefore, the combination of the 3-inch-diameter direct openings and the volumes of Rooms A and B satisfies the combustion air demand of the appliances.

Example 2:

A combination of indoor and outdoor combustion air is to be supplied for two natural draft boilers in a room as shown in Commentary Figure G2407.7.3 (the air infiltration rate is not known).

1. In accordance with Section G2407.5.1, the required volume of the room containing the boilers would be:

   $$\frac{90{,}000 \text{ Btu/h} + 90{,}000 \text{ Btu/h}}{1{,}000} \times 50 \text{ ft}^2$$

   $$= \frac{180{,}000}{1{,}000} \times 50 \text{ ft}^3 = 180 \times 50 \text{ ft}^3 = 9{,}000 \text{ ft}^3$$

2. The actual room volume is 20ft × 50ft × 8ft = 8,000 ft^3.

3. In accordance with Section G2407.7.3, Item 1, determine the ratio of available (actual) volume to the required volume.

   $$\frac{\text{Actual Volume}}{\text{Required Volume}} \quad \frac{8{,}000 \text{ ft}^3}{9{,}000 \text{ ft}^3} = 0.89$$

4. In accordance with Section G2407.7.3, Item 2, determine outdoor opening size reduction factor.

   1 - 0.89 = 0.11

5. In accordance with Section G2407.7.3, Item 3, determine the size of the outdoor opening required as if all combustion air is to be supplied through the outdoor opening. Because a single high opening is built into an exterior wall, Section G2407.6.2 applies and would require an area of 1 in^2/3000 Btu/h of total appliance input rating (Assuming 6-in. vent connectors, the total area of the boiler vent connectors is 56.6 in^2).

   $$\frac{90{,}000 \text{ Btu/h} + 90{,}000 \text{ Btu/h}}{3{,}000} = 60 \text{ in}^2$$

6. The required size of the outdoor air opening is 60 in^2 × 0.11 = 6.6 in^2. Because the minimum dimensions must be not less than 3 inches, the minimum area of a square opening must be 9 in^2. This combination satisfies the combustion air demand of the appliances; however, note that Section G2407.6.2 requires an area not less than the sum of the vent connector areas, which is 56.6 in^2 in this example.

G2407.8 (304.8) Engineered installations. Engineered *combustion air* installations shall provide an adequate supply of *combustion,* ventilation and *dilution air* and shall be *approved.*

❖ Potential sources of combustion air are the indoor atmosphere in which the appliance is located, outdoor openings and ducts that communicate with the outdoor atmosphere, a combination of these or any other

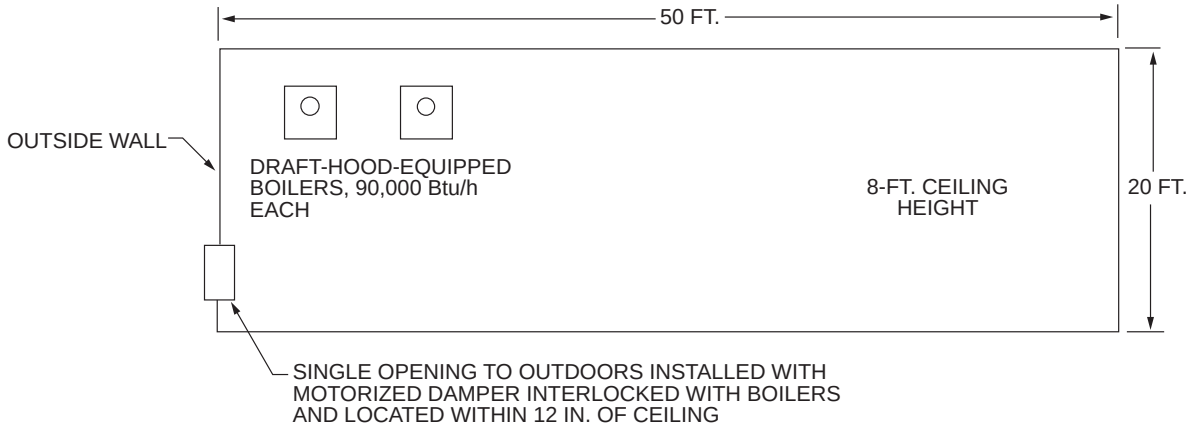

For SI: 1 inch - 25.4 mm, 1 foot = 304.8 mm, 1 British thermal unit per hour = 0.293 W.

Figure G2407.7.3
ROOM CONFIGURATION USED IN EXAMPLE 2

INTERNATIONAL CODE COUNCIL®
Copyright © 2015 ICC. ALL RIGHTS RESERVED. Accessed by David Dammon on Jun 21, 2017 12:30:52 PM pursuant to License Agreement with ICC. No further reproduction or distribution authorized. ANY UNAUTHORIZED REPRODUCTION OR DISTRIBUTION IS A VIOLATION OF THE FEDERAL COPYRIGHT ACT AND THE LICENSE AGREEMENT, AND SUBJECT TO CIVIL AND CRIMINAL PENALTIES THEREUNDER.

approved arrangement for the dependable introduction of outdoor air into the building or directly to the fuel-burning appliance.

The provisions of Section G2407 are intended for application only to appliances and equipment using natural draft atmospheric burners. Gas-fired appliances, especially those that are not of the atmospheric-burner type, are commonly supplied with combustion air by engineered systems. For example, special engineered systems are usually designed for appliances equipped with power burners. Power burners force combustion air into the burner under pressure and are, therefore, not dependent on gravity airflow. In some applications, engineered combustion air supplies have advantages and can be preferable to large gravity (natural) openings to the outdoors. Engineered designs must be evaluated for code compliance, approved and installed in accordance with the appliance manufacturer's instructions [see Commentary Figures G2407.8(1) through G2407.8(3)].

G2407.9 (304.9) Mechanical combustion air supply. Where all *combustion air* is provided by a mechanical air supply system, the *combustion air* shall be supplied from the outdoors at a rate not less than 0.35 cubic feet per minute per 1,000 *Btu*/h (0.034 m^3/min per kW) of total input rating of all *appliances* located within the space.

❖ This method supplies combustion air by means of a fan/blower that runs when any of the served appliances are in a firing cycle. The fan/blower must be sized to supply the required airflow based on the simultaneous operation of all appliances that are served by the fans/blowers. The total Btu/h input rating of all fuel-burning appliances located in the room or space must be used because the potential exists for all of the appliances to be operating at the same time. This method is used where gravity openings to the outdoors are impractical or undesirable. A small fan-powered intake opening can substitute for comparatively large gravity openings, especially where freezing temperatures are a problem or there is no room for the required size gravity openings. Commentary Figures G2407.8(1), (2) and (3) illustrate factory-engineered mechanical combustion air supply units (see Commentary Figure G2407.9).

The prescribed air flow rate of 0.35 cfm per 1,000 Btu/h is equivalent to 1 cfm per 2,867 Btu/h and is based on a combustion air need of 21 cubic feet of volume for each cubic foot of natural gas (1,000 Btu/h). The rate is derived as follows:

$$\frac{2857 \text{ Btu/h}}{1000 \text{ Btu/ft}^3} = 2.857 \text{ ft}^3 \text{ of gas per hour}$$

Thus, 1 cfm is required for each 2,857 Btu/h or 0.35 cfm per 1,000 Btu/h.

G2407.9.1 (304.9.1) Makeup air. Where exhaust fans are installed, *makeup air* shall be provided to replace the exhausted air.

❖ This section expresses the exact same concern as Section G2407.4 (see commentary, Section G2407.4). If the air that is supplied by the combustion air fan becomes makeup air for an exhaust fan, the combustion air will not be available to the appliance(s) for which the air was intended.

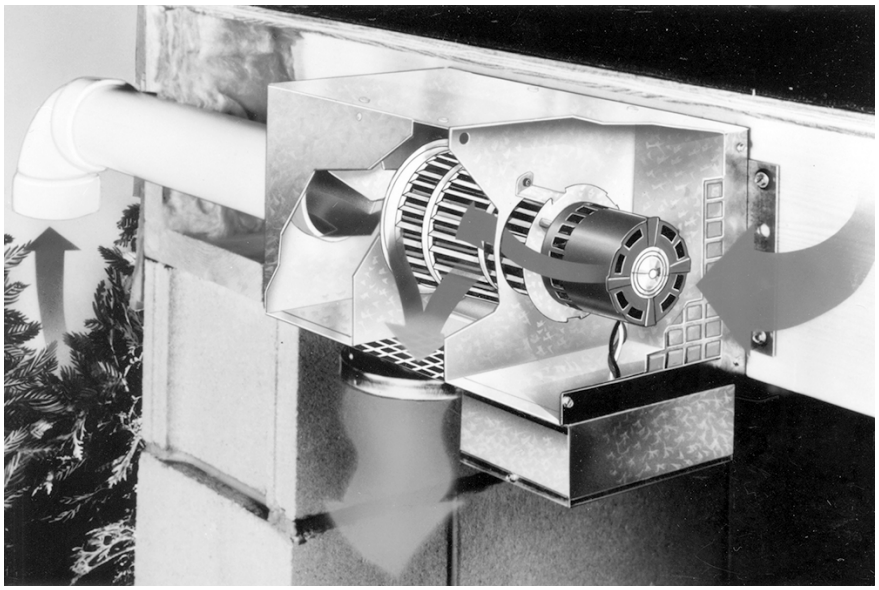

Figure courtesy of Tjernlund Products, Inc.

Figure G2407.8(1)
MECHANICAL COMBUSTION AIR/MAKEUP AIR-SUPPLY SYSTEM

INTERNATIONAL CODE COUNCIL®
Copyright © 2015 ICC. ALL RIGHTS RESERVED. Accessed by David Dammon on Jun 21, 2017 12:30:52 PM pursuant to License Agreement with ICC. No further reproduction or distribution authorized. ANY UNAUTHORIZED REPRODUCTION OR DISTRIBUTION IS A VIOLATION OF THE FEDERAL COPYRIGHT ACT AND THE LICENSE AGREEMENT, AND SUBJECT TO CIVIL AND CRIMINAL PENALTIES THEREUNDER.

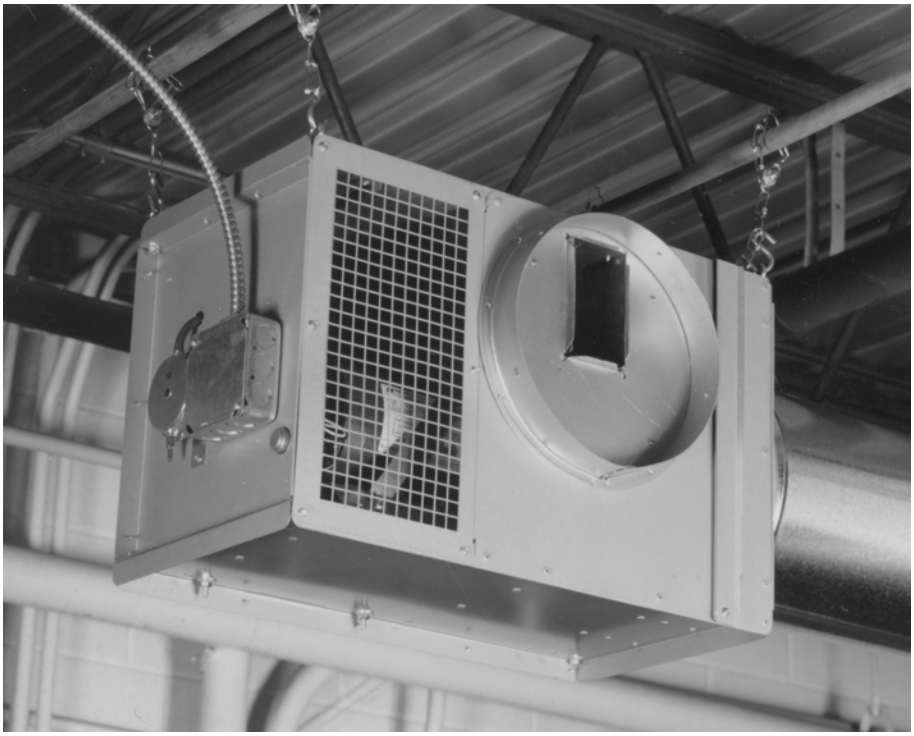

Photo courtesy of Tjernlund Products, Inc.

Figure G2407.8(2)
MECHANICAL COMBUSTION AIR-SUPPLY SYSTEM

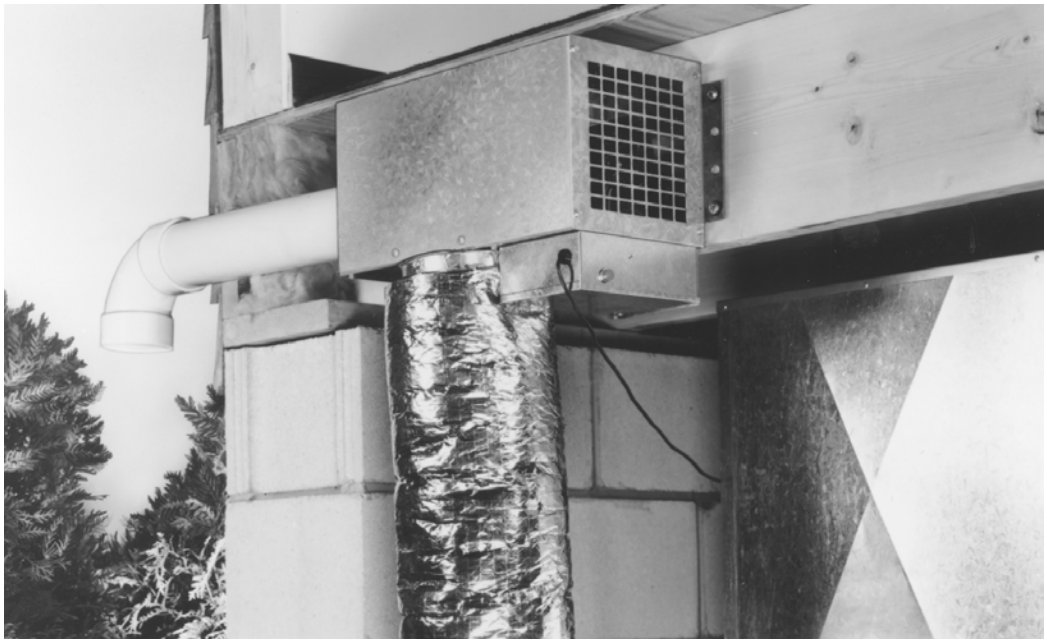

Photo courtesy of Tjernlund Products, Inc.

Figure G2407.8(3)
MECHANICAL COMBUSTION AIR/MAKEUP AIR-SUPPLY SYSTEM

INTERNATIONAL CODE COUNCIL®
Copyright © 2015 ICC. ALL RIGHTS RESERVED. Accessed by David Dammon on Jun 21, 2017 12:30:52 PM pursuant to License Agreement with ICC. No further reproduction or distribution authorized. ANY UNAUTHORIZED REPRODUCTION OR DISTRIBUTION IS A VIOLATION OF THE FEDERAL COPYRIGHT ACT AND THE LICENSE AGREEMENT, AND SUBJECT TO CIVIL AND CRIMINAL PENALTIES THEREUNDER.

G2407.9.2 (304.9.2) Appliance interlock. Each of the *appliances* served shall be interlocked with the mechanical air supply system to prevent *main burner* operation when the mechanical air supply system is not in operation.

❖ This section requires an interlock circuit as opposed to simple parallel operation wiring. In other words, the combustion air fan/blower must start when initiated by the means that controls the appliance operation cycles (e.g., thermostat), and only after the combustion air fan/blower is proven to be operating will the appliance be allowed to start a firing cycle. If the combustion air fan/blower fails during a firing cycle of an appliance, the appliance firing cycle must be terminated (see Commentary Figure G2407.9.2).

The following steps must occur in this order:

1. Call for heat.
2. Combustion air fan/blower starts.
3. Combustion air fan/blower is proven to be operating.
4. Proving controls allow appliance to fire.

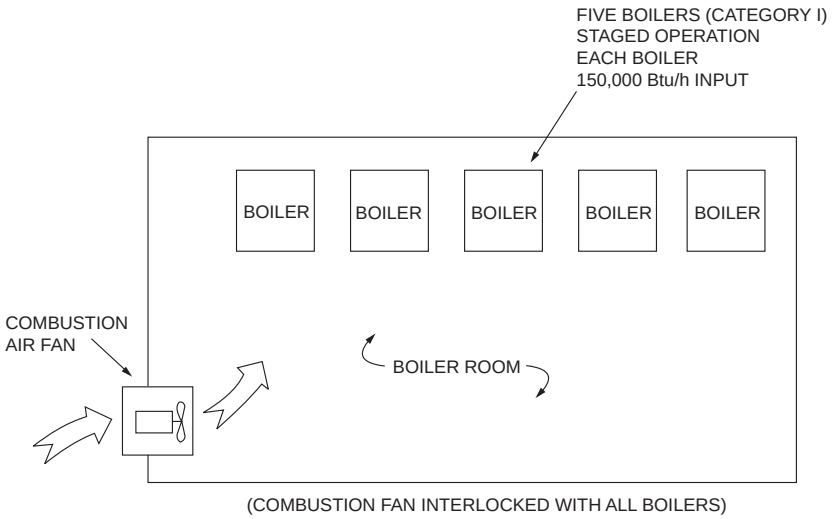

Example:

1. Total appliance input rating: 750,000 Btu/h
2. $\frac{\text{Total input Btu/h}}{\text{1,000 Btu/h}}$ x [0.35 = 262.5 cfm]

Figure G2407.9
MECHANICALLY SUPPLIED COMBUSTION AIR

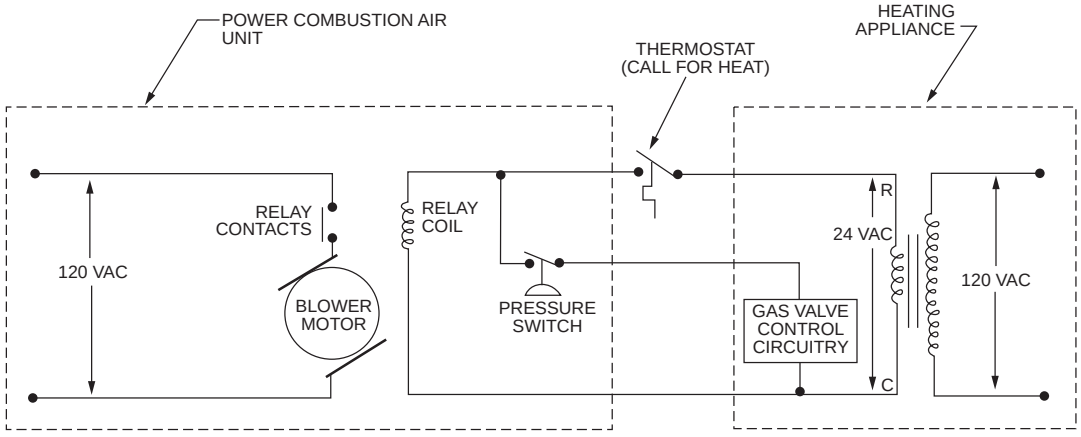

Figure G2407.9.2
SIMPLIFIED EXAMPLE SCHEMATIC OF INTERLOCK
BETWEEN APPLIANCE AND POWER COMBUSTION AIR UNIT
(Shown for Illustrative Purpose Only)

INTERNATIONAL CODE COUNCIL®
Copyright © 2015 ICC. ALL RIGHTS RESERVED. Accessed by David Dammon on Jun 21, 2017 12:30:52 PM pursuant to License Agreement with ICC. No further reproduction or distribution authorized. ANY UNAUTHORIZED REPRODUCTION OR DISTRIBUTION IS A VIOLATION OF THE FEDERAL COPYRIGHT ACT AND THE LICENSE AGREEMENT, AND SUBJECT TO CIVIL AND CRIMINAL PENALTIES THEREUNDER.

G2407.9.3 (304.9.3) Combined combustion air and ventilation air system. Where *combustion air* is provided by the building's mechanical ventilation system, the system shall provide the specified *combustion air* rate in addition to the required ventilation air.

❖ If combustion air is mechanically supplied through an HVAC system, the system must deliver the required combustion air rate above and beyond any outdoor air rate supplied for ventilation of the occupied spaces. The HVAC system must also be interlocked with the appliance(s) as required by Section G2407.9.2. Neither continuous operation nor parallel operation of the HVAC system satisfies the requirement for a true interlock as required by Section G2407.9.2.

G2407.10 (304.10) Louvers and grilles. The required size of openings for *combustion*, ventilation and *dilution air* shall be based on the net free area of each opening. Where the free area through a design of louver, grille or screen is known, it shall be used in calculating the size opening required to provide the free area specified. Where the design and free area of louvers and grilles are not known, it shall be assumed that wood louvers will have 25-percent free area and metal louvers and grilles will have 75-percent free area. Screens shall have a mesh size not smaller than $^1/_4$ inch (6.4 mm). Nonmotorized louvers and grilles shall be fixed in the open position. Motorized louvers shall be interlocked with the *appliance* so that they are proven to be in the full open position prior to *main burner* ignition and during *main burner* operation. Means shall be provided to prevent the *main burner* from igniting if the louvers fail to open during *burner* start-up and to shut down the *main burner* if the louvers close during operation.

❖ This section recognizes that louvers and grilles are usually installed over air inlets and outlets to prevent rain, snow and animals from entering the building. When louvers or grilles are used, the solid portion of the louver or grille must be considered when determining the unobstructed (net clear) area of the opening.

Combustion air openings are sized based on there being a free, unobstructed area for the passage of air into the space where the fuel-burning appliances are located. Louvers or grilles placed over these openings reduce the area of the openings because of the area occupied by the solid portions of the grille or louver. The reduction in area must be considered because only the unobstructed area can be credited toward the required opening size.

The reduction in opening area caused by the presence of grilles or louvers will always require openings to be larger than determined from the sizing ratios of this chapter and larger than any duct of the minimum required size that might connect to these openings. Once the required size of a combustion air duct or opening is determined, any increase in opening size that must be made as a result of the effect of louvers or grilles must be determined. If a metal louver is used and based on the default opening area of 75 percent, the designer must calculate what size opening times 75 percent will yield the previously determined combustion air opening or duct area.

For example, assume that a combustion air duct needs to have a cross-sectional area of 200 square inches and this duct connects to an exterior wall opening with a metal louver protecting it.

x = The required opening area adjusted to account for the louver.

$$0.75x = 200 \text{ in}^2$$

$$x = \frac{200}{75}$$

$$x = 266.7 \text{ in}^2$$

This can be simplified to multiplying by the reciprocal of the percentage as follows:

For metal louvers and grilles, the required combustion air duct or opening size multiplied by 1.33 equals the adjusted opening size.

For wooden louvers and grilles, the required combustion air duct or opening size multiplied by 4 equals the adjusted opening size.

The actual free opening of a louver or grille should be obtained from the manufacturer rather than relying on default assumptions.

This section does not apply to grilles, louvers or screens that are an integral component of a labeled appliance that is installed in accordance with the manufacturer's instructions. Where the manufacturer states the free, unobstructed area of a grille or louver, it is acceptable to consider that area as actual without requiring further calculation.

The code also requires the free area of screens to be considered in the opening sizing calculations. If it is unknown, it will have to be calculated because there is no stated default area for screens as there is for louvers and grilles. The code prohibits screens having mesh sizes smaller than $^1/_4$ inch (6 mm). Screens with a mesh size of $^1/_4$ inch (6 mm) and larger are not insect screens and would be suitable only for keeping out large debris, rodents and other small animals. Smaller size mesh is likely to become obstructed by lint, plant fibers, cottonwood seeds, etc. At best, placing screens in combustion air openings is risky, and grilles and louvers are preferred to keep out the unwanted.

Metal louvers are constructed so that the solid portion of the louver occupies approximately 25 percent of the opening area, leaving 75 percent of this area unobstructed. Wood louvers occupy approximately 75 percent of the opening area, leaving 25 percent of the area unobstructed. When the required amount of unobstructed area is determined, the effect that a louver has on that area must be taken into account to make certain the minimum amount of unobstructed opening is achieved. The material type, thickness and spacing all have a significant effect on the actual net free area of any louver or grille.

INTERNATIONAL CODE COUNCIL®
Copyright © 2015 ICC. ALL RIGHTS RESERVED. Accessed by David Dammon on Jun 21, 2017 12:30:52 PM pursuant to License Agreement with ICC. No further reproduction or distribution authorized. ANY UNAUTHORIZED REPRODUCTION OR DISTRIBUTION IS A VIOLATION OF THE FEDERAL COPYRIGHT ACT AND THE LICENSE AGREEMENT, AND SUBJECT TO CIVIL AND CRIMINAL PENALTIES THEREUNDER.

Note that the 75-percent and 25-percent default numbers might be too liberal for some louvers or grilles and every effort should be made to consult the louver or grille manufacturer's specifications.

To prevent freezing of pipes, to save energy and maintain comfortable temperatures in appliance rooms, outdoor openings often have motorized dampers that close during the appliance(s) off cycle. The damper motors and/or damper blades must be supervised so that an interlock can be established between the dampers and the appliances, thereby preventing appliance operation when the dampers are closed.

Combustion air openings must not be closable unless they open and close automatically using a mechanism that is interlocked with the appliances (see Commentary Figure G2407.10). Damper supervision is easily accomplished by damper motor end switches or blade position travel switches that monitor the position of the drive motor shaft, the damper/motor linkage hardware or the damper blades. These switches provide feedback to the appliance control circuitry to allow firing only when the dampers are proven to be fully open.

G2407.11 (304.11) Combustion air ducts. *Combustion air* ducts shall comply with all of the following:

1. Ducts shall be constructed of galvanized steel complying with Chapter 16 or of a material having equivalent corrosion resistance, strength and rigidity.

   Exception: Within dwellings units, unobstructed stud and joist spaces shall not be prohibited from conveying *combustion air*, provided that not more than one required fireblock is removed.

2. Ducts shall terminate in an unobstructed space allowing free movement of *combustion air* to the *appliances.*
3. Ducts shall serve a single enclosure.
4. Ducts shall not serve both upper and lower *combustion air* openings where both such openings are used. The separation between ducts serving upper and lower *combustion air* openings shall be maintained to the source of *combustion air*.
5. Ducts shall not be screened where terminating in an attic space.
6. Horizontal upper *combustion air* ducts shall not slope downward toward the source of *combustion air*.
7. The remaining space surrounding a *chimney* liner, gas vent, special gas vent or plastic *piping* installed within a masonry, metal or factory-built *chimney* shall not be used to supply *combustion air*.

   Exception: Direct-vent gas-fired *appliances* designed for installation in a solid fuel-burning *fireplace* where installed in accordance with the manufacturer's instructions.

8. *Combustion air* intake openings located on the exterior of a building shall have the lowest side of such open-

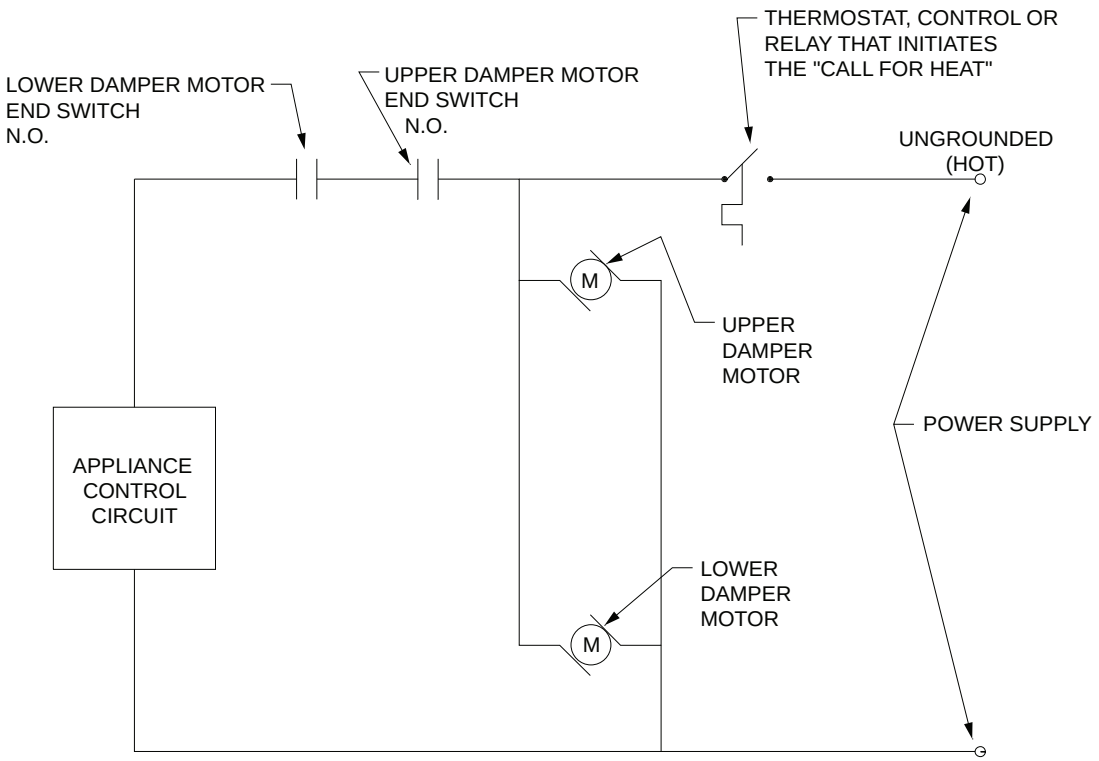

Figure G2407.10
SIMPLIFIED EXAMPLE SCHEMATIC OF COMBUSTION AIR DAMPER/APPLIANCE INTERLOCK
(Shown for Illustrative Purpose Only)

INTERNATIONAL CODE COUNCIL®
Copyright © 2015 ICC. ALL RIGHTS RESERVED. Accessed by David Dammon on Jun 21, 2017 12:30:52 PM pursuant to License Agreement with ICC. No further reproduction or distribution authorized. ANY UNAUTHORIZED REPRODUCTION OR DISTRIBUTION IS A VIOLATION OF THE FEDERAL COPYRIGHT ACT AND THE LICENSE AGREEMENT, AND SUBJECT TO CIVIL AND CRIMINAL PENALTIES THEREUNDER.

ings located not less than 12 inches (305 mm) vertically from the adjoining finished ground level.

❖ This section addresses the construction and installation of combustion air ducts.

Item 1 requires that combustion air ducts be constructed of galvanized sheet steel or an approved equivalent material. The intent is to cause ducts to be constructed of a material that is resistant to corrosion and physical damage, which would allow the ducts to remain in place undamaged for the life of the installation. It is doubtful that the authors of Item 1 ever anticipated the use of flexible ducts and the higher friction losses associated with such rough-wall ducts. It is also reasonable to assume that all of the sizing criteria in Section G2407 are based on smooth-wall ducts. The strength and rigidity of typical flexible ducts would not be equivalent to rigid steel ducts. The exception expresses a concern for fire safety where stud cavities are used as a duct.

Item 2 is intended to prevent blockages and minimize resistance (friction loss) to airflow.

Item 3 prohibits a duct from serving more than one appliance enclosure because the duct and opening sizing criteria are based on a single duct serving a single opening in an appliance location. Multiple openings supplied by a single duct could result in unpredictable airflow and might not create the convective movements of air intended by the combustion air methods.

Item 4 recognizes that where both upper and lower combustion air openings are required, air circulation cannot occur if a single duct serves both combustion air openings. The lower opening functions as an air inlet and the upper opening as an air outlet, thus independent ducts are required (see Commentary Figure G2407.11).

Item 5 is intended to prevent obstruction or blockage by insulation materials.

Item 6 is intended to prevent trapping or sloping of the upper combustion air opening in a way that would impede the convective movement of air. The horizontal duct for the upper openings must slope upward as it travels away from the appliance(s) and toward the outdoors.

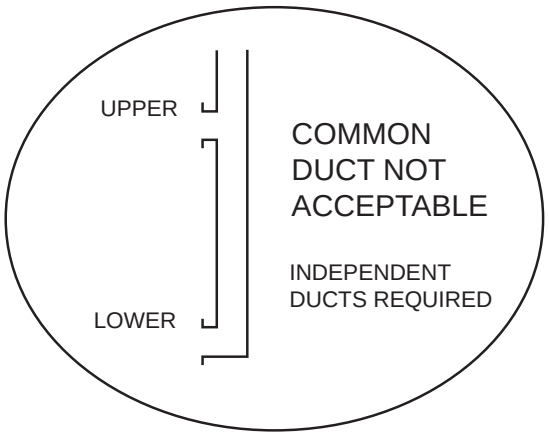

Figure G2047.11
COMMON DUCT PROHIBITED

When a vent or chimney liner is installed within a chimney, an annular space will exist between the vent or liner and the interior chimney walls. According to Item 7, this space cannot be used as a conduit for conveying combustion air because of poor flow characteristics, the tendency for reverse flow to occur as the combustion air is warmed by the liner or vent and the adverse cooling effect on the vent or liner. The exception recognizes that there could be appliances that are designed and listed for the type of installation that this item intends to prohibit.

Item 8 intends to prevent combustion air openings from being obstructed by snow, leaves and vegetation. No part of a combustion air opening is allowed to be less than 12 inches (305 mm) above the finished ground level under such opening.

G2407.12 (304.12) Protection from fumes and gases. Where corrosive or flammable process fumes or gases, other than products of *combustion*, are present, means for the disposal of such fumes or gases shall be provided. Such fumes or gases include carbon monoxide, hydrogen sulfide, ammonia, chlorine and halogenated hydrocarbons.

In barbershops, beauty shops and other facilities where chemicals that generate corrosive or flammable products, such as aerosol sprays, are routinely used, nondirect vent-type *appliances* shall be located in a mechanical room separated or partitioned off from other areas with provisions for *combustion air* and *dilution air* from the outdoors. *Direct-vent appliances* shall be installed in accordance with the *appliance* manufacturer's instructions.

❖ In many occupancies, the routine use of chemicals contaminates the indoor combustion air. These contaminants can combine with water vapor in the combustion gases to produce acids and other corrosive compounds that can destroy appliance components, vents, chimneys and connectors. For example, it is common to see vents and vent connectors for draft-hood-equipped water heaters in beauty shops that have deteriorated to the point of structural failure. Other examples are swimming pool heaters exposed to chlorine, boilers exposed to laundry and dry cleaning chemicals and boilers exposed to refrigerant leakage. Some contaminants are more toxic to life after they have passed through an appliance combustion chamber. The highly poisonous chemical "phosgene" (carbonyl chloride) can be produced when common refrigerants contaminate combustion air.

Obviously, choosing direct-vent appliances will eliminate this problem in most cases and will not require isolation enclosures for the appliances. It is possible that some atmospheres are unsuitable for any appliance, direct-vent or otherwise. The code provides an alternative to direct-vent appliances that requires the appliances to be isolated from the contaminated atmosphere by reasonably air-tight enclosures and requires that all combustion air be supplied for the appliance(s) from the outdoors.

INTERNATIONAL CODE COUNCIL®
Copyright © 2015 ICC. ALL RIGHTS RESERVED. Accessed by David Dammon on Jun 21, 2017 12:30:52 PM pursuant to License Agreement with ICC. No further reproduction or distribution authorized. ANY UNAUTHORIZED REPRODUCTION OR DISTRIBUTION IS A VIOLATION OF THE FEDERAL COPYRIGHT ACT AND THE LICENSE AGREEMENT, AND SUBJECT TO CIVIL AND CRIMINAL PENALTIES THEREUNDER.

SECTION G2408 (305)
INSTALLATION

G2408.1 (305.1) General. *Equipment* and *appliances* shall be installed as required by the terms of their approval, in accordance with the conditions of listing, the manufacturer's instructions and this code. Manufacturer's installation instructions shall be available on the job site at the time of inspection. Where a code provision is less restrictive than the conditions of the listing of the *equipment* or *appliance* or the manufacturer's installation instructions, the conditions of the listing and the manufacturer's installation instructions shall apply.

Unlisted *appliances approved* in accordance with Section G2404.3 shall be limited to uses recommended by the manufacturer and shall be installed in accordance with the manufacturer's instructions, the provisions of this code and the requirements determined by the *code official*.

❖ Manufacturers' installation instructions are evaluated by the listing agency verifying compliance with the applicable standard. The listing agency can require that the manufacturer alter, delete or add information to the instructions as necessary to achieve compliance with applicable standards and code requirements. Manufacturers' installation instructions are an enforceable extension of the code and must be in the hands of the code official when an inspection takes place.

When an appliance is tested to obtain a listing and label, the approved agency installs the appliance in accordance with the manufacturer's installation instructions. The appliance is tested under these conditions; thus, the installation instructions become an integral part of the labeling process.

The listing and labeling process assures that the appliance and its installation instructions are in compliance with applicable standards. Therefore, an installation in accordance with the manufacturer's instructions is required, except where the code requirements are more stringent. An inspector must carefully and completely read and comprehend the manufacturer's instructions to properly perform an installation inspection.

In some cases, the code will specifically address an installation requirement that is also addressed in the manufacturer's installation instructions. The code requirements may be the same or may exceed the requirements in the manufacturer's installation instructions, or the manufacturer's installation instructions could contain requirements that exceed those in the code. In all such cases, the more restrictive requirements would apply.

In addition to the installation requirements for the appliance or equipment itself, this section also regulates the connections to appliances and equipment by requiring compliance with all other applicable sections of this code and other *International Codes*®. These connections include but are not limited to fuel and electrical supplies, control wiring, hydronic piping, chimneys, vents and ductwork. Some overlap or coincidence of connection requirements may occur in the code and the manufacturer's installation instructions. In the unlikely event that the code was less restrictive (more lenient) than the manufacturer's instructions regarding an installation issue, the manufacturer's instructions must prevail. Where differences or conflicts occur, the requirements that provide the greatest level of safety always apply.

Even if an installation appears to be in compliance with the manufacturer's instructions, the installation cannot be complete or approved until all associated components, connections, and systems that serve the appliance or equipment are also in compliance with the applicable provisions of the code. For example, a gas-fired boiler installation must not be approved if the boiler is connected to a deteriorated, undersized, improper or otherwise unsafe chimney or vent. Likewise, the same installation must not be approved if the existing gas piping is in poor condition or if the electrical supply circuit is inadequate or unsafe.

In the case of replacement installations, the intent of this section is to require all new work associated with the installation to comply with the code without necessarily requiring full compliance for the existing, unchanged portions of the related ductwork, piping, electrical, venting and similar mechanical systems. In the case of an appliance replacement, such as a furnace, it is the expectation of both the manufacturer's instructions and the code that the new furnace be connected to a code-complying venting system, fuel supply system and electrical circuit, all of which are part of the furnace installation. If the ductwork system was such that the furnace temperature rise across the heat exchanger exceeded the maximum allowable temperature rise, the ductwork system might have to be altered as part of the furnace installation. Existing mechanical systems are accepted on the basis that they are free from hazard although not necessarily compliant with current codes. The code is not retroactive except where specifically stated that it applies to existing systems.

Manufacturer's installation instructions are often updated and changed for various reasons, such as changes in the appliance or equipment design, revisions to the product standards and as a result of field experience related to existing installations. The code official should stay abreast of any changes by reviewing the manufacturer's instructions for every installation.

Equipment and appliances must be installed in accordance with the manufacturer's installation instructions. The manufacturer's label and installation instructions must be consulted in determining whether or not an appliance or piece of equipment can be installed and operated in a particular hazardous location. Without the manufacturer's installation instructions, an inspector cannot fully perform his or her job, which is why the manufacturer's installation instructions must be available on the job site when the equipment is being inspected.

INTERNATIONAL CODE COUNCIL®
Copyright © 2015 ICC. ALL RIGHTS RESERVED. Accessed by David Dammon on Jun 21, 2017 12:30:52 PM pursuant to License Agreement with ICC. No further reproduction or distribution authorized. ANY UNAUTHORIZED REPRODUCTION OR DISTRIBUTION IS A VIOLATION OF THE FEDERAL COPYRIGHT ACT AND THE LICENSE AGREEMENT, AND SUBJECT TO CIVIL AND CRIMINAL PENALTIES THEREUNDER.

G2408.2 (305.3) Elevation of ignition source. *Equipment* and *appliances* having an *ignition source* shall be elevated such that the source of ignition is not less than 18 inches (457 mm) above the floor in *hazardous locations* and public garages, private garages, repair garages, motor fuel-dispensing facilities and parking garages. For the purpose of this section, rooms or spaces that are not part of the *living space* of a *dwelling unit* and that communicate directly with a private garage through openings shall be considered to be part of the private garage.

Exception: Elevation of the *ignition source* is not required for *appliances* that are *listed* as flammable-vapor-ignition resistant.

❖ To reduce the possibility of ignition of flammable vapors in hazardous areas, the potential sources of ignition must be elevated above the surface supporting the equipment or appliance. It is not the intent of this section for the installer to measure the elevation from the surface of a dedicated appliance stand or other structure built to support the appliance where that stand or structure does not afford room for the storage of flammable liquids. Some flammable and combustible liquids typically associated with hazardous locations give off vapors that are denser than air and tend to collect near the floor. The 18-inch (457 mm) height requirement is intended to reduce the possibility of flammable vapor ignition by keeping the ignition sources elevated above the anticipated level of accumulated vapors. The 18-inch (457 mm) value is a minimum requirement and must be increased when required by the manufacturer's installation instructions.

This section will effectively prohibit the installation of most furnaces, boilers, space heaters, clothes dryers and water heaters directly on the floor of residential garages.

The accumulation of flammable vapors more than 18 inches (457 mm) deep is unlikely in most ventilated locations; therefore, maintaining all possible sources of ignition at least 18 inches (457 mm) above the floor will substantially reduce the risk of explosion and fire [see Commentary Figures G2408.2(1) and G2408.2(2)].

In the context of this section, a source of ignition could be a pilot flame, burner, burner igniter or electrical component capable of producing a spark. The term "ignition source" is defined and can be interpreted as meaning an intentional source of ignition, such as for a burner, or an unintentional source of ignition for any flammable vapors that may be present (see definition of "Ignition source").

An appliance installed in a closet or room that is accessible only from the garage must be considered as part of the garage for application of this section. Even though the room may be separated from the garage by walls and a door, there is no practical means of making the door vapor tight, nor is there any assurance that the door will remain closed during normal use. An appliance room that is accessed only from the outdoors or only from the living space would not be considered as part of the garage (see Section G2408.2.1). Rooms

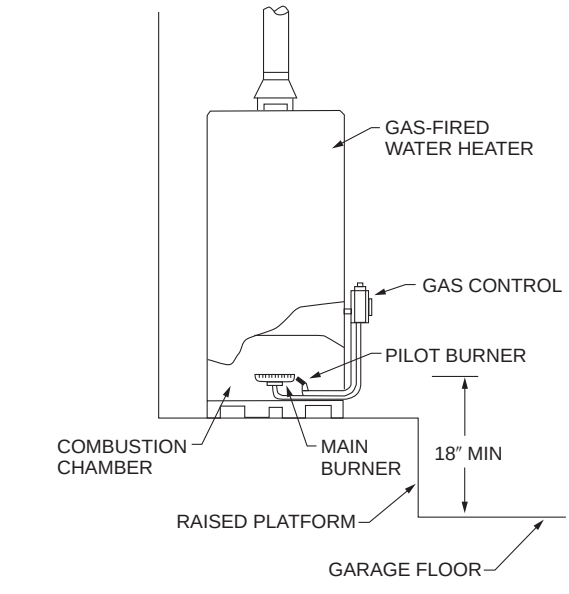

For SI: 1 inch = 25.4 mm.

Figure G2408.2(1)
GAS-FIRED WATER HEATER INSTALLATION IN A GARAGE



Figure G2408.2(2)
SOURCES OF IGNITION ELEVATED IN PRIVATE GARAGE

INTERNATIONAL CODE COUNCIL®
Copyright © 2015 ICC. ALL RIGHTS RESERVED. Accessed by David Dammon on Jun 21, 2017 12:30:52 PM pursuant to License Agreement with ICC. No further reproduction or distribution authorized. ANY UNAUTHORIZED REPRODUCTION OR DISTRIBUTION IS A VIOLATION OF THE FEDERAL COPYRIGHT ACT AND THE LICENSE AGREEMENT, AND SUBJECT TO CIVIL AND CRIMINAL PENALTIES THEREUNDER.

such as utility rooms or laundry rooms that communicate with both the garage and the living space and that are considered as part of the living space are not part of the garage (see definition of "Living space"). If a room opens to the garage and that room is not living space, it is part of the garage for the purpose of this section [see Commentary Figure G2408.2(3)].

The exception recognizes that new technology exists that allows appliances, such as water heaters, to be tested and listed as being flammable-vapor-ignition resistant and suitable for installation without the 18-inch (457 mm) elevation requirement. This new technology was developed for conventional draft-hood-equipped water heaters, and now the standard for these appliances, ANSI Z21.10.1, mandates that by specified effective dates, all water heaters must comply with the flammable-vapor-ignition criteria in the standard. The technology involves variously configured flame arrestor screens having precisely engineered openings (slots). All combustion air for the appliance is passed through the flame arrestor screen. To pass through the small slots in the screen, the combustion air velocity is increased (Venturi principle) such that it exceeds the velocity at which flames travel through a flammable vapor. If the combustion air contains flammable vapors, the vapors will enter the appliance and be ignited within the combustion chamber. The flames will be contained (trapped) within the combustion chamber because the arrestor screen will not allow flames to exit the combustion chamber. The result is that vapor ignition is limited to the appliance interior and is not allowed to spread to the atmosphere surrounding the appliance. During such an event, a thermal sensing device shuts down and locks out the appliance. Some appliance manufacturers might require that the appliance be replaced after a flammable-vapor-ignition event. Others require that a sensor be replaced or reset. The appliance standard includes testing requirements to determine whether the arrestor screen is subject to blockage by debris, including lint, plant fibers, dust particles, etc. If the arrestor screen openings become restricted by debris, the appliance will be deprived of combustion air and incomplete combustion and serious appliance malfunction can result. If an appliance shuts down as a result of the arrestor screen being blocked by debris, thus restricting the combustion air supply, typically a thermal device can be reset or replaced to restore operation of the appliance.

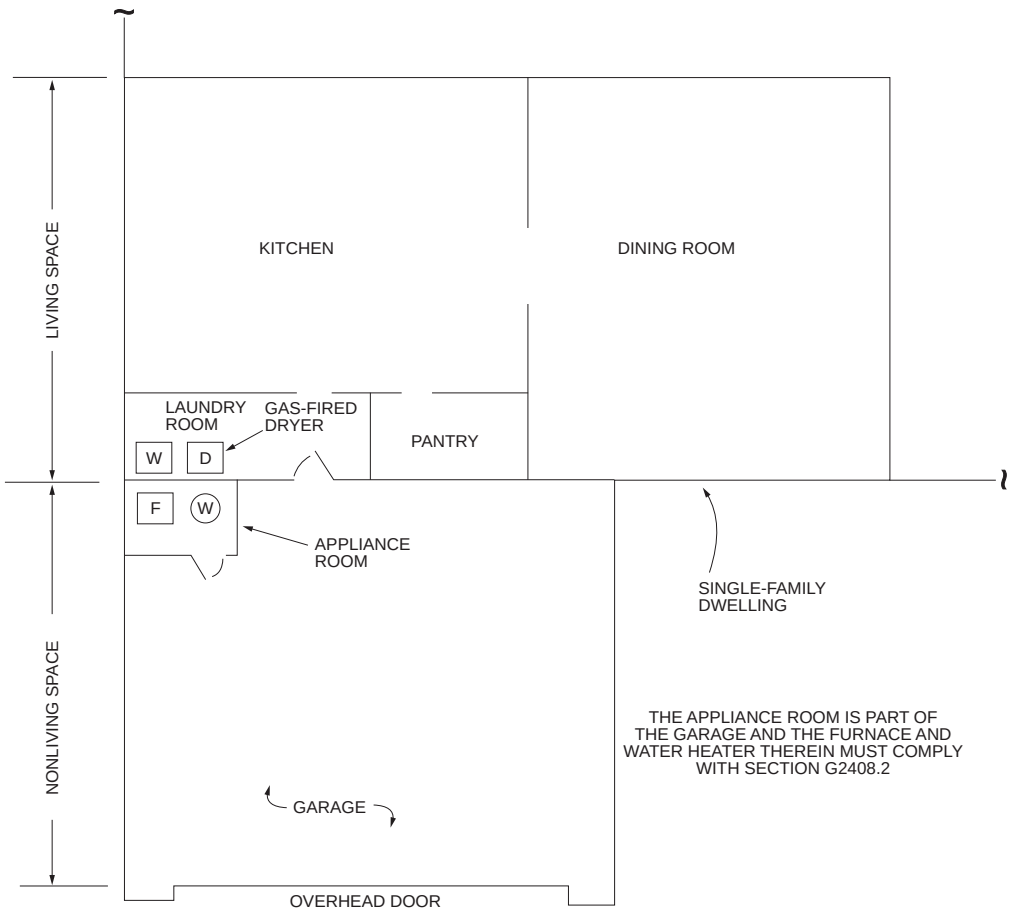

Figure G2408.2(3)
GARAGE SPACE VS. LIVING SPACE

INTERNATIONAL CODE COUNCIL®
Copyright © 2015 ICC. ALL RIGHTS RESERVED. Accessed by David Dammon on Jun 21, 2017 12:30:52 PM pursuant to License Agreement with ICC. No further reproduction or distribution authorized. ANY UNAUTHORIZED REPRODUCTION OR DISTRIBUTION IS A VIOLATION OF THE FEDERAL COPYRIGHT ACT AND THE LICENSE AGREEMENT, AND SUBJECT TO CIVIL AND CRIMINAL PENALTIES THEREUNDER.

If the installation instructions or the label of a water heater equipped with flammable-vapor-ignition-resistant technology state that the appliance must be elevated so that the source of ignition is at least 18 inches (457 mm) above the floor, it must be installed as directed [see Commentary Figures G2408.2(1) through G2408.2(6)].

G2408.2.1 (305.3.1) Installation in residential garages. In residential garages where *appliances* are installed in a separate, enclosed space having access only from outside of the garage, such *appliances* shall be permitted to be installed at floor level, provided that the required *combustion air* is taken from the exterior of the garage.

❖ See Commentary Figure G2408.2.1 and Section G2408.2.

G2408.3 (305.5) Private garages. *Appliances* located in private garages shall be installed with a minimum *clearance* of 6 feet (1829 mm) above the floor.

Exception: The requirements of this section shall not apply where the *appliances* are protected from motor vehicle impact and installed in accordance with Section G2408.2.

❖ Appliances located in a private garage or carport must be protected from vehicle impact (also see Section M1307.3.1). This section is applicable to appliances located in an area where motor vehicles can be operated and includes appliances under which a vehicle can pass and those located anywhere in a vehicle's path where impact is possible. The 6-foot (1829 mm) minimum height requirement is intended to provide adequate clearance above the typical automobile.

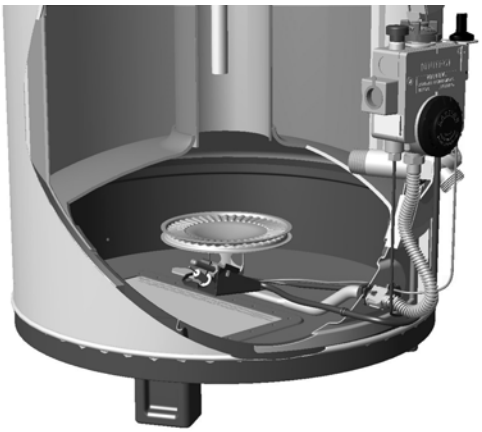

Figure courtesy of American Water Heater Company

Figure G2408.2(4)
EXAMPLE OF FLAMMABLE-VAPOR-IGNITION-RESISTANT WATER HEATER TECHNOLOGY

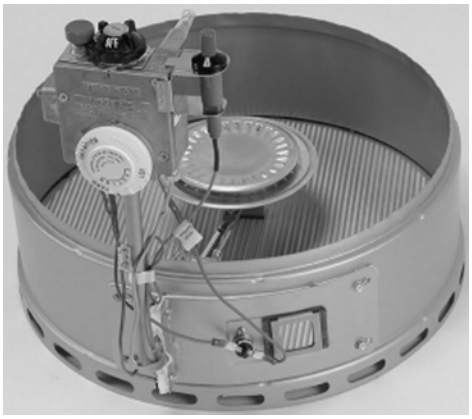

Photo courtesy of Bradford White Corporation
(Bradford White Defender Safety System™)

Figure G2408.2(6)
EXAMPLE OF FLAMMABLE-VAPOR-IGNITION-RESISTANT WATER HEATER TECHNOLOGY



Photo courtesy of American Water Heater Company

Figure G2408.2(5)
EXAMPLE OF FLAMMABLE-VAPOR-IGNITION-RESISTANT WATER HEATER TECHNOLOGY

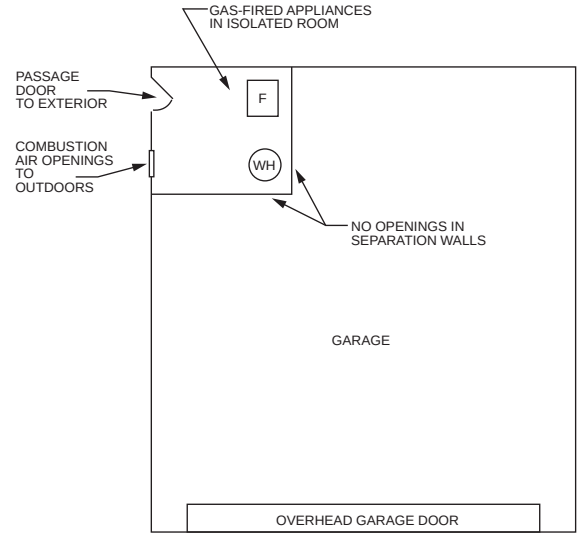

Figure G2408.2.1
ELEVATION OF APPLIANCES NOT REQUIRED

INTERNATIONAL CODE COUNCIL®
Copyright © 2015 ICC. ALL RIGHTS RESERVED. Accessed by David Dammon on Jun 21, 2017 12:30:52 PM pursuant to License Agreement with ICC. No further reproduction or distribution authorized. ANY UNAUTHORIZED REPRODUCTION OR DISTRIBUTION IS A VIOLATION OF THE FEDERAL COPYRIGHT ACT AND THE LICENSE AGREEMENT, AND SUBJECT TO CIVIL AND CRIMINAL PENALTIES THEREUNDER.

With the popularity of conversion vans and recreational vehicles, which can be much higher than other automobiles, the 6-foot (1829 mm) minimum installation height above the floor may not provide adequate clearance; additional height might be necessary. The garage door height can be used as a guide in determining the maximum vehicle height [see Commentary Figures G2408.3(1) through G2408.3(5)].

G2408.4 (305.7) Clearances from grade. *Equipment* and *appliances* installed at grade level shall be supported on a level concrete slab or other *approved* material extending not less than 3 inches (76 mm) above adjoining grade or shall be suspended not less than 6 inches (152 mm) above adjoining grade. Such supports shall be installed in accordance with the manufacturer's instructions.

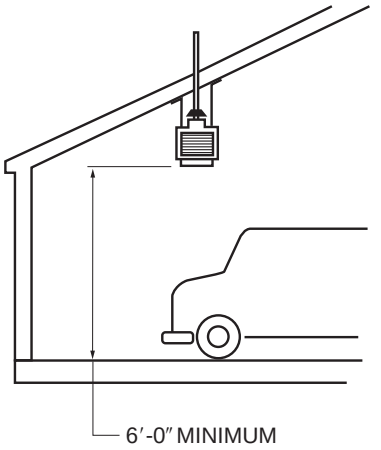

For SI: 1 foot = 304.8 mm.

Figure G2408.3(1)
SUSPENDED UNIT HEATER

❖ This section is consistent with Section M1305.1.4.1 and addresses outdoor and crawl space installations where an appliance is resting on the earth and not supported by a building. The intent is to maintain level support and protect the appliance from corrosion and deterioration. The slab should be concrete or a material having comparable strength and longevity. Outdoor appliance installations must be designed to tolerate movement where frost heave will cause a slab to rise and fall.

G2408.5 (305.8) Clearances to combustible construction. Heat-producing *equipment* and *appliances* shall be installed to maintain the required clearances to combustible construction as specified in the listing and manufacturer's instructions. Such *clearances* shall be reduced only in accordance with Section G2409. *Clearances* to combustibles shall include such considerations as door swing, drawer pull, overhead projections or shelving and window swing. Devices, such as door stops or limits and closers, shall not be used to provide the required *clearances.*

❖ Section G2409 allows clearances to be reduced where protective assemblies are installed to decrease the transfer of heat from the source to the combustible material/assembly. Clearances must be measured from shelving, overhead projections and the possible positions of doors, windows and drawers. Doorstops and closers are easily defeated and subject to failure.

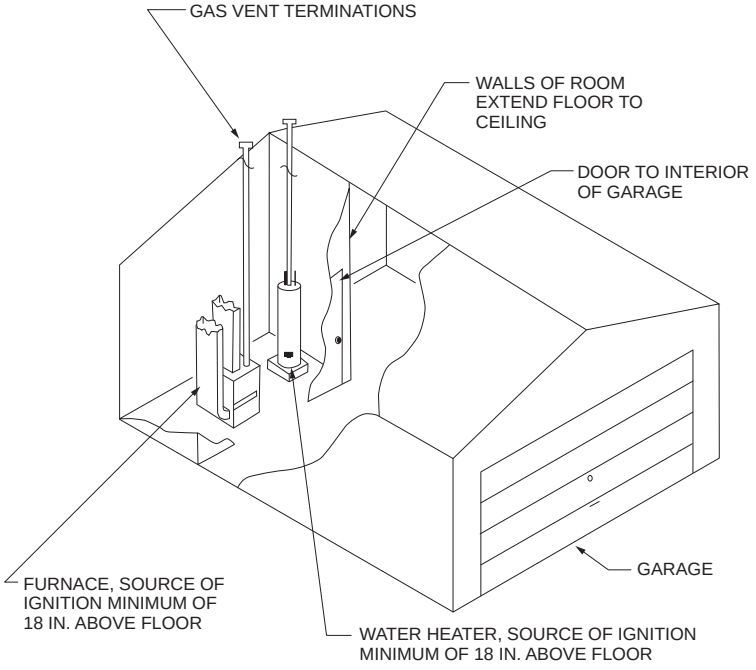

For SI: 1 inch = 25.4 mm.

Figure G2408.3(2)
PROTECTED BY WALLS

INTERNATIONAL CODE COUNCIL®
Copyright © 2015 ICC. ALL RIGHTS RESERVED. Accessed by David Dammon on Jun 21, 2017 12:30:52 PM pursuant to License Agreement with ICC. No further reproduction or distribution authorized. ANY UNAUTHORIZED REPRODUCTION OR DISTRIBUTION IS A VIOLATION OF THE FEDERAL COPYRIGHT ACT AND THE LICENSE AGREEMENT, AND SUBJECT TO CIVIL AND CRIMINAL PENALTIES THEREUNDER.

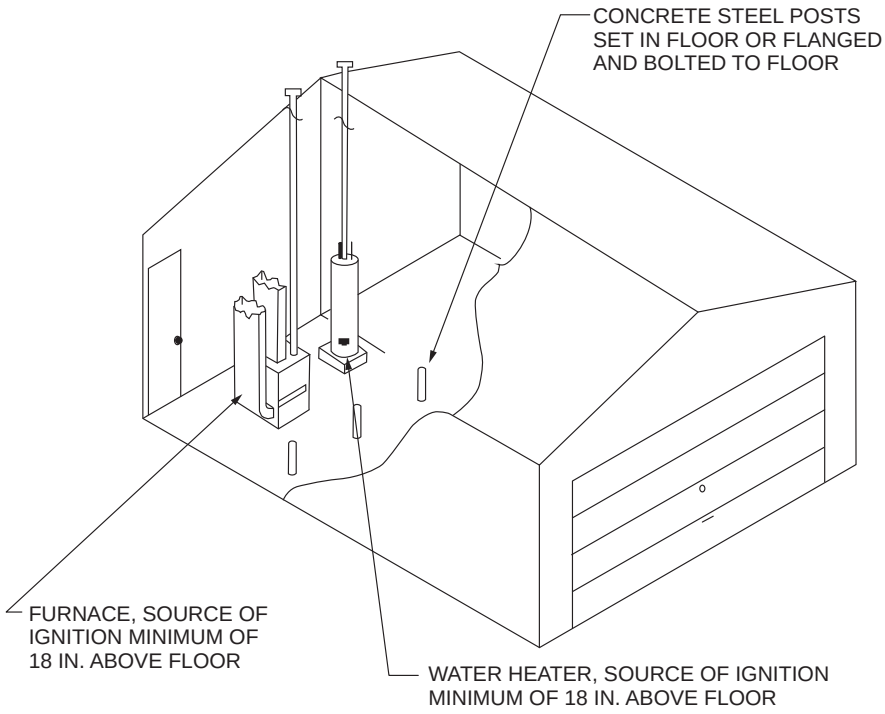

For SI: 1 inch = 25.4 mm.

Figure G2408.3(3)
PROTECTED BY GUARDS

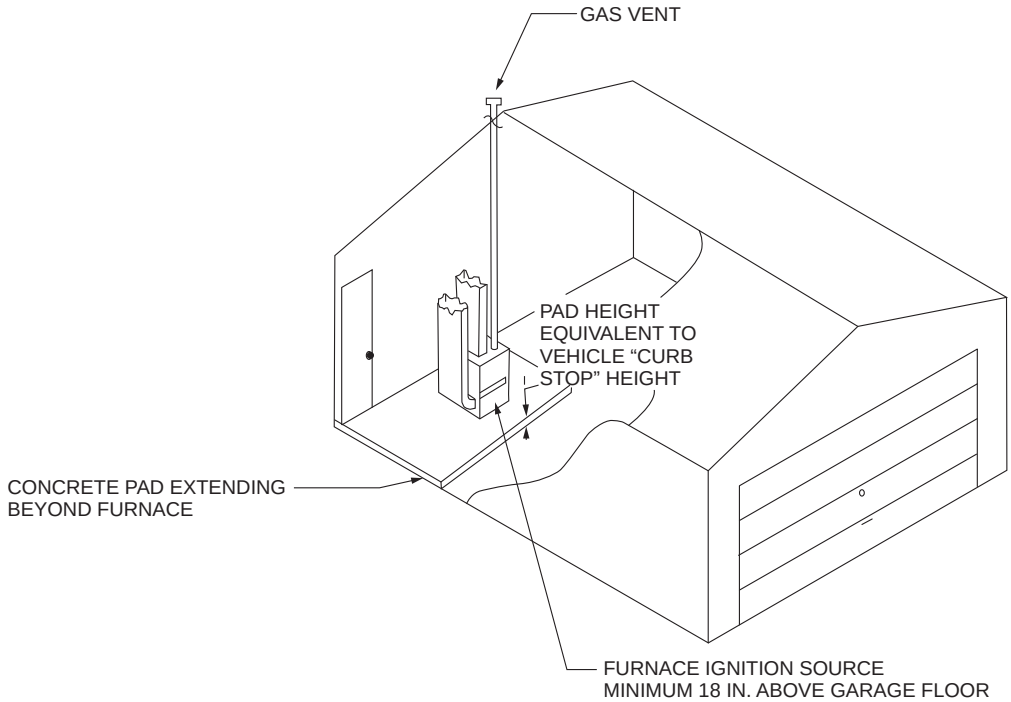

For SI: 1 inch = 25.4 mm.

Figure G2408.3(4)
PROTECTED BY A PLATFORM

INTERNATIONAL CODE COUNCIL®
Copyright © 2015 ICC. ALL RIGHTS RESERVED. Accessed by David Dammon on Jun 21, 2017 12:30:52 PM pursuant to License Agreement with ICC. No further reproduction or distribution authorized. ANY UNAUTHORIZED REPRODUCTION OR DISTRIBUTION IS A VIOLATION OF THE FEDERAL COPYRIGHT ACT AND THE LICENSE AGREEMENT, AND SUBJECT TO CIVIL AND CRIMINAL PENALTIES THEREUNDER.

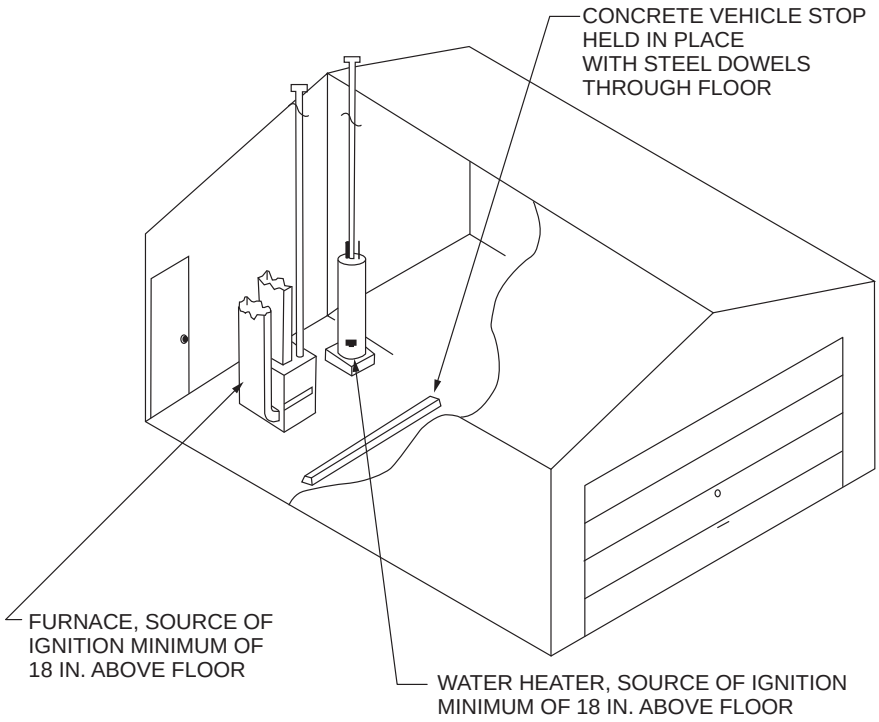

For SI: 1 inch = 25.4 mm.

Figure G2408.3(5)
PROTECTED BY A CURB STOP

G2408.6 (305.12) Avoid strain on gas piping. *Appliances* shall be supported and connected to the *piping* so as not to exert undue strain on the connections.

❖ Connections under strain can transmit forces to gas controls that can distort valve/control bodies and put strain on burner manifolds and other components. Gas piping must not exert forces on the appliance connection and vice versa. To accomplish this intent, the appliance and the gas piping must be supported independently. "Undue" strain is not specific, but is to be taken to mean any strain that is reasonably capable of threatening the integrity of the appliance connection over any period of time. That being very hard to determine, it would be wise to make the point of connection a neutral point where no forces are transmitted to or from the appliance. For example, where steel gas piping connects to an appliance's gas control, it can be determined if the piping is exerting strain on the gas control by simply observing if the piping moves when the union is opened. If the piping moves in some direction, it is exerting a force on the appliance gas control in that same direction.

SECTION G2409 (308)
CLEARANCE REDUCTION

G2409.1 (308.1) Scope. This section shall govern the reduction in required clearances to *combustible materials*, including gypsum board, and *combustible assemblies* for chimneys, vents, appliances, devices and equipment. Clearance requirements for air-conditioning equipment and central heating boilers and furnaces shall comply with Sections G2409.3 and G2409.4.

❖ Heat-producing appliances and mechanical equipment must be installed with the required minimum clearances to combustible materials indicated by their listing label. It is not uncommon to encounter practical or structural difficulties in maintaining clearances. Therefore, clearance reduction methods have been developed to allow, in some cases, reduction of the minimum prescribed clearance distance while achieving equivalent protection. An important understanding is that all prescribed clearances to combustibles are air-space clearances measured from the heat source to the face of the nearest combustible surface (see Commentary Figure G2409.1). When using the assemblies described in Table G2409.2, the clearance is measured as described in Note b. In the case of listed equipment, the required clearances are intended to be clear airspace, and therefore the space is not to be filled with insulation or any other material other than an assembly intended to allow clearance reduction. This is especially important where clearances are required from appliances and equipment that rely on the airspace for convection cooling to maintain their proper operating temperature.

INTERNATIONAL CODE COUNCIL®
Copyright © 2015 ICC. ALL RIGHTS RESERVED. Accessed by David Dammon on Jun 21, 2017 12:30:52 PM pursuant to License Agreement with ICC. No further reproduction or distribution authorized. ANY UNAUTHORIZED REPRODUCTION OR DISTRIBUTION IS A VIOLATION OF THE FEDERAL COPYRIGHT ACT AND THE LICENSE AGREEMENT, AND SUBJECT TO CIVIL AND CRIMINAL PENALTIES THEREUNDER.

The provisions contained in this section are based on the principles of heat transfer. Mechanical equipment or appliances producing heat can become hot, and many appliances have hot exterior surfaces by design. The heat energy is then radiated to objects surrounding the appliances or equipment. When mechanical equipment and appliances are tested, the minimum clearances are established so that radiant and, to a lesser extent, convective heat transfer do not represent an ignition hazard to adjacent surfaces and objects. This distance is called the "required clearance" to combustible materials. Appliance and equipment labels must specify minimum clearances in all directions.

This section permits the use of materials and systems as radiation shields, decreasing the amount of heat energy transferred to surrounding objects and reducing the required clearances between gas-fired appliances and equipment to combustibles.

Plaster and gypsum by themselves are classified as noncombustible materials. Under continued exposure to heat, however, these materials will gradually decompose as water molecules are driven out of the material. Plaster on wood lath, plasterboard, sheetrock and drywall are all considered to be combustible materials when the code provisions are applied.

Additionally, gypsum wallboard is faced with paper that has a flame spread index that is measurable in the ASTM E84 test. This alone identifies the need to classify gypsum wallboard as a combustible material for the purpose of requiring a separation from heat-producing equipment and appliances.

The code specifically prohibits the reduction of clearances in certain applications. For examples, see Sections G2409.2 through G2409.4.

G2409.2 (308.2) Reduction table. The allowable *clearance* reduction shall be based on one of the methods specified in Table G2409.2 or shall utilize a reduced *clearance* protective assembly *listed* and *labeled* in accordance with UL 1618. Where required *clearances* are not listed in Table G2409.2, the reduced clearances shall be determined by linear interpolation between the distances listed in the table. Reduced *clearances* shall not be derived by extrapolation below the range of the table. The reduction of the required *clearances* to combustibles for *listed* and *labeled appliances* and *equipment* shall be in accordance with the requirements of this section, except that such *clearances* shall not be reduced where reduction is specifically prohibited by the terms of the *appliance* or *equipment listing* [see Figures G2409.2(1) through 2409.2(3)].

❖ Another option for reducing the required clearances to combustible materials is to use one of the on-site field-constructed methods specified in Table G2409.2.

TABLE G2409.2. See page 24-60.

❖ The column headings of Table G2409.2 list required clearances without protection. The numbers to the right of each method indicate the permissible reduced clearance measured from the heat-producing appliances/equipment to the face of the combustible material.

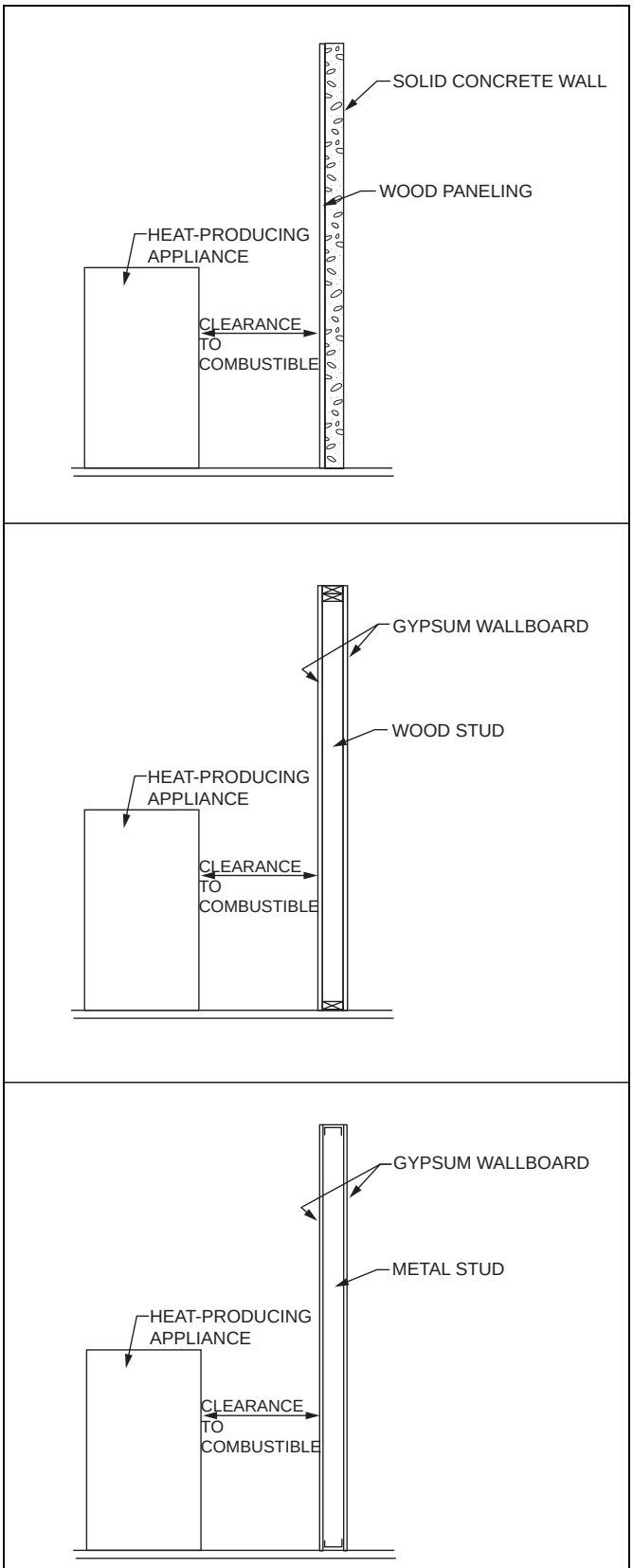

Figure G2409.1
CLEARANCE TO COMBUSTIBLES—
EXAMPLES OF HOW TO MEASURE

INTERNATIONAL CODE COUNCIL®
Copyright © 2015 ICC. ALL RIGHTS RESERVED. Accessed by David Dammon on Jun 21, 2017 12:30:52 PM pursuant to License Agreement with ICC. No further reproduction or distribution authorized. ANY UNAUTHORIZED REPRODUCTION OR DISTRIBUTION IS A VIOLATION OF THE FEDERAL COPYRIGHT ACT AND THE LICENSE AGREEMENT, AND SUBJECT TO CIVIL AND CRIMINAL PENALTIES THEREUNDER.

The rationale behind the methods of protection listed in Table G2409.2 is based on the ability of the protection to reduce radiant heat transmission from the appliance and equipment to the combustible material so that the temperature rise of the combustible material will remain below the maximum allowed.

Although the materials referred to in Table G2409.2 are common construction materials, confusion often arises over what satisfies the requirement for "insulation board" (Item 6 in the table), sometimes referred to an inorganic insulating board, noncombustible mineral board or noncombustible insulating board. These products are not made of carbon-based compounds.

Carbon-based compounds are those found in cellulose (wood), plastics and other materials manufactured from raw materials that once existed in living organisms. Cement board materials must have a specified maximum "C" (conductance) value in addition to being noncombustible.

Note h specifies a maximum thermal conductivity of Btu/in^2 · h · °F. Conductivity is the amount of heat in Btus that will flow each hour through a 1-foot-square

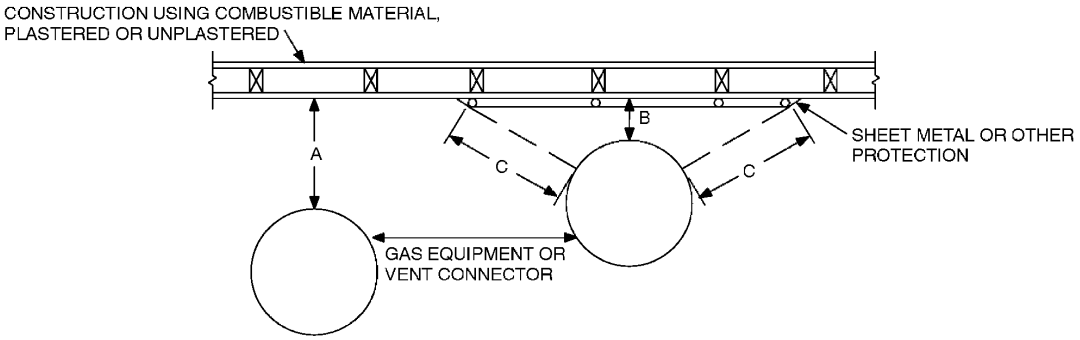

NOTES:

"A" equals the *clearance* without protection.

"B" equals the reduced *clearance* permitted in accordance with Table G2409.2. The protection applied to the construction using *combustible material* shall extend far enough in each direction to make "C" equal to "A."

FIGURE G2409.2(1) [308.2(1)]
EXTENT OF PROTECTION NECESSARY TO REDUCE CLEARANCES FROM GAS EQUIPMENT OR VENT CONNECTORS

❖ See the commentary to Section G2409.2

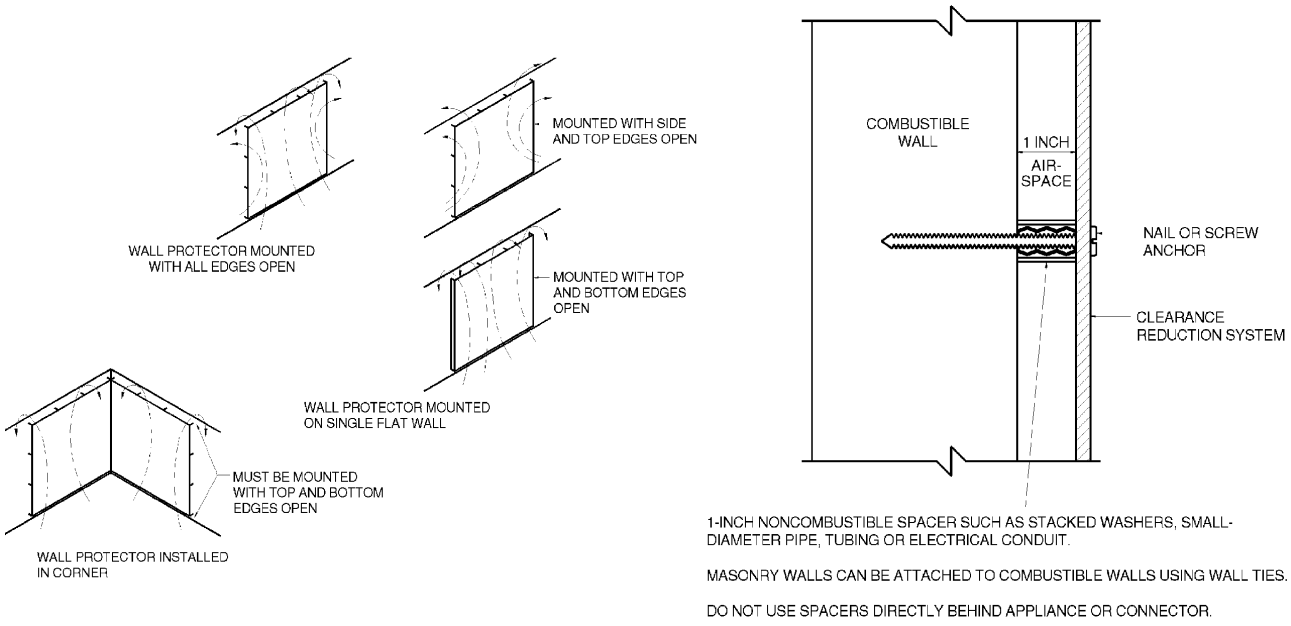

For SI: 1 inch = 25.4 mm.

FIGURE G2409.2(2) [308.2(2)]
WALL PROTECTOR CLEARANCE REDUCTION SYSTEM

❖ See the commentary to Section G2409.2.

INTERNATIONAL CODE COUNCIL®
Copyright © 2015 ICC. ALL RIGHTS RESERVED. Accessed by David Dammon on Jun 21, 2017 12:30:52 PM pursuant to License Agreement with ICC. No further reproduction or distribution authorized. ANY UNAUTHORIZED REPRODUCTION OR DISTRIBUTION IS A VIOLATION OF THE FEDERAL COPYRIGHT ACT AND THE LICENSE AGREEMENT, AND SUBJECT TO CIVIL AND CRIMINAL PENALTIES THEREUNDER.

(0.0929 m^2) slab of material, 1-inch (25.4 mm) thick with a 1°F temperature difference between both sides and is usually identified by the symbol "k." Tables of k values usually do not include the area term in the dimensions for conductivity, and it must be understood that the value must be multiplied by the area to obtain the total Btu value.

Thermal conductance (overall) is the time rate of heat flow through a body not taking thickness into account and is usually identified by the symbol "C" (Btu/h · ft^2 · °F).

Thermal resistance (overall) is the reciprocal of overall thermal conductance and is usually identified by the symbol "R" (hr · ft^2 · °F/Btu).

This translates into a minimum required insulation *R*-value of 1.0 (ft^2 · hr · °F)/Btu per inch of insulating material. The methods in Table G2409.2 control heat transmission by reflecting heat radiation, retarding thermal conductance and providing convective cooling. Where sheet metal materials or metal plates are specified, the effectiveness of the protection can be enhanced by the reflective surface of the metal. Painting or otherwise covering the surface would reduce the metal's ability to reflect radiant heat and, depending on the color, could increase heat absorption. The airspace between the protected surface and the clearance-reduction assembly al lows convection air currents to cool the protection assembly by carrying away heat that has been conducted through the assembly. Where a clearance-reduction assembly must be spaced 1 inch off the wall, the top, bottom and sides of the assembly must remain open as required by Notes d and f to permit unrestricted airflow (convection currents). If the openings were not provided, the air-cooling effect would not take place, and the protection assembly would not be as effective in limiting the temperature rise on the protected surfaces. Ideally, the protection assembly should be open on all sides to provide maximum ventilation. Figure G2409.2(2) and Commentary Figure G2409.2 show assemblies incorporating airspace.

Spacers must be noncombustible. Spacers should not be placed directly behind the heat source because the location would increase the amount of heat conduction through the spacer, thus creating a "hot spot." Figure G2409.2(2) specifically shows a noncombustible spacer arrangement.

The performance of a protective assembly when applied to a horizontal surface, such as a ceiling, will differ substantially from the same assembly placed in a

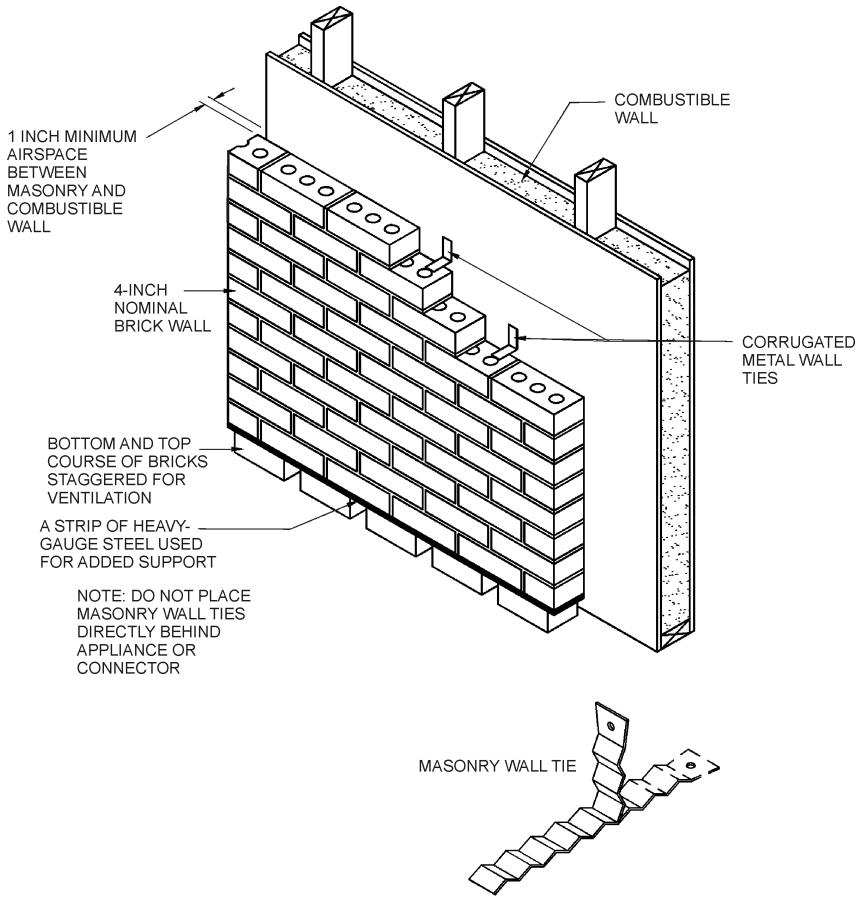

For SI: 1 inch = 25.4 mm.

FIGURE G2409.2(3) [308.2(3)]
MASONRY CLEARANCE REDUCTION SYSTEM

INTERNATIONAL CODE COUNCIL®
Copyright © 2015 ICC. ALL RIGHTS RESERVED. Accessed by David Dammon on Jun 21, 2017 12:30:52 PM pursuant to License Agreement with ICC. No further reproduction or distribution authorized. ANY UNAUTHORIZED REPRODUCTION OR DISTRIBUTION IS A VIOLATION OF THE FEDERAL COPYRIGHT ACT AND THE LICENSE AGREEMENT, AND SUBJECT TO CIVIL AND CRIMINAL PENALTIES THEREUNDER.

vertical plane. Obviously, temperatures at a ceiling surface will be higher because of natural convection and because the air circulation between the method of protection and the protected ceiling surface will be substantially reduced or nonexistent. It is for these reasons that Table G2409.2 is divided into two application groups.

The manufacturer's instructions or label for many appliances will state an absolute minimum clearance, regardless of any clearance reduction method used. Those clearance requirements take precedence over Table G2409.2.

The methods in Table G2409.2 are intended to be permanent installations properly supported to prevent displacement or deformation. Movement could adversely affect the performance of the protection method, thus posing a potential fire hazard.

The assemblies in Table G2409.2 are the product of experience and testing. To achieve predictable and dependable performance, the components of the vari-

TABLE G2409.2 (308.2)[a through k]
REDUCTION OF CLEARANCES WITH SPECIFIED FORMS OF PROTECTION

TYPE OF PROTECTION APPLIED TO AND COVERING ALL SURFACES OF COMBUSTIBLE MATERIAL WITHIN THE DISTANCE SPECIFIED AS THE REQUIRED CLEARANCE WITH NO PROTECTION [see Figures G2409.2(1), G2409.2(2), and G2409.2(3)]	WHERE THE REQUIRED CLEARANCE WITH NO PROTECTION FROM APPLIANCE, VENT CONNECTOR, OR SINGLE-WALL METAL PIPE IS: (inches)									
	36		18		12		9		6	
	Allowable clearances with specified protection (inches)									
	Use Column 1 for clearances above appliance or horizontal connector. Use Column 2 for clearances from appliance, vertical connector and single-wall metal pipe.									
	Above Col. 1	Sides and rear Col. 2	Above Col. 1	Sides and rear Col. 2	Above Col. 1	Sides and rear Col. 2	Above Col. 1	Sides and rear Col. 2	Above Col. 1	Sides and rear Col. 2
1. $3^1/_2$-inch-thick masonry wall without ventilated airspace	—	24	—	12	—	9	—	6	—	5
2. $^1/_2$-inch insulation board over 1-inch glass fiber or mineral wool batts	24	18	12	9	9	6	6	5	4	3
3. 0.024-inch (nominal 24 gage) sheet metal over 1-inch glass fiber or mineral wool batts reinforced with wire on rear face with ventilated airspace	18	12	9	6	6	4	5	3	3	3
4. $3^1/_2$-inch-thick masonry wall with ventilated airspace	—	12	—	6	—	6	—	6	—	6
5. 0.024-inch (nominal 24 gage) sheet metal with ventilated airspace	18	12	9	6	6	4	5	3	3	2
6. $^1/_2$-inch-thick insulation board with ventilated airspace	18	12	9	6	6	4	5	3	3	3
7. 0.024-inch (nominal 24 gage) sheet metal with ventilated airspace over 0.024-inch (nominal 24 gage) sheet metal with ventilated airspace	18	12	9	6	6	4	5	3	3	3
8. 1-inch glass fiber or mineral wool batts sandwiched between two sheets 0.024-inch (nominal 24 gage) sheet metal with ventilated airspace	18	12	9	6	6	4	5	3	3	3

For SI: 1 inch = 25.4 mm, ºC = [(ºF - 32)/1.8], 1 pound per cubic foot = 16.02 kg/m^3, 1 Btu per inch per square foot per hour per ºF = 0.144 W/m^2 · K.

a. Reduction of *clearances* from *combustible materials* shall not interfere with combustion air, draft hood *clearance* and relief, and accessibility of servicing.

b. All *clearances* shall be measured from the outer surface of the *combustible material* to the nearest point on the surface of the *appliance*, disregarding any intervening protection applied to the *combustible material*.

c. Spacers and ties shall be of *noncombustible material*. A spacer or tie shall not be used directly opposite an *appliance* or *connector*.

d. For all clearance reduction systems using a ventilated airspace, adequate provision for air circulation shall be provided as described [see Figures G2409.2(2) and G2409.2(3)].

e. There shall be at least 1 inch between *clearance* reduction systems and combustible walls and ceilings for reduction systems using ventilated airspace.

f. Where a wall protector is mounted on a single flat wall away from corners, it shall have an air gap of not less than 1 inch. To provide air circulation, the bottom and top edges, or only the side and top edges, or all edges shall be left open.

g. Mineral wool batts (blanket or board) shall have a density of not less than 8 pounds per cubic foot and a melting point of not less than 1500ºF.

h. Insulation material used as part of a *clearance* reduction system shall have a thermal conductivity of 1.0 Btu per inch per square foot per hour per ºF or less.

i. There shall be not less than 1 inch between the *appliance* and the protector. The *clearance* between the *appliance* and the combustible surface shall not be reduced below that allowed in this table.

j. All *clearances* and thicknesses are minimum; larger *clearances* and thicknesses are acceptable.

k. *Listed* single-wall connectors shall be installed in accordance with the manufacturer's instructions.

INTERNATIONAL CODE COUNCIL®
Copyright © 2015 ICC. ALL RIGHTS RESERVED. Accessed by David Dammon on Jun 21, 2017 12:30:52 PM pursuant to License Agreement with ICC. No further reproduction or distribution authorized. ANY UNAUTHORIZED REPRODUCTION OR DISTRIBUTION IS A VIOLATION OF THE FEDERAL COPYRIGHT ACT AND THE LICENSE AGREEMENT, AND SUBJECT TO CIVIL AND CRIMINAL PENALTIES THEREUNDER.

ous assemblies cannot be mixed, matched, combined or otherwise rearranged to comprise new assemblies, and materials cannot be substituted for those prescribed in the table. Any alterations or substitutions could have an effect on the assembly, and its performance must be tested and approved.

The reduced clearance is measured from the heat source to the combustible material, disregarding any intervening protection assembly.

Factory-built clearance reduction assemblies are available that are listed to UL1618. Such assemblies may or may not require field assembly of components.

G2409.3 (308.3) Clearances for indoor air-conditioning appliances. *Clearance* requirements for indoor air-conditioning *appliances* shall comply with Sections G2409.3.1 through G2409.3.4.

❖ Requirements for clearances to combustibles are emphasized because of the potential fire hazard posed when those clearances are not observed. Maintaining an appropriate distance from the outer surfaces of an appliance or piece of equipment to combustible materials reduces the possibility of ignition of combustible materials.

The minimum clearances to combustibles are specified in the manufacturer's installation instructions for a labeled appliance. Because an approved agency tests appliances in accordance with these instructions, the clearances required are necessary for correct installation and operation of the appliance.

Reduction of the required clearances to combustibles is allowed only when the combustibles are protected by one of the methods outlined in Section G2409 and clearance reduction is not prohibited by Section G2409 or the appliance and equipment listing (see commentary, Section G2409). The manufacturer's specified minimum clearances and the clearances specified in Section G2409 are all airspace clearances, and such spaces cannot be filled with insulation or any other material, even if the material is noncombustible. In some cases, the manufacturer's installation instructions will specify absolute minimum clearances that must not be reduced by any clearance reduction method.

The most common wall covering material-gypsum wallboard-is a combustible finish material for the purpose of the code. As a result, gypsum wallboard as well as all other combustible wall finishes must be separated from an appliance or equipment in accordance with the prescribed clearance to combustibles. Clearances to combustibles also apply to furnishings, window treatments and moveable items that can be placed within the required clearance range of appliances and equipment.

G2409.3.1 (308.3.1) Appliances clearances. Air-conditioning *appliances* shall be installed with clearances in accordance with the manufacturer's instructions.

❖ The concept of "rooms large or not large in comparison with the appliance" is no longer part of the code. The code has been simplified by no longer tying rules for clearances to whether or not an appliance is installed in a room having a specific volume. The dated concept of room volume in comparison to appliance volume

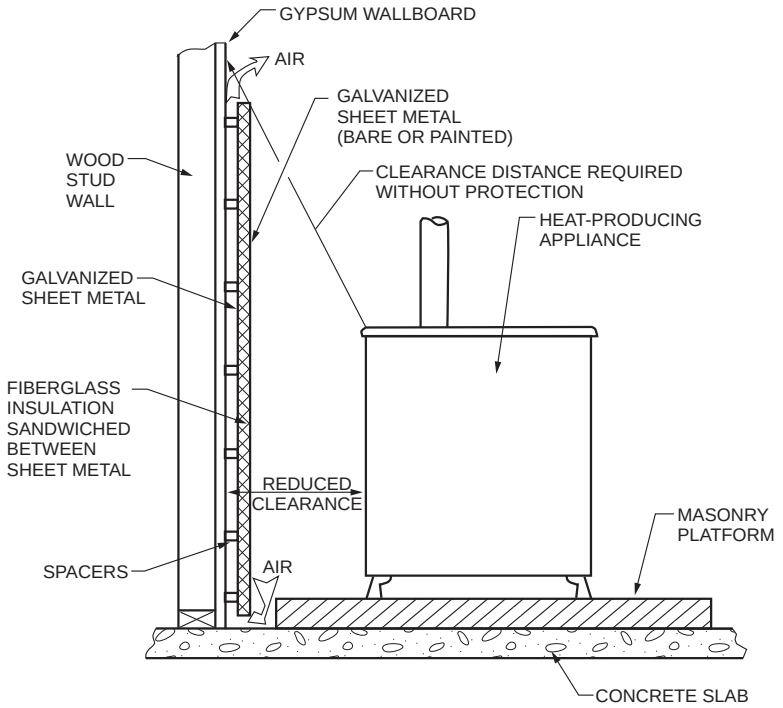

Figure G2409.2
REDUCED CLEARANCE TO COMBUSTIBLES

INTERNATIONAL CODE COUNCIL®
Copyright © 2015 ICC. ALL RIGHTS RESERVED. Accessed by David Dammon on Jun 21, 2017 12:30:52 PM pursuant to License Agreement with ICC. No further reproduction or distribution authorized. ANY UNAUTHORIZED REPRODUCTION OR DISTRIBUTION IS A VIOLATION OF THE FEDERAL COPYRIGHT ACT AND THE LICENSE AGREEMENT, AND SUBJECT TO CIVIL AND CRIMINAL PENALTIES THEREUNDER.

was meant to determine when the room was considered to be a closet or alcove. If the room was determined to be a closet or alcove, the code would then prohibit the use of clearance reduction methods and require the appliances to be listed for installation in closets and alcoves because the small room volume would not allow adequate dissipation of heat. This concept has outlived its intent because modern appliances are more efficient, have less jacket heat losses and are listed to current appliance standards. Now, the code simply defers to the appliance manufacturer's instructions and the appliance listing to establish the clearance requirements. In some cases, the installation instructions for an appliance might specifically prohibit the application of a clearance reduction method (see Section G2409.2).

G2409.3.2 (308.3.2) Clearance reduction. Air-conditioning appliances shall be permitted to be installed with reduced clearances to *combustible material*, provided that the *combustible material* or *appliance* is protected as described in Table G2409.2 and such reduction is allowed by the manufacturer's instructions.

❖ The clearance reduction methods in the code are always allowed unless the manufacturer's instructions specifically prohibit the reduction of clearances or specify different clearance reduction methods (see commentary, Section G2409.3.1). Note that some appliances specify clearances that are absolute minimums that cannot be reduced by any means.

G2409.3.3 (308.3.3) Plenum clearances. Where the *furnace plenum* is adjacent to plaster on metal lath or *noncombustible material* attached to *combustible material*, the *clearance* shall be measured to the surface of the plaster or other noncombustible finish where the *clearance* specified is 2 inches (51 mm) or less.

❖ Where the air-conditioning equipment plenum is adjacent to surfaces covered by noncombustible material as described in this section and the required clearance from combustibles is 2 inches (51 mm) or less, the required clearance must be measured to the surface of the adjacent material. Measuring to the combustible material would reduce the clearance between the equipment plenum and adjacent surface. Reducing this clearance would affect the cooling of the equipment and could cause overheating.

G2409.3.4 (308.3.4) Clearance from supply ducts. Supply air ducts connecting to listed central heating furnaces shall have the same minimum clearance to combustibles as required for the furnace supply plenum for a distance of not less than 3 feet (914 mm) from the supply plenum. Clearance is not required beyond the 3-foot (914 mm) distance.

❖ Portions of ducts that are within 3 feet (914 mm) of the supply plenum to which they connect will reach nearly the same temperature as the plenum.

G2409.4 (308.4) Central heating boilers and furnaces. *Clearance* requirements for central-heating boilers and *furnaces* shall comply with Sections G2409.4.1 through G2409.4.5. The *clearance* to these *appliances* shall not interfere with *combustion air*; *draft hood clearance* and relief; and accessibility for servicing.

❖ See the commentary to Section G2409.3.

G2409.4.1 (308.4.1) Appliances clearances. Central-heating furnaces and low-pressure boilers shall be installed with clearances in accordance with the manufacturer's instructions.

❖ See the commentary to Section G2409.3.1.

G2409.4.2 (308.4.2) Clearance reduction. Central-heating furnaces and low-pressure boilers shall be permitted to be installed with reduced clearances to *combustible material* provided that the *combustible material* or *appliance* is protected as described in Table G2409.2 and such reduction is allowed by the manufacturer's instructions.

❖ See the commentary to Section G2409.3.2.

G2409.4.3 (308.4.4) Plenum clearances. Where the *furnace plenum* is adjacent to plaster on metal lath or *noncombustible* material attached to *combustible material*, the *clearance* shall be measured to the surface of the plaster or other noncombustible finish where the *clearance* specified is 2 inches (51 mm) or less.

❖ See the commentary to Section G2409.3.3.

G2409.4.4 (308.4.5) Clearance from supply ducts. Supply air ducts connecting to listed central heating furnaces shall have the same minimum clearance to combustibles as required for the furnace supply plenum for a distance of not less than 3 feet (914 mm) from the supply plenum. Clearance is not required beyond the 3-foot (914 mm) distance.

❖ See the commentary to Section G2409.3.4.

G2409.4.5 (308.4.3) Clearance for servicing appliances. Front *clearance* shall be sufficient for servicing the *burner* and the *furnace* or boiler.

❖ Because mechanical equipment and appliances require routine maintenance, repairs and possible replacement, access is required. Additionally, access recommendations or requirements are usually stated in the manufacturer's installation instructions.

The intent of this section is to secure access to components that require observation, inspection, adjustment, servicing, repair or replacement such as controls, gauges, burners, filters, blowers, and motors. Access is also necessary to conduct operating procedures such as startup or shut down.

The code defines access as being able to be reached, but first may require the removal of a panel, door or similar obstruction. An appliance or piece of equipment is not accessible if any portion of the structure's permanent finish materials, such as drywall, plaster, paneling, built-in furniture, cabinets or any other similar permanently affixed building component must be removed.

INTERNATIONAL CODE COUNCIL®
Copyright © 2015 ICC. ALL RIGHTS RESERVED. Accessed by David Dammon on Jun 21, 2017 12:30:52 PM pursuant to License Agreement with ICC. No further reproduction or distribution authorized. ANY UNAUTHORIZED REPRODUCTION OR DISTRIBUTION IS A VIOLATION OF THE FEDERAL COPYRIGHT ACT AND THE LICENSE AGREEMENT, AND SUBJECT TO CIVIL AND CRIMINAL PENALTIES THEREUNDER.

SECTION G2410 (309)
ELECTRICAL

G2410.1 (309.1) Grounding. *Gas piping* shall not be used as a grounding electrode.

❖ Section E3508.6 prohibits metal underground gas piping from being used as a grounding electrode. Metal gas piping must be bonded to the electrical service grounding electrode system, but it cannot serve as a grounding electrode. This is somewhat contradictory and this section has been the center of much confusion relative to the "equal-potential" bonding of gas piping. Underground gas piping cannot be used as an earth electrode because it is not recognized as such in the *National Electric Code*® (NEC®), also known as NFPA 70, and because of the perceived risk of potential current flow on piping that conveys flammable gas. There is also the obvious fact that underground piping is typically plastic or metal, with a dielectric fitting isolating the metal piping from above-ground piping. However, bonding underground metal gas piping to the grounding electrode system will cause the piping to act as an additional electrode whether or not this is intended or desired. This is unavoidable, unless dielectric fittings are used to electrically isolate the underground portion of the metal piping from the above-ground portion. Any fault current will take all possible paths to earth with the intensity dictated by the impedance of the path. The key to remember is that this section does not negate the requirement to bond all metal above-ground gas piping, as required by the NEC and Section G2411. See Sections G2411.1 and G2415.10 for clarification of gas piping bonding means.

G2410.2 (309.2) Connections. Electrical connections between *appliances* and the building wiring, including the grounding of the *appliances*, shall conform to Chapters 34 through 43.

❖ Field-installed power wiring and control wiring for appliances and equipment must be installed in accordance with Chapters 34 through 43.

The power wiring includes all the wiring, disconnects, overcurrent protection devices, starters and related hardware used to supply electrical power to the appliance or equipment. The control wiring includes all the wiring, devices and related hardware that connect the main unit to all external controls and accessories, such as temperature and pressure sensors, thermostats, exhausters, equipment contractors, interlock controls and remote damper motors. The internal factory wiring of appliances and equipment is not covered by this section unless it is specifically addressed in Chapters 34 through 43; however, the wiring is covered by the testing and review performed by an approved agency as part of the listing and labeling process.

The mechanical or electrical code official responsible for the inspection of appliances and equipment must be familiar with the applicable sections of Chapters 34 through 43.

SECTION G2411 (310)
ELECTRICAL BONDING

G2411.1 (310.1) Pipe and tubing other than CSST. Each above-ground portion of a *gas piping system* other than corrugated stainless steel tubing (CSST) that is likely to become energized shall be electrically continuous and bonded to an effective ground-fault current path. *Gas piping* other than CSST shall be considered to be bonded where it is connected to *appliances* that are connected to the *equipment* grounding conductor of the circuit supplying that *appliance*.

❖ This section is consistent with Section 250.104(B) of the 2014 edition of the NEC (NFPA 70). Although difficult to define, gas piping that is likely to become energized is typically considered to be any gas piping that connects to one or more appliances that are electrically powered. The metal components of the appliances are required to be grounded; therefore, the metal gas piping that connects to the appliances should be as well because the piping has the same likelihood of being energized as the appliance components. The term "bonding" simply means to electrically tie metal parts together by means of conductors to create a low impedance path for electricity to flow between them. Metallic objects that are bonded together will have no voltage difference between them and they will all have the same potential with respect to ground.

In the majority of cases, the gas piping system will be connected to at least one, if not several, appliances that use electrical power. The gas connections involve metal-to-metal joints that ensure electrical continuity with the appliance. Those appliances will be connected to an equipment grounding conductor that will serve to bond the gas piping to the grounding electrode system for the building. Where the appliance branch circuits include grounding conductors properly connected to the appliances and one or more such appliances are connected to the gas piping system, the gas-piping system is automatically bonded as required by this section (see Commentary Figure G2411.1). This method of bonding is not allowed as the sole means of bonding for CSST gas piping systems. Note that the manufacturer's installation instructions for some gas tubing systems will require additional bonding beyond what is required by this section. This is true for CSST systems and is also mandated by Section G2411.1.1 (see Section G2411.1.1).

The purpose of the bonding required by this section is to make sure that there is no electrical potential (voltage difference) between gas piping and appliances, between gas piping and any other piping and between any piping and the earth so as to eliminate electrical shock hazards. If all of the metal piping, systems and appliances are bonded together, there cannot be a voltage difference between them; therefore, human contact across any such piping systems and appliances will not result in electrical shock. This is referred to as "equal-potential" bonding, the primary purpose of which is to prevent shock. Section G2411.1.1 addresses bonding that has an additional purpose.

INTERNATIONAL CODE COUNCIL®
Copyright © 2015 ICC. ALL RIGHTS RESERVED. Accessed by David Dammon on Jun 21, 2017 12:30:52 PM pursuant to License Agreement with ICC. No further reproduction or distribution authorized. ANY UNAUTHORIZED REPRODUCTION OR DISTRIBUTION IS A VIOLATION OF THE FEDERAL COPYRIGHT ACT AND THE LICENSE AGREEMENT, AND SUBJECT TO CIVIL AND CRIMINAL PENALTIES THEREUNDER.

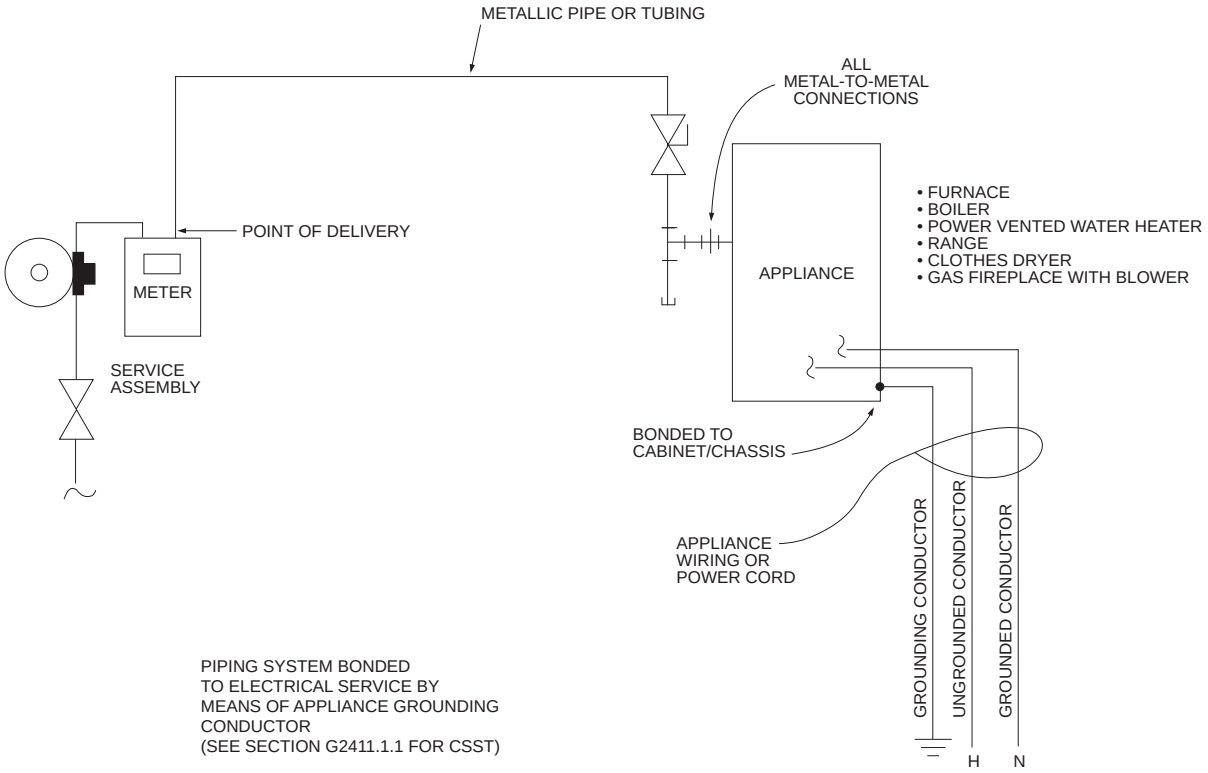

Figure G2411.1
GAS PIPE BONDING BY APPLIANCE BRANCH CIRCUIT

G2411.1.1 (310.1.1) CSST. Corrugated stainless steel tubing (CSST) gas *piping* systems and piping systems containing one or more segments of CSST shall be bonded to the electrical service grounding electrode system or, where provided, the lightning protection electrode system.

❖ This section addresses gas pipe bonding specific to CSST and does so for the purpose of lessening the possibility of damage to the CSST caused by the electrical energy created by indirect lightning strikes.

It is assumed that nothing is capable of fully protecting anything subjected to a direct strike by lightning because of the extremely high energy levels involved and unpredictability of the paths of flow. It is more common for building components to be energized by nearby lightning strikes to the earth, trees, poles, towers, etc. This intense electrical energy can travel through the earth or other objects and energize gas piping systems, among other metal systems and components. This can happen by simple conduction to the piping or by induction through forms of magnetic field coupling. The electrical energy can travel along a pipe or tube and unpredictably jump off and onto another metal pipe, wire, duct or other metal object. This "jumping off" point will experience an arc that has enough energy to burn through a pipe, tube or connector wall. The resulting exit wound caused by the arcing is a perforation that will result in gas leakage and possibly a fire or explosion. This damage can happen to any piping material, including steel pipe, CSST and copper tube, and also gas connectors. Relatively recent experience has shown that CSST is susceptible to this type of lightning damage and this section intends to mitigate the possibility of such damage.

Recall that the CSST piping will already be bonded to some degree by the appliance grounding conductor(s), as explained in the commentary to Section G2411.1, assuming that it is connected to appliances that are electrically powered. This bonding, however, is not considered to be adequate to protect CSST, therefore, Section G2411.1.1 mandates a more effective bonding means. Directly bonding the CSST piping to the electrical service grounding electrode system or the lightning protection electrode system has been shown, by laboratory experiments, to substantially reduce the risk of lightning damage. The minimum size bonding jumper was chosen based on the maximum size grounding electrode conductor that is required to connect to "made" electrodes, such as ground rods and plates as addressed in the NEC (NFPA 70) (see Section E3608.3). A number 6 AWG copper bonding jumper provides an electrical path with considerably less impedance than the typical equipment grounding conductor found in an appliance branch circuit. The gas service and electrical service are often in close proximity, thus allowing for a short bonding jumper between the point of delivery and the electrical service. The shorter the bonding jumper, the better it will perform. In cases where the electrical service and gas ser-

INTERNATIONAL CODE COUNCIL®
Copyright © 2015 ICC. ALL RIGHTS RESERVED. Accessed by David Dammon on Jun 21, 2017 12:30:52 PM pursuant to License Agreement with ICC. No further reproduction or distribution authorized. ANY UNAUTHORIZED REPRODUCTION OR DISTRIBUTION IS A VIOLATION OF THE FEDERAL COPYRIGHT ACT AND THE LICENSE AGREEMENT, AND SUBJECT TO CIVIL AND CRIMINAL PENALTIES THEREUNDER.

vice are not in close proximity, the bonding jumper should be routed to take the shortest path, noting the length limit of Section G2411.1.1.3.

The requirement of this section is also a requirement in the manufacturer's installation instructions for CSST.

As stated in the manufacturer's instructions, the bonding clamp must connect only to rigid steel pipe or a brass CSST fitting and it must never connect directly to the tubing itself. Clamping directly to the corrugated tubing would result in a poor electrical connection and could promote failure from current flow at that location. Bonding clamps must be listed for the application, for example, clamps used outdoors must be a type identified for outdoor use. The typical installation will have Schedule 40 steel pipe extending from the point of delivery (typically the meter outlet) and passing through the outside wall into the building for some distance. The bonding clamp will be attached to this steel pipe either indoors or outdoors or attached to any other section of steel pipe or any downstream CSST fitting. Note that this section applies to gas-piping systems that have any CSST in them. For example, if a piping system is constructed mostly of steel pipe, but contains one or more sections of CSST, such a system is treated as if it was constructed entirely of CSST and this code section applies [see Commentary Figures G2411.1.1(1) and G2411.1.1(2)].

Some CSST manufacturers have designed and are marketing a type of CSST that has an electrically conductive outer jacket or jacket assembly intended to conduct stray currents and dissipate them in such a manner that arcing is prevented. The code allows these conductive jacketed types, but the bonding provisions of this section still apply unless the code official approves otherwise in accordance with Section R104.11. See Sections G2411.1.1.1 through G2411.1.1.5.

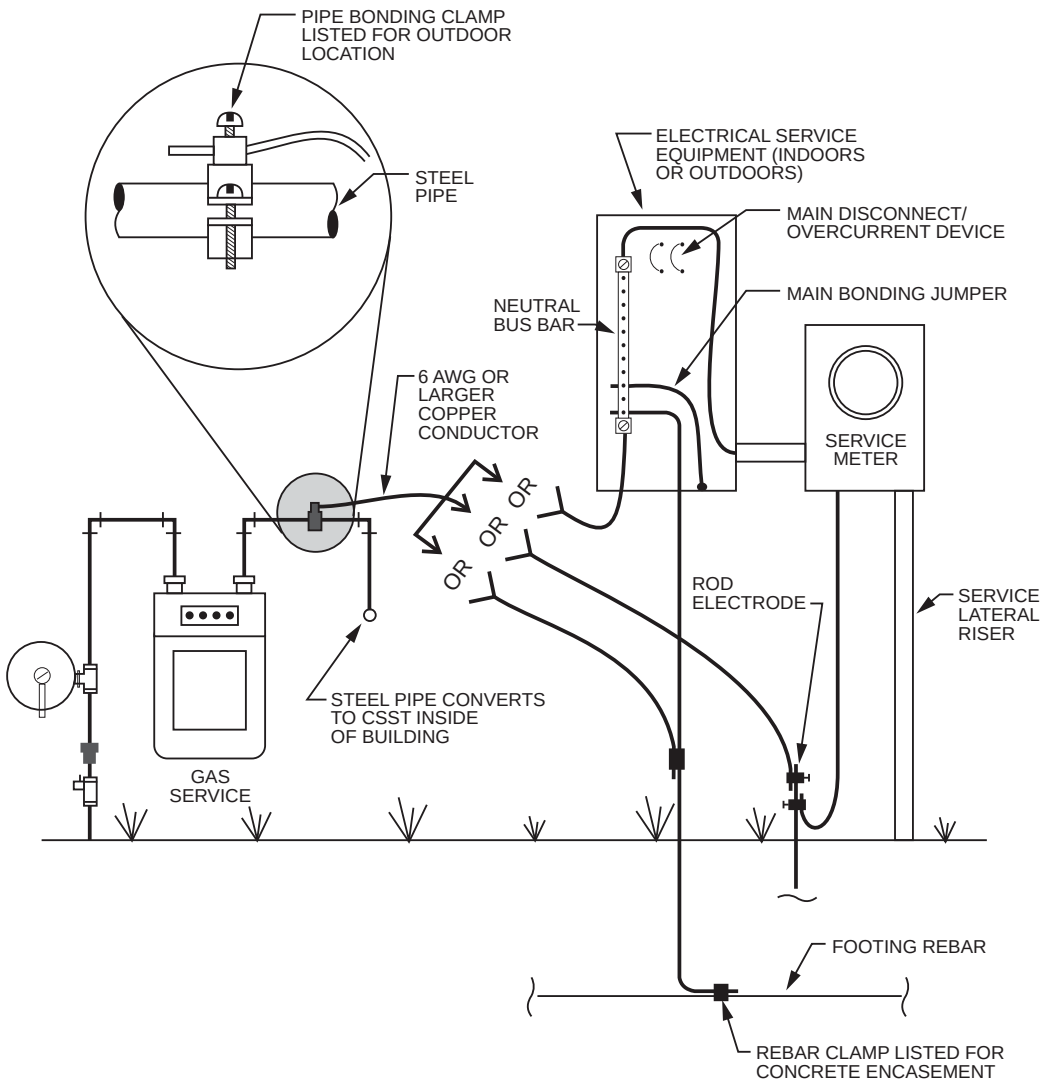

Figure G2411.1.1(1)
CSST BONDING

INTERNATIONAL CODE COUNCIL®
Copyright © 2015 ICC. ALL RIGHTS RESERVED. Accessed by David Dammon on Jun 21, 2017 12:30:52 PM pursuant to License Agreement with ICC. No further reproduction or distribution authorized. ANY UNAUTHORIZED REPRODUCTION OR DISTRIBUTION IS A VIOLATION OF THE FEDERAL COPYRIGHT ACT AND THE LICENSE AGREEMENT, AND SUBJECT TO CIVIL AND CRIMINAL PENALTIES THEREUNDER.

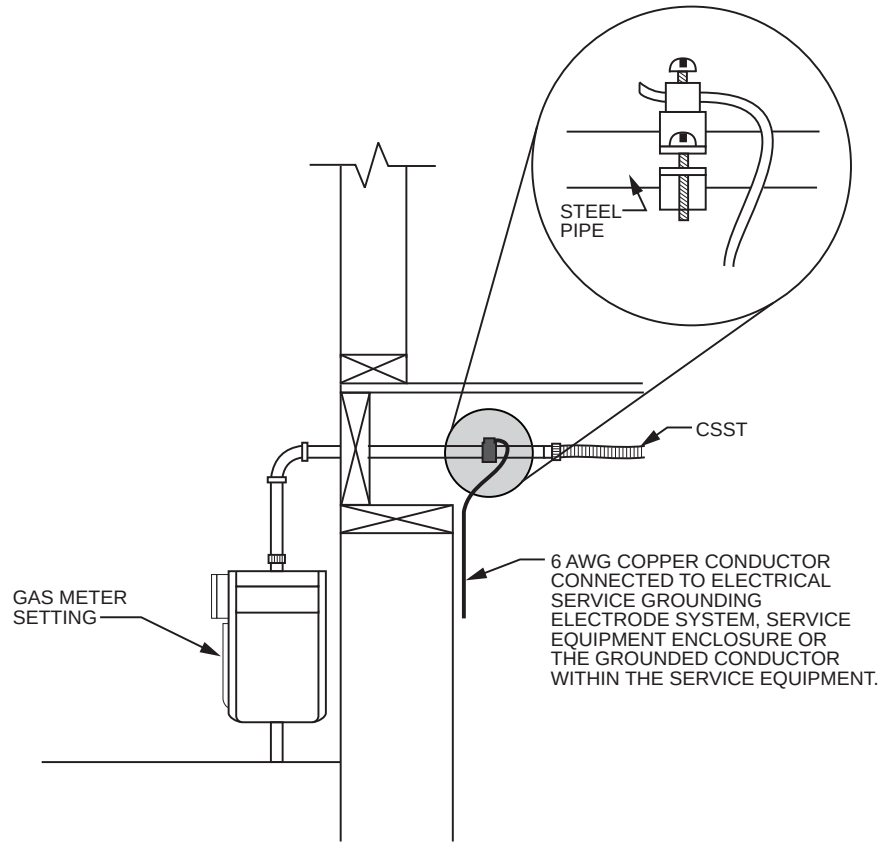

Figure G2411.1.1(2)
ALTERNATIVE LOCATION FOR BONDING CLAMP

G2411.1.1.1 (310.1.1.1) Point of connection. The boding jumper shall connect to a metallic pipe, pipe fitting or CSST fitting.

❖ The bonding jumper must connect to metal pipe or a CSST fitting, but such connection point can be anywhere in the distribution system. The bonding connection does not have to be between the point of delivery and the first downstream CSST fitting [see Commentary Figure G2411.1.1.3(1)].

G2411.1.1.2 (310.1.1.2) Size and material of jumper. The bonding jumper shall be not smaller than 6 AWG copper wire of equivalent.

❖ See the commentary to Section G2411.1.1.

G2411.1.1.3 (310.1.1.3) Bonding jumper length. The length of the bonding jumper between the connection to a gas piping system and the connection to a grounding electrode system shall not exceed 75 feet (22 860 mm). Any additional grounding electrodes used shall be bonded to the electrical service grounding electrode system or, where provided, the lightning protection grounding electrode system.

❖ It is a well-known fact that the longer a bonding jumper is the less effective it is because of the increasing impedance to electrical flow on the wire. Therefore, the shorter the better for jumper effectiveness. Extensive testing was performed by the CSST industry to determine how well the bonding protects the CSST from indirect lightning strikes and lightning-induced currents. The testing concluded that the bonding was effective in preventing perforations in the CSST under the conditions of the predicted lightning events. The testing also determined that the bonding jumper was functionally adequate up to approximately 100 feet in preventing arcing, thus suggesting the need for a length limit. A length limit of 75 feet was chosen to provide a safety factor and also because it was believed that 75 feet would accommodate the majority of building designs and utility service entrances [see Commentary Figure G2411.1.1.3(1)].

Bonding the CCST to an independent grounding electrode is prohibited; however, the code does not prevent a designer or installer from installing a supplemental grounding electrode (“additional,” as stated in the code text) for perceived additional protection. Where such supplemental electrodes are installed, the code requires that they be bonded back to the electrical service grounding electrode system, as this is consistent with NFPA 70 requirements for a common grounding electrode system. The author believes that the code is not intended to allow the length limit to be circumvented by the installation of supplemental elec-

INTERNATIONAL CODE COUNCIL®
Copyright © 2015 ICC. ALL RIGHTS RESERVED. Accessed by David Dammon on Jun 21, 2017 12:30:52 PM pursuant to License Agreement with ICC. No further reproduction or distribution authorized. ANY UNAUTHORIZED REPRODUCTION OR DISTRIBUTION IS A VIOLATION OF THE FEDERAL COPYRIGHT ACT AND THE LICENSE AGREEMENT, AND SUBJECT TO CIVIL AND CRIMINAL PENALTIES THEREUNDER.

trodes. Where supplemental electrodes are installed by choice, the code implies that the bonding jumpers that connect to the electrical service grounding electrode system are still limited to 75 feet in combined length. An opposing interpretation is that the length of the bonding jumper between the CSST and the supplemental grounding electrode is limited to 75 feet, and the length of the jumper that connects the supplemental grounding electrode back to the electrical service grounding electrode system is limited only by the NEC, NFPA 70. The new code text implies that the more conservative interpretation is intended.

The points of connection to the electrical service grounding electrode system, the methods of connections and the protection of the bonding conductors must be in accordance with NFPA 70 (NEC). The devices, such as clamps, that are used to connect the bonding jumper on both ends must be listed for the application and environment in which they are installed. For example, clamps used outdoors must be listed for exposure to the elements. Some commonly used bonding clamps are suitable only for indoor use, and some are suitable for both indoor and outdoor use [see Commentary Figure G2411.1.1.3(2)].

G2411.1.1.4 (310.1.1.4) Bonding connections. Bonding connections shall be in accordance with NFPA 70.

❖ See the commentary to Section G2411.1.1.3.

G2411.1.1.5 (310.1.1.5) Connection devices. Devices used for making the bonding connections shall be *listed* for the application in accordance with UL 467.

❖ See the commentary to Section G2411.1.1.3.

SECTION G2412 (401)
GENERAL

G2412.1 (401.1) Scope. This section shall govern the design, installation, modification and maintenance of *piping systems*. The applicability of this *code* to *piping systems* extends from the *point of delivery* to the connections with the *appliances* and includes the design, materials, components, fabrication, assembly, installation, testing, inspection, operation and maintenance of such *piping systems*.

❖ This section regulates aspects of fuel-gas distribution systems, including design, installation, testing, repair and maintenance. The applicability of this chapter is limited to the consumer side of the public utility company's gas distribution system.

The code governs all piping and system components from the end point of the gas purveyor's (utility company) service line to the supplied appliances and equipment. Typically, the gas utility company service line terminates at the service pressure regulator and meter setting. In other words, the code does not apply to piping and components that are owned by the gas utility company. The construction of utility-owned gas piping is governed by the federal Department of Transportation (DOT) regulations wherever the piping is located. However, in cases where the utility-owned piping runs through, in or on a building, it must do so in a way that does not jeopardize the structural integrity or fire safety of the building. Therefore, the relationship of the utility-owned piping to the building (prohibited locations, penetrations, etc.) is governed by the building portion of this code (see Section G2412.1.1). No

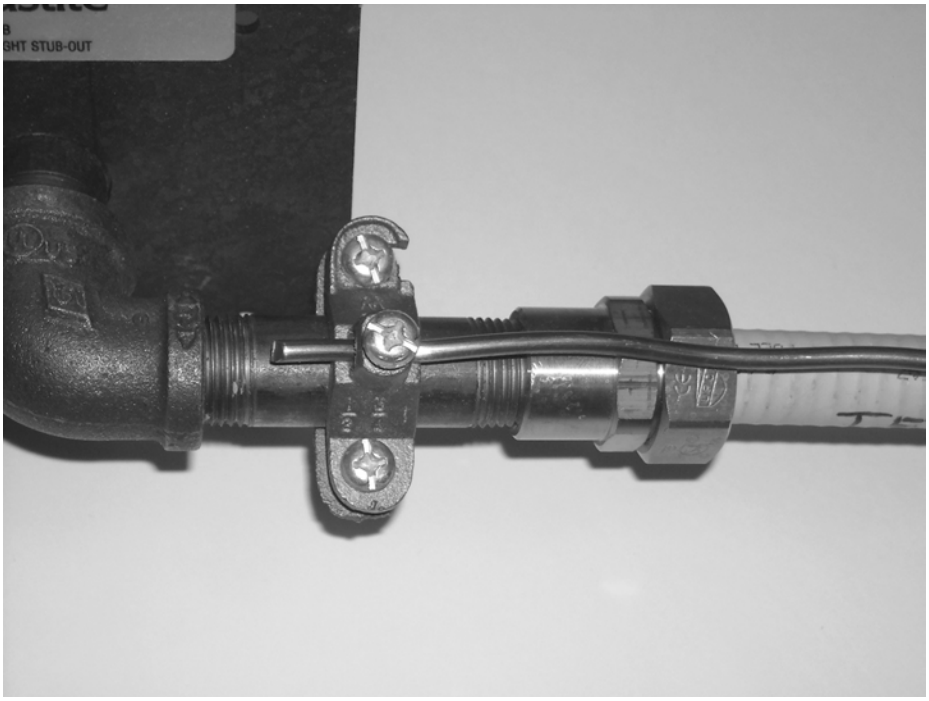

Figure G2411.1.1.3(2)
BONDING CLAMP

INTERNATIONAL CODE COUNCIL®
Copyright © 2015 ICC. ALL RIGHTS RESERVED. Accessed by David Dammon on Jun 21, 2017 12:30:52 PM pursuant to License Agreement with ICC. No further reproduction or distribution authorized. ANY UNAUTHORIZED REPRODUCTION OR DISTRIBUTION IS A VIOLATION OF THE FEDERAL COPYRIGHT ACT AND THE LICENSE AGREEMENT, AND SUBJECT TO CIVIL AND CRIMINAL PENALTIES THEREUNDER.

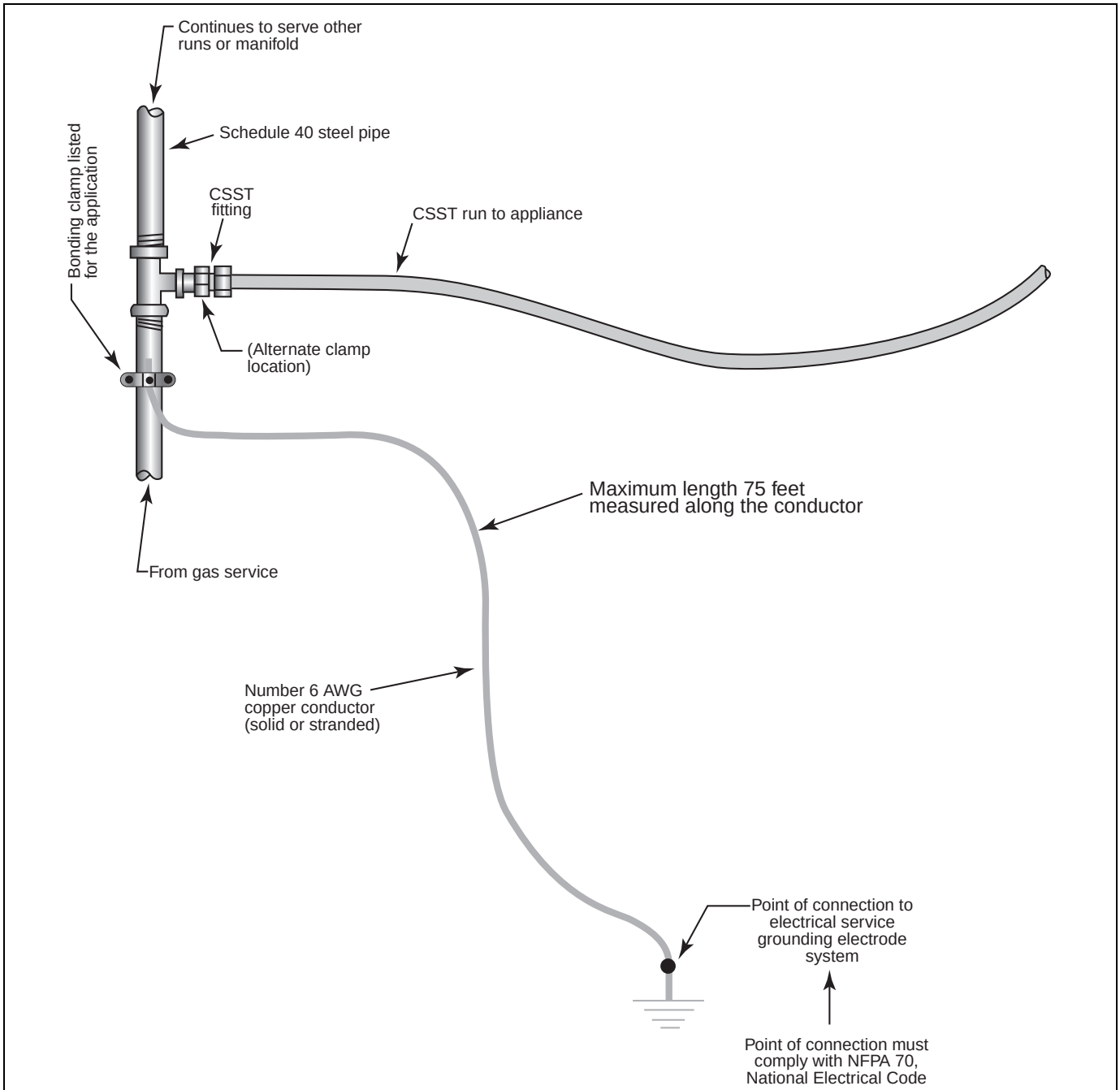

Figure G2411.1.1.3(1)
BONDING JUMPER LENGTH

other provision within this chapter applies to utility-owned gas piping.

Although LP-gas storage systems generally remain under the ownership of the gas supplier, these systems are governed by the code through the reference to NFPA 58 (see commentary, Section G2412.2). An LP-gas piping system begins at the outlet side of the first-stage pressure regulator. The piping between the first- and second-stage (final) regulator is governed by NFPA 58, and the piping downstream of the second-stage regulator is governed by this code. The first-stage pressure regulator reduces the storage container pressure to 10 pounds per square inch gauge (psig) (69 kPa) or less.

The termination point of gas utility services varies depending on the particular company's policies, but typically the service terminates at the property line or outdoors, immediately adjacent to the building or structure served by the service [see Commentary Figures G2412.1(1) and G2412.1(2)].

INTERNATIONAL CODE COUNCIL®
Copyright © 2015 ICC. ALL RIGHTS RESERVED. Accessed by David Dammon on Jun 21, 2017 12:30:52 PM pursuant to License Agreement with ICC. No further reproduction or distribution authorized. ANY UNAUTHORIZED REPRODUCTION OR DISTRIBUTION IS A VIOLATION OF THE FEDERAL COPYRIGHT ACT AND THE LICENSE AGREEMENT, AND SUBJECT TO CIVIL AND CRIMINAL PENALTIES THEREUNDER.

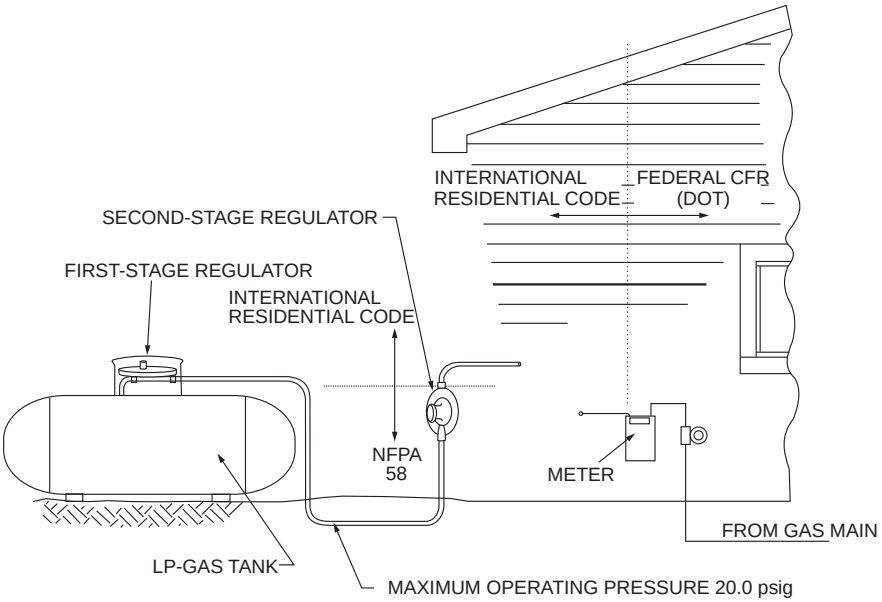

For SI: 1 pound per square inch gauge = 6.895 kPa.

Figure G2412.1(1)
SCOPE OF CODES

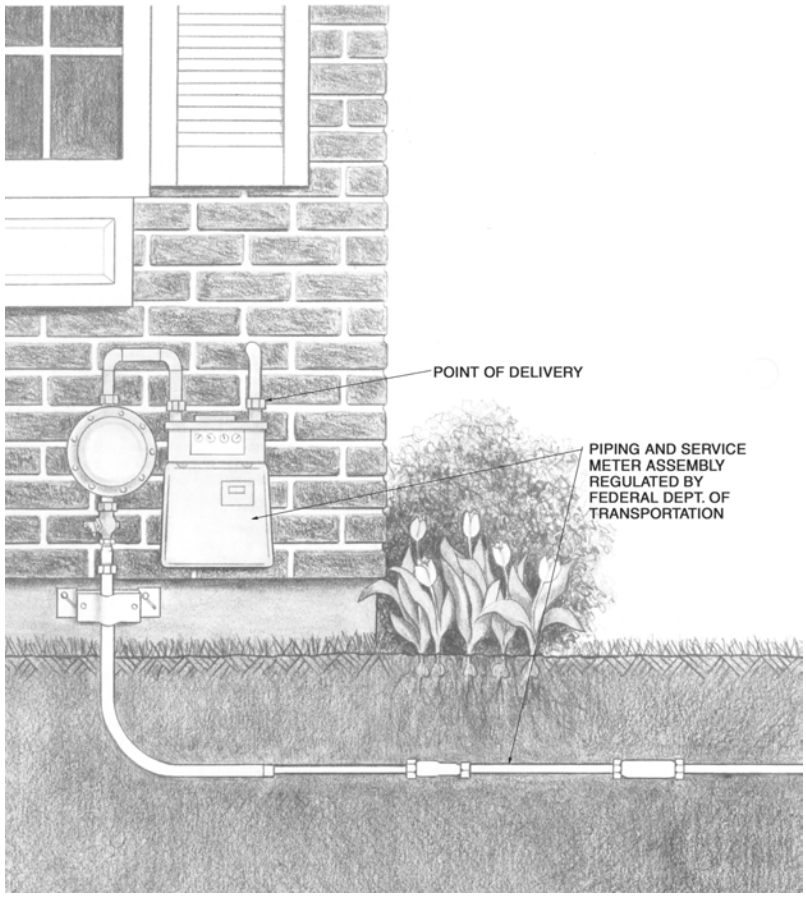

Figure courtesy of NORMAC

Figure G2412.1(2)
TYPICAL POINT OF DELIVERY FOR NATURAL GAS SERVICE

INTERNATIONAL CODE COUNCIL®
Copyright © 2015 ICC. ALL RIGHTS RESERVED. Accessed by David Dammon on Jun 21, 2017 12:30:52 PM pursuant to License Agreement with ICC. No further reproduction or distribution authorized. ANY UNAUTHORIZED REPRODUCTION OR DISTRIBUTION IS A VIOLATION OF THE FEDERAL COPYRIGHT ACT AND THE LICENSE AGREEMENT, AND SUBJECT TO CIVIL AND CRIMINAL PENALTIES THEREUNDER.

G2412.1.1 (401.1.1) Utility piping systems located within buildings. Utility service *piping* located within buildings shall be installed in accordance with the structural safety and fire protection provisions of this code.

❖ Piping and components upstream of the point of delivery are designed, installed, tested, owned and maintained by the gas utility company and are regulated by federal DOT regulations, not this code. This code does, however, regulate two aspects of the installation related to protection of the structure from a structural and fire safety standpoint. By reference, the building portion of this code would regulate the piping penetrations through structural components and through fire-resistance-rated assemblies. The building portion of this code would also regulate piping support to handle structural loads and seismic forces.

G2412.2 (401.2) Liquefied petroleum gas storage. The storage system for *liquefied petroleum gas* shall be designed and installed in accordance with the *International Fire Code* and NFPA 58.

❖ LP-gas tanks, containers, cylinders, storage vessels and related components must comply with NFPA 58. The storage system includes storage vessels of any type and the vessel appurtenances such as shutoff valves, pressure gauges, liquid level indicators, pressure regulators, pressure relief valves and filling connections. The first- and second-stage pressure regulators and interconnecting piping are also addressed by the standard and could, therefore, be considered part of the LP-gas storage system. If the piping between the first-stage regulator and the point of delivery [second-stage or 2-psi (13.7 kPa) regulator] is not placed under the control of NFPA 58, it would be unregulated because Section G2412.1 states that the code coverage begins at the point of delivery (see definition of "Point of delivery"). Second-stage 2-psi regulators reduce the outlet pressure of the first-stage regulator to 2-psi (13.7 kPa) and a line pressure regulator downstream of the 2-psi regulator reduces the pressure from 2-psi to a maximum of 14 inches w.c. (3.5 kPa). Second-stage regulators reduce the outlet pressure of the first-stage regulator to a maximum of 14 inches w.c. NFPA 58 addresses all aspects of LP-gas storage systems such as container design and construction, container appurtenances, safety devices, container location and installation. A referenced standard is enforceable only in the context in which it is referenced. Any portions of NFPA 58 that extend beyond the scope of the storage system are not applicable because of the context of the reference in this section.

G2412.3 (401.3) Modifications to existing systems. In modifying or adding to existing *piping systems*, sizes shall be maintained in accordance with this chapter.

❖ The gas volume demand on any portion of a distribution system cannot be increased beyond the capacity of the piping serving that portion. Modifications and additions to existing piping systems can have a detrimental effect on the existing piping system's ability to serve the connected loads. Commonly, new gas-fired equipment or appliances will be added to existing distribution piping without any regard for the effect of the extra load. To prevent dangerously low gas pressures, existing piping must be able to adequately supply additional loads, or the piping size must be increased. For example, a substantial load increase would occur where a storage-type (tank) water heater is replaced by an instantaneous tankless water heater.

G2412.4 (401.4) Additional appliances. Where an additional *appliance* is to be served, the existing *piping* shall be checked to determine if it has adequate capacity for all *appliances* served. If inadequate, the existing system shall be enlarged as required or separate *piping* of adequate capacity shall be provided.

❖ This section parallels Section G2412.8 and makes it clear that when any appliances are added to an existing gas piping system, the system must be carefully evaluated to verify that adding an appliance will not create a dangerous low-gas-pressure condition within the gas piping system. The evaluation must be conducted on the completed system as it will be configured after the appliance is added, and if the results indicate that the existing piping system cannot adequately serve the gas demand of the new appliance, the system must be revised accordingly. Undersized (overloaded) piping will cause pressure losses that can result in serious appliance malfunction.

G2412.5 (401.5) Identification. For other than steel *pipe*, exposed *piping* shall be identified by a yellow label marked "Gas" in black letters. The marking shall be spaced at intervals not exceeding 5 feet (1524 mm). The marking shall not be required on *pipe* located in the same room as the *appliance* served.

❖ The intent of this section is to prevent gas piping from being mistaken for other piping. A case of mistaken identity could lead to a dangerous condition if gas piping were to be cut or opened unintentionally. It is not uncommon for fuel-gas piping systems and various other gas or liquid piping systems in a building to be constructed of the same materials and thus have the same appearance. The method of identifying fuel gas piping must be permanent, legible and conspicuous. Steel pipe (typically what is referred to as "black iron") is exempt from the identification requirements because it is the traditional gas pipe material and is generally recognized as such. CSST is manufactured in compliance with the marking requirements of this section, and some copper tubing is manufactured with a similar yellow plastic jacket [see Commentary Figures G2414.5 and G2414.5.3(1)]. Steel pipe does not have to be identified, regardless of its color and regardless of any applied paint. Note that steel pipe that has been painted another color is still steel pipe.

INTERNATIONAL CODE COUNCIL®
Copyright © 2015 ICC. ALL RIGHTS RESERVED. Accessed by David Dammon on Jun 21, 2017 12:30:52 PM pursuant to License Agreement with ICC. No further reproduction or distribution authorized. ANY UNAUTHORIZED REPRODUCTION OR DISTRIBUTION IS A VIOLATION OF THE FEDERAL COPYRIGHT ACT AND THE LICENSE AGREEMENT, AND SUBJECT TO CIVIL AND CRIMINAL PENALTIES THEREUNDER.

G2412.6 (401.6) Interconnections. Where two or more *meters* are installed on the same premises but supply separate consumers, the *piping systems* shall not be interconnected on the outlet side of the *meters*.

❖ If gas distribution systems with independent meters were connected downstream of the meters, it would be impossible to determine the actual consumption of each of the interconnected systems. As the result of building renovations, remodeling and additions, or as the result of intentionally valved cross-connections between separately metered systems, it is possible for a consumer to be paying for fuel gas consumed by another consumer. Accurate consumption metering can occur only if each metered distribution system is independent of all other metered distribution systems on the premises. Also, a system thought to be shut off could be backfed from an interconnected system, thereby maintaining pressure in a system that was intended to be shut off.

G2412.7 (401.7) Piping meter identification. *Piping* from multiple *meter* installations shall be marked with an *approved* permanent identification by the installer so that the *piping system* supplied by each *meter* is readily identifiable.

❖ This provision allows service and emergency personnel to readily locate the shutoff valve that serves each piping system. The identification also helps to prevent interconnections between systems and between spaces when additions and/or alterations are made in the piping systems.

G2412.8 (401.8) Minimum sizes. All *pipe* utilized for the installation, extension and *alteration* of any *piping system* shall be sized to supply the full number of outlets for the intended purpose and shall be sized in accordance with Section G2413.

❖ Undersized gas piping systems are not capable of delivering the required volume of fuel at the required pressure. Inadequate gas pressure can cause hazardous operation of appliances. Appliances depend on proper gas pressure to maintain the design Btu (J) input rate, to maintain the required minimum manifold pressure and to produce the required gas velocity in the burners. If the gas pressure to an appliance is too low, the result can be incomplete combustion, burner malfunction and flashback, soot production and appliance malfunction and damage. Gas piping must be sized to maintain the required minimum gas pressures at the appliance inlet.

When designing a gas piping distribution system, all connected appliances and equipment are assumed to operate simultaneously, except as provided for in Section G2413.2. In other words, the system is designed for maximum demand. The code contains provisions for sizing gas piping systems using an exact equation or design tables. The tabular method is most often used because it is simpler and less likely to produce errors. Factors that affect the sizing of gas piping systems include the specific gravity of the gas, the length of the pipe and the number of fittings installed, the maximum gas demand, the allowable pressure loss through the system and any diversity factor that is applicable.

The design of gas piping installations should also take into account the possibility of future increases in gas demand (load). The farther the gas meter or point of delivery is from the building, the more extensive will be the disruption of the property in the event that a larger yard line between the meter and the building becomes necessary in the future as a result of increased gas demand within the building, a change in fuel gas type or a change in service pressure.

G2412.9 (401.9) Identification. Each length of pipe and tubing and each pipe fitting, utilized in a fuel gas system, shall bear the identification of the manufacturer.

❖ All pipe, tubing and fittings for the pipe and tubing must be able to be traced back to their source in case there is an issue with the material or its listing. Fittings of all sizes are easily marked with the symbol or logo of the manufacturer, but this requirement is more difficult for close and shoulder pipe nipples because there is little or no surface area suitable for such marking. Pipe nipples constructed in the field must be cut and threaded using pipe that meets the code. The pipe is marked, but the field-cut nipples might not be.

G2412.10 (401.10) Third-party testing and certification. Piping, tubing and fittings shall comply with the applicable referenced standards, specifications and performance criteria of this code and shall be identified in accordance with Section G2412.9. Piping, tubing and fittings shall either be tested by an approved third-party testing agency or certified by an approved *third-party certification agency*.

❖ These materials have always been required to comply with the standards prescribed by the code and this section requires verification by a third-party entity. The materials, or in some cases their packaging, must bear proof that a third-party entity has verified that the materials comply. This requirement will make it easier for builders, designers and code officials to determine that materials comply with the appropriate product standards.

SECTION G2413 (402)
PIPE SIZING

G2413.1 (402.1) General considerations. *Piping systems* shall be of such size and so installed as to provide a supply of gas sufficient to meet the maximum *demand* and supply gas to each *appliance* inlet at not less than the minimum supply pressure required by the *appliance*.

❖ This section is a summation of the provisions of Sections G2412.8 and G2413.5, and is intended to give guidance to the designer (see commentary, Sections G2412.8 and G2413.5). The pressure loss (drop) in a gas piping system must not exceed the allowable loss described in Section G2413.5. Pressure loss must be controlled to make sure that the supply pressure at each appliance inlet is not less than the minimum

INTERNATIONAL CODE COUNCIL®
Copyright © 2015 ICC. ALL RIGHTS RESERVED. Accessed by David Dammon on Jun 21, 2017 12:30:52 PM pursuant to License Agreement with ICC. No further reproduction or distribution authorized. ANY UNAUTHORIZED REPRODUCTION OR DISTRIBUTION IS A VIOLATION OF THE FEDERAL COPYRIGHT ACT AND THE LICENSE AGREEMENT, AND SUBJECT TO CIVIL AND CRIMINAL PENALTIES THEREUNDER.

required by the appliance. Inadequate supply pressure can result in hazardous appliance operation or malfunction.

G2413.2 (402.2) Maximum gas demand. The volumetric flow rate of gas to be provided shall be the sum of the maximum input of the *appliance*s served.

The total connected hourly load shall be used as the basis for pipe sizing, assuming that all appliances could be operating at full capacity simultaneously. Where a diversity of load can be established, pipe sizing shall be permitted to be based on such loads.

The volumetric flow rate of gas to be provided shall be adjusted for altitude where the installation is above 2,000 feet (610 m) in elevation.

❖ To determine the demand volume required by an appliance in cubic feet (m^3) of gas per hour, the input rating of the appliance in British thermal units per hour (Btu/h) (W) as specified by the appliance manufacturer must be known. This information will be on the appliance nameplate. Note that, depending on the elevation above sea level at which the appliance is installed, the manufacturer of the appliance might also require that the input be derated to compensate for the effect of altitude. If a derating adjustment of input is required, this adjusted input rate would be used in the calculation. If the average heating value of the gas is known [typically about 1,000 Btu/ft^3 (37.3 MJ/m^3) for natural gas], the volume of gas required per hour can be calculated. The heating value can be obtained for the gas supplier. The input rating of all appliances must be shown on the appliance label. When the input rating of the appliances is unknown at the time of piping system design, the gas demand will have to be estimated based on input from appliance manufacturers, gas utilities or another source. However, when the actual appliance demands are determined upon appliance selection, any approximate calculations must be checked to verify that the piping system is, in fact, adequate to supply the known demand for all appliances. The designer must be aware of the fact that a system designed in accordance with an estimated load might be undersized relative to the actual connected load.

In all cases, the piping must have the capacity to supply the actual connected load of appliances. As also stated in this section and Section G2412.8, the load on the piping system must be based on the simultaneous operation of all appliances at full output. The only exception to this would be the demonstration of actual load diversity. For example, the designer could have access to data that demonstrates that the total load for cooking ranges or water heaters in a multiple-family dwelling (apartment building) is less than the sum of all of the appliance demands at full output. The code official would have to be convinced that any such diversity factor had been established. Any known diversity factors would likely come from the serving gas supplier.

The following is an example of how gas demand is calculated for a representative appliance: an appliance installed at sea level has a nameplate (label) input rating of 120,000 Btu/h (35.2 kW). Using natural gas with an average heating value of 1,000 Btu/ft^3 (37.3 MJ/m^3), the volume of gas required for the appliance is: 120,000/1,000 = 120 cubic feet per hour (3.4 m^3/h).

G2413.3 (402.3) Sizing. *Gas piping* shall be sized in accordance with one of the following:

1. *Pipe* sizing tables or sizing equations in accordance with Section G2413.4.
2. The sizing tables included in a *listed piping* system's manufacturer's installation instructions.
3. Other *approved* engineering methods.

❖ Using the sizing tables is generally simpler and less time consuming than using the equations found in Section G2413.4. The gas system pressure, allowable pressure drop, maximum gas demand and the specific gravity of the fuel gas must be known in order to use tables. The allowable pressure drop is the designer's choice because the intent of the code is to provide the appliance or equipment with the required rate of gas flow at the required minimum pressure. The tables are based on a given pressure drop and cannot be used if the designer wishes to use any other pressure drop. The sizing tables are based on using smooth-bore pipe or tube and can be used with the piping materials listed in Section G2414. Pipe materials with higher resistance to flow cannot be sized using these tables. CSST is sized using CSST-specific tables. The pipe sizes in the pipe sizing tables are based on the traditional steel pipe size designation as used in the material standards. More information may be obtained from a variety of pipe design publications, including the *Piping Handbook* by Sabin Crocker and the ASHRAE *Handbook of HVAC Systems and Equipment*. Each of the tables presents different piping material and design parameters and represents the most common system design applications. The tables assume that the system being sized is constructed of a single type pipe or tubing material throughout; thus, a single table cannot be used for systems constructed of multiple materials. For example, it is common to find hybrid systems composed of both steel pipe and CSST. Such systems would have to be sized from two different tables based on the longest run of the entire system.

The code does not limit sizing methodology to the tables or equations. Manufacturers of gas piping/tubing may provide sizing charts, tables or slide calculators that, in effect, become part of the installation instructions. This is the case for CSST, which is a listed piping system.

Section G2413.4 describes a sizing method that uses an exact thermodynamic flow equation to determine the required pipe sizes. Although this is an exact method, the degree of accuracy it affords may not always prove valuable, because pipe sizes are standardized and the pipe diameter calculated may not correspond to an available pipe size. For example, a calculated pipe diameter of 0.80 inch (20.3 mm) will

INTERNATIONAL CODE COUNCIL®
Copyright © 2015 ICC. ALL RIGHTS RESERVED. Accessed by David Dammon on Jun 21, 2017 12:30:52 PM pursuant to License Agreement with ICC. No further reproduction or distribution authorized. ANY UNAUTHORIZED REPRODUCTION OR DISTRIBUTION IS A VIOLATION OF THE FEDERAL COPYRIGHT ACT AND THE LICENSE AGREEMENT, AND SUBJECT TO CIVIL AND CRIMINAL PENALTIES THEREUNDER.

require the selection of the next larger standard pipe size [1-inch (25.4 mm) pipe].

There are two equations in Section G2413.4 to be used, depending on the gas pressure within the piping system.

As stated in Appendix A, Sections A.2.2 and A.2.3, an equivalent length of pipe should be added to the length of any piping run having four or more fittings (see Appendix A, Table A.2.2). Some designers simply add 50 percent of the actual length of piping as an all-inclusive fitting allowance (i.e., actual pipe length x 1.5). This is a conservative estimate and is used because the necessary number and type of fittings is usually not known when the system is being designed.

Steel pipe sizes $^1/_4$ inch and $^3/_8$ inch have been deleted from the tables because the use of such sizes is very rare. The pressure of "0.50 or less" that appeared in some table titles has been replaced by "less than 2 psi" because such tables can be used with any pressure less than 2 psi (13.8 kPa), including 0.50 psi (3.5 kPa) and less.

G2413.4 (402.4) Sizing tables and equations. Where Tables G2413.4(1) through G2413.4(21) are used to size *piping* or *tubing*, the *pipe* length shall be determined in accordance with Section G2413.4.1, G2413.4.2 or G2413.4.3.

Where Equations 24-3 and 24-4 are used to size *piping* or *tubing*, the *pipe* or *tubing* shall have smooth inside walls and the pipe length shall be determined in accordance with Section G2413.4.1, G2413.4.2 or G2413.4.3.

1. Low-pressure gas equation [Less than $1^1/_2$ pounds per square inch (psi) (10.3 kPa)]:

$$D = \frac{Q^{0.381}}{19.17\left(\frac{\Delta H}{C_r \times L}\right)^{0.206}} \qquad \textbf{(Equation 24-3)}$$

2. High-pressure gas equation [1.5 psi (10.3 kPa) and above]:

$$D = \frac{Q^{0.381}}{18.93\left[\frac{(P_1^2 - P_2^2) \times Y}{C_r \times L}\right]^{0.206}} \qquad \textbf{(Equation 24-4)}$$

where:

D = Inside diameter of *pipe*, inches (mm).

Q = Input rate *appliance(s)*, cubic feet per hour at 60°F (16°C) and 30-inch mercury column.

P_1 = Upstream pressure, psia (P_1 + 14.7).

P_2 = Downstream pressure, psia (P_2 + 14.7).

L = Equivalent length of *pipe*, feet.

ΔH = *Pressure drop*, inch water column (27.7 inch water column = 1 psi).

❖ The length of pipe or tube to be used with the tables and equations is determined by the sizing method being used. Section G2413.4.1 involves only one length whereas Sections G2413.4.2 and G2413.4.3 involve multiple lengths.

TABLE G2413.4 (402.4)
C_r AND Y VALUES FOR NATURAL GAS AND UNDILUTED PROPANE AT STANDARD CONDITIONS

GAS	EQUATION FACTORS	
	C_r	Y
Natural gas	0.6094	0.9992
Undiluted propane	1.2462	0.9910

For SI: 1 cubic foot = 0.028 m^3, 1 foot = 305 mm,
1-inch water column = 0.249 kPa,
1 pound per square inch = 6.895 kPa,
1 British thermal unit per hour = 0.293 W.

❖ **Example 1:**

Determine the required pipe sizes for the gas distribution system in Commentary Figure G2413.4 using the equation method outlined in this section. The system is designed to operate at less than 0.5 pound per square inch (psig) (3.5 kPa), using steel pipe. Assume the following:

Fuel gas	Natural
Specific gravity	0.60
Heating value	1,000 Btu per cubic foot
Maximum allowable pressure drop	$^1/_2$ inch of water column

Negligible number of fittings

For SI: 1 inch = 25.4mm, 1 foot = 304.8mm, 1 Btu/h = 0.2931 W, 1 Btu/ft^3 = 0.0373 MJ/m^3, 1 inch water column = 0.2488 kPa, 1 cubic foot = 0.02832 m^3, 1 pound per square inch gauge = 6.895 kPa.

To use equations in this section, the gas volume of each appliance must be known.

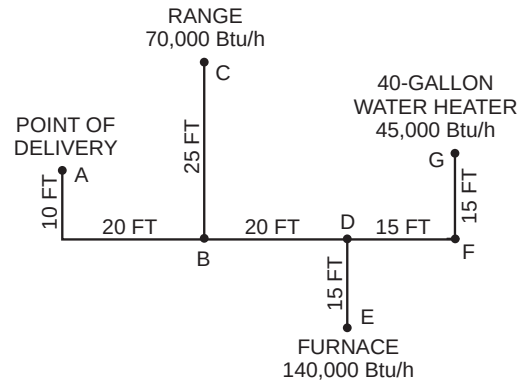

For SI: 1 foot = 304.8 mm, 1 Btu/h = 0.294 W.

Figure G2413.4
GAS PIPING LAYOUT

Gas volume of an appliance = input rating of an appliance (Btu/h)/Heating value of the fuel gas (Btu/ft^3).

Using the equation, we can solve for the minimum pipe diameter (D) as follows:

$D = Q^{0.381}/19.17\ [(\Delta H)/(C_r \times L]^{0.206}$

INTERNATIONAL CODE COUNCIL®
Copyright © 2015 ICC. ALL RIGHTS RESERVED. Accessed by David Dammon on Jun 21, 2017 12:30:52 PM pursuant to License Agreement with ICC. No further reproduction or distribution authorized. ANY UNAUTHORIZED REPRODUCTION OR DISTRIBUTION IS A VIOLATION OF THE FEDERAL COPYRIGHT ACT AND THE LICENSE AGREEMENT, AND SUBJECT TO CIVIL AND CRIMINAL PENALTIES THEREUNDER.

APPLIANCE	INPUT RATING (Btu/h)	GAS VOLUME (ft^3/h)
Range	70,000	70
Furnace	140,000	140
Water heater	45,000	45

Starting at the most remote appliance from the point of delivery (Point G - water heater), determine the minimum pipe size for pipe segment D.

$D = (45)^{0.381}/19.17\ [(1/2)/(0.609 \times 80)]^{0.206} = 0.574$

Repeat the calculation for each pipe segment. The gas piping system is sized as follows:

PIPE SEGMENT	FLOW RATE (Q)	CALCULATED PIPE DIAMETER (*D*) (in.)	NOMINAL PIPE SIZE (in.)
A-B	255	1.11	$1\frac{1}{4}$
B-C	70	0.679	$\frac{3}{4}$
B-D	185	0.983	1
D-E	140	0.884	1
D-G	45	0.574	$\frac{1}{2}$

Most gas pipe sizing will be determined by using the sizing tables. In the event that circumstances warrant it, however, pipe sizing may be done by calculation using the provisions of Appendix A or other approved methods. If in a particular design, the piping length, desired pressure loss, system supply pressure, specific gravity or pipe size does not fall within the parameters of a table, an approved alternate sizing procedure must be used.

Instead of using the methods specified in this section, piping sizes may be determined by the use of accurate gas flow, computer or pressure drop charts. Such sizing tools must be acceptable to the code official. Note that calculators, charts and computer programs can be designed to size gas piping for any pressure drop because the intent of the code is to make sure that the supply pressure at the appliance is greater than or equal to the minimum pressure required for proper operation of the appliance (see Section G2413.5).

TABLES G2413.4(1) through G2413.4(21). See pages 24-76 through 24-96.

❖ See the commentary to Section G2413.4.

G2413.4.1 (402.4.1) Longest length method. The *pipe* size of each section of *gas piping* shall be determined using the longest length of *piping* from the *point of delivery* to the most remote *outlet* and the load of the section.

❖ This section provides a step-by-step approach to proper application of the tables using the traditional longest-length method. When using the tables, the maximum pipe length from the point of delivery to the farthest outlet must be determined, including any allowance for the equivalent length of fittings. The designer will use the row in the table that equals the determined length or the next higher row if the determined length is between table values. The system will be designed using only values taken from this row. This is known as the longest-run method. Basing the sizing on the most demanding circuit (longest run) compensates for pressure losses throughout the entire system. Even though the appliances are not typical for dwellings, Commentary Figure G2413.4.1 and the example serve to illustrate the longest length method.

Longest length method example: Basing the sizing on the most demanding circuit (longest run using Table G2413.4(1), size the piping system in Commentary Figure G2413.4.1. The longest run is from the meter (point of delivery) to Roof Top Unit (RTU) 5 and is 210 feet (64 008 mm), therefore, all pipe sizes will be chosen from the 250 foot (76 200 mm) row of the table.

PIPE SECTION	LOAD (MBH)	SIZE (in.)
A	690	2
B	690	2
C	540	2
D	450	2
E	250	$1\frac{1}{2}$
F	250	$1\frac{1}{2}$
G	150	$1\frac{1}{4}$
H	90	1
I	200	$1\frac{1}{4}$
J	100	1
K	150	$1\frac{1}{4}$

INTERNATIONAL CODE COUNCIL®
Copyright © 2015 ICC. ALL RIGHTS RESERVED. Accessed by David Dammon on Jun 21, 2017 12:30:52 PM pursuant to License Agreement with ICC. No further reproduction or distribution authorized. ANY UNAUTHORIZED REPRODUCTION OR DISTRIBUTION IS A VIOLATION OF THE FEDERAL COPYRIGHT ACT AND THE LICENSE AGREEMENT, AND SUBJECT TO CIVIL AND CRIMINAL PENALTIES THEREUNDER.

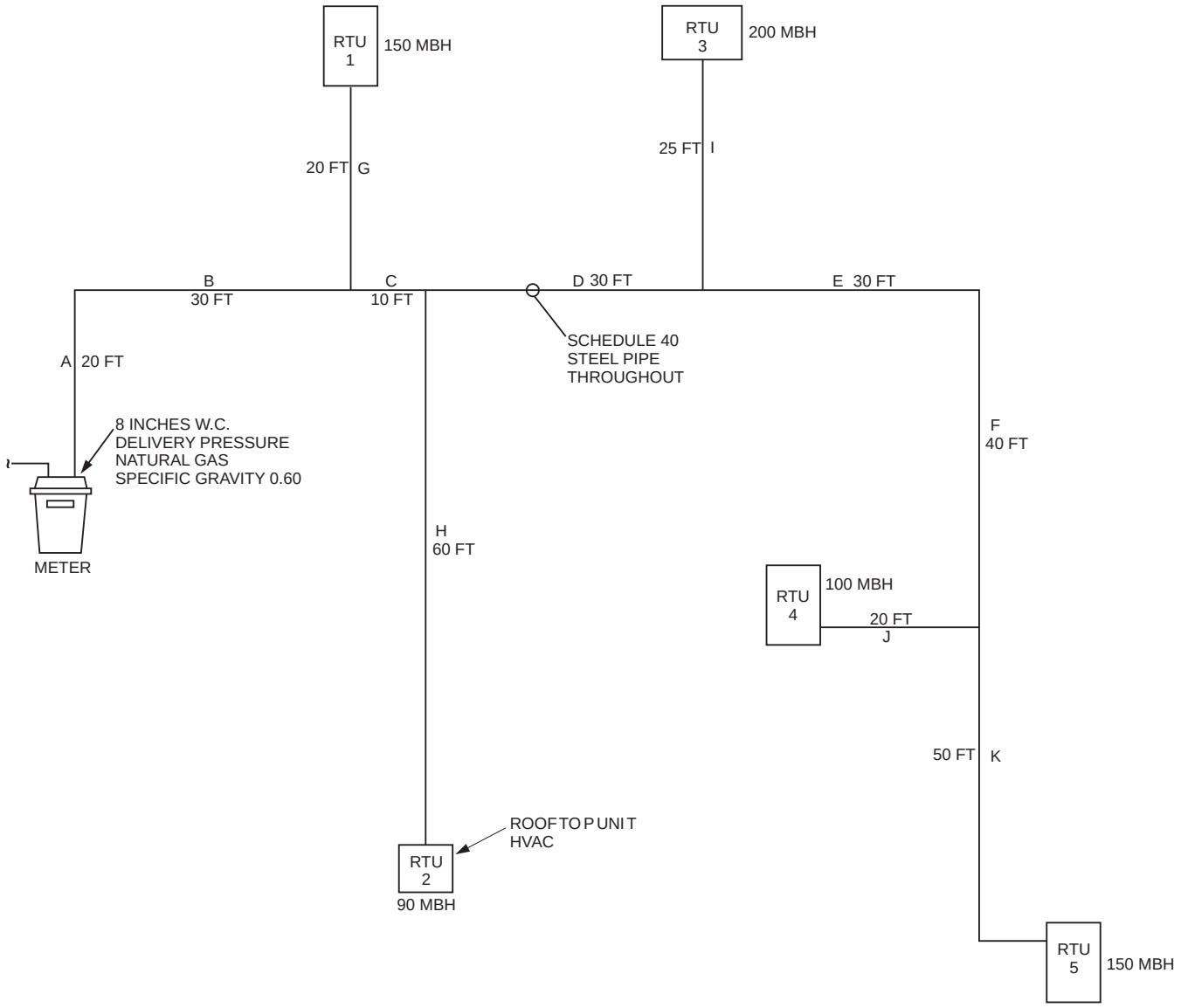

For SI: 1 foot = 304.8 mm, 1 MBH = 293 inches.

Figure G2413.4.1
STEEL PIPE BRANCH SYSTEM FOR ROOFTOP UNITS

INTERNATIONAL CODE COUNCIL®
Copyright © 2015 ICC. ALL RIGHTS RESERVED. Accessed by David Dammon on Jun 21, 2017 12:30:52 PM pursuant to License Agreement with ICC. No further reproduction or distribution authorized. ANY UNAUTHORIZED REPRODUCTION OR DISTRIBUTION IS A VIOLATION OF THE FEDERAL COPYRIGHT ACT AND THE LICENSE AGREEMENT, AND SUBJECT TO CIVIL AND CRIMINAL PENALTIES THEREUNDER.

TABLE G2413.4(1) [402.4(2)]
SCHEDULE 40 METALLIC PIPE

Gas	Natural
Inlet Pressure	Less than 2 psi
Pressure Drop	0.5 in. w.c.
Specific Gravity	0.60

PIPE SIZE (inches)														
Nominal	**1/2**	**3/4**	**1**	**1 1/4**	**1 1/2**	**2**	**2 1/2**	**3**	**4**	**5**	**6**	**8**	**10**	**12**
Actual ID	**0.622**	**0.824**	**1.049**	**1.380**	**1.610**	**2.067**	**2.469**	**3.068**	**4.026**	**5.047**	**6.065**	**7.981**	**10.020**	**11.938**
Length (ft)	**Capacity in Cubic Feet of Gas per Hour**													
10	172	360	678	1,390	2,090	4,020	6,400	11,300	23,100	41,800	67,600	139,000	252,000	399,000
20	118	247	466	957	1,430	2,760	4,400	7,780	15,900	28,700	46,500	95,500	173,000	275,000
30	95	199	374	768	1,150	2,220	3,530	6,250	12,700	23,000	37,300	76,700	139,000	220,000
40	81	170	320	657	985	1,900	3,020	5,350	10,900	19,700	31,900	65,600	119,000	189,000
50	72	151	284	583	873	1,680	2,680	4,740	9,660	17,500	28,300	58,200	106,000	167,000
60	65	137	257	528	791	1,520	2,430	4,290	8,760	15,800	25,600	52,700	95,700	152,000
70	60	126	237	486	728	1,400	2,230	3,950	8,050	14,600	23,600	48,500	88,100	139,000
80	56	117	220	452	677	1,300	2,080	3,670	7,490	13,600	22,000	45,100	81,900	130,000
90	52	110	207	424	635	1,220	1,950	3,450	7,030	12,700	20,600	42,300	76,900	122,000
100	50	104	195	400	600	1,160	1,840	3,260	6,640	12,000	19,500	40,000	72,600	115,000
125	44	92	173	355	532	1,020	1,630	2,890	5,890	10,600	17,200	35,400	64,300	102,000
150	40	83	157	322	482	928	1,480	2,610	5,330	9,650	15,600	32,100	58,300	92,300
175	37	77	144	296	443	854	1,360	2,410	4,910	8,880	14,400	29,500	53,600	84,900
200	34	71	134	275	412	794	1,270	2,240	4,560	8,260	13,400	27,500	49,900	79,000
250	30	63	119	244	366	704	1,120	1,980	4,050	7,320	11,900	24,300	44,200	70,000
300	27	57	108	221	331	638	1,020	1,800	3,670	6,630	10,700	22,100	40,100	63,400
350	25	53	99	203	305	587	935	1,650	3,370	6,100	9,880	20,300	36,900	58,400
400	23	49	92	189	283	546	870	1,540	3,140	5,680	9,190	18,900	34,300	54,300
450	22	46	86	177	266	512	816	1,440	2,940	5,330	8,620	17,700	32,200	50,900
500	21	43	82	168	251	484	771	1,360	2,780	5,030	8,150	16,700	30,400	48,100
550	20	41	78	159	239	459	732	1,290	2,640	4,780	7,740	15,900	28,900	45,700
600	19	39	74	152	228	438	699	1,240	2,520	4,560	7,380	15,200	27,500	43,600
650	18	38	71	145	218	420	669	1,180	2,410	4,360	7,070	14,500	26,400	41,800
700	17	36	68	140	209	403	643	1,140	2,320	4,190	6,790	14,000	25,300	40,100
750	17	35	66	135	202	389	619	1,090	2,230	4,040	6,540	13,400	24,400	38,600
800	16	34	63	130	195	375	598	1,060	2,160	3,900	6,320	13,000	23,600	37,300
850	16	33	61	126	189	363	579	1,020	2,090	3,780	6,110	12,600	22,800	36,100
900	15	32	59	122	183	352	561	992	2,020	3,660	5,930	12,200	22,100	35,000
950	15	31	58	118	178	342	545	963	1,960	3,550	5,760	11,800	21,500	34,000
1,000	14	30	56	115	173	333	530	937	1,910	3,460	5,600	11,500	20,900	33,100
1,100	14	28	53	109	164	316	503	890	1,810	3,280	5,320	10,900	19,800	31,400
1,200	13	27	51	104	156	301	480	849	1,730	3,130	5,070	10,400	18,900	30,000
1,300	12	26	49	100	150	289	460	813	1,660	3,000	4,860	9,980	18,100	28,700
1,400	12	25	47	96	144	277	442	781	1,590	2,880	4,670	9,590	17,400	27,600
1,500	11	24	45	93	139	267	426	752	1,530	2,780	4,500	9,240	16,800	26,600
1,600	11	23	44	89	134	258	411	727	1,480	2,680	4,340	8,920	16,200	25,600
1,700	11	22	42	86	130	250	398	703	1,430	2,590	4,200	8,630	15,700	24,800
1,800	10	22	41	84	126	242	386	682	1,390	2,520	4,070	8,370	15,200	24,100
1,900	10	21	40	81	122	235	375	662	1,350	2,440	3,960	8,130	14,800	23,400
2,000	NA	20	39	79	119	229	364	644	1,310	2,380	3,850	7,910	14,400	22,700

For SI: 1 inch = 25.4 mm, 1 foot = 304.8 mm, 1 pound per square inch = 6.895 kPa, 1-inch water column = 0.2488 kPa, 1 British thermal unit per hour = 0.2931 W, 1 cubic foot per hour = 0.0283 m^3/h, 1 degree = 0.01745 rad.

Notes:

1. NA means a flow of less than 10 cfh.
2. All table entries have been rounded to three significant digits.

INTERNATIONAL CODE COUNCIL®
Copyright © 2015 ICC. ALL RIGHTS RESERVED. Accessed by David Dammon on Jun 21, 2017 12:30:52 PM pursuant to License Agreement with ICC. No further reproduction or distribution authorized. ANY UNAUTHORIZED REPRODUCTION OR DISTRIBUTION IS A VIOLATION OF THE FEDERAL COPYRIGHT ACT AND THE LICENSE AGREEMENT, AND SUBJECT TO CIVIL AND CRIMINAL PENALTIES THEREUNDER.

TABLE G2413.4(2) [402.4(5)]
SCHEDULE 40 METALLIC PIPE

Gas	Natural
Inlet Pressure	2.0 psi
Pressure Drop	1.0 psi
Specific Gravity	0.60

PIPE SIZE (inches)									
Nominal	$^1/_2$	$^3/_4$	1	$1^1/_4$	$1^1/_2$	2	$2^1/_2$	3	4
Actual ID	**0.622**	**0.824**	**1.049**	**1.380**	**1.610**	**2.067**	**2.469**	**3.068**	**4.026**
Length (ft)	**Capacity in Cubic Feet of Gas per Hour**								
10	1,510	3,040	5,560	11,400	17,100	32,900	52,500	92,800	189,000
20	1,070	2,150	3,930	8,070	12,100	23,300	37,100	65,600	134,000
30	869	1,760	3,210	6,590	9,880	19,000	30,300	53,600	109,000
40	753	1,520	2,780	5,710	8,550	16,500	26,300	46,400	94,700
50	673	1,360	2,490	5,110	7,650	14,700	23,500	41,500	84,700
60	615	1,240	2,270	4,660	6,980	13,500	21,400	37,900	77,300
70	569	1,150	2,100	4,320	6,470	12,500	19,900	35,100	71,600
80	532	1,080	1,970	4,040	6,050	11,700	18,600	32,800	67,000
90	502	1,010	1,850	3,810	5,700	11,000	17,500	30,900	63,100
100	462	934	1,710	3,510	5,260	10,100	16,100	28,500	58,200
125	414	836	1,530	3,140	4,700	9,060	14,400	25,500	52,100
150	372	751	1,370	2,820	4,220	8,130	13,000	22,900	46,700
175	344	695	1,270	2,601	3,910	7,530	12,000	21,200	43,300
200	318	642	1,170	2,410	3,610	6,960	11,100	19,600	40,000
250	279	583	1,040	2,140	3,210	6,180	9,850	17,400	35,500
300	253	528	945	1,940	2,910	5,600	8,920	15,800	32,200
350	232	486	869	1,790	2,670	5,150	8,210	14,500	29,600
400	216	452	809	1,660	2,490	4,790	7,640	13,500	27,500
450	203	424	759	1,560	2,330	4,500	7,170	12,700	25,800
500	192	401	717	1,470	2,210	4,250	6,770	12,000	24,400
550	182	381	681	1,400	2,090	4,030	6,430	11,400	23,200
600	174	363	650	1,330	2,000	3,850	6,130	10,800	22,100
650	166	348	622	1,280	1,910	3,680	5,870	10,400	21,200
700	160	334	598	1,230	1,840	3,540	5,640	9,970	20,300
750	154	322	576	1,180	1,770	3,410	5,440	9,610	19,600
800	149	311	556	1,140	1,710	3,290	5,250	9,280	18,900
850	144	301	538	1,100	1,650	3,190	5,080	8,980	18,300
900	139	292	522	1,070	1,600	3,090	4,930	8,710	17,800
950	135	283	507	1,040	1,560	3,000	4,780	8,460	17,200
1,000	132	275	493	1,010	1,520	2,920	4,650	8,220	16,800
1,100	125	262	468	960	1,440	2,770	4,420	7,810	15,900
1,200	119	250	446	917	1,370	2,640	4,220	7,450	15,200
1,300	114	239	427	878	1,320	2,530	4,040	7,140	14,600
1,400	110	230	411	843	1,260	2,430	3,880	6,860	14,000
1,500	106	221	396	812	1,220	2,340	3,740	6,600	13,500
1,600	102	214	382	784	1,180	2,260	3,610	6,380	13,000
1,700	99	207	370	759	1,140	2,190	3,490	6,170	12,600
1,800	96	200	358	736	1,100	2,120	3,390	5,980	12,200
1,900	93	195	348	715	1,070	2,060	3,290	5,810	11,900
2,000	91	189	339	695	1,040	2,010	3,200	5,650	11,500

For SI: 1 inch = 25.4 mm, 1 foot = 304.8 mm, 1 pound per square inch = 6.895 kPa, 1-inch water column = 0.2488 kPa,
1 British thermal unit per hour = 0.2931 W, 1 cubic foot per hour = 0.0283 m^3/h, 1 degree = 0.01745 rad.

Note: All table entries have been rounded to three significant digits.

INTERNATIONAL CODE COUNCIL®
Copyright © 2015 ICC. ALL RIGHTS RESERVED. Accessed by David Dammon on Jun 21, 2017 12:30:52 PM pursuant to License Agreement with ICC. No further reproduction or distribution authorized. ANY UNAUTHORIZED REPRODUCTION OR DISTRIBUTION IS A VIOLATION OF THE FEDERAL COPYRIGHT ACT AND THE LICENSE AGREEMENT, AND SUBJECT TO CIVIL AND CRIMINAL PENALTIES THEREUNDER.

TABLE G2413.4(3) [402.4(9)]
SEMIRIGID COPPER TUBING

Gas	Natural
Inlet Pressure	Less than 2 psi
Pressure Drop	0.5 in. w.c.
Specific Gravity	0.60

TUBE SIZE (inches)										
Nominal	**K & L**	**1/4**	**3/8**	**1/2**	**5/8**	**3/4**	**1**	**1 1/4**	**1 1/2**	**2**
	ACR	**3/8**	**1/2**	**5/8**	**3/4**	**7/8**	**1 1/8**	**1 3/8**	**—**	**—**
Outside		**0.375**	**0.500**	**0.625**	**0.750**	**0.875**	**1.125**	**1.375**	**1.625**	**2.125**
Inside		**0.305**	**0.402**	**0.527**	**0.652**	**0.745**	**0.995**	**1.245**	**1.481**	**1.959**
Length (ft)		**Capacity in Cubic Feet of Gas per Hour**								
10		27	55	111	195	276	590	1,060	1,680	3,490
20		18	38	77	134	190	406	730	1,150	2,400
30		15	30	61	107	152	326	586	925	1,930
40		13	26	53	92	131	279	502	791	1,650
50		11	23	47	82	116	247	445	701	1,460
60		10	21	42	74	105	224	403	635	1,320
70		NA	19	39	68	96	206	371	585	1,220
80		NA	18	36	63	90	192	345	544	1,130
90		NA	17	34	59	84	180	324	510	1,060
100		NA	16	32	56	79	170	306	482	1,000
125		NA	14	28	50	70	151	271	427	890
150		NA	13	26	45	64	136	245	387	806
175		NA	12	24	41	59	125	226	356	742
200		NA	11	22	39	55	117	210	331	690
250		NA	NA	20	34	48	103	186	294	612
300		NA	NA	18	31	44	94	169	266	554
350		NA	NA	16	28	40	86	155	245	510
400		NA	NA	15	26	38	80	144	228	474
450		NA	NA	14	25	35	75	135	214	445
500		NA	NA	13	23	33	71	128	202	420
550		NA	NA	13	22	32	68	122	192	399
600		NA	NA	12	21	30	64	116	183	381
650		NA	NA	12	20	29	62	111	175	365
700		NA	NA	11	20	28	59	107	168	350
750		NA	NA	11	19	27	57	103	162	338
800		NA	NA	10	18	26	55	99	156	326
850		NA	NA	10	18	25	53	96	151	315
900		NA	NA	NA	17	24	52	93	147	306
950		NA	NA	NA	17	24	50	90	143	297
1,000		NA	NA	NA	16	23	49	88	139	289
1,100		NA	NA	NA	15	22	46	84	132	274
1,200		NA	NA	NA	15	21	44	80	126	262
1,300		NA	NA	NA	14	20	42	76	120	251
1,400		NA	NA	NA	13	19	41	73	116	241
1,500		NA	NA	NA	13	18	39	71	111	232
1,600		NA	NA	NA	13	18	38	68	108	224
1,700		NA	NA	NA	12	17	37	66	104	217
1,800		NA	NA	NA	12	17	36	64	101	210
1,900		NA	NA	NA	11	16	35	62	98	204
2,000		NA	NA	NA	11	16	34	60	95	199

For SI: 1 inch = 25.4 mm, 1 foot = 304.8 mm, 1 pound per square inch = 6.895 kPa, 1-inch water column = 0.2488 kPa, 1 British thermal unit per hour = 0.2931 W, 1 cubic foot per hour = 0.0283 m^3/h, 1 degree = 0.01745 rad.

Notes:

1. Table capacities are based on Type K copper tubing inside diameter (shown), which has the smallest inside diameter of the copper tubing products.
2. NA means a flow of less than 10 cfh.
3. All table entries have been rounded to three significant digits.

INTERNATIONAL CODE COUNCIL®
Copyright © 2015 ICC. ALL RIGHTS RESERVED. Accessed by David Dammon on Jun 21, 2017 12:30:52 PM pursuant to License Agreement with ICC. No further reproduction or distribution authorized. ANY UNAUTHORIZED REPRODUCTION OR DISTRIBUTION IS A VIOLATION OF THE FEDERAL COPYRIGHT ACT AND THE LICENSE AGREEMENT, AND SUBJECT TO CIVIL AND CRIMINAL PENALTIES THEREUNDER.

TABLE G2413.4(4) [402.4(12)]
SEMIRIGID COPPER TUBING

Gas	Natural
Inlet Pressure	2.0 psi
Pressure Drop	1.0 psi
Specific Gravity	0.60

TUBE SIZE (inches)										
Nominal	**K & L**	$^1/_4$	$^3/_8$	$^1/_2$	$^5/_8$	$^3/_4$	**1**	$1^1/_4$	$1^1/_2$	**2**
	ACR	$^3/_8$	$^1/_2$	$^5/_8$	$^3/_4$	$^7/_8$	$1^1/_8$	$1^3/_8$	—	—
Outside		**0.375**	**0.500**	**0.625**	**0.750**	**0.875**	**1.125**	**1.375**	**1.625**	**2.125**
Inside		**0.305**	**0.402**	**0.527**	**0.652**	**0.745**	**0.995**	**1.245**	**1.481**	**1.959**
Length (ft)		**Capacity in Cubic Feet of Gas per Hour**								
10		245	506	1,030	1,800	2,550	5,450	9,820	15,500	32,200
20		169	348	708	1,240	1,760	3,750	6,750	10,600	22,200
30		135	279	568	993	1,410	3,010	5,420	8,550	17,800
40		116	239	486	850	1,210	2,580	4,640	7,310	15,200
50		103	212	431	754	1,070	2,280	4,110	6,480	13,500
60		93	192	391	683	969	2,070	3,730	5,870	12,200
70		86	177	359	628	891	1,900	3,430	5,400	11,300
80		80	164	334	584	829	1,770	3,190	5,030	10,500
90		75	154	314	548	778	1,660	2,990	4,720	9,820
100		71	146	296	518	735	1,570	2,830	4,450	9,280
125		63	129	263	459	651	1,390	2,500	3,950	8,220
150		57	117	238	416	590	1,260	2,270	3,580	7,450
175		52	108	219	383	543	1,160	2,090	3,290	6,850
200		49	100	204	356	505	1,080	1,940	3,060	6,380
250		43	89	181	315	448	956	1,720	2,710	5,650
300		39	80	164	286	406	866	1,560	2,460	5,120
350		36	74	150	263	373	797	1,430	2,260	4,710
400		33	69	140	245	347	741	1,330	2,100	4,380
450		31	65	131	230	326	696	1,250	1,970	4,110
500		30	61	124	217	308	657	1,180	1,870	3,880
550		28	58	118	206	292	624	1,120	1,770	3,690
600		27	55	112	196	279	595	1,070	1,690	3,520
650		26	53	108	188	267	570	1,030	1,620	3,370
700		25	51	103	181	256	548	986	1,550	3,240
750		24	49	100	174	247	528	950	1,500	3,120
800		23	47	96	168	239	510	917	1,450	3,010
850		22	46	93	163	231	493	888	1,400	2,920
900		22	44	90	158	224	478	861	1,360	2,830
950		21	43	88	153	217	464	836	1,320	2,740
1,000		20	42	85	149	211	452	813	1,280	2,670
1,100		19	40	81	142	201	429	772	1,220	2,540
1,200		18	38	77	135	192	409	737	1,160	2,420
1,300		18	36	74	129	183	392	705	1,110	2,320
1,400		17	35	71	124	176	376	678	1,070	2,230
1,500		16	34	68	120	170	363	653	1,030	2,140
1,600		16	33	66	116	164	350	630	994	2,070
1,700		15	31	64	112	159	339	610	962	2,000
1,800		15	30	62	108	154	329	592	933	1,940
1,900		14	30	60	105	149	319	575	906	1,890
2,000		14	29	59	102	145	310	559	881	1,830

For SI: 1 inch = 25.4 mm, 1 foot = 304.8 mm, 1 pound per square inch = 6.895 kPa, 1-inch water column = 0.2488 kPa, 1 British thermal unit per hour = 0.2931 W, 1 cubic foot per hour = 0.0283 m^3/h, 1 degree = 0.01745 rad.

Notes:

1. Table capacities are based on Type K copper tubing inside diameter (shown), which has the smallest inside diameter of the copper tubing products.
2. All table entries have been rounded to three significant digits.

INTERNATIONAL CODE COUNCIL®
Copyright © 2015 ICC. ALL RIGHTS RESERVED. Accessed by David Dammon on Jun 21, 2017 12:30:52 PM pursuant to License Agreement with ICC. No further reproduction or distribution authorized. ANY UNAUTHORIZED REPRODUCTION OR DISTRIBUTION IS A VIOLATION OF THE FEDERAL COPYRIGHT ACT AND THE LICENSE AGREEMENT, AND SUBJECT TO CIVIL AND CRIMINAL PENALTIES THEREUNDER.

TABLE G2413.4(5) [402.4(15)]
CORRUGATED STAINLESS STEEL TUBING (CSST)

Gas	Natural
Inlet Pressure	Less than 2 psi
Pressure Drop	0.5 in. w.c.
Specific Gravity	0.60

TUBE SIZE (EHD)														
Flow Designation	**13**	**15**	**18**	**19**	**23**	**25**	**30**	**31**	**37**	**39**	**46**	**48**	**60**	**62**
Length (ft)	**Capacity in Cubic Feet of Gas per Hour**													
5	46	63	115	134	225	270	471	546	895	1,037	1,790	2,070	3,660	4,140
10	32	44	82	95	161	192	330	383	639	746	1,260	1,470	2,600	2,930
15	25	35	66	77	132	157	267	310	524	615	1,030	1,200	2,140	2,400
20	22	31	58	67	116	137	231	269	456	536	888	1,050	1,850	2,080
25	19	27	52	60	104	122	206	240	409	482	793	936	1,660	1,860
30	18	25	47	55	96	112	188	218	374	442	723	856	1,520	1,700
40	15	21	41	47	83	97	162	188	325	386	625	742	1,320	1,470
50	13	19	37	42	75	87	144	168	292	347	559	665	1,180	1,320
60	12	17	34	38	68	80	131	153	267	318	509	608	1,080	1,200
70	11	16	31	36	63	74	121	141	248	295	471	563	1,000	1,110
80	10	15	29	33	60	69	113	132	232	277	440	527	940	1,040
90	10	14	28	32	57	65	107	125	219	262	415	498	887	983
100	9	13	26	30	54	62	101	118	208	249	393	472	843	933
150	7	10	20	23	42	48	78	91	171	205	320	387	691	762
200	6	9	18	21	38	44	71	82	148	179	277	336	600	661
250	5	8	16	19	34	39	63	74	133	161	247	301	538	591
300	5	7	15	17	32	36	57	67	95	148	226	275	492	540

For SI: 1 inch = 25.4 mm, 1 foot = 304.8 mm, 1 pound per square inch = 6.895 kPa, 1-inch water column = 0.2488 kPa, 1 British thermal unit per hour = 0.2931 W, 1 cubic foot per hour = 0.0283 m^3/h, 1 degree = 0.01745 rad.

Notes:

1. Table includes losses for four 90-degree bends and two end fittings. Tubing runs with larger numbers of bends or fittings shall be increased by an equivalent length of tubing to the following equation: $L = 1.3n$, where L is additional length (feet) of tubing and n is the number of additional fittings or bends.
2. EHD—Equivalent Hydraulic Diameter, which is a measure of the relative hydraulic efficiency between different tubing sizes. The greater the value of EHD, the greater the gas capacity of the tubing.
3. All table entries have been rounded to three significant digits.

INTERNATIONAL CODE COUNCIL®
Copyright © 2015 ICC. ALL RIGHTS RESERVED. Accessed by David Dammon on Jun 21, 2017 12:30:52 PM pursuant to License Agreement with ICC. No further reproduction or distribution authorized. ANY UNAUTHORIZED REPRODUCTION OR DISTRIBUTION IS A VIOLATION OF THE FEDERAL COPYRIGHT ACT AND THE LICENSE AGREEMENT, AND SUBJECT TO CIVIL AND CRIMINAL PENALTIES THEREUNDER.

TABLE G2413.4(6) [402.4(18)]
CORRUGATED STAINLESS STEEL TUBING (CSST)

Gas	Natural
Inlet Pressure	2.0 psi
Pressure Drop	1.0 psi
Specific Gravity	0.60

TUBE SIZE (EHD)														
Flow Designation	**13**	**15**	**18**	**19**	**23**	**25**	**30**	**31**	**37**	**39**	**46**	**48**	**60**	**62**
Length (ft)	**Capacity in Cubic Feet of Gas Per Hour**													
10	270	353	587	700	1,100	1,370	2,590	2,990	4,510	5,037	9,600	10,700	18,600	21,600
25	166	220	374	444	709	876	1,620	1,870	2,890	3,258	6,040	6,780	11,900	13,700
30	151	200	342	405	650	801	1,480	1,700	2,640	2,987	5,510	6,200	10,900	12,500
40	129	172	297	351	567	696	1,270	1,470	2,300	2,605	4,760	5,380	9,440	10,900
50	115	154	266	314	510	624	1,140	1,310	2,060	2,343	4,260	4,820	8,470	9,720
75	93	124	218	257	420	512	922	1,070	1,690	1,932	3,470	3,950	6,940	7,940
80	89	120	211	249	407	496	892	1,030	1,640	1,874	3,360	3,820	6,730	7,690
100	79	107	189	222	366	445	795	920	1,470	1,685	3,000	3,420	6,030	6,880
150	64	87	155	182	302	364	646	748	1,210	1,389	2,440	2,800	4,940	5,620
200	55	75	135	157	263	317	557	645	1,050	1,212	2,110	2,430	4,290	4,870
250	49	67	121	141	236	284	497	576	941	1,090	1,890	2,180	3,850	4,360
300	44	61	110	129	217	260	453	525	862	999	1,720	1,990	3,520	3,980
400	38	52	96	111	189	225	390	453	749	871	1,490	1,730	3,060	3,450
500	34	46	86	100	170	202	348	404	552	783	1,330	1,550	2,740	3,090

For SI: 1 inch = 25.4 mm, 1 foot = 304.8 mm, 1 pound per square inch = 6.895 kPa, 1-inch water column = 0.2488 kPa, 1 British thermal unit per hour = 0.2931 W, 1 cubic foot per hour = 0.0283 m^3/h, 1 degree = 0.01745 rad.

Notes:

1. Table does not include effect of pressure drop across the line regulator. Where regulator loss exceeds $^3/_4$ psi, DO NOT USE THIS TABLE. Consult with the regulator manufacturer for pressure drops and capacity factors. Pressure drops across a regulator can vary with flow rate.
2. CAUTION: Capacities shown in the table might exceed maximum capacity for a selected regulator. Consult with the regulator or tubing manufacturer for guidance.
3. Table includes losses for four 90-degree bends and two end fittings. Tubing runs with larger numbers of bends or fittings shall be increased by an equivalent length of tubing to the following equation: $L = 1.3n$ where L is additional length (feet) of tubing and n is the number of additional fittings or bends.
4. EHD—Equivalent Hydraulic Diameter, which is a measure of the relative hydraulic efficiency between different tubing sizes. The greater the value of EHD, the greater the gas capacity of the tubing.
5. All table entries have been rounded to three significant digits.

INTERNATIONAL CODE COUNCIL®
Copyright © 2015 ICC. ALL RIGHTS RESERVED. Accessed by David Dammon on Jun 21, 2017 12:30:52 PM pursuant to License Agreement with ICC. No further reproduction or distribution authorized. ANY UNAUTHORIZED REPRODUCTION OR DISTRIBUTION IS A VIOLATION OF THE FEDERAL COPYRIGHT ACT AND THE LICENSE AGREEMENT, AND SUBJECT TO CIVIL AND CRIMINAL PENALTIES THEREUNDER.

TABLE G2413.4(7) [402.4(21)]
POLYETHYLENE PLASTIC PIPE

Gas	Natural
Inlet Pressure	Less than 2 psi
Pressure Drop	0.5 in. w.c.
Specific Gravity	0.60

PIPE SIZE (inches)						
Nominal OD	**$^1/_2$**	**$^3/_4$**	**1**	**$1^1/_4$**	**$1^1/_2$**	**2**
Designation	**SDR 9**	**SDR 11**	**SDR 11**	**SDR 10**	**SDR 11**	**SDR 11**
Actual ID	**0.660**	**0.860**	**1.077**	**1.328**	**1.554**	**1.943**
Length (ft)	**Capacity in Cubic Feet of Gas per Hour**					
10	201	403	726	1,260	1,900	3,410
20	138	277	499	865	1,310	2,350
30	111	222	401	695	1,050	1,880
40	95	190	343	594	898	1,610
50	84	169	304	527	796	1,430
60	76	153	276	477	721	1,300
70	70	140	254	439	663	1,190
80	65	131	236	409	617	1,110
90	61	123	221	383	579	1,040
100	58	116	209	362	547	983
125	51	103	185	321	485	871
150	46	93	168	291	439	789
175	43	86	154	268	404	726
200	40	80	144	249	376	675
250	35	71	127	221	333	598
300	32	64	115	200	302	542
350	29	59	106	184	278	499
400	27	55	99	171	258	464
450	26	51	93	160	242	435
500	24	48	88	152	229	411

For SI: 1 inch = 25.4 mm, 1 foot = 304.8 mm, 1 pound per square inch = 6.895 kPa, 1-inch water column = 0.2488 kPa, 1 British thermal unit per hour = 0.2931 W, 1 cubic foot per hour = 0.0283 m^3/h, 1 degree = 0.01745 rad.

Note: All table entries have been rounded to three significant digits.

INTERNATIONAL CODE COUNCIL®
Copyright © 2015 ICC. ALL RIGHTS RESERVED. Accessed by David Dammon on Jun 21, 2017 12:30:52 PM pursuant to License Agreement with ICC. No further reproduction or distribution authorized. ANY UNAUTHORIZED REPRODUCTION OR DISTRIBUTION IS A VIOLATION OF THE FEDERAL COPYRIGHT ACT AND THE LICENSE AGREEMENT, AND SUBJECT TO CIVIL AND CRIMINAL PENALTIES THEREUNDER.

TABLE G2413.4(8) [402.4(22)]
POLYETHYLENE PLASTIC PIPE

Gas	Natural
Inlet Pressure	2.0 psi
Pressure Drop	1.0 psi
Specific Gravity	0.60

PIPE SIZE (inches)						
Nominal OD	$^1/_2$	$^3/_4$	1	$1^1/_4$	$1^1/_2$	2
Designation	**SDR 9**	**SDR 11**	**SDR 11**	**SDR 10**	**SDR 11**	**SDR 11**
Actual ID	**0.660**	**0.860**	**1.077**	**1.328**	**1.554**	**1.943**
Length (ft)	**Capacity in Cubic Feet of Gas per Hour**					
10	1,860	3,720	6,710	11,600	17,600	31,600
20	1,280	2,560	4,610	7,990	12,100	21,700
30	1,030	2,050	3,710	6,420	9,690	17,400
40	878	1,760	3,170	5,490	8,300	14,900
50	778	1,560	2,810	4,870	7,350	13,200
60	705	1,410	2,550	4,410	6,660	12,000
70	649	1,300	2,340	4,060	6,130	11,000
80	603	1,210	2,180	3,780	5,700	10,200
90	566	1,130	2,050	3,540	5,350	9,610
100	535	1,070	1,930	3,350	5,050	9,080
125	474	949	1,710	2,970	4,480	8,050
150	429	860	1,550	2,690	4,060	7,290
175	395	791	1,430	2,470	3,730	6,710
200	368	736	1,330	2,300	3,470	6,240
250	326	652	1,180	2,040	3,080	5,530
300	295	591	1,070	1,850	2,790	5,010
350	272	544	981	1,700	2,570	4,610
400	253	506	913	1,580	2,390	4,290
450	237	475	856	1,480	2,240	4,020
500	224	448	809	1,400	2,120	3,800
550	213	426	768	1,330	2,010	3,610
600	203	406	733	1,270	1,920	3,440
650	194	389	702	1,220	1,840	3,300
700	187	374	674	1,170	1,760	3,170
750	180	360	649	1,130	1,700	3,050
800	174	348	627	1,090	1,640	2,950
850	168	336	607	1,050	1,590	2,850
900	163	326	588	1,020	1,540	2,770
950	158	317	572	990	1,500	2,690
1,000	154	308	556	963	1,450	2,610
1,100	146	293	528	915	1,380	2,480
1,200	139	279	504	873	1,320	2,370
1,300	134	267	482	836	1,260	2,270
1,400	128	257	463	803	1,210	2,180
1,500	124	247	446	773	1,170	2,100
1,600	119	239	431	747	1,130	2,030
1,700	115	231	417	723	1,090	1,960
1,800	112	224	404	701	1,060	1,900
1,900	109	218	393	680	1,030	1,850
2,000	106	212	382	662	1,000	1,800

For SI: 1 inch = 25.4 mm, 1 foot = 304.8 mm, 1 pound per square inch = 6.895 kPa, 1-inch water column = 0.2488 kPa, 1 British thermal unit per hour = 0.2931 W, 1 cubic foot per hour = 0.0283 m^3/h, 1 degree = 0.01745 rad.

Note: All table entries have been rounded to three significant digits.

INTERNATIONAL CODE COUNCIL®
Copyright © 2015 ICC. ALL RIGHTS RESERVED. Accessed by David Dammon on Jun 21, 2017 12:30:52 PM pursuant to License Agreement with ICC. No further reproduction or distribution authorized. ANY UNAUTHORIZED REPRODUCTION OR DISTRIBUTION IS A VIOLATION OF THE FEDERAL COPYRIGHT ACT AND THE LICENSE AGREEMENT, AND SUBJECT TO CIVIL AND CRIMINAL PENALTIES THEREUNDER.

TABLE G2413.4(9) [402.4(25)]
SCHEDULE 40 METALLIC PIPE

Gas	Undiluted Propane
Inlet Pressure	10.0 psi
Pressure Drop	1.0 psi
Specific Gravity	1.50

INTENDED USE	**Pipe sizing between first stage (high-pressure regulator) and second stage (low-pressure regulator).**								
	PIPE SIZE (inches)								
Nominal	**1/2**	**3/4**	**1**	**1 1/4**	**1 1/2**	**2**	**2 1/2**	**3**	**4**
Actual ID	**0.622**	**0.824**	**1.049**	**1.380**	**1.610**	**2.067**	**2.469**	**3.068**	**4.026**
Length (ft)	**Capacity in Thousands of Btu per Hour**								
10	3,320	6,950	13,100	26,900	40,300	77,600	124,000	219,000	446,000
20	2,280	4,780	9,000	18,500	27,700	53,300	85,000	150,000	306,000
30	1,830	3,840	7,220	14,800	22,200	42,800	68,200	121,000	246,000
40	1,570	3,280	6,180	12,700	19,000	36,600	58,400	103,000	211,000
50	1,390	2,910	5,480	11,300	16,900	32,500	51,700	91,500	187,000
60	1,260	2,640	4,970	10,200	15,300	29,400	46,900	82,900	169,000
70	1,160	2,430	4,570	9,380	14,100	27,100	43,100	76,300	156,000
80	1,080	2,260	4,250	8,730	13,100	25,200	40,100	70,900	145,000
90	1,010	2,120	3,990	8,190	12,300	23,600	37,700	66,600	136,000
100	956	2,000	3,770	7,730	11,600	22,300	35,600	62,900	128,000
125	848	1,770	3,340	6,850	10,300	19,800	31,500	55,700	114,000
150	768	1,610	3,020	6,210	9,300	17,900	28,600	50,500	103,000
175	706	1,480	2,780	5,710	8,560	16,500	26,300	46,500	94,700
200	657	1,370	2,590	5,320	7,960	15,300	24,400	43,200	88,100
250	582	1,220	2,290	4,710	7,060	13,600	21,700	38,300	78,100
300	528	1,100	2,080	4,270	6,400	12,300	19,600	34,700	70,800
350	486	1,020	1,910	3,930	5,880	11,300	18,100	31,900	65,100
400	452	945	1,780	3,650	5,470	10,500	16,800	29,700	60,600
450	424	886	1,670	3,430	5,140	9,890	15,800	27,900	56,800
500	400	837	1,580	3,240	4,850	9,340	14,900	26,300	53,700
550	380	795	1,500	3,070	4,610	8,870	14,100	25,000	51,000
600	363	759	1,430	2,930	4,400	8,460	13,500	23,900	48,600
650	347	726	1,370	2,810	4,210	8,110	12,900	22,800	46,600
700	334	698	1,310	2,700	4,040	7,790	12,400	21,900	44,800
750	321	672	1,270	2,600	3,900	7,500	12,000	21,100	43,100
800	310	649	1,220	2,510	3,760	7,240	11,500	20,400	41,600
850	300	628	1,180	2,430	3,640	7,010	11,200	19,800	40,300
900	291	609	1,150	2,360	3,530	6,800	10,800	19,200	39,100
950	283	592	1,110	2,290	3,430	6,600	10,500	18,600	37,900
1,000	275	575	1,080	2,230	3,330	6,420	10,200	18,100	36,900
1,100	261	546	1,030	2,110	3,170	6,100	9,720	17,200	35,000
1,200	249	521	982	2,020	3,020	5,820	9,270	16,400	33,400
1,300	239	499	940	1,930	2,890	5,570	8,880	15,700	32,000
1,400	229	480	903	1,850	2,780	5,350	8,530	15,100	30,800
1,500	221	462	870	1,790	2,680	5,160	8,220	14,500	29,600
1,600	213	446	840	1,730	2,590	4,980	7,940	14,000	28,600
1,700	206	432	813	1,670	2,500	4,820	7,680	13,600	27,700
1,800	200	419	789	1,620	2,430	4,670	7,450	13,200	26,900
1,900	194	407	766	1,570	2,360	4,540	7,230	12,800	26,100
2,000	189	395	745	1,530	2,290	4,410	7,030	12,400	25,400

For SI: 1 inch = 25.4 mm, 1 foot = 304.8 mm, 1 pound per square inch = 6.895 kPa, 1-inch water column = 0.2488 kPa, 1 British thermal unit per hour = 0.2931 W, 1 cubic foot per hour = 0.0283 m^3/h, 1 degree = 0.01745 rad.

Note: All table entries have been rounded to three significant digits.

INTERNATIONAL CODE COUNCIL®
Copyright © 2015 ICC. ALL RIGHTS RESERVED. Accessed by David Dammon on Jun 21, 2017 12:30:52 PM pursuant to License Agreement with ICC. No further reproduction or distribution authorized. ANY UNAUTHORIZED REPRODUCTION OR DISTRIBUTION IS A VIOLATION OF THE FEDERAL COPYRIGHT ACT AND THE LICENSE AGREEMENT, AND SUBJECT TO CIVIL AND CRIMINAL PENALTIES THEREUNDER.

TABLE G2413.4(10) [402.4(26)]
SCHEDULE 40 METALLIC PIPE

Gas	Undiluted Propane
Inlet Pressure	10.0 psi
Pressure Drop	3.0 psi
Specific Gravity	1.50

INTENDED USE	**Pipe sizing between first stage (high-pressure regulator) and second stage (low-pressure regulator).**								
	PIPE SIZE (inches)								
Nominal	**1/2**	**3/4**	**1**	**1 1/4**	**1 1/2**	**2**	**2 1/2**	**3**	**4**
Actual ID	**0.622**	**0.824**	**1.049**	**1.380**	**1.610**	**2.067**	**2.469**	**3.068**	**4.026**
Length (ft)	**Capacity in Thousands of Btu per Hour**								
10	5,890	12,300	23,200	47,600	71,300	137,000	219,000	387,000	789,000
20	4,050	8,460	15,900	32,700	49,000	94,400	150,000	266,000	543,000
30	3,250	6,790	12,800	26,300	39,400	75,800	121,000	214,000	436,000
40	2,780	5,810	11,000	22,500	33,700	64,900	103,000	183,000	373,000
50	2,460	5,150	9,710	19,900	29,900	57,500	91,600	162,000	330,000
60	2,230	4,670	8,790	18,100	27,100	52,100	83,000	147,000	299,000
70	2,050	4,300	8,090	16,600	24,900	47,900	76,400	135,000	275,000
80	1,910	4,000	7,530	15,500	23,200	44,600	71,100	126,000	256,000
90	1,790	3,750	7,060	14,500	21,700	41,800	66,700	118,000	240,000
100	1,690	3,540	6,670	13,700	20,500	39,500	63,000	111,000	227,000
125	1,500	3,140	5,910	12,100	18,200	35,000	55,800	98,700	201,000
150	1,360	2,840	5,360	11,000	16,500	31,700	50,600	89,400	182,000
175	1,250	2,620	4,930	10,100	15,200	29,200	46,500	82,300	167,800
200	1,160	2,430	4,580	9,410	14,100	27,200	43,300	76,500	156,100
250	1,030	2,160	4,060	8,340	12,500	24,100	38,400	67,800	138,400
300	935	1,950	3,680	7,560	11,300	21,800	34,800	61,500	125,400
350	860	1,800	3,390	6,950	10,400	20,100	32,000	56,500	115,300
400	800	1,670	3,150	6,470	9,690	18,700	29,800	52,600	107,300
450	751	1,570	2,960	6,070	9,090	17,500	27,900	49,400	100,700
500	709	1,480	2,790	5,730	8,590	16,500	26,400	46,600	95,100
550	673	1,410	2,650	5,450	8,160	15,700	25,000	44,300	90,300
600	642	1,340	2,530	5,200	7,780	15,000	23,900	42,200	86,200
650	615	1,290	2,420	4,980	7,450	14,400	22,900	40,500	82,500
700	591	1,240	2,330	4,780	7,160	13,800	22,000	38,900	79,300
750	569	1,190	2,240	4,600	6,900	13,300	21,200	37,400	76,400
800	550	1,150	2,170	4,450	6,660	12,800	20,500	36,200	73,700
850	532	1,110	2,100	4,300	6,450	12,400	19,800	35,000	71,400
900	516	1,080	2,030	4,170	6,250	12,000	19,200	33,900	69,200
950	501	1,050	1,970	4,050	6,070	11,700	18,600	32,900	67,200
1,000	487	1,020	1,920	3,940	5,900	11,400	18,100	32,000	65,400
1,100	463	968	1,820	3,740	5,610	10,800	17,200	30,400	62,100
1,200	442	923	1,740	3,570	5,350	10,300	16,400	29,000	59,200
1,300	423	884	1,670	3,420	5,120	9,870	15,700	27,800	56,700
1,400	406	849	1,600	3,280	4,920	9,480	15,100	26,700	54,500
1,500	391	818	1,540	3,160	4,740	9,130	14,600	25,700	52,500
1,600	378	790	1,490	3,060	4,580	8,820	14,100	24,800	50,700
1,700	366	765	1,440	2,960	4,430	8,530	13,600	24,000	49,000
1,800	355	741	1,400	2,870	4,300	8,270	13,200	23,300	47,600
1,900	344	720	1,360	2,780	4,170	8,040	12,800	22,600	46,200
2,000	335	700	1,320	2,710	4,060	7,820	12,500	22,000	44,900

For SI: 1 inch = 25.4 mm, 1 foot = 304.8 mm, 1 pound per square inch = 6.895 kPa, 1-inch water column = 0.2488 kPa, 1 British thermal unit per hour = 0.2931 W, 1 cubic foot per hour = 0.0283 m^3/h, 1 degree = 0.01745 rad.

Note: All table entries have been rounded to three significant digits.

INTERNATIONAL CODE COUNCIL®
Copyright © 2015 ICC. ALL RIGHTS RESERVED. Accessed by David Dammon on Jun 21, 2017 12:30:52 PM pursuant to License Agreement with ICC. No further reproduction or distribution authorized. ANY UNAUTHORIZED REPRODUCTION OR DISTRIBUTION IS A VIOLATION OF THE FEDERAL COPYRIGHT ACT AND THE LICENSE AGREEMENT, AND SUBJECT TO CIVIL AND CRIMINAL PENALTIES THEREUNDER.

TABLE G2413.4(11) [402.4(27)]
SCHEDULE 40 METALLIC PIPE

Gas	Undiluted Propane
Inlet Pressure	2.0 psi
Pressure Drop	1.0 psi
Specific Gravity	1.50

INTENDED USE	**Pipe sizing between 2 psig service and line pressure regulator.**								
PIPE SIZE (inches)									
Nominal	**1/2**	**3/4**	**1**	**1 1/4**	**1 1/2**	**2**	**2 1/2**	**3**	**4**
Actual ID	**0.622**	**0.824**	**1.049**	**1.380**	**1.610**	**2.067**	**2.469**	**3.068**	**4.026**
Length (ft)	**Capacity in Thousands of Btu per Hour**								
10	2,680	5,590	10,500	21,600	32,400	62,400	99,500	176,000	359,000
20	1,840	3,850	7,240	14,900	22,300	42,900	68,400	121,000	247,000
30	1,480	3,090	5,820	11,900	17,900	34,500	54,900	97,100	198,000
40	1,260	2,640	4,980	10,200	15,300	29,500	47,000	83,100	170,000
50	1,120	2,340	4,410	9,060	13,600	26,100	41,700	73,700	150,000
60	1,010	2,120	4,000	8,210	12,300	23,700	37,700	66,700	136,000
70	934	1,950	3,680	7,550	11,300	21,800	34,700	61,400	125,000
80	869	1,820	3,420	7,020	10,500	20,300	32,300	57,100	116,000
90	815	1,700	3,210	6,590	9,880	19,000	30,300	53,600	109,000
100	770	1,610	3,030	6,230	9,330	18,000	28,600	50,600	103,000
125	682	1,430	2,690	5,520	8,270	15,900	25,400	44,900	91,500
150	618	1,290	2,440	5,000	7,490	14,400	23,000	40,700	82,900
175	569	1,190	2,240	4,600	6,890	13,300	21,200	37,400	76,300
200	529	1,110	2,080	4,280	6,410	12,300	19,700	34,800	71,000
250	469	981	1,850	3,790	5,680	10,900	17,400	30,800	62,900
300	425	889	1,670	3,440	5,150	9,920	15,800	27,900	57,000
350	391	817	1,540	3,160	4,740	9,120	14,500	25,700	52,400
400	364	760	1,430	2,940	4,410	8,490	13,500	23,900	48,800
450	341	714	1,340	2,760	4,130	7,960	12,700	22,400	45,800
500	322	674	1,270	2,610	3,910	7,520	12,000	21,200	43,200
550	306	640	1,210	2,480	3,710	7,140	11,400	20,100	41,100
600	292	611	1,150	2,360	3,540	6,820	10,900	19,200	39,200
650	280	585	1,100	2,260	3,390	6,530	10,400	18,400	37,500
700	269	562	1,060	2,170	3,260	6,270	9,990	17,700	36,000
750	259	541	1,020	2,090	3,140	6,040	9,630	17,000	34,700
800	250	523	985	2,020	3,030	5,830	9,300	16,400	33,500
850	242	506	953	1,960	2,930	5,640	9,000	15,900	32,400
900	235	490	924	1,900	2,840	5,470	8,720	15,400	31,500
950	228	476	897	1,840	2,760	5,310	8,470	15,000	30,500
1,000	222	463	873	1,790	2,680	5,170	8,240	14,600	29,700
1,100	210	440	829	1,700	2,550	4,910	7,830	13,800	28,200
1,200	201	420	791	1,620	2,430	4,680	7,470	13,200	26,900
1,300	192	402	757	1,550	2,330	4,490	7,150	12,600	25,800
1,400	185	386	727	1,490	2,240	4,310	6,870	12,100	24,800
1,500	178	372	701	1,440	2,160	4,150	6,620	11,700	23,900
1,600	172	359	677	1,390	2,080	4,010	6,390	11,300	23,000
1,700	166	348	655	1,340	2,010	3,880	6,180	10,900	22,300
1,800	161	337	635	1,300	1,950	3,760	6,000	10,600	21,600
1,900	157	327	617	1,270	1,900	3,650	5,820	10,300	21,000
2,000	152	318	600	1,230	1,840	3,550	5,660	10,000	20,400

For SI: 1 inch = 25.4 mm, 1 foot = 304.8 mm, 1 pound per square inch = 6.895 kPa, 1-inch water column = 0.2488 kPa, 1 British thermal unit per hour = 0.2931 W, 1 cubic foot per hour = 0.0283 m^3/h, 1 degree = 0.01745 rad.

Note: All table entries have been rounded to three significant digits.

INTERNATIONAL CODE COUNCIL®
Copyright © 2015 ICC. ALL RIGHTS RESERVED. Accessed by David Dammon on Jun 21, 2017 12:30:52 PM pursuant to License Agreement with ICC. No further reproduction or distribution authorized. ANY UNAUTHORIZED REPRODUCTION OR DISTRIBUTION IS A VIOLATION OF THE FEDERAL COPYRIGHT ACT AND THE LICENSE AGREEMENT, AND SUBJECT TO CIVIL AND CRIMINAL PENALTIES THEREUNDER.

TABLE G2413.4(12) [402.4(28)]
SCHEDULE 40 METALLIC PIPE

Gas	Undiluted Propane
Inlet Pressure	11.0 in. w.c.
Pressure Drop	0.5 in. w.c.
Specific Gravity	1.50

INTENDED USE	**Pipe sizing between single- or second-stage (low pressure) regulator and appliance.**								
	PIPE SIZE (inches)								
Nominal	**1/2**	**3/4**	**1**	**1 1/4**	**1 1/2**	**2**	**2 1/2**	**3**	**4**
Actual ID	**0.622**	**0.824**	**1.049**	**1.380**	**1.610**	**2.067**	**2.469**	**3.068**	**4.026**
Length (ft)	**Capacity in Thousands of Btu per Hour**								
10	291	608	1,150	2,350	3,520	6,790	10,800	19,100	39,000
20	200	418	787	1,620	2,420	4,660	7,430	13,100	26,800
30	160	336	632	1,300	1,940	3,750	5,970	10,600	21,500
40	137	287	541	1,110	1,660	3,210	5,110	9,030	18,400
50	122	255	480	985	1,480	2,840	4,530	8,000	16,300
60	110	231	434	892	1,340	2,570	4,100	7,250	14,800
80	101	212	400	821	1,230	2,370	3,770	6,670	13,600
100	94	197	372	763	1,140	2,200	3,510	6,210	12,700
125	89	185	349	716	1,070	2,070	3,290	5,820	11,900
150	84	175	330	677	1,010	1,950	3,110	5,500	11,200
175	74	155	292	600	899	1,730	2,760	4,880	9,950
200	67	140	265	543	814	1,570	2,500	4,420	9,010
250	62	129	243	500	749	1,440	2,300	4,060	8,290
300	58	120	227	465	697	1,340	2,140	3,780	7,710
350	51	107	201	412	618	1,190	1,900	3,350	6,840
400	46	97	182	373	560	1,080	1,720	3,040	6,190
450	42	89	167	344	515	991	1,580	2,790	5,700
500	40	83	156	320	479	922	1,470	2,600	5,300
550	37	78	146	300	449	865	1,380	2,440	4,970
600	35	73	138	283	424	817	1,300	2,300	4,700
650	33	70	131	269	403	776	1,240	2,190	4,460
700	32	66	125	257	385	741	1,180	2,090	4,260
750	30	64	120	246	368	709	1,130	2,000	4,080
800	29	61	115	236	354	681	1,090	1,920	3,920
850	28	59	111	227	341	656	1,050	1,850	3,770
900	27	57	107	220	329	634	1,010	1,790	3,640
950	26	55	104	213	319	613	978	1,730	3,530
1,000	25	53	100	206	309	595	948	1,680	3,420
1,100	25	52	97	200	300	578	921	1,630	3,320
1,200	24	50	95	195	292	562	895	1,580	3,230
1,300	23	48	90	185	277	534	850	1,500	3,070
1,400	22	46	86	176	264	509	811	1,430	2,930
1,500	21	44	82	169	253	487	777	1,370	2,800
1,200	24	50	95	195	292	562	895	1,580	3,230
1,300	23	48	90	185	277	534	850	1,500	3,070
1,400	22	46	86	176	264	509	811	1,430	2,930
1,500	21	44	82	169	253	487	777	1,370	2,800
1,600	20	42	79	162	243	468	746	1,320	2,690
1,700	19	40	76	156	234	451	719	1,270	2,590
1,800	19	39	74	151	226	436	694	1,230	2,500
1,900	18	38	71	146	219	422	672	1,190	2,420
2,000	18	37	69	142	212	409	652	1,150	2,350

For SI: 1 inch = 25.4 mm, 1 foot = 304.8 mm, 1 pound per square inch = 6.895 kPa, 1-inch water column = 0.2488 kPa, 1 British thermal unit per hour = 0.2931 W, 1 cubic foot per hour = 0.0283 m^3/h, 1 degree = 0.01745 rad.

Note: All table entries have been rounded to three significant digits.

INTERNATIONAL CODE COUNCIL®
Copyright © 2015 ICC. ALL RIGHTS RESERVED. Accessed by David Dammon on Jun 21, 2017 12:30:52 PM pursuant to License Agreement with ICC. No further reproduction or distribution authorized. ANY UNAUTHORIZED REPRODUCTION OR DISTRIBUTION IS A VIOLATION OF THE FEDERAL COPYRIGHT ACT AND THE LICENSE AGREEMENT, AND SUBJECT TO CIVIL AND CRIMINAL PENALTIES THEREUNDER.

TABLE G2413.4(13) [402.4(29)]
SEMIRIGID COPPER TUBING

Gas	Undiluted Propane
Inlet Pressure	10.0 psi
Pressure Drop	1.0 psi
Specific Gravity	1.50

INTENDED USE		**Sizing between first stage (high-pressure regulator) and second stage (low-pressure regulator).**								
TUBE SIZE (inches)										
Nominal	**K & L**	**1/4**	**3/8**	**1/2**	**5/8**	**3/4**	**1**	**1 1/4**	**1 1/2**	**2**
	ACR	**3/8**	**1/2**	**5/8**	**3/4**	**7/8**	**1 1/8**	**1 3/8**	**—**	**—**
Outside		**0.375**	**0.500**	**0.625**	**0.750**	**0.875**	**1.125**	**1.375**	**1.625**	**2.125**
Inside		**0.305**	**0.402**	**0.527**	**0.652**	**0.745**	**0.995**	**1.245**	**1.481**	**1.959**
Length (ft)		**Capacity in Thousands of Btu per Hour**								
10		513	1,060	2,150	3,760	5,330	11,400	20,500	32,300	67,400
20		352	727	1,480	2,580	3,670	7,830	14,100	22,200	46,300
30		283	584	1,190	2,080	2,940	6,290	11,300	17,900	37,200
40		242	500	1,020	1,780	2,520	5,380	9,690	15,300	31,800
50		215	443	901	1,570	2,230	4,770	8,590	13,500	28,200
60		194	401	816	1,430	2,020	4,320	7,780	12,300	25,600
70		179	369	751	1,310	1,860	3,980	7,160	11,300	23,500
80		166	343	699	1,220	1,730	3,700	6,660	10,500	21,900
90		156	322	655	1,150	1,630	3,470	6,250	9,850	20,500
100		147	304	619	1,080	1,540	3,280	5,900	9,310	19,400
125		131	270	549	959	1,360	2,910	5,230	8,250	17,200
150		118	244	497	869	1,230	2,630	4,740	7,470	15,600
175		109	225	457	799	1,130	2,420	4,360	6,880	14,300
200		101	209	426	744	1,060	2,250	4,060	6,400	13,300
250		90	185	377	659	935	2,000	3,600	5,670	11,800
300		81	168	342	597	847	1,810	3,260	5,140	10,700
350		75	155	314	549	779	1,660	3,000	4,730	9,840
400		70	144	292	511	725	1,550	2,790	4,400	9,160
450		65	135	274	480	680	1,450	2,620	4,130	8,590
500		62	127	259	453	643	1,370	2,470	3,900	8,120
550		59	121	246	430	610	1,300	2,350	3,700	7,710
600		56	115	235	410	582	1,240	2,240	3,530	7,350
650		54	111	225	393	558	1,190	2,140	3,380	7,040
700		51	106	216	378	536	1,140	2,060	3,250	6,770
750		50	102	208	364	516	1,100	1,980	3,130	6,520
800		48	99	201	351	498	1,060	1,920	3,020	6,290
850		46	96	195	340	482	1,030	1,850	2,920	6,090
900		45	93	189	330	468	1,000	1,800	2,840	5,910
950		44	90	183	320	454	970	1,750	2,750	5,730
1,000		42	88	178	311	442	944	1,700	2,680	5,580
1,100		40	83	169	296	420	896	1,610	2,540	5,300
1,200		38	79	161	282	400	855	1,540	2,430	5,050
1,300		37	76	155	270	383	819	1,470	2,320	4,840
1,400		35	73	148	260	368	787	1,420	2,230	4,650
1,500		34	70	143	250	355	758	1,360	2,150	4,480
1,600		33	68	138	241	343	732	1,320	2,080	4,330
1,700		32	66	134	234	331	708	1,270	2,010	4,190
1,800		31	64	130	227	321	687	1,240	1,950	4,060
1,900		30	62	126	220	312	667	1,200	1,890	3,940
2,000		29	60	122	214	304	648	1,170	1,840	3,830

For SI: 1 inch = 25.4 mm, 1 foot = 304.8 mm, 1 pound per square inch = 6.895 kPa, 1-inch water column = 0.2488 kPa,
1 British thermal unit per hour = 0.2931 W, 1 cubic foot per hour = 0.0283 m^3/h, 1 degree = 0.01745 rad.

Notes:

1. Table capacities are based on Type K copper tubing inside diameter (shown), which has the smallest inside diameter of the copper tubing products.
2. All table entries have been rounded to three significant digits.

INTERNATIONAL CODE COUNCIL®
Copyright © 2015 ICC. ALL RIGHTS RESERVED. Accessed by David Dammon on Jun 21, 2017 12:30:52 PM pursuant to License Agreement with ICC. No further reproduction or distribution authorized. ANY UNAUTHORIZED REPRODUCTION OR DISTRIBUTION IS A VIOLATION OF THE FEDERAL COPYRIGHT ACT AND THE LICENSE AGREEMENT, AND SUBJECT TO CIVIL AND CRIMINAL PENALTIES THEREUNDER.

TABLE G2413.4(14) [402.4(30)]
SEMIRIGID COPPER TUBING

Gas	Undiluted Propane
Inlet Pressure	11.0 in. w.c.
Pressure Drop	0.5 in. w.c.
Specific Gravity	1.50

INTENDED USE		**Sizing between single- or second-stage (low-pressure regulator) and appliance.**								
TUBE SIZE (inches)										
Nominal	**K & L**	**1/4**	**3/8**	**1/2**	**5/8**	**3/4**	**1**	**1 1/4**	**1 1/2**	**2**
	ACR	**3/8**	**1/2**	**5/8**	**3/4**	**7/8**	**1 1/8**	**1 3/8**	**—**	**—**
Outside		**0.375**	**0.500**	**0.625**	**0.750**	**0.875**	**1.125**	**1.375**	**1.625**	**2.125**
Inside		**0.305**	**0.402**	**0.527**	**0.652**	**0.745**	**0.995**	**1.245**	**1.481**	**1.959**
Length (ft)		**Capacity in Thousands of Btu per Hour**								
10		45	93	188	329	467	997	1,800	2,830	5,890
20		31	64	129	226	321	685	1,230	1,950	4,050
30		25	51	104	182	258	550	991	1,560	3,250
40		21	44	89	155	220	471	848	1,340	2,780
50		19	39	79	138	195	417	752	1,180	2,470
60		17	35	71	125	177	378	681	1,070	2,240
70		16	32	66	115	163	348	626	988	2,060
80		15	30	61	107	152	324	583	919	1,910
90		14	28	57	100	142	304	547	862	1,800
100		13	27	54	95	134	287	517	814	1,700
125		11	24	48	84	119	254	458	722	1,500
150		10	21	44	76	108	230	415	654	1,360
175		NA	20	40	70	99	212	382	602	1,250
200		NA	18	37	65	92	197	355	560	1,170
250		NA	16	33	58	82	175	315	496	1,030
300		NA	15	30	52	74	158	285	449	936
350		NA	14	28	48	68	146	262	414	861
400		NA	13	26	45	63	136	244	385	801
450		NA	12	24	42	60	127	229	361	752
500		NA	11	23	40	56	120	216	341	710
550		NA	11	22	38	53	114	205	324	674
600		NA	10	21	36	51	109	196	309	643
650		NA	NA	20	34	49	104	188	296	616
700		NA	NA	19	33	47	100	180	284	592
750		NA	NA	18	32	45	96	174	274	570
800		NA	NA	18	31	44	93	168	264	551
850		NA	NA	17	30	42	90	162	256	533
900		NA	NA	17	29	41	87	157	248	517
950		NA	NA	16	28	40	85	153	241	502
1,000		NA	NA	16	27	39	83	149	234	488
1,100		NA	NA	15	26	37	78	141	223	464
1,200		NA	NA	14	25	35	75	135	212	442
1,300		NA	NA	14	24	34	72	129	203	423
1,400		NA	NA	13	23	32	69	124	195	407
1,500		NA	NA	13	22	31	66	119	188	392
1,600		NA	NA	12	21	30	64	115	182	378
1,700		NA	NA	12	20	29	62	112	176	366
1,800		NA	NA	11	20	28	60	108	170	355
1,900		NA	NA	11	19	27	58	105	166	345
2,000		NA	NA	11	19	27	57	102	161	335

For SI: 1 inch = 25.4 mm, 1 foot = 304.8 mm, 1 pound per square inch = 6.895 kPa, 1-inch water column = 0.2488 kPa, 1 British thermal unit per hour = 0.2931 W, 1 cubic foot per hour = 0.0283 m^3/h, 1 degree = 0.01745 rad.

Notes:

1. Table capacities are based on Type K copper tubing inside diameter (shown), which has the smallest inside diameter of the copper tubing products.
2. NA means a flow of less than 10,000 Btu/hr.
3. All table entries have been rounded to three significant digits.

INTERNATIONAL CODE COUNCIL®
Copyright © 2015 ICC. ALL RIGHTS RESERVED. Accessed by David Dammon on Jun 21, 2017 12:30:52 PM pursuant to License Agreement with ICC. No further reproduction or distribution authorized. ANY UNAUTHORIZED REPRODUCTION OR DISTRIBUTION IS A VIOLATION OF THE FEDERAL COPYRIGHT ACT AND THE LICENSE AGREEMENT, AND SUBJECT TO CIVIL AND CRIMINAL PENALTIES THEREUNDER.

TABLE G2413.4(15) [402.4(31)]
SEMIRIGID COPPER TUBING

Gas	Undiluted Propane
Inlet Pressure	2.0 psi
Pressure Drop	1.0 psi
Specific Gravity	1.50

INTENDED USE		**Tube sizing between 2 psig service and line pressure regulator.**								
TUBE SIZE (inches)										
Nominal	**K & L**	$^1/_4$	$^3/_8$	$^1/_2$	$^5/_8$	$^3/_4$	1	$1^1/_4$	$1^1/_2$	2
	ACR	$^3/_8$	$^1/_2$	$^5/_8$	$^3/_4$	$^7/_8$	$1^1/_8$	$1^3/_8$	—	—
Outside		**0.375**	**0.500**	**0.625**	**0.750**	**0.875**	**1.125**	**1.375**	**1.625**	**2.125**
Inside		**0.305**	**0.402**	**0.527**	**0.652**	**0.745**	**0.995**	**1.245**	**1.481**	**1.959**
Length (ft)		**Capacity in Thousands of Btu per Hour**								
10		413	852	1,730	3,030	4,300	9,170	16,500	26,000	54,200
20		284	585	1,190	2,080	2,950	6,310	11,400	17,900	37,300
30		228	470	956	1,670	2,370	5,060	9,120	14,400	29,900
40		195	402	818	1,430	2,030	4,330	7,800	12,300	25,600
50		173	356	725	1,270	1,800	3,840	6,920	10,900	22,700
60		157	323	657	1,150	1,630	3,480	6,270	9,880	20,600
70		144	297	605	1,060	1,500	3,200	5,760	9,090	18,900
80		134	276	562	983	1,390	2,980	5,360	8,450	17,600
90		126	259	528	922	1,310	2,790	5,030	7,930	16,500
100		119	245	498	871	1,240	2,640	4,750	7,490	15,600
125		105	217	442	772	1,100	2,340	4,210	6,640	13,800
150		95	197	400	700	992	2,120	3,820	6,020	12,500
175		88	181	368	644	913	1,950	3,510	5,540	11,500
200		82	168	343	599	849	1,810	3,270	5,150	10,700
250		72	149	304	531	753	1,610	2,900	4,560	9,510
300		66	135	275	481	682	1,460	2,620	4,140	8,610
350		60	124	253	442	628	1,340	2,410	3,800	7,920
400		56	116	235	411	584	1,250	2,250	3,540	7,370
450		53	109	221	386	548	1,170	2,110	3,320	6,920
500		50	103	209	365	517	1,110	1,990	3,140	6,530
550		47	97	198	346	491	1,050	1,890	2,980	6,210
600		45	93	189	330	469	1,000	1,800	2,840	5,920
650		43	89	181	316	449	959	1,730	2,720	5,670
700		41	86	174	304	431	921	1,660	2,620	5,450
750		40	82	168	293	415	888	1,600	2,520	5,250
800		39	80	162	283	401	857	1,540	2,430	5,070
850		37	77	157	274	388	829	1,490	2,350	4,900
900		36	75	152	265	376	804	1,450	2,280	4,750
950		35	72	147	258	366	781	1,410	2,220	4,620
1,000		34	71	143	251	356	760	1,370	2,160	4,490
1,100		32	67	136	238	338	721	1,300	2,050	4,270
1,200		31	64	130	227	322	688	1,240	1,950	4,070
1,300		30	61	124	217	309	659	1,190	1,870	3,900
1,400		28	59	120	209	296	633	1,140	1,800	3,740
1,500		27	57	115	201	286	610	1,100	1,730	3,610
1,600		26	55	111	194	276	589	1,060	1,670	3,480
1,700		26	53	108	188	267	570	1,030	1,620	3,370
1,800		25	51	104	182	259	553	1,000	1,570	3,270
1,900		24	50	101	177	251	537	966	1,520	3,170
2,000		23	48	99	172	244	522	940	1,480	3,090

For SI: 1 inch = 25.4 mm, 1 foot = 304.8 mm, 1 pound per square inch = 6.895 kPa, 1-inch water column = 0.2488 kPa,
1 British thermal unit per hour = 0.2931 W, 1 cubic foot per hour = 0.0283 m^3/h, 1 degree = 0.01745 rad.

Notes:

1. Table capacities are based on Type K copper tubing inside diameter (shown), which has the smallest inside diameter of the copper tubing products.
2. All table entries have been rounded to three significant digits.

INTERNATIONAL CODE COUNCIL®
Copyright © 2015 ICC. ALL RIGHTS RESERVED. Accessed by David Dammon on Jun 21, 2017 12:30:52 PM pursuant to License Agreement with ICC. No further reproduction or distribution authorized. ANY UNAUTHORIZED REPRODUCTION OR DISTRIBUTION IS A VIOLATION OF THE FEDERAL COPYRIGHT ACT AND THE LICENSE AGREEMENT, AND SUBJECT TO CIVIL AND CRIMINAL PENALTIES THEREUNDER.

TABLE G2413.4(16) [402.4(32)]
CORRUGATED STAINLESS STEEL TUBING (CSST)

Gas	Undiluted Propane
Inlet Pressure	11.0 in. w.c.
Pressure Drop	0.5 in. w.c.
Specific Gravity	1.50

INTENDED USE: SIZING BETWEEN SINGLE OR SECOND STAGE (Low Pressure) REGULATOR AND THE APPLIANCE SHUTOFF VALVE.														
TUBE SIZE (EHD)														
Flow Designation	**13**	**15**	**18**	**19**	**23**	**25**	**30**	**31**	**37**	**39**	**46**	**48**	**60**	**62**
Length (ft)	**Capacity in Thousands of Btu per Hour**													
5	72	99	181	211	355	426	744	863	1,420	1,638	2,830	3,270	5,780	6,550
10	50	69	129	150	254	303	521	605	971	1,179	1,990	2,320	4,110	4,640
15	39	55	104	121	208	248	422	490	775	972	1,620	1,900	3,370	3,790
20	34	49	91	106	183	216	365	425	661	847	1,400	1,650	2,930	3,290
25	30	42	82	94	164	192	325	379	583	762	1,250	1,480	2,630	2,940
30	28	39	74	87	151	177	297	344	528	698	1,140	1,350	2,400	2,680
40	23	33	64	74	131	153	256	297	449	610	988	1,170	2,090	2,330
50	20	30	58	66	118	137	227	265	397	548	884	1,050	1,870	2,080
60	19	26	53	60	107	126	207	241	359	502	805	961	1,710	1,900
70	17	25	49	57	99	117	191	222	330	466	745	890	1,590	1,760
80	15	23	45	52	94	109	178	208	307	438	696	833	1,490	1,650
90	15	22	44	50	90	102	169	197	286	414	656	787	1,400	1,550
100	14	20	41	47	85	98	159	186	270	393	621	746	1,330	1,480
150	11	15	31	36	66	75	123	143	217	324	506	611	1,090	1,210
200	9	14	28	33	60	69	112	129	183	283	438	531	948	1,050
250	8	12	25	30	53	61	99	117	163	254	390	476	850	934
300	8	11	23	26	50	57	90	107	147	234	357	434	777	854

For SI: 1 inch = 25.4 mm, 1 foot = 304.8 mm, 1 pound per square inch = 6.895 kPa, 1-inch water column = 0.2488 kPa, 1 British thermal unit per hour = 0.2931 W, 1 cubic foot per hour = 0.0283 m^3/h, 1 degree = 0.01745 rad.

Notes:

1. Table includes losses for four 90-degree bends and two end fittings. Tubing runs with larger numbers of bends or fittings shall be increased by an equivalent length of tubing to the following equation: $L = 1.3n$ where L is additional length (feet) of tubing and n is the number of additional fittings or bends.
2. EHD—Equivalent Hydraulic Diameter, which is a measure of the relative hydraulic efficiency between different tubing sizes. The greater the value of EHD, the greater the gas capacity of the tubing.
3. All table entries have been rounded to three significant digits.

INTERNATIONAL CODE COUNCIL®
Copyright © 2015 ICC. ALL RIGHTS RESERVED. Accessed by David Dammon on Jun 21, 2017 12:30:52 PM pursuant to License Agreement with ICC. No further reproduction or distribution authorized. ANY UNAUTHORIZED REPRODUCTION OR DISTRIBUTION IS A VIOLATION OF THE FEDERAL COPYRIGHT ACT AND THE LICENSE AGREEMENT, AND SUBJECT TO CIVIL AND CRIMINAL PENALTIES THEREUNDER.

TABLE G2413.4(17) [402.4(33)]
CORRUGATED STAINLESS STEEL TUBING (CSST)

Gas	Undiluted Propane
Inlet Pressure	2.0 psi
Pressure Drop	1.0 psi
Specific Gravity	1.50

INTENDED USE: SIZING BETWEEN 2 PSI SERVICE AND THE LINE PRESSURE REGULATOR.														
TUBE SIZE (EHD)														
Flow Designation	**13**	**15**	**18**	**19**	**23**	**25**	**30**	**31**	**37**	**39**	**46**	**48**	**60**	**62**
Length (ft)	**Capacity in Thousands of Btu per Hour**													
10	426	558	927	1,110	1,740	2,170	4,100	4,720	7,130	7,958	15,200	16,800	29,400	34,200
25	262	347	591	701	1,120	1,380	2,560	2,950	4,560	5,147	9,550	10,700	18,800	21,700
30	238	316	540	640	1,030	1,270	2,330	2,690	4,180	4,719	8,710	9,790	17,200	19,800
40	203	271	469	554	896	1,100	2,010	2,320	3,630	4,116	7,530	8,500	14,900	17,200
50	181	243	420	496	806	986	1,790	2,070	3,260	3,702	6,730	7,610	13,400	15,400
75	147	196	344	406	663	809	1,460	1,690	2,680	3,053	5,480	6,230	11,000	12,600
80	140	189	333	393	643	768	1,410	1,630	2,590	2,961	5,300	6,040	10,600	12,200
100	124	169	298	350	578	703	1,260	1,450	2,330	2,662	4,740	5,410	9,530	10,900
150	101	137	245	287	477	575	1,020	1,180	1,910	2,195	3,860	4,430	7,810	8,890
200	86	118	213	248	415	501	880	1,020	1,660	1,915	3,340	3,840	6,780	7,710
250	77	105	191	222	373	448	785	910	1,490	1,722	2,980	3,440	6,080	6,900
300	69	96	173	203	343	411	716	829	1,360	1,578	2,720	3,150	5,560	6,300
400	60	82	151	175	298	355	616	716	1,160	1,376	2,350	2,730	4,830	5,460
500	53	72	135	158	268	319	550	638	1,030	1,237	2,100	2,450	4,330	4,880

For SI: 1 inch = 25.4 mm, 1 foot = 304.8 mm, 1 pound per square inch = 6.895 kPa, 1-inch water column = 0.2488 kPa, 1 British thermal unit per hour = 0.2931 W, 1 cubic foot per hour = 0.0283 m^3/h, 1 degree = 0.01745 rad.

Notes:

1. Table does not include effect of pressure drop across the line regulator. Where regulator loss exceeds $^1/_2$ psi (based on 13 in. w.c. outlet pressure), DO NOT USE THIS TABLE. Consult with the regulator manufacturer for pressure drops and capacity factors. Pressure drops across a regulator can vary with flow rate.
2. CAUTION: Capacities shown in the table might exceed maximum capacity for a selected regulator. Consult with the regulator or tubing manufacturer for guidance.
3. Table includes losses for four 90-degree bends and two end fittings. Tubing runs with larger numbers of bends or fittings shall be increased by an equivalent length of tubing to the following equation: $L = 1.3n$ where L is additional length (feet) of tubing and n is the number of additional fittings or bends.
4. EHD—Equivalent Hydraulic Diameter, which is a measure of the relative hydraulic efficiency between different tubing sizes. The greater the value of EHD, the greater the gas capacity of the tubing.
5. All table entries have been rounded to three significant digits.

INTERNATIONAL CODE COUNCIL®
Copyright © 2015 ICC. ALL RIGHTS RESERVED. Accessed by David Dammon on Jun 21, 2017 12:30:52 PM pursuant to License Agreement with ICC. No further reproduction or distribution authorized. ANY UNAUTHORIZED REPRODUCTION OR DISTRIBUTION IS A VIOLATION OF THE FEDERAL COPYRIGHT ACT AND THE LICENSE AGREEMENT, AND SUBJECT TO CIVIL AND CRIMINAL PENALTIES THEREUNDER.

TABLE G2413.4(18) [402.4(34)]
CORRUGATED STAINLESS STEEL TUBING (CSST)

Gas	Undiluted Propane
Inlet Pressure	5.0 psi
Pressure Drop	3.5 psi
Specific Gravity	1.50

TUBE SIZE (EHD)														
Flow Designation	**13**	**15**	**18**	**19**	**23**	**25**	**30**	**31**	**37**	**39**	**46**	**48**	**60**	**62**
Length (ft)	**Capacity in Thousands of Btu per Hour**													
10	826	1,070	1,710	2,060	3,150	4,000	7,830	8,950	13,100	14,441	28,600	31,200	54,400	63,800
25	509	664	1,090	1,310	2,040	2,550	4,860	5,600	8,400	9,339	18,000	19,900	34,700	40,400
30	461	603	999	1,190	1,870	2,340	4,430	5,100	7,680	8,564	16,400	18,200	31,700	36,900
40	396	520	867	1,030	1,630	2,030	3,820	4,400	6,680	7,469	14,200	15,800	27,600	32,000
50	352	463	777	926	1,460	1,820	3,410	3,930	5,990	6,717	12,700	14,100	24,700	28,600
75	284	376	637	757	1,210	1,490	2,770	3,190	4,920	5,539	10,300	11,600	20,300	23,400
80	275	363	618	731	1,170	1,450	2,680	3,090	4,770	5,372	9,990	11,200	19,600	22,700
100	243	324	553	656	1,050	1,300	2,390	2,760	4,280	4,830	8,930	10,000	17,600	20,300
150	196	262	453	535	866	1,060	1,940	2,240	3,510	3,983	7,270	8,210	14,400	16,600
200	169	226	393	464	755	923	1,680	1,930	3,050	3,474	6,290	7,130	12,500	14,400
250	150	202	352	415	679	828	1,490	1,730	2,740	3,124	5,620	6,390	11,200	12,900
300	136	183	322	379	622	757	1,360	1,570	2,510	2,865	5,120	5,840	10,300	11,700
400	117	158	279	328	542	657	1,170	1,360	2,180	2,498	4,430	5,070	8,920	10,200
500	104	140	251	294	488	589	1,050	1,210	1,950	2,247	3,960	4,540	8,000	9,110

For SI: 1 inch = 25.4 mm, 1 foot = 304.8 mm, 1 pound per square inch = 6.895 kPa, 1-inch water column = 0.2488 kPa,
1 British thermal unit per hour = 0.2931 W, 1 cubic foot per hour = 0.0283 m^3/h, 1 degree = 0.01745 rad.

Notes:

1. Table does not include effect of pressure drop across line regulator. Where regulator loss exceeds1 psi, DO NOT USE THIS TABLE. Consult with the regulator manufacturer for pressure drops and capacity factors. Pressure drop across regulator can vary with the flow rate.
2. CAUTION: Capacities shown in the table might exceed maximum capacity of selected regulator. Consult with the tubing manufacturer for guidance.
3. Table includes losses for four 90-degree bends and two end fittings. Tubing runs with larger numbers of bends or fittings shall be increased by an equivalent length of tubing to the following equation: $L = 1.3n$ where L is additional length (feet) of tubing and n is the number of additional fittings or bends.
4. EHD—Equivalent Hydraulic Diameter, which is a measure of the relative hydraulic efficiency between different tubing sizes. The greater the value of EHD, the greater the gas capacity of the tubing.
5. All table entries have been rounded to three significant digits.

INTERNATIONAL CODE COUNCIL®
Copyright © 2015 ICC. ALL RIGHTS RESERVED. Accessed by David Dammon on Jun 21, 2017 12:30:52 PM pursuant to License Agreement with ICC. No further reproduction or distribution authorized. ANY UNAUTHORIZED REPRODUCTION OR DISTRIBUTION IS A VIOLATION OF THE FEDERAL COPYRIGHT ACT AND THE LICENSE AGREEMENT, AND SUBJECT TO CIVIL AND CRIMINAL PENALTIES THEREUNDER.

TABLE G2413.4(19) [402.4(35)]
POLYETHYLENE PLASTIC PIPE

Gas	Undiluted Propane
Inlet Pressure	11.0 in. w.c.
Pressure Drop	0.5 in. w.c.
Specific Gravity	1.50

INTENDED USE	**PE pipe sizing between integral 2-stage regulator at tank or second stage (low-pressure regulator) and building.**					
	PIPE SIZE (inches)					
Nominal OD	**1/2**	**3/4**	**1**	**1 1/4**	**1 1/2**	**2**
Designation	**SDR 9**	**SDR 11**	**SDR 11**	**SDR 10**	**SDR 11**	**SDR 11**
Actual ID	**0.660**	**0.860**	**1.077**	**1.328**	**1.554**	**1.943**
Length (ft)	**Capacity in Thousands of Btu per Hour**					
10	340	680	1,230	2,130	3,210	5,770
20	233	468	844	1,460	2,210	3,970
30	187	375	677	1,170	1,770	3,180
40	160	321	580	1,000	1,520	2,730
50	142	285	514	890	1,340	2,420
60	129	258	466	807	1,220	2,190
70	119	237	428	742	1,120	2,010
80	110	221	398	690	1,040	1,870
90	103	207	374	648	978	1,760
100	98	196	353	612	924	1,660
125	87	173	313	542	819	1,470
150	78	157	284	491	742	1,330
175	72	145	261	452	683	1,230
200	67	135	243	420	635	1,140
250	60	119	215	373	563	1,010
300	54	108	195	338	510	916
350	50	99	179	311	469	843
400	46	92	167	289	436	784
450	43	87	157	271	409	736
500	41	82	148	256	387	695

For SI: 1 inch = 25.4 mm, 1 foot = 304.8 mm, 1 pound per square inch = 6.895 kPa, 1-inch water column = 0.2488 kPa, 1 British thermal unit per hour = 0.2931 W, 1 cubic foot per hour = 0.0283 m^3/h, 1 degree = 0.01745 rad.

Note: All table entries have been rounded to three significant digits.

INTERNATIONAL CODE COUNCIL®
Copyright © 2015 ICC. ALL RIGHTS RESERVED. Accessed by David Dammon on Jun 21, 2017 12:30:52 PM pursuant to License Agreement with ICC. No further reproduction or distribution authorized. ANY UNAUTHORIZED REPRODUCTION OR DISTRIBUTION IS A VIOLATION OF THE FEDERAL COPYRIGHT ACT AND THE LICENSE AGREEMENT, AND SUBJECT TO CIVIL AND CRIMINAL PENALTIES THEREUNDER.

TABLE G2413.4(20) [402.4(36)]
POLYETHYLENE PLASTIC PIPE

Gas	Undiluted Propane
Inlet Pressure	2.0 psi
Pressure Drop	1.0 psi
Specific Gravity	1.50

INTENDED USE	**PE pipe sizing between 2 psig service regulator and line pressure regulator.**					
	PIPE SIZE (inches)					
Nominal OD	**$^1/_2$**	**$^3/_4$**	**1**	**$1^1/_4$**	**$1^1/_2$**	**2**
Designation	**SDR 9**	**SDR 11**	**SDR 11**	**SDR 10**	**SDR 11**	**SDR 11**
Actual ID	**0.660**	**0.860**	**1.077**	**1.328**	**1.554**	**1.943**
Length (ft)	**Capacity in Thousands of Btu per Hour**					
10	3,130	6,260	11,300	19,600	29,500	53,100
20	2,150	4,300	7,760	13,400	20,300	36,500
30	1,730	3,450	6,230	10,800	16,300	29,300
40	1,480	2,960	5,330	9,240	14,000	25,100
50	1,310	2,620	4,730	8,190	12,400	22,200
60	1,190	2,370	4,280	7,420	11,200	20,100
70	1,090	2,180	3,940	6,830	10,300	18,500
80	1,010	2,030	3,670	6,350	9,590	17,200
90	952	1,910	3,440	5,960	9,000	16,200
100	899	1,800	3,250	5,630	8,500	15,300
125	797	1,600	2,880	4,990	7,530	13,500
150	722	1,450	2,610	4,520	6,830	12,300
175	664	1,330	2,400	4,160	6,280	11,300
200	618	1,240	2,230	3,870	5,840	10,500
250	548	1,100	1,980	3,430	5,180	9,300
300	496	994	1,790	3,110	4,690	8,430
350	457	914	1,650	2,860	4,320	7,760
400	425	851	1,530	2,660	4,020	7,220
450	399	798	1,440	2,500	3,770	6,770
500	377	754	1,360	2,360	3,560	6,390
550	358	716	1,290	2,240	3,380	6,070
600	341	683	1,230	2,140	3,220	5,790
650	327	654	1,180	2,040	3,090	5,550
700	314	628	1,130	1,960	2,970	5,330
750	302	605	1,090	1,890	2,860	5,140
800	292	585	1,050	1,830	2,760	4,960
850	283	566	1,020	1,770	2,670	4,800
900	274	549	990	1,710	2,590	4,650
950	266	533	961	1,670	2,520	4,520
1,000	259	518	935	1,620	2,450	4,400
1,100	246	492	888	1,540	2,320	4,170
1,200	234	470	847	1,470	2,220	3,980
1,300	225	450	811	1,410	2,120	3,810
1,400	216	432	779	1,350	2,040	3,660
1,500	208	416	751	1,300	1,960	3,530
1,600	201	402	725	1,260	1,900	3,410
1,700	194	389	702	1,220	1,840	3,300
1,800	188	377	680	1,180	1,780	3,200
1,900	183	366	661	1,140	1,730	3,110
2,000	178	356	643	1,110	1,680	3,020

For SI: 1 inch = 25.4 mm, 1 foot = 304.8 mm, 1 pound per square inch = 6.895 kPa, 1-inch water column = 0.2488 kPa, 1 British thermal unit per hour = 0.2931 W, 1 cubic foot per hour = 0.0283 m^3/h, 1 degree = 0.01745 rad.

Note: All table entries have been rounded to three significant digits.

INTERNATIONAL CODE COUNCIL®
Copyright © 2015 ICC. ALL RIGHTS RESERVED. Accessed by David Dammon on Jun 21, 2017 12:30:52 PM pursuant to License Agreement with ICC. No further reproduction or distribution authorized. ANY UNAUTHORIZED REPRODUCTION OR DISTRIBUTION IS A VIOLATION OF THE FEDERAL COPYRIGHT ACT AND THE LICENSE AGREEMENT, AND SUBJECT TO CIVIL AND CRIMINAL PENALTIES THEREUNDER.

TABLE G2413.4(21) [402.4(37)]
POLYETHYLENE PLASTIC TUBING

Gas	Undiluted Propane
Inlet Pressure	11.0 in. w.c.
Pressure Drop	0.5 in. w.c.
Specific Gravity	1.50

INTENDED USE: PE PIPE SIZING BETWEEN INTEGRAL 2-STAGE REGULATOR AT TANK OR SECOND STAGE (low-pressure regulator) AND BUILDING.		
Plastic Tubing Size (CTS) (inch)		
Nominal OD	**$^1/_2$**	**1**
Designation	**SDR 7**	**SDR 11**
Actual ID	**0.445**	**0.927**
Length (ft)	**Capacity in Cubic Feet of Gas per Hour**	
10	121	828
20	83	569
30	67	457
40	57	391
50	51	347
60	46	314
70	42	289
80	39	269
90	37	252
100	35	238
125	31	211
150	28	191
175	26	176
200	24	164
225	22	154
250	21	145
275	20	138
300	19	132
350	18	121
400	16	113
450	15	106
500	15	100

For SI: 1 inch = 25.4 mm, 1 foot = 304.8 mm, 1 pound per square inch = 6.895 kPa, 1-inch water column = 0.2488 kPa, 1 British thermal unit per hour = 0.2931 W, 1 cubic foot per hour = 0.0283 m^3/h, 1 degree = 0.01745 rad.

Note: All table entries have been rounded to three significant digits.

INTERNATIONAL CODE COUNCIL®
Copyright © 2015 ICC. ALL RIGHTS RESERVED. Accessed by David Dammon on Jun 21, 2017 12:30:52 PM pursuant to License Agreement with ICC. No further reproduction or distribution authorized. ANY UNAUTHORIZED REPRODUCTION OR DISTRIBUTION IS A VIOLATION OF THE FEDERAL COPYRIGHT ACT AND THE LICENSE AGREEMENT, AND SUBJECT TO CIVIL AND CRIMINAL PENALTIES THEREUNDER.

G2413.4.2 (402.4.2) Branch length method. *Pipe* shall be sized as follows:

1. *Pipe* size of each section of the longest *pipe* run from the *point of delivery* to the most remote *outlet* shall be determined using the longest run of *piping* and the load of the section.
2. The *pipe* size of each section of branch *piping* not previously sized shall be determined using the length of *piping* from the *point of delivery* to the most remote *outlet* in each branch and the load of the section.

❖ This sizing method is a variation of the longest-length method, and the results can be less conservative. Because less headroom is built into this method, it is especially important to account for the equivalent length of fittings installed in the system [see Commentary Figures G2413.4.2(1) and (2) and examples].This method involves multiple piping lengths within a system for application of the tables or equations, whereas the longest-length method involves only one piping length per system.

G2413.4.3 (402.4.3) Hybrid pressure. The *pipe* size for each section of higher pressure *gas piping* shall be determined using the longest length of *piping* from the *point of delivery* to the most remote line *pressure regulator*. The *pipe* size from the line *pressure regulator* to each *outlet* shall be determined using the length of *piping* from the *regulator* to the most remote outlet served by the *regulator*.

❖ Hybrid pressure piping systems convey gas at different pressures in different parts of the system. One or more pressure regulators are used to reduce the pressure in portions of the system. In some cases, a single gas piping system must deliver widely varying pressure to loads throughout a building. The most common hybrid pressure systems allow small economically sized piping to carry large loads over long distances by conveying gas at high pressures. Near the load being supplied, pressure regulators reduce the higher pressure to suit the load. For example, rooftop units on buildings are typically designed for a natural gas pressure of 14 inches w.c. (3.5 kPa) or less. Running hundreds of feet of pipe across expansive roofs would require large expensive pipe at such low pressure. At 5-psi (34.4 kPa) pressure, small, less expensive pipe can be run over long distances, and regulators at each rooftop unit reduce the 5-psi (34.4 kPa) pressure to less than $^1/_2$ psi (3.4 kPa), which is typically 8 inches w.c. (2 kPa) [see Commentary Figures G2413.4.3(1) and (2) and examples.

Branch length method [Commentary Figure G2413.4.2(1)] Example 1:

1. In accordance with Section G2413.4.2 Item 1, determine the size of Sections A, B, C, D and E (constructed of Schedule 40 steel pipe) based on the load of each section and the longest run length of 85 feet (25 908 mm). Because the system pressure is less than 0.5 psi [(14 in. w.c.) (3.5 kPa), Table G2413.4(1) is chosen. Because the longest run length is between rows in the table, the 90-foot (27 432 mm) row must be chosen.

PIPE SECTION	LOAD (MBH)	SIZE (in.)
A	230	$1^1/_4$
B	170	1
C	135	1
D	95	$^3/_4$
E	20	$^1/_2$

2. In accordance with Section G2413.4.2 Item 2, determine the size of Branch Sections F, G, H, I and J (constructed of CSST) based on the load of each section and the length of piping and tubing from the point of delivery to the outlet on that section. Table G2413.4(5) is chosen because the branch sections are constructed of CSST

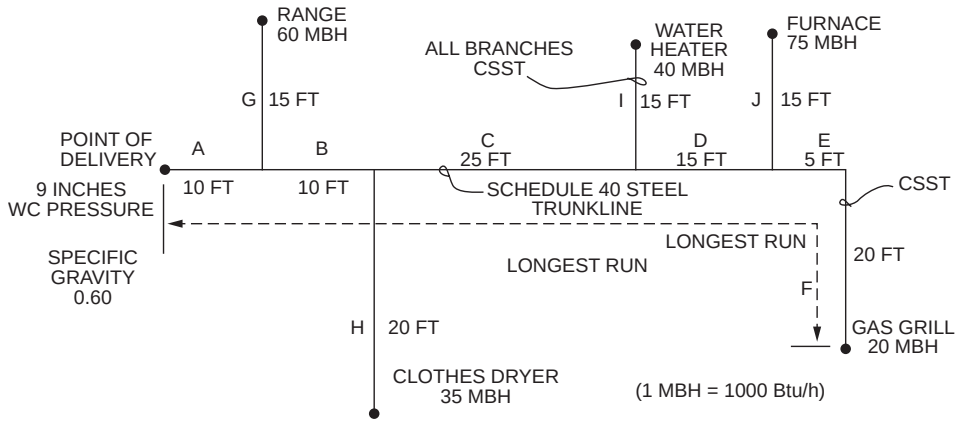

For SI: 1 foot = 304.8 mm, 1 MBH = 293 W.

Figure G2413.4.2(1)
BRANCH PIPING SYSTEM WITH SCHEDULE 40 STEEL PIPE TRUNKLINE AND CSST BRANCHES

INTERNATIONAL CODE COUNCIL®
Copyright © 2015 ICC. ALL RIGHTS RESERVED. Accessed by David Dammon on Jun 21, 2017 12:30:52 PM pursuant to License Agreement with ICC. No further reproduction or distribution authorized. ANY UNAUTHORIZED REPRODUCTION OR DISTRIBUTION IS A VIOLATION OF THE FEDERAL COPYRIGHT ACT AND THE LICENSE AGREEMENT, AND SUBJECT TO CIVIL AND CRIMINAL PENALTIES THEREUNDER.

and the pressure is less than 0.5 psi [(14 in. w.c) (3.5 kPa)]. Where a length falls between entries in the table, use the next longer length row.

CSST BRANCH	LOAD (MBH)	LENGTH PIPING AND TUBING (ft)	SIZE EHD
F	20	85	18
G	60	25	19
H	35	40	18
I	40	60	23
J	75	75	30

Branch length method [Commentary Figure G2413.4.2(2)] Example 2:

Determine the minimum required size of each piping section using branch length method.

Given:

- Piping arranged in parallel.
- Main section and individual appliance runs constructed of CSST.
- Supply pressure is 6 inches wc downstream of meter.
- Natural gas with specific gravity of 0.60.
- Chosen pressure drop 0.5 inch w.c. Minimum appliance supply pressure requirements are 5 inches wc.
- Heating value of gas is 1,000 Btu per cubic foot.

Sizing Section A:

- Size Section A based on appliance total load and length from meter to furthest appliance.
- Total load = 80 + 36 + 52 + 28 + 25 = 221 cfh.
- Section length = 45 + 20 + 5 = 70 feet.
- Use Table G2413.4(5).

Sizing Section B:

- Size Section B based on appliance total load and length from meter to appliance.
- Total load = 80 cfh.
- Section length (furnace) = 45 + 15 = 60 feet.
- Use Table G2413.4(5).

Sizing Section C:

- Size Section C based on appliance total load and length from meter to appliance.
- Total load = 36 cfh.
- Section length (water heater) = 45 + 10 = 55.
- Use Table G2413.4(5).

Sizing Section D:

- Size Section D based on appliance total load and length from meter to appliance.
- Total load = 52 cfh.
- Section Length (range) = 45 + 20 = 65 feet.
- Use Table G2413.4(5).

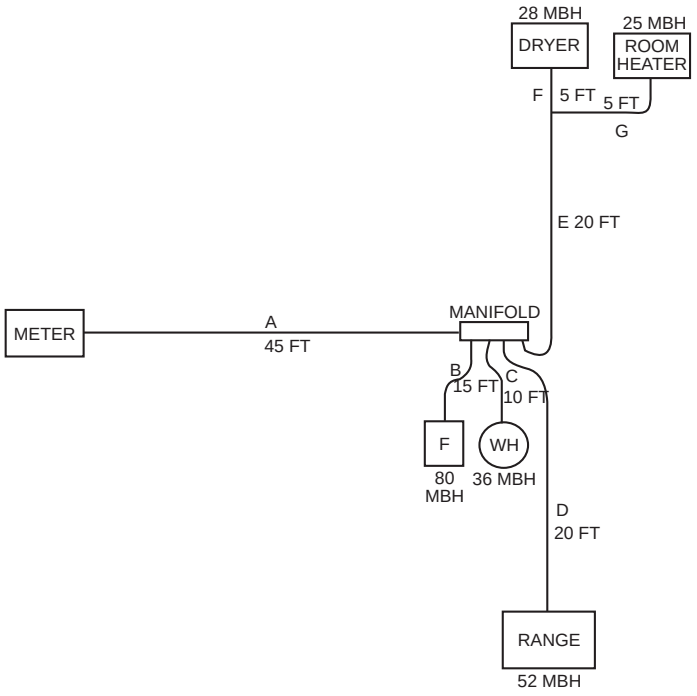

For SI: 1foot = 304.8 mm, 1 MBH = 293 W.

Figure G2413.4.2(2)
SINGLE PRESSURE CSST MANIFOLD SYSTEM

INTERNATIONAL CODE COUNCIL®
Copyright © 2015 ICC. ALL RIGHTS RESERVED. Accessed by David Dammon on Jun 21, 2017 12:30:52 PM pursuant to License Agreement with ICC. No further reproduction or distribution authorized. ANY UNAUTHORIZED REPRODUCTION OR DISTRIBUTION IS A VIOLATION OF THE FEDERAL COPYRIGHT ACT AND THE LICENSE AGREEMENT, AND SUBJECT TO CIVIL AND CRIMINAL PENALTIES THEREUNDER.

Sizing Section E:

- Size Section E base on appliance total load and length from meter to furthest appliance.
- Total load = 25 + 28 = 53 cfh.
- Section length (dryer/room heater) = 45 + 20 + 5 = 70 feet.
- Use Table G2413.4(5).

Sizing Section F:

- Size Section F based on appliance total load and length from meter to furthest appliance.
- Total load = 28 cfh.
- Section length (dryer) = 45 + 20 + 5 = 70 feet.
- Use Table G2413.4(5).

Sizing Section G:

- Size Section G based on appliance total load and length from meter to furthest appliance.
- Total load (room heater) = 25 cfh.
- Section length = 45 + 20 + 5 = 70 feet.
- Use Table G2413.4(5).

Branch length method [Commentary Figure G2413.4.3(1)] Example 1:

Note: This example illustrates hybrid system design, but is not typical for dwellings.

1. Using Table 402.4(7) of the IFGC, determine the minimum required size of piping Sections A through D. The longest run of piping from the point of delivery to the most remote regulator is 175 feet.
   - Section A serves a load of 625 MBH and in the 175 foot row of the table, $^1/_2$-inch pipe is shown to have a capacity of 728 ft^3/hr or 728,000 Btu/h for gas with a heating value of 1,000 Btu/ft^3.
   - Because Sections B, C and D all serve lesser loads than Section A, they too can be $^1/_2$ inch in size.
   - Because Table 402.4(7) of the IFGC is based upon a pressure drop of 3.5 psi, the available pressure at the inlets of the "pounds-to-inches" regulators under full load condition will be at least 1.5 psig.
2. Determine size of piping Sections E, F and G, using Table 402.4(2) of the IFGC and the longest length of piping from the pounds-to-inches regulator to the most remote outlet. In this case, rooftop unit 1 is the most remote at 65 feet from the regulator.
3. Determine size of piping sections H, I and J in the same manner described in Item 2.

NOTE: MBH = 1,000 Btu/h

Hybrid pressure [Commentary Figure G2413.4.3(2)] Example 2:

Given:

- All piping is CSST.
- Piping branches run in parallel.
- Individual CSST appliance branch runs supplied by manifold.
- Supply pressure is 2 psi downstream of meter.
- Chosen pressure drop is 1 psi for Section A.
- Natural gas with specific gravity of 0.60.
- Heating value of gas is 1,000 Btu/ft^3.
- Supply pressure at manifold is 8 inches w.c.
- Chosen pressure drop is 3 inches w.c. for Sections B through G.
- Appliances need 5 inches w.c. minimum supply pressure.
- Pressure drop across regulator is less than $^1/_2$ psi at full load of this system.

Sizing Section A:

- Size Section A based on total load and length from meter to regulator.
- Total load = 80 + 36 + 52 + 28 + 25 = 221 cfh.
- Section length = 45 feet.
- Use Table G2413.4(6).

Sizing Section B:

- Size Section B based on appliance load and length from regulator to appliance.

SUMMARY TABLE FOR BRANCH LENGTH METHOD EXAMPLE 2

SECTION	LOAD (cfh)	SECTION LENGTH (feet)	SECTION LENGTH (feet) USED WITH TABLE	REQUIRED SIZE (CSST)
A	221	45	70	
B	80	15	60	
C	36	10	55	
D	52	20	65	
E	53	20	70	
F	28	5	70	
G	25	5	70	

INTERNATIONAL CODE COUNCIL®
Copyright © 2015 ICC. ALL RIGHTS RESERVED. Accessed by David Dammon on Jun 21, 2017 12:30:52 PM pursuant to License Agreement with ICC. No further reproduction or distribution authorized. ANY UNAUTHORIZED REPRODUCTION OR DISTRIBUTION IS A VIOLATION OF THE FEDERAL COPYRIGHT ACT AND THE LICENSE AGREEMENT, AND SUBJECT TO CIVIL AND CRIMINAL PENALTIES THEREUNDER.

- Appliance load = 80 cfh.
- Section length (furnace) = 15 feet.
- Use Table 402.4(16) of the IFGC.

Sizing Section C:

- Size Section C based on appliance load and length from regulator to appliance.
- Total load = 36 cfh.
- Section length (water heater) = 10 feet.
- oUse Table 402.4(16) of the IFGC.

Sizing Section D:

- Size Section D based on appliance load and length from regulator to appliance.
- Total load = 52 cfh.
- Section length (range) = 20 feet
- Use Table 402.4(16) of the IFGC

Sizing Section E:

- Size Section E based on appliance total load and length from regulator to furthest appliance.
- Total load = 25 + 28 = 53 cfh.

SUMMARY TABLE FOR HYBRID PRESSURE EXAMPLE 2

SECTION	LOAD (cfh)	ACTUAL SECTION LENGTH (feet) (including equivalent length of fittings and bends)	SECTION LENGTH (FT) USED WITH TABLE	REQUIRED SIZE (CSST)
A	221	45	45[a]	
B	80	15	15[b]	
C	36	10	10[b]	
D	52	20	20[b]	
E	53	20	25[b]	
F	28	5	25[b]	
G	25	5	25[b]	

a. Distance from meter to regulator is the run length for the main section.
b. Distance from regulator to each appliance is the run length for appliance branch run sections.

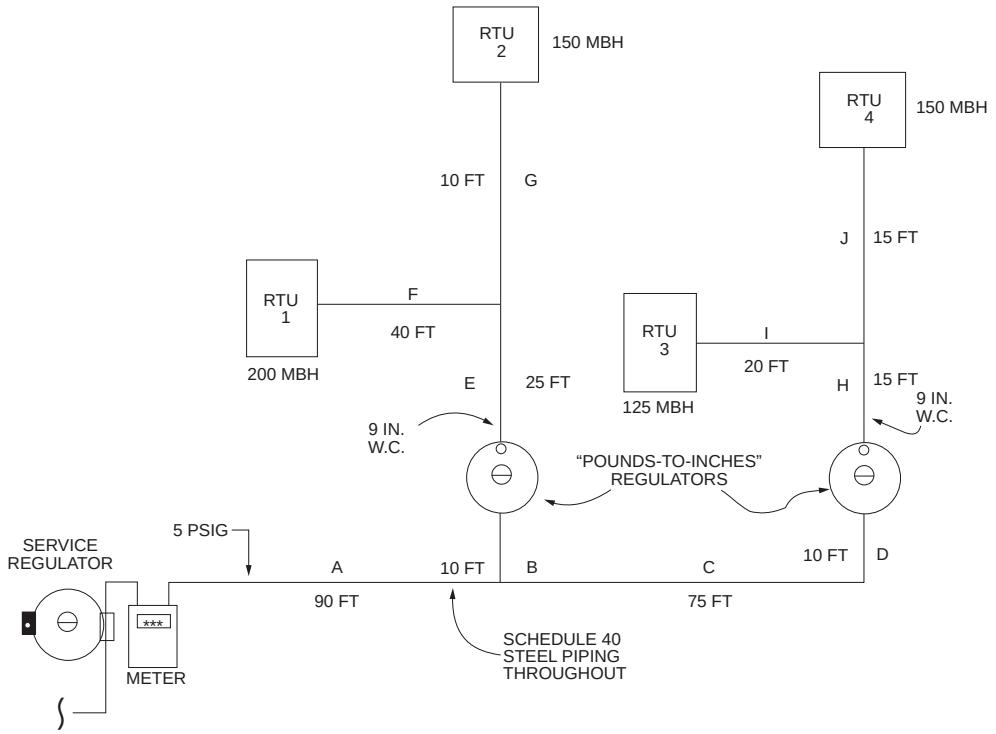

For SI: 1 foot 304.8 mm, 1 MBH = 293 W, 1 inch water column = 2.49 Pa.

Figure G2413.4.3(1)
HYBRID PRESSURE BRANCH SYSTEM FOR ROOF TOP UNITS

INTERNATIONAL CODE COUNCIL®
Copyright © 2015 ICC. ALL RIGHTS RESERVED. Accessed by David Dammon on Jun 21, 2017 12:30:52 PM pursuant to License Agreement with ICC. No further reproduction or distribution authorized. ANY UNAUTHORIZED REPRODUCTION OR DISTRIBUTION IS A VIOLATION OF THE FEDERAL COPYRIGHT ACT AND THE LICENSE AGREEMENT, AND SUBJECT TO CIVIL AND CRIMINAL PENALTIES THEREUNDER.

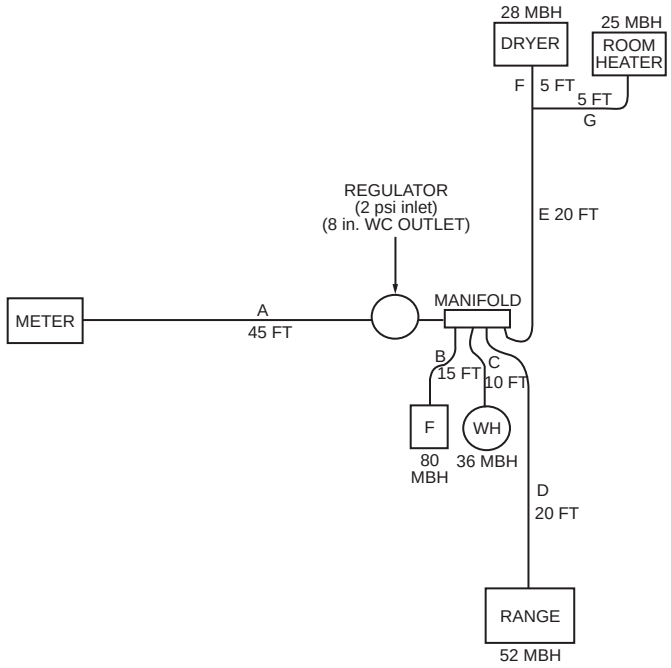

For SI: 1 foot = 304.8 mm, 1 inch water column = 249 Pa, 1 MBH = 293 W.

Figure G2413.4.3(2)
HYBRID PRESSURE PARALLEL DISTRIBUTION SYSTEM

- Section length (dryer/room heater) = 20 + 5 =25 feet.
- Use Table 402.4(16) of the IFGC.

Sizing Section F:

- Size Section F based on appliance total load and length from regulator to furthest appliance.
- Total load (dryer) = 28 cfh (0.8 m^3/h).
- Section length = 20 + 5 = 25 feet (7620 mm).
- Use Table 402.4(16) of the IFGC.

Sizing Section G:

- Size Section G based on appliance total load and length from regulator to furthest appliance.
- Total load (room heater) = 25 cfh.
- Section length = 20 + 5 = 25 feet.
- Use Table 402.4(16) of the IFGC.

G2413.5 (402.5) Allowable pressure drop. The design pressure loss in any *piping system* under maximum probable flow conditions, from the *point of delivery* to the inlet connection of the *appliance*, shall be such that the supply pressure at the *appliance* is greater than or equal to the minimum pressure required by the *appliance*.

❖ Between the point of delivery and the load, gas pressure losses will occur because of pipe friction. The design of the system must control these losses to ensure that the pressure at the load (appliance) connection point will be equal to or greater than the minimum required pressure as dictated by the appliance manufacturer. As stated in the commentary to Section G2412.8, inadequate gas pressures can result in dangerous appliance operation. This section speaks of "maximum probable flow conditions," which must be taken to mean the total connected load of all appliances operating at full capacity except where a diversity-of-load factor is applied.

The designer can choose any pressure loss for a piping system if the goal of this section is met. The code does not specify any maximum pressure drop other than what is required by this section. For example, consider an appliance that has a minimum required inlet pressure of 5 inches w.c. (1.25 kPa), and the gas pressure at the point of delivery is 8 inches w.c. (2 kPa). The maximum allowable pressure drop through the piping system would be 3 inches w.c. (0.75 kPa) because the pressure at the appliance connection must be greater than or equal to 5 inches w.c. Some sizing tables such as Tables G2413.4(1) and G2413.4(3) are based on very small pressure drops [0.5 inch w.c. (125 Pa)] and, thus are quite conservative sizing methods that account for the friction losses through a limited number of fittings used in a piping system. The tables are optional sizing methods placed in the code for convenience. The code allows piping systems to be designed for the exact pressure losses allowed by this section. Some tables are based on much larger pressure losses and can be used where the designer wants to keep pipe sizes to their minimum. The code intends to allow the designer to have the option of choosing the system pressure losses, provided that such losses meet the requirement of this section.

INTERNATIONAL CODE COUNCIL®
Copyright © 2015 ICC. ALL RIGHTS RESERVED. Accessed by David Dammon on Jun 21, 2017 12:30:52 PM pursuant to License Agreement with ICC. No further reproduction or distribution authorized. ANY UNAUTHORIZED REPRODUCTION OR DISTRIBUTION IS A VIOLATION OF THE FEDERAL COPYRIGHT ACT AND THE LICENSE AGREEMENT, AND SUBJECT TO CIVIL AND CRIMINAL PENALTIES THEREUNDER.

G2413.6 (402.6) Maximum design operating pressure. The maximum design operating pressure for *piping systems* located inside buildings shall not exceed 5 pounds per square inch gauge (psig) (34 kPa gauge) except where one or more of the following conditions are met:

1. The *piping system* is welded.
2. The *piping* is located in a ventilated chase or otherwise enclosed for protection against accidental gas accumulation.
3. The *piping* is a temporary installation for buildings under construction.

❖ This section is specific to indoor piping systems. The pressure is limited to 5 psig (34 kPa) to minimize the consequences of a leak. Also, the higher the pressure, the more difficult it is to contain any gas and, thus leakage is more likely. Item 1 recognizes the superior strength and integrity of steel piping with welded joints. Item 2 allows the option of higher pressures where the piping is enclosed to prevent leakage from entering the building. Item 3 allows higher pressures for temporary piping for construction site applications, such as temporary space heating, because of low occupant density, the presence of trained personnel and the short duration of use. Item 3 recognizes the unique nature of temporary piping on construction sites where small piping is desirable, thus making higher pressures necessary.

This section applies to all fuel gases including LP-gas (see Section G2413.6.1).

G2413.6.1 (402.6.1) Liquefied petroleum gas systems. LP-gas systems designed to operate below -5ºF (-21ºC) or with butane or a propane-butane mix shall be designed to either accommodate liquid LP-gas or prevent LP-gas vapor from condensing into a liquid.

❖ In low-temperature environments, LP-gases might condense into the liquid state within the piping system. If the liquid fuel enters system components or appliances, dangerous malfunctions could result. The temperature and pressure of a gas both affect the point at which a gas will change states to a liquid phase. LP-gas can be made to condense to liquid by applying pressure, by cooling the gas and by a combination of both. At atmospheric pressure, 14.7 psia at sea level, propane will condense at -44°F (-42°C) and butane will condense at 15°F (-9°C) meaning that LP liquid would remain as a liquid in an open container at temperatures of minus 44 degrees F and lower. As the liquid warms to temperatures above the condensing temperature, the liquid will begin to boil producing gas vapor and the resultant vapor pressure will have to be held in a closed container to prevent vaporization of all of the liquid. This is what happens in an LP-gas storage tank. The tank holds both liquid and gaseous LP under pressure that will vary with the ambient temperature. Within a piping system, the pressure could be higher than one atmosphere and LP-gas would, therefore, condense at a higher temperature. For example, at 20 psig (138 kPa), propane will condense at -5°F (-21°C). The -5°F threshold requirement of this section was chosen because 20 psi system piping was commonly installed outdoors.

SECTION G2414 (403) PIPING MATERIALS

G2414.1 (403.1) General. Materials used for *piping systems* shall comply with the requirements of this chapter or shall be *approved*.

❖ This section dictates what materials and components can be used to construct gas distribution systems and also specifies the allowable applications of those materials.

G2414.2 (403.2) Used materials. *Pipe*, fittings, *valves* or other materials shall not be used again unless they are free of foreign materials and have been ascertained to be adequate for the service intended.

❖ Ideally, gas pipe installations should be constructed of new materials. However, this section recognizes that there are occasions when used piping materials may be perfectly acceptable for an installation if they meet a number of very strict criteria that intend to reduce the potential for poor performance. To judge equivalency of reused piping materials, compliance with approval criteria for new materials should be used.

G2414.3 (403.3) Other materials. Material not covered by the standards specifications listed herein shall be investigated and tested to determine that it is safe and suitable for the proposed service, and, in addition, shall be recommended for that service by the manufacturer and shall be *approved* by the *code official*.

❖ This section echoes the intent of Section R104.11.

G2414.4 (403.4) Metallic pipe. Metallic *pipe* shall comply with Sections G2414.4.1 and G2414.4.2.

❖ This section addresses the traditional metal pipes used in piping installations.

G2414.4.1 (403.4.1) Cast iron. Cast-iron *pipe* shall not be used.

❖ Because cast iron pipe is brittle compared to the malleable metals, it is more likely to fail under stress and therefore is not suitable for conveying fuel gases. Steel pipe will deform under extreme stress, but cast iron pipe will break.

G2414.4.2 (403.4.2) Steel. Steel and wrought-iron *pipe* shall be at least of standard weight (Schedule 40) and shall comply with one of the following standards:

1. ASME B36.10, 10M.
2. ASTM A53/A 53M.
3. ASTM A106.

❖ Steel pipe must be Schedule 40 or heavier, must comply with one of the listed standards and can be black iron or galvanized. Contrary to popular belief, natural gas does not adversely react with the zinc coating on galvanized pipe.

INTERNATIONAL CODE COUNCIL®
Copyright © 2015 ICC. ALL RIGHTS RESERVED. Accessed by David Dammon on Jun 21, 2017 12:30:52 PM pursuant to License Agreement with ICC. No further reproduction or distribution authorized. ANY UNAUTHORIZED REPRODUCTION OR DISTRIBUTION IS A VIOLATION OF THE FEDERAL COPYRIGHT ACT AND THE LICENSE AGREEMENT, AND SUBJECT TO CIVIL AND CRIMINAL PENALTIES THEREUNDER.

G2414.5 (403.5) Metallic tubing. Seamless copper, aluminum alloy and steel *tubing* shall not be used with gases corrosive to such materials.

❖ Aluminum and steel tubing are used in the manufacturing of appliances but are rarely used for gas distribution. Copper tubing is widely used in gas distribution systems and is used as an alternative to CSST in parallel distribution manifold systems. As with copper pipe, copper tubing cannot be used with gases that will cause it to corrode. Commentary Figure G2414.5 illustrates a type of sheathed copper tubing that is designed for gas distribution. The corrosiveness of the gas can be determined by contacting the gas supplier. Depending on the chemical composition of the gas, copper can form scale deposits on the interior pipe wall, and such scale can find its way into gas controls, regulators and valves causing malfunctions.

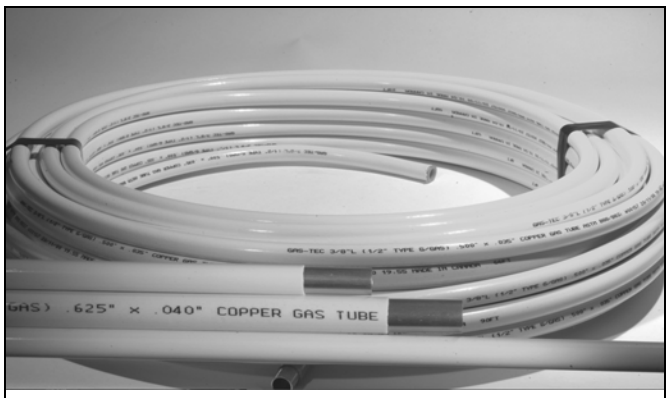

Photo courtesy of KAMCO Products Ltd.

Figure G2414.5
PLASTIC-SHEATHED COPPER TUBING

G2414.5.1 (403.5.1) Steel tubing. Steel *tubing* shall comply with ASTM A254.

❖ Steel tubing is used only in industrial applications and in the construction of appliances.

G2414.5.2 (403.5.2) Copper and copper alloy tubing. Copper *tubing* shall comply with Standard Type K or L of ASTM B88 or ASTM B280.

Copper and copper alloy *tubing* shall not be used if the gas contains more than an average of 0.3 grains of hydrogen sulfide per 100 standard cubic feet of gas (0.7 milligrams per 100 liters).

❖ ASTM B88 applies to copper water tube, and Type K and L refers to wall thickness. Type M tubing is the thinnest wall and is not allowed for gas service.

G2414.5.3 (403.5.4) Corrugated stainless steel tubing. Corrugated stainless steel *tubing* shall be *listed* in accordance with ANSI LC 1/CSA 6.26.

❖ ANSI LC-1 contains material and performance criteria and installation requirements for corrugated stainless steel tubing (CSST) gas distribution systems. CSST systems are used as an alternative to more traditional gas piping systems for the distribution of natural gas within buildings.

Corrugated stainless steel tubing is a semirigid stainless steel tubing with a plastic jacket and is available in coil lengths varying from 100 to 250 feet (30 480 to 76 200 mm) and in the following standard sizes: $^3/_8$, $^1/_2$, $^3/_4$, 1, $1^1/_4$, $1^1/_2$ and 2 inch (larger sizes may be available) [see Commentary Figure G2414.5.3(1)]. Note that CSST sizes are designated by equivalent hydraulic diameters (EHD) not standard tube sizes in inches. Any standard size markings in inches provided by the manufacturer are approximations only. Special proprietary fittings are required for connection of the tubing [see Commentary Figures G2414.5.3(2) through G2414.5.3(4)]. CSST can be used in low-pressure systems [up to 0.5 psig (14 inches w.c.) (3.45 kPa)] and in higher pressure systems operating at pressures up to 5 psig (34.5 kPa). Commentary Figure G2414.5.3(5) shows a typical manifold installation using CSST and shows a multiport manifold with a pressure regulator and shutoff valve installed. To prevent damage or puncture by screws and nails, specialized steel shield plates and protective flexible conduit are used to protect CSST systems that pass through or near structural members. Such protection must employ the parts specified by the

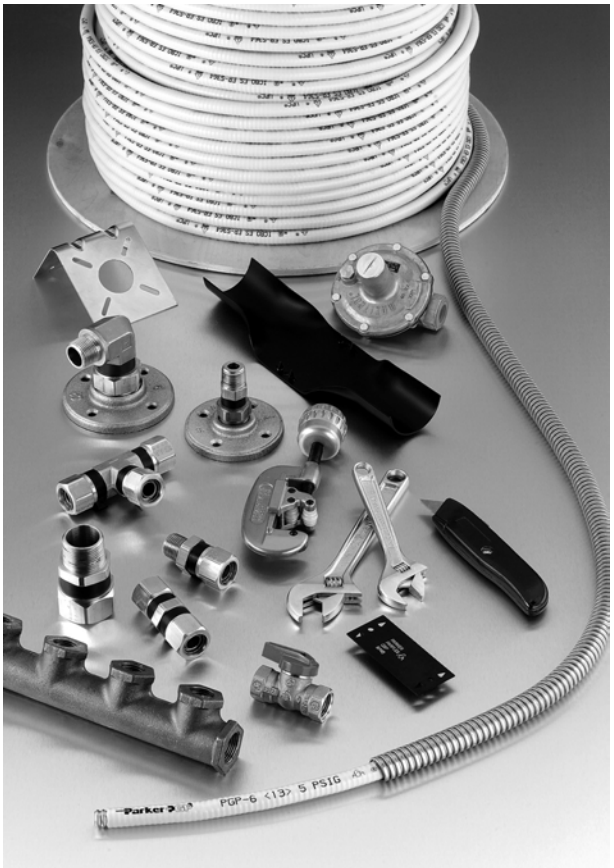

Photo courtesy of Parker Hannifin

Figure G2414.5.3(1)
CSST AND SYSTEM COMPONENTS

INTERNATIONAL CODE COUNCIL®
Copyright © 2015 ICC. ALL RIGHTS RESERVED. Accessed by David Dammon on Jun 21, 2017 12:30:52 PM pursuant to License Agreement with ICC. No further reproduction or distribution authorized. ANY UNAUTHORIZED REPRODUCTION OR DISTRIBUTION IS A VIOLATION OF THE FEDERAL COPYRIGHT ACT AND THE LICENSE AGREEMENT, AND SUBJECT TO CIVIL AND CRIMINAL PENALTIES THEREUNDER.

CSST manufacturer as opposed to standard off-the-shelf protection devices [see Commentary Figures G2414.5.3(1) and G2414.5.3(6)].

CSST systems are usually designed as parallel distribution (manifold) systems, whereas traditional gas distribution systems are typically designed as branch (series) systems [see Commentary Figure G2414.5.3(7)].

Medium-pressure CSST systems, typically 2 psig (13.8 kPa) maximum, are designed to allow the use of small diameter tubing for long runs. Significant distribution pressure losses can be compensated for by providing sufficiently high supply pressures. Medium-pressure distribution systems require the installation of pressure regulators, commonly called pounds-to-inches regulators, to reduce the supply pressure to the pressure required for delivery to the gas-fired appliances [see commentary, Section G2421 and Commentary Figure G2414.5.3(8)]. Note that systems with pressures over 2 psi (13.8 kPa) that supply appliances designed for a maximum inlet pressure of 14 inches

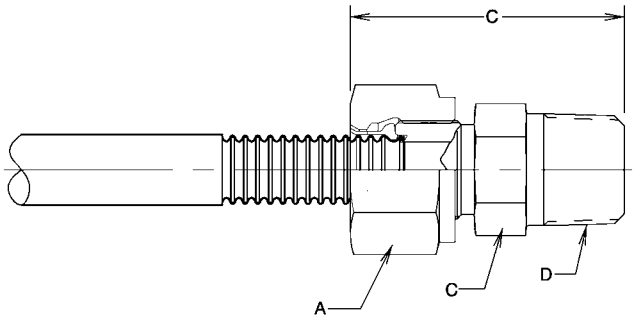

Figure courtesy of Parker Hannifin

Figure G2414.5.3(2)
CSST FITTING

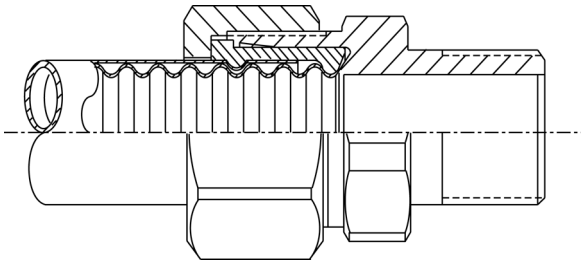

Figure courtesy of Gastite Division/Titeflex Corporation

Figure G2414.5.3(3)
CSST FITTING



Photo courtesy of Gastite Division/Titeflex Corporation

Figure G2414.5.3(4)
CSST FITTING

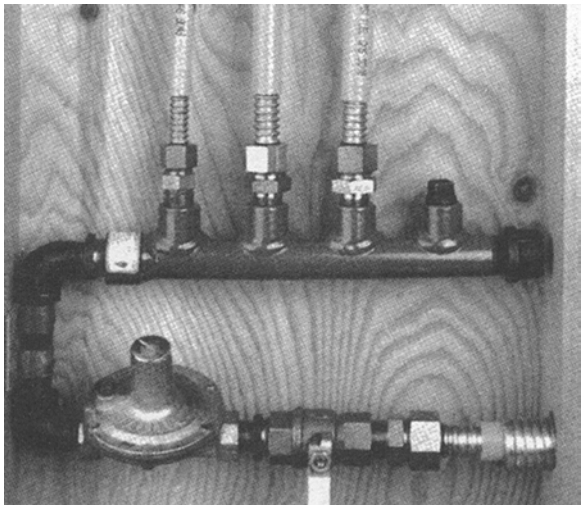

Photo courtesy of Gastite Division/Titeflex Corporation

Figure G2414.5.3(5)
MULTIPORT MANIFOLD INSTALLATION USING CSST

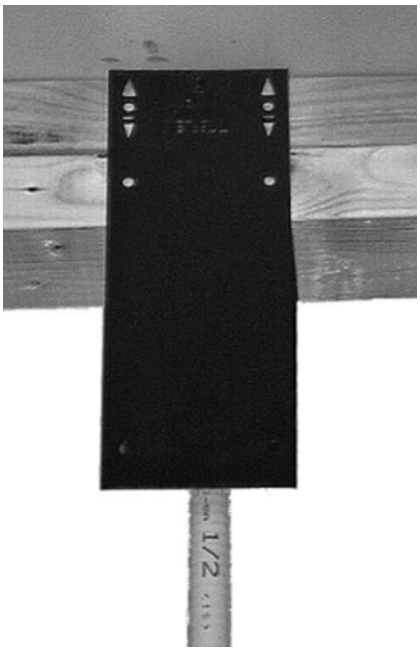

Photo courtesy of Gastite Division/Titeflex Corporation

Figure G2414.5.3(6)
TOP PLATE TUBING PROTECTION SHIELD

INTERNATIONAL CODE COUNCIL®
Copyright © 2015 ICC. ALL RIGHTS RESERVED. Accessed by David Dammon on Jun 21, 2017 12:30:52 PM pursuant to License Agreement with ICC. No further reproduction or distribution authorized. ANY UNAUTHORIZED REPRODUCTION OR DISTRIBUTION IS A VIOLATION OF THE FEDERAL COPYRIGHT ACT AND THE LICENSE AGREEMENT, AND SUBJECT TO CIVIL AND CRIMINAL PENALTIES THEREUNDER.

w.c. (3.5 kPa) must have overpressure protection devices (OPD) in addition to the pounds-to-inches line pressure regulators. Such OPDs are factory installed on pressure regulators shipped for use in systems having pressures greater than 2 psi (13.8 kPa).

Section G2415.5 prohibits tubing fittings in concealed locations but does not apply to CSST fittings. In accordance with the manufacturer's installation instructions and the material listing, CSST fittings can be concealed in the building construction. The tubing, fittings, shields and outlet terminals are all part of a system and must be installed together as a system. The manufacturer's installation instructions are to be considered as a complete system installation manual, which also includes the proprietary sizing criteria. Except for those tables that are specific to CSST, the sizing tables in Section G2413 do not apply to and cannot be used for CSST systems.

Installation of CSST is not allowed underground (directly buried) unless it is of a type specially designed and listed for underground applications [see Commentary Figure G2414.5.3(9)]. Some manufacturers' instal-

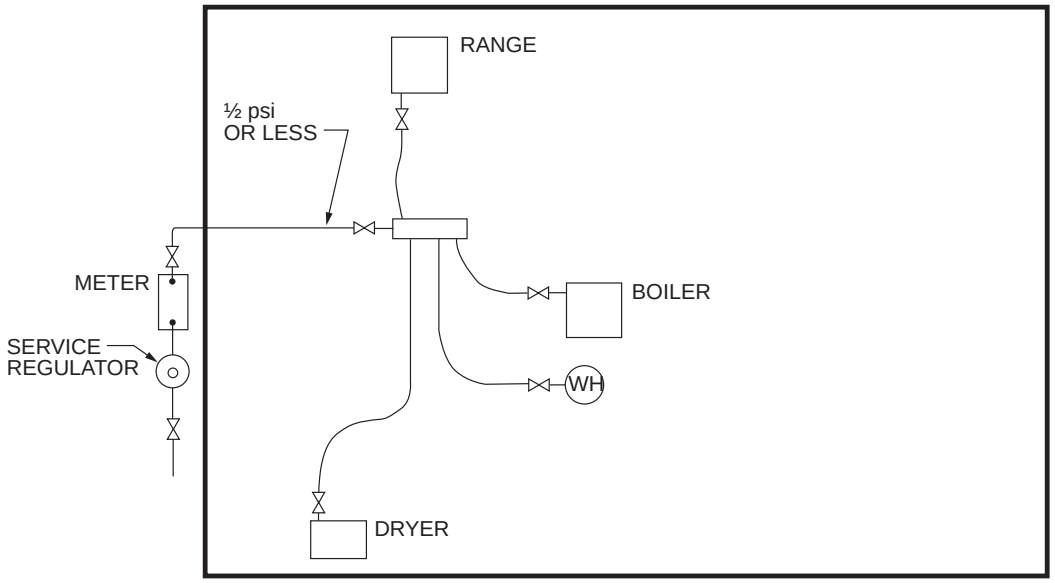

For SI: 1 pound per square inch = 6.895 kPa.

Figure G2414.5.3(7)
LOW-PRESSURE GAS PIPING SYSTEM USING CSST

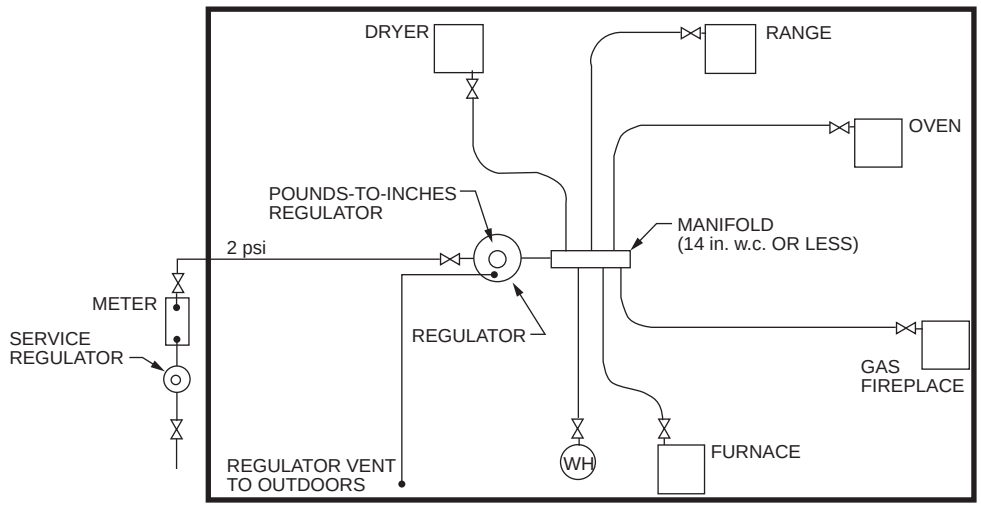

For SI: 1 pound per square inch = 6.896 kPa, 1 inch water column = 249 Pa.

Figure G2414.5.3(8)
MEDIUM-PRESSURE GAS PIPING SYSTEM USING CSST

INTERNATIONAL CODE COUNCIL®
Copyright © 2015 ICC. ALL RIGHTS RESERVED. Accessed by David Dammon on Jun 21, 2017 12:30:52 PM pursuant to License Agreement with ICC. No further reproduction or distribution authorized. ANY UNAUTHORIZED REPRODUCTION OR DISTRIBUTION IS A VIOLATION OF THE FEDERAL COPYRIGHT ACT AND THE LICENSE AGREEMENT, AND SUBJECT TO CIVIL AND CRIMINAL PENALTIES THEREUNDER.

lation instructions allow CSST to be "indirectly" buried by installing the tubing within a nonmetallic, water-tight conduit, such as PVC, PE or ABS plastic pipe. Other manufacturers may offer CSST with an integral casing and sealing fittings specifically designed for underground installation. See Sections G2415.6 and G2415.12 through G2415.14 regarding piping buried in slabs and beneath buildings.

CSST is allowed by the manufacturers' installation instructions to connect directly to fixed-in-place, nonportable, nonmovable appliances such as furnaces, boilers, gas fireplaces and water heaters. CSST is not intended for direct connection to moveable appliances such as clothes dryers or ranges nor is it intended to connect to appliances suspended on chains or rods such as radiant heaters and unit heaters. Also, connecting directly to log lighters installed in solid-fuel burning fireplaces is not allowed. Direct connection is allowed for gas fireplace appliances in accordance with the CSST and fireplace manufacturers' instructions. At range and clothes dryer locations, the CSST must terminate at a CSST termination fitting assembly, and a gas appliance connector must be used to connect the appliance to the termination fitting assembly. CSST must not be exposed to impact, vibration or repeated movement. "Drops" to fixed-in-place nonmovable appliances must be well supported and routed to avoid being disturbed. In other words "flying runs" of CSST are prohibited. CSST, like copper tubing, is not flexible, but rather is semirigid, allowing it to be formed into shape as it is installed. CSST, like any metallic tubing, must not be repeatedly bent in the same location because this can result in kinking, work hardening and structural failure.

Generally, the sale of CSST materials is restricted and only individuals who have been specially trained and certified are allowed to purchase and install CSST systems.

Traditionally, the utility company (gas supplier) service regulator delivers natural gas to the building at a pressure of approximately 6 to 10 inches w.c. (1.49 to 2.49 kPa). Where medium-pressure [2 psig (13.8 kPa)] systems are used, the service regulator is set to deliver gas at a pressure of 2 psig (13.8 kPa). A medium-pressure gas distribution system must be properly designed to deliver gas to the connected appliances at pressures not exceeding the maximum inlet (supply) pressure for which the appliance is designed. A hazardous condition could develop if gas is supplied to appliances at pressures greater than the design inlet pressure of the appliances. See Section 416 of the IFGC.

ANSI LC-1 /CSA 6.26 addresses CSST systems and contains installation requirements. Installers and inspectors must have copies of the standard and the CSST manufacturer's installation instructions to properly install and inspect CSST systems. Manufacturers' instructions contain detailed requirements for protection hardware designed to prevent damage to installed CSST systems. As with most tubing systems, the most common installation errors involve abuse of the CSST tubing, lack of support and improperly installed puncture protection devices or the omission of protection devices. CSST manufacturers publish design and installation guides that are very helpful and should be on the book shelves of inspectors, installers and designers [see Commentary Figures G2414.5.3(10) and G2414.5.3(11)]. Some CSST manufacturers offer preassembled manifolds in a rough-in cabinet to sim-

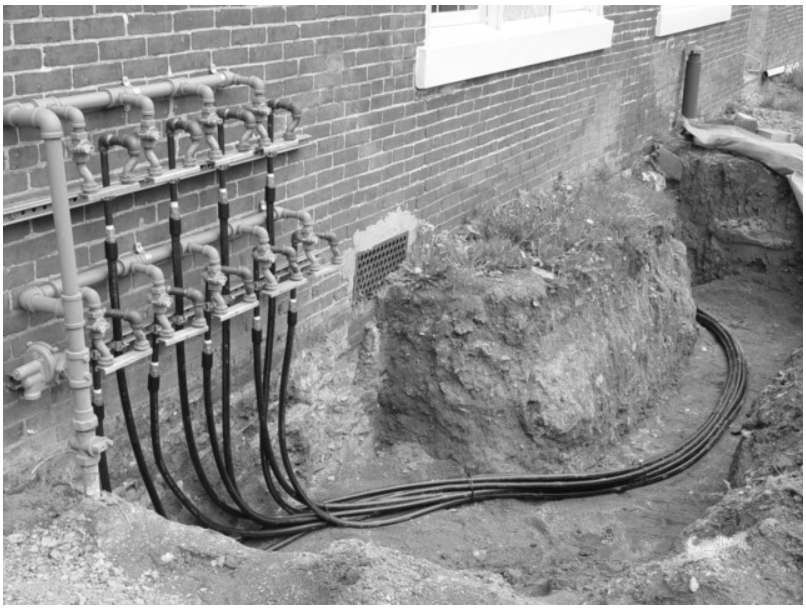

Photo courtesy of Omega Flex

Figure G2414.5.3(9)
CSST MANUFACTURED FOR UNDERGROUND INSTALLATION

INTERNATIONAL CODE COUNCIL®
Copyright © 2015 ICC. ALL RIGHTS RESERVED. Accessed by David Dammon on Jun 21, 2017 12:30:52 PM pursuant to License Agreement with ICC. No further reproduction or distribution authorized. ANY UNAUTHORIZED REPRODUCTION OR DISTRIBUTION IS A VIOLATION OF THE FEDERAL COPYRIGHT ACT AND THE LICENSE AGREEMENT, AND SUBJECT TO CIVIL AND CRIMINAL PENALTIES THEREUNDER.

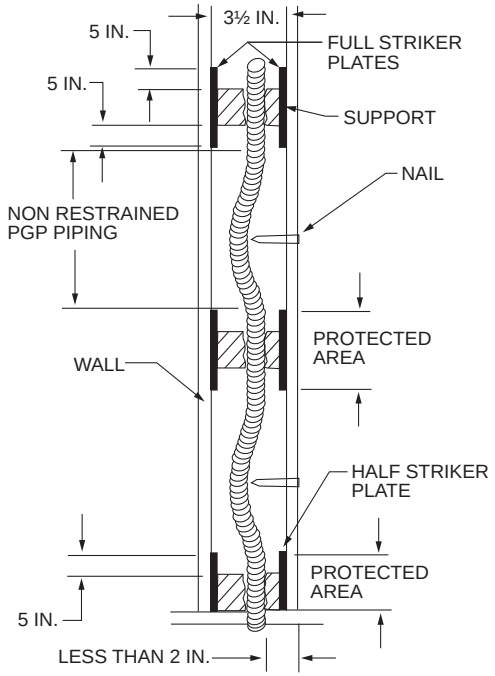

Figure courtesy of Parker Hannifin
For SI: 1 inch = 25.4 mm.

Figure G2414.5.3(10)
EXCERPT FROM CSST MANUFACTURER'S INSTALLATION INSTRUCTIONS

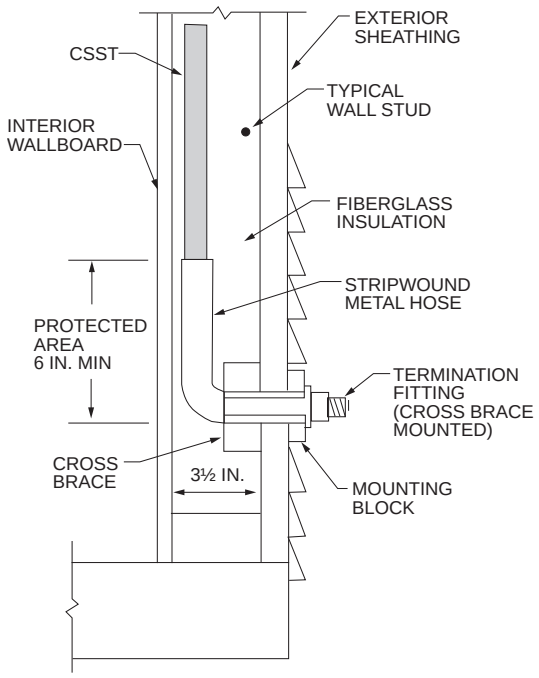

Figure courtesy of Parker Hannifin
For SI: 1 inch = 25.4 mm.

Figure G2414.5.3(11)
EXCERPT FROM CSST MANUFACTURER'S INSTALLATION INSTRUCTIONS

plify installation [see Commentary Figure G2414.5.3(12)]. CSST transitions to rigid pipe appliance connections and listed appliance connectors must be made with fittings that prevent stress and rotational forces from being applied to the CSST. Commentary Figures G2414.5.3(13) through (15) illustrate typical fitting assemblies used to make the transition from CSST to appliance connections or connectors. It is a code violation to construct appliance outlets with a standard pipe elbow and rigid pipe nipple stubbed out of a wall or up through a floor because any rotational forces applied by tools to the outlet nipple will cause the CSST to rotate behind the wall or below the floor. The same is true for tee-handle valves concealed in a wall. The proper terminal fittings and brackets must be used to prevent forces from being transferred to the CSST.

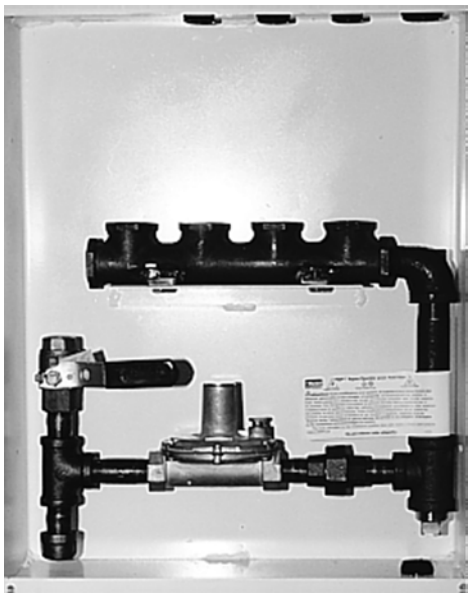

Photo courtesy of Parker Hannifin

Figure G2414.5.3(12)
MANIFOLD FOR 2 PSI PARALLEL DISTRIBUTION SYSTEM



Photo courtesy of Parker Hannifin

Figure G2414.5.3(13)
"STUB-OUT" TERMINATION TRANSITION FITTING

INTERNATIONAL CODE COUNCIL®
Copyright © 2015 ICC. ALL RIGHTS RESERVED. Accessed by David Dammon on Jun 21, 2017 12:30:52 PM pursuant to License Agreement with ICC. No further reproduction or distribution authorized. ANY UNAUTHORIZED REPRODUCTION OR DISTRIBUTION IS A VIOLATION OF THE FEDERAL COPYRIGHT ACT AND THE LICENSE AGREEMENT, AND SUBJECT TO CIVIL AND CRIMINAL PENALTIES THEREUNDER.



Photo courtesy of Gastite Division/Titeflex Corporation

Figure G2414.5.3(14)
"VALVE BOX" TERMINATION TRANSITION FITTING



Photo courtesy of Gastite Division/Titeflex Corporation

Figure G2414.5.3(15)
TERMINATION TRANSITION FITTING

G2414.6 (403.6) Plastic pipe, tubing and fittings. Polyethylene plastic pipe, tubing and fittings used to supply fuel gas shall conform to ASTM D2513. Such pipe shall be marked "Gas" and "ASTM D2513."

Plastic pipe, tubing and fittings, other than polyethylene, shall be identified and conform to the 2008 edition of ASTM D2513. Such pipe shall be marked "Gas" and "ASTM D2513."

Polyvinyl chloride (PVC) and chlorinated polyvinyl chloride (CPVC) plastic pipe, tubing and fittings shall not be used to supply fuel gas.

❖ The installation of plastic pipe and tubing is limited to areas that are both outside the building (outdoors) and underground because of the potential hazard associated with the use of a material that has lower resistance to physical damage and heat compared to metallic pipe. Plastic pipe and tubing must never be installed in or under any building. Plastic pipe and tubing are widely used for underground gas distribution systems because of their ease of installation and inherent resistance to corrosion (see Section G2415.17.1). The scope of ASTM D2513 was recently changed to limit its application to polyethylene (PE) pipe; therefore, an older edition is referenced for other types of plastic. This section specifically prohibits the use of PVC and CPVC pipe, tubing and fittings for conveying fuel gas.

The code now references the 2013 edition of ASTM D2513, which has been revised to address polyethylene (PE) plastic pipe, tubing and fittings only, whereas the 2008 edition addressed all plastic materials. The code had to maintain a reference to the 2008 edition of the standard in order to address plastics other than PE such as polyamide (nylon). It was determined that polyamide pipe is currently used to supply fuel gas; however, PVC and CPVC are not. Further, it was decided that because of the brittle nature of PVC and CPVC, especially at low temperatures, these materials are not suitable for conveying fuel gas. Rather than being silent, the code now prohibits what the marketplace has failed to embrace as a viable material for fuel gas (see Commentary Figure G2414.6).

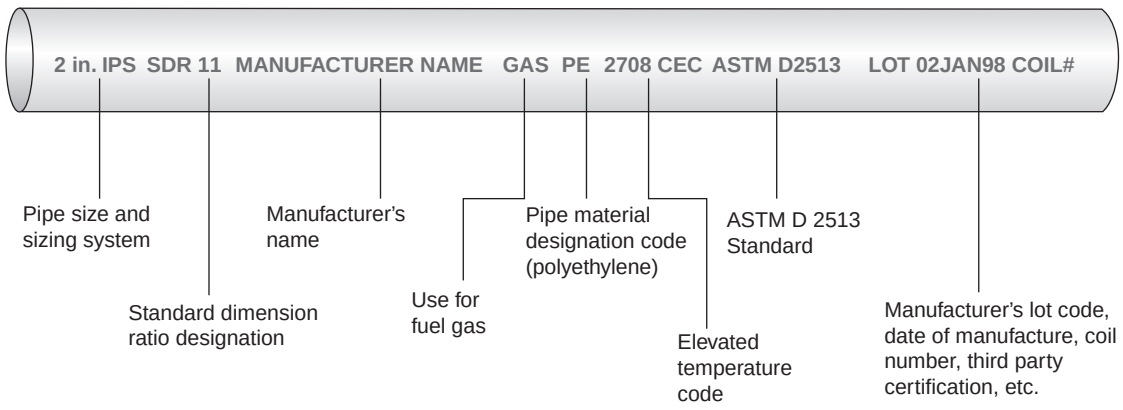

Figure G2414.6
PE PIPE MARKINGS

INTERNATIONAL CODE COUNCIL®
Copyright © 2015 ICC. ALL RIGHTS RESERVED. Accessed by David Dammon on Jun 21, 2017 12:30:52 PM pursuant to License Agreement with ICC. No further reproduction or distribution authorized. ANY UNAUTHORIZED REPRODUCTION OR DISTRIBUTION IS A VIOLATION OF THE FEDERAL COPYRIGHT ACT AND THE LICENSE AGREEMENT, AND SUBJECT TO CIVIL AND CRIMINAL PENALTIES THEREUNDER.

G2414.6.1 (403.6.1) Anodeless risers. Plastic pipe, tubing and anodeless risers shall comply with the following:

1. Factory-assembled anodeless risers shall be recommended by the manufacturer for the gas used and shall be leak tested by the manufacturer in accordance with written procedures.
2. Service head adapters and field-assembled anodeless risers incorporating service head adapters shall be recommended by the manufacturer for the gas used, and shall be designed and certified to meet the requirements of Category I of ASTM D2513, and U.S. Department of Transportation, Code of Federal Regulations, Title 49, Part 192.281(e). The manufacturer shall provide the user with qualified installation instructions as prescribed by the U.S. Department of Transportation, Code of Federal Regulations, Title 49, Part 192.283(b).



Photo courtesy of Perfection Corporation

Figure G2414.6.1(1)
SERVICE HEAD ADAPTERS

❖ This section is an exception to the absolute prohibition of plastic gas piping above ground. Plastic pipe is allowed to rise from underground within a steel riser conduit constructed as an anodeless riser assembly. Such risers are coated to resist corrosion and do not use a sacrificial anode for cathodic corrosion protection, hence the name "anodeless riser." The steel riser protects the PE plastic pipe from physical damage and terminates the plastic pipe with a threaded steel pipe transition fitting. A sweeping 90-degree (1.57 rad) bend is placed on the underground end of rigid risers to prevent them from rotating in the ground when threaded connections are made at the terminal end. The plastic pipe could be damaged by rotational and bending stresses transmitted by the riser; therefore, a horizontal portion of steel piping is installed at the bottom of the riser to limit such movement. These risers can eliminate the need for an underground plastic-to-metal transition fitting and simplify installation. They are used extensively by utility companies for service laterals and can be used for other installations such as supply runs to out-buildings, pool heaters, gas grills and yard lights.

Service head adapters are also a type of terminal transition fitting that allow plastic pipe to be pulled through a retired steel gas service lateral and terminated at the point where the concentric piping passes through the building foundation wall. The adapter makes the transition from plastic pipe to steel pipe and seals the end of the retired steel service lateral [see Commentary Figures G2403.(1), G2414.6.1(1) G2414.6.1(2) and G2414.6.1(3)].

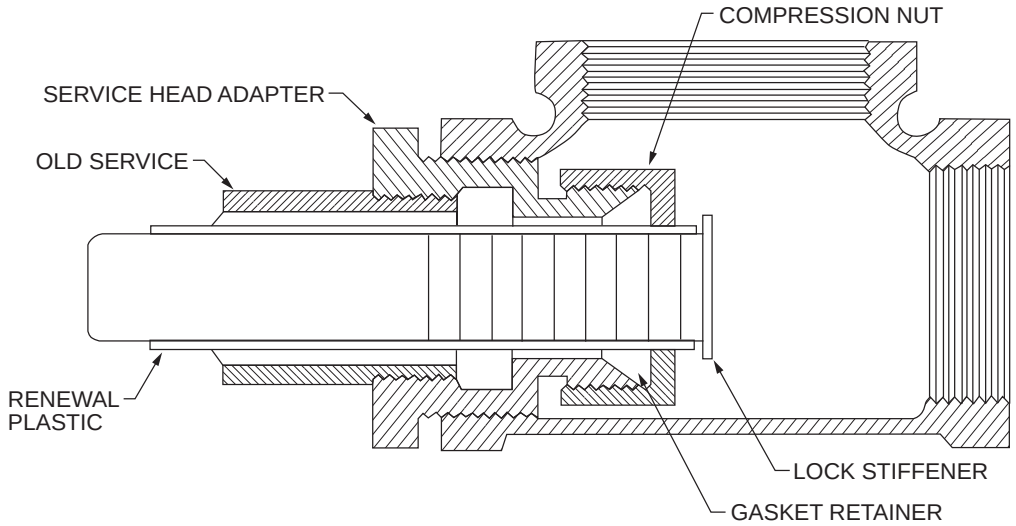

Figure courtesy of NORMAC

Figure G2414.6.1(2)
SERVICE HEAD ADAPTERS

INTERNATIONAL CODE COUNCIL®
Copyright © 2015 ICC. ALL RIGHTS RESERVED. Accessed by David Dammon on Jun 21, 2017 12:30:52 PM pursuant to License Agreement with ICC. No further reproduction or distribution authorized. ANY UNAUTHORIZED REPRODUCTION OR DISTRIBUTION IS A VIOLATION OF THE FEDERAL COPYRIGHT ACT AND THE LICENSE AGREEMENT, AND SUBJECT TO CIVIL AND CRIMINAL PENALTIES THEREUNDER.

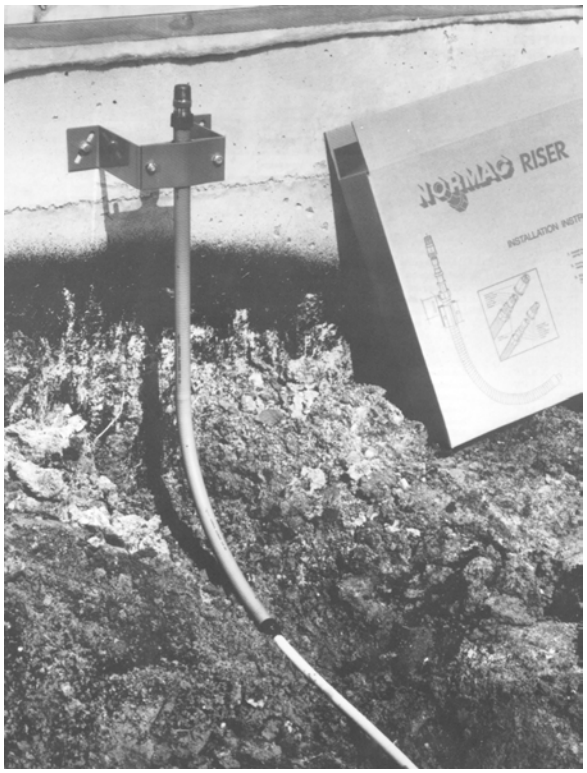

Photo courtesy of NORMAC

Figure G2414.6.1(3)
FLEXIBLE ANODELESS RISER

G2414.6.2 (403.6.2) LP-gas systems. The use of plastic pipe, tubing and fittings in undiluted liquefied petroleum gas *piping* systems shall be in accordance with NFPA 58.

❖ NFPA 58 limits plastic piping for LP-gas service to only polyethylene pipe and tubing. The PE pipe and tubing must be marked as being in compliance with ASTM D2513 and is allowed for LP-gas service only if so recommended by the material manufacturer.

G2414.6.3 (403.6.3) Regulator vent piping. Plastic pipe and fittings used to connect *regulator* vents to remote vent terminations shall be of PVC conforming to ANSI/UL 651. PVC vent *piping* shall not be installed indoors.

❖ The referenced standard is for Schedule 40 and 80 PVC electrical conduit. This material was chosen because it is required to be sunlight-resistant for use above ground and the typical application for regulator vent piping is above ground, outdoors where it would be subject to the degrading effects of ultraviolet radiation in sunlight. Consistent with other provisions in this code, plastic pipe that does or could convey fuel gas is prohibited indoors. Regulator vent outlets are piped to maintain separation between vent outlets and sources of ignition and air intake openings in building envelopes.

G2414.7 (403.7) Workmanship and defects. *Pipe, tubing* and fittings shall be clear and free from cutting burrs and defects in structure or threading, and shall be thoroughly brushed, and chip and scale blown.

Defects in *pipe* or *tubing* or fittings shall not be repaired. Defective *pipe, tubing* or fittings shall be replaced. (See Section G2417.1.2.)

❖ This section stresses that proper installation procedures are necessary to secure a safe installation. In the context of this section, good workmanship is an enforceable requirement. Burrs result from the cutting of pipe or tube and cause flow restriction. Pipe scale, dirt, construction site debris, metal chips from cutting and threading operations and excess thread compound are potentially harmful contaminates that might cause damage to valves, regulators and appliances. Damaged and/or improperly cut threads can cause leakage or joint failure. Defective materials must be replaced because attempts to repair them are always makeshift at best, and any cost savings would not be worth the risk.

G2414.8 (403.8) Protective coating. Where in contact with material or atmosphere exerting a corrosive action, metallic *piping* and fittings coated with a corrosion-resistant material shall be used. External or internal coatings or linings used on *piping* or components shall not be considered as adding strength.

❖ Protective coatings in the form of wrappings, tapes, enamels, epoxies, sleeves, casings and factory-applied coverings are a common method of isolating metallic piping materials from the atmosphere or from the earth in which they are buried. Application of these materials under strictly controlled factory conditions improves the quality control process and reduces the likelihood of coating defects. Corrosion can be caused by weather exposure, burial in the soil or construction materials that are in contact with the pipe. Cinders (also known as dross) are the waste residue from steel production and carry the waste products skimmed from the molten metal during the smelting process. Cinders are also the waste residue of coal-fired appliances and equipment. These materials are extremely corrosive to metallic piping and may not be used in any form (backfill or cinder blocks, for example) where in direct contact with the pipe. Protection is usually provided by a factory-applied coating or by field wrapping the pipe with a protective covering, such as a coal-tar-based or plastic wrapping. Galvanized piping in contact with soil would require additional coating or protection. The zinc coating does not usually provide long-term protection in underground applications. Where possible, a piping material is chosen that is not subject to the type of corrosion of the application.

Corrosion can also be caused by galvanic action that takes place where dissimilar metals are joined in a current-carrying medium, such as soil or water. For example, if steel and copper pipe are joined in a medium that conducts electrical current, the steel pipe will corrode at an accelerated rate because of the electro-chemical process between the dissimilar metals. In this case, the soil acts as an electrolyte, the steel will be a sacrificial anode, and the copper will be a cathode. Because

INTERNATIONAL CODE COUNCIL®
Copyright © 2015 ICC. ALL RIGHTS RESERVED. Accessed by David Dammon on Jun 21, 2017 12:30:52 PM pursuant to License Agreement with ICC. No further reproduction or distribution authorized. ANY UNAUTHORIZED REPRODUCTION OR DISTRIBUTION IS A VIOLATION OF THE FEDERAL COPYRIGHT ACT AND THE LICENSE AGREEMENT, AND SUBJECT TO CIVIL AND CRIMINAL PENALTIES THEREUNDER.

a cell is created, current will flow through the metal junction and the soil, resulting in the gradual deterioration of the steel. To protect against galvanic corrosion, dielectric fittings and couplings are used to join the piping, thus breaking the circuit of the cell.

This section is commonly interpreted as requiring priming and painting of black steel pipe that is exposed to the weather as the minimum form of protection.

G2414.9 (403.9) Metallic pipe threads. Metallic *pipe* and fitting threads shall be taper *pipe* threads and shall comply with ASME B 1.20.1.

❖ Threads must be taper cut in accordance with the stated standard. The standard regulates tapered and straight threads, but this section specifies tapered threads. Tapered pipe threads, when made up, form a metal-to-metal (interference fit) seal. Pipe-joint compound or PTFE (Teflon) tape is to be applied to male threads only to decrease the possibility of tape fragments or compound entering the piping system. Such debris in piping systems can block orifices, restrict flow or interfere with the operation of controls. The primary purpose of pipe-thread compounds is to act as a lubricant to allow proper tightening and to achieve a metal-to-metal seal. They also fill in small imperfections on the threaded surfaces. This section prohibits the use of straight tapped fittings such as couplings because the threaded joint will not provide the same seal as a joint made with taper-tapped fittings. Steel taper-threaded couplings are easily identified because they look exactly like the run of a tee fitting (see Commentary Figure G2414.9). The common designation "NPT" is misinterpreted as "nominal pipe threads" and actually stands for "national standard, pipe, tapered."

G2414.9.1 (403.9.1) Damaged threads. *Pipe* with threads that are stripped, chipped, corroded or otherwise damaged shall not be used. Where a weld opens during the operation of cutting or threading, that portion of the *pipe* shall not be used.

❖ Damaged or improperly cut threads and defective welded seam pipe must be eliminated from any gas piping system because of the potential for leaks.

G2414.9.2 (403.9.2) Number of threads. Field threading of metallic *pipe* shall be in accordance with Table G2414.9.2.

❖ The table sets forth the required number of threads per unit length of pipe based on the pipe size. These specifications are intended to be both maximums and minimums because both undercutting and overcutting can result in faulty joints. Proper threading of pipe requires skill, practice, and the proper well-maintained tools.

TABLE G2414.9.2 (403.9.2)
SPECIFICATIONS FOR THREADING METALLIC PIPE

IRON PIPE SIZE (inches)	APPROXIMATE LENGTH OF THREADED PORTION (inches)	APPROXIMATE NO. OF THREADS TO BE CUT
$^1/_2$	$^3/_4$	10
$^3/_4$	$^3/_4$	10
1	$^7/_8$	10
$1^1/_4$	1	11
$1^1/_2$	1	11

For SI: 1 inch = 25.4 mm.

G2414.9.3 (403.9.3) Thread joint compounds. Thread joint compounds shall be resistant to the action of liquefied petroleum gas or to any other chemical constituents of the gases to be conducted through the *piping*.

❖ Joint compounds in both paste and tape forms are commonly misapplied and used for the wrong application. Some compounds react chemically with the gas

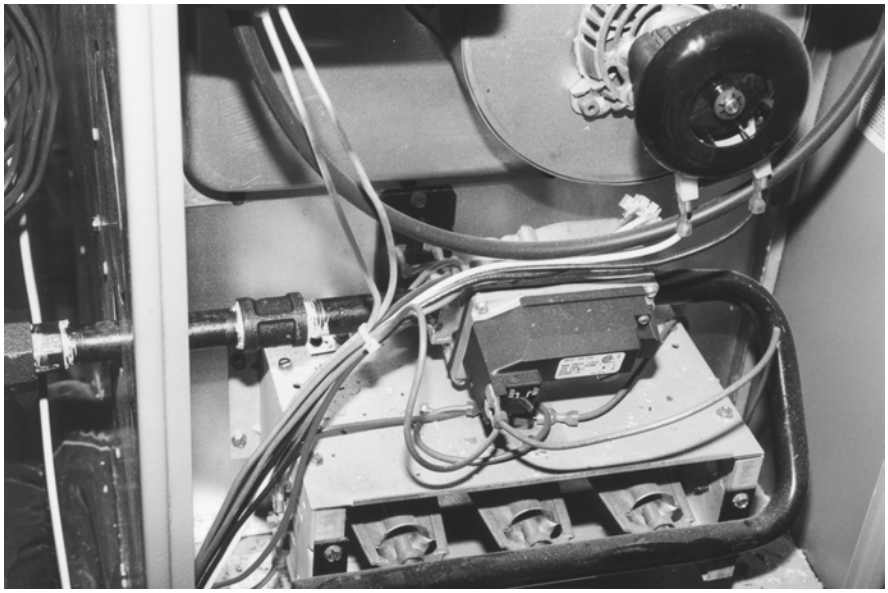

Figure G2414.9
TAPERED THREAD COUPLING IN CONNECTION TO FURNACE

INTERNATIONAL CODE COUNCIL®
Copyright © 2015 ICC. ALL RIGHTS RESERVED. Accessed by David Dammon on Jun 21, 2017 12:30:52 PM pursuant to License Agreement with ICC. No further reproduction or distribution authorized. ANY UNAUTHORIZED REPRODUCTION OR DISTRIBUTION IS A VIOLATION OF THE FEDERAL COPYRIGHT ACT AND THE LICENSE AGREEMENT, AND SUBJECT TO CIVIL AND CRIMINAL PENALTIES THEREUNDER.

being conveyed, which could result in leakage. The label on the compound container will specify the applications for which the compound is suitable. Thread compounds act as a lubricant for the threads during assembly and also act as a sealant for the life of the joint. Care must be taken to keep all compounds out of the piping system interior because the contamination can cause damage to components and appliances. Pipe-joint compound or tape is limited to application on the male threads only to decrease the possibility of tape fragments or compound entering the piping system. Such debris in piping systems can block orifices, restrict flow or interfere with the operation of safety controls. It is important to leave the first one or two threads on the end of the male threads bare to help prevent the compound from entering the piping system.

Once made from lead compounds and linseed oil, joint compound formulations now commonly contain PTFE (Teflon). The primary purpose of pipe-thread compounds is to act as a lubricant to allow proper tightening and to achieve a metal-to-metal seal. They also fill in small imperfections on the threaded surfaces. Pipe-thread compounds and tapes must be compatible with both the piping material and the contents of the piping.

LP-gases can be a solvent for some pipe joint compound formulations. Therefore, a type must be chosen that will not react with the gas.

G2414.10 (403.10) Metallic piping joints and fittings. The type of *piping* joint used shall be suitable for the pressure-temperature conditions and shall be selected giving consideration to joint tightness and mechanical strength under the service conditions. The joint shall be able to sustain the maximum end force caused by the internal pressure and any additional forces due to temperature expansion or contraction, vibration, fatigue, or to the weight of the *pipe* and its contents.

❖ This section is in performance language and requires the designer and/or installer to choose the type of joining means that is appropriate for the application. Besides being leak-tight, the joints must be able to withstand the conditions of service. Many joining methods are addressed in the code, but not all of them are suitable for all applications. For example, PE pipe for LP-gas use is limited to a maximum pressure of 30 psig (206.8 kPa), and most tubing materials would be unsuitable for uses involving equipment vibration that is transferred to the tubing. Also, some fittings might not be suitable for exposure to extreme changes in temperature.

G2414.10.1 (403.10.1) Pipe joints. *Pipe* joints shall be threaded, flanged, brazed or welded. Where nonferrous *pipe* is brazed, the *brazing* materials shall have a melting point in excess of 1,000ºF (538ºC). *Brazing* alloys shall not contain more than 0.05-percent phosphorus.

❖ Joints in piping materials can be made by four methods: threaded (screwed), brazed, welded and flanged. Flanged joints must also involve threading or welding as the means of attaching the flanges to the pipe. The limit on phosphorus content is related to corrosion that can occur from the reaction of phosphorus with a trace contaminant (sulphur) in the gas (see commentary, Section G2414.10.2).

G2414.10.2 (403.10.2) Tubing joints. *Tubing* joints shall be made with *approved gas tubing* fittings or be brazed with a material having a melting point in excess of 1,000ºF (538ºC) or made with press-connect fittings complying with ANSI LC-4. *Brazing alloys* shall not contain more than 0.05-percent phosphorus.

❖ Tubing joints can be made by three methods: brazing, tubing fittings and press-connect fittings. Tubing fittings include flare, compression and CSST. Press-connect fittings require special tools that make an irreversible joint (see Commentary Figure G2414.10.2).

Brazing is the act of producing a brazed joint. Brazing is often referred to as silver soldering. Silver soldering is more accurately described as silver brazing and employs high-silver-bearing alloys primarily composed

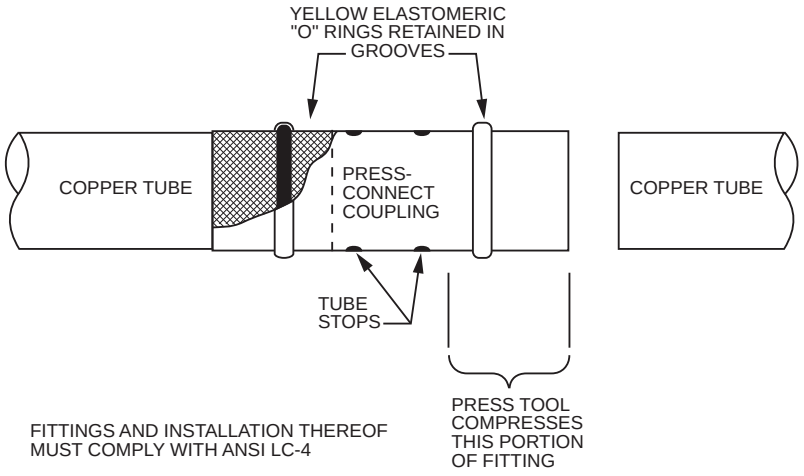

Figure G2414.10.2
PRESS-CONNECT COPPER FITTING

INTERNATIONAL CODE COUNCIL®
Copyright © 2015 ICC. ALL RIGHTS RESERVED. Accessed by David Dammon on Jun 21, 2017 12:30:52 PM pursuant to License Agreement with ICC. No further reproduction or distribution authorized. ANY UNAUTHORIZED REPRODUCTION OR DISTRIBUTION IS A VIOLATION OF THE FEDERAL COPYRIGHT ACT AND THE LICENSE AGREEMENT, AND SUBJECT TO CIVIL AND CRIMINAL PENALTIES THEREUNDER.

of silver, copper and zinc. Silver soldering (brazing) typically requires temperatures in excess of 1,000°F (538°C), and such solders are classified as "hard" solders (see commentary to "Brazed joint").

Confusion has always been present with respect to the distinction between "silver solder" and "silver-bearing" solder. Silver solders are unique and can be further subdivided into soft and hard categories, which are determined by the percentages of silver and the other component elements of the particular alloy. The distinction is that silver-bearing solders [melting point below 600° F (316°C)] are used in soft-soldered joints, and silver solders [melting point higher than 1,000°F (538°C)] are used in silver-brazed joints.

Brazed joints are considered to have superior strength and stress resistance and, because of the high melting point, are less likely to fail when exposed to fire.

Brazing with a filler metal conforming to AWS A5.8 produces a strong joint that will perform under extreme service conditions. The surfaces to be brazed must be cleaned free of oxides and impurities. Flux should be applied as soon as possible after the surfaces have been cleaned. Flux helps to remove residual traces of oxides, to promote wetting and to protect the surfaces from oxidation during heating. Care should be taken to prevent flux from entering the piping system during the brazing operation because flux that remains may corrode the pipe or contaminate the system.

Air should be removed from the pipe being brazed by purging the piping with a nonflammable gas such as carbon dioxide or nitrogen. Purging the system has several benefits, such as preventing oxidation from occurring on the inside of the pipe. Mechanical joints are usually proprietary joints that are developed and marketed by individual manufacturers. Many types of mechanical joints use a sleeve or ferrule that is compressed around the circumference of the pipe or tube. Mechanical joints must be specifically designed for and compatible with the type of pipe or tube to be joined.

G2414.10.3 (403.10.3) Flared joints. *Flared joints* shall be used only in systems constructed from nonferrous *pipe* and *tubing* where experience or tests have demonstrated that the joint is suitable for the conditions and where provisions are made in the design to prevent separation of the joints.

❖ Flared joints are typically used with copper and aluminum tubing and are prohibited for steel tubing. Flared joints require the use of specialized tools. Because the pipe end is expanded in a flared joint, only annealed and bending tempered (drawn) copper tubing may be flared. Commonly used flaring tools use a screw yoke and block assembly or an expander tool that is driven into the tube with a hammer. The flared tubing end is compressed between a fitting seat and a threaded nut to form a metal-to-metal seal.

G2414.10.4 (403.10.4) Metallic fittings. Metallic fittings, shall comply with the following:

1. Fittings used with steel or wrought-iron *pipe* shall be steel, copper alloy, malleable iron or cast iron.
2. Fittings used with copper or copper alloy *pipe* shall be copper or copper alloy.
3. Cast-iron bushings shall be prohibited.
4. Special fittings. Fittings such as couplings, proprietary-type joints, saddle tees, gland-type compression fittings, and flared, flareless and compression-type *tubing* fittings shall be: used within the fitting manufacturer's pressure-temperature recommendations; used within the service conditions anticipated with respect to vibration, fatigue, thermal expansion and contraction; and shall be *approved*.
5. Where pipe fittings are drilled and tapped in the field, the operation shall be in accordance with all of the following:
    5.1. The operation shall be performed on systems having operating pressures of 5 psi (34.5 kPa) or less.
    5.2. The operation shall be performed by the gas supplier or the gas supplier's designated representative.
    5.3. The drilling and tapping operation shall be performed in accordance with written procedures prepared by the gas supplier.
    5.4. The fittings shall be located outdoors.
    5.5. The tapped fitting assembly shall be inspected and proven to be free of leakage.

❖ Item 1 allows use of cast iron fittings with steel, but cast iron pipe is prohibited. Malleable iron (steel) fittings are used almost exclusively.

Item 2 requires fittings for nonferrous pipes to be of a material consistent with the pipe material.

Item 3 places limitations on cast iron fittings because of the brittle nature of cast iron. Bushings have been known to split from overtightening.

Item 4 speaks of special fittings of the mechanical type.

Item 5 addresses a practice that is allowed only for gas utility (gas supplier) companies.

Occasionally, an installer will drill a hole in a Schedule 40 or heavier pipe fitting and tap threads in the hole for the purpose of making a test connection or branch connection. The pipe fittings were never designed to be drilled and tapped, and the thickness of the fitting wall does not allow for even one complete thread in Schedule 40 fittings. The resulting pipe connection or plugged opening would not have sufficient threads to make a joint that is both strong and free of leakage. Lacking the required number of complete threads, such joints would rely solely on the thread-sealant paste or tape to effect a seal. Normal threaded joints rely on an interference fit of several threads and metal-to-metal sealing, while depending on pipe-joint pastes and tapes only as thread lubricants and for sealing tiny imperfections in the threads. Field drilling and tapping of outdoor fittings on the outlet side of the meter is performed by some gas suppliers (utilities) for a unique

INTERNATIONAL CODE COUNCIL®
Copyright © 2015 ICC. ALL RIGHTS RESERVED. Accessed by David Dammon on Jun 21, 2017 12:30:52 PM pursuant to License Agreement with ICC. No further reproduction or distribution authorized. ANY UNAUTHORIZED REPRODUCTION OR DISTRIBUTION IS A VIOLATION OF THE FEDERAL COPYRIGHT ACT AND THE LICENSE AGREEMENT, AND SUBJECT TO CIVIL AND CRIMINAL PENALTIES THEREUNDER.

purpose. If the gas supplier needs to replace a customer's gas meter, and it is not convenient to shut off the gas supply to the customer in order to replace the meter, the gas supplier may use a special apparatus to tap into the customer's piping near the meter for the purpose of temporarily supplying gas to the system at the same time the meter is isolated, removed and replaced. The gas is temporarily supplied from tanks of compressed gas on the utility's service trucks. After replacing the meter, the tapped opening is plugged. The five conditions in the new text limit this practice to gas-supplier personnel and authorized contractors employed by the gas supplier. The practice is limited to outdoor fittings, and the entire operation must be performed with specialized tools and equipment in accordance with the prescribed procedures. In cases where a leak-free plugged assembly cannot be achieved, the gas supplier will cover the affected area of the fitting with specialized devices or leak-repair methods used in the gas industry.

The drilling and tapping of pipe fittings is prohibited in all cases except where performed in accordance with all five conditions that are intended to mitigate the risk [see Commentary Figures G2414.10.4(1) and (2)].

G2414.11 (403.11) Plastic piping, joints and fittings. Plastic *pipe, tubing* and fittings shall be joined in accordance with the manufacturers' instructions. Such joints shall comply with the following:

1. The joints shall be designed and installed so that the longitudinal pull-out resistance of the joints will be at least equal to the tensile strength of the plastic *piping* material.
2. Heat-fusion joints shall be made in accordance with qualified procedures that have been established and proven by test to produce gas-tight joints at least as strong as the *pipe* or *tubing* being joined. Joints shall be made with the joining method recommended by the *pipe* manufacturer. Heat fusion fittings shall be marked "ASTM D2513."
3. Where compression-type *mechanical joints* are used, the gasket material in the fitting shall be compatible with the plastic *piping* and with the gas distributed by the system. An internal tubular rigid stiffener shall be used in conjunction with the fitting. The stiffener shall be flush with the end of the *pipe* or *tubing* and shall extend at least to the outside end of the compression fitting when installed. The stiffener shall be free of rough or sharp edges and shall not be a force fit in the plastic. Split tubular stiffeners shall not be used.
4. Plastic *piping* joints and fittings for use in *liquefied petroleum gas piping systems* shall be in accordance with NFPA 58.

❖ This section contains general requirements for the proper joining of plastic gas pipe materials. Although plastic pipe materials offer many advantages such as ease of installation, corrosion resistance, lighter weight and lower cost, these materials require different handling and installation methods than steel or other metal pipe or tubing. In all cases, the pipe material manufacturer's installation instructions must be strictly adhered to in order to reduce the likelihood of creating improper

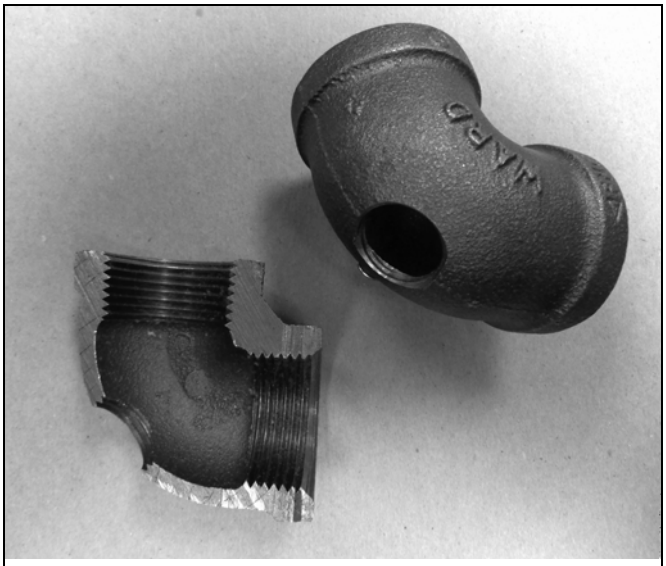

Figure 2414.10.4(1)
DRILLED AND TAPPED FITTING



Figure 2414.10.4(2)
OUTDOOR METER SETTING

INTERNATIONAL CODE COUNCIL®
Copyright © 2015 ICC. ALL RIGHTS RESERVED. Accessed by David Dammon on Jun 21, 2017 12:30:52 PM pursuant to License Agreement with ICC. No further reproduction or distribution authorized. ANY UNAUTHORIZED REPRODUCTION OR DISTRIBUTION IS A VIOLATION OF THE FEDERAL COPYRIGHT ACT AND THE LICENSE AGREEMENT, AND SUBJECT TO CIVIL AND CRIMINAL PENALTIES THEREUNDER.

joints, which could lead to gas leakage or piping or joint failure. Dissimilar types of plastic materials may not be joined by heat fusion methods. Because of the resulting reduction in wall thickness, plastic pipe and tubing must not be field-threaded as a joining method. All approved joints must be designed to account for the forces acting upon the piping system, such as expansion, contraction and external loads imposed by burial in underground installations. The longitudinal pull-out resistance of the joint should be approximately the same as the tensile strength of the materials being joined.

Heat-fusion joints for plastic pipe are analogous to the welding of steel pipe. Heat fusion must be performed in accordance with the pipe manufacturer's instructions. The process involves heating the pipe and fittings with a special iron. When the parts to be joined reach their melting points, they are assembled and allowed to fuse. Electrical fusion fittings are available and employ an integral heating element that is connected to a power supply unit that allows the fitting to be heated at the required rate and duration.

Mechanical compression joints employ an elastomeric seal that must be compatible not only with the piping material but also with the gas that is conveyed in the system. The manufacturers' instructions normally require an internal stiffener insert used in conjunction with the fitting to provide additional support. The stiffener insert prevents the pipe from deforming under the compression force exerted by the seal and compression nut assembly.

Category 1 fittings in accordance with ASTM D2513 are designed to provide a gas-tight seal and resist axial (pull-out) forces equal to the yield strength of the piping material [see Commentary Figures G2414.11(1) through G2414.11(4)].



Photo courtesy of Perfection Corporation

Figure G2414.11(1)
MECHANICAL JOINTS

SECTION G2415 (404)
PIPING SYSTEM INSTALLATION

G2415.1 (404.1) Installation of materials. Materials used shall be installed in strict accordance with the standards under which the materials are accepted and approved. In the absence of such installation procedures, the manufacturer's instructions shall be followed. Where the requirements of referenced standards or manufacturer's instructions do not conform to minimum provisions of this code, the provisions of this code shall apply.

❖ Piping materials and related system components must be installed in accordance with the standards to which

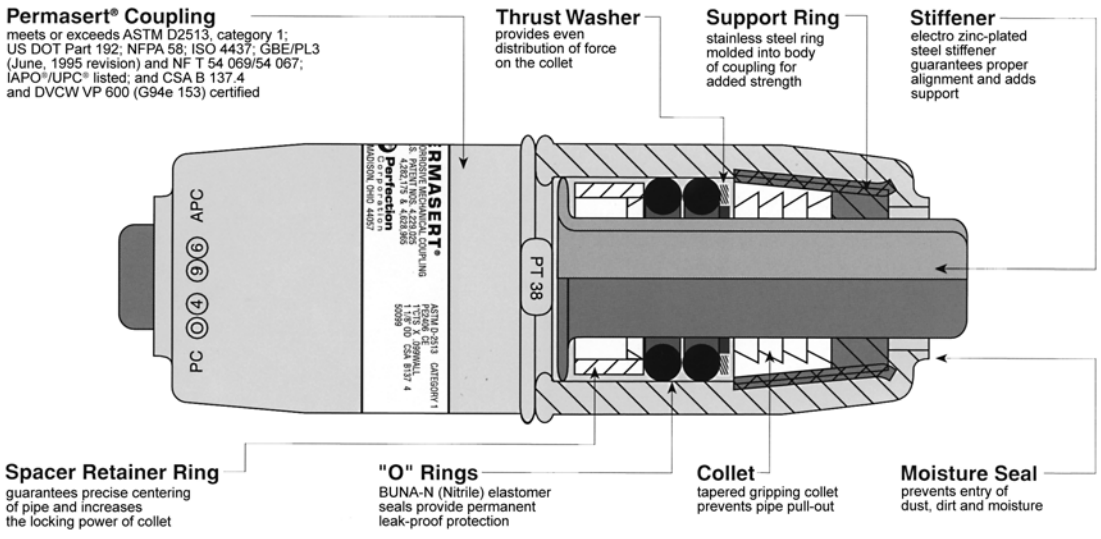

Figure courtesy of Perfection Corporation

Figure G2414.11(2)
MECHANICAL JOINT

INTERNATIONAL CODE COUNCIL®
Copyright © 2015 ICC. ALL RIGHTS RESERVED. Accessed by David Dammon on Jun 21, 2017 12:30:52 PM pursuant to License Agreement with ICC. No further reproduction or distribution authorized. ANY UNAUTHORIZED REPRODUCTION OR DISTRIBUTION IS A VIOLATION OF THE FEDERAL COPYRIGHT ACT AND THE LICENSE AGREEMENT, AND SUBJECT TO CIVIL AND CRIMINAL PENALTIES THEREUNDER.

they are listed. Improper installation can result in substandard performance, product failures and hazardous conditions. In some cases, the product standard will contain installation requirements, such as found in ANSI LC-1 for CSST. In other cases, the product standards might not contain any installation requirements; therefore, the manufacturer of the product supplies the only installation requirements. The manufacturer could also have installation requirements that are in addition to or in excess of those in the standard or vice versa. If the installation requirements in the product standards or manufacturer's instructions are somehow less stringent than a provision of the code, the code must prevail.

G2415.2 (404.2) CSST. CSST piping systems shall be installed in accordance with the terms of their approval, the conditions of listing, the manufacturer's instructions and this code.

❖ The CSST product standard dictates what the manufacturer's instructions must include at a minimum. This section was added because Section G2414.5.3 only required that CSST be listed and failed to clarify that the CSST system must also comply with the standard, the manufacturer's instructions, the code and any conditions established in the approval of such systems.

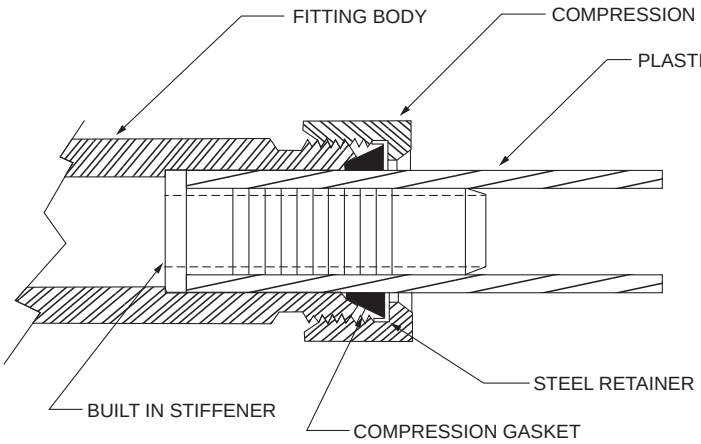

Figure courtesy of NORMAC

Figure G2414.11(3)
PLASTIC PIPE TRANSITION FITTING



Figure courtesy of NORMAC

Figure G2414.11(4)
PLASTIC PIPE TRANSITION FITTING

INTERNATIONAL CODE COUNCIL®
Copyright © 2015 ICC. ALL RIGHTS RESERVED. Accessed by David Dammon on Jun 21, 2017 12:30:52 PM pursuant to License Agreement with ICC. No further reproduction or distribution authorized. ANY UNAUTHORIZED REPRODUCTION OR DISTRIBUTION IS A VIOLATION OF THE FEDERAL COPYRIGHT ACT AND THE LICENSE AGREEMENT, AND SUBJECT TO CIVIL AND CRIMINAL PENALTIES THEREUNDER.

G2415.3 (404.3) Prohibited locations. *Piping* shall not be installed in or through a ducted supply, return or exhaust, or a clothes chute, *chimney* or gas vent, dumbwaiter or elevator shaft. *Piping* installed downstream of the *point of delivery* shall not extend through any townhouse unit other than the unit served by such *piping*.

❖ An air supply duct or areas that create a shaft that provides a path for the gas to travel are considered to be locations where the problem of a gas leak could be compounded by spreading the gas or any resultant fire throughout the building. Also, in some locations, the gas piping could be subject to deterioration because of temperature or corrosive conditions such as in air ducts or chimneys.

Locating fuel gas piping in certain areas or atmospheres may cause corrosion of the pipe, which in turn may cause a leak in the piping system. Within a supply air duct, the conditioned air may cause moisture to condense on or within the pipe, thereby causing corrosion of the pipe. Fuel-gas piping located within a chimney or a vent will be subjected to high temperatures and the corrosive effects of flue gases.

Additionally, piping located in a dumbwaiter or elevator shaft may be subject to an additional hazard resulting in mechanical damage to the pipe. Damage from a dumbwaiter or elevator impacting the fuel-gas piping may not only cause a leak that would allow the gas to escape and travel up the shaft but may also put any occupants within an elevator in immediate danger. The elevator codes also intend to prohibit nonessential piping within elevator shafts.

Gas piping is not prohibited in concealed spaces used to convey environmental air; for example, above ceiling and below floor plenums, stud cavities and joist spaces. Gas piping is often installed in return air plenums above a suspended ceiling with no history of problems. The piping system is assumed not to leak in a ceiling air plenum or any other location, for that matter. In fact, when viewed logically, it would be more hazardous for a leak to occur in a location where the air is static and an explosive gas-air mixture could be created. Return, supply and exhaust air ducts are not considered to be a plenum. These ducts are supply, return and exhaust air conduits constructed as components of a ductwork system. A furnace plenum is part of a ductwork system and would be treated as an air duct (see the definition of "Furnace plenum").

This section now prohibits what was once a common practice, that is, the practice of placing a bank of gas meters on one end of a townhouse complex and running the load side gas line from each meter through the attic or crawl spaces of the townhouse units to reach the units served. For example, the gas supply line for the unit farthest away from the meter bank will pass through all of the other units to reach the unit it serves. This is a concern because of what might be done to the piping within the units through which it passes and because of the potential for one of the units to be destroyed by fire, thereby damaging the gas piping that passes through the fire walls/separation walls between units. Townhouses are considered to be separate buildings in the code and are constructed to prevent fire from spreading beyond the unit of origin. This is similar to the provision in the code that prevents electrical service entrance conductors from passing through dwelling units other than the unit served (see Commentary Figure G2415.3).

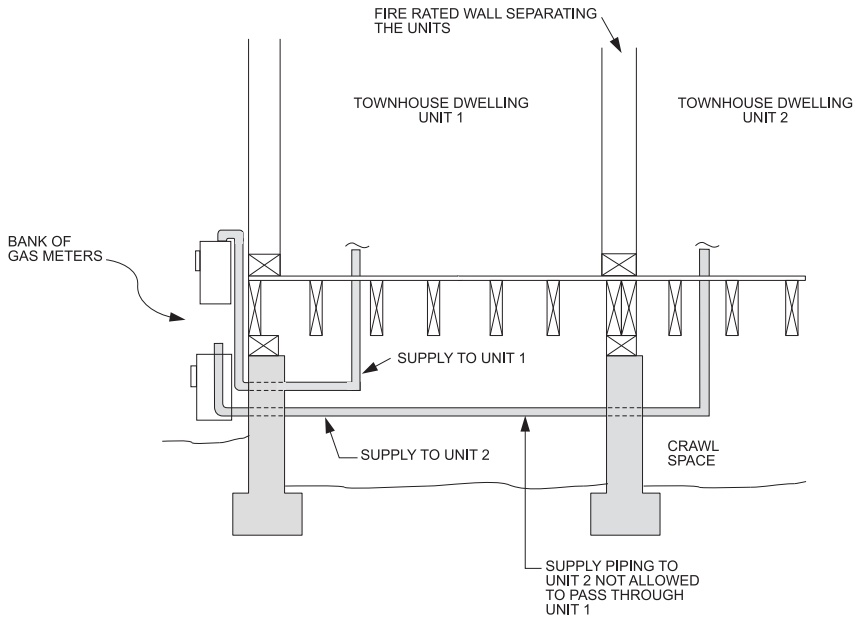

Figure G2415.3
PROHIBITED TOWNHOUSE INSTALLATION

INTERNATIONAL CODE COUNCIL®
Copyright © 2015 ICC. ALL RIGHTS RESERVED. Accessed by David Dammon on Jun 21, 2017 12:30:52 PM pursuant to License Agreement with ICC. No further reproduction or distribution authorized. ANY UNAUTHORIZED REPRODUCTION OR DISTRIBUTION IS A VIOLATION OF THE FEDERAL COPYRIGHT ACT AND THE LICENSE AGREEMENT, AND SUBJECT TO CIVIL AND CRIMINAL PENALTIES THEREUNDER.

G2415.4 (404.4) Piping in solid partitions and walls. *Concealed piping* shall not be located in solid partitions and solid walls, unless installed in a chase or casing.

❖ As with the alternative installation requirements in Section G2415.8, this section allows installation of gas piping within solid walls or partitions only if the piping is installed within a chase or casing to protect the pipe from stress and from corrosive effects of wall materials such as concrete.

G2415.5 (404.5) Fittings in concealed locations. Fittings installed in concealed locations shall be limited to the following types:

1. Threaded elbows, tees and couplings.
2. Brazed fittings.
3. Welded fittings.
4. Fittings *listed* to ANSI LC-1/CSA 6.26 or ANSI LC-4.

❖ A concealed location is a location that requires the removal of permanent construction in order to gain access (see the definition of "Concealed location"). The space above a dropped ceiling having readily removable lay-in panels or other locations that have removable access panels are not considered concealed locations for the purposes of this section. Concealed locations include wall, floor and ceiling cavities bounded by permanent finish materials such as gypsum board, masonry or paneling. This section lists what is allowed to be concealed; therefore, by omission, all other types of fittings are not allowed in concealed locations. Note that threaded plugs and caps are not listed, but, the author is not aware of any reason to prohibit them. The National Fuel Gas Code Z223.1, 2015 edition, has been revised to specifically allow threaded plugs and caps in concealed locations. Unions and mechanical joint tubing fittings are not permitted in concealed locations because they are more likely to loosen and leak than other joining means and fittings. Tubing fittings include flare, compression and similar proprietary-type fittings, all of which are mechanical joints.

Joints for CSST systems are mechanical tubing joints; however, these joints use specialized proprietary fittings that are listed for concealment as part of the CSST system. Such fittings undergo stringent testing to determine their ability to remain leak-tight.

Right and left couplings are somewhat archaic and were used as a union is now used. The coupling is made with right-hand threads on one end and left-hand threads on the other, and the corresponding male pipe threads can be used to connect pipe and fittings within a section of existing piping. The code does not specifically prohibit right and left couplings, as it refers only to "couplings" generically; however, if a right and left coupling was concealed, people would not be aware of such a fitting in a piping system and would not realize that they were loosening a joint as they applied the traditional tightening torque to an exposed section of piping. Piping should always be backed up with wrenches to prevent rotational forces from extending beyond the work piece. When the code refers to couplings, those fittings are tapered-thread fittings. See Section G2414.9. Bushings have been known to split after assembly and are not trusted in concealed locations.

Brazing is a commonly used method of joining copper tubing and is as reliable as welded joints for steel pipe.

This section does not prohibit NPT threaded (screwed) elbow, tee and coupling fittings from being concealed; however, it does prohibit threaded unions and bushings from being concealed.

G2415.6 (404.6) Underground penetrations prohibited. Gas *piping* shall not penetrate building foundation walls at any point below grade. Gas *piping* shall enter and exit a building at a point above grade and the annular space between the *pipe* and the wall shall be sealed.

❖ The preferred and required method for bringing outdoor gas piping into or out of a building is to penetrate the exterior wall at a point above grade. In other words, gas piping that comes into or leaves a building should not provide a path for underground gas leakage to enter the interior of a building. This section does not apply to utility-company-owned piping upstream of the point of delivery. See Section G2401.1.

The penetration of the pipe and any protective sleeve must be adequately sealed to prevent the possibility of water or insect entry into the building. A gas pipe is not permitted to enter or exit a building below grade because any gas leakage in the underground piping will be channeled into the building through the surrounding soil and the wall penetration. Gas leakage can travel in the annular space that exists between the outside wall of the pipe and the soil that surrounds it. With an above-ground wall penetration, any outdoor piping leakage will vent to the outdoors with very little possibility of it finding its way into the building. Underground penetrations of building foundations are very difficult to seal against gas migration and the best way to eliminate the possibility of gas entering the building is to simply require the piping to enter and exit above grade. There have been cases of explosions that were believed to be caused by gas entering basements and crawl spaces through underground wall penetrations (see Commentary Figure G2415.6).

G2415.7 (404.7) Protection against physical damage. Where *piping* will be concealed within light-frame construction assemblies, the *piping* shall be protected against penetration by fasteners in accordance with Sections G2415.7.1 through G2415.7.3.

Exception: Black steel *piping* and galvanized steel *piping* shall not be required to be protected.

❖ This section is intended to minimize the possibility that nails or screws will be driven into the gas pipe or tube. Because nails and screws sometimes miss the stud, rafter, joist or sole or top plates, the shield plates must extend parallel to the pipe or tube not less than 4 inches (102 mm) beyond the member on each side or not less than 4 inches (102 mm) above or below sole or top wall plates, respectively. Commentary Figures

INTERNATIONAL CODE COUNCIL®
Copyright © 2015 ICC. ALL RIGHTS RESERVED. Accessed by David Dammon on Jun 21, 2017 12:30:52 PM pursuant to License Agreement with ICC. No further reproduction or distribution authorized. ANY UNAUTHORIZED REPRODUCTION OR DISTRIBUTION IS A VIOLATION OF THE FEDERAL COPYRIGHT ACT AND THE LICENSE AGREEMENT, AND SUBJECT TO CIVIL AND CRIMINAL PENALTIES THEREUNDER.

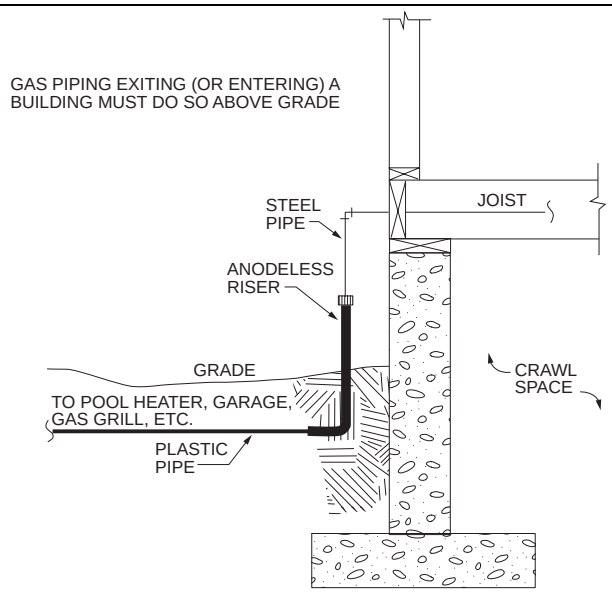

Figure G2415.6
ABOVE-GRADE ENTRANCE/EXIT

G2415.7 and G2414.5.3(6) show typical shield plates. Black and galvanized steel pipe (Schedule 40) each have wall thicknesses greater than the required thickness for the shield plates, which makes these piping materials inherently resistant to nail and screw penetrations. This section does not apply to CSST tubing, because CSST systems have their own protection requirements dictated by the manufacturer's instructions and ANSI LC-1/CSA 6.26. The protection requirements for CSST systems are, overall, more stringent than those of this section. Before studs, rafters, joists or other structural members are drilled or notched, the building portion of this code should be consulted.

The section on protection of piping has been completely rewritten to address more than just bored holes and notches in structural members. It now addresses piping parallel to framing members and piping within framing members. The new text requires that the protection extend well beyond the edge of members that are bored or notched.

Piping and tubing other than Schedule 40 steel pipe must be protected from penetration by nails and screws where the pipe or tubing is less than $1^1/_2$ inches from the face of the member where membranes will be attached. This protection is necessary whether the pipe or tube is perpendicular or parallel to the framing member. If a pipe or tube is run inside of the "C" channel of a $3^1/_2$-inch metal stud, it will almost certainly be penetrated by screws unless the pipe or tube is $^1/_2$ inch or less in diameter and located dead center in the stud channel. Where pipes and tubing are attached to and run parallel with the side of a framing member, penetration by a nail or screw is likely if the installer misses the member with the nail or screw and the pipe or tube is less than $1^1/_2$ inches from either face of the stud. Extending the protection shield 4 inches beyond the edges of the framing member is intended to protect against fasteners that miss the member or that exit the member on an angle. To avoid having protection plates run parallel with a member, the installer could simply place the pipe or tube on "standoffs" such that the pipe/tube is not less than $1^1/_2$ inches from the nearest edge of the face of the member. As always, a designer's careful planning of the routing of gas piping or tubing can avoid the need for installation of protection plates by simply relying on a distance of at least $1^1/_2$ inches between the pipe/tubing and the fastener face of the member. Pipes and tubes are sometimes penetrated by screws or nails, and a leak does not develop immediately. It may take years for the fastener to corrode enough for a leak to eventually develop.

This section pertains to piping and tubing that will be concealed within wood or steel light-frame construction assemblies, which is the same scope as the original text.

G2415.7.1 (404.7.1) Piping through bored holes or notches. Where *piping* is installed through holes or notches in framing members and the *piping* is located less than $1^1/_2$ inches (38 mm) from the framing member face to which wall, ceiling or floor membranes will be attached, the pipe shall be protected by shield plates that cover the width of the pipe and the framing member and that extend not less than 4 inches (51 mm) to each side of the framing member. Where the framing member that the *piping* passes through is a bottom plate, bottom track, top plate or top track, the shield plates shall cover the framing member and extend not less than 4 inches (51 mm) above the bottom framing member and not less than 4 inches (51 mm) below the top framing member.

❖ See the commentary to Section G2415.7.

INTERNATIONAL CODE COUNCIL®
Copyright © 2015 ICC. ALL RIGHTS RESERVED. Accessed by David Dammon on Jun 21, 2017 12:30:52 PM pursuant to License Agreement with ICC. No further reproduction or distribution authorized. ANY UNAUTHORIZED REPRODUCTION OR DISTRIBUTION IS A VIOLATION OF THE FEDERAL COPYRIGHT ACT AND THE LICENSE AGREEMENT, AND SUBJECT TO CIVIL AND CRIMINAL PENALTIES THEREUNDER.

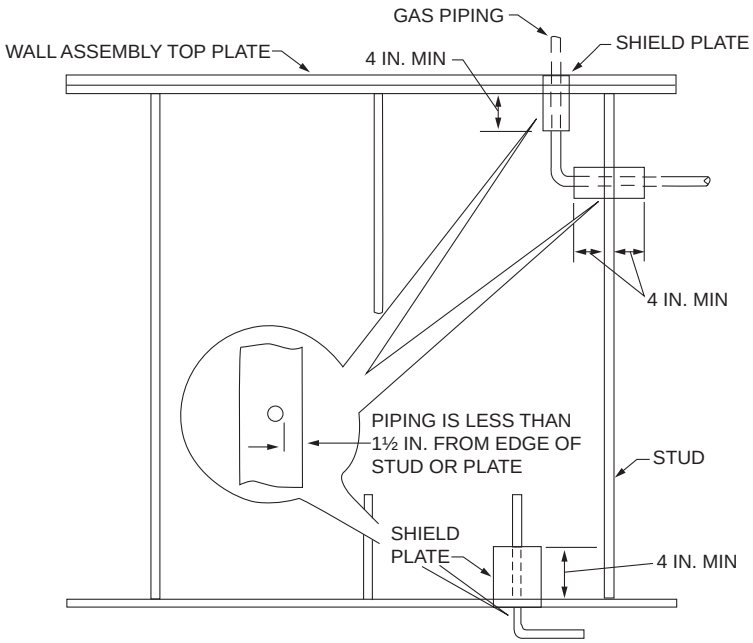

For SI: 1 inch = 25.4 mm.

Figure G2415.7
PIPE PROTECTION

G2415.7.2 (404.7.2) Piping installed in other locations. Where the *piping* is located within a framing member and is less than $1^1/_2$ inches (38 mm) from the framing member face to which wall, ceiling or floor membranes will be attached, the *piping* shall be protected by shield plates that cover the width and length of the *piping*. Where the *piping* is located outside of a framing member and is located less than $1^1/_2$ inches (38 mm) from the nearest edge of the face of the framing member to which the membrane will be attached, the *piping* shall be protected by shield plates that cover the width and length of the *piping*.

❖ This section addresses piping that is run along the side of framing members and also piping that is run inside the channel of metal framing members. Where the piping is within $1^1/_2$ inches of the face of the framing member where fasteners will penetrate the member, there is the danger that fasteners will miss the target or be driven at an angle such that the piping is penetrated. Piping is sometimes run within the "C" channel of metal studs, which practically begs for the pipe/tube to be penetrated by fasteners that attach wall sheathing to the framing members (see commentary, Section G2415.7).

2415.7.3 (404.7.3) Shield plates. Shield plates shall be of steel material having a thickness of not less than 0.0575 inch (1.463 mm) (No. 16 gage).

❖ See the commentary to Section G2415.7.

G2415.8 (404.8) Piping in solid floors. *Piping* in solid floors shall be laid in channels in the floor and covered in a manner that will allow access to the *piping* with a minimum amount of damage to the building. Where such *piping* is subject to exposure to excessive moisture or corrosive substances, the *piping* shall be protected in an *approved* manner. As an alternative to installation in channels, the *piping* shall be installed in a conduit of Schedule 40 steel, wrought iron, PVC or ABS pipe in accordance with Section G2415.6.1 or G2415.6.2.

❖ Piping must not be installed in any solid concrete or masonry floor construction. The potential for pipe damage from slab settlement, cracking or the corrosive action of the floor material makes it imperative that one of the installation methods in this section be used. This section does not intend to allow any direct encasement of gas piping in solid concrete or masonry floor systems.

Gas piping installed within a solid floor system must be safeguarded by installation in a sealed casing or in a floor channel with a removable cover for pipe access (see Commentary Figure G2415.8). Either of these methods should provide reasonable protection of the pipe from the effects of settling, cracking and being in contact with corrosive materials.

Because casings constructed of metal could corrode where installed within a concrete slab on grade, consideration should be given to corrosion protection for the steel casing, or an alternate material should be chosen.

INTERNATIONAL CODE COUNCIL®
Copyright © 2015 ICC. ALL RIGHTS RESERVED. Accessed by David Dammon on Jun 21, 2017 12:30:52 PM pursuant to License Agreement with ICC. No further reproduction or distribution authorized. ANY UNAUTHORIZED REPRODUCTION OR DISTRIBUTION IS A VIOLATION OF THE FEDERAL COPYRIGHT ACT AND THE LICENSE AGREEMENT, AND SUBJECT TO CIVIL AND CRIMINAL PENALTIES THEREUNDER.

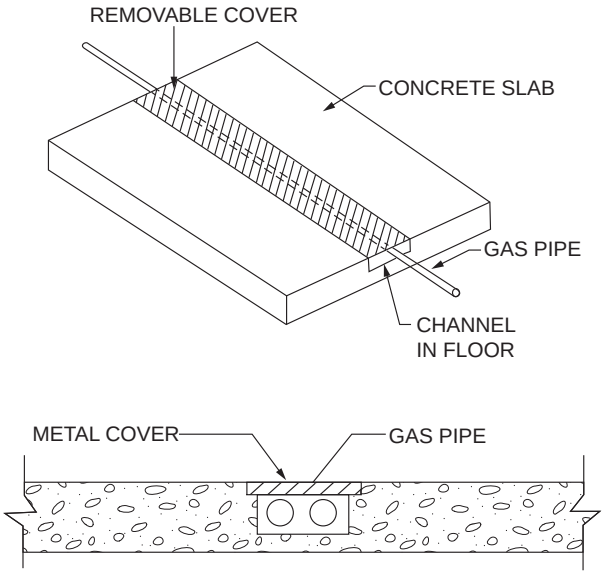

Figure G2415.8
PIPING IN SOLID FLOORS

G2415.8.1 (404.8.1) Conduit with one end terminating outdoors. The conduit shall extend into an occupiable portion of the building and, at the point where the conduit terminates in the building, the space between the conduit and the *gas piping* shall be sealed to prevent the possible entrance of any gas leakage. The conduit shall extend not less than 2 inches (51 mm) beyond the point where the *pipe* emerges from the floor. If the end sealing is capable of withstanding the full pressure of the gas *pipe*, the conduit shall be designed for the same pressure as the *pipe*. Such conduit shall extend not less than 4 inches (102 mm) outside the building, shall be vented above grade to the outdoors and shall be installed to prevent the entrance of water and insects.

❖ This method could be used in any application, but is more logically applied where piping enters the building from the outdoors or exits the building to the outdoors. The intent is to direct any gas leakage to the outdoors by means of the secondary containment conduit and the outdoor vent terminal.

Note that the application of this section is extremely limited because of Section G2415.6, which prohibits gas piping from entering or exiting a building below grade. Clearly, Section G2415.8.1 was originally intended to address installations involving gas piping that entered or exited a building; however, this section now has only one application and that would be for gas piping that runs from point to point all within the building. The requirements of this section are more stringent than those of Section G2415.8.2; therefore, it is not likely that an installer would choose the more difficult method prescribed in this section. Because of Section G2415.6, the methods prescribed in both Sections G2415.8.1 and G2415.8.2 are applicable only to gas piping that does not enter or exit the building. Note that this discussion also applies to Sections G2415.14.1 and G2415.14.2.

G2415.8.2 (404.8.2) Conduit with both ends terminating indoors. Where the conduit originates and terminates within the same building, the conduit shall originate and terminate in an accessible portion of the building and shall not be sealed. The conduit shall extend not less than 2 inches (51 mm) beyond the point where the pipe emerges from the floor.

❖ This method allows piping to run between any two points within the building without a vent run to the outdoors and without sealing the ends of the conduit. The minimum rise of 2 inches (51 mm) above the floor is intended to prevent liquids and debris from falling into the conduit. The ends of the conduit are not to be sealed so as to allow any leakage to be noticed by the occupants, the same as leakage would be noticed from piping located anywhere else in the structure. If the conduit ends were sealed, there would be no evidence of a piping defect, no matter how severe the defect, possibly leading to a major leak in the event of conduit or end-seal failure (see Commentary Figure G2415.8.2).

G2415.9 (404.9) Above-ground piping outdoors. *Piping* installed outdoors shall be elevated not less than $3^1/_2$ inches (152 mm) above ground and where installed across roof surfaces, shall be elevated not less than $3^1/_2$ inches (152 mm) above the roof surface. *Piping* installed above ground, outdoors, and installed across the surface of roofs shall be securely supported and located where it will be protected from physical damage. Where passing through an outside wall, the *piping* shall also be protected against corrosion by coating or wrapping with an inert material. Where *piping* is encased in a protective pipe sleeve, the annular space between the *piping* and the sleeve shall be sealed.

❖ Gas piping in any location must be properly supported and protected from physical damage. Protection from damage is especially important where piping is run out-

INTERNATIONAL CODE COUNCIL®
Copyright © 2015 ICC. ALL RIGHTS RESERVED. Accessed by David Dammon on Jun 21, 2017 12:30:52 PM pursuant to License Agreement with ICC. No further reproduction or distribution authorized. ANY UNAUTHORIZED REPRODUCTION OR DISTRIBUTION IS A VIOLATION OF THE FEDERAL COPYRIGHT ACT AND THE LICENSE AGREEMENT, AND SUBJECT TO CIVIL AND CRIMINAL PENALTIES THEREUNDER.

doors near grade or across roof surfaces. See Sections G2418 and G2424. Piping passing through an outside wall must be protected where the material of the wall could corrode or abrade the piping (concrete, masonry or stucco, for example). To help protect piping from corrosion resulting from exposure to moisture, the piping must always be located at least $3^1/_2$ inches (89 mm) above the earth and roof surfaces. The distance of $3^1/_2$ inches (89 mm) was chosen because it corresponds to the size of nominal 4-inch by 4-inch (102 mm by 102 mm) pressure-treated lumber which is commonly used to support piping run across roof surfaces.

Where piping is supported on 4-inch by 4-inch (102 mm by 102 mm) wood blocks or similar supports, the piping should be attached to the blocking with suitable clamps or straps. It is common to see wood blocking or piping that has been displaced because the piping was not properly fastened to the blocking. Section G2424.1 dictates the minimum required spacing for blocking.

G2415.10 (404.10) Isolation. Metallic *piping* and metallic *tubing* that conveys *fuel gas* from an LP-gas storage container shall be provided with an *approved* dielectric fitting to electrically isolate the underground portion of the pipe or tube from the above ground portion that enters a building. Such dielectric fitting shall be installed above ground outdoors.

❖ Such isolation is common practice for natural gas utility service risers. The required isolation fitting is intended to isolate the piping/tubing in the building from piping extending underground. This section does not require isolation between the LP-gas storage tank and the piping/tubing running from it to below ground. In other words, in the typical installation, piping/tubing enters the soil near the tank and rises out of the soil near the building served and the isolation is required where the piping/tubing rises to enter the building. This section is related to Sections G2410 and G2411. There has been concern raised about bonding metal gas piping/tubing that extends underground and this section is intended to alleviate such concern (see Commentary Figure G2415.10).

G2415.11 (404.11) Protection against corrosion. Metallic pipe or *tubing* exposed to corrosive action, such as soil condition or moisture, shall be protected in an *approved* manner. Zinc coatings (galvanizing) shall not be deemed adequate protection for *gas piping* underground. Where dissimilar metals are joined underground, an insulating coupling or fitting shall be used. *Piping* shall not be laid in contact with cinders.

❖ See the commentary to Section G2414.8.

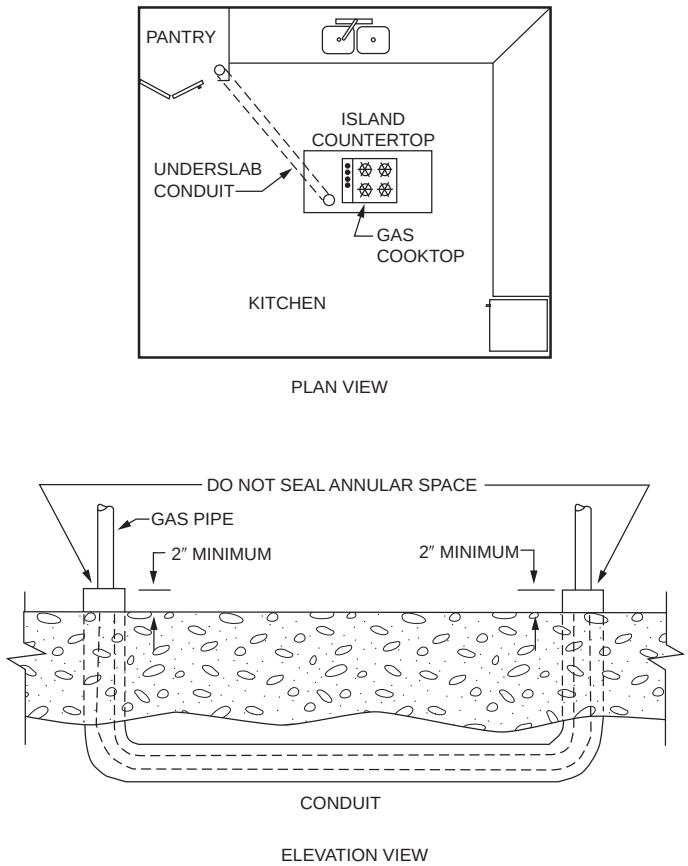

For SI: 1 inch = 25.4 mm.

Figure G2415.8.2
PIPE UNDER SLAB BETWEEN INTERIOR POINTS

INTERNATIONAL CODE COUNCIL®
Copyright © 2015 ICC. ALL RIGHTS RESERVED. Accessed by David Dammon on Jun 21, 2017 12:30:52 PM pursuant to License Agreement with ICC. No further reproduction or distribution authorized. ANY UNAUTHORIZED REPRODUCTION OR DISTRIBUTION IS A VIOLATION OF THE FEDERAL COPYRIGHT ACT AND THE LICENSE AGREEMENT, AND SUBJECT TO CIVIL AND CRIMINAL PENALTIES THEREUNDER.

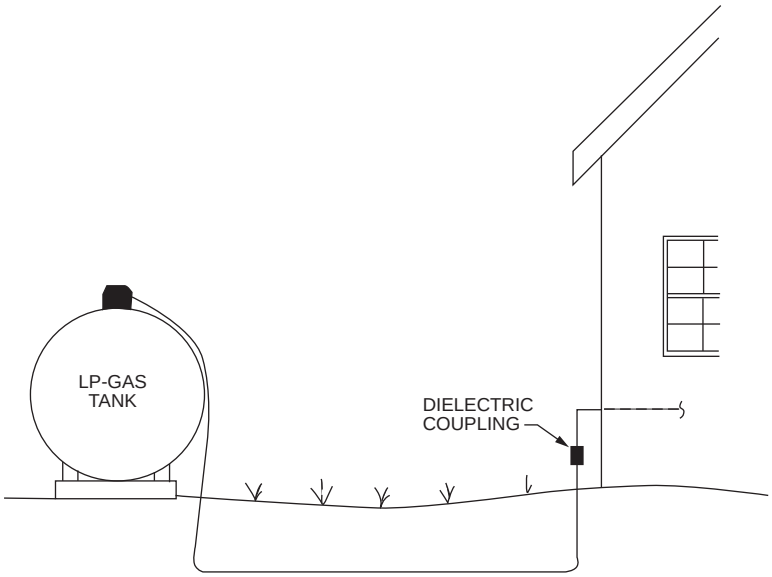

Figure G2415.10
LP-GAS PIPING ISOLATION

G2415.11.1 (404.11.1) Prohibited use. Uncoated threaded or socket-welded joints shall not be used in *piping* in contact with soil or where internal or external crevice corrosion is known to occur.

❖ Pits, crevices and other surface imperfections can create concentrated corrosion cells where the corrosion effect is amplified. Pipe or fitting failure could occur more quickly than if the corrosion was uniformly distributed over the entire surface of the pipe or fitting (see commentary, Section G2415.9.2).

G2415.11.2 (404.11.2) Protective coatings and wrapping. Pipe protective coatings and wrappings shall be *approved* for the application and shall be factory applied.

Exception: Where installed in accordance with the manufacturer's instructions, field application of coatings and wrappings shall be permitted for pipe nipples, fittings and locations where the factory coating or wrapping has been damaged or necessarily removed at joints.

❖ Protective coatings in the form of wrappings, tapes, enamels, epoxies, sleeves, casings and factory-applied coverings are a common method of isolating metallic piping materials from the atmosphere or from the earth in which they are buried. Corrosion can be caused by soil or construction materials that are in contact with the pipe. Protection is usually provided by a factory-applied coating or by field wrapping the pipe with a protective covering such as a coal-tar-based or plastic wrapping. Where possible, a piping material is chosen that is not subject to the type of corrosion typical of the application. Application of these materials under strictly controlled factory conditions improves the quality control process and reduces the likelihood of coating defects. In the event that coatings or wrappings must be applied in the field, the exception states that they must be installed in accordance with the manufacturer's installation instructions. Coatings and wrappings should be applied only by persons trained and experienced in such work in order to improve reliability of the coating/wrapping process. Field application is permitted only in cases where the factory-applied material may have been damaged during transit or installation of the pipe, where the applied coating was removed for pipe welding or threading of the pipe or for short sections (nipples) of pipe used in the installation. Corrosion can be concentrated on the pipe or fitting where there are flaws in the coating or wrapping; therefore, improperly applied coatings and wrappings can cause pipe or fitting failures to occur faster than failures would occur in unprotected metals. It is evident why plastic piping is used extensively in underground installations.

G2415.12 (404.12) Minimum burial depth. Underground *piping systems* shall be installed a minimum depth of 12 inches (305 mm) below grade, except as provided for in Section G2415.12.1.

❖ The depth of 12 inches (305 mm) is considered to be sufficient to avoid possible harm to the pipe from the use of hand tools such as spades and shovels. However, if the piping is located in an area subject to surface loads such as vehicular traffic, the 12-inch (305 mm) depth may not be sufficient to protect the piping from those loads (see Commentary Figure G2415.12).

INTERNATIONAL CODE COUNCIL®
Copyright © 2015 ICC. ALL RIGHTS RESERVED. Accessed by David Dammon on Jun 21, 2017 12:30:52 PM pursuant to License Agreement with ICC. No further reproduction or distribution authorized. ANY UNAUTHORIZED REPRODUCTION OR DISTRIBUTION IS A VIOLATION OF THE FEDERAL COPYRIGHT ACT AND THE LICENSE AGREEMENT, AND SUBJECT TO CIVIL AND CRIMINAL PENALTIES THEREUNDER.

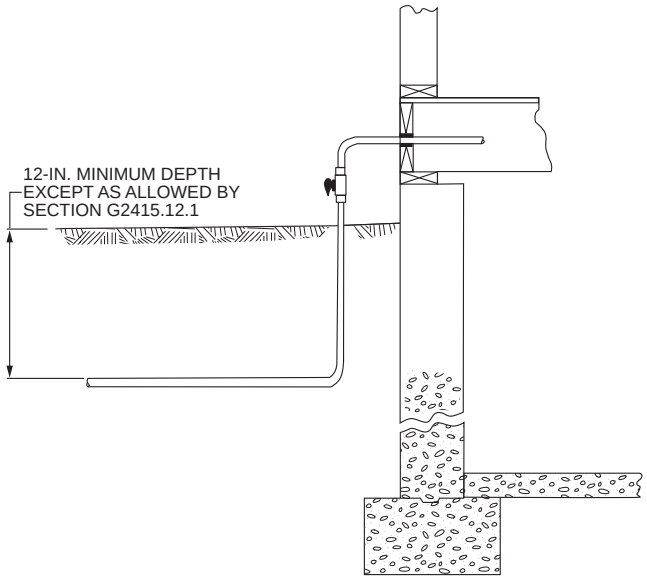

For SI: 1 inch = 25.4 mm.

Figure G2415.12
MINIMUM BURIAL DEPTH

G2415.12.1 (404.12.1) Individual outside appliances. Individual lines to outdoor lights, grills or other *appliances* shall be installed not less than 8 inches (203 mm) below finished grade, provided that such installation is *approved* and is installed in locations not susceptible to physical damage.

❖ Gas piping may be installed within 8 inches (203 mm) of the ground surface where it serves individual outdoor appliances and is not likely to be subjected to damage such as might occur from vehicular traffic, gardening, future excavation, etc. Each individual installation must be reviewed and approved by the code official. The intent is to allow shallow installations for small distribution lines that serve outdoor gas lights, cooking appliances, pool heaters and similar loads only where the piping is unlikely to be disturbed.

G2415.13 (404.13) Trenches. The trench shall be graded so that the pipe has a firm, substantially continuous bearing on the bottom of the trench.

❖ Where trenches have nonuniform depth or peaks and valleys in the bottom, the piping could lack continuous support and could be subjected to stresses from the backfill and surface loads.

G2415.14 (404.14) Piping underground beneath buildings. *Piping* installed underground beneath buildings is prohibited except where the *piping* is encased in a conduit of wrought iron, plastic pipe, steel pipe or other *approved* conduit material designed to withstand the superimposed loads. The conduit shall be protected from corrosion in accordance with Section G2415.11 and shall be installed in accordance with Section G2415.14.1 or G2415.14.2.

❖ This section prohibits the installation of gas piping beneath buildings to reduce the potential for an inaccessible pipe failure caused by settling of the structure. The prohibition also reduces the potential for corrosion-caused failure of piping embedded in soil or fill. See Section G2415.8 for gas pipe installations in floor slabs. Where underground installation under a building is unavoidable, the piping must be encased in another pipe (conduit) to act as a secondary containment system or as a protective shield from the fill under the floor (see Commentary Figure G2415.8.2).

G2415.14.1 (404.14.1) Conduit with one end terminating outdoors. The conduit shall extend into an occupiable portion of the building and, at the point where the conduit terminates in the building, the space between the conduit and the *gas piping* shall be sealed to prevent the possible entrance of any gas leakage. The conduit shall extend not less than 2 inches (51 mm) beyond the point where the *pipe* emerges from the floor. Where the end sealing is capable of withstanding the full pressure of the gas pipe, the conduit shall be designed for the same pressure as the pipe. Such conduit shall extend not less than 4 inches (102 mm) outside the building, shall be vented above grade to the outdoors and shall be installed so as to prevent the entrance of water and insects.

❖ See the commentary to Section G2415.8.1.

G2415.14.2 (404.14.2) Conduit with both ends terminating indoors. Where the conduit originates and terminates within the same building, the conduit shall originate and terminate in an accessible portion of the building and shall not be sealed. The conduit shall extend not less than 2 inches (51 mm) beyond the point where the pipe emerges from the floor.

❖ See the commentary to Section G2415.8.2.

G2415.15 (404.15) Outlet closures. Gas *outlets* that do not connect to *appliances* shall be capped gas tight.

Exception: *Listed* and *labeled* flush-mounted-type quick-disconnect devices and *listed* and *labeled gas convenience*

INTERNATIONAL CODE COUNCIL®
Copyright © 2015 ICC. ALL RIGHTS RESERVED. Accessed by David Dammon on Jun 21, 2017 12:30:52 PM pursuant to License Agreement with ICC. No further reproduction or distribution authorized. ANY UNAUTHORIZED REPRODUCTION OR DISTRIBUTION IS A VIOLATION OF THE FEDERAL COPYRIGHT ACT AND THE LICENSE AGREEMENT, AND SUBJECT TO CIVIL AND CRIMINAL PENALTIES THEREUNDER.

outlets shall be installed in accordance with the manufacturer's instructions.

❖ Unused fuel gas outlets must be capped or plugged gas tight, regardless of whether a shutoff valve is installed at the outlet. A closed valve alone is not dependable and poses an unnecessary risk of leakage, accidental opening and vandalism. The exception recognizes that listed gas outlet devices are built with an inherent safety feature that will automatically shut off the gas flow if the mating connector is disengaged or that will not allow the appliance connector to be disengaged until the integral shutoff valve is manually closed.

G2415.16 (404.16) Location of outlets. The unthreaded portion of *piping outlets* shall extend not less than l inch (25 mm) through finished ceilings and walls and where extending through floors, outdoor patios and slabs, shall not be less than 2 inches (51 mm) above them. The *outlet* fitting or *piping* shall be securely supported. *Outlets* shall not be placed behind doors. *Outlets* shall be located in the room or space where the *appliance* is installed.

Exception: *Listed* and *labeled* flush-mounted-type quick-disconnect devices and *listed* and *labeled gas convenience outlets* shall be installed in accordance with the manufacturer's instructions.

❖ This section regulates the location, installation and termination of gas piping system outlets to reduce the likelihood of physical damage and to provide clearances for the use of tools. When making connections to piping outlets, "back-up" wrenches are used to prevent piping from rotating, loosening or being damaged. Sufficient pipe length is necessary to allow the application of tools. Gas outlet devices that have been tested and labeled for installation methods other than those addressed in this section must be installed in accordance with the terms of their testing and listing as contained in the manufacturer's installation instructions. Gas outlets for CSST systems must be installed with the termination fitting designed specifically for that purpose and provided by the CSST manufacturer.

G2415.17 (404.17) Plastic pipe. The installation of plastic *pipe* shall comply with Sections G2415.17.1 through G2415.17.3.

❖ This section places restrictions on the location and operating pressures for plastic pipe in addition to stating installation requirements specific to plastic pipe.

G2415.17.1 (404.17.1) Limitations. Plastic pipe shall be installed outdoors underground only. Plastic pipe shall not be used within or under any building or slab or be operated at pressures greater than 100 psig (689 kPa) for natural gas or 30 psig (207 kPa) for LP-gas.

Exceptions:

1. Plastic pipe shall be permitted to terminate above ground outside of buildings where installed in pre-manufactured *anodeless risers* or service head adapter risers that are installed in accordance with the manufacturer's instructions.
2. Plastic pipe shall be permitted to terminate with a wall head adapter within buildings where the plastic pipe is inserted in a *piping* material for *fuel gas* use in buildings.
3. Plastic pipe shall be permitted under outdoor patio, walkway and driveway slabs provided that the burial depth complies with Section G2415.10.

❖ Because of the potential hazard associated with the use of a material that has lower resistance to physical damage and heat as compared to metallic pipe, installation of plastic pipe and tubing is limited to areas that are both outside of the building and underground. Plastic pipe and tubing are widely used for underground gas distribution systems because of their ease of installation and inherent resistance to corrosion. Polyethylene (PE) and polyamide (PA) SDR 11 pipe are the only allowable plastic pipes for use with LP-gas, and the code user is directed to the referenced standard, NFPA 58, which requires that these piping materials comply with ASTM D2513. The exception makes it clear that if an equivalent level of physical protection is installed, plastic pipe may terminate above ground outside of the building. It is common practice for gas utility companies to install premanufactured riser assemblies at their meter settings. Such risers typically consist of a steel pipe with a corrosion-resistant coating in which a length of PE pipe is preinstalled for coupling to the service lateral. A 90-degree (1.57 rad) sweeping bend is built into the underground end of the riser assembly. Plastic piping is not allowed in or under a concrete slab except as permitted by Exception 3. It is not the intent of this section to prevent an outdoor slab from being placed over customer-owned (private) underground gas lines, such as in the case of walkways, driveways and open patios. The prohibition on piping within a slab is applicable to all slabs without exception. Exceptions 1 and 2 relate to Section G2414.6.1; see the commentary to that section (see Commentary Figure G2415.17.1).

G2415.17.2 (404.17.2) Connections. Connections outdoors and underground between metallic and plastic *piping* shall be made only with transition fittings conforming to ASTM D2513 Category I or ASTM F1973.

❖ Because installation of plastic piping is allowed only where both outside and underground, the same requirement holds for joining plastic and metallic piping. Mechanical compression joints employ an elastomeric seal that must be compatible not only with the piping material but also with the gas that is conveyed in the system. The manufacturer's instructions normally require use of an internal stiffener insert in conjunction with the fitting for additional support. The stiffener insert prevents the pipe from deforming under the compression force exerted by the seal and compression nut assembly.

Category 1 fittings are designed to make a gas-tight seal and resist axial (pull-out) forces equal to the yield strength of the piping material [see Commentary Figure G2414.11(3)].

INTERNATIONAL CODE COUNCIL®
Copyright © 2015 ICC. ALL RIGHTS RESERVED. Accessed by David Dammon on Jun 21, 2017 12:30:52 PM pursuant to License Agreement with ICC. No further reproduction or distribution authorized. ANY UNAUTHORIZED REPRODUCTION OR DISTRIBUTION IS A VIOLATION OF THE FEDERAL COPYRIGHT ACT AND THE LICENSE AGREEMENT, AND SUBJECT TO CIVIL AND CRIMINAL PENALTIES THEREUNDER.

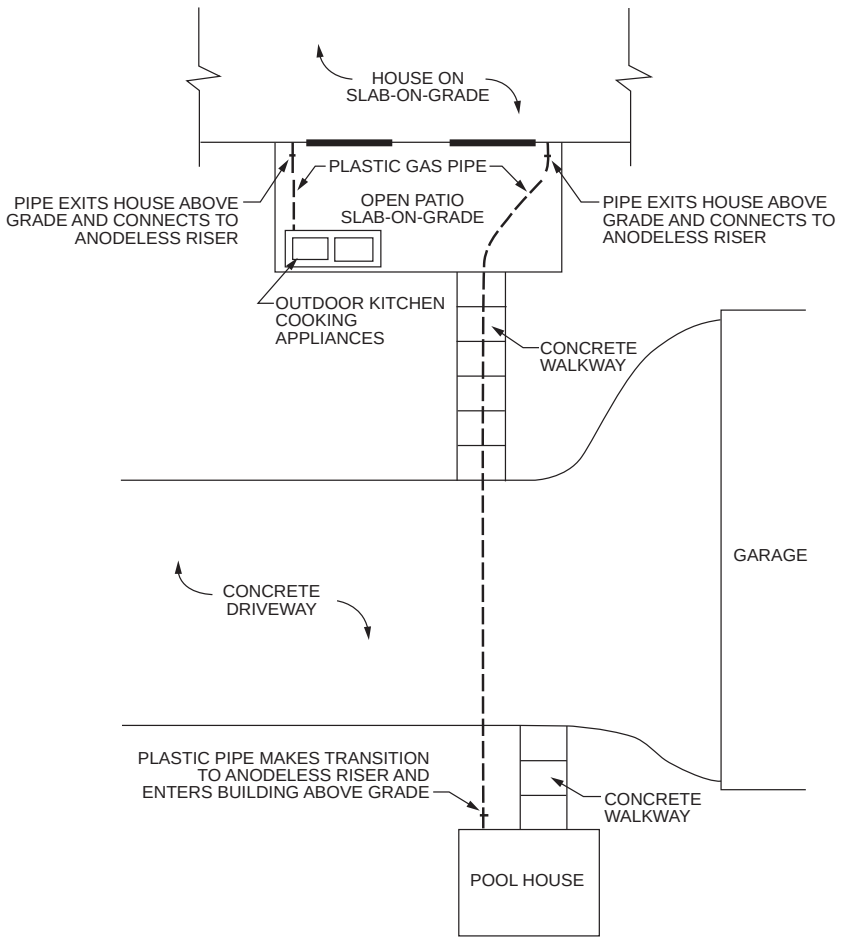

Figure G2415.17.1
PIPING UNDER SLABS

G2415.17.3 (404.17.3) Tracer. A yellow insulated copper tracer wire or other *approved* conductor shall be installed adjacent to underground nonmetallic *piping*. *Access* shall be provided to the tracer wire or the tracer wire shall terminate above ground at each end of the nonmetallic *piping*. The tracer wire size shall not be less than 18 AWG and the insulation type shall be suitable for direct burial.

❖ To avoid piping damage and a hazardous condition, the location of underground piping must be known prior to excavation work in the vicinity of such piping.

In the past, gas utility companies, installers and contractors relied on metal detectors to locate gas piping underground. With the advent of nonmetallic (plastic) piping, this is no longer possible. A tracer wire provides a means for locating nonmetallic gas piping without having to excavate, thereby avoiding the possibility of damaging the pipe. An electrical current can be passed through the wire to allow a metal detector to locate the piping. Insulated wire is required because copper wire or other approved conductors may be susceptible to corrosion in some soils.

Yellow is the standardized color used to identify gas piping. Specialized tracer systems made of proprietary materials are available. Tapes that contain a conducting strip and also serve as a visual warning are also available.

G2415.18 (404.18) Pipe cleaning. The use of a flammable or combustible gas to clean or remove debris from a *piping* system shall be prohibited.

❖ Such cleaning operations were once used on industrial sites using high-pressure fuel gas. Regardless of the location, fuel gas must never be used as the means of flushing debris from gas piping because the discharge of gas from the piping poses a serious threat of explosion.

G2415.19 (404.19) Prohibited devices. A device shall not be placed inside the *piping* or fittings that will reduce the cross-sectional area or otherwise obstruct the free flow of gas.

Exceptions:

1. Approved gas filters.
2. An approved fitting or device where the gas piping system has been sized to accommodate the pressure drop of the fitting or device.

❖ Devices such as filters and flow-measuring instruments could create considerable pressure drop and are prohibited except where the piping system is

INTERNATIONAL CODE COUNCIL®
Copyright © 2015 ICC. ALL RIGHTS RESERVED. Accessed by David Dammon on Jun 21, 2017 12:30:52 PM pursuant to License Agreement with ICC. No further reproduction or distribution authorized. ANY UNAUTHORIZED REPRODUCTION OR DISTRIBUTION IS A VIOLATION OF THE FEDERAL COPYRIGHT ACT AND THE LICENSE AGREEMENT, AND SUBJECT TO CIVIL AND CRIMINAL PENALTIES THEREUNDER.

designed to tolerate such losses. An unaccounted for restriction in the piping could make an otherwise properly designed system fail to supply the required pressure. This section is not intended to apply to shutoff valves and EFV devices because it specifically addresses devices installed in the interior of piping as opposed to devices installed "in" piping systems. Exception 2 addresses devices such as EFVs that have internal components that can be viewed as being placed inside of pipe or fittings. An EFV will act as a restriction in the piping and the resultant pressure loss from this restriction must be considered to determine if such loss is tolerable and that the load will be supplied with the required minimum inlet pressure.

G2415.20 (404.20) Testing of piping. Before any system of *piping* is put in service or concealed, it shall be tested to ensure that it is gas tight. Testing, inspection and purging of *piping systems* shall comply with Section G2417.

❖ A pressure test is required after every installation, alteration, addition or repair to the fuel-gas piping system. The location of a leak may be difficult to determine, especially if it is concealed in the building construction. If a leak is found, the leaking component must be repaired or replaced before the system is concealed or put into operation. Section G2417 specifies testing pressures based on the type of system, the design working pressure or other parameters. The piping system must sustain the test pressure for the test duration period without exhibiting any sign of leakage.

SECTION G2416 (405)
PIPING BENDS AND CHANGES IN DIRECTION

G2416.1 (405.1) General. Changes in direction of pipe shall be permitted to be made by the use of fittings, factory bends or field bends.

❖ This section permits making changes in direction of gas piping through the use of pipe fittings compatible with the piping material or, if recommended by the pipe manufacturer, by bending the pipe. If bending is the chosen method, it must be accomplished in accordance with Sections G2416.2 and G2416.3. In practice, steel gas piping is rarely bent to accomplish changes in direction because pipe failure at a seam is a possibility for steel pipe that is bent.

G2416.2 (405.2) Metallic pipe. Metallic pipe bends shall comply with the following:

1. Bends shall be made only with bending tools and procedures intended for that purpose.
2. All bends shall be smooth and free from buckling, cracks or other evidence of mechanical damage.
3. The longitudinal weld of the pipe shall be near the neutral axis of the bend.
4. Pipe shall not be bent through an arc of more than 90 degrees (1.6 rad).
5. The inside radius of a bend shall be not less than six times the outside diameter of the pipe.

❖ Pipe is bent to accomplish changes in direction without the use of fittings. Pipe must be bent with the appropriate bending tools and materials. Some materials are not tempered or intended to be bent; therefore, consideration must be given to choosing the proper materials. Bending tools are designed to make bends without damaging the pipe. Pipe intended to be bent has a minimum bend radius which must be observed to avoid damage to the pipe. For example, bending welded seam pipe with the seam located outside of the neutral axis of the bend may result in a split seam because of the stresses induced from the bend. In other words, the welded seam must not be oriented in a bend that would place it in tension or compression. If pipe is to be bent, it should be stated in the pipe specifications that the pipe is suitable for bending. Rigid gas piping is not commonly bent because of the perceived risk of pipe stress failures at the bend and because bending can be more labor intensive than using fittings.

G2416.3 (405.3) Plastic pipe. Plastic pipe bends shall comply with the following:

1. The pipe shall not be damaged and the internal diameter of the pipe shall not be effectively reduced.
2. Joints shall not be located in pipe bends.
3. The radius of the inner curve of such bends shall not be less than 25 times the inside diameter of the pipe.
4. Where the *piping* manufacturer specifies the use of special bending tools or procedures, such tools or procedures shall be used.

❖ Because of the material characteristics of plastic pipe, the code defers to the manufacturer's installation and bending instructions to achieve the performance level contemplated by this section. For example, coiled plastic pipe and tubing have limitations regarding bending beyond or against the natural curvature of the coil. A joint in a bend would be subject to bending stresses and pipe/fitting misalignments that could cause joint structural failure and/or leakage. Thus, a 1-inch (25.4 mm) ID plastic pipe would have a minimum bending radius of 25 inches (635 mm) measured to the inner curve of the bend.

SECTION G2417 (406)
INSPECTION, TESTING AND PURGING

G2417.1 (406.1) General. Prior to acceptance and initial operation, all *piping* installations shall be visually inspected and pressure tested to determine that the materials, design, fabrication and installation practices comply with the requirements of this code.

❖ Before any gas piping system is put to use, it must be inspected, tested and approved. See Sections G2417.1.1 through G2417.6.4. Pressure testing is distinct from leakage checking as covered in Section G2417.6.

INTERNATIONAL CODE COUNCIL®
Copyright © 2015 ICC. ALL RIGHTS RESERVED. Accessed by David Dammon on Jun 21, 2017 12:30:52 PM pursuant to License Agreement with ICC. No further reproduction or distribution authorized. ANY UNAUTHORIZED REPRODUCTION OR DISTRIBUTION IS A VIOLATION OF THE FEDERAL COPYRIGHT ACT AND THE LICENSE AGREEMENT, AND SUBJECT TO CIVIL AND CRIMINAL PENALTIES THEREUNDER.

G2417.1.1 (406.1.1) Inspections. Inspection shall consist of visual examination, during or after manufacture, fabrication, assembly or *pressure tests*.

❖ The inspection of piping installations is intended to be a visual observation of the system and the testing procedure. The designer may require that welded joints in, for example, very high pressure applications be examined by a method that is capable of discovering internal defects that are not detectable by visual observation.

G2417.1.2 (406.1.2) Repairs and additions. In the event repairs or additions are made after the *pressure test*, the affected *piping* shall be tested.

Minor repairs and additions are not required to be *pressure tested* provided that the work is inspected and connections are tested with a noncorrosive leak-detecting fluid or other *approved* leak-detecting methods.

❖ Some time after the initial test of the piping, a repair could be made or a branch could be added or extended. The repaired, added or extended portion of the piping system needs to be tested without requiring the unchanged portions to be tested again. Minor work on an existing system is allowed without pressure testing the minor work if the work is visually inspected and tested by a leak-detecting method. Leak-detecting methods include bubble test fluids and electronic sensors. Some bubble test fluids could be corrosive to some piping; therefore, a noncorrosive fluid designed for this purpose should always be used. Methods other than bubble test fluids must be acceptable to the code official.

G2417.1.3 (406.1.3) New branches. Where new branches are installed to new *appliances*, only the newly installed branches shall be required to be *pressure tested*. Connections between the new *piping* and the existing *piping* shall be tested with a noncorrosive leak-detecting fluid or other *approved* leak-detecting methods.

❖ This section applies to all new branches regardless of where in the piping system they connect. Often, because it is convenient or because the existing piping is fully loaded, a new piping branch will be run from the point of delivery to serve a new appliance installation. The new branch is typically taken from a tee fitting installed immediately downstream of the meter. The entire new branch piping must be tested, including the tee fitting in the existing piping from which the new branch is supplied. The point of connection to the existing piping can be tested by a means other than pressure testing, although all other piping in the new branch must be isolated from the existing piping and pressure tested as required for new work. Section G2417.1.4 requires that the new branch piping be disconnected from the existing piping during pressure testing, except where an assembly consisting of two closed valves in series with an intermediate open valved port is installed to isolate the new piping from the existing piping (see Commentary Figure G2417.1.4).

G2417.1.4 (406.1.4) Section testing. A *piping system* shall be permitted to be tested as a complete unit or in sections. Under no circumstances shall a *valve* in a line be used as a bulkhead between gas in one section of the *piping system* and test medium in an adjacent section, except where a double block and bleed valve system is installed. A valve shall not be subjected to the test pressure unless it can be determined that the valve, including the valve closing mechanism, is designed to safely withstand the test pressure.

❖ Depending on the progression of a job, it may be desirable to test portions of a system as they are completed. It is also possible that portions of a system will be put in service before the entire system is completed. To prevent a test medium from leaking into piping containing fuel gas or vice versa, portions of piping under test must be isolated from portions that are in service. A single valve cannot be depended on to establish this isolation because all valves have some "leak-through" allowance, and also the valve could be accidentally opened. To eliminate this risk, two valves in series must be used, and a valved open port (tell-tale) must be installed between the valves. This arrangement is called a double-block and bleed-valve system. The

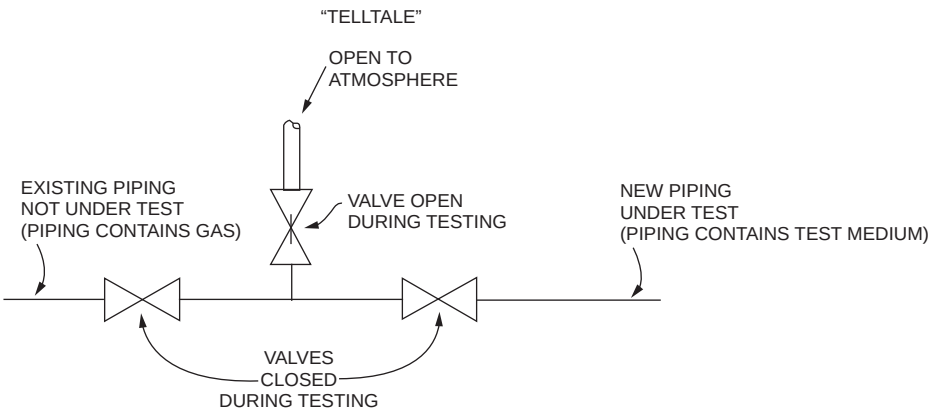

Figure G2417.1.4
PIPING ISOLATION ARRANGEMENT FOR TESTING

INTERNATIONAL CODE COUNCIL®
Copyright © 2015 ICC. ALL RIGHTS RESERVED. Accessed by David Dammon on Jun 21, 2017 12:30:52 PM pursuant to License Agreement with ICC. No further reproduction or distribution authorized. ANY UNAUTHORIZED REPRODUCTION OR DISTRIBUTION IS A VIOLATION OF THE FEDERAL COPYRIGHT ACT AND THE LICENSE AGREEMENT, AND SUBJECT TO CIVIL AND CRIMINAL PENALTIES THEREUNDER.

open port will release any gases that have passed through either isolation valve and also will serve to indicate any leakage or accidental opening of an isolation valve (see Commentary Figure G2417.1.4).

G2417.1.5 (406.1.5) Regulators and valve assemblies. *Regulator* and valve assemblies fabricated independently of the *piping system* in which they are to be installed shall be permitted to be tested with inert gas or air at the time of fabrication.

❖ Assemblies of valves, regulators and/or OPDs might be factory or shop assembled and may be tested independently of the piping system in which they will be installed.

G2417.1.6 (406.1.6) Pipe clearing. Prior to testing, the interior of the pipe shall be cleared of all foreign material.

❖ Piping will contain debris from pipe storage, handling and assembly, including soil, construction site trash, pipe-joint compound, welding debris, threading and reaming scrap and even tools. Clearing the piping of foreign materials will prevent such materials from entering system controls, devices and appliances and will also reduce the chances of injury to personnel from ejected debris and objects (see Section G2415.18).

G2417.2 (406.2) Test medium. The test medium shall be air, nitrogen, carbon dioxide or an inert gas. Oxygen shall not be used.

❖ The gas that is forced into the piping system for pressure testing must be chemically unreactive to prevent undesirable reactions with the piping system components and the fuel to be conveyed in the piping. Oxygen is not inert, and any residual amount could form an explosive mixture with the fuel gas. The typical test gas is air, which is also not inert but is readily available and free. Nitrogen and carbon dioxide are considered to be inert for the purpose of testing piping systems and are inexpensive compared to most truly inert gases.

G2417.3 (406.3) Test preparation. *Pipe* joints, including welds, shall be left exposed for examination during the test.

Exception: Covered or *concealed pipe* end joints that have been previously tested in accordance with this *code*.

❖ This section is consistent with Section R109.1.2 and requires piping joints to remain exposed during testing to allow locations of defects. This section speaks only of joints, but Section R109.1.2 requires that the piping and joints be left exposed until they are inspected and approved.

G2417.3.1 (406.3.1) Expansion joints. Expansion joints shall be provided with temporary restraints, if required, for the additional thrust load under test.

❖ If the piping system uses expansion joints to accommodate piping movement, those joints might need to be restrained to resist the additional thrust loading caused by the movement of the pressurized test gas. Generally, testing does not produce noticeable dynamic thrust forces because of the slow rate at which the test gas is put in and taken out of the piping system. The thrust force produced by the static pressure of the test gas is of concern. Expansion joints are rarely used because expansion loops and offsets perform the same function.

G2417.3.2 (406.3.2) Appliance and equipment isolation. *Appliances* and *equipment* that are not to be included in the test shall be either disconnected from the *piping* or isolated by blanks, blind flanges or caps.

❖ Some equipment can be damaged by test pressure and is therefore disconnected from the piping system or is otherwise isolated by blank-offs placed between the flanges.

G2417.3.3 (406.3.3) Appliance and equipment disconnection. Where the *piping system* is connected to *appliances* or *equipment* designed for operating pressures of less than the test pressure, such *appliances* or *equipment* shall be isolated from the *piping system* by disconnecting them and capping the *outlet(s)*.

❖ This requirement is often overlooked in the field, which could lead to appliance damage and serious consequences. Appliances are typically designed for a maximum inlet gas pressure of $^1/_2$ psig (3.5 kPa) or less, above which damage to controls and regulators could occur. The test pressure will be at least 3 psig (20.7 kPa) and oftentimes much higher in accordance with general practice or local traditions or requirements. Installers routinely pressurize piping systems to pressures between 50 and 100 psig (345 and 690 kPa), often at the insistence of the local authority. It is obvious that there is a good potential to expose appliances to extreme pressures during a test, which is why the code requires the precaution of disconnecting the appliances from the supply piping. Disconnection is normally accomplished by opening a union or disconnecting the appliance connector. The appliance shutoff valve must not be used as a means of appliance isolation because the valve can leak through and/or can be accidentally opened or left open (see Section G2417.3.4 and Commentary Figure G2417.3.3).

G2417.3.4 (406.3.4) Valve isolation. Where the *piping system* is connected to *appliances* or *equipment* designed for operating pressures equal to or greater than the test pressure, such *appliances* or *equipment* shall be isolated from the *piping system* by closing the individual *appliance* or *equipment* shutoff valve(s).

❖ This section will likely never apply to dwellings because the test pressure (see Section G2417.4.1) will exceed the operating pressure of the appliances. If the appliances and other system components are not subject to damage by the test pressure, the equipment shutoff valve can serve to isolate the equipment during the test. Unlike Section G2417.3.3, this section does not require disconnection of the appliance/equipment. This section would probably be applicable only in an industrial occupancy. It is believed that no residential appliance can be safely subjected to even the minimum test pressure of 3 psi (207 kPa); therefore, it is always prudent to disconnect all appliances prior to applying test pressure (see Section G2417.3.3).

INTERNATIONAL CODE COUNCIL®
Copyright © 2015 ICC. ALL RIGHTS RESERVED. Accessed by David Dammon on Jun 21, 2017 12:30:52 PM pursuant to License Agreement with ICC. No further reproduction or distribution authorized. ANY UNAUTHORIZED REPRODUCTION OR DISTRIBUTION IS A VIOLATION OF THE FEDERAL COPYRIGHT ACT AND THE LICENSE AGREEMENT, AND SUBJECT TO CIVIL AND CRIMINAL PENALTIES THEREUNDER.



Figure G2417.3.3
MANUFACTURER'S WARNING REGARDING PRESSURE TESTING OF GAS PIPING

G2417.3.5 (406.3.5) Testing precautions. Testing of *piping* systems shall be performed in a manner that protects the safety of employees and the public during the test.

❖ Compressed gases store energy in direct proportion to the pressure. This stored energy can be destructive and dangerous to personnel if released quickly because of joint, component or pipe failure or an intentional action. Debris will be found in all piping systems after installation. This debris can be harmful to appliances and system components and can act as projectiles during testing and purging operations. Piping is typically purged before testing to flush out foreign materials.

G2417.4 (406.4) Test pressure measurement. Test pressure shall be measured with a manometer or with a pressure-measuring device designed and calibrated to read, record, or indicate a pressure loss caused by leakage during the *pressure test* period. The source of pressure shall be isolated before the *pressure tests* are made. Mechanical gauges used to measure test pressures shall have a range such that the highest end of the scale is not greater than five times the test pressure.

❖ Test pressures must be measured with a manometer or other pressure-measuring device that is designed and calibrated to indicate a pressure loss caused by leakage during the pressure test period. Pressure-measuring devices must be graduated so that small variations in test pressure will be readily detectable. Small pressure variations might go undetected in instruments having broader ranges. Gauges should have scale increments that are small enough to detect small changes in pressure. Mechanical gauges generally achieve their best accuracy near mid-range of their scale. All test instruments should have been calibrated recently and their accuracy verified before starting the test. Although no piping system can be absolutely leak free, the intent of the code is to make the system free of leaks that are measurable with the testing procedures and instruments prescribed in the code and attainable in the field. Spring-type mechanical pressure gauges must have a high-end scale reading of no greater than 5 times the test pressure. If the test pressure was 3 psig (20.7 kPa), for example, the gauge would have to have a maximum range of 0 to 15 psig (0 to 104 kPa). Such gauges are a wise choice because the test reading will be higher in the range of the gauge where the gauge accuracy is better. Also, the gauge can have much smaller increments than the typical 100 psig (690 kPa) gauge, thus allowing greater resolution and discernability in detecting a leak [see Commentary Figure G2417.4(1)]. All spring-type mechanical gauges are susceptible to inaccuracies caused by conditions of use and mishandling and

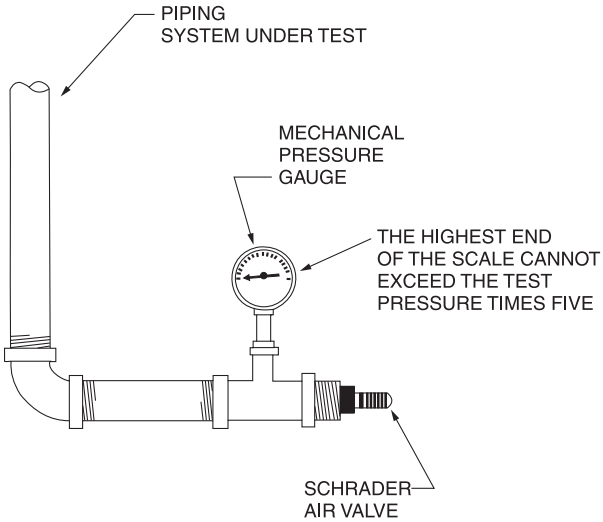

Figure G2417.4(1)
TYPICAL TEST SET-UP FOR AIR-PRESSURE TESTING

INTERNATIONAL CODE COUNCIL®
Copyright © 2015 ICC. ALL RIGHTS RESERVED. Accessed by David Dammon on Jun 21, 2017 12:30:52 PM pursuant to License Agreement with ICC. No further reproduction or distribution authorized. ANY UNAUTHORIZED REPRODUCTION OR DISTRIBUTION IS A VIOLATION OF THE FEDERAL COPYRIGHT ACT AND THE LICENSE AGREEMENT, AND SUBJECT TO CIVIL AND CRIMINAL PENALTIES THEREUNDER.

should be calibrated regularly. Manometers are very accurate and do not need to be calibrated. In all cases, the intent of this section is to require an instrument that is capable of indicating the very small pressure changes that occur as a result of a detectable leak. Test instrument sensitivity is especially important considering the short duration of the test.

The source of pressure in the piping system under test must be disconnected from the system to prevent the source from invalidating the test. For example, the compressed air tank or inert gas cylinder could be adding gas to the piping system at the same rate as a leak is letting gas escape; the test would then be meaningless.

Commentary Figures G2417.4(2), (3) and (4) show examples of test instruments that can be considerably more accurate than mechanical spring gauges. Electronic instruments can provide high resolution readings, making very small leaks as well as regular leaks detectable within short time periods. Commentary Figures G2417.4(3) and (4) show instruments that are designed to give accurate pressure readings and give positive indication of a leak. The liquid manometer-type instrument, shown in Commentary Figure G2417.4(3), functions as a manometer that readily indicates test pressure and leakage. A separate feature of the instrument allows small leaks to be recognized quickly. While the system is under test pressure, an integral valve can be closed that will isolate the liquid reservoir from the piping system, thereby trapping the test pressure in the manometer's liquid reservoir. A small diameter vertical dip tube, having its open end submerged in the liquid, rises above the liquid level in the reservoir. The top end of the dip tube is connected to the piping system under test. If there is no leakage, the pressures at the upper end and lower (submerged) end of the dip tube are equal and liquid will not rise. If leakage occurs, the pressure in the piping system will fall below the pressure trapped in the reservoir at the start of the test procedure and liquid will be forced up into the small diameter dip tube, indicating the leak. The use of a small diameter dip tube allows a small change in liquid level in the reservoir to be seen as a comparatively large movement of liquid in the dip tube.

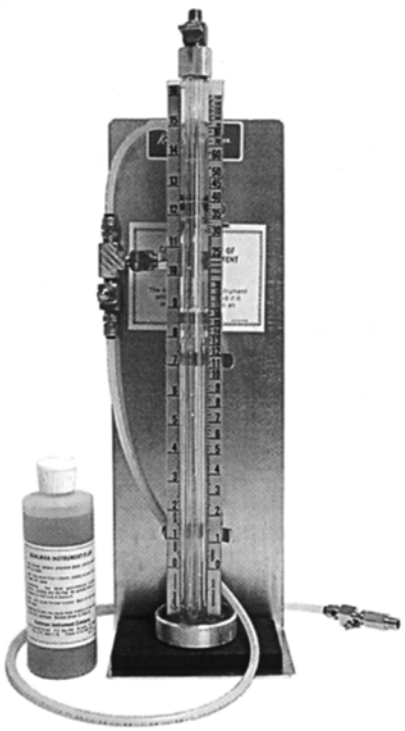

Photo courtesy of KUHLMAN Instrument Company

Figure G2417.4(3)
LEAK DETECTOR INSTRUMENT



Photo courtesy of Dwyer Instruments, Inc.

Figure G2417.4(2)
ELECTRONIC PRESSURE GAUGE

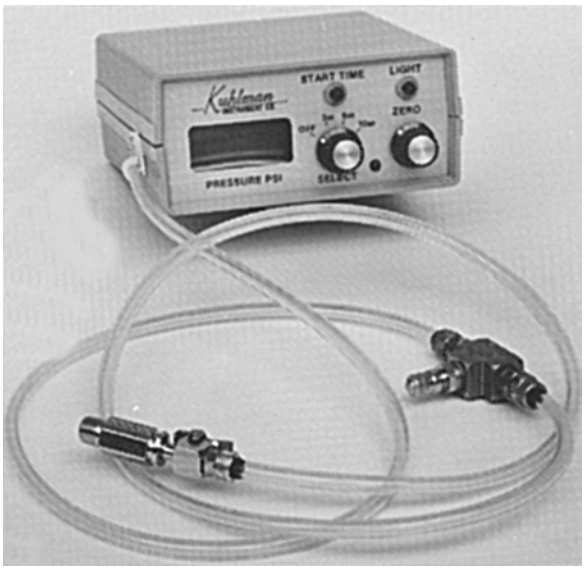

Photo courtesy of KUHLMAN Instrument Company

Figure G2417.4(4)
ELECTRONIC LEAK DETECTOR INSTRUMENT

INTERNATIONAL CODE COUNCIL®
Copyright © 2015 ICC. ALL RIGHTS RESERVED. Accessed by David Dammon on Jun 21, 2017 12:30:52 PM pursuant to License Agreement with ICC. No further reproduction or distribution authorized. ANY UNAUTHORIZED REPRODUCTION OR DISTRIBUTION IS A VIOLATION OF THE FEDERAL COPYRIGHT ACT AND THE LICENSE AGREEMENT, AND SUBJECT TO CIVIL AND CRIMINAL PENALTIES THEREUNDER.

G2417.4.1 (406.4.1) Test pressure. The test pressure to be used shall be not less than $1^1/_2$ times the proposed maximum working pressure, but not less than 3 psig (20 kPa gauge), irrespective of design pressure. Where the test pressure exceeds 125 psig (862 kPa gauge), the test pressure shall not exceed a value that produces a hoop stress in the *piping* greater than 50 percent of the specified minimum yield strength of the pipe.

❖ The minimum test pressure will never be less than 3 psig (20 kPa). The majority of residential and small commercial occupancies are served by piping systems with a pressure of less than $^1/_2$ psig [(14 inches water column) (3.5 kPa)], and for such systems the test pressure must be 3 psig (20 kPa) or higher. The test pressure must also be not less than 1.5 times the pressure at which the piping system is designed to operate. If the piping system is designed to operate at 5 psig (34.5 kPa), the test pressure must be not less than 1.5 × 5 = 7.5 psig (51.7 kPa). In very high pressure applications, the test pressure might approach the structural limits of the piping material, and, therefore, the test pressure must be limited. Hoop stress is the result of internal pressure that tends to expand the pipe walls outward along the circumference of the pipe.

G2417.4.2 (406.4.2) Test duration. The test duration shall be not less than 10 minutes.

❖ As the piping system becomes larger, the test duration must be longer so that any leak can be detected. For example, a leakage rate of 1 cubic foot per hour (472 cm^3/min) would produce a more easily detectable pressure drop in a small 10 cubic foot (0.3 m^3) volume system than it would in a large 500 cubic foot (14.2 m^3) volume system. It would require a longer test period to detect the leak in the large volume system because the leakage of 1 cubic foot represents a much smaller fraction of the total gas volume in the system. If a system has a volume of 501 cubic feet, the minimum test duration would be 1 hour as required by the IFGC. To put this in perspective, 500 cubic feet of piping system internal volume would equate to 83,333 feet (25 400 m) of 1-inch (25 mm) Schedule 40 steel pipe or 9,747 feet (2971 m) of 3-inch (76 mm) Schedule 40 steel pipe.

Because 10 cubic feet (0.3 m^3) equates to 1,667 feet (508.1 m) of 1-inch (25 mm) pipe, it is obvious that single-family dwellings fall in the 10-cubic-foot or less volume category. A 10-minute test period is not much time to detect a pressure drop, which makes it even more important to use a pressure instrument that is capable of indicating very small drops in pressure (see commentary, Section G2417.4).

G2417.5 (406.5) Detection of leaks and defects. The *piping system* shall withstand the test pressure specified without showing any evidence of leakage or other defects. Any reduction of test pressures as indicated by pressure gauges shall be deemed to indicate the presence of a leak unless such reduction can be readily attributed to some other cause.

❖ Any pressure drop, no matter how small, is considered a failure of the test, except where the drop can be shown to result from a change in temperature or other cause. This would be practically impossible to demonstrate in the field, especially for short test durations. A true leak should show up as a continuous drop in test pressure. If the rate of pressure drop slows as the test progresses, it may be caused by cooling of the test medium, which causes it to contract. For example, warm air coming from a compressor will contract when introduced into a cold piping system, thereby causing a test instrument to indicate a drop in pressure. To help eliminate any guess work, the temperature of the test medium should be allowed to stabilize within the piping system before the test begins.

G2417.5.1 (406.5.1) Detection methods. The leakage shall be located by means of an *approved* gas detector, a noncorrosive leak detection fluid or other *approved* leak detection methods.

❖ Once the pressure measuring instrument indicates leakage, the leak or leaks must be located for repair or replacement. Electronic sensors and bubble fluids are used to find leaks that are not readily found by human senses. Many people who have worked with and/or inspected gas piping installations can recall instances of personal injury, fires and close calls that were caused by searching for leaks with an open flame. Open flames must never be used for leak detection because of the explosion danger and because open flames will not detect small leaks.

G2417.5.2 (406.5.2) Corrections. Where leakage or other defects are located, the affected portion of the *piping system* shall be repaired or replaced and retested.

❖ Where a leak is detected by a method named in Section G2417.5.1, the defect must be corrected. Corrections include tightening of fittings or threaded joints and replacing defective pipe, tubing or fittings.

G2417.6 (406.6) Piping system and equipment leakage check. Leakage checking of systems and *equipment* shall be in accordance with Sections G2417.6.1 through G2417.6.4.

❖ Leakage checking is different from pressure testing. Sections G2417.1 through G2417.5 address the pressure testing of newly installed or altered piping systems for the purpose of locating defects in the installation or materials. This section addresses leakage checks that are intended to discover open outlets, defective appliance connections and defects that have developed since the initial installation (see Section G2417.6.2).

G2417.6.1 (406.6.1) Test gases. Leak checks using fuel gas shall be permitted in *piping systems* that have been pressure tested in accordance with Section G2417.

❖ Piping systems are pressure tested with air or an inert gas, and leakage checking is done with the fuel gas at whatever pressure the system is designed to operate (see Section G2417.6.2).

G2417.6.2 (406.6.2) Before turning gas on. During the process of turning gas on into a system of new *gas piping*, the entire system shall be inspected to determine that there are no

INTERNATIONAL CODE COUNCIL®
Copyright © 2015 ICC. ALL RIGHTS RESERVED. Accessed by David Dammon on Jun 21, 2017 12:30:52 PM pursuant to License Agreement with ICC. No further reproduction or distribution authorized. ANY UNAUTHORIZED REPRODUCTION OR DISTRIBUTION IS A VIOLATION OF THE FEDERAL COPYRIGHT ACT AND THE LICENSE AGREEMENT, AND SUBJECT TO CIVIL AND CRIMINAL PENALTIES THEREUNDER.

open fittings or ends and that all *valves* at unused outlets are closed and plugged or capped.

❖ This section requires that a precautionary measure be taken to prevent fuel gas from escaping from the piping system when the gas is turned on in the system for the first time. Because the piping system has never been used, it is not to be fully trusted as being gas tight. Because anything could have been done to the system since it was pressure tested, an additional visual check is justified before the gas is turned on. The condition of appliances may also be unknown, therefore, it may be wise to make sure that all appliance shutoff valves are closed until the appliances are ready to be put in service. Often, parties other than those who installed and tested the piping system are involved with connecting to the outlets in the system. This makes it likely that what was gas tight at the initial pressure testing is no longer gas tight as a result of incomplete or improper connections at the system outlets. Consistent with Section G2415.15, all unused outlets must be capped or plugged.

G2417.6.3 (406.6.3) Leak check. Immediately after the gas is turned on into a new system or into a system that has been initially restored after an interruption of service, the *piping system* shall be checked for leakage. Where leakage is indicated, the gas supply shall be shut off until the necessary repairs have been made.

❖ This section is a logical progression from the previous section. After the visual check for the status of outlets and equipment shutoff valves, the gas is introduced into the system, and the system is checked for leakage. This checking is typically accomplished by examining all the outlets, observing a gas meter for indication of flow, monitoring the system pressure for any drop or any combination of these. Because all outlet valves are closed and unused outlets are capped, any gas flow or pressure drop indicates leakage, and the gas must be turned off. This section would also allow leakage checking with the appliance shutoff valves open and the appliances shut down to prevent their operation. Testing in this manner would verify that the appliance gas controls were not faulty. A leakage check is also required after gas service is restored.

G2417.6.4 (406.6.4) Placing appliances and equipment in operation. *Appliance*s and *equipment* shall not be placed in operation until after the *piping* system has been checked for leakage in accordance with Section G2417.6.3, the *piping system* has been purged in accordance with Section G2417.7 and the connections to the *appliances* have been checked for leakage.

❖ Gas appliances must not be put into service until the gas-piping system that supplies them has been checked for leakage and purged of air and the appliance connections have been checked for leakage (see Section G2417.7.3).

G2417.7 (406.7) Purging. The purging of piping shall be in accordance with Sections G2417.7.1 through 2417.7.3.

❖ Purging is intended to prevent a flammable gas/air mixture from being created in the piping. A flammable mixture could be a fire/explosion hazard in the piping, room or space, or in an appliance combustion chamber. There have been documented accidents involving explosions caused by failure to take the necessary precautions during piping purging operations. It has been purported that some accidents were caused by a condition referred to as “odor fade.” It is a fact that steel pipe can absorb the chemical additive in fuel gas that gives the gas (natural or LP) its distinctive odor. This is evidenced by the fact that steel gas piping will smell like gas for a long time after it is no longer exposed to gas. Odorant fade appears to happen when gas is introduced into a new piping system that has never before contained gas. Once a piping system has been conditioned (seasoned) by exposure to gas, its ability to absorb the odorant diminishes with time. If personnel purge piping into an enclosed area and depend on their sense of smell to detect when gas has reached the purge discharge outlet, they could be fooled if the gas has lost its odor and a serious accident could result from such a dangerous practice. Also, it is known that not all humans have the same ability to detect the odorants in fuel gases. The sense of smell should never be relied upon to detect the presence of fuel gas. Using one’s sense of smell to detect fuel gas is subjective and unreliable at best; therefore, this section prescribes methods that do not depend on the sense of smell. Combustible gas indicators and detectors are commonly used to detect gas during purging operations (see commentary, Sections G2417.7.1 through G2417.7.3).

G2417.7.1 (406.7.1) Piping systems required to be purged outdoors. The purging of piping systems shall be in accordance with the provisions of Sections G2417.7.1.1 through G2417.7.1.4 where the *piping system* meets either of the following:

1. The design operating gas pressure is greater than 2 psig (13.79 kPa).
2. The piping being purged contains one or more sections of pipe or tubing meeting the size and length criteria of Table G2417.7.1.1.

❖ This section requires that piping systems meeting either or both of the stated criteria comply with the listed subsections. Note that Section G2417.7.1.3 requires that the piping be purged only to the outdoors. The two criteria (and those of Section G2417.7.2) were chosen to distinguish the piping systems typically found in industrial, large commercial and large multiple-family residential buildings from those piping systems typically found in small commercial and small residential buildings. The gas-piping systems typically installed in industrial, large commercial and large multiple-family

INTERNATIONAL CODE COUNCIL®
Copyright © 2015 ICC. ALL RIGHTS RESERVED. Accessed by David Dammon on Jun 21, 2017 12:30:52 PM pursuant to License Agreement with ICC. No further reproduction or distribution authorized. ANY UNAUTHORIZED REPRODUCTION OR DISTRIBUTION IS A VIOLATION OF THE FEDERAL COPYRIGHT ACT AND THE LICENSE AGREEMENT, AND SUBJECT TO CIVIL AND CRIMINAL PENALTIES THEREUNDER.

occupancies have larger internal pipe volumes and/or higher flow rates that justify special procedures to avoid creating explosive gas-air mixtures within buildings and within the piping. Combustible gas-air mixtures can be the source of explosions in the building or within the piping itself. Because there is no correlation between the occupancy groups established by the IBC and the size and nature of gas-piping systems installed in buildings, occupancy groups could not be used to distinguish between the larger, more complex piping systems and the smaller, less complex systems. In other words, the operating pressure and size of piping systems are much more dependent upon the type of appliances to be served than upon the occupancy classification of the building. Thus, the criteria of this section and Section G2417.7.2 represent the best attempt to establish a threshold for requiring piping systems to be purged to the outdoors. Note that the gas venting and gas displacement requirements of Sections G2417.7.1.1 and G2417.7.1.2 also apply to piping systems meeting the criteria or criterion of this section.

Criterion 2 is met if any portion of the piping system is larger than 2-inch nominal size and also longer than 50 feet for $2^1/_2$-inch pipe, 30 feet for 3-inch pipe, 15 feet for 4-inch pipe, 10 feet for 6-inch pipe and zero feet for 8-inch and larger pipe. In other words, if any portion of the piping system meets the criteria of Table G2417.7.1.1, the piping system meets Criterion 2 of this section. For example, if a piping system is constructed of $1^1/_2$- and 2-inch piping, but contains one section of 3-inch pipe that is over 30 feet in length, that system meets Criteria 2; however, if that same section of 3-inch pipe is 30 feet or less in length, the system does not comply with Criteria 2 (i.e., 30 feet is not > 30 feet).

If the operating pressure of the system is greater than 2 psig, Sections G2417.7.1.1 through G2417.7.1.4 apply regardless of the sizes of pipe in the system.

G2417.7.1.1 (406.7.1.1) Removal from service. Where existing gas piping is opened, the section that is opened shall be isolated from the gas supply and the line pressure vented in accordance with Section G2417.7.1.3. Where gas *piping* meeting the criteria of Table G2417.7.1.1 is removed from service, the residual fuel gas in the *piping* shall be displaced with an inert gas.

❖ Where a piping system to which this section applies is to be opened for any reason, it must be isolated from the gas supply and then the pressure in the piping system must be relieved by venting the gas to the outdoors in accordance with Section G2417.7.1.3. If the piping being opened or retired meets the criteria of Table G2417.7.1.1, the unpressurized gas in the piping must be displaced with an inert gas (i.e., a gas that will not support combustion such as nitrogen or argon). The displacement with inert gas will prevent an explosive mixture from forming inside of the pipe by eliminating any residual gas that could mix with the ambient air. The larger and longer the pipe, the greater the amount of residual gas in the pipe and the greater the potential for the formation of an explosive mixture.

TABLE G2417.7.1.1 (406.7.1.1)
SIZE AND LENGTH OF PIPING

NOMINAL PIPE SIZE (inches)[a]	LENGTH OF PIPING (feet)
≥ $2^1/_2$ < 3	> 50
≥ 3 < 4	> 30
≥ 4 < 6	> 15
≥ 6 < 8	> 10
≥ 8	Any length

For SI: 1 inch = 25.4 mm, 1 foot = 304.8 mm.

a. CSST EHD size of 62 is equivalent to nominal 2-inch pipe or tubing size.

G2417.7.1.2 (406.7.1.2) Placing in operation. Where gas *piping* containing air and meeting the criteria of Table G2417.7.1.1 is placed in operation, the air in the *piping* shall first be displaced with an inert gas. The inert gas shall then be displaced with fuel gas in accordance with Section G2417.7.1.3.

❖ Where new piping or piping that has been left open for some time is to be put into service, the air that exists in such piping must be removed to prevent an explosive gas-air mixture from forming inside of the piping. This is accomplished by first displacing the air with a gas that does not support combustion (inert gas) and then introducing fuel gas to displace the inert gas. This procedure prevents fuel gas from ever coming into contact with air inside of the piping. As the size and length of the piping increases, so does the volume of air in it and the potential for forming explosive mixtures within the piping. To help determine when sufficient inert gas has been introduced during the process of displacing air with an inert gas, the oxygen levels in the piping system could be monitored.

G2417.7.1.3 (406.7.1.3) Outdoor discharge of purged gases. The open end of a *piping* system being pressure vented or purged shall discharge directly to an outdoor location. Purging operations shall comply will all of the following requirements:

1. The point of discharge shall be controlled with a shut-off valve.
2. The point of discharge shall be located not less than 10 feet (3048 mm) from sources of ignition, not less than 10 feet (3048 mm) from building openings and not less than 25 feet (7620 mm) from mechanical air intake openings.
3. During discharge, the open point of discharge shall be continuously attended and monitored with a combustible gas indicator that complies with Section G2417.7.1.4.
4. Purging operations introducing fuel gas shall be stopped when 90 percent fuel gas by volume is detected within the pipe.

INTERNATIONAL CODE COUNCIL®
Copyright © 2015 ICC. ALL RIGHTS RESERVED. Accessed by David Dammon on Jun 21, 2017 12:30:52 PM pursuant to License Agreement with ICC. No further reproduction or distribution authorized. ANY UNAUTHORIZED REPRODUCTION OR DISTRIBUTION IS A VIOLATION OF THE FEDERAL COPYRIGHT ACT AND THE LICENSE AGREEMENT, AND SUBJECT TO CIVIL AND CRIMINAL PENALTIES THEREUNDER.

5. Persons not involved in the purging operations shall be evacuated from all areas within 10 feet (3048 mm) of the point of discharge.

❖ This section applies to piping systems meeting the criteria of Section G2417.7.1 and mandates that the purged gases discharge directly to the outdoors. Discharging purged gases to the building interior is prohibited by this section. Purging to the outdoors can be accomplished by either running temporary piping or hoses to the outdoors from the piping being purged or by installing permanent piping to the outdoors in locations where purging will be repeated regularly. It could also be accomplished by using existing piping that extends to the outdoors for some other purpose, but that is suitable for and able to be reconfigured for the purpose of gas-pipe purging. Other configurations are possible. The concept has been proposed by gas industry pundits and, some day, the code might contain provisions for purging air from piping by means of evacuation of the air with vacuum pumps and then breaking the vacuum with fuel gas such that the piping will contain nearly 100-percent fuel gas by volume. Purging by vacuum evacuation is only conceptual at this point in time.

Item 1 requires a means to control the purge gas discharge in the event of an emergency. Item 2 intends to prevent purged gases from reaching an ignition source and from entering a building. Item 3 requires that the point of discharge be constantly attended by one or more individuals who are monitoring the discharge gases with an instrument meeting the requirements of Section G2417.7.1.4. Item 4 requires purging operations that are introducing fuel gas into the piping to be stopped immediately after determining that the concentration of fuel gas within the purge gas discharge pipe is 90 percent of the purge-gas volume. This item intends to limit the volume of purged gases that discharge to the outdoor atmosphere. When the content of the piping is 90-percent fuel gas by volume, an explosive mixture is not possible within the piping interior and the piping content upstream of the discharge point is expected to be 90-percent fuel gas or higher. Item 5 intends to protect personnel and passersby from the potential hazard of purge gas discharge and also intends to prevent an individual from bringing an ignition source near the point of discharge.

G2417.7.1.4 (406.7.1.4) Combustible gas indicator. Combustible gas indicators shall be listed and shall be calibrated in accordance with the manufacturer's instructions. Combustible gas indicators shall numerically display a volume scale from zero percent to 100 percent in 1 percent or smaller increments.

❖ Note that a combustible gas indicator (CGI) is a different instrument than the instrument addressed in Section G2417.7.2.2. A CGI is required to be used by Item 3 of Section G2417.7.1.3. This instrument must be capable of indicating the percentage of fuel gas in the purge-gas discharge and do so by a number scale of zero to 100 percent. The display resolution requirement means that the instrument must be able to display percentages across the entire scale with not more than 1 percent between successive numbers. The increments on the 0 to 100 percent scale must be 1 percent or smaller. In other words, the percentage display must be able to read out "1%, 2%, 3%, 4%, 5%," etc., all the way up to 100%. These instruments need to be calibrated routinely because the nature of the sensors used in these instruments is such that they drift over time and with use.

G2417.7.2 (406.7.2) Piping systems allowed to be purged indoors or outdoors. The purging of *piping systems* shall be in accordance with the provisions of Section G2417.7.2.1 where the *piping system* meets both of the following:

1. The design operating gas pressure is 2 psig (13.79 kPa) or less.
2. The *piping* being purged is constructed entirely from pipe or tubing not meeting the size and length criteria of Table G2417.7.1.1.

❖ This section addresses purging procedures that allow the purged gases to discharge to the outdoors or to the indoors. Items 1 and 2 represent the division between the larger, more complex piping systems and the smaller, less complex piping systems (see commentary, Section G2417.7.1). In this section, the piping system must meet both criteria, meaning that the operating pressure of the system must be 2 psig or less and the piping must not meet the criteria of Table G2417.7.1.1. Not meeting the criteria of Table G2417.7.1.1 means that the piping system is either constructed entirely of 2-inch or smaller nominal size pipe, or the piping is 50 feet or less in length for $2^1/_2$-inch pipe, 30 feet or less in length for 3-inch pipe, 15 feet or less in length for 4-inch pipe, 10 feet or less in length for 6-inch pipe and zero feet in length for 8-inch and longer pipe. For example, if a piping system is constructed of 2-inch and smaller pipe but contains one section of 4-inch pipe 15 feet long, that system does not meet the criteria of Table G2417.7.1.1 and thus meets Criteria 2 of this section (i.e., 15 feet is shorter than > 15 feet). If both criteria of this section are met, the piping system is allowed to be purged in accordance with Section G2417.7.2.1; however, if both criteria are not met, purging must comply with Sections G2417.7.1.1 through G2417.7.1.4.

Other examples of their criteria are as follows: A piping system that operates at 2 psig and is constructed of all 2-inch pipe meets both Criteria 1 and 2. A piping system that operates at 2 psig and is constructed of 2-inch and smaller pipe with one 55-foot section of $2^1/_2$-inch pipe meets Criteria 1, but does not meet Criteria 2 because the 55-foot section of $2^1/_2$-inch falls within the size and length criteria of the table.

G2417.7.2.1 (406.7.2.1) Purging procedure. The p*iping system* shall be purged in accordance with one or more of the following:

1. The *piping* shall be purged with fuel gas and shall discharge to the outdoors.

INTERNATIONAL CODE COUNCIL®
Copyright © 2015 ICC. ALL RIGHTS RESERVED. Accessed by David Dammon on Jun 21, 2017 12:30:52 PM pursuant to License Agreement with ICC. No further reproduction or distribution authorized. ANY UNAUTHORIZED REPRODUCTION OR DISTRIBUTION IS A VIOLATION OF THE FEDERAL COPYRIGHT ACT AND THE LICENSE AGREEMENT, AND SUBJECT TO CIVIL AND CRIMINAL PENALTIES THEREUNDER.

2. The *piping* shall be purged with fuel gas and shall discharge to the indoors or outdoors through an *appliance* burner not located in a combustion chamber. Such burner shall be provided with a continuous source of ignition.
3. The *piping* shall be purged with fuel gas and shall discharge to the indoors or outdoors through a burner that has a continuous source of ignition and that is designed for such purpose.
4. The *piping* shall be purged with fuel gas that is discharged to the indoors or outdoors, and the point of discharge shall be monitored with a listed combustible gas detector in accordance with Section G2417.7.2.2. Purging shall be stopped when fuel gas is detected.
5. The *piping* shall be purged by the gas supplier in accordance with written procedures.

❖ The purging provisions of this section are applicable only where the piping system meets both criteria of Section G2417.7.2. These provisions are intended for the piping systems typically found in light commercial and small residential occupancies (see commentary, Section G2417.7.1). Item 1 allows the simple procedure of purging air in a pipe by displacing it with fuel gas and discharging the purged gases to the outdoors. Item 2 allows a procedure used by some installers and gas suppliers in which air in the piping is displaced with fuel gas and the purged gases are discharged through an open appliance burner, typically on a range or cooktop. Any such open burner must have a continuous ignition source that is either integral with the burner or that is temporarily provided by the personnel performing the purging operation. If the purged gases were discharged into an enclosed combustion chamber such as in a furnace, boiler or water heater, an explosive gas/air mixture could form in the presence of an ignition source, resulting in a hazard. Item 3 is basically the same procedure as specified in Item 2, except that the burner is not an appliance burner. Some installers and gas suppliers utilize special purge burners designed for this procedure. Item 4 allows the purged gases to discharge to the indoors or to the outdoors, provided that the point of discharge is continuously monitored by the personnel performing the purging operation using a combustible gas detector (CGD) that complies with Section G2417.7.2.2. The purging operation must be immediately stopped when the CGD indicates the presence of fuel gas at the point of discharge. Item 5 allows personnel employed by the gas supplier to perform purging operations in accordance with detailed procedures that are in writing and originating from the gas supplier. This item assumes that the written procedures are based on practices that have been proven by experience to be safe.

G2417.7.2.2 (406.7.2.2) Combustible gas detector. Combustible gas detectors shall be listed and shall be calibrated or tested in accordance with the manufacturer's instructions. Combustible gas detectors shall be capable of indicating the presence of fuel gas.

❖ A CGD is different than the CGI required by Section G2417.7.1.4; however, both of these instruments need to be calibrated or tested routinely because the nature of the sensors used in these instruments is such that they drift over time and with use.

G2417.7.3 (406.7.3) Purging appliances and equipment. After the *piping system* has been placed in operation, *appliances* and *equipment* shall be purged before being placed into operation.

❖ This section simply requires that after the gas piping has been properly purged and charged with fuel gas, the appliances served be purged of air before startup.

SECTION G2418 (407)
PIPING SUPPORT

G2418.1 (407.1) General. *Piping* shall be provided with support in accordance with Section G2418.2.

❖ Often, piping support is inadequate, poorly installed or overlooked entirely, despite the fact that support is critical in preventing stresses and strains in piping, fittings, joints, connectors and appliance gas trains (see Section G2418.2).

G2418.2 (407.2) Design and installation. *Piping* shall be supported with metal pipe hooks, metal pipe straps, metal bands, metal brackets, metal hangers or building structural components suitable for the size of *piping*, of adequate strength and quality, and located at intervals so as to prevent or damp out excessive vibration. *Piping* shall be anchored to prevent undue strains on connected *appliances* and shall not be supported by other *piping*. Pipe hangers and supports shall conform to the requirements of MSS SP-58 and shall be spaced in accordance with Section G2424. Supports, hangers and anchors shall be installed so as not to interfere with the free expansion and contraction of the *piping* between anchors. All parts of the supporting *equipment* shall be designed and installed so that they will not be disengaged by movement of the supported *piping*.

❖ As with all piping systems, the support of the fuel gas system is as important as any other part of the overall design. Proper supports are necessary to maintain piping alignment and slope, to support the weight of the pipe and its contents, to control movement and to resist dynamic loads, such as thrust. Inadequate support can cause piping to fail under its own weight, resulting in fire, explosion or property damage. Building design must take into consideration the structural loads created by the support of piping systems.

Hangers or supports must not react with or be detrimental to the pipe they support. Hangers or supports for metallic pipe must be of a material that is compatible with the pipe to prevent any corrosive action. For example, copper, copper-clad or specially coated hangers are required if the piping system is con-

INTERNATIONAL CODE COUNCIL®
Copyright © 2015 ICC. ALL RIGHTS RESERVED. Accessed by David Dammon on Jun 21, 2017 12:30:52 PM pursuant to License Agreement with ICC. No further reproduction or distribution authorized. ANY UNAUTHORIZED REPRODUCTION OR DISTRIBUTION IS A VIOLATION OF THE FEDERAL COPYRIGHT ACT AND THE LICENSE AGREEMENT, AND SUBJECT TO CIVIL AND CRIMINAL PENALTIES THEREUNDER.

structed of copper tubing. Hangers and supports must be constructed of noncombustible materials to prevent premature failure in a fire. Also, nonmetallic materials can elongate, deform and "creep" under load. This section prohibits combustible hooks, straps, bands, brackets and hangers. Plastic hooks, straps, hangers, etc., such as used with plumbing piping, are prohibited for use with gas piping. Building structural components are listed as a means of support because piping often rests on wall plates, beams, joists and similar structural members where such members are capable of carrying the additional load of the piping. Gas piping must not depend on other piping for support; thus, it must be supported from the structure independently. Gas controls for appliances can be stressed and damaged by unsupported piping drops that bear on or produce bending moments in the controls. A simple check for proper support at an appliance connected with rigid piping is to open the union and observe any movement of the piping. If the piping drops or moves in any direction, it is evident that stress is being applied to the appliance controls. Eliminating such stress is one of the advantages of using flexible gas connectors (see Section G2424).

SECTION G2419 (408)
DRIPS AND SLOPED PIPING

G2419.1 (408.1) Slopes. *Piping* for other than dry gas conditions shall be sloped not less than $^1/_4$ inch in 15 feet (6.4 mm in 4572 mm) to prevent traps.

❖ The required minimum slope (0.14-percent slope) is intended for gas known to contain enough water vapor to cause condensate to form inside the piping. Such conditions are rarely, if ever, encountered today.

G2419.2 (408.2) Drips. Where wet gas exists, a *drip* shall be provided at any point in the line of pipe where *condensate* could collect. A *drip* shall also be provided at the outlet of the *meter* and shall be installed so as to constitute a trap wherein an accumulation of *condensate* will shut off the flow of gas before the *condensate* will run back into the *meter*.

❖ Drips, often referred to as "drip legs," are distinct from sediment traps. Modern gas supplies and distribution systems are typically dry; thus, drips would be required only when recommended by the gas supplier.

G2419.3 (408.3) Location of drips. *Drips* shall be provided with *ready access* to permit cleaning or emptying. A *drip* shall not be located where the *condensate* is subject to freezing.

❖ A drip is not the same as a sediment trap; they are required for different reasons (see Section G2419.4).

G2419.4 (408.4) Sediment trap. Where a sediment trap is not incorporated as part of the appliance, a sediment trap shall be installed downstream of the appliance shutoff valve as close to the inlet of the appliance as practical. The sediment trap shall be either a tee fitting having a capped nipple of any length installed vertically in the bottommost opening of the tee as illustrated in Figure G2419.4 or other device approved as an effective sediment trap. Illuminating appliances, ranges, clothes dryers, decorative vented appliances for installation in vented fireplaces, gas fireplaces and outdoor grills need not be so equipped.

❖ In addition to the code requirement, most appliance manufacturers require the installation of a sediment trap (dirt leg) to protect the appliance from debris in the gas. Note that a drip leg is not the same as a sediment trap (see Section G2419.2). Sediment traps are necessary to protect appliance gas controls from the dirt, soil, pipe chips, pipe-joint tapes and compounds and construction site debris that enter the piping during storage, handling, installation and repairs. Hazardous appliance operation could result from foreign matter entering gas controls and burners. Despite the fact that utilities supply clean gas, foreign matter can enter the piping prior to and during installation both on the utility side of the system and on the customer side.

Sediment traps are designed to cause the gas flow to change direction 90 degrees (1.57 rad) at the sediment collection point, thus causing the solid or liquid contaminants to drop out of the gas flow [see Commentary Figure G2419.4(1)]. The nipple and cap should not be placed in the branch opening of a tee fitting because this would not create a change in direction of flow and would allow debris to simply pass/jump over the capped nipple collection point. Commentary Figure G2419.4(2) illustrates a relatively ineffective sediment trap; however, such configurations are not expressly prohibited by the wording of this section except that the text does state "as illustrated in Figure G2419.4." The text speaks of the bottommost opening

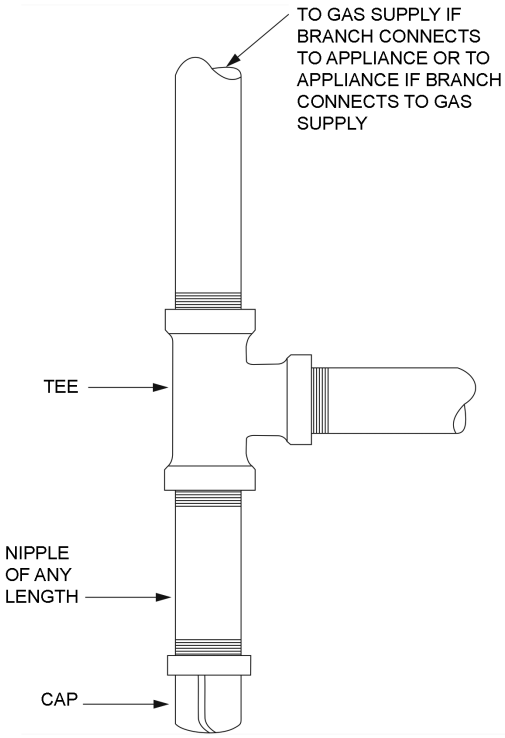

FIGURE G2419.4 (408.4)
METHOD OF INSTALLING A TEE FITTING SEDIMENT TRAP

INTERNATIONAL CODE COUNCIL®
Copyright © 2015 ICC. ALL RIGHTS RESERVED. Accessed by David Dammon on Jun 21, 2017 12:30:52 PM pursuant to License Agreement with ICC. No further reproduction or distribution authorized. ANY UNAUTHORIZED REPRODUCTION OR DISTRIBUTION IS A VIOLATION OF THE FEDERAL COPYRIGHT ACT AND THE LICENSE AGREEMENT, AND SUBJECT TO CIVIL AND CRIMINAL PENALTIES THEREUNDER.

of the tee without prohibiting such opening from being the branch opening. Note that code Figure G2419.4 illustrates the intent to have the nipple and cap in the run of the tee, thereby suggesting that it is not the intent to have it in the branch of the tee. The code does not specify a minimum length for the capped nipple; therefore, it could be from a close nipple on up. Three to 6 inches (76 to 152 mm) is the customary length. The capped nipple must be in a vertical plane to allow the sediments to fall in by gravity. The sediment trap must be as close to the appliance inlet as practical to be able to capture sediment from all of the piping upstream of the appliance connection. The sediment trap must be downstream of the appliance shutoff valve to allow the trap to be serviced after closing the upstream shutoff valve. Manufactured sediment traps are available that have the configuration of a straight section of pipe and are equipped with cleanout openings. Although it would be wise to install sediment traps at all appliance connections, they are not mandated by code for gas lights, ranges, clothes dryers and outdoor grills. These appliances are also susceptible to harm from debris in gas, especially ranges and clothes dryers, and the appliance manufacturer may require sediment traps where the code does not. The code's logic is that these exempt appliances are manually operated rather than automatically operated; therefore, the user would be in attendance and aware of a problem.

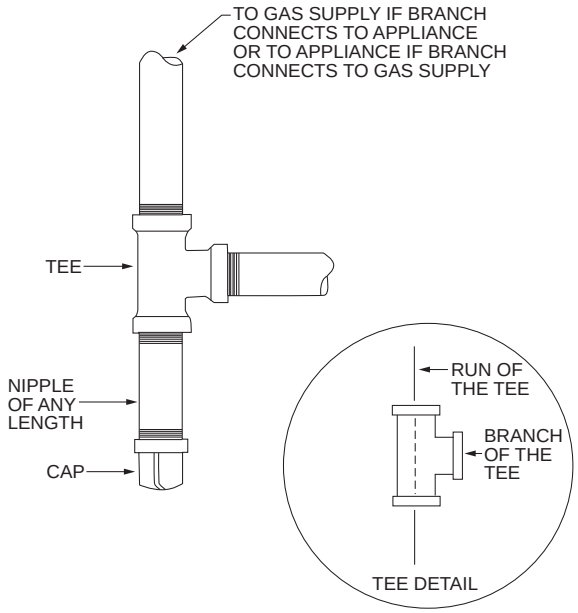

Figure G2419.4(1)
SEDIMENT TRAP

SECTION G2420 (409) SHUTOFF VALVES

G2420.1 (409.1) General. *Piping systems* shall be provided with shutoff valves in accordance with this section.

❖ This section addresses shutoff valves for meters, buildings, tenant spaces, appliances and fireplaces.

G2420.1.1 (409.1.1) Valve approval. Shutoff valves shall be of an *approved* type; shall be constructed of materials compatible with the *piping*; and shall comply with the standard that is applicable for the pressure and application, in accordance with Table G2420.1.1.

❖ The code official must approve the type of shutoff valve used. For example, he or she might not approve a

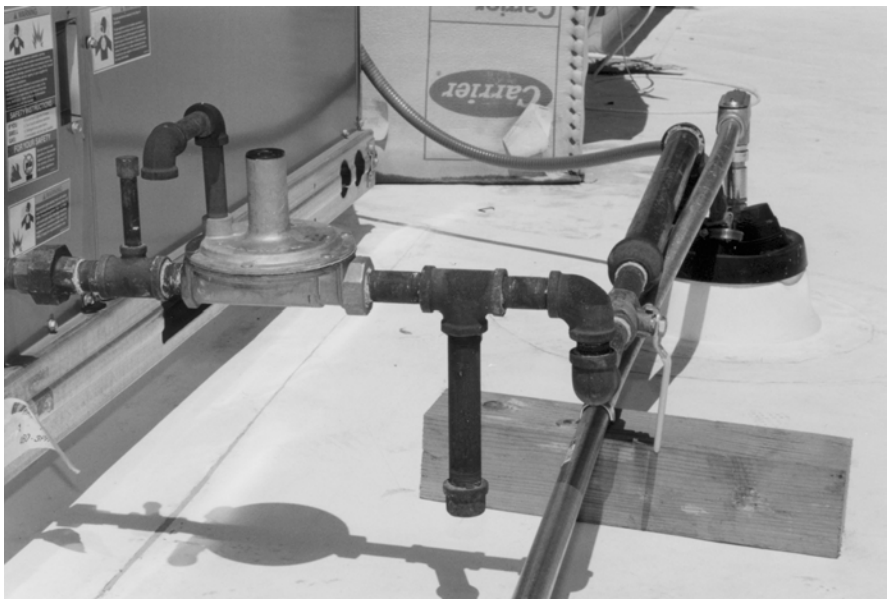

Figure G2419.4(2)
RELATIVELY INEFFECTIVE SEDIMENT TRAP CONFIGURATION

INTERNATIONAL CODE COUNCIL®
Copyright © 2015 ICC. ALL RIGHTS RESERVED. Accessed by David Dammon on Jun 21, 2017 12:30:52 PM pursuant to License Agreement with ICC. No further reproduction or distribution authorized. ANY UNAUTHORIZED REPRODUCTION OR DISTRIBUTION IS A VIOLATION OF THE FEDERAL COPYRIGHT ACT AND THE LICENSE AGREEMENT, AND SUBJECT TO CIVIL AND CRIMINAL PENALTIES THEREUNDER.

valve that requires a wrench to operate. Shutoff valves must be tested to the specified standard and so identified. ANSI Z21.15 is applicable to appliance shutoff valves and appliance connector shutoff valves. Ball valves are used almost exclusively today because of their low pressure losses, ease of operation and reliability [see Commentary Figures G2420.1.1(1) and G2420.1.1(2)].

G2420.1.2 (409.1.2) Prohibited locations. Shutoff valves shall be prohibited in *concealed locations* and *furnace plenums*.

❖ This section does not prohibit shutoff valves in spaces above ceilings and below floors used for conveying environmental air (see definition of "Concealed location"). A valve in a concealed location would be of no value and a potential leak source. The concern for valves in furnace plenums is temperature extremes and lack of access.

G2420.1.3 (409.1.3) Access to shutoff valves. Shutoff *valves* shall be located in places so as to provide access for operation and shall be installed so as to be protected from damage.

❖ As expressed in the previous section, a shutoff valve has no utility if it is installed where it cannot be accessed. Location is especially important for valves in stalled for emergency use, such as a ball valve installed indoors upstream of all appliances to allow the building owner to shut off all gas in the event of an emergency. Outdoor valves are particularly subject to damage.

G2420.2 (409.2) Meter valve. Every *meter* shall be equipped with a shutoff valve located on the supply side of the *meter*.

❖ This valve is typically installed and owned by the gas supplier because it is upstream of the point of delivery for utility-owned meters. These valves require a wrench to operate and are capable of being locked off.

G2420.3 (409.3.2) Individual buildings. In a common system serving more than one building, shutoff valves shall be installed outdoors at each building.

❖ This section requires the shutoff valve for each building to be located outside of the building, thus allowing quick access in an emergency.

TABLE G2420.1.1 (409.1.1)
MANUAL GAS VALVE STANDARDS

VALVE STANDARDS	APPLIANCE SHUTOFF VALVE APPLICATION UP TO $^1/_2$ psig PRESSURE	OTHER VALVE APPLICATIONS			
		UP TO $^1/_2$ psig PRESSURE	UP TO 2 psig PRESSURE	UP TO 5 psig PRESSURE	UP TO 125 psig PRESSURE
ANSI Z21.15	X	—	—	—	—
ASME B 16.44	X	X	X[a]	X[b]	—
ASME B 16.33	X	X	X	X	X

For SI: 1 pound per square inch gauge = 6.895 kPa.
a. If labeled 2G.
b. If labeled 5G.

❖ Table G2420.1.1 lists two valve application categories: appliance shutoff application and all other applications. The application of a valve must be consistent with the listing of the valve. For example, a valve used ahead of an MP regulator (see Section G2420.4) in a 2-psi system must comply with ASME B16.44 and be marked "2G." It could also comply with ASME B16.33 and without being marked "2G."



Photo courtesy of Dormont Manufacturing Company

Figure G2420.1.1(1)
BALL-TYPE GAS SHUTOFF VALVE



Photo courtesy of Dormont Manufacturing Company

Figure G2420.1.1(2)
BALL-TYPE GAS SHUTOFF VALVE DESIGNED TO MATE WITH A CONNECTOR

INTERNATIONAL CODE COUNCIL®
Copyright © 2015 ICC. ALL RIGHTS RESERVED. Accessed by David Dammon on Jun 21, 2017 12:30:52 PM pursuant to License Agreement with ICC. No further reproduction or distribution authorized. ANY UNAUTHORIZED REPRODUCTION OR DISTRIBUTION IS A VIOLATION OF THE FEDERAL COPYRIGHT ACT AND THE LICENSE AGREEMENT, AND SUBJECT TO CIVIL AND CRIMINAL PENALTIES THEREUNDER.

G2420.4 (409.4) MP regulator valves. A listed shutoff valve shall be installed immediately ahead of each MP *regulator*.

❖ See the definition of "Regulator, Medium-pressure." This regulator (also known as "pounds-to-inches" regulator) is placed between the service regulator and the appliance regulator and is typically associated with manifold parallel distribution systems using CSST or copper tubing. A shutoff valve ahead of the MP regulator will allow the regulator to be conveniently serviced, adjusted or replaced. The valve also serves to isolate the higher pressure system from the lower pressure system. For purposes of sizing, the piping downstream of an MP regulator is considered as a separate system, with the MP regulator being the source of supply for that system.

G2420.5 (409.5) Appliance shutoff valve. Each *appliance* shall be provided with a shutoff valve in accordance with Section G2420.5.1, G2420.5.2 or G2420.5.3.

❖ Each appliance, regardless of type, size or location, must have its own dedicated shutoff valve to isolate the appliance from its gas supply. It is not the intent of this section to allow a single shutoff valve to control more than one appliance. Appliance shutoff valves are not considered to be emergency valves, but rather, are considered to be service valves that allow the appliance to be serviced, repaired, replaced or shut down (see definition of "Valve, Appliance shutoff"). A shutoff valve is a valve other than the valve that is integral with the appliance gas control. The intent is that the separate shutoff valve be located ahead of all appliance control valves. The location requirements of this section are intended to make the valve conspicuous and easy to operate. Note that the three subsections to this section are distinct choices and the shutoff valves have to meet one of these choices.

G2420.5.1 (409.5.1) Located within same room. The shutoff valve shall be located in the same room as the *appliance*. The shutoff valve shall be within 6 feet (1829 mm) of the *appliance*, and shall be installed upstream of the union, connector or quick disconnect device it serves. Such shutoff *valves* shall be provided with *access*. *Appliance shutoff valves* located in the firebox of a *fireplace* shall be installed in accordance with the *appliance* manufacturer's instructions.

❖ This section contains the traditional appliance shutoff valve requirements such as within 6 feet (1829 mm) of and in the same room as the appliance served. This section does not require the appliance shutoff valve to be provided with "ready access." Because such a valve is not an emergency valve, there is no reason to require ready access, and simply providing access is sufficient. Common practice has been to install the appliance shutoff valve behind ranges and clothes dryers and in the control compartment of decorative gas fireplace appliances. This section allows this practice because the valves are accessible. To avoid the use of an exposed valve or concealed "key-handle" valve, it is accepted practice to locate the shutoff valve for gas fireplace appliances in the control compartment in the bottom of the unit, behind the control access panel (see Commentary Figure G2420.5.1).

The code does not indicate how the 6-foot (1829 mm) limit is to be measured, but traditionally, it is measured along the piping such that no more than 6 feet (1829 mm) of piping extends between the outlet of the shutoff valve and the inlet of the appliance.

This section works with the definition of "Piping system" and Section G2413.3 to allow the piping down-



Figure G2420.5.1
SHUTOFF VALVE IN CONTROL COMPARTMENT OF GAS FIREPLACE

INTERNATIONAL CODE COUNCIL®
Copyright © 2015 ICC. ALL RIGHTS RESERVED. Accessed by David Dammon on Jun 21, 2017 12:30:52 PM pursuant to License Agreement with ICC. No further reproduction or distribution authorized. ANY UNAUTHORIZED REPRODUCTION OR DISTRIBUTION IS A VIOLATION OF THE FEDERAL COPYRIGHT ACT AND THE LICENSE AGREEMENT, AND SUBJECT TO CIVIL AND CRIMINAL PENALTIES THEREUNDER.

stream of the shutoff valve to be considered and sized as a connector. The code does not state that the required shutoff valve has to be located external to an appliance cabinet, enclosure or housing; therefore, the valve could be located behind an appliance access door/panel.

The last sentence of this section addresses appliances, such as decorative gas log sets, that are installed in solid fuel-burning fireplaces. The manual shut off may be in the firebox of the fireplace if it is allowed by the appliance manufacturer's instructions and the valve is located as directed by those instructions. There is typically an area adjacent to the appliance controls or inlet connection that is shielded from radiant heat, and this "cool zone" is where the manual shutoff valve must be located. A shutoff valve must never be located in the firebox if solid fuel is burned.

G2420.5.2 (409.5.2) Vented decorative appliances and room heaters. Shutoff valves for vented decorative *appliances*, room heaters and decorative *appliances* for installation in vented fireplaces shall be permitted to be installed in an area remote from the *appliances* where such valves are provided with *ready access*. Such *valves* shall be permanently identified and shall not serve another *appliance*. The *piping* from the shutoff valve to within 6 feet (1829 mm) of the *appliance* shall be designed, sized and installed in accordance with Sections G2412 through G2419.

❖ This section allows locating shutoff valves for the stated appliances remote from the appliance if the valves are permanently tagged as to their function, serve only the single appliance and have ready access. The shutoff valve can be located anywhere, indoors or outdoors, as long as it is provided with ready access and is permanently identified. Ready access is required because the shutoff valve will be more difficult to locate, being remote from the appliance served. This section is an alternative to using concealed "key-handle-type" valves located in the wall or floor adjacent to the appliance. The code intends for such valves to be permanently identified by means of a durable tag suitable for the environment, such as brass medallions on chains. The reference to room heaters in this section is not specific as to the type, thus, it would include both vented and unvented room heaters.

The shutoff valve for a log lighter is also the appliance operating valve; therefore, that valve cannot be located remotely.

Because the remote shutoff valve allowed by this section could be any distance [more than 6 feet (1829 mm)] from the appliance, the piping from the shutoff valve outlet to within 6 feet of the appliance inlet must be treated and sized as gas piping, not as a connector. Recall that the definition of "Piping system" says that the piping system ends at the appliance shutoff valves, therefore, the piping between the shutoff valve and the appliance becomes a connector, no matter how long it is. This section accounts for the potential pressure loss through lengthy connectors by requiring them to be sized as required for the piping system, except for the last 6 feet (1829 mm) before the appliance [see the exception to Section G2422.1.2.1 and Commentary Figure G2422.1.2.1(2)].

G2420.5.3 (409.5.3) Located at manifold. Where the *appliance* shutoff valve is installed at a manifold, such shutoff valve shall be located within 50 feet (15 240 mm) of the *appliance* served and shall be readily accessible and permanently identified. The *piping* from the manifold to within 6 feet (1829 mm) of the *appliance* shall be designed, sized and installed in accordance with Sections G2412 through G2419.

❖ Similar to Section G2420.5.2, this section allows remote appliance shutoff valves, but, unlike Section G2420.5.2, this section specifies the remote location and imposes a distance restriction. Manifolds are part of parallel distribution systems commonly installed with CSST and copper tubing gas distribution systems. A manifold can be a manufactured fitting with multiple branch openings or it can be an assembly of close connected tee fittings. The individual "run-outs" of tubing to each appliance all connect to this manifold and the appliance shutoff valves can be installed at the manifold in a group configuration. Such valves must have ready access and must be labeled as to their function, the same as required in the previous section.

The code does not specify how the 50-foot (15 240 mm) distance limitation is to be measured. Taken literally, it would be measured in a straight line through walls, floors and ceilings. Clearly, such measurement could be difficult to perform in the field and should be approached liberally, keeping in mind the intent to simply have the valve within a reasonable distance.

Because the remote shutoff valve allowed by this section could be any distance [up to 50 feet (12 240 mm)] from the appliance, the piping from the shutoff valve outlet to within 6 feet of the appliance inlet must be treated and sized as gas piping, not as a connector. Recall that the definition of "Piping system" says that the piping system ends at the appliance shutoff valves, therefore, the piping between the shutoff valve and the appliance becomes a connector, no matter how long it is. This section accounts for the potential pressure loss through lengthy connectors by requiring them to be sized as required for the piping system, except for the last 6 feet before the appliance [see the exception to Section G2422.1.2.1 and Commentary Figure G2422.1.2.1(2)].

SECTION G2421 (410)
FLOW CONTROLS

G2421.1 (410.1) Pressure regulators. A line *pressure regulator* shall be installed where the *appliance* is designed to operate at a lower pressure than the supply pressure. *Line gas pressure regulators* shall be *listed* as complying with ANSI Z21.80. *Access* shall be provided to *pressure regulators*. *Pressure regulators* shall be protected from physical damage. *Regulators* installed on the exterior of the building shall be *approved* for outdoor installation.

❖ All gas supply systems employ regulators at some point in the distribution system, and the type and loca-

INTERNATIONAL CODE COUNCIL®
Copyright © 2015 ICC. ALL RIGHTS RESERVED. Accessed by David Dammon on Jun 21, 2017 12:30:52 PM pursuant to License Agreement with ICC. No further reproduction or distribution authorized. ANY UNAUTHORIZED REPRODUCTION OR DISTRIBUTION IS A VIOLATION OF THE FEDERAL COPYRIGHT ACT AND THE LICENSE AGREEMENT, AND SUBJECT TO CIVIL AND CRIMINAL PENALTIES THEREUNDER.

tion of these devices depends on the design pressures of the system and utilization equipment. A line pressure regulator reduces the pressure from the service delivery pressure to the pressure of the distribution system. Additional pressure regulators could be required at other points in the system or at the appliance to reduce the pressure even further [see Commentary Figure G2421.1(1)]. With the increased use of medium-pressure gas distribution systems, systems are designed with one or more regulators in addition to the service regulators. Appliances and gas utilization equipment are also equipped with factory-installed regulators that control burner input (manifold) pressure.

Pressure regulators are extremely important devices that are relied on to prevent overpressurization of appliances and equipment. Typical gas appliance controls are not designed to tolerate a pressure of more than 14 inches w.c. (3.5 kPa). The standards that regulate the design and function of appliance gas controls require that the controls be tested for resistance to permanent damage resulting from exposure to excessive gas supply pressure. Each function of the gas controls must be tested for exposure to $2^1/_2$ psi (17 kPa) pressure for a period of 1 minute, after which, the control must function normally. Excess pressures could lead to severe appliance malfunction. Depending on the application, gas pressure regulators may contain relief mechanisms that are designed to vent gas from the downstream side in the event that the downstream (load) side pressure exceeds a predetermined maximum. This feature is a safeguard intended to prevent the overpressurization of the piping and utilization equipment supplied by the regulator. Regulators with relief devices must be installed outdoors, or the relief vent must be piped to the outdoors to prevent gas from being discharged into the building.

Access to pressure regulators is required for the maintenance, adjustment and servicing of the devices. The definition of "Access" appears in Section G2403. Protecting regulators from physical damage essentially means that regulators must be installed in locations that are not prone to impact from equipment or vehicles, or they must be shielded from impact. Because of the range of environmental conditions encountered outside the building, regulators must be evaluated and approved for installation outdoors. Regulators exposed to the weather must be protected from moisture and precipitation. Commentary Figure G2421.1(2) shows a service regulator with discharge piping connected to the integral relief valve port. This regulator establishes the pressure at the point of delivery. Commentary Figure G2421.1(3) illustrates the basic operating principle of gas pressure regulators. Outlet pressure acts upon the flexible diaphragm and adjustment spring, causing the valve to close on a rise in outlet pressure and open on a fall in outlet pressure. The vent allows the diaphragm to move freely by admitting or emitting air above the diaphragm. Atmospheric pressure and the adjustment spring force act together to establish the outlet pressure setting of the regulator [see Commentary Figure G2421.1(4)].

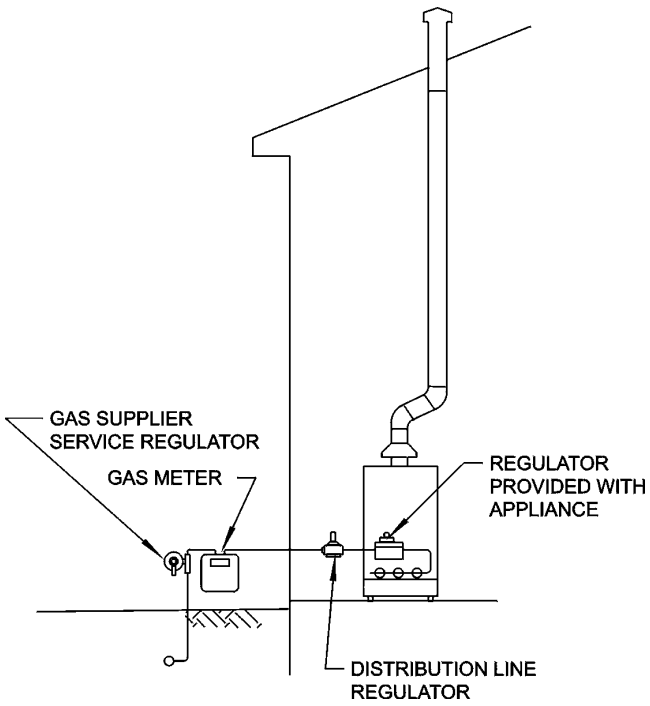

Figure G2421.1(1)
GAS PRESSURE REGULATOR

INTERNATIONAL CODE COUNCIL®
Copyright © 2015 ICC. ALL RIGHTS RESERVED. Accessed by David Dammon on Jun 21, 2017 12:30:52 PM pursuant to License Agreement with ICC. No further reproduction or distribution authorized. ANY UNAUTHORIZED REPRODUCTION OR DISTRIBUTION IS A VIOLATION OF THE FEDERAL COPYRIGHT ACT AND THE LICENSE AGREEMENT, AND SUBJECT TO CIVIL AND CRIMINAL PENALTIES THEREUNDER.

G2421.2 (410.2) MP regulators. MP *pressure regulators* shall comply with the following:

1. The MP *regulator* shall be *approved* and shall be suitable for the inlet and outlet gas pressures for the application.
2. The MP *regulator* shall maintain a reduced outlet pressure under lock-up (no-flow) conditions.
3. The capacity of the MP *regulator*, determined by published ratings of its manufacturer, shall be adequate to supply the *appliances* served.
4. The MP *pressure regulator* shall be provided with *access*. Where located indoors, the *regulator* shall be vented to the outdoors or shall be equipped with a leak-limiting device, in either case complying with Section G2421.3.
5. A tee fitting with one opening capped or plugged shall be installed between the MP *regulator* and its upstream shutoff valve. Such tee fitting shall be positioned to allow connection of a pressure-measuring instrument and to serve as a sediment trap.

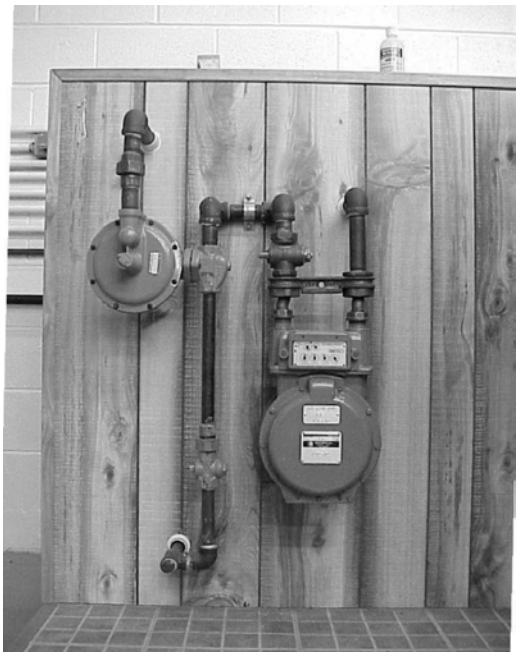

Photo courtesy of Washington Gas

Figure G2421.1(2)
SERVICE REGULATOR

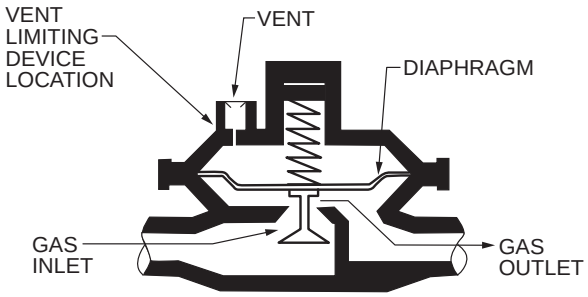

Figure G2421.1(3)
GAS PRESSURE REGULATOR

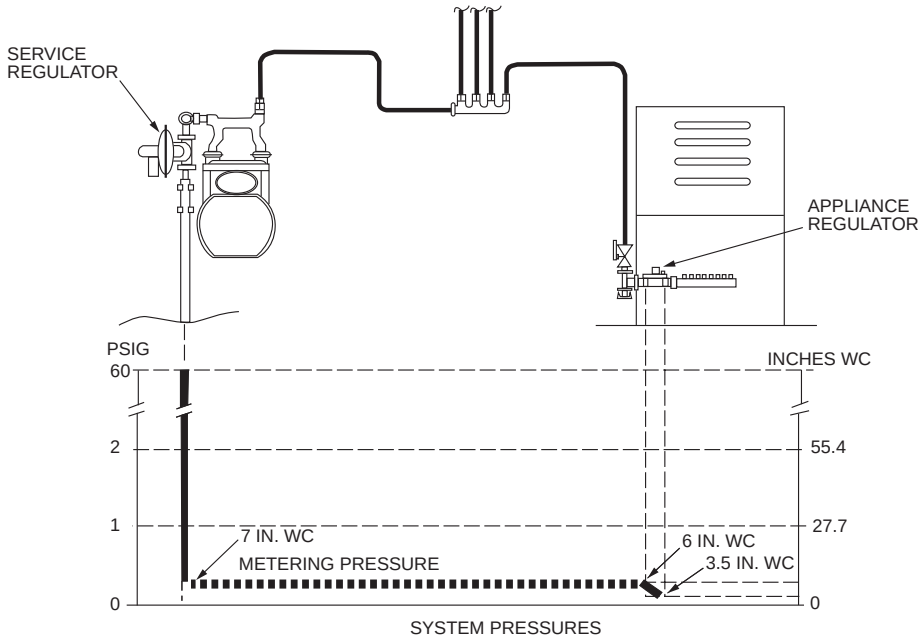

For SI: 1 inch water column = 249 Pa, 1 pound per square inch gauge = 6.895 kPa.

Figure G2421.1(4)
SYSTEM PRESSURES

INTERNATIONAL CODE COUNCIL®
Copyright © 2015 ICC. ALL RIGHTS RESERVED. Accessed by David Dammon on Jun 21, 2017 12:30:52 PM pursuant to License Agreement with ICC. No further reproduction or distribution authorized. ANY UNAUTHORIZED REPRODUCTION OR DISTRIBUTION IS A VIOLATION OF THE FEDERAL COPYRIGHT ACT AND THE LICENSE AGREEMENT, AND SUBJECT TO CIVIL AND CRIMINAL PENALTIES THEREUNDER.

6. A tee fitting with one opening capped or plugged shall be installed not less than 10 pipe diameters downstream of the MP *regulator* outlet. Such tee fitting shall be positioned to allow connection of a pressure-measuring instrument.
7. Where connected to rigid *piping*, a union shall be installed within 1 foot (304 mm) of either side of the MP *regulator*.

❖ This section states the minimum requirements for medium-pressure (MP) gas regulators installed in 2-psi (13.8 kPa) gas piping systems or portions of systems. These requirements intend to keep the regulators accessible for service and repair, protect them from physical damage, require that they are suitable for the use intended, are properly sized and installed, and, if installed indoors, are properly vented to the outdoors (see commentary, Section G2421.3). Item 2 requires a "lockup"-type regulator capable of holding the approximate outlet pressure setpoint indefinitely under no-flow conditions. Section G2420.4 requires a gas shutoff valve immediately upstream of the MP regulator to allow isolation of the regulator during testing, repair or replacement of the regulator. Items 5 and 6 require a tee fitting upstream and downstream of the MP regulator to facilitate the connection of pressure-measuring instruments for calibrating the regulator. These fittings should have a $^1/_8$-inch (3.2 mm) threaded tapping for connection of common gauges and manometers. Item 5 also requires a sediment trap on the inlet side of the regulator. Because a lot of faith is placed in the integrity of this regulator, it deserves the protection from debris afforded by a simple tee, nipple and cap arrangement (see Section G2419.4).

Where a line pressure regulator serves appliances rated for $^1/_2$ psi (3.5 kPa) or less inlet pressure and the regulator's inlet pressure is over 2 psi (13.8 kPa), a downstream over-pressure protection device must be installed in accordance with ANSI Z21.80, the standard for line pressure regulators [see Commentary Figures G2421.2(1) and G2421.2(2)]. The OPD is designed to limit the downstream (outlet) pressure to 2 psi (13.8 kPa).

MP regulators are line pressure regulators that serve to reduce pressures that are above 0.5 psi and

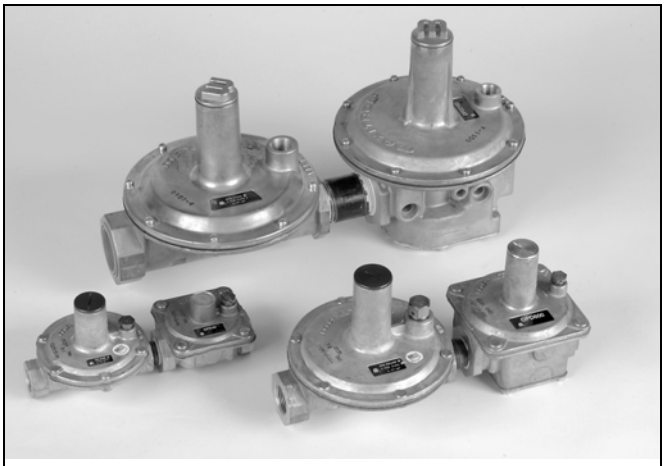

Photo courtesy of MAXITROL Company

Figure G2421.2(2)
PRESSURE REGULATOR/OVERPRESSURE PROTECTION DEVICE ASSEMBLIES

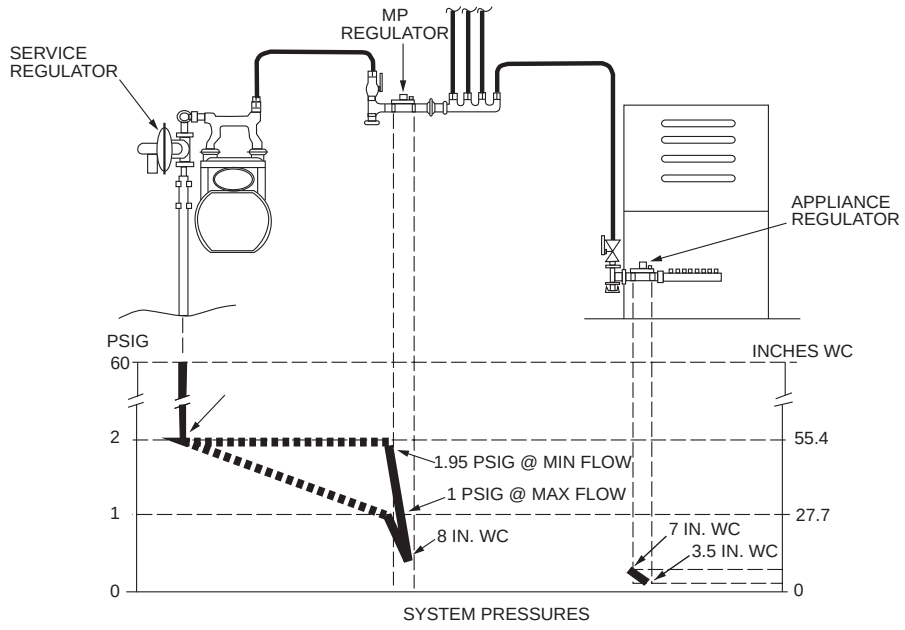

For SI: 1 inch water column = 249 Pa, 1 pound per square inch gauge = 6.895 kPa.

Figure G2421.2(1)
SYSTEM PRESSURES

INTERNATIONAL CODE COUNCIL®
Copyright © 2015 ICC. ALL RIGHTS RESERVED. Accessed by David Dammon on Jun 21, 2017 12:30:52 PM pursuant to License Agreement with ICC. No further reproduction or distribution authorized. ANY UNAUTHORIZED REPRODUCTION OR DISTRIBUTION IS A VIOLATION OF THE FEDERAL COPYRIGHT ACT AND THE LICENSE AGREEMENT, AND SUBJECT TO CIVIL AND CRIMINAL PENALTIES THEREUNDER.

less than or equal to 5 psi to some lower pressure. They are typically installed in 2-psi and 5-psi gas-distribution systems that serve appliances having a maximum input pressure of 0.5 psi (14 inches water column). If such regulators are installed with steel piping on the inlet and outlet side, the regulators cannot be removed or isolated without disassembly of the piping system for some distance or cutting the piping. To facilitate removal or isolation of the regulator, a union fitting must be placed near the inlet or outlet side of the regulator. This is simply a common-sense provision [see Commentary Figure G2421.2(3)].

G2421.3 (410.3) Venting of regulators. *Pressure regulators* that require a vent shall be vented directly to the outdoors. The vent shall be designed to prevent the entry of insects, water and foreign objects.

Exception: A vent to the outdoors is not required for *regulators* equipped with and *labeled* for utilization with an *approved* vent-limiting device installed in accordance with the manufacturer's instructions.

❖ All regulators use synthetic or natural rubber diaphragms, one side of which is vented to the atmosphere. The devices must vent one side of the diaphragm to the atmosphere to allow unimpeded movement of the diaphragm within its enclosure. Thus, these devices, in effect, see atmospheric pressure as a reference point for controlling the fuel-gas pressure. Regulators cannot operate without the vent. If the diaphragm were to rupture or perforate, gas would be vented to the exterior of the device. For this reason, regulators installed indoors must be vented to the outdoors or must comply with the exception to this section. See the definition of "Vent piping, breather." The vent termination outdoors must be protected from blockage and the entry of foreign objects, insects and water, which could cause regulator failure and a severe hazard [see Commentary Figures G2421.3(1) and G2421.3(2)]. If a regulator vent is blocked by ice, water, insect nests, debris or other foreign material, the air above the diaphragm will be trapped and the regu-

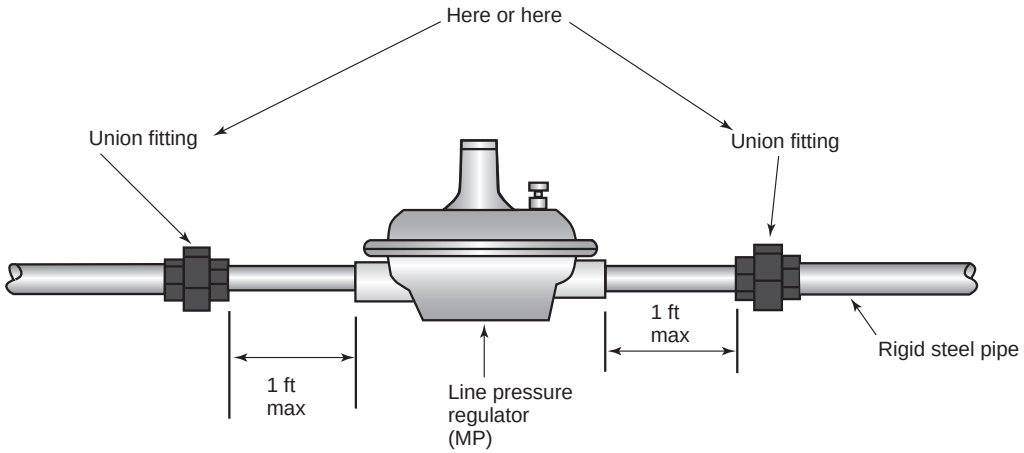

Only one union is required. It can be upstream or downstream.

Figure G2421.2(3)
UNION BEFORE OR AFTER REGULATOR

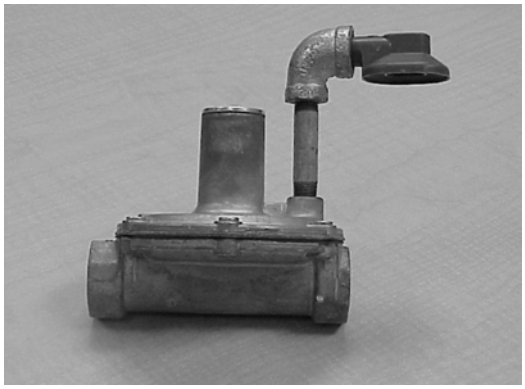

Photo courtesy of Washington Gas

Figure G2421.3(1)
REGULATOR WITH VENT PROTECTION



Photo courtesy of MAXITROL Company

Figure G2421.3(2)
PRESSURE REGULATOR WITH VENT-LIMITING DEVICE

INTERNATIONAL CODE COUNCIL®
Copyright © 2015 ICC. ALL RIGHTS RESERVED. Accessed by David Dammon on Jun 21, 2017 12:30:52 PM pursuant to License Agreement with ICC. No further reproduction or distribution authorized. ANY UNAUTHORIZED REPRODUCTION OR DISTRIBUTION IS A VIOLATION OF THE FEDERAL COPYRIGHT ACT AND THE LICENSE AGREEMENT, AND SUBJECT TO CIVIL AND CRIMINAL PENALTIES THEREUNDER.

lator port valve could be held in the open position thus disabling the regulator and causing overpressurization of the piping system.

The exception permits installation of regulators indoors without a vent to the outdoors where the regulator is equipped with and labeled for use with a factory-installed vent-limiting device. Vent-limiting devices, as the name implies, are designed to allow the vent to "breathe" under normal operating conditions. In the event of diaphragm failure, the vent-limiting devices will limit gas escapement to a rate near 1 cubic foot per hour (0.0283 m^3/h) for natural gas at 2-psi (13.8 kPa) pressure. A vent-limiting device is a ball check valve with a fixed orifice and is designed to allow air inhalation and escapement while restricting gas leakage to a small rate. Even small leakage rates can be hazardous if inadequate ventilation exists to prevent buildup of explosive concentrations. Although a standard is not referenced in this section, ANSI Z21.18 is appropriate for evaluating such vent-limiting devices. The standard limits the volume of gas that a vent-limiting device is al-lowed to discharge into a room or space. Vent-limiting devices should be installed in locations that are ventilated sufficiently to dissipate any gas discharged from the device.

G2421.3.1 (410.3.1) Vent piping. Vent *piping* for relief vents and breather vents shall be constructed of materials allowed for *gas piping* in accordance with Section G2414. Vent *piping* shall be not smaller than the vent connection on the pressure regulating device. Vent *piping* serving relief vents and combination relief and breather vents shall be run independently to the outdoors and shall serve only a single device vent. Vent *piping* serving only breather vents is permitted to be connected in a manifold arrangement where sized in accordance with an *approved* design that minimizes backpressure in the event of diaphragm rupture. *Regulator* vent *piping* shall not exceed the length specified in the *regulator* manufacturer's installation instructions.

❖ See the definitions of relief vents and breather vents. Relief vents must not be combined with any other relief vents or breather vents because of the potential to restrict relief capacity and/or cause regulator malfunction. Only breather vents are allowed to be manifolded together and only where in compliance with this section.

In all cases, the minimum size of vent piping is the size of the vent connection on the device served. Although not stated in this section, there is always a limit on how far any size vent piping can be run. Vent piping may have to be increased in size to compensate for long vent runs. The longer the vent piping, the greater the flow resistance and flow resistance must be limited so that the air flow necessary for unimpeded movement of the regulator diaphragm is not restricted. The regulator manufacturer's installation instructions may include vent piping length limitations and vent piping lengths must be in accordance with such instructions. Manifold piping for breather vents must be engineered based on the predicted rise in internal vent pressure in the event of a diaphragm failure. If regulator vents are blocked or the airflow is restricted in any way, including by undersized or excessively long piping runs, the result will be impaired regulator operation, causing retarded regulator response time, underpressure during appliance start-ups and overpressurization of the downstream system, all of which can be hazardous.

This section also requires regulators to be vented individually to the outdoors to prevent a potentially hazardous situation that may arise if more than one regulator is served by a single vent. The hazard could occur if the diaphragm of one regulator failed and the gas leakage into the vent caused an increase of pressure within the vent, which would then act on the other regulator diaphragms, causing all of the other regulators using the common vent to operate at a higher discharge pressure. This section permits use of engineered vent manifold systems to vent more than one regulator if the manifold is designed and sized to allow unimpeded air movement and to minimize back pressure in the event of a diaphragm failure.

G2421.4 (410.4) Excess flow valves. Where automatic *excess flow valves* are installed, they shall be listed for the application and shall be sized and installed in accordance with the manufacturer's instructions.

❖ The code does not mandate the installation of EFVs; rather, it provides requirements for installations where such installations are chosen. EFVs must be listed for the application in which they are to be used. The manufacturer's installation instructions provide sizing and installation requirements that must be adhered to. Some devices have to be installed in certain positions to work properly. Sizing is very important because the EFV will cause a gas pressure drop and, if this drop is not accounted for in the system, the appliance might be supplied with inadequate pressure, causing a hazardous condition (see commentary, Section G2413.5). Proper sizing for EFVs is also important to ensure that they will function as intended. An undersized EFV might trip unnecessarily, resulting in the appliance being inoperative, and an oversized EFV might not trip at all. See Commentary Figure G2421.4 and the commentary to the definition of "Excess flow valve (EFV)."

G2421.5 (410.5) Flashback arrestor check valve. Where fuel gas is used with oxygen in any hot work operation, a listed protective device that serves as a combination flashback arrestor and backflow check valve shall be installed at an *approved* location on both the fuel gas and oxygen supply lines. Where the pressure of the piped fuel gas supply is insufficient to ensure such safe operation, *approved* equipment shall be installed between the gas meter and the appliance that increases pressure to the level required for such safe operation.

❖ This section relates to commercial and industrial installations that use fuel gas and oxygen for welding and cutting operations. The devices required by this section are designed to prevent the flow of one gas into the piping for another gas caused by differences in line pressures. The result of any such backflow would be potentially hazardous because an explosive mixture could be created in either piping system and such mixture could be delivered to a burner head.

INTERNATIONAL CODE COUNCIL®
Copyright © 2015 ICC. ALL RIGHTS RESERVED. Accessed by David Dammon on Jun 21, 2017 12:30:52 PM pursuant to License Agreement with ICC. No further reproduction or distribution authorized. ANY UNAUTHORIZED REPRODUCTION OR DISTRIBUTION IS A VIOLATION OF THE FEDERAL COPYRIGHT ACT AND THE LICENSE AGREEMENT, AND SUBJECT TO CIVIL AND CRIMINAL PENALTIES THEREUNDER.

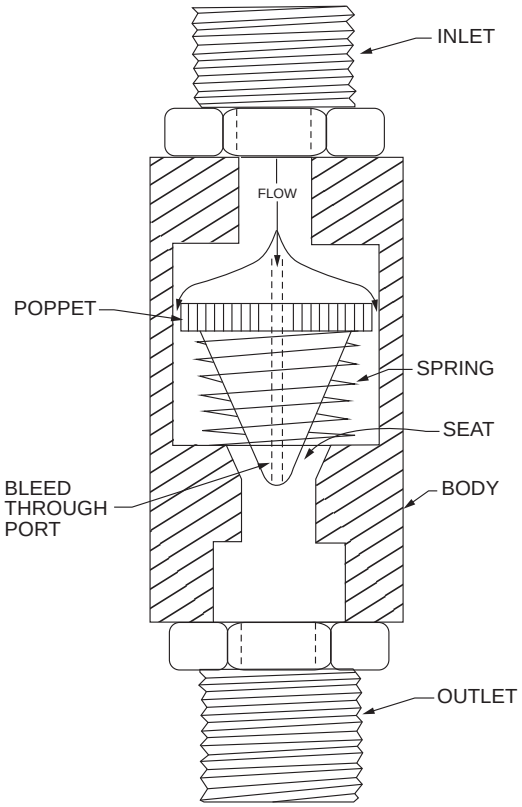

Figure G2421.4
EXAMPLE OF EXCESS FLOW VALVE

SECTION G2422 (411)
APPLIANCE CONNECTIONS

G2422.1 (411.1) Connecting appliances. *Appliances* shall be connected to the *piping system* by one of the following:

1. Rigid metallic pipe and fittings.
2. Corrugated stainless steel *tubing* (CSST) where installed in accordance with the manufacturer's instructions.
3. Listed and labeled *appliance connectors* in compliance with ANSI Z21.24 and installed in accordance with the manufacturer's instructions and located entirely in the same room as the *appliance*.
4. *Listed* and *labeled* quick-disconnect devices used in conjunction with *listed* and *labeled appliance connectors*.
5. *Listed* and *labeled* convenience outlets used in conjunction with *listed* and *labeled appliance connectors*.
6. *Listed* and *labeled* outdoor *appliance connectors* in compliance with ANSI Z21.75/CSA 6.27 and installed in accordance with the manufacturer's instructions.
7. *Listed* outdoor gas hose connectors in compliance with ANSI Z21.54 used to connect portable outdoor *appliances*. The gas hose connection shall be made only in the outdoor area where the *appliance* is used, and shall be to the gas *piping* supply at an *appliance* shutoff valve, a *listed* quick-disconnect device or *listed* gas convenience outlet.

❖ Connectors are used to connect the appliance or equipment to the gas distribution system outlet. The pipe sizing methods in this chapter size distribution piping up to but not beyond the appliance shutoff valve outlet and this section sizes the connection between the shutoff valve outlet and the appliance [see definition of "Piping system" and Commentary Figure G2422.1(1)]. The choice of a connection type must take into consideration such factors as appliance movement, vibration, ambient conditions and susceptibility to physical damage. Between the shutoff valve and the appliance, a union fitting or similar arrangement must allow a means of disconnecting the piping. Flared or ground-joint connections that are part of an approved, labeled semirigid ("flexible") connector can serve as a union [see Commentary Figures G2422.1(2) and (3)].

Item 2 addresses CSST connected directly to appliances. Although CSST is allowed to directly connect to specific appliances (fixed/nonmoveable), CSST is not to be used as a substitute for a connector where one is

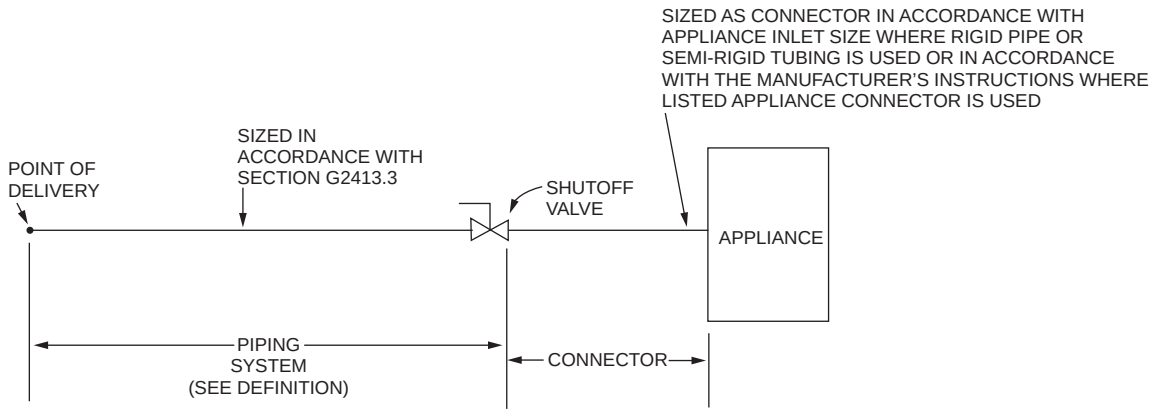

Figure G2422.1(1)
PIPING SYSTEM SIZING AND APPLIANCE CONNECTION AND CONNECTOR SIZING

INTERNATIONAL CODE COUNCIL®
Copyright © 2015 ICC. ALL RIGHTS RESERVED. Accessed by David Dammon on Jun 21, 2017 12:30:52 PM pursuant to License Agreement with ICC. No further reproduction or distribution authorized. ANY UNAUTHORIZED REPRODUCTION OR DISTRIBUTION IS A VIOLATION OF THE FEDERAL COPYRIGHT ACT AND THE LICENSE AGREEMENT, AND SUBJECT TO CIVIL AND CRIMINAL PENALTIES THEREUNDER.

required. CSST manufacturers' instructions specify where CSST can directly connect to appliances and where it cannot [see Commentary Figures G2422.1(4) and (5)].

Item 3 refers to the commonly used, so called "flexible" connectors typically made of corrugated stainless steel and previously made of brass. Appliance connectors are listed and labeled with the label typically being wrapped around the connector tubing.

Most appliance connectors manufactured today have attached plastic labels that state the installation and sizing instructions. These connectors are not designed for repeated movement that causes bending of the metal and should not be reused after the initial installation. Reuse is typically prohibited by the manufacturers' instructions. Repeated bending and/or vibration can cause metal fatigue, stress cracking and gas leak-age [see Commentary Figures G2422.1(6) and (7)].

The piping system is sized up to the outlet of the appliance shutoff valve. The connector occurs between the shutoff valve outlet and the appliance and is sized by the connector manufacturer or is based on the appliance input rating, gas inlet size and length of the connector [see Commentary Figure G2422.1(1)]. For example, a boiler is supplied by branch piping required to be 1 inch (25 mm) based on the sizing methods in Section G2413. The branch piping is 1 inch (25 mm) up to the boiler shutoff valve, but the boiler inlet opening is only $^1/_2$ inch (13 mm). The piping (connector) downstream of the shutoff valve is sized as a connector because it is 6 feet (1829 mm) or less in length (see commentary, Section G2420.5.1).

Item 7 addresses connections for portable outdoor appliances [see Commentary Figure G2422.1(8)].

Because portable appliances can be moved, methods 1 through 7 of this section are not suited for connecting portable appliances to the gas distribution piping system. Most appliance connectors are not designed to be used with any appliance that can be readily moved. All appliance connectors must be used within the parameters of their listings. For outdoor portable appliances, new method 7 is the only apparent option. Outdoor gas-hose connectors have to be resistant to mechanical damage, possible heat exposure and the harmful effects of exposure to the weather. Connectors listed to ANSI Z21.54 are evaluated and tested for the particularly harsh environment of outdoor use. The gas-hose connector must be located entirely outdoors and must be connected to the gas piping system at a point outdoors. The point of connection to the gas distribution system piping must be through a listed device that allows the hose to be readily manually disconnected or through an appliance shutoff valve. Quick-disconnect devices have safety features such as thermal shutoffs that will close the valve when exposed to high temperatures and interlocking systems that will not allow the hose to be removed until the manual gas valve is closed.

The intent of new Item 7 is to address portable outdoor appliance connections and to mandate that such connectors be listed to a specific safety standard.

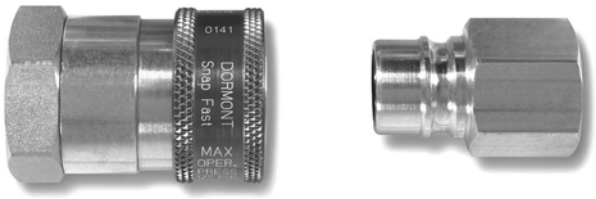

Photo courtesy of Dormont Manufacturing Company

Figure G2422.1(2)
QUICK-DISCONNECT DEVICE FOR USE WITH COMMERICAL APPLIANCE CONNECTORS

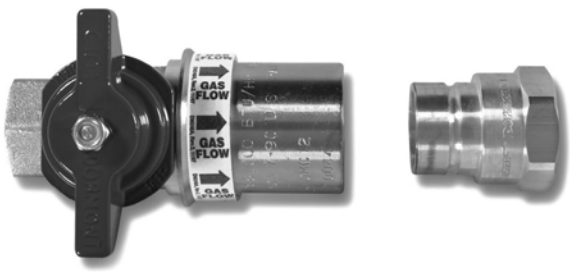

Photo courtesy of Dormont Manufacturing Company

Figure G2422.1(3)
QUICK-DISCONNECT DEVICE FOR USE WITH COMMERCIAL APPLIANCE CONNECTORS

INTERNATIONAL CODE COUNCIL®
Copyright © 2015 ICC. ALL RIGHTS RESERVED. Accessed by David Dammon on Jun 21, 2017 12:30:52 PM pursuant to License Agreement with ICC. No further reproduction or distribution authorized. ANY UNAUTHORIZED REPRODUCTION OR DISTRIBUTION IS A VIOLATION OF THE FEDERAL COPYRIGHT ACT AND THE LICENSE AGREEMENT, AND SUBJECT TO CIVIL AND CRIMINAL PENALTIES THEREUNDER.

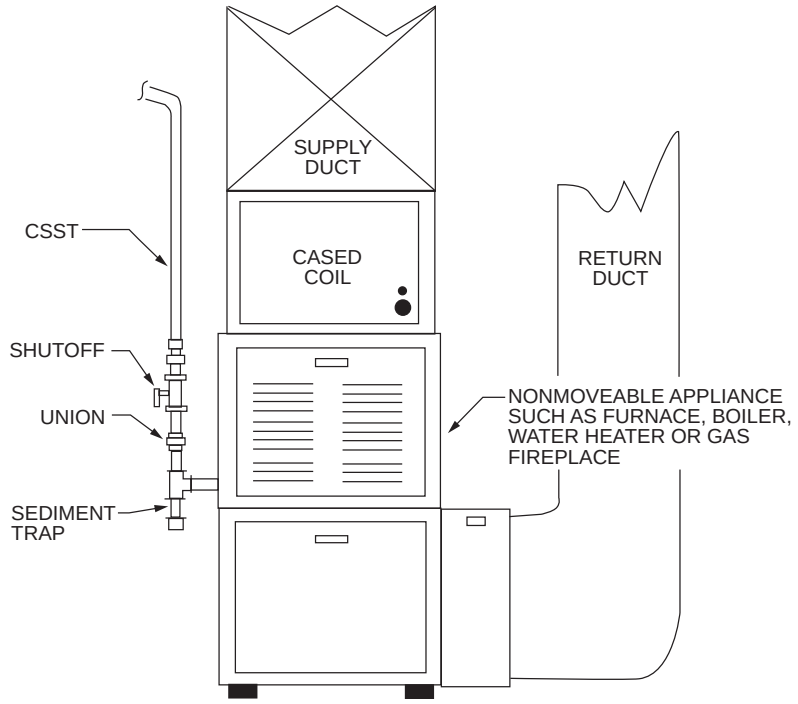

Figure G2422.1(4)
CSST DIRECTLY CONNECTED TO NONMOVABLE APPLIANCE

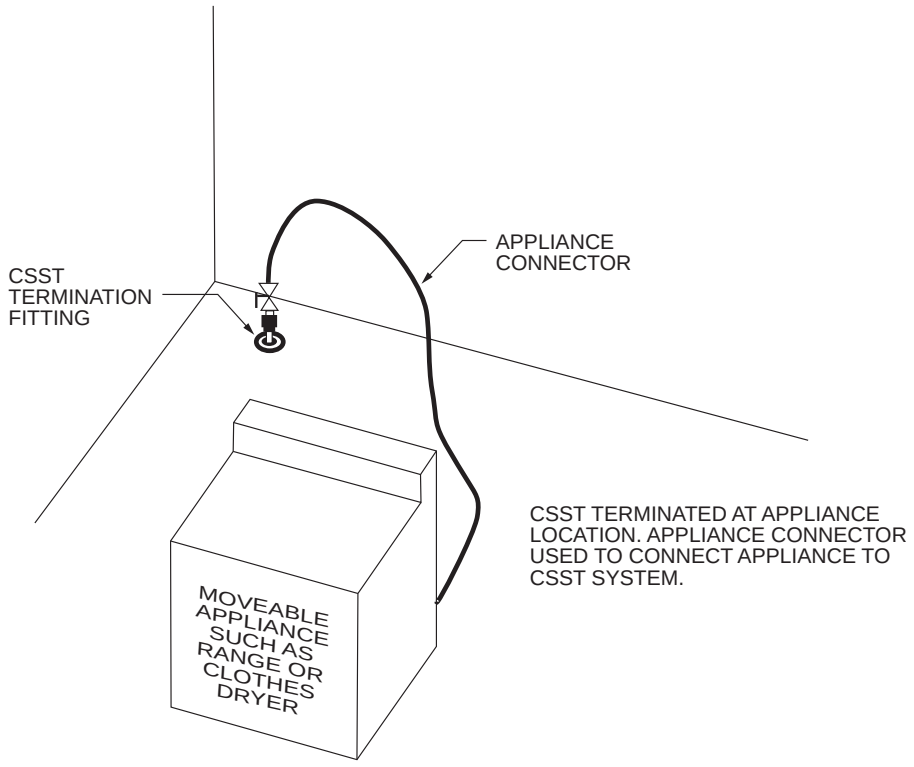

Figure G2422.1(5)
CSST TERMINATED AT APPLIANCE LOCATION

INTERNATIONAL CODE COUNCIL®
Copyright © 2015 ICC. ALL RIGHTS RESERVED. Accessed by David Dammon on Jun 21, 2017 12:30:52 PM pursuant to License Agreement with ICC. No further reproduction or distribution authorized. ANY UNAUTHORIZED REPRODUCTION OR DISTRIBUTION IS A VIOLATION OF THE FEDERAL COPYRIGHT ACT AND THE LICENSE AGREEMENT, AND SUBJECT TO CIVIL AND CRIMINAL PENALTIES THEREUNDER.

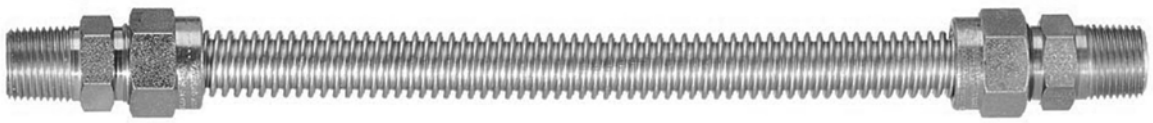

Photo courtesy of Dormont Manufacturing Company

Figure G2422.1(6)
SEMIRIGID (FLEXIBLE) APPLIANCE CONNECTOR



Photo courtesy of Dormont Manufacturing Company

Figure G2422.1(7)
OUTDOOR MOBILE HOME CONNECTOR

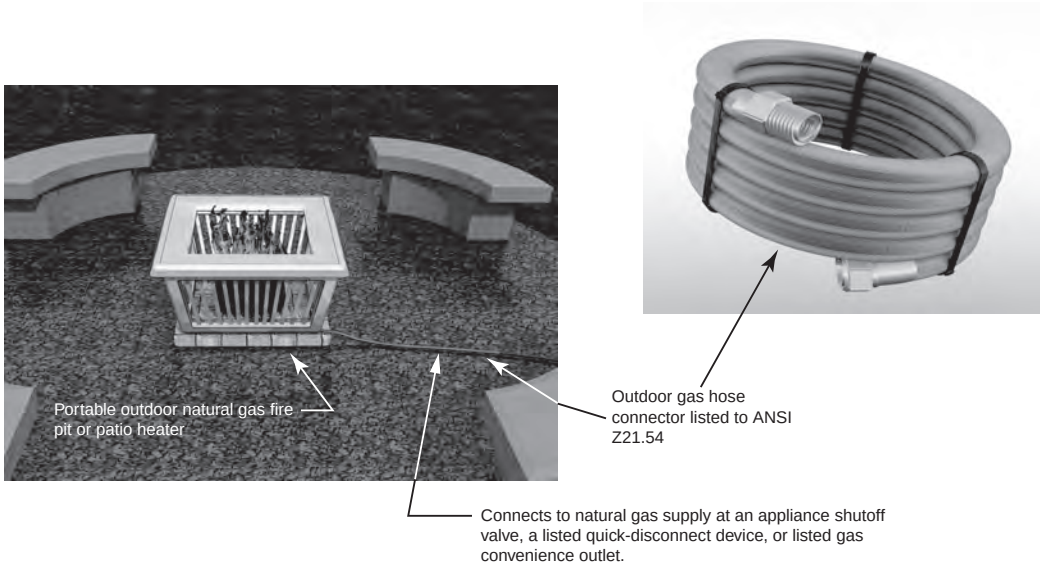

Figure G2422.1(8)
OUTDOOR GAS HOSE CONNECTOR

G2422.1.1 (411.1.2) Protection from damage. Connectors and *tubing* shall be installed so as to be protected against physical damage.

❖ Appliance connectors, although sound, are not constructed or tested to withstand the same rigors of service as the gas piping system without physical damage. Therefore, they must be installed to minimize the potential for damage. For example, "flexible" and semirigid tubing connectors should not be used where subject to excessive vibration or impact by occupants, vehicles, animals, doors, stored materials, etc. Impact, repeated movement and vibration can cause connector failure.

It is not the intent of this section to require that appliance connectors be hidden from view behind or under an appliance to consider them as protected from dam-

INTERNATIONAL CODE COUNCIL®
Copyright © 2015 ICC. ALL RIGHTS RESERVED. Accessed by David Dammon on Jun 21, 2017 12:30:52 PM pursuant to License Agreement with ICC. No further reproduction or distribution authorized. ANY UNAUTHORIZED REPRODUCTION OR DISTRIBUTION IS A VIOLATION OF THE FEDERAL COPYRIGHT ACT AND THE LICENSE AGREEMENT, AND SUBJECT TO CIVIL AND CRIMINAL PENALTIES THEREUNDER.

age. For typical range and clothes dryer installations, the connectors are physically protected by the appliances themselves. However, for water heaters, furnaces, boilers, unit heaters, infrared heaters, etc., the connector will be located in the open and thus will need protection from damage by proper location, placement, elevation or guards. Protection from damage is commonly afforded by locating the connector out of harm's way, such as between a wall and an appliance or 8 feet (2438 mm) or more above the floor.

G2422.1.2 (411.1.3) Connector installation. *Appliance* fuel connectors shall be installed in accordance with the manufacturer's instructions and Sections G2422.1.2.1 through G2422.1.2.4.

❖ Flexible (semirigid) appliance fuel connectors are primarily intended for use with cooking ranges, clothes dryers and similar appliances where the gas connection is located behind the appliance and some degree of flexibility is necessary to facilitate the hook-up; however, flexible connectors may be used with any appliance where they are not subject to damage (see commentary, Section G2422.1.1). Rigid connections are not practical for movable appliances. Flexible connectors are typically constructed of stainless steel and are labeled with tags or metal rings placed over the tubing. The manufacturer's installation instructions dictate the installation requirements that are intended to protect the connector from damage and prevent leakage. Most flexible connectors are intended to be installed only once and are not designed for repeated bending and forming. For other than commercial flexible connections that are designed for repeated movement, a new connector should be used each time an appliance is reinstalled. Repeated flexing or bending can cause metal fatigue and connector failure. Flexible connectors must be protected from physical damage and are not allowed to pass through any walls, floors, ceilings or appliance housings except as allowed by Section G2422.1.2.3.

G2422.1.2.1 (411.1.3.1) Maximum length. Connectors shall have an overall length not to exceed 6 feet (1829 mm). Measurement shall be made along the centerline of the connector. Only one connector shall be used for each *appliance*.

Exception: Rigid metallic *piping* used to connect an *appliance* to the *piping system* shall be permitted to have a total length greater than 6 feet (1829 mm) provided that the connecting pipe is sized as part of the *piping system* in accordance with Section G2413 and the location of the *appliance* shutoff valve complies with Section G2420.5.

❖ Flexible connectors must bear the label of an approved agency and are limited to a maximum of 6 feet (1829 mm) in length. Six-foot (1829 mm) lengths have traditionally been used for range and dryer installations to allow the connector to be looped or otherwise arranged to allow limited movement of the appliance without stressing the connector. The safety record for such connectors has been good, therefore, the use of 6-foot-length connectors is not limited to specific appliances. Flexible connectors are evaluated in accordance with ANSI Z21.24 or ANSI Z21.69. Multiple connectors must not be connected together to circumvent the maximum length requirement [see Commentary Figures G2422.1.2.1(1) and (2)].

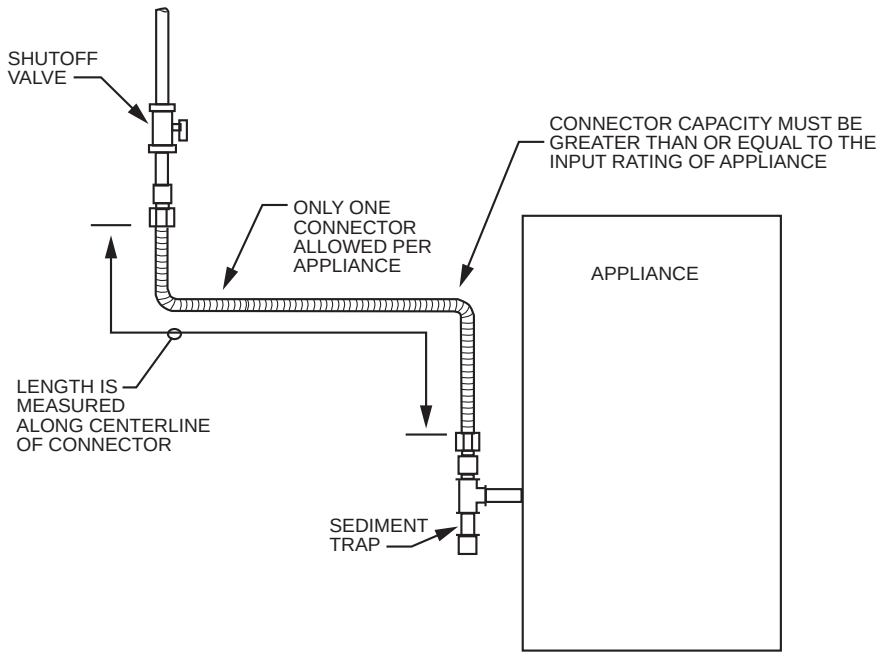

Figure G2422.1.2.1(1)
APPLIANCE FUEL CONNECTOR

INTERNATIONAL CODE COUNCIL®
Copyright © 2015 ICC. ALL RIGHTS RESERVED. Accessed by David Dammon on Jun 21, 2017 12:30:52 PM pursuant to License Agreement with ICC. No further reproduction or distribution authorized. ANY UNAUTHORIZED REPRODUCTION OR DISTRIBUTION IS A VIOLATION OF THE FEDERAL COPYRIGHT ACT AND THE LICENSE AGREEMENT, AND SUBJECT TO CIVIL AND CRIMINAL PENALTIES THEREUNDER.

The exception allows rigid metallic piping (steel) to exceed 6 feet (914 mm) in length for connection to any appliance if the shutoff valve is located in accordance with Section G2420.5 and the connector is sized as gas piping. If the shutoff valve must be within 6 feet (1829 mm) of the appliance, the connector length is also limited to 6 feet (1829 mm). If the shutoff valve is remote in accordance with Section G2420.5.2 or G2420.5.3, the connector length is unlimited if sized as gas piping (see Sections G2420.5.1 through G2420.5.3).

G2422.1.2.2 (411.1.3.2) Minimum size. Connectors shall have the capacity for the total *demand* of the connected *appliance*.

❖ Connectors must be chosen on the basis that they will provide the total gas demand of the appliance served at the required minimum pressure, as indicated in the manufacturer's instructions. Listed connectors provide capacity information on the tag attached to the connector.

G2422.1.2.3 (411.1.3.3) Prohibited locations and penetrations. Connectors shall not be concealed within, or extended through, walls, floors, partitions, ceilings or *appliance* housings.

Exceptions:

1. Connectors constructed of materials allowed for *piping systems* in accordance with Section G2414 shall be permitted to pass through walls, floors, partitions and ceilings where installed in accordance with Section G2420.5.2 or G2420.5.3.
2. Rigid steel pipe connectors shall be permitted to extend through openings in *appliance* housings.
3. *Fireplace* inserts that are factory equipped with grommets, sleeves or other means of protection in accordance with the listing of the *appliance*.
4. Semirigid *tubing* and *listed* connectors shall be permitted to extend through an opening in an *appliance* housing, cabinet or casing where the tubing or connector is protected against damage.

❖ This section requires connectors to be located entirely in the same room as the appliance served to protect them from damage and because the connector begins at the appliance shutoff valve, which must also be in the same room as the appliance served in accordance with Section G2420.5.1. Exception 1 applies to piping system materials, not semirigid (flexible) appliance connectors, and recognizes that Sections G2420.5.2 and G2420.5.3 both permit remote shutoff valves, meaning that in many cases, the piping between the shutoff valve and the appliance will necessarily have to pass through walls, floors, etc., in order to reach the appliance served. For example, a gas fireplace on the first floor has its shutoff valve in the basement and the piping (connector) must pass through the floor to connect to the fireplace. With respect to passing through appliance housings, this section is intended to address listed so-called "flexible" appliance connectors and metal tubing used as a connector. As addressed in Exception 2, rigid steel piping has always been allowed to pass through appliance housings and is often required by appliance installation instructions. CSST installed upstream of the appliance shutoff valve is not considered to be a connector; rather, it is part of the piping system. CSST installed downstream of an appliance shutoff valve, like all other piping materials, is treated as a connector (see Commentary Figure G2422.1.2.3).

Exception 2 recognizes that rigid steel pipe is not likely to be damaged by passing through an appliance housing/cabinet opening designed for that purpose.

Recall that all piping downstream from a shutoff valve is connector piping by the definition of "Piping system."

Exception 3 allows any connector of any material to pass through fireplace insert appliance housings where

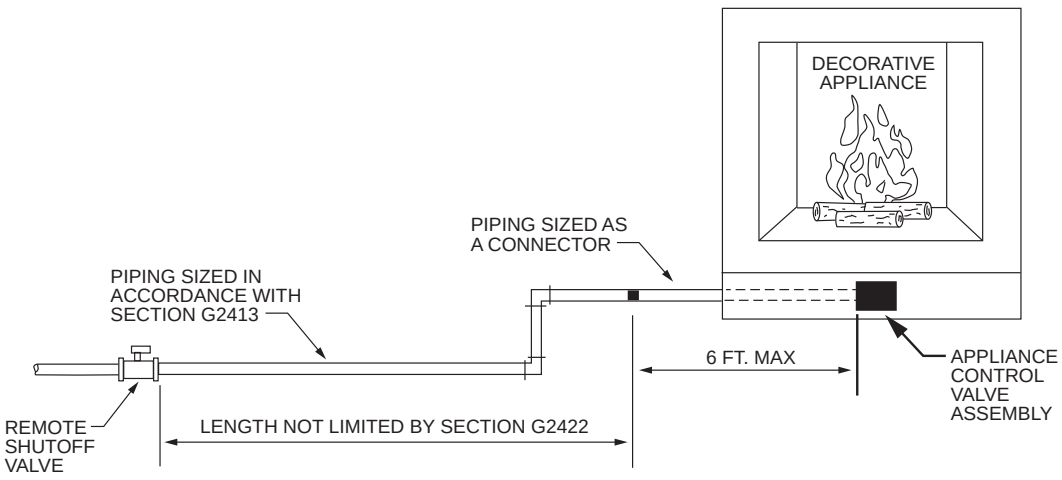

For SI: 1 foot = 304.8 mm.

Figure G2422.1.2.1(2)
APPLIANCE FUEL CONNECTOR

INTERNATIONAL CODE COUNCIL®
Copyright © 2015 ICC. ALL RIGHTS RESERVED. Accessed by David Dammon on Jun 21, 2017 12:30:52 PM pursuant to License Agreement with ICC. No further reproduction or distribution authorized. ANY UNAUTHORIZED REPRODUCTION OR DISTRIBUTION IS A VIOLATION OF THE FEDERAL COPYRIGHT ACT AND THE LICENSE AGREEMENT, AND SUBJECT TO CIVIL AND CRIMINAL PENALTIES THEREUNDER.

means integral with the appliance provide adequate protection from abrasion, cutting and vibration.

Exception 4 allows listed appliance connectors and tubing used as a connector to pass through any appliance housing/cabinet/casing provided that the connector is adequately protected from abrasion, cutting and vibration.

G2422.1.2.4 (411.1.3.4) Shutoff valve. A shutoff valve not less than the nominal size of the connector shall be installed ahead of the connector in accordance with Section G2420.5.

❖ Connectors are installed downstream of the shutoff valve and that valve must be located in the same room as the appliance except as allowed by Sections G2420.5.2 and G2420.5.3. All of the connectors addressed in Section G2422.1 must be sized for the connected load.

G2422.1.3 (411.1.5) Connection of gas engine-powered air conditioners. Internal combustion engines shall not be rigidly connected to the gas supply *piping*.

❖ Internal combustion engines produce significant vibrations and will move on their mounting during operation. Such movement could weaken and damage gas connections and/or gas controls. Some type of "flexible" connector designed for this purpose must be used to allow for movement.

G2422.1.4 (411.1.6) Unions. A union fitting shall be provided for *appliances* connected by rigid metallic pipe. Such unions shall be accessible and located within 6 feet (1829 mm) of the *appliance*.

❖ Although unions have always been installed in rigid pipe connections to appliances by necessity, previous code editions did not specifically require them. Regardless of where the shutoff valve is located, the union must be within 6 feet (1829 mm) of the appliance. Note that this section applies only to rigid piping because tubing systems and appliance connectors are joined with fittings that can serve as a union. A union is a special type of threaded coupling fitting consisting of three mating components and it is used "inline" to join two sections of piping that could not otherwise be threaded together. Unions also allow an appliance to be easily disconnected for repairs and during gas piping system testing (see Section G2415.5).

G2422.1.5 (411.1.4) Movable appliances. Where *appliances* are equipped with casters or are otherwise subject to periodic movement or relocation for purposes such as routine cleaning and maintenance, such *appliances* shall be connected to the supply system *piping* by means of an *appliance connector listed* as complying with ANSI Z21.69 or by means of Item 1 of Section G2422.1. Such flexible connectors shall be

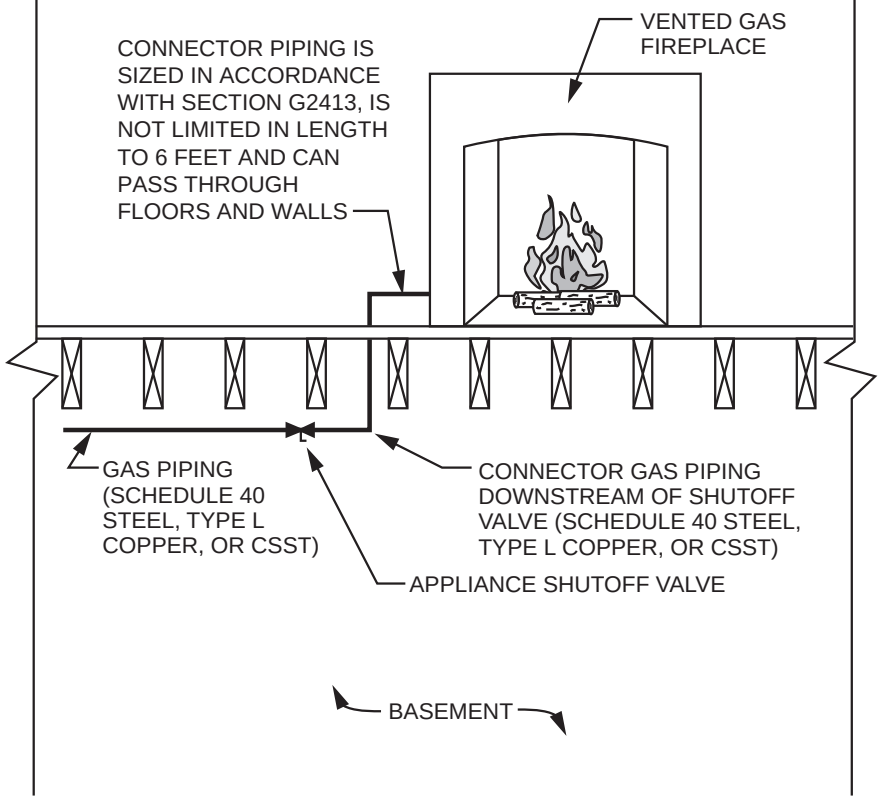

For SI: 1 foot = 304.8 mm.

Figure G2422.1.2.3
CONNECTOR PIPING DOWNSTREAM OF SHUTOFF VALVE

INTERNATIONAL CODE COUNCIL®
Copyright © 2015 ICC. ALL RIGHTS RESERVED. Accessed by David Dammon on Jun 21, 2017 12:30:52 PM pursuant to License Agreement with ICC. No further reproduction or distribution authorized. ANY UNAUTHORIZED REPRODUCTION OR DISTRIBUTION IS A VIOLATION OF THE FEDERAL COPYRIGHT ACT AND THE LICENSE AGREEMENT, AND SUBJECT TO CIVIL AND CRIMINAL PENALTIES THEREUNDER.

installed and protected against physical damage in accordance with the manufacturer's instructions.

❖ Listed residential appliances on casters are not likely to be found in a dwelling. Appliances, such as cooking appliances, commonly use heavy-duty, commercial-type flexible gas connectors. These connectors are designed to tolerate repeated movement to allow appliances on wheels or casters to be moved for cleaning operations or relocation.

Such connectors are commonly equipped with quick-disconnect couplings for ease of disconnection and reconnection and restraint cables to limit the amount of appliance movement, thereby preventing stress and damage to the connector.

Flexible connectors designed for specific applications are also used for the connection of equipment and appliances that produce significant vibrations. For example, gas-burning combustion engines in generator sets and HVAC equipment are connected with specially designed vibration dampening flexible connectors. Some pulse-combustion heating appliances employ flexible connectors to control the transmission of noise to gas distribution piping.

G2422.2 (411.3) Suspended low-intensity infrared tube heaters. Suspended low-intensity infrared tube heaters shall be connected to the building *piping system* with a connector *listed* for the application complying with ANSI Z21.24/CGA 6.10. The connector shall be installed as specified by the tube heater manufacturer's instructions.

❖ Such heaters are used in garages, shops and recreation/hobby spaces where the desire is to partially condition the space by heating the occupants rather than the ambient air in the space. Although uncommon, radiant tube heaters could be found within dwelling accessory structures and garages. This type of appliance will move each time it cycles on and off because of linear expansion and contraction of the radiant tube heating element. This movement has been known to cause stress failures of the appliance connectors that serve these appliances. The appliance manufacturer's installation instructions will provide very specific details on how the appliance connector is to be installed, configured and oriented. Commentary Figures G2422.2(1) and G2422.2(2) are examples of one manufacturer's installation instructions. The instructions will vary from manufacturer to manufacturer, but the theme and intent are the same, that is, to orient and configure the connector such that it will flex with the movement of the appliance without causing stress in the connector.

SECTION G2423 (413)
COMPRESSED NATURAL GAS MOTOR VEHICLE FUEL-DISPENSING FACILITIES

G2423.1 (413.1) General. Motor fuel-dispensing facilities for CNG fuel shall be in accordance with Section 413 of the *International Fuel Gas Code.*

❖ Section 2308 of the IFC regulates CNG service stations.

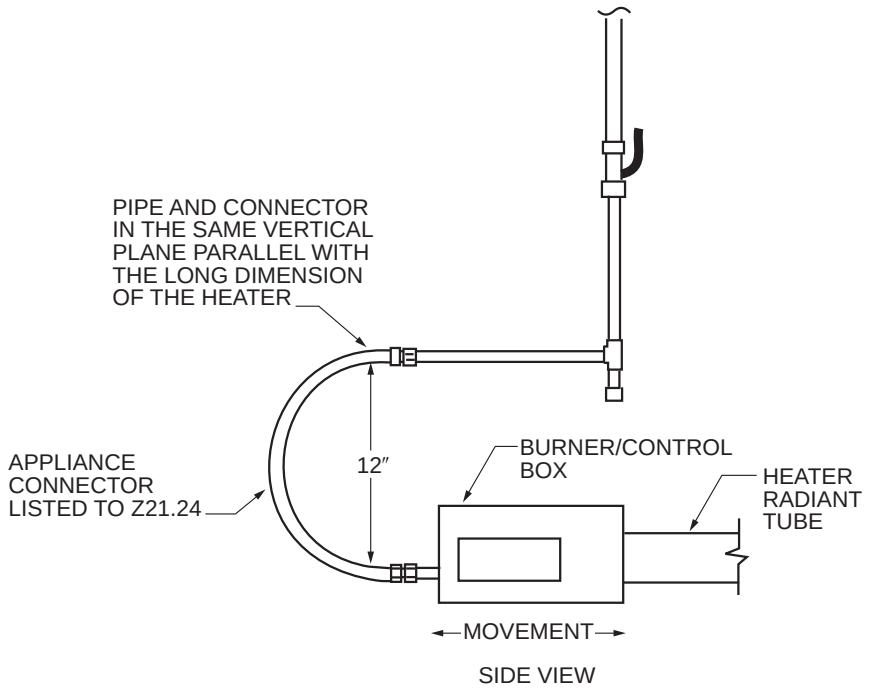

For SI: 1 inch = 25.4 mm.

Figure G2422.2(1)
EXAMPLE OF ONE MANUFACTURER'S INSTALLATION INSTRUCTIONS

INTERNATIONAL CODE COUNCIL®
Copyright © 2015 ICC. ALL RIGHTS RESERVED. Accessed by David Dammon on Jun 21, 2017 12:30:52 PM pursuant to License Agreement with ICC. No further reproduction or distribution authorized. ANY UNAUTHORIZED REPRODUCTION OR DISTRIBUTION IS A VIOLATION OF THE FEDERAL COPYRIGHT ACT AND THE LICENSE AGREEMENT, AND SUBJECT TO CIVIL AND CRIMINAL PENALTIES THEREUNDER.

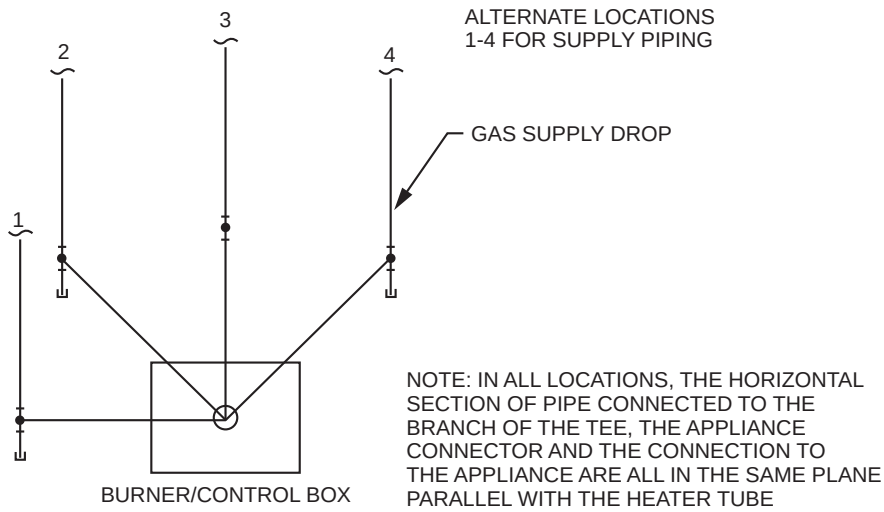

Figure G2422.2(2)
END VIEW OF FIGURE G2422.2(1)

SECTION G2424 (415)
PIPING SUPPORT INTERVALS

G2424.1 (415.1) Interval of support. *Piping* shall be supported at intervals not exceeding the spacing specified in Table G2424.1. Spacing of supports for CSST shall be in accordance with the CSST manufacturer's instructions.

❖ See the commentary to Table G2424.1.

TABLE G2424.1 (415.1)
SUPPORT OF PIPING

STEEL PIPE, NOMINAL SIZE OF PIPE (inches)	SPACING OF SUPPORTS (feet)	NOMINAL SIZE OF TUBING SMOOTH-WALL (inch O.D.)	SPACING OF SUPPORTS (feet)
1/2	6	1/2	4
3/4 or 1	8	5/8 or 3/4	6
1 1/4 or larger (horizontal)	10	7/8 or 1 (horizontal)	8
1 1/4 or larger (vertical)	Every floor level	1 or larger (vertical)	Every floor level

For SI: 1 inch = 25.4 mm, 1 foot = 304.8 mm.

❖ This table is two tables side-by-side. The first two columns are for steel pipe, and the second two columns are for tubing materials (see Section G2418). Support for CSST is dictated by the manufacturers' installation instructions.

SECTION G2425 (501)
GENERAL

G2425.1 (501.1) Scope. This section shall govern the installation, maintenance, repair and approval of factory-built *chimneys, chimney* liners, vents and connectors and the utilization of masonry chimneys serving gas-fired *appliances*.

❖ This section contains requirements for the installation, maintenance, repair and approval of residential, commercial and industrial chimney and venting systems that convey the products of combustion from a gas-fired appliance to the outside atmosphere. Venting systems for fuel-fired appliances other than gas-fired appliances, such as oil and solid-fuel appliances, are covered in Chapter 18. The construction of masonry chimneys is regulated by Chapter 10 (see Section G2425.3).

G2425.2 (501.2) General. Every *appliance* shall discharge the products of combustion to the outdoors, except for *appliances* exempted by Section G2425.8.

❖ Appliances other than those listed in Section G2425.8 must be vented to convey the potentially harmful combustion byproducts to the outdoor atmosphere (see Section G2425.8).

G2425.3 (501.3) Masonry chimneys. *Masonry chimneys* shall be constructed in accordance with Section G2427.5 and Chapter 10.

❖ A masonry chimney is a field-constructed assembly that can consist of solid masonry units, reinforced concrete, rubble stone, fire-clay liners and mortars. A masonry chimney is permitted to serve low-, medium- and high-heat appliances. Chapter 10 outlines the general code requirements regarding the construction details for masonry chimneys, including those serving masonry fireplaces.

G2425.4 (501.4) Minimum size of chimney or vent. *Chimneys* and vents shall be sized in accordance with Sections G2427 and G2428.

❖ Sections G2427 and G2428 contain the requirements for sizing Category I appliance venting systems. Sizing

INTERNATIONAL CODE COUNCIL®
Copyright © 2015 ICC. ALL RIGHTS RESERVED. Accessed by David Dammon on Jun 21, 2017 12:30:52 PM pursuant to License Agreement with ICC. No further reproduction or distribution authorized. ANY UNAUTHORIZED REPRODUCTION OR DISTRIBUTION IS A VIOLATION OF THE FEDERAL COPYRIGHT ACT AND THE LICENSE AGREEMENT, AND SUBJECT TO CIVIL AND CRIMINAL PENALTIES THEREUNDER.

of venting systems for other categories is dictated by the appliance manufacturer.

G2425.5 (501.5) Abandoned inlet openings. Abandoned inlet openings in *chimneys* and vents shall be closed by an *approved* method.

❖ Abandoned inlet openings result from appliances being disconnected or reconnected at different elevations. Unused openings in chimneys and vents can allow combustion gases to enter the building; can cause loss of draft at other appliances connected to the chimney or vent; can allow conditioned air to escape, resulting in energy losses; and can allow the entry of birds and rodents. For example, consider an appliance that was connected to a chimney and has been replaced with an appliance that vents through an exterior wall. The opening in the chimney left by the disconnection of the appliance must be properly closed to prevent a hazardous condition. Combustion gases from appliances connected to chimneys and vents can escape through openings in the chimney and vent. Those openings can affect the draft of the remaining appliances, causing them to spill combustion gases into the building.

The method used to close an unused opening must not create a protrusion in the flue passageway, which could restrict vent gas flow. It is not uncommon to find multiple openings in chimneys that were used at one time but have since been abandoned and covered or closed in some makeshift fashion, or left open. Inlet openings that are not closed could allow the escape of vent gases and could affect the draft produced by the chimney or vent. Excess dilution air will be admitted through unused openings, which could weaken draft by cooling the vent gases and bypassing the flow through appliance connectors. It is rare to find unused openings in vents because vent openings are easily closed or adapted to different appliance connections; however, the hazard of abandoned openings is the same as for chimneys. Vent and factory-built chimney openings are easily closed by eliminating tees and wyes or by using metal caps. Closure of masonry chimney openings may require the replacement of masonry, especially where the chimney has been structurally weakened by the openings.

G2425.6 (501.6) Positive pressure. Where an *appliance* equipped with a mechanical forced *draft* system creates a positive pressure in the venting system, the venting system shall be designed for positive pressure applications.

❖ Commonly used chimney and vent systems are not designed for positive pressure (above atmospheric). Chimneys and vents are intended to produce a draft and thus operate with negative internal pressures. Specialized vents and chimneys are available that are designed for positive pressure applications (see Commentary Figure G2425.6). The misapplication of materials can result in leakage of combustion gases and can cause chimney or vent deterioration from condensate corrosion. Masonry chimneys, Type B vents, Type L vents and most factory-built chimneys are designed for negative pressure applications, meaning that the venting system is producing draft. Negative-pressure venting systems will leak if subjected to positive internal pressures. Leakage can allow combustion gases to enter the building, and condensation can cause rapid deterioration of the chimney or vent.

G2425.7 (501.7) Connection to fireplace. Connection of *appliances* to *chimney* flues serving *fireplaces* shall be in accordance with Sections G2425.7.1 through G2425.7.3.

❖ This section regulates installations where fireplace chimneys are used as the venting means for appliances such as room heaters and fireplace-insert-type heaters.

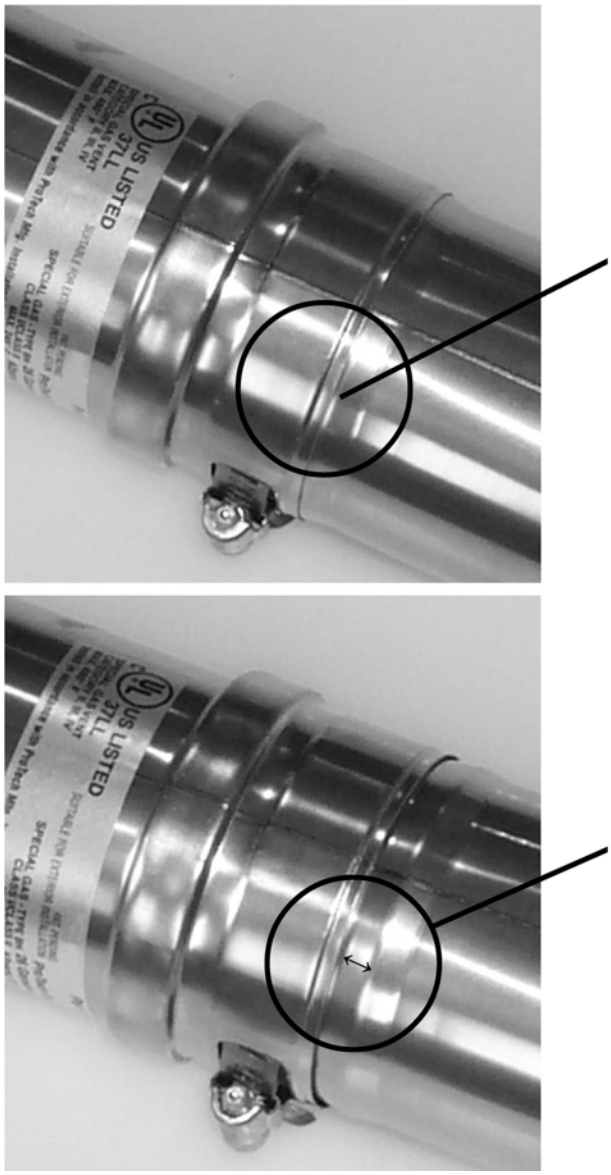

Figure courtesy of Selkirk L.L.C.

Figure G2425.6
VENT DESIGNED FOR GATEGORY III AND IV (POSITIVE PRESSURE) APPLICATIONS

INTERNATIONAL CODE COUNCIL®
Copyright © 2015 ICC. ALL RIGHTS RESERVED. Accessed by David Dammon on Jun 21, 2017 12:30:52 PM pursuant to License Agreement with ICC. No further reproduction or distribution authorized. ANY UNAUTHORIZED REPRODUCTION OR DISTRIBUTION IS A VIOLATION OF THE FEDERAL COPYRIGHT ACT AND THE LICENSE AGREEMENT, AND SUBJECT TO CIVIL AND CRIMINAL PENALTIES THEREUNDER.

G2425.7.1 (501.7.1) Closure and access. A noncombustible seal shall be provided below the point of connection to prevent entry of room air into the flue. Means shall be provided for *access* to the flue for inspection and cleaning.

❖ Without an airtight connection between the chimney flue and the appliance chimney connector, chimney draft will draw room air into the flue, thus weakening the draft drawn through the appliance. The chimney connection must be designed for access for inspection and cleaning of the chimney because the chimney flue is no longer open to the fireplace firebox.

G2425.7.2 (501.7.2) Connection to factory-built fireplace flue. An *appliance* shall not be connected to a flue serving a *factory-built fireplace* unless the *appliance* is specifically *listed* for such installation. The connection shall be made in accordance with the *appliance* manufacturer's installation instructions.

❖ Factory-built fireplaces may or may not be tested for any use other than as a traditional fireplace. Installing an appliance or fireplace-insert-type heater could result in abnormally high fireplace or chimney temperatures, component deterioration and hazardous operation. The fireplace manufacturer will provide specific instructions covering what is or is not allowed regarding appliance installations. Typically, the manufacturer's instructions will prohibit any modifications and any use of the fireplace other than for what it was designed.

G2425.7.3 (501.7.3) Connection to masonry fireplace flue. A connector shall extend from the *appliance* to the flue serving a *masonry fireplace* such that the *flue gases* are exhausted directly into the flue. The connector shall be accessible or removable for inspection and cleaning of both the connector and the flue. *Listed* direct connection devices shall be installed in accordance with their listing.

❖ The appliance chimney connector must extend up through the fireplace damper and smoke chamber and terminate in the chimney flue. This helps produce an adequate draft.

G2425.8 (501.8) Appliances not required to be vented. The following *appliances* shall not be required to be vented:

1. Ranges.
2. Built-in domestic cooking units *listed* and marked for optional venting.
3. Hot plates and laundry stoves.
4. *Type 1 clothes dryers* (*Type 1 clothes dryers* shall be exhausted in accordance with the requirements of Section G2439).
5. Refrigerators.
6. Counter *appliances*.
7. Room heaters *listed* for unvented use.

Where the *appliances* listed in Items 5 through 7 above are installed so that the aggregate input rating exceeds 20 Btu per hour per cubic foot (207 W/m^3) of volume of the room or space in which such *appliances* are installed, one or more shall be provided with venting *systems* or other *approved* means for conveying the *vent gases* to the outdoor atmosphere so that the aggregate input rating of the remaining *unvented appliances* does not exceed 20 Btu per hour per cubic foot (207 W/m^3). Where the room or space in which the *appliance* is installed is directly connected to another room or space by a doorway, archway or other opening of comparable size that cannot be closed, the volume of such adjacent room or space shall be permitted to be included in the calculations.

❖ The specified appliances do not have to be vented unless required by the last paragraph of this section, which addresses Items 5 through 7 and not Items 1 through 4. Section G2404.3 requires that all appliances be listed.

Item 1 recognizes that residential-type cooking appliances are listed for unvented operations.

Item 4 clarifies that clothes dryers are not vented, but instead, are exhausted. The products of combustion for gas-fired clothes dryers are discharged to the outdoors along with the moisture exhaust; in effect, the dryer is "vented," but not in the sense that other appliances are vented. Clothes dryer exhaust ducts are not referred to as vents because they are exhaust ducts, not a type of vent. Clothes dryer exhaust ducts are erroneously referred to as "vents." Clothes dryers, both gas and electric, must exhaust to the outdoors.

Twenty Btu per hour per cubic foot of room volume (207 w/m^3) is the same ratio as 50 cubic feet per 1000 Btu per hour (4.8 m^3/w) on which Section G2407.5.1 is based. In other words, this section requires that unvented appliances be located in a space that meets the volume requirement for indoor combustion air specified in Section G2407.5.1. If the total unvented appliance input rating exceeds the ratio of 20 Btu/h per cubic foot of space volume (207 w/m^3), one or more appliances would have to be vented or removed to keep the total at or below the limit. Maintaining a minimum space volume will help control the level of combustion products in the space by dilution with infiltration air. The appliances listed in Items 5 through 7 are allowed to be unvented, only where the total Btu/h input is at or below the limit set for the space volume.

G2425.9 (501.9) Chimney entrance. Connectors shall connect to a *masonry chimney* flue at a point not less than 12 inches (305 mm) above the lowest portion of the interior of the *chimney* flue.

❖ This requirement is intended to prevent blockage of the connector opening by debris that has collected at the bottom of the flue passage. The 12-inch deep (305 mm) space below the connector functions as a trap (dirt leg) for debris such as dead animals, leaves, flaking tile, mortar and soot. This section is not intended to apply to factory-built chimneys because those chimneys are protected from the entry of debris by the required cap.

G2425.10 (501.10) Connections to exhauster. *Appliance* connections to a *chimney* or vent equipped with a power exhauster shall be made on the inlet side of the exhauster. Joints on the positive pressure side of the exhauster shall be

INTERNATIONAL CODE COUNCIL®
Copyright © 2015 ICC. ALL RIGHTS RESERVED. Accessed by David Dammon on Jun 21, 2017 12:30:52 PM pursuant to License Agreement with ICC. No further reproduction or distribution authorized. ANY UNAUTHORIZED REPRODUCTION OR DISTRIBUTION IS A VIOLATION OF THE FEDERAL COPYRIGHT ACT AND THE LICENSE AGREEMENT, AND SUBJECT TO CIVIL AND CRIMINAL PENALTIES THEREUNDER.

sealed to prevent flue-gas leakage as specified by the manufacturer's installation instructions for the exhauster.

❖ When a mechanical draft device or power exhauster is installed, the resulting "forced draft" creates a positive pressure inside the chimney or vent on the discharge or outlet side of the fan. A hazardous condition will result if an appliance is connected on the outlet or discharge side of a power exhauster. The appliance connector provides an alternate path for the flue gases to travel back into the building. Also, the appliance connected on the discharge side (outlet) of the exhauster will not be supplied with draft, and its combustion products will spill into the building interior.

A hazardous condition can also occur when a vent connector serving an appliance vented by natural draft is connected to the vent of an appliance equipped with integral power-venting means. This section does not prohibit Category I fan-assisted appliances from being common-vented with draft-hood (natural draft) appliances as addressed in Section G2428.

Any vent, chimney or connector piping into which an exhauster discharges must be rated and approved for positive pressure and properly installed to prevent leakage of combustion gases. For example, Type B vents cannot be used on the outlet side of an exhauster or a power-vented appliance, regardless of any appliance manufacturer's recommendations. Type B vent material cannot be sealed to prevent leakage when exposed to positive pressure. Positive pressure can force combustion products into the annular space between the pipe walls where condensation could occur, causing deterioration of the piping.

G2425.11 (501.11) Masonry chimneys. *Masonry chimneys* utilized to vent *appliances* shall be located, constructed and sized as specified in the manufacturer's installation instructions for the *appliances* being vented and Section G2427.

❖ Manufacturers' instructions for today's gas-fired appliances specify very limited conditions under which the appliance is allowed to vent to a masonry chimney. The conditions include chimney size, condition, location and construction. Because many existing masonry chimneys are oversized, unlined, in poor structural condition or partially exposed to the outdoors, they might not be suitable to serve gas-fired appliances. Masonry chimneys serving to vent fan-assisted gas-fired appliances are becoming rare. In many cases, a masonry chimney must be relined with a retrofit metal liner system, or a vent such as Type B vent will have to be installed within the flueway of the chimney. Masonry chimneys have a large thermal mass that has to be heated to above the dew point of the combustion gases to avoid condensation. The flue gas temperatures discharged from many appliances will not be high enough to sufficiently warm the chimney mass, especially where the chimney is oversized and/or exposed to the exterior.

G2425.12 (501.12) Residential and low-heat appliances flue lining systems. *Flue lining* systems for use with residential-type and low-heat *appliances* shall be limited to the following:

1. Clay *flue lining* complying with the requirements of ASTM C315 or equivalent. Clay *flue lining* shall be installed in accordance with Chapter 10.
2. *Listed chimney* lining systems complying with UL 1777.
3. Other *approved* materials that will resist, without cracking, softening or corrosion, *flue gases* and *condensate* at temperatures up to 1,800ºF (982ºC).

❖ Flue lining systems for masonry chimneys include clay tile, poured-in-place refractory materials and stainless steel pipe.

G2425.13 (501.13) Category I appliance flue lining systems. *Flue lining* systems for use with Category I *appliances* shall be limited to the following:

1. *Flue lining* systems complying with Section G2425.12.
2. *Chimney* lining systems *listed* and *labeled* for use with gas *appliances* with *draft hoods* and other Category I gas *appliances listed* and *labeled* for use with Type B vents.

❖ Chimney lining systems for chimneys serving gas-fired appliances include stainless steel and aluminum piping (uninsulated or insulated) designed for both new construction and for relining existing chimneys.

Type B vent is also used as a chimney liner, although it is not considered to be a lining system, and in such cases the chimney is actually a masonry chase containing a vent. Relining of existing chimneys is quite common now because of the incompatibility of mid-efficiency appliances and masonry chimneys. Relining systems allow reuse of existing chimneys, thereby saving expense and retaining desirable architectural features of buildings [see Commentary Figures G2425.13(1) through G2425.13(4)].

G2425.14 (501.14) Category II, III and IV appliance venting systems. The design, sizing and installation of vents for Category II, III and IV *appliances* shall be in accordance with the *appliance* manufacturer's instructions.

❖ Venting systems for these appliances are special vent systems specified by the appliance manufacturer and are not addressed further in the code (see Commentary Figure G2425.14).

INTERNATIONAL CODE COUNCIL®
Copyright © 2015 ICC. ALL RIGHTS RESERVED. Accessed by David Dammon on Jun 21, 2017 12:30:52 PM pursuant to License Agreement with ICC. No further reproduction or distribution authorized. ANY UNAUTHORIZED REPRODUCTION OR DISTRIBUTION IS A VIOLATION OF THE FEDERAL COPYRIGHT ACT AND THE LICENSE AGREEMENT, AND SUBJECT TO CIVIL AND CRIMINAL PENALTIES THEREUNDER.

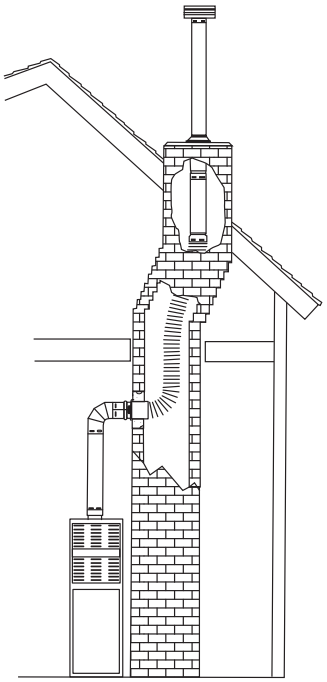

Figure courtesy of Simpson Dura-Vent Company, Incorporated

Figure G2425.13(1)
MASONRY CHIMNEY RELINING SYSTEM

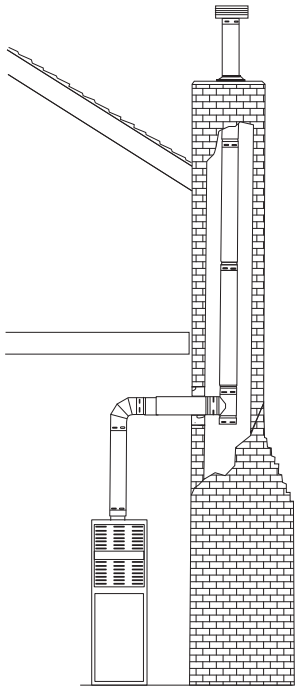

Figure courtesy of Simpson Dura-Vent Company, Incorporated

Figure G2425.13(3)
MASONRY CHIMNEY RELINING BY INSTALLATION OF TYPE B VENT SYSTEM

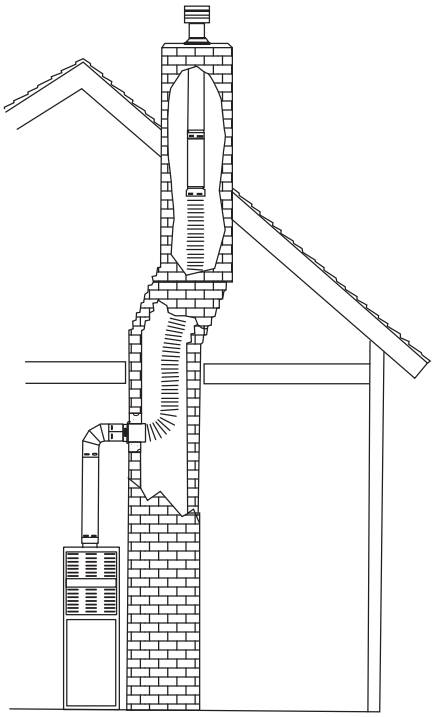

Figure courtesy of Simpson Dura-Vent Company, Incorporated

Figure G2425.13(2)
MASONRY CHIMNEY RELINING SYSTEM



Photo courtesy of Simpson Dura-Vent Company, Incorporated

Figure G2425.13(4)
MASONRY CHIMNEY RELINING SYSTEM

INTERNATIONAL CODE COUNCIL®
Copyright © 2015 ICC. ALL RIGHTS RESERVED. Accessed by David Dammon on Jun 21, 2017 12:30:52 PM pursuant to License Agreement with ICC. No further reproduction or distribution authorized. ANY UNAUTHORIZED REPRODUCTION OR DISTRIBUTION IS A VIOLATION OF THE FEDERAL COPYRIGHT ACT AND THE LICENSE AGREEMENT, AND SUBJECT TO CIVIL AND CRIMINAL PENALTIES THEREUNDER.



Photo courtesy of Selkirk L.L.C.

Figure G2425.14
SPECIAL VENT SYSTEM FOR CATEGORY II, III AND IV APPLIANCES

G2425.15 (501.15) Existing chimneys and vents. Where an *appliance* is permanently disconnected from an existing *chimney* or vent, or where an *appliance* is connected to an existing *chimney* or vent during the process of a new installation, the *chimney* or vent shall comply with Sections G2425.15.1 through G2425.15.4.

❖ Existing chimneys and vents must be reevaluated for continued suitability whenever the conditions of use change. Size, which is covered in Section G2425.15.1, is of primary importance. Other considerations are the presence of liner obstructions, combustible deposits in the liner, the structural condition of the liner, the inclusion of a cleanout and clearances to combustibles, which are addressed in Sections G2425.15.2 through G2425.15.4. It is the intent of this section that whenever a new appliance is connected or an existing appliance is disconnected from a chimney or vent, the chimney or vent is subject to the requirements in Sections G2425.15.2 through G2425.15.4, which include requirements for inspection, cleaning, possible repair, the installation of a cleanout if one is not already there and the establishment of clearances to combustibles in accordance with the requirements for new chimneys or vent installations.

Chimneys, vents and the appliances served are all designed to function together as a system. Any change to an existing chimney or vent system will have an impact on the performance of that system. Something as simple as disconnecting an appliance from a chimney can upset the system balance and cause the venting system to fail to produce a draft for the remaining appliances, and could cause the venting system to produce harmful condensation (see Commentary Figure G2425.15).

G2425.15.1 (501.15.1) Size. The *chimney* or vent shall be resized as necessary to control flue gas condensation in the interior of the *chimney* or vent and to provide the *appliance* or *appliances* served with the required *draft*. For Category I *appliances*, the resizing shall be in accordance with Section G2426.

❖ The combined input from multiple appliances, especially older lower-efficiency appliances, can maintain sufficiently high chimney or vent temperatures to provide the necessary draft and to avoid condensation. Changing an existing configuration by disconnecting and eliminating an appliance or by substituting a higher-efficiency appliance can cause a decrease in flue gas temperature, resulting in condensation or poor draft. Also, the elimination of one or more draft-hood-equipped appliances will reduce the amount of dilution air in a venting system, thus increasing the likelihood of condensation. Often, it is necessary to resize a chimney or vent by replacing it with a smaller-size chimney or vent or by installing a liner system (see Commentary Figure G2425.15).

A common scenario involves removing chimney-vented furnaces or boilers and leaving a water heater as the only appliance vented to the chimney. In such cases, the chimney would typically be grossly oversized for the water heater, could fail to produce adequate draft and could be subject to continuous condensation. This scenario has received much attention and has created the phrase “orphaned water heaters.”

G2425.15.2 (501.15.2) Flue passageways. The flue gas passageway shall be free of obstructions and combustible deposits and shall be cleaned if previously used for venting a solid or liquid fuel-burning *appliance* or *fireplace*. The *flue liner*, *chimney* inner wall or vent inner wall shall be continuous and shall be free of cracks, gaps, perforations, or other damage or deterioration that would allow the escape of *combustion products*, including gases, moisture and creosote.

❖ A chimney or flue must be cleaned to examine the flue liner surface, to eliminate fuel for a possible chimney fire, to reduce frictional resistance to flow and to prevent any residual deposits from falling into lower parts of the venting system. Installation or removal of an appliance without an inspection of the existing flue is prohibited. If the flue served a solid- or liquid-fuel-burning appliance or fireplace, cleaning is required in order to make the required inspection and to remove any combustible deposits. In that case, the addition or removal of an appliance without both cleaning and inspection of the existing flue would be a code violation. If inspection shows that the flueway of the vent or chimney is incapable of preventing the leakage of combustion gases, the chimney or vent would have to be repaired or relined.

INTERNATIONAL CODE COUNCIL®
Copyright © 2015 ICC. ALL RIGHTS RESERVED. Accessed by David Dammon on Jun 21, 2017 12:30:52 PM pursuant to License Agreement with ICC. No further reproduction or distribution authorized. ANY UNAUTHORIZED REPRODUCTION OR DISTRIBUTION IS A VIOLATION OF THE FEDERAL COPYRIGHT ACT AND THE LICENSE AGREEMENT, AND SUBJECT TO CIVIL AND CRIMINAL PENALTIES THEREUNDER.

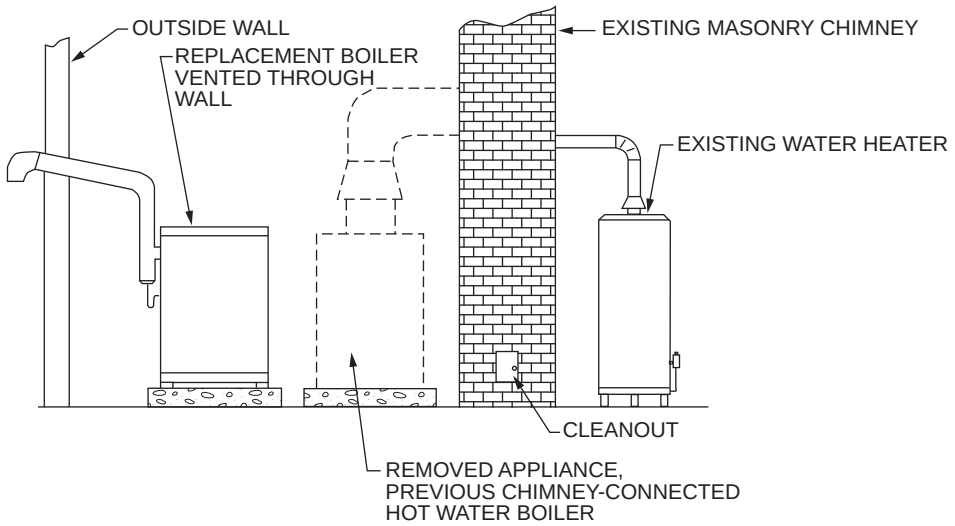

Figure G2425.15
APPLIANCE REPLACEMENTS AFFECTING EXISTING APPLIANCES

G2425.15.3 (501.15.3) Cleanout. *Masonry chimney* flues shall be provided with a cleanout opening having a minimum height of 6 inches (152 mm). The upper edge of the opening shall be located not less than 6 inches (152 mm) below the lowest *chimney* inlet opening. The cleanout shall be provided with a tight-fitting, noncombustible cover.

❖ This section requires installation of a cleanout in a chimney to facilitate cleaning and inspection. A fireplace inherently provides access to its chimney through the firebox, throat and smoke chamber. The cleanout cover and opening frame must be of an approved material such as cast iron, precast cement or other noncombustible material and must be arranged to remain tightly closed. A loose fitting or unsecured cleanout can allow air to flow into the chimney, affecting draft at the appliance or fireplace, and can result in an energy loss in the building. Under certain conditions, combustion products could escape into the building through an ill-fitting cleanout door or cover. The requirement for placing the cleanout at least 6 inches (152 mm) below the lowest connection to the chimney is intended to minimize the possibility of combustion products exiting the chimney through the cleanout. It is the intent of this section that a cleanout opening be installed, if one is not already provided, for existing masonry chimney flues whenever another appliance is installed or an existing appliance is removed.

G2425.15.4 (501.15.4) Clearances. *Chimney*s and vents shall have airspace *clearance* to combustibles in accordance with Chapter 10 and the *chimney* or vent manufacturer's installation instructions.

Exception: *Masonry chimneys* without the required airspace *clearances* shall be permitted to be used if lined or relined with a *chimney* lining system *listed* for use in *chimneys* with reduced *clearances* in accordance with UL 1777. The *chimney clearance* shall be not less than that permitted by the terms of the *chimney* liner listing and the manufacturer's instructions.

❖ This section requires that the existing chimney or vent be inspected for clearances to combustibles for the entire length of the chimney or vent. Clearances to combustibles for masonry chimneys are found in Chapter 10. The required clearances for a listed factory-built chimney or vent would be in accordance with the existing chimney or vent manufacturer's installation instructions. The clearances to combustibles for vents and factory-built chimneys are typically indicated on the vent or chimney. If they are not, the manufacturer must be contacted and the original installation instructions consulted.

Existing masonry chimneys commonly do not have the clearances required by the code, especially if the structure is fairly old. Listed chimney lining systems, which provide insulation value to compensate for the lack of clearance, are available for use in such chimneys. Lining systems listed to UL 1777 include poured-in-place insulating refractory cement and insulated metal liners. The lining system listing will specify what the required clearance must be from the relined chimney to combustibles.

G2425.15.4.1 (501.15.4.1) Fireblocking. Noncombustible fireblocking shall be provided in accordance with Chapter 10.

❖ See Section R1003.19.

SECTION G2426 (502) VENTS

G2426.1 (502.1) General. Vents, except as provided in Section G2427.7, shall be *listed* and *labeled*. Type B and BW vents shall be tested in accordance with UL 441. Type L vents shall be tested in accordance with UL 641. Vents for Category II and III *appliances* shall be tested in accordance

INTERNATIONAL CODE COUNCIL®
Copyright © 2015 ICC. ALL RIGHTS RESERVED. Accessed by David Dammon on Jun 21, 2017 12:30:52 PM pursuant to License Agreement with ICC. No further reproduction or distribution authorized. ANY UNAUTHORIZED REPRODUCTION OR DISTRIBUTION IS A VIOLATION OF THE FEDERAL COPYRIGHT ACT AND THE LICENSE AGREEMENT, AND SUBJECT TO CIVIL AND CRIMINAL PENALTIES THEREUNDER.

with UL 1738. Plastic vents for Category IV *appliances* shall not be required to be *listed* and *labeled* where such vents are as specified by the *appliance* manufacturer and are installed in accordance with the *appliance* manufacturer's instructions.

❖ Vents regulated by this section are factory fabricated and must be listed and labeled. The labeling requirement applies to all components of the system such as the sections of pipe, fittings, terminal caps, supports and spacers.

The provision for unlisted plastic vents is necessary to allow for the venting systems commonly specified in the installation instructions for Category IV condensing appliances. Unlisted plastic pipe (commonly PVC or CPVC plumbing pipe) vents are distinct from listed high-temperature plastic special gas vents that were designed primarily for Category III appliances. Unlisted plastic pipe can be used only when specified by the appliance manufacturer and must be installed as directed in the appliance installation instructions. Unlisted plastic pipe is used only for high-efficiency Category IV gas-fired appliances. The pipe functions as an exhaust pipe for combustion gases and as a combustion air intake pipe.

Gas appliances (furnaces and boilers) are categorized so that the proper venting system can be selected. Four categories have been developed based on the pressure produced in the vent passageway and whether or not the flue gas temperatures approach the dew point, making condensation likely (see the definition for "Vented gas appliance categories").

Category I appliances operate under a negative or neutral vent pressure, are noncondensing appliances and may generate vent gases with temperatures up to 550°F (288°C). A Category I appliance can use a draft hood or an integral vent blower or draft inducer (fan assisted) [see Commentary Figure G2426.1(1)].

Category II appliances also operate under negative or neutral vent pressure, but the vent gas temperature and percent of CO_2 yield a flue loss of less than 17 percent, meaning that condensation of flue gases can occur. Vent systems serving Category II appliances fall under the special vent provisions of Sections G2425.14, G2427.4 and G2427.6.8.3.

Category III appliances operate with a positive vent pressure and can produce condensation, although they are not considered to be "condensing appliances." The positive pressure in the vent system necessitates airtight flue passageways to avoid leakage. Vent systems serving Category III appliances fall under the special vent provisions of Sections G2425.14, G2427.4, and G2427.6.8.3. They are typically constructed of high-temperature plastic or stainless steel pipe. The type of stainless steel specified today is typically AL29-4C, a special alloy known for its corrosion resistance.

Category IV appliances operate with a positive vent pressure and condense flue gases. Condensing (high-efficiency) appliances require airtight vent passageways and a method of collecting and draining condensation. The vent system serving this type of appliance is usually constructed of plastic, such as PVC or CPVC. Vent systems serving Category IV appliances also fall under the special vent provisions of Sections G2425.14, G2427.4 and G2427.6.8.3 [see Commentary Figure G2426.1(2)].

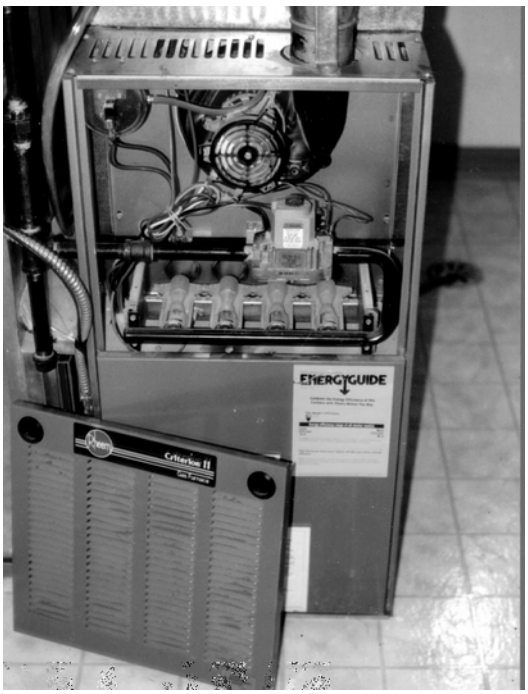

Figure G2426.1(1)
CATEGORY I FAN-ASSISTED FURNACE



Figure courtesy of Carrier Corporation

Figure G2426.1(2)
CATEGORY IV APPLIANCE (FURNACE)

INTERNATIONAL CODE COUNCIL®
Copyright © 2015 ICC. ALL RIGHTS RESERVED. Accessed by David Dammon on Jun 21, 2017 12:30:52 PM pursuant to License Agreement with ICC. No further reproduction or distribution authorized. ANY UNAUTHORIZED REPRODUCTION OR DISTRIBUTION IS A VIOLATION OF THE FEDERAL COPYRIGHT ACT AND THE LICENSE AGREEMENT, AND SUBJECT TO CIVIL AND CRIMINAL PENALTIES THEREUNDER.

A vent system can be used only in conjunction with gas-burning appliances that are listed and labeled for use with a vent. Appliances equipped with draft hoods and Category I (including fan-assisted) appliances both depend on the vent to produce a draft to convey the combustion products to the outdoors. Solid-fuel-burning appliances must not be connected to a vent system because they produce flue-gas temperatures that are much higher than the temperatures for which vents are designed. The burning of solid fuels also produces creosote. Creosote formation leaves a combustible deposit on the surface of the flue passageway that, if ignited, can produce a fire with temperatures exceeding 2,000°F (1093°C), far exceeding the safe temperature limitations of a vent system.

Type B vents are designed for venting noncondensing gas appliances equipped with a draft hood and fan-assisted appliances that operate with a nonpositive vent pressure and that are listed and labeled for use with a Type B vent. Type B vents are capable of withstanding continuous firing at flue temperatures not exceeding 400°F (222°C) above room temperature. This section requires that a Type B vent be tested in accordance with UL 441. Type B vents must not be used with incinerators, appliances readily converted to the use of solid or liquid fuels or combination gas/oil burning appliances. Type B vents can serve multiple gas-fired appliance installations [see Commentary Figure G2426.1(3)].

Type BW vents must also be tested in accordance with UL 441 and can serve only labeled gas-fired wall furnaces. A Type BW vent is an oval-shaped vent designed and tested for installation in a stud wall cavity. This type of vent is capable of withstanding continuous firing at flue temperatures not exceeding 400°F (222°C) above room temperature. Type BW vents must not be used to vent incinerators, appliances readily converted to the use of solid or liquid fuels or combination gas/oil-burning appliances.

Type L vents must be tested in accordance with UL 641 and are designed to vent oil-burning appliances, which produce a higher flue gas temperature than gas-fired appliances. Type L vents can also be used with appliances listed and labeled for Type B vent systems, meaning that Type L vents can substitute for Type B vents, but Type B vents cannot serve appliances that require Type L vents.

Type B and BW vents are double-walled, air-insulated vent piping systems constructed of galvanized steel outer walls and aluminum inner walls [see Commentary Figure G2426.1(4)]. Type L vents are typically double-wall, air-insulated vent piping systems constructed of galvanized and stainless steel.

Type B, BW and L vents are designed for natural draft applications only and must not be used to convey combustion gases under positive pressure. For example, a Type B vent must not be used with Category III or IV gas-fired appliances and must not be used on the

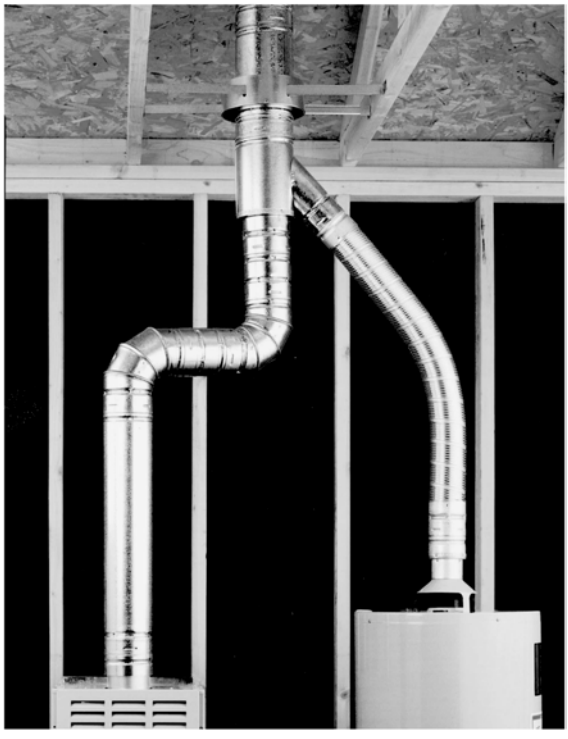

Photo courtesy of Simpson Dura-Vent Company, Incorporated

Figure G2426.1(3)
TYPE B GAS VENT SERVING
TWO CATEGORY I APPLIANCES



Figure courtesy of Simpson Dura-Vent Company, Incorporated

Figure G2426.1(4)
TYPE B VENT SECTIONS WITH
AIR SPACE BETWEEN PIPE WALLS

INTERNATIONAL CODE COUNCIL®
Copyright © 2015 ICC. ALL RIGHTS RESERVED. Accessed by David Dammon on Jun 21, 2017 12:30:52 PM pursuant to License Agreement with ICC. No further reproduction or distribution authorized. ANY UNAUTHORIZED REPRODUCTION OR DISTRIBUTION IS A VIOLATION OF THE FEDERAL COPYRIGHT ACT AND THE LICENSE AGREEMENT, AND SUBJECT TO CIVIL AND CRIMINAL PENALTIES THEREUNDER.

discharge side of an exhauster or power-vented appliance. Positive pressures will cause a Type B vent to leak combustion gases into the building, and the leakage can cause condensation to form within the vent system pipe, fittings and joints, resulting in corrosion damage to the vent and eventual vent failure. Fan-assisted Category I appliances are not considered power vented and do not produce positive vent pressures when vented vertically to a properly sized draft-producing vent such as a Type B vent system (see commentary, Section G2428). UL 1738 covers factory-built vents for Category II, Ill and IV appliances. These vents can be constructed of metallic or plastic materials including aluminum alloys, steel (coated, galvanized, stainless or aluminized), PVC and CPVC.

G2426.2 (502.2) Connectors required. Connectors shall be used to connect *appliances* to the vertical *chimney* or vent, except where the *chimney* or vent is attached directly to the *appliance*. Vent *connector* size, material, construction and installation shall be in accordance with Section G2427.

❖ Connectors designed, constructed and installed in accordance with Section G2427 are required except where a chimney or vent serves a single appliance and connects directly to that appliance. In such cases, a connector does not exist. The use of single-wall connectors for fan-assisted appliances is extremely limited by the sizing tables because of the high heat input necessary (minimum capacity column) to offset the heat loss of single-wall pipe.

G2426.3 (502.3) Vent application. The application of vents shall be in accordance with Table G2427.4.

❖ See Section G2427.4.

G2426.4 (502.4) Insulation shield. Where vents pass through insulated assemblies, an insulation shield constructed of steel having a minimum thickness of 0.0187 inch (0.4712 mm) (No. 26 gage) shall be installed to provide *clearance* between the vent and the insulation material. The *clearance* shall not be less than the *clearance* to combustibles specified by the vent manufacturer's installation instructions. Where vents pass through attic space, the shield shall terminate not less than 2 inches (51 mm) above the insulation materials and shall be secured in place to prevent displacement. Insulation shields provided as part of a *listed* vent system shall be installed in accordance with the manufacturer's instructions.

❖ Loose insulation in attic floor assemblies or roof assemblies can fall against vents, creating a fire hazard, and can also cause abnormally high vent temperatures. Even though clearances to combustible construction such as wood framing are maintained, the continued heating of combustible insulation materials that have fallen against a vent could be a source of ignition. This section applies regardless of the combustibility of the insulation. Shields constructed in the field must be sufficient to serve their purpose and must be securely attached to building construction because shields that are merely resting in place could be inadvertently dislodged or removed during maintenance activities.

G2426.5 (502.5) Installation. Vent systems shall be sized, installed and terminated in accordance with the vent and *appliance* manufacturer's installation instructions and Section G2427.

❖ The standards with which vents and appliances comply require that venting instructions be supplied by the manufacturer of the appliance and the manufacturer of the vent system. These instructions are part of the labeling requirements. Any deviation from them is in violation of the code.

The instructions for Type B vents and for gas appliances approved for use with Type B vents may be specific to a certain appliance or manufacturer's B-vent material. The clearance to combustibles for a vent system is determined by the testing agency and is stated on the component labels and in the manufacturer's instructions. Not all vents have the same required clearances to combustibles. The clearances are determined by the vent's performance during testing in accordance with the applicable standard. Different vent materials and designs impact the vent's ability to control the amount of heat transmitted to surrounding combustibles. It is critical that the vent system be installed in accordance with the clearances listed on the vent's label and in the manufacturer's installation instructions.

The termination of a natural draft vent must comply with the requirements of the manufacturer's installation instructions and Sections G2427.6.3, G2427.6.6 and G2427.6.7. A vent used in conjunction with a mechanical exhauster must meet the termination requirements established in Sections G2427.3.3 and G2427.8.

Physical protection of the vent system is required to prevent damage to the vent and to prevent combustibles from coming into contact with or being placed too close to the vents. Such protection is typically provided by enclosing the vent in chases, shafts or cavities in the building construction. Physical protection is not required in the room or space where the vent originates (at the appliance connection) and would not be required in such locations as attics that are not occupied or used for storage. For example, assume that a vent is installed in an existing building and that it extends from the basement, through a first-floor closet, through the attic and through the roof. The portion of the vent passing through the closet must be protected from damage. The means of physical damage protection should also be designed to maintain separation between the vent and any combustible storage. To prevent the passage of fire and smoke through the annular space around a vent penetration through a floor or ceiling, the vent must be fireblocked with a noncombustible material in accordance with this code.

Vent manufacturers provide installation instructions and factory-built components for fireblocking penetrations.

INTERNATIONAL CODE COUNCIL®
Copyright © 2015 ICC. ALL RIGHTS RESERVED. Accessed by David Dammon on Jun 21, 2017 12:30:52 PM pursuant to License Agreement with ICC. No further reproduction or distribution authorized. ANY UNAUTHORIZED REPRODUCTION OR DISTRIBUTION IS A VIOLATION OF THE FEDERAL COPYRIGHT ACT AND THE LICENSE AGREEMENT, AND SUBJECT TO CIVIL AND CRIMINAL PENALTIES THEREUNDER.

G2426.6 (502.6) Support of vents. All portions of vents shall be adequately supported for the design and weight of the materials employed.

❖ Vent manufacturers supply support parts, and manufacturers' instructions contain detailed requirements for support of vent systems. Improper support can cause strain on vent components, appliance connectors and fittings, resulting in vent, appliance or connector damage, as well as loss of required clearance to combustibles and proper slope. Frequently, venting installations suffer from lack of or improperly installed supports, brackets and hangers.

G2426.7 (502.7) Protection against physical damage. In *concealed locations*, where a vent is installed through holes or notches in studs, joists, rafters or similar members less than $1^1/_2$ inches (38 mm) from the nearest edge of the member, the vent shall be protected by shield plates. Protective steel shield plates having a minimum thickness of 0.0575-inch (1.463 mm) (16 gage) shall cover the area of the vent where the member is notched or bored and shall extend a minimum of 4 inches (102 mm) above sole plates, below top plates and to each side of a stud, joist or rafter.

❖ This section requires protection from nail and screw penetration for vents in the same manner that the code protects gas piping and tubing (see Commentary Figure G2426.7). Plastic and metal vent systems typically pass through or are enclosed by construction assemblies, thereby making them highly susceptible to penetration by fasteners. Such penetrations can damage the vent and the damage would not be visible in concealed locations. Possible results from vent penetration include cracking/splitting of pipe, leakage of condensate and/or combustion gases, corrosion failure of metals, structural decay, interference with required clearances and restraint of expansion and contraction movement.

G2426.7.1 (502.7.1) Door swing. Appliance and equipment vent terminals shall be located such that doors cannot swing within 12 inches (305 mm) horizontally of the vent terminal. Door stops or closures shall not be installed to obtain this clearance.

❖ Vent terminals for sidewall-vented appliances (such as direct-vent gas fireplaces and fireplace heaters, direct-vent room heaters, direct-vent water heaters, furnaces and boilers and also nondirect-vent appliances) are sometimes located where a side-swinging door can impact the vent terminal or swing close to the terminal. The results can be damage to the vent terminal, a fire hazard and interference with the appliance venting and combustion air intake. Also, if the door blocks or deflects the vent discharge such that the combustion products are pulled back into the combustion air intake, the result would be excessive CO production and serious appliance malfunction and sooting.

A damaged vent terminal could cause appliance malfunction and carbon monoxide poisoning. It could also cause damage to nearby combustible surfaces and create a fire hazard. Door stops and closer devices cannot be depended on because they are easily defeated or removed [see Commentary Figures G2426.7.1(1) and (2)].

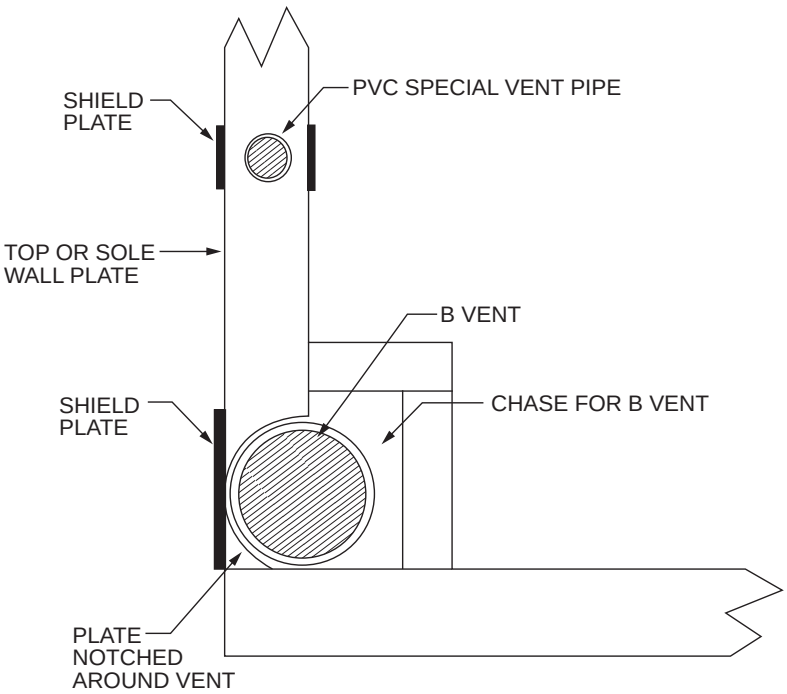

Figure G2426.7
PLAN VIEW OF STUD WALL

INTERNATIONAL CODE COUNCIL®
Copyright © 2015 ICC. ALL RIGHTS RESERVED. Accessed by David Dammon on Jun 21, 2017 12:30:52 PM pursuant to License Agreement with ICC. No further reproduction or distribution authorized. ANY UNAUTHORIZED REPRODUCTION OR DISTRIBUTION IS A VIOLATION OF THE FEDERAL COPYRIGHT ACT AND THE LICENSE AGREEMENT, AND SUBJECT TO CIVIL AND CRIMINAL PENALTIES THEREUNDER.

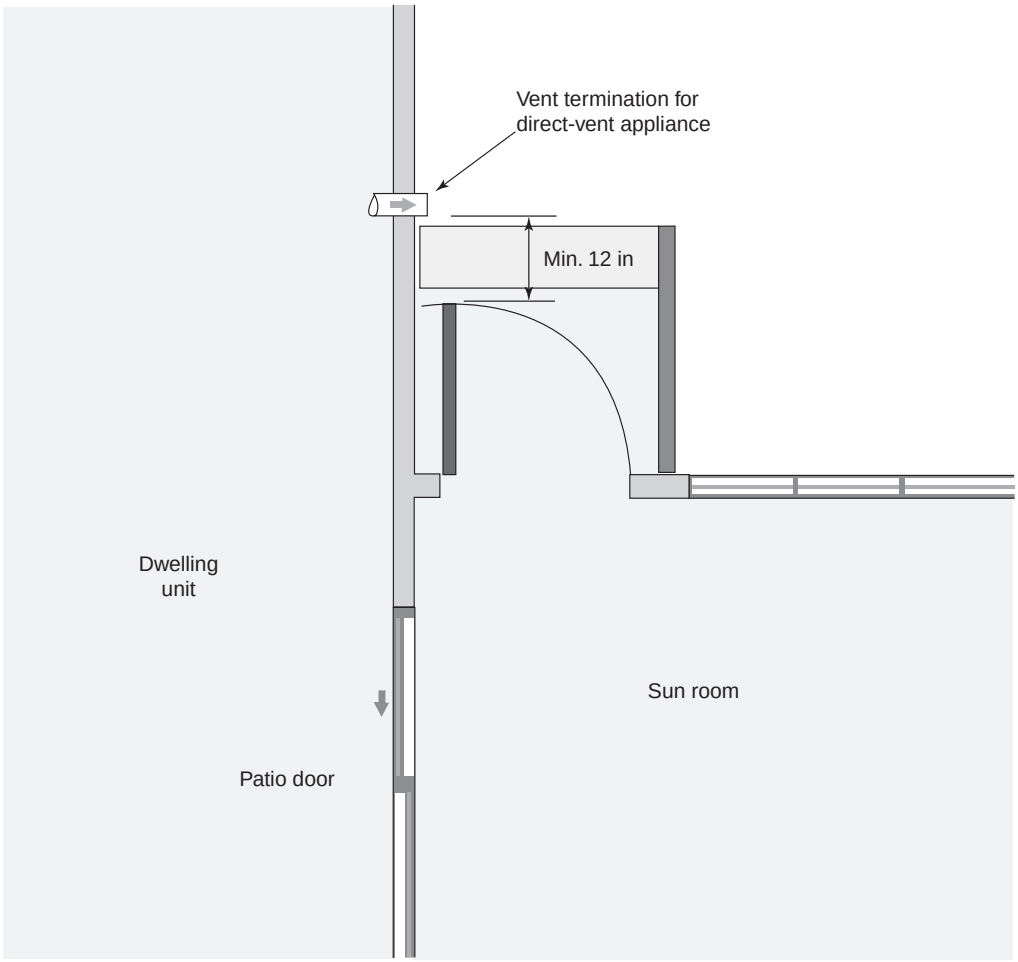

Figure G2426.7.1(1)
DOOR SWING



Figure G2426.7.1(2)
DOOR SWING

INTERNATIONAL CODE COUNCIL®
Copyright © 2015 ICC. ALL RIGHTS RESERVED. Accessed by David Dammon on Jun 21, 2017 12:30:52 PM pursuant to License Agreement with ICC. No further reproduction or distribution authorized. ANY UNAUTHORIZED REPRODUCTION OR DISTRIBUTION IS A VIOLATION OF THE FEDERAL COPYRIGHT ACT AND THE LICENSE AGREEMENT, AND SUBJECT TO CIVIL AND CRIMINAL PENALTIES THEREUNDER.

SECTION G2427 (503)
VENTING OF APPLIANCES

G2427.1 (503.1) General. The venting of appliances shall be in accordance with Sections G2427.2 through G2427.16.

❖ Section G2427 contains general sizing, design and installation requirements for venting systems. Section G2428 covers vent system sizing for Category I appliances.

G2427.2 (503.2) Venting systems required. Except as permitted in Sections G2427.2.1, G2427.2.2 and G2425.8, all *appliances* shall be connected to *venting systems*.

❖ All appliances must be vented by a venting system except those allowed to be unvented by Section G2425.8.

The appliances addressed in Sections G2427.2.1 and G2427.2.2 must have a venting system.

G2427.2.1 (503.2.3) Direct-vent appliances. *Listed direct-vent appliances* shall be installed in accordance with the manufacturer's instructions and Section G2427.8, Item 3.

❖ Direct-vent appliances are vented by a natural or mechanical draft system that is designed as part of the appliance and that usually requires some assembling on the job site. Except for the vent terminal requirements of Section G2427.8, Item 3, the code depends on the appliance manufacturer's installation instructions for all aspects of venting direct-vent appliances. Direct-vent appliances include some Category IV condensing furnaces and boilers and power- and gravity-vented direct-vent water heaters, unit heaters, space heaters and packaged terminal units.

Direct-vent appliances have the distinct advantage of providing their own combustion air supply in addition to their own dedicated venting means [see definition of "Direct-vent appliance" and Commentary Figures G2403(6) and G2427.2.1(1) through G2427.2.1(6)].

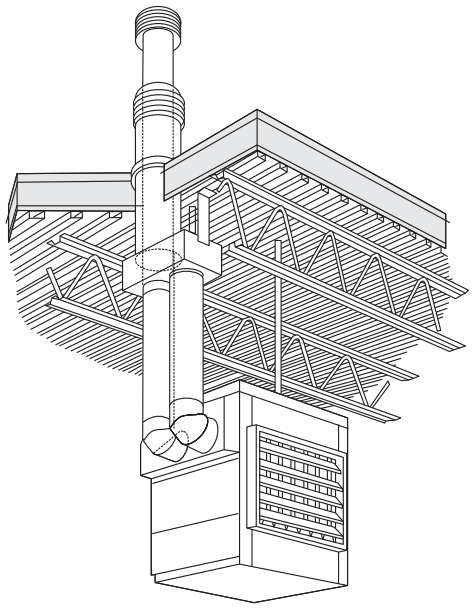

Figure courtesy of Reznor/Thomas & Betts corporation

Figure G2427.2.1(2)
DIRECT-VENT
(SEPARATED COMBUSTION) UNIT HEATERS

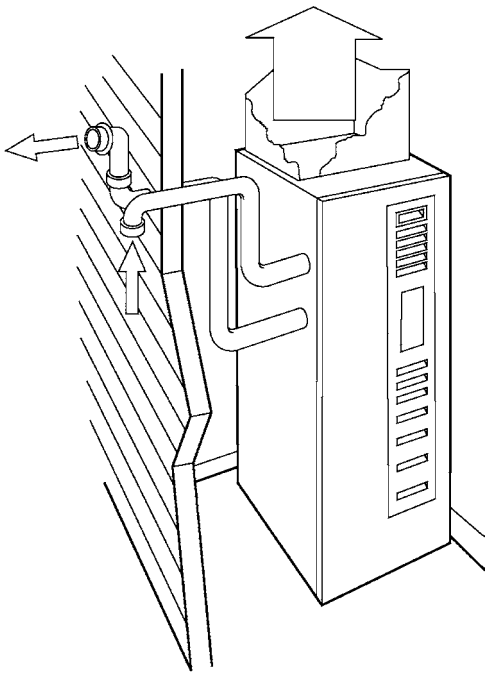

Figure courtesy of Carrier Corporation

Figure G2427.2.1(1)
DIRECT-VENT APPLIANCE

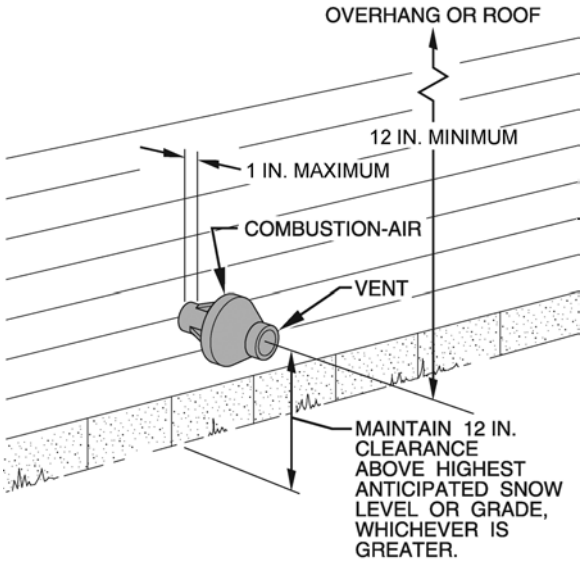

Figure courtesy of Carrier Corporation
For SI: 1 inch = 25.4 mm.

Figure G2427.2.1(3)
EXAMPLE OF MANUFACTURER'S DETAIL FOR DIRECT-VENT APPLIANCE CONCENTRIC VENT-AIR INTAKE TERMINAL

INTERNATIONAL CODE COUNCIL®
Copyright © 2015 ICC. ALL RIGHTS RESERVED. Accessed by David Dammon on Jun 21, 2017 12:30:52 PM pursuant to License Agreement with ICC. No further reproduction or distribution authorized. ANY UNAUTHORIZED REPRODUCTION OR DISTRIBUTION IS A VIOLATION OF THE FEDERAL COPYRIGHT ACT AND THE LICENSE AGREEMENT, AND SUBJECT TO CIVIL AND CRIMINAL PENALTIES THEREUNDER.



Photo courtesy of Lochinvar Corporation

Figure G2427.2.1(4)
DIRECT-VENT APPLIANCES



Photo courtesy of A.O. Smith Water Products

Figure G2427.2.1(5)
GRAVITY DIRECT-VENT WATER HEATER



Photo courtesy of Simpson Dura-Vent Company, Incorporated

Figure G2427.2.1(6)
DIRECT-VENT SYSTEM COMPONENTS

G2427.2.2 (503.2.4) Appliances with integral vents. *Appliances* incorporating integral venting means shall be installed in accordance with the manufacturer's instructions and Section G2427.8, Items 1 and 2.

❖ As it does with direct-vent appliances, the code trusts the manufacturer's installation instructions for the installation of appliances having an integral venting means. Integral-vent appliances such as rooftop HVAC units, outdoor makeup air heaters, and outdoor heaters for swimming pools have a built-in natural or mechanical venting means. The natural-draft integral venting means is simply a short vertical vent with a factory supplied vent cap assembly. The mechanical integral-vent appliances use supervised blowers to discharge the combustion gases directly to the atmosphere. The typical means of blower supervision is one or more pressure switches or a centrifugal switch mounted to the blower motor shaft. Integral-vent appliances must not be confused with unvented appliances and appliances that need not be vented in accordance with Section G2425.8. Integral-vent appliances must be vented to the outside atmosphere and thus are always designed for outdoor use only [see Section G2427.8, Items 1 and 2, and Commentary Figures G2427.2.2(1) through G2427.2.2(3)].

INTERNATIONAL CODE COUNCIL®
Copyright © 2015 ICC. ALL RIGHTS RESERVED. Accessed by David Dammon on Jun 21, 2017 12:30:52 PM pursuant to License Agreement with ICC. No further reproduction or distribution authorized. ANY UNAUTHORIZED REPRODUCTION OR DISTRIBUTION IS A VIOLATION OF THE FEDERAL COPYRIGHT ACT AND THE LICENSE AGREEMENT, AND SUBJECT TO CIVIL AND CRIMINAL PENALTIES THEREUNDER.



Figure courtesy of A.O. Smith Water Products

Figure G2427.2.2(1)
HOT WATER BOILER WITH INTEGRAL VENT FOR OUTDOOR INSTALLATION



Figure courtesy of Reznor/Thomas & Betts Corporation

Figure G2427.2.2(2)
OUTDOOR DUCT FURNACE WITH INTEGRAL POWER VENTING

G2427.3 (503.3) Design and construction. Venting systems shall be designed and constructed so as to convey all flue and *vent gases* to the outdoors.

❖ This section is stated in performance language and requires venting systems to convey the products of combustion to the outdoors. The reference to a "positive flow" does not imply that the venting system is under a positive pressure, but rather implies that the vent produces a dependable flow at its design operating pressure.

G2427.3.1 (503.3.1) Appliance draft requirements. A venting system shall satisfy the *draft* requirements of the *appliance* in accordance with the manufacturer's instructions.

❖ This section is stated in performance language and requires venting systems to produce the draft necessary for the operation of the appliance being vented. An appliance manufacturer will specify the required type of venting means and, to assure the required amount of draft, may specify the size and height of a vent or chimney or may specify a mechanical draft system.

G2427.3.2 (503.3.2) Design and construction. *Appliances* required to be vented shall be connected to a venting system designed and installed in accordance with the provisions of Sections G2427.4 through G2427.16.

❖ As defined in Section G2403, a venting system includes natural-induced- and forced-draft systems, which are addressed in Sections G2427.3.3 through G2427.16.

INTERNATIONAL CODE COUNCIL®
Copyright © 2015 ICC. ALL RIGHTS RESERVED. Accessed by David Dammon on Jun 21, 2017 12:30:52 PM pursuant to License Agreement with ICC. No further reproduction or distribution authorized. ANY UNAUTHORIZED REPRODUCTION OR DISTRIBUTION IS A VIOLATION OF THE FEDERAL COPYRIGHT ACT AND THE LICENSE AGREEMENT, AND SUBJECT TO CIVIL AND CRIMINAL PENALTIES THEREUNDER.



Photo courtesy of Carrier Corporation

Figure G2427.2.2(3)
ROOFTOP HVAC UNIT WITH INTEGRAL POWER VENT

G2427.3.3 (503.3.3) Mechanical draft systems. Mechanical *draft* systems shall comply with the following:

1. Mechanical *draft* systems shall be *listed* and shall be installed in accordance with the manufacturer's instructions for both the *appliance* and the mechanical *draft* system.
2. *Appliances* requiring venting shall be permitted to be vented by means of mechanical *draft* systems of either forced or induced *draft* design.
3. Forced *draft* systems and all portions of induced *draft* systems under positive pressure during operation shall be designed and installed so as to prevent leakage of flue or *vent gases* into a building.
4. *Vent connectors* serving *appliances* vented by natural *draft* shall not be connected into any portion of mechanical *draft* systems operating under positive pressure.
5. Where a mechanical *draft* system is employed, provisions shall be made to prevent the flow of gas to the *main burners* when the *draft* system is not performing so as to satisfy the operating requirements of the *appliance* for safe performance.
6. The exit terminals of mechanical *draft* systems shall be not less than 7 feet (2134 mm) above finished ground level where located adjacent to public walkways and shall be located as specified in Section G2427.8, Items 1 and 2.

❖ The appliances and equipment installations addressed in this section use auxiliary or integral fans and blowers to force the flow of combustion products to the outdoors.

This section applies to externally installed power exhausters, integrally power-exhausted appliances and venting systems equipped with draft inducers. This section does not address fan-assisted Category I appliances and does not address direct-vent appliances. Category III and IV appliances are subject to the requirements of this section if they are not listed as direct-vent appliances. Some Category I appliances are field convertible to Category III. Item 4 also applies to Category I fan-assisted appliances because they are vented by natural draft.

Power exhausters are field-installed pieces of equipment that are independent of, but used in conjunction with, other appliances [see Commentary Figures G2427.3.3(1) through G2427.3.3(7)].

INTERNATIONAL CODE COUNCIL®
Copyright © 2015 ICC. ALL RIGHTS RESERVED. Accessed by David Dammon on Jun 21, 2017 12:30:52 PM pursuant to License Agreement with ICC. No further reproduction or distribution authorized. ANY UNAUTHORIZED REPRODUCTION OR DISTRIBUTION IS A VIOLATION OF THE FEDERAL COPYRIGHT ACT AND THE LICENSE AGREEMENT, AND SUBJECT TO CIVIL AND CRIMINAL PENALTIES THEREUNDER.

Power exhausters are typically used where other means of venting are impractical, impossible or uneconomical. Power exhausters are typically designed for use with gas-fired and oil-fired natural draft appliances. Some are also designed for use with fan-assisted appliances and appliances equipped with integral forced-draft (power-vent) fans. Power exhausters produce negative pressures at their inlet connection and positive pressures at their outlet (discharge connection). The most common installation locates the exhauster at the point of termination of the vent or chimney. In such installations, the vent or chimney between the appliance and the exhauster operates under negative pressure [see Commentary Figures G2427.3.3(1) through G2427.3.3(7)].



Photo courtesy of Tjernlund Products, Inc.

Figure G2427.3.3(1)
VERTICAL DRAFT INDUCER

Induced draft systems employ separate field-installed units designed to boost draft in a natural (gravity) draft chimney or vent [see Commentary Figures G2427.3.3(8) and G2427.3.3(9)].

Power-vented (self-venting) appliances are equipped with factory-installed integral blowers that force the combustion products through the special venting systems that are addressed in Sections G2425.14 and G2427.4. Power-vented appliances include mid- to high-efficiency furnaces, boilers, water heaters and heating units that are designed for through-the-wall or through-the-roof venting [see

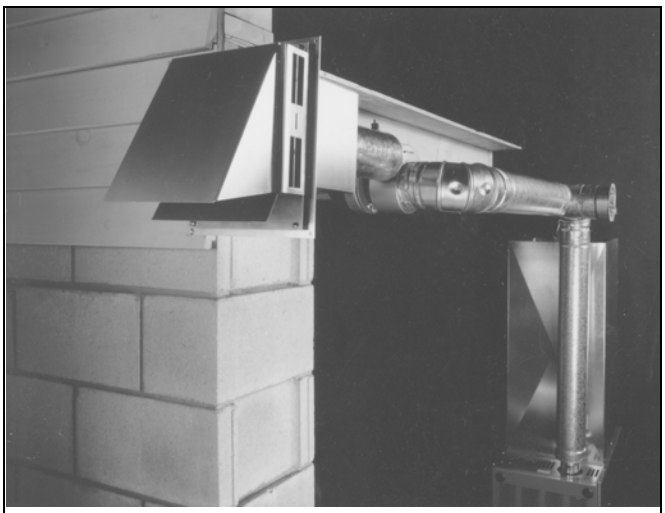

Photo courtesy of Tjernlund Products, Inc.

Figure G2427.3.3(2)
HORIZONTAL POWER EXHAUSTER



Photo courtesy of Exhausto, Inc.

Figure G2427.3.3(3)
HORIZONTAL POWER EXHAUSTERS

INTERNATIONAL CODE COUNCIL®
Copyright © 2015 ICC. ALL RIGHTS RESERVED. Accessed by David Dammon on Jun 21, 2017 12:30:52 PM pursuant to License Agreement with ICC. No further reproduction or distribution authorized. ANY UNAUTHORIZED REPRODUCTION OR DISTRIBUTION IS A VIOLATION OF THE FEDERAL COPYRIGHT ACT AND THE LICENSE AGREEMENT, AND SUBJECT TO CIVIL AND CRIMINAL PENALTIES THEREUNDER.

Commentary Figure G2427.3.3(10)]. Appliances for outdoor installation are typically power vented and discharge directly to the atmosphere. They are addressed in Section G2427.2.2.

Although not specifically referred to as an appliance, a power exhauster (mechanical draft system) is considered to be a mechanical appliance appurtenance and therefore must bear the label of an approved agency in accordance with Item 1 (see definition of "Appliance"). A power exhauster is an essential component of the appliance installation it serves and must be installed in accordance with the manufacturer's installation instructions for both the power exhauster and the appliance served. Mechanical draft devices that are an integral part of an appliance are covered by the appliance listing.

Vent or chimney systems installed downstream (discharge side) of a power exhauster must be designed and approved for positive-pressure applica-

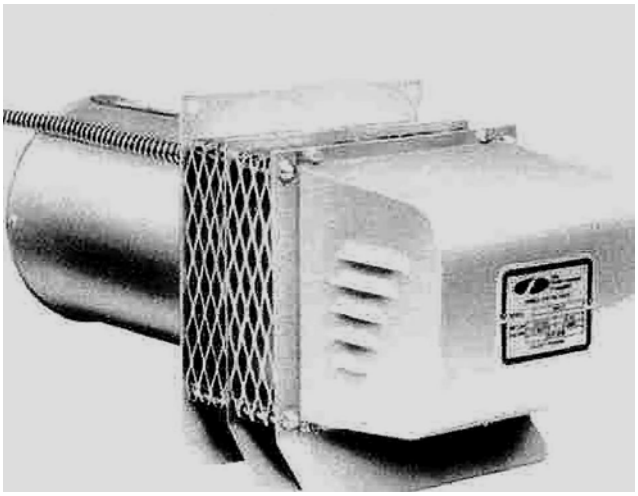

Photo courtesy of Field Controls Company

Figure G2427.3.3(4)
POWER EXHAUSTER OUTDOOR TERMINAL-TYPE UNIT

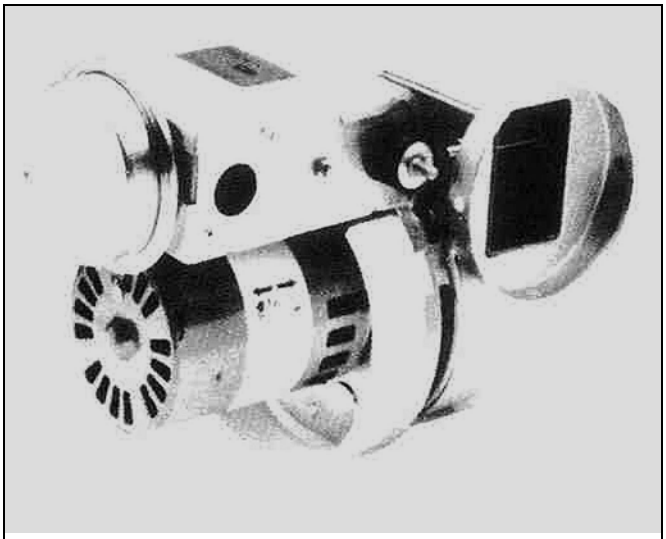

Photo courtesy of Tjernlund Products, Inc.

Figure G2427.3.3(6)
TYPICAL POWER EXHAUSTER

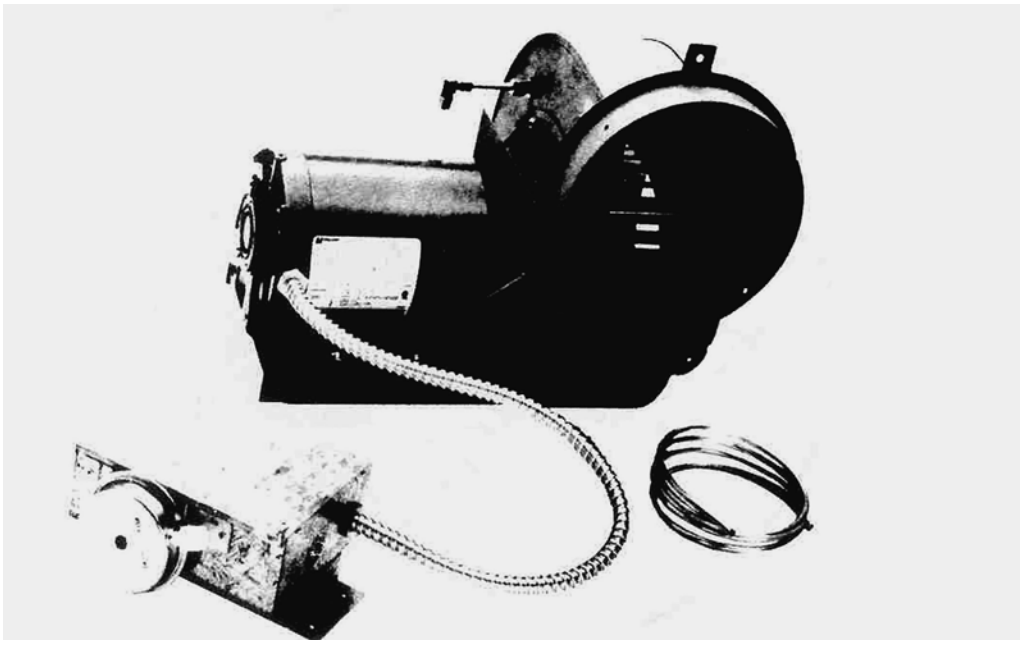

Photo courtesy of Tjernlund Products, Inc.

Figure G2427.3.3(5)
EXHAUSTER AND CONTROL PACKAGE

INTERNATIONAL CODE COUNCIL®
Copyright © 2015 ICC. ALL RIGHTS RESERVED. Accessed by David Dammon on Jun 21, 2017 12:30:52 PM pursuant to License Agreement with ICC. No further reproduction or distribution authorized. ANY UNAUTHORIZED REPRODUCTION OR DISTRIBUTION IS A VIOLATION OF THE FEDERAL COPYRIGHT ACT AND THE LICENSE AGREEMENT, AND SUBJECT TO CIVIL AND CRIMINAL PENALTIES THEREUNDER.

tions. For example, Type B vent cannot be used on the discharge side of an exhauster because such pipe is not designed for positive pressure applications. The application and installation of exhausters (power venters) must comply with the manufacturers' installation instructions for the exhausters and the appliance(s) served by the exhausters (see commentary, Section G2425.6).

There are three distinct variations in the use of blowers at the combustion chamber inlet working in conjunction with the fuel burner.

1. Blowers that supply turbulent combustion air to aid fuel-air mixing in a combustion chamber that is under negative pressure. To obtain proper negative overfire draft (which optimizes combustion) also requires steady negative (below atmospheric) pressure at the flue outlet. This will be produced by a natural draft chimney and may be controlled by a barometric draft regulator.
2. Blowers that supply sufficient combustion air and pressure to produce flow through the combustion chamber, but the combustion process does not need additional vent or chimney draft. This permits use of gravity or neutral draft venting products such as Type B vent for gas conversion burners. A draft regulator may be used for such equipment to prevent excess draft from affecting combustion efficiency.

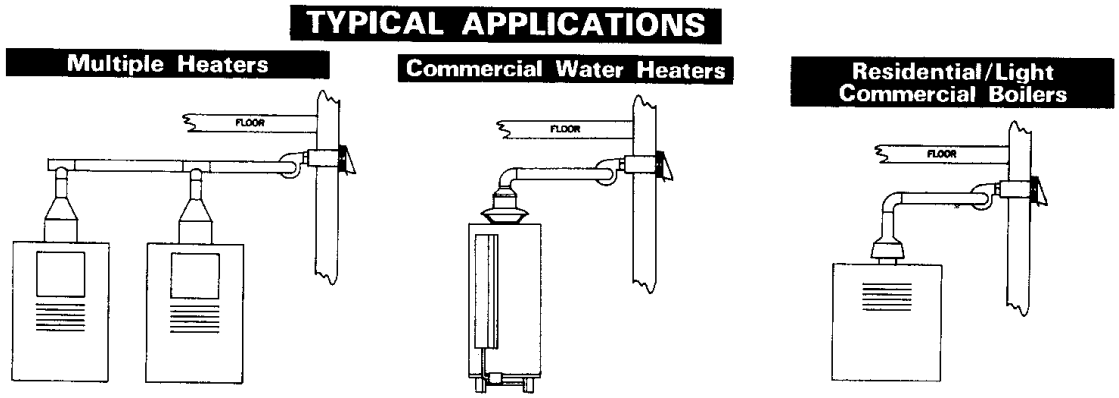

Figure courtesy of Tjernlund Products, Inc.

Figure G2427.3.3(7)
TYPICAL EXHAUSTER APPLICATIONS



Photo courtesy of Tjernlund Products, Inc.

Figure G2427.3.3(8)
DRAFT INDUCER

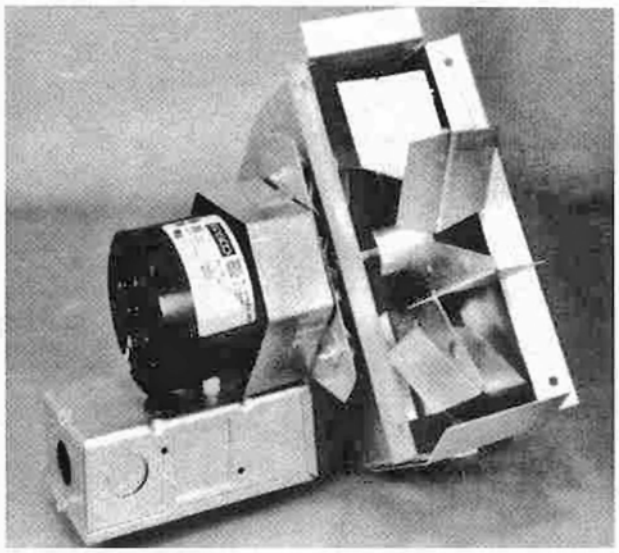

Photo courtesy of Field Controls Company

Figure G2427.3.3(9)
DRAFT INDUCER

INTERNATIONAL CODE COUNCIL®
Copyright © 2015 ICC. ALL RIGHTS RESERVED. Accessed by David Dammon on Jun 21, 2017 12:30:52 PM pursuant to License Agreement with ICC. No further reproduction or distribution authorized. ANY UNAUTHORIZED REPRODUCTION OR DISTRIBUTION IS A VIOLATION OF THE FEDERAL COPYRIGHT ACT AND THE LICENSE AGREEMENT, AND SUBJECT TO CIVIL AND CRIMINAL PENALTIES THEREUNDER.

3. Blowers with enough power to overcome internal flue passage pressure losses (i.e., in fire-tube boilers) that also produce positive pressure at the outlet. This outlet pressure must be added to gravity draft as the motive force for flow in a chimney. If positive outlet pressure exists, the use of a sealed pressure-tight chimney is required.



Photo courtesy of A.O. Smith Water Products

Figure G2427.3.3(10)
POWER-VENTED WATER HEATER

These three types of equipment usually have integral blower/burner systems, and all could be considered as forced combustion systems. Only those described in the third paragraph truly produce forced chimney draft. When power-venting equipment is installed, it becomes an essential part of the appliance it serves. The appliance relies on the power-venting equipment (exhauster) to provide sufficient draft for proper appliance operation and for venting of the combustion products. Power exhausters are electrically interlocked with the appliance or appliances they serve to ensure that the appliances will not operate if there is insufficient draft to vent the products of combustion. If an exhauster fails, the appliances served by the exhauster would discharge the products of combustion into the building unless shut off by controls that monitor draft and draft-hood spillage. An improper or lacking interlock can cause the appliance(s) to malfunction and spill harmful flue gases into the building space. The electrical interlock (interconnection) is typically accomplished with controls provided by the exhauster manufacturer [see Commentary Figure G2427.3.3(11)].

The usual sequence of operation is as follows: The call for heat from the appliance operating control starts the exhauster, and pressure controls start the appliance only after adequate draft has been proven to exist. In some cases, temperature sensors are used in addition to pressure controls to sense draft-hood spillage or unusual vent system temperatures and shut off the appliance.

Item 6 addresses the concern for pedestrian safety relative to exposure to combustion gases (see Section G2427.8).

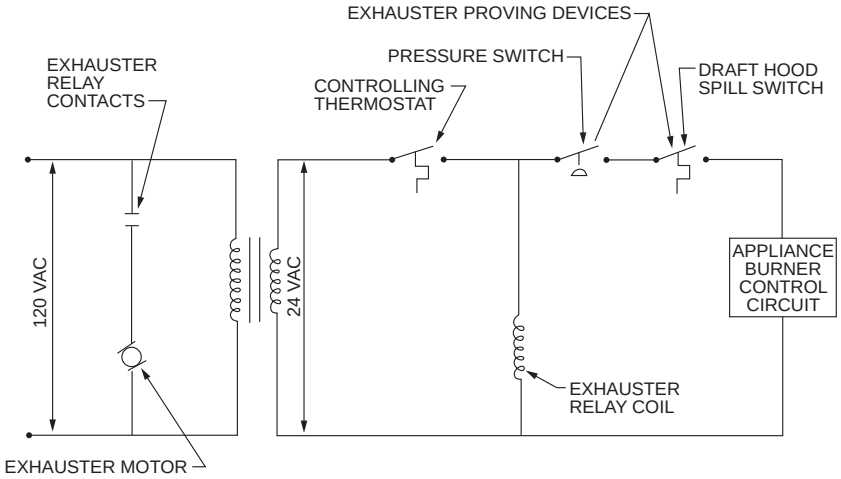

Figure G2427.3.3(11)
SIMPLIFIED SAMPLE INTERLOCK DIAGRAM FOR APPLIANCE SERVED BY POWER EXHAUSTER
(Shown for Illustration Only)

INTERNATIONAL CODE COUNCIL®
Copyright © 2015 ICC. ALL RIGHTS RESERVED. Accessed by David Dammon on Jun 21, 2017 12:30:52 PM pursuant to License Agreement with ICC. No further reproduction or distribution authorized. ANY UNAUTHORIZED REPRODUCTION OR DISTRIBUTION IS A VIOLATION OF THE FEDERAL COPYRIGHT ACT AND THE LICENSE AGREEMENT, AND SUBJECT TO CIVIL AND CRIMINAL PENALTIES THEREUNDER.

G2427.3.4 (503.3.5) Air ducts and furnace plenums. *Venting systems* shall not extend into or pass through any fabricated air duct or *furnace plenum*.

❖ If a vent or chimney or a connector passes through or extends into a duct or furnace plenum, it is possible to subject the venting system to negative or positive pressures and/or temperature extremes that could cause the venting system to deteriorate, fail to produce the required draft, produce condensation and/or leak combustion gases. A furnace plenum is a component of the ductwork system constructed as a junction box for multiple duct connections. The term "furnace plenum" is defined in Section G2403 and the term "fabricated air duct" refers to supply and return air ducts and does not refer to nonducted building cavities and plenums, such as spaces above ceilings used to convey air. Section G2427.3.5 addresses nonducted interstitial spaces used as plenums.

G2427.3.5 (503.3.6) Above-ceiling air-handling spaces. Where a venting system passes through an above-ceiling air-handling space or other nonducted portion of an air-handling system, the venting system shall conform to one of the following requirements:

1. The venting system shall be a *listed* special gas vent; other venting system serving a Category III or Category IV *appliance*; or other positive pressure vent, with joints sealed in accordance with the *appliance* or vent manufacturer's instructions.
2. The venting system shall be installed such that fittings and joints between sections are not installed in the above-ceiling space.
3. The venting system shall be installed in a conduit or enclosure with sealed joints separating the interior of the conduit or enclosure from the ceiling space.

❖ Vents are allowed to pass through interstitial spaces of a building used to convey environmental air such as above-ceiling return air-handling spaces (plenums), if the penetration/pass-through conforms to one of the three described installations (see Commentary Figure G2427.3.5). All three installations are intended to prevent pressure differentials between the air-handling space and the vent interior from causing leakage of combustion products from the vent.

G2427.4 (503.4) Type of venting system to be used. The type of venting system to be used shall be in accordance with Table G2427.4.

❖ The table lists various types of vents and the corresponding types of appliances that can be served by the vents. The vent system must be tested and specifically approved for use with the approved appliance. If the vent system is not a tested and labeled component of the appliance, the material must be approved for use with the appliance and installed in accordance with the manufacturer's installation instructions.

Gas-burning appliances (listed as Category II, Ill or IV) require special vent systems that are specific to the type of appliance. Special vent systems are typically associated with mid- to high-efficiency appliances and include vent materials such as polyvinyl chloride (PVC), chlorinated polyvinyl chloride (CPVC) and special alloys of stainless steel.

A primary consideration for the design of a special vent system that serves a high-efficiency appliance is

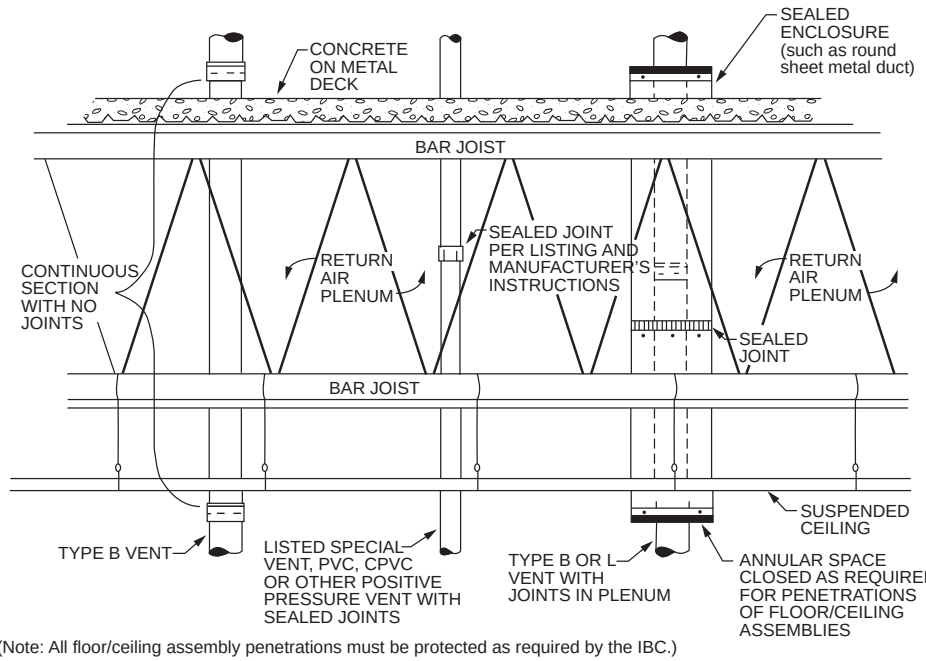

(Note: All floor/ceiling assembly penetrations must be protected as required by the IBC.)

Figure G2427.3.5
VENTS THROUGH AIR PLENUMS

INTERNATIONAL CODE COUNCIL®
Copyright © 2015 ICC. ALL RIGHTS RESERVED. Accessed by David Dammon on Jun 21, 2017 12:30:52 PM pursuant to License Agreement with ICC. No further reproduction or distribution authorized. ANY UNAUTHORIZED REPRODUCTION OR DISTRIBUTION IS A VIOLATION OF THE FEDERAL COPYRIGHT ACT AND THE LICENSE AGREEMENT, AND SUBJECT TO CIVIL AND CRIMINAL PENALTIES THEREUNDER.

the selection of a material that is capable of withstanding the corrosive effects of condensate. Flue gas condensate is slightly acidic and corrosive and can deteriorate many vent materials. Sulfur in the fuel and halogens carried in the combustion air can combine with the combustion products to create acids. To prevent the corrosion of a vent and possible escape of flue gas, metallic flue passageways can be protected with appropriate coatings; however, any imperfections, pinholes or discontinuities in the coating can create areas for condensate to collect and accelerate the deterioration of the chimney or vent. The solution to this problem has been to use a material such as PVC, PP, CPVC or high-temperature plastic that is resistant to acidic condensation and compatible with the temperature of the appliance flue gases. Plastic pipe is a suitable material because it is impervious to corrosive condensation and can easily be designed to drain off accumulated condensate. The flue-gas temperatures of most condensing-type appliances are not high enough to affect such materials adversely.

Special vent systems must be designed and installed in compliance with the manufacturers' instructions, which will specify installation requirements that are specific to that type of vent and appliance. For example, a maximum developed length, a maximum number of directional fittings, fitting turn radius and specific support requirements will be specified for special vents using plastic pipe. Special vent systems also have special vent termination requirements, and typically incorporate condensate collection and drainage fittings and connections.

Gas- and oil-burning appliances can be used with a vent system if the appliance is so labeled and approved.

The type and size of the vent must be as dictated by the manufacturer's installation instructions for the appliance. The design and installation instructions provided by the vent manufacturer must also be consulted when designing a vent system for any particular application. Commentary Figure G2427.4 shows some of the variables that affect vent system sizing. In addition to Section G2428, the vent manufacturers' design and application handbooks and installation instructions contain information and tables for the sizing and application of the vent systems.

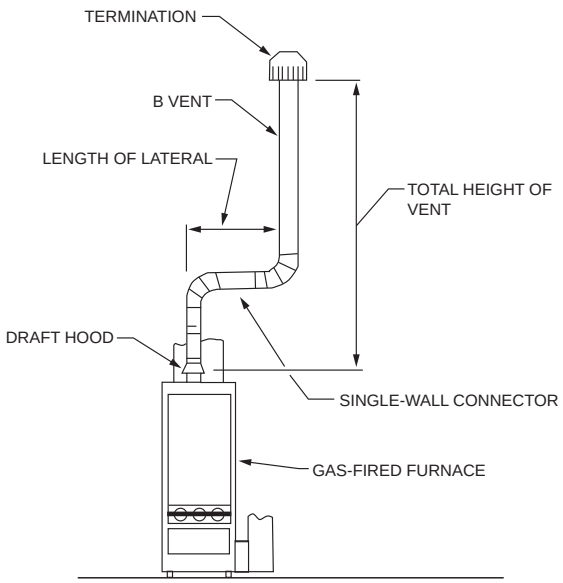

Figure G2427.4
DETERMINING VENT HEIGHT

TABLE G2427.4 (503.4)
TYPE OF VENTING SYSTEM TO BE USED

APPLIANCES	TYPE OF VENTING SYSTEM
Listed Category I *appliances* *Listed appliances* equipped with draft hood *Appliances* listed for use with Type B gas vent	Type B gas *vent* (Section G2427.6) *Chimney* (Section G2427.5) Single-wall metal pipe (Section G2427.7) *Listed* chimney lining system for gas venting (Section G2427.5.2) Special gas *vent* listed for these appliances (Section G2427.4.2)
Listed vented wall furnaces	Type B-W gas vent (Sections G2427.6, G2436)
Category II *appliances*	As specified or furnished by manufacturers of *listed appliances* (Sections G2427.4.1, G2427.4.2)
Category III *appliances*	As specified or furnished by manufacturers of *listed appliances* (Sections G2427.4.1, G2427.4.2)
Category IV *appliances*	As specified or furnished by manufacturers of *listed appliances* (Sections G2427.4.1, G2427.4.2)
Unlisted *appliances*	Chimney (Section G2427.5)
Decorative *appliances* in vented fireplaces	Chimney
Direct-vent *appliances*	See Section G2427.2.1
Appliances with integral vent	See Section G2427.2.2

❖ Table G2427.4 lists the currently available types of appliances and the types of venting systems to be used with such appliances. In the first row, the three types of appliances can be matched up with any of the five types of venting systems, if allowed by the appliance manufacturer's installation instructions. The fourth row up from the bottom addresses unlisted appliances that are not allowed by the code except under the alternative approval provisions of Section R104.11.

INTERNATIONAL CODE COUNCIL®
Copyright © 2015 ICC. ALL RIGHTS RESERVED. Accessed by David Dammon on Jun 21, 2017 12:30:52 PM pursuant to License Agreement with ICC. No further reproduction or distribution authorized. ANY UNAUTHORIZED REPRODUCTION OR DISTRIBUTION IS A VIOLATION OF THE FEDERAL COPYRIGHT ACT AND THE LICENSE AGREEMENT, AND SUBJECT TO CIVIL AND CRIMINAL PENALTIES THEREUNDER.

G2427.4.1 (503.4.1) Plastic piping. Where plastic piping is used to vent an appliance, the appliance shall be listed for use with such venting materials and the appliance manufacturer's installation instructions shall identify the specific plastic piping material.

❖ Commonly used plastic venting materials include PVC, PP and CPVC (see Commentary Figure G2427.4.1). This section no longer requires code official approval of vents because the code official is not in a position to determine what venting materials are suitable and safe for venting various appliances. Such decisions should be left to design engineers, manufacturers and the testing and listing agencies that list the appliances. The previous code text did not actually require that the appliance be listed for use with specific venting system materials, although this was implied by the text and it is required in the appliance standards.

The appliance manufacturer's installation instructions must clearly specify what plastic materials are required or allowed for venting an appliance. The installation instructions will be consistent with how the appliance was tested by the listing agency. The product standards for gas appliances contain various testing procedures for plastic venting systems. The appliance manufacturer determines the type of plastic vent that is suitable for venting its product, and the testing and listing agency tests the appliance with that venting system for compliance with the product standards. There must not be any uncertainty about what type of venting system is required for any appliance, so that venting system failures can be avoided. The definition of "Vent" does not include plastic pipe such as PVC, ABS and CPVC because such pipes are not currently listed as factory-built venting systems. Section 503.4.1 refers to the plastic pipe as a material used for venting; it is not referred to as a vent conforming to the definition. PVC, ABS and CPVC pipe manufacturers do not recommend that their pipe be used for appliance venting because such products are not currently listed for such applications. There are polypropylene venting systems on the market that are listed to UL 1738 as appliance venting systems, and they would fall under the definition of "Vent" (see Commentary Figure G2427.4.1).

G2427.4.1.1 (503.4.1.1) (IFGS) Plastic vent joints. Plastic *pipe* and fittings used to vent *appliances* shall be installed in accordance with the *appliance* manufacturer's instructions. Where a primer is required, it shall be of a contrasting color.

❖ Experience has shown that plastic pipe and fittings used for venting appliances are not always joined together properly and joint failures occur resulting in leakage of combustion products. Piping materials such as PVC and CPVC usually require the use of a primer in the solvent welding process. The color of the primer, typically purple, must contrast with the color of the pipe, fittings and solvent cement so as to be visible for inspection. The use of a clear primer will not be evident on a completed solvent weld joint.

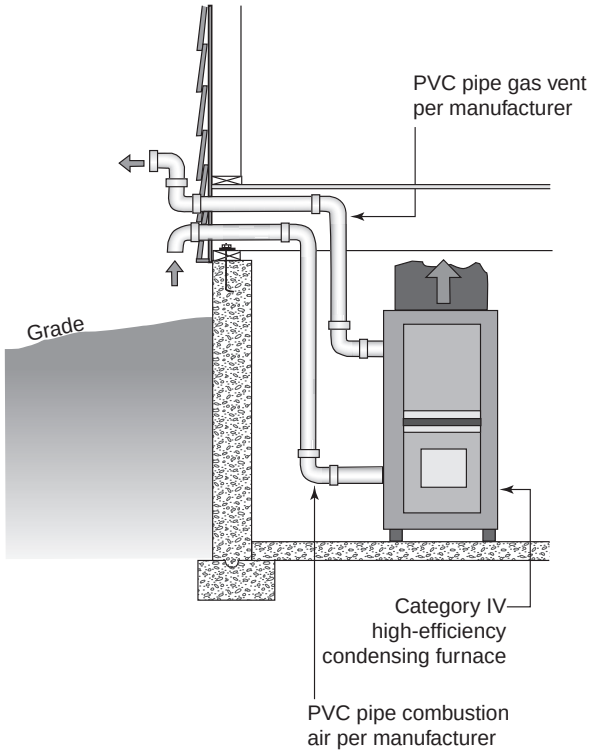

Figure G2427.4.1
PLASTIC VENTING MATERIAL

INTERNATIONAL CODE COUNCIL®
Copyright © 2015 ICC. ALL RIGHTS RESERVED. Accessed by David Dammon on Jun 21, 2017 12:30:52 PM pursuant to License Agreement with ICC. No further reproduction or distribution authorized. ANY UNAUTHORIZED REPRODUCTION OR DISTRIBUTION IS A VIOLATION OF THE FEDERAL COPYRIGHT ACT AND THE LICENSE AGREEMENT, AND SUBJECT TO CIVIL AND CRIMINAL PENALTIES THEREUNDER.

G2427.4.2 (503.4.2) Special gas vent. Special gas *vent* shall be *listed* and installed in accordance with the special gas *vent* manufacturer's instructions.

❖ Special gas vents include high-temperature plastic pipe, stainless steel alloy pipe and positive-pressure pipe that are specified by the appliance manufacturer for use with a specific appliance. This section does not necessarily require that all plastic pipe be listed as a venting system component. For example, the installation instructions for Category IV appliances often specify PVC, CPVC and ABS plastic plumbing pipe for venting the appliances, and such pipe is not listed as a component of a venting system (see Section G2427.4.1).

G2427.5 (503.5) Masonry, metal and factory-built chimneys. Masonry, metal and factory-built *chimneys* shall comply with Sections G2427.5.1 through G2427.5.9.

❖ See Sections G2427.5.1 through G2427.5.9.

G2427.5.1 (503.5.1) Factory-built chimneys. Factory-built *chimneys* shall be installed in accordance with the manufacturer's instructions. Factory-built *chimneys* used to vent *appliances* that operate at a positive vent pressure shall be *listed* for such application.

❖ Prefabricated chimney systems must bear the label of an approved agency. A label is required on all components of the chimney system such as the pipe sections, shields, fireblocks, fittings, termination caps and supports. The label states information such as the type of appliance the chimney was tested for use with, a reference to the manufacturer's installation instructions and the minimum required clearances to combustibles [see Commentary Figures G2403(4) and G2403(5)].

Most factory-built chimneys are either of the double-walled fiber-insulated design or the triple-walled air-cooled design. Factory-built chimneys are constructed of stainless steel inner liners with stainless steel outer walls. Factory-built chimneys, like vent systems, are composed of components that must be installed as a complete system. Components from different manufacturers are not designed to be mixed and installed together.

The manufacturer's instructions contain sizing criteria and requirements for every aspect of a factory-built chimney installation. The requirements include component assembly, clearances to combustibles, support, terminations, connections, protection from damage and fireblocking.

Any vent or chimney that conveys vent gases under positive pressure must be factory designed for that application. There is no allowable method of taping or sealing a chimney or vent that will convert a nonpositive-pressure chimney or vent into a positive-pressure chimney.

G2427.5.2 (503.5.3) Masonry chimneys. Masonry *chimneys* shall be built and installed in accordance with NFPA 211 and shall be lined with *approved* clay *flue lining*, a *listed chimney* lining system or other *approved* material that will resist corrosion, erosion, softening or cracking from vent gases at temperatures up to 1,800ºF (982ºC).

Exception: Masonry *chimney* flues serving *listed* gas *appliances* with *draft hoods*, Category I *appliances* and other gas *appliances listed* for use with Type B vents shall be permitted to be lined with a *chimney* lining system specifically *listed* for use only with such *appliances*. The liner shall be installed in accordance with the liner manufacturer's instructions. A permanent identifying label shall be attached at the point where the connection is to be made to the liner. The label shall read: "This *chimney* liner is for *appliances* that burn gas only. Do not connect to solid or liquid fuel-burning appliances or incinerators."

❖ A chimney liner might be listed for use with solid-, liquid- and gas-fuel-fired appliances. The label required by this section is intended to warn the unknowing installer who sees a masonry chimney and thinks that it can serve a solid- or liquid-fuel-fired appliance. The label would be applicable to chimney liner systems that are designed for gas-fired appliances only (see Section G2425.3).

G2427.5.3 (503.5.4) Chimney termination. *Chimneys* for residential-type or low-heat *appliances* shall extend not less than 3 feet (914 mm) above the highest point where they pass through a roof of a building and not less than 2 feet (610 mm) higher than any portion of a building within a horizontal distance of 10 feet (3048 mm). *Chimneys* for medium-heat *appliances* shall extend not less than 10 feet (3048 mm) higher than any portion of any building within 25 feet (7620 mm). *Chimneys* shall extend not less than 5 feet (1524 mm) above the highest connected *appliance draft hood* outlet or *flue collar*. Decorative shrouds shall not be installed at the termination of factory-built *chimneys* except where such shrouds are *listed* and *labeled* for use with the specific factory-built *chimney* system and are installed in accordance with the manufacturer's instructions.

❖ Low-heat and residential-type chimneys must extend at least 3 feet (914 mm) above the roof, measured from the highest point of the roof penetration. They must also be at least 2 feet (610 mm) higher than any portion of the roof within a 10-foot (3048 mm) horizontal distance [see Commentary Figures G2427.5.3(1) and G2427.5.3(2)].

The 2-foot (610 mm) termination requirement is intended to prevent wind and pressure zones from reducing the amount of draft produced by the chimney. Wind and wind-induced eddy currents can react with building structural surfaces, thereby creating air pressure zones that can diminish chimney draft and cause reverse flow (backdraft) in the chimney. Loss of draft will cause the appliance or fireplace served by the chimney to discharge combustion products into the building interior. Locating the chimney outlet well into the undisturbed wind stream and away from the cavity and wake (eddy) zones around the building can counteract the adverse effects and also prevent the reentry of vent gases into the building through openings and fresh air intakes. Terminating a chimney in the eddy

INTERNATIONAL CODE COUNCIL®
Copyright © 2015 ICC. ALL RIGHTS RESERVED. Accessed by David Dammon on Jun 21, 2017 12:30:52 PM pursuant to License Agreement with ICC. No further reproduction or distribution authorized. ANY UNAUTHORIZED REPRODUCTION OR DISTRIBUTION IS A VIOLATION OF THE FEDERAL COPYRIGHT ACT AND THE LICENSE AGREEMENT, AND SUBJECT TO CIVIL AND CRIMINAL PENALTIES THEREUNDER.

current area recirculates the combustion products and allows them to enter the building via infiltration, wall openings and air intakes. A chimney terminal properly located above the eddy current area allows the wind to carry the combustion products away from the building. Factory-built chimneys have termination caps that are part of the labeled chimney system and that must be installed. Like vent systems, the chimney cap is designed to keep out precipitation and animals and minimize the adverse effects of wind.

Decorative shrouds are designed to be aesthetically pleasing and to hide chimney terminations from view. These shrouds have, in some cases, caused fires resulting from overheated combustible construction and the accumulation of debris and animal nesting. Shrouds can also interfere with the functioning of a vent or chimney. The listing of the shroud must state the specific make and model of chimney with which the shroud is intended to be used. Some manufacturers are manufacturing shrouds that are listed for use with a specific make and model of chimney. Most often, shrouds are field-constructed of sheet metal, masonry or stucco on frame.

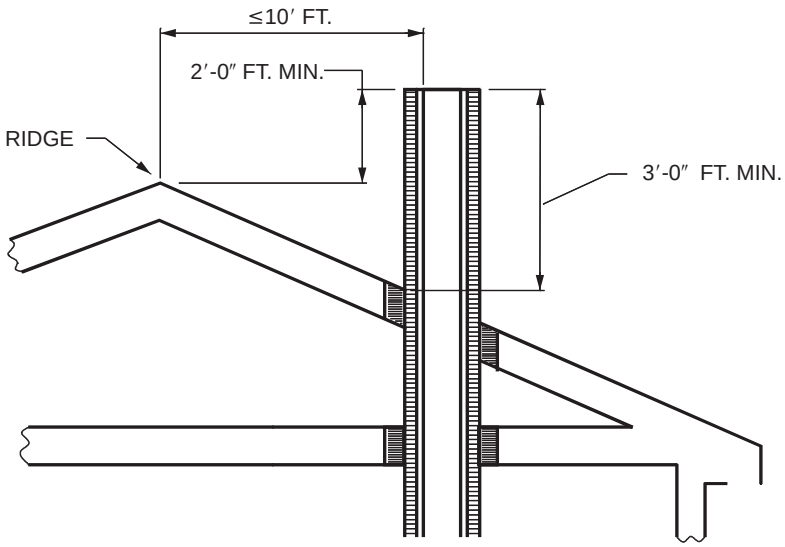

CROSS SECTION - WHEN 10 FT. OR LESS FROM RIDGE

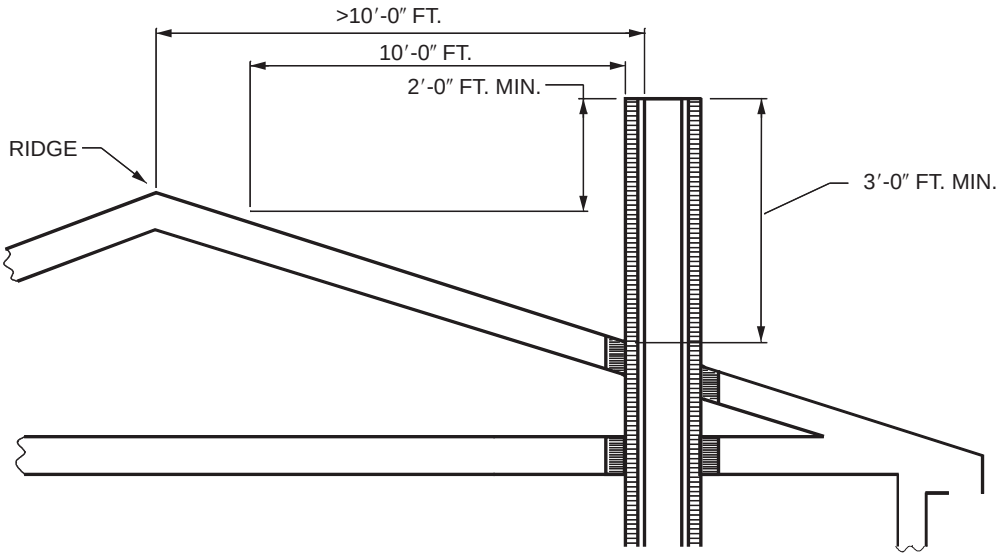

CROSS SECTION - WHEN MORE THAN 10 FT. FROM RIDGE

For SI: 1 foot = 304.8 mm.

Figure G2427.5.3(1)
LOW-HEAT CHIMNEY TERMINATIONS

INTERNATIONAL CODE COUNCIL®
Copyright © 2015 ICC. ALL RIGHTS RESERVED. Accessed by David Dammon on Jun 21, 2017 12:30:52 PM pursuant to License Agreement with ICC. No further reproduction or distribution authorized. ANY UNAUTHORIZED REPRODUCTION OR DISTRIBUTION IS A VIOLATION OF THE FEDERAL COPYRIGHT ACT AND THE LICENSE AGREEMENT, AND SUBJECT TO CIVIL AND CRIMINAL PENALTIES THEREUNDER.



Figure G2427.5.3(2)
DECORATIVE SHROUDS

G2427.5.4 (503.5.5) Size of chimneys. The effective area of a *chimney* venting system serving *listed appliances* with *draft hoods*, Category I *appliances*, and other *appliances listed* for use with Type B vents shall be determined in accordance with one of the following methods:

1. The provisions of Section G2428.
2. For sizing an individual *chimney* venting system for a single *appliance* with a *draft hood*, the effective areas of the *vent connector* and *chimney* flue shall be not less than the area of the *appliance flue collar* or *draft hood* outlet, nor greater than seven times the *draft hood* outlet area.
3. For sizing a *chimney* venting system connected to two *appliances* with *draft hoods*, the effective area of the *chimney* flue shall be not less than the area of the larger *draft hood* outlet plus 50 percent of the area of the smaller *draft hood* outlet, nor greater than seven times the smallest *draft hood* outlet area.
4. *Chimney venting systems* using mechanical *draft* shall be sized in accordance with *approved* engineering methods.
5. Other *approved* engineering methods.

❖ Chimneys can be sized in accordance with Section G2428, by Item 2, 3 or 4 of this section or by an engineering method acceptable to the code official. Some appliances are not categorized; however, appliances with draft hoods and appliances listed for use with Type B vents would fit in Category I if they were categorized. The manufacturer's instructions for some Category I appliances, such as fan-assisted furnaces and boilers, may not allow connecting the appliance to a masonry chimney except under specific limited conditions.

Item 2 applies only to a single appliance that is factory equipped with a draft hood. The "seven times rule" prevents the chimney from being too large, which could result in poor draft and condensation problems.

Like vents, chimneys that are too large in area can be as problematic as chimneys that are too small in area.

Item 3 is limited to only one venting arrangement. It can only be used for a chimney that serves two appliances, both of which must be factory-equipped with draft hoods. The method is based on the areas of the chimneys and draft hood outlets, not on the diameters.

Item 4 recognizes that some manufacturers of mechanical draft equipment (exhausters) have their own sizing methodology specific to their product. Recall that Item 1 of Section G2427.3.3 requires listing of such equipment.

G2427.5.5 (503.5.6) Inspection of chimneys. Before replacing an existing *appliance* or connecting a vent *connector* to a *chimney*, the *chimney* passageway shall be examined to ascertain that it is clear and free of obstructions and it shall be cleaned if previously used for venting solid or liquid fuel-burning appliances or *fireplaces*.

❖ If a chimney is going to serve a new appliance installation or a replacement appliance installation, the chimney must be inspected to determine whether it is still serviceable and free of deposits. Chimneys can become obstructed by debris such as leaves, animal carcasses, loose mortar and pieces of masonry and

INTERNATIONAL CODE COUNCIL®
Copyright © 2015 ICC. ALL RIGHTS RESERVED. Accessed by David Dammon on Jun 21, 2017 12:30:52 PM pursuant to License Agreement with ICC. No further reproduction or distribution authorized. ANY UNAUTHORIZED REPRODUCTION OR DISTRIBUTION IS A VIOLATION OF THE FEDERAL COPYRIGHT ACT AND THE LICENSE AGREEMENT, AND SUBJECT TO CIVIL AND CRIMINAL PENALTIES THEREUNDER.

liner. Combustible deposits can accumulate on chimney walls used to vent liquid- and solid-fuel-fired appliances, and this section mandates that the chimney be cleaned if it served such appliances in the past. Masonry chimneys are especially susceptible to internal deterioration and should be inspected regularly, in addition to when a new or replacement appliance is connected.

G2427.5.5.1 (503.5.6.1) Chimney lining. *Chimneys* shall be lined in accordance with NFPA 211.

Exception: Where an existing chimney complies with Sections G2427.5.5 through G2427.5.5.3 and its sizing is in accordance with Section G2427.5.4, its continued use shall be allowed where the *appliance* vented by such *chimney* is replaced by an *appliance* of similar type, input rating and efficiency.

❖ The liner forms the flue passageway and is the actual conductor of all products of combustion. The chimney liner must be able to withstand exposure to high temperatures and corrosive chemicals. The chimney lining protects the masonry construction of the chimney walls and allows the chimney to be constructed gas tight. This section regulates liners and relining systems. Liners are often used to reline an existing chimney to salvage a masonry chimney or allow connection of higher-efficiency appliances.

Flue lining systems for masonry chimneys include clay tile, poured-in-place refractory materials and stainless steel pipe. Chimney lining systems for chimneys serving gas-fired appliances include stainless steel and aluminum piping (uninsulated or insulated) designed for both new construction and for relining existing chimneys [see Commentary Figures G2427.5.5.1(1) and G2427.5.5.1(2)]. Type B vent is also used as a chimney liner, although it is not considered a lining system, and in such cases the chimney is actually a masonry chase containing a vent.

Relining of existing chimneys is quite common now because of the incompatibility of mid-efficiency appliances and masonry chimneys. Relining systems allows reuse of existing chimneys, thereby saving expense and retaining desirable architectural features of buildings.

The exception is intended to allow an unlined chimney to serve a new appliance that is installed to replace a previously served appliance if the new appliance does not create any different operating conditions in the chimney; that is, the volume, water vapor content and dilution air content of the new appliance flue gases are the same as those of the old appliance.

The exception assumes that the existing chimney and the existing appliances operated as intended by this code. If there is evidence that the previous chimney and appliance system was not working as required by this code, the exception is not intended to be appli-



Photo courtesy of Selkirk L.L.C.

Figure G2427.5.5.1(1)
CHIMNEY LINING SYSTEM FOR GAS APPLIANCES

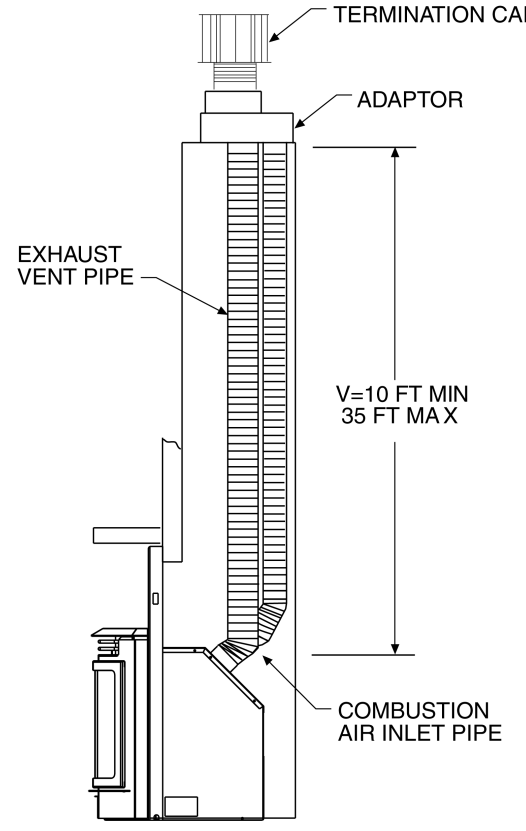

Figure courtesy of Quadra-Fire
For SI: 1 foot = 304.8 mm.

Figure G2427.5.5.1(2)
DIRECT-VENT GAS APPLIANCE FOR INSTALLATION IN SOLID-FUEL FIREPLACE

INTERNATIONAL CODE COUNCIL®
Copyright © 2015 ICC. ALL RIGHTS RESERVED. Accessed by David Dammon on Jun 21, 2017 12:30:52 PM pursuant to License Agreement with ICC. No further reproduction or distribution authorized. ANY UNAUTHORIZED REPRODUCTION OR DISTRIBUTION IS A VIOLATION OF THE FEDERAL COPYRIGHT ACT AND THE LICENSE AGREEMENT, AND SUBJECT TO CIVIL AND CRIMINAL PENALTIES THEREUNDER.

cable. Because this exception would allow an installation that is in conflict with the typical appliance manufacturer's installation instructions, it is in effect negated because the manufacturer's instructions will prevail in this case (see Sections G2408.1 and G2427.5.5.3). Before the exception could ever be applied, the chimney would have to be inspected and determined to be clear, clean, free of obstructions, safe for the intended use and properly sized for the appliances served. Also, the replacement appliance(s) would have to be the same type with nearly the same input rating and efficiency to make sure that the same amount of heat and dilution air enters the chimney. This will rarely, if ever, be encountered in the field, therefore, for multiple reasons, the exception will likely never be applicable.

G2427.5.5.2 (503.5.6.2) Cleanouts. Cleanouts shall be examined to determine if they will remain tightly closed when not in use.

❖ A cleanout door or panel must be capable of securely sealing the opening to prevent air from entering the chimney, which would reduce draft for the appliances served. Under certain conditions, a faulty cleanout could also cause vent gases to leak from the chimney.

G2427.5.5.3 (503.5.6.3) Unsafe chimneys. Where inspection reveals that an existing *chimney* is not safe for the intended application, it shall be repaired, rebuilt, lined, relined or replaced with a vent or *chimney* to conform to NFPA 211 and it shall be suitable for the *appliances* to be vented.

❖ If a chimney is inspected and found to be unsafe for any reason, it must be made safe or be replaced. See Section G2425.3. Some chimneys and appliances are not compatible as dictated by the appliance and/or factory-built chimney manufacturer. Masonry chimneys usually become unsafe as a result of deteriorated mortar joints and liners. Other causes include structural instability, cracks, faulty cleanouts, deposit formation and moisture damage.

G2427.5.6 (503.5.7) Chimneys serving appliances burning other fuels. *Chimneys* serving *appliances* burning other fuels shall comply with Sections G2427.5.6.1 through G2427.5.6.4.

❖ See the commentary to Sections G2427.5.6.1 through G2427.5.6.4.

G2427.5.6.1 (503.5.7.1) Solid fuel-burning appliances. An *appliance* shall not be connected to a *chimney* flue serving a separate *appliance* designed to burn solid fuel.

❖ Each solid fuel-burning appliance or fireplace must be connected to a dedicated independent chimney, or a dedicated independent flue in multiple-flue chimney constructions. Solid-fuel-burning appliances and fireplaces cannot share a common chimney or flue-way with any other appliance or fireplace.

Solid-fuel-burning appliances produce creosote deposits on the interior walls of chimney liners. The creosote formation is highly combustible and creates a potential fire hazard. Because of the potential for a chimney fire, other connections to the chimney can allow fire to break out of the chimney into the building.

Also, chimney passageways can become restricted by the creosote formations. If other appliances were vented to such chimneys, combustion products could be discharged into the building and the other appliances might seriously interfere with the draft for the solid-fuel-burning appliance.

This section is also intended to prevent the possibility of creosote leaking out of the chimney through appliance connectors.

Combination (dual fuel) gas- or oil- and solid-fuel-burning appliances are designed to be connected to a single chimney passageway. Such dual-fuel appliances must be listed, labeled and installed in accordance with the manufacturers' instructions.

G2427.5.6.2 (503.5.7.2) Liquid fuel-burning appliances. Where one *chimney* flue serves gas *appliances* and liquid fuel-burning appliances, the appliances shall be connected through separate openings or shall be connected through a single opening where joined by a suitable fitting located as close as practical to the *chimney*. Where two or more openings are provided into one *chimney* flue, they shall be at different levels. Where the appliances are automatically controlled, they shall be equipped with *safety shutoff devices*.

❖ Gas-fired and oil-fired appliances are allowed to share a chimney or flue. The code does not include a sizing method for such arrangements; therefore, the system would have to be engineered or otherwise approved by the code official. Placing the openings at different levels in the chimney flue will minimize interference between the flow of the chimney connectors. The last sentence is consistent with the design of all automatically controlled appliances listed to today's appliance standards as required by this code.

G2427.5.6.3 (503.5.7.3) Combination gas- and solid fuel-burning appliances. A combination gas- and solid fuel-burning *appliance* shall be permitted to be connected to a single chimney flue where equipped with a manual reset device to shut off gas to the *main burner* in the event of sustained backdraft or flue gas spillage. The *chimney* flue shall be sized to properly vent the *appliance*.

❖ A dual fuel appliance, gas and solid fuel, can be served by a single chimney or flue if the appliance is equipped with a safety control that monitors chimney spillage. A solid-fuel fire cannot be turned on and off like other fuel fires; thus, it is possible that the gas burner could be operated while the solid-fuel fire is still burning, and the chimney could be overloaded, causing spillage of combustion gases. The chimney size would have to be engineered or would have to comply with the appliance manufacturer's instructions.

G2427.5.6.4 (503.5.7.4) Combination gas- and oil fuel-burning appliances. A *listed* combination gas- and oil fuel-burning *appliance* shall be permitted to be connected to a single *chimney* flue. The *chimney* flue shall be sized to properly vent the *appliance*.

❖ See the commentary to Section G2427.5.6.3.

INTERNATIONAL CODE COUNCIL®
Copyright © 2015 ICC. ALL RIGHTS RESERVED. Accessed by David Dammon on Jun 21, 2017 12:30:52 PM pursuant to License Agreement with ICC. No further reproduction or distribution authorized. ANY UNAUTHORIZED REPRODUCTION OR DISTRIBUTION IS A VIOLATION OF THE FEDERAL COPYRIGHT ACT AND THE LICENSE AGREEMENT, AND SUBJECT TO CIVIL AND CRIMINAL PENALTIES THEREUNDER.

G2427.5.7 (503.5.8) Support of chimneys. All portions of *chimneys* shall be supported for the design and weight of the materials employed. Factory-built *chimneys* shall be supported and spaced in accordance with the manufacturer's installation instructions.

❖ Chimneys, including factory-built, are very heavy compared to vents and need substantial support to carry their weight and prevent displacement. Factory-built chimneys require special support fittings at offsets to prevent the elbows from being damaged by bearing the weight of the chimney sections above the offset. Chimneys, like piping systems, often suffer from lack of adequate support (see Section G2426.6).

G2427.5.8 (503.5.9) Cleanouts. Where a *chimney* that formerly carried flue products from liquid or solid fuel-burning appliances is used with an *appliance* using *fuel gas*, an accessible cleanout shall be provided. The cleanout shall have a tight-fitting cover and be installed so its upper edge is at least 6 inches (152 mm) below the lower edge of the lowest *chimney* inlet opening.

❖ If an existing chimney has no cleanout and was used for oil or solid-fuel appliances, a cleanout must be added. The cleanout allows access for a person to inspect and clean the chimney and monitor deposits on the interior walls. The cleanout must be located so that vent gases will not be in contact with the cleanout door/cover.

G2427.5.9 (503.5.10) Space surrounding lining or vent. The remaining space surrounding a *chimney* liner, gas vent, special gas *vent* or plastic *piping* installed within a masonry *chimney* flue shall not be used to vent another *appliance*. The insertion of another liner or vent within the *chimney* as provided in this *code* and the liner or vent manufacturer's instructions shall not be prohibited.

The remaining space surrounding a *chimney* liner, gas vent, special gas vent or plastic *piping* installed within a masonry, metal or factory-built *chimney* shall not be used to supply *combustion air*. Such space shall not be prohibited from supplying *combustion air* to *direct-vent appliances* designed for installation in a solid fuel-burning *fireplace* and installed in accordance with the manufacturer's instructions.

❖ If a vent or a chimney liner is installed within a chimney flue, there will be space between the vent or liner and the chimney walls. This space must not be used to convey vent gases because of its irregular size and geometry and because the vent gases could damage the vent or liner installed in the chimney. A metallic vent or liner could be corroded by surrounding vent gases, and plastic pipes could be overheated. Liner systems and vent systems are not listed for use within an atmosphere of vent gases. Installing multiple liners or vents within a chimney is not the same as using the annular space between a vent or liner and the inside chimney walls.

The space between a liner, vent or pipe and the interior chimney walls cannot be used as a duct for conveying combustion air. That space would have poor air-flow characteristics, and moving cold combustion air over a liner or vent can cause condensation in the venting system. An exception is made for direct-vent appliances that are listed for installation in solid-fuel-burning fireplaces.

G2427.6 (503.6) Gas vents. Gas vents shall comply with Sections G2427.6.1 through G2427.6.11. (See Section G2403, Definitions.)

❖ See the commentary to Sections G2427.6.1 through G2427.6.11.

G2427.6.1 (503.6.1) Installation, general. Gas vents shall be installed in accordance with the manufacturer's instructions.

❖ Gas vents, such as Type B vents, come with installation instructions available at the place of purchase or enclosed within the boxed items. The manufacturers also will provide, upon request, very detailed and informative design manuals that discuss sizing and venting fundamentals. These design manuals are invaluable for someone who installs, inspects or designs Type B vent systems (see Sections G2426.1 and G2426.5).

G2427.6.2 (503.6.2) Type B-W vent capacity. A Type B-W gas vent shall have a listed capacity not less than that of the *listed vented wall furnace* to which it is connected.

❖ A Type B-W vent is an oval shaped version of a Type B vent designed to fit within a nominal 2-inch by 4-inch framed wall and serve a wall furnace (see Section G2436).

G2427.6.3 (503.6.4) Gas vent terminations. A gas vent shall terminate in accordance with one of the following:

1. Gas vents that are 12 inches (305 mm) or less in size and located not less than 8 feet (2438 mm) from a vertical wall or similar obstruction shall terminate above the roof in accordance with Figure G2427.6.3.
2. Gas vents that are over 12 inches (305 mm) in size or are located less than 8 feet (2438 mm) from a vertical wall or similar obstruction shall terminate not less than 2 feet (610 mm) above the highest point where they pass through the roof and not less than 2 feet (610 mm) above any portion of a building within 10 feet (3048 mm) horizontally.
3. As provided for direct-vent systems in Section G2427.2.1.
4. As provided for *appliances* with integral vents in Section G2427.2.2.
5. As provided for mechanical *draft* systems in Section G2427.3.3.

❖ This section duplicates typical vent manufacturers' instructions and emphasizes that a vent is a system of components that are all necessary for proper functioning. The cap must be as specified by the vent manufacturer and is a listed component. A vent cap not only keeps out moisture, debris and animals, it also serves to prevent wind interference that could negatively affect the vent's ability to produce the required draft. Vent caps are tested for flow resistance and performance in wind.

INTERNATIONAL CODE COUNCIL®
Copyright © 2015 ICC. ALL RIGHTS RESERVED. Accessed by David Dammon on Jun 21, 2017 12:30:52 PM pursuant to License Agreement with ICC. No further reproduction or distribution authorized. ANY UNAUTHORIZED REPRODUCTION OR DISTRIBUTION IS A VIOLATION OF THE FEDERAL COPYRIGHT ACT AND THE LICENSE AGREEMENT, AND SUBJECT TO CIVIL AND CRIMINAL PENALTIES THEREUNDER.

This section is consistent with typical vent manufacturers' instructions and applies only to vents equipped with listed caps as required by Section G2427.6.5. The relationship between vent terminal height and roof pitch is based on reducing the effects of wind and maintaining a minimum separation between the vent terminal and the roof surface.

See Section G2428.2.9 for a discussion of vent terminations that extend above the roof higher than required by the code.

Figure G2427.6.3 requires greater vent height above the roof as the roof approaches being a vertical surface. The greater the roof pitch, the greater the effect of wind striking the roof surface and the closer the cap becomes (horizontally) to the roof surface (see Figure G2427.6.3).

It is a common misapplication for code users to apply chimney termination height requirements to vents, thereby causing vents to extend above roofs much higher than required in many cases. For example, a 6-inch (152 mm) diameter Type B vent must extend above a simple gabled roof only 1 foot (305 mm) for roofs having up to 6/12 pitch, if the terminal is not within 8 feet (2438 mm) of a vertical surface such as an upper-story exterior wall. Consideration should be given to vent location in a building in the

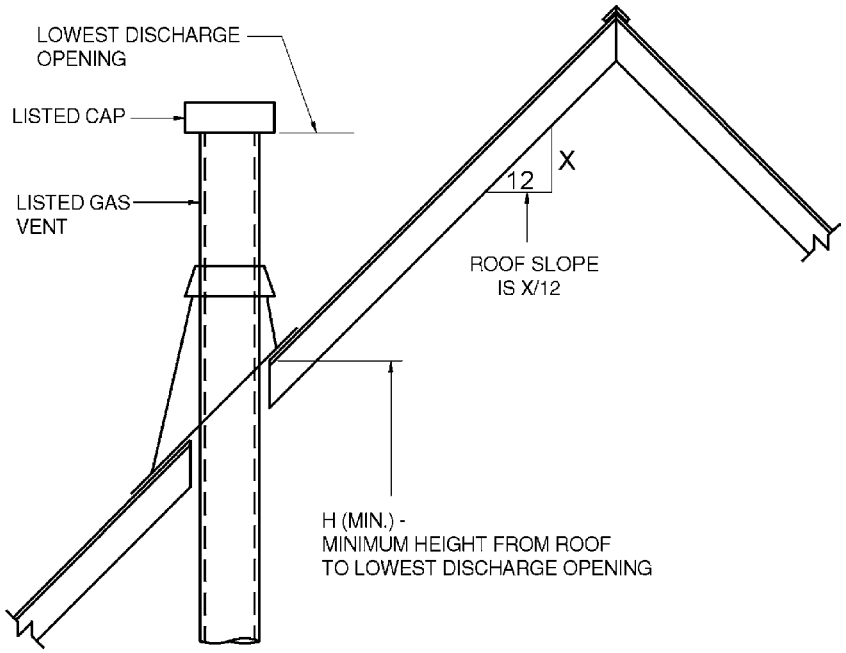

ROOF SLOPE	H (minimum) ft
Flat to $^{6}/_{12}$	1.0
Over $^{6}/_{12}$ to $^{7}/_{12}$	1.25
Over $^{7}/_{12}$ to $^{8}/_{12}$	1.5
Over $^{8}/_{12}$ to $^{9}/_{12}$	2.0
Over $^{9}/_{12}$ to $^{10}/_{12}$	2.5
Over $^{10}/_{12}$ to $^{11}/_{12}$	3.25
Over $^{11}/_{12}$ to $^{12}/_{12}$	4.0
Over $^{12}/_{12}$ to $^{14}/_{12}$	5.0
Over $^{14}/_{12}$ to $^{16}/_{12}$	6.0
Over $^{16}/_{12}$ to $^{18}/_{12}$	7.0
Over $^{18}/_{12}$ to $^{20}/_{12}$	7.5
Over $^{20}/_{12}$ to $^{21}/_{12}$	8.0

For SI: 1 foot = 304.8 mm.

FIGURE G2427.6.3 (503.6.4)
TERMINATION LOCATIONS FOR GAS VENTS WITH LISTED CAPS 12 INCHES OR LESS IN SIZE AT LEAST 8 FEET FROM A VERTICAL WALL

❖ See the commentary to Section G2427.6.3

INTERNATIONAL CODE COUNCIL®
Copyright © 2015 ICC. ALL RIGHTS RESERVED. Accessed by David Dammon on Jun 21, 2017 12:30:52 PM pursuant to License Agreement with ICC. No further reproduction or distribution authorized. ANY UNAUTHORIZED REPRODUCTION OR DISTRIBUTION IS A VIOLATION OF THE FEDERAL COPYRIGHT ACT AND THE LICENSE AGREEMENT, AND SUBJECT TO CIVIL AND CRIMINAL PENALTIES THEREUNDER.

design/installation phase so that the vent termination will not be difficult or require long extensions of vent pipe exposed to the outdoors. Vent piping exposed to the outdoors encourages condensation in cold weather, could require guy wires or braces depending on height and is considered aesthetically unattractive. Another good reason to plan for vent location during the design phase of a building is to allow straight vertical runs of vent and avoid offsets. Good planning can also prevent vents from passing through the roof on the street side of the building. Quite often, vent offsets in attics are installed for the sole purpose of penetrating the roof on the back side of a building.

Vent termination heights are affected by the pitch of the roof and the proximity of walls and other vertical or near vertical structural components. Where vent terminal locations within 8 feet (2438 mm) of a gable end, upper story or other vertical surface cannot be avoided, vent terminations must be regulated in a manner similar to chimneys [i.e., 2-feet (610 mm) minimum height and not less than 2 feet (610 mm) above any part of building within 10 feet (3048 mm)] (see Commentary Figure G2427.6.3). Commentary Figure G2427.6.3 does not apply to vent sizes larger than 12 inches (305 mm). This is consistent with manufacturers' instructions and relates to the testing of gas vents to the referenced standard.

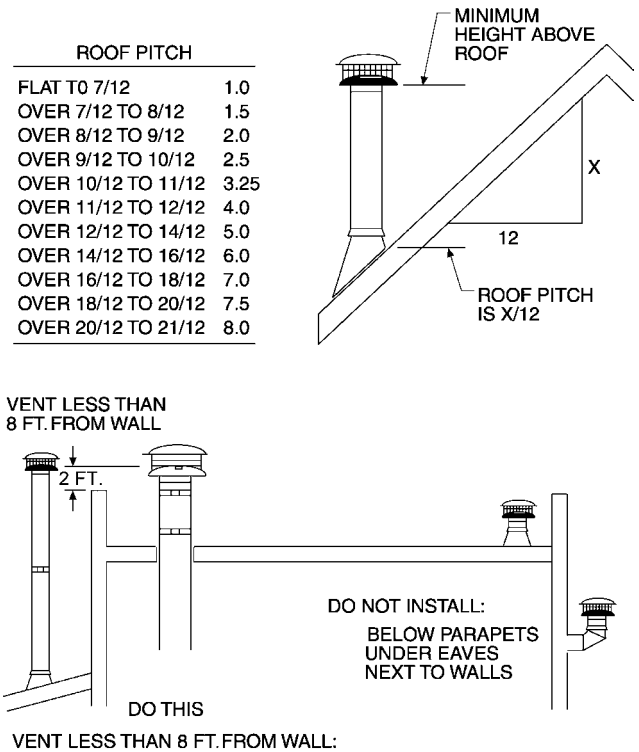

Figure courtesy of Selkirk, L.L.C.
For SI: 1 foot = 304.8 mm.

Figure G2427.6.3
TOP LOCATION RULES

The intent of Section G2428.2.9 is for vents exposed to the outdoors below the roof penetration to be sized by a method other than the tables in Section G2428. This means that if a vent is within 8 feet (2438 mm) of a vertical wall or is larger in size than 12 inches (305 mm), it must extend 2 feet (3048 mm) above any part of the building within 10 feet horizontally, and this could expose a substantial run of vent to the outdoors. In such cases, the tables of Section G2428 would not apply, and the vent system would have to be engineered.

G2427.6.3.1 (503.6.4.1) Decorative shrouds. Decorative shrouds shall not be installed at the termination of gas vents except where such shrouds are *listed* for use with the specific gas venting system and are installed in accordance with manufacturer's instructions.

❖ Decorative shrouds have become a popular architectural feature. They are designed to be aesthetically pleasing and to hide chimney and vent terminations. These shrouds have, in some cases, caused fires resulting from overheated combustible construction and the accumulation of debris and animal nesting. Shrouds can also interfere with the functioning of a chimney or vent system. Shrouds are allowed only where they are listed and labeled for use with the specific factory-built chimney system or gas venting system (see Commentary Figure G2427.6.3.1).

G2427.6.4 (503.6.5) Minimum height. A Type B or L gas vent shall terminate at least 5 feet (1524 mm) in vertical height above the highest connected *appliance draft hood* or *flue collar*. A Type B-W gas vent shall terminate not less than 12 feet (3658 mm) in vertical height above the bottom of the wall *furnace*.

❖ The amount of draft produced by a vent is directly related to the height of the vent. A minimum height must be established to produce the minimum draft necessary for the appliance served. This is made evident by looking at the tables in Section G2428 that indicate increasing vent capacity as the vent height increases. This is a result of the increase in draft and vent flow velocity. The tables in Section G2428 and some vent manufacturers' instructions indicate a minimum height of 6 feet (1829 mm) because this is the lowest entry for height in the sizing tables.

This section is often violated for appliances installed near the roof such as suspended unit heaters and appliances installed under shed roofs.

G2427.6.5 (503.6.6) Roof terminations. Gas vents shall extend through the roof flashing, roof jack or roof thimble and terminate with a *listed* cap or *listed* roof assembly.

❖ This section duplicates the typical vent manufacturer's instructions and emphasizes that a vent is a system of components that are all necessary for proper functioning. The cap must be as specified by the vent manufacturer and is a listed component. A vent cap not only keeps out moisture, debris and animals, it also serves to prevent wind interference that could negatively affect the vent's ability to produce the required draft.

INTERNATIONAL CODE COUNCIL®
Copyright © 2015 ICC. ALL RIGHTS RESERVED. Accessed by David Dammon on Jun 21, 2017 12:30:52 PM pursuant to License Agreement with ICC. No further reproduction or distribution authorized. ANY UNAUTHORIZED REPRODUCTION OR DISTRIBUTION IS A VIOLATION OF THE FEDERAL COPYRIGHT ACT AND THE LICENSE AGREEMENT, AND SUBJECT TO CIVIL AND CRIMINAL PENALTIES THEREUNDER.

Vent caps are tested for flow resistance and performance in wind. The emphasis here is that the vent system must extend through the roof all the way to the cap using components that are listed as part of the listed venting system.

G2427.6.6 (503.6.7) Forced air inlets. Gas vents shall terminate not less than 3 feet (914 mm) above any forced air inlet located within 10 feet (3048 mm).

❖ If the vent termination is 10 feet (3048 mm) or more from the forced-air (mechanical intake opening), this section does not apply. The intent is to prevent combustion gases from being drawn into the building through powered air intakes of any type (see Commentary Figure G2427.6.6).

G2427.6.7 (503.6.8) Exterior wall penetrations. A gas *vent* extending through an exterior wall shall not terminate adjacent to the wall or below eaves or parapets, except as provided in Sections G2427.2.1 and G2427.3.3.

❖ The termination locations prohibited by this section would result in poor draft or back draft because of the effects of wind. Also, termination in such locations could result in a fire hazard, damage to the structure and entry of vent gases into the building. If a gas vent (typically Type B) penetrates an exterior wall, the vent would have to extend vertically above the roof in accordance with Section G2427.6.3; however, this exterior extension of vent presents a problem in itself. Gas vents, such as Type B vents, are not designed for out-



Figure G2427.6.3.1
DECORATIVE SHROUDS

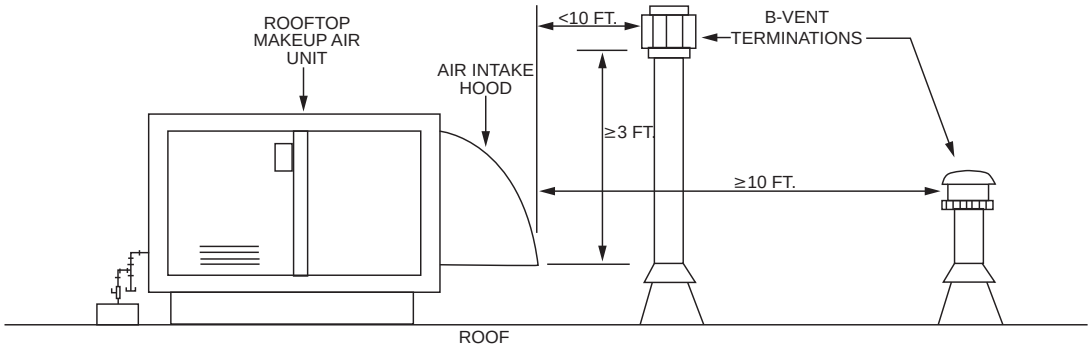

For SI: 1 foot = 304.8 mm.

Figure G2427.6.6
GAS VENT TERMINATIONS WITH RESPECT TO FORCED-AIR INTAKES

INTERNATIONAL CODE COUNCIL®
Copyright © 2015 ICC. ALL RIGHTS RESERVED. Accessed by David Dammon on Jun 21, 2017 12:30:52 PM pursuant to License Agreement with ICC. No further reproduction or distribution authorized. ANY UNAUTHORIZED REPRODUCTION OR DISTRIBUTION IS A VIOLATION OF THE FEDERAL COPYRIGHT ACT AND THE LICENSE AGREEMENT, AND SUBJECT TO CIVIL AND CRIMINAL PENALTIES THEREUNDER.

door exposure, except for the short section of vent that passes through the roof. Sections G2428.2.9 and G2428.3.16 reinforce this by stating that the vent sizing tables in Section G2428 do not apply to vents exposed to the outdoors below the roof line. Vents exposed to the outdoors will suffer from poor draft and condensation production in most climates because of the heat loss through the exposed vent walls. The bottom line is that vents sized in accordance with Section G2428 cannot extend up the exterior side of a building as implied by this section and Section G2427.6.3. This type of installation could occur only if the vent system was engineered to account for the outdoor exposure. Note that this is also consistent with typical vent manufacturers' design manuals and installation instructions. Even though it is common to see gas vents run up the exterior wall of a building, such installations are not allowed unless they are engineered and allowed by the vent manufacturer, neither of which is likely. Typically, gas vents run outdoors up the side of a building will show signs of severe corrosion, rusting and degradation.

G2427.6.8 (503.6.9) Size of gas vents. *Venting systems* shall be sized and constructed in accordance with Section G2428 or other *approved* engineering methods and the gas vent and *appliance* manufacturer's installation instructions.

❖ Gas vents are to be sized by either Section G2428 or an engineering method acceptable to the code official and, in all cases, in accordance with the vent manufacturer's instructions (see Sections G2427.6.8.1 through G2427.6.8.3).

G2427.6.8.1 (503.6.9.1) Category I appliances. The sizing of *natural draft venting systems* serving one or more *listed appliances* equipped with a *draft hood* or *appliances listed* for use with Type B gas vent, installed in a single story of a building, shall be in accordance with one of the following methods:

1. The provisions of Section G2428.
2. For sizing an individual gas vent for a single, draft-hood-equipped *appliance*, the effective area of the vent *connector* and the gas vent shall be not less than the area of the *appliance draft hood* outlet, nor greater than seven times the *draft hood* outlet area.
3. For sizing a gas vent connected to two *appliances* with *draft hoods*, the effective area of the vent shall be not less than the area of the larger *draft hood* outlet plus 50 percent of the area of the smaller *draft hood* outlet, nor greater than seven times the smaller *draft hood* outlet area.
4. *Approved* engineering practices.

❖ This section reiterates the intent of the preceding section, is specific to Category I appliances, and applies only to appliances installed within the same story. Multiple-story applications are addressed in the IFGC. Category I appliances are vented by natural draft and, depending upon the design and efficiency, are either equipped with a draft hood or a fan-assisted combustion system. Because of the higher thermal efficiencies and lack of dilution air, vent designs for fan-assisted appliances are different from those for draft hood-equipped appliances.

Item 3 allows a very limited application of the old "50-percent rule." Item 2 applies only to a single draft-hood-equipped appliance. Item 3 applies only to a common vent system serving two draft-hood equipped appliances. Neither Item 2 nor 3 can be applied to the venting of fan-assisted appliances, because the old alternate method (50-percent rule) was not created with fan-assisted appliances in mind and will not work with such appliances. Besides being limited to draft hood appliances, Items 2 and 3 should be further limited to simple venting system configurations having short laterals; few, if any, changes in direction (fittings); short connector lengths with maximum vertical rise and tall vent heights. Vent manufacturers emphatically warn against the use of the alterative sizing rule in Item 3 because this method does not account for many factors now known to be important in vent sizing.

G2427.6.8.2 (503.6.9.2) Vent offsets. Type B and L vents sized in accordance with Item 2 or 3 of Section G2427.6.8.1 shall extend in a generally vertical direction with offsets not exceeding 45 degrees (0.79 rad), except that a vent system having not more than one 60-degree (1.04 rad) *offset* shall be permitted. Any angle greater than 45 degrees (0.79 rad) from the vertical is considered horizontal. The total horizontal distance of a vent plus the horizontal vent *connector* serving *draft hood*-equipped *appliances* shall be not greater than 75 percent of the vertical height of the vent.

❖ This section addresses vent offsets differently than Section G2428 and is in no way related to Section G2428. This section would be applied only if Section G2428 is not applied; therefore, this section is rarely applied, because Section G2428 is necessary for sizing the majority of today's Category I venting systems. The only time that a Type B vent system would not be designed in accordance with Section G2428 is if it were an engineered system or if it were designed in accordance with Section G2427.6.8.1, Item 2 or 3, applicable only to draft-hood-equipped appliances.

This section regulates vent offsets, but without the tables and design requirements of Section G2428, there are only very limited design requirements in Section G2427 to accompany the offset provisions. In other words, this section would be only one of many parts necessary to design a vent system. This section is not intended for application in conjunction with the requirements of Section G2428.

This section is not applicable to fan-assisted appliances and applies only to Type B and L vents sized in accordance with Item 2 or 3 of Section G2427.6.8.1.

G2427.6.8.3 (503.6.9.3) Category II, III and IV appliances. The sizing of gas vents for Category II, III and IV appliances shall be in accordance with the appliance manufacturer's instructions. The sizing of plastic pipe that is specified by the appliance manufacturer as a venting material for

INTERNATIONAL CODE COUNCIL®
Copyright © 2015 ICC. ALL RIGHTS RESERVED. Accessed by David Dammon on Jun 21, 2017 12:30:52 PM pursuant to License Agreement with ICC. No further reproduction or distribution authorized. ANY UNAUTHORIZED REPRODUCTION OR DISTRIBUTION IS A VIOLATION OF THE FEDERAL COPYRIGHT ACT AND THE LICENSE AGREEMENT, AND SUBJECT TO CIVIL AND CRIMINAL PENALTIES THEREUNDER.

Category II, III and IV appliances, shall be in accordance with the manufacturer's instructions.

❖ Venting systems for Category II, Ill and IV appliances are special vent systems specified by the appliance manufacturer and are not addressed further in the code (see Section G2427.4).

Because plastic pipes such PVC, ABS and CPVC plumbing pipes are not listed and labeled as appliance vents (see the definition of "Vent"), the code was silent on how to size such pipes. The sizing is covered in the appliance manufacturer's instructions, and the code requires compliance with such instructions. However, for consistency, this section has been modified to address both listed vents and unlisted materials used as vents. For example, PVC pipe that vents a Category IV furnace is not listed as a vent; rather, it is a material that is used as a vent, and the appliance must be listed for use with the PVC pipe.

G2427.6.8.4 (503.6.9.4) Mechanical draft. *Chimney venting systems* using mechanical *draft* shall be sized in accordance with *approved* engineering methods.

❖ The manufacturers of exhausters (mechanical draft systems) provide sizing criteria for the vents and chimneys served by such equipment. The code's sizing criteria are based on natural draft chimneys and vents; therefore, engineered sizing methods must be used for other than natural draft (see Section G2427.3.3).

G2427.6.9 (503.6.11) Support of gas vents. Gas vents shall be supported and spaced in accordance with the manufacturer's installation instructions.

❖ Type B vents must be supported to prevent the weight of the system from bearing on appliances and vent fittings. Fittings such as adjustable elbows are not designed to carry the weight of upper or lower sections of vent pipe, nor are appliance draft hoods and flue collars. Support bases, brackets and spacers are available from the vent manufacturer and are used to support the weight of the vent and maintain alignment and clearance to combustibles. On most job sites, the vents will be supported by various field-constructed brackets and straps made of sheet metal scraps, duct slips and drives and plumber's perforated straps. Gas vents are often poorly supported by methods that allow the vent fittings to rotate, that cause excessive loads on fittings and that allow the vent to sag or lose its required clearance. The installations should be carefully examined to determine that such field-constructed supports are adequate. Sheet metal screws must not penetrate the inner liner of any Type B vent component. Type B vents are designed for installation without the use of any additional fasteners that penetrate the vent walls (see Section G2427.6.11).

G2427.6.10 (503.6.12) Marking. In those localities where solid and liquid fuels are used extensively, gas vents shall be permanently identified by a label attached to the wall or ceiling at a point where the *vent connector* enters the gas vent. The determination of where such localities exist shall be made by the *code official*. The label shall read:

"This gas vent is for *appliances* that burn gas. Do not connect to solid or liquid fuel-burning appliances or incinerators."

❖ Type B vents installed in localities where oil- and solid-fuel-fired appliances are common must be labeled to warn the installers and occupants that Type B vents cannot be used to vent any appliances other than gas fired. The label is not placed on the vent; rather, it is to be placed on a wall or ceiling where it would be conspicuous to someone attempting to connect to the vent. The code official determines whether their locality is the intended target for this provision. It is assumed that ignorance of gas vents will be more likely in regions where oil and solid fuel have been commonly used for fuel.

G2427.6.11 (503.6.13) Fastener penetrations. Screws, rivets and other fasteners shall not penetrate the inner wall of double-wall gas vents, except at the transition from an *appliance draft hood* outlet, a *flue collar* or a single-wall metal connector to a double-wall vent.

❖ Gas vents are not designed to be joined with screws or other fasteners, yet installers insist on using screws or rivets to augment the proprietary joint methods provided by the vent manufacturer. Manufacturers might not prohibit this practice, but they do not encourage it and definitely do warn against penetrating the inner wall. Screws are also commonly used to attach support (stand-off) brackets and hangers to vent pipe. It is typical to find duct slips and S-drives used as supports for vents with screws used to attach to the vent.

When fasteners penetrate the inner wall, condensation in the vent will corrode the fastener and leak into the air space between the vent walls causing vent deterioration. Vent manufacturers offer adapter fittings to transition between a vent and an appliance outlet or flue collar; however, installers usually ignore these fittings and connect the vent pipe or vent elbow directly to the appliance. This section permits the inner wall to be penetrated only at the point of transition between single-wall pipe and the vent, and between an appliance outlet collar and the vent (see Commentary Figure G2427.6.11).

G2427.7 (503.7) Single-wall metal pipe. Single-wall metal *pipe* vents shall comply with Sections G2427.7.1 through G2427.7.13.

❖ Although discouraged or prohibited by designers, code officials and appliance and vent manufacturers alike, the code still recognizes the use of unlisted single-wall metal pipe as a vent. All other types of vents are listed systems as required by Section G2426.1. As evidenced by Sections G2427.7.1 through G2427.7.13, single-wall metal pipe is restricted to very limited applications, and extraordinary installation precautions are necessary. Single-wall metal pipe was once common, but it will not be found in residential construction today except in extremely rare circumstances in existing buildings. Appliance manufacturers' instructions will typically prohibit the use of a single-wall metal vent (see Section G2427.7.8).

INTERNATIONAL CODE COUNCIL®
Copyright © 2015 ICC. ALL RIGHTS RESERVED. Accessed by David Dammon on Jun 21, 2017 12:30:52 PM pursuant to License Agreement with ICC. No further reproduction or distribution authorized. ANY UNAUTHORIZED REPRODUCTION OR DISTRIBUTION IS A VIOLATION OF THE FEDERAL COPYRIGHT ACT AND THE LICENSE AGREEMENT, AND SUBJECT TO CIVIL AND CRIMINAL PENALTIES THEREUNDER.

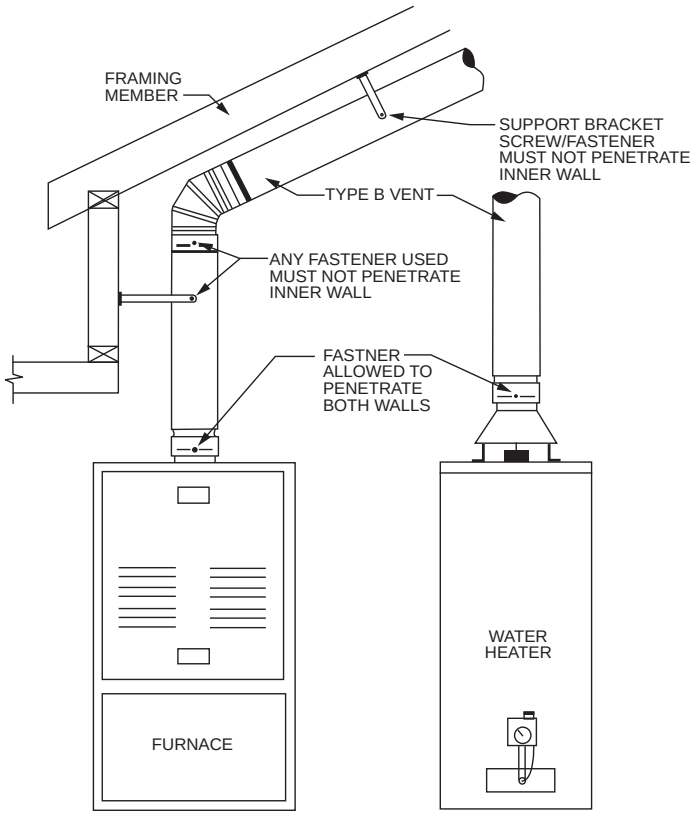

Figure G2427.6.11
FASTENER PENETRATIONS

G2427.7.1 (503.7.1) Construction. Single-wall metal pipe shall be constructed of galvanized sheet steel not less than 0.0304 inch (0.7 mm) thick, or other *approved*, noncombustible, corrosion-resistant material.

❖ The galvanized sheet steel thickness specified is equivalent to 22 gage, which is heavier than the pipe commonly used for connectors for most residential solid-fuel-fired appliances.

G2427.7.2 (503.7.2) Cold climate. Uninsulated single-wall metal pipe shall not be used outdoors for venting *appliances* in regions where the 99-percent winter design temperature is below 32ºF (0ºC).

❖ This section limits the use of single-wall vents to regions such as the southwestern and southeastern parts of the United States, unless the pipe is an insulated type to compensate for the high heat loss of single-wall pipe. The code contains no guidance for the type of insulation required or what *R*-value is required. At the minimum, insulation applied directly to the pipe would have to be a noncombustible material, the *R*-value would have to exceed that afforded by a double-wall vent, and the insulation would have to be permanently attached and protected from the weather. Insulating single-wall pipe could be considerably more difficult and expensive than using a venting system designed for outdoor use. Bear in mind that air-insulated double-wall vent pipe (Type B) is not designed for use outdoors in cold climates. When applying Section G2428, single-wall vents are also prohibited from being exposed to the outdoors below the point of roof penetration.

G2427.7.3 (503.7.3) Termination. Single-wall metal pipe shall terminate at least 5 feet (1524 mm) in vertical height above the highest connected *appliance draft hood* outlet or *flue collar*. Single-wall metal pipe shall extend at least 2 feet (610 mm) above the highest point where it passes through a roof of a building and at least 2 feet (610 mm) higher than any portion of a building within a horizontal distance of 10 feet (3048 mm). An *approved* cap or roof assembly shall be attached to the terminus of a single-wall metal pipe.

❖ Single-wall metal vents are not allowed to terminate as allowed by Section G2427.6.3 and must comply with the termination requirements for chimneys, except that the minimum height above the roof penetration is 2 feet (610 mm), whereas it is 3 feet (914 mm) for chimneys [see Commentary Figure G2427.5.3(1)]. The minimum height and vent cap requirements are consistent with Sections G2427.6.3 and G2427.6.4.

INTERNATIONAL CODE COUNCIL®
Copyright © 2015 ICC. ALL RIGHTS RESERVED. Accessed by David Dammon on Jun 21, 2017 12:30:52 PM pursuant to License Agreement with ICC. No further reproduction or distribution authorized. ANY UNAUTHORIZED REPRODUCTION OR DISTRIBUTION IS A VIOLATION OF THE FEDERAL COPYRIGHT ACT AND THE LICENSE AGREEMENT, AND SUBJECT TO CIVIL AND CRIMINAL PENALTIES THEREUNDER.

G2427.7.4 (503.7.4) Limitations of use. Single-wall metal pipe shall be used only for runs directly from the space in which the *appliance* is located through the roof or exterior wall to the outdoor atmosphere.

❖ Single-wall metal pipe is further restricted by this section to only two applications. It can run from the appliance directly to the outdoors through an exterior wall or it can run from the appliance directly to the outdoors through a roof. Single-wall metal pipe cannot pass through any floors, interior walls or partitions and cannot pass through attics or concealed spaces. This means that the appliance served must be in a space with an exterior wall or in the same story as a cathedral or shed-type roof.

G2427.7.5 (503.7.5) Roof penetrations. A pipe passing through a roof shall extend without interruption through the roof flashing, roof jack or roof thimble. Where a single-wall metal pipe passes through a roof constructed of combustible material, a noncombustible, nonventilating thimble shall be used at the point of passage. The thimble shall extend not less than 18 inches (457 mm) above and 6 inches (152 mm) below the roof with the annular space open at the bottom and closed only at the top. The thimble shall be sized in accordance with Section G2427.7.7.

❖ A thimble is a sheet metal assembly designed to provide clearance between a vent and combustible materials, analogous to a thimble that protects one's fingers from a sewing needle. It is essentially a spacer that provides an annular space around the vent. Annular space is usually ventilated by punched holes in the faces of the thimble assembly. Some thimbles are constructed with insulation in addition to an annular space.

A roof jack is an assembly that passes through the roof and contains a thimble and weather protection all in one. Roof jacks are flashing/thimble combinations and typically mount to a roof curb.

G2427.7.6 (503.7.6) Installation. Single-wall metal pipe shall not originate in any unoccupied attic or concealed space and shall not pass through any attic, inside wall, concealed space, or floor. The installation of a single-wall metal pipe through an exterior combustible wall shall comply with Section G2427.7.7.

❖ A single-wall metal vent must be exposed for its entire length, except for the section of pipe that is within a thimble or roof jack assembly. Single-wall vents can penetrate only exterior walls and roofs. A roof/ceiling assembly cannot be penetrated if there is an attic or a concealed space between the ceiling and the roof (see Section G2427.7.4).

G2427.7.7 (503.7.7) Single-wall penetrations of combustible walls. Single-wall metal pipe shall not pass through a combustible exterior wall unless guarded at the point of passage by a ventilated metal thimble not smaller than the following:

1. For *listed appliances* with *draft hoods* and *appliances listed* for use with Type B gas vents, the thimble shall be not less than 4 inches (102 mm) larger in diameter than the metal pipe. Where there is a run of not less than 6 feet (1829 mm) of metal pipe in the open between the *draft hood* outlet and the thimble, the thimble shall be permitted to be not less than 2 inches (51 mm) larger in diameter than the metal pipe.
2. For unlisted *appliances* having *draft hoods*, the thimble shall be not less than 6 inches (152 mm) larger in diameter than the metal pipe.
3. For residential and low-heat *appliances*, the thimble shall be not less than 12 inches (305 mm) larger in diameter than the metal pipe.

Exception: In lieu of thimble protection, all *combustible material* in the wall shall be removed a sufficient distance from the metal pipe to provide the specified *clearance* from such metal pipe to *combustible material*. Any material used to close up such opening shall be noncombustible.

❖ The only single-wall vent component that is allowed to penetrate an exterior wall is a single-wall vent. Single-wall vent connectors cannot penetrate an exterior wall because if they did, they would be outdoors and exposed to the ambient outdoor temperatures. See Sections G2427.7.2 and G2427.10.2.2. This section is located in the single-wall vent section because this is the only place that it is applicable.

Items 1 through 3 dictate the size of thimbles used to protect the combustible wall. For example, in accordance with the first sentence of Item 1, a 4-inch (102 mm) metal pipe would require an 8-inch (203 mm) diameter thimble. Ventilated thimbles have holes in the faces of the thimble to allow air to cool the thimble by convection. Item 2 would rarely apply because unlisted appliances are not allowed by this code unless specifically approved by the code official under Section R104.11. Item 3 would rarely apply because it is addressing appliances other than those addressed in Items 1 and 2. The exception requires that the combustible wall be made noncombustible at the point of penetration. The noncombustible portion of the wall must extend from the metal pipe in all directions a distance equal to the required airspace clearance for the metal pipe.

G2427.7.8 (503.7.8) Clearances. Minimum *clearances* from single-wall metal pipe to *combustible material* shall be in accordance with Table G2427.10.5. The *clearance* from single-wall metal pipe to *combustible material* shall be permitted to be reduced where the *combustible material* is protected as specified for *vent connectors* in Table G2409.2.

❖ Consideration should be given to the fact that single-wall vents will have high surface temperatures compared to insulated vents such as Type B vents. High surface temperatures could be an ignition or burn injury hazard.

INTERNATIONAL CODE COUNCIL®
Copyright © 2015 ICC. ALL RIGHTS RESERVED. Accessed by David Dammon on Jun 21, 2017 12:30:52 PM pursuant to License Agreement with ICC. No further reproduction or distribution authorized. ANY UNAUTHORIZED REPRODUCTION OR DISTRIBUTION IS A VIOLATION OF THE FEDERAL COPYRIGHT ACT AND THE LICENSE AGREEMENT, AND SUBJECT TO CIVIL AND CRIMINAL PENALTIES THEREUNDER.

G2427.7.9 (503.7.9) Size of single-wall metal pipe. A venting system constructed of single-wall metal pipe shall be sized in accordance with one of the following methods and the *appliance* manufacturer's instructions:

1. For a draft-hood-equipped *appliance*, in accordance with Section G2428.
2. For a venting system for a single *appliance* with a *draft hood*, the areas of the connector and the pipe each shall be not less than the area of the *appliance flue collar* or *draft hood* outlet, whichever is smaller. The vent area shall not be greater than seven times the *draft hood* outlet area.
3. Other *approved* engineering methods.

❖ As can be seen from Items 1, 2 and 3, and Tables 504.2(5) and 504.3(5) of the IFGC, single-wall metal pipe vents are limited to use with draft-hood-equipped appliances, except where the system is engineered. Note that the appliance manufacturer's instructions will generally require connection to a listed vent system.

G2427.7.10 (503.7.10) Pipe geometry. Any shaped single-wall metal pipe shall be permitted to be used, provided that its equivalent effective area is equal to the effective area of the round pipe for which it is substituted, and provided that the minimum internal dimension of the pipe is not less than 2 inches (51 mm).

❖ Single-wall metal pipe does not have to be round; it could be oval, square, or rectangular. Round pipe has the best flow characteristics as evidenced by the fact that a round chimney liner will have a greater capacity than a rectangular liner of equal area.

G2427.7.11 (503.7.11) Termination capacity. The vent cap or a roof assembly shall have a venting capacity of not less than that of the pipe to which it is attached.

❖ Section G2427.7.3 requires an approved vent cap or roof termination assembly, and this section requires that the terminus be sized and designed to not reduce the capacity of the vent. An unlisted, untested cap or roof assembly will have an unknown capacity unless it is engineered.

G2427.7.12 (503.7.12) Support of single-wall metal pipe. All portions of single-wall metal pipe shall be supported for the design and weight of the material employed.

❖ Single-wall vents, like all vents and chimneys, must be supported to prevent structural failure and joint separation and to maintain the required clearances.

G2427.7.13 (503.7.13) Marking. Single-wall metal pipe shall comply with the marking provisions of Section G2427.6.10.

❖ See the commentary to Section G2427.6.10.

G2427.8 (503.8) Venting system termination location. The location of venting system terminations shall comply with the following (see Appendix C):

1. A mechanical *draft* venting system shall terminate not less than 3 feet (914 mm) above any forced-air inlet located within 10 feet (3048 mm).

   Exceptions:

   1. This provision shall not apply to the *combustion air* intake of a direct-vent *appliance*.
   2. This provision shall not apply to the separation of the integral outdoor air inlet and flue gas discharge of *listed* outdoor *appliances*.
2. A mechanical *draft* venting system, excluding *direct*-vent *appliances*, shall terminate not less than 4 feet (1219 mm) below, 4 feet (1219 mm) horizontally from, or 1 foot (305 mm) above any door, operable window or gravity air inlet into any building. The bottom of the vent terminal shall be located not less than 12 inches (305 mm) above finished ground level.
3. The vent terminal of a *direct*-vent *appliance* with an input of 10,000 *Btu* per hour (3 kW) or less shall be located not less than 6 inches (152 mm) from any air opening into a building. Such an *appliance* with an input over 10,000 *Btu* per hour (3 kW) but not over 50,000 *Btu* per hour (14.7 kW) shall be installed with a 9-inch (230 mm) vent termination *clearance*, and an *appliance* with an input over 50,000 Btu per hour (14.7 kW) shall have not less than a 12-inch (305 mm) vent termination *clearance*. The bottom of the vent terminal and the air intake shall be located not less than 12 inches (305 mm) above grade finished ground level.
4. Through-the-wall vents for Category II and IV *appliances* and noncategorized condensing *appliances* shall not terminate over public walkways or over an area where *condensate* or vapor could create a nuisance or hazard or could be detrimental to the operation of *regulators, relief valves* or other *equipment*. Where local experience indicates that *condensate* is a problem with Category I and III *appliances*, this provision shall also apply. Drains for *condensate* shall be installed in accordance with the appliance and vent manufacturer's installation instructions.
5. Vent systems for Category IV appliances that terminate through an outside wall of a building and discharge flue gases perpendicular to the adjacent wall shall be located not less than 10 feet (3048 mm) horizontally from an operable opening in an adjacent building. This requirement shall not apply to vent terminals that are 2 feet (607 mm) or more above or 25 feet (7620 mm) or more below operable openings.

❖ This section addresses the terminations of mechanical draft systems and direct-vent appliances. To prevent vent gases from entering the building, Item 1 requires forced air (mechanical) intakes to be at least 10 feet (3048 mm) away from a mechanical draft termination, or the termination must be at least 3 feet (914 mm) above the air intake. The natural buoyancy of vent gases is the justification for allowing a closer distance where the terminal is above the air intake. A combustion air intake for a direct-vent appliance is not what Item 1 intends to address (see Exception 1). Direct-vent appliance exhaust and intake opening locations are dictated by the appliance listing and manufacturer's instructions. Note the distinction between

INTERNATIONAL CODE COUNCIL®
Copyright © 2015 ICC. ALL RIGHTS RESERVED. Accessed by David Dammon on Jun 21, 2017 12:30:52 PM pursuant to License Agreement with ICC. No further reproduction or distribution authorized. ANY UNAUTHORIZED REPRODUCTION OR DISTRIBUTION IS A VIOLATION OF THE FEDERAL COPYRIGHT ACT AND THE LICENSE AGREEMENT, AND SUBJECT TO CIVIL AND CRIMINAL PENALTIES THEREUNDER.

direct-vent and other than direct-vent appliances in the manufacturer's instructions. Item 1 also does not apply to appliances such as rooftop units that have built-in outdoor air intakes and combustion gas exhaust outlets. The code assumes that the design and listing of the outdoor appliance accounts for the location of those openings (see Exception 2).

Item 2 addresses gravity air inlets in the exterior envelope of a building, including doors, operable (openable) windows and intake louvers and grilles. The appliances addressed by this item use auxiliary or integral fans and blowers to force the flow of combustion products to the outdoors. This item applies to externally installed power exhausters, integrally power-exhausted appliances and venting systems equipped with draft inducers. This item does not address fan-assisted Category I appliances and does not address direct-vent appliances. Category Ill and IV appliances are subject to the requirements of this item if those appliances are not listed as direct-vent appliances. Some Category I appliances are field convertible to Category III.

Power exhausters are field-installed pieces of equipment that are independent of, but used in conjunction with, other appliances [see Commentary Figure G2427.8(1)].

This item is consistent with appliance installation instructions that will contain additional details for the location of the venting system terminals, including but not limited to clearance to grade, inside corners, outside comers, decks, porches, balconies, soffits, roof eaves, utility meters, combustion air intakes, other appliance vents, service regulators, sidewalks and driveways.

There are significant differences between the requirements of Items 2 and 3 as they relate to nondirect-vent and direct-vent appliances, respectively. A Category IV, 90-percent efficient furnace or boiler would be subject to Item 2 if installed without a combustion air intake pipe to the outdoors but would be subject to Item 3, not Item 2, if installed with a combustion air intake pipe to the outdoors. This is because such a furnace can be listed as both a direct-vent and nondirect-vent appliance, and as such can be installed

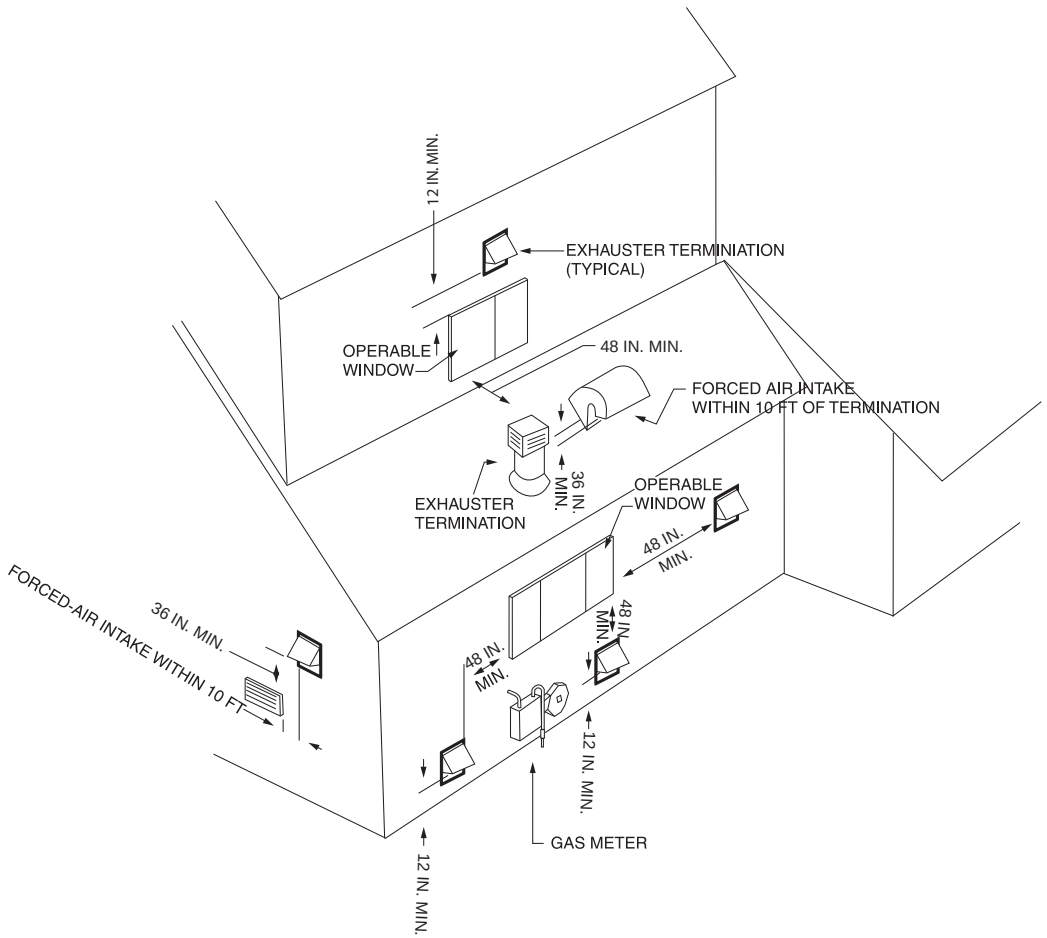

For SI: 1 inch = 25.4 mm, 1 foot = 304.8 mm.

Figure G2427.8(1)
MECHANICAL DRAFT VENTING SYSTEM EXHAUSTER TERMINATIONS

INTERNATIONAL CODE COUNCIL®
Copyright © 2015 ICC. ALL RIGHTS RESERVED. Accessed by David Dammon on Jun 21, 2017 12:30:52 PM pursuant to License Agreement with ICC. No further reproduction or distribution authorized. ANY UNAUTHORIZED REPRODUCTION OR DISTRIBUTION IS A VIOLATION OF THE FEDERAL COPYRIGHT ACT AND THE LICENSE AGREEMENT, AND SUBJECT TO CIVIL AND CRIMINAL PENALTIES THEREUNDER.

either way. Less restrictive clearances, improved operating efficiency, longer appliance life, immunity from the effects of building exhaust systems and ease of providing combustion air are some of the advantages of direct-vent appliances. For example, according to Item 2, a side-wall vent terminal must be 4 feet (1219 mm) or more to either side of an openable window, or must be 4 feet (1219 mm) or more below the bottom of the window or must be 1 foot (305 mm) or more above the top of the window.

Item 3 is consistent with appliance manufacturers' instructions. Research has shown that the distances associated with the input ranges are necessary to allow the combustion gases to dissipate in the atmosphere, thus avoiding entry into the building through openings. This item is applicable only to direct-vent appliances. For example, a Category IV, 90-percent efficient furnace installed without an outdoor air intake pipe for combustion air would be subject to Item 2, not 3 [see Commentary Figures G2427.8(2), G2427.8(3) and G2427.8(4)].

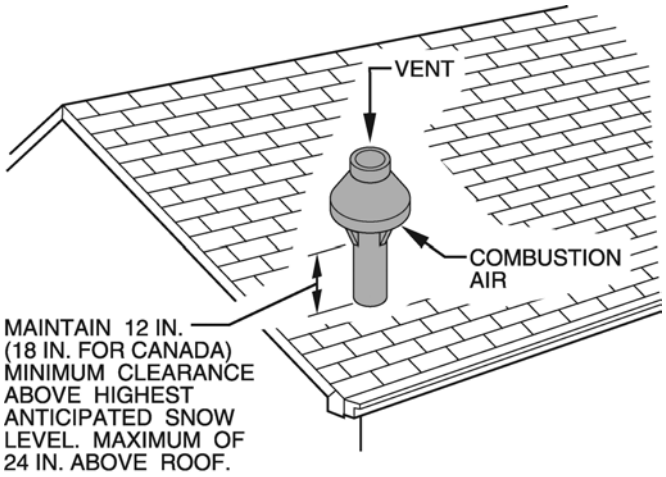

Figure courtesy of Carrier Corporation
For SI: 1 inch = 25.4 mm.

Figure G2427.8(2)
EXAMPLE OF MANUFACTURER'S DETAIL FOR DIRECT-VENT APPLIANCE TERMINAL

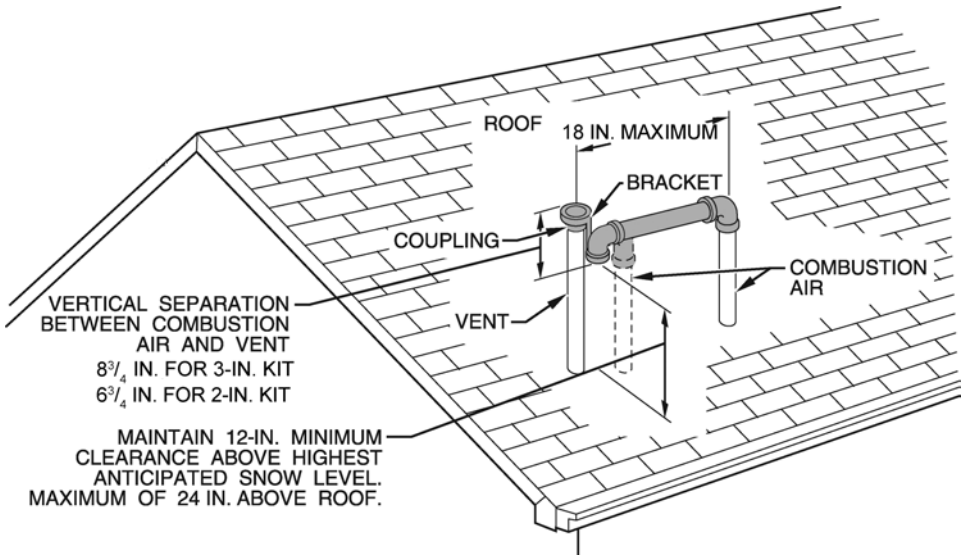

Figure courtesy of Carrier Corporation
For SI: 1 inch = 25.4 mm.

Figure G2427.8(3)
EXAMPLE OF MANUFACTURER'S DETAIL FOR DIRECT-VENT APPLIANCE TERMINAL

INTERNATIONAL CODE COUNCIL®
Copyright © 2015 ICC. ALL RIGHTS RESERVED. Accessed by David Dammon on Jun 21, 2017 12:30:52 PM pursuant to License Agreement with ICC. No further reproduction or distribution authorized. ANY UNAUTHORIZED REPRODUCTION OR DISTRIBUTION IS A VIOLATION OF THE FEDERAL COPYRIGHT ACT AND THE LICENSE AGREEMENT, AND SUBJECT TO CIVIL AND CRIMINAL PENALTIES THEREUNDER.

Item 4 addresses the possible effect of condensation on pedestrians, service equipment, etc. Condensate is corrosive and could create a hazard when it freezes. Condensate ice could be a slip hazard and could obstruct regulator and relief valve vents. Category I and III appliances do not produce as much condensate as appliances in the other two categories, but they can also cause condensate problems in cold climates. It is common to see large masses of ice build up on or near the vent terminals of Category I and III vents. Such ice masses can fall or slide from roofs and injure someone or cause damage to a building, vehicle or equipment.



Photo courtesy of Weil-McLain

Figure G2427.8(4)
DIRECT-VENT HOT WATER BOILER

Item 5 is specific to sidewall terminations of vents for Category IV appliances such as furnaces and boilers [see Commentary Figure G2427.8(5)].

A common issue arises where buildings, especially homes, are located very close to each other, and sidewall-vented appliances are installed with the vent terminals directed toward the neighboring home. The concern is that combustion gases will enter the adjacent building through openings in the exterior walls that face the appliance vent terminal. This section applies only to Category IV (condensing) appliances that are sidewall-vented with stainless steel or plastic vents.

Computer simulations were conducted as part of a research project, and the results indicated that in many scenarios the combustion products would impinge on the neighboring building. Many factors impact the simulated scenarios including wind speed and direction, the height of the adjacent buildings and the type of vent terminal (i.e., straight pipe, tee fitting, deflector cap, directional fitting, etc.). The worst-case scenario that this code section addresses is a straight open-ended pipe used as the appliance vent terminal that is perpendicular to the wall it passes through. This scenario is the most common and the most likely to project combustion gases far enough to be a potential danger to the neighbors. The research project suggested that vent terminals that utilize a tee-fitting outlet or a deflector cap or that are directed at some angle downward are much less likely to interfere with the neighbors because with these terminals the combustion gases disperse and lack the velocity to impinge on the adjacent building.

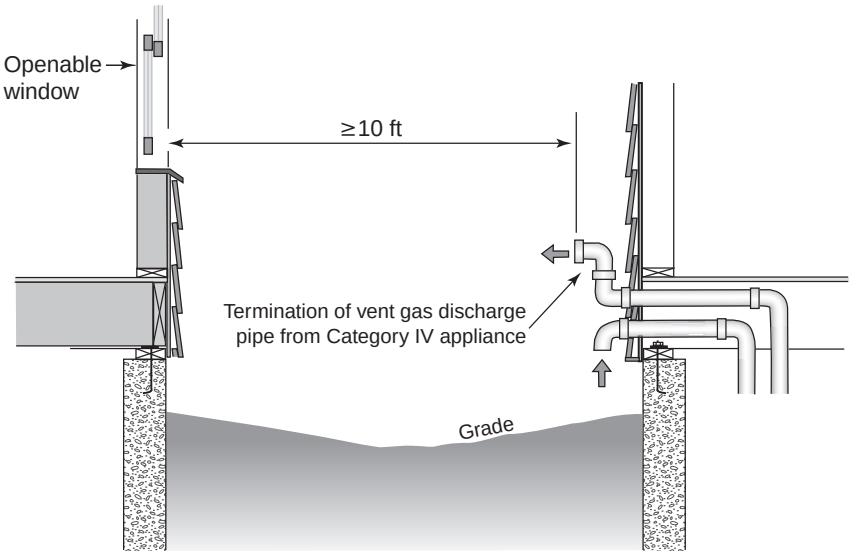

Figure G2427.8(5)
SIDEWALL TERMINATION CLEARANCE

INTERNATIONAL CODE COUNCIL®
Copyright © 2015 ICC. ALL RIGHTS RESERVED. Accessed by David Dammon on Jun 21, 2017 12:30:52 PM pursuant to License Agreement with ICC. No further reproduction or distribution authorized. ANY UNAUTHORIZED REPRODUCTION OR DISTRIBUTION IS A VIOLATION OF THE FEDERAL COPYRIGHT ACT AND THE LICENSE AGREEMENT, AND SUBJECT TO CIVIL AND CRIMINAL PENALTIES THEREUNDER.

G2427.9 (503.9) Condensation drainage. Provisions shall be made to collect and dispose of *condensate* from *venting systems* serving Category II and IV *appliances* and noncategorized condensing *appliances* in accordance with Section G2427.8, Item 4. Where local experience indicates that condensation is a problem, provisions shall be made to drain off and dispose of *condensate* from *venting systems* serving Category I and III *appliances* in accordance with Section G2427.8, Item 4.

❖ See Section G2427.8, Item 4.

G2427.10 (503.10) Vent connectors for Category I appliances. Vent *connectors* for Category I *appliances* shall comply with Sections G2427.10.1 through G2427.10.13.

❖ See Sections G2427.10.1 through G2417.10.5.

G2427.10.1 (503.10.1) Where required. A vent *connector* shall be used to connect an *appliance* to a gas vent, *chimney* or single-wall metal pipe, except where the gas vent, *chimney* or single-wall metal pipe is directly connected to the *appliance*.

❖ Unless the chimney or vent is connected directly to the appliance, a connector, defined in Section G2403 as pipe used to connect an approved fuel-burning appliance to a chimney or vent, is necessary. This includes the fittings necessary to make a connection or change in direction. This is usually accomplished with a single-wall metal pipe, but it is also common practice to use listed and labeled chimney and vent pipe or listed factory-built single- or double-wall bendable connectors.

Many factors affect the design and configuration of a connector. The most important of these is the appliance location with respect to the chimney or vent system. This impacts the connector size, length and rise. Another important factor is the number of appliances being vented. The appliance manufacturer's installation instructions may prohibit the use of single-wall connectors. For example, a single-wall vent connector may not be appropriate for fan-assisted appliances because of the possibility of condensation, corrosion and leakage. They are also not permitted in attic or crawl space installations that are subject to cold temperatures. The cold temperatures increase the possibility of condensation, which leads to accelerated material failure. If the vent or chimney extends all the way to a single appliance vent outlet (collar), no connector is needed.

G2427.10.2 (503.10.2) Materials. *Vent connectors* shall be constructed in accordance with Sections G2427.10.2.1 through G2427.10.2.4.

❖ See Sections G2427.10.2.1 through G2427.10.2.4.

G2427.10.2.1 (503.10.2.1) General. A *vent connector* shall be made of noncombustible corrosion-resistant material capable of withstanding the vent gas temperature produced by the *appliance* and of sufficient thickness to withstand physical damage.

❖ See Sections G2427.10.2.2 through G2427.10.2.4.

G2427.10.2.2 (503.10.2.2) Vent connectors located in unconditioned areas. Where the *vent connector* used for an *appliance* having a *draft hood* or a Category I *appliance* is located in or passes through attics, crawl spaces or other unconditioned spaces, that portion of the *vent connector* shall be *listed* Type B, Type L or listed vent material having equivalent insulation properties.

Exception: Single-wall metal pipe located within the exterior walls of the building in areas having a local 99-percent winter design temperature of 5ºF (-15ºC) or higher shall be permitted to be used in unconditioned spaces other than attics and crawl spaces.

❖ Compared to double-wall pipe, single-wall pipe has a much higher heat loss, and when installed in an unconditioned space, condensation can occur, deteriorating the pipe. A typical scenario is an attic, garage or crawl space appliance installation where a connector would be exposed to cold temperatures, practically ensuring the formation of condensation in the connector. Except as allowed in the exception, this section effectively prohibits the use of single-wall connectors in garages, attics and crawl spaces when the spaces are unheated.

The term "unconditioned" is not defined and the debate over the intent created the text in the exception, which is climate related. Attics and crawl spaces are usually unconditioned spaces; however, the uncertainty has been with residential basements and garages, which are common locations for gas-fired appliances. In many climates, the garage winter temperatures will be cold enough to cause the combustion gases in a connector to reach their dew point, meaning that condensate will form and linger in the connector, causing its rapid destruction. Most residential garages and some basements are considered to be unconditioned insofar as they are not directly or indirectly heated as is the living space.

The typical residential garage is not heated (conditioned) and, in most climates, will certainly have low ambient temperatures. The exception allows single-wall metal pipe in unconditioned spaces (other than attics and crawl spaces) if the climate is as described. The winter design temperatures can be found in the ASHRAE *Handbook of Fundamentals*. To put the climate criterion in perspective, Philadelphia, Pennsylvania; Louisville, Kentucky; Fall River, Massachusetts; and Providence, Rhode Island all have 99-percent winter design temperatures of 5°F (-15°C) or higher. The exception is applicable only to vent connectors that are inside a building (i.e., located within the exterior walls) (see Commentary Figure G2427.10.2.2).

G2427.10.2.3 (503.10.2.3) Residential-type appliance connectors. Where *vent connectors* for residential-type *appliances* are not installed in attics or other unconditioned spaces, connectors for *listed appliances* having *draft hoods, appliances* having *draft hoods* and equipped with *listed conversion burners* and Category I *appliances* shall be one of the following:

1. Type B or L vent material.

INTERNATIONAL CODE COUNCIL®
Copyright © 2015 ICC. ALL RIGHTS RESERVED. Accessed by David Dammon on Jun 21, 2017 12:30:52 PM pursuant to License Agreement with ICC. No further reproduction or distribution authorized. ANY UNAUTHORIZED REPRODUCTION OR DISTRIBUTION IS A VIOLATION OF THE FEDERAL COPYRIGHT ACT AND THE LICENSE AGREEMENT, AND SUBJECT TO CIVIL AND CRIMINAL PENALTIES THEREUNDER.

2. Galvanized sheet steel not less than 0.018 inch (0.46 mm) thick.
3. Aluminum (1100 or 3003 alloy or equivalent) sheet not less than 0.027 inch (0.69 mm) thick.
4. Stainless steel sheet not less than 0.012 inch (0.31 mm) thick.
5. Smooth interior wall metal pipe having resistance to heat and corrosion equal to or greater than that of Item 2, 3 or 4.
6. A *listed* vent *connector*.

Vent connectors shall not be covered with insulation.

Exception: *Listed* insulated *vent connectors* shall be installed in accordance with the manufacturer's instructions.

❖ This section applies to draft-hood-equipped appliances only and lists the allowable materials, including sheet metals, listed connectors and listed vent system pipe. The minimum thickness for single-wall galvanized steel pipe is equivalent to 26 gage. Installers have field-installed insulation on vent connectors in an attempt to control heat loss and the resultant condensation; however, this is prohibited because of the combustibility of most insulation materials and the possibility of excessive connector temperatures. Listed double-wall (air insulated) Type B connectors are available as an option to using Type B vent pipe (see Commentary Figure G2427.10.2.2).



Photo courtesy of Selkirk L.L.C.

Figure G2427.10.2.2
LISTED BENDABLE DOUBLE-WALL CONNECTOR

G2427.10.2.4 (503.10.2.4) Low-heat appliance. A *vent connector* for a nonresidential, low-heat *appliance* shall be a factory-built *chimney* section or steel *pipe* having resistance to heat and corrosion equivalent to that for the appropriate galvanized pipe as specified in Table G2427.10.2.4. Factory-built *chimney* sections shall be joined together in accordance with the *chimney* manufacturer's instructions.

❖ Residential appliances are also low-heat by definition, and the provisions of Section G2427.10.2.3 apply as well. The table is intended for nonresidential-type appliances, which is apparent when compared to the materials allowed by Section G2427.10.2.3.

TABLE G2427.10.2.4 (503.10.2.4)
MINIMUM THICKNESS FOR GALVANIZED STEEL VENT CONNECTORS FOR LOW-HEAT APPLIANCES

DIAMETER OF CONNECTOR (inches)	MINIMUM THICKNESS (inch)
Less than 6	0.019
6 to less than 10	0.023
10 to 12 inclusive	0.029
14 to 16 inclusive	0.034
Over 16	0.056

For SI: 1 inch = 25.4 mm.

❖ See the commentary to Section G2427.10.2.4.

G2427.10.3 (503.10.3) Size of vent connector. *Vent connectors* shall be sized in accordance with Sections G2427.10.3.1 through G2427.3.5.

❖ See the commentary to Sections G2427.10.3.1 through G2427.10.3.5.

G2427.10.3.1 (503.10.3.1) Single draft hood and fan-assisted. A *vent connector* for an *appliance* with a single *draft hood* or for a Category I fan-assisted *combustion* system *appliance* shall be sized and installed in accordance with Section G2428 or other *approved* engineering methods.

❖ The sizing tables in Section G2428 will determine connector size with the fundamental requirement that a connector not be smaller than the appliance vent connection, except as allowed by Sections G2428.2.2 and G2428.3.17. The tables will often require that a connector be larger than the appliance vent outlet (see Section G2428).

G2427.10.3.2 (503.10.3.2) Multiple draft hood. For a single *appliance* having more than one *draft hood* outlet or *flue collar*, the manifold shall be constructed according to the instructions of the *appliance* manufacturer. Where there are no instructions, the manifold shall be designed and constructed in accordance with *approved* engineering practices. As an alternate method, the effective area of the manifold shall equal the combined area of the *flue collars* or *draft hood* outlets and the *vent connectors* shall have a minimum 1-foot (305 mm) rise.

❖ Some appliances are designed with more than one venting (flue) outlet. For example, some large furnaces were built with dual heat exchangers and burner sections, and thus have two draft hoods or flue collar outlets. The manufacturer's instructions must be followed; however, in the event that the manufacturer's instructions are not available, this section specifies required sizing criteria. Section G2408.1 requires the manufacturer's instructions to be on the job site.

INTERNATIONAL CODE COUNCIL®
Copyright © 2015 ICC. ALL RIGHTS RESERVED. Accessed by David Dammon on Jun 21, 2017 12:30:52 PM pursuant to License Agreement with ICC. No further reproduction or distribution authorized. ANY UNAUTHORIZED REPRODUCTION OR DISTRIBUTION IS A VIOLATION OF THE FEDERAL COPYRIGHT ACT AND THE LICENSE AGREEMENT, AND SUBJECT TO CIVIL AND CRIMINAL PENALTIES THEREUNDER.

G2427.10.3.3 (503.10.3.3) Multiple appliances. Where two or more *appliances* are connected to a common *vent* or *chimney*, each *vent connector* shall be sized in accordance with Section G2428 or other *approved* engineering methods.

As an alternative method applicable only when all of the *appliances* are *draft hood* equipped, each *vent connector* shall have an effective area not less than the area of the *draft hood* outlet of the *appliance* to which it is connected.

❖ The sizing tables in Section G2428 will determine connector size with the fundamental requirement that a connector not be smaller than the appliance vent connection, except as allowed by Sections G2428.2.2 and G2428.3.17. The tables will often require a connector that is larger than the appliance vent outlet (see Section G2428). The alternative method paragraph of this section is incompatible with Section G2428 and is intended only for use with the alternative sizing method of Section G2427.6.8.1.

G2427.10.3.4 (503.10.3.4) Common connector/manifold. Where two or more *appliances* are vented through a common *vent connector* or vent manifold, the common *vent connector* or vent manifold shall be located at the highest level consistent with available headroom and the required *clearance* to *combustible materials* and shall be sized in accordance with Section G2428 or other *approved* engineering methods.

As an alternate method applicable only where there are two *draft hood*-equipped *appliances*, the effective area of the common *vent connector* or vent manifold and all junction fittings shall be not less than the area of the larger *vent connector* plus 50 percent of the area of the smaller *flue collar* outlet.

❖ Vent manufacturers' instructions contain detailed design criteria for manifolds. Connectors serving gas-fired appliances are allowed to join to form a common connector manifold rather than connecting independently to the vertical common vent [see Commentary Figures G2427.10.3.4(1) and G2427.10.3.4(2)]. Various manufacturers' instructions require a 10-percent to 20-percent reduction in the capacity of a common vent where a manifold is used (see commentary, Section G2428.3.4). A manifold is defined as a vent or connector that is a lateral (horizontal) extension of the lower

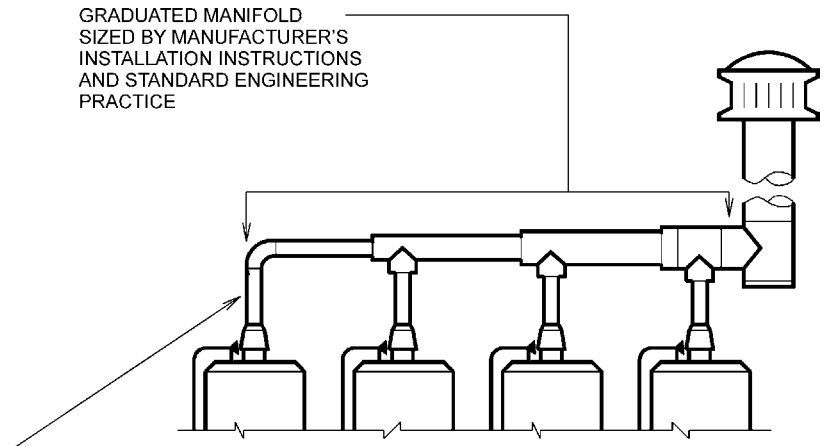

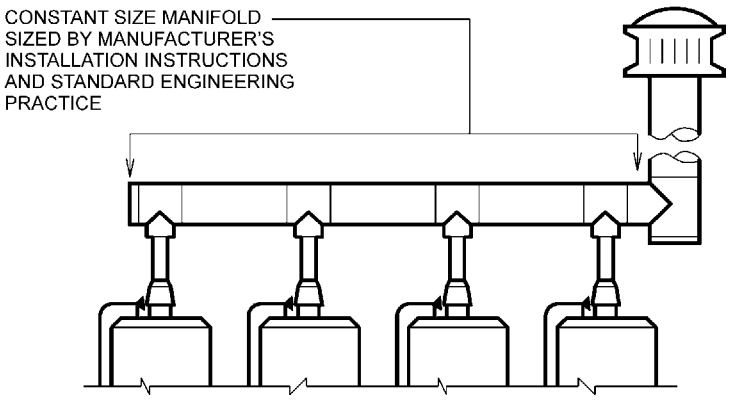

Figure courtesy of Selkirk, L.L.C.

Figure G2427.10.3.4(1)
MANIFOLD SIZING

INTERNATIONAL CODE COUNCIL®
Copyright © 2015 ICC. ALL RIGHTS RESERVED. Accessed by David Dammon on Jun 21, 2017 12:30:52 PM pursuant to License Agreement with ICC. No further reproduction or distribution authorized. ANY UNAUTHORIZED REPRODUCTION OR DISTRIBUTION IS A VIOLATION OF THE FEDERAL COPYRIGHT ACT AND THE LICENSE AGREEMENT, AND SUBJECT TO CIVIL AND CRIMINAL PENALTIES THEREUNDER.

end of a common vent. Because a manifold serves multiple appliances and thus conveys flue gases from two or more appliances, manifolds must be sized by the common vent tables. This section requires that manifolds be installed as high as possible, respective of ceiling height and clearance-to combustibles requirements. This will result in the most appliance connector rise, which is always beneficial for venting performance. Connector rise takes advantage of the energy of hot gases discharging directly from the appliance and develops flow velocity and draft in addition to that produced by the common vent [see Commentary Figures G2427.10.3.4(1) and G2427.10.3.4(2)]. The alternative method in the second paragraph is intended for use only with the alternative sizing method of Section G2427.6.8.1 and is not compatible with Section G2428.

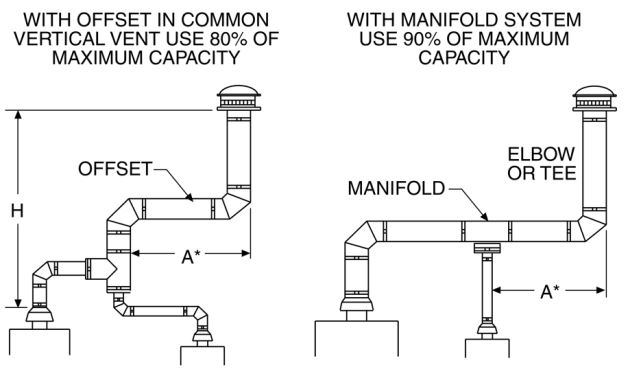

Figure courtesy of Selkirk, L.L.C.
For SI: 1 inch = 25.4 mm.

Figure G2427.10.3.4(2)
COMMON VENT OFFSET AND MANIFOLD

G2427.10.3.5 (503.10.3.5) Size increase. Where the size of a *vent connector* is increased to overcome installation limitations and obtain connector capacity equal to the *appliance* input, the size increase shall be made at the *appliance draft hood* outlet.

❖ If a connector must be larger than the appliance vent outlet, the size increase must occur at the appliance connection by use of an increaser fitting. For example, it is common for a water heater with a 3-inch (76 mm) draft-hood outlet to be connected to a 4-inch (102 mm) connector by a 3-inch by 4-inch (76 mm by 102 mm) increaser fitting, as dictated by the vent tables in Section G2428.

G2427.10.4 (503.10.4) Two or more appliances connected to a single vent or chimney. Where two or more *vent connectors* enter a common gas vent, *chimney* flue, or single-wall metal pipe, the smaller connector shall enter at the highest level consistent with the available headroom or *clearance* to *combustible material*. *Vent connectors* serving Category I *appliances* shall not be connected to any portion of a *mechanical draft* system operating under positive static pressure, such as those serving Category III or IV *appliances*.

❖ A common vent is somewhat oversized when only a single appliance is operating; therefore, every effort is made to achieve proper vent/chimney operation during all possible operating circumstances. Placing the smallest appliance connection at the highest elevation in the common vent/chimney will allow the greatest connector rise for the smaller appliance connector and will take advantage of any draft priming effect caused by the lower connector. For example, it has been common practice to connect a domestic water heater connector above the furnace or boiler connector in a chimney or vent system. Category I appliances require a vent that produces a draft and therefore cannot be connected to any venting system that produces a positive pressure. For example, a Category I appliance and a Category Ill appliance cannot share the same vent unless they both connect to the negative pressure (inlet) side of a mechanical draft system in accordance with the appliance and draft system installation instructions (see Section G2425.10).

G2427.10.4.1 (503.10.4.1) Two or more openings. Where two or more openings are provided into one *chimney* flue or vent, the openings shall be at different levels, or the connectors shall be attached to the vertical portion of the *chimney* or vent at an angle of 45 degrees (0.79 rad) or less relative to the vertical.

❖ The intent is to prevent turbulence and flow interference that could impede flow from a chimney or vent connector into the chimney or common vent. Openings at the same elevation, such as those directly opposite of each other, could negatively affect the flow from either or both of the connectors (see Commentary Figure G2427.10.4.1).

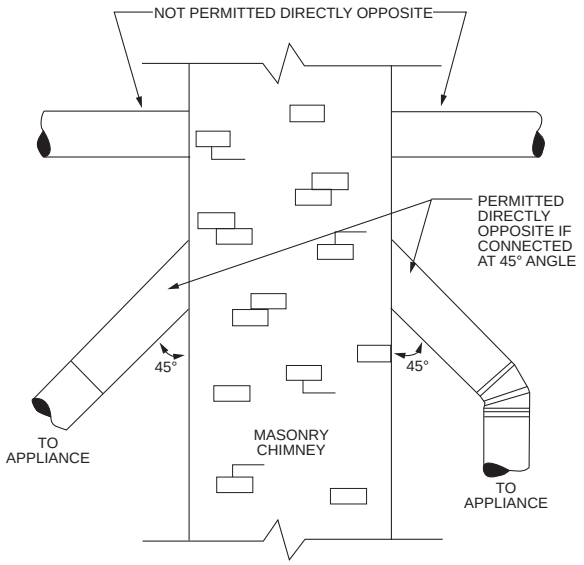

Figure G2427.10.4.1
OPPOSING OPENINGS IN CHIMNEY

INTERNATIONAL CODE COUNCIL®
Copyright © 2015 ICC. ALL RIGHTS RESERVED. Accessed by David Dammon on Jun 21, 2017 12:30:52 PM pursuant to License Agreement with ICC. No further reproduction or distribution authorized. ANY UNAUTHORIZED REPRODUCTION OR DISTRIBUTION IS A VIOLATION OF THE FEDERAL COPYRIGHT ACT AND THE LICENSE AGREEMENT, AND SUBJECT TO CIVIL AND CRIMINAL PENALTIES THEREUNDER.

G2427.10.5 (503.10.5) Clearance. Minimum *clearances* from *vent connectors* to *combustible material* shall be in accordance with Table G2427.10.5.

Exception: The *clearance* between a *vent connector* and *combustible material* shall be permitted to be reduced where the *combustible material* is protected as specified for *vent connectors* in Table G2409.2.

❖ Flue gas passageways must have minimum clearances to ignitable materials. The single-wall metal pipe clearance requirements in Table G2427.10.5 apply to unlisted single-wall connectors. Connectors that are listed and labeled for this use must be installed with a clearance to combustibles as required by the connector manufacturer's installation instructions. If the appliance or connector manufacturer's installation instructions specify larger clearances than those prescribed by this section, the manufacturer's installation instructions govern. Table G2427.10.5 dictates the required air-space clearances between vent connectors and combustible materials and assemblies. The provisions of Section G2409 would allow reduction of connector clearances where the prescribed clearance cannot be provided or is impractical. Lack of vent connector clearance is a common code violation. Connectors usually lack the required clearances to wood joists, plastic plumbing piping, building and piping insulation materials and gypsum board. A major disadvantage of single-wall connectors is the large clearance required to combustibles. Listed connectors usually require far less clearance, in some cases only 1 inch (25.4 mm).

G2427.10.6 (503.10.6) Joints. Joints between sections of connector *piping* and connections to *flue collars* and *draft hood* outlets shall be fastened by one of the following methods:

1. Sheet metal screws.
2. *Vent connectors* of *listed* vent material assembled and connected to *flue collars* or *draft hood* outlets in accordance with the manufacturers' instructions.
3. Other *approved* means.

❖ Single-wall connectors (unlisted) have been traditionally fastened with sheet metal screws and rivets. All connector joints must be fastened, including the joint at the appliance draft hood or flue collar. A displaced connector could result in a life-threatening condition; therefore, connectors must be fastened and supported well. Appliance connectors are often located where they can be impacted or otherwise disturbed by building occupants, making proper fastening even more important. Item 2 speaks of listed connectors such as Type B vent material and factory-built corrugated (bendable) connectors, which use adapter fittings or integral collars that are mechanically fastened to the appliance with screws or rivets (see Commentary Figure G2427.10.2.2).

G2427.10.7 (503.10.7) Slope. A *vent connector* shall be installed without dips or sags and shall slope upward toward the vent or *chimney* at least $^1/_4$ inch per foot (21 mm/m).

Exception: *Vent connectors* attached to a mechanical *draft* system installed in accordance with the *appliance* and *draft* system manufacturers' instructions.

❖ The ideal chimney or vent configuration is a totally vertical system, even though it is not always practical. This section requires all portions of a chimney or vent connector to rise vertically a minimum of a $^1/_4$ inch per each foot (21 mm/m) of its horizontal length. The connector slope is intended to induce the flow of flue gases using the natural buoyancy of the hot gases. Connector slope can promote the priming of a cold venting system and can partially compensate for short connector vertical rise. Low points, dips and sags could also trap condensate and accelerate corrosion of the connector. The exception allows connectors without slope where connected to mechanical draft systems because the connector is on the negative pressure (inlet) side of the exhauster and slope would provide no benefit.

TABLE G2427.10.5 (503.10.5)[a]
CLEARANCES FOR CONNECTORS

APPLIANCE	MINIMUM DISTANCE FROM COMBUSTIBLE MATERIAL			
	Listed Type B gas vent material	Listed Type L vent material	Single-wall metal pipe	Factory-built chimney sections
Listed appliances with draft hoods and appliances listed for use with Type B gas vents	As listed	As listed	6 inches	As listed
Residential boilers and furnaces with listed gas conversion burner and with draft hood	6 inches	6 inches	9 inches	As listed
Residential appliances listed for use with Type L vents	Not permitted	As listed	9 inches	As listed
Listed gas-fired toilets	Not permitted	As listed	As listed	As listed
Unlisted residential appliances with draft hood	Not permitted	6 inches	9 inches	As listed
Residential and low-heat appliances other than above	Not permitted	9 inches	18 inches	As listed
Medium-heat appliances	Not permitted	Not permitted	36 inches	As listed

For SI: 1 inch = 25.4 mm.

a. These clearances shall apply unless the manufacturer's installation instructions for a listed appliance or connector specify different clearances, in which case the listed clearances shall apply.

INTERNATIONAL CODE COUNCIL®
Copyright © 2015 ICC. ALL RIGHTS RESERVED. Accessed by David Dammon on Jun 21, 2017 12:30:52 PM pursuant to License Agreement with ICC. No further reproduction or distribution authorized. ANY UNAUTHORIZED REPRODUCTION OR DISTRIBUTION IS A VIOLATION OF THE FEDERAL COPYRIGHT ACT AND THE LICENSE AGREEMENT, AND SUBJECT TO CIVIL AND CRIMINAL PENALTIES THEREUNDER.

G2427.10.8 (503.10.8) Length of vent connector. The maximum horizontal length of a single-wall connector shall be 75 percent of the height of the *chimney* or vent except for engineered systems. The maximum horizontal length of a Type B double-wall connector shall be 100 percent of the height of the *chimney* or vent except for engineered systems.

❖ This section is applied in conjunction with Section G2428.3.2. The appliance and chimney or vent must be located to keep the connector length as short as practicable. This section establishes the maximum allowable length for uninsulated chimney and vent connectors, insulated chimney and vent connectors and individual connectors for a chimney or vent system serving multiple appliances. These requirements are based on the heat loss of the connector and the ability of the vent or chimney system to produce a draft.

An insulated connector (double wall) reduces the amount of heat transfer through the connector pipe; thus, the flue gas is maintained at a higher temperature (see commentary, Section G2428.3.2). The amount of draft is directly related to the chimney or vent height and the difference in temperature between the flue gases and the ambient air. An uninsulated connector is a run of single-wall pipe. Commentary Figure G2427.10.8 shows that the total chimney or vent height is measured from the top of the highest appliance flue outlet connection to the termination point of the chimney or vent. The length limitations of this section are based on the total vertical rise of the chimney or vent and on the developed length of horizontal connectors within the chimney or vent system. The venting tables will often prohibit the use of single-wall connectors with fan-assisted appliances, and most appliance and vent manufacturers recommend against the use of single-wall (uninsulated) connectors.

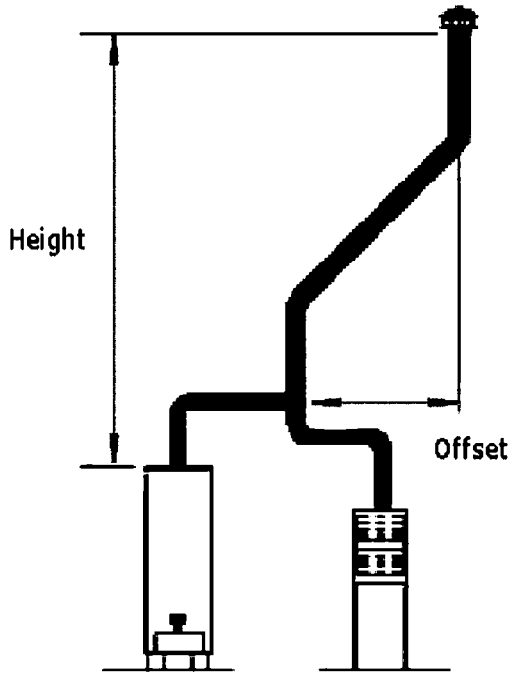

Figure courtesy of Simpson Dura-Vent Company, Incorporated

Figure G2427.10.8
VENT HEIGHT

Connectors are limited in length because of the flow resistance of the connector pipe and because heat loss through the connector is directly related to its length. For a venting system to work, the draft produced by the vertical vent or chimney must be able to overcome the resistance to flow created by the connector. The longer the connector, the longer it takes to prime a cold venting system and develop draft. As stated in Section G2428.3.2, connectors should always be as short as the installation conditions will permit. The sizing methodology and tables in Section G2428 for connectors in single-appliance installations might allow connector lengths greater than the general limits given in this section or might require a shorter connector length than would be allowed by these limits, depending on the combination of appliance type and input, connector size and type and vent height.

Because the sizing tables in Section G2428.2 are based on specific computer modeling of the installation configuration, the limitations or allowances in the single-appliance tables supersede what would be required in this section. For multiple-appliance systems, the sizing methods and tables do not contain the same limitations on connector length. This section establishes an absolute length limitation for connectors in multiple-appliance systems (100 percent of the height of the chimney or vent), which still provides liberal installation flexibility without permitting excessively long connectors. This section functions as an absolute cap for the connector length provisions of Sections G2428.3.2 and G2428.3.3.

The appliance and vent location should be well planned to allow the shortest horizontal run of connector piping (see Sections G2428.3.2 and G2428.3.3).

The intent of the reference to engineered systems is to allow connector length to be determined by design as part of an engineered venting system.

G2427.10.9 (503.10.9) Support. A *vent connector* shall be supported for the design and weight of the material employed to maintain *clearances* and prevent physical damage and separation of joints.

❖ A connector must be supported for the design and weight of the material used. Proper support is necessary to maintain the clearances required by Section G2427.10.5, to maintain the required slope and to prevent physical damage and separation of joints. The joints between connectors and appliance draft-hood outlets and flue collars must be secured with screws, rivets or other approved means. The joints between pipe sections also must be secured with screws, rivets or other approved means. Some connectors are available with a proprietary-type fastening method, which does not require screws, rivets or other fasteners if it provides equivalent resistance to disengagement or displacement. This section addresses connectors, not chimneys and vents, and most chimney and vent man-

INTERNATIONAL CODE COUNCIL®
Copyright © 2015 ICC. ALL RIGHTS RESERVED. Accessed by David Dammon on Jun 21, 2017 12:30:52 PM pursuant to License Agreement with ICC. No further reproduction or distribution authorized. ANY UNAUTHORIZED REPRODUCTION OR DISTRIBUTION IS A VIOLATION OF THE FEDERAL COPYRIGHT ACT AND THE LICENSE AGREEMENT, AND SUBJECT TO CIVIL AND CRIMINAL PENALTIES THEREUNDER.

ufacturers do not require or might even prohibit the use of screws or rivets for securing joints for chimney and vent pipe sections and fittings.

G2427.10.10 (503.10.10) Chimney connection. Where entering a flue in a masonry or metal *chimney*, the *vent connector* shall be installed above the extreme bottom to avoid stoppage. Where a thimble or slip joint is used to facilitate removal of the connector, the connector shall be firmly attached to or inserted into the thimble or slip joint to prevent the connector from falling out. Means shall be employed to prevent the connector from entering so far as to restrict the space between its end and the opposite wall of the *chimney* flue (see Section G2425.9).

❖ All of the precautions taken to provide adequate chimney design may be ineffective if the connection between the appliance and the chimney is not properly accomplished. Improper connections can lead to appliance or connector failure and the leakage of vent gases into the building. This section contains requirements for the connection between a chimney and the appliance connector. The connection to a vent is properly accomplished by vent fittings and likewise for factory-built chimneys. Chimney connectors are required to pass through a masonry chimney wall to the inner face of the liner, but not beyond. A connector that extends into a chimney passageway can restrict the flow of vent gases and provide a ledge on which debris can accumulate. The joint between the connector and the chimney must be fastened in a manner that will prevent separation. If the connector enters a masonry chimney, it must be cemented in place with an approved material such as refractory mortar or other heat-resistant cement.

This section also permits the use of thimbles at a masonry chimney opening to provide for easy removal of the connector to facilitate cleaning. When a thimble is installed, it is to be permanently cemented in place with an approved high-temperature cement. A connector must be attached to a thimble in an approved manner to prevent displacement. A collar on the connector or a similar arrangement must be provided to limit the penetration of the connector into the chimney. Otherwise, it is quite possible that a connector will be shoved blindly into a chimney, reaching to the back wall of the chimney, and thus be obstructed.

G2427.10.11 (503.10.11) Inspection. The entire length of a *vent connector* shall be provided with *ready access* for inspection, cleaning and replacement.

❖ A connector cannot be concealed by any form of building construction, whether or not such construction is removable. Connectors must be inspected periodically for corrosion damage, structural integrity, joint separation and clearances to combustibles (see Section G2427.10.13).

G2427.10.12 (503.10.12) Fireplaces. A *vent connector* shall not be connected to a *chimney* flue serving a *fireplace* unless the *fireplace* flue opening is permanently sealed.

❖ A fireplace chimney cannot serve any appliance unless the fireplace is retired by permanently sealing off the chimney from the fireplace. If this is not done, the fireplace can affect draft for the connected appliance, and/or vent gases could escape into the building through the fireplace opening.

G2427.10.13 (503.10.13) Passage through ceilings, floors or walls. Single-wall metal pipe connectors shall not pass through any wall, floor or ceiling except as permitted by Section G2427.7.4.

❖ This section no longer prohibits double-wall, Type B connectors from passing through walls, floors and ceilings. The prohibition on pass-through is limited to single-wall metal pipe connectors, recognizing that Section G2427.7.4 allows single-wall metal pipe vents to extend from the appliance to the outdoors by passing through a roof or exterior wall. A single-wall connector has more than double the heat loss of a listed metal vent or chimney system. This produces high temperatures on the outside surface and cooling of the flue gases on the inside of the connector. The cooling of flue gases produces condensation, which can cause connector deterioration, while the excessive surface temperatures pose a potential fire hazard. For these reasons, a single-wall connector can be located only within the room or space in which the appliance is located. Single-wall connectors are prohibited from passing through any ceiling, floor or wall. If single-wall connectors were allowed to pass through walls, floors or ceilings, they might not be readily observable, and a potential fire hazard or connector deterioration could go undetected. Also, pass-through increase the likelihood that the connector will be excessively long, exposed to low ambient temperatures or subject to contact with combustibles. Connectors that pass through a wall, floor or ceiling would be out of sight and therefore out of mind, meaning that they would not get the attention needed to avoid hazardous conditions (see Commentary Figure G2427.10.13).

G2427.11 (503.11) Vent connectors for Category II, III and IV appliances. *Vent connectors* for Category II, III and IV *appliances* shall be as specified for the *venting systems* in accordance with Section G2427.4.

❖ See Sections G2427.4, G2427.4.1 and G2427.4.2.

G2427.12 (503.12) Draft hoods and draft controls. The installation of *draft hoods* and draft controls shall comply with Sections G2427.12.1 through G2427.12.7.

❖ See Sections G2427.12.1 through G2427.12.7.

G2427.12.1 (503.12.1) Appliances requiring draft hoods. *Vented appliances* shall be installed with *draft hoods*.

Exception: Dual oven-type combination ranges; *direct-vent appliances*; fan-assisted *combustion* system *appliances*; *appliances* requiring *chimney draft* for operation; single firebox boilers equipped with *conversion burners* with inputs greater than 400,000 *Btu* per hour (117 kW); *appliances* equipped with blast, power or pressure *burners*

INTERNATIONAL CODE COUNCIL®
Copyright © 2015 ICC. ALL RIGHTS RESERVED. Accessed by David Dammon on Jun 21, 2017 12:30:52 PM pursuant to License Agreement with ICC. No further reproduction or distribution authorized. ANY UNAUTHORIZED REPRODUCTION OR DISTRIBUTION IS A VIOLATION OF THE FEDERAL COPYRIGHT ACT AND THE LICENSE AGREEMENT, AND SUBJECT TO CIVIL AND CRIMINAL PENALTIES THEREUNDER.

that are not *listed* for use with *draft hoods*; and *appliances* designed for forced venting.

❖ Draft hoods are integral to or are supplied with natural draft atmospheric-burner gas-fired appliances (see Commentary Figure G2427.12.1). With the development of higher appliance efficiencies, fan-assisted combustion, direct-vent appliances and Category III and IV appliances, fewer draft-hood appliances will be used. Draft hoods are still common on conventional tank-type and tankless water heaters and 80-percent-efficient boilers. A draft-hood-equipped appliance will allow a continuous flow of air into the venting system, which represents an energy loss except where an automatic vent damper is installed to close off the vent in the off cycle. Without an automatic vent damper, conditioned air is taken from the space in which the appliance is located and residual heat is taken away from the appliance itself, both of which contribute to energy loss. Not all appliances are categorized, but if they were, draft-hood-equipped appliances would fall under Category I. Draft hoods have multiple functions. They serve as a relief opening in the event of vent or chimney backdraft or blockage, they stabilize/regulate the amount of draft that occurs in the appliance combustion chamber and they allow the introduction of dilution air into the chimney or vent.

G2427.12.2 (503.12.2) Installation. A *draft hood* supplied with or forming a part of a *listed vented appliance* shall be installed without *alteration*, exactly as furnished and specified by the *appliance* manufacturer.

❖ Draft hoods are often shipped with appliances as a part that must be field installed. Installers have been known to shorten or otherwise modify the draft hoods to compensate for installation constraints and have also installed them in an orientation other than vertical.



Figure courtesy of A.O. Smith Water Products

Figure G2427.12.1
DRAFT-HOOD-EQUIPPED APPLIANCE

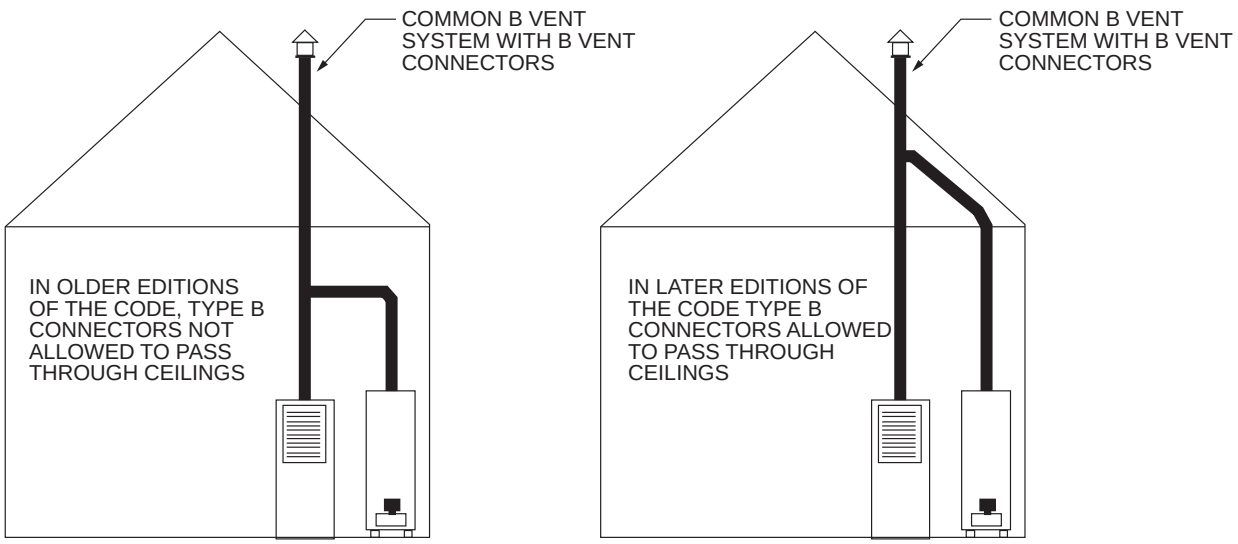

Figure G2427.10.13
TYPE B VENT CONNECTOR PENETRATIONS

INTERNATIONAL CODE COUNCIL®
Copyright © 2015 ICC. ALL RIGHTS RESERVED. Accessed by David Dammon on Jun 21, 2017 12:30:52 PM pursuant to License Agreement with ICC. No further reproduction or distribution authorized. ANY UNAUTHORIZED REPRODUCTION OR DISTRIBUTION IS A VIOLATION OF THE FEDERAL COPYRIGHT ACT AND THE LICENSE AGREEMENT, AND SUBJECT TO CIVIL AND CRIMINAL PENALTIES THEREUNDER.

G2427.12.2.1 (503.12.2.1) Draft hood required. If a *draft hood* is not supplied by the *appliance* manufacturer where one is required, a *draft hood* shall be installed, shall be of a *listed* or *approved* type and, in the absence of other instructions, shall be of the same size as the *appliance flue* collar. Where a *draft hood* is required with a *conversion burner*, it shall be of a *listed* or *approved* type.

❖ In the unlikely event that an appliance manufacturer does not supply the required draft hood, a listed or approved draft hood must be obtained and installed.

G2427.12.2.2 (503.12.2.2) Special design draft hood. Where it is determined that a *draft hood* of special design is needed or preferable for a particular installation, the installation shall be in accordance with the recommendations of the *appliance* manufacturer and shall be *approved*.

❖ There could be unusual circumstances, such as where a horizontal type draft hood is needed, because of low ceilings and/or insufficient connector rise.

G2427.12.3 (503.12.3) Draft control devices. Where a *draft control* device is part of the *appliance* or is supplied by the *appliance* manufacturer, it shall be installed in accordance with the manufacturer's instructions. In the absence of manufacturer's instructions, the device shall be attached to the *flue collar* of the *appliance* or as near to the *appliance* as practical.

❖ Draft hoods also serve to control draft; however, this section would be redundant with Section G2427.12.2 if it were not addressing draft controls such as barometric dampers. Two types of draft controls are installed in the appliance vent outlet or vent connector: the passive draft hood and the active barometric damper. Barometric dampers consist of a damper plate mounted on an axle that rotates in low friction bearing points such as needle or knife-edge bearings. The device is mounted in a tee fitting arrangement and connects with the appliance vent connector. It admits air in varying amounts into the vent connector to control the amount of draft through the appliance combustion chamber. These devices respond to varying chimney or vent draft caused by changes in indoor and outdoor temperatures, changes in atmospheric (barometric) pressure and changes in wind speed and direction. Barometric dampers are tuned by adjustable balancing weights attached to the damper plate. The damper manufacturer will provide instructions on how and where to install the device [see Commentary Figure G2403(2)].

G2427.12.4 (503.12.4) Additional devices. *Appliances* requiring a controlled *chimney draft* shall be permitted to be equipped with a *listed* double-acting barometric-*draft regulator* installed and adjusted in accordance with the manufacturer's instructions.

❖ Like Section G2427.12.3, this section addresses barometric dampers, specifically, the double-acting type. These dampers open inward to admit air into the vent system like all other barometric dampers, but can also open outward in the event of backdraft to allow vent gases to be spilled into the room or space in which the appliance is located, just as a draft hood would do. The manufacturer's installation instructions may require or recommend that a sensor (spill switch) be installed that will sense prolonged vent-gas spillage from the damper and shut down the appliance. In such cases, a manufacturer's recommendation should be interpreted as an enforceable requirement.

Some Category I fan-assisted furnaces can be fitted with a factory-supplied conversion part that is, in effect, a retrofit draft hood. This will lower the efficiency of the appliance by converting it to a draft-hood equipped appliance that will now introduce dilution air (conditioned room air) into the vent. This is done solely to allow fan-assisted furnaces to connect to existing masonry chimneys that would otherwise not be allowed to serve such appliances. These conversion parts use a sensor (spill switch) in the relief/air inlet opening. The manufacturer of the appliance and the draft hood conversion kit will provide specific installation instructions that must be followed for the conversion.

Vent gas spillage must not occur from an incinerator venting system; therefore, a draft regulating device must be of the single-acting type.

G2427.12.5 (503.12.5) Location. *Draft hoods* and *barometric draft regulators* shall be installed in the same room or enclosure as the *appliance* in such a manner as to prevent any difference in pressure between the hood or *regulator* and the *combustion air* supply.

❖ Draft-regulation devices are designed to maintain a constant draft through the appliance combustion chamber and flue passages for the purpose of maintaining proper combustion conditions and achieving the high-est possible efficiency. If the draft control sees a different ambient pressure than the appliance, it could allow too much or too little draft through the appliance. The positive, negative or neutral pressures within a building must act equally on both the appliance and the draft control to allow the draft control to be adjusted and perform its intended function.

G2427.12.6 (503.12.6) Positioning. *Draft hoods* and *draft regulators* shall be installed in the position for which they were designed with reference to the horizontal and vertical planes and shall be located so that the *relief opening* is not obstructed by any part of the *appliance* or adjacent construction. The *appliance* and its *draft hood* shall be located so that the *relief opening* is accessible for checking *vent* operation.

❖ Draft hoods and barometric dampers are both affected by their orientation. There are two basic types of draft hoods: vertical draft hoods and horizontal draft hoods. These types of draft hoods are not interchangeable. Barometric dampers can be adjusted to connect to either vertical or horizontal vent connectors; however, they are always positioned so that the closed damper plate is in a vertical plane. The manufacturer's instructions must always be followed. The relief opening on draft controls is also the dilution air inlet, and it must be unobstructed to allow air to enter under normal conditions, allow vent gases to spill in the event of backdraft

INTERNATIONAL CODE COUNCIL®
Copyright © 2015 ICC. ALL RIGHTS RESERVED. Accessed by David Dammon on Jun 21, 2017 12:30:52 PM pursuant to License Agreement with ICC. No further reproduction or distribution authorized. ANY UNAUTHORIZED REPRODUCTION OR DISTRIBUTION IS A VIOLATION OF THE FEDERAL COPYRIGHT ACT AND THE LICENSE AGREEMENT, AND SUBJECT TO CIVIL AND CRIMINAL PENALTIES THEREUNDER.

and allow testing of the vent system for proper draft. For example, for many years, appliance venting/draft has been checked by observing the movement of smoke introduced near the relief/inlet opening.

G2427.12.7 (503.12.7) Clearance. A *draft hood* shall be located so its *relief opening* is not less than 6 inches (152 mm) from any surface except that of the *appliance* it serves and the venting system to which the *draft hood* is connected. Where a greater or lesser *clearance* is indicated on the *appliance* label, the *clearance* shall be not less than that specified on the label. Such *clearances* shall not be reduced.

❖ The specified clearance is necessary to assure the unimpeded flow of air into the draft hood and flow of vent gas spillage from the hood. The clearance also protects materials from the hot gases that can spill from the draft hood and allows access for testing and observation.

G2427.13 (503.13) Manually operated dampers. A manually operated *damper* shall not be placed in the vent *connector* for any *appliance*. Fixed baffles shall not be classified as manually operated *dampers*.

❖ Manual dampers are associated with solid-fuel appliances but not with gas-fired appliances. A manual damper requires manual operation by a human, which cannot be relied on because humans forget. If a damper is left closed or partially closed during appliance operation, a severe hazard could result from vent-gas spillage and/or appliance malfunction (see Section G2427.14).

G2427.14 (503.14) Automatically operated vent dampers. An automatically operated vent damper shall be of a *listed* type.

❖ Automatic vent dampers are intended for use with gas-fired natural-draft appliances. An automatic vent damper must be installed in strict compliance with the manufacturer's installation instructions. Because automatic vent-damper failure can result in a hazardous condition, automatic dampers must be listed and labeled. An automatic vent damper is installed on the draft hood outlet of an individual gas-fired appliance (see Commentary Figure G2427.14). These dampers must not serve more than one appliance. The manufacturer's installation instructions require that the damper be installed by a qualified installer in accordance with the terms of the listing and the manufacturer's instructions.

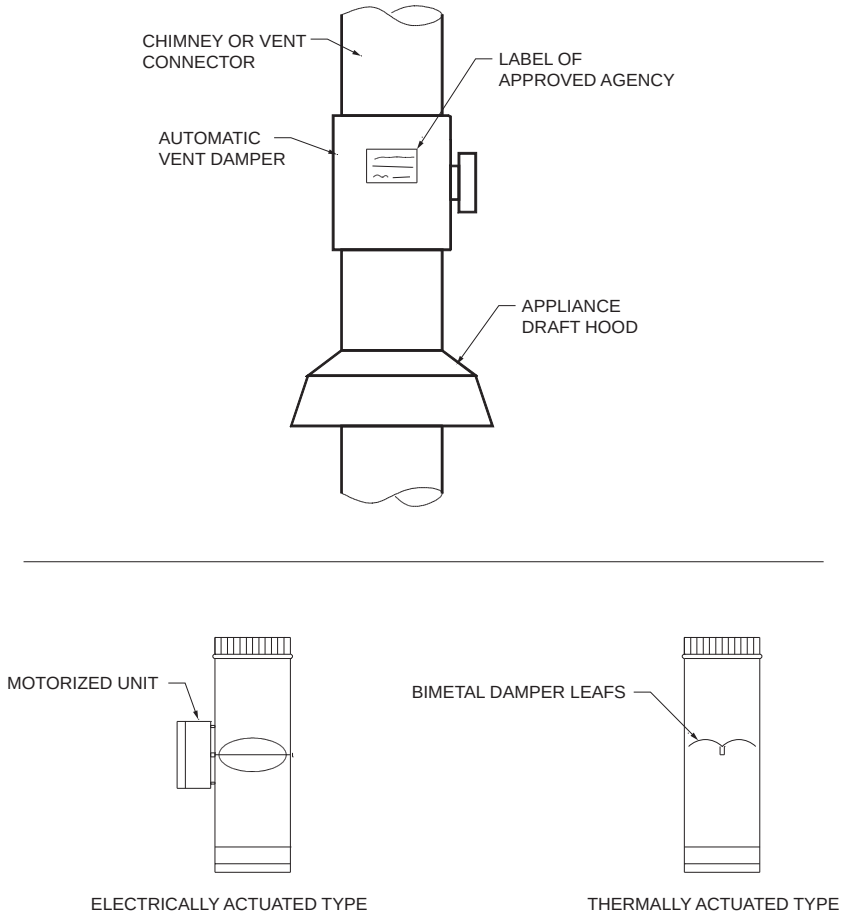

Figure G2427.14
AUTOMATIC VENT DAMPERS

INTERNATIONAL CODE COUNCIL®
Copyright © 2015 ICC. ALL RIGHTS RESERVED. Accessed by David Dammon on Jun 21, 2017 12:30:52 PM pursuant to License Agreement with ICC. No further reproduction or distribution authorized. ANY UNAUTHORIZED REPRODUCTION OR DISTRIBUTION IS A VIOLATION OF THE FEDERAL COPYRIGHT ACT AND THE LICENSE AGREEMENT, AND SUBJECT TO CIVIL AND CRIMINAL PENALTIES THEREUNDER.

Because the purpose of a vent damper is to close or restrict the flue passageway of an appliance, it is imperative that the device be properly installed to minimize the possibility of failure. A malfunctioning or improperly installed vent-damper device can cause the appliance to malfunction and could cause the discharge of products of combustion directly into the building interior. Automatic vent dampers are energy-saving devices designed to close off or restrict an appliance flue passageway when the appliance is not operating and is in its "off" cycle. These devices save energy by trapping residual heat in a heat exchanger after the burners shut off and by preventing the escape of conditioned room air up the chimney or vent. Thus, appliance efficiency can be boosted, and building air infiltration can be reduced. Such devices can be field-installed additions to existing equipment and can be a factory-supplied component of an appliance (see Commentary Figure G2428.2.1).

A common application for vent dampers today is for mid-efficiency (80 to 83 percent) hot water boilers, which are draft-hood equipped. There are three types of automatic vent dampers: electrical-, mechanical- and thermal-actuating. The electric-motor-operated type is the commonly encountered type today (see Commentary Figures G2427.14 and G2428.2.1). Electrical- and mechanical-actuating automatic dampers must open automatically prior to main burner ignition and must remain open until completion of the burner cycle. They must also be interlocked electrically with the appliance control circuitry to prevent operation of the appliance in the event of damper failure. Thermal-actuating dampers open in response to flue gas temperature after burner ignition and close after burner shutdown. Thermal-actuated dampers use bimetal components that convert heat energy into mechanical energy. Some thermal-actuated dampers require the installation of a draft-hood spillage sensor that would shut off the appliance if the damper failed to open. The most common type of vent damper uses an electric motor to rotate a damper blade. The device uses switches that prove the damper position and allow the appliance to start only after the damper is opened and verified. The sequence of operation is the same as that described in the commentary to Section G2427.3.3.

G2427.15 (503.15) Obstructions. Devices that retard the flow of *vent gases* shall not be installed in a *vent connector*, *chimney*, or vent. The following shall not be considered as obstructions:

1. *Draft regulators* and safety *controls* specifically listed for installation in *venting systems* and installed in accordance with the manufacturer's instructions.
2. *Approved draft regulators* and safety *controls* that are designed and installed in accordance with *approved* engineering methods.
3. Listed heat reclaimers and automatically operated vent dampers installed in accordance with the manufacturer's instructions.
4. *Approved* economizers, heat reclaimers and recuperators installed in *venting systems* of *appliances* not required to be equipped with *draft hoods*, provided that the *appliance* manufacturer's instructions cover the installation of such a device in the venting system and performance in accordance with Sections G2427.3 and G2427.3.1 is obtained.
5. Vent dampers serving *listed appliances* installed in accordance with Sections G2428.2.1 and G2428.3.1 or other *approved* engineering methods.

❖ Manual dampers, flow restricting orifices and similar devices are not accounted for in the vent design methods of this code. The tables in Section G2428 assume that no such devices are installed in the vent. Item 3 addresses the automatic vent dampers covered in Section G2427.14. These dampers open fully before the appliance is allowed to fire and offer negligible flow resistance because the damper plate is parallel to the vent gas flow. Item 4 addresses devices that extract heat from the vent gases to save energy that would otherwise be lost to the outside atmosphere. Appliances without draft hoods, excluding Category I fan-assisted, Category II, Ill and IV appliances, usually have higher vent gas temperatures than those with draft hoods; therefore, waste heat can be reclaimed with less chance of diminishing draft (see Section G2428.2.1).

G2427.16 (503.16) (IFGS) Outside wall penetrations. Where vents, including those for *direct-vent appliances*, penetrate outside walls of buildings, the annular spaces around such penetrations shall be permanently sealed using *approved* materials to prevent entry of *combustion products* into the building.

❖ Vents that terminate through outside walls are subject to being covered (buried) in snow in many climates and experience has shown that combustion products can enter the building through the annular space between the vent and the wall assembly. In some cases, snow cover can trap combustion gases and cause them to reenter a direct-vent appliance combustion chamber via the combustion air intake. This will generate excessive carbon monoxide levels as a result of oxygen depletion. The snow cover can trap and channel these toxic gases into the building through any unsealed annular space in the wall penetration. The required sealing must be permanent and able to tolerate movement of the vent caused by expansion and contraction of the vent. Plastic pipe used for vents will expand and contract much more than metal pipe, and the annular space seal will be broken if allowances are not made for this movement.

Although not explicitly stated, this section should also be applied to penetrations by combustion air intake pipes that are associated with direct-vent appliances because such intakes are in close proximity to the vent discharge terminal and are affected by the same snow cover.

This section applies to all vents, not just those in regions subject to snowfall. Wind, fences, visual

INTERNATIONAL CODE COUNCIL®
Copyright © 2015 ICC. ALL RIGHTS RESERVED. Accessed by David Dammon on Jun 21, 2017 12:30:52 PM pursuant to License Agreement with ICC. No further reproduction or distribution authorized. ANY UNAUTHORIZED REPRODUCTION OR DISTRIBUTION IS A VIOLATION OF THE FEDERAL COPYRIGHT ACT AND THE LICENSE AGREEMENT, AND SUBJECT TO CIVIL AND CRIMINAL PENALTIES THEREUNDER.

screens, vegetation and other causes could also create the conditions where combustion gases could enter the building.

SECTION G2428 (504)
SIZING OF CATEGORY I APPLIANCE VENTING SYSTEMS

G2428.1 (504.1) Definitions. The following definitions apply to the tables in this section.

❖ The definitions in this section are necessary for application of the vent sizing tables and are exclusively related to Section G2428. As stated in the main section title, this section applies to Category I appliances. See the definition of "Vented appliance categories." However, it also applies to draft-hood-equipped appliances, which may or may not be categorized at all, even though they could be Category I because they meet the definition of Category I appliances. For example, a draft-hood water heater need not be categorized by its governing standard, but if it were categorized it would be a Category I appliance. A gas-fired appliance with a draft hood depends on gravity flow for supply of combustion air, for flow of combustion products through the heat exchanger and for proper gas venting. The draft hood is designed to maintain proper combustion in the event of draft fluctuations. Its relief opening serves as a flue product exit in the event of a blocked vent or downdraft. The relief opening, however, also allows dilution air to enter the vent during normal appliance/vent operation. When this dilution air is obtained from within the heated space, there is a loss of seasonal efficiency, which can be reduced by installation of a vent damper designed to reduce the flow of air through the vent when the burner is not firing.

To improve annual fuel utilization efficiency (AFUE), many appliance manufacturers have designed fan-assisted combustion using mechanical means (blowers or fans) to obtain either induced or forced flow of combustion air and combustion products. Greater efficiency results from three major effects. First, heat exchange improves because of higher internal flow velocity, which enhances heat transfer by creating turbulent flow and the "scrubbing" of heat exchanger surfaces. Second, induced draft through the appliance combustion chambers and heat exchangers allows the heat exchangers to be constructed with longer passes, which results in greater surface area and thus longer flue gas retention time. This allows extraction of more heat from the combustion gases. Third, there is no longer a draft hood to cause heated air loss up the vent, both when the appliance is operating and when it is not [see Commentary Figures G2428.1(1) through G2428.1(4)].

A fan-assisted combustion appliance uses pressure-sensing and heat-sensing controls to monitor proper venting. The controls must prove that the appliance flue outlet is at neutral or negative pressure and that adequate flow of flue gases exists. Without a draft hood and dilution air to dilute the combustion products, gases entering the vent will have a higher water vapor content than those from a draft-hood appliance. [see Commentary Figure G2428.1(3)]. There will likely be a longer period of condensation in the vent (wet time), particularly in the upper and/or colder portions of the venting system. These differences between fan-assisted and draft-hood appliances are reflected in the tables by the lack of minimum capacities for draft hood appliances. The minimums for fan-assisted appliances

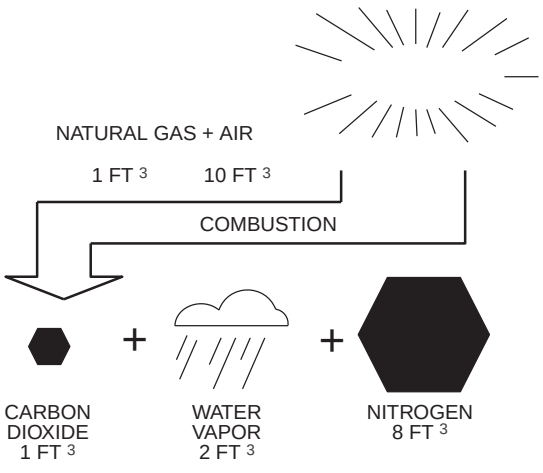

Figure courtesy of Simpson Dura-Vent Company, Incorporated
For SI: 1 cubic foot = 0.0283 m^3.

Figure G2428.1(1)
COMBUSTION PROCESS FOR NATURAL GAS

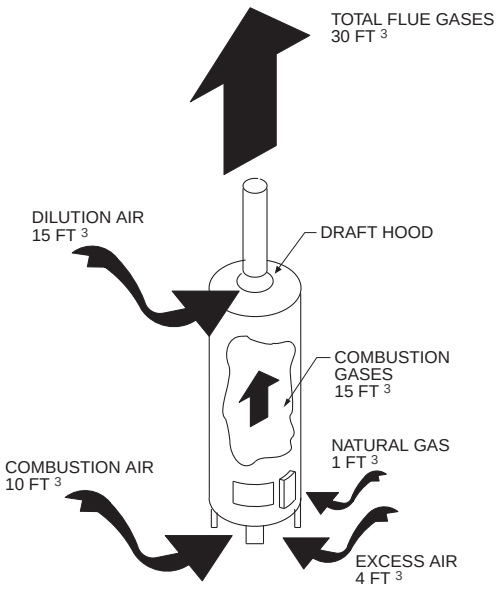

Figure courtesy of Simpson Dura-Vent Company, Incorporated
For SI: 1 cubic foot = 0.0283 m^3.

Figure G2428.1(2)
FLUE GAS COMPOSITION

INTERNATIONAL CODE COUNCIL®
Copyright © 2015 ICC. ALL RIGHTS RESERVED. Accessed by David Dammon on Jun 21, 2017 12:30:52 PM pursuant to License Agreement with ICC. No further reproduction or distribution authorized. ANY UNAUTHORIZED REPRODUCTION OR DISTRIBUTION IS A VIOLATION OF THE FEDERAL COPYRIGHT ACT AND THE LICENSE AGREEMENT, AND SUBJECT TO CIVIL AND CRIMINAL PENALTIES THEREUNDER.

are based on the heat input needed to control the duration of wet time or condensation during appliance startup and operation.

The tables do not apply to:

1. Wall furnaces (recessed heaters), which require Type BW vents.
2. Decorative gas appliances, which generally require a specific vent size and are best individually vented.
3. Category II, Ill or IV gas appliances. If permitted by the appliance manufacturer, some Category III appliances can also be vented in accordance with Category I conditions. Specifically, if the vent for a Category Ill appliance is sized and configured (connector rise, total height, etc.) for the input, the vent will operate under nonpositive pressure. This allows the use of a Type B gas vent. For a Category III appliance to operate as a Category I, appliance manufacturers' instructions must be followed, and the vent size may need to be larger than the appliance flue collar.
4. Gas-fired appliances listed for use only with chimneys or dual-fuel appliances such as oil/gas, wood/gas, or coal/gas. Dual-fuel appliances require chimneys sized in accordance with the appliance manufacturer's instructions and in accordance with the chimney manufacturer's instructions.

Capacities in the tables assume cold starts such as with an intermittent ignition system (no standing pilot). The type of ignition system does not affect maximum capacities, but it does affect minimums. A standing pilot on an appliance will keep vent gas temperatures slightly above outdoor ambient temperature, whereas a tank of hot water plus water-heater pilot operation will maintain flue temperature ahead of the draft hood at approaching the same temperature as the stored water. This flow of heat into a vent aids in priming as well as reducing wet time. In some cases, the fan-assisted appliance manufacturer and/or the sizing tables in the code will require connection of a draft-hood-type appliance to the venting system because the relatively inefficient draft-hood appliance contributes heat to the venting system necessary to make it function.

The tables also assume that there are no adverse or building depressurization effects. A strong wind or mechanical ventilation/exhaust might cause a downdraft with draft-hood appliances that will prevent the vent from priming properly.

The input capacity values in the tables are computed for typical natural gas. They can be used for LP-gases, such as propane and butane, and mixtures of these with air. With LP-gases, the maximum capacity remains the same, but because these have less hydrogen and produce less water vapor, the possibility of condensation is somewhat lower. To simplify matters, assume that minimum capacities are the same regardless of fuel type. Oversized or excessively long vents can cause condensation and should be avoided. The tables define limits that minimize wet time in the indoor portions as well as in the upper exposed end of the vent.

The maximum vent lateral lengths for FAN appliances are calculated on the basis of several assumed conditions, including flue gas temperature and com-

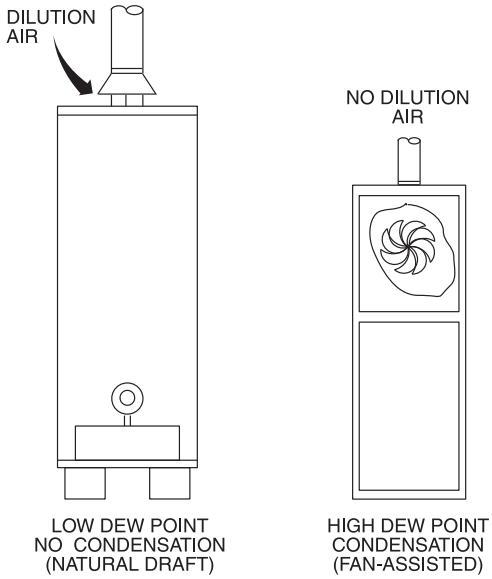

Figure courtesy of Simpson Dura-Vent Company, Incorporated

Figure G2428.1(3)
DRAFT-HOOD APPLIANCE COMPARED TO FAN-ASSISTED APPLIANCE

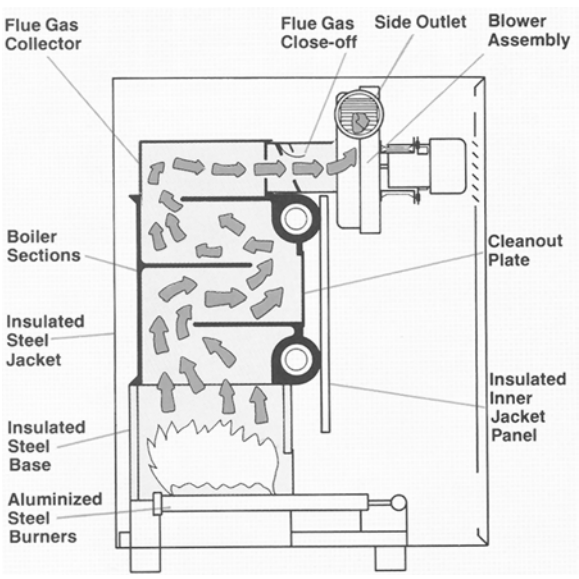

Figure courtesy of Weil-McLain

Figure G2428.1(4)
ILLUSTRATION OF THE BASIC PRINCIPLE OF FAN-ASSISTED COMBUSTION

INTERNATIONAL CODE COUNCIL®
Copyright © 2015 ICC. ALL RIGHTS RESERVED. Accessed by David Dammon on Jun 21, 2017 12:30:52 PM pursuant to License Agreement with ICC. No further reproduction or distribution authorized. ANY UNAUTHORIZED REPRODUCTION OR DISTRIBUTION IS A VIOLATION OF THE FEDERAL COPYRIGHT ACT AND THE LICENSE AGREEMENT, AND SUBJECT TO CIVIL AND CRIMINAL PENALTIES THEREUNDER.

position, and an outdoor ambient temperature of 42°F (6°C), chosen as a representative value. Colder assumed temperatures or greater outdoor exposure of the vent would lead to shorter maximum allowable lengths or to greater possibilities of condensation. To minimize condensation, it is essential to operate closer to maximum than minimum capacity and also to use the smallest allowable vent size.

APPLIANCE CATEGORIZED VENT DIAMETER/ AREA. The minimum vent area/diameter permissible for Category I *appliances* to maintain a nonpositive vent static pressure when tested in accordance with nationally recognized standards.

❖ The minimum Category I appliance vent area/diameter necessary to maintain a nonpositive vent static pressure when tested in accordance with the applicable standard. The appliance categorized vent diameter/ area is determined by the appliance manufacturer and is typically the vent outlet collar installed on the appliance.

FAN-ASSISTED COMBUSTION SYSTEM. An *appliance* equipped with an integral mechanical means to either draw or force products of *combustion* through the *combustion chamber* or heat exchanger.

❖ An appliance equipped with an integral mechanical means to either draw or force products of combustion through the combustion chamber or heat exchanger [see Commentary Figures G2428.1(4) and (5)].

FAN Min. The minimum input rating of a Category I fan-assisted *appliance* attached to a vent or connector.

❖ The minimum appliance input rating of a Category I appliance with a fan-assisted combustion system that is capable of being attached to a vent.



Photo courtesy of Weil-McLain

Figure G2428.1(5)
FAN-ASSISTED HOT WATER BOILER

FAN Max. The maximum input rating of a Category I fan-assisted *appliance* attached to a vent or connector.

❖ The maximum appliance input rating of a Category I appliance with a fan-assisted combustion system that is capable of being attached to a vent.

NAT Max. The maximum input rating of a Category I draft-hood-equipped *appliance* attached to a vent or connector.

❖ The maximum input rating of a Category I appliance equipped with a draft hood that is capable of being attached to a vent. There are no minimum appliance input ratings for draft-hood-equipped appliances.

FAN + FAN. The maximum combined *appliance* input rating of two or more Category I fan-assisted *appliances* attached to the common vent.

FAN + NAT. The maximum combined *appliance* input rating of one or more Category I fan-assisted *appliances* and one or more Category I draft-hood-equipped *appliances* attached to the common vent.

NA. Vent configuration is not permitted due to potential for *condensate* formation or pressurization of the venting system, or not applicable due to physical or geometric restraints.

❖ Vent configuration is prohibited.

NAT + NAT. The maximum combined *appliance* input rating of two or more Category I draft-hood-equipped *appliances* attached to the common vent.

G2428.2 (504.2) Application of single appliance vent Tables G2428.2(1) and G2428.2(2). The application of Tables G2428.2(1) and G2428.2(2) shall be subject to the requirements of Sections G2428.2.1 through G2428.2.17.

❖ Note that all of the table titles have been reformatted to make them easier to use and to lessen the possibility for error in choosing the appropriate table. The tables do not apply to Type B-W vents; vents for decorative gas appliances; vents for Category II, Ill or IV appliances; vents for dual-fuel appliances; vents for appliances not listed for use with Type B vent and appliances listed only for connection to chimneys. Category I appliances can be a fan-assisted design or can be a draft-hood-equipped design, and each design has different vent system design considerations. A noteworthy difference between fan-assisted and draft-hood equipped designs is that the vents for fan-assisted appliances have both a maximum and a minimum vent capacity. In the past, lower-efficiency draft-hood-type appliances were dominant, and vent sizing was based only on the maximum venting capacity of the vent. In other words, the only concern was to make sure that the vent was big enough. This is no longer the case with the advent of mid-efficiency fan-assisted-type appliances. Today, it is possible for a vent to be either too small or too large. An undersized vent will have insufficient capacity and can allow flue gas spillage or cause positive pressure to occur within the vent. An oversized vent can fail to produce sufficient draft and can be subject to the continuous formation of water vapor condensation on the interior vent surfaces. A typical individual vent is shown in Commen-

INTERNATIONAL CODE COUNCIL®
Copyright © 2015 ICC. ALL RIGHTS RESERVED. Accessed by David Dammon on Jun 21, 2017 12:30:52 PM pursuant to License Agreement with ICC. No further reproduction or distribution authorized. ANY UNAUTHORIZED REPRODUCTION OR DISTRIBUTION IS A VIOLATION OF THE FEDERAL COPYRIGHT ACT AND THE LICENSE AGREEMENT, AND SUBJECT TO CIVIL AND CRIMINAL PENALTIES THEREUNDER.

tary Figure G2428.2(1) for a FAN furnace with an input rating of 150,000 Btu/h (44 kW) and a 5-inch (127 mm) outlet connection.

Procedure for a Type B vent, Table G2428.2(1): Go down the height column to 20 feet (6096 mm) and across on the 10-foot (3048 mm) lateral line.

For this furnace, the MAX capacity under the 5-inch (127 mm) size heading is 229,000 Btu/h (67.1 kW) and the MIN capacity is 50,000 Btu/h (14.7 kW). A 5-inch (127 mm) size Type B vent will be correct. See Commentary Figure G2428.2(1). In applying the tables, extreme care must be taken to observe the title of the table and to apply the conditions and instructions set forth in Sections G2428.2.1 through G2428.2.17.

To determine the proper size for an individual vent, apply the table as follows:

1. Determine the total vent height and length of lateral, based on the appliance and vent location and the height to the top of the vent, as indicated in Commentary Figure G2428.2(1). If gas appliances, such as a furnace, boiler or water heater, have not been chosen or installed, estimate the height beginning at 6 feet (1829 mm) above the floor. For attic or horizontal furnaces, floor furnaces, room heaters and small boilers, the height location of the draft hood outlet or vent collar should be known.
2. Read down the height column to a height equal to or less than the estimated total height.
3. Select the horizontal row for the appropriate lateral (L) length.
4. Read across to the first column under the type of appliance (FAN or NAT) that shows an appliance in-put rating equal to or greater than the name plate sea level input rating of the appliance to be vented.

Commentary Figure G2428.2(2) illustrates the measurement of height and laterals for draft-hood appliances.

Some vent manufacturers include special requirements regarding certain types of appliances in their installation/design instructions.

G2428.2.1 (504.2.1) Vent obstructions. These venting tables shall not be used where obstructions, as described in Section G2427.15, are installed in the venting system. The installation of vents serving *listed appliances* with vent dampers shall be in accordance with the *appliance* manufacturer's instructions or in accordance with the following:

1. The maximum capacity of the vent system shall be determined using the "NAT Max" column.
2. The minimum capacity shall be determined as if the *appliance* were a fan-assisted *appliance*, using the "FAN Min" column to determine the minimum capacity of the vent system. Where the corresponding "FAN Min" is "NA," the vent configuration shall not be permitted and an alternative venting configuration shall be utilized.

❖ An engineered-vent sizing method or appliance and vent/chimney manufacturer's instructions must be used to size vents where devices (obstructions) are installed in a venting system. The tables do not account for the flow resistance caused by such devices, nor do they account for the reduction of flue gas temperatures resulting from heat reclaim exchangers. Section G2427.15 lists several items that are not to be viewed

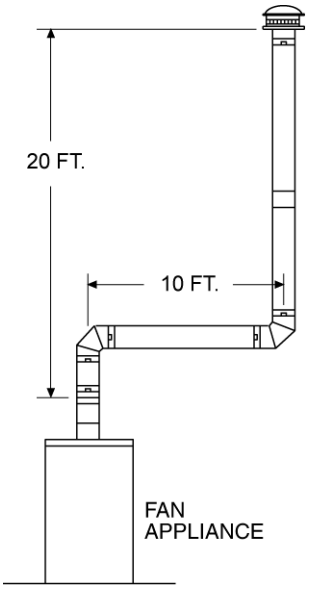

Figure courtesy of Selkirk, L.L.C.
For SI: 1 foot = 304.8 mm.

Figure G2428.2(1)
EXAMPLE OF INDIVIDUAL VENT DIMENSIONS

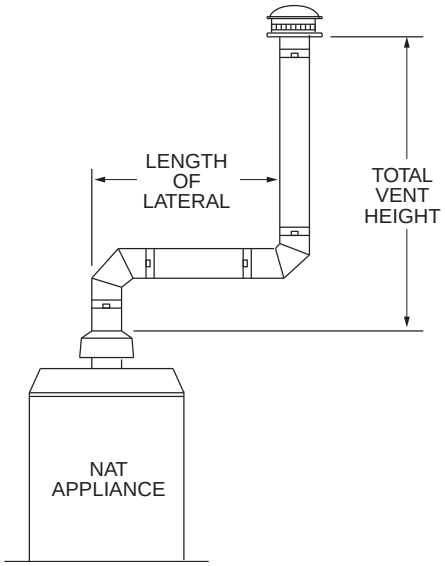

Figure G2428.2(2)
INDIVIDUAL VENT—
LATERAL AND HEIGHT

INTERNATIONAL CODE COUNCIL®
Copyright © 2015 ICC. ALL RIGHTS RESERVED. Accessed by David Dammon on Jun 21, 2017 12:30:52 PM pursuant to License Agreement with ICC. No further reproduction or distribution authorized. ANY UNAUTHORIZED REPRODUCTION OR DISTRIBUTION IS A VIOLATION OF THE FEDERAL COPYRIGHT ACT AND THE LICENSE AGREEMENT, AND SUBJECT TO CIVIL AND CRIMINAL PENALTIES THEREUNDER.

as obstructions, including automatic vent dampers. This section recognizes the use of the vent sizing tables with appliances equipped with automatic vent-damper devices. By referring to the appliance manufacturer's installation instructions, this section implies that the appliances are factory equipped with automatic vent dampers. Item 1 recognizes that during the firing cycle, an appliance with an automatic vent damper affects a venting system no differently than a draft-hood appliance without one. Item 2 addresses the effect that appliances equipped with automatic vent dampers have on venting systems during the appliance "off" cycle. The appliance acts as if it were an idle fan-assisted appliance because a closed vent damper will allow little or no air to enter the vent system, just as an idle fan-assisted appliance allows no air to enter the vent system. The lack of dilution air entering the venting system is a primary reason that the minimum input columns were created in the vent sizing tables. Boilers and water heaters with draft hoods commonly use automatic vent dampers to boost the efficiency of the appliance by trapping residual heat of the firing cycle, reducing standby losses and reducing the amount of conditioned air that escapes up the vent through the draft hood (see Commentary Figure G2428.2.1).



Photo courtesy of Weil-McLain

Figure G2428.2.1
CATEGORY I NATURAL DRAFT HOT WATER BOILER WITH DRAFT HOOD AND AUTOMATIC VENT DAMPER

G2428.2.2 (504.2.2) Minimum size. Where the vent size determined from the tables is smaller than the *appliance draft hood outlet* or *flue collar*, the smaller size shall be permitted to be used provided all of the following requirements are met:

1. The total vent height (H) is at least 10 feet (3048 mm).
2. Vents for *appliance draft hood* outlets or *flue collars* 12 inches (305 mm) in diameter or smaller are not reduced more than one table size.
3. Vents for *appliance draft hood* outlets or *flue collars* larger than 12 inches (305 mm) in diameter are not reduced more than two table sizes.
4. The maximum capacity listed in the tables for a fan-assisted *appliance* is reduced by 10 percent (0.90 × maximum table capacity).
5. The *draft hood* outlet is greater than 4 inches (102 mm) in diameter. Do not connect a 3-inch-diameter (76 mm) vent to a 4-inch-diameter (102 mm) *draft hood* outlet. This provision shall not apply to fan-assisted *appliances*.

❖ If a vent complies with all of Items 1 through 5 and is sized in accordance with the appropriate table, it is allowed to be smaller than the appliance connection, primarily because of the increase in capacity of the vent resulting from its height and because vent capacity is based on the Btu/h input rating of the appliance and not the size of the appliance flue collar. This code section suggests that flue collars are sized for worst case vent designs and are thus somewhat oversized for vents with higher venting capacities. Item 4 is necessary to prevent positive pressure from developing in the vent serving fan-assisted appliances. A 6-inch (152 mm) draft hood connected to a 5-inch (127 mm) Type B vent, for example, might look like an installation error, but this section could allow it in some cases, and operating a vent nearer its maximum capacity is always desirable (see Section G2428.2.10).

G2428.2.3 (504.2.3) Vent offsets. Single-*appliance* venting configurations with zero (0) lateral lengths in Tables G2428.2(1) and G2428.2(2) shall not have elbows in the *venting system*. Single-*appliance* venting configurations with lateral lengths include two 90-degree (1.57 rad) elbows. For each additional elbow up to and including 45 degrees (0.79 rad), the maximum capacity listed in the venting tables shall be reduced by 5 percent. For each additional elbow greater than 45 degrees (0.79 rad) up to and including 90 degrees (1.57 rad), the maximum capacity listed in the venting tables shall be reduced by 10 percent. Where multiple *offsets* occur in a vent, the total lateral length of all *offsets* combined shall not exceed that specified in Tables G2428.2(1) and G2428.2(2).

❖ A vent system with a zero lateral length is an ideal system because it is entirely vertical and thus has the least flow resistance and greatest draft. To create a lateral run of vent or vent connector, one or two elbows (adjustable fittings) are necessary [see Commentary Figure G2428.2(2)]. The tables account for two 90-degree (1.57 rad) changes in direction, which will offer considerable resistance to the flow of flue gases. Depending on the appliance flue collar or draft hood outlet orientation, a single elbow can create a lateral, but the tables assume that a vertical outlet orientation and two elbows are used. Two 45-degree (0.79 rad) fittings joined together, for example, are the equivalent of

INTERNATIONAL CODE COUNCIL®
Copyright © 2015 ICC. ALL RIGHTS RESERVED. Accessed by David Dammon on Jun 21, 2017 12:30:52 PM pursuant to License Agreement with ICC. No further reproduction or distribution authorized. ANY UNAUTHORIZED REPRODUCTION OR DISTRIBUTION IS A VIOLATION OF THE FEDERAL COPYRIGHT ACT AND THE LICENSE AGREEMENT, AND SUBJECT TO CIVIL AND CRIMINAL PENALTIES THEREUNDER.

a single 90-degree (1.57 rad) fitting but would offer slightly less resistance to flow because of the larger turning radius. The capacity reduction penalty for each change in direction in excess of the two "free" 90-degree (1.57 rad) fittings accounts for the increased flow resistance caused by the additional fittings (elbows). For example, a vent using two 90-degree (1.57 rad) fittings and two 45-degree (0.79 rad) fittings would have a 10 percent capacity reduction penalty. A vent using two 90-degree (1.57 rad) fittings and two 30-degree (0.52 rad) fittings would also have a 10 percent capacity penalty. All changes of direction (fittings), regardless of the angle, that are in addition to the two "free" 90-degree fittings are accounted for by a capacity reduction penalty. A fitting adjusted to 45-degrees (0.79 rad) or less will cause a 5 percent penalty and a fitting adjusted to greater than 45-degrees (0.79 rad) and up to 90 degrees (1.57 rad) will cause a 10 percent penalty.

Whenever possible, an individual vent should be located directly over the appliance outlet. If the appliance flue outlet is horizontal, one 90-degree (1.57 rad) elbow should be used with the vent directly over it. A straight vertical vent is more easily supported and has less flow resistance.

There is no need to offset the vertical vent to include a tee and bracket. The use of a tee for cleanout or inspection purposes is quite unnecessary for three reasons. First, using a B-vent cap keeps debris and birds out. Second, clean-burning gas does not produce any deposits needing removal. Third, Type B vent joints are easily opened for inspection of the inside of the piping.

Should an offset be needed, the use of two elbows will provide somewhat greater capacity than an elbow and a tee. A tee has greater flow resistance than an elbow. The two 90-degree turns that are accounted for by the tables for laterals can occur anywhere within the vent system. This means that if the turns are used where the appliance connects to the system, the rest of the vent must be entirely vertical, or else the penalties of this section must be applied. The two "free" 90-degree (1.57 rad) turns can be composed of any number and angle of fittings that total not more than 180 degrees (3.1 rad). Simply put, there are free turns up to a maximum of 180 degrees (3.1 rad), and after that each additional turn will cause a capacity penalty to apply (see definition of "Offset").

Vent offsets should always be avoided where possible, especially offsets in the upper portion of the vent and in cold spaces such as attics and truss spaces. Offsets can be avoided with simple planning of the vent system and appliance locations. The attic offset is prevalent because the vent and appliance location is often not planned, and the building owners and designers do not want the vent to terminate on the street side of a roof for aesthetic reasons. This type of offset causes the most problems for several reasons. The typical attic will have winter temperatures close to the outdoor temperature; therefore, offsets in attics will cause more vent pipe to be exposed to the cold attic (see commentary, Section G2428.2.9). This can increase the production of condensate in the vent, and the fittings used will be points at which the condensate can leak from the inner vent lining. Most condensate leakage from vents can be traced to a fitting used in an offset. The code (see Sections G2428.2.9 and G2428.3.16) assumes that a vent will not be exposed to outdoor temperatures except for the necessary portion that extends above the roof. The temperature in a typical attic today is nearly equivalent to the outdoors.

Studies have shown that offsets in the upper portion of vent systems can produce slight positive pressures because of the flow resistance, and this encourages water vapor to escape from the vent and condense between the vent walls. Offsets in attics usually involve long runs of pipe that increase the surface area of vent pipe exposed to cold temperature. It is quite common to find that attic offsets exceed the horizontal length allowed by Section G2428.3.5.

Each offset introduces a horizontal component to a vent and this horizontal component is limited by the "lateral" column of the single appliance tables. The horizontal component of all offsets in a vent must be totaled and the total cannot exceed the lateral length allowance in the single appliance tables.

G2428.2.4 (504.2.4) Zero lateral. Zero (0) lateral (L) shall apply only to a straight vertical vent attached to a top outlet *draft hood* or *flue collar*.

❖ The zero lateral rows in the tables refer only to an entirely vertical vent run without offsets, lateral runs and directional fittings. This would be the ideal vent. Unfortunately, it is seldom seen because of lack of planning and coordination of vent and appliance locations. Architectural features of buildings usually dictate that vents take less than desirable paths to get from the appliances to the outdoors.

G2428.2.5 (504.2.5) High-altitude installations. Sea- level input ratings shall be used when determining maximum capacity for high-altitude installation. Actual input, derated for altitude, shall be used for determining minimum capacity for high-altitude installation.

❖ Appliances installed at elevations above sea level must have their Btu/h (W) input reduced (derated) because the atmosphere is less dense and oxygen levels decrease as altitude increases. The actual volume of flue gases entering a vent (i.e., primary and secondary combustion air, excess air and combustion byproducts) does not significantly change for different elevations; therefore, the maximum vent capacity is based on the sea-level input rating. The minimum capacity of a vent depends on heat input to the vent to control condensation and maintain the required draft. Therefore, the actual heat input (as derated) is used to determine the minimum capacity of a vent.

INTERNATIONAL CODE COUNCIL®
Copyright © 2015 ICC. ALL RIGHTS RESERVED. Accessed by David Dammon on Jun 21, 2017 12:30:52 PM pursuant to License Agreement with ICC. No further reproduction or distribution authorized. ANY UNAUTHORIZED REPRODUCTION OR DISTRIBUTION IS A VIOLATION OF THE FEDERAL COPYRIGHT ACT AND THE LICENSE AGREEMENT, AND SUBJECT TO CIVIL AND CRIMINAL PENALTIES THEREUNDER.

TABLE G2428.2(1) [504.2(1)]
TYPE B DOUBLE-WALL GAS VENT

Number of Appliances	Single
Appliance Type	Category I
Appliance Vent Connection	Connected directly to vent

HEIGHT (*H*) (feet)	LATERAL (*L*) (feet)	VENT DIAMETER—(*D*) inches																				
		3			4			5			6			7			8			9		
		APPLIANCE INPUT RATING IN THOUSANDS OF BTU/H																				
		FAN		NAT	FAN		NAT	FAN		NAT	FAN		NAT	FAN		NAT	FAN		NAT	FAN		NAT
		Min	Max	Max	Min	Max	Max	Min	Max	Max	Min	Max	Max	Min	Max	Max	Min	Max	Max	Min	Max	Max
6	0	0	78	46	0	152	86	0	251	141	0	375	205	0	524	285	0	698	370	0	897	470
	2	13	51	36	18	97	67	27	157	105	32	232	157	44	321	217	53	425	285	63	543	370
	4	21	49	34	30	94	64	39	153	103	50	227	153	66	316	211	79	419	279	93	536	362
	6	25	46	32	36	91	61	47	149	100	59	223	149	78	310	205	93	413	273	110	530	354
8	0	0	84	50	0	165	94	0	276	155	0	415	235	0	583	320	0	780	415	0	1,006	537
	2	12	57	40	16	109	75	25	178	120	28	263	180	42	365	247	50	483	322	60	619	418
	5	23	53	38	32	103	71	42	171	115	53	255	173	70	356	237	83	473	313	99	607	407
	8	28	49	35	39	98	66	51	164	109	64	247	165	84	347	227	99	463	303	117	596	396
10	0	0	88	53	0	175	100	0	295	166	0	447	255	0	631	345	0	847	450	0	1,096	585
	2	12	61	42	17	118	81	23	194	129	26	289	195	40	402	273	48	533	355	57	684	457
	5	23	57	40	32	113	77	41	187	124	52	280	188	68	392	263	81	522	346	95	671	446
	10	30	51	36	41	104	70	54	176	115	67	267	175	88	376	245	104	504	330	122	651	427
15	0	0	94	58	0	191	112	0	327	187	0	502	285	0	716	390	0	970	525	0	1,263	682
	2	11	69	48	15	136	93	20	226	150	22	339	225	38	475	316	45	633	414	53	815	544
	5	22	65	45	30	130	87	39	219	142	49	330	217	64	463	300	76	620	403	90	800	529
	10	29	59	41	40	121	82	51	206	135	64	315	208	84	445	288	99	600	386	116	777	507
	15	35	53	37	48	112	76	61	195	128	76	301	198	98	429	275	115	580	373	134	755	491
20	0	0	97	61	0	202	119	0	349	202	0	540	307	0	776	430	0	1,057	575	0	1,384	752
	2	10	75	51	14	149	100	18	250	166	20	377	249	33	531	346	41	711	470	50	917	612
	5	21	71	48	29	143	96	38	242	160	47	367	241	62	519	337	73	697	460	86	902	599
	10	28	64	44	38	133	89	50	229	150	62	351	228	81	499	321	95	675	443	112	877	576
	15	34	58	40	46	124	84	59	217	142	73	337	217	94	481	308	111	654	427	129	853	557
	20	48	52	35	55	116	78	69	206	134	84	322	206	107	464	295	125	634	410	145	830	537

(continued)

Copyright © 2015 ICC. ALL RIGHTS RESERVED. Accessed by David Dammon on Jun 21, 2017 12:30:52 PM pursuant to License Agreement with ICC. No further reproduction or distribution authorized. ANY UNAUTHORIZED REPRODUCTION OR DISTRIBUTION IS A VIOLATION OF THE FEDERAL COPYRIGHT ACT AND THE LICENSE AGREEMENT, AND SUBJECT TO CIVIL AND CRIMINAL PENALTIES THEREUNDER.

TABLE G2428.2(1) [504.2(1)]—continued
TYPE B DOUBLE-WALL GAS VENT

Number of Appliances	Single
Appliance Type	Category I
Appliance Vent Connection	Connected directly to vent

HEIGHT (*H*) (feet)	LATERAL (*L*) (feet)	VENT DIAMETER—(*D*) inches																				
		3			4			5			6			7			8			9		
		APPLIANCE INPUT RATING IN THOUSANDS OF BTU/H																				
		FAN		NAT	FAN		NAT	FAN		NAT	FAN		NAT	FAN		NAT	FAN		NAT	FAN		NAT
		Min	Max	Max	Min	Max	Max	Min	Max	Max	Min	Max	Max	Min	Max	Max	Min	Max	Max	Min	Max	Max
30	0	0	100	64	0	213	128	0	374	220	0	587	336	0	853	475	0	1,173	650	0	1,548	855
	2	9	81	56	13	166	112	14	283	185	18	432	280	27	613	394	33	826	535	42	1,072	700
	5	21	77	54	28	160	108	36	275	176	45	421	273	58	600	385	69	811	524	82	1,055	688
	10	27	70	50	37	150	102	48	262	171	59	405	261	77	580	371	91	788	507	107	1,028	668
	15	33	64	NA	44	141	96	57	249	163	70	389	249	90	560	357	105	765	490	124	1,002	648
	20	56	58	NA	53	132	90	66	237	154	80	374	237	102	542	343	119	743	473	139	977	628
	30	NA	NA	NA	73	113	NA	88	214	NA	104	346	219	131	507	321	149	702	444	171	929	594
50	0	0	101	67	0	216	134	0	397	232	0	633	363	0	932	518	0	1,297	708	0	1,730	952
	2	8	86	61	11	183	122	14	320	206	15	497	314	22	715	445	26	975	615	33	1,276	813
	5	20	82	NA	27	177	119	35	312	200	43	487	308	55	702	438	65	960	605	77	1,259	798
	10	26	76	NA	35	168	114	45	299	190	56	471	298	73	681	426	86	935	589	101	1,230	773
	15	59	70	NA	42	158	NA	54	287	180	66	455	288	85	662	413	100	911	572	117	1,203	747
	20	NA	NA	NA	50	149	NA	63	275	169	76	440	278	97	642	401	113	888	556	131	1,176	722
	30	NA	NA	NA	69	131	NA	84	250	NA	99	410	259	123	605	376	141	844	522	161	1,125	670

For SI: 1 inch = 25.4 mm, 1 foot = 304.8 mm, 1 British thermal unit per hour = 0.2931 W.

Copyright © 2015 ICC. ALL RIGHTS RESERVED. Accessed by David Dammon on Jun 21, 2017 12:30:52 PM pursuant to License Agreement with ICC. No further reproduction or distribution authorized. ANY UNAUTHORIZED REPRODUCTION OR DISTRIBUTION IS A VIOLATION OF THE FEDERAL COPYRIGHT ACT AND THE LICENSE AGREEMENT, AND SUBJECT TO CIVIL AND CRIMINAL PENALTIES THEREUNDER.

TABLE G2428.2(2) [504.2(2)]
TYPE B DOUBLE-WALL GAS VENT

Number of Appliances	Single
Appliance Type	Category I
Appliance Vent Connection	Single-wall metal connector

HEIGHT (*H*) (feet)	LATERAL (*L*) (feet)	VENT DIAMETER—(*D*) inches																										
		3			4			5			6			7			8			9			10			12		
		APPLIANCE INPUT RATING IN THOUSANDS OF BTU/H																										
		FAN		NAT	FAN		NAT	FAN		NAT	FAN		NAT	FAN		NAT	FAN		NAT	FAN		NAT	FAN		NAT	FAN		NAT
		Min	Max	Max	Min	Max	Max	Min	Max	Max	Min	Max	Max	Min	Max	Max	Min	Max	Max	Min	Max	Max	Min	Max	Max	Min	Max	Max
6	0	38	77	45	59	151	85	85	249	140	126	373	204	165	522	284	211	695	369	267	894	469	371	1,118	569	537	1,639	849
	2	39	51	36	60	96	66	85	156	104	123	231	156	159	320	213	201	423	284	251	541	368	347	673	453	498	979	648
	4	NA	NA	33	74	92	63	102	152	102	146	225	152	187	313	208	237	416	277	295	533	360	409	664	443	584	971	638
	6	NA	NA	31	83	89	60	114	147	99	163	220	148	207	307	203	263	409	271	327	526	352	449	656	433	638	962	627
8	0	37	83	50	58	164	93	83	273	154	123	412	234	161	580	319	206	777	414	258	1,002	536	360	1,257	658	521	1,852	967
	2	39	56	39	59	108	75	83	176	119	121	261	179	155	363	246	197	482	321	246	617	417	339	768	513	486	1,120	743
	5	NA	NA	37	77	102	69	107	168	114	151	252	171	193	352	235	245	470	311	305	604	404	418	754	500	598	1,104	730
	8	NA	NA	33	90	95	64	122	161	107	175	243	163	223	342	225	280	458	300	344	591	392	470	740	486	665	1,089	715
10	0	37	87	53	57	174	99	82	293	165	120	444	254	158	628	344	202	844	449	253	1,093	584	351	1,373	718	507	2,031	1,057
	2	39	61	41	59	117	80	82	193	128	119	287	194	153	400	272	193	531	354	242	681	456	332	849	559	475	1,242	848
	5	52	56	39	76	111	76	105	185	122	148	277	186	190	388	261	241	518	344	299	667	443	409	834	544	584	1,224	825
	10	NA	NA	34	97	100	68	132	171	112	188	261	171	237	369	241	296	497	325	363	643	423	492	808	520	688	1,194	788
15	0	36	93	57	56	190	111	80	325	186	116	499	283	153	713	388	195	966	523	244	1,259	681	336	1,591	838	488	2,374	1,237
	2	38	69	47	57	136	93	80	225	149	115	337	224	148	473	314	187	631	413	232	812	543	319	1,015	673	457	1,491	983
	5	51	63	44	75	128	86	102	216	140	144	326	217	182	459	298	231	616	400	287	795	526	392	997	657	562	1,469	963
	10	NA	NA	39	95	116	79	128	201	131	182	308	203	228	438	284	284	592	381	349	768	501	470	966	628	664	1,433	928
	15	NA	NA	NA	NA	NA	72	158	186	124	220	290	192	272	418	269	334	568	367	404	742	484	540	937	601	750	1,399	894
20	0	35	96	60	54	200	118	78	346	201	114	537	306	149	772	428	190	1,053	573	238	1,379	750	326	1,751	927	473	2,631	1,346
	2	37	74	50	56	148	99	78	248	165	113	375	248	144	528	344	182	708	468	227	914	611	309	1,146	754	443	1,689	1,098
	5	50	68	47	73	140	94	100	239	158	141	363	239	178	514	334	224	692	457	279	896	596	381	1,126	734	547	1,665	1,074
	10	NA	NA	41	93	129	86	125	223	146	177	344	224	222	491	316	277	666	437	339	866	570	457	1,092	702	646	1,626	1,037
	15	NA	NA	NA	NA	NA	80	155	208	136	216	325	210	264	469	301	325	640	419	393	838	549	526	1,060	677	730	1,587	1,005
	20	NA	NA	NA	NA	NA	NA	186	192	126	254	306	196	309	448	285	374	616	400	448	810	526	592	1,028	651	808	1,550	973

(continued)

Copyright © 2015 ICC. ALL RIGHTS RESERVED. Accessed by David Dammon on Jun 21, 2017 12:30:52 PM pursuant to License Agreement with ICC. No further reproduction or distribution authorized. ANY UNAUTHORIZED REPRODUCTION OR DISTRIBUTION IS A VIOLATION OF THE FEDERAL COPYRIGHT ACT AND THE LICENSE AGREEMENT, AND SUBJECT TO CIVIL AND CRIMINAL PENALTIES THEREUNDER.

TABLE G2428.2(2) [504.2(2)]—continued
TYPE B DOUBLE-WALL GAS VENT

Number of Appliances	Single
Appliance Type	Category I
Appliance Vent Connection	Single-wall metal connector

HEIGHT (*H*) (feet)	LATERAL (*L*) (feet)	VENT DIAMETER—(*D*) inches																											
		3			4			5			6			7			8			9			10			12				
		APPLIANCE INPUT RATING IN THOUSANDS OF BTU/H																											
		FAN		NAT	FAN		NAT	FAN		NAT	FAN		NAT	FAN		NAT	FAN		NAT	FAN		NAT	FAN		NAT	FAN		NAT	FAN		NAT
		Min	Max	Max	Min	Max	Max	Min	Max	Max	Min	Max	Max	Min	Max	Max	Min	Max	Max	Min	Max	Max	Min	Max	Max	Min	Max	Max	Min	Max	Max
30	0	34	99	63	53	211	127	76	372	219	110	584	334	144	849	472	184	1,168	647	229	1,542	852	312	1,971	1,056	454	2,996	1,545			
	2	37	80	56	55	164	111	76	281	183	109	429	279	139	610	392	175	823	533	219	1,069	698	296	1,346	863	424	1,999	1,308			
	5	49	74	52	72	157	106	98	271	173	136	417	271	171	595	382	215	806	521	269	1,049	684	366	1,324	846	524	1,971	1,283			
	10	NA	NA	NA	91	144	98	122	255	168	171	397	257	213	570	367	265	777	501	327	1,017	662	440	1,287	821	620	1,927	1,234			
	15	NA	NA	NA	115	131	NA	151	239	157	208	377	242	255	547	349	312	750	481	379	985	638	507	1,251	794	702	1,884	1,205			
	20	NA	NA	NA	NA	NA	NA	181	223	NA	246	357	228	298	524	333	360	723	461	433	955	615	570	1,216	768	780	1,841	1,166			
	30	NA	NA	NA	NA	NA	NA	NA	NA	NA	NA	NA	NA	389	477	305	461	670	426	541	895	574	704	1,147	720	937	1,759	1,101			
50	0	33	99	66	51	213	133	73	394	230	105	629	361	138	928	515	176	1,292	704	220	1,724	948	295	2,223	1,189	428	3,432	1,818			
	2	36	84	61	53	181	121	73	318	205	104	495	312	133	712	443	168	971	613	209	1,273	811	280	1,615	1,007	401	2,426	1,509			
	5	48	80	NA	70	174	117	94	308	198	131	482	305	164	696	435	204	953	602	257	1,252	795	347	1,591	991	496	2,396	1,490			
	10	NA	NA	NA	89	160	NA	118	292	186	162	461	292	203	671	420	253	923	583	313	1,217	765	418	1,551	963	589	2,347	1,455			
	15	NA	NA	NA	112	148	NA	145	275	174	199	441	280	244	646	405	299	894	562	363	1,183	736	481	1,512	934	668	2,299	1,421			
	20	NA	NA	NA	NA	NA	NA	176	257	NA	236	420	267	285	622	389	345	866	543	415	1,150	708	544	1,473	906	741	2,251	1,387			
	30	NA	NA	NA	NA	NA	NA	NA	NA	NA	315	376	NA	373	573	NA	442	809	502	521	1,086	649	674	1,399	848	892	2,159	1,318			

For SI:1 inch = 25.4 mm, 1 foot = 304.8 mm, 1 British thermal unit per hour = 0.2931 W.

Copyright © 2015 ICC. ALL RIGHTS RESERVED. Accessed by David Dammon on Jun 21, 2017 12:30:52 PM pursuant to License Agreement with ICC. No further reproduction or distribution authorized. ANY UNAUTHORIZED REPRODUCTION OR DISTRIBUTION IS A VIOLATION OF THE FEDERAL COPYRIGHT ACT AND THE LICENSE AGREEMENT, AND SUBJECT TO CIVIL AND CRIMINAL PENALTIES THEREUNDER.

TABLE G2428.3(1) [504.3(1)]
TYPE B DOUBLE-WALL VENT

Number of Appliances	Two or more
Appliances Type	Category I
Appliances Vent Connection	Single-wall metal connector

VENT CONNECTOR CAPACITY

VENT HEIGHT (*H*) (feet)	CONNECTOR RISE (*R*) (feet)	TYPE B DOUBLE-WALL VENT AND CONNECTOR DIAMETER—(*D*) inches																							
		3			4			5			6			7			8			9			10		
		APPLIANCE INPUT RATING LIMITS IN THOUSANDS OF BTU/H																							
		FAN		NAT	FAN		NAT	FAN		NAT	FAN		NAT	FAN		NAT	FAN		NAT	FAN		NAT	FAN		NAT
		Min	Max	Max	Min	Max	Max	Min	Max	Max	Min	Max	Max	Min	Max	Max	Min	Max	Max	Min	Max	Max	Min	Max	Max
6	1	22	37	26	35	66	46	46	106	72	58	164	104	77	225	142	92	296	185	109	376	237	128	466	289
	2	23	41	31	37	75	55	48	121	86	60	183	124	79	253	168	95	333	220	112	424	282	131	526	345
	3	24	44	35	38	81	62	49	132	96	62	199	139	82	275	189	97	363	248	114	463	317	134	575	386
8	1	22	40	27	35	72	48	49	114	76	64	176	109	84	243	148	100	320	194	118	408	248	138	507	303
	2	23	44	32	36	80	57	51	128	90	66	195	129	86	269	175	103	356	230	121	454	294	141	564	358
	3	24	47	36	37	87	64	53	139	101	67	210	145	88	290	198	105	384	258	123	492	330	143	612	402
10	1	22	43	28	34	78	50	49	123	78	65	189	113	89	257	154	106	341	200	125	436	257	146	542	314
	2	23	47	33	36	86	59	51	136	93	67	206	134	91	282	182	109	374	238	128	479	305	149	596	372
	3	24	50	37	37	92	67	52	146	104	69	220	150	94	303	205	111	402	268	131	515	342	152	642	417
15	1	21	50	30	33	89	53	47	142	83	64	220	120	88	298	163	110	389	214	134	493	273	162	609	333
	2	22	53	35	35	96	63	49	153	99	66	235	142	91	320	193	112	419	253	137	532	323	165	658	394
	3	24	55	40	36	102	71	51	163	111	68	248	160	93	339	218	115	445	286	140	565	365	167	700	444
20	1	21	54	31	33	99	56	46	157	87	62	246	125	86	334	171	107	436	224	131	552	285	158	681	347
	2	22	57	37	34	105	66	48	167	104	64	259	149	89	354	202	110	463	265	134	587	339	161	725	414
	3	23	60	42	35	110	74	50	176	116	66	271	168	91	371	228	113	486	300	137	618	383	164	764	466
30	1	20	62	33	31	113	59	45	181	93	60	288	134	83	391	182	103	512	238	125	649	305	151	802	372
	2	21	64	39	33	118	70	47	190	110	62	299	158	85	408	215	105	535	282	129	679	360	155	840	439
	3	22	66	44	34	123	79	48	198	124	64	309	178	88	423	242	108	555	317	132	706	405	158	874	494

COMMON VENT CAPACITY

VENT HEIGHT (*H*) (feet)	TYPE B DOUBLE-WALL COMMON VENT DIAMETER (*D*)—inches																				
	4			5			6			7			8			9			10		
	COMBINED APPLIANCE INPUT RATING IN THOUSANDS OF BTU/H																				
	FAN +FAN	FAN +NAT	NAT +NAT	FAN +FAN	FAN +NAT	NAT +NAT	FAN +FAN	FAN +NAT	NAT +NAT	FAN +FAN	FAN +NAT	NAT +NAT	FAN +FAN	FAN +NAT	NAT +NAT	FAN +FAN	FAN +NAT	NAT +NAT	FAN +FAN	FAN +NAT	NAT +NAT
6	92	81	65	140	116	103	204	161	147	309	248	200	404	314	260	547	434	335	672	520	410
8	101	90	73	155	129	114	224	178	163	339	275	223	444	348	290	602	480	378	740	577	465
10	110	97	79	169	141	124	243	194	178	367	299	242	477	377	315	649	522	405	800	627	495
15	125	112	91	195	164	144	283	228	206	427	352	280	556	444	365	753	612	465	924	733	565
20	136	123	102	215	183	160	314	255	229	475	394	310	621	499	405	842	688	523	1,035	826	640
30	152	138	118	244	210	185	361	297	266	547	459	360	720	585	470	979	808	605	1,209	975	740
50	167	153	134	279	244	214	421	353	310	641	547	423	854	706	550	1,164	977	705	1,451	1,188	860

For SI: 1 inch = 25.4 mm, 1 foot = 304.8 mm, 1 British thermal unit per hour = 0.2931 W.

INTERNATIONAL CODE COUNCIL®
Copyright © 2015 ICC. ALL RIGHTS RESERVED. Accessed by David Dammon on Jun 21, 2017 12:30:52 PM pursuant to License Agreement with ICC. No further reproduction or distribution authorized. ANY UNAUTHORIZED REPRODUCTION OR DISTRIBUTION IS A VIOLATION OF THE FEDERAL COPYRIGHT ACT AND THE LICENSE AGREEMENT, AND SUBJECT TO CIVIL AND CRIMINAL PENALTIES THEREUNDER.

TABLE G2428.3(2) [504.3(2)]
TYPE B DOUBLE-WALL VENT

Number of Appliances	Two or more
Appliances Type	Category I
Appliances Vent Connection	Type B double-wall connector

VENT CONNECTOR CAPACITY

VENT HEIGHT (*H*) (feet)	CONNECTOR RISE (*R*) (feet)	SINGLE-WALL METAL VENT CONNECTOR DIAMETER—(*D*) inches																							
		3			4			5			6			7			8			9			10		
		APPLIANCE INPUT RATING LIMITS IN THOUSANDS OF BTU/H																							
		FAN		NAT	FAN		NAT	FAN		NAT	FAN		NAT	FAN		NAT	FAN		NAT	FAN		NAT	FAN		NAT
		Min	Max	Max	Min	Max	Max	Min	Max	Max	Min	Max	Max	Min	Max	Max	Min	Max	Max	Min	Max	Max	Min	Max	Max
6	1	NA	NA	26	NA	NA	46	NA	NA	71	NA	NA	102	207	223	140	262	293	183	325	373	234	447	463	286
	2	NA	NA	31	NA	NA	55	NA	NA	85	168	182	123	215	251	167	271	331	219	334	422	281	458	524	344
	3	NA	NA	34	NA	NA	62	121	131	95	175	198	138	222	273	188	279	361	247	344	462	316	468	574	385
8	1	NA	NA	27	NA	NA	48	NA	NA	75	NA	NA	106	226	240	145	285	316	191	352	403	244	481	502	299
	2	NA	NA	32	NA	NA	57	125	126	89	184	193	127	234	266	173	293	353	228	360	450	292	492	560	355
	3	NA	NA	35	NA	NA	64	130	138	100	191	208	144	241	287	197	302	381	256	370	489	328	501	609	400
10	1	NA	NA	28	NA	NA	50	119	121	77	182	186	110	240	253	150	302	335	196	372	429	252	506	534	308
	2	NA	NA	33	84	85	59	124	134	91	189	203	132	248	278	183	311	369	235	381	473	302	517	589	368
	3	NA	NA	36	89	91	67	129	144	102	197	217	148	257	299	203	320	398	265	391	511	339	528	637	413
15	1	NA	NA	29	79	87	52	116	138	81	177	214	116	238	291	158	312	380	208	397	482	266	556	596	324
	2	NA	NA	34	83	94	62	121	150	97	185	230	138	246	314	189	321	411	248	407	522	317	568	646	387
	3	NA	NA	39	87	100	70	127	160	109	193	243	157	255	333	215	331	438	281	418	557	360	579	690	437
20	1	49	56	30	78	97	54	115	152	84	175	238	120	233	325	165	306	425	217	390	538	276	546	664	336
	2	52	59	36	82	103	64	120	163	101	182	252	144	243	346	197	317	453	259	400	574	331	558	709	403
	3	55	62	40	87	107	72	125	172	113	190	264	164	252	363	223	326	476	294	412	607	375	570	750	457
30	1	47	60	31	77	110	57	112	175	89	169	278	129	226	380	175	296	497	230	378	630	294	528	779	358
	2	51	62	37	81	115	67	117	185	106	177	290	152	236	397	208	307	521	274	389	662	349	541	819	425
	3	54	64	42	85	119	76	122	193	120	185	300	172	244	412	235	316	542	309	400	690	394	555	855	482

COMMON VENT CAPACITY

VENT HEIGHT (*H*) (feet)	TYPE B DOUBLE-WALL COMMON VENT DIAMETER—(*D*) inches																					
	4			5			6			7			8			9			10		
	COMBINED APPLIANCE INPUT RATING IN THOUSANDS OF BTU/H																				
	FAN +FAN	FAN +NAT	NAT +NAT	FAN +FAN	FAN +NAT	NAT +NAT	FAN +FAN	FAN +NAT	NAT +NAT	FAN +FAN	FAN +NAT	NAT +NAT	FAN +FAN	FAN +NAT	NAT +NAT	FAN +FAN	FAN +NAT	NAT +NAT	FAN +FAN	FAN +NAT	NAT +NAT
6	NA	78	64	NA	113	99	200	158	144	304	244	196	398	310	257	541	429	332	665	515	407
8	NA	87	71	NA	126	111	218	173	159	331	269	218	436	342	285	592	473	373	730	569	460
10	NA	94	76	163	137	120	237	189	174	357	292	236	467	369	309	638	512	398	787	617	487
15	121	108	88	189	159	140	275	221	200	416	343	274	544	434	357	738	599	456	905	718	553
20	131	118	98	208	177	156	305	247	223	463	383	302	606	487	395	824	673	512	1,013	808	626
30	145	132	113	236	202	180	350	286	257	533	446	349	703	570	459	958	790	593	1,183	952	723
50	159	145	128	268	233	208	406	337	296	622	529	410	833	686	535	1,139	954	689	1,418	1,157	838

For SI: 1 inch = 25.4 mm, 1 foot = 304.8 mm, 1 British thermal unit per hour = 0.2931 W.

INTERNATIONAL CODE COUNCIL®
Copyright © 2015 ICC. ALL RIGHTS RESERVED. Accessed by David Dammon on Jun 21, 2017 12:30:52 PM pursuant to License Agreement with ICC. No further reproduction or distribution authorized. ANY UNAUTHORIZED REPRODUCTION OR DISTRIBUTION IS A VIOLATION OF THE FEDERAL COPYRIGHT ACT AND THE LICENSE AGREEMENT, AND SUBJECT TO CIVIL AND CRIMINAL PENALTIES THEREUNDER.

TABLE G2428.3(3) [504.3(3)]
MASONRY CHIMNEY

Number of Appliances	Two or more
Appliances Type	Category I
Appliances Vent Connection	Type B double-wall connector

VENT CONNECTOR CAPACITY

VENT HEIGHT (*H*) (feet)	CONNECTOR RISE (*R*) (feet)	TYPE B DOUBLE-WALL VENT CONNECTOR DIAMETER—(*D*) inches																							
		3			4			5			6			7			8			9			10		
		APPLIANCE INPUT RATING LIMITS IN THOUSANDS OF BTU/H																							
		FAN		NAT	FAN		NAT	FAN		NAT	FAN		NAT	FAN		NAT	FAN		NAT	FAN		NAT	FAN		NAT
		Min	Max	Max	Min	Max	Max	Min	Max	Max	Min	Max	Max	Min	Max	Max	Min	Max	Max	Min	Max	Max	Min	Max	Max
6	1	24	33	21	39	62	40	52	106	67	65	194	101	87	274	141	104	370	201	124	479	253	145	599	319
	2	26	43	28	41	79	52	53	133	85	67	230	124	89	324	173	107	436	232	127	562	300	148	694	378
	3	27	49	34	42	92	61	55	155	97	69	262	143	91	369	203	109	491	270	129	633	349	151	795	439
8	1	24	39	22	39	72	41	55	117	69	71	213	105	94	304	148	113	414	210	134	539	267	156	682	335
	2	26	47	29	40	87	53	57	140	86	73	246	127	97	350	179	116	473	240	137	615	311	160	776	394
	3	27	52	34	42	97	62	59	159	98	75	269	145	99	383	206	119	517	276	139	672	358	163	848	452
10	1	24	42	22	38	80	42	55	130	71	74	232	108	101	324	153	120	444	216	142	582	277	165	739	348
	2	26	50	29	40	93	54	57	153	87	76	261	129	103	366	184	123	498	247	145	652	321	168	825	407
	3	27	55	35	41	105	63	58	170	100	78	284	148	106	397	209	126	540	281	147	705	366	171	893	463
15	1	24	48	23	38	93	44	54	154	74	72	277	114	100	384	164	125	511	229	153	658	297	184	824	375
	2	25	55	31	39	105	55	56	174	89	74	299	134	103	419	192	128	558	260	156	718	339	187	900	432
	3	26	59	35	41	115	64	57	189	102	76	319	153	105	448	215	131	597	292	159	760	382	190	960	486
20	1	24	52	24	37	102	46	53	172	77	71	313	119	98	437	173	123	584	239	150	752	312	180	943	397
	2	25	58	31	39	114	56	55	190	91	73	335	138	101	467	199	126	625	270	153	805	354	184	1,011	452
	3	26	63	35	40	123	65	57	204	104	75	353	157	104	493	222	129	661	301	156	851	396	187	1,067	505

COMMON VENT CAPACITY

VENT HEIGHT (*H*) (feet)	MINIMUM INTERNAL AREA OF MASONRY CHIMNEY FLUE (square inches)																								
	12			19			28			38			50			63			78			113		
	COMBINED APPLIANCE INPUT RATING IN THOUSANDS OF BTU/H																								
	FAN +FAN	FAN +NAT	NAT +NAT	FAN +FAN	FAN +NAT	NAT +NAT	FAN +FAN	FAN +NAT	NAT +NAT	FAN +FAN	FAN +NAT	NAT +NAT	FAN +FAN	FAN +NAT	NAT +NAT	FAN +FAN	FAN +NAT	NAT +NAT	FAN +FAN	FAN +NAT	NAT +NAT	FAN +FAN	FAN +NAT	NAT +NAT
6	NA	74	25	NA	119	46	NA	178	71	NA	257	103	NA	351	143	NA	458	188	NA	582	246	1,041	853	NA
8	NA	80	28	NA	130	53	NA	193	82	NA	279	119	NA	384	163	NA	501	218	724	636	278	1,144	937	408
10	NA	84	31	NA	138	56	NA	207	90	NA	299	131	NA	409	177	606	538	236	776	686	302	1,226	1,010	454
15	NA	NA	36	NA	152	67	NA	233	106	NA	334	152	523	467	212	682	611	283	874	781	365	1,374	1,156	546
20	NA	NA	41	NA	NA	75	NA	250	122	NA	368	172	565	508	243	742	668	325	955	858	419	1,513	1,286	648
30	NA	NA	NA	NA	NA	NA	NA	270	137	NA	404	198	615	564	278	816	747	381	1,062	969	496	1,702	1,473	749
50	NA	NA	NA	NA	NA	NA	NA	NA	NA	NA	NA	NA	NA	620	328	879	831	461	1,165	1,089	606	1,905	1,692	922

For SI: 1 inch = 25.4 mm, 1 square inch = 645.16 mm^2, 1 foot = 304.8 mm, 1 British thermal unit per hour = 0.2931 W.

INTERNATIONAL CODE COUNCIL®
Copyright © 2015 ICC. ALL RIGHTS RESERVED. Accessed by David Dammon on Jun 21, 2017 12:30:52 PM pursuant to License Agreement with ICC. No further reproduction or distribution authorized. ANY UNAUTHORIZED REPRODUCTION OR DISTRIBUTION IS A VIOLATION OF THE FEDERAL COPYRIGHT ACT AND THE LICENSE AGREEMENT, AND SUBJECT TO CIVIL AND CRIMINAL PENALTIES THEREUNDER.

TABLE G2428.3(4) [504.3(4)]
MASONRY CHIMNEY

Number of Appliances	Two or more
Appliances Type	Category I
Appliances Vent Connection	Single-wall connector

VENT CONNECTOR CAPACITY

VENT HEIGHT (*H*) (feet)	CONNECTOR RISE (*R*) (feet)	SINGLE-WALL METAL VENT CONNECTOR DIAMETER (*D*)—inches																							
		3			4			5			6			7			8			9			10		
		APPLIANCE INPUT RATING LIMITS IN THOUSANDS OF BTU/H																							
		FAN		NAT	FAN		NAT	FAN		NAT	FAN		NAT	FAN		NAT	FAN		NAT	FAN		NAT	FAN		NAT
		Min	Max	Max	Min	Max	Max	Min	Max	Max	Min	Max	Max	Min	Max	Max	Min	Max	Max	Min	Max	Max	Min	Max	Max
6	1	NA	NA	21	NA	NA	39	NA	NA	66	179	191	100	231	271	140	292	366	200	362	474	252	499	594	316
	2	NA	NA	28	NA	NA	52	NA	NA	84	186	227	123	239	321	172	301	432	231	373	557	299	509	696	376
	3	NA	NA	34	NA	NA	61	134	153	97	193	258	142	247	365	202	309	491	269	381	634	348	519	793	437
8	1	NA	NA	21	NA	NA	40	NA	NA	68	195	208	103	250	298	146	313	407	207	387	530	263	529	672	331
	2	NA	NA	28	NA	NA	52	137	139	85	202	240	125	258	343	177	323	465	238	397	607	309	540	766	391
	3	NA	NA	34	NA	NA	62	143	156	98	210	264	145	266	376	205	332	509	274	407	663	356	551	838	450
10	1	NA	NA	22	NA	NA	41	130	151	70	202	225	106	267	316	151	333	434	213	410	571	273	558	727	343
	2	NA	NA	29	NA	NA	53	136	150	86	210	255	128	276	358	181	343	489	244	420	640	317	569	813	403
	3	NA	NA	34	97	102	62	143	166	99	217	277	147	284	389	207	352	530	279	430	694	363	580	880	459
15	1	NA	NA	23	NA	NA	43	129	151	73	199	271	112	268	376	161	349	502	225	445	646	291	623	808	366
	2	NA	NA	30	92	103	54	135	170	88	207	295	132	277	411	189	359	548	256	456	706	334	634	884	424
	3	NA	NA	34	96	112	63	141	185	101	215	315	151	286	439	213	368	586	289	466	755	378	646	945	479
20	1	NA	NA	23	87	99	45	128	167	76	197	303	117	265	425	169	345	569	235	439	734	306	614	921	347
	2	NA	NA	30	91	111	55	134	185	90	205	325	136	274	455	195	355	610	266	450	787	348	627	986	443
	3	NA	NA	35	96	119	64	140	199	103	213	343	154	282	481	219	365	644	298	461	831	391	639	1,042	496

COMMON VENT CAPACITY

VENT HEIGHT (*H*) (feet)	MINIMUM INTERNAL AREA OF MASONRY CHIMNEY FLUE (square inches)																								
	12			19			28			38			50			63			78			113			
	COMBINED APPLIANCE INPUT RATING IN THOUSANDS OF BTU/H																								
	FAN +FAN	FAN +NAT	NAT +NAT	FAN +FAN	FAN +NAT	NAT +NAT	FAN +FAN	FAN +NAT	NAT +NAT	FAN +FAN	FAN +NAT	NAT +NAT	FAN +FAN	FAN +NAT	NAT +NAT	FAN +FAN	FAN +NAT	NAT +NAT	FAN +FAN	FAN +NAT	NAT +NAT	FAN +FAN	FAN +NAT	NAT +NAT
6	NA	NA	25	NA	118	45	NA	176	71	NA	255	102	NA	348	142	NA	455	187	NA	579	245	NA	846	NA
8	NA	NA	28	NA	128	52	NA	190	81	NA	276	118	NA	380	162	NA	497	217	NA	633	277	1,136	928	405
10	NA	NA	31	NA	136	56	NA	205	89	NA	295	129	NA	405	175	NA	532	234	171	680	300	1,216	1,000	450
15	NA	NA	36	NA	NA	66	NA	230	105	NA	335	150	NA	400	210	677	602	280	866	772	360	1,359	1,139	540
20	NA	NA	NA	NA	NA	74	NA	247	120	NA	362	170	NA	503	240	765	661	321	947	849	415	1,495	1,264	640
30	NA	NA	NA	NA	NA	NA	NA	NA	135	NA	398	195	NA	558	275	808	739	377	1,052	957	490	1,682	1,447	740
50	NA	NA	NA	NA	NA	NA	NA	NA	NA	NA	NA	NA	NA	612	325	NA	821	456	1,152	1,076	600	1,879	1,672	910

For SI: 1 inch = 25.4 mm, 1 square inch = 645.16 mm^2, 1 foot = 304.8 mm, 1 British thermal unit per hour = 0.2931 W.

INTERNATIONAL CODE COUNCIL®
Copyright © 2015 ICC. ALL RIGHTS RESERVED. Accessed by David Dammon on Jun 21, 2017 12:30:52 PM pursuant to License Agreement with ICC. No further reproduction or distribution authorized. ANY UNAUTHORIZED REPRODUCTION OR DISTRIBUTION IS A VIOLATION OF THE FEDERAL COPYRIGHT ACT AND THE LICENSE AGREEMENT, AND SUBJECT TO CIVIL AND CRIMINAL PENALTIES THEREUNDER.

G2428.2.6 (504.2.6) Multiple input rate appliances. For *appliances* with more than one input rate, the minimum vent capacity (FAN Min) determined from the tables shall be less than the lowest *appliance* input rating, and the maximum vent capacity (FAN Max/NAT Max) determined from the tables shall be greater than the highest *appliance* rating input.

❖ To improve efficiency, some appliances are equipped with modulating input or high-low two-stage input. Such appliances typically use two-stage thermostats or timers to change over from low-fire to high-fire operation, thus more closely matching the appliance input to the heating load. The venting system must be capable of operating properly throughout the entire firing range of the appliance. The venting system must be capable of handling the maximum input of the appliance and also must be compatible with the appliance when the appliance is operating at its lowest input. Such appliances will usually operate at the "low-fire" input most of their total operating time. To satisfy the minimum input requirements for fan-assisted appliance vents, the vent design must be based on the lowest Btu/h rating of the appliance because this is what the vent senses as the connected load. The lowest appliance input rate is used for minimum vent capacity, and the highest input rate must be used for maximum vent capacity. This requirement can be easily overlooked if the appliance label is not carefully studied because the appliance will usually be described by its maximum input, and any minimum input will have to obtained from the label.

G2428.2.7 (504.2.7) Liner system sizing and connections. *Listed* corrugated metallic *chimney* liner systems in masonry *chimneys* shall be sized by using Table G2428.2(1) or G2428.2(2) for Type B vents with the maximum capacity reduced by 20 percent (0.80 × maximum capacity) and the minimum capacity as shown in Table G2428.2(1) or G2428.2(2). Corrugated metallic liner systems installed with bends or offsets shall have their maximum capacity further reduced in accordance with Section G2428.2.3. The 20-percent reduction for corrugated metallic *chimney* liner systems includes an allowance for one long-radius 90-degree (1.57 rad) turn at the bottom of the liner.

Connections between *chimney* liners and listed double-wall connectors shall be made with listed adapters designed for such purpose.

❖ A liner system installed within a masonry chimney is sized and designed as if the chimney/liner system combination were a Type B vent. Corrugated metal liners are constructed of semirigid piping having a higher flow resistance than smooth-wall rigid pipe. A capacity reduction penalty compensates for the poorer flow characteristics of corrugated pipe. Bends in semirigid liners count as elbows and are regulated by Section G2428.2.3. Note that the sweeping 90-degree (1.57 rad) bend in the liner at the point where it exits the bottom of the chimney and connects to the appliance(s) is already accounted for in the 20-percent capacity penalty and no further capacity adjustment is required for such turn/bend. Listed adapter fittings must be used to connect double-wall connectors to the liner to avoid "make shift" field connections that can result in poor fit and leakage.

G2428.2.8 (504.2.8) Vent area and diameter. Where the vertical vent has a larger diameter than the *vent connector*, the vertical vent diameter shall be used to determine the minimum vent capacity, and the connector diameter shall be used to determine the maximum vent capacity. The flow area of the vertical vent shall not exceed seven times the flow area of the listed *appliance* categorized vent area, *flue collar* area, or *draft hood* outlet area unless designed in accordance with *approved* engineering methods.

❖ The maximum capacity of a venting system must be based on the element of the system having the least capacity (i.e., the weakest link in the chain). Likewise, the minimum Btu/h (W) input required for proper vent system operation must be based on the largest element of the system because the largest element will naturally have the highest minimum input requirement. A connector that is smaller than the vent will set the maximum capacity limit for the system because it has the greater flow resistance and smaller cross-sectional area. The minimum Btu/h input is based on the larger vent size because the vent will require more heat to produce adequate draft and avoid condensation. The ratio of appliance vent-connection area to vertical vent area is intended to prevent oversizing of the vent, which can result in poor draft and condensation problems. Because the tables will allow vents to be larger than needed, this section serves as a limit to prevent gross oversizing. For example, in Table G2428.2(1) it can be seen that a fan-assisted appliance having an input rating near the maximum end of the minimum/maximum range for any 4-inch (102 mm) venting system configuration can be served by not only a 4-inch (102 mm) vent but also a 5-inch (127 mm) and sometimes a 6-inch (152 mm) or 7-inch (178 mm) vent. Consistent with vent manufacturers' instructions, a venting system should always be designed to use the smallest vent allowed by the tables. Vents that are larger than they need to be usually will not perform as well as accurately sized vents and are more likely to suffer from poor draft and condensate problems.

G2428.2.9 (504.2.9) Chimney and vent locations. Tables G2428.2(1) and G2428.2(2) shall be used only for chimneys and vents not exposed to the outdoors below the roof line. A Type B vent or listed chimney lining system passing through an unused masonry chimney flue shall not be considered to be exposed to the outdoors. Where vents extend outdoors above the roof more than 5 feet (1524 mm) higher than required by Figure G2427.6.3 and where vents terminate in accordance with Section G2427.6.3, Item 2, the outdoor portion of the vent shall be enclosed as required by this section for vents not considered to be exposed to the outdoors or such venting system shall be engineered. A Type B vent shall not be considered to be exposed to the outdoors where it passes through an unventilated enclosure or chase insulated to a value of not less than R8.

❖ Chimneys that have one or more walls exposed to the outdoors and vents exposed to the outdoors can

INTERNATIONAL CODE COUNCIL®
Copyright © 2015 ICC. ALL RIGHTS RESERVED. Accessed by David Dammon on Jun 21, 2017 12:30:52 PM pursuant to License Agreement with ICC. No further reproduction or distribution authorized. ANY UNAUTHORIZED REPRODUCTION OR DISTRIBUTION IS A VIOLATION OF THE FEDERAL COPYRIGHT ACT AND THE LICENSE AGREEMENT, AND SUBJECT TO CIVIL AND CRIMINAL PENALTIES THEREUNDER.

develop condensation and weak draft problems in cold weather. Commentary Figure G2428.2.9(1) illustrates why masonry chimneys, including interior chimneys, are more prone to draft and condensation problems. The tables assume that the only portion of the chimney or vent that is exposed to the outdoors is the portion that extends above the roof penetration. Even though an attic is technically not outdoors, the temperature in an attic can be very close to the outdoor temperature. In some climates, the actual attic temperature can be far lower than the assumed temperature used in the computer modeling on which the vent sizing tables are based. Therefore, the portion of a venting system that passes through an attic should be kept to an absolute minimum. If at all possible, the installation should be planned to avoid the need for vent offsets in an attic. Section G2428.2.7 states that a chimney lined with a listed liner or Type B vent is to be sized as if it were a Type B vent. The walls of a chimney will provide some insulating effect for a properly installed Type B vent or lining system installed within the chimney. A chimney lined with a Type B vent is not considered to be a chimney, but is treated as a Type B vent installed within a masonry chase (see Section G2428.2.3).

This section intends that the listed tables be applicable only to vents and chimneys that are not exposed to the outdoors below the roof penetration. If the vent or chimney is exposed to the outdoors below the roof penetration, the listed sizing tables do not apply and the venting system would have to be engineered. The intent is that vents and chimneys be enclosed within the building envelope to lessen exposure to low ambient temperatures and wind. It is these conditions that were considered in the development of the vent sizing tables. The sizing tables are based on an assumed outdoor temperature of 42°F (6°C) and the assumption that all portions of a vent or chimney below the roof penetration are exposed to an ambient temperature of 60°F (16°C). This makes it obvious that long runs of vent piping through attics and long extensions above roofs should be avoided in cold climates (see Section G2428.3.5).

This section prohibits the use of the vent sizing tables for the installation of a Type B vent run up the out-side of an exterior wall of a building. This is consistent with vent manufacturers' instructions. Outdoor vents obviously suffer from poorer draft and increased condensation formation because they are exposed to the elements, low temperatures being the main factor. "Stack effect" in the building interior can cause back drafts (reverse flow) to occur in any vent or chimney, particularly vents exposed to the outdoors. For the same reasons, vents should extend above the roof no more than required by the code because the more vent pipe that extends above the roof, the more vent pipe will be exposed to the cold and wind. In some cases, designers and installers will intentionally raise a vent above a roof more than Section G2427.6.3 requires just to increase the vent capacity. In doing so, additional vent pipe is exposed to the outdoors, thus inviting condensation and possibly diminishing draft. Section G2427.6.3 could also require a vent to extend well above a lower roof penetration, thus causing the sizing tables of this section to be inapplicable to such a vent. A Type B vent that is enclosed in an airtight (unventilated) chase insulated to a value of at least R8 is protected from the weather and is therefore considered as an indoor vent. R8 is the same insulation value required by the *International Energy Conservation Code*® (IECC®) for ducts located outside of the building thermal envelope. To be effective, the chase enclosure would have to be built air tight and with an internal volume no larger than necessary to accommodate the vent with the required clearance to combustibles.

Where vents extend outdoors above the roof more than 5 feet higher than required by Figure G2427.6.3 and also where vents extend outdoors above the roof as required by Section G2427.6.3, Item 2, the outdoor portion of such vents must be enclosed in an insulated and sealed chase/enclosure. This requirement is necessary because such vents are not within the parameters upon which the vent sizing tables were calculated; thus, these vents would be expected to not perform as intended [see Commentary Figures G2428.2.9(1) and (2)]. If the owner, designer, builder or installer wants to avoid the expense and any displeasing aesthetics of these outdoor enclosures, the location of vent terminations will have to be thoughtfully planned, or already installed vents may have to be relocated. The allowance for 5 feet higher than required by Figure G2427.6.3 is a necessary tolerance to account for the fact that sections of vent pipe are available only in certain lengths. Therefore, in many cases, vent pipes extending above the roof some distance higher than required by the code will be unavoidable.

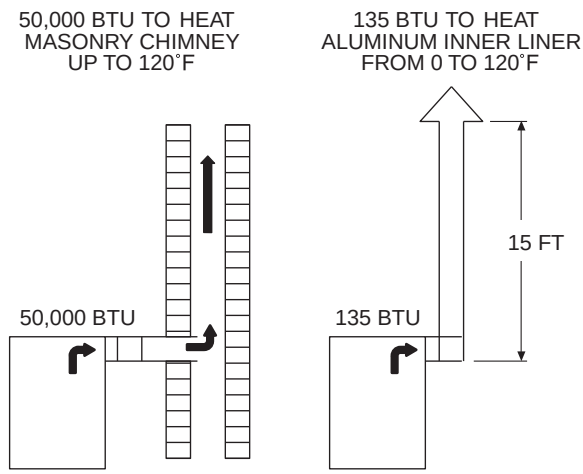

Figure courtesy of Simpson Dura-Vent Company, Incorporated

Figure G2428.2.9(1)
MASONRY CHIMNEY COMPARED TO TYPE B VENT

INTERNATIONAL CODE COUNCIL®
Copyright © 2015 ICC. ALL RIGHTS RESERVED. Accessed by David Dammon on Jun 21, 2017 12:30:52 PM pursuant to License Agreement with ICC. No further reproduction or distribution authorized. ANY UNAUTHORIZED REPRODUCTION OR DISTRIBUTION IS A VIOLATION OF THE FEDERAL COPYRIGHT ACT AND THE LICENSE AGREEMENT, AND SUBJECT TO CIVIL AND CRIMINAL PENALTIES THEREUNDER.

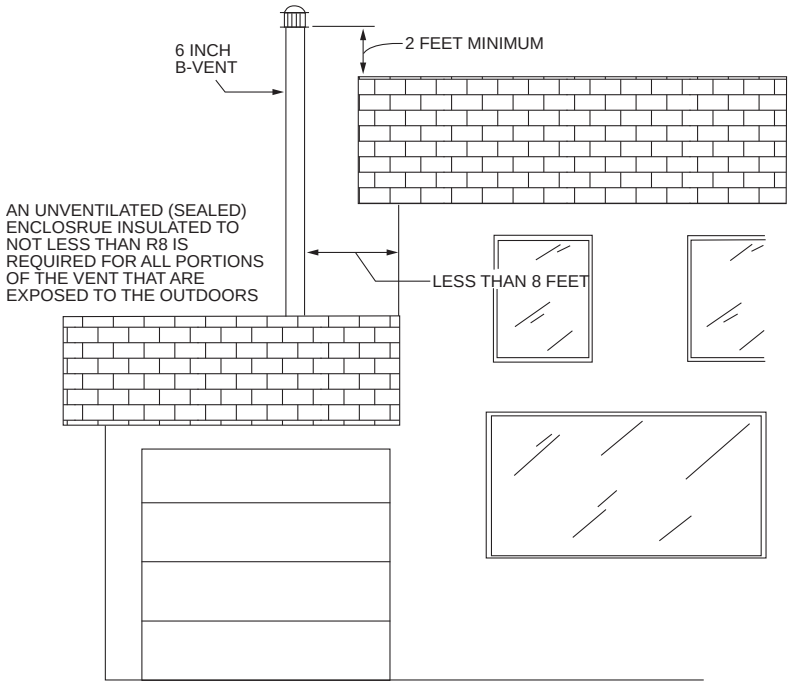

For SI: 1 inch = 25.4 mm, 1 foot = 304.8 mm.

Figure G2428.2.9(2)
HEIGHT ABOVE ROOF

G2428.2.10 (504.2.10) Corrugated vent connector size. Corrugated *vent connectors* shall be not smaller than the listed *appliance* categorized *vent* diameter, *flue collar* diameter, or *draft hood* outlet diameter.

❖ Corrugated vent connectors are becoming more common because they can save installation time and avoid the use of fittings. This section is consistent with Section G2428.3.17 and applies to both draft-hood equipped and fan-assisted appliances. Corrugated materials have higher resistance to flow than smooth wall materials; therefore, to ensure the required capacity, full size connectors must be used.

G2428.2.11 (504.2.11) Vent connector size limitation. *Vent connectors* shall not be increased in size more than two sizes greater than the listed *appliance* categorized vent diameter, *flue collar* diameter or *draft hood* outlet diameter.

❖ The sizing tables of this section will often require that a connector be larger than the appliance vent connection. The appliance manufacturer's instructions may also require that the size of a connector be increased. The increase in size compensates for flow resistance in the connector and prevents positive pressurization. A grossly oversized connector will allow the vent gases to expand and cool too much, thus negatively affecting draft and contributing to the formation of condensation. Connector size is sometimes increased for the sole purpose of gaining more allowable length (Section G2428.3.2), and this section will limit that practice.

G2428.2.12 (504.2.12) Component commingling. In a single run of vent or *vent connector*, different diameters and types of vent and connector components shall be permitted to be used, provided that all such sizes and types are permitted by the tables.

❖ In the unlikely event that an installer wants to mix, for example, Type B vent with single-wall pipe in a single connector (for example, Type B vent from a draft hood, switching to single wall and connecting to Type B vent again), the mixed system must comply with the code based on each type of material as if the run were constructed entirely of that material. There may be some unique situations that would justify commingling of different types and/or sizes of components, but clearances, heat loss, ambient temperatures, joining methods and flow characteristics must be considered.

G2428.2.13 (504.2.13) Draft hood conversion accessories. *Draft hood* conversion accessories for use with *masonry chimneys* venting listed Category I fan-assisted *appliances* shall be listed and installed in accordance with the manufacturer's instructions for such listed accessories.

❖ Some appliance manufacturers offer an accessory kit that allows the appliance to be converted from a fan-assisted Category I appliance to something that performs closely to a draft-hood-equipped Category I appliance. This conversion will result in some loss in appliance efficiency (AFUE) and its sole purpose is to allow the appliance to vent to a masonry chimney, whereas without the conversion, the appliance would

INTERNATIONAL CODE COUNCIL®
Copyright © 2015 ICC. ALL RIGHTS RESERVED. Accessed by David Dammon on Jun 21, 2017 12:30:52 PM pursuant to License Agreement with ICC. No further reproduction or distribution authorized. ANY UNAUTHORIZED REPRODUCTION OR DISTRIBUTION IS A VIOLATION OF THE FEDERAL COPYRIGHT ACT AND THE LICENSE AGREEMENT, AND SUBJECT TO CIVIL AND CRIMINAL PENALTIES THEREUNDER.

be prohibited from venting to a masonry chimney. The net result of the conversion is to put dilution air into the chimney, thus helping to warm it and reduce the possibility of condensation. Such conversion kits come with their own installation instructions and are specific to a particular make and model of appliance.

G2428.2.14 (504.2.14) Table interpolation. Interpolation shall be permitted in calculating capacities for vent dimensions that fall between the table entries.

❖ Because Tables G2428.2(1) and G2428.2(2) do not contain values for every possible height of a vent or length of a lateral, interpolation could be necessary. The maximum and minimum capacity of vents having heights not listed in the tables can be determined using the following equations.

Interpolated Maximum Vent Capacity = $(NB \times C) + D$
Interpolated Minimum Vent Capacity = $E - (AB \times F)$

where:

A = The difference between the design height entry and the next lower height entry in the applicable table.

B = The difference between the closest consecutive height entries in the applicable table.

C = The difference between the maximum capacity column consecutive entries in the applicable table.

D = The lower maximum capacity entry in the applicable table.

E = The higher minimum capacity entry in the applicable table.

F = The difference between the minimum capacity column consecutive entries in the applicable table.

For SI: 1 inch = 25.4 mm, 1 foot = 304.8 mm, 1 Btu/h = 0.2931 W.

Example 1:

Determine the minimum and maximum vent capacity for a single fan-assisted appliance given the following:

Vertical design height of vent	17 feet
Diameter of vent	6 inches
Vent type	Type B
Length of lateral	10 feet

Using Table G2428.2(1):

Interpolated Maximum Vent Capacity = [(17 ft - 15 ft)/(20 ft - 15 ft) × (351,000 Btu/h - 315,000 Btu/h)] + 315,000 Btu/h = (2/5 × 36,000 Btu/h) + 315,000 Btu/h)] 329,400 Btu/h

Interpolated Minimum Vent Capacity = 64,000 Btu/h - [(17 ft - 15 ft)/(20 ft - 15 ft) × (64,000 Btu/h - 62,000 Btu/h)] = 64,000 Btu/h - (2/5 × 2,000 Btu/h) = 63,200 Btu/h

Example 2:

Determine the maximum vent capacity for a single fan assisted furnace given the following:

Input rating of furnace	210,000 Btu/h
Vertical design height of vent	$12^1/_2$ feet
Diameter of vent	6 inches
Vent type	Type B
Length of lateral	2 feet

Using Table G2428.2(1):

Step 1: Find the maximum vent capacity (MAX) at the first height entry greater than $12^1/_2$ feet, i.e., 15 feet.

MAX_{15} = 226,000 Btu/h

Step 2: Find the maximum vent capacity (MAX) at the next height entry lower than $12^1/_2$ feet, i.e., 10 feet.

MAX_{10} = 194,000 Btu/h

Step 3: Determine the difference between the two maximum vent capacities.

MAX_{15} - MAX_{10} = 226,000 Btu/h - 194,000 Btu/h = 32,000 Btu/h

Step 4: Determine the maximum vent capacity for a $12^1/_2$-foot high vent using:

MAX $12^1/_2$ = [(NB) × (MAX_{15} MAX_{10})] + MAX_{10}

where:

A = The difference between the next higher table vent height and the design vent height.

B = The difference between the consecutive closest table vent heights.

MAX $12^1/_2$ = [(15 ft - $12^1/_2$ ft)/(15 ft -10 ft) × 32,000 Btu/h] + 194,000 Btu/h = [($2^1/_2$ ft)/(5 ft) × 32,000 Btu/h] + 194,000 Btu/h = 16,000 Btu/h + 194,000/h = 210,000 Btu/h

When a vent height falls between height entries in a table, the code user can choose to interpolate or use the closest table height entry that is lower than the actual height of the vent. These are the only allowable options.

This example also illustrates how the tables may be used to reduce vent size if there is adequate height and capacity to do so (see commentary, Section G2428.2.2).

It is important to consider interpolation before assuming that an "in between" height vent installation is not in compliance with the code. For example, a vent with a 25-foot (7620 mm) height could fail to comply with a table when it is viewed as a 20-foot (6096 mm) vent, but that same vent could quite possibly comply with the table when viewed as what it actually is, a 25-foot (7620 mm) high vent.

This interpolation process can also be used to estimate in-between capacities for intermediate lengths of laterals, as well as in-between minimum capacities.

INTERNATIONAL CODE COUNCIL®
Copyright © 2015 ICC. ALL RIGHTS RESERVED. Accessed by David Dammon on Jun 21, 2017 12:30:52 PM pursuant to License Agreement with ICC. No further reproduction or distribution authorized. ANY UNAUTHORIZED REPRODUCTION OR DISTRIBUTION IS A VIOLATION OF THE FEDERAL COPYRIGHT ACT AND THE LICENSE AGREEMENT, AND SUBJECT TO CIVIL AND CRIMINAL PENALTIES THEREUNDER.

There is no way to estimate in-between capacity between a zero lateral (straight vertical vent) and a 2-foot (610 mm) lateral (which has two elbows). If the vent has just one 90-degree (1.57 rad) turn, the 2-foot (610 mm) lateral capacity applies.

G2428.2.15 (504.2.15) Extrapolation prohibited. Extrapolation beyond the table entries shall not be permitted.

❖ Projecting capacities below the lowest or above the highest boundary entries of the tables is not allowed because the tables are based on the known operational limits of venting systems. The tables cannot predict the operating characteristics of venting systems having heights shorter or taller than the table limits; therefore, any such system must be an engineered system.

G2428.2.16 (504.2.16) Engineering calculations. For *vent* heights less than 6 feet (1829 mm) and greater than shown in the tables, engineering methods shall be used to calculate *vent* capacities.

❖ This section parallels the previous section by stating that vents having heights not within the tables must be designed by an engineered method. In other words, extrapolation above or below the table height entries is not allowed (see Section G2428.2.14).

G2428.2.17 (504.2.17) Height entries. Where the actual height of a vent falls between entries in the height column of the applicable table in Tables G2428.2(1) and G2428.2(2), either interpolation shall be used or the lower appliance input rating shown in the table entries shall be used for FAN Max and NAT Max column values and the higher appliance input rating shall be used for the FAN MIN column values.

❖ This section makes it very clear what is to be done where the vent being designed is of a height that does not correspond to a height row in the applicable table. For example, it is given that a Type B vent has a height of 17 feet and the venting system is subject to Table G2428.2(2). The height of 17 feet falls between the 15-foot row and the 20-foot row in the table, which means that neither the 15- nor 20-foot row provides accurate values for this vent. Often times, the code user will mistakenly choose the 20-foot row because it is close to 17, but this is incorrect because a 17-foot-high vent will have less capacity than a 20-foot-high vent, as can be seen by comparing the FAN MAX and NAT MAX entries for the 15- and 20-foot rows, and because a 17-foot-high vent requires a greater minimum input than a 20-foot-high vent, as can be seen by comparing the FAN MIN entries. Clearly, the 20-foot row is inappropriate. Because the 20-foot row is not a choice, either interpolation must be used to mathematically construct entries for a 17-foot row or the 15-foot row must be used. When the 15-foot row is used, the FAN MAX and NAT MAX values will be lower than the corresponding values in the 20-foot row and the FAN MIN value will be higher than the corresponding value in the 20-foot row. This approach is a safe alternative to interpolation because the 17-foot vent will perform better than a 15-foot vent. In other words, the 17-foot vent has a higher maximum appliance input capacity and a lower minimum appliance input requirement than a 15-foot vent. Using the 15-foot row corresponds to the instructions of this section to use the lower appliance input rating given in each of the MAX columns and to use the higher appliance input rating for the FAN MIN column.

G2428.3 (504.3) Application of multiple appliance vent Tables G2428.3(1) through G2428.3(4). The application of Tables G2428.3(1) through G2428.3(4) shall be subject to the requirements of Sections G2428.3.1 through G2428.3.23.

❖ The application of Tables G2428.3(1) through G2428.3(4) shall be subject to the requirements of Sections G2428.3.1 through G2428.3.23. This part of Section G2428 regulates vents and chimneys that serve more than one appliance. These venting systems can be described as combined vents and include multiple connectors. A "combined vent" is a vent for two or more appliances at one level served by a common vent. "Least total height" is the vertical distance from the highest appliance outlet (draft hood or flue collar) to the lowest discharge opening of the vent top. This height dimension is illustrated in Commentary Figure G2428.3(1) for a typical (FAN + NAT) system. The same height measurement applies to FAN + FAN and NAT + NAT systems. Least total height is used for vent sizing of all connected appliances on one level. "Connector rise" for any appliance is the vertical distance from its outlet connection to the level at which it joins the common vent, as shown in Commentary Figure G2428.3(1).

A "connector" for purposes of designing a combined vent is that part of the vent piping between the appliance outlet and its junction with or interconnection to the rest of the system. A chimney is referred to as a venting means, although a chimney and a vent are distinct. An improperly sized common vent or chimney could fail to vent the combustion products of the appliances served. Many factors influence the sizing of a vent or chimney, including total height, offsets, lateral lengths, the type of appliance, the appliance energy input and the appliance connector configurations. The "common vent" is that portion of the system serving two or more connected appliances. If connectors are joined before reaching the vertical vent, the run between the last entering connector and the vertical portion is also treated as part of the common vent. In Commentary Figure G2428.3(1), the vertical common vent is cross-hatched beginning at the interconnection tee.

For each connector, the correct size must be found from the applicable tables based on its appliance input, rise and least total vent height. For draft-hood (NAT) appliances, the outlet size may be too small if there is not enough rise; therefore, connector design involves choosing the correct size and verifying that the use of a connector the same size as the outlet is within input rating limits.

For the common vent, the capacity table shows maximum combined ratings only. The size of the common vent is thus based on least total height and the combination of attached appliances: FAN + FAN, FAN + NAT

INTERNATIONAL CODE COUNCIL®
Copyright © 2015 ICC. ALL RIGHTS RESERVED. Accessed by David Dammon on Jun 21, 2017 12:30:52 PM pursuant to License Agreement with ICC. No further reproduction or distribution authorized. ANY UNAUTHORIZED REPRODUCTION OR DISTRIBUTION IS A VIOLATION OF THE FEDERAL COPYRIGHT ACT AND THE LICENSE AGREEMENT, AND SUBJECT TO CIVIL AND CRIMINAL PENALTIES THEREUNDER.

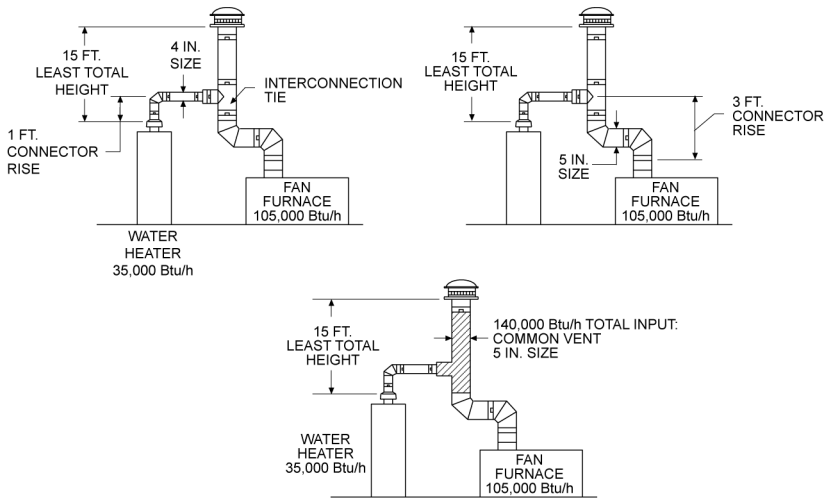

Figure courtesy of Selkirk, L.L.C.
For SI: 1 inch = 25.4 mm, 1 foot = 304.8 mm, 1 Btu/h = 0.2931 W.

Figure G2428.3(1)
COMBINED VENT DIMENSIONS

or NAT + NAT. To find each connector size, use Table G2428.3(1) for Type B vent connectors or Table G2428.3(2) for single-wall metal connectors and proceed as follows:

1. Determine "least total height" for the system.
2. Determine connector rise for each appliance.
3. Enter the applicable vent connector table at the least total height. Continue across on the line for appliance connector rise to a MAX input rating equal to or greater than that of the appliance. For a FAN appliance, this input rating should also be greater than shown in the MIN column. Read the connector size at the top of the column. If Table G2428.3(2) for single wall shows NA, use a double-wall connector in accordance with Table G2428.3(1). In some cases, the table will dictate a connector size that is larger than the appliance vent outlet (flue collar).

To find the common vent size, proceed as follows:

1. Add all appliance Btu input ratings to get the total Btu input.
2. If one or both connectors are single-wall metal, use Table G2428.3(2) for the common vent.
3. Enter the common vent table at the same least total height used for connectors.
4. Continue across and stop at the first applicable column of combined appliance input rating equal to or greater than the total. If Table G2428.3(2) for the common vent shows NA, the entire system must be double-wall Type B vent.
5. Read the size of the common vent at the top of the applicable column (NAT + NAT, FAN + NAT or FAN + FAN).
   a. Regardless of table results for size, the common vent must be at least as large as the largest connector (see Section G2428.3.8).

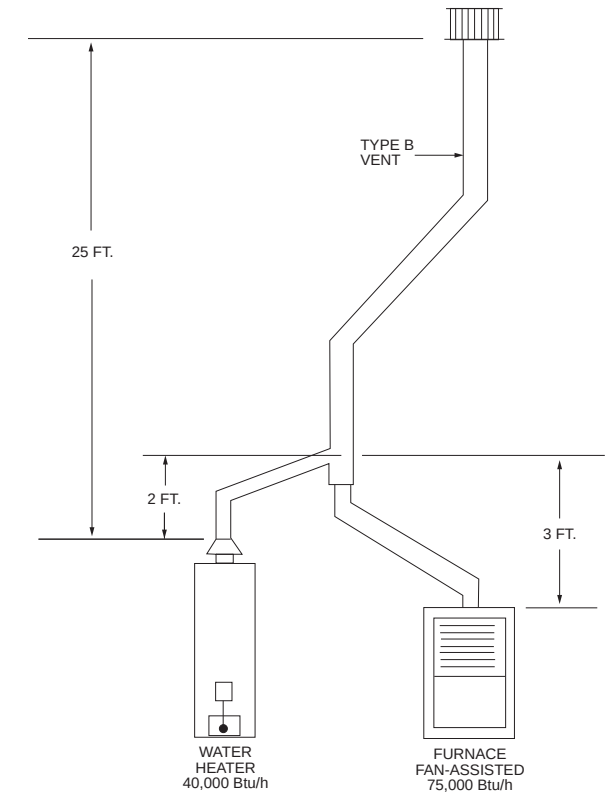

For SI: 1 foot = 304.8 mm, 1 British thermal unit per hour = 0.2931 W.

Figure G2428.3(2)
FAN AND NAT VENT SIZING EXAMPLE

INTERNATIONAL CODE COUNCIL®
Copyright © 2015 ICC. ALL RIGHTS RESERVED. Accessed by David Dammon on Jun 21, 2017 12:30:52 PM pursuant to License Agreement with ICC. No further reproduction or distribution authorized. ANY UNAUTHORIZED REPRODUCTION OR DISTRIBUTION IS A VIOLATION OF THE FEDERAL COPYRIGHT ACT AND THE LICENSE AGREEMENT, AND SUBJECT TO CIVIL AND CRIMINAL PENALTIES THEREUNDER.

b. In accordance with vent manufacturer's instructions, for NAT + NAT appliance combinations, if both connectors are the same size, the common vent must be at least one size larger.

Example 1:

Commentary Figure G2428.3(1) shows a two-appliance FAN + NAT system, combining a draft-hood water heater (NAT appliance) with a fan-assisted combustion Category I (FAN) furnace. The system is designed in the following steps using Table G2428.3(1) for double-wall connectors:

1. For the water heater, enter the vent connector table at a least total height of 15 feet (4572 mm) and a connector rise of 1 foot (305 mm). Read across to the MAX Btu/h rating for a NAT appliance vent higher than 35,000 Btu/h (10.3 kW). The table shows that a 4-inch (102 mm) connector is needed. This size must be used beginning at the draft hood, regardless of draft hood size, which might be 3 inches (76 mm) [see Commentary Figure G2428.3(1)].
2. For the 105,000 Btu/h (30.8 kW) furnace, enter the vent connector table at the same least total height (15 feet) at a connector rise of 3 feet (914 mm). Read across to 163,000 under the FAN MAX column. The MIN is 51,000. Therefore, 5 inches (127 mm) is the correct connector size [see Commentary Figure G2428.3(1)].
3. For the common vent, the sum of the two ratings is 140,000 Btu/h (41.0 kW). Enter the common vent table at 15 foot (4572 mm) least total height.

For a FAN + NAT combination, the maximum input of 5-inch (127 mm) vent is 164,000 Btu/h (48.1 kW), so 5 inches (127 mm) is the proper size, as shown in Commentary Figure G2428.3(1). Both draft-hood and fan-assisted appliances may be common vented in any combination, as indicated by the headings in the common vent table. Appliance types include the following:

- Central heating furnaces.
- Central heating boilers (hot water and steam).
- Water heaters.
- Unit heaters.
- Duct furnaces.
- Room heaters*.
- Floor furnaces*.

*If these have draft hoods, a design input increase of 40 percent is recommended by some vent manufacturers in order to use the tables (see commentary, Section G2428.2).

The common vent tables do not apply to the following:

1. Gas cooking appliances, which should be vented into an exhaust hood or vented individually in accordance with the appliance manufacturer's instructions.
2. Forced draft and commercial or industrial hot water or steam boilers without draft hoods. For this equipment, see the boiler and vent/chimney manufacturers' instructions.
3. Categories II, Ill and IV gas-burning equipment, for which the equipment manufacturer's venting instructions must be used.
4. Gas-fired incinerators.

The manufacturers of chimney and vent systems provide installation and design information as part of their installation instructions. The common chimney or vent must be designed to properly vent the products of combustion when any one, any combination or all of the connected appliances operate. [see Commentary Figure G2428.3(2)]. Solid-fuel-burning appliances must not connect to common chimneys (see Section G2427.5.6.1).

Combined vent systems for two or more gas appliances of either type (FAN or NAT) must be designed to prevent draft-hood spillage for natural draft (NAT) appliances and to avoid positive pressure for fan-assisted (FAN) appliances. The connector and common vent tables have been computed by examining the most critical situations for any operating combination. A common vent must function properly when all, one or any combination of the connected appliances are firing. It is particularly demanding of a vent system to operate properly when only a single appliance having the lowest input rating is firing, thus creating the greatest potential for poor draft and condensation. Oversizing of venting systems should be avoided.

The connector tables are based on the most critical condition for a particular appliance when operating by itself, whereas the common vent tables show sizes that assure adequate capacity and draft, whether one or all appliances are operating simultaneously.

All parts of a combined vent must be checked for capacity. For connectors, the size must be determined from the tables, particularly for low-height vents or where headroom restricts available connector rise.

The connector in a combined-vent system is defined as the piping from a draft hood or flue collar to the junction of the common vent or to a junction in a vent manifold. Proper connector design is vital to obtaining adequate capacity. The connector must produce its share of the total draft for its NAT or FAN appliance and must deliver enough heat to the common vent so that it can contribute the balance of draft needed.

For application of the code's installation provisions, the Type B gas vent connector is a "gas vent." It is essential, however, for system design purposes to use the word "connector" so that its rise and configuration may be explained and tabulated. The connector tables for combined vents show MIN and MAX capacities only for FAN appliances because no minimums

INTERNATIONAL CODE COUNCIL®
Copyright © 2015 ICC. ALL RIGHTS RESERVED. Accessed by David Dammon on Jun 21, 2017 12:30:52 PM pursuant to License Agreement with ICC. No further reproduction or distribution authorized. ANY UNAUTHORIZED REPRODUCTION OR DISTRIBUTION IS A VIOLATION OF THE FEDERAL COPYRIGHT ACT AND THE LICENSE AGREEMENT, AND SUBJECT TO CIVIL AND CRIMINAL PENALTIES THEREUNDER.

are needed for NAT appliances with Type B gas-vent connectors. Important factors in connector design include the following:

- Connector material.
- Connector length.
- Connector rise.
- Number.
- Appliance location as it affects the piping arrangement.
- Number of attached appliances or different connector sizes.
- Connection to an offset or manifold rather than directly to the vertical common vent.

Example 2:

This example is a common scenario [see Commentary Figure G2428.3(2)].

Given:

- Single-family house with Type B vent serving two appliances;
- Category I fan-assisted furnace, 80-percent efficient, 75,000 Btu/h input (4-inch vent collar);
- Furnace connector single-wall pipe with 3-foot rise;
- Draft-hood-equipped water heater, 40,000 Btu/h (3-inch draft hood outlet);
- Water heater connector single-wall with 2-foot rise;
- Vent height: 25 feet;
- A 45-degree offset occurs in the common vent in the attic.

Step 1: Choose the applicable table. Table G2428.3(2) addresses two or more Category I appliances with single-wall connectors.

Step 2: Using the top portion of the table, size the appliance connectors. Because the table has no row for the 25-foot height, the 20-foot row must be used, or interpolation must be used to calculate the capacities at 25 feet. To simplify the procedure, first proceed using the 20-foot row until interpolation is necessary.

a. Looking in the "NAT" columns, see that a 4-inch connector is required for the water heater because the water heater input of 40,000 Btu/h exceeds the maximum capacity (36,000) of a 3-inch connector with a 2-foot rise.

b. Looking in the "FAN" columns, see that the furnace input of 75,000 Btu/h is less than the minimum capacity of 4-inch and larger connectors with a 3-foot rise. This means that single-wall pipe cannot be used for the furnace connector. The furnace connector must be double-wall (Type B or equivalent) and must be sized using Table G2428.3(1). In Table G2428.3(1), see that a 4-inch double-wall connector is suitable for the furnace because the 75,000 Btu/h input fits within the range of 35,000 to 110,000 Btu/h for a 3-foot rise.

The furnace connector has been determined to be 4-inch double-wall pipe, and the water heater connector has been determined to be 4-inch single-wall pipe.

Step 3: Using the bottom portion of Table G2428.3(2), the common vent is sized. (Because both single- and double-wall connectors are used within the same system, Section G2428.3.18 requires use of the single-wall table.) The water heater and furnace inputs total 115,000 Btu/h. Under the 4-inch vent heading, FAN + NAT column, see that 4-inch Type B vent has a capacity of 118,000 Btu/h, which exceeds the appliance total of 115,000. However, the system contains an offset, which will reduce this capacity by 20 percent in accordance with Section G2428.3.5 (0.80 x 118,000) = 94,400 Btu/h.

The actual capacity of a 4-inch common vent is 94,400 Btu/h, which is less than the 115,000 appliance total; therefore, a 5-inch common vent is required.

Verify 5-inch capacity: (0.80 $\times$ 177) = 141,600 Btu/h.

From the 30-foot height rows, it is apparent that interpolation for the actual height of 25 feet would not have changed the outcome of this system design.

Appendix B contains additional sizing examples.

G2428.3.1 (504.3.1) Vent obstructions. These venting tables shall not be used where obstructions, as described in Section G2427.15, are installed in the venting system. The installation of vents serving listed *appliances* with vent dampers shall be in accordance with the *appliance* manufacturer's instructions or in accordance with the following:

1. The maximum capacity of the *vent connector* shall be determined using the NAT Max column.
2. The maximum capacity of the vertical vent or *chimney* shall be determined using the FAN+NAT column when the second *appliance* is a fan-assisted *appliance*, or the NAT+NAT column when the second *appliance* is equipped with a *draft hood*.
3. The minimum capacity shall be determined as if the *appliance* were a fan-assisted *appliance*.
   3.1. The minimum capacity of the *vent connector* shall be determined using the FAN Min column.
   3.2. The FAN+FAN column shall be used when the second *appliance* is a fan-assisted *appliance*, and the FAN+NAT column shall be used when the second *appliance* is equipped with a *draft hood*, to determine whether the vertical vent or *chimney* configuration is not permitted (NA). Where the vent configuration is NA, the vent configuration shall not be permitted and an alternative venting configuration shall be utilized.

❖ See the commentary to Section G2428.2.1. This section is a bit more complex than Section G2428.2.1

INTERNATIONAL CODE COUNCIL®
Copyright © 2015 ICC. ALL RIGHTS RESERVED. Accessed by David Dammon on Jun 21, 2017 12:30:52 PM pursuant to License Agreement with ICC. No further reproduction or distribution authorized. ANY UNAUTHORIZED REPRODUCTION OR DISTRIBUTION IS A VIOLATION OF THE FEDERAL COPYRIGHT ACT AND THE LICENSE AGREEMENT, AND SUBJECT TO CIVIL AND CRIMINAL PENALTIES THEREUNDER.

because the tables for multiple appliances are two-part tables. The difference lies in Items 2 and 3.2 dealing with the common vent portion of the sizing tables. Item 2 determines the maximum capacity of the common vent by treating the vent-damper-equipped appliance as a draft-hood appliance coupled with either another draft-hood appliance or a fan-assisted appliance. Item 3.2 is a test wherein the vent-damper-equipped appliance is treated as a fan-assisted appliance. If the table says NA, the vent system must be redesigned, regardless of the fact that it may have been allowed by the table under Item 2.

G2428.3.2 (504.3.2) Connector length limit. The *vent connector* shall be routed to the vent utilizing the shortest possible route. Except as provided in Section G2428.3.3, the maximum *vent connector* horizontal length shall be $1^1/_2$ feet for each inch (18 mm per mm) of connector diameter as shown in Table G2428.3.2.

❖ Connectors are necessary for chimney and vent systems that serve multiple appliances. To reduce friction loss and flue-gas heat loss and to conserve available draft, connectors must be kept to a minimum length. Thoughtful placement of appliances and chimneys or vents can reduce connector lengths and achieve optimum venting performance. Unlike Tables G2428.2(1) and G2428.2(2), Tables G2428.3(1) through G2428.3(4) do not provide a range of permissible lateral lengths. Therefore, Section G2427.10.8 places an overall maximum limit on connector length. Section G2427.10.8 provides a necessary limiting function because Tables G2428.3(1) through G2428.3(4) would appear to allow (unintentionally) a connector to be considerably longer than the height of the vent.

Increasing the length of the connector increases the required minimum capacity of a vent and decreases its maximum capacity. Some vent manufacturers appear to measure only the horizontal (lateral) run of a connector in their design manuals. The more conservative approach would be to consider the friction loss and heat loss for the entire run of a connector throughout its developed length (see commentary, Section G2427.10.8). The vent sizing tables were developed with the assumption that vent connectors are no longer than 18 inches per inch of connector diameter. This section establishes the basic rule, which is modified by Sections G2428.3.3 and G2427.10.8. Simply put, connector length is limited by this section to 18 inches per inch of diameter without capacity penalties or is limited in length by Section G2427.10.8 if the capacity penalties of Section G2428.3.3 are applied and the minimum capacity is met for fan-assisted appliances. Section G2428.3.3 allows longer connector lengths, but this section still requires connectors to take the shortest route to the vent.

TABLE G2428.3.2 (504.3.2)
MAXIMUM VENT CONNECTOR LENGTH

CONNECTOR DIAMETER (inches)	CONNECTOR MAXIMUM HORIZONTAL LENGTH (feet)
3	$4^1/_2$
4	6
5	$7^1/_2$
6	9
7	$10^1/_2$
8	12
9	$13^1/_2$

For SI: 1 inch = 25.4 mm, 1 foot = 304.8 mm.

❖ See the commentary to Section G2428.3.2.

G2428.3.3 (504.3.3) Connectors with longer lengths. Connectors with longer horizontal lengths than those listed in Section G2428.3.2 are permitted under the following conditions:

1. The maximum capacity (FAN Max or NAT Max) of the *vent connector* shall be reduced 10 percent for each additional multiple of the length allowed by Section G2428.3.2. For example, the maximum length listed in Table G2428.3.2 for a 4-inch (102 mm) connector is 6 feet (1829 mm). With a connector length greater than 6 feet (1829 mm) but not exceeding 12 feet (3658 mm), the maximum capacity must be reduced by 10 percent (0.90 × maximum vent *connector* capacity). With a connector length greater than 12 feet (3658 mm), but not exceeding 18 feet (5486 mm), the maximum capacity must be reduced by 20 percent (0.80 × maximum vent capacity).
2. For a connector serving a fan-assisted *appliance*, the minimum capacity (FAN Min) of the connector shall be determined by referring to the corresponding single-*appliance* table. For Type B double-wall connectors, Table G2428.2(1) shall be used. For single-wall connectors, Table G2428.2(2) shall be used. The height (*H*) and lateral (*L*) shall be measured according to the procedures for a single-*appliance* vent, as if the other *appliances* were not present.

❖ Section G2427.10.8 still applies and serves to limit the application of this section and Section G2428.3.2. For fan-assisted appliances, both Items 1 and 2 apply. Item 1 allows the maximum length permitted by Section G2428.3.2 to be increased (doubled, tripled, etc.) if the vent connector capacity is reduced by 10 percent when the maximum connector length is doubled, by 20 percent when tripled, by 30 percent when quadrupled, etc. Regardless of the length permitted, connectors should always be as short as practicable.

Item 2 applies to fan-assisted appliances and allows connector lengths to be as long as the lateral entries in Table G2428.2(1) or G2428.2(2) if the limits of Section

INTERNATIONAL CODE COUNCIL®
Copyright © 2015 ICC. ALL RIGHTS RESERVED. Accessed by David Dammon on Jun 21, 2017 12:30:52 PM pursuant to License Agreement with ICC. No further reproduction or distribution authorized. ANY UNAUTHORIZED REPRODUCTION OR DISTRIBUTION IS A VIOLATION OF THE FEDERAL COPYRIGHT ACT AND THE LICENSE AGREEMENT, AND SUBJECT TO CIVIL AND CRIMINAL PENALTIES THEREUNDER.

G2427.10.8 are not exceeded and the appliance complies with the minimum input requirement of the respective table.

When horizontal lengths in excess of those stated in Section G2428.3.2 are necessary, the minimum capacity of the system is determined by referring to the corresponding single-appliance table. In this case, for each appliance the entire vent connector and common vent from appliance to vent termination is treated as a single-appliance vent (of the same size as the common vent), as if the others were not present. Any appliance failing to meet the Min input may be prone to creating excessive condensation and/or insufficient draft within the vent system if the appliance is operated by itself. In that case, options may include relocation of appliances, selective sequential or simultaneous operation of appliances or separate vent installations. This section is intended for use only where a longer connector cannot be avoided as required by Section G2427.10.8 and the connector takes the shortest possible route to the vent. The longer the connector, the greater the flow resistance and the greater the heat loss, both of which negatively affect vent system operation. The capacity penalties account for the increased flow resistance and Item 2 accounts for the increased heat loss. Item 2 addresses the worst case condition when a single appliance is operating and treats a connector serving a fan-assisted appliance as if the appliance was being independently vented, hence, the reference to the single appliance tables. Recall that the single appliance tables limit lateral length, which can be, in effect, a connector length limitation.

In many cases, the sizing tables will prevent someone from taking advantage of the allowances of this section for connectors. For example, a single-wall connector serving a fan-assisted appliance may not be able to meet the minimum input requirement (FAN Min) if the capacity penalty of this section forces increasing the connector size. Note that Section G2427.10.8 will not allow a connector length to exceed the vent or chimney height in any case.

G2428.3.4 (504.3.4) Vent connector manifold. Where the *vent connectors* are combined prior to entering the vertical portion of the common vent to form a common vent manifold, the size of the common vent manifold and the common vent shall be determined by applying a 10-percent reduction (0.90 × maximum common vent capacity) to the common vent capacity part of the common vent tables. The length of the common *vent connector* manifold (L_m) shall not exceed $1^1/_2$ feet for each inch (18 mm per mm) of common *vent connector* manifold diameter (*D*).

❖ This section inflicts a 10-percent capacity penalty on the common vent as a result of the lateral (offset) effect of a manifold. A connector manifold is a horizontal extension of the lower end of a common vent [see Commentary Figures G2427.10.3.4(1) and (2)]. The capacity reduction accounts for the additional turn in the common vent. The manifold portion of a vent is sized based on the common vent portion of the tables. The length of a connector manifold is measured from the vertical common vent to the most upstream interconnection fitting.

G2428.3.5 (504.3.5) Common vertical vent offset. Where the common vertical vent is *offset*, the maximum capacity of the common vent shall be reduced in accordance with Section G2428.3.6. The horizontal length of the common vent *offset* (L_o) shall not exceed $1^1/_2$ feet for each inch (18 mm per mm) of common vent diameter (*D*). Where multiple *offsets* occur in a common vent, the total horizontal length of all *offsets* combined shall not exceed $1^1/_2$ feet for each inch (18 mm/mm per) of the common vent diameter (*D*).

❖ Offsets, as opposed to a single change in direction, require two fittings (elbows) [see Commentary Figures G2403(13) and G2427.10.3.4(2)]. An offset offers resistance to flow as does any change of direction in a vent chimney or connector, and the capacity reduction penalty compensates for this flow resistance. Common vent locations should be well planned in a building to avoid the need for an offset. Offsets also introduce the need for additional supports to prevent stress on fittings (elbows). The term Offset (Vent) is defined in Section G2403 [see commentary, Sections G2428.2.3 and G2428.2.9].

Offsets should be avoided because of the flow resistance, capacity reduction, additional support requirements and possibility of condensation leakage. The length limitation of this section is absolute with no allowance for greater lengths. This provision is commonly violated in attic space offsets with some violations resulting in offsets that are as long or longer than the vent height. The length of an offset is measured in a horizontal plane, not along the developed length of the vent pipe. For example, a 45-degree offset with 7 feet (2134 mm) of pipe between the fittings will have an offset length of 5 feet (1524 mm) for application of this section. (For a 45-degree (0.79 rad) offset, actual pipe developed length is approximately 1.4 times the horizontal distance between the parallel vertical sections of pipe) (see Commentary Figure G2428.3.5).

The total length of all horizontal offsets combined cannot exceed the maximum limit of $1^1/_2$ feet (457 mm) per inch of vent diameter. In other words, horizontal offsets are accumulative.

G2428.3.6 (504.3.6) Elbows in vents. For each elbow up to and including 45 degrees (0.79 rad) in the common vent, the maximum common vent capacity listed in the venting tables shall be reduced by 5 percent. For each elbow greater than 45 degrees (0.79 rad) up to and including 90 degrees (1.57 rad), the maximum common vent capacity listed in the venting tables shall be reduced by 10 percent.

❖ This section applies to the common vent portion of a vent system (see commentary, Section G2428.2.3). For example, a common vent may have two 30-degree (0.52 rad) changes of direction at its base and might also have an offset constructed with 45-degree (0.79 rad) fittings in an attic space, thus having a total capacity reduction of 20 percent. If that same vent system had two 45-degree (0.79 rad) changes of direction at the base and an offset constructed with 60-degree

INTERNATIONAL CODE COUNCIL®
Copyright © 2015 ICC. ALL RIGHTS RESERVED. Accessed by David Dammon on Jun 21, 2017 12:30:52 PM pursuant to License Agreement with ICC. No further reproduction or distribution authorized. ANY UNAUTHORIZED REPRODUCTION OR DISTRIBUTION IS A VIOLATION OF THE FEDERAL COPYRIGHT ACT AND THE LICENSE AGREEMENT, AND SUBJECT TO CIVIL AND CRIMINAL PENALTIES THEREUNDER.

(1.05 rad) fittings in the attic, the total capacity penalty would be 30 percent. In Commentary Figure G2428.3.6(1), an offset is created in the common vent by the use of two fittings (elbows) adjusted to 45 degree (0.79 rad) angles. The common vent capacity would be reduced by 10 percent total (5 percent for each fitting/elbow). If the fittings were adjusted to angles greater than 45 degrees (0.79 rad), the total capacity reduction would be 10 percent per fitting for a total of 20 percent (see Commentary Figures G2428.3.6(2) and G2428.3.6(3)].

G2428.3.7 (504.3.7) Elbows in connectors. The *vent connector* capacities listed in the common vent sizing tables include allowance for two 90-degree (1.57 rad) elbows. For each additional elbow up to and including 45 degrees (0.79 rad), the maximum *vent connector* capacity listed in the venting tables shall be reduced by 5 percent. For each elbow greater than 45 degrees (0.79 rad) up to and including 90 degrees (1.57 rad), the maximum *vent connector* capacity listed in the venting tables shall be reduced by 10 percent.

❖ In Commentary Figure G2428.3.6(1), the connector for the fan-assisted appliance is offset with two 60-degree (1.05 rad) fittings (elbows). Because the tables include an allowance for two "free" 90-degree (1.57 rad) fittings, no capacity reduction would be required for this connector. The draft-hood-equipped appliance has a connector with a total of four 90-degree (1.57 rad) fittings, including the tee in the common vent. This would require a total capacity reduction of 20 percent. Note that Section G2427.10.8 intends to prohibit connectors with excessive length and fittings/elbows. Excess fittings and length are often the result of poor planning, improper appliance location and obstructions, such as ducts, structural members and other appliances. Capacity reduction penalties can force an increase in connector size, and in the case of fan-assisted appliances, increasing the connector size might raise the minimum required input rating above the appliance rating, thus forcing redesign of the system.

G2428.3.8 (504.3.8) Common vent minimum size. The cross-sectional area of the common vent shall be equal to or greater than the cross-sectional area of the largest connector.

❖ This requirement is consistent with vent manufacturers' instructions and is necessary to prevent overloading of the common vent. It is apparent that a vent's maximum capacity could be exceeded where multiple connectors are involved, especially if one of the connectors is larger than the common vent itself. Vent manufacturers may also require that the common vent be increased one size where more than one appliance connector and the common vent are the same size.

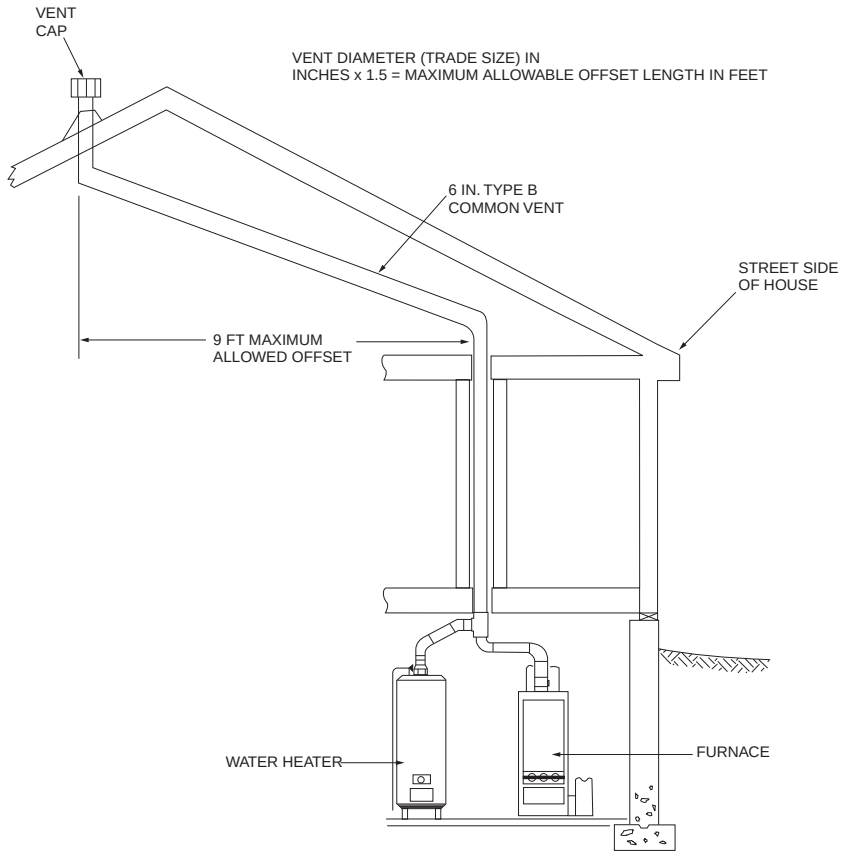

For SI: 1 inch = 25.4 mm, 1 foot = 304.8 mm.

Figure G2428.3.5
COMMON VENT OFFSET IN ATTIC FOR THE PURPOSE OF AVOIDING A STREET-SIDE ROOF PENETRATION

INTERNATIONAL CODE COUNCIL®
Copyright © 2015 ICC. ALL RIGHTS RESERVED. Accessed by David Dammon on Jun 21, 2017 12:30:52 PM pursuant to License Agreement with ICC. No further reproduction or distribution authorized. ANY UNAUTHORIZED REPRODUCTION OR DISTRIBUTION IS A VIOLATION OF THE FEDERAL COPYRIGHT ACT AND THE LICENSE AGREEMENT, AND SUBJECT TO CIVIL AND CRIMINAL PENALTIES THEREUNDER.

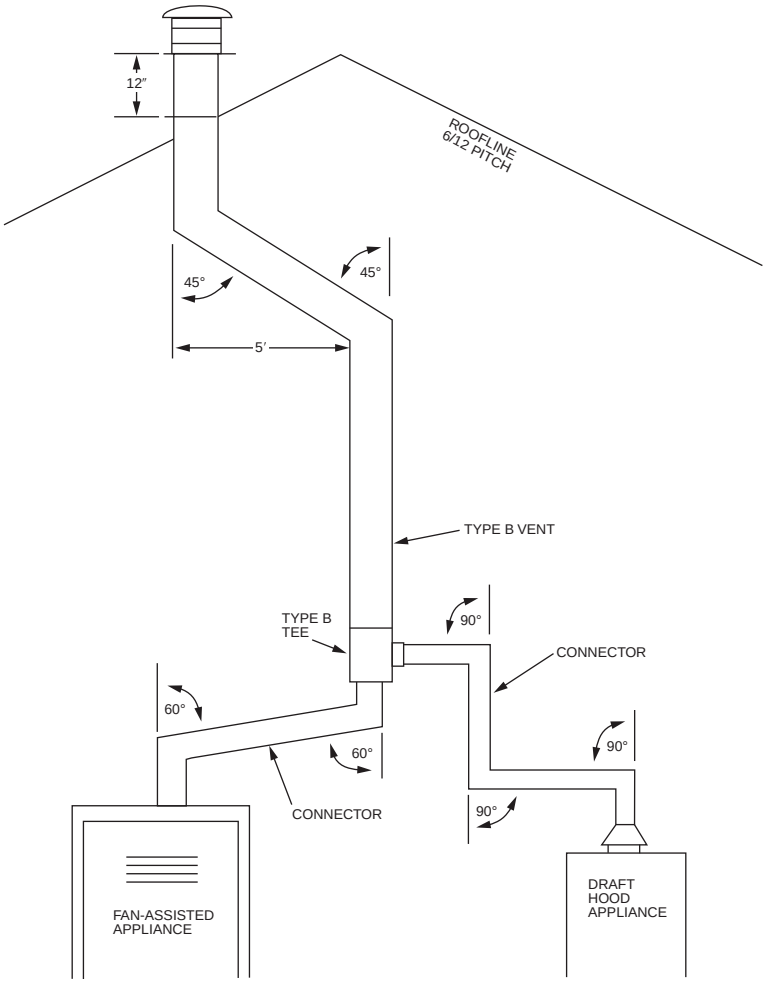

For SI: 1 degree = 0.01745 rad.

Figure G2428.3.6(1)
OFFSET IN COMMON VENT AND CONNECTORS

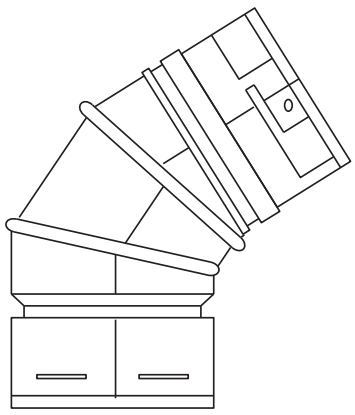

Figure courtesy of Simpson Dura-Vent Co., Inc.

Figure G2428.3.6(2)
TYPE B VENT ADJUSTABLE
45-DEGREE ELBOW FITTING

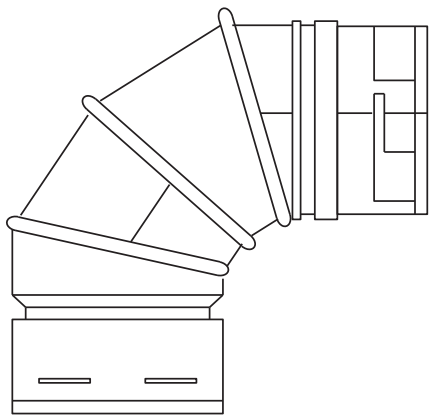

Figure courtesy of Simpson Dura-Vent Co., Inc.

Figure G2428.3.6(3)
TYPE B VENT ADJUSTABLE
90-DEGREE ELBOW FITTING

INTERNATIONAL CODE COUNCIL®
Copyright © 2015 ICC. ALL RIGHTS RESERVED. Accessed by David Dammon on Jun 21, 2017 12:30:52 PM pursuant to License Agreement with ICC. No further reproduction or distribution authorized. ANY UNAUTHORIZED REPRODUCTION OR DISTRIBUTION IS A VIOLATION OF THE FEDERAL COPYRIGHT ACT AND THE LICENSE AGREEMENT, AND SUBJECT TO CIVIL AND CRIMINAL PENALTIES THEREUNDER.

G2428.3.9 (504.3.9) Common vent fittings. At the point where tee or wye fittings connect to a common vent, the opening size of the fitting shall be equal to the size of the common vent. Such fittings shall not be prohibited from having reduced-size openings at the point of connection of *appliance vent connectors*.

❖ This section specifically allows use of tee and wye fittings with reduced-size openings to join appliance vent connectors to the common vent. The fittings must be the same size as the common vent at the point where they join, but are allowed to have smaller branch openings and smaller openings on the opposite end of the run of the fitting. A common question regarding interconnection fittings is whether or not the code intends to allow single-wall interconnection fittings such as tees and wyes. These fittings have commonly been used with single-wall connectors to join two appliances to a common Type B vent $5 \times 4 \times 3$-inch wyes, $6 \times 6 \times 4$-inch tees, etc. Vent manufacturers' opinion on this issue is that because the interconnection fitting is part of the common vent, it should be constructed as required for the common vent, meaning Type B vent tees and wyes. Certainly, double-wall vent connectors are not allowed to discharge into a single-wall fitting. The code was previously silent with regard to single-wall connectors discharging into single-wall fittings. However, Section G2428.3.9.1 has settled this issue. Double-wall tees and wyes are preferable because they have far less heat loss and less required clearance to combustibles [see Commentary Figures G2428.3.9(1) and (2) and Section G2428.3.9.1].

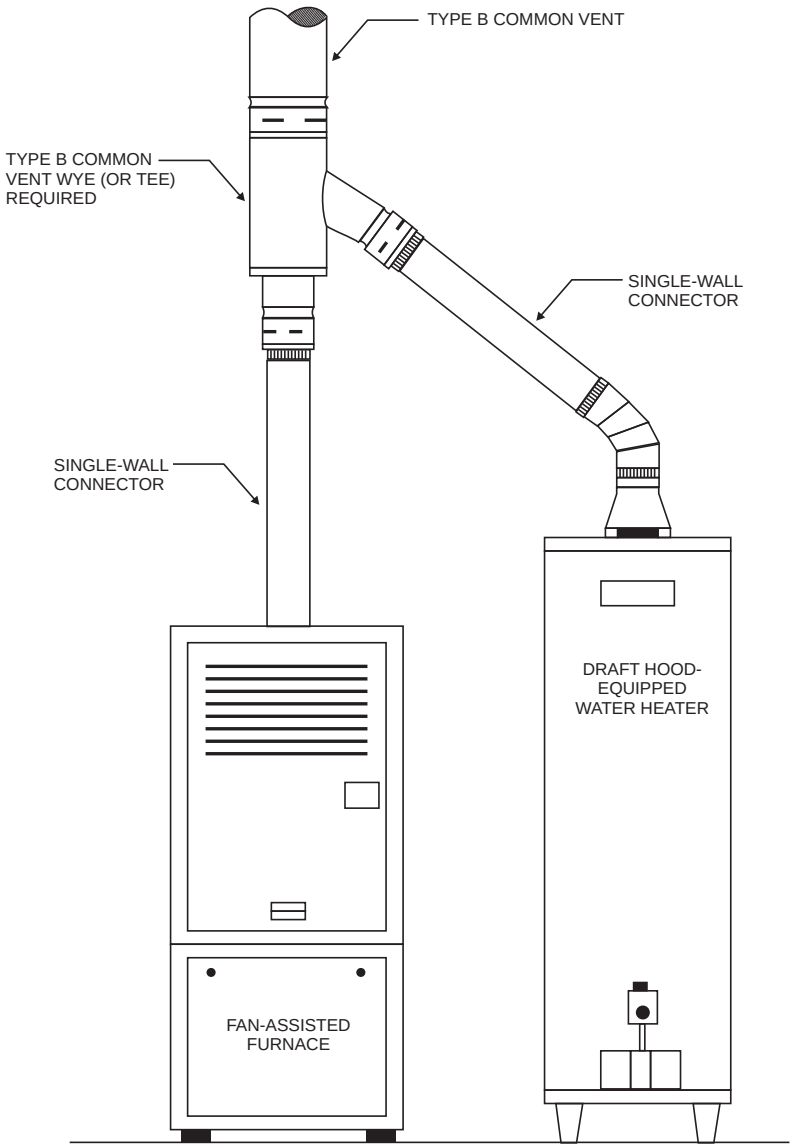

Figure G2428.3.9.1
SINGLE-WALL TEES AND WYES PROHIBITED IN TYPE B COMMON VENT SYSTEMS

INTERNATIONAL CODE COUNCIL®
Copyright © 2015 ICC. ALL RIGHTS RESERVED. Accessed by David Dammon on Jun 21, 2017 12:30:52 PM pursuant to License Agreement with ICC. No further reproduction or distribution authorized. ANY UNAUTHORIZED REPRODUCTION OR DISTRIBUTION IS A VIOLATION OF THE FEDERAL COPYRIGHT ACT AND THE LICENSE AGREEMENT, AND SUBJECT TO CIVIL AND CRIMINAL PENALTIES THEREUNDER.

G2428.3.9.1 (504.3.9.1) Tee and wye fittings. Tee and wye fittings connected to a common gas vent shall be considered as part of the common gas vent and shall be constructed of materials consistent with that of the common gas vent.

❖ Because the tee and wye fittings are part of the common vent, they must be of the same construction as the common vent. This is consistent with the vent manufacturer's recommendations [see Commentary Figures G2428.3.9.1, G2428.3.9(1) and G2428.3.9(2)]. Tee and wye fittings used with Type B common vents are not allowed to be single wall fittings.

G2428.3.10 (504.3.10) High-altitude installations. Sea-level input ratings shall be used when determining maximum capacity for high-altitude installation. Actual input, derated for altitude, shall be used for determining minimum capacity for high-altitude installation.

❖ See the commentary to Section G2428.2.5.

G2428.3.11 (504.3.11) Connector rise measurement. Connector rise (*R*) for each *appliance connector* shall be measured from the *draft hood* outlet or *flue collar* to the centerline where the vent gas streams come together.

❖ It is desirable to achieve the greatest connector rise that conditions will permit [see Commentary Figures G2428.3.11 and G2428.3(2)].

G2428.3.12 (504.3.12) Vent height measurement. For multiple *appliances* all located on one floor, available total height (H) shall be measured from the highest *draft hood* outlet or *flue collar* up to the level of the outlet of the common vent.

❖ The vent design is based on the "worst case" (most conservative) height so that a vent is not given credit for being taller than it actually is [see commentary Figure G2428.3(2)].



Photo courtesy of Simpson Dura-Vent Company, Incorporated

Figure G2428.3.9(1)
TYPE B VENT REDUCING TEE

G2428.3.13 (504.3.17) Vertical vent maximum size. Where two or more *appliances* are connected to a vertical vent or *chimney*, the flow area of the largest section of vertical vent or *chimney* shall not exceed seven times the smallest listed *appliance* categorized vent areas, *flue collar* area, or *draft hood* outlet area unless designed in accordance with *approved* engineering methods.

❖ Vent manufacturers' instructions address ratios of areas of appliance connectors connecting to a com-



Photo courtesy of Simpson Dura-Vent Company, Incorporated

Figure G2428.3.9(2)
TYPE B VENT REDUCING WYE

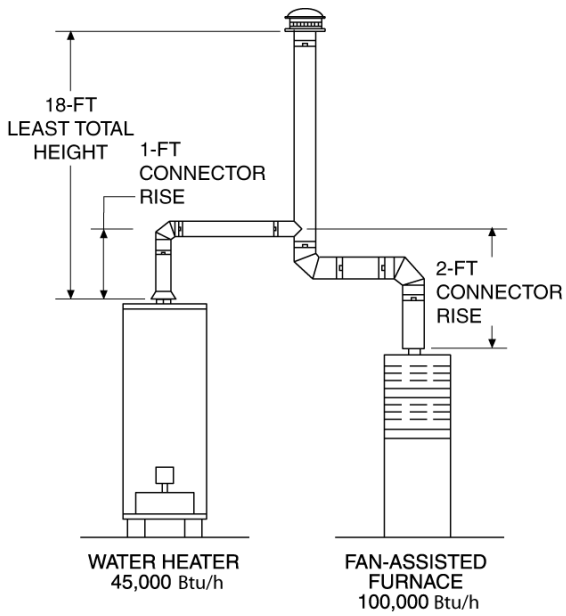

Figure courtesy of Simpson Dura-Vent Company, Incorporated
For SI: 1 foot = 304.8 mm.

Figure G2428.3.11
CONNECTOR RISE

INTERNATIONAL CODE COUNCIL®
Copyright © 2015 ICC. ALL RIGHTS RESERVED. Accessed by David Dammon on Jun 21, 2017 12:30:52 PM pursuant to License Agreement with ICC. No further reproduction or distribution authorized. ANY UNAUTHORIZED REPRODUCTION OR DISTRIBUTION IS A VIOLATION OF THE FEDERAL COPYRIGHT ACT AND THE LICENSE AGREEMENT, AND SUBJECT TO CIVIL AND CRIMINAL PENALTIES THEREUNDER.

mon vent. This section relates the area ratio limitation to the smallest appliance connection and the area of the vertical common vent. The concern is that the smaller or smallest appliance may not be able to provide enough heat to the common vent to develop sufficient draft and prevent a condensation problem. It can be seen that the common vent tables would allow gross oversizing if it were not for the limit of this section. For example, if the table permits a 5-inch common vent, it would also permit a 6-, 7-, 8-, 9- and 10-inch common vent. This section serves to limit the size of the common vent, whereas the table does not. The larger the common vent, the more difficult it becomes to maintain draft and avoid condensation, especially when the smallest appliance is firing by itself.

G2428.3.14 (504.3.18) Multiple input rate appliances. For *appliances* with more than one input rate, the minimum *vent connector* capacity (FAN Min) determined from the tables shall be less than the lowest *appliance* input rating, and the maximum *vent connector* capacity (FAN Max or NAT Max) determined from the tables shall be greater than the highest *appliance* input rating.

❖ See the commentary to Section G2428.2.6.

G2428.3.15 (504.3.19) Liner system sizing and connections. Listed, corrugated metallic *chimney* liner systems in masonry *chimneys* shall be sized by using Table G2428.3(1) or G2428.3(2) for Type B vents, with the maximum capacity reduced by 20 percent (0.80 × maximum capacity) and the minimum capacity as shown in Table G2428.3(1) or G2428.3(2). Corrugated metallic liner systems installed with bends or offsets shall have their maximum capacity further reduced in accordance with Sections G2428.3.5 and G2428.3.6. The 20-percent reduction for corrugated metallic *chimney* liner systems includes an allowance for one long-radius 90-degree (1.57 rad) turn at the bottom of the liner. Where double-wall connectors are required, tee and wye fittings used to connect to the common vent *chimney* liner shall be listed double-wall fittings. Connections between *chimney* liners and listed double-wall fittings shall be made with listed adapter fittings designed for such purpose.

❖ See the commentary to Section G2428.2.7.

G2428.3.16 (504.3.20) Chimney and vent location. Tables G2428.3(1), G2428.3(2), G2428.3(3) and G2428.3(4) shall be used only for chimneys and vents not exposed to the outdoors below the roof line. A Type B vent or *listed* chimney lining system passing through an unused masonry chimney flue shall not be considered to be exposed to the outdoors. Where vents extend outdoors above the roof more than 5 feet (1524 mm) higher than required by Figure G2427.6.3 and where vents terminate in accordance with Section G2427.6.3, Item 2, the outdoor portion of the vent shall be enclosed as required by this section for vents not considered to be exposed to the outdoors or such venting system shall be engineered. A Type B vent shall not be considered to be exposed to the outdoors where it passes through an unventilated enclosure or chase insulated to a value of not less than R8.

❖ See the commentary to Section G2428.2.9.

G2428.3.17 (504.3.21) Connector maximum and minimum size. *Vent connectors* shall not be increased in size more than two sizes greater than the listed *appliance* categorized vent diameter, *flue collar* diameter or *draft hood* outlet diameter. *Vent connectors* for draft-hood-equipped *appliances* shall not be smaller than the *draft hood* outlet diameter. Where a *vent connector* size(s) determined from the tables for a fan-assisted *appliance(s)* is smaller than the *flue collar* diameter, the use of the smaller size(s) shall be permitted provided that the installation complies with all of the following conditions:

1. *Vent connectors* for fan-assisted *appliance flue collars* 12 inches (305 mm) in diameter or smaller are not reduced by more than one table size [e.g., 12 inches to 10 inches (305 mm to 254 mm) is a one-size reduction] and those larger than 12 inches (305 mm) in diameter are not reduced more than two table sizes [e.g., 24 inches to 20 inches (610 mm to 508 mm) is a two-size reduction].
2. The fan-assisted *appliance(s)* is common vented with a draft-hood-equipped *appliance(s)*.
3. The vent *connector* has a smooth interior wall.

❖ Using a connector that is larger than the appliance outlet connection may sometimes be necessary to comply with the requirements of the sizing tables for multiple-appliance systems. However, having a connector significantly larger than the appliance outlet connection could cause reduced flow velocity, excessive loss of heat and could result in the allowance of excessively long connectors.

In accordance with Section G2428.2.2, a venting system serving a single appliance can, under certain conditions, be smaller than the appliance outlet connection. However, this is prohibited by this section for draft-hood appliances in common venting systems serving more than one appliance (see commentary, Section G2428.2.11). The reason for this prohibition is that a common vent or chimney, being large enough for multiple appliances, may not be able to produce adequate draft or avoid condensation where a single appliance is operating with a reduced-size vent connector.

Recent research involving computerized modeling has shown that connectors for fan-assisted appliances in multiple-appliance systems can be reduced under conditions similar to those for single-appliance installations. Therefore, this section makes an exception for systems with fan-assisted appliances commonly vented with appliances equipped with a draft hood (see commentary, Section G2428.2.2). The allowance for a connector to be smaller than an appliance flue collar is applicable only to fan-assisted appliances. A reduction in size is not allowed for corrugated metal connectors.

G2428.3.18 (504.3.22) Component commingling. All combinations of pipe sizes, single-wall and double-wall metal pipe shall be allowed within any connector run(s) or within the common vent, provided that all of the appropriate tables permit all of the desired sizes and types of pipe, as if they

INTERNATIONAL CODE COUNCIL®
Copyright © 2015 ICC. ALL RIGHTS RESERVED. Accessed by David Dammon on Jun 21, 2017 12:30:52 PM pursuant to License Agreement with ICC. No further reproduction or distribution authorized. ANY UNAUTHORIZED REPRODUCTION OR DISTRIBUTION IS A VIOLATION OF THE FEDERAL COPYRIGHT ACT AND THE LICENSE AGREEMENT, AND SUBJECT TO CIVIL AND CRIMINAL PENALTIES THEREUNDER.

were used for the entire length of the subject connector or vent. Where single-wall and Type B double-wall metal pipes are used for *vent connectors* within the same venting system, the common vent must be sized using Table G2428.3(2) or G2428.3(4), as appropriate.

❖ Because this section parallels Section G2428.2.12, see the commentary to that section. This section addresses the installation that uses both single-wall connectors and double-wall connectors in the same venting system. The penalty for mixing is that the common vent must be sized from the more restrictive single-wall connector tables. Double-wall pipe is not designed to be interchangeable with single-wall pipe, and all such transitions would have to made with fittings designed for the transition.

G2428.3.19 (504.3.23) Draft hood conversion accessories. *Draft hood* conversion accessories for use with *masonry chimneys* venting listed Category I fan-assisted *appliances* shall be listed and installed in accordance with the manufacturer's instructions for such listed accessories.

❖ See the commentary to Section G2428.2.13.

G2428.3.20 (504.3.24) Multiple sizes permitted. Where a table permits more than one diameter of pipe to be used for a connector or vent, all the permitted sizes shall be permitted to be used.

❖ This section broadly states that any size pipe permitted by the sizing tables may be used. However, do not overlook Sections G2428.3.8, G2428.3.13 and G2428.3.17, which contain provisions that can override this section. Vent manufacturers stress that the smallest size pipe allowed by the code should be used rather than any larger sizes that may be permitted. Operating a vent or chimney at nearer to its maximum capacity will produce stronger draft and result in better protection against the formation of condensation.

G2428.3.21 (504.3.25) Table interpolation. Interpolation shall be permitted in calculating capacities for vent dimensions that fall between table entries.

❖ See Section G2428.2.14.

G2428.3.22 (504.3.26) Extrapolation prohibited. Extrapolation beyond the table entries shall not be permitted.

❖ See Section G2428.2.15.

G2428.3.23 (504.3.27) Engineering calculations. For vent heights less than 6 feet (1829 mm) and greater than shown in the tables, engineering methods shall be used to calculate vent capacities.

❖ See Section G2428.2.16.

G2428.3.24 (504.3.28) Height entries. Where the actual height of a vent falls between entries in the height column of the applicable table in Tables G2428.3(1) through G2428.3(4), either interpolation shall be used or the lower appliance input rating shown in the table shall be used for FAN Max and NAT Max column values and the higher appliance input rating shall be used for the FAN Min column values.

❖ See the commentary to Section G2428.2.17.

SECTION G2429 (505)
DIRECT-VENT, INTEGRAL VENT, MECHANICAL VENT AND VENTILATION/EXHAUST HOOD VENTING

G2429.1 (505.1) General. The installation of direct-vent and integral vent *appliances* shall be in accordance with Section G2427. Mechanical *venting systems* shall be designed and installed in accordance with Section G2427.

❖ See Sections G2427.2.1, G2427.2.2, G2427.3.3 and G2427.8.

SECTION G2430 (506)
FACTORY-BUILT CHIMNEYS

G2430.1 (506.1) Listing. Factory-built *chimneys* for building heating *appliances* producing *flue gases* having a temperature not greater than 1,000ºF (538ºC), measured at the entrance to the *chimney*, shall be listed and *labeled* in accordance with UL 103 and shall be installed and terminated in accordance with the manufacturer's instructions.

❖ Factory-built chimneys can be used with gas-fired appliances if allowed by the chimney manufacturer. The sizing tables in Section G2428 do not apply to factory-built chimneys; therefore, sizing must be engineered or as specified by the chimney and appliance manufacturers' instructions. Factory-built chimneys will be too large for many residential gas appliances [see Commentary Figures G2430.1(1) and G2430.1(2)].



Photo courtesy of Selkirk L.L.C.

Figure G2430.1(1)
FACTORY-BUILT CHIMNEY

INTERNATIONAL CODE COUNCIL®
Copyright © 2015 ICC. ALL RIGHTS RESERVED. Accessed by David Dammon on Jun 21, 2017 12:30:52 PM pursuant to License Agreement with ICC. No further reproduction or distribution authorized. ANY UNAUTHORIZED REPRODUCTION OR DISTRIBUTION IS A VIOLATION OF THE FEDERAL COPYRIGHT ACT AND THE LICENSE AGREEMENT, AND SUBJECT TO CIVIL AND CRIMINAL PENALTIES THEREUNDER.



Photo courtesy of Simpson Dura-Vent Co., Inc.

Figure G2430.1(2)
FACTORY BUILT AIR-COOLED CHIMNEY SYSTEM

G2430.2 (506.2) Support. Where factory-built *chimneys* are supported by structural members, such as joists and rafters, such members shall be designed to support the additional load.

❖ Factory-built chimneys are supported by the building structure and can impose considerable weight on structural components. Joists, rafters and other structural members must be designed to support the additional loading. Structural evaluation may be necessary, especially where framing for a chimney requires cutting and heading of joists and rafters.

SECTION G2431 (601) GENERAL

G2431.1 (601.1) Scope. Sections G2432 through G2454 shall govern the approval, design, installation, construction, maintenance, *alteration* and repair of the *appliances* and *equipment* specifically identified herein.

❖ This chapter regulates all aspects of appliances and equipment to the extent found in each of Sections G2432 through G2454.

SECTION G2432 (602) DECORATIVE APPLIANCES FOR INSTALLATION IN FIREPLACES

G2432.1 (602.1) General. Decorative *appliances* for installation in *approved* solid fuel-burning *fireplaces* shall be tested in accordance with ANSI Z21.60 and shall be installed in accordance with the manufacturer's instructions. Manually lighted natural gas decorative *appliances* shall be tested in accordance with ANSI Z21.84.

❖ These appliances include gas log sets that are designed to simulate wood fires (see Commentary Figure G2432.1). Sections G2404 through G2411 address the requirements for testing, labeling and installing mechanical equipment and appliances. The gas-burning appliance must be tested to the standard or standards appropriate for the equipment. The testing agency is responsible for determining the standard to be used to test the equipment. In the case of decorative gas log sets, ANSI Z21.60 or Z21.84 is the applicable test standard.

Labeling is the code official's assurance that the subject product is a representative duplication of the product that the testing agency tested in the laboratory. The label indicates that an independent agency has conducted inspections at the plant to verify that all units conform to the specifications that the quality control manual sets forth for fabricating the gas appliances. Information that must be contained on the label is described in Section M1303.1 and includes the manufacturer's identification, the third-party inspection agency's identification, the model number, the serial number, the input ratings and the type of fuel the appliance is designed to burn.

The code requires that the appliance be installed in accordance with the manufacturer's installation instructions. This requirement is also linked to the laboratory testing of the appliance because the laboratory used the same installation instructions to install the prototype appliance being tested. When the appliance has been tested and evaluated for code compliance and judged to meet the performance and construction requirements of the applicable standard, the installation instructions become an integral part of the labeling requirements and must be strictly adhered to.



Photography by D.F. Noyes Studio, Courtesy of DESA International

Figure G2432.1
VENTED GAS LOG SET

INTERNATIONAL CODE COUNCIL®
Copyright © 2015 ICC. ALL RIGHTS RESERVED. Accessed by David Dammon on Jun 21, 2017 12:30:52 PM pursuant to License Agreement with ICC. No further reproduction or distribution authorized. ANY UNAUTHORIZED REPRODUCTION OR DISTRIBUTION IS A VIOLATION OF THE FEDERAL COPYRIGHT ACT AND THE LICENSE AGREEMENT, AND SUBJECT TO CIVIL AND CRIMINAL PENALTIES THEREUNDER.

The intent of this section is to regulate gas-burning appliances that are accessory to, and designed for installation in, vented solid-fuel-burning fireplaces. Gas-fired decorative log sets and log lighters are examples of accessory appliances that are designed for installation in solid-fuel-burning fireplaces. Gas log sets provide some radiant heat; however, their primary function is to create an aesthetically pleasing simulation of a wood log fire. This section addresses vented appliances and does not address "unvented gas log sets" (room heaters).

Decorative gas-burning appliances, such as some gas log sets, are designed to simulate wood fires by intentionally causing incomplete combustion as necessary to yield yellow or yellow-tipped flames. This incomplete combustion results in an increase in the amount of carbon monoxide produced. The highly toxic carbon monoxide is odorless and colorless, and the accompanying products of combustion produced by a gas-burning appliance do not have a strong odor or an odor that is readily recognized by an untrained person.

If a decorative gas appliance were operated with the fireplace damper closed, the carbon monoxide levels could be dangerously high before the building occupants became aware of the hazard. To prevent harm and the possible asphyxiation of the occupants, it is imperative that the fireplace damper be open whenever the appliance is burning. The manufacturer's installation instructions will specify the minimum free area of damper opening required to vent the appliance combustion products. The damper area is proportional to the appliance's input rating. The fireplace damper plate must be removed or permanently fixed in a position that provides the opening area required by the appliance manufacturer's installation instructions.

G2432.2 (602.2) Flame safeguard device. Decorative *appliances* for installation in *approved* solid fuel-burning *fireplaces*, with the exception of those tested in accordance with ANSI Z21.84, shall utilize a direct ignition device, an ignitor or a *pilot* flame to ignite the fuel at the *main burner*, and shall be equipped with a *flame safeguard* device. The *flame safeguard* device shall automatically shut off the fuel supply to a *main burner* or group of *burners* when the means of ignition of such *burners* becomes inoperative.

❖ To eliminate the hazards associated with manually igniting a decorative gas appliance, the code requires that the main burner be ignited by a supervised means of direct ignition, such as a standing pilot. The exception to this requirement is for manually lighted appliances listed to ANSI Z21.84. The use of automatic ignition controls prevents the operator of the appliance from being exposed to the potential hazard of trying to ignite the main burner with a match or other manual lighting device. The flame safeguard device consists of a control valve assembly with an integral means of pilot or igniter supervision and is designed to prevent or shut off the flow of gas to the appliance main burner in the event that the source of ignition is extinguished or otherwise fails.

The typical flame safeguard device used with gas log set appliances is a combination manual control valve, pressure regulator, pilot feed and magnetic pilot safety mechanism with a thermocouple generator. If the pilot flame is extinguished, the drop in thermocouple output voltage will cause the control valve to "lock out" in the closed position, thereby preventing the flow of gas to the main burner and the pilot burner. It is not the intent of this section to require flame safeguard devices for manually operated log lighter appliances used to kindle wood fires.

A flame safeguard, also known as a safety shutoff device, functions to automatically shut off the fuel supply to the main burner or burners of an appliance when the source of ignition becomes inoperative. Gas-burning equipment may operate using standing pilot ignition, which is a small flame kept constantly burning for the sole purpose of igniting the main burner when the thermostat calls for heat or a manual gas valve is opened by the operator. If the pilot is not lit, for whatever reason, the flame safeguard will automatically activate to prevent the flow of fuel to the main burner or burners of the appliance. Appliances that use automatic sparking devices or other means for ignition are subject to the same requirements for providing flame safeguards, and the method of operation of the flame safeguard will differ depending on the type of ignition system in use.

Automatically operated gas-burning equipment and appliances are equipped with some means of monitoring the means of ignition or the main burner flame because fuel introduced into a combustion chamber and not ignited and burned could cause a dangerous condition.

The most commonly used type of flame safeguard device consists of a thermocouple and an electromechanical device that function together to supervise a standing pilot flame. In the event of pilot failure, the thermocouple and flame safeguard device will function to prevent the flow of fuel to the main burners, and if the safeguard control is of the 100-percent shutoff type, it will also shut off the flow of fuel to the pilot burner.

Modern appliances seldom have standing pilots and instead use electric-spark-ignited intermittent pilots or direct ignition devices such as hot surface igniters and glow coils. The methods of detecting the presence of a pilot flame include thermocouples, millivolt (power pile) generators, liquid-filled capillary tubes, bimetal mechanisms and flame rectification circuits. Where only the main burner is monitored to verify ignition and continued combustion, the methods of detection include flame rectification, infrared detectors, ultraviolet detectors and bimetal stack sensors. The majority of today's appliances rely on electronic flame rectification or radiant energy detectors (infrared or ultraviolet) as the means of proving ignition of a pilot burner or the main burner(s). The flame rectification method of sensing the presence of flames is very common today and involves two electrodes, those being a flame rod and the burner itself. An AC voltage is applied between the

INTERNATIONAL CODE COUNCIL®
Copyright © 2015 ICC. ALL RIGHTS RESERVED. Accessed by David Dammon on Jun 21, 2017 12:30:52 PM pursuant to License Agreement with ICC. No further reproduction or distribution authorized. ANY UNAUTHORIZED REPRODUCTION OR DISTRIBUTION IS A VIOLATION OF THE FEDERAL COPYRIGHT ACT AND THE LICENSE AGREEMENT, AND SUBJECT TO CIVIL AND CRIMINAL PENALTIES THEREUNDER.

flame rod and the burner. If a flame is present and impinges on both of these electrodes, a few microamps of current will flow through the ionized gases in the flame, but almost entirely in one direction because of the relative size of the surface areas of the two electrodes. This unidirectional flow rectifies the ac current to dc current, which is then recognized by electronic circuitry, thereby proving the presence of a flame. Manually lighted natural gas decorative appliances tested and listed to ANSI Z21.84 do not have to be equipped with a flame safeguard device.

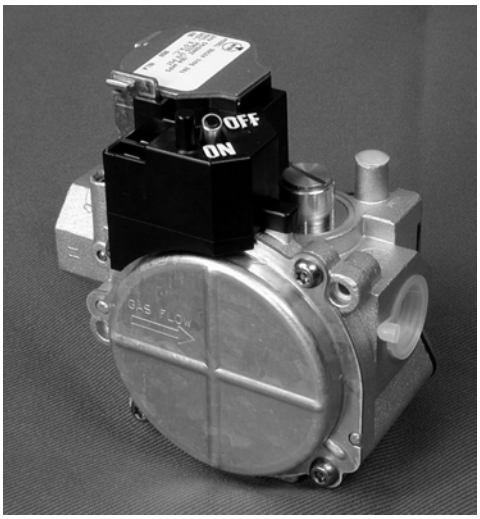

Photo courtesy of Emerson Climate Technologies, White Rodgers

Figure G2432.2(1)
COMBINATION GAS CONTROL

Flame safeguard devices are commonly integral with a combination gas control. These controls typically incorporate multiple solenoid valves, a manual valve, an appliance gas-pressure regulator, a pressure operated valve and flame safeguard devices all in one device body. It is also common for flame safeguard devices to be incorporated into an electronic integrated circuit control module that is separate from the combination gas control. For example, spark ignition and hot surface ignition systems incorporate the means of ignition and ignition supervision in an electronic control module that may also contain components and circuitry for control of combustion fans, furnace blowers, combustion chamber purging and monitoring of multiple system pressure and temperature sensors located throughout an appliance. Commentary Figure G2432.2(1) illustrates a type of combination gas control designed for use with an outboard intermittent ignition control module. Commentary Figure G2432.2(2) illustrates the internal workings that are typical of combination gas controls. These controls have redundant valve mechanisms as an additional safety feature.

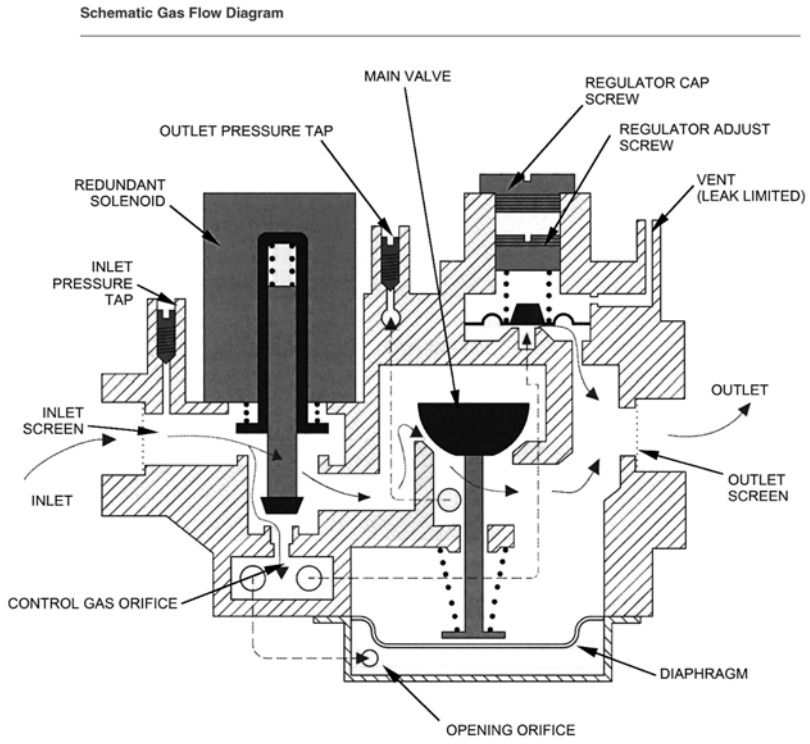

Photo courtesy of Emerson Climate Technologies, White Rodgers

Figure G2432.2(2)
COMBINATION GAS CONTROL FOR APPLIANCES
(Shown for Illustration Only)

INTERNATIONAL CODE COUNCIL®
Copyright © 2015 ICC. ALL RIGHTS RESERVED. Accessed by David Dammon on Jun 21, 2017 12:30:52 PM pursuant to License Agreement with ICC. No further reproduction or distribution authorized. ANY UNAUTHORIZED REPRODUCTION OR DISTRIBUTION IS A VIOLATION OF THE FEDERAL COPYRIGHT ACT AND THE LICENSE AGREEMENT, AND SUBJECT TO CIVIL AND CRIMINAL PENALTIES THEREUNDER.

G2432.3 (602.3) Prohibited installations. Decorative *appliances* for installation in *fireplaces* shall not be installed where prohibited by Section G2406.2.

❖ Section G2406.2 lists, with exceptions, various locations where gas appliances cannot be installed, such as bedrooms and bathrooms. Those prohibitions also apply to decorative appliances.

SECTION G2433 (603) LOG LIGHTERS

G2433.1 (603.1) General. Log lighters shall be tested in accordance with CSA 8 and shall be installed in accordance with the manufacturer's instructions.

❖ Log lighters are simple manually operated burners used to start wood fires. Log lighters are functional rather than decorative appliances. The heat produced by the log lighter flames raises the temperature of the wood fuel to its ignition temperature. Log lighters are designed to be turned off manually after the wood fire is capable of sustaining combustion. The code, rather than providing prescriptive installation requirements, requires that log lighters be installed in accordance with the manufacturer's installation instructions. Log lighters must comply with the standard CSA 8. Note that log lighters are often packaged with a T-Handle shutoff valve and the package will indicate that the device is listed, referring to the shutoff valve. The code requires that the log lighter itself be listed. The lighter must be designed for the type of gas, i.e., natural or propane.

SECTION G2434 (604) VENTED GAS FIREPLACES (DECORATIVE APPLIANCES)

G2434.1 (604.1) General. Vented gas *fireplaces* shall be tested in accordance with ANSI Z21.50, shall be installed in accordance with the manufacturer's instructions and shall be designed and equipped as specified in Section G2432.2.

❖ Unlike the appliances addressed in Section G2432, these appliances are self-contained and do not rely on a fireplace to contain or vent them. Such appliances are referred to as gas fireplaces because they are designed to simulate a solid-fuel-burning fireplace. The standard, ANSI Z21.50, that regulates these appliances has recently been retitled as "Vented Gas Fireplaces." Therefore, these appliances will be referred to as gas fireplaces even though they do not fall under the definition of "Fireplace" [see Commentary Figures G2434.1(1), G2434.1(2) and G2434.1(3)]. These appliances are designed for various methods of venting, including direct-venting through the wall or roof and conventional venting with Type B vent or factory-supplied vent material. Section G2406.2 controls the type of appliance that is allowed in bathrooms, toilet rooms and bedrooms. Direct-vent appliances have the advantage of a closed combustion chamber that does not communicate with the room in which they are installed, as well as the advantage of an outdoor combustion air supply.



Photography by D.F. Noyes Studio, courtesy of DESA International

Figure G2434.1(1)
VENTED DECORATIVE APPLIANCE



Photography by D.F. Noyes Studio, courtesy of DESA International

Figure G2434.1(2)
DIRECT-VENT DECORATIVE APPLIANCE

INTERNATIONAL CODE COUNCIL®
Copyright © 2015 ICC. ALL RIGHTS RESERVED. Accessed by David Dammon on Jun 21, 2017 12:30:52 PM pursuant to License Agreement with ICC. No further reproduction or distribution authorized. ANY UNAUTHORIZED REPRODUCTION OR DISTRIBUTION IS A VIOLATION OF THE FEDERAL COPYRIGHT ACT AND THE LICENSE AGREEMENT, AND SUBJECT TO CIVIL AND CRIMINAL PENALTIES THEREUNDER.



Figure G2434.1(3)
DIRECT-VENT DECORATIVE APPLIANCE

G2434.2 (604.2) Access. Panels, grilles and access doors that are required to be removed for normal servicing operations shall not be attached to the building.

❖ Access to the appliance for maintenance and repair may be through panels, grilles or doors, but such panels must be removable as intended by the manufacturer of the appliance and not a permanent part of the structure (see definition of "Access" in Section G2403).

SECTION G2435 (605)
VENTED GAS FIREPLACE HEATERS

G2435.1 (605.1) General. Vented gas *fireplace* heaters shall be installed in accordance with the manufacturer's instructions, shall be tested in accordance with ANSI Z21.88 and shall be designed and equipped as specified in Section G2432.2.

❖ These appliances are similar to those addressed in Section G2434, the main difference being that vented gas fireplace heaters are designed with more emphasis on space heating while maintaining the decorative features. These heaters must comply with minimum thermal efficiency requirements (see Commentary Figure G2435.1).

SECTION G2436 (608)
VENTED WALL FURNACES

G2436.1 (608.1) General. *Vented wall furnaces* shall be tested in accordance with ANSI Z21.86/CSA 2.32 and shall be installed in accordance with the manufacturer's instructions.

❖ Wall furnaces are a type of room heater usually designed to be installed within a 2-inch by 4-inch (51 mm by 102 mm) stud cavity in frame construction. They are typically used in cottages, room additions and homes in mild climates. Some units are designed to serve a single room, and others are designed as through-the-wall units to serve adjacent rooms. Wall furnaces are ductless; however, some units are listed for use with a surface-mounted supply outlet extension. Wall furnaces can be either gravity or forced air type.

G2436.2 (608.2) Venting. *Vented wall furnaces* shall be vented in accordance with Section G2427.

❖ Because wall furnaces are designed to fit within a wall cavity, a special type of oval-shaped vent is required to fit within the same wall. Type BW vent is specially designed for wall furnace applications (see commentary, Section G2427).



Photo courtesy of Quadra-Fire

Figure G2435.1
VENTED GAS FIREPLACE HEATER

INTERNATIONAL CODE COUNCIL®
Copyright © 2015 ICC. ALL RIGHTS RESERVED. Accessed by David Dammon on Jun 21, 2017 12:30:52 PM pursuant to License Agreement with ICC. No further reproduction or distribution authorized. ANY UNAUTHORIZED REPRODUCTION OR DISTRIBUTION IS A VIOLATION OF THE FEDERAL COPYRIGHT ACT AND THE LICENSE AGREEMENT, AND SUBJECT TO CIVIL AND CRIMINAL PENALTIES THEREUNDER.

G2436.3 (608.3) Location. *Vented wall furnaces* shall be located so as not to cause a fire hazard to walls, floors, combustible furnishings or doors. *Vented wall furnaces* installed between bathrooms and adjoining rooms shall not circulate air from bathrooms to other parts of the building.

❖ Wall furnaces, like all room heaters, can present a fire hazard if improperly located. The heat discharged or directly radiated from these units can ignite nearby wall or floor surfaces, furniture, trim items, window treatments and doors (see commentary, Section G2436.4). A through-the-wall unit serving both a bathroom and an adjacent room must not be capable of recirculating air between those spaces.

G2436.4 (608.4) Door swing. *Vented wall furnaces* shall be located so that a door cannot swing within 12 inches (305 mm) of an air inlet or air outlet of such *furnace* measured at right angles to the opening. Doorstops or door closers shall not be installed to obtain this *clearance*.

❖ A combustible door that swings close to a wall furnace could be a fire hazard if at some position the door would be within 12 inches (305 mm) of an air inlet or outlet. Because door closers and door stops are easily defeated, they must not be depended upon to secure the required clearance. If the door swing cannot comply with this section, the door would have to be removed or rehung to change its swing direction.

G2436.5 (608.5) Ducts prohibited. Ducts shall not be attached to wall *furnaces*. Casing extension boots shall not be installed unless listed as part of the *appliance*.

❖ Most wall furnaces are not designed to force air through ducts, especially those gravity types that do not use fans. Attachment of ducts would add resistance to the flow of air through the furnace, thereby causing an abnormally high temperature rise across the heat exchanger and abnormally high temperatures on furnace surfaces. Some wall furnaces are listed and designed for use with supply duct extensions intended for wall mounting and intended to improve heat distribution. Such duct extensions are factory-built and supplied only by the furnace manufacturer.

G2436.6 (608.6) Access. *Vented wall furnaces* shall be provided with *access* for cleaning of heating surfaces, removal of *burners*, replacement of sections, motors, *controls*, filters and other working parts, and for adjustments and lubrication of parts requiring such attention. Panels, grilles and access doors that are required to be removed for normal servicing operations shall not be attached to the building construction.

❖ All access panels and doors must be removable as intended by the manufacturer of the furnace.

SECTION G2437 (609)
FLOOR FURNACES

G2437.1 (609.1) General. *Floor furnaces* shall be tested in accordance with ANSI Z21.86/CSA 2.32 and shall be installed in accordance with the manufacturer's instructions.

❖ Floor furnaces are vented appliances that are installed in an opening in the floor. These units heat the room by gravity convection and direct radiation and usually serve as the sole source of space heating. Such furnaces are common in cottages, small homes, seasonally occupied structures and rural homes. Because the floor grille can become hot, extreme care must be exercised to prevent occupants, especially children, from contacting the grille by walking or falling on it. Also, care must be taken to avoid a fire hazard caused by placement of materials or furnishings on or near the furnace floor grille (see Commentary Figure G2437.1).



Photo courtesy of Empire Comfort Systems Inc.

Figure G2437.1
FLOOR FURNACE

G2437.2 (609.2) Placement. The following provisions apply to *floor furnaces*:

1. Floors. *Floor furnaces* shall not be installed in the floor of any doorway, stairway landing, aisle or passageway of any enclosure, public or private, or in an exitway from any such room or space.
2. Walls and corners. The register of a *floor furnace* with a horizontal warm air outlet shall not be placed closer than 6 inches (152 mm) to the nearest wall. A distance of at least 18 inches (457 mm) from two adjoining sides of the *floor furnace* register to walls shall be provided to eliminate the necessity of occupants walking over the warm-air discharge. The remaining sides shall be permitted to be placed not closer than 6 inches (152 mm) to a wall. Wall-register models shall not be placed closer than 6 inches (152 mm) to a corner.
3. Draperies. The *furnace* shall be placed so that a door, drapery, or similar object cannot be nearer than 12 inches (305 mm) to any portion of the register of the *furnace*.

INTERNATIONAL CODE COUNCIL®
Copyright © 2015 ICC. ALL RIGHTS RESERVED. Accessed by David Dammon on Jun 21, 2017 12:30:52 PM pursuant to License Agreement with ICC. No further reproduction or distribution authorized. ANY UNAUTHORIZED REPRODUCTION OR DISTRIBUTION IS A VIOLATION OF THE FEDERAL COPYRIGHT ACT AND THE LICENSE AGREEMENT, AND SUBJECT TO CIVIL AND CRIMINAL PENALTIES THEREUNDER.

4. Floor construction. *Floor furnaces* shall not be installed in concrete floor construction built on grade.
5. *Thermostat.* The controlling *thermostat* for a *floor furnace* shall be located within the same room or space as the *floor furnace* or shall be located in an adjacent room or space that is permanently open to the room or space containing the *floor furnace*.

❖ 1. Floor furnaces must not be located where they would interfere with or impede egress. In an emergency egress situation, a floor furnace could be a tripping hazard and could collapse under the live load of many occupants.

2. The floor furnace register must be at least 6 inches (152 mm) from walls to avoid creating a fire hazard by raising the wall temperature to a combustible level. The same reasoning applies to the 6-inch (152 mm) distance from wall registers to a corner. The 18-inch (457 mm) clearance from adjoining sides of a register to walls provides space for the occupants to walk around the grille, which can reach temperatures high enough to cause burns.
3. As stated in Section G2436.3, the furnace location must not create a fire hazard by being too close to wall surfaces, trim items, furnishings and window treatments.
4. A floor furnace installed in a slab on grade would have to be in a pit, would be subject to flooding and corrosion, and would be inaccessible for service and inspection.
5. If the controlling thermostat does not sense the air temperature in the room in which the furnace is installed, dangerous overheating could result. A thermostat isolated from the source of heat it controls would not respond to the condition in the space served by the furnace.

G2437.3 (609.3) Bracing. The floor around the *furnace* shall be braced and headed with a support framework designed in accordance with Chapter 5.

❖ The framing around the floor opening must be capable of supporting the floor system, the anticipated floor loads and the weight of the furnace. The structural requirements of the IBC must be complied with.

G2437.4 (609.4) Clearance. The lowest portion of the *floor furnace* shall have not less than a 6-inch (152 mm) *clearance* from the grade level; except where the lower 6-inch (152 mm) portion of the *floor furnace* is sealed by the manufacturer to prevent entrance of water, the minimum *clearance* shall be reduced to not less than 2 inches (51 mm). Where such *clearances* cannot be provided, the ground below and to the sides shall be excavated to form a pit under the *furnace* so that the required *clearance* is provided beneath the lowest portion of the *furnace*. A 12-inch (305 mm) minimum clearance shall be provided on all sides except the *control* side, which shall have an 18-inch (457 mm) minimum *clearance*.

❖ This section specifies clearances between the ground and the furnace, which apply to crawl space installations. The clearances allow access for service and inspection and help prevent corrosion of the furnace assembly.

G2437.5 (609.5) First floor installation. Where the basement story level below the floor in which a *floor furnace* is installed is utilized as habitable space, such *floor furnaces* shall be enclosed as specified in Section G2437.6 and shall project into a nonhabitable space.

❖ Where a floor furnace is installed above a habitable basement space, the furnace must project into an uninhabitable space and be separated from that space by noncombustible construction (see commentary, Section G2437.6).

G2437.6 (609.6) Upper floor installations. *Floor furnaces* installed in upper stories of buildings shall project below into nonhabitable space and shall be separated from the nonhabitable space by an enclosure constructed of *noncombustible materials*. The *floor furnace* shall be provided with *access*, *clearance* to all sides and bottom of not less than 6 inches (152 mm) and *combustion air* in accordance with Section G2407.

❖ Where the floor furnace is installed in an upper floor of a building, the furnace must project into a nonhabitable space, similar to the installation in Section G2437.5, and must be separated from that space by noncombustible construction. Access and clearance must be provided for maintenance and servicing. An adequate source of combustion air must also supply the furnace.

SECTION G2438 (613)
CLOTHES DRYERS

G2438.1 (613.1) General. *Clothes dryers* shall be tested in accordance with ANSI Z21.5.1 and shall be installed in accordance with the manufacturer's instructions.

❖ This section addresses clothes dryer appliances, Types 1 and 2 (see definition of "Clothes dryer"). Dryers are tested to the applicable safety standard for the appliance, and the manufacturer's installation instructions convey the information needed to duplicate the installation configuration that was tested and found to meet the requirements of the safety standard. The manufacturer's installation instructions are evaluated by the agency responsible for testing, listing and labeling the appliance, and will therefore prescribe an installation that is consistent with the appliance installation that was tested. Clothes dryers must be exhausted in compliance with Section G2439 and the manufacturer's installation instructions (see Commentary Figure G2438.1).

INTERNATIONAL CODE COUNCIL®
Copyright © 2015 ICC. ALL RIGHTS RESERVED. Accessed by David Dammon on Jun 21, 2017 12:30:52 PM pursuant to License Agreement with ICC. No further reproduction or distribution authorized. ANY UNAUTHORIZED REPRODUCTION OR DISTRIBUTION IS A VIOLATION OF THE FEDERAL COPYRIGHT ACT AND THE LICENSE AGREEMENT, AND SUBJECT TO CIVIL AND CRIMINAL PENALTIES THEREUNDER.



Figure courtesy of Maytag Corporation

Figure G2438.1
TYPE I CLOTHES DRYER LABEL

SECTION G2439 (614)
CLOTHES DRYER EXHAUST

G2439.1 (614.1) Installation. *Clothes dryers* shall be exhausted in accordance with the manufacturer's instructions. Dryer exhaust systems shall be independent of all other systems and shall convey the moisture and any products of *combustion* to the outside of the building.

❖ Clothes dryer exhaust systems must convey the moisture and any products of combustion directly to the exterior of the building (outdoors). The code does not use the term "dryer vent." Gas-fired clothes dryers are not "vented" as are other fuel-fired appliances, but rather are exhausted.

Clothes dryer exhaust ducts must be installed to comply with the dryer manufacturer's installation instructions and the requirements of this section. Dryers are designed and built to meet industry safety standards.

The clothes dryer manufacturer's installation instructions control the type of exhaust duct material allowed and the method of installation. For example, typical dryer installation instructions will require metallic duct materials and will impose more stringent length limitations for flexible metallic ducts than for rigid ducts because of the poorer flow characteristics of flexible duct materials.

Because clothes dryer exhaust contains high concentrations of combustible lint, debris and water vapor, dryer exhaust systems must be independent of all other systems. This requirement prevents the fire hazards associated with such an exhaust system from extending into or affecting other systems or other areas in the building. Additionally, this section intends to prevent products of combustion from entering the building through other systems.

Dryer exhaust ducts must be independent of other dryer exhaust ducts unless connected to an engineered exhaust system specifically designed to serve multiple dryers. Type I domestic dryers are not designed for connection to a common exhaust duct serving multiple dryers. For example, connecting multiple Type I dryers to a common duct riser would pressurize the riser and cause exhaust to back up into any dryer that was not operating. Also, the low-flow velocities and duct temperature losses could result in water vapor condensation and the buildup of lint and debris at low points.

Clothes dryer exhaust systems cannot terminate in or discharge to any enclosed space such as an attic or crawl space, regardless of whether the space is ventilated through openings to the outdoors. The high levels of moisture in the exhaust air can cause condensation to form on exposed surfaces or in insulation materials. Water vapor condensation can cause structural damage and deterioration of building materials and contribute to the growth of mold and fungus. Clothes dryer exhausts that discharge to enclosed spaces will also cause an accumulation of combustible lint and debris, creating a significant fire hazard. An improperly installed clothes dryer exhaust system not only reduces dryer efficiency and increases running time but can also cause a significant increase in exhaust temperature, in turn causing the dryer to cycle on its high limit control, which is an unsafe operating condition.

G2439.2 (614.2) Duct penetrations. Ducts that exhaust *clothes dryers* shall not penetrate or be located within any fireblocking, draftstopping or any wall, floor/ceiling or other assembly required by this *code* to be fire-resistance rated, unless such duct is constructed of galvanized steel or aluminum of the thickness specified in the mechanical provisions of this *code* and the fire-resistance rating is maintained in accordance with this *code*. Fire dampers shall not be installed in *clothes dryer* exhaust duct systems.

❖ Rigid clothes dryer exhaust ducts are permitted to penetrate assemblies that are not fire-resistance-rated and building elements not used as fireblocking or draftstopping. In all other cases, ducts must be constructed of galvanized steel or aluminum of the thickness specified in the mechanical provisions of this code, and the penetration must be protected to maintain the fire-resistance rating and integrity of the assembly or element being penetrated. Because of the strength and rigidity differences between steel and aluminum, aluminum ducts generally must be of a heavier (thicker) gage than steel ducts for a given application.

The metal thickness requirements of Chapter 16 necessitate rigid pipe and rule out the use of flexible duct where the duct must penetrate fireblocking, draftstopping or a fire-resistance-rated assembly. Where penetrating fireblocking or draftstopping, the exhaust duct must be constructed of galvanized steel or aluminum, and the annular space around the duct must be fireblocked in accordance with the IBC (see Section G2439.7.1).

Where penetrating a fire-resistance-rated assembly, the penetration must be protected. The requirements of this section, combined with Section G2439.7.4, make a compelling case for always placing clothes dry-

INTERNATIONAL CODE COUNCIL®
Copyright © 2015 ICC. ALL RIGHTS RESERVED. Accessed by David Dammon on Jun 21, 2017 12:30:52 PM pursuant to License Agreement with ICC. No further reproduction or distribution authorized. ANY UNAUTHORIZED REPRODUCTION OR DISTRIBUTION IS A VIOLATION OF THE FEDERAL COPYRIGHT ACT AND THE LICENSE AGREEMENT, AND SUBJECT TO CIVIL AND CRIMINAL PENALTIES THEREUNDER.

ers against outside walls to avoid long duct runs and penetrations of other than exterior walls.

G2439.3 (614.4) Exhaust installation. Exhaust ducts for *clothes dryers* shall terminate on the outside of the building and shall be equipped with a backdraft *damper*. Screens shall not be installed at the duct termination. Ducts shall not be connected or installed with sheet metal screws or other fasteners that will obstruct the flow. *Clothes dryer* exhaust ducts shall not be connected to a *vent connector*, vent or *chimney*. *Clothes dryer* exhaust ducts shall not extend into or through ducts or plenums.

❖ Exhaust ducts must connect directly to terminals that pass through the building envelope to the outdoor atmosphere. Attics and crawl spaces are not considered to be outdoors, and exhaust ducts cannot terminate in those spaces (see commentary, Section G2439.1). Backdraft dampers must be installed in dryer exhaust ducts to avoid outdoor air infiltration during periods when the dryer is not operating and to prevent the entry of animals. These dampers should be designed and installed to provide an adequate seal when in a closed position to minimize air leakage (infiltration). A backdraft damper is usually of the gravity type that is opened by the energy of the exhaust discharge. Some dryer manufacturers prohibit the use of magnetic backdraft dampers because of the extra resistance that the exhaust flow must overcome.

Exhaust terminal opening size is also governed by the dryer manufacturer's instructions. Full-opening terminals present less resistance to flow and might be mandated by the dryer manufacturer. A "full opening" is considered to be an opening having no dimension less than the diameter of the exhaust duct. Dryer exhaust flow must not be restricted by screens or fastening devices such as sheet metal screws. See the allowance in Section G2439.7.2 for fasteners. Any type of screen, including so-called bird screens, could become completely blocked with fibers in a very short time. Consider that the filter screen integral with the appliance becomes restricted with lint in each cycle of operation. These restrictions and projections will promote the accumulation of combustible lint and debris in the exhaust duct, thereby creating a potential fire hazard and causing flow resistance. Duct tape should not be relied upon as the sole means of joining dryer exhaust ducts because adhesives can deteriorate with age and when exposed to high temperatures, causing joints to separate. However, sealing joints is still desirable to limit leakage of lint, fibers, moisture vapor and combustion products into the occupied space. Ducts can also separate during duct-cleaning operations using brushes.

G2439.4 (614.5) Dryer exhaust duct power ventilators. Domestic dryer exhaust duct power ventilators shall be listed and labeled to UL 705 for use in dryer exhaust duct systems. The dryer exhaust duct power ventilator shall be installed in accordance with the manufacturer's instructions.

❖ The previous code editions did not recognize dryer exhaust duct power ventilators (DEDPVs) as an option for clothes dryer installations. DEDPVs are loosely referred to as "dryer booster fans" in the marketplace. Prior to the 2015 code, the designer's choices for exhaust duct length were to: 1. Limit the duct length to 35 feet; 2. Follow the length limits in the clothes dryer manufacturer's instructions; or 3. Relocate the dryer. A fourth option was to get the code official to approve the installation of a DEDPV under the alternative approval provision in Section 105.

Exhaust ducts that exceed the developed length allowed by the code are a potential fire hazard, create maintenance problems, increase drying times and cause the dryer to be inefficient and waste energy. Dryer exhaust systems are commonly installed improperly with excessive lengths, too many elbows and the wrong duct materials. Because of the high incidence of reported dryer fires, the code strictly regulates the installation. DEDPVs are listed to a revised version of UL 705 that now contains tests and construction requirements that are specific to these devices. DEDPVs have been around for years, but until recently, were not listed to a national consensus standard that was specific to these devices. The UL 705 standard contains requirements for the construction, testing and installation of DEDPVs and requires them to be equipped with features such as interlocks, limit controls, monitoring controls and enunciator devices to make certain that the dryers or dryer operators are aware of the operating status of the DEDPVs [see Commentary Figures G2439.4(1) and (2).]

G2439.5 (614.6) Makeup air. Installations exhausting more than 200 cfm (0.09 m^3/s) shall be provided with *makeup air*. Where a closet is designed for the installation of a *clothes dryer*, an opening having an area of not less than 100 square inches (0.0645 m^2) for *makeup air* shall be provided in the closet enclosure, or *makeup air* shall be provided by other *approved* means.

❖ Makeup air must be supplied to compensate for the air exhausted by the dryer exhaust system. A typical domestic clothes dryer will exhaust less than 200 cubic feet per minute (0.09 m^3/s). For closet installations, the closet door or the closet enclosure must have an opening with a minimum area of 2 square inches (0.0645 m^2). Where louvers or grilles are used, the solid portion of the louver or grille should be evaluated in accordance with Section G2407.10. Makeup air is necessary to prevent the room or space housing the dryer(s) from developing a negative pressure with respect to adjacent spaces or the outdoors, which could result in the improper and dangerous operation of the dryer and other fuel-burning appliances. The required amount of makeup air should be approximately equal to the amount exhausted and is normally supplied by infiltration of air from outdoors or through openings to the outdoors.

The makeup air not only supplies the air that is to be exhausted from the dryer, but also supplies combustion air for gas-fired appliances.

INTERNATIONAL CODE COUNCIL®
Copyright © 2015 ICC. ALL RIGHTS RESERVED. Accessed by David Dammon on Jun 21, 2017 12:30:52 PM pursuant to License Agreement with ICC. No further reproduction or distribution authorized. ANY UNAUTHORIZED REPRODUCTION OR DISTRIBUTION IS A VIOLATION OF THE FEDERAL COPYRIGHT ACT AND THE LICENSE AGREEMENT, AND SUBJECT TO CIVIL AND CRIMINAL PENALTIES THEREUNDER.



Figure G2439.4(1)
DRYER EXHAUST DUCT POWER VENTILATORS

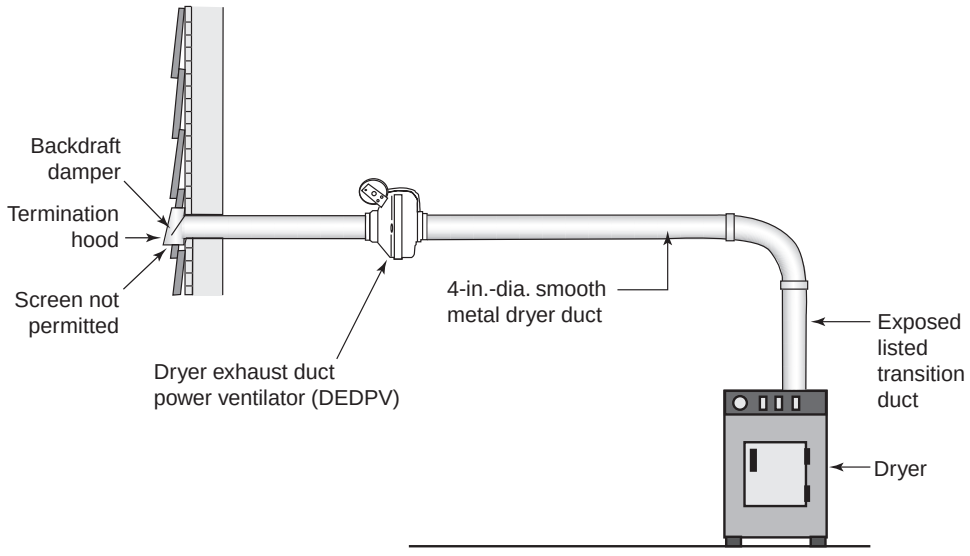

Figure G2439.4(2)
DRYER EXHAUST DUCT POWER VENTILATOR INSTALLATION

INTERNATIONAL CODE COUNCIL®
Copyright © 2015 ICC. ALL RIGHTS RESERVED. Accessed by David Dammon on Jun 21, 2017 12:30:52 PM pursuant to License Agreement with ICC. No further reproduction or distribution authorized. ANY UNAUTHORIZED REPRODUCTION OR DISTRIBUTION IS A VIOLATION OF THE FEDERAL COPYRIGHT ACT AND THE LICENSE AGREEMENT, AND SUBJECT TO CIVIL AND CRIMINAL PENALTIES THEREUNDER.

G2439.6 (614.7) Protection required. Protective shield plates shall be placed where nails or screws from finish or other work are likely to penetrate the *clothes dryer* exhaust duct. Shield plates shall be placed on the finished face of all framing members where there is less than $1^1/_4$ inches (32 mm) between the duct and the finished face of the framing member. Protective shield plates shall be constructed of steel, shall have a minimum thickness of 0.062 inch (1.6 mm) and shall extend a minimum of 2 inches (51 mm) above sole plates and below top plates.

❖ See the commentary to Section M1502.5 (see Commentary Figure G2439.6).

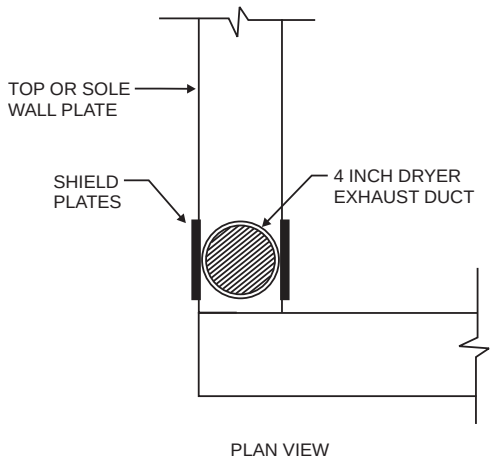

For SI: 1 inch = 25.4 mm.

Figure G2439.6
DRYER EXHAUST DUCT PROTECTION

G2439.7 (614.8) Domestic clothes dryer exhaust ducts. Exhaust ducts for domestic *clothes dryers* shall conform to the requirements of Sections G2439.7.1 through G2439.7.6.

❖ Section G2408.1 states that gas-fired equipment and appliances must be installed in accordance with the manufacturer's installation instructions for the listed and labeled equipment. An installation complying with the manufacturer's installation instructions is required, except where the code requirements are more stringent. The code specifically addresses dryer exhaust ducts, an installation requirement that is also addressed in the dryer manufacturer's installation instructions. The code requirements for the items addressed in these sections, such as maximum total developed length of dryer exhaust ducts, equivalent lengths of directional fittings and minimum nominal size to name a few, may parallel or exceed the applicable requirements in the manufacturer's installation instructions. The manufacturer's installation instructions could also contain requirements that exceed those in the code.

In all cases, the more restrictive requirements would apply. Therefore, the clothes dryer exhaust duct size must be determined by the clothes dryer manufacturer but must not be less than 4 inches (102 mm) in diameter.

Dryer exhaust ducts cannot be larger than 4 inches (102 mm) in diameter unless specifically allowed by the manufacturer. Note that enlarging a duct will cause a reduction in flow velocity, and dryer exhaust ducts must maintain sufficient flow velocity to transport lint and fibers through the duct to the discharge terminal.

The duct length, the number and degree of directional fittings, the smoothness of the duct interior wall and the type of exhaust outlet terminal all contribute to the overall friction loss of a clothes dryer exhaust system. When the friction loss is high enough to restrict the required exhaust flow, the duct system must be redesigned to allow the required flow rate. An exhaust duct may have to be shortened or rerouted to compensate for the flow resistance.

Excessive friction losses will also result in reduced flow velocities, which means that the exhaust ducts would be much more likely to collect debris. An improperly designed exhaust system will result in poor dryer performance and poor energy efficiency and can cause the appliance to cycle on its limit control, which can be hazardous.

Joints in the dryer exhaust system must be reasonably air tight, must have a smooth interior finish and must run in the direction of airflow. For example, the male end of each section of duct must point away from the dryer. This permits the dryer exhaust system to function as intended so that joints and connections do not serve as collection points for lint and debris.

Proper support is required and necessary for maintaining alignment of the dryer exhaust duct system and to prevent excessive stress on ducts and duct joints. A sagging duct will increase the internal resistance to airflow, reduce the efficiency of the system and cause the accumulation of lint and debris.

Section G2439.7.3 specifically addresses transition duct connectors. Within the context of this section, a transition duct is a flexible connector used as a transition between the dryer outlet and the connection point to the exhaust duct system. Transition duct connectors must be listed and labeled as transition ducts for clothes dryer application. Transition ducts are currently listed to comply with UL 2158A and are not considered to be flexible air ducts or flexible air connectors subject to the material requirements of Chapter 16.

Transition ducts are flexible ducts constructed of a metalized (foil) fabric supported on a spiral wire frame. They are more fire resistant than the typical plastic spiral duct. Transition duct connectors are limited to 8 feet (1829 mm) in and length and must be installed in compliance with their listing and the manufacturer's instructions. These duct connectors must not be concealed by any portion of the structure's permanent finish materials such as drywall, plaster, paneling, built-in furniture or cabinets or any other similar permanently affixed building component; they must remain entirely within the room in which the appliance is installed. Transition duct connectors cannot be joined

INTERNATIONAL CODE COUNCIL®
Copyright © 2015 ICC. ALL RIGHTS RESERVED. Accessed by David Dammon on Jun 21, 2017 12:30:52 PM pursuant to License Agreement with ICC. No further reproduction or distribution authorized. ANY UNAUTHORIZED REPRODUCTION OR DISTRIBUTION IS A VIOLATION OF THE FEDERAL COPYRIGHT ACT AND THE LICENSE AGREEMENT, AND SUBJECT TO CIVIL AND CRIMINAL PENALTIES THEREUNDER.

together to extend beyond the 8-foot (1829 mm) maximum length limit. Transition ducts are to be cut to length as needed to avoid excess duct and unnecessary bends.

Transition duct connectors are necessary for domestic dryers because of appliance movement, vibration and outlet location. In many cases, connecting a domestic clothes dryer directly to rigid duct would be difficult.

G2439.7.1 (614.8.1) Material and size. Exhaust ducts shall have a smooth interior finish and shall be constructed of metal a minimum 0.016-inch (0.4 mm) thick. The exhaust duct size shall be 4 inches (102 mm) nominal in diameter.

❖ This section requires that the diameter of the exhaust duct be 4 inches (102 mm), no larger and no smaller. Round duct is intended. A 4-inch (102 mm) duct is the basis for the design of the appliance exhaust system. Ducts that are too small would restrict air movement and would cause the dryer to consume more energy because of the longer drying time. They could also cause appliance overheating. Ducts that are too large will cause a decrease in the flow velocity, causing lint and debris to drop out of the exhaust air stream. For example, increasing the duct size from 4 inches to 5 inches (102 mm to 127 mm) will result in a reduction of duct velocity of approximately 37 percent for the typical dryer. The exhaust duct material must be smooth-wall metal with the specified minimum wall thickness. Plastic ducts, corrugated ducts and flexible ducts are all prohibited with the exception of transition ducts in accordance with Section M1502.4.3.

G2439.7.2 (614.8.2) Duct installation. Exhaust ducts shall be supported at 4-foot (1219 mm) intervals and secured in place. The insert end of the duct shall extend into the adjoining duct or fitting in the direction of airflow. Ducts shall not be joined with screws or similar fasteners that protrude more than $^1/_8$ inch (3.2 mm) into the inside of the duct.

❖ Section G2439.3 states that fasteners used to join fittings and sections of dryer exhaust ducts together must not obstruct the airflow. This could be interpreted as a prohibition of screws and rivets, or it could mean that such fasteners must not penetrate too far into the duct. The revision to Section G2439.7.2 now makes it clear how Section G2439.3 is to be interpreted. A fastener protrusion of $^1/_8$ inch or less will collect some lint, but it is believed to be insignificant. Actually, smooth duct walls also collect lint. The trade-off for allowing tiny amounts of lint to collect is improved duct construction. If dryer exhaust ducts are not allowed to be mechanically fastened, the only method to prevent separation of joints is duct tape. Duct tape should never be depended on as the sole means of securing duct systems because it is a sealing means, not a fastening means. Now ducts can be properly and securely fastened and then sealed with tapes or mastics. Section M1502 requires dryer exhaust ducts to be mechanically fastened and allows the same $^1/_8$-inch maximum penetration. See the commentary to Section M1502.4.2 and Commentary Figure G2439.7.2.

G2439.7.3 (614.8.3) Transition ducts. Transition ducts used to connect the dryer to the exhaust duct system shall be a single length that is *listed* and *labeled* in accordance with UL 2158A. Transition ducts shall be not more than 8 feet (2438 mm) in length and shall not be concealed within construction.

❖ See the commentary to Section M1502.4.3.

G2439.7.4 (614.8.4) Duct length. The maximum allowable exhaust duct length shall be determined by one of the methods specified in Sections G2439.7.4.1 through G2439.7.4.3.

❖ See the commentary to Section M1502.4.5.

G2439.7.4.1 (614.8.4.1) Specified length. The maximum length of the exhaust duct shall be 35 feet (10 668 mm) from the connection to the transition duct from the dryer to the outlet terminal. Where fittings are used, the maximum length of the exhaust duct shall be reduced in accordance with Table G2439.7.4.1.

❖ The maximum length of 35 feet (7620 mm) and the associated reductions for changes in direction can be very restrictive and make it necessary, in most cases, to locate the clothes dryer close to an exterior wall. Locating the dryer in the middle of a house or apartment creates a design problem for the architect and the contractor. Exceeding the length requirement of this section will contribute to excessive pressure loss, poor dryer performance and potential fire hazards (see commentary, Section G2439.7.4).

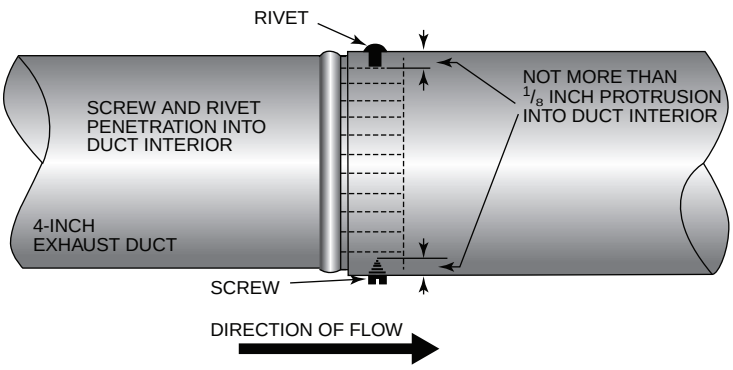

Figure G2439.7.2
FASTENER PENETRATION

INTERNATIONAL CODE COUNCIL®
Copyright © 2015 ICC. ALL RIGHTS RESERVED. Accessed by David Dammon on Jun 21, 2017 12:30:52 PM pursuant to License Agreement with ICC. No further reproduction or distribution authorized. ANY UNAUTHORIZED REPRODUCTION OR DISTRIBUTION IS A VIOLATION OF THE FEDERAL COPYRIGHT ACT AND THE LICENSE AGREEMENT, AND SUBJECT TO CIVIL AND CRIMINAL PENALTIES THEREUNDER.

The length reduction for changes in direction applies to all changes in direction in the exhaust duct, including the first 90-degree (1.57 rad) turn required to run the duct inside a wall cavity. Any change in direction made with the 8-foot (1829 mm) transition duct connector does not require a reduction in length. The length penalties for bends account for the flow resistance created by the change in direction. See Table G2439.7.4.1, which allows lesser length penalties for bends (elbows) used in a system if such bends are long turn radius (long sweep) bends. Section G2439.7.4.2 allows the 35-foot (7620 mm) duct length to be exceeded if the manufacturer's installation instructions specify a longer duct allowance. The manufacturer's instructions must be made available to the code official to allow verification of the allowable length and to allow inspection of the rough-in installation for compliance with those instructions. The code official will also have to verify that the specific clothes dryer is installed. The dryer chosen for the application of the exception to this section must be installed before final approval can be given.

Note that Section G2439.7.4.2 could create a problem when the occupants move and take the dryer with them. The next occupant must either buy a dryer with an equivalent duct length allowance or install a duct that is compatible with the dryer to be used. If the new occupant is not aware of the duct requirements, he or she might install a standard dryer designed for only 35 feet (7620 mm) of duct length. This could result in a build-up of lint in the duct and a potential fire hazard. The code official is usually not aware of the occupancy change and has no method of ensuring that the proper dryer and duct are installed. See Section G2439.7.5

See Sections G2439.4 and G2439.7.4.3 regarding "booster fans" (DEDPV) that are marketed for the purpose of extending exhaust duct lengths. Clothes dryer exhaust duct length problems could be eliminated if designers would give more thought to the location of laundry facilities.

TABLE G2439.7.4.1 (TABLE 614.8.4.1)
DRYER EXHAUST DUCT FITTING EQUIVALENT LENGTH

DRYER EXHAUST DUCT FITTING TYPE	EQUIVALENT LENGTH
4 inch radius mitered 45-degree elbow	2 feet, 6 inches
4 inch radius mitered 90-degree elbow	5 feet
6 inch radius smooth 45-degree elbow	1 foot
6 inch radius smooth 90-degree elbow	1 foot, 9 inches
8 inch radius smooth 45-degree elbow	1 foot
8 inch radius smooth 90-degree elbow	1 foot, 7 inches
10 inch radius smooth 45-degree elbow	9 inches
10 inch radius smooth 90-degree elbow	1 foot, 6 inches

For SI: 1 inch = 25.4 mm, 1 foot = 304.8 mm, 1 degree = 0.0175 rad.

G2439.7.4.2 (614.8.4.2) Manufacturer's instructions. The maximum length of the exhaust duct shall be determined by the dryer manufacturer's installation instructions. The *code official* shall be provided with a copy of the installation instructions for the make and model of the dryer. Where the exhaust duct is to be concealed, the installation instructions shall be provided to the *code official* prior to the concealment inspection. In the absence of fitting equivalent length calculations from the clothes dryer manufacturer, Table G2439.5.5.1 shall be utilized.

❖ See the commentary to Section M1502.4.5.2.

G2439.7.4.3 (614.8.4.3) Dryer exhaust duct power ventilator length. The maximum length of the exhaust duct shall be determined by the dryer exhaust duct power ventilator manufacturer's installation instructions.

❖ See the commentary to Section G2439.3.

G2439.7.5 (614.8.5) Length identification. Where the exhaust duct equivalent length exceeds 35 feet (10 668 mm), the equivalent length of the exhaust duct shall be identified on a permanent label or tag. The label or tag shall be located within 6 feet (1829 mm) of the exhaust duct connection.

❖ See the commentary to Section M1502.4.6 (see Commentary Figure G2439.7.5).



Sample of typical placard to be placed behind all future dryer installation locations
Approx. size: 8" x 6" (heavy plastic-like laminate material)
Type: .014" poly carbonate label with area for length display to be punched out with typical hole punch and exhibit a paint-resistant laminate coating
Permanent pressure-sensitive 3M adhesive and 4 holes 3/32"
Provided and installed by HVAC or sheet metal tradesman at trim-out

Figure G2439.7.5
LENGTH LABEL

G2439.7.6 (614.8.6) Exhaust duct required. Where space for a *clothes dryer* is provided, an exhaust duct system shall be installed.

Where the *clothes dryer* is not installed at the time of occupancy, the exhaust duct shall be capped at location of the future dryer.

Exception: Where a *listed* condensing *clothes dryer* is installed prior to occupancy of the structure.

❖ See the commentary to Section M1502.4.7.

INTERNATIONAL CODE COUNCIL®
Copyright © 2015 ICC. ALL RIGHTS RESERVED. Accessed by David Dammon on Jun 21, 2017 12:30:52 PM pursuant to License Agreement with ICC. No further reproduction or distribution authorized. ANY UNAUTHORIZED REPRODUCTION OR DISTRIBUTION IS A VIOLATION OF THE FEDERAL COPYRIGHT ACT AND THE LICENSE AGREEMENT, AND SUBJECT TO CIVIL AND CRIMINAL PENALTIES THEREUNDER.

SECTION G2440 (615)
SAUNA HEATERS

G2440.1 (615.1) General. Sauna heaters shall be installed in accordance with the manufacturer's instructions.

❖ Sauna heaters are used in steam baths and similar rooms to generate heat and steam. They must be installed in compliance with the manufacturer's instructions to ensure they are installed as designed and tested. The code relies on these installation instructions rather than stating prescriptive requirements that might contradict the manufacturer.

G2440.2 (615.2) Location and protection. Sauna heaters shall be located so as to minimize the possibility of accidental contact by a person in the room.

❖ Sauna heaters produce steam by passing water over a heated surface. The choice of locations must consider the fact that a heat-producing appliance will be exposed within a small, limited-visibility room with unclothed occupants.

G2440.2.1 (615.2.1) Guards. Sauna heaters shall be protected from accidental contact by an *approved* guard or barrier of material having a low coefficient of thermal conductivity. The guard shall not substantially affect the transfer of heat from the heater to the room.

❖ Guards must be installed to protect the occupants from being burned. The guards must be constructed of a material that is a poor conductor of heat (e.g., wood) so that the guard itself will not present a burn hazard. The design of the guard must protect the occupants but impede the flow of heat into the room from the heater.

G2440.3 (615.3) Access. Panels, grilles and access doors that are required to be removed for normal servicing operations, shall not be attached to the building.

❖ Access panels, covers and doors must not be made unusable by trim, woodwork or room enclosures that impede or interfere with access.

G2440.4 (615.4) Combustion and dilution air intakes. Sauna heaters of other than the direct-vent type shall be installed with the *draft hood* and *combustion air* intake located outside the sauna room. Where the *combustion air* inlet and the *draft hood* are in a dressing room adjacent to the sauna room, there shall be provisions to prevent physically blocking the *combustion air* inlet and the *draft hood* inlet, and to prevent physical contact with the *draft hood* and vent assembly, or warning notices shall be posted to avoid such contact. Any warning notice shall be easily readable, shall contrast with its background and the wording shall be in letters not less than $^1/_4$ inch (6.4 mm) high.

❖ Combustion air and dilution air must not be taken from the sauna room because of the excessive water vapor in the air and the fact that the sauna room would probably be incapable of providing the required volume of combustion air. If a draft hood or combustion air inlet is obstructed, the appliance could malfunction, which could threaten the occupants. For example, a combustion-air-starved heater would produce high levels of carbon monoxide that could enter the sauna room in the event of venting failure. In general, the code expresses concern for the use of fuel-fired appliances in small closed rooms, especially where the occupants are sleeping or would have impaired senses or a diminished ability to recognize danger.

G2440.5 (615.5) Combustion and ventilation air. *Combustion air* shall not be taken from inside the sauna room. *Combustion* and ventilation air for a sauna heater not of the direct-vent type shall be provided to the area in which the *combustion air* inlet and *draft hood* are located in accordance with Section G2407.

❖ This section would require the heater to be either a direct-vent type or a separated-combustion type in which the combustion chamber does not communicate with the sauna room (see commentary, Section G2440.4).

G2440.6 (615.6) Heat and time controls. Sauna heaters shall be equipped with a *thermostat* which will limit room temperature to 194ºF (90ºC). If the *thermostat* is not an integral part of the sauna heater, the heat-sensing element shall be located within 6 inches (152 mm) of the ceiling. If the heat-sensing element is a capillary tube and bulb, the assembly shall be attached to the wall or other support, and shall be protected against physical damage.

❖ A thermostat is required to limit the temperature in the sauna for fire safety. The control must sense the warmest air near the ceiling and must be protected from physical damage.

G2440.6.1 (615.6.1) Timers. A timer, if provided to *control main burner* operation, shall have a maximum operating time of 1 hour. The *control* for the timer shall be located outside the sauna room.

❖ Timers are not required by the code but provide an extra level of protection when installed. To protect both the occupants and the building, timers must limit the heater operating time to 1 hour. Resetting the timer would require the occupant to exit the sauna, thus lessening the chances of overexposure.

G2440.7 (615.7) Sauna room. A ventilation opening into the sauna room shall be provided. The opening shall be not less than 4 inches by 8 inches (102 mm by 203 mm) located near the top of the door into the sauna room.

❖ A ventilation opening is required to allow the escape of steam and heat and to supply ventilation for the occupants. The opening is required near the ceiling to take advantage of the natural tendency of heat and steam to rise, facilitating the exhaust.

SECTION G2441 (617)
POOL AND SPA HEATERS

G2441.1 (617.1) General. Pool and spa heaters shall be tested in accordance with ANSI Z21.56/CSA 4.7 and shall be installed in accordance with the manufacturer's instructions.

❖ Pool and spa heaters are specialized water heaters very similar in design to hot water supply boilers and are used with swimming pools, recreational or thera-

INTERNATIONAL CODE COUNCIL®
Copyright © 2015 ICC. ALL RIGHTS RESERVED. Accessed by David Dammon on Jun 21, 2017 12:30:52 PM pursuant to License Agreement with ICC. No further reproduction or distribution authorized. ANY UNAUTHORIZED REPRODUCTION OR DISTRIBUTION IS A VIOLATION OF THE FEDERAL COPYRIGHT ACT AND THE LICENSE AGREEMENT, AND SUBJECT TO CIVIL AND CRIMINAL PENALTIES THEREUNDER.

peutic spas and hot tubs. These heaters are usually of the water-tube type and are designed for either indoor or outdoor installation.

SECTION G2442 (618)
FORCED-AIR WARM-AIR FURNACES

G2442.1 (618.1) General. Forced-air warm-air *furnaces* shall be tested in accordance with ANSI Z21.47 or UL 795 and shall be installed in accordance with the manufacturer's instructions.

❖ Forced-air warm-air furnaces are considered to be central heating units and consist of burners or heating elements, heat exchangers, blowers and associated controls. Forced-air furnaces are made in many different configurations, including upflow, counterglow (down flow), horizontal flow, multiposition flow and indoor and outdoor units. Commentary Figure G2426.1(2) is an example of a multiposition flow (i.e., up, down and horizontal flow) forced-air warm-air furnace.

G2442.2 (618.2) Forced-air furnaces. The minimum unobstructed total area of the outside and return air ducts or openings to a forced-air warm-air *furnace* shall be not less than 2 square inches for each 1,000 *Btu*/h (4402 mm^2/W) output rating capacity of the *furnace* and not less than that specified in the *furnace* manufacturer's installation instructions. The minimum unobstructed total area of supply ducts from a forced-air warm-air *furnace* shall be not less than 2 square inches for each 1,000 *Btu*/h (4402 mm^2/W) output rating capacity of the *furnace* and not less than that specified in the *furnace* manufacturer's installation instructions.

Exception: The total area of the supply air ducts and outside and return air ducts shall not be required to be larger than the minimum size required by the *furnace* manufacturer's installation instructions.

❖ The aggregate area of all ducts or openings that convey supply air from the furnace or return air back to the furnace must be adequate to allow the required airflow through the furnace. A furnace that is "starved" for return air or is restricted by an inadequate supply air duct size will produce an abnormal temperature rise across the heat exchanger, which is both a fire hazard and detrimental to the furnace. The furnace output rating is not usually indicated on the label and would be determined as approximately the input rating in Btu/h (W) times the efficiency rating of the furnace. For example, 100,000 Btu/h (29 310 W) input times 0.80 (80-percent efficiency) is 80,000 Btu/h (23 448 W) output. Return or supply air openings required by this section must not be less than that specified by the furnace manufacturer's installation instructions.

The exception intends to clarify that if the furnace installation instructions specify a lesser return or supply area than this section, that lesser area is permitted. The code-specified minimum area applies where the furnace manufacturer does not specify a minimum area.

G2442.3 (618.3) Dampers. Volume dampers shall not be placed in the air inlet to a *furnace* in a manner that will reduce the required air to the *furnace*.

❖ Dampers are usually avoided in return air ducts and openings because of the risk of starving the furnace for return air. If dampers are installed, the total unrestricted return air duct or opening area must be as required by the code with all of the dampers in the fully closed position.

G2442.4 (618.4) Prohibited sources. Outdoor or return air for forced-air heating and cooling systems shall not be taken from the following locations:

1. Closer than 10 feet (3048 mm) from an *appliance* vent outlet, a vent opening from a plumbing drainage system or the discharge outlet of an exhaust fan, unless the outlet is 3 feet (914 mm) above the outside air inlet.
2. Where there is the presence of objectionable odors, fumes or flammable vapors; or where located less than 10 feet (3048 mm) above the surface of any abutting public way or driveway; or where located at grade level by a sidewalk, street, alley or driveway.
3. A hazardous or insanitary location or a refrigeration machinery room as defined in the *International Mechanical Code*.
4. A room or space, the volume of which is less than 25 percent of the entire volume served by such system. Where connected by a permanent opening having an area sized in accordance with Section G2442.2, adjoining rooms or spaces shall be considered as a single room or space for the purpose of determining the volume of such rooms or spaces.

   Exception: The minimum volume requirement shall not apply where the amount of return air taken from a room or space is less than or equal to the amount of supply air delivered to such room or space.
5. A room or space containing an *appliance* where such a room or space serves as the sole source of return air.

   Exception: This shall not apply where:

   1. The *appliance* is a direct-vent *appliance* or an *appliance* not requiring a vent in accordance with Section G2425.8.
   2. The room or space complies with the following requirements:

      2.1. The return air shall be taken from a room or space having a volume exceeding 1 cubic foot for each 10 Btu/h (9.6L/W) of combined input rating of all fuel-burning appliances therein.

      2.2. The volume of supply air discharged back into the same space shall be approximately equal to the volume of return air taken from the space.

INTERNATIONAL CODE COUNCIL®
Copyright © 2015 ICC. ALL RIGHTS RESERVED. Accessed by David Dammon on Jun 21, 2017 12:30:52 PM pursuant to License Agreement with ICC. No further reproduction or distribution authorized. ANY UNAUTHORIZED REPRODUCTION OR DISTRIBUTION IS A VIOLATION OF THE FEDERAL COPYRIGHT ACT AND THE LICENSE AGREEMENT, AND SUBJECT TO CIVIL AND CRIMINAL PENALTIES THEREUNDER.

2.3. Return-air inlets shall not be located within 10 feet (3048 mm) of a draft hood in the same room or space or the combustion chamber of any atmospheric burner *appliance* in the same room or space.

3. Rooms or spaces containing solid fuel-burning appliances, provided that return-air inlets are located not less than 10 feet (3048 mm) from the firebox of such appliances.

6. A closet, bathroom, toilet room, kitchen, garage, boiler room, furnace room or unconditioned attic.

Exceptions:

1. Where return air intakes are located not less than 10 feet (3048 mm) from cooking appliances and serve only the kitchen area, taking return air from a kitchen area shall not be prohibited.
2. Dedicated forced air systems serving only a garage shall not be prohibited from obtaining return air from the garage.

7. A crawl space by means of direct connection to the return side of a forced-air system. Transfer openings in the crawl space enclosure shall not be prohibited.

❖ This section prohibits outdoor air and return air from being taken from locations that are potential sources of contamination, odor, flammable vapors or toxic substances and also from locations that would negatively affect the operation of the furnace itself or other fuel-burning appliances.

Items 1, 2 and 3 are contaminant related.

Part of the intent of Items 4 and 5 is to prevent the system from being starved for return air by the placement of the main or only return-air intake in an area not meeting the volume requirements. Also there is concern for the possibility of combustion gases leaking from fuel-fired appliances because of negative pressure in the space produced by an air handler drawing return air from such space. It is not the intent of this section to prohibit the common practice of installing return-air intakes in bedrooms and similarly sized rooms that typically have a volume that is far less than 25 percent of the total volume of the space served by the furnace. The return-air system must be able to convey the required air flow to the furnace regardless of the position of any doors to any rooms in the building served by the furnace. Item 6 is contaminate related and space pressurization related. Exception 1 recognizes that taking return air from a kitchen is of no concern if the air-handling system serves only the kitchen and the intake does not interfere with cooking exhaust systems or entrain cooking effluent from cooking appliances. Exception 2 recognizes that it is illogical to prohibit return air from being taken from a garage where the air handler is serving only the garage.

Item 7 is contaminate related and recognizes that some crawl spaces are designed to be within the thermal envelope of a building.

It is the intent of this section to avoid arrangements that cause an air pressure imbalance, which can cause fuel-fired appliances to spill combustion products into the occupied space. Pressure imbalances can be avoided by making sure that the amount of supply air discharge to a room or space is approximately equal to the amount of return-air taken from the room or space and by locating return air inlets where they will not cause depressurization of an enclosed space.

G2442.5 (618.5) Screen. Required outdoor air inlets shall be covered with a screen having $^1/_4$-inch (6.4 mm) openings.

❖ The inlet openings for outdoor air must be covered with screen or mesh material with a mesh opening size as specified. The screen openings must be small enough to keep out insects, rodents, birds, etc., while being large enough to prevent blockage of air flow by lint, debris and plant fibers.

G2442.6 (618.6) Return-air limitation. Return air from one *dwelling unit* shall not be discharged into another *dwelling unit*.

❖ This section prohibits a forced-air heating/cooling system from serving more than one dwelling unit. Any arrangement in which dwelling units share all or part of an air distribution system would allow a communication of atmospheres between the units. This type of communication would spread odors, smoke, allergens, contaminants and disease-causing organisms from one dwelling unit to another and, therefore, must be avoided.

G2442.7 (618.7) Furnace plenums and air ducts. Where a *furnace* is installed so that supply ducts carry air circulated by the *furnace* to areas outside of the space containing the *furnace*, the return air shall be handled by a duct(s) sealed to the *furnace* casing and terminating outside of the space containing the *furnace*.

❖ This section is somewhat redundant with Section G2442.4 and has the same intent. That is, to prevent a furnace room, closet, alcove, etc., from developing a negative pressure with respect to the outside of the enclosure (see commentary, Section G2442.4). It is a typical design to have a furnace or air handler in a closet with a water heater and the closet door is louvered or a grille is placed in the closet wall. If none of the appliances in the closet are fuel fired, this design is harmless, but a real hazard is created if any are fuel fired.

INTERNATIONAL CODE COUNCIL®
Copyright © 2015 ICC. ALL RIGHTS RESERVED. Accessed by David Dammon on Jun 21, 2017 12:30:52 PM pursuant to License Agreement with ICC. No further reproduction or distribution authorized. ANY UNAUTHORIZED REPRODUCTION OR DISTRIBUTION IS A VIOLATION OF THE FEDERAL COPYRIGHT ACT AND THE LICENSE AGREEMENT, AND SUBJECT TO CIVIL AND CRIMINAL PENALTIES THEREUNDER.

SECTION G2443 (619)
CONVERSION BURNERS

G2443.1 (619.1) Conversion burners. The installation of *conversion burners* shall conform to ANSI Z21.8.

❖ The referenced standard is an installation standard that, in addition to the manufacturers' instructions, would govern the installation of conversion burners. Conversion burners are an assembly of components including burners, gas controls, blowers, safety devices and supporting means. These units are designed to convert an existing appliance from another fuel to gas, commonly from fuel oil or coal. Conversion of an existing appliance to a different fuel can involve much more than installation of a conversion burner. It can also include the addition of safety controls and limits, combustion air and secondary air supplies, fuel gas piping installation, chimney or vent alterations and other modifications to the existing appliance and its control system.

SECTION G2444 (620)
UNIT HEATERS

G2444.1 (620.1) General. *Unit heaters* shall be tested in accordance with ANSI Z83.8 and shall be installed in accordance with the manufacturer's instructions.

❖ Unit heaters are ductless warm-air space heaters that are self-contained and usually suspended from a ceiling or roof structure. Garages, workshops, warehouses, factories, gymnasiums, mercantile spaces and similar large, open spaces are the most common locations for unit heaters [see Commentary Figures G2444.1(1) through G2444.1(5)].



Photo courtesy of Modine Manufacturing Company

Figure G2444.1(2)
POWER-VENTED UNIT HEATER



Photo courtesy of Modine Manufacturing Company

Figure G2444.1(1)
DIRECT-VENT UNIT HEATER

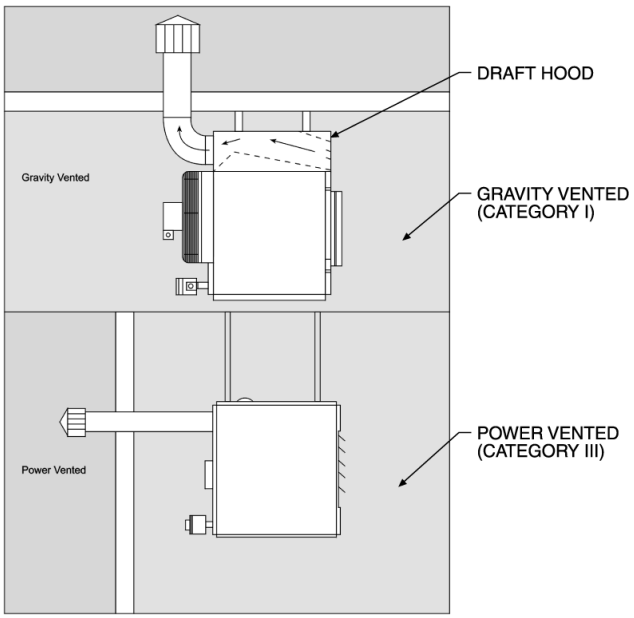

Figure courtesy of Reznor/Thomas & Betts Corporation

Figure G2444.1(3)
UNIT HEATER VENTING (TYPICAL)

INTERNATIONAL CODE COUNCIL®
Copyright © 2015 ICC. ALL RIGHTS RESERVED. Accessed by David Dammon on Jun 21, 2017 12:30:52 PM pursuant to License Agreement with ICC. No further reproduction or distribution authorized. ANY UNAUTHORIZED REPRODUCTION OR DISTRIBUTION IS A VIOLATION OF THE FEDERAL COPYRIGHT ACT AND THE LICENSE AGREEMENT, AND SUBJECT TO CIVIL AND CRIMINAL PENALTIES THEREUNDER.

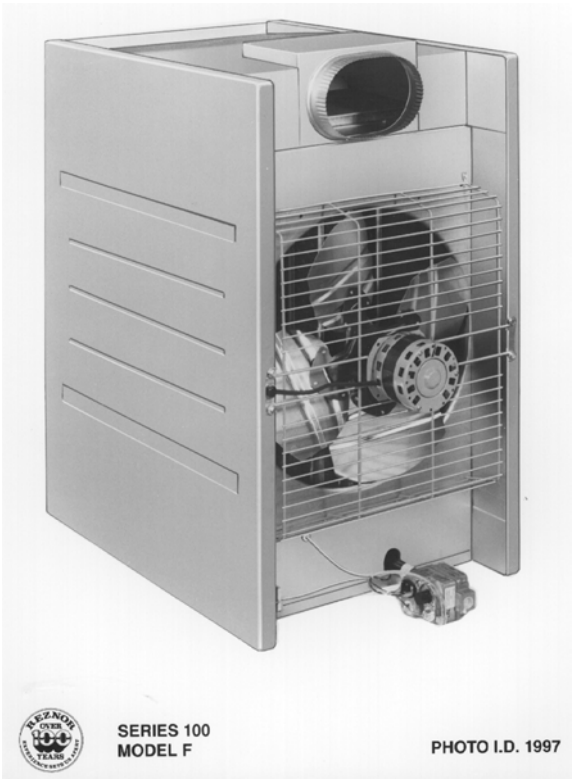

Photo courtesy of Reznor/Thomas & Betts Corporation

Figure G2444.1(4)
DRAFT-HOOD-EQUIPPED UNIT HEATER

G2444.2 (620.2) Support. Suspended-type *unit heaters* shall be supported by elements that are designed and constructed to accommodate the weight and dynamic loads. Hangers and brackets shall be of noncombustible material.

❖ As with all suspended fuel-fired appliances, a support failure can result in a fire, explosion or injury to building occupants. The supports themselves must be properly designed. Equally important are the structural members to which the supports are attached, such as rafters, beams, joists and purlins. Brackets, pipes, rods, angle iron, structural members and fasteners must be designed for the dead and dynamic loads of the suspended appliance.

G2444.3 (620.3) Ductwork. Ducts shall not be connected to a unit heater unless the heater is *listed* for such installation.

❖ Unit heaters are usually not designed to move air through ductwork. Unless specifically listed for the application, the fans or blowers on unit heaters are designed only for moving air across the heat exchanger without the added friction of ductwork. The addition of ductwork could create a hazard by restricting airflow through the heater.

G2444.4 (620.4) Clearance. Suspended-type *unit heaters* shall be installed with *clearances* to *combustible materials* of not less than 18 inches (457 mm) at the sides, 12 inches (305 mm) at the bottom and 6 inches (152 mm) above the top where the unit heater has an internal *draft hood* or 1 inch (25 mm) above the top of the sloping side of the vertical *draft hood*.

Floor-mounted-type *unit heaters* shall be installed with *clearances* to *combustible materials* at the back and one side only of not less than 6 inches (152 mm). Where the *flue gases*

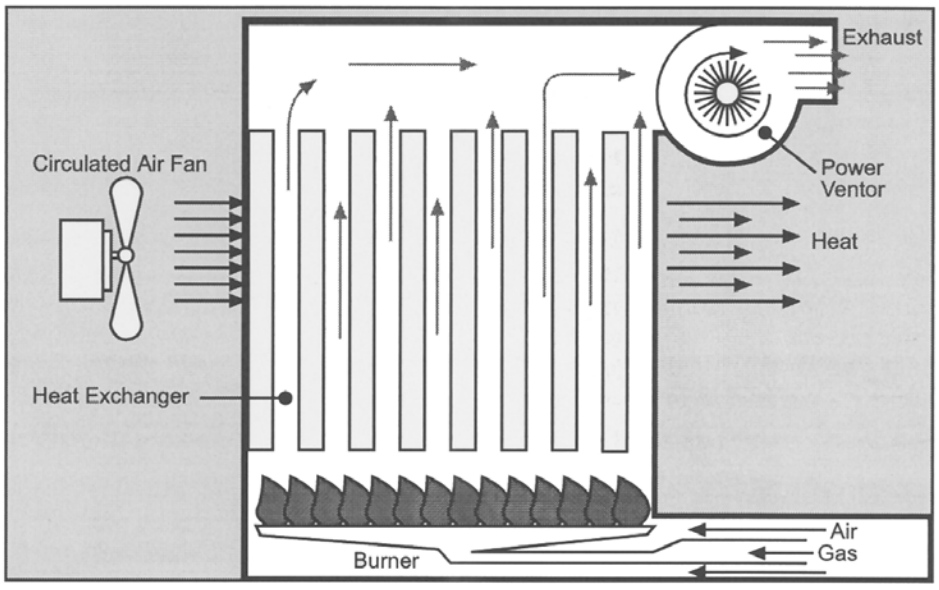

Figure courtesy of Reznor/Thomas & Betts Corporation

Figure G2444.1(5)
FUNDAMENTAL COMPONENTS OF UNIT HEATER

INTERNATIONAL CODE COUNCIL®
Copyright © 2015 ICC. ALL RIGHTS RESERVED. Accessed by David Dammon on Jun 21, 2017 12:30:52 PM pursuant to License Agreement with ICC. No further reproduction or distribution authorized. ANY UNAUTHORIZED REPRODUCTION OR DISTRIBUTION IS A VIOLATION OF THE FEDERAL COPYRIGHT ACT AND THE LICENSE AGREEMENT, AND SUBJECT TO CIVIL AND CRIMINAL PENALTIES THEREUNDER.

are vented horizontally, the 6-inch (152 mm) *clearance* shall be measured from the *draft hood* or *vent* instead of the rear wall of the unit heater. Floor-mounted-type *unit heaters* shall not be installed on combustible floors unless *listed* for such installation.

Clearances for servicing all *unit heaters* shall be in accordance with the manufacturer's installation instructions.

Exception: *Unit heaters listed* for reduced *clearance* shall be permitted to be installed with such *clearances* in accordance with their listing and the manufacturer's instructions.

❖ The required clearances to combustible materials for suspended and floor-mounted unit heaters are specified in this section and must be adhered to unless the unit is listed for less clearance. The clearance reduction methods detailed in Section G2409 may be applied where applicable. See the commentary to Section G2409 for a complete discussion concerning clearance requirements and clearance reduction methods.

SECTION G2445 (621)
UNVENTED ROOM HEATERS

G2445.1 (621.1) General. *Unvented room heaters* shall be tested in accordance with ANSI Z21.11.2 and shall be installed in accordance with the conditions of the listing and the manufacturer's instructions.

❖ Unvented room heaters are limited-size gas-fired space heaters that discharge the combustion byproducts into the space being heated. Like all appliances regulated by this code, unvented gas-fired room heaters must be listed and labeled, and their installation must comply with the manufacturer's installation instructions [see Commentary Figures G2445.1(1) and G2445.1(2)].



Photo courtesy of Empire Comfort Systems Inc.

Figure G2445.1(1)
UNVENTED ROOM HEATER



Photo by D.F. Noyes Studio, courtesy of DESA International

Figure G2445.1(2)
UNVENTED ROOM HEATER

G2445.2 (621.2) Prohibited use. One or more *unvented room heaters* shall not be used as the sole source of comfort heating in a *dwelling unit*.

❖ Unvented room heaters are designed to supplement a central heating system to allow zone heating of particular rooms and spaces. Unvented room heaters are not intended for continuous use as would occur if they were the only source of heat in a building. One or more unvented room heaters used as the sole source of heat would not provide adequate heat distribution in most building arrangements and, depending on the heating load, could require continuous operation of the appliance. Unvented gas-log heaters are listed as room heaters and their installation in factory-built fireplaces is addressed in UL 127 [see Commentary Figure G2445.1(2)]. Fireplaces built to the current edition of UL 127 will have a label and installation instructions that will either allow or disallow the installation of an unvented gas log in the fireplace firebox (see Section G2445.2).

G2445.3 (621.3) Input rating. *Unvented room heaters* shall not have an input rating in excess of 40,000 *Btu*/h (11.7 kW).

❖ The input rating limitation is consistent with the industry standard for such appliances and allows unvented room heaters to be categorized in the supplemental room heater classification.

G2445.4 (621.4) Prohibited locations. The location of *unvented room heaters* shall comply with Section G2406.2.

❖ In accordance with this section and Section G2406.2, unvented gas-fired heaters are prohibited in assembly, educational and institutional occupancies and in sleeping rooms, bathrooms and toilet rooms in all occupancies (see commentary, Section G2406.2 for exceptions). These heaters are considered to be an unacceptable risk in such occupancies because of occupant density, occupant age, occupant physical condition and awareness and small room volumes.

INTERNATIONAL CODE COUNCIL®
Copyright © 2015 ICC. ALL RIGHTS RESERVED. Accessed by David Dammon on Jun 21, 2017 12:30:52 PM pursuant to License Agreement with ICC. No further reproduction or distribution authorized. ANY UNAUTHORIZED REPRODUCTION OR DISTRIBUTION IS A VIOLATION OF THE FEDERAL COPYRIGHT ACT AND THE LICENSE AGREEMENT, AND SUBJECT TO CIVIL AND CRIMINAL PENALTIES THEREUNDER.

G2445.5 (621.5) Room or space volume. The aggregate input rating of all *unvented appliances* installed in a room or space shall not exceed 20 *Btu*/h per *cubic foot* (207 W/m^3) of volume of such room or space. Where the room or space in which the *appliances* are installed is directly connected to another room or space by a doorway, archway or other opening of comparable size that cannot be closed, the volume of such adjacent room or space shall be permitted to be included in the calculations.

❖ The Btu/h (W) input to room volume ratio limits the accumulation of combustion byproducts in the building interior. Combustion byproducts include carbon monoxide, nitrogen oxides and water vapor. The required room volume would allow dilution of the combustion byproducts by infiltration (see commentary, Section G2425.8).

G2445.6 (621.6) Oxygen-depletion safety system. *Unvented room heaters* shall be equipped with an oxygen-depletion-sensitive safety shutoff system. The system shall shut off the gas supply to the main and *pilot burners* when the oxygen in the surrounding atmosphere is depleted to the percent concentration specified by the manufacturer, but not lower than 18 percent. The system shall not incorporate field adjustment means capable of changing the set point at which the system acts to shut off the gas supply to the room heater.

❖ Because unvented heaters are not vented to the outdoors, the appliance standard requires them to incorporate this extra safety feature. This safety system consists of a special pilot burner device that is incorporated with the appliance's flame safeguard device (see commentary, Section G2432.2). The oxygen-depletion sensor is basically a pilot burner that is extremely sensitive to the oxygen content in the combustion air. See definition of oxygen depletion safety shutoff system. If the oxygen content (approximately 20 percent normal) drops to a predetermined level, the pilot flame will become "lazy," shifting from a stable horizontal flame to a less stable, more vertical flame, which is incapable of sufficiently heating the thermocouple or thermopile generator, resulting in main gas control valve shutdown and lockout. The predetermined oxygen level that activates burner shutdown is above the level at which incomplete combustion would start to occur.

The monitoring of oxygen levels in this manner is an indicator of approaching insufficient combustion air and is designed to prevent the formation of excess carbon monoxide. If the oxygen level reaches a low enough percentage of air, the level of oxygen will have an inverse relationship with the level of carbon monoxide. This means that as burners are increasingly starved for oxygen, the amount of carbon monoxide produced by the flames is increased. This relationship is valid for appliances in good working order. An improperly maintained, maladjusted or defective burner could produce abnormal (elevated) amounts of carbon monoxide regardless of the oxygen level in the combustion air, and in such cases, the oxygen-depletion sensor device will react only to the oxygen level because it cannot directly detect burner malfunction or abnormal carbon monoxide production.

G2445.7 (621.7) Unvented decorative room heaters. An unvented decorative room heater shall not be installed in a *factory-built fireplace* unless the *fireplace* system has been specifically tested, *listed* and *labeled* for such use in accordance with UL 127.

❖ Because the fireplace chimney damper can be closed while an unvented decorative (log) heater (room heater) is operating, the firebox might reach surface temperatures higher than would occur with the damper open. The lack of chimney draft with the resultant dilution air introduction into the firebox would allow higher temperatures to occur in the fireplace components. To prevent surface temperatures from exceeding that allowed by UL 127, that standard now requires factory-built fireplace manufacturers to either test their units for use with unvented log heaters and meet the standard criteria or provide instructions and labels that prohibit such use.

If a factory-built fireplace has not been tested for use with an unvented appliance, the installation instructions and labels must state that the use is prohibited.

Fireplaces manufactured before the UL standard added coverage for unvented decorative (log) heaters could not have been tested for that use, and the manufacturers did not have the opportunity to include instructions and labels covering unvented log heaters for use with their units. The installation instructions for fireplace units that were built prior to the unvented heater coverage being added to the UL 127 standard stated that the fireplace was permitted for use only with solid fuel and decorative gas logs listed to ANSI Z21.60. Therefore, regardless of when the fireplace unit was manufactured, unvented decorative heaters can be installed only in factory-built fireplaces that specifically state that they are tested for use with unvented decorative heaters. The fireplace manufacturers will currently indicate whether or not their units are intended for use with unvented decorative heaters. If listed for the application, an unvented decorative (log) heater can be used as a vented decorative appliance by opening the fireplace chimney damper.

G2445.7.1 (621.7.1) Ventless firebox enclosures. Ventless firebox enclosures used with unvented decorative room heaters shall be *listed* as complying with ANSI Z21.91.

❖ Ventless firebox enclosures are designed and tested to accommodate the appliances addressed in Section G2445.7. Such enclosures have no chimney or vent connection (see Commentary Figure G2445.7.1).

INTERNATIONAL CODE COUNCIL®
Copyright © 2015 ICC. ALL RIGHTS RESERVED. Accessed by David Dammon on Jun 21, 2017 12:30:52 PM pursuant to License Agreement with ICC. No further reproduction or distribution authorized. ANY UNAUTHORIZED REPRODUCTION OR DISTRIBUTION IS A VIOLATION OF THE FEDERAL COPYRIGHT ACT AND THE LICENSE AGREEMENT, AND SUBJECT TO CIVIL AND CRIMINAL PENALTIES THEREUNDER.



Photography by D.F. Noyes Studio, courtesy of DESA International

Figure G2445.7.1
FIREBOX FOR UNVENTED ROOM HEATER

SECTION G2446 (622)
VENTED ROOM HEATERS

G2446.1 (622.1) General. *Vented room heaters* shall be tested in accordance with ANSI Z21.86/CSA 2.32, shall be designed and equipped as specified in Section G2432.2 and shall be installed in accordance with the manufacturer's instructions.

❖ This section addresses vented gas-fired space/room heaters, including direct-vent and vent- or chimney-connected appliances, which are limited-size room heaters designed to connect to a vent or chimney. As required by the appliance standard, these appliances are equipped with safety controls that will prevent gas flow to the burners in the event of ignition system failure (see Commentary Figure G2446.1).



Photo courtesy of Maytag Corporation

Figure G2446.1
VENTED ROOM HEATER

SECTION G2447 (623)
COOKING APPLIANCES

G2447.1 (623.1) Cooking appliances. Cooking *appliances* that are designed for permanent installation, including ranges, ovens, stoves, broilers, grills, fryers, griddles, hot plates and barbecues, shall be tested in accordance with ANSI Z21.1 or ANSI Z21.58 and shall be installed in accordance with the manufacturer's instructions.

❖ This section addresses cooking appliances in all occupancies that are designed for permanent installation, including, but not limited to, ranges, ovens, stoves, broilers, grills, fryers, griddles and barbecues. These appliances must be installed in accordance with the listing and the manufacturer's installation instructions.

The code intends to regulate the design, construction and installation of cooking appliances that are designed for permanent installation-heated countertop appliances. Appliances that are not readily moveable to another location because of a gas-fuel supply connection would be considered permanently installed, even if they were on casters. Line equipment under a Type I hood, for example, is usually on casters and connected with quick-disconnect-type fuel supply lines to allow movement for routine cleaning. This kind of equipment would be considered permanently installed.

G2447.2 (623.2) Prohibited location. Cooking appliances designed, tested, *listed* and *labeled* for use in commercial occupancies shall not be installed within dwelling units or within any area where domestic cooking operations occur.

Exception: Appliances that are also listed as domestic cooking appliances.

❖ Commercial cooking appliances are tested and labeled to different standards than those listed for domestic use. Commercial cooking appliances generally are not insulated to the same level, have higher surface operating temperatures and require a much greater clearance to combustible material. The safety measures inherent to household cooking appliances, such as child-safe push-to-turn knobs and insulated oven doors, are not usually found in commercial cooking appliances. Commercial cooking appliances also have a greater ventilation air requirement for safe operation than household-type cooking appliances. For these reasons, the installation of commercial-type cooking appliances in dwellings is prohibited. Note that many cooking appliances are dual-listed as both commercial and domestic (household) cooking appliances. The code does not prohibit such dual-listed appliances in dwelling units because such appliances have the safety features that are necessary for the domestic environment (see Commentary Figure G2447.2).

G2447.3 (623.3) Domestic appliances. Cooking *appliances* installed within *dwelling units* and within areas where domestic cooking operations occur shall be *listed* and *labeled* as household-type *appliances* for domestic use.

❖ Cooking appliances used in dwelling units or in areas where domestic cooking operations occur require a greater degree of user protection and must be listed and

INTERNATIONAL CODE COUNCIL®
Copyright © 2015 ICC. ALL RIGHTS RESERVED. Accessed by David Dammon on Jun 21, 2017 12:30:52 PM pursuant to License Agreement with ICC. No further reproduction or distribution authorized. ANY UNAUTHORIZED REPRODUCTION OR DISTRIBUTION IS A VIOLATION OF THE FEDERAL COPYRIGHT ACT AND THE LICENSE AGREEMENT, AND SUBJECT TO CIVIL AND CRIMINAL PENALTIES THEREUNDER.

labeled as household-type appliances for domestic use (see commentary, Section G2447.2). To satisfy residential consumer demand for commercial appliances in the home, some manufacturers are producing listed household-type appliances that have the appearance of commercial application cooking appliances [see Commentary Figures G2447.3(1) and G2447.3(2)].

G2447.4 (623.4) Range installation. Ranges installed on combustible floors shall be set on their own bases or legs and shall be installed with *clearances* of not less than that shown on the label.

❖ This section requires the installation of a domestic range using the legs or base provided by the manufacturer where the range is resting on a combustible surface. These supports were part of the test set-up when the range was tested and must be included in the installation to ensure compliance with the listing. Clearances behind and to the sides of the range must also comply with the listing.



Figure G2447.2
COOKING RANGE IN DWELLING

G2447.5 (623.7) Vertical clearance above cooking top. Household cooking *appliances* shall have a vertical *clearance* above the cooking top of not less than 30 inches (760 mm) to *combustible material* and metal cabinets. A minimum *clearance* of 24 inches (610 mm) is permitted where one of the following is installed:

1. The underside of the *combustible material* or metal cabinet above the cooking top is protected with not less than



Photo courtesy of Maytag Corporation

Figure G2447.3(1)
DOMESTIC (HOUSEHOLD) RANGE

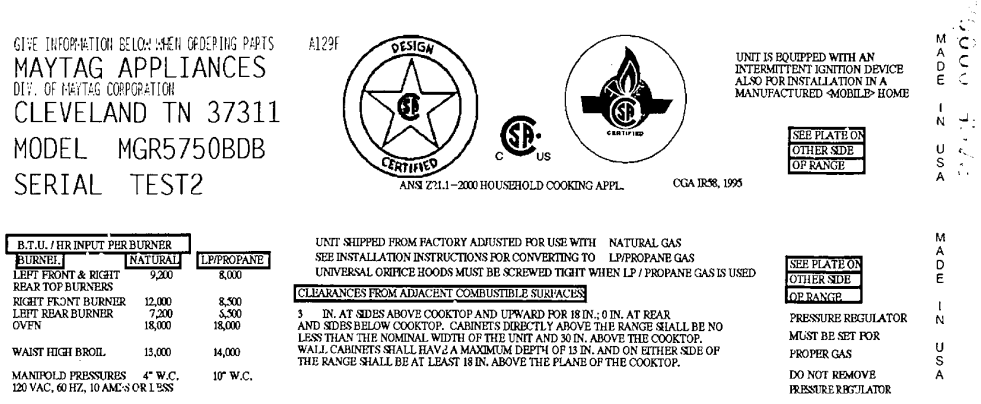

Figure courtesy of Maytag Corporation

Figure G2447.3(2)
HOUSEHOLD-TYPE COOKING APPLIANCE LABEL

INTERNATIONAL CODE COUNCIL®
Copyright © 2015 ICC. ALL RIGHTS RESERVED. Accessed by David Dammon on Jun 21, 2017 12:30:52 PM pursuant to License Agreement with ICC. No further reproduction or distribution authorized. ANY UNAUTHORIZED REPRODUCTION OR DISTRIBUTION IS A VIOLATION OF THE FEDERAL COPYRIGHT ACT AND THE LICENSE AGREEMENT, AND SUBJECT TO CIVIL AND CRIMINAL PENALTIES THEREUNDER.

$^1/_4$-inch (6 mm) insulating millboard covered with sheet metal not less than 0.0122 inch (0.3 mm) thick.

2. A metal ventilating hood constructed of sheet metal not less than 0.0122 inch (0.3 mm) thick is installed above the cooking top with a *clearance* of not less than $^1/_4$ inch (6 mm) between the hood and the underside of the *combustible material* or metal cabinet. The hood shall have a width not less than the width of the *appliance* and shall be centered over the *appliance*.
3. A *listed* cooking *appliance* or microwave oven is installed over a *listed* cooking *appliance* and in compliance with the terms of the manufacturer's installation instructions for the upper *appliance*.

❖ This section addresses the fire hazard created by having hot surfaces, open flames and, possibly, a cooking fire located under combustible cabinets, soffits, etc., and also under metal cabinets with combustible contents (see Commentary Figure G2447.5).

SECTION G2448 (624) WATER HEATERS

G2448.1 (624.1) General. Water heaters shall be tested in accordance with ANSI Z21.10.1 and ANSI Z21.10.3 and shall be installed in accordance with the manufacturer's instructions.

❖ Water heaters are recognized by the codes as both a plumbing and a mechanical appliance. Chapter 5 of the IPC and Chapter 10 of the IMC contain more detailed information concerning the testing and installation of water heaters than is given in this code. This section identifies those aspects of water heaters specifically related to fuel gas. The IMC addresses those aspects related to other fuel or power sources.

The standards listed are specific to gas-fired water heaters. ANSI Z21.10.1 is for water heaters with an input rating less than or equal to 75,000 Btu/h (22 kw). ANSI Z21.10.3 is for water heaters with an input rating greater than 75,000 Btu/h (22 kW) and for circulating and instantaneous water heaters.

G2448.1.1 (624.1.1) Installation requirements. The requirements for *water heaters* relative to sizing, *relief valves*, drain pans and scald protection shall be in accordance with this code.

❖ This section refers the user to the IPC for generic requirements related to water heaters not related to the fuel source. These include connections to the potable water system, safety devices such as relief valves, drain pans for protection of the structure and sizing of the water heaters.

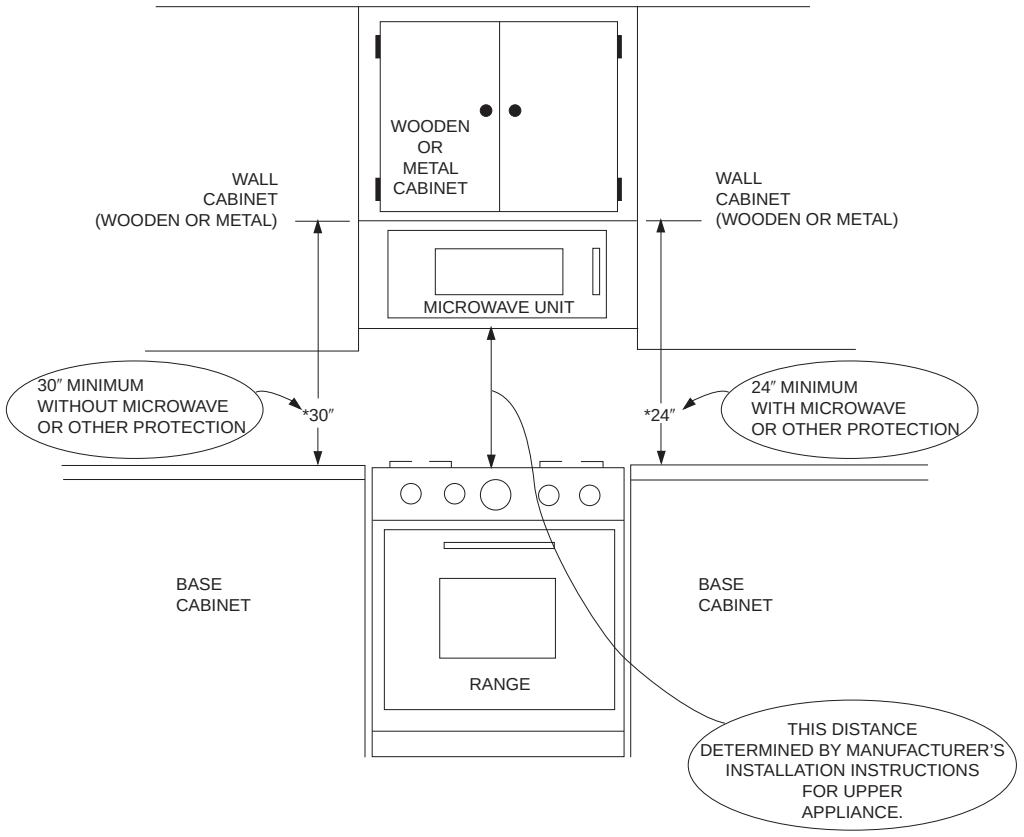

For SI: 1 inch = 25.4 mm.

Figure G2447.5
CLEARANCE ABOVE COOKING TOP

INTERNATIONAL CODE COUNCIL®
Copyright © 2015 ICC. ALL RIGHTS RESERVED. Accessed by David Dammon on Jun 21, 2017 12:30:52 PM pursuant to License Agreement with ICC. No further reproduction or distribution authorized. ANY UNAUTHORIZED REPRODUCTION OR DISTRIBUTION IS A VIOLATION OF THE FEDERAL COPYRIGHT ACT AND THE LICENSE AGREEMENT, AND SUBJECT TO CIVIL AND CRIMINAL PENALTIES THEREUNDER.

G2448.2 (624.2) Water heaters utilized for space heating. *Water heaters* utilized both to supply potable hot water and provide hot water for space-heating applications shall be *listed* and *labeled* for such applications by the manufacturer and shall be installed in accordance with the manufacturer's instructions and this code.

❖ Water heaters serving the dual purpose of supplying potable hot water and serving as a heat source for a space-heating system must be listed and labeled for that dual application. This section does not address water heaters used solely for space-heating applications, but rather addresses water heaters that serve a secondary purpose of space heating. The label will indicate whether the water heater is suitable for space heating [see Commentary Figures G2448.2(1) and (2)].

The plumbing chapters contain additional requirements for the proper installation of these appliances.



Figure G2448.2(1)
DIRECT-VENT WATER HEATER DESIGNED FOR BOTH POTABLE WATER HEATING AND SPACE HEATING APPLICATIONS

SECTION G2449 (627)
AIR-CONDITIONING APPLIANCES

G2449.1 (627.1) General. Gas-fired air-conditioning *appliances* shall be tested in accordance with ANSI Z21.40.1 or ANSI Z21.40.2 and shall be installed in accordance with the manufacturer's instructions.

❖ Gas-fired air conditioning systems include absorption types and internal-combustion-engine-driven machines. The referenced American National Standards Institute (ANSI) standards contain requirements for gas-fired air conditioning equipment. ANSI Z21.40.1 regulates gas-fired absorption systems; ANSI Z21.40.2 regulates work-activated gas-fired air conditioning and heat pump systems. The code relies on the manufacturer's installation instructions and the referenced standards for installation requirements.

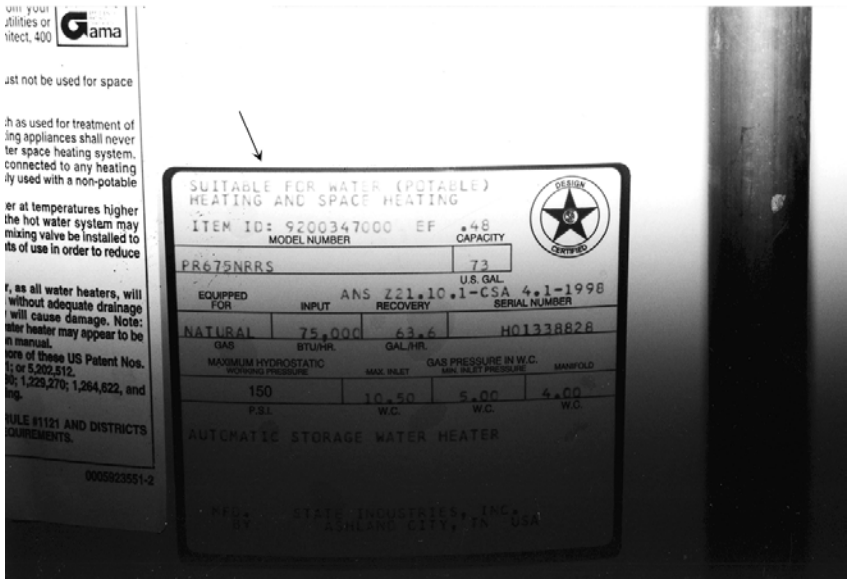

Figure G2448.2(2)
WATER HEATER LABEL INDICATING SUITABILITY FOR BOTH POTABLE WATER HEATING AND SPACE HEATING

INTERNATIONAL CODE COUNCIL®
Copyright © 2015 ICC. ALL RIGHTS RESERVED. Accessed by David Dammon on Jun 21, 2017 12:30:52 PM pursuant to License Agreement with ICC. No further reproduction or distribution authorized. ANY UNAUTHORIZED REPRODUCTION OR DISTRIBUTION IS A VIOLATION OF THE FEDERAL COPYRIGHT ACT AND THE LICENSE AGREEMENT, AND SUBJECT TO CIVIL AND CRIMINAL PENALTIES THEREUNDER.

G2449.2 (627.2) Independent piping. *Gas piping* serving heating *appliances* shall be permitted to also serve cooling *appliances* where such heating and cooling *appliances* cannot be operated simultaneously (see Section G2413).

❖ Where gas supply piping serves both heating and cooling equipment, this section permits the piping to be sized based on the larger gas demand of the two systems rather than sizing based on the total demand of the two systems. This provision is not applicable unless the heating and cooling systems are incapable of operating simultaneously.

G2449.3 (627.3) Connection of gas engine-powered air conditioners. To protect against the effects of normal vibration in service, gas engines shall not be rigidly connected to the gas supply *piping*.

❖ Because of the inherent vibration of a gas engine, a connector must be installed between the engine and the gas supply pipe so that the vibration does not place undue stress on the connector or have an adverse effect on the shutoff valve or the gas piping. Vibration transmitted to the connector and piping could eventually cause joint failure and/or connector failure. The connector must be designed and approved for this application.

G2449.4 (627.6) Installation. Air conditioning *appliances* shall be installed in accordance with the manufacturer's instructions. Unless the *appliance* is *listed* for installation on a combustible surface such as a floor or roof, or unless the surface is protected in an *approved* manner, the *appliance* shall be installed on a surface of noncombustible construction with *noncombustible material* and surface finish and with no *combustible material* against the underside thereof.

❖ The intent of this section is to prohibit the installation of gas-fired air-conditioning equipment on combustible surfaces unless specifically listed for such an installation or the surface is protected in a manner approved by the code official.

SECTION G2450 (628)
ILLUMINATING APPLIANCES

G2450.1 (628.1) General. Illuminating *appliances* shall be tested in accordance with ANSI Z21.42 and shall be installed in accordance with the manufacturer's instructions.

❖ Illuminating appliances must be listed and labeled as required for other appliances regulated by this code. These appliances include gas lamps designed for outdoor use.

G2450.2 (628.2) Mounting on buildings. Illuminating *appliances* designed for wall or ceiling mounting shall be securely attached to substantial structures in such a manner that they are not dependent on the *gas piping* for support.

❖ Gas piping is not designed to act as a support for any appliance. All appliances must be independently supported to prevent stresses and strains on fuel supply connections.

G2450.3 (628.3) Mounting on posts. Illuminating *appliances* designed for post mounting shall be securely and rigidly attached to a post. Posts shall be rigidly mounted. The strength and rigidity of posts greater than 3 feet (914 mm) in height shall be at least equivalent to that of a $2^1/_2$-inch-diameter (64 mm) post constructed of 0.064-inch-thick (1.6 mm) steel or a 1-inch (25 mm) Schedule 40 steel *pipe*. Posts 3 feet (914 mm) or less in height shall not be smaller than a $^3/_4$-inch (19.1 mm) Schedule 40 steel *pipe*. Drain openings shall be provided near the base of posts where there is a possibility of water collecting inside them.

❖ Regardless of the intended method of mounting and support of an appliance, the installation must be secure and must not transmit any loading to the fuel supply connection. A requirement is added to provide a drain at the base of the post to prevent collection of water that can deteriorate the post material.

G2450.4 (628.4) Appliance pressure regulators. Where an *appliance pressure regulator* is not supplied with an illuminating *appliance* and the service line is not equipped with a *service pressure regulator*, an *appliance pressure regulator* shall be installed in the line to the illuminating *appliance*. For multiple installations, one *regulator* of adequate capacity shall be permitted to serve more than one illuminating *appliance*.

❖ Outdoor lighting appliances generally require low-pressure gas flow. Some of these lighting appliances are supplied by the manufacturer with a built-in pressure regulator set for the proper operating pressure. If, however, the regulator is not provided, this section requires the installation of one in the gas line serving the appliance. This regulator must be appropriate for the pressure required by the manufacturer. One pressure regulator with the required capacity may be installed to serve more than one lighting appliance if the piping pressure losses permit.

SECTION G2451 (630)
INFRARED RADIANT HEATERS

G2451.1 (630.1) General. Infrared radiant heaters shall be tested in accordance with ANSI Z83.19 or Z83.20 and shall be installed in accordance with the manufacturer's instructions.

❖ This section addresses radiant heaters including ceramic element and steel tube-type designs. Infrared heaters are produced in both vented and unvented types and function by creating a very hot surface area from which heat energy is directly radiated. Infrared radiant heaters are usually suspended from ceilings or roofs. These heaters are typically used for "spot" heating in spaces that are otherwise unconditioned or that are not conditioned to human comfort levels. Radiant heaters have the advantage of being able to heat objects and personnel without having to heat the surrounding air [see Commentary Figures G2451.1(1) through G2451.1(3)].

INTERNATIONAL CODE COUNCIL®
Copyright © 2015 ICC. ALL RIGHTS RESERVED. Accessed by David Dammon on Jun 21, 2017 12:30:52 PM pursuant to License Agreement with ICC. No further reproduction or distribution authorized. ANY UNAUTHORIZED REPRODUCTION OR DISTRIBUTION IS A VIOLATION OF THE FEDERAL COPYRIGHT ACT AND THE LICENSE AGREEMENT, AND SUBJECT TO CIVIL AND CRIMINAL PENALTIES THEREUNDER.

The code relies on the manufacturers' installation instructions for installation requirements. Maintaining the clearance to combustibles for radiant heaters is of paramount importance. Direct radiation is a very effective method of transferring heat energy, and improperly located combustible materials can be readily ignited [see Commentary Figure G2451.1(4)].

G2451.2 (630.2) Support. *Infrared radiant heaters* shall be fixed in a position independent of gas and electric supply lines. Hangers and brackets shall be of *noncombustible material*.

❖ Supports must prevent radiant heaters from falling. A fall would mean losing the required clearance to combustibles; putting tension or pressure on electrical, fuel and vent connections; and dislocating that redirects the radiant output to where a fire hazard would result. Often, such heaters are improperly hung and restrained, allowing heater movement (swinging) to stress flexible (semirigid) gas connectors. Gas connectors must be designed and approved for applications in which the appliance moves because of expansion and contraction or lack of restraints. To accommodate expansion/contraction movement, some appliance manufacturers require flexible connectors to be coiled or shaped in a manner that allows limited movement without stressing the metal of the connector, similar to expansion loops and offsets in rigid piping systems.



Photo courtesy of Reznor/Thomas & Betts Corporation

Figure G2451.1(1)
CERAMIC BURNER INFRARED RADIANT HEATER



Photo courtesy of Reznor/Thomas & Betts Corporation

Figure G2451.1(2)
TUBE-TYPE INFRARED RADIANT HEATER

SECTION G2452 (631)
BOILERS

G2452.1 (631.1) Standards. Boilers shall be *listed* in accordance with the requirements of ANSI Z21.13 or UL 795. If applicable, the boiler shall be designed and constructed in accordance with the requirements of ASME CSD-1 and as applicable, the ASME *Boiler and Pressure Vessel Code*, Sections I, II, IV, V and IX and NFPA 85.

❖ The scope of this section includes boilers in all occupancies including power plants; factories; industrial plants; schools; and institutional occupancies such as hospitals, commercial laundries, hotels and residential structures. Boilers are defined in Section G2403 of this code (see Commentary Figure G2452.1).

Boilers are potentially dangerous if not properly designed, constructed and operated, more so than many other appliances because of the potential explosion hazard associated with pressure vessels. In addition to this code, several industry standards are referenced. Manufactured gas-fired boilers must be listed to either ANSI Z21.13 or UL 795. Commentary Figure G2403(3) shows a typical label with the required information for a listed boiler. Only the design and construction requirements of boilers are regulated by the referenced standards. The requirements for specific types of boilers can be found in the respective sections of the referenced standards.



Photo courtesy of Reznor/Thomas & Betts Corporation

Figure G2451.1(3)
TUBE-TYPE INFRARED RADIANT HEATER

INTERNATIONAL CODE COUNCIL®
Copyright © 2015 ICC. ALL RIGHTS RESERVED. Accessed by David Dammon on Jun 21, 2017 12:30:52 PM pursuant to License Agreement with ICC. No further reproduction or distribution authorized. ANY UNAUTHORIZED REPRODUCTION OR DISTRIBUTION IS A VIOLATION OF THE FEDERAL COPYRIGHT ACT AND THE LICENSE AGREEMENT, AND SUBJECT TO CIVIL AND CRIMINAL PENALTIES THEREUNDER.

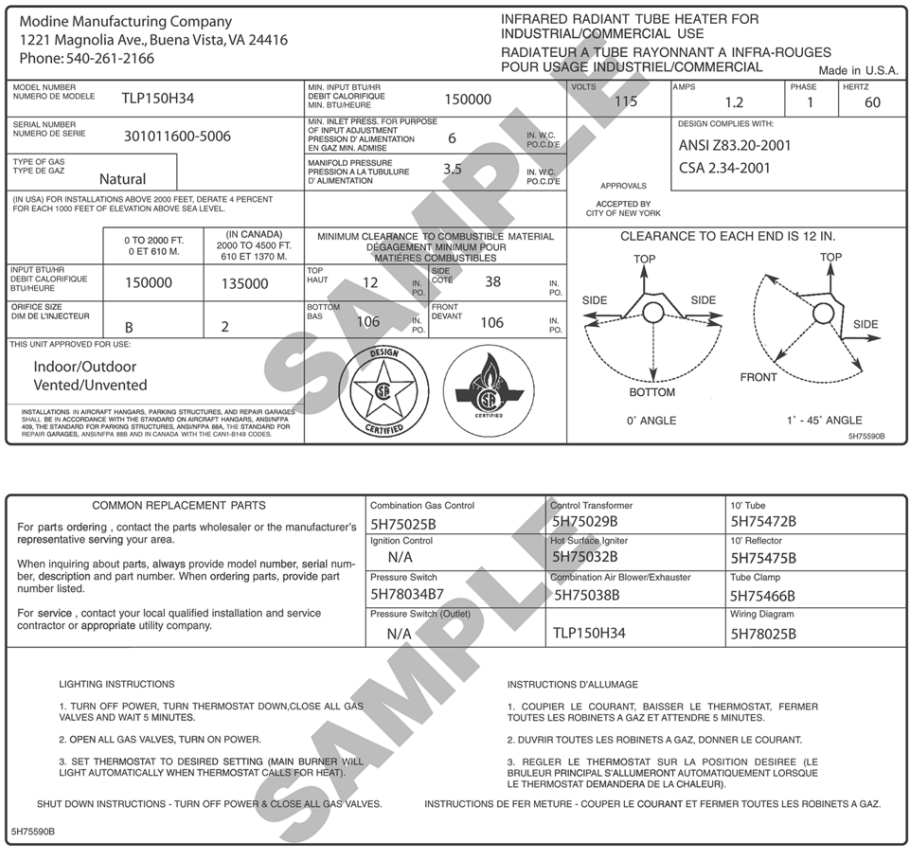

Modine Manufacturing Company
1221 Magnolia Ave., Buena Vista, VA 24416
Phone: 540-261-2166

INFRARED RADIANT TUBE HEATER FOR INDUSTRIAL/COMMERCIAL USE
RADIATEUR A TUBE RAYONNANT A INFRA-ROUGES POUR USAGE INDUSTRIEL/COMMERCIAL
Made in U.S.A.

MODEL NUMBER / NUMERO DE MODELE	TLP150H34	MIN. INPUT BTU/HR / DEBIT CALORIFIQUE MIN. BTU/HEURE	150000	VOLTS 115	AMPS 1.2	PHASE 1 / HERTZ 60
SERIAL NUMBER / NUMERO DE SERIE	301011600-5006	MIN. INLET PRESS. FOR PURPOSE OF INPUT ADJUSTMENT / PRESSION D'ALIMENTATION EN GAZ MIN. ADMISE	6 IN. W.C. PO.C.D'E	DESIGN COMPLIES WITH: ANSI Z83.20-2001, CSA 2.34-2001		
TYPE OF GAS / TYPE DE GAZ	Natural	MANIFOLD PRESSURE / PRESSION A LA TUBULURE D'ALIMENTATION	3.5 IN. W.C. PO.C.D'E	APPROVALS: ACCEPTED BY CITY OF NEW YORK		

(IN USA) FOR INSTALLATIONS ABOVE 2000 FEET, DERATE 4 PERCENT FOR EACH 1000 FEET OF ELEVATION ABOVE SEA LEVEL.

	0 TO 2000 FT. / 0 ET 610 M.	(IN CANADA) 2000 TO 4500 FT. / 610 ET 1370 M.
INPUT BTU/HR / DEBIT CALORIFIQUE BTU/HEURE	150000	135000
ORIFICE SIZE / DIM DE L'INJECTEUR	B	2

MINIMUM CLEARANCE TO COMBUSTIBLE MATERIAL / DEGAGEMENT MINIMUM POUR MATIERES COMBUSTIBLES

TOP / HAUT	12 IN. PO.	SIDE / COTE	38	IN. PO.
BOTTOM / BAS	106 IN. PO.	FRONT / DEVANT	106	IN. PO.

CLEARANCE TO EACH END IS 12 IN.

THIS UNIT APPROVED FOR USE:
Indoor/Outdoor
Vented/Unvented

INSTALLATIONS IN AIRCRAFT HANGARS, PARKING STRUCTURES, AND REPAIR GARAGES SHALL BE IN ACCORDANCE WITH THE STANDARD ON AIRCRAFT HANGARS, ANSI/NFPA 409, THE STANDARD FOR PARKING STRUCTURES, ANSI/NFPA 88A, THE STANDARD FOR REPAIR GARAGES, ANSI/NFPA 88B AND IN CANADA WITH THE CAN1-B149 CODES.

5H75590B

COMMON REPLACEMENT PARTS

For parts ordering , contact the parts wholesaler or the manufacturer's representative serving your area.

When inquiring about parts, always provide model number, serial number, description and part number. When ordering parts, provide part number listed.

For service , contact your local qualified installation and service contractor or appropriate utility company.

Combination Gas Control	5H75025B	Control Transformer	5H75029B	10" Tube	5H75472B
Ignition Control	N/A	Hot Surface Igniter	5H75032B	10" Reflector	5H75475B
Pressure Switch	5H78034B7	Combination Air Blower/Exhauster	5H75038B	Tube Clamp	5H75466B
Pressure Switch (Outlet)	N/A		TLP150H34	Wiring Diagram	5H78025B

LIGHTING INSTRUCTIONS

1. TURN OFF POWER, TURN THERMOSTAT DOWN,CLOSE ALL GAS VALVES AND WAIT 5 MINUTES.
2. OPEN ALL GAS VALVES, TURN ON POWER.
3. SET THERMOSTAT TO DESIRED SETTING (MAIN BURNER WILL LIGHT AUTOMATICALLY WHEN THERMOSTAT CALLS FOR HEAT).

SHUT DOWN INSTRUCTIONS - TURN OFF POWER & CLOSE ALL GAS VALVES.

INSTRUCTIONS D'ALLUMAGE

1. COUPIER LE COURANT, BAISSER LE THERMOSTAT, FERMER TOUTES LES ROBINETS A GAZ ET ATTENDRE 5 MINUTES.
2. DUVRIR TOUTES LES ROBINETS A GAZ, DONNER LE COURANT.
3. REGLER LE THERMOSTAT SUR LA POSITION DESIREE (LE BRULEUR PRINCIPAL S'ALLUMERONT AUTOMATIQUEMENT LORSQUE LE THERMOSTAT DEMANDERA DE LA CHALEUR).

INSTRUCTIONS DE FER METURE - COUPER LE COURANT ET FERMER TOUTES LES ROBINETS A GAZ.

SAMPLE

Figure courtesy of Modine Manufacturing Company

Figure G2451.1(4)
SAMPLE LABEL INFRARED RADIANT TUBE HEATER

G2452.2 (631.2) Installation. In addition to the requirements of this code, the installation of boilers shall be in accordance with the manufacturer's instructions. Operating instructions of a permanent type shall be attached to the boiler. Boilers shall have all *controls* set, adjusted and tested by the installer. A complete *control* diagram together with complete boiler operating instructions shall be furnished by the installer. The manufacturer's rating data and the nameplate shall be attached to the boiler.

❖ This section governs the installation and commissioning of boilers and their control systems. The mechanical equipment requirements for approval, labeling, installation, maintenance, repair and alteration are regulated by the IMC and the manufacturer's instructions. The IMC contains installation requirements for boilers including provisions for shutoff valves, pressure relief valves, safety valves, electrical control wiring, blowoff valves, expansion tanks and low water cutoff controls [see Commentary Figures G2452.1 and G2452.2(1) through G2452.2(3)].

Complete operating instructions must be permanently affixed to the boiler upon completion of the installation. Boiler systems can be complex and generally require coordination of several pieces of equipment. The proper operating procedures, set points, etc., must be specified and included in these instructions. This is usually done in the control system design documentation, including such things as diagrams, system schematics and control sequence descriptions. Typically, an operating and maintenance (O&M) manual is given to the building owner/operator upon completion of the project. Along with operating and control procedures, the O&M manual will clearly identify routine maintenance and calibration information. It is also typical for operation sequences and calibration information to be displayed under glass in a conspicuous place in the boiler room for use by operating and service personnel. The intent is to provide the owner/operator with all operating and control information necessary to properly operate and maintain the boiler and its associated controls and equipment.

INTERNATIONAL CODE COUNCIL®
Copyright © 2015 ICC. ALL RIGHTS RESERVED. Accessed by David Dammon on Jun 21, 2017 12:30:52 PM pursuant to License Agreement with ICC. No further reproduction or distribution authorized. ANY UNAUTHORIZED REPRODUCTION OR DISTRIBUTION IS A VIOLATION OF THE FEDERAL COPYRIGHT ACT AND THE LICENSE AGREEMENT, AND SUBJECT TO CIVIL AND CRIMINAL PENALTIES THEREUNDER.



Photo courtesy of Weil-McLain

Figure G2452.1
STEAM HEATING BOILER WITH GAUGE GLASS, LOW WATER CUTOFF CONTROL, PRESSURE GAUGE, PRESSURE LIMIT CONTROL AND AUTOMATIC VENT DAMPER

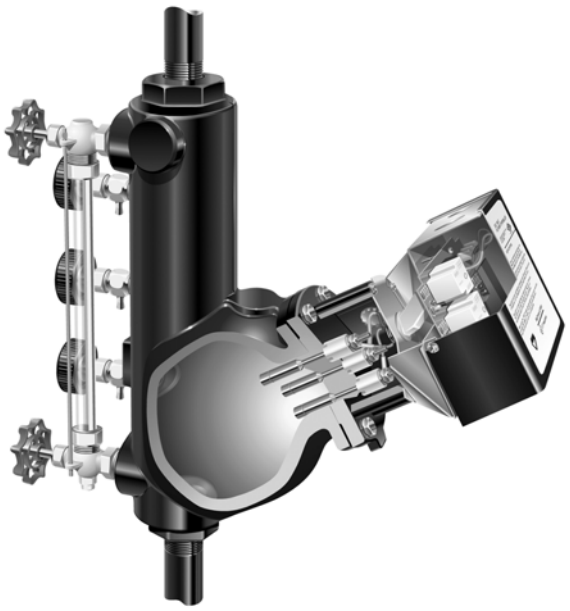

Photo courtesy of McDonnell & Miller

Figure G2452.2(1)
ELECTRONIC PROBE-TYPE LOW-WATER CUTOFF CONTROL WITH GAUGE GLASS AND TRI-COCKS FOR STEAM BOILER APPLICATION



Photo courtesy of McDonnell & Miller

Figure G2452.2(2)
ELECTRONIC PROBE-TYPE LOW-WATER CUTOFF CONTROL FOR HOT WATER BOILER APPLICATION



Photo courtesy of McDonnell & Miller

Figure G2452.2(3)
ELECTRONIC PROBE-TYPE LOW-WATER CUTOFF CONTROL FOR HOT WATER BOILER APPLICATION

G2452.3 (631.3) Clearance to combustible material. *Clearances* to *combustible materials* shall be in accordance with Section G2409.4.

❖ Boilers, like all gas-fired equipment and appliances, operate at high temperatures that require adequate separation from combustibles. This section refers the user to Section G2409 of this code for requirements for clearances to combustibles and allowable clearance reduction methods.

SECTION G2453 (634) CHIMNEY DAMPER OPENING AREA

G2453.1 (634.1) Free opening area of chimney dampers. Where an unlisted decorative *appliance* for installation in a vented *fireplace* is installed, the *fireplace damper* shall have a permanent free opening equal to or greater than specified in Table G2453.1.

❖ This section intends to ensure that an adequate fireplace damper opening is installed for all unlisted dec-

INTERNATIONAL CODE COUNCIL®
Copyright © 2015 ICC. ALL RIGHTS RESERVED. Accessed by David Dammon on Jun 21, 2017 12:30:52 PM pursuant to License Agreement with ICC. No further reproduction or distribution authorized. ANY UNAUTHORIZED REPRODUCTION OR DISTRIBUTION IS A VIOLATION OF THE FEDERAL COPYRIGHT ACT AND THE LICENSE AGREEMENT, AND SUBJECT TO CIVIL AND CRIMINAL PENALTIES THEREUNDER.

orative appliances. The minimum damper opening size is part of the listing for listed appliances, but the installer and the code official might not have access to this information for an unlisted appliance. Section G2404.3 requires all appliances to be listed.

The free opening size is a function of the height of the chimney and the appliance input rating. As stated in note "a," the opening areas in the table correspond to the cross-sectional area of round chimney flues having nominal sizes from 3 to 8 inches (76 to 203 mm), and the 64 square inches (41 290 mm^2) represents the cross-sectional area of a standard 8- by 8-inch chimney tile.

SECTION G2454 (636)
OUTDOOR DECORATIVE APPLIANCES

G2454.1 (636.1) General. Permanently fixed-in-place outdoor decorative appliances shall be tested in accordance with ANSI Z21.97 and shall be installed in accordance with the manufacturer's instructions.

❖ There are many different types of gas-fired decorative appliances that are for outdoor use only, such as simulated camp fire units and table-top decorative display burner units. Such appliances are popular for outdoor living areas, patios, outdoor kitchens, etc. (see Commentary Figure G2454.1).

Bibliography

The following resource materials were used in the preparation of the commentary for this chapter of the code:

IBC–15, *International Building Code*. Washington, DC: International Code Council, 2014.

IFGC–15, *International Fuel Gas Code*. Washington, DC: International Code Council, 2014.

IMC–15, *International Mechanical Code*. Washington DC: International Code Council, 2014.

IPC–15, *International Plumbing Code*. Washington, DC: International Code Council, 2014.

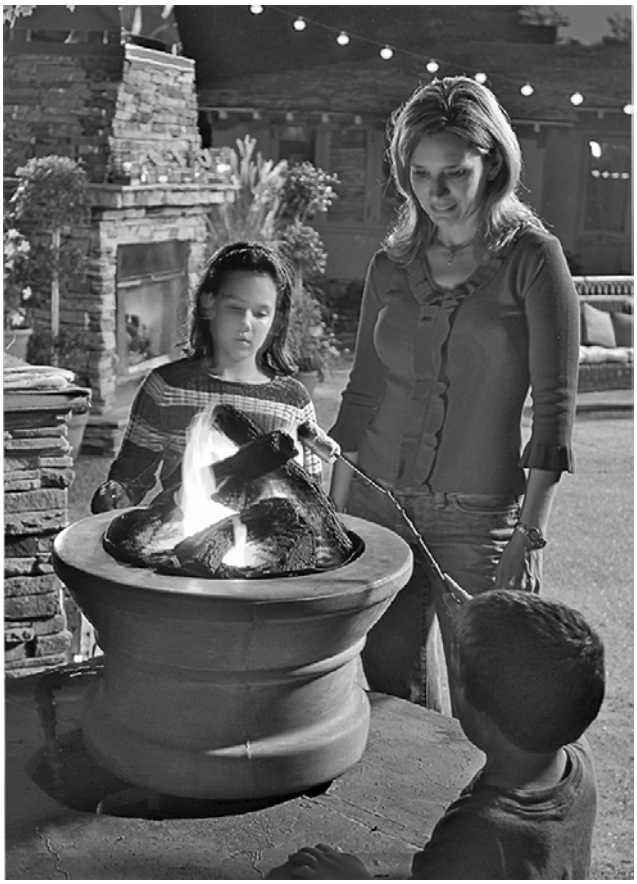

Photo courtesy of Hearth and Home Technologies. Inc.

Figure G2454.1
OUTDOOR (CAMPFIRE) DECORATIVE APPLIANCE

TABLE G2453.1 (634.1)
FREE OPENING AREA OF CHIMNEY DAMPER FOR VENTING FLUE GASES FROM UNLISTED DECORATIVE APPLIANCES FOR INSTALLATION IN VENTED FIREPLACES

CHIMNEY HEIGHT (feet)	MINIMUM PERMANENT FREE OPENING (square inches)[a]						
	8	13	20	29	39	51	64
	Appliance input rating (Btu per hour)						
6	7,800	14,000	23,200	34,000	46,400	62,400	80,000
8	8,400	15,200	25,200	37,000	50,400	68,000	86,000
10	9,000	16,800	27,600	40,400	55,800	74,400	96,400
15	9,800	18,200	30,200	44,600	62,400	84,000	108,800
20	10,600	20,200	32,600	50,400	68,400	94,000	122,200
30	11,200	21,600	36,600	55,200	76,800	105,800	138,600

For SI: 1 inch = 25.4 mm, 1 foot = 304.8 mm, 1 square inch = 645.16 mm^2, 1,000 Btu per hour = 0.293 kW.

a. The first six minimum permanent free openings (8 to 51 square inches) correspond approximately to the cross-sectional areas of chimneys having diameters of 3 through 8 inches, respectively. The 64-square-inch opening corresponds to the cross-sectional area of standard 8-inch by 8-inch chimney tile.

INTERNATIONAL CODE COUNCIL®

Copyright © 2015 ICC. ALL RIGHTS RESERVED. Accessed by David Dammon on Jun 21, 2017 12:30:52 PM pursuant to License Agreement with ICC. No further reproduction or distribution authorized. ANY UNAUTHORIZED REPRODUCTION OR DISTRIBUTION IS A VIOLATION OF THE FEDERAL COPYRIGHT ACT AND THE LICENSE AGREEMENT, AND SUBJECT TO CIVIL AND CRIMINAL PENALTIES THEREUNDER.

Part VII—Plumbing

Chapter 25: Plumbing Administration

General Comments

Chapter 25 contains administrative requirements that apply to the installation of plumbing systems and to the ensuing plumbing related chapters of the code. Chapter 25 refers the user to the applicable provisions of Chapter 1 and addresses the code requirements' applicability to additions, alterations and repairs. This chapter also outlines the building official's authority and discretion regarding existing construction that is used in conjunction with new construction.

Chapter 25 lists the types and phases of various inspections as well as detailing the permit holder's responsibilities for scheduling and performing tests.

Purpose

The requirements of Chapter 25 do not supersede the administrative provisions of Chapter 1. Rather, the administrative guidelines of Chapter 25 pertain to plumbing installations that are best referenced and located within the plumbing chapters. This chapter addresses how to apply the plumbing provisions of this code to specific types or phases of construction. This chapter also outlines the responsibilities of the applicant, the installer and the inspector with regard to testing plumbing installations.

SECTION P2501 GENERAL

P2501.1 Scope. The provisions of this chapter shall establish the general administrative requirements applicable to plumbing systems and inspection requirements of this code.

❖ This section states that the provisions of Chapter 25 set forth the general administration requirements for plumbing systems.

P2501.2 Application. In addition to the general administration requirements of Chapter 1, the administrative provisions of this chapter shall also apply to the plumbing requirements of Chapters 25 through 32.

❖ Section P2501.2 refers to the applicability of the administrative requirements of Chapter 1 and of plumbing Chapters 25 through 33.

SECTION P2502 EXISTING PLUMBING SYSTEMS

P2502.1 Existing building sewers and building drains. Where the entire sanitary drainage system of an existing building is replaced, existing *building drains* under concrete slabs and existing *building sewers* that will serve the new system shall be internally examined to verify that the piping is sloping in the correct direction, is not broken, is not obstructed and is sized for the drainage load of the new plumbing drainage system to be installed.

❖ A home could be so significantly damaged from fire or wind that the home must be completely removed in order for another home to be constructed. Or, the repair of an older home might be so cost prohibitive that it is more cost effective to tear it down and build a new home on the same lot. The routing of the existing building sewer might be complicated by existing driveways, trees or accessory buildings. In some jurisdictions, the homeowner is responsible for their building sewer as it passes into a right-of-way, such as crossing a street en route to the public sewer main on the other side. In other situations, the homeowner's building sewer might cross another owner's property.

Another situation might be that a concrete slab-on-grade building is completely replaced using the existing slab as the foundation for the new building. The existing building drain system could still be intact and in good condition such that the slab would not have to be cut up to replace the building drain.

Although the code does not specifically state that new-built homes must be served by a new building sewer (and a new building drain), some code officials might interpret the code as requiring an all new building drain and building sewer. In the scenarios given in the previous two paragraphs, replacement of building drains and building sewers might be very costly. Furthermore, the replacement might be completely unnecessary. Why tear out good, serviceable building drains and building sewers just for sake of replacing with new material? The only way to know if existing building drains and existing building sewers are serviceable is to internally examine the piping for problems. The only way to properly examine this piping is by an internal video camera survey.

INTERNATIONAL CODE COUNCIL®
Copyright © 2015 ICC. ALL RIGHTS RESERVED. Accessed by David Dammon on Jun 21, 2017 12:30:52 PM pursuant to License Agreement with ICC. No further reproduction or distribution authorized. ANY UNAUTHORIZED REPRODUCTION OR DISTRIBUTION IS A VIOLATION OF THE FEDERAL COPYRIGHT ACT AND THE LICENSE AGREEMENT, AND SUBJECT TO CIVIL AND CRIMINAL PENALTIES THEREUNDER.

Video pipe surveys can identify reverse slopes, sags, breaks, tree root intrusions, illegal taps, diameter changes and the overall condition of the piping so that an evaluation can be made as to whether to repair or replace the piping.

P2502.2 Additions, alterations or repairs. Additions, *alterations*, renovations or repairs to any plumbing system shall conform to that required for a new plumbing system without requiring the existing plumbing system to comply with the requirements of this code. Additions, *alterations* or repairs shall not cause an existing system to become unsafe, insanitary or overloaded.

Minor additions, *alterations*, renovations and repairs to existing plumbing systems shall be permitted in the same manner and arrangement as in the existing system, provided that such repairs or replacement are not hazardous and are *approved*.

❖ Simply stated, new work must comply with current code requirements. Any alteration or addition to an existing system involves some new work, and therefore is subject to the requirements of the code. Additions or alterations to an existing system can place additional loads or different demands on the system, which could necessitate changing all or part of the existing system. For example, the addition of plumbing fixtures to an existing system may necessitate an increase in drain piping size and water distribution piping size. Additions and alterations must not cause an existing system to be any less in compliance with the code than it was before the changes.

Repair of an existing nonconforming plumbing system is permitted without having to completely replace the nonconforming portion. This typically occurs when repairing a fixture or piping. Although some types of fixtures or piping arrangements are no longer permitted, existing fixtures or piping can be repaired and remain in service if a health hazard or insanitary condition is not maintained or created. This section distinguishes between alterations (subject to applicable provisions of the code) and ordinary repairs (maintenance activities not requiring a permit). The intent of this section is to allow the continued use of existing plumbing systems and equipment that might not be designed and constructed as required for new installations.

Existing plumbing systems and equipment will normally require repair and component replacement to remain operational. This section permits repair and component replacements without requiring the redesign, alteration or replacement of the entire system. In other words, the plumbing system is allowed to stay as it was if it is not hazardous. It is important to note that the word “minor” in this section is intended to modify “additions,” “alterations,” “renovations” and “repairs.” It is not the intent of this section to waive code requirements for the replacement of all or major portions of systems under the guise of repair. Any work other than minor repairs or replacement of minor portions of a system must be considered as new work subject to all applicable provisions of the code. Repairs and minor component replacements are permitted in a manner that is consistent with the existing system if those repairs or replacements are approved by the code official; are not hazardous; do not cause the system or equipment to be any less in compliance with the code than before; and are, to the extent practicable, in compliance with the provisions of the code applicable to new work.

SECTION P2503
INSPECTION AND TESTS

P2503.1 Inspection required. New plumbing work and parts of existing systems affected by new work or *alterations* shall be inspected by the *building official* to ensure compliance with the requirements of this code.

❖ This section establishes the building official’s authority to conduct inspections of plumbing work to determine code compliance. The code requires inspection and approval of new work and existing systems that could be affected by new work. This provision allows the building official to inspect existing systems as part of the overall approval process.

P2503.2 Concealment. A plumbing or drainage system, or part thereof, shall not be covered, concealed or put into use until it has been tested, inspected and *approved* by the *building official*.

❖ It is the responsibility of the contractor, the builder, the owner or other authorized party to arrange for the required inspections and to coordinate them to prevent work from being concealed or put into use before the work is inspected, tested and approved by the authority having jurisdiction.

P2503.3 Responsibility of permittee. Test equipment, materials and labor shall be furnished by the permittee.

❖ The permit holder is responsible for supplying all of the labor, equipment and apparatus necessary to conduct such tests. The code official only observes the tests being performed.

P2503.4 Building sewer testing. The *building sewer* shall be tested by insertion of a test plug at the point of connection with the public sewer, filling the *building sewer* with water and pressurizing the sewer to not less than 10-foot (3048 mm) head of water. The test pressure shall not decrease during a period of not less than 15 minutes. The *building sewer* shall be watertight at all points.

A forced sewer test shall consist of pressurizing the piping to a pressure of not less than 5 psi (34.5 kPa) greater than the pump rating and maintaining such pressure for not less than 15 minutes. The forced sewer shall be water tight at all points.

❖ This section requires that the gravity building sewer be plugged at the point of connection to the public sewer and tested with 10 feet (3048 mm) of water for 15 minutes without leaking. Even though such a test applies a relatively small amount of pressure [approximately 5 pounds per square inch (psi) (34 kPa)], it is sufficient for unpressurized piping applications.

INTERNATIONAL CODE COUNCIL®
Copyright © 2015 ICC. ALL RIGHTS RESERVED. Accessed by David Dammon on Jun 21, 2017 12:30:52 PM pursuant to License Agreement with ICC. No further reproduction or distribution authorized. ANY UNAUTHORIZED REPRODUCTION OR DISTRIBUTION IS A VIOLATION OF THE FEDERAL COPYRIGHT ACT AND THE LICENSE AGREEMENT, AND SUBJECT TO CIVIL AND CRIMINAL PENALTIES THEREUNDER.

The second paragraph of this section is for forced sewers (i.e., pressurized building sewers). The piping must be pressurized to not less than 5 psi greater than the rating of the pump that creates the pressure to move the sewage to the public sewer. The pump curve (or data from the manufacturer) must be consulted to determine the greatest pressure that the pump can generate.

P2503.5 Drain, waste and vent systems testing. Rough-in and finished plumbing installations of drain, waste and vent systems shall be tested in accordance with Sections P2503.5.1 and P2503.5.2.

❖ Section P2503.5 indicates that drainage and venting systems are to be tested once during the rough-in phase and again after the plumbing fixtures have been set and traps installed.

P2503.5.1 Rough plumbing. DWV systems shall be tested on completion of the rough piping installation by water or, for piping systems other than plastic, by air, without evidence of leakage. Either test shall be applied to the drainage system in its entirety or in sections after rough-in piping has been installed, as follows:

1. Water test. Each section shall be filled with water to a point not less than 5 feet (1524 mm) above the highest fitting connection in that section, or to the highest point in the completed system. Water shall be held in the section under test for a period of 15 minutes. The system shall prove leak free by visual inspection.
2. Air test. The portion under test shall be maintained at a gauge pressure of 5 pounds per square inch (psi) (34 kPa) or 10 inches of mercury column (34 kPa). This pressure shall be held without introduction of additional air for a period of 15 minutes.

❖ This section describes the procedures for performing a water or air test of the drainage, waste and vent (DWV) system. Note that air cannot be used for testing plastic piping systems. The water test is performed during the rough-in phase to determine whether the plumbing system complies with the code and operates as intended. This test allows identification and repair of any defects before the system is concealed within the building. Except for the top 5 feet (1524 mm) of the system, each section must be tested with not less than a 5-foot (1524 mm) head of water for a period of 15 minutes. The system must be leak free at all points.

As an alternative, this section allows an air-pressure test of the DWV system. Note that air cannot be used for testing plastic piping systems. The system must hold 5 psi (34 kPa) pressure throughout for a period of at least 15 minutes without introducing additional air. Testing DWV systems with air is inherently more dangerous to personnel than testing with water because of the energy release that can occur if the system fails or ruptures. Increasing the test pressure beyond the material's safety limits poses a hazard.

P2503.5.2 Finished plumbing. After the plumbing fixtures have been set and their traps filled with water, their connections shall be tested and proved gas tight or water tight as follows:

1. Water tightness. Each fixture shall be filled and then drained. Traps and fixture connections shall be proven water tight by visual inspection.
2. Gas tightness. Where required by the local administrative authority, a final test for gas tightness of the DWV system shall be made by the smoke or peppermint test as follows:
   2.1. Smoke test. Introduce a pungent, thick smoke into the system. When the smoke appears at vent terminals, such terminals shall be sealed and a pressure equivalent to a 1-inch water column (249 Pa) shall be applied and maintained for a test period of not less than 15 minutes.
   2.2. Peppermint test. Introduce 2 ounces (59 mL) of oil of peppermint into the system. Add 10 quarts (9464 mL) of hot water and seal the vent terminals. The odor of peppermint shall not be detected at any trap or other point in the system.

❖ This section requires a visual inspection of the finished plumbing system. When there is any doubt that the finished system is not water tight, this section allows the code official to require the entire system to be subjected to a smoke or peppermint test. The smoke test involves filling all traps with water and then introducing a thick pungent smoke produced by a smoke machine [see Commentary Figure P2503.5.2(1)]. When smoke appears at stack openings, they must be capped and a pressure equivalent to 1-inch water column (w.c.) (249 Pa) must be maintained for a period of 15 minutes. The pressure developed for the smoke test must not exceed 1 inch (249 Pa) of w.c. because any higher pressure could affect the water seal in the traps, thereby rendering the test invalid. Detection of any smoke indicates a leak that must be repaired [see Commentary Figure P2503.5.2(2)].



Figure P2503.5.2(1)
SMOKE GENERATING EQUIPMENT
(Photo courtesy of Hurco Technologies, Inc.)

INTERNATIONAL CODE COUNCIL®
Copyright © 2015 ICC. ALL RIGHTS RESERVED. Accessed by David Dammon on Jun 21, 2017 12:30:52 PM pursuant to License Agreement with ICC. No further reproduction or distribution authorized. ANY UNAUTHORIZED REPRODUCTION OR DISTRIBUTION IS A VIOLATION OF THE FEDERAL COPYRIGHT ACT AND THE LICENSE AGREEMENT, AND SUBJECT TO CIVIL AND CRIMINAL PENALTIES THEREUNDER.

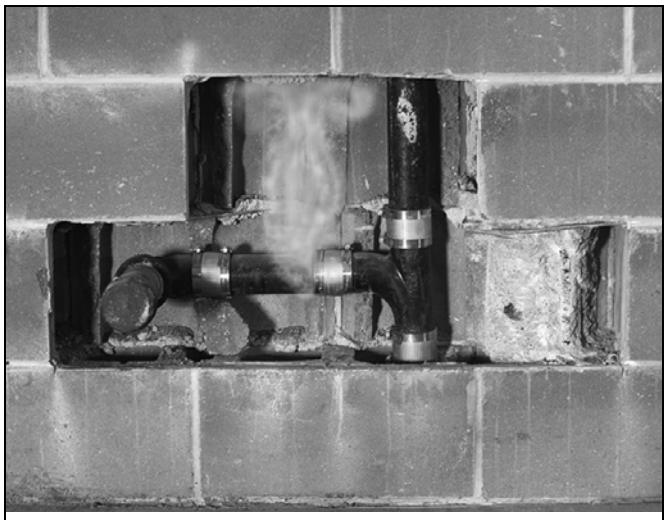

Figure P2503.5.2(2)
SMOKE INDICATING PRESENCE OF LEAK
(Photo courtesy of Hurco Technologies, Inc.)

P2503.6 Shower liner test. Where shower floors and receptors are made water tight by the application of materials required by Section P2709.2, the completed liner installation shall be tested. The pipe from the shower drain shall be plugged water tight for the test. The floor and receptor area shall be filled with potable water to a depth of not less than 2 inches (51 mm) measured at the threshold. Where a threshold of not less than 2 inches (51 mm) in height does not exist, a temporary threshold shall be constructed to retain the test water in the lined floor or receptor area to a level not less than 2 inches (51 mm) in depth measured at the threshold. The water shall be retained for a test period of not less than 15 minutes and there shall not be evidence of leakage.

❖ The resulting water damage, increased difficulty in making repairs and the additional expense involved associated with discovering a leak after a building has been completed requires that field-fabricated shower liners be tested at the rough-in stage.

This section clearly spells out how to perform the test. The evidence of leakage could be either the lowering of the water level from the full threshold level or water drips/seepage outside of the receptor area [see Commentary Figures P2503.6(1) and P2503.6(2)].

P2503.7 Water-supply system testing. Upon completion of the water-supply system or a section of it, the system or portion completed shall be tested and proved tight under a water pressure of not less than the working pressure of the system or, for piping systems other than plastic, by an air test of not less than 50 psi (345 kPa). This pressure shall be held for not

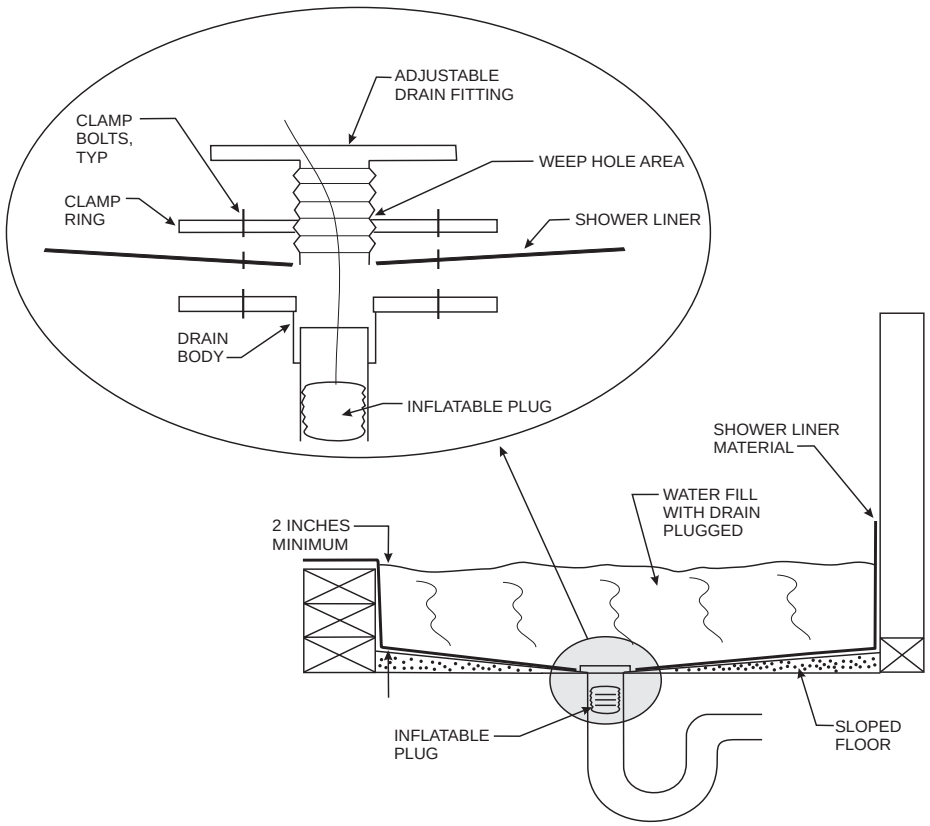

For SI: 1 inch = 25.4 mm.

Figure P2503.6(1)
TESTING OF FIELD-FABRICATED SHOWER LINER

INTERNATIONAL CODE COUNCIL®
Copyright © 2015 ICC. ALL RIGHTS RESERVED. Accessed by David Dammon on Jun 21, 2017 12:30:52 PM pursuant to License Agreement with ICC. No further reproduction or distribution authorized. ANY UNAUTHORIZED REPRODUCTION OR DISTRIBUTION IS A VIOLATION OF THE FEDERAL COPYRIGHT ACT AND THE LICENSE AGREEMENT, AND SUBJECT TO CIVIL AND CRIMINAL PENALTIES THEREUNDER.



Figure P2503.6(2)
INSTALLED SHOWER LINER READY FOR TESTING

less than 15 minutes. The water used for tests shall be obtained from a potable water source.

❖ The water supply system consists of piping from the water meter at the curb, the stop valve at the curb or the well system to the ends of the water distribution piping in the building.

The term "working pressure" is not defined in the code. It is understood to be the maximum pressure in a water supply system under normal operating conditions. The working pressure can be different depending on where the pressure is measured in a system. For example, the working pressure in a water service line from the curb stop valve to the entry point into the building might be 120 psi (827 kPa). As this pressure is greater than 80 psi (551 kPa), in accordance with Section P2903.3.1, a pressure-reducing valve must be installed to limit the pressure in the building's water distribution system to no greater than 80 psi (551 kPa). Therefore, the working pressure in the water distribution system portion of the water supply system is 80 psi (551 kPa).

The phrase "the system shall be proved tight," although a somewhat archaic expression, means that by visual inspection, no evidence of leakage from the piping system is observed. Evidence of leakage is typically determined by attaching a pressure gauge to the system, pressurizing the system to the test pressure and, without further addition of test water or air to the system, verifying after 15 minutes that the pressure gauge indication has not changed from the reading taken at the beginning of the test (note the test gauge requirements of Section P2503.9). Where minor repairs or modifications are made to a water-supply system and the system is tested with water, the pressure gauge method is not necessary as evidence of leakage could be simply determined by observing each piping connection for the presence of leaking water.

If air is used to test a water supply system of other than plastic material, the test pressure need only be 50 psi (344 kPa). Where testing with compressed air, it is advisable to allow the system under test pressure to thermally stabilize before the start of the observation period. Warm air from a compressor introduced into cold piping will cool and result in a decrease in the test pressure, falsely indicating a leak. Gaskets and O-rings in shower mixing valves are intended to seal against water pressure and typically do not initially seat or seal well when first pressurized with air. In most cases, leaks from these locations will eventually cease after a "seating in" period of time. Adjustments for changes in pressure resulting from ambient temperature fluctuations or the seating of gaskets must be made prior to the start of the 15-minute test period.

Air testing of water supply systems of plastic material is prohibited by the code and many plastic piping manufacturers due to the risk of personal injury caused by flying shards of plastic should the piping rupture. Compressed air stores potential energy not unlike a compressed coil spring stores energy. If the piping ruptures, the stored potential energy becomes kinetic energy that can propel plastic pieces with great force and velocity.

Sections P2503.5.1 and P2503.5.2 specify two general construction stages that require inspection: (1) rough-in, including underground and above ground and (2) final (completion of plumbing work). Depending on the size and required sequence of a project, multiple inspections may be necessary for each stage. The intent of this section is to ensure that all under-ground and above-ground water supply system piping is tested prior to concealment so that any leaks can be readily located and repaired. The final inspection and "test" (see Section P2503.5.2) provides for visual inspection to find leaks in exposed water supply system connections, such as water heater piping, stop valves, supply tube connections and fixture/faucet assemblies.

P2503.8 Inspection and testing of backflow prevention devices. Inspection and testing of backflow prevention devices shall comply with Sections P2503.8.1 and P2503.8.2.

❖ A device must be tested in accordance with Section P2503.8.2 to determine whether it is operating properly. A visual inspection will determine whether the unit is installed according to its listing and the manufacturer's instructions (see commentary, Section P2902).

P2503.8.1 Inspections. Inspections shall be made of backflow prevention assemblies to determine whether they are operable.

❖ This section requires inspection of all backflow assemblies to determine whether they are installed correctly and are operating in accordance with the manufacturer's instructions. The commentary for Section P2902 provides further discussion of installation.

INTERNATIONAL CODE COUNCIL®
Copyright © 2015 ICC. ALL RIGHTS RESERVED. Accessed by David Dammon on Jun 21, 2017 12:30:52 PM pursuant to License Agreement with ICC. No further reproduction or distribution authorized. ANY UNAUTHORIZED REPRODUCTION OR DISTRIBUTION IS A VIOLATION OF THE FEDERAL COPYRIGHT ACT AND THE LICENSE AGREEMENT, AND SUBJECT TO CIVIL AND CRIMINAL PENALTIES THEREUNDER.

P2503.8.2 Testing. Reduced pressure principle, double check, double check detector and pressure vacuum breaker backflow preventer assemblies shall be tested at the time of installation, immediately after repairs or relocation and every year thereafter.

❖ Four types of assemblies require testing: reduced-pressure principle backflow prevention assemblies; double-check-valve backflow prevention assemblies; double-detector check-valve backflow prevention assemblies and pressure vacuum breaker assemblies (see commentary, Section P2902). Other backflow prevention devices, such as atmospheric vacuum breakers and air gaps, are used within a water distribution system to protect against cross contamination. For the purpose of testing their adequacy under certain working conditions, the four assemblies referenced in this section are equipped with test cocks (or ports) that are used in conjunction with specific testing equipment and procedures. These tests are required at the time of installation, repair and relocation, and at least annually thereafter.

P2503.9 Test gauges. Gauges used for testing shall be as follows:

1. Tests requiring a pressure of 10 psi or less shall utilize a testing gauge having increments of 0.10 psi (0.69 kPa) or less.
2. Tests requiring a pressure higher than 10 psi (0.69 kPa) but less than or equal to 100 psi (690 kPa) shall use a testing gauge having increments of 1 psi (6.9 kPa) or less.
3. Tests requiring a pressure higher than 100 psi (690 kPa) shall use a testing gauge having increments of 2 psi (14 kPa) or less.

❖ It is common to see test gauges with 1-, 2-, 5- or even 10-psi (0.1, 0.2, 0.5 or 1.0 kg/cm^2) increments being used in a DWV inspection that requires only a 5-psi (34.5 kPa) test. These gauges are difficult to read and interpret and lack the resolution necessary to detect all but the largest of leaks.

In each case, the user needs to ensure that the proper pressure gauge is selected with respect to indicating range and design (see Commentary Figure P2503.9). Most standard dial-type mechanical pressure gauges use a bourdon tube sensing element generally made of a copper alloy (brass) or stainless steel. The construction is simple, and operation does not require any additional power source. The C-shaped or spiral wound bourdon tube flexes when pressure is applied, producing a rotational movement that in turn causes the pointer to indicate the measured pressure. Installation of shut-off devices between the measuring point and the pressure gauge is recommended. This will allow an exchange of the pressure gauge and checks on the gauge's zero setting while the system remains under pressure.

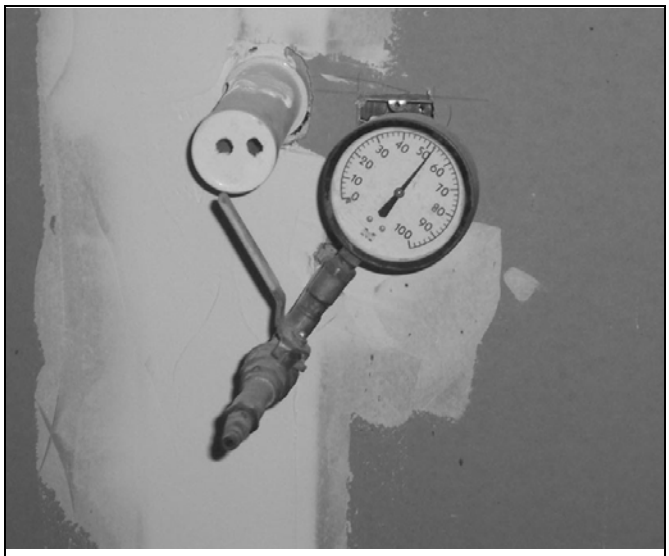

Figure P2503.9
IMPROPER GAUGE FOR TEST
(DIAL INCREMENTS TOO LARGE)

INTERNATIONAL CODE COUNCIL®
Copyright © 2015 ICC. ALL RIGHTS RESERVED. Accessed by David Dammon on Jun 21, 2017 12:30:52 PM pursuant to License Agreement with ICC. No further reproduction or distribution authorized. ANY UNAUTHORIZED REPRODUCTION OR DISTRIBUTION IS A VIOLATION OF THE FEDERAL COPYRIGHT ACT AND THE LICENSE AGREEMENT, AND SUBJECT TO CIVIL AND CRIMINAL PENALTIES THEREUNDER.

Chapter 26:
General Plumbing Requirements

General Comments

This chapter provides for the proper installation of piping systems used in conjunction with plumbing fixtures, drains and appliances. It mandates the removal of liquid wastes and sewage within a building and specifies approved sources of potable water and proper collection of wastes.

Chapter 26 outlines approved methods for maintaining structural integrity when installing the plumbing system as well as for protecting the piping system itself. This chapter also provides guidelines for installing and inspecting underground piping and for preventing the undermining of foundation footings.

Chapter 26 includes a table as well as specifications for providing proper horizontal and vertical support to piping systems using diverse materials. This chapter also addresses the water tightness of a structure's exterior membrane penetrations. Chapter 26 includes provisions for adhering to standards that regulate materials used in piping systems for durability and health effects.

Purpose

Chapter 26 contains requirements for plumbing systems that do not correlate to the provisions set forth in the remaining plumbing related chapters. In other words, if specific provisions do not demand that a requirement be located in another chapter, the requirement is located in this chapter.

SECTION P2601
GENERAL

P2601.1 Scope. The provisions of this chapter shall govern the installation of plumbing not specifically covered in other chapters applicable to plumbing systems. The installation of plumbing, *appliances*, *equipment* and systems not addressed by this code shall comply with the applicable provisions of the *International Plumbing Code*.

❖ Chapter 26 covers the items that are not specifically addressed in the other chapters of Part VII-Plumbing. In other words, this chapter contains subject matter that is generally applicable to all plumbing systems covered by the code. Rather than repeat such general requirements in each chapter, they are collected together in this chapter for easy reference and brevity of the code.

As stated in the introduction section of the preface of the code, the *International Residential Code*® (IRC®) is a comprehensive, stand-alone code that applies only to one- and two-family dwellings and townhouses. The content of the code was developed and has been maintained in a manner that provides the homebuilder a single code book that covers all aspects of typical home construction. If the subject matter is covered in the IRC, then it is intended that the IRC will provide all of the needed coverage for that subject. In other words, it is not intended that the IRC be applied with additional requirements plucked from the other codes. Therefore, users of the IRC expect that all of the applicable requirements are in the IRC and do not expect to have to determine what additional unknown requirements might apply from some other code. If this was not the case, the IRC user would never be sure that he or she had all of the applicable requirements in front of him or her. Other codes apply only where the IRC is silent on a subject; however, the fact that the IRC does not contain some particular requirement from another code does not mean that the IRC is silent on a subject. For example, the IRC covers the design of drainage system piping, as does the *International Plumbing Code*® (IPC®). If the IPC contains an additional requirement that is not also in the IRC, such additional requirement is not to be applied to an installation regulated by the IRC. In this case, the IRC contains all of the coverage for drainage piping that was intended. In other words, it is not intended that the IRC provisions be “mixed and matched” with provisions of other codes and it is not intended that code users “shop” in or “cherry pick” from other codes when applying the IRC. It is likely that where the IRC does not contain a particular requirement that is found in another code, such requirement was intentionally left out of the IRC.

A comparison between the IPC and Part VII-Plumbing of this code will reveal many instances where the IPC is different, perhaps more stringent, than this code. These differences are not oversights, but are the result of the cost/benefit and technical analysis decision-making process that occurs in the development of the IRC. Thus, the IPC may have more regulations, or more stringent regulations, relative to a particular aspect of plumbing systems, but the intent is for the IRC to be used as a stand-alone code that is separate and distinct from the regulations of other codes, such as the IPC.

The majority of one- and two-family dwellings and townhouses are, in general, simplistic in design so the regulations contained in the IRC are able to completely

INTERNATIONAL CODE COUNCIL®
Copyright © 2015 ICC. ALL RIGHTS RESERVED. Accessed by David Dammon on Jun 21, 2017 12:30:52 PM pursuant to License Agreement with ICC. No further reproduction or distribution authorized. ANY UNAUTHORIZED REPRODUCTION OR DISTRIBUTION IS A VIOLATION OF THE FEDERAL COPYRIGHT ACT AND THE LICENSE AGREEMENT, AND SUBJECT TO CIVIL AND CRIMINAL PENALTIES THEREUNDER.

cover all aspects of the design and installation of such structures. In rare cases, a homebuilder may come across a situation or feature where the IRC is silent on a subject. For example, imagine that a homeowner wishes that a urinal be installed. Because the IRC is silent on urinals, the homebuilder and code official would look to the IPC where urinals are covered in order to find regulations that would be useful for application in a home environment. The intent of the last line of this code section is to provide a link to the IPC where it is necessary to address plumbing, appliances, equipment and systems that the IRC does not address. It is not the intent of this code section to provide the link to the IPC so that additional or more stringent regulations of the IPC be applied to applications that are already covered by the IRC.

P2601.2 Connections to drainage system. Plumbing fixtures, drains, appurtenances and *appliances* used to receive or discharge liquid wastes or sewage shall be directly connected to the sanitary drainage system of the building or premises, in accordance with the requirements of this code. This section shall not be construed to prevent indirect waste connections where required by the code.

Exception: Bathtubs, showers, lavatories, clothes washers and laundry trays shall not be required to discharge to the sanitary drainage system where such fixtures discharge to systems complying with Sections P2910 and P2911.

❖ Plumbing fixtures, drains, appurtenances and appliances that receive or discharge liquid waste or sewage must be directly connected to the sanitary drainage system unless specifically required to be indirectly connected. An example of an indirect waste connection would be a standpipe receiving the discharge of a clothes washer (see commentary, Section P2718).

The exception to this section allows for the indicated fixtures (producing gray water) to be connected to a nonpotable water reuse system or a subsurface irrigation system instead of being connected to the sanitary drainage system.

P2601.3 Flood hazard areas. In flood hazard areas as established by Table R301.2(1), plumbing fixtures, drains, and *appliances* shall be located or installed in accordance with Section R322.1.6.

❖ See the commentary to Section R322.1.6.

SECTION P2602
INDIVIDUAL WATER SUPPLY AND SEWAGE DISPOSAL

P2602.1 General. The water-distribution and drainage system of any building or premises where plumbing fixtures are installed shall be connected to a public water supply or sewer system, respectively, if available. Where either a public water-supply or sewer system, or both, are not available, or connection to them is not feasible, an individual water supply or individual (private) sewage-disposal system, or both, shall be provided.

❖ For compliance with Section P2601, this section requires that both the water distribution system and the drainage system be connected to a public water supply and a public sewer system, respectively. The code allows for connection to an individual water supply and a private sewage disposal when a public connection is not feasible. Usually, the local jurisdictional authorities (i.e., building department, water purveyor, sewer utility district, etc.) determine feasibility. The most common individual water supply is a private well.

P2602.2 Flood-resistant installation. In flood hazard areas as established by Table R301.2(1):

1. Water supply systems shall be designed and constructed to prevent infiltration of floodwaters.
2. Pipes for sewage disposal systems shall be designed and constructed to prevent infiltration of floodwaters into the systems and discharges from the systems into floodwaters.

❖ This section requires that certain plumbing systems be designed to minimize or eliminate infiltration of floodwaters into them. These requirements are intended to prevent damage to the system, guard against contamination of the water supply through floodwater entering the system and prevent sewage from escaping and further contaminating floodwaters.

Potable water service pipes, both in the lower levels of the building and those buried below ground, are to be water tight to prevent floodwater from entering them. Although a water pipe under normal conditions does not leak, it could develop a leak when it is subjected to the additional stress from floodwater. This means that the entire piping system subject to floodwater contact must be designed accordingly by, for example, having hangers that are capable of resisting not only the normal downward load of the pipe and its contents, but also lateral or upward forces on the pipe caused by floodwaters.

Sanitary drainage and vent piping must be designed so that the additional stress of the floodwater does not cause it to fail and thus contaminate the floodwater.

SECTION P2603
STRUCTURAL AND PIPING PROTECTION

P2603.1 General. In the process of installing or repairing any part of a plumbing and drainage installation, the finished floors, walls, ceilings, tile work or any other part of the building or premises that must be changed or replaced shall be left in a safe structural condition in accordance with the requirements of the building portion of this code.

❖ Where new plumbing components are installed within existing construction, structural components that are modified must comply with the minimum structural requirements of the code's building chapters

P2603.2 Drilling and notching. Wood-framed structural members shall not be drilled, notched or altered in any manner except as provided in Sections R502.8, R602.6, R802.7 and R802.7.1. Holes in load-bearing members of cold-formed steel light-frame construction shall be made only in accordance with Sections R505.2.6, R603.2.6 and R804.2.6. In

INTERNATIONAL CODE COUNCIL®
Copyright © 2015 ICC. ALL RIGHTS RESERVED. Accessed by David Dammon on Jun 21, 2017 12:30:52 PM pursuant to License Agreement with ICC. No further reproduction or distribution authorized. ANY UNAUTHORIZED REPRODUCTION OR DISTRIBUTION IS A VIOLATION OF THE FEDERAL COPYRIGHT ACT AND THE LICENSE AGREEMENT, AND SUBJECT TO CIVIL AND CRIMINAL PENALTIES THEREUNDER.

accordance with the provisions in Sections R505.3.5, R603.3.3 and R804.3.4, cutting and notching of flanges and lips of load-bearing members of cold-formed steel light-frame construction shall be prohibited. Structural insulated panels (SIPs) shall be drilled and notched or altered in accordance with the provisions of Section R613.7.

❖ The code recognizes that it is occasionally necessary to modify framing members by boring holes, notching or cutting in the course of installing plumbing piping or plumbing fixture supports. While the original intent of this section was to address modifications to solid sawn wood members (commonly called "dimensional lumber"), modern building construction includes a mix of "engineered" wood members and assemblies, cold-formed steel light-frame members, structural steel members and log members. To maintain a building's structural integrity, the load-carrying capacity of these members must not be reduced. If a structural member is modified beyond what is specifically permitted by the code, the member must either be replaced with an unmodified member or a structural analysis of that member must be performed by a registered design professional (and approved by the code official) to verify that the modified member will have the required structural capacity. As either solution could be costly, the plumbing installer should carefully consider the specified limitations for modification of all framing members before such alterations are performed.

Bearing Walls versus Nonbearing Walls

The terms "bearing" and "nonbearing" are used in the prescriptive allowances for the alteration of studs. In order to apply the allowances in the least restrictive manner, the plumbing installer must understand how the roof and floor loads of a building are supported by the wall framing. Exterior walls are always considered to be (load) bearing walls. Where floor joists, trusses or I-joists are supported by an interior wall, the wall is a (load) bearing wall. Roof trusses might also require support by interior walls and as such, those walls would be (load) bearing. However, not all walls located under the bottom chord of a roof truss are intended to support roof trusses. Where a wall only supports itself and no other framing member, it is non(load) bearing. If the plumbing installer has doubt about whether a wall is bearing or nonbearing, he or she should either consult with the party responsible for the framing design or assume that the wall is (load) bearing.

Sawn Wood Members

The code offers prescriptive allowances for cutting, notching and boring of sawn wood studs, joists and rafters. These allowances apply to wood-constructed buildings that have been designed in accordance with the conventional light-frame wood construction design method.

Figure R502.8 illustrates the limitations for sawn lumber (wood) joists.

Figures R602.6(1) and R602.6(2) illustrate the limitations for wood studs in bearing and nonbearing walls, respectively.

Section R802.7.1 indicates the limitations for sawn lumber (wood) ceiling joists, rafters and beams. Because these limitations are the same as for wood joists, Figure 502.8 can be used for illustration of the limitations.

In Commentary Figure P2603.2(1), the bearing wall studs have $2^1/_8$-inch (54 mm) holes drilled in 2 by 4 studs for passage of the $1^1/_2$-inch (38 mm) drain and vent pipes. The holes exceed 40 percent of the $3^1/_2$-inch (89 mm) actual depth of the stud and therefore, according to the *International Building Code*® (IBC®), the modified studs should have been evaluated by a design professional for structural adequacy. However, in this situation, the code official allowed the use of metal reinforcing brackets (often called "stud shoes") to reinforce the studs at the oversized hole locations. An exception in Section R602.6 allows for approved metal "stud shoes" to be used for reinforcing of a stud that has been modified beyond the prescribed limitations. The stud shoes must be installed in accordance with the manufacturer's recommendations. The proper fasteners, in accordance with the manufacturer's instructions, must be used to attach the bracket to the stud. The code official must approve the type of bracket being used.

Commentary Figures P2603.2(2) through P2603.2(4) also show notching on the face of the studs. The allowable notch depth for a bearing stud is 25 percent of the stud depth or $^7/_8$ inch (22 mm). The notches in these studs are deeper than $^7/_8$ inch (22 mm) and thus are in violation of the notching rules.

Section R802.7.2 prohibits any modifications to engineered wood products, such as trusses, structural composite lumber, structural glue-laminated members or I-joists, unless specifically allowed by the manufacturer or where approved by a registered design professional.

Sawn Wood Wall Plate Reinforcement

The top plate of a (load) bearing wood stud wall is a structural member that has limitations for cutting, notching or boring. See the commentary to Section R602.6.1 for those limitations and required reinforcement. Commentary Figures P2603.2(5) and P2603.2(6) illustrate two commonly occurring violations.

Steel Joists

Figure R505.2.5.1 illustrates the hole limitations for cold-formed steel floor joists. Section R505.3.5 prohibits the cutting or notching of flanges or lips of steel joists. Section R505.1.3 prohibits any alteration of steel floor trusses.

INTERNATIONAL CODE COUNCIL®
Copyright © 2015 ICC. ALL RIGHTS RESERVED. Accessed by David Dammon on Jun 21, 2017 12:30:52 PM pursuant to License Agreement with ICC. No further reproduction or distribution authorized. ANY UNAUTHORIZED REPRODUCTION OR DISTRIBUTION IS A VIOLATION OF THE FEDERAL COPYRIGHT ACT AND THE LICENSE AGREEMENT, AND SUBJECT TO CIVIL AND CRIMINAL PENALTIES THEREUNDER.

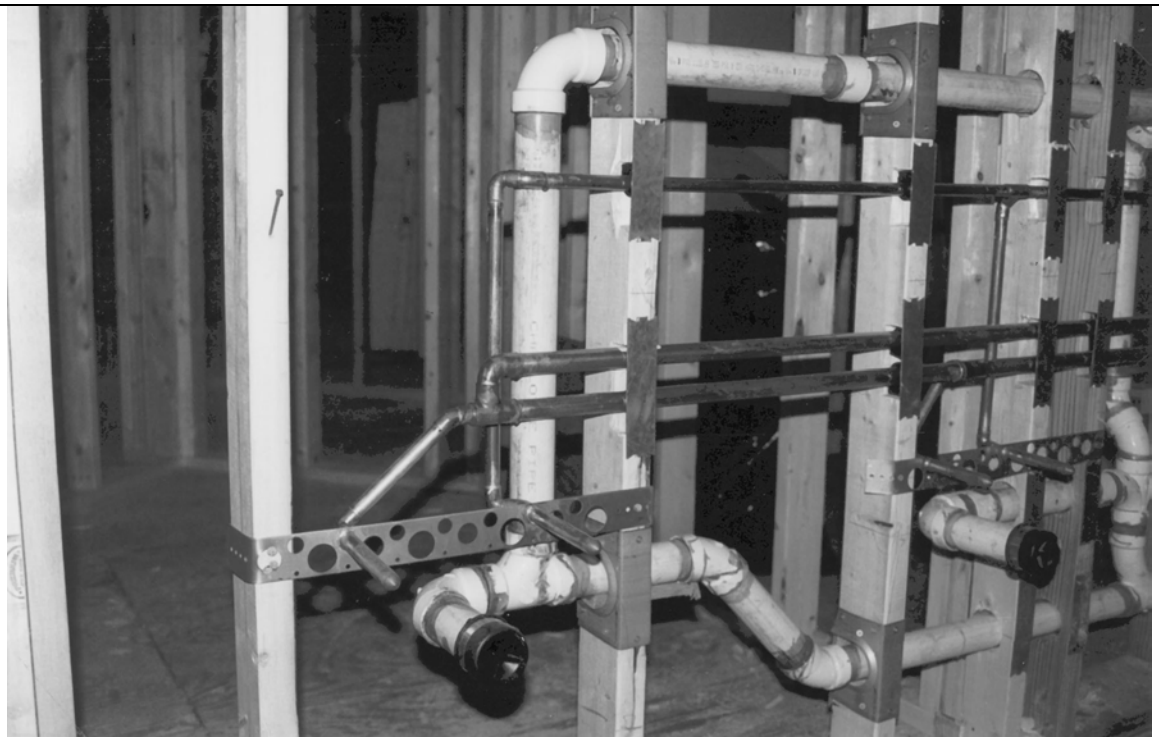

Figure P2603.2(1)
NOTCHING AND BORING IN A WOOD STUD WALL



Figure P2603.2(2)
VIOLATION: NOTCHES TOO DEEP IN STUDS

INTERNATIONAL CODE COUNCIL®
Copyright © 2015 ICC. ALL RIGHTS RESERVED. Accessed by David Dammon on Jun 21, 2017 12:30:52 PM pursuant to License Agreement with ICC. No further reproduction or distribution authorized. ANY UNAUTHORIZED REPRODUCTION OR DISTRIBUTION IS A VIOLATION OF THE FEDERAL COPYRIGHT ACT AND THE LICENSE AGREEMENT, AND SUBJECT TO CIVIL AND CRIMINAL PENALTIES THEREUNDER.



Figure P2603.2(3)
VIOLATION: EXTERIOR STUD NOTCHED TOO DEEP



Figure P2603.2(4)
VIOLATION: EXTERIOR STUD COMPLETELY SEVERED

INTERNATIONAL CODE COUNCIL®
Copyright © 2015 ICC. ALL RIGHTS RESERVED. Accessed by David Dammon on Jun 21, 2017 12:30:52 PM pursuant to License Agreement with ICC. No further reproduction or distribution authorized. ANY UNAUTHORIZED REPRODUCTION OR DISTRIBUTION IS A VIOLATION OF THE FEDERAL COPYRIGHT ACT AND THE LICENSE AGREEMENT, AND SUBJECT TO CIVIL AND CRIMINAL PENALTIES THEREUNDER.



Figure P2603.2(5)
VIOLATION: WALL TOP PLATE NOT REINFORCED



Figure P2603.2(6)
VIOLATION: WALL TOP PLATE NOT REINFORCED

INTERNATIONAL CODE COUNCIL®
Copyright © 2015 ICC. ALL RIGHTS RESERVED. Accessed by David Dammon on Jun 21, 2017 12:30:52 PM pursuant to License Agreement with ICC. No further reproduction or distribution authorized. ANY UNAUTHORIZED REPRODUCTION OR DISTRIBUTION IS A VIOLATION OF THE FEDERAL COPYRIGHT ACT AND THE LICENSE AGREEMENT, AND SUBJECT TO CIVIL AND CRIMINAL PENALTIES THEREUNDER.

Steel Roofing Members

Limitations for holes in webs of steel roofing members are indicated in Section 804.2.5.1 and illustrated by Figure 804.2.5.1. Section 804.3.4 prohibits notching or cutting of flanges and lips of steel roofing members.

Engineered Wood Members

Section R502.8.2 prohibits any modifications to engineered wood products, such as trusses, structural composite lumber, structural glue-laminated members or I-joists, unless specifically allowed by the manufacturer or where approved by a registered design professional. Engineered wood members are manufactured in many ways. The most common products used are laminated veneer lumber (LVL) beams [see Commentary Figure P2603.2(7)], trusses of dimensional lumber, and I-joists of oriented strand board (OSB) webs with dimensional lumber top and bottom flanges (chords). LVL members must not be cut or notched. Because most LVL manufacturers either prohibit the installation of holes or severely limit the size, location and number of holes in LVL members, as a general rule, holes should never be bored in LVL members. Truss members must not be altered in any manner.

The top and bottom chords of I-joist members must never be cut or notched. Although most I-joist manufacturers allow holes to be cut in the web of the member, the maximum size and location of holes must be in accordance with the specific manufacturer's product instructions. The cutting, notching and boring limitations indicated for sawn lumber joists (see Figure R502.8) do not apply to I-joists. The installer and inspector must have access to the product instructions in order to determine if hole sizes and locations are acceptable. A review of several I-joist manufacturers' installation instructions provides some generalizations that can help the plumbing installer plan piping routes as well as alert the inspector that a violation might exist. The generalizations are:

1. The closer the hole is located to the bearing locations (supports) of the I-joist, the smaller the allowable size of the hole becomes. Typically, holes near the bearing ends are limited to $1^1/_2$ inches (38 mm) in diameter with a spacing (hole edge to hole edge) of not less than 12 inches (305 mm).
2. As the hole location is placed farther from the bearing locations of the I-joist, the allowable size of the hole becomes larger. Large holes should be spaced apart (hole edge to hole edge) not less than the largest diameter or longest dimension of the largest hole.
3. Holes should be cut round, square or rectangular. The edge of any hole should not be closer than $^1/_4$ inch (6.4 mm) to a top or bottom chord of the I-joist.

Always refer to the I-joist manufacturer's installation instructions for specific hole limitations. Commentary Figures P2603.2(8) through P2603.2(11) show prohibited boring, cutting and notching of trusses and I-joists.



Figure P2603.2(7)
LAMINATED VENEER LUMBER BEAM

INTERNATIONAL CODE COUNCIL®
Copyright © 2015 ICC. ALL RIGHTS RESERVED. Accessed by David Dammon on Jun 21, 2017 12:30:52 PM pursuant to License Agreement with ICC. No further reproduction or distribution authorized. ANY UNAUTHORIZED REPRODUCTION OR DISTRIBUTION IS A VIOLATION OF THE FEDERAL COPYRIGHT ACT AND THE LICENSE AGREEMENT, AND SUBJECT TO CIVIL AND CRIMINAL PENALTIES THEREUNDER.



Figure P2603.2(8)
VIOLATION: TOP CHORD OF TRUSS NOTCHED



Figure P2603.2(9)
VIOLATION: HOLE IN BOTTOM CHORD OF ROOF TRUSS

INTERNATIONAL CODE COUNCIL®
Copyright © 2015 ICC. ALL RIGHTS RESERVED. Accessed by David Dammon on Jun 21, 2017 12:30:52 PM pursuant to License Agreement with ICC. No further reproduction or distribution authorized. ANY UNAUTHORIZED REPRODUCTION OR DISTRIBUTION IS A VIOLATION OF THE FEDERAL COPYRIGHT ACT AND THE LICENSE AGREEMENT, AND SUBJECT TO CIVIL AND CRIMINAL PENALTIES THEREUNDER.



Figure P2603.2(10)
VIOLATION: TOP CHORD OF I-JOIST COMPLETELY SEVERED



Figure P2603.2(11)
VIOLATION: I-JOIST WEB HOLES IRREGULAR SHAPE, TOO LARGE, TOO CLOSE TOGETHER

INTERNATIONAL CODE COUNCIL®
Copyright © 2015 ICC. ALL RIGHTS RESERVED. Accessed by David Dammon on Jun 21, 2017 12:30:52 PM pursuant to License Agreement with ICC. No further reproduction or distribution authorized. ANY UNAUTHORIZED REPRODUCTION OR DISTRIBUTION IS A VIOLATION OF THE FEDERAL COPYRIGHT ACT AND THE LICENSE AGREEMENT, AND SUBJECT TO CIVIL AND CRIMINAL PENALTIES THEREUNDER.

Cold-formed Steel Studs

Figure R603.2.5.1 illustrates the hole limitations for steel studs, both load bearing and nonload bearing. Section R603.3.4 prohibits notching or cutting of flanges and lips of steel studs. Section R603.2.5.3 covers hole patching requirements if a hole in a steel stud is greater than the hole size limitation, but less than or equal to 70 percent of the stud width.

Structural Insulated Panels (SIPs)

As the name implies, the entire panel is a structural member. These panels are primarily used for exterior walls and roofs, but can also be used for interior bearing walls. Section R613.7 allows one rectangular or circular hole with the largest dimension no greater than 12 inches (305 mm) to be cut in each panel section. For example, a 2-inch (51 mm) vent pipe that is required to pass through a sloped SIP roof might require a 4-inch-diameter (102 mm) hole. Otherwise, SIPs must not be cut or notched in any manner. Therefore, plumbing water supply, drainage or vent piping cannot be installed within a structural insulated panel.

Log Members

The code references ICC 400 for the construction of log structures. Section 302.2.4 of ICC 400 covers the limitations for notching and boring of holes in logs used in structural applications.

P2603.2.1 Protection against physical damage. In concealed locations, where piping, other than cast-iron or galvanized steel, is installed through holes or notches in studs, joists, rafters or similar members less than $1^1/_4$ inches (31.8 mm) from the nearest edge of the member, the pipe shall be protected by steel shield plates. Such shield plates shall have a thickness of not less than 0.0575 inch (1.463 mm) (No. 16 Gage). Such plates shall cover the area of the pipe where the member is notched or bored, and shall extend not less than 2 inches (51 mm) above sole plates and below top plates.

❖ This section is intended to minimize the possibility of drainage and water pipe damage caused by nails, screws or other fasteners used to affix wall panels. A shield plate must be installed to protect the pipe through the full width of the member and must extend not less than 2 inches (51 mm) above or below sole or top wall plates. Commentary Figure P2603.2.1(1) shows locations for shield plates. Commentary Figure

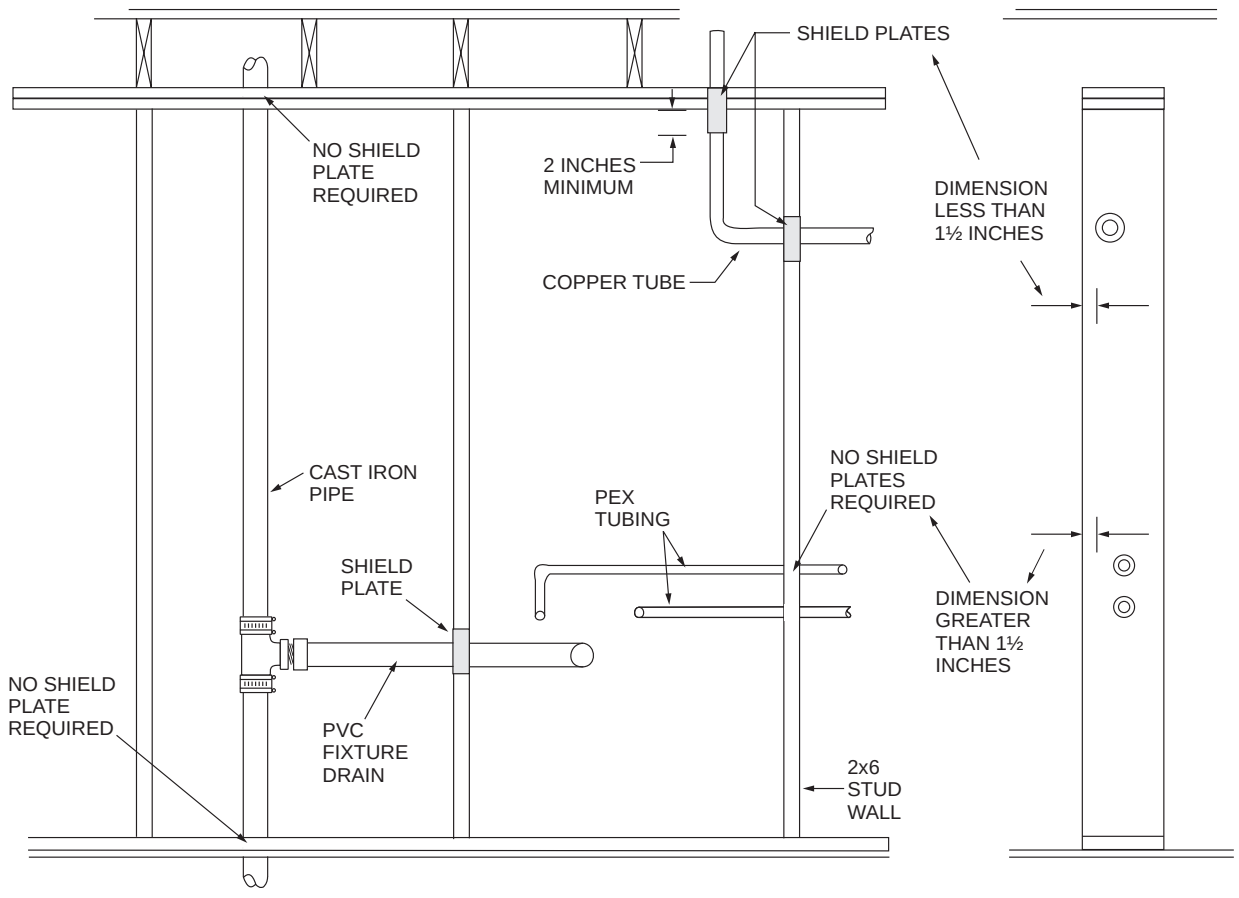

For SI: 1 inch = 25.4 mm.

Figure P2603.2.1(1)
REQUIRED SHIELD PLATES

INTERNATIONAL CODE COUNCIL®
Copyright © 2015 ICC. ALL RIGHTS RESERVED. Accessed by David Dammon on Jun 21, 2017 12:30:52 PM pursuant to License Agreement with ICC. No further reproduction or distribution authorized. ANY UNAUTHORIZED REPRODUCTION OR DISTRIBUTION IS A VIOLATION OF THE FEDERAL COPYRIGHT ACT AND THE LICENSE AGREEMENT, AND SUBJECT TO CIVIL AND CRIMINAL PENALTIES THEREUNDER.

P2603.2.1(2) shows shield plates improperly installed because the plate(s) do not extend 2 inches (51 mm) below the bottom member of the double top plate. Cast-iron and galvanized steel pipe each have wall thicknesses greater than the required thicknesses for the shield plate, which makes them inherently resistant to nail and screw penetrations.

The shield plate minimum thickness specified represents the "low end" of the thickness tolerance range for No. 16 gage galvanized sheet metal in accordance with Sheet Metal and Air Conditioning Contractors' National Association (SMACNA) standards. The "low end" thickness dimension is stated so that if a field measurement of shield plate thickness is necessary, the absolute minimum thickness will allow all possible thicknesses of No. 16 gage shield plates to be acceptable. No. 16 gage has been proven to be the minimum thickness to prevent penetration by commonly used fasteners without causing noticeable "bulge" appearance problems in the covering materials.

P2603.3 Protection against corrosion. Metallic piping, except for cast iron, ductile iron and galvanized steel, shall not be placed in direct contact with steel framing members, concrete or masonry. Metallic piping shall not be placed in direct contact with corrosive soil. Where sheathing is used to prevent direct contact, the sheathing material thickness shall be not less than 0.008 inch (8 mil) (0.203 mm) and shall be made of plastic. Where sheathing protects piping that penetrates concrete or masonry walls or floors, the sheathing shall be installed in a manner that allows movement of the piping within the sheathing.

❖ Metallic piping must be protected from external corrosion in locations where the piping is in direct contact with materials known to be corrosive.

Steel framing members can be source of corrosion to metallic piping, especially to copper piping.

Concrete, in a wet slurry state, is caustic (pH level of 12 to 13) due to the lime-stone-based portland cement in the concrete reacting with water. Because concrete (and masonry units made from concrete) could contain acid-producing cinders and cured concrete is still somewhat caustic, metallic piping must be protected from direct contact with concrete or concrete masonry units.

The exceptions for cast iron, ductile iron and galvanized steel are provided because these pipe materials are heavy walled products. External corrosion as the result of being in contact with steel framing members, concrete and masonry has minimal impact on the piping.

Corrosive soils such as found in swamps, peat bogs or tidal marshes can corrode metallic piping. Fill materials containing furnace slag, cinders, ash or spent industrial byproducts can also be corrosive to metallic piping. The designer or installer should consult with soils engineers, piping manufacturers as well as local code officials concerning the need for corrosion protection of metallic piping in contact with soil or fill materials of potentially corrosive nature.

Direct exposure of metallic piping to corrosive materials can be prevented by sheathing the piping. Sheathing involves inserting the piping into a flexible plastic sleeve of material. The sheathing must allow for pipe movement. In other words, the sheathing should not be adhered to the pipe so that the pipe can expand and contract within the protective material. This section requires the thickness of the sheathing or wrapping to be at least 0.008 inch (8 mil) (0.203 mm).



Figure P2603.2.1(2)
PIPE PROTECTION VIOLATION

INTERNATIONAL CODE COUNCIL®
Copyright © 2015 ICC. ALL RIGHTS RESERVED. Accessed by David Dammon on Jun 21, 2017 12:30:52 PM pursuant to License Agreement with ICC. No further reproduction or distribution authorized. ANY UNAUTHORIZED REPRODUCTION OR DISTRIBUTION IS A VIOLATION OF THE FEDERAL COPYRIGHT ACT AND THE LICENSE AGREEMENT, AND SUBJECT TO CIVIL AND CRIMINAL PENALTIES THEREUNDER.

P2603.4 Pipes through foundation walls. A pipe that passes through a foundation wall shall be provided with a relieving arch, or a pipe sleeve shall be built into the foundation wall. The sleeve shall be two pipe sizes greater than the pipe passing through the wall.

❖ Piping installed through a foundation wall must be structurally protected from any transferred loading from the foundation wall. This protection must be provided by either a relieving arch or a pipe sleeve.

Where a pipe sleeve is used, it must be sized to be two pipe sizes larger than the pipe that passes through the pipe sleeve. For example, a 4-inch (102 mm) drainage pipe would require a 6-inch (152 mm) pipe sleeve. The annular space between the pipe sleeve and the pipe that passes through the sleeve will allow for any differential movement between the pipe and the wall. The pipe sleeve or relieving arch protects the pipe so that it will not be subjected to undue stresses that could cause it to rupture and leak [see Commentary Figures P2603.4(1) and P2603.4(2)].

In rare circumstances, it is sometimes necessary for a pipe to pass though a footing. For example, the slope of a building drain might not be able to be changed, resulting in the drainage pipe needing to pass through the footing. Although the code does not specifically address pipes passing through footings, the need for protecting pipes passing though footings is no different than for pipes passing through foundation walls. In these situations, protection of the pipe is not the only concern as the strength of the footing could be compromised by the installation of a pipe sleeve or relieving arch. Any footing to be altered, either before or after placement of the footing, should be reviewed by a design professional to determine what footing design changes might be necessary to maintain the required footing strength.

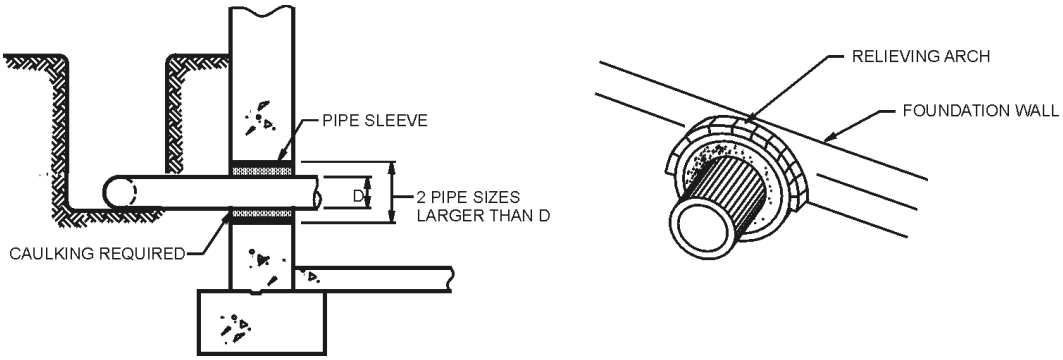

Figure P2603.4(1)
PIPE PROTECTION



Figure P2603.4(2)
BUILDING DRAIN PENETRATION THROUGH FOUNDATION WALL

INTERNATIONAL CODE COUNCIL®
Copyright © 2015 ICC. ALL RIGHTS RESERVED. Accessed by David Dammon on Jun 21, 2017 12:30:52 PM pursuant to License Agreement with ICC. No further reproduction or distribution authorized. ANY UNAUTHORIZED REPRODUCTION OR DISTRIBUTION IS A VIOLATION OF THE FEDERAL COPYRIGHT ACT AND THE LICENSE AGREEMENT, AND SUBJECT TO CIVIL AND CRIMINAL PENALTIES THEREUNDER.

Prior editions of the code required a relieving arch or a pipe sleeve for a pipe that passes under a footing. This was determined to be unnecessary since the footing already acts as a relieving arch to "span over" the area where the pipe passes under the footing. This is not to say that routing any size or number of pipes under a footing is without consequences. Footings are designed to be uniformly supported by undisturbed or highly compacted soil. A trench for a pipe passing under the footing disrupts the uniform support for the footing. If the trench can be backfilled and compacted to the same level of compaction as the surrounding undisturbed or highly compacted soil, then the footing will be uniformly supported. But if the trench cannot be compacted sufficiently, such as where the trench is dug after the footing is in place, then the footing will not be uniformly supported by the soil. The footing will experience more stress than it was designed for. In actual practice, in a low-rise building where one or two "small" diameter pipes [less than 8 inches (203 mm)] pass under a footing in the same area, the footing will most likely have sufficient reserve capacity to span the trench. Larger buildings, typically requiring larger pipes, will have footings that are already designed for spanning over the trenches of these larger pipes. There are no "rules of thumb" to know when a footing design should be analyzed for adequacy. Installers and code officials need to be aware of the possible consequences to the footings and, where necessary, consult with a design professional concerning the footing design.

P2603.5 Freezing. In localities having a winter design temperature of 32°F (0°C) or lower as shown in Table R301.2(1) of this code, a water, soil or waste pipe shall not be installed outside of a building, in exterior walls, in *attics* or crawl spaces, or in any other place subjected to freezing temperature unless adequate provision is made to protect it from freezing by insulation or heat or both. Water service pipe shall be installed not less than 12 inches (305 mm) deep and not less than 6 inches (152 mm) below the frost line.

❖ Water, soil and waste pipes must be protected from freezing. Although vent piping is not required to be protected from freezing, it may be prudent to insulate vent pipes in extreme freezing climates. Where a water or drain pipe is installed in an exterior wall or ceiling of a space intended for occupancy (in other words, a heated space), some degree of freeze protection can be achieved by making sure that the thermal insulation for the wall (or ceiling) is installed between the exterior wall surface and the piping [see Commentary Figures P2603.5(1) and P2603.5(2)]. Whether or not this arrangement will prevent freezing temperatures at the piping location depends on the climatic conditions, the thickness of insulation (between the exterior wall surface and the piping) and the room temperature.

Note that there must always be a heat source along with an appropriate insulation thickness in order to protect pipes from freezing conditions. Insulation by itself (without a heat source) cannot protect a pipe from freezing; insulation only slows the rate of heat loss. The closer a pipe is to the heat source and the less insulation there is between the pipe and the heat source the warmer the pipe will be. Commentary Figure P2603.5(3) shows piping in an exterior wall of a building. The water distribution piping has been covered with foam tube insulation. On the left of the photo, note the close proximity of the horizontal water pipe to the exterior sheathing. While the insulation on the pipe between the pipe and the sheathing does help protect the pipe from outdoor temperatures, the insulation on the pipe between the pipe and the room will insulate the pipe from the heat coming from the room. In all likelihood, the wall insulation will be installed over the insulated pipe, resulting in further insulation of the pipe from the room heat. On the right side of this photo, note the multitude of water distribution pipes behind the fixture location (probably a laundry tub). Again, while the pipe insulation between the pipes and the sheathing is beneficial for freeze protection of the pipes, the insulation on the room side of the pipes is detrimental because it insulates the pipes from the room heat. The congestion in this area will undoubtedly cause difficulty for installing wall insulation, especially between the piping and the sheathing. In the center of this photo,

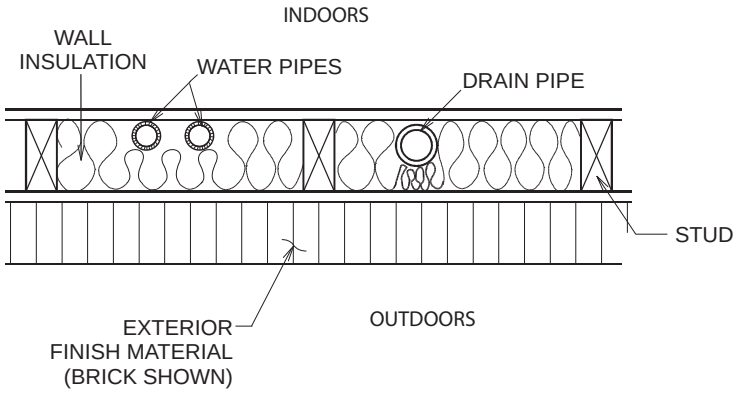

Figure P2603.5(1)
PROTECTION AGAINST FREEZING

INTERNATIONAL CODE COUNCIL®
Copyright © 2015 ICC. ALL RIGHTS RESERVED. Accessed by David Dammon on Jun 21, 2017 12:30:52 PM pursuant to License Agreement with ICC. No further reproduction or distribution authorized. ANY UNAUTHORIZED REPRODUCTION OR DISTRIBUTION IS A VIOLATION OF THE FEDERAL COPYRIGHT ACT AND THE LICENSE AGREEMENT, AND SUBJECT TO CIVIL AND CRIMINAL PENALTIES THEREUNDER.

note that the trap for the clothes washer standpipe is in close proximity to the sheathing, so much so that it will be difficult to install any insulation between the trap and the sheathing. The arrangement and insulation of pipes shown in this figure would most likely only be suitable for a building located where freezing climatic conditions are unlikely or are of limited duration.

Where piping is not directly adjacent to heated spaces in a building, electric-resistance heat tapes or cables can be used to supply heat to the piping. Generally, heat tapes should not be used on piping in concealed spaces since the tapes can burn out and require replacement. Since the code is silent with regard to the use of heat tape in a concealed area, however,



Figure P2603.5(2)
WATER DISTRIBUTION PIPING IN EXTERIOR WALL



Figure P2603.5(3)
PIPING IN EXTERIOR WALL

INTERNATIONAL CODE COUNCIL®
Copyright © 2015 ICC. ALL RIGHTS RESERVED. Accessed by David Dammon on Jun 21, 2017 12:30:52 PM pursuant to License Agreement with ICC. No further reproduction or distribution authorized. ANY UNAUTHORIZED REPRODUCTION OR DISTRIBUTION IS A VIOLATION OF THE FEDERAL COPYRIGHT ACT AND THE LICENSE AGREEMENT, AND SUBJECT TO CIVIL AND CRIMINAL PENALTIES THEREUNDER.

the only recourse the code official has to prohibit such installations is to determine if the manufacturer's instructions limit the product use to unconcealed areas. There are heavy-duty electric heat-tracing products that are suitable for concealed- and earth-burial applications. Note that plastic piping requires self-limiting-type heat tape to prevent overheating of the pipe.

The code does not provide any guidelines for insulating methods to ensure that piping will not be exposed to freezing temperatures. The code official is responsible for determining whether water and drain piping is adequately protected for the climatic conditions expected in the geographic area.

Freezeproof Hose Faucets

Hose bibbs and wall hydrants located on the exterior wall must be protected where installed in areas subject to freezing temperatures. This can be accomplished by installing devices, such as freezeproof hose bibbs, that locate the valve seat within the heated space and allow residual water within the hydrant to drain after the valve is closed. A freezeproof hose bibb cannot be installed with the valve seat located in an unheated garage or storage room. The valve seat must extend through to the heated side of the exterior wall. Valve casings on these devices are available in various lengths to accommodate a variety of wall thicknesses [see Commentary Figure P2603.5(4)].

Underground Water Service Piping

Water service piping that is installed exterior to a building and underground must be buried at least 12 inches (305 mm) below grade or 6 inches (152 mm) below the established frost penetration depth for the geographic area [see Commentary Figure P2603.5(5)], whichever is the greater depth. For example, if the frost depth for the region is 24 inches (610 mm) below grade, the water service pipe must be installed so that the top surface of the pipe is at least 30 inches (762 mm) below grade. If the frost depth is 5 inches (127 mm) below grade, the water service pipe must be installed such that the top surface of the pipe is at least 12 inches (305 mm) below grade. Where frost penetration depth controls the burial depth, the 6-inch (152 mm) buffer protects the pipe from forces caused by the freezing and expansion of moisture in the above soil (i.e., "frost heave") [see Commentary Figure P2603.5(6)]. The minimum burial depth of 12 inches (305 mm) protects the pipe from the most common accidental damage: shallow hand digging for landscape plantings.

Plumbing in Seasonal-use Buildings and Outdoor-use Areas

The potable water plumbing systems for poolside bathhouses, summer-use-only cabins and other unheated areas not used during freezing temperature conditions are typically designed in some way to be "winterized" so that water in the piping does not freeze and break the piping. Two common ways of accomplishing winterization of plumbing systems are: (1) gravity draining the potable water system to an outlet at the system's lowest point or (2) pumping an antifreeze solution into the potable water system to displace the water. Although the code is silent about winterization, there are several code sections to consider: (1) stop and waste valves below grade (Section P2903.9.5) and (2) introduction of nonpotable liquids into a potable water system (Section P2902.1).

Consider a poolside bathhouse built on a slab-on-grade foundation. Gravity draining of the water from the potable water system would require a drain outlet located below grade so that water in the system can drain down to an elevation below the frost line. However, Section P2903.9.5 prohibits stop and waste

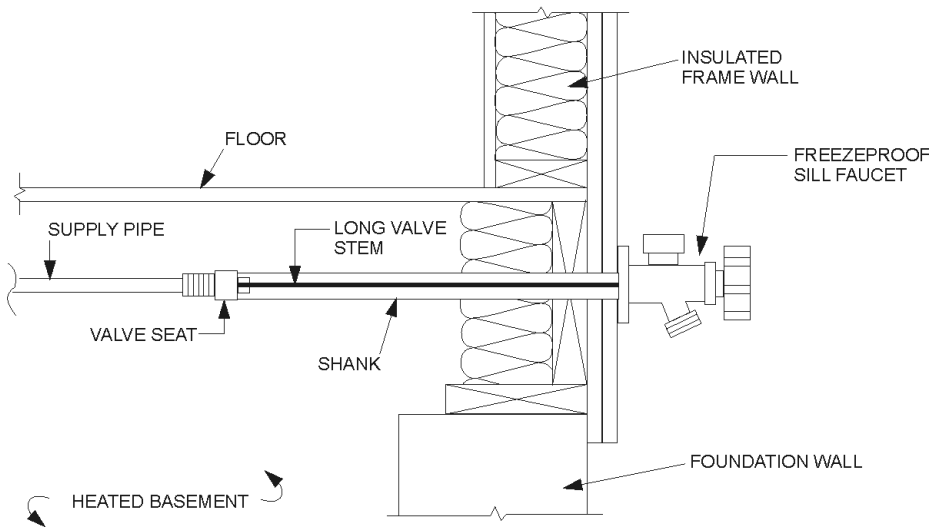

Figure P2603.5(4)
TYPICAL FREEZEPROOF HOSE FAUCET INSTALLATION

INTERNATIONAL CODE COUNCIL®
Copyright © 2015 ICC. ALL RIGHTS RESERVED. Accessed by David Dammon on Jun 21, 2017 12:30:52 PM pursuant to License Agreement with ICC. No further reproduction or distribution authorized. ANY UNAUTHORIZED REPRODUCTION OR DISTRIBUTION IS A VIOLATION OF THE FEDERAL COPYRIGHT ACT AND THE LICENSE AGREEMENT, AND SUBJECT TO CIVIL AND CRIMINAL PENALTIES THEREUNDER.

valves below grade because there is a high probability for the drain outlet valve to be left open during the off season such that ground water could enter and contaminate the potable water system. Therefore, gravity draining of the bathhouse potable water system through the below-grade outlet is not an acceptable method for winterizing. One possible solution for evacuating the water from the potable water system is to design the system so that the water could be vacuumed out from one or more specifically designed above-grade openings that are connected directly to the low points in the system. Other parts of the potable water system would require careful piping installation to ensure that the water in the system gravity drains to the low points of the system.

A potable water system could also be winterized by pumping "antifreeze" into the system to displace the water throughout all of the piping. In general, plastic piping manufacturers recommend using only a glycerin-based antifreeze solution since it is generally regarded as nontoxic and is chemically compatible with all types of plastic pipe materials listed in the code. The use of glycerin-based antifreeze for nonplastic piping should be equally acceptable. Waste glycerin antifreeze could be captured for reuse or, if disposed of, should be done so in an environmentally safe manner.

P2603.5.1 Sewer depth. *Building sewers* that connect to private sewage disposal systems shall be a not less than **[NUMBER]** inches (mm) below finished grade at the point of septic tank connection. *Building sewers* shall be not less than **[NUMBER]** inches (mm) below grade.

❖ A building sewer is not subject to the same constraints as a water pipe because a sewer conveys heat to the surrounding soil as the drainage flows through it. A

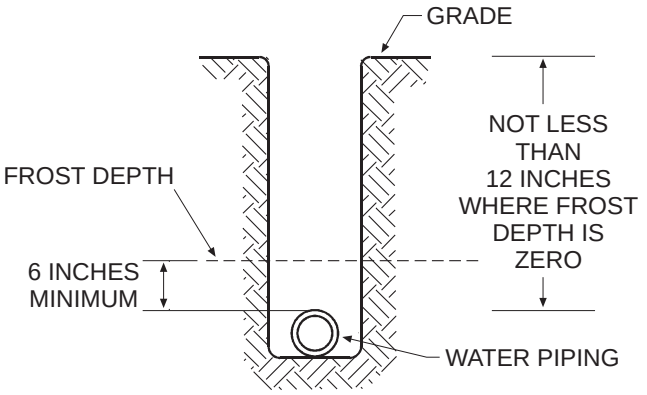

For SI: 1 inch = 25.4 mm.

Figure P2603.5(6)
REQUIRED BURIAL DEPTH

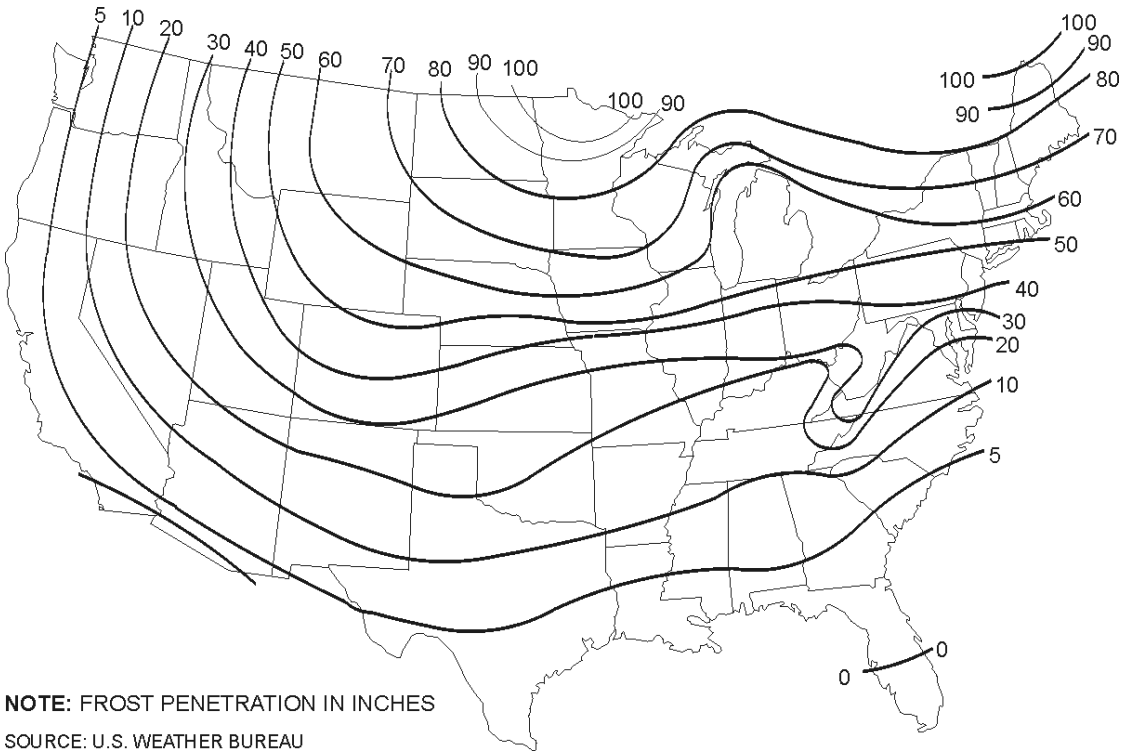

For SI: 1 inch = 25.4 mm.

Figure P2603.5(5)
SEVERE FROST PENETRATION LEVELS

INTERNATIONAL CODE COUNCIL®
Copyright © 2015 ICC. ALL RIGHTS RESERVED. Accessed by David Dammon on Jun 21, 2017 12:30:52 PM pursuant to License Agreement with ICC. No further reproduction or distribution authorized. ANY UNAUTHORIZED REPRODUCTION OR DISTRIBUTION IS A VIOLATION OF THE FEDERAL COPYRIGHT ACT AND THE LICENSE AGREEMENT, AND SUBJECT TO CIVIL AND CRIMINAL PENALTIES THEREUNDER.

building sewer also has an intermittent flow. As a result, the frost depth is higher in the immediate area of the building sewer; therefore, the burial depth of a building sewer does not have to be below the recorded frost depth. A typical burial depth for a building sewer ranges from 6 to 18 inches (152 to 457 mm). The installation depth of the sewer pipe connecting to a septic tank could be different to facilitate the proper operation of the private sewage disposal system. The connection at the septic tank is typically 18 inches (457 mm) below grade; however, the code official must determine the depths necessary for the locality.

SECTION P2604
TRENCHING AND BACKFILLING

P2604.1 Trenching and bedding. Where trenches are excavated such that the bottom of the trench forms the bed for the pipe, solid and continuous load-bearing support shall be provided between joints. Where over-excavated, the trench shall be backfilled to the proper grade with compacted earth, sand, fine gravel or similar granular material. Piping shall not be supported on rocks or blocks at any point. Rocky or unstable soil shall be over-excavated by two or more pipe diameters and brought to the proper grade with suitable compacted granular material.

❖ A trench must be sufficiently wide to allow proper pipe alignment. Piping must be supported on solid, continuous bedding for its entire length. Improper backfill material will subject the pipe to uneven earth loading that can lead to damage to the pipe or joints. Where a trench contains unstable material, the code requires overexcavation by at least two pipe diameters below the pipe and placement of suitable, compacted granular material below the pipe to provide proper and even support. Manufacturer's installation instructions often include material-specific information on burial techniques.

P2604.2 Water service and building sewer in same trench. Where the water service piping and *building sewer* piping is installed in same trench, the installation shall be in accordance with Section P2906.4.1.

❖ See Section P2906.4.1.

P2604.3 Backfilling. Backfill shall be free from discarded construction material and debris. Backfill shall be free from rocks, broken concrete and frozen chunks until the pipe is covered by not less than 12 inches (305 mm) of tamped earth. Backfill shall be placed evenly on both sides of the pipe and tamped to retain proper alignment. Loose earth shall be carefully placed in the trench in 6-inch (152 mm) layers and tamped in place.

❖ This section requires that backfill material be devoid of construction materials, trash, debris, rocks, broken concrete, frozen chunks and other rubble. The provisions of this section are intended to protect buried piping from all of the rubbish, scraps, rubble, etc., that all too commonly find their way into piping excavations. Piping excavations are not to be used as a waste disposal "landfill." Twelve inches (305 mm) of clean tamped earth, sand or fine gravel must be used to cover the pipe. Loose earth must be placed carefully in the trench in 6-inch (152 mm) layers and tamped in place to achieve stability and proper compaction (see Commentary Figure P2604.3).

P2604.4 Protection of footings. Trenching installed parallel to footings and walls shall not extend into the bearing plane of a footing or wall. The upper boundary of the bearing plane is a line that extends downward, at an angle of 45 degrees from horizontal, from the outside bottom edge of the footing or wall.

❖ This section provides for the installation of pipes parallel to a footing. This is intended to protect the piping from building loads and to prevent the disturbance of the soil in the bearing plane of the footing (see Commentary Figure P2604.4).

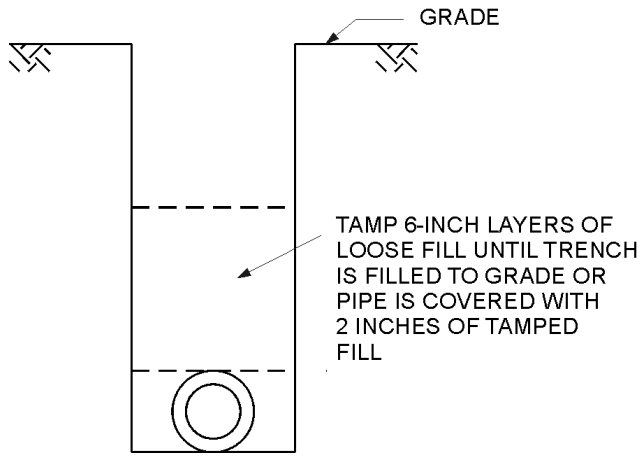

For SI: 1 inch = 25.4 mm.

Figure P2604.3
TAMPING LOOSE FILL IN 6-INCH LAYERS

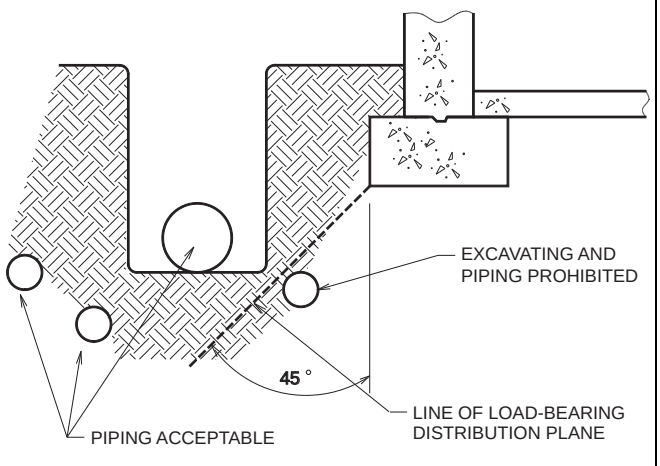

For SI: 1 degree = 0.01745 rad.

Figure P2604.4
EXCAVATION IN RELATION TO FOOTING

INTERNATIONAL CODE COUNCIL®
Copyright © 2015 ICC. ALL RIGHTS RESERVED. Accessed by David Dammon on Jun 21, 2017 12:30:52 PM pursuant to License Agreement with ICC. No further reproduction or distribution authorized. ANY UNAUTHORIZED REPRODUCTION OR DISTRIBUTION IS A VIOLATION OF THE FEDERAL COPYRIGHT ACT AND THE LICENSE AGREEMENT, AND SUBJECT TO CIVIL AND CRIMINAL PENALTIES THEREUNDER.

SECTION P2605
SUPPORT

P2605.1 General. Piping shall be supported in accordance with the following:

1. Piping shall be supported to ensure alignment and prevent sagging, and allow movement associated with the expansion and contraction of the piping system.
2. Piping in the ground shall be laid on a firm bed for its entire length, except where support is otherwise provided.
3. Hangers and anchors shall be of sufficient strength to maintain their proportional share of the weight of pipe and contents and of sufficient width to prevent distortion to the pipe. Hangers and strapping shall be of *approved* material that will not promote galvanic action. Rigid support sway bracing shall be provided at changes in direction greater than 45 degrees (0.79 rad) for pipe sizes 4 inches (102 mm) and larger.
4. Piping shall be supported at distances not to exceed those indicated in Table P2605.1.

❖ The intent of supporting the pipe is to maintain proper slope and alignment and to prevent sagging, while allowing movement of the pipe resulting from expansion and contraction [see Commentary Figure P2605.1(2)]. Hangers and supports for piping must be capable of supporting the load imposed by the piping system and must not be detrimental to the pipes they support. Using hanger or strapping material that is not compatible with the piping material can result in corrosion caused by galvanic action. Galvanic action occurs when dissimilar metals are in contact in the presence of an electrolyte. Section P2605.1 also contains lateral support requirements. Pipes are subject to the momentum resulting from the flow of waste. Hangers alone may not be sufficient to resist these forces, and, thus, rigid support sway bracing is required for pipe sizes 4 inches (102 mm) or larger at changes of direction greater than 45 degrees (0.79 rad) [see Commentary Figures P2605.1(1) and P2605.1(3)].

TABLE P2605.1. See below.

❖ The code refers to Table P2605.1 for piping support requirements. The maximum amount of sag occurs at a point equidistant from the supports and when the pipe is full of water. The recommended spacing of supports in Table P2605.1 is designed to limit sag and pipe stress and to maintain slope and alignment. As the pipe's diameter increases, so does the pipe's strength and resistance to sag. The spacing in the table is calculated for a small-diameter pipe [see Commentary Figures P2605.1(2) and P2605.1(3)]. Consult the pipe manufacturer's installation instructions for more specific spacing instructions.

The spacing of supports indicated in Table P2605.1 determines the minimum number of supports required.

TABLE P2605.1
PIPING SUPPORT

PIPING MATERIAL	MAXIMUM HORIZONTAL SPACING (feet)	MAXIMUM VERTICAL SPACING (feet)
ABS pipe	4	10[b]
Aluminum tubing	10	15
Cast-iron pipe	5[a]	15
Copper or copper alloy pipe	12	10
Copper or copper alloy tubing ($1^1/_4$ inches in diameter and smaller)	6	10
Copper or copper alloy tubing ($1^1/_2$ inches in diameter and larger)	10	10
Cross-linked polyethylene (PEX) pipe, 1 inch and smaller	2.67 (32 inches)	10[b]
Cross-linked polyethylene (PEX) pipe, $1^1/_4$ inch and larger	4	10[b]
Cross-linked polyethylene/aluminum/cross-linked polyethylene (PEX-AL-PEX) pipe	2.67 (32 inches)	4[b]
CPVC pipe or tubing (1 inch in diameter and smaller)	3	10[b]
CPVC pipe or tubing ($1^1/_4$ inches in diameter and larger)	4	10[b]
Lead pipe	Continuous	4
PB pipe or tubing	2.67 (32 inches)	4
Polyethylene of raised temperature (PE-RT) pipe, 1 inch and smaller	2.67 (32 inches)	10[b]
Polyethylene of raised temperature (PE-RT) pipe, $1^1/_4$ inch and larger	4	10[b]
Polypropylene (PP) pipe or tubing (1 inch and smaller)	2.67 (32 inches)	10[b]
Polypropylene (PP) pipe or tubing ($1^1/_4$ inches and larger)	4	10[b]
PVC pipe	4	10[b]
Stainless steel drainage systems	10	10[b]
Steel pipe	12	15

For SI: 1 inch = 25.4 mm, 1 foot = 304.8 mm.

a. The maximum horizontal spacing of cast-iron pipe hangers shall be increased to 10 feet where 10-foot lengths of pipe are installed.

b. For sizes 2 inches and smaller, a guide shall be installed midway between required vertical supports. Such guides shall prevent pipe movement in a direction perpendicular to the axis of the pipe.

INTERNATIONAL CODE COUNCIL®
Copyright © 2015 ICC. ALL RIGHTS RESERVED. Accessed by David Dammon on Jun 21, 2017 12:30:52 PM pursuant to License Agreement with ICC. No further reproduction or distribution authorized. ANY UNAUTHORIZED REPRODUCTION OR DISTRIBUTION IS A VIOLATION OF THE FEDERAL COPYRIGHT ACT AND THE LICENSE AGREEMENT, AND SUBJECT TO CIVIL AND CRIMINAL PENALTIES THEREUNDER.

Extra supports should be used as necessary because of fittings, connections, change in direction or connection to a vertical pipe.

SECTION P2606
PENETRATIONS

P2606.1 Sealing of annular spaces. The annular space between the outside of a pipe and the inside of a pipe sleeve or between the outside of a pipe and an opening in a building envelope wall, floor, or ceiling assembly penetrated by a pipe shall be sealed with caulking material or foam sealant or closed with a gasketing system. The caulking material, foam sealant or gasketing system shall be designed for the conditions at the penetration location and shall be compatible with the pipe, sleeve and building materials in contact with the sealing materials. Annular spaces created by pipes penetrating fire-resistance-rated assemblies or membranes of such assemblies shall be sealed or closed in accordance with the building portion of this code.

❖ The annular space created between a pipe sleeve and a pipe or an opening in the building envelope and a pipe must be sealed to prevent airflow though the space and to block the space from insects. The material used must be somewhat elastic to prevent structural loading of the pipe should there be some movement between the pipe and the opening. Caulking, expanding foam sealant or a gasketing system can be used to seal the ends of the annular space. It is not required to fill the entire annular space with material. The materials used to seal the annular space must be compatible with the pipe as well as the pipe sleeve material or building envelope materials.

Annular spaces created by penetrations in fire-resistance-rated assemblies must only be sealed in accordance with materials and methods specific to the firestop assembly chosen for the through penetration (see Section R302).

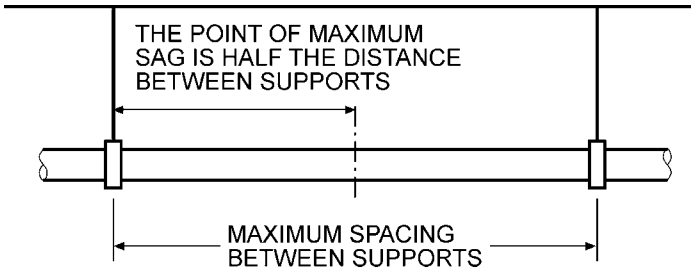

Figure P2605.1(1)
POINT OF SAG BETWEEN HANGERS

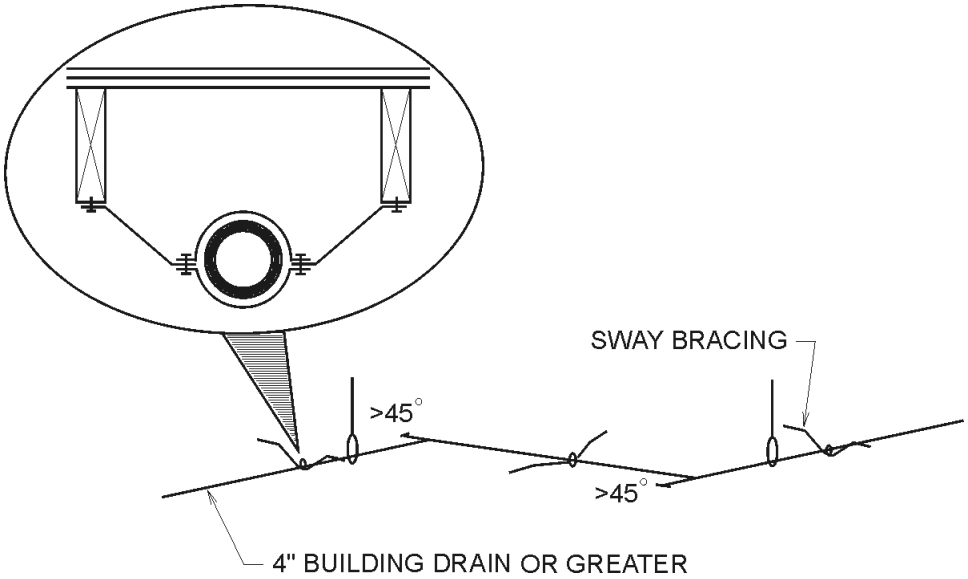

For SI: 1 inch = 25.4 mm, 1 degree = 0.01745 rad.

Figure P2605.1(2)
SWAY BRACING

INTERNATIONAL CODE COUNCIL®
Copyright © 2015 ICC. ALL RIGHTS RESERVED. Accessed by David Dammon on Jun 21, 2017 12:30:52 PM pursuant to License Agreement with ICC. No further reproduction or distribution authorized. ANY UNAUTHORIZED REPRODUCTION OR DISTRIBUTION IS A VIOLATION OF THE FEDERAL COPYRIGHT ACT AND THE LICENSE AGREEMENT, AND SUBJECT TO CIVIL AND CRIMINAL PENALTIES THEREUNDER.

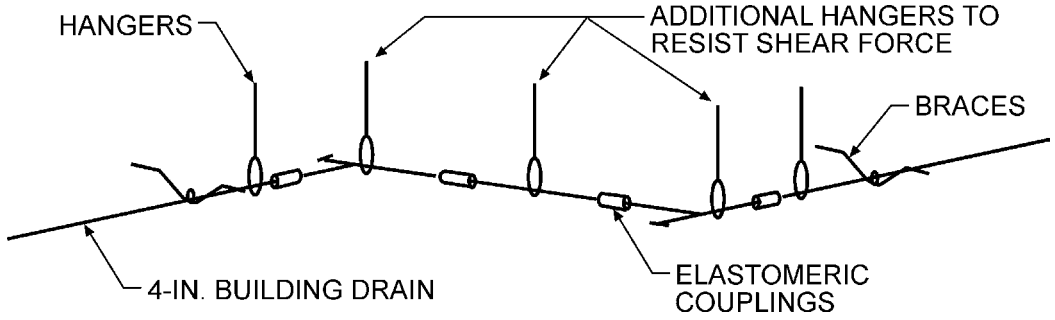

For SI: 1 inch = 25.4 mm.

Figure P2605.1(3)
LOCATION OF HANGERS

SECTION P2607
WATERPROOFING OF OPENINGS

P2607.1 Pipes penetrating roofs. Where a pipe penetrates a roof, a flashing of lead, copper, galvanized steel or an *approved* elastomeric material shall be installed in manner that prevents water entry into the building. Counterflashing into the opening of pipe serving as a vent terminal shall not reduce the required internal cross-sectional area of the vent pipe to less than the internal cross-sectional area of one pipe size smaller.

❖ Roof penetrations must be watertight where penetrated by piping. Use of lead, copper, plastic or galvanized steel flashing is a common method of waterproofing roof penetrations.

Where using flashing materials, such as lead that wraps over the top of the pipe, significant reduction of the required cross-sectional area of the vent terminal should be avoided (see Commentary Figure P2607.1).

P2607.2 Pipes penetrating exterior walls. Where a pipe penetrates an exterior wall, a waterproof seal shall be made on the exterior of the wall by one of the following methods:

1. A waterproof sealant applied at the joint between the wall and the pipe.
2. A flashing of an *approved* elastomeric material.

❖ Exterior walls can be subject to driving rain and wind. Pipe penetrations need to be water tight. Sealing with a waterproof sealant or installation of an approved wall flashing can provide the necessary sealing.

SECTION P2608
WORKMANSHIP

P2608.1 General. Valves, pipes and fittings shall be installed in correct relationship to the direction of the flow. Burred ends shall be reamed to the full bore of the pipe.

❖ Drainage piping and fittings must be installed in the correct direction to assist the flow of waste. Table P3005.1 regulates the installation of fittings according to the change of direction. Pipe ends that are burred because of cutting procedures must be reamed to the full bore of the pipe to eliminate turbulence in water piping and rough edges that can cause blockage in drainage piping.

Burred ends on the pipe's outer edges must be removed to create the desired joint. A chamfering tool can be used to remove the burred ends (see Commentary Figure P2608.1).

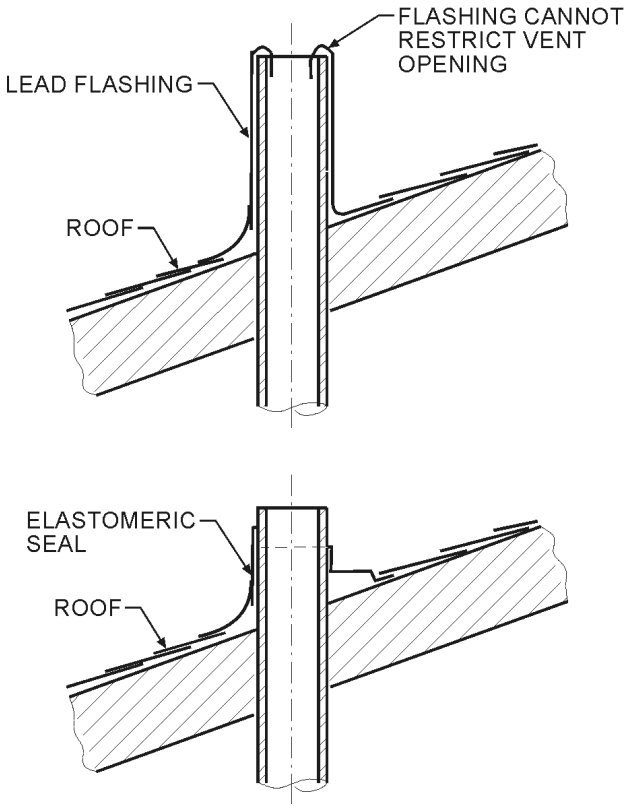

Figure P2607.1
ROOF PENETRATIONS

INTERNATIONAL CODE COUNCIL®
Copyright © 2015 ICC. ALL RIGHTS RESERVED. Accessed by David Dammon on Jun 21, 2017 12:30:52 PM pursuant to License Agreement with ICC. No further reproduction or distribution authorized. ANY UNAUTHORIZED REPRODUCTION OR DISTRIBUTION IS A VIOLATION OF THE FEDERAL COPYRIGHT ACT AND THE LICENSE AGREEMENT, AND SUBJECT TO CIVIL AND CRIMINAL PENALTIES THEREUNDER.

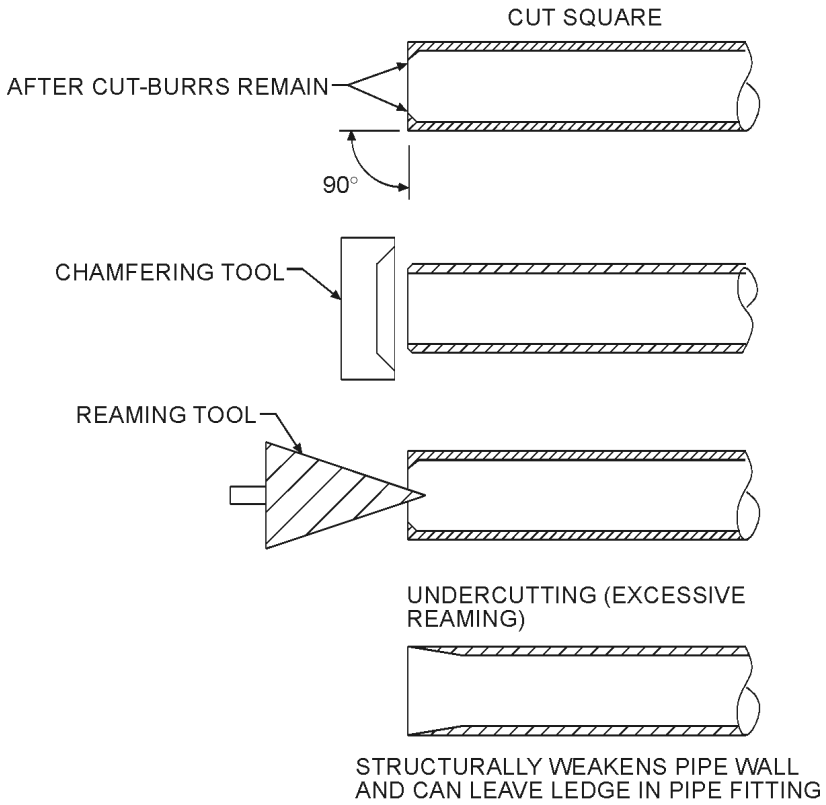

For SI: 1 degree = 0.0175 rad.

Figure P2608.1
PREPARATION OF PIPE END

SECTION P2609
MATERIALS EVALUATION AND LISTING

P2609.1 Identification. Each length of pipe and each pipe fitting, trap, fixture, material and device utilized in a plumbing system shall bear the identification of the manufacturer and any markings required by the applicable referenced standards. Nipples created from the cutting and threading of *approved* pipe shall not be required to be identified.

Exception: Where the manufacturer identification cannot be marked on pipe fittings and pipe nipples because of the small size of such fittings, the identification shall be printed on the item packaging or on documentation provided with the item.

❖ The manufacturer is given the option of determining the type of marking for the material. If there is no applicable standard or the applicable standard does not require identification of a material, identification of the manufacturer is still required by the code. Where the code indicates compliance with an approved standard, the manufacturer must comply with the requirements for marking in accordance with that standard.

The exception recognizes that nipples fabricated in the field from stock pipe lengths will not always have the required marking because the stock length markings occur at such wide intervals. Also, for small fittings and short factory-made pipe nipples, it is sometimes impractical for the manufacturer to apply the standard markings on each piece. In those situations, packaging or carton indications of the standards will suffice to comply with this section.

P2609.2 Installation of materials. Materials used shall be installed in strict accordance with the standards under which the materials are accepted and *approved*. In the absence of such installation procedures, the manufacturer's instructions shall be followed. Where the requirements of referenced standards or manufacturer's instructions do not conform to the minimum provisions of this code, the provisions of this code shall apply.

❖ Plumbing components and materials are to be installed in accordance with the installation requirements of the applicable standard listed in the code.

Where a standard is not applicable, the manufacturer's instructions and the code provide the only requirements. The code prevails where there are conflicts or inconsistencies between the code and the referenced standards and the manufacturer's instructions.

P2609.3 Plastic pipe, fittings and components. Plastic pipe, fittings and components shall be third-party certified as conforming to NSF 14.

❖ All plastic piping, fittings and plastic-pipe-related components, including solvent cements, primers, tapes,

INTERNATIONAL CODE COUNCIL®
Copyright © 2015 ICC. ALL RIGHTS RESERVED. Accessed by David Dammon on Jun 21, 2017 12:30:52 PM pursuant to License Agreement with ICC. No further reproduction or distribution authorized. ANY UNAUTHORIZED REPRODUCTION OR DISTRIBUTION IS A VIOLATION OF THE FEDERAL COPYRIGHT ACT AND THE LICENSE AGREEMENT, AND SUBJECT TO CIVIL AND CRIMINAL PENALTIES THEREUNDER.

lubricants and seals used in plumbing systems, must be tested and certified as conforming to NSF 14. This includes all water service, water distribution and drainage piping and fittings as well as plastic piping system components, including but not limited to pipes, fittings, valves, joining materials, gaskets and appurtenances. This section does not apply to components that include plastic parts such as brass valves with a plastic stem or to fixture fittings such as fixture stop valves. Plastic piping systems, fittings and related components intended for use in the potable water supply system must comply with NSF 61 in addition to NSF 14.

P2609.4 Third-party certification. Plumbing products and materials required by the code to be in compliance with a referenced standard shall be *listed* by a third-party certification agency as complying with the referenced standards. Products and materials shall be identified in accordance with Section P2609.1.

❖ To simplify inspections and approvals, the code requires that all plumbing products and materials that are to be in compliance with a referenced standard be third-party certified. The code official only has to confirm that the product or material has the mark of the third-party certifying agency. Commentary Figure P2609.4 shows an example of typical markings on PVC plastic pipe.

P2609.5 Water supply systems. Water service pipes, water distribution pipes and the necessary connecting pipes, fittings, control valves, faucets and appurtenances used to dispense water intended for human ingestion shall be evaluated and listed as conforming to the requirements of NSF 61.

❖ Piping material that comes in contact with the potable water source must comply with the requirements of NSF 61. The purpose is to control potential adverse health effects produced by indirect additives, products, and materials that come in contact with potable water. Plastic piping systems, fittings and related components intended for use with the potable water supply system must comply with NSF 14 in addition to NSF 61.

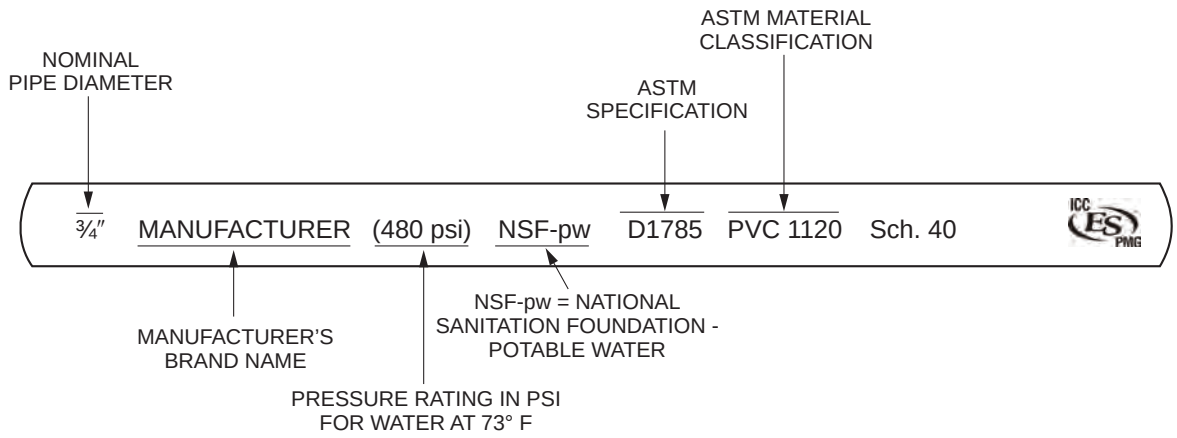

For SI: 1 inch = 25.4 mm, °C = [(°F) - 32]/1.8, 1 pound per square inch = 6.895 kPa.

Figure P2609.4
SAMPLE MARKING OF PVC PRESSURE PIPE

INTERNATIONAL CODE COUNCIL®
Copyright © 2015 ICC. ALL RIGHTS RESERVED. Accessed by David Dammon on Jun 21, 2017 12:30:52 PM pursuant to License Agreement with ICC. No further reproduction or distribution authorized. ANY UNAUTHORIZED REPRODUCTION OR DISTRIBUTION IS A VIOLATION OF THE FEDERAL COPYRIGHT ACT AND THE LICENSE AGREEMENT, AND SUBJECT TO CIVIL AND CRIMINAL PENALTIES THEREUNDER.

Chapter 27: Plumbing Fixtures

General Comments

Chapter 27 addresses each type of fixture individually, including the accessory parts or installation criteria specific to a given fixture.

Chapter 27 outlines the fixtures, faucets and fixture fittings and the standards for their manufacture. In particular, it covers the materials used in the manufacture of tailpieces and traps, their fittings and the strainer requirements for the fixture outlet. This chapter also regulates fixture tailpieces and specifies the minimum tailpiece size required for each fixture. Chapter 27 lists access requirements for inspection and repair of slip-joint connections.

This chapter also details installation criteria for material, methods and location of fixtures and their parts.

The majority of the chapter is devoted to detailing specific provisions relating to waste receptors, kitchen fixtures and appliances, bathroom and toilet room fixtures, laundry facilities, valves and fixture fittings and macerating toilet systems.

Purpose

Fixtures must be of the proper type, approved for the purpose and installed properly to promote usability and a safe, sanitary condition. Chapter 27 contains the standards to which fixtures must be manufactured and installed.

SECTION P2701
FIXTURES, FAUCETS AND FIXTURE FITTINGS

P2701.1 Quality of fixtures. Plumbing fixtures, faucets and fixture fittings shall have smooth impervious surfaces, shall be free from defects, shall not have concealed fouling surfaces, and shall conform to the standards indicated in Table P2701.1 and elsewhere in this code.

❖ This section requires plumbing fixtures, faucets and fixture fittings to be in compliance with the appropriate referenced standards found in Table P2701.1 and other locations in the code. The products cannot have pervious surfaces, defects or concealed fouling surfaces that might lead to insanitary conditions that the user cannot resolve.

SECTION P2702
FIXTURE ACCESSORIES

P2702.1 Plumbing fixtures. Plumbing fixtures, other than water closets, shall be provided with *approved* strainers.

Exception: Hub drains receiving only clear water waste and standpipes shall not require strainers.

❖ This section requires the drain outlet(s) of plumbing fixtures, except water closets, to be equipped with approved strainers. This requirement prevents items such as toothbrushes, rings, cosmetic devices and large food waste particles from entering the drainage system and creating clogs. The exception recognizes that hub drains receiving clear water waste and standpipes do not require strainers because these are not the type of fixtures where items will be inadvertently dropped into them.

TABLE P2701.1. See page 27-2.

P2702.2 Waste fittings. Waste fittings shall conform to ASME A112.18.2/CSA B125.2, ASTM F409 or shall be made from pipe and pipe fittings complying with any of the standards indicated in Tables P3002.1(1) and P3002.3.

❖ Waste fittings are the tail pieces, traps, waste and overflow assemblies and continuous waste assemblies used to connect the outlet of a fixture to the fixture drain pipe. The American Society of Mechanical Engineers (ASME) and ASTM International (ASTM) standards regulate the material quality, wall thicknesses and dimensional uniformity of tubular size waste fittings, among other criteria. The ASME standard covers metal and plastic fittings; the ASTM standard covers polypropylene plastic fittings.

The installer is not confined to using tubular waste fittings to connect a fixture outlet to a fixture drain since this section also allows any pipe or fittings that comply with above-ground drainage and vent pipe and fittings to be used [see Table P3002.1(1)].

P2702.3 Plastic tubular fittings. Plastic tubular fittings shall conform to ASTM F409 as indicated in Table P2701.1.

❖ Literally, this section requires plastic tubular waste fittings to be made of only polypropylene plastic. However, Section P2702.2 allows tubular waste fittings to conform to ASME A112.18.2/CSA B125.2, which allows other plastic materials such as PVC and ABS.

INTERNATIONAL CODE COUNCIL®
Copyright © 2015 ICC. ALL RIGHTS RESERVED. Accessed by David Dammon on Jun 21, 2017 12:30:52 PM pursuant to License Agreement with ICC. No further reproduction or distribution authorized. ANY UNAUTHORIZED REPRODUCTION OR DISTRIBUTION IS A VIOLATION OF THE FEDERAL COPYRIGHT ACT AND THE LICENSE AGREEMENT, AND SUBJECT TO CIVIL AND CRIMINAL PENALTIES THEREUNDER.

TABLE P2701.1
PLUMBING FIXTURES, FAUCETS AND FIXTURE FITTINGS

MATERIAL	STANDARD
Air gap fittings for use with plumbing fixtures, appliances and appurtenances	ASME A 112.1.3
Bathtub/whirlpool pressure-sealed doors	ASME A 112.19.15
Diverters for faucets with hose spray, anti-syphon type, residential application	ASTM A112.18.1/CSA B125.1
Enameled cast-iron plumbing fixtures	ASME A 112.19.1M/CSA B45.2
Floor drains	ASME A 112.6.3
Floor-affixed supports for off-the-floor plumbing fixtures for public use	ASME A 112.6.1M
Framing-affixed supports for off-the-floor water closets with concealed tanks	ASME A 112.6.2
Hose connection vacuum breaker	ASSE 1052
Hot water dispensers, household storage type, electrical	ASSE 1023
Household disposers	ASSE 1008
Hydraulic performance for water closets and urinals	ASME A 112.19.2/CSA B45.1
Individual automatic compensating valves for individual fixture fittings	ASME A 112.18.1/CSA B125.1
Individual shower control valves anti-scald	ASSE 1016/ASME A 112.1016/CSA B125.16
Macerating toilet systems and related components	ASME A 112.3.4/CSA B45.9
Nonvitreous ceramic plumbing fixtures	ASME A 112.19.2/CSA B45.1
Plastic bathtub units	CSA B45.5/IAPMO Z124, ASME A112.19.2/CSA B45.1
Plastic lavatories	CSA B45.5/IAPMO Z124
Plastic shower receptors and shower stall	CSA B45.5/IAPMO Z124
Plastic sinks	CSA B45.5/IAPMO Z124
Plastic water closet bowls and tanks	CSA B45.5/IAPMO Z124
Plumbing fixture fittings	ASME A 112.18.1/CSA B125.1
Plumbing fixture waste fittings	ASME A 112.18.2/CSA B125.2, ASTM F409
Porcelain-enameled formed steel plumbing fixtures	ASME A 112.19.1/CSA B45.2
Pressurized flushing devices for plumbing fixtures	ASSE 1037, CSA B125.3
Specification for copper sheet and strip for building construction	ASTM B370
Stainless steel plumbing fixtures	ASME A 112.19.3/CSA B45.4
Suction fittings for use in whirlpool bathtub appliances	ASME A 112.19.7 /CSA B45.10
Temperature-actuated, flow reduction valves to individual fixture fittings	ASSE 1062
Thermoplastic accessible and replaceable plastic tube and tubular fittings	ASTM F409
Trench drains	ASME A 112.6.3
Trim for water closet bowls, tanks and urinals	ASME A 112.19.5/CSA B45.15
Vacuum breaker wall hydrant-frost-resistant, automatic-draining type	ASSE 1019
Vitreous china plumbing fixtures	ASME A 112.19.2/CSA B45.1
Wall-mounted and pedestal-mounted, adjustable and pivoting lavatory and sink carrier systems	ASME A 112.19.12
Water closet flush tank fill valves	ASSE 1002, CSA B125.3
Whirlpool bathtub appliances	ASME A 112.19.7 /CSA B45.10

INTERNATIONAL CODE COUNCIL®
Copyright © 2015 ICC. ALL RIGHTS RESERVED. Accessed by David Dammon on Jun 21, 2017 12:30:52 PM pursuant to License Agreement with ICC. No further reproduction or distribution authorized. ANY UNAUTHORIZED REPRODUCTION OR DISTRIBUTION IS A VIOLATION OF THE FEDERAL COPYRIGHT ACT AND THE LICENSE AGREEMENT, AND SUBJECT TO CIVIL AND CRIMINAL PENALTIES THEREUNDER.

P2702.4 Carriers for wall-hung water closets. Carriers for wall-hung water closets shall conform to ASME A112.6.1 or ASME A112.6.2.

❖ Contrary to what the name implies, a wall-hung water closet is not actually supported by the wall that the water closet appears to be bolted to. The weight of the water closet and of the person sitting on the water closet is transferred through bolts or studs that are screwed into a robust metal carrier assembly. The carrier assembly is bolted to the floor behind the wall. The referenced standards, ASME A112.6.1 or ASME A112.6.2, regulate the design and test requirements for the strength of the hanger (see Commentary Figure P2702.4).

SECTION P2703
TAIL PIECES

P2703.1 Minimum size. Fixture tail pieces shall be not less than $1^1/_2$ inches (38 mm) in diameter for sinks, dishwashers, laundry tubs, bathtubs and similar fixtures, and not less than $1^1/_4$ inches (32 mm) in diameter for bidets, lavatories and similar fixtures.

❖ This section regulates the tail piece size for specific types of fixtures. The tail piece of a fixture is the drain tube immediately downstream of the fixture waste outlet opening and upstream of the fixture trap. Lavatories and bidets must have a tail piece diameter that is not less than $1^1/_4$ inches (32 mm). Sinks, dishwashers, laundry tubs and bathtubs must have a tail piece diameter that is not less than $1^1/_2$ inches (38 mm). These requirements apply to similar types of fixtures.

SECTION P2704
ACCESS TO CONNECTIONS

P2704.1 General. Slip joints shall be made with an *approved* elastomeric gasket and shall be installed only on the trap outlet, trap inlet and within the trap seal. Fixtures with concealed slip-joint connections shall be provided with an access panel or utility space not less than 12 inches (305 mm) in its smallest dimension or other *approved* arrangement so as to provide access to the slip connections for inspection and repair.

❖ Slip joints are found on tubular waste fittings (including tubular waste traps) that are used to connect fixtures with $1^1/_4$-inch and $1^1/_2$-inch (32 mm and 38 mm) tubular waste outlet tail pieces to the fixture drain (see Commentary Figure P2704.1). Because slip-joint connections can become loose or start leaking over time, they must be located where they can be accessed without the need for removing permanent portions of the building, such as drywall or cabinetry. Where access panels (or cabinet doors) are provided for such access, the opening must be not less than 12 inches (305 mm) in the least dimension so that service personnel have adequate space to work on the joint.

One of the most common violations of this section is where a bathtub is located above a finished ceiling and tubular waste fittings with slip joints have been used for the waste outlet connections. This section would require an access panel in the ceiling below. However, the need for an access panel could be eliminated if the waste overflow assembly and the slip-jointed trap were replaced with a polyvynil chloride (PVC) overflow assembly and trap having solvent welded joints. The code does not require access panels in finished walls where joints are accessible from an under-floor space area (crawl space or unfinished basement ceiling).

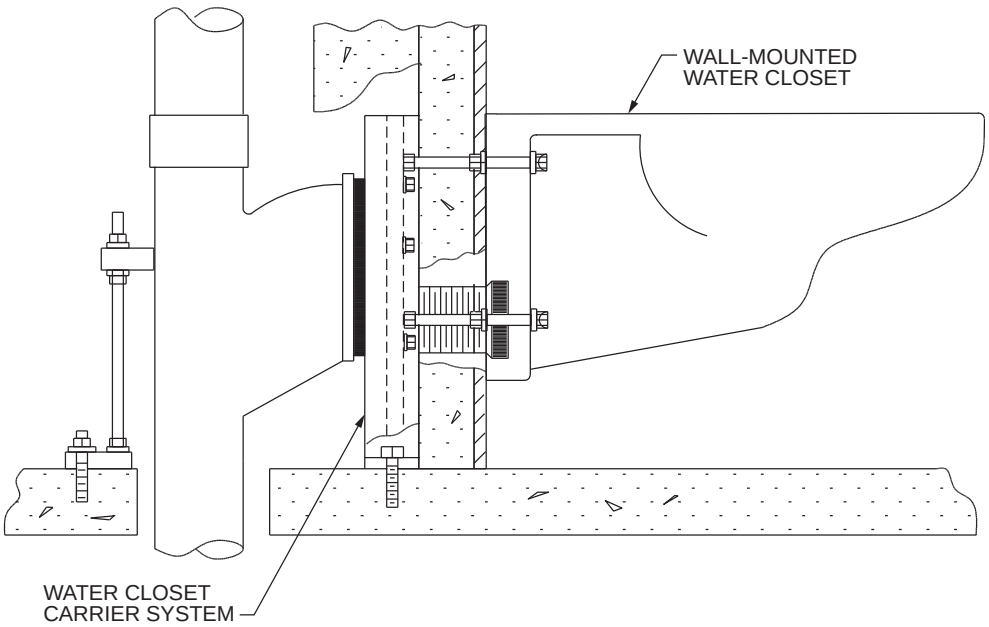

Figure P2702.4
WALL-HUNG WATER CLOSET

INTERNATIONAL CODE COUNCIL®
Copyright © 2015 ICC. ALL RIGHTS RESERVED. Accessed by David Dammon on Jun 21, 2017 12:30:52 PM pursuant to License Agreement with ICC. No further reproduction or distribution authorized. ANY UNAUTHORIZED REPRODUCTION OR DISTRIBUTION IS A VIOLATION OF THE FEDERAL COPYRIGHT ACT AND THE LICENSE AGREEMENT, AND SUBJECT TO CIVIL AND CRIMINAL PENALTIES THEREUNDER.

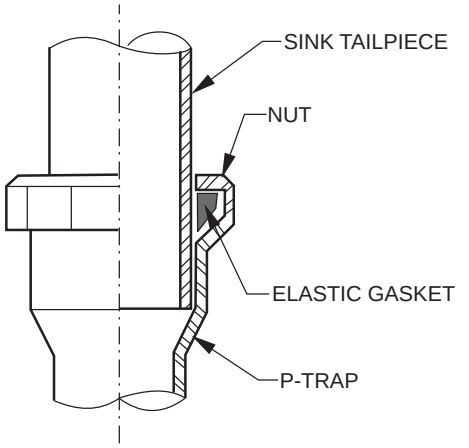

Figure P2704.1
SLIP JOINT

SECTION P2705
INSTALLATION

P2705.1 General. The installation of fixtures shall conform to the following:

1. Floor-outlet or floor-mounted fixtures shall be secured to the drainage connection and to the floor, where so designed, by screws, bolts, washers, nuts and similar fasteners of copper, copper alloy or other corrosion-resistant material.
2. Wall-hung fixtures shall be rigidly supported so that strain is not transmitted to the plumbing system.
3. Where fixtures come in contact with walls and floors, the contact area shall be water tight.
4. Plumbing fixtures shall be usable.
5. Water closets, lavatories and bidets. A water closet, lavatory or bidet shall not be set closer than 15 inches (381 mm) from its center to any side wall, partition or vanity or closer than 30 inches (762 mm) center-to-center between adjacent fixtures. There shall be a clearance of not less than 21 inches (533 mm) in front of a water closet, lavatory or bidet to any wall, fixture or door.
6. The location of piping, fixtures or equipment shall not interfere with the operation of windows or doors.
7. In flood hazard areas as established by Table R301.2(1), plumbing fixtures shall be located or installed in accordance with Section R322.1.6.
8. Integral fixture-fitting mounting surfaces on manufactured plumbing fixtures or plumbing fixtures constructed on site, shall meet the design requirements of ASME A112.19.2/CSA B45.1 or ASME A112.19.3/CSA B45.4.

❖ Most water closets utilize a floor-flange drainage connection where the water closet bolts to the flange and the flange is attached to the floor [see Commentary Figure P2705.1(1)]. Other designs of water closets are fastened directly to the floor. The fasteners must be corrosion resistant because they could be repeatedly exposed to moisture. The required screws, bolts, washers, nuts and similar fasteners are usually made of copper, copper alloy (previously referred to as brass) or plastic.

Wall-hung water closets must be rigidly supported using specially designed carriers that are securely fastened to the floor structure behind the wall (see commentary, Section P2702.4). The piping to the water closet must not provide any support for the water closet. Wall-hung lavatories must be adequately supported and fastened to the wall so the lavatory is not applying loads to the piping systems that connect to the lavatory.

Where fixtures contact walls or floors, those joints must be caulked so that water does not enter the concealed space between the fixture and the wall or floor [see Commentary Figure P2705.1(2)].

Plumbing fixtures require space around them for use and cleaning purposes. This section item requires that centerline of water closets, lavatories and bidets be not less than 15 inches (381 mm) from an adjacent sidewall, partition or vanity and not be less than 30 inches (762 mm) from the centerline to any adjacent fixture. A clearance of not less than 21 inches (533 mm) is required in front of a water closet, bidet and lavatory to any wall, fixture or door [see Commentary Figure P2705.1(3)]. The 21-inch (533 mm) clearance does not apply to the swing arc of a door.

Plumbing fixture locations must not interfere with the operation of any window or door. For example, if opening a window or door causes it to swing inward, the swing of the window or door must not be obstructed by a plumbing fixture. For the purposes of interpreting this section, the maximum window opening is the mechanical limit of the window assembly or 90 degrees (1.57 rad) from the fully closed position, whichever is less. The maximum door opening is considered to be 90 degrees (1.57 rad) from the fully closed position [see Commentary Figure P2705.1(4)]. Also see Section R307, which regulates fixture location.

Plumbing fixtures must be located at or above the flood elevation required in Section R322.1.6 unless specially designed to prevent floodwaters from entering during conditions of the design flood. Plumbing fixtures should not be necessary below elevated buildings, given the use of enclosed areas below elevated buildings is limited to parking of vehicles, building access and storage (see commentary, Section R322). See Section R307, which also regulates fixture location.

Fixture fittings are faucets or waste outlet assemblies that are intended to be mounted integrally to plumbing fixtures, such as lavatories or sinks. The design of the fixture fittings is in accordance with fixture-fitting standards that are coordinated with plumbing-fixture standards. For example, a 4-inch (102 mm) centerset lavatory faucet will fit a lavatory that is drilled in accordance with one of the plumbing-fixture standards. Where plumbing fixtures are field constructed, the mounting-surface dimensions required must be in accordance with the same standards.

INTERNATIONAL CODE COUNCIL®
Copyright © 2015 ICC. ALL RIGHTS RESERVED. Accessed by David Dammon on Jun 21, 2017 12:30:52 PM pursuant to License Agreement with ICC. No further reproduction or distribution authorized. ANY UNAUTHORIZED REPRODUCTION OR DISTRIBUTION IS A VIOLATION OF THE FEDERAL COPYRIGHT ACT AND THE LICENSE AGREEMENT, AND SUBJECT TO CIVIL AND CRIMINAL PENALTIES THEREUNDER.

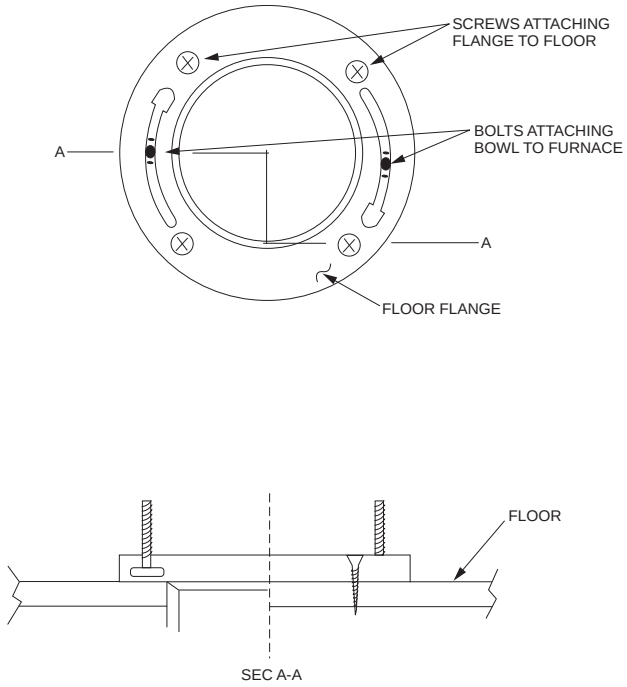

Figure P2705.1(1)
WATER CLOSET FLOOR FLANGE



Figure P2705.1(2)
LAVATORY PROPERLY SEALED TO WALL

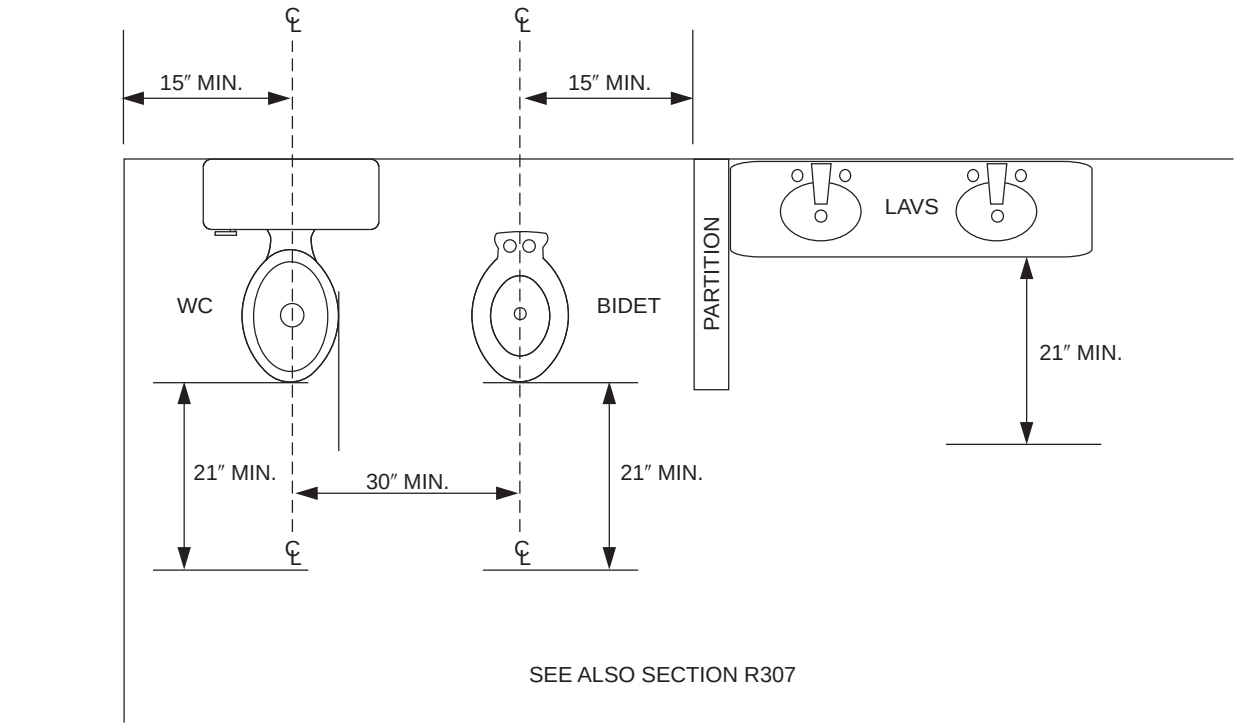

For SI: 1 inch = 25.4 mm.

Figure P2705.1(3)
FIXTURE CLEARANCES

INTERNATIONAL CODE COUNCIL®
Copyright © 2015 ICC. ALL RIGHTS RESERVED. Accessed by David Dammon on Jun 21, 2017 12:30:52 PM pursuant to License Agreement with ICC. No further reproduction or distribution authorized. ANY UNAUTHORIZED REPRODUCTION OR DISTRIBUTION IS A VIOLATION OF THE FEDERAL COPYRIGHT ACT AND THE LICENSE AGREEMENT, AND SUBJECT TO CIVIL AND CRIMINAL PENALTIES THEREUNDER.

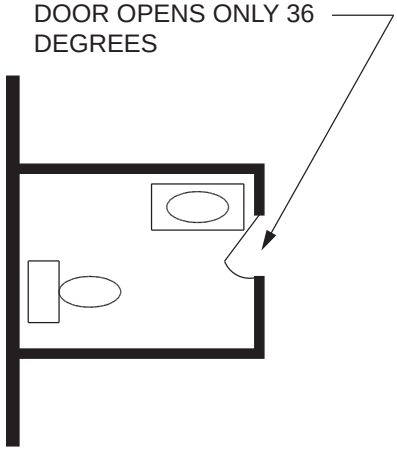

For SI: 1 degree = 0.01745 rad.

Figure P2705.1(4)
FIXTURE OBSTRUCTION OF DOOR

SECTION P2706
WASTE RECEPTORS

P2706.1 General. For other than hub drains that receive only clear-water waste and standpipes, a removable strainer or basket shall cover the waste outlet of waste receptors. Waste receptors shall not be installed in concealed spaces. Waste receptors shall not be installed in plenums, attics, crawl spaces or interstitial spaces above ceilings and below floors. Waste receptors shall be readily accessible.

❖ Waste receptors include floor sinks, hub drains, laundry tubs, standpipes and funnel-equipped floor drains. Waste receptors are typically used to receive discharge from fixtures or appliances that are required to discharge through an air break or air gap, such as heating, ventilating and air-conditioning (HVAC) condensate drains, water heater T&P valve discharge pipes, water heater drip pan drains, clothes washer drains and dishwasher drains. Waste receptors must be equipped with a strainer unless the receptor is an open hub receptor or standpipe. Note that open hub receptors can only be installed in locations where the surrounding floor is water impervious.

Waste receptors cannot be concealed in an interstitial space such as inside of a wall, above a ceiling and below a floor, or a plenum. They also cannot be installed in areas not occasionally visited by the building occupant. These spaces would be attics and crawl spaces (see Commentary Figure P2706.1).

Waste receptors must be readily accessible, meaning that access does not require removal or opening of a panel or panel door.

P2706.1.1 Hub drains. Hub drains shall be in the form of a hub or a pipe that extends not less than 1 inch (25 mm) above a water-impervious floor.

❖ Hub drain drains are commonly used for a disposal point for condensate from HVAC systems and water heater T&P valve discharges.

P2706.1.2 Standpipes. Standpipes shall extend not less than 18 inches (457 mm) and not greater than 42 inches (1067 mm) above the trap weir.

❖ A standpipe is typically used for capturing the waste flow from a pumped discharge plumbing appliance such as a dishwasher or a clothes washer. An 18-inch (457 mm) minimum height standpipe provides a small volume for accumulation of waste flow above the entrance to the trap. If the appliance discharges at a greater rate than the trap is discharging to the fixture drain, the accumulated volume will not spill out the top of the standpipe. The accumulation of waste volume above the entry of the trap also creates a small amount of head pressure on the trap inlet to make the trap pass the waste flow at a higher rate. The limitation on the maximum height of a standpipe is so the falling waste water does not gain too much velocity, which might cause the trap to self-siphon.

Standpipes and the traps for standpipes can be concealed within construction, but the inlet to the standpipe must be accessible to allow drain cleaning.

P2706.1.2.1 Laundry tray connection to standpipe. Where a laundry tray waste line connects into a standpipe for an automatic clothes washer drain, the standpipe shall extend not less than 30 inches (762 mm) above the standpipe trap weir and shall extend above the flood level rim of the laundry tray. The outlet of the laundry tray shall not be greater than 30 inches (762 mm) horizontally from the standpipe trap.

❖ A laundry tray is more commonly known as a laundry tub or a laundry sink and typically has a capacity of at least 20 gallons (76 L). A common laundry room arrangement places the laundry tray adjacent to the clothes washer and thus adjacent to the standpipe for the clothes washer discharge.

The discharge from a laundry tray (laundry tub) is allowed to connect to the clothes washer standpipe if the top of the standpipe is at least 30 inches (762 mm) above the trap weir of the clothes washing standpipe trap and the laundry tray outlet is not more than 30 inches (762 mm) horizontally from the standpipe trap. To prevent overflow of the standpipe, the top of the standpipe must be higher than the flood level rim of the sink. The 30-inch (762 mm) horizontal distance limitation is intended to maintain a sanitary condition by minimizing the length of piping on the inlet side (house side) of the trap (see Commentary Figure P2706.1.2.1).

P2706.2 Prohibited waste receptors. Plumbing fixtures that are used for washing or bathing shall not be used to receive the discharge of indirect waste piping.

Exceptions:

1. A kitchen sink trap is acceptable for use as a receptor for a dishwasher.

INTERNATIONAL CODE COUNCIL®
Copyright © 2015 ICC. ALL RIGHTS RESERVED. Accessed by David Dammon on Jun 21, 2017 12:30:52 PM pursuant to License Agreement with ICC. No further reproduction or distribution authorized. ANY UNAUTHORIZED REPRODUCTION OR DISTRIBUTION IS A VIOLATION OF THE FEDERAL COPYRIGHT ACT AND THE LICENSE AGREEMENT, AND SUBJECT TO CIVIL AND CRIMINAL PENALTIES THEREUNDER.

2. A laundry tray is acceptable for use as a receptor for a clothes washing machine.

❖ For sanitary reasons, this section prohibits discharge of indirect waste piping into a sink used for washing or bathing purposes. However, this provision does not apply to the indirect connection of a dishwasher to a kitchen sink because a dishwasher essentially performs the same function as a kitchen sink. By the same logic, this section also permits a clothes washing machine to discharge into a laundry tub (see Commentary Figure 2706.1).

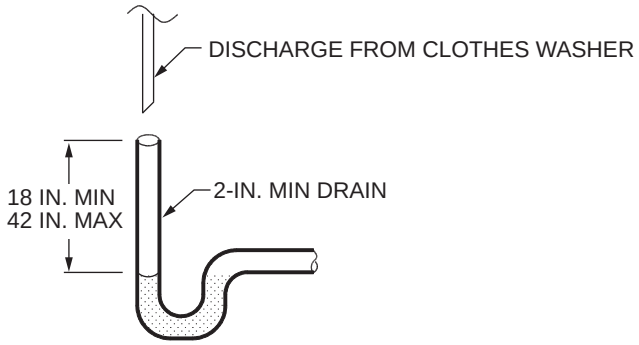

Figure P2706.1.2
STANDPIPES

SECTION P2707
DIRECTIONAL FITTINGS

P2707.1 Directional fitting required. *Approved* directional-type branch fittings shall be installed in fixture tailpieces receiving the discharge from food-waste disposer units or dishwashers.

❖ Waste disposal units and dishwashers connected to a tailpiece of a kitchen sink must use a directional-type branch fitting to guide the flow, thus helping to prevent blockages and the backup of discharge into the sink. One option is to use a tee equipped with a baffle, a wye branch or a similar type of directional fitting that would guide the discharge in the direction of flow.

SECTION P2708
SHOWERS

P2708.1 General. Shower compartments shall have not less than 900 square inches (0.6 m^2) of interior cross-sectional area. Shower compartments shall be not less than 30 inches (762 mm) in minimum dimension measured from the finished interior dimension of the shower compartment, exclusive of fixture valves, shower heads, soap dishes, and safety grab bars or rails. The minimum required area and dimension shall be measured from the finished interior dimension at a height equal to the top of the threshold and at a point tangent to its centerline and shall be continued to a height of not less than 70 inches (1778 mm) above the shower drain outlet. Hinged

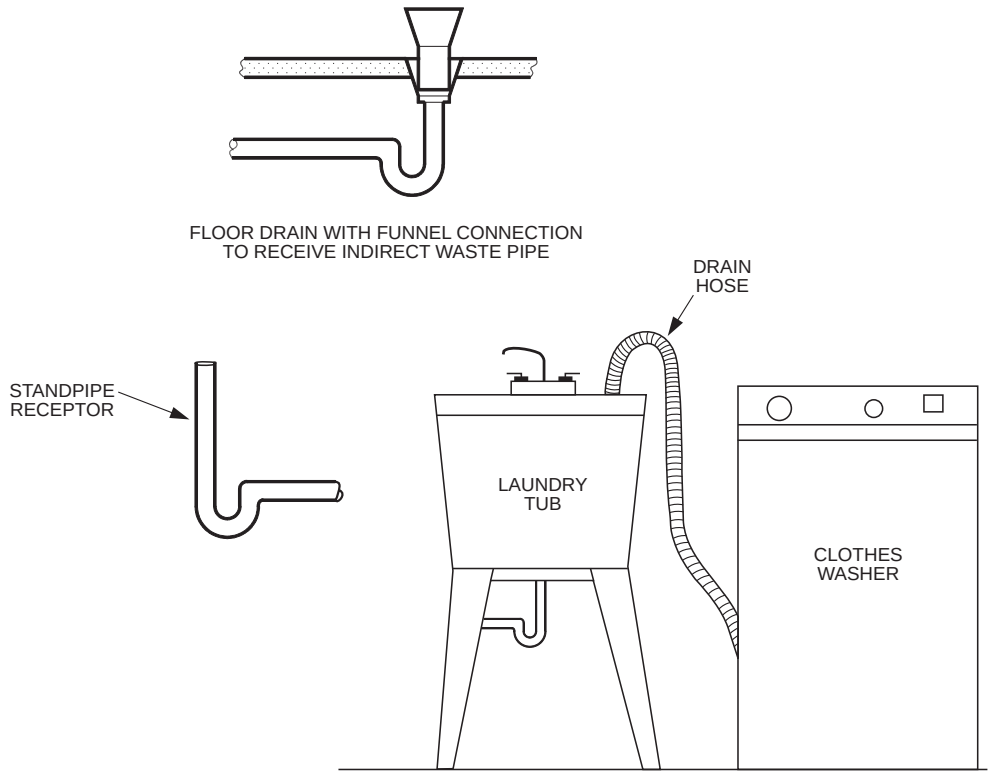

Figure P2706.1
WASTE RECEPTOR

INTERNATIONAL CODE COUNCIL®
Copyright © 2015 ICC. ALL RIGHTS RESERVED. Accessed by David Dammon on Jun 21, 2017 12:30:52 PM pursuant to License Agreement with ICC. No further reproduction or distribution authorized. ANY UNAUTHORIZED REPRODUCTION OR DISTRIBUTION IS A VIOLATION OF THE FEDERAL COPYRIGHT ACT AND THE LICENSE AGREEMENT, AND SUBJECT TO CIVIL AND CRIMINAL PENALTIES THEREUNDER.

shower doors shall open outward. The wall area above built-in tubs having installed shower heads and in shower compartments shall be constructed in accordance with Section R702.4. Such walls shall form a water-tight joint with each other and with either the tub, receptor or shower floor.

Exceptions:

1. Fold-down seats shall be permitted in the shower, provided the required 900-square-inch (0.6 m^2) dimension is maintained when the seat is in the folded-up position.
2. Shower compartments having not less than 25 inches (635 mm) in minimum dimension measured from the finished interior dimension of the compartment provided that the shower compartment has a cross-sectional area of not less than 1,300 square inches (0.838 m^2).

❖ In plan view, from the elevation of the top of the threshold to an elevation 70 inches (1778 mm) above the top of the drain, the interior dimension from the back wall to the centerline of the threshold must not be less than 30 inches (762 mm) and the area of the compartment must not be less than 900 square inches (0.6 m^2). When measuring the interior dimension of the compartment, minor encroachments into the area, such as handrails, shower valves, shower heads and soap dishes, are to be ignored (see Commentary Figure P2708.1).

Because of the limited area within the typical size of most shower compartments, shower doors must open outward. This allows for the user to easily step out of the shower without having to navigate on a wet shower floor around a shower door.

Section R307.2 requires that the walls of shower compartments be nonabsorbent and extend to a point that is not less than 72 inches (1829 mm) above the finished floor outside the shower. To protect concealed areas from water damage, this section (Section P2708.1) requires all intersections of the nonabsorbent walls to each other and to adjacent finished surfaces be water tight.

Exception 1 allows a wall-mounted folding seat to be installed in a shower as long as the minimum required area or minimum required interior dimension is not violated with the seat in the folded-up position.

Exception 2 allows for a shower to have an interior dimension of less than 30 inches (762 mm), but not less than 25 inches (635 mm) as long as the area of the shower is not less than 1,300 square inches (0.838 m^2). This exception is necessary for replacing a standard size bathtub [typically 30 inches by 60 inches (762 mm by 1524 mm)] with a shower compartment.

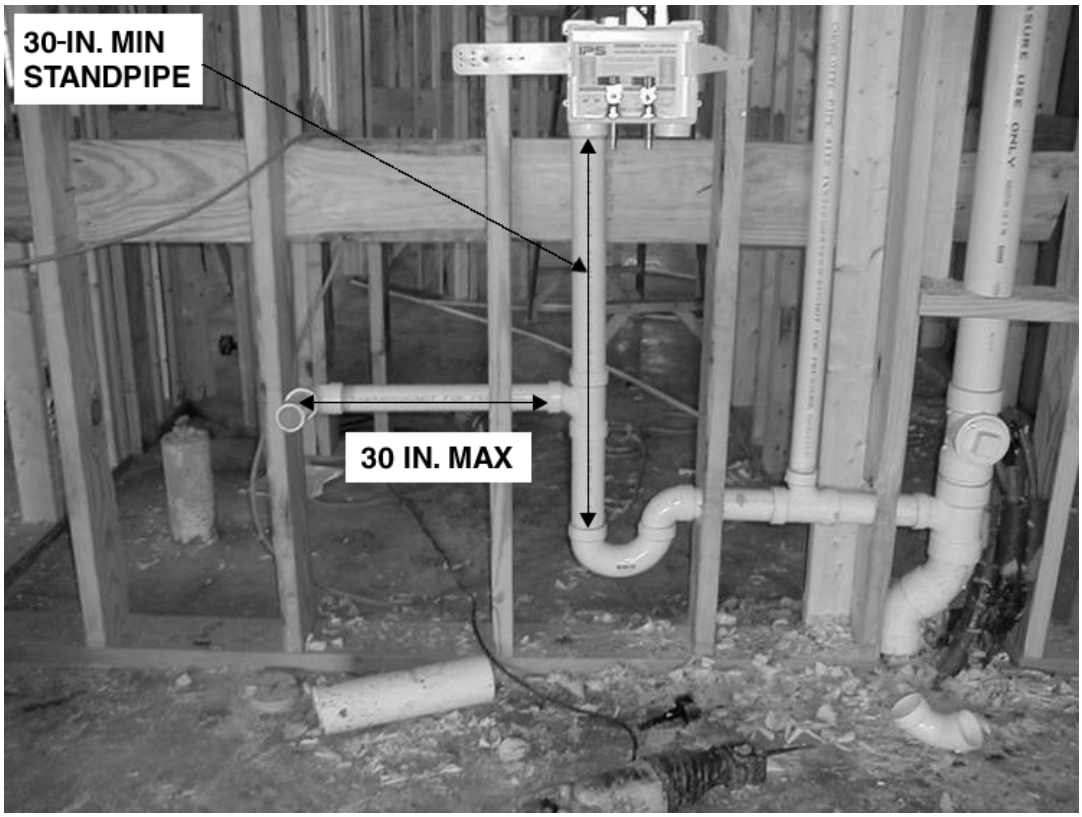

For SI: 1 inch = 25.4 mm.

Figure P2706.1.2.1
LAUNDRY TUB CONNECTION TO STANDPIPE

INTERNATIONAL CODE COUNCIL®
Copyright © 2015 ICC. ALL RIGHTS RESERVED. Accessed by David Dammon on Jun 21, 2017 12:30:52 PM pursuant to License Agreement with ICC. No further reproduction or distribution authorized. ANY UNAUTHORIZED REPRODUCTION OR DISTRIBUTION IS A VIOLATION OF THE FEDERAL COPYRIGHT ACT AND THE LICENSE AGREEMENT, AND SUBJECT TO CIVIL AND CRIMINAL PENALTIES THEREUNDER.

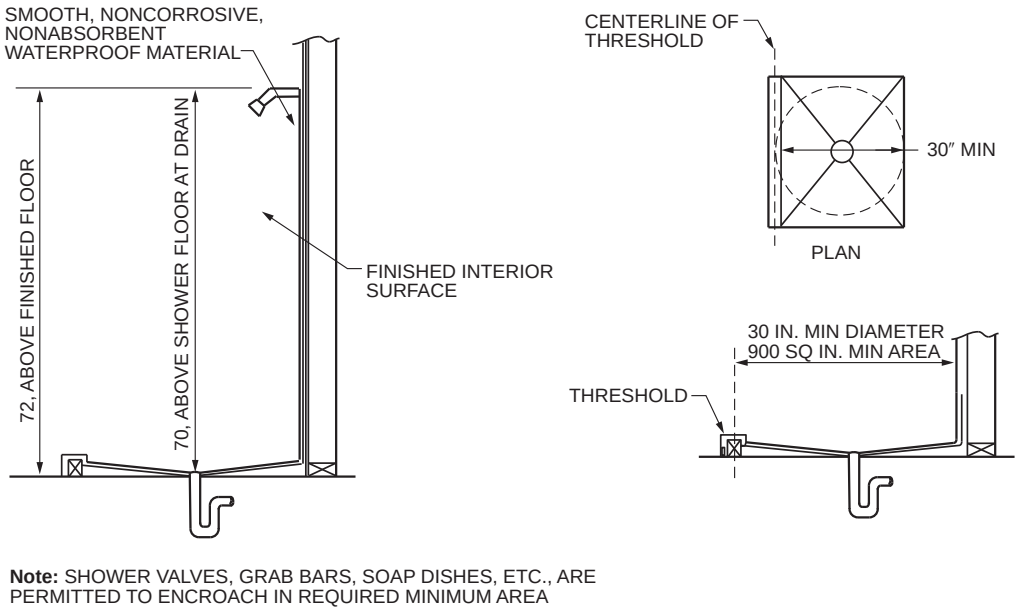

Note: SHOWER VALVES, GRAB BARS, SOAP DISHES, ETC., ARE PERMITTED TO ENCROACH IN REQUIRED MINIMUM AREA

Figure P2708.1
SHOWER COMPARTMENT

P2708.1.1 Access. The shower compartment access and egress opening shall have a clear and unobstructed finished width of not less than 22 inches (559 mm).

❖ Twenty-two inches (559 mm) corresponds to the approximate width of the shoulders of the average adult.

P2708.2 Shower drain. Shower drains shall have an outlet size of not less than $1^1/_2$ inches [38 mm] in diameter.

❖ The minimum size of a shower drain outlet is $1^1/_2$ inches.

P2708.3 Water supply riser. Water supply risers from the shower valve to the shower head outlet, whether exposed or concealed, shall be attached to the structure using support devices designed for use with the specific piping material or fittings anchored with screws.

❖ The shower head riser must be attached to a building structural element to protect the pipe and shower valve from damage caused by shower head movement [see Commentary Figures P2708.3(1) and P2708.3(2)]. Users commonly put force on the shower head arm when they adjust the spray pattern, add hose attachments and hang bathing product organizers. A standard practice for installing the riser is to place a drop-ear elbow at the top of the riser. A drop-ear elbow has two wing connections, permitting the elbow to be screwed into a structural member. Where drop-ear elbows are not used, one or more pipe straps are installed at the top of the riser. A support system specifically designed for riser support can also be used. This section intends to prohibit shoddy practice such as supporting the riser with nails driven beside the pipe and bent over the pipe.

Where the shower riser is exposed, the manufacturer typically provides a clamp or other means of support matching the finish of the exposed piping. The clamp or other support is firmly secured to a structural member and attached to the riser.

P2708.4 Shower control valves. Individual shower and tub/shower combination valves shall be equipped with control valves of the pressure-balance, thermostatic-mixing or combination pressure-balance/thermostatic-mixing valve types with a high limit stop in accordance with ASSE 1016/ASME A112.1016/CSA B125.16. The high limit stop shall be set to limit the water temperature to not greater than 120°F (49°C). In-line thermostatic valves shall not be used for compliance with this section.

❖ Commentary Figure P2708.4 shows exposure times at various water temperatures that cause third-degree burns to human skin. Industry safety experts have chosen 120°F (49°C) to be the maximum safe water temperature for showering and bathing purposes. In a showering application where the shower head is fixed, a user subjected to a surge of high-temperature water usually reacts by abruptly moving away from the hot spray. This abrupt movement often causes falls, resulting in the stunned user not being able to escape the scalding water stream. Children and some elderly persons often have delayed or no physical reaction to the scalding water such that they continue to stand in the stream. Therefore, showers and combination tub/showers must have a shower control valve that is capable of protecting an individual from being exposed to water temperatures in excess of 120°F (49°C). The control valve must be installed at the point of use. In other words, the person in the shower must have access to the control handle(s) of the valve.

INTERNATIONAL CODE COUNCIL®
Copyright © 2015 ICC. ALL RIGHTS RESERVED. Accessed by David Dammon on Jun 21, 2017 12:30:52 PM pursuant to License Agreement with ICC. No further reproduction or distribution authorized. ANY UNAUTHORIZED REPRODUCTION OR DISTRIBUTION IS A VIOLATION OF THE FEDERAL COPYRIGHT ACT AND THE LICENSE AGREEMENT, AND SUBJECT TO CIVIL AND CRIMINAL PENALTIES THEREUNDER.

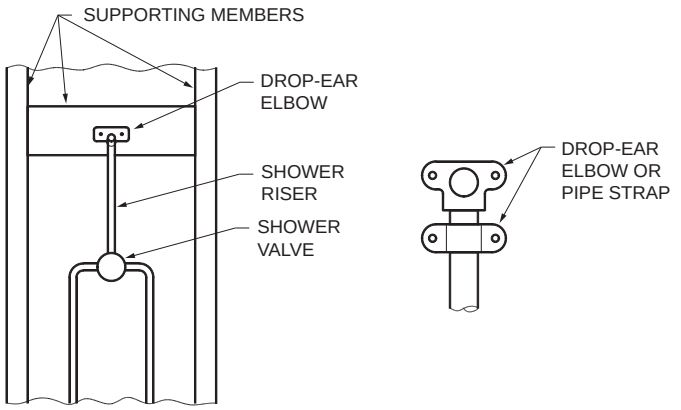

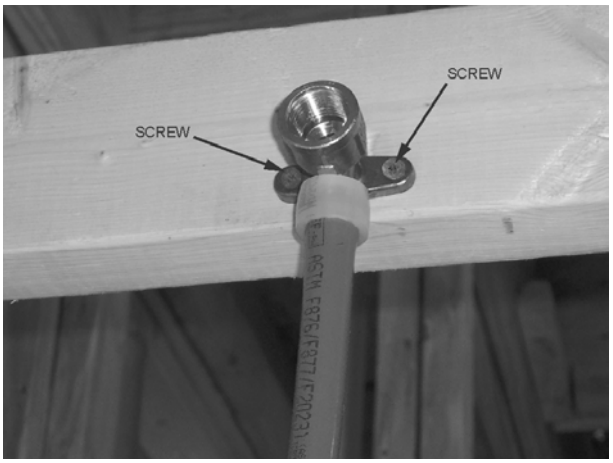

Figure P2708.3(1)
SECURING SHOWER RISER



Figure P2708.3(2)
SPECIAL BRACKET FOR SHOWER RISER
(Photo courtesy of Holdrite-Hubbard Enterprises)

The control valve must be designed to protect against two types of events: (1) extreme temperature fluctuations from the user's set temperature caused by changes in hot or cold water distribution line pressures and (2) extreme temperature conditions caused by the user either purposely or accidentally adjusting the control valve to deliver the hottest water available from the hot water distribution system. Where water inlet pressures or temperatures fluctuate during shower use, control valves complying with ASSE 1016/ASME A112.1016/CSA B125.16 must automatically and rapidly adjust to maintain the water discharge temperature to ±3.6°F (±2°C) of the user-selected temperature.

The standards also require that shower control valves have a maximum temperature-limit device that is not adjustable by the user at the point of use. The high-limit stop is typically an adjustable set screw or cam that is manually set to limit the travel of the control valve handle. The high-limit stop must be field adjusted at the time of installation to limit the delivered water temperature to a maximum of 120°F (49°C). Most control valve manufacturers' instructions require that a thermometer be used to verify the maximum discharge temperature from the valve.

The three types of shower control valves available are pressure balancing, thermostatic and combination thermostatic/pressure balancing. A pressure-balancing valve senses changes in pressure of the hot and cold water supplies (up to 50-percent pressure change). If the pressure on one side changes, the valve reacts so that the flow from each side of the valve is adjusted to maintain the user's temperature selection. The thermostatic valve senses the discharge water temperature and adjusts flows of supply water to the valve to maintain the user's set temperature. A thermostatic valve provides some limited protection against hot and cold supply pressure fluctuations (up to 20-percent pressure change). A combination thermostatic/pressure-balancing valve adjusts to changes in supply pressures (up to 50-percent pressure change) and discharge temperature.

Pressure-balancing control valves are used in a majority of shower applications. One slight disadvantage of the pressure-balanced-type control valve is that any change in the temperature setting of the water heating system will affect the maximum discharge temperature available from the control valve. If the system temperature is lowered, some users might

INTERNATIONAL CODE COUNCIL®
Copyright © 2015 ICC. ALL RIGHTS RESERVED. Accessed by David Dammon on Jun 21, 2017 12:30:52 PM pursuant to License Agreement with ICC. No further reproduction or distribution authorized. ANY UNAUTHORIZED REPRODUCTION OR DISTRIBUTION IS A VIOLATION OF THE FEDERAL COPYRIGHT ACT AND THE LICENSE AGREEMENT, AND SUBJECT TO CIVIL AND CRIMINAL PENALTIES THEREUNDER.

TIME AND TEMPERATURE RELATIONSHIP TO SERIOUS BURNS		
	Adults (skin thickness of 2.5 mm)	Children (skin thickness of 0.56 mm)
WATER TEMPERATURE	Time required for a third-degree burn to occur	
155°F (68°C)	1 second	0.5 second
148°F (64°C)	2 seconds	1 second
140°F (60°C)	5 seconds	1 second
133°F (56°C)	15 seconds	4 seconds
127°F (52°C)	1 minute	10 seconds
124°F (51°C)	3 minutes	1.5 minutes
120°F (48°C)	5 minutes	2.5 minutes
100°F (37°C)	Safe temperature for bathing	Safe temperature for bathing

For SI: 1 inch = 25.4 mm.

Figure P2708.4
TEMPERATURE BURN CHART

complain that they are not receiving hot enough water. If the system temperature is raised, the maximum water temperature available from the valve might be in excess of 120°F (49°C). Seasonal fluctuations in the cold water supply temperature can also affect the maximum discharge temperature. Thus, pressure-balancing-type control valves might require periodic readjustment of the high-limit setting.

The maximum discharge temperature from a thermostatic-type control valve is not affected by changes in the temperatures of the hot and cold water supplies to the valve except for when the hot water supply temperature falls below the high-limit setting. Although this type of valve might significantly reduce the need for readjustments to the high-limit setting, due to its inherent limited protection against supply-side pressure changes, a thermostatic valve might not be suitable for applications where large pressure fluctuations (greater than 20-percent change in pressure) are expected.

A combination pressure balanced/thermostatic control valve offers the greatest degree of protection for the shower user. As the name implies, this type of valve offers the best features of both the pressure-balanced-type valve and the thermostatic-type valve designs.

This section does not apply to control valves that supply water only for filling tubs (see Section P2713.3). Inline-type thermostatic and pressure-balancing valves do not satisfy the requirements of this section because they are not the final control valve that the user adjusts at the point of use and they do not have a high-limit setting feature.

P2708.5 Hand showers. Hand-held showers shall conform to ASME A112.18.1/CSA B125.1. Hand-held showers shall provide backflow protection in accordance with ASME A112.18.1/CSA B125.1 or shall be protected against backflow by a device complying with ASME A112.18.3.

❖ Because it is possible for a hand-held shower to be submerged in the bathtub or shower compartment base, a cross connection to waste water could be created. The hand-held shower must have adequate protection against backflow. The backflow protection may be integral to the hand-held shower or may be provided by an external backflow device that meets ASME A112.18.3. These types of showers are commonly installed in accessible shower enclosures. Their use, however, has increased in popularity in showers within a dwelling unit. The referenced standards specify the requirements for backflow protection of the hand-held shower.

A hand-held shower, used in a hand-held mode, is not considered to be the type of shower that requires a means to protect the user from scalding. The reason for this comes from the justifications that eventually led to the code requirement for antiscald shower valves (see commentary, Section P2708.3). Therefore, if the hand-held shower is mounted for use in a hands-free mode with the user in a standing position, a hand-held shower is no different than any other fixed-type shower head and must be supplied through an antiscald shower valve in accordance with Section P2708.3.

However, where a hand-held shower is used in a hand-held mode, most users, when subjected to a high-temperature surge of water spray, will either drop or simply redirect the hand-held shower. If the user is standing, the potential for a fall injury is minimal. If the user is sitting, fall injuries cannot occur. Therefore, where a hand-held shower is used only in a hand-held mode, the water discharged from a hand-held-only shower is not required to be supplied through an antiscald shower valve.

INTERNATIONAL CODE COUNCIL®
Copyright © 2015 ICC. ALL RIGHTS RESERVED. Accessed by David Dammon on Jun 21, 2017 12:30:52 PM pursuant to License Agreement with ICC. No further reproduction or distribution authorized. ANY UNAUTHORIZED REPRODUCTION OR DISTRIBUTION IS A VIOLATION OF THE FEDERAL COPYRIGHT ACT AND THE LICENSE AGREEMENT, AND SUBJECT TO CIVIL AND CRIMINAL PENALTIES THEREUNDER.

SECTION P2709
SHOWER RECEPTORS

P2709.1 Construction. Where a shower receptor has a finished curb threshold, it shall be not less than 1 inch (25 mm) below the sides and back of the receptor. The curb shall be not less than 2 inches (51 mm) and not more than 9 inches (229 mm) deep when measured from the top of the curb to the top of the drain. The finished floor shall slope uniformly toward the drain not less than $^1/_4$ unit vertical in 12 units horizontal (2-percent slope) nor more than $^1/_2$ unit vertical per 12 units horizontal (4-percent slope) and floor drains shall be flanged to provide a water-tight joint in the floor.

❖ This section regulates three aspects of shower receptors: (1) threshold height, (2) finished floor slope and (3) connection of the floor drain to the receptor. For factory-fabricated shower receptors, the requirements of the section are automatically covered by the applicable standards, ANSI Z124.2 and CSA B45.5. This section provides the necessary information for field-fabricated shower receptors.

The first part of the first sentence of this section allows for a shower receptor to not have a curb. This is necessary to enable "zero height threshold" shower receptors to be installed for wheelchair access or for ease of access for disabled users. If the shower receptor is to be designed with a threshold, this section requires that the top of the threshold be not less than 1 inch (25 mm) below the sides and back of the receptor. This is required so that if the drain should clog, water will overflow the threshold before overflowing the back or sides of the receptor. With respect to the top of the drain, the top of the curb cannot be less than 2 inches (51 mm) above the drain. This allows for some amount of water storage in the receptor so that if the drain is sluggish or a washcloth is accidently dropped over the drain, the user will notice the accumulation of water on the floor before water begins flowing over the threshold. There is also a maximum height of the top of the threshold above the drain of 9 inches (229 mm) so that the user does not have to step too far down into the receptor.

The required minimum slope of the finished floor is to keep shower water moving towards the drain. The maximum slope of the finished floor is to keep the shower floor from being too steep so that the user could slip and fall too easily.

Obviously, a floor drain in the shower receptor must be connected to the receptor in a water-tight manner. This requires a specially flanged drain design that enables the installer to make a proper water-tight seal. There are two types of special floor drains for showers: (1) flanged type and (2) clamp-ring type. Flanged-type drains are used on factory-fabricated receptors such as one-piece fiberglass or molded plastic receptors. Clamp-ring-type drains are used for field-fabricated receptors ("built up") where a liner or a coating that acts like a liner is used to make the shower floor waterproof.

P2709.2 Lining required. The adjoining walls and floor framing enclosing on-site built-up shower receptors shall be lined with one of the following materials:

1. Sheet lead.
2. Sheet copper.
3. Plastic liner material that complies with ASTM D4068 or ASTM D4551.
4. Hot mopping in accordance with Section P2709.2.3.
5. Sheet-applied load-bearing, bonded waterproof membranes that comply with ANSI A118.10.

The lining material shall extend not less than 2 inches (51 mm) beyond or around the rough jambs and not less than 2 inches (51 mm) above finished thresholds. Sheet-applied load bearing, bonded waterproof membranes shall be applied in accordance with the manufacturer's instructions.

❖ There are a variety of materials that can be used for a waterproof lining of shower receptors that are field built. Extending the material at least 2 inches (51 mm) beyond rough jambs and 2 inches (51 mm) above the finished threshold creates a water-tight pan beneath the finished floor of the shower receptor.

For the 2012 edition, the amount of liner material required above the finished threshold was reduced from 3 inches (76 mm) to 2 inches (51 mm) to be in alignment with *International Plumbing Code*® (IPC®) requirements.

P2709.2.1 PVC sheets. Plasticized polyvinyl chloride (PVC) sheet shall meet the requirements of ASTM D4551. Sheets shall be joined by solvent welding in accordance with the manufacturer's instructions.

❖ PVC shower liner membranes are an alternative to lead, copper and chlorinated polyethylene (CPE) liner materials.

P2709.2.2 Chlorinated polyethylene (CPE) sheets. Nonplasticized chlorinated polyethylene sheet shall meet the requirements of ASTM D4068. The liner shall be joined in accordance with the manufacturer's instructions.

❖ CPE shower liner membranes are an alternative to lead, copper and PVC liner materials.

P2709.2.3 Hot-mopping. Shower receptors lined by hot-mopping shall be built-up with not less than three layers of standard grade Type 15 asphalt-impregnated roofing felt. The bottom layer shall be fitted to the formed subbase and each succeeding layer thoroughly hot-mopped to that below. Corners shall be carefully fitted and shall be made strong and water tight by folding or lapping, and each corner shall be reinforced with suitable webbing hot-mopped in place. Folds, laps and reinforcing webbing shall extend not less than 4 inches (102 mm) in all directions from the corner and webbing shall be of *approved* type and mesh, producing a tensile strength of not less than 50 pounds per inch (893 kg/m) in either direction.

❖ Hot-mopping is permitted if three separate layers of Type 15 asphalt-impregnated roofing felt are thor-

INTERNATIONAL CODE COUNCIL®
Copyright © 2015 ICC. ALL RIGHTS RESERVED. Accessed by David Dammon on Jun 21, 2017 12:30:52 PM pursuant to License Agreement with ICC. No further reproduction or distribution authorized. ANY UNAUTHORIZED REPRODUCTION OR DISTRIBUTION IS A VIOLATION OF THE FEDERAL COPYRIGHT ACT AND THE LICENSE AGREEMENT, AND SUBJECT TO CIVIL AND CRIMINAL PENALTIES THEREUNDER.

oughly hot-mopped in succession. Corners must be carefully fitted, with folds extending at least 4 inches (102 mm) and webbing that has a minimum tensile strength of 50 pounds per inch (893 kg/m) in either direction.

P2709.2.4 Liquid-type, trowel-applied, load-bearing, bonded waterproof materials. Liquid-type**,** trowel-applied, load-bearing, bonded waterproof materials shall meet the requirements of ANSI A118.10 and shall be applied in accordance with the manufacturer's instructions.

❖ Liquid-type, trowel-applied, load-bearing, bonded waterproof material can be applied to various substrates in accordance with the manufacturer's instructions. No reinforcing materials are necessary as the cured product forms a flexible water-tight barrier that prevents water from penetrating to the substrate materials.

P2709.3 Installation. Lining materials shall be sloped one-fourth unit vertical in 12 units horizontal (2-percent slope) to weep holes in the subdrain by means of a smooth, solidly formed subbase, shall be properly recessed and fastened to *approved* backing so as not to occupy the space required for the wall covering, and shall not be nailed or perforated at any point less than 1 inch (25.4 mm) above the finished threshold.

❖ This section requires that the lining material (just below the finished floor) maintain a gradient to the drain of at least one fourth unit vertical in 12 units horizontal (2-percent slope) to the weep holes in the subdrain (see Commentary Figure P2709.1). No punctures or perforations in the lining material are permitted at any point less than 1 inch (25.4 mm) above finished threshold.

P2709.3.1 Materials. Lead and copper linings shall be insulated from conducting substances other than the connecting drain by 15-pound (6.80 kg) asphalt felt or its equivalent. Sheet lead liners shall weigh not less than 4 pounds per square foot (19.5 kg/m^2). Sheet copper liners shall weigh not less than 12 ounces per square foot (3.7 kg/m^2). Joints in lead and copper pans or liners shall be burned or silver brazed, respectively. Joints in plastic liner materials shall be joined in accordance with the manufacturer's instructions.

❖ The specified weights determine the thickness of lead and copper sheet materials.

P2709.4 Receptor drains. An *approved* flanged drain shall be installed with shower subpans or linings. The flange shall be placed flush with the subbase and be equipped with a clamping ring or other device to make a water-tight connection between the lining and the drain. The flange shall have weep holes into the drain.

❖ As illustrated in Commentary Figure P2709.1, a flanged drain must be installed flush with the sub-base and equipped with a clamping ring to create a water-tight connection between the lining and the drain. The purpose of this is to drain any water that seeps down to the liner from the shower floor.

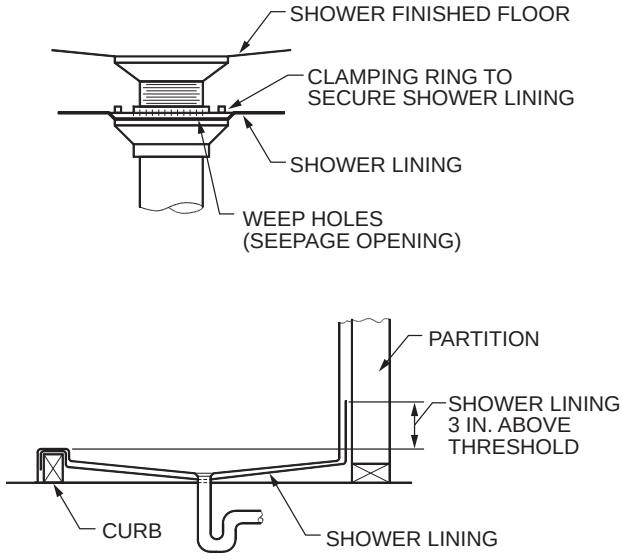

For SI: 1 inch = 25.4 mm.

Figure P2709.1
BUILT-UP SHOWER DRAIN AND LINER ARRANGEMENT

SECTION P2710
SHOWER WALLS

P2710.1 Bathtub and shower spaces. Walls in shower compartments and walls above bathtubs that have a wall-mounted showerhead shall be finished in accordance with Section R307.2.

❖ Section P2710.1 directs the reader to Section R307.2, which addresses wall construction. Also see Section R702.4.

SECTION P2711
LAVATORIES

P2711.1 Approval. Lavatories shall conform to ASME A112.19.1/CSA B45.2, ASME A112.19.2/CSA B45.1, ASME A112.19.3/CSA B45.4 or CSA B45.5/IAPMO Z124.

❖ Lavatories are available in enameled cast iron, vitreous china, stainless steel, porcelain-enameled-formed steel, plastic and nonvitreous ceramic. Lavatories also come in a variety of shapes and sizes, such as wall-mounted, hanger-mounted, pedestal, rimmed, above-counter basins and undermounted types. Referenced standards previously required lavatories to have an overflow; however, that is not currently the case. The provision of an overflow and its location is an option of the manufacturer. The reason for eliminating the overflow requirement was the lack of use, which resulted in the growth of bacteria and microorganisms.

INTERNATIONAL CODE COUNCIL®
Copyright © 2015 ICC. ALL RIGHTS RESERVED. Accessed by David Dammon on Jun 21, 2017 12:30:52 PM pursuant to License Agreement with ICC. No further reproduction or distribution authorized. ANY UNAUTHORIZED REPRODUCTION OR DISTRIBUTION IS A VIOLATION OF THE FEDERAL COPYRIGHT ACT AND THE LICENSE AGREEMENT, AND SUBJECT TO CIVIL AND CRIMINAL PENALTIES THEREUNDER.

P2711.2 Cultured marble lavatories. Cultured marble vanity tops with an integral lavatory shall conform to CSA B45.5/IAPMO Z124.

❖ Vanity tops with an integral lavatory that is all plastic must conform to the standard. Lavatory units can be constructed of a variety of synthetic materials including ABS, PVC, gel-coated fiberglass-reinforced plastic, acrylic, cultured marble cast-filled fiberglass, polyester and cultured marble acrylic. Cultured marble vanity tops are impregnated with fire-retardant chemicals, reducing the fuel contribution of the unit during a fire.

P2711.3 Lavatory waste outlets. Lavatories shall have waste outlets not less than $1^1/_4$ inch (32 mm) in diameter. A strainer, pop-up stopper, crossbar or other device shall be provided to restrict the clear opening of the waste outlet.

❖ The first sentence of this section requires that lavatories have a waste outlet assembly that is not less than $1^1/_4$ inches (32 mm). The second sentence requires that lavatory drain openings have a restriction device that prevents foreign items such as jewelry, toiletry items and cosmetics from inadvertently entering the drainage system.

P2711.4 Movable lavatory systems. Movable lavatory systems shall comply with ASME A112.19.12.

❖ Movable and pivoting lavatories allow the user to adjust the location of a lavatory upward and downward, from side-to-side and front-to-back to maximize the ease of use of the fixture. Some products also pivot.

SECTION P2712
WATER CLOSETS

P2712.1 Approval. Water closets shall conform to the water consumption requirements of Section P2903.2 and shall conform to ASME A112.19.2/CSA B45.1, ASME A112.19.3/CSA B45.4 or CSA B45.5/IAPMO Z124. Water closets shall conform to the hydraulic performance requirements of ASME A112.19.2/CSA B45.1. Water closet tanks shall conform to ASME A112.19.2/CSA B45.1, ASME A112.19.3/CSA B45.4 or CSA B45.5/IAPMO Z124. Water closets that have an invisible seal and unventilated space or walls that are not thoroughly washed at each discharge shall be prohibited. Water closets that allow backflow of the contents of the bowl into the flush tank shall be prohibited. Water closets equipped with a dual flushing device shall comply with ASME A112.19.14.

❖ A water closet is referred to by many other names, including "toilet," "stool" and "commode." The term "water closet" is the technical expression that derives from the first attempt to bring plumbing indoors. Early water closets consisted of a room that was the size of a closet, containing a cistern and a chair. Today, the term "water closet" applies to the name of the fixture itself. The most common word used in the United States to identify a water closet is "toilet;" however, the word "toilet" more accurately describes the room in which a water closet is installed.

The water closet is the fixture primarily responsible for the modernization of plumbing. The fixture effectively disposes of human waste in a sanitary manner. A water closet that does not thoroughly scour the bowl surface when flushed will harbor bacteria and germs that pose health risks to occupants. This would also be the case if the contents of the bowl were to enter the flush tank.

In accordance with Table P2903.2, water closets must be of the water-conservation type. The fixture standard limits the water consumption to an average of 1.6 gallons (6.1 L) of water per flushing cycle. No cycle during the testing can exceed 2.0 gallons (7.6 L) per flush. To determine conformance, a representative model of the water closet must be tested for its flushing efficiency. The flushing test uses polypropylene balls and polyethylene granule discs. There is also a test for the ability to remove an ink stain on the inside surface of the water closet bowl and a dye test measuring the exchange rate of water in the bowl. Another test measures the capacity of the drain line attached to the water closet to carry away the solids from the bowl after being flushed.

Dual flush water closets are becoming very popular and, in some locales, mandatory, so that less water is used to flush the bowl contents. These water closets must comply with the standard for dual flush water closets.

P2712.2 Flushing devices required. Water closets shall be provided with a flush tank, flushometer tank or flushometer valve designed and installed to supply water in sufficient quantity and flow to flush the contents of the fixture, to cleanse the fixture and refill the fixture trap in accordance with ASME A112.19.2/CSA B45.1.

❖ Generally, there are three physical configurations of water closets: flushometer valve equipped (bowl only), close coupled and one piece. A flushometer valve water closet is a bowl only (no tank) that requires the installation of a separate flushometer valve to the bowl. A close-coupled water closet has a bowl with a separate gravity-type flush tank or flushometer tank that is mounted to the bowl. A one-piece water closet is constructed with a gravity-type flush tank or flushometer tank integral with the bowl construction. The most common type installed in residential buildings is the close-coupled, gravity-type tank water closet. Regardless of the type of flushing mechanism used, the resulting effect must be the evacuation of the contents of the bowl, cleansing of the bowl's wetted surfaces and restoration of water in the trapway to maintain a 2-inch (51 mm) liquid seal. These performance parameters are ensured for each model of water closet by the testing protocols of ASME A112.19.2/CSA B45.1.

INTERNATIONAL CODE COUNCIL®
Copyright © 2015 ICC. ALL RIGHTS RESERVED. Accessed by David Dammon on Jun 21, 2017 12:30:52 PM pursuant to License Agreement with ICC. No further reproduction or distribution authorized. ANY UNAUTHORIZED REPRODUCTION OR DISTRIBUTION IS A VIOLATION OF THE FEDERAL COPYRIGHT ACT AND THE LICENSE AGREEMENT, AND SUBJECT TO CIVIL AND CRIMINAL PENALTIES THEREUNDER.

P2712.3 Water supply for flushing devices. An adequate quantity of water shall be provided to flush and clean the fixture served. The water supply to flushing devices equipped for manual flushing shall be controlled by a float valve or other automatic device designed to refill the tank after each discharge and to completely shut off the water flow to the tank when the tank is filled to operational capacity. Provision shall be made to automatically supply water to the fixture so as to refill the trap after each flushing.

❖ In a more general way, the first sentence of this section states the same thing as required by Section P2712.2. The remainder of this section describes the required operation of a gravity-type flush tank. A gravity-type flush tank has an automatic fill valve (sometimes called a "float valve") that allows water to fill the tank to a prescribed height. A valve at the bottom of the tank (called the "flush valve") is triggered to open by the user activating a lever or button on the outside of the tank. The water drains from the flush tank into the internal waterways of the water closet bowl to start a flushing action within the bowl. Once the water in the flush tank depletes to a certain level, the flush valve closes and the automatic fill valve begins filling the tank with water to be ready for the next flush cycle. Depending on the design of the water closet, replenishment of the water in the trap of the bowl could be accomplished by a bowl internal waterway design or a small tube from the fill valve (called the "refill tube"), directing water into the tank overflow tube, which drains into the bowl.

The design of gravity-flush tanks varies considerably even within the same manufacturer's product line. Flush tanks are engineered specifically for each water closet bowl design in order to produce the required flushing action using not more than a specified amount of water required by the fixture standard (ASME A112.19.2/CSA B45.1). In order to ensure that the water closet functions as originally intended by the manufacturer, identically designed replacement parts should be used when making repairs.

As Section P2712.2 indicates, two other major devices for supplying flushing water to a water closet bowl are the flushometer tank and the flushometer valve. From the exterior, a flushometer tank looks like a gravity-flush tank; however, the flushing mechanism is quite different. This design uses a pressure vessel to accumulate a specific volume of water with a volume of compressed air above the water. When an external lever or button is actuated by the user, a flush valve opens, allowing the pressurized water to exit the pressure vessel into the internal waterways of the bowl to initiate flushing action. The flushing water exits with significant velocity so as to create a rapid and highly effective flushing action in the bowl.

The flushometer valve flushing device is a special type of water control valve that is mounted above the water closet bowl. A $1^1/_2$-inch (38 mm) vertical tube connects the outlet of the flushometer valve to a connector (called the "spud") on the top or the top rear of the water closet bowl. When the user actuates a lever on the flushometer valve, a diaphragm mechanism in the valve moves to open an internal water valve to discharge water into the outlet tube of the valve. The valve stays open for a predetermined amount of time to discharge a specific volume of water and then automatically closes. The discharged water enters the internal waterways of the water closet bowl to initiate flushing action in the bowl.

P2712.4 Flush valves in flush tanks. Flush valve seats in tanks for flushing water closets shall be not less than 1 inch (25 mm) above the flood-level rim of the bowl connected thereto, except an *approved* water closet and flush tank combination designed so that when the tank is flushed and the fixture is clogged or partially clogged, the flush valve will close tightly so that water will not spill continuously over the rim of the bowl or backflow from the bowl to the tank.

❖ This section pertains only to gravity-type flush tanks. The design of the flush valve in the bottom of the tank must have the seat of the valve located not less than 1 inch (25 mm) above the flood-level rim of the water closet bowl. This is to protect the flush tank from contamination caused by waste from the water closet bowl from backing up into the tank should the outlet of the water closet bowl become clogged.

An exception is provided for those designs of gravity-type flush tanks that are integral to the water closet bowl where the flush valve seat cannot be above the flood-level rim of the water closet bowl. In these designs, a special mechanical arrangement must be used that keeps the flush valve tightly closed should the water closet bowl become partially or fully clogged. This arrangement satisfies the requirement of preventing backflow of the bowl contents into the tank and prevents water from continuously spilling into the bowl when the bowl is clogged.

P2712.5 Overflows in flush tanks. Flush tanks shall be provided with overflows discharging to the water closet connected thereto and such overflow shall be of sufficient size to prevent flooding the tank at the maximum rate at which the tanks are supplied with water according to the manufacturer's design conditions.

❖ This section pertains only to gravity-type flush tanks. The design of the flush tank must have an overflow pipe that drains into the water closet bowl to prevent the water in the tank from rising above a certain level should the automatic fill valve fail to shut off the water flow. The overflow pipe must be designed to accommodate draining of the maximum water discharge rate from a fully opened fill valve.

Automatic fill valves for gravity-type flushing water closets must be of the antisiphon type to protect the water distribution system from contamination that might be in the water of the flush tank (see Table P2701.1). Antisiphon fill valves must have a "critical level" marking that, when the fill valve is installed in the tank, must be above the top of the overflow pipe. Proper location of the critical level of the fill valve ensures that the backflow protection of the fill valve is not compromised. Fill valve manufacturer's instruc-

INTERNATIONAL CODE COUNCIL®
Copyright © 2015 ICC. ALL RIGHTS RESERVED. Accessed by David Dammon on Jun 21, 2017 12:30:52 PM pursuant to License Agreement with ICC. No further reproduction or distribution authorized. ANY UNAUTHORIZED REPRODUCTION OR DISTRIBUTION IS A VIOLATION OF THE FEDERAL COPYRIGHT ACT AND THE LICENSE AGREEMENT, AND SUBJECT TO CIVIL AND CRIMINAL PENALTIES THEREUNDER.

tions will indicate the location of the critical level of the valve and how far that location needs to be above the top of the overflow pipe. Typically, this dimension is 1 inch (25 mm).

In certain designs of water closet bowls with integral flush tanks, the top of the overflow pipe is below the water closet flood-level rim. To ensure that the fill valve backflow protection is not compromised should the tank water level rise above the top of the overflow pipe, overflow openings are provided in the back wall of the tank to serve as a secondary overflow.

P2712.6 Access. Parts in a flush tank shall be accessible for repair and replacement.

❖ The components in both gravity-type and flushometer tank-type flush tanks for water closets will periodically require repair and replacement. Permanent construction must not block access to the flush tank so that service personnel can work on the components without needing to disassemble the flush tank from the water closet or remove the water closet from its mounted location.

P2712.7 Water closet seats. Water closets shall be equipped with seats of smooth, nonabsorbent material and shall be properly sized for the water closet bowl type.

❖ A water closet seat must be designed to be easily cleaned. The seat must also be designed to suit the bowl. For example, an elongated bowl requires an elongated seat.

P2712.8 Flush tank lining. Sheet copper used for flush tank linings shall have a weight of not less than 10 ounces per square foot (3 kg/m^2).

❖ Long ago, sheet copper was commonly used to line wooden flush tanks so that they would hold water without leaking.

P2712.9 Electro-hydraulic water closets. Electro-hydraulic water closets shall conform to ASME A112.19.2/CSA B45.1.

❖ An electrohydraulic water closet is a siphonic or washdown water closet with a nonmechanical trap seal. The water closet incorporates electrical motor(s), pump(s) and controllers to facilitate the flushing action.

SECTION P2713
BATHTUBS

P2713.1 Bathtub waste outlets and overflows. Bathtubs shall be equipped with a waste outlet and an overflow outlet. The outlets shall be connected to waste tubing or piping not less than $1^1/_2$ inches (38 mm) in diameter. The waste outlet shall be equipped with a water-tight stopper.

❖ An overflow opening must be provided in a bathtub. Waste overflows are sometimes used to access the drain piping for the purpose of rodding to clear blockages in the trap and fixture drain piping. Waste overflow drain assemblies are typically designed only for the removal of displaced water when a bather enters a full tub. They are not designed to prevent overfilling of a bathtub should the tub filler faucet be left open and unattended.

A device for blocking the flow of tub water from the outlet (tub drain) must be provided in order to allow the user to fill the tub with water for bathing. The device could be as simple as a "pull out"-type rubber plug that tightly fits in the opening of the waste assembly or other approved methods such as trip lever waste units, cable-actuated closure devices or metal push/pull or pop-up devices.

P2713.2 Bathtub enclosures. Doors within a bathtub enclosure shall conform to ASME A112.19.15.

❖ Bathtub/whirlpool bathtubs with pressure-sealed doors allow the bather to enter the fixture at approximately the same level as the floor. The door can be opened, allowing the bather easier access to the bathtub. Once inside the fixture, the door is closed and the water is turned on. Sensor switches, which note the presence of water entering the vessel, activate an air pump that pressurizes the door seal, thereby keeping the water within the bathing vessel. Upon completion of bathing, the bather can open the door only when the bath water is drained from the vessel.

P2713.3 Bathtub and whirlpool bathtub valves. Hot water supplied to bathtubs and whirlpool bathtubs shall be limited to a temperature of not greater than 120°F (49°C) by a water-temperature limiting device that conforms to ASSE 1070 or CSA B125.3, except where such protection is otherwise provided by a combination tub/shower valve in accordance with Section P2708.4.

❖ This section addresses faucets used only for the filling of whirlpool tubs or bathtubs. The water discharged from these "tub-filler" faucets must be limited to a maximum temperature of 120°F (49°C) to prevent skin burns (see commentary, Section P2708.3). It is not uncommon for a user to fill a bathtub in advance, with water hotter than he or she could stand, in an attempt to compensate for the cooling effect caused by the tub walls or a planned delay in entering the tub. These users typically avoid skin burns by testing the temperature of the water in the tub and adding cold water to temper the hot water before getting into the tub; however, there have been cases in which the user was sitting on the side of the tub, reached to adjust the control for cold water, accidentally slipped into the tub and received third-degree burns. In other cases, children placed in a tub being filled have been scalded because the water became hotter some time after an adult tested the flowing water temperature at the beginning of tub filling. While it would seem that hot water supply temperatures might be simply controlled by setting the water heater thermostat to 120°F (49°C), experience has indicated that this is an unreliable means for limiting the temperature of hot water in any type of building because thermostats are inaccurate and are too easy for laypersons to adjust. The adjustment to a higher temperature setting is usually in response to users' complaints that there is not enough hot water during periods of high demand. Adjusting a water heater to a

INTERNATIONAL CODE COUNCIL®
Copyright © 2015 ICC. ALL RIGHTS RESERVED. Accessed by David Dammon on Jun 21, 2017 12:30:52 PM pursuant to License Agreement with ICC. No further reproduction or distribution authorized. ANY UNAUTHORIZED REPRODUCTION OR DISTRIBUTION IS A VIOLATION OF THE FEDERAL COPYRIGHT ACT AND THE LICENSE AGREEMENT, AND SUBJECT TO CIVIL AND CRIMINAL PENALTIES THEREUNDER.

higher temperature effectively creates more hot water volume. This is because less, higher temperature, hot water flow is required for any particular mixed hot/cold water temperature and, thus, there is effectively more hot water available to the users. Because the code does not regulate the temperature to which water heater thermostats must be set and the thermostats are not tamperproof or have the necessary repeatable accuracy, water temperature control devices exterior to the water heater unit must be used to positively limit the discharge water temperature to 120°F (49°C).

The temperature-limiting device required by this section is a control valve that might require periodic adjustment, maintenance or replacement. Obviously, these valves should be located so that they can be accessed. Access panels in finished walls, floors or ceilings might be required in order to provide access.

This code section allows for a combination tub/shower valve (complying with ASSE 1016/ASME A112.1016/CSA B125.16), with or without a fixed shower head, to be used for filling a tub, including a large whirlpool tub. In actual practice, however, the installation of a combination tub/shower valve as a tub filler for a large tub (such as a garden or whirlpool tub) is rarely done, for several reasons: (1) faucet manufacturers generally do not provide or offer "extra long" wall-mount tub spouts to enable the discharge of the spout to be located over the tub well so as to not splash onto the tub deck and (2) the placement of the water control on the wall makes it difficult for a user sitting in a large tub to add more water if needed. This "allowance" for a combination tub/shower valve for a tub application might lead the reader to assume that any device meeting ASSE 1016/ASME A112.1016/CSA B125.16 is also acceptable for meeting the requirements of this section, but this is not the case. Combination tub/shower valves are the only ASSE 1016/ASME A112.1016/CSA B125.16 device that can be used to meet the requirements of this section.

This is a reason why ASSE 1016 valves (other than combination tub/shower valves) cannot be used for the ASSE 1070 or CSA B125.3 device required by this section. ASSE 1016 or CSA B125.3 devices, other than combination tub/shower valves, have a limited useful "maximum flow" rating. In other words, for flows in excess of 2.5 gallons per minute (gpm) [9.5 liters per minute (lpm)], the pressure drop through these devices severely limits the user's ability to fill a large tub in short order. ASSE 1070 and CSA B125.3 devices have a much higher usable flow rate, typical of what is needed to rapidly fill a large bathtub or whirlpool tub. The "allowance" to use a combination tub/shower valve complying with Section 424.3 for a tub-filler faucet is a modest compromise directed at the most commonly installed, minimum size [30 inches (762 mm) x 60 inches (1524 mm) x 16 inches (406 mm) deep], standard tub found in most residential bathrooms. The filling time of this standard tub size using a combination tub/shower valve through a standard tub spout is deemed "reasonable" based upon years of user experience with filling tubs through anti-scald-type combination tub/shower valves. However, where tub sizes are larger, higher faucet flow rates are required to fill those tubs within an acceptable length of time. Requiring the use of an ASSE 1070 device with the higher flow-through rating ensures that larger tubs can be filled quickly so that the tub water temperature has less time to "cool off" since these devices are limiting the discharge temperature to 120°F (49°C).

Where a hand-held shower is connected to a tub-filler faucet, the hand shower is not required to be provided with water supplied through an ASSE 1016/ASME A112.1016/CSA B125.16 device as is required for a standup-type shower application. The hand-held shower also does not "reclassify" a tub- filler faucet as a "combination tub/shower valve" such that it would be required to comply with ASSE 1016/ASME A112.1016/CSA B125.16.

SECTION P2714
SINKS

P2714.1 Sink waste outlets. Sinks shall be provided with waste outlets not less than $1^1/_2$ inches (38 mm) in diameter. A strainer, crossbar or other device shall be provided to restrict the clear opening of the waste outlet.

❖ This section requires sinks such as dishwashing sinks, food prep sinks and handwashing sinks (but not lavatories) be provided with waste outlet assemblies that are not less than $1^1/_2$ inches (38 mm) in diameter. The drain opening in the sink can be larger than $1^1/_2$ inches (38 mm) so that a $3^1/_2$-inch (89 mm) basket strainer assembly or a food waste disposer can be installed. Waste outlet assemblies must be provided with strainers or crossbars to prevent large items from entering the drainage system.

P2714.2 Movable sink systems. Movable sink systems shall comply with ASME A112.19.12.

❖ Movable sinks allow the user to adjust the elevation of the sink for easier use.

SECTION P2715
LAUNDRY TUBS

P2715.1 Laundry tub waste outlet. Each compartment of a laundry tub shall be provided with a waste outlet not less than $1^1/_2$ inches (38 mm) in diameter. A strainer or crossbar shall restrict the clear opening of the waste outlet.

❖ This section requires laundry tubs be provided with waste outlet assemblies that are not less than $1^1/_2$ inches (38 mm) in diameter. Waste outlet assemblies must be provided with strainers or crossbars to prevent large items from entering the drainage system.

INTERNATIONAL CODE COUNCIL®
Copyright © 2015 ICC. ALL RIGHTS RESERVED. Accessed by David Dammon on Jun 21, 2017 12:30:52 PM pursuant to License Agreement with ICC. No further reproduction or distribution authorized. ANY UNAUTHORIZED REPRODUCTION OR DISTRIBUTION IS A VIOLATION OF THE FEDERAL COPYRIGHT ACT AND THE LICENSE AGREEMENT, AND SUBJECT TO CIVIL AND CRIMINAL PENALTIES THEREUNDER.

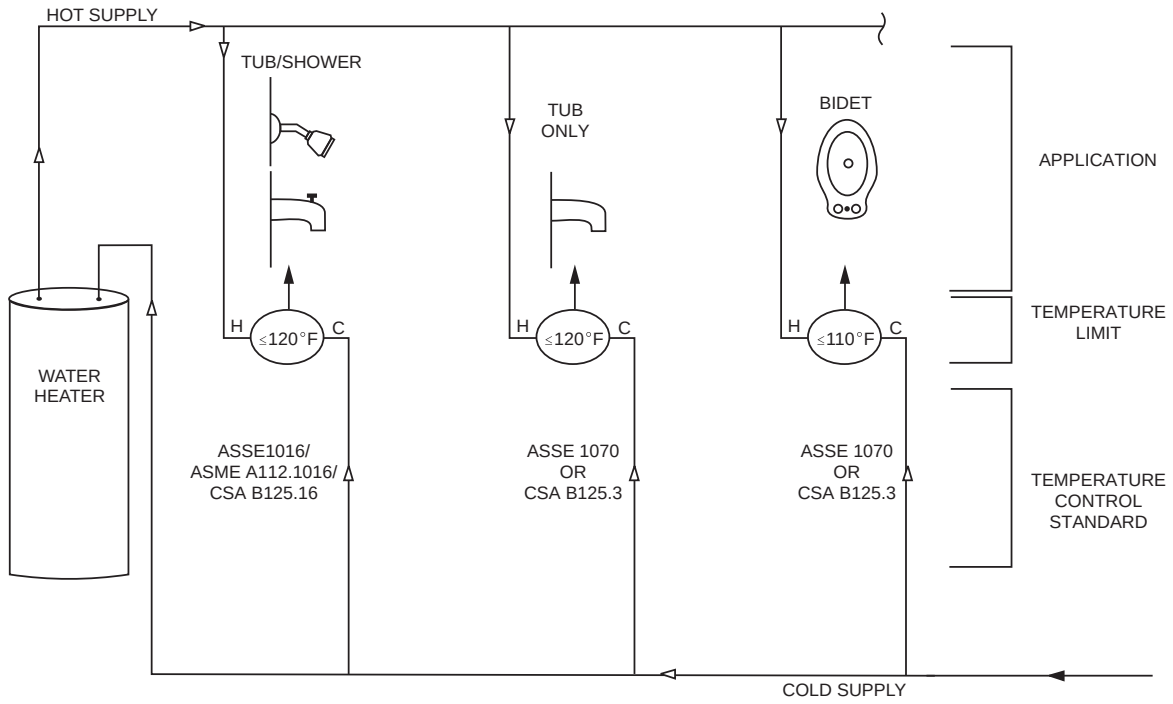

For SI: °C = (°F - 32)/1.8.

Figure P2713.3
DELIVERED WATER TEMPERATURE LIMITS AND TEMPERATURE CONTROL STANDARDS

SECTION P2716
FOOD-WASTE DISPOSER

P2716.1 Food-waste disposer waste outlets. Food-waste disposers shall be connected to a drain of not less than $1^1/_2$ inches (38 mm) in diameter.

❖ The outlet, or discharge, of the food-waste disposer must be at least $1^1/_2$ inches (38 mm) in diameter, which is consistent with the size of the waste outlet assembly tubing from a kitchen sink (see Section P2714.1).

P2716.2 Water supply required. A sink equipped with a food-waste disposer shall be provided with a faucet.

❖ A supply of water is necessary to promote proper food waste disposer operation and to carry food waste into and through the drain.

SECTION P2717
DISHWASHING MACHINES

P2717.1 Protection of water supply. The water supply to a dishwasher shall be protected against backflow by an *air gap* complying with ASME A112.1.3 or A112.1.2 that is installed integrally within the machine or a backflow preventer in accordance with Section P2902.

❖ This section requires protection of the water distribution system against backflow from a dishwasher water supply connection. An air gap or air gap device inside of the machine (i.e., integral with the machine) is what the vast majority of manufacturers provide. Where an air gap is not provided integral to the machine, a backflow preventer external to the machine must be installed in the water supply line to the dishwasher.

P2717.2 Sink and dishwasher. The combined discharge from a dishwasher and a one- or two-compartment sink, with or without a food-waste disposer, shall be served by a trap of not less than $1^1/_2$ inches (38 mm) in outside diameter. The dishwasher discharge pipe or tubing shall rise to the underside of the counter and be fastened or otherwise held in that position before connecting to the head of the food-waste disposer or to a wye fitting in the sink tailpiece.

❖ In the majority of residential kitchen arrangements, a dishwasher is often located directly adjacent to the kitchen sink. Where the kitchen sink is not equipped with a food grinder, the discharge tube from the dishwasher must connect to the sink waste tailpiece through an angled tube (see the right panel of Commentary Figure P2717.2). This section also requires that the discharge tube be fastened to the underside of the countertop in order to reduce the possibility of waste water from the sink backing up into the dishwasher should a drain clog occur.

INTERNATIONAL CODE COUNCIL®
Copyright © 2015 ICC. ALL RIGHTS RESERVED. Accessed by David Dammon on Jun 21, 2017 12:30:52 PM pursuant to License Agreement with ICC. No further reproduction or distribution authorized. ANY UNAUTHORIZED REPRODUCTION OR DISTRIBUTION IS A VIOLATION OF THE FEDERAL COPYRIGHT ACT AND THE LICENSE AGREEMENT, AND SUBJECT TO CIVIL AND CRIMINAL PENALTIES THEREUNDER.

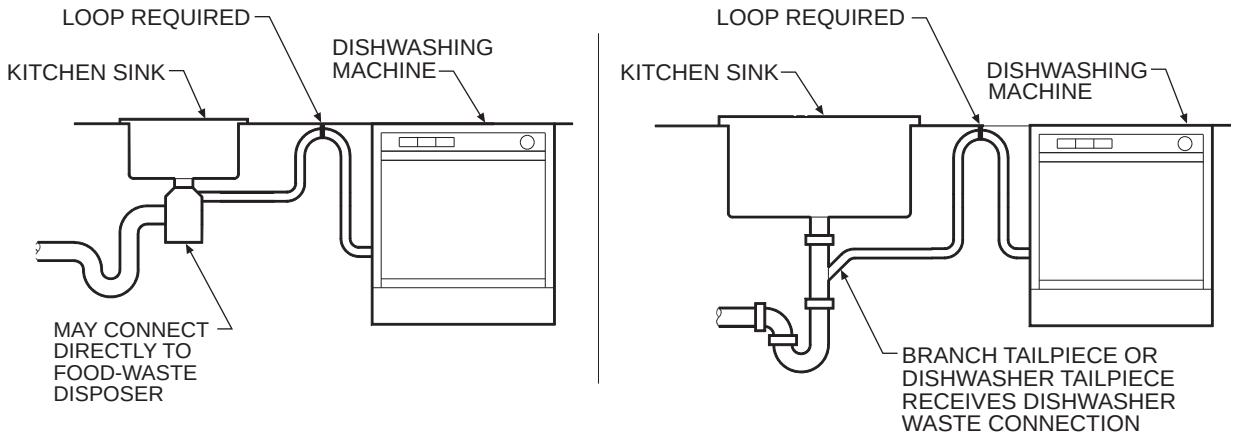

Figure P2717.2
DISHWASHER WASTE CONNECTIONS

SECTION P2718
CLOTHES WASHING MACHINE

P2718.1 Waste connection. The discharge from a clothes washing machine shall be through an *air break*.

❖ A clothes-washing machine must not be directly connected to the sanitary drainage system in order to prevent contamination of the washer with sewage should the drainage system become clogged. Because the discharge from a clothes washer is waste water, the indirect connection is only required to be an air break. The air-break connection also prevents siphoning of the liquids within the clothes washer where the discharge is to a standpipe waste receptor [see the commentary to Section P2706.2 for further information on standpipes and Section P2706.3, Exception 2, for use of a laundry tray (tub) as a waste receptor].

SECTION P2719
FLOOR DRAINS

P2719.1 Floor drains. Floor drains shall have waste outlets not less than 2 inches (51 mm) in diameter and a removable strainer. Floor drains shall be constructed so that the drain can be cleaned. Access shall be provided to the drain inlet. Floor drains shall not be located under or have their access restricted by permanently installed appliances.

❖ Although the code does not specifically require floor drains, designers often include floor drains in single-family dwellings to provide for emergency drainage or to meet specific drainage needs (e.g., relief valve drains for water heaters, condensate drains, etc.). Floor drains must conform to ASME A112.6.3 as listed in Table P2701.1. Unless used as a receptor, floor drains are viewed as emergency drains and Table P3004.1 does not assign them a fixture unit value. Section P2719.1 clearly states that the outlet (hence, the trap and drain also) must be not less than 2 inches (51 mm) in diameter.

It is important to not have floor drains concealed under furnaces, water heaters or other permanently installed appliances so that the drain strainer can be inspected and cleaned periodically and the floor drain and connected piping can be rodded to clear clogs.

SECTION P2720
WHIRLPOOL BATHTUBS

P2720.1 Access to pump. Access shall be provided to circulation pumps in accordance with the fixture or pump manufacturer's installation instructions. Where the manufacturer's instructions do not specify the location and minimum size of field-fabricated access openings, an opening of not less than 12-inches by 12-inches (305 mm by 305 mm) shall be installed for access to the circulation pump. Where pumps are located more than 2 feet (610 mm) from the access opening, an opening of not less than 18 inches by 18 inches (457 mm by 457 mm) shall be installed. A door or panel shall be permitted to close the opening. The access opening shall be unobstructed and be of the size necessary to permit the removal and replacement of the circulation pump.

❖ Whirlpool bathtubs are often ordered, located or installed without consideration for the location of the circulation pump and the requirement for access for servicing and replacement. The fixture or pump manufacturer's instructions usually specify the access requirements for the serviceable components of the whirlpool tub. But if the instructions are silent, this section requires the minimum size of openings for access to the pumps. In no case can such openings be obstructed by piping, framing, etc. [see Commentary Figures P2720.1(1) and (2)].

INTERNATIONAL CODE COUNCIL®
Copyright © 2015 ICC. ALL RIGHTS RESERVED. Accessed by David Dammon on Jun 21, 2017 12:30:52 PM pursuant to License Agreement with ICC. No further reproduction or distribution authorized. ANY UNAUTHORIZED REPRODUCTION OR DISTRIBUTION IS A VIOLATION OF THE FEDERAL COPYRIGHT ACT AND THE LICENSE AGREEMENT, AND SUBJECT TO CIVIL AND CRIMINAL PENALTIES THEREUNDER.



Figure P2720.1(1)
NONCOMPLIANT WHIRLPOOL BATHTUB PUMP ACCESS

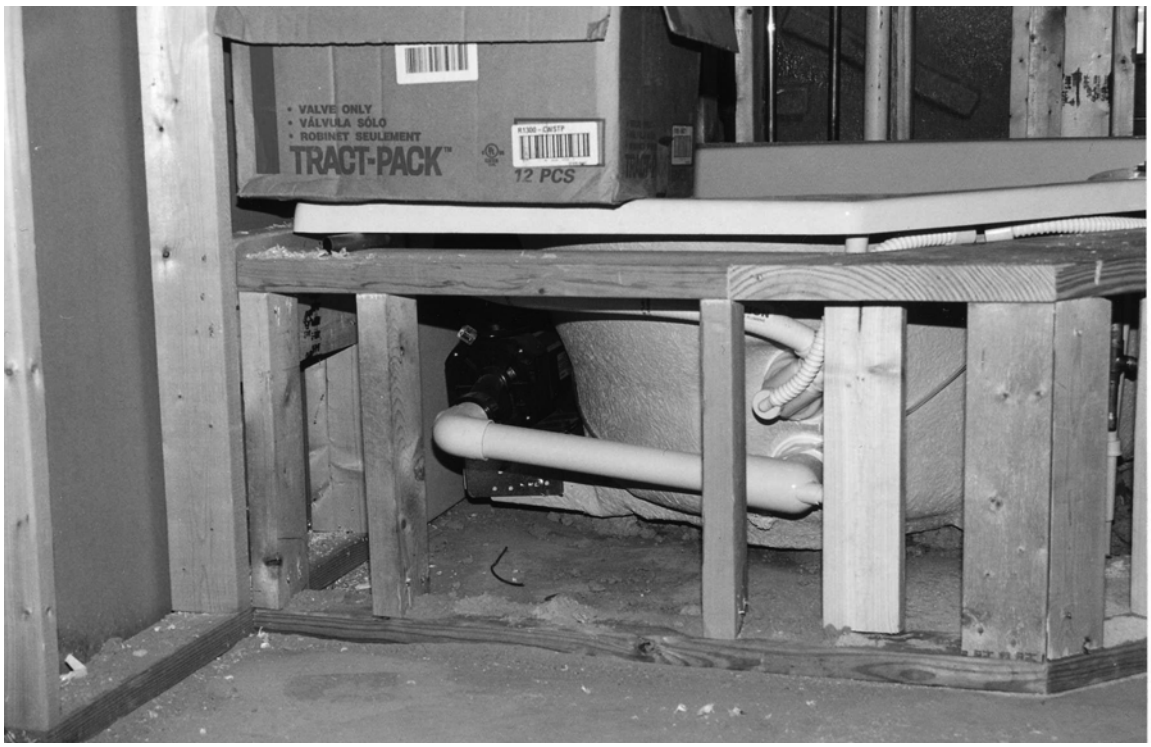

Figure P2720.1(2)
NONCOMPLIANT WHIRLPOOL BATHTUB PUMP ACCESS

INTERNATIONAL CODE COUNCIL®
Copyright © 2015 ICC. ALL RIGHTS RESERVED. Accessed by David Dammon on Jun 21, 2017 12:30:52 PM pursuant to License Agreement with ICC. No further reproduction or distribution authorized. ANY UNAUTHORIZED REPRODUCTION OR DISTRIBUTION IS A VIOLATION OF THE FEDERAL COPYRIGHT ACT AND THE LICENSE AGREEMENT, AND SUBJECT TO CIVIL AND CRIMINAL PENALTIES THEREUNDER.

P2720.2 Piping drainage. The circulation pump shall be accessibly located above the crown weir of the trap. The pump drain line shall be properly graded to ensure minimum water retention in the volute after fixture use. The circulation piping shall be installed to be self-draining.

❖ The pump and suction lines for the whirlpool bathtub must be designed to drain completely after each use. Waste water left standing in the pump body or in the suction and discharge piping will promote bacterial growth. Therefore, the pump must be located above the crown weir of the trap, and the piping must be properly graded to ensure minimum water retention.

P2720.3 Leak testing. Leak testing and pump operation shall be performed in accordance with the manufacturer's instructions.

❖ A whirlpool bathtub is the combination of a plumbing fixture and a plumbing appliance. As whirlpool tubs are installed at the plumbing rough-in stage and then the sides are covered with finish construction, leak and operational testing of the pump, jets and recirculation piping must be performed prior to concealment to verify that the unit is water tight and operational. Repair of a leak or replacement of a pump is far easier to accomplish at the plumbing rough-in stage. It also prevents water damage to finished construction should a leak not be discovered until the occupant starts using the tub.

P2720.4 Manufacturer's instructions. The product shall be installed in accordance with the manufacturer's instructions.

❖ The installation requirements of whirlpool tubs vary from manufacturer to manufacturer. One of the most important aspects of whirlpool tub installations is making sure that the supporting structure is capable of the significant loads caused by the weight of the tub, its pump/piping, the water and the occupant(s). Although a whirlpool tub might appear to be "deck mounted," that is, supported at the outer edge of the deck flange, in most cases, the tub must be solidly supported under the basin of the tub. Some manufacturers require that the bottom of the tub be set in a bed of mortar in order to provide proper support and dampen the vibrations from operation. Manufacturer's instructions must be followed to ensure that the tub is not damaged by improper installation.

SECTION P2721
BIDET INSTALLATIONS

P2721.1 Water supply. The bidet shall be equipped with either an air-gap-type or vacuum-breaker-type fixture supply fitting.

❖ The outlet end of the water supply nozzle of a bidet is typically located below the flood-level rim of the fixture. To protect the water distribution system from backflow of contaminants, the water supply to the nozzle must pass through either an air gap or a vacuum breaker. Many bidet faucet manufacturers offer designs that have integral vacuum breaker protection built into the faucet.

P2721.2 Bidet water temperature. The discharge water temperature from a bidet fitting shall be limited to not greater than 110°F (43°C) by a water-temperature-limiting device conforming to ASSE 1070 or CSA B125.3.

❖ Users of bidets would be at significant risk for scalding of sensitive areas of the body if not for this section's requirement for a water temperature-limiting device. Temperature-limiting devices meeting ASSE 1070 or CSA B125.3 provide for temperature-limiting control for flow rates as small as 0.5 gpm (1.8 lpm). Note that because these devices are valves and might require periodic adjustment and repair, access must be provided to the valves.

SECTION P2722
FIXTURE FITTING

P2722.1 General. Fixture supply valves and faucets shall comply with ASME A112.18.1/CSA B125.1 as indicated in Table P2701.1. Faucets and fixture fittings that supply drinking water for human ingestion shall conform to the requirements of NSF 61, Section 9. Flexible water connectors shall conform to the requirements of Section P2905.7.

❖ The design and manufacture of faucets and fixture supply valves must be controlled by a standard so that interchangeability exists between the various models produced for the market. Furthermore, items that convey water for human consumption must be tested in compliance with NSF 61 to make sure that the internal wetted surfaces of these items do not impart any significant level of toxic substances. Flexible water connectors are not covered by the ASME/CSA standard but are covered by ASME A112.18.6, which requires compliance with Section 9 of NSF 61.

P2722.2 Hot water. Fixture fittings supplied with both hot and cold water shall be installed and adjusted so that the left-hand side of the water temperature control represents the flow of hot water when facing the outlet.

Exception: Shower and tub/shower mixing valves conforming to ASSE 1016/ASME A112.1016/CSA B125.16, where the water temperature control corresponds to the markings on the device.

❖ For safety reasons, the code requires that the handle location for hot water corresponds to the left side of the fixture when facing the fixture fitting. It is traditional and is, therefore, human nature to equate the left side of the faucet or control with hot water. If the fixture was incorrectly connected to result in hot water being controlled by the right handle location, a user might not realize that hot water was being discharged before inserting his or her hands into the flow stream. This could result in scalding, especially for children or the elderly as they might not have the reaction speed to avoid a skin burn.

The exception is provided to allow single-handle shower valves complying with ASSE 1016 or ASME

INTERNATIONAL CODE COUNCIL®
Copyright © 2015 ICC. ALL RIGHTS RESERVED. Accessed by David Dammon on Jun 21, 2017 12:30:52 PM pursuant to License Agreement with ICC. No further reproduction or distribution authorized. ANY UNAUTHORIZED REPRODUCTION OR DISTRIBUTION IS A VIOLATION OF THE FEDERAL COPYRIGHT ACT AND THE LICENSE AGREEMENT, AND SUBJECT TO CIVIL AND CRIMINAL PENALTIES THEREUNDER.

A112.18.1/CSA B125.1 to have identifiable "hot" designations on the control valve that do not correspond with the left side of the valve. These devices operate by rotating a single handle or knob away from the "off" position to initiate water flow. Moving the handle further in the same direction increases the temperature of flowing water. Because the rotating operation is limited to one direction, the user cannot mistakenly activate water flow at the maximum hot water setting without first rotating the handle or knob through the cold water setting. Both the ASSE 1016 and ASME A112.18.1/CSA B125.1 standards require control valves to have markings that indicate clearly the direction or means of adjusting the temperature.

P2722.3 Hose-connected outlets. Faucets and fixture fittings with hose-connected outlets shall conform to ASME A112.18.3 or ASME A112.18.1/CSA B125.1.

❖ A hose connected to a faucet could have the end of the hose submerged in waste water or other nonpotable fluids. To prevent a backsiphonage of contaminant into the water distribution system, the faucet must comply with either ASME A112.18.3 or ASME A112.18.1/CSA B125.1, which ensure that the faucet hose assembly has proper backflow protection. A kitchen faucet with a side spray is an example of a faucet with a hose connected.

P2722.4 Individual pressure-balancing in-line valves for individual fixture fittings. Individual pressure-balancing in-line valves for individual fixture fittings shall comply with ASSE 1066. Such valves shall be installed in an accessible location and shall not be used as a substitute for the balanced pressure, thermostatic or combination shower valves required in Section P2708.3.

❖ For faucets (fixture fittings) where the code does not require control of the temperature of the water discharge, there still may be a need (but not a code requirement) to keep the user's set, faucet outlet temperature from fluctuating due to pressure changes. For example, the flushing of a water closet might cause significant pressure changes in the water distribution system such that the water temperature discharged from a lavatory faucet might change considerably. This could be annoying and perhaps dangerous. An inline pressure-balancing valve that complies with ASSE 1066 has no adjustments and no upper temperature limit. The valve simply adjusts the flow rate through one side of the valve in order to compensate for a pressure differential between the sides (hot and cold) of up to 50 percent.

ASSE 1066 valves do not meet the requirements for balanced-pressure, thermostatic or combination balanced-pressure/thermostatic mixing valves for showers (see Section P2708.3.). An ASSE 1066 valve is only intended for connection to a single-fixture fitting.

P2722.5 Water closet personal hygiene devices. Personal hygiene devices integral to water closets or water closet seats shall conform to ASME A112.4.2.

❖ These devices can be integral to some water closet designs or part of a water closet seat. Typical functions of personal hygiene devices are bidet spray and blow drying. The standard ensures that products have proper potable water backflow prevention, strength and dimensional conformity to fit a variety of water closets. Some models have wireless programmable wall controls for ease of use.

SECTION P2723
MACERATING TOILET SYSTEMS

P2723.1 General. Macerating toilet systems shall be installed in accordance with manufacturer's instructions.

❖ A macerating toilet system collects the waste from a single water closet, lavatory and bathtub located in the same room. The system then grinds the waste and discharges it through a small discharge line to the drainage system. The concept of this system is similar to that of a building drain installation using a sewage ejector pump [see Commentary Figures P2723.1(1) and P2723.1(2)].

P2723.2 Drain. The size of the drain from the macerating toilet system shall be not less than $^3/_4$ inch (19 mm) in diameter.

❖ Because a macerating toilet "liquefies" the solids in the waste water, a $^3/_4$-inch (19.1 mm) discharge line is adequate for handling the pumped discharge.

SECTION P2724
SPECIALTY TEMPERATURE CONTROL DEVICES AND VALVES

P2724.1 Temperature-actuated mixing valves. Temperature-actuated mixing valves, which are installed to reduce water temperatures to defined limits, shall comply with ASSE 1017. Such valves shall be installed at the hot water source.

❖ There could be hot water system applications where it is necessary to reduce the temperature of the hot water generated to "reasonable" temperature levels. For example, a water heater could also be supplying water for a space heating system that requires the water temperature to be greater than 140°F (60°C). Section P2802.2 requires that a thermostatic mixing valve (also known as a temperature-actuated mixing valve) be installed to limit the water temperature to the plumbing system. Section P2724.1 requires the valve to be located at the source (water heater) and not at some distant point near plumbing fixtures.

INTERNATIONAL CODE COUNCIL®
Copyright © 2015 ICC. ALL RIGHTS RESERVED. Accessed by David Dammon on Jun 21, 2017 12:30:52 PM pursuant to License Agreement with ICC. No further reproduction or distribution authorized. ANY UNAUTHORIZED REPRODUCTION OR DISTRIBUTION IS A VIOLATION OF THE FEDERAL COPYRIGHT ACT AND THE LICENSE AGREEMENT, AND SUBJECT TO CIVIL AND CRIMINAL PENALTIES THEREUNDER.



Figure P2723.1(1)
MACERATING TOILET SYSTEM
(Photo courtesy of SFA SANIFLO)

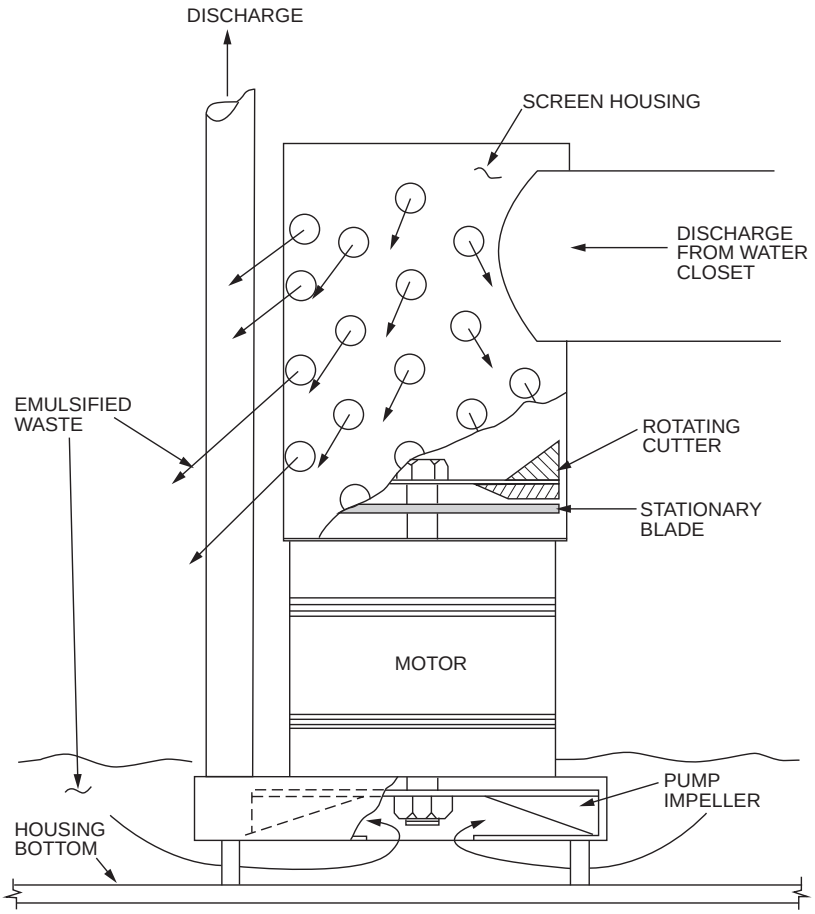

Figure P2723.1(2)
MACERATING TOILET PUMP/MACERATING UNIT

INTERNATIONAL CODE COUNCIL®
Copyright © 2015 ICC. ALL RIGHTS RESERVED. Accessed by David Dammon on Jun 21, 2017 12:30:52 PM pursuant to License Agreement with ICC. No further reproduction or distribution authorized. ANY UNAUTHORIZED REPRODUCTION OR DISTRIBUTION IS A VIOLATION OF THE FEDERAL COPYRIGHT ACT AND THE LICENSE AGREEMENT, AND SUBJECT TO CIVIL AND CRIMINAL PENALTIES THEREUNDER.

P2724.2 Temperature-actuated, flow-reduction devices for individual fixtures. Temperature-actuated, flow-reduction devices, where installed for individual fixture fittings, shall conform to ASSE 1062. Such valves shall not be used as a substitute for the balanced pressure, thermostatic or combination shower valves required for showers in Section P2708.3.

❖ Temperature-actuated, flow-reduction valves for individual fixture fittings must comply with the provisions in ASSE 1062. These valves reduce flow to 0.25 gpm (0.946 L/m) or less automatically in response to outlet temperatures higher than a preset temperature not to exceed 120°F (49°C). This limits a person's exposure to high-temperature water discharge from an individual fixture fitting, such as a bath and utility faucet, lavatory or sink faucet. These devices may not be used as a substitute for shower or tub/shower valves required in Section P2708.3.

SECTION P2725
NONLIQUID SATURATED TREATMENT SYSTEMS

P2725.1 General. Materials, design, construction and performance of nonliquid saturated treatment systems shall comply with NSF 41.

❖ The standard covers composting toilet systems.

Bibliography

The following resource materials were used in the preparation of the commentary for this chapter of the code:

ASSE 1016/ASME A112.1016/CSA B125.16–2011, *Performance Requirements for Automatic Compensating Valves for Individual Showers and Tub/Shower Combinations*. Westlake, OH: American Society of Sanitary Engineering, 2011.

INTERNATIONAL CODE COUNCIL®
Copyright © 2015 ICC. ALL RIGHTS RESERVED. Accessed by David Dammon on Jun 21, 2017 12:30:52 PM pursuant to License Agreement with ICC. No further reproduction or distribution authorized. ANY UNAUTHORIZED REPRODUCTION OR DISTRIBUTION IS A VIOLATION OF THE FEDERAL COPYRIGHT ACT AND THE LICENSE AGREEMENT, AND SUBJECT TO CIVIL AND CRIMINAL PENALTIES THEREUNDER.

Chapter 28: Water Heaters

General Comments

A water heater is any appliance that heats potable water and supplies it to the potable hot water distribution system of the building. Some water heaters might also provide hot water for space heating purposes in addition to supplying hot water to the water distribution system. This chapter does not apply to appliances, equipment and devices that provide hot water for the sole purpose of space heating (hydronic heating systems) because, by definition in this code, a water heater supplies water to the potable water distribution system. Hydronic heating systems are regulated by Chapters 20 and 21 of the code.

Historically, the main focus of this chapter has been to regulate the installation and safety features for automatic storage tank water heaters and unfired hot water storage tanks. Other water heating methods and equipment, such as solar, electric heat pump, ground source thermal transfer, boiler water recirculation, steam heat transfer, solid fuel-fired technology and the necessary controls/safety devices for those methods, are not specifically addressed in this chapter.

Questions often arise as to how the regulations in this chapter are intended to apply to the installation of alternative water-heating methods. Where the code does not specifically address those questions, manufacturers' instructions must serve as the basis for the installation of these products.

Wherever hot water is stored in a closed vessel (tank), there is a potential for explosion. There are documented cases where improperly installed (or poorly maintained) water heaters have exploded with such force that they have been propelled through floor and roof assemblies and over 100 feet (30 480 mm) in the air. Thus, the intent of this chapter is to regulate the materials, design and installation of water heaters and related safety devices in order to protect property and life.

Purpose

Chapter 28 regulates the design, approval and installation of water heaters and related safety devices. The intent is to minimize the hazards associated with the installation and operation of water heaters.

SECTION P2801 GENERAL

P2801.1 Required. Hot water shall be supplied to plumbing fixtures and plumbing appliances intended for bathing, washing or culinary purposes.

❖ A source of hot water must be supplied to plumbing fixtures and appliances that are intended to be used for bathing, washing, food preparation or for cleanup of pots, pans, dishes and flatware. This requirement corresponds to Section R306.4, which requires that both hot and cold water be supplied to plumbing fixtures. Hot water helps to melt oils, allowing soaps and detergents to reach the soils and dirt. The need for hot water is also a human comfort issue in most situations.

For many decades, the typical source of hot water for a dwelling was either a self-contained storage tank water heater or a hot water storage tank where the water was heated by an outside heat source such as a boiler. Tanks for storing hot water must be made of noncorrosive metal (e.g., stainless steel) or be made with a noncorrosive liner (usually glass).

The code does not provide criteria for determining the "minimum required" capacity of a storage tank water heater for a particular application. The sizing of storage-type water-heating equipment for domestic hot water applications is difficult because user behavior patterns are not highly predictable. There have been many studies of hot water demand for a variety of residential, institutional and commercial applications. At best, these studies have concluded that without significant oversizing (i.e., more storage volume) of the storage water heater, users will experience a shortage of hot water. Customer satisfaction surveys in one study revealed that in general, single-family home occupants are satisfied with their hot water availability even if they run out of hot water up to 12 times per year. Most residential users understand that there is a limit to hot water availability and if they run out of hot water frequently, they learn to adjust their living patterns to accommodate the existing storage tank capacity.

In recent years, tankless water heaters have become increasingly popular because they occupy less floor space than a storage-type tank water heater, use zero energy in the standby mode and, if properly maintained, can last considerably longer than a storage tank water heater. But perhaps their most advertised feature is that a tankless water heater can provide an "unlimited" flow of hot water. This is opposed to a storage tank water heater that will eventually be depleted of its stored hot water, given enough time of hot water flowing from a hot water outlet. A tankless water heater instantly and continuously heats water as long as hot water is demanded at a fixture.

INTERNATIONAL CODE COUNCIL®
Copyright © 2015 ICC. ALL RIGHTS RESERVED. Accessed by David Dammon on Jun 21, 2017 12:30:52 PM pursuant to License Agreement with ICC. No further reproduction or distribution authorized. ANY UNAUTHORIZED REPRODUCTION OR DISTRIBUTION IS A VIOLATION OF THE FEDERAL COPYRIGHT ACT AND THE LICENSE AGREEMENT, AND SUBJECT TO CIVIL AND CRIMINAL PENALTIES THEREUNDER.

But if tankless water heaters can provide an "unlimited" flow of hot water, could installing a tankless water heater instead of a storage tank water heater be a solution to not running out of hot water? The answer depends on the flow rate demanded of the tankless water heater.

Tankless water heaters are rated to provide for a specific temperature increase (rise) of the incoming cold water at a specific flow rate. For example, one rating might be 50°F (10°C) temperature rise at 2.6 gallons per minute (gpm) (9.8 L/m). If the cold water temperature flowing into the tankless heater is 60°F (16°C) and the flow through the heater is 2.6 gpm (9.8 L/m), the outlet water temperature will be 50°F (10°C) + 60°F (16°C) = 110°F (43°C). Therefore, if the hot water demand at the fixture is 2.6 gpm (9.8 L/m), hot water at a temperature of 110°F (43°C) can be expected to be discharged at the hot water outlet (neglecting heat losses from the hot water piping system). This flow of hot water can continue indefinitely so, indeed, the user "never runs out of hot water."

One important characteristic of tankless water heaters is that if the flow through the water heater becomes greater, the temperature rise becomes less. Conversely, as the flow becomes less, the temperature rise becomes greater. Commentary Figure P2801.1(1) shows typical capacity graphs for a Model A and a Model B of electric tankless water heaters. Although some manufacturers might choose to show the same information in table form as shown in Commentary Table P2801.1, the concept is the same as that shown in a capacity graph. Commentary Figure P2801.1(2) illustrates the operating point of 50°F (10°C) temperature rise at 2.6 gpm (9.8 L/m) for a Model A unit. If the flow through the unit is 3 gpm (11 L/m), the temperature rise would only be approximately 40°F (4°C). If the flow through the unit is only 1.5 gpm (5.7 L/m), the temperature rise would be 100°F (38°C) (assuming that high outlet water temperature controls do not exist). What does this information mean in terms of the operation of plumbing fixtures in a building?

FLOW	TEMPERATURE RISE, °F		
	1.0 gpm	2.0 gpm	4.0 gpm
Model A (9.5 kW)	65	32	16
Model B (19 kW)	130	65	32

For SI: 1 gallon per minute = 3.785 L/m, °C = [(°F) - 32]/1.8.

Figure P2801.1
TYPICAL CAPACITY TABLE FOR TANKLESS WATER HEATERS

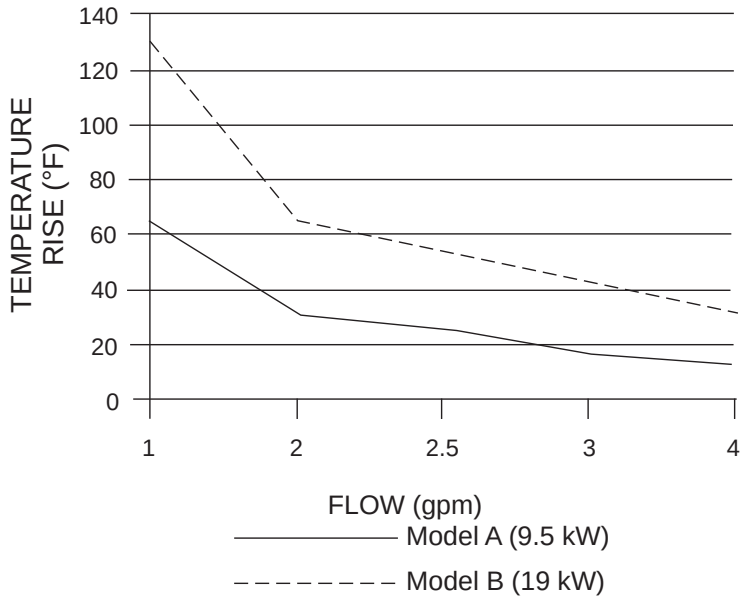

For SI: °C = [(°F) - 32]/1.8.

Figure P2801.1(1)
TYPICAL CAPACITY GRAPH FOR TANKLESS WATER HEATER

INTERNATIONAL CODE COUNCIL®
Copyright © 2015 ICC. ALL RIGHTS RESERVED. Accessed by David Dammon on Jun 21, 2017 12:30:52 PM pursuant to License Agreement with ICC. No further reproduction or distribution authorized. ANY UNAUTHORIZED REPRODUCTION OR DISTRIBUTION IS A VIOLATION OF THE FEDERAL COPYRIGHT ACT AND THE LICENSE AGREEMENT, AND SUBJECT TO CIVIL AND CRIMINAL PENALTIES THEREUNDER.

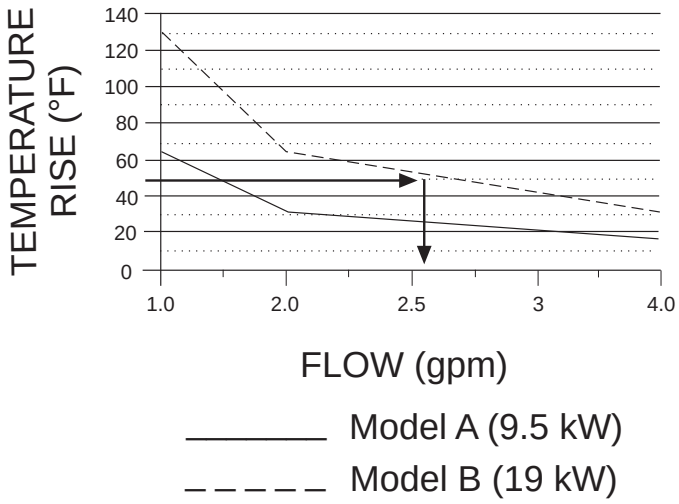

For SI: °C = [(°F) - 32]/1.8.

Figure P2801.1(2)
OPERATING POINT FOR TANKLESS WATER HEATER

Consider a shower with one shower head that discharges 2.5 gpm (9.8 L/m). Then consider a shower user desiring a shower water temperature of 110°F (43°C). If a Model A tankless water heater unit (as described previously) supplies hot water to the plumbing system, the shower user could turn the shower mixing valve almost all the way to the full hot position and enjoy a 110°F (43°C) shower, indefinitely. Now consider that another user desires to wash his or her hands at a lavatory [flowing at 1.5 gpm (5.7 L/m)] connected to the same hot water system as the shower. The lavatory user turns on only the hot water side of the faucet to get hot water flowing to the faucet before turning on the cold water to temper the hot water to a usable temperature. What is the result of this action? Now the flow rate through the tankless water heater unit is 2.5 + 1.5 = 4 gpm (15 L/m). According to the graph shown in Commentary Figure P2801.1(2), at 4 gpm (15 L/m), the Model A unit has a temperature rise of only 30°F (-1°C)—a drop of 20°F (-7°C) from the 50°F (10°C) temperature rise at 2.5 gpm (9.8 L/m). The result is that both the shower user and the lavatory user will only receive 110°F (38°C) - 20°F (-7°C) = 90°F (32°C) hot water. The shower user will most likely notice the change in temperature and will wonder what happened to his or her "hot water that never runs out."

The previous example is an "extreme" case to illustrate the effect of multiple simultaneous users of hot water generated by a tankless water heater. In reality, the effects of multiple simultaneous uses of hot water are a little more complex because of temperature-controlled shower valves, the variety of possible settings of the shower valve, incoming cold water temperature and the characteristics of the tankless water heater. However, the basic concept for tankless water heaters that more hot water demand causes less temperature rise is substantially different than a storage tank water heater that can provide the same water temperature to all fixtures operating simultaneously, but only for a limited time.

Because showers typically require the largest flow rate of hot water in a residential building, some tankless water heater manufacturers have made selection of a "properly" sized tankless water heater simpler by providing unit sizing/selection charts based upon the number of showers (and sometimes "plus" other fixtures) that the designer believes will be operating simultaneously. While this selection method is simple, the designer must be aware of the fixture flow rates and incoming water temperature conditions that were assumed in creation of the sizing/selection chart. For example, a flow rate of 2.0 gpm (7.6 L/m) for a shower and 0.5 gpm (1.9 L/m) for a lavatory and an incoming cold water temperature of 55°F (13°C) might be used to develop the manufacturer's chart. If the actual operating conditions are different, then the tankless water heater may not deliver the flow rate of hot water at the desired temperature as anticipated. Where greater flow rates, different cold water temperatures or multiple shower heads per shower are involved, the designer must use the capacity graphs or tables to determine the appropriate size of tankless water heaters.

There are many different models of electric and fuel-gas-powered tankless water heaters, each having a specific capacity graph or table. If the largest tankless water heater cannot accommodate the total demand, additional tankless units can be added to meet the total demand. For electric units, each can be installed to serve a specific fixture or group of fixtures that can be accommodated by that unit. Where additional fuel-gas units are required to meet the total demand, each unit could be connected to serve only

INTERNATIONAL CODE COUNCIL®
Copyright © 2015 ICC. ALL RIGHTS RESERVED. Accessed by David Dammon on Jun 21, 2017 12:30:52 PM pursuant to License Agreement with ICC. No further reproduction or distribution authorized. ANY UNAUTHORIZED REPRODUCTION OR DISTRIBUTION IS A VIOLATION OF THE FEDERAL COPYRIGHT ACT AND THE LICENSE AGREEMENT, AND SUBJECT TO CIVIL AND CRIMINAL PENALTIES THEREUNDER.

specific fixture groups within the building. However, most fuel-gas-powered unit controls are sophisticated enough so that multiple units can be connected to a common header and the controls interconnected so as to cause additional units to "come online" when hot water demand increases beyond the capacity of the first unit.

Depending on how systems were originally designed, the users of tankless water heater systems might be required to adjust their expectations concerning when and to what extent simultaneous hot water demands can be expected before temperature (and flow) of the hot water is affected. This adjustment of expectations is no different than for most users of storage tank-type water heater systems. Users implicitly understand that there is a limit to how much hot water can be used before the temperature of the hot water becomes unacceptable for the purposes intended and how much time it takes for the system to recover sufficiently in order to provide an acceptable supply and temperature level of hot water.

P2801.2 Drain valves. Drain valves for emptying shall be installed at the bottom of each tank-type water heater and *hot water* storage tank. The drain valve inlet shall be not less than $^{3}/_{4}$-inch (19.1 mm) nominal iron pipe size and the outlet shall be provided with a male hose thread.

❖ Eventually, hot water storage tanks and tank-type water heaters will require replacement because of tank failure (leaks in the walls of the tank). Also, some maintenance procedures require draining of the tank to be able to perform the maintenance. The drain valve is needed for both purposes. The requirement for the valve to be on the bottom of the tank is not to be construed as meaning to be on the underside of the tank. For a vertical tank, a valve on the side of the tank, near the bottom of the side, is typical for vertical storage tanks. The intent of the valve is to drain most of the water from the tank so the tank is not so heavy that it is unnecessarily difficult to move.

P2801.3 Installation. Water heaters shall be installed in accordance with this chapter and Chapters 20 and 24.

❖ Chapters 20, "Boilers and Water Heaters," and 24, "Fuel Gas," provide installation requirements for water heaters, in addition to this chapter.

P2801.4 Location. Water heaters and storage tanks shall be installed in accordance with Section M1305 and shall be located and connected to provide access for observation, maintenance, servicing and replacement.

❖ This section requires installation compliance with Section M1305, as well as access to all components of a water heater that require observation, inspection, adjustment, servicing, repair and replacement. Access is also required to conduct startup and shutdown operations.

The manufacturer's installation instructions typically provide clearance requirements for accessing controls and performing component removal, as well as the minimum acceptable clearances between the unit and building surfaces, such as walls and ceilings. As provided by Sections M2005.1 and G2448.1, the manufacturer's instructions are part of the code.

P2801.5 Prohibited locations. Water heaters shall be located in accordance with Chapter 20.

❖ This section refers to Chapter 20 for water heater location requirements with respect to attics, storage closets, bedrooms, bathrooms and crawl spaces (see Sections M2005 and G2406).

P2801.6 Required pan. Where a storage tank-type water heater or a hot water storage tank is installed in a location where water leakage from the tank will cause damage, the tank shall be installed in a pan constructed of one of the following:

1. Galvanized steel or aluminum of not less than 0.0236 inch (0.6010 mm) in thickness.
2. Plastic not less than 0.036 inch (0.9 mm) in thickness.
3. Other approved materials.

A plastic pan shall not be installed beneath a gas-fired water heater.

❖ Where leaks from a storage-type water heater or hot water storage tank would cause damage to the building structure, the tank must be installed in a pan (also known as a "safe" pan or "drip" pan) (see Commentary Figure P2801.6). The pans must be made of galvanized steel, aluminum or plastic in the thicknesses indicated in the code text. The list also allows for other materials to be used but those materials would have to be approved by the code official. Note that plastic pans cannot be installed under gas-fired water heaters because of the high temperatures that might occur under those types of water heaters.

The required thickness of galvanized sheet metal is the minimum thickness tolerance for 24-gauge galvanized sheet metal so that a field measurement of thickness would allow for all thicknesses within the tolerance range of 24 gauge to be acceptable.

Note that tankless water heaters are not required to have a pan.

P2801.6.1 Pan size and drain. The pan shall be not less than $1^{1}/_{2}$ inches (38 mm) deep and shall be of sufficient size and shape to receive dripping or condensate from the tank or water heater. The pan shall be drained by an indirect waste pipe of not less than $^{3}/_{4}$ inch (19 mm) diameter. Piping for safety pan drains shall be of those materials indicated in Table P2906.5. Where a pan drain was not previously installed, a pan drain shall not be required for a replacement water heater installation.

❖ The pan required by this section is intended to catch only dripping water from tank or flue condensation, a small leak in the tank, a small leak at a connection to the tank, or a leaking temperature and pressure relief valve. The typical pan design having a flat bottom, a depth of $1^{1}/_{2}$ inches (38 mm) and a side outlet drain of $^{3}/_{4}$ inch (19 mm) is not capable of accommodating large flows, such as would occur if the water heater tank ruptured or the temperature and pressure relief valve discharged at its full capacity. In other words, a water

INTERNATIONAL CODE COUNCIL®
Copyright © 2015 ICC. ALL RIGHTS RESERVED. Accessed by David Dammon on Jun 21, 2017 12:30:52 PM pursuant to License Agreement with ICC. No further reproduction or distribution authorized. ANY UNAUTHORIZED REPRODUCTION OR DISTRIBUTION IS A VIOLATION OF THE FEDERAL COPYRIGHT ACT AND THE LICENSE AGREEMENT, AND SUBJECT TO CIVIL AND CRIMINAL PENALTIES THEREUNDER.

heater pan meeting the minimum requirements of this section is not a waste receptor as defined by the code. Although a storage tank could rupture and a temperature and pressure relief valve could "trip," causing large flows of water, such occurrences happen so infrequently that requiring a true waste receptor pan design for every installation requiring a pan is not justified.

The pan drain pipe must be made of one of the materials listed for piping material suitable for water distribution system use. The concern is that leaking hot water could occur for extended periods of time until discovered. If the pan drain pipe was not made of a material suitable for hot water, the small diameter drain piping might sag between the supports to cause sluggish draining and clogging, which ultimately could cause the drain pan to overflow. Although many commercially available pans have a PVC adapter fitting for connecting the pan drain piping, PVC pipe material is not included in Table P2905.5 because it is not rated for hot water temperatures.

Where Section P2801.6 requires a pan under a water heater, the replacement of an existing water heater in those locations requires a pan, even though the code might not have required a pan for the previous water heater installation. Adding a pan to a replacement water heater job is not usually a significant issue, but providing a drain pipe and a suitable discharge point for the drain pipe can be an obstacle. The water heater might be in a basement where the building drain is above the elevation of the bottom of the water heater or the water heater might be in the middle of a slab-on-grade building, without a nearby floor drain and not adjacent to an outside wall. The last sentence of this code section allows the pan to be installed without a drain. Although it might seem illogical to require a pan that does not have a drain, the intent is that when a tank leak occurs, it is contained until the point at which the leaking water overflows the pan. Perhaps an occupant might notice water in the pan that is normally dry, or if water does overflow the pan and someone is investigating the cause for dampness in adjacent areas, water overflowing the pan is a sure sign that the tank is leaking. Otherwise, a leaking tank could leak for months without any visible evidence until after the leaking water has started to rot wood or create mold conditions.

The presence of a water heater drain pan (whether it is required or not) also allows the T & P valve drain pipe of the water heater to terminate at the drain pan in accordance with Item 5 of Section P2804.6.1.

If a pan drain is not required for the pan, then the implication is that the pan does not have a drain opening. As many factory-made pans already have a hole punched for a drain adapter, this means that the punched hole needs to be blocked off. One way to do this would be to install the male adapter provided with the pan in the opening and then install a plug into the adapter; or cap a short piece of pipe installed in the adapter.

The adapter (and plug, or cap materials) might not need to be of Table P2905.5 materials, as the hot water pipe material requirement for the pan drain is mainly concerned about sagging of drain piping on its way to the pipe termination. The "plug assembly" on the pan would not have this problem. The point is, with or without a prepunched hole in the pan, the pan should have the full $1^1/_2$-inch-deep capacity for water.

Another advantage of a drain pan (whether it is required or not) without a pan drain is that it allows for the installation of water leak detection alarms. Such alarms are not required by the code, however, many homeowners after having experienced a leaking water heater, would have liked to have known when leakage began so that they could have rescued personal possessions and shut off the water supply to the water heater.

P2801.6.2 Pan drain termination. The pan drain shall extend full-size and terminate over a suitably located indirect waste receptor or shall extend to the exterior of the building and terminate not less than 6 inches (152 mm) and not more than 24 inches (610 mm) above the adjacent ground surface.

❖ Although a pan drain is not required to follow the same rules as for gravity flow sanitary drainage, it should be obvious that any reductions in pan drain pipe size would restrict flow and be a potential clogging point, especially where pans might have collected years of dust and possible rust flakes from corroding steel tanks. Since the drainage from the pan is basically clear water, the drain line is not required to have a trap and the drain can terminate outdoors, at a waste receptor or at a floor drain. The discharge at a waste receptor or floor drain does not have to be through an air gap as might be assumed by the term "over." Where the pan drain terminates outdoors, a termination point of at least 6 inches (152 mm) above the ground protects the open end from being blocked by careless landscaping work and vegetation growth, which might allow for insects to build nests in the opening. The 6 inches (152 mm) minimum provides for clearance above grade to prevent blockage by ground cover. The 24 inches (610 mm) maximum provides a level of safety to keep hot water flow away from passers-by face and hands.

P2801.7 Water heaters installed in garages. Water heaters having an *ignition source* shall be elevated such that the source of ignition is not less than 18 inches (457 mm) above the garage floor.

Exception: Elevation of the *ignition source* is not required for appliances that are *listed* as flammable vapor ignition-resistant.

❖ An ignition source could be many things including an open flame, such as a pilot light, an electrical switch, open resistance heating coils or an electrical igniter unit (such as hot surface or spark ignition types). See the definition of "Ignition source" in Chapter 2. Residential garages have a high potential for volatile liquids, such as gasoline and paint thinners, to be spilled

INTERNATIONAL CODE COUNCIL®
Copyright © 2015 ICC. ALL RIGHTS RESERVED. Accessed by David Dammon on Jun 21, 2017 12:30:52 PM pursuant to License Agreement with ICC. No further reproduction or distribution authorized. ANY UNAUTHORIZED REPRODUCTION OR DISTRIBUTION IS A VIOLATION OF THE FEDERAL COPYRIGHT ACT AND THE LICENSE AGREEMENT, AND SUBJECT TO CIVIL AND CRIMINAL PENALTIES THEREUNDER.

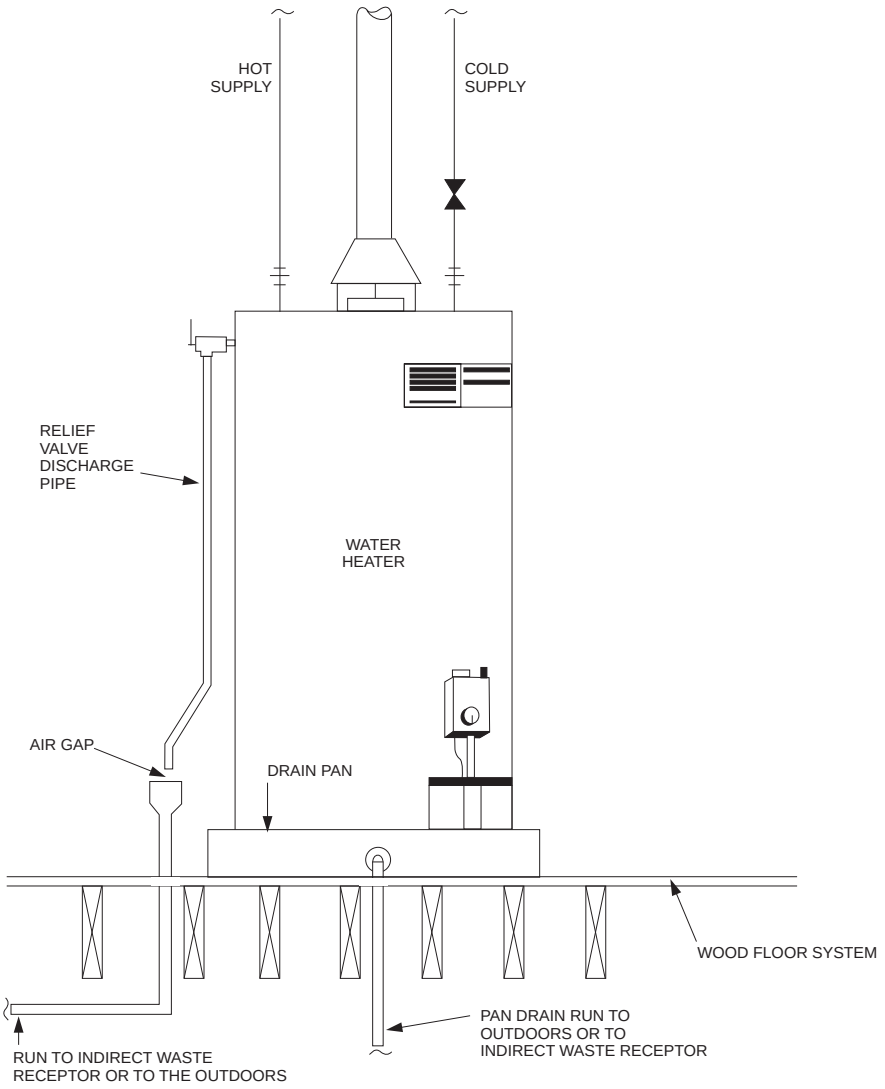

Figure P2801.6
WATER HEATER IN DRAIN PAN

or leak from their containers. Because the vapors from these liquids are heavier than air, they concentrate just above floor level, posing an explosion hazard. Testing has indicated that locating ignition sources at an elevation of 18 inches (457 mm) above the floor in these areas provides a degree of safety due to the time delay for the vapors from a spilled combustible liquid to build up to ignitable concentrations at the elevation of the ignition source. However, given large enough spills and enough time, an ignition source at any elevation in an enclosed area could cause an explosion.

Many electric water heater thermostats have enclosed contacts, but they are not sealed gas tight. Therefore, if an electric water heater having a thermostat is located less than 18 inches (457 mm) from the bottom of the unit, both this section and Section M1307.3 require that the unit be elevated so the ignition source (thermostat) is at least 18 inches (457 mm) above the garage floor. Electric water heaters having all switching controls located above 18 inches (457 mm) from the bottom of the water heater are not required to be elevated.

Section G2408.2 for gas-fired appliances reiterates the requirement for elevation above the garage floor, but has an exception to allow gas-fired appliances having flammable ignition vapor resistant (FVIR) design to be installed without elevating the unit. Note that in this section and Section M1307.3, rooms or spaces that are not part of the living space of a dwelling unit and that communicate directly with the garage are considered to be part of the private garage. For example, a storage room on the same level as the garage having a door opening into the garage is in “direct communication” (in terms of the exchange of air) with the garage.

INTERNATIONAL CODE COUNCIL®
Copyright © 2015 ICC. ALL RIGHTS RESERVED. Accessed by David Dammon on Jun 21, 2017 12:30:52 PM pursuant to License Agreement with ICC. No further reproduction or distribution authorized. ANY UNAUTHORIZED REPRODUCTION OR DISTRIBUTION IS A VIOLATION OF THE FEDERAL COPYRIGHT ACT AND THE LICENSE AGREEMENT, AND SUBJECT TO CIVIL AND CRIMINAL PENALTIES THEREUNDER.

A frequently asked question is how this section, as well as Sections M1307.3.1 and G2408.2, should be applied to a replacement water heater that originally was not required by the adopted code at that time to be elevated. The code makes no distinction between an installation in new construction and a replacement installation in existing construction. Where installers are confronted with obstacles that appear to prevent strict compliance with the code, they should consult with the code official before performing the replacement work.

P2801.8 Water heater seismic bracing. In Seismic Design Categories D_0, D_1 and D_2 and townhouses in Seismic Design Category C, water heaters shall be anchored or strapped in the upper one-third and in the lower one-third of the appliance to resist a horizontal force equal to one-third of the operating weight of the water heater, acting in any horizontal direction, or in accordance with the appliance manufacturer's recommendations.

❖ The seismic design category for a building is determined by Section R301. The required strapping is intended to prevent movement of the appliance when subjected to lateral forces generated during an earthquake. The weight of the heater plus the weight of the water in it equals the operating weight (see Commentary Figure P2801.8).

NOTE: THIS IS AN EXAMPLE OF AN EARTHQUAKE RESTRAINT DESIGN FOR WATER HEATERS UNDER 100 GALLONS (EXAMPLE TAKEN FROM A SPECIFICATION ISSUED BY A WEST COAST CITY IN U.S.A.)

THE ILLUSTRATION BELOW SHOWS THE STRAPPING REQUIREMENTS FOR WATER HEATERS UP TO 40 GALLONS WITHIN 12 INCHES OF A STUD WALLS. FOR WATER HEATERS OVER 40 GALLONS BUT LESS THAN 100 GALLONS, USE $^{3}/_{4}$ INCH EMT CONDUIT AND $1^{1}/_{2}$ INCH METAL STRAP. WATER HEATERS OVER 100 GALLONS AND/OR WATER HEATERS MORE THAN 12 INCHES FROM A WALL REQUIRE A DESIGNED SYSTEM.

NOTE: APPROVED MANUFACTURED WATER HEATER SUPPORT KITS SOLD AT BUILDING AND PLUMBING SUPPLY STORES MAY BE USED AS AN ALTERNATE TO THESE REQUIREMENTS.

INSTALLATION CHECKLIST

- LOCATE WALL STUDS ON BOTH SIDES OF THE WATER HEATER. PRE-DRILL HOLES FOR ANCHOR BOLTS IN STUD CENTER.
- MEASURE DISTANCE AROUND WATER HEATER. CUT TWO $1^{1}/_{2}$″ x 16 GAUGE STRAPS TO ENCOMPASS WATER HEATER.
- DRILL HOLES IN THE ENDS OF THE STRAPS AND BEND THEM 45 DEGREES.
- CUT FOUR PIECES OF $^{1}/_{2}$″ EMT CONDUIT TO THE PROPER LENGTH AS SHOWN IN DIAGRAM AND FLATTEN ENDS.
- DRILL HOLES IN FLATTENED ENDS OF CONDUIT. BEND FLATTENED ENDS 45 DEGREES ON ONE SIDE.
- INSTALL STRAPPING. STRAPPING SHALL BE LOCATED AT POINTS WITHIN THE UPPER AND LOWER ($^{1}/_{3}$) ONE THIRD OF THE VERTICAL DIMENSION OF THE WATER HEATER. AT THE LOWER POINT, A MINIMUM DISTANCE OF 4 INCHES SHALL BE MAINTAINED ABOVE THE CONTROLS. WRAP THE STRAPS AROUND THE HEATER AND INSERT A $^{5}/_{16}$″X $1^{1}/_{4}$″ BOLT WITH WASHER INTO THE BENT ENDS.
- INSTALL EMT CONDUIT. INSERT $^{1}/_{4}$″ x 3″ LAG BOLTS THROUGH HOLE IN ENDS OF CONDUIT INTO THE WALL STUD AND TIGHTEN. INSERT $^{5}/_{16}$″X $1^{1}/_{4}$″ BOLT, WHICH IS IN STRAPPING, THROUGH OTHER END OF CONDUIT AND TIGHTEN.

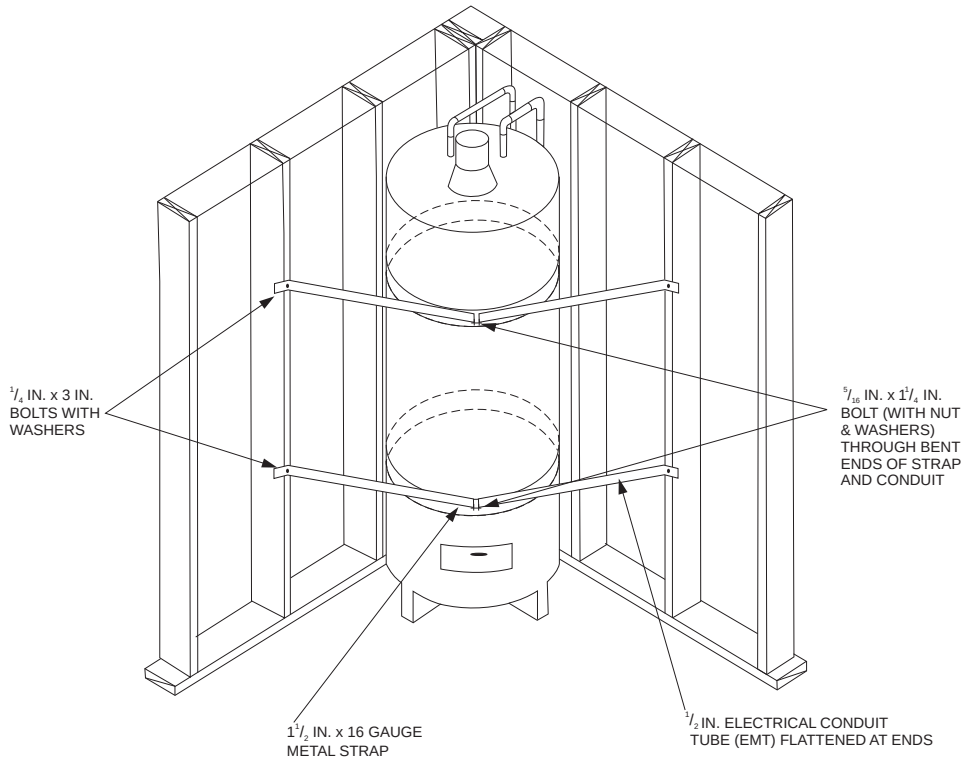

For SI: 1 gallon = 3.785 L, 1 inch = 25.4 mm, 1 degree = 0.0175 rad.

Figure P2801.8
EXAMPLE OF SEISMIC RESTRAINT FOR SMALL WATER HEATERS
(Shown for illustration only)

INTERNATIONAL CODE COUNCIL®
Copyright © 2015 ICC. ALL RIGHTS RESERVED. Accessed by David Dammon on Jun 21, 2017 12:30:52 PM pursuant to License Agreement with ICC. No further reproduction or distribution authorized. ANY UNAUTHORIZED REPRODUCTION OR DISTRIBUTION IS A VIOLATION OF THE FEDERAL COPYRIGHT ACT AND THE LICENSE AGREEMENT, AND SUBJECT TO CIVIL AND CRIMINAL PENALTIES THEREUNDER.

SECTION P2802
SOLAR WATER HEATING SYSTEMS

P2802.1 Water temperature control. Where heated water is discharged from a solar thermal system to a *hot water* distribution system, a thermostatic mixing valve complying with ASSE 1017 shall be installed to temper the water to a temperature of not greater than 140°F (60°C). Solar thermal systems supplying *hot water* for both space heating and domestic uses shall comply with Section P2803.2. A temperature-indicating device shall be installed to indicate the temperature of the water discharged from the outlet of the mixing valve. The thermostatic mixing valve required by this section shall not be a substitute for water temperature limiting devices required by Chapter 27 for specific fixtures.

❖ Solar thermal water-heating systems can generate very high water temperatures. Water of a temperature greater than 140°F must not be released into the potable water distribution system because of the scalding implications that such high temperature water could cause. Therefore, a thermostatic mixing valve in accordance with ASSE 1017 must be installed to limit the temperature to not more than 140°F.

P2802.2 Isolation valves. Isolation valves in accordance with P2903.9.2 shall be provided on the cold water feed to the water heater. Isolation valves and associated piping shall be provided to bypass solar storage tanks where the system contains multiple storage tanks.

❖ Solar water-heating systems need repair and servicing from time to time, so a shutoff valve is required on the water supply to the system. Where multiple storage tanks are installed for a solar water-heating system, each tank must have a bypass piping arrangement to bypass the tank for maintenance and replacement.

SECTION P2803
WATER HEATERS USED FOR SPACE HEATING

P2803.1 Protection of potable water. Piping and components connected to a water heater for space heating applications shall be suitable for use with potable water in accordance with Chapter 29. Water heaters that will be used to supply potable water shall not be connected to a heating system or components previously used with nonpotable-water heating *appliances*. Chemicals for boiler treatment shall not be introduced into the water heater.

❖ There are combined systems that serve the dual purpose of providing both space heating and domestic hot water. In this case, precautions must be taken to protect the potable water from contamination. Thus, any piping that is used as part of the space heating system must meet the material and installation requirements of Chapter 29.

P2803.2 Temperature control. Where a combination water heater-space heating system requires water for space heating at temperatures exceeding 140°F (60°C), a master thermostatic mixing valve complying with ASSE 1017 shall be installed to temper the water to a temperature of not greater than 140°F (60°C) for domestic uses.

❖ Where a water heater has a dual purpose of supplying hot water and serving as a heat source for a hot water space heating system, the maximum outlet water temperature for the potable hot water distribution system is limited to 140°F (60°C). A master thermostatic mixing valve conforming to ASSE 1017 must be installed to limit the water temperature. These valves are used extensively in applications for domestic service to mix hot and cold water to reduce high-service water temperature to the building distribution system (see Commentary Figure P2803.2). These devices are not intended for final temperature control at fixtures and appliances (see commentary, Section P2708.3).

A water heater used as part of a space heating system must be protected from any conditions that can cause contamination of the potable water supply system. A typical installation might be an under-floor radiant heating system or baseboard fin-tube radiation system. Because the water heater is part of the potable water system, materials used in the heating system must be approved for use in a potable water system, and all connections must be protected against contamination. In the summer months when the heating system is inactive, a method to prevent stagnation of the water can be employed. A small orifice in the isolation valves to permit a small amount of water to circulate through the system may be provided for this purpose. Chemicals of any type must not be added to the heating system because this would directly contaminate the potable water supply. The potable water supply must be protected in accordance with Section P2902.

SECTION P2804
RELIEF VALVES

P2804.1 Relief valves required. Appliances and equipment used for heating water or storing hot water shall be protected by one of the following:

1. A separate pressure-relief valve and a separate temperature-relief valve.
2. A combination pressure-and-temperature relief valve.

❖ A combination pressure- and temperature-relief valve or separate temperature-relief and pressure-relief valves are needed to protect the water heater against damage and potential violent explosion. Pressure-relief valves are designed to relieve excessive pressures that can develop in a closed system (the water heater and piping). Temperature-relief valves are designed to open in response to excessive temperatures and to discharge heated water, thereby limiting the water temperature in the water heater. In the event of water heater control malfunction, it is possible for the water pressure to exceed the maximum pressure for which the water heater and piping system were designed. Also, water heater control failures could allow excessive temperature rises that could superheat the water (i.e., heated above the temperature at which it would vaporize at atmospheric pressure).

INTERNATIONAL CODE COUNCIL®
Copyright © 2015 ICC. ALL RIGHTS RESERVED. Accessed by David Dammon on Jun 21, 2017 12:30:52 PM pursuant to License Agreement with ICC. No further reproduction or distribution authorized. ANY UNAUTHORIZED REPRODUCTION OR DISTRIBUTION IS A VIOLATION OF THE FEDERAL COPYRIGHT ACT AND THE LICENSE AGREEMENT, AND SUBJECT TO CIVIL AND CRIMINAL PENALTIES THEREUNDER.

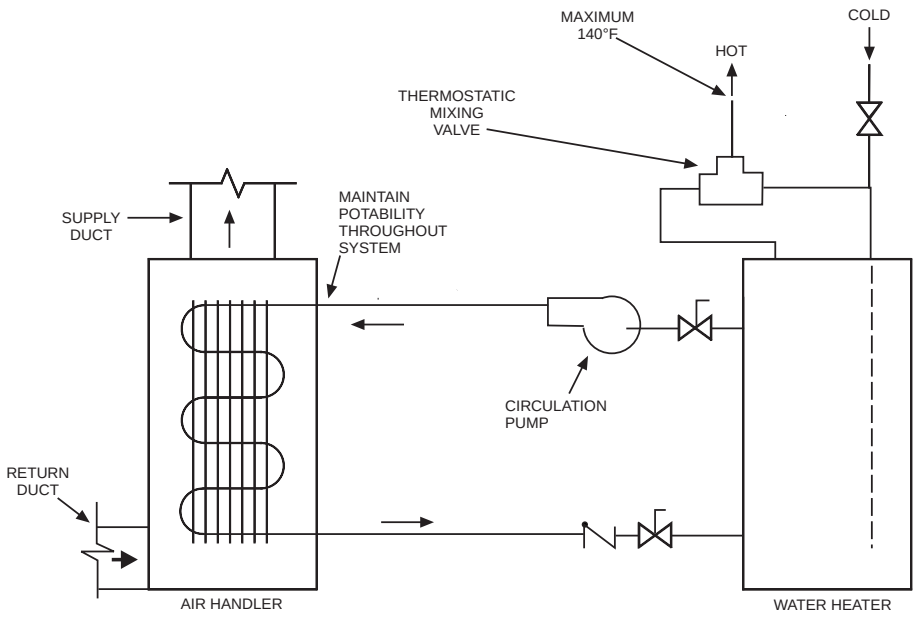

For SI: °C = [(°F) - 32]/1.8.

Figure P2803.2
USING POTABLE HOT WATER FOR BOTH SPACE HEATING AND DOMESTIC USE

P2804.2 Rating. Relief valves shall have a minimum rated capacity for the equipment served and shall conform to ANSI Z21.22.

❖ To perform as intended, the relief valve capacity must be equal to or greater than the energy input capacity of the appliance it protects. Relief valves must be manufactured and tested in accordance with ANSI Z21.22. Conformance to the standard indicates to the installer, the inspector and the occupant that a similar relief valve has been tested and evaluated to demonstrate that this valve will perform as required when properly installed.

P2804.3 Pressure-relief valves. Pressure-relief valves shall have a relief rating adequate to meet the pressure conditions for the appliances or equipment protected. In tanks, they shall be installed directly into a tank tapping or in a water line close to the tank. They shall be set to open at not less than 25 psi (172 kPa) above the system pressure and not greater than 150 psi (1034 kPa). The relief-valve setting shall not exceed the rated working pressure of the tank.

❖ The code requires an independent pressure-relief valve for a water heater or hot water storage tank to be set to open at least 25 pounds per square inch (psi) (172 kPa) above the system pressure, but not over 150 psi (1034 kPa). Regardless, the valve setting must not exceed the tank's rated working pressure. Because the valve reacts to pressure, not temperature, its location in the system is not as critical as for temperature-relief valves. However, the location must be in a tank opening or immediately adjacent to the tank in a water pipe connected to the tank. All tank-type water heaters manufactured today provide a tapping in the tank for installation of relief valves. To prevent the relief valve from being rendered useless, valves cannot be located between a relief valve and the vessel it protects (see Section P2804.6).

P2804.4 Temperature-relief valves. Temperature-relief valves shall have a relief rating compatible with the temperature conditions of the appliances or equipment protected. The valves shall be installed such that the temperature-sensing element monitors the water within the top 6 inches (152 mm) of the tank. The valve shall be set to open at a temperature of not greater than 210°F (99°C).

❖ The code requires that temperature-relief valves be set to open at a maximum temperature of 210°F (99°C). The highest temperature water rises to the top of the tank in tank-type water heaters. The thermal sensing element of the temperature relief valve must be installed within 6 inches (152 mm) of the top of the tank. This measure allows the valve to sense the hottest water temperature accurately and to provide an early response to afford maximum protection. The water heater manufacturer's installation instructions usually specify the location, which is the tank tapping provided and so identified on the heater (see Commentary Figure P2804.4).

P2804.5 Combination pressure-and-temperature relief valves. Combination pressure and temperature-relief valves shall comply with the requirements for separate pressure- and temperature-relief valves.

❖ All of the provisions of Sections P2804.3 and P2804.4 that apply to separate relief valves apply to combination relief valves. Because combination valves operate by sensing changes in temperature and pressure, the location requirements of Section P2804.4 apply.

INTERNATIONAL CODE COUNCIL®
Copyright © 2015 ICC. ALL RIGHTS RESERVED. Accessed by David Dammon on Jun 21, 2017 12:30:52 PM pursuant to License Agreement with ICC. No further reproduction or distribution authorized. ANY UNAUTHORIZED REPRODUCTION OR DISTRIBUTION IS A VIOLATION OF THE FEDERAL COPYRIGHT ACT AND THE LICENSE AGREEMENT, AND SUBJECT TO CIVIL AND CRIMINAL PENALTIES THEREUNDER.

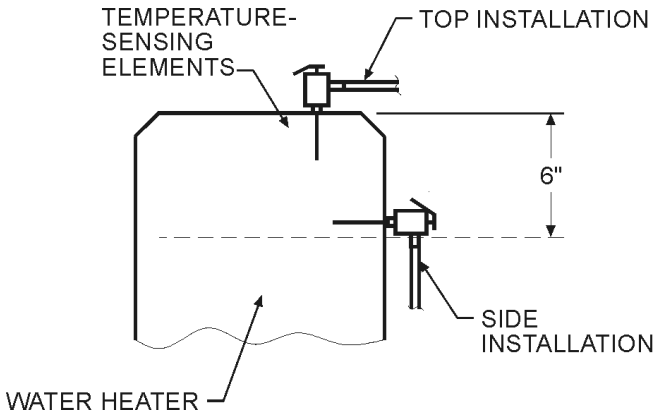

For SI: 1 inch = 25.4 mm.

Figure P2804.4
TEMPERATURE AND PRESSURE RELIEF VALVE INSTALLATION

P2804.6 Installation of relief valves. A check or shutoff valve shall not be installed in any of the following locations:

1. Between a relief valve and the termination point of the relief valve discharge pipe.
2. Between a relief valve and a tank.
3. Between a relief valve and heating appliances or equipment.

❖ A check valve or shutoff valve can restrict or completely cut off the physical connection between the water heater and the relief valve, thus rendering the relief valve ineffective for its designed purpose and thereby causing the installation to be an extreme hazard.

P2804.6.1 Requirements for discharge pipe. The discharge piping serving a pressure-relief valve, temperature-relief valve or combination valve shall:

1. Not be directly connected to the drainage system.
2. Discharge through an air gap located in the same room as the water heater.
3. Not be smaller than the diameter of the outlet of the valve served and shall discharge full size to the air gap.
4. Serve a single relief device and shall not connect to piping serving any other relief device or equipment.
5. Discharge to the floor, to the pan serving the water heater or storage tank, to a waste receptor or to the outdoors.
6. Discharge in a manner that does not cause personal injury or structural damage.
7. Discharge to a termination point that is readily observable by the building occupants.
8. Not be trapped.
9. Be installed to flow by gravity.
10. Terminate not more than 6 inches (152 mm) and not less than two times the discharge pipe diameter above the floor or waste receptor flood level rim.
11. Not have a threaded connection at the end of the piping.
12. Not have valves or tee fittings.
13. Be constructed of those materials indicated in Section P2906.5 or materials tested, rated and *approved* for such use in accordance with ASME A112.4.1.
14. Be one nominal size larger than the size of the relief-valve outlet, where the relief-valve discharge piping is constructed of PEX or PE-RT tubing. The outlet end of such tubing shall be fastened in place.

❖ The discharge pipe from a water heater temperature and pressure relief valve (T&P valve) is an extension of the potable water distribution system. Because Section P2902.1 prohibits cross connections between the potable water supply and any source of contamination (such as a drainage system), a T&P valve discharge pipe that discharges to a drain system must connect indirectly to that drainage system.

Regardless of where the T&P valve discharge pipe terminates, an air gap is required to protect the potable water supply system. Section P2902.3.1 requires a minimum air gap dimension of twice the diameter of the effective opening of the discharge pipe. There are three reasons for the air gap to be in the same room as the water heater: (1) it prevents a direct connection to concealed discharge piping that might be bent, flattened, plugged, reverse-sloped or inadvertently capped off; (2) it provides a location for observing discharge when testing the relief valve and (3) it provides a readily accessible location to observe valve leakage indicating a defective T&P valve, a water distribution system overpressure problem, or a water heater operation problem.

INTERNATIONAL CODE COUNCIL®
Copyright © 2015 ICC. ALL RIGHTS RESERVED. Accessed by David Dammon on Jun 21, 2017 12:30:52 PM pursuant to License Agreement with ICC. No further reproduction or distribution authorized. ANY UNAUTHORIZED REPRODUCTION OR DISTRIBUTION IS A VIOLATION OF THE FEDERAL COPYRIGHT ACT AND THE LICENSE AGREEMENT, AND SUBJECT TO CIVIL AND CRIMINAL PENALTIES THEREUNDER.

The size of the discharge pipe must be not less than the size of the T&P valve outlet to ensure that the valve can discharge at its full capacity. The pipe size must not be reduced as this would create a restriction that might prevent full-capacity discharge in an emergency condition.

The discharge pipe cannot be combined with any other discharge pipe or connect with any other piping before terminating at the required air gap. Connection of other piping could introduce flow that would interfere with the relief valve discharge flow. Also, full-capacity discharge could damage other connected equipment or cause the discharge to exit at other points where persons could be injured by the escaping hot water.

Water discharged from the T&P valve must be directed to one of four locations: 1. The floor below the water heater; 2. The water heater or storage tank drip pan, if present; 3. A waste receptor, such as a floor drain; or 4. The outdoors. The choice of discharge location must consider the potential for personal injury and structural damage that water discharge might cause. For example, a floor discharge might be suitable in a concrete-floored and curbed garage, but where the garage walls are of wood and rest directly on the floor, this discharge point might be unsuitable. Another suitable floor discharge example might be the tiled and sloped floor of a laundry/utility room that has a floor drain. Discharge to laundry trays/tubs and sinks would not be a suitable location as it violates the intent of Item 6 of this section, which is to protect the person using the fixture from hot water and steam that could come from the discharge pipe.

As discharge from a T&P valve is an indicator of a problem, the discharge point should be readily observable by the occupants so they can take action to correct the problem.

T&P relief valve pipes must not have traps and must be so installed to cause water to completely flow out of the pipe by gravity. If a trap was in the line or the line was not sloped to completely drain, hot water drying out in the trapped location could cause deposits to build up and eventually block the flow. Where the pipe is exposed to freezing temperatures, an ice block could form in the pipe and block flow.

Where the T&P discharge pipe discharges to a floor or waste receptor, such as a floor drain, the opening of the pipe must not be any higher than 6 inches (152 mm) above the floor or receptor. This precaution is necessary to keep any hot water discharge from splashing and possibly causing injury to someone nearby. However, the installer must be careful to allow for an air gap above the floor or flood level rim of the waste receptor. For arrangements where the T&P valve discharge pipe is routed to the water heater drip pan (see Item 5), the intent is that the air gap at the end of the pipe be above the flood level rim of the pan, even though the pan is not considered to be a waste receptor.

Threads on the end of a T&P discharge pipe are an invitation for someone to install a threaded cap to stop a nuisance relief valve drip. What would be perceived as a fix would actually be creating a very serious hazard. Because the installation of valves or tees in the relief valve would only invite someone to close the valve (thus blocking the flow) or connect another drain line to the discharge pipe (creating another hazard), their installation is prohibited.

Relief valve discharge piping must be one of the piping materials listed in Table P2906.5. Although the pipe materials in this table have a pressure rating of at least 100 psi (690 kPa) at 180°F (82°C), they have the capability to survive the limited time exposures (e.g., 15 minutes) at a temperature of 210°F (99°C) to carry a full output relief valve discharge. A discharge tube assembly complying with ASME A112.4.1 can also be installed.

The use of PEX or PE-RT tubing for T & P discharge piping is permitted as those are piping types indicated in Table P2906.5. However, the typical fittings for these tubing types are insert fittings. The insert fittings have a smaller inside diameter than the tubing and as such, would create additional resistance to flow. This would not be a good situation for a “full trip” event of the T&P valve. Therefore, Item 14 requires that the tubing size be one nominal size larger than the relief valve opening so that the insert fittings for the one size larger tubing are not a significant restrictor of flow. PEX and PE-RT tubing is flexible and, after uncoiling, has the inclination to want to return to its former coiled shape. Therefore, the free end of PEX and PE-RT tubing T&P discharge pipe must be fastened in the intended position.

A frequently asked question is how this section should be applied to a relief valve discharge pipe termination that, originally, terminated just above the floor without a drain or waste receptor to capture the flow, regardless of the potential for damage. The water heater might be in a basement where the building drain is above the elevation of the water heater T&P valve or the water heater might be in the middle of a slab-on-grade building, without a nearby floor drain and not adjacent to an outside wall. Where water heater replacement installers are confronted with obstacles that appear to prevent strict compliance with this section, they should consult with the code official before performing the replacement work.

P2804.7 Vacuum-relief valve. Bottom fed tank-type water heaters and bottom fed tanks connected to water heaters shall have a vacuum-relief valve installed that complies with ANSI Z21.22.

❖ A vacuum-relief valve must be installed in bottom fed water heaters and bottom fed tanks connected to water heaters. The vacuum relief valve is intended to prevent a possible pressure reduction within the tank to below atmospheric pressure (i.e., a partial vacuum). Many tanks are not designed to resist external pres-

INTERNATIONAL CODE COUNCIL®
Copyright © 2015 ICC. ALL RIGHTS RESERVED. Accessed by David Dammon on Jun 21, 2017 12:30:52 PM pursuant to License Agreement with ICC. No further reproduction or distribution authorized. ANY UNAUTHORIZED REPRODUCTION OR DISTRIBUTION IS A VIOLATION OF THE FEDERAL COPYRIGHT ACT AND THE LICENSE AGREEMENT, AND SUBJECT TO CIVIL AND CRIMINAL PENALTIES THEREUNDER.

sures exceeding internal pressures; therefore, a vacuum-relief valve is necessary to prevent atmospheric pressure from possibly collapsing the tank or damaging an internal flue.

The vacuum-relief valve operates by automatically allowing air into the supply piping to the tank when a partial vacuum is created, (see Commentary Figure P2804.7). Bottom fed tanks are also susceptible to the creation of a vacuum by tank drainage resulting from negative supply pipe pressure or leakage.

Vacuum-relief valves must be constructed and tested in accordance with ANSI Z21.22.

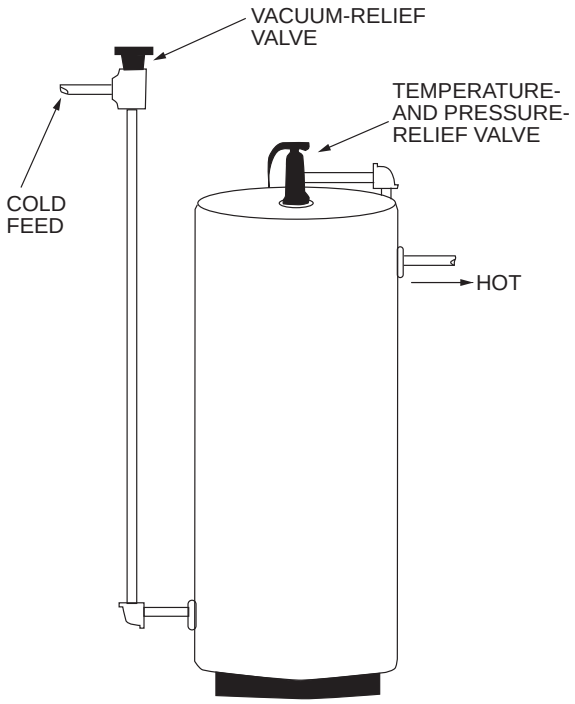

Figure P2804.7
BOTTOM-FED WATER HEATER

INTERNATIONAL CODE COUNCIL®
Copyright © 2015 ICC. ALL RIGHTS RESERVED. Accessed by David Dammon on Jun 21, 2017 12:30:52 PM pursuant to License Agreement with ICC. No further reproduction or distribution authorized. ANY UNAUTHORIZED REPRODUCTION OR DISTRIBUTION IS A VIOLATION OF THE FEDERAL COPYRIGHT ACT AND THE LICENSE AGREEMENT, AND SUBJECT TO CIVIL AND CRIMINAL PENALTIES THEREUNDER.

Chapter 29:
Water Supply and Distribution

General Comments

Chapter 29 regulates the design and installation of water supply systems. The code requires potable water to be supplied to dwelling units, and contains specific guidelines for maintaining the potability of the water supply. These provisions for protecting the water system from contamination are without question the most important part of this chapter and perhaps all of the plumbing chapters.

The chapter further outlines the methods that can be used in sizing water supply systems, along with specific precautions that must be adhered to in order to maintain the integrity of the material and its contents. Information specific to the types of materials that are approved for use within a potable water supply system are included, along with provisions relating to the types of connecting components or methods specific to each material.

The type and installation of various drinking water treatment units, such as water softeners and water filters, are also included.

Purpose

This chapter contains the minimum requirements necessary to design and install a water distribution system. The provisions include materials, installation guidelines and methods for maintaining the potability of the water system.

SECTION P2901
GENERAL

P2901.1 Potable water required. Potable water shall be supplied to plumbing fixtures and plumbing *appliances* except where treated rainwater, treated gray water or municipal reclaimed water is supplied to water closets, urinals and trap primers. The requirements of this section shall not be construed to require signage for water closets and urinals.

❖ A dwelling unit must be supplied with potable water to provide for the sanitation, hygiene, cooking and drinking needs of the occupants. An increasing number of homes use nonpotable water for irrigation and for flushing of water closets.

P2901.2 Identification of nonpotable water systems. Where *nonpotable* water systems are installed, the piping conveying the nonpotable water shall be identified either by color marking, metal tags or tape in accordance with Sections P2901.2.1 through P2901.2.2.3.

❖ Where nonpotable water supply systems are installed in a building, the piping of the nonpotable system must be identified to prevent an inadvertent cross connection between different systems, especially the potable water system, during repairs or renovations. For example, a building could be provided with a recycled gray-water supply system that supplies nonpotable water for flushing urinals and water closets. Without identification of the recycled gray-water piping, the piping system might be assumed to convey potable water because it is commonplace for urinals and water closets to be supplied with potable water. A connection to an unmarked nonpotable piping system for the purpose of obtaining potable water could lead to significant health risks for the building's occupants.

P2901.2.1 Signage required. Nonpotable water outlets such as hose connections, open-ended pipes and faucets shall be identified with signage that reads as follows: "Nonpotable water is utilized for [application name]. CAUTION: NONPOTABLE WATER. DO NOT DRINK." The words shall be legibly and indelibly printed on a tag or sign constructed of corrosion-resistant water-proof material or shall be indelibly printed on the fixture. The letters of the words shall be not less than 0.5 inches (12.7 mm) in height and in colors in contrast to the background on which they are applied. In addition to the required wordage, the pictograph shown in Figure P2901.2.1 shall appear on the required signage.

❖ Some nonpotable water systems have outlets such as hose connections, open-ended pipes and faucets that could be mistaken for potable water outlets. Therefore, at these locations, the code requires signage to warn the building's occupants that water obtained from these outlets is not safe for drinking. The pictograph in Figure P2901.2.1 conveys the intent in a visual manner.



FIGURE P2901.2.1
PICTOGRAPH—DO NOT DRINK

INTERNATIONAL CODE COUNCIL®
Copyright © 2015 ICC. ALL RIGHTS RESERVED. Accessed by David Dammon on Jun 21, 2017 12:30:52 PM pursuant to License Agreement with ICC. No further reproduction or distribution authorized. ANY UNAUTHORIZED REPRODUCTION OR DISTRIBUTION IS A VIOLATION OF THE FEDERAL COPYRIGHT ACT AND THE LICENSE AGREEMENT, AND SUBJECT TO CIVIL AND CRIMINAL PENALTIES THEREUNDER.

P2901.2.2 Distribution pipe labeling and marking. Nonpotable distribution piping shall be purple in color and shall be embossed or integrally stamped or marked with the words: "CAUTION: NONPOTABLE WATER—DO NOT DRINK" or the piping shall be installed with a purple identification tape or wrap. Pipe identification shall include the contents of the piping system and an arrow indicating the direction of flow. Hazardous piping systems shall contain information addressing the nature of the hazard. Pipe identification shall be repeated at intervals not exceeding 25 feet (7620 mm) and at each point where the piping passes through a wall, floor or roof. Lettering shall be readily observable within the room or space where the piping is located.

❖ Distribution piping conveying nonpotable water must be purple in color and have the caution lettering as indicated. Many types of water distribution pipe materials are offered with the external purple color and caution lettering. For those materials that are not offered with purple color or lettering, or if the installer wishes to use standard pipe (not purple), the code allows for pipe identification using tapes or wraps. The tapes and wraps would need to be of purple color (primarily) and have the cautionary lettering. The intent of this section is not to require that elbows, tees, and valves in the piping be purple colored or have the cautionary lettering. Identification of the pipe is all that is required as the pipe is where someone would be most likely to attempt to "tap into."

Piping identification must indicate the contents and the direction of flow, and any hazardous nature of the flow such as temperature, pressure, flammability and toxicity. The repetition of the identification locations is necessary so that those performing maintenance and modifications can easily find the pipe identification to determine the contents of the piping. Obviously, the pipe identification must be in a position such that a person within the room or space can easily see the identification markings.

P2901.2.2.1 Color. The color of the pipe identification shall be discernable and consistent throughout the building. The color purple shall be used to identify reclaimed, rain and gray water distribution systems.

❖ Where color is used for pipe identification, it must be clearly recognizable from any other pipe identification colors and be the same color for the same type of piping in the entire building. Where identifying reclaimed, rain and gray water distribution systems with color, the color purple must be used.

P2901.2.2.2 Lettering size. The size of the background color field and lettering shall comply with Table P2901.2.2.2.

❖ See Table P2901.2.2.2 for the required size of pipe identification.

P2901.2.2.3 Identification Tape. Where used, identification tape shall be not less than 3 inches (76 mm) wide and have white or black lettering on a purple field stating "CAUTION: NONPOTABLE WATER—DO NOT DRINK." Identification tape shall be installed on top of nonpotable rainwater distribution pipes and fastened not greater than every 10 feet (3048 mm) to each pipe length, and run continuously the entire length of the pipe.

❖ This section provides requirements for identification tapes for nonpotable water distribution piping. Also, this section requires that identification tape used for rainwater distribution piping be located on top of the piping and fastened at 10-foot intervals (and that the tape be continuously applied along the entire length of the pipe).

It is believed that this text comes from one of the many rainwater reuse "best practices" manuals that have been created over the last decade and that the text was selected primarily for the requirements for the identification tape. The part about use of the tape for identifying rainwater distribution piping, while important for buried rainwater distribution piping, does not seem to be logical to apply to rainwater piping inside of buildings (unless that piping is buried under the building).

The code does not specify how to use/apply identification tapes, other than the buried application for rainwater piping. Where tapes are used for identifying buried piping for any type of nonpotable water distribution piping, the tape requirements for buried rainwater distribution piping appear to be reasonable, although this is not a code requirement for other than rainwater piping. Where nonpotable water distribution piping is in a building (and not buried below the building), nonself-adhering tapes could be (spiral) wrapped around nonpotable water distribution piping because simply fastening at 10-foot intervals might not result in a "permanent" marking. For example, if the tape were fastened at 10-foot intervals on a horizontal pipe, the tape could sag and eventually be torn off during other work. Spiral wrapping of tape is not a code requirement but seems to be a logical method for maintaining identification.

Identification tapes could also be self-adhering, however, application of such tapes should consider

TABLE P2901.2.2.2
SIZE OF PIPE IDENTIFICATION

PIPE DIAMETER (inches)	LENGTH OF BACKGROUND COLOR FIELD (inches)	SIZE OF LETTERS (inches)
$^3/_4$ to $1^1/_4$	8	0.5
$1^1/_2$ to 2	8	0.75
$2^1/_2$ to 6	12	1.25
8 to 10	2	2.5
over 10	32	3.5

For SI: 1 inch = 25.4 mm.

INTERNATIONAL CODE COUNCIL®
Copyright © 2015 ICC. ALL RIGHTS RESERVED. Accessed by David Dammon on Jun 21, 2017 12:30:52 PM pursuant to License Agreement with ICC. No further reproduction or distribution authorized. ANY UNAUTHORIZED REPRODUCTION OR DISTRIBUTION IS A VIOLATION OF THE FEDERAL COPYRIGHT ACT AND THE LICENSE AGREEMENT, AND SUBJECT TO CIVIL AND CRIMINAL PENALTIES THEREUNDER.

whether the adhesive will have a negative impact on the pipe material, whether the adhesive will hold up in the expected environmental conditions (heat, condensation, etc.) and whether the adhesive can be removed without damage to the piping, should a repair or alteration be necessary.

SECTION P2902
PROTECTION OF POTABLE WATER SUPPLY

P2902.1 General. A potable water supply system shall be designed and installed as to prevent contamination from nonpotable liquids, solids or gases being introduced into the potable water supply. Connections shall not be made to a potable water supply in a manner that could contaminate the water supply or provide a cross-connection between the supply and a source of contamination except where *approved* backflow prevention assemblies, backflow prevention devices or other means or methods are installed to protect the potable water supply. Cross-connections between an individual water supply and a potable public water supply shall be prohibited.

❖ History is filled with localized and widespread occurrences of sicknesses, diseases and deaths caused by contamination of potable water supplies. It is therefore imperative that potable water supply systems be designed and maintained in a safe-for-drinking condition at all times. Although the requirements of this section appear straightforward, piping arrangements, fixture designs and appliance operations can be complex. Adding to this complexity is the potential for upset conditions to occur with regard to pressures within piping systems. As a result, designers and installers of potable water systems must be aware of hazardous conditions that might occur because of connections made to potable water systems or changing pressure conditions within piping systems that would not be normally expected.

A potable water "cross connection" is an arrangement where there is a potential for contamination to flow into the potable water supply. Because potable water supply systems normally flow in one direction, (i.e., from the source to the point of delivery), a flow back into a potable water system is called a "backflow." To prevent backflows from occurring, specific piping arrangements or specially designed devices must be installed. These are called "backflow prevention methods" and "backflow prevention devices," respectively. A discussion on backflow methods and devices is presented in the commentary to Section P2902.3.

The last sentence of this section prohibits the interconnection of a public water supply system and a private water system, such as a well. Even though a private well might be a good source of potable water, there is no guarantee that a private well will continue to produce potable water as wells are subject to contamination from numerous sources beyond the control of the well owner. Therefore, private water systems must not be connected to public water systems regardless of whether a backflow prevention method or device is installed at the connection.

To protect the potable water supply, identify potential threats and determine the appropriate backflow prevention method; an understanding of how backflow can occur is necessary. Backflow depends on atmospheric pressure, water pressures and variations in the water supply at any moment. The following discusses pressure and backflow:

ATMOSPHERIC PRESSURE: The pressure exerted by the weight of the atmosphere. Atmospheric pressure at sea level is 14.7 pounds per square inch (psi) (101 kPa) and varies with altitude.

GAUGE PRESSURE: The pressure read on a gauge. The reference point for the gauge is atmospheric pressure equal to zero. In other words, gauge pressure is the amount of pressure above or below atmospheric pressure.

ABSOLUTE PRESSURE: The sum of atmospheric pressure and gauge pressure.

WATER PRESSURE: A function of the weight and height of a column of water. A cubic foot of water weights 62.4 pounds (28.3 kg); the pressure exerted at the base of the cube is 62.4 pounds per square foot (psf) or 0.433 psi (2.987 kPa). Therefore, the height of a column of water determines the pressure that is exerted at its base. The diameter of the pipe or vessel has no bearing on this pressure. For example, a 100-foot high (30 480 mm) column of water that is 20 feet (6096 mm) in diameter has the same pressure at its base as a 100-foot high (30 480 mm) column of water that is 1 inch (25 mm) in diameter.

Columns of water with a free surface (exposed to atmosphere) will have atmospheric pressure in addition to pressure that is caused by the weight of water exerted at its base.

BACKFLOW: Flow of liquids in potable water distribution piping that is in reverse of its intended direction. Two types of pressure conditions cause backflow: backsiphonage and backpressure.

BACKSIPHONAGE: Backflow of water that is caused by system pressure falling below atmospheric pressure. Atmosphere supplies the force that reverses flow. Any gauge reading of pressure below atmospheric pressure will be negative.

To illustrate the effect atmospheric pressure has on water, assume that a 50-foot-long (15 240 mm) tube open on both ends is inserted vertically into a container of water. Atmospheric pressure acts equally on the surface of the water within the tube and outside the tube.

If the top of the tube is sealed and a vacuum pump is used to evacuate all the air from the tube, a vacuum with a pressure of 0 pounds per square inch gauge (psig) (0 Pa) is created within the tube. Atmospheric pressure will force water up into the tube and the water in the tube will rise to 33.9 feet (10 333 mm) above the surface of the water in the container. This height is equal to the height that can be supported by

INTERNATIONAL CODE COUNCIL®
Copyright © 2015 ICC. ALL RIGHTS RESERVED. Accessed by David Dammon on Jun 21, 2017 12:30:52 PM pursuant to License Agreement with ICC. No further reproduction or distribution authorized. ANY UNAUTHORIZED REPRODUCTION OR DISTRIBUTION IS A VIOLATION OF THE FEDERAL COPYRIGHT ACT AND THE LICENSE AGREEMENT, AND SUBJECT TO CIVIL AND CRIMINAL PENALTIES THEREUNDER.

the atmospheric pressure. Standard (sea level) atmospheric pressure is 14.7 psi (101 kPa) and will support a column of water 33.9 feet (10 333 mm) high [33.9 feet × 0.433 psi = 14.7 psi (101 kPa)].

Backsiphonage occurs in the water distribution system when supply pressure falls below atmospheric pressure. The following are practical examples of conditions that can cause back-siphonage.

A simple siphon occurs when pressure is reduced as a result of a difference in water levels at two separate points within a continuous fluid system [see Commentary Figure P2902.1(1)].

Aspiration or venturi principle is achieved when reduced pressure is created within a fluid system as a result of fluid motion. Intentional or unintentional constriction of flow through an opening or pipe increases velocity and decreases pressure. If this point of reduction is linked to a source of pollution, backsiphonage of the pollutant can occur [see Commentary Figure P2902.1(2)].

Supply pressure can be reduced at the pump intake or suction side. Insufficient water pressure or undersized piping supplying the pump can cause a negative pressure and allow contaminated water to be drawn into the system [see Commentary Figure P2902.1(3)].

BACKPRESSURE: Pressure created in a nonpotable system in excess of the water supply mains, causing backflow. Backpressure may be created by mechanical means, such as a pump; by static head pressure including an elevated tank; or by thermal expansion from a heat source, such as a water heater.

P2902.2 Plumbing fixtures. The supply lines and fittings for every plumbing fixture shall be installed so as to prevent backflow. Plumbing fixture fittings shall provide backflow protection in accordance with ASME A112.18.1/CSA B125.1.

❖ Faucets and fixture fittings are required to comply with ASME A112.18.1/CSA B125.1, which addresses backflow protection. These components must be installed in a manner that does not allow backflow conditions to occur.

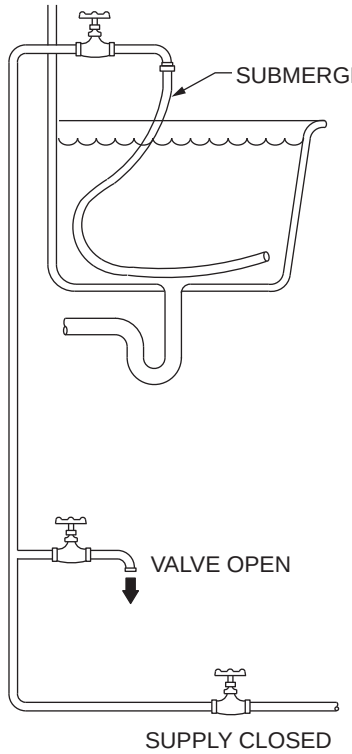

Figure P2902.1(1)
EXAMPLE OF SIMPLE SIPHON

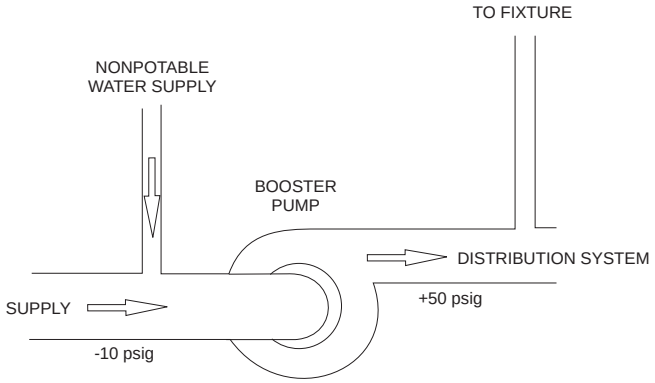

For SI: 1 pound per square inch = 6.895 kPa.

Figure P2902.1(3)
EXAMPLE OF PUMP CAUSING NEGATIVE PRESSURE

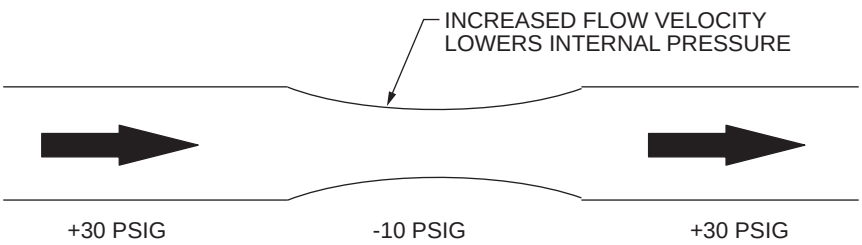

For SI: 1 pound per square inch = 6.895 kPa.

Figure P2902.1(2)
EXAMPLE OF ASPIRATION OR VENTURI PRINCIPLE

INTERNATIONAL CODE COUNCIL®
Copyright © 2015 ICC. ALL RIGHTS RESERVED. Accessed by David Dammon on Jun 21, 2017 12:30:52 PM pursuant to License Agreement with ICC. No further reproduction or distribution authorized. ANY UNAUTHORIZED REPRODUCTION OR DISTRIBUTION IS A VIOLATION OF THE FEDERAL COPYRIGHT ACT AND THE LICENSE AGREEMENT, AND SUBJECT TO CIVIL AND CRIMINAL PENALTIES THEREUNDER.

P2902.3 Backflow protection. A means of protection against backflow shall be provided in accordance with Sections P2902.3.1 through P2902.3.6. Backflow prevention applications shall conform to Table P2902.3, except as specifically stated in Sections P2902.4 through P2902.5.5.

❖ This section refers the reader to six subsections, each detailing a type of approved backflow preventer that can be used, depending on the type of installation and commensurate with the degree of hazard.

TABLE P2902.3. See below.

❖ Where the code does not specifically address backflow prevention methods or devices for a specific application within Sections P2902.4 through P2902.5.5, this table must be used to select a suitable method or device for the application. To use the table, first identify whether the potential hazard substance that might enter the potable water system is a low or high hazard to the potable water supply. Note a directs the reader to the Chapter 2 definitions of "Pollution" and "Contamination" for determining whether the hazard is low or high, respectively. Once the hazard is selected, this should eliminate some entries in the table as being viable for the application. Next, determine if the application will be subject to backpressure conditions. If so, this will eliminate additional table entries as being viable. (If not, then no table entries will be eliminated because all methods and devices are suitable for backsiphonage conditions). Of the remaining entries to choose from, the reader must then select a method or device using the description based upon the specific application for which the description fits. Of the final list of viable entries, the best selection is typically the one that is most economical to purchase and install.

TABLE P2902.3
APPLICATION FOR BACKFLOW PREVENTERS

DEVICE	DEGREE OF HAZARD[a]	APPLICATION[b]	APPLICABLE STANDARDS
Backflow Prevention Assemblies			
Double check backflow prevention assembly and double check fire protection backflow prevention assembly	Low hazard	Backpressure or backsiphonage Sizes $^3/_8$″ – 16″	ASSE 1015, AWWA C510, CSA B64.5, CSA B64.5.1
Double check detector fire protection backflow prevention assemblies	Low hazard	Backpressure or backsiphonage Sizes 2″ – 16″	ASSE 1048
Pressure vacuum breaker assembly	High or low hazard	Backsiphonage only Sizes $^1/_2$″ – 2″	ASSE 1020, CSA B64.1.2
Reduced pressure principle backflow prevention assembly and reduced pressure principle fire protection backflow prevention assembly	High or low hazard	Backpressure or backsiphonage Sizes $^3/_8$″ – 16″	ASSE 1013, AWWA C511, CSA B64.4, CSA B64.4.1
Reduced pressure detector fire protection backflow prevention assemblies	High or low hazard	Backsiphonage or backpressure (Fire sprinkler systems)	ASSE 1047
Spill-resistant vacuum breaker	High or low hazard	Backsiphonage only Sizes $^1/_4$″ – 2″	ASSE 1056, CSA B64.1.3
Backflow Preventer Plumbing Devices			
Antisiphon-type fill valves for gravity water closet flush tanks	High hazard	Backsiphonage only	ASSE 1002, CSA B125.3
Backflow preventer with intermediate atmospheric vents	Low hazard	Backpressure or backsiphonage Sizes $^1/_4$″ – $^3/_8$″	ASSE 1012, CSA B64.3
Dual-check-valve-type backflow preventers	Low hazard	Backpressure or backsiphonage Sizes $^1/_4$″ – 1″	ASSE 1024, CSA B64.6
Hose-connection backflow preventer	High or low hazard	Low head backpressure, rated working pressure backpressure or backsiphonage Sizes $^1/_2$″ – 1″	ASSE 1052, CSA B64.2.1.1
Hose-connection vacuum breaker	High or low hazard	Low head backpressure or backsiphonage Sizes $^1/_2$″, $^3/_4$″, 1″	ASSE 1011, CSA B64.2, B64.2.1
Laboratory faucet backflow preventer	High or low hazard	Low head backpressure and backsiphonage	ASSE 1035, CSA B64.7
Pipe-applied atmospheric-type vacuum breaker	High or low hazard	Backsiphonage only Sizes $^1/_4$″ – 4″	ASSE 1001, CSA B64.1.1
Vacuum breaker wall hydrants, frost-resistant, automatic-draining type	High or low hazard	Low head backpressure or backsiphonage Sizes $^3/_4$″ – 1″	ASSE 1019, CSA B64.2.2
Other Means Or Methods			
Air gap	High or low hazard	Backsiphonage only	ASME A112.1.2
Air gap fittings for use with plumbing fixtures, appliances and appurtenances	High or low hazard	Backsiphonage or backpressure	ASME A112.1.3

For SI: 1 inch = 25.4 mm.

a. Low hazard—See Pollution (Section R202). High hazard—See Contamination (Section R202).

b. See Backpressure (Section R202). See Backpressure, Low Head (Section R202). See Backsiphonage (Section R202).

INTERNATIONAL CODE COUNCIL®
Copyright © 2015 ICC. ALL RIGHTS RESERVED. Accessed by David Dammon on Jun 21, 2017 12:30:52 PM pursuant to License Agreement with ICC. No further reproduction or distribution authorized. ANY UNAUTHORIZED REPRODUCTION OR DISTRIBUTION IS A VIOLATION OF THE FEDERAL COPYRIGHT ACT AND THE LICENSE AGREEMENT, AND SUBJECT TO CIVIL AND CRIMINAL PENALTIES THEREUNDER.

P2902.3.1 Air gaps. *Air gaps* shall comply with ASME A112.1.2 and *air gap* fittings shall comply with ASME A112.1.3. An *air gap* shall be measured vertically from the lowest end of a water outlet to the flood level rim of the fixture or receptor into which the water outlets discharges to the floor. The required *air gap* shall be not less than twice the diameter of the effective opening of the outlet and not less than the values specified in Table P2902.3.1.

❖ The table referred to in this section has been a mainstay in the plumbing industry since 1940. The values specified have not changed in more than 70 years. The minimum air gap distance must be twice the diameter of the effective opening [see Commentary Figure P2902.3.1(1)].

This section refers the reader to Table P2902.3.1 for distance requirements from side walls (see commentary, Table P2902.3.1).

Further provisions specify minimum air gap requirements. An air gap is required at the discharge point of a relief valve, and within dishwashers and clothes washers (see commentary, Sections P2717.1, P2718.1 and P2803.6.1).

TABLE P2902.3.1. See below.

❖ The middle column of the table provides minimum air gap dimensions for outlets located away from walls or obstructions. The third column provides more stringent air gap dimensions for outlets located near walls or obstructions [see Commentary Figures P2902.3.1(2) and P2902.3.1(3)].

ASME A112.1.2 is the standard for air gaps that require specific dimensions; these are listed in Table P2902.3.1. An air gap is not a device and has no moving parts. It is, therefore, the most effective and dependable method of preventing backflow and should be used where feasible. However, when this method of protection is used, there must be an assurance or at least a level of awareness by the user that the air gap cannot be bypassed or defeated by the addition of a hose or extension from the end of the potable water outlet to the source of contamination. The potable water opening or outlet must terminate at an elevation above the level of the source of contamination. The potable water could be contaminated only if the entire area or room is flooded to a depth that would submerge the potable water opening or outlet. An air gap installation must always be constructed so that the air gap remains permanently fixed.

ASME A112.1.3 is the standard for air gap fittings for use with plumbing fixtures, appliances and appurtenances. This standard was developed for applications where an air gap fitting is manufactured for appliance applications.

TABLE P2902.3.1
MINIMUM AIR GAPS

FIXTURE	MINIMUM AIR GAP	
	Away from a wall[a] (inches)	Close to a wall (inches)
Effective openings greater than 1 inch	Two times the diameter of the effective opening	Three times the diameter of the effective opening
Lavatories and other fixtures with effective opening not greater than $^1/_2$ inch in diameter	1	1.5
Over-rim bath fillers and other fixtures with effective openings not greater than 1 inch in diameter	2	3
Sink, laundry trays, gooseneck back faucets and other fixtures with effective openings not greater than $^3/_4$ inch in diameter	1.5	2.5

For SI: 1 inch = 25.4 mm.

a. Applicable where walls or obstructions are spaced from the nearest inside edge of the spout opening a distance greater than three times the diameter of the effective opening for a single wall, or a distance greater than four times the diameter of the effective opening for two intersecting walls.

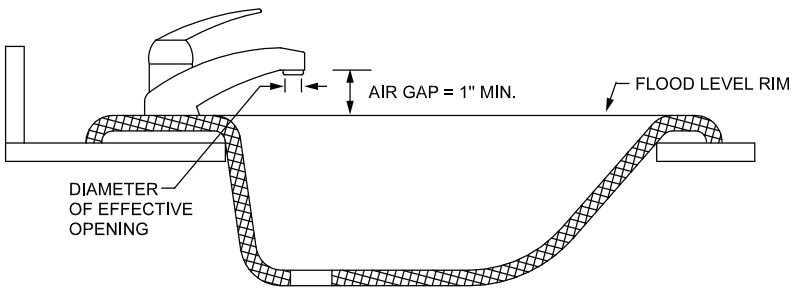

For SI: 1 inch = 25.4 mm.

Figure P2902.3.1(1)
AIR GAP FOR A LAVATORY FAUCET

INTERNATIONAL CODE COUNCIL®
Copyright © 2015 ICC. ALL RIGHTS RESERVED. Accessed by David Dammon on Jun 21, 2017 12:30:52 PM pursuant to License Agreement with ICC. No further reproduction or distribution authorized. ANY UNAUTHORIZED REPRODUCTION OR DISTRIBUTION IS A VIOLATION OF THE FEDERAL COPYRIGHT ACT AND THE LICENSE AGREEMENT, AND SUBJECT TO CIVIL AND CRIMINAL PENALTIES THEREUNDER.

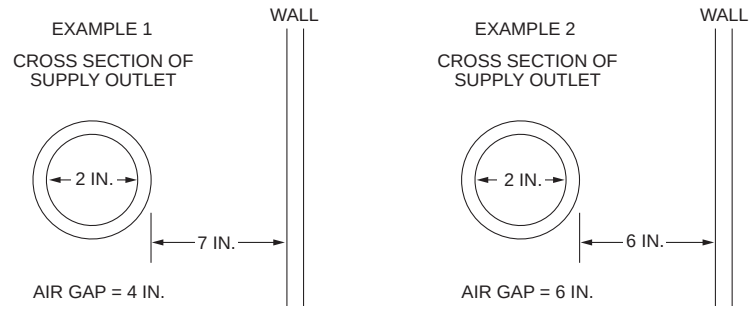

For SI: 1 inch = 25.4 mm.

Figure P2902.3.1(2)
AIR GAPS—LOCATED NEAR SINGLE WALL

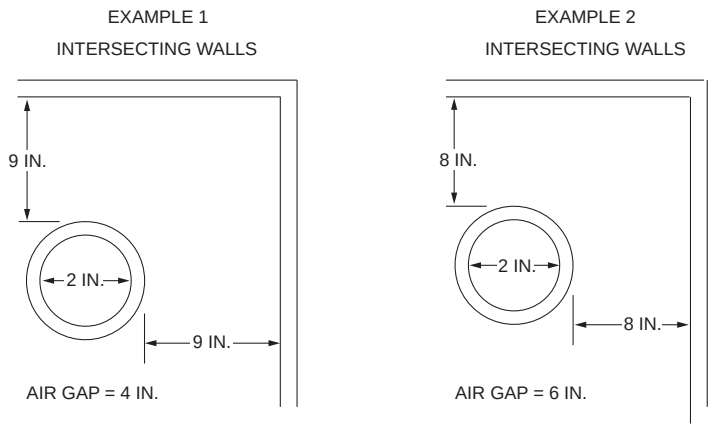

For SI: 1 inch = 25.4 mm.

Figure P2902.3.1(3)
AIR GAPS—LOCATED NEAR INTERSECTING WALLS

P2902.3.2 Atmospheric-type vacuum breakers. Atmospheric-type vacuum breakers shall conform to ASSE 1001 or CSA B64.1.1. Hose-connection vacuum breakers shall conform to ASSE 1011, ASSE 1019, ASSE 1035, ASSE 1052, CSA B64.2, CSA B64.2.1, CSA B64.2.1.1, CSA B64.2.2 or CSA B64.7. Both types of vacuum breakers shall be installed with the outlet continuously open to the atmosphere. The critical level of the atmospheric vacuum breaker shall be set at not less than 6 inches (152 mm) above the highest elevation of downstream piping and the flood level rim of the fixture or device.

❖ An atmospheric vacuum breaker is designed to prevent siphonic action from occurring down-stream of the device. When a negative pressure (full or partial vacuum) occurs in the water supply, the vacuum breaker opens to the atmosphere, allowing air to enter the piping system, thus breaking the vacuum. This prevents contamination of the potable water system by stopping the back-siphonage backflow. Under backsiphonage conditions the disc float (poppet) drops over the inlet seat opening and air enters the atmospheric port opening allowing the remaining water in the piping downstream from the vacuum breaker to drain.

These devices are not effective in preventing backflow resulting from backpressure. The outlet of atmospheric vacuum breakers must remain open to the atmosphere by terminating with a pipe, spout or similar unobstructed opening. Valves must not be installed downstream of this device because this would subject the device to supply pressure, which could cause the disc float (poppet) to stick in the closed position, thereby rendering it inoperative.

An atmospheric-type vacuum breaker:

- Provides protection against low-hazard or high-hazard contamination.
- Provides protection against backsiphonage only.
- Cannot be installed where it is under continuous pressure from the water supply (12-hour or less intervals).
- Has a critical level of installation of 6 inches (152 mm) above the highest point of use downstream.
- Must be accessible for inspection and replacement.

INTERNATIONAL CODE COUNCIL®
Copyright © 2015 ICC. ALL RIGHTS RESERVED. Accessed by David Dammon on Jun 21, 2017 12:30:52 PM pursuant to License Agreement with ICC. No further reproduction or distribution authorized. ANY UNAUTHORIZED REPRODUCTION OR DISTRIBUTION IS A VIOLATION OF THE FEDERAL COPYRIGHT ACT AND THE LICENSE AGREEMENT, AND SUBJECT TO CIVIL AND CRIMINAL PENALTIES THEREUNDER.

Hose-connection backflow preventers are designed to be installed on the discharge side of a hose-threaded outlet on a potable water system. This two-check device protects against backflow caused by backsiphonage and low-head backpressure, under the high-hazard conditions present at a hose-threaded outlet. This device must be used only on systems where sources of backpressure are not introduced and where low-head backpressure does not exceed that generated by an elevated hose equal to or less than 10 feet (3048 mm) in height. For example, using a garden hose while standing on a ladder could create a backpressure of 10 feet (3048 mm) of head.

P2902.3.3 Backflow preventer with intermediate atmospheric vent. Backflow preventers with intermediate atmospheric vents shall conform to ASSE 1012 or CSA B64.3. These devices shall be permitted to be installed where subject to continuous pressure conditions. These devices shall be prohibited as a means of protection where any hazardous chemical additives are introduced downstream of the device. The relief opening shall discharge by *air gap* and shall be prevented from being submerged.

❖ A backflow preventer with intermediate atmospheric vent is a nontestable device consisting of two spring-loaded check valves in the closed position and a vent to atmosphere between the two check valves. The design and principle of operation of these backflow preventers are similar to those of a reduced pressure principle backflow preventer. Supply pressure keeps the atmospheric vent closed, but zero supply pressure or backsiphonage will open the inner chamber to the atmosphere.

With a flow through the valve, the primary check opens away from the diaphragm seal. The atmospheric vent remains closed by the deflection of the diaphragm seal. The secondary check opens away from the downstream seal, permitting the flow of water through the valve.

A backflow preventer with intermediate atmospheric vent:

- Provides protection against low-hazard contamination.
- Provides protection against backsiphonage and backpressure backflow.
- Must have its relief vent opening discharge through an air gap.
- Can be used where it is under continuous pressure from the water supply.
- Cannot be installed below grade where it may be subject to submersion.
- Must be accessible for inspection and replacement.

Provisions must be made at or near the location of the installation to prevent drainage from the relief vent opening causing damage to the structure.

P2902.3.4 Pressure vacuum breaker assemblies. Pressure vacuum breaker assemblies shall conform to ASSE 1020 or CSA B64.1.2. Spill-resistant vacuum breaker assemblies shall comply with ASSE 1056. These assemblies are designed for installation under continuous pressure conditions where the critical level is installed at the required height. The critical level of a pressure vacuum breaker and a spill-resistant vacuum breaker assembly shall be set at not less than 12 inches (304 mm) above the highest elevation of downstream piping and the flood level rim of the fixture or device. Pressure vacuum breaker assemblies shall not be installed in locations where spillage could cause damage to the structure.

❖ A pressure vacuum breaker assembly contains one or two independently operating spring-loaded check valves and an independently operating spring-loaded air inlet valve located on the discharge side of the check valve. This device is testable because it has a shutoff valve and test cock at each end (see Commentary Figure P2902.3.4). Although a pressure vacuum breaker assembly operates by the same principle as an atmospheric vacuum breaker, a pressure vacuum breaker assembly is spring activated. The water pressure acting against the spring closes off the air opening. Because of the spring activation, a valve can be located downstream of a pressure vacuum breaker assembly.

A pressure-type vacuum breaker:

- Provides protection against low-hazard and high-hazard contamination.
- Provides protection against backsiphonage only.
- Can be used where it is under continuous pressure from the water supply (valving permitted downstream).

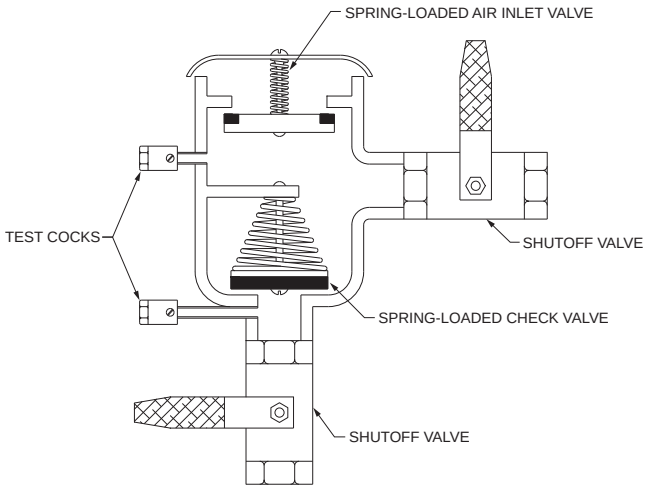

Figure P2902.3.4
PRESSURE VACCUM BREAKER

INTERNATIONAL CODE COUNCIL®
Copyright © 2015 ICC. ALL RIGHTS RESERVED. Accessed by David Dammon on Jun 21, 2017 12:30:52 PM pursuant to License Agreement with ICC. No further reproduction or distribution authorized. ANY UNAUTHORIZED REPRODUCTION OR DISTRIBUTION IS A VIOLATION OF THE FEDERAL COPYRIGHT ACT AND THE LICENSE AGREEMENT, AND SUBJECT TO CIVIL AND CRIMINAL PENALTIES THEREUNDER.

- Has a critical level of installation of 6 inches (152 mm) above flood-level rim.
- Must be accessible for testing and inspection.

Provisions must be made at or near the location of the installation to prevent leakage from the air vent opening from causing damage to the structure when the device is installed in a building or structure.

ASSE 1056 was developed to specifically address indoor applications offering the same vacuum breaker capabilities as ASSE 1020; however, water discharges each time the valve is pressurized. As with ASSE 1020 valves, backflow protection against backsiphonage is achieved by a check valve backed up with an air inlet vent that opens in response to a loss of supply pressure. Such valves are not for use in any system where backpressure is applied to the device. Where the system is pressurized, the vent closes to prevent flow through the upstream check valve and to eliminate vent spillage.

P2902.3.5 Reduced pressure principle backflow prevention assemblies. Reduced pressure principle backflow prevention assemblies and reduced pressure principle fire protection backflow prevention assemblies shall conform to ASSE 1013, AWWA C511, CSA B64.4 or CSA B64.4.1. Reduced pressure detector fire protection backflow prevention assemblies shall conform to ASSE 1047. These devices shall be permitted to be installed where subject to continuous pressure conditions. The relief opening shall discharge by *air gap* and shall be prevented from being submerged.

❖ A reduced pressure principle backflow prevention assembly is considered to be the most reliable mechanical method to prevent backflow. These devices consist of dual, independently acting, spring-loaded check valves that are separated by a chamber or "zone" equipped with a relief valve (see Commentary Figure P2902.3.5). The pressure downstream of the device and in the central chamber between the check valves is maintained at a minimum of 2 psi (13.8 kPa) less than the potable water supply pressure at the device inlet; hence the name "reduced pressure principle." The relief valve located in the central chamber is held closed by the pressure differential between the inlet supply pressure and the central chamber pressure. If the inlet supply pressure decreases, the device will discharge water from the central chamber, thus maintaining a lower pressure in the chamber. In the event of backpressure or negative supply pressure, the relief valve will open to the atmosphere and drain any backflow that has leaked through the check valve. The relief vent will also allow air to enter to prevent any siphonage.

During a static or no-flow condition, both check valves and the relief vent remain closed. When there is normal flow, the two check valves open and the relief vent port remains closed. The supply pressure drops across the valve because of the force required to open the spring-loaded check valves. If backsiphonage or backpressure occurs, both check valves close and the relief vent opens to the atmosphere, discharging the water in the intermediate zone. If both check valves are fouled and held in the open position, and there is either a backsiphonage or backpressure, or both, the relief vent port opens, discharging the possibly contaminated water to the atmosphere and allowing air to enter to break the siphon. This gives a visual indication of a malfunction of one or both of the check valves or relief valve.

ASSE 1013 is the standard for two types of backflow prevention assemblies, identified as "reduced pressure principle backflow preventers" (RP) and "reduced

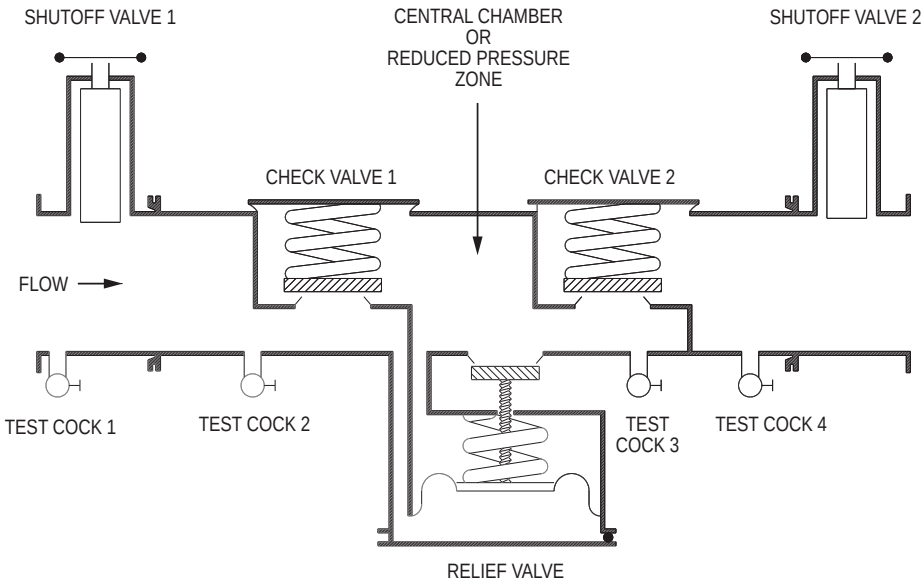

Figure P2902.3.5
REDUCED PRESSURE PRINCIPLE BLACKFLOW PREVENTER

INTERNATIONAL CODE COUNCIL®
Copyright © 2015 ICC. ALL RIGHTS RESERVED. Accessed by David Dammon on Jun 21, 2017 12:30:52 PM pursuant to License Agreement with ICC. No further reproduction or distribution authorized. ANY UNAUTHORIZED REPRODUCTION OR DISTRIBUTION IS A VIOLATION OF THE FEDERAL COPYRIGHT ACT AND THE LICENSE AGREEMENT, AND SUBJECT TO CIVIL AND CRIMINAL PENALTIES THEREUNDER.

pressure principle fire protection backflow preventers" (RPF). An RP device is designed for a working pressure of 150 psi (1024 kPa) and an RPF device is designed for a working pressure of 175 psi (1207 kPa). The RP and RPF are identical in their backflow protection. The RPF has specific performance requirements relating to its use on fire protection systems.

ASSE 1047 is the standard for devices known as "reduced pressure detector fire protection backflow prevention assemblies" (RPDF). This device is primarily used for the protection of the public water supply from contaminants found in fire sprinkler systems, and it is used to detect low rates of flow up to 2 gallons per minute (gpm) (0.126 L/s) within the sprinkler system caused by leakage or unauthorized use. This standard also has provisions for allowing inclusion of alarm signaling devices in the assembly.

An RP:

- Provides protection against low- or high-hazard contamination.
- Provides protection against backsiphonage and backpressure backflow.
- Can be used where it is under continuous pressure from the water supply.
- Must have its relief vent opening discharge through an air gap.
- Must be accessible for testing and inspection.
- Cannot be installed below grade where it may be subject to submersion.

Provisions must be made at or near the location of the installation to prevent drainage from the relief vent opening causing damage to the structure when the device is installed in a building or structure.

P2902.3.6 Double check backflow prevention assemblies. Double check backflow prevention assemblies shall conform to ASSE 1015, CSA B64.5, CSA B64.5.1 or AWWA C510. Double check detector fire protection backflow prevention assemblies shall conform to ASSE 1048. These assemblies shall be capable of operating under continuous pressure conditions.

❖ These devices are designed for low-hazard applications subject to backpressure and backsiphonage applications. The devices consist of two independent spring-loaded check valves in series. Test cocks are provided to permit testing of the devices. Note that these devices must not be confused with dual check-valve devices or two single check valves placed in series.

Double-detector check-valve assemblies are always permitted as an option where double check-valve assemblies are required because they offer identical protection. Double-detector devices provide the user the ability to monitor water flow through the device to determine whether there is a system leak or water is being intentionally withdrawn from the system downstream of the device.

P2902.3.7 Dual check backflow preventer. Dual check backflow preventers shall conform with ASSE 1024 or CSA B64.6.

❖ Some water purveyors/utilities require that the building water supply system be isolated from the public water main by means of dual check-valve backflow preventers. The code does not require this. Typically, this type of backflow preventer is installed along with the water meter "set," by the water purveyor/utility. This device is not field testable.

P2902.4 Protection of potable water outlets. Potable water openings and outlets shall be protected by an *air gap*, a reduced pressure principle backflow prevention assembly, an atmospheric vent, an atmospheric-type vacuum breaker, a pressure-type vacuum breaker assembly or a hose connection backflow preventer.

❖ The potable water system comes in contact with the atmosphere at openings or outlets. These include faucets, hose bibbs and plumbing appliances. The openings can be protected by an air gap, RP principle backflow preventer with atmospheric vent, atmospheric-type vacuum breaker, pressure-type vacuum breaker or hose connection backflow preventer.

P2902.4.1 Fill valves. Flush tanks shall be equipped with an antisiphon fill valve conforming to ASSE 1002 or CSA B125.3. The critical level of the fill valve shall be located not less than 1 inch (25 mm) above the top of the flush tank overflow pipe.

❖ The fill valve is the refilling component that controls the flow of water into the flush tank. Because the fill valve connects the potable water to the flush tank, it must have adequate protection against backflow. The referenced standards require an antisiphon device in the fill valve. An antisiphon device is a type of vacuum breaker that must be located a minimum of 1 inch (25 mm) above the overflow pipe to prevent its submersion. The 1-inch (25 mm) minimum is equivalent to the vacuum breaker critical level.

P2902.4.2 Deck-mounted and integral vacuum breakers. *Approved* deck-mounted or equipment-mounted vacuum breakers and faucets with integral atmospheric vacuum breakers or spill–resistant vacuum breaker assemblies shall be installed in accordance with the manufacturer's instructions and the requirements for labeling. The critical level of the breakers and assemblies shall be located at not less than 1 inch (25 mm) above the *flood level rim*.

❖ These devices are installed on the decks of plumbing fixtures, such as custom bathtubs, whirlpools, bidets or sinks. They need to be installed only 1 inch (25 mm), instead of 6 inches (152 mm), above the flood-level rim unless required otherwise by the manufacturer. However, these devices must be tested for that reduced elevation so that they function properly and prevent backsiphonage. Faucets with integral atmospheric vacuum breakers or spill-resistant vacuum breaker assemblies must also be installed 1 inch (25 mm) above the flood-level rim of the fixture served. The

INTERNATIONAL CODE COUNCIL®
Copyright © 2015 ICC. ALL RIGHTS RESERVED. Accessed by David Dammon on Jun 21, 2017 12:30:52 PM pursuant to License Agreement with ICC. No further reproduction or distribution authorized. ANY UNAUTHORIZED REPRODUCTION OR DISTRIBUTION IS A VIOLATION OF THE FEDERAL COPYRIGHT ACT AND THE LICENSE AGREEMENT, AND SUBJECT TO CIVIL AND CRIMINAL PENALTIES THEREUNDER.

manufacturer's instructions must be followed so that the devices will function as intended.

P2902.4.3 Hose connection. Sillcocks, hose bibbs, wall hydrants and other openings with a hose connection shall be protected by an atmospheric-type or pressure-type vacuum breaker, a pressure vacuum breaker assembly or a permanently attached hose connection vacuum breaker.

Exceptions:

1. This section shall not apply to water heater and boiler drain valves that are provided with hose connection threads and that are intended only for tank or vessel draining.
2. This section shall not apply to water supply valves intended for connection of clothes washing machines where backflow prevention is otherwise provided or is integral with the machine.

❖ Sillcocks, hose bibbs, wall hydrants and other openings with hose connections must be protected by either an atmospheric, or pressure-type vacuum breaker or a permanently attached hose connection vacuum breaker (see Commentary Figure P2902.4.3). There is danger of backsiphonage with any outlet that has a hose connected to it if the hose can be submerged. Therefore, a device that will stop the siphonage action is required. The type of device will depend on whether a shutoff valve is installed upstream or downstream of the device. Where a shutoff valve is installed upstream of the device, and the device is not subjected to prolonged flow, an atmospheric-type vacuum breaker or a hose connection vacuum breaker can be installed. Where a shutoff valve is installed downstream, or the device is subjected to prolonged flow, a pressure-type vacuum breaker is required.

Backflow prevention devices are not required for fixtures that already include integral backflow prevention devices, such as dishwashers, clothes washers and ice machines.

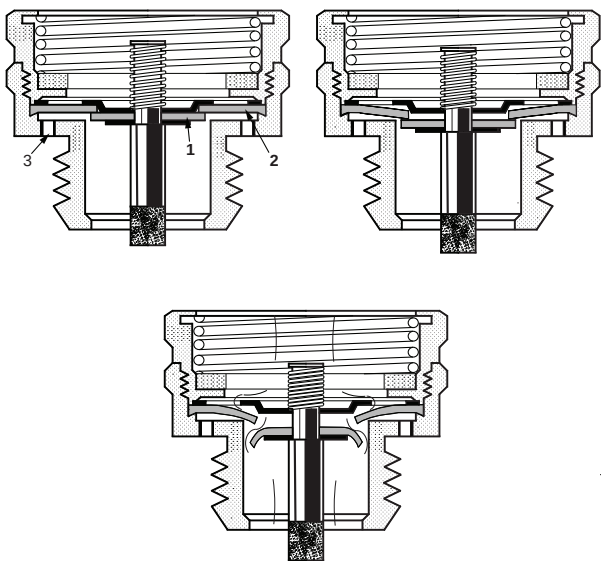

Figure P2902.4.3
HOSE CONNECTION VACUUM BREAKER

P2902.5 Protection of potable water connections. Connections to the potable water shall conform to Sections P2902.5.1 through P2902.5.5.

❖ This section regulates direct connections between potable and nonpotable systems that result in a cross connection. There are instances where specific provisions override the previous general provisions, as indicated in Sections P2902.5.1 through P2902.5.5.

P2902.5.1 Connections to boilers. Where chemicals will not be introduced into a boiler, the potable water supply to the boiler shall be protected from the boiler by a backflow preventer with an intermediate atmospheric vent complying with ASSE 1012 or CSA B64.3. Where chemicals will be introduced into a boiler, the potable water supply to the boiler shall be protected from the boiler by an *air gap* or a reduced pressure principle backflow prevention assembly complying with ASSE 1013, CSA B64.4 or AWWA C511.

❖ Because boilers are pressurized vessels, the potential for backflow caused by backpressure is high. If the water supply pressure drops below the boiler pressure, backflow can occur. When the boiler contains untreated water (without additives), a backflow preventer with an intermediate atmospheric vent can be installed. However, where chemicals are added to the boiler, the potable water supply connection must be protected by a reduced pressure zone (RPZ) device or by an air gap.

If potable water is used for domestic use in conjunction with space heating, such systems must be protected from conditions that can cause contamination. Because the water heater or boiler is part of the potable water system, all materials used in the heating system must be approved for use in a potable water system. Note the temperature-protection requirements of Section P2803.2.

P2902.5.2 Heat exchangers. Heat exchangers using an essentially toxic transfer fluid shall be separated from the potable water by double-wall construction. An *air gap* open to the atmosphere shall be provided between the two walls. Single-wall construction heat exchangers shall be used only where an *essentially nontoxic transfer fluid* is utilized.

❖ Heat exchangers are used to transfer energy to or from potable water without mixing with the medium carrying the energy to or from the heat exchanger. Because a wall separates the medium from the potable water, care must be exercised so that mixing between the two will not occur, especially when the medium is toxic. If the medium is toxic, double-wall heat exchangers with an air gap between the walls vented to atmosphere are required so that any leak from either side will leak to the outside, alerting the occupant that a problem exists. Single-wall heat exchangers are only allowed where the heat transfer fluid is not toxic.

P2902.5.3 Lawn irrigation systems. The potable water supply to lawn irrigation systems shall be protected against backflow by an atmospheric vacuum breaker, a pressure vacuum

INTERNATIONAL CODE COUNCIL®
Copyright © 2015 ICC. ALL RIGHTS RESERVED. Accessed by David Dammon on Jun 21, 2017 12:30:52 PM pursuant to License Agreement with ICC. No further reproduction or distribution authorized. ANY UNAUTHORIZED REPRODUCTION OR DISTRIBUTION IS A VIOLATION OF THE FEDERAL COPYRIGHT ACT AND THE LICENSE AGREEMENT, AND SUBJECT TO CIVIL AND CRIMINAL PENALTIES THEREUNDER.

breaker assembly or a reduced pressure principle backflow prevention assembly. Valves shall not be installed downstream from an atmospheric vacuum breaker. Where chemicals are introduced into the system, the potable water supply shall be protected against backflow by a reduced pressure principle backflow prevention assembly.

❖ Lawn irrigation system outlets can be installed at or below grade and are not regulated by the code; however, the potable water supply point of connection to the system must be protected against backflow by an atmospheric vacuum breaker, a pressure vacuum breaker assembly or a reduced pressure principle backflow prevention assembly. The most common method of protection uses pressure vacuum breakers. These devices are permitted for all irrigation systems that use valved sprinklers or zone controls that could render atmospheric vacuum breakers inoperative. Where chemicals can be introduced into the irrigation system, the potable water system must be protected by a reduced pressure principle backflow prevention assembly. RPZ devices are typically installed in cases where it is not known at the time of installation whether or not chemicals will be introduced into the irrigation system.

P2902.5.4 Connections to automatic fire sprinkler systems. The potable water supply to automatic fire sprinkler systems shall be protected against backflow by a double check backflow prevention assembly, a double check fire protection backflow prevention assembly, a reduced pressure principle backflow prevention assembly or a reduced pressure principle fire protection backflow prevention assembly.

Exception: Where systems are installed as a portion of the water distribution system in accordance with the requirements of this code and are not provided with a fire department connection, backflow protection for the water supply system shall not be required.

❖ Automatic fire sprinkler systems installed in dwellings are either installed as a portion of the water distribution system in accordance with the requirements of the code, in which case there are usually no stagnant portions, or they are completely isolated from the potable water system, in which case there could be areas where water can stagnate and possibly develop pollutants and residue from the piping system. If the entire piping system, including sprinkler piping, is constructed of materials that are approved for potable water, a backflow preventer is not required. However, if the water distribution system and fire sprinkler system share only the main supply (water service) in common, a double check-valve assembly is required to isolate the sprinkler system from the potable water supply main.

P2902.5.4.1 Additives or nonpotable source. Where systems contain chemical additives or antifreeze, or where systems are connected to a nonpotable secondary water supply, the potable water supply shall be protected against backflow by a reduced pressure principle backflow prevention assembly or a reduced pressure principle fire protection backflow prevention assembly. Where chemical additives or antifreeze is added to only a portion of an automatic fire sprinkler or standpipe system, the reduced pressure principle fire protection backflow preventer shall be permitted to be located so as to isolate that portion of the system.

❖ Some fire sprinkler systems incorporate the use of chemicals or additives that can be used to protect the piping system from corrosion or protect it from freezing. In such cases, a reduced pressure principle backflow prevention assembly is required. In cases where sections of the system are chemically treated, only those treated sections need to be isolated.

P2902.5.5 Solar thermal systems. Where a solar thermal system heats potable water to supply a potable *hot water* distribution or any other type of heating system, the solar thermal system shall be in accordance with Section P2902.5.5.1, P2902.5.5.2 or P2902.5.5.3 as applicable.

❖ There are two basic types of solar thermal water-heating systems: direct and indirect. The following sections cover the plumbing requirements for these systems.

P2902.5.5.1 Indirect systems. Water supplies of any type shall not be connected to the solar heating loop of an indirect solar thermal *hot water* heating system. This requirement shall not prohibit the presence of inlets or outlets on the solar heating loop for the purposes of servicing the fluid in the solar heating loop.

❖ An indirect solar thermal water-heating system heats a heat transfer fluid and then passes that heated fluid through a heat exchanger that is in contact with the water to be heated for distribution in the building's potable hot water distribution system. The heat exchanger construction must comply with Section P2902.5.2.

P2902.5.5.2 Direct systems for potable water distribution systems. Where a solar thermal system directly heats potable water for a potable water distribution system, the pipe, fittings, valves and other components that are in contact with the potable water in the system shall comply with the requirements of Chapter 29.

❖ A direct solar thermal water-heating system heats the potable water that is to be distributed to the building's potable hot water distribution system. All components in a direct solar thermal water-heating system must comply with requirements for potable water distribution system piping and components.

P2902.5.5.3 Direct systems for other than potable water distribution systems. Where a solar thermal system directly heats water for a system other than a potable water distribution system, a potable water supply connected to such system shall be protected by a backflow preventer with an intermediate atmospheric vent complying with ASSE 1012. Where a solar thermal system directly heats chemically treated water for a system other than a potable water distribution system, a potable water supply connected to such system shall be protected by a reduced pressure principle backflow prevention assembly complying with ASSE 1013.

❖ Solar thermal water-heating systems can be used for purposes other than heating potable water for distribu-

INTERNATIONAL CODE COUNCIL®
Copyright © 2015 ICC. ALL RIGHTS RESERVED. Accessed by David Dammon on Jun 21, 2017 12:30:52 PM pursuant to License Agreement with ICC. No further reproduction or distribution authorized. ANY UNAUTHORIZED REPRODUCTION OR DISTRIBUTION IS A VIOLATION OF THE FEDERAL COPYRIGHT ACT AND THE LICENSE AGREEMENT, AND SUBJECT TO CIVIL AND CRIMINAL PENALTIES THEREUNDER.

tion of hot water to the building's potable hot water distribution system. One purpose might be for space heating. To protect the potable water system, a backflow preventer must be installed between the solar thermal water-heating system and the potable water supply.

P2902.6 Location of backflow preventers. Access shall be provided to backflow preventers as specified by the manufacturer's installation instructions.

❖ Because backflow preventers require periodic inspection, testing and repair, they must be installed and oriented in locations that permit these activities to be performed. The manufacturer's installation instructions must be followed to provide the proper access.

P2902.6.1 Outdoor enclosures for backflow prevention devices. Outdoor enclosures for backflow prevention devices shall comply with ASSE 1060.

❖ A typical residential backflow preventer that is located outdoors is associated with a lawn irrigation system. As these units are commonly located near a curb-located water meter or in landscaped areas outside of the residence, residential owners desire that these units be camouflaged by a variety of methods. Because some makeshift structures might compromise the performance of the unit, the code requires enclosures to meet the requirements of ASSE 1060. Enclosures meeting this standard are required to resist at least 100 psf (4.79 kPa) vertical loading and allow for water that is discharged from the backflow preventer to readily drain to the exterior.

P2902.6.2 Protection of backflow preventers. Backflow preventers shall not be located in areas subject to freezing except where they can be removed by means of unions, or are protected by heat, insulation or both.

❖ A backflow preventer located outdoors in freezing climates might be damaged by freezing conditions. If the backflow preventer is used only when seasonal temperatures are above freezing, then one solution is to remove the unit and store it in an above freezing environment. Unions in the piping to the unit allow for ease of removal. If the backflow preventer is to remain in place during freezing weather, it must be protected from freezing. Where outdoor temperatures dip to just below freezing for only a few hours each day, wrapping the unit with insulating material might successfully protect the unit. However, any insulation covering must not block the discharge port. A better solution would be to use an insulated enclosure complying with ASSE 1060. Where temperatures are below freezing for extended periods of time, the enclosure must have a heat source to keep the unit from freezing.

P2902.6.3 Relief port piping. The termination of the piping from the relief port or air gap fitting of the backflow preventer shall discharge to an *approved* indirect waste receptor or to the outdoors where it will not cause damage or create a nuisance.

❖ Wherever a backflow preventer is located, provisions must be made to dispose of the water that could discharge from the unit. Backflow preventers that are located indoors must have the relief discharge port located over a suitable waste receptor or an area that drains to the out-doors. Where piping from the relief port is required to route discharges to a suitable disposal location, the piping must be connected to an air gap fitting that is an integral part of the back-flow preventer, or the termination of the relief port piping at the discharge point must provide for an air gap.

SECTION P2903
WATER SUPPLY SYSTEM

P2903.1 Water supply system design criteria. The water service and water distribution systems shall be designed and pipe sizes shall be selected such that under conditions of peak demand, the capacities at the point of outlet discharge shall not be less than shown in Table P2903.1.

❖ Each plumbing fixture requires a given flow rate and minimum water supply pressure to function properly. The minimum values are shown in Table P2903.1. For fixtures not listed in the table, manufacturer's specifications for the specific fixture must be used. Minimum flow rate and pressure requirements must be satisfied during periods of peak demand. Peak demand is the maximum flow rate of water at any given time during the day. Usually, peak demand for residential occupancies is in the morning before 8 a.m. and at night between 9 p.m. and 10 p.m. Because it is unrealistic to consider the maximum flow rate based on all fixtures in a building operating at the same time, the code uses water supply demand factors for determining the maximum probable flow at peak conditions. These factors are provided in Table P2903.6 and are called water supply fixture units (w.s.f.u.). An w.s.f.u. is a dimensionless factor that is the result of combining probability of use with the water demand for each type of plumbing fixture. The w.s.f.u values only have meaning when used with a table that converts the value into gallons per minute flow [see commentary, Section P2903.6 and Table P2903.6(1)].

TABLE P2903.1. See Page 29-14.

❖ This table specifies the design parameters required for a water distribution system. These minimum values must be satisfied in the design of the system for proper functioning of each plumbing fixture. The design professional must use the table when calculating pipe sizes as required in Section P2903.7 (see commentary, Section P2903.7).

P2903.2 Maximum flow and water consumption. The maximum water consumption flow rates and quantities for plumbing fixtures and fixture fittings shall be in accordance with Table P2903.2.

❖ This section conserves water resources by limiting the consumption of water by plumbing fixtures. Water conservation is important not only to conserve our limited water supplies, but also to conserve the energy required to pump, transport and treat water. The relationship between water use and energy use is evi-

INTERNATIONAL CODE COUNCIL®
Copyright © 2015 ICC. ALL RIGHTS RESERVED. Accessed by David Dammon on Jun 21, 2017 12:30:52 PM pursuant to License Agreement with ICC. No further reproduction or distribution authorized. ANY UNAUTHORIZED REPRODUCTION OR DISTRIBUTION IS A VIOLATION OF THE FEDERAL COPYRIGHT ACT AND THE LICENSE AGREEMENT, AND SUBJECT TO CIVIL AND CRIMINAL PENALTIES THEREUNDER.

denced by the fact that the federal government water conservation requirements are part of the National Energy Policy Act. Table P2903.2 contains the maximum allowable flow rates for various types of fixtures.

TABLE P2903.2. See below.

❖ The fixtures and faucets listed in this table are those that function in a cyclical manner or that are allowed to discharge water continuously for the duration of fixture use. Water is conserved by limiting the flow rate for manually controlled fixtures and by limiting the volume-per-cycle usage for cyclically operating fixtures.

The maximum flow rates for nonmetering showers, lavatories and sink faucets are dependent on the supply pressure; therefore, a reference pressure is stated for each item in the table. Where the actual supply pressure is less than the pressure in the table, the actual flow rate of the faucet or shower head will be less than the maximum flow rate in the table.

P2903.3 Minimum pressure. Where the water pressure supplied by the public water main or an individual water supply system is insufficient to provide for the minimum pressures and quantities for the plumbing fixtures in the building, the pressure shall be increased by means of an elevated water tank, a hydropnuematic pressure booster system or a water pressure booster pump.

❖ Table P2903.1 indicates the minimum flow pressures that are required for fixtures, appliances and outlets. Note that Section P2903.1 requires these pressures be available at "peak demand" of the system. See the commentary to Section P2903.1 concerning peak demand. Where the pressures at the fixtures cannot be provided by the public or private water supply system, additional equipment to increase the water pressure needs to be installed.

P2903.3.1 Maximum pressure. The static water pressure shall be not greater than 80 psi (551 kPa). Where the main pressure exceeds 80 psi (551 kPa), an *approved* pressure-reducing valve conforming to ASSE 1003 or CSA B356 shall be installed on the domestic water branch main or riser at the connection to the water service pipe.

❖ The piping system, components and fixtures in a water distribution system are designed to withstand a given pressure. The code establishes 80 psi (55 kPa) as the maximum working pressure of the system. Where the pressure from the public water system or the individual private water supply system exceeds 80 psi (55 kPa), a pressure-reducing valve (PRV) conforming to ASSE 1003 must be installed in the water service line before it connects to the water distribution system of the building.

TABLE P2903.1
REQUIRED CAPACITIES AT POINT OF OUTLET DISCHARGE

FIXTURE SUPPLY OUTLET SERVING	FLOW RATE (gpm)	FLOW PRESSURE (psi)
Bathtub, balanced-pressure, thermostatic or combination balanced-pressure/thermostatic mixing valve	4	20
Bidet, thermostatic mixing valve	2	20
Dishwasher	2.75	8
Laundry tray	4	8
Lavatory	0.8	8
Shower, balanced-pressure, thermostatic or combination balanced-pressure/thermostatic mixing valve	2.5[a]	20
Sillcock, hose bibb	5	8
Sink	1.75	8
Water closet, flushometer tank	1.6	20
Water closet, tank, close coupled	3	20
Water closet, tank, one-piece	6	20

For SI: 1 pound per square inch = 6.895 kPa, 1 gallon per minute = 3.785 L/m.

a. Where the shower mixing valve manufacturer indicates a lower flow rating for the mixing valve, the lower value shall be applied.

TABLE P2903.2
MAXIMUM FLOW RATES AND CONSUMPTION FOR PLUMBING FIXTURES AND FIXTURE FITTINGS[b]

PLUMBING FIXTURE OR FIXTURE FITTING	MAXIMUM FLOW RATE OR QUANTITY
Lavatory faucet	2.2 gpm at 60 psi
Shower head[a]	2.5 gpm at 80 psi
Sink faucet	2.2 gpm at 60 psi
Water closet	1.6 gallons per flushing cycle

For SI: 1 gallon per minute = 3.785 L/m,
1 pound per square inch = 6.895 kPa.

a. A handheld shower spray shall be considered a shower head.

b. Consumption tolerances shall be determined from referenced standards.

INTERNATIONAL CODE COUNCIL®
Copyright © 2015 ICC. ALL RIGHTS RESERVED. Accessed by David Dammon on Jun 21, 2017 12:30:52 PM pursuant to License Agreement with ICC. No further reproduction or distribution authorized. ANY UNAUTHORIZED REPRODUCTION OR DISTRIBUTION IS A VIOLATION OF THE FEDERAL COPYRIGHT ACT AND THE LICENSE AGREEMENT, AND SUBJECT TO CIVIL AND CRIMINAL PENALTIES THEREUNDER.

P2903.4 Thermal expansion control. A means for controlling increased pressure caused by thermal expansion shall be installed where required in accordance with Sections P2903.4.1 and P2903.4.2.

❖ As the water in a water heater is heated to higher temperatures, it expands in volume. Usually, the water expands into the water service and the public water main. This volume relief prevents an increase in water pressure in the building distribution system. If the water cannot expand into the water service, high pressures can develop in the water distribution system, which can damage the piping, fixtures, appliances and water heaters, and cause the water heater relief valve to discharge. The code, therefore, mandates that an approved device for thermal expansion control be installed.

P2903.4.1 Pressure-reducing valve. For water service system sizes up to and including 2 inches (51 mm), a device for controlling pressure shall be installed where, because of thermal expansion, the pressure on the downstream side of a pressure-reducing valve exceeds the pressure-reducing valve setting.

❖ A pressure reducing valve (PRV) is installed where the pressure in the water main and water service is greater than the 80 psi (552 kPa) limit indicated in Section P2903.3.1. A PRV can act like a check valve and prevent water from expanding through it back out into the water service. If the pressure on the outlet (downstream) side of the PRV exceeds the setpoint of the PRV, either the PRV has failed or thermal expansion has caused the elevated pressure to occur. Either way, the purpose of the PRV has been defeated. Some PRVs have an integral bypass valve that will allow reverse flow through the PRV when excessive backpressure occurs on the outlet side of the valve; however, this feature is useless when the inlet pressure (street pressure) is higher than the outlet pressure. For example, a bypass valve cannot allow reverse flow if the outlet pressure is 85 psi (586 kPa) and the inlet pressure is 120 psi (827 kPa). The street pressure being higher than allowed for the building is typically the reason why the PRV was installed and, therefore, an internal bypass feature will not serve as a means of thermal expansion control. A thermal expansion tank is commonly used to control thermal expansion. Such tanks must be sized based on the volume of the water heater, the temperature rise across the heater and the maximum allowable system pressure. Recall that Section P2903.3.1 limits the maximum pressure to 80 psi (552 kPa) at all times under all conditions (see commentary, Section P2903.4.2 and Commentary Figure P2903.4).

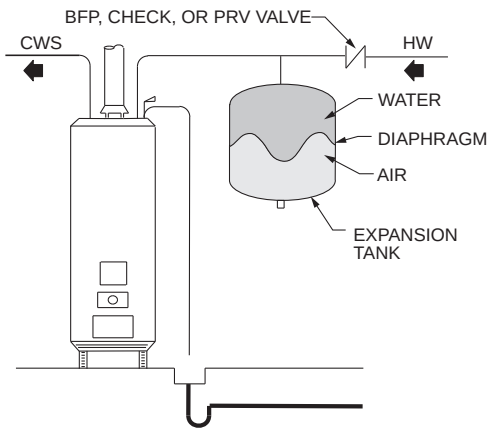

Figure P2903.4
ONE METHOD OF THERMAL EXPANSION CONTROL

P2903.4.2 Backflow prevention device or check valve. Where a backflow prevention device, check valve or other device is installed on a water supply system using storage water heating equipment such that thermal expansion causes an increase in pressure, a device for controlling pressure shall be installed.

❖ A backflow preventer, check valve or PRV installed in a water service or anywhere else up-stream of the water heater creates a closed system, and thermal expansion can cause destructive and hazardous pressures to develop in the piping system. This section requires expansion control for closed piping systems served by storage-type (tank) water heaters. The typical solution to this problem is an expansion (compression) tank properly sized for the application. Thermal expansion of water is not addressed for tankless (nonstorage) water heaters because such heaters have a negligible water volume and are operational only when water is flowing through them to an outlet. Storage-type (tank) water heaters can heat water when no water usage is occurring and the piping system is, therefore, a closed system (see commentary, Section P2902.4.1). Note that expansion tanks are commonly, but incorrectly, sized only to prevent the system pressure from approaching the setpoint of the relief valve. For example, for a system with a 150-psi (1034 kPa) relief valve, the expansion tank will often be sized to limit system pressure to approximately 90 percent of the relief valve setting, or 135 psi (931 kPa). In such a system, pressure excursions of up to 135 psi (931 kPa) violate Section P2903.3.1 because the system pressure should never exceed 80 psi (552 kPa).

P2903.5 Water hammer. The flow velocity of the water distribution system shall be controlled to reduce the possibility of water hammer. Water-hammer arrestors shall be installed in accordance with the manufacturer's instructions. Water-hammer arrestors shall conform to ASSE 1010.

❖ "Water hammer" is a term used to describe the effect of hydraulic shock within a piping system. Hydraulic shock happens when fluid flowing through a pipe is subjected to a rapid decrease in flow velocity. Flowing water has kinetic energy. When the flow is abruptly stopped, the kinetic energy must dissipate. The dissipation of energy occurs in the form of a pressure surge that produces a hydraulic shockwave traveling at extremely high velocity. Depending on the speed at which the flow is stopped, the pressure surge can be significant. A rule of thumb for determining the intensity of this pressure is 60 times the change in velocity. In

INTERNATIONAL CODE COUNCIL®
Copyright © 2015 ICC. ALL RIGHTS RESERVED. Accessed by David Dammon on Jun 21, 2017 12:30:52 PM pursuant to License Agreement with ICC. No further reproduction or distribution authorized. ANY UNAUTHORIZED REPRODUCTION OR DISTRIBUTION IS A VIOLATION OF THE FEDERAL COPYRIGHT ACT AND THE LICENSE AGREEMENT, AND SUBJECT TO CIVIL AND CRIMINAL PENALTIES THEREUNDER.

other words, if a 10-foot-per-second (3 m/s) (fps) flow is stopped, the pressure surge could be as great as 600 psi (4137 kPa). The pressure surge is sometimes accompanied by a banging noise within the piping system, hence the expression "water hammer." Any time flowing water is abruptly stopped, water hammer occurs, whether heard or not. Because water hammer creates a pressure spike within the piping system, the potential for piping, fixture or appliance damage exists.

The primary methods for keeping water hammer from causing damage or noise are designing the piping for low-flow velocities the and the use of slow-closing faucets and valves. Another method for controlling water hammer is the installation of a water hammer arrestor in the piping near faucet and valve locations that are known to have a high probability for causing water hammer.

The code does not mandate the use of water hammer arrestors for quick-closing valves. There has been great debate over what constitutes a quick-closing valve and because other methods can be used to reduce water hammer.

A common, but rarely effective, practice is the installation of air chambers in the piping system in order to control water hammer. Unfortunately, air chambers quickly become waterlogged and after a short time period, the air chambers become ineffective in controlling water hammer.

Mechanical water hammer arrestors provide for permanent and reliable control of water hammer. Typically, a mechanical water hammer arrestor has a pressurized gas chamber separated by either a moving piston or diaphragm. When a piping system pressure surge occurs, the piston or diaphragm moves to compress the captive gas and, thus, provides a damping effect that absorbs the pressure surge. Another type of mechanical water hammer uses an elastic metal bellows to absorb the pressure surges (see Commentary Figure P2903.5). Where mechanical water hammer arrestors are used, they must be in conformance with ASSE 1010. Typical locations where water hammer might cause problems are the supply piping to dishwashers, icemakers, washing machines and self-closing faucets or water controls (see commentary for the definition of "Quick-closing valves" in Chapter 2).

P2903.6 Determining water supply fixture units. Supply loads in the building water distribution system shall be determined by total load on the pipe being sized, in terms of water supply fixture units (w.s.f.u.), as shown in Table P2903.6, and gallon per minute (gpm) flow rates [see Table P2903.6(1)]. For fixtures not listed, choose a w.s.f.u. value of a fixture with similar flow characteristics.

❖ As stated in the commentary for Section P2903.1, the w.s.f.u. for determining flow has evolved through the years and has been accepted as a standard method for determining water demands within a building. Table P2903.6 shows w.s.f.u. assigned for various fixtures. However, in order to apply hydraulic formulas for sizing of piping, these dimensionless values must be converted into flow rates. Table P2903.6(1) provides the information for this conversion. Where a building fixture is not listed in Table P2903.6, the w.s.f.u. value of a similar fixture must be chosen and allocated.

TABLE P2903.6. See page 29-17.

❖ This table shows w.s.f.u. values for various fixtures and groups of fixtures that are designed to work in conjunction with the prescriptive sizing methods such as those found in Appendix P. Values are given for hot water and cold water use, along with a combined hot and cold use, the combined use value being somewhat less than the total of the hot and cold w.s.f.u. values. To estimate the

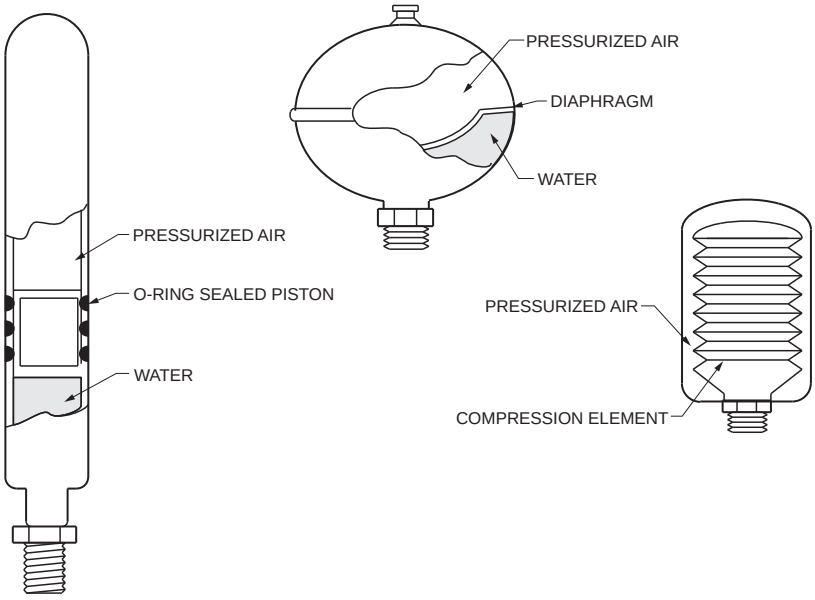

Figure P2903.5
EXAMPLE OF MECHANICAL WATER HAMMER ARRESTORS

INTERNATIONAL CODE COUNCIL®
Copyright © 2015 ICC. ALL RIGHTS RESERVED. Accessed by David Dammon on Jun 21, 2017 12:30:52 PM pursuant to License Agreement with ICC. No further reproduction or distribution authorized. ANY UNAUTHORIZED REPRODUCTION OR DISTRIBUTION IS A VIOLATION OF THE FEDERAL COPYRIGHT ACT AND THE LICENSE AGREEMENT, AND SUBJECT TO CIVIL AND CRIMINAL PENALTIES THEREUNDER.

supply demand of the building main and branches of the system, total the corresponding demands in the right column of the table.

Section P2903.7 does not contain provisions for the minimum size of a fixture supply pipe (see the definition of "Fixture supply" in Chapter 2). To size the fixture supply pipe when connecting faucets, sinks, lavatories, tubs, dishwashers and hose bibbs, the referenced standard under fixture fittings in Section P2722.1 is used.

TABLE P2903.6
WATER-SUPPLY FIXTURE-UNIT VALUES FOR VARIOUS PLUMBING FIXTURES AND FIXTURE GROUPS

TYPE OF FIXTURES OR GROUP OF FIXTURES	WATER-SUPPLY FIXTURE-UNIT VALUE (w.s.f.u.)		
	Hot	Cold	Combined
Bathtub (with/without overhead shower head)	1.0	1.0	1.4
Clothes washer	1.0	1.0	1.4
Dishwasher	1.4	—	1.4
Full-bath group with bathtub (with/without shower head) or shower stall	1.5	2.7	3.6
Half-bath group (water closet and lavatory)	0.5	2.5	2.6
Hose bibb (sillcock)[a]	—	2.5	2.5
Kitchen group (dishwasher and sink with or without food-waste disposer)	1.9	1.0	2.5
Kitchen sink	1.0	1.0	1.4
Laundry group (clothes washer standpipe and laundry tub)	1.8	1.8	2.5
Laundry tub	1.0	1.0	1.4
Lavatory	0.5	0.5	0.7
Shower stall	1.0	1.0	1.4
Water closet (tank type)	—	2.2	2.2

For SI: 1 gallon per minute = 3.785 L/m.

a. The fixture unit value 2.5 assumes a flow demand of 2.5 gpm, such as for an individual lawn sprinkler device. If a hose bibb or sill cock will be required to furnish a greater flow, the equivalent fixture-unit value may be obtained from this table or Table P2903.6(1).

TABLE P2903.6(1)
CONVERSIONS FROM WATER SUPPLY FIXTURE UNIT TO GALLON PER MINUTE FLOW RATES

SUPPLY SYSTEMS PREDOMINANTLY FOR FLUSH TANKS			SUPPLY SYSTEMS PREDOMINANTLY FOR FLUSHOMETER VALVES		
Load	Demand		Load	Demand	
(Water supply fixture units)	(Gallons per minute)	(Cubic feet per minute)	(Water supply fixture units)	(Gallons per minute)	(Cubic feet per minute)
1	3.0	0.04104	—	—	—
2	5.0	0.0684	—	—	—
3	6.5	0.86892	—	—	—
4	8.0	1.06944	—	—	—
5	9.4	1.256592	5	15.0	2.0052
6	10.7	1.430376	6	17.4	2.326032
7	11.8	1.577424	7	19.8	2.646364
8	12.8	1.711104	8	22.2	2.967696
9	13.7	1.831416	9	24.6	3.288528
10	14.6	1.951728	10	27.0	3.60936
11	15.4	2.058672	11	27.8	3.716304
12	16.0	2.13888	12	28.6	3.823248
13	16.5	2.20572	13	29.4	3.930192
14	17.0	2.27256	14	30.2	4.037136
15	17.5	2.3394	15	31.0	4.14408
16	18.0	2.90624	16	31.8	4.241024
17	18.4	2.459712	17	32.6	4.357968
18	18.8	2.513184	18	33.4	4.464912
19	19.2	2.566656	19	34.2	4.571856
20	19.6	2.620128	20	35.0	4.6788

(continued)

INTERNATIONAL CODE COUNCIL®
Copyright © 2015 ICC. ALL RIGHTS RESERVED. Accessed by David Dammon on Jun 21, 2017 12:30:52 PM pursuant to License Agreement with ICC. No further reproduction or distribution authorized. ANY UNAUTHORIZED REPRODUCTION OR DISTRIBUTION IS A VIOLATION OF THE FEDERAL COPYRIGHT ACT AND THE LICENSE AGREEMENT, AND SUBJECT TO CIVIL AND CRIMINAL PENALTIES THEREUNDER.

TABLE P2903.6(1)—continued
CONVERSIONS FROM WATER SUPPLY FIXTURE UNIT TO GALLON PER MINUTE FLOW RATES

SUPPLY SYSTEMS PREDOMINANTLY FOR FLUSH TANKS			SUPPLY SYSTEMS PREDOMINANTLY FOR FLUSHOMETER VALVES		
Load	Demand		Load	Demand	
(Water supply fixture units)	(Gallons per minute)	(Cubic feet per minute)	(Water supply fixture units)	(Gallons per minute)	(Cubic feet per minute)
25	21.5	2.87412	25	38.0	5.07984
30	23.3	3.114744	30	42.0	5.61356
35	24.9	3.328632	35	44.0	5.88192
40	26.3	3.515784	40	46.0	6.14928
45	27.7	3.702936	45	48.0	6.41664
50	29.1	3.890088	50	50.0	6.684

For SI: 1 gallon per minute = 3.785 L/m, 1 cubic foot per minute = 0.4719 L/s.

TABLE P2903.6(1). See Pages 29-17 and 29-18.

❖ This table is the basis for conversion from w.s.f.u. to gallons per minute (gpm) flow in order to determine water service and water distribution pipe sizing when using w.s.f.u. to estimate water supply demand.

P2903.7 Size of water-service mains, branch mains and risers. The size of the water service pipe shall be not less than $^{3}/_{4}$ inch (19 mm) diameter. The size of water service mains, branch mains and risers shall be determined from the water supply demand [gpm (L/m)], available water pressure [psi (kPa)] and friction loss caused by the water meter and *developed length* of pipe [feet (m)], including *equivalent length* of fittings. The size of each water distribution system shall be determined according to design methods conforming to acceptable engineering practice, such as those methods in Appendix P and shall be *approved* by the code official.

❖ There are numerous methods that can be used to size piping for a building and the code leaves it up to the user of the code and the code official to agree on what method is approved. Regardless of the method, the code requires that water demand, pipe friction loss, water meter friction loss, equivalent length of fittings and developed length of pipe be factors in determining pipe size.

P2903.8 Gridded and parallel water distribution systems. Hot water and cold water manifolds installed with parallel-connected individual distribution lines and cold water manifolds installed with gridded distribution lines to each fixture or fixture fitting shall be designed in accordance with Sections P2903.8.1 through P2903.8.5. Gridded systems for hot water distribution systems shall be prohibited.

❖ A gridded water supply system involves distribution pipes that are fed from each end. Such systems allow greater design flexibility and smaller diameter piping. A manifold with parallel water distribution lines is a system that provides a centralized distribution point for all fixture supply piping. Each fixture is supplied with an individual supply line that extends from a common manifold, thus eliminating concealed joints and simplifying the method of installation. This type of system allows for smaller pipe sizes than are used for a conventional trunk and branch system if the system is installed in accordance with Sections P2903.8.1 through P2903.8.7. Commentary Figure P2903.8 shows typical details of a manifold system.

The prohibition for gridded distribution systems for hot water distribution is because these types of systems delay the arrival of hot water to the outlets, wasting water and energy.

P2903.8.1 Sizing of manifolds. Manifolds shall be sized in accordance with Table P2903.8.1. Total gallons per minute is the demand for all outlets.

❖ The size of parallel water distribution system manifolds is regulated by Table P2903.8.1. The total w.s.f.u. must be converted into gallons per minute (gpm) demand [see Table P2903.6(1)].

TABLE P2903.8.1
MANIFOLD SIZING

PLASTIC		METALLIC	
Nominal Size ID (inches)	Maximum[a] gpm	Nominal Size ID (inches)	Maximum[a] gpm
$^{3}/_{4}$	17	$^{3}/_{4}$	11
1	29	1	20
$1^{1}/_{4}$	46	$1^{1}/_{4}$	31
$1^{1}/_{2}$	66	$1^{1}/_{2}$	44

For SI: 1 inch = 25.4 mm, 1 gallon per minute = 3.785 L/m, 1 foot per second = 0.3048 m/s.

Note: See Table P2903.6(1) for w.s.f.u and Table 2903.6(1) for gallon-per-minute (gpm) flow rates.

a. Based on velocity limitation: plastic-12 fps; metal-8 fps.

❖ For example, a typical two-story single-family residence with three full baths, an extra shower, kitchen sink, dishwasher, laundry tray, clothes washer and two hose bibbs would have a total w.s.f.u. count of 22.2 and a 20.5 gallon (81 L) per minute demand based on flush tank water closets. In accordance with Table P2903.8.1, a 1 inch (25 mm) plastic manifold size could serve this residence.

INTERNATIONAL CODE COUNCIL®
Copyright © 2015 ICC. ALL RIGHTS RESERVED. Accessed by David Dammon on Jun 21, 2017 12:30:52 PM pursuant to License Agreement with ICC. No further reproduction or distribution authorized. ANY UNAUTHORIZED REPRODUCTION OR DISTRIBUTION IS A VIOLATION OF THE FEDERAL COPYRIGHT ACT AND THE LICENSE AGREEMENT, AND SUBJECT TO CIVIL AND CRIMINAL PENALTIES THEREUNDER.

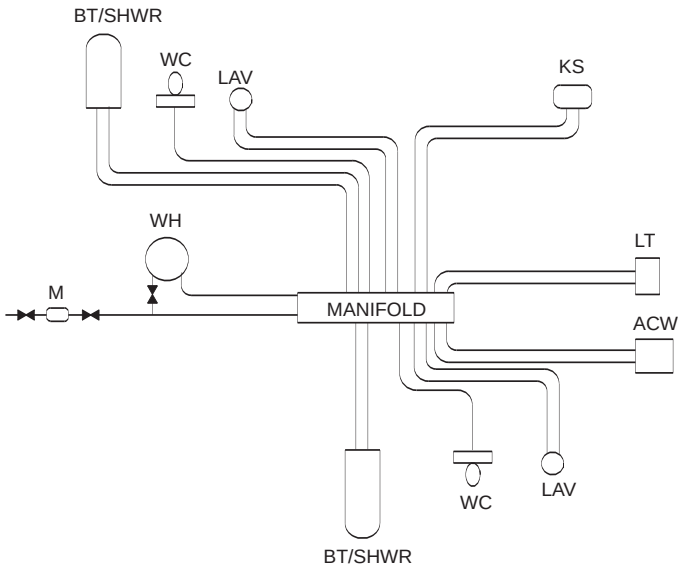

Figure P2903.8
SIMPLIFIED SCHEMATIC OF PARALLEL WATER DISTRIBUTION

P2903.8.2 Minimum size. Where the *developed length* of the distribution line is 60 feet (18 288 mm) or less, and the available pressure at the meter is not less than 40 pounds per square inch (276 kPa), the size of individual distribution lines shall be not less than $^{3}/_{8}$ inch (10 mm) diameter. Certain fixtures such as one-piece water closets and whirlpool bathtubs shall require a larger size where specified by the manufacturer. If a water heater is fed from the end of a cold water manifold, the manifold shall be one size larger than the water heater feed.

❖ The minimum size of individual distribution lines is determined by the required gallons per minute (gpm) flow rate of each fixture and the developed length. This section allows a minimum individual distribution line size of $^{3}/_{8}$ inch (10 mm) if the minimum pressure and maximum length criteria are met. However, one-piece water closets and whirlpool bathtubs might require a larger size based on the manufacturer's instructions.

P2903.8.3 Support and protection. Plastic piping bundles shall be secured in accordance with the manufacturer's instructions and supported in accordance with Section P2605. Bundles that have a change in direction equal to or greater than 45 degrees (0.79 rad) shall be protected from chafing at the point of contact with framing members by sleeving or wrapping.

❖ This section requires that plastic pipe bundles be secured in accordance with the manufacturer's installation instructions and the requirements of Section P2605. In addition, changes in direction can create movement of the branches because of expansion and contraction, and thrust forces resulting from water flow (see commentary, Section P2605.1 and Table P2605.1).

P2903.8.4 Valving. Fixture valves, when installed, shall be located either at the fixture or at the manifold. Valves installed at the manifold shall be labeled indicating the fixture served.

❖ Fixture valves can be installed either at the fixture or at the manifold. However, where valves are installed at the manifold, they must be labeled to identify the fixture served.

P2903.8.5 Hose bibb bleed. A *readily accessible* air bleed shall be installed in hose bibb supplies at the manifold or at the hose bibb exit point.

❖ This section requires installation of a readily accessible air bleed to allow the purging of any trapped air that might be in the system.

P2903.9 Valves. Valves shall be installed in accordance with Sections P2903.9.1 through P2903.9.5.

❖ This section addresses requirements for fixture shutoff valves. Where such valves are located at the manifold, they must be labeled to identify the fixture served.

P2903.9.1 Service valve. Each *dwelling unit* shall be provided with an accessible main shutoff valve near the entrance of the water service. The valve shall be of a full-open type having nominal restriction to flow, with provision for drainage such as a bleed orifice or installation of a separate drain valve. Additionally, the water service shall be valved at the curb or lot line in accordance with local requirements.

❖ Each dwelling unit must have a full-open valve at the curb or property line as required by the local water supplier. In addition, this section requires an accessible full-open valve for the dwelling unit at or near the entrance of the water service. In multiple-family dwellings, the full-open valve must be located at the point where the water distribution pipe enters each dwelling

INTERNATIONAL CODE COUNCIL®
Copyright © 2015 ICC. ALL RIGHTS RESERVED. Accessed by David Dammon on Jun 21, 2017 12:30:52 PM pursuant to License Agreement with ICC. No further reproduction or distribution authorized. ANY UNAUTHORIZED REPRODUCTION OR DISTRIBUTION IS A VIOLATION OF THE FEDERAL COPYRIGHT ACT AND THE LICENSE AGREEMENT, AND SUBJECT TO CIVIL AND CRIMINAL PENALTIES THEREUNDER.

unit so that in the event of a leak within the unit, the unit can be isolated [see Commentary Figures P2903.9.1(1), P2903.9.1(2) and P2903.9.1(3)]. The two valves allow isolation of the meter for the water supplier and shutoff of the entire building for service.

Full-open valves, such as gate valves and ball valves, reduce the amount of friction loss, as compared to other valves, such as globe valves. Therefore, this section requires full-open-type valves to minimize friction loss and to coincide with the prescriptive sizing methods of water distribution systems as outlined in this chapter. The bleed orifice or termination of the drain from a drain valve must be above grade to prevent contamination of the potable water system.

P2903.9.2 Water heater valve. A *readily accessible* full-open valve shall be installed in the cold-water supply pipe to each water heater at or near the water heater.

❖ To allow for maintenance, replacement or emergency shutoff of a water heater, a readily accessible full-open valve is required on the cold water supply to the water heater. The valve must be located at or near the water heater so that it is readily recognized as serving the water heater.

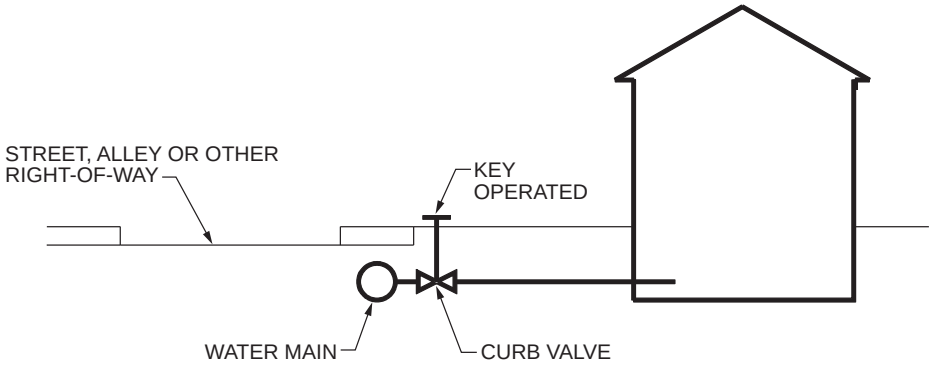

Figure P2903.9.1(1)
CURB VALVE ON WATER SUPPLY

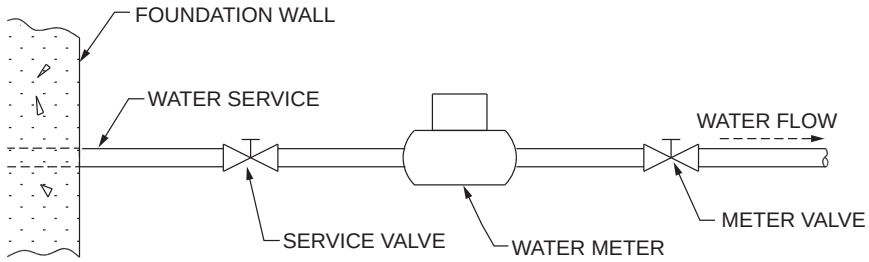

Figure P2903.9.1(2)
VALVE AT ENTRANCE TO THE BUILDING AND ON THE DISCHARGE SIDE OF THE METER

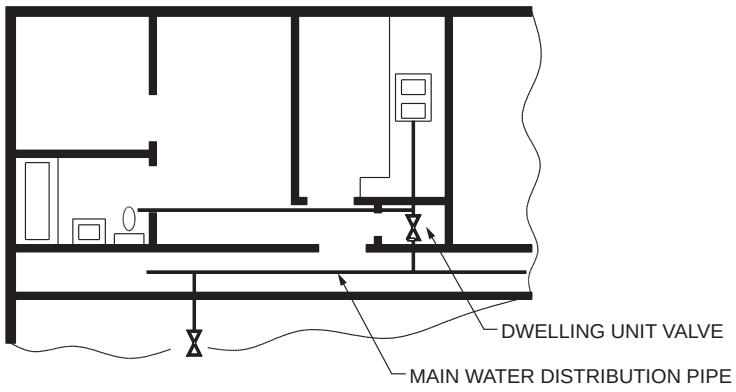

Figure P2903.9.1(3)
DWELLING UNIT VALVE

INTERNATIONAL CODE COUNCIL®
Copyright © 2015 ICC. ALL RIGHTS RESERVED. Accessed by David Dammon on Jun 21, 2017 12:30:52 PM pursuant to License Agreement with ICC. No further reproduction or distribution authorized. ANY UNAUTHORIZED REPRODUCTION OR DISTRIBUTION IS A VIOLATION OF THE FEDERAL COPYRIGHT ACT AND THE LICENSE AGREEMENT, AND SUBJECT TO CIVIL AND CRIMINAL PENALTIES THEREUNDER.

P2903.9.3 Fixture valves and access. Shutoff valves shall be required on each fixture supply pipe to each plumbing appliance and to each plumbing fixture other than bathtubs and showers. Valves serving individual plumbing fixtures, *plumbing appliances*, risers and branches shall be *accessible*.

❖ Within the dwelling, a shutoff valve is required on the fixture supply pipe to each plumbing fixture except for bathtubs and showers. Bathtubs and showers typically do not have shutoff valves because it could be difficult to provide access to valves for locations such as upper-story bathrooms. Some tub and shower controls are available with integral shutoff valve (stops) that can be accessed by removing a trim piece or escutcheon.

P2903.9.4 Valve requirements. Valves shall be compatible with the type of piping material installed in the system. Valves shall conform to one of the standards listed in Table P2903.9.4 or shall be *approved*. Valves intended to supply drinking water shall meet the requirements of NSF 61.

❖ Valves must comply with one of the standards indicated in Table P2903.4 so that a level of quality for valves is ensured. Where a valve does not meet one of the standards, the building official is required to review the information about the valve and determine if the valve meets the overall intent of the code (see Section R104.11).

Any valve through which water flows for consumption by living creatures must meet NSF 61. This standard evaluates the valves for their affect on the potability of the water.

P2903.9.5 Valves and outlets prohibited below grade. Potable water outlets and combination stop-and-waste valves shall not be installed underground or below grade. Freeze-proof yard hydrants that drain the riser into the ground are considered to be stop-and-waste valves.

Exception: Installation of freezeproof yard hydrants that drain the riser into the ground shall be permitted if the potable water supply to such hydrants is protected upstream of the hydrants in accordance with Section P2902 and the hydrants are permanently identified as non-potable outlets by *approved* signage that reads as follows: "Caution, Nonpotable Water. Do Not Drink."

❖ A potable water outlet or a valve with a waste drain outlet located below grade has the potential for becoming submerged by either ground water or rainwater. If the valve or the valve waste port does not completely shut off or develops a leak during a loss in system pressure, backsiphonage could occur and contaminate the potable water supply line connected to the valve. Also, contaminated water can enter piping downstream of the valve through the open waste opening when the valve is closed. A common example of a violation is a hose bibb valve located in a pit below grade or in a recessed box in a concrete slab.

Any fixture or device that incorporates a stop-and-waste feature is prohibited if the waste opening is underground or in any location where waste water or water-borne contaminants could enter the device, or water supply from the ground or other source by reversal of flow.

Many water utilities routinely use stop-and-waste valves on curb stops and fire hydrants. An-other common location for stop-and-waste valves is in yard hydrants equipped with a below-grade self-draining weep hole [see Commentary Figures P2903.9.5(1) and P2903.9.5(2)].

Sanitary yard hydrants are available that protect against ground-water contamination by eliminating the waste opening below grade. These devices use a sealed reservoir to collect water draining from the hydrant head and riser, and empty the reservoir upon opening of the valve the next time the hydrant is used [see Commentary Figure P2903.9.5(3)].

The exception allows for installations of frostproof yard hydrants (having a combination stop-and-waste valve below grade) for applications where nonpotable water is acceptable for the use intended. Examples of nonpotable water use applications are hydrants used for farm area wash down, public park area cleaning, and garbage area cleanup. Yard hydrants having stop-and-waste valves below grade must have the potable water supply supplying the hydrant protected with backflow protection as specified in Section P2902. The hydrant must be marked permanently with a sign having the code specified words. The sign must meet the approval of the code official [see Commentary Figure P2903.9.5(4)].

TABLE P2903.9.4
VALVES

MATERIAL	STANDARD
Chlorinated polyvinyl chloride (CPVC) plastic	ASME A112.4.14, ASME A112.18.1/CSA B125.1, ASTM F1970, CSA B125.3
Copper or copper alloy	ASME A112.4.14, ASME A112.18.1/CSA B125.1, ASME B16.34, CSA B125.3, MSS SP-67, MSS SP-80, MSS SP-110
Gray and ductile iron	ASTM A126, AWWA C500, AWWA C504, AWWA C507, MSS SP-42, MSS SP-67, MSS SP-70, MSS SP-71, MSS SP-72, MSS SP-78
Cross-linked polyethylene (PEX) plastic	ASME A112.4.14, ASME A112.18.1/CSA B125.1, CSA B125.3, NSF 359
Polypropylene (PP) plastic	ASME A112.4.14, ASTM F2389
Polyvinyl chloride (PVC) plastic	ASME A112.4.14, ASTM F1970

INTERNATIONAL CODE COUNCIL®
Copyright © 2015 ICC. ALL RIGHTS RESERVED. Accessed by David Dammon on Jun 21, 2017 12:30:52 PM pursuant to License Agreement with ICC. No further reproduction or distribution authorized. ANY UNAUTHORIZED REPRODUCTION OR DISTRIBUTION IS A VIOLATION OF THE FEDERAL COPYRIGHT ACT AND THE LICENSE AGREEMENT, AND SUBJECT TO CIVIL AND CRIMINAL PENALTIES THEREUNDER.

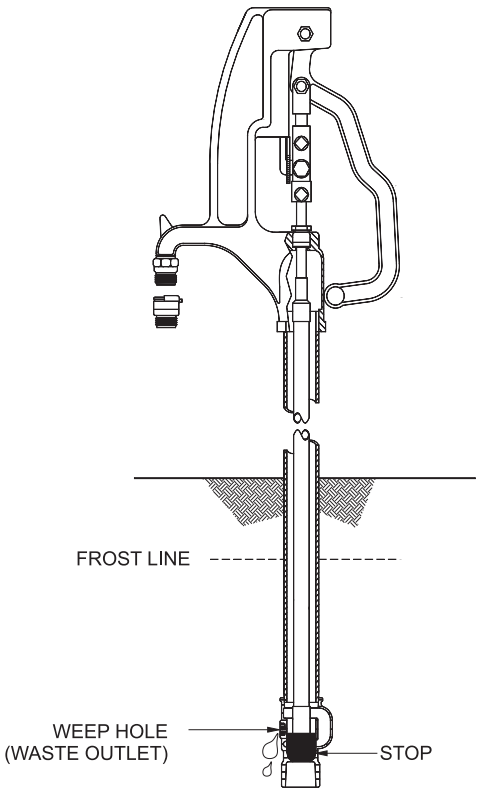

Figure P2903.9.5(1)
FROSTPROOF YARD HYDRANT
WITH STOP-AND-WASTE VALVE BELOW GRADE



Figure P2903.9.5(3)
SANITARY FROSTPROOF YARD HYDRANT
(Figure courtesy of Murdock-Super Secure)



Figure P2903.9.5(2)
VIOLATION: FROSTPROOF YARD HYDRANT CONNECTED TO WATER SERVICE LINE

INTERNATIONAL CODE COUNCIL®
Copyright © 2015 ICC. ALL RIGHTS RESERVED. Accessed by David Dammon on Jun 21, 2017 12:30:52 PM pursuant to License Agreement with ICC. No further reproduction or distribution authorized. ANY UNAUTHORIZED REPRODUCTION OR DISTRIBUTION IS A VIOLATION OF THE FEDERAL COPYRIGHT ACT AND THE LICENSE AGREEMENT, AND SUBJECT TO CIVIL AND CRIMINAL PENALTIES THEREUNDER.

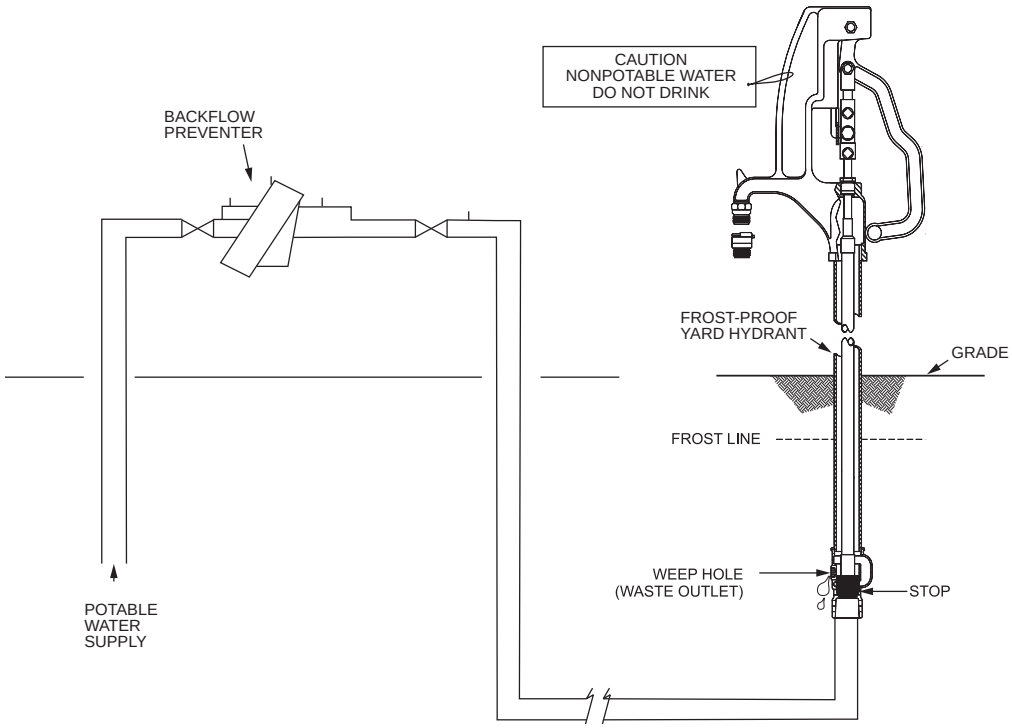

Figure P2903.9.5(4)
PROPER INSTALLATION OF FROSTPROOF YARD HYDRANT WITH STOP-AND-WASTE VALVE BELOW GRADE

P2903.10 Hose bibb. Hose bibbs subject to freezing, including the "frostproof" type, shall be equipped with an accessible stop-and-waste-type valve inside the building so that they can be controlled and drained during cold periods.

Exception: Frostproof hose bibbs installed such that the stem extends through the building insulation into an open heated or semi*conditioned space* need not be separately valved (see Figure P2903.10).

❖ This section requires that hose bibbs that are subject to freezing be supplied through an accessible stop-and-waste type valve. This feature allows drainage of water from the piping and hose bibb. An exception to this requirement exists for frostproof hose bibbs that have stems extending beyond the building insulation to an area that will not subject the water to freezing conditions. To prevent cross contamination of the potable water system, the bleed orifice or termination of the drain must be above grade. The exception applies only to frostproof hose bibbs where the point of shutoff is not subject to freezing (see commentary, Figure P2903.10). If the bibb is subject to freezing, the exception does not apply.

FIGURE P2903.10. See Page 29-24.

❖ This figure shows a detail of a proper installation of a frostproof hose bibb through an insulated exterior wall separating a conditioned space from the exterior of the building. The point of shutoff (valve seat) is within the conditioned (heated) space. The hose bibb is installed so that the shank portion drains automatically when the valve seat is in the closed position. This type of installation would not require a separate shutoff valve as specified in Section P2903.10.

P2903.11 Drain water heat recovery units. Drain water heat recovery units shall be in accordance with Section N1103.5.4.

❖ As the recovery of waste energy is becoming very popular, recovery of heat from warm waste water has become beneficial in the overall goal to reduce energy consumption of a building. This code section does not require drain water heat recovery units. This section is simply a pointer to Chapter 11, the energy conservation chapter, to alert the plumbing community that standards for these units are available and where drain water heater recovery (DWHR) units are installed, they must comply with those standards.

SECTION P2904
DWELLING UNIT FIRE SPRINKLER SYSTEMS

P2904.1 General. The design and installation of residential fire sprinkler systems shall be in accordance with NFPA 13D or Section P2904, which shall be considered equivalent to NFPA 13D. Partial residential sprinkler systems shall be permitted to be installed only in buildings not required to be equipped with a residential sprinkler system. Section P2904 shall apply to stand-alone and multipurpose wet-pipe sprinkler systems that do not include the use of antifreeze. A multipurpose fire sprinkler system shall provide domestic water to both fire sprinklers and plumbing fixtures. A stand-alone

INTERNATIONAL CODE COUNCIL®
Copyright © 2015 ICC. ALL RIGHTS RESERVED. Accessed by David Dammon on Jun 21, 2017 12:30:52 PM pursuant to License Agreement with ICC. No further reproduction or distribution authorized. ANY UNAUTHORIZED REPRODUCTION OR DISTRIBUTION IS A VIOLATION OF THE FEDERAL COPYRIGHT ACT AND THE LICENSE AGREEMENT, AND SUBJECT TO CIVIL AND CRIMINAL PENALTIES THEREUNDER.

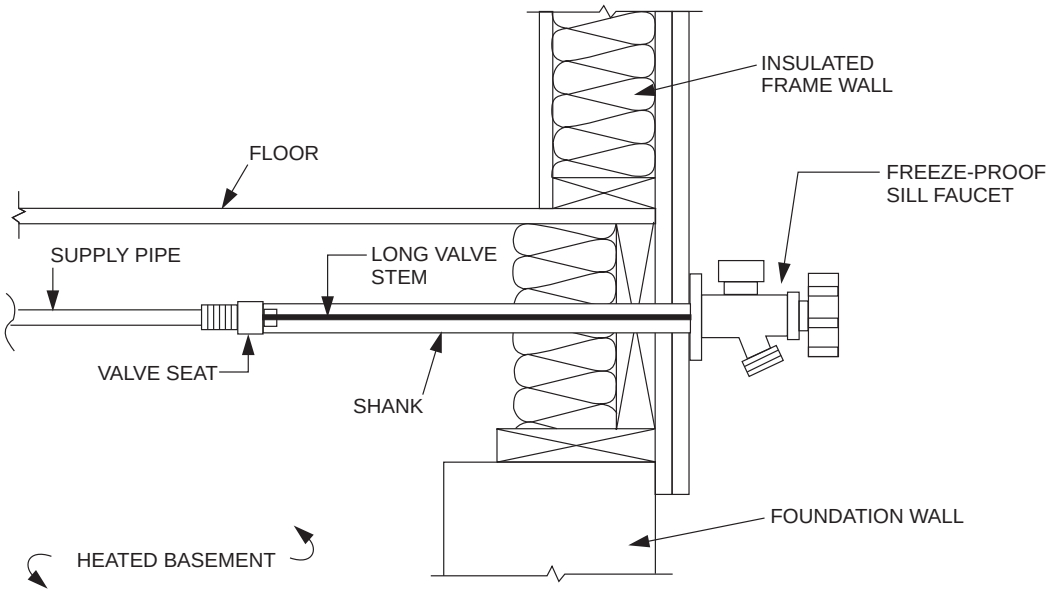

FIGURE P2093.10
TYPICAL FREEZE-PROOF HOSE BIBB INSTALLATION NOT REQUIRING SEPARATE VALVE

sprinkler system shall be separate and independent from the water distribution system. A backflow preventer shall not be required to separate a stand-alone sprinkler system from the water distribution system.

❖ This section does not require fire sprinkler systems to be installed in buildings covered by the code, rather, it provides a specification for the design and installation of a sprinkler system (or portion of a sprinkler system) where such systems are installed. Other sections of the code dictate which buildings are required to have sprinkler systems.

The terms "sprinkler system" and "sprinklers" do not have the same meaning. A sprinkler system is the complete piping system that provides water to the sprinklers. A sprinkler is the individual device that sprays the water. The term "sprinklers" means multiple sprinkler devices, not a sprinkler system.

NFPA 13D is a widely accepted standard for the design and installation of residential fire sprinkler systems. Although not as complicated or stringent as its parent, NFPA 13 and 13D requires hydraulic calculations that essentially limit the design and installation of such systems to qualified sprinkler system contractors with experience with such calculations. Section P2904 was developed to provide a design and installation method for a fire sprinkler system that will provide an equivalent level of protection as provided by an NFPA 13D system, but without the need for sophisticated calculations and other installation complexities. Thus, the residential plumbing contractor, and even the homeowner doing his or her own plumbing work, can design and install a sprinkler system in conjunction with the installation of plumbing systems.

This section can also be used for the design and installation of a stand-alone sprinkler system, that is, a system that does not supply water for purposes other than fire protection. Because the piping used for systems designed in accordance with this section is approved for potable water distribution, a backflow preventer is not required at the connection of the stand-alone system to the potable water supply.

Because the required flow rate for residential sprinkler systems designed in accordance with this section is much greater than the flow rate required for most residential plumbing systems, the pipe sizes for the sprinkler system are more than adequate for supplying water to plumbing fixtures. Thus, a system designed in accordance with Section 2904 is suitable as a multipurpose system design without adding any additional flow for the plumbing fixture operation. Although it is possible that one or even two sprinklers could activate at the same time as one or more plumbing fixtures would be in operation, it is assumed that the operation of plumbing fixtures generally imposes so little demand on the sprinkler system piping that flow to any sprinkler is not significantly comprised.

Systems designed in accordance with this section must not be designed to have portions of the system freeze protected by the use of antifreeze solutions. The reason for this is that the owner of buildings covered by the code might not reliably check the condition of antifreeze solution to avoid freeze damage to the piping.

P2904.1.1 Required sprinkler locations. Sprinklers shall be installed to protect all areas of a *dwelling unit*.

Exceptions:

1. Attics, crawl spaces and normally unoccupied concealed spaces that do not contain fuel-fired appliances do not require sprinklers. In *attics*, crawl spaces and normally unoccupied concealed spaces

INTERNATIONAL CODE COUNCIL®
Copyright © 2015 ICC. ALL RIGHTS RESERVED. Accessed by David Dammon on Jun 21, 2017 12:30:52 PM pursuant to License Agreement with ICC. No further reproduction or distribution authorized. ANY UNAUTHORIZED REPRODUCTION OR DISTRIBUTION IS A VIOLATION OF THE FEDERAL COPYRIGHT ACT AND THE LICENSE AGREEMENT, AND SUBJECT TO CIVIL AND CRIMINAL PENALTIES THEREUNDER.

that contain fuel-fired equipment, a sprinkler shall be installed above the equipment; however, sprinklers shall not be required in the remainder of the space.

2. Clothes closets, linen closets and pantries not exceeding 24 square feet (2.2 m^2) in area, with the smallest dimension not greater than 3 feet (915 mm) and having wall and ceiling surfaces of gypsum board.
3. Bathrooms not more than 55 square feet (5.1 m^2) in area.
4. Garages; carports; exterior porches; unheated entry areas, such as mud rooms, that are adjacent to an exterior door; and similar areas.

❖ The section does not mandate sprinkler systems for all dwelling units, but requires sprinklers for all areas of dwelling units that are required to have a sprinkler system installed. Although it might seem odd that this section has a requirement to install sprinklers in all areas of dwelling unit, followed by exceptions that allow areas not to have sprinklers, the language arrangement ensures that areas not specifically mentioned in the exception will have sprinklers installed.

Studies have shown that most fires in residential buildings have a high probability of occurring in the living areas and at locations of fuel-fired equipment. The installation of sprinklers beyond those rooms and locations offers only a minimal increase in safety since fires rarely begin in those areas. Note that garages and carports are not required to have sprinklers even though, statistically, there is a moderate probability of fire occurrence in those areas. There are several reasons for this exception: 1. Dwelling units are required to be fire protected from attached garages by the application of gypsum board to the garage wall (and ceiling, in most cases); and 2. Unheated garages are difficult to protect with a sprinkler system that does not allow the use of antifreeze or preaction-type sprinklers.

P2904.2 Sprinklers. Sprinklers shall be new listed residential sprinklers and shall be installed in accordance with the sprinkler manufacturer's instructions.

❖ Sprinklers are required to pass tests by an independent agency to prove that they: 1. Open within a specified time when exposed to the required temperature range; 2. Discharge the required water flow rate at a rated pressure; and 3. Produce the spray coverage pattern as indicated by the manufacturer. Only sprinklers listed for residential use can be used in a residential sprinkler system because residential sprinklers have a faster response time than sprinklers used in other occupancies.

Once a sprinkler has been activated or has been removed from service, it cannot be refurbished or reused in another system. In other words, used or recycled sprinklers must not be installed in a sprinkler system.

The manufacturer's installation instructions must be followed so: 1. The appropriate type of sprinkler is installed for each application; 2. The proper thread sealing methods are used; 3. The approved wrenches for tightening are used; and 4. The correct escutcheon plates or decorative covers are properly installed.

There are two types of residential sprinklers: pendant type and horizontal sidewall type. Pendant-type sprinklers release a jet of water downward towards a horizontal deflector that distributes the water in droplets into the covered area [see Commentary Figure P2904.2(1)]. A horizontal sidewall sprinkler directs a water jet horizontally towards both a horizontal and vertical deflector assembly to distribute the water in droplets into the covered area [see Commentary Figure P2904.2(2)].



Figure P2904.2(1)
PENDANT SPRINKLER



Figure P2904.2(2)
HORIZONTAL SIDEWALL SPRINKLER

INTERNATIONAL CODE COUNCIL®
Copyright © 2015 ICC. ALL RIGHTS RESERVED. Accessed by David Dammon on Jun 21, 2017 12:30:52 PM pursuant to License Agreement with ICC. No further reproduction or distribution authorized. ANY UNAUTHORIZED REPRODUCTION OR DISTRIBUTION IS A VIOLATION OF THE FEDERAL COPYRIGHT ACT AND THE LICENSE AGREEMENT, AND SUBJECT TO CIVIL AND CRIMINAL PENALTIES THEREUNDER.

P2904.2.1 Temperature rating and separation from heat sources. Except as provided for in Section P2904.2.2, sprinklers shall have a temperature rating of not less than 135°F (57°C) and not more than 170°F (77°C). Sprinklers shall be separated from heat sources as required by the sprinkler manufacturer's installation instructions.

❖ When a fire starts, the heat from the combustion process raises the temperature of that area until the sensor in the sprinkler is heated to within the range of 135°F to 170°F (57°C to 77°C). The sprinkler opens and sprays the area with water. If there are nearby heat sources, such as a fireplace or skylight, the heat from those sources could possibly activate a sprinkler even though no fire exists. Therefore, the manufacturer's installation instructions must be followed for locating "ordinary" temperature range sprinklers near heat-generating sources (see commentary, Section P2904.2.2).

P2904.2.2 Intermediate temperature sprinklers. Sprinklers shall have an intermediate temperature rating not less than 175°F (79°C) and not more than 225°F (107°C) where installed in the following locations:

1. Directly under skylights, where the sprinkler is exposed to direct sunlight.
2. In *attics*.
3. In concealed spaces located directly beneath a roof.
4. Within the distance to a heat source as specified in Table P2904.2.2.

❖ Certain areas in a building are known to have elevated temperatures that could prematurely activate ordinary temperature sprinklers. Sprinklers that are directly under skylights, in attics or in concealed spaces located directly beneath a roof must be intermediate temperature sprinklers. Where there are heat sources, as listed in Table P2904.2.2, and sprinklers are located within the dimension range of those heat sources as indicated in Table P2904.2.2, those sprinklers must be intermediate temperature sprinklers.

TABLE P2904.2.2. See below.

❖ As stated in the commentary to Section P2904.2.1, ordinary temperature range sprinklers must not be located too near to heat sources. This section identifies three specific locations where intermediate temperature sprinklers, instead of ordinary temperature sprinklers, must be installed. The upper end of the distance range to heat sources in Table P2904.2.2 indicates the smallest distance that standard sprinklers can be to specific heat sources. Where the sprinkler location is less than the upper end of the distance range, an intermediate temperature sprinkler must be installed at that location. Note that intermediate temperature sprinklers cannot be located any closer to the heat source than the lower end of the distance range in Table P2904.2.2, unless the specific sprinkler listing allows a closer distance (see Note a). For example, a sprinkler cannot be located less than 9 inches (229 mm) from a chimney connector, regardless of its rating, unless listed otherwise. Commentary Figure P2904.2.2 illustrates allowable distances for the two temperature ranges of sprinklers to a ceiling-mounted warm air register.

TABLE P2904.2.2
LOCATIONS WHERE INTERMEDIATE TEMPERATURE SPRINKLERS ARE REQUIRED

HEAT SOURCE	RANGE OF DISTANCE FROM HEAT SOURCE WITHIN WHICH INTERMEDIATE TEMPERATURE SPRINKLERS ARE REQUIRED[a, b] (inches)
Fireplace, side of open or recessed fireplace	12 to 36
Fireplace, front of recessed fireplace	36 to 60
Coal and wood burning stove	12 to 42
Kitchen range top	9 to 18
Oven	9 to 18
Vent connector or chimney connector	9 to 18
Heating duct, not insulated	9 to 18
Hot water pipe, not insulated	6 to 12
Side of ceiling or wall warm air register	12 to 24
Front of wall mounted warm air register	18 to 36
Water heater, furnace or boiler	3 to 6
Luminaire up to 250 watts	3 to 6
Luminaire 250 watts up to 499 watts	6 to 12

For SI: 1 inch = 25.4 mm.

a. Sprinklers shall not be located at distances less than the minimum table distance unless the sprinkler listing allows a lesser distance.

b. Distances shall be measured in a straight line from the nearest edge of the heat source to the nearest edge of the sprinkler.

INTERNATIONAL CODE COUNCIL®
Copyright © 2015 ICC. ALL RIGHTS RESERVED. Accessed by David Dammon on Jun 21, 2017 12:30:52 PM pursuant to License Agreement with ICC. No further reproduction or distribution authorized. ANY UNAUTHORIZED REPRODUCTION OR DISTRIBUTION IS A VIOLATION OF THE FEDERAL COPYRIGHT ACT AND THE LICENSE AGREEMENT, AND SUBJECT TO CIVIL AND CRIMINAL PENALTIES THEREUNDER.

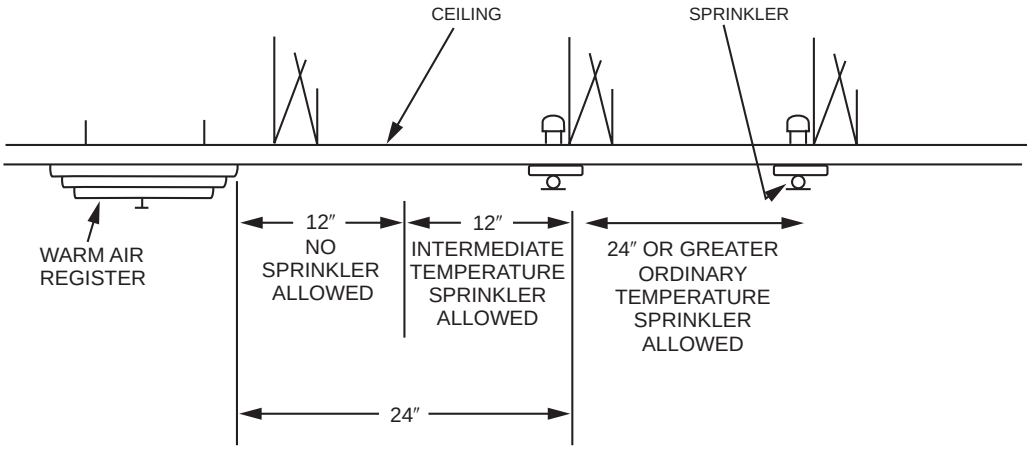

For SI: 1 inch = 25.4 mm.

Figure P2904.2.2
SPRINKLER PLACEMENT NEAR CEILING-MOUNTED WARM AIR REGISTER

P2904.2.3 Freezing areas. Piping shall be protected from freezing as required by Section P2603.6. Where sprinklers are required in areas that are subject to freezing, dry-sidewall or dry-pendent sprinklers extending from a nonfreezing area into a freezing area shall be installed.

❖ Sprinkler piping containing water must be protected from freezing in the same manner as the water distribution piping is protected so as to prevent freeze damage to the piping and sprinklers, and to prevent frozen piping from disabling the system. Where a sprinkler is required to be located in an area subject to freezing conditions, dry-type sprinklers can be installed. Dry-type sprinklers have an extended body to place the water stopping device of the sprinkler in a location where the water piping is not subject to freezing. Although Section P2904.2 requires that sprinklers be a listed residential type, dry-pendant or dry-horizontal-sidewall sprinklers having a residential listing may not be commonly available from all sprinkler manufacturers.

P2904.2.4 Sprinkler coverage. Sprinkler coverage requirements and sprinkler obstruction requirements shall be in accordance with Sections P2904.2.4.1 and P2904.2.4.2.

❖ The following two sections prescribe limitations for sprinkler coverage area and requirements relative to obstructions to a sprinkler water spray pattern.

P2904.2.4.1 Coverage area limit. The area of coverage of a single sprinkler shall not exceed 400 square feet (37 m^2) and shall be based on the sprinkler listing and the sprinkler manufacturer's installation instructions.

❖ Every type of sprinkler is rated to cover a maximum area size based upon a specific flow and pressure; however, not more than 400 square feet (37 m^2) of floor area can be protected by a single sprinkler. The area limit is dictated by the manufacturer, and the 400-square-foot (37 m^2) limit is simply an overall cap on area. If the sprinkler piping is designed to deliver the manufacturer's flow rate at the manufacturer's stated pressure, the sprinkler will have a very high probability of extinguishing a fire in that covered area. Some sprinklers may have a smaller area of coverage.

P2904.2.4.2 Obstructions to coverage. Sprinkler discharge shall not be blocked by obstructions unless additional sprinklers are installed to protect the obstructed area. Additional sprinklers shall not be required where the sprinkler separation from obstructions complies with either the minimum distance indicated in Figure P2904.2.4.2 or the minimum distances specified in the sprinkler manufacturer's instructions where the manufacturer's instructions permit a lesser distance.

❖ A sprinkler's water spray pattern could be blocked by various building elements, such as lintels, beams, soffits, protruding walls, chases, cabinets, surface-mounted ceiling luminaires and ceiling fans thereby causing gaps in spray coverage. The manufacturer's installation instructions provide the necessary sprinkler location requirements to ensure that all areas requiring sprinklers are covered.

P2904.2.4.2.1 Additional requirements for pendent sprinklers. Pendent sprinklers within 3 feet (915 mm) of the center of a ceiling fan, surface-mounted ceiling luminaire or similar object shall be considered to be obstructed, and additional sprinklers shall be installed.

❖ Ceiling-mounted fixtures could block the spray pattern of a ceiling-mounted sprinkler if located within 3 feet (915 mm) of the center of a sprinkler. If the location of the sprinkler cannot be moved outside of the 3-foot (915 mm) proximity, extra sprinklers must be installed to cover the blocked area or the fixtures must be relocated.

INTERNATIONAL CODE COUNCIL®
Copyright © 2015 ICC. ALL RIGHTS RESERVED. Accessed by David Dammon on Jun 21, 2017 12:30:52 PM pursuant to License Agreement with ICC. No further reproduction or distribution authorized. ANY UNAUTHORIZED REPRODUCTION OR DISTRIBUTION IS A VIOLATION OF THE FEDERAL COPYRIGHT ACT AND THE LICENSE AGREEMENT, AND SUBJECT TO CIVIL AND CRIMINAL PENALTIES THEREUNDER.

P2904.2.4.2.2 Additional requirements for sidewall sprinklers. Sidewall sprinklers within 5 feet (1524 mm) of the center of a ceiling fan, surface-mounted ceiling luminaire or similar object shall be considered to be obstructed, and additional sprinklers shall be installed.

❖ Ceiling-mounted fixtures could also block the spray pattern of sidewall-mounted sprinklers if located within 5 feet (1524 mm) of the center of a sprinkler. If the location of the sprinkler cannot be moved outside of the 5-foot (1524 mm) proximity, extra sprinklers must be installed to cover the blocked area or the fixtures must be relocated.

P2904.2.5 Sprinkler installation on systems assembled with solvent cement. The solvent cementing of threaded adapter fittings shall be completed and threaded adapters for sprinklers shall be verified as being clear of excess cement prior to the installation of sprinklers on systems assembled with solvent cement.

❖ Because all sprinklers are designed to thread into a fitting that is connected to the sprinkler system piping, adapter fittings are required where the sprinkler piping is of a material that is solvent cemented to fittings and adapters. Excess solvent cement must be removed from the inside of the adapter fittings so that the sprinkler orifice does not become plugged upon sprinkler activation.

P2904.2.6 Sprinkler modifications prohibited. Painting, caulking or modifying of sprinklers shall be prohibited. Sprinklers that have been painted, caulked, modified or damaged shall be replaced with new sprinklers.

❖ Painting or decorating of sprinklers after factory shipment could affect their operation and the temperature at which they activate. Sprinklers are available from the manufacturer in a variety of colors to coordinate with interior finish colors. Sprinklers must not be field painted or modified in any manner. Field-painted, modified or damaged sprinklers must be replaced with new sprinklers.

P2904.3 Sprinkler piping system. Sprinkler piping shall be supported in accordance with requirements for cold water distribution piping. Sprinkler piping shall comply with the requirements for cold water distribution piping. For multipurpose piping systems, the sprinkler piping shall connect to and be a part of the cold water distribution piping system.

Exception: For plastic piping, it shall be permissible to follow the manufacturer's installation instructions.

❖ The support of sprinkler piping must be in accordance with the requirements of Table P2605.1. The support spacing requirements in this section might be more stringent than what is stated in design and installation manuals from sprinkler piping manufacturers. Because of the reaction force of an activated sprinkler, special consideration must be given to supporting the piping near sprinklers that are supported only by the piping. For example, when a ceiling sprinkler activates, the downward force of the water flow creates an oppo-

PENDANT SPRINKLER TO SIDE OBSTRUCTION

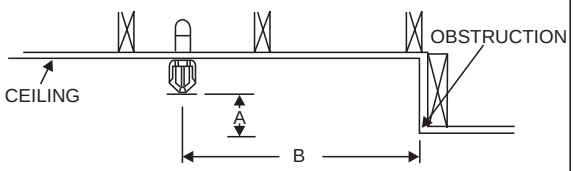

WHERE A IS LESS THAN OR EQUAL TO: (INCHES)	WHERE A IS LESS THAN OR EQUAL TO: (FEET)
1	1½
3	3
5	4
7	4½
9	6
11	6½
14	7

SIDEWALL SPRINKLER TO SIDE OBSTRUCTION

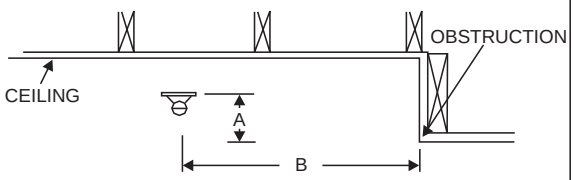

WHERE A IS LESS THAN OR EQUAL TO: (INCHES)	WHERE A IS LESS THAN OR EQUAL TO: (FEET)
1	1½
3	3
5	4
7	4½
9	6
11	6½
14	7

SIDEWALL SPRINKLER TO FORWARD OBSTRUCTION

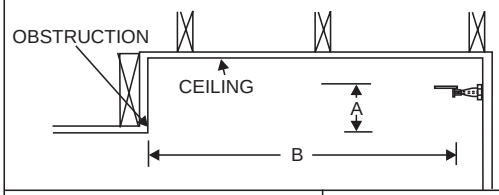

WHERE A IS LESS THAN OR EQUAL TO: (INCHES)	WHERE A IS LESS THAN OR EQUAL TO: (FEET)
1	8
2	10
3	11
4	12
6	13
7	14
9	15
11	16
14	17

For SI: 1 inch = 25.4 mm, 1 foot = 304.8 mm.

FIGURE P2904.2.4.2
MINIMUM ALLOWABLE DISTANCE BETWEEN SPRINKLER AND OBSTRUCTION

INTERNATIONAL CODE COUNCIL®
Copyright © 2015 ICC. ALL RIGHTS RESERVED. Accessed by David Dammon on Jun 21, 2017 12:30:52 PM pursuant to License Agreement with ICC. No further reproduction or distribution authorized. ANY UNAUTHORIZED REPRODUCTION OR DISTRIBUTION IS A VIOLATION OF THE FEDERAL COPYRIGHT ACT AND THE LICENSE AGREEMENT, AND SUBJECT TO CIVIL AND CRIMINAL PENALTIES THEREUNDER.

site reaction in the sprinkler. If the sprinkler piping at the sprinkler is not properly fastened to the structure, the sprinkler, upon activation, could be forced above the ceiling membrane, causing the sprinkler to be ineffective. Sprinkler manufacturer's installation instructions, also sprinkler piping manufacturer's installation instructions, will typically indicate the required support arrangements for piping that supports sprinklers. The exception attempts to clarify that piping manufacturer and sprinkler manufacturer instructions can also be used for piping support instructions.

P2904.3.1 Nonmetallic pipe and tubing. Nonmetallic pipe and tubing, such as CPVC, PEX, and PE-RT shall be listed for use in residential fire sprinkler systems.

❖ Where nonmetallic piping is used for a multipurpose sprinkler system, the piping from the service valve to every sprinkler must be "listed" for use as fire sprinkler piping. The term "listed" is defined in Chapter 2 of this code as an approved agency that has evaluated and tested the product and has put the product on a list of products that are intended for use in residential fire sprinkler systems. Although not required by this section, most products that are listed will be labeled with an identifying mark of the agency that lists the product. The majority of sprinkler products are listed and labeled by either Underwriters Laboratories (UL) or Factory Mutual (FM). Other agencies may meet the approval of the authority having jurisdiction.

Because sprinklers, sprinkler piping and fittings are in contact with potable water that flows to the plumbing fixtures, these components are also required to be certified to NSF 61.

For cross-linked polyethylene (PEX) material, listed tubing must comply with ASTM F877 or CSA B137.10M. PEX fittings must comply with the fittings standards as recommended by the PEX pipe manufacturer.

For chlorinated polyvinyl chloride (CPVC) material, listed pipe must comply with ASTM F442, and listed fittings must comply with ASTM F437 (threaded fittings in Schedule 80 wall thickness), ASTM F438 (socket fittings in Schedule 40 wall thickness) or ASTM F439 (socket fittings in Schedule 80 wall thickness). Although there are listed resins that are black in color, the majority of CPVC tubing, pipe and fittings for sprinkler system service is orange in color.

CPVC pipe and fittings that are listed for residential sprinkler service are iron pipe size (ips), not CPVC copper tube size (CTS). CTS CPVC, which is normally used for residential plumbing, is not listed for residential sprinkler use. Where CPVC is used for a multipurpose residential sprinkler system, listed CPVC pipe must be used for all piping supplying water to sprinklers. Piping branches from the multipurpose sprinkler system piping for supplying water to plumbing fixtures can be CTS CPVC. Special adapter fittings are available to convert from CPVC pipe size to CPVC CTS to allow for a solvent-cemented connection. However, the code does not address a conflict between the requirements for solvent cement for CPVC plumbing piping (or tubing) and the solvent cement required by manufacturer's listed CPVC residential sprinkler piping. Section P2905.9.1.2 requires that solvent cement for CPVC materials be yellow or orange in color and comply with ASTM F493. The listing for CPVC sprinkler piping requires a solvent cement that is red in color and in compliance with ASTM F493. The code official will have to determine if solvent cementing of these different types of CPVC is acceptable with the solvent cement the installer chooses for this connection. Otherwise, the connection should be made using threaded adapters.

P2904.3.1.1 Nonmetallic pipe protection. Nonmetallic pipe and tubing systems shall be protected from exposure to the living space by a layer of not less than $^3/_8$-inch-thick (9.5 mm) gypsum wallboard, $^1/_2$-inch-thick (13 mm) plywood, or other material having a 15-minute fire rating.

Exceptions:

1. Pipe protection shall not be required in areas that do not require protection with sprinklers as specified in Section P2904.1.1.
2. Pipe protection shall not be required where exposed piping is permitted by the pipe listing.

❖ Nonmetallic pipe must be protected from the potential heat from a fire that could occur in a protected area. Nonmetallic piping is allowed to be exposed in areas not protected by sprinklers. For example, sprinkler piping could be exposed in a small [i.e., less than 24-square-feet (2.2 m^2)] closet, but not exposed in the adjacent room requiring sprinklers. The assumption is that because the area is not required to be protected, it will be unlikely that a fire will occur in that area and expose the pipe to heat.

Where pipe protection is required, the protection must consist of gypsum board not less than $^3/_8$-inch (9.5 mm) thick, $^1/_2$-inch (13 mm) plywood or a 15-minute fire-rated material.

The listing for nonmetallic pipe might allow exposed piping in protected areas given certain conditions, such as depth of joists above the sprinkler location, sprinkler spacing and type of area. Although it might appear that the use of nonmetallic piping in a protected area could result in a piping failure before a fire in that area is extinguished, consider that the pipe is full of water, which helps to dissipate heat that would otherwise soften the pipe if it held no water.

P2904.3.2 Shutoff valves prohibited. With the exception of shutoff valves for the entire water distribution system, valves shall not be installed in any location where the valve would isolate piping serving one or more sprinklers.

❖ Having only one shutoff valve in a multipurpose fire sprinkler system ensures that whenever the valve is in the "off" position, no water is available at the plumbing fixture, thereby, indicating that water is also not available for the sprinkler system.

INTERNATIONAL CODE COUNCIL®
Copyright © 2015 ICC. ALL RIGHTS RESERVED. Accessed by David Dammon on Jun 21, 2017 12:30:52 PM pursuant to License Agreement with ICC. No further reproduction or distribution authorized. ANY UNAUTHORIZED REPRODUCTION OR DISTRIBUTION IS A VIOLATION OF THE FEDERAL COPYRIGHT ACT AND THE LICENSE AGREEMENT, AND SUBJECT TO CIVIL AND CRIMINAL PENALTIES THEREUNDER.

P2904.3.3 Single dwelling limit. Piping beyond the service valve located at the beginning of the water distribution system shall not serve more than one *dwelling*.

❖ Once the water service pipe enters into a two-family dwelling, the water distribution piping for each unit must be completely separate so that only the sprinkler system for a single unit will be shut off when the water to that same unit's plumbing fixtures is shut off. This prevents one valve from controlling more than one dwelling unit.

P2904.3.4 Drain. A means to drain the sprinkler system shall be provided on the system side of the water distribution shutoff valve.

❖ A residential sprinkler system might require maintenance, therefore, a means for draining down the system must be provided. In most cases, the sprinkler system can be drained sufficiently by opening plumbing fixture faucets and hose bibs.

P2904.4 Determining system design flow. The flow for sizing the sprinkler piping system shall be based on the flow rating of each sprinkler in accordance with Section P2904.4.1 and the calculation in accordance with Section P2904.4.2.

❖ A sprinkler will discharge a specified water flow rate at a specified pressure. As long as the piping system is designed to maintain the pressure at the sprinkler during flow, the system will operate as intended.

P2904.4.1 Determining required flow rate for each sprinkler. The minimum required flow for each sprinkler shall be determined using the sprinkler manufacturer's published data for the specific sprinkler model based on all of the following:

1. The area of coverage.
2. The ceiling configuration.
3. The temperature rating.
4. Any additional conditions specified by the sprinkler manufacturer.

❖ The selection of which sprinkler model to be used for protecting an area begins with: (1) evaluating the floor dimensions of the space to be protected, (2) evaluating the ceiling condition (e.g., the presence of ceiling slope greater than $9^1/_2$ degrees or beams) and (3) deciding whether use of a pendent-type or sidewall-type sprinkler results in better piping economy or protection from freezing. Generally, the sprinkler model having the lowest K-value that will provide coverage for the area, given the ceiling condition, is the optimum selection. The K-factor is a dimensionless flow coefficient that is used by sprinkler manufacturers to easily determine flow rates at different pressures. The following sprinkler manufacturer data information and examples illustrate the selection and design process:

Sprinkler model A, Pendent, K = 3.1

COVERAGE	MINUMUM WATER SUPPLY REQUIREMENTS
12 feet by 12 feet	9 gpm @ 8.4 psi
14 feet by 14 feet	10 gpm @ 10.4 psi

Sprinkler model B, Pendent, K = 4.3

COVERAGE	MINUMUM WATER SUPPLY REQUIREMENTS
12 feet by 12 feet	12 gpm @ 7.8 psi
14 feet by 14 feet	13 gpm @ 9.1 psi
16 feet by 16 feet	13 gpm @ 9.1 psi
18 feet by 18 feet	17 gpm @ 15.6 psi
20 feet by 20 feet	21 gpm @ 23.9 psi

Sprinkler model C, Horizontal Sidewall, Deflector 4-6 inches from ceiling, K = 4.0

COVERAGE	MINUMUM WATER SUPPLY REQUIREMENTS
12 feet by 12 feet	11 gpm @ 7.6 psi
14 feet by 14 feet	12 gpm @ 9 psi
16 feet by 16 feet	15 gpm @ 14.1 psi

Sprinkler model D, Horizontal Sidewall, Deflector 4-6 inches from ceiling, K = 4.3

COVERAGE	MINUMUM WATER SUPPLY REQUIREMENTS
12 feet by 12 feet	11 gpm @ 7.6 psi
14 feet by 14 feet	12 gpm @ 9 psi
16 feet by 16 feet	16 gpm @ 16 psi
16 feet by 18 feet	16 gpm @ 16 psi
16 feet by 20 feet	23 gpm @ 33.1 psi
18 feet by 18 feet	19 gpm @ 22.6 psi
18 feet by 20 feet	24 gpm @ 36 psi

Where the coverage area is rectangular, the first number is the width of the room (i.e., the dimension that is parallel to the wall that the sprinkler is located on) and the second number is the length of the room (i.e., the dimension perpendicular to the wall that the sprinkler is located on).

Example 1

Given: Room floor dimensions of 16 feet by 16 feet.

Ceiling slope is zero degrees (i.e., a flat ceiling).

A horizontal sidewall sprinkler is chosen for best piping economy.

Sprinkler C is chosen because the required flow is 15 gpm versus the required flow of 16 gpm for Model D.

Example 2

Given: Room floor dimensions of 14 feet by 20 feet.

Ceiling slope is zero degrees.

A pendent sprinkler is chosen for best piping economy.

Sprinkler B is chosen because Sprinkler A does not have a rating for coverage of 14-foot by 20-foot. The flow rate and pressure (21 gpm @ 23.9 psi) for the 20-

INTERNATIONAL CODE COUNCIL®
Copyright © 2015 ICC. ALL RIGHTS RESERVED. Accessed by David Dammon on Jun 21, 2017 12:30:52 PM pursuant to License Agreement with ICC. No further reproduction or distribution authorized. ANY UNAUTHORIZED REPRODUCTION OR DISTRIBUTION IS A VIOLATION OF THE FEDERAL COPYRIGHT ACT AND THE LICENSE AGREEMENT, AND SUBJECT TO CIVIL AND CRIMINAL PENALTIES THEREUNDER.

foot by 20-foot area for Sprinkler B must be used. One alternative to using one Sprinkler B to cover the area would be to use two Sprinkler As, at the minimum spacing of 8 feet apart, at the flow rate and pressure for a coverage of a 14-foot by 14-foot area (requiring 10 gpm @ 10.4 psi). Note that by using two of Sprinkler A, the flow required and pressure required for the room (10 + 10 = 20 gpm versus 21 gpm and 10.4 psi versus 23.9 psi) is reduced.

Another alternative would be to use a sidewall sprinkler. One Sprinkler D covering 16-foot by 20- foot (23 gpm @ 33.1 psi) would be suitable. While all selections will provide adequate protection to the area, if available supply pressure is low, the two Sprinkler A option would be better than the one Sprinkler B. If there is plenty of supply pressure, one Sprinkler B would be preferable over one Sprinkler D due to the lesser flow and pressure requirements.

P2904.4.2 System design flow rate. The design flow rate for the system shall be based on the following:

1. The design flow rate for a room having only one sprinkler shall be the flow rate required for that sprinkler, as determined by Section P2904.4.1.
2. The design flow rate for a room having two or more sprinklers a shall be determined by identifying the sprinkler in that room with the highest required flow rate, based on Section P2904.4.1, and multiplying that flow rate by 2.
3. Where the sprinkler manufacturer specifies different criteria for ceiling configurations that are not smooth, flat and horizontal, the required flow rate for that room shall comply with the sprinkler manufacturer's instructions.
4. The design flow rate for the sprinkler system shall be the flow required by the room with the largest flow rate, based on Items 1, 2 and 3.
5. For the purpose of this section, it shall be permissible to reduce the design flow rate for a room by subdividing the space into two or more rooms, where each room is evaluated separately with respect to the required design flow rate. Each room shall be bounded by walls and a ceiling. Openings in walls shall have a lintel not less than 8 inches (203 mm) in depth and each lintel shall form a solid barrier between the ceiling and the top of the opening.

❖ Because of the "light" fire hazard nature of residential interiors and the required fast sprinkler response time for residential sprinklers, it is assumed that if there is one sprinkler in a room, a fire in that room will be extinguished before the heat of the fire can travel to other rooms and activate other sprinklers. If a room has more than one sprinkler, it is assumed that only two sprinklers in that room would be activated before a fire is extinguished. Thus, if there is only one sprinkler per room in a building, the sprinkler piping system design only needs to be based upon one sprinkler discharging. If there is more than one sprinkler per room, the sprinkler piping design must be based on twice the flow of the room sprinkler having the largest required flow.

Where ceilings have slopes greater than 9.5 degrees or have beams, the chosen model of sprinkler might require a higher flow rate and pressure for those conditions. This section requires the higher flow rate and pressure to be used for the design of the sprinkler piping system. Use of the higher flow rate does not permit the designer to consider only one sprinkler in a room having multiple sprinklers. The higher flow rate must be doubled for sprinkler piping design.

A large room with multiple sprinklers can be considered as separate rooms if lintels divide the room into two or more areas. The lintel must extend from the ceiling down at least 8 inches (203 mm) to be considered as a separation for the areas. The lintel must be solid so that heat from a fire in one room cannot flow to another to activate sprinklers not over the fire area.

P2904.5 Water supply. The water supply shall provide not less than the required design flow rate for sprinklers in accordance with Section P2904.4.2 at a pressure not less than that used to comply with Section P2904.6.

❖ The source of the water for the fire sprinkler system must have the capability to provide the flow and pressure to the sprinkler piping to result in the design flow rate and pressure at the design sprinkler location.

P2904.5.1 Water supply from individual sources. Where a *dwelling unit* water supply is from a tank system, a private well system or a combination of these, the available water supply shall be based on the minimum pressure control setting for the pump.

❖ For sprinkler systems supplied from individual water supplies, such as wells or tanks, the sprinkler piping design must be based upon the pump "cut-on" (low) pressure setting and not the pump "cut-off" (high) pressure setting. This accounts for the worst-case pressure condition.

P2904.5.2 Required capacity. The water supply shall have the capacity to provide the required design flow rate for sprinklers for a period of time as follows:

1. Seven minutes for *dwelling units* one *story* in height and less than 2,000 square feet (186 m^2) in area.
2. Ten minutes for *dwelling units* two or more stories in height or equal to or greater than 2,000 square feet (186 m^2) in area.

Where a well system, a water supply tank system or a combination thereof is used, any combination of well capacity and tank storage shall be permitted to meet the capacity requirement.

❖ The other purpose of a sprinkler system is to provide the occupants ample time to realize that they must exit the building and then actually do so. Occupants can exit a smaller dwelling [one story and less than 2,000 square feet (186 m^2)] much quicker than they can a larger [2,000 square feet (186 m^2) or greater] or multistory building (two or more stories). The requirements of this section are identical to that required by NFPA 13D.

INTERNATIONAL CODE COUNCIL®
Copyright © 2015 ICC. ALL RIGHTS RESERVED. Accessed by David Dammon on Jun 21, 2017 12:30:52 PM pursuant to License Agreement with ICC. No further reproduction or distribution authorized. ANY UNAUTHORIZED REPRODUCTION OR DISTRIBUTION IS A VIOLATION OF THE FEDERAL COPYRIGHT ACT AND THE LICENSE AGREEMENT, AND SUBJECT TO CIVIL AND CRIMINAL PENALTIES THEREUNDER.

P2904.6 Pipe sizing. The piping to sprinklers shall be sized for the flow required by Section P2904.4.2. The flow required to supply the plumbing fixtures shall not be required to be added to the sprinkler design flow.

❖ For multipurpose piping systems, because the sprinkler demand on the piping is much greater than the plumbing demand and because the plumbing fixtures' water demand on a system during a fire will likely be minimal or zero, the design of the piping system only needs to consider the sprinkler design flow rate.

P2904.6.1 Method of sizing pipe. Piping supplying sprinklers shall be sized using the prescriptive method in Section P2904.6.2 or by hydraulic calculation in accordance with NFPA 13D. The minimum pipe size from the water supply source to any sprinkler shall be $^3/_4$ inch (19 mm) nominal. Threaded adapter fittings at the point where sprinklers are attached to the piping shall be not less than $^1/_2$ inch (13 mm) nominal.

❖ Once the sprinkler design flow and pressure is known, the piping system can be designed in accordance with Section P2904.6.2 or by the methods as required by NFPA 13D. Where Section P2904.6.2 is used, the sprinkler design flow value is used in Tables P2904.6.2(4) through P2904.6.2(9) to determine the allowable length of the water distribution pipe to the most remote sprinkler creating the design sprinkler flow.

Most residential sprinklers have $^1/_2$-inch (12.7 mm) male pipe threads. Because the piping to each sprinkler must not be less than $^3/_4$ inch (19.1 mm), an adapter fitting must be used to couple the piping to the sprinkler. For copper piping or CPVC piping, the adapter must have a socket on one end that is sized for the sprinkler piping and $^1/_2$-inch (12.7 mm) female pipe threads on the other end. The female threaded end of CPVC adapter fittings must have either metal reinforcement around the outside of the body of the fitting where the female threads are located or have a metal insert in the fitting to prevent the fitting from cracking when the sprinkler is tightened into the fitting. Fittings for PEX tubing are made of metal construction and have barbed ends that insert into the sprinkler tubing. The tubing connection to the barbed end of the fitting is with a clamped ring. Depending on the piping material, there are various configurations of adapter fittings that can be used, such as a straight, 90-degree (1.57 rad) elbow, back-to-back tee and back-to-back cross.

P2904.6.2 Prescriptive pipe sizing method. Pipe shall be sized by determining the available pressure to offset friction loss in piping and identifying a piping material, diameter and length using the equation in Section P2904.6.2.1 and the procedure in Section P2904.6.2.2.

❖ The rationale of this section's prescriptive design is simply to subtract all known pressure losses (except for piping pressure losses), and the design sprinkler flow pressure, from the available supply pressure. The remainder is the pressure available for overcoming pipe friction losses.

P2904.6.2.1 Available pressure equation. The pressure available to offset friction loss in the interior piping system (P_t) shall be determined in accordance with the Equation 29-1.

$$P_t = P_{sup} - PL_{svc} - PL_m - PL_d - PL_e - P_{sp} \quad \textbf{(Equation 29-1)}$$

where:

P_t = Pressure used in applying Tables P2904.6.2(4) through P2904.6.2(9).

P_{sup} = Pressure available from the water supply source.

PL_{svc} = Pressure loss in the water-service pipe.

PL_m = Pressure loss in the water meter.

PL_d = Pressure loss from devices other than the water meter.

PL_e = Pressure loss associated with changes in elevation.

P_{sp} = Maximum pressure required by a sprinkler.

❖ This formula indicates the factors that must be considered in the calculation of the pressure that is remaining and available for overcoming pipe friction losses.

TABLE P2904.6.2(1). See page 29-33.

❖ This table is applicable for all types of piping listed in Table P2905.4.

P2904.6.2.2 Calculation procedure. Determination of the required size for water distribution piping shall be in accordance with the following procedure:

Step 1—Determine P_{sup}

Obtain the static supply pressure that will be available from the water main from the water purveyor, or for an individual source, the available supply pressure shall be in accordance with Section P2904.5.1.

❖ If the water supply is from the public water main, the supplier of the water can provide the static pressure at the tap location. As this pressure will vary over a 24-hour period, as well as seasonally, worse case pressure should be used. For individual water sources (wells), the pressure will be the pump "cut-on" pressure setting.

Step 2—Determine PL_{svc}

Use Table P2904.6.2(1) to determine the pressure loss in the water service pipe based on the selected size of the water service.

❖ The table indicates pressure loss caused by friction, and includes friction factors for fittings and shutoff valves that are typically used in service lines. If the design sprinkler flow falls between table values, select the next higher value in the table. Note that if the service line supplies water for two dwellings, 5 gpm (0.3 L/s) must be added to the design sprinkler flow before using this table.

For individual water sources (wells), there may not be a water service line that requires determination of pressure loss because the water distribution system usually begins at the point where the pressure switch is located (i.e., the pressure tank).

INTERNATIONAL CODE COUNCIL®
Copyright © 2015 ICC. ALL RIGHTS RESERVED. Accessed by David Dammon on Jun 21, 2017 12:30:52 PM pursuant to License Agreement with ICC. No further reproduction or distribution authorized. ANY UNAUTHORIZED REPRODUCTION OR DISTRIBUTION IS A VIOLATION OF THE FEDERAL COPYRIGHT ACT AND THE LICENSE AGREEMENT, AND SUBJECT TO CIVIL AND CRIMINAL PENALTIES THEREUNDER.

TABLE P2904.6.2(1)
WATER SERVICE PRESSURE LOSS (PL_{svc})[a, b]

FLOW RATE[c] (gpm)	$^3/_4$-INCH WATER SERVICE PRESSURE LOSS (psi)				1-INCH WATER SERVICE PRESSURE LOSS (psi)				$1^1/_4$-INCH WATER SERVICE PRESSURE LOSS (psi)			
	Length of water service pipe (feet)				Length of water service pipe (feet)				Length of water service pipe (feet)			
	40 or less	41 to 75	76 to 100	101 to 150	40 or less	41 to 75	76 to 100	101 to 150	40 or less	41 to 75	76 to 100	101 to 150
8	5.1	8.7	11.8	17.4	1.5	2.5	3.4	5.1	0.6	1.0	1.3	1.9
10	7.7	13.1	17.8	26.3	2.3	3.8	5.2	7.7	0.8	1.4	2.0	2.9
12	10.8	18.4	24.9	NP	3.2	5.4	7.3	10.7	1.2	2.0	2.7	4.0
14	14.4	24.5	NP	NP	4.2	7.1	9.6	14.3	1.6	2.7	3.6	5.4
16	18.4	NP	NP	NP	5.4	9.1	12.4	18.3	2.0	3.4	4.7	6.9
18	22.9	NP	NP	NP	6.7	11.4	15.4	22.7	2.5	4.3	5.8	8.6
20	27.8	NP	NP	NP	8.1	13.8	18.7	27.6	3.1	5.2	7.0	10.4
22	NP	NP	NP	NP	9.7	16.5	22.3	NP	3.7	6.2	8.4	12.4
24	NP	NP	NP	NP	11.4	19.3	26.2	NP	4.3	7.3	9.9	14.6
26	NP	NP	NP	NP	13.2	22.4	NP	NP	5.0	8.5	11.4	16.9
28	NP	NP	NP	NP	15.1	25.7	NP	NP	5.7	9.7	13.1	19.4
30	NP	NP	NP	NP	17.2	NP	NP	NP	6.5	11.0	14.9	22.0
32	NP	NP	NP	NP	19.4	NP	NP	NP	7.3	12.4	16.8	24.8
34	NP	NP	NP	NP	21.7	NP	NP	NP	8.2	13.9	18.8	NP
36	NP	NP	NP	NP	24.1	NP	NP	NP	9.1	15.4	20.9	NP

For SI: 1 inch = 25.4 mm, 1 foot = 304.8 mm, 1 gallon per minute = 0.063 L/s, 1 pound per square inch = 6.895 kPa.

NP = Not permitted. Pressure loss exceeds reasonable limits.

a. Values are applicable for underground piping materials listed in Table P2905.4 and are based on an SDR of 11 and a Hazen Williams C Factor of 150.

b. Values include the following length allowances for fittings: 25% length increase for actual lengths up to 100 feet and 15% length increase for actual lengths over 100 feet.

c. Flow rate from Section P2904.4.2. Add 5 gpm to the flow rate required by Section P2904.4.2 where the water-service pipe supplies more than one dwelling.

Step 3—Determine PL_m

Use Table P2904.6.2(2) to determine the pressure loss from the water meter, based on the selected water meter size.

❖ The table indicates pressure loss from friction through the meter. If the sprinkler demand flow rate is between table values, select the next higher value in the table. Note that if the service line gpm supplies water for two dwellings, 5 gpm (0.34 L/s) must be added to the sprinkler design flow before using this table.

Step 4—Determine PL_d

Determine the pressure loss from devices other than the water meter installed in the piping system supplying sprinklers, such as pressure-reducing valves, backflow preventers, water softeners or water filters. Device pressure losses shall be based on the device manufacturer's specifications. The flow rate used to determine pressure loss shall be the rate from Section P2904.4.2, except that 5 gpm (0.3 L/s) shall be added where the device is installed in a water-service pipe that supplies more than one *dwelling*. As an alternative to deducting pressure loss for a device, an automatic bypass valve shall be installed to divert flow around the device when a sprinkler activates.

❖ Devices other than water meters are often installed in water service lines. All devices will create a pressure loss based upon the water flow rate through the device. Device manufacturers can provide pressure loss values for the sprinkler design flow. Where the pressure loss for a device is not available or the pressure loss is known and too high, this section allows for an automatic bypass valve to be installed so that flow can be diverted around the device so that the device pressure loss does not have to be included in the calculations. Pressure loss due to the automatic bypass valve must be included in the calculation. Note that if the service line supplies water for two dwellings, 5 gpm (0.34 L/s) must be added to the sprinkler design flow before using this table.

Step 5—Determine PL_e

Use Table P2904.6.2(3) to determine the pressure loss associated with changes in elevation. The elevation used in applying the table shall be the difference between the elevation where the water source pressure was measured and the elevation of the highest sprinkler.

❖ Note that the difference in elevation is to the highest sprinkler in the building, but not necessarily will that sprinkler be the one creating the sprinkler design flow. The table uses the conversion of 1 foot (305 mm) of water head is equal to 0.433 psi (2.99 kPa). Where the difference in elevation falls between values, use the next higher value in the table or interpolate between the values.

INTERNATIONAL CODE COUNCIL®
Copyright © 2015 ICC. ALL RIGHTS RESERVED. Accessed by David Dammon on Jun 21, 2017 12:30:52 PM pursuant to License Agreement with ICC. No further reproduction or distribution authorized. ANY UNAUTHORIZED REPRODUCTION OR DISTRIBUTION IS A VIOLATION OF THE FEDERAL COPYRIGHT ACT AND THE LICENSE AGREEMENT, AND SUBJECT TO CIVIL AND CRIMINAL PENALTIES THEREUNDER.

TABLE P2904.6.2(2)
MINIMUM WATER METER PRESSURE LOSS (PL_m)[a]

FLOW RATE (gallons per minute, gpm)[b]	$^5/_8$-INCH METER PRESSURE LOSS (pounds per square inch, psi)	$^3/_4$-INCH METER PRESSURE LESS (pounds per square inch, psi)	1-INCH METER PRESSURE LOSS (pounds per square inch, psi)
8	2	1	1
10	3	1	1
12	4	1	1
14	5	2	1
16	7	3	1
18	9	4	1
20	11	4	2
22	NP	5	2
24	NP	5	2
26	NP	6	2
28	NP	6	2
30	NP	7	2
32	NP	7	3
34	NP	8	3
36	NP	8	3

For SI: 1 inch = 25.4 mm, 1 pound per square inch = 6.895 kPa, 1 gallon per minute = 0.063 L/s.

NP—Not permitted unless the actual water meter pressure loss is known.

a. Table P2904.6.2(2) establishes conservative values for water meter pressure loss or installations where the water meter loss is unknown. Where the actual water meter pressure loss is known, P_m shall be the actual loss.

b. Flow rate from Section P2904.4.2. Add 5 gpm to the flow rate required by Section P2904.4.2 where the water-service pipe supplies more than one dwelling.

TABLE P2904.6.2(3)
ELEVATION LOSS (PL_e)

ELEVATION (feet)	PRESSURE LOSS (psi)
5	2.2
10	4.4
15	6.5
20	8.7
25	10.9
30	13
35	15.2
40	17.4

For SI: 1 foot = 304.8 mm, 1 pound per square inch = 6.895 kPa.

Step 6—Determine P_{sp}

Determine the maximum pressure required by any individual sprinkler based on the flow rate from Section P2904.4.1. The required pressure is provided in the sprinkler manufacturer's published data for the specific sprinkler model based on the selected flow rate.

❖ For the sprinkler creating the design flow, obtain the required sprinkler pressure from the manufacturer's published literature.

Step 7—Calculate P_t

Using Equation 29-1, calculate the pressure available to offset friction loss in water-distribution piping between the service valve and the sprinklers.

❖ The value, P_t, will be necessary for using Tables P2904.6.2(4) through P2904.6.2(9).

Step 8—Determine the maximum allowable pipe length

Use Tables P2904.6.2(4) through P2904.6.2(9) to select a material and size for water distribution piping. The piping material and size shall be acceptable if the *developed length* of pipe between the service valve and the most remote sprinkler does not exceed the maximum allowable length specified by the applicable table. Interpolation of P_t between the tabular values shall be permitted.

The maximum allowable length of piping in Tables P2904.6.2(4) through P2904.6.2(9) incorporates an adjustment for pipe fittings. Additional consideration of friction losses associated with pipe fittings shall not be required.

❖ From the building drawings, determine the developed length of the water distribution piping from the water service valve (at the discharge end of the water service

INTERNATIONAL CODE COUNCIL®
Copyright © 2015 ICC. ALL RIGHTS RESERVED. Accessed by David Dammon on Jun 21, 2017 12:30:52 PM pursuant to License Agreement with ICC. No further reproduction or distribution authorized. ANY UNAUTHORIZED REPRODUCTION OR DISTRIBUTION IS A VIOLATION OF THE FEDERAL COPYRIGHT ACT AND THE LICENSE AGREEMENT, AND SUBJECT TO CIVIL AND CRIMINAL PENALTIES THEREUNDER.

line) to the most remote sprinkler. This actual length is compared to an allowable length that is derived from Tables P2904.6.2(4) through P2904.6.2(9).

Sample Problem 1

Refer to the single floor plan shown in Commentary Figure P2904.6.2.2(1). The length of the water service line from the public water main to the entry point into the building is 100 feet. The public water main's minimum expected pressure at the tap location is 105 psi. The building is located on a hill such that the building floor elevation is 30 feet above the public water main. A $^5/_8$-inch water meter will be provided by the water utility company. The water service pipe will enter the building at 4 feet below the floor level of the building. The available sprinklers are the generic Models A, B, C and D indicated in the commentary to Section P2902.5.1. The heating, ventilating and air-conditioning (HVAC) unit is electric (not fuel fired) and is located in the attic. All ceilings are flat. The water dis-

TABLE P2904.6.2(4)
ALLOWABLE PIPE LENGTH FOR $^3/_4$-INCH TYPE M COPPER WATER TUBING

SPRINKLER FLOW RATE[a] (gpm)	WATER DISTRIBUTION SIZE (inch)	AVAILABLE PRESSURE—P_t (psi)									
		15	20	25	30	35	40	45	50	55	60
		Allowable length of pipe from service valve to farthest sprinkler (feet)									
8	$^3/_4$	217	289	361	434	506	578	650	723	795	867
9	$^3/_4$	174	232	291	349	407	465	523	581	639	697
10	$^3/_4$	143	191	239	287	335	383	430	478	526	574
11	$^3/_4$	120	160	200	241	281	321	361	401	441	481
12	$^3/_4$	102	137	171	205	239	273	307	341	375	410
13	$^3/_4$	88	118	147	177	206	235	265	294	324	353
14	$^3/_4$	77	103	128	154	180	205	231	257	282	308
15	$^3/_4$	68	90	113	136	158	181	203	226	248	271
16	$^3/_4$	60	80	100	120	140	160	180	200	220	241
17	$^3/_4$	54	72	90	108	125	143	161	179	197	215
18	$^3/_4$	48	64	81	97	113	129	145	161	177	193
19	$^3/_4$	44	58	73	88	102	117	131	146	160	175
20	$^3/_4$	40	53	66	80	93	106	119	133	146	159
21	$^3/_4$	36	48	61	73	85	97	109	121	133	145
22	$^3/_4$	33	44	56	67	78	89	100	111	122	133
23	$^3/_4$	31	41	51	61	72	82	92	102	113	123
24	$^3/_4$	28	38	47	57	66	76	85	95	104	114
25	$^3/_4$	26	35	44	53	61	70	79	88	97	105
26	$^3/_4$	24	33	41	49	57	65	73	82	90	98
27	$^3/_4$	23	30	38	46	53	61	69	76	84	91
28	$^3/_4$	21	28	36	43	50	57	64	71	78	85
29	$^3/_4$	20	27	33	40	47	53	60	67	73	80
30	$^3/_4$	19	25	31	38	44	50	56	63	69	75
31	$^3/_4$	18	24	29	35	41	47	53	59	65	71
32	$^3/_4$	17	22	28	33	39	44	50	56	61	67
33	$^3/_4$	16	21	26	32	37	42	47	53	58	63
34	$^3/_4$	NP	20	25	30	35	40	45	50	55	60
35	$^3/_4$	NP	19	24	28	33	38	42	47	52	57
36	$^3/_4$	NP	18	22	27	31	36	40	45	49	54
37	$^3/_4$	NP	17	21	26	30	34	38	43	47	51
38	$^3/_4$	NP	16	20	24	28	32	36	40	45	49
39	$^3/_4$	NP	15	19	23	27	31	35	39	42	46
40	$^3/_4$	NP	NP	18	22	26	29	33	37	40	44

For SI: 1 inch = 25.4 mm, 1 foot = 304.8 mm, 1 pound per square inch = 6.895 kPa, 1 gallon per minute = 0.963 L/s.
NP—Not permitted.
a. Flow rate from Section P2904.4.2.

INTERNATIONAL CODE COUNCIL®
Copyright © 2015 ICC. ALL RIGHTS RESERVED. Accessed by David Dammon on Jun 21, 2017 12:30:52 PM pursuant to License Agreement with ICC. No further reproduction or distribution authorized. ANY UNAUTHORIZED REPRODUCTION OR DISTRIBUTION IS A VIOLATION OF THE FEDERAL COPYRIGHT ACT AND THE LICENSE AGREEMENT, AND SUBJECT TO CIVIL AND CRIMINAL PENALTIES THEREUNDER.

tribution piping material will be CPVC. The building is located in a freezing climate such that sprinkler piping must not be installed above the ceiling (in the attic), or in outside walls. Design a multipurpose sprinkler system for this building.

Problem Approach

Locate the sprinkler positions for every area of the building exempting those areas listed in Section P2904.1.1. Determine the length of piping to the most remote sprinkler location. Determine which room has the greatest sprinkler flow. Where a room has two sprinklers, the sprinkler demand flow is double the flow of the sprinkler having the greater flow. Calculate the pressure available for pipe friction loss, P_t, to be used in the pipe sizing tables. From the pipe sizing tables, identify the size of the water service pipe to the building and the size of the water distribution piping to all sprinklers.

TABLE P2904.6.2(5)
ALLOWABLE PIPE LENGTH FOR 1-INCH TYPE M COPPER WATER TUBING

SPRINKLER FLOW RATE[a] (gpm)	WATER DISTRIBUTION SIZE (inch)	AVAILABLE PRESSURE—P_t (psi)									
		15	20	25	30	35	40	45	50	55	60
		Allowable length of pipe from service valve to farthest sprinkler (feet)									
8	1	806	1075	1343	1612	1881	2149	2418	2687	2955	3224
9	1	648	864	1080	1296	1512	1728	1945	2161	2377	2593
10	1	533	711	889	1067	1245	1422	1600	1778	1956	2134
11	1	447	586	745	894	1043	1192	1341	1491	1640	1789
12	1	381	508	634	761	888	1015	1142	1269	1396	1523
13	1	328	438	547	657	766	875	985	1094	1204	1313
14	1	286	382	477	572	668	763	859	954	1049	1145
15	1	252	336	420	504	588	672	756	840	924	1008
16	1	224	298	373	447	522	596	671	745	820	894
17	1	200	266	333	400	466	533	600	666	733	799
18	1	180	240	300	360	420	479	539	599	659	719
19	1	163	217	271	325	380	434	488	542	597	651
20	1	148	197	247	296	345	395	444	493	543	592
21	1	135	180	225	270	315	360	406	451	496	541
22	1	124	165	207	248	289	331	372	413	455	496
23	1	114	152	190	228	267	305	343	381	419	457
24	1	106	141	176	211	246	282	317	352	387	422
25	1	98	131	163	196	228	261	294	326	359	392
26	1	91	121	152	182	212	243	273	304	334	364
27	1	85	113	142	170	198	226	255	283	311	340
28	1	79	106	132	159	185	212	238	265	291	318
29	1	74	99	124	149	174	198	223	248	273	298
30	1	70	93	116	140	163	186	210	233	256	280
31	1	66	88	110	132	153	175	197	219	241	263
32	1	62	83	103	124	145	165	186	207	227	248
33	1	59	78	98	117	137	156	176	195	215	234
34	1	55	74	92	111	129	148	166	185	203	222
35	1	53	70	88	105	123	140	158	175	193	210
36	1	50	66	83	100	116	133	150	166	183	199
37	1	47	63	79	95	111	126	142	158	174	190
38	1	45	60	75	90	105	120	135	150	165	181
39	1	43	57	72	86	100	115	129	143	158	172
40	1	41	55	68	82	96	109	123	137	150	164

For SI: 1 inch = 25.4 mm, 1 foot = 304.8 mm, 1 pound per square inch = 6.895 kPa, 1 gallon per minute = 0.963 L/s.
a. Flow rate from Section P2904.4.2.

INTERNATIONAL CODE COUNCIL®
Copyright © 2015 ICC. ALL RIGHTS RESERVED. Accessed by David Dammon on Jun 21, 2017 12:30:52 PM pursuant to License Agreement with ICC. No further reproduction or distribution authorized. ANY UNAUTHORIZED REPRODUCTION OR DISTRIBUTION IS A VIOLATION OF THE FEDERAL COPYRIGHT ACT AND THE LICENSE AGREEMENT, AND SUBJECT TO CIVIL AND CRIMINAL PENALTIES THEREUNDER.

The solution is broken down into Parts A, B, and C:

Solution—Part A

Because every closet is less than 24 square feet with the smallest dimension less than 3 feet, and the bathroom is less than 55 square feet, these areas do not require sprinklers. Because the HVAC unit is all electric, a sprinkler is not required at the HVAC unit. As sprinkler piping cannot be installed above the ceiling, horizontal sidewall sprinklers will be selected for all applications.

Note that Bedroom 1 has a ceiling fan, Bedroom 2 has an alcove entry area, the living room has a fireplace, and the kitchen has a surface-mounted luminaire (light fixture) and range. The presence of these features could affect placement of sprinklers or could require intermediate temperature sprinklers to be used in those areas.

Review the living room area to locate a sprinkler. Considering that sprinkler piping cannot be in exterior walls because of the potential for freezing, the two possible locations for a single sprinkler to cover the

TABLE P2904.6.2(6)
ALLOWABLE PIPE LENGTH FOR $^3/_4$-INCH CPVC PIPE

SPRINKLER FLOW RATE[a] (gpm)	WATER DISTRIBUTION SIZE (inch)	AVAILABLE PRESSURE—P_t (psi)									
		15	20	25	30	35	40	45	50	55	60
		Allowable length of pipe from service valve to farthest sprinkler (feet)									
8	$^3/_4$	348	465	581	697	813	929	1045	1161	1278	1394
9	$^3/_4$	280	374	467	560	654	747	841	934	1027	1121
10	$^3/_4$	231	307	384	461	538	615	692	769	845	922
11	$^3/_4$	193	258	322	387	451	515	580	644	709	773
12	$^3/_4$	165	219	274	329	384	439	494	549	603	658
13	$^3/_4$	142	189	237	284	331	378	426	473	520	568
14	$^3/_4$	124	165	206	247	289	330	371	412	454	495
15	$^3/_4$	109	145	182	218	254	290	327	363	399	436
16	$^3/_4$	97	129	161	193	226	258	290	322	354	387
17	$^3/_4$	86	115	144	173	202	230	259	288	317	346
18	$^3/_4$	78	104	130	155	181	207	233	259	285	311
19	$^3/_4$	70	94	117	141	164	188	211	234	258	281
20	$^3/_4$	64	85	107	128	149	171	192	213	235	256
21	$^3/_4$	58	78	97	117	136	156	175	195	214	234
22	$^3/_4$	54	71	89	107	125	143	161	179	197	214
23	$^3/_4$	49	66	82	99	115	132	148	165	181	198
24	$^3/_4$	46	61	76	91	107	122	137	152	167	183
25	$^3/_4$	42	56	71	85	99	113	127	141	155	169
26	$^3/_4$	39	52	66	79	92	105	118	131	144	157
27	$^3/_4$	37	49	61	73	86	98	110	122	135	147
28	$^3/_4$	34	46	57	69	80	92	103	114	126	137
29	$^3/_4$	32	43	54	64	75	86	96	107	118	129
30	$^3/_4$	30	40	50	60	70	81	91	101	111	121
31	$^3/_4$	28	38	47	57	66	76	85	95	104	114
32	$^3/_4$	27	36	45	54	63	71	80	89	98	107
33	$^3/_4$	25	34	42	51	59	68	76	84	93	101
34	$^3/_4$	24	32	40	48	56	64	72	80	88	96
35	$^3/_4$	23	30	38	45	53	61	68	76	83	91
36	$^3/_4$	22	29	36	43	50	57	65	72	79	86
37	$^3/_4$	20	27	34	41	48	55	61	68	75	82
38	$^3/_4$	20	26	33	39	46	52	59	65	72	78
39	$^3/_4$	19	25	31	37	43	50	56	62	68	74
40	$^3/_4$	18	24	30	35	41	47	53	59	65	71

For SI: 1 inch = 25.4 mm, 1 foot = 304.8 mm, 1 pound per square inch = 6.895 kPa, 1 gallon per minute = 0.963 L/s.
a. Flow rate from Section P2904.4.2.

INTERNATIONAL CODE COUNCIL®
Copyright © 2015 ICC. ALL RIGHTS RESERVED. Accessed by David Dammon on Jun 21, 2017 12:30:52 PM pursuant to License Agreement with ICC. No further reproduction or distribution authorized. ANY UNAUTHORIZED REPRODUCTION OR DISTRIBUTION IS A VIOLATION OF THE FEDERAL COPYRIGHT ACT AND THE LICENSE AGREEMENT, AND SUBJECT TO CIVIL AND CRIMINAL PENALTIES THEREUNDER.

area are Points A and B [see Commentary Figure P2904.6.2.2(2)]. Because the one dimension of the room is 17 feet, one Model C sprinkler will not cover the area. One Model D sprinkler located at Point A will cover the room if it is provided with 16 gpm at a pressure of 16 psi. If the Model D sprinkler is located at Point B, it would have to be supplied with 19 gpm at 22.6 psi in order to cover the room. Note that both Points A and B are located farther than 60 inches from the front of the fireplace, thus an immediate temperature sprinkler is not required for either location. Because Point B is adjacent to the possible Point C location for a kitchen sprinkler, Point B might be the better choice, in order to save piping costs.

Review the kitchen area to locate a sprinkler. The two possible locations for a single sprinkler to cover the area are Points C and D. However, because of the proximity of the surface-mounted luminaire, with the sprinkler located at Point D, Point C is the only acceptable location. A Model C sprinkler is chosen, requiring

TABLE P2904.6.2(7)
ALLOWABLE PIPE LENGTH FOR 1-INCH CPVC PIPE

SPRINKLER FLOW RATE[a] (gpm)	WATER DISTRIBUTION SIZE (inch)	AVAILABLE PRESSURE—P_t (psi)									
		15	20	25	30	35	40	45	50	55	60
		Allowable length of pipe from service valve to farthest sprinkler (feet)									
8	1	1049	1398	1748	2098	2447	2797	3146	3496	3845	4195
9	1	843	1125	1406	1687	1968	2249	2530	2811	3093	3374
10	1	694	925	1157	1388	1619	1851	2082	2314	2545	2776
11	1	582	776	970	1164	1358	1552	1746	1940	2133	2327
12	1	495	660	826	991	1156	1321	1486	1651	1816	1981
13	1	427	570	712	854	997	1139	1281	1424	1566	1709
14	1	372	497	621	745	869	993	1117	1241	1366	1490
15	1	328	437	546	656	765	874	983	1093	1202	1311
16	1	291	388	485	582	679	776	873	970	1067	1164
17	1	260	347	433	520	607	693	780	867	954	1040
18	1	234	312	390	468	546	624	702	780	858	936
19	1	212	282	353	423	494	565	635	706	776	847
20	1	193	257	321	385	449	513	578	642	706	770
21	1	176	235	293	352	410	469	528	586	645	704
22	1	161	215	269	323	377	430	484	538	592	646
23	1	149	198	248	297	347	396	446	496	545	595
24	1	137	183	229	275	321	366	412	458	504	550
25	1	127	170	212	255	297	340	382	425	467	510
26	1	118	158	197	237	276	316	355	395	434	474
27	1	111	147	184	221	258	295	332	368	405	442
28	1	103	138	172	207	241	275	310	344	379	413
29	1	97	129	161	194	226	258	290	323	355	387
30	1	91	121	152	182	212	242	273	303	333	364
31	1	86	114	143	171	200	228	257	285	314	342
32	1	81	108	134	161	188	215	242	269	296	323
33	1	76	102	127	152	178	203	229	254	280	305
34	1	72	96	120	144	168	192	216	240	265	289
35	1	68	91	114	137	160	182	205	228	251	273
36	1	65	87	108	130	151	173	195	216	238	260
37	1	62	82	103	123	144	165	185	206	226	247
38	1	59	78	98	117	137	157	176	196	215	235
39	1	56	75	93	112	131	149	168	187	205	224
40	1	53	71	89	107	125	142	160	178	196	214

For SI: 1 inch = 25.4 mm, 1 foot = 304.8 mm, 1 pound per square inch = 6.895 kPa, 1 gallon per minute = 0.963 L/s.
a. Flow rate from Section P2904.4.2.

INTERNATIONAL CODE COUNCIL®
Copyright © 2015 ICC. ALL RIGHTS RESERVED. Accessed by David Dammon on Jun 21, 2017 12:30:52 PM pursuant to License Agreement with ICC. No further reproduction or distribution authorized. ANY UNAUTHORIZED REPRODUCTION OR DISTRIBUTION IS A VIOLATION OF THE FEDERAL COPYRIGHT ACT AND THE LICENSE AGREEMENT, AND SUBJECT TO CIVIL AND CRIMINAL PENALTIES THEREUNDER.

15 gpm at 14.6 psi to cover a 16-foot by 16-foot area. Because Point C was chosen, it is more economical to locate the living room sprinkler at Point B.

For Bedrooms 2 and 3, it is more economical to locate the sprinkler for each room adjacent to one another on the wall common to both rooms (Points E and F). A sprinkler location at Point E provides coverage for the room entry alcove in Bedroom 2. Therefore, a Model C sprinkler is chosen for coverage of a 16-foot by 16-foot area requiring 15 gpm at 14.1 psi. For Bedroom 3, either a Model C or D sprinkler can be chosen for a coverage area of 14 feet by 14 feet, which is more than adequate to cover the 12-foot, 6-inch by 7-foot area. The required flow for both models of sprinklers is 12 gpm at 9 psi.

Bedroom 1 has only one logical location for a sprinkler and that is at Point G. As the ceiling fan is located in the center of the room, it is more than 5 feet from the sprinkler and, therefore, the ceiling fan is not considered to be an obstruction to the sprinkler spray pat-

TABLE P2904.6.2(8)
ALLOWABLE PIPE LENGTH FOR $^3/_4$-INCH PEX AND PE-RT TUBING

SPRINKLER FLOW RATE[a] (gpm)	WATER DISTRIBUTION SIZE (inch)	AVAILABLE PRESSURE—P_t (psi)									
		15	20	25	30	35	40	45	50	55	60
		Allowable length of pipe from service valve to farthest sprinkler (feet)									
8	$^3/_4$	93	123	154	185	216	247	278	309	339	370
9	$^3/_4$	74	99	124	149	174	199	223	248	273	298
10	$^3/_4$	61	82	102	123	143	163	184	204	225	245
11	$^3/_4$	51	68	86	103	120	137	154	171	188	205
12	$^3/_4$	44	58	73	87	102	117	131	146	160	175
13	$^3/_4$	38	50	63	75	88	101	113	126	138	151
14	$^3/_4$	33	44	55	66	77	88	99	110	121	132
15	$^3/_4$	29	39	48	58	68	77	87	96	106	116
16	$^3/_4$	26	34	43	51	60	68	77	86	94	103
17	$^3/_4$	23	31	38	46	54	61	69	77	84	92
18	$^3/_4$	21	28	34	41	48	55	62	69	76	83
19	$^3/_4$	19	25	31	37	44	50	56	62	69	75
20	$^3/_4$	17	23	28	34	40	45	51	57	62	68
21	$^3/_4$	16	21	26	31	36	41	47	52	57	62
22	$^3/_4$	NP	19	24	28	33	38	43	47	52	57
23	$^3/_4$	NP	17	22	26	31	35	39	44	48	52
24	$^3/_4$	NP	16	20	24	28	32	36	40	44	49
25	$^3/_4$	NP	NP	19	22	26	30	34	37	41	45
26	$^3/_4$	NP	NP	17	21	24	28	31	35	38	42
27	$^3/_4$	NP	NP	16	20	23	26	29	33	36	39
28	$^3/_4$	NP	NP	15	18	21	24	27	30	33	36
29	$^3/_4$	NP	NP	NP	17	20	23	26	28	31	34
30	$^3/_4$	NP	NP	NP	16	19	21	24	27	29	32
31	$^3/_4$	NP	NP	NP	15	18	20	23	25	28	30
32	$^3/_4$	NP	NP	NP	NP	17	19	21	24	26	28
33	$^3/_4$	NP	NP	NP	NP	16	18	20	22	25	27
34	$^3/_4$	NP	NP	NP	NP	NP	17	19	21	23	25
35	$^3/_4$	NP	NP	NP	NP	NP	16	18	20	22	24
36	$^3/_4$	NP	NP	NP	NP	NP	15	17	19	21	23
37	$^3/_4$	NP	NP	NP	NP	NP	NP	16	18	20	22
38	$^3/_4$	NP	NP	NP	NP	NP	NP	16	17	19	21
39	$^3/_4$	NP	NP	NP	NP	NP	NP	NP	16	18	20
40	$^3/_4$	NP	NP	NP	NP	NP	NP	NP	16	17	19

For SI: 1 inch = 25.4 mm, 1 foot = 304.8 mm, 1 pound per square inch = 6.895 kPa, 1 gallon per minute = 0.963 L/s.
NP— Not permitted.
a. Flow rate from Section P2904.4.2.

INTERNATIONAL CODE COUNCIL®
Copyright © 2015 ICC. ALL RIGHTS RESERVED. Accessed by David Dammon on Jun 21, 2017 12:30:52 PM pursuant to License Agreement with ICC. No further reproduction or distribution authorized. ANY UNAUTHORIZED REPRODUCTION OR DISTRIBUTION IS A VIOLATION OF THE FEDERAL COPYRIGHT ACT AND THE LICENSE AGREEMENT, AND SUBJECT TO CIVIL AND CRIMINAL PENALTIES THEREUNDER.

tern. A Model C sprinkler is chosen to cover the 12-foot by 12-foot area. The sprinkler will require 11 gpm at 7.6 psi.

The sprinkler at Point B has the greatest demand flow at 19 gpm at 22.6 psi. The sprinkler at Point B also happens to be the most remote sprinkler location in the building. In this example, it is just a coincidence that the sprinkler having the greatest demand is also the sprinkler that is most remote. If the example was a two-story building and the living room still had the sprinkler with the greatest demand, the most remote sprinkler would be at a sprinkler location on the second floor.

Solution—Part B

The supply pressure, P_{sup}, is 105 psi. To calculate pressure loss of the water service line, PL_{svc}, find the sprinkler demand flow of 19 gpm, in the far left column of Table P2904.6.2(1) and select the row that is equal to or greater than 19 gpm. The row for 20 gpm is chosen.

TABLE P2904.6.2(9)
ALLOWABLE PIPE LENGTH FOR 1-INCH PEX AND PE-RT TUBING

SPRINKLER FLOW RATE[a] (gpm)	WATER DISTRIBUTION SIZE (inch)	AVAILABLE PRESSURE—P_t (psi)									
		15	20	25	30	35	40	45	50	55	60
		Allowable length of pipe from service valve to farthest sprinkler (feet)									
8	1	314	418	523	628	732	837	941	1046	1151	1255
9	1	252	336	421	505	589	673	757	841	925	1009
10	1	208	277	346	415	485	554	623	692	761	831
11	1	174	232	290	348	406	464	522	580	638	696
12	1	148	198	247	296	346	395	445	494	543	593
13	1	128	170	213	256	298	341	383	426	469	511
14	1	111	149	186	223	260	297	334	371	409	446
15	1	98	131	163	196	229	262	294	327	360	392
16	1	87	116	145	174	203	232	261	290	319	348
17	1	78	104	130	156	182	208	233	259	285	311
18	1	70	93	117	140	163	187	210	233	257	280
19	1	63	84	106	127	148	169	190	211	232	253
20	1	58	77	96	115	134	154	173	192	211	230
21	1	53	70	88	105	123	140	158	175	193	211
22	1	48	64	80	97	113	129	145	161	177	193
23	1	44	59	74	89	104	119	133	148	163	178
24	1	41	55	69	82	96	110	123	137	151	164
25	1	38	51	64	76	89	102	114	127	140	152
26	1	35	47	59	71	83	95	106	118	130	142
27	1	33	44	55	66	77	88	99	110	121	132
28	1	31	41	52	62	72	82	93	103	113	124
29	1	29	39	48	58	68	77	87	97	106	116
30	1	27	36	45	54	63	73	82	91	100	109
31	1	26	34	43	51	60	68	77	85	94	102
32	1	24	32	40	48	56	64	72	80	89	97
33	1	23	30	38	46	53	61	68	76	84	91
34	1	22	29	36	43	50	58	65	72	79	86
35	1	20	27	34	41	48	55	61	68	75	82
36	1	19	26	32	39	45	52	58	65	71	78
37	1	18	25	31	37	43	49	55	62	68	74
38	1	18	23	29	35	41	47	53	59	64	70
39	1	17	22	28	33	39	45	50	56	61	67
40	1	16	21	27	32	37	43	48	53	59	64

For SI: 1 inch = 25.4 mm, 1 foot = 304.8 mm, 1 pound per square inch = 6.895 kPa, 1 gallon per minute = 0.963 L/s.
a. Flow rate from Section P2904.4.2.

INTERNATIONAL CODE COUNCIL®
Copyright © 2015 ICC. ALL RIGHTS RESERVED. Accessed by David Dammon on Jun 21, 2017 12:30:52 PM pursuant to License Agreement with ICC. No further reproduction or distribution authorized. ANY UNAUTHORIZED REPRODUCTION OR DISTRIBUTION IS A VIOLATION OF THE FEDERAL COPYRIGHT ACT AND THE LICENSE AGREEMENT, AND SUBJECT TO CIVIL AND CRIMINAL PENALTIES THEREUNDER.

The length of the water service is given as 100 feet. Follow across the 20-gpm row and identify the first 100-foot column, which has a value. The pressure loss of 18.7 psi is identified. Note that the water service line must be at least a 1-inch (25.4 mm) pipe or tube size.

To calculate the water meter pressure loss, PLm, find the sprinkler demand flow of 19 gpm, in the far left column of Table P2904.6.2(2) and select the row that is equal to or greater than 19 gpm. The row for 20 gpm is chosen. Follow across the 20 gpm row and identify the first column that has a number. A $^5/_8$-inch meter has an 11-psi pressure loss.

The next unknown to calculate is the pressure loss for all devices, such as PRVs, filters, water softeners, etc., that are in the water supply or in the main water distribution line supplying water to the sprinklers. Because the public main has a pressure of 105 psi, a PRV might be required. However, due to the location of the building on a hill, the static pressure at the building entry point must first be calculated. Note that the elevation difference is given between the public water main and the floor elevation and not to the sprinkler elevation. Therefore, assuming that the ceiling height is 8 feet, the sprinkler elevation is approximately 7.5 feet above the floor elevation since sidewall sprinklers are located at 4 to 6 inches from the ceiling. Enter the left hand column of Table P2904.6.2(3) and select a row that is equal to or greater than $37^1/_2$ feet. The 40-psi row is chosen. Move across that row to the right-hand column to identify a pressure loss of 17.4 psi due to the elevation difference. Subtracting 17.4 psi from 105 psi equals 87.6 psi. Because the code requires (see Section 2903.3.1) that the supply pressure of the building plumbing system not exceed 80-psi static pressure, a PRV is required to be installed in order to limit the pressure to 80 psi. As there are so many different sizes and models of PRVs, the code does not provide values for pressure losses for PRVs. The values must be obtained from the manufacturer of the valve to be used on the project. In this example, it is determined (from manufacturer's data sheets) that a $^3/_4$-inch (19.1 mm) PRV is required and at the design sprinkler flow of 19 gpm, the pressure loss is 22 psi.

The design sprinkler pressure, P_{sp}, is stated as 22.6 psi. The pressure available for pipe friction, P_t is calculated as follows:

$$P_t = P_{sup} - PL_{svc} - PL_m - PL_d - PL_e - P_{sp}$$

$$P_t = 105 - 18.7 - 11 - 22 - 17.4 - 22.6$$

$$P_t = 13.3 \text{ psi}$$

A total of 13.3 psi is available for pipe friction losses from the point of water service entry into the building to the most remote sprinkler.

Looking at the allowable pipe length tables [see Tables P2904.6.2(4) through (9)], it is realized that the lowest available pressure in every table is 15 psi. In this example, with the sizes chosen to this point, there

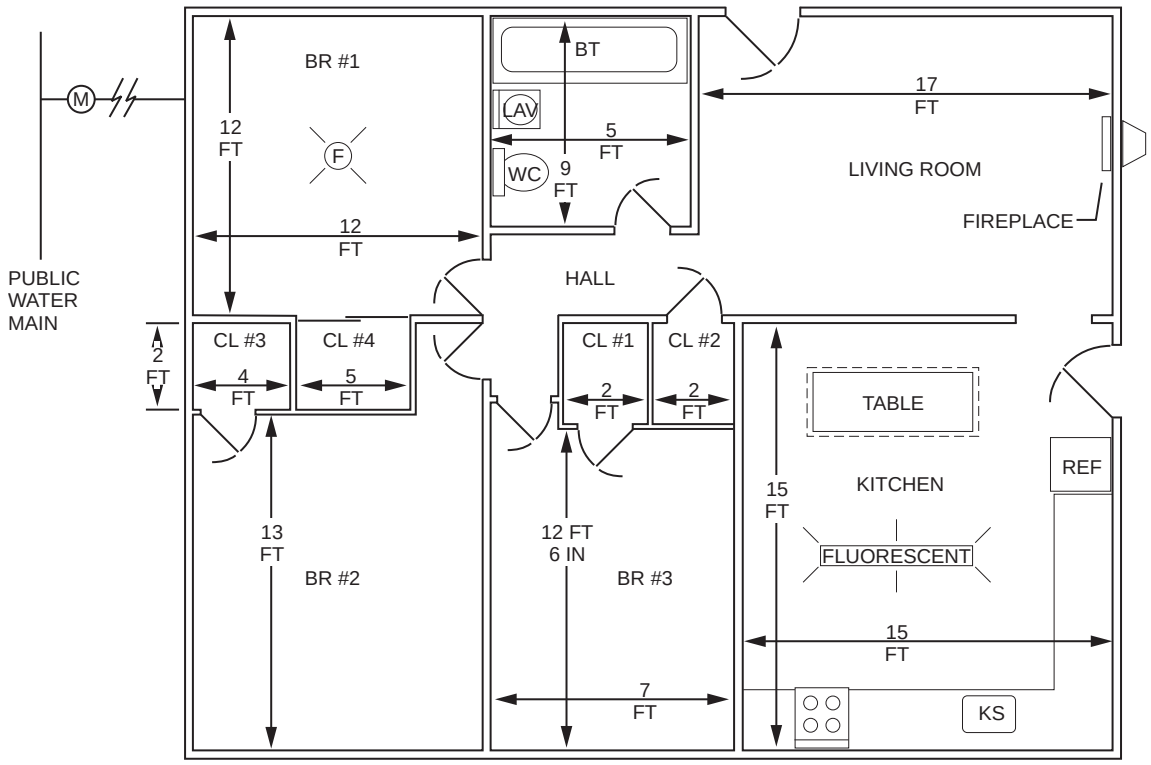

For SI: 1 inch = 25.4 mm, 1 foot = 304.8 mm.

Figure P2904.6.2.2(1)
BUILDING PLAN

INTERNATIONAL CODE COUNCIL®
Copyright © 2015 ICC. ALL RIGHTS RESERVED. Accessed by David Dammon on Jun 21, 2017 12:30:52 PM pursuant to License Agreement with ICC. No further reproduction or distribution authorized. ANY UNAUTHORIZED REPRODUCTION OR DISTRIBUTION IS A VIOLATION OF THE FEDERAL COPYRIGHT ACT AND THE LICENSE AGREEMENT, AND SUBJECT TO CIVIL AND CRIMINAL PENALTIES THEREUNDER.

is not enough pressure in order to use the tables. Therefore, some recalculation is necessary in order to increase the pressure remaining to accommodate pipe friction losses.

In review of the previous calculations, the water service pressure loss at 18.7 psi and the PRV pressure loss at 22 psi are big losses that could be reduced by choosing larger sizes. Therefore, a $1^1/_4$-inch water service line is chosen, which has a pressure loss of only 7 psi and a 1-inch PRV is chosen, which has a pressure loss (according to the manufacturer) of only 16 psi. Substituting the revised values into the equation:

$P_t = 105 - 7 - 11 - 16 - 17.4 - 22.6$

$P_t = 31$ psi

Solution—Part C

From the building drawings, determine the length of piping from the water service line entry point to most remote sprinkler [see Commentary Figure P2904.6.2.2(3)]. Starting from the below-grade entry of the water service line into the structure, the line runs up 4 feet to the bottom of the joists, over 26 feet, over 10 feet and up 9 feet for a total developed length of 49 feet. Because CPVC piping will be used, Table P2904.6.2(6) will be the starting point for determining what size pipe is required. Enter in the left-hand column of the table and select a row that is equal to or greater than 19 gpm (the required flow rate or the highest demand sprinkler). The 19 gpm row is chosen. Enter the topmost row having the available pressure values (15, 20, 30, etc.) and identify the column that is equal to or less than 31 psi. The 30 psi column is chosen. At the intersection of the chosen row and column, identify the value. In this example, the value of 141 feet is found. This value represents the maximum length of $^3/_4$-inch (19 mm) CPVC piping allowed from the water service entrance point into the building to the most remote sprinkler. Because 141 feet (42 977 mm) is greater than the actual 49 feet of pipe, the design is acceptable using $^3/_4$-inch (19 mm) piping for the piping to every sprinkler.

P2904.7 Instructions and signs. An owner's manual for the fire sprinkler system shall be provided to the owner. A sign or valve tag shall be installed at the main shutoff valve to the water distribution system stating the following: "Warning, the water system for this home supplies fire sprinklers that require certain flows and pressures to fight a fire. Devices that restrict the flow or decrease the pressure or automatically shut off the water to the fire sprinkler system, such as water softeners, filtration systems and automatic shutoff valves, shall not be added to this system without a review of the fire sprinkler system by a fire protection specialist. Do not remove this sign."

❖ A fire sprinkler system is not unlike other types of mechanical systems in the home that require maintenance. An owner's manual might include details as to

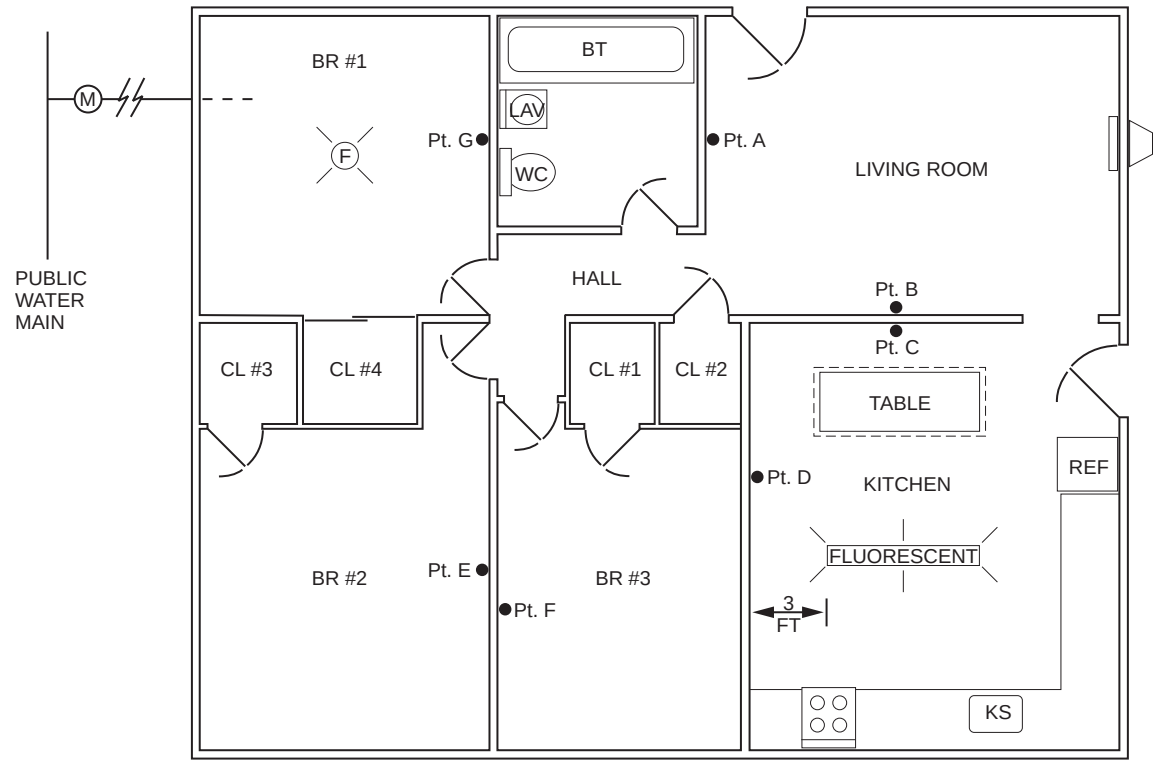

For SI: 1 foot = 304.8 mm.

Figure P2904.6.2.2(2)
LOCATIONS OF SPRINKLER

INTERNATIONAL CODE COUNCIL®
Copyright © 2015 ICC. ALL RIGHTS RESERVED. Accessed by David Dammon on Jun 21, 2017 12:30:52 PM pursuant to License Agreement with ICC. No further reproduction or distribution authorized. ANY UNAUTHORIZED REPRODUCTION OR DISTRIBUTION IS A VIOLATION OF THE FEDERAL COPYRIGHT ACT AND THE LICENSE AGREEMENT, AND SUBJECT TO CIVIL AND CRIMINAL PENALTIES THEREUNDER.

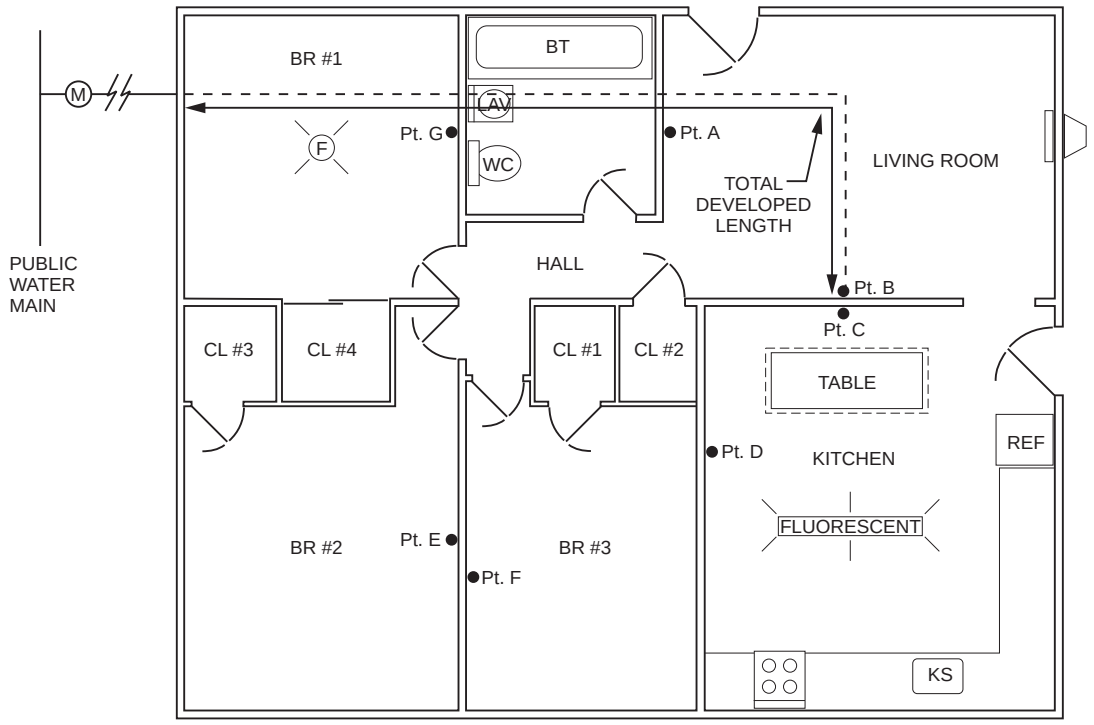

Figure P2904.6.2.2(3)
PIPING TO SPRINKLER

the model of sprinklers used for each location, specification sheets for the sprinklers used, calculation sheets, sprinkler replacement procedures and warnings. The required warning tag is necessary to alert service personnel that modifications to the system might require that the system design be reviewed by someone who is familiar with the design of fire sprinkler systems.

P2904.8 Inspections. The water distribution system shall be inspected in accordance with Sections P2904.8.1 and P2904.8.2.

❖ In order for sprinkler systems to be effective when needed, the installation must be inspected prior to concealment and at completion.

P2904.8.1 Preconcealment inspection. The following items shall be verified prior to the concealment of any sprinkler system piping:

1. Sprinklers are installed in all areas as required by Section P2904.1.1.
2. Where sprinkler water spray patterns are obstructed by construction features, luminaires or ceiling fans, additional sprinklers are installed as required by Section P2904.2.4.2.
3. Sprinklers are the correct temperature rating and are installed at or beyond the required separation distances from heat sources as required by Sections P2904.2.1 and P2904.2.2.
4. The pipe size equals or exceeds the size used in applying Tables P2904.6.2(4) through P2904.6.2(9) or, if the piping system was hydraulically calculated in accordance with Section P2904.6.1, the size used in the hydraulic calculation.
5. The pipe length does not exceed the length permitted by Tables P2904.6.2(4) through P2904.6.2(9) or, if the piping system was hydraulically calculated in accordance with Section P2904.6.1, pipe lengths and fittings do not exceed those used in the hydraulic calculation.
6. Nonmetallic piping that conveys water to sprinklers is listed for use with fire sprinklers.
7. Piping is supported in accordance with the pipe manufacturer's and sprinkler manufacturer's installation instructions.
8. The piping system is tested in accordance with Section P2503.7.

❖ This section provides a checklist of items to verify before the sprinkler system piping is concealed [see Commentary Figures P2904.8.1(1) and P2904.8.1(2)].

INTERNATIONAL CODE COUNCIL®
Copyright © 2015 ICC. ALL RIGHTS RESERVED. Accessed by David Dammon on Jun 21, 2017 12:30:52 PM pursuant to License Agreement with ICC. No further reproduction or distribution authorized. ANY UNAUTHORIZED REPRODUCTION OR DISTRIBUTION IS A VIOLATION OF THE FEDERAL COPYRIGHT ACT AND THE LICENSE AGREEMENT, AND SUBJECT TO CIVIL AND CRIMINAL PENALTIES THEREUNDER.



Figure P2904.8.1(1)
SPRINKLER SYSTEM ROUGH-IN



Figure P2904.8.1(2)
SPRINKLER SHOWN WITHOUT TEMPORARY PROTECTIVE COVER INSTALLED

INTERNATIONAL CODE COUNCIL®
Copyright © 2015 ICC. ALL RIGHTS RESERVED. Accessed by David Dammon on Jun 21, 2017 12:30:52 PM pursuant to License Agreement with ICC. No further reproduction or distribution authorized. ANY UNAUTHORIZED REPRODUCTION OR DISTRIBUTION IS A VIOLATION OF THE FEDERAL COPYRIGHT ACT AND THE LICENSE AGREEMENT, AND SUBJECT TO CIVIL AND CRIMINAL PENALTIES THEREUNDER.

P2904.8.2 Final inspection. The following items shall be verified upon completion of the system:

1. Sprinkler are not painted, damaged or otherwise hindered from operation.
2. Where a pump is required to provide water to the system, the pump starts automatically upon system water demand.
3. Pressure-reducing valves, water softeners, water filters or other impairments to water flow that were not part of the original design have not been installed.
4. The sign or valve tag required by Section P2904.7 is installed and the owner's manual for the system is present.

❖ This section provides a checklist of items to verify at final inspection.

SECTION P2905
HEATED WATER DISTRIBUTION SYSTEMS

P2905.1 Heated water circulation systems and heat trace systems. Circulation systems and heat trace systems that are installed to bring heated water in close proximity to one or more fixtures shall meet the requirements of Section N1103.5.1.

❖ This section is meant to alert the plumbing community that there are requirements (and prohibitions) in Section N1103.5.1 for hot water circulation systems.

P2905.2 Demand recirculation systems. Demand recirculation water systems shall be in accordance with Section N1103.5.2.

❖ This section is meant to alert the plumbing community that there are requirements in Section N1103.5.2 for demand circulation water systems. See the Chapter 11 definition of "Demand recirculation water systems."

SECTION P2906
MATERIALS, JOINTS AND CONNECTIONS

P2906.1 Soil and groundwater. The installation of water service pipe, water distribution pipe, fittings, valves, appurtenances and gaskets shall be prohibited in soil and groundwater that is contaminated with solvents, fuels, organic compounds or other detrimental materials that cause permeation, corrosion, degradation or structural failure of the water service or water distribution piping material.

❖ This section requires that soil be investigated for contaminants, based on the material selected. When a pipe is buried, the surrounding soil conditions may cause a component of the system to corrode or degrade at an accelerated rate. The soil must be evaluated, or historical knowledge of the soil applied, to determine whether additional requirements are necessary to protect the piping material. Most soils are corrosive to galvanized steel pipe; therefore, additional protection would be required. The pipe is either coated or wrapped with coal tar, or an elastomeric or epoxy coating is applied to the exterior of the pipe. Some soils affect copper tubing, and soil with cinders will attack unprotected copper pipe or tubing. The pipe or tube must therefore be coated with a protective layer. Thermoplastic piping can degrade quickly in soil that contains heavy concentrations of hydrocarbons.

P2906.1.1 Investigation required. Where detrimental conditions are suspected by or brought to the attention of the *building official*, a chemical analysis of the soil and groundwater conditions shall be required to ascertain the acceptability of the water service material for the specific installation.

❖ If historical knowledge of the soil or a visual inspection reveals the possibility of contaminants being present, a chemical analysis is required. Based on the results of such analysis, approved materials must be installed.

P2906.1.2 Detrimental condition. Where a detrimental condition exists, *approved* alternate materials or alternate routing shall be required.

❖ If a detrimental soil condition exists, either an alternative material must be used or the piping must bypass the detrimental soil.

P2906.2 Lead content. The lead content in pipe and fittings used in the water supply system shall be not greater than 8 percent.

❖ An amendment of the Safe Drinking Water Act (SDWA) occurred in 2011 to further reduce the amount of lead in plumbing products. The amendment became law in January of 2014. The amendment changes the meaning of "lead free" from 8 percent or less to 0.25 percent or less. However, the law also changes the determination of lead content to a "weighted average of wetted surfaces method." Therefore, the SDWA no longer requires laboratory testing of water exposed to products to determine the lead content. However, this section remains in the code.

P2906.2.1 Lead content of drinking water pipe and fittings. Pipe, pipe fittings, joints, valves, faucets and fixture fittings utilized to supply water for drinking or cooking purposes shall comply with NSF 372 and shall have a weighted average lead content of 0.25 percent lead or less.

❖ In recent years, additional health study data has been gathered to indicate that limiting the lead content to not greater than 8 percent might not be restrictive enough to avoid human health problems. Initially, two states (California and Vermont) enacted legislation to require the lead content of pipe, pipe fittings, plumbing fittings and fixture fittings (faucets) to be not greater than 0.25 percent (by wetted surface weighted average method). The United States Environmental Protection Agency followed up with a similar recommendation for all states and the "Low Lead" amendment to the Safe Drinking Water Act became law in January, 2014. See commentary to Section 605.2.

Neither NSF 372 nor the federal law requires low-lead compliant products to be marked or identified in any particular manner. Identification markings of "low-lead" products are not standardized among manufac-

INTERNATIONAL CODE COUNCIL®
Copyright © 2015 ICC. ALL RIGHTS RESERVED. Accessed by David Dammon on Jun 21, 2017 12:30:52 PM pursuant to License Agreement with ICC. No further reproduction or distribution authorized. ANY UNAUTHORIZED REPRODUCTION OR DISTRIBUTION IS A VIOLATION OF THE FEDERAL COPYRIGHT ACT AND THE LICENSE AGREEMENT, AND SUBJECT TO CIVIL AND CRIMINAL PENALTIES THEREUNDER.

turers or third-party certification agencies. Some manufacturers might make both low-lead compliant products and products that are intended to be used in systems such as hydronic heating systems and nonpotable water systems that do not require low-lead compliant products. Contractors will need to be aware of the difference to avoid using the wrong product, such as a noncompliant valve, in an application where a low-lead compliant valve is required. Code officials will need to be knowledgeable about various product markings and vigilant for improper application errors when making inspections. Other manufacturers that make products such as kitchen faucets, lavatory faucets and drinking fountains that are intended for sale in areas covered by federal law will have only the low-lead compliant versions available for sale in those areas. However, with the increasing global access to plumbing products, contractors and code officials will need to be careful about the products that are being installed to ensure that federal law is not violated. This code's requirement for third-party certification to NSF 372 will make such verifications easier. Evaluation of products for compliance with the low-lead federal law (and NSF 372) is by calculation method only.

P2906.3 Polyethylene plastic piping installation. Polyethylene pipe shall be cut square using a cutter designed for plastic pipe. Except where joined by heat fusion, pipe ends shall be chamfered to remove sharp edges. Pipe that has been kinked shall not be installed. For bends, the installed radius of pipe curvature shall be greater than 30 pipe diameters or the coil radius where bending with the coil. Coiled pipe shall not be bent beyond straight. Bends within 10 pipe diameters of any fitting or valve shall be prohibited. Joints between polyethylene plastic pipe and fittings shall comply with Section P2906.3.1 or P2906.3.2.

❖ Any properly made pipe joint requires the pipe ends be cut square for proper alignment, proper insertion depth and adequate surface area for joining. Because polyethylene plastic (PE) pipe and tubing can be kinked and stress weakened, a minimum pipe bending radius is specified so the structural capacity of the material is not exceeded. The minimum bending radius must not be less than the radius of the pipe coil as it came from the manufacturer or less than 30 pipe diameters, whichever is larger (see Commentary Figure P2906.3).

The pipe can be straightened as it is taken from the coil, but it cannot be bent in a direction opposite the bending direction of the coil (see Commentary Figure P2906.3). To avoid stress on connected fittings or valves, the location of pipe bends is restricted to specific distances from such components.

P2906.3.1 Heat-fusion joints. Joint surfaces shall be clean and free from moisture. Joint surfaces shall be heated to melting temperature and joined. The joint shall be undisturbed until cool. Joints shall be made in accordance with ASTM D2657.

❖ Polyethylene (PE) pipe cannot be solvent welded; therefore, it is joined by thermal welding (heat fusion) or by mechanical joints.

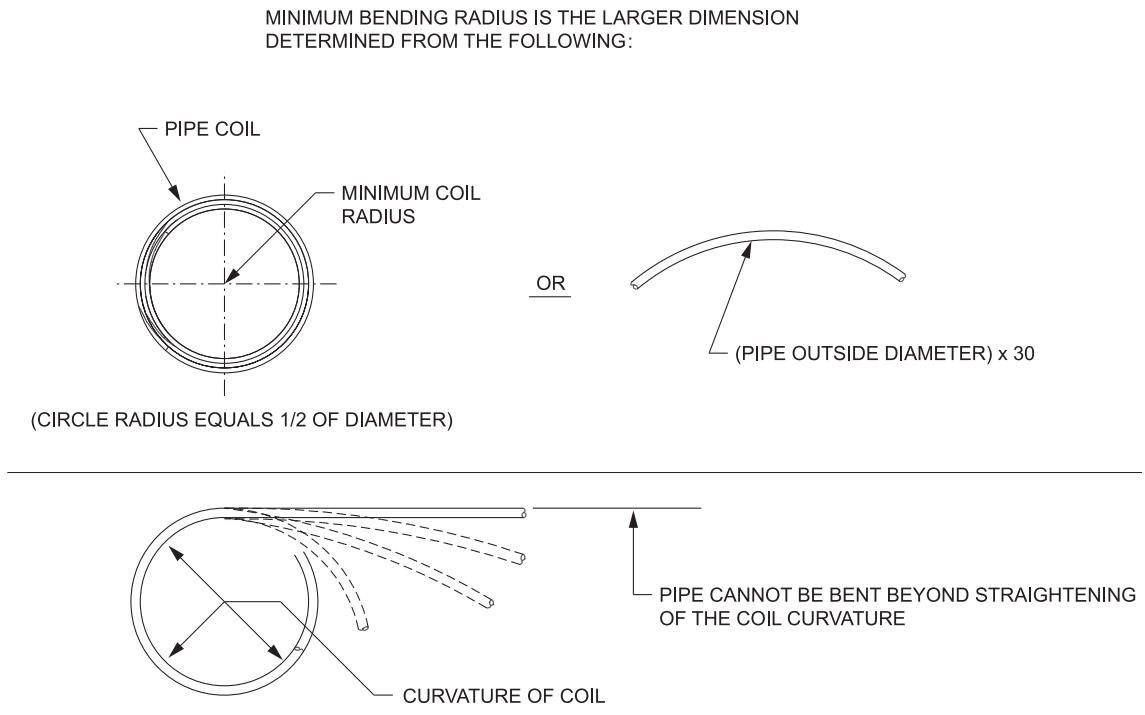

Figure P2906.3
BENDING

INTERNATIONAL CODE COUNCIL®
Copyright © 2015 ICC. ALL RIGHTS RESERVED. Accessed by David Dammon on Jun 21, 2017 12:30:52 PM pursuant to License Agreement with ICC. No further reproduction or distribution authorized. ANY UNAUTHORIZED REPRODUCTION OR DISTRIBUTION IS A VIOLATION OF THE FEDERAL COPYRIGHT ACT AND THE LICENSE AGREEMENT, AND SUBJECT TO CIVIL AND CRIMINAL PENALTIES THEREUNDER.

P2906.3.2 Mechanical joints. Mechanical joints shall be installed in accordance with the manufacturer's instructions.

❖ Mechanical joints include insert fittings and compression fittings.

P2906.4 Water service pipe. Water service pipe shall conform to NSF 61 and shall conform to one of the standards indicated in Table P2906.4. Water service pipe or tubing, installed underground and outside of the structure, shall have a working pressure rating of not less than 160 pounds per square inch at 73°F (1103 kPa at 23°C). Where the water pressure exceeds 160 pounds per square inch (1103 kPa), piping material shall have a rated working pressure equal to or greater than the highest available pressure. Water service piping materials not third-party certified for water distribution shall terminate at or before the full open valve located at the entrance to the structure. Ductile iron water service piping shall be cement mortar lined in accordance with AWWA C104/A21.4.

❖ Water service pipe must conform to the requirements of NSF 61 and to the requirements for one of the materials listed in Table P2906.4. See the definition of "Water service pipe" in Chapter 2. Materials that will be underground and outside of the building must have a working pressure rating of at least 160 psi (1103 kPa) and not less than the highest available pressure in the supply main to which they connect [see Commentary Figure P2906.4(1)].

TABLE P2906.4. See below.

❖ The referenced table specifies allowable piping materials for water service. It also identifies the standards with which these materials must comply.

ACRYLONITRILE BUTADIENE STYRENE (ABS) PLASTIC PIPE: ABS pipe is rarely manufactured for water service. However, it is approved for use outside the structure. The pipe is black and must be rated for distribution of potable water. ASTM D1527 is the referenced standard for Schedules 40 and 80 ABS pipe. The schedule number indicates the wall thickness; the higher the schedule number, the thicker the pipe wall. ASTM D2282 is the referenced standard for SDR-PR pipe. SDR is an abbreviation for "standard (pipe) dimension ratio," which is the ratio of pipe diameter to wall thickness. The PR designation indicates that the pipe is "pressure rated."

COPPER AND COPPER ALLOY PIPE: Copper and copper alloy pipe is approved for both water service and water distribution. The piping material is composed of approximately 85 percent copper and 15 percent zinc. The pipe is available in both standard and extra strong weight. Extra strong weight pipe has the same outside diameter as standard weight pipe, but with a thicker pipe wall.

Standard weight pipe is often referred to as "Schedule 40," and extra strong pipe is often referred to as "Schedule 80." Brass pipe dimensions are very similar to steel pipe dimensions.

Section P2904.5 requires copper and copper alloy pipe to comply with NSF 61, which restricts lead content to very small concentrations.

COPPER OR COPPER-ALLOY TUBING (TYPE K, WK, L, WL, M OR WM): This material is approved for both water service and water distribution. The tubing

TABLE P2906.4
WATER SERVICE PIPE

MATERIAL	STANDARD
Acrylonitrile butadiene styrene (ABS) plastic pipe	ASTM D1527; ASTM D2282
Chlorinated polyvinyl chloride (CPVC) plastic pipe	ASTM D2846; ASTM F441; ASTM F442; CSA B137.6
Chlorinated polyvinyl chloride/aluminum/chlorinated polyvinyl chloride (CPVC/AL/CPVC) plastic pipe	ASTM F2855
Copper or copper-alloy pipe	ASTM B42; ASTM B43; ASTM B302
Copper or copper-alloy tubing (Type K, WK, L, WL, M or WM)	ASTM B75; ASTM B88; ASTM B251; ASTM B447
Cross-linked polyethylene/aluminum/cross-linked polyethylene (PEX-AL-PEX) pipe	ASTM F1281; ASTM F2262; CSA B137.10
Cross-linked polyethylene/aluminum/high-density polyethylene (PEX-AL-HDPE) pipe	ASTM F1986
Cross-linked polyethylene (PEX) plastic tubing	ASTM F876; ASTM F877; CSA B137.5
Ductile iron water pipe	AWWA C115/A21.15; AWWA C151/A21.51
Galvanized steel pipe	ASTM A53
Polyethylene/aluminum/polyethylene (PE-AL-PE) pipe	ASTM F1282; CSA B137.9
Polyethylene (PE) plastic pipe	ASTM D2104; ASTM D2239; AWWA C901; CSA B137.1
Polyethylene (PE) plastic tubing	ASTM D2737; AWWA C901; CSA B137.1
Polyethylene of raised temperature (PE-RT) plastic tubing	ASTM F2769
Polypropylene (PP) plastic tubing	ASTM F2389; CSA B137.11
Polyvinyl chloride (PVC) plastic pipe	ASTM D1785; ASTM D2241; ASTM D2672; CSA B137.3
Stainless steel (Type 304/304L) pipe	ASTM A312; ASTM A778
Stainless steel (Type 316/316L) pipe	ASTM A312; ASTM A778

INTERNATIONAL CODE COUNCIL®
Copyright © 2015 ICC. ALL RIGHTS RESERVED. Accessed by David Dammon on Jun 21, 2017 12:30:52 PM pursuant to License Agreement with ICC. No further reproduction or distribution authorized. ANY UNAUTHORIZED REPRODUCTION OR DISTRIBUTION IS A VIOLATION OF THE FEDERAL COPYRIGHT ACT AND THE LICENSE AGREEMENT, AND SUBJECT TO CIVIL AND CRIMINAL PENALTIES THEREUNDER.

is manufactured in two different tempers, which are identified as drawn (called hard copper with the designation "H") and annealed (called soft copper with the designation "O"). Hard (drawn) copper tubing comes in straight lengths. Soft (annealed) copper tubing comes in both straight lengths and coils.

Annealed copper and tempered drawn copper may be formed by bending. Bending tempered copper is identified on the pipe with the designation "BT." Only bending tempered copper tubing may be joined by flared connections.

Seamless copper water tubing is available in Type K, L or M. The tubing type indicates the wall thickness. Type K has the greatest wall thickness, followed by Types L and M. The outside diameter of the tubing is the same for all three types; only the inside diameter varies with wall thickness. Welded copper tubing has the designation "WK," "WL" or "WM." The "W" indicates that the tubing is welded-seam. The pipe dimensions correspond to Type K, L or M seamless tubing.

The types of copper tubing are continuously identified with a color marking for ease of identification. These color markings are as follows:

- Type K (WK)-Green
- Type L (WL)-Blue
- Type M (WM)-Red

CHLORINATED POLYVINYL CHLORIDE (CPVC) PLASTIC PIPE: CPVC is approved for both water service and water distribution. CPVC raw material used to produce pipe is a polyvinyl chloride (PVC) that has been chlorinated to improve the material characteristics. The resulting pipe is more resistant to temperature extremes than PVC pipe.

CPVC plastic pipe may be either a white or a milky white (cream) color. The pipe listed is continuously marked with the manufacturer's name, the ASTM standard, and CPVC 4120 or CPVC 41, followed by two additional numbers. The designation CPVC 4120 identifies the quality of the material used to produce the pipe. The pipe is made with Grade 23447 plastic material. The grade number is a code for the quality of the pipe. The first digit indicates that the base resin is of CPVC. The remaining four digits indicate the impact strength, tensile strength, modulus of elasticity and deflection temperature.

Grade 23445 was previously designated Type IV, Grade 1, which was shortened to CPVC 41. The last two digits in CPVC 4120 indicate the hydrostatic design stress in hundreds of pounds per square inch. CPVC 4120 has a hydrostatic design stress of 2,000 psi (13 790 kPa).

ASTM D2846 is the referenced standard for SDR 11 CPVC plastic pipe and CPVC socket fittings. ASTM F441 is the referenced standard for Schedules 40 and 80 plastic pipe. The dimensions of the pipe are the same as Schedule 40 and 80 steel pipe. The referenced standard for SDR 13.5, 17, 21, 26 and 32.5 CPVC pipe is ASTM F442. The pipe is designated "PR," indicating that it is pressure rated.

CHLORINATED POLYVINYL CHLORIDE/ALUMINUM/CHLORINATED POLYVINYL CHLORIDE (CPVC/AL/CPVC) TUBING: The CPVC material used to produce CPVC/AL/CPVC tubing has similar characteristics as CPVC tubing. This pipe is a three-layer assembly that has aluminum as the middle layer. The outside color is off-white. The three layers are bonded together with melt adhesive. The main advantage of

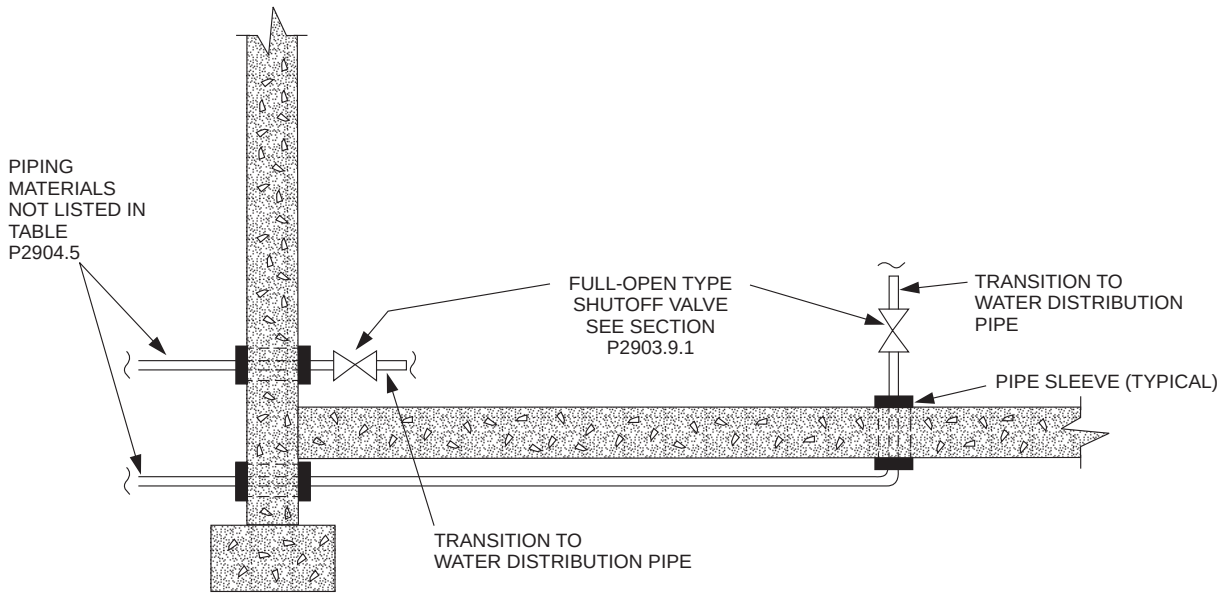

Figure P2906.4(1)
WATER SERVICE MATERIAL TRANSITIONS

INTERNATIONAL CODE COUNCIL®
Copyright © 2015 ICC. ALL RIGHTS RESERVED. Accessed by David Dammon on Jun 21, 2017 12:30:52 PM pursuant to License Agreement with ICC. No further reproduction or distribution authorized. ANY UNAUTHORIZED REPRODUCTION OR DISTRIBUTION IS A VIOLATION OF THE FEDERAL COPYRIGHT ACT AND THE LICENSE AGREEMENT, AND SUBJECT TO CIVIL AND CRIMINAL PENALTIES THEREUNDER.

this type of pipe is that it is "form stable," which means that the piping can be field bent to make permanent bends.

Bends can be made as small as 6 times the outside diameter of the tubing. The tubing can be formed to make a 90-degree bend (requiring a 135-degree "over bend" to make the bend). Bending tools should be used for making such "tight" bends to avoid collapse of the pipe.

The tubing must be cut with a roll-type cutting tool and not with a scissor-type cutter. The cut ends of the tube must have a bushing (marked F2855) cemented into the end of the tubing to prevent delamination at the tube end.

The thermal expansion is approximately 2.2×10^5 inches/(inch · °F), which is less than for CPVC tubing.

The outside diameter (OD) dimensions of the tubing product are copper tube size (CTS) $^1/_2$, $^3/_4$ and 1 inch. The inside diameters (IDs) of the tubing are 0.448, 0.691 and 0.932 inch, respectively.

Section 303.3 requires identification of all plastic pipe and fittings with the mark of an approved agency establishing conformance to NSF 14 (see commentary, Section P2609.3). Where used for drinking water, the product must be certified to NSF 61.

The product is marked at intervals of not more than 5 feet with the following information:

- The manufacturer's name.
- CPVC/AL/CPVC TUBING.
- 0.079 minimum wall.
- CAUTION: USER SHALL FIRST SOLVENT CEMENT F2855 BUSHINGS INTO CUT ENDS OF TUBING PRIOR TO JOINING.
- The standard designation (ASTM F2855).
- Certification for conformance to NSF 61.
- Nominal size.
- Type of plastic material (CPVC 23447).
- Pressure rating (100 psi at 180 psi).

DUCTILE-IRON WATER PIPE: Piping material is identified as either cast iron or ductile iron. Both materials are within the classification of cast iron. Ductile iron is a cast iron that is higher in ductility, hence the name. It is not as brittle as cast-iron pipe. Cement-mortar lining is necessary to provide a protective barrier between the potable water supply and the ductile-iron pipe to prevent impurities and contaminants from leaching into the water supply.

GALVANIZED STEEL PIPE: There is a wide variety of pipe classified as galvanized steel pipe. The grade of steel (thickness) can differ greatly. These thicknesses are referred to as Schedules 40, 80 and 160. As the schedule number increases, the wall thickness of the pipe increases. The outside diameter, however, remains the same for each pipe size.

Galvanized steel pipe is sometimes called "galvanized pipe" or mistakenly called "wrought-iron pipe." Wrought-iron pipe has not been manufactured in the United States in more than 30 years. All pipe referred to as "wrought-iron pipe" is steel pipe.

POLYETHYLENE (PE) PLASTIC PIPE AND TUBING: PE pipe and tubing is approved for water service. Like polybutylene (PB), PE is an inert polyolefin material. It is resistant to chemical action, making solvent-cement joining impossible. PE pipe is blue or black when supplied for water service. Orange or yellow-colored PE is typically rated only for gas pipe installations. The pipe is continuously marked with the manufacturer's name, the ASTM or the Canadian Standards Association (CSA) standard and the grade of PE.

Various grades of polyethylene resin are used to produce pipe or tubing. In accordance with the ASTM standard, the material is identified by the term "PE," followed by four digits. The first digit indicates the type of material based on the density. The second digit is the category identifying the extrusion flow rate. The last two digits show the hydrostatic design stress in hundreds of pounds per square inch. The hydrostatic design stress is not an indication of the pressure rating of the pipe.

ASTM D2737 is for PE tubing with an SDR of 7.3, 9 and 11. The SDR for tubing is based on the average outside diameter. The grades of polyethylene permitted are PE 2305, PE 2306, PE 3306, PE 3406 and PE 3408.

CROSS-LINKED POLYETHYLENE (PEX) PLASTIC TUBING: PEX tubing is approved for both water service and water distribution, except that PEX tubing that conforms to ASTM F876 may not be used for water distribution. The material is available in sizes [National Pipe Size (NPS)] $^1/_4$ inch through 2 inches (6 mm through 51 mm) and a standard dimension ratio (SDR 9) [see Commentary Figure P2906.4(2)].

Unlike most other pipe materials, PEX can be produced by several different manufacturing processes, such as the Engel, Silane, Monosil, Point a'Mousson, Daoplas and electron beam methods. Although each manufacturing process can yield tubing that complies with the referenced standards, each process produces a tube that possesses unique characteristics. The cross-linked molecular structuring gives the pipe additional resistance to rupture over a wider range of temperatures and pressures than that of other polyolefin plastics [PE, PB, and polypropylene (PP)]. Because of PEX pipe's unique molecular structure and resistance to heat, heat fusion is not permitted as a joining method. Because PEX is a member of the polyolefin plastic family, it is resistant to solvents. Therefore, the pipe cannot be joined by solvent cementing.

PEX pipe is flexible and can be bent using two methods: hot and cold bending. For hot bending, a hot-air gun with a diffuser nozzle is used. The pipe cannot be exposed to an open flame. The hot air meeting the pipe surface must not exceed 338°F (170°C), and the heat-up time must not exceed 5 min-

INTERNATIONAL CODE COUNCIL®
Copyright © 2015 ICC. ALL RIGHTS RESERVED. Accessed by David Dammon on Jun 21, 2017 12:30:52 PM pursuant to License Agreement with ICC. No further reproduction or distribution authorized. ANY UNAUTHORIZED REPRODUCTION OR DISTRIBUTION IS A VIOLATION OF THE FEDERAL COPYRIGHT ACT AND THE LICENSE AGREEMENT, AND SUBJECT TO CIVIL AND CRIMINAL PENALTIES THEREUNDER.

utes. The pipe is bent using conventional methods and is allowed to cool to room temperature before removal from the bending tool. The minimum hot-bending radius is two and one-half times the outside diameter. PEX can be bent at room temperature (cold bending) to a minimum radius of six times the outside diameter.

Mechanical connectors and fittings for PEX pipe are proprietary and must only be used with the pipe for which they have been designed and tested. Fitting systems currently available include compression fittings with inserts and ferrules or O-rings, insert fittings using a metallic lock (crimp) ring, and insert fittings with compression collars using a cold flaring tool. It is important to consult the manufacturer's installation instructions to identify the fittings authorized for use with PEX piping.

CROSS-LINKED POLYETHYLENE/ALUMINUM/CROSS-LINKED POLYETHYLENE (PEX-AL-PEX) PIPE: PEX-AL-PEX is approved for both water distribution and water service. PEX-AL-PEX is a composite pipe made of an aluminum tube laminated to interior and exterior layers of PE. The layers are bonded together with an adhesive.

The cross-linked molecular structure gives the pipe additional resistance to rupture that is superior to that of PE (see the commentary to "cross-linked polyethylene plastic tubing" in this section). Therefore, the pipe is suitable for hot and cold water distribution and is pressure rated for 125 psi at 180°F (862 kPa at 82°C).

Although it is partially plastic, the PEX-AL-PEX pipe resembles metal tubing in that it can be bent by hand or with a suitable bending device and maintains its shape without fittings or supports. The minimum bending radius specified by manufacturers is five times the outside diameter.

Mechanical joints are the only methods currently available to join PEX-AL-PEX pipe. A number of proprietary mechanical-compression-type connectors have been developed for use with the composite pipe to permit transition to other pipes and fittings. Such fittings must be installed in accordance with the manufacturer's instructions.

POLYETHYLENE/ALUMINUM/POLYETHYLENE (PE-AL-PE) PIPE: PE-AL-PE is identical to PEX-AL-PEX composite pipe except for the physical properties of PE. PE-AL-PE displays the same resistance to temperature and pressure as PEX-AL-PEX does; therefore, it is suitable for hot and cold water distribution and is pressure rated for 125 psi at 180°F (862 kPa at 82°C) (see the commentary to "PEX-AL-PEX" in this section).

POLYVINYL CHLORIDE (PVC) PLASTIC PIPE: PVC water service pipe is a different material from PVC drainage pipe, although both materials are white. The pipe must be continuously marked with the manufacturer's name, ASTM standard and the grade of PVC material.

A number of grades of PVC material are used to produce pipe. In accordance with the ASTM standards, the compounds are identified as PVC 12454-B, 12454-C and 14333-D. The first digit indicates the base resin, with the following four digits identifying the impact strength, modulus of elasticity and deflection temperature. The letter suffix indicates the material's chemical resistance. The compounds were previously identified by type and grade: 12454-B was Type 1; 12454-C was Type 1, Grade 2; and 14333-D was Type 2, Grade 1. The marking on the pipe lists the material grade by the term "PVC," followed by four digits. The first two digits use the previous type and grade numbers to identify the compound. The last two digits indicate the hydrostatic design stress in hundreds of pounds per square inch. The hydrostatic design stress is not an indication of the pressure rating of the pipe.

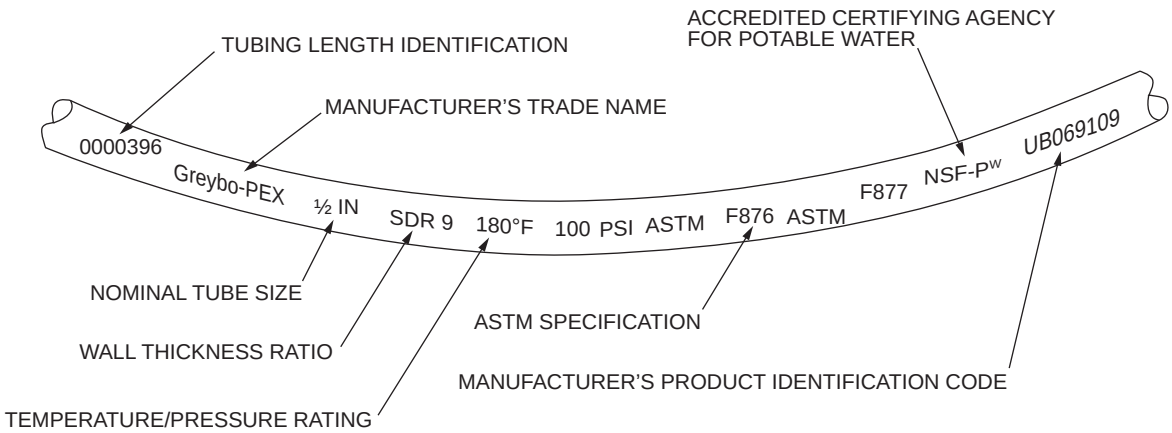

For SI: 1 inch = 25.4 mm, 1 pound per square inch = 6.895 kPa, °C = [(°F) - 32]/1.8.

Figure P2906.4(2)
SAMPLE MARKING OF PEX TUBING

INTERNATIONAL CODE COUNCIL®
Copyright © 2015 ICC. ALL RIGHTS RESERVED. Accessed by David Dammon on Jun 21, 2017 12:30:52 PM pursuant to License Agreement with ICC. No further reproduction or distribution authorized. ANY UNAUTHORIZED REPRODUCTION OR DISTRIBUTION IS A VIOLATION OF THE FEDERAL COPYRIGHT ACT AND THE LICENSE AGREEMENT, AND SUBJECT TO CIVIL AND CRIMINAL PENALTIES THEREUNDER.

ASTM D1785 is the referenced standard for Schedule 40, 80 and 160 PVC plastic pipe. These dimensions are the same as Schedule 40, 80 and 160 steel pipe. ASTM D2241 is the referenced standard for SDR-PR PVC plastic pipe. SDRs of the pipe are 13.5,17, 21, 26, 32.5, 41 and 64.

STAINLESS STEEL: Stainless steel is a family of iron-based alloys that must contain at least 10 percent or more chromium. The presence of chromium creates an invisible surface film that resists oxidation and makes the material corrosion resistant. The fact that stainless steel has a great resistance to corrosion means that it will have a very long life compared to mild steel. The benefits of stainless steel includes corrosion resistance, fire and heat resistance, hygiene (easy cleaning ability), aesthetic appearance, strength-to-weight advantage, ease of fabrication, impact resistance and long-term value.

Wrought-austenitic stainless steels combine a useful combination of outstanding corrosion and heat resistance with good mechanical properties over a wide temperature range.

P2906.4.1 Separation of water service and building sewer. Trenching, pipe installation and backfilling shall be in accordance with Section P2604. Where water service piping is located in the same trench with the building sewer, such sewer shall be constructed of materials listed in Table P3002.1(2). Where the building sewer piping is not constructed of materials indicated in Table P3002.1(2), the water service pipe and the building sewer shall be horizontally separated by not less than 5 feet (1524 mm) of undisturbed or compacted earth. The required separation distance shall not apply where a water service pipe crosses a sewer pipe, provided the water service is sleeved to a point not less than 5 feet (1524 mm) horizontally from the sewer pipe centerline on both sides of such crossing. The sleeve shall be of pipe materials indicated in Table P2906.4, P3002.1(2) or P3002.2. The required separation distance shall not apply where the bottom of the water service pipe that is located within 5 feet (1524 mm) of the sewer is not less than 12 inches (305 mm) above the highest point of the top of the building sewer.

❖ This section was completely reworded for the 2015 edition; however, the requirements were not changed. The language in the previous editions was complex and seemed difficult to understand in an exception format.

The section begins with the most common method to install water service and sewer piping to a building: one trench is excavated and both water service and the building sewer are installed in the same trench. In the majority of those situations, the building sewer is constructed of materials that are indicated in Table P3002.1(2). Materials in that table are suitable for installation inside of a building (those materials are also indicated in Table P3002.2 for building sewer piping). As Table P3002.1(2) materials are more robust than the piping materials indicated only for building sewers, there is a low probability of sewage leaking from the building sewer [see Commentary Figure P2906.4.1(1)].

The second sentence concerns building sewer piping that is of a material not indicated in Table P3002.1(2). In other words, materials indicated only in Table P3002.2. These piping materials are not as robust as Table P3002.1(2) piping materials and could leak sewage into the ground. Water service piping cannot be located in the same trench as these types of building sewer materials. Independent trenches must be excavated for the water service line and the building sewer so that not less than 5 feet of undisturbed earth are between the trenches. Compacted earth is considered to be the same as undisturbed earth [see Commentary Figure P2906.4.1(1)].

The third sentence is for the situation of a water service pipe crossing (either above or below) a building

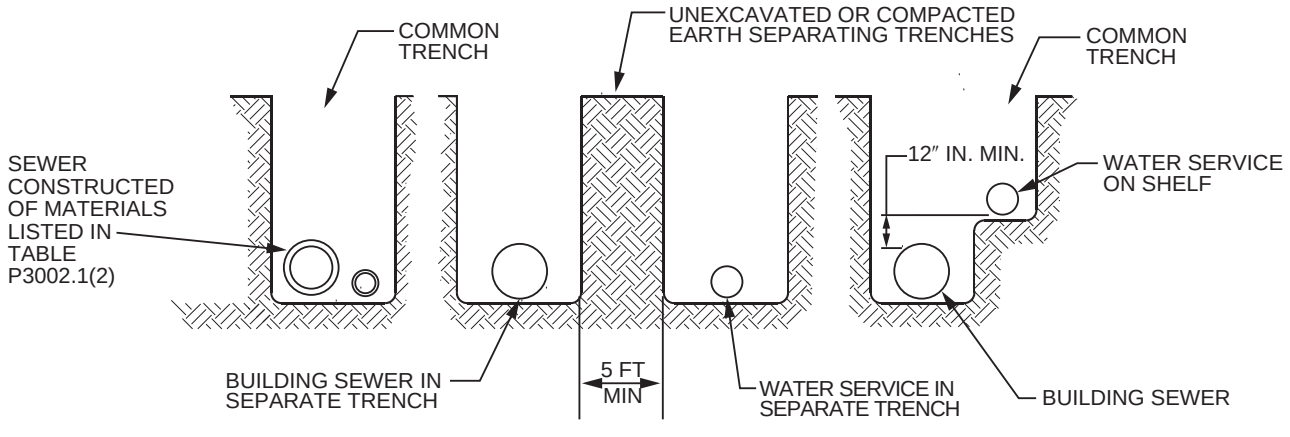

For SI: 1 inch = 25.4 mm, 1 foot = 304.8 mm.

Figure P2906.4.1(1)
SEPARATION OF WATER SERVICE AND BUILDING SEWER

INTERNATIONAL CODE COUNCIL®
Copyright © 2015 ICC. ALL RIGHTS RESERVED. Accessed by David Dammon on Jun 21, 2017 12:30:52 PM pursuant to License Agreement with ICC. No further reproduction or distribution authorized. ANY UNAUTHORIZED REPRODUCTION OR DISTRIBUTION IS A VIOLATION OF THE FEDERAL COPYRIGHT ACT AND THE LICENSE AGREEMENT, AND SUBJECT TO CIVIL AND CRIMINAL PENALTIES THEREUNDER.

sewer that is of piping materials indicated only in Table P3002.2. Although the code does not directly state that the building sewer piping material referred to in this sentence is only one of those indicated in Table P3002.2, it should be obvious because if the building sewer was of materials indicated in Table P3002.1(2), the water service piping could be in the same trench or anywhere around a building sewer material indicated in Table P3002.1(2). The water service piping has to be sleeved for a length of not less than 5 feet on either side of the building sewer so that if the building sewer did leak sewage into the earth, the water service piping is not directly exposed. The sleeve material can be any of the materials indicated in Table P2906.4, P3002.1(2) or P3002.1(2).

The last sentence concerns water service piping that is at an elevation that is not less than 12 inches above the highest part of the building sewer [where that sewer is of materials indicated only in Table P3002.1(2)]. If sewage leaks from a building sewer, gravity will cause the sewage to seep downwards into the earth and not upwards. Therefore, if the water service piping is above the highest part of the building sewer, there is little probability of sewage contamination of the earth around the water service piping [see Commentary Figure P2906.4.1(2)].

P2906.5 Water-distribution pipe. Water-distribution piping within *dwelling units* shall conform to NSF 61 and shall conform to one of the standards indicated in Table P2906.5. Hot-water-distribution pipe and tubing shall have a pressure rating of not less than 100 psi at 180°F (689 kPa at 82°C).

❖ This section refers to Table P2906.5 for approved piping material inside the building for both hot and cold water. The referenced table specifies materials that are suitable for water distribution piping. Hot water distribution piping must be rated at 100 psi (689 kPa) at 180°F (82°C) as opposed to 160 psi (1103 kPa) at 73°F (23°C), for water service piping. Note that all potable water piping and fittings must conform to NSF 61 so that all toxicity limitations imposed by that standard are met.

TABLE P2906.5. See below.

❖ See the commentary to Section P2906.5.

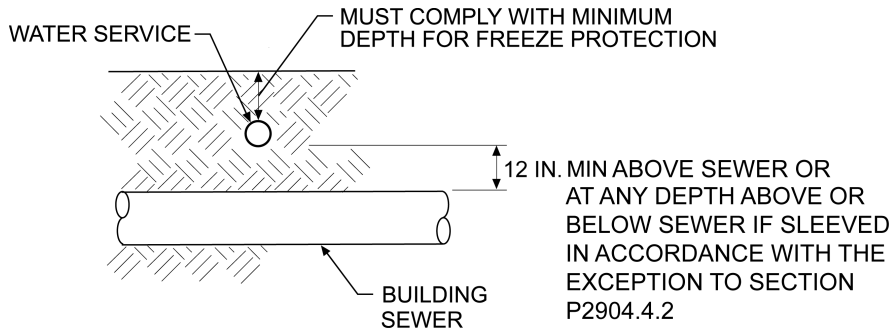

For SI: 1 inch = 25.4 mm.

Figure P2906.4.1(2)
WATER SERVICE CROSSING OVER BUILDING SEWER

TABLE P2906.5
WATER DISTRIBUTION PIPE

MATERIAL	STANDARD
Chlorinated polyvinyl chloride (CPVC) plastic pipe and tubing	ASTM D2846; ASTM F441; ASTM F442; CSA B 137.6
Chlorinated polyvinyl chloride/aluminum/chlorinated polyvinyl chloride (CPVC/AL/CPVC) plastic pipe	ASTM F2855
Copper or copper-alloy pipe	ASTM B42; ASTM B43; ASTM B302
Copper or copper-alloy tubing (Type K, WK, L, WL, M or WM)	ASTM B75; ASTM B88; ASTM B251; ASTM B447
Cross-linked polyethylene (PEX) plastic tubing	ASTM F876; ASTMF 877; CSA B137.5
Cross-linked polyethylene/aluminum/cross-linked polyethylene (PEX-AL-PEX) pipe	ASTM F1281; ASTM F2262; CSA B137.10
Cross-linked polyethylene/aluminum/high-density polyethylene (PEX-AL-HDPE) pipe	ASTM F1986
Galvanized steel pipe	ASTM A53
Polyethylene/aluminum/polyethylene (PE-AL-PE) composite pipe	ASTM F1282
Polyethylene of raised temperature (PE-RT) plastic tubing	ASTM F2769
Polypropylene (PP) plastic pipe or tubing	ASTM F2389; CSA B137.11
Stainless steel (Type 304/304L) pipe	ASTM A312; ASTM A778

INTERNATIONAL CODE COUNCIL®
Copyright © 2015 ICC. ALL RIGHTS RESERVED. Accessed by David Dammon on Jun 21, 2017 12:30:52 PM pursuant to License Agreement with ICC. No further reproduction or distribution authorized. ANY UNAUTHORIZED REPRODUCTION OR DISTRIBUTION IS A VIOLATION OF THE FEDERAL COPYRIGHT ACT AND THE LICENSE AGREEMENT, AND SUBJECT TO CIVIL AND CRIMINAL PENALTIES THEREUNDER.

P2906.6 Fittings. Pipe fittings shall be *approved* for installation with the piping material installed and shall comply with the applicable standards indicated in Table P2906.6. Pipe fittings used in water supply systems shall comply with NSF 61.

❖ Table 2906.6 can be used to determine the applicable standards for pipe fittings. In some cases, especially with certain plastic pipe or tubing systems, the manufacturer will specify the type of fittings to be used. Where such proprietary conditions exist, they must be adhered to so as not to violate the conditions of the material listing.

TABLE P2906.6. See below.

❖ This table specifies acceptable materials for pipe fittings along with the appropriate standards to which the fittings must comply. Each fitting is designed to be installed in a particular system with a given material or combination of materials. For example, drainage pattern fittings must be installed in drainage systems and vent fittings are limited to the venting system. Many fittings are intended for use only for water distribution systems. Fittings that may be installed in any type of plumbing system are also available.

Fittings must be of the same material as the pipe and must be compatible with the pipe. This avoids any chemical or corrosive action between dissimilar materials. Although a number of standards strictly regulate fittings, many pipe standards include them, as well. All pipe fittings must comply with the limitations set forth in NSF 61.

P2906.7 Flexible water connectors. Flexible water connectors, exposed to continuous pressure, shall conform to ASME A112.18.6/CSA B125.6. Access shall be provided to flexible water connectors.

❖ ASME A112.18.6/CSA B125.3 is the referenced standard for flexible water connectors used under continuous pressure. Such connectors typically consist of a flexible elastomeric tube covered by a metal or plastic braided jacket with termination fittings on each end. They are commonly used to connect the fixture fitting to the fixture supply pipe. Plastic materials coming into contact with potable water must comply with the applicable sections of NSF 14. Flexible connectors for delivery of drinking water must comply with NSF 61. Solder and fluxes containing lead in excess of 0.2 percent must not be used. Metal alloys must not exceed an 8-percent lead content. Copper-alloy components used with the assembled connector must contain not less than 58-percent copper.

Flexible water connectors are designed to function at water pressures up to 125 psi (862 kPa) and supply temperatures from 40°F to 180°F (4°C to 82°C).

TABLE P2906.6
PIPE FITTINGS

MATERIAL	STANDARD
Acrylonitrile butadiene styrene (ABS) plastic	ASTM D2468
Cast-iron	ASME B16.4
Chlorinated polyvinyl chloride (CPVC) plastic	ASSE 1061; ASTM D2846; ASTM F437; ASTM F438; ASTM F439; CSA B137.6
Copper or copper alloy	ASSE 1061; ASME B16.15; ASME B16.18; ASME B16.22; ASME B16.26; ASME B16.51
Cross-linked polyethylene/aluminum/high-density polyethylene (PEX-AL-HDPE)	ASTM F1986
Fittings for cross-linked polyethylene (PEX) plastic tubing	ASSE 1061; ASTM F877; ASTM F1807; ASTM F1960; ASTM F2080; ASTM F2098; ASTM F2159; ASTM F2434; ASTM F2735; CSA B137.5
Gray iron and ductile iron	AWWA C110/A21.10; AWWA C153/A21.53
Malleable iron	ASME B16.3
Insert fittings for Polyethylene/aluminum/polyethylene (PE-AL-PE) and cross-linked polyethylene/aluminum/cross-linked polyethylene (PEX-AL-PEX)	ASTM F1974; ASTM F1281; ASTM F1282; CSA B137.9; CSA B137.10
Polyethylene (PE) plastic	ASTM D2609; CSA B137.1
Fittings for polyethylene of raised temperature (PE-RT) plastic tubing	ASTM F1807; ASTM F2098; ASTM F2159; ASTM F2735; ASTM F2769
Polypropylene (PP) plastic pipe or tubing	ASTM F2389; CSA B137.11
Polyvinyl chloride (PVC) plastic	ASTM D2464; ASTM D2466; ASTM D2467; CSA B137.2; CSA B137.3
Stainless steel (Type 304/304L) pipe	ASTM A312; ASTM A778
Stainless steel (Type 316/316L) pipe	ASTM A312; ASTM A778
Steel	ASME B16.9; ASME B16.11; ASME B16.28

INTERNATIONAL CODE COUNCIL®
Copyright © 2015 ICC. ALL RIGHTS RESERVED. Accessed by David Dammon on Jun 21, 2017 12:30:52 PM pursuant to License Agreement with ICC. No further reproduction or distribution authorized. ANY UNAUTHORIZED REPRODUCTION OR DISTRIBUTION IS A VIOLATION OF THE FEDERAL COPYRIGHT ACT AND THE LICENSE AGREEMENT, AND SUBJECT TO CIVIL AND CRIMINAL PENALTIES THEREUNDER.

P2906.8 Joint and connection tightness. Joints and connections in the plumbing system shall be gas tight and water tight for the intended use or required test pressure.

❖ This section simply states that joints in a plumbing system must be air and water tight (see commentary, Section P2503.6).

P2906.9 Plastic pipe joints. Joints in plastic piping shall be made with *approved* fittings by solvent cementing, heat fusion, corrosion-resistant metal clamps with insert fittings or compression connections. Flared joints for polyethylene pipe shall be permitted in accordance with Section P2906.3.

❖ Plastic pipe may be joined in numerous ways depending on the material and the methods allowed by the manufacturer. This section provides the different acceptable methods of joining plastic pipe and specifies the various standards applicable in each case. Solvent cementing, heat fusion, clamps with insert fittings, compression connections and flared joints are all permitted methods of joining plastic pipe.

P2906.9.1 Solvent cementing. Solvent-cemented joints shall comply with Sections P2906.9.1.1 through P2906.9.1.3.

❖ Depending on the type of pipe, material, standards and methods to be applied are outlined in Sections P2906.9.1.1 through P2906.9.1.3.

P2906.9.1.1 ABS plastic pipe. Solvent cement for ABS plastic pipe conforming to ASTM D2235 shall be applied to all joint surfaces.

❖ Solvent cementing is the most common method of joining ABS plastic pipe and fittings. It is also one of the most misunderstood methods of joining pipe. The ASTM referenced standard indicates how to handle solvent cement and recommends a practice for making joints.

The pipe and fittings must be at approximately the same temperature prior to solvent cementing. The pipe end and socket fitting must be clean, dry and free of grease, oil and other foreign materials. The pipe end must be prepared as required by the manufacturer. Chamfering of the pipe end will help prevent binding as the pipe is inserted into the fitting and will also help prevent the cement from being scraped off the fitting socket during insertion. The solvent cement must be uniformly applied to the socket of the fitting and to the end of the pipe to the depth of the socket. Excessive solvent cement must be avoided to prevent a bead from forming on the inside of the pipe joint. The joint is made by twisting the pipe into the fitting socket immediately after applying the cement. The pipe must be held in place for a few seconds until the solvent cement begins to set. The pipe will tend to back out unless it is restrained. A small bead of solvent cement forms between the pipe exterior and fitting. The bead must be removed with a clean cloth to avoid the possibility of weakening the pipe wall. A solvent-cement joint must not be exposed to the working pressure for a period of 24 hours. The pipe must not be handled roughly for at least 1 hour after the joint is made.

Because each type of solvent cement is specifically designed for a given piping material, all-purpose solvent cement or universal solvent cement cannot be used to join ABS pipe or fittings unless it conforms to ASTM D2235. Solvent cement for each plastic pipe material requires a unique mixture or combination of solvents and dissolved plastic resins to conform to the standard. Although all-purpose cement may dissolve the surfaces of ABS, PVC and CPVC, it may be too aggressive or not aggressive enough to keep a joint strong enough to meet the minimum joint strength requirements of the referenced standard. Solvent cement must be identified on the can as complying with ASTM D2235.

P2906.9.1.2 CPVC plastic pipe. Joint surfaces shall be clean and free from moisture. Joints shall be made in accordance with the pipe, fitting or solvent cement manufacturer's installation instructions. Where such instructions require a primer to be used, an *approved* primer shall be applied, and a solvent cement, orange in color and conforming to ASTM F493, shall be applied to joint surfaces. Where such instructions allow for a one-step solvent cement, yellow or red in color and conforming to ASTM F493, to be used, the joint surfaces shall not require application of a primer before the solvent cement is applied. The joint shall be made while the cement is wet, and in accordance with ASTM D2846 or ASTM F493. Solvent cement joints shall be permitted above or below ground.

❖ Solvent cementing of CPVC piping must be performed in accordance with the pipe manufacturer's instructions using a solvent cement that complies with ASTM F493. Some pipe manufacturers may require specific brands or types of solvent cement be used for certain types and sizes of piping. The pipe and fitting surfaces to be joined must be free of dirt, grease, oil and any other foreign substances. Especially critical is the need for the joint surfaces to be dry, as solvent cement quickly congeals in the presence of water.

Some pipe manufacturer's instructions may require that a primer liquid be used to prepare the joint surfaces. Primer liquids break down the glossy surface finish of the plastic, help remove any remaining foreign substances from the joint area and begin to soften the plastic surfaces. Because of its softening capability, primer liquids must not be allowed to puddle inside of fittings. Some pipe manufacturers may require specific brands or types of primer liquids be used for certain types and sizes of piping. This section does not require primer liquids to be tinted with a color (such as purple or blue); however, a colored primer could be useful for determining if all joint surfaces have been primed.

Where priming of joint surfaces is required by the pipe manufacturer, the color of the solvent cement to be used must be orange. In general, solvent cement is applied to all joint surfaces immediately after the joint surfaces have been primed. Immediately after application of the solvent cement, the joint is assembled. The assembled joint is held in the assembled position for a period of time as required by the pipe manufacturer. Different sizes of piping require very specific assembly

INTERNATIONAL CODE COUNCIL®
Copyright © 2015 ICC. ALL RIGHTS RESERVED. Accessed by David Dammon on Jun 21, 2017 12:30:52 PM pursuant to License Agreement with ICC. No further reproduction or distribution authorized. ANY UNAUTHORIZED REPRODUCTION OR DISTRIBUTION IS A VIOLATION OF THE FEDERAL COPYRIGHT ACT AND THE LICENSE AGREEMENT, AND SUBJECT TO CIVIL AND CRIMINAL PENALTIES THEREUNDER.

procedures and holding times. The piping manufacturer's instructions must be followed in every detail to ensure a proper joint.

Where the pipe manufacturer allows for a one-step solvent cementing process (in other words, priming of the joint surfaces is not required), the color of the solvent cement to be used must be either red or yellow. One-step solvent cementing can be in accordance with either ASTM D2846 or ASTM F493.

The two colors of one-step cement, red or yellow, deserve further explanation. It is not the intent that red or yellow solvent cements be used interchangeably on any type of CPVC piping. Red solvent cement is required by the piping manufacturer for CPVC fire sprinkler piping that is orange in color. Yellow solvent cement is required by the piping manufacturer for CPVC piping (other than CPVC fire sprinkler piping) where specified by the piping manufacturer that a one-step solvent cement can be used. Where CPVC multipurpose sprinkler systems are installed in a building, and the potable water distribution system of the building is also of CPVC material, there is an inherent need to connect the regular CPVC piping material to the orange CPVC fire sprinkler piping material at numerous locations throughout the building. CPVC adapters for solvent cementing on both ends are available to connect the Schedule 40 pipe-sized sprinkler piping to the copper tube size tubing of the distribution system. The adapter is all of the same material, typically regular (not orange) CPVC material. A dilemma sometimes arises as to which color of solvent cement to use at this connection. The intent of allowing either red- or yellow-colored solvent cement is to accommodate these solvent cemented connections in multipurpose sprinkler systems.

Assembled and cured joints can be located above or below the ground.

P2906.9.1.3 CPVC/AL/CPVC pipe. Joint surfaces shall be clean and free from moisture, and an *approved* primer shall be applied. Solvent cement, orange in color and conforming to ASTM F493, shall be applied to all joint surfaces. The joint shall be made while the cement is wet, and in accordance with ASTM D2846 or ASTM F493. Solvent-cement joints shall be installed above or below ground.

Exception: A primer shall not be required where all of the following conditions apply:

1. The solvent cement used is third-party certified as conforming to ASTM F493.
2. The solvent cement used is yellow in color.
3. The solvent cement is used only for joining $^1/_2$-inch (12.7 mm) through 1-inch (25 mm) diameter CPVC/AL/CPVC pipe and CPVC fittings.
4. The CPVC fittings are manufactured in accordance with ASTM D2846.

❖ Solvent cementing of CPVC/AL/CPVC piping must be performed in accordance with the pipe manufacturer's instructions using a solvent cement that complies with ASTM F493. Some pipe manufacturers may require specific brands or types of solvent cement be used for certain types and sizes of piping. The pipe and fitting surfaces to be joined must be free of dirt, grease, oil and any other foreign substances. Especially critical is the need for the joint surfaces to be dry, as solvent cement quickly congeals in the presence of water.

Priming of joint surfaces is required. Primer liquids break down the glossy surface finish of the plastic, help remove any remaining foreign substances from the joint area and begin to soften the plastic surfaces. Because of its softening capability, primer liquids must not be allowed to puddle inside of fittings. Some pipe manufacturers may require specific brands or types of primer liquids be used for certain types and sizes of piping. The color of the solvent cement to be used must be orange.

In general, solvent cement is applied to all joint surfaces immediately after the joint surfaces have been primed. Immediately after application of the solvent cement, the joint is assembled. The assembled joint is held in the assembled position for a period of time as required by the pipe manufacturer. Different sizes of piping require very specific assembly procedures and holding times. The piping manufacturer's instructions must be followed in every detail to ensure a proper joint.

A one-step solvent cementing process (in other words, priming of the joint surfaces is not required) can be used provided that all of the conditions of the exceptions are met.

Assembled and cured joints can be located above or below the ground.

P2906.9.1.4 PVC plastic pipe. A purple primer that conforms to ASTM F656 shall be applied to PVC solvent-cemented joints. Solvent cement for PVC plastic pipe conforming to ASTM D2564 shall be applied to all joint surfaces.

❖ Like CPVC, PVC plastic pipe requires a primer prior to solvent cementing. ASTM F656 recommends that PVC primer not be orange, insofar as this is the recommended color for CPVC solvent cement. The required purple coloring allows the installer and the inspector to verify that the required primer has been applied.

To distinguish the primer from the solvent cement, the solvent cement must be a different color than the primer. Solvent cement for PVC is typically clear.

The PVC solvent cement is applied to the pipe and socket fitting. The joint is made with a slight twisting motion until the pipe reaches the full depth of the socket fitting. It is held in place until the solvent cement begins to set. The installer should wear impervious gloves to prevent solvent cement and primer from coming into contact with the skin. The solvent-cementing procedure must be done in accordance with the referenced standard. To minimize the health and fire hazards associated with solvent cements and primers, the manufacturer's instructions for the use and handling of these materials must be followed.

INTERNATIONAL CODE COUNCIL®
Copyright © 2015 ICC. ALL RIGHTS RESERVED. Accessed by David Dammon on Jun 21, 2017 12:30:52 PM pursuant to License Agreement with ICC. No further reproduction or distribution authorized. ANY UNAUTHORIZED REPRODUCTION OR DISTRIBUTION IS A VIOLATION OF THE FEDERAL COPYRIGHT ACT AND THE LICENSE AGREEMENT, AND SUBJECT TO CIVIL AND CRIMINAL PENALTIES THEREUNDER.

P2906.9.1.5 Cross-linked polyethylene plastic (PEX). Joints between cross-linked polyethylene plastic tubing or fittings shall comply with Section P2906.9.1.5.1 or Section P2906.9.1.5.2.

❖ This section speaks specifically to PEX systems. Two methods of joining such material are outlined in the following subsections. Often, this type of material, and manufacturer's the fittings and joining methods are proprietary. The installation instructions must be followed and the specified fittings and tools must be used.

P2906.9.1.5.1 Flared joints. Flared pipe ends shall be made by a tool designed for that operation.

❖ Flared joints must be made with tools specific to the design of the connector system. The assembly method must be in accordance with the manufacturer's instructions specific to the type of connectors being used. Flare configurations will vary depending on the tool used. Using a cold flaring tool, wherein the tubing outside diameter is expanded mechanically, the flared end is then secured between the fitting components. The flared surface serves as the sealing surface between the tubing and fitting.

P2906.9.1.5.2 Mechanical joints. Mechanical joints shall be installed in accordance with the manufacturer's instructions. Fittings for cross-linked polyethylene (PEX) plastic tubing shall comply with the applicable standards indicated in Table P2906.6 and shall be installed in accordance with the manufacturer's instructions. PEX tubing shall be factory marked with the applicable standards for the fittings that the PEX manufacturer specifies for use with the tubing.

❖ ASTM F1807, ASTM F1960 and ASTM F2080 are the standards for metal insert fittings and copper crimp rings or cold-expansion fittings with PEX reinforcing rings or metal compression sleeves for use with PEX plastic tubing or pipe. These fittings are intended for use in 100 psi (689.5 kPa) cold and hot water distribution systems operating at temperatures up to and including 180°F (82°C). These fittings must be installed in accordance with the manufacturer's instructions. Insert fittings must be joined to PEX tubing by the compression of a copper crimp ring around the outer circumference of the tubing, forcing the tubing material into annular spaces formed by ribs on the fittings.

The crimping procedure involves sliding the crimp ring onto the tubing, then inserting the ribbed end of the fitting into the end of the tubing until the tubing contacts the shoulders of the fitting or tube stop. The crimp ring must then be positioned on the tubing so that the edge of the crimp ring is the required distance from the end of the tube. The jaws of the crimping tool must be centered over the crimp ring, and the tool must be held so that the crimping jaws are approximately perpendicular to the axis of the barb. The jaws of the crimping tool must be closed around the crimp ring, compressing the crimp ring onto the tubing. The crimp ring must not be crimped more than once.

P2906.10 Polypropylene (PP) plastic. Joints between polypropylene plastic pipe and fittings shall comply with Section P2906.10.1 or P2906.10.2.

❖ Like PEX, polypropylene (PP) cannot be solvent welded, therefore, mechanical and heat-fusion joints are the only options.

P2906.10.1 Heat-fusion joints. Heat fusion joints for polypropylene pipe and tubing joints shall be installed with socket-type heat-fused polypropylene fittings, butt-fusion polypropylene fittings or electrofusion polypropylene fittings. Joint surfaces shall be clean and free from moisture. The joint shall be undisturbed until cool. Joints shall be made in accordance with ASTM F2389.

❖ Heat fusion is the same as thermal welding and involves the use of special tools to heat and soften a surface of a pipe and fitting. Electrofusion fittings have a single-use heating element built into the socket for use with proprietary power supply units.

P2906.10.2 Mechanical and compression sleeve joints. Mechanical and compression sleeve joints shall be installed in accordance with the manufacturer's instructions.

❖ This section covers any type of joint that involves the mechanical application of force around the circumference of the pipe. Such joints generally use an elastomeric sealing element.

P2906.11 Cross-linked polyethylene/aluminum/cross-linked polyethylene. Joints between polyethylene/aluminum/polyethylene (PE-AL-PE) and cross-linked polyethylene/aluminum/cross-linked polyethylene (PEX-AL-PEX) pipe and fittings shall comply with Section P2906.11.1.

❖ See the commentary to Section P2905.11.1.

P2906.11.1 Mechanical joints. Mechanical joints shall be installed in accordance with the manufacturer's instructions. Fittings for PE-AL-PE and PEX-AL-PEX as described in ASTM F1974, ASTM F1281, ASTM F1282, CSA B137.9 and CSA B137.10 shall be installed in accordance with the manufacturer's instructions.

❖ The ASTM standards listed are for insert fittings with either crimp rings or stainless steel clamps. Manufacturer's instructions must be followed for the installation of the fittings to the pipe.

P2906.12 Stainless steel. Joints between stainless steel pipe and fittings shall comply with Section P2906.12.1 or P2906.12.2.

❖ Acceptable joints for stainless steel pipe or fittings are identified in the referenced sections.

P2906.12.1 Mechanical joints. Mechanical joints shall be installed in accordance with the manufacturer's instructions.

❖ Mechanical joints, such as compression joints, grooved couplings, hydraulic pressed fittings or flange designs, can be used to join stainless steel pipe and fittings, and are specified by the manufacturer. Such joints must be assembled and installed in compliance with the manufacturer's instructions.

INTERNATIONAL CODE COUNCIL®
Copyright © 2015 ICC. ALL RIGHTS RESERVED. Accessed by David Dammon on Jun 21, 2017 12:30:52 PM pursuant to License Agreement with ICC. No further reproduction or distribution authorized. ANY UNAUTHORIZED REPRODUCTION OR DISTRIBUTION IS A VIOLATION OF THE FEDERAL COPYRIGHT ACT AND THE LICENSE AGREEMENT, AND SUBJECT TO CIVIL AND CRIMINAL PENALTIES THEREUNDER.

P2906.12.2 Welded joints. Joint surfaces shall be cleaned. The joint shall be welded autogenously or with an *approved* filler metal in accordance with ASTM A312.

❖ The two basic methods for welding stainless steels are fusion welding and resistance welding. In fusion welding, heat is provided by an electric arc struck between an electrode and the metal to be welded. In resistance welding, bonding is the result of heat and pressure. Heat is produced by the resistance to the flow of electric current through the parts to be welded and pressure is applied by the electrodes.

Welds and the surrounding area should be thoroughly cleaned to avoid impairment of corrosion resistance. Weld spatter, flux or scale may become focal points for corrosive attack if not properly removed, especially in aggressive environments.

P2906.13 Threaded pipe joints. Threaded joints shall conform to American National Taper Pipe Thread specifications. Pipe ends shall be deburred and chips removed. Pipe joint compound shall be used only on male threads.

❖ Threaded pipe joints must conform to the American National Taper Pipe Thread requirements (ASME B1.20.1, referred to under the standards chapter). After cutting the threads, chips must be removed and the pipe must be reamed so that any remaining material that might obstruct the flow within the pipe is removed. It is imperative that the threads not exceed the maximum required for the size of the pipe. If there are too many threads, the improper amount of taper will not allow the threads to engage as intended. If there are not enough threads, the integrity of the joint is diminished.

Pipe joint compound must be applied to the male threads only. This prevents the compound from entering the piping system when the joints are made.

P2906.14 Soldered and brazed joints. Soldered joints in copper and copper alloy tubing shall be made with fittings approved for water piping and shall conform to ASTM B828. Surfaces to be soldered shall be cleaned bright. Fluxes for soldering shall be in accordance with ASTM B813. Brazing fluxes shall be in accordance with AWS A5.31M/A5.31. Solders and fluxes used in potable water-supply systems shall have a lead content of not greater than 0.2 percent.

❖ A soldered joint is the most common method of joining copper pipe and tubing. Pipe must be cut square for proper alignment, adequate surface area for joining and an interior free from obstructions.

When the pipe is cut, an edge (burr) is left protruding into the pipe. The pipe must be reamed to properly remove the burr. Chamfering is required to bevel the outer edge of the cut end of the pipe. Undercutting (excessive reaming) can reduce pipe wall thickness (see Commentary Figure P2906.14).

ASTM B828 governs the procedures for making joints by soldering of copper and copper tubing and fittings. Flux must be applied to all joint surfaces. Flux is a chemically active material that prevents metal oxides from forming in the joint area during heating, allowing the melted solder to spread out onto the surfaces to be joined. The flux material must conform to ASTM B813, which establishes minimum performance criteria. It also limits the maximum lead content to 0.2 percent. Any solder used in connection with potable water systems must also be limited to a maximum lead content of 0.2 percent.

The solder will flow by capillary action toward the heat. The temperatures of the joint surfaces play a major role in the making of a properly soldered joint. The fitting and pipe must be approximately the same temperature when the solder is applied. Heating the copper liquefies the flux and solder, and expands the surface voids of the material, allowing the solder to penetrate. A strong bond is created when the solder solidifies. If the temperatures are incorrect or uneven, the solder will run down the inside of the pipe and fitting or onto the outside of the pipe. The result is a solder-lined pipe.

Lead-bearing solder can sometimes be visually identified because the solder tends to darken with age. Test kits are available that can be used to identify lead-bearing solders with absolute certainty.

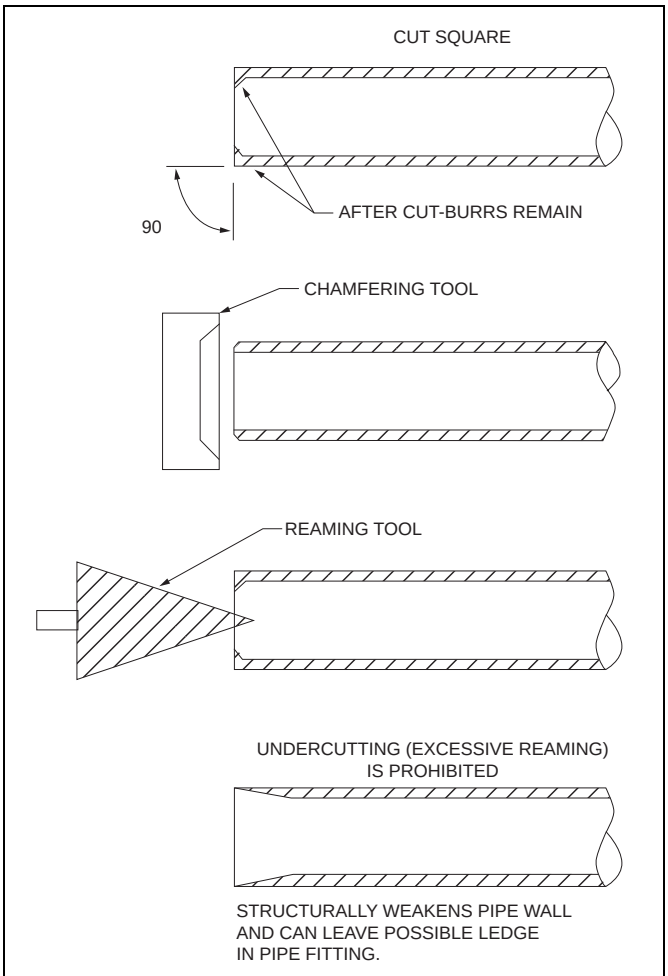

For SI: 90 degrees = 1.57 rad.

Figure P2906.14
PREPARATION OF PIPE END

INTERNATIONAL CODE COUNCIL®
Copyright © 2015 ICC. ALL RIGHTS RESERVED. Accessed by David Dammon on Jun 21, 2017 12:30:52 PM pursuant to License Agreement with ICC. No further reproduction or distribution authorized. ANY UNAUTHORIZED REPRODUCTION OR DISTRIBUTION IS A VIOLATION OF THE FEDERAL COPYRIGHT ACT AND THE LICENSE AGREEMENT, AND SUBJECT TO CIVIL AND CRIMINAL PENALTIES THEREUNDER.

P2906.15 Flared joints. Flared joints in water tubing shall be made with *approved* fittings. The tubing shall be reamed and then expanded with a flaring tool.

❖ Outside of PEX materials, copper tube is the most common material that can be joined by the use of a flared joint. See the commentaries to Sections P2904.3 and P2904.9.1.4.1 for flared joint requirements pertaining to PE and PEX materials.

Because the pipe end is expanded in a flared joint, only annealed and bending-tempered drawn copper tubing may be flared. There are two types of flaring tools: hammered and a screw yoke and block. The hammer-type flaring tool is inserted into the pipe and hammered. With the screw yoke and block, the end of the pipe is firmly held by the block assembly. The screw yoke is attached, and a flaring surface is pressed into the pipe end, creating the flare. The flared surface of the pipe is compressed against the mating surface of the fitting by the flare nut to form a watertight seal. Commonly, pipe-joint compound is placed on flare-fitting threads to lubricate the assembly (see Commentary Figure P2906.15).

Because hard-drawn pipe is subject to splitting when flared, a flared joint is restricted to soft (annealed) copper tubing. A flared joint is readily dismantled and is, in effect, a type of union connection.

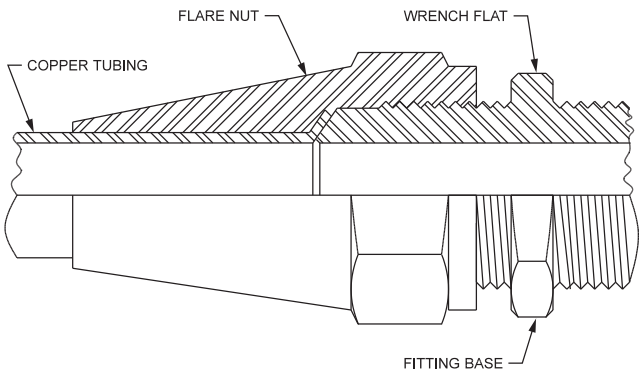

Figure P2906.15
TYPICAL FLARED JOINT

P2906.16 Above-ground joints. Joints within the building between copper pipe or CPVC tubing, in any combination with compatible outside diameters, shall be permitted to be made with the use of *approved* push-in mechanical fittings of a pressure-lock design.

❖ Push-in mechanical fittings of a pressure-lock design are allowed to be used to join copper pipe, or CPVC tubing, where piping is within the building.

In addition, joints between different materials must be installed in accordance with Sections P2905.17.1 through P2405.17.5 (see commentary, Sections P2905.17.1 through P2905.17.3).

P2906.17 Joints between different materials. Joints between different piping materials shall be made in accordance with Section P2906.17.1, P2906.17.2 or P2906.17.3, or with a mechanical joint of the compression or mechanical sealing type having an elastomeric seal conforming to ASTM D1869 or ASTM F477. Joints shall be installed in accordance with the manufacturer's instructions.

❖ Mechanical joints can be used to join dissimilar piping materials. Because many piping materials have the same outside diameter, a number of fittings are designed to join different piping materials. This section requires mechanical joints to be of the compression or mechanical sealing type having an elastomeric seal conforming to ASTM D1869 or ASTM F477. These types of joints must be capable of handling the required test pressure and must also be compatible with the material and its intended use (see commentary, Section P2503.6).

P2906.17.1 Copper or copper-alloy tubing to galvanized steel pipe. Joints between copper or copper-alloy tubing and galvanized steel pipe shall be made with a copper alloy fitting or dielectric fitting. The copper tubing shall be joined to the fitting in an *approved* manner, and the fitting shall be screwed to the threaded pipe.

❖ This section requires a method to protect against galvanic action when joining copper or copper-alloy tubing with galvanized steel pipe. Galvanic action occurs when two dissimilar metals come into contact with each other in the presence of an electrolyte, resulting in an electrical current that causes corrosion of one of the two metals. To stop galvanic action, this section requires either a dielectric coupling that includes an insulator (barrier) between the two metals or a copper alloy fitting that acts as a buffer and retards the galvanic action (see Commentary Figure P2906.17.1 for an illustration of the former).

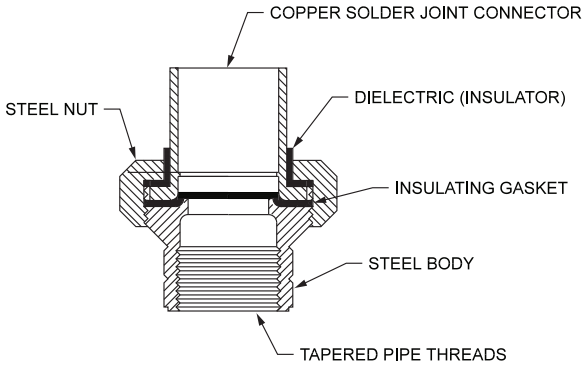

Figure P2906.17.1
DIELECTRIC UNION

P2906.17.2 Plastic pipe or tubing to other piping material. Joints between different types of plastic pipe or between plastic pipe and other piping material shall be made with an *approved* adapter fitting.

❖ The joining of different types of plastic pipe, and of plastic pipe to other piping materials, requires the use of adapter fittings specifically designed for such connections. The adaptor fitting must be compatible with the two dissimilar materials being joined.

INTERNATIONAL CODE COUNCIL®
Copyright © 2015 ICC. ALL RIGHTS RESERVED. Accessed by David Dammon on Jun 21, 2017 12:30:52 PM pursuant to License Agreement with ICC. No further reproduction or distribution authorized. ANY UNAUTHORIZED REPRODUCTION OR DISTRIBUTION IS A VIOLATION OF THE FEDERAL COPYRIGHT ACT AND THE LICENSE AGREEMENT, AND SUBJECT TO CIVIL AND CRIMINAL PENALTIES THEREUNDER.

Adapter fittings must be evaluated individually and approved by the code official. Some key items to review when evaluating adaptor fittings are joint tightness, compatibility of the adaptor with the dissimilar materials being joined, and the presence of any ledges, shoulders or reductions that could retard or obstruct the flow of water in the piping.

P2906.17.3 Stainless steel. Joints between stainless steel and different piping materials shall be made with a mechanical joint of the compression or mechanical-sealing type or a dielectric fitting.

❖ In theory, all metals immersed in an electrolyte, such as water, have a voltage potential. The relative activity of the metal is determined by voltage potential with those metals having negative voltages being the most active and more likely to corrode. Dielectric sleeves may be used with flange bolting or as gaskets for connections between different types of materials to prevent such corrosion. The plastic or rubber gasket engages the thread of the fitting attached, thereby insulating the metal from the water. This prevents corrosion on either part.

P2906.18 Press-connect joints. Press-connect joints shall conform to one of the standards indicated in Table P2906.6. Press-type mechanical joints in copper tubing shall be made in accordance with the manufacturer's instructions. Cut tube ends shall be reamed to the full inside diameter of the tube end. Joint surfaces shall be cleaned. The tube shall be fully inserted into the press connect fitting. Press-connect joints shall be pressed with a tool certified by the manufacturer.

❖ Press-connect joints are a specific type of mechanical joints in which the copper pipe is inserted into the fitting and a proprietary motorized tool deforms (presses) the fitting and the pipe creating a nonreversible joint. The fittings use an O-ring and are rated for a working pressure of 200 psi (1379 kPa) with a temperature limitation of 250°F (121°C).

P2906.19 Polyethylene of raised temperature plastic. Joints between polyethylene of raised temperature plastic tubing and fittings shall be in accordance with Section P2906.19.1.

❖ Polyethylene of raised temperature tubing can only be connected by using the mechanical joining method in Section P2906.19.1.

P2906.19.1 Mechanical joints. Mechanical joints shall be installed in accordance with the manufacturer's instructions. Fittings for polyethylene of raised temperature plastic tubing shall comply with the applicable standards listed in Table P2906.6 and shall be installed in accordance with the manufacturer's instructions. Polyethylene of raised temperature plastic tubing shall be factory marked with the applicable standards for the fittings that the manufacturer of the tubing specifies for use with the tubing.

❖ Mechanical joints for these materials include insert-type fittings, metallic lock-ring fittings, compression fittings and crimp-type fittings. Each fitting is intended for a specific pipe material and cannot be interchanged unless specified by the pipe manufacturer. In all cases, the fittings connecting any type of polyethylene pipe must be assembled and installed in accordance with the manufacturer's instructions.

SECTION P2907
CHANGES IN DIRECTION

P2907.1 Bends. Changes in direction in copper tubing shall be permitted to be made with bends having a radius of not less than four diameters of the tube, provided that such bends are made by use of forming equipment that does not deform or create loss in cross-sectional area of the tube.

❖ Annealed copper and tempered drawn copper may be formed by bending. Whereas in most cases copper fittings will be used to change direction, "soft" copper can be bent to make the desired change in direction. Care must be exercised so that the minimum bending radius of four times the diameter of the copper tube is not exceeded. Although such a sharp bend is possible, the use of proper bending tools will be required to avoid a kink in the copper that would reduce both the cross-sectional area and the integrity of the material.

SECTION P2908
SUPPORT

P2908.1 General. Pipe and tubing support shall conform to Section P2605.

❖ This section points the reader to Section P2605, which is titled "Support" and contains provisions pertaining to the horizontal and vertical support of piping materials used within water distribution systems (see commentary to Section P2605.1 and Table P2605.1).

SECTION P2909
DRINKING WATER TREATMENT UNITS

P2909.1 Design. Drinking water treatment units shall meet the requirements of NSF42, NSF 44, NSF 53, NSF 60 or CSA B483.1.

❖ Water delivered to a building is expected to be within established guidelines for health, odor and chemical content. These guidelines are established by the U.S. Department of Health and Human Services and are applicable to all potable water sources, whether these sources are public municipal water treatment facilities or individual private wells. Although the guidelines make certain that the water is safe to consume, occasionally there are times when the water supply has an objectionable odor or dissolved materials within it that are noticeable to the occupants of the building, particularly in the drinking water.

NSF 42 contains the requirements for units that are designed to improve the perceived quality of the drinking water supplied to the occupants of the building.

These units are designed to reduce the amount of specific contaminants present in the water supply.

INTERNATIONAL CODE COUNCIL®
Copyright © 2015 ICC. ALL RIGHTS RESERVED. Accessed by David Dammon on Jun 21, 2017 12:30:52 PM pursuant to License Agreement with ICC. No further reproduction or distribution authorized. ANY UNAUTHORIZED REPRODUCTION OR DISTRIBUTION IS A VIOLATION OF THE FEDERAL COPYRIGHT ACT AND THE LICENSE AGREEMENT, AND SUBJECT TO CIVIL AND CRIMINAL PENALTIES THEREUNDER.

These contaminants affect the aesthetic quality of the water. Most water treatment units are designed to remove certain odors or dissolved materials in the drinking water supply.

The user or installer of the treatment unit is responsible for the selection of the proper unit based on the offensive characteristics of the water and the unit's reported performance capabilities. Treatment units require periodic maintenance so they will continue to function as designed. Because of this requirement, the treatment unit must be installed in a location where it is accessible for maintenance.

NSF 53, similar to the NSF 42 contains the standards for units designed to improve the quality of drinking water by removing dissolved materials or substances that could have a negative effect on the health of the occupants of the building. These materials or substances may be microbiological, chemical or particulate and are often considered to be either an established or potential health hazard.

NSF 44 contains requirements pertaining to cation (ion) exchange water softeners, which use charged ions in removing dissolved minerals.

P2909.2 Reverse osmosis drinking water treatment units. Point-of-use reverse osmosis drinking water treatment units, designed for residential use, shall meet the requirements of NSF 58 or CSA B483.1. Waste or discharge from reverse osmosis drinking water treatment units shall enter the drainage system through an *air gap* or an *air gap* device that meets the requirements of NSF 58.

❖ Reverse osmosis systems manufactured in accordance with NSF 58 are intended to remove specific contaminants from public or private drinking water supplies considered to be microbiologically safe. The treatment units designed in conformance to NSF 58 are intended to reduce the total dissolved solids (TDS) and other contaminants present in the drinking water. Many of these dissolved materials are considered to be either established or potential health hazards.

The objectionable dissolved materials in a reverse osmosis system are removed using pressure to force the water through a semipermeable membrane. In normal osmosis, water molecules would move across a membrane by the phenomenon of “osmotic pressure” from a solution of lower contaminant concentration into a solution of higher concentration until the concentrations equalize.

In reverse osmosis, a water pressure differential is used to reverse natural osmosis and this forces water molecules to pass through a semipermeable membrane while leaving behind the undesirable molecules that cannot pass through the membrane. The membrane acts as an extremely fine filter (molecular filter).

Reverse osmosis treatment systems are intended to be installed as a point of use system. This means the treatment unit serves the drinking water fixture located immediately adjacent to the treatment system.

The discharge from these units must be through an air gap or air gap device meeting the requirements of NSF 58 and Section P2902.2.1. See the commentary to Section P2902.2.1 and Table P2902.2.1.

P2909.3 Connection tubing. The tubing to and from drinking water treatment units shall be of a size and material as recommended by the manufacturer. The tubing shall comply with NSF 14, NSF 42, NSF 44, NSF 53, NSF 58 or NSF 61.

❖ The NSF (National Sanitation Foundation) standards listed address the connections for these units. The tubing used for drinking water treatment units must be of a size and material recommended by the manufacturer. The tubing materials are certified during the evaluation of the equipment for compliance with materials or products that come into contact with drinking water.

SECTION P2910
NONPOTABLE WATER SYSTEMS

P2910.1 Scope. The provisions of this section shall govern the materials, design, construction and installation of systems for the collection, storage, treatment and distribution of nonpotable water. The use and application of nonpotable water shall comply with laws, rules and ordinances applicable in the jurisdiction.

❖ This chapter covers the required details about collecting, storing, treating and distributing nonpotable water. The end use for these waters is controlled by the rules established in each jurisdiction. For example, collecting and using rainwater in Atlanta, Georgia might be allowed whereas that practice might not be allowed in Denver, Colorado.

P2910.2 Water quality. Nonpotable water for each end use application shall meet the minimum water quality requirements as established for the intended application by the laws, rules and ordinances applicable in the jurisdiction. Where nonpotable water from different sources is combined in a system, the system shall comply with the most stringent requirements of this code applicable to such sources.

❖ The quality required for the nonpotable water to be used in a particular application must be established by each jurisdiction. It is hoped that, eventually, quality requirements for nonpotable water used in specific applications will become somewhat standardized, similar to the standardization of the quality for potable drinking water. However, unlike the ultimate use for potable water (human ingestion), the use of nonpotable water can be quite varied such that the setting of an ultimate quality standard for any one use will most likely be impractical. Another compounding issue is the extremely wide (quality) variations of raw sources of nonpotable water. For example, raw water sources for potable water are typically lakes, rivers and underground aquifers which provide “nature cleansed” water for starting the potable water treatment process. Treatment is fairly straightforward because the quality and consistency of the raw water source is known. For nonpotable water, the raw water source can greatly vary depending on what nonpotable waters are collected, the combinations of different nonpotable waters and the

INTERNATIONAL CODE COUNCIL®
Copyright © 2015 ICC. ALL RIGHTS RESERVED. Accessed by David Dammon on Jun 21, 2017 12:30:52 PM pursuant to License Agreement with ICC. No further reproduction or distribution authorized. ANY UNAUTHORIZED REPRODUCTION OR DISTRIBUTION IS A VIOLATION OF THE FEDERAL COPYRIGHT ACT AND THE LICENSE AGREEMENT, AND SUBJECT TO CIVIL AND CRIMINAL PENALTIES THEREUNDER.

volumes of each, all of which can vary over any period of time. Of course, the goal is to not "over treat" the nonpotable water for an end use application, as this can be costly in terms of initial equipment installation and long-term operation. Conversely, there is the inherent obligation for ensuring that the use of the nonpotable water does not create hazards for living organisms that come into contact with the water. For example, some raw nonpotable waters might have a pH characteristic that can be accommodated by flush valves for water closets and urinals, but unsuitable for drip irrigation for landscaping. A treatment process to correct the pH so that the nonpotable water can be used for both the landscaping and the flushing applications might be appropriate. However, why use pH adjusting treatment for that volume of nonpotable water only used for flushing, when the flush valves can accommodate the non pH-adjusted water? Treating all of the (combined) water for the highest quality required for any one use might make sense, depending on what treatments are necessary. However, the code does not prohibit combining the raw sources, treating that water to a certain quality level and then sending part of that water to another location for additional treatment for a specific end use application that requires a "higher" quality level than the initial treatment provided. This provides a better understanding of the last sentence of the section: "Only where the raw water sources are combined, and treated, stored and used as a combined treated source does the code requirement apply for treatment to the most stringent of the requirements of the code."

P2910.2.1 Residual disinfectants. Where chlorine is used for disinfection, the nonpotable water shall contain not more than 4 ppm (4 mg/L) of chloramines or free chlorine. Where ozone is used for disinfection, the nonpotable water shall not contain gas bubbles having elevated levels of ozone at the point of use.

Exception: Reclaimed water sources shall not be required to comply with the requirements of this section.

❖ Chlorinating and ozonizing are two of the most common methods for disinfection of water. Chlorine is inexpensive to obtain and ozone is easy to make on site. They are effective, very controllable and the results (bacteria kill) are well established for the quantities and detention times needed for volumes of water. Some "over disinfection" is necessary to ensure that a minimum level of disinfection product is maintained. But, too much disinfection product in the water is costly in the long run and does not yield any better results (the bacteria is dead—more disinfection is unnecessary). The excess disinfection product off-gasses out of the water and produces undesirable effects in the short term. For chlorine, that effect is an unpleasant chlorine odor, similar to the air around most indoor public swimming pools. For ozone, that effect is an effervescence bubbling up and out of the water along with a sweet, pungent smell that is similar to how the air smells on a calm summer day just prior to the beginning of a thunderstorm. These effects in an outdoor environment are typically of no concern. However, in an indoor environment, the effects can be quite a nuisance to the building occupants and depending on the concentrations and length of exposure, could impact the health of the occupants. Therefore, this section requires control in the use of these products.

Where ultraviolet light, instead of chlorine or ozone, is to be used for disinfection, this method will require approval by the code official in accordance with Section R104.11.

The exception for reclaimed water recognizes that such water is disinfected at the source, the water utility that provides the water. See the definition for "Reclaimed water" in Chapter 2.

P2910.2.2 Filtration required. Nonpotable water utilized for water closet and urinal flushing applications shall be filtered by a 100 micron or finer filter.

Exception: Reclaimed water sources shall not be required to comply with the requirements of this section.

❖ Water closet fill valves (and flush valves) and urinal flush valves have small diameter water ways that could become clogged with particulate matter sometimes found in nonpotable water. The 100-micron filter requirement ensures that valves will function as the manufacturer intended.

The exception for reclaimed water recognizes that such water is filtered at the source, the water utility that provides the water. See the definition for "Reclaimed water" in Chapter 2.

P2910.3 Signage required. Nonpotable water outlets such as hose connections, open-ended pipes and faucets shall be identified at the point of use for each outlet with signage that reads as follows: "Nonpotable water is utilized for [application name]. CAUTION: NONPOTABLE WATER. DO NOT DRINK." The words shall be legibly and indelibly printed on a tag or sign constructed of corrosion-resistant, waterproof material or shall be indelibly printed on the fixture. The letters of the words shall be not less than 0.5 inches (12.7 mm) in height and in colors contrasting the background on which they are applied. In addition to the required wordage, the pictograph shown in Figure P2910.3 shall appear on the signage required by this section.

❖ This section is identical to Section P2901.2.1. See the commentary to that section.



FIGURE P2910.3
PICTOGRAPH—DO NOT DRINK

INTERNATIONAL CODE COUNCIL®
Copyright © 2015 ICC. ALL RIGHTS RESERVED. Accessed by David Dammon on Jun 21, 2017 12:30:52 PM pursuant to License Agreement with ICC. No further reproduction or distribution authorized. ANY UNAUTHORIZED REPRODUCTION OR DISTRIBUTION IS A VIOLATION OF THE FEDERAL COPYRIGHT ACT AND THE LICENSE AGREEMENT, AND SUBJECT TO CIVIL AND CRIMINAL PENALTIES THEREUNDER.

P2910.4 Permits. Permits shall be required for the construction, installation, alteration and repair of nonpotable water systems. Construction documents, engineering calculations, diagrams and other such data pertaining to the nonpotable water system shall be submitted with each permit application.

❖ Although Section R105 of the code requires permits for the work covered by the code, this section reinforces that requirement as not everyone considers all nonpotable water system work as needing a permit. For example, rainwater collection and distribution systems have been installed for many decades without a single thought towards compliance to a code. There have been guidelines developed by numerous jurisdictions where water shortages are a significant problem. Some guidelines have been adopted and made part of the laws so that code officials could enforce the guidelines. In other areas, the guidelines are not law. This section makes it clear that this chapter is enforceable when the code is adopted.

P2910.5 Potable water connections. Where a potable system is connected to a nonpotable water system, the potable water supply shall be protected against backflow in accordance with Section P2902.

❖ This section simply points to the backflow prevention section for where nonpotable water might possibly contaminate a potable water supply system when a backflow event (in the potable water system) occurs.

P2910.6 Approved components and materials. Piping, plumbing components and materials used in collection and conveyance systems shall be manufactured of material approved for the intended application and compatible with any disinfection and treatment systems used.

❖ The use of the term "approved" may or may not mean approved by the building official, as the code does not provide a basis for which the materials can be evaluated for some applications. For example, a gray water collection system inside of (and below) the building will be constructed of piping materials that comply with Tables P3002.1(1), P3002.1(2) and P3002.3. However, should the continuation of that piping outside of the building be allowed to comply with Table P3002.2 (building sewer piping)? The building official might agree that it does comply with the code, but manufacturers of systems that "process" the nonpotable waters might not agree.

P2910.7 Insect and vermin control. The system shall be protected to prevent the entrance of insects and vermin into storage tanks and piping systems. Screen materials shall be compatible with contacting system components and shall not accelerate the corrosion of system components.

❖ Large floating "mats" of dead insects and vermin in storage tanks will decompose and create odors through the tank vent. Although it is usually not possible to prevent all insects from entry, those that do enter will hopefully become waterlogged and sink to the bottom of the tank. Other sections provide additional requirements for on-site nonpotable water and rainwater. Filtering to remove insects and vermin from reclaimed water is performed at the water utility that distributes the reclaimed water.

Screens for storage tank vents must not be of materials that are incompatible with the material that they are in contact with so that the screen does not corrode and fall off the opening.

It is uncertain whether this section requires screens at each vent pipe termination (of the vent piping required for equalizing pressures in a drain piping system) to prevent the entry of insects and vermin into the piping system. Any insect and vermin would be captured by filters installed before the storage tank. The code official will need to make this decision.

P2910.8 Freeze protection. Where sustained freezing temperatures occur, provisions shall be made to keep storage tanks and the related piping from freezing.

❖ Because storage tanks have a large volume of water, it would take an "amount of time" of exposure to freezing temperatures for the water in the tank to begin freezing. The length of time necessary to cause the water to freeze will depend on many factors such as sunlight, wind, movement of water in the tank and the lowest temperature excursion. For these reasons, many nonpotable water tanks are buried underground. However, some climates could have only "mildly freezing" temperatures that last for only a few hours a day. In regions that do have freezing temperatures, storage tanks could be located outdoors under open shelters, or in enclosed shelter buildings that have very little or no heat. Tank contents that are kept moving by a circulation system could endure "mildly freezing" overnight conditions.

The exposure of piping, pumps and other equipment to freezing conditions is a more serious issue because in most cases the water is not moving. See the commentary to Section P2603.5 concerning protection of piping against freezing. Note that while the piping, pumps and other equipment might need protection (insulation, heat or both) against freezing conditions, that is not an indication that the storage tank needs similar protection.

P2909.9 Nonpotable water storage tanks. Nonpotable water storage tanks shall comply with Sections P2910.9.1 through P2910.9.11.

❖ A storage tank can be of any shape and be of a multitude of materials. The following sections provide the requirements for storage tanks.

P2910.9.1 Sizing. The holding capacity of the storage tank shall be sized in accordance with the anticipated demand.

❖ Ideally, all nonpotable water collected and stored will (eventually) be reused for another purpose. However, that is not the case with raw gray water, as Section P2911.6 prohibits untreated gray water from being retained for more than 24 hours. Another factor is that there is not enough demand (use) for the collected nonpotable water. For example, a rainwater collection system collects large volumes of rainwater in a continuously "rainy" region. The rainwater is only used

INTERNATIONAL CODE COUNCIL®
Copyright © 2015 ICC. ALL RIGHTS RESERVED. Accessed by David Dammon on Jun 21, 2017 12:30:52 PM pursuant to License Agreement with ICC. No further reproduction or distribution authorized. ANY UNAUTHORIZED REPRODUCTION OR DISTRIBUTION IS A VIOLATION OF THE FEDERAL COPYRIGHT ACT AND THE LICENSE AGREEMENT, AND SUBJECT TO CIVIL AND CRIMINAL PENALTIES THEREUNDER.

to flush water closets (the installed nonwater urinals not needing water). Does it make sense to install a large storage tank to retain all of the rainwater? Perhaps not. After careful analysis of the rainwater flows (historical weather data) and the demands (anticipated use of the fixtures that will use the water), the designer of the system will make the decision on the size of the storage tank.

P2910.9.2 Location. Storage tanks shall be installed above or below grade. Above-grade storage tanks shall be protected from direct sunlight and shall be constructed using opaque, UV-resistant materials such as, but not limited to, heavily tinted plastic, lined metal, concrete and wood; or painted to prevent algae growth; or shall have specially constructed sun barriers including, but not limited to, installation in garages, crawlspaces or sheds. Storage tanks and their manholes shall not be located directly under any soil piping, waste piping or any source of contamination.

❖ Storage tanks can be located anywhere. Possible locations could be inside of buildings, on roofs or on grade (with proper shelter) or underground (inside of or outside of the building footprint). The designer chooses the location that best suits the needs of the system that he is designing.

Tanks above grade need to be protected so that the material of the tank's outer wall is not degraded by exposure to sunlight because sunlight includes wavelengths in the ultraviolet (UV) range. Most untinted thermoplastic materials, such as polypropylene and polyethylene, can start cracking because the sun's UV radiation causes degradation of the connection points within the molecules of plastic materials. The cracking continues until the material loses enough strength to fail. Although "above grade" usually means outdoors and above grade, the situation would be the same for a plastic storage tank located inside of a standard glass greenhouse (plain glass is able to pass some UV radiation). Does this mean that storage tanks located in a room inside of a building where a wall window allows natural light into the room must be heavily tinted? Perhaps not, as the exposure to sunlight will probably be incidental or only be directly shining on the tank for a very limited amount of time (as the sun moves though the sky). However, if the room has many clear skylights (not tinted) such as might be found in a warehouse, that thought might have to reevaluated. Note that this section is only concerned about exposure of the tank to sunlight. However, the sun is not the only generator of UV radiation. A shop that performs open welding could cause significant UV radiation toward a plastic tank if the tank was not shielded in some manner.

Plastic tanks can be protected against UV radiation by the addition of pigments that absorb the UV rays. As UV absorbers (UVAs) will degrade over long periods of time, significant UVA pigments must be added to compensate for the UVA degradation. Thus, the code requires "heavily tinted" plastic tank materials.

Another reason for keeping direct sunlight off of a translucent tank is to prevent algae growth in the water. Algae need sunlight to propagate. Unchecked algae growth causes significant equipment problems and can create difficult to solve water quality issues.

Lined metal tanks are one type of metal tank. This specifically refers to carbon steel metal which will rust and produce scale (corrode). Typical linings are epoxy coatings that are applied after the carbon steel metal is sandblasted clean. Presumably, stainless steel tanks would not require a lining because stainless steel (if the proper series of stainless steel is chosen) will not corrode.

The requirement for storage tanks (and their manholes) to not be located under soil or waste piping, or any "source of contamination" is to make sure that the water in the tank does not become something other than expected.

P2910.9.3 Materials. Where collected on site, water shall be collected in an *approved* tank constructed of durable, nonabsorbent and corrosion-resistant materials. The storage tank shall be constructed of materials compatible with any disinfection systems used to treat water upstream of the tank and with any systems used to maintain water quality within the tank. Wooden storage tanks that are not equipped with a makeup water source shall be provided with a flexible liner.

❖ Storage tanks must be approved by the code official. There are many types of "tanks" that are not of the durability, nonabsorbency and corrosion resistance needed for long-term use as a permanent system for the intended use. For example, a field-built brick (or block) structure with a rubber lining that was adhered to the walls might hold water for the initial test, but is that an appropriate long-term solution? The code official must make the decision.

The tank materials must be compatible with the disinfection and treatment methods for the water that will be stored in the tank. For example, if alternative approval was obtained for the use of UV lamps in the tank for disinfection of the water, then a tank made of untinted plastic might not be compatible with the disinfection method (see commentary for Section P2910.9.2).

The water tightness of wooden storage tanks depends on the wood planking "swelling" and closing off the gaps between the planks. If the water level in a wood tank is allowed to decrease for long periods of time (such as a day), the planks dry out, shrink and the gaps open up to cause leaks. Makeup water added to the tank keeps the planks wet. The makeup water would not be needed at any time that the water level in the tank becomes low, but only when the tank level remains low for a period of time where the planks would start drying out. If adding makeup water does not make sense in the scheme of collecting as much nonpotable water as possible (and reducing the use of potable water), then a wood tank would have to be lined with a flexible liner so that the water level could remain low for long periods of time. For example, rainwater might be used from rainwater storage at a very slow rate while rainwater is collected in "surges" (rainfall events). Fill-

INTERNATIONAL CODE COUNCIL®
Copyright © 2015 ICC. ALL RIGHTS RESERVED. Accessed by David Dammon on Jun 21, 2017 12:30:52 PM pursuant to License Agreement with ICC. No further reproduction or distribution authorized. ANY UNAUTHORIZED REPRODUCTION OR DISTRIBUTION IS A VIOLATION OF THE FEDERAL COPYRIGHT ACT AND THE LICENSE AGREEMENT, AND SUBJECT TO CIVIL AND CRIMINAL PENALTIES THEREUNDER.

ing the wood tank to the overflow point to keep the wood from drying out would be senseless.

P2910.9.4 Foundation and supports. Storage tanks shall be supported on a firm base capable of withstanding the weight of the storage tank when filled to capacity. Storage tanks shall be supported in accordance with this code.

❖ Water weighs 62.4 pounds per cubic foot or 8.34 pounds per gallon. A 100-gallon tank will weigh 834 pounds plus the weight of the tank itself. The weight of a filled water tank is always significant, but especially so when supported by a building structure. Other parts of this code concerned with the building structure must be reviewed.

P2910.9.4.1 Ballast. Where the soil can become saturated, an underground storage tank shall be ballasted or otherwise secured to prevent the tank from floating out of the ground when empty. The combined weight of the tank and hold-down ballast shall meet or exceed the buoyancy force of the tank. Where the installation requires a foundation, the foundation shall be flat and shall be designed to support the storage tank weight when full, consistent with the bearing capability of adjacent soil.

❖ Uplift forces of an empty underground tank are very significant when the ground around the tank becomes saturated with water. The effect is no different than placing a ping pong ball under water and releasing it. It will return to the surface. The effect was scientifically discovered by Archimedes of Syracuse (Greece) around 250 B.C. His principle states: "Any object, wholly or partially immersed in a fluid, is buoyed up by a force equal to the weight of the fluid displaced by the object." In other words, objects have "buoyancy," however, when the weight of the object is greater than the weight of the fluid displaced, the object is not buoyant (and is not uplifted toward the surface of the water).

Consider a tank of 5,000-gallon capacity. The uplift force of that tank (empty and neglecting the empty weight of the tank) in fully saturated soil is 5,000 gallons $\times$ 8.34 pounds per gallon or 41,700 pounds. That amount of force will cause a $1^1/_8$-inch nominal diameter reinforcing bar (40 ksi yield strength) to begin to pull apart. Design of the straps and their connections to the tank and to the concrete foundation must be carefully considered to prevent underground tanks from "popping up and out of the ground."

The (concrete) foundation that the tank rests on must also be properly designed to accept the loads from the tank (filled to capacity) without failure and to not overload the soil that the foundation rests on.

P2910.9.4.2 Structural support. Where installed below grade, storage tank installations shall be designed to withstand earth and surface structural loads without damage and with minimal deformation when empty or filled with water.

❖ An underground tank must be able to support the earth loads against the sides and top of the tank. If the tank is under a road, driveway or parking lot, vehicle loads add to the loads that the tank must withstand. Where the tank is adjacent to a road, driveway or parking lot, some of those loads could transfer at an angle away from directly under those areas to the tank. Water-saturated soils also impart significant loads to the sides of an empty tank.

P2910.9.5 Makeup water. Where an uninterrupted nonpotable water supply is required for the intended application, potable or reclaimed water shall be provided as a source of makeup water for the storage tank. The makeup water supply shall be protected against backflow by means of an *air gap* not less than 4 inches (102 mm) above the overflow or an *approved* backflow device in accordance with Section P2902. A full-open valve located on the makeup water supply line to the storage tank shall be provided. Inlets to the storage tank shall be controlled by fill valves or other automatic supply valves installed to prevent the tank from overflowing and to prevent the water level from dropping below a predetermined point. Where makeup water is provided, the water level shall be prohibited from dropping below the source water inlet or the intake of any attached pump.

❖ Where a constant supply of nonpotable water is depended on for any use, a makeup water supply for the storage tank is necessary. For example, where rainwater or treated gray water is used to flush water closets and urinals, a constant supply of water is necessary. If the volume of raw nonpotable water supply is not sufficient to keep up with the demand, then additional water must be added to the tank to keep the nonpotable water supply system going. Makeup water does not necessarily need to be potable water, but often it is. The connection of makeup water to a storage tank must comply with Section 608 to protect the higher quality makeup water from contamination in the event that there is a backflow event in the makeup water system.

The intent of this section is that the makeup water be supplied to the tank by automatic means. The term "fill valve" implies that the type of mechanical "float type" fill valve is found in a flush tank water closet or at the top of a vat. Or the valve could be the type that is electrically controlled (such as a solenoid valve) through float switches or other water level detection devices. A full open valve is required to be on the makeup water line so that the fill valve or other automatic control valve can be removed, repaired or replaced.

Obviously, the makeup water fill valve must shut before water in the tank begins to empty out through the overflow of the tank. However, the shutoff point does not need to be at the overflow level in order to leave room for the addition of nonpotable water from the original sources. The valve must open before the water in the tank reaches a certain low level, as determined by the designer of the system. In most nonpotable water storage tanks, especially those storing water with some particulate matter, the incoming water (both the original water and makeup) is introduced into the tank at a point that is below the water surface and somewhat above the bottom of the tank. This is to

INTERNATIONAL CODE COUNCIL®
Copyright © 2015 ICC. ALL RIGHTS RESERVED. Accessed by David Dammon on Jun 21, 2017 12:30:52 PM pursuant to License Agreement with ICC. No further reproduction or distribution authorized. ANY UNAUTHORIZED REPRODUCTION OR DISTRIBUTION IS A VIOLATION OF THE FEDERAL COPYRIGHT ACT AND THE LICENSE AGREEMENT, AND SUBJECT TO CIVIL AND CRIMINAL PENALTIES THEREUNDER.

reduce "stirring" of the floating debris on the surface of water in the tank. Entry of water into the tank should be as calm as possible. Allowing the level of water to drop below the inlet level would only introduce turbulence on the surface of the water resulting in the particulate becoming entrained throughout the tank. This could later negatively impact the operation of pumps, valves and filters in the distribution system.

P2910.9.5.1 Inlet control valve alarm. Makeup water systems shall be fitted with a warning mechanism that alerts the user to a failure of the inlet control valve to close correctly. The alarm shall activate before the water within the storage tank begins to discharge into the overflow system.

❖ A makeup water supply that fails to shut off could waste many thousands of gallons of potable water. In a residential building environment, this could be very expensive if water is being paid for or, could affect the longevity of a private well pump. A simple high level alarm will notify the building owner of a condition that needs repair.

P2910.9.6 Overflow. The storage tank shall be equipped with an overflow pipe having a diameter not less than that shown in Table P2910.9.6. The overflow outlet shall discharge at a point not less than 6 inches (152 mm) above the roof or roof drain; floor or floor drain; or over an open water-supplied fixture. The overflow outlet shall be covered with a corrosion-resistant screen of not less than 16 by 20 mesh per inch (630 by 787 mesh per m) and by $^1/_4$-inch (6.4 mm) hardware cloth or shall terminate in a horizontal angle seat check valve. Drainage from overflow pipes shall be directed to prevent freezing on roof walks. The overflow drain shall not be equipped with a shutoff valve. Not less than one cleanout shall be provided on each overflow pipe in accordance with Section P3005.2.

❖ Storage tanks can become filled to capacity and additional water added to the tank has to go somewhere or the collection system will back up and cause problems. The overflow is another location where insects and vermin can enter the storage tank so a screen is necessary. In some situations, such as rainwater storage tanks, the overflow could discharge to a storm sewer or a natural waterway. Because it is rainwater, logically, it would seem that allowing it to flow into the storm sewer or natural waterway would be acceptable. However, that depends on the storm water runoff requirements of the jurisdiction. If the rainwater has been treated (other than screening for particulate) or potable (or other nonpotable) water is used for the makeup water supply, there could be restrictions against discharging to a storm sewer or natural waterway. If the local jurisdiction does not know, state environmental agencies should be sought out to determine the answer. In the United States, the Environmental Protection Agency (EPA) considers storm water discharges as point sources of pollution because rainwater could contain harmful pollutants that could wash into streams, river, lakes and coastal water. Most states administer the National Pollutant Discharge Elimination System (NPDES) Stormwater program; however, in some states and territories and all tribal lands, the EPA directly administers the program.

Although this section implies that any nonpotable water (other than rainwater) could be allowed to overflow to a storm sewer or waterway, it is doubtful that this would be allowed in any jurisdiction, pursuant to the overriding requirements of the EPA. And, even though reclaimed water is of an equal quality (or perhaps of higher quality) than what exits the tertiary stage of the municipal wastewater treatment facility that distributes the reclaimed water, reclaimed water may not necessarily be allowed to flow into storm sewers or waterways.

If the flow of water from the overflow is allowed to drain onto the ground around the outside of a storage tank, it must be routed to drain away from the tank area and not toward a building or an adjacent lot. Foundations for the tank and a building can be quickly undermined when excess water surcharges the soil at these locations. Adjacent lot owners would not appreciate such overflows.

Where a water tank is on a roof (as many water tanks have been located in New York City), water coming out of an overflow during freezing weather creates hazardous conditions on the roof walkways. Prior planning to put the overflow and walkways in different locations is necessary.

Overflows could become clogged, especially where the overflow has an outlet screen. A cleanout is necessary to clear blockages.

TABLE P2910.9.6
SIZE OF DRAIN PIPES FOR WATER TANKS

TANK CAPACITY (gallons)	DRAIN PIPE (inches)
Up to 750	1
751 to 1500	$1^1/_2$
1501 to 3000	2
3001 to 5000	$2^1/_2$
5001 to 7500	3
Over 7500	4

For SI: 1 gallon = 3.875 liters, 1 inch = 25.4 mm.

INTERNATIONAL CODE COUNCIL®
Copyright © 2015 ICC. ALL RIGHTS RESERVED. Accessed by David Dammon on Jun 21, 2017 12:30:52 PM pursuant to License Agreement with ICC. No further reproduction or distribution authorized. ANY UNAUTHORIZED REPRODUCTION OR DISTRIBUTION IS A VIOLATION OF THE FEDERAL COPYRIGHT ACT AND THE LICENSE AGREEMENT, AND SUBJECT TO CIVIL AND CRIMINAL PENALTIES THEREUNDER.

P2910.9.7 Access. Not less than one access opening shall be provided to allow inspection and cleaning of the tank interior. Access openings shall have an *approved* locking device or other *approved* method of securing access. Below-grade storage tanks, located outside of the building, shall be provided with a manhole either not less than 24 inches (610 mm) square or with an inside diameter not less than 24 inches (610 mm). Manholes shall extend not less than 4 inches (102 mm) above ground or shall be designed to prevent water infiltration. Finished grade shall be sloped away from the manhole to divert surface water. Manhole covers shall be secured to prevent unauthorized access. Service ports in manhole covers shall be not less than 8 inches (203 mm) in diameter and shall be not less than 4 inches (102 mm) above the finished grade level. The service port shall be secured to prevent unauthorized access.

Exception: Storage tanks under 800 gallons (3028 L) in volume installed below grade shall not be required to be equipped with a manhole, but shall have a service port not less than 8 inches (203 mm) in diameter.

❖ Storage tanks, large and small, need to be accessed for inspection. Above-ground tanks are not required to have a manhole access but need an inspection access. Below-grade tanks must have manhole access except where the tank is less than 800 gallons capacity. All openings must be secured to prevent unauthorized access.

P2910.9.8 Venting. Storage tanks shall be provided with a vent sized in accordance with Chapter 31 and based on the aggregate diameter of all tank influent pipes. The reservoir vent shall not be connected to sanitary drainage system vents. Vents shall be protected from contamination by means of an *approved* cap or a U-bend installed with the opening directed downward. Vent outlets shall extend not less than 4 inches (102 mm) above grade, or as necessary to prevent surface water from entering the storage tank. Vent openings shall be protected against the entrance of vermin and insects in accordance with the requirements of Section P2902.7.

❖ As the water level in the tank rises and drops, air needs to escape and enter the tank to prevent pressure (and especially negative pressure) from occurring in the tank.

P2910.9.9 Drain. A drain shall be located at the lowest point of the storage tank. The tank drain pipe shall discharge as required for overflow pipes and shall not be smaller in size than specified in Table P2910.9.6. Not less than one cleanout shall be provided on each drain pipe in accordance with Section P3005.2.

❖ A tank can be drained by a pump or by a drain near the bottom of the tank. Most the time, draining of the tank is required to clean the tank of accumulated debris. In-tank pumps and level controls are usually accessible by lifting them out of the tank, so draining is not required for those repairs. Where there is a tank drain, this section requires a "tank drain pipe." In other words, there needs to be a pipe connected near the bottom of the tank, presumably with a valve, so that drain flow can be controlled. In other words, having a "drain plug" would not meet the intent of this section as once the plug was removed there would not be any way to control the discharge.

P2910.10 Marking and signage. Each nonpotable water storage tank shall be labeled with its rated capacity. The contents of storage tanks shall be identified with the words "CAUTION: NONPOTABLE WATER—DO NOT DRINK." Where an opening is provided that could allow the entry of personnel, the opening shall be marked with the words, "DANGER—CONFINED SPACE." Markings shall be indelibly printed on the tank, or on a tag or sign constructed of corrosion-resistant waterproof material that is mounted on the tank. The letters of the words shall be not less than 0.5 inches (12.7 mm) in height and shall be of a color in contrast with the background on which they are applied.

❖ The requirements of this section are straightforward. A capacity label, especially for underground tanks, is useful when the contents have to be pumped out and hauled to a disposal point.

P2910.11 Storage tank tests. Storage tanks shall be tested in accordance with the following:

1. Storage tanks shall be filled with water to the overflow line prior to and during inspection. Seams and joints shall be left exposed and the tank shall remain water tight without leakage for a period of 24 hours.
2. After 24 hours, supplemental water shall be introduced for a period of 15 minutes to verify proper drainage of the overflow system and leaks do not exist.
3. Following a successful test of the overflow, the water level in the tank shall be reduced to a level that is 2 inches (51 mm) below the makeup water trigger point by using the tank drain. The tank drain shall be observed for proper operation. The makeup water system shall be observed for proper operation, and successful automatic shutoff of the system at the refill threshold shall be verified. Water shall not be drained from the overflow at any time during the refill test.

❖ The requirements of this section are straightforward. Although 24 hours seems like a long test period, it might take that amount of time for a small leak to develop enough of a puddle to be observed. For a lined carbon steel tank, even a small leak could become a much larger leak over time (because of corrosion), so it is useful to wait a day to find leaks. For wood tanks, the tank must be filled well ahead of the test period so that the wood can swell and close up any gaps.

P2910.12 System abandonment. If the owner of an on-site nonpotable water reuse system or rainwater collection and conveyance system elects to cease use of or fails to properly maintain such system, the system shall be abandoned and shall comply with the following:

1. System piping connecting to a utility-provided water system shall be removed or disabled.
2. The distribution piping system shall be replaced with an *approved* potable water supply piping system. Where an existing potable water pipe system is already in place, the fixtures shall be connected to the existing system.

INTERNATIONAL CODE COUNCIL®
Copyright © 2015 ICC. ALL RIGHTS RESERVED. Accessed by David Dammon on Jun 21, 2017 12:30:52 PM pursuant to License Agreement with ICC. No further reproduction or distribution authorized. ANY UNAUTHORIZED REPRODUCTION OR DISTRIBUTION IS A VIOLATION OF THE FEDERAL COPYRIGHT ACT AND THE LICENSE AGREEMENT, AND SUBJECT TO CIVIL AND CRIMINAL PENALTIES THEREUNDER.

3. The storage tank shall be secured from accidental access by sealing or locking tank inlets and access points, or filled with sand or equivalent.

❖ Nonpotable water reuse systems do require maintenance and must be kept in good repair to provide water for the intended fixtures or other uses. However, there will be times that abandonment of some systems will be necessary.

P2910.13 Separation requirements for nonpotable water piping. Nonpotable water collection and distribution piping and reclaimed water piping shall be separated from the building sewer and potable water piping underground by 5 feet (1524 mm) of undisturbed or compacted earth. Nonpotable water collection and distribution piping shall not be located in, under or above cesspools, septic tanks, septic tank drainage fields or seepage pits. Buried nonpotable water piping shall comply with the requirements of Section P2604.

Exceptions:

1. The required separation distance shall not apply where the bottom of the nonpotable water pipe within 5 feet (1524 mm) of the sewer is not less than 12 inches (305 mm) above the top of the highest point of the sewer and the pipe materials conforms to Table P3002.2.
2. The required separation distance shall not apply where the bottom of the potable water service pipe within 5 feet (1524 mm) of the nonpotable water pipe is not less than 12 inches (305 mm) above the top of the highest point of the nonpotable water pipe and the pipe materials comply with the requirements of Table P2906.5.
3. The required separation distance shall not apply where a nonpotable water pipe is located in the same trench with a building sewer that is constructed of materials that comply with the requirements of Table P3002.2.
4. The required separation distance shall not apply where a nonpotable water pipe crosses a sewer pipe provided that the nonpotable water pipe is sleeved to not less than 5 feet (1524 mm) horizontally from the sewer pipe centerline on both sides of such crossing, with pipe materials that comply with Table P3002.2.
5. The required separation distance shall not apply where a potable water service pipe crosses a nonpotable water pipe, provided that the potable water service pipe is sleeved for a distance of not less than 5 feet (1524 mm) horizontally from the centerline of the nonpotable pipe on both sides of such crossing, with pipe materials that comply with Table P3002.2.
6. The required separation distance shall not apply to irrigation piping located outside of a building and downstream of the backflow preventer where nonpotable water is used for outdoor applications.

❖ These are the same requirements (excluding Exception 6) as for the installation of a potable water supply system. Nonpotable water irrigation piping does not need separation from the building sewer because this would be too difficult to accomplish and provide limited benefit.

P2910.14 Outdoor outlet access. Sillcocks, hose bibs, wall hydrants, yard hydrants and other outdoor outlets supplied by nonpotable water shall be located in a locked vault or shall be operable only by means of a removable key.

❖ Rainwater (or possibly reclaimed water) could be used outside of a building for various uses. Rainwater could be used to water gardens and vegetation, or to wash vehicles. Reclaimed water might be able to be used for outdoor heavy equipment washdowns. The outlets to connect to these waters sources need to be controlled so that unauthorized use does not occur.

SECTION P2911
ON-SITE NONPOTABLE WATER REUSE SYSTEMS

P2911.1 General. The provisions of this section shall govern the construction, installation, alteration and repair of on-site nonpotable water reuse systems for the collection, storage, treatment and distribution of on-site sources of nonpotable water as permitted by the jurisdiction.

❖ This section is about the specific details for on-site nonpotable water reuse systems. Refer to the definition “On-site nonpotable water reuse system” in Chapter 2.

P2911.2 Sources. On-site nonpotable water reuse systems shall collect waste discharge only from the following sources: bathtubs, showers, lavatories, clothes washers and laundry trays. Water from other *approved* nonpotable sources including swimming pool backwash operations, air conditioner condensate, rainwater, foundation drain water, fluid cooler discharge water and fire pump test water shall be permitted to be collected for reuse by on-site nonpotable water reuse systems, as approved by the building official and as appropriate for the intended application.

❖ Essentially, an on-site nonpotable water reuse system only collects gray water. However, there are many other kinds of nonpotable waters that could be available at the building site. Some of these might be generated in quantities that overshadow the flow of gray water into the system. The “qualities” of gray water are well understood. Other nonpotable waters are quite different from gray water and any type of nonpotable water could have a significant impact on the suitability of the water for an end-use application. For example, cooling tower blowdown water could have such a high level of total dissolved solids that, for an end use as water closet flushing, the bowls of the water closets become scaled and hard to clean. Problems with water closet fill and flush valves, and clogging of the internal waterways of the water closet could occur. Thus, the need for the code official to approve these other nonpotable water sources for inclusion.

INTERNATIONAL CODE COUNCIL®
Copyright © 2015 ICC. ALL RIGHTS RESERVED. Accessed by David Dammon on Jun 21, 2017 12:30:52 PM pursuant to License Agreement with ICC. No further reproduction or distribution authorized. ANY UNAUTHORIZED REPRODUCTION OR DISTRIBUTION IS A VIOLATION OF THE FEDERAL COPYRIGHT ACT AND THE LICENSE AGREEMENT, AND SUBJECT TO CIVIL AND CRIMINAL PENALTIES THEREUNDER.

P2911.2.1 Prohibited sources. Reverse osmosis system reject water, water softener backwash water, kitchen sink wastewater, dishwasher wastewater and wastewater containing urine or fecal matter shall not be collected for reuse within an on-site nonpotable water reuse system.

❖ There are certain nonpotable waters that are known to be detrimental to on-site nonpotable water reuse systems. They are prohibited from inclusion.

P2911.3 Traps. Traps serving fixtures and devices discharging waste water to on-site nonpotable water reuse systems shall comply with the Section P3201.2.

❖ Plumbing fixtures (and clothes washer waste receptors) are already required to have traps that comply with Section P3201.2. Where other nonpotable water is collected by the on-site nonpotable water reuse systems, a trap is required between the connection of the piping from the nonpotable water source and the collection piping leading to the on-site nonpotable water reuse systems. The trap is required to comply with Section P3201.2. In most cases, these additional nonpotable waters will be connected indirectly to the gray water piping system.

P2911.4 Collection pipe. On-site nonpotable water reuse systems shall utilize drainage piping *approved* for use within plumbing drainage systems to collect and convey untreated water for reuse. Vent piping *approved* for use within plumbing venting systems shall be utilized for vents within the gray-water system. Collection and vent piping materials shall comply with Section P3002.

❖ The piping used for collecting all on-site nonpotable water must comply with Section P3002. Vent piping must also be in accordance with Section P3002.

P2911.4.1 Installation. Collection piping conveying untreated water for reuse shall be installed in accordance with Section P3005.

❖ Installation of the collection piping must comply with Section P3005.

P2911.4.2 Joints. Collection piping conveying untreated water for reuse shall utilize joints *approved* for use with the distribution piping and appropriate for the intended applications as specified in Section P3002.

❖ Joints in collection piping must comply with Section P3002.

P2911.4.3 Size. Collection piping conveying untreated water for reuse shall be sized in accordance with drainage sizing requirements specified in Section P3005.4.

❖ Although this section indicates that the drain piping is to be sized in accordance with Section P3005.4, the flows from nonpotable water sources (other than the allowed plumbing fixtures) are not measured in drainage fixture units (dfu). In most cases, a maximum flow rate in gallons per minute can be computed for these flows.

P2911.4.4 Marking. Additional marking of collection piping conveying untreated water for reuse shall not be required beyond that required for sanitary drainage, waste and vent piping by the Chapter 30.

❖ As the code does not require labeling/marking of sanitary drainage piping, including piping that conveys only gray water, the code does not require labeling/marking for nonpotable water collection piping.

P2911.5 Filtration. Untreated water collected for reuse shall be filtered as required for the intended end use. Filters shall be accessible for inspection and maintenance. Filters shall utilize a pressure gauge or other *approved* method to provide indication when a filter requires servicing or replacement. Filters shall be installed with shutoff valves immediately upstream and downstream to allow for isolation during maintenance.

❖ Filters are typically installed to filter the flow before entering the storage tank so that debris is kept out of the tank. Some type of alert system is required to indicate when the filter needs to be cleaned or changed.

P2911.6 Disinfection. Nonpotable water collected on site for reuse shall be disinfected, treated or both to provide the quality of water needed for the intended end-use application. Where the intended end-use application does not have requirements for the quality of water, disinfection and treatment of water collected on site for reuse shall not be required. Nonpotable water collected on site containing untreated gray water shall be retained in collection reservoirs for not more than 24 hours.

❖ Some nonpotable water, such as gray water, will need disinfection before being used for certain applications. Other nonpotable waters, such as rainwater, will not require disinfection for certain applications. The designer decides what waters need disinfection in order to meet the jurisdiction's water quality requirements for the end use application. Note that untreated gray water cannot be stored for longer than 24 hours because of the significant bacteria present in the water.

P2911.6.1 Gray water used for fixture flushing. Gray water used for flushing water closets and urinals shall be disinfected and treated by an on-site water reuse treatment system complying with NSF 350.

❖ Untreated gray water, even though disinfected, is too much of a health risk to be used inside of a building for the purposes of flushing water closets and urinals. Gray water must be processed through treatment equipment that complies with NSF 350.

P2911.7 Storage tanks. Storage tanks utilized in on-site nonpotable water reuse systems shall comply with Section P2910.9 and Sections P2911.7.1 through P2911.7.3.

❖ In addition to Section P2909.9, there are additional requirements for nonpotable water tanks.

P2911.7.1 Location. Storage tanks shall be located with a minimum horizontal distance between various elements as indicated in Table P2911.7.1.

❖ Table P22911.7.1 indicates the minimum required clearance between nonpotable water storage tanks

INTERNATIONAL CODE COUNCIL®
Copyright © 2015 ICC. ALL RIGHTS RESERVED. Accessed by David Dammon on Jun 21, 2017 12:30:52 PM pursuant to License Agreement with ICC. No further reproduction or distribution authorized. ANY UNAUTHORIZED REPRODUCTION OR DISTRIBUTION IS A VIOLATION OF THE FEDERAL COPYRIGHT ACT AND THE LICENSE AGREEMENT, AND SUBJECT TO CIVIL AND CRIMINAL PENALTIES THEREUNDER.

and sources of possible contamination, water services that could be contaminated, adjacent lot lines and the critical root zone of trees that must be protected.

TABLE P2911.7.1
LOCATION OF NONPOTABLE WATER REUSE STORAGE TANKS

ELEMENT	MINIMUM HORIZONTAL DISTANCE FROM STORAGE TANK (feet)
Critical root zone (CRZ) of protected trees	2
Lot line adjoining private lots	5
Seepage pits	5
Septic tanks	5
Water wells	50
Streams and lakes	50
Water service	5
Public water main	10

For SI: 1 foot = 304.8 mm

P2911.7.2 Inlets. Storage tank inlets shall be designed to introduce water into the tank with minimum turbulence, and shall be located and designed to avoid agitating the contents of the storage tank.

❖ The introduction of gray water into a storage tank (already having some water in the tank) must be in a manner that limits agitation of the water. Typically, the water is introduced below a certain water "low point" level but above the bottom of the tank.

P2911.7.3 Outlets. Outlets shall be located not less than 4 inches (102 mm) above the bottom of the storage tank, and shall not skim water from the surface.

❖ The "outlet" referred to is not the drain outlet of the tank. The purpose of the section is to allow some volume for sediment to settle in the bottom of the tank and to not have pump intakes or intake piping (or floating intake mechanisms) pulling water (and sediment) from this area. This is the same purpose for prohibiting water from being pulled from the surface of the water: to avoid pulling in floating debris from the water surface.

P2911.8 Valves. Valves shall be supplied on on-site nonpotable water reuse systems in accordance with Sections P2911.8.1 and P2911.8.2.

❖ There are two valves that must be provided on nonpotable water reuse systems: a bypass valve and a backwater valve for the overflow and drain of the storage tank.

P2911.8.1 Bypass valve. One three-way diverter valve certified to NSF 50 or other *approved* device shall be installed on collection piping upstream of each storage tank, or drainfield, as applicable, to divert untreated on-site reuse sources to the sanitary sewer to allow servicing and inspection of the system. Bypass valves shall be installed downstream of fixture traps and vent connections. Bypass valves shall be labeled to indicate the direction of flow, connection and storage tank or drainfield connection. Bypass valves shall be installed in accessible locations. Two shutoff valves shall not be installed to serve as a bypass valve.

❖ There will be situations where flow to the nonpotable water storage tank must be diverted. One of those times will be during cleaning of the tank. The flow must be positively diverted so that it is known that the flow is not backing up in the building but is being diverted to an appropriate location. The only way to positively know is by installing a three-way diverter valve where the flow can only be diverted from one outlet to the other outlet (without the incoming flow being blocked). Note the last sentence of the section that prohibits two independent valves from being used to divert the flow. Opening and closing two independent valves could result in both valves being inadvertently closed. The requirement for listing and labeling of the three-way valve to NSF 50 ensures that the valve is of quality construction and meets durability requirements, as this valve might be installed outdoors.

P2911.8.2 Backwater valve. Backwater valves shall be installed on each overflow and tank drain pipe. Backwater valves shall be in accordance with Section P3008.

❖ Contamination of a nonpotable water storage tank by any type of external water must be avoided. A back water valve is a check valve for nonpotable water in gravity flow piping. Although the reference is to Section P3008, Section P3008.1 does not apply because this section always requires backwater valves. Sections P3008.2 through P3008.5 do apply.

P2911.9 Pumping and control system. Mechanical equipment including pumps, valves and filters shall be accessible and removable in order to perform repair, maintenance and cleaning. The minimum flow rate and flow pressure delivered by the pumping system shall be appropriate for the application and in accordance with Section P2903.

❖ Equipment must be maintained, repaired or replaced, so access will be needed to perform that work. How easy that access will be is up to the designer of the system and the area that he or she has to fit the system into. Every effort should be made to think about how components can be taken apart while still connected to the system. Where components need to be replaced, the designer needs to think about the clearances necessary for removal of the component. For example, many underground storage tanks have submersible pumps attached to discharge piping such that the entire vertical section of discharge piping has to be lifted out to bring the pump up to, and out of the tank. Will there be sufficient overhead clearance at the completion of the entire project? Sometimes, at the "rough-in" installation of a large tank, it does appear that there is sufficient clearance. However, afterwards a large duct or a fire water line may be inappropriately routed across the area counted on for removal of the pump.

The pumps must have the capacity to provide the necessary flow and pressure for proper operation of the plumbing fixtures (water closets and urinals).

INTERNATIONAL CODE COUNCIL®
Copyright © 2015 ICC. ALL RIGHTS RESERVED. Accessed by David Dammon on Jun 21, 2017 12:30:52 PM pursuant to License Agreement with ICC. No further reproduction or distribution authorized. ANY UNAUTHORIZED REPRODUCTION OR DISTRIBUTION IS A VIOLATION OF THE FEDERAL COPYRIGHT ACT AND THE LICENSE AGREEMENT, AND SUBJECT TO CIVIL AND CRIMINAL PENALTIES THEREUNDER.

P2911.10 Water-pressure-reducing valve or regulator. Where the water pressure supplied by the pumping system exceeds 80 psi (552 kPa) static, a pressure-reducing valve shall be installed to reduce the pressure in the nonpotable water distribution system piping to 80 psi (552 kPa) static or less. Pressure-reducing valves shall be specified and installed in accordance with Section P2903.3.1.

❖ Most pumps have a variation in pressure output that changes with the flow rate. Typically, the highest output pressure is when the flow rate is zero (or nearly zero). As outlets in the distribution system open, the flow rate from the pump increases to match the demand, and the pressure that the pump generates is somewhat less. As more outlets open, the flow becomes greater and the outlet pressure of the pump becomes even less. Because of this effect, a pump model is chosen to supply the minimum required pressure of the system when the demand (flow rate) of the system is at the greatest. Thus, at low demands (flow rates), the pressure in the system can easily exceed 80 psi and a pressure regulator is required to keep the system pressure from exceeding 80 psi. Note that in distribution systems of multistory buildings, the pressure in the riser(s) might need to be significantly greater than 80 psi to counter the effect of pressure loss caused by elevation change. Pressure reducers are installed for the branches for the fixtures on lower floor levels to maintain the pressure in those branches at or below 80 psi for those floors.

Variable speed pumps for water distribution can resolve the problem of needing to choose a pump that has a much higher pressure at low/no-flow conditions so that there is adequate pressure at peak flow conditions. A variable speed pump changes the rotational speed pump impeller to better match the pump's outlet pressure in response to the flow rate. However, for multistory buildings, there will still be the need for reducing pressures for the branches serving the lower floors.

P2911.11 Distribution pipe. Distribution piping utilized in on-site nonpotable water reuse systems shall comply with Sections P2911.11.1 through P2911.11.3.

Exception: Irrigation piping located outside of the building and downstream of a backflow preventer.

❖ Distribution piping begins at the treated water storage tank and ends at the termination of the fixture supply pipe, such as at a water closet or urinal. Where the end use of the nonpotable water is not a plumbing fixture, then the piping ends at a control valve for the system that utilizes the nonpotable water.

The exception for irrigation systems allows for piping not complying with this section to begin after the backflow preventer for the irrigation system.

P2910.11.1 Materials, joints and connections. Distribution piping shall conform to the standards and requirements specified in Section P2906 for nonpotable water.

❖ To maintain consistency in the pipe sizes, materials and connections of water distribution piping, both potable and nonpotable, must comply with the requirements of Section P2906. Although there is very little difference between Tables P2906.4 and P2906.5, one notable difference is that PVC piping is not indicated in Table P2906.5. For a potable water supply system, PVC is not allowed to be used for water distribution piping (piping that is downstream of the main water shutoff valve for the building) primarily because the material is not rated for hot water service. Where piping potable water systems inside of a building, there is the concern that PVC piping could be inadvertently used for a hot water line and that the piping could fail under that service condition. Because nonpotable water would not be heated prior to use in a building, it is questionable as to whether this (potable water system) limitation for use of PVC piping for nonpotable water distribution (in a building) is necessary or appropriate. The building official will have to make this decision.

P2911.11.2 Design. On-site nonpotable water reuse distribution piping systems shall be designed and sized in accordance with Section P2903 for the intended application.

❖ Section P2903 requires that water distribution systems be designed in accordance with an accepted engineering practice and provides basic design criteria. A nonpotable water distribution system serving fixtures (water closets and urinals) needs to provide the same pressures and flow rates to the fixtures as if those fixtures were supplied by a potable water system.

P2911.11.3 Marking. On-site nonpotable water distribution piping labeling and marking shall comply with Section P2901.2.

❖ See the commentary to Section P2901.2. The term "labeling" in this section is not to be confused with requirements for third-party inspection and certification of products (e.g., the "listing and labeling" to a standard).

P2911.12 Tests and inspections. Tests and inspections shall be performed in accordance with Sections P2911.12.1 through P2911.12.6.

❖ Piping must be tested after it is installed to ensure the integrity of the installation. Note that the tests of piping are not necessarily attempting to replicate an actual condition of service. This section is also concerned with water quality at the point of use.

P2911.12.1 Collection pipe and vent test. Drain, waste and vent piping used for on-site water reuse systems shall be tested in accordance with Section P2503.

❖ Section P2503 covers testing of drainage and vent piping inside a building (including under the building). Note that Section P2503.5.1 covering air testing of piping, prohibits air testing of plastic piping. Where drainage piping is outside of a building, either above or below ground, Section P2503.4 appears to apply even though the piping is not sewer piping (carrying sewage with fecal matter).

INTERNATIONAL CODE COUNCIL®
Copyright © 2015 ICC. ALL RIGHTS RESERVED. Accessed by David Dammon on Jun 21, 2017 12:30:52 PM pursuant to License Agreement with ICC. No further reproduction or distribution authorized. ANY UNAUTHORIZED REPRODUCTION OR DISTRIBUTION IS A VIOLATION OF THE FEDERAL COPYRIGHT ACT AND THE LICENSE AGREEMENT, AND SUBJECT TO CIVIL AND CRIMINAL PENALTIES THEREUNDER.

P2911.12.2 Storage tank test. Storage tanks shall be tested in accordance with Section P2910.11.

❖ This section references the storage tank tests in Section P2910.11. In some situations, vent piping for storage tanks will be completely outdoors. The storage tank test does not include testing of the vent piping because the vent piping is completely outdoors, including the vent terminal. However, in other situations, the storage tank vent piping will be indoors (primarily because the storage tank is inside of the building or under the building). This vent piping should be tested separately, not as a part of testing the storage tank. Although it would be possible to temporarily block the tank overflow and fill the storage tank completely full until the water spilled out of the top of the vent pipe, storage tanks might not be designed for more than the pressure of just the tank being filled to capacity (tank overflow level). Adding the head pressure of a vertical run of vent piping, perhaps several stories or more, could overstress the storage tank walls.

This does not necessarily mean that storage tank (indoor) vent piping should not be tested. Testing of the tank vent piping might require that a valve be installed in the vent piping just above the tank, with the valve closed and the vent piping filled with water for the leak check. After the test, the valve could be opened, the water in the piping drained to the tank and the valve removed so that final vent-to-tank connections can be completed.

P2911.12.3 Water supply system test. The testing of makeup water supply piping and distribution piping shall be conducted in accordance with Section P2503.7.

❖ Makeup water supply piping could be another nonpotable water supply but is more often a potable water supply. In either situation, the piping must be leak free. Note that air testing of plastic piping is prohibited. And where piping other than plastic is tested, test air pressure is only required to be 50 psi. Where water testing is performed, the test pressure must be the working pressure of the system.

However, in service, the piping is only required to be leak free at the normal water pressures encountered. This does not imply that all water piping to the storage tank will experience the same pressure. For example, the makeup water control valve might be a 1-inch motorized ball valve located at some distance away from the storage tank. The valve might even be below the top of the storage tank. When the valve opens, the piping downstream of the valve will only be subjected to the pressure of the flow resistance in the downstream piping and any difference in the elevation between the valve and the outlet of the piping. That pressure will most likely be much less than the static pressure upstream of the makeup water valve. For the piping from the makeup water valve to the storage tank, the "test" of the piping should simply be a visual test. There is no need to temporarily install a test valve right at the tank for testing this piping at full line pressure.

Testing of distribution piping is not any different than for potable water.

P2911.12.4 Inspection and testing of backflow prevention assemblies. The testing of backflow preventers and backwater valves shall be conducted in accordance with Section P2503.8.

❖ Section P2503.8 covers the inspection and testing of backflow prevention assemblies and hose connection backflow preventers. The section also covers the inspection of air gaps. A backflow prevention assembly is a type of backflow preventer that can be field tested using sensitive, calibrated gauges to determine if the assembly is operational. Backflow prevention assemblies have "test cocks" for attachment of the gauge's test hoses.

A hose connection backflow preventer is a very simple device to test. All that is necessary is to hold the open outlet of a connected hose above the elevation of the hose connection backflow preventer (the valve before the backflow preventer should be in the "off" position). The contents of the hose will flow back to the backflow preventer and out of the backflow preventer's ports.

An air gap can be visually inspected to verify that the required open air distance is provided.

P2911.12.5 Inspection of vermin and insect protection. Inlets and vents to the system shall be inspected to verify that each is protected to prevent the entrance of insects and vermin into the storage tank and piping systems in accordance with Section P2910.7.

❖ This section points back to Section P2910.7 so that verification can be made that protection has been provided.

All other types of backflow preventers cannot be field tested nor should any attempts be made to perform a field test, as this could damage the device such that it might not perform the intended function under service conditions.

P2911.12.6 Water quality test. The quality of the water for the intended application shall be verified at the point of use in accordance with the requirements of the jurisdiction.

❖ The jurisdiction allowed the installation of the nonpotable water reuse system based on the premise that a certain quality level would be achieved by the treatment and disinfection of the system. The installer has to perform tests to show that the system provides that quality.

P2911.13 Operation and maintenance manuals. Operation and maintenance materials shall be supplied with nonpotable on-site water reuse systems in accordance with Sections P2910.13.1 through P2910.13.4.

❖ The following sections indicate the minimum requirements for operation and maintenance manuals supplied with on-site nonpotable water reuse systems. As these systems can be very diverse and some are very customized, more than these minimum requirements are encouraged. For example, photographs of compo-

INTERNATIONAL CODE COUNCIL®
Copyright © 2015 ICC. ALL RIGHTS RESERVED. Accessed by David Dammon on Jun 21, 2017 12:30:52 PM pursuant to License Agreement with ICC. No further reproduction or distribution authorized. ANY UNAUTHORIZED REPRODUCTION OR DISTRIBUTION IS A VIOLATION OF THE FEDERAL COPYRIGHT ACT AND THE LICENSE AGREEMENT, AND SUBJECT TO CIVIL AND CRIMINAL PENALTIES THEREUNDER.

nents, photograph sequences of specialized repair procedures, dimensional drawings including orientation references, common component manufacturer's part numbers and electronic files of the entire O&M package would be well received by the system owner. These systems can be complex and because numerous repair and maintenance firms will be required to work on these systems, perhaps for many generations, information must be complete and clear. And with the current diversity and number of firms providing these systems, there are bound to be future mergers and acquisitions that will make future identification of particular systems difficult as dwindling numbers of people will remain who will remember those "older" systems, let alone have access to the original records of those systems.

P2911.13.1 Manual. A detailed operations and maintenance manual shall be supplied in hard-copy form for each system.

❖ A hard copy (a booklet or binder) of the manual is most basic for anyone to comprehend and use.

P2911.13.2 Schematics. The manual shall include a detailed system schematic, the location of system components and a list of system components that includes the manufacturers and model numbers of the components.

❖ A schematic can take many forms, but in terms of these types of systems, the schematic would most likely be in the form of primarily showing tanks, pumps and treatment units in their approximate "physical forms," with the piping shown as lines connecting those components. Valves, meters and controls are typically shown in a common "legend" format for quick comprehension of their functionality. A numbered list, similar to a "bill of material," identifies every item on the schematic.

P2911.13.3 Maintenance procedures. The manual shall provide a schedule and procedures for system components requiring periodic maintenance. Consumable parts including filters shall be noted along with part numbers.

❖ An on-site nonpotable water reuse system is much more complex than a potable water system for a building. Scheduled maintenance is paramount to making sure that the nonpotable water delivered for an end use does not become a health hazard for the occupants. The other reason for performing required maintenance of these systems is that where the end use for the water is for flushing water closets and urinals, the building owner can ill afford to not have these fixtures operational. If those fixtures do not work, the building will be condemned and evacuated until such time that the system is repaired and the fixtures are operational. This is a totally different concept for most building owners who are unaware of the implications of poor or no maintenance of these systems. If the public water supply to a building is shut off because of a utility piping problem (e.g., water line break in the street, fire hydrant broken), the building owner is not to blame and the occupants "make do" with the inconvenience. However, with an on-site nonpotable water reuse system, the building owner is fully responsible for providing the nonpotable water to the water closets and urinals. The health department and code enforcement department might not look favorably at a building owner's lack of nonpotable water for his building.

P2911.13.4 Operations procedures. The manual shall include system startup and shutdown procedures. The manual shall include detailed operating procedures for the system.

❖ This requirement addresses indicating what the system components do over a period of time so that the operator of the system knows when the system is not properly operating. That period of time includes startup and shut down of the system, where an operator is usually necessary to override certain automatic functions.

SECTION P2912
NONPOTABLE RAINWATER COLLECTION AND DISTRIBUTION SYSTEMS

P2912.1 General. The provisions of this section shall govern the construction, installation, alteration, and repair of rainwater collection and conveyance systems for the collection, storage, treatment and distribution of rainwater for nonpotable applications, as permitted by the jurisdiction.

❖ Rainwater is very plentiful in many areas of the United States and so reliance on this water source is strong. However, other areas do not have much rainfall so there is no advantage to capturing what little does fall. There are also areas of the country that have legal restrictions about capturing and reusing rainwater. These areas are concerned about yearly replenishment of lakes and underground aquifers that provide the raw water source for making potable water. The more rainwater that is captured and used in a building, the less of that water finds its way back into the natural waterways that feed the lakes and rivers. It is a very delicate problem for some areas. Thus, the jurisdiction decides whether rainwater collection and distribution systems can be installed depending on the end use application. For example, a rainwater collection system for outdoor irrigation might be approved because the water will drain to the natural waterways. However, that same rainwater collection system might not be approved where the system is used to supply water closets and urinals.

P2912.2 Collection surface. Rainwater shall be collected only from above-ground impervious roofing surfaces constructed from *approved* materials. Collection of water from vehicular parking or pedestrian walkway surfaces shall be prohibited except where the water is used exclusively for landscape irrigation. Overflow and bleed-off pipes from roof-mounted *appliances* including, but not limited to, evaporative coolers, water heaters and solar water heaters shall not discharge onto rainwater collection surfaces.

❖ Before it comes in contact with a surface, rainwater is certainly of much higher "quality" than gray water. One can drink collected rainwater out of a clean drinking

INTERNATIONAL CODE COUNCIL®
Copyright © 2015 ICC. ALL RIGHTS RESERVED. Accessed by David Dammon on Jun 21, 2017 12:30:52 PM pursuant to License Agreement with ICC. No further reproduction or distribution authorized. ANY UNAUTHORIZED REPRODUCTION OR DISTRIBUTION IS A VIOLATION OF THE FEDERAL COPYRIGHT ACT AND THE LICENSE AGREEMENT, AND SUBJECT TO CIVIL AND CRIMINAL PENALTIES THEREUNDER.

cup that was put outside during a rainfall event and be fairly certain that he or she would not experience ill effects from doing so. People have been doing this for thousands of years and some people still capture rainwater for drinking and cooking. However, rainwater could become nonpotable before reaching a collection surface because of airborne pollutants that the rainwater picks up as it falls from the sky. Imagine the condition of rainwater in an area around a large coal-fired boiler such as found in a power plant. Furthermore, the collection of rainwater (contacting a roof surface) adds more pollutants to the water as collection surfaces (roofs) have bird droppings, airborne particulates, dirt with pesticides and a host of many other things that would make the rainwater unsafe for drinking.

The requirement for roofing surfaces (used for the collection of rainwater) to be of materials approved by the code official is to make sure that the roof material itself does not add any more contamination to the rainwater that the end use application cannot have or that the treatment processes for the rainwater cannot remove before end use. For example, a roof made of copper with lead-soldered joints might not be appropriate for the end use of the rainwater to be drinking water because of the potential for copper and lead contamination that might not be removed by the proposed treatment process.

Any other potential sources of contamination, such as bleed offs and overflows from mechanical systems and relief valves from water heaters, must not be allowed to discharge to the roof surface for the same reasons as making sure that the roof material does not add contaminants to the rainwater.

P2912.3 Debris excluders. Downspouts and leaders shall be connected to a roof washer and shall be equipped with a debris excluder or equivalent device to prevent the contamination of collected rainwater with leaves, sticks, pine needles and similar material. Debris excluders and equivalent devices shall be self-cleaning.

❖ The debris excluder can be an integral part of the roof washer or it can be separate. The debris excluder screens out sticks, leaves and other large particles from the rainwater flow. As debris captured in the debris excluder can build up quickly, these devices are required to be self-cleaning.

P2912.4 Roof washer. An amount of rainwater shall be diverted at the beginning of each rain event, and not allowed to enter the storage tank, to wash accumulated debris from the collection surface. The amount of rainfall to be diverted shall be field adjustable as necessary to minimize storage tank water contamination. The roof washer shall not rely on manually operated valves or devices, and shall operate automatically. Diverted rainwater shall not be drained to the roof surface, and shall be discharged in a manner consistent with the storm water runoff requirements of the jurisdiction. Roof washers shall be accessible for maintenance and service.

❖ The term "roof washer" can be misleading. The roof washer is actually a device that wastes the initial flow of rainwater coming from the roof so that the highly contaminated rainwater is diverted from the storage tank. This device must be adjustable so that the amount of water wasted can be varied to meet the actual conditions of service. The basis of adjustment is usually water testing to determine the level of contaminants in the water going to the storage tank. Once set, the roof washer may not need adjustment unless conditions of the captured rainwater change.

P2912.5 Roof gutters and downspouts. Gutters and downspouts shall be constructed of materials that are compatible with the collection surface and the rainwater quality for the desired end use. Joints shall be watertight.

❖ The construction materials of gutters and downspouts must be "compatible" with the raw rainwater quality that is needed for the end uses. The intent is the same as for roof materials that collect rainwater. As gutters are often in direct contact with roofing materials (the collection surface), material compatibility between the two surfaces must be considered. For example, an aluminum collection surface (roofing) might not be compatible with galvanized steel gutters.

P2912.5.1 Slope. Roof gutters, leaders and rainwater collection piping shall slope continuously toward collection inlets and shall be free of leaks. Gutters and downspouts shall have a slope of not less than $^1/_8$ inch per foot (10.4 mm/m) along their entire length. Gutters and downspouts shall be installed so that water does not pool at any point.

❖ Once rainwater is collected by gutters, the rainwater must be kept moving toward the storage tank so that particulate matter and debris do not drop out of the flow. Pockets and pools of nonmoving water will begin to create bacteria "nests" that will contaminate the stored rainwater after the roof washer has wasted the highly contaminated initial flow from the roof.

P2912.5.2 Cleanouts. Cleanouts shall be provided in the water conveyance system to allow access to filters, flushes, pipes and downspouts.

❖ There needs to be access to the collection and conveyance systems and filters for conveying rainwater so that debris can be periodically cleared from those systems.

P2912.6 Drainage. Water drained from the roof washer or debris excluder shall not be drained to the sanitary sewer. Such water shall be diverted from the storage tank and shall discharge to a location that will not cause erosion or damage to property. Roof washers and debris excluders shall be provided with an automatic means of self-draining between rain events and shall not drain onto roof surfaces.

❖ The first sentence prohibits wasted storm water (rainwater) from entering a drain system for sewage only. Rainwater does not need sewage treatment processes, whether they be public or private systems, and adding this water unnecessarily taxes those systems. Control of rainwater runoff from a roof washer or debris excluder is required to avoid erosion and other possible negative effects.

INTERNATIONAL CODE COUNCIL®
Copyright © 2015 ICC. ALL RIGHTS RESERVED. Accessed by David Dammon on Jun 21, 2017 12:30:52 PM pursuant to License Agreement with ICC. No further reproduction or distribution authorized. ANY UNAUTHORIZED REPRODUCTION OR DISTRIBUTION IS A VIOLATION OF THE FEDERAL COPYRIGHT ACT AND THE LICENSE AGREEMENT, AND SUBJECT TO CIVIL AND CRIMINAL PENALTIES THEREUNDER.

Roof washers and debris excluders must be self-draining so that there is not captive water that could harbor mosquitos. Also, captive water during freezing temperatures could freeze and damage these devices.

The water and debris that is excluded from going to the storage tank should not be wasted to the roof surface, as this will only reintroduce the contaminants to the collection system after the roof washer has cycled for the initial rainwater flow.

P2912.7 Collection pipe. Rainwater collection and conveyance systems shall utilize drainage piping *approved* for use within plumbing drainage systems to collect and convey captured rainwater. Vent piping *approved* for use within plumbing venting systems shall be utilized for vents within the rainwater system. Collection and vent piping materials shall comply with Section P3002.

❖ Where piping is used to convey rainwater or to vent rainwater systems, the piping must comply with materials that are in accordance with Section P3002.

P2912.7.1 Installation. Collection piping conveying captured rainwater shall be installed in accordance with Section P3005.3.

❖ See the commentary to Section P2911.4.1.

P2912.7.2 Joints. Collection piping conveying captured rainwater shall utilize joints *approved* for use with the distribution piping and appropriate for the intended applications as specified in Section P3003.

❖ See the commentary to Section P2911.4.2.

P2912.7.3 Size. Collection piping conveying captured rainwater shall be sized in accordance with drainage-sizing requirements specified in Section P3005.4.

❖ See the commentary to Section P2911.4.3.

P2912.7.4 Marking. Additional marking of collection piping conveying captured rainwater for reuse shall not be required beyond that required for sanitary drainage, waste, and vent piping by Chapter 30.

❖ See the commentary to Section P2911.4.4.

P2912.8 Filtration. Collected rainwater shall be filtered as required for the intended end use. Filters shall be accessible for inspection and maintenance. Filters shall utilize a pressure gauge or other *approved* method to provide indication when a filter requires servicing or replacement. Filters shall be installed with shutoff valves installed immediately upstream and downstream to allow for isolation during maintenance.

❖ See the commentary to Section P2911.5.

P2912.9 Disinfection. Where the intended application for rainwater requires disinfection or other treatment or both, it shall be disinfected as needed to ensure that the required water quality is delivered at the point of use.

❖ Collected rainwater will not require disinfection for many end use applications. The designer decides whether there is need for disinfection in order to meet the jurisdiction's water quality requirements for the end use application.

P2912.10 Storage tanks. Storage tanks utilized in nonpotable rainwater collection and conveyance systems shall comply with Section P2910.9 and Sections P2912.10.1 through P2912.10.3.

❖ In addition to Section P2910.9, there are additional requirements for nonpotable water tanks.

P2912.10.1 Location. Storage tanks shall be located with a minimum horizontal distance between various elements as indicated in Table P2912.10.1.

❖ This section refers to Table P2912.10.1, which is similar to Table P2911.7.1, except there is not a concern for the rainwater contaminating other water sources. Rainwater does not offer the tree roots as much "incentive" to travel towards the storage tank where the tank is underground.

P2912.10.2 Inlets. Storage tank inlets shall be designed to introduce collected rainwater into the tank with minimum turbulence, and shall be located and designed to avoid agitating the contents of the storage tank.

❖ The introduction of rainwater into a storage tank (already having some water in the tank) must be in a manner that limits agitation of the water. Typically, the water is introduced below a certain water "low point" level but above the bottom of the tank. Although there is usually not too much floating debris on the surface of the water, a biofilm does develop on the surface of the water and the bottom of the tank. The biofilms are helpful in maintaining the water in good condition. Therefore, avoiding unnecessary turbulence contributes to the health of these biofilms.

P2912.10.3 Outlets. Outlets shall be located not less than 4 inches (102 mm) above the bottom of the storage tank and shall not skim water from the surface.

❖ The purpose of the section is to allow some volume for sediment to settle in the bottom of the tank and to not have pump intakes or intake piping (or floating intake mechanisms) pulling water (and sediment) from this area.

TABLE P2912.10.1
LOCATION OF RAINWATER STORAGE TANKS

ELEMENT	MINIMUM HORIZONTAL DISTANCE FROM STORAGE TANK (feet)
Critical root zone (CRZ) of protected trees	2
Lot line adjoining private lots	5
Seepage pits	5
Septic tanks	5

For SI: 1 foot = 304.8 mm

INTERNATIONAL CODE COUNCIL®
Copyright © 2015 ICC. ALL RIGHTS RESERVED. Accessed by David Dammon on Jun 21, 2017 12:30:52 PM pursuant to License Agreement with ICC. No further reproduction or distribution authorized. ANY UNAUTHORIZED REPRODUCTION OR DISTRIBUTION IS A VIOLATION OF THE FEDERAL COPYRIGHT ACT AND THE LICENSE AGREEMENT, AND SUBJECT TO CIVIL AND CRIMINAL PENALTIES THEREUNDER.

P2912.11 Valves. Valves shall be supplied on rainwater collection and conveyance systems in accordance with Sections P2912.11.1 and P2912.11.2.

❖ Sections P2912.11.1 and P2912.11.2 describe the required inlet and outlet valves for the system.

P2912.11.1 Influent diversion. A means shall be provided to divert storage tank influent to allow for maintenance and repair of the storage tank system.

❖ The code does not require a valve for the inlet of the tank; however, valves might be used for this purpose so that maintenance of the storage tank can be performed. Such valves would not necessarily need to be a three-way valve. One valve could be used for the tank inlet and the inlet piping arranged so that the inlet piping (before the valve) "over-flows" to a storm sewer or alternative discharge point while the tank is out of service.

P2912.11.2 Backwater valve. Backwater valves shall be installed on each overflow and tank drain pipe. Backwater valves shall be in accordance with Section P3008.

❖ See the commentary to Section P2911.8.2.

P2912.12 Pumping and control system. Mechanical equipment including pumps, valves and filters shall be easily accessible and removable in order to perform repair, maintenance and cleaning. The minimum flow rate and flow pressure delivered by the pumping system shall appropriate for the application and in accordance with Section P2903.

❖ See the commentary to Section P2903.

P2912.13 Water-pressure-reducing valve or regulator. Where the water pressure supplied by the pumping system exceeds 80 psi (552 kPa) static, a pressure-reducing valve shall be installed to reduce the pressure in the rainwater distribution system piping to 80 psi (552 kPa) static or less. Pressure-reducing valves shall be specified and installed in accordance with Section P2903.3.1.

❖ See the commentary to Section P2911.10.

P2912.14 Distribution pipe. Distribution piping utilized in rainwater collection and conveyance systems shall comply with Sections P2912.14.1 through P2912.14.3.

Exception: Irrigation piping located outside of the building and downstream of a backflow preventer.

❖ See the commentary to Section P2911.11.

P2912.14.1 Materials, joints and connections. Distribution piping shall conform to the standards and requirements specified in Section P2906 for nonpotable water.

❖ See the commentary to Section P2912.11.1.

P2912.14.2 Design. Distribution piping systems shall be designed and sized in accordance with the Section P2903 for the intended application.

❖ See the commentary to Section P2912.11.1.

P2912.14.3 Labeling and marking. Nonpotable rainwater distribution piping labeling and marking shall comply with Section P2901.2.

❖ See the commentary to Section P2912.11.3.

P2912.15 Tests and inspections. Tests and inspections shall be performed in accordance with Sections P2912.15.1 through P2912.15.8.

❖ Piping must be tested after it is installed to ensure the integrity of the installation. Note that the tests of piping are not necessarily attempting to replicate an actual condition of service. Gutters need to be inspected to make sure they have proper slope. This section is also concerned with water quality at the point of use.

P2912.15.1 Roof gutter inspection and test. Roof gutters shall be inspected to verify that the installation and slope is in accordance with Section P2912.5.1. Gutters shall be tested by pouring not less than one gallon of water (3.8 L) into the end of the gutter opposite the collection point. The gutter being tested shall not leak and shall not retain standing water.

❖ Water collected from roof surfaces cannot be collected unless the water can make it to the storage tank. Improperly sloped gutters (usually backwardly sloped or without slope) will cause the gutters to overflow during peak rainfall events resulting in loss of rainwater. Standing water in gutters will evaporate (another loss) or create pools where mosquitos can proliferate. Leaky gutters also waste rainwater. Pouring water into the most remote end of a gutter system is the simplest way to determine proper slope and to find leaks. Note that the minimum quantity of 1 gallon is to prevent someone from pouring a smaller amount of water into the gutter and because the water did not leak out of the gutter (because the water did not arrive at all points in the gutter system), the gutter is considered "leak free." The intent of this section is to introduce sufficient water to the gutter to test the gutter system for leaks, flow direction and standing water.

P2912.15.2 Roofwasher test. Roofwashers shall be tested by introducing water into the gutters. Proper diversion of the first quantity of water in accordance with the requirements of Section P2912.4 shall be verified.

❖ At the same time that the gutters are being tested, the roof washer operation can be tested. The initial amount of rainwater diversion is chosen by the designer. Knowing that the roof washer is adjustable, verification of the amount for this test is not necessary. Only a verification that the device wastes the initial flow and returns to a position to allow the flow to be sent to the storage tank is necessary.

P2912.15.3 Collection pipe and vent test. Drain, waste and vent piping used for rainwater collection and conveyance systems shall be tested in accordance with Section P2503.

❖ See the commentary to Section P2911.12.1.

INTERNATIONAL CODE COUNCIL®
Copyright © 2015 ICC. ALL RIGHTS RESERVED. Accessed by David Dammon on Jun 21, 2017 12:30:52 PM pursuant to License Agreement with ICC. No further reproduction or distribution authorized. ANY UNAUTHORIZED REPRODUCTION OR DISTRIBUTION IS A VIOLATION OF THE FEDERAL COPYRIGHT ACT AND THE LICENSE AGREEMENT, AND SUBJECT TO CIVIL AND CRIMINAL PENALTIES THEREUNDER.

P2912.15.4 Storage tank test. Storage tanks shall be tested in accordance with the Section P2910.11.

❖ See the commentary to Section P2911.12.2.

P2912.15.5 Water supply system test. The testing of makeup water supply piping and distribution piping shall be conducted in accordance with Section P2503.7.

❖ Makeup water supply piping will be a potable water supply. The piping must be leak free. Note that air testing of plastic piping is prohibited. And where piping other than plastic is tested, test air pressure is only required to be 50 psi. Where water testing is performed, the test pressure must be the working pressure of the system.

However, in service, the piping is only required to be leak free at the normal water pressures encountered. This does not mean that all water piping to the storage tank will experience the same pressure. For example, in a large nonpotable water reuse system, the makeup water control valve might be a 1-inch motorized ball valve located some distance away from the storage tank. The valve might even be below the top of the storage tank. When the valve opens, the piping downstream of the valve will only be subjected to the pressure of the flow resistance in the downstream piping and any difference in the elevation between the valve and the outlet of the piping. That pressure will most likely be much less than the static pressure upstream of the makeup water valve. For the piping from the makeup up water valve to the storage tank, the "test" of the piping should simply be a visual test. There is no need to "temporarily install a test valve" right at the tank for testing this piping at full line pressure. In this example, this would be a 3-inch valve, which would be a needless expenditure.

Testing of distribution piping is not any different than for potable water.

P2912.15.6 Inspection and testing of backflow prevention assemblies. The testing of backflow preventers and backwater valves shall be conducted in accordance with Section P2503.8.

❖ See the commentary to Section P2911.12.4.

P2912.15.7 Inspection of vermin and insect protection. Inlets and vents to the system shall be inspected to verify that each is protected to prevent the entrance of insects and vermin into the storage tank and piping systems in accordance with Section P2910.7.

❖ This section refers back to Section P2510.7 so that verification can be made that protection has been provided.

P2912.15.8 Water quality test. The quality of the water for the intended application shall be verified at the point of use in accordance with the requirements of the jurisdiction.

❖ The jurisdiction allows the installation of the nonpotable rainwater reuse system based on the premise that a certain quality level, at the end use point, would be achieved by the treatment and disinfection systems of the rainwater reuse system. The installer has to perform tests to show that the system provides that quality at the end use point. This does not mean the collected rainwater in the storage tank must meet these requirements, because the treatment of rainwater occurs after the storage tank.

P2912.16 Operation and maintenance manuals. Operation and maintenance manuals shall be supplied with rainwater collection and conveyance systems in accordance with Sections P2912.16.1 through P2912.16.4.

❖ Sections P2912.16.1 through P2912.16.4 describe the details for operation and maintenance manuals.

P2912.16.1 Manual. A detailed operations and maintenance manual shall be supplied in hard-copy form for each system.

❖ See the commentary to Section P2911.13.1.

P2912.16.2 Schematics. The manual shall include a detailed system schematic, the location of system components and a list of system components that includes the manufacturers and model numbers of the components.

❖ See the commentary to Section P2911.13.2.

P2912.16.3 Maintenance procedures. The manual shall provide a maintenance schedule and procedures for system components requiring periodic maintenance. Consumable parts, including filters, shall be noted along with part numbers.

❖ See the commentary to Section P2911.13.3.

P2912.16.4 Operations procedures. The manual shall include system startup and shutdown procedures, and detailed operating procedures.

❖ See the commentary to Section P2911.13.4.

SECTION P2913
RECLAIMED WATER SYSTEMS

P2913.1 General. The provisions of this section shall govern the construction, installation, alteration and repair of systems supplying nonpotable reclaimed water.

❖ In most situations, reclaimed water is supplied to a building site by a public water supply utility. See the definition of "Reclaimed water" in Chapter 2. The systems that provide reclaimed water to the building site are similar to how a public utility supplies potable water to a building site. The public water supply utility goes to great lengths to make sure that these nonpotable water supplies are well marked/identified in order to avoid inadvertent connections to those systems. In most situations, piping, valves, backflow preventers and piping are colored purple.

However, the code does not limit the use of reclaimed water to only that which is supplied by a public water supply utility. A building site could have a wastewater facility (licensed by authorities having jurisdiction over such facilities) where the effluent is of a quality that meets the jurisdiction's quality requirements for reclaimed water.

INTERNATIONAL CODE COUNCIL®
Copyright © 2015 ICC. ALL RIGHTS RESERVED. Accessed by David Dammon on Jun 21, 2017 12:30:52 PM pursuant to License Agreement with ICC. No further reproduction or distribution authorized. ANY UNAUTHORIZED REPRODUCTION OR DISTRIBUTION IS A VIOLATION OF THE FEDERAL COPYRIGHT ACT AND THE LICENSE AGREEMENT, AND SUBJECT TO CIVIL AND CRIMINAL PENALTIES THEREUNDER.

P2913.2 Water-pressure-reducing valve or regulator. Where the reclaimed water pressure supplied to the building exceeds 80 psi (552 kPa) static, a pressure-reducing valve shall be installed to reduce the pressure in the reclaimed water distribution system piping to 80 psi (552 kPa) static or less. Pressure-reducing valves shall be specified and installed in accordance with Section P2903.3.1.

❖ See the commentary to Section P2911.10.

P2913.3 Reclaimed water systems. The design of the reclaimed water systems shall conform to accepted engineering practice.

❖ As reclaimed systems will be custom engineered for the specific building site, accepted engineering practices must be used for these systems.

P2913.3.1 Distribution pipe. Distribution piping shall comply with Sections P2913.3.1.1 through P2913.3.1.3.

Exception: Irrigation piping located outside of the building and downstream of a backflow preventer.

❖ See the commentary to Section P2911.11.

P2913.3.1.1 Materials, joints and connections. Distribution piping conveying reclaimed water shall conform to standards and requirements specified in Section P2905 for nonpotable water.

❖ See the commentary to Section P2911.11.1.

P2913.3.1.2 Design. Distribution piping systems shall be designed and sized in accordance with Section P2903 for the intended application.

❖ See the commentary to Section P2911.11.2.

P2913.3.1.3 Labeling and marking. Nonpotable rainwater distribution piping labeling and marking shall comply with Section P2901.2.

❖ See the commentary to Section P2911.11.3.

P2913.4 Tests and inspections. Tests and inspections shall be performed in accordance with Sections P2913.4.1 and P2913.4.2.

❖ Piping must be tested after it is installed to ensure the integrity of the installation and that the piping does not leak.

P2913.4.1 Water supply system test. The testing of makeup water supply piping and reclaimed water distribution piping shall be conducted in accordance with Section P2503.7.

❖ See the commentary to Section P2503.7.

P2913.4.2 Inspection and testing of backflow prevention assemblies. The testing of backflow preventers shall be conducted in accordance with Section P2503.8.

❖ See the commentary to Section P2503.8.

Bibliography

The following resource materials were used in the preparation of the commentary for this chapter of the code:

ASTM D2282–99e01, *Specification for Acrylonitrile-Butadiene-Styrene (ABS) Plastic Pipe (SDR-PR).* West Conshohocken, PA: ASTM International, 2001.

ASTM D2737–03, *Specification for Polyethylene (PE) Plastic Tubing.* West Conshohocken, PA: ASTM International, 2003.

ASTM D2846/D2846M–99, *Specification for Chlorinated Poly (Vinyl Chloride) (CPVC) Plastic Hot- and Cold-Water Distribution Systems.* West Conshohocken, PA: ASTM International, 1999.

ASTM F441/F441M–02, *Specification for Chlorinated Poly (Vinyl Chloride) (CPVC) Plastic Pipe, Schedules 40 and 80.* West Conshohocken, PA: ASTM International, 2002.

ASTM F876–04, *Specification for Cross-linked Polyethylene (PEX) Tubing.* West Conshohocken, PA: ASTM International, 2004.

INTERNATIONAL CODE COUNCIL®
Copyright © 2015 ICC. ALL RIGHTS RESERVED. Accessed by David Dammon on Jun 21, 2017 12:30:52 PM pursuant to License Agreement with ICC. No further reproduction or distribution authorized. ANY UNAUTHORIZED REPRODUCTION OR DISTRIBUTION IS A VIOLATION OF THE FEDERAL COPYRIGHT ACT AND THE LICENSE AGREEMENT, AND SUBJECT TO CIVIL AND CRIMINAL PENALTIES THEREUNDER.

INTERNATIONAL CODE COUNCIL®
Copyright © 2015 ICC. ALL RIGHTS RESERVED. Accessed by David Dammon on Jun 21, 2017 12:30:52 PM pursuant to License Agreement with ICC. No further reproduction or distribution authorized. ANY UNAUTHORIZED REPRODUCTION OR DISTRIBUTION IS A VIOLATION OF THE FEDERAL COPYRIGHT ACT AND THE LICENSE AGREEMENT, AND SUBJECT TO CIVIL AND CRIMINAL PENALTIES THEREUNDER.

Chapter 30: Sanitary Drainage

General Comments

This chapter contains the requirements pertaining to the design, sizing and installation of sanitary drainage systems. Because gray water is a subset of sanitary drainage, by default, a gray water collection system must be designed in the same manner as a sanitary drainage system except the discharge is collected in a gray water tank.

Material requirements for sanitary drainage systems and applicable standards for the various materials are given in a table format for ease of reference. This chapter discusses joining methods of similar or different types of material and includes a table the designer can use to determine the drainage fixture unit (d.f.u) values as they apply to various fixtures and appliances.

It also addresses the appropriate use of various fittings, provisions for future fixtures or connections, adequate placement of cleanouts, sizing requirements pertaining to horizontal and vertical drain lines, and limitations pertaining to vertical and horizontal offsets in vertical drainage stacks. It includes requirements for drainage fixtures and drains that cannot be drained by gravity to the sewer.

This chapter regulates the use of pumps. It provides the requirement for, and the manufacture of, backwater valves.

Purpose

This chapter states the minimum requirements for achieving a properly sized sanitary drainage system. It addresses the proper use of fittings for directing the flow and its contents effectively. It also outlines materials and provisions necessary for servicing the drainage system.

A properly working drainage system will depend on adequate air to balance the pressure fluctuations that are common in such systems; hence, there is a need for properly sized and located vents to the atmosphere. Venting requirements are located in Chapter 31.

In the 19th century, typhoid fever, cholera and dysentery were common. The elimination of these diseases in industrialized nations has been due in large part to modern plumbing systems with proper drainage piping. Medical professionals give much of the credit for improvements in health and longevity to the plumbing profession. Medicine alone, without improvements in sanitation practices, would have had only a marginal effect.

SECTION P3001 GENERAL

P3001.1 Scope. The provisions of this chapter shall govern the materials, design, construction and installation of sanitary drainage systems. Plumbing materials shall conform to the requirements of this chapter. The drainage, waste and vent (DWV) system shall consist of piping for conveying wastes from plumbing fixtures, appliances and appurtenances, including fixture traps; above-grade drainage piping; below-grade drains within the building (*building drain*); below- and above-grade venting systems; and piping to the public sewer or private septic system.

❖ This chapter covers both sanitary drainage and sewers. Because gray water is a subset of sanitary drainage, by default, a gray water collection system must be designed in the same manner as a sanitary drainage system except the discharge is collected in a gray water tank.

All portions of the drain, waste and vent (DWV) system are listed here. Although this chapter primarily addresses drainage and waste lines, venting is also an important part of the entire drainage system in that it provides the air movement needed for the drainage system to function properly.

P3001.2 Protection from freezing. No portion of the above-grade DWV system, other than vent terminals, shall be located outside of a building, in *attics* or crawl spaces, concealed in outside walls, or in any other place subjected to freezing temperatures unless adequate provision is made to protect them from freezing by insulation or heat or both, except in localities having a winter design temperature greater than 32°F (0°C) (ASHRAE 97.5 percent column, winter, see Chapter 3).

❖ In areas where freezing can occur, care must be exercised not to install drainage systems where their contents can freeze. To determine whether the locality is subject to freezing, the ASHRAE 97.5 percent column of the winter design condition table is referenced. The code user is referred to Chapter 3. A review of Table R301.2(1) for the winter design temperature will show that this determination can be made by the use of Appendix D of the *International Plumbing Code*® (IPC®). If the temperature is 32°F (0°C) or lower, this section will apply. In this case, all drainage and vent piping must not be allowed outside the building (unless buried and below the frost level), in attics or crawl spaces, concealed in outside walls or any other place subject to freezing. If the designer has no alternative but to place the piping in these places, provisions must be made to either insulate or heat those sections so

INTERNATIONAL CODE COUNCIL®
Copyright © 2015 ICC. ALL RIGHTS RESERVED. Accessed by David Dammon on Jun 21, 2017 12:30:52 PM pursuant to License Agreement with ICC. No further reproduction or distribution authorized. ANY UNAUTHORIZED REPRODUCTION OR DISTRIBUTION IS A VIOLATION OF THE FEDERAL COPYRIGHT ACT AND THE LICENSE AGREEMENT, AND SUBJECT TO CIVIL AND CRIMINAL PENALTIES THEREUNDER.

that the contents will not freeze. The concern is not only that a stoppage can occur in the pipe, but also that the pipe can burst because freezing water expands in volume. No amount of insulation by itself (without a heat source) can prevent freezing. Insulation can only delay freezing by slowing the rate of heat loss. Pipe heating devices, such as a self-limiting heat tape, can be used. Care is especially necessary where portions of the system that contain standing water, such as a trap, are installed; for example, where the trap is installed within a cantilever and may extend below the floor insulation (see Commentary Figure P2603.6).

P3001.3 Flood-resistant installation. In flood hazard areas as established by Table R301.2(1), drainage, waste and vent systems shall be located and installed to prevent infiltration of floodwaters into the systems and discharges from the systems into floodwaters.

❖ See the commentary to Section P2602.2.

SECTION P3002
MATERIALS

P3002.1 Piping within buildings. Drain, waste and vent (DWV) piping in buildings shall be as indicated in Tables P3002.1(1) and P3002.1(2) except that galvanized wrought-iron or galvanized steel pipe shall not be used underground and shall be maintained not less than 6 inches (152 mm) above ground. Allowance shall be made for the thermal expansion and contraction of plastic piping.

❖ Above-ground DWV piping within buildings must be of the materials specified in Table P3002.1(1). Underground DWV piping must be of the materials specified in Table P3002.1(2). Because galvanized wrought iron and steel pipe are very susceptible to exterior corrosion where buried in the earth, these materials are prohibited from being installed underground or within 6 inches (152 mm) above the ground. Where plastic pipe is used, there must be consideration given to the thermal expansion and contraction of the pipe because of

TABLE P3002.1(1)
ABOVE-GROUND DRAINAGE AND VENT PIPE

MATERIAL	STANDARD
Acrylonitrile butadiene styrene (ABS) plastic pipe in IPS diameters, including schedule 40, DR 22 (PS 200) and DR 24 (PS 140); with a solid, cellular core or composite wall	ASTM D2661; ASTM F628; ASTM F1488; CSA B181.1
Cast-iron pipe	ASTM A74; CISPI 301; ASTM A888
Copper or copper-alloy pipe	ASTM B42; ASTM B43; ASTM B302
Copper or copper-alloy tubing (Type K, L, M or DWV)	ASTM B75; ASTM B88; ASTM B251; ASTM B306
Galvanized steel pipe	ASTM A53
Polyolefin pipe	CSA B181.3
Polyvinyl chloride (PVC) plastic pipe in IPS diameters, including schedule 40, DR 22 (PS 200) and DR 24 (PS 140); with a solid, cellular core or composite wall	ASTM D2665; ASTM F891; CSA B181.2; ASTM F1488
Polyvinyl chloride (PVC) plastic pipe with a 3.25 inch O.D. and a solid, cellular core or composite wall	ASTM D2949; ASTM F1488
Stainless steel drainage systems, Types 304 and 316L	ASME A112.3.1

For SI: 1 inch = 25.4 mm.

TABLE P3002.1(2)
UNDERGROUND BUILDING DRAINAGE AND VENT PIPE

PIPE	STANDARD
Acrylonitrile butadiene styrene (ABS) plastic pipe in IPS diameters, including schedule 40, DR 22 (PS 200) and DR 24 (PS 140); with a solid, cellular core or composite wall	ASTM D2661; ASTM F628; ASTM F1488; CSA B181.1
Cast-iron pipe	ASTM A74; CISPI 301; ASTM A888
Copper or copper alloy tubing (Type K, L, M or DWV)	ASTM B75; ASTM B88; ASTM B251; ASTM B306
Polyolefin pipe	ASTM F1412; CSA B181.3
Polyvinyl chloride (PVC) plastic pipe in IPS diameters, including schedule 40, DR 22 (PS 200) and DR 24 (PS 140); with a solid, cellular core or composite wall	ASTM D2665; ASTM F891; ASTM F1488; CSA B181.2
Polyvinyl chloride (PVC) plastic pipe with a 3.25 inch O.D. and a solid, cellular core or composite wall	ASTM D2949; ASTM F1488
Stainless steel drainage systems, Type 316L	ASME A112.3.1

For SI: 1 inch = 25.4 mm.

INTERNATIONAL CODE COUNCIL®
Copyright © 2015 ICC. ALL RIGHTS RESERVED. Accessed by David Dammon on Jun 21, 2017 12:30:52 PM pursuant to License Agreement with ICC. No further reproduction or distribution authorized. ANY UNAUTHORIZED REPRODUCTION OR DISTRIBUTION IS A VIOLATION OF THE FEDERAL COPYRIGHT ACT AND THE LICENSE AGREEMENT, AND SUBJECT TO CIVIL AND CRIMINAL PENALTIES THEREUNDER.

the much higher rate of expansion in comparison to metallic pipe. Where expansion and contraction of plastic pipe will cause damage to the pipe, a means for controlling the change of length must be incorporated into the installation.

P3002.2 Building sewer. *Building sewer* piping shall be as shown in Table P3002.2. Forced main sewer piping shall conform to one of the standards for ABS plastic pipe, copper or copper-alloy tubing, PVC plastic pipe or pressure-rated pipe indicated in Table P3002.2.

❖ Building sewer piping must be of the pipe materials listed in Table P3002.2. These materials are suitable for installation underground and have appropriately designed (sanitary pattern) fittings and smooth interior surfaces so as not to impede gravity flow.

The term "forced main" actually means a completely full, pressurized sewer pipe (as opposed to a partially full gravity flow sewer pipe). A pump or ejector is used to "push" the waste through a pipe up to a higher elevation. The amount of pressure that the pressurized sewer pipe must handle is the maximum discharge pressure of the pump or ejector. The following is an example of this scenario:

Consider the outlet of a building sewer from a building at an elevation that is 12 feet (3658 mm) below the elevation of the gravity public sewer main. A pump basin is installed to collect the sewage from the gravity building sewer. A sewage pump is installed in the basin to pump the sewage up to the public sewer main. If the pump discharge outlet is 2 feet (610 mm) below the building drain elevation, the head that the pump must generate to begin to cause flow in the pipe is 14 feet (4267 mm) (12 + 2 = 14). As flow develops in the pressurized sewer pipe, pipe friction losses require the pump to develop additional head to be able to sustain the flow at the desired flow rate. For simplicity of this example, assume that the pipe friction loss requires an additional 1 foot (305 mm) of head (pressure). Therefore, the total dynamic head that the pump must generate is 15 feet (4572 mm) (14 + 1 = 15). A pump model is selected to produce 15 feet (4572 mm) of head (pressure) and the flow rate is verified to be adequate.

A general characteristic of a majority of sewage pumps is that they develop the highest discharge head when the flow rate is zero or approaches zero. A flow rate of zero would occur if the discharge pipe became blocked such as might occur if the public sewer main became surcharged. To illustrate this, assume that the pump curve (or chart) for the model of pump chosen indicates a maximum discharge head of 20 feet (6096 mm). This head is equivalent to 20 feet (6096 mm) × 0.433 pounds per square inch (psi)/foot of head = 8.6 psi (59 kPa). Therefore, the discharge piping at the outlet of the pump must be suitable for 8.6 psi (59 kPa). However, at higher elevations along the run of the discharge pipe, the pressure in the pipe becomes less (see Commentary Figure P3002.2).

The point of the preceding example is to illustrate how the pressures are generally determined for pressurized sewer piping ("forced mains") and the potential magnitudes of those pressures. Although this section

TABLE P3002.2
BUILDING SEWER PIPE

MATERIAL	STANDARD
Acrylonitrile butadiene styrene (ABS) plastic pipe in IPS diameters, including schedule 40, DR 22 (PS 200) and DR 24 (PS 140); with a solid, cellular core or composite wall	ASTM D2661; ASTM F628; ASTM F1488
Cast-iron pipe	ASTM A74; ASTM A888; CISPI 301
Acrylonitrile butadiene styrene (ABS) plastic pipe in sewer and drain diameters, including SDR 42 (PS 20), PS35, SDR 35 (PS 45), PS50, PS100, PS140, SDR 23.5 (PS 150) and PS200; with a solid, cellular core or composite wall	ASTM F1488; ASTM D2751
Polyvinyl chloride (PVC) plastic pipe in sewer and drain diameters, including PS 25, SDR 41 (PS 28), PS 35, SDR 35 (PS 46), PS 50, PS 100, SDR 26 (PS 115), PS140 and PS 200; with a solid, cellular core or composite wall	ASTM F891; ASTM F1488; ASTM D3034; CSA B182.2; CSA B182.4
Concrete pipe	ASTM C14; ASTM C76; CSA A257.1M; CSA A257.2M
Copper or copper-alloy tubing (Type K or L)	ASTM B75; ASTM B88; ASTMB 251
Polyethylene (PE) plastic pipe (SDR-PR)	ASTM F714
Polyolefin pipe	ASTM F1412; CSA B181.3
Polyvinyl chloride (PVC) plastic pipe in IPS diameters, including schedule 40, DR 22 (PS 200) and DR 24 (PS 140); with solid, cellular core or composite wall	ASTM D2665; ASTM D2949; ASTM D3034; ASTM F1412; CSA B182.2; CSA B182.4
Polyvinyl chloride (PVC) plastic pipe with a 3.25 inch O.D. and a solid, cellular core or composite wall	ASTM D2949, ASTM F1488
Stainless steel drainage systems, Types 304 and 316L	ASME A112.3.1
Vitrified clay pipe	ASTM C425; ASTM C700

For SI: 1 inch = 25.4 mm.

INTERNATIONAL CODE COUNCIL®
Copyright © 2015 ICC. ALL RIGHTS RESERVED. Accessed by David Dammon on Jun 21, 2017 12:30:52 PM pursuant to License Agreement with ICC. No further reproduction or distribution authorized. ANY UNAUTHORIZED REPRODUCTION OR DISTRIBUTION IS A VIOLATION OF THE FEDERAL COPYRIGHT ACT AND THE LICENSE AGREEMENT, AND SUBJECT TO CIVIL AND CRIMINAL PENALTIES THEREUNDER.

specifically requires pressurized sewer piping (or tubing) be made of ABS, PVC, copper, copper alloy or pressure-rated pipes that are listed in Table P3002.2, it is the designer's or installer's responsibility to choose piping and components from that set of materials that are suitable for the intended pressures. Where the maximum pump head (pressure) is very low, it might not be necessary to use pressure-rated ABS and PVC pipes and fittings since pipes for gravity drainage and sanitary drainage fittings might be adequate for the pressures involved.

P3002.2.1 Building sewer pipe near the water service. The proximity of a *building sewer* to a water service shall comply with Section P2905.4.2.

❖ See the commentary to Section P2905.4.2.

P3002.3 Fittings. Pipe fittings shall be *approved* for installation with the piping material installed and shall comply with the applicable standards indicated in Table P3002.3.

❖ Each fitting is designed for installation in a particular system with a given material. Drainage pattern fittings are typically "directional" to guide the flow derived from gravitational force. The required radius of curvature of the fittings will vary with the location where the fittings are used. Flows changing direction from horizontal to vertical, vertical to horizontal and horizontal to horizontal require progressively longer radiuses to allow the flow to change direction without slowing down to a point where solids can separate from the liquid. When the velocity of the flow slows below a certain threshold [typically 2 feet (610 mm) per second], solids may separate and adhere to the pipe, thus creating blockages. Therefore, the type of fittings used in drainage systems not only have to be directional but must also be correctly selected for the specific location where they are to be installed. Vent fittings must never be used as drainage fittings. Vent fittings have less radius than drainage fittings because they only convey air.

P3002.3.1 Drainage. Drainage fittings shall have a smooth interior waterway of the same diameter as the piping served. Fittings shall conform to the type of pipe used. Drainage fittings shall not have ledges, shoulders or reductions that can retard or obstruct drainage flow in the piping. Threaded drainage pipe fittings shall be of the recessed drainage type, black or galvanized. Drainage fittings shall be designed to maintain one-fourth unit vertical in 12 units horizontal (2-percent slope) grade. This section shall not be applicable to tubular waste fittings used to convey vertical flow upstream of the trap seal liquid level of a fixture trap.

❖ Successful gravity flow of waste water, especially waste water with solids, requires smooth internal piping surfaces that do not impede flow. The combinations of pipe and pipe fittings for drainage systems must be carefully chosen so that ledges, shoulders or reductions in the direction of flow are not created. A simple example of an inappropriate combination would be Schedule 80 wall pipe with commonly available drainage fittings. Drainage fittings (plastic and cast iron) are intended for use only with Schedule 40 wall pipe. Schedule 80 wall pipe has a smaller inside

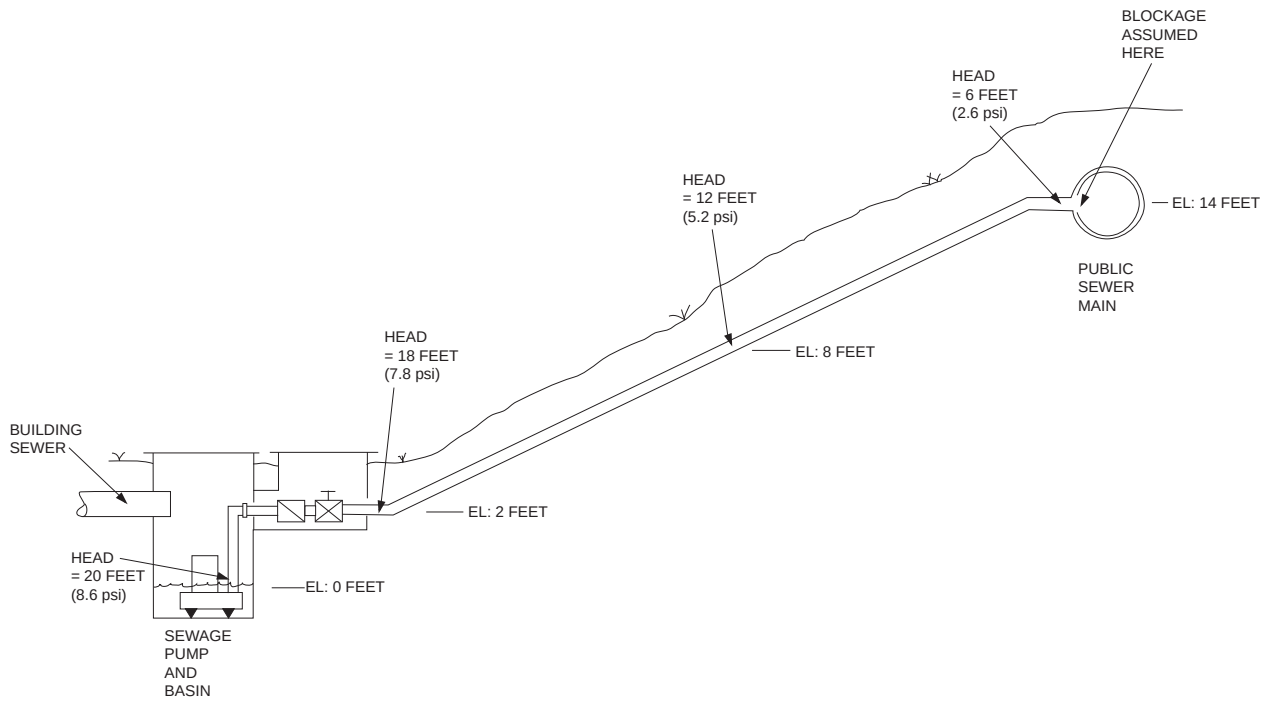

For SI: 1 foot = 304.8 mm, 1 pound per square inch = 6.895 kPa.

Figure P3002.2
EXAMPLE OF FORCED MAIN PRESSURES

INTERNATIONAL CODE COUNCIL®
Copyright © 2015 ICC. ALL RIGHTS RESERVED. Accessed by David Dammon on Jun 21, 2017 12:30:52 PM pursuant to License Agreement with ICC. No further reproduction or distribution authorized. ANY UNAUTHORIZED REPRODUCTION OR DISTRIBUTION IS A VIOLATION OF THE FEDERAL COPYRIGHT ACT AND THE LICENSE AGREEMENT, AND SUBJECT TO CIVIL AND CRIMINAL PENALTIES THEREUNDER.

diameter, which would create a ledge in the direction of flow. Another example of an inappropriate combination would be the use of pressure-pipe fittings for a drainage application. The inside diameter of the body of a pressure-pipe fitting is not reduced such that it is the same diameter as the Schedule 40 drainage pipe that connects to the fitting. Only drainage fittings must be used in gravity-flow piping systems.

The last line of this section clarifies that the requirement for not having ledges or obstructions in the flow path does not apply to tubular waste fittings installed in a vertical flow orientation. For example, tubular waste fittings such as a disposal connect tee with an internal baffle or a pop-up actuator rod tailpiece both create a restriction to gravity flow. It is not the intent of this section to prohibit these tubular waste fittings when they are used in a vertical flow orientation; however, it is inappropriate to use such fittings in a horizontal flow orientation. For example, a dishwasher connection tubular fitting with an internal baffle must not be installed in a horizontal flow orientation.

P3002.4 Other materials. Sheet lead, lead bends, lead traps and sheet copper shall comply with Sections P3002.4.1 through P3002.4.3.

❖ This section regulates the material requirements for sheet lead, lead bends, lead traps and sheet copper. Each of these are addressed in the subsections herein.

P3002.4.1 Sheet lead. Sheet lead shall weigh not less than indicated for the following applications:

1. Flashing of vent terminals, 3 psf (15 kg/m^2).
2. Prefabricated flashing for vent pipes, $2^1/_2$ psf (12 kg/m^2).

❖ Flashing materials are used to close off the opening between a vent pipe and the hole in the roof made for the vent pipe to terminate outdoors. Where sheet lead is used to field fabricate a vent flashing, the sheet lead must have a weight of not less than 3 pounds per square foot (psf) (15 kg/m^2). Where such flashings are factory fabricated, the sheet lead must have a weight of not less than $2^1/_2$ psf (12 kg/m^2) (see commentary, Section P2606).

P3002.4.2 Lead bends and traps. Lead bends and lead traps shall be not less than $^1/_8$-inch (3 mm) wall thickness.

❖ Although lead is not one of the materials referenced in Table P3002.1(1), P3002.1(2) or P3002.3, on those rare occasions where repairs must be made to existing installations having lead bends and lead traps, the wall thickness of the material must be not less than 0.125 inch (3.2 mm).

P3002.4.3 Sheet copper. Sheet copper shall weigh not less than indicated for the following applications:

1. General use, 12 ounces per square feet (4 kg/m^2).
2. Flashing for vent pipes, 8 ounces per square feet (2.5 kg/m^2).

❖ Sheet copper is sometimes used as a lining or flashing material. Where used as a flashing material, the copper must not weigh less than 8 ounces per square foot (3.7 kg/m^2). Where used for other purposes (such as lining material), the copper must weigh not less than 12 ounces per square foot (3.7 kg/m^2). See Section P2709.3.1 for the requirements pertaining to the use of sheet copper for shower lining material.

TABLE P3002.3
PIPE FITTINGS

PIPE MATERIAL	FITTING STANDARD
Acrylonitrile butadiene styrene (ABS) plastic pipe in IPS diameters	ASTM D2661; ASTM D3311; ASTM F628; CSA B181.1
Cast-iron	ASME B16.4; ASME B16.12; ASTM A74; ASTM A888; CISPI 301
Acrylonotrile butadiene styrene (ABS) plastic pipe in sewer and drain diameters	ASTM D2751
Polyvinyl chloride (PVC) plastic pipe in sewer and drain diameters	ASTM D 3034
Copper or copper alloy	ASME B16.15; ASME B16.18; ASME B16.22; ASME B16.23; ASME B16.26; ASME B16.29
Gray iron and ductile iron	AWWA C 110/A21.10
Polyolefin	ASTM F1412; CSA B181.3
Polyvinyl chloride (PVC) plastic in IPS diameters	ASTM D2665; ASTM D3311; ASTM F1866
Polyvinyl chloride (PVC) plastic pipe with a 3.25 inch O.D.	ASTM D2949
PVC fabricated fittings	ASTM F1866
Stainless steel drainage systems, Types 304 and 316L	ASME A112.3.1
Vitrified clay	ASTM C700

For SI: 1 inch = 25.4 mm.

INTERNATIONAL CODE COUNCIL®
Copyright © 2015 ICC. ALL RIGHTS RESERVED. Accessed by David Dammon on Jun 21, 2017 12:30:52 PM pursuant to License Agreement with ICC. No further reproduction or distribution authorized. ANY UNAUTHORIZED REPRODUCTION OR DISTRIBUTION IS A VIOLATION OF THE FEDERAL COPYRIGHT ACT AND THE LICENSE AGREEMENT, AND SUBJECT TO CIVIL AND CRIMINAL PENALTIES THEREUNDER.

SECTION P3003
JOINTS AND CONNECTIONS

P3003.1 Tightness. Joints and connections in the DWV system shall be gas tight and water tight for the intended use or pressure required by test.

❖ DWV systems carry liquid waste and odors (gases) that must be prevented from leaking into the building. Therefore, joints and connections in those systems must be gas tight and liquid tight under test pressure conditions so that they are leak free during normal system operation (see commentary, Section 2503.5).

P3003.1.1 Threaded joints, general. Pipe and fitting threads shall be tapered.

❖ Tapered threads are required at all threaded connections so that they can be tightened to produce a leak free connection under service and test conditions. This is one of those requirements that was always intended and understood, but not actually stated in the code.

P3003.2 Prohibited joints. Running threads and bands shall not be used in the drainage system. Drainage and vent piping shall not be drilled, tapped, burned or welded.

The following types of joints and connections shall be prohibited:

1. Cement or concrete.
2. Mastic or hot-pour bituminous joints.
3. Joints made with fittings not *approved* for the specific installation.
4. Joints between different diameter pipes made with elastomeric rolling O-rings.
5. Solvent-cement joints between different types of plastic pipe.
6. Saddle-type fittings.

❖ Running threads are threads that have no taper and, therefore, will not tighten to produce leak-free joints. Drilling, tapping, burning and welding to create fittings for connections are prohibited because these means do not create the smooth transitions like those found in factory-cast or molded directional fittings.

This section specifically prohibits certain types of joints. Cement and concrete are not effective in sealing a pipe joint because such materials are inflexible and susceptible to cracking and displacement. Mastic or hot pour bituminous joints could dry out and crack. A rolling O-ring has no resistance to being pushed or rolled out of a joint when exposed to pressure or the movement of pipe caused by expansion and contraction. Because a solvent-cement joint actually fuses the plastic pipe and plastic fitting materials, if the materials are different, proper fusion will not occur and the strength and integrity of the joint will be adversely affected. For example, solvent cementing is prohibited between ABS and PVC, PVC and CPVC or ABS and CPVC. Saddle-type fittings can be too easily moved out of alignment. The hole cut into the side of the pipe can weaken the pipe and, typically, does not form a drainage pattern connection. However, saddle-type fittings are commonly used for connecting a building sewer to an existing public sewer.

P3003.3 ABS plastic. Joints between ABS plastic pipe or fittings shall comply with Sections P3003.3.1 through P3003.3.3.

❖ Acceptable joints for ABS plastic pipe are identified in the referenced sections.

P3003.3.1 Mechanical joints. Mechanical joints on drainage pipes shall be made with an elastomeric seal conforming to ASTM C1173, ASTM D3212 or CSA B602. Mechanical joints shall be installed only in underground systems unless otherwise *approved*. Joints shall be installed in accordance with the manufacturer's instructions.

❖ Mechanical joints are predominantly used in underground applications (e.g., bell or hub compression gasket joints and elastomeric transition couplings). Mechanical joints are typically of the unrestrained type. Above-ground mechanical joints are limited primarily to rehabilitation installations and connections to existing systems when it is impractical to make another type of joint. Mechanical joints are sometimes used where other joining means cannot be used. For example, underground PVC pipe may be joined with an elastomeric coupling where, because of water in the trench, solvent cementing is not possible. The referenced standards are addressed only with respect to the elastomeric material used to make the seal in a mechanical joint, not the entire coupling or fitting assembly.

P3003.3.2 Solvent cementing. Joint surfaces shall be clean and free from moisture. Solvent cement that conforms to ASTM D2235 or CSA B181.1 shall be applied to joint surfaces. The joint shall be made while the cement is wet. Joints shall be made in accordance with ASTM D2235, ASTM D2661, ASTM F628 or CSA B181.1. Solvent-cement joints shall be permitted above or below ground.

❖ Solvent cementing is the most common method of joining ABS plastic pipe and fittings. This section clarifies that solvent cementing is an acceptable joining method for both above-ground and below-ground installations. Although it is the most common method, solvent cementing is one of the most misunderstood methods of joining pipe. ASTM International (ASTM) and Canadian Standards Association (CSA) referenced standards indicate how to handle solvent cement safely and recommend a practice for making joints. ABS solvent cement is a flammable liquid and a source of flammable vapors. It must be kept a safe distance from any source of ignition. Solvent cement should also be used in a well-ventilated area. Prolonged breathing of solvent-cement vapors can have adverse health effects. Solvent cement is also an eye and skin irritant. If contact with the eyes is possible, protective goggles should be worn. When frequent contact with the skin is likely, impervious gloves should be worn. The pipe and fittings should be approximately the same temperature prior to solvent cementing. The pipe end and socket fitting must be clean, dry and free from grease, oil and other foreign materials. The solvent cement must be

INTERNATIONAL CODE COUNCIL®
Copyright © 2015 ICC. ALL RIGHTS RESERVED. Accessed by David Dammon on Jun 21, 2017 12:30:52 PM pursuant to License Agreement with ICC. No further reproduction or distribution authorized. ANY UNAUTHORIZED REPRODUCTION OR DISTRIBUTION IS A VIOLATION OF THE FEDERAL COPYRIGHT ACT AND THE LICENSE AGREEMENT, AND SUBJECT TO CIVIL AND CRIMINAL PENALTIES THEREUNDER.

uniformly applied to the socket of the fitting and to the end of the pipe to the depth of the socket. Excessive solvent cement should be avoided to prevent a puddle of cement from forming on the inside of the pipe joint, which may deform or structurally weaken the fitting or the pipe. The joint is made by twisting the pipe into the fitting socket immediately after applying the cement. The pipe will tend to back out unless it is restrained; therefore, it must be held in place for a few seconds until the solvent cement begins to set. A small bead of solvent cement forms between the pipe exterior and fitting. The bead must be removed with a clean cloth to avoid the possibility of weakening the pipe wall. A solvent-cement joint should remain for a period of 24 hours before being exposed to working pressure. There should be no rough handling of the pipe for at least 1 hour after the joint is made. Because each type of solvent cement is specifically designed for a given piping material, all-purpose solvent cement or universal solvent cement cannot be used to join ABS pipe or fittings unless it conforms to ASTM D2235 or CSA B181.1. Solvent cement for each plastic pipe material requires a unique mixture or combination of solvents and dissolved plastic resins to conform to the applicable standard. Although all-purpose cement may dissolve the surfaces of ABS, PVC and CPVC, it may be too aggressive or not aggressive enough to make a joint strong enough to meet the minimum strength requirements of the referenced standards. Solvent cement must be identified on its container as complying with the appropriate ASTM or CSA standard.

P3003.3.3 Threaded joints. Threads shall conform to ASME B1.20.1. Schedule 80 or heavier pipe shall be permitted to be threaded with dies specifically designed for plastic pipe. *Approved* thread lubricant or tape shall be applied on the male threads only.

❖ ASME B1.20.1 identifies pipe dimensions as "NPT," which is often thought of as an abbreviation. Some of the terms from which NPT has been shortened are: National Pipe Thread, Nominal Pipe Thread and National Pipe Tapered Thread. NPT is a coded designation: N stands for USA Standard, P indicates pipe and T means that the threads are tapered. Thread lubricant (pipe-joint compound) must be specifically designed for plastic pipe. It is not the same lubricant that is commonly used for metallic pipe, such as steel. Thread lubricant and tape are designed for two purposes: to lubricate the joint for proper thread mating and to fill in small imperfections on the surfaces of the threads. Field threading is limited to solid-core Schedule 80 pipe because the wall thickness is sufficient to accommodate threads without affecting pipe strength.

P3003.4 Cast iron. Joints between cast-iron pipe or fittings shall comply with Sections P3003.4.1 through P3003.4.3.

❖ Acceptable joints for cast-iron pipe or fittings are identified in the referenced sections.

P3003.4.1 Caulked joints. Joints for hub and spigot pipe shall be firmly packed with oakum or hemp. Molten lead shall be poured in one operation to a depth of not less than 1 inch (25 mm). The lead shall not recede more than $^1/_8$ inch (3 mm) below the rim of the hub and shall be caulked tight. Paint, varnish or other coatings shall not be permitted on the jointing material until after the joint has been tested and *approved*. Lead shall be run in one pouring and shall be caulked tight.

❖ A caulked joint is the oldest form of joining cast-iron pipe. The joint is sealed using tightly packed oakum or hemp. The oakum or hemp expands the first time it becomes wet, thus sealing the joint. Lead is poured in place behind the oakum to prevent the oakum from expanding out of the joint. Quite often, a caulked joint will leak when it is first tested because the oakum has not yet expanded in place. Once the oakum has expanded, the joint will not leak.

The joint is made by packing the oakum or hemp into the hub fitting around the pipe to be joined. The oakum and joint surfaces must be dry to prevent the oakum from expanding prematurely. Once in place, the oakum is packed tight with a packing iron and hammer. Molten lead is poured in one continuous operation, securing the oakum. If the joint surfaces or oakum are wet when the lead is poured, rapidly expanding steam can cause the lead to pop or explode. After the lead solidifies, it must be packed tight. A properly made caulked joint will bear marks on the lead caused by a finishing iron used to pack the lead. Because caulked joints are labor intensive and involve the risk of worker injury, and because lead is a health hazard, such joints are becoming increasingly rare.

The code does not recognize a substitute for lead in caulked joints. In the case of remodeling and repair work where one or more caulked joints must be made to allow transitions to different types of piping, building officials have on occasion approved the use of lead substitutes, such as cement-based compounds. Elastomeric seals are also available for the purpose of making transition joints with hubbed cast-iron pipe.

P3003.4.2 Compression gasket joints. Compression gaskets for hub and spigot pipe and fittings shall conform to ASTM C564. Gaskets shall be compressed when the pipe is fully inserted.

❖ The elastomeric gasket is often called a "rubber gasket" or "rubber joint." The gasket is inserted into the hub of the pipe. A lubricant is used to coat the end of the joining pipe and the gasket. The pipe is inserted into the hub using a special tool that pulls the pipe and hub together, compressing the gasket in the annular space between the pipe and hub.

The pipes must be completely pulled together to properly make the joint. A typical compression joint has two main compression points in the seal.

INTERNATIONAL CODE COUNCIL®
Copyright © 2015 ICC. ALL RIGHTS RESERVED. Accessed by David Dammon on Jun 21, 2017 12:30:52 PM pursuant to License Agreement with ICC. No further reproduction or distribution authorized. ANY UNAUTHORIZED REPRODUCTION OR DISTRIBUTION IS A VIOLATION OF THE FEDERAL COPYRIGHT ACT AND THE LICENSE AGREEMENT, AND SUBJECT TO CIVIL AND CRIMINAL PENALTIES THEREUNDER.

P3003.4.3 Mechanical joint coupling. Mechanical joint couplings for hubless pipe and fittings shall consist of an elastomeric sealing sleeve and a metallic shield that comply with CISPI 310, ASTM C1277 or ASTM C1540. The elastomeric sealing sleeve shall conform to ASTM C564 or CSA B602 and shall have a center stop. Mechanical joint couplings shall be installed in accordance with the manufacturer's instructions.

❖ Mechanical joint couplings refer to couplings that are used to join hubless cast-iron DWV pipe and fittings. Mechanical joint couplings are manufactured in a variety of types, all of which include an elastomeric seal and a clamp assembly that compresses the seal around the outside circumference of the pipe or fitting. Most designs include a metal shield (sleeve) that fits between the inside diameter of the clamps and the outside diameter of the sealing element. The shield protects the elastomeric seal from external punctures and abuse. Thicker shields contribute shear-force-resistance and rigidity to the assembled joint.

Mechanical joint couplings are usually designed to resist the shear forces that can cause misalignment of pipe and fittings. ASTM C1540 and CSA B602 apply only to the elastomeric seal component of mechanical joint couplings. CISPI 310, ASTM C1277 and ASTM C1540 address entire coupling assemblies. The purpose of the center stop in the elastomeric part of the coupling is to prevent the pipe or fitting from penetrating too far into the coupling.

Mechanical joints and mechanical joint couplings must be installed in accordance with the manufacturer's instructions. Manufacturer's instructions require that a small torque wrench be used to tighten the clamps so that clamping force is even but not excessive which could result in damage to the elastomeric seal.

P3003.5 Concrete joints. Joints between concrete pipe and fittings shall be made with an elastomeric seal conforming to ASTM C443, ASTM C1173, CSA A257.3M or CSA B602.

❖ The only acceptable method of joining concrete pipe is the pipe to form a seal. The ASTM and CSA standards regulate the design, material and performance of the elastomeric gasket.

P3003.6 Copper and copper-alloy pipe and tubing. Joints between copper or copper-alloy pipe tubing or fittings shall comply with Sections P3003.6.1 through P3003.6.4.

❖ Acceptable joints for copper or copper-alloy pipe or fittings are identified in the referenced sections.

P3003.6.1 Brazed joints. All joint surfaces shall be cleaned. An *approved* flux shall be applied where required. Brazing materials shall have a melting point in excess of 1,000ºF (538ºC). Brazing alloys filler metal shall be in accordance with AWS A5.8.

❖ Although brazed joints are similar to soldered joints, brazed joints are joined at a higher temperature [in excess of 1,000°F (538°C)]. Because of the brazed joint's inherent resistance to elevated temperatures, it is much stronger than a soldered joint. Brazing is often referred to as "silver soldering." Silver soldering is more accurately described as silver brazing and uses high-silver alloys primarily composed of silver, copper and zinc. Silver soldering (brazing) typically requires temperatures in excess of 1,000°F (538°C), and such solders are classified as "hard" solders. Confusion has always been present with respect to the distinction between "silver solder" and "silver-bearing solder." Silver solders are unique and may be further subdivided into soft and hard categories, which are determined by the percentages of silver and the other component elements of the particular alloy. The distinction must be made that silver-bearing solders [with a melting point less than 600°F (316°C)] are used in soft-soldered joints, whereas silver solders [with a melting point greater than 1,000°F (538°C)] are used in silver-brazed joints. The two common series of filler metals used for brazing are phosphorous copper brazing rods (BCuP) and silver brazing rods (BAg). BCuP contains phosphorus and copper alloys. BAg contains 30 to 60 percent silver with zinc and copper alloys. Some of the BAg filler metals also contain cadmium. During brazing, such filler metal produces toxic fumes. Brazing should always be done in well-ventilated areas, and protective eye gear must also be worn. The joint surfaces to be brazed must be cleaned, which is typically accomplished by polishing the pipe with an emery cloth. The socket fitting is cleaned with a specially designed brush. Brazing flux is applied to the joint surfaces. Certain types of BCuP filler metals do not require flux for certain types of joints. The manufacturer's recommendations should be consulted to determine when flux is necessary.

The joints are typically heated with an oxyacetylene torch, though an air acetylene torch may be used on a smaller-diameter pipe. The pipe and fitting must be at approximately the same temperature when making the joint. The filler metal flows to the heat with the aid of the flux. The pipe must first be heated above the fitting. When the flux becomes clear, the heat must be directed to the base of the fitting socket. When the flux becomes clear and quiet, the filler metal is applied to the joint. The heat draws the filler metal into the socket. Any remaining flux residue must be removed from the pipe and joint surfaces.

P3003.6.2 Mechanical joints. Mechanical joints shall be installed in accordance with the manufacturer's instructions.

❖ Mechanical joints for copper or copper-alloy pipe are similar to those used to join brass pipe. Because many different types of mechanical joints are available and most couplings are unique to each manufacturer, the joining method must be in accordance with the manufacturer's installation instructions. Such joints are highly resistant to being pulled apart.

INTERNATIONAL CODE COUNCIL®
Copyright © 2015 ICC. ALL RIGHTS RESERVED. Accessed by David Dammon on Jun 21, 2017 12:30:52 PM pursuant to License Agreement with ICC. No further reproduction or distribution authorized. ANY UNAUTHORIZED REPRODUCTION OR DISTRIBUTION IS A VIOLATION OF THE FEDERAL COPYRIGHT ACT AND THE LICENSE AGREEMENT, AND SUBJECT TO CIVIL AND CRIMINAL PENALTIES THEREUNDER.

P3003.6.3 Soldered joints. Copper and copper-alloy joints shall be soldered in accordance with ASTM B828. Cut tube ends shall be reamed to the full inside diameter of the tube end. All joint surfaces shall be cleaned. Fluxes for soldering shall be in accordance with ASTM B813 and shall become noncorrosive and nontoxic after soldering. The joint shall be soldered with a solder conforming to ASTM B32.

❖ Soldering is the most common method of joining copper pipe and tubing. ASTM B828 governs the procedures for making capillary joints by soldering copper and copper-alloy tube and fittings. To consistently make satisfactory joints, the following sequence of joint preparation and operations must be followed: measuring and cutting, reaming, cleaning, fluxing, assembly and support, heating, applying the solder, and cooling and cleaning. The joint surfaces must be accurately measured because if the tube is too short, it will not reach all the way into the fitting and a proper joint cannot be made. If the tube is too long, the system strain may affect service life.

The tubing may be cut in a number of different ways to produce a square end. The tubing may be cut with a tubing cutter, a hacksaw, an abrasive wheel or a band saw. Regardless of the method, the cut must be square with the run of the tube so it will seat properly in the fitting. The tubing ends, outside of the tube ends to the inside diameter of the tube, must be reamed to remove the burrs created by the cutting operation. The joint surfaces for a soldered joint must be cleaned to remove all oxides and surface soil from the tube ends and fittings. Cleaning can be accomplished using a sand cloth, abrasive pad and fitting brush.

The space between the tube and fitting is the gap the solder metal fills by capillary action. The spacing is critical for the solder metal to flow into the gap and form a strong joint. Uniformity of capillary space will ensure metal capillary flow. Once the joint surfaces are cleaned, the cleaned area must not be touched with bare hands or oily gloves. Skin oils, lubricating oils or grease will impair the solder metal.

Apply a thin, even coating of flux to both the tubing and fitting that will dissolve and remove traces of oxide from the cleaned surfaces. Care must be taken in applying flux because excessive amounts will cause corrosion that may perforate the wall of the tubing, the fitting or both. The flux material must conform to ASTM B813, which establishes minimum performance criteria. This also limits the maximum lead content to 0.2 percent.

Begin heating with the flame alternating from the fitting cup back onto the tube. Touch the solder to the joint and if the solder does not melt, remove it and continue the heating process. Once the melting temperatures are reached, apply heat to the base of the fitting to aid in capillary action in drawing the molten solder into the cup toward the heat source. Molten solder metal is drawn into the joint by capillary action regardless of the direction that the metal is being fed (horizontal or vertical). If excessive heat is used, the flux will burn out and char the pipe, and where the temperature is too uneven, the solder will run down either the inside or the outside of the pipe. Either condition will prevent capillary action. Allow the completed joint to cool naturally; cooling it with water will cause unnecessary shock and stress on the joint. When the joint is cool, clean off any remaining flux.

P3003.6.4 Threaded joints. Threads shall conform to ASME B1.20.1. Pipe-joint compound or tape shall be applied on the male threads only.

❖ Before assembly, the threads must be cleaned with a wire brush to remove burrs or chips resulting from the cutting process. Pipe-joint compound or Teflon tape is applied on the male thread to ensure a tight seal. If pipe-joint compound is applied to the female thread, it will enter the system. The male thread is placed inside the female thread and the joint is tightened using pipe wrenches. It is generally limited to smaller pipe diameters because of the amount of effort required to turn a pipe of larger size in making the joint.

P3003.7 Steel. Joints between galvanized steel pipe or fittings shall comply with Sections P3003.7.1 and P3003.7.2.

❖ Acceptable joints for galvanized steel pipe or fittings are identified in the referenced sections.

P3003.7.1 Threaded joints. Threads shall conform to ASME B1.20.1. Pipe-joint compound or tape shall be applied on the male threads only.

❖ The pipe-joint compound used for steel pipe will also be used for both copper and brass pipe. The application of pipe-joint compound or Teflon tape to only male threads prevents the compound from entering the piping system.

P3003.7.2 Mechanical joints. Joints shall be made with an *approved* elastomeric seal. Mechanical joints shall be installed in accordance with the manufacturer's instructions.

❖ There is a wide variety of mechanical joints available to join steel pipe, including plain or beveled ends, cut or rolled grooves. Each requires different pipe-end preparation in making a joint. Rolled grooves are used where the wall of the pipe is not thick enough to have a groove formed around the pipe near the ends. The coupling assembly for both types is the same. The joint consists of an inner elastomeric gasket and an outer split metallic sleeve with an integral bolt used for tightening. The assembly is placed over both ends and joined with the grooves in the pipe. The bolt is tightened to the torque requirements listed in the manufacturer's installation instructions.

P3003.8 Lead. Joints between lead pipe or fittings shall comply with Sections P3003.8.1 and P3003.8.2.

❖ Acceptable joints for lead pipe or fittings are identified in the referenced sections.

INTERNATIONAL CODE COUNCIL®
Copyright © 2015 ICC. ALL RIGHTS RESERVED. Accessed by David Dammon on Jun 21, 2017 12:30:52 PM pursuant to License Agreement with ICC. No further reproduction or distribution authorized. ANY UNAUTHORIZED REPRODUCTION OR DISTRIBUTION IS A VIOLATION OF THE FEDERAL COPYRIGHT ACT AND THE LICENSE AGREEMENT, AND SUBJECT TO CIVIL AND CRIMINAL PENALTIES THEREUNDER.

P3003.8.1 Burned. Burned joints shall be uniformly fused together into one continuous piece. The thickness of the joint shall be not less than the thickness of the lead being joined. The filler metal shall be of the same material as the pipe.

❖ A burned joint is formed by fitting the end of one lead pipe into the flared end of another lead pipe. Heat is then applied evenly around the joint, melting the overlapping edges and fusing them together. Lead burning is a method used for joining sheet lead or making lead pans.

P3003.8.2 Wiped. Joints shall be fully wiped, with an exposed surface on each side of the joint not less than $^3/_4$ inch (19 mm). The joint shall be not less than $^3/_8$ inch (9.5 mm) thick at the thickest point.

❖ A wiped joint is formed by fitting the end of one pipe into the flared end of the other. Molten lead is poured onto the joint and wiped with a hand-held pad, providing a minimum dimension of $^3/_4$ inch (19 mm) and a maximum thickness of $^3/_8$ inch (9.5 mm). With the aid of modern technology and the introduction of new materials, lead pipe is rarely used in drainage systems.

P3003.9 PVC plastic. Joints between PVC plastic pipe or fittings shall comply with Sections P3003.9.1 through P3003.9.3.

❖ Acceptable joints for PVC plastic pipe or fittings are identified in the referenced sections.

P3003.9.1 Mechanical joints. Mechanical joints on drainage pipe shall be made with an elastomeric seal conforming to ASTM C1173, ASTM D3212 or CSA B602. Mechanical joints shall not be installed in above-ground systems, unless otherwise *approved*. Joints shall be installed in accordance with the manufacturer's instructions.

❖ The typical mechanical joint must be restrained to prevent separation; therefore, such joints are limited to underground installations where restraint is accomplished by burial of the piping.

P3003.9.2 Solvent cementing. Joint surfaces shall be clean and free from moisture. A purple primer that conforms to ASTM F656 shall be applied. Solvent cement not purple in color and conforming to ASTM D2564, CSA B137.3 or CSA B181.2 shall be applied to all joint surfaces. The joint shall be made while the cement is wet, and shall be in accordance with ASTM D2855. Solvent-cement joints shall be installed above or below ground.

Exception: A primer shall not be required where all of the following conditions apply:

1. The solvent cement used is third-party certified as conforming to ASTM D2564.
2. The solvent cement is used only for joining PVC drain, waste and vent pipe and fittings in non-pressure applications in sizes up to and including 4 inches (102 mm) in diameter.

❖ Generally speaking, PVC plastic pipe requires the application of a primer prior to solvent cementing. Although ASTM F656 only recommends that PVC primer be purple, purple primer is a code requirement. The purple coloring is intended to allow the installer and the inspector to verify that the required primer has been applied. To distinguish the difference between primer and solvent cement, the solvent cement must be a color other than purple. Solvent cement for PVC is typically clear. First, primer is applied to both the fitting socket and the pipe. The PVC solvent cement is then applied to the pipe and socket fitting. The joint is made with a slight twisting until the pipe reaches the full depth of the socket fitting. It is then held in place until the solvent cement begins to set. The solvent-cementing procedure must be done in accordance with the referenced standard.

To minimize the health and fire hazards associated with solvent cements and primers, the manufacturer's instructions for the use and handling of these materials must be followed, in addition to the requirements found in ASTM D2855.

Recent testing by the National Sanitation Foundation determined that for PVC pipe sizes 4 inches and smaller, a primer is not required for solvent cement joints provided that the solvent cement used complies with ASTM D2564 and the DWV piping is only for non-pressure applications. Even though the code requires all plumbing products required to comply with a standard to be third-party certified (see Section P2609.4), one condition of the exception is for the solvent cement that is used (without primer being first applied to the joint surfaces) to be third-party certified to ASTM D2564 to ensure that the solvent cement is a product that meets the requirements of that standard.

P3003.9.3 Threaded joints. Threads shall conform to ASME B1.20.1. Schedule 80 or heavier pipe shall be permitted to be threaded with dies specifically designed for plastic pipe. *Approved* thread lubricant or tape shall be applied on the male threads only.

❖ The requirements regarding threaded joints for PVC plastic pipe are identical to those of ABS and CPVC plastic pipe.

P3003.10 Vitrified clay. Joints between vitrified clay pipe or fittings shall be made with an elastomeric seal conforming to ASTM C425, ASTM C1173 or CSA B602.

❖ An acceptable joint for vitrified clay pipe is a mechanical joint sealed with an elastomeric material. This is a type of compression joint similar to that used with other hubbed pipe and fittings.

P3003.11 Polyolefin plastic. Joints between polyolefin plastic pipe and fittings shall comply with Sections P3003.11.1 and P3003.11.2.

❖ The term polyolefin refers to a family of thermoplastic materials made from the chemical compounds named alkenes (olefins). Alkenes are hydrocarbon monomers that can be molecularly bonded to form long chains of molecules known as polymers. The polyolefin family includes polyethylene (PE), polypropylene (PP), polybutylene (PB) and cross-linked polyethylene (PEX). PE materials cannot be solvent welded.

INTERNATIONAL CODE COUNCIL®
Copyright © 2015 ICC. ALL RIGHTS RESERVED. Accessed by David Dammon on Jun 21, 2017 12:30:52 PM pursuant to License Agreement with ICC. No further reproduction or distribution authorized. ANY UNAUTHORIZED REPRODUCTION OR DISTRIBUTION IS A VIOLATION OF THE FEDERAL COPYRIGHT ACT AND THE LICENSE AGREEMENT, AND SUBJECT TO CIVIL AND CRIMINAL PENALTIES THEREUNDER.

P3003.11.1 Heat-fusion joints. Heat-fusion joints for polyolefin pipe and tubing joints shall be installed with socket-type heat-fused polyolefin fittings or electrofusion polyolefin fittings. Joint surfaces shall be clean and free from moisture. The joint shall be undisturbed until cool. Joints shall be made in accordance with ASTM F1412 or CSA B181.3.

❖ Heat fusion of plastic pipe and fittings is the equivalent of welding of steel pipe and fittings. Heating irons or heating elements embedded in the fitting are used to thermally soften (melt) the materials to allow them to fuse (weld) together. ASTM F1412 addresses Schedule 40 and 80 PE and polypropylene pipe and fittings for corrosive waste drainage systems.

P3003.11.2 Mechanical and compression sleeve joints. Mechanical and compression sleeve joints shall be installed in accordance with the manufacturer's instructions.

❖ Mechanical joints are commonly proprietary and installed in accordance with specific installation instructions unique to that fitting and pipe material. Mechanical joints include bolted or clamped sleeve couplings with elastomeric seals.

P3003.12 Polyethylene plastic pipe. Joints between polyethylene plastic pipe and fittings shall be underground and shall comply with Section P3003.12.1 or P3003.12.2.

❖ PE pipe is a type of polyolefin pipe and is used for underground building sewers and for insertion renewal of existing sewers (see commentary, Section P3003.16).

P3003.12.1 Heat fusion joints. Joint surfaces shall be clean and free from moisture. Joint surfaces shall be cut, heated to melting temperature and joined using tools specifically designed for the operation. Joints shall be undisturbed until cool. Joints shall be made in accordance with ASTM D2657 and the manufacturer's instructions.

❖ See the commentary to Section P3003.16.1.

P3003.12.2 Mechanical joints. Mechanical joints in drainage piping shall be made with an elastomeric seal conforming to ASTM C1173, ASTM D3212 or CSA B602. Mechanical joints shall be installed in accordance with the manufacturer's instructions.

❖ See the commentary to Section P3003.16.2.

P3003.13 Joints between different materials. Joints between different piping materials shall be made with a mechanical joint of the compression or mechanical-sealing type conforming to ASTM C1173, ASTM C1460 or ASTM C1461. Connectors and adapters shall be *approved* for the application and such joints shall have an elastomeric seal conforming to ASTM C425, ASTM C443, ASTM C564, ASTM C1440, ASTM D1869, ASTM F477, CSA A257.3M or CSA B602, or as required in Sections P3003.13.1 through P3003.13.6. Joints between glass pipe and other types of materials shall be made with adapters having a TFE seal. Joints shall be installed in accordance with the manufacturer's instructions.

❖ Mechanical joints are typically used to join dissimilar piping materials. Because many piping materials have the same outside diameters, many fittings are designed by manufacturers for use with a number of different piping materials. Some mechanical joints are manufactured specifically for joining pipes having different outside diameters. Transition couplings use bushings (inserts) to match the outside diameters of the pipes or are simply designed to fit over pipe ends of different outside diameter. ASTM C1173, ASTM C1460 or ASTM C1461 are the standards for the complete coupling assembly, which includes an elastomeric gasket, clamp assembly or both.

P3003.13.1 Copper or copper-alloy tubing to cast-iron hub pipe. Joints between copper or copper-alloy tubing and cast-iron hub pipe shall be made with a copper-alloy ferrule or compression joint. The copper or copper-alloy tubing shall be soldered to the ferrule in an *approved* manner, and the ferrule shall be joined to the cast-iron hub by a caulked joint or a mechanical compression joint.

❖ An adapter must be used when joining copper tubing to a cast-iron hub. The adapter is called by a wide variety of names, the most common being "soil adapter" or "caulk adapter." The adapter creates a spigot end similar to that of cast-iron pipe and fittings.

P3003.13.2 Copper or copper-alloy tubing to galvanized steel pipe. Joints between copper or copper-alloy tubing and galvanized steel pipe shall be made with a copper-alloy fitting or dielectric fitting. The copper tubing shall be soldered to the fitting in an *approved* manner, and the fitting shall be screwed to the threaded pipe.

❖ When joining copper or copper-alloy tubing to galvanized steel pipe, a method of protecting against galvanic corrosion is required. Galvanic corrosion occurs when two different metals come in contact in the presence of an electrolyte, such as water. Galvanic corrosion accelerates the natural corrosion process that occurs in metals, and because certain metals corrode faster than others, they have been placed in a hierarchy in order of rate of corrosion. The more reactive metal at a connection is called the "anode" (galvanized steel pipe), and the less reactive metal is called the "cathode" (copper tubing). When the copper tubing and galvanized steel pipe are coupled together, the galvanized steel pipe will tend to dissolve in the electrolyte, thereby generating an electric current flow between the metals. This section prescribes two methods of protection against galvanic corrosion: dielectric fittings and copper alloy fittings. The fittings are designed to provide a barrier or buffer between the two materials.

P3003.13.3 Cast-iron pipe to galvanized steel or brass pipe. Joints between cast-iron and galvanized steel or copper-alloy pipe shall be made by either caulked or threaded joints or with an *approved* adapter fitting.

❖ Galvanized steel pipe and copper alloy pipe may be caulked directly into the hub of cast-iron pipe without an adapter fitting. Certain cast-iron fittings have a female tapped inlet to permit a direct threaded connection.

INTERNATIONAL CODE COUNCIL®
Copyright © 2015 ICC. ALL RIGHTS RESERVED. Accessed by David Dammon on Jun 21, 2017 12:30:52 PM pursuant to License Agreement with ICC. No further reproduction or distribution authorized. ANY UNAUTHORIZED REPRODUCTION OR DISTRIBUTION IS A VIOLATION OF THE FEDERAL COPYRIGHT ACT AND THE LICENSE AGREEMENT, AND SUBJECT TO CIVIL AND CRIMINAL PENALTIES THEREUNDER.

P3003.13.4 Plastic pipe or tubing to other piping material. Joints between different types of plastic pipe or between plastic pipe and other piping material shall be made with an *approved* adapter fitting. Joints between plastic pipe and cast-iron hub pipe shall be made by a caulked joint or a mechanical compression joint.

❖ ABS and PVC pipe may connect directly into the hub of cast-iron pipe with a caulked joint or the use of a compression gasket without the use of an adapter fitting. Special caulk-adapter plastic fittings are available that provide a spigot end for use with hubbed pipe and fittings. Where different grades of plastic pipe are joined, or where plastic pipe and cast-iron spigot-end pipe, Schedule 40 steel pipe or copper pipe are joined, an adapter fitting must be used.

P3003.13.5 Lead pipe to other piping material. Joints between lead pipe and other piping material shall be made by a wiped joint to a caulking ferrule, soldering nipple, or bushing or shall be made with an *approved* adapter fitting.

❖ The common method of adapting to lead is by a piped joint to a ferrule, nipple or bushing; however, a mechanical adapter fitting using an elastomeric material may also be used.

P3003.13.6 Stainless steel drainage systems to other materials. Joints between stainless steel drainage systems and other piping materials shall be made with *approved* mechanical couplings.

❖ Joints between stainless steel drainage systems must be made with a mechanical coupling and have an elastomeric seal conforming to ASTM C425, ASTM C443, ASTM C564, ASTM C1173, ASTM D1869, ASTM F477, CSA A257.3M or CSA B602. Because many different types of mechanical joints are available and most couplings are unique to each manufacturer, the joining method must be in accordance with the manufacturer's installation instructions.

P3003.14 Joints between drainage piping and water closets. Joints between drainage piping and water closets or similar fixtures shall be made by means of a closet flange or a waste connector and sealing gasket compatible with the drainage system material, securely fastened to a structurally firm base. The joint shall be bolted, with an *approved* gasket flange to fixture connection complying with ASME A112.4.3 or setting compound between the fixture and the closet flange or waste connector and sealing gasket. The waste connector and sealing gasket joint shall comply with the joint-tightness test of ASME A112.4.3 and shall be installed in accordance with the manufacturer's instructions.

❖ The flange connection method is the most common water closet-to-piping connection method used in North America. The bottom outlet of the water closet forms one-half of the flange and the floor flange forms the other half of the connection. The setting compound most commonly used is a wax ring made of beeswax or a synthetic wax. In the past, putty was commonly used, but this practice is rarely used as putty dries out and cracks. Elastomeric gaskets are also used between fixture outlets (horns) and flanges [see Commentary Figure P3003.14(2)]. Corrosion-resistant bolts or screws are required in this application so that there is not a reduction of strength of the fastener over time due to corrosion. The flange-to-fixture connection complying with ASME A112.4.3 is a special plastic fitting that is only suitable for floor-mounted, bottom discharge water closets. The device seals to the inside of the drain pipe with an elastomeric O-ring and seals to the outlet of the water closet bowl with an elastomeric gasket. The gasket does not adhere to the bowl but seals to the bowl when backpressure in the drain pipe occurs. Where this device is used, the floor flange only serves as an attachment point for the closet bowl bolts.

Another type of water closet-to-piping system connection method is the gasketed waste tube connection method [see Commentary Figure P3003.14(1)]. This is a relatively new method for the North American plumbing industry; however, the gasketed waste tube connection method has been used in European countries (and countries using European standards) for decades. Note that this method does not require a floor flange. In some cases, the presence of a floor flange could interfere with the water closet installation. Without a floor flange to support the pipe at the floor, it is necessary for the piping installer to adequately support and provide

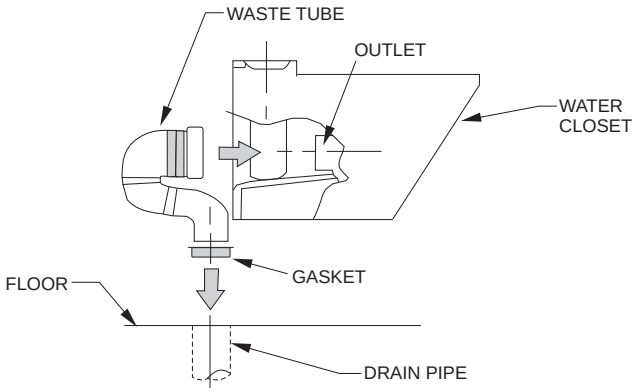

Figure P3003.14(1)
GASKETED WASTE TUBE OUTLET CONNECTION FOR WATER CLOSET

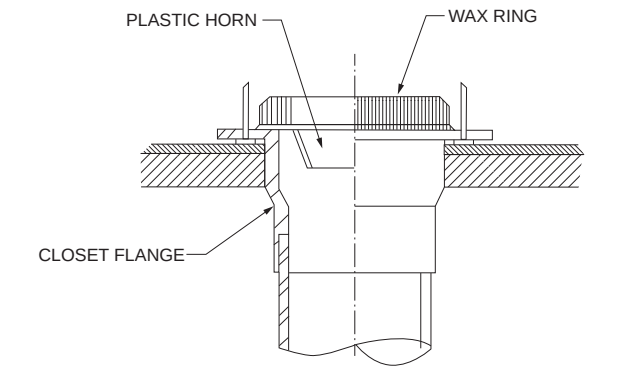

Figure P3003.14(2)
WATER CLOSET FLOOR FLANGE

INTERNATIONAL CODE COUNCIL®
Copyright © 2015 ICC. ALL RIGHTS RESERVED. Accessed by David Dammon on Jun 21, 2017 12:30:52 PM pursuant to License Agreement with ICC. No further reproduction or distribution authorized. ANY UNAUTHORIZED REPRODUCTION OR DISTRIBUTION IS A VIOLATION OF THE FEDERAL COPYRIGHT ACT AND THE LICENSE AGREEMENT, AND SUBJECT TO CIVIL AND CRIMINAL PENALTIES THEREUNDER.

blocking for the pipe to remain stationary when the sealing gasket/waste tube assembly is pressed into the pipe opening (and for when the water closet is removed). Note that the rough-in dimension for gasketed waste tube connected water closets may not necessarily be standardized in the familiar 14-, 12- and 10-inch (356, 305 and 254 mm) center-of-outlet to face-of-finished-wall dimensions. Piping installers will need to know the exact model of water closet to be installed prior to installing the receiving drainage pipe to ensure that the gasketed waste tube connection arrangement will work as intended.

SECTION P3004
DETERMINING DRAINAGE FIXTURE UNITS

P3004.1 DWV system load. The load on DWV-system piping shall be computed in terms of drainage fixture unit (d.f.u.) values in accordance with Table P3004.1.

❖ This section regulates the maximum loads that can be imposed on a drainage system. Table P3004.1 is used for the determination of d.f.u. The conventional method of sizing a sanitary drainage system is by d.f.u. load values. The fixture unit approach takes into consideration the probability of load on a drainage system. The probability method of sizing drainage systems was developed largely by Dr. Roy B. Hunter. Through his research, Dr. Hunter helped standardize and simplify design principles, which reduced the cost of plumbing systems.

Fixture unit values were determined based on the average rate of discharge by a fixture, the time of a single operation and the frequency of use or interval between operations. The theoretical approach considers a large group of fixtures being connected to the plumbing system with only a small fraction of the total number of fixtures in use simultaneously. The probability method has also been effective in the design of smaller plumbing systems because of the overdesign factor added by Dr. Hunter. Dr. Hunter sought an adequate design methodology to provide satisfactory service without interruption or inconvenience to the user.

TABLE P3004.1
DRAINAGE FIXTURE UNIT (d.f.u.) VALUES FOR VARIOUS PLUMBING FIXTURES

TYPE OF FIXTURE OR GROUP OF FIXTURES	DRAINAGE FIXTURE UNIT VALUE (d.f.u.)[a]
Bar sink	1
Bathtub (with or without a shower head or whirlpool attachments)	2
Bidet	1
Clothes washer standpipe	2
Dishwasher	2
Floor drain[b]	0
Kitchen sink	2
Lavatory	1
Laundry tub	2
Shower stall	2
Water closet (1.6 gallons per flush)	3
Water closet (greater than 1.6 gallons per flush)	4
Full-bath group with bathtub (with 1.6 gallon per flush water closet, and with or without shower head and/or whirlpool attachment on the bathtub or shower stall)	5
Full-bath group with bathtub (water closet greater than 1.6 gallon per flush, and with or without shower head and/or whirlpool attachment on the bathtub or shower stall)	6
Half-bath group (1.6 gallon per flush water closet plus lavatory)	4
Half-bath group (water closet greater than 1.6 gallon per flush plus lavatory)	5
Kitchen group (dishwasher and sink with or without food-waste disposer)	2
Laundry group (clothes washer standpipe and laundry tub)	3
Multiple-bath groups[c]: 1.5 baths 2 baths 2.5 baths 3 baths 3.5 baths	 7 8 9 10 11

For SI: 1 gallon = 3.785 L.

a. For a continuous or semicontinuous flow into a drainage system, such as from a pump or similar device, 1.5 fixture units shall be allowed per gpm of flow. For a fixture not listed, use the highest d.f.u. value for a similar listed fixture.

b. A floor drain itself does not add hydraulic load. Where used as a receptor, the fixture unit value of the fixture discharging into the receptor shall be applicable.

c. Add 2 d.f.u. for each additional full bath.

INTERNATIONAL CODE COUNCIL®
Copyright © 2015 ICC. ALL RIGHTS RESERVED. Accessed by David Dammon on Jun 21, 2017 12:30:52 PM pursuant to License Agreement with ICC. No further reproduction or distribution authorized. ANY UNAUTHORIZED REPRODUCTION OR DISTRIBUTION IS A VIOLATION OF THE FEDERAL COPYRIGHT ACT AND THE LICENSE AGREEMENT, AND SUBJECT TO CIVIL AND CRIMINAL PENALTIES THEREUNDER.

Because the fixture unit values have a built-in probability factor, they cannot be directly translated into flow rates of discharge. For example, 1 d.f.u. is equivalent to a discharge rate of 1 cubic foot per minute (cfm) (0.47 L/s) or approximately 7.5 gallons per minute (gpm) (29 L/m). Two independent fixtures, however, each with a value of 1 drainage fixture unit, cannot be considered to have a combined discharge rate of 15 gpm (57 L/m), because the drainage fixture unit value incorporates the element of probability.

TABLE P3004.1. See page 30-13.

❖ This table identifies common plumbing fixtures with their corresponding d.f.u. values. The d.f.u. values are used to determine the load on a drain, which in turn is used to determine the minimum drainage pipe size requirement for the load served. In determining the fixture unit values, each fixture was evaluated for its impact on the sanitary drainage system. The original development of fixture unit values was based on an arbitrary scale established by Dr. Hunter.

The table takes into consideration the unlikely probability of multiple fixtures being used simultaneously. Therefore, sizing can be based on d.f.u. values for individual fixtures or for fixtures combined with adjacent fixtures within the same bathroom or grouping. For this purpose, the table assigns combined d.f.u. values for groups of bathroom fixtures, kitchen fixtures, appliances and laundry fixtures. These groups are adequately defined within the table itself.

Additional information is provided in the footnotes to the table for the purpose of sizing drains that receive the discharge of pumps or similar devices, floor drains, multiple-bathroom groups and other types of fixtures or drains not specifically listed within the table.

SECTION P3005
DRAINAGE SYSTEM

P3005.1 Drainage fittings and connections. Changes in direction in drainage piping shall be made by the appropriate use of sanitary tees, wyes, sweeps, bends or by a combination of these drainage fittings in accordance with Table P3005.1. Change in direction by combination fittings, heel or side inlets or increasers shall be installed in accordance with Table P3005.1 and Sections P3005.1.1 through P3005.1.4. based on the pattern of flow created by the fitting.

❖ This section refers the user to Table P3005.1 and the appropriate subsections for the determination of the type of drainage fitting that can be used depending on the installation. Consideration is given to the direction of flow, type of fixtures installed and point of connection as it relates to stacks, vents, drains or other connections. Drainage fittings and connections must provide a smooth transition of flow without creating obstructions or causing interference. The use of proper fittings helps to maintain the required flow velocities and reduces the possibility of stoppage in the drainage system.

Combination fittings are commonly used in drainage systems and must be evaluated for their pattern of flow. Combination fittings include fittings made up of two or more fittings and one-piece fittings, such as combination wye and eighth bends or tee-wyes.

TABLE P3005.1. See below.

❖ Where flow is from the horizontal to the horizontal, long-pattern fittings are necessary to prevent excessive reduction in flow velocity. Where flow is from the horizontal to the vertical or from the vertical to the horizontal, a short-pattern fitting can be used because the acceleration of flow caused by gravity will maintain higher flow velocities. An X in the column indicates that a particular fitting is acceptable for the described change in direction. For example, the only X shown for a sanitary tee is in the column for a horizontal-to-vertical change in direction.

The table has been developed to identify where use of a particular drainage pattern fitting is allowed. The terminology used to identify drainage pattern fittings was originally developed by the cast-iron soil pipe industry.

TABLE P3005.1
FITTINGS FOR CHANGE IN DIRECTION

TYPE OF FITTING PATTERN	CHANGE IN DIRECTION		
	Horizontal to vertical[c]	Vertical to horizontal	Horizontal to horizontal
Sixteenth bend	X	X	X
Eighth bend	X	X	X
Sixth bend	X	X	X
Quarter bend	X	X[a]	X[a]
Short sweep	X	X[a,b]	X[a]
Long sweep	X	X	X
Sanitary tee	X[c]	—	—
Wye	X	X	X
Combination wye and eighth bend	X	X	X

For SI: 1 inch = 25.4 mm.

a. The fittings shall only be permitted for a 2-inch or smaller fixture drain.

b. Three inches and larger.

c. For a limitation on multiple connection fittings, see Section P3005.1.1.

INTERNATIONAL CODE COUNCIL®
Copyright © 2015 ICC. ALL RIGHTS RESERVED. Accessed by David Dammon on Jun 21, 2017 12:30:52 PM pursuant to License Agreement with ICC. No further reproduction or distribution authorized. ANY UNAUTHORIZED REPRODUCTION OR DISTRIBUTION IS A VIOLATION OF THE FEDERAL COPYRIGHT ACT AND THE LICENSE AGREEMENT, AND SUBJECT TO CIVIL AND CRIMINAL PENALTIES THEREUNDER.

The pattern of the fittings is regulated by the fitting standards referenced in Table P3002.3. A fitting of one material will not necessarily look the same as a fitting of another material with the same name.

Note b permits the use of short-sweep fittings of 3 inches (76 mm) in diameter or larger where the change in direction is from the vertical to the horizontal. Note a permits the use of 2-inch (51 mm) or smaller short-sweep and quarter-bend fittings for drains serving a single fixture where the change in direction is from the vertical to the horizontal or from the horizontal to the horizontal. The intent of Note a is to allow short-pattern fittings for fixture drains because fixture drains are generally difficult to install using long-pattern fittings in frame construction. Only cast-iron pipe fittings have a separate quarter bend fitting and short sweep fitting. For other drainage piping materials, a quarter bend and short sweep are the same fitting. A quarter bend with a very short radius, less than that of a short sweep, is identified as a vent elbow or vent quarter bend. These particular fittings are designed for vent system applications only.

Because there is no waste flow in vent piping and because the airflow in vent piping can be in either direction, the types of fittings used in vent piping are not regulated by this section. For example, a sanitary tee placed on its back with the branch inlet connected to a vertical dry vent riser is a common installation practice and is not prohibited. In this application, the only waste flow is through the straight run of the fitting, and the

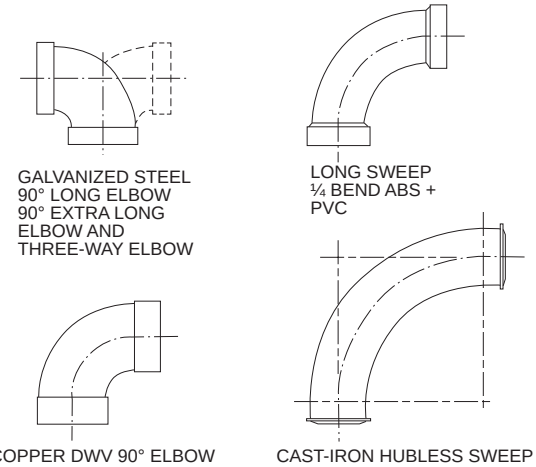

For SI: 1 inch = 25.4 mm, 1 degree = 0.0175 rad.

Figure P3005.1(1)
CAMPARISON OF DIFFERENT $1^1/_2$-INCH LONG SWEEPS FOR VARIOUS PIPING MATERIALS

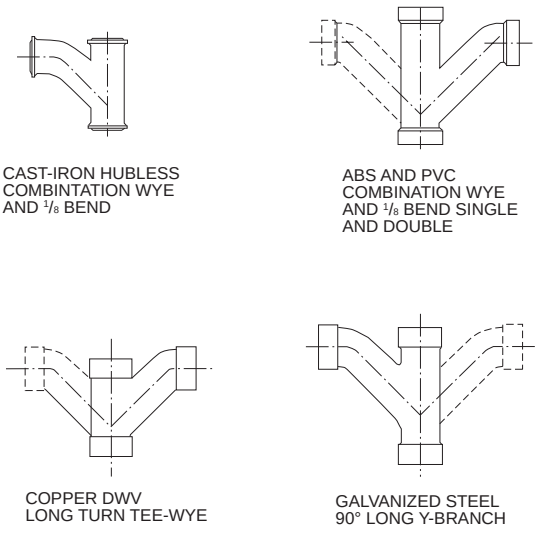

For SI: 1 inch = 25.4 mm, 1 degree = 0.0175 rad.

Figure P3005.1(2)
COMPARISON FOR 3-INCH COMBINATION WYE AND EIGHTH BEND FOR VARIOUS PIPING MATERIALS

INTERNATIONAL CODE COUNCIL®
Copyright © 2015 ICC. ALL RIGHTS RESERVED. Accessed by David Dammon on Jun 21, 2017 12:30:52 PM pursuant to License Agreement with ICC. No further reproduction or distribution authorized. ANY UNAUTHORIZED REPRODUCTION OR DISTRIBUTION IS A VIOLATION OF THE FEDERAL COPYRIGHT ACT AND THE LICENSE AGREEMENT, AND SUBJECT TO CIVIL AND CRIMINAL PENALTIES THEREUNDER.

branch inlet conducts only air into or out of the horizontal drain pipe. Note that the tee must be oriented to allow compliance with Section P3104.3. The restrictions placed on the use of a sanitary tee are based on its inability to guide waste flow entering through the branch inlet. Such restrictions do not apply where the branch inlet is used for a dry vent connection in compliance with Section P3104.

In all cases, the code requires that fittings be installed in a manner that will encourage high-velocity drainage flow and minimize the chances of blockage [see Commentary Figures P3005.1(1) through P3005.1(7)].

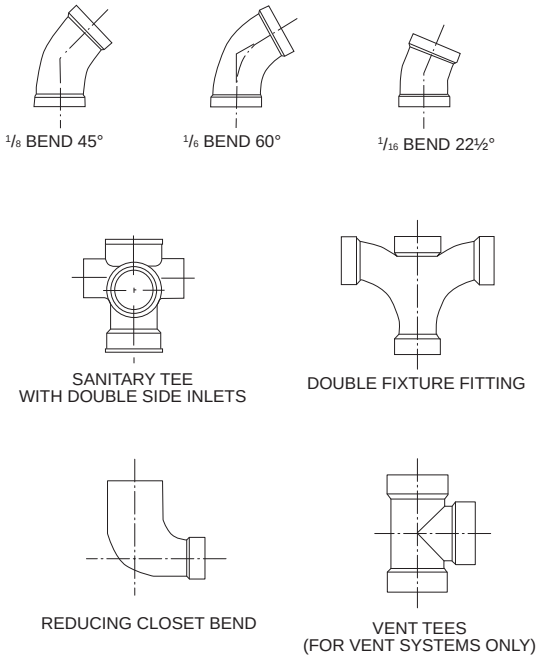

For SI: 1 degree = 0.0175 rad.

Figure P3005.1(3)
DRAINAGE PATTERN FITTINGS

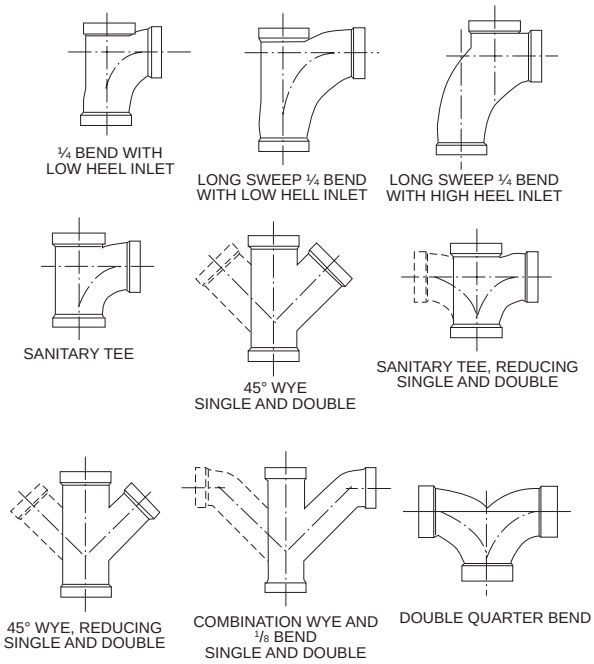

For SI: 1 degree = 0.0175 rad.

Figure P3005.1(4)
DRAINAGE PATTERN FITTINGS

INTERNATIONAL CODE COUNCIL®
Copyright © 2015 ICC. ALL RIGHTS RESERVED. Accessed by David Dammon on Jun 21, 2017 12:30:52 PM pursuant to License Agreement with ICC. No further reproduction or distribution authorized. ANY UNAUTHORIZED REPRODUCTION OR DISTRIBUTION IS A VIOLATION OF THE FEDERAL COPYRIGHT ACT AND THE LICENSE AGREEMENT, AND SUBJECT TO CIVIL AND CRIMINAL PENALTIES THEREUNDER.

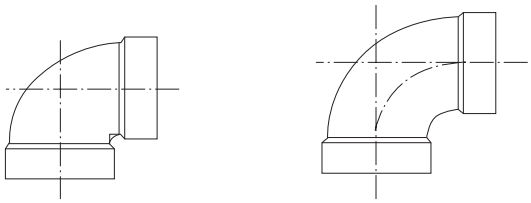

For SI: 1 degree = 0.0175 rad.

Figure P3005.1(5)
DIFFERENCE BETWEEN PVC PLASTIC $^1/_4$-BEND SHORT SWEEP AND $^1/_4$-BEND VENT ELBOW

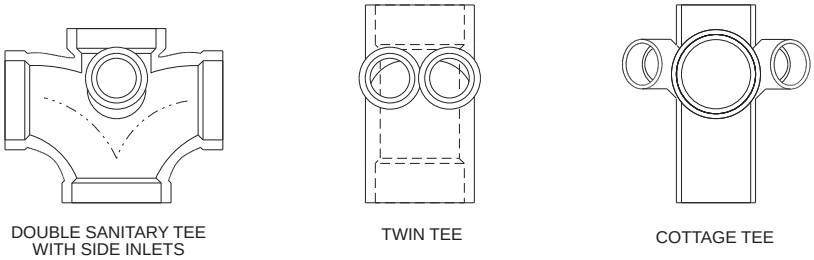

Figure P3005.1(6)
COMBINATION TEES

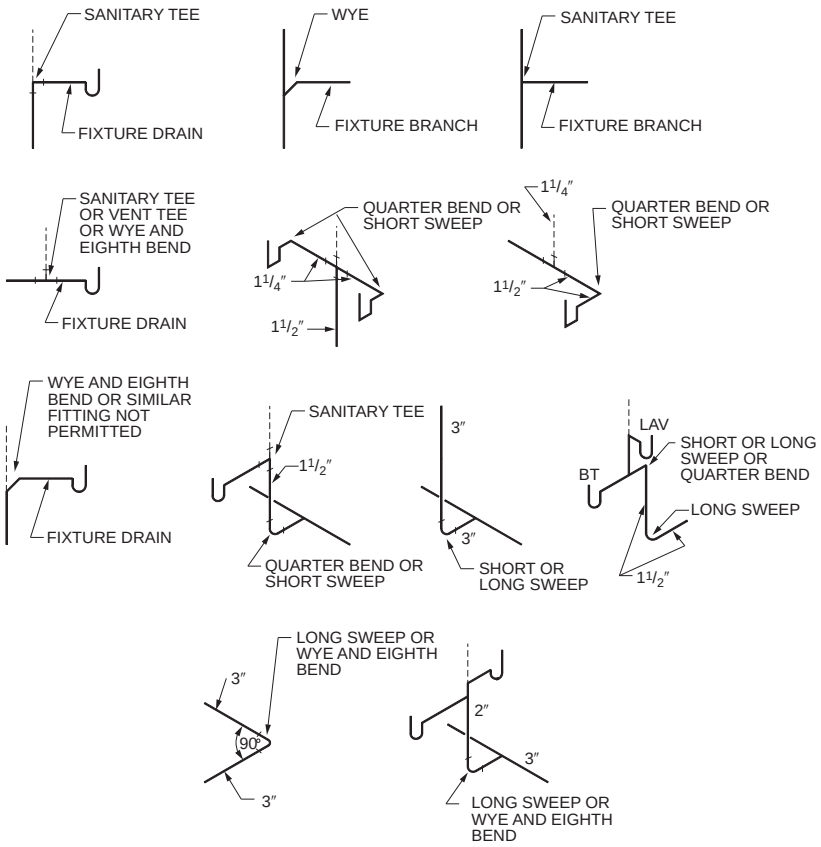

For SI: 1 inch = 25.4 mm, 1 degree = 0.0175 rad.

Figure P3005.1(7)
FITTING USES

INTERNATIONAL CODE COUNCIL®
Copyright © 2015 ICC. ALL RIGHTS RESERVED. Accessed by David Dammon on Jun 21, 2017 12:30:52 PM pursuant to License Agreement with ICC. No further reproduction or distribution authorized. ANY UNAUTHORIZED REPRODUCTION OR DISTRIBUTION IS A VIOLATION OF THE FEDERAL COPYRIGHT ACT AND THE LICENSE AGREEMENT, AND SUBJECT TO CIVIL AND CRIMINAL PENALTIES THEREUNDER.

P3005.1.1 Horizontal to vertical (multiple connection fittings). Double fittings such as double sanitary tees and tee-wyes or *approved* multiple connection fittings and back-to-back fixture arrangements that connect two or more branches at the same level shall be permitted as long as directly opposing connections are the same size and the discharge into directly opposing connections is from similar fixture types or fixture groups. Double sanitary tee patterns shall not receive the discharge of back-to-back water closets and fixtures or appliances with pumping action discharge.

Exception: Back-to-back water closet connections to double sanitary tee patterns shall be permitted where the horizontal *developed length* between the outlet of the water closet and the connection to the double sanitary tee is 18 inches (457 mm) or greater.

❖ This section addresses the use of double (or multiple) inlet fittings that connect more than one horizontal drain to a vertical drain or stack. This is most common with, but is not limited to, back-to-back fixtures (see Commentary Figure P3005.1.1).

It is mistakenly thought that the use of a double combination fitting, such as tee-wyes and combination wye and $^1/_8$ bends as shown in Commentary Figure P3005.1(4), is not permitted for the water closet arrangement, insofar as it will not permit the vent to connect above the trap weir. However, this arrangement is permitted because the vent connection limitation is designed to prevent self-siphonage and water closets must self-siphon to operate properly (see Section P3105.2).

Double sanitary tees must not be installed where water closets or appliances with pumping action are back-to-back. Washing machines and dishwashers are the typical appliances with pumping action in one- and two-family dwellings. The exception recognizes that the waste flow in the fixture drain will not have the energy to jump across the fitting branches after it has been conveyed horizontally for $1^1/_2$ feet (457 mm) or more. Only in this case may a double sanitary tee be used for back-to-back water closet installations.

For all other fixture connections using double sanitary tees and tee-wyes or other multiple connection fittings, the back-to-back fixtures must be similar to one another (two lavatories, two bathtubs, etc.), and each opposing branch connecting to the fitting must be the same size.

P3005.1.2 Heel- or side-inlet quarter bends, drainage. Heel-inlet quarter bends shall be an acceptable means of connection, except where the quarter bends serves a water closet. A low-heel inlet shall not be used as a wet-vented connection. Side-inlet quarter bends shall be an acceptable means of connection for both drainage, wet venting and stack venting arrangements.

❖ This section addresses the use of heel-inlet quarter bends and side-inlet quarter bends for the purpose of drainage. There are two types of heel-inlet quarter bends: a heel-inlet and a side-inlet [see Commentary Figures P3005.1.2(1) and P3005.1.2(2)]. A heel-inlet (low or high) quarter bend cannot be used to connect a water closet, and a low-heel-inlet quarter bend, in particular, cannot be used as a wet-vented connection. Side-inlet quarter bends have no usage limitations. This section addresses combination quarter bend fittings where the quarter bend portion is used for vertical to horizontal changes in direction. Note the serious building code violation in Figure P3005.1.2(2) (floor joist cut).

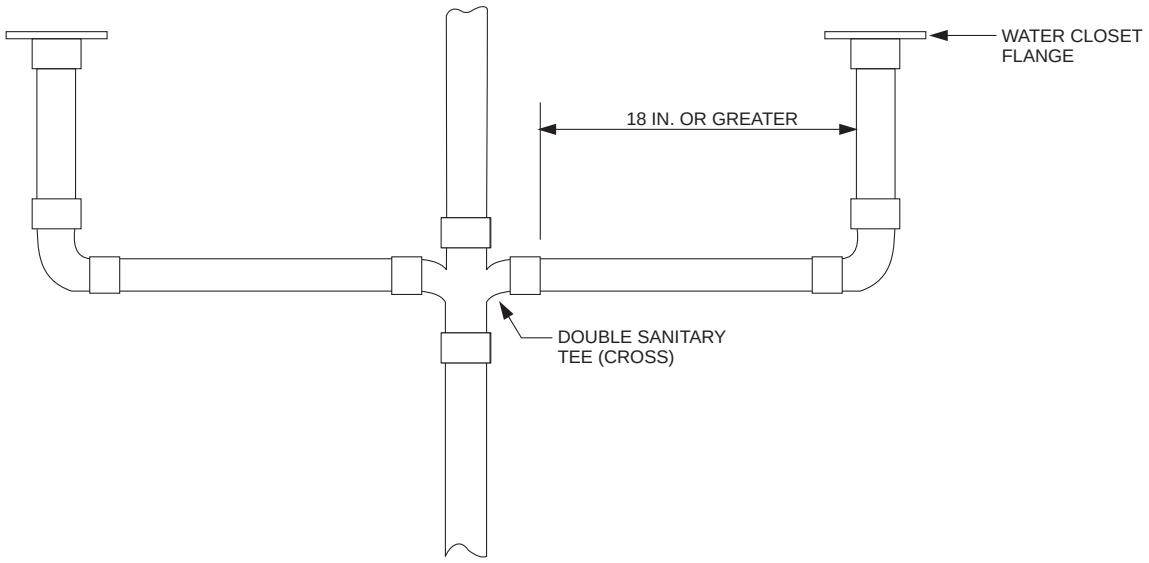

For SI: 1 inch = 25.4 mm.

Figure P3005.1.1
DOUBLE SANITARY TEE APPLICATION WITH WATER CLOSETS

INTERNATIONAL CODE COUNCIL®
Copyright © 2015 ICC. ALL RIGHTS RESERVED. Accessed by David Dammon on Jun 21, 2017 12:30:52 PM pursuant to License Agreement with ICC. No further reproduction or distribution authorized. ANY UNAUTHORIZED REPRODUCTION OR DISTRIBUTION IS A VIOLATION OF THE FEDERAL COPYRIGHT ACT AND THE LICENSE AGREEMENT, AND SUBJECT TO CIVIL AND CRIMINAL PENALTIES THEREUNDER.

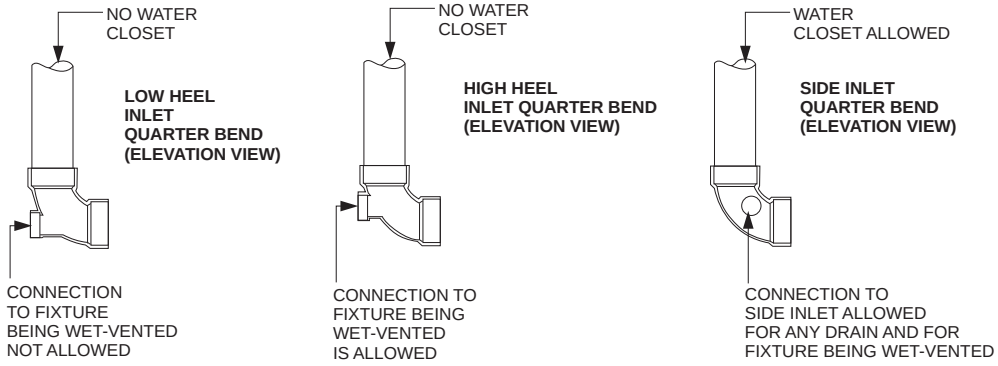

Figure P3005.1.2(1)
HEEL-INLET FITTINGS



Figure P3005.1.2(2)
VIOLATION: I-JOIST SEVERED FOR PIPING INSTALLATION

P3005.1.3 Heel- or side-inlet quarter bends, venting. Heel-inlet or side-inlet quarter bends, or any arrangement of pipe and fittings producing a similar effect, shall be acceptable as a dry vent where the inlet is placed in a vertical position. The inlet is permitted to be placed in a horizontal position only where the entire fitting is part of a dry vent arrangement.

❖ The only application where heel- or side-inlet quarter bends can be used for the purpose of venting a drain is where the inlet is in the vertical position. This means that if waste flows through the quarter bend, the low, high or side inlet would have to point upward. If there is no waste flow through the quarter bend, it is being used only as a vent fitting and the fitting can be installed in any orientation.

P3005.1.4 Water closet connection between flange and pipe. One-quarter bends 3 inches (76 mm) in diameter shall be acceptable for water closet or similar connections, provided that a 4-inch by 3-inch (102 mm by 76 mm) flange is installed to receive the closet fixture horn. Alternately, a 4-inch by 3-inch (102 mm by 76 mm) elbow shall be acceptable with a 4-inch (102 mm) flange.

❖ The reduction from 4 inches (102 mm) to 3 inches (76 mm) by means of a 4-inch by 3-inch (102 mm by 76 mm) closet flange or a 4-inch by 3-inch (102 mm by 76 mm) closet elbow is acceptable and is not to be considered an obstruction, as would be the case with reducing drain sizes downstream of the connection. A 4-inch by 3-inch (102 mm by 76 mm) closet flange is referred to as a reducing flange or simply a 3-inch (76 mm) closet flange.

INTERNATIONAL CODE COUNCIL®
Copyright © 2015 ICC. ALL RIGHTS RESERVED. Accessed by David Dammon on Jun 21, 2017 12:30:52 PM pursuant to License Agreement with ICC. No further reproduction or distribution authorized. ANY UNAUTHORIZED REPRODUCTION OR DISTRIBUTION IS A VIOLATION OF THE FEDERAL COPYRIGHT ACT AND THE LICENSE AGREEMENT, AND SUBJECT TO CIVIL AND CRIMINAL PENALTIES THEREUNDER.

P3005.1.5 Provisions for future fixtures. Where drainage has been roughed-in for future fixtures, the drainage unit values of the future fixtures shall be considered in determining the required drain sizes. Such future installations shall be terminated with an accessible permanent plug or cap fitting.

❖ Logically, the d.f.u. values for future fixtures must be included in determining the size of the drainage system; otherwise, the system might be undersized such that the future fixtures could not be accommodated. The piping must be permanently plugged or capped to prevent the escape of sewer gases or the intrusion of foreign objects. The point of future connection at the plug or cap must be accessible (see the definition of "Accessible" in Chapter 2). Note that Section P3104.6 also requires a vent to be roughed-in for drainage piping that will serve fixtures intended to be installed.

P3005.1.6 Change in size. The size of the drainage piping shall not be reduced in size in the direction of the flow. A 4-inch by 3-inch (102 mm by 76 mm) water closet connection shall not be considered as a reduction in size.

❖ One of the fundamental requirements of a drainage system is that the size of the piping cannot be reduced in the direction of drainage flow. A size reduction would create an obstruction to flow, possibly resulting in a backup of flow, an interruption of service in the drainage system or stoppage in the pipe. A 4-inch by 3-inch (102 mm by 76 mm) water closet connection is not considered to be a reduction in pipe size.

P3005.2 Cleanouts required. Cleanouts shall be provided for drainage piping in accordance with Sections P3005.2.1 through P3005.2.11.

❖ There must be points of access to drainage systems for clearing blockages. These access points are called cleanouts. See the definition for "Cleanout" in Chapter 2. Blockages in vertical piping rarely, if ever, occur because gravity will cause the blockage to move downward. Therefore, only horizontal piping is required to have cleanouts. In locating cleanouts, the designer or installer should consider the type of equipment that might be necessary for clearing blockages. Typical drain clearing/cleaning equipment includes hand-held cable augers, flat tapes, power-driven cables from $^1/_4$-inch diameter to $1^1/_8$-inch diameter (or larger), and water jetting hoses from $^1/_4$-inch diameter to 1-inch diameter (or larger). This equipment, especially power driven units, can be sizable and heavy. A large machine could be difficult to maneuver into smaller areas, let alone be safe to operate in a confined area. This section does provide a few limitations for where cleanouts can be located. Otherwise, the experience of the designer or installer is leaned on heavily to determine the best, most logical locations for cleanouts.

A frequently asked question is whether mechanical joints such as elastomeric connections (hubless joint connectors) can be considered as cleanouts. A significant amount of drain cleaning is performed by personnel that, although trained on drain-cleaning methods and equipment, may not have the necessary training on the proper removal and reinstallation of piping. Hangers could be left out, couplings reused or couplings overtightened such that the plumbing system might not work as intended or become a hazard (either environmentally or structurally). In the author's opinion, appropriate cleanout access such as removal of a cleanout plug is a far superior and a safer approach to provide access to the drainage system. However, some code officials might believe that removal of piping connectors would provide the intended access. The code is silent on this topic.

P3005.2.1 Horizontal drains and building drains. Horizontal drainage pipes in buildings shall have cleanouts located at intervals of not more than 100 feet (30 480 mm). *Building drains* shall have cleanouts located at intervals of not more than 100 feet (30 480 mm) except where manholes are used instead of cleanouts, the manholes shall be located at intervals of not more than 400 feet (122 m). The interval length shall be measured from the cleanout or manhole opening, along the *developed length* of the piping to the next drainage fitting providing access for cleaning, the end of the horizontal drain or the end of the *building drain*.

Exception: Horizontal fixture drain piping serving a nonremovable trap shall not be required to have a cleanout for the section of piping between the trap and the vent connection for such trap.

❖ Modern drain-cleaning equipment is available with cable (or jetter hose) length to clear blockages in horizontal drainage piping that is 100 feet (or less) in developed piping length from the cleanout opening. Manholes are sometimes used for cleanouts for larger-diameter piping. The larger piping diameter allows for larger-diameter cables (or larger diameter/higher pressure jetter hoses) to be used which are capable of clearing blockages in horizontal drainage piping that is 400 feet in length (or less). A key point to consider in locating the cleanouts is that the lengths indicated in this section are measured from the cleanout opening to the farthest point where the next cleanout allows access to the horizontal drain piping. For example, if the cleanout is on a stack and cleanout opening is 10 feet above the horizontal drain pipe (that the stack connects to), then the length of horizontal drainage piping that can be cleared is only 90 feet. The lengths in this section are for drainage piping that does not have changes in direction any greater than 45 degrees. See Section P3005.2.4 for horizontal changes in direction that are greater than 45 degrees.

The exception covers the special circumstance for horizontal drain piping that begins with a nonremovable trap such as for a floor drain or a shower drain. It is understood that a cable or jetter hose can be negotiated through a trap. However, the convoluted path of the trap creates additional drag on a cable such that running the cable for too far of a distance from the trap can cause high stresses in the cable resulting in a greater potential for cable breakage. Therefore, the cleanout access for these horizontal drains can be located downstream of these traps for a distance of up

INTERNATIONAL CODE COUNCIL®
Copyright © 2015 ICC. ALL RIGHTS RESERVED. Accessed by David Dammon on Jun 21, 2017 12:30:52 PM pursuant to License Agreement with ICC. No further reproduction or distribution authorized. ANY UNAUTHORIZED REPRODUCTION OR DISTRIBUTION IS A VIOLATION OF THE FEDERAL COPYRIGHT ACT AND THE LICENSE AGREEMENT, AND SUBJECT TO CIVIL AND CRIMINAL PENALTIES THEREUNDER.

to the maximum allowable pipe length between the trap and the vent connection for the trap. See Table P3105.1 for trap-to-vent distances.

P3005.2.2 Building sewers. *Building sewers* smaller than 8 inches (203 mm) shall have cleanouts located at intervals of not more than 100 feet (30 480 mm). *Building sewers* 8 inches (203 mm) and larger shall have a manhole located not more than 200 feet (60 960 mm) from the junction of the *building drain* and *building sewer* and at intervals of not more than 400 feet (122 m). The interval length shall be measured from the cleanout or manhole opening, along the *developed length* of the piping to the next drainage fitting providing access for cleaning, a manhole or the end of the *building sewer*.

❖ The commentary for Section P3005.2.1 explains most of the information in this section. Sewers that are 8 inches or larger are required to have manholes for cleanout access because the large cables (or jetter hoses) needed for these pipelines cannot be easily negotiated through the standard pattern wye and one-eighth bend fitting that would be needed to bring the cleanout access opening to grade level. Building sewers could be broken at wye and one-eighth bend entry into the horizontal drainage piping, resulting in earth or stone backfill later migrating into the sewer. Manholes for these larger cables and hoses provide the needed space for access to the piping. Note that the first manhole for an 8-inch or larger diameter sewer is not required to be at the building. A manhole located up to 200 feet away from the building can be used to clear blockages in the sewer line back towards the building.

P3005.2.3 Building drain and building sewer junction. The junction of the *building drain* and the *building sewer* shall be served by a cleanout that is located at the junction or within 10 feet (3048 mm) *developed length* of piping upstream of the junction. For the requirements of this section, removal of a water closet shall not be required to provide cleanout access.

❖ The building sewer begins at the termination of the building drain which ends, by definition, at a point that is 30 inches from the outside wall of the building. Access to the building sewer is very important because blockages can frequently occur as the result of low-flow velocities being unable to transport solids and tree roots that can penetrate the sewer. Blockages might also be the result of other underground utilities that were installed by underground horizontal directional boring methods or "slit" trenching, both of which can sever/penetrate a building sewer without the knowledge of the equipment operator.

The allowance to have the cleanout located upstream of the building drain/building sewer juncture, but only up to 10 feet, provides for building sewer cleanouts to be in basements, crawl spaces, interior rooms or corridors. The prohibition of not allowing the removal of a water closet to provide cleanout access has a two-fold purpose: 1. Water closets are either in a water closet compartment or a small single-user toilet room. Although removal of the water closet could be a cleanout (see "Cleanout" definition in Chapter 2), such spaces are usually not large enough to facilitate the safe operation of cable machines that are powerful enough to have root-cutting capability. 2. The location of a wall (stack) or floor cleanout that requires removal of the water closet to gain safe access to the cleanout defeats the purpose of having installed the cleanout that is to facilitate drain clearing. For example, a cleanout might be located directly behind a water closet, on the (close) wall side of a water closet or on the floor next to the water closet such that the water closet would need to be removed to enable positioning of a large drain cleaning machine near the cleanout opening. A heavy machine near or on the closet flange could cause damage to the flange that might not be properly repaired. The location of a building sewer cleanout on the interior of a building needs to be well thought out.

A note needs to be said about safety and situational awareness when attempting to clear building sewer blockages. As stated previously, underground horizontal directional boring or slit trenching are frequently being used to install many types of underground utilities. Because building sewers are usually not marked on drawings, are frequently made of nonmetallic materials and are rarely installed with detectable tapes or wires such that detection equipment can locate them, a building sewer could be inadvertently penetrated by a utility service. This may cause sewer blockage. Thus, drain cleaning personnel need to be aware of any evidence (including information from the building occupant/owner) of recent construction activities in the area that could have impacted the sewer line, especially if those activities involve natural gas lines or electric power cabling. There have been injuries and deaths associated with sewer cleaning work where gas lines or electric cables penetrated a sewer and were cut by the sewer cleaning operations.

P3005.2.4 Changes of direction. Where a horizontal drainage pipe, a *building drain* or a *building sewer* has a change of horizontal direction greater than 45 degrees (0.79 rad), a cleanout shall be installed at the change of direction. Where more than one change of horizontal direction greater than 45 degrees (0.79 rad) occurs within 40 feet (12 192 mm) of *developed length* of piping, the cleanout installed for the first change of direction shall serve as the cleanout for all changes in direction within that 40 feet (12 192 mm) of developed length of piping.

❖ Table P3005.1 covers what types of fittings can be used for changes in direction of drainage piping. However, where there are many changes in direction greater than 45 degrees, it becomes more difficult for the drain-cleaning equipment (cables or jetter hoses) to negotiate the turns. The length of 40 feet is based on the drain-cleaning equipment's ability to negotiate all of the turns without significant equipment problems.

Where the length of drainage piping to be cleared is longer than 40 feet, some accommodations are necessary to ease the way for the cable or jetter hose for

INTERNATIONAL CODE COUNCIL®
Copyright © 2015 ICC. ALL RIGHTS RESERVED. Accessed by David Dammon on Jun 21, 2017 12:30:52 PM pursuant to License Agreement with ICC. No further reproduction or distribution authorized. ANY UNAUTHORIZED REPRODUCTION OR DISTRIBUTION IS A VIOLATION OF THE FEDERAL COPYRIGHT ACT AND THE LICENSE AGREEMENT, AND SUBJECT TO CIVIL AND CRIMINAL PENALTIES THEREUNDER.

these longer pipelines. The accommodation is to not use single fitting patterns for changes in direction greater than 45 degrees.

A single pattern fitting or a fitting made up from "combining" fittings to make a pattern that is virtually identical to a single fitting must be avoided. Examples are: 1. A quarter bend long sweep fitting can be duplicated by assembling a one-eighth bend spigot end elbow into the hub end of a one-eighth bend elbow; and 2. A combination wye and one-eighth bend fitting can be duplicated by assembling a one-eighth bend spigot end elbow into the branch of a wye fitting. A frequent question is whether two one-eighth bend pattern fittings can be connected together by a short length of pipe and not be considered to be duplicating a single pattern fitting (and not requiring a cleanout for that change in direction). An example would be making a 90 degree change in direction using two one-eighth bend fittings (hubs on both ends) connected by a "make up" length of pipe (such that the hub end of each fitting touches the other). The code does allow 45 degree changes in direction and does not state how far apart those changes are required to be. The logical conclusion is that the length of pipe between the two fittings could be minimal and the made up fitting still be in compliance such that a cleanout would not be required. This might not necessarily be the same conclusion that the local code official might make. And the type of pipe material (and how the fittings are made for that type of pipe such as hubless cast iron fittings versus plastic fittings) might alter the code official's viewpoint in the matter. If a length of pipe needs to be used to make up a fitting to accomplish a change of direction greater than 45 degrees, then it would be better to plan for and use a length that clearly separates the two fittings into two separate changes in direction rather than causing the question to be raised in the first place.

P3005.2.5 Cleanout size. Cleanouts shall be the same size as the piping served by the cleanout, except cleanouts for piping larger than 4 inches (102 mm) need not be larger than 4 inches (102 mm).

Exceptions:

1. Cleanouts located on stacks can be one size smaller than the stack size.
2. The size of cleanouts for cast-iron piping can be in accordance with the referenced standards for cast iron fittings as indicated in Table P3002.3.

❖ Cleanout openings for $1^1/_4$-, $1^1/_2$-, 2-, $2^1/_2$-, 3- and 4-inch pipes must not be smaller than the pipe served, thus allowing use of full-bore cleaning equipment. For larger piping, a 4-inch (102 mm) opening is considered adequate for today's cleaning equipment, and full-bore cleaning equipment is typically not used for such piping.

Manufactured cleanout fittings, like pipe, are sized by nominal dimensions.

Section P3005.2.5, Exception 1 allows a smaller nominal size fitting to serve as a cleanout for a larger nominal pipe size. This exception is very specific and limited to removable "P" traps. Exception 1 is intended to permit the removal of fixture traps to provide access to the connecting drains. Exception 2 accommodates some stack fitting designs that have always had the "one pipe size smaller" cleanout opening.

P3005.2.6 Cleanout plugs. Cleanout plugs shall be copper alloy, plastic or other *approved* materials. Cleanout plugs for borosilicate glass piping systems shall be of borosilicate glass. Brass cleanout plugs shall conform to ASTM A74 and shall be limited for use only on metallic piping systems. Plastic cleanout plugs shall conform to the referenced standards for plastic pipe fittings as indicated in Table P3002.3. Cleanout plugs shall have a raised square head, a countersunk square head or a countersunk slot head. Where a cleanout plug will have a trim cover screw installed into the plug, the plug shall be manufactured with a blind end threaded hole for such purpose.

❖ Metallic cleanout plugs must be brass to provide for easy removal. If the cleanout plug is corroded in place, the brass plug is a soft enough material to be chiseled out. Brass cleanout plugs are limited to metallic fittings because the metal plug threads may damage the softer plastic threads of a fitting. Plastic plugs are intended for use with plastic fittings; however, this section does not prohibit the use of plastic plugs with metallic fittings. Like brass plugs, plastic plugs are less likely to seize in metallic fittings. The cleanout plug must have a square turning surface to allow for ease of removal while minimizing the possibility of stripping the surface during removal.

P3005.2.7 Manholes. Manholes and manhole covers shall be of an approved type. Manholes located inside of a building shall have gas-tight covers that require tools for removal.

❖ There are many designs for manholes and manhole covers. Frequently, jurisdictions have specifications on manhole design and require specially embossed covers to be used. The code official must approve the design.

Where manholes are installed inside of buildings, the manhole covers must be of gas-tight design to prevent sewer gases from entering the building. Covers need to be bolted down or otherwise require tools to remove to cause limited access.

The designer specifying the installation of manholes in areas subject to flooding must consider the protection of manholes from the effects of floodwaters. Floodwaters may damage or completely displace manholes and covers if they are not properly sealed and secured. Additionally, submerged manhole openings (covers) may allow floodwaters to enter the drainage system. The manhole cover may be located above the base flood level elevation or designed to resist hydrostatic forces when submerged in water and dynamic forces resulting from wave action or high-velocity water.

INTERNATIONAL CODE COUNCIL®
Copyright © 2015 ICC. ALL RIGHTS RESERVED. Accessed by David Dammon on Jun 21, 2017 12:30:52 PM pursuant to License Agreement with ICC. No further reproduction or distribution authorized. ANY UNAUTHORIZED REPRODUCTION OR DISTRIBUTION IS A VIOLATION OF THE FEDERAL COPYRIGHT ACT AND THE LICENSE AGREEMENT, AND SUBJECT TO CIVIL AND CRIMINAL PENALTIES THEREUNDER.

P3005.2.8 Installation arrangement. The installation arrangement of a cleanout shall enable cleaning of drainage piping only in the direction of drainage flow.

Exceptions:

1. Test tees serving as cleanouts.
2. A two-way cleanout installation that is *approved* for meeting the requirements of Section P3005.2.3.

❖ Many fixtures and buildings have been damaged by drain cleaning work that allowed the cable or jetter hose to be routed in an upstream direction. Drainage piping is frequently smaller in diameter at upstream locations and augers can break or permanently jam in the piping. Almost every plumbing contractor has heard of stories or has personally witnessed the aftermath of a cleaning cable that found its way out through a water closet, breaking the water closet and causing significant wall, floor and ceiling damage in a toilet room. Cleanouts must be well thought out ensuring that the preferred cleanout arrangement is for cleaning in a downstream direction.

Exception 1 recognizes that a test tee might be required to be installed for a cleanout. The intent is not for enabling drain cleaning in the upstream direction. The drainage piping upstream of the test tee (serving as a cleanout) must have the required cleanout. Though not required by the code, some permanent indication of flow should be indicated on test tees serving as cleanouts, except those where the direction of flow is obvious, such as on a vertical pipe.

Exception 2 recognizes a specialized two-way cleanout fitting that is constructed with a branch throat that curves toward both the upstream and downstream directions of the run of the fitting. This fitting is only allowed to be used for the building drain/building sewer cleanout requirement of Section P3005.2.3. This fitting is sometimes used as a retrofit for existing buildings where the building drain was not provided with an upstream cleanout. A question that is often asked is how far below grade can a two-way cleanout fitting be located? The concern is about being able to reliably guide the cleaning cable (or jetter hose) in the intended direction (and not in an unintended direction). Or it should be obvious that the cleanout is a specialized two-way cleanout fitting so that a drain cleaner doesn't just assume that the fitting will always direct the cable downstream. The code is silent on this issue.

P3005.2.9 Required clearance. Cleanouts for 6-inch (153 mm) and smaller piping shall be provided with a clearance of not less than 18 inches (457 mm) from, and perpendicular to, the face of the opening to any obstruction. Cleanouts for 8-inch (203 mm) and larger piping shall be provided with a clearance of not less than 36 inches (914 mm) from, and perpendicular to, the face of the opening to any obstruction.

❖ The usability of cleanouts is not to be compromised by their placement in the building. The required clearances in this section are the minimum conditions that will allow the cleanout to be used for the intended purpose. The designer is encouraged to provide additional clearance whenever possible and practical. The required clearances are to be measured perpendicular to the face of the cleanout opening to any obstruction. Obstructions could mean fixed equipment, plumbing fixtures and equipment, appliances that cannot be moved by hand only (such as an ice machine), or permanent building construction such as water closet compartment panels that are fixed to the building.

P3005.2.10 Cleanout access. Required cleanouts shall not be installed in concealed locations. For the purposes of this section, concealed locations include, but are not limited to, the inside of plenums, within walls, within floor/ceiling assemblies, below grade and in crawl spaces where the height from the crawl space floor to the nearest obstruction along the path from the crawl space opening to the cleanout location is less than 24 inches (610 mm). Cleanouts with openings at a finished wall shall have the face of the opening located within $1^1/_2$ inches (38 mm) of the finished wall surface. Cleanouts located below grade shall be extended to grade level so that the top of the cleanout plug is at or above grade. A cleanout installed in a floor or walkway that will not have a trim cover installed shall have a counter-sunk plug installed so the top surface of the plug is flush with the finished surface of the floor or walkway.

❖ A cleanout cannot be located in permanently concealed areas, be concealed by permanent finish materials or be located in an area where cleaning equipment could not be obviously moved to perform the work. A cleanout that cannot be found is a useless cleanout. A cleanout that is poorly located (such as in floor/ceiling area) and presents difficulties resulting in building damage is not an intelligent choice.

P3005.2.10.1 Cleanout plug trim covers. Trim covers and access doors for cleanout plugs shall be designed for such purposes. Trim cover fasteners that thread into cleanout plugs shall be corrosion resistant. Cleanout plugs shall not be covered with mortar, plaster or any other permanent material.

❖ Trim covers and access panels are required to be designed for such purposes so that they are recognizable as a potential location for a cleanout. Such covers and panels must be approved by the code official so that obscure and inappropriate methods for covering up cleanouts are not chosen.

P3005.2.10.2 Floor cleanout assemblies. Where it is necessary to protect a cleanout plug from the loads of vehicular traffic, cleanout assemblies in accordance with ASME A112.36.2M shall be installed.

❖ Load-rated cleanout assemblies are required for vehicular traffic areas.

P3005.2.11 Prohibited use. The use of a threaded cleanout opening to add a fixture or extend piping shall be prohibited except where another cleanout of equal size is installed with the required access and clearance.

❖ If a cleanout opening is eliminated by a permanent piping connection, a new approved cleanout of equal access and capacity must be installed. In existing structures, cleanouts provide a convenient opening for the connection of new piping in remodeling, addition

INTERNATIONAL CODE COUNCIL®
Copyright © 2015 ICC. ALL RIGHTS RESERVED. Accessed by David Dammon on Jun 21, 2017 12:30:52 PM pursuant to License Agreement with ICC. No further reproduction or distribution authorized. ANY UNAUTHORIZED REPRODUCTION OR DISTRIBUTION IS A VIOLATION OF THE FEDERAL COPYRIGHT ACT AND THE LICENSE AGREEMENT, AND SUBJECT TO CIVIL AND CRIMINAL PENALTIES THEREUNDER.

and alteration work. The cleanout fitting is commonly removed to allow a new connection; however, a substitute cleanout must be provided to serve in the same capacity as the cleanout that was eliminated. Many threaded cleanout openings have only a few threads and, therefore, are not intended to receive threaded pipe or male adapters.

P3005.3 Horizontal drainage piping slope. Horizontal drainage piping shall be installed in uniform alignment at uniform slopes not less than $^1/_4$ unit vertical in 12 units horizontal (2-percent slope) for $2^1/_2$ inch (64 mm) diameter and less, and not less than $^1/_8$ unit vertical in 12 units horizontal (1-percent slope) for diameters of 3 inches (76 mm) or more.

❖ The minimum desired velocity in a horizontal drain pipe is approximately 2 feet per second (0.609 m/s). This velocity is often referred to as the "scouring velocity." This minimum velocity is intended to keep solids in suspension. If velocity is too low because the pipe slope is too shallow, the solids will tend to drop out of suspension, settling at the bottom of the pipe. This will ultimately lead to a drain blockage. The slope requirements of this section produce the minimum required drainage flow velocity. Two-percent slope is required for $2^1/_2$-inch (64 mm) diameter and smaller pipe, and 1-percent slope is required for 3-inch (76 mm) diameter and larger pipe. Drainage pipe can always be installed with greater slopes.

P3005.4 Drain pipe sizing. Drain pipes shall be sized according to drainage fixture unit (d.f.u.) loads. The size of the drainage piping shall not be reduced in size in the direction of flow. The following general procedure is permitted to be used:

1. Draw an isometric layout or riser diagram denoting fixtures on the layout.
2. Assign d.f.u. values to each fixture group plus individual fixtures using Table P3004.1.
3. Starting with the top floor or most remote fixtures, work downstream toward the *building drain* accumulating d.f.u. values for fixture groups plus individual fixtures for each branch. Where multiple bath groups are being added, use the reduced d.f.u. values in Table P3004.1, which take into account probability factors of simultaneous use.
4. Size branches and stacks by equating the assigned d.f.u. values to pipe sizes shown in Table P3005.4.1.
5. Determine the pipe diameter and slope of the *building drain* and *building sewer* based on the accumulated d.f.u. values, using Table P3005.4.2.

❖ This section outlines in detail the method the designer can use to effectively size the drainage portion of the DWV system.

The first step is to draw an isometric layout of the drain lines. This drawing must show each fixture (or group of fixtures) and must indicate all points of connection (see Commentary Figure P3005.4).

Step two is to assign d.f.u. values to each fixture or group of fixtures. This information is found in Table P3004.1 (see commentaries, Section P3004.1 and Table P3004.1).

The third step is to add up the d.f.u.s for each section of piping. Start with the most remote fixture (or group) and follow downstream, adding the total for each section of pipe (see Commentary Figure P3005.4).

Step four is to size the branches and stacks. This requires the use of Table P3005.4.1, and the size of drainage piping must not be reduced in the direction of flow (see commentaries, Section P3005.4.1, Table P3005.4.1, and the definitions of "Branch" and "Stack").

The fifth and final step is to size the building drain and building sewer based on the d.f.u.s as determined in the previous steps. This will require the use of Table P3005.4.2 (see commentaries, Section P3005.4.2, Table P3005.4.2, and the definitions of "Building drain" and "Building sewer").

P3005.4.1 Branch and stack sizing. Branches and stacks shall be sized in accordance with Table P3005.4.1. Below grade drain pipes shall be not less than $1^1/_2$ inches (38 mm) in diameter. Drain stacks shall be not smaller than the largest horizontal branch connected.

Exceptions:

1. A 4-inch by 3-inch (102 mm by 76 mm) closet bend or flange.
2. A 4-inch (102 mm) closet bend connected to a 3-inch (76 mm) stack tee shall not be prohibited.

❖ This section outlines the method for sizing branches and stacks (see Chapter 2 for the definitions of "Branch" and "Stack"). Refer to Table P3005.4.1 for determining the size of pipe based on the d.f.u. value. It is important to understand the definitions of "Branch" and "Stack," especially as they relate to the definition of a "Building Drain" (see commentaries for the Chapter 2 definitions of "Branch," "Building Drain" and "Stack"). A closer look at these definitions, as they relate to Commentary Figure P3005.4, shows that none of the drain lines in the diagram can be defined as a stack or branch. Rather, they are part of building drain and the building drain branches, which are sized in accordance with Table P3005.4.2. In addition, Table P3201.7 dictates the trap size required for each fixture.

A $1^1/_4$-inch (32 mm) pipe is limited to use as a fixture drain and is not allowed to be installed underground.

INTERNATIONAL CODE COUNCIL®
Copyright © 2015 ICC. ALL RIGHTS RESERVED. Accessed by David Dammon on Jun 21, 2017 12:30:52 PM pursuant to License Agreement with ICC. No further reproduction or distribution authorized. ANY UNAUTHORIZED REPRODUCTION OR DISTRIBUTION IS A VIOLATION OF THE FEDERAL COPYRIGHT ACT AND THE LICENSE AGREEMENT, AND SUBJECT TO CIVIL AND CRIMINAL PENALTIES THEREUNDER.

TABLE P3005.4.1
MAXIMUM FIXTURE UNITS ALLOWED TO BE CONNECTED TO BRANCHES AND STACKS

NOMINAL PIPE SIZE (inches)	ANY HORIZONTAL FIXTURE BRANCH	ANY ONE VERTICAL STACK OR DRAIN
$1^1/_4$[a]	—	—
$1^1/_2$[b]	3	4
2[b]	6	10
$2^1/_2$[b]	12	20
3	20	48
4	160	240

For SI: 1 inch = 25.4 mm.

a. $1^1/_4$-inch pipe size limited to a single-fixture drain or trap arm. See Table P3201.7.

b. No water closets.

❖ This table lists the maximum number of fixture units that are allowed to discharge into a pipe of a given size. As the number of drainage fixture units increases in the direction of flow, the pipe might also have to be increased in size.

Note that a d.f.u. load is not given for the use of $1^1/_4$-inch (32 mm) pipe. Note a shows that a $1^1/_4$-inch (32 mm) drain can serve only one fixture drain or trap (see the definition of "Fixture drain"). Of course, the fixture must be such that it can be served by a $1^1/_4$-inch (32 mm) drain or trap in accordance with Table P3201.7.

P3005.4.2 Building drain and sewer size and slope. Pipe sizes and slope shall be determined from Table P3005.4.2 on the basis of drainage load in fixture units (d.f.u.) computed from Table P3004.1.

❖ This table provides the size of pipe to be used, based on the accumulated d.f.u. load. As indicated in the table, the d.f.u. capacity increases for a greater slope, providing the designer with greater flexibility in sizing and layout. Where a d.f.u. load is not given, this is due to a minimum slope required for certain sizes of drains or the limitation on fixtures as outlined in Note a. As with Table P3005.4.1, Note b clarifies that piping with diameters of less than 3 inches (76 mm) cannot serve a water closet.

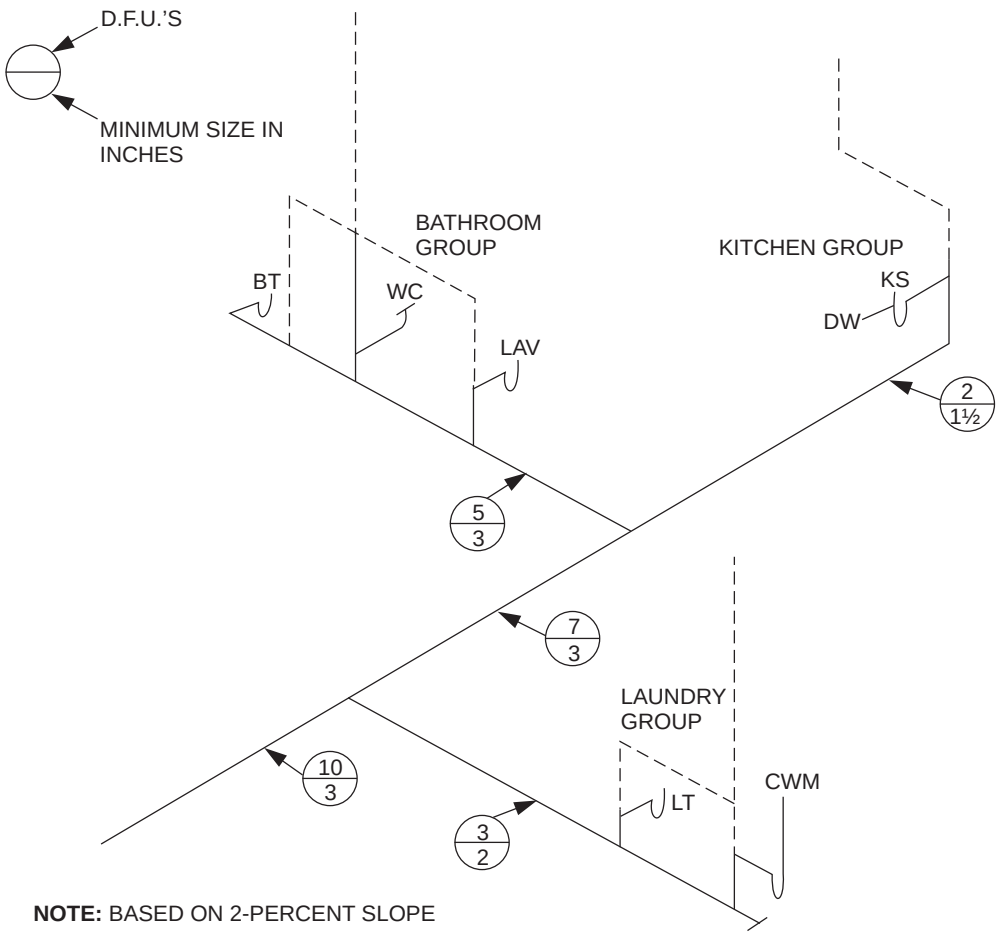

For SI: 1 inch = 25.4 mm.

Figure P3005.4
DRAIN LINE LAYOUT

INTERNATIONAL CODE COUNCIL®
Copyright © 2015 ICC. ALL RIGHTS RESERVED. Accessed by David Dammon on Jun 21, 2017 12:30:52 PM pursuant to License Agreement with ICC. No further reproduction or distribution authorized. ANY UNAUTHORIZED REPRODUCTION OR DISTRIBUTION IS A VIOLATION OF THE FEDERAL COPYRIGHT ACT AND THE LICENSE AGREEMENT, AND SUBJECT TO CIVIL AND CRIMINAL PENALTIES THEREUNDER.

TABLE P3005.4.2
MAXIMUM NUMBER OF FIXTURE UNITS ALLOWED TO BE CONNECTED TO THE BUILDING DRAIN, BUILDING DRAIN BRANCHES OR THE BUILDING SEWER

DIAMETER OF PIPE (inches)	SLOPE PER FOOT		
	$^1/_8$ inch	$^1/_4$ inch	$^1/_2$ inch
$1^1/_2$ [a, b]	—	Note a	Note a
2 [b]	—	21	27
$2^1/_2$ [b]	—	24	31
3	36	42	50
4	180	216	250

For SI: 1 inch = 25.4 mm, 1 foot = 304.8 mm.

a. $1^1/_2$-inch pipe size limited to a building drain branch serving not more than two waste fixtures, or not more than one waste fixture if serving a pumped discharge fixture or food waste disposer discharge.

b. No water closets.

❖ See the commentary to Section P3005.4.2.

P3005.5 Connections to offsets and bases of stacks. Horizontal branches shall connect to the bases of stacks at a point located not less than 10 times the diameter of the drainage stack downstream from the stack. Horizontal branches shall connect to horizontal stack offsets at a point located not less than 10 times the diameter of the drainage stack downstream from the upper stack.

❖ Within 10 pipe diameters of a stack, hydraulic jump can occur causing pressure fluctuations that affect traps and also causing waste and solids to enter the branch fitting.

SECTION P3006
SIZING OF DRAIN PIPE OFFSETS

P3006.1 Vertical offsets. An offset in a vertical drain, with a change of direction of 45 degrees (0.79 rad) or less from the vertical, shall be sized as a straight vertical drain.

❖ An offset is created by two fittings that each cause a change of direction. It brings one section of the pipe out of line and into a line parallel with the other section. Though the drain line changes direction, it is sized as though it were still vertical. The offset (or the section of piping out of line with the run of pipe) portion must not exceed 45 degrees (0.79 rad) with the connecting lines on a vertical installation. Where the offset exceeds an angle of 45 degrees (0.79 rad) it is considered to be horizontal and must be sized in accordance with Section P3006.2 or P3006.3, whichever applies.

P3006.2 Horizontal offsets above the lowest branch. A stack with an offset of more than 45 degrees (0.79 rad) from the vertical shall be sized as follows:

1. The portion of the stack above the offset shall be sized as for a regular stack based on the total number of fixture units above the offset.
2. The offset shall be sized as for a *building drain* in accordance with Table P3005.4.2.
3. The portion of the stack below the offset shall be sized as for the offset or based on the total number of fixture units on the entire stack, whichever is larger.

❖ This section applies to offsets that are installed in a stack, are located above the lowest branch and are not defined as "Vertical offsets" (see commentary, Section P3006.1 and the definition of "Offset").

The portion of the stack above the horizontal offset must be sized for a regular stack in accordance with Table P3005.4.1. The horizontal offset portion must be sized in accordance with Table P3005.4.2. This will then determine the minimum size of the remainder of the stack below the offset, except that additional d.f.u.s for fixtures and branches connecting to it must be included in the sizing of the stack; this could necessitate a further increase in size beyond that required for the horizontal offset. Offsets in stacks create turbulent flow by disrupting the annular flow that occurs in straight stacks. This turbulent flow can, in turn, create pressure fluctuations that can negatively affect trap seals.

P3006.3 Horizontal offsets below the lowest branch. In soil or waste stacks below the lowest horizontal branch, a change in diameter shall not be required if the offset is made at an angle not greater than 45 degrees (0.79 rad) from the vertical. If an offset greater than 45 degrees (0.79 rad) from the vertical is made, the offset and stack below it shall be sized as a *building drain* (see Table P3005.4.2).

❖ Vertical offsets that are below the lowest horizontal branch connection to the stack are not required to increase in size because of the offset. Offsets in stacks create turbulent flow by disrupting the annular flow that occurs in straight stacks. This turbulent flow can, in turn, create pressure fluctuations that can negatively affect trans or seals.

The pressure differences created by horizontal offsets mainly affect the horizontal branches downstream of the offset. Horizontal offsets that are below the lowest horizontal branch connection are required to be sized as a building drain in accordance with Table P3005.4.2.

SECTION P3007
SUMPS AND EJECTORS

P3007.1 Building subdrains. Building subdrains that cannot be discharged to the sewer by gravity flow shall be discharged into a tightly covered and vented sump from which the liquid shall be lifted and discharged into the building gravity drainage system by automatic pumping equipment or other *approved* method. In other than existing structures, the sump shall not receive drainage from any piping within the building capable of being discharged by gravity to the *building sewer*.

❖ Where the drainage system or portions of it cannot discharge by gravity to the sewer, the drainage is collected in a tightly sealed and vented sump and pumped

INTERNATIONAL CODE COUNCIL®
Copyright © 2015 ICC. ALL RIGHTS RESERVED. Accessed by David Dammon on Jun 21, 2017 12:30:52 PM pursuant to License Agreement with ICC. No further reproduction or distribution authorized. ANY UNAUTHORIZED REPRODUCTION OR DISTRIBUTION IS A VIOLATION OF THE FEDERAL COPYRIGHT ACT AND THE LICENSE AGREEMENT, AND SUBJECT TO CIVIL AND CRIMINAL PENALTIES THEREUNDER.

to a gravity sewer or drain. The sump must be sized to provide adequate holding capacity and to limit the retention period of the waste. Though not specifically required by the code, the intent of this section is that the capacity of the sump must not exceed one-half of a day's (12 hours) discharge load from the piping system connected to the sump under normal use. The intent is to keep the waste retention period short to prevent the sump from acting as a waste decomposition (septic) tank (see Commentary Figures P3007.1 and P3007.2).

The minimum capacity of the sump must be such that the pumping equipment operates for at least 15 seconds per pumping cycle to prevent short cycling, thereby extending the life of the equipment.

The cover for the sump must be gas tight to prevent the escape of sewer gas into the building (see commentary, Section P3113.4). Sumps, other than pneumatic ejectors, must be vented in accordance with Section P3113.4.1.

Sumps receiving water closet and urinal discharge use a sewage ejector to pump the soil and waste to a gravity drain. Quite often, the pumping equipment is referred to as a sewage pump by technical standards. A pneumatic ejector is a special type of sewage "pump" that operates by air pressure, which forces the sewage from the pressurized receiver instead of mechanically pumping it. Pneumatic ejectors require special relief vents to instantaneously relieve the pressure in the receiver (see commentary, Section P3113.4.2).

P3007.2 Valves required. A check valve and a full open valve located on the discharge side of the check valve shall be installed in the pump or ejector discharge piping between the pump or ejector and the gravity drainage system. Access shall be provided to such valves. Such valves shall be located above the sump cover required by Section P3007.3.2 or, where the discharge pipe from the ejector is below grade, the valves shall be accessibly located outside the sump below grade in an access pit with a removable access cover.

❖ The discharge piping must have a check valve to prevent the previously pumped waste from returning to the sump pit when the pump or ejector shuts off. This prolongs the life of the pumping equipment and conserves energy. The check valve will also prevent the gravity drainage system from backing up into the sump or receiver.

The requirement for the installation of a full-open valve on the discharge side of the check valve indicates a similar concern. There will be some point over the service life of the sump or check valve when replacement or repairs are necessary. This full-open valve is there to prevent waste from running back into the discharge piping when maintenance is performed

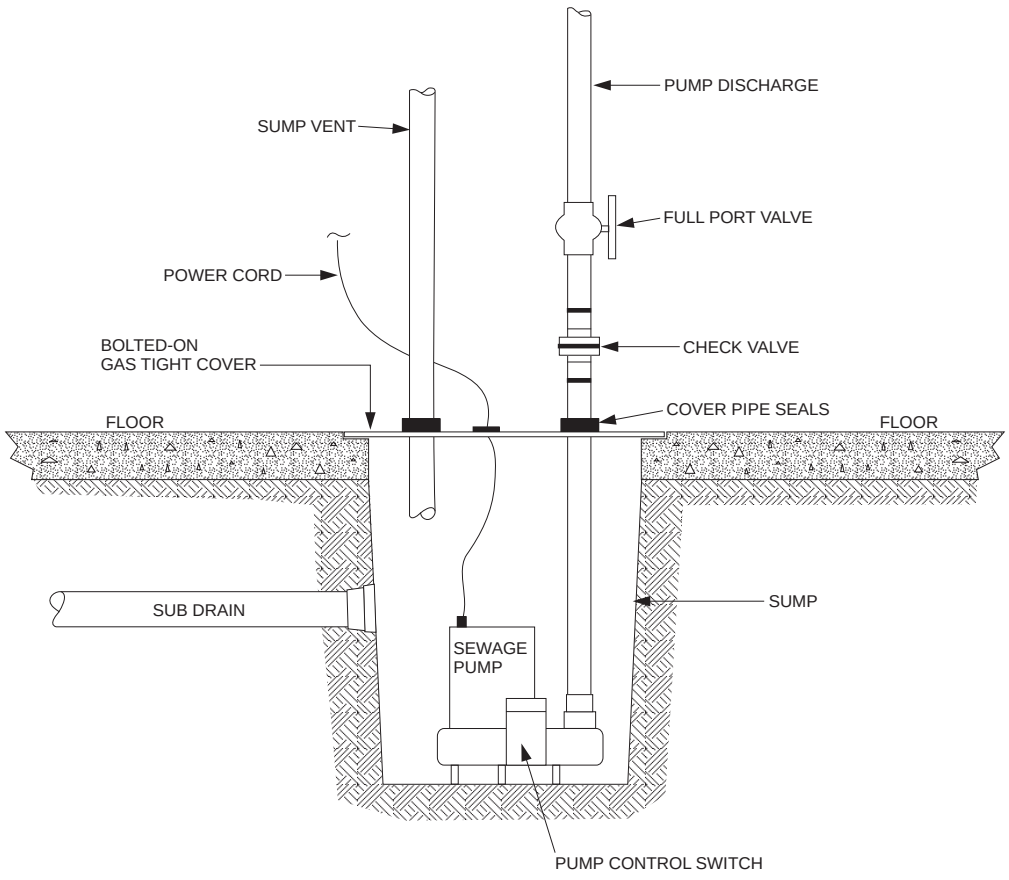

Figure P3007.1
SUBMERSIBLE SEWAGE PUMP

INTERNATIONAL CODE COUNCIL®
Copyright © 2015 ICC. ALL RIGHTS RESERVED. Accessed by David Dammon on Jun 21, 2017 12:30:52 PM pursuant to License Agreement with ICC. No further reproduction or distribution authorized. ANY UNAUTHORIZED REPRODUCTION OR DISTRIBUTION IS A VIOLATION OF THE FEDERAL COPYRIGHT ACT AND THE LICENSE AGREEMENT, AND SUBJECT TO CIVIL AND CRIMINAL PENALTIES THEREUNDER.

on the check valve or pump/ejector. It also allows isolation of the drainage system to prevent backups and sewer gas leakage during pump replacement and maintenance. Both valves must be accessible for maintenance and must be installed on the discharge pipe between the pump or ejector and the gravity drainage system.

P3007.3 Sump design. The sump pump, pit and discharge piping shall conform to the requirements of Sections P3007.3.1 through P3007.3.5.

❖ This is the main section, under which Sections P3007.3.1 through P3007.3.5 will give the specific requirements for the construction of the sump pump, sump pit and discharge piping related to sumps and ejectors.

P3007.3.1 Sump pump. The sump pump capacity and head shall be appropriate to anticipated use requirements.

❖ The sewage pump or pneumatic ejector must be sized properly to accommodate the peak flow into the receiver or pit, to provide the head pressure required to lift or eject waste, to prevent excessive cycling of the pumping equipment and to handle the type of waste that discharges to the sump.

Sewage pumps and ejectors must be able to handle, without creating blockages, the types of solid waste discharged into the sump pit or receiver. Pumps and ejectors serving water closets must be able to handle the solids associated with soil drainage.

Grinder pumps and grinder ejectors that serve water closets are exempt from the 2-inch (51 mm) spherical solids-handling requirements of this section. These pumps and ejectors reduce solids to a near-liquid state and pump the slurry to the drainage system. The liquidized solids pass readily through the pump and into the drainage system, thus reducing the possibility of creating a stoppage in either the pump or the receiving drainage line.

In certain instances, the design professional may choose to install duplex pumping equipment. Duplex pumping installations consist of two pumps with special controls installed to alternate pump duty. If the inflow into the sump is at a high rate or one pump fails to operate, the second pump provides assistance.

The intent behind duplex pumping equipment is to reduce the possibility of a disruption of service of the plumbing system. If a pump fails, it may be repaired while the drainage system functions normally with the remaining pump. Duplex pumping equipment is not required by the code.

The sewage pump or ejector must have a minimum capacity that is based on the size of the discharge pipe. The required capacity provides a full-flow velocity of at least 2 feet per second (0.61 m/s) in the discharge pipe (see Table P3007.6).

P3007.3.2 Sump pit. The sump pit shall be not less than 18 inches (457 mm) in diameter and 24 inches (610 mm) deep, unless otherwise *approved*. The pit shall be accessible and located so that drainage flows into the pit by gravity. The sump pit shall be constructed of tile, concrete, steel, plastic or other *approved* materials. The pit bottom shall be solid and provide permanent support for the pump. The sump pit shall be fitted with a gas-tight removable cover that is installed above grade level or floor level, or not more than 2 inches (51 mm) below grade or floor level. The cover shall be adequate to support anticipated loads in the area of use. The sump pit shall be vented in accordance with Chapter 31.

❖ As discussed in the commentary to Section 3007.1, the sump pit must be properly sized to receive waste

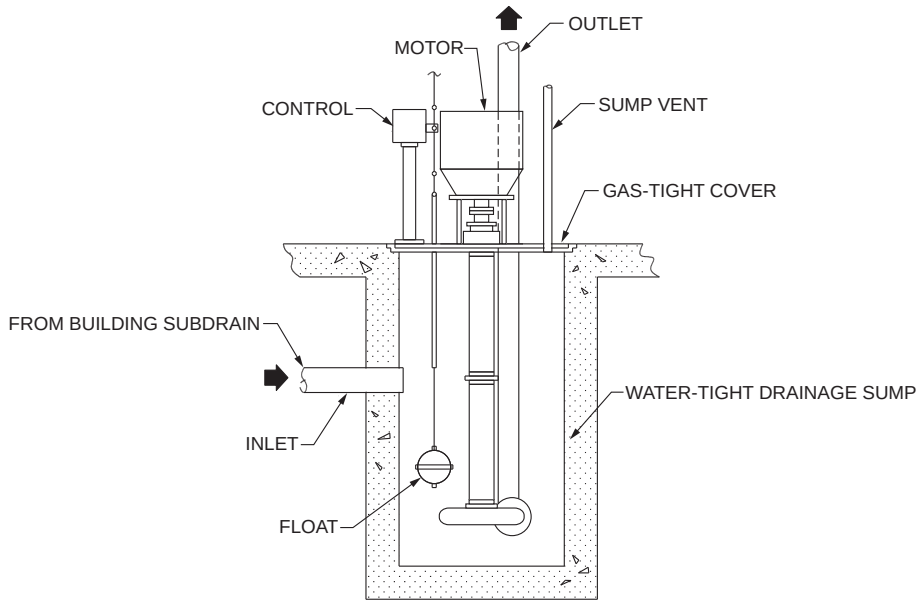

Figure P3007.2
VERTICAL SUSPENDED WET-PIT SEWAGE PUMP

INTERNATIONAL CODE COUNCIL®
Copyright © 2015 ICC. ALL RIGHTS RESERVED. Accessed by David Dammon on Jun 21, 2017 12:30:52 PM pursuant to License Agreement with ICC. No further reproduction or distribution authorized. ANY UNAUTHORIZED REPRODUCTION OR DISTRIBUTION IS A VIOLATION OF THE FEDERAL COPYRIGHT ACT AND THE LICENSE AGREEMENT, AND SUBJECT TO CIVIL AND CRIMINAL PENALTIES THEREUNDER.

and sewage from the plumbing fixtures that it will serve and allow proper operation of the pump.

In this section, the minimum dimensions of 18 inches (457 mm) in diameter and 24 inches (610 mm) in depth are given, unless the designer or manufacturer presents calculations and other supporting data that will allow the code official to determine that other dimensions work for the situation being addressed. This approval is strictly on a case-by-case basis by the code official. This section states that the sump pit is to be accessible for maintenance and requires that all drainage flow into the pit must be by the force of gravity.

The sump pit must be constructed of a durable material, such as tile, concrete, steel, plastic or other approved materials. The bottom of the sump pit must be solid and structurally capable of supporting the sump pump. The sump pit must have a gas-tight removable cover to prevent the escape of sewer gas. This cover is to be structurally capable of supporting the weight of loads it will receive based on the location of the sump pit. The sump pit must be vented in accordance with Chapter 31. The sump pit cover must be readily removable; therefore, the method used to connect the vent to the sump pit must be designed for disassembly.

The cover to the sump must be above grade or floor level, or no more than 2 inches below grade or floor level. The limitation for below-grade or floor-level distance is so that a repair person will not have difficulty in reaching a cover that is significantly below grade or floor level.

P3007.3.3 Discharge pipe and fittings. Discharge pipe and fittings serving sump pumps and ejectors shall be constructed of materials in accordance with Sections P3007.3.3.1 and P3007.3.3.2 and shall be *approved*.

❖ Section P3007.3.3.1 specifies the allowable types of materials for pipes and fittings. Section P3007.3.3.2 requires suitability of pipes and fittings for the pressure, temperature and burial conditions. Section P3007.6 regulates the size of the discharge piping. Section P3007.2 requires valves in the discharge piping; however, because there are no other sections of the code that regulate pump discharge piping, the code official is required to specifically approve the piping.

P3007.3.3.1 Materials. Pipe and fitting materials shall be constructed of copper alloy, copper, CPVC, ductile iron, PE, or PVC.

❖ The materials listed by this section offer maximum durability for pump discharge service.

P3007.3.3.2 Ratings. Pipe and fittings shall be rated for the maximum system operating pressure and temperature. Pipe fitting materials shall be compatible with the pipe material. Where pipe and fittings are buried in the earth, they shall be suitable for burial.

❖ The pipe and fittings must be able to withstand the pressure developed by the pump. If the pump discharges hot water, the pipe must be rated for the temperature at the maximum pressure. If the pipe and fittings are buried, the materials must be suitable for burial.

P3007.3.4 Maximum effluent level. The effluent level control shall be adjusted and maintained to at all times prevent the effluent in the sump from rising to within 2 inches (51 mm) of the invert of the gravity drain inlet into the sump.

❖ This section states that the control mechanism that starts and stops the pump must be maintained and adjusted to limit the level of effluent in the sump to not higher than 2 inches (51 mm) below the invert level of the gravity drainage pipe(s) entering the sump. This requirement is to reduce the chance that the gravity drainage piping will become flooded or clogged because of standing effluent in the sump that may back up into the drain piping.

P3007.3.5 Ejector connection to the drainage system. Pumps connected to the drainage system shall connect to a *building sewer*, *building drain*, soil stack, waste stack or horizontal branch drain. Where the discharge line connects into horizontal drainage piping, the connection shall be made through a wye fitting into the top of the drainage piping and such wye fitting shall be located not less than 10 pipe diameters from the base of any soil stack, waste stack or fixture drain.

❖ Section P3007 is titled "Sumps and ejectors." As such, it may be interpreted to be applicable to both sewage pumps (including the "grinder type") and pneumatic sewage ejectors. The terms "sewage pump" and "ejector" are sometimes used interchangeably to describe the same device. This section imposes certain restrictions on how and where sewage pumps and pneumatic sewage ejectors may connect to the gravity drainage system.

This section clarifies that pumps and ejectors are allowed to connect to any drainage pipe of the sanitary drainage system, not just to building sewers or building drain. If the discharge pipe is connecting to a horizontal drain pipe, a wye fitting must be used and it must be located a minimum of 10 pipe diameters away from other pipe connections or fixtures to reduce the likelihood that discharge from the pump/ejector will interfere with the gravity flow in the drainage system. The 10 pipe diameters distance allows the pumped waste flow to settle (flatten out) in the invert of the pipe without creating backups and pressure surges. In a related requirement, the wye fitting must be oriented with the wye branch toward the top of the drainage piping. This requirement is to help prevent disruption of the flow of waste inside the drainage piping because the normal flow is on the bottom of the pipe. Therefore, introducing discharge flow into the top half of the pipe will not cause blockages of the pipe or disruption of other flow inside the pipe.

INTERNATIONAL CODE COUNCIL®
Copyright © 2015 ICC. ALL RIGHTS RESERVED. Accessed by David Dammon on Jun 21, 2017 12:30:52 PM pursuant to License Agreement with ICC. No further reproduction or distribution authorized. ANY UNAUTHORIZED REPRODUCTION OR DISTRIBUTION IS A VIOLATION OF THE FEDERAL COPYRIGHT ACT AND THE LICENSE AGREEMENT, AND SUBJECT TO CIVIL AND CRIMINAL PENALTIES THEREUNDER.

P3007.4 Sewage pumps and sewage ejectors. A sewage pump or sewage ejector shall automatically discharge the contents of the sump to the building drainage system.

❖ This section is redundant with Section P3007.1 and requires such equipment to operate automatically.

P3007.5 Macerating toilet systems and pumped waste systems. Macerating toilet systems and pumped waste systems shall comply with ASME A112.3.4/CSA B45.9 and shall be installed in accordance with the manufacturer's instructions.

❖ Macerating toilet systems and macerating pumping systems are unique in that there are many acceptable types available. ASME A112.3.4/CSA B45.9 is the standard for macerating toilet systems and pumping systems. Such systems must be installed in accordance with the manufacturer's instructions for their proper use and function. A macerating/pumping system encompasses three components: the container that houses the operating mechanisms; the pressure chamber that automatically activates and deactivates the macerating pump; and an induction motor that drives the shredder blades and pump assembly. Such systems collect waste from a single water closet, lavatory, bathtub or any combination thereof located in the same room, and grind and pump the collected wastes to some point in the sanitary drainage system [see Commentary Figure P3007.5(1)]. These systems are designed for above-the-floor installation and incorporate either a directly affixed macerating tank and integral grinder/pump mechanism to a specially designed rear discharge water closet; or a separate system with a built-in grinder/pump mechanism [see Commentary Figure P3007.5(2)].

P3007.6 Capacity. Sewage pumps and sewage ejectors shall have the capacity and head for the application requirements. Pumps and ejectors that receive the discharge of water closets shall be capable of handling spherical solids with a diameter of up to and including 2 inches (51 mm). Other pumps or ejectors shall be capable of handling spherical solids with a diameter of up to and including 1 inch (25.4 mm). The minimum capacity of a pump or ejector based on the diameter of the discharge pipe shall be in accordance with Table 3007.6.

Exceptions:

1. Grinder pumps or grinder ejectors that receive the discharge of water closets shall have a discharge opening of not less than $1^1/_4$ inches (32 mm).
2. Macerating toilet assemblies that serve single water closets shall have a discharge opening of not less than $^3/_4$ inch (19 mm).

❖ The sewage pump or ejector must be sized properly to accommodate the peak flow into the receiver, to provide the head pressure required for the elevation of lift, to prevent excessive cycling of the pumping equipment and to handle the type of waste that discharges to the sump. Sewage pumps and ejectors must be able to handle, without creating blockages, the types of solid waste discharged into the sump or receiver. Pumps and ejectors serving water closets must be able to handle the solids associated with soil drainage. Grinder pumps/ejectors and macerating toilet assemblies that serve water closets are exempt from the 2-inch (51 mm) spherical solids-handling requirements of this section. These pumps and ejectors reduce solids to a near-liquid state and pump the slurry to the drainage system. The $1^1/_4$-inch (32 mm) minimum-size discharge for grinder pumps and ejectors and $^3/_4$-inch (19 mm) minimum-size discharge for macerating grinder/pump systems will permit solids that are completely reduced to pass without creating a stoppage.

TABLE 3007.6
MINIMUM CAPACITY OF SEWAGE PUMP OR SEWAGE EJECTOR

DIAMETER OF THE DISCHARGE PIPE (inches)	CAPACITY OF PUMP OR EJECTOR (gpm)
2	21
$2^1/_2$	30
3	46

For SI: 1 inch = 25.4 mm, 1 gallon per minute = 3.785 L/m.

❖ Table P3007.6 specifies sewage pump capacity in gallons per minute (L/m) with respect to the pump's discharge opening size. This relationship between pipe size and pump capacity will maintain flow velocity in the piping to help prevent blockage and restriction.

SECTION P3008
BACKWATER VALVES

P3008.1 Sewage backflow. Where the flood level rims of plumbing fixtures are below the elevation of the manhole cover of the next upstream manhole in the public sewer, the fixtures shall be protected by a backwater valve installed in the *building drain*, branch of the *building drain* or horizontal branch serving such fixtures. Plumbing fixtures having flood level rims above the elevation of the manhole cover of the next upstream manhole in the public sewer shall not discharge through a backwater valve.

Exception: In existing buildings, fixtures above the elevation of the manhole cover of the next upstream manhole in the *public sewer* shall not be prohibited from discharging through a backwater valve.

❖ A backwater valve is required in areas where the public sewer might back up into the building through the sanitary drainage system [see Commentary Figure P3008.1(1)]. Where plumbing fixtures are located above the next upstream manhole cover from the building sewer connection to the public sewer, the sewer will back up through the street manhole before entering the building.

Public sewers might become blocked or overloaded, which will result in sewage backing up into the manholes and any laterals (taps) connected to the sewer system. The point of overflow for the public sewer will be the top of the manholes in the backed-up portion of the system.

INTERNATIONAL CODE COUNCIL®
Copyright © 2015 ICC. ALL RIGHTS RESERVED. Accessed by David Dammon on Jun 21, 2017 12:30:52 PM pursuant to License Agreement with ICC. No further reproduction or distribution authorized. ANY UNAUTHORIZED REPRODUCTION OR DISTRIBUTION IS A VIOLATION OF THE FEDERAL COPYRIGHT ACT AND THE LICENSE AGREEMENT, AND SUBJECT TO CIVIL AND CRIMINAL PENALTIES THEREUNDER.

Fixtures or drains located at an elevation below that of the tops of the manholes for the relative portion of the sewer system are subject to backflow and must be protected by backwater valves [see Commentary Figure P3008.1(2)]. Plumbing fixtures that are not subject to backflow are not permitted to discharge through a backwater valve. In theory, limiting the fixtures that discharge through a backwater valve will prevent waste from up-stream fixtures from backing up through downstream fixtures because it cannot pass through the backwater valve when the public sewer is blocked or overloaded. Additionally, the valve will be protected



Figure P3007.5(1)
MACERATING TOILET SYSTEMS
(Photo courtesy of SFA SANIFLO)

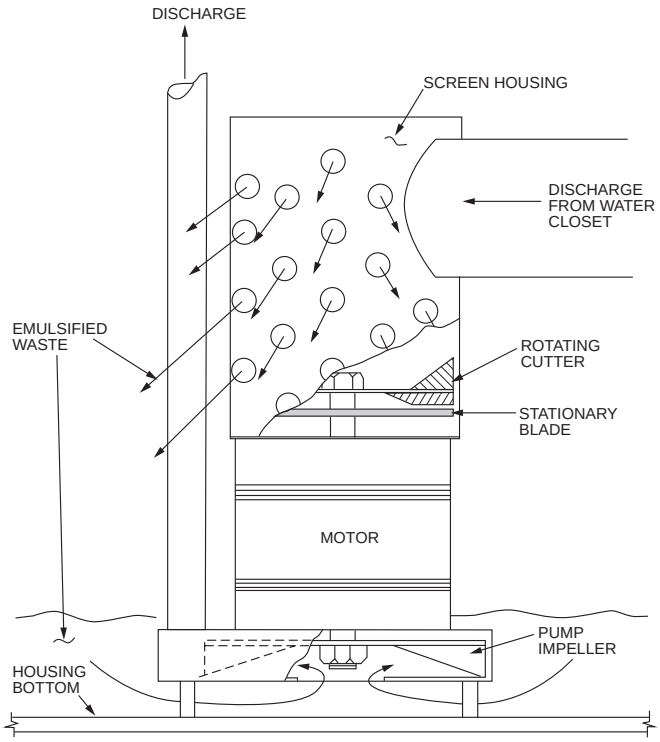

Figure P3007.5(2)
MACERATING TOILET PUMP/MACERATING UNIT

INTERNATIONAL CODE COUNCIL®
Copyright © 2015 ICC. ALL RIGHTS RESERVED. Accessed by David Dammon on Jun 21, 2017 12:30:52 PM pursuant to License Agreement with ICC. No further reproduction or distribution authorized. ANY UNAUTHORIZED REPRODUCTION OR DISTRIBUTION IS A VIOLATION OF THE FEDERAL COPYRIGHT ACT AND THE LICENSE AGREEMENT, AND SUBJECT TO CIVIL AND CRIMINAL PENALTIES THEREUNDER.

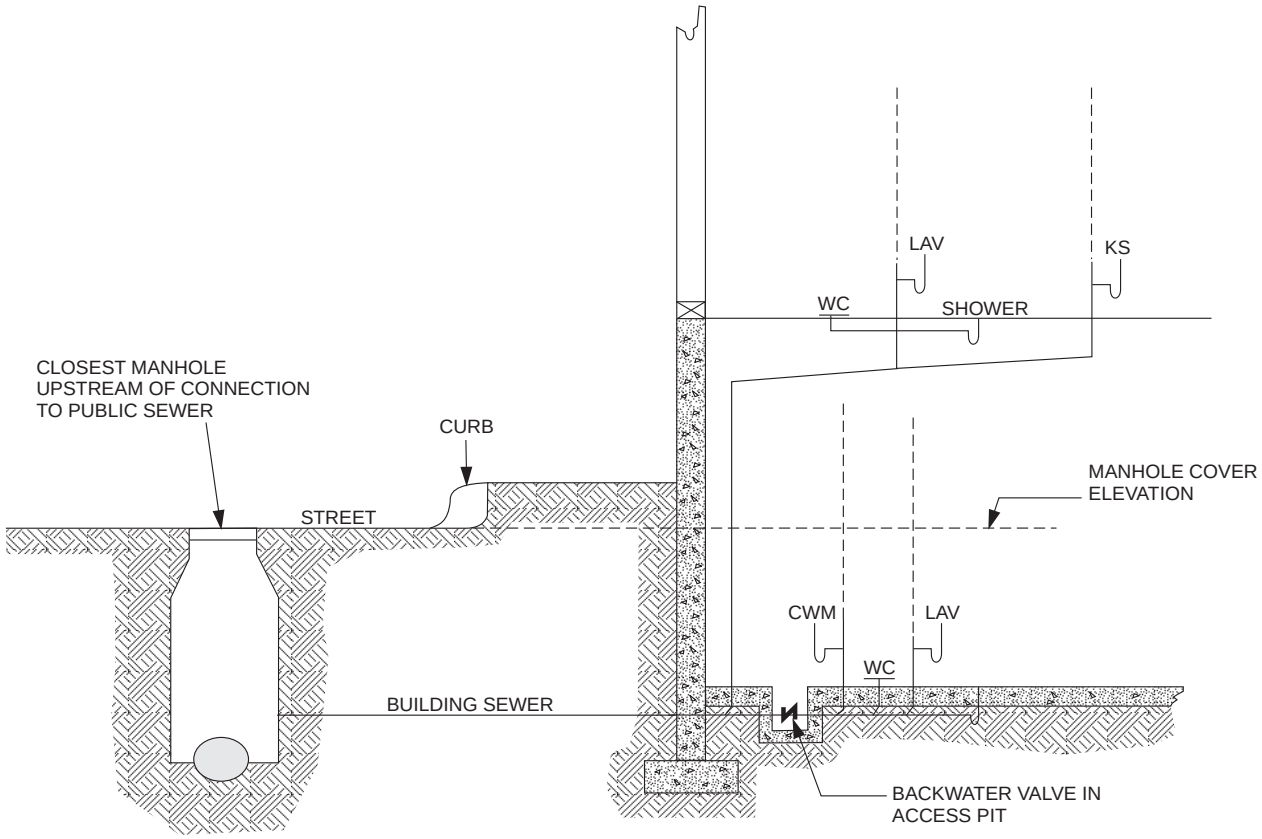

Figure P3008.1(1)
BACKWATER VALVE LOCATION

from excess wear and potential failure resulting from debris and accumulations.

The last sentence of this section, if taken literally, would apply to fixtures having a flood level rim a fraction of an inch above the upstream manhole cover. Such fixtures might still be subject to the backup of sewage, which may be insanitary and present the risk of sewage entering the structure through fixture connections, traps and other "weak links" in the piping system.

The exception to this section allows for retrofit of a backwater valve to the drainage system of an existing building without the need to separate the drainage piping of the building into "fixtures above the next upstream manhole cover elevation" and "fixtures below that elevation." Where an existing building owner is concerned about the public sewer backing up into his (or her) building, the easiest solution is to install a backwater valve in the building sewer. Although such an installation does present the risk of the building owner flooding his building by use fixtures on a floor level above a lower floor with fixtures, he does have control over the building's fixture use. Without the backwater valve, the building owner has no control over flooding of his building from a public sewer backup.

P3008.2 Material. Bearing parts of backwater valves shall be of corrosion-resistant material. Backwater valves shall comply with ASME A112.14.1, CSA B181.1 or CSA B181.2.

❖ This section requires that bearing parts of the backwater valve be made of corrosion-resistant materials so that the valve remains operable for its expected life, thus protecting the building it serves. This section also gives the industry standards to which the backwater valve must be manufactured. As required in Section P2608.4, these backwater valves are to be inspected and verified by an independent third-party quality-assurance facility.

P3008.3 Seal. Backwater valves shall be constructed to provide a mechanical seal against backflow.

❖ A backwater valve is designed to prevent the backflow of drainage in a piping system. The valve incorporates a swing check on the inlet side of the body. This section requires that the swing check have a positive seal against the backflow of drainage. Some back-water valves are also equipped with a gate valve that is manually operated to close the outlet side of the device. Backwater valves equipped with gate valves are typically used in areas subject to severe flooding conditions [see Commentary Figure P3008.1(2)].

INTERNATIONAL CODE COUNCIL®
Copyright © 2015 ICC. ALL RIGHTS RESERVED. Accessed by David Dammon on Jun 21, 2017 12:30:52 PM pursuant to License Agreement with ICC. No further reproduction or distribution authorized. ANY UNAUTHORIZED REPRODUCTION OR DISTRIBUTION IS A VIOLATION OF THE FEDERAL COPYRIGHT ACT AND THE LICENSE AGREEMENT, AND SUBJECT TO CIVIL AND CRIMINAL PENALTIES THEREUNDER.

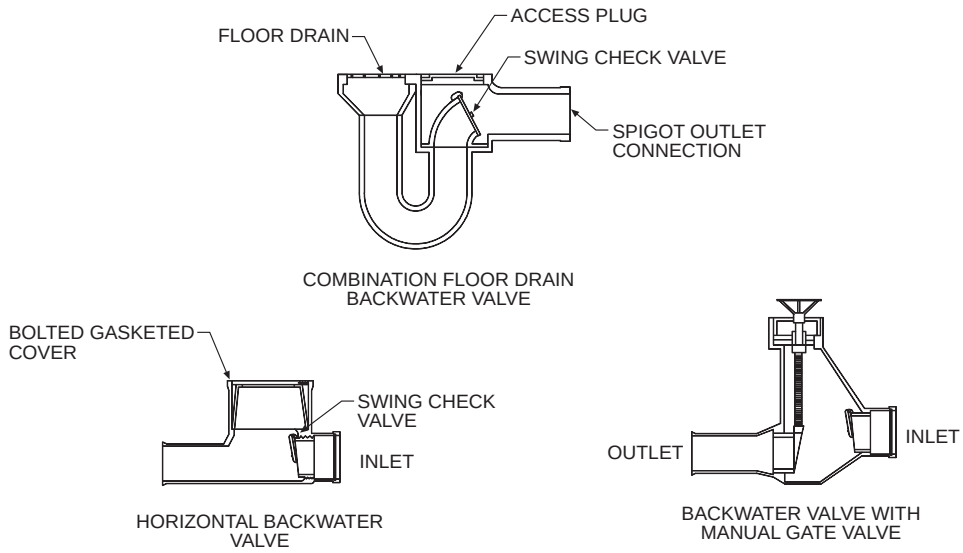

Figure P3008.1(2)
BACKWATER VALVES

P3008.4 Diameter. Backwater valves, when fully opened, shall have a capacity not less than that of the pipes in which they are installed.

❖ This section simply requires that the capacity of the pipe in which the backwater valve is located not be reduced by the valve. This would include components of the backwater valve, including any optional manual gate valves. Backwater valves are designed so as to not create a restriction in the piping.

P3008.5 Location. Backwater valves shall be installed so that the working parts are accessible for service and repair.

❖ Because a backwater valve has movable parts, there is a possibility of stoppage or malfunction. This section requires that backwater valves be located to be accessible to permit the necessary maintenance or repairs.

SECTION P3009
SUBSURFACE LANDSCAPE IRRIGATION SYSTEMS

P3009.1 Scope. The provisions of this section shall govern the materials, design, construction and installation of subsurface landscape irrigation systems connected to nonpotable water from on-site water reuse systems.

❖ The chapter provides specific details for designing and constructing subsurface irrigation systems.

P3009.2 Materials. Above-ground drain, waste and vent piping for subsurface landscape irrigation systems shall conform to one of the standards indicated in Table P3002.2(1). Subsurface landscape irrigation, underground building drainage and vent pipe shall conform to one of the standards indicated in Table P3002.1(2).

❖ The piping for above-ground landscape systems must comply with the standards in Table P3002.2(1). The piping for above-ground landscape systems must comply with the standards in Table P3002.2(2). The appropriate pipe fittings from Table P3002.2.3 must be used to make connections in the pipe.

P3009.3 Tests. Drain, waste and vent piping for subsurface landscape irrigation systems shall be tested in accordance with Section P2503.

❖ Section P2503 covers testing of drainage and vent piping inside a building (including under the building). Note that air testing of piping is prohibited.

P3009.4 Inspections. Subsurface landscape irrigation systems shall be inspected in accordance with Section R109.

❖ The installation of systems needs to be performed prior to concealment to make sure that the system is installed according to the requirements of the code.

P3009.5 Disinfection. Disinfection shall not be required for on-site nonpotable reuse water for subsurface landscape irrigation systems.

❖ Water sent to a subsurface irrigation system is not required to be disinfected as there is not human contact with the water.

P3009.6 Coloring. On-site nonpotable reuse water used for subsurface landscape irrigation systems shall not be required to be dyed.

❖ Coloring of the water is not required because the water is not visible to humans.

P3009.7 Sizing. The system shall be sized in accordance with the sum of the output of all water sources connected to the subsurface irrigation system. Where gray-water collection piping is connected to subsurface landscape irrigation systems, gray-water output shall be calculated according to the gallons-per-day-per-occupant (liters per day per occupant)

INTERNATIONAL CODE COUNCIL®
Copyright © 2015 ICC. ALL RIGHTS RESERVED. Accessed by David Dammon on Jun 21, 2017 12:30:52 PM pursuant to License Agreement with ICC. No further reproduction or distribution authorized. ANY UNAUTHORIZED REPRODUCTION OR DISTRIBUTION IS A VIOLATION OF THE FEDERAL COPYRIGHT ACT AND THE LICENSE AGREEMENT, AND SUBJECT TO CIVIL AND CRIMINAL PENALTIES THEREUNDER.

number based on the type of fixtures connected. The gray-water discharge shall be calculated by the following equation:

$C = A \times B$ **(Equation 30-1)**

where:

A = Number of occupants:

Number of occupants shall be determined by the actual number of occupants, but not less than two occupants for one bedroom and one occupant for each additional bedroom.

B = Estimated flow demands for each occupant:

25 gallons (94.6 L) per day per occupant for showers, bathtubs and lavatories and 15 gallons (56.7 L) per day per occupant for clothes washers or laundry trays.

C = Estimated gray-water discharge based on the total number of occupants.

❖ The volume of gray-water discharge from residential buildings is the estimated number of occupants living in the building times a fixed amount of 25 gallons per day (94.6 L/day). An additional 15 gallons per day (56.7 L/day) per occupant is added if clothes washers or laundry trays exist. The number of occupants for the building must be not less than two for the first bedroom and one additional for each additional bedroom.

P3009.8 Percolation tests. The permeability of the soil in the proposed absorption system shall be determined by percolation tests or permeability evaluation.

❖ In order to determine how large the subsurface irrigation system (the absorption system) must be in order to accommodate the maximum daily flow of gray water, tests of the subsurface soil must be performed to determine the soil's capacity for accepting the flow. Soil testing can be by the percolation test method or permeability evaluation method.

P3009.8.1 Percolation tests and procedures. Not less than three percolation tests in each system area shall be conducted. The holes shall be spaced uniformly in relation to the bottom depth of the proposed absorption system. More percolation tests shall be made where necessary, de-pending on system design.

❖ A percolation test involves digging at least three holes to a depth where the proposed absorption system is planned to be installed. The undisturbed soil at the bottom of the hole will be representative of the soil that must absorb the gray-water flow.

P3009.8.1.1 Percolation test hole. The test hole shall be dug or bored. The test hole shall have vertical sides and a horizontal dimension of 4 inches to 8 inches (102 mm to 203 mm). The bottom and sides of the hole shall be scratched with a sharp-pointed instrument to expose the natural soil. Loose material shall be removed from the hole and the bottom shall be covered with 2 inches (51 mm) of gravel or coarse sand.

❖ The percolation test holes must be of the same size and shape so that the test results from multiple holes can be compared. The surfaces of holes must be scratched to break up any soil smearing that could block the flow of test water. Test holes are made purposely small in horizontal dimension so a limited amount of water is necessary to perform the test. The placement of gravel or coarse sand in the bottom of the hole prevents scouring of the bottom of the test hole as test water is poured into the hole.

P3009.8.1.2 Test procedure, sandy soils. The hole shall be filled with clear water to not less than 12 inches (305 mm) above the bottom of the hole for tests in sandy soils. The time for this amount of water to seep away shall be determined, and this procedure shall be repeated if the water from the second filling of the hole seeps away in 10 minutes or less. The test shall proceed as follows: Water shall be added to a point not more than 6 inches (152 mm) above the gravel or coarse sand. Thereupon, from a fixed reference point, water levels shall be measured at 10-minute intervals for a period of 1 hour. Where 6 inches (152 mm) of water seeps away in less than 10 minutes, a shorter interval between measurements shall be used. The water depth shall not exceed 6 inches (152 mm). Where 6 inches (152 mm) of water seeps away in less than 2 minutes, the test shall be stopped and a rate of less than 3 minutes per inch (7.2 s/mm) shall be reported. The final water level drop shall be used to calculate the percolation rate. Soils not meeting these requirements shall be tested in accordance with Section P3009.8.1.3.

❖ To prepare sandy soil for the percolation test, 12 inches (305 mm) of water is poured into the test hole and allowed to drain out. Another 12 inches (305 mm) of water is added to the hole and, if the time that it takes to drain out is 10 minutes or less, then the hole is repeatedly filled with 12 inches (305 mm) of water until the time that it takes for the water to drain away is greater than 10 minutes.

For the sandy soil percolation test, the hole is filled with 6 inches (152 mm) of water and the level measured from a fixed reference point is taken every 10 minutes. If the 6 inches (152 mm) of water completely drains from the hole in less than 10 minutes, then the measurement interval must be shortened so that some water remains in the hole at the end of the measurement interval. If the 6 inches (152 mm) of water completely drains out in 2 minutes or less, then a percolation rate of 3 minutes per inch is assigned. If the 6 inches (152 mm) of water drains out slower than 2 minutes, then the percolation rate is determined from the final water level drop in the test hole. For example, assume that the measurement interval is 5 minutes and the last water level drop (before the hole becomes completely empty) was $^3/_4$ inch (19.1 mm). The percolation rate would be 5 minutes/0.75 inches (19.1 mm) = 6.7 minutes per inch.

P3009.8.1.3 Test procedure, other soils. The hole shall be filled with clear water, and a minimum water depth of 12 inches (305 mm) shall be maintained above the bottom of the hole for a 4-hour period by refilling whenever necessary or by use of an automatic siphon. Water remaining in the hole after 4 hours shall not be removed. Thereafter, the soil shall be allowed to swell not less than 16 hours or more than 30 hours. Immediately after the soil swelling period, the mea-

INTERNATIONAL CODE COUNCIL®
Copyright © 2015 ICC. ALL RIGHTS RESERVED. Accessed by David Dammon on Jun 21, 2017 12:30:52 PM pursuant to License Agreement with ICC. No further reproduction or distribution authorized. ANY UNAUTHORIZED REPRODUCTION OR DISTRIBUTION IS A VIOLATION OF THE FEDERAL COPYRIGHT ACT AND THE LICENSE AGREEMENT, AND SUBJECT TO CIVIL AND CRIMINAL PENALTIES THEREUNDER.

surements for determining the percolation rate shall be made as follows: any soil sloughed into the hole shall be removed and the water level shall be adjusted to 6 inches (152 mm) above the gravel or coarse sand. Thereupon, from a fixed reference point, the water level shall be measured at 30-minute intervals for a period of 4 hours, unless two successive water level drops do not vary by more than $^1/_{16}$ inch (1.59 mm). Not less than three water level drops shall be observed and recorded. The hole shall be filled with clear water to a point not more than 6 inches (152 mm) above the gravel or coarse sand whenever it becomes nearly empty. Adjustments of the water level shall not be made during the three measurement periods except to the limits of the last measured water level drop. When the first 6 inches (152 mm) of water seeps away in less than 30 minutes, the time interval between measurements shall be 10 minutes and the test run for 1 hour. The water depth shall not exceed 5 inches (127 mm) at any time during the measurement period. The drop that occurs during the final measurement period shall be used in calculating the percolation rate.

❖ For soils other than sandy soils, the soil in the test hole has to be prepared by soaking with not less than 12 inches (305 mm) of water for 4 hours. After the soaking period, the water is left in the hole and the soil allowed to swell for not less than 16 hours nor more than 30 hours. Immediately after the swelling period, the water in the hole must be adjusted to a 6-inch (152 mm) depth above the bottom of the hole and measurements of the water level drop taken at 30-minute intervals for 4 hours. If two consecutive water level drops do not vary more than $^1/_{16}$ inch (1.6 mm), then the test can be stopped and the percolation rate can be determined from the last water level drop.

If the water in the hole drains out in less than 30 minutes, then water level drop measurements must be taken at 10-minute intervals for a total of 1 hour. After each measurement, the hole must be refilled to at least 5 inches (127 mm) above the bottom of the hole.

P3009.8.1.4 Mechanical test equipment. Mechanical percolation test equipment shall be of an *approved* type.

❖ Another way to determine soil percolation rates is by using mechanical percolation test equipment such as a permeameter. Such equipment must be approved by the code official.

P3009.8.2 Permeability evaluation. Soil shall be evaluated for estimated percolation based on structure and texture in accordance with accepted soil evaluation practices. Borings shall be made in accordance with Section P3009.8.1.1 for evaluating the soil.

❖ The soil from the bored percolation test hole must be evaluated for the type of soil structure and texture to determine if the soil is suitable for absorbing water. Evidence of soil mottling could indicate that a seasonal high water table exists, even though the test hole soil is dry.

P3009.9 Subsurface landscape irrigation site location. The surface grade of soil absorption systems shall be located at a point lower than the surface grade of any water well or reservoir on the same or adjoining lot. Where this is not possible, the site shall be located so surface water drainage from the site is not directed toward a well or reservoir. The soil absorption system shall be located with a minimum horizontal distance between various elements as indicated in Table P3009.9. Private sewage disposal systems in compacted areas, such as parking lots and driveways, are prohibited. Surface water shall be diverted away from any soil absorption site on the same or neighboring lots.

❖ Because gray water contains bacteria, it is important to make sure that the soil-absorption system be located away and preferably downhill from water reservoirs and water wells. Table P3009.9 indicates the minimum distances that tanks and absorption systems must be located from certain features on the lot.

TABLE P3009.9
LOCATION OF SUBSURFACE IRRIGATION SYSTEM

ELEMENT	MINIMUM HORIZONTAL DISTANCE	
	STORAGE TANK (feet)	IRRIGATION DISPOSAL FIELD (feet)
Buildings	5	2
Lot line adjoining private property	5	5
Water wells	50	100
Streams and lakes	50	50
Seepage pits	5	5
Septic tanks	0	5
Water service	5	5
Public water main	10	10

For SI: 1 foot = 304.8 mm.

P3009.10 Installation. Absorption systems shall be installed in accordance with Sections P3009.10.1 through P30091.10.5 to provide landscape irrigation without surfacing of water.

❖ This section directs the reader to the subsections that regulate the installation of absorption systems.

P3009.10.1 Absorption area. The total absorption area required shall be computed from the estimated daily gray-water discharge and the design-loading rate based on the percolation rate for the site. The required absorption area equals the estimated gray-water discharge divided by the design loading rate from Table P3009.10.1.

❖ The area of the absorption system is determined by dividing the estimated number of gray water gallons per day by the design loading rate from Table P3009.10.1. The design loading rate is a function of the percolation test results.

INTERNATIONAL CODE COUNCIL®
Copyright © 2015 ICC. ALL RIGHTS RESERVED. Accessed by David Dammon on Jun 21, 2017 12:30:52 PM pursuant to License Agreement with ICC. No further reproduction or distribution authorized. ANY UNAUTHORIZED REPRODUCTION OR DISTRIBUTION IS A VIOLATION OF THE FEDERAL COPYRIGHT ACT AND THE LICENSE AGREEMENT, AND SUBJECT TO CIVIL AND CRIMINAL PENALTIES THEREUNDER.

TABLE P3009.10.1
DESIGN LOADING RATE

PERCOLATION RATE (minutes per inch)	DESIGN LOADING FACTOR (gallons per square foot per day)
0 to less than 10	1.2
10 to less than 30	0.8
30 to less than 45	0.72
45 to 60	0.4

For SI: 1 minute per inch = min/25.4 mm,
1 gallon per square foot = 40.7 L/m^2.

P3009.10.2 Seepage trench excavations. Seepage trench excavations shall be not less than 1 foot (304 mm) in width and not greater than 5 feet (1524 mm) in width. Trench excavations shall be spaced not less than 2 feet (610 mm) apart. The soil absorption area of a seepage trench shall be computed by using the bottom of the trench area (width) multiplied by the length of pipe. Individual seepage trenches shall be not greater than 100 feet (30 480 mm) in developed length.

❖ One method for making a subsurface irrigation system is to dig a trench 1 to 5 feet (304 to 1524 mm) in width and place a distribution pipe along the center of the width of the trench. Trenches are dug to a depth of where the percolation tests were performed. Where multiple trenches are required, they must be not less than 2 feet (610 mm) apart. Trenches are limited to 100 feet (30 480 mm) in length as this is a practical limit for keeping the entire trench bottom level. The absorption area of the trench is the width of the trench multiplied by the length of the pipe to be placed in the trench.

P3009.10.3 Seepage bed excavations. Seepage bed excavations shall be not less than 5 feet (1524 mm) in width and have more than one distribution pipe. The absorption area of a seepage bed shall be computed by using the bottom of the trench area. Distribution piping in a seepage bed shall be uniformly spaced not greater than 5 feet (1524 mm) and not less than 3 feet (914 mm) apart, and greater than 3 feet (914 mm) and not less than 1 foot (305 mm) from the sidewall or headwall.

❖ Another method for making a subsurface irrigation system is to excavate an area that is not less than 5 feet (1524 mm) wide and place multiple distribution pipes, equally spaced from 3 to 5 feet (914 to 1524 mm) apart in the excavated area. The distribution pipes must be not closer than 1 foot (305 mm) and not more than 3 feet (914 mm) from the headwall and sidewalls. The absorption area of the trench is the width of the excavated bed area multiplied by the length of the bed area.

P3009.10.4 Excavation and construction. The bottom of a trench or bed excavation shall be level. Seepage trenches or beds shall not be excavated where the soil is so wet that such material rolled between the hands forms a soil wire. Smeared or compacted soil surfaces in the sidewalls or bottom of seepage trench or bed excavations shall be scarified to the depth of smearing or compaction and the loose material removed. Where rain falls on an open excavation, the soil shall be left until sufficiently dry so a soil wire will not form when soil from the excavation bottom is rolled between the hands. The bottom area shall then be scarified and loose material removed.

❖ Care must be taken to not excavate or work in trenches or beds when the soil is wet so that a soil wire can be formed between the hands. Smeared and compacted soil must be scarified (scratched) to break up the smearing and compaction. Loose soil must be removed from the trench or bed area. The bottom of bed and trench areas must be level.

P3009.10.5 Aggregate and backfill. Not less than 6 inches (150 mm) in depth of aggregate ranging in size from $^1/_2$ to $2^1/_2$ inches (12.7 mm to 64 mm) shall be laid into the trench below the distribution piping elevation. The aggregate shall be evenly distributed not less than 2 inches (51 mm) in depth over the top of the distribution pipe. The aggregate shall be covered with *approved* synthetic materials or 9 inches (229 mm) of uncompacted marsh hay or straw. Building paper shall not be used to cover the aggregate. Not less than 9 inches (229 mm) of soil backfill shall be provided above the covering.

❖ The bottom of the bed or trench area must have aggregate placed to a depth of 6 inches (152 mm). Then the distribution pipe is laid on top of the aggregate and covered with more aggregate so that the distribution pipe is covered with 2 inches (51 mm) of aggregate. The installer has the choice of covering the aggregate with synthetic materials or 9 inches (229 mm) of marsh hay or straw. The trench or bed is then covered by not less than 9 inches (229 mm) of soil backfill.

P3009.11 Distribution piping. Distribution piping shall be not less than 3 inches (76 mm) in diameter. Materials shall comply with Table P3009.11. The top of the distribution pipe shall be not less than 8 inches (203 mm) below the original surface. The slope of the distribution pipes shall be not less than 2 inches (51 mm) and not greater than 4 inches (102 mm) per 100 feet (30 480 mm).

❖ Distribution piping must be at least 3 inches (76 mm) in diameter and be of one of the materials listed in Table P3009.11. The elevation of the top of the pipe in the trench or bed must be not less than 8 inches (203 mm) below the original grade elevation. The distribution pipe must be sloped at least 2 inches (51 mm) per 100 feet (30 480 mm) but not more than 4 inches (102 mm) per 100 feet (30 480 mm).

TABLE P3009.11
DISTRIBUTION PIPE

MATERIAL	STANDARD
Polyethylene (PE) plastic pipe	ASTM F405
Polyvinyl chloride (PVC) plastic pipe	ASTM D2729
Polyvinyl chloride (PVC) plastic pipe with a 3.5-inch O.D. and solid cellular core or composite wall	ASTM F1488

For SI: 1 inch = 25.4 mm.

INTERNATIONAL CODE COUNCIL®
Copyright © 2015 ICC. ALL RIGHTS RESERVED. Accessed by David Dammon on Jun 21, 2017 12:30:52 PM pursuant to License Agreement with ICC. No further reproduction or distribution authorized. ANY UNAUTHORIZED REPRODUCTION OR DISTRIBUTION IS A VIOLATION OF THE FEDERAL COPYRIGHT ACT AND THE LICENSE AGREEMENT, AND SUBJECT TO CIVIL AND CRIMINAL PENALTIES THEREUNDER.

P3009.11.1 Joints. Joints in distribution pipe shall be made in accordance with Section P3003 of this code.

❖ Distribution piping must be joined by one of the methods in Section P3003, as applicable to the type of pipe being used.

SECTION P3010
REPLACEMENT OF UNDERGROUND SEWERS BY PIPE BURSTING METHODS

P3010.1 General. This section shall govern the replacement of existing *building sewer* piping by pipe-bursting methods.

❖ This is a method for replacing existing building piping that does not require complete excavation of the existing piping. This method uses an expanding mandrel that is attached to the end of the replacement pipe. The mandrel (with the replacement pipe in tow) is pulled by a cable through the existing sewer line. The mandrel has a hydraulically activated expanding shell that expands and breaks (bursts) the existing pipe to make room for the new pipe as it is pulled into position.

The method requires that launching and receiving pits be excavated at the beginning and ending points of the pipe to be replaced. If there are any lateral connections that need to be made between the beginning and the end, excavated pits are required at those locations as well.

P3010.2 Applicability. The replacement of building sewer piping by pipe bursting methods shall be limited to gravity drainage piping of sizes 6 inches (150 mm) and smaller. The replacement piping shall be of the same nominal size as the existing piping.

❖ Although the pipe-bursting method of underground pipe replacement is used for large pipe sizes, the code limits its use to the replacement of pipes that are 6 inches and smaller. The code also limits this method to use on gravity sewers and a replacement using the same size as existing piping.

P3010.3 Preinstallation inspection. The existing piping sections to be replaced shall be inspected internally by a recorded video camera survey. The survey shall include notations of the position of cleanouts and the depth of connections to the existing piping.

❖ An internal video camera survey of the existing installation is required to identify problem areas and location of connections and cleanouts.

P3010.4 Pipe. The replacement pipe shall be made of a high-density polyethylene (HDPE) that conforms to cell classification number PE3608, PE4608 or PE4710 as indicated in ASTM F714. The pipe fittings shall be manufactured with an SDR of 17 and in compliance with ASTM F714.

❖ The only material that the code allows for sewer replacement is polyethylene plastic pipe (ASTM F714) having an SDR 17 wall thickness. This pipe is an outer-diameter- and wall-thickness-controlled product. SDR 17 provides for an inside diameter that is very close to the inside diameter of PVC and cast iron sewer piping of the same nominal pipe size.

P3010.5 Pipe fittings. Pipe fittings to be connected to the replacement piping shall be made of high-density polyethylene (HDPE) that conforms to cell classification number PE3608, PE4608 or PE4710 as indicated in ASTM F714. The pipe fittings shall be manufactured with an SDR of 17 and in compliance with ASTM D2683.

❖ Fittings for this material must be compatible with the pipe. The requirement for compliance to ASTM D2683 avoids the use of butt-welded fittings. A butt-welded fitting could have internal edges that could catch and restrict flow. Use of a socket fitting allows for pipe ends to be deburred/chamfered before assembly.

P3010.6 Cleanouts. Where the existing *building sewer* did not have cleanouts meeting the requirements of this code, cleanout fittings shall be installed as required by this code.

❖ Cleanouts are required in accordance with the code, whether the existing sewer had the cleanouts or not.

P3010.7 Post-installation inspection. The completed replacement piping section shall be inspected internally by a recorded video camera survey. The video survey shall be reviewed and *approved* by the building official prior to pressure testing of the replacement piping system.

❖ An internal video camera survey of the completed installation is required to be reviewed by the code official prior to pressure testing of replacement pipe, including all connections to the replacement pipe.

P3010.8 Pressure testing. The replacement piping system and the connections to the replacement piping shall be tested in accordance with Section P2503.4.

❖ As with any installation of a new sewer, pressure testing is required.

INTERNATIONAL CODE COUNCIL®
Copyright © 2015 ICC. ALL RIGHTS RESERVED. Accessed by David Dammon on Jun 21, 2017 12:30:52 PM pursuant to License Agreement with ICC. No further reproduction or distribution authorized. ANY UNAUTHORIZED REPRODUCTION OR DISTRIBUTION IS A VIOLATION OF THE FEDERAL COPYRIGHT ACT AND THE LICENSE AGREEMENT, AND SUBJECT TO CIVIL AND CRIMINAL PENALTIES THEREUNDER.

INTERNATIONAL CODE COUNCIL®
Copyright © 2015 ICC. ALL RIGHTS RESERVED. Accessed by David Dammon on Jun 21, 2017 12:30:52 PM pursuant to License Agreement with ICC. No further reproduction or distribution authorized. ANY UNAUTHORIZED REPRODUCTION OR DISTRIBUTION IS A VIOLATION OF THE FEDERAL COPYRIGHT ACT AND THE LICENSE AGREEMENT, AND SUBJECT TO CIVIL AND CRIMINAL PENALTIES THEREUNDER.

Chapter 31: Vents

General Comments

Venting protects the trap seals within the plumbing system. When installed in accordance with this chapter, the system will function properly. Failure to adhere to these provisions can result in the loss of trap seals and the introduction of sewer gases into the building.

This chapter includes basic venting requirements and the purpose for them. It also provides installation guidelines that address sizing, penetrations, termination, protection and provisions for future vents. It outlines maximum distances and sizing limitations for trap and fixture drain sizes.

This chapter details various venting concepts, including individual venting for each fixture, common venting, waste stack venting, circuit venting, combination waste and vent systems, and the use of air admittance valves (AAV). Some of these vents are sized to allow a drain to serve as a vent, providing design options that may result in economical material use. This chapter also includes a technique specific to the installation of island sinks.

Purpose

Venting protects the trap seal of each trap. The vents are designed to maintain maximum differential pressures at each trap to less than 1 inch of water column (wc) (249 Pa). Waste flow in the drainage system creates pressure fluctuations that can negatively affect traps. Venting is not intended to provide for the circulation of air within the drainage system. If there were no traps in a drainage system, venting would not be required. The system would function adequately because it would be open to the atmosphere at the fixture connections, thereby allowing airflow.

Chapter 31 covers the requirements for vents and venting. Knowing why venting is required makes it easier to understand this chapter. Venting protects every trap against the loss of a trap seal. All of the provisions set forth in this chapter are intended to limit the pressure differentials in the drainage system to a maximum of 1 inch w.c. (249 Pa) above or below atmospheric pressure (i.e., positive or negative pressures).

SECTION P3101
VENT SYSTEMS

P3101.1 General. This chapter shall govern the selection and installation of piping, tubing and fittings for vent systems. This chapter shall control the minimum diameter of vent pipes, circuit vents, branch vents and individual vents, and the size and length of vents and various aspects of vent stacks and stack vents. Additionally, this chapter regulates vent grades and connections, height above fixtures and relief vents for stacks and fixture traps, and the venting of sumps and sewers.

❖ This section established the scope of this chapter, which governs the selection and installation of vent systems. The chapter also includes requirements for sizing vents, circuit vents, branch vents and individual vents. It regulates the size and length of vents, as well as stating vent stack and stack vent requirements. In addition, it specifies and regulates vent grades, height above fixtures, relief vents for stacks and fixture traps, and venting of sumps and ejectors.

P3101.2 Trap seal protection. The plumbing system shall be provided with a system of vent piping that will allow the admission or emission of air so that the liquid seal of any fixture trap shall not be subjected to a pressure differential of more than 1 inch of water column (249 Pa).

❖ Protection of the trap seal means that during the normal operation of the plumbing system, the water seal remains in the trap. Each trap has a minimum trap seal depth of 2 inches (51 mm) translating to a hydro-static pressure equal to a 2-inch w.c. (498 Pa). If exposed to a 1-inch w.c. (249 Pa) pressure differential, a 1-inch (25 mm) water seal remains in the trap. The vent methods identified in this chapter limit the pressure differential at trap seals to 1-inch w.c. (249 Pa) or less.

A lower pressure on the outlet side of the trap is detrimental because this could cause all or part of the liquid seal to be lost down the drain. A higher pressure on the outlet side of the trap could result in sewer gases being pushed through the trap seal. For example, bubbles rising through the trap seal of a water closet are an indication of excessive pressure on the outlet side of the trap.

P3101.2.1 Venting required. Every *trap* and trapped fixture shall be vented in accordance with one of the venting methods specified in this chapter.

❖ This section establishes that all traps and trapped fixtures must be vented. It also indicates that the method of venting can be any of the methods described in the chapter. Proper application of the venting options will allow the designer latitude that can be applied to numerous situations encountered in building construction and may also prove cost effective.

INTERNATIONAL CODE COUNCIL®
Copyright © 2015 ICC. ALL RIGHTS RESERVED. Accessed by David Dammon on Jun 21, 2017 12:30:52 PM pursuant to License Agreement with ICC. No further reproduction or distribution authorized. ANY UNAUTHORIZED REPRODUCTION OR DISTRIBUTION IS A VIOLATION OF THE FEDERAL COPYRIGHT ACT AND THE LICENSE AGREEMENT, AND SUBJECT TO CIVIL AND CRIMINAL PENALTIES THEREUNDER.

P3101.3 Use limitations. The plumbing vent system shall not be used for purposes other than the venting of the plumbing system.

❖ The venting system is designed for a specific function and cannot be used for any other purposes. Any other use could interfere with the proper operation of the plumbing system or could create a hazard. For example, vent piping must not serve as a drain for condensate from an air-conditioning unit. Such use would introduce waste into piping not intended to convey waste and might allow sewer gases to enter the building through the air-conditioning unit.

P3101.4 Extension outside a structure. In climates where the 97.5-percent value for outside design temperature is 0°F (-18°C) or less (ASHRAE 97.5-percent column, winter, see Chapter 3), vent pipes installed on the exterior of the structure shall be protected against freezing by insulation, heat or both. Vent terminals shall be protected from frost closure in accordance with Section P3103.2.

❖ In areas where the outdoor design temperature [in accordance with the American Society of Heating, Refrigeration and Air Conditioning Engineers (ASHRAE) data] is 0°F (-18°C) or less, vent pipes installed on the exterior of the building must be protected from freezing by either insulation or heat, or both. Insulation alone will not prevent freezing temperatures in pipes unless there is a heat source for the pipe. In addition, where subject to frost, the vent terminals must be protected against closure as outlined in Section P3103.2 [see commentary, Table R301.2(1)].

P3101.5 Flood resistance. In flood hazard areas as established by Table R301.2(1), vents shall be located at or above the elevation required in Section R322.1 (flood hazard areas including A Zones) or R322.2 (coastal high-hazard areas including V Zones).

❖ See the commentary to Section P2602.2.

SECTION P3102
VENT STACKS AND STACK VENTS

P3102.1 Required vent extension. The vent system serving each *building drain* shall have not less than one vent pipe that extends to the outdoors.

❖ Each drainage system must have not less than one vent pipe open to the outdoors. This is consistent with Section P3114.7. Section P3102.2 dictates the nature of the required vent. This modernized section has evolved from the traditional “main vent” text and intends to provide for the relief of pressures that might develop in the building drain. This section does not require anything that has not already been done throughout the history of modern plumbing.

P3102.2 Installation. The required vent shall be a dry vent that connects to the *building drain* or an extension of a drain that connects to the *building drain*. Such vent shall not be an island fixture vent as permitted by Section P3112.

❖ The required vent can be a dry vent taken off of the building drain or it can be the dry vent extension of any drain that connects to the building drain. For example, a vent stack that rises from the building drain meets the intent of this section, as would any dry-vented fixture drain or fixture branch that connects to the building drain. As can be seen, this section will typically be satisfied by any plumbing installation that otherwise complies with the code because almost all systems will have one or more dry-vented drains that connect to the building drain and comply with the sizing of Section P3102.3.

An island fixture vent (see Section P3112) is the only type of vent that cannot satisfy this section because of the inherent risk of blockage in a vent that is allowed to have a horizontal component below the flood level rim of the fixture served (see Commentary Figure P3102.2).

P3102.3 Size. The required vent shall be sized in accordance with Section P3113.1 based on the required size of the *building drain*.

❖ Section P3113.1 requires the vent to have a diameter of not less than one-half of the diameter of the building drain. For example, a 4-inch (102 mm) building drain must have connected to it a 2-inch (51 mm) or larger dry vent extending to the outdoors or a 2-inch (51 mm) or larger drain with a 2-inch (51 mm) or larger dry vent extension to the outdoors.

SECTION P3103
VENT TERMINALS

P3103.1 Roof extension. Open vent pipes that extend through a roof shall be terminated not less than 6 inches (152 mm) above the roof or 6 inches (152 mm) above the anticipated snow accumulation, whichever is greater. Where a roof is to be used for assembly, as a promenade, observation deck or sunbathing deck or for similar purposes, open vent pipes shall terminate not less than 7 feet (2134 mm) above the roof.

❖ Where the roof is occupied for any purpose, such as occurs with a recreational roof deck, plumbing vents must extend at least 7 feet (2134 mm) above the roof to prevent harmful sewer gases from contaminating the area. The sewer gases will tend to disperse into the air rather than accumulate near the roof surface. The minimum termination height must be determined by the local jurisdiction based on the local snowfall averages, but 6 inches (152 mm) above the roof is the minimum termination height necessary to protect the terminal from being blocked by snow and to allow a sufficient length of pipe for a proper roof flashing (see Commentary Figure P3103.1).

The vent terminal through the roof must tolerate movement resulting from the expansion and contraction of the piping material. This is extremely important when the vent piping material has high rates of expansion and contraction, such as acrylonitrilebutadiene-styrene (ABS) and polyvinyl chloride (PVC).

INTERNATIONAL CODE COUNCIL®
Copyright © 2015 ICC. ALL RIGHTS RESERVED. Accessed by David Dammon on Jun 21, 2017 12:30:52 PM pursuant to License Agreement with ICC. No further reproduction or distribution authorized. ANY UNAUTHORIZED REPRODUCTION OR DISTRIBUTION IS A VIOLATION OF THE FEDERAL COPYRIGHT ACT AND THE LICENSE AGREEMENT, AND SUBJECT TO CIVIL AND CRIMINAL PENALTIES THEREUNDER.

P3103.2 Frost closure. Where the 97.5-percent value for outside design temperature is 0°F (-18°C) or less, vent extensions through a roof or wall shall be not less than 3 inches (76 mm) in diameter. Any increase in the size of the vent shall be made not less than 1 foot (304.8 mm) inside the thermal envelope of the building.

❖ The possibility of frost closure occurs only in areas of the country having cold climates with outdoor design temperatures of 0°F (-18°C) and less. A vent 3 inches (76 mm) in diameter or greater is not likely to completely close up from frost formation. This section requires vents smaller than 3 inches (76 mm) in diameter to be increased in size where frost enclosure is possible. The increase must occur within the thermal envelope of the building to protect the smaller pipe from direct exposure to the outside atmosphere [see commentary, Table R301.2(1)].

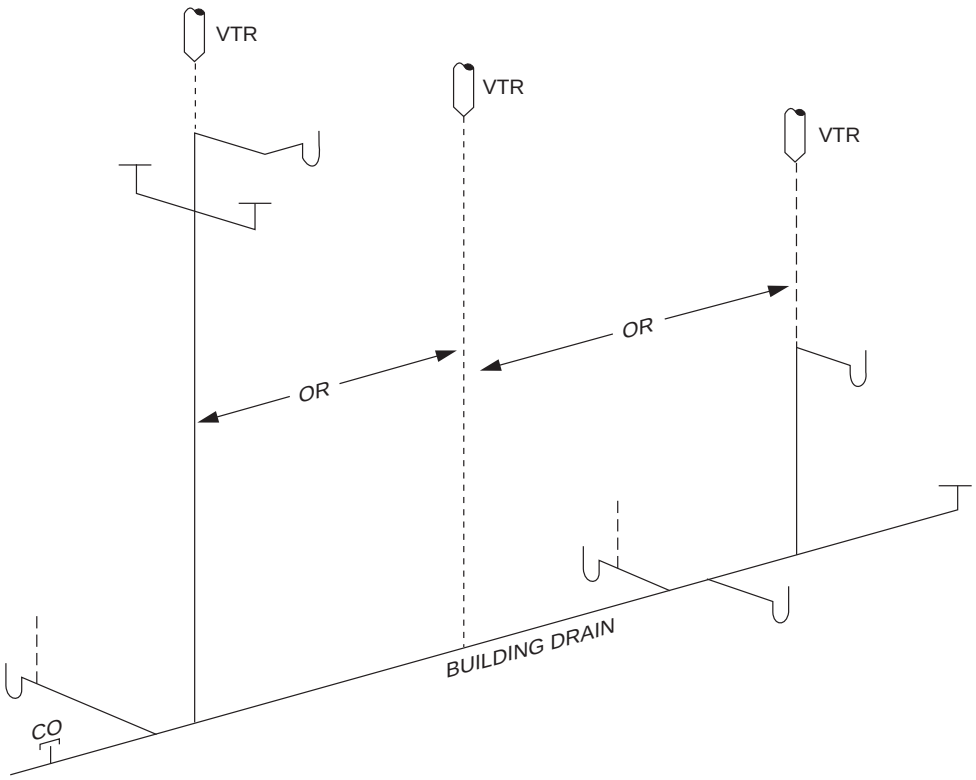

Figure P3102.2
AT LEAST ONE VENT TO THE OUTDOORS

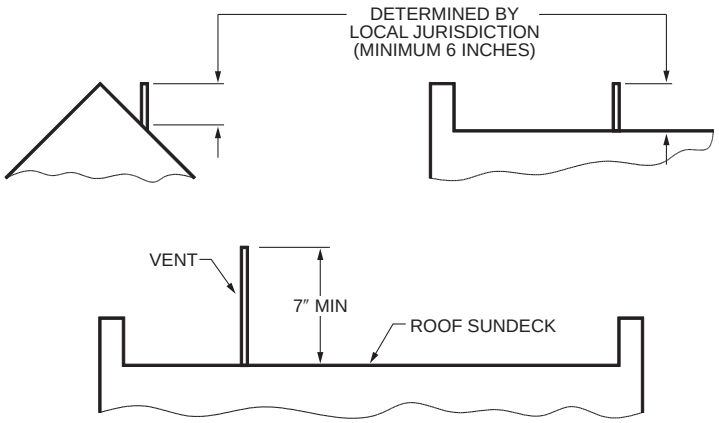

For SI: 1 inch = 25.4 mm.

Figure P3103.1
VENT TERMINAL

INTERNATIONAL CODE COUNCIL®
Copyright © 2015 ICC. ALL RIGHTS RESERVED. Accessed by David Dammon on Jun 21, 2017 12:30:52 PM pursuant to License Agreement with ICC. No further reproduction or distribution authorized. ANY UNAUTHORIZED REPRODUCTION OR DISTRIBUTION IS A VIOLATION OF THE FEDERAL COPYRIGHT ACT AND THE LICENSE AGREEMENT, AND SUBJECT TO CIVIL AND CRIMINAL PENALTIES THEREUNDER.

P3103.3 Flashings and sealing. The juncture of each vent pipe with the roof line shall be made water tight by an *approved* flashing. Vent extensions in walls and soffits shall be made weather tight by caulking.

❖ Water penetration of the roof or wall, at the point where the vent exits, can cause decay of wood and degradation of other building materials. Flashing must be installed at roof penetrations, and caulking must be applied at wall penetrations to protect the interior of the building from moisture and to prevent the intrusion of insects or vermin (see Sections P2606 and P3002.4.1 for additional provisions).

P3103.4 Prohibited use. A vent terminal shall not be used for any purpose other than a vent terminal.

❖ The use of the vent terminal to support any imposed loads is prohibited.

P3103.5 Location of vent terminal. An open vent terminal from a drainage system shall not be located less than 4 feet (1219 mm) directly beneath any door, openable window, or other air intake opening of the building or of an adjacent building, nor shall any such vent terminal be within 10 feet (3048 mm) horizontally of such an opening unless it is not less than 3 feet (914 mm) above the top of such opening.

❖ To prevent sewer gases from entering the building through gravity openings or forced air intakes, this section requires that vents be terminated not less than 4 feet (1219 mm) below, 10 feet (3048 mm) horizontally from or 3 feet (914 mm) above any opening into the building or adjacent buildings (see Commentary Figure P3103.5).

P3103.6 Extension through the wall. Vent terminals extending through the wall shall terminate not less than 10 feet (3048 mm) from the *lot line* and 10 feet (3048 mm) above the highest adjacent *grade* within 10 feet (3048 mm) horizontally of the vent terminal. Vent terminals shall not terminate under the overhang of a structure with soffit vents. Side wall vent terminals shall be protected to prevent birds or rodents from entering or blocking the vent opening.

❖ Side-wall vent terminations are an alternative to roof penetrations. This alternative might provide significant cost savings and a more aesthetically pleasing instal-

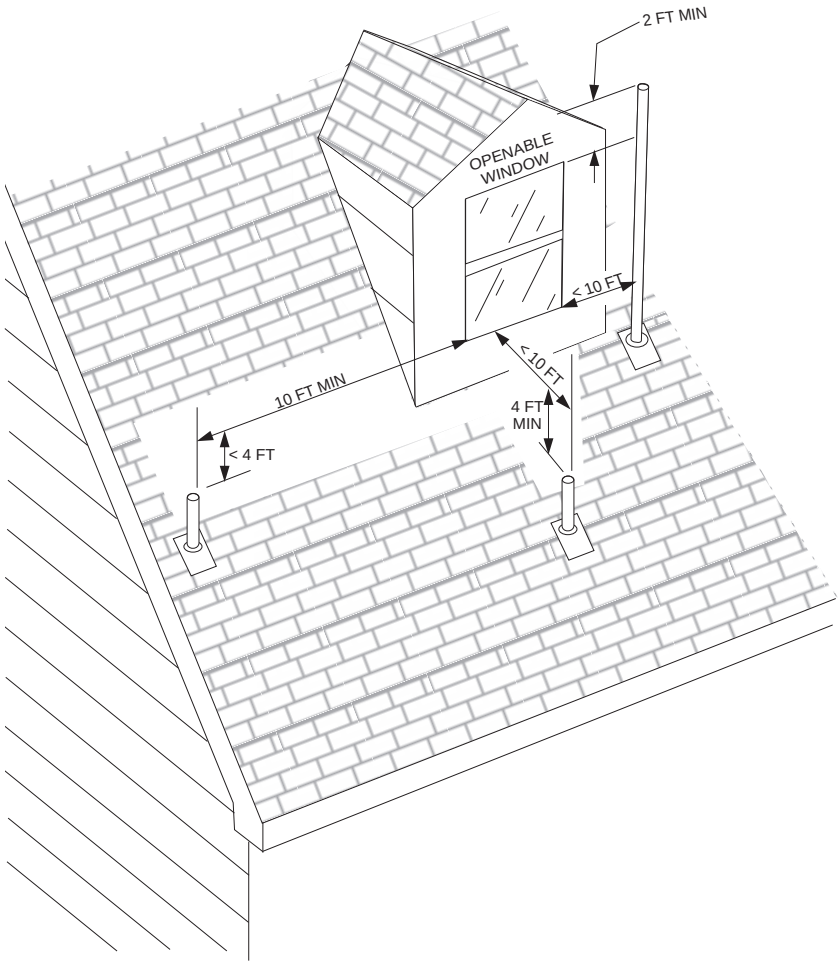

For SI: 1 foot = 304.8 mm.

Figure P3103.5
VENT TERMINAL CLEARANCES

INTERNATIONAL CODE COUNCIL®
Copyright © 2015 ICC. ALL RIGHTS RESERVED. Accessed by David Dammon on Jun 21, 2017 12:30:52 PM pursuant to License Agreement with ICC. No further reproduction or distribution authorized. ANY UNAUTHORIZED REPRODUCTION OR DISTRIBUTION IS A VIOLATION OF THE FEDERAL COPYRIGHT ACT AND THE LICENSE AGREEMENT, AND SUBJECT TO CIVIL AND CRIMINAL PENALTIES THEREUNDER.

lation. For example, a side-wall vent may be preferred to penetrating membrane, built-up, slate or tile roofs, especially for existing buildings. Such roof penetrations are difficult to make leakproof, can be expensive and are often unsightly.

In multiple-story buildings where remodeling work is done, a side wall vent termination can serve as an alternative to running vent piping through finished or occupied stories above. When a side-wall vent is installed, the vent opening must be protected with a screen or louver to prevent birds from building a nest in the pipe. The screen or louver also prevents rodents from entering the vent system (see Commentary Figure P3103.6). Such vents must not terminate where the emissions can cause structural damage or enter the building envelope through soffit vents. Also, such vents must comply with the location requirements of Section P3103.5.

SECTION P3104
VENT CONNECTIONS AND GRADES

P3104.1 Connection. Individual branch and circuit vents shall connect to a vent stack, stack vent or extend to the open air.

Exception: Individual, branch and circuit vents shall be permitted to terminate at an *air admittance valve* in accordance with Section P3114.

❖ This section further emphasizes the requirement that all vents must extend to the outdoors. This can be accomplished by connecting to a vent stack or stack vent that extends outdoors and terminates to the open

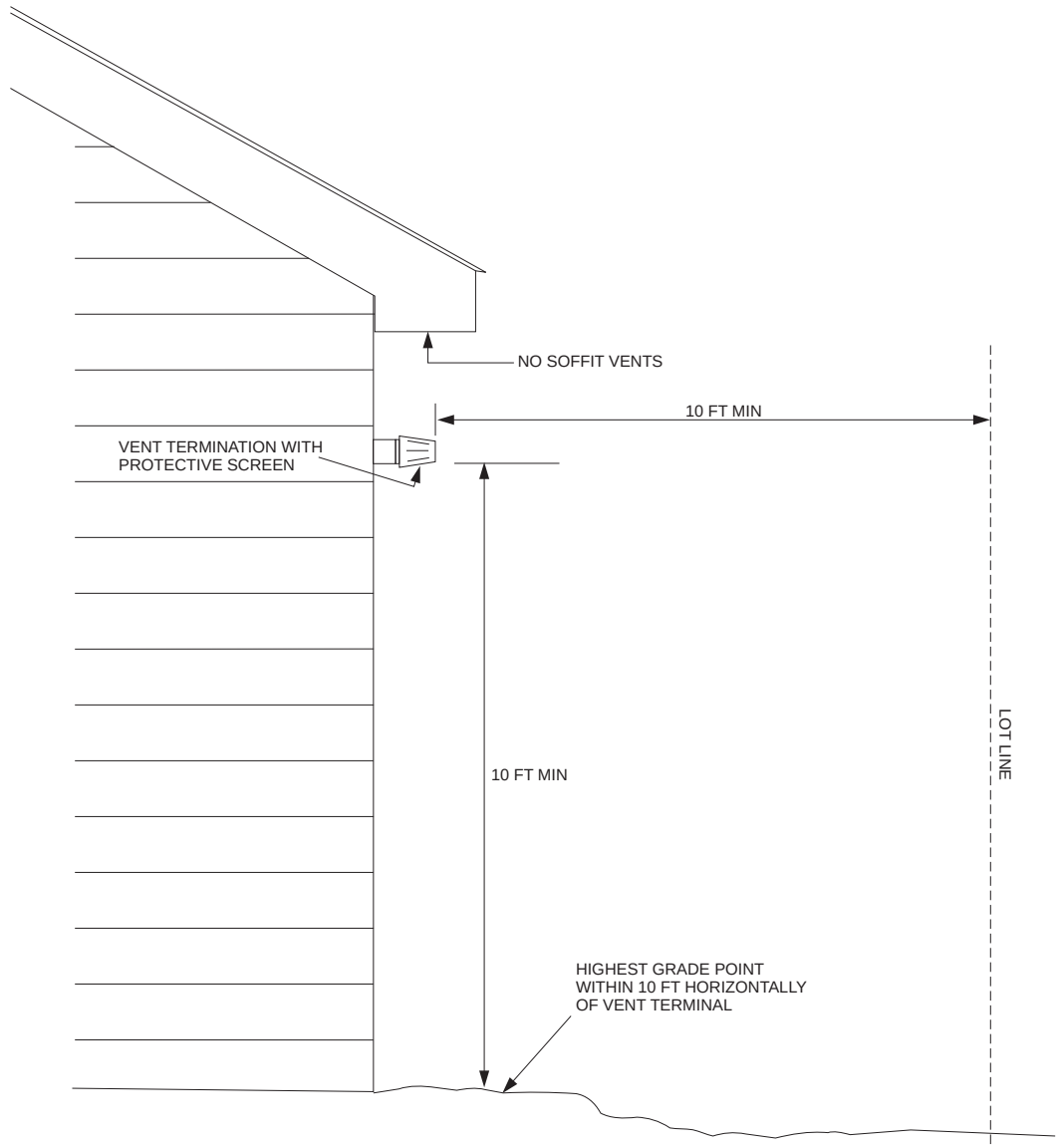

For SI: 1 foot = 304.8 mm.

Figure P3103.6
VENT TERMINATION THROUGH EXTERIOR WALL

INTERNATIONAL CODE COUNCIL®
Copyright © 2015 ICC. ALL RIGHTS RESERVED. Accessed by David Dammon on Jun 21, 2017 12:30:52 PM pursuant to License Agreement with ICC. No further reproduction or distribution authorized. ANY UNAUTHORIZED REPRODUCTION OR DISTRIBUTION IS A VIOLATION OF THE FEDERAL COPYRIGHT ACT AND THE LICENSE AGREEMENT, AND SUBJECT TO CIVIL AND CRIMINAL PENALTIES THEREUNDER.

air or by extending these vents independently to the outdoors. The intent is to prevent sewer gases from escaping into the building. The exception recognizes the use of air admittance valves as an alternative to terminating a vent outdoors. The exception does not apply to stack vents and vent stacks (see Sections P3102.1 and P3114).

P3104.2 Grade. Vent and branch vent pipes shall be graded, connected and supported to allow moisture and condensate to drain back to the soil or waste pipe by gravity.

❖ Vents commonly convey moisture vapor from the drainage system, and such vapor can condense in the vent piping. Also, rainwater can enter the vent system at the vent terminal. Therefore, the vent must be graded to drain any moisture back into the drainage piping, preventing accumulation of condensate or rainwater. A vent pipe that is not sloped or that has a reverse slope can be partially or completely filled with water, which lessens the efficiency of the vent or makes it useless (see Commentary Figure P3104.2).

P3104.3 Vent connection to drainage system. A dry vent connecting to a horizontal drain shall connect above the centerline of the horizontal drain pipe.

❖ When drainage enters a pipe, the liquid is assumed to proceed down the pipe in the direction of flow. Being a liquid, however, the drainage seeks its own level and can move against the direction of flow before reversing and draining down the pipe. When this occurs, the solids may drop out of suspension to the bottom of the pipe. In a drain, the solids will again move down the pipe with the next discharge of liquid to the drain.

If the horizontal pipe serves only as a dry vent, the solids have no possibility of being brought back into suspension and, over a period of time, the horizontal vent pipe could be completely obstructed by waste. To avoid these blockages, the vent must connect to horizontal drains above the centerline (see Commentary Figure P3104.3). This prevents waste from entering a dry vent by connecting the vent above the flow line of the drain. Such connections will result in vent piping that forms a 45-degree (0.79 rad) or greater angle with the horizontal.

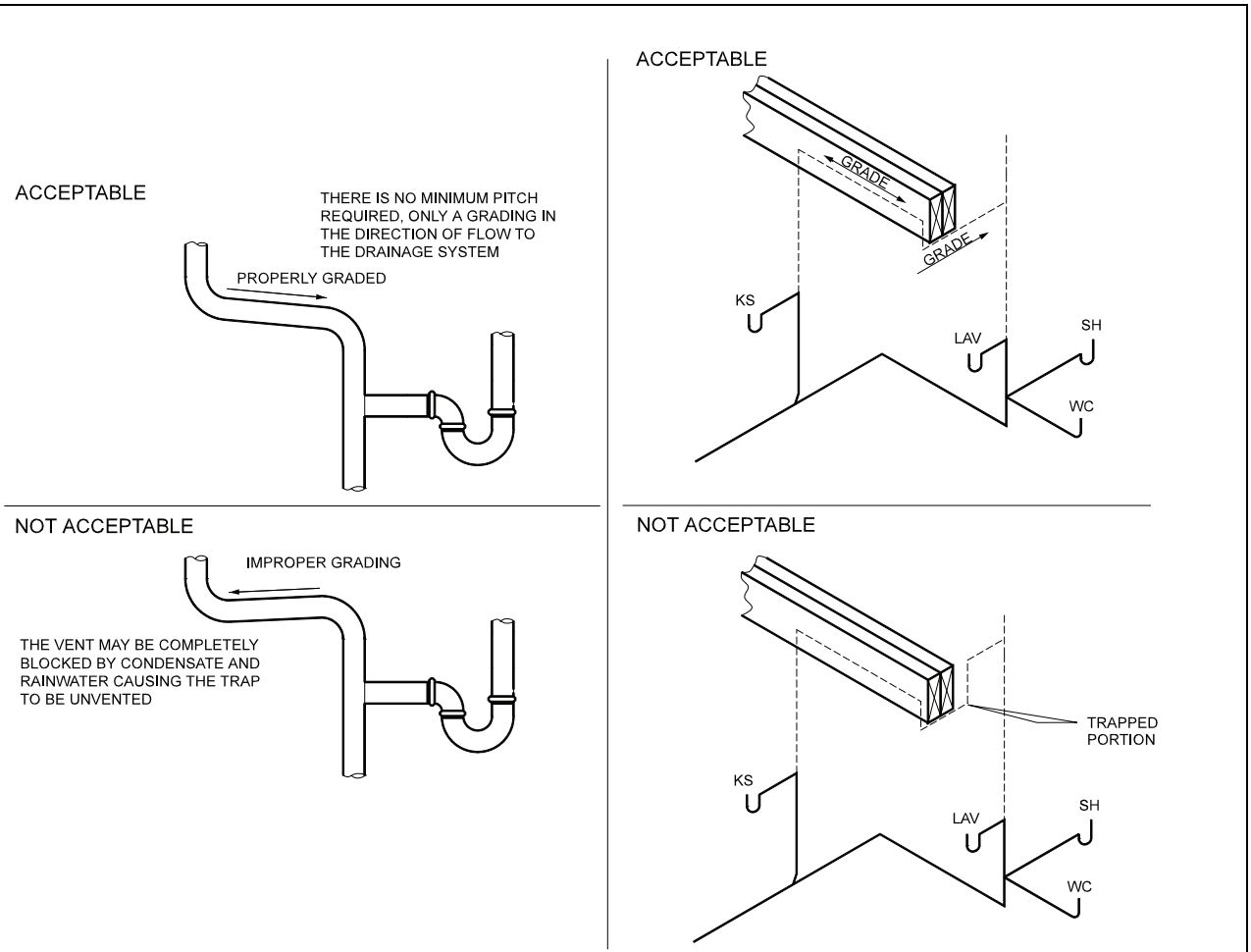

Figure P3104.2
GRADE OF VENTS

INTERNATIONAL CODE COUNCIL®
Copyright © 2015 ICC. ALL RIGHTS RESERVED. Accessed by David Dammon on Jun 21, 2017 12:30:52 PM pursuant to License Agreement with ICC. No further reproduction or distribution authorized. ANY UNAUTHORIZED REPRODUCTION OR DISTRIBUTION IS A VIOLATION OF THE FEDERAL COPYRIGHT ACT AND THE LICENSE AGREEMENT, AND SUBJECT TO CIVIL AND CRIMINAL PENALTIES THEREUNDER.

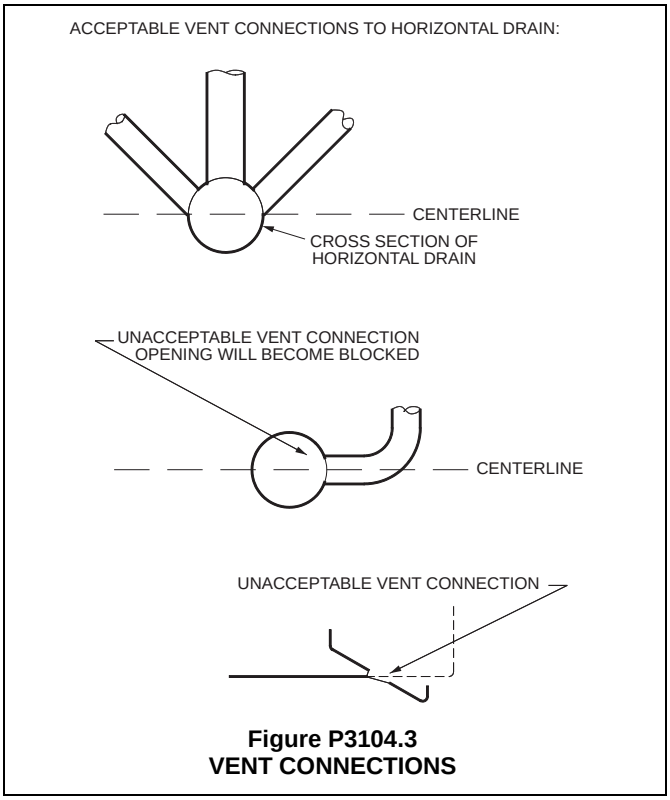

Figure P3104.3
VENT CONNECTIONS

P3104.4 Vertical rise of vent. A dry vent shall rise vertically to not less than 6 inches (152 mm) above the flood level rim of the highest trap or trapped fixture being vented.

❖ This section prohibits horizontal vent piping from being located where it will be subject to waste flow. A vertical rise of the vent piping will reduce the possibility of having a blockage in the vent pipe. Drainage "backup" resulting from a system stoppage will flow over the fixture flood rim before reaching the horizontal vent line. Drain stoppage is immediately apparent, but vent stoppage is not; however, the latter can cause trap seal loss and allow sewer gases to enter the building. A vertical rise would meet the definition of a vertical pipe, which is an angle of 45 degrees (0.79 rad) or more with the horizontal (see Commentary Figure P3104.4).

P3104.5 Height above fixtures. A connection between a vent pipe and a vent stack or stack vent shall be made not less than 6 inches (152 mm) above the flood level rim of the highest fixture served by the vent. Horizontal vent pipes forming branch vents shall be not less than 6 inches (152 mm) above the flood level rim of the highest fixture served.

❖ This section expresses the same concern as the previous section. In the event of drain stoppage, waste could rise into the vent piping. Over time, the vent piping could become blocked with solids that have settled out of the waste liquids. Additionally, individual, common or branch vents that improperly connect to vent stacks or stack vents could become drains where the fixture drain or drains served are blocked or restricted. It is entirely possible for a vent to serve unintentionally as a drain, and this condition could go unnoticed for a long period [see Commentary Figures P3104.5(1) and P3104.5(2)].

P3104.6 Vent for future fixtures. Where the drainage piping has been roughed-in for future fixtures, a rough-in connection for a vent, not less than one-half the diameter of the drain, shall be installed. The vent rough-in shall connect to the vent system or shall be vented by other means as provided in this chapter. The connection shall be identified to indicate that the connection is a vent.

❖ When future fixture rough-in drainage piping is installed, vents must also be installed. The vent rough-in must be tied into the vent system or must extend to a vent terminal. The rough-in connection must be identified as a vent so that the purpose of the original installation is evident when the future plumbing is completed.

SECTION P3105
FIXTURE VENTS

P3105.1 Distance of trap from vent. Each fixture trap shall have a protecting vent located so that the slope and the *developed length* in the *fixture drain* from the trap weir to the vent fitting are within the requirements set forth in Table P3105.1.

Exception: The *developed length* of the *fixture drain* from the trap weir to the vent fitting for self-siphoning fixtures, such as water closets, shall not be limited.

❖ The distance from a trap to its vent is limited to reduce the possibility of the trap self-siphoning, which is the siphoning caused by the discharge from the fixture the trap serves. Excessive distance results in excessive fall resulting from the pipe slope and this could cause the drain to resemble an S trap in function. S traps and piping arrangements similar to S traps are prohibited because of the tendency to self-siphon the trap [see Commentary Figures P3105.1(1) and P3105.1(2)].

An exception is made for the trap-to-vent distance for fixtures, such as water closets, because these fixtures rely on self-siphonage to operate properly, and the trap is resealed after each use. The water closet must be vented in all cases, but limiting the distance between the vent connection and the water closet serves no purpose.

TABLE P3105.1
MAXIMUM DISTANCE OF FIXTURE TRAP FROM VENT

SIZE OF TRAP (inches)	SLOPE (inch per foot)	DISTANCE FROM TRAP (feet)
$1^1/_4$	$^1/_4$	5
$1^1/_2$	$^1/_4$	6
2	$^1/_4$	8
3	$^1/_8$	12
4	$^1/_8$	16

For SI: 1 inch = 25.4 mm, 1 foot = 304.8 mm,
1 inch per foot = 83.3 mm/m.

❖ The distances listed in Table P3105.1 are based on laboratory testing and prevent the weir of the trap from being located above the highest inlet to the vent. As the total change in elevation of a fixture drain (resulting

INTERNATIONAL CODE COUNCIL®
Copyright © 2015 ICC. ALL RIGHTS RESERVED. Accessed by David Dammon on Jun 21, 2017 12:30:52 PM pursuant to License Agreement with ICC. No further reproduction or distribution authorized. ANY UNAUTHORIZED REPRODUCTION OR DISTRIBUTION IS A VIOLATION OF THE FEDERAL COPYRIGHT ACT AND THE LICENSE AGREEMENT, AND SUBJECT TO CIVIL AND CRIMINAL PENALTIES THEREUNDER.

from the fixture drain slope) approaches the inside diameter of the drain, the weir of the trap approaches the highest level of the vent connection and self-siphoning is more likely (see commentary, Section P3105.2).

P3105.2 Fixture drains. The total fall in a *fixture drain* resulting from pipe slope shall not exceed one pipe diameter, nor shall the vent pipe connection to a *fixture drain*, except for water closets, be below the weir of the trap.

❖ This section's requirements reinforce those of the previous section. They substantiate the basic rule applied in Table P3105.1 and require that the total fall in a fixture drain caused by slope not to exceed one pipe diameter (based on inside diameter). For example, a 2-

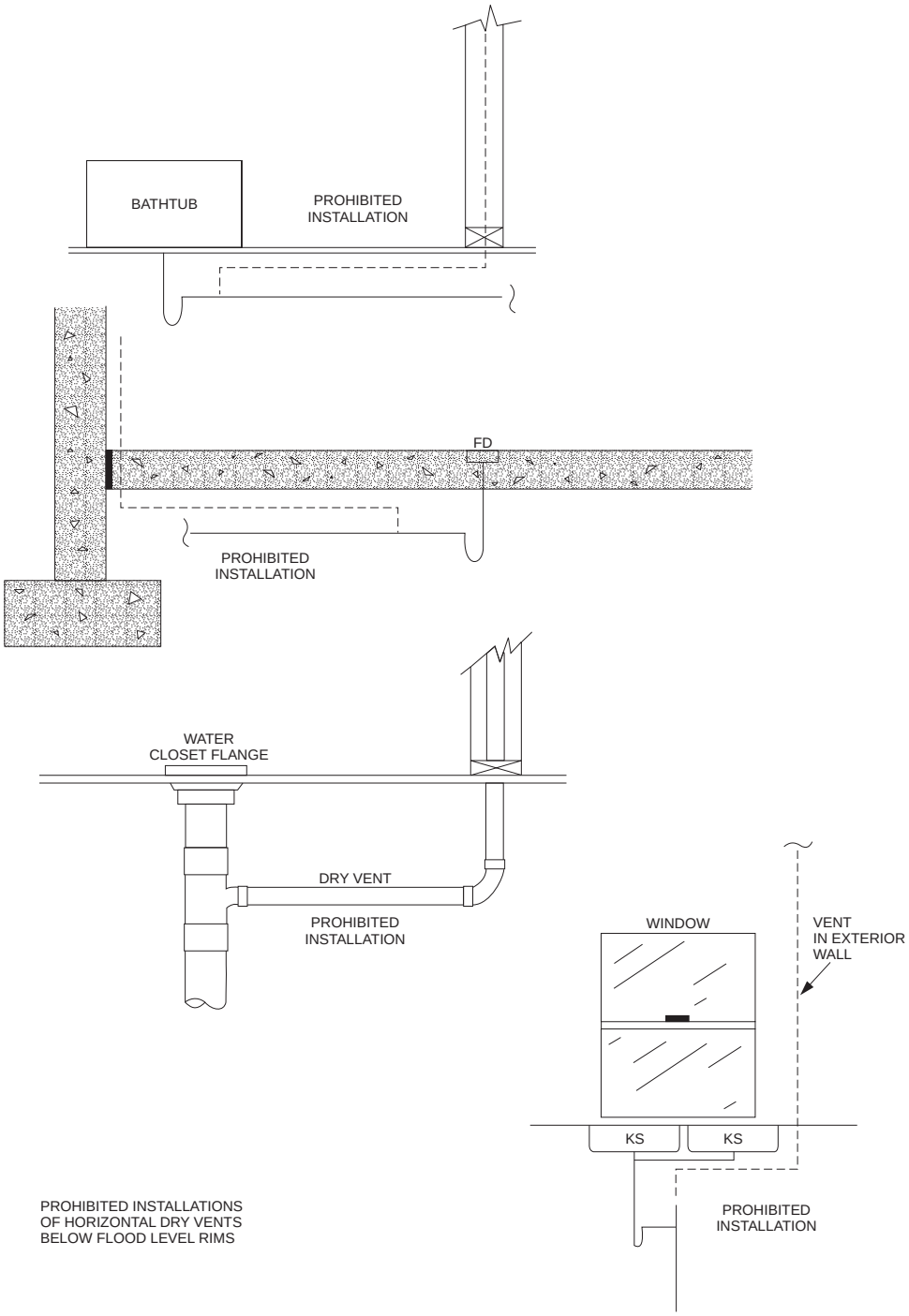

Figure P3104.4
PROHIBITED HORIZONTAL VENT PIPING

INTERNATIONAL CODE COUNCIL®
Copyright © 2015 ICC. ALL RIGHTS RESERVED. Accessed by David Dammon on Jun 21, 2017 12:30:52 PM pursuant to License Agreement with ICC. No further reproduction or distribution authorized. ANY UNAUTHORIZED REPRODUCTION OR DISTRIBUTION IS A VIOLATION OF THE FEDERAL COPYRIGHT ACT AND THE LICENSE AGREEMENT, AND SUBJECT TO CIVIL AND CRIMINAL PENALTIES THEREUNDER.

inch (51 mm) trap discharges into a 2-inch fixture drain installed at a slope of $^1/_4$ inch per foot (21 mm/m). Eight feet (2438 mm) of pipe run will produce a total fall of 2 inches ($8 \times {}^1/_4$) and this is equal to the drain pipe's internal diameter. Because a water closet depends on trap siphonage in its operation to remove the contents, water closets are exempted from these requirements.

Chapter 32 outlines trap size requirements (see Commentary Figure P3105.2).

P3105.3 Crown vent prohibited. A vent shall not be installed within two pipe diameters of the trap weir.

❖ Crown venting is an arrangement in which a vent connects at the top of the weir (crown) of a trap. The original crown vent was a crown-vented, factory-built S trap, which is no longer manufactured. The problem with this type of connection is that the vent opening can become blocked, thus closing the vent and allowing the trap to siphon. The blockage is a result of the action of the drainage flowing through the trap. Flow direction and velocity will force waste up into the vent connection. It has been found that when the vent is connected at least two pipe diameters downstream from the trap weir, this problem can be avoided [see Commentary Figures P3105.3(1) and P3105.3(2)].

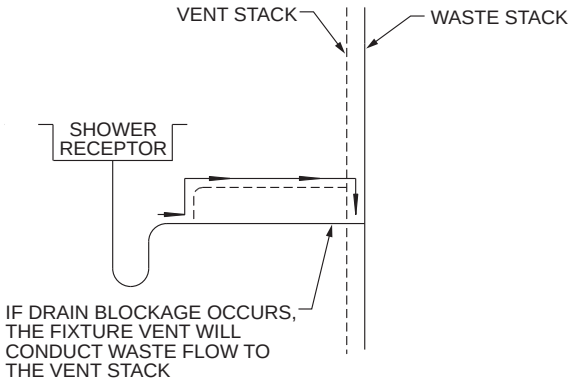

Figure P3104.5(1)
IMPROPERLY CONNECTED VENT SERVING A DRAIN

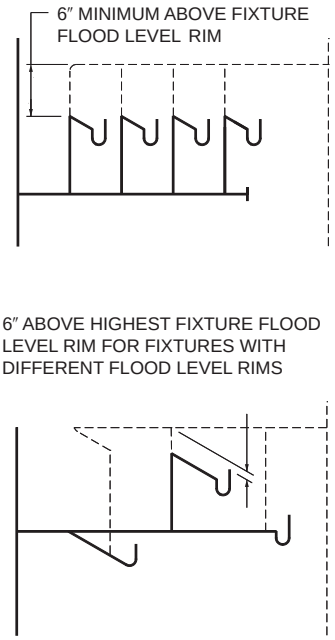

For SI: 1 inch = 25.4 mm.

Figure P3104.5(2)
HORIZONTAL OFFSET OF BRANCH VENT

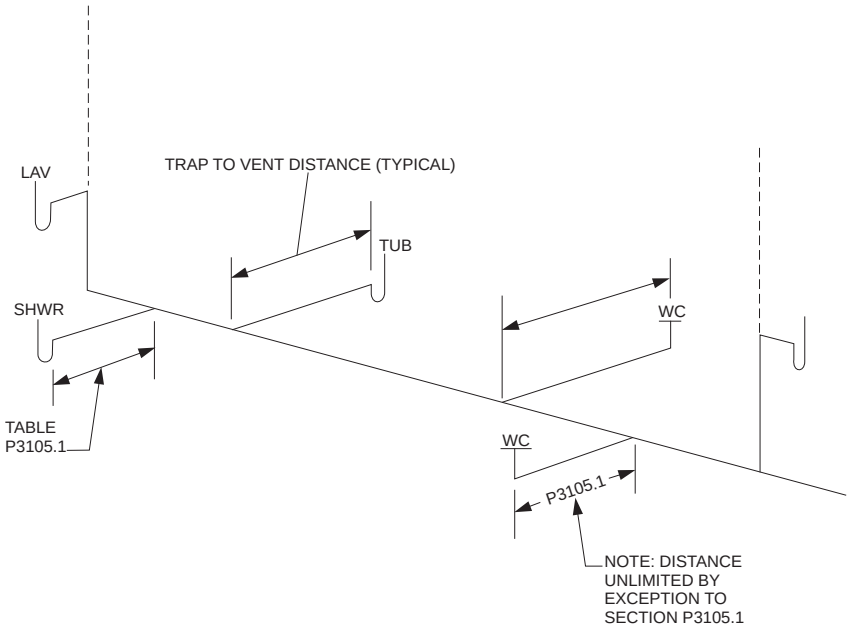

Figure P3105.1(1)
TRAP TO VENT DISTANCE FOR WET VENT BRANCH

INTERNATIONAL CODE COUNCIL®
Copyright © 2015 ICC. ALL RIGHTS RESERVED. Accessed by David Dammon on Jun 21, 2017 12:30:52 PM pursuant to License Agreement with ICC. No further reproduction or distribution authorized. ANY UNAUTHORIZED REPRODUCTION OR DISTRIBUTION IS A VIOLATION OF THE FEDERAL COPYRIGHT ACT AND THE LICENSE AGREEMENT, AND SUBJECT TO CIVIL AND CRIMINAL PENALTIES THEREUNDER.

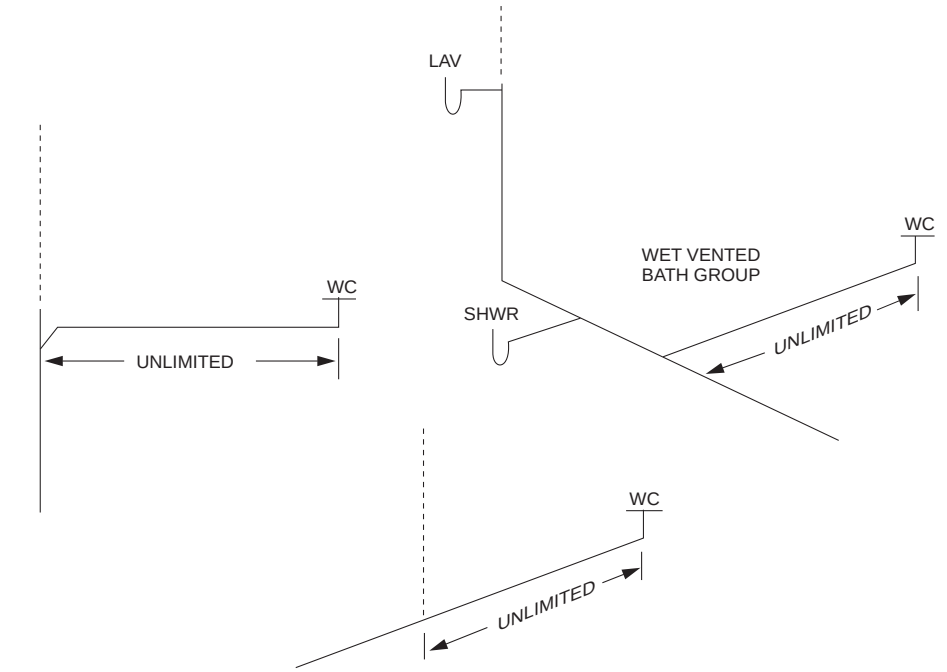

Figure P3105.1(2)
TRAP TO VENT DISTANCE FOR WATER CLOSETS

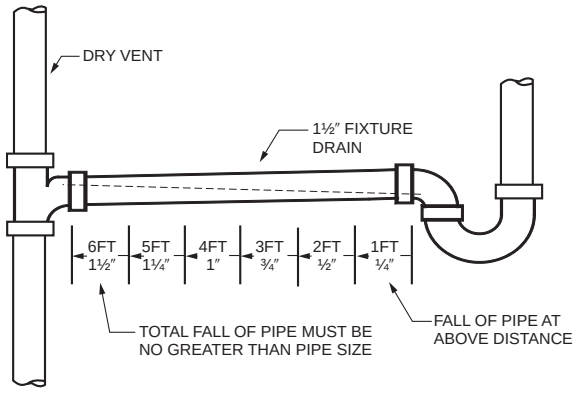

For SI: 1 inch = 25.4 mm, 1 foot = 304.8 mm.

Figure P3105.2
MAXIMUM FALL OF FIXTURE
DRAIN BETWEEN TRAP AND VENT

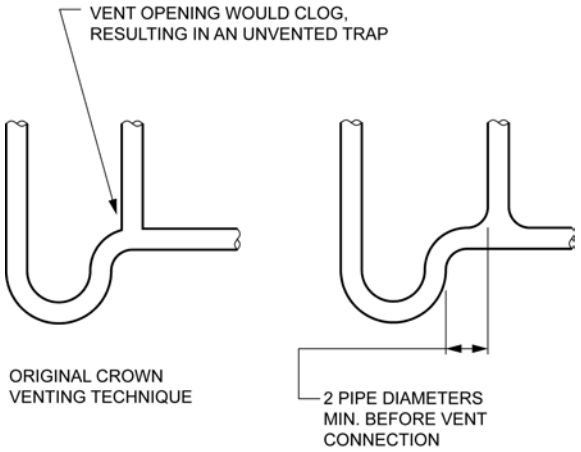

Figure P3105.3(1)
CROWN VENTING

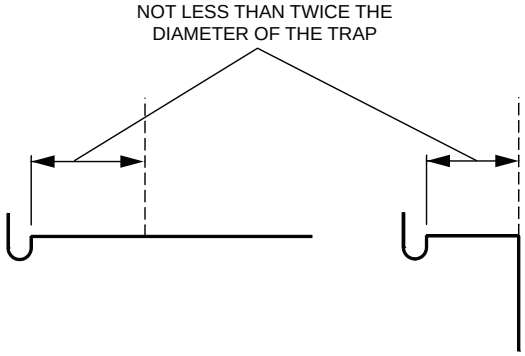

Figure P3105.3(2)
CROWN VENTING

INTERNATIONAL CODE COUNCIL®
Copyright © 2015 ICC. ALL RIGHTS RESERVED. Accessed by David Dammon on Jun 21, 2017 12:30:52 PM pursuant to License Agreement with ICC. No further reproduction or distribution authorized. ANY UNAUTHORIZED REPRODUCTION OR DISTRIBUTION IS A VIOLATION OF THE FEDERAL COPYRIGHT ACT AND THE LICENSE AGREEMENT, AND SUBJECT TO CIVIL AND CRIMINAL PENALTIES THEREUNDER.

SECTION P3106
INDIVIDUAL VENT

P3106.1 Individual vent permitted. Each trap and trapped fixture shall be permitted to be provided with an individual vent. The individual vent shall connect to the *fixture drain* of the trap or trapped fixture being vented.

❖ The simplest form of venting a trap or trapped fixture is an individual vent for each trap. A single vent pipe is connected between the trap of the fixture and the connection to the drainage system. An individual vent is always placed between the trap it is protecting and the drainage system. With a properly installed individual vent, only the drainage of the fixture served is flowing past the vent. The sizes of individual vents are to be in accordance with Section P3113. See the commentary to Sections P3113.1 and P3113.2. Also, see Commentary Figures P3106.1(1) and P3106.1(2).

SECTION P3107
COMMON VENT

P3107.1 Individual vent as common vent. An individual vent shall be permitted to vent two traps or trapped fixtures as a common vent. The traps or trapped fixtures being common vented shall be located on the same floor level.

❖ Common venting allows an individual vent installed in accordance with Section P3107.1 to serve two fixtures. Sections P3107.2 and P3107.3 contain the provisions that pertain to the connection of fixture drains at the same level or at different levels, respectively. In either case, the fixtures vented by the common vent must be located on the same floor level.

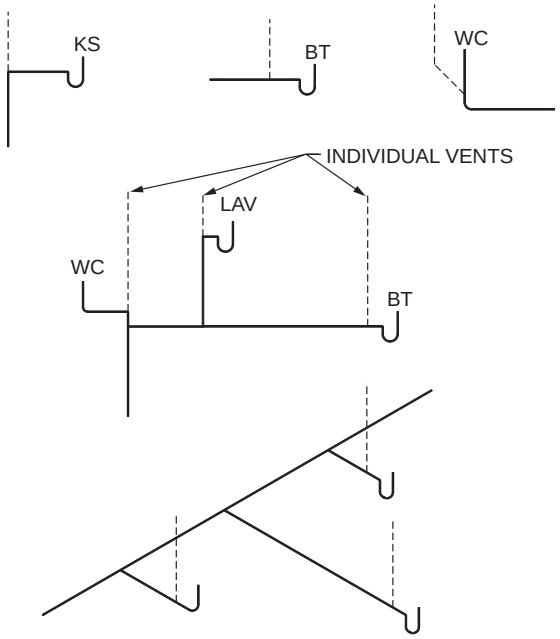

Figure P3106.1(1)
INDIVIDUAL VENTS

P3107.2 Connection at the same level. Where the *fixture drains* being common vented connect at the same level, the vent connection shall be at the interconnection of the *fixture drains* or downstream of the interconnection.

❖ One form of common venting connects two fixtures at the same level. A typical installation consists of two horizontal drains connecting to a vertical drain through a double-pattern fitting. The extension of the vertical drain serves as the vent. Two drains connecting horizontally to a common horizontal drain through a double-pattern fitting is also a form of common venting and the vent is allowed to connect at the interconnection of the fixture drains or downstream along the horizontal drain. The distance from the trap to the vent for each fixture drain must be in accordance with Table P3105.1 (see Commentary Figure P3107.2).

The fittings used in such installations must be as outlined in Section P3005.

P3107.3 Connection at different levels. Where the *fixture drains* connect at different levels, the vent shall connect as a vertical extension of the vertical drain. The vertical drain pipe connecting the two *fixture drains* shall be considered the vent for the lower *fixture drain*, and shall be sized in accordance with Table P3107.3. The upper fixture shall not be a water closet.

❖ Two fixtures within a single story can connect at different levels to a vertical drain and be considered common vented, but the vent remains an individual vent serving as a common vent. The drain pipe between the upper and lower fixtures must meet the sizing requirements of Table 3107.3 (see commentary, Table P3107.3). The upper fixture cannot be a water closet because the pressures created by the rapid discharge of a water closet could adversely affect the venting of the lower fixture.

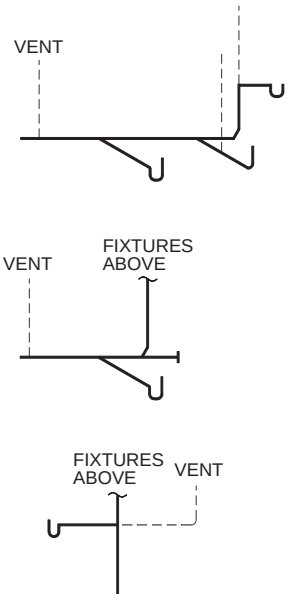

Figure P3106.1(2)
IMPROPERLY INSTALLED INDIVIDUAL VENTS

INTERNATIONAL CODE COUNCIL®
Copyright © 2015 ICC. ALL RIGHTS RESERVED. Accessed by David Dammon on Jun 21, 2017 12:30:52 PM pursuant to License Agreement with ICC. No further reproduction or distribution authorized. ANY UNAUTHORIZED REPRODUCTION OR DISTRIBUTION IS A VIOLATION OF THE FEDERAL COPYRIGHT ACT AND THE LICENSE AGREEMENT, AND SUBJECT TO CIVIL AND CRIMINAL PENALTIES THEREUNDER.

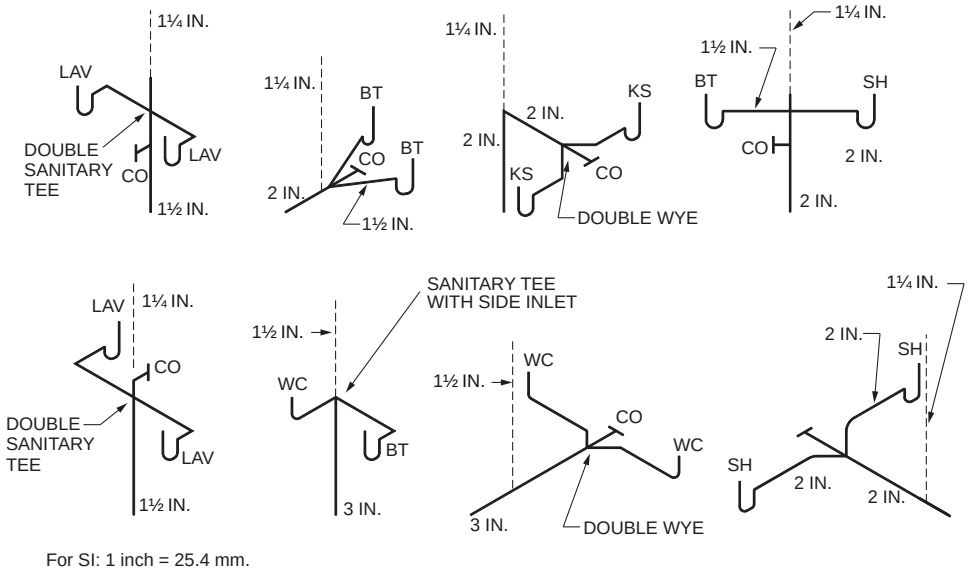

For SI: 1 inch = 25.4 mm.

For SI: 1 inch = 25.4 mm.

Figure P3107.2
COMMON VENTS WITH FIXTURE DRAINS CONNECTING AT SAME LEVEL

TABLE P3107.3
COMMON VENT SIZES

PIPE SIZE (inches)	MAXIMUM DISCHARGE FROM UPPER FIXTURE DRAIN (d.f.u.)
$1^1/_2$	1
2	4
$2^1/_2$ to 3	6

For SI: 1 inch = 25.4 mm.

❖ This table lists the maximum allowable drainage fixture units (d.f.u.) that can be served by the common vent, which is that portion of piping between the upper fixture drain and lower fixture drain connection. Note the resemblance to Table P3108.3. In principle, this section is describing a form of vertical wet venting. The common vent is sized based on the d.f.u. of the upper fixture drain. The drain pipe downstream of the lower fixture drain must be sized in accordance with Section P3005.4, based on the combined d.f.u. of both the upper and lower fixture drains connecting to the common vent (see commentary, Section P3005.4 and Commentary Figure P3107.3).

SECTION P3108
WET VENTING

P3108.1 Horizontal wet vent permitted. Any combination of fixtures within two *bathroom groups* located on the same floor level shall be permitted to be vented by a horizontal wet vent. The wet vent shall be considered the vent for the fixtures and shall extend from the connection of the dry vent along the direction of the flow in the drain pipe to the most downstream *fixture drain* connection. Each *fixture drain* shall connect horizontally to the horizontal branch being wet vented or shall have a dry vent. Each wet-vented *fixture drain* shall connect independently to the horizontal wet vent. Only the fixtures within the *bathroom groups* shall connect to the wet-vented horizontal branch drain. Any additional fixtures shall discharge downstream of the horizontal wet vent.

❖ A wet vent is a vent pipe that conveys drainage. It can also be said that a wet vent is a drain that acts as a vent. Wet venting is a method of venting any combination of fixtures within a single or double bathroom group (see the commentary to the definition of "Bathroom group"). Wet venting uses oversized piping to allow for the flow of air above the waste flow. Reliance is placed on two factors for establishing that there will always be adequate volume within the wet vent pipe to permit required airflow (the low probability of simultaneous fixture discharge and the low-flow velocity that results from requiring the fixtures to be on the same floor level). A single properly sized vent will provide airflow when fixtures are being discharged to relieve pressures that develop in the drain piping.

The wet vent is that portion of the drainage system receiving discharge from a fixture and serving as a vent for other fixtures. Only the fixture types and quantities addressed in this section are allowed to connect to or be served by a wet vent. For example, three water closets cannot be vented by the same wet vent system because the set of fixtures from two bathroom groups includes only two water closets. Because of distances or rough-in heights, more than one fixture might be vented by an individual dry vent. However, this does not prohibit such fixtures from discharging into the wet vent. Fixtures that are part of the two bathroom groups are allowed to discharge to the wet vent, even if such

INTERNATIONAL CODE COUNCIL®
Copyright © 2015 ICC. ALL RIGHTS RESERVED. Accessed by David Dammon on Jun 21, 2017 12:30:52 PM pursuant to License Agreement with ICC. No further reproduction or distribution authorized. ANY UNAUTHORIZED REPRODUCTION OR DISTRIBUTION IS A VIOLATION OF THE FEDERAL COPYRIGHT ACT AND THE LICENSE AGREEMENT, AND SUBJECT TO CIVIL AND CRIMINAL PENALTIES THEREUNDER.

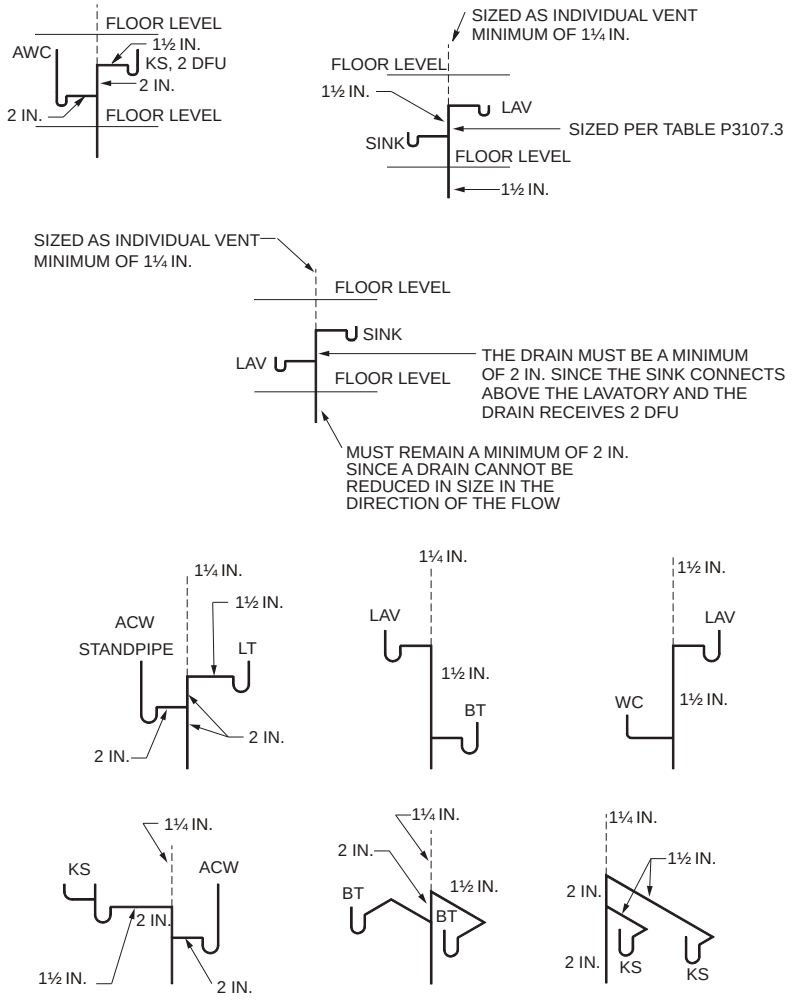

For SI: 1 inch = 25.4 mm.

Figure P3107.3
COMMON VENTS WITH FIXTURE DRAINS CONNECTING AT DIFFERENT LEVELS

fixtures are not being wet vented. Additional fixtures must connect downstream of the wet-vented section. Each fixture drain that is being wet vented must connect to the wet vent in a horizontal plane consistent with the intent of Section P3105.2. Also, each fixture drain must individually connect to the wet vent whether it is wet vented or not [see Commentary Figures P3108.1(1) and P3108.1(2)].

P3108.2 Dry vent connection. The required dry-vent connection for wet-vented systems shall comply with Sections P3108.2.1 and P3108.2.2.

❖ Sections P3108.2.1 and P3108.2.2 cover the dry-vent connections to horizontal wet-vent systems and vertical wet-vent systems, respectively.

P3108.2.1 Horizontal wet vent. The dry-vent connection for a horizontal wet-vent system shall be an individual vent or a common vent for any *bathroom group* fixture, except an emergency floor drain. Where the dry vent connects to a water closet *fixture drain*, the drain shall connect horizontally to the horizontal wet vent system. Not more than one wet-vented *fixture drain* shall discharge upstream of the dry-vented *fixture drain* connection.

❖ Section P3108.2.1 regulates the dry-vent connection to the horizontal wet vent. The dry vent for a horizontal wet vent must connect to a vent stack, stack vent, air admittance valve or terminate outdoors.

The required vent could be a dry vent directly connected to the main section of the horizontal wet-vent pipe downstream of the most upstream fixture [see Commentary Figure P3108.2.1(1) and (2)]. In this arrangement, the dry vent is classified as an individual vent for the most upstream fixture.

The last sentence of Section P3108.2.1 attempts to reinforce the definition of a horizontal wet vent so that improper fixture connections are avoided. A horizontal wet vent begins at the dry-vent connection and extends downstream to the last fixture being wet vented. The

INTERNATIONAL CODE COUNCIL®
Copyright © 2015 ICC. ALL RIGHTS RESERVED. Accessed by David Dammon on Jun 21, 2017 12:30:52 PM pursuant to License Agreement with ICC. No further reproduction or distribution authorized. ANY UNAUTHORIZED REPRODUCTION OR DISTRIBUTION IS A VIOLATION OF THE FEDERAL COPYRIGHT ACT AND THE LICENSE AGREEMENT, AND SUBJECT TO CIVIL AND CRIMINAL PENALTIES THEREUNDER.

horizontal wet vent does not extend upstream of the connection that leads to the dry-vent connection. Thus, multiple interconnected fixture drains that connect upstream of the dry-vented fixture connection or the dry-vent connection are not vented by the horizontal wet vent. Commentary Figures P3108.2.1(2), (3) and (4) are examples of prohibited arrangements.

An emergency floor drain is not allowed to be the upstream dry-vented fixture because there is a concern that debris could build up in the horizontal drain downstream of the vent connection. Emergency floor drains rarely, if ever, receive any flow that would keep debris clear of the vent connection.

P3108.2.2 Vertical wet vent. The dry-vent connection for a vertical wet-vent system shall be an individual vent or common vent for the most upstream *fixture drain*.

❖ Section P3108.2.2 regulates how the dry-vent connection is made to the vertical wet vent and Table 3108.3 regulates the size of the dry vent. The dry vent is an extension of the vertical wet vent and is connected to a vent stack, stack vent, air admittance valve or point of termination outside the building. The dry-vent size must be at least one-half the largest required pipe size served by the wet vent. For example, if the largest pipe served by the vertical wet vent is 3 inches (76 mm), the dry vent is required to be a minimum of $1^1/_2$ inches (38

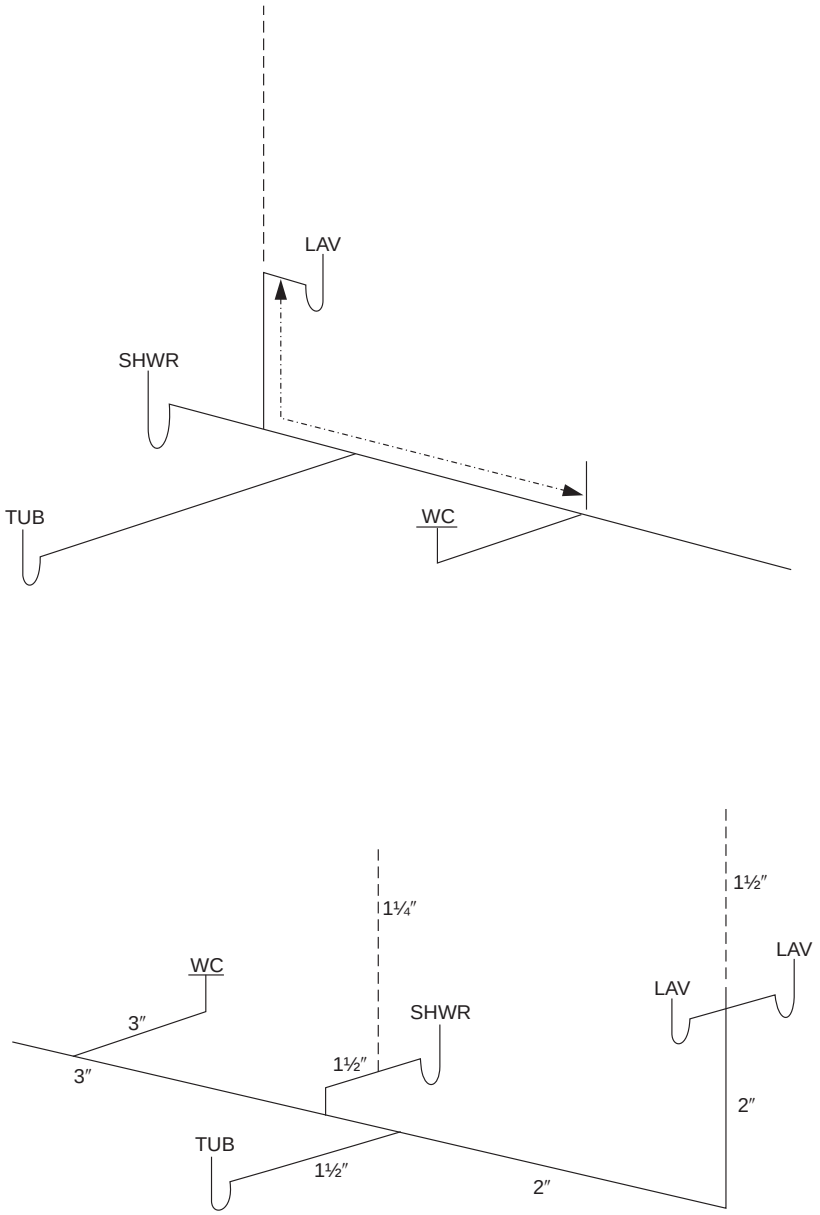

For SI: 1 inch = 25.4 mm.

Figure 3108.1(1)
ACCEPTABLE FIXTURE CONNECTIONS TO WET VENTS

INTERNATIONAL CODE COUNCIL®
Copyright © 2015 ICC. ALL RIGHTS RESERVED. Accessed by David Dammon on Jun 21, 2017 12:30:52 PM pursuant to License Agreement with ICC. No further reproduction or distribution authorized. ANY UNAUTHORIZED REPRODUCTION OR DISTRIBUTION IS A VIOLATION OF THE FEDERAL COPYRIGHT ACT AND THE LICENSE AGREEMENT, AND SUBJECT TO CIVIL AND CRIMINAL PENALTIES THEREUNDER.

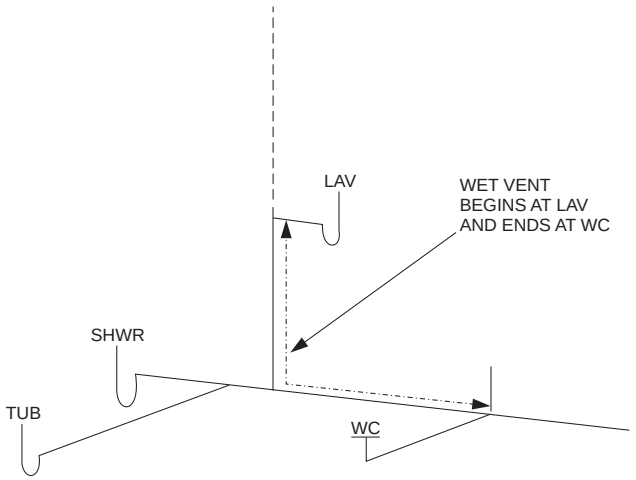

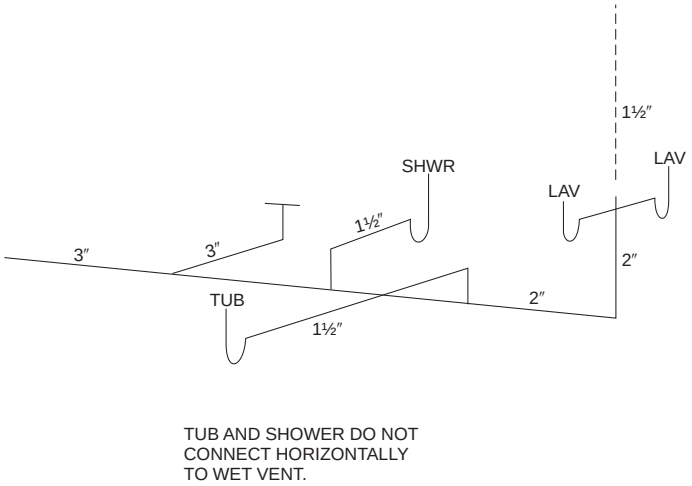

For SI: 1 inch = 25.4 mm.

Figure P3108.1(2)
PROHIBITED FIXTURE CONNECTIONS TO WET VENTS

mm). If the run of the dry vent from the start of the dry-vent fixture connection to the termination of the vent (to a vent stack, stack vent, AAV or termination outdoors) exceeds 40 feet (12 192 mm) developed length, Section P3113.3 requires the dry-vent size to be increased by one nominal pipe size for its entire length.

P3108.3 Size. Horizontal and vertical wet vents shall be not less than the size as specified in Table P3108.3, based on the fixture unit discharge to the wet vent. The dry vent serving the wet vent shall be sized based on the largest required diameter of pipe within the wet-vent system served by the dry vent.

❖ This section refers the reader to Table P3108.3 for sizing the wet-vented section of piping. The table applies to both vertical and horizontal wet venting.

TABLE P3108.3
WET VENT SIZE

WET VENT PIPE SIZE (inches)	FIXTURE UNIT LOAD (d.f.u.)
$1^1/_2$	1
2	4
$2^1/_2$	6
3	12
4	32

For SI: 1 inch = 25.4 mm.

❖ This table provides minimum sizes of wet-vent piping, ranging from $1^1/_2$ inches (38 mm) through 4 inches (102 mm) in diameter.

INTERNATIONAL CODE COUNCIL®
Copyright © 2015 ICC. ALL RIGHTS RESERVED. Accessed by David Dammon on Jun 21, 2017 12:30:52 PM pursuant to License Agreement with ICC. No further reproduction or distribution authorized. ANY UNAUTHORIZED REPRODUCTION OR DISTRIBUTION IS A VIOLATION OF THE FEDERAL COPYRIGHT ACT AND THE LICENSE AGREEMENT, AND SUBJECT TO CIVIL AND CRIMINAL PENALTIES THEREUNDER.

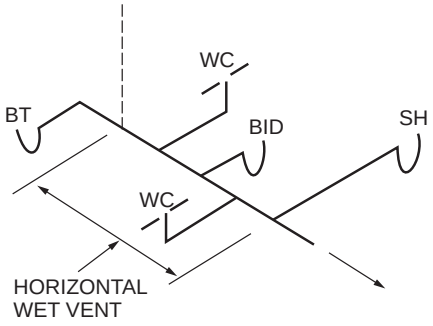

Figure P3108.2.1(1)
HORIZONTAL WET VENT WITH INDIVIDUAL VENT

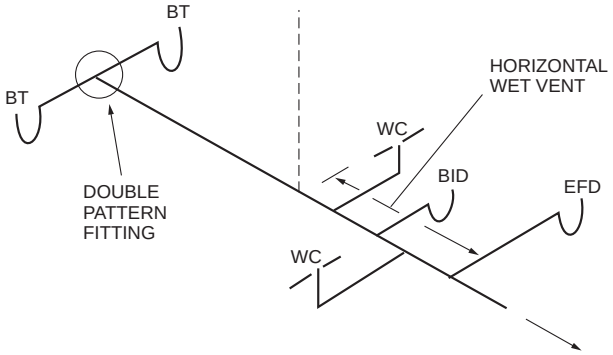

Figure P3108.2.1(2)
DRY VENT FOR COMMON VENTED BATHTUBS SERVES AS DRY VENT FOR HORIZONTAL WET VENT

P3108.4 Vertical wet vent permitted. A combination of fixtures located on the same floor level shall be permitted to be vented by a vertical wet vent. The vertical wet vent shall be considered the vent for the fixtures and shall extend from the connection of the dry vent down to the lowest *fixture drain* connection. Each wet-vented fixture shall connect independently to the vertical wet vent. All water closet drains shall connect at the same elevation. Other *fixture drains* shall connect above or at the same elevation as the water closet *fixture drains*. The dry vent connection to the vertical wet vent shall be an individual or common vent serving one or two fixtures.

❖ This section contains the requirements for vertical wet venting, which is the same basic idea as that of horizontal wet venting, as provided for in Section P3108.1. In a vertical wet-vent configuration, the connection of a water closet must be the lowest connection to the vertical wet-vented section. In addition, where two water closets are part of the wet-vented system and connect to the vertical drain independently, they must connect at the same level. All other connections to the vertical drain must be above or at the same height as the water closet connection. Table P3108.3 shows vertical wet-vent sizing.

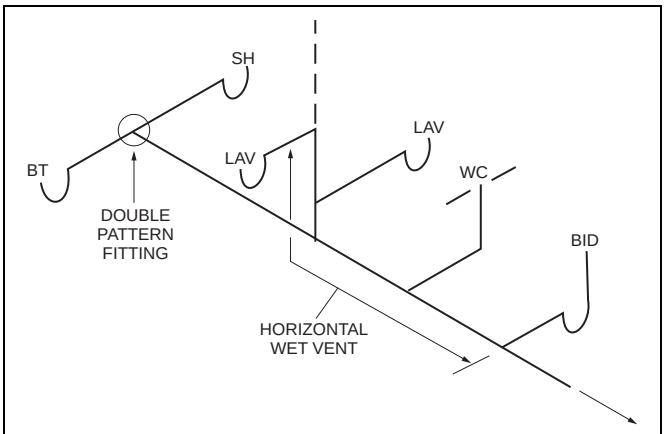

Figure P3108.2.1(3)
PROHIBITED CONNECTION OF TWO FIXTURES UPSTREAM OF DRY-VENTED FIXTURE CONNECTION

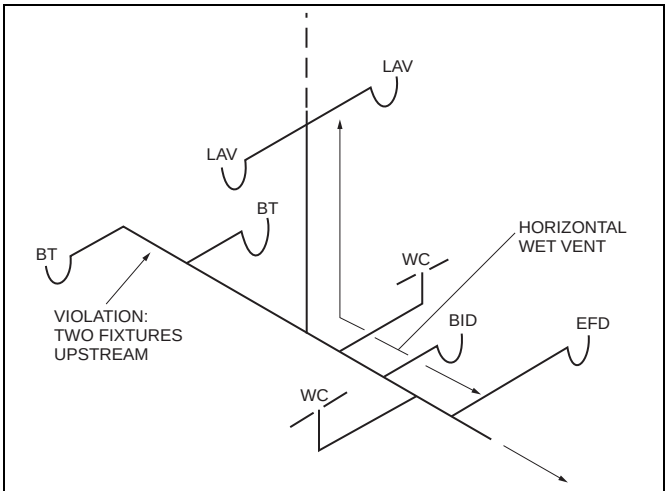

Figure P3108.2.1(4)
PROHIBITED CONNECTION OF TWO FIXTURES UPSTREAM OF DRY-VENTED FIXTURE CONNECTION

P3108.5 Trap weir to wet vent distances. The maximum *developed length* of wet-vented *fixture drains* shall comply with Table P3105.1.

❖ Fixture drains that are wet vented end at the point of connection to the wet vent (vertical and horizontal). Thus, the distance between the fixture trap and wet vent is limited in the same manner that all other fixture drains are limited (see Sections P3105.1 and P3105.2).

SECTION P3109
WASTE STACK VENT

P3109.1 Waste stack vent permitted. A waste stack shall be considered a vent for all of the fixtures discharging to the stack where installed in accordance with the requirements of this section.

❖ The term “waste stack” is used because water closets are prohibited in this system and thus, the stack is truly

INTERNATIONAL CODE COUNCIL®
Copyright © 2015 ICC. ALL RIGHTS RESERVED. Accessed by David Dammon on Jun 21, 2017 12:30:52 PM pursuant to License Agreement with ICC. No further reproduction or distribution authorized. ANY UNAUTHORIZED REPRODUCTION OR DISTRIBUTION IS A VIOLATION OF THE FEDERAL COPYRIGHT ACT AND THE LICENSE AGREEMENT, AND SUBJECT TO CIVIL AND CRIMINAL PENALTIES THEREUNDER.

a waste-only stack (see the definition of "Waste"). The principles of waste stack venting are based on some of the original research that was performed in plumbing. The system has been identified by a variety of names, including vertical wet venting, single-stack venting and multifloor stack venting. Common venting and vertical wet-venting installations are allowed only when the various fixtures connecting into the stack are all located on the same floor. Waste stack venting, not to be confused with common venting and vertical wet venting, is allowed to serve fixtures on multiple floors.

P3109.2 Stack installation. The waste stack shall be vertical, and both horizontal and vertical offsets shall be prohibited between the lowest *fixture drain* connection and the highest *fixture drain* connection to the stack. Every *fixture drain* shall connect separately to the waste stack. The stack shall not receive the discharge of water closets or urinals.

❖ Because the stack is also functioning as a vent, the annular flow of waste down the interior pipe wall must be maintained to avoid the pressure fluctuations that are created when the cross-sectional area of the stack is filled with waste at any point. Offsets disrupt the annular flow and water closets create a surge flow, both of which can create full cross sectional flow in the stack which, in turn, creates positive and negative pressures in the stack that can have adverse effects on traps (see Commentary Figure P3109.2). All fixture drains connecting to the stack must be connected separately; therefore, only fixture drains (as opposed to fixture branches) connect to the stack.

P3109.3 Stack vent. A stack vent shall be installed for the waste stack. The size of the stack vent shall be not less than the size of the waste stack. Offsets shall be permitted in the stack vent and shall be located not less than 6 inches (152 mm) above the flood level of the highest fixture, and shall be in accordance with Section P3104.5. The stack vent shall be permitted to connect with other stack vents and vent stacks in accordance with Section P3113.3.

❖ The waste stack vent serves as both a drain and a vent; therefore, the stack must be vented to the outdoors to neutralize pressures in the stack. To limit flow resistance in the stack vent, it must be no smaller than the waste stack that it serves. The stack vent must be the same diameter as or larger than the stack.

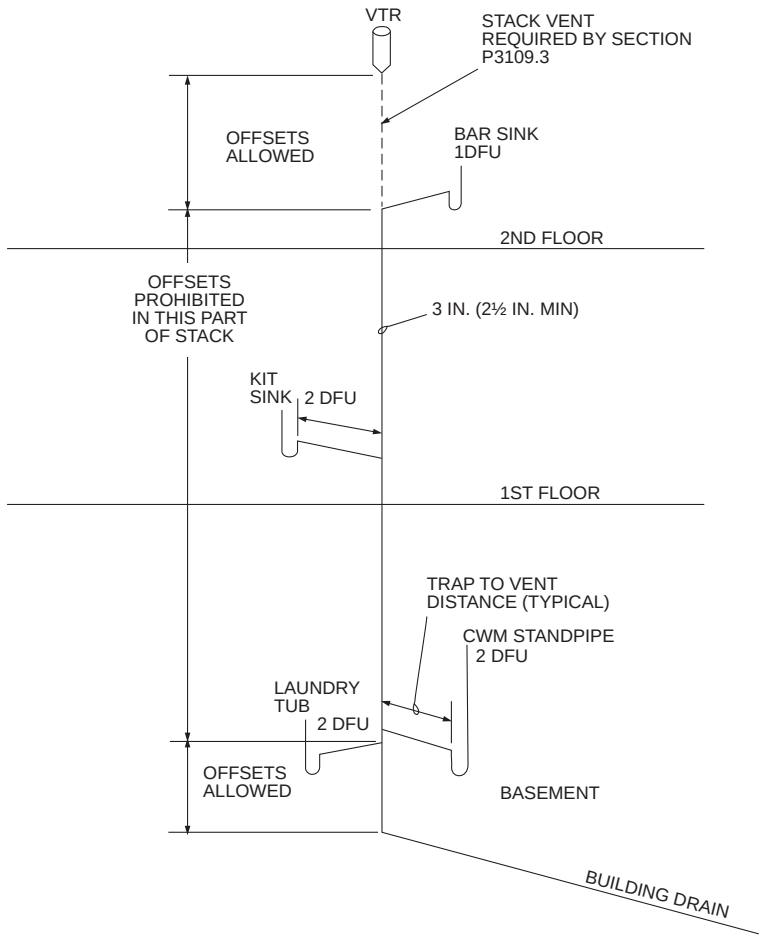

For SI: 1 inch = 25.4 mm.

Figure P3109.2
WASTE STACK VENT SYSTEM

INTERNATIONAL CODE COUNCIL®
Copyright © 2015 ICC. ALL RIGHTS RESERVED. Accessed by David Dammon on Jun 21, 2017 12:30:52 PM pursuant to License Agreement with ICC. No further reproduction or distribution authorized. ANY UNAUTHORIZED REPRODUCTION OR DISTRIBUTION IS A VIOLATION OF THE FEDERAL COPYRIGHT ACT AND THE LICENSE AGREEMENT, AND SUBJECT TO CIVIL AND CRIMINAL PENALTIES THEREUNDER.

P3109.4 Waste stack size. The waste stack shall be sized based on the total discharge to the stack and the discharge within a *branch interval* in accordance with Table P3109.4. The waste stack shall be the same size throughout the length of the waste stack.

❖ In Commentary Figure P3109.2, the total d.f.u. of all the fixtures could be handled by a 2-inch (51 mm) diameter vertical drain (see Tables P3004.1 and P3005.4.1); however, the total d.f.u. load is 7, which exceeds the loading allowed by Table P3109.4. Thus, Table P3109.4 will require a $2^1/_2$-inch (64 mm) minimum diameter stack.

TABLE P3109.4
WASTE STACK VENT SIZE

STACK SIZE (inches)	MAXIMUM NUMBER OF FIXTURE UNITS (d.f.u.)	
	Total discharge into one branch interval	Total discharge for stack
$1^1/_2$	1	2
2	2	4
$2^1/_2$	No limit	8
3	No limit	24
4	No limit	50

For SI: 1 inch = 25.4 mm.

❖ This table states the minimum size requirements for waste stack vents based on the d.f.u. totals for all fixture drains served (see commentary, Section P3109.4). Note that the table refers to branch intervals, which are measured between connections of horizontal branches. Recall that Section P3109.2 requires that only fixture drains connect to the stack (see the definition of "Branch interval").

SECTION P3110
CIRCUIT VENTING

P3110.1 Circuit vent permitted. Not greater than eight fixtures connected to a horizontal branch drain shall be permitted to be circuit vented. Each *fixture drain* shall connect horizontally to the horizontal branch being circuit vented. The horizontal branch drain shall be classified as a vent from the most downstream *fixture drain* connection to the most upstream *fixture drain* connection to the horizontal branch.

❖ Circuit venting is based on many of the same principles as wet venting. However, it will allow for the connection of other types or totals of similar fixtures that may be outside of the definition of a bathroom group. The maximum number of fixtures allowed to be circuit vented on one branch is eight. In addition, unlike wet venting, each fixture drain being circuit vented must connect horizontally to the horizontal circuit-vented branch drain.

P3110.2 Vent connection. The circuit vent connection shall be located between the two most upstream *fixture drains*. The vent shall connect to the horizontal branch and shall be installed in accordance with Section P3104. The circuit vent pipe shall not receive the discharge of any soil or waste.

❖ The circuit vent itself must connect to the horizontal branch between the two uppermost fixture drains so that the point of connection is washed by the upstream fixture and is not a dead end. It must conform to Section P3104 and must be a dry vent.

P3110.3 Slope and size of horizontal branch. The slope of the vent section of the horizontal branch drain shall be not greater than one unit vertical in 12 units horizontal (8-percent slope). The entire length of the vent section of the horizontal branch drain shall be sized for the total drainage discharge to the branch in accordance with Table P3005.4.1.

❖ To maintain a relatively flat flow channel depth, the maximum slope for a circuit-vented horizontal branch drain is 1 inch per foot (83 mm/m) (8-percent slope). Unlike wet venting, circuit venting does not depend on a unique sizing table; rather, the circuit-vented horizontal drain branch is to be sized in accordance with Table P3005.4.1. The horizontal branch must be the same size throughout its length.

P3110.4 Additional fixtures. Fixtures, other than the circuit vented fixtures shall be permitted to discharge, to the horizontal branch drain. Such fixtures shall be located on the same floor as the circuit vented fixtures and shall be either individually or common vented.

❖ Although a maximum of eight fixture drains is allowed to connect horizontally to the circuit vent, other fixtures may connect also if they are individually or common vented and are located on the same floor level as the circuit-vented fixtures. Circuit-vented branches are allowed at any elevation, above or below a floor.

SECTION P3111
COMBINATION WASTE AND VENT SYSTEM

P3111.1 Type of fixtures. A combination waste and vent system shall not serve fixtures other than floor drains, sinks and lavatories. A combination waste and vent system shall not receive the discharge of a food waste disposer.

❖ A combination waste and vent system is another type of venting system that allows a drain to serve as a vent. Floor drains, sinks and lavatories discharge clear- or gray-water waste. Because of the low-flow velocities and volumes that occur in these systems, any solids introduced would accumulate, causing blockages and reduction of the internal cross-sectional area of the piping. Therefore, sinks equipped with food waste disposers and fixtures that discharge solid wastes are not allowed to be served by a combination drain and vent. Ground food waste can collect in the drain, causing blockages. Combination drain and vent systems are oversized drains; therefore, the flow velocity will be low, which reduces drain line carry and scouring action.

INTERNATIONAL CODE COUNCIL®
Copyright © 2015 ICC. ALL RIGHTS RESERVED. Accessed by David Dammon on Jun 21, 2017 12:30:52 PM pursuant to License Agreement with ICC. No further reproduction or distribution authorized. ANY UNAUTHORIZED REPRODUCTION OR DISTRIBUTION IS A VIOLATION OF THE FEDERAL COPYRIGHT ACT AND THE LICENSE AGREEMENT, AND SUBJECT TO CIVIL AND CRIMINAL PENALTIES THEREUNDER.

P3111.2 Installation. The only vertical pipe of a combination waste and vent system shall be the connection between the fixture drain and the horizontal combination waste and vent pipe. The vertical distance shall be not greater than 8 feet (2438 mm).

❖ A combination waste and vent system is a horizontal piping system and the only vertical pipe allowed in the system is the pipe (drop) between the fixture trap and the horizontal waste and vent pipe. This vertical component (drop) is necessary for fixtures that rough-in above the floor and traps that must be installed above the horizontal system. Commentary Figures P3111.2(1) and P3111.2(2) show combination waste and vent systems.

P3111.2.1 Slope. The horizontal combination waste and vent pipe shall have a slope of not greater than $^1/_2$ unit vertical in 12 units horizontal (4-percent slope). The minimum slope shall be in accordance with Section P3005.3.

❖ To control flow velocity and maintain a nearly flat flow channel depth, this section specifies the maximum slope to be $^1/_2$ inch per foot (42 mm/m) or a 4-percent slope.

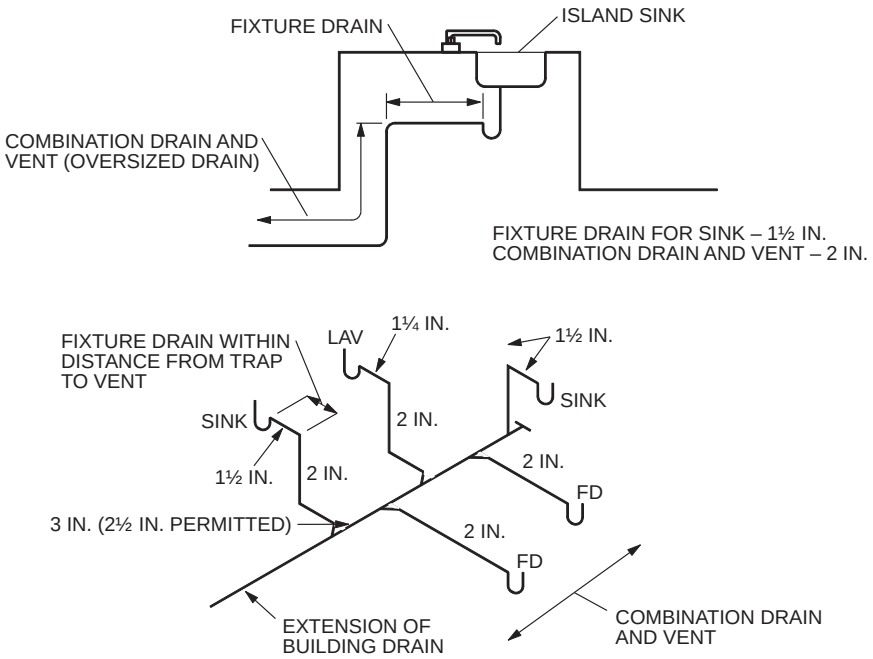

For SI: 1 inch = 25.4 mm.

Figure P3111.2(1)
COMBINATION DRAIN AND VENT

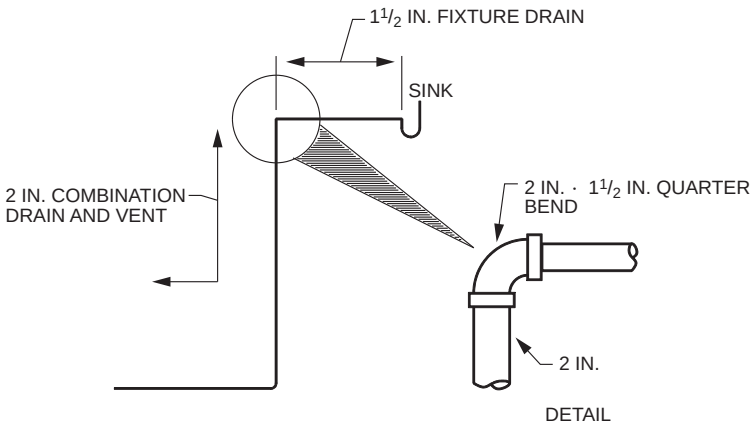

For SI: 1 inch = 25.4 mm.

Figure P3111.2(2)
COMBINATION DRAIN AND VENT

INTERNATIONAL CODE COUNCIL®
Copyright © 2015 ICC. ALL RIGHTS RESERVED. Accessed by David Dammon on Jun 21, 2017 12:30:52 PM pursuant to License Agreement with ICC. No further reproduction or distribution authorized. ANY UNAUTHORIZED REPRODUCTION OR DISTRIBUTION IS A VIOLATION OF THE FEDERAL COPYRIGHT ACT AND THE LICENSE AGREEMENT, AND SUBJECT TO CIVIL AND CRIMINAL PENALTIES THEREUNDER.

P3111.2.2 Connection. The combination waste and vent system shall be provided with a dry vent connected at any point within the system or the system shall connect to a horizontal drain that serves vented fixtures located on the same floor. Combination waste and vent systems connecting to *building drains* receiving only the discharge from one or more stacks shall be provided with a dry vent. The vent connection to the combination waste and vent pipe shall extend vertically to a point not less than 6 inches (152 mm) above the flood level rim of the highest fixture being vented before offsetting horizontally.

❖ Where a combination waste and vented horizontal branch extends laterally from a vented horizontal drain, an additional dry vent is not required; otherwise, the combination waste and vent system will require a dry vent, as outlined in this section and in Section P3111.2.3. A vented horizontal drain could be a horizontal wet-vent branch, a circuit-vented branch or a combination waste and vent system (see Commentary Figure P3111.2.2).

P3111.2.3 Vent size. The vent shall be sized for the total fixture unit load in accordance with Section P3113.1.

❖ See the commentary to Section P3113.1.

P3111.2.4 Fixture branch or drain. The fixture branch or *fixture drain* shall connect to the combination waste and vent within a distance specified in Table P3105.1. The combination waste and vent pipe shall be considered the vent for the fixture.

❖ The combination waste and vent system is oversized and vented so that the entire system allows sufficient air movement to maintain the trap seals for the fixtures being connected. Because the combination waste and vent system is the vent for the fixture, the fixture drains or branches connecting to the system need not be oversized; therefore, the size and length limitations of Table P3105.1 apply. If the fixture drains are sized in accordance with Table P3111.3, they are, themselves, combination waste and vent pipes; thus, the distance limits between the trap and its vent are not relevant.

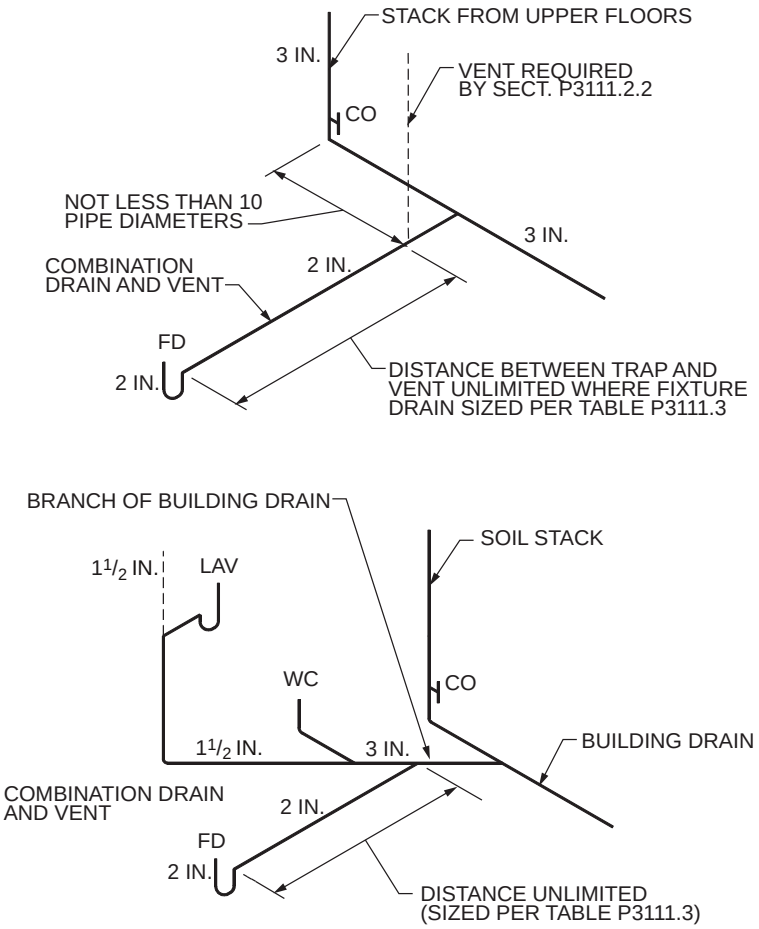

For SI: 1 inch = 25.4 mm.

Figure P3111.2.2
COMBINATION DRAIN AND VENT

INTERNATIONAL CODE COUNCIL®
Copyright © 2015 ICC. ALL RIGHTS RESERVED. Accessed by David Dammon on Jun 21, 2017 12:30:52 PM pursuant to License Agreement with ICC. No further reproduction or distribution authorized. ANY UNAUTHORIZED REPRODUCTION OR DISTRIBUTION IS A VIOLATION OF THE FEDERAL COPYRIGHT ACT AND THE LICENSE AGREEMENT, AND SUBJECT TO CIVIL AND CRIMINAL PENALTIES THEREUNDER.

P3111.3 Size. The size of a combination drain and vent pipe shall be not less than that specified in Table 3111.3. The horizontal length of a combination drain and vent system shall be unlimited.

❖ There is not a limit as to the horizontal length of a combination waste and vent system because, as long as the pipe is sized according to the Table P3111.3, there will always be sufficient airspace above the flow line to vent the fixtures connected (see commentary, Table P3111.3).

TABLE P3111.3
SIZE OF COMBINATION WASTE AND VENT PIPE

DIAMETER PIPE (inches)	MAXIMUM NUMBER OF FIXTURE UNITS (d.f.u.)	
	Connecting to a horizontal branch or stack	Connecting to a building drain or building subdrain
2	3	4
$2^1/_2$	6	26
3	12	31
4	20	50

For SI: 1 inch = 25.4 mm.

❖ This table outlines the maximum d.f.u. loading for various sizes of pipe. The loading depends on whether the combination waste and vent branch extends from a building drain or sub-drain, or from a horizontal branch or stack (see the definitions of "Building drain" and "Horizontal branch, drainage"). The differences between the second and third columns of this table parallel the differences between Tables P3005.4.1 and P3005.4.2.

SECTION P3112
ISLAND FIXTURE VENTING

P3112.1 Limitation. Island fixture venting shall not be permitted for fixtures other than sinks and lavatories. Kitchen sinks with a dishwasher waste connection, a food waste disposer, or both, in combination with the kitchen sink waste, shall be permitted to be vented in accordance with this section.

❖ Because of the many diverse designs in construction, a fixture might be located without the nearby walls or partitions necessary for conventional venting methods to be used. Other options for island fixtures are as permitted by Sections P3111 and P3114.

P3112.2 Vent connection. The island fixture vent shall connect to the *fixture drain* as required for an individual or common vent. The vent shall rise vertically to above the drainage outlet of the fixture being vented before offsetting horizontally or vertically downward. The vent or branch vent for multiple island fixture vents shall extend not less than 6 inches (152 mm) above the highest island fixture being vented before connecting to the outside vent terminal.

❖ The vent rises to above the outlet of the fixture before turning downward so that in the event of a drain stoppage, waste will rise and stand in the bottom of the future before discharging into the vent piping (see Commentary Figure P3112.2).

P3112.3 Vent installation below the fixture flood level rim. The vent located below the flood level rim of the fixture being vented shall be installed as required for drainage piping in accordance with Chapter 30, except for sizing. The vent shall be sized in accordance with Section P3113.1. The lowest point of the island fixture vent shall connect full size to the drainage system. The connection shall be to a vertical drain pipe or to the top half of a horizontal drain pipe. Cleanouts shall be provided in the island fixture vent to permit rodding of all vent piping located below the flood level rim of the fixtures. Rodding in both directions shall be permitted through a cleanout.

❖ This section contains further provisions for the vent discussed in Section P3112.2. Any portion of the vent that is below the flood level rim of the island sink must be installed with drainage fittings and slope in accordance with Chapter 30 because waste-flow invasion into the vent is possible when the drain piping is blocked.

This will prevent the low (trapped) portion of the vent from becoming filled with waste. Because the vent is installed horizontally below the fixture flood-level rim, it could be subject to waste flow; therefore, a cleanout must be provided (see Commentary Figure P3112.2).

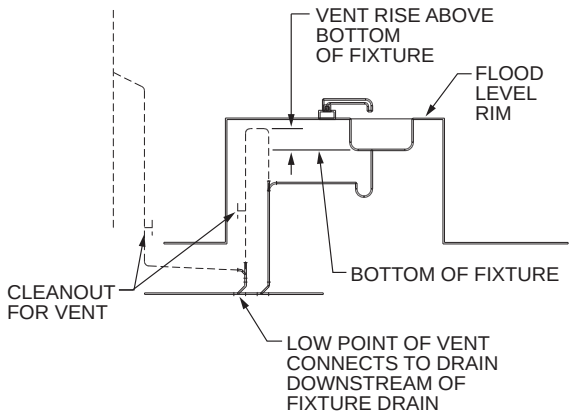

Figure P3112.2
ISLAND FIXTURE VENT

SECTION P3113
VENT PIPE SIZING

P3113.1 Size of vents. The required diameter of individual vents, branch vents, circuit vents, vent stacks and stack vents shall be not less than one-half the required diameter of the drain served. The required size of the drain shall be determined in accordance with Chapter 30. Vent pipes shall be not less than $1^1/_4$ inches (32 mm) in diameter. Vents exceeding 40 feet (12 192 mm) in *developed length* shall be increased by one nominal pipe size for the entire *developed length* of the vent pipe.

❖ This section provides for the sizing of different types of vents. Sizing is based on the minimum required diameter of the drain served and the total developed length. All vents must be a minimum of one-half the diameter of the drain that they serve. No vent may be less than $1^1/_4$ inches (32 mm) in diameter. This does not exempt

INTERNATIONAL CODE COUNCIL®
Copyright © 2015 ICC. ALL RIGHTS RESERVED. Accessed by David Dammon on Jun 21, 2017 12:30:52 PM pursuant to License Agreement with ICC. No further reproduction or distribution authorized. ANY UNAUTHORIZED REPRODUCTION OR DISTRIBUTION IS A VIOLATION OF THE FEDERAL COPYRIGHT ACT AND THE LICENSE AGREEMENT, AND SUBJECT TO CIVIL AND CRIMINAL PENALTIES THEREUNDER.

vents from the specific provisions for vent sizing outlined in the sections addressing some of the venting concepts, such as those found in Sections P3108.3, P3109.4, P3110.3 and P3111.3.

Research has shown that a vent length over 40 feet (12 192 mm) will have too much friction loss to allow the air movement necessary to maintain control over pressure excursions in the drainage system. Recall that vents are designed to move air under the influence of plus or minus 2 inches of w.c. pressure (498 Pa). If the size of a vent is increased by one pipe size, the allowable developed length will be longer than any vent run likely to be installed in any dwelling (see Section P3113.2).

P3113.2 Developed length. The *developed length* of individual, branch, and circuit vents shall be measured from the farthest point of vent connection to the drainage system, to the point of connection to the vent stack, stack vent or termination outside of the building.

❖ The developed length of a vent must be determined to apply the 40-foot (12 192 mm) developed length limitation of Section P3113.1 (see Commentary Figure P3113.2).

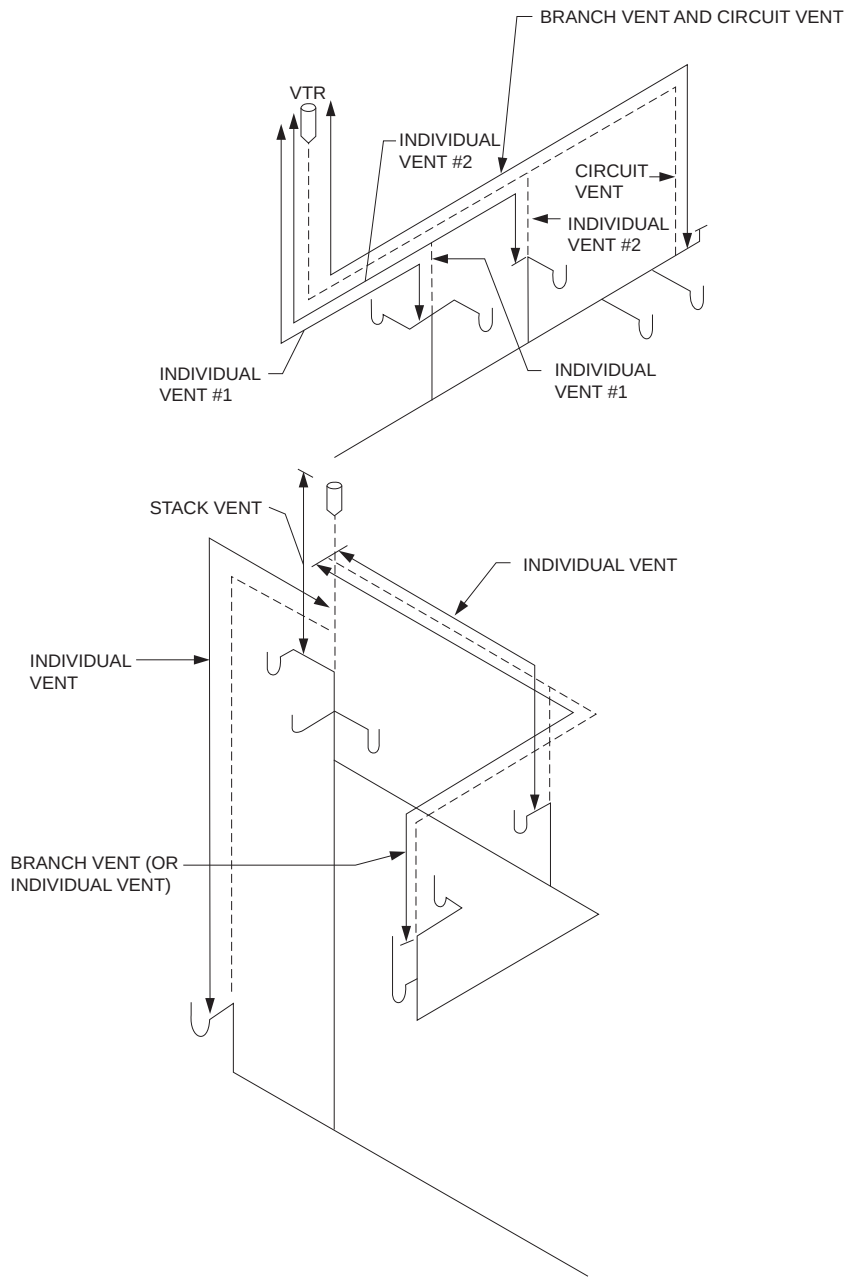

Figure P3113.2
DEVELOPED LENGTH OF VENTS

INTERNATIONAL CODE COUNCIL®
Copyright © 2015 ICC. ALL RIGHTS RESERVED. Accessed by David Dammon on Jun 21, 2017 12:30:52 PM pursuant to License Agreement with ICC. No further reproduction or distribution authorized. ANY UNAUTHORIZED REPRODUCTION OR DISTRIBUTION IS A VIOLATION OF THE FEDERAL COPYRIGHT ACT AND THE LICENSE AGREEMENT, AND SUBJECT TO CIVIL AND CRIMINAL PENALTIES THEREUNDER.

P3113.3 Branch vents. Where branch vents are connected to a common branch vent, the common branch vent shall be sized in accordance with this section, based on the size of the common horizontal drainage branch that is or would be required to serve the total drainage fixture unit (d.f.u.) load being vented.

❖ Multiple branch vents could connect to a common branch vent, thus serving a large number of fixture units. In other words, one can have a number of horizontal branches, each with a vent, all of which connect together to a common branch vent prior to termination. To determine the proper size of the vents, the d.f.u. total for each of the horizontal branches must be added and then the drain size would be determined for this total in accordance with Section P3005.4. The vent must then be sized in accordance with Section P3113 based on the required drain size for a drain that could serve the d.f.u. load.

P3113.4 Sump vents. Sump vent sizes shall be determined in accordance with Sections P3113.4.1 and P3113.4.2.

❖ The following two subsections state venting requirements for sewage pumps and ejectors.

P3113.4.1 Sewage pumps and sewage ejectors other than pneumatic. Drainage piping below sewer level shall be vented in the same manner as that of a gravity system. Building sump vent sizes for sumps with sewage pumps or sewage ejectors, other than pneumatic, shall be determined in accordance with Table P3113.4.1.

❖ Sumps receiving sanitary drainage must be vented to allow air to enter and exit as the liquid level falls and rises, respectively. Where a sewage pump is used, the vent can connect to the building venting system. Table P3113.4.1 specifies the minimum vent pipe size based on the discharge capacity of the pump and the developed length of vent pipe. Building sub-drain systems, including their venting systems, are designed like gravity drainage systems, including their venting systems, except that they cannot drain to the sewer by gravity and, thus, require a sewage pump or ejector. The vents for gravity systems and subdrain ejector systems can be combined if pneumatic ejectors are not used.

P3113.4.2 Pneumatic sewage ejectors. The air pressure relief pipe from a pneumatic sewage ejector shall be connected to an independent vent stack terminating as required for vent extensions through the roof. The relief pipe shall be sized to relieve air pressure inside the ejector to atmospheric pressure, but shall be not less than $1^1/_4$ inches (32 mm) in size.

❖ Pneumatic sewage ejectors operate at high air pressure, forcing the sewage from the ejector receiver to the gravity drainage system. Such ejectors are probably not used in dwelling units. An independent vent is necessary to relieve the pressure in the receiver at the completion of the ejector cycle. If such a vent were connected to the building venting system, it would create tremendous pressure differentials, disrupting the normal operation of the drainage system.

SECTION P3114
AIR ADMITTANCE VALVES

P3114.1 General. Vent systems using *air admittance valves* shall comply with this section. Individual and branch-type air admittance valves shall conform to ASSE 1051. Stack-type air admittance valves shall conform to ASSE 1050.

❖ AAVs can be used in place of other vent termination methods provided for in this chapter (see the definition of "Air admittance valve" in Chapter 2).

There are two standards to which AAVs are manufactured. These are ASSE 1051 for individual and branch-type valves and ASSE 1050 for stack-type valves. The standards require that the AAV be marked with the name of the manufacturer, model number or device description, and device classification.

TABLE P3113.4.1
SIZE AND LENGTH OF SUMP VENTS

DISCHARGE CAPACITY OF PUMP (gpm)	MAXIMUM DEVELOPED LENGTH OF VENT (feet)[a]				
	Diameter of vent (inches)				
	$1^1/_4$	$1^1/_2$	2	$2^1/_2$	3
10	No limit[b]	No limit	No limit	No limit	No limit
20	270	No limit	No limit	No limit	No limit
40	72	160	No limit	No limit	No limit
60	31	75	270	No limit	No limit

For SI: 1 inch = 25.4 mm, 1 foot = 304.8 mm, 1 gallon per minute (gpm) = 3.785 L/m.

a. Developed length plus an appropriate allowance for entrance losses and friction caused by fittings, changes in direction and diameter. Suggested allowances shall be obtained from NBS Monograph 31 or other approved sources. An allowance of 50 percent of the developed length shall be assumed if a more precise value is not available.

b. Actual values greater than 500 feet.

❖ This table specifies the minimum vent pipe size based on the discharge capacity of the pump and the developed length of the vent.

INTERNATIONAL CODE COUNCIL®
Copyright © 2015 ICC. ALL RIGHTS RESERVED. Accessed by David Dammon on Jun 21, 2017 12:30:52 PM pursuant to License Agreement with ICC. No further reproduction or distribution authorized. ANY UNAUTHORIZED REPRODUCTION OR DISTRIBUTION IS A VIOLATION OF THE FEDERAL COPYRIGHT ACT AND THE LICENSE AGREEMENT, AND SUBJECT TO CIVIL AND CRIMINAL PENALTIES THEREUNDER.

P3114.2 Installation. The valves shall be installed in accordance with the requirements of this section and the manufacturer's instructions. *Air admittance valves* shall be installed after the DWV testing required by Section P2503.5.1 or P2503.5.2 has been performed.

❖ Both the code (see Section P3114) and the manufacturer's installation instructions apply. Where there is a conflict between this section and the manufacturer's installations, the provisions of this section apply.

Section P2503.5.1 provides for testing of the DWV system. That test will produce pressure differentials greater than those for which AAVs are designed. Therefore, the AAVs must not be installed until after the testing has been completed.

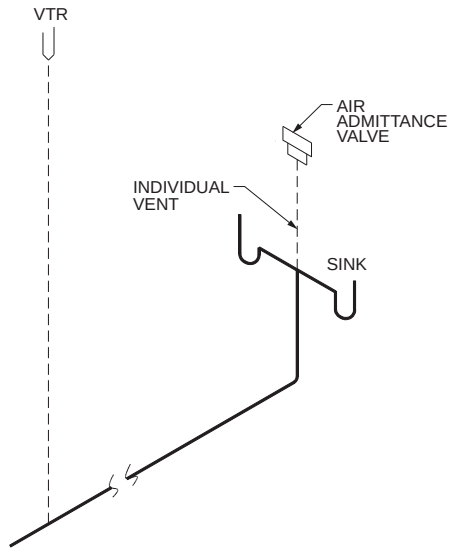

Figure P3114.3(1)
AIR ADMITTANCE VALVES-INDIVIDUAL VENT

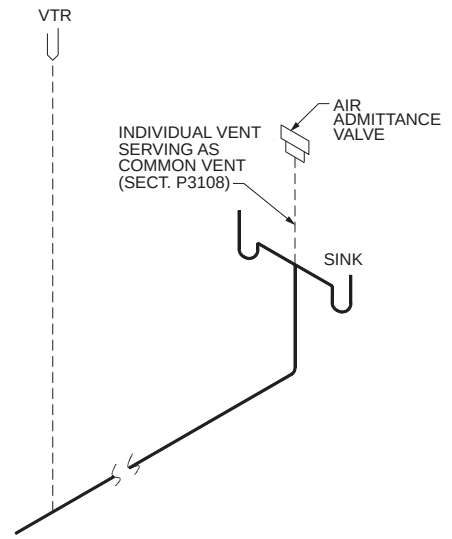

Figure P3114.3(2)
COMMON VENT

P3114.3 Where permitted. Individual vents, branch vents, circuit vents and stack vents shall be permitted to terminate with a connection to an *air admittance valve*. Individual and branch type air admittance valves shall vent only fixtures that are on the same floor level and connect to a horizontal branch drain.

❖ This section establishes the specific locations within the vent system where AAVs can be installed. Individual vents, branch vents and circuit vents can terminate to an AAV conforming to ASSE 1051, and a stack vent or vent stack can terminate to an AAV conforming to ASSE 1050. An ASSE 1051 AAV cannot be used to vent fixtures that are on multiple floors. Sump vents cannot terminate to an AAV because an AAV can only admit air and the sump vent must both admit and emit air. Commentary Figures P3114.3(1) through P3114.3(4) show various AAV applications. Commentary Figure P3114.3(5) shows improper use of an AAV.

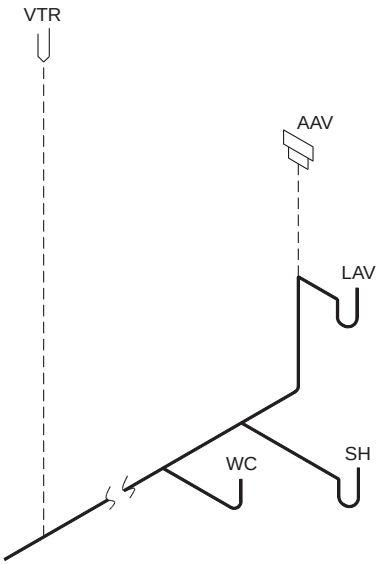

Figure P3114.3(3)
WET VENT

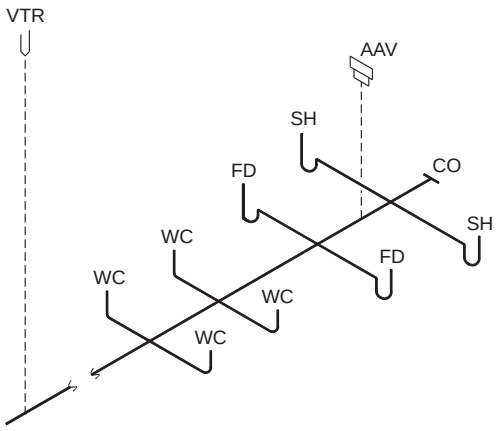

Figure P3114.3(4)
CIRCUIT VENT

INTERNATIONAL CODE COUNCIL®
Copyright © 2015 ICC. ALL RIGHTS RESERVED. Accessed by David Dammon on Jun 21, 2017 12:30:52 PM pursuant to License Agreement with ICC. No further reproduction or distribution authorized. ANY UNAUTHORIZED REPRODUCTION OR DISTRIBUTION IS A VIOLATION OF THE FEDERAL COPYRIGHT ACT AND THE LICENSE AGREEMENT, AND SUBJECT TO CIVIL AND CRIMINAL PENALTIES THEREUNDER.

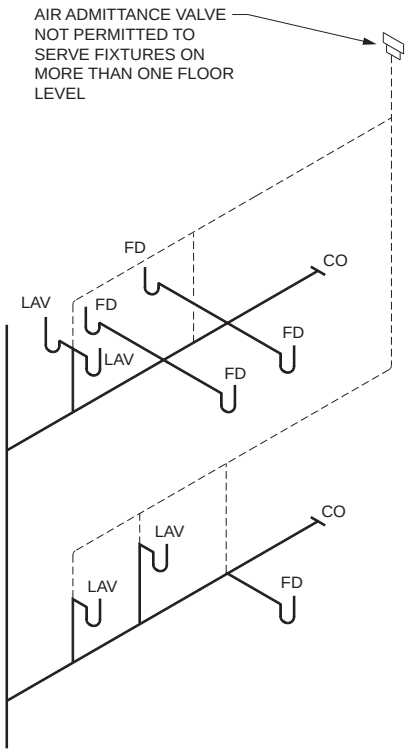

Figure P3114.3(5)
VENT CONNECTION NOT PERMITTED

P3114.4 Location. Individual and branch *air admittance valves* shall be located not less than 4 inches (102 mm) above the horizontal branch drain or *fixture drain* being vented. Stack-type air admittance valves shall be located not less than 6 inches (152 mm) above the flood level rim of the highest fixture being vented. The *air admittance valve* shall be located within the maximum *developed length* permitted for the vent. The *air admittance valve* shall be installed not less than 6 inches (152 mm) above insulation materials where installed in *attics*.

❖ The height requirements of this section are intended to prevent waste from contaminating an AAV. There will always be an air pocket trapped in the riser beneath an AAV that will prevent waste from reaching the AAV. A vent terminating at an AAV is subject to the same friction losses as any other vent; therefore, the same length limitations apply to such vents (see Commentary Figure P3114.4).

P3114.5 Access and ventilation. Access shall be provided to *air admittance valves*. Such valves shall be installed in a location that allows air to enter the valve.

❖ Because an AAV is a device with a single moving part, it must be accessible for inspection, service, repair or replacement. The code defines accessible as being able to be reached, but first the removal of a panel, door or similar obstruction might be required. Access to an AAV is not achieved if any portion of the structure's permanent finish materials, such as drywall, plaster, paneling, built-in furniture or cabinets or any other similar permanently affixed building component, must be removed.

Where located in confined spaces, ventilation openings are required in those spaces. AAVs admit air into the drainage system; therefore, an unimpeded air supply must be available to the devices at all times. Additionally, the manufacturer's installation instructions address access and ventilation requirements. The space within a cabinet under a sink counter has an unimpeded air supply and is accessible.

P3114.6 Size. The *air admittance valve* shall be rated for the size of the vent to which the valve is connected.

❖ The size of the vent pipe is regulated by Section P3113.1 or as provided for in the more specific venting provisions found elsewhere in Chapter 31. The AAV is sized based on the required size of the vent pipe and the d.f.u. load limitations found in the manufacturer's instructions. The d.f.u. loading is based on testing performed in accordance with ASSE 1050 and 1051.

P3114.7 Vent required. Within each plumbing system, not less than one stack vent or a vent stack shall extend outdoors to the open air.

❖ The plumbing system must have at least one vent stack or a stack vent extending to the outdoors to relieve positive pressure excursions that might occur, such as from pressure-cleaning operations in the public sewer. Most likely, this vent is also the vent required by Section P3102.1.

P3114.8 Prohibited installations. *Air admittance valves* shall not be used to vent sumps or tanks except where the vent system for the sump or tank has been designed by an engineer.

❖ AAVs must not be used to vent sumps or tanks as there is positive pressure generated when the tank or sump is filling. An AAV cannot relieve positive pressure (see Commentary Figure P3114.8). AAVs can be used as part of an engineered design for tank or sump venting.

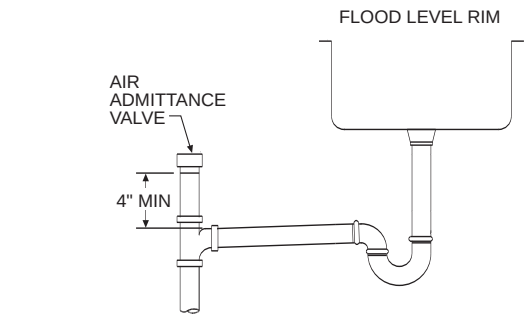

For SI: 1 inch = 25.4 mm.

Figure P3114.4
DISTANCE ABOVE DRAIN

INTERNATIONAL CODE COUNCIL®
Copyright © 2015 ICC. ALL RIGHTS RESERVED. Accessed by David Dammon on Jun 21, 2017 12:30:52 PM pursuant to License Agreement with ICC. No further reproduction or distribution authorized. ANY UNAUTHORIZED REPRODUCTION OR DISTRIBUTION IS A VIOLATION OF THE FEDERAL COPYRIGHT ACT AND THE LICENSE AGREEMENT, AND SUBJECT TO CIVIL AND CRIMINAL PENALTIES THEREUNDER.

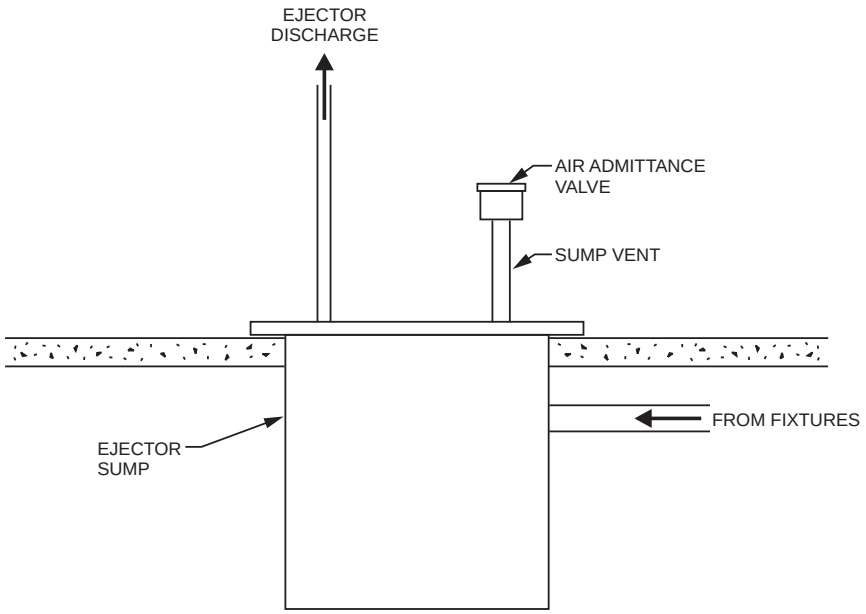

Figure P3114.8
PROHIBITED USE OF AIR ADMITTANCE VALVE

INTERNATIONAL CODE COUNCIL®
Copyright © 2015 ICC. ALL RIGHTS RESERVED. Accessed by David Dammon on Jun 21, 2017 12:30:52 PM pursuant to License Agreement with ICC. No further reproduction or distribution authorized. ANY UNAUTHORIZED REPRODUCTION OR DISTRIBUTION IS A VIOLATION OF THE FEDERAL COPYRIGHT ACT AND THE LICENSE AGREEMENT, AND SUBJECT TO CIVIL AND CRIMINAL PENALTIES THEREUNDER.

Chapter 32: Traps

User note: Code change proposals to this chapter will be considered by the IRC – Plumbing and Mechanical Code Development Committee during the 2015 (Group A) Code Development Cycle. See explanation on page xvii.

General Comments

Chapter 32 covers fixture traps including criteria for material, design, installation and minimum size of traps as determined by the fixture served, and outlines the approved methods available for maintaining the trap seal. It also specifies types of traps that are prohibited.

Purpose

Traps prevent sewer gas from escaping from the drainage piping into the building. Liquid seal traps are the simplest and most reliable means of preventing sewer gas from entering the interior environment.

SECTION P3201
FIXTURE TRAPS

P3201.1 Design of traps. Traps shall be of standard design, shall have smooth uniform internal waterways, shall be self-cleaning and shall not have interior partitions except where integral with the fixture. Traps shall be constructed of lead, cast iron, copper or copper alloy or *approved* plastic. Copper or copper alloy traps shall be not less than No. 20 gage (0.8 mm) thickness. Solid connections, slip joints and couplings shall be permitted to be used on the trap inlet, trap outlet, or within the trap seal. Slip joints shall be accessible.

❖ This section outlines the types of material that can be used for the construction of fixture traps. Most traps are factory made, though a trap can be fabricated with approved pipe and fittings. When slip joints are used, they must be provided with access as required by Section P2704.1 [see Commentary Figure P3201.1(1)].

A trap must have a pattern allowing unobstructed flow to the drain. Some fixtures, such as water closets, have an integral trap and, thus, are not designed to be connected to an additional trap [see Commentary Figure P3201.1(2)].

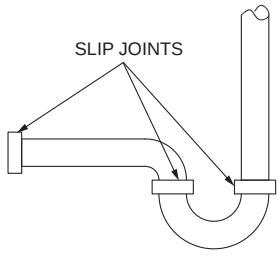

Figure P3201.1(1)
SLIP JOINTS IN TRAPS

P3201.2 Trap seals. Each fixture trap shall have a liquid seal of not less than 2 inches (51 mm) and not more than 4 inches (102 mm).

❖ A liquid seal of 2 inches (51 mm) is standard for most traps. Some larger pipes, 3 through 6 inches (76 through 152 mm), have a greater seal of up to 4 inches (102 mm) to construct a smooth pattern of flow for the given pipe.

A trap seal must be deep enough to resist the pressures that can develop in a properly vented drainage system, but not deep enough to promote the retention of solids or the growth of bacteria.

Traps that do not periodically receive waste discharge will eventually lose their seal as a result of evaporation. The rate of trap seal evaporation is somewhat dependent on the location of the trap. For example, water in fixture traps in environments with high ambient temperatures or high-volume air movement will evaporate rapidly. Fixtures, such as floor drains, typically have trap seals that are subject to loss by evaporation and, therefore, must be protected by trap seal primers. A deep seal will not prevent the loss of a trap seal, but will simply lengthen the time it will take for it to evaporate.

P3201.2.1 Trap seal protection. Traps seals of emergency floor drain traps and traps subject to evaporation shall be protected by one of the methods in Sections P3201.2.1.1 through P3201.2.1.4.

❖ There are two methods to protect the trap seal against evaporation: 1) a trap seal primer, 2) a trap seal protection device. Sections P3201.2.1.1 through P3201.2.4.1 cover these methods.

P3201.2.1.1 Potable water-supplied trap seal primer valve. A potable water-supplied trap seal primer valve shall supply water to the trap. Water-supplied trap seal primer valves shall conform to ASSE 1018. The discharge pipe from

INTERNATIONAL CODE COUNCIL®
Copyright © 2015 ICC. ALL RIGHTS RESERVED. Accessed by David Dammon on Jun 21, 2017 12:30:52 PM pursuant to License Agreement with ICC. No further reproduction or distribution authorized. ANY UNAUTHORIZED REPRODUCTION OR DISTRIBUTION IS A VIOLATION OF THE FEDERAL COPYRIGHT ACT AND THE LICENSE AGREEMENT, AND SUBJECT TO CIVIL AND CRIMINAL PENALTIES THEREUNDER.

the trap seal primer valve shall connect to the trap above the trap seal on the inlet side of the trap.

❖ The trap primer concept is simple: add a small amount of water to the trap every so often and that trap seal will remain intact. A potable-water-supplied trap primer connects to the potable water distribution system and supplies a small amount of potable water to the trap when a triggering event occurs. For one type of potable water trap seal primer, the triggering event is the use of cold water at a fixture. The cold water distribution piping near the fixture experiences a slight drop of pressure when the cold water valve at the fixture is opened. The trap seal primer device senses the drop in pressure and briefly opens a valve to "waste" a small amount of potable water into a tube that is connected to the trap. Frequent use of the fixture ensures that the trap seal doesn't evaporate. The discharge tube must connect at a level higher than the trap seal so that the tube doesn't become blocked by waste debris floating in or on top of the trap seal.

P3201.2.1.2 Reclaimed or gray-water-supplied trap seal primer valve. A reclaimed or gray-water-supplied trap seal primer valve shall supply water to the trap. Water-supplied trap seal primer valves shall conform to ASSE 1018. The quality of reclaimed or gray water supplied to trap seal primer valves shall be in accordance with the requirements of the manufacturer of the trap seal primer valve. The discharge pipe from the trap seal primer valve shall connect to the trap above the trap seal on the inlet side of the trap.

❖ The commentary for Section P3201.2.1 is applicable, except the valve is connected to pressurized reclaimed water source or a pressurized (and treated) gray-water source. The triggering fixture could be a water closet or a urinal that is supplied with reclaimed or gray water for flushing. The discharge tube must connect at a level higher than the trap seal so that the tube does not become blocked by waste debris floating in or on top of the trap seal. Note that trap seal primer valve manufacturers provide the water quality requirements for the nonpotable water to be used in the trap seal primer valve.

P3201.2.1.3 Waste-water-supplied trap primer device. A waste-water-supplied trap primer device shall supply water to the trap. Waste-water-supplied trap primer devices shall conform to ASSE 1044. The discharge pipe from the trap seal

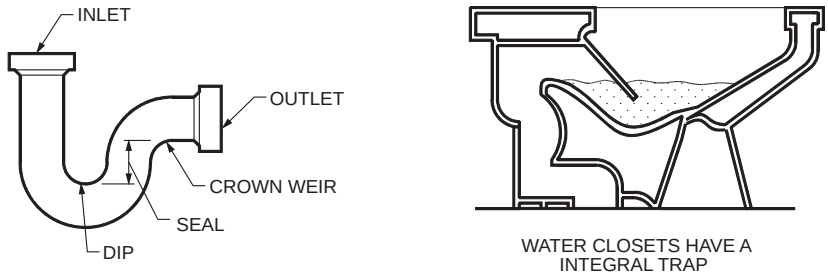

Figure P3201.1(2)
TRAP REQUIREMENTS

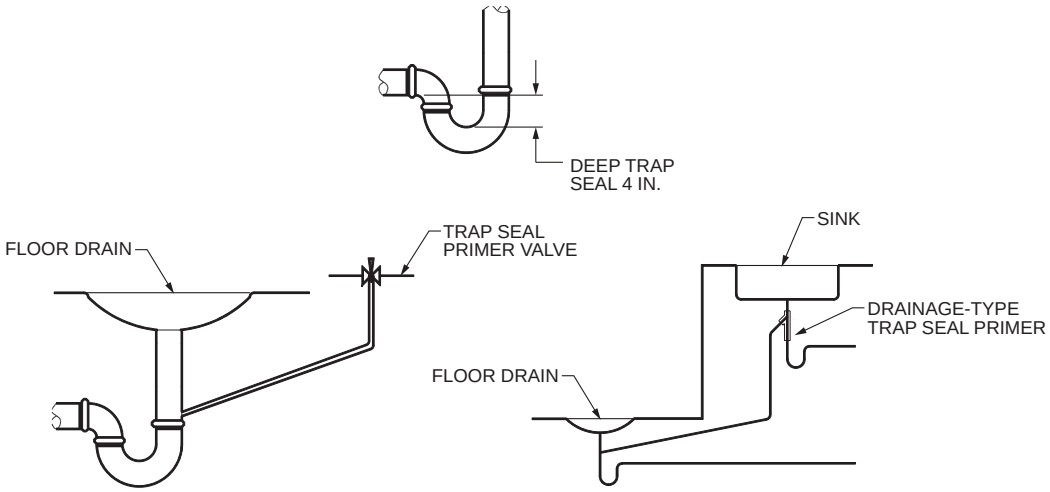

For SI: 1 inch = 25.4 mm.

Figure P3201.2
TRAP SUBJECT TO EVAPORATION

INTERNATIONAL CODE COUNCIL®
Copyright © 2015 ICC. ALL RIGHTS RESERVED. Accessed by David Dammon on Jun 21, 2017 12:30:52 PM pursuant to License Agreement with ICC. No further reproduction or distribution authorized. ANY UNAUTHORIZED REPRODUCTION OR DISTRIBUTION IS A VIOLATION OF THE FEDERAL COPYRIGHT ACT AND THE LICENSE AGREEMENT, AND SUBJECT TO CIVIL AND CRIMINAL PENALTIES THEREUNDER.

primer device shall connect to the trap above the trap seal on the inlet side of the trap.

❖ This type of device simply diverts some raw gray water from a fixture that discharges gray water. The fixture is typically a lavatory. Usually, such a lavatory has a grid strainer outlet to keep debris from being discharged from the fixture; however, a grid strainer is not a code requirement.

P3201.2.1.4 Barrier-type trap seal protection device. A barrier-type trap seal protection device shall protect the floor drain trap seal from evaporation. Barrier-type floor drain trap seal protection devices shall conform to ASSE 1072. The devices shall be installed in accordance with the manufacturer's instructions.

❖ This device is an elastomeric "check valve" that is inserted into the pipe opening of a floor drain. When the floor drain is accepting water, the flapper allows the water to flow into the pipe. Otherwise, the flapper returns to its closed position to prevent trap seal exposure to the air and evaporation.

P3201.3 Trap setting and protection. Traps shall be set level with respect to their water seals and shall be protected from freezing. Trap seals shall be protected from siphonage, aspiration or back pressure by an *approved* system of venting (see Section P3101).

❖ Traps must be set level with their seal to perform as designed (see Commentary Figure P3201.3). Because they hold water at all times, traps must be protected where they are subject to freezing. In colder climates, freezing can occur in unheated areas, such as garages or workshops, and also in cantilevered construction where the trap for a bathtub or shower may be installed below the floor insulation.

Where properly installed to code, the venting portion of the drainage system compensates for both negative and positive pressures that can occur in the plumbing system. This helps maintain the water seals in the traps. The venting provisions of Chapter 31 must be adhered to for a properly vented system. This is addressed in Section P3101.2.

P3201.4 Building traps. Building traps shall be prohibited.

❖ Originally, building traps were installed on the building drain, before it was connected to the building sewer, as a form of rat control. In major cities, rats would breed in the sewer system and enter a building through the sewer connection. A water trap seal was believed to prevent rats from entering the building. Such traps are considered to be high maintenance because of the potential for stoppages.

Building traps may still be necessary in rare cases where the public sewer exerts a positive back pressure on the connected building sewers; however, the installation of a building trap would require special approval. The back-pressure can cause the building vent terminations to emit strong sewer gases, which can create a serious odor problem around the building.

P3201.5 Prohibited trap designs. The following types of traps are prohibited:

1. Bell traps.
2. Separate fixture traps with interior partitions, except those lavatory traps made of plastic, stainless steel or other corrosion-resistant material.
3. "S" traps.
4. Drum traps.
5. Trap designs with moving parts.

❖ A trap is a simple U-shaped piping arrangement that offers minimal resistance to flow. Certain traps or arrangements are prohibited.

Item 1 refers to bell traps, which, because of their design, tend to clog with debris. The trap seal has a larger exposed surface area, which accelerates evaporation.

Item 2 refers to separate fixture traps with interior partitions, except those lavatory traps made of plastic, stainless steel or other corrosion-resistant material. Such lavatory traps are sometimes referred to as bottle traps. This item refers to independent traps that are not integral with the fixture. For example, water closet traps are a form of partition trap, but because they are part of the fixture they are not prohibited. Partition traps are single-wall traps that rely on a single partition to separate the house side of the trap from the sewer side of the trap. Although they may be made of corrosion-resistant material, they are still subject to corrosion and can fail structurally. Because such failure does not result in leakage, there will be no indication of the lost trap seal.

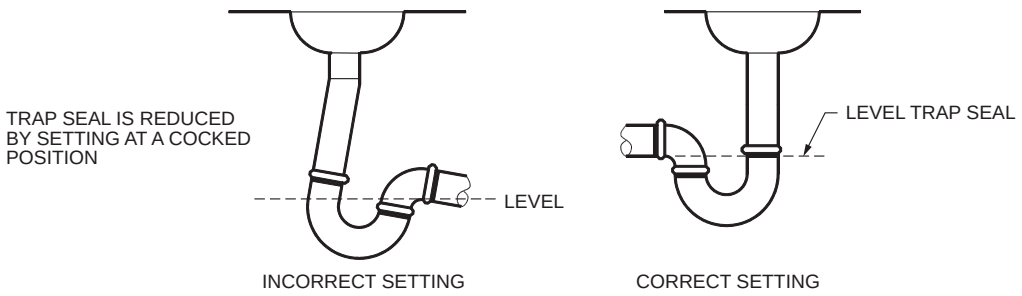

Figure P3201.3
INSTALLATION OF TRAP

INTERNATIONAL CODE COUNCIL®
Copyright © 2015 ICC. ALL RIGHTS RESERVED. Accessed by David Dammon on Jun 21, 2017 12:30:52 PM pursuant to License Agreement with ICC. No further reproduction or distribution authorized. ANY UNAUTHORIZED REPRODUCTION OR DISTRIBUTION IS A VIOLATION OF THE FEDERAL COPYRIGHT ACT AND THE LICENSE AGREEMENT, AND SUBJECT TO CIVIL AND CRIMINAL PENALTIES THEREUNDER.

Item 3 refers to "S" traps. "S" configuration traps tend to create a siphon effect, which causes loss of the trap seal.

Item 4 refers to drum traps, which, because they are not self-cleaning, are subject to clogging. Although in certain cases they may be desired in nonresidential occupancies, there is no special need for them in dwellings; thus, they are prohibited by the code.

Item 5 refers to trap designs with moving parts. These are mechanical traps that use moving parts, such as floats or flappers. Because of corrosion, clogging and waste deposits that interfere with the operation of moving components and seals, such designs are not dependable.

P3201.6 Number of fixtures per trap. Each plumbing fixture shall be separately trapped by a water seal trap. The vertical distance from the fixture outlet to the trap weir shall not exceed 24 inches (610 mm) and the horizontal distance shall not exceed 30 inches (762 mm) measured from the center line of the fixture outlet to the centerline of the inlet of the trap. The height of a clothes washer standpipe above a trap shall conform to Section P2706.1.2. Fixtures shall not be double trapped.

Exceptions:

1. Fixtures that have integral traps.
2. A single trap shall be permitted to serve two or three like fixtures limited to kitchen sinks, laundry tubs and lavatories. Such fixtures shall be adjacent to each other and located in the same room with a continuous waste arrangement. The trap shall be installed at the center fixture where three fixtures are installed. Common trapped fixture outlets shall be not more than 30 inches (762 mm) apart.
3. Connection of a laundry tray waste line into a standpipe for the automatic clothes-washer drain shall be permitted in accordance with Section P2706.1.2.1.

❖ Double trapping a fixture will cause obstruction of flow and potential stoppages because air is trapped between the two trap seals.

Except for a clothes washer standpipe, which has a maximum vertical distance of 42 inches (1067 mm), the maximum vertical distance of 24 inches (610 mm) from a fixture outlet to the trap weir is required for all other fixtures for two reasons. First, buildup on the wall of the pipe can breed bacteria and cause odors. It is, therefore, best to locate the trap as close as possible to the fixture to minimize the amount of drain pipe that occurs on the inlet (house) side of the trap. Second, the velocity of the drainage flow must be controlled. If the vertical distance is too great, a self-siphoning effect could occur. The horizontal distance limit between the fixture outlet and the trap intends to prevent excessive lengths of pipe on the house side of the trap in which bacteria can grow.

This section allows a single trap to serve a set of not more than three like fixtures (lavatories, laundry tubs or kitchen sinks). In residential applications, this could apply to a double lavatory vanity. Where fixtures are connected to a single trap, the trap must be installed at the center fixture. This minimizes the amount of piping on the inlet (house) side of the trap, thus reducing the likelihood of bacteria growth and subsequent odors.

Reference is made to Section P2706.2.1, where the provision for connecting a laundry tray to a clothes washer standpipe is allowed.

P3201.7 Size of fixture traps. Trap sizes for plumbing fixtures shall be as indicated in Table P3201.7. Where the tailpiece of a plumbing fixture is larger than that indicated in Table P3201.7, the trap size shall be the same nominal size as the fixture tailpiece. A trap shall not be larger than the drainage pipe into which the trap discharges.

❖ A properly sized trap allows the fixture to drain rapidly and function as intended. The code does not prescribe a maximum trap size; however, if a trap is oversized, it will not scour (cleanse) itself and will be prone to clogging. A trap that is larger than the drainage pipe into which it discharges is further prone to clogging because the reduced size outlet pipe does not allow a water velocity high enough to scour the trap.

TABLE P3201.7
SIZE OF TRAPS FOR PLUMBING FIXTURES

PLUMBING FIXTURE	TRAP SIZE MINIMUM (inches)
Bathtub (with or without shower head and/or whirlpool attachments)	$1^1/_2$
Bidet	$1^1/_4$
Clothes washer standpipe	2
Dishwasher (on separate trap)	$1^1/_2$
Floor drain	2
Kitchen sink (one or two traps, with or without dishwasher and food waste disposer)	$1^1/_2$
Laundry tub (one or more compartments)	$1^1/_2$
Lavatory	$1^1/_4$
Shower (based on the total flow rate through showerheads and bodysprays) Flow rate: 5.7 gpm and less More than 5.7 gpm up to 12.3 gpm More than 12.3 gpm up to 25.8 gpm More than 25.8 gpm up to 55.6 gpm	 $1^1/_2$ 2 3 4

For SI: 1 inch = 25.4 mm.

❖ This table shows minimum trap sizes for most fixtures. The provisions of Section P3201.6, which allow a set of not more than three similar fixtures (lavatories, laundry trays or kitchen sinks) to be drained by one trap, do not require an increase in the size of the trap.

Because of the low flow rate for showers [2.5 gpm (9.5 L/m) in accordance with Section P2903.2], a $1^1/_2$-inch (38 mm) shower drain is more than adequate and will require less maintenance than a 2-inch (51 mm) drain because the higher flow velocity in the smaller drain will scour the trap and pipe walls. Where multiple shower heads or body spray heads are installed, the drain and trap size may have to be increased to accommodate the increased load.

INTERNATIONAL CODE COUNCIL®
Copyright © 2015 ICC. ALL RIGHTS RESERVED. Accessed by David Dammon on Jun 21, 2017 12:30:52 PM pursuant to License Agreement with ICC. No further reproduction or distribution authorized. ANY UNAUTHORIZED REPRODUCTION OR DISTRIBUTION IS A VIOLATION OF THE FEDERAL COPYRIGHT ACT AND THE LICENSE AGREEMENT, AND SUBJECT TO CIVIL AND CRIMINAL PENALTIES THEREUNDER.

Chapter 33: Storm Drainage

User note: Code change proposals to this chapter will be considered by the IRC – Plumbing and Mechanical Code Development Committee during the 2015 (Group A) Code Development Cycle. See explanation on page xvii.

General Comments

Chapter 33 covers criteria for material, design and installation of subsoil drainage systems typically used around the perimeter of foundations. Poor or subsoil drainage can affect the structural stability of the foundation walls and, where basements are below grade, cause water damage to finished area and property.

Purpose

This chapter defines the requirements for subsoil drainage systems, including pumping systems for removal of the storm water collected by those systems.

SECTION P3301 GENERAL

P3301.1 Scope. The provisions of this chapter shall govern the materials, design, construction and installation of storm drainage.

❖ This chapter covers the requirements for storm drainage systems.

SECTION P3302 SUBSOIL DRAINS

P3302.1 Subsoil drains. Subsoil drains shall be open-jointed, horizontally split or perforated pipe conforming to one of the standards listed in Table P3302.1. Such drains shall be not less than 4 inches (102 mm) in diameter. Where the building is subject to backwater, the subsoil drain shall be protected by an accessibly located backwater valve. Subsoil drains shall discharge to a trapped area drain, sump, dry well or *approved* location above ground. The subsoil sump shall not be required to have either a gas-tight cover or a vent. The sump and pumping system shall comply with Section P3303.

❖ The drains in a subsoil drainage system consist of collection piping having holes, slots or end-to-end gaps for the ground water to infiltrate into the pipe to then be carried away from the collection area. The requirement for piping to be at least 4 inches (102 mm) in diameter ensures that adequate flow area will exist after sediments are deposited along the bottom of the pipes. Although not stated by this section, subsoil drain piping is typically installed with zero slope as the water entering the subsoil drainage piping will naturally flow towards an outlet in the piping system.

If the project site is sloped such that finished grade elevation is below the subsoil drainage system, the collected water can flow by gravity to a suitable location on the project site, a dry well, or an area drain. If the area drain is connected to a combined storm sanitary drainage system, the area drain must be trapped so that sewer gases cannot flow into the subsoil drainage system. Where the outlet of a gravity-flow subsoil drainage system could be submerged by high levels of surface water, the subsoil drainage system must have a backwater valve installed (see Commentary Figure P3302.1). Access must be provided for maintaining the backwater valve.

Where the water from a subsoil drainage system cannot flow away from the collection area by gravity, a sump with a sump pump must be provided for the collected water to flow into. The requirements for the sump and sump pump are located in Section 3303. Sumps are not required to have a gas-tight cover; however, Section 3303.1.2 requires the sump to have a cover that can support the anticipated loads. If a gas-

TABLE P3302.1
SUBSOIL DRAIN PIPE

MATERIAL	STANDARD
Cast-iron pipe	ASTM A74; ASTM A888; CISPI 301
Polyethylene (PE) plastic pipe	ASTM F405; CSA B182.1; CSA B182.6; CSA B182.8
Polyvinyl chloride (PVC) Plastic pipe (type sewer pipe, SDR 35, PS25, PS50 or PS100)	ASTM D2729; ASTM D3034; ASTM F891; CSA B182.2; CSA B182.4
Stainless steel drainage systems, Type 316L	ASME A112.3.1
Vitrified clay pipe	ASTM C4; ASTM C700

INTERNATIONAL CODE COUNCIL®
Copyright © 2015 ICC. ALL RIGHTS RESERVED. Accessed by David Dammon on Jun 21, 2017 12:30:52 PM pursuant to License Agreement with ICC. No further reproduction or distribution authorized. ANY UNAUTHORIZED REPRODUCTION OR DISTRIBUTION IS A VIOLATION OF THE FEDERAL COPYRIGHT ACT AND THE LICENSE AGREEMENT, AND SUBJECT TO CIVIL AND CRIMINAL PENALTIES THEREUNDER.

tight cover is installed, a vent-to-atmosphere is recommended. The vent must not connect to the venting system of a sanitary drainage system.

TABLE P3302.1. See page 33-1.

❖ Most of the standards for the piping materials in Table 3302.1 include requirements for the number, size and location of perforations. Where a pipe of a material listed in the table is not available in a perforated form, a common practice is to install short sections [approximately 2 feet long (610 mm)] of pipe end-to-end, with a gap between the ends. An archaic practice was to cover the gap between the ends of the pipe with asphaltic roofing paper to keep backfill material from flowing into the gaps; however, modern "geotextiles" are available for this purpose. The "open-jointed" installation method is only appropriate for pipe materials supplied in straight lengths and not in coiled form.

SECTION P3303
SUMPS AND PUMPING SYSTEMS

P3303.1 Pumping system. The sump pump, pit and discharge piping shall conform to Sections P3303.1.1 through P3303.1.4.

P3303.1.1 Pump capacity and head. The sump pump shall be of a capacity and head appropriate to anticipated use requirements.

❖ The amount of subsoil drainage flow is dependent on many project site factors, such as the length of subsoil piping system, rainfall duration, porosity of soil and the elevation of the water table. There is no easy method to determine what flow capacity of sump pump is required for any given application. It is easier to determine the required pump head pressure and check the pump flow rate to see if it is reasonable.

The amount of head pressure that the pump must overcome can be approximated from the difference in elevation between the pump and the highest portion of the discharge piping. For example, consider a pump located in a 2-foot-deep (610 mm) sump pit in the floor of a basement that is 9 feet (2743 mm) below finished grade. The desired discharge point for the pumped flow is 1 foot (305 mm) above finished grade. The sump pump must develop at least 12 feet (3658 mm) (2 + 9 + 1 = 12) of head pressure in order to "lift" water from the sump to the discharge point.

Although the flow of water in discharge piping creates a resistance to flow that the pump must also overcome, it is usually not taken into account because most

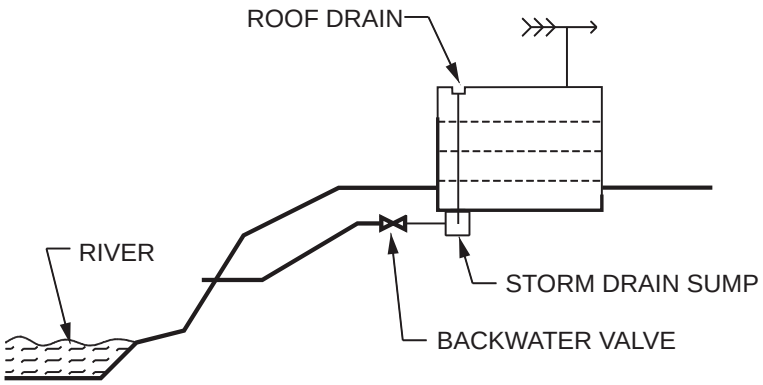

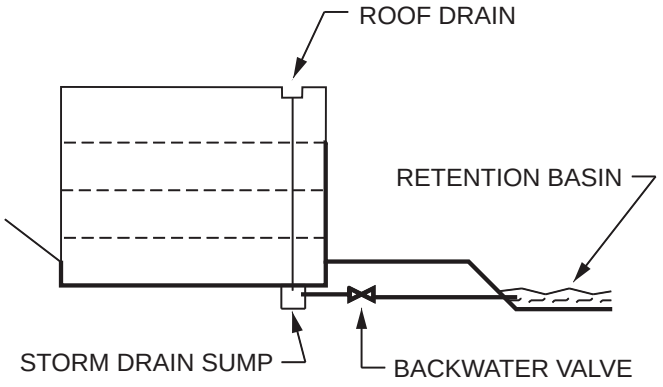

Figure P3302.1
SUBSOIL DRAIN SUBJECT TO BACKFLOW

INTERNATIONAL CODE COUNCIL®
Copyright © 2015 ICC. ALL RIGHTS RESERVED. Accessed by David Dammon on Jun 21, 2017 12:30:52 PM pursuant to License Agreement with ICC. No further reproduction or distribution authorized. ANY UNAUTHORIZED REPRODUCTION OR DISTRIBUTION IS A VIOLATION OF THE FEDERAL COPYRIGHT ACT AND THE LICENSE AGREEMENT, AND SUBJECT TO CIVIL AND CRIMINAL PENALTIES THEREUNDER.

sump pump discharge piping lengths are relatively short [e.g., 20 feet (6096 mm)].

Sump pumps are typically rated for so many gallons per minute (or hour) at a so many feet of "head" pressure. A pump can be chosen by finding a pump model that can produce the head pressure (determined previously), while delivering at least 20 gpm (1200 L/m) gallons per hour. The flow rate of 20 gpm (1200 L/m) provides for a pump run time of at least 30 seconds when the pump is installed in the minimum size sump pit, as required by Section P3303.1.2.

Although not stated in the code, the assumption is that the sump pump is equipped with an integral float switch or have some other means for automatic control.

P3303.1.2 Sump pit. The sump pit shall be not less than 18 inches (457 mm) in diameter and 24 inches (610 mm) deep, unless otherwise *approved*. The pit shall be accessible and located so that all drainage flows into the pit by gravity. The sump pit shall be constructed of tile, steel, plastic, cast-iron, concrete or other *approved* material, with a removable cover adequate to support anticipated loads in the area of use. The pit floor shall be solid and provide permanent support for the pump.

❖ An 18-inch-diameter (457mm) pit allows adequate room for any typical sump pump with a typical float switch arrangement. The depth of the pit allows for a reasonable pump run time given typical sump pump designs.

P3303.1.3 Electrical. Electrical outlets shall meet the requirements of Chapters 34 through 43.

❖ Although not specifically stated, the intent of the code is for the sump pump power cord to be plugged into a receptacle. The receptacle must meet the requirements of the electrical portion of the code (see Chapters 34 though 43). Given that sump pumps are usually located in unfinished portions of basements, receptacles will be protected by ground fault circuit interrupter devices.

P3303.1.4 Piping. Discharge piping shall meet the requirements of Sections P3002.1, P3002.2, P3002.3 and P3003. Discharge piping shall include an accessible full flow check valve. Pipe and fittings shall be the same size as, or larger than, the pump discharge tapping.

❖ Because a sump pump "lifts" water to another location, a check valve in the discharge line is necessary to prevent the pumped water from flowing backward into the sump. The check valve must have access for cleaning or replacement. The discharge piping must not be smaller than the outlet size of the pump in order to keep piping friction losses at a minimum.

INTERNATIONAL CODE COUNCIL®
Copyright © 2015 ICC. ALL RIGHTS RESERVED. Accessed by David Dammon on Jun 21, 2017 12:30:52 PM pursuant to License Agreement with ICC. No further reproduction or distribution authorized. ANY UNAUTHORIZED REPRODUCTION OR DISTRIBUTION IS A VIOLATION OF THE FEDERAL COPYRIGHT ACT AND THE LICENSE AGREEMENT, AND SUBJECT TO CIVIL AND CRIMINAL PENALTIES THEREUNDER.

INTERNATIONAL CODE COUNCIL®
Copyright © 2015 ICC. ALL RIGHTS RESERVED. Accessed by David Dammon on Jun 21, 2017 12:30:52 PM pursuant to License Agreement with ICC. No further reproduction or distribution authorized. ANY UNAUTHORIZED REPRODUCTION OR DISTRIBUTION IS A VIOLATION OF THE FEDERAL COPYRIGHT ACT AND THE LICENSE AGREEMENT, AND SUBJECT TO CIVIL AND CRIMINAL PENALTIES THEREUNDER.

Part VIII—Electrical

Chapter 34: General Requirements

This Electrical Part (Chapters 34 through 43) is produced and copyrighted by the National Fire Protection Association (NFPA) and is based on the 2014 *National Electrical Code*® (NEC®) (NFPA 70®-2014), copyright 2013, National Fire Protection Association, all rights reserved. Use of the Electrical Part is pursuant to license with the NFPA.

The title *National Electrical Code*®, the acronym NEC® and the document number NFPA 70® are registered trademarks of the National Fire Protection Association, Quincy, Massachusetts. The section numbers appearing in parentheses or brackets after IRC text are the section numbers of the corresponding text in the *National Electrical Code* (NFPA 70).

IMPORTANT NOTICE AND DISCLAIMER CONCERNING THE NEC AND THIS ELECTRICAL PART.

This Electrical Part is a compilation of provisions extracted from the 2014 edition of the NEC. The NEC, like all NFPA codes and standards, is developed through a consensus standards development process approved by the American National Standards Institute. This process brings together volunteers representing varied viewpoints and interests to achieve consensus on fire and other safety issues. While the NFPA administers the process and establishes rules to promote fairness in the development of consensus, it does not independently test, evaluate or verify the accuracy of any information or the soundness of any judgments contained in its codes and standards.

The NFPA disclaims liability for any personal injury, property or other damages of any nature whatsoever, whether special, indirect, consequential or compensatory, directly or indirectly resulting from the publication, use of, or reliance on the NEC or this Electrical Part. The NFPA also makes no guaranty or warranty as to the accuracy or completeness of any information published in these documents.

In issuing and making the NEC and this Electrical Part available, the NFPA is not undertaking to render professional or other services for or on behalf of any person or entity. Nor is the NFPA undertaking to perform any duty owed by any person or entity to someone else. Anyone using these documents should rely on his or her own independent judgment or, as appropriate, seek the advice of a competent professional in determining the exercise of reasonable care in any given circumstances.

The NFPA has no power, nor does it undertake, to police or enforce compliance with the contents of the NEC and this Electrical Part. Nor does the NFPA list, certify, test, or inspect products, designs, or installations for compliance with these documents. Any certification or other statement of compliance with the requirements of these documents shall not be attributable to the NFPA and is solely the responsibility of the certifier or maker of the statement.

For additional notices and disclaimers concerning NFPA codes and standards see www.nfpa.org/disclaimers.

General Comments

This chapter contains broadly applicable requirements including provisions for the protection of the structural elements of a building, inspection of work, general installation provisions and conductor identification. Section E3403.3 requires that all electrical system components be listed and labeled by an approved agency.

The portions of the National Electrical Code® (NEC®) text that are not applicable to dwelling construction have been excluded; therefore, the provisions herein are appropriate for the scope of coverage of the code. The NEC text has been reformatted, reorganized and, in some cases, restated for the purpose of making the provisions easier to locate, understand and apply. The code is formatted in a manner consistent with the other International Codes® (I-Codes®), designed to be a "cookbook" for dwelling construction and meant to be user friendly for both builders and code officials.

The electrical code provisions of the code are identical to the intent of the NEC provisions except that the code requires all electrical system components be listed and labeled; the NEC does not. The code does not contain unique electrical requirements. A dwelling built to the code will have electrical systems identical to those required by the respective edition of the NEC. The code addresses only those electrical systems that are common to dwelling construction, and the NEC is referenced for any subject not addressed in the code.

The code electrical chapters are produced and maintained by the National Fire Protection Association (NFPA) in accordance with a contract between the International Code Council® (ICC®) and NFPA. The contract requires NFPA to update the code to the new edition of the NEC, and the code and the NEC to remain technically consistent. ICC's technical staff works with NFPA's technical staff to present the updated text in ICC style and format.

INTERNATIONAL CODE COUNCIL®

Copyright © 2015 ICC. ALL RIGHTS RESERVED. Accessed by David Dammon on Jun 21, 2017 12:30:52 PM pursuant to License Agreement with ICC. No further reproduction or distribution authorized. ANY UNAUTHORIZED REPRODUCTION OR DISTRIBUTION IS A VIOLATION OF THE FEDERAL COPYRIGHT ACT AND THE LICENSE AGREEMENT, AND SUBJECT TO CIVIL AND CRIMINAL PENALTIES THEREUNDER.

Purpose

This chapter establishes the scope of coverage of the code and provides reference to NFPA 70 where the code lacks coverage of any wiring method or material. The provisions of this chapter intend to protect life, limb and property from the hazards of electricity, attempting to make sure that electrical equipment and conductors are properly located, guarded and identified.

SECTION E3401
GENERAL

E3401.1 Applicability. The provisions of Chapters 34 through 43 shall establish the general scope of the electrical system and equipment requirements of this code. Chapters 34 through 43 cover those wiring methods and materials most commonly encountered in the construction of one- and two-family dwellings and structures regulated by this code. Other wiring methods, materials and subject matter covered in NFPA 70 are also allowed by this code.

❖ These chapters cover the wiring methods, materials, equipment, fixtures and appliances that are most commonly used in residential buildings. Where special equipment, wiring methods or materials are used in dwellings or on residential property, the provisions of the NEC apply (see Section R101.2).

E3401.2 Scope. Chapters 34 through 43 shall cover the installation of electrical systems, equipment and components indoors and outdoors that are within the scope of this code, including services, power distribution systems, fixtures, appliances, devices and appurtenances. Services within the scope of this code shall be limited to 120/240-volt, 0- to 400-ampere, single-phase systems. These chapters specifically cover the equipment, fixtures, appliances, wiring methods and materials that are most commonly used in the construction or alteration of one- and two-family dwellings and accessory structures regulated by this code. The omission from these chapters of any material or method of construction provided for in the referenced standard NFPA 70 shall not be construed as prohibiting the use of such material or method of construction. Electrical systems, equipment or components not specifically covered in these chapters shall comply with the applicable provisions of NFPA 70.

❖ This section states that any material or method of construction not covered by these chapters must comply with the applicable provisions of the NEC. Section R102.4 states that codes and standards referenced in the code must be considered part of the requirements of this code. This section, in the "Administration" chapter, goes on to state that "where differences occur between provisions of this code and referenced codes and standards, the provisions of this code shall apply."

The provisions of Chapters 34 through 43 cover the electrical installations of wiring and equipment most commonly used for one- and two-family dwellings and associated structures. In the development of these chapters, it was considered that the vast majority of one- and two-family dwellings have a 120/240-volt single-phase service of between 100 and 400 amperes. Therefore, it was deemed adequate for the code to include provisions considered necessary only for one- and two-family dwellings with a service of up to a maximum of 400 amperes (see Section R101.2). For larger services and methods that are less common for one- and two-family dwellings, the provisions of the NEC would apply.

In residential electrical work, many times the electrician or electrical contractor on the job designs the wiring system. The plans may have only the locations of lighting and receptacle outlets, so the electrician or electrical contractor must calculate the load for the dwelling, as well as the load for the branch circuits and then design the layout of the wiring job. The electrical chapters of the code are written in a way that makes them simple to use while still being technically accurate and complete for the most common methods of installation. They contain minimum provisions that, if followed, will result in a safe and sufficient installation. However, larger conductor sizes, more branch circuits, and more lighting and receptacle outlets than the minimum required by the code are sometimes desirable for added convenience.

The electrical provisions in these chapters are based on the 2014 NEC, so the requirements are the same as in that referenced standard. For consistency with the building, mechanical and plumbing provisions, the electrical chapters of the code are written in a somewhat different style and format from those in the NEC. The requirements of the NEC pertain to many different occupancies and varied installations. In the development of the electrical provisions of the code, it was desired to develop an organization scheme that pertained specifically to dwellings. One result of this is that fewer exceptions are needed because the code covers only residential buildings. Also, several tables are included to summarize the various code rules. For example, many of the requirements for the different wiring methods are consolidated into tables.

An effort has been made to arrange the chapters in a logical order, beginning with general requirements. The start of the wiring system and electrical supply is the service and feeders, so provisions concerning them became the next chapter in the sequence. Grounding as a general subject was separated into two areas: service and feeder grounding and equipment grounding. Because system grounding is part of the electrical service, the service grounding and bonding provisions, including the grounding electrode system are included in Chapter 36. The next chapter contains the branch circuit and feeder requirements. The chapters that follow are on wiring methods and requirements for power and lighting distribution. These include provisions for outlets and equipment grounding

INTERNATIONAL CODE COUNCIL®
Copyright © 2015 ICC. ALL RIGHTS RESERVED. Accessed by David Dammon on Jun 21, 2017 12:30:52 PM pursuant to License Agreement with ICC. No further reproduction or distribution authorized. ANY UNAUTHORIZED REPRODUCTION OR DISTRIBUTION IS A VIOLATION OF THE FEDERAL COPYRIGHT ACT AND THE LICENSE AGREEMENT, AND SUBJECT TO CIVIL AND CRIMINAL PENALTIES THEREUNDER.

which in turn include rules for sizing equipment grounding conductors. The final three chapters contain rules on appliances, swimming pools and low-voltage circuits.

E3401.3 Not covered. Chapters 34 through 43 do not cover the following:

1. Installations, including associated lighting, under the exclusive control of communications utilities and electric utilities.
2. Services over 400 amperes.

❖ This code does not directly cover requirements for the service-drop or service-lateral conductors. In most cases, the service-drop and service-lateral conductors are owned and maintained by the utility company, so it is responsible for these conductors. The clearances for these conductors and the depth of cover for laterals that are beyond the service point are not in the code. A dwelling unit with a service rated over 400 amperes may require equipment not covered by this code and is not within the scope of this code.

E3401.4 Additions and alterations. Any addition or alteration to an existing electrical system shall be made in conformity to the provisions of Chapters 34 through 43. Where additions subject portions of existing systems to loads exceeding those permitted herein, such portions shall be made to comply with Chapters 34 through 43.

❖ This section correlates with the administrative provisions of Chapter 1, Section R101.2, which states that the code applies to the construction, alteration, movement, enlargement, replacement, repair, removal and demolition of one- and two-family dwellings. It is important to consider the provisions of Chapter 1 with the electrical chapters. For example, Section R105 has the requirement to obtain a permit from the code official before work is started. Electrical work that is exempt from a permit is also listed in Section R105.

Additions, alterations or repairs to any structure must conform to this code, but they do not require that the entire structure be updated or brought into current code compliance. Where the additions, alterations or repairs do not cause the existing electrical system to be unsafe, upgrading the old system is not required. For example, a simple bedroom addition may not result in a big difference in the electrical load on the service or feeders. The addition of a circuit fora bedroom light and four or five receptacle outlets would probably not be a reason to replace the electrical service equipment with one of larger ampacity. However, in a very old house with a 60-ampere service, the addition of one circuit could well cause an overload on the service, and the service would need to be upgraded. This is not to imply that the electrical load required for a small addition of lighting, outlets or equipment can be neglected. The load for additions to existing dwellings should always be calculated. If the existing service and/or feeder conductors are found to be inadequate to handle the new load, an upgrade would be necessary. Chapters 36 and 37 contain the load calculation requirements.

It is important to look not only at the electrical chapters when considering electrical requirements. A bedroom addition would require that a smoke alarm be installed in the bedroom. Where smoke alarms are wired and not just battery powered, they are installed as part of the wiring job and are in the domain of the electrician and the electrical inspector. Although the requirement to install smoke alarms is in Part III-Building Planning and Construction and not in Part VIII-Electrical, the provisions for the materials and methods for wiring the smoke alarms are included in the electrical chapters. Section R314.2.2 requires that when one or more sleeping rooms are added or created in an existing dwelling, the dwelling unit must have smoke alarms as required for new dwellings. If this dwelling did not already have smoke alarms installed, the code requires that they be installed in all bedrooms and outside each separate sleeping area in the immediate vicinity of the bedrooms and in each additional story of the dwelling including basements and cellars. All of these smoke alarms must be interconnected and hard wired, including the one in the new bedroom. The exception to this rule is that where the wall or ceiling finish is not removed during the construction or remodeling and there is no access to install the wiring, smoke alarms would not have to be interconnected. However, the smoke alarm in the new bedroom would have to be hard wired. Whether and how to interconnect additional smoke alarms in the existing part of the dwelling may be decisions reached between the code official and the installer of the electrical wiring. See the exception to Section R314.4.

Whenever interior alterations, repairs or additions are done that require a permit, smoke alarms must be in-stalled in the dwelling in accordance with the smoke alarm requirements for new construction. This provision indicates that in a house with no existing smoke alarms, where the kitchen is remodeled for example, the kitchen wiring must be installed according to current code rules, and smoke alarms must be installed in all the required locations in the existing house, hard wired and interconnected where possible.

SECTION E3402
BUILDING STRUCTURE PROTECTION

E3402.1 Drilling and notching. Wood-framed structural members shall not be drilled, notched or altered in any manner except as provided for in this code.

❖ The installation of wire and cable requires drilling and notching of floor joists, studs and other wood-framing members. This provision is another example of the necessity to look in other parts of the code when installing or inspecting the electrical wiring. When drilling and notching, two factors must be remembered: the integrity of the framing member and the protection of the wire or cable. To protect the strength and structural load bearing integrity of wood-framed structural members, the provisions of Sections R502.8 and R602.6 must be followed. Requirements in Table E3802.1 are

INTERNATIONAL CODE COUNCIL®
Copyright © 2015 ICC. ALL RIGHTS RESERVED. Accessed by David Dammon on Jun 21, 2017 12:30:52 PM pursuant to License Agreement with ICC. No further reproduction or distribution authorized. ANY UNAUTHORIZED REPRODUCTION OR DISTRIBUTION IS A VIOLATION OF THE FEDERAL COPYRIGHT ACT AND THE LICENSE AGREEMENT, AND SUBJECT TO CIVIL AND CRIMINAL PENALTIES THEREUNDER.

somewhat different and are for the protection of the wire, cable or other wiring method.

E3402.2 Penetrations of fire-resistance-rated assemblies. Electrical installations in hollow spaces, vertical shafts and ventilation or air-handling ducts shall be made so that the possible spread of fire or products of combustion will not be substantially increased. Electrical penetrations into or through fire-resistance-rated walls, partitions, floors or ceilings shall be protected by approved methods to maintain the fire-resistance rating of the element penetrated. Penetrations of fire-resistance-rated walls shall be limited as specified in Section R302.4. (300.21)

❖ Penetrations through fire-resistance-rated walls or floors must meet the requirements of Section R317.3. Wall and/or floor assemblies of at least a 1-hour fire-resistance rating separate two-family dwellings from each other. For the installation of electrical wire, cable, conduit or electrical outlet boxes, it is often necessary to make a through penetration or a membrane penetration. A through penetration is an opening that passes through an entire assembly, accommodating an item such as a cable or conduit. Where membrane construction is provided, such as gypsum board applied to both sides of a stud wall, a through penetration would pass entirely through both membranes and the cavity of the wall. An electrical box installed in the wall or ceiling/floor assembly separating a two-family dwelling and a recessed light fixture in the ceiling of a dwelling that has a separate dwelling unit on the floor above are examples of membrane penetrations, which are openings through only one membrane of a wall, ceiling or floor. Where nonmetallic electrical outlet boxes are used in a membrane penetration, they must be installed in accordance with their listings. For steel electrical boxes, the specific requirements of Section R302.4.2 must be followed.

E3402.3 Penetrations of firestops and draftstops. Penetrations through fire blocking and draftstopping shall be protected in an approved manner to maintain the integrity of the element penetrated.

❖ See Section R302.11 for requirements regarding the penetration of fireblocking systems. Penetrations through fire blocking and draftstopping by electrical conduit, cables and equipment must be installed in a way that will maintain the integrity of the building element being penetrated. There are many fire-blocking and draftstopping materials available, and both the electrician and the builder must be familiar with these products and methods.

SECTION E3403
INSPECTION AND APPROVAL

E3403.1 Approval. Electrical materials, components and equipment shall be approved. (110.2)

❖ Electrical materials and equipment installed in one- and two-family dwellings must be approved by the code official for the specific use or application.

E3403.2 Inspection required. New electrical work and parts of existing systems affected by new work or alterations shall be inspected by the building official to ensure compliance with the requirements of Chapters 34 through 43.

❖ In small towns and municipalities, the building inspector may perform all of the inspections. However, in many larger jurisdictions, inspectors are hired to work under the direction of the code official who manages the building department from the office and does not spend much time in the field. Where the code requires inspections by the code official, it means that the code official can designate the inspector to perform the actual inspection in the field.

E3403.3 Listing and labeling. Electrical materials, components, devices, fixtures and equipment shall be listed for the application, shall bear the label of an approved agency and shall be installed, and used, or both, in accordance with the manufacturer's installation instructions. [110.3(B)]

❖ This code requires that all electrical system components be listed. Testing laboratories publish lists of materials that have been tested. Laboratories and the testing methods they use are evaluated by an evaluation service. An evaluation report is available on the listed products. Code officials rely on these lists and evaluation reports to approve materials for use in the installation of electrical systems. Electrical materials must be approved and installed in accordance with the manufacturer's installation instructions. It is necessary to know these listing requirements as well as the code rules.

SECTION E3404
GENERAL EQUIPMENT REQUIREMENTS

E3404.1 Voltages. Throughout Chapters 34 through 43, the voltage considered shall be that at which the circuit operates. (110.4)

❖ For the code provisions in Chapters 34 through 43, the voltage to be considered must be the voltage at which the circuit operates. Nominal voltage for residential wiring as stated in Section E3602.4 is 120/240-volt, single phase, with a grounded neutral. However, the actual voltage at which the circuit operates can vary from the nominal voltage designation.

E3404.2 Interrupting rating. Equipment intended to interrupt current at fault levels shall have a minimum interrupting rating of 10,000 amperes. Equipment intended to interrupt current at levels other than fault levels shall have an interrupting rating at nominal circuit voltage of not less than the current that must be interrupted. (110.9)

❖ See the commentary to Section E3404.3.

E3404.3 Circuit characteristics. The overcurrent protective devices, total impedance, equipment short-circuit current ratings and other characteristics of the circuit to be protected shall be so selected and coordinated as to permit the circuit protective devices that are used to clear a fault to do so without extensive damage to the electrical equipment of the circuit. This fault shall be assumed to be either between two or more of the

INTERNATIONAL CODE COUNCIL®
Copyright © 2015 ICC. ALL RIGHTS RESERVED. Accessed by David Dammon on Jun 21, 2017 12:30:52 PM pursuant to License Agreement with ICC. No further reproduction or distribution authorized. ANY UNAUTHORIZED REPRODUCTION OR DISTRIBUTION IS A VIOLATION OF THE FEDERAL COPYRIGHT ACT AND THE LICENSE AGREEMENT, AND SUBJECT TO CIVIL AND CRIMINAL PENALTIES THEREUNDER.

circuit conductors or between any circuit conductor and the equipment grounding conductors permitted in Section E3908.8. Listed equipment applied in accordance with its listing shall be considered to meet the requirements of this section. (110.10)

❖ It is important that the ratings, intended uses and proper types of materials are selected for the appropriate use. In one- and two-family dwellings, circuit breakers are the most commonly used overcurrent protective device (OPD) for circuits originating at the panelboard. Fuses are often used for protection of wiring and components of air conditioning equipment and other motor circuits. If a short circuit or ground fault occurs, the circuit must be de-energized as soon as possible to prevent fire and/or damage to the equipment. Section E3705.5 mandates that OPDs be placed in the circuit where the conductors receive their supply. These devices are designed to open the circuit and interrupt the current under other than normal current flow conditions without damage to either the device or to items protected by the device.

Insulation Failure

One of the major causes of trouble in wiring is insulation failure. The results of insulation failure are short circuits and ground faults.

A "short circuit" is a conducting connection between any two conductors of an electrical system; it could be between any two ungrounded conductors or between an ungrounded conductor and the grounded conductor.

A "ground fault" is a conducting connection between a conductor of an electrical system and a grounded object such as a conduit, box or enclosure. Where opposite phase conductors are accidentally connected together and then energized, the connection is called a bolted fault, and there is usually no arcing. But where the ungrounded conductor lightly touches another ungrounded conductor or a metal enclosure around the conductors, a fault occurs that would likely be an arcing ground fault.

Purpose of the OPD

OPDs serve two separate functions. They protect against: (1) current overload or current higher than normal operating levels for the circuit conductors and (2) short circuits and ground faults. Accordingly, OPDs have two different interrupting ratings.

Current Overload Interrupting Rating

The standard ampere rating of an OPD is for the maximum current flow under normal operating conditions. In common practice in the field, this rating is not usually referred to as an interrupting rating, although that is what it is. Electricians simply call it the ampere rating of the breaker. For example, they would install a 20-ampere breaker on the circuit supplying the clothes washer. The 20-ampere rating is an interrupting rating in that the breaker will open and interrupt the current flow if the load increases to over 20 amperes. The laundry circuit often has a convenience outlet in the same room in addition to the clothes washer receptacle. If a high current use appliance such as a space heater is plugged into this receptacle, the total load could possibly be over 20 amperes. A current flow greater than 20 amperes, if not interrupted, could cause such a high temperature that the conductor insulation or the wire itself would be damaged. Section E3705.6 lists the standard ampere rating of overcurrent protective devices, which determines the rating of the branch circuit and is coordinated with the ampacity of the circuit conductors (see Section E3702.2).

Short-circuit or Ground-fault Interrupting Rating

This section requires that all OPD have a short-circuit and ground-fault interrupting rating of at least 10,000 amperes. If the available short-circuit or ground-fault current is higher than 10,000 amperes, the installed OPD must have sufficient interrupting ratings above the 10,000 ampere level. The electrician or electrical contractor must have this information and be able to provide it to the inspector or the code official (the authority having jurisdiction).

The Amount of Current Flow in a Short-circuit or Ground-fault Circuit

A high-level short circuit or ground fault could destroy the OPD and/or the panelboard, as well as lead to the ignition of a fire. To determine the amount of current (let-through current) in a short circuit or ground fault, it is necessary to know the amount of available short-circuit current in amperes from the supply system and take into account the impedance of the short-circuit or ground-fault circuit. The impedance is very low in a short circuit, and therefore the current flow is very high.

In a bolted short circuit, there is high current flow. The current can be almost all of what the system can deliver. In most residential systems, the available short-circuit current is usually under 10,000 amperes but could be more, depending on several factors including the transformer size, transformer impedance, how close the transformer is to the dwelling and the wire size.

E3404.4 Enclosure types. Enclosures, other than surrounding fences or walls, of panelboards, meter sockets, enclosed switches, transfer switches, circuit breakers, pullout switches and motor controllers, rated not over 600 volts nominal and intended for such locations, shall be marked with an enclosure-type number as shown in Table E3404.4.

Table E3404.4 shall be used for selecting these enclosures for use in specific locations other than hazardous (classified) locations. The enclosures are not intended to protect against conditions such as condensation, icing, corrosion, or contamination that might occur within the enclosure or enter through the conduit or unsealed openings. (110.28)

❖ Enclosures are the housing or cabinet that enclose wiring terminals, overcurrent devices, switches and other

INTERNATIONAL CODE COUNCIL®
Copyright © 2015 ICC. ALL RIGHTS RESERVED. Accessed by David Dammon on Jun 21, 2017 12:30:52 PM pursuant to License Agreement with ICC. No further reproduction or distribution authorized. ANY UNAUTHORIZED REPRODUCTION OR DISTRIBUTION IS A VIOLATION OF THE FEDERAL COPYRIGHT ACT AND THE LICENSE AGREEMENT, AND SUBJECT TO CIVIL AND CRIMINAL PENALTIES THEREUNDER.

electrical components. Enclosures serve to protect what they enclose from damage and also protect persons by shielding them from energized parts. Table E3404.4 lists the enclosure type designations established by the equipment manufacturers, often referred to as National Electrical Manufacturers Association (NEMA) designations. An enclosure must be suitable for the environment to which it will be exposed. In residential applications, Type 3R enclosures are typically used for outdoor installations such as service and equipment disconnects and panelboards.

E3404.5 Protection of equipment. Equipment not identified for outdoor use and equipment identified only for indoor use, such as "dry locations," "indoor use only" "damp locations," or enclosure Type 1, 2, 5, 12, 12K and/or 13, shall be protected against damage from the weather during construction. (110.11)

❖ During construction, equipment delivered to the job site that is identified for indoor use or for dry locations only must be protected from the weather. The electrical equipment manufacturing industry has designated equipment with different type numbers. A Type 1 enclosure is designated for indoor use only. Equipment should be stored in a dry and clean location until it is installed.

E3404.6 Unused openings. Unused openings, other than those intended for the operation of equipment, those intended for mounting purposes, and those permitted as part of the design for listed equipment, shall be closed to afford protection substantially equivalent to the wall of the equipment.

TABLE E3404.4 (Table 110.28)
ENCLOSURE SELECTION

PROVIDES A DEGREE OF PROTECTION AGAINST THE FOLLOWING ENVIRONMENTAL CONDITIONS	FOR OUTDOOR USE									
	Enclosure-type Number									
	3	3R	3S	3X	3RX	3SX	4	4X	6	6P
Incidental contact with the enclosed equipment	X	X	X	X	X	X	X	X	X	X
Rain, snow and sleet	X	X	X	X	X	X	X	X	X	X
Sleet[a]	—	—	X	—	—	X	—	—	—	—
Windblown dust	X	—	X	X	—	X	X	X	X	X
Hosedown	—	—	—	—	—	—	X	X	X	X
Corrosive agents	—	—	—	X	X	X	—	X	—	X
Temporary submersion	—	—	—	—	—	—	—	—	X	X
Prolonged submersion	—	—	—	—	—	—	—	—	—	X
PROVIDES A DEGREE OF PROTECTION AGAINST THE FOLLOWING ENVIRONMENTAL CONDITIONS	**FOR INDOOR USE**									
	Enclosure-type Number									
	1	**2**	**4**	**4X**	**5**	**6**	**6P**	**12**	**12K**	**13**
Incidental contact with the enclosed equipment	X	X	X	X	X	X	X	X	X	X
Falling dirt	X	X	X	X	X	X	X	X	X	X
Falling liquids and light splashing	—	X	X	X	X	X	X	X	X	X
Circulating dust, lint, fibers and flyings	—	—	X	X	—	X	X	X	X	X
Settling airborne dust, lint, fibers and flings	—	—	X	X	X	X	X	X	X	X
Hosedown and splashing water	—	—	X	X	—	X	X	—	—	—
Oil and coolant seepage	—	—	—	—	—	—	—	X	X	X
Oil or coolant spraying and splashing	—	—	—	—	—	—	—	—	—	X
Corrosive agents	—	—	—	X	—	—	X	—	—	—
Temporary submersion	—	—	—	—	—	X	X	—	—	—
Prolonged submersion	—	—	—	—	—	—	X	—	—	—

a. Mechanism shall be operable when ice covered.

Note 1: The term raintight is typically used in conjunction with Enclosure Types 3, 3S, 3SX, 3X, 4, 4X, 6 and 6P. The term rainproof is typically used in conjunction with Enclosure Types 3R and 3RX. The term watertight is typically used in conjunction with Enclosure Types 4, 4X, 6 and 6P. The term driptight is typically used in conjunction with Enclosure Types 2, 5, 12, 12K and 13. The term dusttight is typically used in conjunction with Enclosure Types 3, 3S, 3SX, 3X, 5, 12, 12K and 13.

Note 2: Ingress protection (IP) ratings are found in ANSI/NEMA 60529, *Degrees of Protection Provided by Enclosures*. IP ratings are not a substitute for enclosure-type ratings.

INTERNATIONAL CODE COUNCIL®
Copyright © 2015 ICC. ALL RIGHTS RESERVED. Accessed by David Dammon on Jun 21, 2017 12:30:52 PM pursuant to License Agreement with ICC. No further reproduction or distribution authorized. ANY UNAUTHORIZED REPRODUCTION OR DISTRIBUTION IS A VIOLATION OF THE FEDERAL COPYRIGHT ACT AND THE LICENSE AGREEMENT, AND SUBJECT TO CIVIL AND CRIMINAL PENALTIES THEREUNDER.

Where metallic plugs or plates are used with nonmetallic enclosures they shall be recessed at least $^1/_4$ inch (6.4 mm) from the outer surface of the enclosure. [110.12(A)]

❖ Unused openings include knockouts in device boxes, threaded raceway sockets in conduit bodies and boxes, cabinet and enclosure concentric and eccentric knockouts and circuit breaker knockouts in panelboard covers. Boxes and enclosures must have the integrity to keep out foreign objects, protect the conductors and devices therein, contain any arcing or hot materials resulting from faults and splice failures in the box or enclosure and protect persons from accidental contact with energized components. Metal plugs used with nonmetallic boxes will not be grounded, and recessing them in the outer surface will limit contact.

Knockouts being left open and unused in boxes and other cabinets is a very common problem. A knockout opening in a box is sometimes covered with tape, which is not equivalent to the wall of the box. This procedure does not comply with the code. Unused openings must be closed with appropriate materials for the protection of the circuit conductors and devices as well as for protection against shock by someone inserting a finger or tool into the enclosure. Listed knockout plugs are available for this purpose.

This section is not intended to be applicable to holes provided for fasteners for mounting purposes, cooling slots and similar openings that are part of the design of the listed equipment. In the context of this section, unused opening are openings that are drilled, punched or "knocked out" of the enclosure.

E3404.7 Integrity of electrical equipment. Internal parts of electrical equipment, including busbars, wiring terminals, insulators and other surfaces, shall not be damaged or contaminated by foreign materials such as paint, plaster, cleaners or abrasives, and corrosive residues. There shall not be any damaged parts that might adversely affect safe operation or mechanical strength of the equipment such as parts that are broken; bent; cut; deteriorated by corrosion, chemical action, or overheating. Foreign debris shall be removed from equipment. [110.12(B)]

❖ After installation, electrical materials must be protected. A panelboard installed during the rough wiring phase of the job could result in having the bus bars coated with paint while the walls were being spray painted. Thus, the panel must be covered during construction. Also, the inspector should watch for a router tool being used to cut openings for the electrical boxes after the drywall is hung. In many cases, the openings for the electrical boxes are not premeasured and cut before the wallboard is installed. First the drywall or wallboard is placed on the stud wall, then a router is used to cut the openings where a switch or receptacle box has been installed behind the wallboard. This results in damage to the conductors in the box and can also damage the box; it is a clear violation of the code. Often the conductors are cut and the insulation is scraped from the conductors. Later, after the walls are finished and painted, it is difficult to repair the wiring within the outlet boxes. It is often thought that code violations in the electrical wiring system are caused only by the electrician as a result of improper installation or improper wiring methods. But the electrical system can be installed in total compliance with code requirements and later be found to violate the code through improper construction practices. Correlation between all construction trades is needed to prevent these types of problems and is required by the code.

E3404.8 Mounting. Electrical equipment shall be firmly secured to the surface on which it is mounted. Wooden plugs driven into masonry, concrete, plaster, or similar materials shall not be used. [110.13(A)]

❖ Equipment must be mounted securely. This provision is an example of a code requirement that is not exactly prescriptive, meaning that it does not spell out such things as the weight of the equipment or the number and size of fasteners. It is more of a performance requirement in that it simply requires that the equipment be mounted securely so that it will not come loose, displace or move when utilized. For example, on a brick house the service equipment is often installed on the surface of the brick wall. Holes lined up with the mounting holes in the back of the meter base or panelboard are drilled into the brick or mortar. If wooden plugs are used, the panelboard may look secure at the time of installation, but the wooden plugs will deteriorate, and the equipment will eventually sag or fall off the wall. Wooden plugs can decay and shrink, causing fasteners to pull out. Proper masonry anchors and fasteners must be used.

For relatively lightweight boxes and enclosures, plastic or metal plugs with lag screws can work well. The weight of the equipment should be taken into account. In some cases, it may be necessary to install additional supports such as lag screws that attach to the framing members. Where service equipment is supplied by a service lateral, conduit is often used from below the ground up to the bottom of the service equipment. This conduit must be securely attached to the house. In new housing developments where the area next to the foundation has been excavated to place the footing and foundation and then backfilled, the ground may settle over the first several months and can pull the conduit containing the service-lateral conductors out of the service equipment. This can easily happen where, for example, a heavy 2-inch (51 mm) rigid metal conduit with a 90-degree (1.57 rad) elbow underground is installed into a connector through concentric knockouts at the bottom of the outdoor panelboard. A one-hole strap attached with a plastic screw anchor may not be enough to prevent the conduit from pulling away from the equipment. This code requirement is not only for service equipment but pertains to all electrical equipment. Sections E4004.5 and E4101.6 cover the provisions for mounting boxes for lighting fixtures weighing over 50 pounds (22.7 kg) and boxes for fans.

INTERNATIONAL CODE COUNCIL®
Copyright © 2015 ICC. ALL RIGHTS RESERVED. Accessed by David Dammon on Jun 21, 2017 12:30:52 PM pursuant to License Agreement with ICC. No further reproduction or distribution authorized. ANY UNAUTHORIZED REPRODUCTION OR DISTRIBUTION IS A VIOLATION OF THE FEDERAL COPYRIGHT ACT AND THE LICENSE AGREEMENT, AND SUBJECT TO CIVIL AND CRIMINAL PENALTIES THEREUNDER.

E3404.9 Energized parts guarded against accidental contact. Approved enclosures shall guard energized parts that are operating at 50 volts or more against accidental contact. [110.27(A)]

❖ Any electrical circuit of 50 volts or more must have its components enclosed. A doorbell circuit transformer has the line terminals or leads that connect to a 120-volt circuit enclosed in a box, but the load terminals, that supply less than 50 volts (typically 24 volts), are permitted to be in the open.

E3404.10 Prevent physical damage. In locations where electrical equipment is likely to be exposed to physical damage, enclosures or guards shall be so arranged and of such strength as to prevent such damage. [110.27(B)]

❖ Locations where electrical equipment is likely to be exposed to physical damage are determined by the code official in the enforcement of this code. These locations are not spelled out, but many are obvious, such as on the outside of the dwelling where a vehicle or a lawn mower could possibly hit or damage a box or other wiring or equipment. Guards or enclosures may be required in such locations.

E3404.11 Equipment identification. The manufacturer's name, trademark or other descriptive marking by which the organization responsible for the product can be identified shall be placed on all electric equipment. Other markings shall be provided that indicate voltage, current, wattage or other ratings as specified elsewhere in Chapters 34 through 43. The marking shall have the durability to withstand the environment involved. [110.21(A)]

❖ In addition to the name of the manufacturer, markings must be provided on electrical equipment regarding volt-age, current, wattage and other information necessary to define the correct use of such equipment. The equipment must be identified so that it can be determined if it is being used in compliance with code provisions and according to its listing requirements.

E3404.12 Field-applied hazard markings. Where caution, warning, or danger signs or labels are required by this code, the labels shall meet the following requirements:

1. The marking shall adequately warn of the hazard using effective words, colors, or symbols or combinations of such.
2. Labels shall be permanently affixed to the equipment or wiring method.
3. Labels shall not be hand written except for portions of labels or markings that are variable, or that could be subject to changes. Labels shall be legible.
4. Labels shall be of sufficient durability to withstand the environment involved. [110.21(B)]

❖ Obviously, the code does not intend to allow poorly constructed signs and labels, such as those of duct tape and marker pens or marker pens alone. The required markings must use universally understood pictograms, symbols or colors; or must use words that clearly convey the message. Any effective combination of words, symbols, colors, pictograms, etc., are allowed. Labels must be suitable for the environment in which they are located so that they will continue to serve their purpose for the life of the equipment. Hand written labels are not allowed because they are typically illegible and because they lack an authoritative and professional appearance. Caution, warning and danger signs and labels are life safety protection features that must remain in place and convey their messages for as long as the equipment, system, wiring, etc., remains in service.

E3404.13 Identification of disconnecting means. Each disconnecting means shall be legibly marked to indicate its purpose, except where located and arranged so that the purpose is evident. The marking shall have the durability to withstand the environment involved. [110.22(A)]

❖ The main disconnecting means for the dwelling must be marked "Main Disconnect." In the case of a fire, fire department personnel must be able to determine whether the disconnect they are switching off is the main disconnect or not. In outdoor panels especially the marking may fade with time, so the code official may consider a requirement for a durable type of marking. Included in this section is the requirement to label the branch circuit panelboard (see also commentary, Section E3706.2).

Branch circuits must be legibly marked or identified. In many cases, panelboards are marked with illegible handwriting or may have circuits marked with only a simple description. The code does not spell out how detailed the marking must be; that is, the code does not specify whether the marking must indicate the specific rooms a lighting circuit serves or only that it is a lighting circuit. These would be determined by the code official in the enforcement of the code.

SECTION E3405
EQUIPMENT LOCATION AND CLEARANCES

E3405.1 Working space and clearances. Access and working space shall be provided and maintained around all electrical equipment to permit ready and safe operation and maintenance of such equipment in accordance with this section and Figure E3405.1. (110.26)

❖ Enough space should be provided to work on electrical equipment without jeopardizing the safety of the worker. It is not left to the arbitrary decision of the electrician or architect to state how much clearance is needed; the code is very specific with regard to the minimum clearances required for electrical equipment. More clearance is always better.

The code does not simply state that sufficient space must be provided. Figure E3405.1 provides a very complete picture of the basic requirements for location and clearances for panelboards. This also includes the requirements for electrical equipment located outdoors such as the meter base and main disconnect and air conditioner disconnect.

INTERNATIONAL CODE COUNCIL®
Copyright © 2015 ICC. ALL RIGHTS RESERVED. Accessed by David Dammon on Jun 21, 2017 12:30:52 PM pursuant to License Agreement with ICC. No further reproduction or distribution authorized. ANY UNAUTHORIZED REPRODUCTION OR DISTRIBUTION IS A VIOLATION OF THE FEDERAL COPYRIGHT ACT AND THE LICENSE AGREEMENT, AND SUBJECT TO CIVIL AND CRIMINAL PENALTIES THEREUNDER.

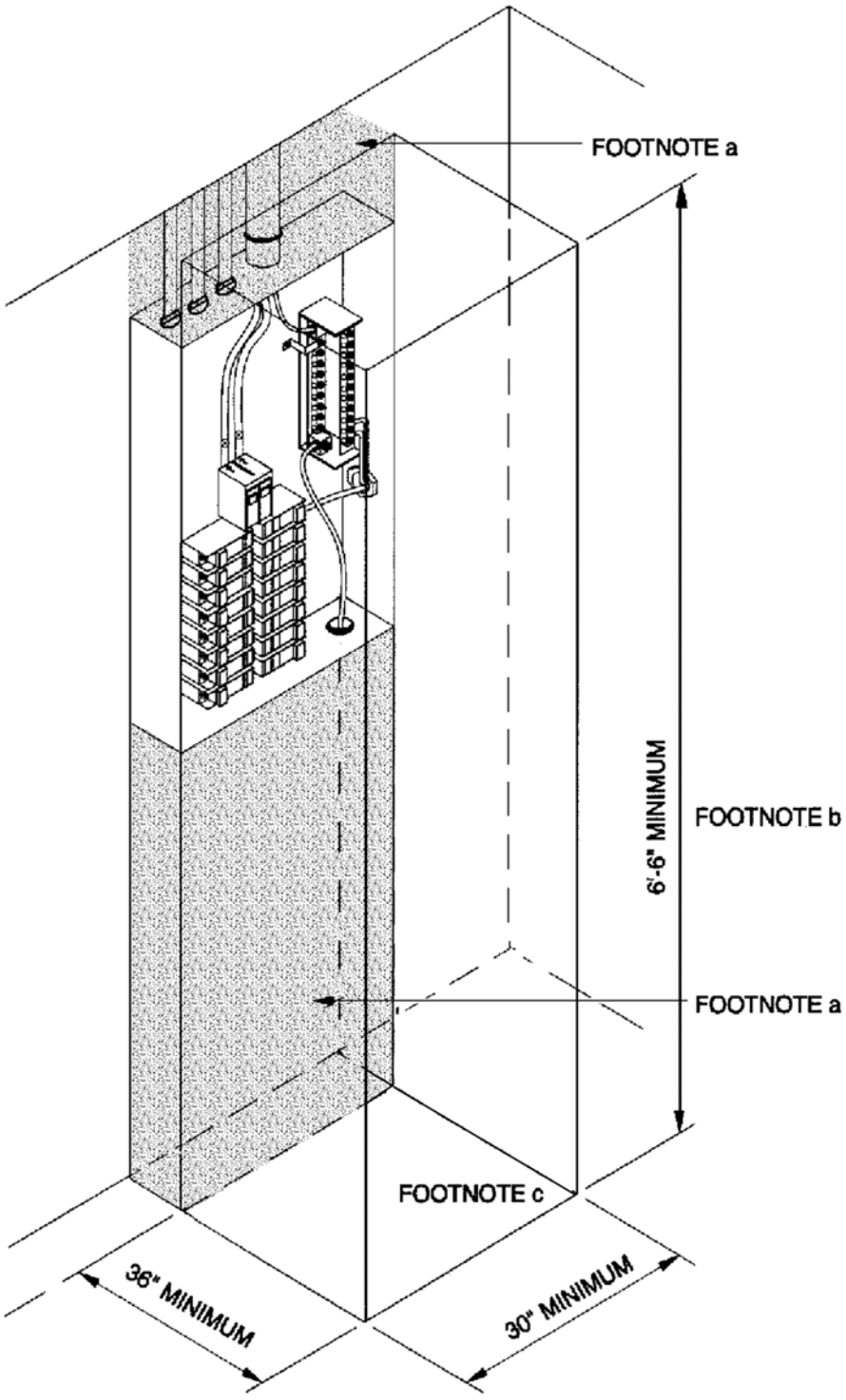

For SI: 1 inch = 25.4 mm, 1 foot = 304.8 mm.

a. Equipment, piping and ducts foreign to the electrical installation shall not be placed in the shaded areas extending from the floor to a height of 6 feet above the panelboard enclosure, or to the structural ceiling, whichever is lower.
b. The working space shall be clear and unobstructed from the floor to a height of 6.5 feet or the height of the equipment, whichever is greater.
c. The working space shall not be designated for storage.
d. Panelboards, service equipment and similar enclosures shall not be located in bathrooms, toilet rooms, clothes closets or over the steps of a stairway.
e. Such work spaces shall be provided with artificial lighting where located indoors and shall not be controlled by automatic means only.

FIGURE E3405.1[a, b, c, d, e]
WORKING SPACE AND CLEARANCES

INTERNATIONAL CODE COUNCIL®
Copyright © 2015 ICC. ALL RIGHTS RESERVED. Accessed by David Dammon on Jun 21, 2017 12:30:52 PM pursuant to License Agreement with ICC. No further reproduction or distribution authorized. ANY UNAUTHORIZED REPRODUCTION OR DISTRIBUTION IS A VIOLATION OF THE FEDERAL COPYRIGHT ACT AND THE LICENSE AGREEMENT, AND SUBJECT TO CIVIL AND CRIMINAL PENALTIES THEREUNDER.

E3405.2 Working clearances for energized equipment and panelboards. Except as otherwise specified in Chapters 34 through 43, the dimension of the working space in the direction of access to panelboards and live parts of other equipment likely to require examination, adjustment, servicing or maintenance while energized shall be not less than 36 inches (914 mm) in depth. Distances shall be measured from the energized parts where such parts are exposed or from the enclosure front or opening where such parts are enclosed. In addition to the 36-inch dimension (914 mm), the work space shall not be less than 30 inches (762 mm) wide in front of the electrical equipment and not less than the width of such equipment. The work space shall be clear and shall extend from the floor or platform to a height of 6.5 feet (1981 mm) or the height of the equipment, whichever is greater. In all cases, the work space shall allow at least a 90-degree (1.57 rad) opening of equipment doors or hinged panels. Equipment associated with the electrical installation located above or below the electrical equipment shall be permitted to extend not more than 6 inches (152 mm) beyond the front of the electrical equipment. [110.26(A) (1), (2), (3)]

Exceptions:

1. In existing dwelling units, service equipment and panelboards that are not rated in excess of 200 amperes shall be permitted in spaces where the height of the working space is less than 6.5 feet (1981 mm). [110.26(A)(3) Exception No. 1]
2. Meters that are installed in meter sockets shall be permitted to extend beyond the other equipment. Meter sockets shall not be exempt from the requirements of this section. [110.26(A)(3) Exception No. 2]

❖ When a worker is standing in front of a panelboard or air conditioner disconnect switch, for example, he or she should be able to walk up to it and stand in a clear space with no obstructions without having to lean or climb over another piece of electrical equipment or other obstruction. The last sentence of this section states that "equipment associated with the electrical installation located above or below the electrical equipment shall be permitted to extend not more that 6 inches (152 mm) beyond the front of the electrical equipment." At first reading, this may be difficult to understand if taken out of context. The working space in front of any electrical equipment must be clear from the floor or ground to at least 6.5 feet (1981 mm) (see Exception 1) above the floor or ground. Equipment that extends more than 6 inches (152 mm) past the front of other equipment is considered to protrude into the required clear working space (see Exception 2).

On residential properties, such things as the locations of a lawn sprinkler valve box that sits above the surface of the ground, a telephone connection box, a junction box, a subpanel or a current transformer enclosure should be carefully considered when locating the panelboard and service equipment. If these items extend more than 6 inches (152 mm) farther out than the front of the adjacent equipment, they are not permitted in the 36-inch (914 mm) depth or 30-inch (762 mm) width space in front of the panelboard or service equipment.

E3405.3 Indoor dedicated panelboard space. The indoor space equal to the width and depth of the panelboard and extending from the floor to a height of 6 feet (1829 mm) above the panelboard, or to the structural ceiling, whichever is lower, shall be dedicated to the electrical installation. Piping, ducts, leak protection apparatus and other equipment foreign to the electrical installation shall not be installed in such dedicated space. The area above the dedicated space shall be permitted to contain foreign systems, provided that protection is installed to avoid damage to the electrical equipment from condensation, leaks and breaks in such foreign systems (see Figure E3405.1).

Exception: Suspended ceilings with removable panels shall be permitted within the 6-foot (1829 mm) dedicated space.

❖ This section is specific to indoor spaces and Section E3405.4 addresses outdoor spaces. A dedicated space above and below the panelboard equal to the depth and width of the panelboard must be maintained clear of all ducts, piping and other foreign items. In basements, the heating and air conditioning ducts are often run against a wall and the ceiling. To locate the panelboard on a wall with a duct installed above and tight to the wall is a code violation, unless the duct is 6 feet (1829 mm) or more above the top of the panelboard. That is not likely in most dwellings. Many times, the electrician arrives at the job site first and installs the panelboard and the wiring, and later the plumbing and heating, ventilation and air-conditioning (HVAC) contractor installs the piping and ducts. This may seem to be acceptable if the wiring is installed first; however, no such provision is in the code. It is necessary for the electrician to know the location of the ducts and pipes before they are installed or for the installer of the ducts and pipes to avoid the required clear space above the panelboard (see Figure E3405.1).

E3405.4 Outdoor dedicated panelboard space. The outdoor space equal to the width and depth of the panelboard, and extending from grade to a height of 6 feet (1.8 m) above the panelboard, shall be dedicated to the electrical installation. Piping and other equipment foreign to the electrical installation shall not be located in this zone.

❖ See the commentary to Section E3405.3.

E3405.5 Location of working spaces and equipment. Required working space shall not be designated for storage. Panelboards and overcurrent protection devices shall not be located in clothes closets, in bathrooms, or over the steps of a stairway. [110.26(B), 240.24(D), (E), (F)]

❖ This section specifies that the clear working space required in front of electrical equipment not be in a storage area and that OPDs and panelboards must not be located in clothes closets or bathrooms.

Closets are obviously designed for storage, and combustible material in a closet could be stored close to or in contact with the panelboard. To avoid the possibility of easily ignitable material being placed next to a panelboard and to avoid the storage of materials in front of a panelboard, thus blocking access to it, overcurrent protection devices must not be installed in clothes closets. Although the code specifically prohib-

INTERNATIONAL CODE COUNCIL®
Copyright © 2015 ICC. ALL RIGHTS RESERVED. Accessed by David Dammon on Jun 21, 2017 12:30:52 PM pursuant to License Agreement with ICC. No further reproduction or distribution authorized. ANY UNAUTHORIZED REPRODUCTION OR DISTRIBUTION IS A VIOLATION OF THE FEDERAL COPYRIGHT ACT AND THE LICENSE AGREEMENT, AND SUBJECT TO CIVIL AND CRIMINAL PENALTIES THEREUNDER.

its the panelboard in a clothes closet, it seems wise to not locate a panelboard in any closet, because no one knows what the occupants of the dwelling will store there.

OPDs in a bathroom are a problem because of the location of plumbing fixtures and moisture present in the room.

The required clear space cannot be part of an area designated for storage. One common problem occurs where a panelboard or other equipment is installed on the wall of a garage. When the house is being built and there are no shelves along the wall of the garage, it is easy to put the panel on that wall. Later, a workbench is built under the panelboard, or shelves are installed all around it. Although this is not a code violation at the time of the panelboard installation, it can be a major problem later and becomes a code violation, even though the house passed inspection initially. It is difficult to foresee that a home owner may install a cabinet over a panelboard in the garage, cutting out the back of the cabinet to apparently allow access to the panel. Care should be taken by the electrician to select a location for the panelboard that will not likely be used as a storage area later.

Locating equipment above stair steps is an obvious fall hazard to occupants and service personnel who would have to access such equipment. The loss of one's footing could also result in a shock hazard when working on the equipment.

E3405.6 Access and entrance to working space. Access shall be provided to the required working space. [110.26(C)(1)]

❖ The minimum working space is defined, but access dimensions such as the specific dimensions of a door or entrance to the working space are not given. The access to the working space must be sufficient.

E3405.7 Illumination. Artificial illumination shall be provided for all working spaces for service equipment and panelboards installed indoors and shall not be controlled by automatic means only. Additional lighting outlets shall not be required where the work space is illuminated by an adjacent light source or as permitted by Exception 1 of Section E3903.2 for switched receptacles. [110.26(D)]

❖ Although the code does not specify how close to the equipment the light source must be installed, it must provide enough light to work safely on the equipment. If the lighting was controlled by automatic means only, such as occupant sensors, the lighting might turn off unexpectedly or might not turn on at all if the control device is inoperative.

SECTION E3406
ELECTRICAL CONDUCTORS AND CONNECTIONS

E3406.1 General. This section provides general requirements for conductors, connections and splices. These requirements do not apply to conductors that form an integral part of equipment, such as motors, appliances and similar equipment, or to conductors specifically provided for elsewhere in Chapters 34 through 43. (310.1)

❖ This section deals specifically with residential wiring.

E3406.2 Conductor material. Conductors used to conduct current shall be of copper except as otherwise provided in Chapters 34 through 43. Where the conductor material is not specified, the material and the sizes given in these chapters shall apply to copper conductors. Where other materials are used, the conductor sizes shall be changed accordingly. (110.5)

❖ Copper conductors are used almost exclusively for branch circuits of 15 and 20 amperes. Nonmetallic sheathed cable with aluminum conductors was used in the 1970s in some regions for these smaller circuits in residential wiring, but now it is not readily available. Aluminum conductors, even in these smaller sizes, are not prohibited by the code. Table E3705.1, which lists the allowable ampacities for conductors, begins with size 12 AWG for aluminum conductors. For repair and remodeling work, the ampacities are included for these smaller aluminum conductors. For larger conductors such as for services and feeders, aluminum is commonly used.

E3406.3 Minimum size of conductors. The minimum size of conductors for feeders and branch circuits shall be 14 AWG copper and 12 AWG aluminum. The minimum size of service conductors shall be as specified in Chapter 36. The minimum size of Class 2 remote control, signaling and power-limited circuits conductors shall be as specified in Chapter 43. [310.106(A)]

❖ The absolute minimum size of conductors is listed here, but for the minimum ampacities or allowable ampacities, refer to Table E3705.1. For example, in that table, size 12 AWG aluminum is listed as having an allowable ampacity of 20 amperes but is limited to a 15 ampere circuit by Section E3705.5.3.

E3406.4 Stranded conductors. Where installed in raceways, conductors 8 AWG and larger shall be stranded. A solid 8 AWG conductor shall be permitted to be installed in a raceway only to meet the requirements of Sections E3610.2 and E4204. [310.106(C)]

❖ This requirement limits the size of solid conductors installed in raceways to 10 AWG and smaller. Solid conductors of 8 AWG and larger are usually very difficult to pull into conduit or tubing and may be damaged in the process. Section E4204 requires a minimum 8 AWG solid conductor to be used to bond all the metallic parts of a swimming pool. Where installed in a raceway, the raceway should be sized to allow sufficient room to hold this conductor alone. An exception to this section is the case where a single solid grounding electrode conductor is pulled into a conduit sleeve for physical protection. For example, a solid number 8 AWG grounding electrode conductor could be installed in conduit. Table E3603.4, Note d requires No. 8 grounding electrode conductors to be protected by means

INTERNATIONAL CODE COUNCIL®
Copyright © 2015 ICC. ALL RIGHTS RESERVED. Accessed by David Dammon on Jun 21, 2017 12:30:52 PM pursuant to License Agreement with ICC. No further reproduction or distribution authorized. ANY UNAUTHORIZED REPRODUCTION OR DISTRIBUTION IS A VIOLATION OF THE FEDERAL COPYRIGHT ACT AND THE LICENSE AGREEMENT, AND SUBJECT TO CIVIL AND CRIMINAL PENALTIES THEREUNDER.

such as metal or nonmetallic conduit. The reference to Section E3610.2 could imply that larger solid grounding electrode conductors could not be installed in a raceway, however, installing a solid No. 6 or 4 copper conductor in a short length of $^1/_2$-inch (12 mm) or $^3/_4$-inch (19 mm) conduit with no bends is common practice and would not likely damage the conductor, especially considering that it is not required to be insulated.

E3406.5 Individual conductor insulation. Except where otherwise permitted in Sections E3605.1 and E3908.9, and E4303, current-carrying conductors shall be insulated. Insulated conductors shall have insulation types identified as RHH, RHW, RHW-2, THHN, THHW, THW, THW-2, THWN, THWN-2, TW, UF, USE, USE-2, XHHW or XHHW-2. Insulation types shall be approved for the application. [310.106(C), 310.104]

❖ The common specific conductor insulation types listed are the conductors included in Table E3705.1. The provisions of this code cover the installations in which these conductor types would be used in residential wiring. Conductor insulation types have different temperature ratings, indicating the temperature the conductor insulation can withstand before being damaged. Wherever conductors are used in wet locations, such as service entrance conductors that are exposed at the service head, the conductors must have a "W" in the insulation type. The following are letters in the conductor insulation types and the corresponding use or meaning:

R — Rubber

T — Thermoplastic

H — Rated for a 15°C (27° F) temperature rise over the 60°C (140° F) rating

HH — Rated for a 30°C (54° F) temperature rise over the 60°C (140° F) rating

N — Outer nylon jacket or equivalent

W — Rated for wet location

X — Cross-linked synthetic polymer

E3406.6 Conductors in parallel. Circuit conductors that are connected in parallel shall be limited to sizes 1/0 AWG and larger. Conductors in parallel shall: be of the same length; consist of the same conductor material; be the same circular mil area and have the same insulation type. Conductors in parallel shall be terminated in the same manner. Where run in separate raceways or cables, the raceway or cables shall have the same physical characteristics. Where conductors are in separate raceways or cables, the same number of conductors shall be used in each raceway or cable. [310.10(H)]

❖ Parallel conductors are typically installed in conduit or raceways, and for one- and two-family dwellings within the scope of this code (dwellings with a service size of up to 400 amperes), only very large circuits or the service or feeder conductors would likely be run in parallel. Although permitted for conductors of 1/0 AWG and above, paralleling conductors in residential wiring would normally be used only for service conductors. The size of the raceway or cable, labor involved and the cost of the conductors are major factors in the decision to use paralleled conductors.

E3406.7 Conductors of the same circuit. All conductors of the same circuit and, where used, the grounded conductor and all equipment grounding conductors and bonding conductors shall be contained within the same raceway, cable or cord. [300.3(B)]

❖ This provision requires that all conductors of a circuit be in the same raceway, cable or cord to prevent magnetic fields from creating heat in metal enclosures and raceways.

E3406.8 Aluminum and copper connections. Terminals and splicing connectors shall be identified for the material of the conductors joined. Conductors of dissimilar metals shall not be joined in a terminal or splicing connector where physical contact occurs between dissimilar conductors such as copper and aluminum, copper and copper-clad aluminum, or aluminum and copper-clad aluminum, except where the device is listed for the purpose and conditions of application. Materials such as inhibitors and compounds shall be suitable for the application and shall be of a type that will not adversely affect the conductors, installation or equipment. (110.14)

❖ Copper and aluminum conductors must not be joined unless the device or connector is listed for the purpose. Some wire nut connectors are listed for this purpose. If the connector is marked "AL/CU," aluminum and copper conductors could be connected together in the same pressure connector. It is very important to use an approved oxide-inhibiting compound on aluminum conductors. Where aluminum conductors are exposed to the atmosphere, oxidation can occur. Oxidation of aluminum can cause a thin film or layer, which looks like a powder, on the conductor. It will result in heat buildup by impeding current flow. Wire connectors that are listed and approved for connection of aluminum to aluminum or for copper to aluminum conductors are available. Most wire nuts are not specifically listed for use with aluminum conductors, and one cannot assume that they can be used. If they are identified for this application, the container will so indicate with a marking such as "AL/CU" and may indicate that an approved oxide inhibitor should be used where aluminum conductors are connected. Many of these approved wire nuts are made with a specially formulated corrosion-resistant compound to help prevent aluminum corrosion. There is a need for these connectors, for example where an old house wired with aluminum is being remodeled or a room is being added. If any of the old aluminum conductors are spliced, the installer should be careful to use approved connectors. Where connections of larger conductors are made, for example feeder or service conductors, aluminum is commonly used. Again, there may be a need in a retrofit job to make connections between the existing aluminum and copper conductors. Split bolts connectors may be used for this connection. These connectors will have a separator between the two openings where the wire is inserted which functions to

INTERNATIONAL CODE COUNCIL®
Copyright © 2015 ICC. ALL RIGHTS RESERVED. Accessed by David Dammon on Jun 21, 2017 12:30:52 PM pursuant to License Agreement with ICC. No further reproduction or distribution authorized. ANY UNAUTHORIZED REPRODUCTION OR DISTRIBUTION IS A VIOLATION OF THE FEDERAL COPYRIGHT ACT AND THE LICENSE AGREEMENT, AND SUBJECT TO CIVIL AND CRIMINAL PENALTIES THEREUNDER.

prevent contact between the conductors. The bolts must have markings on them such as "AL/CU," indicating they may be used for aluminum-to-copper connections.

E3406.9 Fine stranded conductors. Connectors and terminals for conductors that are more finely stranded than Class B and Class C stranding as shown in Table E3406.9, shall be identified for the specific conductor class or classes. (110.14)

❖ Conductors are more finely stranded as the number of strands increases and the diameter of each strand decreases. Stranded conductors are typically used only where flexibility is desired and are not commonly found in residential construction. The finer the strands, the more difficult it is to make good terminations and splices. The device, wire connector or terminal being used with stranded wire must be suitable for the application. Some devices and terminals state that they are for use with solid wire only and some devices or terminals might not be suitable for use with very finely stranded wire. Other than what is contained in the product listing information, the manufacturer's instructions and on product markings, the code is silent on the proper termination of stranded wire with devices such as snap switches and receptacles. Most workmen agree that crimp-on spade terminals should be used or the device should be of the "backwired" type, which employs a screw to compress the stranded conductor between two pressure plates. Stranded wire tends to deform and "spread out" when placed under the head of a wire-binding screw, creating a questionable termination. There are tricks of the trade, such as reverse twisting and creative wire stripping techniques, that are used to make "side-wiring" with wire-binding screws more viable, but choosing a more suitable type of device or using spade terminals is believed to be the better way. Of course, there is always the option of splicing the stranded conductor to a solid conductor pigtail.

E3406.10 Terminals. Connection of conductors to terminal parts shall be made without damaging the conductors and shall be made by means of pressure connectors, including set-screw type, by means of splices to flexible leads, or for conductor sizes of 10 AWG and smaller, by means of wire binding screws or studs and nuts having upturned lugs or the equivalent. Terminals for more than one conductor and terminals for connecting aluminum conductors shall be identified for the application. [110.14(A)]

❖ Connections must be made without damaging the conductors. When stripping the insulation from the ends of conductors, it is easy to nick or cut into the wire. Using improper techniques or tools when stripping the conductors may damage the softer aluminum conductors.

In many installations, two or more conductors are connected under one terminal because it is easy to install them and they will fit. However, terminals for connecting multiple conductors must be listed for this purpose. Most modern equipment such as panelboards has terminal strips with a sufficient number of terminals to connect all necessary circuit conductors. In some cases, it may be necessary to install additional terminal strips to terminate each conductor under a separate terminal. If the terminals are approved for the connection of more than one conductor, the approval will be stated in the listing information or supplied with the packaging of the equipment.

TABLE E3406.9 (Chapter 9, Table 10)
CONDUCTOR STRANDING[c]

CONDUCTOR SIZE		NUMBER OF STRANDS		
		Copper		Aluminum
AWG or kcmil	mm^2	Class B	Class C	Class B
24-30	0.20-0.05	a	—	—
22	0.32	7	—	—
20	0.52	10	—	—
18	0.82	16	—	—
16	1.3	26	—	—
14-2	2.1-33.6	7	19	7[b]
1-4/0	42.4-107	19	37	19
250-500	127-253	37	61	37
600-1000	304-508	61	91	61
1250-1500	635-759	91	127	91
1750-2000	886-1016	127	271	127

a. Number of strands vary.

b. Aluminum 14 AWG (2.1 mm^2) is not available.

c. With the permission of Underwriters Laboratories, Inc., this material is reproduced from UL Standard 486A-B, Wire Connectors, which is copyrighted by Underwriters Laboratories, Inc., Northbrook, Illinois. While use of this material has been authorized, UL shall not be responsible for the manner in which the information is presented, nor for any interpretations thereof.

INTERNATIONAL CODE COUNCIL®
Copyright © 2015 ICC. ALL RIGHTS RESERVED. Accessed by David Dammon on Jun 21, 2017 12:30:52 PM pursuant to License Agreement with ICC. No further reproduction or distribution authorized. ANY UNAUTHORIZED REPRODUCTION OR DISTRIBUTION IS A VIOLATION OF THE FEDERAL COPYRIGHT ACT AND THE LICENSE AGREEMENT, AND SUBJECT TO CIVIL AND CRIMINAL PENALTIES THEREUNDER.

E3406.11 Splices. Conductors shall be spliced or joined with splicing devices listed for the purpose. Splices and joints and the free ends of conductors shall be covered with an insulation equivalent to that of the conductors or with an insulating device listed for the purpose. Wire connectors or splicing means installed on conductors for direct burial shall be listed for such use. [110.14(B)]

❖ Conductors must be spliced with devices listed for the purpose. The points in the electrical wiring system where conductors are spliced or connected are the weakest links. Here problems could occur such as deterioration of the conductor, overheating, arcing, breaking, or opening of the connection. Therefore, it is very important that conductors be properly spliced. Splicing and terminating conductors in high-voltage wiring, for example, is a skill that must be acquired and developed. But even in low-voltage wiring, the splicing of small conductors is a skill and critical to the proper operation of the system. Bad connections are the source of many of the problems in an electrical wiring system, including fires.

One unapproved method of making a connection is to rely only on twisting the stripped ends of the conductors together using pliers and then using tape to cover the connection without any approved device. Wire nuts or pressure connectors of the appropriate size and type must be used. Some installers claim that the stripped ends of conductors should be securely twisted together with pliers before applying the wire nut, even though the wire nut manufacturers typically say the stripped wire ends should be held together and then twisted together using only the wire nut. The installer should consult the instructions for how to install the particular type of wire connector to be used. The instructions on the container will state, for example, "Pretwisting unnecessary. Hold the stripped wires together with the ends even." Most wire nuts or pressure connectors that are sold for use in residential wiring are for connecting copper wires only, and the container will have such a message on it. See the commentary to Section E3406.8 for details about joining aluminum and copper conductors.

Where a split bolt or clamp-on pressure connector is used, the code requires that the splice be covered with an insulating material equivalent to the conductor insulation. Some of these bolts are supplied with an approved plastic or insulating cover that snaps into place around the splice, but many are bare, and the electrician must cover the connection with splicing compounds and tape. If the insulating tape is listed for the purpose, this could be an approved method if the thickness of the covering is equivalent to that of the conductor insulation.

E3406.11.1 Continuity. Conductors in raceways shall be continuous between outlets, boxes, and devices and shall be without splices or taps in the raceway.

Exception: Splices shall be permitted within surface-mounted raceways that have a removable cover. [300.13(A)]

❖ Most raceways have neither the room nor the means of access to allow splices to occur within them. Splices in raceways can cause overfill of the cross-sectional area and would prevent the conductors from being withdrawn or the addition of new conductors.

E3406.11.2 Device connections. The continuity of a grounded conductor in multiwire branch circuits shall not be dependent on connection to devices such as receptacles and lampholders. The arrangement of grounding connections shall be such that the disconnection or the removal of a receptacle, luminaire or other device fed from the box does not interfere with or interrupt the grounding continuity. [300.13(B)]

❖ The grounded conductor, which is commonly referred to in the field as the neutral conductor, is often connected or spliced only by means of the receptacle in an outlet box. This is commonly done where two 2-wire or 3-wire cables are brought into an outlet box for the installation of a 120-volt duplex receptacle, and the two grounded conductors are connected only to the receptacle and are not tied together before being connected to the receptacle. A multiwire circuit has two ungrounded conductors (usually one red and one black) with a voltage of 240 between them and a grounded (neutral) conductor (white) with a voltage of 120 volts between it and each of the ungrounded conductors. When the receptacle is replaced or one of the wires is disconnected, an open neutral could result. If this is done when the circuit is energized, it could cause abnormal voltages (both exceedingly high and low) to be imposed on any appliances or equipment connected to the circuit (see Commentary Figure E3406.11.2). Therefore, the code requires that the white grounded conductors be connected together and then connected with a short jumper to the receptacle (pigtailed). This way, the continuity of the grounded conductor is maintained at all times even when the device is removed.

Where multiple equipment grounding conductors are brought into a junction box for the connection of devices, they must be connected together. If a device or luminaire is installed in or on the box, a pigtail must be used so that only one conductor connects to the grounding terminal or lead of the device or luminaire. This is to maintain continuity of the grounding conductor and the protection it provides.

INTERNATIONAL CODE COUNCIL®
Copyright © 2015 ICC. ALL RIGHTS RESERVED. Accessed by David Dammon on Jun 21, 2017 12:30:52 PM pursuant to License Agreement with ICC. No further reproduction or distribution authorized. ANY UNAUTHORIZED REPRODUCTION OR DISTRIBUTION IS A VIOLATION OF THE FEDERAL COPYRIGHT ACT AND THE LICENSE AGREEMENT, AND SUBJECT TO CIVIL AND CRIMINAL PENALTIES THEREUNDER.

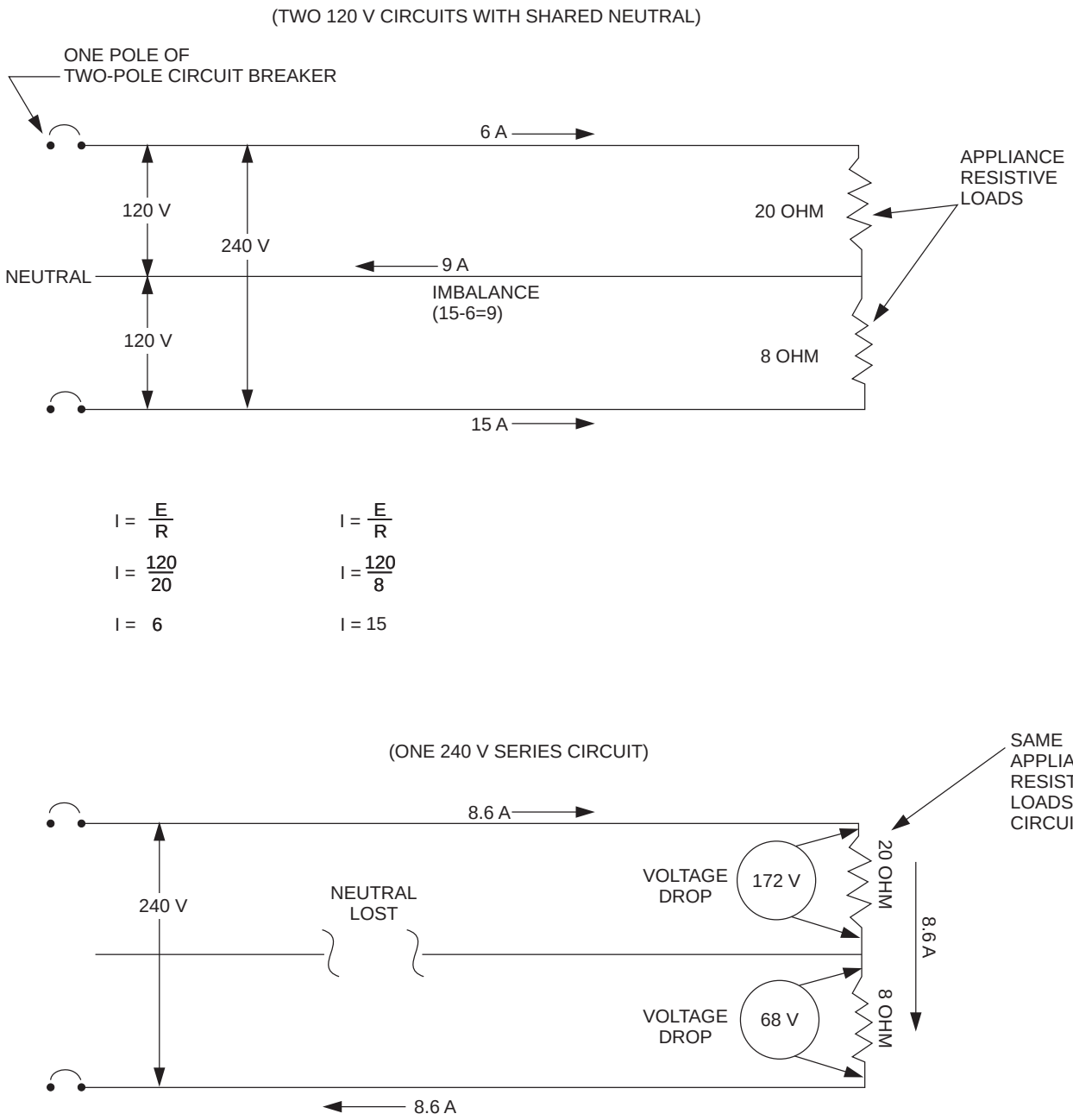

Figure E3406.11.2
MULTIWIRE BRANCH CIRCUITS WITH SHARED NEUTRAL

INTERNATIONAL CODE COUNCIL®
Copyright © 2015 ICC. ALL RIGHTS RESERVED. Accessed by David Dammon on Jun 21, 2017 12:30:52 PM pursuant to License Agreement with ICC. No further reproduction or distribution authorized. ANY UNAUTHORIZED REPRODUCTION OR DISTRIBUTION IS A VIOLATION OF THE FEDERAL COPYRIGHT ACT AND THE LICENSE AGREEMENT, AND SUBJECT TO CIVIL AND CRIMINAL PENALTIES THEREUNDER.

E3406.11.3 Length of conductor for splice or termination. Where conductors are to be spliced, terminated or connected to fixtures or devices, a minimum length of 6 inches (152 mm) of free conductor shall be provided at each outlet, junction or switch point. The required length shall be measured from the point in the box where the conductor emerges from its raceway or cable sheath. Where the opening to an outlet, junction or switch point is less than 8 inches (200 mm) in any dimension, each conductor shall be long enough to extend at least 3 inches (75 mm) outside of such opening. (300.14)

❖ This code provision is prescriptive and leaves little room for misinterpretation. It is very difficult to make splices and device terminations while working inside a device box on very short wires. In many cases, especially when remodeling on older houses, it is found that existing wires have been cut or installed very short. When an attempt is made to remove the switch or receptacle, it cannot be pulled out and turned so that the electrician might see or work on the connections. These device boxes are often smaller than would normally be used in modern wiring, which adds to the difficulty. The alternative can also be a problem. If too much wire is left at the outlet, it is difficult to put the extra length back into the box when installing the device. Although the requirement is very precise, care must be taken to tuck the conductors into the outlet box when the switch or receptacle is installed. If the box is too small, the wires could be damaged when they are pushed back into the box to make room for the device. Minimum box sizes are specified in Section E3905, but consideration should be given to the size of the wiring device to be installed. Some devices, such as fan control switches, dimmers and ground-fault circuit interrupter receptacles, take up more room in the box than ordinary switches or receptacles. Therefore, it may be necessary to size the box larger than the minimum required to have room to tuck the required conductor length into the box without damaging the conductors. For junction boxes with an opening of at least 8 inches (203 mm) in any of its dimensions, the requirement is for only 6 inches (152 mm) of free conductor from the point in the box where the conductor emerges from the raceway or cable sheath. It may be easier for electricians to reach into the box and work on conductors in a junction box with openings of at least 8 inches (203 mm). For all other boxes, the conductor must be long enough to extend at least 3 inches (76 mm) beyond the front edge of the box. This provision does not override the requirement for a 6-inch (152 mm) length of free conductor (see Commentary Figure E3406.11.3).

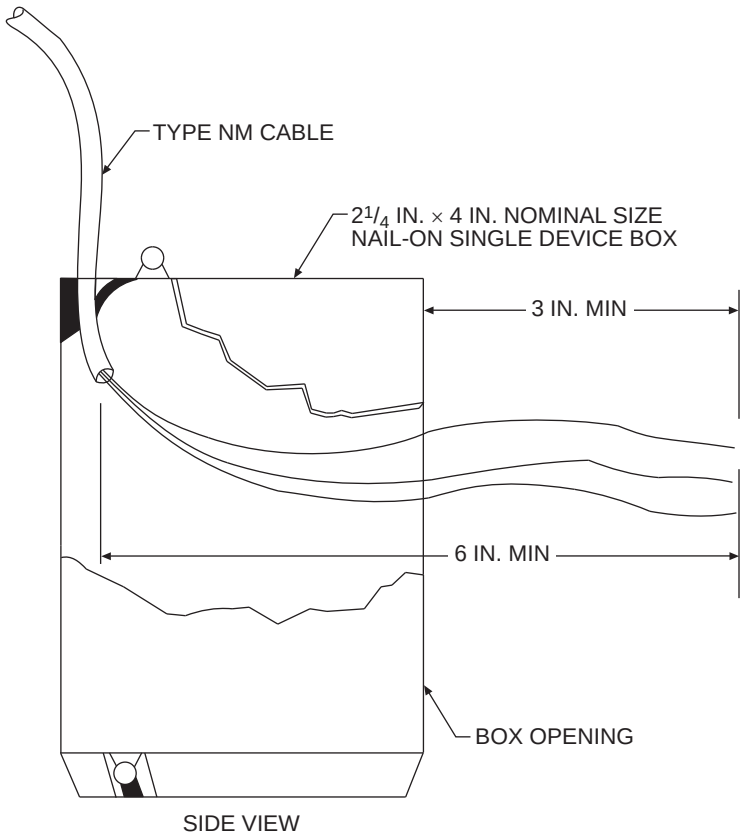

For SI: 1 inch = 25.4 mm.

Figure E3406.11.3
MEASURING CONDUCTOR LENGTH AT OUTLET BOX

INTERNATIONAL CODE COUNCIL®
Copyright © 2015 ICC. ALL RIGHTS RESERVED. Accessed by David Dammon on Jun 21, 2017 12:30:52 PM pursuant to License Agreement with ICC. No further reproduction or distribution authorized. ANY UNAUTHORIZED REPRODUCTION OR DISTRIBUTION IS A VIOLATION OF THE FEDERAL COPYRIGHT ACT AND THE LICENSE AGREEMENT, AND SUBJECT TO CIVIL AND CRIMINAL PENALTIES THEREUNDER.

E3406.12 Grounded conductor continuity. The continuity of a grounded conductor shall not depend on connection to a metallic enclosure, raceway or cable armor. [200.2(B)]

❖ The grounded conductor, not to be confused with a grounding conductor, is a current carrying conductor and can never utilize sheet metal, conduits or metal armors as any portion of such conductor. Recall that the only place that the neutral (grounded) conductor is bonded to a grounded metal enclosure or raceway is within the service equipment, never downstream of the service equipment. For example, a neutral or grounded conductor can not be terminated on a lug bolted to a service panelboard enclosure because the connection of the conductor to the service neutral terminal bus would depend upon the sheet steel of the enclosure to complete the circuit. Even though the service enclosure is bonded to the neutral conductor, the enclosure must not be utilized as a normal current carrying component for any circuit.

E3406.13 Connection of grounding and bonding equipment. The connection of equipment grounding conductors, grounding electrode conductors and bonding jumpers shall be in accordance with Sections E3406.13.1 and E3406.13.2.

❖ See the commentary to Sections E3406.13.1 and E3406.13.2.

E3406.13.1 Permitted methods. Equipment grounding conductors, grounding electrode conductors, and bonding jumpers shall be connected by one or more of the following means:

1. Listed pressure connectors.
2. Terminal bars.
3. Pressure connectors listed as grounding and bonding equipment.
4. Exothermic welding process.
5. Machine screw-type fasteners that engage not less than two threads or are secured with a nut.
6. Thread-forming machine screws that engage not less than two threads in the enclosure.
7. Connections that are part of a listed assembly.
8. Other listed means. [250.8 (A)]

❖ Item 1 refers to devices such as set screw connectors, split-bolt connectors, clamp-type connectors and compression connectors.

Item 2 refers to terminals bars that are most likely part of the listed electrical equipment being grounded or bonded.

Item 3 refers to devices that are listed for the specific purpose of making grounding and bonding connections such as grounding rod connectors and connectors for bonding metal pipes and reinforcement steel bars.

Item 4 refers to welding kits that include a graphite crucible mold and a thermite powder composed of powdered aluminum and copper oxide along with an ignition powder such as magnesium. When ignited and combusted, the powder yields aluminum oxide and pure molten copper. The molten copper drops into the mold and welds the conductors together. Exothermic means that the process yields more heat energy than it consumes, thus an external heat source is not needed for such welding.

Item 5 refers to machine screws threaded into factory-provided threaded openings or machine screws with threaded nuts. Sheet metal screws are NOT allowed.

Item 6 refers to machine screws that act as taps and cut threads in the factory-supplied opening in which they are installed. Such screws are part of listed boxes or panelboard enclosures. Sheet metal screws are NOT allowed.

Item 7 refers to any type of connection that is part of an electrical system component, where such component is listed and labeled for the purpose. See Section E3404.3.

Item 8 is a catch-all category for any means of connection that is specifically listed for the application.

E3406.13.2 Methods not permitted. Connection devices or fittings that depend solely on solder shall not be used. [250.8 (B)]

❖ Connections that completely depend on solder to maintain contact with the conductor(s) are prohibited. Solder has a low melting temperature and the joint could come apart under fault conditions. Note that this section does not prohibit solder joints where the conductors are mechanically joined and then soldered. When solder joints were common, the wires were twisted tightly around each other and then soldered. Solder joints are very rare today because of the potential of heat to damage conductor insulation and because they are labor intensive.

SECTION E3407
CONDUCTOR AND TERMINAL IDENTIFICATION

E3407.1 Grounded conductors. Insulated grounded conductors of sizes 6 AWG or smaller shall be identified by a continuous white or gray outer finish or by three continuous white or gray stripes on other than green insulation along the entire length of the conductors. Conductors of sizes 4 AWG or larger shall be identified either by a continuous white or gray outer finish or by three continuous white or gray stripes on other than green insulation along its entire length or at the time of installation by a distinctive white or gray marking at its terminations. This marking shall encircle the conductor or insulation. [200.6(A) & (B)]

❖ Grounded conductors are commonly referred to as neutral conductors. The correct terminology should be used to identify conductors, namely: grounded, grounding and ungrounded. Conductors with green insulation are prohibited from being used as grounded or neutral circuit conductors; white or gray insulation is always used for the grounded conductors. The provision for using a color other than green with three white stripes as a grounded conductor is included for cases where equipment, lighting fixtures or flexible cords

INTERNATIONAL CODE COUNCIL®
Copyright © 2015 ICC. ALL RIGHTS RESERVED. Accessed by David Dammon on Jun 21, 2017 12:30:52 PM pursuant to License Agreement with ICC. No further reproduction or distribution authorized. ANY UNAUTHORIZED REPRODUCTION OR DISTRIBUTION IS A VIOLATION OF THE FEDERAL COPYRIGHT ACT AND THE LICENSE AGREEMENT, AND SUBJECT TO CIVIL AND CRIMINAL PENALTIES THEREUNDER.

may contain conductors with this coloring. One of the conductors of flexible cord and fixture wire must be identified as the grounded conductor.

For grounded conductors up to and including size 6 AWG, the white insulation, gray insulation or three white stripes must be continuous for the length of the grounded conductor. For 4 AWG and larger, any color conductor insulation other than green may be used for the grounded conductor as long as it is identified at the terminations by white markings at the time of installation. The most common method of marking the grounded conductors of colors other than white or gray is the use of white tape, although white paint that would remain permanently on the conductor could be used. Some paints could react with the insulation, causing damage and such paints should be avoided for marking. At junction and outlet boxes, cabinets and panelboards where grounded conductors are identified with white tape, there is no requirement that the grounded conductor be taped or marked white for the entire length of the exposed conductor. Marking the entire length might be assumed and might help to make the grounded conductor more readily identifiable at these locations. However, the length of the white marking at the termination locations is not defined; the only requirement is that the marking encircle the conductor.

In the wiring of one- and two-family dwellings, the installation of grounded conductors with the wrong color of insulation is not common because the smaller conductors used in residential wiring are either part of a multiconductor cable assembly that is manufactured with the proper color identification or the conductors are required to be the proper color because of their size. This is typically an issue for service and feeder conductors only. Using the white conductor of a multiconductor cable as an ungrounded conductor is permitted only under the exceptions to Section E3407.3.

E3407.2 Equipment grounding conductors. Equipment grounding conductors of sizes 6 AWG and smaller shall be identified by a continuous green color or a continuous green color with one or more yellow stripes on the insulation or covering, except where bare. Conductors with insulation or individual covering that is green, green with one or more yellow stripes, or otherwise identified as permitted by this section shall not be used for ungrounded or grounded circuit conductors. (250.119)

Equipment grounding conductors 4 AWG and larger AWG that are not identified as required for conductors of sizes 6 AWG and smaller shall, at the time of installation, be permanently identified as an equipment grounding conductor at each end and at every point where the conductor is accessible, except where such conductors are bare.

The required identification for conductors 4 AWG and larger shall encircle the conductor and shall be accomplished by one of the following:

1. Stripping the insulation or covering from the entire exposed length.
2. Coloring the exposed insulation or covering green at the termination.
3. Marking the exposed insulation or covering with green tape or green adhesive labels at the termination. [250.119(A)]

Exceptions:

1. Conductors 4 AWG and larger shall not be required to be identified in conduit bodies that do not contain splices or unused hubs. [250.119(A)(1) Exception]
2. Power-limited, Class 2 or Class 3 circuit cables containing only circuits operating at less than 50 volts shall be permitted to use a conductor with green insulation for other than equipment grounding purposes. [250.119 Exception No. 1]

❖ Equipment grounding conductors may be bare in most cases; however, the code will indicate when insulation is required, such as for swimming pool grounding. If the conductors are insulated or covered they must be identified by a continuous green color or continuous green color with one or more yellow stripes. An insulated equipment grounding conductor larger than 6 AWG is permitted to be identified at termination points such as junction boxes, cabinets and panelboards by having the insulation stripped from the entire exposed length or by having the insulation colored green or taped with green tape. For example, a 4 AWG aluminum equipment grounding conductor used on a circuit with an overcurrent device of 200 amperes could have insulation of any color if it is marked with green tape where it is exposed to view at all junction boxes and termination points. The bottom line is: if the conductor is small (6 AWG and smaller), the code says that there is no excuse for not installing conductors with the required color of insulation. The code recognizes that larger conductors with green insulation may not be readily available or may require special order. Note that Items 2 and 3 appear to require reidentification of the conductor only at the termination points; however, the second paragraph of this section also requires the conductor to be reidentified at all points where the conductor is accessible, such as in junction and pull boxes. The code official must determine if the specifics of Items 2 and 3 override the general requirement in this regard.

E3407.3 Ungrounded conductors. Insulation on the ungrounded conductors shall be a continuous color other than white, gray and green. [310.110(C)]

Exception: An insulated conductor that is part of a cable or flexible cord assembly and that has a white or gray finish or a finish marking with three continuous white or gray stripes shall be permitted to be used as an ungrounded conductor where it is permanently reidentified to indicate its use as an ungrounded conductor by marking tape, painting, or other effective means at all terminations and at each location where the conductor is visible and accessible. Identification shall encircle the insulation and shall be a color other than white, gray, and green. [200.7(C)(1)]

Where used for single-pole, 3-way or 4-way switch loops, the reidentified conductor with white or gray insulation or three continuous white or gray stripes shall be used

INTERNATIONAL CODE COUNCIL®
Copyright © 2015 ICC. ALL RIGHTS RESERVED. Accessed by David Dammon on Jun 21, 2017 12:30:52 PM pursuant to License Agreement with ICC. No further reproduction or distribution authorized. ANY UNAUTHORIZED REPRODUCTION OR DISTRIBUTION IS A VIOLATION OF THE FEDERAL COPYRIGHT ACT AND THE LICENSE AGREEMENT, AND SUBJECT TO CIVIL AND CRIMINAL PENALTIES THEREUNDER.

only for the supply to the switch, not as a return conductor from the switch to the outlet. [200.7(C)(2)]

❖ Any color of insulation other than white, gray or green is permitted for ungrounded conductors. The only exception occurs where the conductor with white or gray insulation or with white stripes is part of a multiconductor cable or cord assembly and is permanently reidentified by marking or taping with a color other than white, gray, or green at all termination points on the circuit and at all locations where the conductor is visible or accessible. One example of this is a switch loop in which conductors supplying power to a luminaire are brought to the lighting outlet. Only one cable with a black, white, and bare conductor is run to the switch point. The white conductor is connected to the ungrounded conductor at the lighting outlet and supplies power to the switch. When the switch is closed, power is carried back to the lighting outlet on the black conductor of the switch-loop cable. At the device box for the switch and in the lighting outlet box, the white conductor in the switch loop must be colored, marked or taped to indicate that it is an ungrounded conductor. After the installation is completed and the wall is covered, the wiring layout will not be visible. If the switch box has only one cable run to it, and the switch terminals have only the white and black conductors connected, a person opening the box could assume that the white conductor is used as an ungrounded conductor. However, the code requirement is for it to be marked as ungrounded so that such assumptions are not necessary.

A conductor with white or gray insulation installed in conduit or tubing cannot be used as an ungrounded conductor. For example, a white conductor to be used as an ungrounded conductor that is taped with black tape and installed in conduit or tubing would be in violation of the code.

Exception 2 is a very specific application of the same allowance expressed in Exception 1.

E3407.4 Identification of terminals. Terminals for attachment to conductors shall be identified in accordance with Sections E3407.4.1 and E3407.4.2.

❖ See the commentary to Sections E3407.4.1 and E3407.4.2.

E3407.4.1 Device terminals. All devices excluding panelboards, provided with terminals for the attachment of conductors and intended for connection to more than one side of the circuit shall have terminals properly marked for identification, except where the terminal intended to be connected to the grounded conductor is clearly evident. [200.10(A)]

Exception: Terminal identification shall not be required for devices that have a normal current rating of over 30 amperes, other than polarized attachment caps and polarized receptacles for attachment caps as required in Section E3407.4.2. [200.10(A) Exception]

❖ Devices that have provisions for terminating both grounded and ungrounded conductors must have the terminals identified to indicate the connections. This is required for most of the devices that would be used in residential wiring except for certain specified devices with a normal current rating of over 30 amperes.

E3407.4.2 Receptacles, plugs and connectors. Receptacles, polarized attachment plugs and cord connectors for plugs and polarized plugs shall have the terminal intended for connection to the grounded (white) conductor identified. Identification shall be by a metal or metal coating substantially white in color or by the word "white" or the letter "W" located adjacent to the identified terminal. Where the terminal is not visible, the conductor entrance hole for the connection shall be colored white or marked with the word "white" or the letter "W." [200.10(B)]

❖ Most devices used for residential wiring have the grounded conductor terminals identified by a white (silver) metal composition or metal plating that is lighter in color than the terminals for the ungrounded conductors, which are usually brass colored. Some receptacles and connectors may have corrosion-resistant terminals, which are all white or a light color, or they may have all brass-colored terminals. For these devices especially, the terminals for the connection of the grounded or neutral conductor must be marked with the word "white," marked with the letter "W" or have white paint adjacent to the terminal. Many receptacles have both the distinctive colored terminals and the word "white" to indicate the grounded conductor connection.

Bibliography

The following resource materials were used in the preparation of the commentary for this chapter of the code:

NFPA 70–14, *National Electrical Code*. Quincy, MA: National Fire Protection Association, 2013.

INTERNATIONAL CODE COUNCIL®
Copyright © 2015 ICC. ALL RIGHTS RESERVED. Accessed by David Dammon on Jun 21, 2017 12:30:52 PM pursuant to License Agreement with ICC. No further reproduction or distribution authorized. ANY UNAUTHORIZED REPRODUCTION OR DISTRIBUTION IS A VIOLATION OF THE FEDERAL COPYRIGHT ACT AND THE LICENSE AGREEMENT, AND SUBJECT TO CIVIL AND CRIMINAL PENALTIES THEREUNDER.

INTERNATIONAL CODE COUNCIL®
Copyright © 2015 ICC. ALL RIGHTS RESERVED. Accessed by David Dammon on Jun 21, 2017 12:30:52 PM pursuant to License Agreement with ICC. No further reproduction or distribution authorized. ANY UNAUTHORIZED REPRODUCTION OR DISTRIBUTION IS A VIOLATION OF THE FEDERAL COPYRIGHT ACT AND THE LICENSE AGREEMENT, AND SUBJECT TO CIVIL AND CRIMINAL PENALTIES THEREUNDER.

Chapter 35: Electrical Definitions

General Comments

The electrical trade, like other construction trades, has its vernacular. If people do not understand the language of the code text, they will have difficulty with interpretation of the text. Many words have a unique meaning in the context of a particular code and may be undefined or defined differently in a dictionary.

Purpose

Because much code text meaning depends on the definitions of the terms used in the text, Chapter 35 lists the definitions of terms that do not have everyday, common, universally accepted or dictionary-defined meanings. Chapter 35 is provided as the key to understanding the electrical text.

SECTION E3501 GENERAL

E3501.1 Scope. This chapter contains definitions that shall apply only to the electrical requirements of Chapters 34 through 43. Unless otherwise expressly stated, the following terms shall, for the purpose of this code, have the meanings indicated in this chapter. Words used in the present tense include the future; the singular number includes the plural and the plural the singular. Where terms are not defined in this section and are defined in Section R202 of this code, such terms shall have the meanings ascribed to them in that section. Where terms are not defined in these sections, they shall have their ordinarily accepted meanings or such as the context implies.

❖ In addition to the definitions in this chapter, the code provides definitions at the beginning of Chapter 42, "Swimming Pools," and the beginning of Chapter 43, "Class 2 Remote-Control, Signaling and Power-Limited Circuits." It is necessary that everyone understand the meaning of the terms used when they are using the code provisions. There are many technical terms in the code that would not be understood without a definition. Also, there are many common terms that have a different meaning or very specific meaning when applied to code rules. An individual may try to use terms such as "ground" or "accessible" according to a commonly understood meaning, but the specific definitions in this chapter are necessary to apply the code rules properly. Any definitions not included in this chapter or in Chapter 42 or 43 are to be understood as the commonly used definition in the English language. In addition, there are some terms used in the code such as "service head," "service mast," "threadless coupling," "raceway seal," "multioutlet branch circuit" "opening" and "yoke" that are neither defined herein nor used in their common English sense but are understood with exposure to the electrical industry.

ACCESSIBLE. (As applied to equipment.) Admitting close approach; not guarded by locked doors, elevation or other effective means.

❖ Where equipment must be accessible, it must not be guarded by such things as locked doors or elevation. This does not mean that the equipment cannot be behind a locked door or installed at a high elevation. The key word of this definition is "guarded"; refer to the definition of "Guarded" in this chapter. Equipment is accessible as long as it is not guarded. Also, equipment may be on a roof and still be accessible by someone climbing a permanent or portable ladder. If it is mounted at a high elevation to prevent people from getting to it, it is guarded.

ACCESSIBLE. (As applied to wiring methods.) Capable of being removed or exposed without damaging the building structure or finish, or not permanently closed in by the structure or finish of the building.

❖ Where wiring methods must be accessible, they must not be concealed behind finished walls or behind or in a part of the dwelling construction that is permanent. The wiring is accessible even if reaching it requires someone to climb a ladder or remove an access door. For example, access to the wiring connections for a hydromassage bathtub may be through an access door that is secured with several screws. The connections are accessible as long as reaching them does not require the removal of a permanent cabinet or finished wall. It may take some time to remove the screws securing the access door, but the door does provide access. However, if the access door were inside a linen closet on the opposite side of a wall where the bathtub is located, there may not be room to physically get to the wiring and adequately and safely work on it. If the hydromassage bathtub pump motor needed to be replaced, it may be practically impossible to reach the enclosure for the wiring connections. Thus, it may technically be accessible by removal of the access door, but the accessible space must be considered also. If it is too small a space, the wiring would not be accessible. Wiring in a crawl space, unfinished basement, or attic is accessible as long as a person can get to the wiring for inspection, maintenance, repair or replacement. See the commentary to Section E3905.1 for making connections and splices accessible.

ACCESSIBLE, READILY. Capable of being reached quickly for operation, renewal or inspections, without requiring those to whom ready access is requisite to take actions

INTERNATIONAL CODE COUNCIL®
Copyright © 2015 ICC. ALL RIGHTS RESERVED. Accessed by David Dammon on Jun 21, 2017 12:30:52 PM pursuant to License Agreement with ICC. No further reproduction or distribution authorized. ANY UNAUTHORIZED REPRODUCTION OR DISTRIBUTION IS A VIOLATION OF THE FEDERAL COPYRIGHT ACT AND THE LICENSE AGREEMENT, AND SUBJECT TO CIVIL AND CRIMINAL PENALTIES THEREUNDER.

such as to use tools, to climb over or remove obstacles or to resort to portable ladders, etc.

❖ A student of or person experienced in using the *International Building Code*® (IBC®) may automatically think of "accessible" and "readily accessible" in terms of something being accessible to physically disabled persons. The definition in this code as it pertains to equipment has not been a part of building codes in the past but has been peculiar to electrical code requirements and also more recently included in mechanical and plumbing codes. The difference between accessible and readily accessible is very important in applying code rules.

The definition here is also in Section R202 of this code. Where the code states that equipment must be readily accessible, it means that a person can walk up to the equipment or device and work on it or operate it without climbing or removing any obstacles. Disconnect switches and panelboards containing overcurrent devices must be readily accessible. They should be located where it is not likely that someone will store materials nearby that could block access (see commentary, Section E3405.5).

AMPACITY. The maximum current in amperes that a conductor can carry continuously under the conditions of use without exceeding its temperature rating.

❖ This term is the combination of two terms, "ampere" and "capacity." It relates to the temperature rating of the conductor insulation material. The maximum current that a conductor can carry continuously without exceeding its temperature rating is not set at a certain value but will vary with the conditions of use. The two conditions of use that must be considered to determine the allowable ampacity are the ambient temperature and the number of conductors in close proximity to each other. See the commentary to Section E3704.5 for more information on ampacity.

APPLIANCE. Utilization equipment, normally built in standardized sizes or types, that is installed or connected as a unit to perform one or more functions such as clothes washing, air conditioning, food mixing, deep frying, etc.

❖ Unlike devices, appliances consume power. Chapter 41 has the general code provisions covering appliances. Chapter 37 contains the rules covering the load calculations and branch circuit conductors for appliances such as clothes dryers and ranges. The provisions for the installation of ceiling fans are in Chapter 41. Many times a ceiling fan is thought of as a lighting fixture, however, it is considered to be an appliance.

APPROVED. Acceptable to the authority having jurisdiction.

❖ The term "approved" is used to describe a specific material or method of installation. It means that the material or method is acceptable to the code official. This term is also defined in Section R202 of this code. That definition states that "approved" means acceptable to the code official. The term "authority having jurisdiction" is used in the *National Electrical Code*® (NEC®). In the enforcement of the code, the authority having jurisdiction is the same as the code official. As stated in Section R202, it is imperative that the code official (or authority having jurisdiction) bases her or his decision of approval on the result of investigations, tests or accepted principles or practices.

ARC-FAULT CIRCUIT INTERRUPTER. A device intended to provide protection from the effects of arc-faults by recognizing characteristics unique to arcing and by functioning to de-energize the circuit when an arc-fault is detected.

❖ An arc is produced by electricity flowing through an air gap between two conducting surfaces in a circuit. Because of the high resistance offered by the air gap, intense heat is developed in the arc along with radiation of energy including visible light. For comparison, consider the process of arc-welding, which readily melts the base metal and the filler metals. Arcing can result from loose terminals, screws, lugs, splicing devices, plug and receptacle parts and also from damaged or severed conductors.

The type of arc-fault circuit interrupter (AFCI) device currently required by this code is the combination type, which is further explained in Section E3902.11. In the typical installation, the AFCI device consists of a standard circuit breaker with additional electronic circuitry that is capable of recognizing the unique current fluctuations that result from an arcing condition. Like ground fault circuit interrupter (GFCI) circuit breakers, AFCI circuit breakers are designed and installed such that the grounded conductor and ungrounded conductor of the branch circuit both connect to the AFCI device. This is because the devices monitor the balance of current flow between the conductors. Under normal conditions, the current flow on the ungrounded and grounded conductors of a two-wire branch circuit are equal. If the flow on the conductors is not equal, the AFCI will open in a similar manner as a GFCI device except at a higher leakage current threshold.

An AFCI is designed to detect arcing faults that could cause a fire, and then de-energize the circuit thereby preventing a fire from developing. Conventional circuit breakers reduce the risk of fire by protecting the conductors from excess current which causes conductor heating and AFCI devices enhance this protection by also protecting against heating caused by arcing. For example, at a bad (loose) connection at the terminal of a receptacle, series arcing can occur under load. Over time, as the arcing persists, a layer of carbon builds even more resistance in the connection and the result is heat, which could eventually build up enough to cause a fire. AFCIs are required in most rooms of a dwelling. An AFCI is designed to de-energize the circuit before ignition can occur.

Several different AFCI devices have been developed and are available for use at different points in a circuit. A circuit-breaker type of device that mounts in the panelboard at the origin of the branch circuit or feeder provides protection for the entire branch circuit or feeder. An outlet branch circuit AFCI is installed as

INTERNATIONAL CODE COUNCIL®
Copyright © 2015 ICC. ALL RIGHTS RESERVED. Accessed by David Dammon on Jun 21, 2017 12:30:52 PM pursuant to License Agreement with ICC. No further reproduction or distribution authorized. ANY UNAUTHORIZED REPRODUCTION OR DISTRIBUTION IS A VIOLATION OF THE FEDERAL COPYRIGHT ACT AND THE LICENSE AGREEMENT, AND SUBJECT TO CIVIL AND CRIMINAL PENALTIES THEREUNDER.

a receptacle in the branch circuit and provides protection for downstream wiring, including extension cords and power-supply cords plugged into the circuit. Other AFCI devices can be used such as a portable plug-in device with multiple outlets that provides protection for extension cords and power-supply cords plugged into it, and a cord AFCI that has the device built into or attached to the extension cord and is intended to protect only that cord. These devices are designed to clear the arc fault or open the circuit in a specified time of between one second and 200 milliseconds, depending on the current in the arc fault, thus helping to prevent the ignition of a fire.

Note that the code specifies only one type of AFCI device, that being the combination type. Combination type AFCI breakers will be labeled as such and are also distinguished by different color test buttons. For example, one manufacturer used a blue test button for the earlier branch circuit type of AFCI and uses a white button for the combination type.

ATTACHMENT PLUG (PLUG CAP) (PLUG). A device that, by insertion into a receptacle, establishes connection between the conductors of the attached flexible cord and the conductors connected permanently to the receptacle.

❖ Receptacles are often incorrectly referred to as plugs. Plugs are referred to as the male end of a cord assembly whereas a receptacle is the female component. Attachment plugs have voltage and amperage ratings. Specific configurations are designed so that the attachment plug for an appliance such as a clothes dryer, for example, will not fit the receptacle for a range because they have different amperage ratings.

AUTOMATIC. Performing a function without the necessity of human intervention.

❖ Examples of devices that operate automatically are timing switches, occupant sensor controls, ground- and arc-fault interrupters, thermostats and overcurrent devices.

BATHROOM. An area, including a basin, with one or more of the following: a toilet, a urinal, a tub, a shower, a bidet, or similar plumbing fixture.

❖ The definition of "Bathroom" is important in determining where outlets are required and which ones must have GFCI receptacles (see Sections E3601.6.2, E3705.7, E3901.6 and E3902.1).

BONDED (BONDING). Connected to establish electrical continuity and conductivity.

❖ Bonding is necessary to help ensure continuity between all the metallic parts of the electrical wiring system and will provide an effective path for fault current. If the fault current path is interrupted, open or of high enough impedance, circuit breakers and fuses will not operate properly or at the appropriate time. Bonding can be provided with a conductor or a device, as long as one of these provides a solid metallic connection between the parts being bonded. See Section E3509 for bonding provisions and commentary.

BONDING CONDUCTOR OR JUMPER. A reliable conductor to ensure the required electrical conductivity between metal parts required to be electrically connected.

❖ A bonding jumper is required where the continuity between metallic parts is broken, opened or where the impedance to current flow is too high. An example of this is where a metal conduit is installed containing under-ground service conductors and is attached to the bottom of an outdoor panelboard with a fitting through an opening made by breaking out the concentric rings of the prepunched knockout, which is there to adjust the opening to the size of conduit being installed. The electrical conductivity through the remaining two or three tabs holding the remaining concentric rings in place may be negligible, and in the case of ground fault, the fault current would be impeded. Installing the correct size "bonding jumper" between the conduit and the panelboard provides for a solid fault current path. Note that bonding jumper is also defined in Chapter 24 where it has a similar yet unique definition.

BONDING JUMPER (EQUIPMENT). The connection between two or more portions of the equipment grounding conductor.

❖ Where there is a possibility of an incomplete fault current path or a fault current path that would have high impedance, a bonding jumper must be installed to maintain the continuity and current carrying capacity of the fault current path.

BONDING JUMPER, MAIN. The connection between the grounded circuit conductor and the equipment grounding conductor at the service.

❖ The main bonding jumper is a connection between the service grounded conductor and the equipment grounding conductor. Because the code uses the term "jumper" as part of this term, an individual might think of the main bonding jumper only as a conductor or short piece of wire. Indeed, a wire is used in some cases to make the connection, but the connection is often accomplished with a strap, busbar or self-tapping screw.

For example, in the service equipment (and only in the service equipment), at the location of the main disconnect, the grounded service conductor is connected to the same busbar as the equipment grounding conductors and possibly one or more grounding electrode conductors. Therefore, that busbar functions as a main bonding jumper because it is the connection between the grounded service conductor and the equipment grounding conductors. In the typical dwelling service equipment, the grounded (neutral) busbar is bonded to the service panel-board enclosure by means of a special bonding screw or strap provided by the equipment manufacturer. The equipment grounding conductors for the branch circuits and feeders are terminated on the same busbar that is bonded to the service panel-board enclosure or they are terminated on a separate equipment grounding bus bar that is also bonded to the equipment enclosure. If a separate equipment ground-

INTERNATIONAL CODE COUNCIL®
Copyright © 2015 ICC. ALL RIGHTS RESERVED. Accessed by David Dammon on Jun 21, 2017 12:30:52 PM pursuant to License Agreement with ICC. No further reproduction or distribution authorized. ANY UNAUTHORIZED REPRODUCTION OR DISTRIBUTION IS A VIOLATION OF THE FEDERAL COPYRIGHT ACT AND THE LICENSE AGREEMENT, AND SUBJECT TO CIVIL AND CRIMINAL PENALTIES THEREUNDER.

ing conductor busbar is installed in the service panelboard, it is the steel enclosure that bonds that equipment grounding busbar to the neutral busbar.

The factory supplied bonding jumper screw or strap is shipped disconnected or as a loose component because the manufacturer of the panelboard or enclosed switch cannot anticipate whether or not the equipment will be used as service equipment. If used as service equipment, the neutral conductor bus must be bonded to the enclosure, but, if not used as service equipment, the neutral or grounded conductor bus must be electrically isolated from the enclosure. This is why the bonding jumper screw or strap is not factory installed, it is used in some cases and discarded in others. Where such bonding jumper screws and straps are not required to be installed, they should be discarded to prevent someone from installing them, thinking that they were overlooked.

The purpose of the main bonding jumper is to provide a low-impedance fault-current path back to the power supply to facilitate the tripping of the overcurrent device in case of a ground fault.

BONDING JUMPER, SUPPLY-SIDE. A conductor installed on the supply side of a service or within a service equipment enclosure(s) that ensures the required electrical conductivity between metal parts required to be electrically connected.

❖ Such jumpers are commonly used to bond metallic raceways to equipment enclosures by means of bonding bushings, lugs and short pieces of bare copper conductors.

BRANCH CIRCUIT. The circuit conductors between the final overcurrent device protecting the circuit and the outlet(s).

❖ "Branch circuit" is a general term that includes the conductors run between the final overcurrent device in the panelboard and an outlet such as a receptacle outlet or a lighting fixture. This term helps distinguish a branch circuit from a feeder, which supplies power to the final overcurrent devices.

BRANCH CIRCUIT, APPLIANCE. A branch circuit that supplies energy to one or more outlets to which appliances are to be connected, and that has no permanently connected luminaires that are not a part of an appliance.

❖ This term refers to dedicated branch circuits such as those for laundry appliances and the small-appliance branch circuits required for kitchen and dining areas by Section E3703.2. These are receptacle circuits intended for appliance use only.

BRANCH CIRCUIT, GENERAL PURPOSE. A branch circuit that supplies two or more receptacle outlets or outlets for lighting and appliances.

❖ General-purpose branch circuits supply lighting and receptacle outlets. The receptacle and lighting outlets are not required to be supplied by separate circuits because both are permitted on the same circuit. For dwellings, the number of lighting or receptacle outlets permitted on each general-purpose branch circuit is not specified. The minimum number of general purpose branch circuits is determined from the total computed load (see Section E3703.5).

BRANCH CIRCUIT, INDIVIDUAL. A branch circuit that supplies only one utilization equipment.

❖ Individual branch circuits are used for most major appliances and motors and are sized to provide power to specific loads according to the rating of the equipment, appliance or load served. The circuits supplying power for dishwashers, dryers, ranges and many motor-driven appliances are examples of individual branch circuits. See Section E3702 for rules on sizing individual branch circuits for motor loads. Where an individual branch circuit supplies a receptacle that the appliance is plugged into, it must be a single receptacle. An appliance such as an instant electric water heater installed under a kitchen sink may require an individual branch circuit because of the high current load. If a duplex receptacle were installed under the sink, a disposal could also be connected to that circuit, and if both appliances were operated at once, the overcurrent device could trip. Therefore, this electric water heater should have a single receptacle installed and should be supplied by a separate circuit—an individual branch circuit. Not all individual branch circuits supply receptacles. For example, individual branch circuit conductors are run directly to the furnace and not to a receptacle. Section E3703.1 requires that the furnace be supplied by an individual branch circuit regardless of the horsepower rating of the motor.

BRANCH CIRCUIT, MULTIWIRE. A branch circuit consisting of two or more ungrounded conductors having voltage difference between them, and a grounded conductor having equal voltage difference between it and each ungrounded conductor of the circuit, and that is connected to the neutral or grounded conductor of the system.

❖ See the commentaries for "Branch circuit" and "Branch circuit, individual" (see Commentary Figure E3406.11.2).

CABINET. An enclosure designed either for surface or flush mounting and provided with a frame, mat or trim in which a swinging door or doors are or may be hung.

❖ A cabinet is an enclosure such as a meter base. A panelboard enclosure is a cabinet, which is essentially a metal or plastic box that houses apparatus such as busbars, terminals and overcurrent devices. In everyday usage in the field, many electricians and electrical contractors involved in residential wiring refer to the cabinet and panel-board together as simply the panel, or they use trade jargon terms such as "breaker box" and do not necessarily distinguish between the cabinet and the panelboard as separate items. Perhaps this is because most panel-boards used in one- and two-family dwellings come from the manufacturer already installed in a cabinet. For simplicity, the term "panelboard" is also used in this commentary in many places to refer to the cabinet and panel-board as a unit.

INTERNATIONAL CODE COUNCIL®
Copyright © 2015 ICC. ALL RIGHTS RESERVED. Accessed by David Dammon on Jun 21, 2017 12:30:52 PM pursuant to License Agreement with ICC. No further reproduction or distribution authorized. ANY UNAUTHORIZED REPRODUCTION OR DISTRIBUTION IS A VIOLATION OF THE FEDERAL COPYRIGHT ACT AND THE LICENSE AGREEMENT, AND SUBJECT TO CIVIL AND CRIMINAL PENALTIES THEREUNDER.

However, it is important to know the definition for cabinet to understand code rules that apply specifically to the panelboard enclosure or other enclosures such as the meter base. See Section E3907 for the rules covering cabinets, which include positioning, mounting, and running cables and raceways into the cabinet. Preassembled cabinet and panelboard units comply with requirements for sizing and space such as providing sufficient wire bending space.

CIRCUIT BREAKER. A device designed to open and close a circuit by nonautomatic means and to open the circuit automatically on a predetermined overcurrent without damage to itself when properly applied within its rating.

❖ Circuit breakers are the most commonly used form of overcurrent protection in residential wiring. Except for service-entrance conductors and some tap conductors, the code requires that an overcurrent protection device be installed in series with each ungrounded conductor at the point where the conductor receives its supply. Conductors are rated to operate at maximum temperatures, and circuit breakers serve to open the circuit and protect the conductor if the temperature in the conductor rises to a level that would damage the conductor. Circuit breakers also protect conductors from short circuits and ground faults. A ground fault is current flowing to something that is grounded, such as a flow between a hot conductor and a metal enclosure. A short circuit is the flow of current between ungrounded conductors or between an ungrounded and a grounded conductor. The short circuit current is usually quite high and flows for a very short time. Circuit breakers must have an interrupting rating sufficient to stop the flow of current before damage occurs from excessive heating or arcing.

CLOTHES CLOSET. A nonhabitable room or space intended primarily for storage of garments and apparel.

❖ A clothes closet is a space or a room that is not considered to be habitable. Its main function is to store clothing, shoes and apparel. The definition of "Habitable space" in Chapter 2 excludes closets, storage rooms, bathrooms and similar spaces, in harmony with this definition and also describes habitable space as that used for living, sleeping, eating or cooking. The question often arises about how to view a walk-in closet that is quite large, provided with cabinetry and furniture, designated as a "dressing room" and that resembles a habitable room more than a "closet." Despite the fact that such a space appears to be more than a closet, its primary purpose is for storage of clothing and apparel and it is not used for living, sleeping, eating or cooking. A dressing room is more akin to a bathroom than a habitable room. This issue is a concern when applying the code provisions relative to receptacle outlet placement and the allowable types of luminaires. If the "main function" of a room is to store clothes, shoes and apparel, it is a clothes closet and the type of luminaires should comply with Section E4003.12.

CONCEALED. Rendered inaccessible by the structure or finish of the building.

❖ Wiring and equipment that is installed within the finished construction is considered to be concealed. Access to it would require the removal of finished construction. The wiring in a crawl space or attic is not concealed if one could get to the wiring to work on it. In some cases, the space in the attic and crawl space or some parts of the attic or crawl space of a dwelling is very limited. For example, where a junction box is visible from one part of a crawl space but the area is too small to actually crawl to the box or reach the box to work on it, is the junction box considered to be concealed? Junction boxes are considered to be concealed if a person would need to remove some finished construction to work on them.

CONDUCTOR.

Bare. A conductor having no covering or electrical insulation whatsoever.

Covered. A conductor encased within material of composition or thickness that is not recognized by this code as electrical insulation.

Insulated. A conductor encased within material of composition and thickness that is recognized by this code as electrical insulation.

❖ An example of a covered conductor is the grounding conductor within the sheathing of Type NM cable. When the sheathing is stripped and the separate conductors are examined, it can be seen that this grounding conductor is covered with paper. This is not an insulated conductor. An improper use of this paper-covered bare conductor would be to use it as an ungrounded or grounded conductor. Insulated conductors are tested to meet standards for temperature and conditions of use and are marked as to the type of insulation. The conductor types most widely used in wiring of one- and two-family dwellings are listed in Section E3406.5 [see Commentary Figure E3501(1)].

CONDUIT BODY. A separate portion of a conduit or tubing system that provides access through a removable cover(s) to the interior of the system at a junction of two or more sections of the system or at a terminal point of the system. Boxes such as FS and FD or larger cast or sheet metal boxes are not classified as conduit bodies.

❖ A conduit body is a fitting designed to provide access to the wiring through a separate cover. It is used mostly where a 90-degree bend with a full radius would be difficult to install. Many different styles and shapes of conduit bodies are available for both metal and nonmetallic conduit systems. Some of the different types are LB, where the opening is on the back; LL and LR, which are intended to lay flat against the sur-face and have the opening on the left or right side respectively; and T, which is a combination of an LL and an LR. A Type C conduit body is used in a straight run of conduit to provide an opening in the conduit run or to make a splice. A splice can be made in a conduit body if it is marked with the cubic-inch capacity.

INTERNATIONAL CODE COUNCIL®
Copyright © 2015 ICC. ALL RIGHTS RESERVED. Accessed by David Dammon on Jun 21, 2017 12:30:52 PM pursuant to License Agreement with ICC. No further reproduction or distribution authorized. ANY UNAUTHORIZED REPRODUCTION OR DISTRIBUTION IS A VIOLATION OF THE FEDERAL COPYRIGHT ACT AND THE LICENSE AGREEMENT, AND SUBJECT TO CIVIL AND CRIMINAL PENALTIES THEREUNDER.

CONNECTOR, PRESSURE (SOLDERLESS). A device that establishes a connection between two or more conductors or between one or more conductors and a terminal by means of mechanical pressure and without the use of solder.

❖ This term applies to the common bolted-type pressure connector used for terminals in panelboards and other equipment where a screw or bolt binds against the end of a conductor. This term also applies to devices commonly referred to as "wire nuts," which are used to connect two or more conductors. Wire nuts are a screw-on type of connector with an insulated cap made of plastic or other nonconductive material. Most wire nuts contain a spiral metallic spring or coil inside to bind the conductors together. Wire nuts are typically color-coded to indicate the maximum size and number of conductors for which the device is rated. These colors are not determined by the code and may be different for different manufacturers. The proper size connector must be used for the wires to be spliced. See Section E3406.10 for detailed information on making connections.

CONTINUOUS LOAD. A load where the maximum current is expected to continue for 3 hours or more.

❖ Continuous loads could result in higher conductor temperatures. Section E3701.2 requires that conductors for continuous loads be sized at 125 percent of the load.

COOKING UNIT, COUNTER-MOUNTED. A cooking appliance designed for mounting in or on a counter and consisting of one or more heating elements, internal wiring and built-in or separately mountable controls.

❖ This definition must be considered when calculating the feeder neutral load for cooking appliances as prescribed in Section E3704.3 (see also Table E3602.2 and Section E3702.9).

COPPER-CLAD ALUMINUM CONDUCTORS. Conductors drawn from a copper-clad aluminum rod with the copper metallurgically bonded to an aluminum core. The copper forms a minimum of 10 percent of the cross-sectional area of a solid conductor or each strand of a stranded conductor.

❖ Copper-clad aluminum conductors were used in nonmetallic sheathed cable in the late 1950s and early 1960s. It is important to know the terminating and splicing provisions for repair and retrofitting work that involves older dwellings that are wired with copper-clad aluminum conductors.

CUTOUT BOX. An enclosure designed for surface mounting and having swinging doors or covers secured directly to and telescoping with the walls of the box proper (see "Cabinet").

❖ This is a variation of a cabinet defined above, which is an enclosure for electrical devices and equipment such as fuses and circuit breakers, switches, current transformers, etc. A cutout box may be used for a motor disconnect switch with fuses for overcurrent protection. A junction box has a cover attached with screws or bolts, but a cutout box has a swinging door with a hinge. A cutout box is made to contain devices that may need to be worked on, inspected or maintained; the hinged cover makes it easier to get into than a junction box.

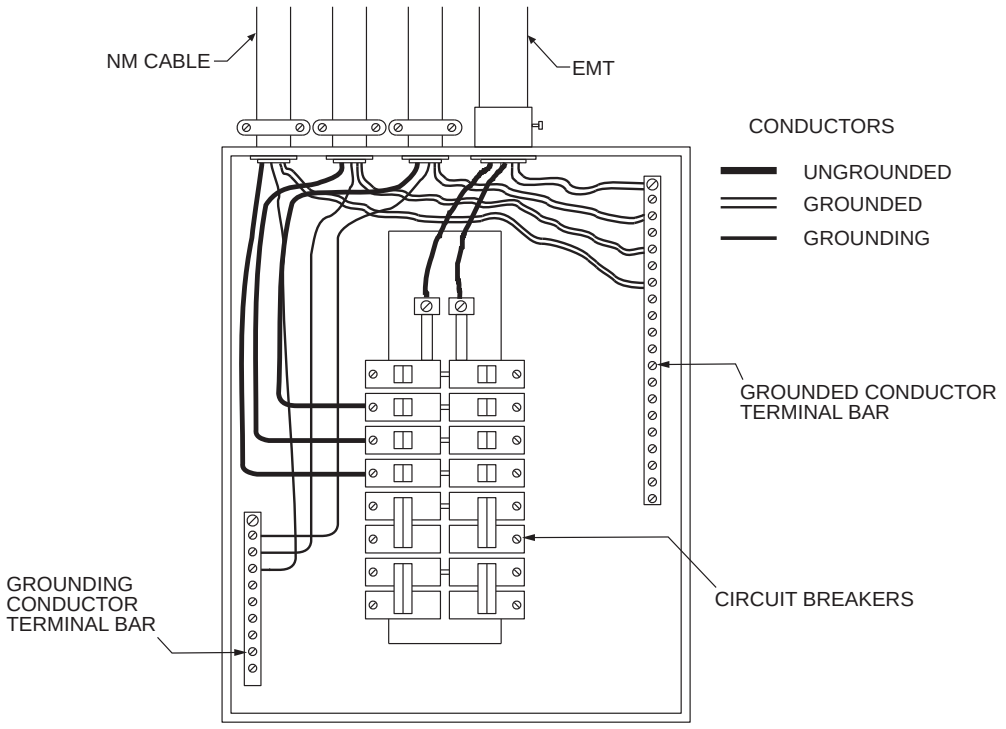

Figure E3501(1)
CONDUCTOR TERMINOLOGY

INTERNATIONAL CODE COUNCIL®
Copyright © 2015 ICC. ALL RIGHTS RESERVED. Accessed by David Dammon on Jun 21, 2017 12:30:52 PM pursuant to License Agreement with ICC. No further reproduction or distribution authorized. ANY UNAUTHORIZED REPRODUCTION OR DISTRIBUTION IS A VIOLATION OF THE FEDERAL COPYRIGHT ACT AND THE LICENSE AGREEMENT, AND SUBJECT TO CIVIL AND CRIMINAL PENALTIES THEREUNDER.

DEAD FRONT. Without live parts exposed to a person on the operating side of the equipment.

❖ The door or cover of a cabinet or cutout box is a "dead front;" the live parts within are not exposed to a person standing in front of a panelboard or equipment. This term is used in measuring the working clearances for electrical equipment. The clearance from the dead front or front of the enclosure of the cabinet for a panelboard is a minimum of 36 inches (914 mm).

DEMAND FACTOR. The ratio of the maximum demand of a system, or part of a system, to the total connected load of a system or the part of the system under consideration.

❖ Demand factors are used in the calculations for various loads such as service and feeder loads. Demand factors are expressed as a percentage of the calculated load and are used when there are multiple loads that are not likely to be used at the same time. Feeders are not sized to have the current-carrying capacity to supply the total current for all the loads at once. For example, for certain fastened-in-place appliances in a dwelling, the total nameplate rating load must be calculated at 100 percent if the number of appliances is three or fewer. But if there are four or more, the load is calculated at 75 percent of the total load of the appliances. It is unlikely that all four of the appliances would be used at full load at the same time [see Tables E3602.2 and E3704.2(1)].

DEVICE. A unit of an electrical system that carries or controls electrical energy as it principal function.

❖ A switch, receptacle, circuit breaker, fuse, meter and thermostat are all examples of a "device" since they do not use or consume electrical energy; they just control or carry the current. This definition recognizes that some devices such as illuminated switches, timer switches, occupant sensing switches, remote control switches and GFCI receptacles do, in fact, consume some small amount of electrical power, but their primary function is still consistent with this definition.

DISCONNECTING MEANS. A device, or group of devices, or other means by which the conductors of a circuit can be disconnected from their source of supply.

❖ This term is usually used in conjunction with the service, appliances and motors. Disconnecting means can be fused or unfused enclosed switches, enclosed circuit breakers and pull-out devices. Code provisions for disconnecting means are very specific for such things as identification, location, type and ratings. The disconnection of power to a circuit is an obvious safety issue.

DWELLING.

Dwelling unit. A single unit, providing complete and independent living facilities for one or more persons, including permanent provisions for living, sleeping, cooking and sanitation.

One-family dwelling. A building consisting solely of one dwelling unit.

Two-family dwelling. A building consisting solely of two dwelling units.

❖ A guest room in a hotel or motel is not a dwelling unit unless it contains permanent provisions for cooking. A portable microwave is not permanent, so even a motel room with a kitchenette is not a dwelling unit unless the cooking equipment is a built-in range or cook top. Because this code covers only one- and two-family dwellings and townhouses, the definition for a multiple-family dwelling is not included (see Section R101.2).

EFFECTIVE GROUND-FAULT CURRENT PATH. An intentionally constructed, low-impedance electrically conductive path designed and intended to carry current under ground-fault conditions from the point of a ground fault on a wiring system to the electrical supply source and that facilitates the operation of the overcurrent protective device or ground-fault detectors.

❖ See Sections E3908.4 and E3908.5.

ENCLOSED. Surrounded by a case, housing, fence or walls that will prevent persons from accidentally contacting energized parts.

❖ This is a general term that applies to enclosing things such as devices inside a cabinet. It can also apply to equipment inside a room such as an electrical equipment room.

ENCLOSURE. The case or housing of apparatus, or the fence or walls surrounding an installation, to prevent personnel from accidentally contacting energized parts or to protect the equipment from physical damage.

❖ An enclosure contains electrical equipment. All enclosures, from recessed light fixtures to outdoor panelboards, are evaluated by a testing agency to designate proper use and location. The designation is marked on or comes with the equipment. Examples of types of enclosures are Type 1 for general indoor use and Type 3R for outdoor use. A Type 3R enclosure provides a degree of protection against rain, snow and sleet.

ENERGIZED. Electrically connected to, or is, a source of voltage.

❖ Energized conductors and devices have a voltage impressed upon them. Some jurisdictions require that a house be energized before an inspection can be completed. Often, temporary power can be connected to the house for the inspection to check such things as proper polarity of receptacles and the proper functioning of the GFCI receptacles.

EQUIPMENT. A general term including material, fittings, devices, appliances, luminaires, apparatus, machinery and the like used as a part of, or in connection with, an electrical installation.

❖ This is a general catchall term used to refer to anything from large items such as appliances, air-conditioning units, cabinets, panelboards and meter bases to items such as a 4-inch-square junction box or receptacle. Note that "Equipment" is defined differently in Chapter 2.

INTERNATIONAL CODE COUNCIL®
Copyright © 2015 ICC. ALL RIGHTS RESERVED. Accessed by David Dammon on Jun 21, 2017 12:30:52 PM pursuant to License Agreement with ICC. No further reproduction or distribution authorized. ANY UNAUTHORIZED REPRODUCTION OR DISTRIBUTION IS A VIOLATION OF THE FEDERAL COPYRIGHT ACT AND THE LICENSE AGREEMENT, AND SUBJECT TO CIVIL AND CRIMINAL PENALTIES THEREUNDER.

EXPOSED. (As applied to live parts.) Capable of being inadvertently touched or approached nearer than a safe distance by a person.

❖ The term "exposed" live parts refers to the uninsulated portion of conductors, terminals or devices that are energized and that are not guarded or enclosed. The conductors and overcurrent devices of a panelboard in a cabinet are exposed when the cover is removed.

EXPOSED. (As applied to wiring methods.) On or attached to the surface or behind panels designed to allow access.

❖ Wiring methods that are not concealed in the construction of the dwelling are considered exposed. For example, nonmetallic sheathed cable can be run exposed where not subject to physical damage. The provisions of Section E3802.3 cover the installation of exposed cables.

EXTERNALLY OPERABLE. Capable of being operated without exposing the operator to contact with live parts.

❖ Circuit breakers, for example, are externally operable because a dead front cover is installed over the panelboard containing the breakers so that the operator will not be exposed to live parts.

FEEDER. All circuit conductors between the service equipment, or the source of a separately derived system, or other power supply source and the final branch-circuit overcurrent device.

❖ In residential wiring systems, a feeder is usually a large set of conductors run in cable or in a raceway from the service equipment to the main panel or to a subpanel, which has the final branch circuit overcurrent devices. A feeder carries power to a distribution center or panel that is the origination point for one or more branch circuits. The arrangement and layout of the service equipment can vary, and some houses may not have feeder conductors. Where the meter base, main disconnect and distribution panel are combined into one unit or piece of equipment, this unit may be referred to in common usage or slang as a meter-main combination panel. The main disconnect and all the branch circuit overcurrent devices are located in this equipment, usually on the outside of the house. If all the circuit breakers except for the main disconnect are for branch circuits, and there are no sub-panels anywhere else in or on the house, there is no feeder.

Another arrangement may be where a meter base only is on the outside of the house and the service-entrance conductors are run to the meter base and continue on to a panelboard inside the house. This panel inside the house may be called, in common usage (but not in the code), a main breaker panel because the main breaker is installed in or is part of the panelboard along with the final branch circuit overcurrent devices. Again, if there are no subpanels where additional final overcurrent devices for branch circuits would be installed, there would be no feeder.

Another arrangement of service equipment is where the meter base and main disconnect are located on the outside of the house and the panelboard is separate. The conductors that are run from the main disconnect to the distribution panel are the main power feeder. The main disconnect may consist of up to six switches (which are usually circuit breakers), and the conductors from any of these switches or circuit breakers that feed a distribution panel are feeders (see Section E3706.3). A large house may have two or more distribution panels where final branch circuit overcurrent devices are installed. For example, the conductors from the main service to a panel for a detached garage and to a panel serving swimming pool equipment are feeder conductors. All of the main disconnect switches, which could number up to six, do not necessarily supply feeder conductors. For example, one of the six main disconnects at the service equipment may serve an air conditioning condenser unit near the service equipment. These conductors would be branch circuit conductors, not feeder conductors.

FITTING. An accessory such as a locknut, bushing or other part of a wiring system that is intended primarily to perform a mechanical rather than an electrical function.

❖ Fittings connect cables, raceways, boxes and other equipment together to form a complete wiring system for the wiring method used. Wiring methods for dwellings include cable and raceway systems along with the associated boxes and hardware. Fittings include accessories such as cable and conduit connectors, couplings, adapters, reducers, clamps, bushings, locknuts, nipples, knock-out seals, conduit bodies, capped elbows, pipe and rod ground clamps, brackets, hubs and service heads.

GROUND. The earth.

❖ A "ground" is a conducting connection. Two examples of how this term is used are "ground clamp" and "ground bus," which refer to the conducting connection. This term is not used by the code to describe a wire or conductor. To say the "ground conductor" or the "ground wire" may lead to miscommunication. In talking about a conductor, it is helpful to use either "grounded conductor" or "grounding conductor." In some publications the term "ground wire" is used to indicate the "grounding wire." The terms used to refer to ground and grounding have very specific meanings and should be understood and used properly. "Ground wire" usually means the grounding conductor, but someone could possibly use it to mean the grounded conductor. Many informal words and phrases are used in the electrical trade to describe materials, devices, equipment and conductors. Although not defined in the code or other publications, these informal terms are understood by all individuals with at least some experience. Some terms, however, should be used according to the code definition to make communication accurate and avoid misunderstandings.

INTERNATIONAL CODE COUNCIL®
Copyright © 2015 ICC. ALL RIGHTS RESERVED. Accessed by David Dammon on Jun 21, 2017 12:30:52 PM pursuant to License Agreement with ICC. No further reproduction or distribution authorized. ANY UNAUTHORIZED REPRODUCTION OR DISTRIBUTION IS A VIOLATION OF THE FEDERAL COPYRIGHT ACT AND THE LICENSE AGREEMENT, AND SUBJECT TO CIVIL AND CRIMINAL PENALTIES THEREUNDER.

GROUNDED (GROUNDING). Connected (connecting) to ground or to a conductive body that extends the ground connection.

❖ Grounded conductors are intentionally connected to the earth by means of an electrode such as a ground rod, concrete reenforcing steel, copper water service pipe or other grounding electrode.

GROUNDED, EFFECTIVELY. Intentionally connected to earth through a ground connection or connections of sufficiently low impedance and having sufficient current-carrying capacity to prevent the buildup of voltages that may result in undue hazards to connected equipment or to persons.

❖ Grounding an object prevents it from being at a voltage potential different from the earth. An electrical system must be effectively grounded by connecting it to the earth in a manner that will provide a current-carrying path of sufficient capacity to limit the voltage to ground (earth), limit the voltage imposed by a lightning strike or a line surge and provide a reference level for the normal system voltage. See Section E3607 for more information on grounding.

GROUNDED CONDUCTOR. A system or circuit conductor that is intentionally grounded.

❖ The grounded conductor of the service, feeder or branch circuits is commonly called the "neutral" and is required to be white or gray. Although the word "neutral" is not included in this chapter and is seldom used in the code, in trade jargon it is used interchangeably with "grounded conductor." The term "neutral" is used in Section E3704.3 regarding the load on a feeder. The code requires that one of the three service conductors supplying the dwelling be grounded for the reasons listed under "Effectively grounded," above. Electrical power is supplied to one- and two-family dwellings from a single-phase, 3-wire transformer, the midpoint of which is grounded at the transformer. The conductor that is connected to the midpoint of the transformer winding is the grounded conductor. The other two service conductors are ungrounded and have a potential difference of 240 volts between them. The grounded conductor has a potential difference of 120 volts between it and each ungrounded conductor. The grounded conductor is the neutral conductor of the system and carries only the unbalanced current between the two phase conductors. According to Section E3607.1, the grounded conductor is grounded at the service disconnect location through its connection to the grounding electrode conductor, which is run to an acceptable grounding electrode. See Section E3608 for the "Grounding Electrode System."

GROUNDING CONDUCTOR, EQUIPMENT (EGC). The conductive path(s) that provides a ground-fault current path and connects normally noncurrent-carrying metal parts of equipment together and, to the system grounded conductor, the grounding electrode conductor or both.

❖ The equipment grounding conductor is not intended to carry current except in case of a ground fault. It must be sized according to the rating of the overcurrent device serving the feeder or branch circuit. Section E3908 covers equipment grounding. All of the noncurrent carrying metallic parts of the electrical wiring system are tied together to form a continuous low-impedance current path for any fault current that could occur. Equipment is grounded so that in case of a failure in the insulation or for any other reason the metal equipment becomes energized, current will flow along the equipment grounding conductor path back to the source and trip the circuit breaker or fuse. In one- and two-family dwellings, equipment is grounded with the equipment grounding conductor, which is typically the green or bare conductor in the nonmetallic sheathed cable run for the branch circuits. Or, where metal conduit or tubing (such as electrical metallic tubing or EMT) is used, the code permits the conduit or tubing itself to be the equipment grounding conductor. There are several conditions in Section E3908.8.1 for using flexible metal conduit itself as the equipment grounding conductor. In actual practice, it is easier to install the green or bare equipment grounding conductor. The equipment grounding conductor is connected to the grounded conductor only within the service equipment. It must not be tied to the grounded conductor or neutral conductor at any point downstream from the service equipment (see Section E3607.2).

GROUNDING ELECTRODE. A conducting object through which a direct connection to earth is established.

❖ Ground rods, plates, pipes, wire loops, footing reenforcing steel and metal underground water pipes are all examples of grounding electrodes. An electrode in the context of this code is a metal electrically conductive terminal through which current enters the earth.

GROUNDING ELECTRODE CONDUCTOR. A conductor used to connect the system grounded conductor or the equipment to a grounding electrode or to a point on the grounding electrode system.

❖ The grounding electrode conductor is a copper, aluminum or copper-clad aluminum conductor, and it is not in-tended to carry current except in case of a ground fault. It can be bare, and the code does not specify a color for the grounding electrode conductor. The grounding electrode conductor is sized based on the size of the largest service-entrance conductor as shown in Table E3603.4.

The grounding electrode conductor is connected to the grounded service conductor at any accessible point between the load end of the service drop or service lateral and the main disconnect. This connection is usually made in the service equipment where the main disconnect is located or in the meter enclosure. The grounding electrode conductor and the grounded service conductor are bonded together and to the metal service enclosure by the main bonding jumper. The equipment grounding conductors are also brought to this point and tied to the grounded service conductor and to the grounding electrode conductor. The other

INTERNATIONAL CODE COUNCIL®
Copyright © 2015 ICC. ALL RIGHTS RESERVED. Accessed by David Dammon on Jun 21, 2017 12:30:52 PM pursuant to License Agreement with ICC. No further reproduction or distribution authorized. ANY UNAUTHORIZED REPRODUCTION OR DISTRIBUTION IS A VIOLATION OF THE FEDERAL COPYRIGHT ACT AND THE LICENSE AGREEMENT, AND SUBJECT TO CIVIL AND CRIMINAL PENALTIES THEREUNDER.

end of the grounding electrode conductor is connected to one or more grounding electrodes such as an underground water pipe and ground rod.

GROUND-FAULT CIRCUIT-INTERRUPTER. A device intended for the protection of personnel that functions to de-energize a circuit or portion thereof within an established period of time when a current to ground exceeds the value for a Class A device.

❖ A ground-fault circuit-interrupter (GFCI) is a device that will open a circuit when current flows outside of the intended circuit. A current flowing outside the circuit conductors could occur, for example, from a damaged conductor that could create an outside path for current to flow to a grounded object. The small current flow may not be enough to trip the normal circuit breaker. Or it could be a low-resistance current path through an individual who touches something like a cord, box, wire or tool surface that has become "hot" or energized by a ground fault. It has been determined that even a small current flow of 6 milliamperes could be harmful to people under certain circumstances.

The GFCI device contains a coil through which both circuit conductors are routed. If between 4 and 6 milliamperes of current is flowing outside the circuit conductors, this current transformer coil senses the unbalance of current in the two branch circuit conductors and generates a small current that activates the trip mechanism and opens the circuit. A GFCI receptacle provides only ground-fault protection, and the GFCI circuit breaker provides overcurrent protection as well.

GROUND-FAULT CURRENT PATH. An electrically conductive path from the point of a ground fault on a wiring system through normally non-current-carrying conductors, equipment, or the earth to the electrical supply source.

Examples of ground-fault current paths are any combination of equipment grounding conductors, metallic raceways, metallic cable sheaths, electrical equipment, and any other electrically conductive material such as metal, water, and gas piping; steel framing members; stucco mesh; metal ducting; reinforcing steel; shields of communications cables; and the earth itself.

GUARDED. Covered, shielded, fenced, enclosed or otherwise protected by means of suitable covers, casings, barriers, rails, screens, mats or platforms to remove the likelihood of approach or contact by persons or objects to a point of danger.

❖ The code requires live parts to be guarded against accidental contact. Where live parts are installed inside approved boxes, cabinets and other enclosures, they are considered guarded.

IDENTIFIED. (As applied to equipment.) Recognizable as suitable for the specific purpose, function, use, environment, application, etc., where described in a particular code requirement.

❖ Equipment that is identified for a specific purpose is listed and labeled or marked. In this way, it is recognizable as suitable for the use and for the conditions in which it is installed. For example, a cable that is suitable for direct burial underground is identified for this use by its listing and labeling as Type UF (Underground Feeder) cable. Another example is the disconnect switch installed on the outside of a house for an air conditioner. It must be identified for outdoor use where it could be subject to rain or snow. A Type 3R enclosure for this disconnect switch would survive the usual outdoor weather conditions. An installer and inspector can rely on the identification of equipment in its listing and labeling because a nationally recognized testing laboratory has tested it.

INTERRUPTING RATING. The highest current at rated voltage that a device is identified to interrupt under standard test conditions.

❖ This rating is the highest current that can flow through a circuit breaker or fuse without damage to the device and its enclosure. This is not the overcurrent rating, such as the identification of a fuse as a 15-ampere or 20-ampere fuse. Where a short circuit occurs as two ungrounded conductors touch, or where a ground fault occurs as an ungrounded conductor comes in contact with a grounded conductor, a very high current can flow. This can damage the overcurrent device and the equipment in which it is mounted. Circuit breakers and fuses are designed to trip without being damaged where the rating is high enough for the current imposed on the device. The amount of short-circuit or ground-fault current available must be calculated and the devices rated accordingly. Most circuit breakers are made with an interrupting rating of 10,000 amperes. See Sections E3404.2 and E3404.3 for more information.

INTERSYSTEM BONDING TERMINATION. A device that provides a means for connecting intersystem bonding conductors for communications systems to the grounding electrode system.

❖ Such devices provide a convenient place for bonding of communications and entertainment systems. All systems serving a dwelling are required to be bonded together. Without the convenience of such bonding devices, bonding is more likely to be overlooked by the installers of the systems. One type of device clamps onto a service enclosure such as a meter box and provides terminals for bonding conductors from telephone, cable and other utilities (see Section E3609.3).

ISOLATED. (As applied to location.) Not readily accessible to persons unless special means for access are used.

❖ This term may be used to refer to some wiring method or equipment that is not readily accessible.

Switches or devices could be considered isolated if they are located inside a locked cabinet. This term is related to location and does not relate to usage such as isolated grounding receptacles.

KITCHEN. An area with a sink and permanent provisions for food preparation and cooking.

❖ This term is used in many locations in the code and requires that three elements be present: a sink, provi-

INTERNATIONAL CODE COUNCIL®
Copyright © 2015 ICC. ALL RIGHTS RESERVED. Accessed by David Dammon on Jun 21, 2017 12:30:52 PM pursuant to License Agreement with ICC. No further reproduction or distribution authorized. ANY UNAUTHORIZED REPRODUCTION OR DISTRIBUTION IS A VIOLATION OF THE FEDERAL COPYRIGHT ACT AND THE LICENSE AGREEMENT, AND SUBJECT TO CIVIL AND CRIMINAL PENALTIES THEREUNDER.

sions for food preparation and provisions for cooking, all of which must be permanent.

LABELED. Equipment or materials to which has been attached a label, symbol or other identifying mark of an organization acceptable to the authority having jurisdiction and concerned with product evaluation that maintains periodic inspection of production of labeled equipment or materials and by whose labeling the manufacturer indicates compliance with appropriate standards or performance in a specified manner.

❖ The code official must approve the materials and equipment installed in an electrical wiring system. A label of a nationally recognized testing laboratory (NRTL) identifies a product or material and provides other information that the code official uses to determine compliance with the code. Equipment and products that have been labeled have been tested for conformance to a standard and subject to third-party inspection, which verifies that the minimum level of quality required by the applicable standard is maintained. The labeling agency performing the third-party inspection must be approved by the code official, and the basis for this approval may include, but is not necessarily limited to, the capacity and capability of the agency to perform the specific testing and inspection.

The label will have the name and/or symbol of the NRTL and will contain the product category and type of the equipment or product, which has its proper use and application described in the listing publication from the NRTL. The applicable reference standard often states the minimum identifying information that must be on a label. Labels or marks are applied to the tested product by stamping, molding, affixing a sticker, affixing a printed decal or other similar means. If the product is too small or has a shape, texture or is of a material that makes the attachment of a label difficult, the product container will have the label or mark. For this purpose, the installer should make available the product container for the inspector if requested. The product container might have, in addition to the label, installation instructions for the product.

LIGHTING OUTLET. An outlet intended for the direct connection of a lampholder or luminaire.

❖ An outlet box designed for the attachment of a lamp holder, a lighting fixture or a pendant cord terminating in a lamp holder is installed at a lighting outlet, which is an opening in the wiring system. The word "opening" is not defined in the code but is commonly used in the trade. It is the point where junction boxes, device boxes or boxes for the attachment of lighting fixtures are installed. Lighting outlets are required in specific locations in a dwelling as covered in Section E3903.1.

LIGHTING TRACK (Track Lighting). A manufactured assembly designed to support and energize luminaires that are capable of being readily repositioned on the track. Its length can be altered by the addition or subtraction of sections of track.

❖ See Section E4005.

LISTED. Equipment, materials or services included in a list published by an organization that is acceptable to the authority having jurisdiction and concerned with evaluation of products or services, that maintains periodic inspection of production of listed equipment or materials or periodic evaluation of services, and whose listing states either that the equipment, material or services meets identified standards or has been tested and found suitable for a specified purpose.

❖ Nationally recognized testing laboratories (NRTLs) publish lists of electrical materials, components, devices, fixtures and equipment that they have subjected to standardized tests and found suitable for installation and use in a specific manner. The listing information is necessary if there is a question as to the suitability of the product or material for a specific installation. Section E3403.3 requires the listing and labeling of electrical materials, components, devices, fixtures and equipment.

LIVE PARTS. Energized conductive components.

❖ Live parts must be enclosed or guarded to prevent people from receiving electric shock. For example, live parts should not be left exposed during the construction of the dwelling. When the cover (dead front) of a panelboard is removed, live parts will be exposed if the panelboard is energized. Cabinet doors and junction box covers are usually not installed until the finish phase of the project, but means should be taken where necessary to enclose or guard live parts.

LOCATION, DAMP. Location protected from weather and not subject to saturation with water or other liquids but subject to moderate degrees of moisture.

LOCATION, DRY. A location not normally subject to dampness or wetness. A location classified as dry may be temporarily subject to dampness or wetness, as in the case of a building under construction.

LOCATION, WET. Installations underground or in concrete slabs or masonry in direct contact with the earth and locations subject to saturation with water or other liquids, such as vehicle-washing areas, and locations exposed to weather.

❖ The designation of certain areas as a type of location is very important in determining what equipment and materials are permitted to be installed at a specific place in the dwelling. The location must be considered when selecting almost any material such as boxes, cabinets, conductors, lighting fixtures, cables and raceways.

It may seem apparent that all locations inside a dwelling would be "dry locations" for the purpose of installing wire and materials. But, as the code states, some basements may be damp locations because moisture could seep through concrete or masonry walls and because water may be present in some basements. In most cases it is evident that an area might be subject to dampness and the appropriate wiring methods must be used. If the classification of location is questionable, the code official would make the determination.

INTERNATIONAL CODE COUNCIL®
Copyright © 2015 ICC. ALL RIGHTS RESERVED. Accessed by David Dammon on Jun 21, 2017 12:30:52 PM pursuant to License Agreement with ICC. No further reproduction or distribution authorized. ANY UNAUTHORIZED REPRODUCTION OR DISTRIBUTION IS A VIOLATION OF THE FEDERAL COPYRIGHT ACT AND THE LICENSE AGREEMENT, AND SUBJECT TO CIVIL AND CRIMINAL PENALTIES THEREUNDER.

All conductors used in a wet location must be rated for that use and must have a "W" in the marking of the conductor type such as THW and THWN. The "W" indicates that it is approved for use in a wet location. The in-side of a conduit where the conduit is installed underground is a wet location because of the chance that water could accumulate there. Conductors installed in underground conduits must have the "W" rating.

LUMINAIRE. A complete lighting unit consisting of a light source such as a lamp or lamps together with the parts designed to position the light source and connect it to the power supply. A luminaire can include parts to protect the light source or the ballast or to distribute the light. A lampholder itself is not a luminaire.

❖ The term "luminaire," pronounced "lumenair," has replaced the term "lighting fixture."

MULTIOUTLET ASSEMBLY. A type of surface, or flush, or freestanding raceway; designed to hold conductors and receptacles, assembled in the field or at the factory.

❖ A multioutlet assembly is a raceway type of enclosure that is a long narrow strip with single receptacles spaced at regular intervals such as every 6 inches (152 mm). An 8-foot-long (2438 mm) multioutlet assembly, for example, could be installed on the wall above a workbench where it would be convenient to have several tools plugged in at once. It is designed to be mounted directly on the surface of the wall and is either factory-made or built on the job. It may come as a channel with fittings for couplings, connectors, corner installations and a snap-on cover that holds the receptacles. It could be direct wired by mounting over a receptacle outlet box. If it were used on a garage wall over a workbench, the receptacles would require GFCI protection. A multioutlet assembly may be used in a kitchen where several appliances need to be plugged in or at a desk or built-in counter where there is a need to plug in computers and related equipment.

NEUTRAL CONDUCTOR. The conductor connected to the neutral point of a system that is intended to carry current under normal conditions.

❖ A neutral conductor originates as a center tap of the secondary winding of the utility transformer that supplies power to a 3-wire, single-phase 120/240 volt system. The two ends of the secondary winding are the ungrounded conductors and the midpoint of the winding is the neutral point from which the neutral conductor originates. This neutral conductor serves as the common return conductor for the two ungrounded conductors. The neutral conductor is always a grounded conductor, but a grounded conductor is not always a neutral conductor. This sounds confusing and we need not discuss it further because in the wiring systems covered by this code, the only grounded conductor that exists is the neutral conductor. In systems beyond the scope of this code, there can be grounded phase conductors that are not connected to a neutral point in a transformer.

Most people refer to all grounded (white) conductors in branch circuits in a dwelling as neutral conductors because they all connect to the grounded neutral conductor in the service, although, the code refers to them as grounded conductors (see definition of "Neutral point").

NEUTRAL POINT. The common point on a wye-connection in a polyphase system or midpoint on a single-phase, 3-wire system, or midpoint of a single-phase portion of a 3-phase delta system, or a midpoint of a 3-wire, direct-current system.

❖ The only part of this definition that is applicable in this code is the reference to the midpoint on a single-phase, 3-wire system (see definition of "neutral conductor").

OUTLET. A point on the wiring system at which current is taken to supply utilization equipment.

❖ An "outlet" is not a junction box or any device box such as a switch box. A switch is installed in a device box, and it may be referred to by the electrician as an opening in the wiring system, but it is not an outlet because power is not taken from the distribution system at this point. A box where a receptacle or lighting fixture will be installed is an outlet.

OVERCURRENT. Any current in excess of the rated current of equipment or the ampacity of a conductor. Such current might result from overload, short circuit or ground fault.

❖ Conductors have a rated current which is the allowable ampacity. An overcurrent is a current in excess of the rated current. Overcurrent is caused by overloads and short circuits or ground faults. An overcurrent will cause the temperature of the conductor and/or equipment to rise to a level that could cause damage. In some cases, an overcurrent can exist for a certain length of time without causing damage. For installation in these cases, some overcurrent protection devices are built with a time delay so they will not trip instantaneously.

OVERLOAD. Operation of equipment in excess of normal, full-load rating, or of a conductor in excess of rated ampacity that, when it persists for a sufficient length of time, would cause damage or dangerous overheating. A fault, such as a short circuit or ground fault, is not an overload.

❖ Heat is produced as a result of an overload, which is due to a level of current above the rating of the conductors. The severity of the overload is determined by: 1. The amount of current; 2. The resistance of the conductor; and 3. The amount of time the overload persists. Overloading a conductor results in overcurrent that can cause conductor and device damage, excessive voltage drop and, if severe enough, can cause a fire.

PANELBOARD. A single panel or group of panel units designed for assembly in the form of a single panel, including buses and automatic overcurrent devices, and equipped with or without switches for the control of light, heat or power circuits, designed to be placed in a cabinet or cutout box placed

INTERNATIONAL CODE COUNCIL®
Copyright © 2015 ICC. ALL RIGHTS RESERVED. Accessed by David Dammon on Jun 21, 2017 12:30:52 PM pursuant to License Agreement with ICC. No further reproduction or distribution authorized. ANY UNAUTHORIZED REPRODUCTION OR DISTRIBUTION IS A VIOLATION OF THE FEDERAL COPYRIGHT ACT AND THE LICENSE AGREEMENT, AND SUBJECT TO CIVIL AND CRIMINAL PENALTIES THEREUNDER.

in or against a wall, partition or other support and accessible only from the front.

❖ A panelboard contains the final branch-circuit overcurrent devices, which are the points where the branch circuits originate. The panelboard is an assembly of busbars and mounting hardware designed to be enclosed in a cabinet or cutout box. In residential wiring, the panelboard is usually not distinguished as a separate piece of equipment from its enclosure because it is normally installed inside the cabinet at the factory. Panelboards intended for flush mounting in the wall have adjusting screws so that the dead front or cover can be set to the right depth.

PLENUM. A compartment or chamber to which one or more air ducts are connected and that forms part of the air distribution system.

❖ A plenum is a ductwork component that serves to connect multiple ducts together and is associated with furnaces and air handlers. See Section E3904.7, which addresses cavities within the building construction.

POWER OUTLET. An enclosed assembly that may include receptacles, circuit breakers, fuseholders, fused switches, buses and watt-hour meter mounting means, intended to supply and control power to mobile homes, recreational vehicles or boats, or to serve as a means for distributing power required to operate mobile or temporarily installed equipment.

❖ A pedestal-mounted power outlet is an assembly supplied by an underground feeder or service lateral. A power outlet can also be mounted on a pole or other surface and supplied by an overhead service drop. It has receptacles and overcurrent devices installed in a weatherproof cabinet or box, and can include a meter. It can also be used to provide temporary power during construction.

PREMISES WIRING (SYSTEM). Interior and exterior wiring, including power, lighting, control and signal circuit wiring together with all of their associated hardware, fittings and wiring devices, both permanently and temporarily installed. This includes wiring from the service point or power source to the outlets and wiring from and including the power source to the outlets where there is no service point. Such wiring does not include wiring internal to appliances, luminaires, motors, controllers, and similar equipment.

❖ The premises wiring system includes all of the installed conductors and equipment inside and outside the dwelling. This definition makes it clear that the premises wiring system begins at the utility service point, however, where there is no service point, the premises wiring includes the power source such as solar and wind generation systems. For an overhead service, the service point is at the load end of the utility service drop or at the service head. For an underground service, it is at the load end of the utility service lateral. All of the wiring and equipment from that point on is covered by this code except internal wiring of appliances and factory-made equipment.

QUALIFIED PERSON. One who has the skills and knowledge related to the construction and operation of the electrical equipment and installations and has received safety training to recognize and avoid the hazards involved.

❖ The code may limit access to, operation of or installation of certain equipment to persons who have the ability to work safely with such equipment. For example, NFPA 70 will relax some safety provisions where it can be demonstrated that only qualified persons will be working on or around certain equipment.

RACEWAY. An enclosed channel of metallic or nonmetallic materials designed expressly for holding wires, cables, or busbars, with additional functions as permitted in this code.

❖ Table E3801.2 lists the types of raceways used in residential wiring. Raceways include any channel that encloses conductors including conduit and tubing. The term "conduit" is used in the descriptive name of various types of conduit and is different from "tubing."

EMT, for example, is not conduit. This distinction is important in relation to the rules of the support of boxes with devices and lighting fixtures. The use of EMT for this support is not permitted, but the use of conduit is (see Sections E3906.8.4 and E3906.8.5).

RAINPROOF. Constructed, protected or treated so as to prevent rain from interfering with the successful operation of the apparatus under specified test conditions.

❖ The definition of "Rainproof" is similar to the definition of "Weatherproof" in that the box, enclosure or fitting, is made and installed so that rain will "not interfere with the successful operation" of the contained apparatus. When the enclosure is rainproof, it has been tested to ensure that exposure to a beating rain will not interfere with the operation or result in the live parts and wiring within the enclosure becoming wet. It does not mean that the enclosure is sealed against the entry of water.

RAIN TIGHT. Constructed or protected so that exposure to a beating rain will not result in the entrance of water under specified test conditions.

❖ The definition of "Rain tight" is similar to the definition of "Water tight," which concerns the entrance of water. The testing of equipment designed to be rain tight simulates exposure to a beating rain, and the result must be that water will not enter the enclosure. For example, the weatherhead or service head must be "rain tight" (see Section E3605.9.1).

RECEPTACLE. A receptacle is a contact device installed at the outlet for the connection of an attachment plug. A single receptacle is a single contact device with no other contact device on the same yoke. A multiple receptacle is two or more contact devices on the same yoke.

❖ The distinction between "outlet" and "receptacle" is important. The outlet is the point on the wiring system where a device box and receptacle are installed. A receptacle is the device installed in the box at the outlet. A receptacle can be single, duplex or multiple. The term "yoke" is not defined in this chapter but is used to describe the strap on which the receptacle is mounted

INTERNATIONAL CODE COUNCIL®
Copyright © 2015 ICC. ALL RIGHTS RESERVED. Accessed by David Dammon on Jun 21, 2017 12:30:52 PM pursuant to License Agreement with ICC. No further reproduction or distribution authorized. ANY UNAUTHORIZED REPRODUCTION OR DISTRIBUTION IS A VIOLATION OF THE FEDERAL COPYRIGHT ACT AND THE LICENSE AGREEMENT, AND SUBJECT TO CIVIL AND CRIMINAL PENALTIES THEREUNDER.

and that is made to attach to the device box. A strap or yoke can hold a single device or multiple devices.

Chapter 39 of the code requires receptacle outlets to be installed at specific locations. Duplex receptacles are universally used; however, single and triplex receptacles are also found in some locations.

RECEPTACLE OUTLET. An outlet where one or more receptacles are installed.

❖ See the commentary to "Receptacle."

SERVICE. The conductors and equipment for delivering energy from the serving utility to the wiring system of the premises served.

❖ "Service" is a general term used to refer to all of the service conductors and equipment. A key part of this definition is that the service begins at the load end of the service drop or lateral and ends at the enclosure that houses the main disconnecting means.

SERVICE CABLE. Service conductors made up in the form of a cable.

❖ Service conductors for dwellings are installed in a raceway or in a cable assembly called the service-entrance cable, although almost all modern services are separate conductors in a raceway. Cable Types SE and USE are service entrance cables.

SERVICE CONDUCTORS. The conductors from the service point to the service disconnecting means.

❖ It is clear that service conductors include service-entrance conductors and any other conductors up to the main disconnect. This definition typically excludes the service drop or service lateral conductors because such conductors are on the supply side of the service point. What is included and what is excluded depends on where the service point is. See the definition of "Service point."

SERVICE CONDUCTORS, OVERHEAD. The overhead conductors between the service point and the first point of connection to the service-entrance conductors at the building or other structure.

❖ This definition recognizes that service conductors not owned by the serving utility could exist between the service point and the service-entrance conductors at or on the building. In such cases, the service point is not at the building and is located, for example, on a pole or on an accessory structure on the premises.

SERVICE CONDUCTORS, UNDERGROUND. The underground conductors between the service point and the first point of connection to the service-entrance conductors in a terminal box, meter, or other enclosure, inside or outside of the building wall.

❖ See the commentary to "Service conductors, overhead."

SERVICE DROP. The overhead service conductors between the utility electric supply system and the service point.

❖ Service drop conductors run from the overhead utility line or pole and are connected at the weatherhead to the service-entrance conductors. They are usually owned and maintained by the utility company. Where utility owned, the size of the service drop conductors is decided by the utility company and is not dictated by this code.

SERVICE-ENTRANCE CONDUCTORS, OVERHEAD SYSTEM. The service conductors between the terminals of the service equipment and a point usually outside of the building, clear of building walls, where joined by tap or splice to the service drop or overhead service conductors.

❖ Overhead service-entrance conductors run from the weatherhead to the main disconnect. The layout and configuration of the service equipment may be such that only a meter is on the outside of the house with the conductors run to the main disconnect on the inside of the house. The code does not dictate that the main disconnect be on the outside of the house except as might be required by Section E3601.6.2. An electric meter installed between the weatherhead and the main disconnect is not relevant. The service-entrance conductors continue inside the house to the main disconnect. Where the meter is in the same box or enclosure as the main disconnect, the service-entrance conductors would run only from the weatherhead down (in raceway or cable) to the meter/main disconnect enclosure.

SERVICE-ENTRANCE CONDUCTORS, UNDERGROUND SYSTEM. The service conductors between the terminals of the service equipment and the point of connection to the service lateral or underground service conductors.

❖ For an underground service, the service-entrance conductors connect to the service lateral and run to the terminals of the service equipment. Where the meter-main combination cabinet is on the outside of the house, there are no service-entrance conductors because the service lateral is defined as the conductors from the utility supply to the first terminal box, meter or enclosure at the structure. If the first enclosure is the location of the main disconnect, which could be an enclosure with a meter and the main disconnect together, the service-lateral conductors connect at the terminals of this equipment, and there are essentially no service-entrance conductors. In this installation, if the panelboard were also in the same enclosure, there would be no feeder to supply the panelboard, and the installer would not need to calculate the size of the service-entrance conductors. If the panel-board were on the inside of the house, a feeder would be installed to serve the panelboard, and the size of feeder would need to be calculated.

SERVICE EQUIPMENT. The necessary equipment, usually consisting of a circuit breaker(s) or switch(es) and fuse(s), and their accessories, connected to the load end of the service conductors to a building or other structure, or an otherwise designated area, and intended to constitute the main control and cutoff of the supply.

❖ See the commentary to "Service."

INTERNATIONAL CODE COUNCIL®
Copyright © 2015 ICC. ALL RIGHTS RESERVED. Accessed by David Dammon on Jun 21, 2017 12:30:52 PM pursuant to License Agreement with ICC. No further reproduction or distribution authorized. ANY UNAUTHORIZED REPRODUCTION OR DISTRIBUTION IS A VIOLATION OF THE FEDERAL COPYRIGHT ACT AND THE LICENSE AGREEMENT, AND SUBJECT TO CIVIL AND CRIMINAL PENALTIES THEREUNDER.

SERVICE LATERAL. The underground service conductors between the electric utility supply system and the service point.

❖ The utility company may have an underground supply system with transformers on pads at or near the property line. The service lateral runs underground to the building from a transformer or connection box installed at the ground level. Where there is an overhead transmission line, the homeowner may not want a service drop (over-head line) run across the property. In such cases, the conductors can be run down a utility pole in a raceway and then run underground to the house. Both of these installations would be called a service lateral, which is defined as the conductors from the utility main line to the point at which they connect to the service equipment or service-entrance conductors at the house. The service lateral typically terminates at a meter or main disconnect enclosure.

Usually the utility company is responsible for maintaining the conductors of the service lateral.

The electrician or contractor is usually responsible for installing a raceway conductor enclosure from the service equipment down to the required burial depth of the lateral.

SERVICE POINT. The point of connection between the facilities of the serving utility and the premises wiring.

❖ The service point is determined by the electric utility company. This is the point of connection between the electric-utility-owned conductors and the premises wiring-system conductors. If the overhead service drop is installed and owned by the utility company, the service point would be at the connection of the service-entrance conductors to the service drop at a point close to the weatherhead. If the utility company owns the underground service lateral conductors, the service point would be where the service lateral conductors connect to the terminals of the service equipment.

STRUCTURE. That which is built or constructed.

❖ Structures include buildings, houses, towers, fences, sheds and swimming pools.

SWITCHES.

General-use switch. A switch intended for use in general distribution and branch circuits. It is rated in amperes and is capable of interrupting its rated current at its rated voltage.

❖ A general-use switch may be used to control equipment, appliances, or a feeder. These switches are rated in amperes and voltage and are designed and permitted to interrupt up to their rated current at their rated voltage. An example of a general-use switch is the disconnect switch for a condensing unit of an air-conditioner system mounted on the outside of the house. These switches are either fused or nonfused and are often referred to by electricians as safety switches. They are installed in a cabinet or cutout box, which is usually mounted on the surface of the wall and has a hinged door that opens on the side or the top. In many of these installations, the switch handle is on the side and is operated vertically. In some safety switch enclosures, the switch is a pull-out block in the front with a handle. A safety feature of some of these switches is that the door will not open when the switch is in the closed position, and some are built so that when the door is opened, a mechanism moves an insulated cover over the live parts.

General-use snap switch. A form of general-use switch constructed so that it can be installed in device boxes or on box covers or otherwise used in conjunction with wiring systems recognized by this code.

❖ General-use snap switches come from the factory mounted on a yoke or strap, the same as a receptacle yoke, and are installed in a device box with two screws. They also may be used in other ways such as attached to the raised cover of a four-square metal box. General-use snap switches are the common toggle switches used throughout the dwelling for the majority of the switching needs. They are installed to control basically all of the lighting fixtures and also motor loads such as the garbage disposal and pump motors. The switches are rated in amperes and voltage, and these ratings are stamped or marked on the switch. For example, the yoke of the switch might have stamped on it “15A, 120VAC.” It is important to use these switches within their ratings.

AC general-use snap switches are designed for and can be used up to a maximum of the full current rating of the switch to control: 1. Resistive loads such as incandescent lighting and heating loads; 2. Inductive loads such as fluorescent lighting; and 3. Tungsten-filament lamp loads of 120 volts. For example, an AC general-use snap switch rated at 15 amperes can control a resistive load of 15 amperes. For stationary motors of 2 horsepower (1.5 kW) or less, an ac general-use snap switch is permitted as the disconnect where the full-load current rating of the motor is a maximum of 80 percent of the rating of the switch. For example, if an ac general-use snap switch were used as the disconnect for a 1-horsepower (0.75 kw) motor with a full-load current rating of 16 amperes, a 20-ampere rated switch would be required. The full-load motor current of 16 amperes times 125 percent is 20 amperes. A 15-ampere rated switch would be permitted to control a motor with a maximum full-load current of 12 amperes or 80 percent of the 15 amperes.

AC/DC general-use snap switches are designed for and can be used up to a maximum of the full current rating of the switch to control resistive loads and tungsten-filament lamp loads. These switches are tested for a tungsten-filament lamp load with a rating of 125 volts and are marked with a “T” where intended for use with this type of lamp, which draws a high current when first turned on. Where an AC/DC general-use snap switch is used for inductive loads, the load cannot exceed 50 percent of the rating of the switch. Some residential lighting circuits could serve relatively large inductive lighting loads such as fluorescent lights, mercury vapor lights, or high-intensity discharge fixtures. If a 20-ampere rated AC/DC general-use snap switch

INTERNATIONAL CODE COUNCIL®
Copyright © 2015 ICC. ALL RIGHTS RESERVED. Accessed by David Dammon on Jun 21, 2017 12:30:52 PM pursuant to License Agreement with ICC. No further reproduction or distribution authorized. ANY UNAUTHORIZED REPRODUCTION OR DISTRIBUTION IS A VIOLATION OF THE FEDERAL COPYRIGHT ACT AND THE LICENSE AGREEMENT, AND SUBJECT TO CIVIL AND CRIMINAL PENALTIES THEREUNDER.

were used for these types of lights, the load could be a maximum of only 10 amperes.

Isolating switch. A switch intended for isolating an electric circuit from the source of power. It has no interrupting rating and is intended to be operated only after the circuit has been opened by some other means.

❖ This type of switch is used mainly for large equipment or for entire parts of an electric wiring system. It is not designed to be operated under load conditions. Such switches are uncommon in residential installations. For a dwelling, a meter socket can serve as an isolation switch by pulling the meter from its socket and placing a cover over the meter opening in the enclosure.

Motor-circuit switch. A switch, rated in horsepower that is capable of interrupting the maximum operating overload current of a motor of the same horsepower rating as the switch at the rated voltage.

❖ A motor-circuit switch must have a horsepower rating of at least the horsepower of the motor and must be able to interrupt the maximum overload current of the motor. A horsepower-rated motor-circuit switch may be a toggle switch and will have the rating stamped or marked on it. But not all toggle switches are motor-circuit switches, and not all motors in a dwelling require a motor-circuit switch. The disconnect switch for a motor could be the branch-circuit overcurrent device if the motor is $^1/_8$ horsepower (93 W) or less. And an ac general-use snap switch could be used for a motor of 2 horsepower (15 kW) or less if the switch has a rating of 125 percent of the motor full-load current.

UNGROUNDED. Not connected to ground or to a conductive body that extends the ground connection.

❖ Ungrounded conductors are typically referred to as "hot" conductors, although this is erroneous because the grounded conductors carry the same voltage and current as the ungrounded conductors in all two-wire circuits. Ungrounded conductors are color coded by any color except white, green and gray. In cable wiring systems, the lone ungrounded conductor in a cable will be black and a second ungrounded conductor will be red and beyond that they will be any other color except whit, green and gray. In dwelling wiring systems, all conductors are ungrounded except the neutral, ungrounded (white), equipment grounding and grounding electrode conductors.

UTILIZATION EQUIPMENT. Equipment that utilizes electric energy for electronic, electromechanical, chemical, heating, lighting or similar purposes.

❖ This equipment, such as a range, exhaust fan, luminaire, or electric furnace, is differentiated by its use from equipment that does not use energy. Junction boxes, switches and raceways are not utilization equipment.

VENTILATED. Provided with a means to permit circulation of air sufficient to remove an excess of heat, fumes or vapors.

❖ Some types of equipment are ventilated such as motors, transformers, recessed lighting fixtures and cabinets. This definition for the electrical chapters does not necessarily refer to the ventilation system for the occupants of the building.

VOLTAGE (OF A CIRCUIT). The greatest root-mean-square (rms) (effective) difference of potential between any two conductors of the circuit concerned.

❖ See the definition of "Voltage (Nominal)."

VOLTAGE, NOMINAL. A nominal value assigned to a circuit or system for the purpose of conveniently designating its voltage class (e.g., 120/240). The actual voltage at which a circuit operates can vary from the nominal within a range that permits satisfactory operation of equipment.

❖ The voltage of the power supplied by the electric utility varies somewhat by regions and by power demand but typically not enough to cause any harm to the components of the premises wiring system or the utilization equipment. The circuit voltage and the voltage to ground are the actual voltages as measured. The nominal voltage is used as a common reference and for calculations [see Commentary Figure E3501(2)].

VOLTAGE TO GROUND. For grounded circuits, the voltage between the given conductor and that point or conductor of the circuit that is grounded. For ungrounded circuits, the greatest voltage between the given conductor and any other conductor of the circuit.

❖ See the definition to "Voltage (nominal)."

WATERTIGHT. Constructed so that moisture will not enter the enclosure under specified test conditions.

❖ See the commentary to "Rain tight."

WEATHERPROOF. Constructed or protected so that exposure to the weather will not interfere with successful operation.

❖ See the commentary to "Rainproof."

Bibliography

The following resource materials were used in the preparation of the commentary for this chapter of the code:

NFPA 70–14, *National Electrical Code*. Quincy, MA: National Fire Protection Association, 2013.

INTERNATIONAL CODE COUNCIL®
Copyright © 2015 ICC. ALL RIGHTS RESERVED. Accessed by David Dammon on Jun 21, 2017 12:30:52 PM pursuant to License Agreement with ICC. No further reproduction or distribution authorized. ANY UNAUTHORIZED REPRODUCTION OR DISTRIBUTION IS A VIOLATION OF THE FEDERAL COPYRIGHT ACT AND THE LICENSE AGREEMENT, AND SUBJECT TO CIVIL AND CRIMINAL PENALTIES THEREUNDER.

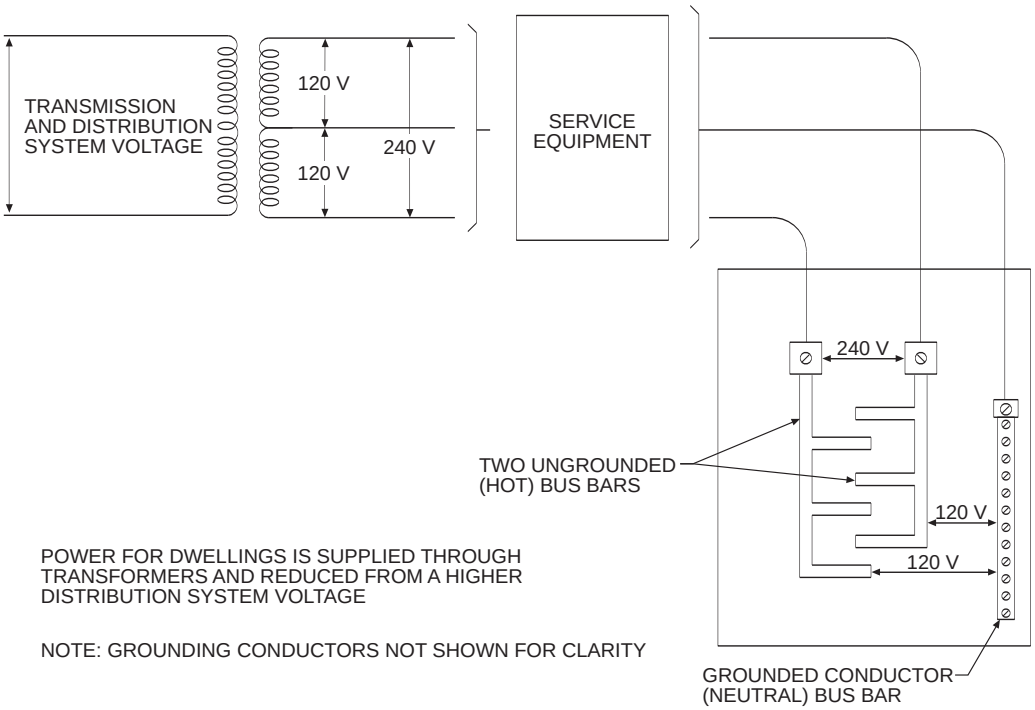

Figure E3501(2)
POWER SUPPLY VOLTAGES

INTERNATIONAL CODE COUNCIL®
Copyright © 2015 ICC. ALL RIGHTS RESERVED. Accessed by David Dammon on Jun 21, 2017 12:30:52 PM pursuant to License Agreement with ICC. No further reproduction or distribution authorized. ANY UNAUTHORIZED REPRODUCTION OR DISTRIBUTION IS A VIOLATION OF THE FEDERAL COPYRIGHT ACT AND THE LICENSE AGREEMENT, AND SUBJECT TO CIVIL AND CRIMINAL PENALTIES THEREUNDER.

INTERNATIONAL CODE COUNCIL®
Copyright © 2015 ICC. ALL RIGHTS RESERVED. Accessed by David Dammon on Jun 21, 2017 12:30:52 PM pursuant to License Agreement with ICC. No further reproduction or distribution authorized. ANY UNAUTHORIZED REPRODUCTION OR DISTRIBUTION IS A VIOLATION OF THE FEDERAL COPYRIGHT ACT AND THE LICENSE AGREEMENT, AND SUBJECT TO CIVIL AND CRIMINAL PENALTIES THEREUNDER.

Chapter 36: Services

General Comments

This chapter is the first of the logical order of chapters that mimics the normal sequence of dwelling construction. The first step in dwelling wiring is typically the sizing, design and installation of the service that is the source of power for the building. This chapter addresses the sizing of services, service conductor sizing and installation, system grounding and bonding, overcurrent protection, disconnecting means and the grounding electrode system.

Purpose

This chapter requires services to be properly sized to serve the load. This is intended to prevent overloading and to provide the utility expected by the occupants. This chapter also intends to protect occupants and the building from fire and protect the occupants from electrical shock hazards associated with service conductors and equipment.

SECTION E3601 GENERAL SERVICES

E3601.1 Scope. This chapter covers service conductors and equipment for the control and protection of services and their installation requirements. (230.1)

❖ A logical place to begin when planning the wiring for a house is the service. The size and location of the service equipment and main distribution panelboard are usually determined before the branch circuits are laid out. The service delivers energy from the serving utility to the wiring system of the premises and includes all of the equipment and conductors for this purpose. The electric utility provides power to the dwelling in an overhead service drop or in an underground service lateral. This chapter covers these conductors and all wiring and equipment up to the main disconnect, including the system grounding and bonding requirements. Equipment grounding is covered in later chapters, but the rules for the grounding electrode system are related directly to the service.

E3601.2 Number of services. One- and two-family dwellings shall be supplied by only one service. (230.2)

❖ The code requires that a building be supplied by only one service; that is, one overhead service drop or one underground service lateral run to the one- or two-family dwelling. In some cases, there may be a need for each unit of a two-family dwelling to be considered as a separate building. Generally, where a building is separated into two areas or occupancies, the code requires a 1- or 2-hour fire-resistant wall and/or floor assembly between the two areas. For example, the code defines a townhouse as a single-family dwelling and considers the dwelling as a separate building. See the *International Residential Code*® (IRC®) *Commentary, Volume I*, Sections R202 and R302.2. Because Section R302.3 of the code states that units in two-family dwellings must be separated from each other by wall and/or floor assemblies of not less than 1-hour fire-resistance rating (note exceptions), the two dwellings in a two-family dwelling would not be considered as separate buildings, and two services would not be permitted. If the need existed for two services, it would be with special permission from the code official, and the fire-resistance rating of the separation between the two dwelling units would be considered in the decision.

Anyone observing existing older dwellings has probably seen a house that was remodeled to create a separate apartment with a separate service drop and separate service equipment. Special written permission of the code official is required for this kind of installation.

E3601.3 One building or other structure not to be supplied through another. Service conductors supplying a building or other structure shall not pass through the interior of another building or other structure. (230.3)

❖ The service entrance conductors are not permitted to be run through one building to serve another. For example, the service equipment for a townhouse could not pass through the crawl space or attic of another townhouse (see Commentary Figure E3601.3). This section does not apply to feeders. Service conductors are not protected from fault currents and pose a risk; whereas, feeder conductors are fully protected from shorts, ground faults and overcurrent, and therefore pose no risk.

E3601.4 Other conductors in raceway or cable. Conductors other than service conductors shall not be installed in the same service raceway or service cable. (230.7)

Exceptions:

1. Grounding electrode conductors and equipment bonding jumpers or conductors.
2. Load management control conductors having overcurrent protection.

❖ The set of fuses or a circuit breaker that is the overcurrent protection for the service conductors is an integral

INTERNATIONAL CODE COUNCIL®
Copyright © 2015 ICC. ALL RIGHTS RESERVED. Accessed by David Dammon on Jun 21, 2017 12:30:52 PM pursuant to License Agreement with ICC. No further reproduction or distribution authorized. ANY UNAUTHORIZED REPRODUCTION OR DISTRIBUTION IS A VIOLATION OF THE FEDERAL COPYRIGHT ACT AND THE LICENSE AGREEMENT, AND SUBJECT TO CIVIL AND CRIMINAL PENALTIES THEREUNDER.

part of the service disconnecting means and is located at the load end of the service lateral or service entrance conductors. By definition, service conductors end at the main disconnect, and any conductors after that point on the system are feeders and branch-circuit conductors. Because service conductors are run directly into the service equipment from the utility company's supply lines, they are protected only at the load end. If feeder or branch-circuit conductors were in the same raceway with the service conductors, they could be subject to fault current.

E3601.5 Raceway seal. Where a service raceway enters from an underground distribution system, it shall be sealed in accordance with Section E3803.6. (230.8)

❖ See the commentary to Section E3803.6.

E3601.6 Service disconnect required. Means shall be provided to disconnect all conductors in a building or other structure from the service entrance conductors. (230.70)

❖ The code requires that there be a means for disconnecting all conductors from the service entrance conductors. The disconnecting means for the ungrounded conductors is almost always an overcurrent device in the form of a circuit breaker or set of fuses. If the service overcurrent device is not an integral part of the service disconnecting means, the main disconnect must be adjacent to the overcurrent device. It is rarely done, but a fuseless safety switch could be installed as the main disconnect; however, it must be next to the service overcurrent device.

The main service disconnect switch, circuit breaker or set of fuses provides a means to dis-connect the ungrounded conductors from the supply. No overcurrent device should be placed in series with the grounded (neutral) conductor unless that device will disconnect both ungrounded and grounded conductors. Such devices are not used in residential services.

The code requires that the service equipment have a means to disconnect all conductors from the supply, which includes the grounded service conductor or neutral. The neutral is cut and terminated in a bus bar or lugs provided in the service equipment for this purpose. For example, where the main disconnect is located on the outside of the house and the panelboard is on the inside, the neutral could not be run through the service equipment and on to the panelboard without cutting it. Means must be provided to disconnect the neutral or remove it from the terminal at the location of the main disconnect; it need not be disconnected with a switch or as part of the overcurrent device. The code rule is satisfied if the neutral can be removed from the terminal or bus bar.

E3601.6.1 Marking of service equipment and disconnects. Service disconnects shall be permanently marked as a service disconnect. [230.70(B)]

❖ In a house with an overhead service, it may be obvious that the power is supplied through the service drop and continues down through the service-entrance conductors to the enclosure where the main disconnect is located. In an emergency, for example in the case of a fire, the fire department personnel could easily see

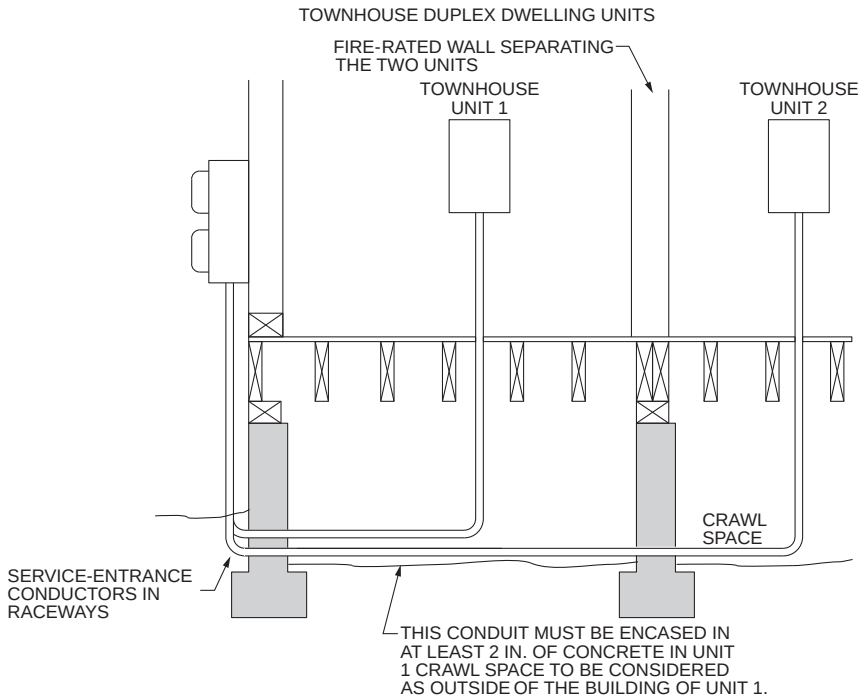

For SI: 1 inch = 25.4 mm.

Figure E3601.3
ONE BUILDING NOT TO BE SUPPLIED THROUGH ANOTHER

INTERNATIONAL CODE COUNCIL®
Copyright © 2015 ICC. ALL RIGHTS RESERVED. Accessed by David Dammon on Jun 21, 2017 12:30:52 PM pursuant to License Agreement with ICC. No further reproduction or distribution authorized. ANY UNAUTHORIZED REPRODUCTION OR DISTRIBUTION IS A VIOLATION OF THE FEDERAL COPYRIGHT ACT AND THE LICENSE AGREEMENT, AND SUBJECT TO CIVIL AND CRIMINAL PENALTIES THEREUNDER.

where the main disconnect is located and turn off the power. But in many houses there may be enclosures, gutters, raceways and cables on the house. These might be part of the service equipment or other boxes on the load side of the service equipment. Therefore, it is important to have the main disconnect clearly marked. On some older dwellings, the only way to disconnect the power was by pulling the meter. An individual meter socket is not considered service equipment because service equipment constitutes the main control and cutoff of the supply (see the definition of "Service equipment" in Chapter 35). The code does not require a meter, but permits it.

E3601.6.2 Service disconnect location. The service disconnecting means shall be installed at a readily accessible location either outside of a building or inside nearest the point of entrance of the service conductors. Service disconnecting means shall not be installed in bathrooms. Each occupant shall have access to the disconnect serving the dwelling unit in which they reside. [230.70(A)(1), 230.72(C)]

❖ The code permits the service disconnect to be located on either the outside or the inside of a building (see Section E3603.3.3). It need not be attached to or mounted on the house, although it almost always is. Various reasons from practical to personal have been given for locating it on the outside or the inside. Practical reasons may include making it easier for fire service personnel to find it outside the house and turn off the power in case of a fire. In other cases, it is installed inside the house for personal reasons like reducing the likelihood of a burglar turning off the power before attempting to enter.

Wherever the main disconnect is installed, it must be at a readily accessible location (see the definition of "Readily accessible" in Chapter 35). The maximum height permitted for the grip of the operating handle of the disconnect is 6 feet, 7 inches (2007 mm) above the floor or ground (see Section E4001.6). On a house under construction, the final grade level around the house might not be established when the service equipment is installed. After the electrician installs the main disconnect, the contractor might excavate and lower the surrounding grade, making the disconnect out of reach. For an underground service, by grading the yard, the contractor might decrease the burial depth of the service lateral, resulting in a code violation. It is important to consider what the final grade will be before mounting the main disconnect. The same caution also applies to meter placement. Although the code does not specify any dimension, the power company usually has a required range of height above the ground.

Where the main disconnect is located on the inside of the house, a question arises of how far inside the dwelling the unprotected service conductors are allowed to be run before being terminated at the main disconnect. The concern is that the service conductors are unprotected from fault-current and short-current up to the point of the main disconnect, which is usually the main overcurrent device. The available short-circuit current or fault current is usually very high. In case of a fault current or short circuit, the current flow could be of a magnitude that would heat up and damage the conductors, which could start afire. If the decision is made to locate the main disconnect inside the house, the code indicates that it must be at a location "nearest the point of entrance of the service conductors."

Many code provisions are very prescriptive and state an exact dimension, but because of the many variables and configurations of laying out the service equipment, the length of the service conductors inside the dwelling is left to the discretion of the code official. Some jurisdictions establish a length limit for this. For instance, the length of the conductors might be permitted to run a maximum of 10 or 15 feet (3048 or 4572 mm) inside the building before being terminated at the load end at the main disconnect and overcurrent device. If the requirement stated that the main disconnect must be placed on the inside wall at the point at which the service conductors enter, the disconnect might be at a location that is either not readily accessible or convenient. Because there are so many different house plans and designs, it is impossible to have detailed prescriptive code provisions that would address every situation [see Commentary Figures E3601.6.2(1) and (2)].

E3601.7 Maximum number of disconnects. The service disconnecting means shall consist of not more than six switches or six circuit breakers mounted in a single enclosure or in a group of separate enclosures. [230.71(A)]

❖ A person must be able to turn off all the power to a house with no more than six motions of the hand while at one location. The main disconnect does not have to be one switch, one circuit breaker or one set of fuses and does not have to be in only one enclosure. For new construction, the service disconnect or disconnects are usually in one enclosure, but on an existing dwelling, for example where a load is being added, an additional main disconnect could be installed in a separate enclosure. However, all the disconnects must be grouped or located together and marked. There may be up to six enclosures that constitute the main disconnecting means for the dwelling, and each one must be clearly marked.

This code provision is usually not a problem in new construction. A house that has only one panelboard with all loads fed from that panelboard would require only one main disconnect, such as a two-pole circuit breaker. Although it is not a code requirement, installing service equipment that has room for additional circuit breakers may be helpful for future expansion. Service equipment enclosures are available for residential wiring with spaces for up to 6 two-pole circuit breakers. With this design, feeders could be run from the main service equipment instead of from the panelboard for such things as a subpanel for swimming pool equipment or for an outbuilding, detached garage or air conditioner.

INTERNATIONAL CODE COUNCIL®
Copyright © 2015 ICC. ALL RIGHTS RESERVED. Accessed by David Dammon on Jun 21, 2017 12:30:52 PM pursuant to License Agreement with ICC. No further reproduction or distribution authorized. ANY UNAUTHORIZED REPRODUCTION OR DISTRIBUTION IS A VIOLATION OF THE FEDERAL COPYRIGHT ACT AND THE LICENSE AGREEMENT, AND SUBJECT TO CIVIL AND CRIMINAL PENALTIES THEREUNDER.

In an older dwelling, there might be six circuit breakers or fuses that serve the branch circuits with no other main disconnect. If that dwelling is being remodeled and circuits are run for new kitchen appliances or for a room addition, it may be necessary to change the service equipment because the addition of another branch circuit overcurrent device would be over the six maximum permitted for turning off all the power to the house. Obviously, when adding more circuits, the size of the existing service conductors would be a major concern in the decision to install new service equipment, but it would not be the only concern. The number of disconnects could be the deciding factor.

See Section E3603.3.1, which provides for the overload protection of ungrounded service conductors, and Commentary Figure E3601.7.

This section is applied on a per-building basis in cases where one service supplies more than one set of service conductors. For example, in rural locations it is not uncommon to find a service installed on an outbuilding, such as pole barn, and that service supplies two sets of service conductors-one for the pole barn and one for the dwelling. In this case, up to six disconnects would be allowed for each building and they would not be required to be grouped at the service location on the pole barn.

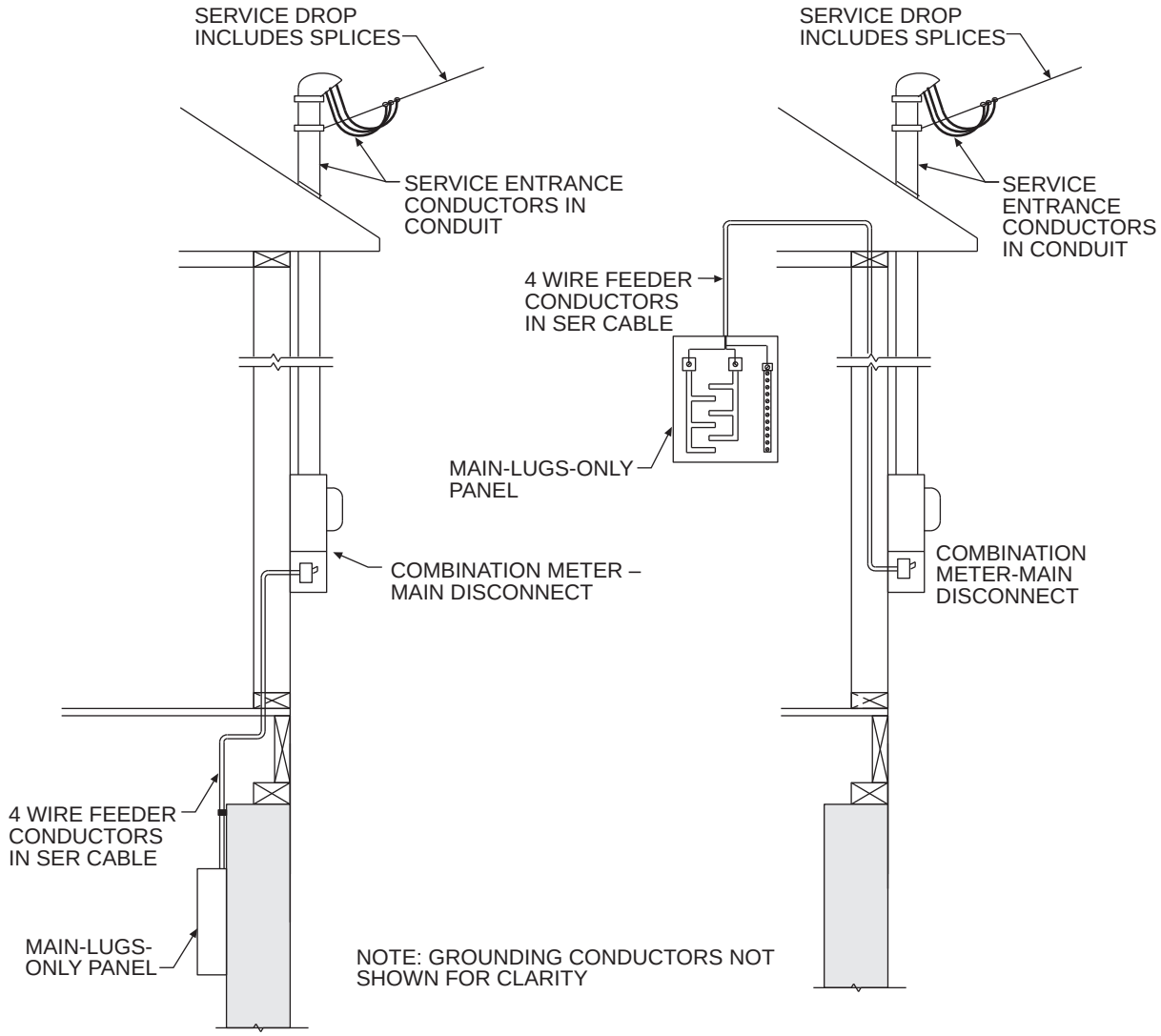

Figure E3601.6.2(1)
METER AND MAIN DISCONNECT ON OUTSIDE OF HOUSE

INTERNATIONAL CODE COUNCIL®
Copyright © 2015 ICC. ALL RIGHTS RESERVED. Accessed by David Dammon on Jun 21, 2017 12:30:52 PM pursuant to License Agreement with ICC. No further reproduction or distribution authorized. ANY UNAUTHORIZED REPRODUCTION OR DISTRIBUTION IS A VIOLATION OF THE FEDERAL COPYRIGHT ACT AND THE LICENSE AGREEMENT, AND SUBJECT TO CIVIL AND CRIMINAL PENALTIES THEREUNDER.

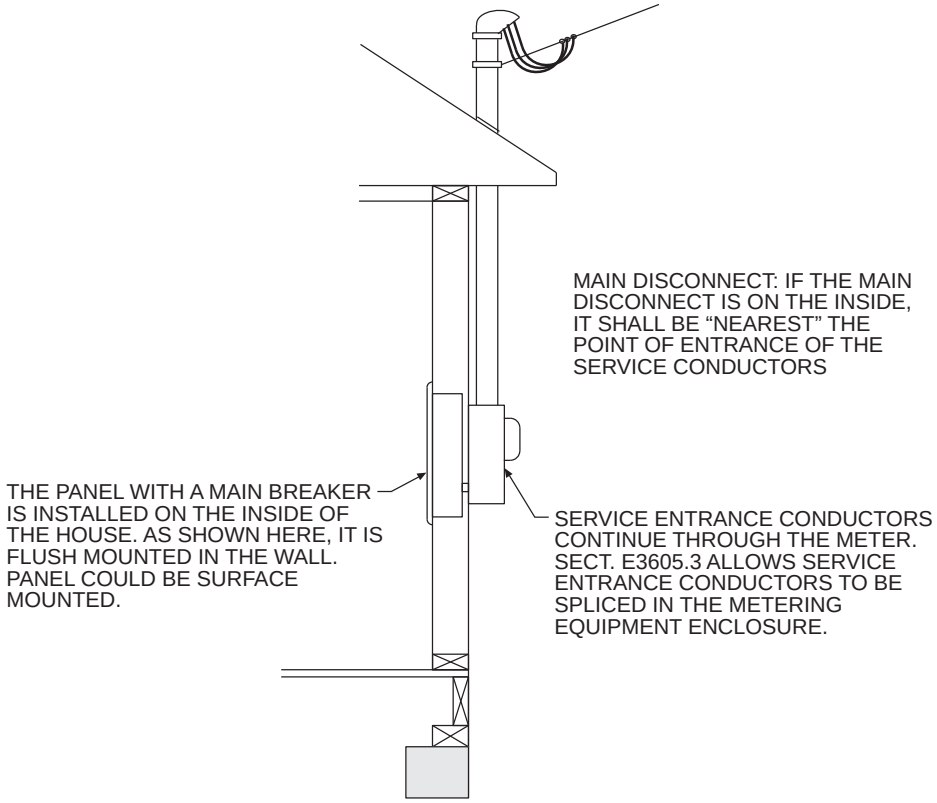

Figure E3601.6.2(2)
METER ON OUTSIDE OF HOUSE; MAIN DISCONNECT ON INSIDE OF HOUSE



Figure E3601.7
SERVICE DISCONNECTING MEANS CONSISTING OF SIX OR FEWER SWITCHES OR CIRCUIT BREAKERS

INTERNATIONAL CODE COUNCIL®
Copyright © 2015 ICC. ALL RIGHTS RESERVED. Accessed by David Dammon on Jun 21, 2017 12:30:52 PM pursuant to License Agreement with ICC. No further reproduction or distribution authorized. ANY UNAUTHORIZED REPRODUCTION OR DISTRIBUTION IS A VIOLATION OF THE FEDERAL COPYRIGHT ACT AND THE LICENSE AGREEMENT, AND SUBJECT TO CIVIL AND CRIMINAL PENALTIES THEREUNDER.

SECTION E3602
SERVICE SIZE AND RATING

E3602.1 Ampacity of ungrounded conductors. Ungrounded service conductors shall have an ampacity of not less than the load served. For one-family dwellings, the ampacity of the ungrounded conductors shall be not less than 100 amperes, 3 wire. For all other installations, the ampacity of the ungrounded conductors shall be not less than 60 amperes. [230.42(B), 230.79(C) & (D)]

❖ The minimum service rating for any dwelling unit is 100 amperes, but the load must be calculated to determine whether 100 amperes is sufficient. The load depends on many factors, such as use of gas appliances or electric space heating and water heating. The square footage of the house is another factor, but it is only one of the elements that should be taken into account. Some electricians may have a guideline that would require a certain size service corresponding to the square footage of the house, such as a minimum 100-ampere service for a house of 1,000 square feet (93 m^2), a 125-ampere rating for a house up to 1,250 square feet (116 m^2), a 150-ampere rating for a house of 1,500 square feet (139 m^2) and so on. This kind of rule is not a code provision, but it may work in some cases. Because of the various loads that may be present in a dwelling, the code official, in enforcing the code, would require calculations to show that the rating of the service is sufficient.

The provision in this paragraph for a 60-ampere-rated service does not apply to the dwelling but would be for something like a separate service on the residential property such as on a farm where a service might be run to a remote building. Exceptions to the minimum 60-ampere rating are in Section E3603.2.

E3602.2 Service load. The minimum load for ungrounded service conductors and service devices that serve 100 percent of the dwelling unit load shall be computed in accordance with Table E3602.2. Ungrounded service conductors and service devices that serve less than 100 percent of the dwelling unit load shall be computed as required for feeders in accordance with Chapter 37. [220.82(A)]

❖ Where the service conductors serve 100 percent of the load, Table E3602.2 is used to calculate the size of the service conductors. For example, where an overhead service drop feeds the service entrance conductors, which are run to a service equipment cabinet that table must be used. This equipment is referred to by electricians in some areas as a meter-main combination, meaning that the enclosure has a meter base and a panelboard with the main disconnect or main breaker in the panel. In other words, it is a main-breaker panel combined with a meter base. In this case, the service entrance conductors terminated at the main breaker serve 100 percent of the load.

The service conductors must be of sufficient size to carry the load. The procedure set forth in this table is used to calculate the minimum load, in amperes, required for the service conductors. Once the load is determined, the conductor size can be selected in accordance with Section E3603.1. For many smaller houses, especially where gas is used for space heating and water heating, the calculation using Table E3602.2 will usually result in a load of 100 amperes or less. Of course, the minimum rating required for ungrounded service conductors is 100 amperes as stated in Section E3602.1, even if the calculated load is less. The code requirements to calculate the minimum load in order to select the size conductors that are necessary for safety. However, the minimum conductor size and service rating may not be adequate for additional loads that could be added later. A good practice is to calculate the minimum load as required and then consider the feasibility and costs of installing a service larger than required to provide for future expansion.

TABLE E3602.2
MINIMUM SERVICE LOAD CALCULATION [220.82(B) & (C)]

LOADS AND PROCEDURE
3 volt-amperes per square foot of floor area for general lighting and general use receptacle outlets.
Plus
1,500 volt-amperes multiplied by total number of 20-ampere-rated small appliance and laundry circuits.
Plus
The nameplate volt-ampere rating of all fastened-in-place, permanently connected or dedicated circuit-supplied appliances such as ranges, ovens, cooking units, clothes dryers not connected to the laundry branch circuit and water heaters.
Apply the following demand factors to the above subtotal:
The minimum subtotal for the loads above shall be 100 percent of the first 10,000 volt-amperes of the sum of the above loads plus 40 percent of any portion of the sum that is in excess of 10,000 volt-amperes.
Plus the largest of the following:
One-hundred percent of the nameplate rating(s) of the air-conditioning and cooling equipment.
One hundred percent of the nameplate rating(s) of the heat pump where a heat pump is used without any supplemental electric heating.
One-hundred percent of the nameplate rating of the electric thermal storage and other heating systems where the usual load is expected to be continuous at the full nameplate value. Systems qualifying under this selection shall not be figured under any other category in this table.
One-hundred percent of nameplate rating of the heat pump compressor and sixty-five percent of the supplemental electric heating load for central electric space-heating systems. If the heat pump compressor is prevented from operating at the same time as the supplementary heat, the compressor load does not need to be added to the supplementary heat load for the total central electric space-heating load.
Sixty-five percent of nameplate rating(s) of electric space-heating units if less than four separately controlled units.
Forty percent of nameplate rating(s) of electric space-heating units of four or more separately controlled units.
The minimum total load in amperes shall be the volt-ampere sum calculated above divided by 240 volts.

INTERNATIONAL CODE COUNCIL®
Copyright © 2015 ICC. ALL RIGHTS RESERVED. Accessed by David Dammon on Jun 21, 2017 12:30:52 PM pursuant to License Agreement with ICC. No further reproduction or distribution authorized. ANY UNAUTHORIZED REPRODUCTION OR DISTRIBUTION IS A VIOLATION OF THE FEDERAL COPYRIGHT ACT AND THE LICENSE AGREEMENT, AND SUBJECT TO CIVIL AND CRIMINAL PENALTIES THEREUNDER.

The following is a description of the loads listed in the table.

General Lighting and Convenience Receptacle Loads:

A unit load of not less than 3 volt-amperes per square foot constitutes the minimum lighting load for each square foot of floor area. The floor area must be computed from the outside dimensions of the dwelling and does not include open porches, garages, or unused spaces not adaptable for future use. However, in all cases these unit values are based on minimum load conditions with a 100-percent power factor, and they may not provide sufficient capacity for the installation contemplated. Included in the lighting load are general use (convenience) receptacle outlets of 15- and 20-ampere rating. The bathroom receptacle outlets supplied by the separate branch circuit required by Section E3703.4 are also included in the general lighting load.

Small Appliance Branch Circuit Loads:

A load of 1,500 volt-amperes is included in the calculation for each two-wire small appliance branch circuit for portable appliances supplied by 15- or 20-ampere receptacles on 20-ampere branch circuits in the kitchen, pantry, dining room and breakfast room. Since the code requires a minimum of two small appliance circuits regardless of the size of the house, the minimum load to be included in the calculation is 3,000 volt-amperes. Where a dwelling has more than two small appliance branch circuits, a load of 1,500 volt-amperes must be included for each circuit. An electrician may choose to supply the refrigerator receptacle on a separate circuit. Because this is not required by the code, an additional 1,500 volt-amperes would not need to be added to the load calculation for this circuit.

Laundry Circuit Load:

A load of 1,500 volt-amperes is included for the circuit supplying the clothes washer and gas-fired dryer. Where the clothes washer is in a laundry room and additional receptacle outlets are provided, such as an outlet for the iron, these receptacles are permitted on the laundry circuit, and only one unit load of 1,500 volt-amperes is included.

Appliance Load:

This is the nameplate rating of all appliances that are fastened in place, permanently connected, or connected to a dedicated circuit including ranges, dryers, and water heaters. The reference to clothes dryers is addressing clothes dryers that are not served by the required 20-amp laundry branch circuit. In other words, the load for a gas-fired clothes dryer served by the 20-amp laundry branch circuit is already included in the 1,500 volt-amperes counted for this circuit. An electric clothes dryer load must be added in this step because it is not accounted for in the previous step. For the calculation, an appliance that has the nameplate rating given only in amperes must have its rating converted to volt-amperes by multiplying the ampere rating by the rated voltage.

Air-conditioning and Heating Loads:

It is unlikely that air-conditioning (cooling equipment) and heating loads will be used simultaneously. Therefore, only the largest load is used in the calculation. The bottom half of Table E3602.2 lists cooling equipment loads and various combinations of space-heating loads. The largest of any of these loads present in the dwelling is used for the calculation.

Sample Calculation

Description of loads in a dwelling:

Volt-amperes are indicated as VA. Depending on the power factor, VA is not always equivalent to wattage. However, wattage is considered the same as volt-amperes for purposes of calculating service loads.

Sample Calculation: A dwelling with no gas supply for space or water heating has the following:

- Outside dimensions of 30 feet $\times$ 65 feet, which does not include the garage, porches, attic or cellar.
- Two small appliance circuits in the kitchen and related rooms.
- One laundry circuit to serve the clothes washer and outlets in the laundry room.
- Water heater rated at 4,500 watts.
- Clothes dryer rated at 5,000 VA.
- Range rated at 12,000 VA.
- Dishwasher rated at 1,200 VA.
- Disposal rated at 1,000 VA.
- Microwave oven rated at 1,800 VA.
- Air-conditioner condensing unit with a nameplate rating of 28 amperes, 240 volts.
- Gas furnace rated at 7 amperes, 120 volts for heating and cooling, but on a separate circuit.

Performing the calculation:

1. General lighting and general purpose receptacle loads:

   $30 \times 65 = 1{,}950$ sq. ft. $\times$ 3 VA/sq. ft. = 5,850 VA

2. Small appliance and laundry circuit loads:

   Two small appliance branch circuits at 1,500 VA each = 3,000 VA

   One laundry branch circuit at 1,500 VA = 1,500 VA

   4,500 VA

INTERNATIONAL CODE COUNCIL®
Copyright © 2015 ICC. ALL RIGHTS RESERVED. Accessed by David Dammon on Jun 21, 2017 12:30:52 PM pursuant to License Agreement with ICC. No further reproduction or distribution authorized. ANY UNAUTHORIZED REPRODUCTION OR DISTRIBUTION IS A VIOLATION OF THE FEDERAL COPYRIGHT ACT AND THE LICENSE AGREEMENT, AND SUBJECT TO CIVIL AND CRIMINAL PENALTIES THEREUNDER.

3. Nameplate rating of appliances:

Water heater	4,500 VA
Clothes dryer	5,000 VA
Range	12,000 VA
Dishwasher	1,200 VA
Disposal	1,000 VA
Microwave oven	1,800 VA
Gas furnace: 7 amperes × 120 volts	840 VA
	26,340 VA

4. Combine loads from steps 1, 2, and 3: 36,690 VA

5. Apply demand factor:

Add VA in this column

Up to first 10,000 at 100%: 10,000 VA

Remainder at 40% =

36,690 - 10,000 =

26,690 × 0.4 10,676 VA

Total 20,676 VA

6. Cooling/Heating Loads:

Gas furnace rated at 840 VA

Cooling equipment load is 28 amperes × 240 volts = 6,720 VA

The largest of these is the cooling load: 6,720 VA

Total 27,396 VA

Sizing the ungrounded service conductors:

27,396 VA/240 volts = 114.15 amperes. The standard ampere ratings of fuses and circuit breakers include 100, 110 and 125. Therefore, the main disconnect would need to be at least 125 amperes because the calculated load is over 110 amperes and below 125 amperes (see Sections E3705.5.2 and E3705.6). From Section E3603.1, the minimum size permitted for an ungrounded service conductor would be a size 2 AWG copper conductor or a size 1/0 AWG aluminum conductor from the 75°C column of Table E3705.1. (Per Section E3603.1.1, 0.83 × 125 amps = 104 amps.) The main breaker or set of fuses would be 125 amperes.

Sizing the grounded (neutral) service conductor:

The neutral conductor must be of a size to adequately carry the maximum unbalanced load in accordance with Sections E3603.1 and E3704.3. The size of the service ungrounded conductors that are part of the "main power feeder" is dictated by Section E3603.1. Because Section E3603.1.4 does not directly address the sizing of grounded service conductors, Section E3704.3 provides for the sizing of such conductors by applying the feeder load calculation method. Section E3704.3 provides the definition of "maximum unbalanced load," which is applicable for any feeder neutral and for the grounded service conductor. It states: "The maximum unbalanced load shall be the maximum net computed load between the neutral and any one ungrounded conductor." Accordingly, the maximum unbalanced load for the 120/240-volt, three-wire range and dryer branch circuits is 70 percent of the load calculated for the ungrounded conductors serving these two appliances. Two-wire 240-volt loads, such as electric water heaters, do not add to the neutral load. The cooling equipment is not counted because it is a 240-volt load that does not have a neutral. Where a blower motor is used for air handling in air conditioning, it is usually a 120-volt motor and must be included in the calculation of the neutral load. Of course, when the circuit breakers are installed in the panelboard, the loads should be balanced as much as possible between the two ungrounded "hot" legs of the service. The following example assumes that the 120-volt loads are equally distributed between the two ungrounded service conductors. If they were not equally distributed across the two ungrounded service conductors (legs), the load calculation would have to be performed twice, once for each leg of the service based on the actual distribution as installed.

Calculating the Service Neutral Load Using Table E3704.2(1) and Section E3704.3:

Add VA in this column

1. General lighting and convenience receptacle loads:

3 VA per sq. ft. 30 65 =

1950 × 3 = 5,850 VA

2. Small appliance and laundry circuit loads

Two small appliance branch circuit loads 1,500 VA each = 3,000 VA

One laundry ranch circuit at 1,500 VA = 1,500 VA

= 10,350 VA

Applying demand factor, first 3,000 at 100% = 3,000 VA

10,350 - 3,000 = 7,350 at 35% = 2,573 VA

= 5,573 VA

Total demand for lighting, receptacle, small appliances and laundry is: 5,573 VA

3. Appliance loads:

Water heater (two-wire, 240 volts,

INTERNATIONAL CODE COUNCIL®
Copyright © 2015 ICC. ALL RIGHTS RESERVED. Accessed by David Dammon on Jun 21, 2017 12:30:52 PM pursuant to License Agreement with ICC. No further reproduction or distribution authorized. ANY UNAUTHORIZED REPRODUCTION OR DISTRIBUTION IS A VIOLATION OF THE FEDERAL COPYRIGHT ACT AND THE LICENSE AGREEMENT, AND SUBJECT TO CIVIL AND CRIMINAL PENALTIES THEREUNDER.

no neutral load)	=	0 VA
Dishwasher	=	1,200 VA
Disposer	=	1,000 VA
Largest motor load: Disposer: 1000 × 25%	=	250 VA
Microwave Oven	=	1,800 VA
Gas furnace, 7 amperes × 120 volts	=	840 VA
Clothes dryer 5,000 VA × 70%	=	3,500 VA
Range at 8,000 VA × 70%	=	5,600 VA
Subtotal 14,190 VA		14,190 VA
		Total 19,763 VA

4. Cooling/heating: No neutral loads other than furnace.

The branch circuit load for the range is permitted to be calculated in accordance with Table E3704.2(2), which lists the demand load for one range with a rating of 12 kVA or less, as 8,000 VA. This demand load is not used for the range load when calculating the load for the service in accordance with Section E3602.2.

19,763 VA/240 volts = 82.34 amperes.

From Section E3603.1.4 and Table E3705.1, at 75°C (167°F), the minimum size permitted for the grounded service conductor would be a size 4 AWG copper conductor or a size 2 AWG aluminum conductor.

The total load was divided by 240 volts rather than 120 volts because this example uses the common calculation procedure, which assumes that the 120 volt loads are equally distributed between the two ungrounded conductors. The only alternative would be to add all of the 120-volt loads that are actually connected to one ungrounded conductor and divide the total by 120 volts, and this procedure must be repeated for the other ungrounded conductor to determine the greatest load (maximum unbalance). Of course, the lengthy exercise of calculating the neutral conductor size could be avoided by simply making the neutral conductor the same size as the ungrounded conductors. A "full-size" neutral has the same ampacity as the ungrounded conductors and will certainly be able to carry the maximum unbalanced load. Unless there is some economy of scale, the installation of a neutral conductor that is smaller than the ungrounded conductors is generally avoided because of the necessity to provide calculations to justify such an installation.

E3602.2.1 Services under 100 amperes. Services that are not required to be 100 amperes shall be sized in accordance with Chapter 37. [230.42(A), (B), and (C)].

❖ The load calculation method in Table E3602.2 is only for services of 100 amperes and larger. Therefore, smaller services must be sized by the method in Chapter 37. Where a service supplies a separate load, such as a separate workshop or a panelboard at a small building that houses swimming pool equipment and a bath house, the conductors would be calculated as required for feeders according to Chapter 37 (see Section E3602.1).

E3602.3 Rating of service disconnect. The combined rating of all individual service disconnects serving a single dwelling unit shall be not less than the load determined from Table E3602.2 and shall be not less than as specified in Section E3602.1. (230.79 & 230.80)

❖ The service load is calculated to determine the ampacity rating of the service conductors and service equipment. When designing the service and performing the load calculation, it is commonly assumed that there will be only one switch for the main disconnecting means in the service equipment. However, Section E3601.7 permits the service disconnecting means to consist of up to six switches or circuit breakers, which could all be in the same enclosure or in a group of separate enclosures. The combined rating of the switches or circuit breakers must be at least equal to the calculated load and not less than the minimums dictated by Section E3602.1. If the load calculation for a dwelling is under 100 amperes, then the minimum required ampere rating for the service disconnect would be 100 amperes according to this section (see Section E3603.3.1).

E3602.4 Voltage rating. Systems shall be three-wire, 120/240-volt, single-phase with a grounded neutral. [220.82(A)]

❖ For purposes of performing load calculations, the voltage used must be 120/240 volts. The services considered under the provisions of this code are three-wire, single phase with a grounded neutral.

SECTION E3603
SERVICE, FEEDER AND GROUNDING ELECTRODE CONDUCTOR SIZING

E3603.1 Grounded and ungrounded service conductor size. Service and feeder conductors supplied by a single-phase, 120/240-volt system shall be sized in accordance with Sections E3603.1.1 through E3603.1.4 and Table 3705.1.

❖ Dwellings are supplied by 120/240-volt single-phase systems (see Section E3602.4) and the service and main feeder conductors are sized in accordance with Sections E3603.1.1 through E3603.1.4. The main power feeder is the feeder between the main disconnect and the panelboard that supplies, either by branch circuits or by feeders, or both, all loads that are part of or are associated with the dwelling unit.

E3603.1.1 Ungrounded service conductors. For a service rated at 100 through 400 amperes, the service conductors supplying the entire load associated with a one-family dwelling, or the service conductors supplying the entire load associated with an individual dwelling unit in a two-family dwelling, shall have an ampacity of not less than 83 percent of the service rating.

❖ Note that the code requires services to be at least 100 ampere rated for dwellings and the scope of the elec-

INTERNATIONAL CODE COUNCIL®
Copyright © 2015 ICC. ALL RIGHTS RESERVED. Accessed by David Dammon on Jun 21, 2017 12:30:52 PM pursuant to License Agreement with ICC. No further reproduction or distribution authorized. ANY UNAUTHORIZED REPRODUCTION OR DISTRIBUTION IS A VIOLATION OF THE FEDERAL COPYRIGHT ACT AND THE LICENSE AGREEMENT, AND SUBJECT TO CIVIL AND CRIMINAL PENALTIES THEREUNDER.

trical part of the code cuts off at 400 amp rate services (see Sections E3401.2 and E3602.1). In previous editions of the code, ungrounded service conductors were sized from a table that allowed smaller conductors than would otherwise be allowed by Table E3705.1, based on assumed load diversity and the duration of loads for the typical dwelling. The ampacity of conductors in the 75°C column of Table E3705.1 is very close to 83 percent of the rating of corresponding conductors in the former Table E3603.1 for a specific service rating. The 75°C column is chosen because the terminals on service equipment will almost certainly have a maximum temperature rating of 75°C. It is apparent that Table E3603.1 from the 2012 IRC has been replaced with a simple calculation for determining 83 percent. For example, if the service rating is 100 ampere, then the ungrounded service conductors must have an ampacity of at least 83 amps (100 amp $\times$ 83% = 100 $\times$ 0.83 = 83 amp). Table E3705.1 indicates that a number 4 copper conductor under the 75°C column has an ampacity of 85. Likewise, if a service has a 200 amp rating, the ungrounded conductors must have an ampacity of at least 166 amps (200 $\times$ 0.83 = 166 amps). A number 2/0 copper conductor has an ampacity of 175 amps under the 75°C column in Table E3705.1.

The "rating" of a service is the calculated load for the service. The calculated service load equals the service rating. Service equipment is built in standard sizes, so the "service rating" translates to be the standard size of equipment that is the closest match to the calculated load for the service. The intent of the code is to apply the 83-percent calculation to the rating of the service disconnect (see Section E3602.3). The service disconnect equipment is built in standard sizes, as are circuit breakers. Because the service disconnect in dwellings is almost always a circuit breaker (or pair of breakers with handle ties), the service disconnect and service overcurrent device are typically one in the same. This means that the 83-percent calculation is applied to the rating of the main overcurrent device/disconnect device (see Sections E3705.5.2 and E3705.6).

E3603.1.2 Ungrounded feeder conductors. For a feeder rated at 100 through 400 amperes, the feeder conductors supplying the entire load associated with a one-family dwelling, or the feeder conductors supplying the entire load associated with an individual dwelling unit in a two-family dwelling, shall have an ampacity of not less than 83 percent of the feeder rating.

❖ This section is essentially the same as Section E3603.1.1 because feeder conductors that carry the entire load for the dwelling are acting no differently than the service conductors, as both service and "main feeder" conductors are carrying the entire load for the dwelling. Recall that the code used to refer to the conductors that carry the entire load for the dwelling as "main feeder" conductors. "Main feeder" conductors are those that, for example, extend from an outdoor main disconnect/overcurrent device and feed an indoor panelboard from which all branch circuits originate. The feeder rating is that which is necessary to serve the calculated load.

E3603.1.3 Feeder size relative to service size. A feeder for an individual dwelling unit shall not be required to have an ampacity greater than that specified in Sections E3603.1.1 and E3603.1.2.

❖ Service loads and feeder loads are calculated differently (see Sections E3602.2 and E3704.2); thus, the size of the conductors could vary by calculation. Sections E3603.1.1 and E3603.1.2 both require the same minimum 83-percent ampacity, but the loads for the feeder and the service could be different based on the two different load calculation methods for services and feeders. This section is simply stating that regardless of the calculations, feeder conductors do not have to be larger in size than the service conductors, for the logical reason that both sets of conductors carry the same loads. See Section E3602.2. The code is saying that main power feeders are treated as service conductors for purposes of sizing, despite the fact that they are actually feeders by definition.

E3603.1.4 Grounded conductors. The grounded conductor ampacity shall be not less than the maximum unbalance of the load and the size of the grounded conductor shall be not smaller than the required minimum grounding electrode conductor size specified in Table E3603.4. [310.15(B)(7)]

❖ The grounded service conductor (neutral) is sometimes reduced in size compared to the ungrounded conductors, but it should not be assumed that the neutral can always be smaller than the ungrounded conductors. It must be large enough to carry the maximum unbalance of current between it and either of the ungrounded conductors. Also, it must not be smaller than the minimum grounding conductor electrode size because it must carry any fault current back to the supply transformer. The neutral becomes the low-impedance path back to the power source. To determine the maximum unbalance of the load, add all of the 120-volt loads that are actually connected to one ungrounded conductor and divide the total by 120 volts. This procedure must be repeated for the other ungrounded conductor to determine the greatest load (maximum unbalance). Of course, the lengthy exercise of calculating the neutral conductor size could be avoided by simply making the neutral conductor the same size as the ungrounded conductors. A "full-size" neutral has the same ampacity as the ungrounded conductors and will certainly be able to carry the maximum unbalanced load. Unless there is some economy of scale, the installation of a neutral conductor smaller than the ungrounded conductors is generally avoided because of the necessity to provide calculations to justify such an installation. Also, there is the concern that the unbalance (or balance) could be changed as a result of rearranging circuits after the initial installation. A full-sized, ungrounded conductor greatly simplifies the system design.

E3603.2 Ungrounded service conductors for accessory buildings and structures. Ungrounded conductors for other than dwelling units shall have an ampacity of not less than 60

INTERNATIONAL CODE COUNCIL®
Copyright © 2015 ICC. ALL RIGHTS RESERVED. Accessed by David Dammon on Jun 21, 2017 12:30:52 PM pursuant to License Agreement with ICC. No further reproduction or distribution authorized. ANY UNAUTHORIZED REPRODUCTION OR DISTRIBUTION IS A VIOLATION OF THE FEDERAL COPYRIGHT ACT AND THE LICENSE AGREEMENT, AND SUBJECT TO CIVIL AND CRIMINAL PENALTIES THEREUNDER.

amperes and shall be sized as required for feeders in Chapter 37. [230.79(D)]

Exceptions:

1. For limited loads of a single branch circuit, the service conductors shall have an ampacity of not less than 15 amperes. [230.79(A)]
2. For loads consisting of not more than two two-wire branch circuits, the service conductors shall have an ampacity of not less than 30 amperes. [230.79(C)]

❖ Power supplied to accessory buildings and detached structures is usually by a feeder, although in some cases it could be a separate service. This section specifies the size of service conductors for such structures. Section E3607.3 contains important rules for system grounding for an accessory building.

E3603.3 Overload protection. Each ungrounded service conductor shall have overload protection. (230.90)

❖ See the commentary to Section E3603.3.1.

E3603.3.1 Ungrounded conductor. Overload protection shall be provided by an overcurrent device installed in series with each ungrounded service conductor. The overcurrent device shall have a rating or setting not higher than the allowable service or feeder rating specified in Section E3603.1. A set of fuses shall be considered to be all of the fuses required to protect all of the ungrounded conductors of a circuit. Single pole circuit breakers, grouped in accordance with Section E3601.7, shall be considered as one protective device. [230.90(A)]

Exception: Two to six circuit breakers or sets of fuses shall be permitted as the overcurrent device to provide the overload protection. The sum of the ratings of the circuit breakers or fuses shall be permitted to exceed the ampacity of the service conductors, provided that the calculated load does not exceed the ampacity of the service conductors. [230.90(A) Exception No. 3]

❖ The overload protection must be located at the service equipment and is typically integral with the main disconnect in the form of a circuit breaker or set of fuses. The rating of the overcurrent protection device must be not more than the allowable ampacity of the service conductors as determined by Section E3603. 1, except as allowed by the exception. Section E3705.5 contains the general rule for overload protection of conductors and states that overcurrent protection be installed at the point where the conductors receive their supply, which is the power company's transformer. On the line side of the main disconnect, such conductors are not protected against short-circuit or fault current. This requirement for overload protection of the ungrounded service conductors correlates with Section E3601.7.

The main disconnecting means may consist of any combination of single- or two-pole circuit breakers, or single fuses or a set of fuses. A set of fuses used as the main disconnect or as one of the six disconnecting means would be used on a 240-volt circuit and would have a handle tie or means to disconnect both hot legs of the circuit. The set of fuses would count as one of the maximum six disconnects. Two-pole circuit breakers are manufactured with a master handle or a handle tie that connects the handles of each pole together. Thus, a two-pole circuit breaker would be one of the six disconnects. Where two single-pole switches or circuit breakers are tied together with a handle tie, they would count as one of the six disconnecting means. The intent of this code requirement is that all ungrounded service conductors can be disconnected from the source of supply with no more than six operations of the hand.

E3603.3.2 Not in grounded conductor. Overcurrent devices shall not be connected in series with a grounded service conductor except where a circuit breaker is used that simultaneously opens all conductors of the circuit. [230.90(B)]

❖ The grounded service conductor must not be switched because it also must serve as the low-impedance ground path in case of a fault to facilitate the operation of the overcurrent device.

E3603.3.3 Location. The service overcurrent device shall be an integral part of the service disconnecting means or shall be located immediately adjacent thereto. (230.91)

❖ Most often, the service overcurrent device and the service disconnecting means are the same (a main circuit breaker). These devices could be separate but grouped together, such as a set of fuses or a circuit breaker and an unfused switch, although this would be rare today. The key to the intent of this provision lies in Section E3601.6.2; the code intends to limit the length of service-entrance conductors that are both inside of a building and on the line side of the service overcurrent device. Service-entrance conductors on the line side of the service overcurrent device are not protected against short circuits and ground faults. Conductors on the load side of the service overcurrent device are feeders and are not limited in length (see Commentary Figure E3603.3.3).

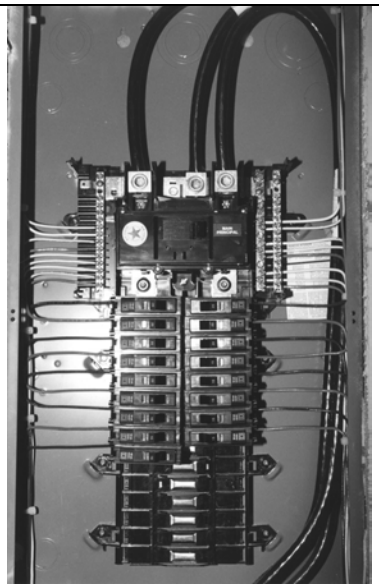

Figure E3603.3.3
SERVICE OVERCURRENT DEVICE INTEGRAL WITH SERVICE DISCONNECTING MEANS

INTERNATIONAL CODE COUNCIL®
Copyright © 2015 ICC. ALL RIGHTS RESERVED. Accessed by David Dammon on Jun 21, 2017 12:30:52 PM pursuant to License Agreement with ICC. No further reproduction or distribution authorized. ANY UNAUTHORIZED REPRODUCTION OR DISTRIBUTION IS A VIOLATION OF THE FEDERAL COPYRIGHT ACT AND THE LICENSE AGREEMENT, AND SUBJECT TO CIVIL AND CRIMINAL PENALTIES THEREUNDER.

E3603.4 Grounding electrode conductor size. The grounding electrode conductors shall be sized based on the size of the service entrance conductors as required in Table E3603.4. (250.66)

❖ This is a prescriptive rule based on the size of the largest ungrounded service-entrance conductor for the dwelling. The size of the grounding electrode conductor is not based on the rating of the overcurrent device, nor is it based on the calculated load; rather, it is based on the size of the installed ungrounded service conductors. Service-entrance conductor size is determined from the calculation, but if a larger service-entrance conductor is used, for example, to provide capacity for future expansion, the grounding electrode conductor would be based on the size installed.

TABLE E3603.4
GROUNDING ELECTRODE CONDUCTOR SIZE[a, b, c, d, e, f]

SIZE OF LARGEST UNGROUNDED SERVICE-ENTRANCE CONDUCTOR OR EQUIVALENT AREA FOR PARALLEL CONDUCTORS (AWG/kcmil)		SIZE OF GROUNDING ELECTRODE CONDUCTOR (AWG/kcmil)	
Copper	Aluminum or copper-clad aluminum	Copper	Aluminum or copper-clad aluminum
2 or smaller	1/0 or smaller	8	6
1 or 1/0	2/0 or 3/0	6	4
2/0 or 3/0	4/0 or 250	4	2
Over 3/0 through 350	Over 250 through 500	2	1/0
Over 350 through 600	Over 500 through 900	1/0	3/0

a. If multiple sets of service-entrance conductors connect directly to a service drop, set of overhead service conductors, set of underground service conductors, or service lateral, the equivalent size of the largest service-entrance conductor shall be determined by the largest sum of the areas of the corresponding conductors of each set.

b. Where there are no service-entrance conductors, the grounding electrode conductor size shall be determined by the equivalent size of the largest service-entrance conductor required for the load to be served.

c. Where protected by a ferrous metal raceway, grounding electrode conductors shall be electrically bonded to the ferrous metal raceway at both ends. [250.64(E)(1)]

d. An 8 AWG grounding electrode conductor shall be protected with rigid metal conduit, intermediate metal conduit, rigid polyvinyl chloride (Type PVC) nonmetallic conduit, rigid thermosetting resin (Type RTRC) nonmetallic conduit, electrical metallic tubing or cable armor. [250.64(B)]

e. Where not protected, 6 AWG grounding electrode conductor shall closely follow a structural surface for physical protection. The supports shall be spaced not more than 24 inches on center and shall be within 12 inches of any enclosure or termination. [250.64(B)]

f. Where the sole grounding electrode system is a ground rod or pipe as covered in Section E3608.3, the grounding electrode conductor shall not be required to be larger than 6 AWG copper or 4 AWG aluminum. Where the sole grounding electrode system is the footing steel as covered in Section E3608.1.2, the grounding electrode conductor shall not be required to be larger than 4 AWG copper conductor. [250.66(A) and (B)]

E3603.5 Temperature limitations. Except where the equipment is marked otherwise, conductor ampacities used in determining equipment termination provisions shall be based on Table E3705.1. [110.14(C)(1)]

❖ The ampacities specified by Table E3705.1 are to be used in determining the maximum operating temperature of equipment connections to the service-entrance conductors. For example, a 4-AWG copper service conductor is limited to a load of 85 amps by Table E3705.1 where the operating temperature must be not greater than 75°C. See Section E3705.4.

SECTION E3604
OVERHEAD SERVICE AND SERVICE-ENTRANCE CONDUCTOR INSTALLATION

E3604.1 Clearances on buildings. Open conductors and multiconductor cables without an overall outer jacket shall have a clearance of not less than 3 feet (914 mm) from the sides of doors, porches, decks, stairs, ladders, fire escapes and balconies, and from the sides and bottom of windows that open. See Figure E3604.1. [230.9(A)]

❖ This code requirement pertains to overhead service-entrance conductors. Where service-entrance conductors are installed as SE cable or in a raceway, there is no minimum distance specified between openings and doors and the cable or raceway. The main concern here is that an individual standing on a balcony or similar place or reaching out of an openable window should not be able to reach open conductors (see Figure E3604.1 and Commentary Figure E3604.1).

E3604.2 Vertical clearances. Overhead service conductors shall not have ready access and shall comply with Sections E3604.2.1 and E3604.2.2. (230.24)

❖ The installer is responsible for the required clearance for the overhead service conductors. The sag in the overhead span of conductors will change with the temperature and with loading from ice and wind. The conductors will contract in colder temperatures and expand in warmer temperatures. The conductors must be installed such that when they are extended because of the increased sag, required clearances will still be maintained.

E3604.2.1 Above roofs. Conductors shall have a vertical clearance of not less than 8 feet (2438 mm) above the roof surface. The vertical clearance above the roof level shall be maintained for a distance of not less than 3 feet (914 mm) in all directions from the edge of the roof. See Figure E3604.2.1. [230.24(A)]

Exceptions:

1. Conductors above a roof surface subject to pedestrian traffic shall have a vertical clearance from the roof surface in accordance with Section E3604.2.2. [230.24(A) Exception No. 1]
2. Where the roof has a slope of 4 inches (102 mm) in 12 inches (305 mm), or greater, the minimum clearance shall be 3 feet (914 mm). [230.24(A) Exception No. 2]

INTERNATIONAL CODE COUNCIL®
Copyright © 2015 ICC. ALL RIGHTS RESERVED. Accessed by David Dammon on Jun 21, 2017 12:30:52 PM pursuant to License Agreement with ICC. No further reproduction or distribution authorized. ANY UNAUTHORIZED REPRODUCTION OR DISTRIBUTION IS A VIOLATION OF THE FEDERAL COPYRIGHT ACT AND THE LICENSE AGREEMENT, AND SUBJECT TO CIVIL AND CRIMINAL PENALTIES THEREUNDER.

3. The minimum clearance above only the overhanging portion of the roof shall not be less than 18 inches (457 mm) where not more than 6 feet (1829 mm) of overhead service conductor length passes over 4 feet (1219 mm) or less of roof surface measured horizontally and such conductors are terminated at a through-the-roof raceway or approved support. [230.24(A) Exception No. 3]
4. The requirement for maintaining the vertical clearance for a distance of 3 feet (914 mm) from the edge of the roof shall not apply to the final conductor span where the service drop is attached to the side of a building. [230.24(A) Exception No. 4]
5. Where the voltage between conductors does not exceed 300 and the roof area is guarded or isolated, a reduction in clearance to 3 feet (914 mm) shall be permitted. [230.24(A) Exception No. 5]

❖ Most roofs of one- and two-family dwellings are not subject to pedestrian traffic, but may be walked on. This code provision considers that where the slope of the roof is less than 4 inches (102 mm) vertical in 12 inches (305 mm) horizontal, is it easier to walk on; therefore, it is more likely that an individual will be walking on the roof at some point in time. A roof that has a slope of 4 or more inches (102 mm) vertical in 12 inches (305 mm) horizontal is more difficult to walk on, and the conductor clearance may be reduced to 3 feet (914 mm), recognizing that walking on the roof is less likely.

Exception 3 pertains only to the overhanging portion of the roof; that is, where the roof extends past the wall of the dwelling. Where the service equipment is mounted on the wall with the riser extending through the roof the conductors will usually pass over only the overhanging portion of the roof. The clearance can be reduced to 18 inches (457 mm) above the roof surface if a length of 6 feet (1829 mm) or less of service conductor passes over a maximum of 4 feet (1219 mm) of overhanging roof. The 4 feet (1219 mm) is measured in any direction, not just perpendicular to the wall of the house.

Exception 4 is for an installation where the service drop is not attached to the service mast but to the building, and the service riser does not extend through the roof. The service drop conductors may run near the edge of the roof, and the vertical clearance for a distance of 3 feet (914 mm) from the edge of the roof is not required for this installation.

Exception 5 addresses those conditions where human contact with the conductors is extremely unlikely or impossible.

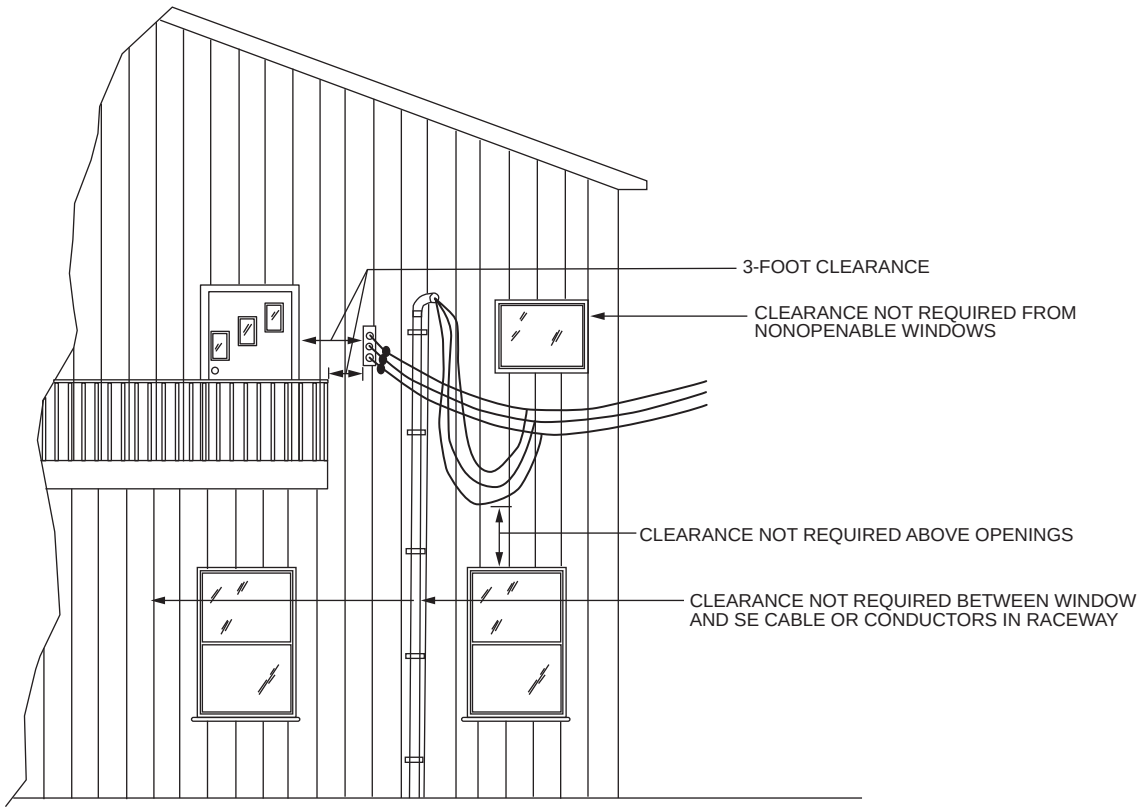

For SI: 1 foot = 304.8 mm.

FIGURE E3604.1
CLEARANCES FROM BUILDING OPENINGS

INTERNATIONAL CODE COUNCIL®
Copyright © 2015 ICC. ALL RIGHTS RESERVED. Accessed by David Dammon on Jun 21, 2017 12:30:52 PM pursuant to License Agreement with ICC. No further reproduction or distribution authorized. ANY UNAUTHORIZED REPRODUCTION OR DISTRIBUTION IS A VIOLATION OF THE FEDERAL COPYRIGHT ACT AND THE LICENSE AGREEMENT, AND SUBJECT TO CIVIL AND CRIMINAL PENALTIES THEREUNDER.

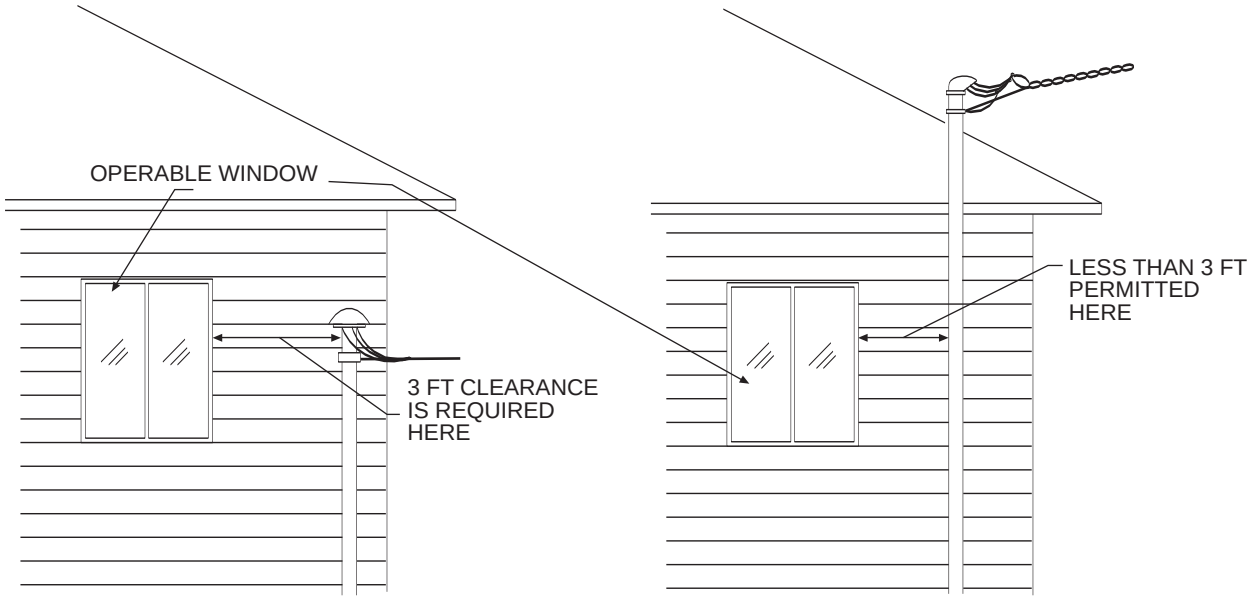

For SI: 1 foot = 304.8 mm.

Figure E3604.1
CLEARANCES FROM BUILDING OPENINGS

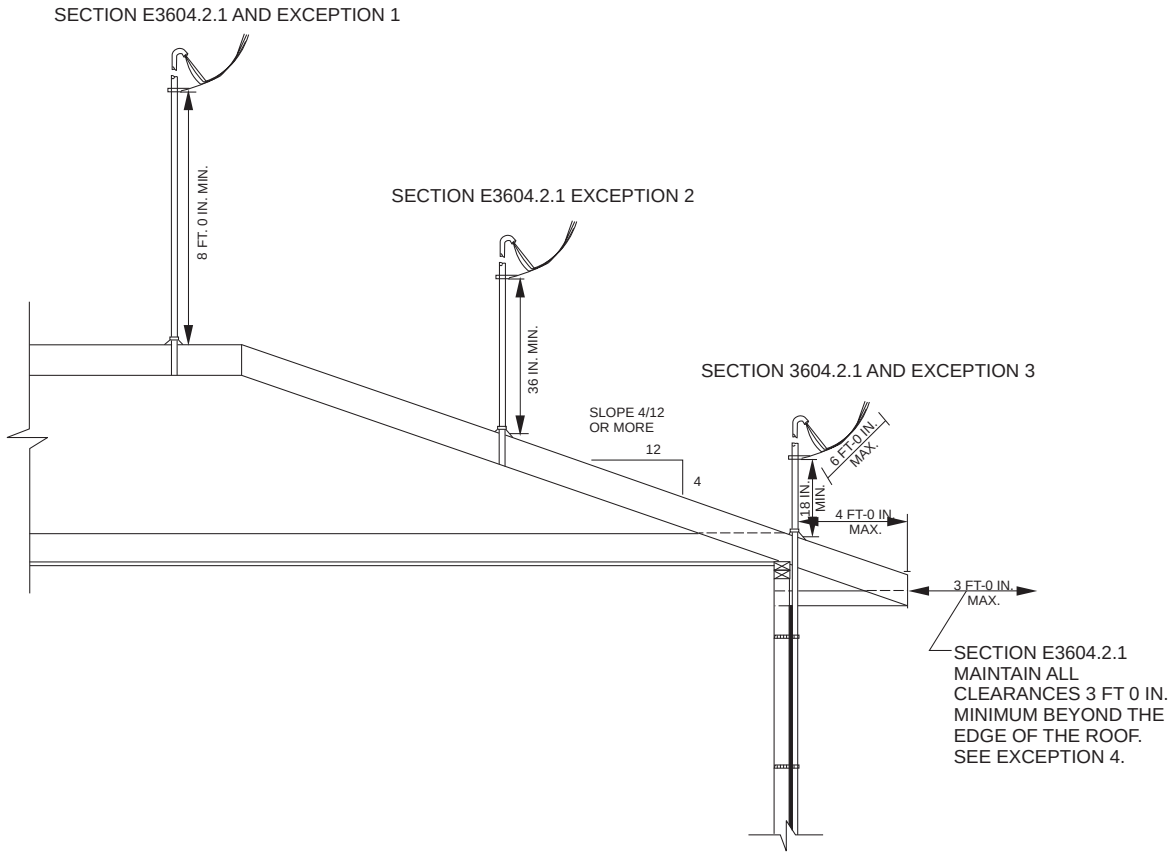

For SI: 1 inch = 25.4 mm, 1 foot = 304.8 mm.

FIGURE E3604.2.1
CLEARANCES FROM ROOFS

INTERNATIONAL CODE COUNCIL®
Copyright © 2015 ICC. ALL RIGHTS RESERVED. Accessed by David Dammon on Jun 21, 2017 12:30:52 PM pursuant to License Agreement with ICC. No further reproduction or distribution authorized. ANY UNAUTHORIZED REPRODUCTION OR DISTRIBUTION IS A VIOLATION OF THE FEDERAL COPYRIGHT ACT AND THE LICENSE AGREEMENT, AND SUBJECT TO CIVIL AND CRIMINAL PENALTIES THEREUNDER.

E3604.2.2 Vertical clearance from grade. Overhead service conductors shall have the following minimum clearances from final grade:

1. For conductors supported on and cabled together with a grounded bare messenger wire, the minimum vertical clearance shall be 10 feet (3048 mm) at the electric service entrance to buildings, at the lowest point of the drip loop of the building electric entrance, and above areas or sidewalks accessed by pedestrians only. Such clearance shall be measured from final grade or other accessible surfaces.
2. Twelve feet (3658 mm)—over residential property and driveways.
3. Eighteen feet (5486 mm)—over public streets, alleys, roads or parking areas subject to truck traffic. [(230.24(B)(1), (2), and (4)]

❖ The 10-foot (3048 mm) vertical clearance requirement from final grade applies to the drip loop as well as the service conductors.

E3604.3 Point of attachment. The point of attachment of the overhead service conductors to a building or other structure shall provide the minimum clearances as specified in Sections E3604.1 through E3604.2.2. The point of attachment shall be not less than 10 feet (3048 mm) above finished grade. (230.26)

❖ This code section indicates that the height above grade of the point of attachment governs the clearance of the service drop conductors. Several factors must be considered in determining the height of the point of attachment, such as the length of conductor left to form the drip loop; the length of span and sag of the service drop conductors and the 10-, 12- or 18-foot clearance rules. The point of attachment could be 10 feet (3048 mm) above grade at the lowest.

E3604.4 Means of attachment. Multiconductor cables used for overhead service conductors shall be attached to buildings or other structures by fittings approved for the purpose. (230.27)

❖ Only fittings that are approved and designed for the purpose can be used for the attachment of the service conductors. Installation of the supports or fittings to the framing members before the outside or inside walls are finished may be necessary.

E3604.5 Service masts as supports. A service mast used for the support of service-drop or overhead service conductors shall comply with Sections E3604.5.1 and E3604.5.2. Only power service drop or overhead service conductors shall be attached to a service mast.

❖ The code does not contain a prescriptive requirement for the size and type of conduit to be used or for the height above the roof it can extend before being supported by braces or guy wires where overhead service drop conductors are attached to the service mast. In many juris-dictions, the power utility company specifies that if the service riser is installed through the roof, a minimum 2-inch (51 mm) rigid conduit must be installed to provide adequate strength where the conduit connects the overhead service drop. The size of the mast depends on the length and size of the service drop conductors, the height that the mast extends above the last point of support and loading resulting from wind and ice build-up. The overhead service mast must not support such things as cable TV and telephone wires.

E3504.5.1 Strength. The service mast shall be of adequate strength or shall be supported by braces or guys to safely withstand the strain imposed by the service-drop or overhead service conductors. Hubs intended for use with a conduit that serves as a service mast shall be identified for use with service-entrance equipment.

❖ See Section E3604.5. Threaded hubs on the top of meter enclosures and service equipment enclosures must be identified for the duty. Typically, such conduit hubs bear the full force created by the mast acting as a lever across the fulcrum that occurs at the point of support at the roof.

E3604.5.2 Attachment. Service-drop or overhead service conductors shall not be attached to a service mast at a point between a coupling and a weatherhead or the end of the conduit, where the coupling is located above the last point of securement of the building or other structure or is located above the building or other structure. [230.28(A) & (B)]

❖ This section prohibits the attachment of service conductors to masts at a point on the mast that is above a conduit coupling where the coupling is above the last point of support for the mast. Where a bending force is applied to conduit, a coupling is a weak point and stress failure is likely to occur at the coupling before the mast deforms. The threaded portion of conduit is thinner than the conduit wall and the coupling is a hinge-point not designed to resist bending forces.

E3604.6 Supports over buildings. Service conductors passing over a roof shall be securely supported. Where practicable, such supports shall be independent of the building. (230.29)

❖ Where it is necessary for a service drop to pass over the roof of a building, the service drop should be supported independently of the building over which it crosses.

SECTION E3605
SERVICE-ENTRANCE CONDUCTORS

E3605.1 Insulation of service-entrance conductors. Service-entrance conductors entering or on the exterior of buildings or other structures shall be insulated in accordance with Section E3406.5. (230.41)

Exceptions:

1. A copper grounded conductor shall not be required to be insulated where it is:
   1.1. In a raceway or part of a service cable assembly,
   1.2. Directly buried in soil of suitable condition, or

INTERNATIONAL CODE COUNCIL®
Copyright © 2015 ICC. ALL RIGHTS RESERVED. Accessed by David Dammon on Jun 21, 2017 12:30:52 PM pursuant to License Agreement with ICC. No further reproduction or distribution authorized. ANY UNAUTHORIZED REPRODUCTION OR DISTRIBUTION IS A VIOLATION OF THE FEDERAL COPYRIGHT ACT AND THE LICENSE AGREEMENT, AND SUBJECT TO CIVIL AND CRIMINAL PENALTIES THEREUNDER.

1.3. Part of a cable assembly listed for direct burial without regard to soil conditions.

2. An aluminum or copper-clad aluminum grounded conductor shall not be required to be insulated where part of a cable or where identified for direct burial or utilization in underground raceways. (230.41 Exception)

❖ Service-entrance conductors are almost always installed in raceways or they are part of a multiwire cable assembly. The grounded conductor need not be insulated if it is in a raceway or cable. Some SE cables are made with a bare conductor that is used as the neutral.

E3605.2 Wiring methods for services. Service-entrance wiring methods shall be installed in accordance with the applicable requirements in Chapter 38. (230.43)

❖ Table E3801.4 includes eight different types of wiring methods as allowable for service-entrance wiring.

E3605.3 Spliced conductors. Service-entrance conductors shall be permitted to be spliced or tapped. Splices shall be made in enclosures or, if directly buried, with listed underground splice kits. Conductor splices shall be made in accordance with Chapters 34, 37, 38 and 39. (230.33, 230.46)

❖ Service-entrance conductors are spliced for the service of a two-family dwelling. On an over-head service, the riser is run down to a gutter where the service-entrance conductors are spliced and run to the two separate main disconnects.

E3605.4 Protection of underground service entrance conductors. Underground service-entrance conductors shall be protected against physical damage in accordance with Chapter 38. (230.32)

❖ See the commentary to Section E3803 for rules on the protection of underground service-entrance conductors.

E3605.5 Protection of all other service cables. Above-ground service-entrance cables, where subject to physical damage, shall be protected by one or more of the following: rigid metal conduit, intermediate metal conduit, Schedule 80 PVC conduit, electrical metallic tubing or other approved means. [230.50(1)]

❖ Where above-ground SE cables are deemed by the code official to be subject to physical damage, they must be protected by installing them in one of the types of conduit listed or they must be installed in electrical metallic tubing. For new work, separate service-entrance conductors are normally installed in one of the listed wiring methods. If SE cable is used, it could be run exposed. Installation in one of the raceways on the list is not required except at any point where it could be damaged.

E3605.6 Locations exposed to direct sunlight. Insulated conductors and cables used where exposed to direct rays of the sun shall comply with one of the following:

1. The conductors and cables shall be listed, or listed and marked, as being sunlight resistant.

2. The conductors and cables are covered with insulating material, such as tape or sleeving, that is listed, or listed and marked, as being sunlight resistant. [310.10(D)]

❖ Ultraviolet radiation from sunlight will attack and degrade many plastic materials such as those used for conductor insulation and cable jackets (sheaths). Therefore, any conductor exposed to sunlight, such as the exposed service-entrance conductors at the drip loop at the connection to a service drop, must be "sunlight resistant." Cables run on the exterior surfaces of buildings, such as SE cables, must be "sunlight resistant" as well. A sunlight-resistant covering, listed and labeled as such, can be used to protect conductors and cable assemblies.

E3605.7 Mounting supports. Service-entrance cables shall be supported by straps or other approved means within 12 inches (305 mm) of every service head, gooseneck or connection to a raceway or enclosure and at intervals not exceeding 30 inches (762 mm). [230.51(A)]

❖ Where installed on the surface of a wall, service entrance cable must be supported at least every 30 inches (762 mm) to keep the cable flat against the wall surface and protected from damage.

E3605.8 Raceways to drain. Where exposed to the weather, raceways enclosing service-entrance conductors shall be suitable for use in wet locations and arranged to drain. Where embedded in masonry, raceways shall be arranged to drain. (230.53)

❖ Although a weatherhead installed at the top of an overhead riser will keep out precipitation, differences in temperature can cause condensation to form inside a raceway. The raceway and the associated equipment have drain holes for this reason, which must not be plugged or covered during installation.

E3605.9 Overhead service locations. Connections at service heads shall be in accordance with Sections E3605.9.1 through E3605.9.7. (230.54)

❖ See the commentary to Sections E3605.9.1 through E3605.9.7.

E3605.9.1 Rain-tight service head. Service raceways shall be equipped with a service head at the point of connection to service-drop or overhead conductors. The service head shall be listed for use in wet locations. [230.54(A)]

❖ See the commentary to Section E3605.9.7.

E3605.9.2 Service cable, service head or gooseneck. Service-entrance cable shall be equipped with a service head or shall be formed into a gooseneck in an approved manner. The service head shall be listed for use in wet locations. [230.54(B)]

❖ See the commentary to Section E3605.9.7.

E3605.9.3 Service-head location. Service heads, and goosenecks in service-entrance cables, shall be located above the point of attachment of the service-drop or overhead service conductors to the building or other structure. [230.54(C)]

Exception: Where it is impracticable to locate the service head or gooseneck above the point of attachment, the ser-

INTERNATIONAL CODE COUNCIL®
Copyright © 2015 ICC. ALL RIGHTS RESERVED. Accessed by David Dammon on Jun 21, 2017 12:30:52 PM pursuant to License Agreement with ICC. No further reproduction or distribution authorized. ANY UNAUTHORIZED REPRODUCTION OR DISTRIBUTION IS A VIOLATION OF THE FEDERAL COPYRIGHT ACT AND THE LICENSE AGREEMENT, AND SUBJECT TO CIVIL AND CRIMINAL PENALTIES THEREUNDER.

vice head or gooseneck location shall be not more than 24 inches (610 mm) from the point of attachment. [230.54(C) Exception]

❖ See the commentary to Section E3605.9.7.

E3605.9.4 Separately bushed openings. Service heads shall have conductors of different potential brought out through separately bushed openings. [230.54(E)]

❖ See the commentary to Section E3605.9.7.

E3605.9.5 Drip loops. Drip loops shall be formed on individual conductors. To prevent the entrance of moisture, service-entrance conductors shall be connected to the service-drop or overhead conductors either below the level of the service head or below the level of the termination of the service-entrance cable sheath. [230.54(F)]

❖ See the commentary to Section E3605.9.7.

E3605.9.6 Conductor arrangement. Service-entrance and overhead service conductors shall be arranged so that water will not enter service raceways or equipment. [230.54(G)]

❖ See the commentary to Section E3605.9.7.

E3605.9.7 Secured. Service-entrance cables shall be held securely in place. [230.54(D)]

❖ A weatherhead or service head is installed at the top of the conduit or electrical metallic tubing used as the riser for the service entrance conductors. There is a separate hole in the weather-head for each conductor. The weatherhead is rain tight, which means that when it is installed properly, rain water will not enter the raceway through the weatherhead. Some condensation will occur within the raceway for which drain holes are provided. The point of attachment of the service-drop conductors is below the weather head so that rain water running down along the service conductors will not enter the service raceway and get into the service equipment. At the point the service-entrance conductors emerge from the weatherhead, they are bent downward to form a drip loop so that water will not run along these conductors and enter the service equipment.

SECTION E3606
SERVICE EQUIPMENT—GENERAL

E3606.1 Service equipment enclosures. Energized parts of service equipment shall be enclosed. (230.62)

❖ All energized parts are enclosed within the panelboard or service equipment (see the commentary to Section E3404.9).

E3606.2 Working space. The working space in the vicinity of service equipment shall be not less than that specified in Chapter 34. (110.26)

❖ See the commentary to Section E3405.

E3606.3 Available short-circuit current. Service equipment shall be suitable for the maximum fault current available at its supply terminals, but not less than 10,000 amperes. (110.9)

❖ See the commentary to Section E3404.3.

E3606.4 Marking. Service equipment shall be marked to identify it as being suitable for use as service equipment. Service equipment shall be listed. Individual meter socket enclosures shall not be considered as service equipment. (230.66)

❖ See the commentary to Section E3601.6.1.

SECTION E3607
SYSTEM GROUNDING

E3607.1 System service ground. The premises wiring system shall be grounded at the service with a grounding electrode conductor connected to a grounding electrode system as required by this code. Grounding electrode conductors shall be sized in accordance with Table E3603.4. [250.20(B)(1) and 250.24(A)]

❖ The electrical system must be connected to earth to limit voltage imposed by lightning, line surges or unintentional contact with higher voltage lines and to stabilize voltage to earth during normal operation. The electrical system is connected to earth or grounded by connecting the neutral, referred to as the grounded service conductor, to a grounding electrode conductor, which is run to the grounding electrode system. This is part of the fault-current path and must have sufficiently low impedance to facilitate the operation of the overcurrent device and clear the fault. An electrically continuous and permanent path must be established that will allow enough current to flow during a fault condition to trip the main circuit breaker or set of fuses. When a fault occurs at some point in the electrical wiring system, the current will return to the source of the power supply, which is the utility company transformer. The grounding electrode conductor is sized according to the size of the ungrounded service conductors. The size of the grounding electrode conductor is not based on the rating of the main service disconnect, and it is not based strictly on the calculated load. Although the calculated load determines the minimum acceptable ungrounded conductor size, a larger conductor could be selected and installed. The amount of current that will flow in a ground-fault (line-to-ground) condition is determined by the impedance in the circuit from the source (ungrounded conductor) to the fault and the impedance in the fault-current return path. Obviously, the larger the size of the source or ungrounded conductor, the lower the impedance will be, and the larger the grounding electrode conductor must be.

The grounding electrode conductor sizes in Table E3603.4 are appropriate to carry the fault current likely to be imposed on the grounding electrode conductor.

E3607.2 Location of grounding electrode conductor connection. The grounding electrode conductor shall be connected to the grounded service conductor at any accessible point from the load end of the overhead service conductors, service drop, underground service conductors, or service lateral to and including the terminal or bus to which the grounded service conductor is connected at the service disconnecting means. A grounding connection shall not be made

INTERNATIONAL CODE COUNCIL®
Copyright © 2015 ICC. ALL RIGHTS RESERVED. Accessed by David Dammon on Jun 21, 2017 12:30:52 PM pursuant to License Agreement with ICC. No further reproduction or distribution authorized. ANY UNAUTHORIZED REPRODUCTION OR DISTRIBUTION IS A VIOLATION OF THE FEDERAL COPYRIGHT ACT AND THE LICENSE AGREEMENT, AND SUBJECT TO CIVIL AND CRIMINAL PENALTIES THEREUNDER.

to any grounded circuit conductor on the load side of the service disconnecting means, except as provided in Section E3607.3.2. [250.24(A)(1) and (A)(5)]

❖ Commonly, the grounded conductor is connected to the grounding electrode conductor at a grounding terminal in the service equipment at the location of the main disconnect (see Commentary Figure E3607.2). The code permits this connection to be made at any accessible location between the load end of the service drop or service lateral and the main disconnect and it is often made in a meter cabinet. The meter cabinet is an accessible location for this connection. For an overhead service, the connection could be made at the weatherhead, the meter cabinet, a current transformer cabinet or the main disconnect. If the connection is made in the meter cabinet, it may be considered inaccessible and therefore not permitted by the utility company. The main disconnect is usually the most convenient place to make the connection.

It is extremely important that no connection be made between the grounded conductors and the grounding conductors downstream of the main disconnect. Such a connection on the load side of the main disconnect could create a hazardous parallel path for fault-current and normal current. An exception to this rule is for the circuits to existing ranges and dryers. Another exception, for existing installations only, is where two or more buildings are supplied from a common service and an equipment grounding conductor is not run with the supply conductors to the other building (see the commentary to Section E3607.3.2). See also Sections E3908.5 and E3908.6.

E3607.3 Buildings or structures supplied by feeder(s) or branch circuit(s). Buildings or structures supplied by feeder(s) or branch circuit(s) shall have a grounding electrode or grounding electrode system installed in accordance with Section E3608. The grounding electrode conductor(s) shall be connected in a manner specified in Section E3607.3.1 or, for existing premises wiring systems only, Section E3607.3.2. Where there is no existing grounding electrode, the grounding electrode(s) required in Section E3608 shall be installed. [250.32(A)]

Exception: A grounding electrode shall not be required where only one branch circuit, including a multiwire branch circuit, supplies the building or structure and the branch circuit includes an equipment grounding conductor for grounding the noncurrent-carrying parts of all equipment. For the purposes of this section, a multiwire branch

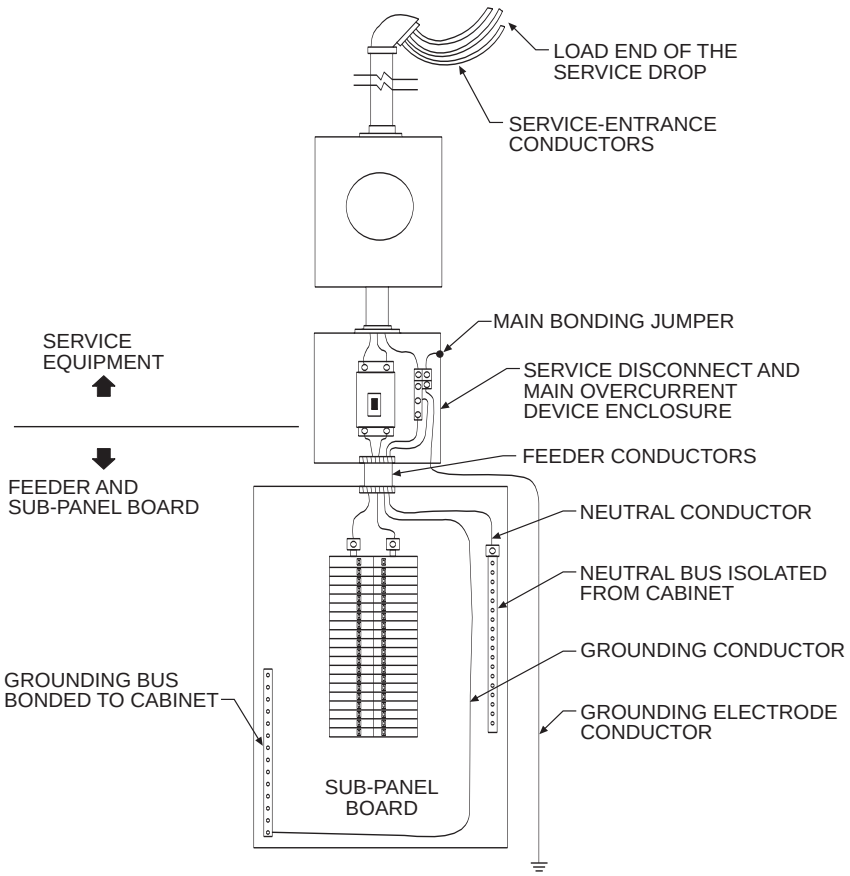

Figure E3607.2
SERVICE EQUIPMENT AND EQUIPMENT ON THE LOAD SIDE OF THE DISCONNECTING MEANS

INTERNATIONAL CODE COUNCIL®
Copyright © 2015 ICC. ALL RIGHTS RESERVED. Accessed by David Dammon on Jun 21, 2017 12:30:52 PM pursuant to License Agreement with ICC. No further reproduction or distribution authorized. ANY UNAUTHORIZED REPRODUCTION OR DISTRIBUTION IS A VIOLATION OF THE FEDERAL COPYRIGHT ACT AND THE LICENSE AGREEMENT, AND SUBJECT TO CIVIL AND CRIMINAL PENALTIES THEREUNDER.

circuit shall be considered as a single branch circuit. [250.32(A) Exception]

❖ Where two or more buildings are supplied from one service, each building must have a grounding electrode. For example, a dwelling has a service supplied from the power company to service equipment on the outside of the dwelling and has two 2-pole circuit breakers as main service disconnects. One 2-pole circuit breaker serves a feeder run to the panelboard inside the dwelling, and the other serves a feeder run to a panelboard at a separate workshop building 100 feet (30 480 mm) away from the dwelling. Both the dwelling and the workshop must have a grounding electrode as described in Section E3608. If there is no grounding electrode at the workshop, one of the grounding electrodes listed in Section E3608 must be installed. A ground rod, concrete encased electrode, or ground ring could be installed. If water is supplied to the separate workshop building through metal pipe, an underground metal water pipe could serve as the grounding electrode. This section states that the grounding electrode at the separate building must be connected in the building disconnecting means in one of the ways described in the two subsections that follow. Note that Section E3607.3.2 applies only to existing premises wiring systems. A separate building must have a main disconnect and not simply a panelboard. A main disconnect could be a main circuit breaker in the panelboard that would disconnect all the power to the panelboard.

A grounding electrode is not required in a separate building if it is served by only one branch circuit. If a separate building supplied by only one branch circuit does not have a grounding electrode, it does not have to have one installed. If a metal underground water pipe is already installed at the building, it does not have to be bonded to the equipment grounding conductor of the one branch circuit. A building like a small tool shed, for example, may have only a light and receptacle. The equipment grounding conductor run with the branch circuit conductors is sufficient to ground any equipment for this separate building. Of course, a receptacle in a tool storage shed or accessory building at grade level would require ground-fault circuit-interrupter (GFCI) protection, but, the grounding conductor need not be connected to a grounding electrode such as a ground rod.

E3607.3.1 Equipment grounding conductor. An equipment grounding conductor as described in Section E3908 shall be run with the supply conductors and connected to the building or structure disconnecting means and to the grounding electrode(s). The equipment grounding conductor shall be used for grounding or bonding of equipment, structures or frames required to be grounded or bonded. The equipment grounding conductor shall be sized in accordance with Section E3908.12. Any installed grounded conductor shall not be connected to the equipment grounding conductor or to the grounding electrode(s). [250.32(B) and Table 250.122]

❖ Where the feeder that supplies the separate building is run with an equipment grounding conductor, the rules of this subsection apply. Consider the example of the separate workshop building in the commentary to Section E3607.3. The panelboard at the workshop is served by a feeder in a raceway or cable consisting of four conductors: two ungrounded, one grounded (neutral) and one equipment grounding conductor of the appropriate sizes. The equipment grounding conductor run along with the supply conductors will be connected to the separate building disconnecting means and to the separate building grounding electrode(s). The feeder neutral or grounded conductor of the supply must be insulated and is not bonded to the panelboard cabinet. It is kept separate from the grounding conductors and is not bonded to the separate building grounding electrode(s). The panelboard cabinet of the separate building has one terminal bus for the grounded conductors and another for the grounding conductors. The bonding screw supplied for the purpose of bonding the neutral terminal strip or bus to the metal cabinet must not be installed, and this neutral terminal strip or bus is insulated from the metal cabinet. The grounding electrode is connected to the equipment grounding terminal, which is bonded to the metal cabinet. If the neutral terminal bus and the equipment grounding conductor terminal bus were bonded together, the current intended to return via the neutral will also flow on the equipment grounding conductor. This is a fire- and life-safety hazard and violates Section E3607.2, among others.

The equipment-grounding conductor run with the feeder could be any of the types listed in Section E3908.8, including the conduit or tubing enclosing the circuit conductors where the installation complies with the provisions of Section E3908 (see Commentary Figure E3607.3.1).

E3607.3.2 Grounded conductor, existing premises. For installations made in compliance with previous editions of this code that permitted such connection and where an equipment grounding conductor is not run with the supply conductors to the building or structure, there are no continuous metallic paths bonded to the grounding system in both buildings or structures involved, and ground-fault protection of equipment has not been installed on the supply side of the feeder(s), the grounded conductor run with the supply to the buildings or structure shall be connected to the building or structure disconnecting means and to the grounding electrode(s) and shall be used for grounding or bonding of equipment, structures, or frames required to be grounded or bonded. Where used for grounding in accordance with this provision, the grounded conductor shall be not smaller than the larger of:

1. That required by Section E3704.3.
2. That required by Section E3908.12. [250.32(B)(1) Exception]

❖ Where the feeder that supplies the separate building is run without an equipment grounding conductor, the rules of this subsection apply. Note that this section applies only to existing wiring systems that were installed in compliance with previous editions of the code that allowed such connections. If, for example,

INTERNATIONAL CODE COUNCIL®
Copyright © 2015 ICC. ALL RIGHTS RESERVED. Accessed by David Dammon on Jun 21, 2017 12:30:52 PM pursuant to License Agreement with ICC. No further reproduction or distribution authorized. ANY UNAUTHORIZED REPRODUCTION OR DISTRIBUTION IS A VIOLATION OF THE FEDERAL COPYRIGHT ACT AND THE LICENSE AGREEMENT, AND SUBJECT TO CIVIL AND CRIMINAL PENALTIES THEREUNDER.

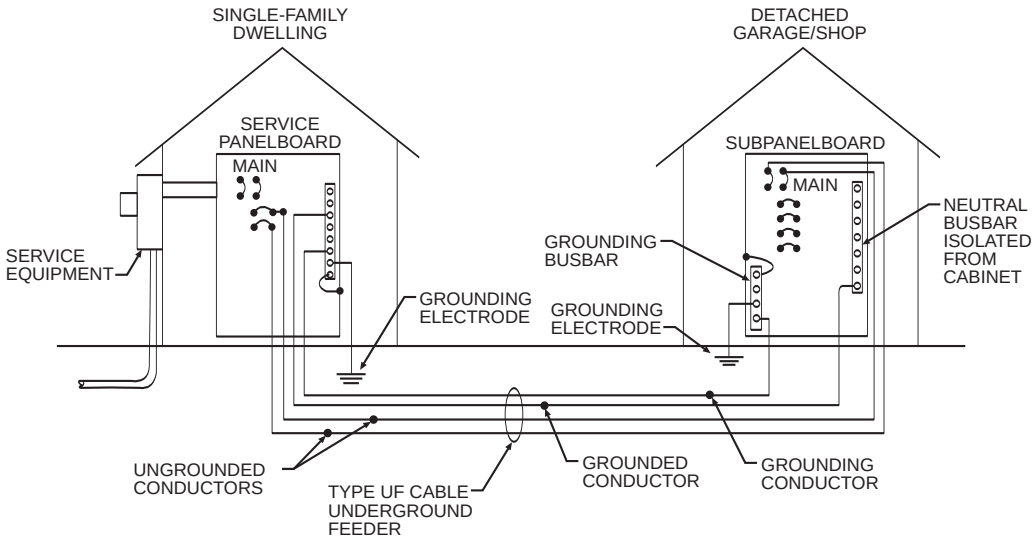

Figure E3607.3.1
TWO BUILDINGS SUPPLIED FROM A COMMON SERVICE

new wiring was to be installed to supply a building that did not have power run to it, the code intends to require the installation to comply with Section E3607.3.1. In previous editions of the code, this section applied to new and existing installations and this was considered to be an unnecessarily risky practice. Recall that the code recently underwent similar revisions regarding the grounding of electric clothes dryers and ranges, where the long-standing practice of grounding the appliance frames to the grounded (neutral) conductor was banned, except for existing installations.

The preferred method is covered in Section E3607.3.1 and for new installations, there is no excuse for not complying with the preferred safer method, thus this section (E3607.3.2) was revised to apply only to existing installations. Let's assume that the panelboard at the workshop discussed in the previous section is served by an existing underground feeder cable consisting of three conductors: two ungrounded and one neutral conductor of the appropriate sizes. The neutral or grounded conductor of the feeder is grounded again at the separate building by a grounding electrode conductor connected to the separate building grounding electrode(s). The panelboard cabinet of the separate building may have one terminal bus for the grounded conductors and another for the grounding conductors; if so, they must be bonded together or bonded to the cabinet by a main bonding jumper. Or there may be only one terminal bus to connect all grounded and grounding conductors. In this case, the bonding screw or strap supplied for the purpose of bonding the neutral terminal strip to the metal cabinet is installed, and this bonding screw or strap is considered as a main bonding jumper. The grounding electrode is also bonded to the equipment-grounding terminal, which is bonded to the metal cabinet.

An important rule that applies where only a three-conductor feeder is run to the separate building and the feeder grounded conductor is bonded to the grounding electrode system at the separate building is that there must be no common continuous metallic paths bonded to the grounding electrode system in both buildings. Bonding at both ends of such objects as a metal water pipe or gas pipe that was run from the house to the separate building could result in a parallel path for neutral current as well as for fault current. If the neutral were broken or became disconnected, the return current could be through the metal pipe, which would cause a dangerous potential on noncurrent carrying metal surfaces (see Commentary Figure E3607.3.2).

E3607.4 Grounding electrode conductor. A grounding electrode conductor shall be used to connect the equipment grounding conductors, the service equipment enclosures, and the grounded service conductor to the grounding electrode(s). This conductor shall be sized in accordance with Table E3603.4. [250.24(D)]

❖ The grounded service conductor, the grounding conductors and the metal service enclosures must be stabilized at a potential voltage to earth of zero volts. The grounding electrode conductor is used to connect these components to the grounding electrode buried in the earth.

E3607.5 Main bonding jumper. An unspliced main bonding jumper shall be used to connect the equipment grounding conductor(s) and the service-disconnect enclosure to the grounded conductor of the system within the enclosure for each service disconnect. [250.24(B)]

❖ The grounded service conductor, the grounding conductors and the metal service enclosures must be connected together by the main bonding jumper. This connection is made at the main disconnect location.

INTERNATIONAL CODE COUNCIL®
Copyright © 2015 ICC. ALL RIGHTS RESERVED. Accessed by David Dammon on Jun 21, 2017 12:30:52 PM pursuant to License Agreement with ICC. No further reproduction or distribution authorized. ANY UNAUTHORIZED REPRODUCTION OR DISTRIBUTION IS A VIOLATION OF THE FEDERAL COPYRIGHT ACT AND THE LICENSE AGREEMENT, AND SUBJECT TO CIVIL AND CRIMINAL PENALTIES THEREUNDER.

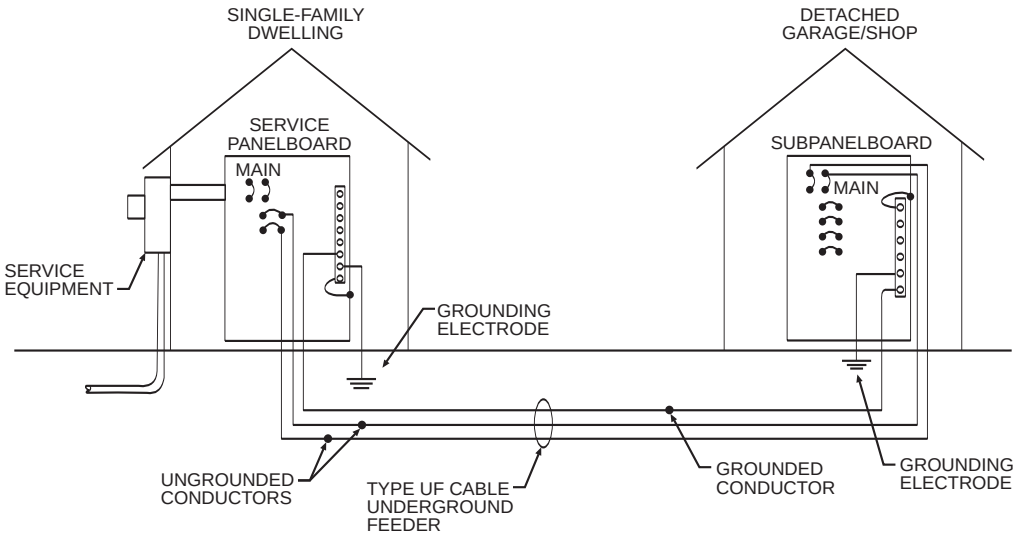

Figure E3607.3.2
TWO BUILDINGS SUPPLIED FROM A COMMON SERVICE

E3607.6 Common grounding electrode. Where an ac system is connected to a grounding electrode in or at a building or structure, the same electrode shall be used to ground conductor enclosures and equipment in or on that building or structure. Where separate services, feeders or branch circuits supply a building and are required to be connected to a grounding electrode(s), the same grounding electrode(s) shall be used. Two or more grounding electrodes that are effectively bonded together shall be considered as a single grounding electrode system. (250.58)

❖ This section requires that the grounding electrode used to ground the service neutral conductor also be used to ground all the metallic enclosures in the electrical system. With one grounding electrode used to ground all of these components, there will not be a different potential; all enclosures will be at the same zero voltage potential as the grounded service conductor. Where two or more grounding electrodes are used at the premises, they must be effectively bonded together and considered as one grounding electrode. This keeps all noncurrent carrying metal surfaces in the electrical system at earth potential.

SECTION E3608
GROUNDING ELECTRODE SYSTEM

E3608.1 Grounding electrode system. All electrodes specified in Sections E3608.1.1, E3608.1.2, E3608.1.3, E3608.1.4 E3608.1.5 and E3608.1.6 that are present at each building or structure served shall be bonded together to form the grounding electrode system. Where none of these electrodes are present, one or more of the electrodes specified in Sections E3608.1.3, E3608.1.4, E3608.1.5 and E3608.1.6 shall be installed and used. (250.50)

Exception: Concrete-encased electrodes of existing buildings or structures shall not be required to be part of the grounding electrode system where the steel reinforcing bars or rods are not accessible for use without disturbing the concrete. (250.50 Exception)

❖ The code requires that the premises wiring system, which includes the wiring for the house, any outbuildings and appurtenances, be connected to the earth or grounded at the service. The term "grounded" as defined in Chapter 35 means connected to the earth. Grounding will cause the conductors and equipment so connected to have the same voltage potential as the earth. In other words, there would be no voltage difference between a grounded conductor or equipment and the earth. The electrical system must be connected to the earth to limit voltage imposed by lightning, line surges or unintentional contact with higher voltage lines and to stabilize voltage to earth during normal operation.

The electrical system is connected to the earth through the grounding electrode system. An electrode is a conductor or object serving as a conductor terminal placed in an electrolyte or substance through which electricity could enter or leave. In this case, the electrode is placed in the earth, which contains electrolytes such as mineral and salt solutions that are at different potencies depending on the moisture content of the soil. All of the available grounding electrodes at the premises that are identified by the code must be bonded together to form a "grounding electrode system." To put it simply, the code intends to take advantage of any and all electrodes that are on the site in order to create to the best electrode system possible. The code does not specify that these electrodes be bonded together all at one point or location, or at a specific point or location; it just specifies that they be bonded together. The grounded service conductor or neutral is connected to the grounding electrode system with a grounding electrode conductor. This conductor is run from the service equipment, usually at the point of the main disconnect or on the line side of the main

INTERNATIONAL CODE COUNCIL®
Copyright © 2015 ICC. ALL RIGHTS RESERVED. Accessed by David Dammon on Jun 21, 2017 12:30:52 PM pursuant to License Agreement with ICC. No further reproduction or distribution authorized. ANY UNAUTHORIZED REPRODUCTION OR DISTRIBUTION IS A VIOLATION OF THE FEDERAL COPYRIGHT ACT AND THE LICENSE AGREEMENT, AND SUBJECT TO CIVIL AND CRIMINAL PENALTIES THEREUNDER.

disconnect, to any convenient point on the grounding electrode system, convenient meaning at any of the electrodes or at any point along the grounding electrode conductor. The size of the grounding electrode conductor depends on the size required for the largest of the available grounding electrodes.

Because a metal underground water pipe is one of the electrodes that must be connected to the grounding electrode system, it would be convenient to run a short grounding electrode conductor to the nearest cold water pipe, but this is prohibited. In many houses, there is a cold water pipe just inside the house near the service equipment. The general concept would be to let the water piping system serve as the conductor all the way through the house to where the water pipe enters the house and is buried underground. This type of grounding was a common practice in some areas before the early 1990s when code provisions were changed to prohibit using the water-piping system as a grounding electrode conductor. For various reasons, the water piping system may not always remain continuous or remain the ideal conductor, and the wiring system could be left in an ungrounded condition. Piping could be disconnected during repairs of the plumbing system and a section of nonmetallic water piping could be installed.

The code permits only the first 5 feet (1524 mm) of the water piping system from the point where the pipe enters the building to be used to connect the electrodes together. There are usually not any or not very many interconnections of the piping system in the first 5 feet (1524 mm). In most new houses, if the underground water pipe is metal for 10 feet (3048 mm) to the point where it enters the building, it is an available grounding electrode, and the grounding electrode conductor is run continuously from the service to the point where the water pipe enters the house.

Where any or all of the electrodes mentioned under Section E3608.1 are present (existing) on the premises, they must be bonded together as part of the system. Concrete-encased grounding electrodes consisting of concrete-reinforcing steel must be used as part of the electrode system. The code does not specify that a reinforcing bar be made available or left exposed above the concrete for connection of a grounding electrode conductor, or that 20 feet (6096 mm) of size 4-AWG bare copper be encased in the concrete and left exposed to run to the service equipment. However, such steel must be connected to the grounding electrode system if it is present on the job site. The concrete-encased electrode has been proven to be one of the most effective electrodes in any type of soil (see Commentary Figure E3608.1). The exception further clarifies the intent to require steel reinforcing elements to be bonded to the service, because only where the steel is inaccessible in an existing building would bonding not be required.

E3608.1.1 Metal underground water pipe. A metal underground water pipe that is in direct contact with the earth for 10 feet (3048 mm) or more, including any well casing effectively bonded to the pipe and that is electrically continuous, or made electrically continuous by bonding around insulating joints or insulating pipe to the points of connection of the grounding electrode conductor and the bonding conductors, shall be considered as a grounding electrode (see Section E3608.1). [250.52(A)(1)]

❖ Any metal water pipe in contact with the earth for a distance of 10 feet (3048 mm) or more is considered to be a grounding electrode. It is often thought that only the main water service piping fits this description, but any metal water pipe, such as an irrigation pipe or pipe from a water well, if buried in the earth 10 feet (3048 mm) or more, must be bonded as part of the grounding electrode system. The pipe could be of any material such as copper or steel because the code does not mention the type of metal. In many houses, a water meter, water-pressure reducing valve, or similar equipment is installed in the water supply line. A bonding jumper of the same size as the grounding electrode conductor is installed around such devices because many of these devices are made of or utilize nonconductive materials. In many cases, when the device is removed and/or replaced, the grounding electrode is disconnected. A useful practice is to leave enough slack in the bonding jumper around the device that the jumper will not have to be taken off the piping in the event the device is replaced.

The code assumes that the first 5 feet (1524 mm) of water piping, measured from the point that the piping penetrates an outside wall or floor slab on grade, will not be disturbed or altered by plumbing work. Any piping beyond 5 feet (1524 mm) into the building is more likely to be altered such that electrical continuity is lost. This alteration could take the form of the installation of plastic piping, nonconductive components (e.g., water filters), dielectric fittings or the removal of grounding clamps.

A supplemental grounding electrode is always required when a water pipe electrode is used. The most commonly used supplemental grounding electrode is the ground rod. That is why in so many dwellings a grounding electrode conductor is run from the service equipment to the entry point of the water pipe and another grounding electrode conductor is run to a ground rod. The ground rod is quite often driven into the ground close to the service equipment. A grounding electrode conductor that connects the service equipment to a ground rod, pipe or plate electrode and connects to no other electrodes is not required to be larger than size 6-AWG copper or 4-AWG aluminum (see Section E3610.2).

E3608.1.1.1 Interior metal water piping. Interior metal water piping located more than 5 feet (1524 mm) from the entrance to the building shall not be used as a conductor to interconnect electrodes that are part of the grounding electrode system. [250.68(C)(1)]

❖ See the commentary to Section E3608.1.1.

INTERNATIONAL CODE COUNCIL®
Copyright © 2015 ICC. ALL RIGHTS RESERVED. Accessed by David Dammon on Jun 21, 2017 12:30:52 PM pursuant to License Agreement with ICC. No further reproduction or distribution authorized. ANY UNAUTHORIZED REPRODUCTION OR DISTRIBUTION IS A VIOLATION OF THE FEDERAL COPYRIGHT ACT AND THE LICENSE AGREEMENT, AND SUBJECT TO CIVIL AND CRIMINAL PENALTIES THEREUNDER.

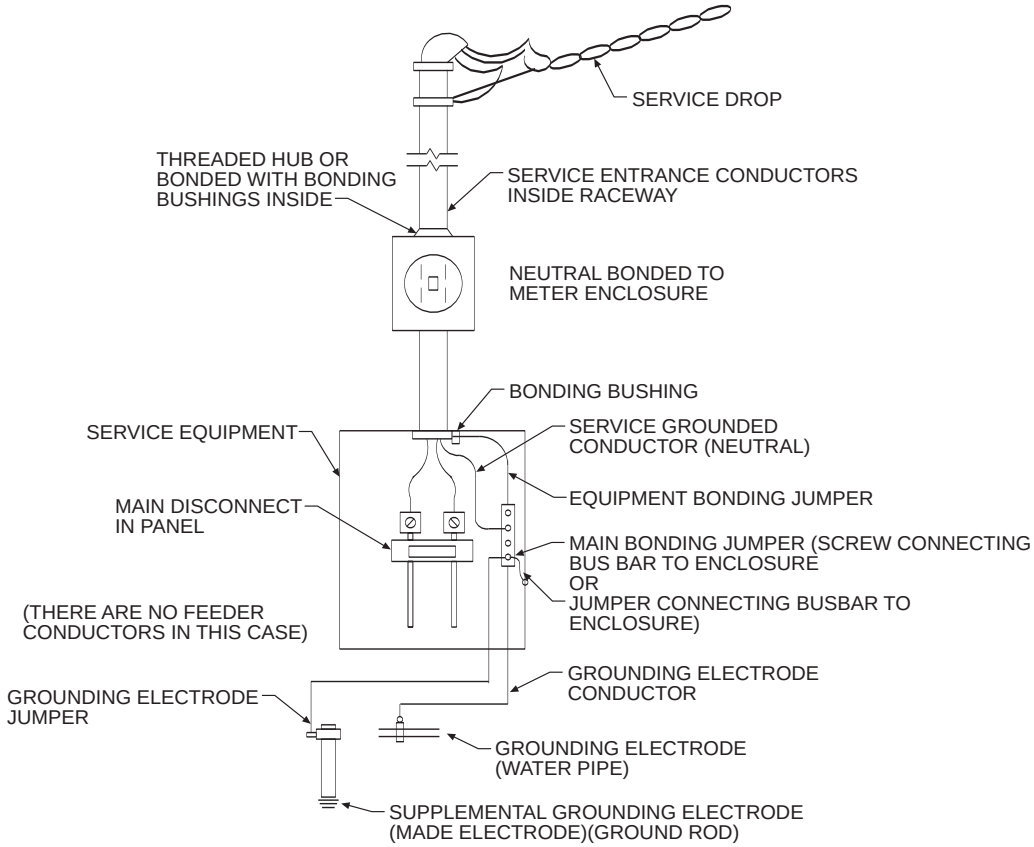

Figure E3608.1
GROUNDING ELECTRODE SYSTEM

E3608.1.1.2 Installation. Continuity of the grounding path or the bonding connection to interior piping shall not rely on water meters, filtering devices and similar equipment. A metal underground water pipe shall be supplemented by an additional electrode of a type specified in Sections E3608.1.2 through E3608.1.6. The supplemental electrode shall be bonded to the grounding electrode conductor, the grounded service-entrance conductor, a nonflexible grounded service raceway, any grounded service enclosure or to the equipment grounding conductor provided in accordance with Section E3607.3.1. Where the supplemental electrode is a rod, pipe or plate electrode in accordance with Section E3608.1.4 or E3608.1.5, it shall comply with Section E3608.4.

Where the supplemental electrode is a rod, pipe or plate electrode in accordance with Section E3608.1.4 or E3608.1.5, that portion of the bonding jumper that is the sole connection to the supplemental grounding electrode shall not be required to be larger than 6 AWG copper or 4 AWG aluminum wire. [250.53(D) and (E)]

❖ See the commentary to Section E3608.1.1.

E3608.1.2 Concrete-encased electrode. A concrete-encased electrode consisting of at least 20 feet (6096 mm) of either of the following shall be considered as a grounding electrode:

1. One or more bare or zinc galvanized or other electrically conductive coated steel reinforcing bars or rods not less than $^1/_2$ inch (13 mm) in diameter, installed in one continuous 20-foot (6096 mm) length, or if in multiple pieces connected together by the usual steel tie wires, exothermic welding, welding, or other effective means to create a 20-foot (6096 mm) or greater length.
2. A bare copper conductor not smaller than 4 AWG.

Metallic components shall be encased by at least 2 inches (51 mm) of concrete and shall be located horizontally within that portion of a concrete foundation or footing that is in direct contact with the earth or within vertical foundations or structural components or members that are in direct contact with the earth.

Where multiple concrete-encased electrodes are present at a building or structure, only one shall be required to be bonded into the grounding electrode system. [250.52(A)(3)]

❖ Encasing an electrode in concrete must be done, of course, before the concrete is placed for the footings. The 20 feet (6096 mm) of size 4-AWG bare copper conductor is run in the forms close to the bottom of the footing before the concrete is placed. Enough conductor is left extending out of the footing to be run to the service equipment without a splice. At the point where the copper conductor exits the concrete, it could be broken off by being bent back and forth several times before and during construction. To help protect this conductor, a nonmetallic conduit around the conductor where it leaves the footing would be helpful. In some installations, the end of a horizontal reinforcing bar in the concrete is bent upward so as to create an above-

INTERNATIONAL CODE COUNCIL®
Copyright © 2015 ICC. ALL RIGHTS RESERVED. Accessed by David Dammon on Jun 21, 2017 12:30:52 PM pursuant to License Agreement with ICC. No further reproduction or distribution authorized. ANY UNAUTHORIZED REPRODUCTION OR DISTRIBUTION IS A VIOLATION OF THE FEDERAL COPYRIGHT ACT AND THE LICENSE AGREEMENT, AND SUBJECT TO CIVIL AND CRIMINAL PENALTIES THEREUNDER.

ground exposed connection point for a grounding electrode conductor. In other cases, concrete contractors have been known to provide a short piece of steel-reinforcing rod bent at a 90-degree (1.57 rad) angle and tie-wire it to a footing reinforcing bar for the purpose of providing a stub out for the electrician to connect to. The code does not appear to address these practices and it is the author's opinion that the code does not anticipate that connections will be made that are solely dependent upon a scrap of rebar that is scabbed (tie-wired) onto the functional rebar. It is noted, however, that the code does allow multiple pieces of rebar to be tied together to create a 20-foot (6096 mm) or longer electrode, assuming that such pieces are placed horizontally in the concrete as required by this section. The best conducting path will likely be achieved where the grounding electrode conductor connects directly to the functional reinforcing steel. The code does not assume that the reinforcing steel bars are present because they are required as part of the structural design, although that is typically why they would be present. Reinforcing bars could be installed for the sole purpose of creating an electrode.

This section allows horizontally oriented electrodes to be placed in vertical concrete foundation components that are in direct contact with the earth, such as below-grade foundation walls. Within the footing is an ideal location because it is the deepest part and the moisture levels will likely be greater at greater depths.

Note that Section E3608.1 requires connection to footing steel where footing steel exists; therefore, the electrical contractor and concrete contractor must coordinate their work to allow for the required bonding. The excuse that the electrician was not able to make the required connection to the footing steel before the concrete was poured is not valid.

This section raises the question of what to do with rebar smaller than $^1/_2$-inch (12.7 mm) in diameter. For example, $^3/_8$-inch (9.53 mm) rod does not qualify as an electrode, but if it is used in the footing, does the code intend to require it to be bonded regardless? It appears that the code would not require bonding to rebar smaller than $^1/_2$ inch (12.7 mm), even though doing so would enhance the overall electrode system.

E3608.1.3 Ground rings. A ground ring encircling the building or structure, in direct contact with the earth at a depth below the earth's surface of not less than 30 inches (762 mm), consisting of at least 20 feet (6096 mm) of bare copper conductor not smaller than 2 AWG shall be considered as a grounding electrode. [250.52(A)(4)]

❖ A ground ring is installed around the building as an intentionally constructed grounding electrode. It may be installed: because someone prefers it to other electrodes; as an enhancement to an electrode system or because electrodes, such as footing rebar and copper water service pipes, are not present. A ground ring may be necessary because of the resistivity of the soil, the type of equipment present at the house or other conditions.

E3608.1.4 Rod and pipe electrodes. Rod and pipe electrodes not less than 8 feet (2438 mm) in length and consisting of the following materials shall be considered as a grounding electrode:

1. Grounding electrodes of pipe or conduit shall not be smaller than trade size $^3/_4$ (metric designator 21) and, where of iron or steel, shall have the outer surface galvanized or otherwise metal-coated for corrosion protection.
2. Rod-type grounding electrodes of stainless steel and copper or zinc-coated steel shall be at least $^5/_8$ inch (15.9 mm) in diameter unless listed. [250.52(A)(5)]

❖ Rod and pipe electrodes must be at least 8 feet (2438 mm) long, and must be made of steel, stainless steel or nonferrous material. If not of stainless steel or nonferrous material, the rod must have a coating for corrosion protection. Pipe electrodes are rarely used today. The most common electrode is a listed $^5/_8$-inch (15.9 mm) copper coated steel rod.

E3608.1.4.1 Installation. The rod and pipe electrodes shall be installed such that at least 8 feet (2438 mm) of length is in contact with the soil. They shall be driven to a depth of not less than 8 feet (2438 mm) except that, where rock bottom is encountered, electrodes shall be driven at an oblique angle not to exceed 45 degrees (0.79 rad) from the vertical or shall be buried in a trench that is at least 30 inches (762 mm) deep. The upper end of the electrodes shall be flush with or below ground level except where the aboveground end and the grounding electrode conductor attachment are protected against physical damage. (250.53(G)]

❖ The previous section requires that the ground rod must be at least 8 feet (2438 mm) long. This section requires that at least 8 feet (2438 mm) of the ground rod be in contact with the earth. Therefore, an 8-foot (2438 mm) long ground rod cannot be installed with the top exposed for the connection of the grounding electrode conductor. The ground rod clamp must be suitable for direct burial, or an exothermic welding process must be used. In some cases, the installers leave the upper end of the rod exposed so that the connection of the grounding electrode conductor can be inspected. The only way this would be acceptable is if the rod were longer than 8 feet (2438 mm), and then the attachment of the grounding electrode conductor must be protected against physical damage. In some cases the rod may be driven away from the house to miss the footing as it is being driven. As a result, it is several inches away from the wall of the house in a flower bed or in a future driveway or patio. Some electricians leave it exposed rather than cover it with concrete for a sidewalk or patio. Where the rod is installed in such a location, the code official would need to inspect the connection and the length of the driven or buried ground rod before the concrete slab was placed.

Where the upper end of the rod and connection clamp are exposed above ground, they must be protected against damage that could result in connector or conductor failure.

INTERNATIONAL CODE COUNCIL®
Copyright © 2015 ICC. ALL RIGHTS RESERVED. Accessed by David Dammon on Jun 21, 2017 12:30:52 PM pursuant to License Agreement with ICC. No further reproduction or distribution authorized. ANY UNAUTHORIZED REPRODUCTION OR DISTRIBUTION IS A VIOLATION OF THE FEDERAL COPYRIGHT ACT AND THE LICENSE AGREEMENT, AND SUBJECT TO CIVIL AND CRIMINAL PENALTIES THEREUNDER.

E3608.1.5 Plate electrodes. A plate electrode that exposes not less than 2 square feet (0.186 m^2) of surface to exterior soil shall be considered as a grounding electrode. Electrodes of bare or conductively coated iron or steel plates shall be at least $^1/_4$ inch (6.4 mm) in thickness. Solid, uncoated electrodes of nonferrous metal shall be at least 0.06 inch (1.5 mm) in thickness. Plate electrodes shall be installed not less than 30 inches (762 mm) below the surface of the earth. [250.52(A)(7)]

❖ Plate electrodes are now manufactured and are becoming more commonplace as alternatives to rods and pipes. They are constructed of copper or steel and are sized to provide adequate surface area in contact with the soil.

E3608.1.6 Other electrodes. In addition to the grounding electrodes specified in Sections E3608.1.1 through E3608.1.5, other listed grounding electrodes shall be permitted. [250.52(A)(6)]

❖ This section simply recognizes the fact that other listed electrodes could be manufactured now or in the future. Currently rod and plate electrodes are available as listed products.

E3608.2 Bonding jumper. The bonding jumper(s) used to connect the grounding electrodes together to form the grounding electrode system shall be installed in accordance with Sections E3610.2, and E3610.3, shall be sized in accordance with Section E3603.4, and shall be connected in the manner specified in Section E3611.1. [250.53(C)]

❖ See the commentary to Sections E3610.2, E3610.3, E3603.4 and E3611.1.

E3608.3 Rod, pipe and plate electrode requirements. Where practicable, rod, pipe and plate electrodes shall be embedded below permanent moisture level. Such electrodes shall be free from nonconductive coatings such as paint or enamel. Where more than one such electrode is used, each electrode of one grounding system shall be not less than 6 feet (1829 mm) from any other electrode of another grounding system. Two or more grounding electrodes that are effectively bonded together shall be considered as a single grounding electrode system. That portion of a bonding jumper that is the sole connection to a rod, pipe or plate electrode shall not be required to be larger than 6 AWG copper or 4 AWG aluminum wire. [250.53(A)(1), 250.53(B), 250.53(C)]

❖ Moist soil (earth) is more conductive than dry soil and therefore provides for better grounding. Multiple electrodes placed less than 6 feet (1829 mm) apart are not much more effective than a single electrode. This relates to the concept of earth resistance as addressed in Section E3608.4.

E3608.4 Supplemental electrode required. A single rod, pipe, or plate electrode shall be supplemented by an additional electrode of a type specified in Sections E3608.1.2 through E3608.1.6. The supplemental electrode shall be bonded to one of the following:

1. A rod, pipe, or plate electrode.
2. A grounding electrode conductor.
3. A grounded service-entrance conductor.
4. A nonflexible grounded service raceway.
5. A grounded service enclosure.

Where multiple rod, pipe, or plate electrodes are installed to meet the requirements of this section, they shall not be less than 6 feet (1829 mm) apart. [250.53(A)(2) and (A)(3)]

Exception: Where a single rod, pipe, or plate grounding electrode has a resistance to earth of 25 ohms or less, the supplemental electrode shall not be required. [250.53(A)(2) Exception]

❖ The requirement of this section for a supplemental electrode or a maximum of 25 ohms of resistance between the grounding electrode and the earth is only for "made" electrodes (rods, pipes and plates). Note that the fundamental requirements of this section have not changed from previous editions of the code, but the approach has changed. The code now requires the supplemental electrode as the primary rule and allows an exception for low-resistance electrode installations, whereas previously, the code first required a low-resistance electrode installation and mandated a supplemental electrode only where the low resistance could not be demonstrated. The code comes at it from a different angle, but the results are the same.

If the resistance is over 25 ohms for an electrode, the code requires that an additional electrode be installed at least 6 feet (1829 mm) away from the first one. There is no requirement to keep adding electrodes until the resistance is reduced to 25 ohms or less. There are many different types of soil, and the resistivity or conductivity of the soil changes with the amount of moisture in the soil and even with the temperature of the soil. This code rule provides a low-resistance path to ground to limit the voltage imposed on the system by lightning or ground faults. The earth must never be used as the sole grounding conductor or ground-fault path because it has such high resistance. The current flow through the earth would not facilitate the operation of the overcurrent device under fault conditions.

Earth resistance can be measured with "fall-of-potential"-type instruments and modern clamp-on hand-held instruments. At some distance from the electrode under a fall-of-potential test, the earth resistance will peak and level off for subsequent test points before rising again at farther test points. This "leveled-off" resistance is taken as the actual resistance between the electrode and the earth [see Commentary Figures E3608.4(1) and (2)].

The code does not state specifically that the resistance measurement must be taken for each house and submitted. In some areas, it may be well known that the soil resistivity is high and there will almost always be over 25 ohms of resistance to ground from the ground rod, meaning that the exception to this section would never apply. Historically, many code officials have simply taken the approach that two grounding electrodes must always be installed unless the resistance is measured and shown to be 25 ohms or less, and now the code states just that.

INTERNATIONAL CODE COUNCIL®
Copyright © 2015 ICC. ALL RIGHTS RESERVED. Accessed by David Dammon on Jun 21, 2017 12:30:52 PM pursuant to License Agreement with ICC. No further reproduction or distribution authorized. ANY UNAUTHORIZED REPRODUCTION OR DISTRIBUTION IS A VIOLATION OF THE FEDERAL COPYRIGHT ACT AND THE LICENSE AGREEMENT, AND SUBJECT TO CIVIL AND CRIMINAL PENALTIES THEREUNDER.

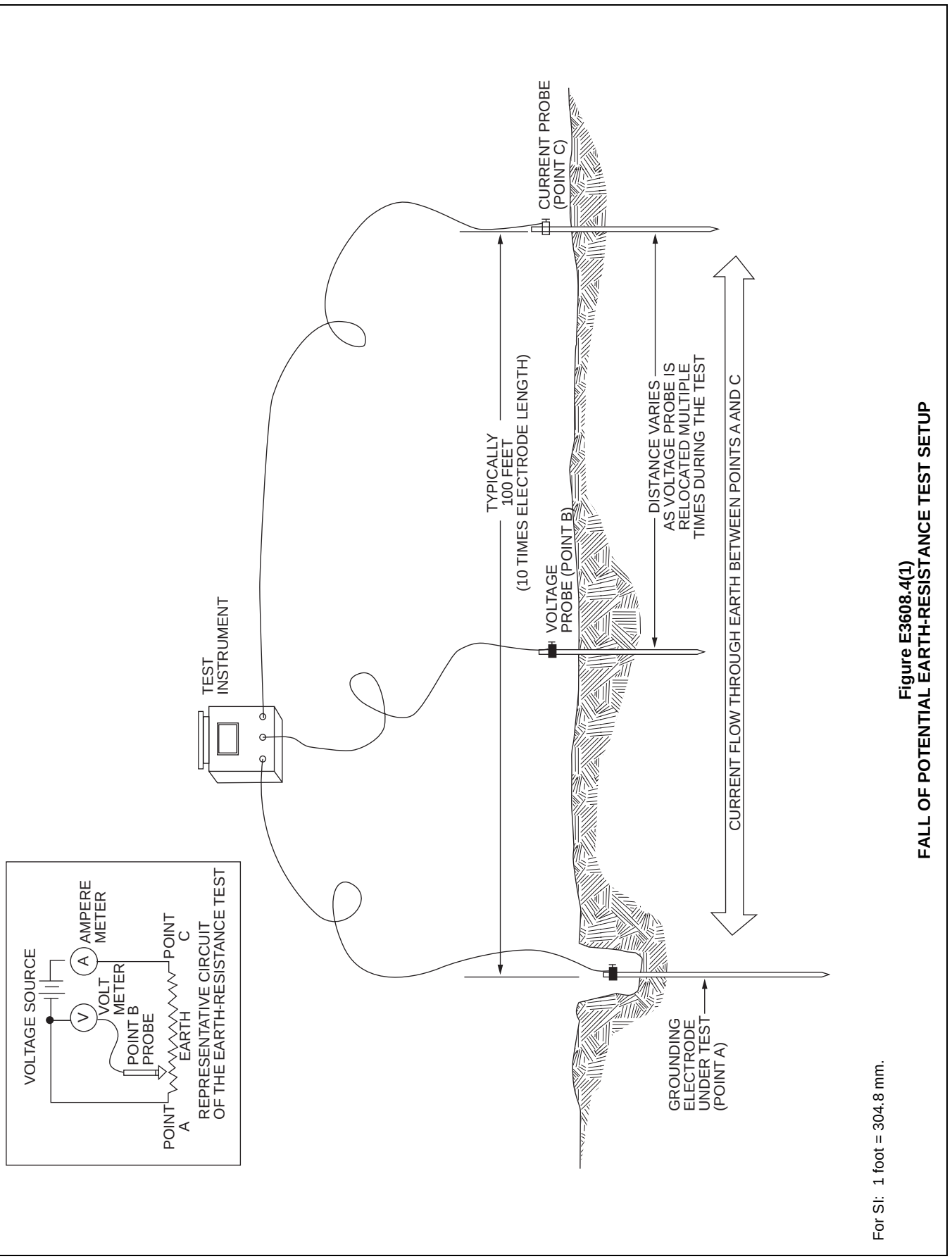

Figure E3608.4(1)
FALL OF POTENTIAL EARTH-RESISTANCE TEST SETUP

INTERNATIONAL CODE COUNCIL®
Copyright © 2015 ICC. ALL RIGHTS RESERVED. Accessed by David Dammon on Jun 21, 2017 12:30:52 PM pursuant to License Agreement with ICC. No further reproduction or distribution authorized. ANY UNAUTHORIZED REPRODUCTION OR DISTRIBUTION IS A VIOLATION OF THE FEDERAL COPYRIGHT ACT AND THE LICENSE AGREEMENT, AND SUBJECT TO CIVIL AND CRIMINAL PENALTIES THEREUNDER.

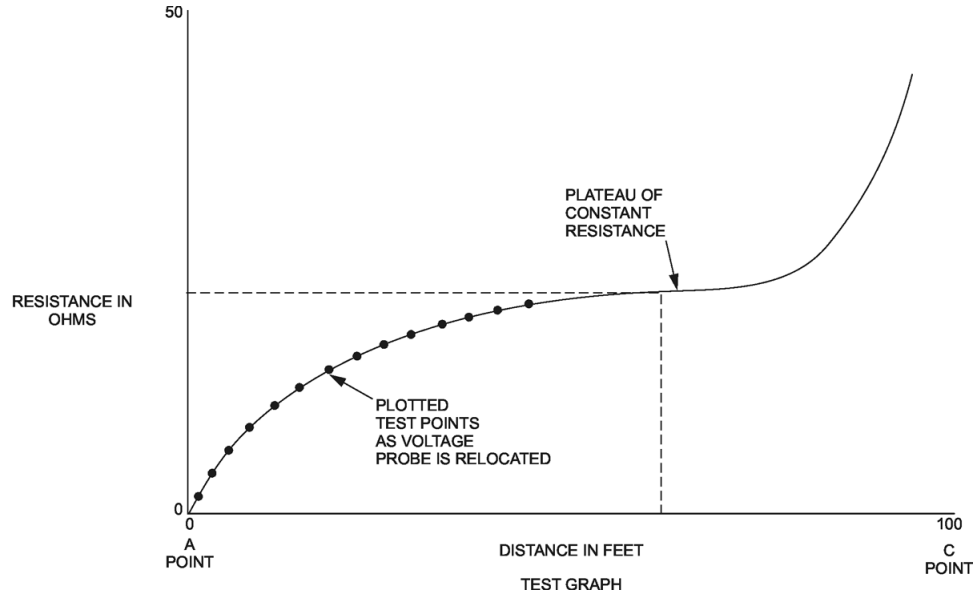

For SI: 1 foot = 304.8 mm.

Figure E3608.4(2)
TYPICAL GRAPH FOR FALL-OF-POTENTIAL EARTH-RESISTANCE TEST

E3608.5 Aluminum electrodes. Aluminum electrodes shall not be permitted. [250.52(B)(2)]

❖ See the commentary to Section E3610.1.

E3608.6 Metal underground gas piping system. A metal underground gas piping system shall not be used as a grounding electrode. [250.52(B)(1)]

❖ Where a dwelling is served with a metal underground gas piping system, the gas utility usually installs an insulating fitting in the line at or near the point the gas line enters the house. This interrupts the continuity of the metal pipe to the earth. Gas piping is not recognized as an electrode and such use could be hazardous in some circumstances.

SECTION E3609
BONDING

E3609.1 General. Bonding shall be provided where necessary to ensure electrical continuity and the capacity to conduct safely any fault current likely to be imposed. (250.90)

❖ Bonding is the connection of metallic parts to make one continuous current path to ensure the fault current path has low impedance. Bonding and grounding are often thought of as the same general subject because bonding is related to grounding as far as the fault-current path is concerned.

E3609.2 Bonding of equipment for services. The noncurrent-carrying metal parts of the following equipment shall be effectively bonded together:

1. Raceways or service cable armor or sheath that enclose, contain, or support service conductors.
2. Service enclosures containing service conductors, including meter fittings, and boxes, interposed in the service raceway or armor. [250.92(A)]

❖ All of the service equipment, raceways, and metallic surfaces must be bonded together to ensure a low impedance fault-current path of electrical continuity. The enclosures and cabinets such as the service mast, weatherhead, conduit to and from the meter base, meter base, cable armor, boxes and the can for the main disconnecting means all contain conductors that have overcurrent protection only on the load end. The service equipment and conductors may be subject to a high fault current, which would require the utility company transformer switch or overcurrent device to open to clear the fault. Where metal conduit or electrical metallic tubing is used to enclose the grounding electrode conductor, the conduit or tubing must be bonded to the grounding electrode conductor to make one continuous fault-current path.

E3609.3 Bonding for other systems. An intersystem bonding termination for connecting intersystem bonding conductors required for other systems shall be provided external to enclosures at the service equipment or metering equipment enclosure and at the disconnecting means for any additional buildings or structures. The intersystem bonding termination shall comply with all of the following:

1. It shall be accessible for connection and inspection.
2. It shall consist of a set of terminals with the capacity for connection of not less than three intersystem bonding conductors.
3. It shall not interfere with opening of the enclosure for a service, building or structure disconnecting means, or metering equipment.

INTERNATIONAL CODE COUNCIL®
Copyright © 2015 ICC. ALL RIGHTS RESERVED. Accessed by David Dammon on Jun 21, 2017 12:30:52 PM pursuant to License Agreement with ICC. No further reproduction or distribution authorized. ANY UNAUTHORIZED REPRODUCTION OR DISTRIBUTION IS A VIOLATION OF THE FEDERAL COPYRIGHT ACT AND THE LICENSE AGREEMENT, AND SUBJECT TO CIVIL AND CRIMINAL PENALTIES THEREUNDER.

4. Where located at the service equipment, it shall be securely mounted and electrically connected to an enclosure for the service equipment, to the meter enclosure, or to an exposed nonflexible metallic service raceway, or shall be mounted at one of these enclosures and connected to the enclosure or to the grounding electrode conductor with a 6 AWG or larger copper conductor.
5. Where located at the disconnecting means for a building or structure, it shall be securely mounted and electrically connected to the metallic enclosure for the building or structure disconnecting means, or shall be mounted at the disconnecting means and connected to the metallic enclosure or to the grounding electrode conductor with a 6 AWG or larger copper conductor.
6. It shall be listed as grounding and bonding equipment. (250.94)

❖ Communications systems, cable TV and similar systems must be grounded. If the enclosures, raceways and noncurrent carrying metal surfaces of these "other systems" are not bonded to the premises wiring system, they could operate at a difference in potential. Intersystem bonding is required to reduce the shock hazard and minimize the possible fire danger from arcing. Bonding systems together will eliminate any voltage difference between them. Where the service equipment cabinet and meter base are flush with a brick or stucco wall, the raceways are concealed within the wall, the grounding electrode conductor is not accessible and the ground rod has been buried, there is nothing available to which to bond the metallic jacket of the communications cable. If the installer drives a separate ground rod for bonding the cable TV cable shield and boxes, it would be a code violation if not bonded to the service electrode system. An accessible means external to the service equipment enclosures must be provided.

This section requires a method for the convenient bonding of other systems, and such a method must involve a terminal bar or set of terminals that will accommodate at least three intersystem bonding conductors. Providing convenient bonding terminals will increase the likelihood that the communication and entertainment system installers will actually install the required bonding conductors.

E3609.4 Method of bonding at the service. Bonding jumpers meeting the requirements of this chapter shall be used around impaired connections, such as reducing washers or oversized, concentric, or eccentric knockouts. Standard locknuts or bushings shall not be the only means for the bonding required by this section but shall be permitted to be installed to make mechanical connections of raceways. Electrical continuity at service equipment, service raceways and service conductor enclosures shall be ensured by one or more of the methods specified in Sections E3609.4.1 through E3609.4.4.

❖ The metal parts of the service equipment that do not normally carry current must be bonded together. The methods and means to do this are covered in the following four subsections. Concentric and eccentric knockouts greatly reduce the current carrying capacity or conductivity of the connection because very little metal is left intact between the removable sections of the knockout. This is not the case with single-size knockouts. Fault current will flow along the raceway and be impeded at the point where the raceway fitting is attached to the cabinet through a concentric or eccentric knockout. In some cases where part of (but not the entire) knockout is removed, the mechanical connection is so weak that reducing washers must be installed just to strengthen the connection. There certainly is not a solid electrical connection at this point. In addition, standard locknuts are not permitted to provide the only bonding connection of the service equipment. Commonly, a special bonding bushing is used on the inside of the enclosure for the bonding of the raceway or fitting to the enclosure. Such bonding bushings have lugs for jumper connections and may also have set screws that bite into the metal of the enclosure and/or the threads on the conduit or fitting.

E3609.4.1 Grounded service conductor. Equipment shall be bonded to the grounded service conductor in a manner provided in this code.

❖ Bonding to the grounded service conductor is done by using listed pressure connectors such as a terminal bar or bus in a panelboard cabinet, listed lugs, clamps or exothermic welding.

E3609.4.2 Threaded connections. Equipment shall be bonded by connections using threaded couplings or threaded hubs on enclosures. Such connections shall be made wrench tight.

❖ Raceways joined by threaded couplings and connectors must be wrench tight. High impedance in the ground-fault current path can occur if the installer only hand tightens threaded couplings. "Wrench tight" is another term that is not defined in Chapter 35, but the meaning is obvious. Tightening the threaded couplings with a wrench is necessary not only for mechanical strength but to ensure that the fault-current path has good electrical continuity. For overhead service risers, a typical installation uses a 2-inch (51 mm) rigid conduit. A hub is provided with the service equipment that has predrilled holes for the attachment of the conduit. It is important that the conduit be threaded into the hub wrench tight.

E3609.4.3 Threadless couplings and connectors. Equipment shall be bonded by threadless couplings and connectors for metal raceways and metal-clad cables. Such couplings and connectors shall be made wrench tight. Standard locknuts or bushings shall not be used for the bonding required by this section.

❖ Threadless couplings and connectors are permitted for bonding the parts of service equipment together, but these must be rain tight where installed outdoors. For example, a set-screw connector is permitted to connect the conduit of an underground service lateral to

INTERNATIONAL CODE COUNCIL®
Copyright © 2015 ICC. ALL RIGHTS RESERVED. Accessed by David Dammon on Jun 21, 2017 12:30:52 PM pursuant to License Agreement with ICC. No further reproduction or distribution authorized. ANY UNAUTHORIZED REPRODUCTION OR DISTRIBUTION IS A VIOLATION OF THE FEDERAL COPYRIGHT ACT AND THE LICENSE AGREEMENT, AND SUBJECT TO CIVIL AND CRIMINAL PENALTIES THEREUNDER.

the service equipment cabinet where it is run up to the bottom of the cabinet. Also, where the cabinet is installed in the wall and is flush with the surface, setscrew connectors and couplings are permitted, but they must be made wrench tight.

E3609.4.4 Other devices. Equipment shall be bonded by other listed devices, such as bonding-type locknuts, bushings and bushings with bonding jumpers. [250.92(B)]

❖ To ensure electrical continuity throughout the interconnection of the various components of the service equipment, special devices such as bonding bushings are required where raceways and fittings are connected to concentric and eccentric knockouts punched in boxes and cabinets. Bonding bushings have a set screw that positively bonds to the threads of the raceway or fitting, a lug for the connection of a bonding jumper and sometimes a set screw that bites into the enclosure wall.

E3609.5 Sizing supply-side bonding jumper and main bonding jumper. The bonding jumper shall not be smaller than the sizes shown in Table E3603.4 for grounding electrode conductors. Where the service-entrance conductors are paralleled in two or more raceways or cables, and an individual supply-side bonding jumper is used for bonding these raceways or cables, the supply-side bonding jumper for each raceway or cable shall be selected from Table E3603.4 based on the size of the ungrounded supply conductors in each raceway or cable. A single supply-side bonding jumper installed for bonding two or more raceways or cables shall be sized in accordance with Table E3603.4 based on the largest set of parallel ungrounded supply conductors. [250.102(C)]

❖ Paralleled service conductors are rarely used in dwelling unit services. For example, for a 200-ampere service using size 2/0-AWG copper conductors, the table indicates that bonding jumpers would be a minimum of size 4-AWG copper.

E3609.6 Metal water piping bonding. The metal water piping system shall be bonded to the service equipment enclosure, the grounded conductor at the service, the grounding electrode conductor where of sufficient size, or to the one or more grounding electrodes used. The bonding jumper shall be sized in accordance with Table E3603.4. The points of attachment of the bonding jumper(s) shall be accessible. [250.104(A) and 250.104(A)(1)]

❖ Because the interior metal water piping might become energized, it must be bonded to the grounding electrode system. Bonding metal piping systems together reduces the possibility of a voltage potential between them and the associated shock hazard. This is not the same requirement that the metal underground water pipe be used as a grounding electrode. If the water service is a metal pipe for 10 feet (3048 mm) underground and metal where it enters the house, it is used as the grounding electrode. In some dwellings, the water piping system changes to plastic inside the house, and much of the water supply piping is plastic; however, any piping that is metal must be bonded to one of the parts of the grounding electrode system listed in this section. If the entire piping system is metal, it may seem obvious that the grounding electrode conductor being run to the first 5 feet (1524 mm) of the point at which the water pipe enters the house would bond the entire water piping system. In many cases there is a dielectric union at the entry of the water piping system, and a jumper is required from the line side of the union to the downstream side of the water piping. It may be necessary to bond between the hot and cold water pipes because these could have nonconductive materials at the water heater. The bonding jumper must be at least the size of the grounding electrode conductor determined for the service from Table E3603.4. The pipe clamp or fitting used to attach the bonding jumper to the water piping system must be accessible. The water heater is a convenient place for this since the attachment point will always be accessible. Also, this may be the best place to bond between the hot and cold water piping, if that is necessary.

E3609.7 Bonding other metal piping. Where installed in or attached to a building or structure, metal piping systems, including gas piping, capable of becoming energized shall be bonded to the service equipment enclosure, the grounded conductor at the service, the grounding electrode conductor where of sufficient size, or to the one or more grounding electrodes used. The bonding conductor(s) or jumper(s) shall be sized in accordance with Table E3908.12 using the rating of the circuit capable of energizing the piping. The equipment grounding conductor for the circuit that is capable of energizing the piping shall be permitted to serve as the bonding means. The points of attachment of the bonding jumper(s) shall be accessible. [250.104(B)]

❖ The above-ground metal gas piping upstream from equipment shutoff valves must be bonded because it could become energized. The rating of the circuit serving the gas appliance or equipment determines the size of the bonding jumper in accordance with Table E3908.12. Under this practice, the size of a bonding conductor for a gas pipe serving a furnace supplied with a 20 ampere circuit would be 12 AWG according to the table. A three-conductor nonmetallic sheathed cable with size 12-AWG conductors (12-2 with ground) that is to run to the furnace is adequate for bonding the metal gas pipe since the grounding conductor of the cable is bonded to the grounding electrode system. The gas piping is connected to the appliance by metal-to-metal joints; therefore, the piping is bonded to the appliance and the appliance grounding conductor. The gas piping is considered to be bonded where connected to the equipment-grounding conductor for a circuit capable of energizing the piping. This is specifically stated in the 2008 edition of NFPA 70, Section 250.104(B). See Section G2411 of the code, which addresses the bonding of gas piping and corrugated stainless steel tubing (CSST) used for gas. The bonding requirements for CSST are unique and extend beyond the requirements in this section.

INTERNATIONAL CODE COUNCIL®
Copyright © 2015 ICC. ALL RIGHTS RESERVED. Accessed by David Dammon on Jun 21, 2017 12:30:52 PM pursuant to License Agreement with ICC. No further reproduction or distribution authorized. ANY UNAUTHORIZED REPRODUCTION OR DISTRIBUTION IS A VIOLATION OF THE FEDERAL COPYRIGHT ACT AND THE LICENSE AGREEMENT, AND SUBJECT TO CIVIL AND CRIMINAL PENALTIES THEREUNDER.

SECTION E3610
GROUNDING ELECTRODE CONDUCTORS

E3610.1 Continuous. The grounding electrode conductor shall be installed in one continuous length without splices or joints and shall run to any convenient grounding electrode available in the grounding electrode system where the other electrode(s), if any, are connected by bonding jumpers in accordance with Section E3608.2, or to one or more grounding electrode(s) individually. The grounding electrode conductor shall be sized for the largest grounding electrode conductor required among all of the electrodes connected to it. [250.64(C)]

Exception: Splicing of the grounding electrode conductor by irreversible compression-type connectors listed as grounding and bonding equipment or by the exothermic welding process shall not be prohibited. [250.64(C)(1)]

❖ Except as allowed by the exception, grounding electrode conductors are to be run in continuous lengths without splices. Note that the exception allows two extremely reliable methods of splicing. Unspliced conductors will have the greatest reliability and continuity. Where electrodes are connected together to a common electrode conductor, the largest required size of the conductors will dictate the size of the common conductor. For example, if a 6-AWG conductor ran from the service to a ground rod and a 4-AWG conductor was required to connect the ground rod to the footing steel, the 6-AWG conductor would have to be upsized to a 4 AWG.

E3610.2 Securing and protection against physical damage. Where exposed, a grounding electrode conductor or its enclosure shall be securely fastened to the surface on which it is carried. Grounding electrode conductors shall be permitted to be installed on or through framing members. A 4 AWG or larger conductor shall be protected where exposed to physical damage. A 6 AWG grounding conductor that is free from exposure to physical damage shall be permitted to be run along the surface of the building construction without metal covering or protection where it is and securely fastened to the construction; otherwise, it shall be in rigid metal conduit, intermediate metal conduit, rigid polyvinyl chloride (PVC), nonmetallic conduit, reinforced thermosetting resin (RTRC) nonmetallic conduit, electrical metallic tubing or cable armor. Grounding electrode conductors smaller than 6 AWG shall be in rigid metal conduit, intermediate metal conduit, rigid polyvinyl chloride (PVC) nonmetallic conduit, reinforced thermoseting resin (RTRC) nonmetallic conduit, electrical metallic tubing or cable armor. Grounding electrode conductors and grounding electrode bonding jumpers shall not be required to comply with Section E3803. [250.64(B)]

Bare aluminum or copper-clad aluminum grounding electrode conductors shall not be used where in direct contact with masonry or the earth or where subject to corrosive conditions. Where used outside, aluminum or copper-clad aluminum grounding electrode conductors shall not be installed within 18 inches (457 mm) of the earth. [250.64(A)]

❖ This section provides rules for the physical protection of the grounding electrode conductors. It is up to the code official to decide whether the grounding electrode conductors as installed are exposed to physical damage.

Where run on the interior of the dwelling, it is unlikely that these conductors would be exposed to physical damage. Where installed along the outside wall or surface of the house, the possibility of physical damage is often a concern. In most new houses, the grounding electrode conductor is run on the interior, and another grounding electrode conductor is run to a made electrode on the outside of the building. The conductor that is the sole connection to the supplemental grounding electrode or ground rod is considered one of the grounding electrode conductors, and the requirements of this section apply to it as well as to a grounding electrode conductor run to the entry point of the metal underground water pipe.

Quite often a solid bare copper conductor is installed on the outside of the house as the grounding electrode conductor and is run from the service equipment enclosure to grade along the wall of the house. The smallest size grounding conductor permitted to run exposed without any covering or protection is 6 AWG, but only if it is free from exposure to physical damage. Although it can be done, it is difficult to install these conductors in a neat and workmanlike manner where they are run exposed. Many electricians install these surface conductors in one of the raceways listed in this section.

The code does not permit the installation of aluminum conductors within 18 inches (457 mm) of the earth where used outdoors because of moisture and the potential for corrosion.

E3610.3 Raceways and enclosures for grounding electrode conductors. Ferrous metal raceways and enclosures for grounding electrode conductors shall be electrically continuous from the point of attachment to cabinets or equipment to the grounding electrode, and shall be securely fastened to the ground clamp or fitting. Nonferrous metal raceways and enclosures shall not be required to be electrically continuous. Ferrous metal raceways and enclosures shall be bonded at each end of the raceway or enclosure to the grounding electrode or to the grounding electrode conductor. Bonding methods in compliance with Section E3609.4 for installations at service equipment locations and with E3609.4.2 through E3609.4.4 for other than service equipment locations shall apply at each end and to all intervening ferrous raceways, boxes, and enclosures between the cabinets or equipment and the grounding electrode. The bonding jumper for a grounding electrode conductor raceway shall be the same size or larger than the required enclosed grounding electrode conductor.

Where a raceway is used as protection for a grounding conductor, the installation shall comply with the requirements of Chapter 38. [250.64(E)(4)]

❖ Where grounding electrode conductors are installed inside a metal raceway, the metal conduit or tubing must be bonded at each end to the conductor so that it is electrically continuous. If this is not done and a high-fault current flows through the grounding electrode

INTERNATIONAL CODE COUNCIL®
Copyright © 2015 ICC. ALL RIGHTS RESERVED. Accessed by David Dammon on Jun 21, 2017 12:30:52 PM pursuant to License Agreement with ICC. No further reproduction or distribution authorized. ANY UNAUTHORIZED REPRODUCTION OR DISTRIBUTION IS A VIOLATION OF THE FEDERAL COPYRIGHT ACT AND THE LICENSE AGREEMENT, AND SUBJECT TO CIVIL AND CRIMINAL PENALTIES THEREUNDER.

conductor, the current could create a magnetic flux field around the raceway enclosing the conductor and, depending on the amount of fault current, this would create a high impedance in the fault current return path. One solution is to install nonmetallic conduit where permitted for protection of the grounding electrode conductor.

E3610.4 Prohibited use. An equipment grounding conductor shall not be used as a grounding electrode conductor. (250.121)

Exception: A wire-type equipment grounding conductor shall be permitted to serve as both an equipment grounding conductor and a grounding electrode conductor where installed in accordance with the applicable requirements for both the equipment grounding conductor and the grounding electrode conductor in Chapters 36 and 39. Where used as a grounding electrode conductor, the wire-type equipment grounding conductor shall be installed and arranged in a manner that will prevent objectionable current. [250.121 Exception, 250.6(A)]

❖ Grounding electrode conductors are dedicated purpose conductors that comply with the requirements of Section E3610. Equipment grounding conductors comply with Section E3908. Conductors used to ground equipment such as appliances and panelboard enclosures cannot serve as grounding electrode conductors, except where the conductor is a wire and complies with all of the code provisions for both types of conductors. In dwelling unit construction, the opportunity to utilize a combination conductor would be rare.

SECTION E3611
GROUNDING ELECTRODE CONDUCTOR CONNECTION TO THE GROUNDING ELECTRODES

E3611.1 Methods of grounding conductor connection to electrodes. The grounding or bonding conductor shall be connected to the grounding electrode by exothermic welding, listed lugs, listed pressure connectors, listed clamps or other listed means. Connections depending on solder shall not be used. Ground clamps shall be listed for the materials of the grounding electrode and the grounding electrode conductor and, where used on pipe, rod or other buried electrodes, shall also be listed for direct soil burial or concrete encasement. Not more than one conductor shall be connected to the grounding electrode by a single clamp or fitting unless the clamp or fitting is listed for multiple conductors. One of the methods indicated in the following items shall be used:

1. A pipe fitting, pipe plug or other approved device screwed into a pipe or pipe fitting.
2. A listed bolted clamp of cast bronze or brass, or plain or malleable iron.
3. For indoor communications purposes only, a listed sheet metal strap-type ground clamp having a rigid metal base that seats on the electrode and having a strap of such material and dimensions that it is not likely to stretch during or after installation.
4. Other equally substantial approved means. (250.70)

❖ This section lists items that can be used to connect the grounding electrode conductor to the grounding electrode.

E3611.2 Accessibility. All mechanical elements used to terminate a grounding electrode conductor or bonding jumper to the grounding electrodes that are not buried or concrete encased shall be accessible. [250.68(A) and 250.68(A) Exception]

❖ Devices that connect a conductor to an electrode must be accessible except where such devices are buried or concrete encased. Such connections are often located underground so as to provide a degree of protection from physical damage. Any device used to connect to an electrode must be listed for the environment to which it is exposed, such as listed for direct burial or concrete encasement.

E3611.3 Effective grounding path. The connection of the grounding electrode conductor or bonding jumper shall be made in a manner that will ensure a permanent and effective grounding path. Where necessary to ensure effective grounding for a metal piping system used as a grounding electrode, effective bonding shall be provided around insulated joints and sections and around any equipment that is likely to be disconnected for repairs or replacement. Bonding jumpers shall be of sufficient length to permit removal of such equipment while retaining the integrity of the grounding path. [250.68(B)]

❖ Where a metal piping system is used as the grounding electrode, a permanent and effective ground-fault current path must be maintained. Water meters, pressure reducing devices and the like may be installed in the piping system, and a bonding jumper must be installed around such devices. The bonding jumper must be of sufficient length that the item can be repaired or replaced without disconnecting the bonding jumper.

E3611.4 Interior metal water piping. Where grounding electrode conductors and bonding jumpers are connected to interior metal water piping as a means to extend the grounding electrode conductor connection to an electrode(s), such piping shall be located not more than 5 feet (1524 mm) from the point of entry into the building.

Where interior metal water piping is used as a conductor to interconnect electrodes that are part of the grounding electrode system, such piping shall be located not more than 5 feet (1524 mm) from the point of entry into the building. [250.68(C)(1)]

❖ See the commentary to Section E3608.1.1.

E3611.5 Protection of ground clamps and fittings. Ground clamps or other fittings shall be approved for applications without protection or shall be protected from physical damage by installing them where they are not likely to be damaged or by enclosing them in metal, wood or equivalent protective coverings. (250.10)

❖ If not protected from physical damage by their location, ground clamps and fittings must be protected with approved enclosures. The code official must decide whether physical damage is likely to occur.

INTERNATIONAL CODE COUNCIL®
Copyright © 2015 ICC. ALL RIGHTS RESERVED. Accessed by David Dammon on Jun 21, 2017 12:30:52 PM pursuant to License Agreement with ICC. No further reproduction or distribution authorized. ANY UNAUTHORIZED REPRODUCTION OR DISTRIBUTION IS A VIOLATION OF THE FEDERAL COPYRIGHT ACT AND THE LICENSE AGREEMENT, AND SUBJECT TO CIVIL AND CRIMINAL PENALTIES THEREUNDER.

E3611.6 Clean surfaces. Nonconductive coatings (such as paint, enamel and lacquer) on equipment to be grounded shall be removed from threads and other contact surfaces to ensure good electrical continuity or shall be connected by fittings that make such removal unnecessary. (250.12)

❖ Nonconductive coatings such as paint must be removed to help ensure the continuity of a grounding circuit that may need to carry high levels of fault current. Fittings that make the removal of paint unnecessary may not be available or may be very hard to find.

Bibliography

The following resource materials were used in the preparation of the commentary for this chapter of the code:

NFPA 70–14, *National Electrical Code*. Quincy, MA: National Fire Protection Association, 2013.

INTERNATIONAL CODE COUNCIL®

Copyright © 2015 ICC. ALL RIGHTS RESERVED. Accessed by David Dammon on Jun 21, 2017 12:30:52 PM pursuant to License Agreement with ICC. No further reproduction or distribution authorized. ANY UNAUTHORIZED REPRODUCTION OR DISTRIBUTION IS A VIOLATION OF THE FEDERAL COPYRIGHT ACT AND THE LICENSE AGREEMENT, AND SUBJECT TO CIVIL AND CRIMINAL PENALTIES THEREUNDER.

Chapter 37: Branch Circuit and Feeder Requirements

General Comments

Chapter 37 addresses the sizing of conductors for feeders and branch circuits, specifies the required branch circuits, provides for overcurrent protection of such conductors, specifies limitations for branch circuit loading, and addresses panel board ratings and protection. After the service is designed or installed, the next stage in the design or installation is the feeder and branch circuit design or installation.

Purpose

The primary purpose of this chapter is to provide the required number and type/rating of branch circuits to serve the anticipated loads and to protect conductors from overload (overcurrent). This translates to protection from fire and property damage.

SECTION E3701 GENERAL

E3701.1 Scope. This chapter covers branch circuits and feeders and specifies the minimum required branch circuits, the allowable loads and the required overcurrent protection for branch circuits and feeders that serve less than 100 percent of the total dwelling unit load. Feeder circuits that serve 100 percent of the dwelling unit load shall be sized in accordance with the procedures in Chapter 36. [310.15(B)(7)(2)]

❖ Feeders carry power from the service to the branch circuit overcurrent protective devices or the panelboard, which is where the branch circuits begin. Figure E3607.2 shows that the feeder runs from the service equipment to supply power to the panelboard, in accordance with the definition given in Chapter 35. The terms "subfeeder" and "subpanel" are not defined in the code but are terms commonly used in the field. A "subfeeder" runs from a panelboard to serve another panel or "subpanel." In other words, feeders do not serve loads directly but serve a panelboard from which a branch circuit is run to supply the appliances or equipment. Overcurrent protection is provided at the supply end of the feeder or "subfeeder," and the panel or "subpanel" it serves is not required to have a main circuit breaker or set of main fuses if located within the same building. "Main-lug only" panels located within the same building as the service equipment are allowed to be supplied by feeders. See Sections 225.31 through 225.39 of the *National Electrical Code*® (NEC®).

The conductor size for a feeder that carries 100 percent of the load is calculated under the provisions of Chapter 36. An example of a feeder that carries 100 percent of the load is one where the service consists of only one main disconnect/overcurrent device and where a single set of conductors from such equipment to the panelboard (the feeder conductors) supplies the power for all of the loads of the dwelling.

Where the feeder conductors do not serve 100 percent of the total dwelling unit load, the provisions of this chapter are used to calculate the conductor size.

E3701.2 Branch-circuit and feeder ampacity. Branch-circuit and feeder conductors shall have ampacities not less than the maximum load to be served. Where a branch circuit or a feeder supplies continuous loads or any combination of continuous and noncontinuous loads, the minimum branch-circuit or feeder conductor size, before the application of any adjustment or correction factors, shall have an allowable ampacity equal to or greater than the noncontinuous load plus 125 percent of the continuous load. [210.19(A)(1)(a) and 215.2(A)(1)(a)]

Exception: The grounded conductors of feeders that are not connected to an overcurrent device shall be permitted to be sized at 100 percent of the continuous and noncontinuous load. [215.1(A)(1) Exception No. 2]

❖ This requirement pertains to the size or the allowable ampacity of the conductors and not to the rating of the branch circuit. The branch circuit rating does not always correspond to the conductor size. See Section E3702 for branch circuit ratings. The branch circuit and feeder loads must be calculated to determine the appropriate size conductors and overcurrent protection devices to be used. Demand factors may be used in sizing conductors. For demand factors, see the commentary to Section E3704.3.

In calculating conductor ampacity, the type of load also must be taken into account (see commentary, Section E3705.1). A load that is in operation for three hours or more is a continuous load. When a load is operated continuously, the heating effect on the conductors is a concern because, without time to dissipate, the heat can build up. Although it may seem that the lights are sometimes on for many hours, there is usually much diversity in the operation of residential lighting. Generally, dwelling unit lighting loads are not considered as continuous loads for calculation purposes. Some loads in residential wiring may need to be

INTERNATIONAL CODE COUNCIL®
Copyright © 2015 ICC. ALL RIGHTS RESERVED. Accessed by David Dammon on Jun 21, 2017 12:30:52 PM pursuant to License Agreement with ICC. No further reproduction or distribution authorized. ANY UNAUTHORIZED REPRODUCTION OR DISTRIBUTION IS A VIOLATION OF THE FEDERAL COPYRIGHT ACT AND THE LICENSE AGREEMENT, AND SUBJECT TO CIVIL AND CRIMINAL PENALTIES THEREUNDER.

considered as continuous and be calculated at 125 percent of the full load. However, the code does not specify certain loads as being continuous. For residential wiring, it may be a judgement call as to how long the load will operate at any one time.

For any load considered to be continuous, the allowable conductor ampacity must be at least 125 percent of the calculated load. This is the same as saying that the continuous load on a conductor should not be more than 80 percent of its allowable ampacity.

Even for noncontinuous loads, this is a good practice, although not required. For example, a 20-ampere-rated branch circuit serving a noncontinuous load is permitted to be loaded at up to 20 amperes in accordance with Table E3702.14. A good rule of thumb is to try to estimate a maximum load of 16 amperes for a 20-ampere circuit. However, for general purpose branch circuits in a dwelling supplying receptacles and lighting outlets, it is impossible to know at the time the wiring is being installed what load will be connected. Even for a circuit consisting of only lighting outlets, it is difficult to know what the load will be, as light fixtures and lamps can be changed.

The exception allows the sizing of grounded conductors based on the actual load where there is no heating effect from device terminals.

E3701.3 Selection of ampacity. Where more than one calculated or tabulated ampacity could apply for a given circuit length, the lowest value shall be used. [310.15(A)(2)]

> **Exception:** Where two different ampacities apply to adjacent portions of a circuit, the higher ampacity shall be permitted to be used beyond the point of transition, a distance equal to 10 feet (3048 mm) or 10 percent of the circuit length figured at the higher ampacity, whichever is less. [310.15(A)(2) Exception]

❖ If the conductors of a circuit are exposed to different ambient temperatures (a cable run from a basement through an attic, for example), they could have different ampacities based on the application of Section E3705.2. The portion of the circuit in the higher ambient temperature location is the weakest link; therefore, the lowest calculated ampacity must apply. The exception relaxes this requirement slightly by allowing the higher ampacity to apply for conductors that extend only a short distance into an area of higher ambient temperature.

E3701.4 Branch circuits with more than one receptacle. Conductors of branch circuits supplying more than one receptacle for cord-and-plug-connected portable loads shall have ampacities of not less than the rating of the branch circuit. [210.19(A)(2)]

❖ For multioutlet branch circuits, the rating of the branch circuit overcurrent protection device determines the minimum size of conductors that can be used. Conductors must have an ampacity of not less than the rating of the branch circuit. For example, the use of a 20-ampere circuit breaker requires that the conductors have an ampacity of at least 20 amperes. This is different for a dedicated circuit to a specific load such as a large motor or appliance. The conductors must have an ampacity sufficient for the load, but this ampacity for the motor or appliance may not correspond to a standard size of overcurrent device. In this case, the next higher size circuit breaker could be used, and therefore the conductor ampacity could be less than the rating of the branch circuit. The rating of the branch circuit is set by the size of the overcurrent protection device. However, on multioutlet branch circuits that supply receptacles for cord- and plug-connected loads, the conductor ampacity must be matched exactly to the branch circuit rating because it is unknown what load might be plugged into the circuit.

E3701.5 Multiwire branch circuits. All conductors for multiwire branch circuits shall originate from the same panelboard or similar distribution equipment. Except where all ungrounded conductors are opened simultaneously by the branch-circuit overcurrent device, multiwire branch circuits shall supply only line-to-neutral loads or only one appliance. [210.4(A) and 210.4(C)]

❖ In residential wiring, a multiwire branch circuit is a three-wire circuit that consists of two ungrounded conductors that have a potential of 240 volts between them and a grounded conductor that has a potential of 120 volts between it and each ungrounded conductor. The circuit that supplies an electric range or electric clothes dryer is a multiwire branch circuit (see Commentary Figure E3406.10.2).

A multiwire branch circuit could also be two separate circuits that share a neutral conductor. In commercial locations where conduit is used, this type of circuit is used very commonly: three conductors are pulled into the raceway, and the neutral carries only the unbalanced current of the two circuits. However, in residential work where cable is primarily used, it is not as advantageous; the perceived advantage being a savings in materials. Depending on how the receptacle circuits are routed, there may be no advantage to using a multiwire circuit and the potential risks could be avoided. Some electricians like to install a three-conductor cable. It actually contains four conductors: a red and black for the ungrounded or hot conductors, a white for the shared neutral (grounded conductor) and a bare or green for the grounding conductor. This installation can result in serious problems, and care must be taken to ensure that all code provisions are complied with. One concern is that in dwellings a homeowner or individual who does not understand the special code provisions sometimes rearranges the circuit breakers in the panelboard by placing both hot conductors of the multiwire circuit on the same leg (ungrounded conductor) of the service, resulting in the neutral conductor carrying the sum of the return current of both circuits instead of only the unbalanced current of the two circuits. On a 20-ampere multiwire circuit, it is conceivable that the neutral conductor would be subjected to up to 40 amperes on a size 12-AWG conductor. This could heat up the neutral con-

INTERNATIONAL CODE COUNCIL®
Copyright © 2015 ICC. ALL RIGHTS RESERVED. Accessed by David Dammon on Jun 21, 2017 12:30:52 PM pursuant to License Agreement with ICC. No further reproduction or distribution authorized. ANY UNAUTHORIZED REPRODUCTION OR DISTRIBUTION IS A VIOLATION OF THE FEDERAL COPYRIGHT ACT AND THE LICENSE AGREEMENT, AND SUBJECT TO CIVIL AND CRIMINAL PENALTIES THEREUNDER.

ductor and melt or burn the insulation and possibly result in a fire.

One use where this is encountered is for the two kitchen small appliance circuits. Duplex receptacles with breakoff tabs are used so that the two separate receptacles on the same yoke or strap can be supplied by the two hot conductors of the multiwire circuit. A person working on the circuit might check one of the "split-wired" receptacles to determine that the power is turned off at the circuit breaker but not turn off the power to both circuits. The worker is then subject to the risk of shock. This is why multiwire circuits must be supplied by a two-pole circuit breaker or two single-pole circuit breakers with an approved handle tie. An approved handle tie is a clip made specifically for and listed for clamping over the handles of the two single-pole circuit breakers. If one of the circuit breakers trips open, it will operate the handle of the other breaker. Some circuit breakers are made with a hole in the handle through which a nail can be inserted. A nail holding the handles of two breakers together should not be approved. Where the handle of the circuit breaker does not already have a hole, attempts have been made to drill a small hole through the handle to insert a nail or wire. This is an obvious code violation. Not tying the handles together is certainly a code violation. The most foolproof installation would use a two-pole circuit breaker with a single handle, thus avoiding the need to use field-installed ties. Note that although the last sentence of this section alludes to the possibility of having independent overcurrent devices serving the two ungrounded circuit conductors, Section E3701.5.1 strictly prohibits this (see Section E3701.5.1).

The shared neutral conductor of the multiwire circuit must be pigtailed in each outlet box where the duplex receptacle is installed. If the duplex receptacle was used to splice or connect the neutral conductor of the circuit, the circuit would be broken when the receptacle is removed or worked on. If this is done when the circuit is energized, it would place appliances plugged into the circuit in a 240-volt series circuit. The voltage drop across each appliance would depend on its resistance and could cause abnormal voltages and thus damage to the appliances (see commentary, Section E3406.10.2).

E3701.5.1 Disconnecting means. Each multiwire branch circuit shall be provided with a means that will simultaneously disconnect all ungrounded conductors at the point where the branch circuit originates. [210.4(B)]

❖ In its practical effect, this section requires that multiwire circuits be supplied through two-pole circuit breakers to eliminate the possibility of opening one ungrounded conductor while the other remains energized. The reason for this is discussed in the previous section's commentary.

E3701.5.2 Grouping. The ungrounded and grounded circuit conductors of each multiwire branch circuit shall be grouped by cable ties or similar means in at least one location within the panelboard or other point of origination. [210.4(D)]

Exception: Grouping shall not be required where the circuit conductors enter from a cable or raceway unique to the circuit, thereby making the grouping obvious, or where the conductors are identified at their terminations with numbered wire markers corresponding to their appropriate circuit number. [210.4(D) Exception].

❖ As discussed in the commentary to Section E3701.5, multiwire circuits can be hazardous if incorrectly wired. The intent of this section is to make it less likely that multiwire circuits will be incorrectly connected at the time of installation and at any later time when work is performed in the panelboard enclosure. A visual "red flag" will alert someone that the grouped conductors are part of a multiwire circuit. If the only conductors in a conduit are those that serve the load to which the conduit is run, and such load requires a multiwire branch circuit, the circuit will be recognizable when looking inside the panelboard. The same is true for cables such as Type NM, AC and MC because the presence of a white, black and red conductor emerging from the cable is recognizable as a multiwire circuit.

SECTION E3702
BRANCH CIRCUIT RATINGS

E3702.1 Branch-circuit voltage limitations. The voltage ratings of branch circuits that supply luminaires or receptacles for cord-and-plug-connected loads of up to 1,400 volt-amperes or of less than $^1/_4$ horsepower (0.186 kW) shall be limited to a maximum rating of 120 volts, nominal, between conductors.

Branch circuits that supply cord-and-plug-connected or permanently connected utilization equipment and appliances rated at over 1,440 volt-amperes or $^1/_4$ horsepower (0.186 kW) and greater shall be rated at 120 volts or 240 volts, nominal. [210.6(A), (B), and (C)]

❖ The code requires that lighting fixtures in dwelling units be supplied by circuits with a maximum voltage of 120 volts. Lighting fixtures designed for higher voltages are for use in commercial and industrial occupancies. Receptacles supplying cord- and plug-connected loads of up to 1,440 volt-amperes or 12 amperes are also limited to 120 volts. A multiwire circuit with a potential of 240 volts between the two ungrounded conductors that supplies a range or dryer is permitted under the second paragraph because the load is well over 12 amperes (see Section E3701.5). A multiwire circuit connected to one duplex receptacle with the break-off tab removed so that it is a split-wired receptacle is a 240-volt branch circuit, and the cord- and plug-connected load will usually be less than 1,440 volt-amperes; however, this multiwire circuit would be considered as two separate 120-volt circuits. See the commentary to Section E3701.5, which states that a multiwire branch circuit could also be two separate circuits that share a neutral conductor.

E3702.2 Branch-circuit ampere rating. Branch circuits shall be rated in accordance with the maximum allowable ampere rating or setting of the overcurrent protection device. The rating for other than individual branch circuits shall be 15, 20, 30,

INTERNATIONAL CODE COUNCIL®
Copyright © 2015 ICC. ALL RIGHTS RESERVED. Accessed by David Dammon on Jun 21, 2017 12:30:52 PM pursuant to License Agreement with ICC. No further reproduction or distribution authorized. ANY UNAUTHORIZED REPRODUCTION OR DISTRIBUTION IS A VIOLATION OF THE FEDERAL COPYRIGHT ACT AND THE LICENSE AGREEMENT, AND SUBJECT TO CIVIL AND CRIMINAL PENALTIES THEREUNDER.

40 and 50 amperes. Where conductors of higher ampacity are used, the ampere rating or setting of the specified over-current device shall determine the circuit rating. (210.3)

❖ The rating of the branch circuit is set by the size of the overcurrent protection device.

The rating of the overcurrent device, not the size or ampacity of the branch circuit conductors, determines the rating of the branch circuit. The conductor size is sometimes increased to compensate for voltage drop such as where a size 10-AWG copper conductor is used on a 20-ampere branch circuit where a size 12 AWG would normally be used. It is a 20-ampere branch circuit because a 20-ampere circuit breaker is used.

Most of the loads for residential applications can be supplied by branch circuits of the standard 15-, 20-, 30-, 40- or 50-ampere ratings given in this section. An individual branch circuit (a circuit that supplies only one piece of utilization equipment) is permitted to be of any rating necessary to supply the load it serves.

E3702.3 Fifteen- and 20-ampere branch circuits. A 15- or 20-ampere branch circuit shall be permitted to supply lighting units, or other utilization equipment, or a combination of both. The rating of any one cord-and-plug-connected utilization equipment not fastened in place shall not exceed 80 percent of the branch-circuit ampere rating. The total rating of utilization equipment fastened in place, other than luminaires, shall not exceed 50 percent of the branch-circuit ampere rating where lighting units, cord-and-plug-connected utilization equipment not fastened in place, or both, are also supplied. [210.23(A)(1) and (2)]

❖ This section covers combination loads for 15- and 20-ampere branch circuits that supply multiple outlets, appliances, and equipment.

In this code section, appliances and equipment are referred to as two types: (1) as cord- and plug-connected and not fastened in place and (2) as fastened in place. An appliance or equipment that is fastened in place or connected by permanent wiring methods is sometimes called a fixed appliance or fixed equipment. For this discussion, the term “fixed” will be used for appliances and equipment fastened in place and connected with permanent wiring methods. The term “appliance” will be used to discuss appliances and utilization equipment.

A 15- or 20-ampere branch circuit is permitted to supply a combination of loads except for the two 20-ampere small appliance branch circuits required for the kitchen area receptacles in accordance with Sections E3703.2 and E3901.3 through E3901.3.2. It is common practice to run a separate branch circuit to appliances such as a dishwasher, refrigerator, disposal, etc. It is also permissible to supply two or more loads of different types on the same circuit. A furnace, considered an appliance, is required to be supplied by a separate individual branch circuit in accordance with Section E3703.1.

Where a separate circuit is installed for appliances, the circuit is called an appliance branch circuit or individual branch circuit. Appliances can also be supplied by a general purpose branch circuit, but the rating of the appliance is restricted. The total ampere rating of fixed appliances must not exceed 50 percent of the rating of the branch circuit if other loads are also served on the same branch circuit. A 120-volt, 20-ampere rated branch circuit that supplies a room air conditioner, for example, could also supply light fixtures or a receptacle for cord- and plug-connected loads, as long as the air conditioner load does not exceed 10 amperes. More than one fixed appliance could be served by the mixed-load circuit. For example, consider a 20-ampere general purpose branch circuit that supplies several receptacles, light fixtures and two fixed attic fans. The rating of this circuit would comply with code as long as the combined rating of the two attic fans was not more than 10 amperes. The number of receptacle outlets on the mixed load circuit is not restricted.

In summary, for a 15- or-20 ampere-rated general purpose branch circuit that serves a combination of loads, the maximum rating of a fixed appliance served by that circuit is 50 percent of the circuit rating. Any cord- and plug-connected appliance not fastened in place and served by this general purpose branch circuit must have an ampere rating not more than 80 percent of the circuit rating.

E3702.4 Thirty-ampere branch circuits. A 30-ampere branch circuit shall be permitted to supply fixed utilization equipment. A rating of any one cord-and-plug-connected utilization equipment shall not exceed 80 percent of the branch-circuit ampere rating. [210.23(B)]

❖ A 30-ampere branch circuit is used for fixed utilization equipment, which is considered equipment fastened in place or connected by permanent wiring methods. Water heaters and condensing units are examples of 30-ampere circuits that would be installed in a dwelling. The load of the appliance should be checked to make sure it does not exceed 80 percent of the branch circuit rating or 5,760 volt-amperes or 24 amperes. In most cases, when a new house is being wired, the exact rating of the appliances is not known. For a clothes dryer, it is common practice to run size 10-AWG copper conductors on a 30-ampere circuit. For calculating a feeder load, a clothes dryer for which the nameplate rating is not known is considered as 5,000 volt-amperes. This would require a 240 volt, 30-ampere rated circuit (5,000 volt-amperes/240 volts = 20.8 amperes, which would require a 30-ampere-rated circuit).

E3702.5 Branch circuits serving multiple loads or outlets. General-purpose branch circuits shall supply lighting outlets, appliances, equipment or receptacle outlets, and combinations of such. Multioutlet branch circuits serving lighting or receptacles shall be limited to a maximum branch-circuit rating of 20 amperes. [210.23(A), (B), and (C)]

❖ The code permits circuits serving general purpose convenience receptacles to also serve lighting outlets. In commercial and industrial buildings, it is common

INTERNATIONAL CODE COUNCIL®
Copyright © 2015 ICC. ALL RIGHTS RESERVED. Accessed by David Dammon on Jun 21, 2017 12:30:52 PM pursuant to License Agreement with ICC. No further reproduction or distribution authorized. ANY UNAUTHORIZED REPRODUCTION OR DISTRIBUTION IS A VIOLATION OF THE FEDERAL COPYRIGHT ACT AND THE LICENSE AGREEMENT, AND SUBJECT TO CIVIL AND CRIMINAL PENALTIES THEREUNDER.

practice to install receptacles on one circuit and lighting loads on another circuit and not to mix the two. But in residential wiring, it is very common to mix the two loads on the same circuit (see commentary, Section E3702.3). The number of general purpose (convenience) receptacle outlets on a branch circuit is not limited.

E3702.6 Branch circuits serving a single motor. Branch-circuit conductors supplying a single motor shall have an ampacity not less than 125 percent of the motor full-load current rating. [430.22(A)]

❖ Some examples of motor loads in residential wiring are an attic fan, a sump pump, a circulating pump for hot water space heating, a garage door opener and a garbage disposal. Such loads are typically served by individual dedicated branch circuits. Circuits that run to motors such as these must have conductors rated for at least 125 percent of the full load rating of the motor to allow for starting current.

E3702.7 Branch circuits serving motor-operated and combination loads. For circuits supplying loads consisting of motor-operated utilization equipment that is fastened in place and that has a motor larger than $^1/_8$ horsepower (0.093 kW) in combination with other loads, the total calculated load shall be based on 125 percent of the largest motor load plus the sum of the other loads. [220.18(A)]

❖ To correctly size branch circuit conductors, the load must be calculated. Branch circuits that supply fastened-in-place utilization equipment having a motor larger than $^1/_8$ horsepower must have the branch circuit load calculated at 125 percent of the motor load plus the other loads served. If none of the motors on a circuit is larger than $^1/_8$ horsepower, it is not necessary to add the extra 25 percent.

E3702.8 Branch-circuit inductive and LED lighting loads. For circuits supplying luminaires having ballasts or LED drivers, the calculated load shall be based on the total ampere ratings of such units and not on the total watts of the lamps. [220.18(B)]

❖ On circuits serving light fixtures that contain a ballast such as fluorescent, mercury-vapor, high-intensity discharge and high-pressure sodium, there is an inductive load. In addition to the wattage or volt-amperes of the lamps, the inductive load must be considered. Therefore, the total ampere rating of the light fixtures must be used for determining the load on the circuit. Such light fixtures are marked with a rating that includes the ballast and lamp load.

E3702.9 Branch-circuit load for ranges and cooking appliances. It shall be permissible to calculate the branch-circuit load for one range in accordance with Table E3704.2(2). The branch-circuit load for one wall-mounted oven or one counter-mounted cooking unit shall be the nameplate rating of the appliance. The branch-circuit load for a counter-mounted cooking unit and not more than two wall-mounted ovens all supplied from a single branch circuit and located in the same room shall be calculated by adding the nameplate ratings of the individual appliances and treating the total as equivalent to one range. (220.55 Note 4)

❖ The oven and all of the heating elements of a range are usually not used all at the same time. Because of this diversity, the demand factors of Table E3704.2(2) can be used. A counter-mounted cooking unit (a stove top) and one or two ovens are treated as one range. If only a separate counter-mounted cooking unit or oven is installed, the nameplate rating must be used as the load for the branch circuit. See the sample feeder load calculations for Section E3704.3.

E3702.9.1 Minimum branch circuit for ranges. Ranges with a rating of 8.75 kVA or more shall be supplied by a branch circuit having a minimum rating of 40 amperes. [210.19(A)(3)]

❖ A minimum rating of 40 amperes is required for any range rated 8.75 kVA or more. Typically, 60-ampere circuits are installed for ranges.

E3702.10 Branch circuits serving heating loads. Electric space-heating and water-heating appliances shall be considered to be continuous loads. Branch circuits supplying two or more outlets for fixed electric space-heating equipment shall be rated 15, 20, 25 or 30 amperes. [424.3(A)]

❖ Such appliance loads are considered to be continuous loads and, thus, cannot be greater than 80 percent of the rating of the circuit (see definition of "Continuous load"). A 30-ampere circuit is the maximum permitted for fixed electric space heating such as baseboard resistance heaters.

E3702.11 Branch circuits for air-conditioning and heat pump equipment. The ampacity of the conductors supplying multimotor and combination load equipment shall be not less than the minimum circuit ampacity marked on the equipment. The branch-circuit overcurrent device rating shall be the size and type marked on the appliance. [440.4(B), 440.35, 440.62(A)]

❖ For these circuits, it is necessary to know the nameplate information in order to determine the proper size conductors. The equipment label will dictate the required branch circuit ampacity and rating of the overcurrent device.

E3702.12 Branch circuits serving room air conditioners. A room air conditioner shall be considered as a single motor unit in determining its branch-circuit requirements where all the following conditions are met:

1. It is cord- and attachment plug-connected.
2. The rating is not more than 40 amperes and 250 volts; single phase.
3. Total rated-load current is shown on the room air-conditioner nameplate rather than individual motor currents.
4. The rating of the branch-circuit short-circuit and ground-fault protective device does not exceed the ampacity of the branch-circuit conductors, or the rating

INTERNATIONAL CODE COUNCIL®
Copyright © 2015 ICC. ALL RIGHTS RESERVED. Accessed by David Dammon on Jun 21, 2017 12:30:52 PM pursuant to License Agreement with ICC. No further reproduction or distribution authorized. ANY UNAUTHORIZED REPRODUCTION OR DISTRIBUTION IS A VIOLATION OF THE FEDERAL COPYRIGHT ACT AND THE LICENSE AGREEMENT, AND SUBJECT TO CIVIL AND CRIMINAL PENALTIES THEREUNDER.

of the branch-circuit conductors, or the rating of the receptacle, whichever is less. [440.62(A)]

❖ Dwelling unit air conditioning is usually provided by whole-house systems and room air conditioners, such as the window type or the through-the-wall type used in motels and hotels, usually cool or heat only a small room or area. Room air conditioners are considered to be fastened-in-place appliances but are subject to specific rules that are different from those for whole-house systems, mainly because these units are connected with cord and attachment plugs. These appliances can be supplied either by an individual branch circuit or by a branch circuit that also supplies other loads including lighting and/or other appliances. In the planning stages of wiring a dwelling unit, an individual branch circuit is commonly used; however, the room air conditioner could be installed later and connected to a branch circuit also serving other loads.

A room air conditioner usually has a compressor motor and a fan motor, but the code rule indicates that for calculating the branch circuit conductor size and overcurrent device rating, it is considered to be a unit. The total rated-load current must be shown on the nameplate. Where these units are served by a 15- or 20-ampere branch circuit, they are subject to the provisions of Section E3702.3. Those same provisions are reiterated specifically for room air conditioners in the two sections below.

E3702.12.1 Where no other loads are supplied. The total marked rating of a cord- and attachment plug-connected room air conditioner shall not exceed 80 percent of the rating of a branch circuit where no other appliances are also supplied. [440.62(B)]

❖ Where supplied by an individual branch circuit, the unit as a whole, which includes both the compressor and the fan motor, must have a rating not more than 80 percent of the branch circuit rating. For a 15-ampere circuit, the rating can be a maximum of 12 amperes, and for a 20-ampere circuit, a maximum of 16 amperes.

E3702.12.2 Where lighting units or other appliances are also supplied. The total marked rating of a cord- and attachment plug-connected room air conditioner shall not exceed 50 percent of the rating of a branch circuit where lighting or other appliances are also supplied. Where the circuitry is interlocked to prevent simultaneous operation of the room air conditioner and energization of other outlets on the same branch circuit, a cord- and attachment-plug-connected room air conditioner shall not exceed 80 percent of the branch-circuit rating. [440.62(C)]

❖ Where the branch circuit serves other loads, the total rating of the room air conditioner, whether it has been planned from the initial stages of the wiring job or installed in a window with the cord being plugged into an existing circuit, must not exceed 50 percent of the branch circuit rating, that is, 50 percent of the size of the overcurrent protection device, not 50 percent of the ampacity of the branch circuit conductors. For example, one room air conditioner with a total unit rating of up to 10 amperes could be plugged into a receptacle on a 20-ampere circuit. An interlock arrangement that prevents other outlets on the same circuit from being used when the room air conditioner is running would allow the 50-percent limit to increase to 80 percent.

E3702.13 Electric vehicle branch circuit. Outlets installed for the purpose of charging electric vehicles shall be supplied by a separate branch circuit. Such circuit shall not supply other outlets. (210.17)

❖ Charging equipment for electric automobiles operates for long periods, up to 8 hours, depending on the input voltage to the charger. Also, the load on the branch circuit is substantial, therefore, the branch circuit has little capacity for other loads. Nuisance tripping of circuit breakers could lead to the inconvenience of having the vehicle not charged when it is needed, plus the loss of power to any other load served by the circuit. It is a wise precaution to have continuous loads served by dedicated branch circuits.

E3702.14 Branch-circuit requirement—summary. The requirements for circuits having two or more outlets, or receptacles, other than the receptacle circuits of Sections E3703.2, E3703.3 and E3703.4, are summarized in Table E3702.14. Branch circuits in dwelling units shall supply only loads within that dwelling unit or loads associated only with that dwelling unit. Branch circuits installed for the purpose of lighting, central alarm, signal, communications or other purposes for public or common areas of a two-family dwelling shall not be supplied from equipment that supplies an individual dwelling unit. (210.24 and 210.25)

❖ Notice from Table E3702.14 that a 20-ampere rated receptacle is not permitted to be installed on a 15-ampere rated circuit, but a 15-ampere rated receptacle is permitted on a 20-ampere circuit. Equipment may have a 20-ampere rated attachment plug intended for use on a 20-ampere circuit. If a circuit is not really a 20-ampere circuit, it may not provide the required amount of current. Section E4002.1.1 requires that a single receptacle on an individual branch be rated equal to the rating of the branch circuit (see commentary for Section E4002.1.1).

A two-family dwelling unit may have areas common to both residences. For example, yard lighting, carport lighting or entry lighting could be used by occupants of both dwellings. If this is the case, the power for the common area loads must be supplied from a separate service and panelboard. Even where a two-family dwelling is owned or managed by one occupant, the common power needs cannot be supplied from the panel in the manager's unit, for example. Common area lighting and other power needs are more prevalent in multiple-family dwellings and are not often seen in two-family dwellings.

INTERNATIONAL CODE COUNCIL®
Copyright © 2015 ICC. ALL RIGHTS RESERVED. Accessed by David Dammon on Jun 21, 2017 12:30:52 PM pursuant to License Agreement with ICC. No further reproduction or distribution authorized. ANY UNAUTHORIZED REPRODUCTION OR DISTRIBUTION IS A VIOLATION OF THE FEDERAL COPYRIGHT ACT AND THE LICENSE AGREEMENT, AND SUBJECT TO CIVIL AND CRIMINAL PENALTIES THEREUNDER.

TABLE E3702.14 (Table 210.24)
BRANCH-CIRCUIT REQUIREMENTS-SUMMARY[a, b]

	CIRCUIT RATING		
	15 amp	20 amp	30 amp
Conductors: Minimum size (AWG) circuit conductors	14	12	10
Maximum overcurrent-protection device rating Ampere rating	15	20	30
Outlet devices: Lampholders permitted Receptacle rating (amperes)	Any type 15 maximum	Any type 15 or 20	N/A 30
Maximum load (amperes)	15	20	30

a. These gages are for copper conductors.
b. N/A means not allowed.

❖ See Section E3702.13.

SECTION E3703
REQUIRED BRANCH CIRCUITS

E3703.1 Branch circuits for heating. Central heating equipment other than fixed electric space heating shall be supplied by an individual branch circuit. Permanently connected air-conditioning equipment, and auxiliary equipment directly associated with the central heating equipment such as pumps, motorized valves, humidifiers and electrostatic air cleaners, shall not be prohibited from connecting to the same branch circuit as the central heating equipment. (422.12 and 422.12 Exceptions No. 1 and No. 2)

❖ For most furnaces, the motor load, even with the extra 25 percent, would not exceed the maximum 80 percent of the branch circuit rating; however, if the furnace was connected to the same circuit serving other loads and an overload occurred, opening the circuit breaker, the heat supply for the house would be out of order. In some climates, this could be a very serious problem. Thus, the heating equipment must be supplied from a separate circuit. Associated auxiliary equipment and controls may be connected to the same branch circuit.

E3703.2 Kitchen and dining area receptacles. A minimum of two 20-ampere-rated branch circuits shall be provided to serve all wall and floor receptacle outlets located in the kitchen, pantry, breakfast area, dining area or similar area of a dwelling. The kitchen countertop receptacles shall be served by a minimum of two 20-ampere-rated branch circuits, either or both of which shall also be permitted to supply other receptacle outlets in the same kitchen, pantry, breakfast and dining area including receptacle outlets for refrigeration appliances. [210.11(C)(1) and 210.52(B)(1) and (B)(2)]

Exception: The receptacle outlet for refrigeration appliances shall be permitted to be supplied from an individual branch circuit rated 15 amperes or greater. [210.52(B)(1) Exception No. 2]

❖ This section requires at least two 20-ampere-rated circuits for the kitchen and dining area receptacles to serve the many high wattage countertop appliances likely to be used in a dwelling. Section E3901 provides rules on location and spacing of the receptacles. The code specifies that there must be at least two circuits but does not specify or limit the number of receptacle outlets. The countertop receptacle branch circuits are permitted to supply receptacles installed for refrigerators. So as not to rob capacity from the small appliance circuits, the refrigerators are commonly served by a dedicated branch circuit. These required circuits are intended to serve related/associated spaces and cannot serve receptacle outlets in kitchen, pantry, breakfast and dining areas located in different parts or stories of a dwelling, such as in the case of a home with more than one kitchen and its related areas.

E3703.3 Laundry circuit. A minimum of one 20-ampere-rated branch circuit shall be provided for receptacles located in the laundry area and shall serve only receptacle outlets located in the laundry area. [210.11(C)(2)]

❖ A dedicated branch circuit is required for the laundry area. This circuit can serve receptacles that, for example, are used for ironing, clothes washers and gas dryers.

E3703.4 Bathroom branch circuits. A minimum of one 20-ampere branch circuit shall be provided to supply bathroom receptacle outlet(s). Such circuits shall have no other outlets. [210.11(C)(3)]

Exception: Where the 20-ampere circuit supplies a single bathroom, outlets for other equipment within the same bathroom shall be permitted to be supplied in accordance with Section E3702. [210.11(C)(3) Exception)

❖ This section requires a dedicated branch circuit for the bathroom receptacle outlet(s). Section E3901.6 provides rules for the location of the receptacle(s). Two choices are available for the branch circuit serving the bathroom(s) in the house.

1. One 20-ampere-rated circuit may serve the required receptacle(s) in all the bathrooms in the house. In this case, no other outlets may be served by this circuit. The bathroom lighting and any fan or heat lamps would be served by a distinct general purpose branch circuit.
2. A 20-ampere circuit may serve only one bathroom. For additional bathrooms in the house, additional separate circuits would be run. The one circuit for the single bathroom supplies the required receptacle(s) and is also permitted to serve lighting and equipment in the bathroom such as an exhaust fan and/or heat lamp. Because this circuit is subject to the provisions of Section E3702, the load of the other equipment can be a maximum of 50 percent of the rating of the branch circuit.

The bathroom receptacle must be ground-fault circuit interrupter (GFCI) protected, but lighting and other equipment is not required to be GFCI protected un-less otherwise stated as a condition of the listing of a fixture or equipment. Some electricians supply the luminaires and fans in a bathroom from a GFCI-pro-

INTERNATIONAL CODE COUNCIL®
Copyright © 2015 ICC. ALL RIGHTS RESERVED. Accessed by David Dammon on Jun 21, 2017 12:30:52 PM pursuant to License Agreement with ICC. No further reproduction or distribution authorized. ANY UNAUTHORIZED REPRODUCTION OR DISTRIBUTION IS A VIOLATION OF THE FEDERAL COPYRIGHT ACT AND THE LICENSE AGREEMENT, AND SUBJECT TO CIVIL AND CRIMINAL PENALTIES THEREUNDER.

tected circuit to provide additional safety for the occupants who come in contact with the luminaires, fans and switches.

E3703.5 Number of branch circuits. The minimum number of branch circuits shall be determined from the total calculated load and the size or rating of the circuits used. The number of circuits shall be sufficient to supply the load served. In no case shall the load on any circuit exceed the maximum specified by Section E3702. [210.11(A)]

❖ The minimum number of branch circuits required for various specific loads such as the laundry, furnace, bathroom, and small appliance circuits, is clearly prescribed in Section E3703. However, a simple calculation is necessary to find the minimum number of branch circuits required for the general lighting load.

The general lighting load includes all of the general purpose convenience receptacles and lighting outlets and is calculated at 3 volt-amperes per square foot (33 VA/m^2) in accordance with Section E3704.4. The square footage of the house used for this calculation does not include open porches, garages or unused or unfinished areas that are not adaptable for future use. Certainly, these areas have receptacle and lighting outlets, and even areas such as an attic or crawl space could have lighting and receptacles. See Section 3903.4 for lighting required in storage spaces. Although these outlets are part of the general lighting load, these rooms and spaces are not part of the floor area used in the general lighting load calculation. In many jurisdictions, new houses are completed with an unfinished basement, which is intended for future habitable space. The square footage of such basements must be included in the general lighting load calculation.

To find the number of general purpose lighting and receptacle circuits needed, multiply the dwelling square footage by 3 volt-amperes. This is the total lighting and receptacle load. Divide this load by the circuit voltage to find the total amperage needed. The total amperage is then divided by the rating of the circuit breaker to find the minimum number of circuits needed.

For a 2,200-square-foot house, the total lighting load is 3 VA $\times$ 2,200 = 6,600 volt-amperes. To get the total amperage load for the 120-volt branch circuits, divide the volt-amperes by 120 volts, which is 55 amperes. For a 15-ampere-rated circuit, divide the 55 amperes by 15. The result is 3.67 circuits, which must be rounded up to four circuits. For a 20-ampere-rated circuit, divide the 55 amperes by 20. The result is 2.75 circuits, which must be rounded up to three 20-ampere circuits to serve all the general purpose convenience receptacles and lighting load of the house. This is the minimum number of circuits required; however, many more are typically installed as a matter of convenience and good planning.

The 2,200-square-foot house in this example could have three or four bedrooms, a family room and a living room. With the addition of hallway, entry hall and outdoor receptacle outlets, it may easily contain 40 or more general purpose receptacle outlets. (This does not include the laundry, bathroom, kitchen and dining area receptacles on the small appliance circuits.) Add to this all the lighting outlets, (which do include the laundry, kitchen and dining room, and could include the bathroom lights, depending on how the bathroom branch circuits are run). See Section E3703.4 for bathroom branch circuits. The outside porch lights, garage lights, attic storage area lights, etc., are included in the general lighting branch circuits, although these areas are not included in the 3 volt-amperes per square foot of floor area. The total number of lighting outlets could easily be 20 or more. For instance, if there were 40 general purpose receptacle outlets and 15 lighting outlets for this house, the total of 55 outlets would be supplied by the minimum required number of four 15-ampere or three 20-ampere circuits. This lighting load must be evenly proportioned among the multioutlet branch circuits in accordance with Section E3703.6. Therefore, there could be approximately 17 to 18 outlets per 20-ampere circuit or 13 to 14 outlets per 15-ampere circuit for this house; however, the number of outlets per circuit is not limited by the code. Evenly proportioned loading of the required number of branch circuits is required.

This calculation covers the first sentence of the section: “The minimum number of branch circuits shall be determined from the total computed load and the size or rating of the circuits used.” However, it is very important not to overlook the rest of the paragraph, which requires that the number of circuits be sufficient to supply the load served and that the load not exceed the limitations of Section E3702.

Where the loads are known, such as the number and wattage of the lighting fixtures to be installed or the cord- and plug-connected appliances or equipment to be used, additional circuits will need to be installed according to the load. For good practice, the wiring system should provide for increased loads and the use of added future electrical appliances. These factors should be taken into account in addition to the mere minimum number of circuits.

Many electricians use a rule of thumb method based on experience and practice for deciding on the number of branch circuits for a dwelling. In most cases, these traditional practices result in the actual number of branch circuits installed exceeding the minimum number required by the code calculation. Because the number and wattage of lamps to be used in light fixtures is not known at the time of deciding the number of circuits, and the load of the plug- and cord-connected appliances cannot be known, one rule of thumb method used in some areas is a maximum of 8 to 10 outlets included on any one general purpose branch circuit. This is not a code rule, but this kind of installation would provide a safety and convenience margin so that circuit breakers are not as likely to open on overload; for example, during a cold season when a homeowner may use portable space heaters in the house.

INTERNATIONAL CODE COUNCIL®
Copyright © 2015 ICC. ALL RIGHTS RESERVED. Accessed by David Dammon on Jun 21, 2017 12:30:52 PM pursuant to License Agreement with ICC. No further reproduction or distribution authorized. ANY UNAUTHORIZED REPRODUCTION OR DISTRIBUTION IS A VIOLATION OF THE FEDERAL COPYRIGHT ACT AND THE LICENSE AGREEMENT, AND SUBJECT TO CIVIL AND CRIMINAL PENALTIES THEREUNDER.

Limiting of outlets per circuit is not a code rule unless the loads are known.

One reason that some electricians limit the number of outlets per circuit may be because of the influence of the method used to determine the number of circuits for commercial buildings. The number of outlets per circuit is limited on commercial buildings. For other than residential wiring, each receptacle outlet is assigned a value of 1.5 amperes, which is 180 volt-amperes divided by 120 volts. Under this method, a 20-ampere circuit could have 13 outlets, and a 15-ampere circuit could have 10 outlets. This is sometimes confused with the requirements for dwellings, and if the commercial method is applied to calculating the number of outlets and branch circuits for dwellings, then the number of circuits would most likely satisfy the residential code requirements. In residential wiring, as long as the minimum number of circuits based on the square footage is provided, there is no limit on the number of outlets per branch circuit. The spacing and location requirements of receptacle outlets for dwellings result in the installation of many outlets that most definitely will not all be used at the same time. Because of the intermittent use and great diversity in the loads and duration of operation of the loads connected to the receptacle outlets in a house, any number of outlets can be installed on each general purpose branch circuit.

Sample Calculation

Consider a three-bedroom, two-bathroom, 1,500-square-foot (139 m^2) house served with fuel gas for space and water heating and with the following lighting and receptacle outlets. The house has a 500-square-foot (46 m^2) garage.

Number of Lighting Outlets	
Three Bedrooms	3
Two Bathrooms	2
Hall	1
Living Room	1
Kitchen/Dining Rooms	2
Laundry Room	1
Outside Doors and Garage	3
Total Lighting Outlets*	13
Number of Receptacle Outlets	
Three Bedrooms, four receptacles each	12
Hall	1
Outdoors (front and back)	2
Garage	2
Living Room	6
Total Receptacles*	23

*These numbers are used for this example only. See Chapter 39 for required outlets.

What is the minimum number of branch circuits needed for the total of 36 lighting and receptacle outlets for this house?

To determine the minimum required number of circuits, from Table E3704.2(1) find 3 volt-amperes per square foot for lighting and receptacles.

1,500 square feet $\times$ 3 VA = 4,500 VA/1 20 Volts = 37.5 amps minimum required for the house.

For 15-ampere circuits, divide 15 into 37.5 amperes 37.5/15 = 2.5, round up to 3

For 20-ampere circuits, divide 20 into 37.5 amperes 37.5/20 =1.8, round up to 2

Another method is to take the voltage times the rating of the circuit in amperes to find how many volt-amperes are allowed on the circuit.

A 15-ampere circuit has a capacity for 1,800 VA ($120 \times 15 = 1{,}800$ VA)

A 20-ampere circuit has a capacity for 2,400 VA ($120 \times 20 = 2{,}400$ VA)

The minimum lighting load required for this house is $3 \times 1{,}500$ or 4,500 VA

Divide the VA that each circuit can handle into 4,500 VA to find the minimum number of general lighting circuits.

Using 15-ampere circuits:

4,500/1,800 = 2.5, round up to 3

Using 20-ampere circuits:

4,500/2,400=1.8, round up to 2

The 36 lighting and receptacle outlets should be evenly proportioned between the two or three general purpose branch circuits. More circuits could be needed, such as a separate circuit to a receptacle in the garage to serve a freezer.

In addition to the general lighting branch circuits, the minimum required circuits for this house are as follows:

- Kitchen and dining area receptacles served by two small appliance branch circuits (see Sections E3703.2 and E3901.3).
- Refrigerator. The refrigerator is permitted to be on one of the kitchen small appliance circuits, or it can be on a separate 15-ampere circuit (see Section E3901.3 and Exception 2).
- Laundry branch circuit (see Sections E3703.3 and E3901.8).
- Bathroom circuit. One 20-ampere circuit could serve the receptacles in both bathrooms (see Sections E3703.4 and E3901.6).
- Central heating or furnace circuit (see Section E3703.1).
- Individual or appliance branch circuits. Section E3702 requires that circuits be provided to supply such loads as a disposal, dishwasher, range

INTERNATIONAL CODE COUNCIL®
Copyright © 2015 ICC. ALL RIGHTS RESERVED. Accessed by David Dammon on Jun 21, 2017 12:30:52 PM pursuant to License Agreement with ICC. No further reproduction or distribution authorized. ANY UNAUTHORIZED REPRODUCTION OR DISTRIBUTION IS A VIOLATION OF THE FEDERAL COPYRIGHT ACT AND THE LICENSE AGREEMENT, AND SUBJECT TO CIVIL AND CRIMINAL PENALTIES THEREUNDER.

and dryer sized according to the rating of the appliance or equipment.

The code does not prescribe or state in words that the dishwasher and disposal should each be supplied by a separate circuit as it does for the furnace, laundry and bathroom circuits. This must be determined by a simple calculation. Because the dishwasher and disposal are closely associated in proximity and function, some electricians wire both appliances on the same 20-ampere circuit. This might be permitted if all code requirements are satisfied. Because the appliances to be installed are not usually available on the job when the circuits are being installed at the rough-wiring stage, and because the appliances could be upgraded at a future time using the same branch circuits, it is best to run a separate 20-ampere circuit to each appliance. Section E3702.3 requires that if two appliances are supplied by the same branch circuit, the rating of any one appliance (utilization equipment), in this case the dishwasher or disposal, not exceed 80 percent of the branch circuit rating.

Section E3702.7, for combination loads, requires that the branch circuit total computed load be based on the 125 percent of the largest motor plus the sum of the other loads. A dishwasher has a pump motor and heating element, but they usually do not operate at the same time. A typical dishwasher nameplate lists the total load as 11.0 amperes and the motor load as 6.5 amperes. This dishwasher could be supplied by a separate 15-ampere circuit. The disposal is rated at 7.3 amperes and could be supplied by a separate 15-ampere circuit because the computed load is 7.3 × 125 percent, or 9.125 amperes. Could these two appliances be supplied on the same 20-ampere branch circuit? For combination loads, take 125 percent of the largest motor load plus the sum of the other loads. The disposal is the largest motor load at 7.3 × 125 percent = 9.125 amperes + the dishwasher at 11.0 amperes = 20.125 amperes. Neither one exceeds 80 percent of the 20-ampere branch circuit rating, but the total computed load is over 20 amperes. Therefore, two separate circuits are needed for these two appliances. Two separate 15-ampere circuits would satisfy code requirements, but good practice would indicate that two 20-ampere circuits be installed to provide sufficient capacity for future upgrades to appliances of higher load ratings.

E3703.6 Branch-circuit load proportioning. Where the branch-circuit load is calculated on a volt-amperes-per-square-foot (m^2) basis, the wiring system, up to and including the branch-circuit panelboard(s), shall have the capacity to serve not less than the calculated load. This load shall be evenly proportioned among multioutlet branch circuits within the panelboard(s). Branch-circuit overcurrent devices and circuits shall only be required to be installed to serve the connected load. [210.11(B)]

❖ What if the actual connected load on the branch circuits was known and was less than the calculated load? The first sentence of this section requires that the wiring system have the capacity to serve at least the calculated load even if the actual load is less.

The branch circuit load calculated for the general lighting and general purpose receptacles must be evenly proportioned among the number of multioutlet branch circuits. Although distributing the loads over a greater number of circuits than the required minimum would provide for future load increases, the code requires only the number of branch circuits necessary to carry the connected load.

SECTION E3704
FEEDER REQUIREMENTS

E3704.1 Conductor size. Feeder conductors that do not serve 100 percent of the dwelling unit load and branch-circuit conductors shall be of a size sufficient to carry the load as determined by this chapter. Feeder conductors shall not be required to be larger than the service-entrance conductors that supply the dwelling unit. The load for feeder conductors that serve as the main power feeder to a dwelling unit shall be determined as specified in Chapter 36 for services. [310.15(B)(7)(2) and (3)]

❖ Feeder conductors that are run to a subpanel serving a detached garage, swimming pool equipment building, detached shop or upper story are examples of feeder conductors that do not serve 100 percent of the dwelling unit load.

But how are the main power feeder conductors sized? The term “main power feeder” refers to the feeder conductors between the main disconnect at the service and the panelboard serving branch circuits for lighting, receptacles and appliances. The main power feeder can be, but is not always, the only feeder in the wiring system and as such might not serve 100 percent of the dwelling unit load. In the example feeder load calculation for Section E3704.3, the main power feeder is not the only feeder in the system.

Use Chapter 36 for sizing the main power feeder conductors. Because of the diversity in the use of the dwelling unit lighting, receptacle and appliance loads, the demand on the main power feeder conductors is lower than the demand on the other feeders. In addition to the demand factors allowed in the actual calculation, Section E3603.1 has a built-in demand factor or reduction in the conductor size. Feeders other than the main power feeder can be expected to be more fully loaded and thus are sized by a different, more conservative method.

E3704.2 Feeder loads. The minimum load in volt-amperes shall be calculated in accordance with the load calculation procedure prescribed in Table E3704.2(1). The associated table demand factors shall be applied to the actual load to determine the minimum load for feeders. (220.40)

❖ Table E3704.2(1) is used to calculate the load for a feeder that supplies power to a sub-panelboard serving branch circuits for lighting, receptacles, motors and

INTERNATIONAL CODE COUNCIL®
Copyright © 2015 ICC. ALL RIGHTS RESERVED. Accessed by David Dammon on Jun 21, 2017 12:30:52 PM pursuant to License Agreement with ICC. No further reproduction or distribution authorized. ANY UNAUTHORIZED REPRODUCTION OR DISTRIBUTION IS A VIOLATION OF THE FEDERAL COPYRIGHT ACT AND THE LICENSE AGREEMENT, AND SUBJECT TO CIVIL AND CRIMINAL PENALTIES THEREUNDER.

appliances. Once the feeder load is determined, the conductor size is selected. For sizing a main power feeder (serves 100 percent of the dwelling-unit load), see Section E3603.1.

The code provisions for calculating the feeder loads allow for the fact that in most cases all of the lighting, receptacles, motors and appliances served by the feeder will not be in use at the same time. Because of this diversity in the operation of the various loads, demand factors can be used. For example, a demand factor of 75 percent can be applied to the total load of four or more appliances served by a feeder. If it is known that the load will be operated 100 percent of the time, the demand factor would be 100 percent.

Sample Calculation

Using Table E3704.2(1), the following is an example of the calculation for a feeder to a subpanelboard serving branch circuits for lighting, receptacles, motors and appliances. In this example, the feeder is protected by Circuit Breaker #4.

A house that measures 30 feet by 60 feet (9144 mm by 18 288 mm) exclusive of the garage and porches has service equipment containing four main disconnects, which are two-pole, 240-volt circuit breakers. The four disconnects serve the following:

- Disconnect 1 serves a feeder to a subpanelboard in a separate bathhouse building used to house swimming pool equipment,
- Disconnect 2 serves a branch circuit to a 240-volt, 18,000-volt-ampere heat pump,
- Disconnect 3 serves a branch circuit to a 240-volt, 8,500-volt-ampere house air conditioner and
- Disconnect 4 serves a feeder to a subpanelboard inside the house, which supplies the following loads:

Appliance or Equipment	Rating
240-volt water heater:	6,000 volt-amperes
120-volt dishwasher:	16,000 volt-amperes
(motor rated 6.5 amperes included in 1,600 VA total rating)	
120-volt disposal:	8.3 amperes
120-volt microwave oven:	1,400 volt-amperes
240-volt dryer:	5,500 volt-amperes
240-volt range:	11,000 volt-amperes
120-volt pump motor for a hydromassage bathtub:	10 amperes
120-volt room air conditioner:	1,400 volt-amperes
120-volt garage door opener:	7.2 amperes
120-volt clothes washer:	1,500 volt-amperes
Three 20-ampere kitchen and dining area receptacle branch circuits:	4,500 volt-amperes

TABLE E3704.2(1)
(Table 220.12, 220.14, Table 220.42, 220.50, 220.51, 220.52, 220.53, 220.54, 220.55, and 220.60)
FEEDER LOAD CALCULATION

LOAD CALCULATION PROCEDURE	APPLIED DEMAND FACTOR
Lighting and receptacles: A unit load of not less than 3 VA per square foot of total floor area shall constitute the lighting and 120-volt, 15- and 20-ampere general use receptacle load. 1,500 VA shall be added for each 20-ampere branch circuit serving receptacles in the kitchen, dining room, pantry, breakfast area and laundry area.	100 percent of first 3,000 VA or less and 35 percent of that in excess of 3,000 VA.
Plus	
Appliances and motors: The nameplate rating load of all fastened-in-place appliances other than dryers, ranges, air-conditioning and space-heating equipment.	100 percent of load for three or less appliances. 75 percent of load for four or more appliances.
Plus	
Fixed motors: Full-load current of motors plus 25 percent of the full load current of the largest motor.	
Plus	
Electric clothes dryer: The dryer load shall be 5,000 VA for each dryer circuit or the nameplate rating load of each dryer, whichever is greater.	
Plus	
Cooking appliances: The nameplate rating of ranges, wall-mounted ovens, counter-mounted cooking units and other cooking appliances rated in excess of 1.75 kVA shall be summed.	Demand factors shall be as allowed by Table E3704.2(2).
Plus the largest of either the heating or cooling load	
Largest of the following two selections: 1.100 percent of the nameplate rating(s) of the air conditioning and cooling, including heat pump compressors. 2.100 percent of the fixed electric space heating.	

For SI: 1 square foot = 0.0929 m^2.

❖ See the commentary to Section E3704.2.

INTERNATIONAL CODE COUNCIL®
Copyright © 2015 ICC. ALL RIGHTS RESERVED. Accessed by David Dammon on Jun 21, 2017 12:30:52 PM pursuant to License Agreement with ICC. No further reproduction or distribution authorized. ANY UNAUTHORIZED REPRODUCTION OR DISTRIBUTION IS A VIOLATION OF THE FEDERAL COPYRIGHT ACT AND THE LICENSE AGREEMENT, AND SUBJECT TO CIVIL AND CRIMINAL PENALTIES THEREUNDER.

Step 1: Lighting load, kitchen and dining area receptacle branch circuits and laundry branch circuit

Total floor area 30 feet × 60 feet =
1,800 × 3 VA/sq. ft. = 5,400 volt-amperes

Three 20-ampere kitchen and dining area receptacle branch circuits: 4,500 volt-amperes*

(Only two are required, but this example indicates three installed.)

One 20-ampere laundry branch circuit: 1,500 volt amperes
11,400 volt-amperes

Applying the demand factor:
3,000 at 100 percent = 3,000

35 percent of remainder:
8,400 × 0.35 = 2,940

Total for Step 1: 5,940 volt-amperes

Step 2: Fastened-in-place appliances

Water heater: 6,000 volt-amperes

Dishwasher: 1,600 volt-amperes

Disposal:
120 volts × 8.3 amperes = 996 volt-amperes

Microwave oven: 1,400 volt-amperes

Hydromassage bathtub pump motor:
129 volts × 10 amperes = 1,200 volt-amperes

Room air conditioner: 1,400 volt-amperes

Garage door opener:
120 volts × 7.2 amperes = 864 volt-amperes

Total rating of appliances: 13,460 volt-amperes

Applying the demand factor:
13,460 × 0.75 = 10,095

Total for Step 2: 10,095 volt-amperes

Step 3: Motors

25 percent of largest motor:

Hydromassage bathtub pump motor:
120 volts × 10 amperes = 1,200 × 0.25 =

Total for Step 3: 300 volt-amperes

Step 4: Clothes Dryer

Greater of 5,000 VA or nameplate rating.

Total for Step 4: 5,500 volt-amperes

Step 5: Cooking Appliances

8,000 VA for the range per Column A of Table E3604.2(2)

Total for Step 5: 8,000 volt-amperes

Total computed feeder load: 29,835 volt-amperes

The minimum ampacity of the ungrounded feeder conductors is 29,835/240 volts = 124.3 amperes. A two-pole, 125-ampere circuit breaker can be used. Referring to Table E3705.1, copper conductors of size 1 AWG with a 75°C-rated insulation type can be used for ungrounded conductors for this feeder.

The heating and cooling loads for the house in this example are not served by the feeder from Disconnect #4, but would be used in calculating the load for the service conductors. If the heating and cooling loads were served by this feeder, it would not be necessary to consider both loads in the calculation. As shown in Table E3704.2(1), only the largest of these two loads would be used, because it is unlikely that the heating and cooling loads will be used simultaneously.

E3704.3 Feeder neutral load. The feeder neutral load shall be the maximum unbalance of the load determined in accordance with this chapter. The maximum unbalanced load shall be the maximum net calculated load between the neutral and any one ungrounded conductor. For a feeder or service supplying electric ranges, wall-mounted ovens, counter-mounted cooking units and electric dryers, the maximum unbalanced load shall be considered as 70 percent of the load on the ungrounded conductors. [220.61(A) and (B)]

❖ For a three-wire, 120/240-volt single-phase system, the grounded (neutral) conductor run from the transformer is also grounded at the service equipment. The

TABLE E3704.2(2) (220.55 and Table 220.55)
DEMAND LOADS FOR ELECTRIC RANGES, WALL-MOUNTED OVENS, COUNTER-MOUNTED COOKING UNITS AND OTHER COOKING APPLIANCES OVER $1^3/_4$ kVA RATING[a, b]

NUMBER OF APPLIANCES	MAXIMUM DEMAND[b, c]	DEMAND FACTORS (percent)[d]	
	Column A maximum 12 kVA rating	Column B less than $3^1/_2$ kVA rating	Column C $3^1/_2$ to $8^3/_4$ kVA rating
1	8 kVA	80	80
2	11 kVA	75	65

a. Column A shall be used in all cases except as provided for in Footnote d.

b. For ranges all having the same rating and individually rated more than 12 kVA but not more than 27 kVA, the maximum demand in Column A shall be increased 5 percent for each additional kVA of rating or major fraction thereof by which the rating of individual ranges exceeds 12 kVA.

c. For ranges of unequal ratings and individually rated more than 8.75 kVA, but none exceeding 27 kVA, an average value of rating shall be computed by adding together the ratings of all ranges to obtain the total connected load (using 12 kVA for any ranges rated less than 12 kVA) and dividing by the total number of ranges; and then the maximum demand in Column A shall be increased 5 percent for each kVA or major fraction thereof by which this average value exceeds 12 kVA.

d. Over 1.75 kVA through 8.75 kVA. As an alternative to the method provided in Column A, the nameplate ratings of all ranges rated more than 1.75 kVA but not more than 8.75 kVA shall be added and the sum shall be multiplied by the demand factor specified in Column B or C for the given number of appliances.

❖ See the commentary to Section E3704.2.

INTERNATIONAL CODE COUNCIL®
Copyright © 2015 ICC. ALL RIGHTS RESERVED. Accessed by David Dammon on Jun 21, 2017 12:30:52 PM pursuant to License Agreement with ICC. No further reproduction or distribution authorized. ANY UNAUTHORIZED REPRODUCTION OR DISTRIBUTION IS A VIOLATION OF THE FEDERAL COPYRIGHT ACT AND THE LICENSE AGREEMENT, AND SUBJECT TO CIVIL AND CRIMINAL PENALTIES THEREUNDER.

voltage between the grounded neutral and each ungrounded conductor is 120 volts. A 240-volt branch circuit to a motor or space heater, for example, has no neutral conductor because the load is supplied by the two ungrounded conductors. There is no current in the feeder neutral from the 240-volt load [see Commentary Figure E3401(2)].

To calculate the feeder neutral load from the example in Section E3704.2, do not include the water heater load, because it is 240 volts and does not use a neutral conductor. The maximum unbalanced load for the dryer and range is considered as 70 percent of the load used for the ungrounded conductor load calculation.

Appliance or Equipment	Rating
120-volt dishwasher:	1,600 volt-amperes
(motor rated 6.5 amperes included in 1,600 VA total rating)	
120-volt disposal:	8.3 amperes
120-volt microwave oven:	1,400 volt-amperes
240-volt dryer:	5,500 volt-amperes
240-volt range:	11,000 volt-amperes
120-volt pump motor for a hydromassage bathtub:	10 amperes
120-volt room air conditioner:	1,400 volt-amperes
120-volt garage door opener:	7.2 amperes
120-volt clothes washer (laundry circuit):	1,500 volt-amperes
Three 20-ampere kitchen and dining area receptacle branch circuits:	4,500 volt-amperes
Step 1: Lighting load, kitchen and dining area receptacle branch circuits and laundry branch circuit	
Total floor area 30 feet 60 feet = 1,800 × 3 VA/sq. ft. =	5,400 volt-amperes
Three 20-ampere kitchen and dining area receptacle branch circuits:	45,00 volt-amperes*
*(Only two are required, but this example indicates three installed.)	
One 20-ampere laundry branch circuit:	1,500 volt-amperes
	11,400 volt-amperes
Applying the demand factor: 3,000 at 100 percent =	3,000
35 percent of remainder: 8,400 × 0.35 =	2,940
Total for Step 1:	5,940 volt-amperes
Step 2: Fastened-in-place appliances that use a neutral conductor	
Dishwasher:	1,600 volt-amperes
Disposal: 120 volts 8.3 amperes =	996 volt-amperes
Microwave oven:	1,400 volt-amperes
Hydromassage bathtub pump motor: 120 volts × 10 amperes =	1,200 volt-amperes
Room air conditioner:	1,400 volt-amperes
Garage door opener: 120 volts × 7.2 amperes =	864 volt-amperes
Total rating of appliances:	7,460 volt-amperes
Applying the demand factor: 7,460 × 0.75 =	10,095
Total for Step 2:	5,595 volt-amperes
Step 3: Motors	
25 percent of largest motor:	
Hydromassage bathtub pump motor: 120 volts × 10 amperes = 1,200 × 25 percent =	300 volt-amperes
Total for Step 3:	300 volt-amperes
Step 4: Clothes Dryer	
70 percent of rating: 5,500 VA × 70 percent =	3,850
Total for Step 4:	3,850 volt-amperes
Step 5: Cooking Appliances	
8,000 VA × 70 percent =	5,600
Total for Step 5:	5,600 volt-amperes
Total computed Feeder load:	21,285 volt-amperes

The minimum ampacity of the neutral feeder conductor is 21,285/240 volts = 88.68 amperes. Using the 75°C column of Table E3705.1, a size 3-AWG Type THWN copper conductor is the minimum size permitted.

E3704.4 Lighting and general use receptacle load. A unit load of not less than 3 volt-amperes shall constitute the minimum lighting and general use receptacle load for each square foot of floor area (33 VA for each square meter of floor area). The floor area for each floor shall be calculated from the outside dimensions of the building. The calculated floor area shall not include open porches, garages, or unused or unfinished spaces not adaptable for future use. [220.12, Table 220.12, and 220.14(J)]

❖ See the commentary to Section E3704.2.

E3704.5 Ampacity and calculated loads. The calculated load of a feeder shall be not less than the sum of the loads on the branch circuits supplied, as determined by Section E3704, after any applicable demand factors permitted by Section E3704 have been applied. (220.40)

❖ A feeder must have an ampacity at least equal to the calculated feeder load. Feeder load is calculated in accordance with Section E3704.

E3704.6 Equipment grounding conductor. Where a feeder supplies branch circuits in which equipment grounding conductors are required, the feeder shall include or provide an equipment grounding conductor that is one or more or a combination of the types specified in Section E3908.8, to which the equipment grounding conductors of the branch circuits

INTERNATIONAL CODE COUNCIL®
Copyright © 2015 ICC. ALL RIGHTS RESERVED. Accessed by David Dammon on Jun 21, 2017 12:30:52 PM pursuant to License Agreement with ICC. No further reproduction or distribution authorized. ANY UNAUTHORIZED REPRODUCTION OR DISTRIBUTION IS A VIOLATION OF THE FEDERAL COPYRIGHT ACT AND THE LICENSE AGREEMENT, AND SUBJECT TO CIVIL AND CRIMINAL PENALTIES THEREUNDER.

shall be connected. Where the feeder supplies a separate building or structure, the requirements of Section E3607.3.1 shall apply. (215.6)

❖ Feeders typically supply a subpanelboard which in turn supplies two or more branch circuits. Because the branch circuits will require grounding conductors, there must be a grounding conductor included as part of the feeder, to which the branch circuit grounding conductors will connect (see Section E3607.3.1 relative to feeders to outbuildings). If the subpanel serves 240-volt loads, a four-wire feeder will be necessary. Recall that multiple sections of the code repeat the very important rule that the grounded conductors in such subpanels be electrically isolated from the grounding conductors, thus requiring separate terminal bus bars for the grounded and grounding conductor terminations.

SECTION E3705
CONDUCTOR SIZING AND OVERCURRENT PROTECTION

E3705.1 General. Ampacities for conductors shall be determined based in accordance with Table E3705.1 and Sections E3705.2 and E3705.3. [310.15(A)]

❖ Table E3705.1 covers the allowable ampacities for other than service conductors and main power feeder conductors. Section E3603.1 covers the conductor sizes for services and feeders that serve 100 percent of the dwelling-unit load.

The selection of conductors for dwelling unit wiring begins with finding the allowable conductor ampacity. Several variables are involved in determining the ampacity of a conductor. These include the ambient temperature, the number of conductors in close proximity, the temperature rating of the terminations and the maximum overcurrent protection ratings for specific conductor sizes such as given in Table E3705.5.3.

TABLE E3705.1
ALLOWABLE AMPACITIES

CONDUCTOR SIZE	CONDUCTOR TEMPERATURE RATING						CONDUCTOR SIZE
	60°C	75°C	90°C	60°C	75°C	90°C	
AWG kcmil	Types TW, UF	Types RHW, THHW, THW, THWN, USE, XHHW	Types RHW-2, THHN, THHW, THW-2, THWN-2, XHHW, XHHW-2, USE-2	Types TW, UF	Types RHW, THHW, THW, THWN, USE, XHHW	Types RHW-2, THHN, THHW, THW-2, THWN-2, XHHW, XHHW-2, USE-2	AWG kcmil
	Copper			Aluminum or copper-clad aluminum			
14[a]	15	20	25	—	—	—	—
12[a]	20	25	30	15	20	25	12[a]
10[a]	30	35	40	25	30	35	10[a]
8	40	50	55	35	40	45	8
6	55	65	75	40	50	55	6
4	70	85	95	55	65	75	4
3	85	100	115	65	75	85	3
2	95	115	130	75	90	100	2
1	110	130	145	85	100	115	1
1/0	125	150	170	100	120	135	1/0
2/0	145	175	195	115	135	150	2/0
3/0	165	200	225	130	155	175	3/0
4/0	195	230	260	150	180	205	4/0
250	215	255	290	170	205	230	250
300	240	285	320	195	230	260	300
350	260	310	350	210	250	280	350
400	280	335	380	225	270	305	400
500	320	380	430	260	310	350	500
600	350	420	475	285	340	385	600
700	385	460	520	315	375	425	700
750	400	475	535	320	385	435	750
800	410	490	555	330	395	445	800
900	435	520	585	355	425	480	900

For SI: °C = [(°F) - 32]/1.8.

a. See Table E3705.5.3 for conductor overcurrent protection limitations.

❖ See the commentary to Section E3705.1.

INTERNATIONAL CODE COUNCIL®
Copyright © 2015 ICC. ALL RIGHTS RESERVED. Accessed by David Dammon on Jun 21, 2017 12:30:52 PM pursuant to License Agreement with ICC. No further reproduction or distribution authorized. ANY UNAUTHORIZED REPRODUCTION OR DISTRIBUTION IS A VIOLATION OF THE FEDERAL COPYRIGHT ACT AND THE LICENSE AGREEMENT, AND SUBJECT TO CIVIL AND CRIMINAL PENALTIES THEREUNDER.

Table E3705.1 cannot be used to determine conductor ampacity without knowing the "conditions of use" of the conductor. It is important here to review the definition of ampacity from Chapter 35: "The current in amperes a conductor can carry continuously under the conditions of use without exceeding its temperature rating." This definition applies to continuous use. There is not one ampacity for continuous use and another for noncontinuous use. Where a load is operated continuously (for 3 hours or more), the ampacity of the branch circuit conductors must be 125 percent of the continuous load. If the load is not operated continuously, the branch circuit conductors must have an ampacity at least equal to the load being served (see Section E3701.2).

Because of resistance, current passing through a conductor causes heat to build up in it, which must be dissipated into the ambient air. Ampacity is the amount of current that a conductor can carry without exceeding the thermal limit of its insulation material, which is the temperature rating. Conductors are classified by the different types of insulation that are capable of withstanding a certain level of heat before the insulation degrades, melts or burns. The conductor temperature ratings of 60°C, 75°C and 90°C at the top of the table indicate the maximum temperature a given size conductor with the type of insulation shown can withstand (60°C = 140°F; 75°C = 167°F; 90°C = 194°F). The maximum current the conductor can carry without raising the temperature higher than 60°C, 75°C or 90°C is shown in the table as the ampacity for that size of conductor with the type of insulation shown at the top of the column. Ampacities shown in Table E3705.1 are based on an ambient temperature of 86°F (30°C). Look at the first column in Table E3705.2 for ambient temperature. The 5th row is 26°C - 30°C, and there is no adjustment factor for the ampacity of conductors with this ambient temperature (a mulitplier of 1 has no effect).

For example, a size 8-AWG copper conductor with Type XHHW insulation can carry 50 amperes continuously at 30°C without raising the temperature of the conductor over 167°F (75°C). If this conductor carries a higher current, a temperature higher than 75°C could develop in the conductor, thus causing damage.

E3705.2 Correction factor for ambient temperatures. For ambient temperatures other than 30°C (86°F), multiply the allowable ampacities specified in Table E3705.1 by the appropriate correction factor shown in Table E3705.2. [310.15(B)(2)]

❖ The ampacity values shown in Table E3705.1 must be reduced according to the factors in Table E3705.2. This table is usually referred to for a reduction in allowable ampacity; however, the ambient temperature correction factors could result in a slight increase in ampacity if the ambient temperature where the conductors are installed never exceeds 77°F (25°C) as indicated in the first row of the table.

It is reasonable to assume that attic temperatures will reach 105°F (41°C) and greater. Where conductors run in attics are exposed to the possibility of such high temperatures, a correction factor for conductor ampacity must be applied. Consider an air-conditioner supplied by a 40-ampere branch circuit with copper size 8-AWG, Type THHN conductors run through an attic where temperatures in summer months reach 125°F (52°C). To find the ampacity of these conductors under this condition of use, find Type THHN con-

TABLE E3705.2 [Table 310.15(B)(2)(a)]
AMBIENT TEMPERATURE CORRECTION FACTORS

For ambient temperatures other than 30°C (86°F), multiply the allowable ampacities specified in the ampacity tables by the appropriate correction factor shown below.				
Ambient Temperature (°C)	Temperature Rating of Conductor			Ambient Temperature (°F)
	60°C	75°C	90°C	
10 or less	1.29	1.20	1.15	50 or less
11-15	1.22	1.15	1.12	51-59
16-20	1.15	1.11	1.08	60-68
21-25	1.08	1.05	1.04	69-77
26-30	1.00	1.00	1.00	78-86
31-35	0.91	0.94	0.96	87-95
36-40	0.82	0.88	0.91	96-104
41-45	0.71	0.82	0.87	105-113
46-50	0.58	0.75	0.82	114-122
51-55	0.41	0.67	0.76	123-131
56-60	—	0.58	0.71	132-140
61-65	—	0.47	0.65	141-149
66-70	—	0.33	0.58	150-158
71-75	—	—	0.50	159-167
76-80	—	—	0.41	168-176
81-85	—	—	0.29	177-185

For SI: 1 °C = [(°F) - 32]/1.8.

❖ See the commentary to Section E3705.2.

INTERNATIONAL CODE COUNCIL®
Copyright © 2015 ICC. ALL RIGHTS RESERVED. Accessed by David Dammon on Jun 21, 2017 12:30:52 PM pursuant to License Agreement with ICC. No further reproduction or distribution authorized. ANY UNAUTHORIZED REPRODUCTION OR DISTRIBUTION IS A VIOLATION OF THE FEDERAL COPYRIGHT ACT AND THE LICENSE AGREEMENT, AND SUBJECT TO CIVIL AND CRIMINAL PENALTIES THEREUNDER.

ductors in the 90°C column (on the left half of the table, for copper) of Table E3705.1. Reading down to the row for size 8 AWG, these conductors would have an ampacity of 55 amperes if installed in a maximum ambient temperature of 30°C (86°F). However, read down the far right hand column of Table E3705.2 to the row that includes 125°F (52°C). In this row, move left to the column for Type THHN conductors. THHN is at the top of Tables E3705.1 and E3705.2. The correction factor is 0.76, which indicates a correction factor of 76 percent of the 55 amperes, or 41.8 amperes. The maximum allowable ampacity for the size 8-AWG conductors is 41.8 amperes.

If these size 8-AWG Type THHN copper conductors supplying the air conditioner are in nonmetallic-sheathed cable, the code simply states that the ampacity shall be that of the 60°C column or 40 amperes (see Section E3705.4.4). So why start with the 90°C column and have to apply the correction factor? If we started with the 60°C column, the correction factor would be 0.41, which would reduce the ampacity of the size 8-AWG conductors to 16.4 amperes (40 Ax 0.41). Section E3705.4.4 states that the 90°C (194°F) rating is permitted to be used for ampacity correction and adjustment purposes.

Nonmetallic sheathed cable manufactured today has Type THHN insulation on the conductors for this very purpose. The most commonly used Type NM will be marked "NM-B" indicating that it contains conductors rated for 90°C (see Section E3705.4.4). The derating is done from the ampacity values in the 90°C column. The lowest value, of either the 60°C column or the calculated ampacity using the correction factor, is then used to determine the ampacity. If the ambient temperature was 132°F (55°C), size 8-AWG Type THHN conductors would have an ampacity of 39.05 (55 $\times$ 0.71) and could not be used on a 40-ampere circuit. For this installation, size 6-AWG Type THHN conductors could be used. The ampacity would be (75 0.71) 53.25 amperes. This would be acceptable for the 40-ampere branch circuit under the conditions of use where the conductors pass through the 132°F (55°C) ambient temperature.

E3705.3 Adjustment factor for conductor proximity. Where the number of current-carrying conductors in a raceway or cable exceeds three, or where single conductors or multiconductor cables are stacked or bundled for distances greater than 24 inches (610 mm) without maintaining spacing and are not installed in raceways, the allowable ampacity of each conductor shall be reduced as shown in Table E3705.3. [310.15(B)(3)]

Exceptions:

1. Adjustment factors shall not apply to conductors in nipples having a length not exceeding 24 inches (610 mm). [310.15(B)(3)(2)]
2. Adjustment factors shall not apply to underground conductors entering or leaving an outdoor trench if those conductors have physical protection in the form of rigid metal conduit, intermediate metal conduit, or rigid nonmetallic conduit having a length not exceeding 10 feet (3048 mm) and the number of conductors does not exceed four.[310.15(B)(3)(3)]
3. Adjustment factors shall not apply to type AC cable or to type MC cable without an overall outer jacket meeting all of the following conditions:
   3.1. Each cable has not more than three current-carrying conductors.
   3.2. The conductors are 12 AWG copper.
   3.3. Not more than 20 current-carrying conductors are bundled, stacked or supported on bridle rings. [310.15(B)(3)(4)]
4. An adjustment factor of 60 percent shall be applied to Type AC cable and Type MC cable where all of the following conditions apply:
   4.1. The cables do not have an overall outer jacket.
   4.2. The number of current-carrying conductors exceeds 20.
   4.3. The cables are stacked or bundled longer than 24 inches (607 mm) without spacing being maintained. [310.15(B)(3)(5)]

❖ The allowable ampacity of branch circuit conductors varies not only according to the ambient temperature surrounding the conductors but also according to the number of current-carrying conductors in a raceway or cable or in close proximity. Where multiconductor cables (such as nonmetallic-sheathed cables used in residential wiring) are stacked or bundled together for 24 inches (610 mm) or more without maintaining spacing, the allowable ampacity is reduced according to the factors in Table E3705.3. For example, the allowable ampacity of size 12-AWG copper THHN conductors (found in nonmetallic-sheathed cable) used with 90°C terminals is 30 amperes. If several of these cables were bundled together for 2 feet (610 mm) or more such that seven current-carrying conductors were in the bundle, then the allowable ampacity would be reduced 70 percent to 21 amperes (see Commentary Figure E3705.3).

In some cases where the allowable ampacity is reduced, either a smaller circuit breaker would need to be installed or the conductors would need to be installed with sufficient spacing between them and not bundled. Some judgement may enter into the interpretation and enforcement of this code rule because in residential loads there is so much diversity in the amount of current use in the branch circuit conductors and in the duration of operation of the loads. To drill one hole in the top plate of the framing above the panelboard and run all the branch circuit cables in a bundle for 2 or 3 feet (610 or 914 mm) into the panel would be a code violation. This is not a good practice, because the heat developed in the current-carrying conductors cannot readily dissipate. Spacing should be maintained or the allowable ampacity of the conductors would be reduced.

INTERNATIONAL CODE COUNCIL®
Copyright © 2015 ICC. ALL RIGHTS RESERVED. Accessed by David Dammon on Jun 21, 2017 12:30:52 PM pursuant to License Agreement with ICC. No further reproduction or distribution authorized. ANY UNAUTHORIZED REPRODUCTION OR DISTRIBUTION IS A VIOLATION OF THE FEDERAL COPYRIGHT ACT AND THE LICENSE AGREEMENT, AND SUBJECT TO CIVIL AND CRIMINAL PENALTIES THEREUNDER.

The correction factors for ambient temperature and for the number of current-carrying conductors must both be applied. For example, if a 30-ampere electric water heater branch circuit using size 10 AWG copper conductors of Type THHN in nonmetallic sheathed cable was run through an attic where the temperature reached 123°F (51°C), the ampacity would be 30.4 amperes. If this cable was bundled together for over 2 feet (610 mm) with other cables containing six current-carrying conductors, a further reduction would be required. The 30.4 amperes would be reduced by 20 percent (indicated in Table E3705.3) to 24.32 amperes, and the size 10-AWG conductors would be a violation if protected by a 30-ampere circuit breaker.

TABLE E3705.3 [Table 310.15(B)(3)(a)]
CONDUCTOR PROXIMITY ADJUSTMENT FACTORS

NUMBER OF CURRENT-CARRYING CONDUCTORS IN CABLE OR RACEWAY	PERCENT OF VALUES IN TABLE E3705.1
4-6	80
7-9	70
10-20	50
21-30	45
31-40	40
41 and above	35

❖ See the commentary to Section E3705.3.

E3705.4 Temperature limitations. The temperature rating associated with the ampacity of a conductor shall be so selected and coordinated to not exceed the lowest temperature rating of any connected termination, conductor or device. Conductors with temperature ratings higher than specified for terminations shall be permitted to be used for ampacity adjustment, correction, or both. Except where the equipment is marked otherwise, conductor ampacities used in determining equipment termination provisions shall be based on Table E3705.1. [110.14(C)]

❖ The allowable conductor ampacity is not the only consideration in determining what size conductor to use. In addition to the temperature rating of the conductor, the



Figure E3705.3
MULTICONDUCTOR CABLES BUNDLED TOGETHER

INTERNATIONAL CODE COUNCIL®
Copyright © 2015 ICC. ALL RIGHTS RESERVED. Accessed by David Dammon on Jun 21, 2017 12:30:52 PM pursuant to License Agreement with ICC. No further reproduction or distribution authorized. ANY UNAUTHORIZED REPRODUCTION OR DISTRIBUTION IS A VIOLATION OF THE FEDERAL COPYRIGHT ACT AND THE LICENSE AGREEMENT, AND SUBJECT TO CIVIL AND CRIMINAL PENALTIES THEREUNDER.

temperature rating of the terminations or terminals the conductor connects to at each end of the conductor is critical. The terminals on devices such as receptacles, switches, circuit breakers and panelboards all have maximum temperature ratings. Current passing through these terminations can heat up the device just as it does in a conductor. The lowest temperature rating of any of the devices in the circuit determines the allowable ampacity. Many switches and receptacles used in residential work have a temperature rating of 60°C (140°F). Circuit breakers might have temperature ratings of 75°C (167°F).

E3705.4.1 Conductors rated 60°C. Except where the equipment is marked otherwise, termination provisions of equipment for circuits rated 100 amperes or less, or marked for 14 AWG through 1 AWG conductors, shall be used only for one of the following:

1. Conductors rated 60°C (140°F);
2. Conductors with higher temperature ratings, provided that the ampacity of such conductors is determined based on the 60°C (140°F) ampacity of the conductor size used;
3. Conductors with higher temperature ratings where the equipment is listed and identified for use with such conductors; or
4. For motors marked with design letters B, C, or D conductors having an insulation rating of 75°C (167°F) or higher shall be permitted to be used provided that the ampacity of such conductors does not exceed the 75°C (167°F) ampacity. [110.14(C)(1)(a)]

❖ See the commentary to Section E3705.4.2.

E3705.4.2 Conductors rated 75°C. Termination provisions of equipment for circuits rated over 100 amperes, or marked for conductors larger than 1 AWG, shall be used only for:

1. Conductors rated 75°C (167°F).
2. Conductors with higher temperature ratings provided that the ampacity of such conductors does not exceed the 75°C (167°F) ampacity of the conductor size used, or provided that the equipment is listed and identified for use with such conductors. [110.14(C)(1)(b)]

❖ Where the temperature rating of the termination on the device is 60°C (140°F), the allowable conductor ampacity is found in the 60°C (140°F) column of Table E3705.1. Conductors with higher temperature rated insulation are allowed to be used, and this is often the case when de-rating is necessary for ambient temperature or for the number of conductors in close proximity.

An example of this would be THHN copper conductors connected to a 70-ampere 2-pole circuit breaker that is listed and marked at 60/75°C (140/167°F). The conductors feed equipment that has terminals listed and marked at 60°C (140°F). Assuming an ambient temperature of 80°F, and not over three current carrying conductors in the raceway, the smallest size THHN copper conductors that may be used in this installation are size 4 AWG, determined from the 60°C column.

E3705.4.3 Separately installed pressure connectors. Separately installed pressure connectors shall be used with conductors at the ampacities not exceeding the ampacity at the listed and identified temperature rating of the connector. [110.14(C)(2)]

❖ The temperature rating of wire nuts and other pressure connectors is one factor in determining the allowable ampacity of the conductors. Make sure that the temperature rating of the connectors is suitable for the temperature rating associated with the conductor ampacity.

E3705.4.4 Conductors of Type NM cable. Conductors in NM cable assemblies shall be rated at 90°C (194°F). Types NM, NMC, and NMS cable identified by the markings NM-B, NMC-B, and NMS-B meet this requirement. The allowable ampacity of Types NM, NMC, and NMS cable shall not exceed that of 60°C (140°F) rated conductors and shall comply with Section E3705.1 and Table E3705.5.3. The 90°C (194°F) rating shall be permitted to be used for ampacity adjustment and calculations provided that the final corrected or adjusted ampacity does not exceed that for a 60°C (140°F) rated conductor. Where more than two NM cables containing two or more current-carrying conductors are installed, without maintaining spacing between the cables, through the same opening in wood framing that is to be sealed with thermal insulation, caulk or sealing foam, the allowable ampacity of each conductor shall be adjusted in accordance with Table E3705.3. Where more than two NM cables containing two or more current-carrying conductors are installed in contact with thermal insulation without maintaining spacing between cables, the allowable ampacity of each conductor shall be adjusted in accordance with Table E3705.3. (334.80 and 334.112)

❖ The code requires that the individual conductors in nonmetallic sheathed cable have an insulation rating of 90°C (194°F), but the ampacity is that of the 60°C column of Table E3705.1. This conservative approach of limiting the ampacity to that of 60°C (140°F) conductors accounts for the fact that NM cable is often embedded in thermal insulation (see commentary, Sections E3705.2 and E3705.3). The adjustment factor for conductor proximity heating effect must be applied where three or more NM cables pass through the same bored hole in wood members and such holes are to be sealed by fire and/or draftstopping materials. Experiments have shown that excessive temperatures can develop in conductors installed in this manner. If cables must be pulled through bored holes through which one or more other cables already pass, extreme caution must be used to prevent friction damage caused by the cables rubbing and abrading each other. Although "one cable per bored hole" is a safe practice, it is not a code requirement.

Where three or more NM cables are installed in contact with thermal insulation, such as cables would be where installed in outside wall cavities, and such

INTERNATIONAL CODE COUNCIL®
Copyright © 2015 ICC. ALL RIGHTS RESERVED. Accessed by David Dammon on Jun 21, 2017 12:30:52 PM pursuant to License Agreement with ICC. No further reproduction or distribution authorized. ANY UNAUTHORIZED REPRODUCTION OR DISTRIBUTION IS A VIOLATION OF THE FEDERAL COPYRIGHT ACT AND THE LICENSE AGREEMENT, AND SUBJECT TO CIVIL AND CRIMINAL PENALTIES THEREUNDER.

cables are bundled or otherwise lack spacing between them, their ampacity must be adjusted in accordance with Table E3705.3. In such cases, the conductors will be subject to additional heating caused by the lack of "breathing room" and the heat retention property of the thermal insulation material.

E3705.4.5 Conductors of Type SE cable. Where used as a branch circuit or feeder wiring method within the interior of a building and installed in thermal insulation, the ampacity of the conductors in Type SE cable assemblies shall be in accordance with the 60°C (140°F) conductor temperature rating. The maximum conductor temperature rating shall be permitted to be used for ampacity adjustment and correction purposes, provided that the final derated ampacity does not exceed that for a 60°C (140°F) rated conductor. [338.10(B)(4)(a)]

❖ This requirement is similar to that for Type NM cable (see Section E3705.4.4). Type SE (service entrance) cable conductors typically have XHHW insulation or can have THHN or THWN insulation. This section applies to SE cable that meets both conditions: 1. It is used for a feeder or branch circuit; and 2. It is installed within thermal insulation. This section does not apply to SE cable used for service conductors. Note that SE-U (flat U-shaped) cable is limited in application because it has a bare neutral conductor. Type SE-U can be used only for service entrance conductors or for branch or feeder conductors where the bare conductor is used as an equipment grounding conductor. Type SE-R (round shape) cable has an insulated neutral and a bare or insulated grounding conductor and is commonly used for feeders and branch circuits (see Section E3801.4).

E3705.5 Overcurrent protection required. All ungrounded branch-circuit and feeder conductors shall be protected against overcurrent by an overcurrent device installed at the point where the conductors receive their supply. Overcurrent devices shall not be connected in series with a grounded conductor. Overcurrent protection and allowable loads for branch circuits and for feeders that do not serve as the main power feeder to the dwelling unit load shall be in accordance with this chapter.

Branch-circuit conductors and equipment shall be protected by overcurrent protective devices having a rating or setting not exceeding the allowable ampacity specified in Table E3705.1 and Sections E3705.2, E3705.3 and E3705.4 except where otherwise permitted or required in Sections E3705.5.1 through E3705.5.3. [240.4, 240.21, and 310.15(B)(7)(2)]

❖ The overcurrent devices consist of circuit breakers or fuses and are installed at the beginning of the circuit where the conductors receive their supply. The overcurrent protection devices prevent the conductors from carrying currents above the allowable ampacity determined from Table E3705.1 and the associated de-rating provisions. The overcurrent protection device will automatically open and protect the conductors if the current is high enough to cause a dangerous temperature.

E3705.5.1 Cords. Cords shall be protected in accordance with Section E3909.2. [240.5(B)]

❖ See the commentary to Section E3909.2.

E3705.5.2 Overcurrent devices of the next higher rating. The next higher standard overcurrent device rating, above the ampacity of the conductors being protected, shall be permitted to be used, provided that all of the following conditions are met:

1. The conductors being protected are not part of a branch circuit supplying more than one receptacle for cord- and plug-connected portable loads.
2. The ampacity of conductors does not correspond with the standard ampere rating of a fuse or a circuit breaker without overload trip adjustments above its rating (but that shall be permitted to have other trip or rating adjustments).
3. The next higher standard device rating does not exceed 400 amperes. [240.4(B)]

❖ Where a circuit supplies only a specific load, the maximum load current is known. For multioutlet branch circuits, it is not known what the load will be for cord- and plug-connected equipment and appliances. But where the load is known, and it does not match one of the standard ratings of overcurrent devices, an overcurrent device of the next higher rating can be used. In these cases, the conductor ampacity could be less than the rating of the overcurrent device, which is the branch circuit rating. For example, if the ampacity of the conductors serving only a single appliance was calculated to be 27 amperes, a 30-ampere circuit breaker could be used to protect such conductors.

E3705.5.3 Small conductors. Except as specifically permitted by Section E3705.5.4, the rating of overcurrent protection devices shall not exceed the ratings shown in Table E3705.5.3 for the conductors specified therein. [240.4(D)]

❖ Referring to Table E3705.1 on conductor ampacity, the allowable ampacity of size 14 AWG is 20 to 25 amperes, depending on the type of insulation and the temperature ratings. Various ampacities are also given for sizes 12 and 10 AWG. However, Table E3705.5.3 provides the maximum overcurrent device rating for these small size conductors regardless of the allowable ampacity given in Table E3705.1. This section provides an extra level of safety by placing a conservative cap on the overcurrent device ratings for the smaller conductors used throughout the dwelling.

A 15-ampere circuit breaker is used on circuits with size 14-AWG conductors, a 20-ampere circuit breaker with size 12-AWG conductors, and a 30-ampere circuit breaker with size 10 AWG conductors. The only exception is as allowed by Section E3705.5.4.

Do not overlook the note to Table E3705.5.3, which addresses the fact that an even lower overcurrent device rating could be required where the conductors are derated as required by Sections E3705.2 and E3705.3.

INTERNATIONAL CODE COUNCIL®
Copyright © 2015 ICC. ALL RIGHTS RESERVED. Accessed by David Dammon on Jun 21, 2017 12:30:52 PM pursuant to License Agreement with ICC. No further reproduction or distribution authorized. ANY UNAUTHORIZED REPRODUCTION OR DISTRIBUTION IS A VIOLATION OF THE FEDERAL COPYRIGHT ACT AND THE LICENSE AGREEMENT, AND SUBJECT TO CIVIL AND CRIMINAL PENALTIES THEREUNDER.

TABLE E3705.5.3 [240.4(D)]
OVERCURRENT-PROTECTION RATING

COPPER		ALUMINUM OR COPPER-CLAD ALUMINUM	
Size (AWG)	Maximum overcurrent-protection-device rating[a] (amps)	Size (AWG)	Maximum overcurrent-protection-device rating[a] (amps)
14	15	12	15
12	20	10	25
10	30	8	30

a. The maximum overcurrent-protection-device rating shall not exceed the conductor allowable ampacity determined by the application of the correction and adjustment factors in accordance with Sections E3705.2 and E3705.3.

❖ See the commentary to Section E3705.5.3.

E3705.5.4 Air-conditioning and heat pump equipment. Air-conditioning and heat pump equipment circuit conductors shall be permitted to be protected against overcurrent in accordance with Section E3702.11. [240.4(G)]

❖ The overcurrent protection device rating for air-conditioning and heat-pump circuits is stated on the equipment label.

E3705.6 Fuses and fixed trip circuit breakers. The standard ampere ratings for fuses and inverse time circuit breakers shall be considered to be 15, 20, 25, 30, 35, 40, 45, 50, 60, 70, 80, 90, 100, 110, 125, 150, 175, 200, 225, 250, 300, 350 and 400 amperes. (240.6)

❖ Although 25 amperes is a standard size circuit breaker, and the allowable ampacity from Table E3705.1 shows 25 amperes for size 12-AWG Type THW, it would be a code violation to install a 25-ampere circuit breaker on a branch circuit of this size conductor. An electrician might try to solve a problem of a circuit breaker tripping from overload by looking at Table E3705.1 and, seeing that a size 12-THHN conductor has an ampacity of 30 amperes, installing a 25- or 30-ampere circuit breaker. This has been done and is a code violation and a serious fire hazard (see commentary, Section E3705.5.3).

E3705.7 Location of overcurrent devices in or on premises. Overcurrent devices shall:

1. Be readily accessible. [240.24(A)]
2. Not be located where they will be exposed to physical damage. [240.24(C)]
3. Not be located where they will be in the vicinity of easily ignitible material such as in clothes closets. [240.24(D)]
4. Not be located in bathrooms. [240.24(E)]
5. Not be located over steps of a stairway.
6. Be installed so that the center of the grip of the operating handle of the switch or circuit breaker, when in its highest position, is not more than 6 feet 7 inches (2007 mm) above the floor or working platform. [240.24(A)]

Exceptions:

1. This section shall not apply to supplementary overcurrent protection that is integral to utilization equipment. [240.24(A)(2)]
2. Overcurrent devices installed adjacent to the utilization equipment that they supply shall be permitted to be accessible by portable means. [240.24(A)(4)]

❖ The panelboard (which contains overcurrent protection devices) is not permitted to be installed in a clothes closet or in any closet. It might be determined that a pantry closet in a kitchen would not have "easily ignitable material." Whether the code official would permit a panelboard to be installed in such a closet is a matter of interpretation. Because of the dampness and humidity, and potential shock hazard, overcurrent devices are not permitted in bathrooms. A panelboard would be permitted to be installed in a laundry room or utility room.

Panelboards cannot be located over stairs because this section prohibits the installation of overcurrent devices over stairs. Such a location would obviously place the user or worker at risk of injury from falling.

E3705.8 Ready access for occupants. Each occupant shall have ready access to all overcurrent devices protecting the conductors supplying that occupancy. [240.24(B)]

❖ In a two-family dwelling, each occupant must have access to all overcurrent protective devices for their own dwelling. This includes the service disconnecting means. The overcurrent protection devices must not be locked such as to prevent occupant access.

E3705.9 Enclosures for overcurrent devices. Overcurrent devices shall be enclosed in cabinets, cutout boxes, or equipment assemblies. The operating handle of a circuit breaker shall be permitted to be accessible without opening a door or cover. [240.30(A) and (B)]

❖ Panelboards are installed in a cabinet or cutout box. See the commentary to the definitions for these items in Chapter 35.

SECTION E3706
PANELBOARDS

E3706.1 Panelboard rating. All panelboards shall have a rating not less than that of the minimum service or feeder capacity required for the calculated load. (408.30)

❖ Panelboards are located in a cabinet or cutout box and hold the circuit breakers for the branch circuits. The busbar to which the circuit breakers are connected must have an ampere rating at least equal to the rating of the feeder serving the panelboard. Some common panelboard ratings are 60-, 100-, 125-, 150- and 200-ampere ratings.

E3706.2 Panelboard circuit identification. All circuits and circuit modifications shall be legibly identified as to their clear, evident, and specific purpose or use. The identification shall include an approved degree of detail that allows each circuit to be distinguished from all others. Spare positions that contain unused overcurrent devices or switches shall be described accordingly. The identification shall be included in a circuit directory located on the face of the panelboard enclosure or inside the panel door. Circuits shall not be

INTERNATIONAL CODE COUNCIL®
Copyright © 2015 ICC. ALL RIGHTS RESERVED. Accessed by David Dammon on Jun 21, 2017 12:30:52 PM pursuant to License Agreement with ICC. No further reproduction or distribution authorized. ANY UNAUTHORIZED REPRODUCTION OR DISTRIBUTION IS A VIOLATION OF THE FEDERAL COPYRIGHT ACT AND THE LICENSE AGREEMENT, AND SUBJECT TO CIVIL AND CRIMINAL PENALTIES THEREUNDER.

described in a manner that depends on transient conditions of occupancy. [408.4(A)]

- ❖ The panelboard circuit directory must be permanent and legible. In many homes, the door of the panelboard cabinet reveals illegible markings. The outlets that a circuit serves are a mystery to an observer because the markings on the panelboard have become faded or are incomplete. Some electricians and installers write only such things as "lights" or "plugs" or "kitchen plugs" to satisfy this section. Each circuit identification must be detailed enough to distinguish the circuit from all other circuits. Obviously, 10 circuits labeled "lights and receptacles" cannot be distinguished from each other and such labels are a violation of this section. Factory-made panel labeling kits are available that will facilitate compliance with the intent. Of course, acceptance of such markings is according to the judgment of the code official, but if the markings are not legible, a code violation exists. Correct terminology must be used; for example, branch circuits do supply receptacles, but not "plugs." Obviously, the circuits for appliances such as dishwashers, disposals, furnaces, etc., should be marked. Commentary Figures E3601.7 and E3706.2 illustrate panelboard directories on the inside of the doors. A potential hazard exists where circuit breakers are mislabeled or ambiguously labeled because the occupants or electrical workers might not actually be de-energizing what they intend to de-energize. Installed circuit breakers that serve no load are spares and must be labeled as such. Circuits must not be labeled in a manner that would be understood only by certain occupants of the dwelling. For example, if a circuit was labeled "Uncle Waldo's room" or "Guest bedroom," that designation would be meaningless to any occupants other than the occupants who originally labeled the circuits.

E3706.3 Panelboard overcurrent protection. In addition to the requirement of Section E3706.1, a panelboard shall be protected by an overcurrent protective device having a rating not greater than that of the panelboard. Such overcurrent protective device shall be located within or at any point on the supply side of the panelboard. (408.36)

- ❖ The overcurrent device supplying the panelboard must have a rating not more than the ampere rating of the panelboard busbars. The last sentence indicates that the panelboard can be protected by the main breaker installed in the panelboard or at the supply end of the feeder supplying the panelboard.

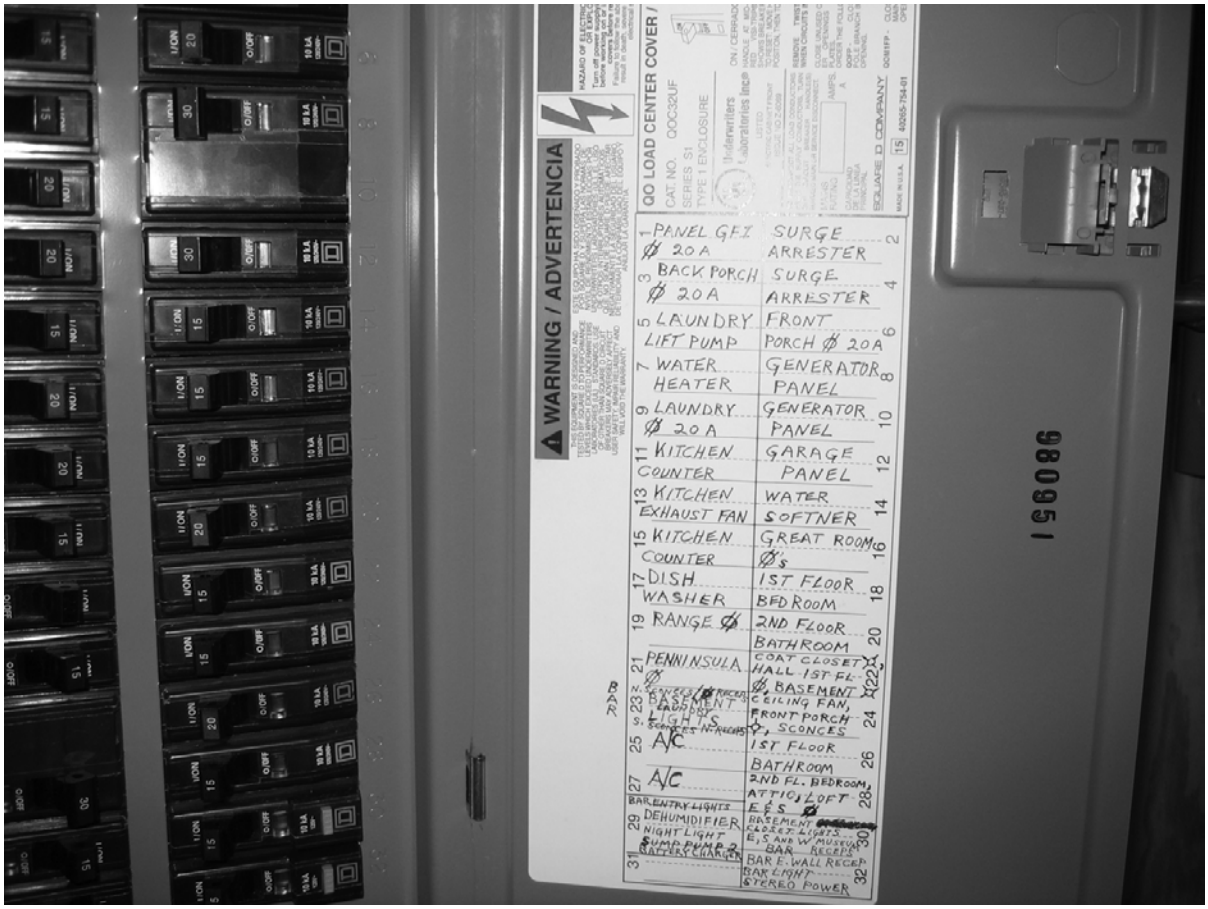

Figure E3706.2
PANELBOARD CIRCUIT IDENTIFICATION

INTERNATIONAL CODE COUNCIL®
Copyright © 2015 ICC. ALL RIGHTS RESERVED. Accessed by David Dammon on Jun 21, 2017 12:30:52 PM pursuant to License Agreement with ICC. No further reproduction or distribution authorized. ANY UNAUTHORIZED REPRODUCTION OR DISTRIBUTION IS A VIOLATION OF THE FEDERAL COPYRIGHT ACT AND THE LICENSE AGREEMENT, AND SUBJECT TO CIVIL AND CRIMINAL PENALTIES THEREUNDER.

E3706.4 Grounded conductor terminations. Each grounded conductor shall terminate within the panelboard on an individual terminal that is not also used for another conductor, except that grounded conductors of circuits with parallel conductors shall be permitted to terminate on a single terminal where the terminal is identified for connection of more than one conductor. (408.41 and 408.41 Exception)

❖ This section applies to grounded conductors (see definition), which are typically referred to as neutrals. Panelboard neutral bus bars are usually not listed for use with more than one wire per terminal. This rule can be thought of as the "one wire per hole" rule. If multiple grounded conductors are terminated at one terminal, loosening the terminal screw to remove one conductor would loosen all of the conductors temporarily. Unless all of the affected circuits are de-energized, this will result in arcing and/or loss of the grounded or neutral conductor for all of the circuits associated with that terminal. In the case of multiwire circuits, loss of the neutral connection, even momentarily, could cause a hazardous condition and appliance damage (see commentary, Sections E3701.5 through E3701.5.2). With only one wire per terminal, it is assumed that the wire being removed is part of a circuit that has been de-energized.

E3706.5 Back-fed devices. Plug-in-type overcurrent protection devices or plug-in-type main lug assemblies that are back-fed and used to terminate field-installed ungrounded supply conductors shall be secured in place by an additional fastener that requires other than a pull to release the device from the mounting means on the panel. [408.36(D)]

❖ Back-fed circuit breakers are commonly used in small main lug only subpanels and in generator transfer switch subpanels. Instead of receiving power through their plug-in terminals from bus parts in the panelboard, back-fed breakers receive power through their load terminals, hence, the name "back-fed." The circuit breakers appear to be wired in reverse, but the devices do not know the difference and function normally. The only problem with this arrangement is that if the device was unplugged from the panelboard, the exposed plug-in terminals on the back of the device are still hot (energized) because the device is back-fed through its load terminals. This poses a shock and arcing hazard. Such breakers require the additional securing means (typically a clamp and screw) to warn personnel and prevent accidental unplugging.

Bibliography

The following resource materials were used in the preparation of the commentary for this chapter of the code:

NFPA 70–14, *National Electrical Code*. Quincy, MA: National Fire Protection Association, 2013.

INTERNATIONAL CODE COUNCIL®
Copyright © 2015 ICC. ALL RIGHTS RESERVED. Accessed by David Dammon on Jun 21, 2017 12:30:52 PM pursuant to License Agreement with ICC. No further reproduction or distribution authorized. ANY UNAUTHORIZED REPRODUCTION OR DISTRIBUTION IS A VIOLATION OF THE FEDERAL COPYRIGHT ACT AND THE LICENSE AGREEMENT, AND SUBJECT TO CIVIL AND CRIMINAL PENALTIES THEREUNDER.

Chapter 38: Wiring Methods

General Comments

This chapter provides installation details for the wiring methods commonly found in dwelling unit construction, and it dictates where and under what conditions specific wiring methods can be used.

Purpose

The purpose of this chapter is to protect life and property by making sure that the wiring in a building is suitable for the environment to which it is exposed and that the wiring is properly supported and protected from damage.

SECTION E3801
GENERAL REQUIREMENTS

E3801.1 Scope. This chapter covers the wiring methods for services, feeders and branch circuits for electrical power and distribution. (300.1)

❖ Wiring methods consist of the cable, tubing or conduit in which the individual wiring is installed. Cable comes with the wire already installed. Tubing and conduit are installed first, with the wire inserted after. This chapter includes the provisions for installing cable, tubing or conduit. Chapter 39 covers the number of conductors permitted in the tubing or conduit, and boxes. This chapter covers how and where the cable, tubing or conduit may be installed.

E3801.2 Allowable wiring methods. The allowable wiring methods for electrical installations shall be those listed in Table E3801.2. Single conductors shall be used only where part of one of the recognized wiring methods listed in Table E3801.2. As used in this code, abbreviations of the wiring-method types shall be as indicated in Table E3801.2. [110.8, 300.3(A)]

❖ Single insulated conductors are not permitted as a wiring method without being part of a cable assembly or installed in tubing or conduit. In many older houses, a wiring method known as "knob-and-tube" was used, consisting of single insulated conductors supported in free air on ceramic insulators (knobs) and, where run through a wood-framing member, installed through ceramic or fabric insulating tubes. Where remodeling, retrofitting or repair is being done in an old house that has this type of wiring method, it is permitted to connect into or tap into one of these circuits to make an extension of the circuit. But instead of running new individual conductors, the transition to the new wiring should be to cable. In early years, this type of wiring method was installed in the hollow spaces of walls, ceilings and attics. It was not installed directly on the wood framing as cable is today, but supported in free air, thus allowing for the dissipation of any heat buildup in the conductors. Care should be taken if insulation is blown in the wall or attic or if foam insulation is installed around these wires, thereby affecting heat dissipation. In many older houses, the wiring is still sound and in good shape, but where additions or extensions are made, the possibility for arcing, bad connections, heating and overloading comes into play.

TABLE E3801.2
ALLOWABLE WIRING METHODS

ALLOWABLE WIRING METHOD	DESIGNATED ABBREVIATION
Armored cable	AC
Electrical metallic tubing	EMT
Electrical nonmetallic tubing	ENT
Flexible metal conduit	FMC
Intermediate metal conduit	IMC
Liquidtight flexible conduit	LFC
Metal-clad cable	MC
Nonmetallic sheathed cable	NM
Rigid polyvinyl chloride conduit (Type PVC)	RNC
Rigid metallic conduit	RMC
Service entrance cable	SE
Surface raceways	SR
Underground feeder cable	UF
Underground service cable	USE

E3801.3 Circuit conductors. All conductors of a circuit, including equipment grounding conductors and bonding conductors, shall be contained in the same raceway, trench, cable or cord. [300.3(B)]

❖ Current flow in a conductor produces a magnetic flux around the conductor. Through this induction process, heating of the surrounding metal enclosure occurs, and impedance increases. In alternating current circuits, the polarity of the magnetic field is constantly reversing, which causes induction heating. Where both conductors of the circuit are run together in close proximity, the magnetic field of one conductor is canceled or balanced by that of the other.

INTERNATIONAL CODE COUNCIL®
Copyright © 2015 ICC. ALL RIGHTS RESERVED. Accessed by David Dammon on Jun 21, 2017 12:30:52 PM pursuant to License Agreement with ICC. No further reproduction or distribution authorized. ANY UNAUTHORIZED REPRODUCTION OR DISTRIBUTION IS A VIOLATION OF THE FEDERAL COPYRIGHT ACT AND THE LICENSE AGREEMENT, AND SUBJECT TO CIVIL AND CRIMINAL PENALTIES THEREUNDER.

E3801.4 Wiring method applications. Wiring methods shall be applied in accordance with Table E3801.4. (Chapter 3 and 300.2)

❖ Table E3801.4 is a summary of the applications or locations permitted for the various wiring methods. The footnotes of the table are provisions of the code and should not be overlooked. The most common wiring method for interior wiring is nonmetallic-sheathed cable (NM). Type NM and NMC cables are permitted for one- and two-family dwellings regardless of the number of stories.

SECTION E3802
ABOVE-GROUND INSTALLATION REQUIREMENTS

E3802.1 Installation and support requirements. Wiring methods shall be installed and supported in accordance with Table E3802.1. (Chapter 3 and 300.11)

❖ Table E3802.1 covers the requirements for the support of above-ground wiring methods used in dwellings. Where run parallel to a framing member, cables and nonmetallic wiring methods must be held back at least $1^1/_4$ inches (32 mm) from the edge. This is so that when the drywall is applied, a nail or screw that misses the stud of the framing member cannot penetrate and damage the cable or conduit.

TABLE E3801.4 (Chapter 3 and 300.2)
ALLOWABLE APPLICATIONS FOR WIRING METHODS[a, b, c, d, e, f, g, h, i, j, k]

ALLOWABLE APPLICATIONS (application allowed where marked with an "A")	AC	EMT	ENT	FMC	IMC RMC RNC	LFC[a, g]	MC	NM	SR	SE	UF	USE
Services	—	A	A[h]	A[i]	A	A[i]	A	—	—	A	—	A
Feeders	A	A	A	A	A	A	A	A	—	A[b]	A	A[b]
Branch circuits	A	A	A	A	A	A	A	A	A	A[c]	A	—
Inside a building	A	A	A	A	A	A	A	A	A	A	A	—
Wet locations exposed to sunlight	—	A	A[h]	—	A	A	A	—	—	A	A[e]	A[e]
Damp locations	—	A	A	A[d]	A	A	A	—	—	A	A	A
Embedded in noncinder concrete in dry location	—	A	A	—	A	A[j]	—	—	—	—	—	—
In noncinder concrete in contact with grade	—	A[f]	A	—	A[f]	A[j]	—	—	—	—	—	—
Embedded in plaster not exposed to dampness	A	A	A	A	A	A	A	—	—	A	A	—
Embedded in masonry	—	A	A	—	A[f]	A	A	—	—	—	—	—
In masonry voids and cells exposed to dampness or below grade line	—	A[f]	A	A[d]	A[f]	A	A	—	—	A	A	—
Fished in masonry voids	A	—	—	A	—	A	A	A	—	A	A	—
In masonry voids and cells not exposed to dampness	A	A	A	A	A	A	A	A	—	A	A	—
Run exposed	A	A	A	A	A	A	A	A	A	A	A	—
Run exposed and subject to physical damage	—	—	—	—	A[g]	—	—	—	—	—	—	—
For direct burial	—	A[f]	—	—	A[f]	A	A[f]	—	—	—	A	A

For SI: 1 foot = 304.8 mm.

a. Liquid-tight flexible nonmetallic conduit without integral reinforcement within the conduit wall shall not exceed 6 feet in length.
b. Type USE cable shall not be used inside buildings.
c. The grounded conductor shall be insulated.
d. Conductors shall be a type approved for wet locations and the installation shall prevent water from entering other raceways.
e. Shall be listed as "Sunlight Resistant."
f. Metal raceways shall be protected from corrosion and approved for the application. Aluminum RMC requires approved supplementary corrosion protection.
g. RNC shall be Schedule 80.
h. Shall be listed as "Sunlight Resistant" where exposed to the direct rays of the sun.
i. Conduit shall not exceed 6 feet in length.
j. Liquid-tight flexible nonmetallic conduit is permitted to be encased in concrete where listed for direct burial and only straight connectors listed for use with LFNC are used.
k. In wet locations under any of the following conditions:
   1. The metallic covering is impervious to moisture.
   2. A lead sheath or moisture-impervious jacket is provided under the metal covering.
   3. The insulated conductors under the metallic covering are listed for use in wet locations and a corrosion-resistant jacket is provided over the metallic sheath.

INTERNATIONAL CODE COUNCIL®
Copyright © 2015 ICC. ALL RIGHTS RESERVED. Accessed by David Dammon on Jun 21, 2017 12:30:52 PM pursuant to License Agreement with ICC. No further reproduction or distribution authorized. ANY UNAUTHORIZED REPRODUCTION OR DISTRIBUTION IS A VIOLATION OF THE FEDERAL COPYRIGHT ACT AND THE LICENSE AGREEMENT, AND SUBJECT TO CIVIL AND CRIMINAL PENALTIES THEREUNDER.

Where holes are bored in studs and vertical framing members for cables and nonmetallic wiring methods, the nearest edge of the hole must be at least $1^1/_4$ inches (32 mm) from the edge of the framing member. This is to help prevent a nail or screw from penetrating the wiring installed through the holes. Where this is impossible, a steel plate at least $^1/_{16}$ inch (1.5 mm) thick must be installed over the framing member where the wiring passes through. However, protection plates that are listed for the purpose may be more or less than $^1/_{16}$ inch in thickness.

Electricians know the $1^1/_4$-inch rule because this is an electrical code provision for protection of cables and nonmetallic wiring methods. But for drilling and notching of framing members, structural integrity must be considered also. Electrical code provisions cover protection of wiring but not structural framing rules.

Building code provisions require that the outer edges of holes drilled in horizontal framing members must be at least 2 inches (51 mm) back from the member edge. This requirement is to prevent weakening of the structural members such as floor joists. See Section R502.8 and Figure R502.8 of the code for details of drilling and notching provisions for structural floor members. This requirement is included in Table E3802.1.

Detailed provisions for drilling and notching of studs in an exterior wall or bearing partition are in Section R602.6. In addition to following the electrical code provisions for protection of wiring, these provisions must be followed for structural strength (see Commentary Figure E3802.1).

TABLE E3802.1 (Chapter 3)
GENERAL INSTALLATION AND SUPPORT REQUIREMENTS FOR WIRING METHODS[a, b, c, d, e, f, g, h, i, j, k]

INSTALLATION REQUIREMENTS (Requirement applicable only to wiring methods marked "A")	AC MC	EMT IMC RMC	ENT	FMC LFC	NM UF	RNC	SE	SR[a]	USE
Where run parallel with the framing member or furring strip, the wiring shall be not less than $1^1/_4$ inches from the edge of a furring strip or a framing member such as a joist, rafter or stud or shall be physically protected.	A	—	A	A	A	—	A	—	—
Bored holes in framing members for wiring shall be located not less than $1^1/_4$ inches from the edge of the framing member or shall be protected with a minimum 0.0625-inch steel plate or sleeve, a listed steel plate or other physical protection.	A[k]	—	A[k]	A[k]	A[k]	—	A[k]	—	—
Where installed in grooves, to be covered by wallboard, siding, paneling, carpeting, or similar finish, wiring methods shall be protected by 0.0625-inch-thick steel plate, sleeve, or equivalent, a listed steel plate or by not less than $1^1/_4$-inch free space for the full length of the groove in which the cable or raceway is installed.	A	—	A	A	A	—	A	A	A
Securely fastened bushings or grommets shall be provided to protect wiring run through openings in metal framing members.	—	—	A[j]	—	A[j]	—	A[j]	—	—
The maximum number of 90-degree bends shall not exceed four between junction boxes.	—	A	A	A	—	A	—	—	—
Bushings shall be provided where entering a box, fitting or enclosure unless the box or fitting is designed to afford equivalent protection.	A	A	A	A	—	A	—	A	—
Ends of raceways shall be reamed to remove rough edges.	—	A	A	A	—	A	—	A	—
Maximum allowable on center support spacing for the wiring method in feet.	4.5[b, c]	10[l]	3[b]	4.5[b]	4.5[i]	3[d, l]	2.5[e]	—	2.5
Maximum support distance in inches from box or other terminations.	12[b, f]	36	36	12[b, g]	12[h, i]	36	12	—	—

For SI: 1 inch = 25.4 mm, 1 foot = 304.8 mm, 1 degree = 0.0175 rad.

a. Installed in accordance with listing requirements.
b. Supports not required in accessible ceiling spaces between light fixtures where lengths do not exceed 6 feet.
c. Six feet for MC cable.
d. Five feet for trade sizes greater than 1 inch.
e. Two and one-half feet where used for service or outdoor feeder and 4.5 feet where used for branch circuit or indoor feeder.
f. Twenty-four inches for Type AC cable and thirty-six inches for interlocking Type MC cable where flexibility is necessary.
g. Where flexibility after installation is necessary, lengths of flexible metal conduit and liquidtight flexible metal conduit measured from the last point where the raceway is securely fastened shall not exceed: 36 inches for trade sizes $^1/_2$ through $1^1/_4$, 48 inches for trade sizes $1^1/_2$ through 2 and 5 feet for trade sizes $2^1/_2$ and larger.
h. Within 8 inches of boxes without cable clamps.
i. Flat cables shall not be stapled on edge.
j. Bushings and grommets shall remain in place and shall be listed for the purpose of cable protection.
k. See Sections R502.8 and R802.7 for additional limitations on the location of bored holes in horizontal framing members.

INTERNATIONAL CODE COUNCIL®
Copyright © 2015 ICC. ALL RIGHTS RESERVED. Accessed by David Dammon on Jun 21, 2017 12:30:52 PM pursuant to License Agreement with ICC. No further reproduction or distribution authorized. ANY UNAUTHORIZED REPRODUCTION OR DISTRIBUTION IS A VIOLATION OF THE FEDERAL COPYRIGHT ACT AND THE LICENSE AGREEMENT, AND SUBJECT TO CIVIL AND CRIMINAL PENALTIES THEREUNDER.



For SI: 1 inch = 25.4 mm.

Figure E3802.1
CABLES HELD $1^1/_4$ INCHES BACK FROM EDGE OF FRAMING MEMBER

E3802.2 Cables in accessible attics. Cables in attics or roof spaces provided with access shall be installed as specified in Sections E3802.2.1 and E3802.2.2. (320.3 and 334.23)

❖ An attic can be totally enclosed or accessible through a small 22-inch by 30-inch (559 mm by 762 mm) opening or provided with a ladder or stairs. Section R807 of the code requires an attic access opening for attic areas over 30 square feet (3 m^2) and a vertical height of at least 30 inches (762 mm). Where cables are run in an attic that has an access opening, specific rules apply as stated in the two following sections.

E3802.2.1 Across structural members. Where run across the top of floor joists, or run within 7 feet (2134 mm) of floor or floor joists across the face of rafters or studding, in attics and roof spaces that are provided with access, the cable shall be protected by substantial guard strips that are at least as high as the cable. Where such spaces are not provided with access by permanent stairs or ladders, protection shall only be required within 6 feet (1829 mm) of the nearest edge of the attic entrance. [330.23(A) and 334.23]

❖ If the attic is accessed using a ladder or stairs, any exposed cable run must be protected as stated. These code provisions are intended as protection for the cables where it is likely that people will be in the attic. Any cable run exposed along the surface of rafters or studs could easily be pulled on or used to hang things. Cables that are exposed and run across the surface of joists could be walked on or have storage items placed on them, causing damage to the cables. Thus, they are required to be protected or kept at least 7 feet (2134 mm) above the floor of the attic. Some new dwellings do not have an unfinished attic accessible by stairs or a ladder where cables are exposed, but most do have an attic accessible by a scuttle hole (a term used in the industry for the small attic entrance). In attics with only the scuttle hole entrance, cables run across the face of rafters or studs must be protected with guard strips for a distance of 6 feet (1829 mm) from the entrance. This provision should be inspected during the rough inspection. On the finish inspection a ladder may be necessary to look into the attic, and the wiring is usually covered by insulation.

INTERNATIONAL CODE COUNCIL®
Copyright © 2015 ICC. ALL RIGHTS RESERVED. Accessed by David Dammon on Jun 21, 2017 12:30:52 PM pursuant to License Agreement with ICC. No further reproduction or distribution authorized. ANY UNAUTHORIZED REPRODUCTION OR DISTRIBUTION IS A VIOLATION OF THE FEDERAL COPYRIGHT ACT AND THE LICENSE AGREEMENT, AND SUBJECT TO CIVIL AND CRIMINAL PENALTIES THEREUNDER.

E3802.2.2 Cable installed through or parallel to framing members. Where cables are installed through or parallel to the sides of rafters, studs or floor joists, guard strips and running boards shall not be required, and the installation shall comply with Table E3802.1. [330.23(B) and 334.23]

❖ In an attic where cable is run along the sides of rafters, studs or joists, no extra protection, such as guard strips, is required because the cable is not subject to damage by being walked on or having storage items placed on it as would be the case if it was run over the tops of joists. Table E3802.1 requires that cable be kept back at least 1.25 inches (32 mm) from the face of the rafter, stud or joist.

E3802.3 Exposed cable. In exposed work, except as provided for in Sections E3802.2 and E3802.4, cable assemblies shall be installed as specified in Sections E3802.3.1 and E3802.3.2. (330.15 and 334.15)

❖ See the commentary to Section E3802.3.2 and Commentary Figures E3802.3.1(1) and E3802.3.1(2).

E3802.3.1 Surface installation. Cables shall closely follow the surface of the building finish or running boards. [334.15(A)]

❖ This section prevents exposed cables from being in the open away from a solid surface except as allowed by Sections E3802.4, E3802.2.1, E3802.2.2 and Table E3802.1. See the commentary to Section E3802.3.2 and Commentary Figures E3802.3.1(1), E3802.3.1(2) and E3907.8.

E3802.3.2 Protection from physical damage. Where subject to physical damage, cables shall be protected by rigid metal conduit, intermediate metal conduit, electrical metallic tubing, Schedule 80 PVC rigid nonmetallic conduit, or other approved means. Where passing through a floor, the cable shall be enclosed in rigid metal conduit, intermediate metal conduit, electrical metallic tubing, Schedule 80 PVC rigid nonmetallic conduit or other approved means extending not less than 6 inches (152 mm) above the floor. [334.15(B)]

❖ The provisions of this section apply to exposed cable in other than attics and joist spaces of unfinished base-

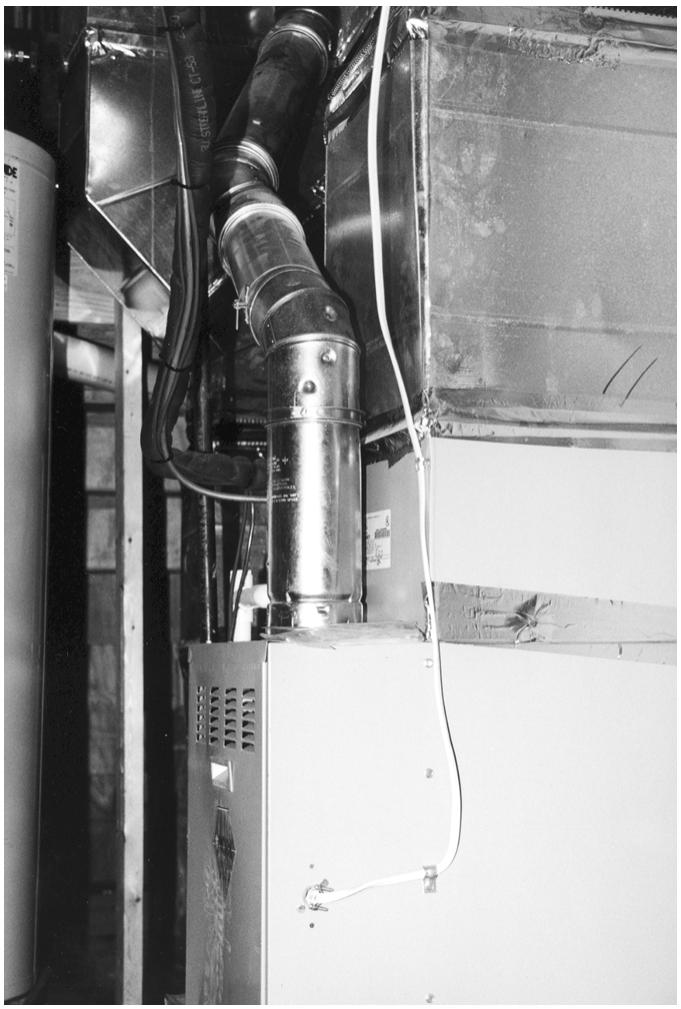

Figure E3802.3.1(1)
PROHIBITED APPLICATION OF TYPE NM CABLE

INTERNATIONAL CODE COUNCIL®
Copyright © 2015 ICC. ALL RIGHTS RESERVED. Accessed by David Dammon on Jun 21, 2017 12:30:52 PM pursuant to License Agreement with ICC. No further reproduction or distribution authorized. ANY UNAUTHORIZED REPRODUCTION OR DISTRIBUTION IS A VIOLATION OF THE FEDERAL COPYRIGHT ACT AND THE LICENSE AGREEMENT, AND SUBJECT TO CIVIL AND CRIMINAL PENALTIES THEREUNDER.

ments. They apply to cables installed in such places as on the wall of an unfinished basement. Although it may not look good to have cable installed on the surface of a wall, it is permitted where the cable is not subject to physical damage. Running it through conduit is one common protection method.

For example, in an unfinished basement, a switch is installed on the concrete or masonry wall at the entrance to the outside stairway. The nonmetallic sheathed cable run to the switch must be protected. One way to do this is to install a short, 3- or 4-foot (914 or 1219 mm) length of conduit or EMT from the ceiling or joist space down to an appropriate switch box attached to the concrete wall. This makes for a neat looking installation along the wall and provides protection for the cable. However, the cable could be subject to damage where it enters the conduit or EMT. The part of the cable in the basement ceiling or joist area could be pulled to gain slack for various reasons, such as when installing heating ducts. At the top of the short run of conduit or EMT, a fitting must be installed to protect the cable where it enters the EMT.

Where cable is installed through a floor, it must be protected such that it cannot be damaged by being walked on or kicked or having objects placed against it [see Commentary Figures E3802.3.1(1) and E3802.3.1(2)].

E3802.3.3 Locations exposed to direct sunlight. Insulated conductors and cables used where exposed to direct rays of the sun shall be listed or listed and marked, as being "sunlight resistant," or shall be covered with insulating material, such as tape or sleeving, that is listed or listed and marked as being "sunlight resistant." [310.10(D)]

❖ See the commentary to Section E3605.6.

E3802.4 In unfinished basements and crawl spaces. Where type NM or SE cable is run at angles with joists in unfinished basements and crawl spaces, cable assemblies containing two or more conductors of sizes 6 AWG and larger and assemblies containing three or more conductors of sizes 8 AWG and larger shall not require additional protection where attached directly to the bottom of the joists. Smaller cables shall be run either through bored holes in joists or on running boards. Type NM or SE cable installed on the wall of an unfinished basement shall be permitted to be installed in a listed conduit or tubing or shall be protected in accordance with Table E3802.1. Conduit or tubing shall be provided with a suitable insulating bushing or adapter at the point where the cable enters the raceway. The sheath of the Type NM or SE cable shall extend through the conduit or tubing and into the outlet or device box not less than $^1/_4$ inch (6.4 mm). The cable shall be secured within 12 inches (305 mm) of the point where the cable enters the conduit or tubing. Metal conduit, tubing, and metal outlet boxes shall be connected to an equipment grounding conductor complying with Section E3908.13. [334.15(C)]

❖ Although there are options, in most cases in unfinished basement ceilings, cables are installed through holes in the joists. Note that this section also applies to crawl spaces requiring the same protection for cables as required for basements. Cables that are run across the bottom of floor joists are subject to damage resulting from occupants hanging things from or storing things on the cables. If the basement is left unfinished in a new house, the electrician is usually expected to run the cables within the joist area instead of on the lower surface of the joists because it is expected that at a future time a ceiling membrane will be attached directly to the bottom edge of the floor joists to finish the base-



Figure E3802.3.1(2)
PROHIBITED APPLICATION OF TYPE NM CABLE

INTERNATIONAL CODE COUNCIL®
Copyright © 2015 ICC. ALL RIGHTS RESERVED. Accessed by David Dammon on Jun 21, 2017 12:30:52 PM pursuant to License Agreement with ICC. No further reproduction or distribution authorized. ANY UNAUTHORIZED REPRODUCTION OR DISTRIBUTION IS A VIOLATION OF THE FEDERAL COPYRIGHT ACT AND THE LICENSE AGREEMENT, AND SUBJECT TO CIVIL AND CRIMINAL PENALTIES THEREUNDER.

ment ceiling. Even larger cables such as feeders to a panelboard are run through drilled holes. But to accommodate piping and ducts, the ceiling of an unfinished basement may need to be furred down below the surface of the floor joists to prepare for applying the ceiling membrane. For whatever reason, if the electrician chooses to run the cables on the surface of the lower edge of the joists, these specific requirements apply.

Only the specified cables can be installed across the bottom of joists without further protection. Cables with conductor sizes 14, 12 and 10 AWG must be either run through drilled holes or installed on running boards. Note that the building portion of the code limits the size and location of bored holes in joists (see Commentary Figure E3802.4). Commonly, the installer makes the mistake of boring holes in joists too close to the bottom of the joist. Holes located in the center of the joist have the least effect on the strength of the joist.

E3802.5 Bends. Bends shall be made so as not to damage the wiring method or reduce the internal diameter of raceways.

For types NM and SE cable, bends shall be so made, and other handling shall be such that the cable will not be damaged and the radius of the curve of the inner edge of any bend shall be not less than five times the diameter of the cable. (334.24 and 338.24)

❖ Where installing through drilled holes in studs and joists, it is important to avoid kinks and knots in the cable as it is pulled off the spool or coil. Although a slang term used in some areas for cable is “rope,” it should not be installed as if it were rope. Care must be used when pulling cables through holes at various angles. Cables must not be bent too sharply as this can damage the insulation on the conductors by compressing it on the inside of the bend and stretching it on the outside of the bend.



Figure E3802.4
PROHIBITED INSTALLATION OF TYPE MM CABLE ACROSS THE BOTTOM OF FLOOR JOISTS

INTERNATIONAL CODE COUNCIL®
Copyright © 2015 ICC. ALL RIGHTS RESERVED. Accessed by David Dammon on Jun 21, 2017 12:30:52 PM pursuant to License Agreement with ICC. No further reproduction or distribution authorized. ANY UNAUTHORIZED REPRODUCTION OR DISTRIBUTION IS A VIOLATION OF THE FEDERAL COPYRIGHT ACT AND THE LICENSE AGREEMENT, AND SUBJECT TO CIVIL AND CRIMINAL PENALTIES THEREUNDER.

E3802.6 Raceways exposed to different temperatures. Where portions of a raceway or sleeve are known to be subjected to different temperatures and where condensation is known to be a problem, as in cold storage areas of buildings or where passing from the interior to the exterior of a building, the raceway or sleeve shall be filled with an approved material to prevent the circulation of warm air to a colder section of the raceway or sleeve. [300.7(A)]

❖ Pressure differentials caused by wind, stack effect and exhaust fans can cause air to pass through various openings in the building envelope. If warm humid air from a dwelling interior passes through a raceway that extends into an unconditioned space or outdoors, condensation can occur within the raceway, causing damage to electrical components and/or the structure. This can be observed where a conduit extends from an interior switch box to an exterior luminaire box. Liquid water can form in the raceway and in the exterior box. This can also be seen where raceways pass through attic spaces and connect to ceiling outlet boxes. Electrical putty such as "duct seal putty" could be used to seal the raceway or sleeve.

E3802.7 Raceways in wet locations above grade. Where raceways are installed in wet locations above grade, the interior of such raceways shall be considered to be a wet location. Insulated conductors and cables installed in raceways in wet locations above grade shall be listed for use in wet locations. (300.9)

❖ Raceways installed above grade in wet locations and all raceways installed below grade are subject to internal moisture; therefore, the conductors in such raceways must be listed as suitable for wet locations.

SECTION E3803
UNDERGROUND INSTALLATION REQUIREMENTS

E3803.1 Minimum cover requirements. Direct buried cable or raceways shall be installed in accordance with the minimum cover requirements of Table E3803.1. [300.5(A)]

❖ Underground wiring must be protected by burial at a sufficient depth. For example, a 120-volt, 20-ampere branch circuit with ground-fault circuit interrupter (GFCI) protection serving a yard light must be buried at least 12 inches (305 mm) deep where it is under the residential drive-way. A service lateral installed in a PVC conduit under the backyard lawn must be buried at least 18 inches (457 mm) deep. Many utility companies require the service lateral to be installed in conduit. Where the service lateral is a direct buried cable under the backyard lawn with no protection such as a concrete slab, it must be buried at least 24 inches (610 mm) deep, according to Table E3803.1.

E3803.2 Warning ribbon. Underground service conductors that are not encased in concrete and that are buried 18 inches (457 mm) or more below grade shall have their location identified by a warning ribbon that is placed in the trench not less than 12 inches (305 mm) above the underground installation. [300.5(D)(3)]

❖ A warning ribbon, typically red plastic tape with printed warnings, is required for service conductor installations to help prevent excavators from damaging the conductors and risking injury or death. Table E3803.1 dictates the conditions under which service conductors must be buried at least 18 inches (457 mm). The ribbon must be at least 12 inches (305 mm) above the conductors to provide warning well in advance of reaching the conductor depth.

E3803.3 Protection from damage. Direct buried conductors and cables emerging from the ground shall be protected by enclosures or raceways extending from the minimum cover distance below grade required by Section E3803.1 to a point at least 8 feet (2438 mm) above finished grade. In no case shall the protection be required to exceed 18 inches (457 mm) below finished grade. Conductors entering a building shall be protected to the point of entrance. Where the enclosure or raceway is subject to physical damage, the conductors shall be installed in rigid metal conduit, intermediate metal conduit, Schedule 80 rigid nonmetallic conduit or the equivalent. [300.5(D)(1)]

❖ Where a light installed on a pole is fed by direct buried cable such as a UF cable, the cable must be protected from at least 18 inches (457 mm) below the ground surface to a height of at least 8 feet (2438 mm) up the pole.

Most service laterals to a dwelling would not be encased in concrete (such as a service lateral enclosed in nonmetallic conduit that is encased in concrete) unless under special circumstances. In all other cases, whether direct-buried or enclosed in conduit, the warning ribbon must be placed in the trench 12 inches (305 mm) or more above the service lateral to help avoid damage or electrocution when digging occurs near the buried conductors. The service lateral is not protected against fault current caused by a short circuit.

E3803.4 Splices and taps. Direct buried conductors or cables shall be permitted to be spliced or tapped without the use of splice boxes. The splices or taps shall be made by approved methods with materials listed for the application. [300.5(E)]

❖ Splicing kits are available for use on direct-buried conductors. These are used in most cases where the conductors have been damaged and it becomes necessary to repair the conductors rather than replace the entire underground run.

E3803.5 Backfill. Backfill containing large rock, paving materials, cinders, large or sharply angular substances, or corrosive material shall not be placed in an excavation where such materials cause damage to raceways, cables or other substructures or prevent adequate compaction of fill or contribute to corrosion of raceways, cables or other substructures. Where necessary to prevent physical damage to the raceway or cable, protection shall be provided in the form of granular or selected material, suitable boards, suitable sleeves or other approved means. [300.5(F)]

❖ Unless the soil is suitable to prevent damage to the buried conductors or raceways, sand must be brought in and placed in the trench below and on top of the underground wiring method, or other approved means must be used. In cases where this is not done,

INTERNATIONAL CODE COUNCIL®
Copyright © 2015 ICC. ALL RIGHTS RESERVED. Accessed by David Dammon on Jun 21, 2017 12:30:52 PM pursuant to License Agreement with ICC. No further reproduction or distribution authorized. ANY UNAUTHORIZED REPRODUCTION OR DISTRIBUTION IS A VIOLATION OF THE FEDERAL COPYRIGHT ACT AND THE LICENSE AGREEMENT, AND SUBJECT TO CIVIL AND CRIMINAL PENALTIES THEREUNDER.

direct buried cable can be damaged upon backfilling by rocks falling into the trench on top of the cable. Where aluminum cable is used, a small nick or cut in the conductor insulation can cause moisture to penetrate the sheath or insulation, which in turn can cause the aluminum to oxidize and deteriorate. For underground service laterals, many utility companies have equipment to locate the exact point of the damaged or open conductor. It can then be repaired by digging down to the cable and making a splice allowed by Section E3803.4. This is a very costly and time-consuming process and requires digging. Therefore, in landscaped areas, the utility companies often require that service laterals be run in conduit from the point of supply to the service equipment.

E3803.6 Raceway seals. Conduits or raceways shall be sealed or plugged at either or both ends where moisture will enter and contact live parts. [300.5(G)]

❖ Where an underground conduit is run through the basement wall, for example, the temperature difference will cause condensation, and moisture could enter an electrical enclosure such as a box or cabinet. An example is a service lateral that is run directly into service equipment located on the inside wall of a basement. The conduit must be plugged or a sealing compound used to prevent moisture from entering and contacting energized parts.

TABLE E3803.1 (Table 300.5)
MINIMUM COVER REQUIREMENTS, BURIAL IN INCHES[a, b, c, d, e]

LOCATION OF WIRING METHOD OR CIRCUIT	TYPE OF WIRING METHOD OR CIRCUIT				
	1 Direct burial cables or conductors	2 Rigid metal conduit or intermediate metal conduit	3 Nonmetallic raceways listed for direct burial without concrete encasement or other approved raceways	4 Residential branch circuits rated 120 volts or less with GFCI protection and maximum overcurrent protection of 20 amperes	5 Circuits for control of irrigation and landscape lighting limited to not more than 30 volts and installed with type UF or in other identified cable or raceway
All locations not specified below	24	6	18	12	6
In trench below 2-inch-thick concrete or equivalent	18	6	12	6	6
Under a building	0 (In raceway only or Type MC identified for direct burial)	0	0	0 (In raceway only or Type MC identified for direct burial)	0 (In raceway only or Type MC identified for direct burial)
Under minimum of 4-inch-thick concrete exterior slab with no vehicular traffic and the slab extending not less than 6 inches beyond the underground installation	18	4	4	6 (Direct burial) 4 (In raceway)	6 (Direct burial) 4 (In raceway)
Under streets, highways, roads, alleys, driveways and parking lots	24	24	24	24	24
One- and two-family dwelling driveways and outdoor parking areas, and used only for dwelling-related purposes	18	18	18	12	18
In solid rock where covered by minimum of 2 inches concrete extending down to rock	2 (In raceway only)	2	2	2 (In raceway only)	2 (In raceway only)

For SI: 1 inch = 25.4 mm.

a. Raceways approved for burial only where encased concrete shall require concrete envelope not less than 2 inches thick.

b. Lesser depths shall be permitted where cables and conductors rise for terminations or splices or where access is otherwise required.

c. Where one of the wiring method types listed in columns 1 to 3 is combined with one of the circuit types in columns 4 and 5, the shallower depth of burial shall be permitted.

d. Where solid rock prevents compliance with the cover depths specified in this table, the wiring shall be installed in metal or nonmetallic raceway permitted for direct burial. The raceways shall be covered by a minimum of 2 inches of concrete extending down to the rock.

e. Cover is defined as the shortest distance in inches (millimeters) measured between a point on the top surface of any direct-buried conductor, cable, conduit or other raceway and the top surface of finished grade, concrete, or similar cover.

❖ See the commentary to Sections E3802.1 and E3803.1.

INTERNATIONAL CODE COUNCIL®
Copyright © 2015 ICC. ALL RIGHTS RESERVED. Accessed by David Dammon on Jun 21, 2017 12:30:52 PM pursuant to License Agreement with ICC. No further reproduction or distribution authorized. ANY UNAUTHORIZED REPRODUCTION OR DISTRIBUTION IS A VIOLATION OF THE FEDERAL COPYRIGHT ACT AND THE LICENSE AGREEMENT, AND SUBJECT TO CIVIL AND CRIMINAL PENALTIES THEREUNDER.

E3803.7 Bushing. A bushing, or terminal fitting, with an integral bushed opening shall be installed on the end of a conduit or other raceway that terminates underground where the conductors or cables emerge as a direct burial wiring method. A seal incorporating the physical protection characteristics of a bushing shall be considered equivalent to a bushing. [300.5(H)]

❖ An example of this requirement is where direct buried service lateral conductors are installed in rigid or intermediate metal conduit from a point underground up to the service equipment. At the point where the conductors emerge from the conduit, a bushing must be installed to protect the conductors. The ground around the conductors and the conduit will settle and pull the conductors against the conduit, which, if installed in compliance with code provisions, is fastened solidly to the wall of the house. Where the conduit is not fastened solidly to the wall of the house, the settling of the ground has been observed to pull the conduit connector away from the service equipment enclosure, exposing the conductor under the service equipment cabinet. It is important to leave slack in the direct buried conductors of the service lateral where they enter the riser conduit in the trench. Where the earth has been backfilled around a new house, settlement of the ground will occur that can also cause the conductors to move.

E3803.8 Single conductors. All conductors of the same circuit and, where present, the grounded conductor and all equipment grounding conductors shall be installed in the same raceway or shall be installed in close proximity in the same trench. [300.5(I)]

Exception: Conductors shall be permitted to be installed in parallel in raceways, multiconductor cables, and direct-buried single conductor cables. Each raceway or multiconductor cable shall contain all conductors of the same circuit, including equipment grounding conductors. Each direct-buried single conductor cable shall be located in close proximity in the trench to the other single conductor cables in the same parallel set of conductors in the circuit, including equipment grounding conductors. [300.5(I) Exception No.1]

❖ Conductors must be grouped together in the same raceway or trench to reduce induction heating in raceways and cables. Where conductors are run in parallel (not often encountered in dwelling electrical systems), each raceway must contain a complete set of the circuit conductors. For example, a parallel set of 4-wire feeders is supplying a 120/240-volt panelboard, and in this case, each raceway would contain two ungrounded conductors (with a voltage of 240 volts between them), one grounded conductor and one grounding conductor, the same as if there was only a single raceway.

E3803.9 Earth movement. Where direct buried conductors, raceways or cables are subject to movement by settlement or frost, direct buried conductors, raceways or cables shall be arranged to prevent damage to the enclosed conductors or to equipment connected to the raceways. [300.5(J)]

❖ See the commentary to Section E3803.8. Conductors in a raceway rising from underground and entering the bottom of an enclosure can be looped in the enclosure in such manner that will allow them to flex when the soil rises and falls and pushes or pulls the conductors.

E3803.10 Wet locations. The interior of enclosures or raceways installed underground shall be considered to be a wet location. Insulated conductors and cables installed in such enclosures or raceways in underground installations shall be listed for use in wet locations. Connections or splices in an underground installation shall be approved for wet locations. [300.5(B)]

❖ This section is a reminder of what is already understood in the code; that is, the interior of raceways and enclosures located underground must be treated as wet locations. It cannot be assumed that the interior of any enclosure or raceway is free of moisture. Moisture will enter in liquid form and/or in vapor form and condense in the raceway or enclosure (see Section E3802.7).

E3803.11 Under buildings. Underground cable and conductors installed under a building shall be in a raceway. [300.5(C)]

Exception: Type MC Cable shall be permitted under a building without installation in a raceway where the cable is listed and identified for direct burial or concrete encasement and one or more of the following applies:

1. The metallic covering is impervious to moisture.
2. A moisture-impervious jacket is provided under the metal covering.
3. The insulated conductors under the metallic covering are listed for use in wet locations, and a corrosion-resistant jacket is provided over the metallic sheath. [300.5(C) Exception No.2]

❖ A common code violation is the installation of Type UF cable under a floor slab on grade to supply floor receptacle boxes. Raceways provide physical protection for cables and conductors under slabs and also allow conductors to be removed and reinstalled in a location that is permanently concealed under concrete. If it complies with all of the provisions of the exception to this section, MC cable is also allowed under a slab because of the physical protection afforded by the metal covering.

Bibliography

The following resource materials were used in the preparation of the commentary for this chapter of the code:

NFPA 70–14, *National Electrical Code*. Quincy, MA: National Fire Protection Association, 2013.

INTERNATIONAL CODE COUNCIL®
Copyright © 2015 ICC. ALL RIGHTS RESERVED. Accessed by David Dammon on Jun 21, 2017 12:30:52 PM pursuant to License Agreement with ICC. No further reproduction or distribution authorized. ANY UNAUTHORIZED REPRODUCTION OR DISTRIBUTION IS A VIOLATION OF THE FEDERAL COPYRIGHT ACT AND THE LICENSE AGREEMENT, AND SUBJECT TO CIVIL AND CRIMINAL PENALTIES THEREUNDER.

Chapter 39:
Power and Lighting Distribution

General Comments

Chapter 39 addresses the "rough-in" stage of construction in which the wiring system is installed to distribute receptacle and lighting outlets throughout the dwelling. This chapter covers receptacle outlet spacing, GFCI (ground-fault circuit interrupter) and AFCI (arc-fault circuit interrupter) protection, lighting outlet locations, raceway and box fill limitations, box and panel board installation, equipment grounding and flexible cords.

Purpose

The intent of Chapter 39 is to protect occupants from fire, electrical shock and accidents. By eliminating the need for extension cords, by providing adequate lighting and by requiring equipment grounding and GFCI and AFCI protection, the code substantially increases the level of safety in homes.

SECTION E3901
RECEPTACLE OUTLETS

E3901.1 General. Outlets for receptacles rated at 125 volts, 15- and 20-amperes shall be provided in accordance with Sections E3901.2 through E3901.11. Receptacle outlets required by this section shall be in addition to any receptacle that is:

1. Part of a luminaire or appliance;
2. Located within cabinets or cupboards;
3. Controlled by a wall switch in accordance with Section E3903.2, Exception 1; or
4. Located over 5.5 feet (1676 mm) above the floor.

Permanently installed electric baseboard heaters equipped with factory-installed receptacle outlets, or outlets provided as a separate assembly by the baseboard manufacturer shall be permitted as the required outlet or outlets for the wall space utilized by such permanently installed heaters. Such receptacle outlets shall not be connected to the heater circuits. (210.52)

❖ Section E3901 covers the requirements for the locations of receptacle outlets. A receptacle that is built-in or is an integral part of a light fixture, appliance or cabinet is not counted as one of the outlets required by this section. However, a factory-installed receptacle in a baseboard heater is permitted to serve as one of the required outlets, but such a receptacle must not be connected to the circuit supplying the heater.

A baseboard heater must not be installed on the wall below a receptacle outlet unless specifically listed for such installations. Where a cord is plugged into a receptacle, it could drape over the baseboard heater or come into contact with it; thus, the cord would become hot, which could melt or weaken the insulation and create a possible fire or shock hazard. If the plan calls for baseboard heaters, the required receptacles must be either integral with the heater or be positioned so that cords will not contact the heater.

A receptacle outlet is controlled by a light switch does not satisfy the requirements of this section for convenience and appliance receptacle distribution. Switched receptacles make convenient lighting outlets, but are not suitable for most other plug loads because of unintended switch operation by the occupants and because the occupants may not be aware that the receptacle is switched. Note that a duplex receptacle is actually two receptacles, therefore, half of the duplex device could be switched and the other half could be unswitched, thus complying with the intent of this section. If both halves of the duplex receptacle are switched, that outlet is not counted as fulfilling the intent of this section.

E3901.2 General purpose receptacle distribution. In every kitchen, family room, dining room, living room, parlor, library, den, sun room, bedroom, recreation room, or similar room or area of dwelling units, receptacle outlets shall be installed in accordance with the general provisions specified in Sections E3901.2.1 through E3901.2.3 (see Figure E3901.2).

❖ Simply stated, no matter where a lamp or appliance is placed along a wall, a receptacle must be within reach of the approximately 6-foot (1829 mm) long cord of the lamp or appliance. The receptacles in all rooms of a dwelling unit except bathrooms and laundry rooms are referred to as general use (convenience) receptacles. This section and the following four subsections cover the location and spacing requirements for general use receptacles. There is no minimum or maximum number of receptacles for a room. There is no height requirement for general use (convenience) receptacles except that any receptacle located over $5^1/_2$ feet (1676 mm) above the floor is not counted. There are, however, certain height requirements for accessibility standards that must be observed.

Although there are specific requirements for countertop receptacles in a kitchen, the location and spacing of all other receptacles in kitchens and dining areas are included in the provisions of this section.

INTERNATIONAL CODE COUNCIL®
Copyright © 2015 ICC. ALL RIGHTS RESERVED. Accessed by David Dammon on Jun 21, 2017 12:30:52 PM pursuant to License Agreement with ICC. No further reproduction or distribution authorized. ANY UNAUTHORIZED REPRODUCTION OR DISTRIBUTION IS A VIOLATION OF THE FEDERAL COPYRIGHT ACT AND THE LICENSE AGREEMENT, AND SUBJECT TO CIVIL AND CRIMINAL PENALTIES THEREUNDER.

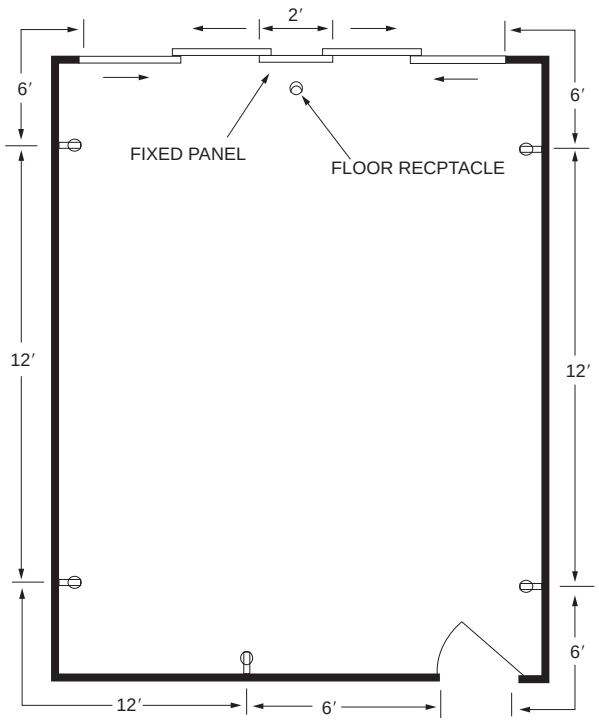

For SI: 1 foot = 304.8 mm.

FIGURE E3901.2
GENERAL USE RECEPTACLE DISTRIBUTION

E3901.2.1 Spacing. Receptacles shall be installed so that no point measured horizontally along the floor line of any wall space is more than 6 feet (1829 mm), from a receptacle outlet. [210.52(A)(1)]

❖ This requirement is intended to eliminate the need for extension cords. In any of the rooms listed (or a similar area of a dwelling), a lamp, appliance, radio, TV or other electrical appliance can be placed at any point along the floor line, and a receptacle must be available within 6 feet (1829 mm) of that location. It is important to not "cut corners" when measuring. The floor line is measured along the wall all the way into and around corners. Where a door opens against a wall, it may seem reasonable to begin the measurement at the end of the door swing, about 30 to 36 inches (762 to 914 mm) from the hinged side of the door casing, but the code requires that the wall space be counted all the way to the doorjamb. The logic of this section is simply to provide enough conveniently located receptacles to prevent the occupants from creating hazards by running or draping cords in poor locations. Poorly located cords could become tripping hazards, could cause appliances to fall, could be covered by rugs, walked on, pinched in doors, etc., all of which could cause fires or injuries. The code never assumes that any wall space meeting the criteria of Section E3901.2.2 will be an "unlikely" place for a lamp or appliance. If it is reasonably possible, an occupant will utilize every spot along a wall space at some point in the life of the building.

E3901.2.2 Wall space. As used in this section, a wall space shall include the following: [210.52(A)(2)]

1. Any space that is 2 feet (610 mm) or more in width, including space measured around corners, and that is unbroken along the floor line by doorways and similar openings, fireplaces, and fixed cabinets.
2. The space occupied by fixed panels in exterior walls, excluding sliding panels.
3. The space created by fixed room dividers such as railings and freestanding bar-type counters.

❖ An appliance or lamp, for example, could be placed in front of the fixed portion of a sliding door, which must be counted as wall space for determining the spacing requirements of receptacle outlets. An example of a fixed room divider is a partial wall that subdivides a space or that separates a bar area from the rest of a room. A guardrail that separates spaces at different elevations could also qualify as a room divider and appliances, lamps, entertainment equipment, etc., could also be placed along such dividers. Appliances or lamps could be placed by the homeowner along any partial wall or railing, and a receptacle must be available at a point not farther than 6 feet (1829 mm) from any point along such wall or railing. Floor outlets may be necessary in situations where the room divider is an open guardrail.

E3901.2.3 Floor receptacles. Receptacle outlets in floors shall not be counted as part of the required number of receptacle outlets except where located within 18 inches (457 mm) of the wall. [210.52(A)(3)]

❖ Where the furniture layout is known, floor receptacles are sometimes located in the middle of a room. For example, power may be required for a floor lamp to be placed near a couch that is located in the center of a living room. Such receptacles are not counted as part of the required number of receptacles as measured along the wall line. In the example under Section E3901.2.2, a floor outlet must be installed not more than 18 inches (457 mm) from the railing to count as the required receptacle.

E3901.2.4 Countertop receptacles. Receptacles installed for countertop surfaces as specified in Section E3901.4 shall not be considered as the receptacles required by Section E3901.2. [210.52(A)(4)]

❖ Receptacles installed to serve a countertop surface are not recognized as also serving any wall space. For example, a bar counter could be installed against a partial wall that subdivides a room. The side of such wall that is opposite of the bar countertop would require receptacles in accordance with Section E3901.2.2 and the receptacles provided to serve the bar countertop cannot also serve this wall space. Keep in mind the intent to prevent occupants from running or draping cords over obstacles such that a hazard is created.

INTERNATIONAL CODE COUNCIL®
Copyright © 2015 ICC. ALL RIGHTS RESERVED. Accessed by David Dammon on Jun 21, 2017 12:30:52 PM pursuant to License Agreement with ICC. No further reproduction or distribution authorized. ANY UNAUTHORIZED REPRODUCTION OR DISTRIBUTION IS A VIOLATION OF THE FEDERAL COPYRIGHT ACT AND THE LICENSE AGREEMENT, AND SUBJECT TO CIVIL AND CRIMINAL PENALTIES THEREUNDER.

E3901.3 Small appliance receptacles. In the kitchen, pantry, breakfast room, dining room, or similar area of a dwelling unit, the two or more 20-ampere small-appliance branch circuits required by Section E3703.2, shall serve all wall and floor receptacle outlets covered by Sections E3901.2 and E3901.4 and those receptacle outlets provided for refrigeration appliances. [210.52(B)(1)]

Exceptions:

1. In addition to the required receptacles specified by Sections E3901.1 and E3901.2, switched receptacles supplied from a general-purpose branch circuit as defined in Section E3903.2, Exception 1 shall be permitted. [210.52(B)(1) Exception No. 1]
2. The receptacle outlet for refrigeration appliances shall be permitted to be supplied from an individual branch circuit rated at 15 amperes or greater. [210.52(B)(1) Exception No. 2]

❖ Small appliance receptacles are supplied by at least two 20-ampere branch circuits and include all of the receptacles in the kitchen, pantry, dining and similar areas of a house. The countertop receptacles as well as all of the other "low" receptacles [usually installed around 12 to 18 inches (305 to 457 mm) above the floor] in these rooms are served by the small appliance receptacle branch circuits. In a dining room, a receptacle controlled by a wall switch can serve as the required lighting outlet. Such a receptacle would not be served by one of the small appliance branch circuits but would be served by a general-purpose lighting circuit.

The receptacle serving a refrigerator can be included on one of the small appliance circuits or can be supplied by a separate individual branch circuit. Where it is an individual branch circuit, it can be a 15- or 20-ampere-rated branch circuit.

E3901.3.1 Other outlets prohibited. The two or more small-appliance branch circuits specified in Section E3901.3 shall serve no other outlets. [210.52(B)(2)]

Exceptions:

1. A receptacle installed solely for the electrical supply to and support of an electric clock in any of the rooms specified in Section E3901.3. [210.52(B)(2) Exception No.1]
2. Receptacles installed to provide power for supplemental equipment and lighting on gas-fired ranges, ovens, and counter-mounted cooking units. [210.52(B)(2) Exception No.2]

❖ Receptacles for specific fixed-in-place appliances such as a disposal, dishwasher or trash compactor cannot be served by the small-appliance branch circuits. The small-appliance circuits cannot supply anything else, such as the hood fan over the range.

A half century ago, a receptacle for an electric clock installed high on the wall was a standard feature in the kitchen in some areas of the country. Special recessed receptacles were used for clocks. The power for a clock is minimal, and although this type of receptacle outlet is not as common now, including it on one of the small appliance branch circuits has been permitted for many years. Where a gas range is installed in the kitchen, a 120-volt receptacle outlet is needed to operate such items on the range as the timer, lights and ignition system. This receptacle can be connected to one of the small appliance branch circuits.

E3901.3.2 Limitations. Receptacles installed in a kitchen to serve countertop surfaces shall be supplied by not less than two small-appliance branch circuits, either or both of which shall also be permitted to supply receptacle outlets in the same kitchen and in other rooms specified in Section E3901.3. Additional small-appliance branch circuits shall be permitted to supply receptacle outlets in the kitchen and other rooms specified in Section E3901.3. A small-appliance branch circuit shall not serve more than one kitchen. [210.52(B)(3)]

❖ Small appliance branch circuits can serve receptacles in a dining room. In a formal dining room, where no cooking is done and it is not likely that any appliances will be used, it may seem that the receptacles could be served by a general-purpose lighting branch circuit, but these receptacles must be included on one of the two or more small-appliance branch circuits.

There is not a limit on the number of outlets served by a small appliance branch circuit. Some electrical contractors have traditional ways of laying out these circuits. For example, one practice is that all countertop receptacles on one side of the kitchen sink are wired on one circuit, and another circuit is used for all receptacles on the other side of the sink. Another method is to alternate countertop receptacles on two different circuits so that no two adjacent receptacles are on the same circuit. Yet another method is to use three-conductor cable and wire the top half of the duplex receptacle on one circuit and the bottom half on another circuit. These methods are not code requirements but only preferences for some installers. The code simply requires that all receptacles in the kitchen, pantry and dining areas be served by two or more small appliance branch circuits.

E3901.4 Countertop receptacles. In kitchens pantries, breakfast rooms, dining rooms and similar areas of dwelling units, receptacle outlets for countertop spaces shall be installed in accordance with Sections E3901.4.1 through E3901.4.5 (see Figure E3901.4). [210.52(C)]

❖ This section introduces five subsections. The first four subsections cover the countertop spaces where receptacles are required, and the fifth covers the location of receptacles in those required spaces.

E3901.4.1 Wall countertop space. A receptacle outlet shall be installed at each wall countertop space 12 inches (305 mm) or wider. Receptacle outlets shall be installed so that no point along the wall line is more than 24 inches (610 mm), measured horizontally from a receptacle outlet in that space. [210.52(C)(1)]

Exception: Receptacle outlets shall not be required on a wall directly behind a range, counter-mounted cooking

INTERNATIONAL CODE COUNCIL®
Copyright © 2015 ICC. ALL RIGHTS RESERVED. Accessed by David Dammon on Jun 21, 2017 12:30:52 PM pursuant to License Agreement with ICC. No further reproduction or distribution authorized. ANY UNAUTHORIZED REPRODUCTION OR DISTRIBUTION IS A VIOLATION OF THE FEDERAL COPYRIGHT ACT AND THE LICENSE AGREEMENT, AND SUBJECT TO CIVIL AND CRIMINAL PENALTIES THEREUNDER.

unit or sink in the installation described in Figure E3901.4.1. [210.52(C)(1) Exception]

❖ In many kitchens there is a short section of countertop (between the refrigerator and the range) on which it is helpful to place items when getting them in and out of the refrigerator. The literal code requirement is that if this countertop is 12 inches (305 mm) or more wide, a receptacle is required along the wall at this space. Some installers have omitted the receptacle where the countertop space is only 9 or 10 inches (229 or 254 mm). This is a case where good judgment should prevail. For example, a toaster could be placed on such a countertop space, and if there were not a receptacle available, the toaster cord could be placed across the range to be plugged in. This would create an unsafe situation. Providing a receptacle at a 10-inch (254 mm) countertop space, for example, is a good idea, although not a code requirement.

As indicated in Figure E3901.4, receptacle outlets must not be spaced more than 48 inches (1219 mm) apart along the wall line of the countertop. For this measurement, cutting corners is not permitted. Notice the measurement at the left of the sink in the figure. The edge of the sink is considered to be the beginning of the countertop, and an outlet must be available within 24 inches (610 mm) of that point. Continuing to the left from that point, the measurement follows the wall line.

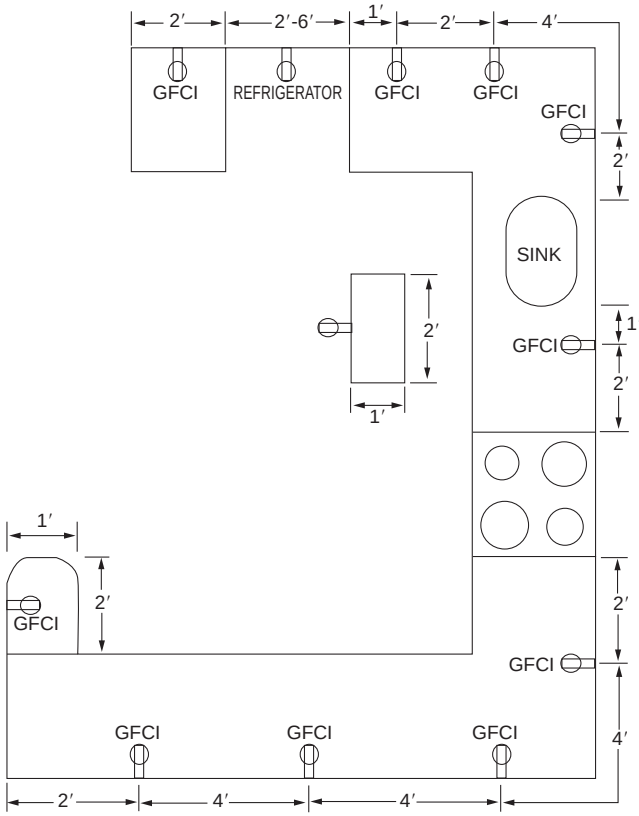

For SI: 1 foot = 304.8 mm.

FIGURE E3901.4
COUNTERTOP RECEPTACLES

Using Figure E3901.4, it is incorrect, for example, to draw an imaginary line along the front edge of the countertop in front of the sink all the way to the wall left of the sink, consider that to be one "countertop," then begin at that point to measure to the refrigerator. The wall line in the corner must be included in the measurement.

The exception allows receptacles to be omitted in the wall space or spaces directly behind the sink, range or counter-mounted cooking unit because such space is not likely to be used for countertop appliances since they would be out of the reach of the user, and the cords could be dragged over hot cooking surfaces.

E3901.4.2 Island countertop spaces. At least one receptacle outlet shall be installed at each island countertop space with a long dimension of 24 inches (610 mm) or greater and a short dimension of 12 inches (305 mm) or greater. [210.52(C)(2)]

❖ At an island counter space, one receptacle is required for each counter space. Where the island contains no sink, range or cooktop, only one receptacle is required. More may be installed, for example, at each end. The 24-inch (610 mm) spacing requirement does not apply to the island countertop space because there is no wall line. Depending on the size of the space behind the sink, range or cooktop, an island might be divided into two counter spaces by the presence of the sink or cooktop, thus requiring a receptacle for each counter space so created. In Commentary Figure E3901.4.2, the higher countertop surface is used as a dining table

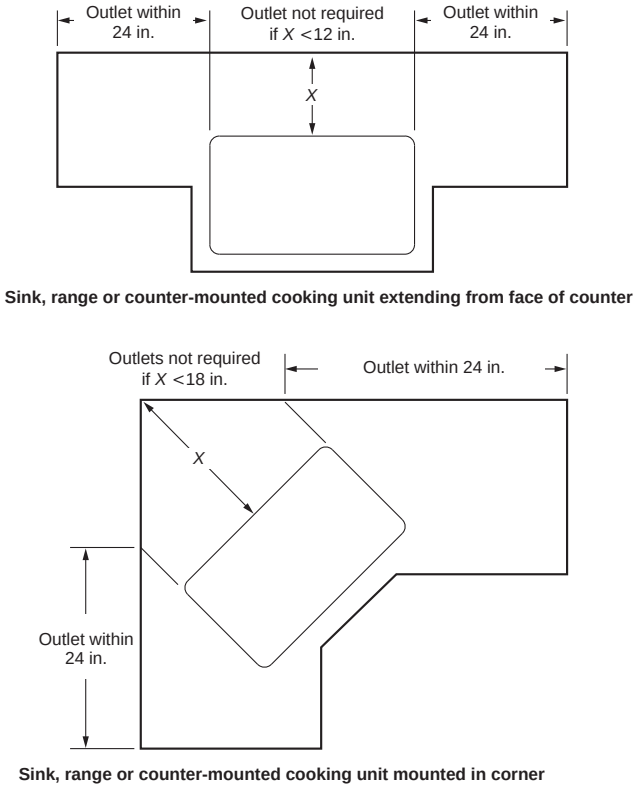

For SI: 1 inch = 25.4 mm.

FIGURE E3901.4.1
DETERMINATION OF AREA BEHIND SINK OR RANGE

INTERNATIONAL CODE COUNCIL®
Copyright © 2015 ICC. ALL RIGHTS RESERVED. Accessed by David Dammon on Jun 21, 2017 12:30:52 PM pursuant to License Agreement with ICC. No further reproduction or distribution authorized. ANY UNAUTHORIZED REPRODUCTION OR DISTRIBUTION IS A VIOLATION OF THE FEDERAL COPYRIGHT ACT AND THE LICENSE AGREEMENT, AND SUBJECT TO CIVIL AND CRIMINAL PENALTIES THEREUNDER.



Figure E3901.4.2
ISLAND WITH TWO COUNTER SPACES

where chairs are placed along the back side of the island. Also the higher surface is out of reach and unhandy for use as typical countertop workspace. For these reasons, one could interpret that two countertop spaces are present requiring at least two receptacles, regardless of the depth of space of the upper surface.

E3901.4.3 Peninsular countertop space. At least one receptacle outlet shall be installed at each peninsular countertop space with a long dimension of 24 inches (610 mm) or greater and a short dimension of 12 inches (305 mm) or greater. A peninsular countertop is measured from the connecting edge. [210.52(C)(3)]

❖ The connecting edge of a peninsular countertop is an imaginary line along the front edge of the adjacent countertop. At least one receptacle is required at the peninsular countertop space. It need not be at the end of the peninsula (see the commentary to and the text of Section E3901.4).

E3901.4.4 Separate spaces. Countertop spaces separated by range tops, refrigerators, or sinks shall be considered as separate countertop spaces in applying the requirements of Sections E3901.4.1, E3901.4.2 and E3901.4.3. Where a range, counter-mounted cooking unit, or sink is installed in an island or peninsular countertop and the depth of the countertop behind the range, counter-mounted cooking unit, or sink is less than 12 inches (305 mm), the range, counter-mounted cooking unit, or sink has divided the countertop space into two separate countertop spaces as defined in Section E3901.4.4. Each separate countertop space shall comply with the applicable requirements of this section. [210.52(C)(4)]

❖ The intent of this code requirement is to prevent cords from being stretched or laid across the range, cooktop or sink that divides the countertop space. The left and right edges of the kitchen sink or cooktop, as one faces it, are the points where the measurement begins for the countertop space (see Section E3901.4).

Where there is not much countertop surface extending away from the back of a sink or counter-recessed cooking unit, the code considers such sinks and cooking units as effective dividers that split the island or peninsular counter space into separate counter spaces. If the counter spaces created by this split meet the dimensional requirements of Section E3901.4.2 or E3901.4.3, each space must have its own receptacle(s).

E3901.4.5 Receptacle outlet location. Receptacle outlets shall be located not more than 20 inches (508 mm) above the countertop. Receptacle outlet assemblies installed in countertops shall be listed for the application. Receptacle outlets shall not be installed in a face-up position in the work surfaces or countertops. Receptacle outlets rendered not readily accessible by appliances fastened in place, appliance garages, sinks or rangetops as addressed in the exception to Section E3901.4.1, or appliances occupying dedicated space shall not be considered as these required outlets. [210.52(C)(5)]

Exception: Receptacle outlets shall be permitted to be mounted not more than 12 inches (305 mm) below the countertop in construction designed for the physically impaired and for island and peninsular countertops where the countertop is flat across its entire surface and there are no means to mount a receptacle within 20 inches (508 mm) above the countertop, such as in an overhead cabinet. Receptacles mounted below the countertop in accordance with this exception shall not be located where the counter-

INTERNATIONAL CODE COUNCIL®
Copyright © 2015 ICC. ALL RIGHTS RESERVED. Accessed by David Dammon on Jun 21, 2017 12:30:52 PM pursuant to License Agreement with ICC. No further reproduction or distribution authorized. ANY UNAUTHORIZED REPRODUCTION OR DISTRIBUTION IS A VIOLATION OF THE FEDERAL COPYRIGHT ACT AND THE LICENSE AGREEMENT, AND SUBJECT TO CIVIL AND CRIMINAL PENALTIES THEREUNDER.

top extends more than 6 inches (152 mm) beyond its support base. [210.52(C)(5) Exception]

❖ The intent of the code rule is that receptacles be available for small appliances used on the countertop. The code lists several locations for receptacles that do not comply with the intent to provide accessible receptacles. It can be a hazard to have appliances plugged in below the countertop surface because the cord would be draped over the edge of the countertop, and the cord could easily be snagged, pulling the appliance off of the countertop. Where an island or peninsular countertop does not overhang the cabinet more than 6 inches (152 mm) and there is no other location option, the required receptacle is permitted to be installed below the countertop if not more than 12 inches (305 mm) below it. Appliance garages are storage spaces for small countertop appliances. Such spaces have side walls and doors and are accessed at countertop level. Receptacles must not be mounted face-up in a countertop surface because liquids and debris would enter the device. The code recognizes receptacle assemblies that are designed for installation in countertop surfaces and listed for this application. Such assemblies consist of a device box, cover assembly and a pop-up receptacle. These assemblies are hard-wired with permanent raceway wiring methods from under the countertop.

E3901.5 Appliance receptacle outlets. Appliance receptacle outlets installed for specific appliances, such as laundry equipment, shall be installed within 6 feet (1829 mm) of the intended location of the appliance. (210.50(C)]

❖ Where the outlet is not more than 6 feet (1829 mm) from the location of an appliance, it is assumed that the appliance cord will reach the outlet. The intent is that extension cords will not have to be used. Common sense should be used here, and the 6-foot (1829 mm) measurement may not be adequate if the measured distance is simply from the edge of the appliance space. For example, if a 120-volt receptacle for a gas clothes dryer is 6 feet (1829 mm) from the edge of the dryer space, the receptacle placement may satisfy the code rule, but the dryer cord at the rear of a gas clothes dryer may be at the opposite side of the space closest to the receptacle. Consideration should be given to the location of the appliances such as garage door openers, sump pumps, clothes washers, etc., so that extension cords will not have to be used.

E3901.6 Bathroom. At least one wall receptacle outlet shall be installed in bathrooms and such outlet shall be located within 36 inches (914 mm) of the outside edge of each lavatory basin. The receptacle outlet shall be located on a wall or partition that is adjacent to the lavatory basin location, located on the countertop, or installed on the side or face of the basin cabinet. The receptacle shall be located not more than 12 inches (305 mm) below the top of the basin.

Receptacle outlets shall not be installed in a face-up position in the work surfaces or countertops in a bathroom basin location. Receptacle outlet assemblies installed in countertops shall be listed for the application. [210.52(D)]

❖ Because of the popularity of full-height mirrors, it is becoming more difficult to find a suitable location for the receptacle outlets; therefore, the code allows installation of such receptacles on the face or sides of vanity cabinets. The receptacle must not be more than 12 inches (305 mm) below the top of the lavatory because a hazard is created by having appliance cords protruding from the cabinet sides or face. Also, the lower the receptacle, the less appliance cord that will be available for using the appliance. A raceway wiring method will be necessary within the cabinet to protect and support the conductors for such receptacles. Wiring methods in the cabinet must be located so as to be clear of drawers and plumbing components. Type NM cable should not be allowed exposed within any cabinet. Ideally, such receptacles would be supplied from a junction box behind the cabinet back, thereby allowing the cabinet to be replaced easily (see Section E3802.3). Receptacles must not be installed within the cabinet such that they cannot be accessed from the cabinet exterior. Some home owners have requested that the receptacles be installed within the cabinet interior and this would be a serious fire hazard because the temptation would be to leave grooming appliances plugged in while stored in the cabinet. Where a bathroom lighting fixture contains a receptacle, it does not satisfy the requirement for the bathroom wall receptacle as stated in Section E3901.1 because required receptacles are in addition to any that are part of a lighting fixture. It is possible for one receptacle outlet to serve two lavatories if it is placed between the lavatories, for example.

Receptacles must not be mounted face-up in a countertop surface because liquids and debris would enter the device.

The code recognizes receptacle assemblies that are designed for installation in countertop surfaces and listed for this application. Such assemblies consist of a device box, cover assembly and a pop-up receptacle. These assemblies are hard-wired with permanent raceway wiring methods from under the countertop.

E3901.7 Outdoor outlets. Not less than one receptacle outlet that is readily accessible from grade level and located not more than 6 feet, 6 inches (1981 mm) above grade, shall be installed outdoors at the front and back of each dwelling unit having direct access to grade level. Balconies, decks, and porches that are accessible from inside of the dwelling unit shall have at least one receptacle outlet installed within the perimeter of the balcony, deck, or porch. The receptacle shall be located not more than 6 feet, 6 inches (1981 mm) above the balcony, deck, or porch surface. [210.52(E)]

❖ Any dwelling unit that has direct access to grade requires an outdoor receptacle both at the front and back of the dwelling. A receptacle that is part of a yard light mounted on a post, for example, would not satisfy this requirement. Where a dwelling unit has a balcony or deck accessible only through a door from the inside of

INTERNATIONAL CODE COUNCIL®
Copyright © 2015 ICC. ALL RIGHTS RESERVED. Accessed by David Dammon on Jun 21, 2017 12:30:52 PM pursuant to License Agreement with ICC. No further reproduction or distribution authorized. ANY UNAUTHORIZED REPRODUCTION OR DISTRIBUTION IS A VIOLATION OF THE FEDERAL COPYRIGHT ACT AND THE LICENSE AGREEMENT, AND SUBJECT TO CIVIL AND CRIMINAL PENALTIES THEREUNDER.

the house, an outdoor receptacle at the balcony or deck location may not satisfy this requirement if the receptacle is not accessible at grade level. If it is not over $6^1/_2$ feet (1981 mm) from the ground and can be reached from standing on the ground, it counts as the required receptacle.

Balconies, decks and porches having or exceeding the minimum usable area and that can be accessed from within the dwelling must have a receptacle to allow the use of appliances, lighting fixtures, radios, computers and other plug loads likely to be found in such spaces. In the case of the typical deck area, the required outdoor receptacle and the required deck receptacle could be the same receptacle if all of the access conditions are met.

E3901.8 Laundry areas. Not less than one receptacle outlet shall be installed in areas designated for the installation of laundry equipment.

❖ Section E3703.3 requires at least one 20-amp-rated branch circuit for the laundry area. Typically, this circuit supplies a duplex receptacle to serve a clothes washer and a gas-fired clothes dryer, however a single (simplex) receptacle would be allowed where the clothes dryer is an electric appliance (see Section E3901.5 for receptacle location requirements). "Areas designated for the installation of laundry equipment" is not defined but is interpreted as including an ironing area within the laundry area, meaning that multiple receptacle locations could be supplied by the required laundry branch circuit. A laundry area could be a separate room or an alcove or any portion of another room. Bear in mind that a 20-amp-rated branch circuit is nearly at its full capacity when serving both a washer and dryer (see Section E3902.9 for GFCI protection).

E3901.9 Basements, garages and accessory buildings. Not less than one receptacle outlet, in addition to any provided for specific equipment, shall be installed in each separate unfinished portion of a basement, in each attached garage, and in each detached garage or accessory building that is provided with electrical power. The branch circuit supplying the receptacle(s) in a garage shall not supply outlets outside of the garage and not less than one receptacle outlet shall be installed for each motor vehicle space. [210.52(G)(1), (2), and (3)]

❖ The code does not require that a detached garage or an accessory building be supplied with electrical power. But if it has power, it must have at least one receptacle that is not dedicated for specific equipment. Because there are many uses and activities in attached garages and unfinished basements that require power, an attached garage, an unfinished basement and each separate unfinished portion of a basement must have at least one receptacle to avoid the overuse or unsafe use of extension cords. This section is not satisfied by a receptacle provided specifically for appliances or equipment, such as sump pumps, laundry appliances, water treatment equipment, security systems, overhead door operators, etc. Section E3909.1 prohibits the use of flexible cord as a substitute for fixed wiring in the dwelling and indicates that cords must not be run through holes in walls, ceilings or floors. Where receptacles are installed at appropriate locations, the receptacles will reduce the need for extension cords. In garages, at least one receptacle outlet must be installed for each vehicle space, thus a two car garage would require at least two receptacle outlets. Although not specifically required by code, the obvious intent is to locate the receptacles so that they can be accessed near each vehicle without the use of extension cords, considering the use of battery chargers, shop vacuums, trouble lights, engine block warmers, etc. Extension cords are likely to be run over by vehicles or draped across vehicles. The philosophy of the code is consistent, that is: Do not make it tempting for people to do unsafe things with electricity and extension cords.

E3901.10 Hallways. Hallways of 10 feet (3048 mm) or more in length shall have at least one receptacle outlet. The hall length shall be considered the length measured along the centerline of the hall without passing through a doorway. [210.52(H)]

❖ The length of an L-shaped hallway is also measured along the centerline and includes the total L-shaped length. The purpose for this requirement is to mandate supply power for a vacuum cleaner. This results in convenience and safety by helping avoid the use of extension cords.

E3901.11 Foyers. Foyers that are not part of a hallway in accordance with Section E3901.10 and that have an area that is greater than 60 ft^2 (5.57 m^2) shall have a receptacle(s) located in each wall space that is 3 feet (914 mm) or more in width. Doorways, door-side windows that extend to the floor, and similar openings shall not be considered as wall space. [210.52(H)]

❖ The code now addresses foyers, which are not covered in Section E3901.2. Foyers can be quite large and receptacles are necessary to serve lamps, cleaning and maintenance appliances, holiday lighting, etc. The spacing requirements are less stringent than they are for the spaces covered by Section E3901.2. Doors, door side-lights that extend to the floor and windows that extend to the floor do not count as wall space under this section (see Section E3901.2.2 for comparison).

E3901.12 HVAC outlet. A 125-volt, single-phase, 15- or 20-ampere-rated receptacle outlet shall be installed at an accessible location for the servicing of heating, air-conditioning and refrigeration equipment. The receptacle shall be located on the same level and within 25 feet (7620 mm) of the heating, air-conditioning and refrigeration equipment. The receptacle outlet shall not be connected to the load side of the HVAC equipment disconnecting means. (210.63)

Exception: A receptacle outlet shall not be required for the servicing of evaporative coolers. (210.63 Exception)

❖ When servicing or repairing HVAC equipment, a technician usually needs electrically powered tools, instruments or equipment. The intent of this section is to avoid the necessity of a technician dragging an extension cord through the attic or crawl space or across a roof.

INTERNATIONAL CODE COUNCIL®
Copyright © 2015 ICC. ALL RIGHTS RESERVED. Accessed by David Dammon on Jun 21, 2017 12:30:52 PM pursuant to License Agreement with ICC. No further reproduction or distribution authorized. ANY UNAUTHORIZED REPRODUCTION OR DISTRIBUTION IS A VIOLATION OF THE FEDERAL COPYRIGHT ACT AND THE LICENSE AGREEMENT, AND SUBJECT TO CIVIL AND CRIMINAL PENALTIES THEREUNDER.

This applies to both indoor and outdoor equipment. Evaporative coolers are exempt because power tools, diagnostic instruments, trouble lights and vacuum equipment are typically not needed to service them. Evaporative coolers are typical only in dry climates and are sometimes referred to as "swamp coolers."

SECTION E3902
GROUND-FAULT AND ARC-FAULT CIRCUIT-INTERRUPTER PROTECTION

E3902.1 Bathroom receptacles. 125-volt, single-phase, 15- and 20-ampere receptacles installed in bathrooms shall have ground-fault circuit-interrupter protection for personnel. [210.8(A)(1)]

❖ There are many unique layouts for a dwelling unit bath-room. This section and the requirement for bath-room receptacles and GFCI protection are the reasons that there is a code definition of bathroom. A bathroom is not necessarily a room. It is an area that includes a wash basin (lavatory) and also has a water closet, a tub or a shower. The water closet, tub or shower could be in a separate room from the wash basin, and the area would still be defined as a bathroom. There is no exception to the requirement for GFCI protection of receptacles in bathrooms. All receptacles would include, for example, a receptacle in a light fixture, a receptacle for a clothes washer, or a receptacle for any other appliance installed in a bathroom (see Commentary Figure E3902.1).

E3902.2 Garage and accessory building receptacles. 125-volt, single-phase, 15- or 20-ampere receptacles installed in garages and grade-level portions of unfinished accessory buildings used for storage or work areas shall have ground-fault circuit-interrupter protection for personnel. [210.8(A)(2)]

❖ A receptacle in an accessory building, an implement shed or even a storage shed also requires GFCI protection. Sometimes an appliance such as a food freezer or refrigerator is located in a garage, and where such an appliance is plugged into a GFCI receptacle, nuisance tripping of the GFCI device could cause food to spoil. Therefore, in the past, it was common to have some appliances supplied by non-GFCI protected circuits where the appliances and the receptacles that supplied them were in a space dedicated for the cord- and plug-connected appliances and such appliances were "not easily moved," however, this practice is no longer allowed. The concern for nuisance tripping is not valid for modern appliances that have far less leakage currents than their predecessors. If an appliance such as older model refrigerator trips a GFCI device, it proves that the appliance has high leakage current and should be retired and recycled. The code believes that there is no valid excuse for not having GFCI protection in any location where the occupants could be at risk of electrical shock. There are no exceptions to this section's requirements.

Note that electric utility companies often claim that it is energy wasteful to relocate old inefficient freezers and refrigerators to the garage where they will continue to waste energy in their new location and also labor under extreme temperature conditions.

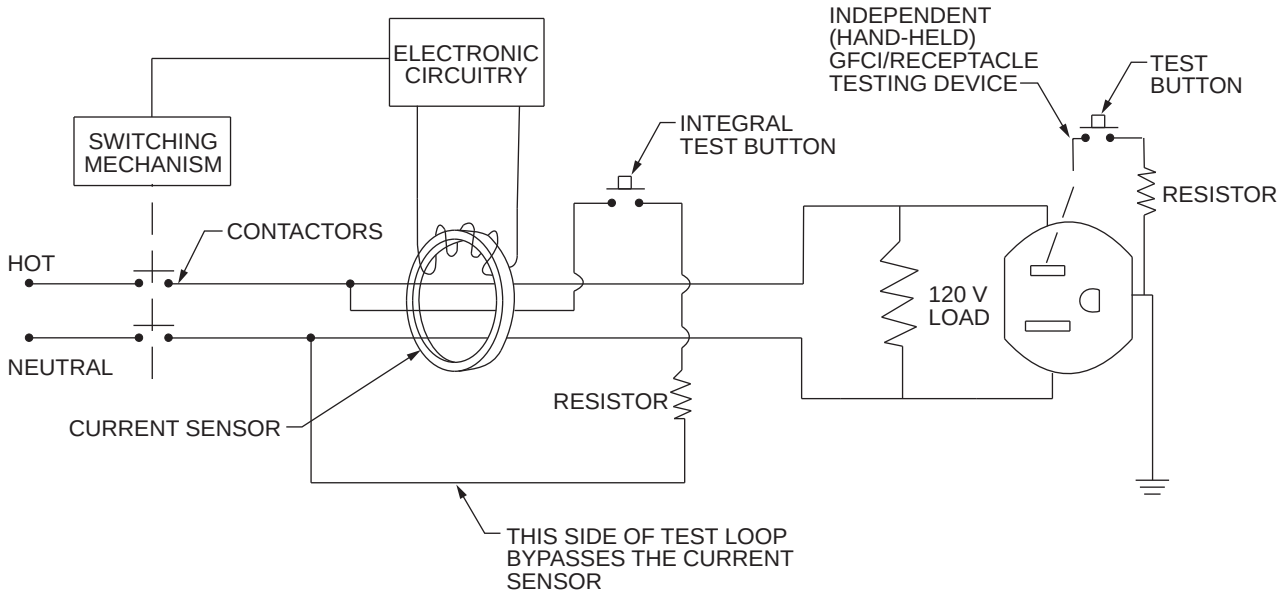

Figure E3902.1
BASIC PRINCIPLES OF OPERATION OF GFCI RECEPTABLE DEVICE AND DEVICE TESTER

INTERNATIONAL CODE COUNCIL®
Copyright © 2015 ICC. ALL RIGHTS RESERVED. Accessed by David Dammon on Jun 21, 2017 12:30:52 PM pursuant to License Agreement with ICC. No further reproduction or distribution authorized. ANY UNAUTHORIZED REPRODUCTION OR DISTRIBUTION IS A VIOLATION OF THE FEDERAL COPYRIGHT ACT AND THE LICENSE AGREEMENT, AND SUBJECT TO CIVIL AND CRIMINAL PENALTIES THEREUNDER.

E3902.3 Outdoor receptacles. 125-volt, single-phase, 15- and 20-ampere receptacles installed outdoors shall have ground-fault circuit-interrupter protection for personnel. [210.8(A)(3)]

> **Exception:** Receptacles as covered in Section E4101.7. [210.8(A)(3) Exception]

❖ The only outdoor receptacles that are exempt from GFCI protection are those located in the eave of the dwelling for cord- and plug-connected deicing equipment. These receptacle outlets are not readily accessible, are supplied from a dedicated circuit especially for the deicing equipment or cable and are usually separate from eave receptacles that would be used for decorative holiday lighting.

E3902.4 Crawl space receptacles. Where a crawl space is at or below grade level, 125-volt, single-phase, 15- and 20-ampere receptacles installed in such spaces shall have ground-fault circuit-interrupter protection for personnel. [210.8(A)(4)]

❖ This requirement is for GFCI protection of a crawl space receptacle outlet. According to Section E3901.12, a crawl space is not required to have a receptacle outlet unless there is equipment such as HVAC appliances that require servicing located there. Plumbing pipes and electrical cable run in the crawl space area are not considered to be equipment that would need servicing, so a receptacle would not be required because of the piping or wiring. However, if the choice is made to install a crawl space receptacle, it must be GFCI protected.

E3902.5 Unfinished basement receptacles. 125-volt, single-phase, 15- and 20-ampere receptacles installed in unfinished basements shall have ground-fault circuit-interrupter protection for personnel. For purposes of this section, unfinished basements are defined as portions or areas of the basement not intended as habitable rooms and limited to storage areas, work areas, and similar areas. [210.8(A)(5)]

> **Exception:** A receptacle supplying only a permanently installed fire alarm or burglar alarm system. Receptacles installed in accordance with this exception shall not be considered as meeting the requirement of Section E3901.9. [210.8(A)(5) Exception]

❖ Masonry and concrete can provide a conductive path to earth. Bare concrete or masonry walls might also be subject to moisture. Judgment must enter into the decision of whether to consider a basement space as finished or unfinished. Clearly the intent is to protect the occupants from the potential shock hazard associated with using electricity in a location where they are in contact with conductive surfaces that provide an electrical path to the earth. Concrete floors, walls and bare earth are of particular concern. It is the author's opinion that painted concrete walls and floors do not make a basement "finished" and because the electrical shock hazard is not mitigated, GFCI protection would be required. Basements with carpet and padding and furred and paneled walls lessen the concern for exposed conductive surfaces. Considering that GFCI protection is very inexpensive, complete protection for all areas of the basement will eliminate the need to determine what is or is not "finished."

A single receptacle (not a duplex) supplying a plug-in transformer for an alarm system is exempt because the receptacle is occupied, and nuisance tripping could disable the alarm system. This exception states that a receptacle for an alarm system does not satisfy the requirement of Section E3901.9, which is more appropriately the subject matter of Section E3901.9 rather than this section. It is understood, however, that the intent of this section and Section E3901.9 is to not allow an alarm system receptacle to count as the receptacle(s) required for basements, garages and accessory buildings. The alarm receptacle is dedicated for that purpose, therefore, another convenience receptacle must be installed for general purpose use. Besides, the alarm receptacle will be a single, occupied receptacle in order to avoid being GFCI protected, which is the entire premise of the exception.

E3902.6 Kitchen receptacles. 125-volt, single-phase, 15- and 20-ampere receptacles that serve countertop surfaces shall have ground-fault circuit-interrupter protection for personnel. [210.8(A)(6)]

❖ In a kitchen, all receptacles serving any countertop must be GFCI protected. In the past, the only kitchen countertop receptacles that required GFCI protection were the ones close to the kitchen sink. Now, any countertop receptacle, even in an area far away from the sink, is required to have GFCI protection.

E3902.7 Sink receptacles. 125-volt, single-phase, 15- and 20-ampere receptacles that are located within 6 feet (1829 mm) of the outside edge of a sink shall have ground-fault circuit-interrupter protection for personnel. Receptacle outlets shall not be installed in a face-up position in the work surfaces or countertops. [210.8(A)(7)]

❖ This requirement is different from the kitchen countertop receptacles in that only receptacles within 6 feet (1829 mm) measured in any direction from the sink must be GFCI protected. With regards to how the 6-foot (1829 mm) criterion is measured, the term "within" is defined as inside the limits of a distance; therefore, it could be argued that a receptacle that is exactly 6 feet (1829 mm) from a sink is exempt because it is not "within" the 6 foot (1829 mm) distance. The opposing view is that the receptacle would be exempt only if it was over 6 feet (1829 mm) from the sink. Note that this section is applicable to laundry sinks (tubs), utility sinks and bar sinks and is applicable to all receptacles, including those provided for laundry appliances.

E3902.8 Bathtub or shower stall receptacles. 125-volt, single phase, 15- and 20-ampere receptacles that are located within 6 feet (1829 mm) of the outside edge of a bathtub or shower stall shall have ground-fault circuit interrupter protection for personnel. [210.8(A)(8)]

❖ Section E4002.11 prohibits receptacles within bathtub and shower spaces, but receptacles are allowed to be outside of those spaces, with no minimum distance requirement. This section requires GFCI protection for receptacles that are less than 6 feet from the edge of

INTERNATIONAL CODE COUNCIL®
Copyright © 2015 ICC. ALL RIGHTS RESERVED. Accessed by David Dammon on Jun 21, 2017 12:30:52 PM pursuant to License Agreement with ICC. No further reproduction or distribution authorized. ANY UNAUTHORIZED REPRODUCTION OR DISTRIBUTION IS A VIOLATION OF THE FEDERAL COPYRIGHT ACT AND THE LICENSE AGREEMENT, AND SUBJECT TO CIVIL AND CRIMINAL PENALTIES THEREUNDER.

the bathtub or shower space. A user of a shower or bathtub could reach a receptacle that is less than 6 feet from the edge of the shower or bathtub, thus, a shock hazard exists.

E3902.9 Laundry areas. 125-volt, single-phase, 15- and 20-ampere receptacles installed in laundry areas shall have ground-fault circuit interrupter protection for personnel. [210.8(A)(9)]

❖ Laundry areas provide opportunities for occupants to contact a grounded conducting surface, grounded water piping, grounded appliance housings, etc. A potential hazard exists where occupants put themselves between a voltage source and a grounded object or surface. See Section E3901.8.

E3902.10 Kitchen dishwasher branch circuit. Ground-fault circuit-interrupter protection shall be provided for outlets that supply dishwashers in dwelling unit locations. [210.8(D)]

❖ The kitchen provides the opportunity for occupants to place themselves between a voltage source and a grounded surface or object creating a shock hazard. The branch circuits that supply dishwashers must have GFCI protection whether the appliance is hardwired or cord- and plug-connected. This is accomplished by means of a GFCI-type circuit breaker or a GFCI receptacle device. Dishwashers are commonly supplied by a dedicated branch circuit and the appliance is commonly fitted with a cord and plug and plugged into a receptacle mounted in the back of an adjacent kitchen sink base cabinet. Such an arrangement allows the dishwasher to be easily slid in and out of the space in which it is installed and satisfies the disconnect requirement of Table E4101.5 (see Section E4101.3). It would be good practice to provide a single (not duplex) receptacle for the dishwasher so as to discourage occupants from using an open receptacle mounted inside of a cabinet.

E3902.11 Boathouse receptacles. 125-volt, single-phase, 15- or 20-ampere receptacles installed in boathouses shall have ground-fault circuit-interrupter protection for personnel. [210.8(A)(8)]

❖ The potential shock hazards in buildings having unfinished concrete floors on grade and wet surfaces are comparable to shock hazards outdoors and in kitchens, bathrooms, garages, basements and workshops.

E3902.12 Boat hoists. Ground-fault circuit-interrupter protection for personnel shall be provided for 240-volt and less outlets that supply boat hoists. [210.8(C)]

❖ Generally, boat hoists are permanently installed on a boat dock and used to lift a boat out of the water.

E3902.13 Electrically heated floors. Ground-fault circuit-interrupter protection for personnel shall be provided for electrically heated floors in bathrooms, kitchens and in hydromassage bathtub, spa and hot tub locations. [424.44(G)]

❖ Heat-producing cables and grids can be embedded in concrete floors to warm the floor for occupant comfort. The possibility of current leakage combined with wet surfaces and grounded plumbing fixtures justifies this requirement; the branch circuit overcurrent device serving the heating cables must provide GFCI protection.

E3902.14 Location of ground-fault circuit interrupters. Ground-fault circuit interrupters shall be installed in a readily accessible location. [210.8(A)]

❖ See the definition of "Accessible, readily."

E3902.15 Location of arc-fault circuit interrupters. Arc-fault circuit interrupters shall be installed in readily accessible locations.

❖ See the definition of "Accessible, readily."

E3902.16 Arc-fault circuit-interrupter protection. Branch circuits that supply 120-volt, single-phase, 15- and 20-ampere outlets installed in kitchens, family rooms, dining rooms, living rooms, parlors, libraries, dens, bedrooms, sunrooms, recreations rooms, closets, hallways, laundry areas and similar rooms or areas shall be protected by any of the following: [210.12(A)]

1. A listed combination-type arc-fault circuit interrupter, installed to provide protection of the entire branch circuit. [210.12(A)(1)]
2. A listed branch/feeder-type AFCI installed at the origin of the branch-circuit in combination with a listed outlet branch-circuit type arc-fault circuit interrupter installed at the first outlet box on the branch circuit. The first outlet box in the branch circuit shall be marked to indicate that it is the first outlet of the circuit. [210.12(A)(2)]
3. A listed supplemental arc protection circuit breaker installed at the origin of the branch circuit in combination with a listed outlet branch-circuit type arc-fault circuit interrupter installed at the first outlet box on the branch circuit where all of the following conditions are met:
   - 3.1. The branch-circuit wiring shall be continuous from the branch-circuit overcurrent device to the outlet branch-circuit arc-fault circuit interrupter.
   - 3.2. The maximum length of the branch-circuit wiring from the branch-circuit overcurrent device to the first outlet shall not exceed 50 feet (15.2 m) for 14 AWG conductors and 70 feet (21.3 m) for 12 AWG conductors.
   - 3.3. The first outlet box on the branch circuit shall be marked to indicate that it is the first outlet on the circuit. [210.12(A)(3)]
4. A listed outlet branch-circuit type arc-fault circuit interrupter installed at the first outlet on the branch circuit in combination with a listed branch-circuit overcurrent protective device where all of the following conditions are met:
   - 4.1. The branch-circuit wiring shall be continuous from the branch-circuit overcurrent device to the outlet branch-circuit arc-fault circuit interrupter.
   - 4.2. The maximum length of the branch-circuit wiring from the branch-circuit overcurrent device to the first outlet shall not exceed 50 feet (15.2 m) for 14 AWG conductors and 70 feet (21.3 m) for 12 AWG conductors.

INTERNATIONAL CODE COUNCIL®
Copyright © 2015 ICC. ALL RIGHTS RESERVED. Accessed by David Dammon on Jun 21, 2017 12:30:52 PM pursuant to License Agreement with ICC. No further reproduction or distribution authorized. ANY UNAUTHORIZED REPRODUCTION OR DISTRIBUTION IS A VIOLATION OF THE FEDERAL COPYRIGHT ACT AND THE LICENSE AGREEMENT, AND SUBJECT TO CIVIL AND CRIMINAL PENALTIES THEREUNDER.

4.3. The first outlet box on the branch circuit shall be marked to indicate that it is the first outlet on the circuit.

4.4. The combination of the branch-circuit overcurrent device and outlet branch-circuit AFCI shall be identified as meeting the requirements for a system combination-type AFCI and shall be listed as such. [210.12(A)(4)]

5. Where metal outlet boxes and junction boxes and RMC, IMC, EMT, Type MC or steel-armored Type AC cables meeting the requirements of Section E3908.8, metal wireways or metal auxiliary gutters are installed for the portion of the branch circuit between the branch-circuit overcurrent device and the first outlet, a listed outlet branch-circuit type AFCI installed at the first outlet shall be considered as providing protection for the remaining portion of the branch circuit. [210.12(A)(5)]

6. Where a listed metal or nonmetallic conduit or tubing or Type MC cable is encased in not less than 2 inches (50.8 mm) of concrete for the portion of the branch circuit between the branch-circuit overcurrent device and the first outlet, a listed outlet branch-circuit type AFCI installed at the first outlet shall be considered as providing protection for the remaining portion of the branch circuit. [210.12(A)(6)]

Exception: AFCI protection is not required for an individual branch circuit supplying only a fire alarm system where the branch circuit is wired with metal outlet and junction boxes and RMC, IMC, EMT or steel-sheathed armored cable Type AC or Type MC meeting the requirements of Section E3908.8.

❖ This section requires that AFCIs be installed to protect 15- and 20-ampere 120-volt branch circuits that supply outlets installed in the listed dwelling unit rooms. There are two distinct provisions of this requirement to keep in mind (see Commentary Figure E3902.16). First, the section refers to "outlets," which by definition, includes receptacle outlets, lighting outlets and other outlets such as smoke alarms (see Section E3501 for the definition of "Outlet"). The second provision is that the protection is for the "branch circuit" and not just the outlet itself. A branch circuit begins at the last overcurrent device (circuit breaker) and runs to the outlet (see the definition of "Branch circuit" in Section E3401).

AFCIs combine a standard circuit breaker with electronic circuitry that can detect the characteristics of hazardous arcing in an ac circuit [see the commentary to the definition of "Arc-fault circuit interrupter (AFCI)"]. An arc will produce some unique characteristics including high frequency noise, voltage spikes on the waveform and fluctuating arcing current lower than normal current. These and other factors are analyzed by the AFCI to determine whether an arc is present and whether it is an arc that should be interrupted. The AFCI device is designed to ignore normal arcing, such as when switches open and close and when plugs are inserted or removed from receptacles.

Bedrooms were chosen as the initial location in which to introduce AFCI protection requirements. Because arcing can occur in any circuit in a dwelling, the code has greatly expanded the requirement for AFCI protection of 120-volt branch circuits. In fact, the expanded list of rooms and spaces appears to include everything but bathrooms, unfinished basement spaces, garages and outdoors.

Section R314 requires smoke alarm outlets in bedrooms, and such outlets must also be on an AFCI circuit. These smoke-alarm outlets must be interconnected and would conveniently be served by the same branch circuit. Although not specifically required by this code, smoke-alarm circuits powered by a branch circuit that also supplies lighting will be monitored because power loss to the smoke alarms will also mean loss of power to the lighting. In such cases, the occupant will restore power to the alarms in their effort to restore lighting. It is also recognized that there are requirements for smoke alarms to have a secondary power source should the primary power source be interrupted for any reason.

Branch/feeder-type AFCIs are designed to detect and clear (deenergize the circuit) higher energy parallel arc faults of about 75 amperes and higher for line-to-neutral faults and low energy parallel faults of 5 amperes and higher for line-to-ground faults. Many AFCIs on the market today can detect line-to-ground faults at currents as low as 50 milliamperes. Series arcing involves much lower current flows and, depending on the level, might not be detected by branch/feeder-type AFCIs.



Photo courtesy of Square D Company.

Figure E3902.6
AFCI TYPE CIRCUIT BREAKER

INTERNATIONAL CODE COUNCIL®
Copyright © 2015 ICC. ALL RIGHTS RESERVED. Accessed by David Dammon on Jun 21, 2017 12:30:52 PM pursuant to License Agreement with ICC. No further reproduction or distribution authorized. ANY UNAUTHORIZED REPRODUCTION OR DISTRIBUTION IS A VIOLATION OF THE FEDERAL COPYRIGHT ACT AND THE LICENSE AGREEMENT, AND SUBJECT TO CIVIL AND CRIMINAL PENALTIES THEREUNDER.

A new requirement of this section is that the AFCI device must be the combination type. A combination AFCI integrates the arc detection of a branch/feeder AFCI with low level series arc detection (as low as 5 amperes). One point of confusion to avoid is that a "combination AFCI" is NOT a combination AFCI/GFCI device. UL 1699 is the applicable standard for AFCIs and can provide more detail on the types of AFCIs. Even though AFCI circuit breaker devices and GFCI circuit breaker devices look similar and are installed in a similar manner, they are very different devices with different functions and they cannot be substituted for one another to satisfy code requirements. Devices that combine a circuit breaker, a GFCI and an AFCI all in one package may be available in the marketplace now or in the future.

Branch/feeder-type AFCI devices (typically in the form of a circuit breaker) protect the branch circuit wiring primarily from parallel arcing between conductors and provide some limited protection for branch circuit extension wiring such as cord sets and appliance cords. Outlet branch circuit-type AFCI devices are generally for installation in the first outlet box downstream of the branch circuit overcurrent device and provide protection from series arcing such as would occur in a broken or severed conductor in an appliance or fixture cord, but also provide protection of upstream and downstream branch circuit conductors. A combination AFCI device incorporates both kinds of protection.

The UL product categories are as follows for the three types of AFCI devices addressed in this code section.

AVZQ	Arc Fault Circuit Interrupters, Branch/Feeder Type
AWAH	Arc Fault Circuit Interrupters, Combination Type
AWBZ	Arc Fault Circuit Interrupters, Outlet Branch Circuit Type

This section allows an AFCI to be located outside of the distribution panelboard. This provision handles unique installations where an existing system has circuits being added that require AFCI protection. Where the older service panelboard or sub-panelboard is fusible or of an older type for which an AFCI device is not available, this provision will allow locating an AFCI outside of the panelboard in a separate enclosure. Outlets supplied by this branch circuit cannot occur upstream of the AFCI device. The conductors between the existing panelboard and the AFCI must have the additional protection from physical damage because they are upstream of the AFCI and, therefore, are not protected from arcing faults.

Items 1 through 6 provide the options for the required protection. Option 1 simply requires a combination-type AFCI that would be installed in the panelboard at the source of the branch circuit. This option is the most simple and likely the most economical approach and would be chosen for new panelboards in new construction.

Option 2 requires a branch/feeder-type AFCI device to protect the circuit conductors between the panelboard and the first outlet box on the circuit. It also requires an outlet branch circuit AFCI device in the first outlet box. Note that the code says "first outlet box," not the first receptacle outlet. The first outlet box on a circuit may or may not be a receptacle outlet box. The branch circuit conductors are not required to have any means of physical protection above and beyond what is otherwise required by the code. An outlet branch circuit AFCI device is typically a receptacle device or a blind device designed for installation in a receptacle box.

Option 3 requires a standard AFCI circuit breaker (older product line; not a combination type) supplemented by an outlet branch circuit-type AFCI device. Because the AFCI device in the panelboard is the less capable type, the code requires that there be no splices in wiring between the two AFCI devices and limits the conductor lengths.

Option 4 requires an outlet branch circuit AFCI device as the only AFCI device provided that such device in combination with the circuit breaker is listed as meeting all of the requirements for a system combination-type AFCI. This appears to be addressing devices made by the same manufacturer and the manufacturer has submitted the device combination to a testing agency to determine if the device combination meets the applicable criteria.

Option 5 requires only an outlet branch circuit-type AFCI device and requires exceptional physical protection of the branch circuit conductors between the overcurrent device and the first outlet. This item could apply in cases where AFCI circuit breakers are not available for the type of existing panelboard, and in such cases, a new sub-panelboard could be placed near the service panelboard. The new sub-panelboard would be supplied by a feeder protected by the wiring methods specified in this item and the required AFCI devices would be installed in the new sub-panelboard.

Option 6 is similar in approach to Option 5.

The exception to this code section exempts dedicated branch circuits for fire alarm systems where the circuit conductors are provided with exceptional physical protection.

E3902.17 Arc-fault circuit interrupter protection for branch circuit extensions or modifications. Where branch-circuit wiring is modified, replaced, or extended in any of the areas specified in Section E3902.16, the branch circuit shall be protected by one of the following:

1. A combination-type AFCI located at the origin of the branch circuit
2. An outlet branch-circuit type AFCI located at the first receptacle outlet of the existing branch circuit. [210.12(B)]

Exception: AFCI protection shall not be required where the extension of the existing conductors is not more than 6

INTERNATIONAL CODE COUNCIL®
Copyright © 2015 ICC. ALL RIGHTS RESERVED. Accessed by David Dammon on Jun 21, 2017 12:30:52 PM pursuant to License Agreement with ICC. No further reproduction or distribution authorized. ANY UNAUTHORIZED REPRODUCTION OR DISTRIBUTION IS A VIOLATION OF THE FEDERAL COPYRIGHT ACT AND THE LICENSE AGREEMENT, AND SUBJECT TO CIVIL AND CRIMINAL PENALTIES THEREUNDER.

feet (1.8 m) in length and does not include any additional outlets or devices. [210.12(B) Exception]

❖ This section addresses existing buildings and will require AFCI protection where wiring is replaced, altered and extended. For example, if an existing branch circuit serving receptacle and/or lighting outlets is extended to serve a new receptacle, that existing circuit must be protected at its origin or such protection must be provided by an outlet-type AFCI device installed at the first outlet so as to protect all downstream outlets. Any work on branch circuit wiring that would require a permit would trigger the requirement for AFCI protection of the affected branch circuit wiring. The exception applies where the branch circuit extension is very short in length and does not involve any new outlets or devices, thus, the amount of wiring subject to faults is negligible.

SECTION E3903
LIGHTING OUTLETS

E3903.1 General. Lighting outlets shall be provided in accordance with Sections E3903.2 through E3903.4. [210.70(A)]

❖ See the commentary to Sections E3903.2 and E3903.4.

E3903.2 Habitable rooms. At least one wall switch-controlled lighting outlet shall be installed in every habitable room and bathroom. [210.70(A)(1)]

Exceptions:

1. In other than kitchens and bathrooms, one or more receptacles controlled by a wall switch shall be considered equivalent to the required lighting outlet. [210.70(A)(1) Exception No. 1]
2. Lighting outlets shall be permitted to be controlled by occupancy sensors that are in addition to wall switches, or that are located at a customary wall switch location and equipped with a manual override that will allow the sensor to function as a wall switch. [210.70(A)(1) Exception No. 2]

❖ According to Chapter 2, a space for living, sleeping, eating or cooking is a habitable space and does not include a bathroom. Therefore, a bathroom is specifically referred to as an area where a wall-switch-controlled lighting outlet is required. In all rooms other than kitchens and bathrooms, the lighting outlet may be a switched receptacle. Switched receptacles serve floor and table lamps and such lamps are not found in and are not appropriate for kitchens and bathrooms.

It seems unlikely that the dining room lighting outlet would be a switched receptacle. However, if this is the case, such a receptacle must not be supplied by one of the small appliance branch circuits. This is clear from the exception to Section E3901.3, which allows for a switched receptacle to be supplied from a general purpose branch circuit. Thus, all of the receptacles in a dining room must be supplied by a small appliance circuit except the one that is switched and considered to be the lighting outlet (see commentary, Section E3901.1).

E3903.3 Additional locations. At least one wall-switch-controlled lighting outlet shall be installed in hallways, stairways, attached garages, and detached garages with electric power. At least one wall-switch-controlled lighting outlet shall be installed to provide illumination on the exterior side of each outdoor egress door having grade level access, including outdoor egress doors for attached garages and detached garages with electric power. A vehicle door in a garage shall not be considered as an outdoor egress door. Where one or more lighting outlets are installed for interior stairways, there shall be a wall switch at each floor level and landing level that includes an entryway to control the lighting outlets where the stairway between floor levels has six or more risers. [210.70(A)(2)]

Exception: In hallways, stairways, and at outdoor egress doors, remote, central, or automatic control of lighting shall be permitted. [210.70(A)(2) Exception]

❖ Additional areas that are not habitable and would not be included in Section E3903.2 are hallways, stairways and garages. There is no requirement for a three-way switch at each end of a hallway or, for that matter, in any room. The only requirement for three-way switches or four-way switches (where a lighting outlet is controlled from two or three separate switches at different locations) is at a stairway that has at least six risers. Installing three-way and four-way switches at separate entrances of a large room does provide for convenience and also an added measure of safety, but it is not required by the code (see Section R303.6.1). Where intermediate landings occur in stairways and those landings are served by egress doors, a wall switch must also be installed on such landings.

E3903.4 Storage or equipment spaces. In attics, under-floor spaces, utility rooms and basements, at least one lighting outlet shall be installed where these spaces are used for storage or contain equipment requiring servicing. Such lighting outlet shall be controlled by a wall switch or shall have an integral switch. At least one point of control shall be at the usual point of entry to these spaces. The lighting outlet shall be provided at or near the equipment requiring servicing. [210.70(A)(3)]

❖ In attics or crawl spaces that are used for storage or have equipment that requires servicing, a lighting outlet is required with a switch at the point of entrance. If an attic or crawl space is not used for storage and contains no equipment, no lighting outlet is required. A utility room and a basement would have equipment and/or be used for storage and would require a lighting outlet. Similar requirements are found in Section M1305. The required lighting outlet is for general illumination to allow the space to be safely navigated and is not intended to provide all of the illumination necessary for servicing of equipment. Such equipment includes furnaces, boilers, water heaters, well system components, exhaust fans, etc.

INTERNATIONAL CODE COUNCIL®
Copyright © 2015 ICC. ALL RIGHTS RESERVED. Accessed by David Dammon on Jun 21, 2017 12:30:52 PM pursuant to License Agreement with ICC. No further reproduction or distribution authorized. ANY UNAUTHORIZED REPRODUCTION OR DISTRIBUTION IS A VIOLATION OF THE FEDERAL COPYRIGHT ACT AND THE LICENSE AGREEMENT, AND SUBJECT TO CIVIL AND CRIMINAL PENALTIES THEREUNDER.

SECTION E3904
GENERAL INSTALLATION REQUIREMENTS

E3904.1 Electrical continuity of metal raceways and enclosures. Metal raceways, cable armor and other metal enclosures for conductors shall be mechanically joined together into a continuous electric conductor and shall be connected to all boxes, fittings and cabinets so as to provide effective electrical continuity. Raceways and cable assemblies shall be mechanically secured to boxes, fittings cabinets and other enclosures. (300.10)

Exception: Short sections of raceway used to provide cable assemblies with support or protection against physical damage. (300.10 Exception No. 1)

❖ Where armored cable is used, the armor must be continuous to be able to serve as a conductor to carry fault current. In a raceway system, the metal raceway must serve as a conductor to carry fault current. Where the mechanical connection at a box or fitting is not tight, high resistance will occur and prevent the flow of fault current necessary to trip the overcurrent protective device. Poor connections can also cause arcing under fault conditions creating a fire hazard. Good workmanship is essential to providing raceway electrical continuity. It is not uncommon to find raceways such as conduit entering a box on an angle such that the connector and its locknut contact the box at only a single point, thus making a poor connection that has poor continuity and that is likely to work loose. Proper workmanship must be enforced to achieve the intent of this section.

E3904.2 Mechanical continuity—raceways and cables. Metal or nonmetallic raceways, cable armors and cable sheaths shall be continuous between cabinets, boxes, fittings or other enclosures or outlets.

Exception: Short sections of raceway used to provide cable assemblies with support or protection against physical damage. (300.12 Exception No. 1)

❖ Cable is permitted to be protected from physical damage by running it through a section of raceway (see Section E3904.1).

E3904.3 Securing and supporting. Raceways, cable assemblies, boxes, cabinets and fittings shall be securely fastened in place. (300.11)

❖ Raceways and cables are wiring methods covered in Chapter 38. The supporting requirements are covered in Table E3802.1. Boxes and cabinets must be securely supported according to provisions in Section E3906.8. Detailed requirements are included for support of boxes.

E3904.3.1 Prohibited means of support. Cable wiring methods shall not be used as a means of support for other cables, raceways and nonelectrical equipment. [300.11(C)]

❖ Cables, raceways and electrical and nonelectrical equipment must not be supported by other cables because this would be poor support at best and could cause damage to the cables that are used for supports. This could also be a violation of Section E3802.3.1.

E3904.4 Raceways as means of support. Raceways shall be used as a means of support for other raceways, cables or nonelectric equipment only under the following conditions:

1. Where the raceway or means of support is identified as a means of support; or
2. Where the raceway contains power supply conductors for electrically controlled equipment and is used to support Class 2 circuit conductors or cables that are solely for the purpose of connection to the control circuits of the equipment served by such raceway; or
3. Where the raceway is used to support boxes or conduit bodies in accordance with Sections E3906.8.4 and E3906.8.5. [300.11(B)]

❖ The use of raceways to support other raceways, cables or wires is permitted only under the limited circumstances listed. Where wires, cables and other raceways are "piggybacked" on other raceways, the additional weight and tension forces could strain the host raceway and its supports. Other installers tend to attach their wiring to whatever is conveniently located where they are working and this practice can get out of hand.

A thermostat wire for the control of heating and air conditioning may be supported by the raceway supplying power to the equipment. Control wiring is typically supported by the conduit or raceway that supplies furnaces, boilers and condensing units. Where cables such as telephone wiring, IT cables and cable TV wiring are supported by a conduit or electrical metallic tubing, the cables could prevent the dissipation of heat produced inside the raceway and also add additional stresses from the weight of the wires and cables.

E3904.5 Raceway installations. Raceways shall be installed complete between outlet, junction or splicing points prior to the installation of conductors. (300.18)

Exception: Short sections of raceways used to contain conductors or cable assemblies for protection from physical damage shall not be required to be installed complete between outlet, junction, or splicing points. (300.18 Exception)

❖ The proper way to install wiring in raceways is to assemble the complete raceway system first and properly support it. After the entire system is in place and secured, the wire can be pulled into the raceway with less risk of damaging it. Trying to install the wire piecemeal as the conduit is installed will likely result in damage to the conductor insulation.

E3904.6 Conduit and tubing fill. The maximum number of conductors installed in conduit or tubing shall be in accordance with Tables E3904.6(1) through E3904.6(10). (300.17, Chapter 9, Table 1 and Annex C)

❖ The code includes 10 tables to indicate how many conductors of the various types and sizes are allowed in the various sizes and types of raceway.

INTERNATIONAL CODE COUNCIL®
Copyright © 2015 ICC. ALL RIGHTS RESERVED. Accessed by David Dammon on Jun 21, 2017 12:30:52 PM pursuant to License Agreement with ICC. No further reproduction or distribution authorized. ANY UNAUTHORIZED REPRODUCTION OR DISTRIBUTION IS A VIOLATION OF THE FEDERAL COPYRIGHT ACT AND THE LICENSE AGREEMENT, AND SUBJECT TO CIVIL AND CRIMINAL PENALTIES THEREUNDER.

TABLE E3904.6(1) (Annex C, Table C.1)
MAXIMUM NUMBER OF CONDUCTORS IN ELECTRICAL METALLIC TUBING (EMT)[a]

TYPE LETTERS	CONDUCTOR SIZE AWG/kcmil	TRADE SIZES (inches)					
		1/2	3/4	1	1 1/4	1 1/2	2
RHH, RHW, RHW-2	14	4	7	11	20	27	46
	12	3	6	9	17	23	38
	10	2	5	8	13	18	30
	8	1	2	4	7	9	16
	6	1	1	3	5	8	13
	4	1	1	2	4	6	10
	3	1	1	1	4	5	9
	2	1	1	1	3	4	7
	1	0	1	1	1	3	5
	1/0	0	1	1	1	2	4
	2/0	0	1	1	1	2	4
	3/0	0	0	1	1	1	3
	4/0	0	0	1	1	1	3
TW, THHW, THW, THW-2	14	8	15	25	43	58	96
	12	6	11	19	33	45	74
	10	5	8	14	24	33	55
	8	2	5	8	13	18	30
RHH[a], RHW[a], RHW-2[a]	14	6	10	16	28	39	64
	12	4	8	13	23	31	51
	10	3	6	10	18	24	40
	8	1	4	6	10	14	24
RHH[a], RHW[a], RHW-2[a], TW, THW, THHW, THW-2	6	1	3	4	8	11	18
	4	1	1	3	6	8	13
	3	1	1	3	5	7	12
	2	1	1	2	4	6	10
	1	1	1	1	3	4	7
	1/0	0	1	1	2	3	6
	2/0	0	1	1	1	3	5
	3/0	0	1	1	1	2	4
	4/0	0	0	1	1	1	3
THHN, THWN, THWN-2	14	12	22	35	61	84	138
	12	9	16	26	45	61	101
	10	5	10	16	28	38	63
	8	3	6	9	16	22	36
	6	2	4	7	12	16	26
	4	1	2	4	7	10	16
	3	1	1	3	6	8	13
	2	1	1	3	5	7	11
	1	1	1	1	4	5	8
	1/0	1	1	1	3	4	7
	2/0	0	1	1	2	3	6
	3/0	0	1	1	1	3	5
	4/0	0	1	1	1	2	4
XHH, XHHW, XHHW-2	14	8	15	25	43	58	96
	12	6	11	19	33	45	74
	10	5	8	14	24	33	55
	8	2	5	8	13	18	30
	6	1	3	6	10	14	22
	4	1	2	4	7	10	16
	3	1	1	3	6	8	14
	2	1	1	3	5	7	11
	1	1	1	1	4	5	8
	1/0	1	1	1	3	4	7
	2/0	0	1	1	2	3	6
	3/0	0	1	1	1	3	5
	4/0	0	1	1	1	2	4

For SI: 1 inch = 25.4 mm.

a. Types RHW, and RHW-2 without outer covering.

❖ See the commentary to Section E3904.6.

INTERNATIONAL CODE COUNCIL®
Copyright © 2015 ICC. ALL RIGHTS RESERVED. Accessed by David Dammon on Jun 21, 2017 12:30:52 PM pursuant to License Agreement with ICC. No further reproduction or distribution authorized. ANY UNAUTHORIZED REPRODUCTION OR DISTRIBUTION IS A VIOLATION OF THE FEDERAL COPYRIGHT ACT AND THE LICENSE AGREEMENT, AND SUBJECT TO CIVIL AND CRIMINAL PENALTIES THEREUNDER.

TABLE E3904.6(2) (Annex C, Table C.2)
MAXIMUM NUMBER OF CONDUCTORS IN ELECTRICAL NONMETALLIC TUBING (ENT)[a]

TYPE LETTERS	CONDUCTOR SIZE AWG/kcmil	TRADE SIZES (inches)					
		1/2	3/4	1	1 1/4	1 1/2	2
RHH, RHW, RHW-2	14	3	6	10	19	26	43
	12	2	5	9	16	22	36
	10	1	4	7	13	17	29
	8	1	1	3	6	9	15
	6	1	1	3	5	7	12
	4	1	1	2	4	6	9
	3	1	1	1	3	5	8
	2	0	1	1	3	4	7
	1	0	1	1	1	3	5
	1/0	0	0	1	1	2	4
	2/0	0	0	1	1	1	3
RHH, RHW, RHW-2	3/0	0	0	1	1	1	3
	4/0	0	0	1	1	1	2
TW, THHW, THW, THW-2	14	7	13	22	40	55	92
	12	5	10	17	31	42	71
	10	4	7	13	23	32	52
	8	1	4	7	13	17	29
RHH[a], RHW[a], RHW-2[a]	14	4	8	15	27	37	61
	12	3	7	12	21	29	49
	10	3	5	9	17	23	38
	8	1	3	5	10	14	23
RHH[a], RHW[a], RHW-2[a], TW, THW, THHW, THW-2	6	1	2	4	7	10	17
	4	1	1	3	5	8	13
	3	1	1	2	5	7	11
	2	1	1	2	4	6	9
	1	0	1	1	3	4	6
	1/0	0	1	1	2	3	5
	2/0	0	1	1	1	3	5
	3/0	0	0	1	1	2	4
	4/0	0	0	1	1	1	3
THHN, THWN, THWN-2	14	10	18	32	58	80	132
	12	7	13	23	42	58	96
	10	4	8	15	26	36	60
	8	2	5	8	15	21	35
	6	1	3	6	11	15	25
	4	1	1	4	7	9	15
	3	1	1	3	5	8	13
	2	1	1	2	5	6	11
THHN, THWN, THWN-2	1	1	1	1	3	5	8
	1/0	0	1	1	3	4	7
	2/0	0	1	1	2	3	5
	3/0	0	1	1	1	3	4
	4/0	0	0	1	1	2	4
XHH, XHHW, XHHW-2	14	7	13	22	40	55	92
	12	5	10	17	31	42	71
	10	4	7	13	23	32	52
	8	1	4	7	13	17	29
	6	1	3	5	9	13	21
	4	1	1	4	7	9	15
	3	1	1	3	6	8	13
	2	1	1	2	5	6	11
	1	1	1	1	3	5	8
	1/0	0	1	1	3	4	7
	2/0	0	1	1	2	3	6
	3/0	0	1	1	1	3	5
	4/0	0	0	1	1	2	4

For SI: 1 inch = 25.4 mm.

a. Types RHW, and RHW-2 without outer covering.

❖ See the commentary to Section E3904.6.

INTERNATIONAL CODE COUNCIL®
Copyright © 2015 ICC. ALL RIGHTS RESERVED. Accessed by David Dammon on Jun 21, 2017 12:30:52 PM pursuant to License Agreement with ICC. No further reproduction or distribution authorized. ANY UNAUTHORIZED REPRODUCTION OR DISTRIBUTION IS A VIOLATION OF THE FEDERAL COPYRIGHT ACT AND THE LICENSE AGREEMENT, AND SUBJECT TO CIVIL AND CRIMINAL PENALTIES THEREUNDER.

TABLE E3904.6(3) (Annex C, Table C.3)
MAXIMUM NUMBER OF CONDUCTORS IN FLEXIBLE METALLIC CONDUIT (FMC)[a]

TYPE LETTERS	CONDUCTOR SIZE AWG/kcmil	TRADE SIZES (inches)					
		1/2	3/4	1	1 1/4	1 1/2	2
RHH, RHW, RHW-2	14	4	7	11	17	25	44
	12	3	6	9	14	21	37
	10	3	5	7	11	17	30
	8	1	2	4	6	9	15
	6	1	1	3	5	7	12
	4	1	1	2	4	5	10
	3	1	1	1	3	5	7
RHH, RHW, RHW-2	2	1	1	1	3	4	7
	1	0	1	1	1	2	5
	1/0	0	1	1	1	2	4
	2/0	0	1	1	1	1	3
	3/0	0	0	1	1	1	3
TW, THHW, THW, THW-2	14	9	15	23	36	53	94
	12	7	11	18	28	41	72
	10	5	8	13	21	30	54
	8	3	5	7	11	17	30
RHH[a], RHW[a], RHW-2[a]	14	6	10	15	24	35	62
	12	5	8	12	19	28	50
	10	4	6	10	15	22	39
	8	1	4	6	9	13	23
RHH[a], RHW[a], RHW-2[a], TW, THW, THHW, THW-2	6	1	3	4	7	10	18
	4	1	1	3	5	7	13
	3	1	1	3	4	6	11
	2	1	1	2	4	5	10
	1	1	1	1	2	4	7
	1/0	0	1	1	1	3	6
	2/0	0	1	1	1	3	5
	3/0	0	1	1	1	2	4
	4/0	0	0	1	1	1	3
	4/0	0	0	1	1	1	2
THHN, THWN, THWN-2	14	13	22	33	52	76	134
	12	9	16	24	38	56	98
	10	6	10	15	24	35	62
	8	3	6	9	14	20	35
THHN, THWN, THWN-2	6	2	4	6	10	14	25
	4	1	2	4	6	9	16
	3	1	1	3	5	7	13
	2	1	1	3	4	6	11
	1	1	1	1	3	4	8
	1/0	1	1	1	2	4	7
	2/0	0	1	1	1	3	6
	3/0	0	1	1	1	2	5
	4/0	0	1	1	1	1	4
XHH, XHHW, XHHW-2	14	9	15	23	36	53	94
	12	7	11	18	28	41	72
	10	5	8	13	21	30	54
	8	3	5	7	11	17	30
	6	1	3	5	8	12	22
	4	1	2	4	6	9	16
	3	1	1	3	5	7	13
	2	1	1	3	4	6	11
	1	1	1	1	3	5	8
	1/0	1	1	1	2	4	7
	2/0	0	1	1	2	3	6
	3/0	0	1	1	1	3	5
	4/0	0	1	1	1	2	4

For SI: 1 inch = 25.4 mm.

a. Types RHW, and RHW-2 without outer covering.

❖ See the commentary to Section E3904.6.

INTERNATIONAL CODE COUNCIL®
Copyright © 2015 ICC. ALL RIGHTS RESERVED. Accessed by David Dammon on Jun 21, 2017 12:30:52 PM pursuant to License Agreement with ICC. No further reproduction or distribution authorized. ANY UNAUTHORIZED REPRODUCTION OR DISTRIBUTION IS A VIOLATION OF THE FEDERAL COPYRIGHT ACT AND THE LICENSE AGREEMENT, AND SUBJECT TO CIVIL AND CRIMINAL PENALTIES THEREUNDER.

TABLE E3904.6(4) (Annex C, Table C.4)
MAXIMUM NUMBER OF CONDUCTORS IN INTERMEDIATE METALLIC CONDUIT (IMC)[a]

TYPE LETTERS	CONDUCTOR SIZE AWG/kcmil	TRADE SIZES (inches)					
		1/2	3/4	1	1 1/4	1 1/2	2
RHH, RHW, RHW-2	14	4	8	13	22	30	49
	12	4	6	11	18	25	41
	10	3	5	8	15	20	33
	8	1	3	4	8	10	17
	6	1	1	3	6	8	14
	4	1	1	3	5	6	11
	3	1	1	2	4	6	9
	2	1	1	1	3	5	8
	1	0	1	1	2	3	5
	1/0	0	1	1	1	3	4
	2/0	0	1	1	1	2	4
	3/0	0	0	1	1	1	3
	4/0	0	0	1	1	1	3
TW, THHW, THW, THW-2	14	10	17	27	47	64	104
	12	7	13	21	36	49	80
	10	5	9	15	27	36	59
	8	3	5	8	15	20	33
RHH[a], RHW[a], RHW-2[a]	14	6	11	18	31	42	69
	12	5	9	14	25	34	56
	10	4	7	11	19	26	43
	8	2	4	7	12	16	26
RHH[a], RHW[a], RHW-2[a], TW, THW, THHW, THW-2	6	1	3	5	9	12	20
	4	1	2	4	6	9	15
	3	1	1	3	6	8	13
	2	1	1	3	5	6	11
	1	1	1	1	3	4	7
	1/0	1	1	1	3	4	6
	2/0	0	1	1	2	3	5
	3/0	0	1	1	1	3	4
	4/0	0	1	1	1	2	4
THHN, THWN, THWN-2	14	14	24	39	68	91	149
	12	10	17	29	49	67	109
	10	6	11	18	31	42	68
	8	3	6	10	18	24	39
	6	2	4	7	13	17	28
	4	1	3	4	8	10	17
	3	1	2	4	6	9	15
	2	1	1	3	5	7	12
	1	1	1	2	4	5	9
	1/0	1	1	1	3	4	8
	2/0	1	1	1	3	4	6
THHN, THWN, THWN-2	3/0	0	1	1	2	3	5
	2/0	0	1	1	1	2	4
XHH, XHHW, XHHW-2	14	10	17	27	47	64	104
	12	7	13	21	36	49	80
	10	5	9	15	27	36	59
	8	3	5	8	15	20	33
	6	1	4	6	11	15	24
	4	1	3	4	8	11	18
	3	1	2	4	7	9	15
	2	1	1	3	5	7	12
	1	1	1	2	4	5	9
	1/0	1	1	1	3	5	8
	2/0	1	1	1	3	4	6
	3/0	0	1	1	2	3	5
	4/0	0	1	1	1	2	4

For SI: 1 inch = 25.4 mm.

a. Types RHW, and RHW-2 without outer covering.

❖ See the commentary to Section E3904.6.

INTERNATIONAL CODE COUNCIL®
Copyright © 2015 ICC. ALL RIGHTS RESERVED. Accessed by David Dammon on Jun 21, 2017 12:30:52 PM pursuant to License Agreement with ICC. No further reproduction or distribution authorized. ANY UNAUTHORIZED REPRODUCTION OR DISTRIBUTION IS A VIOLATION OF THE FEDERAL COPYRIGHT ACT AND THE LICENSE AGREEMENT, AND SUBJECT TO CIVIL AND CRIMINAL PENALTIES THEREUNDER.

TABLE E3904.6(5) (Annex C, Table C.5)
MAXIMUM NUMBER OF CONDUCTORS IN LIQUID-TIGHT FLEXIBLE NONMETALLIC CONDUIT (FNMC-B)[a]

TYPE LETTERS	CONDUCTOR SIZE AWG/kcmil	TRADE SIZES (inches)						
		3/8	1/2	3/4	1	1 1/4	1 1/2	2
RHH, RHW, RHW-2	14	2	4	7	12	21	27	44
	12	1	3	6	10	17	22	36
	10	1	3	5	8	14	18	29
	8	1	1	2	4	7	9	1
	6	1	1	1	3	6	7	12
	4	0	1	1	2	4	6	9
RHH, RHW, RHW-2	3	0	1	1	1	4	5	8
	2	0	1	1	1	3	4	7
	1	0	0	1	1	1	3	5
	1/0	0	0	1	1	1	2	4
	2/0	0	0	1	1	1	1	3
	3/0	0	0	0	1	1	1	3
	4/0	0	0	0	1	1	1	2
TW, THHW, THW, THW-2	14	5	9	15	25	44	57	93
	12	4	7	12	19	33	43	71
	10	3	5	9	14	25	32	53
	8	1	3	5	8	14	18	29
RHH[a], RHW[a], RGW-2[a]	14	3	6	10	16	29	38	62
	12	3	5	8	13	23	30	50
	10	1	3	6	10	18	23	39
	8	1	1	4	6	11	14	23
RHH[a], RHW[a], RHW-2[a], TW, THW, THHW, THW-2	6	1	1	3	5	8	11	18
	4	1	1	1	3	6	8	13
	3	1	1	1	3	5	7	11
	2	0	1	1	2	4	6	9
	1	0	1	1	1	3	4	7
	1/0	0	0	1	1	2	3	6
	2/0	0	0	1	1	2	3	5
	3/0	0	0	1	1	1	2	4
	4/0	0	0	0	1	1	1	3
THHN, THWN, THWN-2	14	8	13	22	36	63	81	133
	12	5	9	16	26	46	59	97
	10	3	6	10	16	29	37	61
	8	1	3	6	9	16	21	35
THHN, THWN, THWN-2	6	1	2	4	7	12	15	25
	4	1	1	2	4	7	9	15
	3	1	1	1	3	6	8	13
	2	1	1	1	3	5	7	11
	1	0	1	1	1	4	5	8
	1/0	0	1	1	1	3	4	7
	2/0	0	0	1	1	2	3	6
	3/0	0	0	1	1	1	3	5
	4/0	0	0	1	1	1	2	4
XHH, XHHW, XHHW-2	14	5	9	15	25	44	57	93
	12	4	7	12	19	33	43	71
	10	3	5	9	14	25	32	53
	8	1	3	5	8	14	18	29
	6	1	1	3	6	10	13	22
	4	1	1	2	4	7	9	16
	3	1	1	1	3	6	8	13
	2	1	1	1	3	5	7	11
	1	0	1	1	1	4	5	8
	1/0	0	1	1	1	3	4	7
	2/0	0	0	1	1	2	3	6
	3/0	0	0	1	1	1	3	5
	4/0	0	0	1	1	1	2	4

For SI: 1 inch = 25.4 mm.

a. Types RHW, and RHW-2 without outer covering.

❖ See the commentary to Section E3904.6.

INTERNATIONAL CODE COUNCIL®
Copyright © 2015 ICC. ALL RIGHTS RESERVED. Accessed by David Dammon on Jun 21, 2017 12:30:52 PM pursuant to License Agreement with ICC. No further reproduction or distribution authorized. ANY UNAUTHORIZED REPRODUCTION OR DISTRIBUTION IS A VIOLATION OF THE FEDERAL COPYRIGHT ACT AND THE LICENSE AGREEMENT, AND SUBJECT TO CIVIL AND CRIMINAL PENALTIES THEREUNDER.

TABLE E3904.6(6) (Annex C, Table C.6)
MAXIMUM NUMBER OF CONDUCTORS IN LIQUID-TIGHT FLEXIBLE NONMETALLIC CONDUIT (FNMC-A)[a]

TYPE LETTERS	CONDUCTOR SIZE AWG/kcmil	TRADE SIZES (inches)						
		3/8	1/2	3/4	1	1 1/4	1 1/2	2
RHH, RHW, RHW-2	14	2	4	7	11	20	27	45
	12	1	3	6	9	17	23	38
	10	1	3	5	8	13	18	30
	8	1	1	2	4	7	9	16
	6	1	1	1	3	5	7	13
	4	0	1	1	2	4	6	10
	3	0	1	1	1	4	5	8
	2	0	1	1	1	3	4	7
	1	0	0	1	1	1	3	5
	1/0	0	0	1	1	1	2	4
	2/0	0	0	1	1	1	1	4
	3/0	0	0	0	1	1	1	3
	4/0	0	0	0	1	1	1	3
TW, THHW, THW, THW-2	14	5	9	15	24	43	58	96
	12	4	7	12	19	33	44	74
	10	3	5	9	14	24	33	55
	8	1	3	5	8	13	18	30
RHH[a], RHW[a], RHW-2[a]	14	3	6	10	16	28	38	64
	12	3	4	8	13	23	31	51
	10	1	3	6	10	18	24	40
	8	1	1	4	6	10	14	24
RHH[a], RHW[a], RHW-2[a], TW, THW, THHW, THW-2	6	1	1	3	4	8	11	18
	4	1	1	1	3	6	8	13
	3	1	1	1	3	5	7	11
	2	0	1	1	2	4	6	10
	1	0	1	1	1	3	4	7
RHH[a], RHW[a], RHW-2[a], TW, THW, THHW, THW-2	1/0	0	0	1	1	2	3	6
	2/0	0	0	1	1	1	3	5
	3/0	0	0	1	1	1	2	4
	4/0	0	0	0	1	1	1	3
THHN, THWN, THWN-2	14	8	13	22	35	62	83	137
	12	5	9	16	25	45	60	100
	10	3	6	10	16	28	38	63
	8	1	3	6	9	16	22	36
	6	1	2	4	6	12	16	26
	4	1	1	2	4	7	9	16
	3	1	1	1	3	6	8	13
	2	1	1	1	3	5	7	11
	1	0	1	1	1	4	5	8
	1/0	0	1	1	1	3	4	7
	2/0	0	0	1	1	2	3	6
	3/0	0	0	1	1	1	3	5
	4/0	0	0	1	1	1	2	4
XHH, XHHW, XHHW-2	14	5	9	15	24	43	58	96
	12	4	7	12	19	33	44	74
	10	3	5	9	14	24	33	55
	8	1	3	5	8	13	18	30
	6	1	1	3	5	10	13	22
	4	1	1	2	4	7	10	16
	3	1	1	1	3	6	8	14
	2	1	1	1	3	5	7	11
	1	0	1	1	1	4	5	8
XHH, XHHW, XHHW-2	1/0	0	1	1	1	3	4	7
	2/0	0	0	1	1	2	3	6
	3/0	0	0	1	1	1	3	5
	4/0	0	0	1	1	1	2	4

For SI: 1 inch = 25.4 mm.

a. Types RHW, and RHW-2 without outer covering.

❖ See the commentary to Section E3904.6.

INTERNATIONAL CODE COUNCIL®
Copyright © 2015 ICC. ALL RIGHTS RESERVED. Accessed by David Dammon on Jun 21, 2017 12:30:52 PM pursuant to License Agreement with ICC. No further reproduction or distribution authorized. ANY UNAUTHORIZED REPRODUCTION OR DISTRIBUTION IS A VIOLATION OF THE FEDERAL COPYRIGHT ACT AND THE LICENSE AGREEMENT, AND SUBJECT TO CIVIL AND CRIMINAL PENALTIES THEREUNDER.

TABLE E3904.6(7) (Annex C, Table C.7)
MAXIMUM NUMBER OF CONDUCTORS IN LIQUID-TIGHT FLEXIBLE METAL CONDUIT (LFMC)[a]

TYPE LETTERS	CONDUCTOR SIZE AWG/kcmil	TRADE SIZES (inches)					
		1/2	3/4	1	1 1/4	1 1/2	2
RHH, RHW, RHW-2	14	4	7	12	21	27	44
	12	3	6	10	17	22	36
	10	3	5	8	14	18	29
	8	1	2	4	7	9	15
	6	1	1	3	6	7	12
	4	1	1	2	4	6	9
	3	1	1	1	4	5	8
	2	1	1	1	3	4	7
	1	0	1	1	1	3	5
	1/0	0	1	1	1	2	4
	2/0	0	1	1	1	1	3
	3/0	0	0	1	1	1	3
	4/0	0	0	1	1	1	2
TW, THHW, THW, THW-2	14	9	15	25	44	57	93
	12	7	12	19	33	43	71
	10	5	9	14	25	32	53
	8	3	5	8	14	18	29
RHH[a], RHW[a], RHW-2[a], THHW, THW, THW-2	14	6	10	16	29	38	62
	12	5	8	13	23	30	50
	10	3	6	10	18	23	39
	8	1	4	6	11	14	23
RHH[a], RHW[a], RHW-2[a], TW, THW, THHW, THW-2	6	1	3	5	8	11	18
	4	1	1	3	6	8	13
	3	1	1	3	5	7	11
	2	1	1	2	4	6	9
	1	1	1	1	3	4	7
	1/0	0	1	1	2	3	6
	2/0	0	1	1	2	3	5
	3/0	0	1	1	1	2	4
	4/0	0	0	1	1	1	3
THHN, THWN, THWN-2	14	13	22	36	63	81	133
	12	9	16	26	46	59	97
	10	6	10	16	29	37	61
	8	3	6	9	16	21	35
	6	2	4	7	12	15	25
	4	1	2	4	7	9	15
	3	1	1	3	6	8	13
	2	1	1	3	5	7	11
	1	1	1	1	4	5	8
	1/0	1	1	1	3	4	7
	2/0	0	1	1	2	3	6
	3/0	0	1	1	1	3	5
	4/0	0	1	1	1	2	4
XHH, XHHW, XHHW-2	14	9	15	25	44	57	93
	12	7	12	19	33	43	71
	10	5	9	14	25	32	53
	8	3	5	8	14	18	29
XHH, XHHW, XHHW-2	6	1	3	6	10	13	22
	4	1	2	4	7	9	16
	3	1	1	3	6	8	13
	2	1	1	3	5	7	11
	1	1	1	1	4	5	8
	1/0	1	1	1	3	4	7
	2/0	0	1	1	2	3	6
	3/0	0	1	1	1	3	5
	4/0	0	1	1	1	2	4

For SI: 1 inch = 25.4 mm.

a. Types RHW, and RHW-2 without outer covering.

❖ See the commentary to Section E3904.6.

INTERNATIONAL CODE COUNCIL®
Copyright © 2015 ICC. ALL RIGHTS RESERVED. Accessed by David Dammon on Jun 21, 2017 12:30:52 PM pursuant to License Agreement with ICC. No further reproduction or distribution authorized. ANY UNAUTHORIZED REPRODUCTION OR DISTRIBUTION IS A VIOLATION OF THE FEDERAL COPYRIGHT ACT AND THE LICENSE AGREEMENT, AND SUBJECT TO CIVIL AND CRIMINAL PENALTIES THEREUNDER.

TABLE E3904.6(8) (Annex C, Table C.8)
MAXIMUM NUMBER OF CONDUCTORS IN RIGID METAL CONDUIT (RMC)[a]

TYPE LETTERS	CONDUCTOR SIZE AWG/kcmil	TRADE SIZES (inches)					
		1/2	3/4	1	1 1/4	1 1/2	2
RHH, RHW, RHW-2	14	4	7	12	21	28	46
	12	3	6	10	17	23	38
	10	3	5	8	14	19	31
	8	1	2	4	7	10	16
	6	1	1	3	6	8	13
	4	1	1	2	4	6	10
	3	1	1	2	4	5	9
	2	1	1	1	3	4	7
	1	0	1	1	1	3	5
	1/0	0	1	1	1	2	4
	2/0	0	1	1	1	2	4
	3/0	0	0	1	1	1	3
	4/0	0	0	1	1	1	3
TW, THHW, THW, THW-2	14	9	15	25	44	59	98
	12	7	12	19	33	45	75
	10	5	9	14	25	34	56
	8	3	5	8	14	19	31
RHH[a], RHW[a], RHW-2[a]	14	6	10	17	29	39	65
	12	5	8	13	23	32	52
	10	3	6	10	18	25	41
	8	1	4	6	11	15	24
RHH[a], RHW[a], RHW-2[a], TW, THW, THHW, THW-2	6	1	3	5	8	11	18
	4	1	1	3	6	8	14
	3	1	1	3	5	7	12
	2	1	1	2	4	6	10
	1	1	1	1	3	4	7
	1/0	0	1	1	2	3	6
	2/0	0	1	1	2	3	5
	3/0	0	1	1	1	2	4
	4/0	0	0	1	1	1	3
THHN, THWN, THWN-2	14	13	22	36	63	85	140
	12	9	16	26	46	62	102
	10	6	10	17	29	39	64
	8	3	6	9	16	22	37
	6	2	4	7	12	16	27
	4	1	2	4	7	10	16
	3	1	1	3	6	8	14
	2	1	1	3	5	7	11
	1	1	1	1	4	5	8
THHN, THWN, THWN-2	1/0	1	1	1	3	4	7
	2/0	0	1	1	2	3	6
	3/0	0	1	1	1	3	5
	4/0	0	1	1	1	2	4
XHH, XHHW, XHHW-2	14	9	15	25	44	59	98
	12	7	12	19	33	45	75
	10	5	9	14	25	34	56
	8	3	5	8	14	19	31
	6	1	3	6	10	14	23
	4	1	2	4	7	10	16
	3	1	1	3	6	8	14
	2	1	1	3	5	7	12
	1	1	1	1	4	5	9
	1/0	1	1	1	3	4	7
	2/0	0	1	1	2	3	6
	3/0	0	1	1	1	3	5
	4/0	0	1	1	1	2	4

For SI: 1 inch = 25.4 mm.

a. Types RHW, and RHW-2 without outer covering.

❖ See the commentary to Section E3904.6.

INTERNATIONAL CODE COUNCIL®
Copyright © 2015 ICC. ALL RIGHTS RESERVED. Accessed by David Dammon on Jun 21, 2017 12:30:52 PM pursuant to License Agreement with ICC. No further reproduction or distribution authorized. ANY UNAUTHORIZED REPRODUCTION OR DISTRIBUTION IS A VIOLATION OF THE FEDERAL COPYRIGHT ACT AND THE LICENSE AGREEMENT, AND SUBJECT TO CIVIL AND CRIMINAL PENALTIES THEREUNDER.

TABLE E3904.6(9) (Annex C, Table C.9)
MAXIMUM NUMBER OF CONDUCTORS IN RIGID PVC CONDUIT, SCHEDULE 80 (PVC-80)[a]

TYPE LETTERS	CONDUCTOR SIZE AWG/kcmil	TRADE SIZES (inches)					
		1/2	3/4	1	1 1/4	1 1/2	2
RHH, RHW, RHW-2	14	3	5	9	17	23	39
	12	2	4	7	14	19	32
	10	1	3	6	11	15	26
	8	1	1	3	6	8	13
	6	1	1	2	4	6	11
	4	1	1	1	3	5	8
RHH, RHW, RHW-2	3	0	1	1	3	4	7
	2	0	1	1	3	4	6
	1	0	1	1	1	2	4
	1/0	0	0	1	1	1	3
	2/0	0	0	1	1	1	3
	3/0	0	0	1	1	1	3
	4/0	0	0	0	1	1	2
TW, THHW, THW, THW-2	14	6	11	20	35	49	82
	12	5	9	15	27	38	63
	10	3	6	11	20	28	47
	8	1	3	6	11	15	26
RHH[a], RHW[a], RHW-2[a]	14	4	8	13	23	32	55
	12	3	6	10	19	26	44
	10	2	5	8	15	20	34
	8	1	3	5	9	12	20
RHH[a], RHW[a], RHW-2[a], TW, THW, THHW, THW-2	6	1	1	3	7	9	16
	4	1	1	3	5	7	12
	3	1	1	2	4	6	10
	2	1	1	1	3	5	8
	1	0	1	1	2	3	6
	1/0	0	1	1	1	3	5
RHH[a], RHW[a], RHW-2[a], TW, THW, THHW, THW-2	2/0	0	1	1	1	2	4
	3/0	0	0	1	1	1	3
	4/0	0	0	1	1	1	3
THHN, THWN, THWN-2	14	9	17	28	51	70	118
	12	6	12	20	37	51	86
	10	4	7	13	23	32	54
	8	2	4	7	13	18	31
	6	1	3	5	9	13	22
	4	1	1	3	6	8	14
	3	1	1	3	5	7	12
	2	1	1	2	4	6	10
	1	0	1	1	3	4	7
	1/0	0	1	1	2	3	6
	2/0	0	1	1	1	3	5
	3/0	0	1	1	1	2	4
	4/0	0	0	1	1	1	3
XHH, XHHW, XHHW-2	14	6	11	20	35	49	82
	12	5	9	15	27	38	63
	10	3	6	11	20	28	47
	8	1	3	6	118	15	26
	6	1	2	4		11	19

(continued)

INTERNATIONAL CODE COUNCIL®
Copyright © 2015 ICC. ALL RIGHTS RESERVED. Accessed by David Dammon on Jun 21, 2017 12:30:52 PM pursuant to License Agreement with ICC. No further reproduction or distribution authorized. ANY UNAUTHORIZED REPRODUCTION OR DISTRIBUTION IS A VIOLATION OF THE FEDERAL COPYRIGHT ACT AND THE LICENSE AGREEMENT, AND SUBJECT TO CIVIL AND CRIMINAL PENALTIES THEREUNDER.

TABLE E3904.6(9) (Annex C, Table C.9)—continued
MAXIMUM NUMBER OF CONDUCTORS IN RIGID PVC CONDUIT, SCHEDULE 80 (PVC-80)[a]

TYPE LETTERS	CONDUCTOR SIZE AWG/kcmil	TRADE SIZES (inches)					
		1/2	3/4	1	1 1/4	1 1/2	2
XHH, XHHW, XHHW-2	14	6	11	20	35	49	82
	12	5	9	15	27	38	63
	10	3	6	11	20	28	47
	8	1	3	6	11	15	26
	6	1	2	4	8	11	19
	4	1	1	3	6	8	14
	3	1	1	3	5	7	12
	2	1	1	2	4	6	10
	1	0	1	1	3	4	7
	1/0	0	1	1	2	3	6
	2/0	0	1	1	1	3	5
	3/0	0	1	1	1	2	4
	4/0	0	0	1	1	1	3

For SI: 1 inch = 25.4 mm.

a. Types RHW, and RHW-2 without outer covering.

❖ See the commentary to Section E3904.6.

INTERNATIONAL CODE COUNCIL®
Copyright © 2015 ICC. ALL RIGHTS RESERVED. Accessed by David Dammon on Jun 21, 2017 12:30:52 PM pursuant to License Agreement with ICC. No further reproduction or distribution authorized. ANY UNAUTHORIZED REPRODUCTION OR DISTRIBUTION IS A VIOLATION OF THE FEDERAL COPYRIGHT ACT AND THE LICENSE AGREEMENT, AND SUBJECT TO CIVIL AND CRIMINAL PENALTIES THEREUNDER.

TABLE E3904.6(10) (Annex C, Table C.10)
MAXIMUM NUMBER OF CONDUCTORS IN RIGID PVC CONDUIT SCHEDULE 40 (PVC-40)[a]

TYPE LETTERS	CONDUCTOR SIZE AWG/kcmil	TRADE SIZES (inches)					
		1/2	3/4	1	1 1/4	1 1/2	2
RHH, RHW, RHW-2	14	4	7	11	20	27	45
	12	3	5	9	16	22	37
	10	2	4	7	13	18	30
	8	1	2	4	7	9	15
	6	1	1	3	5	7	12
	4	1	1	2	4	6	10
	3	1	1	1	4	5	8
	2	1	1	1	3	4	7
RHH, RHW, RHW-2	1	0	1	1	1	3	5
	1/0	0	1	1	1	2	4
	2/0	0	0	1	1	1	3
	3/0	0	0	1	1	1	3
	4/0	0	0	1	1	1	2
TW, THHW, THW, THW-2	14	8	14	24	42	57	94
	12	6	11	18	32	44	72
	10	4	8	13	24	32	54
	8	2	4	7	13	18	30
RHH[a], RHW[a], RHW-2[a]	14	5	9	16	28	38	63
	12	4	8	13	22	30	50
	10	3	6	10	17	24	39
	8	1	3	6	10	14	23
RHH[a], RHW[a], RHW-2[a], TW, THW, THHW, THW-2	6	1	2	4	8	11	18
	4	1	1	3	6	8	13
	3	1	1	3	5	7	11
	2	1	1	2	4	6	10
	1	0	1	1	3	4	7
	1/0	0	1	1	2	3	6
	2/0	0	1	1	1	3	5
	3/0	0	1	1	1	2	4
	4/0	0	0	1	1	1	3
THHN, THWN, THWN-2	14	11	21	34	60	82	135
	12	8	15	25	43	59	99
	10	5	9	15	27	37	62
	8	3	5	9	16	21	36
THHN, THWN, THWN-2	6	1	4	6	11	15	26
	4	1	2	4	7	9	16
	3	1	1	3	6	8	13
	2	1	1	3	5	7	11
	1	1	1	1	3	5	8
	1/0	1	1	1	3	4	7
	2/0	0	1	1	2	3	6
	3/0	0	1	1	1	3	5
	4/0	0	1	1	1	2	4
XHH, XHHW, XHHW-2	14	8	14	24	42	57	94
	12	6	11	18	32	44	72
	10	4	8	13	24	32	54
	8	2	4	7	13	18	30
	6	1	3	5	10	13	22
	4	1	2	4	7	9	16
	3	1	1	3	6	8	13
	2	1	1	3	5	7	11
	1	1	1	1	3	5	8
	1/0	1	1	1	3	4	7
	2/0	0	1	1	2	3	6
	3/0	0	1	1	1	3	5
	4/0	0	1	1	1	2	4

For SI: 1 inch = 25.4 mm.

a. Types RHW, and RHW-2 without outer covering.

❖ See the commentary to Section E3904.6.

INTERNATIONAL CODE COUNCIL®
Copyright © 2015 ICC. ALL RIGHTS RESERVED. Accessed by David Dammon on Jun 21, 2017 12:30:52 PM pursuant to License Agreement with ICC. No further reproduction or distribution authorized. ANY UNAUTHORIZED REPRODUCTION OR DISTRIBUTION IS A VIOLATION OF THE FEDERAL COPYRIGHT ACT AND THE LICENSE AGREEMENT, AND SUBJECT TO CIVIL AND CRIMINAL PENALTIES THEREUNDER.

E3904.7 Air handling-stud cavity and joist spaces. Where wiring methods having a nonmetallic covering pass through stud cavities and joist spaces used for air handling, such wiring shall pass through such spaces perpendicular to the long dimension of the spaces. [300.22(C) Exception]

❖ Limiting the wiring in air-handling spaces and cavities is intended to minimize the production and rapid spreading of toxic fumes/smoke created during a fire. In many situations it might be convenient or necessary to run nonmetallic sheathed cable through a stud or joist space that is intended to convey return air. The code permits this for dwelling wiring on a limited basis only where the cables are run perpendicular to the stud or joist (i.e., run horizontally through stud cavities). In a new house under construction that has been framed and is ready for installation of the rough wiring, plumbing and duct work, it is important to know which stud or joist spaces will be used for return air. If the heating and air-conditioning contractor arrives first and installs the duct work system, and the electrician comes along after that, the wiring can be run correctly. That is, installing cable through a return air space or cavity perpendicular to the long dimension of such space is allowed. But, if the electrician arrives first and has no information on which, if any, stud cavities or joist spaces may be used for air handling, wiring might be installed parallel to the stud or joist in the space or cavity. The mechanical contractor might then enclose the space with a sheet metal pan or otherwise create the air handling space, which would cause the wiring to be in violation of the code. The installers of the wiring and of the heating and air-conditioning systems must coordinate. Note that only wiring that is not perpendicular to the long dimension is prohibited. There is no limit to the amount of wiring that can pass through perpendicular to the long dimension. In other words, any number of NM cables can pass horizontally through a stud cavity, but not one can pass through vertically. This might seem illogical, but, in reality only one or two cables are likely to pass through a stud cavity horizontally, with a much greater likelihood for many cables to pass through the cavity vertically. Note that other sections of this code restrict or eliminate the use of framing cavities for conveying airflow, therefore this practice may be disappearing.

SECTION E3905
BOXES, CONDUIT BODIES AND FITTINGS

E3905.1 Box, conduit body or fitting—where required. A box or conduit body shall be installed at each conductor splice point, outlet, switch point, junction point and pull point except as otherwise permitted in Sections E3905.1.1 through E3905.1.6.

Fittings and connectors shall be used only with the specific wiring methods for which they are designed and listed. (300.15)

❖ The point in the wiring system that is the most vulnerable for possible problems from overheating caused by arcing or sparking is a splice or connection. Except for some cases of underground wiring, a box or enclosure must always be used to make a splice or connection. A splice or connection made outside of a box is a violation and a serious safety concern. Nonmetallic sheathed cable must be used in continuous lengths from box to box. There must be no splices outside of an enclosure listed for the purpose, and the enclosures must be accessible (see Section E3905.11).

E3905.1.1 Equipment. An integral junction box or wiring compartment that is part of listed equipment shall be permitted to serve as a box or conduit body. [300.15(B)]

❖ An example of this is on a hood-fan unit installed above a range. If a box were installed and splices made, the box would probably be covered with the hood. Because the exact height of the hood is not always known, a sufficient length of the cable is left stapled to a stud on the rough wiring without any box and brought through a hole in the drywall. The hood-fan unit has a built-in box where the splices can be made. This is similar for a bathroom exhaust fan, a dishwasher, and many other appliances. It is important to use a proper fitting such as a listed cable connector where the cable enters the equipment junction box. If not protected with a proper connector, the cable could be pulled out and/or damaged by the metal edge of the knockout on the equipment. The proper installation is to use a connector and not simply to wrap tape around the cable where it enters the box.

E3905.1.2 Protection. A box or conduit body shall not be required where cables enter or exit from conduit or tubing that is used to provide cable support or protection against physical damage. A fitting shall be provided on the end(s) of the conduit or tubing to protect the cable from abrasion. [300.15(C)]

❖ A box is not required because there are no splices. An example of the protection required is where a switch box is attached to a concrete or masonry wall in a basement and a short run of EMT is used to protect the cable along the wall. At the top of the short run of EMT, a connector with a bushing or a cable transition fitting must be installed (see commentary, Section E3802.3.2).

E3905.1.3 Integral enclosure. A wiring device with integral enclosure identified for the use, having brackets that securely fasten the device to walls or ceilings of conventional on-site frame construction, for use with nonmetallic-sheathed cable, shall be permitted in lieu of a box or conduit body. [300.15(E)]

❖ An example of an integral enclosure is a receptacle for a range or dryer outlet. It has a base section that is attached to the wall and a cover that is attached by screws after the connections are made to terminals. This type of device is usually for surface mounting.

E3905.1.4 Fitting. A fitting identified for the use shall be permitted in lieu of a box or conduit body where such fitting is accessible after installation and does not contain spliced or terminated conductors. [300.15(F)]

❖ A pulling elbow with an access cover is an example of such fitting. Where a change is made in the type of wir-

INTERNATIONAL CODE COUNCIL®
Copyright © 2015 ICC. ALL RIGHTS RESERVED. Accessed by David Dammon on Jun 21, 2017 12:30:52 PM pursuant to License Agreement with ICC. No further reproduction or distribution authorized. ANY UNAUTHORIZED REPRODUCTION OR DISTRIBUTION IS A VIOLATION OF THE FEDERAL COPYRIGHT ACT AND THE LICENSE AGREEMENT, AND SUBJECT TO CIVIL AND CRIMINAL PENALTIES THEREUNDER.

ing method, a fitting is permitted as long as it does not contain splices. Where there is a transition from nonmetallic-sheathed cable to EMT, a box is not needed if a proper fitting is provided at the transition.

E3905.1.5 Buried conductors. Splices and taps in buried conductors and cables shall not be required to be enclosed in a box or conduit body where installed in accordance with Section E3803.4.

❖ See the commentary to Section E3803.4.

E3905.1.6 Luminaires. Where a luminaire is listed to be used as a raceway, a box or conduit body shall not be required for wiring installed therein. [300.15(J)]

❖ To make the connection of the circuit wires to the fixtures wire, generally a box is required where lighting fixtures are installed. In some older homes cable was brought through the plaster ceiling and the connection made without the use of a box. The light fixture was attached directly to the ceiling with long wood screws, and the canopy of the light fixture contained the splices. This is a code violation because a box is required.

According to this section, however, if a fixture is listed to be used as a box to contain the splices, it would not be a code violation. If the cable or cables are run through the drywall ceiling and brought into the wiring section of such fixture through a knockout opening that is usually provided, the installation would be acceptable and would serve as the enclosure for splicing the circuit conductors to the fixture wires. Where the nonmetallic sheathed cable extends through the finished ceiling wallboard, it is permissible to omit the junction box in the ceiling and use the wiring compartment of the listed fixture as the junction box to make the connections.

E3905.2 Metal boxes. Metal boxes shall be grounded. (314.4)

❖ See Section E3908 on grounding.

E3905.3 Nonmetallic boxes. Nonmetallic boxes shall be used only with cabled wiring methods with entirely nonmetallic sheaths, flexible cords and nonmetallic raceways. (314.3)

Exceptions:

1. Where internal bonding means are provided between all entries, nonmetallic boxes shall be permitted to be used with metal raceways and metal-armored cables. (314.3 Exception No. 1)
2. Where integral bonding means with a provision for attaching an equipment grounding jumper inside the box are provided between all threaded entries in nonmetallic boxes listed for the purpose, nonmetallic boxes shall be permitted to be used with metal raceways and metal-armored cables. (314.3 Exception No. 2)

❖ A nonmetallic device box (used for directly attaching switches or receptacles) is designed for use with nonmetallic-sheathed cable. A nonmetallic 4-inch square box can be used, but a plaster ring would be needed for the attachment of switches and receptacles. Nonmetallic 4-inch square boxes come with knockouts for the entry of nonmetallic-sheathed cable and also have standard size knockouts for conduit and tubing fittings. To use a nonmetallic box in a run of metal conduit or tubing requires special attention to the grounding and bonding requirements.

A metal raceway is permitted to serve as a grounding conductor. Where a nonmetallic box is inserted between two metal raceway entries, the continuity of the grounding conductor is interrupted. Therefore, bonding jumpers are required.

E3905.3.1 Nonmetallic-sheathed cable and nonmetallic boxes. Where nonmetallic-sheathed cable is used, the cable assembly, including the sheath, shall extend into the box not less than $^1/_4$ inch (6.4 mm) through a nonmetallic-sheathed cable knockout opening. (314.7(C))

❖ The individual conductors should not be exposed outside of the box. Where the cable enters the box, the clamp should not bind against the individual conductors but against the sheathing. Some electricians strip the sheathing off the conductors before installing the cable in the nonmetallic device box, and this sometimes results in the cable sheath being too short to extend into the box. On the rough inspection, it is an indication that the job has been done in a careless manner where the sheathing has been stripped short of entering the box.

The amount of sheathing left on the conductors inside the box affects the box fill, because it takes more room to tuck the conductors back into the box when there is too much sheathing left. This leaves less room to install the device. The length of sheathing left in the box, the length of the conductors, the size of the box and the type of device all should be considered, not just the minimum requirements of the code for box size.

E3905.3.2 Securing to box. Wiring methods shall be secured to the boxes. [314.17(C)]

Exception: Where nonmetallic-sheathed cable is used with boxes not larger than a nominal size of $2^1/_4$ inches by 4 inches (57 mm by 102 mm) mounted in walls or ceilings, and where the cable is fastened within 8 inches (203 mm) of the box measured along the sheath, and where the sheath extends through a cable knockout not less than $^1/_4$ inch (6.4 mm), securing the cable to the box shall not be required. [314.17(C) Exception]

❖ The basic rule here is that the cable, such as armored cable and nonmetallic-sheathed cable, should be secured to the box. Where metal boxes are used, this is always required. All metal device boxes come with clamps, usually inside the box. If the metal box used is not a device box, such as a four-square box with a plaster ring installed to make it possible to attach

INTERNATIONAL CODE COUNCIL®
Copyright © 2015 ICC. ALL RIGHTS RESERVED. Accessed by David Dammon on Jun 21, 2017 12:30:52 PM pursuant to License Agreement with ICC. No further reproduction or distribution authorized. ANY UNAUTHORIZED REPRODUCTION OR DISTRIBUTION IS A VIOLATION OF THE FEDERAL COPYRIGHT ACT AND THE LICENSE AGREEMENT, AND SUBJECT TO CIVIL AND CRIMINAL PENALTIES THEREUNDER.

devices, the cable is secured to the box by approved cable connectors through the knockouts or the box may have integral clamps.

This exception refers to a single-gang nonmetallic box, which is usually not larger than $2^1/_4$ inches by 4 inches (57 mm by 102 mm). For single-gang nonmetallic boxes, the cable need not be secured to the box itself if the cable is stapled to the stud within 8 inches (203 mm) of cable length outside the box.

The reason for this requirement is that the electrician may run the cable against the stud and then, at the top of the box, make a bend and run the cable over to a knockout opening farthest away from the stud. When the wires are tucked back into the box or when the device is installed, the cable could be pushed up and the conductors exposed outside the box where the sheathing has been stripped off. Many nonmetallic single-gang boxes have internal clamps that work like a spring, putting pressure against the cable so that it is difficult if not impossible to remove the cable simply by pulling it back out of the box. But the cable sheathing should be long enough so that a nonmetallic internal clamp puts pressure against the sheathing and not against the individual conductors. In other words, in addition to extending into the box at least $^1/_4$ inch (6.3 mm), the sheathing should extend into the box beyond any cable clamp. Running multiple cables through a single knockout opening in such plastic boxes is permitted (see Section E3906.3).

E3905.3.3 Conductor rating. Nonmetallic boxes shall be suitable for the lowest temperature-rated conductor entering the box. [314.17(C)]

❖ All conductors have a temperature rating according to the insulation type, as indicated in Table E3805.1.

Nonmetallic boxes have a temperature rating also, and it should be suitable for the lowest temperature rating of any conductor installed in the box because the lowest temperature rated conductor will set the temperature limit for all conductors within the box. Recall that Type NM cable contains 90°C (194°F) rated conductors but such conductors are sized based on a 60°C (149°F) conductor rating (see Section E3705.4.4).

E3905.4 Minimum depth of boxes for outlets, devices, and utilization equipment. Outlet and device boxes shall have an approved depth to allow equipment installed within them to be mounted properly and without the likelihood of damage to conductors within the box. (314.24)

❖ Boxes that contain devices, including switches, timers, dimmers, receptacles, GFCI devices and electronic controllers must have the necessary volume to prevent crowding of the conductors which can cause damage to conductor insulation. For example, extra deep boxes and 4-inch square boxes are typically used where large devices such as GFCI receptacles are to be installed. Some devices such as receptacles are made with 6-inch-long stranded conductor leads permanently welded to the device and some are made with special mating connectors with such 6-inch leads. Such devices are meant to save installation time, but can also reduce the chances of damaging conductors in boxes while forcing devices into boxes.

E3905.4.1 Outlet boxes without enclosed devices or utilization equipment. Outlet boxes that do not enclose devices or utilization equipment shall have an internal depth of not less than $^1/_2$ inch (12.7 mm). [314.24(A)]

❖ An outlet box could be for a lighting fixture or for a device, such as a receptacle or switch. A box for a lighting fixture that is an outlet box but does not contain devices could be as shallow as $^1/_2$ inch (12.7 mm). A term used for this type of round shallow box is "pancake box," and it can be used, for example, on the surface of a joist or truss where the lighting fixture must be centered in a room or over some feature. Where a device is installed, the box must be at least $^{15}/_{16}$ inch (24 mm) deep. This provision for such a shallow box does not supercede the box fill requirements.

E3905.4.2 Utilization equipment. Outlet and device boxes that enclose devices or utilization equipment shall have a minimum internal depth that accommodates the rearward projection of the equipment and the size of the conductors that supply the equipment. The internal depth shall include that of any extension boxes, plaster rings, or raised covers. The internal depth shall comply with all of the applicable provisions that follow. [314.24(B)]

Exception: Utilization equipment that is listed to be installed with specified boxes.

1. Large equipment. Boxes that enclose devices or utilization equipment that projects more than $1^7/_8$ inches (48 mm) rearward from the mounting plane of the box shall have a depth that is not less than the depth of the equipment plus $^1/_4$ inch (6.4 mm). [314.24(B)(1)]
2. Conductors larger than 4 AWG. Boxes that enclose devices or utilization equipment supplied by conductors larger than 4 AWG shall be identified for their specific function. [314.24(B)(2)]
3. Conductors 8, 6, or 4 AWG. Boxes that enclose devices or utilization equipment supplied by 8, 6, or 4 AWG conductors shall have an internal depth that is not less than $2^1/_{16}$ inches (52.4 mm). [314.24(B)(3)]
4. Conductors 12 or 10 AWG. Boxes that enclose devices or utilization equipment supplied by 12 or 10 AWG conductors shall have an internal depth that is not less than $1^3/_{16}$ inches (30.2 mm). Where the equipment projects rearward from the mounting plane of the box by more than 1 inch (25.4 mm), the box shall have a depth that is not less than that of the equipment plus $^1/_4$ inch (6.4 mm). [314.24(B)(4)]

INTERNATIONAL CODE COUNCIL®
Copyright © 2015 ICC. ALL RIGHTS RESERVED. Accessed by David Dammon on Jun 21, 2017 12:30:52 PM pursuant to License Agreement with ICC. No further reproduction or distribution authorized. ANY UNAUTHORIZED REPRODUCTION OR DISTRIBUTION IS A VIOLATION OF THE FEDERAL COPYRIGHT ACT AND THE LICENSE AGREEMENT, AND SUBJECT TO CIVIL AND CRIMINAL PENALTIES THEREUNDER.

5. Conductors 14 AWG and smaller. Boxes that enclose devices or utilization equipment supplied by 14 AWG or smaller conductors shall have a depth that is not less than $^{15}/_{16}$ inch (23.8 mm). [314.24(B)(5)]

❖ More and more devices and pieces of equipment are being designed for installation in boxes, so the code has evolved to provide additional coverage for these increasingly common installations. Examples include: timers, occupant sensors, dimmers and lighting controllers. The concern again is for conductor overcrowding. Overcrowding can cause overheating and can cause damage to conductor insulation from sharp edges, compression and sharp bending.

E3905.5 Boxes enclosing flush-mounted devices. Boxes enclosing flush-mounted devices shall be of such design that the devices are completely enclosed at the back and all sides and shall provide support for the devices. Screws for supporting the box shall not be used for attachment of the device contained therein. (314.19)

❖ Many devices require a box of greater depth than the minimum $^{15}/_{16}$ inch (24 mm) because of the size of the device. For example, where a GFCI receptacle or a dimmer is installed, the box must have sufficient depth and capacity to completely enclose the device on the sides and back. If a cover is installed but the sides of the device are exposed, it would be a code violation. Fasteners that secure the box to the structure must not be used for any other purpose. Devices are to be supported by the box by screws that are independent of fasteners used to support the box itself.

E3905.6 Boxes at luminaire outlets. Outlet boxes used at luminaire or lampholder outlets shall be designed for the support of luminaires and lampholders and shall be installed as required by Section E3904.3. [314.27(A)]

❖ Luminaires (lighting fixtures) are typically mounted to round or octagonal boxes, which are usually close to 4 inches (102 mm) in diameter. Two sets of mounting holes are provided in some round fixture boxes. The holes, machined to accept 8-32 mounting screws (size No. 8 in diameter with 32 threads per inch), are $2^{3}/_{4}$ inches (70 mm) and $3^{1}/_{2}$ inches (89 mm) apart. This is a standard measurement. Many nonmetallic round boxes have the same two sets of mounting holes. Metal round or octagonal boxes usually have only one set of mounting holes, which are $3^{1}/_{4}$ inches (89 mm) apart. Some luminaires are secured by two 8-32 screws directly through the base of the fixture into the mounting holes of the box, and the holes in the fixture base are exactly $3^{1}/_{2}$ inches (89 mm) apart to match the holes on the round box. Porcelain keyless lamp holders and pull chain type fixtures are examples of fixtures having the mounting holes the same as those on the round "fixture boxes," as they are sometimes referred to in the field. Most luminaires come with a bracket designed to be attached to the outlet box. The bracket serves as a means to adjust the alignment of the holes for mounting the fixture. The bracket must be used as indicated in the instructions provided with the luminaire.

E3905.6.1 Vertical surface outlets. Boxes used at luminaire or lampholder outlets in or on a vertical surface shall be identified and marked on the interior of the box to indicate the maximum weight of the luminaire or lamp holder that is permitted to be supported by the box if other than 50 pounds (22.7 kg). [314.27(A)(1)]

Exception: A vertically-mounted luminaire or lampholder weighing not more than 6 pounds (2.7 kg) shall be permitted to be supported on other boxes or plaster rings that are secured to other boxes, provided that the luminaire or its supporting yoke is secured to the box with not fewer than two No. 6 or larger screws. [314.27(A)(1) Exception]

❖ Wall-mounted lighting outlet boxes (i.e., installed in or on vertical surfaces) do not have to be rated for supporting at least 50 pounds (22.7 kg), but if they are not so rated, they must be marked to indicate their maximum support capacity.

The code does not specify that fixtures must be mounted only on a round or octagonal box. A device box could be used for a small fixture that weighs not over 6 pounds (2.7 kg) if two 6-32 or larger screws are used. Device boxes are used for switches and receptacles and have mounting holes machined to accept 6-32 screws, which obviously would not provide as much support as the 8-32 screws that are supplied with fixtures. A problem is that the mounting holes on a device box are $3^{1}/_{4}$ inches (83 mm) apart, and they do not line up with those on the luminaires. They also might not line up with the mounting holes on many of the brackets supplied with luminaires.

A device box could be installed in the rough-wiring stage with the intention that a small fixture weighing 6 pounds (2.7 kg) or less will be installed at that location in the finish stage. But in the future, the small fixture could be changed for a larger and heavier fixture, thus making the device box not suitable and not in compliance with the code. In some areas, single-gang device boxes have been used in a brick wall for mounting outdoor fixtures. On a brick house, it is easy to install a device box in one of the courses of brick without cutting any brick. If a round box is used, the brick mason has to cut or notch one or more bricks to install the round box flush with the wall. If the luminaire weighs 6 pounds (2.7 kg) or less, use of a device box would be acceptable, but it would be good practice to install a round or octagonal box in anticipation of heavier fixtures. The intent of this section is to require that the boxes be marked to indicate the maximum weight that they can support, except as allowed by the exception (see Section E4003 for more provisions for luminaire installation). The weight capacity of a box can be meaningless if the box is improperly attached to the structure. Be wary of nails and drywall screws that might not have the ability to withstand the pullout or shear forces involved (see Section E3906.8). Because

INTERNATIONAL CODE COUNCIL®
Copyright © 2015 ICC. ALL RIGHTS RESERVED. Accessed by David Dammon on Jun 21, 2017 12:30:52 PM pursuant to License Agreement with ICC. No further reproduction or distribution authorized. ANY UNAUTHORIZED REPRODUCTION OR DISTRIBUTION IS A VIOLATION OF THE FEDERAL COPYRIGHT ACT AND THE LICENSE AGREEMENT, AND SUBJECT TO CIVIL AND CRIMINAL PENALTIES THEREUNDER.

it is an unknown what fixtures the owner will choose to install, it would be wise to provide stout outlet boxes and supports at all locations intended for lighting fixtures.

E3905.6.2 Ceiling outlets. For outlets used exclusively for lighting, the box shall be designed or installed so that a luminaire or lampholder can be attached. Such boxes shall be capable of supporting a luminaire weighing up to 50 pounds (22.7 kg). A luminaire that weighs more than 50 pounds (22.7 kg) shall be supported independently of the outlet box, unless the outlet box is listed and marked on the interior of the box to indicate the maximum weight that the box is permitted to support. [314.27(A)(2)]

❖ This section requires lighting outlet boxes installed in a ceiling to be capable of supporting at least 50 pounds (22.7 kg) to account for the fact that the weight of the luminaire may not be known when the box is installed. For those of us that have ever carried a 50-pound bag of grain, cement or animal feed, it is evident how heavy a 50-pound lighting fixture is. The box and the box supports must be substantial to safely hold a 50-pound weight indefinitely. It is not uncommon to find ceiling outlet boxes attached with roofing nails driven up through the bottom of the box as the only means of support and this is obviously less than desirable because the weight is tending to pull out the nails. Ceiling-mounted luminaires are more likely to be heavier than those that are wall-mounted. Luminaires that weigh more than 50 pounds, such as some chandeliers, must be directly supported by the building structure, except where the outlet box is marked to indicate that it can support the weight of the subject luminaire. All ceiling outlet boxes should be carefully selected based on the anticipated load they might have to support. Ceiling outlet boxes in many locations, such as in parlors, entryways, atriums, great rooms, dining rooms, etc., should be chosen with the expectation that heavy fixtures will be supported from them at some point in time. Roughing in a stout box and supports is much easier than trying to retro fit a box after the building is finished.

E3905.7 Floor boxes. Where outlet boxes for receptacles are installed in the floor, such boxes shall be listed specifically for that application. [314.27(B)]

❖ Floor boxes are specially designed boxes that must be capable of the heavy duty demanded of them. For example, an ordinary device box is typically not listed for installation in a floor and used for a receptacle flush with the floor. Obviously, the support of a floor box should be considered as needing more than just the two nails or plaster ears with which most device boxes are mounted, because the floor receptacle could be walked on, and furniture could be placed on it. The finish or front edge of floor boxes is usually adjustable because the thickness of the flooring material is not known at the rough stage of the wiring. Even if a regular device box were approved for a floor outlet, it would be difficult to estimate the thickness of the flooring so that the box could be mounted at the required height. Both metal and plastic floor boxes listed for the purpose are available.

E3905.8 Boxes at fan outlets. Outlet boxes and outlet box systems used as the sole support of ceiling-suspended fans (paddle) shall be marked by their manufacturer as suitable for this purpose and shall not support ceiling-suspended fans (paddle) that weigh more than 70 pounds (31.8 kg). For outlet boxes and outlet box systems designed to support ceiling-suspended fans (paddle) that weigh more than 35 pounds (15.9 kg), the required marking shall include the maximum weight to be supported.

Where spare, separately switched, ungrounded conductors are provided to a ceiling-mounted outlet box and such box is in a location acceptable for a ceiling-suspended (paddle) fan, the outlet box or outlet box system shall be listed for sole support of a ceiling-suspended (paddle) fan. [314.27(C)]

❖ In no case is an outlet box allowed to support a fan weighing over 70 pounds (31.8 kg) (see Section E4101.6). Logically, an outlet box that is mounted in a location that would be a likely location for a ceiling fan should be a box that is listed and rated for such application, but this section does not mandate such for that reason alone. If, however, that same box had an extra ungrounded (hot) conductor run to it from a switch location, it would be obvious that the outlet is set up for the future installation of a ceiling fan; and, in this case, the box is required to be a type that is listed and rated for the application. For example, it is common to run a 12/3 or 14/3 cable to a ceiling outlet box for the purpose of supplying a separately switched luminare and separately switched fan. This allows the owner to install a luminare only or a fan and luminare combination at any point in time. There is no excuse for not installing a fan-rated box where the wiring clearly anticipates the installation of a fan. Bear in mind that where EMT is the wiring method, a separate ungrounded conductor could be pulled in later.

The weight capacity of a box can be meaningless if the box is improperly attached to the structure. Be wary of nails and drywall screws that might not have the ability to withstand the pullout or shear forces involved (see Section E3906.8). Many fan-rated boxes have appropriate fasteners included with the box or in its packaging. Box mounting instructions must be followed precisely.

E3905.9 Utilization equipment. Boxes used for the support of utilization equipment other than ceiling-suspended (paddle) fans shall meet the requirements of Sections E3905.6.1 and E3905.6.2 for the support of a luminaire that is the same size and weight. [314.27(D)]

Exception: Utilization equipment weighing not more than 6 pounds (2.7 kg) shall be permitted to be supported on other boxes or plaster rings that are secured to other boxes, provided that the equipment or its supporting yoke is secured to the box with not fewer than two No. 6 or larger screws. [314.27(D) Exception]

❖ See the commentary to Sections E3905.6 and E3905.7.

INTERNATIONAL CODE COUNCIL®
Copyright © 2015 ICC. ALL RIGHTS RESERVED. Accessed by David Dammon on Jun 21, 2017 12:30:52 PM pursuant to License Agreement with ICC. No further reproduction or distribution authorized. ANY UNAUTHORIZED REPRODUCTION OR DISTRIBUTION IS A VIOLATION OF THE FEDERAL COPYRIGHT ACT AND THE LICENSE AGREEMENT, AND SUBJECT TO CIVIL AND CRIMINAL PENALTIES THEREUNDER.

E3905.10 Conduit bodies and junction, pull and outlet boxes to be accessible. Conduit bodies and junction, pull and outlet boxes shall be installed so that the wiring therein can be accessed without removing any part of the building or structure or, in underground circuits, without excavating sidewalks, paving, earth or other substance used to establish the finished grade. (314.29)

> **Exception:** Boxes covered by gravel, light aggregate or noncohesive granulated soil shall be listed for the application, and the box locations shall be effectively identified and access shall be provided for excavation. (314.29 Exception)

❖ Boxes must be accessible and have an appropriate cover. A junction box could have a blank cover in a finished wall or ceiling. The homeowner may not want a blank cover showing on a finished wall or ceiling, but it would be a code violation to "bury" or hide the box behind the drywall. In many locations of the country, dwellings are constructed with a basement that is left unfinished when the house is purchased and moved into by the owner. At a later date, when the basement is finished, conductors are spliced in the existing boxes and then covered with drywall. This would be a code violation insofar as the boxes would then be concealed behind the ceiling or wall, and the only way to get to the connection would be to cut open or remove the drywall. If the splices are not in a box, that would be a separate code violation.

This code provision requiring a box where a splice is made is not only for the convenience of being able to work on the circuit in the future, but is a safety concern because overheating could occur from arcing in the splice. If it were not possible or feasible to avoid a splice in a concealed space, the homeowner may simply have to have a junction box in the ceiling of the basement with a blank cover on the finished ceiling. That would make the splice accessible. No matter what choice is made, the cable must be continuous from box to box, and the box must be accessible. Another example is in the remodeling of a kitchen. The old outlets may not be in the desired or required location for the new kitchen cabinet layout. It would be a code violation to permanently cover or conceal junction boxes or splices.

E3905.11 Damp or wet locations. In damp or wet locations, boxes, conduit bodies and fittings shall be placed or equipped so as to prevent moisture from entering or accumulating within the box, conduit body or fitting. Boxes, conduit bodies and fittings installed in wet locations shall be listed for use in wet locations. Where drainage openings are installed in the field in boxes or conduit bodies listed for use in damp or wet locations, such openings shall be approved and not larger than $^1/_4$ inch (6.4 mm). For listed drain fittings, larger openings are permitted where installed in the field in accordance with the manufacturer's instructions. (314.15)

❖ Where an outdoor receptacle is installed and a box is surface mounted, it must be listed for the purpose. Commonly used boxes for this purpose are Type FS or FD. The cover must be installed with a gasket to seal the interior of the box from moisture.

E3905.12 Number of conductors in outlet, device, and junction boxes, and conduit bodies. Boxes and conduit bodies shall be of an approved size to provide free space for all enclosed conductors. In no case shall the volume of the box, as calculated in Section E3905.12.1, be less than the box fill calculation as calculated in Section E3905.12.2. The minimum volume for conduit bodies shall be as calculated in Section E3905.12.3. The provisions of this section shall not apply to terminal housings supplied with motors or generators. (314.16)

❖ Selecting the proper size box requires two tasks. One is to determine the cubic inch capacity of the box, and the second is to determine the box fill allowed or needed. This section deals with determining the cubic-inch capacity or volume of the box.

E3905.12.1 Box volume calculations. The volume of a wiring enclosure (box) shall be the total volume of the assembled sections, and, where used, the space provided by plaster rings, domed covers, extension rings, etc., that are marked with their volume in cubic inches or are made from boxes the dimensions of which are listed in Table E3905.12.1. [314.16(A)]

❖ See the commentary to Section E3905.12.1.2.

E3905.12.1.1 Standard boxes. The volumes of standard boxes that are not marked with a cubic-inch capacity shall be as given in Table E3905.12.1. [314.16(A)(1)]

❖ See the commentary to Section E3905.12.1.2.

E3905.12.1.2 Other boxes. Boxes 100 cubic inches (1640 cm^3) or less, other than those described in Table E3905.12.1, and nonmetallic boxes shall be durably and legibly marked by the manufacturer with their cubic-inch capacity. Boxes described in Table E3905.12.1 that have a larger cubic inch capacity than is designated in the table shall be permitted to have their cubic-inch capacity marked as required by this section. [314.16(A)(2)]

❖ Section E3905.12.1 and the two subsequent subsections are included in the code to establish the criteria to determine the volume or cubic-inch capacity of the box. The code requires the cubic-inch capacity to be marked on all nonmetallic boxes and any metal box of over 100 cubic inches. For standard size metal boxes listed in Table E3905.12.1 that do not have the cubic inch capacity marked, the volume or cubic inch capacity used for conductor fill is that listed in Table E3905.12.1. Because most boxes used in residential wiring do have the cubic inch capacity marked, Table E3905.12.1 is not often needed to determine the box volume.

E3905.12.2 Box fill calculations. The volumes in Section E3905.12.2.1 through Section E3905.12.2.5, as applicable, shall be added together. No allowance shall be required for small fittings such as locknuts and bushings. [314.16(B)]

❖ The various components of box fill are described in the five subsections below (Sections E3905.12.2.1 through E9805.12.2.5). These components are: 1. Conductors; 2. Internal clamps; 3. Support fittings; 4. Devices; and 5. Grounding conductors. The volume allowance for each of these components must be added and multiplied by the cubic inch volume in Table E3905.12.2.1

INTERNATIONAL CODE COUNCIL®
Copyright © 2015 ICC. ALL RIGHTS RESERVED. Accessed by David Dammon on Jun 21, 2017 12:30:52 PM pursuant to License Agreement with ICC. No further reproduction or distribution authorized. ANY UNAUTHORIZED REPRODUCTION OR DISTRIBUTION IS A VIOLATION OF THE FEDERAL COPYRIGHT ACT AND THE LICENSE AGREEMENT, AND SUBJECT TO CIVIL AND CRIMINAL PENALTIES THEREUNDER.

for the size conductor used. In Table E3905.12.2.1, the volume allowances are listed in the second column as free space for each conductor. The volume allowance for all nonconductor components (clamps, fittings, devices and grounding conductors) is based on the largest conductor in the box. For devices, two volume allowances are counted.

The exception to Section E3905.12.2.1 allows for fixtures that have several fixture wires from different lampholders on the fixture terminating in the fixture canopy to be omitted from the calculation. Some fixtures may attach to the box with a support fitting like a threaded stud or hickey, which is a stud with openings for fasteners on the sides. These were used in the distant past but are not common in modern wiring.

Example of Box Fill Calculation

An inspector finds that a device box with no internal cable clamps is marked with a volume of 20 cubic inches (328 cm^3) and contains two size 12-AWG nonmetallic-sheathed cables of 12-3 with ground and a duplex receptacle. (Each cable has two ungrounded conductors, one grounded conductor, and one grounding conductor). Does this box comply with code provisions?

Determine the minimum cubic-inch capacity required for each component of the box from Table E3905.12.2.1. The table indicates that the volume allowance for size 12-AWG conductors is 2.25 cubic inches (37 cm^3).

Six conductors (ungrounded and grounded conductors)	$6 \times 2.25 = 13.5$
All grounding conductors counted as one	$1 \times 2.25 = 2.25$
One receptacle counts as two volume allowances	$2 \times 2.25 = 4.5$
Total cubic inches required	20.25

The use of this box is a code violation because it does not have the volume required.

E3905.12.2.1 Conductor fill. Each conductor that originates outside the box and terminates or is spliced within the box shall be counted once, and each conductor that passes through the box without splice or termination shall be counted once. Each loop or coil of unbroken conductor having a length equal to or greater than twice that required for free conductors by Section E3406.11.3, shall be counted twice. The conductor fill, in cubic inches, shall be computed using Table E3905.12.2.1. A conductor, no part of which leaves the box, shall not be counted. [314.16(B)(1)]

Exception: An equipment grounding conductor or not more than four fixture wires smaller than No. 14, or both, shall be permitted to be omitted from the calculations where such conductors enter a box from a domed fixture

TABLE E3905.12.1 [Table 314.16(A)]
MAXIMUM NUMBER OF CONDUCTORS IN METAL BOXES[a]

BOX DIMENSIONS (inches trade size and type)	MAXIMUM CAPACITY (cubic inches)	MAXIMUM NUMBER OF CONDUCTORS[a]						
		18 Awg	16 Awg	14 Awg	12 Awg	10 Awg	8 Awg	6 Awg
$4 \times 1^1/_4$ round or octagonal	12.5	8	7	6	5	5	4	2
$4 \times 1^1/_2$ round or octagonal	15.5	10	8	7	6	6	5	3
$4 \times 2^1/_8$ round or octagonal	21.5	14	12	10	9	8	7	4
$4 \times 1^1/_4$ square	18.0	12	10	9	8	7	6	3
$4 \times 1^1/_2$ square	21.0	14	12	10	9	8	7	4
$4 \times 2^1/_8$ square	30.3	20	17	15	13	12	10	6
$4^{11}/_{16} \times {}^{11}/_4$ square	25.5	17	14	12	11	10	8	5
$4^{11}/_{16} \times {}^{11}/_2$ square	29.5	19	16	14	13	11	9	5
$4^{11}/_{16} \times 2^1/_8$ square	42.0	28	24	21	18	16	14	8
$3 \times 2 \times 1^1/_2$ device	7.5	5	4	3	3	3	2	1
$3 \times 2 \times 2$ device	10.0	6	5	5	4	4	3	2
$3 \times 2 \times 2^1/_4$ device	10.5	7	6	5	4	4	3	2
$3 \times 2 \times 2^1/_2$ device	12.5	8	7	6	5	5	4	2
$3 \times 2 \times 2^3/_4$ device	14.0	9	8	7	6	5	4	2
$3 \times 2 \times 3^1/_2$ device	18.0	12	10	9	8	7	6	3
$4 \times 2^1/_8 \times 1^1/_2$ device	10.3	6	5	5	4	4	3	2
$4 \times 2^1/_8 \times 1^7/_8$ device	13.0	8	7	6	5	5	4	2
$4 \times 2^1/_8 \times 2^1/_8$ device	14.5	9	8	7	6	5	4	2
$3^3/_4 \times 2 \times 2^1/_2$ masonry box/gang	14.0	9	8	7	6	5	4	2
$3^3/_4 \times 2 \times 3^1/_2$ masonry box/gang	21.0	14	12	10	9	8	7	4

For SI: 1 inch = 25.4 mm, 1 cubic inch = 16.4 cm^3.

a. Where volume allowances are not required by Sections E3905.12.2.2 through E3905.12.2.5.

INTERNATIONAL CODE COUNCIL®
Copyright © 2015 ICC. ALL RIGHTS RESERVED. Accessed by David Dammon on Jun 21, 2017 12:30:52 PM pursuant to License Agreement with ICC. No further reproduction or distribution authorized. ANY UNAUTHORIZED REPRODUCTION OR DISTRIBUTION IS A VIOLATION OF THE FEDERAL COPYRIGHT ACT AND THE LICENSE AGREEMENT, AND SUBJECT TO CIVIL AND CRIMINAL PENALTIES THEREUNDER.

or similar canopy and terminate within that box. [314.16(B)(1) Exception]

❖ See the commentary to Section E3905.12.2.

TABLE E3905.12.2.1 [Table 314.16(B)]
VOLUME ALLOWANCE REQUIRED PER CONDUCTOR

SIZE OF CONDUCTOR	FREE SPACE WITHIN BOX FOR EACH CONDUCTOR (cubic inches)
18 AWG	1.50
16 AWG	1.75
14 AWG	2.00
12 AWG	2.25
10 AWG	2.50
8 AWG	3.00
6 AWG	5.00

For SI: 1 cubic inch = 16.4 cm^3.

E3905.12.2.2 Clamp fill. Where one or more internal cable clamps, whether factory or field supplied, are present in the box, a single volume allowance in accordance with Table E3905.12.2.1 shall be made based on the largest conductor present in the box. An allowance shall not be required for a cable connector having its clamping mechanism outside of the box. A clamp assembly that incorporates a cable termination for the cable conductors shall be listed and marked for use with specific nonmetallic boxes. Conductors that originate within the clamp assembly shall be included in conductor fill calculations provided in Section E3905.12.2.1 as though they entered from outside of the box. The clamp assembly shall not require a fill allowance, but, the volume of the portion of the assembly that remains within the box after installation shall be excluded from the box volume as marked.

❖ See the commentary to Section E3905.12.2.

E3905.12.2.3 Support fittings fill. Where one or more fixture studs or hickeys are present in the box, a single volume allowance in accordance with Table E3905.12.2.1 shall be made for each type of fitting based on the largest conductor present in the box. [314.16(B)(3)]

❖ See the commentary to Section E3905.12.2.

E3905.12.2.4 Device or equipment fill. For each yoke or strap containing one or more devices or equipment, a double volume allowance in accordance with Table E3905.12.2.1 shall be made for each yoke or strap based on the largest conductor connected to a device(s) or equipment supported by that yoke or strap. For a device or utilization equipment that is wider than a single 2-inch (51 mm) device box as described in Table E3905.12.1, a double volume allowance shall be made for each ganged portion required for mounting of the device or equipment. [314.16(B)(4)]

❖ See the commentary to Section E3905.12.2.

E3905.12.2.5 Equipment grounding conductor fill. Where one or more equipment grounding conductors or equipment bonding jumpers enters a box, a single volume allowance in accordance with Table E3905.12.2.1 shall be made based on the largest equipment grounding conductor or equipment bonding jumper present in the box. [314.16(B)(5)]

❖ See the commentary to Section E3905.12.2.

E3905.12.3 Conduit bodies. Conduit bodies enclosing 6 AWG conductors or smaller, other than short-radius conduit bodies, shall have a cross-sectional area not less than twice the cross-sectional area of the largest conduit or tubing to which they can be attached. The maximum number of conductors permitted shall be the maximum number permitted by Section E3904.6 for the conduit to which it is attached. [314.16(C)(1)]

❖ A listed conduit body will have the minimum required cross-sectional area. This is a manufacturing requirement. Following the minimum fill requirements of Table E3904.6 for the type and size of conduit or tubing used will fulfill the requirements for maximum conductor fill of conduit bodies.

E3905.12.3.1 Splices, taps or devices. Only those conduit bodies that are durably and legibly marked by the manufacturer with their cubic inch capacity shall be permitted to contain splices, taps or devices. The maximum number of conductors shall be calculated using the same procedure for similar conductors in other than standard boxes. [314.16(C)(2)]

❖ It is difficult to calculate the cubic inch capacity of a conduit body. If the body is not marked with its capacity, it cannot contain any splices. Conduit bodies used in residential wiring are usually installed to provide access to pull conductors and make a splice.

E3905.12.3.2 Short-radius conduit bodies. Conduit bodies such as capped elbows and service-entrance elbows that enclose conductors 6 AWG or smaller and that are only intended to enable the installation of the raceway and the contained conductors, shall not contain splices, taps, or devices and shall be of sufficient size to provide free space for all conductors enclosed in the conduit body. [314.16(C)(3)]

❖ Conduit bodies such as LBs, LRs and LLs are commonly used with service conductors installed in raceways. These types of elbows have coverplates held in place with two or more screws. The interior volume is only large enough to accommodate the installation of the conductors. The same is true of capped elbows, except that capped elbows are typically used with branch-circuit and feeder conductors and have a removable coverplate or screwed cap that is in a plane 45 degrees from the plane of the raceway connections (i.e., on the outside corner of the elbow).

SECTION E3906
INSTALLATION OF BOXES, CONDUIT BODIES AND FITTINGS

E3906.1 Conductors entering boxes, conduit bodies or fittings. Conductors entering boxes, conduit bodies or fittings shall be protected from abrasion. (314.17)

❖ See the commentary to Section E3906.1.1.

INTERNATIONAL CODE COUNCIL®
Copyright © 2015 ICC. ALL RIGHTS RESERVED. Accessed by David Dammon on Jun 21, 2017 12:30:52 PM pursuant to License Agreement with ICC. No further reproduction or distribution authorized. ANY UNAUTHORIZED REPRODUCTION OR DISTRIBUTION IS A VIOLATION OF THE FEDERAL COPYRIGHT ACT AND THE LICENSE AGREEMENT, AND SUBJECT TO CIVIL AND CRIMINAL PENALTIES THEREUNDER.

E3906.1.1 Insulated fittings. Where raceways contain 4 AWG or larger insulated circuit conductors and these conductors enter a cabinet, box enclosure, or raceway, the conductors shall be protected by an identified fitting providing a smoothly rounded insulating surface, unless the conductors are separated from the fitting or raceway by identified insulating material securely fastened in place. [300.4(G)]

> **Exception:** Where threaded hubs or bosses that are an integral part of a cabinet, box enclosure, or raceway provide a smoothly rounded or flared entry for conductors. [300.4(G) Exception]

Conduit bushings constructed wholly of insulating material shall not be used to secure a fitting or raceway. The insulating fitting or insulating material shall have a temperature rating not less than the insulation temperature rating of the installed conductors. [330.4(G)]

❖ Conduit entering a panelboard cabinet or box is usually attached or connected with a fitting that enters the box. A conduit could be threaded and have one locknut on the outside of the box and one on the inside to secure it in place. Whether this method is used or a fitting is used to attach the raceway to the box or cabinet, it is a good practice to install an insulating bushing on all raceway entries. The code requires this for conductors of size 4 AWG or larger because there is more chance of damaging the insulation because these conductors are more difficult to bend than the smaller conductors.

E3906.2 Openings. Openings through which conductors enter shall be closed in an approved manner. [314.17(A)]

❖ The fitting used to secure the cable into the box should close the knockout opening sufficiently. If a small conductor is installed in a large knockout with a connector or fitting too large for the conductor, it will leave an opening through which foreign items could enter the cabinet or box.

E3906.3 Metal boxes and conduit bodies. Where raceway or cable is installed with metal boxes, or conduit bodies, the raceway or cable shall be secured to such boxes and conduit bodies. [314.17(B)]

❖ The exception in Section E3905.3.2 pertains to nonmetallic boxes only. For metal boxes, there are no exceptions. The cable must be secured to the box. It is obvious that conduit and tubing installed with metal boxes must be secured to the box.

E3906.4 Unused openings. Unused openings other than those intended for the operation of equipment, those intended for mounting purposes, or those permitted as part of the design for listed equipment, shall be closed to afford protection substantially equivalent to that of the wall of the equipment. Metal plugs or plates used with nonmetallic boxes or conduit bodies shall be recessed at least $^1/_4$ inch (6.4 mm) from the outer surface of the box or conduit body. [110.12(A)]

❖ Where a knockout on a box or cabinet is removed by mistake or is otherwise not used, a plug designed for the purpose of closing the opening must be installed. Taping over the opening and other makeshift methods are not allowable methods of closing unused openings. Knockout plugs are available that snap into the opening or that consist of two plates that are joined by a bolt and nut.

E3906.5 In wall or ceiling. In walls or ceilings of concrete, tile or other noncombustible material, boxes employing a flush-type cover or faceplate shall be installed so that the front edge of the box, plaster ring, extension ring, or listed extender will not be set back from the finished surface more than $^1/_4$ inch (6.4 mm). In walls and ceilings constructed of wood or other combustible material, boxes, plaster rings, extension rings and listed extenders shall be flush with the finished surface or project therefrom. (314.20)

❖ Boxes installed in a noncombustible surface are permitted to be recessed a maximum of $^1/_4$ inch (6.4 mm) from the surface. In a wall or ceiling of combustible material, the front edge of the box must be flush with the surface. A problem could occur where the electrician installs the box for $^1/_2$-inch (12.7 mm) drywall and then later wood paneling or trim is installed on top of the drywall. The box then is recessed and must have an extension installed. It may seem sufficient to use longer 6-32 screws than are provided with the devices, but whenever longer screws are needed, the box is probably recessed too far from the surface.

E3906.6 Noncombustible surfaces. Openings in noncombustible surfaces that accommodate boxes employing a flush-type cover or faceplate shall be made so that there are no gaps or open spaces greater than $^1/_8$ inch (3.2 mm) around the edge of the box. (314.21)

❖ The maximum gap in the wall opening from the edge of the box is $^1/_8$ inch (3.2 mm). Usually the drywall installer will repair all gaps with drywall joint compound. Gaps could allow sparks or burning materials to escape from the box into the wall or ceiling cavity.

E3906.7 Surface extensions. Surface extensions shall be made by mounting and mechanically securing an extension ring over the box. (314.22)

> **Exception:** A surface extension shall be permitted to be made from the cover of a flush-mounted box where the cover is designed so it is unlikely to fall off, or be removed if its securing means becomes loose. The wiring method shall be flexible for an approved length that permits removal of the cover and provides access to the box interior and shall be arranged so that any bonding or grounding continuity is independent of the connection between the box and cover. (314.22 Exception)

❖ A box extension must be secured to the box and not just to the wall or ceiling surface. It is acceptable to attach a flexible conduit to a box cover rather than using a box extension. In this case, a grounding conductor must be installed in the conduit to maintain grounding continuity when the cover is removed from the box.

INTERNATIONAL CODE COUNCIL®
Copyright © 2015 ICC. ALL RIGHTS RESERVED. Accessed by David Dammon on Jun 21, 2017 12:30:52 PM pursuant to License Agreement with ICC. No further reproduction or distribution authorized. ANY UNAUTHORIZED REPRODUCTION OR DISTRIBUTION IS A VIOLATION OF THE FEDERAL COPYRIGHT ACT AND THE LICENSE AGREEMENT, AND SUBJECT TO CIVIL AND CRIMINAL PENALTIES THEREUNDER.

E3906.8 Supports. Boxes and enclosures shall be supported in accordance with one or more of the provisions in Sections E3906.8.1 through E3906.8.6. (314.23)

❖ The six subsections of Section E3906.8 cover the code provisions for the support of boxes and enclosures. There is no specific provision for the number of nails or screws to be used to attach boxes and enclosures, and there are no exact provisions pertaining to the weight of the box. How securely the box is supported is a judgment call by the installer and the inspector. Many variables enter into consideration here including the type of surface or structure the box is mounted on. In some cases, special support must be constructed in addition to the building structure or components. This code section is similar to Section E3404.8 (see the commentary to that section).

E3906.8.1 Surface mounting. An enclosure mounted on a building or other surface shall be rigidly and securely fastened in place. If the surface does not provide rigid and secure support, additional support in accordance with other provisions of Section E3906.8 shall be provided. [314.23(A)]

❖ See Sections E3906.8 and E3404.8.

E3906.8.2 Structural mounting. An enclosure supported from a structural member or from grade shall be rigidly supported either directly, or by using a metal, polymeric or wood brace. [314.23(B)]

❖ See Sections E3906.8 and E3404.8.

E3906.8.2.1 Nails and screws. Nails and screws, where used as a fastening means, shall be attached by using brackets on the outside of the enclosure, or they shall pass through the interior within $^1/_4$ inch (6.4 mm) of the back or ends of the enclosure. Screws shall not be permitted to pass through the box except where exposed threads in the box are protected by an approved means to avoid abrasion of conductor insulation. [314.23(B)(1)]

❖ Screw threads exposed inside of a box present sharp edges that can easily damage wiring (see Sections E3906.8 and E3404.8).

E3906.8.2.2 Braces. Metal braces shall be protected against corrosion and formed from metal that is not less than 0.020 inch (0.508 mm) thick uncoated. Wood braces shall have a cross section not less than nominal 1 inch by 2 inches (25.4 mm by 51 mm). Wood braces in wet locations shall be treated for the conditions. Polymeric braces shall be identified as being suitable for the use. [314.23(B)(2)]

❖ See Sections E3906.8 and E3404.8.

E3906.8.3 Mounting in finished surfaces. An enclosure mounted in a finished surface shall be rigidly secured there to by clamps, anchors, or fittings identified for the application. [314.23(C)]

❖ Where the house is finished and the homeowner wants to add an outlet, the provisions of this section apply. Support of a box solely by the wallboard, for a switch or receptacle for example, is permitted if clamps, anchors and/or fittings identified for the purpose are used. Boxes specifically designed and approved for this kind of installation are available. In some areas, these boxes are called an "old work box" from the idea that outlets are being added in an existing house or in an old house. Another term is "cut-in box" from the idea that the wall is being cut into for the installation of the box. A hole is cut in the wall exactly to the shape of the box. The box has brackets that seat against the face or surface of the drywall and brackets that tighten against the inside of the drywall with screws.

Another approved anchor is called a "hold it" or "F" strap, which is a thin piece of metal that slips into the wall along each side of the box and is bent into the box (see also Sections E3906.8 and E3404.8).

E3906.8.4 Raceway supported enclosures without devices or fixtures. An enclosure that does not contain a device(s), other than splicing devices, or support a luminaire, lampholder or other equipment, and that is supported by entering raceways shall not exceed 100 cubic inches (1640 cm^3) in size. The enclosure shall have threaded entries or identified hubs. The enclosure shall be supported by two or more conduits threaded wrenchtight into the enclosure or hubs. Each conduit shall be secured within 3 feet (914 mm) of the enclosure, or within 18 inches (457 mm) of the enclosure if all entries are on the same side of the enclosure. [314.23(E)]

Exception: Rigid metal, intermediate metal, or rigid polyvinyl chloride nonmetallic conduit or electrical metallic tubing shall be permitted to support a conduit body of any size, provided that the conduit body is not larger in trade size than the largest trade size of the supporting conduit or electrical metallic tubing. [314.23(E) Exception]

❖ Where boxes are used outdoors in landscaping, the provisions of this section apply to the support of the boxes, where outdoor receptacles or decorative lighting are installed around patios or in flower beds, for example. This section pertains to junction boxes only or boxes that do not support fixtures or contain any devices. The box must be supported by at least two conduits that are threaded into the box or enclosure. If the two conduits are run into the same side of the box, such as in the installation of boxes for landscape wiring where the two conduits emerge from the ground and are run into the bottom of the box for support, the box must be no more than 18 inches (457 mm) above the ground or from the secure support. These types of threaded conduits are rigid metal conduit, intermediate metal conduit and Schedule 80 nonmetallic conduit. EMT, sometimes referred to as "thin wall," is not considered to be conduit and cannot be used to support a box or enclosure in this manner.

It would be a code violation to install the box on only one conduit that emerges from the ground, even if it was a rigid metal conduit and secured by concrete. The code requires two conduits. In some cases, at the end of a circuit, a second conduit is installed just for support of the box and is stubbed into the ground for a short distance but not connected to any other box and has no wire in it.

The exception allows a conduit body to be supported by rigid metal conduit, intermediate metal con-

INTERNATIONAL CODE COUNCIL®
Copyright © 2015 ICC. ALL RIGHTS RESERVED. Accessed by David Dammon on Jun 21, 2017 12:30:52 PM pursuant to License Agreement with ICC. No further reproduction or distribution authorized. ANY UNAUTHORIZED REPRODUCTION OR DISTRIBUTION IS A VIOLATION OF THE FEDERAL COPYRIGHT ACT AND THE LICENSE AGREEMENT, AND SUBJECT TO CIVIL AND CRIMINAL PENALTIES THEREUNDER.

duit, EMT or rigid nonmetallic conduit. Conduit bodies are usually not supported independently from the conduit but are intended to be part of the conduit run and are similar to a fitting in this respect.

E3906.8.5 Raceway supported enclosures, with devices or luminaire. An enclosure that contains a device(s), other than splicing devices, or supports a luminaire, lampholder or other equipment and is supported by entering raceways shall not exceed 100 cubic inches (1640 cm^3) in size. The enclosure shall have threaded entries or identified hubs. The enclosure shall be supported by two or more conduits threaded wrenchtight into the enclosure or hubs. Each conduit shall be secured within 18 inches (457 mm) of the enclosure. [314.23(F)]

Exceptions:

1. Rigid metal or intermediate metal conduit shall be permitted to support a conduit body of any size, provided that the conduit bodies are not larger in trade size than the largest trade size of the supporting conduit. [314.23(F) Exception No. 1]
2. An unbroken length(s) of rigid or intermediate metal conduit shall be permitted to support a box used for luminaire or lampholder support, or to support a wiring enclosure that is an integral part of a luminaire and used in lieu of a box in accordance with Section E3905.1.1, where all of the following conditions are met:
    2.1. The conduit is securely fastened at a point so that the length of conduit beyond the last point of conduit support does not exceed 3 feet (914 mm).
    2.2. The unbroken conduit length before the last point of conduit support is 12 inches (305 mm) or greater, and that portion of the conduit is securely fastened at some point not less than 12 inches (305 mm) from its last point of support.
    2.3. Where accessible to unqualified persons, the luminaire or lampholder, measured to its lowest point, is not less than 8 feet (2438 mm) above grade or standing area and at least 3 feet (914 mm) measured horizontally to the 8-foot (2438 mm) elevation from windows, doors, porches, fire escapes, or similar locations.
    2.4. A luminaire supported by a single conduit does not exceed 12 inches (305 mm) in any direction from the point of conduit entry.
    2.5. The weight supported by any single conduit does not exceed 20 pounds (9.1 kg).
    2.6. At the luminaire or lampholder end, the conduit(s) is threaded wrenchtight into the box, conduit body, or integral wiring enclosure, or into hubs identified for the purpose. Where a box or conduit body is used for support, the luminaire shall be secured directly to the box or conduit body, or through a threaded conduit nipple not over 3 inches (76 mm) long. [314.23(F) Exception No. 2]

❖ The main difference in this section and Section E3906.8.4 is that if the box contains a switch or receptacle or supports a luminaire, the conduit must be secured within 18 inches (457 mm) of the enclosure, and the provision for being secured within 36 inches (914 mm) from the box is not allowed. Note that the exceptions omit EMT and rigid nonmetallic conduit.

E3906.8.6 Enclosures in concrete or masonry. An enclosure supported by embedment shall be identified as being suitably protected from corrosion and shall be securely embedded in concrete or masonry. [314.23(G)]

❖ Where boxes and enclosures are supported by being encased in concrete or masonry, they must be identified for the application.

E3906.9 Covers and canopies. Outlet boxes shall be effectively closed with a cover, faceplate or fixture canopy. Screws used for the purpose of attaching covers, or other equipment to the box shall be either machine screws matching the thread gauge or size that is integral to the box or shall be in accordance with the manufacturer's instructions. (314.25)

❖ All outlets must have a cover, whether it is a blank cover, the faceplate of a switch or receptacle or the canopy of a luminaire. A residence should not pass inspection if a junction box is left open with the conductors exposed, even if they are tucked or folded back into the box. Where a luminaire is to be installed in the future, the box must be covered with a blank cover.

E3906.10 Covers and plates. Covers and plates shall be nonmetallic or metal. Metal covers and plates shall be grounded. [314.25(A)]

❖ Metal covers are grounded by the metal attachment screws that screw into the metal box or metal yoke of the device. Receptacles and switches have a grounding terminal that is connected to the yoke or strap on which the device is mounted. Therefore, the metal plate is grounded through the mounting screws into the yoke and through the grounding terminal. If a metal box is used and the yoke seats against the metal, as in the case of a surface-mounted box, there will be direct metal-to-metal contact between the yoke and the metal box. This is an approved method of grounding the device and any metal screws or metal cover plates. If there is no metal-to-metal contact, as where a nonmetallic box is used, the mounting strap of a switch must have a grounding terminal to ensure that a metal face plate will be grounded.

See the code requirements on grounding terminals of wiring devices in Section E3908.14 and switch faceplate grounding in Section E4001.11.1.

E3906.11 Exposed combustible finish. Combustible wall or ceiling finish exposed between the edge of a fixture canopy or pan and the outlet box shall be covered with noncombustible material where required by Section E4004.2. [314.25(B)]

❖ Note that this section is related to Section E4004.2 which contains a threshold of 180 square inches for the

INTERNATIONAL CODE COUNCIL®
Copyright © 2015 ICC. ALL RIGHTS RESERVED. Accessed by David Dammon on Jun 21, 2017 12:30:52 PM pursuant to License Agreement with ICC. No further reproduction or distribution authorized. ANY UNAUTHORIZED REPRODUCTION OR DISTRIBUTION IS A VIOLATION OF THE FEDERAL COPYRIGHT ACT AND THE LICENSE AGREEMENT, AND SUBJECT TO CIVIL AND CRIMINAL PENALTIES THEREUNDER.

combustible finish area. This code provision applies where the fixture has a dome, canopy or other shape that creates a void space behind it and would not apply where the fixture has a flat metal back that fits entirely flat against the wall or ceiling surface. An example would be where a round 4-inch (102 mm) box for a wall-hung luminaire is used on a wall with a wood paneling finish. If installed properly, the front edge of the box will be flush with the finished wall surface. A luminaire is installed having a canopy 8 inches (203 mm) in diameter that seats against the wall, leaving a wall surface area 2 inches (51 mm) wide around the box exposed inside the canopy. This area becomes part of the space where the connections are made between the circuit wires and the fixture wires. If arcing occurs or the fixture overheats, heat buildup could cause the wood wall surface around the box to ignite. Thus, that area of combustible wall must be covered with a noncombustible material. Where walls and ceilings are finished with combustible materials such as wood paneling and boards, and fixtures are mounted on such surfaces, the electrical inspector should verify that the surfaces are protected under the fixture pans, domes and canopies. The method of protection is not specified but would likely consist of a metal ring or plate or some noncombustible fiber pad attached to the outlet box such that it is not visible beyond the body of the fixture. Such metal protection means should be grounded to the outlet box or equipment grounding conductor.

SECTION E3907
CABINETS AND PANELBOARDS

E3907.1 Switch and overcurrent device enclosures with splices, taps, and feed-through conductors. Where the wiring space of enclosures for switches or overcurrent devices contains conductors that are feeding through, spliced, or tapping off to other enclosures, switches, or overcurrent devices, all of the following conditions shall apply:

1. The total area of all conductors installed at any cross section of the wiring space shall not exceed 40 percent of the cross-sectional area of that space.
2. The total area of all conductors, splices, and taps installed at any cross section of the wiring space shall not exceed 75 percent of the cross-sectional area of that space.
3. A warning label shall be applied to the enclosure that identifies the closest disconnecting means for any feed-through conductors. (312.8)

❖ This section allows splices within panelboards and switch and circuit breaker enclosures if there is ample room to make and contain such splices without crowding the conductors. It is commonly necessary to splice branch circuit conductors within panelboards as a result of relocating circuit breakers in the panel or replacing standard circuit breakers with GFCI- or AFCI-type breakers. Splices are also necessary when the panelboard is replaced as part of a service upgrade.

E3907.2 Damp and wet locations. In damp or wet locations, cabinets and panelboards of the surface type shall be placed or equipped so as to prevent moisture or water from entering and accumulating within the cabinet, and shall be mounted to provide an air-space not less than $^1/_4$ inch (6.4 mm) between the enclosure and the wall or other supporting surface. Cabinets installed in wet locations shall be weatherproof. For enclosures in wet locations, raceways and cables entering above the level of uninsulated live parts shall be installed with fittings listed for wet locations. (312.2)

Exception: Nonmetallic enclosures installed on concrete, masonry, tile, or similar surfaces shall not be required to be installed with an air space between the enclosure and the wall or supporting surface. (312.2 Exception)

❖ Cabinets and other boxes and enclosures that are mounted in wet or damp locations must have at least a $^1/_4$-inch (6.4 mm) airspace between the wall, cabinet or box so that water or moisture is not trapped against the metal. In some areas and locations, corrosion will result from moisture behind the cabinet. Concentric knockouts factory punched in cabinets for wet locations cannot be made water tight which is why such knockouts are found only below the level of live parts within the cabinet.

E3907.3 Position in wall. In walls of concrete, tile or other noncombustible material, cabinets and panelboards shall be installed so that the front edge of the cabinet will not set back of the finished surface more than $^1/_4$ inch (6.4 mm). In walls constructed of wood or other combustible material, cabinets shall be flush with the finished surface or shall project therefrom. (312.3)

❖ See Section E3906.5.

E3907.4 Repairing noncombustible surfaces. Noncombustible surfaces that are broken or incomplete shall be repaired so that there will not be gaps or open spaces greater than $^1/_8$ inch (3.2 mm) at the edge of the cabinet or cutout box employing a flush-type cover. (312.4)

❖ See Section E3906.6.

E3907.5 Unused openings. Unused openings, other than those intended for the operation of equipment, those intended for mounting purposes, and those permitted as part of the design for listed equipment, shall be closed to afford protection substantially equivalent to that of the wall of the equipment. Metal plugs and plates used with nonmetallic cabinets shall be recessed at least $^1/_4$ inch (6.4 mm) from the outer surface. Unused openings for circuit breakers and switches shall be closed using identified closures, or other approved means that provide protection substantially equivalent to the wall of the enclosure. (110.12(A)]

❖ Closures identified for the purpose must be used to cover unused circuit breaker openings. Such openings would allow fingers or metal objects to contact uninsulated bus bars in the panelboard which is obviously dangerous. Duct tape and sheet metal scraps are not equivalent (see Section E3906.4). Panelboard enclosure manufacturers provide closure plugs for the pur-

INTERNATIONAL CODE COUNCIL®
Copyright © 2015 ICC. ALL RIGHTS RESERVED. Accessed by David Dammon on Jun 21, 2017 12:30:52 PM pursuant to License Agreement with ICC. No further reproduction or distribution authorized. ANY UNAUTHORIZED REPRODUCTION OR DISTRIBUTION IS A VIOLATION OF THE FEDERAL COPYRIGHT ACT AND THE LICENSE AGREEMENT, AND SUBJECT TO CIVIL AND CRIMINAL PENALTIES THEREUNDER.

pose of closing openings that are not closed by a circuit breaker.

E3907.6 Conductors entering cabinets. Conductors entering cabinets and panelboards shall be protected from abrasion and shall comply with Section E3906.1.1. (312.5)

❖ See Section E3906.1.1.

E3907.7 Openings to be closed. Openings through which conductors enter cabinets, panelboards and meter sockets shall be closed in an approved manner. [312.5(A)]

❖ See Section E3906.2.

E3907.8 Cables. Where cables are used, each cable shall be secured to the cabinet, panelboard, cutout box, or meter socket enclosure. [312.5(C)]

Exception: Cables with entirely nonmetallic sheaths shall be permitted to enter the top of a surface-mounted enclosure through one or more sections of rigid raceway not less than 18 inches (457 mm) nor more than 10 feet (3048 mm) in length, provided that all the following conditions are met:

1. Each cable is fastened within 12 inches (305 mm), measured along the sheath, of the outer end of the raceway.
2. The raceway extends directly above the enclosure and does not penetrate a structural ceiling.
3. A fitting is provided on each end of the raceway to protect the cable(s) from abrasion and the fittings remain accessible after installation.
4. The raceway is sealed or plugged at the outer end using approved means so as to prevent access to the enclosure through the raceway.
5. The cable sheath is continuous through the raceway and extends into the enclosure beyond the fitting not less than $^1/_4$ inch (6.4 mm).
6. The raceway is fastened at its outer end and at other points in accordance with Section E3802.1.
7. The allowable cable fill shall not exceed that permitted by Table E3907.8. A multiconductor cable having two or more conductors shall be treated as a single conductor for calculating the percentage of conduit fill area. For cables that have elliptical cross sections, the cross-sectional area calculation shall be based on the major diameter of the ellipse as a circle diameter. [312.5(C) Exception]

❖ Nonmetallic cable must be secured with cable connectors to the cabinet (see Commentary Figure E3907.8). Where a cable enters a cabinet through a knockout, running the cable directly through the hole without any type of connector would be a code violation. Where the connector is omitted, the sharp edge of the knockout could damage the sheathing on the cable and the cable could be pulled out. Installers have been known to wrap the cable with several layers of tape at the point where it enters the cabinet through the knockout. This method is not an acceptable alternative to cable connectors.

The exception recognizes what has been common practice in some localities, and that is running Type NM cables through a conduit riser and into the top of a panelboard cabinet. This practice can overcome a shortage of $^1/_2$-inch (12.7 mm) knockouts on the top of a cabinet and provides physical protection for the cables. It also saves labor in some cases and makes a neat appearance. Section E3705.3 applies where the raceway is longer than 24 inches (610 mm). Note that this installation is limited to surface-mounted cabinets and panelboards only.

TABLE E3907.8 (Chapter 9, Table 1)
PERCENT OF CROSS SECTION OF CONDUIT AND TUBING FOR CONDUCTORS

NUMBER OF CONDUCTORS	MAXIMUM PERCENT OF CONDUIT AND TUBING AREA FILLED BY CONDUCTORS
1	53
2	31
Over 2	40

❖ Each Type NM cable is treated as a conductor when using this table. The fill limits prevent overcrowding and cable damage.

E3907.9 Wire-bending space within an enclosure containing a panelboard. Wire-bending space within an enclosure containing a panelboard shall comply with the requirements of Sections E3907.9.1 through E3907.9.3.

❖ Recall that a panelboard is defined as the buses, terminals, insulators, switches and overcurrent devices (i.e., the guts) that are housed in a cabinet. Loosely speaking, the entire assembly of a panelboard and cabinet is referred to in the field as the "panel."

E3907.9.1 Top and bottom wire-bending space. The top and bottom wire-bending space for a panelboard enclosure shall be sized in accordance with Table E3907.9.1(1) based on the largest conductor entering or leaving the enclosure. [408.55 (A)]

Exceptions:

1. For a panelboard rated at 225 amperes or less and designed to contain not more than 42 overcurrent devices, either the top or bottom wire-bending space shall be permitted to be sized in accordance with Table E3907.9.1(2). For the purposes of this exception, a 2-pole or a 3-pole circuit breaker shall be considered as two or three overcurrent devices, respectively. [408.55(A) Exception No. 1]
2. For any panelboard, either the top or bottom wire-bending space shall be permitted to be sized in accordance with Table E3907.9.1(2) where the wire-bending space on at least one side is sized in accordance with Table E3907.9.1(1) based on the largest conductor to be terminated in any side wire-bending space. [408.55(A) Exception No. 2]
3. Where the panelboard is designed and constructed for wiring using only a single 90-degree bend for each conductor, including the grounded circuit conductor, and the wiring diagram indicates and specifies the method of wiring that must be used, the top

INTERNATIONAL CODE COUNCIL®
Copyright © 2015 ICC. ALL RIGHTS RESERVED. Accessed by David Dammon on Jun 21, 2017 12:30:52 PM pursuant to License Agreement with ICC. No further reproduction or distribution authorized. ANY UNAUTHORIZED REPRODUCTION OR DISTRIBUTION IS A VIOLATION OF THE FEDERAL COPYRIGHT ACT AND THE LICENSE AGREEMENT, AND SUBJECT TO CIVIL AND CRIMINAL PENALTIES THEREUNDER.

and bottom wire-bending space shall be permitted to be sized in accordance with Table E3907.9.1(2). [408.55(A) Exception No. 3]

4. Where there are no conductors terminated in that space, either the top or the bottom wire-bending space, shall be permitted to be sized in accordance with Table E3907.9.1(2). [408.55(A) Exception No. 4]

❖ The code requires adequate space to allow conductors to be bent and terminated without excessive bending. Excessive bending can damage conductor insulation by thinning of insulation on the outer radius of the bend and by compressing insulation against raceway fittings and cabinet walls. Adequate space at terminals allows long radius bends to be made and prevents conductors from being compressed against cabinet walls and fittings. Of course, adequate space makes installation easier and safer as well. Note that the wire bending spaces within the typical cabinet (panel) installed in residential buildings is not something that the installer has control over. It is what it is, so to speak, as provided by the manufacturer; however, the installer must plan where to place raceways and overcurrent devices in the cabinet so as to be in code compliance. If there is not the required space in one area of a cabinet, then the raceway needs to enter at a location where there is adequate space. With thoughtful planning, raceways and overcurrent devices can be located where there will be no need to bend the conductors other than slightly. Less space is required for "lay-in" terminals because the conductor does not have to be pulled back and then inserted into a set screw-type terminal. "Lay-in" terminals open up to allow the conductors to be laid into a saddle without requiring an insertion movement. "Lay-in" terminals are common in meter enclosures and other equipment where large conductors are used.

E3907.9.2 Side wire-bending space. Side wire-bending space shall be in accordance with Table E3907.9.1(2) based on the largest conductor to be terminated in that space. [408.55(B)]

❖ The largest conductor in the space governs the space requirements because it represents the worst case scenario. See Note 1 in Table E 3907.9.1(2), which explains how the space dimension is measured. For example, if 2 AWG conductors are the largest conductors in the side space of a panel and they are to be terminated on a 100-amp two-pole circuit breaker, the minimum required space must be $2^1/_2$ inches (64 mm) in width measured from the outside end of the circuit breaker terminals to the wall of the cabinet that is opposite the terminals. The table recognizes that for very large conductors, they might be run in parallel, thus there is a column for two conductors per terminal.

E3907.9.3 Back wire-bending space. The distance between the center of the rear entry and the nearest termination for the entering conductors shall be not less than the distance given in Table E3907.9.1(1). Where a raceway or cable entry is in the wall of the enclosure, opposite a removable cover, the distance from that wall to the cover shall be permitted to comply with the distance required in Table E3907.9.1(2). [408.55 (C)]

❖ Rear wall knockouts in cabinets (panels) might be located such that the center of the KO opening is very close to the terminals intended for the conductors, thus providing inadequate space to maneuver the conductors. Again, thoughtful planning on where to enter the raceway is important. The typical cabinet and panelboard assembly will have a removable cover opposite of the rear entry KOs, therefore, Table E3907.9.1(2) can be used, which requires less space.

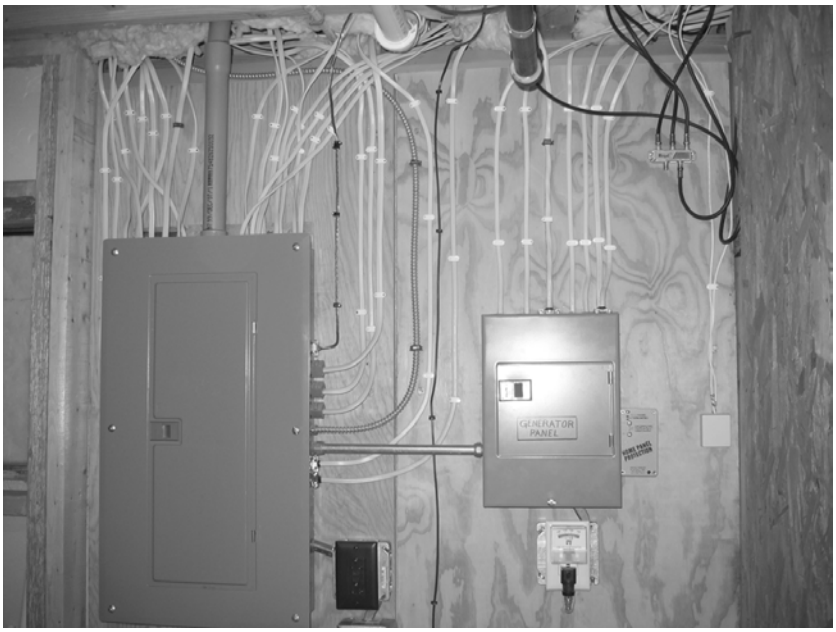

Figure E3907.8
CABLES SECURED TO PANELBOARD ENCLOSURES

INTERNATIONAL CODE COUNCIL®
Copyright © 2015 ICC. ALL RIGHTS RESERVED. Accessed by David Dammon on Jun 21, 2017 12:30:52 PM pursuant to License Agreement with ICC. No further reproduction or distribution authorized. ANY UNAUTHORIZED REPRODUCTION OR DISTRIBUTION IS A VIOLATION OF THE FEDERAL COPYRIGHT ACT AND THE LICENSE AGREEMENT, AND SUBJECT TO CIVIL AND CRIMINAL PENALTIES THEREUNDER.

TABLE E3907.9.1(1) [Table 312.6(B)]
MINIMUM WIRE-BENDING SPACE AT TERMINALS (see note 1)

WIRE SIZE (AWG or kcmil)		WIRES PER TERMINAL			
All other conductors	Compact stranded AA-8000 aluminum alloy conductors (see Note 3)	One (see note 2)		Two	
		inches	mm	inches	mm
14-10	12-8	Not specified	Not specified	—	—
8	6	1 1/2	38.1	—	—
6	4	2	50.8	—	—
4	2	3	76.2	—	—
3	1	3	76.2	—	—
2	1/0	3 1/2	88.9	—	—
1	2/0	4 1/2	114	—	—
1/0	3/0	5 1/2	140	5 1/2	140
2/0	4/0	6	152	6	152
3/0	250	6 1/2 [a]	165 [a]	6 1/2 [a]	165 [a]
4/0	300	7 [b]	178 [b]	7 1/2 [c]	190 [c]
250	350	8 1/2 [d]	216 [d]	8 1/2 [d]	229 [d]
300	400	10 [c]	254 [c]	10 [d]	254 [d]
350	500	12 [c]	305 [c]	12 [c]	305 [c]
400	600	13 [c]	330 [c]	13 [c]	330 [c]
500	700-750	14 [c]	356 [c]	14 [c]	356 [c]
600	800-900	15 [c]	381 [c]	16 [c]	406 [c]
700	1000	16 [c]	406 [c]	18 [c]	457 [c]

1. Bending space at terminals shall be measured in a straight line from the end of the lug or wire connector in a direction perpendicular to the enclosure wall.
2. For removable and lay-in wire terminals intended for only one wire, bending space shall be permitted to be reduced by the following number of inches (millimeters):
   a. 1/2 inches (12.7 mm)
   b. 1 inches (25.4 mm)
   c. 1 1/2 inches (38.1 mm)
   d. 2 inches (50.8 mm)
3. This column shall be permitted to determine the required wire-bending space for compact stranded aluminum conductors in sizes up to 1000 kcmil and manufactured using AA-8000 series electrical grade aluminum alloy conductor material.

INTERNATIONAL CODE COUNCIL®
Copyright © 2015 ICC. ALL RIGHTS RESERVED. Accessed by David Dammon on Jun 21, 2017 12:30:52 PM pursuant to License Agreement with ICC. No further reproduction or distribution authorized. ANY UNAUTHORIZED REPRODUCTION OR DISTRIBUTION IS A VIOLATION OF THE FEDERAL COPYRIGHT ACT AND THE LICENSE AGREEMENT, AND SUBJECT TO CIVIL AND CRIMINAL PENALTIES THEREUNDER.

TABLE E3907.9.1(2) [Table 312.6(A)]
MINIMUM WIRE-BENDING SPACE AT TERMINALS AND MINIMUM WIDTH OF WIRING GUTTERS (see note 1)

WIRE SIZE (AWG or kcmil)	WIRES PER TERMINAL			
	One		Two	
	inches	mm	inches	mm
14-10	Not specified	Not specified	—	—
8-6	$1^1/_2$	38.1	—	—
4-3	2	50.8	—	—
2	$2^1/_2$	63.5	—	—
1	2	76.2	—	—
1/0-2/0	$3^1/_2$	88.9	5	127
3/0-4/0	4	102	6	152
250	$4^1/_2$	114	6	152
300-350	5	127	8	203
400-500	6	152	8	203
600-700	8	203	10	254

1. Bending space at terminals shall be measured in a straight line from the end of the lug or wire connector in the direction that the wire leaves the terminal to the wall, barrier, or obstruction.

SECTION E3908
GROUNDING

E3908.1 Metal enclosures. Metal enclosures of conductors, devices and equipment shall be connected to the equipment grounding conductor. (250.86)

Exceptions:

1. Short sections of metal enclosures or raceways used to provide cable assemblies with support or protection against physical damage. (250.86 Exception No. 2)
2. A metal elbow that is installed in an underground installation of rigid nonmetallic conduit and is isolated from possible contact by a minimum cover of 18 inches (457 mm) to any part of the elbow or that is encased in not less than 2 inches (51 mm) of concrete. (250.86 Exception No. 3)

❖ Two general subjects of grounding are system grounding and equipment grounding. This section covers provisions for equipment grounding. In general, all metal enclosures must be grounded. Grounding serves the purpose of preventing a voltage potential from existing be-tween a conductive surface and the earth or surfaces in contact with the earth. A voltage potential between a surface and the earth could result in a shock hazard where living creatures, humans included, put themselves in contact with the earth and an energized surface. The voltage potential would cause current to flow through living tissue. Surfaces that are tied to the earth electrically (grounded) will have no voltage potential between them and the earth. The surfaces and the earth will be at the same potential with no differences in voltage between them.

E3908.2 Equipment fastened in place or connected by permanent wiring methods (fixed). Exposed, normally noncurrent-carrying metal parts of fixed equipment supplied by or enclosing conductors or components that are likely to become energized shall be connected to the equipment grounding conductor where any of the following conditions apply:

1. Where within 8 feet (2438 mm) vertically or 5 feet (1524 mm) horizontally of earth or grounded metal objects and subject to contact by persons;
2. Where located in a wet or damp location and not isolated; or
3. Where in electrical contact with metal. (250.110)

❖ Examples of equipment fastened in place include furnaces, water heaters, dishwashers, condensing units and evaporative coolers. There is almost no equipment served by a residential wiring system that is exempt from grounding requirements. Section E3908.9 lists the methods of grounding this type of equipment.

E3908.3 Specific equipment fastened in place (fixed) or connected by permanent wiring methods. Exposed, normally noncurrent-carrying metal parts of the following equipment and enclosures shall be connected to an equipment grounding conductor:

1. Luminaires as provided in Chapter 40. [250.112(J)]
2. Motor-operated water pumps, including submersible types.Where a submersible pump is used in a metal well casing, the well casing shall be connected to the pump circuit equipment grounding conductor. [250.112(L)]

❖ Although a submersible water pump might not be attached to the metal well casing, the code requires that the casing be bonded to the pump circuit equipment grounding conductor (see Section E 4003.3).

E3908.4 Effective ground-fault current path. Electrical equipment and wiring and other electrically conductive material likely to become energized shall be installed in a manner that creates a low-impedance circuit facilitating the operation of the overcurrent device or ground detector for high-impedance grounded systems. Such circuit shall be capable of safely carrying the maximum ground-fault current likely to be imposed on it from any point on the wiring system where a ground fault might occur to the electrical supply source. [250.(A)(5)]

❖ When a ground-fault occurs at some point in the electrical wiring system, the current will return to the source of the power supply if there is an electrically continuous path. Such path must be able to conduct the current necessary to open the overcurrent devices and clear the fault. For example, if a ground fault occurs because failed insulation allowed a conductor to contact the metal raceway in which it is installed, sufficient fault current must be conducted through the raceway all the way back to the source of the circuit to allow the overcurrent protective device to trip. Where an equipment grounding conductor is used, it must be sized according to Table E3908.12.

INTERNATIONAL CODE COUNCIL®
Copyright © 2015 ICC. ALL RIGHTS RESERVED. Accessed by David Dammon on Jun 21, 2017 12:30:52 PM pursuant to License Agreement with ICC. No further reproduction or distribution authorized. ANY UNAUTHORIZED REPRODUCTION OR DISTRIBUTION IS A VIOLATION OF THE FEDERAL COPYRIGHT ACT AND THE LICENSE AGREEMENT, AND SUBJECT TO CIVIL AND CRIMINAL PENALTIES THEREUNDER.

E3908.5 Earth as a ground-fault current path. The earth shall not be considered as an effective ground-fault current path. [250.4(A)(5)]

❖ Equipment must be grounded by connection to a grounding conductor and not only to the earth. For example, driving a ground rod at the equipment location and grounding only to the ground rod would not create the electrically continuous and permanent path that must be established to allow enough current to flow during a fault condition to trip the circuit breaker or set of fuses. Some current flows through the earth, but not enough to trip the circuit breaker.

E3908.6 Load-side grounded conductor neutral. A grounded conductor shall not be connected to normally noncurrent-carrying metal parts of equipment, to equipment grounding conductor(s), or be reconnected to ground on the load side of the service disconnecting means. [250.24(A)(5)]

❖ The grounding and grounded conductors are connected together only within the service equipment. At any and all points downstream of the service, meaning on the load side of the main disconnect, the grounding conductor and the grounded conductor must be electrically isolated. The only exception is the specific allowance in Section E3607.3.2. A shock hazard and fire hazard is created where grounding conductors, raceways and enclosures are connected to a grounded conductor at any point other than in or ahead of the service equipment (see Commentary Figures E3607.2 and E3908.7).

E3908.7 Load-side equipment. A grounded circuit conductor shall not be used for grounding noncurrent-carrying metal parts of equipment on the load side of the service disconnecting means. [250.142(B)]

❖ See Commentary Figure E3908.7 and the commentary to Sections E3607.2 and E3908.6. Commentary Figure E3908.7 illustrates what can happen when a grounded circuit conductor is used to ground an appliance or when the grounded circuit conductor and the grounding conductor are not electrically isolated from each other. Because the grounded circuit conductor is carrying current, the entire appliance housing will be energized, creating a potential shock hazard. Also, any metallic raceway will be energized, causing it to become a current carrier in parallel with the grounded conductor and a potential shock hazard as well. A fire hazard is also introduced because of possible arcing at any weak links in the continuity of the raceway. If the grounded conductor were lost for some reason, the raceway would carry the entire load, and the appliance would continue to operate even though it would be hazardous. Voltage drop along the circuit conductors and raceway can cause voltage potentials to exist between the appliance housing or raceway and any other grounded surface.

E3908.8 Types of equipment grounding conductors. The equipment grounding conductor run with or enclosing the circuit conductors shall be one or more or a combination of the following:

1. A copper, aluminum or copper-clad conductor.This conductor shall be solid or stranded; insulated, covered or bare; and in the form of a wire or a busbar of any shape. [250.118(1)]
2. Rigid metal conduit. [250.118(2)]

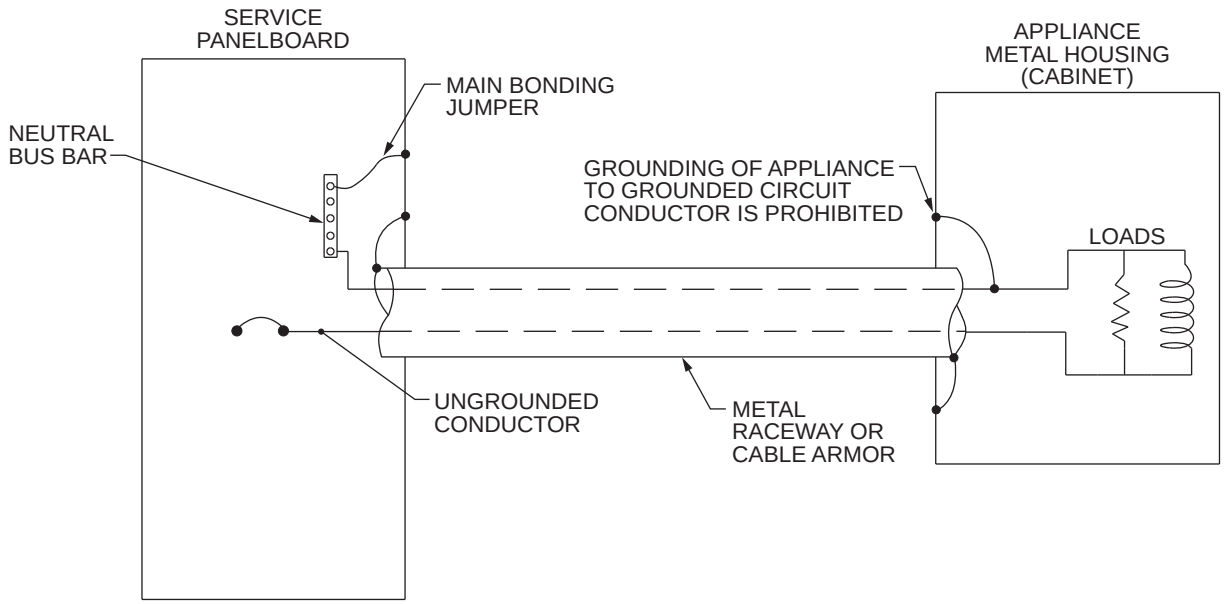

Figure E3908.7
PROHIBITED USE OF GROUNDED CIRCUIT CONDUCTOR

INTERNATIONAL CODE COUNCIL®
Copyright © 2015 ICC. ALL RIGHTS RESERVED. Accessed by David Dammon on Jun 21, 2017 12:30:52 PM pursuant to License Agreement with ICC. No further reproduction or distribution authorized. ANY UNAUTHORIZED REPRODUCTION OR DISTRIBUTION IS A VIOLATION OF THE FEDERAL COPYRIGHT ACT AND THE LICENSE AGREEMENT, AND SUBJECT TO CIVIL AND CRIMINAL PENALTIES THEREUNDER.

3. Intermediate metal conduit. [250.118(3)]
4. Electrical metallic tubing. [250.118(4)]
5. Armor of Type AC cable in accordance with Section E3908.4. [250.118(8)]
6. Type MC cable that provides an effective ground-fault current path in accordance with one or more of the following:
   6.1. It contains an insulated or uninsulated equipment grounding conductor in compliance with Item 1 of this section.
   6.2. The combined metallic sheath and uninsulated equipment grounding/bonding conductor of interlocked metal tape-type MC cable that is listed and identified as an equipment grounding conductor.
   6.3. The metallic sheath or the combined metallic sheath and equipment grounding conductors of the smooth or corrugated tube-type MC cable that is listed and identified as an equipment grounding conductor. [250.118(10)]
7. Other electrically continuous metal raceways and auxiliary gutters. [250.118(13)]
8. Surface metal raceways listed for grounding. [250.118(14)]

❖ Where conduit is used as the grounding conductor, it is very important that all connections be made properly so that there is an electrically continuous path for any fault current. The conduit system can be considered as a grounding conductor, but it is really a conductor that is "manufactured" or assembled on the job. A grounding conductor can be pulled into the conduit system where there is a lack of confidence in the integrity of all the connectors and couplings of the assembled system. If the electrician forgets to tighten one set screw or locknut on a fitting, for example, a high resistance could be created in the grounding return path.

E3908.8.1 Flexible metal conduit. Flexible metal conduit shall be permitted as an equipment grounding conductor where all of the following conditions are met:

1. The conduit is terminated in listed fittings.
2. The circuit conductors contained in the conduit are protected by overcurrent devices rated at 20 amperes or less.
3. The combined length of flexible metal conduit and flexible metallic tubing and liquid-tight flexible metal conduit in the same ground return path does not exceed 6 feet (1829 mm).

If used to connect equipment where flexibility is necessary to minimize the transmission of vibration from equipment or to provide flexibility for equipment that requires movement after installation, an equipment grounding conductor shall be installed. [250.118(5)]

❖ Flexible metal conduit is suitable as a grounding conductor to a certain extent, but the conditions are very limiting. It can be used only for circuits of 20 amperes or less, only in total return path lengths of 6 feet (1829 mm) or less, and only with listed fittings. All flexible metal conduit runs over 6 feet in length require that a grounding conductor be installed within the conduit. It is usually easier to install a grounding conductor in a run of 6 feet or less than find the listed grounding fittings and comply with all the conditions. Where flexible metal conduit is used to provide flexibility for the equipment being served, such as a motor that may need to be replaced or equipment that may vibrate, the flexible metal conduit cannot be relied on for grounding, and a grounding conductor must be installed within the conduit.

Because flexible conduit is formed as a spiral, fault current would have to travel along the spiral path and not straight along the length of the conduit. The fault current return path is longer following the long spiral path, and the spiral path acts as an inductor coil; thus, the impedance could be too high to allow the current flow necessary to trip the overcurrent device.

E3908.8.2 Liquid-tight flexible metal conduit. Liquid-tight flexible metal conduit shall be permitted as an equipment grounding conductor where all of the following conditions are met:

1. The conduit is terminated in listed fittings.
2. For trade sizes $^3/_8$ through $^1/_2$ (metric designator 12 through 16), the circuit conductors contained in the conduit are protected by overcurrent devices rated at 20 amperes or less.
3. For trade sizes $^3/_4$ through $1^1/_4$ (metric designator 21 through 35), the circuit conductors contained in the conduit are protected by overcurrent devices rated at not more than 60 amperes and there is no flexible metal conduit, flexible metallic tubing, or liquid-tight flexible metal conduit in trade sizes $^3/_8$ inch or $^1/_2$ inch (9.5 mm through 12.7 mm) in the ground fault current path.
4. The combined length of flexible metal conduit and flexible metallic tubing and liquid-tight flexible metal conduit in the same ground return path does not exceed 6 feet (1829 mm).

If used to connect equipment where flexibility is necessary to minimize the transmission of vibration from equipment or to provide flexibility for equipment that requires movement after installation, an equipment grounding conductor shall be installed. [250.118(6)]

❖ The same conditions apply to liquid-tight flexible conduit as to flexible metal conduit mentioned above, with the exception of size. For a circuit up to 60 amperes, the code specifies the larger conduit sizes indicated for the liquid-tight flexible metal conduit that is to be used as a grounding conductor. Again, the conditions are so limiting that for residential wiring most electricians choose to run an appropriate size grounding conductor within the conduit. If the conduit is used as a grounding conductor, the conditions must be strictly adhered to.

E3908.8.3 Nonmetallic sheathed cable (Type NM). In addition to the insulated conductors, the cable shall have an insulated, covered, or bare equipment grounding conductor.

INTERNATIONAL CODE COUNCIL®
Copyright © 2015 ICC. ALL RIGHTS RESERVED. Accessed by David Dammon on Jun 21, 2017 12:30:52 PM pursuant to License Agreement with ICC. No further reproduction or distribution authorized. ANY UNAUTHORIZED REPRODUCTION OR DISTRIBUTION IS A VIOLATION OF THE FEDERAL COPYRIGHT ACT AND THE LICENSE AGREEMENT, AND SUBJECT TO CIVIL AND CRIMINAL PENALTIES THEREUNDER.

Equipment grounding conductors shall be sized in accordance with Table E3908.12. (334.108)

❖ The equipment grounding conductor in a nonmetallic sheathed cable is uninsulated (bare) and must be used only as an equipment grounding conductor.

E3908.9 Equipment fastened in place or connected by permanent wiring methods. Noncurrent-carrying metal parts of equipment, raceways and other enclosures, where required to be grounded, shall be grounded by one of the following methods: (250.134)

1. By any of the equipment grounding conductors permitted by Sections E3908.8 through E3908.8.3. [250.134(A)]
2. By an equipment grounding conductor contained within the same raceway, cable or cord, or otherwise run with the circuit conductors. Equipment grounding conductors shall be identified in accordance with Section E3407.2. [250.134(B)]

❖ This section simply requires that equipment be grounded by one of the metallic wiring methods in Section E3908.8 or by a separate conductor run in the conduit, tubing or cable. If the grounding conductor is insulated, it must be green. See Section E3407 for conductor color requirements.

E3908.10 Methods of equipment grounding. Fixtures and equipment shall be considered grounded where mechanically connected to an equipment grounding conductor as specified in Sections E3908.8 through E3908.8.3. Wire type equipment grounding conductors shall be sized in accordance with Section E3908.12. (250 Part VII)

❖ See Section E3908.8.

E3908.11 Equipment grounding conductor installation. Where an equipment grounding conductor consists of a raceway, cable armor or cable sheath or where such conductor is a wire within a raceway or cable, it shall be installed in accordance with the provisions of this chapter and Chapters 34 and 38 using fittings for joints and terminations approved for installation with the type of raceway or cable used. All connections, joints and fittings shall be made tight using suitable tools. (250.120)

❖ See Section E3908.8.

E3908.12 Equipment grounding conductor size. Copper, aluminum and copper-clad aluminum equipment grounding conductors of the wire type shall be not smaller than shown in Table E3908.12, but they shall not be required to be larger than the circuit conductors supplying the equipment. Where a raceway or a cable armor or sheath is used as the equipment grounding conductor, as provided in Section E3908.8, it shall comply with Section E3908.4. Where ungrounded conductors are increased in size from the minimum size that has sufficient ampacity for the intended installation, wire type equipment grounding conductors shall be increased proportionally according to the circular mil area of the ungrounded conductors. [250.122(A) and (B)]

❖ The rule that the equipment grounding conductor does not have to be larger than the circuit conductors may apply where the rating of the circuit breaker has been increased to allow for motor starting. In such a case, the minimum size equipment grounding conductor listed in the table may be larger than the circuit conductors. This is not usually a concern in residential wiring but could be in some rare situations.

Where the equipment grounding conductor is an actual conductor and not a raceway system, using the table to size this conductor is simple because it is prescriptive. But where a raceway like a conduit or the sheath of an armored cable is used as the grounding conductor as allowed in Section E3908.8, the code states here that it must comply with Section E3908.4, which is actually a performance requirement. How is it determined that the conduit or cable sheath is of a sufficient size or has a low enough impedance as an equipment grounding conductor? It is usually assumed that the conduit has enough metal to serve as a conductor and will do so as long as the conduit system is assembled properly or performance is verified through testing. This is why the use of flexible conduit as a grounding conductor is limited by strict conditions.

As an example of sizing the equipment conductor, a 240-volt, 70-ampere circuit to an air-conditioner run with two size 4-AWG copper ungrounded conductors and no grounded conductor would be required to have a minimum size 8-AWG copper equipment grounding conductor.

TABLE E3908.12 (Table 250.122)
EQUIPMENT GROUNDING CONDUCTOR SIZING

RATING OR SETTING OF AUTOMATIC OVERCURRENT DEVICE IN CIRCUIT AHEAD OF EQUIPMENT, CONDUIT, ETC., NOT EXCEEDING THE FOLLOWING RATINGS (amperes)	MINIMUM SIZE	
	Copper wire No. (AWG)	Aluminum or copper-clad aluminum wire No. (AWG)
15	14	12
20	12	10
60	10	8
100	8	6
200	6	4
300	4	2
400	3	1

❖ See the commentary to Section E3908.12.

INTERNATIONAL CODE COUNCIL®
Copyright © 2015 ICC. ALL RIGHTS RESERVED. Accessed by David Dammon on Jun 21, 2017 12:30:52 PM pursuant to License Agreement with ICC. No further reproduction or distribution authorized. ANY UNAUTHORIZED REPRODUCTION OR DISTRIBUTION IS A VIOLATION OF THE FEDERAL COPYRIGHT ACT AND THE LICENSE AGREEMENT, AND SUBJECT TO CIVIL AND CRIMINAL PENALTIES THEREUNDER.

E3908.12.1 Multiple circuits. Where a single equipment grounding conductor is run with multiple circuits in the same raceway or cable, it shall be sized for the largest overcurrent device protecting conductors in the raceway or cable. [250.122(C)]

❖ It is not necessary to run multiple equipment grounding conductors in the same conduit or cable that supplies multiple equipment. But the equipment grounding conductor must be sized for the largest rated circuit in the conduit or cable. For example, where a 20-ampere circuit and a 30-ampere circuit are run in the same conduit, the equipment grounding conductor must be at least size 10-AWG copper. Another example would be where a three-conductor cable is used. A cable marked "12-3 w/ground" may have a red, a black, a white and a bare conductor. The red and black conductors could supply two separate circuits to two different appliances or equipment, as part of a multiwire branch circuit. The one size 12-AWG bare conductor serves as the equipment grounding conductor for both circuits.

E3908.13 Continuity and attachment of equipment grounding conductors to boxes. Where circuit conductors are spliced within a box or terminated on equipment within or supported by a box, any equipment grounding conductors associated with the circuit conductors shall be connected within the box or to the box with devices suitable for the use. Connections depending solely on solder shall not be used. Splices shall be made in accordance with Section E3406.10 except that insulation shall not be required. The arrangement of grounding connections shall be such that the disconnection or removal of a receptacle, luminaire or other device fed from the box will not interfere with or interrupt the grounding continuity. [250.146(A) and (C)]

❖ Where several nonmetallic sheathed cables are installed in a box, the equipment grounding conductors must be joined together with a listed device. These conductors must not be twisted together with pliers as the only means of splicing. A listed connector such as a wire nut must be used. A jumper or "pigtail" must be used to connect to the grounding terminal of the device so that when the device is removed it will not interrupt the continuity of the grounding return path. Special pressure connectors (e.g., wire nuts with a hole in the end and wire nuts with attached lead wires) are available that provide a lead wire (jumper) for connection to devices. See Sections E3908.15 and E3908.16 for equipment grounding conductors in metal boxes and in nonmetallic boxes.

E3908.14 Connecting receptacle grounding terminal to box. An equipment bonding jumper, sized in accordance with Table E3908.12 based on the rating of the overcurrent device protecting the circuit conductors, shall be used to connect the grounding terminal of a grounding-type receptacle to a grounded box except where grounded in accordance with one of the following: (250.146)

1. Surface mounted box.Where the box is mounted on the surface, direct metal-to-metal contact between the device yoke and the box shall be permitted to ground the receptacle to the box. At least one of the insulating washers shall be removed from receptacles that do not have a contact yoke or device designed and listed to be used in conjunction with the supporting screws to establish the grounding circuit between the device yoke and flush-type boxes. This provision shall not apply to cover-mounted receptacles except where the box and cover combination are listed as providing satisfactory ground continuity between the box and the receptacle. A listed exposed work cover shall be considered to be the grounding and bonding means where the device is attached to the cover with at least two fasteners that are permanent, such as a rivet or have a thread locking or screw locking means and where the cover mounting holes are located on a flat nonraised portion of the cover. [250.146(A)]
2. Contact devices or yokes. Contact devices or yokes designed and listed for the purpose shall be permitted in conjunction with the supporting screws to establish equipment bonding between the device yoke and flush-type boxes. [250.146(B)]
3. Floor boxes.The receptacle is installed in a floor box designed for and listed as providing satisfactory ground continuity between the box and the device. [250.146(C)]

❖ Where a metal box is used, a receptacle must be grounded by a jumper from the device grounding terminal to the box unless there is metal-to-metal contact between the yoke and the box. A receptacle having a contact device listed for the purpose of equipment grounding could be used. The so-called "self-grounding" receptacles have a spring type of clip that binds against the 6-32 supporting screw of the device to provide a positive connection between the receptacle yoke and the metal box.

E3908.15 Metal boxes. A connection shall be made between the one or more equipment grounding conductors and a metal box by means of a grounding screw that shall be used for no other purpose, equipment listed for grounding or by means of a listed grounding device. Where screws are used to connect grounding conductors or connection devices to boxes, such screws shall be one or more of the following: [250.148(C)]

1. Machine screw-type fasteners that engage not less than two threads.
2. Machine screw-type fasteners that are secured with a nut.
3. Thread-forming machine screws that engage not less than two threads in the enclosure. [250.8(5) and (6)]

❖ Where a metal box is used, the equipment grounding conductor must be bonded or connected to the metal box by means of a listed grounding screw or grounding device. It may be handy to wrap the equipment grounding conductor around the screw used for attaching the box to the structure, but this would be a poor, unreliable connection and a code violation. Screws that support the box or that are part of a cable clamp cannot be used to ground metal boxes. Most, if not all, metal

INTERNATIONAL CODE COUNCIL®
Copyright © 2015 ICC. ALL RIGHTS RESERVED. Accessed by David Dammon on Jun 21, 2017 12:30:52 PM pursuant to License Agreement with ICC. No further reproduction or distribution authorized. ANY UNAUTHORIZED REPRODUCTION OR DISTRIBUTION IS A VIOLATION OF THE FEDERAL COPYRIGHT ACT AND THE LICENSE AGREEMENT, AND SUBJECT TO CIVIL AND CRIMINAL PENALTIES THEREUNDER.

boxes are provided with factory tapped openings for 10-32 machine screws for grounding purposes.

E3908.16 Nonmetallic boxes. One or more equipment grounding conductors brought into a nonmetallic outlet box shall be arranged to allow connection to fittings or devices installed in that box. [250.148(D)]

❖ See Section E3908.13.

E3908.17 Clean surfaces. Nonconductive coatings such as paint, lacquer and enamel on equipment to be grounded shall be removed from threads and other contact surfaces to ensure electrical continuity or the equipment shall be connected by means of fittings designed so as to make such removal unnecessary. (250.12)

❖ See Section E3908.18.

E3908.18 Bonding other enclosures. Metal raceways, cable armor, cable sheath, enclosures, frames, fittings and other metal noncurrent-carrying parts that serve as equipment grounding conductors, with or without the use of supplementary equipment grounding conductors, shall be effectively bonded where necessary to ensure electrical continuity and the capacity to conduct safely any fault current likely to be imposed on them. Any nonconductive paint, enamel and similar coating shall be removed at threads, contact points and contact surfaces, or connections shall be made by means of fittings designed so as to make such removal unnecessary. [250.96(A)]

❖ Paint is an insulator, and a positive connection cannot be made without removing the paint at the point where the equipment grounding conductor is attached (see also Sections E3908.9 and E3906.10).

E3908.19 Size of equipment bonding jumper on load side of an overcurrent device. The equipment bonding jumper on the load side of an overcurrent devices shall be sized, as a minimum, in accordance with Table E3908.12, but shall not be required to be larger than the circuit conductors supplying the equipment. An equipment bonding conductor shall be not smaller than No. 14 AWG.

A single common continuous equipment bonding jumper shall be permitted to connect two or more raceways or cables where the bonding jumper is sized in accordance with Table E3908.12 for the largest overcurrent device supplying circuits therein. [250.102(D) and 250.122]

❖ Bonding jumpers can be used where two or more raceways enter a junction box to ensure the continuity of the conduit as an equipment grounding conductor. A common bonding jumper can be used as mentioned in the commentary to Section E3908.12.1.

E3908.20 Installation equipment bonding jumper. Bonding jumpers or conductors and equipment bonding jumpers shall be installed either inside or outside of a raceway or an enclosure in accordance with Sections E3908.20.1 and E3908.20.2. [250.102(E)]

❖ An equipment bonding jumper is limited to 6 feet (1829 mm) if installed on the outside of the raceway, but the length is not limited if installed on the inside and run with the circuit conductors. Note the exception for outdoor poles.

E3908.20.1 Inside raceway or enclosure. Where installed inside a raceway or enclosure, equipment bonding jumpers and bonding jumpers or conductors shall comply with the requirements of Sections E3407.2 and E3908.13. [250.102(E)(1)]

❖ See the commentary to Sections E3407.2 and E3908.13.

E3908.20.2 Outside raceway or enclosure. Where installed outside of a raceway or enclosure, the length of the bonding jumper or conductor or equipment bonding jumper shall not exceed 6 feet (1829 mm) and shall be routed with the raceway or enclosure. [250.102(E)(2)]

Equipment bonding jumpers and supply-side bonding jumpers installed for bonding grounding electrodes and installed at outdoor pole locations for the purpose of bonding or grounding isolated sections of metal raceways or elbows installed in exposed risers of metal conduit or other metal raceway, shall not be limited in length and shall not be required to be routed with a raceway or enclosure. [250.102(E)(2) Exception]

❖ An equipment bonding jumper is limited to 6 feet (1829 mm) if installed on the outside of the raceway, but the length is not limited if installed on the inside and run with the circuit conductors. Note the special allowances for bonding grounding electrodes and outdoor pole risers.

E3908.20.3 Protection. Bonding jumpers or conductors and equipment bonding jumpers shall be installed in accordance with Section E3610.2. [250.102(E)(3)]'

❖ See the commentary to Section E3610.2.

SECTION E3909
FLEXIBLE CORDS

E3909.1 Where permitted. Flexible cords shall be used only for the connection of appliances where the fastening means and mechanical connections of such appliances are designed to permit ready removal for maintenance, repair or frequent interchange and the appliance is listed for flexible cord connection. Flexible cords shall not be installed as a substitute for the fixed wiring of a structure; shall not be run through holes in walls, structural ceilings, suspended ceilings, dropped ceilings or floors; shall not be concealed behind walls, floors, ceilings or located above suspended or dropped ceilings. (400.7 and 400.8)

❖ A flexible cord could not be used for the power supply to a furnace or water heater, but could be used for a range. Where a flexible cord is used for an appliance, a receptacle must be placed within reach of the cord in the same area as the appliance so the cord does not have to be run through a wall, ceiling or floor (see Section E4101.3).

E3909.2 Loading and protection. The ampere load of flexible cords serving fixed appliances shall be in accordance with Table E3909.2. This table shall be used in conjunction with

INTERNATIONAL CODE COUNCIL®
Copyright © 2015 ICC. ALL RIGHTS RESERVED. Accessed by David Dammon on Jun 21, 2017 12:30:52 PM pursuant to License Agreement with ICC. No further reproduction or distribution authorized. ANY UNAUTHORIZED REPRODUCTION OR DISTRIBUTION IS A VIOLATION OF THE FEDERAL COPYRIGHT ACT AND THE LICENSE AGREEMENT, AND SUBJECT TO CIVIL AND CRIMINAL PENALTIES THEREUNDER.

applicable end use product standards to ensure selection of the proper size and type. Where flexible cord is approved for and used with a specific listed appliance, it shall be considered to be protected where applied within the appliance listing requirements. [240.4, 240.5(A), 240.5(B)(1), 400.5, and 400.13]

❖ Where a flexible cord is field installed, it is important to follow the ampere load ratings in Table E3909.2. Many cord- and plug-connected appliances and equipment come with a cord already installed, which is sized to carry the load.

TABLE E3909.2 [Table 400.5(A)(1)]
MAXIMUM AMPERE LOAD FOR FLEXIBLE CORDS

CORD SIZE (AWG)	CORD TYPES S, SE, SEO, SJ, SJE, SJEO, SJO, SJOO, SJT, SJTO, SJTOO, SO, SOO, SRD, SRDE, SRDT, ST, STD, SV, SVO, SVOO, SVTO, SVTOO	
	Maximum ampere load	
	Three current-carrying conductors	Two current-carrying conductors
18	7	10
16	10	13
14	15	18
12	20	25

E3909.3 Splices. Flexible cord shall be used only in continuous lengths without splices or taps. (400.9)

❖ No provision is made for splicing or making tap connections to a flexible cord. Flexible cord is not to be used in any way as a substitute for the fixed wiring of the dwelling.

E3909.4 Attachment plugs. Where used in accordance with Section E3909.1, each flexible cord shall be equipped with an attachment plug and shall be energized from a receptacle outlet. [400.7(B)]

❖ Attachment plugs are used to receive power, not to deliver power to a circuit. Plugs are received by receptacles.

Bibliography

The following resource materials were used in the preparation of the commentary for this chapter of the code:

NFPA 70–14, *National Electrical Code*. Quincy, MA: National Fire Protection Association, 2013.

INTERNATIONAL CODE COUNCIL®
Copyright © 2015 ICC. ALL RIGHTS RESERVED. Accessed by David Dammon on Jun 21, 2017 12:30:52 PM pursuant to License Agreement with ICC. No further reproduction or distribution authorized. ANY UNAUTHORIZED REPRODUCTION OR DISTRIBUTION IS A VIOLATION OF THE FEDERAL COPYRIGHT ACT AND THE LICENSE AGREEMENT, AND SUBJECT TO CIVIL AND CRIMINAL PENALTIES THEREUNDER.

INTERNATIONAL CODE COUNCIL®
Copyright © 2015 ICC. ALL RIGHTS RESERVED. Accessed by David Dammon on Jun 21, 2017 12:30:52 PM pursuant to License Agreement with ICC. No further reproduction or distribution authorized. ANY UNAUTHORIZED REPRODUCTION OR DISTRIBUTION IS A VIOLATION OF THE FEDERAL COPYRIGHT ACT AND THE LICENSE AGREEMENT, AND SUBJECT TO CIVIL AND CRIMINAL PENALTIES THEREUNDER.

Chapter 40: Devices and Luminaires

General Comments

This chapter addresses the "trim-out" (final) stage of construction in which devices and fixtures are installed and connected to the installed wiring system.

Chapter 40 covers receptacle ratings and installation, lighting fixture installation, construction and location, and grounding of devices and fixtures.

Purpose

Chapter 40 is intended to prevent fire and electrical shock hazards associated with the exposed devices and fixtures to which occupants and dwelling contents are exposed.

SECTION E4001 SWITCHES

E4001.1 Rating and application of snap switches. General-use snap switches shall be used within their ratings and shall control only the following loads:

1. Resistive and inductive loads not exceeding the ampere rating of the switch at the voltage involved.
2. Tungsten-filament lamp loads not exceeding the ampere rating of the switch at 120 volts.
3. Motor loads not exceeding 80 percent of the ampere rating of the switch at its rated voltage. [404.14(A)]

❖ "Snap switch" is the term for the common types of switches used in dwelling units for lighting control, small appliances and motor-driven equipment. Most snap switches installed in dwellings are rated 15 amperes and 20 amperes. For resistive loads and non-motor inductive loads, such as fluorescent lighting, the switch must have an ampere rating of at least 100 percent of the load. A routine practice is to install 15-ampere switches because the switch often controls only one light fixture in a room. However, where a switch controls many lights of heavy wattage, it is important to consider the total load and make sure that the ampere rating is adequate. A switch controlling a motor must have a rating of 125 percent of the motor load.

E4001.2 CO/ALR snap switches. Snap switches rated 20 amperes or less directly connected to aluminum conductors shall be marked CO/ALR. [404.14(C)]

❖ Aluminum conductors are not used in modern wiring for 15- and 20-ampere branch circuits. However, this code provision is important because it also covers remodeling and rewiring work in older homes where aluminum conductors may be found. If a snap switch is replaced on aluminum wire, the switch must be marked CO/ALR or otherwise indicate "suitable for copper or aluminum conductors." If a switch is not available marked in this way, one alternative is to connect a copper pigtail to the end of each aluminum conductor to be terminated on the switch. A splicing device listed for the application must be used to connect the pigtail. In some cases, a decision is made to go through the entire house and add copper pigtails and replace all receptacles and switches where there is evidence of terminal overheating (see also Section E3406.8).

E4001.3 Indicating. General-use and motor-circuit switches and circuit breakers shall clearly indicate whether they are in the open OFF or closed ON position. Where single-throw switches or circuit breaker handles are operated vertically rather than rotationally or horizontally, the up position of the handle shall be the closed (on) position.

❖ It is assumed that a vertically operated switch will be "on" in the up position and "off" in the down position, because this is the convention. It would not be wise to possibly confuse occupants by changing the convention to which they are accustomed. Similar logic in the code requires the hot water control to correspond with the left side of a faucet.

E4001.4 Time switches and similar devices. Time switches and similar devices shall be of the enclosed type or shall be mounted in cabinets or boxes or equipment enclosures. A barrier shall be used around energized parts to prevent operator exposure when making manual adjustments or switching. (404.5)

❖ Some modern time switches are electronic, and the setting buttons and controls are not near the energized parts, but many time switches have the dial or controls near the live terminals. It is important that the insulating barrier not be removed to help prevent shock or electrocution when adjusting the settings.

E4001.5 Grounding of enclosures. Metal enclosures for switches or circuit breakers shall be connected to an equipment grounding conductor. Metal enclosures for switches or circuit breakers used as service equipment shall comply with the provisions of Section E3609.4. Where nonmetallic enclosures are used with metal raceways or metal-armored cables, provisions shall be made for connecting the equipment grounding conductor.

INTERNATIONAL CODE COUNCIL®
Copyright © 2015 ICC. ALL RIGHTS RESERVED. Accessed by David Dammon on Jun 21, 2017 12:30:52 PM pursuant to License Agreement with ICC. No further reproduction or distribution authorized. ANY UNAUTHORIZED REPRODUCTION OR DISTRIBUTION IS A VIOLATION OF THE FEDERAL COPYRIGHT ACT AND THE LICENSE AGREEMENT, AND SUBJECT TO CIVIL AND CRIMINAL PENALTIES THEREUNDER.

Nonmetallic boxes for switches shall be installed with a wiring method that provides or includes an equipment grounding conductor. (404.12)

❖ The exposed metal parts of a cabinet or switch box must be grounded by connection to the equipment grounding conductor by approved devices. Where nonmetallic boxes are used, the equipment grounding conductors, whether they are wires or raceways, must be bonded together to assure continuity of the ground fault return path (see Section E3609.4).

E4001.6 Access. Switches and circuit breakers used as switches shall be located to allow operation from a readily accessible location. Such devices shall be installed so that the center of the grip of the operating handle of the switch or circuit breaker, when in its highest position, will not be more than 6 feet 7 inches (2007 mm) above the floor or working platform. [404.8(A)]

Exception: This section shall not apply to switches and circuit breakers that are accessible by portable means and are installed adjacent to the motors, appliances and other equipment that they supply. [404.8(A) Exception]

❖ This provision for access to switches includes access to circuit breakers, so when the contractor is considering the location for the panelboard and the location of the main disconnect, this rule must be followed. For example, if the main disconnect is installed on the outside of the house and the level of the grade is lowered, the height of the main breaker will be raised. Most ordinary switches are installed lower than 6 feet, 7 inches (2007 mm). However, in some cases for special equipment, this rule will come into play. One should not need a ladder or stool to operate any switch (see definition of "Readily accessible").

The exception recognizes that accessing some switches by portable ladders, for example, is adequate where the switch or circuit breaker is located adjacent to the motor, appliance or equipment that it serves. An example is an HVAC unit mounted on a roof where the switch is installed next to the unit. Such switches require only occasional or seasonal use and need not be readily accessible.

E4001.7 Damp or wet locations. A surface mounted switch or circuit breaker located in a damp or wet location or outside of a building shall be enclosed in a weatherproof enclosure or cabinet. A flush-mounted switch or circuit breaker in a damp or wet location shall be equipped with a weatherproof cover. Switches shall not be installed within wet locations in tub or shower spaces unless installed as part of a listed tub or shower assembly. [404.8(A), (B), and (C)]

❖ There is no exception to the rule that a common light switch wired to control a fan, lighting outlet, or other load cannot be installed in the bathtub or shower space; however, the code does not provide an exact definition or dimension of tub or shower space. It would be wise to locate the switch out of the reach of someone in the tub or shower, even though this is not stated in the code (see Section E3902.8).

E4001.8 Grounded conductors. Switches or circuit breakers shall not disconnect the grounded conductor of a circuit except where the switch or circuit breaker simultaneously disconnects all conductors of the circuit. [404.2(B)]

❖ Switching the grounded conductor of a two-wire circuit will turn the load on and off, but a safety hazard is created because the ungrounded conductor is not opened. When someone is working on the wiring in a lighting outlet or on a luminaire, the ungrounded or hot conductor must be deenergized when the switch is off.

E4001.9 Switch connections. Three- and four-way switches shall be wired so that all switching occurs only in the ungrounded circuit conductor. Color coding of switch connection conductors shall comply with Section E3407.3. Where in metal raceways or metal-jacketed cables, wiring between switches and outlets shall be in accordance with Section E3406.7. [404.2(A)]

Exception: Switch loops do not require a grounded conductor. [404.2(A) Exception]

❖ One standard way to wire three-way switches is to have an ungrounded and a grounded conductor feed into one switch box (sometimes called the power end), then run "travelers" along with the grounded conductor to the other switch box (sometimes called the switch leg end), and then from there, run the switched ungrounded conductor along with the grounded conductor up to the light fixture. In this circuit layout, it is very simple to keep the grounded conductor from being switched. But there are many different variations on designing a three-way switch circuit and some of these over the years have involved switching the grounded conductor. In older homes, lighting fixtures were sometimes wired in the circuit between two three-way switches such that the polarity at the lamp holder changed depending on the position of the switches. This circuit is difficult to diagnose and creates a shock hazard. This provision is included in the code to specifically prohibit the switching of grounded conductors.

This section also requires, by reference to Section E3406.7, that all conductors of a circuit be in the same raceway or cable. This prohibits running the travelers without the grounded conductor and picking up the grounded conductor on the switch leg from a close-by outlet box that has a grounded conductor such as from a receptacle.

In a switch loop, the conductors supplying power to a light are brought first to the lighting outlet. Only one cable with a black, a white and a bare conductor is run to the switch point. The white conductor is connected to the ungrounded conductor at the lighting outlet and supplies power down to the switch. When the switch is closed, power is carried back to the lighting fixture on the black conductor of the switch-loop cable. This hook-up of a switch involves a "loop" of ungrounded conductor and does not require the grounded conductor to be run with the "hot" switch conductors (see Section E3407.3).

INTERNATIONAL CODE COUNCIL®
Copyright © 2015 ICC. ALL RIGHTS RESERVED. Accessed by David Dammon on Jun 21, 2017 12:30:52 PM pursuant to License Agreement with ICC. No further reproduction or distribution authorized. ANY UNAUTHORIZED REPRODUCTION OR DISTRIBUTION IS A VIOLATION OF THE FEDERAL COPYRIGHT ACT AND THE LICENSE AGREEMENT, AND SUBJECT TO CIVIL AND CRIMINAL PENALTIES THEREUNDER.

E4001.10 Box mounted. Flush-type snap switches mounted in boxes that are recessed from the finished wall surfaces as covered in Section E3906.5 shall be installed so that the extension plaster ears are seated against the surface of the wall. Flush-type snap switches mounted in boxes that are flush with the finished wall surface or project therefrom shall be installed so that the mounting yoke or strap of the switch is seated against the box. Screws used for the purpose of attaching a snap switch to a box shall be of the type provided with a listed snap switch, or shall be machine screws having 32 threads per inch or part of listed assemblies or systems, in accordance with the manufacturer's instructions. [404.10(B)]

❖ Following the rules of this code provision will result in the switch being secure so that it will not move, become loose or cause accidental shorting to a metal box. The ears of the switch are designed to seat solidly against the wall surface or the box itself. Where the wall opening at the outlet is too big because the drywall or plaster has been cut too large, the switch might "float" with only the cover-plate screws holding it in place. This section intends to prevent the use of improper mounting screws for switches. Sheet metal, drywall and wood screws are prohibited because they can loosen and will damage the threads in the box. Also, the wrong screws will have sharp points and likely project into the box and contact wires.

E4001.11 Snap switch faceplates. Faceplates provided for snap switches mounted in boxes and other enclosures shall be installed so as to completely cover the opening and, where the switch is flush mounted, seat against the finished surface. [404.9(A)]

❖ The faceplate is designed to seat against the finished wall surface when the switch is installed properly with its extension plaster ears also seated against the wall surface. If the wall surface around the outlet is not finished properly, the faceplate will not fit properly. An oversized face-plate might cover the opening that has been left too large for the box, but Section E3906.6 requires that the openings in plaster, gypsum board, or plasterboard surfaces around boxes be made so that there is no gap more than $^1/_8$ inch (3.2 mm) from the edge of the box.

E4001.11.1 Faceplate grounding. Snap switches, including dimmer and similar control switches, shall be connected to an equipment grounding conductor and shall provide a means to connect metal faceplates to the equipment grounding conductor, whether or not a metal faceplate is installed. Snap switches shall be considered to be part of an effective ground-fault current path if either of the following conditions is met:

1. The switch is mounted with metal screws to a metal box or metal cover that is connected to an equipment grounding conductor or to a nonmetallic box with integral means for connecting to an equipment grounding conductor.
2. An equipment grounding conductor or equipment bonding jumper is connected to an equipment grounding termination of the snap switch. [404.9(B)]

Exceptions:

1. Where a means to connect to an equipment grounding conductor does not exist within the snap-switch enclosure or where the wiring method does not include or provide an equipment grounding conductor, a snap switch without a grounding connection to an equipment grounding conductor shall be permitted for replacement purposes only. A snap switch wired under the provisions of this exception and located within 8 feet (2438 mm) vertically or 5 feet (1524 mm) horizontally of ground or exposed grounded metal objects, shall be provided with a faceplate of nonconducting noncombustible material with nonmetallic attachment screws, except where the switch-mounting strap or yoke is nonmetallic or the circuit is protected by a ground-fault circuit interrupter. [404.9(B) Exception No.1]
2. Listed kits or listed assemblies shall not be required to be connected to an equipment grounding conductor if all of the following conditions apply:
   2.1. The device is provided with a nonmetallic faceplate that cannot be installed on any other type of device.
   2.2. The device does not have mounting means to accept other configurations of faceplates.
   2.3. The device is equipped with a nonmetallic yoke.
   2.4. All parts of the device that are accessible after installation of the faceplate are manufactured of nonmetallic materials. [404.9(B) Exception No. 2]
3. Connection to an equipment grounding conductor shall not be required for snap switches that have an integral nonmetallic enclosure complying with Section E3905.1.3. [404.9(B) Exception No. 3]

❖ Note that where Exception 1 requires a nonconducting faceplate, the faceplate attachment screws must be nonmetallic. Nylon 6-32 screws are available for this purpose. The theme of the exceptions to this section is to reduce the potential shock hazard by eliminating conducting materials that will come in contact with the user of the switches and controls (see commentary, Sections E3906.10 and E3908.14).

E4001.12 Dimmer switches. General-use dimmer switches shall be used only to control permanently installed incandescent luminaires (lighting fixtures) except where listed for the control of other loads and installed accordingly. [404.14(E)]

❖ General-use dimmer switches are designed for use with only simple resistive loads (incandescent lamps). Dimmer controls must be listed for the purpose if used for controlling inductive loads, such as fluorescent ballasts. Dimmer switches must not be used to control switched receptacles because it will not be known what type of load will be plugged into such receptacles.

INTERNATIONAL CODE COUNCIL®
Copyright © 2015 ICC. ALL RIGHTS RESERVED. Accessed by David Dammon on Jun 21, 2017 12:30:52 PM pursuant to License Agreement with ICC. No further reproduction or distribution authorized. ANY UNAUTHORIZED REPRODUCTION OR DISTRIBUTION IS A VIOLATION OF THE FEDERAL COPYRIGHT ACT AND THE LICENSE AGREEMENT, AND SUBJECT TO CIVIL AND CRIMINAL PENALTIES THEREUNDER.

E4001.13 Multipole snap switches. A multipole, general-use snap switch shall not be fed from more than a single circuit unless it is listed and marked as a two-circuit or three-circuit switch. [404.8(C)]

❖ Multipole snap switches contain more than one single-throw or double-throw switch in a single device (e.g., a double-pole, single-throw switch or a double-pole, double-throw switch).

E4001.14 Cord-and-plug-connected loads. Where snap switches are used to control cord-and-plug-connected equipment on a general-purpose branch circuit, each snap switch controlling receptacle outlets or cord connectors that are supplied by permanently connected cord pendants shall be rated at not less than the rating of the maximum permitted ampere rating or setting of the overcurrent device protecting the receptacles or cord connectors, as provided in Sections E4002.1.1 and E4002.1.2. [404.14(F)]

❖ In cases where snap switches control receptacles for cord- and plug-connected equipment, the connected load will be unpredictable; therefore, the switch needs to be rated to handle the maximum current allowed by the branch-circuit overcurrent device. Otherwise, the switch might be overloaded.

E4001.15 Switches controlling lighting loads. The grounded circuit conductor for the controlled lighting circuit shall be provided at the location where switches control lighting loads that are supplied by a grounded general-purpose branch circuit for other than the following:

1. Where conductors enter the box enclosing the switch through a raceway, provided that the raceway is large enough for all contained conductors, including a grounded conductor.
2. Where the box enclosing the switch is accessible for the installation of an additional or replacement cable without removing finish materials.
3. Where snap switches with integral enclosures comply with E3905.1.3.
4. Where the switch does not serve a habitable room or bathroom.
5. Where multiple switch locations control the same lighting load such that the entire floor area of the room or space is visible from the single or combined switch locations.
6. Where lighting in the area is controlled by automatic means.
7. Where the switch controls a receptacle load. [404.2(C)]

❖ Many switching devices such as illuminated or indicating snap switches, electronic timers, occupant sensors, lighting control centers and other box-mounted devices/equipment consume power to operate; therefore, the grounded conductor will need to be present to supply the intended or future devices.

The first two exceptions recognize the conditions where extending the grounded conductor to the box at a later date is easily achieved. Exceptions 4 through 7 address situations where devices needing a grounded conductor are not likely to be installed.

SECTION E4002
RECEPTACLES

E4002.1 Rating and type. Receptacles and cord connectors shall be rated at not less than 15 amperes, 125 volts, or 15 amperes, 250 volts, and shall not be a lampholder type. Receptacles shall be rated in accordance with this section. [406.3(B)]

❖ The minimum rating allowed for receptacles in dwelling units is 15 amperes. Receptacles are not permitted to be of a type suitable for use as lampholders (i.e., a lampholder socket with a receptacle adapter screwed into it).

E4002.1.1 Single receptacle. A single receptacle installed on an individual branch circuit shall have an ampere rating not less than that of the branch circuit. [210.21(B)]

❖ A receptacle device can be single, duplex or multiple. The term "yoke" describes the strap that the receptacle is mounted on; the yoke is used to attach to the device box. A single receptacle is a device on a strap or yoke that can receive only one plug. The rating of the circuit breaker or overcurrent device is the rating of branch circuit, and on an individual branch circuit serving only a single receptacle, all of the circuit current flow might be taken through it. Therefore, the single receptacle must be rated the same as the branch circuit overcurrent device (see definition of "Receptacle").

E4002.1.2 Two or more receptacles. Where connected to a branch circuit supplying two or more receptacles or outlets, receptacles shall conform to the values listed in Table E4002.1.2. [210.21(B)(3)]

❖ Where two or more receptacles are fed by a 20-ampere branch circuit, Table E4002.1.2 indicates that the receptacles could be rated 15 amperes. This could mean that where a 20-ampere branch circuit feeds only one duplex receptacle, that duplex receptacle could be rated 15 amperes because there is more than a single receptacle on the circuit.

TABLE E4002.1.2 [Table 210.21(B)(3)]
RECEPTACLE RATINGS FOR
VARIOUS SIZE MULTI-OUTLET CIRCUITS

CIRCUIT RATING (amperes)	RECEPTACLE RATING (amperes)
15	15
20	15 or 20
30	30
40	40 or 50
50	50

❖ See the commentary to Section E4002.1.2.

E4002.2 Grounding type. Receptacles installed on 15- and 20-ampere-rated branch circuits shall be of the grounding type. [406.4(A)]

❖ All receptacles must be of the grounding type. That is, they must accept a three-prong grounding plug (cord cap).

INTERNATIONAL CODE COUNCIL®
Copyright © 2015 ICC. ALL RIGHTS RESERVED. Accessed by David Dammon on Jun 21, 2017 12:30:52 PM pursuant to License Agreement with ICC. No further reproduction or distribution authorized. ANY UNAUTHORIZED REPRODUCTION OR DISTRIBUTION IS A VIOLATION OF THE FEDERAL COPYRIGHT ACT AND THE LICENSE AGREEMENT, AND SUBJECT TO CIVIL AND CRIMINAL PENALTIES THEREUNDER.

E4002.3 CO/ALR receptacles. Receptacles rated at 20 amperes or less and directly connected to aluminum conductors shall be marked CO/ALR. [406.3(C)]

❖ See Section E4001.2.

E4002.4 Faceplates. Metal face plates shall be grounded. [406.6(B)]

❖ See the commentary to Sections E3906.10 and E3908.14.

E4002.5 Position of receptacle faces. After installation, receptacle faces shall be flush with or project from face plates of insulating material and shall project a minimum of 0.015 inch (0.381 mm) from metal face plates. Faceplates shall be installed so as to completely cover the opening and seat against the mounting surface. Receptacle faceplates mounted inside of a box having a recess-mounted receptacle shall effectively close the opening and seat against the mounting surface. [406.5(D), 406.6]

Exception: Listed kits or assemblies encompassing receptacles and nonmetallic faceplates that cover the receptacle face, where the plate cannot be installed on any other receptacle, shall be permitted. [406.5(D) Exception]

❖ This section makes a distinction between the face of the actual receptacle and the faceplate or cover plate. The face of the receptacle must project out from a metal faceplate at least $^{1}/_{64}$ inch (0.4 mm). If the face of the receptacle does not project out from a metal faceplate where a metal faceplate is used, the blades of the cord attachment plug could touch the metal faceplate and create a ground fault or short. See also Section E4001.11. If a receptacle is recessed from the surface of the faceplate, the plug may not engage the receptacle at the proper depth.

E4002.6 Receptacle mounted in boxes. Receptacles mounted in boxes that are set back from the finished wall surface as permitted by Section E3906.5 shall be installed so that the mounting yoke or strap of the receptacle is held rigidly at the finished surface of the wall. Screws used for the purpose of attaching receptacles to a box shall be of the type provided with a listed receptacle, or shall be machine screws having 32 threads per inch or part of listed assemblies or systems, in accordance with the manufacturer's instructions. Receptacles mounted in boxes that are flush with the wall surface or project therefrom shall be so installed that the mounting yoke or strap is seated against the box or raised cover. [406.5(A) and (B)]

❖ The way the drywall (gypsum board) is cut out around the box has an effect on compliance with this code provision. If the drywall is cut out too far at the top and bottom of the box so that the extension plaster ears of the receptacle do not seat firmly against the finished wall surface, the receptacle will "float" between the front edge of the box and the finished wall surface, and the face of the receptacle will be recessed from the faceplate. The one screw in the center of the faceplate will be the only thing holding the receptacle in place and will likely break. If washers or spacers are used to space the receptacle mounting yoke out from the face of the box, the faceplate will then be anchored to the receptacle and seated firmly against the wall surface. Because the edges of gypsum board (drywall) around a box opening are fragile, it is likely that the receptacle will become loose if it relies on the plaster ears seated against the drywall. This is why it is important to install boxes so that they will be flush with the finished wall surface, thus allowing the devices to seat against the box. Of course, flush box mounting is not always accomplished because of bowed studs and other factors, so electrical contractors will often use spacers where necessary to make the devices seat against the box instead of depending on fragile drywall edges to support the device. This section intends to prevent the use of improper mounting screws for receptacles. Sheet metal, drywall and wood screws are prohibited because they can loosen and will damage the threads in the box. Also, the wrong screws will have sharp points and likely project into the box and contact wires.

E4002.7 Receptacles mounted on covers. Receptacles mounted to and supported by a cover shall be held rigidly against the cover by more than one screw or shall be a device assembly or box cover listed and identified for securing by a single screw. [406.5(C)]

❖ An example of this is where a 4-inch (102 mm) square metal box is used, and the receptacle is installed in the raised box cover. A raised cover, for example, may have a $^{1}/_{2}$-inch (12.7 mm) rise. It is the same size as the four-square box and fits directly on the face of the box. A switch or receptacle is secured to the raised cover and not to the box, and then the cover is secured to the box. A switch installed in the cover would be secured by two 6-32 screws, the same as regular coverplate screws, but the cover of a receptacle is normally secured by only one screw. The problem is that when attachment plugs are inserted, the receptacle will break away from the cover. This provision was put into the code to require that in these types of installations, two or more screws must be used to support the receptacle in the cover. The 4-inch (102 mm) box covers are now manufactured with two device mounting holes for receptacles and are supplied with screws and locking nuts (see Section E3908.14).

E4002.8 Damp locations. A receptacle installed outdoors in a location protected from the weather or in other damp locations shall have an enclosure for the receptacle that is weatherproof when the receptacle cover(s) is closed and an attachment plug cap is not inserted. An installation suitable for wet locations shall also be considered suitable for damp locations. A receptacle shall be considered to be in a location protected from the weather where located under roofed open porches, canopies and similar structures and not subject to rain or water runoff. Fifteen- and 20-ampere, 125- and 250-volt nonlocking receptacles installed in damp locations shall be listed a weather-resistant type. [406.9(A)]

❖ In this section and the following, the distinction is made between receptacles in damp locations and in wet locations. The type of receptacle cover used is the main issue here. The conventional type of receptacle faceplate used on the interior of the dwelling is not per-

INTERNATIONAL CODE COUNCIL®
Copyright © 2015 ICC. ALL RIGHTS RESERVED. Accessed by David Dammon on Jun 21, 2017 12:30:52 PM pursuant to License Agreement with ICC. No further reproduction or distribution authorized. ANY UNAUTHORIZED REPRODUCTION OR DISTRIBUTION IS A VIOLATION OF THE FEDERAL COPYRIGHT ACT AND THE LICENSE AGREEMENT, AND SUBJECT TO CIVIL AND CRIMINAL PENALTIES THEREUNDER.

mitted outdoors or in any damp or wet location. Several different types of receptacle covers are available for use in damp and wet locations. This section requires that the receptacle have a cover that will make it weatherproof when the cover is closed and the receptacle is not in use. On a receptacle installed on the outside of the house, the receptacle terminals could become corroded from condensation, and the corrosion causes resistance. The result might be that because of corrosion and the development over time of a thin insulating layer on the contacts and terminals, continuity of the circuit might be lost. Damage could result also from the build-up of heat as current is drawn through the poor connection caused by corrosion. The weatherproof cover will help prevent the entrance of moisture to the interior of the receptacle.

The definition of the term "weatherproof" is important to remember: "So constructed or protected that exposure to the weather will not interfere with successful operation." If the receptacle is in a damp location as described here and in Chapter 35, the cover must make the receptacle weatherproof when the cover is closed and no attachment plug is inserted. Note that the receptacle itself must be listed as a special type that is resistant to the environment.

E4002.9 Fifteen- and 20-ampere receptacles in wet locations. Where installed in a wet location, 15- and 20-ampere, 125- and 250-volt receptacles shall have an enclosure that is weatherproof whether or not the attachment plug cap is inserted. An outlet box hood installed for this purpose shall be listed and identified as "extra-duty." Fifteen- and 20-ampere, 125- and 250-volt nonlocking receptacles installed in wet locations shall be a listed weather-resistant type. [406.9(B)(1)]

❖ This section applies to receptacles that are in a wet location either outdoors or indoors. The receptacle box and cover must be weatherproof in all cases, thus requiring what is commonly referred to as a "bubble" cover. Such covers provide the space necessary to allow the cover to close fully over an inserted plug and cord. This provision should end the debate over whether or not the item plugged into the receptacle will be attended while in use (see Section E4002.10). Note that the receptacle itself must be listed as a special type that is resistant to the environment.

E4002.10 Other receptacles in wet locations. Where a receptacle other than a 15- or 20-amp, 125- or 250-volt receptacle is installed in a wet location and where the product intended to be plugged into it is not attended while in use, the receptacle shall have an enclosure that is weatherproof both when the attachment plug cap is inserted and when it is removed. Where such receptacle is installed in a wet location and where the product intended to be plugged into it will be attended while in use, the receptacle shall have an enclosure that is weatherproof when the attachment plug cap is removed. [406.9(B)(2)]

❖ Where a receptacle other than a 15- or 20-amp receptacle is installed in a wet location, two conditions or situations are described: 1. Where an attachment plug is left connected to the receptacle continually; and 2. Where the attachment plug is connected only when attended. In the first situation, the cover used must make the receptacle weatherproof all the time. There are covers that completely blanket the receptacle and the attachment plug when it is inserted. If the receptacle will be used only when attended, the cover could be one that makes the receptacle weatherproof only when not in use. Note that this section will rarely apply because it does not address 15- or 20-amp receptacles. For other than ranges and clothes dryers, 30-amp and larger receptacles are not commonly used in dwellings.

E4002.11 Bathtub and shower space. A receptacle shall not be installed within or directly over a bathtub or shower stall. [406.9(C)]

❖ Although not stated by the code, it would be wise to locate all receptacles beyond the reach of a person using a bathtub or shower (see Sections E3902.8 and E4001.7).

E4002.12 Flush mounting with faceplate. In damp or wet locations, the enclosure for a receptacle installed in an outlet box flush-mounted in a finished surface shall be made weatherproof by means of a weatherproof faceplate assembly that provides a water-tight connection between the plate and the finished surface. [406.9(E)]

❖ Weatherproof covers on outdoor receptacles must seat completely on the wall surface. A receptacle installed in a brick wall can be difficult to seal and must have a gasket or sealant between the wall and the receptacle cover. On a house that has horizontal or vertical siding that overlaps, the receptacle cover must be completely in one of the sections of siding so that there is not a gap where moisture could enter. Siding manufacturers make components for the siding system that can be installed at the receptacle location to provide a flat surface for the installation of a receptacle cover.

E4002.13 Exposed terminals. Receptacles shall be enclosed so that live wiring terminals are not exposed to contact. [406.5(G)]

❖ Receptacles are required to be enclosed in device boxes or must have integral enclosures (see Section E3905.1).

E4002.14 Tamper-resistant receptacles. In areas specified in Section E3901.1, 125-volt, 15- and 20-ampere receptacles shall be listed tamper-resistant receptacles. [406.12(A)]

Exception: Receptacles in the following locations shall not be required to be tamper resistant:

1. Receptacles located more than 5.5 feet (1676 mm) above the floor.
2. Receptacles that are part of a luminaire or appliance.
3. A single receptacle for a single appliance or a duplex receptacle for two appliances where such receptacles are located in spaces dedicated for the appliances served and, under conditions of normal use, the appliances are not easily moved from one place to another. The appliances shall be cord-and-

INTERNATIONAL CODE COUNCIL®
Copyright © 2015 ICC. ALL RIGHTS RESERVED. Accessed by David Dammon on Jun 21, 2017 12:30:52 PM pursuant to License Agreement with ICC. No further reproduction or distribution authorized. ANY UNAUTHORIZED REPRODUCTION OR DISTRIBUTION IS A VIOLATION OF THE FEDERAL COPYRIGHT ACT AND THE LICENSE AGREEMENT, AND SUBJECT TO CIVIL AND CRIMINAL PENALTIES THEREUNDER.

plug-connected to such receptacles in accordance with Section E3909.4. [406.12(A) Exception]

❖ Section 3901.1 addresses all 15- and 20-amp 125-volt receptacles in a dwelling; therefore, all such devices must be listed tamper-resistant receptacle devices. These receptacle devices have an internal mechanism that blocks access to the plug prong openings except when a plug is inserted into the receptacle. The intent is to protect children who often insert objects into receptacles out of curiosity. The author recalls more than one experience where, as a youngster, a hair pin or nail was inserted into a receptacle and, fortunately, he lived to tell about it.

The contact openings (slots) in receptacles pose a shock or electrocution hazard for anyone who purposely or accidentally inserts a metallic object into such openings in a receptacle. The Consumer Product Safety Commission (CPSC) estimates that there are approximately 3,900 injuries treated by hospital emergency rooms every year that are the result of shock or burns from receptacles. Children are the most at risk because of their curiosity and lack of knowledge of the danger and nearly one-third of the reported injuries occur to children. Tamper-resistant receptacles were developed to reduce injuries and are now required for nearly all receptacle locations. Obviously, the intent is to require tamper-resistant receptacles in all locations where there is a possibility of tampering. Note the three exempt locations in the exception. This section applies to 125-volt, 15- and 20-amp receptacles only.

A typical tamper-resistant receptacle is shown in Commentary Figure E4002.14. Note the embossed "TR" on the face of the receptacle to indicate that it is different from a standard receptacle. Inserting a two-prong (or three-prong) plug into a tamper-resistant receptacle is no different than it is for a standard receptacle. Mechanisms within the receptacle sense that the two parallel prongs of a plug are being inserted simultaneously, and this action unlocks an internal shutter to the electrical contacts. If the internal mechanism senses only one slot being penetrated, such as with a screwdriver, nail, key, pin or other object, the shutter does not release to open the slot to the electrical contacts. Each receptacle manufacturer has developed its own proprietary shutter mechanisms to comply with the operation requirements.

It would be easier for installers to use "TR" receptacles in all locations rather than trying to determine what locations, if any, are exempt (see Exception). Based on the extensive coverage of Section E3901.1, it is hard to determine that there are any exempt locations, other than those addressed in the exception. For example, the exception could be applied to allow a non-TR receptacle in a cabinet above a range hood but the exception would not apply to a receptacle mounted in a sink base cabinet to serve a dishwasher. A single (simplex) receptacle behind a refrigerator would be exempt and a receptacle installed in the garage ceiling for the garage door opener would be exempt.

E4002.15 Dimmer-controlled receptacles. A receptacle supplying lighting loads shall not be connected to a dimmer except where the plug and receptacle combination is a nonstandard configuration type that is specifically listed and identified for each such unique combination.

❖ Dimmer switch controls must not serve switched receptacle outlets because the fixture or appliance plugged into the receptacle might not be compatible with the dimmer output. An incandescent lamp is one thing but a motor operated appliance or a computer is an entirely different thing. The exception to this prohibition is where the switched receptacle is an unusual configuration, such as a twist lock configuration, and

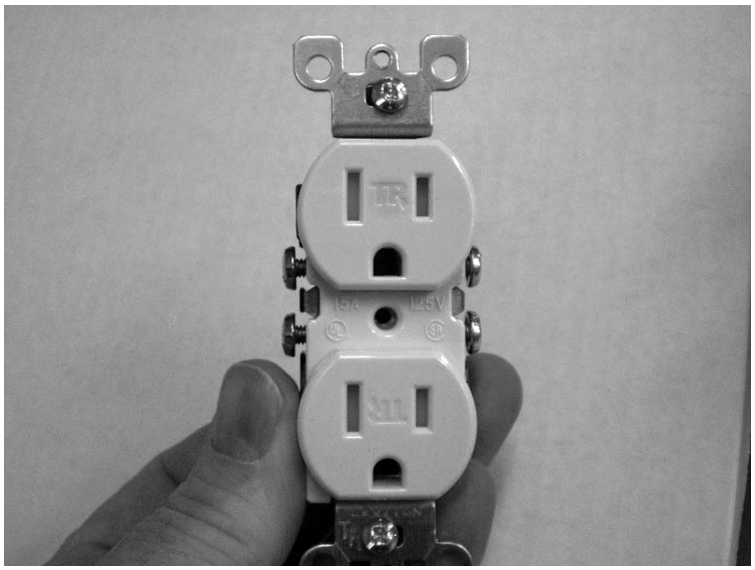

Figure E4002.14
TYPICAL TAMPER-RESISTANT RECEPTACLE

INTERNATIONAL CODE COUNCIL®
Copyright © 2015 ICC. ALL RIGHTS RESERVED. Accessed by David Dammon on Jun 21, 2017 12:30:52 PM pursuant to License Agreement with ICC. No further reproduction or distribution authorized. ANY UNAUTHORIZED REPRODUCTION OR DISTRIBUTION IS A VIOLATION OF THE FEDERAL COPYRIGHT ACT AND THE LICENSE AGREEMENT, AND SUBJECT TO CIVIL AND CRIMINAL PENALTIES THEREUNDER.

only the fixture or appliance that has a mating plug can utilize the receptacle. The receptacle and plug combination must be listed for the application. Such an arrangement would be very unlikely in a dwelling unit. Switched receptacle outlets in dwellings are used almost exclusively for lighting loads, and because the type of lighting load is unknown, dimmers are prohibited.

SECTION E4003
LUMINAIRES

E4003.1 Energized parts. Luminaires, lampholders, and lamps shall not have energized parts normally exposed to contact. (410.5)

❖ Energized parts of luminaires must be enclosed so that they will not be exposed to accidental contact. Suitable covers must be installed to prevent accidental contact with energized parts.

E4003.2 Luminaires near combustible material. Luminaires shall be installed or equipped with shades or guards so that combustible material will not be subjected to temperatures in excess of 90°C (194°F). (410.11)

❖ A significant amount of heat is developed in some incandescent luminaires and luminaires containing ballasts. If there is no means to dissipate the heat, it could cause damage to the surface on which it is mounted and also could cause a fire. It may be necessary to hold the luminaire away from a combustible ceiling or wall surface if the light fixture will create heat in excess of 90°C (194°F). Compliance with this code provision will help prevent fires in combustible structural elements as well as combustible storage.

E4003.3 Exposed conductive parts. The exposed metal parts of luminaires shall be connected to an equipment grounding conductor or shall be insulated from the equipment grounding conductor and other conducting surfaces. Lamp tie wires, mounting screws, clips and decorative bands on glass spaced at least $1^1/_2$ inches (38 mm) from lamp terminals shall not be required to be grounded. (410.42)

❖ All luminaires must be grounded. In older houses, only luminaires installed in a bathroom or outdoors were grounded. A remodeler can observe that some interior luminaires for a bedroom or living room do not contain a grounding wire, although the wiring method has a grounding conductor. When these fixtures are replaced, the grounding wire must be connected. All new luminaires are supplied with a grounding wire or grounding means.

E4003.4 Screw-shell type. Lampholders of the screw-shell type shall be installed for use as lampholders only. (410.90)

❖ The installation or use of lampholders with a screw-in plug adapter is not permitted. This was common practice in the 1920s and 1930s. Lampholders must be used only for lamps.

E4003.5 Recessed incandescent luminaires. Recessed incandescent luminaires shall have thermal protection and shall be listed as thermally protected. [410.115(C)]

Exceptions:

1. Thermal protection shall not be required in recessed luminaires listed for the purpose and installed in poured concrete. [410.115(C) Exception No.1]
2. Thermal protection shall not be required in recessed luminaires having design, construction, and thermal performance characteristics equivalent to that of thermally protected luminaires, and such luminaires are identified as inherently protected. [410.115(C) Exception No. 2]

❖ The buildup of heat in an incandescent recessed fixture can be a serious problem. A recessed fixture should have a clearance from insulation installed around or over it unless it is listed for no clearance. When the heat builds up to a level that could be dangerous, the required thermal protection device automatically turns off the lamp. After the heat in the fixture has dissipated, the device closes the circuit and the light automatically turns back on. Where this happens repeatedly, the fixture might have a higher wattage lamp than the maximum allowed. The problem could be solved by installing lower-wattage lamps or switching to nonincandescent types of lamps. The recessed fixture that cycles off to allow the heat to dissipate is doing what it is designed to do; however, the cause of the over-heating must be eliminated.

E4003.6 Thermal protection. The ballast of a fluorescent luminaire installed indoors shall have integral thermal protection. Replacement ballasts shall also have thermal protection integral with the ballast. A simple reactance ballast in a fluorescent luminaire with straight tubular lamps shall not be required to be thermally protected. [410.130(E)(1)]

❖ In addition to incandescent recessed fixtures, fluorescent fixtures must have thermal protection. The protection required must be part of the ballast. The thermal trip protection integral with the ballast responds to an abnormally high temperature in the ballast.

E4003.7 High-intensity discharge luminaires. Recessed high-intensity luminaires designed to be installed in wall or ceiling cavities shall have thermal protection and be identified as thermally protected. Thermal protection shall not be required in recessed high-intensity luminaires having design, construction and thermal performance characteristics equivalent to that of thermally protected luminaires, and such luminaires are identified as inherently protected. Thermal protection shall not be required in recessed high-intensity discharge luminaires installed in and identified for use in poured concrete. A recessed remote ballast for a high-intensity discharge luminaire shall have thermal protection that is integral with the ballast and shall be identified as thermally protected. [110.130(F)(1), (2), (3), and (4)]

❖ High-intensity discharge fixtures such as metal-halide, sodium and mercury-vapor operate at high tempera-

INTERNATIONAL CODE COUNCIL®
Copyright © 2015 ICC. ALL RIGHTS RESERVED. Accessed by David Dammon on Jun 21, 2017 12:30:52 PM pursuant to License Agreement with ICC. No further reproduction or distribution authorized. ANY UNAUTHORIZED REPRODUCTION OR DISTRIBUTION IS A VIOLATION OF THE FEDERAL COPYRIGHT ACT AND THE LICENSE AGREEMENT, AND SUBJECT TO CIVIL AND CRIMINAL PENALTIES THEREUNDER.

tures and must have thermal protection unless identified as inherently protected.

E4003.8 Metal halide lamp containment. Luminaires that use a metal halide lamp other than a thick-glass parabolic reflector lamp (PAR) shall be provided with a containment barrier that encloses the lamp, or shall be provided with a physical means that allows the use of only a lamp that is Type O. [(110.130(F)(5)]

❖ Type O lamps are designed for use in open fixtures where the lamp is not fully enclosed. Such lamps have a shrouded arc tube which protects the outer glass bulb from damage in the event that the inner arc tube ruptures, the intent of the provision is to fully contain all lamps components in the event of lamp failure. This will prevent white hot metal fragments from falling from the lamp and causing a fire. Luminaires are available with lamp sockets that will accept only Type O lamps to prevent use of the wrong lamp. This is similar to Type S tamper proof plug fuses.

E4003.9 Wet or damp locations. Luminaires installed in wet or damp locations shall be installed so that water cannot enter or accumulate in wiring compartments, lampholders or other electrical parts. All luminaires installed in wet locations shall be marked SUITABLE FOR WET LOCATIONS. All luminaires installed in damp locations shall be marked SUITABLE FOR WET LOCATIONS or SUITABLE FOR DAMP LOCATIONS. (410.10)

❖ Installation of an indoor fixture is not permitted outdoors, even if it is under a porch or on a porch ceiling where the roof overhangs several feet. A partially protected location under canopies and roofed open porches is considered a damp location, as stated in Chapter 35. If a homeowner chooses lighting fixtures for a house and the ones for the ceiling of the open porch are the same as the ones for the entryway just inside the door, it would be necessary to check the fixtures to determine whether they are marked as suitable for a damp location. If not, it would be a code violation to install the fixture outdoors.

A wall porch light that is exposed to weather and unprotected by the roof overhang is in a wet location, and the fixture must be marked as suitable for wet locations.

Installation of a fixture that is suitable only for damp locations is not permitted in wet locations. But a fixture that is marked as suitable for wet locations could also be installed in damp locations. Installation of an indoor light fixture is not permitted outdoors.

E4003.10 Lampholders in wet or damp locations. Lampholders installed in wet locations shall be listed for use in wet locations. Lampholders installed in damp locations shall be listed for damp locations or shall be listed for wet locations. (410.96)

❖ An example of a weatherproof type of lampholder is floodlights installed under the eaves of a house. These weatherproof fixtures have a canopy with a gasket that seats against the surface of the underside of the eave (if that is where it is installed). They have one or more sockets that swivel for adjusting to the desired position. The lamps used are rated for direct exposure to the weather, and the lampholder has a gasket that helps prevent moisture from entering the socket. Fixtures used for this type of application must be weatherproof, and the lampholder must be weatherproof as well. Lampholders listed for wet locations are also suitable for damp locations, but not the other way around.

E4003.11 Bathtub and shower areas. Cord-connected luminaires, chain-, cable-, or cord-suspended-luminaires, lighting track, pendants, and ceiling-suspended (paddle) fans shall not have any parts located within a zone measured 3 feet (914 mm) horizontally and 8 feet (2438 mm) vertically from the top of a bathtub rim or shower stall threshold. This zone is all encompassing and includes the space directly over the tub or shower. Luminaires within the actual outside dimension of the bathtub or shower to a height of 8 feet (2438 mm) vertically from the top of the bathtub rim or shower threshold shall be marked for damp locations and where subject to shower spray, shall be marked for wet locations. [410.4(D)]

❖ In most homes, a bathroom ceiling is not high enough to permit any fixture other than a surface-mounted or recessed-type fixture above a bathtub or shower. Fixtures such as chain-hung or pendant types where a cord is exposed above a bathtub or shower could be a safety hazard, and there is more of a danger of electrocution where water is present. The code does not specifically list a bathroom as a damp or wet location; however, this section requires a light in the ceiling of a shower to be suitable for a wet location or, at a minimum, suitable for a damp location if it is not subject to splashing or direct shower spray. A recessed light with a gasketed glass cover is quite often the fixture used in the ceiling of a shower. There is not a code definition for “out of reach,” but a hanging fixture or paddle fan installed at least 8 feet (2438 mm) above the rim of the bathtub would, in most cases, be out of reach of someone standing in or on the bathtub. Note that the requirement for luminaires to be marked for damp locations applies only to the horizontal area bounded by the actual bathtub or shower dimensions, not the entire “zone” horizontal area described in the first part of the code section.

E4003.12 Luminaires in clothes closets. For the purposes of this section, storage space shall be defined as a volume bounded by the sides and back closet walls and planes extending from the closet floor vertically to a height of 6 feet (1829 mm) or the highest clothes-hanging rod and parallel to the walls at a horizontal distance of 24 inches (610 mm) from the sides and back of the closet walls respectively, and continuing vertically to the closet ceiling parallel to the walls at a horizontal distance of 12 inches (305 mm) or the width of the shelf, whichever is greater. For a closet that permits access to both sides of a hanging rod, the storage space shall include the volume below the highest rod extending 12 inches (305 mm) on either side of the rod on a plane horizontal to the floor extending the entire length of the rod (see Figure E4003.12). (410.2)

The types of luminaires installed in clothes closets shall be limited to surface-mounted or recessed incandescent or LED

INTERNATIONAL CODE COUNCIL®
Copyright © 2015 ICC. ALL RIGHTS RESERVED. Accessed by David Dammon on Jun 21, 2017 12:30:52 PM pursuant to License Agreement with ICC. No further reproduction or distribution authorized. ANY UNAUTHORIZED REPRODUCTION OR DISTRIBUTION IS A VIOLATION OF THE FEDERAL COPYRIGHT ACT AND THE LICENSE AGREEMENT, AND SUBJECT TO CIVIL AND CRIMINAL PENALTIES THEREUNDER.

luminaires with completely enclosed light sources, surface-mounted or recessed fluorescent luminaires, and surface-mounted fluorescent or LED luminaires identified as suitable for installation within the closet storage area. Incandescent luminaires with open or partially enclosed lamps and pendant luminaires or lamp-holders shall be prohibited. The minimum clearance between luminaires installed in clothes closets and the nearest point of a closet storage area shall be as follows: [410.16(A) and (B)]

1. Surface-mounted incandescent or LED luminaires with a completely enclosed light source shall be installed on the wall above the door or on the ceiling, provided that there is a minimum clearance of 12 inches (305 mm) between the fixture and the nearest point of a storage space.
2. Surface-mounted fluorescent luminaires shall be installed on the wall above the door or on the ceiling, provided that there is a minimum clearance of 6 inches (152 mm).
3. Recessed incandescent luminaires or LED luminaires with a completely enclosed light source shall be installed in the wall or the ceiling provided that there is a minimum clearance of 6 inches (152 mm).
4. Recessed fluorescent luminaires shall be installed in the wall or on the ceiling provided that there is a minimum clearance of 6 inches (152 mm) between the fixture and the nearest point of a storage space.
5. Surface-mounted fluorescent or LED luminaires shall be permitted to be installed within the closet storage space where identified for this use. [410.16(C)]

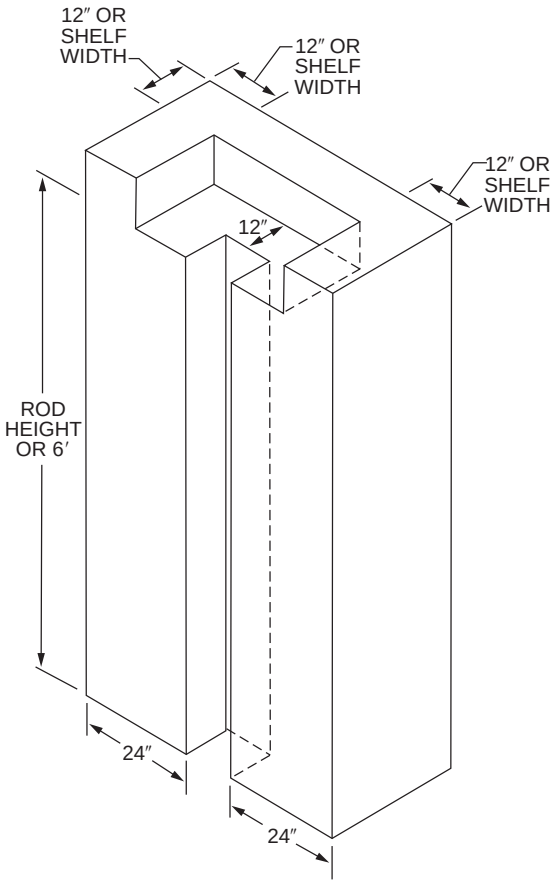

For SI: 1 inch = 25.4 mm, 1 foot = 304.8 mm.

FIGURE E4003.12
CLOSET STORAGE SPACE

❖ In a clothes closet, a fixture with an exposed (incandescent) lightbulb (lamp) is a definite fire hazard and has been strictly prohibited for many years. Some older houses still have a porcelain fixture in closets, with an exposed lamp such as a keyless lampholder or lampholder with a pullchain for the switch. A luminaire designed for use with an exposed incandescent lamp is prohibited even if a compact fluorescent type or LED lamp is screwed into it. Storage items piled or stacked on closet shelves could easily come into contact with the bare lamp and cause a fire. Also, a naked incandescent lamp could be broken and the hot filament fragments could start a fire. This section clearly defines the storage space and provides minimum clearances from the permitted light fixtures to the storage space. For a small closet where this clearance would not be possible, a lighting fixture would be prohibited. Note that there may be special luminaires on the market such as LED fixtures that are listed and identified for installation within the storage space.

E4003.13 Luminaire wiring—general. Wiring on or within luminaires shall be neatly arranged and shall not be exposed to physical damage. Excess wiring shall be avoided. Conductors shall be arranged so that they are not subjected to temperatures above those for which the conductors are rated. (410.48)

❖ Excessive heat will damage fixture wires and the wall or ceiling surface and can cause a fire. Most ceiling-mounted incandescent luminaires for indoor use for general lighting are marked with a statement indicating the maximum wattage of the lamp. Many typical luminaires indicate a maximum lamp wattage of 60. Where higher wattage lamps are installed, the heat produced will likely damage the fixture wires and the wall finish within the canopy of the fixture. Many fixtures come with thermal insulation inside the canopy, which must not be removed because it helps protect both the circuit wires and the fixture wires from excessive heat. Fortunately, from a safety and energy standpoint, incandescent lamps are becoming more rare.

E4003.13.1 Polarization of luminaires. Luminaires shall be wired so that the screw shells of lampholders will be connected to the same luminaire or circuit conductor or terminal. The grounded conductor shall be connected to the screw shell.

❖ The grounded conductor of the circuit must be connected to the screw shell of the socket. The “hot” conductor is connected to the contact in the bottom of the socket. When a person is replacing the lamp in a luminaire that is energized and touches the screw shell part of the lamp, the person could be electrocuted if the screw shell of the lampholder was connected to the ungrounded (hot) conductor.

INTERNATIONAL CODE COUNCIL®
Copyright © 2015 ICC. ALL RIGHTS RESERVED. Accessed by David Dammon on Jun 21, 2017 12:30:52 PM pursuant to License Agreement with ICC. No further reproduction or distribution authorized. ANY UNAUTHORIZED REPRODUCTION OR DISTRIBUTION IS A VIOLATION OF THE FEDERAL COPYRIGHT ACT AND THE LICENSE AGREEMENT, AND SUBJECT TO CIVIL AND CRIMINAL PENALTIES THEREUNDER.

E4003.13.2 Luminaires as raceways. Luminaires shall not be used as raceways for circuit conductors except where such luminaires are listed and marked for use as a raceway or are identified for through-wiring. Luminaires designed for end-to-end connection to form a continuous assembly, and luminaires connected together by recognized wiring methods, shall not be required to be listed as a raceway where they contain the conductors of one 2-wire branch circuit or one multiwire branch circuit and such conductors supply the connected luminaires. One additional 2-wire branch circuit that separately supplies one or more of the connected luminaires shall also be permitted. [410.64(A), (B), and (C)]

❖ This is usually a concern only where several fluorescent fixtures are installed end-to-end and the supply conductors run through one fixture to another. Where two or more fluorescent fixtures are installed end-to-end, the supply conductors may enter at one fixture, and the switched circuit conductors are continued to all other fixtures. This is permitted if the fixture wireway is listed as a raceway and if the conductors are rated for the temperature in the fixture. Heat is created by the ballast, and the circuit wires will likely be run next to the ballast.

SECTION E4004
LUMINAIRE INSTALLATION

E4004.1 Outlet box covers. In a completed installation, each outlet box shall be provided with a cover except where covered by means of a luminaire canopy, lampholder or device with a faceplate. (410.22)

❖ See the commentary to Section E3906.9. Note that the requirement of this section is triggered by a minimum surface area of 180 square inches. Such area will likely be doughnut shaped and the calculation of the area in square inches will require that the area of the inner (smaller) circle for the outlet box be calculated and then deducted from the area of the larger circle representing the size of the fixture canopy.

E4004.2 Combustible material at outlet boxes. Combustible wall or ceiling finish exposed between the inside edge of a luminaire canopy or pan and the outlet box and having a surface area of 180 $in.^2$ (116 129 mm^2) or more shall be covered with a noncombustible material. (410.23)

❖ See the commentary to Section E3906.11.

E4004.3 Access. Luminaires shall be installed so that the connections between the luminaire conductors and the circuit conductors can be accessed without requiring the disconnection of any part of the wiring. Luminaires that are connected by attachment plugs and receptacles meet the requirement of this section. (410.8)

❖ To access connections to circuit wiring, a person might need to move a lighting fixture; therefore, sufficient slack in the luminaire and/or circuit wires is necessary. The luminaire must be hung or supported independently of the wiring.

E4004.4 Supports. Luminaires and lampholders shall be securely supported. A luminaire that weighs more than 6 pounds (2.72 kg) or exceeds 16 inches (406 mm) in any dimension shall not be supported by the screw shell of a lampholder. [410.30(A)]

❖ A luminaire with a lampholder may be designed to have a decorative part attached and supported directly by the lampholder. The part supported by the lampholder is limited in size and weight. The entire fixture that is supported directly by the outlet box is covered in the next section.

E4004.5 Means of support. Outlet boxes or fittings installed as required by Sections E3905 and E3906 shall be permitted to support luminaires. [410.36(A)]

❖ Most luminaires are designed to be supported directly from the outlet box. Any light fixture weighing over 50 pounds (23 kg) must be supported from the building structure or by a box listed for the application. However, for a large fixture such as a chandelier that may be a little less than 50 pounds (23 kg), it may be well to check how securely the outlet box is supported before assuming that it will be acceptable simply because the code allows it. The ceiling outlet box might be attached to the structure with only two nails or by a weak bracket between two framing members, which may not provide the support necessary for a heavy fixture. It would be wise to provide heavy duty boxes and attachment means where it is anticipated that the owner will want a chandelier-type luminaire.

E4004.6 Exposed components. Luminaires having exposed ballasts, transformers, LED drivers or power supplies shall be installed so that such ballasts, transformers, LED drivers or power supplies are not in contact with combustible material unless listed for such condition. [410.136(A)]

❖ Ballasts, transformers and the circuitry in LED lamp assemblies often operate at high temperatures under normal conditions and even higher temperatures under abnormal conditions. Clearance to combustible materials is a precaution against these devices starting a fire. Because winding failure in such devices can cause extreme temperatures and/or open flames, ballasts are equipped with internal thermal overload protection devices (see Section E4003.6).

E4004.7 Combustible low-density cellulose fiberboard. Where a surface-mounted luminaire containing a ballast, transformer, LED driver or power supply is installed on combustible low-density cellulose fiberboard, the luminaire shall be marked for this purpose or it shall be spaced not less than $1^1/_2$ inches (38 mm) from the surface of the fiberboard. Where such luminaires are partially or wholly recessed, the provisions of Sections E4004.8 and E4004.9 shall apply. [410.136(B)]

❖ Where a fluorescent lighting fixture is installed directly on combustible low-density cellulose fiberboard, the fixture must be marked very clearly for this installation. The heat from the ballast could exceed the temperature rating of this type of ceiling finish. Thermal insulation installed above a ceiling of this type will add to the

INTERNATIONAL CODE COUNCIL®
Copyright © 2015 ICC. ALL RIGHTS RESERVED. Accessed by David Dammon on Jun 21, 2017 12:30:52 PM pursuant to License Agreement with ICC. No further reproduction or distribution authorized. ANY UNAUTHORIZED REPRODUCTION OR DISTRIBUTION IS A VIOLATION OF THE FEDERAL COPYRIGHT ACT AND THE LICENSE AGREEMENT, AND SUBJECT TO CIVIL AND CRIMINAL PENALTIES THEREUNDER.

buildup of heat. Combustible low-density cellulose fiberboard includes sheets, panels, and tiles that have a density of 20 pounds per cubic foot (320 kg/m^3) or less and are formed from bonded plant fiber material.

E4004.8 Recessed luminaire clearance. A recessed luminaire that is not identified for contact with insulation shall have all recessed parts spaced at least $^1/_2$ inch (12.7 mm) from combustible materials. The points of support and the finish trim parts at the opening in the ceiling, wall or other finished surface shall be permitted to be in contact with combustible materials. A recessed luminaire that is identified for contact with insulation, Type IC, shall be permitted to be in contact with combustible materials at recessed parts, points of support, and portions passing through the building structure and at finish trim parts at the opening in the ceiling or wall. [410.116(A)(1) and (A)(2)]

❖ A recessed fixture that is designed to allow the insulation above the ceiling to be in contact with the fixture is referred to as Type IC. Type IC is commonly thought of as standing for "insulation contact", however, it is believed to refer to "in ceiling" or "insulation ceiling."

E4004.9 Recessed luminaire installation. Thermal insulation shall not be installed above a recessed luminaire or within 3 inches (76 mm) of the recessed luminaire's enclosure, wiring compartment, ballast, transformer, LED driver or power supply except where such luminaire is identified for contact with insulation, Type IC. [410.116(B)]

❖ Only Type IC recessed fixtures can have insulation installed above and within 3 inches (76 mm) of the fixture. There should be coordination between the electrician and the insulation installer to be sure that insulation is not placed above and is kept at least 3 inches (76 mm) away from the recessed lights, unless Type IC fixtures are used. Heat will be trapped and can cause damage or a fire.

SECTION E4005
TRACK LIGHTING

E4005.1 Installation. Lighting track shall be permanently installed and permanently connected to a branch circuit having a rating not more than that of the track. [410.151(A) and (B)]

❖ Lighting track cannot be supplied by a cord and plug; rather, it must be hard wired as a permanent fixture. To prevent overloading of the track, the branch circuit serving the track must not have a higher current rating than the track.

E4005.2 Fittings. Fittings identified for use on lighting track shall be designed specifically for the track on which they are to be installed. Fittings shall be securely fastened to the track, shall maintain polarization and connection to the equipment grounding conductor, and shall be designed to be suspended directly from the track. Only lighting track fittings shall be installed on lighting track. Lighting track fittings shall not be equipped with general-purpose receptacles. [410.151(A) and (B)]

❖ Track fittings and the track to which they connect must be designed to mate. Ill-fitting, mismatched or improperly installed components could cause poor electrical connections and could cause lighting units to fall. Tracks are intended to function as a component of a lighting system and are not intended to serve as a substitute for convenience receptacles.

E4005.3 Connected load. The connected load on lighting track shall not exceed the rating of the track. [410.151(B)]

❖ If too many lighting units are connected to a track, the total load could exceed the rating of the track, resulting in a hazard. Section E4005.1 also requires that the circuit rating not exceed the track rating; thus, the overcurrent device will be sized to protect the track.

E4005.4 Prohibited locations. Lighting track shall not be installed in the following locations:

1. Where likely to be subjected to physical damage.
2. In wet or damp locations.
3. Where subject to corrosive vapors.
4. In storage battery rooms.
5. In hazardous (classified) locations.
6. Where concealed.
7. Where extended through walls or partitions.
8. Less than 5 feet (1524 mm) above the finished floor except where protected from physical damage or the track operates at less than 30 volts rms open-circuit voltage.
9. Where prohibited by Section E4003.11. [410.151(C)]

❖ Track lighting must not be located where it is subject to damage from impact or moisture. It must not be concealed by structural or finish elements of a building and must not pass through walls or partitions. Item 9 is consistent with Section E4003.11.

E4005.5 Fastening. Lighting track shall be securely mounted so that each fastening will be suitable for supporting the maximum weight of luminaires that can be installed. Except where identified for supports at greater intervals, a single section 4 feet (1219 mm) or shorter in length shall have two supports and, where installed in a continuous row, each individual section of not more than 4 feet (1219 mm) in length shall have one additional support. (410.154)

❖ Support for track lighting is very important. The code does not state that the track must be supported directly into a truss or framing member, only that it must be securely mounted. It is usually not sufficient to support the track lighting solely by attaching it to the drywall of the ceiling. When track lighting is first installed, it may well support the type of fixture initially installed. However, the quantity and type of fixtures that will be attached to the track at a future time is unknown.

E4005.6 Grounding. Lighting track shall be grounded in accordance with Chapter 39, and the track sections shall be securely coupled to maintain continuity of the circuitry, polarization and grounding throughout. [410.155(B)]

❖ Where several sections of lighting track are joined together, it is important that the grounding continuity be

INTERNATIONAL CODE COUNCIL®
Copyright © 2015 ICC. ALL RIGHTS RESERVED. Accessed by David Dammon on Jun 21, 2017 12:30:52 PM pursuant to License Agreement with ICC. No further reproduction or distribution authorized. ANY UNAUTHORIZED REPRODUCTION OR DISTRIBUTION IS A VIOLATION OF THE FEDERAL COPYRIGHT ACT AND THE LICENSE AGREEMENT, AND SUBJECT TO CIVIL AND CRIMINAL PENALTIES THEREUNDER.

secured. The track has the hot or ungrounded conductor on one side and the grounded conductor on the other side. If a section is reversed, the polarity could be reversed.

Bibliography

The following resource materials were used in the preparation of the commentary for this chapter of the code:

NFPA 70–14, *National Electrical Code*. Quincy, MA: Na-tional Fire Protection Association, 2013.

INTERNATIONAL CODE COUNCIL®
Copyright © 2015 ICC. ALL RIGHTS RESERVED. Accessed by David Dammon on Jun 21, 2017 12:30:52 PM pursuant to License Agreement with ICC. No further reproduction or distribution authorized. ANY UNAUTHORIZED REPRODUCTION OR DISTRIBUTION IS A VIOLATION OF THE FEDERAL COPYRIGHT ACT AND THE LICENSE AGREEMENT, AND SUBJECT TO CIVIL AND CRIMINAL PENALTIES THEREUNDER.

INTERNATIONAL CODE COUNCIL®
Copyright © 2015 ICC. ALL RIGHTS RESERVED. Accessed by David Dammon on Jun 21, 2017 12:30:52 PM pursuant to License Agreement with ICC. No further reproduction or distribution authorized. ANY UNAUTHORIZED REPRODUCTION OR DISTRIBUTION IS A VIOLATION OF THE FEDERAL COPYRIGHT ACT AND THE LICENSE AGREEMENT, AND SUBJECT TO CIVIL AND CRIMINAL PENALTIES THEREUNDER.

Chapter 41: Appliance Installation

General Comments

Chapter 41 covers appliance installation, which is typically the final stage of construction after all wiring, devices and fixtures are installed. This chapter covers flexible cords, overcurrent protection, disconnecting means and installation provisions.

Purpose

This chapter intends to make appliance installations safe by regulating power cords, overcurrent/overload protection support and means of disconnecting from the power supply.

SECTION E4101 GENERAL

E4101.1 Scope. This section covers installation requirements for appliances and fixed heating equipment. (422.1 and 424.1)

❖ Appliances are also referred to as utilization equipment. The classification includes small kitchen appliances such as a food mixer and deep fryer that are cord- and plug-connected as well as larger equipment that is fixed in place such as a dishwasher, water heater, air conditioner or central heating furnace.

E4101.2 Installation. Appliances and equipment shall be installed in accordance with the manufacturer's installation instructions. Electrically heated appliances and equipment shall be installed with the required clearances to combustible materials. [110.3(B) and 422.17]

❖ The code does not have prescriptive provisions for the minimum clearance between appliances and combustible materials. Required clearances for various appliances are given in the manufacturer's installation instructions.

E4101.3 Flexible cords. Cord-and-plug-connected appliances shall use cords suitable for the environment and physical conditions likely to be encountered. Flexible cords shall be used only where the appliance is listed to be connected with a flexible cord. The cord shall be identified as suitable in the installation instructions of the appliance manufacturer. Receptacles for cord-and-plug-connected appliances shall be accessible and shall be located to avoid physical damage to the flexible cord. Except for a listed appliance marked to indicate that it is protected by a system of double-insulation, the flexible cord supplying an appliance shall terminate in a grounding-type attachment plug. A receptacle for a cord-and-plug-connected range hood shall be supplied by an individual branch circuit. Specific appliances have additional requirements as specified in Table E4101.3 (see Section E3909). [422.16(B)(1), (B)(2)]

❖ Flexible cords are permitted for appliances to allow easy removal or replacement of the unit, but only if the appliance is listed to be cord- and plug-connected. Kitchen appliances and range hoods listed in Table E4101.3 are specifically permitted to be connected with flexible cord. A disposal is connected to the sink and to the drain piping, but these connections are designed to permit disconnection and removal of the disposal. In many areas, power to a dishwasher is provided by direct connection of nonmetallic sheathed cable in the junction box or termination box at the base of the dishwasher; however, flexible cord is allowed. Type NM cable cannot be directly connected to a waste disposal unit because the cable would not be protected from damage. Flexible metal conduit and flexible cord are the two most commonly installed wiring methods for disposal units. In fact, flexible cord is the ideal method for wiring both dishwashers and disposals. Flexible cord allows for ease of installation and removal of the appliances. The cord and plug connection provides a convenient disconnecting means, also. Furnaces, air handlers and most storage-type electric water heaters are not known to be listed for connection by flexible cords and, therefore, must be hard wired. It is a common code violation in some localities where furnaces, boilers and air handling units are wired with cords and plugs.

TABLE E4101.3
FLEXIBLE CORD LENGTH

APPLIANCE	MINIMUM CORD LENGTH (inches)	MAXIMUM CORD LENGTH (inches)
Electrically operated in-sink waste disposal	18	36
Built-in dishwasher	36	48
Trash compactor	36	48
Range hoods	18	36

For SI: 1 inch = 25.4 mm.

❖ See the commentary to Section E4101.3.

E4101.4 Overcurrent protection. Each appliance shall be protected against overcurrent in accordance with the rating of the appliance and its listing. [110.3(B), 422.11(A)]

❖ Some appliances come with installation instructions or are marked with the minimum and maximum ratings of

INTERNATIONAL CODE COUNCIL®
Copyright © 2015 ICC. ALL RIGHTS RESERVED. Accessed by David Dammon on Jun 21, 2017 12:30:52 PM pursuant to License Agreement with ICC. No further reproduction or distribution authorized. ANY UNAUTHORIZED REPRODUCTION OR DISTRIBUTION IS A VIOLATION OF THE FEDERAL COPYRIGHT ACT AND THE LICENSE AGREEMENT, AND SUBJECT TO CIVIL AND CRIMINAL PENALTIES THEREUNDER.

the overcurrent device for the branch circuit feeding the appliance.

E4101.4.1 Single nonmotor-operated appliance. The overcurrent protection for a branch circuit that supplies a single nonmotor-operated appliance shall not exceed that marked on the appliance. Where the overcurrent protection rating is not marked and the appliance is rated at over 13.3 amperes, the overcurrent protection shall not exceed 150 percent of the appliance rated current. Where 150 percent of the appliance rating does not correspond to a standard overcurrent device ampere rating, the next higher standard rating shall be permitted. Where the overcurrent protection rating is not marked and the appliance is rated at 13.3 amperes or less, the overcurrent protection shall not exceed 20 amperes. [422.11(E)]

❖ The overcurrent device protects the conductors, but it also serves to protect the appliance or equipment itself. An appliance marked with the rated ampere load might not provide information on the rating of branch circuit overcurrent protection. If this was the case and the appliance is rated over 13.3 amperes, the provisions of this section limit the size of the overcurrent device on the branch circuit to 150 percent of the appliance rated current. For example, a typical electric water heater with a maximum load of 4,500 watts draws 18.75 amperes and 150 percent of that is 28.1 amperes, therefore, the typically used 30-ampere overcurrent device is too large. A 25 amp fuse or circuit breaker can serve a continuous load of 18.75 amps and is less than 150 percent of the appliance rating. See Sections E3705.5.2 and E3705.6.

E4101.5 Disconnecting means. Each appliance shall be provided with a means to disconnect all ungrounded supply conductors. For fixed electric space-heating equipment, means shall be provided to disconnect the heater and any motor controller(s) and supplementary overcurrent-protective devices. Switches and circuit breakers used as a disconnecting means shall be of the indicating type. Disconnecting means shall be as set forth in Table E4101.5. (422.30, 422.35, and 424.19)

❖ In Table E4101.5, permanently connected appliances are those with fixed wiring (as opposed to cord- and plug-connected appliances). A circuit breaker in a panelboard could serve as a disconnect if it serves a rated load of $^1/_8$ horsepower (93 W) or less or 300 VA or less. If it is rated over $^1/_8$ horsepower (93 W), or over 300 VA, the circuit breaker is permitted to serve as the disconnecting means if it is within sight of the appliance or if it can be locked in the open position. The second from bottom row in Table E4101.5 indicates that if the appliance has a unit switch with a marked OFF position, it can serve as the disconnect if there is an additional redundant disconnect. In residential wiring, the main service disconnect is permitted to serve as the additional disconnect for this purpose. Air-conditioning condensing units and heat pump units must have a disconnect within sight from the unit as the only allowable means (see Commentary Figure E4101.5). Note that on the typical heat pump or condensing unit there is not likely to be any surface on which a disconnect can be mounted because any flat surface will probably be an access panel or the location of the equipment label (see Note a to Table E4101.5).

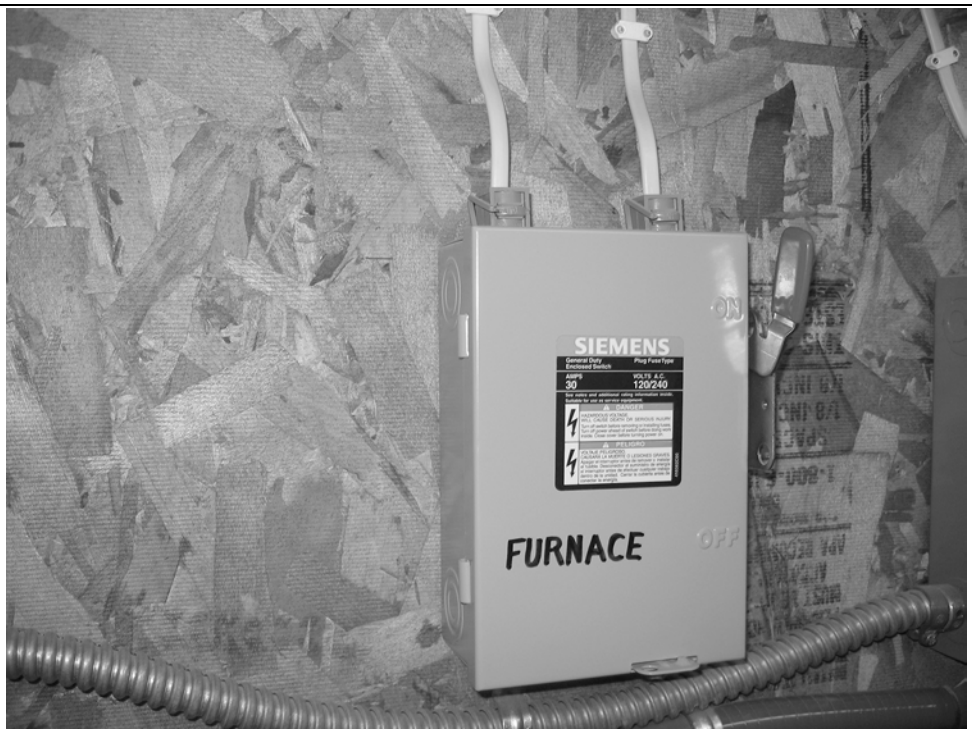

Figure E4101.5
TYPICAL APPLIANCE DISCONNECTING MEANS

INTERNATIONAL CODE COUNCIL®
Copyright © 2015 ICC. ALL RIGHTS RESERVED. Accessed by David Dammon on Jun 21, 2017 12:30:52 PM pursuant to License Agreement with ICC. No further reproduction or distribution authorized. ANY UNAUTHORIZED REPRODUCTION OR DISTRIBUTION IS A VIOLATION OF THE FEDERAL COPYRIGHT ACT AND THE LICENSE AGREEMENT, AND SUBJECT TO CIVIL AND CRIMINAL PENALTIES THEREUNDER.

TABLE E4101.5
DISCONNECTING MEANS
[422.31(A), (B), and (C); 422.34; 422.35; 424.19; 424.20; and 440.14]

DESCRIPTION	ALLOWED DISCONNECTING MEANS
Permanently connected appliance rated at not over 300 volt-amperes or $^1/_8$ horsepower.	Branch-circuit overcurrent device.
Permanently connected appliances rated in excess of 300 volt-amperes.	Branch circuit breaker or switch located within sight of appliance or such devices in any location that are capable of being locked in the open position. The provision for locking or adding a lock to the disconnecting means shall be installed on or at the switch or circuit breaker used as the disconnecting means and shall remain in place with or without the lock installed.
Motor-operated appliances rated over $^1/_8$ horsepower.	For permanently connected motor-operated appliances with motors rated over $^1/_8$ horsepower, the branch circuit switch or circuit breaker shall be permitted to serve as the disconnecting means where the switch or circuit breaker is within sight from the appliance. Where the branch circuit switch is not located within sight from the appliance, the disconnecting means shall be one of the following types: a listed motor-circuit switch rated in horsepower, a listed molded case circuit breaker, a listed molded case switch, a listed manual motor controller additionally marked "Suitable as Motor Disconnect" where installed between the final motor branch-circuit short-circuit protective device and the motor. For stationary motors rated at 2 hp or less and 300 volts or less, the disconnecting means shall be permitted to be one of the following devices: 1. A general-use switch having an ampere rating not less than twice the full-load current rating of the motor. 2. On AC circuits, a general-use snap switch suitable only for use on AC, not general-use AC–DC snap switches, where the motor full-load current rating is not more than 80 percent of the ampere rating of the switch. 3. A listed manual motor controller having a horsepower rating not less than the rating of the motor and marked "Suitable as Motor Disconnect". The disconnecting means for motor circuits rated 600 volts, nominal, or less shall have an ampere rating not less than 115 percent of the full-load current rating of the motor except that a listed unfused motor-circuit switch having a horsepower rating not less than the motor horsepower shall be permitted to have an ampere rating less than 115 percent of the full-load current rating of the motor. The disconnecting means shall be installed within sight of the appliance. **Exception:** A unit switch with a marked-off position that is a part of an appliance and disconnects all ungrounded conductors shall be permitted as the disconnecting means and the switch or circuit breaker serving as the other disconnecting means shall be permitted to be out of sight from the appliance.
Appliances listed for cord-and-plug connection.	A separable connector or attachment plug and receptacle provided with access.

(continued)

INTERNATIONAL CODE COUNCIL®
Copyright © 2015 ICC. ALL RIGHTS RESERVED. Accessed by David Dammon on Jun 21, 2017 12:30:52 PM pursuant to License Agreement with ICC. No further reproduction or distribution authorized. ANY UNAUTHORIZED REPRODUCTION OR DISTRIBUTION IS A VIOLATION OF THE FEDERAL COPYRIGHT ACT AND THE LICENSE AGREEMENT, AND SUBJECT TO CIVIL AND CRIMINAL PENALTIES THEREUNDER.

TABLE E4101.5—continued
DISCONNECTING MEANS

DESCRIPTION	ALLOWED DISCONNECTING MEANS
Permanently installed heating equipment with motors rated at not over $^1/_8$ horsepower with supplementary overcurrent protection.	Disconnect, on the supply side of fuses, in sight from the supplementary overcurrent device, and in sight of the heating equipment or, in any location, if capable of being locked in the open position.
Heating equipment containing motors rated over $^1/_8$ horsepower with supplementary overcurrent protection.	Disconnect permitted to serve as required disconnect for both the heating equipment and the controller where, on the supply side of fuses, and in sight from the supplementary overcurrent devices, if the disconnecting means is also in sight from the controller, or is capable of being locked off and simultaneously disconnects the heater, motor controller(s) and supplementary overcurrent protective devices from all ungrounded conductors. The provision for locking or adding a lock to the disconnecting means shall be installed on or at the switch or circuit breaker used as the disconnecting means and shall remain in place with or without the lock installed. The disconnecting means shall have an ampere rating not less than 125 percent of the total load of the motors and the heaters.
Heating equipment containing no motor rated over $^1/_8$ horsepower without supplementary overcurrent protection.	Branch-circuit switch or circuit breaker where within sight from the heating equipment or capable of being locked off and simultaneously disconnects the heater, motor controller(s) and supplementary overcurrent protective devices from all ungrounded conductors. The provision for locking or adding a lock to the disconnecting means shall be installed on or at the switch or circuit breaker used as the disconnecting means and shall remain in place with or without the lock installed. The disconnecting means shall have an ampere rating not less than 125 percent of the total load of the motors and the heaters.
Heating equipment containing motors rated over $^1/_8$ horsepower without supplementary overcurrent protection.	Disconnecting means in sight from motor controller or as provided for heating equipment with motor rated over $^1/_8$ horsepower with supplementary overcurrent protection and simultaneously disconnects the heater, motor controller(s) and supplementary overcurrent protective devices from all ungrounded conductors. The provision for locking or adding a lock to the disconnecting means shall be installed on or at the switch or circuit breaker used as the disconnecting means and shall remain in place with or without the lock installed. The disconnecting means shall have an ampere rating not less than 125 percent of the total load of the motors and the heaters.
Air-conditioning condensing units and heat pump units.	A readily accessible disconnect within sight from unit as the only allowable means.[a]
Appliances and fixed heating equipment with unit switches having a marked OFF position.	Unit switch where an additional individual switch or circuit breaker serves as a redundant disconnecting means.
Thermostatically controlled fixed heating equipment.	Thermostats with a marked OFF position that directly open all ungrounded conductors, which when manually placed in the OFF position are designed so that the circuit cannot be energized automatically and that are located within sight of the equipment controlled.

For SI: 1 horsepower = 0.746 kW.

a. The disconnecting means shall be permitted to be installed on or within the unit. It shall not be located on panels designed to allow access to the unit or located so as to obscure the air-conditioning equipment nameplate(s).

❖ See the commentary to Section E4101.5.

INTERNATIONAL CODE COUNCIL®
Copyright © 2015 ICC. ALL RIGHTS RESERVED. Accessed by David Dammon on Jun 21, 2017 12:30:52 PM pursuant to License Agreement with ICC. No further reproduction or distribution authorized. ANY UNAUTHORIZED REPRODUCTION OR DISTRIBUTION IS A VIOLATION OF THE FEDERAL COPYRIGHT ACT AND THE LICENSE AGREEMENT, AND SUBJECT TO CIVIL AND CRIMINAL PENALTIES THEREUNDER.

E4101.6 Support of ceiling-suspended paddle fans. Ceiling-suspended fans (paddle) shall be supported independently of an outlet box or by a listed outlet box or outlet box system identified for the use and installed in accordance with Section E3905.8. (422.18)

❖ The provisions for paddle fans are included in this chapter because they are considered to be appliances and not luminaires by the code. The outlet boxes permitted by this section for the support of paddle fans are not the standard luminaire boxes that are used for most lighting outlets (see Section E3905.8). Although not required by the code, it would be wise to install fan support boxes for all outlets where it is anticipated that the owner will want to add a fan in the future. Section E3905.8 will require fan-rated boxes where wiring is provided in anticipation of a fan installation.

E4101.7 Snow-melting and deicing equipment protection. Outdoor receptacles that are not readily accessible and are supplied from a dedicated branch circuit for electric snow-melting or deicing equipment shall be permitted to be installed without ground-fault circuit-interrupter protection for personnel. However, ground-fault protection of equipment shall be provided for fixed outdoor electric deicing and snow-melting equipment. [210.8(A)(3) Exception, 426.28]

❖ Receptacles can be installed under the eaves for the connection of deicing cables installed along the roof edge. These receptacles need not be ground-fault circuit interrupter (GFCI) protected. However, permanently installed deicing and snow melting equipment must have ground-fault protection. Circuit breakers are available with ground-fault equipment protection which will open the circuit if leakage current is detected and will help prevent fires caused by arcing from low-level fault currents.

Bibliography

The following resource materials were used in the preparation of the commentary for this chapter of the code:

NFPA 70–14, *National Electrical Code*. Quincy, MA: Na-tional Fire Protection Association, 2013.

INTERNATIONAL CODE COUNCIL®
Copyright © 2015 ICC. ALL RIGHTS RESERVED. Accessed by David Dammon on Jun 21, 2017 12:30:52 PM pursuant to License Agreement with ICC. No further reproduction or distribution authorized. ANY UNAUTHORIZED REPRODUCTION OR DISTRIBUTION IS A VIOLATION OF THE FEDERAL COPYRIGHT ACT AND THE LICENSE AGREEMENT, AND SUBJECT TO CIVIL AND CRIMINAL PENALTIES THEREUNDER.

INTERNATIONAL CODE COUNCIL®
Copyright © 2015 ICC. ALL RIGHTS RESERVED. Accessed by David Dammon on Jun 21, 2017 12:30:52 PM pursuant to License Agreement with ICC. No further reproduction or distribution authorized. ANY UNAUTHORIZED REPRODUCTION OR DISTRIBUTION IS A VIOLATION OF THE FEDERAL COPYRIGHT ACT AND THE LICENSE AGREEMENT, AND SUBJECT TO CIVIL AND CRIMINAL PENALTIES THEREUNDER.

Chapter 42: Swimming Pools

General Comments

This chapter addresses all aspects of wiring, fixtures, motors and electrical accessories for swimming pools, wading pools, hot tubs, spas and hydromassage bathtubs.

Purpose

This chapter focuses on protection of occupants from electrical shock. The dangers of using electricity around water, wet surfaces, grounded surfaces and plumbing are well known, and this chapter is intended to minimize or eliminate those hazards.

SECTION E4201 GENERAL

E4201.1 Scope. The provisions of this chapter shall apply to the construction and installation of electric wiring and equipment associated with all swimming pools, wading pools, decorative pools, fountains, hot tubs and spas, and hydromassage bathtubs, whether permanently installed or storable, and shall apply to metallic auxiliary equipment, such as pumps, filters and similar equipment. Sections E4202 through E4206 provide general rules for permanent pools, spas and hot tubs. Section E4207 provides specific rules for storable pools and storable/portable spas and hot tubs. Section E4208 provides specific rules for spas and hot tubs. Section E4209 provides specific rules for hydromassage bathtubs. (680.1)

❖ Because of a unique potential of electrical shock hazard around pools, a separate chapter is included in the code to provide specific detailed requirements regarding the wiring in and around swimming pools, wading pools, spas and hot tubs and hydromassage tubs. A conductive path for fault current can easily be established through the water to the earth. When a person in a pool touches a metallic surface that is energized, the fault-current path through the individual can be fatal. Also, a person in the pool not touching anything but the water could become part of a fault-current path. For example, if an energized device such as an electric appliance drops into the pool, an electrical potential could be established in the pool resulting in a voltage gradient that could cause the person to be surrounded by different levels of voltage in the water acting like a conductor. Because of these types of hazards, more stringent and unique code provisions apply to wiring around swimming pools.

E4201.2 Definitions. (680.2)

CORD-AND-PLUG-CONNECTED LIGHTING ASSEMBLY. A lighting assembly consisting of a cord-and-plug-connected transformer and a luminaire intended for installation in the wall of a spa, hot tub, or storable pool.

❖ This is a definition for a lighting fixture used in the wall of a storable swimming pool, spa, or hot tub. It is made with a nonmetallic housing and is supplied with power from a cord- and plug-connected transformer.

DRY-NICHE LUMINAIRE. A luminaire intended for installation in the floor or wall of a pool, spa or fountain in a niche that is sealed against the entry of water.

❖ A dry-niche luminaire is installed behind a clear window below the water level and does not allow pool water to enter the forming shell or the area around the lamp housing. For swimming pool wiring in dwellings, access to the lamp would typically be through a deck box, and relamping is done from behind the waterproof lens or glass window. The dry-niche area where the lamp is installed must have drainage for any water that may enter from the deck area of the pool when the cover is off for servicing. The glass window is sealed against the entry of pool water.

FORMING SHELL. A structure designed to support a wet-niche luminaire assembly and intended for mounting in a pool or fountain structure.

❖ A forming shell is built into the wall of the pool and is the supporting part of the wet-niche luminaire.

FOUNTAIN. Fountains, ornamental pools, display pools, and reflection pools. The definition does not include drinking fountains.

❖ Decorative pools and fountains fall under the scope of this chapter.

HYDROMASSAGE BATHTUB. A permanently installed bathtub equipped with a recirculating piping system, pump, and associated equipment. It is designed so it can accept, circulate and discharge water upon each use.

❖ A hydromassage bathtub is similar to a normal bathtub in that the water is drained after each use. The hydromassage bathtub does not store water and is not left filled with water like a spa or hot tub. It has a pump and piping system for jetting water when filled. The pump must be plugged into a ground-fault circuit interrupter (GFCI) protected receptacle. All receptacles in the same bathroom with the hydromassage bathtub must be GFCI protected.

INTERNATIONAL CODE COUNCIL®
Copyright © 2015 ICC. ALL RIGHTS RESERVED. Accessed by David Dammon on Jun 21, 2017 12:30:52 PM pursuant to License Agreement with ICC. No further reproduction or distribution authorized. ANY UNAUTHORIZED REPRODUCTION OR DISTRIBUTION IS A VIOLATION OF THE FEDERAL COPYRIGHT ACT AND THE LICENSE AGREEMENT, AND SUBJECT TO CIVIL AND CRIMINAL PENALTIES THEREUNDER.

LOW VOLTAGE CONTACT LIMIT. A voltage not exceeding the following values:

1. 15 volts (RMS) for sinusoidal AC
2. 21.2 volts peak for nonsinusoidal AC
3. 30 volts for continuous DC
4. 12.4 volts peak for DC that is interrupted at a rate of 10 to 200 Hz

MAXIMUM WATER LEVEL. The highest level that water can reach before it spills out.

❖ In the plumbing part of this code the term "flood-level rim" is used; the meaning is the same as "maximum water level."

NO-NICHE LUMINAIRE. A luminaire intended for installation above or below the water without a niche.

❖ This is an underwater luminaire installed on the surface of the wall of the pool on a mounting bracket. For changing the lamp, the cord should be long enough to detach the fixture from the bracket underwater and bring it out of the water. A no-niche luminaire is typically used on an aboveground pool that does not have a forming shell.

PACKAGED SPA OR HOT TUB EQUIPMENT ASSEMBLY. A factory-fabricated unit consisting of water-circulating, heating and control equipment mounted on a common base, intended to operate a spa or hot tub. Equipment may include pumps, air blowers, heaters, luminaires, controls and sanitizer generators.

❖ The packaged unit comes already assembled from the manufacturer, minimizing the need to design and install each component in the field. The spa or hot tub vessel comes as a separate component and is installed on the job along with the packaged assembly of equipment.

PERMANENTLY INSTALLED SWIMMING, WADING, IMMERSION AND THERAPEUTIC POOLS. Those that are constructed in the ground or partially in the ground, and all others capable of holding water with a depth greater than 42 inches (1067 mm), and all pools installed inside of a building, regardless of water depth, whether or not served by electrical circuits of any nature.

❖ Special provisions are included in the code for swimming pools because of the high risk of electric shock resulting from the conductive path from a human body to the water surrounding a human body through the concrete and reinforcing steel in the wall of the pool to the earth.

POOL. Manufactured or field-constructed equipment designed to contain water on a permanent or semipermanent basis and used for swimming, wading, immersion, or therapeutic purposes.

POOL COVER, ELECTRICALLY OPERATED. Motor-driven equipment designed to cover and uncover the water surface of a pool by means of a flexible sheet or rigid frame.

❖ Because of the close proximity of the motor of an electrically operated pool cover to the edge of the pool, the code has special provisions regarding these pool covers.

SELF-CONTAINED SPA OR HOT TUB. A factory-fabricated unit consisting of a spa or hot tub vessel with all water-circulating, heating and control equipment integral to the unit. Equipment may include pumps, air blowers, heaters, luminaires, controls and sanitizer generators.

❖ The equipment needed to operate the spa or hot tub such as pumps, heaters, controls, etc., is manufactured together with the spa or hot tub vessel and comes as a complete unit.

SPA OR HOT TUB. A hydromassage pool, or tub for recreational or therapeutic use, not located in health care facilities, designed for immersion of users, and usually having a filter, heater, and motor-driven blower. They are installed indoors or outdoors, on the ground or supporting structure, or in the ground or supporting structure. Generally, a spa or hot tub is not designed or intended to have its contents drained or discharged after each use.

❖ A hot tub is typically built with wood, such as redwood, but a spa is usually made of fiberglass, concrete or tile. They may have much the same equipment that a swimming pool could have, such as stainless-steel handrails and electric equipment for heating and circulating the water.

STORABLE SWIMMING, WADING OR IMMERSION POOLS; OR STORABLE/PORTABLE SPAS AND HOT TUBS. Those that are constructed on or above the ground and are capable of holding water with a maximum depth of 42 inches (1067 mm), or a pool with nonmetallic, molded polymeric walls or inflatable fabric walls regardless of dimension.

❖ This definition was included in the code to help differentiate between a storable pool and a permanent pool built in the ground. Also, the code provisions and definition for storable pools are included in the code because these structures have most of the same equipment that an in-ground pool could have. They are not built with concrete and reinforcing steel, but similar electrical hazards exist. Although storable pool are intended to be temporary, and many storable pools are disassembled during the cold months of the year, an on-ground pool that is left installed all year could still be defined as a storable pool.

THROUGH-WALL LIGHTING ASSEMBLY. A lighting assembly intended for installation above grade, on or through the wall of a pool, consisting of two interconnected groups of components separated by the pool wall.

❖ Such assemblies allow the installations of pool lighting in above-ground pools. The components house the luminaire and also serve to seal the opening made in the wall of the pool.

WET-NICHE LUMINAIRE. A luminaire intended for installation in a forming shell mounted in a pool or fountain structure where the luminaire will be completely surrounded by water.

❖ A wet-niche luminaire is designed to have the pool water completely surround the fixture within the forming shell. A wet-niche luminaire is connected with a

INTERNATIONAL CODE COUNCIL®
Copyright © 2015 ICC. ALL RIGHTS RESERVED. Accessed by David Dammon on Jun 21, 2017 12:30:52 PM pursuant to License Agreement with ICC. No further reproduction or distribution authorized. ANY UNAUTHORIZED REPRODUCTION OR DISTRIBUTION IS A VIOLATION OF THE FEDERAL COPYRIGHT ACT AND THE LICENSE AGREEMENT, AND SUBJECT TO CIVIL AND CRIMINAL PENALTIES THEREUNDER.

cord that extends to a junction box, typically at the pool deck. It has enough cord so that when the fixture is relamped, it is brought up out of the water without the cord being disconnected and then the cord is recoiled and placed behind the fixture in the forming shell.

SECTION E4202
WIRING METHODS FOR POOLS, SPAS, HOT TUBS AND HYDROMASSAGE BATHTUBS

E4202.1 General. Wiring methods used in conjunction with permanently installed swimming pools, spas, hot tubs or hydromassage bathtubs shall be installed in accordance with Table E4202.1 and Chapter 38 except as otherwise stated in this section. Storable swimming pools shall comply with Section E4207. [680.7; 680.21(A); 680.23(B) and (F); 680.25(A); 680.42; 680.43; and 680.70]

❖ Table E4202.1 covers the rules for the raceways and cables that can be used in wiring associated with swimming pools. The rules in Chapter 38 for wiring methods apply except as modified by the provisions of this chapter. It is important to consider the notes of Table E4202.1. For example, Note c indicates that EMT can be used only on or within buildings.

E4202.2 Flexible cords. Flexible cords used in conjunction with a pool, spa, hot tub or hydromassage bathtub shall be installed in accordance with the following:

1. For other than underwater luminaires, fixed or stationary equipment shall be permitted to be connected with a flexible cord to facilitate removal or disconnection for maintenance or repair. For other than storable pools, the flexible cord shall not exceed 3 feet (914 mm) in length. Cords that supply swimming pool equipment shall have a copper equipment grounding conductor not smaller than 12 AWG and shall terminate in a grounding-type attachment plug. [680.7(A), (B), and (C); 680.21(A)(5)]

TABLE E4202.1
ALLOWABLE APPLICATIONS FOR WIRING METHODS[a, b, c, d, e, f, g, h, k]

WIRING LOCATION OR PURPOSE (Application allowed where marked with an "A")	AC, FMC, NM, SR, SE	EMT	ENT	IMC[i], RMC[i], RNC[h]	LFMC	LFNMC	UF	MC[i]	FLEX CORD
Panelboard(s) that supply pool equipment: from service equipment to panelboard	A[b, e] SR not permitted	A[c]	A[b]	A	—	A	A[e]	A[e]	—
Wet-niche and no-niche luminaires: from branch circuit OCPD to deck or junction box	AC[b] only	A[c]	A[b]	A	—	A	—	A[b]	—
Wet-niche and no-niche luminaires: from deck or junction box to forming shell	—	—	—	A[d]	—	A	—	—	A[g]
Dry niche: from branch circuit OCPD to luminaires	AC[b] only	A[c]	A[b]	A	—	A	—	A[b]	—
Pool-associated motors: from branch circuit OCPD to motor	A[b]	A[c]	A[b]	A	A[e]	A[e]	A[b]	A	A[g]
Packaged or self-contained outdoor spas and hot tubs with underwater luminaire: from branch circuit OCPD to spa or hot tub	AC[b] only	A[c]	A[b]	A	A[f]	A[f]	—	A[b]	A[g]
Packaged or self-contained outdoor spas and hot tubs without underwater luminaire: from branch circuit OCPD to spa or hot tub	A[b]	A[c]	A[b]	A	A[f]	A[f]	A[b]	A	A[g]
Indoor spas and hot tubs, hydromassage bathtubs, and other pool, spa or hot tub associated equipment: from branch circuit OCPD to equipment	A[b]	A[c]	A[b]	A	A	A	A	A	A[g]
Connection at pool lighting transformers or power supplies	AC[b] only	A[c]	A[b]	A	A[l, f]	A[f]	—	A[b]	—

For SI: 1 foot = 304.8 mm.

a. For all wiring methods, see Section E4205 for equipment grounding conductor requirements.
b. Limited to use within buildings.
c. Limited to use on or within buildings.
d. Metal conduit shall be constructed of brass or other approved corrosion-resistant metal.
e. Limited to where necessary to employ flexible connections at or adjacent to a pool motor.
f. Sections installed external to spa or hot tub enclosure limited to individual lengths not to exceed 6 feet. Length not limited inside spa or hot tub enclosure.
g. Flexible cord shall be installed in accordance with Section E4202.2.
h. Nonmetallic conduit shall be rigid polyvinyl chloride conduit Type PVC or reinforced thermosetting resin conduit Type RTRC.
i. Aluminum conduits shall not be permitted in the pool area where subject to corrosion.
j. Where installed as direct burial cable or in wet locations, Type MC cable shall be listed and identified for the location.
k. See Section E4202.3 for listed, double-insulated pool pump motors.
l. Limited to use in individual lengths not to exceed 6 feet. The total length of all individual runs of LFMC shall not exceed 10 feet.

INTERNATIONAL CODE COUNCIL®
Copyright © 2015 ICC. ALL RIGHTS RESERVED. Accessed by David Dammon on Jun 21, 2017 12:30:52 PM pursuant to License Agreement with ICC. No further reproduction or distribution authorized. ANY UNAUTHORIZED REPRODUCTION OR DISTRIBUTION IS A VIOLATION OF THE FEDERAL COPYRIGHT ACT AND THE LICENSE AGREEMENT, AND SUBJECT TO CIVIL AND CRIMINAL PENALTIES THEREUNDER.

2. Other than listed low-voltage lighting systems not requiring grounding, wet-niche luminaires that are supplied by a flexible cord or cable shall have all exposed noncurrent-carrying metal parts grounded by an insulated copper equipment grounding conductor that is an integral part of the cord or cable. Such grounding conductor shall be connected to a grounding terminal in the supply junction box, transformer enclosure, or other enclosure and shall be not smaller than the supply conductors and not smaller than 16 AWG. [680.23(B)(3)]
3. A listed packaged spa or hot tub installed outdoors that is GFCI protected shall be permitted to be cord-and-plug-connected provided that such cord does not exceed 15 feet (4572 mm) in length. [680.42(A)(2)]
4. A listed packaged spa or hot tub rated at 20 amperes or less and installed indoors shall be permitted to be cord-and-plug-connected to facilitate maintenance and repair. (680.43 Exception No. 1)
5. For other than underwater and storable pool lighting luminaire, the requirements of Item 1 shall apply to any cord-equipped luminaire that is located within 16 feet (4877 mm) radially from any point on the water surface. [680.22(B)(5)]

❖ Flexible cords are used to facilitate easy removal or repair of fixed or stationary equipment. For example, a pool cover motor could be connected by a flexible cord not over 3 feet (914 mm) long. Limiting the length of the cord will help prevent excessive cord length from being in the pool water or otherwise exposed. Underwater fixtures such as no-niche and wet-niche fixtures are permitted to have longer cords so that the fixture can be removed and brought up on the deck for servicing. Some equipment on a storable pool could have cords longer than 3 feet (914 mm) because it is not fixed or stationary, being installed so that it can be removed and stored.

An example of a permitted flexible cord in the area of a swimming pool is one for a luminaire within 16 feet (4877 mm) of the edge of the water. It is permitted to be cord- and plug-connected if the cord is a maximum of 3 feet (914 mm) long, has a grounding conductor of at least size 12 AWG and has a grounding-type attachment plug (cap).

E4202.3 Double insulated pool pumps. A listed cord and plug-connected pool pump incorporating an approved system of double insulation that provides a means for grounding only the internal and nonaccessible, noncurrent-carrying metal parts of the pump shall be connected to any wiring method recognized in Chapter 38 that is suitable for the location. Where the bonding grid is connected to the equipment grounding conductor of the motor circuit in accordance with Section E4204.2, Item 6.1, the branch circuit wiring shall comply with Sections E4202.1 and E4205.5. [680.21(B)]

❖ See Sections E4202.1, E4204.2 and E4205.5.

SECTION E4203
EQUIPMENT LOCATION AND CLEARANCES

E4203.1 Receptacle outlets. Receptacles outlets shall be installed and located in accordance with Sections E4203.1.1 through E4203.1.5. Distances shall be measured as the shortest path that an appliance supply cord connected to the receptacle would follow without penetrating a floor, wall, ceiling, doorway with hinged or sliding door, window opening, or other effective permanent barrier. [680.22(A)(5)]

❖ The measurement between the edge of the pool and a receptacle is the shortest unobstructed route of an appliance supply cord plugged into the receptacle. The code considers such things as doors, windows, walls, floors and ceilings to be “effective permanent barriers” in determining the distance of a receptacle from the edge of the pool. When measuring the distance from the pool water to the receptacle, if the measurement is, for example, a total of 9 feet (2743 mm) from the pool to the receptacle, but the measurement is through a doorway that has a sliding or hinged door installed (not an opening without a door), the door is considered a barrier and the receptacle would not be considered 9 feet (2743 mm) from the edge of the pool and would not require GFCI protection because of the proximity of the swimming pool. The receptacle in this example could be required to have GFCI protection for a different reason, such as if it were in a bathroom (see commentary, Section E3902.1).

E4203.1.1 Location. Receptacles that provide power for water-pump motors or other loads directly related to the circulation and sanitation system shall be permitted to be located between 6 feet and 10 feet (1829 mm and 3048 mm) from the inside walls of pools and outdoor spas and hot tubs, where the receptacle is single and of the grounding type and protected by ground-fault circuit interrupters.

Other receptacles on the property shall be located not less than 6 feet (1829 mm) from the inside walls of pools and outdoor spas and hot tubs. [680.22(A)(2) and (A)(3)]

❖ Only receptacles for specific equipment are permitted between 6 and 10 feet (1524 mm and 3048 mm) from the inside wall of the pool, and they must be a single receptacle of the locking and grounding type so that a typical radio, for example, could not be plugged into it. The code prohibits receptacles that supply power to appliances from being installed within 6 feet (3048 mm) of the inside wall of the pool.

E4203.1.2 Where required. At least one 125-volt, 15- or 20-ampere receptacle supplied by a general-purpose branch circuit shall be located a minimum of 6 feet (1829 mm) from and not more than 20 feet (6096 mm) from the inside wall of pools and outdoor spas and hot tubs. This receptacle shall be located not more than 6 feet, 6 inches (1981 mm) above the floor, platform or grade level serving the pool, spa or hot tub. [680.22(A)(1)]

❖ At least one receptacle is required in the area between 6 and 20 feet (3048 mm and 6096 mm) from the inside

INTERNATIONAL CODE COUNCIL®
Copyright © 2015 ICC. ALL RIGHTS RESERVED. Accessed by David Dammon on Jun 21, 2017 12:30:52 PM pursuant to License Agreement with ICC. No further reproduction or distribution authorized. ANY UNAUTHORIZED REPRODUCTION OR DISTRIBUTION IS A VIOLATION OF THE FEDERAL COPYRIGHT ACT AND THE LICENSE AGREEMENT, AND SUBJECT TO CIVIL AND CRIMINAL PENALTIES THEREUNDER.

wall of a swimming pool and outdoor spas and hot tubs. This requirement is for indoor and outdoor swimming pools but only for outdoor spas and hot tubs. This provides a power source for appliances to be used near the pool without resorting to the use of extension cords. Because a typical appliance supply cord is about 6 feet (1829 mm), it is less likely that an appliance would be bumped and knocked into the pool where it is plugged into a receptacle located at least 6 feet from the pool water. This required receptacle could be on a wall above a raised deck, for example, as long as the receptacle is not over 78 inches (1981 mm) above the swimming pool deck (see Section E4203.1.3).

E4203.1.3 GFCI protection. All 15- and 20-ampere, single phase, 125-volt receptacles located within 20 feet (6096 mm) of the inside walls of pools and outdoor spas and hot tubs shall be protected by a ground-fault circuit-interrupter. Outlets supplying pool pump motors supplied from branch circuits rated at 120 volts through 240 volts, single phase, whether by receptacle or direct connection, shall be provided with ground-fault circuit-interrupter protection for personnel. [680.21(C) and 680.22(A)(4)]

❖ Pool pump motor receptacles must be GFCI protected regardless of their location. All receptacles within 20 feet (6096 mm) of the pool water must have GFCI protection including any single-, locking- and grounding-type receptacles installed for specific equipment. This applies to storable pools as well as permanently installed indoor and outdoor pools. It may not be common to have an indoor pool with a deck over 20 feet (6096 mm) wide, [20 feet (6096 mm) from the inside wall of the pool to the wall of the building], but where this occurs, any receptacle over 20 feet (6096 mm) from the pool would not have to be GFCI protected. Where a pool is installed outdoors, the 20-foot (6096 mm) rule is irrelevant since all outdoor receptacles at a dwelling require GFCI protection per Section E3902.3.

E4203.1.4 Indoor locations. Receptacles shall be located not less than 6 feet (1829 mm) from the inside walls of indoor spas and hot tubs. A minimum of one 125-volt receptacle shall be located between 6 feet (1829 mm) and 10 feet (3048 mm) from the inside walls of indoor spas or hot tubs. [680.43(A) and 680.43(A)(1)]

❖ This code provision is specifically for indoor spas and hot tubs. The rule to have at least one receptacle between 6 feet and 10 feet (1524 mm and 3048 mm) from the inside wall of the spa or hot tub is to help prevent the hazards inherent with the use of extension cords.

E4203.1.5 Indoor GFCI protection. All 125-volt receptacles rated 30 amperes or less and located within 10 feet (3048 mm) of the inside walls of spas and hot tubs installed indoors, shall be protected by ground-fault circuit-interrupters. [680.43(A)(2)]

❖ All receptacles (30 amp and smaller) within 10 feet (3048 mm) of the inside wall of the spa or hot tub require GFCI protection. The code provisions for locating receptacles around hydromassage bathtubs are different from those for spas and hot tubs. A receptacle is not prohibited in the area within 6 feet (1524 mm) and is not required between 6 feet and 10 feet (1524 and 3048 mm) from a hydromassage bathtub, but any receptacles located within 6 feet (1524 mm) of the inside wall of a hydromassage bathtub must be GFCI protected.

E4203.2 Switching devices. Switching devices shall be located not less than 5 feet (1524 mm) horizontally from the inside walls of pools, spas and hot tubs except where separated from the pool, spa or hot tub by a solid fence, wall, or other permanent barrier or the switches are listed for use within 5 feet (1524 mm). Switching devices located in a room or area containing a hydromassage bathtub shall be located in accordance with the general requirements of this code. [680.22(C); 680.43(C); and 680.72]

❖ This section refers not only to ordinary light switches but also to such devices as a timer, panelboard, etc. By requiring these devices to be at least 5 feet (1524 mm) from the inside walls of the pool, spa or hot tub, the code intends that they cannot be reached by someone in the pool. People will need to get out of the pool, spa or hot tub to operate the switching device, thus reducing the possible shock hazard. This specific rule does not pertain to switching devices around hydromassage bathtubs.

E4203.3 Disconnecting means. One or more means to simultaneously disconnect all ungrounded conductors for all utilization equipment, other than lighting, shall be provided. Each of such means shall be readily accessible and within sight from the equipment it serves and shall be located at least 5 feet (1524 mm) horizontally from the inside walls of a pool, spa, or hot tub unless separated from the open water by a permanently installed barrier that provides a 5-foot (1524 mm) or greater reach path. This horizontal distance shall be measured from the water's edge along the shortest path required to reach the disconnect. (680.12)

❖ The disconnect must be at least 5 feet (1524 mm) away from the inside walls of pools spas and hot tubs and must be within sight from the pool, spa or hot tub. (Note the exception for an effective barrier) This means it must be visible and not more than 50 feet (15 240 mm) away. This allows the power to equipment such as motors and heaters to be turned off while some-one is working on these units.

E4203.4 Luminaires and ceiling fans. Lighting outlets, luminaires, and ceiling-suspended paddle fans shall be installed and located in accordance with Sections E4203.4.1 through E4203.4.6. [680.22(B)]

❖ Compliance with these prescriptive code provisions will help reduce the increased hazards of electrocution near water.

E4203.4.1 Outdoor location. In outdoor pool, outdoor spas and outdoor hot tubs areas, luminaires, lighting outlets, and ceiling-suspended paddle fans shall not be installed over the pool or over the area extending 5 feet (1524 mm) horizontally from the inside walls of a pool except where no part of the

INTERNATIONAL CODE COUNCIL®
Copyright © 2015 ICC. ALL RIGHTS RESERVED. Accessed by David Dammon on Jun 21, 2017 12:30:52 PM pursuant to License Agreement with ICC. No further reproduction or distribution authorized. ANY UNAUTHORIZED REPRODUCTION OR DISTRIBUTION IS A VIOLATION OF THE FEDERAL COPYRIGHT ACT AND THE LICENSE AGREEMENT, AND SUBJECT TO CIVIL AND CRIMINAL PENALTIES THEREUNDER.

luminaire or ceiling-suspended paddle fan is less than 12 feet (3658 mm) above the maximum water level. [680.22(B)(1)]

❖ For an outdoor pool, spa or hot tub; luminaires and paddle fans are not permitted in the zone that is over the water and including the area extending 5 feet (1524 mm) horizontally from the inside edges of the pool and extending upward to a distance of 12 feet (3658 mm) above the water level. There are no exceptions to this rule. See Section E4203.4.3.

E4203.4.2 Indoor locations. In indoor pool areas, the limitations of Section E4203.4.1 shall apply except where the luminaires, lighting outlets and ceiling-suspended paddle fans comply with all of the following conditions:

1. The luminaires are of a totally enclosed type;
2. Ceiling-suspended paddle fans are identified for use beneath ceiling structures such as porches and patios.
3. A ground-fault circuit interrupter is installed in the branch circuit supplying the luminaires or ceiling-suspended paddle fans; and
4. The distance from the bottom of the luminaire or ceiling-suspended paddle fan to the maximum water level is not less than 7 feet, 6 inches (2286 mm). [680.22(B)(2)]

❖ Where provided with GFCI protection, fixtures of the totally enclosed type and paddle fans identified for use on porches and patios, are permitted as close as $7^1/_2$ feet (2286 mm) above the water level. A totally enclosed luminaire is one that completely conceals the lamp and lampholder from view and contact.

E4203.4.3 Low-voltage luminaires. Listed low-voltage luminaires not requiring grounding, not exceeding the low-voltage contact limit, and supplied by listed transformers or power supplies that comply with Section E4206.1 shall be permitted to be located less than 1.5 m (5 ft) from the inside walls of the pool. [680.22(B)(6)]

❖ This section is written as an exception to the previous Sections E4203.4.1 and E4203.4.2, and essentially states that low-voltage luminaires meeting all of the stated conditions can be located at any distance from the inside walls of the pool. The product listing and manufacturer's installation instructions might dictate a minimum distance. Because this section only addresses the area within 5 feet horizontally of the inside wall of the pool, there appears to be no allowance to locate such luminaries over the area of the pool.

E4203.4.4 Existing lighting outlets and luminaires. Existing lighting outlets and luminaires that are located within 5 feet (1524 mm) horizontally from the inside walls of pools and outdoor spas and hot tubs shall be permitted to be located not less than 5 feet (1524 mm) vertically above the maximum water level, provided that such luminaires and outlets are rigidly attached to the existing structure and are protected by a ground-fault circuit-interrupter. [680.22(B)(3)]

❖ This section covers luminaires that are already installed on a house or structure when the construction of the pool begins. This rule on existing lighting outlets and fixtures is for indoor and outdoor pools but only for outdoor spas and hot tubs. If the existing luminaires are rigidly attached to the house or structure and end up being within 5 feet (1524 mm) horizontally from the inside walls, they must be at least 5 feet (1524 mm) above the maximum water level, and the supply circuit must have GFCI protection.

E4203.4.5 Indoor spas and hot tubs.

1. Luminaires, lighting outlets, and ceiling-suspended paddle fans located over the spa or hot tub or within 5 feet (1524 mm) from the inside walls of the spa or hot tub shall be not less than 7 feet, 6 inches (2286 mm) above the maximum water level and shall be protected by a ground-fault circuit interrupter. [680.43(B)(1)(b)]

   Luminaires, lighting outlets, and ceiling-suspended paddle fans that are located 12 feet (3658 mm) or more above the maximum water level shall not require ground-fault circuit interrupter protection. [680.43(B)(1)(a)]

2. Luminaires protected by a ground-fault circuit interrupter and complying with Item 2.1 or 2.2 shall be permitted to be installed less than 7 feet, 6 inches (2286 mm) over a spa or hot tub.

   2.1. Recessed luminaires shall have a glass or plastic lens and nonmetallic or electrically isolated metal trim, and shall be suitable for use in damp locations.

   2.2. Surface-mounted luminaires shall have a glass or plastic globe and a nonmetallic body or a metallic body isolated from contact.Such luminaires shall be suitable for use in damp locations. [680.43(B)(1)(c)]

❖ The general rules for luminaires and paddle fans over indoor spas and hot tubs are the same as for indoor swimming pools found in Section E4203.4.2. However, where lighting is desired above an indoor spa or hot tub, the ceiling is often not high enough to meet the $7^1/_2$ foot (2286 mm) rule. The room containing the spa or hot tub would need to have a high enough ceiling so that the bottom of a luminaire or fan would be at least $7^1/_2$ feet above the water level. Recessed or surface mounted light fixtures are permitted to be less than $7^1/_2$ feet above the water level of the spa or hot tub but must have GFCI protection, and the fixtures must be suitable for use in damp locations, must be all nonmetallic or any metallic parts must be electrically isolated from the fixture and must have a suitable lens or cover so that the lamp is not exposed. Cord-hung or pendant fixtures and paddle fans are not permitted above an indoor spa or hot tub at a height less than $7^1/_2$ feet above the water level.

E4203.4.6 GFCI protection in adjacent areas. Luminaires and outlets that are installed in the area extending between 5 feet (1524 mm) and 10 feet (3048 mm) from the inside walls of pools and outdoor spas and hot tubs shall be protected by ground-fault circuit-interrupters except where such fixtures and outlets are installed not less than 5 feet (1524 mm) above

INTERNATIONAL CODE COUNCIL®
Copyright © 2015 ICC. ALL RIGHTS RESERVED. Accessed by David Dammon on Jun 21, 2017 12:30:52 PM pursuant to License Agreement with ICC. No further reproduction or distribution authorized. ANY UNAUTHORIZED REPRODUCTION OR DISTRIBUTION IS A VIOLATION OF THE FEDERAL COPYRIGHT ACT AND THE LICENSE AGREEMENT, AND SUBJECT TO CIVIL AND CRIMINAL PENALTIES THEREUNDER.

the maximum water level and are rigidly attached to the structure. [680.22(B)(4)]

❖ In the area extending horizontally between 5 feet and 10 feet from the inside wall of a pool or outdoor spaoutlets or hot tub, luminaires and lighting outlets (not receptacle) are permitted, but they must have GFCI protection. In the same area, but at a height of over 5 feet (1524 mm) above the water level, the circuits feeding rigidly attached light fixtures need not have GFCI protection.

E4203.5 Other outlets. Other outlets such as for remote control, signaling, fire alarm and communications shall be not less than 10 feet (3048 mm) from the inside walls of the pool. Measurements shall be determined in accordance with Section E4203.1. [680.22(D)]

❖ This section addresses the outlets for telephone, cable TV, internet, security systems, thermostats, fire alarm, etc., all of which can pose some electrical shock hazard.

E4203.6 Overhead conductor clearances. Except where installed with the clearances specified in Table E4203.6, the following parts of pools and outdoor spas and hot tubs shall not be placed under existing service-drop conductors, overhead service conductor, or any other open overhead wiring; nor shall such wiring be installed above the following:

1. Pools and the areas extending not less than 10 feet, (3048 mm) horizontally from the inside of the walls of the pool.
2. Diving structures and the areas extending not less than 10 feet (3048 mm) horizontally from the outer edge of such structures.
3. Observation stands, towers, and platforms and the areas extending not less than 10 feet (3048 mm) horizontally from the outer edge of such structures.

Overhead conductors of network-powered broadband communications systems shall comply with the provisions in Table E4203.6 for conductors operating at 0 to 750 volts to ground.

Utility-owned, -operated and -maintained communications conductors, community antenna system coaxial cables and the supporting messengers shall be permitted at a height of not less than 10 feet (3048 mm) above swimming and wading pools, diving structures, and observation stands, towers, and platforms. [680.8(A), (B), and (C)]

❖ Service drop conductors are not permitted above a pool or within 10 feet (3048 mm) horizontally from the edge of the pool unless they are at least 22.5 feet (6858 mm) above the water in any direction and 14.5 feet (4420 mm) above a diving platform. Telephone and cable TV lines must be at least 10 feet (3048 mm) above a pool or diving platform. Typically, swimming pools are not installed under the service drop lines because this minimum height is difficult to maintain. Overhead conductors of network-powered broadband communications systems must comply with the column in the table that is applicable to conductors operating at 0 to 750 volts to ground.

E4203.7 Underground wiring. Underground wiring shall not be installed under or within the area extending 5 feet (1524 mm) horizontally from the inside walls of pools and outdoor hot tubs and spas except where the wiring is installed to supply pool, spa or hot tub equipment or where space limitations prevent wiring from being routed 5 feet (1524 mm) or more horizontally from the inside walls. Where installed within 5 feet (1524 mm) of the inside walls, the wiring method shall be a complete raceway system of rigid metal conduit, intermediate metal conduit or a nonmetallic raceway system. Metal conduit shall be corrosion resistant and suitable for the location. The minimum cover depth shall be in accordance with Table E4203.7. (680.10)

❖ Where underground wiring is installed, corrosion of the raceway is possible that could result in a hazardous situation under ground-fault conditions. Because of dampness and the presence of chemicals such as chlorine in the area, corrosion of metallic parts is more likely in a pool area and in the ground around a pool. For this reason, where it is necessary to install wiring underground within 5 feet (1524 mm) of the pool, it must be in rigid metal conduit, intermediate metal conduit or nonmetallic raceway. A typical corrosion-resistant rigid metal conduit has an outer nonmetallic covering. The other option that is commonly used is to run the wiring in a nonmetallic raceway such as PVC conduit. Such raceway/conduits must be complete systems as opposed to only sections of conduit that are within 5 feet of the pool, spa or tub.

TABLE E4203.6 [Table 680.8(A)]
OVERHEAD CONDUCTOR CLEARANCES

	INSULATED SUPPLY OR SERVICE DROP CABLES, 0-750 VOLTS TO GROUND, SUPPORTED ON AND CABLED TOGETHER WITH AN EFFECTIVELY GROUNDED BARE MESSENGER OR EFFECTIVELY GROUNDED NEUTRAL CONDUCTOR (feet)	ALL OTHER SUPPLY OR SERVICE DROP CONDUCTORS (feet)	
		Voltage to ground	
		0-15 kV	Greater than 15 to 50 kV
A. Clearance in any direction to the water level, edge of water surface, base of diving platform, or permanently anchored raft	22.5	25	27
B. Clearance in any direction to the diving platform	14.5	17	18

For SI: 1 foot = 304.8 mm.

INTERNATIONAL CODE COUNCIL®
Copyright © 2015 ICC. ALL RIGHTS RESERVED. Accessed by David Dammon on Jun 21, 2017 12:30:52 PM pursuant to License Agreement with ICC. No further reproduction or distribution authorized. ANY UNAUTHORIZED REPRODUCTION OR DISTRIBUTION IS A VIOLATION OF THE FEDERAL COPYRIGHT ACT AND THE LICENSE AGREEMENT, AND SUBJECT TO CIVIL AND CRIMINAL PENALTIES THEREUNDER.

TABLE E4203.7 (680.10)
MINIMUM BURIAL DEPTHS

WIRING METHOD	UNDERGROUND WIRING (inches)
Rigid metal conduit	6
Intermediate metal conduit	6
Nonmetallic raceways listed for direct burial and under concrete exterior slab not less than 4 inches in thickness and extending not less than 6 inches (162 mm) beyond the underground installation	6
Nonmetallic raceways listed for direct burial without concrete encasement	18
Other approved raceways[a]	18

For SI: 1 inch = 25.4 mm.

a. Raceways approved for burial only where concrete-encased shall require a concrete envelope not less than 2 inches in thickness.

SECTION E4204
BONDING

E4204.1 Performance. The equipotential bonding required by this section shall be installed to reduce voltage gradients in the prescribed areas of permanently installed swimming pools and spas and hot tubs other than the storable/portable type.

❖ "Equipotential" means equal potential (the same voltage). A difference in voltage between two bodies, objects or surfaces is referred to as a potential because of the potential energy that exists from the voltage (i.e., pressure). Potential energy is converted to current flow when the two bodies, objects or surfaces are electrically connected. The intent of such bonding is to eliminate or reduce voltage gradients (differences) between any and all conductive parts between which a living creature could place itself and thereby endanger itself. Voltage differences of only a few volts can be dangerous to occupants in the water or near the water.

E4204.2 Bonded parts. The parts of pools, spas, and hot tubs specified in Items 1 through 7 shall be bonded together using insulated, covered or bare solid copper conductors not smaller than 8 AWG or using rigid metal conduit of brass or other identified corrosion-resistant metal. An 8 AWG or larger solid copper bonding conductor provided to reduce voltage gradients in the pool, spa, or hot tub area shall not be required to be extended or attached to remote panelboards, service equipment, or electrodes. Connections shall be made by exothermic welding, by listed pressure connectors or clamps that are labeled as being suitable for the purpose and that are made of stainless steel, brass, copper or copper alloy, machine screw-type fasteners that engage not less than two threads or are secured with a nut, thread-forming machine screws that engage not less than two-threads, or terminal bars. Connection devices or fittings that depend solely on solder shall not be used. Sheet metal screws shall not be used to connect bonding conductors or connection devices: [680.26(B)]

1. Conductive pool shells. Bonding to conductive pool shells shall be provided as specified in Item 1.1 or 1.2. Poured concrete, pneumatically applied or sprayed concrete, and concrete block with painted or plastered coatings shall be considered to be conductive materials because of their water permeability and porosity. Vinyl liners and fiberglass composite shells shall be considered to be nonconductive materials.

   1.1. Structural reinforcing steel. Unencapsulated structural reinforcing steel shall be bonded together by steel tie wires or the equivalent. Where structural reinforcing steel is encapsulated in a nonconductive compound, a copper conductor grid shall be installed in accordance with Item 1.2.

   1.2. Copper conductor grid. A copper conductor grid shall be provided and shall comply with Items 1.2.1 through 1.2.4:

      1.2.1. It shall be constructed of minimum 8 AWG bare solid copper conductors bonded to each other at all points of crossing.

      1.2.2. It shall conform to the contour of the pool.

      1.2.3. It shall be arranged in a 12-inch (305 mm) by 12-inch (305 mm) network of conductors in a uniformly spaced perpendicular grid pattern with a tolerance of 4 inches (102 mm).

      1.2.4. It shall be secured within or under the pool not more than 6 inches (152 mm) from the outer contour of the pool shell. [680.26(B)(1)]

2. Perimeter surfaces. The perimeter surface shall extend for 3 feet (914 mm) horizontally beyond the inside walls of the pool and shall include unpaved surfaces, poured concrete surfaces and other types of paving. Perimeter surfaces that extend less than 3 feet (914 mm) beyond the inside wall of the pool and that are separated from the pool by a permanent wall or building 5 feet (1524 mm) or more in height shall require equipotential bonding on the pool side of the permanent wall or building. Bonding to perimeter surfaces shall be provided as specified in Item 2.1 or 2.2 and shall be attached to the pool, spa, or hot tub reinforcing steel or copper conductor grid at a minimum of four points uniformly spaced around the perimeter of the pool, spa, or hot tub. For nonconductive pool shells, bonding at four points shall not be required.

   Exceptions:

   1. Equipotential bonding of perimeter surfaces shall not be required for spas and hot tubs where all of the following conditions apply:

INTERNATIONAL CODE COUNCIL®
Copyright © 2015 ICC. ALL RIGHTS RESERVED. Accessed by David Dammon on Jun 21, 2017 12:30:52 PM pursuant to License Agreement with ICC. No further reproduction or distribution authorized. ANY UNAUTHORIZED REPRODUCTION OR DISTRIBUTION IS A VIOLATION OF THE FEDERAL COPYRIGHT ACT AND THE LICENSE AGREEMENT, AND SUBJECT TO CIVIL AND CRIMINAL PENALTIES THEREUNDER.

1.1. The spa or hot tub is listed as a self-contained spa for aboveground use.

1.2. The spa or hot tub is not identified as suitable only for indoor use.

1.3. The installation is in accordance with the manufacturer's instructions and is located on or above grade.

1.4. The top rim of the spa or hot tub is not less than 28 in. (711 mm) above all perimeter surfaces that are within 30 in. (762 mm), measured horizontally from the spa or hot tub. The height of nonconductive external steps for entry to or exit from the self-contained spa is not used to reduce or increase this rim height measurement.

2. The equipotential bonding requirements for perimeter surfaces shall not apply to a listed self-contained spa or hot tub located indoors and installed above a finished floor.

2.1. Structural reinforcing steel. Structural reinforcing steel shall be bonded in accordance with Item 1.1.

2.2. Alternate means. Where structural reinforcing steel is not available or is encapsulated in a nonconductive compound, a copper conductor(s) shall be used in accordance with Items 2.2.1 through 2.2.5:

2.2.1. At least one minimum 8 AWG bare solid copper conductor shall be provided.

2.2.2. The conductors shall follow the contour of the perimeter surface.

2.2.3. Splices shall be listed.

2.2.4. The required conductor shall be 18 to 24 inches (457 to 610 mm) from the inside walls of the pool.

2.2.5. The required conductor shall be secured within or under the perimeter surface 4 to 6 inches (102 mm to 152 mm) below the subgrade. [680.26(B)(2)]

3. Metallic components. All metallic parts of the pool structure, including reinforcing metal not addressed in Item 1.1, shall be bonded. Where reinforcing steel is encapsulated with a nonconductive compound, the reinforcing steel shall not be required to be bonded. [680.26(B)(3)]

4. Underwater lighting. All metal forming shells and mounting brackets of no-niche luminaires shall be bonded. [680.26(B)(4)]

Exception: Listed low-voltage lighting systems with nonmetallic forming shells shall not require bonding. [680.26(B)(4) Exception]

5. Metal fittings. All metal fittings within or attached to the pool structure shall be bonded. Isolated parts that are not over 4 inches (102 mm) in any dimension and do not penetrate into the pool structure more than 1 inch (25.4 mm) shall not require bonding. [680.26(B)(5)]

6. Electrical equipment. Metal parts of electrical equipment associated with the pool water circulating system, including pump motors and metal parts of equipment associated with pool covers, including electric motors, shall be bonded. [680.26(B)(6)]

Exception: Metal parts of listed equipment incorporating an approved system of double insulation shall not be bonded. [680.26(B)(6) Exception]

6.1. Double-insulated water pump motors. Where a double-insulated water pump motor is installed under the provisions of this item, a solid 8 AWG copper conductor of sufficient length to make a bonding connection to a replacement motor shall be extended from the bonding grid to an accessible point in the vicinity of the pool pump motor. Where there is no connection between the swimming pool bonding grid and the equipment grounding system for the premises, this bonding conductor shall be connected to the equipment grounding conductor of the motor circuit. [680.26(B)(6)(a)]

6.2. Pool water heaters. For pool water heaters rated at more than 50 amperes and having specific instructions regarding bonding and grounding, only those parts designated to be bonded shall be bonded and only those parts designated to be grounded shall be grounded. [680.26(B)(6)(b)]

7. All fixed metal parts including, but not limited to, metal-sheathed cables and raceways, metal piping, metal awnings, metal fences and metal door and window frames. [680.26(B)(7)]

Exceptions:

1. Those separated from the pool by a permanent barrier that prevents contact by a person shall not be required to be bonded. [680.26(B)(7) Exception No. 1]
2. Those greater than 5 feet (1524 mm) horizontally from the inside walls of the pool shall not be required to be bonded. [680.26(B)(7) Exception No. 2]
3. Those greater than 12 feet (3658 mm) measured vertically above the maximum water level of the pool, or as measured vertically above any observation stands, towers, or platforms, or any diving structures, shall not be required to be bonded. [680.26(B)(7) Exception No. 3]

❖ Bonding is the joining of metallic parts to form an electrically conductive path that will result in electrical continuity between components of a common grid to ensure that the electrical potential will be the same throughout. Keeping the electrical potential at the same level will reduce the shock hazard created by any stray currents in the pool or in the ground around the pool. The risk of electric shock is great in damp

INTERNATIONAL CODE COUNCIL®
Copyright © 2015 ICC. ALL RIGHTS RESERVED. Accessed by David Dammon on Jun 21, 2017 12:30:52 PM pursuant to License Agreement with ICC. No further reproduction or distribution authorized. ANY UNAUTHORIZED REPRODUCTION OR DISTRIBUTION IS A VIOLATION OF THE FEDERAL COPYRIGHT ACT AND THE LICENSE AGREEMENT, AND SUBJECT TO CIVIL AND CRIMINAL PENALTIES THEREUNDER.

locations, and it is increased where a person is in a pool of water. An electrical potential may occur in a pool because of such things as lightning, ground faults or the operation of electrical equipment in close proximity. Bonding together of all of the metallic items in and around a pool will help eliminate the voltage gradients or differences in electrical potential from one part of the pool to another or from metallic equipment to the pool water. The intent is to prevent the occupants/users of the pool, spa and hot tub from being subjected to voltage potentials that could cause current to flow through their bodies. The various items enumerated in the seven parts of this section provide a clear description of what parts must be bonded together and what parts are exempt from bonding.

Many of the bonding connections, such as the tie wires connecting the reinforcing steel together, must be inspected prior to concealment. Item 2 requires the bonding of walking surfaces around a pool, spa and hot tub, whether paved or unpaved bare earth. Where a permanent wall or building having a height of 5 feet or more is located such that it separates a portion of the 3-foot perimeter from the inside wall of the pool, only the portion of the wall or building on the poolside is required to be bonded.

Spas and hot tubs that meet all of the conditions of Exception 1 of Item 2, "perimeter surfaces," are exempt from the perimeter surface bonding requirements because the listing of the unit has evaluated the potential risks. Steps for the unit that are constructed of nonconductive material are not to be used as a reference elevation to determine compliance with the required 28-inch minimum height above perimeter surfaces. Steps of conductive material would impact the rim height measurement because such steps are another type of surface that could have a voltage potential difference. Note that wood, stone and concrete steps would be considered as conductive.

E4204.3 Pool water. Where none of the bonded parts is in direct connection with the pool water, the pool water shall be in direct contact with an approved corrosion-resistant conductive surface that exposes not less than 9 in.^{2} (5800 mm^2) of surface area to the pool water at all times. The conductive surface shall be located where it is not exposed to physical damage or dislodgement during usual pool activities, and it shall be bonded in accordance with Section E4204.2.

❖ This section requires that the water itself be bonded utilizing a conductive surface as an electrode. The electrode can be metal parts that are submerged in the water such as ladders, lighting components and drain bodies. The electrode can also be a metal body that is constructed specifically for that purpose.

E4204.4 Bonding of outdoor hot tubs and spas. Outdoor hot tubs and spas shall comply with the bonding requirements of Sections E4204.1 through E4204.3. Bonding by metal-to-metal mounting on a common frame or base shall be permitted. The metal bands or hoops used to secure wooden staves shall not be required to be bonded as required in Section E4204.2. [680.42 and 680.42(B)]

❖ Wooden staves are used to build wooden tubs in the same manner as wooden barrels are made (see Sections E4204.1 through E4204.3).

This section applies to indoor hot tubs and spas. Item 3 requires copper and galvanized steel water supply piping to be bonded if within 5 feet of the inside walls. This would also apply to copper, steel and cast iron drain and vent piping. Item 5 applies to electrical devices that are not related to the spa or hot tub, but happen to be located within 5 feet of the inside walls.

E4204.5 Bonding of indoor hot tubs and spas. The following parts of indoor hot tubs and spas shall be bonded together:

1. All metal fittings within or attached to the hot tub or spa structure. [680.43(D)(1)]
2. Metal parts of electrical equipment associated with the hot tub or spa water circulating system, including pump motors unless part of a listed self-contained spa or hot tub. [680.43(D)(2)]
3. Metal raceway and metal piping that are within 5 feet (1524 mm) of the inside walls of the hot tub or spa and that are not separated from the spa or hot tub by a permanent barrier. [680.43(D)(3)]
4. All metal surfaces that are within 5 feet (1524 mm) of the inside walls of the hot tub or spa and that are not separated from the hot tub or spa area by a permanent barrier. [680.43(D)(4)]

   Exception: Small conductive surfaces not likely to become energized, such as air and water jets and drain fittings, where not connected to metallic piping, towel bars, mirror frames, and similar nonelectrical equipment, shall not be required to be bonded. [680.43(D)(4) Exception]
5. Electrical devices and controls that are not associated with the hot tubs or spas and that are located less than 5 feet (1524 mm) from such units. [680.43(D)(5)]

❖ See the commentary to Sections E4204.1 and E4204.2.

E4204.5.1 Methods. All metal parts associated with the hot tub or spa shall be bonded by any of the following methods:

1. The interconnection of threaded metal piping and fittings. [680.43(E)(1)]
2. Metal-to-metal mounting on a common frame or base. [680.43(E)(2)]
3. The provision of an insulated, covered or bare solid copper bonding jumper not smaller than 8 AWG.It shall not be the intent to require that the 8 AWG or larger solid copper bonding conductor be extended or attached to any remote panelboard, service equipment, or any electrode, but only that it shall be employed to eliminate voltage gradients in the hot tub or spa area as prescribed. [680.43(E)(3)]

❖ The methods of bonding are the same as allowed in Sections E4204.2 and E4204.4.

INTERNATIONAL CODE COUNCIL®
Copyright © 2015 ICC. ALL RIGHTS RESERVED. Accessed by David Dammon on Jun 21, 2017 12:30:52 PM pursuant to License Agreement with ICC. No further reproduction or distribution authorized. ANY UNAUTHORIZED REPRODUCTION OR DISTRIBUTION IS A VIOLATION OF THE FEDERAL COPYRIGHT ACT AND THE LICENSE AGREEMENT, AND SUBJECT TO CIVIL AND CRIMINAL PENALTIES THEREUNDER.

E4204.5.2 Connections. Connections to bonded parts shall be made in accordance with Section E3406.13.1.

❖ Connection devices used for bonding must be listed and labeled for the application, such as listed for direct burial in concrete or soil or listed for submersion in water.

SECTION E4205
GROUNDING

E4205.1 Equipment to be grounded. The following equipment shall be grounded:

1. Through-wall lighting assemblies and underwater luminaires other than those low-voltage lighting products listed for the application without a grounding conductor.
2. All electrical equipment located within 5 feet (1524 mm) of the inside wall of the pool, spa or hot tub.
3. All electrical equipment associated with the recirculating system of the pool, spa or hot tub.
4. Junction boxes.
5. Transformer and power supply enclosures.
6. Ground-fault circuit-interrupters.
7. Panelboards that are not part of the service equipment and that supply any electrical equipment associated with the pool, spa or hot tub. (680.7)

❖ Grounding and bonding are required for different reasons. Bonding is required for all metal parts of the electrical equipment and for nonelectrical metal parts of the structure to establish an equipotential grid. Bonding conductors in many cases are permitted to be externally clamped or connected to the noncurrent-carrying metal parts of equipment. The attachment need not be accessible. Bonding of metal parts of electrical equipment is required to ensure a low-impedance path for fault current back to the source of the circuit to facilitate the operation of the overcurrent device. For equipment grounding, a separate grounding conductor is connected to the equipment's grounding terminal.

E4205.2 Luminaires and related equipment. Other than listed low-voltage luminaires not requiring grounding, all through-wall lighting assemblies, wet-niche, dry-niche, or no-niche luminaires shall be connected to an insulated copper equipment grounding conductor sized in accordance with Table E3908.12 but not smaller than 12 AWG. The equipment grounding conductor between the wiring chamber of the secondary winding of a transformer and a junction box shall be sized in accordance with the overcurrent device in such circuit. The junction box, transformer enclosure, or other enclosure in the supply circuit to a wet-niche or no-niche luminaire and the field-wiring chamber of a dry-niche luminaire shall be grounded to the equipment grounding terminal of the panelboard. The equipment grounding terminal shall be directly connected to the panelboard enclosure. The equipment grounding conductor shall be installed without joint or splice. [680.23(F)(2) and 680.23(F)(2) Exception]

Exceptions:

1. Where more than one underwater luminaire is supplied by the same branch circuit, the equipment grounding conductor, installed between the junction boxes, transformer enclosures, or other enclosures in the supply circuit to wet-niche luminaires, or between the field-wiring compartments of dry-niche luminaires, shall be permitted to be terminated on grounding terminals. [680.23(F)(2)(a)]
2. Where an underwater luminaire is supplied from a transformer, ground-fault circuit-interrupter, clock-operated switch, or a manual snap switch that is located between the panelboard and a junction box connected to the conduit that extends directly to the underwater luminaire, the equipment grounding conductor shall be permitted to terminate on grounding terminals on the transformer, ground-fault circuit-interrupter, clock-operated switch enclosure, or an outlet box used to enclose a snap switch. [680.23(F)(2)(b)]

❖ Of particular note here is the requirement that the equipment grounding conductor must be insulated and sized in accordance with Table E3908.12. An insulated conductor run within the metal raceway is used because the conduit could corrode and open the conductive grounding path. The junction box or enclosure in the supply circuit to an underwater luminaire or related equipment must be grounded to the equipment grounding terminal of the panelboard. This is done by running a minimum size 12-AWG insulated equipment grounding conductor directly between the terminals of the junction box or enclosure and the panelboard. This conductor must not be confused with the size 8-AWG bonding conductor used to connect the forming shell to the bonding grid.

E4205.3 Nonmetallic conduit. Where a nonmetallic conduit is installed between a forming shell and a junction box, transformer enclosure, or other enclosure, a 8 AWG insulated copper bonding jumper shall be installed in this conduit except where a listed low-voltage lighting system not requiring grounding is used. The bonding jumper shall be terminated in the forming shell, junction box or transformer enclosure, or ground-fault circuit-interrupter enclosure. The termination of the 8 AWG bonding jumper in the forming shell shall be covered with, or encapsulated in, a listed potting compound to protect such connection from the possible deteriorating effect of pool water. [680.23(B)(2)(b)]

❖ In this section, the size 8-AWG conductor that must be run within the nonmetallic-conduit is not the same bonding conductor used to connect the forming shell to the common bonding grid. The size 8-AWG or larger bonding conductor connects to the forming shell and must be insulated. Note that Section E3406.4 requires 8-AWG and larger conductors to be stranded where installed in raceways and there is no exemption indicated for Section E4205. Stranded conductors are far less likely to have the insulation damaged during installation. The size 8-AWG conductor run within the nonmetallic-conduit provides electrical continuity between the forming shell and the junction box or transformer enclosure. The 8-AWG conductor must have green insulation in accordance with Section

INTERNATIONAL CODE COUNCIL®
Copyright © 2015 ICC. ALL RIGHTS RESERVED. Accessed by David Dammon on Jun 21, 2017 12:30:52 PM pursuant to License Agreement with ICC. No further reproduction or distribution authorized. ANY UNAUTHORIZED REPRODUCTION OR DISTRIBUTION IS A VIOLATION OF THE FEDERAL COPYRIGHT ACT AND THE LICENSE AGREEMENT, AND SUBJECT TO CIVIL AND CRIMINAL PENALTIES THEREUNDER.

E3407.2. Corrosion can occur when the connection is exposed to pool water, and thus the connection must be encapsulated in a listed potting compound.

E4205.4 Flexible cords. Other than listed low-voltage lighting systems not requiring grounding, wet-niche luminaires that are supplied by a flexible cord or cable shall have all exposed noncurrent-carrying metal parts grounded by an insulated copper equipment grounding conductor that is an integral part of the cord or cable. This grounding conductor shall be connected to a grounding terminal in the supply junction box, transformer enclosure, or other enclosure. The grounding conductor shall not be smaller than the supply conductors and not smaller than 16 AWG. [680.23(B)(3)]

❖ See Section E4205.2.

E4205.5 Motors. Pool-associated motors shall be connected to an insulated copper equipment grounding conductor sized in accordance with Table E3908.12, but not smaller than 12 AWG. Where the branch circuit supplying the motor is installed in the interior of a one-family dwelling or in the interior of accessory buildings associated with a one-family dwelling, using a cable wiring method permitted by Table E4202.1, an uninsulated equipment grounding conductor shall be permitted provided that it is enclosed within the outer sheath of the cable assembly. [680.21(A)(1) and (A)(4)]

❖ Motors used with pool equipment must be grounded with a minimum size 12-AWG equipment grounding conductor. This conductor must be insulated or within an overall sheath such as it would be in nonmetallic-sheathed cable.

E4205.6 Feeders. An equipment grounding conductor shall be installed with the feeder conductors between the grounding terminal of the pool equipment panelboard and the grounding terminal of the applicable service equipment. The equipment grounding conductor shall be insulated, shall be sized in accordance with Table E3908.12, and shall be not smaller than 12 AWG.

❖ Where a separate panelboard that supplies swimming pool equipment is fed from service equipment, it must have an insulated equipment grounding conductor not smaller than size 12-AWG run with the feeders from the service equipment.

E4205.6.1 Separate buildings. A feeder to a separate building or structure shall be permitted to supply swimming pool equipment branch circuits, or feeders supplying swimming pool equipment branch circuits, provided that the grounding arrangements in the separate building meet the requirements of Section E3607.3. The feeder equipment grounding conductor shall be an insulated conductor. (680.25(B)(2)]

❖ See Section E3607.3.

E4205.7 Cord-connected equipment. Where fixed or stationary equipment is connected with a flexible cord to facilitate removal or disconnection for maintenance, repair, or storage, as provided in Section E4202.2, the equipment grounding conductors shall be connected to a fixed metal part of the assembly. The removable part shall be mounted on or bonded to the fixed metal part. [680.7(C)]

❖ The equipment grounding conductor is required in order to provide a path of low impedance that helps limit the voltage to ground and serves to carry enough current to trip the overcurrent protective device. Flexible cord is used in some cases to supply power to equipment that may need to be removed for replacement or repair, and the equipment grounding conductor must be connected to a part of the equipment that is not removable.

E4205.8 Other equipment. Other electrical equipment shall be grounded in accordance with Section E3908. (Article 250, Parts V, VI, and VII; and 680.6)

❖ Equipment not addressed specifically in this section must comply with the grounding provisions of Section E3908.

SECTION E4206
EQUIPMENT INSTALLATION

E4206.1 Transformers and power supplies. Transformers and power supplies used for the supply of underwater luminaires, together with the transformer or power supply enclosure, shall be listed for swimming pool and spa use. The transformer or power supply shall incorporate either a transformer of the isolated-winding type with an ungrounded secondary that has a grounded metal barrier between the primary and secondary windings, or a transformer that incorporates an approved system of double insulation between the primary and secondary windings. [680.23(A)(2)]

❖ Transformers used to supply power for underwater swimming pool and spa luminaires are of the independent two-winding type and must be listed for such application. They are of the isolated-winding type, meaning they have a shield or metal barrier between the primary and secondary windings. The metal barrier is grounded by an equipment grounding conductor connected to the equipment grounding terminal in the transformer housing. Without a metal barrier or shield, deterioration of the insulation of the primary and secondary windings could cause the two windings to come into contact with each other, creating a higher voltage on the secondary windings. As an alternative to isolated-winding-type transformers, the code official can approve transformers that employ a double insulation system that separates the primary and secondary windings, thereby providing a level of safety equivalent to the isolated-winding-type transformers.

E4206.2 Ground-fault circuit-interrupters. Ground-fault circuit-interrupters shall be self-contained units, circuit-breaker types, receptacle types or other approved types. (680.5)

❖ A GFCI is a device designed to interrupt or open the circuit when a fault current to ground exceeds a certain value that is less than that required to trip the circuit breaker supplying the branch circuit. A Class A GFCI trips when the ground-fault current is from 4 to 6 milliamperes. Class A GFCIs are suitable for use in branch circuits feeding swimming pool equipment. How-ever, existing branch circuits in older swimming pool instal-

INTERNATIONAL CODE COUNCIL®
Copyright © 2015 ICC. ALL RIGHTS RESERVED. Accessed by David Dammon on Jun 21, 2017 12:30:52 PM pursuant to License Agreement with ICC. No further reproduction or distribution authorized. ANY UNAUTHORIZED REPRODUCTION OR DISTRIBUTION IS A VIOLATION OF THE FEDERAL COPYRIGHT ACT AND THE LICENSE AGREEMENT, AND SUBJECT TO CIVIL AND CRIMINAL PENALTIES THEREUNDER.

lations might have sufficient leakage current to cause a Class A GFCI to trip.

E4206.3 Wiring on load side of ground-fault circuit-interrupters and transformers. For other than grounding conductors, conductors installed on the load side of a ground-fault circuit-interrupter or transformer used to comply with the provisions of Section E4206.4, shall not occupy raceways, boxes, or enclosures containing other conductors except where the other conductors are protected by ground-fault circuit interrupters or are grounding conductors. Supply conductors to a feed-through type ground-fault circuit interrupter shall be permitted in the same enclosure. Ground-fault circuit interrupters shall be permitted in a panelboard that contains circuits protected by other than ground-fault circuit interrupters. [680.23(F)(3)]

❖ Except within panelboard cabinets, the load side conductors of a GFCI circuit are not permitted to share the same wiring space with other conductors that are not GFCI protected other than for equipment grounding conductors. Note the exception for conductors that supply feed-through type GFCI devices where the supply conductors and the GFCI device are allowed to be in the same box. The magnetic inductance caused by current flow in adjacent conductors could cause current to flow in circuit conductors on the load side of GFCI device. Also, insulation failure could energize GFCI protected conductors.

E4206.4 Underwater luminaires. The design of an underwater luminaire supplied from a branch circuit either directly or by way of a transformer or power supply meeting the requirements of Section E4206.1, shall be such that, where the fixture is properly installed without a ground-fault circuit-interrupter, there is no shock hazard with any likely combination of fault conditions during normal use (not relamping). In addition, a ground-fault circuit-interrupter shall be installed in the branch circuit supplying luminaires operating at more than the low-voltage contact limit, such that there is no shock hazard during relamping. The installation of the ground-fault circuit-interrupter shall be such that there is no shock hazard with any likely fault-condition combination that involves a person in a conductive path from any ungrounded part of the branch circuit or the luminaire to ground. Compliance with this requirement shall be obtained by the use of a listed underwater luminaire and by installation of a listed ground-fault circuit-interrupter in the branch circuit or a listed transformer or power supply for luminaires operating at more than the low-voltage contact limit. Luminaires that depend on submersion for safe operation shall be inherently protected against the hazards of overheating when not submerged. [680.23(A)(1), (A)(3), (A)(7) and (A)(8)]

❖ An underwater light fixture must be listed and of such a design that will not pose an electric shock hazard during operation of the fixture without a GFCI device in the circuit. Any light fixture operating at over the low-voltage contact limit must have GFCI protection. This will provide safety from electric shock during relamping. Wet-niche and no-niche fixtures are detached and brought above the water level for relamping (see definition of "Low voltage contact limit").

E4206.4.1 Maximum voltage. Luminaires shall not be installed for operation on supply circuits over 150 volts between conductors. [680.23(A)(4)]

❖ Where luminaires are designed to operate at 120 volts, the circuit must have GFCI protection.

E4206.4.2 Luminaire location. Luminaires mounted in walls shall be installed with the top of the fixture lens not less than 18 inches (457 mm) below the normal water level of the pool, except where the luminaire is listed and identified for use at a depth of not less than 4 inches (102 mm) below the normal water level of the pool. A luminaire facing upward shall have the lens adequately guarded to prevent contact by any person or shall be listed for use without a guard. [680.23(A)(5) and (A)(6)]

❖ If a person is hanging onto the edge in the deep end of a pool, directly in front of a wet-niche luminaire with a broken bulb or damaged lens, fault current could leak into the pool directly to the person. Where the luminaire is at least 18 inches (457 mm) below the normal water level, the person's chest, the most sensitive area for shock hazard, would most likely be above water or above the luminaire and not be directly in line with the fixture.

E4206.5 Wet-niche luminaires. Forming shells shall be installed for the mounting of all wet-niche underwater luminaires and shall be equipped with provisions for conduit entries. Conduit shall extend from the forming shell to a suitable junction box or other enclosure located as provided in Section E4206.9. Metal parts of the luminaire and forming shell in contact with the pool water shall be of brass or other approved corrosion-resistant metal. [680.23(B)(1)]

The end of flexible-cord jackets and flexible-cord conductor terminations within a luminaire shall be covered with, or encapsulated in, a suitable potting compound to prevent the entry of water into the luminaire through the cord or its conductors. If present, the grounding connection within a luminaire shall be similarly treated to protect such connection from the deteriorating effect of pool water in the event of water entry into the luminaire. [680.23(B)(4)]

Luminaires shall be bonded to and secured to the forming shell by a positive locking device that ensures a low-resistance contact and requires a tool to remove the luminaire from the forming shell. [680.23(B)(5)]

❖ These fixtures are typically installed in the wall of a pool or field-fabricated spa. A forming shell is installed before concrete is placed. The forming shell is not sealed from pool water, and the fixture is designed to be surrounded by water. Wet-niche fixtures that are UL listed have a permanently attached, factory installed flexible cord at least 12 feet (3658 mm) long. With this length of flexible cord, the fixture can be removed from the housing or forming shell and brought up to the pool deck for relamping without lowering the water level and without disconnecting the cord from the junction box above the pool deck.

E4206.5.1 Servicing. All wet-niche luminaires shall be removable from the water for inspection, relamping, or other maintenance. The forming shell location and length of cord in

INTERNATIONAL CODE COUNCIL®
Copyright © 2015 ICC. ALL RIGHTS RESERVED. Accessed by David Dammon on Jun 21, 2017 12:30:52 PM pursuant to License Agreement with ICC. No further reproduction or distribution authorized. ANY UNAUTHORIZED REPRODUCTION OR DISTRIBUTION IS A VIOLATION OF THE FEDERAL COPYRIGHT ACT AND THE LICENSE AGREEMENT, AND SUBJECT TO CIVIL AND CRIMINAL PENALTIES THEREUNDER.

the forming shell shall permit personnel to place the removed luminaire on the deck or other dry location for such maintenance. The luminaire maintenance location shall be accessible without entering or going into the pool water. [680.23(B)(6)]

❖ This requirement protects the person performing the maintenance and also helps prevent water from entering the luminaire as it is serviced.

E4206.6 Dry-niche luminaires. Dry-niche luminaires shall have provisions for drainage of water. Other than listed low-voltage luminaires not requiring grounding, a dry-niche luminaire shall have means for accommodating one equipment grounding conductor for each conduit entry. Junction boxes shall not be required but, if used, shall not be required to be elevated or located as specified in Section E4206.9 if the luminaire is specifically identified for the purpose. [680.23(C)(1) and (C)(2)]

❖ These underwater luminaires are designed to be serviced or relamped from the rear in a passageway behind the pool wall. This is not very common in residential pools. A no-niche lighting fixture could be installed in the wall of a pool or spa that is partially above ground level where an elevated deck is built above ground to match the top edge of the pool. Some dry-niche fixtures are installed with a box flush with the deck (where listed for use with the dry-niche fixture, it need not be raised above the deck) from which the lamp can be replaced.

E4206.7 No-niche luminaires. No-niche luminaires shall be listed for the purpose and shall be installed in accordance with the requirements of Section E4206.5. Where connection to a forming shell is specified, the connection shall be to the mounting bracket. [680.23(D)]

❖ See Section E4206.5.

E4206.8 Through-wall lighting assembly. A through-wall lighting assembly shall be equipped with a threaded entry or hub, or a nonmetallic hub, for the purpose of accommodating the termination of the supply conduit. A through-wall lighting assembly shall meet the construction requirements of Section E4205.4 and be installed in accordance with the requirements of Section E4206.5 Where connection to a forming shell is specified, the connection shall be to the conduit termination point. [680.23(E)]

❖ See Sections E4205.4 and E4206.5.

E4206.9 Junction boxes and enclosures for transformers or ground-fault circuit interrupters. Junction boxes for underwater luminaires and enclosures for transformers and ground-fault circuit-interrupters that supply underwater luminaires shall comply with the following: [680.24(A)]

❖ The branch-circuit wiring for underwater swimming pool fixtures is brought to a junction box, transformer or enclosure installed a relatively short distance from the pool or spa. A flexible cord from the fixture is installed in a raceway and connected in the junction box or transformer enclosure, which must be listed specifically for use with underwater luminaires. It must be labeled as a swimming pool junction box.

E4206.9.1 Junction boxes. A junction box connected to a conduit that extends directly to a forming shell or mounting bracket of a no-niche luminaire shall be:

1. Listed as a swimming pool junction box; [680.24(A)(1)]
2. Equipped with threaded entries or hubs or a nonmetallic hub; [680.24(A)(1)(1)]
3. Constructed of copper, brass, suitable plastic, or other approved corrosion-resistant material; [680.24(A)(1)(2)]
4. Provided with electrical continuity between every connected metal conduit and the grounding terminals by means of copper, brass, or other approved corrosion-resistant metal that is integral with the box; and [680.24(A)(1)(3)]
5. Located not less than 4 inches (102 mm), measured from the inside of the bottom of the box, above the ground level, or pool deck, or not less than 8 inches (203 mm) above the maximum pool water level, whichever provides the greatest elevation, and shall be located not less than 4 feet (1219 mm) from the inside wall of the pool, unless separated from the pool by a solid fence, wall or other permanent barrier. Where used on a lighting system operating at the low-voltage contact limit or less, a flush deck box shall be permitted provided that an approved potting compound is used to fill the box to prevent the entrance of moisture; and the flush deck box is located not less than 4 feet (1219 mm) from the inside wall of the pool. [680.24(A)(2)]

❖ The junction box must be sized according the provisions of Section E3905. The junction box must be large enough to accommodate the raceways connected to it. A nonmetallic conduit between a wet-niche luminaire and the deck junction box must be sized large enough for both a size 8 AWG insulated copper bonding conductor and the flexible cord that supplies the fixture. Terminals must be provided within the box for connection of the bonding conductors. A box that is listed under swimming pool junction boxes will have the correct number of integral grounding and bonding terminals for the number of conduit entries it has. The box must have at least one grounding terminal for each conduit entry plus one. Field installation of a grounding terminal or grounding bar is not permitted (see Section E4206.9.4).

E4206.9.2 Other enclosures. An enclosure for a transformer, ground-fault circuit-interrupter or a similar device connected to a conduit that extends directly to a forming shell or mounting bracket of a no-niche luminaire shall be:

1. Listed and labeled for the purpose, comprised of copper, brass, suitable plastic, or other approved corrosion-resistant material; [680.24(B)(1)]
2. Equipped with threaded entries or hubs or a nonmetallic hub; [680.24(B)(2)]
3. Provided with an approved seal, such as duct seal at the conduit connection, that prevents circulation of air between the conduit and the enclosures; [680.24(B)(3)]

INTERNATIONAL CODE COUNCIL®
Copyright © 2015 ICC. ALL RIGHTS RESERVED. Accessed by David Dammon on Jun 21, 2017 12:30:52 PM pursuant to License Agreement with ICC. No further reproduction or distribution authorized. ANY UNAUTHORIZED REPRODUCTION OR DISTRIBUTION IS A VIOLATION OF THE FEDERAL COPYRIGHT ACT AND THE LICENSE AGREEMENT, AND SUBJECT TO CIVIL AND CRIMINAL PENALTIES THEREUNDER.

4. Provided with electrical continuity between every connected metal conduit and the grounding terminals by means of copper, brass or other approved corrosion-resistant metal that is integral with the enclosures; and [680.24(B)(4)]
5. Located not less than 4 inches (102 mm), measured from the inside bottom of the enclosure, above the ground level or pool deck, or not less than 8 inches (203 mm) above the maximum pool water level, whichever provides the greater elevation, and shall be located not less than 4 feet (1219 mm) from the inside wall of the pool, except where separated from the pool by a solid fence, wall or other permanent barrier. [680.24(B)(2)]

❖ A transformer enclosure that has conduits that extend directly to the underwater luminaire must have the conduit entries sealed against air circulation. Corrosion of internal components of the enclosure could occur at a faster rate if not sealed.

E4206.9.3 Protection of junction boxes and enclosures. Junction boxes and enclosures mounted above the grade of the finished walkway around the pool shall not be located in the walkway unless afforded additional protection, such as by location under diving boards or adjacent to fixed structures. [680.24(C)]

❖ Junction boxes must not be installed in the open at walkways and similar locations where subject to damage from foot traffic, carts, patio furniture, etc. Above-grade boxes would also present a serious tripping hazard.

E4206.9.4 Grounding terminals. Junction boxes, transformer and power supply enclosures, and ground-fault circuit-interrupter enclosures connected to a conduit that extends directly to a forming shell or mounting bracket of a no-niche luminaire shall be provided with grounding terminals in a quantity not less than the number of conduit entries plus one. [680.24(D)]

❖ See the commentary to Section E4206.9.1.

E4206.9.5 Strain relief. The termination of a flexible cord of an underwater luminaire within a junction box, transformer or power supply enclosure, ground-fault circuit-interrupter, or other enclosure shall be provided with a strain relief. [680.24(E)]

❖ A flexible cord installed from an underwater luminaire within a raceway must be connected within the box with a strain relief device. When the fixture is removed from the housing or forming shell for relamping, the cord is pulled out of the forming shell and it could be pulled against the connections in the junction box, resulting in bad connections or damage to the cord.

E4206.10 Underwater audio equipment. Underwater audio equipment shall be identified for the purpose. [680.27(A)]

❖ Underwater audio equipment can pose an electrical shock hazard and is installed under provisions similar to those for underwater luminaires (see commentary, Section E4206.4).

E4206.10.1 Speakers. Each speaker shall be mounted in an approved metal forming shell, the front of which is enclosed by a captive metal screen, or equivalent, that is bonded to and secured to the forming shell by a positive locking device that ensures a low-resistance contact and requires a tool to open for installation or servicing of the speaker. The forming shell shall be installed in a recess in the wall or floor of the pool. [680.27(A)(1)]

❖ Underwater speakers are installed in a listed forming shell that is recessed into the wall of the pool. A metal screen must be installed over the forming shell to prevent contact with the speaker. The screen must require a tool to open. Typically, the screen is attached with screws so that it is not easily removed.

E4206.10.2 Wiring methods. Rigid metal conduit of brass or other identified corrosion-resistant metal, rigid polyvinyl chloride conduit, rigid thermosetting resin conduit or liquid-tight flexible nonmetallic conduit (LFNC-B) shall extend from the forming shell to a suitable junction box or other enclosure as provided in Section E4206.9. Where rigid nonmetallic conduit or liquid-tight flexible nonmetallic conduit is used, an 8 AWG solid or stranded insulated copper bonding jumper shall be installed in this conduit with provisions for terminating in the forming shell and the junction box. The termination of the 8 AWG bonding jumper in the forming shell shall be covered with, or encapsulated in, a suitable potting compound to protect such connection from the possible deteriorating effect of pool water. [680.27(A)(2)]

❖ The wiring method of extending a conduit from the speaker forming shell to a deck junction box is the same as for a wet-niche lighting fixture.

E4206.10.3 Forming shell and metal screen. The forming shell and metal screen shall be of brass or other approved corrosion-resistant metal. Forming shells shall include provisions for terminating an 8 AWG copper conductor. [680.27(A)(3)]

❖ Listed equipment is available for installation of underwater audio equipment.

E4206.11 Electrically operated pool covers. The electric motors, controllers, and wiring for pool covers shall be located not less than 5 feet (1524 mm) from the inside wall of the pool except where separated from the pool by a wall, cover, or other permanent barrier. Electric motors installed below grade level shall be of the totally enclosed type. The electric motor and controller shall be connected to a branch circuit protected by a ground-fault circuit-interrupter. The device that controls the operation of the motor for an electrically operated pool cover shall be located so that the operator has full view of the pool. [680.27(B)(1) and (B)(2)]

❖ Pool cover motors and their controllers are typically located at the side of the pool in a box or recessed with a cover flush with the pool deck. Obviously, the box or recessed enclosure must be provided with means to drain water that will accumulate, and the motor must be totally enclosed and served by a GFCI-protected circuit.

The operating control for an electrically operated pool cover must be located to allow the person operating the device to see that people are clear of moving parts. This

INTERNATIONAL CODE COUNCIL®
Copyright © 2015 ICC. ALL RIGHTS RESERVED. Accessed by David Dammon on Jun 21, 2017 12:30:52 PM pursuant to License Agreement with ICC. No further reproduction or distribution authorized. ANY UNAUTHORIZED REPRODUCTION OR DISTRIBUTION IS A VIOLATION OF THE FEDERAL COPYRIGHT ACT AND THE LICENSE AGREEMENT, AND SUBJECT TO CIVIL AND CRIMINAL PENALTIES THEREUNDER.

is a common-sense safety approach for the operation of all machinery.

E4206.12 Electric pool water heaters. Electric pool water heaters shall have the heating elements subdivided into loads not exceeding 48 amperes and protected at not more than 60 amperes. The ampacity of the branch-circuit conductors and the rating or setting of overcurrent protective devices shall be not less than 125 percent of the total nameplate load rating. (680.9)

❖ See Sections E4101.4.1 and E3702.10.

E4206.13 Pool area heating. The provisions of Sections E4206.13.1 through E4206.13.3 shall apply to all pool deck areas, including a covered pool, where electrically operated comfort heating units are installed within 20 feet (6096 mm) of the inside wall of the pool. [680.27(C)]

❖ Where electric heating is installed in an area within 20 feet (6096 mm) of the inside wall of the pool, specific code rules apply to the wiring for heating units.

E4206.13.1 Unit heaters. Unit heaters shall be rigidly mounted to the structure and shall be of the totally enclosed or guarded types. Unit heaters shall not be mounted over the pool or within the area extending 5 feet (1524 mm) horizontally from the inside walls of a pool. [680.27(C)(1)]

❖ Where unit heaters are used in a pool, spa or hot tub area, they must be kept at least 5 feet (1524 mm) horizontally from the inside walls of the pool. They must be guarded or enclosed. These two terms have clear definitions, given in Chapter 35.

E4206.13.2 Permanently wired radiant heaters. Electric radiant heaters shall be suitably guarded and securely fastened to their mounting devices. Heaters shall not be installed over a pool or within the area extending 5 feet (1524 mm) horizontally from the inside walls of the pool and shall be mounted not less than 12 feet (3658 mm) vertically above the pool deck. [680.27(C)(2)]

❖ Radiant heaters in a pool area must be at least 12 feet (3058 mm) above the pool deck. Although these heating units must be securely fastened, there is no exception that would permit installation over the pool. They must be at least 5 feet horizontally from the inside walls of the pool.

E4206.13.3 Radiant heating cables prohibited. Radiant heating cables embedded in or below the deck shall be prohibited. [680.27(C)(3)]

❖ Installation of heating cables is prohibited in the deck of the pool area because of the possible breakdown of the insulation on the cable causing a ground fault or current leakage.

SECTION E4207
STORABLE SWIMMING POOLS, STORABLE SPAS, AND STORABLE HOT TUBS

E4207.1 Pumps. A cord and plug-connected pool filter pump for use with storable pools shall incorporate an approved system of double insulation or its equivalent and shall be provided with means for grounding only the internal and nonaccessible noncurrent-carrying metal parts of the appliance.

The means for grounding shall be an equipment grounding conductor run with the power-supply conductors in a flexible cord that is properly terminated in a grounding-type attachment plug having a fixed grounding contact. Cord and plug-connected pool filter pumps shall be provided with a ground-fault circuit interrupter that is an integral part of the attachment plug or located in the power supply cord within 12 inches (305 mm) of the attachment plug. (680.31)

❖ Filter pumps must be protected by a system of double insulation or the equivalent. The means for grounding the internal noncurrent-carrying metal parts must be an equipment grounding conductor run with the power-supply conductors in the flexible cord terminated with a grounding-type attachment plug.

E4207.2 Ground-fault circuit-interrupters required. Electrical equipment, including power-supply cords, used with storable pools shall be protected by ground-fault circuit-interrupters. 125-volt, 15- and 20-ampere receptacles located within 20 feet (6096 mm) of the inside walls of a storable pool, storable spa, or storable hot tub shall be protected by a ground-fault circuit interrupter. In determining these dimensions, the distance to be measured shall be the shortest path that the supply cord of an appliance connected to the receptacle would follow without passing through a floor, wall, ceiling, doorway with hinged or sliding door, window opening, or other effective permanent barrier. (680.32)

❖ Similar requirements are found in Section E4203.1.3. The 20-foot distance is measured for the worst case condition along the shortest path that the cord could be laid in order to reach the receptacle.

E4207.3 Luminaires. Luminaires for storable pools, storable spas, and storable hot tubs shall not have exposed metal parts and shall be listed for the purpose as an assembly. In addition, luminaires for storable pools shall comply with the requirements of Section E4207.3.1 or E4207.3.2. (680.33)

❖ Luminaires for storable pools, spas and hot tubs are intended for temporary installation on or in the wall of the pool, generally between 8 and 10 inches (203 and 254 mm) below the top of the pool wall. These luminaires are manufactured as an assembly with flexible cords of 25 feet (7620 mm) or more so that they can be routed away from the pool to an enclosure for a transformer or GFCI enclosure. The transformer or GFCI assembly typically has a 3- to 6-foot-long (914 to 1829 mm) power supply cord, and the unit is designed for temporary installation on a structure near a receptacle.

E4207.3.1 Within the low-voltage contact limit. A luminaire installed in or on the wall of a storable pool shall be part of a cord and plug-connected lighting assembly. The assembly shall:

1. Have a luminaire lamp that is suitable for the use at the supplied voltage;
2. Have an impact-resistant polymeric lens, luminaire body, and transformer enclosure;

INTERNATIONAL CODE COUNCIL®
Copyright © 2015 ICC. ALL RIGHTS RESERVED. Accessed by David Dammon on Jun 21, 2017 12:30:52 PM pursuant to License Agreement with ICC. No further reproduction or distribution authorized. ANY UNAUTHORIZED REPRODUCTION OR DISTRIBUTION IS A VIOLATION OF THE FEDERAL COPYRIGHT ACT AND THE LICENSE AGREEMENT, AND SUBJECT TO CIVIL AND CRIMINAL PENALTIES THEREUNDER.

3. Have a transformer meeting the requirements of section E4206.1 with a primary rating not over 150 volts; and
4. Have no exposed metal parts. [680.33(A)]

❖ For use on a storable pool, a cord-and-plug-connected low-voltage light fixture is a listed assembly that receives its power through a flexible cord plugged into a transformer. The primary of the transformer is supplied from a 120-volt branch circuit.

E4207.3.2 Over the low-voltage contact limit but not over 150 volts. A lighting assembly without a transformer or power supply, and with the luminaire lamp(s) operating at over the low-voltage contact limit, but not over 150 volts, shall be permitted to be cord and plug-connected where the assembly is listed as an assembly for the purpose and complies with all of the following:

1. It has an impact-resistant polymeric lens and luminaire body.
2. A ground-fault circuit interrupter with open neutral conductor protection is provided as an integral part of the assembly.
3. The luminaire lamp is permanently connected to the ground-fault circuit interrupter with open-neutral protection.
4. It complies with the requirements of Section E4206.4.
5. It has no exposed metal parts. [680.33(B)]

❖ These fixtures are connected through flexible cords plugged into GFCI devices that have open-neutral protection. A typical GFCI device monitors the current in the ungrounded and grounded conductors, and when it is not balanced, it will trip. A GFCI with open-neutral protection will trip if the neutral is opened or lost.

E4207.4 Receptacle locations. Receptacles shall be located not less than 6 feet (1829 mm) from the inside walls of a storable pool, storable spa or storable hot tub. In determining these dimensions, the distance to be measured shall be the shortest path that the supply cord of an appliance connected to the receptacle would follow without passing through a floor, wall, ceiling, doorway with hinged or sliding door, window opening, or other effective permanent barrier. (680.34)

❖ This section is more stringent in that all receptacles must be at least 10 feet from the inside walls of the storable pool, spa and hot tub (see Sections E4203.1 through E4203.1.2).

E4207.5 Clearances. Overhead conductor installations shall comply with Section E4203.6 and underground conductor installations shall comply with Section E4203.7.

❖ See Sections E4203.6 and E4203.7.

E4207.6 Disconnecting means. Disconnecting means for storable pools and storable/portable spas and hot tubs shall comply with Section E4203.3.

❖ See Section E4203.3.

E4207.7 Ground-fault circuit interrupters. Ground-fault circuit interrupters shall comply with Section E4206.2.

❖ See Section E4206.2.

E4207.8 Grounding of equipment. Equipment shall be grounded as required by Section E4205.1.

❖ See Section E4205.1.

E4207.9 Pool water heaters. Electric pool water heaters shall comply with Section E4206.12.

❖ See Section E4206.12.

SECTION E4208
SPAS AND HOT TUBS

E4208.1 Ground-fault circuit-interrupters. The outlet(s) that supplies a self-contained spa or hot tub, or a packaged spa or hot tub equipment assembly, or a field-assembled spa or hot tub with a heater load of 50 amperes or less, shall be protected by a ground-fault circuit-interrupter. (680.44)

A listed self-contained unit or listed packaged equipment assembly marked to indicate that integral ground-fault circuit-interrupter protection is provided for all electrical parts within the unit or assembly, including pumps, air blowers, heaters, lights, controls, sanitizer generators and wiring, shall not require that the outlet supply be protected by a ground-fault circuit interrupter. [680.44(A)]

❖ The definitions provided at the beginning of this chapter for "Packaged spa or hot tub equipment assembly" and "Self-contained spa or hot tub" are useful in understanding and applying the rules on GFCI protection. Where these units are listed and have integral GFCI protection, the flexible cord need not be plugged into a GFCI receptacle.

E4208.2 Electric water heaters. Electric spa and hot tub water heaters shall be listed and shall have the heating elements subdivided into loads not exceeding 48 amperes and protected at not more than 60 amperes. The ampacity of the branch-circuit conductors, and the rating or setting of overcurrent protective devices, shall be not less than 125 percent of the total nameplate load rating. (680.9)

❖ The ampere load on the circuits supplying water heaters for spas and hot tubs is limited to 80 percent of the branch circuit rating. The maximum load that can be protected by a single over-current device is 48 amperes, therefore, 60 amperes ($0.8 \times 60 = 48$ or $1.25 \times 48 = 60$) is the maximum rating for an overcurrent device protecting this water heater circuit. If the water heater total load consists of more than 48 amperes, the load must be divided into subgroups such that no subgroup load is more than 48 amperes. Heaters with loads over 48 amperes will have multiple circuit breakers or sets of fuses integral with the heater.

E4208.3 Underwater audio equipment. Underwater audio equipment used with spas and hot tubs shall comply with the provisions of Section E4206.10. [680.43(G)]

❖ See Section E4206.10.

E4208.4 Emergency switch for spas and hot tubs. A clearly labeled emergency shutoff or control switch for the purpose of stopping the motor(s) that provides power to the recirculation system and jet system shall be installed at a

INTERNATIONAL CODE COUNCIL®
Copyright © 2015 ICC. ALL RIGHTS RESERVED. Accessed by David Dammon on Jun 21, 2017 12:30:52 PM pursuant to License Agreement with ICC. No further reproduction or distribution authorized. ANY UNAUTHORIZED REPRODUCTION OR DISTRIBUTION IS A VIOLATION OF THE FEDERAL COPYRIGHT ACT AND THE LICENSE AGREEMENT, AND SUBJECT TO CIVIL AND CRIMINAL PENALTIES THEREUNDER.

point that is readily accessible to the users, adjacent to and within sight of the spa or hot tub and not less than 5 feet (1524 mm) away from the spa or hot tub. This requirement shall not apply to single-family dwellings. (680.41)

❖ The emergency switch must be located to allow quick access in an emergency, but must also be a safe distance from the spa or hot tub. This section applies only to spas and hot tubs intended for use by the occupants of more than one dwelling.

SECTION E4209
HYDROMASSAGE BATHTUBS

E4209.1 Ground-fault circuit-interrupters. Hydromassage bathtubs and their associated electrical components shall be supplied by an individual branch circuit(s) and protected by a readily accessible ground-fault circuit-interrupter. All 125-volt, single-phase receptacles not exceeding 30 amperes and located within 6 feet (1829 mm) measured horizontally of the inside walls of a hydromassage tub shall be protected by a ground-fault circuit interrupter(s). (680.71)

❖ Hydromassage bathtubs typically have a cord- and plug-connected motor as part of the unit package. A flexible cord, usually from 18 inches to 3 feet (457 mm to 914 mm) long, is provided for the power supply to the motor. A GFCI-protected receptacle is typically located in the accessible area near the pump, behind an access panel; however, based on the definition of "Readily accessible," one could interpret this section as requiring the GFCI device to be exterior to the bathtub enclosure so that access panels would not have to be removed to gain access to the device. This may necessitate the use of a GFCI circuit breaker in the panelboard. Note that this section requires a dedicated circuit for these bathtubs.

Where located farther than 6 feet from the inside walls of a bathtub, receptacles not supplying the bathtub do not need GFCI protection because they are not easily accessed by and are not within the immediate reach of bathers. Receptacles located where the occupants would be able to use electrical appliances and electronic products in close proximity to the bathtub should be avoided; however, if they are installed within 6 feet, they must be GFCI protected.

Section E3902.1 requires that all receptacles in a bathroom be GFCI protected; therefore, if a hydromassage bathtub is located in a room defined as a bathroom, the distance between the receptacles and the bathtub is irrelevant.

E4209.2 Other electric equipment. Luminaires, switches, receptacles, and other electrical equipment located in the same room, and not directly associated with a hydromassage bathtub, shall be installed in accordance with the requirements of this code relative to the installation of electrical equipment in bathrooms. (680.72)

❖ Receptacles and lighting fixtures in the area are subject to the code provisions for bathrooms. There are no specific rules for locating receptacles at a certain distance from the hydromassage bathtub as there are for pool, spas or hot tubs.

E4209.3 Accessibility. Hydromassage bathtub electrical equipment shall be accessible without damaging the building structure or building finish. Where the hydromassage bathtub is cord- and plug-connected with the supply receptacle accessible only through a service access opening, the receptacle shall be installed so that its face is within direct view and not more than 12 inches (305 mm) from the plane of the opening. (680.73)

❖ The equipment, usually at the base of the hydromassage bathtub, must be accessible. This access is usually provided through an access panel. The cover or door must not be permanently sealed by tile, etc. See Section P2720.1 for specific pump access requirements. The receptacle serving cord- and plug-connected units is typically located under the unit and behind an access panel. This receptacle must be within easy reach and in plain view to allow the cord to be unplugged, to allow replacement of the receptacle and to allow resetting or replacement of any GFCI device.

E4209.4 Bonding. Both metal piping systems and grounded metal parts in contact with the circulating water shall be bonded together using an insulated, covered or bare solid copper bonding jumper not smaller than 8 AWG. The bonding jumper shall be connected to the terminal on the circulating pump motor that is intended for this purpose. The bonding jumper shall not be required to be connected to a double insulated circulating pump motor. The 8 AWG or larger solid copper bonding jumper shall be required for equipotential bonding in the area of the hydromassage bathtub and shall not be required to be extended or attached to any remote panelboard, service equipment, or any electrode. Where a double-insulated circulating pump motor is used, the 8 AWG or larger solid copper bonding jumper shall be long enough to terminate on a replacement nondouble-insulated pump motor and shall be terminated to the equipment grounding conductor of the branch circuit for the motor. (680.74)

❖ Metal parts of the hydromassage bathtub must be bonded together with at least a size 8-AWG solid copper conductor. This is usually done at the base of the unit where the equipment is located. Because the typical hydromassage bathtub is constructed entirely of nonconductive materials, such as plastics and fiberglass, and the water supply and drain piping is commonly plastic, there may not be any components that require bonding to the pump motor. However, metal water supply and drain piping serving the bathtub would be required to be bonded.

Bibliography

The following resource materials were used in the preparation of the commentary for this chapter of the code:

NFPA 70–14, *National Electrical Code*. Quincy, MA: National Fire Protection Association, 2013.

INTERNATIONAL CODE COUNCIL®
Copyright © 2015 ICC. ALL RIGHTS RESERVED. Accessed by David Dammon on Jun 21, 2017 12:30:52 PM pursuant to License Agreement with ICC. No further reproduction or distribution authorized. ANY UNAUTHORIZED REPRODUCTION OR DISTRIBUTION IS A VIOLATION OF THE FEDERAL COPYRIGHT ACT AND THE LICENSE AGREEMENT, AND SUBJECT TO CIVIL AND CRIMINAL PENALTIES THEREUNDER.

Chapter 43: Class 2 Remote-control, Signaling and Power-limited Circuits

General Comments

This chapter covers low-voltage power-limited circuits such as alarm, door bell, remote control and signaling circuits.

Purpose

By regulating installation methods, conductor types and locations and power supplies, this chapter intends to mitigate the potential fire and shock hazards associated with low-voltage power-limited circuits.

SECTION E4301 GENERAL

E4301.1 Scope. This chapter contains requirements for power supplies and wiring methods associated with Class 2 remote-control, signaling, and power-limited circuits that are not an integral part of a device or appliance. Other classes of remote-control, signaling and power-limited conductors shall comply with Article 725 of NFPA 70. (725.1)

❖ Wiring for heating and cooling controls, security systems, intercom systems and door bell chimes are examples of Class 2 wiring in one- and two-family dwellings. Low-voltage circuits that are part of an appliance or equipment are not covered in this chapter. For example, the low-voltage wiring that is integral with a furnace is not covered, but the thermostat wiring is, because it is run in the dwelling exterior to the furnace. For a garage door opener, the wiring to the safety sensors at the base of the door and the push button control wiring is subject to the provisions of this chapter.

E4301.2 Definitions.

CLASS 2 CIRCUIT. That portion of the wiring system between the load side of a Class 2 power source and the connected equipment. Due to its power limitations, a Class 2 circuit considers safety from a fire initiation standpoint and provides acceptable protection from electric shock. (725.2)

❖ There is little or no shock or fire hazard from the operation of devices on power-limited low-voltage circuits. Class 2 circuits typically operate at 30 volts or less and use power supplies that limit current flow to reasonably safe levels.

REMOTE-CONTROL CIRCUIT. Any electrical circuit that controls any other circuit through a relay or an equivalent device. (Article 100)

❖ A low-voltage remote-control circuit is used to open or close a switch to control current flow in another circuit. Current is supplied by a low-voltage power source to a relay, which is used to control the energy supply to equipment, appliances or luminaires. A thermostat is part of a remote-control circuit for the HVAC system that it controls.

SIGNALING CIRCUIT. Any electrical circuit that energizes signaling equipment. (Article 100)

❖ Examples of signaling circuits in one- and two-family dwellings include wiring for security systems, fire alarm systems, chimes, bells and buzzers. For the hearing impaired, a doorbell button is used to energize a relay to turn on a dedicated lamp or to initiate a sequence of strobe lights. Also for the hearing impaired, signaling devices are available that cause the normal lighting fixtures to flash on and off rapidly for a short period. The signaling devices are usually controlled by low-voltage circuits.

SECTION E4302 POWER SOURCES

E4302.1 Power sources for Class 2 circuits. The power source for a Class 2 circuit shall be one of the following:

1. A listed Class 2 transformer.
2. A listed Class 2 power supply.
3. Other listed equipment marked to identify the Class 2 power source.
4. Listed information technology (computer) equipment limited power circuits.
5. A dry-cell battery provided that the voltage is 30 volts or less and the capacity is equal to or less than that available from series connected No. 6 carbon zinc cells. [725.121(A)]

❖ Class 2 low-voltage circuits in residential wiring usually have the voltage and current inherently limited by a transformer. These transformers have inherent protection against overcurrent. Low-voltage transformers are designed to limit current flow to safe values even when a short circuit occurs. Low-voltage transformers are rated in volt-amperes, and a typical step-down trans-

INTERNATIONAL CODE COUNCIL®
Copyright © 2015 ICC. ALL RIGHTS RESERVED. Accessed by David Dammon on Jun 21, 2017 12:30:52 PM pursuant to License Agreement with ICC. No further reproduction or distribution authorized. ANY UNAUTHORIZED REPRODUCTION OR DISTRIBUTION IS A VIOLATION OF THE FEDERAL COPYRIGHT ACT AND THE LICENSE AGREEMENT, AND SUBJECT TO CIVIL AND CRIMINAL PENALTIES THEREUNDER.

former for a 24-volt system is rated at 40 volt-amperes or less. The power rating of Class 2 low-voltage circuits in typical residential applications is less than 100 volt-amperes.

E4302.2 Interconnection of power sources. A Class 2 power source shall not have its output connections paralleled or otherwise interconnected with another Class 2 power source except where listed for such interconnection. [725.121(B)]

❖ Power sources must not be interconnected in a way that allows excessive current flow in Class II circuits. The power supply for a remote-control circuit is usually a step-down transformer, from 120 volts to 24 volts for example.

SECTION E4303
WIRING METHODS

E4303.1 Wiring methods on supply side of Class 2 power source. Conductors and equipment on the supply side of the power source shall be installed in accordance with the appropriate requirements of Chapters 34 through 41. Transformers or other devices supplied from electric light or power circuits shall be protected by an over-current device rated at not over 20 amperes. The input leads of a transformer or other power source supplying Class 2 circuits shall be permitted to be smaller than 14 AWG, if not over 12 inches (305 mm) long and if the conductor insulation is rated at not less than 600 volts. In no case shall such leads be smaller than 18 AWG. (725.127 and 725.127 Exception)

❖ The maximum rating of a branch circuit used to supply power to Class 2 low-voltage circuits is 20 amperes. The input leads to a transformer must be at least size 18 AWG. All of the code provisions covering branch circuits must be followed for the wiring up to and including the primary side of the transformer or power supply. The primary leads of a transformer are installed in the same box or enclosure with the branch-circuit conductors and must have at least the same voltage rating as that of the branch-circuit wires.

E4303.2 Wiring methods and materials on load side of the Class 2 power source. Class 2 cables installed as wiring within buildings shall be listed as being resistant to the spread of fire and listed as meeting the criteria specified in Sections E4303.2.1 through E4303.2.3. Cables shall be marked in accordance with Section E4303.2.4. Cable substitutions as described in Table E4303.2 and wiring methods covered in Chapter 38 shall also be permitted. (725.130 (B); 725.135 (A), (C), (G) and (M); 725.154; Table 725.154; Figure 725.154 (A); and 725.179)

❖ Class 2 low-voltage wiring on the load side of the power source is limited to the cable types listed in Table E4303.2 and wiring methods covered in Chapter 38. The conductors for Class 2 low-voltage circuits are listed based on their flame spread characteristics. They are typically rated as conductors having low smoke-producing characteristics during standardized tests for fire and smoke. The cable types in Table E4303.2 are listed in descending order of resistance to spread of fire.

TABLE E4303.2
CABLE USES AND PERMITTED SUBSTITUTIONS
[Figure 725.154(A)]

CABLE TYPE	USE	PERMITTED SUBSTITUTIONS[a]
CL2P	Class 2 Plenum Cable	CMP, CL3P
CL2R	Class 2 Plenum Cable	CMP, CL3P, CL2P, CMR, CL3R
CL2	Class 2 Cable	CMP, CL3P, CL2P, CMR, CL3R, CL2R CMG, CM, CL3
CL2X	Class 2 Cable, Limited Use	CMP, CL3P CL2P, CMR, CL3R, CL2R, CMG, CM, CL3, CL2, CMX, CL3X

a. For identification of cables other than Class 2 cables, see NFPA 70.

E4303.2.1 Type CL2P cables. Cables installed in ducts, plenums and other spaces used to convey environmental air shall be Type CL2P cables listed as being suitable for the use and listed as having adequate fire-resistant and low smoke-producing characteristics. [725.179(A)]

❖ Under standardized test methods, Class 2 plenum cable (CL2P) is determined to have adequate fire-resistant and low smoke-producing characteristics. The Underwriters Laboratories (UL) *Marking Guide for Wire and Cable* lists the testing criteria for power-limited circuit cable. Cable Type CL2P exhibits a maximum peak optical density of 0.5, a maximum optical density of 0.15, and maximum flame-spread distance of 5 feet (1524 mm).

E4303.2.2 Type CL2 cables. Cables for general-purpose use, shall be listed as being resistant to the spread of fire and listed for the use. [725.179 (C)]

❖ The technical criterion for listing cable Type CL2 as being resistant to the spread of fire is based on a vertical tray flame test where the cable "does not spread flame to the top of the tray" as stated in the (UL) *Marking Guide for Wire and Cable*.

E4303.2.3 Type CL2X cables. Type CL2X limited-use cable shall be listed as being suitable for use in dwellings and for the use and in raceways and shall also be listed as being flame retardant. Cables with a diameter of less than $^1/_4$ inch (6.4 mm) shall be permitted to be installed without a raceway. [725.179 (D)]

❖ According to the (UL) *Marking Guide for Wire and Cable*, cable Type CL2X is intended for use in Class 2 circuits in one- and two-family dwellings or multifamily dwellings where the cable diameter is less than 0.25 inch (6.4 mm). This cable complies with "vertical wire" flame test requirements in UL 1581.

INTERNATIONAL CODE COUNCIL®
Copyright © 2015 ICC. ALL RIGHTS RESERVED. Accessed by David Dammon on Jun 21, 2017 12:30:52 PM pursuant to License Agreement with ICC. No further reproduction or distribution authorized. ANY UNAUTHORIZED REPRODUCTION OR DISTRIBUTION IS A VIOLATION OF THE FEDERAL COPYRIGHT ACT AND THE LICENSE AGREEMENT, AND SUBJECT TO CIVIL AND CRIMINAL PENALTIES THEREUNDER.

E4303.2.4 Type CL2R cables. Cables installed in a vertical run in a shaft or installed from floor to floor shall be listed as suitable for use in a vertical run in a shaft or from floor to floor and shall also be listed as having fire-resistant characteristics capable of preventing fire from being conveyed from floor to floor. [725.179(B)]

Exception: CL2X and CL3X cables with a diameter of less than $^1/_4$ inch (6.4 mm) and CL2 and CL3 cables shall be permitted in risers in one- and two-family dwelling units. [725.154 (G)]

❖ Cables can be tested to a standard that determines whether the cables will convey fire upward through a shaft or chase or upward on exposed cable risers. The code is concerned about combustible cables that will burn and carry fire from one story to the next, thereby accelerating the spread of fire.

E4303.2.5 Marking. Cables shall be marked in accordance with Table E4303.2.5. Voltage ratings shall not be marked on cables.

❖ The voltage rating is not marked on cables listed for use in Class 2 low-voltage circuits because a voltage rating could be misinterpreted to mean that the cable is suitable for use in Class 1 circuits.

Table E4303.2.5 [Table 725.179(K)]
CABLE MARKING

CABLE MARKING	TYPE
CL2P	Class 2 plenum cable
CL2R	Class 2 riser cable
CL2	Class 2 cable
CL2X	Class 2 cable, limited use

SECTION E4304
INSTALLATION REQUIREMENTS

E4304.1 Separation from other conductors. In cables, compartments, enclosures, outlet boxes, device boxes, and raceways, conductors of Class 2 circuits shall not be placed in any cable, compartment, enclosure, outlet box, device box, raceway, or similar fitting with conductors of electric light, power, Class 1 and nonpower-limited fire alarm circuits. (725.136)

Exceptions:

1. Where the conductors of the electric light, power, Class 1 and nonpower-limited fire alarm circuits are separated by a barrier from the Class 2 circuits. In enclosures, Class 2 circuits shall be permitted to be installed in a raceway within the enclosure to separate them from Class 1, electric light, power and nonpower-limited fire alarm circuits. [725.136(B)]
2. Class 2 conductors in compartments, enclosures, device boxes, outlet boxes and similar fittings where electric light, power, Class 1 or nonpower-limited fire alarm circuit conductors are introduced solely to connect to the equipment connected to the Class 2 circuits. The electric light, power, Class 1 and nonpower-limited fire alarm circuit conductors shall be routed to maintain a minimum of $^1/_4$ inch (6.4 mm) separation from the conductors and cables of the Class 2 circuits; or the electric light power, Class 1 and nonpower-limited fire alarm circuit conductors operate at 150 volts or less to ground and the Class 2 circuits are installed using Types CL3, CL3R, or CL3P or permitted substitute cables, and provided that these Class 3 cable conductors extending beyond their jacket are separated by a minimum of $^1/_4$ inch (6.4 mm) or by a nonconductive sleeve or nonconductive barrier from all other conductors. [725.136(D)]

❖ Class 2 low-voltage wiring must not be run in the same raceway or installed in the same box or enclosure with 120-volt branch-circuit wiring. For example, the 120-volt branch circuit conductors for a furnace are run in conduit to the furnace junction box. The Class 2 thermostat wiring controlling the furnace cannot be run in the same raceway.

Class 2 low-voltage conductors could be installed in an enclosure with higher voltage power conductor if a barrier or partition is installed to separate the wiring of each system. This does not apply to conductors such as the leads to the primary side of the transformer as indicated in Section E4303.1. A common code violation is the installation of a Class 2 transformer inside of a panelboard enclosure.

E4304.2 Other applications. Conductors of Class 2 circuits shall be separated by not less than 2 inches (51 mm) from conductors of any electric light, power, Class 1 or nonpower-limited fire alarm circuits except where one of the following conditions is met:

1. All of the electric light, power, Class 1 and nonpower-limited fire alarm circuit conductors are in raceways or in metal-sheathed, metal-clad, nonmetallic-sheathed or Type UF cables.
2. All of the Class 2 circuit conductors are in raceways or in metal-sheathed, metal-clad, nonmetallic-sheathed or Type UF cables. [725.136(I)]

❖ Class 2 circuit conductors must be separated by at least 2 inches (51 mm) from any power and lighting branch circuit conductors except where either the Class 2 or power and lighting conductors are enclosed in raceways, sheathed cable or metal-clad cable. Low-voltage door bell wiring, for example, can be run through the same bored holes as used for the Type NM cable.

E4304.3 Class 2 circuits with communications circuits. Where Class 2 circuit conductors are in the same cable as communications circuits, the Class 2 circuits shall be classified as communications circuits and shall meet the requirements of Article 800 of NFPA 70. The cables shall be listed as communications cables or multipurpose cables.

Cables constructed of individually listed Class 2 and communications cables under a common jacket shall be permitted to be classified as communications cables. The fire-resistance

INTERNATIONAL CODE COUNCIL®
Copyright © 2015 ICC. ALL RIGHTS RESERVED. Accessed by David Dammon on Jun 21, 2017 12:30:52 PM pursuant to License Agreement with ICC. No further reproduction or distribution authorized. ANY UNAUTHORIZED REPRODUCTION OR DISTRIBUTION IS A VIOLATION OF THE FEDERAL COPYRIGHT ACT AND THE LICENSE AGREEMENT, AND SUBJECT TO CIVIL AND CRIMINAL PENALTIES THEREUNDER.

rating of the composite cable shall be determined by the performance of the composite cable. [725.139(D)]

❖ In some cases, a composite cable is used that has telephone wire and Class 2 signaling wire. For these installations, the code provisions for communication circuits apply.

E4304.4 Class 2 cables with other circuit cables. Jacketed cables of Class 2 circuits shall be permitted in the same enclosure or raceway with jacketed cables of any of the following:

1. Power-limited fire alarm systems in compliance with Article 760 of NFPA 70.
2. Nonconductive and conductive optical fiber cables in compliance with Article 770 of NFPA 70.
3. Communications circuits in compliance with Article 800 of NFPA 70.
4. Community antenna television and radio distribution systems in compliance with Article 820 of NFPA 70.
5. Low-power, network-powered broadband communications in compliance with Article 830 of NFPA 70. [725.139(E)]

❖ Jacketed or sheathed Class 2 cables are permitted in the same raceway or enclosure with the cables listed because they are protected from faults by the jackets on the cables, and the cables listed in this code section operate at low voltage.

E4304.5 Installation of conductors and cables. Cables and conductors installed exposed on the surface of ceilings and sidewalls shall be supported by the building structure in such a manner that they will not be damaged by normal building use. Such cables shall be supported by straps, staples, hangers, cable ties or similar fittings designed so as to not damage the cable. Nonmetallic cable ties and other nonmetallic accessories used to secure and support cables located in stud cavity and joist space plenums shall be listed as having low smoke and heat release properties. The installation shall comply with Table E3802.1 regarding cables run parallel with framing members and furring strips. The installation of wires and cables shall not prevent access to equipment nor prevent removal of panels, including suspended ceiling panels. Raceways shall not be used as a means of support for Class 2 circuit conductors, except where the supporting raceway contains conductors supplying power to the functionally associated equipment controlled by the Class 2 conductors. [300.22 (C)(1) and 725.24]

❖ Although Class 2 low-voltage cables can be installed in the same bored holes as Type NM cable, they cannot be taped, strapped or attached by any means to a race-way. An exception to this is where a low-voltage control cable is run along with and strapped to the raceway to a furnace or condensing unit. In this case, the Class 2 cable must be part of the control circuitry for the equipment supplied by the raceway wiring method. Low-voltage wiring is sometimes run in a careless manner because there is not as much concern for shock or fire hazard. However, low-voltage wiring deserves the same respect as higher voltage wiring and should be supported from the building structure and run in a manner that will protect it from damage. Extreme care is necessary to avoid damaging a cable anytime that more than one cable is pulled through the same bored/drilled hole. It is common to find Class 2 cables fastened to ductwork, furnaces and air handlers using scraps of sheet metal with sharp edges that can cut the cable insulation. Class 2 cables are often damaged outdoors where they are run through the air to heat pumps and condensing units, and subsequently damaged by animals, weed trimmers and yard tools. Damage to such cables can lead to the loss of heat in buildings in freezing climates, for example.

Bibliography

The following resource materials were used in the preparation of the commentary for this chapter of the code:

NFPA 70–14, *National Electrical Code*. Quincy, MA: National Fire Protection Association, 2013.

INTERNATIONAL CODE COUNCIL®
Copyright © 2015 ICC. ALL RIGHTS RESERVED. Accessed by David Dammon on Jun 21, 2017 12:30:52 PM pursuant to License Agreement with ICC. No further reproduction or distribution authorized. ANY UNAUTHORIZED REPRODUCTION OR DISTRIBUTION IS A VIOLATION OF THE FEDERAL COPYRIGHT ACT AND THE LICENSE AGREEMENT, AND SUBJECT TO CIVIL AND CRIMINAL PENALTIES THEREUNDER.

Part IX—Referenced Standards

Chapter 44: Referenced Standards

This chapter lists the standards that are referenced in various sections of this document. The standards are listed herein by the promulgating agency of the standard, the standard identification, the effective date and title, and the section or sections of this document that reference the standard. The application of the referenced standards shall be as specified in Section R102.4.

General Comments

Chapter 44 contains a comprehensive list of standards that are referenced in the code. It is organized to make locating specific document references easy.

It is important to understand that not every document related to residential design, installation and construction is qualified to be a "referenced standard." The International Code Council® (ICC®) has adopted a criterion that standards referenced in the *International Codes*® and standards intended for adoption into the *International Codes* must meet to qualify as a referenced standard. The policy is summarized as follows:

- Code references: The scope and application of the standard must be clearly identified in the code text.
- Standard content: The standard must be written in mandatory language and be appropriate for the subject covered. The standard cannot have the effect of requiring proprietary materials or prescribing a proprietary testing agency.
- Standard promulgation: The standard must be readily available and developed and maintained in a consensus process such as those used by ASTM or ANSI.

The ICC Code Development Procedures, of which the standards policy is a part, are updated periodically. A copy of the latest version can be obtained from the ICC offices.

Once a standard is incorporated into the code through the code development process, it becomes an enforceable part of the code. When the code is adopted by a jurisdiction, the standard also is part of that jurisdiction's adopted code. It is for this reason that the criteria were developed. Compliance with this policy means that documents incorporated into the code are developed through the use of a consensus process, are written in mandatory language, and do not mandate the use of proprietary materials or agencies. The requirement for a standard to be developed through a consensus process means that the standard is representative of the most current body of available knowledge on the subject as determined by a broad range of interested or affected parties without dominance by any single interest group. A true consensus process has many attributes, including but not limited to:

- An open process that has formal (published) procedures that allow for the consideration of all viewpoints;
- A definitive review period that allows for the standard to be updated and/or revised;
- A process of notification to all interested parties; and
- An appeals process.

Many available documents related to system design, installation and construction, though useful, are not "standards" and are not appropriate for reference in the code. Often, these documents are developed or written with the intention of being used for regulatory purposes and are unsuitable for use as a standard because of extensive use of recommendations, advisory comments and nonmandatory terms. Typical examples include installation instructions, guidelines and practices.

The objective of ICC's standards policy is to provide regulations that are clear, concise and enforceable; thus, the requirement for standards to be written in mandatory language. This requirement is not intended to mean that a standard cannot contain informational or explanatory material that will aid the user of the standard in its application. When the standard's promulgating agency wants such material to be included, however, the information must appear in a nonmandatory location, such as an annex or appendix, and be clearly identified as not being part of the standard.

Overall, standards referenced by the code must be authoritative, relevant, up to date and, most important, reasonable and enforceable. Standards that comply with ICC's standards policy fulfill these expectations.

INTERNATIONAL CODE COUNCIL®
Copyright © 2015 ICC. ALL RIGHTS RESERVED. Accessed by David Dammon on Jun 21, 2017 12:30:52 PM pursuant to License Agreement with ICC. No further reproduction or distribution authorized. ANY UNAUTHORIZED REPRODUCTION OR DISTRIBUTION IS A VIOLATION OF THE FEDERAL COPYRIGHT ACT AND THE LICENSE AGREEMENT, AND SUBJECT TO CIVIL AND CRIMINAL PENALTIES THEREUNDER.

Purpose

This code contains numerous references to documents that are used to regulate materials and methods of construction. The references to these documents within the code text consist of the promulgating agency's acronym and its publication designation (for example, AWS A5.8) and a further indication that the document being referenced is the one that is listed in Chapter 44. Chapter 44 contains all of the information that is necessary to identify the specific referenced document. Included is the following information on a document's promulgating agency:

- The promulgating agency (the agency's title);
- The promulgating agency's acronym; and
- The promulgating agency's address.

For example, a reference to an ASME standard within the code indicates that the document is promulgated by the American Society of Mechanical Engineers (ASME), which is located in New York, New York. Chapter 44 lists the standards agencies alphabetically for ease of identification.

Chapter 44 also includes the following information on the referenced document itself:

- The document's publication designation;
- The document's edition year;
- The document's title;
- Any addenda or revisions to the document known at the time of the code's publication; and
- Every section of the code in which the document is referenced.

For example, a reference to ASME A112.1.3 indicates that this document can be found in Chapter 44 under the heading ASME. The specific standard's designation is A112.1.3. For convenience, these designations are listed in alphanumeric order. Chapter 44 shows that ASME A112.1.3 is titled Air Gap Fittings for Use with Plumbing Fixtures, Appliances, and Appurtenances; the applicable edition (that is, its year of publication) is 2000; and it is referenced in two specifically identified sections of the code (see Commentary Figure 44).

Chapter 44 also indicates when a document has been discontinued or replaced by its promulgating agency. When a document is replaced by a different one, a note appears to tell the user the designation and title of the new document.

The key aspect of the manner in which standards are referenced by the code is that a specific edition of a specific standard is clearly identified. The requirements necessary for compliance can be readily determined. The basis for code compliance is, therefore, established and available to the code official, the mechanical contractor, the designer and the owner.

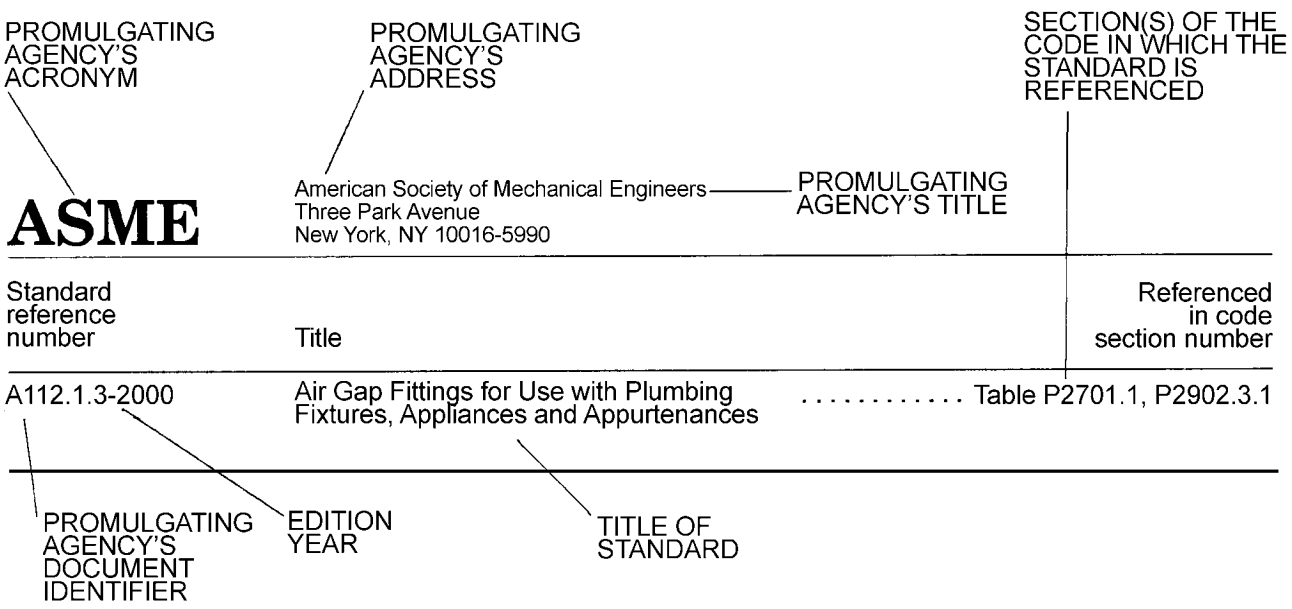

Figure 44
REFERENCE STANDARDS

INTERNATIONAL CODE COUNCIL®
Copyright © 2015 ICC. ALL RIGHTS RESERVED. Accessed by David Dammon on Jun 21, 2017 12:30:52 PM pursuant to License Agreement with ICC. No further reproduction or distribution authorized. ANY UNAUTHORIZED REPRODUCTION OR DISTRIBUTION IS A VIOLATION OF THE FEDERAL COPYRIGHT ACT AND THE LICENSE AGREEMENT, AND SUBJECT TO CIVIL AND CRIMINAL PENALTIES THEREUNDER.

AAMA

American Architectural Manufacturers Association
1827 Walden Office Square, Suite 550
Schaumburg, IL 60173

Standard reference number	Title	Referenced in code section number
AAMA/WDMA/CSA 101/I.S.2/A440—11	North American Fenestration Standards/Specifications for Windows, Doors and Skylights	R308.6.9, R609.3, N1102.4.3
450—10	Voluntary Performance Rating Method for Mulled Fenestration Assemblies	R609.8
506—11	Voluntary Specifications for Hurricane Impact and Cycle Testing of Fenestration Products	R609.6.1
711—13	Voluntary Specification for Self-adhering Flashing Used for Installation of Exterior Wall Fenestration Products	R703.4
712—11	Voluntary Specification for Mechanically Attached Flexible Flashing	R703.4
714—12	Voluntary Specification for Liquid Applied Flashing Used to Create a Water-resistive Seal around Exterior Wall Openings in Buildings	R703.4
AAMA/NPEA/ NSA 2100—12	Specifications for Sunrooms	R302.2.1.1

ACI

American Concrete Institute
38800 Country Club Drive
Farmington Hills, MI 48331

Standard reference number	Title	Referenced in code section number
318—14	Building Code Requirements for Structural Concrete	R301.2.2.2.4, R301.2.2.3.4, R402.2, Table R404.1.2(2), Table R404.1.2(5), Table R404.1.2(6), Table R404.1.2(7), Table R404.1.2(8), Table R404.1.2(9), R404.1.3, R404.1.3.1, R404.1.3.3, R404.1.3.4, R404.1.4.2, R404.5.1, R608.1, R608.1.1, R608.1.2, R608.2, R608.5.1, R608.6.1, R608.8.2, R608.9.2, R608.9.3
332—14	Code Requirements for Residential Concrete Construction	R402.2, R403.1, R404.1.3, R404.1.3.4, R404.1.4.2, R506.1
530—13	Building Code Requirements for Masonry Structures	R404.1.2, R606.1, R606.1.1, R606.12.1, R606.12.2.3.2, R606.12.2.3.1, R703.12
R606.12.3.1530.1—13	Specification for Masonry Structures	R404.1.2, R606.1, R606.1.1, R606.2.9, R606.2.12, R606.12.1, R606.12.2.3.2, R606.12.3.1, 703.12

ACCA

Air Conditioning Contractors of America
2800 Shirlington Road, Suite 300
Arlington, VA 22206

Standard reference number	Title	Referenced in code section number
Manual D—2011	Residential Duct Systems	M1601.1, M1602.2
Manual J—2011	Residential Load Calculation—Eighth Edition	N1103.6, M1401.3
Manual S—13	Residential Equipment Selection	N1103.6, M1401.3

AISI

American Iron and Steel Institute
25 Massachusetts Avenue, NW Suite 800
Washington, DC 20001

Standard reference number	Title	Referenced in code section number
AISI S100—12	North American Specification for the Design of Cold-formed Steel Structural Members, 2012	R505.1.3, R603.6, R608.9.2, R608.9.3, R804.3.6
AISI S200—12	North American Standard for Cold-formed Steel Framing—General Provisions 2012	R702.3.3
AISI S220—11	North American Standard for Cold-formed Steel Framing—Nonstructural Members	R702.3.3

INTERNATIONAL CODE COUNCIL®
Copyright © 2015 ICC. ALL RIGHTS RESERVED. Accessed by David Dammon on Jun 21, 2017 12:30:52 PM pursuant to License Agreement with ICC. No further reproduction or distribution authorized. ANY UNAUTHORIZED REPRODUCTION OR DISTRIBUTION IS A VIOLATION OF THE FEDERAL COPYRIGHT ACT AND THE LICENSE AGREEMENT, AND SUBJECT TO CIVIL AND CRIMINAL PENALTIES THEREUNDER.

AISI—continued

AISI S230—07/ S3-12 (2012)	Standard for Cold-formed Steel Framing—Prescriptive Method for One- and Two-family Dwellings, 2007 with Supplement 3, dated 2012 (Reaffirmed 2012)	R301.1.1, R301.2.1.1, R301.2.2.3.1, R301.2.2.3.5, R603.6, R603.9.4.1, R603.9.4.2, R608.9.2, R608.9.3, Figure 608.9(11), R608.10

AMCA

Air Movement and Control Association
300 West University
Arlington Heights, IL 60004

Standard reference number	Title	Referenced in code section number
ANSI/AMCA 210-ANSI/ASHRAE 51—07	Laboratory Methods of Testing Fans for Aerodynamic Performance Rating	Table M1506.2

AMD

Association of Millwork Distributors Standards
10047 Robert Trent Parkway
New Port Richey, FL 34655-4649

Standard reference number	Title	Referenced in code section number
AMD 100—2013	Structural Performance Ratings of Side Hinged Exterior Door Systems and Procedures for Component Substitution	R609.3

ANCE

Association of the Electric Sector
Av. Lázaro Cardenas No. 869
Col. Nueva Industrial Vallejo
C.P. 07700 México D.F.

Standard reference number	Title	Referenced in code section number
UL/CSA/ANCE 60335-2—2012	Standard for Household and Similar Electric Appliances, Part 2: Particular Requirements for Motor-compressors	M1403.1, M1412.1, M1413.1

ANSI

American National Standards Institute
25 West 43rd Street, Fourth Floor
New York, NY 10036

Standard reference number	Title	Referenced in code section number
A108.1A—99	Installation of Ceramic Tile in the Wet-set Method, with Portland Cement Mortar	R702.4.1
A108.1B—99	Installation of Ceramic Tile, Quarry Tile on a Cured Portland Cement Mortar Setting Bed with Dry-set or Latex Portland Mortar	R702.4.1
A108.4—99	Installation of Ceramic Tile with Organic Adhesives or Water-Cleanable Tile-setting Epoxy Adhesive.	R702.4.1
A108.5—99	Installation of Ceramic Tile with Dry-set Portland Cement Mortar or Latex Portland Cement Mortar	R702.4.1
A108.6—99	Installation of Ceramic Tile with Chemical-resistant, Water-cleanable Tile-setting and -grouting Epoxy	R702.4.1
A108.11—99	Interior Installation of Cementitious Backer Units	R702.4.1
A118.1—99	American National Standard Specifications for Dry-set Portland Cement Mortar	R702.4.1
A118.3—99	American National Standard Specifications for Chemical-resistant, Water-cleanable Tile-setting and -grouting Epoxy, and Water-cleanable Tile-setting Epoxy Adhesive	R702.4.1

INTERNATIONAL CODE COUNCIL®
Copyright © 2015 ICC. ALL RIGHTS RESERVED. Accessed by David Dammon on Jun 21, 2017 12:30:52 PM pursuant to License Agreement with ICC. No further reproduction or distribution authorized. ANY UNAUTHORIZED REPRODUCTION OR DISTRIBUTION IS A VIOLATION OF THE FEDERAL COPYRIGHT ACT AND THE LICENSE AGREEMENT, AND SUBJECT TO CIVIL AND CRIMINAL PENALTIES THEREUNDER.

ANSI—continued

A118.4—99	American National Standard Specifications for Latex-Portland Cement Mortar	R606.2.10
A118.10—99	Specification for Load-bearing, Bonded, Waterproof Membranes for Thin-set Ceramic Tile and Dimension Stone Installation	P2709.2, P2709.2.4
A136.1—99	American National Standard Specifications for Organic Adhesives for Installation of Ceramic Tile	R702.4.1
A137.1—2012	American National Standard Specifications for Ceramic Tile	R702.4.1
LC1/CSA 6.26—13	Fuel Gas Piping Systems Using Corrugated Stainless Steel Tubing (CSST)	G2414.5.3
LC4/CSA 6.32—12	Press-connect Metallic Fittings for Use in Fuel Gas Distribution Systems	G2414.10.2
Z21.1—2010	Household Cooking Gas Appliances	G2447.1
Z21.5.1/CSA 7.1—14	Gas Clothes Dryers—Volume I—Type I Clothes Dryers	G2438.1
Z21.8—94 (R2002)	Installation of Domestic Gas Conversion Burners	G2443.1
Z21.10.1/CSA 4.1—12	Gas Water Heaters—Volume I—Storage Water Heaters with Input Ratings of 75,000 Btu per hour or Less	G2448.1
Z21.10.3/CSA 4.3—11	Gas Water Heaters—Volume III—Storage Water Heaters with Input Ratings above 75,000 Btu per hour, Circulating and Instantaneous	G2448.1
Z21.11.2—11	Gas-fired Room Heaters—Volume II—Unvented Room Heaters	G2445.1
Z21.13/CSA 4.9—11	Gas-fired Low-pressure Steam and Hot Water Boilers	G2452.1
Z21.15/CSA 9.1—09	Manually Operated Gas Valves for Appliances, Appliance Connector Valves and Hose End Valves	Table G2420.1.1
Z21.22—99 (R2003)	Relief Valves for Hot Water Supply Systems—with Addenda Z21.22a—2000 (R2003) and 21.22b—2001 (R2003)	P2804.2, P2804.7
Z21.24/CGA 6.10—06	Connectors for Gas Appliances	G2422.1
Z21.40.1/ CSA 2.91—96 (R2011)	Gas-fired, Heat-activated Air-conditioning and Heat Pump Appliances	G2449.1
Z21.40.2/ CSA 2.92—96 (R2011)	Air-conditioning and Heat Pump Appliances (Thermal Combustion)	G2449.1
Z21.42—2014	Gas-fired Illuminating Appliances	G2450.1
Z21.47/CSA 2.3—12	Gas-fired Central Furnaces	G2442.1
Z21.50/CSA 2.22—12	Vented Gas Fireplaces	G2434.1
Z21.56/CSA 4.7—13	Gas-fired Pool Heaters	G2441.1
Z21.58—95/CSA 1.6—13	Outdoor Cooking Gas Appliances	G2447.1
Z21.60/CSA 2.26—12	Decorative Gas Appliances for Installation in Solid Fuel-burning Fireplaces	G2432.1
Z21.75/CSA 6.27—07	Connectors for Outdoor Gas Appliances and Manufactured Homes	G2422.1
Z21.80—11	Line Pressure Regulators	G2421.1
ANSI/CSA America FCI—12	Stationary Fuel Cell Power Systems	M1903.1
Z21.84—12	Manually Listed, Natural Gas Decorative Gas Appliances for Installation in Solid Fuel-burning Fireplaces	G2432.1, G2432.2
Z21.86—08	Gas-fired Vented Space Heating Appliances	G2436.1, G2437.1, G2446.1
Z21.88/CSA 2.33—15	Vented Gas Fireplace Heaters	G2435.1
Z21.91—07	Ventless Firebox Enclosures for Gas-fired Unvented Decorative Room Heaters	G2445.7.1
Z21.97—12	Outdoor Decorative Appliances	G2454.1
Z83.6—90 (R1998)	Gas-fired Infrared Heaters	G2451.1
Z83.8/CSA 2.6—09	Gas-fired Unit Heaters, Gas Packaged Heaters, Gas Utility Heaters and Gas-fired Duct Furnaces	G2444.1
Z83.19—01 (R2009)	Gas-fuel High-intensity Infrared Heaters	G2451.1
Z83.20—08	Gas-fired Low-intensity Infared Heaters Outdoor Decorative Appliances	G2451.1
Z97.1—2014	Safety Glazing Materials Used in Buildings—Safety Performance Specifications and Methods of Test	R308.1.1, R308.3.1

APA

APA—The Engineered Wood Association
7011 South 19th
Tacoma, WA 98466

Standard reference number	Title	Referenced in code section number
ANSI/A190.1—12	Structural Glued-laminated Timber	R502.1.3, R602.1.3, R802.1.2
ANSI/APA PRP 210—08	Standard for Performance-rated Engineered Wood Siding	R604.1, Table R703.3(1), R703.3.3
ANSI/APA PRG 320—2012	Standard for Performance-rated Cross Laminated Timber	R502.1.6, R602.1.6, R802.1.6
ANSI/APA PRR 410—2011	Standard for Performance-rated Engineered Wood Rim Boards	R502.1.7, R602.1.7, R802.1.7
APA E30—11	Engineered Wood Construction Guide	Table R503.2.1.1(1), R503.2.2, R803.2.2, R803.2.3

INTERNATIONAL CODE COUNCIL®
Copyright © 2015 ICC. ALL RIGHTS RESERVED. Accessed by David Dammon on Jun 21, 2017 12:30:52 PM pursuant to License Agreement with ICC. No further reproduction or distribution authorized. ANY UNAUTHORIZED REPRODUCTION OR DISTRIBUTION IS A VIOLATION OF THE FEDERAL COPYRIGHT ACT AND THE LICENSE AGREEMENT, AND SUBJECT TO CIVIL AND CRIMINAL PENALTIES THEREUNDER.

ASCE/SEI

American Society of Civil Engineers
Structural Engineering Institute
1801 Alexander Bell Drive
Reston, VA 20191

Standard reference number	Title	Referenced in code section number
5—13	Building Code Requirements for Masonry Structures	R404.1.2, R606.1, R606.1.1, R606.12.1, R606.12.2.3.1, R606.12.2.3.2, R606.12.3.1, R703.12
6—13	Specification for Masonry Structures	R404.1.2, R606.1, R606.1.1, R606.2.9, R606.2.12, R606.12.1, R606.12.2.3.1, R606.12.2.3.2, R606.12.3.1, R703.12
7—10	Minimum Design Loads for Buildings and Other Structures with Supplement No. 1	R301.2.1.1, R301.2.1.2, R301.2.1.2.1, R301.2.1.5, R301.2.1.5.1, Table R608.6(1), Table R608.6(2), Table R608.6(3), Table R608.6(4), Table R608.7(1A), Table R608.7(1B), Table R608.7(1C), R608.9.2, R608.9.3, R609.2, AH107.4.3
24—13	Flood-resistant Design and Construction	R301.2.4, R301.2.4.1, R322.1, R322.1.1, R322.1.6, R322.1.9, R322.2.2, R322.3.3
32—01	Design and Construction of Frost-protected Shallow Foundations	R403.1.4.1

ASHRAE

American Society of Heating, Refrigerating and Air-Conditioning Engineers, Inc.
1791 Tullie Circle, NE
Atlanta, GA 30329

Standard reference number	Title	Referenced in code section number
ASHRAE—2013	ASHRAE Handbook of Fundamentals	N1102.1.5, Table N1105.5.2(1), P3001.2, P3101.4
ASHRAE 193—2010	Method of Test for Determining Air Tightness of HVAC Equipment	N1103.3.2.1
34—2013	Designation and Safety Classification of Refrigerants	M1411.1

ASME

American Society of Mechanical Engineers
Three Park Avenue
New York, NY 10016-5990

Standard reference number	Title	Referenced in code section number
ASME/A17.1/ CSA B44—2013	Safety Code for Elevators and Escalators	R321.1
A18.1—2008	Safety Standard for Platforms and Stairway Chair Lifts	R321.2
A112.1.2—2004	Air Gaps in Plumbing Systems	P2717.1, Table P2902.3, P2902.3.1
A112.1.3—2000 (Reaffirmed 2011)	Air Gap Fittings for Use with Plumbing Fixtures, Appliances and Appurtenances	Table P2701.1, P2717.1, Table P2902.3, P2902.3.1
A112.3.1—2007	Stainless Steel Drainage Systems for Sanitary, DWV, Storm and Vacuum Applications Above and Below Ground	Table P3002.1(1), Table P3002.1(2), Table P3002.2, Table P3002.3, Table P3302.1
A112.3.4—2013/ CSA B45.9—13	Macerating Toilet Systems and Related Components	Table P2701.1, P3007.5
A112.4.1—2009	Water Heater Relief Valve Drain Tubes	P2804.6.1
A112.4.2—2009	Water-closet Personal Hygiene Devices	P2722.5
A112.4.3—1999 (R2010)	Plastic Fittings for Connecting Water Closets to the Sanitary Drainage System	P3003.14
A112.4.14—2004 (R2010)	Manually Operated, Quarter-turn Shutoff Valves for Use in Plumbing Systems	Table P2903.9.4
A112.6.1M—1997 (R2008)	Floor-affixed Supports for Off-the-floor Plumbing Fixtures for Public Use	Table P2701.1, P2702.4
A112.6.2—2000 (R2010)	Framing-affixed Supports for Off-the-floor Water Closets with Concealed Tanks	Table P2701.1, P2702.4
A112.6.3—2001 (R2007)	Floor and Trench Drains	Table P2701.1
A112.14.1—03 (Reaffirmed 2008)	Backwater Valves	P3008.2

INTERNATIONAL CODE COUNCIL®
Copyright © 2015 ICC. ALL RIGHTS RESERVED. Accessed by David Dammon on Jun 21, 2017 12:30:52 PM pursuant to License Agreement with ICC. No further reproduction or distribution authorized. ANY UNAUTHORIZED REPRODUCTION OR DISTRIBUTION IS A VIOLATION OF THE FEDERAL COPYRIGHT ACT AND THE LICENSE AGREEMENT, AND SUBJECT TO CIVIL AND CRIMINAL PENALTIES THEREUNDER.

ASME—continued

A112.18.1—2012/ CSA B125.1—2012	Plumbing Supply Fittings	Table P2701.1, P2708.5, P2722.1, P2722.3, P2727.2, P2902.2, Table P2903.9.4
A112.18.2—2011/ CSA B125.2—2011	Plumbing Waste Fittings	Table P2701.1, P2702.2
A112.18.3—2002 (Reaffirmed 2008)	Performance Requirements for Backflow Protection Devices and Systems in Plumbing Fixture Fittings	P2708.5, P2722.3
A112.18.6/ CSA B125.6—2009	Flexible Water Connectors	P2906.7
A112.19.1—2013/ CSA B45.2—2013	Enameled Cast-iron and Enameled Steel Plumbing Fixtures	Table P2701.1, P2711.1
A112.19.2—2013/ CSA B45.1—2013	Ceramic Plumbing Fixtures	Table P2701.1, P2705.1, P2711.1, P2712.1, P2712.2, P2712.9
A112.19.3—2008/ CSA B45.4—08 (R2013)	Stainless Steel Plumbing Fixtures	Table P2701.1, P2705.1, P2711.1, P2712.1
A112.19.5—2011/ CSA B45.15—2011	Flush Valves and Spuds for Water-closets, Urinals and Tanks	Table P2701.1
A112.19.7/2012 CSA B45.10—2012	Hydromassage Bathtub Systems	Table P2701.1
A112.19.12—2006	Wall-mounted and Pedestal-mounted, Adjustable and Pivoting Lavatory and Sink Carrier Systems	Table P2701.1, P2711.4, P2714.2
A112.19.14—2006 (R2011)	Six-Liter Water Closets Equipped with Dual Flushing Device	P2712.1
A112.19.15—2005	Bathtub/Whirlpool Bathtubs with Pressure-sealed Doors	Table P2701.1, P2713.2
A112.36.2m—1991 (R2008)	Cleanouts	P3005.2.10.2
B1.20.1—1983 (R2006)	Pipe Threads, General-purpose (Inch)	G2414.9, P3003.6.4, P3003.17.1, P3003.9.3
B16.3—2011	Malleable-iron-threaded Fittings, Classes 150 and 300	Table P2906.6
B16.4—2011	Gray-iron-threaded Fittings	Table P2906.6, Table P3002.3
B16.9—2007	Factory-made, Wrought-steel Buttwelding Fittings	Table P2906.6
B16.11—2011	Forged Fittings, Socket-welding and Threaded	Table P2906.6
B16.12—2009	Cast-iron-threaded Drainage Fittings	Table P3002.3
B16.15—2011	Cast-bronze-threaded Fittings	Table P2906.6, Table P3002.3
B16.18—2012	Cast-copper-alloy Solder Joint Pressure Fittings	Table P2906.6, Table P3002.3
B16.22—2001 (R2010)	Wrought-copper and Copper-alloy Solder Joint Pressure Fittings	Table P2906.6, Table P3002.3
B16.23—2002 (R2011)	Cast-copper-alloy Solder Joint Drainage Fittings (DWV)	Table P3002.3
B16.26—2011	Cast-copper-alloy Fittings for Flared Copper Tubes	Table P2906.6, Table P3002.3
B16.28—1994	Wrought-steel Buttwelding Short Radius Elbows and Returns	Table P2906.6
B16.29—2012	Wrought-copper and Wrought-copper-alloy Solder Joint Drainage Fittings (DWV)	Table P3002.3
B16.33—2012	Manually Operated Metallic Gas Valves for Use in Gas Piping Systems up to 125 psig (Sizes $^1/_2$ through 2)	Table G2420.1.1
B16.34—2009	Valves—Flanged, Threaded and Welding End	Table P2903.9.4
B16.44—2002 (Reaffirmed 2007)	Manually Operated Metallic Gas Valves for Use in Above-ground Piping Systems up to 5 psi	Table G2420.1.1
B16.51—2011	Copper and Copper Alloy Press-Connect Pressure Fittings	Table 2906.6
B36.10M—2004	Welded and Seamless Wrought-steel Pipe	G2414.4.2
BPVC—2010/2011 addenda	ASME Boiler and Pressure Vessel Code (2007 Edition)	M2001.1.1, G2452.1
CSD-1—2011	Controls and Safety Devices for Automatically Fired Boilers	M2001.1.1, G2452.1
ASSE 1016/ASME 112.1016/ CSA B125.16—2011	Performance Requirements for Automatic Compensating Valves for Individual Showers and Tub/Shower Combinations	Table P2701.1, P2708.4, P2722.2

ASSE

American Society of Sanitary Engineering
901 Canterbury, Suite A
Westlake, OH 44145

Standard reference number	Title	Referenced in code section number
1001—2008	Performance Requirements for Atmospheric-type Vacuum Breakers	Table P2902.3, P2902.3.2
1002—2008	Performance Requirements for Anti-siphon Fill Valves for Water Closet Flush Tank	Table P2701.1, Table P2902.3, P2902.4.1
1003—2009	Performance Requirements for Water-pressure-reducing Valves for Domestic Water Distribution Systems	P2903.3.1

INTERNATIONAL CODE COUNCIL®
Copyright © 2015 ICC. ALL RIGHTS RESERVED. Accessed by David Dammon on Jun 21, 2017 12:30:52 PM pursuant to License Agreement with ICC. No further reproduction or distribution authorized. ANY UNAUTHORIZED REPRODUCTION OR DISTRIBUTION IS A VIOLATION OF THE FEDERAL COPYRIGHT ACT AND THE LICENSE AGREEMENT, AND SUBJECT TO CIVIL AND CRIMINAL PENALTIES THEREUNDER.

ASSE—continued

1008—2006	Performance Requirements for Plumbing Aspects of Residential Food Waste Disposer Units . . . . . Table P2701.1
1010—2004	Performance Requirements for Water Hammer Arresters P2903.5
1011—2004	Performance Requirements for Hose Connection Vacuum Breakers. . . . . Table P2902.3, P2902.3.2
1012—2009	Performance Requirements for Backflow Preventers with Intermediate Atmospheric Vent . . . . . Table P2902.3, P2902.3.3, P2902.5.1, P2902.5.5.3
1013—2009	Performance Requirements for Reduced Pressure Principle Backflow Preventers and Reduced Pressure Principle Fire Protection Backflow Preventers. . . . . Table P2902.3, P2902.3.5, P2902.5.1, P2902.5.5.3
1015—2009	Performance Requirements for Double Check Backflow Prevention Assemblies and Double Check Fire Protection Backflow Prevention Assemblies . . . . . Table P2902.3, P2902.3.6
ASSE 1016/ASME 112.1016/ CSA B125.16—2011	Performance Requirements for Automatic Compensating Valves for Individual Showers and Tub/Shower Combinations. . . . . Table P2701.1, P2708.4, P2722.2
1017—2010	Performance Requirements for Temperature-actuated Mixing Valves for Hot Water Distribution Systems P2724.1, P2802.1, P2803.2
1018—2010	Performance Requirements for Trap Seal Primer Valves; Potable Water Supplied. P3201.2.1, P3201.2.2
1019—2010	Performance Requirements for Freeze-resistant, Wall Hydrants, Vacuum Breaker, Draining Types . . . . . Table P2701.1, P2902.3.2
1020—2004	Performance Requirements for Pressure Vacuum Breaker Assembly . . . . . Table P2902.3, P2902.3.4
1023—2010	Performance Requirements for Hot Water Dispensers, Household-storage-type—Electrical . . . . . Table P2701.1
1024—2004	Performance Requirements for Dual Check Backflow Preventers, Anti-siphon-type, Residential Applications . . . . . Table P2902.3, P2902.3.7
1035—2008	Performance Requirements for Laboratory Faucet Backflow Preventers . . . . . Table P2902.3, P2902.3.2
1037—2010	Performance Requirements for Pressurized Flushing Devices (Flushometer) for Plumbing Fixtures . . . . . Table P2701.1
1044—2010	Performance Requirements for Trap Seal Primer Devices Drainage Types and Electronic Design Types P3201.2.3
1047—2009	Performance Requirements for Reduced Pressure Detector Fire Protection Backflow Prevention Assemblies . . . . . Table P2902.3, P2902.3.5
1048—2009	Performance Requirements for Double Check Detector Fire Protection Backflow Prevention Assemblies . . . . . Table P2902.3, P2902.3.6
1050—2009	Performance Requirements for Stack Air Admittance Valves for Sanitary Drainage Systems P3114.1
1051—2009	Performance Requirements for Individual and Branch-type Air Admittance Valves for Plumbing Drainage Systems P3114.1
1052—2004	Performance Requirements for Hose Connection Backflow Preventers . . . . . Table P2701.1, Table P2902.3, P2902.3.2
1056—2010	Performance Requirements for Spill-resistant Vacuum Breakers . . . . . Table P2902.3, P2902.3.4
1060—2006	Performance Requirements for Outdoor Enclosures for Fluid-conveying Components P2902.6.1
1061—2010	Performance Requirements for Removable and Nonremovable Push Fit Fittings. . . . . Table P2906.6
1062—2006	Performance Requirements for Temperature-actuated, Flow Reduction (TAFR) Valves for Individual Supply Fittings. . . . . Table P2701.1, P2724.2
1066—2009	Performance Requirements for Individual Pressure Balancing In-line Valves for Individual Fixture Fittings. P2722.4
1070—2004	Performance Requirements for Water-temperature-limiting Devices P2713.3, P2721.2, P2724.1
1072—07	Performance Requirements for Barrier-type Floor Drain Trap Seal Protection Devices. P3201.2.4

ASTM

ASTM International
100 Barr Harbor Drive
West Conshohocken, PA 19428

Standard reference number	Title	Referenced in code section number
A36/A36M—08	Specification for Carbon Structural Steel	R606.15, R608.5.2.2
A53/A53M—12	Specification for Pipe, Steel, Black and Hot-dipped, Zinc-coated Welded and Seamless.	R407.3, Table M2101.1, G2414.4.2, Table P2906.4, Table P2906.5, Table P3002.1(1)
A74—13A	Specification for Cast-iron Soil Pipe and Fittings	Table P3002.1(1), Table P3002.1(2), Table P3002.2, Table P3002.3, P3005.2.6, Table P3302.1
A106/A106M—11	Specification for Seamless Carbon Steel Pipe for High-temperature Service	Table M2101.1, G2414.4.2
A126—(2009)	Gray Iron Castings for Valves, Flanges and Pipe Fittings	Table P2903.9.4

INTERNATIONAL CODE COUNCIL®
Copyright © 2015 ICC. ALL RIGHTS RESERVED. Accessed by David Dammon on Jun 21, 2017 12:30:52 PM pursuant to License Agreement with ICC. No further reproduction or distribution authorized. ANY UNAUTHORIZED REPRODUCTION OR DISTRIBUTION IS A VIOLATION OF THE FEDERAL COPYRIGHT ACT AND THE LICENSE AGREEMENT, AND SUBJECT TO CIVIL AND CRIMINAL PENALTIES THEREUNDER.

ASTM—continued

A153/A153M—09	Specification for Zinc Coating (Hot Dip) on Iron and Steel Hardware . . . . . R317.3, Table R606.3.4.1, 703.6.3, R905.7.5, R905.8.6
A167—99 (2009)	Specification for Stainless and Heat-resisting Chromium-nickel Steel Plate, Sheet and Strip . . . . . Table R606.3.4.1
A240/A240M—13A	Standard Specification for Chromium and Chromium-nickel Stainless Steel Plate, Sheet and Strip for Pressure Vessels and for General Applications . . . . . Table R905.10.3(1)
A254—97 (2007)	Specification for Copper Brazed Steel Tubing . . . . . Table M2101.1, G2414.5.1
A307—12	Specification for Carbon Steel Bolts and Studs, 60,000 psi Tensile Strength R608.5.2.2
A312/A312M—13A	Specification for Seamless, Welded and Heavily Cold Worked Austenitic Stainless Steel Pipes . . . . . Table P2906.4, Table P2906.5, Table P2906.6, P2905.12.2
A463/A463M—10	Standard Specification for Steel Sheet, Aluminum-coated by the Hot-dip Process . . . . . Table R905.10.3(2)
A539—99	Specification for Electric-resistance-welded Coiled Steel Tubing for Gas and Fuel Oil Lines. M2202.1
A615/A615M—12	Specification for Deformed and Plain Billet-steel Bars for Concrete Reinforcement. R402.3.1, R403.1.3.5.1, R404.1.3.3.7.1, R608.5.2.1
A641/A641M—09a	Specification for Zinc-coated (Galvanized) Carbon Steel Wire . . . . . Table R606.3.4.1
A653/A653M—11	Specification for Steel Sheet, Zinc-coated (Galvanized) or Zinc-iron Alloy-coated Galvanized) by the Hot-dip Process. . . . . R317.3.1, R505.2.2, R603.2.2, Table R606.3.4.1, R608.5.2.3, R804.2.2, R804.2.3, Table R905.10.3(1), Table R905.10.3(2), M1601.1.1
A706/A706M—09B	Specification for Low-alloy Steel Deformed and Plain Bars for Concrete Reinforcement. R402.3.1, R403.1.3.5.1, R404.1.3.3.7.1, R608.5.2.1
A755/A755M—2011	Specification for Steel Sheet, Metallic Coated by the Hot-dip Process and Prepainted by the Coil-coating Process for Exterior Exposed Building Products . . . . . Table R905.10.3(2)
A778—01 (2009e1)	Specification for Welded Unannealed Austenitic Stainless Steel Tubular Products . . . . . Table P2905.4, Table P2905.5, Table P2905.6
A792/A792M—10	Specification for Steel Sheet, 55% Aluminum-zinc Alloy-coated by the Hot-dip Process . . . . . R505.2.2, R603.2.2, R608.5.2.3, R804.2.2, Table 905.10.3(2)
A875/A875M—13	Specification for Steel Sheet, Zinc-5%, Aluminum Alloy-coated by the Hot-dip Process . . . . . R608.5.2.3, Table R905.10.3(2)
A888—13A	Specification for Hubless Cast Iron Soil Pipe and Fittings for Sanitary and Storm Drain, Waste and Vent Piping Application . . . . . Table P3002.1(1), Table P3002.1(2), Table P3002.2, Table P3002.3, Table P3302.1
A924/A924M—13	Standard Specification for General Requirements for Steel Sheet, Metallic-coated by the Hot-Dip Process . . . . . Table R905.10.3(1)
A996/A996M—2009b	Specifications for Rail-steel and Axle-steel Deformed Bars for Concrete Reinforcement. . . . . Table R404.1.2(9), R402.3, R403.1.3.5.1, R404.1.3.3.7.1, R608.5.2.1, Table R608.5.4(2)
A1003/A1003M—13A	Standard Specification for Steel Sheet, Carbon, Metallic and Nonmetallic-coated for Cold-formed Framing Members R505.2.1, R505.2.2, R603.2.1, R603.2.2, R804.2.1
B32—08	Specification for Solder Metal P3003.6.3
B42—10	Specification for Seamless Copper Pipe, Standard Sizes. . . . . Table M2101.1, Table P2906.4, Table P2906.5, Table P3002.1(1)
B43—09	Specification for Seamless Red Brass Pipe, Standard Sizes . . . . . Table M2101.1, Table P2906.4, Table P2906.5, Table P3002.1(1)
B75—11	Specification for Seamless Copper Tube . . . . . Table M2101.1, Table P2905.4, Table P2906.5, Table P3002.1(1), Table P3002.1(2), Table P3002.2
B88—09	Specification for Seamless Copper Water Tube . . . . . Table M2101.1, G2414.5.2, Table, P2906.4, Table P2905.6, Table P3002.1(1), Table P3002.1(2), Table P3002.2
B101—12	Specification for Lead-coated Copper Sheet and Strip for Building Construction . . . . . Table R905.2.8.2, Table R905.10.3(1)
B135—10	Specification for Seamless Brass Tube . . . . . Table M2101.1
B209—10	Specification for Aluminum and Aluminum-alloy Sheet and Plate. . . . . Table 905.10.3(1)
B227—10	Specification for Hard-drawn Copper-clad Steel Wire R606.15
B251—10	Specification for General Requirements for Wrought Seamless Copper and Copper-alloy Tube . . . . . Table M2101.1, Table P2906.4, Table P2906.5, Table P3002.1(1), Table P3002.1(2), Table P3002.2
B302—12	Specification for Threadless Copper Pipe, Standard Sizes . . . . . Table M2101.1, Table P2906.4, Table P2906.5, Table P3002.1(1)
B306—09	Specification for Copper Drainage Tube (DWV) . . . . . Table M2101.1, Table P3002.1(1), Table P3002.1(2)

INTERNATIONAL CODE COUNCIL®
Copyright © 2015 ICC. ALL RIGHTS RESERVED. Accessed by David Dammon on Jun 21, 2017 12:30:52 PM pursuant to License Agreement with ICC. No further reproduction or distribution authorized. ANY UNAUTHORIZED REPRODUCTION OR DISTRIBUTION IS A VIOLATION OF THE FEDERAL COPYRIGHT ACT AND THE LICENSE AGREEMENT, AND SUBJECT TO CIVIL AND CRIMINAL PENALTIES THEREUNDER.

ASTM—continued

B370—12	Specification for Copper Sheet and Strip for Building Construction . . . . . Table R905.2.8.2, Table R905.10.3(1), Table P2701.1
B447—12a	Specification for Welded Copper Tube . . . . . Table P2906.4, Table P2906.5
B695—04 (2009)	Standard Specification for Coatings of Zinc Mechanically Deposited on Iron and Steel R317.3.1, R317.3.3
B813—10	Specification for Liquid and Paste Fluxes for Soldering Applications of Copper and Copper Alloy Tube . . . . . Table M2101.1, M2103.3, P2906.14, P3003.6.3
B828—02 (2010)	Practice for Making Capillary Joints by Soldering of Copper and Copper Alloy Tube and Fittings M2103.3, P2906.14, P3003.6.3
C4—2009	Specification for Clay Drain Tile and Perforated Clay Drain Tile . . . . . Table P3302.1
C5—10	Specification for Quicklime for Structural Purposes R702.2.1
C14—11	Specification for Non-reinforced Concrete Sewer, Storm Drain and Culvert Pipe . . . . . Table P3002.2
C22/C22M—00 (2010)	Specification for Gypsum R702.2.1, R702.3.1
C27—98 (2008)	Specification for Standard Classification of Fireclay and High-alumina Refractory Brick R1001.5
C28/C28M—10	Specification for Gypsum Plasters R702.2.1
C33/C33M—13	Specification for Concrete Aggregates R403.4.1
C34—12	Specification for Structural Clay Load-bearing Wall Tile . . . . . Table R301.2(1), R606.2.2
C35/C35M—1995 (2009)	Specification for Inorganic Aggregates for Use in Gypsum Plaster R702.2.1
C55—2011	Specification for Concrete Building Brick . . . . . R202, Table R301.2(1), R606.2.1
C56—12	Standard Specification for Structural Clay Nonloadbearing Tile R606.2.2
C59/C59M—00 (2011)	Specification for Gypsum Casting Plaster and Molding Plaster R702.2.1
C61/C61M—00 (2011)	Specification for Gypsum Keene's Cement R702.2.1
C62—13	Standard Specification for Building Brick (Solid Masonry Units Made from Clay or Shale) . . . . . R202, Table R301.2(1), R606.2.2
C73—10	Specification for Calcium Silicate Face Brick (Sand Lime Brick) . . . . . R202, Table R301.2(1), R606.2.1
C76—13A	Specification for Reinforced Concrete Culvert, Storm Drain and Sewer Pipe . . . . . Table P3002.2
C90—13	Specification for Load-bearing Concrete Masonry Units . . . . . Table R301.2(1), 606.2.1
C91—12	Specification for Masonry Cement R702.2.2
C94/C94M—13	Standard Specification for Ready-mixed Concrete R404.1.3.3.2, R608.5.1.2
C126—13	Standard Specification for Ceramic Glazed Structural Clay Facing Tile, Facing Brick, and Solid Masonry Units R606.2.2
C129—11	Specification for Nonload-bearing Concrete Masonry Units . . . . . Table R301.2(1)
C143/C143M—12	Test Method for Slump of Hydraulic Cement Concrete R404.1.3.3.4, R608.5.1.9
C145—85	Specification for Solid Load-bearing Concrete Masonry Units . . . . . R202, Table R301.2(1)
C150—12	Specification for Portland Cement R608.5.1.1, R702.2.2
C199—84 (2011)	Test Method for Pier Test for Refractory Mortar R1001.5, R1001.8, R1003.12
C203—05a (2012)	Standard Test Methods for Breaking Load and Flexural Properties of Block-type Thermal Insulation . . . . . Table R610.3.1
C207—06 (2011)	Specification for Hydrated Lime for Masonry Purposes . . . . . Table R606.2.7
C208—12	Specification for Cellulosic Fiber Insulating Board . . . . . R602.1.10, Table R602.3(1), Table R906.2
C212-10	Standard Specification for Structural Clay Facing Tile R602.2.2
C216—13	Specification for Facing Brick (Solid Masonry Units Made from Clay or Shale) . . . . . R202, Table R301.2(1), R606.2.2
C270—12a	Specification for Mortar for Unit Masonry R606.2.7, R606.2.10
C272/C272M—12	Standard Test Method for Water Absorption of Core Materials for Sandwich Constructions . . . . . Table R610.3.1
C273/C273M—11	Standard Test Method for Shear Properties of Sandwich Core Materials . . . . . Table R610.3.1
C315—07 (2011)	Specification for Clay Flue Liners and Chimney Pots . . . . . R1001.8, R1003.11.1, Table R1003.14(1), G2425.12
C406/C406M—2010	Specifications for Roofing Slate R905.6.4
C411—11	Test Method for Hot-surface Performance of High-temperature Thermal Insulation M1601.3
C425—04 (2009)	Specification for Compression Joints for Vitrified Clay Pipe and Fittings . . . . . Table P3002.2, P3003.10, P3003.13
C443—12	Specification for Joints for Concrete Pipe and Manholes, Using Rubber Gaskets P3003.5, P3003.13
C475/C475—12	Specification for Joint Compound and Joint Tape for Finishing Gypsum Wallboard R702.3.1
C476—10	Specification for Grout for Masonry R606.2.11
C503—10	Standard Specification for Marble Dimension Stone R606.2.4
C514—04 (2009)el	Specification for Nails for the Application of Gypsum Wallboard R702.3.1
C552—12b	Standard Specification for Cellular Glass Thermal Insulation . . . . . Table R906.2
C557—03 (2009)e01	Specification for Adhesives for Fastening Gypsum Wallboard to Wood Framing R702.3.1
C564—12	Specification for Rubber Gaskets for Cast Iron Soil Pipe and Fittings P3003.4.2, P3003.4.3, P3003.13

INTERNATIONAL CODE COUNCIL®
Copyright © 2015 ICC. ALL RIGHTS RESERVED. Accessed by David Dammon on Jun 21, 2017 12:30:52 PM pursuant to License Agreement with ICC. No further reproduction or distribution authorized. ANY UNAUTHORIZED REPRODUCTION OR DISTRIBUTION IS A VIOLATION OF THE FEDERAL COPYRIGHT ACT AND THE LICENSE AGREEMENT, AND SUBJECT TO CIVIL AND CRIMINAL PENALTIES THEREUNDER.

ASTM—continued

C568—10	Standard Specification for Limestone Dimension Stone R606.2.4
C578—12b	Specification for Rigid, Cellular Polystyrene Thermal Insulation. . . . . R316.8, R403.3, R610.3.1, R703.11.2.1, Table R703.15.1, Table R703.15.2, Table R703.16.1, Table R703.16.2, Table R906.2
C587—04(2009)	Specification for Gypsum Veneer Plaster R702.2.1
C595/C595M—13	Specification for Blended Hydraulic Cements. R608.5.1.1, R702.2.2
C615/C615M—11	Standard Specification for Granite Dimension Stone R606.2.4
C616/C615M—10	Standard Specification for Quartz Dimension Stone R606.2.4
C629—10	Standard Specification for Slate Dimension Stone R606.2.4
C631—09	Specification for Bonding Compounds for Interior Gypsum Plastering R702.2.1
C645—13	Specification for Nonstructural Steel Framing Members R702.3.3
C652—13	Specification for Hollow Brick (Hollow Masonry Units Made from Clay or Shale) . . . . . R202, Table R301.2(1), R606.2.2
C685/C685M—11	Specification for Concrete Made by Volumetric Batching and Continuous Mixing R404.1.3.3.2, R608.5.1.2
C700—13	Specification for Vitrified Clay Pipe, Extra Strength, Standard Strength and Perforated . . . . . Table P3002.2, Table P3002.3, Table P3302.1
C728—05 (2013)	Standard Specification for Perlite Thermal Insulation Board . . . . . Table R906.2
C744—11	Standard Specification for Prefaced Concrete and Calcium Silicate Masonry Units R606.2.1
C836/C836M—12	Specification for High Solids Content, Cold Liquid-applied Elastomeric Waterproofing Membrane for Use with Separate Wearing Course. R905.15.2
C843—99 (2012)	Specification for Application of Gypsum Veneer Plaster R702.2.1
C844—04 (2010)	Specification for Application of Gypsum Base to Receive Gypsum Veneer Plaster R702.2.1
C847—12	Specification for Metal Lath R702.2.1, R702.2.2
C887—05 (2010)	Specification for Packaged, Dry, Combined Materials for Surface Bonding Mortar R406.1, R606.2.8
C897—05 (2009)	Specification for Aggregate for Job-mixed Portland Cement-based Plasters R702.2.2
C920—11	Standard Specification for Elastomeric Joint Sealants. R406.4.1
C926—13	Specification for Application of Portland Cement-based Plaster R702.2.2, R702.2.2.1, R703.7, R703.7.2.1, R703.7.4
C933—13	Specification for Welded Wire Lath R702.2.1, R702.2.2
C946—10	Standard Practice for Construction of Dry-Stacked, Surface-Bonded Walls R606.2.8
C954—11	Specification for Steel Drill Screws for the Application of Gypsum Panel Products or Metal Plaster Bases to Steel Studs from 0.033 in (0.84 mm) or to 0.112 in. (2.84 mm) in Thickness R505.2.5, R603.2.5, R702.3.5.1, R804.2.5
C955—11C	Specification for Load-bearing (Transverse and Axial) Steel Studs, Runners (Tracks), and Bracing or Bridging for Screw Application of Gypsum Panel Products and Metal Plaster Bases R702.3.3
C957—10	Specification for High-solids Content, Cold Liquid-applied Elastomeric Waterproofing Membrane for Use with Integral Wearing Surface R905.15.2
C1002—07	Specification for Steel Drill Screws for the Application of Gypsum Panel Products or Metal Plaster Bases R702.3.1, R702.3.5.1
C1029—13	Specification for Spray-applied Rigid Cellular Polyurethane Thermal Insulation R905.14.2
C1032—06 (2011)	Specification for Woven Wire Plaster Base. R702.2.1, R702.2.2
C1047—10a	Specification for Accessories for Gypsum Wallboard and Gypsum Veneer Base R702.2.1, R702.2.2, R702.3.1
C1063—12D	Specification for Installation of Lathing and Furring to Receive Interior and Exterior Portland Cement-based Plaster R702.2.2, R703.7
C1088—13	Standard Specification for Thin Veneer Brick Units Made from Clay or Shale R606.2.2
C1107/C1107M—13	Standard Specification for Packaged Dry, Hydraulic-cement Grout (Nonshrink) R402.3.1
C1116/C116M—10A	Standard Specification for Fiber-reinforced Concrete and Shotcrete R402.3.1
C1157/C1157M—11	Standard Performance Specification for Hydraulic Cement R608.5.1.1
C1167—11	Specification for Clay Roof Tiles R905.3.4
C1173—10e1	Specification for Flexible Transition Couplings for Underground Piping Systems. P3003.3.1, P3003.5, P3003.6.1, P3003.10.1, P3003.12.1, P3003.12.2, P3003.13
C1177/C1177M—08	Specification for Glass Mat Gypsum Substrate for Use as Sheathing. . . . . R702.3.1, Table 906.2
C1178/C1178M—11	Specification for Glass Mat Water-resistant Gypsum Backing Panel . . . . . R702.3.1, R702.3.7, Table R702.4.2
C1186—08 (2012)	Specification for Flat Nonasbestos Fiber Cement Sheets R703.10.1, R703.10.2
C1261—10	Specification for Firebox Brick for Residential Fireplaces R1001.5, R1001.8
C1277—12	Specification for Shielded Couplings Joining Hubless Cast Iron Soil Pipe and Fittings. P3003.4.3
C1278/ C1278M—07a (2011)	Specification for Fiber-reinforced Gypsum Panels . . . . . R702.3.1, R702.3.7, Table R702.4.2, Table R906.2
C1283—11	Practice for Installing Clay Flue Lining. R1003.9.1, R1003.12

INTERNATIONAL CODE COUNCIL®
Copyright © 2015 ICC. ALL RIGHTS RESERVED. Accessed by David Dammon on Jun 21, 2017 12:30:52 PM pursuant to License Agreement with ICC. No further reproduction or distribution authorized. ANY UNAUTHORIZED REPRODUCTION OR DISTRIBUTION IS A VIOLATION OF THE FEDERAL COPYRIGHT ACT AND THE LICENSE AGREEMENT, AND SUBJECT TO CIVIL AND CRIMINAL PENALTIES THEREUNDER.

ASTM—continued

C1288—99 (2010)	Standard Specification for Discrete Nonasbestos Fiber-cement Interior Substrate Sheets . . . . . Table R503.2.1.1(1), Table R503.2.1.1(2), Table 602.3(2), Table R702.4.2
C1289—13e1	Standard Specification for Faced Rigid Cellular Polyisocyanurate Thermal Insulation Board . . . . . R316.8, R703.11.2.1, Table R703.15.1, Table R703.15.2, Table R703.16.1, Table R703.16.2, Table R906.2
C1325—08b	Standard Specification for Nonasbestos Fiber-mat Reinforced Cement Interior Substrate Sheets Backer Units . . . . . Table R702.4.2
C1328/C1328M—12	Specification for Plastic (Stucco) Cement R702.2.2
C1363—11	The Standard Test Method for Thermal Performance of Building Materials and Envelope Assemblies by Means of a Hot Box Apparatus N1101.10.4.1
C1364—10B	Standard Specification for Architectural Cast Stone R606.2.5
C1386—07	Standard Specification for Precast Autoclaved Aerated Concrete (AAC) Wall Construction Units R606.2.3
C1396/C1396M—2013	Specification for Gypsum Board. . . . . Table R602.3(1), R702.2.1, R702.2.2, R702.3.1, R702.3.7
C1405—12	Standard Specification for Glazed Brick (Single Fired, Brick Units). R606.2.2
C1440—08	Specification for Thermoplastic Elastomeric (TPE) Gasket Materials for Drain, Waste and Vent (DWV), Sewer, Sanitary and Storm Plumbing Systems P3003.13
C1460—08	Specification for Shielded Transition Couplings for Use with Dissimilar DWV Pipe and Fittings Above Ground P3003.18
C1461—08	Specification for Mechanical Couplings Using Thermoplastic Elastomeric (TPE) Gaskets for Joining Drain, Waste and Vent (DWV) Sewer, Sanitary and Storm Plumbing Systems for Above and Below Ground Use P3003.13
C1492—03 (2009)	Specification for Concrete Roof Tile R905.3.5
C1513—2013	Standard Specification for Steel Tapping Screws for Cold-formed Steel Framing Connections . . . . . R505.2.5, R603.2.5, R702.3.8.1, Table R703.3(2), R804.2.5 Table R703.16.1, Table R703.16.2
C1540—11	Specification for Heavy Duty Shielded Couplings Joining Hubless Cast-iron Soil Pipe and Fittings P3003.4.3
C1634—11	Standard Specification for Concrete Facing Brick R606.2.1
C1658/C1658M—12	Standard Specification for Glass Mat Gypsum Panels R702.3.1
C1668—12	Standard Specification for Externally Applied Reflective Insulation Systems on Rigid Duct in Heating, Ventilation, and Air Conditioning (HVAC) Systems. M1601.3
D41—05	Specification for Asphalt Primer Used in Roofing, Dampproofing and Waterproofing . . . . . Table R905.9.2, Table R905.11.2
D43—00 (2006)	Specification for Coal Tar Primer Used in Roofing, Dampproofing and Waterproofing . . . . . Table R905.9.2
D226/D226M—09	Specification for Asphalt-saturated (Organic Felt) Used in Roofing and Waterproofing. . . . . R703.2, R905.1.1, Table R905.1.1(1), R905.8.4, Table R905.9.2
D227/D227M—03 (2011)e1	Specification for Coal Tar Saturated (Organic Felt) Used in Roofing and Waterproofing . . . . . Table R905.9.2
D312—00 (2006)	Specification for Asphalt Used in Roofing. . . . . Table R905.9.2
D422—63 (2007)	Test Method for Particle-size Analysis of Soils R403.1.8.1
D449—03 (2008)	Specification for Asphalt Used in Dampproofing and Waterproofing R406.2
D450—07	Specification for Coal-tar Pitch Used in Roofing, Dampproofing and Waterproofing . . . . . Table R905.9.2
D1227—95 (2007)	Specification for Emulsified Asphalt Used as a Protective Coating for Roofing . . . . . Table R905.9.2, Table R905.11.2, R905.15.2
D1248—12	Specification for Polyethylene Plastics Extrusion Materials for Wire and Cable M1601.1.2
D1527—99 (2005)	Specification for Acrylonitrile-butadiene-styrene (ABS) Plastic Pipe, Schedules 40 and 80 . . . . . Table P2906.4
D1621—10	Standard Test Method for Compressive Properties of Rigid Cellular Plastics. . . . . Table R610.3.1
D1622—08	Standard Test Method for Apparent Density of Rigid Cellular Plastics. . . . . Table R610.3.1
D1623—09	Standard Test Method for Tensile and Tensile Adhesion Properties of Rigid Cellular Plastics. . . . . Table R610.3.1
D1693—2013	Test Method for Environmental Stress-cracking of Ethylene Plastics . . . . . Table M2101.1
D1784—11	Standard Specification for Rigid Poly (Vinyl Chloride) (PVC) Compounds and Chlorinated Poly (Vinyl Chloride) (CPVC) Compounds M1601.1.2
D1785—12	Specification for Poly (Vinyl Chloride) (PVC) Plastic Pipe, Schedules 40, 80 and 120 . . . . . Table P2906.4, Table AG101.1
D1863/D1863M—05 (2011)e1	Specification for Mineral Aggregate Used in Built-up Roofs . . . . . Table R905.9.2
D1869—95 (2010)	Specification for Rubber Rings for Asbestos-cement Pipe. P2906.17, P3003.13
D1970/D1970M—2013	Specification for Self-adhering Polymer Modified Bitumen Sheet Materials Used as Steep Roofing Underlayment for Ice Dam Protection R905.1.1, R905.2.8.2, R905.16.4
D2104—03	Specification for Polyethylene (PE) Plastic Pipe, Schedule 40 . . . . . Table P2905.4

INTERNATIONAL CODE COUNCIL®
Copyright © 2015 ICC. ALL RIGHTS RESERVED. Accessed by David Dammon on Jun 21, 2017 12:30:52 PM pursuant to License Agreement with ICC. No further reproduction or distribution authorized. ANY UNAUTHORIZED REPRODUCTION OR DISTRIBUTION IS A VIOLATION OF THE FEDERAL COPYRIGHT ACT AND THE LICENSE AGREEMENT, AND SUBJECT TO CIVIL AND CRIMINAL PENALTIES THEREUNDER.

ASTM—continued

D2126—09	Standard Test Method for Response of Rigid Cellular Plastics to Thermal and Humid Aging . . . . . Table R610.3.1
D2178—04	Specification for Asphalt Glass Felt Used in Roofing and Waterproofing . . . . . Table R905.9.2
D2235—04 (2011)	Specification for Solvent Cement for Acrylonitrile-butadiene-styrene (ABS) Plastic Pipe and Fittings P2906.9.1.1, P3003.3.2
D2239—12A	Specification for Polyethylene (PE) Plastic Pipe (SIDR-PR) Based on Controlled Inside Diameter . . . . . Table P2906.4, Table AG101.1
D2241—09	Specification for Poly (Vinyl Chloride) (PVC) Pressure-rated Pipe (SDR-Series) . . . . . Table P2905.4, Table AG101.1
D2282—99 (2005)	Specification for Acrylonitrile-butadiene-styrene (ABS) Plastic Pipe (SDR-PR). . . . . Table P2905.4
D2412—11	Test Method for Determination of External Loading Characteristics of Plastic Pipe by Parallel-plate Loading M1601.1.2
D2447—03	Specification for Polyethylene (PE) Plastic Pipe Schedules 40 and 80, Based on Outside Diameter . . . . . Table M2101.1
D2464—06	Specification for Threaded Poly (Vinyl Chloride) (PVC) Plastic Pipe Fittings, Schedule 80 . . . . . Table P2906.6
D2466—06	Specification for Poly (Vinyl Chloride) (PVC) Plastic Pipe Fittings, Schedule 40 . . . . . Table P2906.6
D2467—06	Specification for Poly (Vinyl Chloride) (PVC) Plastic Pipe Fittings, Schedule 80 . . . . . Table P2906.6
D2468—96a	Specification for Acrylonitrile-butadiene-styrene (ABS) Plastic Pipe Fittings, Schedule 40 . . . . . Table P2906.6
D2513—2013e1	Specification for Thermoplastic Gas Pressure Pipe, Tubing and Fittings . . . . . Table M2101.1, G2414.6, G2414.6.1, G2414.11, G2415.17.2
D2559—12A	Standard Specification for Adhesives for Bonded Structural Wood Products for Use Under Exterior (West Use) Exposure Conditions R610.3.3
D2564—12	Specification for Solvent Cements for Poly (Vinyl Chloride) (PVC) Plastic Piping Systems P2906.9.1.4, P3003.8.2, P3003.9.2
D2609—02 (2008)	Specification for Plastic Insert Fittings for Polyethylene (PE) Plastic Pipe . . . . . Table P2906.6
D2626/ D2626M—04 (2012)e1	Specification for Asphalt-saturated and Coated Organic Felt Base Sheet Used in Roofing . . . . . R905.3.3, Table R905.9.2
D2657—07	Standard Practice for Heat Fusion-joining of Polyolefin Pipe Fittings M2105.11.1, P2906.3.1, P3003.12.1
D2661—11	Specification for Acrylonitrile-butadiene-styrene (ABS) Schedule 40 Plastic Drain, Waste, and Vent Pipe and Fittings . . . . . Table P3002.1(1), Table P3002.1(2), Table P3002.2, Table P3002.3, P3003.3.2
D2665—12	Specification for Poly (Vinyl Chloride) (PVC) Plastic Drain, Waste and Vent Pipe and Fittings . . . . . Table P3002.1(1), Table P3002.1(2), Table P3002.2, Table P3002.3, Table AG101.1
D2672—96a (2009)	Specification for Joints for IPS PVC Pipe Using Solvent Cement . . . . . Table P2906.4
D2683—2010e1	Specification for Socket-type Polyethylene Fittings for Outside Diameter-controlled Polyethylene Pipe and Tubing . . . . . Table M2105.5, M2105.11.1, P3010.5
D2729—11	Specification for Poly (Vinyl Chloride) (PVC) Sewer Pipe and Fittings . . . . . P3009.11, Table P3302.1, Table AG101.1
D2737—2012A	Specification for Polyethylene (PE) Plastic Tubing. . . . . Table P2906.4, Table AG101.1
D2751—05	Specification for Acrylonitrile-butadiene-styrene (ABS) Sewer Pipe and Fittings . . . . . Table P3002.2, Table P3002.3
D2822/ D2822M—05 (2011)e1	Specification for Asphalt Roof Cement, Asbestos Containing . . . . . Table R905.9.2
D2823/ D2823—05 (2011)e1	Specification for Asphalt Roof Coatings, Asbestos Containing . . . . . Table R905.9.2
D2824—06 (2012)e1	Specification for Aluminum-pigmented Asphalt Roof Coatings, Nonfibered, Asbestos Fibered and Fibered without Asbestos . . . . . Table R905.9.2, Table R905.11.2
D2846/D2846M—09BE1	Specification for Chlorinated Poly (Vinyl Chloride) (CPVC) Plastic Hot- and Cold-water Distribution Systems . . . . . Table M2101.1, Table P2906.4, Table P2906.5, Table P2906.6, P2906.9.1.2, P2906.9.1.3, Table AG101.1
D2855—96 (2010)	Standard Practice for Making Solvent-cemented Joints with Poly (Vinyl Chloride) (PVC) Pipe and Fittings. P3003.9.2
D2898—10	Test Methods for Accelerated Weathering of Fire-retardant-treated Wood for Fire Testing R802.1.5.4, R802.1.5.8
D2949—10	Specification for 3.25-in. Outside Diameter Poly (Vinyl Chloride) (PVC) Plastic Drain, Waste and Vent Pipe and Fittings . . . . . Table P3002.1(1), Table P3002.1(2), Table P3002.2, Table P3002.3, Table AG101.1
D3019—08	Specification for Lap Cement Used with Asphalt Roll Roofing, Nonfibered, Asbestos Fibered and Nonasbestos Fibered. . . . . Table R905.9.2, Table R905.11.2

INTERNATIONAL CODE COUNCIL®
Copyright © 2015 ICC. ALL RIGHTS RESERVED. Accessed by David Dammon on Jun 21, 2017 12:30:52 PM pursuant to License Agreement with ICC. No further reproduction or distribution authorized. ANY UNAUTHORIZED REPRODUCTION OR DISTRIBUTION IS A VIOLATION OF THE FEDERAL COPYRIGHT ACT AND THE LICENSE AGREEMENT, AND SUBJECT TO CIVIL AND CRIMINAL PENALTIES THEREUNDER.

ASTM—continued

D3034—08	Specification for Type PSM Poly (Vinyl Chloride) (PVC) Sewer Pipe and Fittings. . . . . Table P3002.2, Table P3002.3, Table P3202.1, Table AG101.1
D3035—2012e1	Specification for Polyethylene (PE) Plastic Pipe (DR-PR) Based On Controlled Outside Diameter . . . . . Table M2105.4, Table AG101.1
D3161/D3161M—2013	Test Method for Wind Resistance of Asphalt Shingles (Fan Induced Method) . . . . . R905.2.4.1, Table R905.2.4.1, R905.16.7
D3201—2013	Test Method for Hygroscopic Properties of Fire-retardant Wood and Wood-base Products R802.1.5.9
D3212—07	Specification for Joints for Drain and Sewer Plastic Pipes Using Flexible Elastomeric Seals P3003.3.1, P3003.9.1, P3003.12.2
D3261—12	Specification for Butt Heat Fusion Polyethylene (PE) Plastic Fittings for Polyethylene (PE) Plastic Pipe and Tubing . . . . . Table M2105.5, M2105.11.1
D3309—96a (2002)	Specification for Polybutylene (PB) Plastic Hot- and Cold-water Distribution System . . . . . Table M2101.1
D3311—11	Specification for Drain, Waste and Vent (DWV) Plastic Fittings Patterns P3002.3
D3350—2012e1	Specification for Polyethylene Plastic Pipe and Fitting Materials . . . . . Table M2101.1
D3462/D3462M—10A	Specification for Asphalt Shingles Made From Glass Felt and Surfaced with Mineral Granules R905.2.4
D3468—99 (2006)e01	Specification for Liquid-applied Neoprene and Chlorosulfanated Polyethylene Used in Roofing and Waterproofing R905.15.2
D3679—11	Specification for Rigid Poly (Vinyl Chloride) (PVC) Siding R703.11
D3737—2012	Practice for Establishing Allowable Properties for Structural Glued Laminated Timber (Glulam) R502.1.3, R602.1.3, R802.1.2
D3747—79 (2007)	Specification for Emulsified Asphalt Adhesive for Adhering Roof Insulation . . . . . Table R905.9.2, Table R905.11.2
D3909/D3909M—97b (2012)e1	Specification for Asphalt Roll Roofing (Glass Felt) Surfaced with Mineral Granules . . . . . R905.2.8.2, R905.5.4, Table R905.9.2
D4022/D4022M—2007 (2012)e1	Specification for Coal Tar Roof Cement, Asbestos Containing . . . . . Table R905.9.2
D4068—09	Specification for Chlorinated Polyethylene (CPE) Sheeting for Concealed Water Containment Membrane P2709.2, P2709.2.2
D4318—10	Test Methods for Liquid Limit, Plastic Limit and Plasticity Index of Soils R403.1.8.1
D4434/D4434M—12	Specification for Poly (Vinyl Chloride) Sheet Roofing R905.13.2
D4479/D4479M—07 (2012)e1	Specification for Asphalt Roof Coatings-asbestos-free . . . . . Table R905.9.2
D4551—12	Specification for Poly (Vinyl) Chloride (PVC) Plastic Flexible Concealed Water-containment Membrane P2709.2, P2709.2.1
D4586/D4586M—07 (2012)e1	Specification for Asphalt Roof Cement-asbestos-free . . . . . Table R905.9.2
D4601/D4601M—04 (2012)e1	Specification for Asphalt-coated Glass Fiber Base Sheet Used in Roofing . . . . . Table R905.9.2
D4637/D4637M—2013	Specification for EPDM Sheet Used in Single-ply Roof Membrane R905.12.2
D4829—11	Test Method for Expansion Index of Soils R403.1.8.1
D4869/D4869M—05 (2011)e01	Specification for Asphalt-saturated (Organic Felt) Underlayment Used in Steep Slope Roofing . . . . . R905.1.1, Table R905.1.1(1), R905.16.3, R905.16.4.2
D4897/ D4897M—01 (2009)	Specification for Asphalt Coated Glass-fiber Venting Base Sheet Used in Roofing . . . . . Table R905.9.2
D4990—97a (2005)e01	Specification for Coal Tar Glass Felt Used in Roofing and Waterproofing . . . . . Table R905.9.2
D5019—07a	Specification for Reinforced Nonvulcanized Polymeric Sheet Used in Roofing Membrane R905.12.2
D5055—2013	Specification for Establishing and Monitoring Structural Capacities of Prefabricated Wood I-joists R502.1.2
D5456—2013	Standard Specification for Evaluation of Structural Composite Lumber Products R502.1.5, R602.1.5, R802.1.7
D5516—09	Test Method for Evaluating the Flexural Properties of Fire-retardant-treated Softwood Plywood Exposed to the Elevated Temperatures R802.1.5.7
D5643/D5643M—06 (2012)e1	Specification for Coal Tar Roof Cement Asbestos-free . . . . . Table R905.9.2
D5664—10	Test Methods For Evaluating the Effects of Fire-retardant Treatments and Elevated Temperatures on Strength Properties of Fire-retardant-treated Lumber R802.1.5.7
D5665—99a (2006)	Specification for Thermoplastic Fabrics Used in Cold-applied Roofing and Waterproofing . . . . . Table R905.9.2
D5726—98 (2005)	Specification for Thermoplastic Fabrics Used in Hot-applied Roofing and Waterproofing . . . . . Table R905.9.2

INTERNATIONAL CODE COUNCIL®
Copyright © 2015 ICC. ALL RIGHTS RESERVED. Accessed by David Dammon on Jun 21, 2017 12:30:52 PM pursuant to License Agreement with ICC. No further reproduction or distribution authorized. ANY UNAUTHORIZED REPRODUCTION OR DISTRIBUTION IS A VIOLATION OF THE FEDERAL COPYRIGHT ACT AND THE LICENSE AGREEMENT, AND SUBJECT TO CIVIL AND CRIMINAL PENALTIES THEREUNDER.

ASTM—continued

D6083—05e01	Specification for Liquid-applied Acrylic Coating Used in Roofing . . . . . Table R905.9.2, Table R905.11.2, Table R905.14.3, R905.15.2
D6162—2000a (2008)	Specification for Styrene Butadiene Styrene (SBS) Modified Bituminous Sheet Materials Using a Combination of Polyester and Glass Fiber Reinforcements. . . . . Table R905.11.2
D6163—00 (2008)	Specification for Styrene Butadiene Styrene (SBS) Modified Bituminous Sheet Materials Using Glass Fiber Reinforcements . . . . . Table R905.11.2
D6164/D6164M—11	Specification for Styrene Butadiene Styrene (SBS) Modified Bituminous Sheet Materials Using Polyester Reinforcements . . . . . Table R905.11.2
D6222/D6222M—11	Specification for Atactic Polypropylene (APP) Modified Bituminous Sheet Materials Using Polyester Reinforcements . . . . . Table R905.11.2
D6223/D6223M—02 (2011)e1	Specification for Atactic Polypropylene (APP) Modified Bituminous Sheet Materials Using a Combination of Polyester and Glass Fiber Reinforcement . . . . . Table R905.11.2
D6298—05e1	Specification for Fiberglass-reinforced Styrene Butadiene Styrene (SBS) Modified Bituminous Sheets with a Factory Applied Metal Surface . . . . . Table R905.11.2
D6305—08	Practice for Calculating Bending Strength Design Adjustment Factors for Fire-retardant-treated Plywood Roof Sheathing R802.1.5.6
D6380—03 (2009)	Standard Specification for Asphalt Roll Roofing (Organic Felt). . . . . Table R905.1.1(1), R905.2.8.2, R905.5.4
D6694—08	Standard Specification for Liquid-applied Silicone Coating Used in Spray Polyurethane Foam Roofing Systems . . . . . Table R905.14.3, R905.15.2
D6754/D6745M—10	Standard Specification for Ketone-ethylene-ester-based Sheet Roofing. R905.13.2
D6757—2013	Standard Specification for Inorganic Underlayment for Use with Steep Slope Roofing Products . . . . . Table R905.1.1(1), R905.1.1, R905.16.3, R905.16.4.2
D6841—08	Standard Practice for Calculating Design Value Treatment Adjustment Factors for Fire-retardant-treated Lumber R802.1.5.7
D6878/D6878—11a	Standard Specification for Thermoplastic-polyolefin-based Sheet Roofing R905.13.2
D6947—07	Standard Specification for Liquid Applied Moisture Cured Polyurethane Coating Used in Spray Polyurethane Foam Roofing System . . . . . Table R905.14.3, R905.15.2
D7032—10a	Standard Specification for Establishing Performance Ratings for Wood-plastic Composite Deck Boards and Guardrail Systems (Guards or Handrails) . . . R507.3, R507.3.1, 507.3.4, 507.3.4
D7158—D7158M—2011	Standard Test Method for Wind Resistance of Sealed Asphalt Shingles (Uplift Force/Uplift Resistance Method) . . . . . R905.2.4.1, Table R905.2.4.1
D7254—07	Standard Specification for Polypropylene (PP) siding. . . . . Table R703.3(1), R703.14
D7425/D7425M—11	Standard Specification for Spray Polyurethane Foam Used for Roofing Application R905.14.2
D7672—2012	Standard Specification for Evaluating Structural Capacities of Rim Board Products and Assemblies. R502.1.7, R602.1.7, R802.1.7
D7793—13	Standard Specification for Insulated Vinyl Siding. . . . . R703.13, Table R703.3(1)
E84—2013a	Test Method for Surface Burning Characteristics of Building Materials R202, R302.9.3, R302.9.4, R302.10.1, R302.10.2, R316.3, R316.5.9, R316.5.11, R507.3.2, R802.1.5, M1601.3, M1601.5.2
E96/E96M—2013	Test Method for Water Vapor Transmission of Materials. . . . . R202, Table R610.3.1, M1411.6 M1601.4.6
E108—2011	Test Methods for Fire Tests of Roof Coverings. R302.2.2, R902.1
E119—2012a	Test Methods for Fire Tests of Building Construction and Materials . . . . . Table R302.1(1), Table R302.1(2), R302.2, R302.2.2, R302.3, R302.4.1, R302.11.1
E136—2012	Test Method for Behavior of Materials in a Vertical Tube Furnace at 750°C. R202, R302.11
E283—04	Test Method for Determining the Rate of Air Leakage Through Exterior Windows, Curtain Walls and Doors Under Specified Pressure Differences Across the Specimen N1102.4.5
E330—02	Test Method for Structural Performance of Exterior Windows, Curtain Walls and Doors by Uniform Static Air Pressure Difference R609.4, R609.5, R612.4, R703.1.2
E331—00 (2009)	Test Method for Water Penetration of Exterior Windows, Skylights, Doors and Curtain Walls by Uniform Static Air Pressure Difference R703.1.1
E779—10	Standard Test Method for Determining Air Leakage Rate by Fan Pressurization N1102.4.1.2
E814—2013	Test Method for Fire Tests of Through-penetration Firestops. R302.4.1.2
E970—2010	Test Method for Critical Radiant Flux of Exposed Attic Floor Insulation Using a Radiant Heat Energy Source. R302.10.5
E1509—12	Standard Specification for Room Heaters, Pellet Fuel-burning Type M1410.1
E1602—03 (2010)e1	Guide for Construction of Solid Fuel Burning Masonry Heaters R1002.2
E1827—11	Standard Test Methods for Determining Airtightness of Building Using an Orifice Blower Door N1102.4.1.2
E1886—05	Test Method for Performance of Exterior Windows, Curtain Walls, Doors and Storm Shutters Impacted by Missile(s) and Exposed to Cyclic Pressure Differentials R301.2.1.2, R609.6.1

INTERNATIONAL CODE COUNCIL®
Copyright © 2015 ICC. ALL RIGHTS RESERVED. Accessed by David Dammon on Jun 21, 2017 12:30:52 PM pursuant to License Agreement with ICC. No further reproduction or distribution authorized. ANY UNAUTHORIZED REPRODUCTION OR DISTRIBUTION IS A VIOLATION OF THE FEDERAL COPYRIGHT ACT AND THE LICENSE AGREEMENT, AND SUBJECT TO CIVIL AND CRIMINAL PENALTIES THEREUNDER.

ASTM—continued

E1996—2012a	Standard Specification for Performance of Exterior Windows, Curtain Walls, Doors and Impact Protective Systems Impacted by Windborne Debris in Hurricanes R301.2.1.2, R301.2.1.2.1, R609.6.1
E2178—2013	Standard Test Method for Air Permeance of Building Materials R202
E2231—09	Standard Practice for Specimen Preparation and Mounting of Pipe and Duct Insulation Materials to Assess Surface Burning Characteristics M1601.3
E2273—03 (2011)	Standard Test Method for Determining the Drainage Efficiency of Exterior Insulation and Finish Systems (EIFS) Clad Wall Assemblies R703.9.2
E2568—09e1	Standard Specification for PB Exterior Insulation and Finish Systems R703.9.1, R703.9.2
E2570—07	Standard Test Methods for Evaluating Water-resistive Barrier (WRB) Coatings Used Under Exterior Insulation and Finish Systems (EIFS) or EIFS with Drainage R703.9.2
E2634—11	Standard Specification for Flat Wall Insulating Concrete Form (ICF) Systems R404.1.3.3.6.1, R608.4.4
F405—05	Specification for Corrugated Polyethylene (PE) Pipe and Fittings. . . . . Table P3009.11, Table P3302.1, Table AG101.1
F409—12	Specification for Thermoplastic Accessible and Replaceable Plastic Tube and Tubular Fittings. . . . . Table P2701.1, P2702.2, P2702.3
F437—09	Specification for Threaded Chlorinated Poly (Vinyl Chloride) (CPVC) Plastic Pipe Fittings, Schedule 80. . . . . Table P2906.6
F438—09	Specification for Socket-type Chlorinated Poly (Vinyl Chloride) (CPVC) Plastic Pipe Fittings, Schedule 40. . . . . Table P2906.6
F439—12	Specification for Chlorinated Poly (Vinyl Chloride) (CPVC) Plastic Pipe Fittings, Schedule 80. . . . . Table P2906.6
F441/F441M—13	Specification for Chlorinated Poly (Vinyl Chloride) (CPVC) Plastic Pipe, Schedules 40 and 80. . . . . Table P2906.4, Table P2906.5, Table AG101.1
F442/F442M—13	Specification for Chlorinated Poly (Vinyl Chloride) (CPVC) Plastic Pipe (SDR-PR) . . . . . Table P2906.4, Table P2906.5, Table AG101.1
F477—10	Specification for Elastomeric Seals (Gaskets) for Joining Plastic Pipe P2906.17, P3003.13
F493—10	Specification for Solvent Cements for Chlorinated Poly (Vinyl Chloride) (CPVC) Plastic Pipe and Fittings P2906.9.1.2, P2906.9.1.3
F628—08	Specification for Acrylonitrile-butadiene-styrene (ABS) Schedule 40 Plastic Drain, Waste and Vent Pipe with a Cellular Core . . . . . Table P3002.1(1), Table P3002.1(2), Table P3002.2, Table P3002.3, P3003.3.2, Table AG101.1
F656—10	Specification for Primers for Use in Solvent Cement Joints of Poly (Vinyl Chloride) (PVC) Plastic Pipe and Fittings P2906.9.1.4, P3003.9.2
F714—13	Specification for Polyethylene (PE) Plastic Pipe (SDR-PR) Based on Outside Diameter. . . . . Table P3002.2, P3010.4
F876—13	Specification for Cross-linked Polyethylene (PEX) Tubing. . . . . Table M2101.1, Table P2906.4, Table P2906.5, Table AG101.1
F877—11A	Specification for Cross-linked Polyethylene (PEX) Plastic Hot- and Cold-water Distribution Systems . . . . . Table M2101.1, Table P2906.4, Table P2906.5, Table P2906.6
F891—10	Specification for Coextruded Poly (Vinyl Chloride) (PVC) Plastic Pipe with a Cellular Core. . . . . Table P3002.1(1), Table P3002.1(2), Table P3002.2, Table P3302.1, Table AG101.1
F1055—13	Specification for Electrofusion Type Polyethylene Fittings for Outside Diameter Controlled Polyethylene and Crosslinked Polyethylene Pipe and Tubing . . . . . Table M2105.5, M2105.11.2
F1281—11	Specification for Cross-linked Polyethylene/Aluminum/Cross-linked Polyethylene (PEX-AL-PEX) Pressure Pipe . . . . . Table M2101.1, Table P2906.4, Table P2906.5, Table P2906.6, P2506.11.1, Table AG101.1
F1282—10	Specification for Polyethylene/Aluminum/Polyethylene (PE-AL-PE) Composite Pressure Pipe. . . . . Table M2101.1, Table P2906.4, Table P2906.5, Table P2906.6, P2906.11.1, Table AG101.1
F1412—09	Specification for Polyolefin Pipe and Fittings for Corrosive Waste Drainage. . . . . Table P3002.1(2), Table P3002.2, Table P3002.3, P3003.11.1
F1488—09e1	Specification for Coextruded Composite Pipe . . . . . Table P3002.1(1), Table P3002.1(2), Table P3002.2, Table P3009.11
F1554—07a	Specification for Anchor Bolts, Steel, 36, 55 and 105-ksi Yield Strength. R608.5.2.2
F1667—11A e1	Specification for Driven Fasteners, Nails, Spikes and Staples. . . . . R317.3, R703.3.2, R703.6.3, Table R703.15.1, Table R703.15.2, R905.2.5
F1807—13	Specification for Metal Insert Fittings Utilizing a Copper Crimp Ring for SDR9 Cross-linked Polyethylene (PEX) Tubing and SDR9 Polyethylene of Raised Temperature (PE-RT) Tubing. . . . . Table M2101.1, Table P2906.6
F1866—07	Specification for Poly (Vinyl Chloride) (PVC) Plastic Schedule 40 Drainage and DWV Fabricated Fittings . . . . . Table P3002.3

INTERNATIONAL CODE COUNCIL®
Copyright © 2015 ICC. ALL RIGHTS RESERVED. Accessed by David Dammon on Jun 21, 2017 12:30:52 PM pursuant to License Agreement with ICC. No further reproduction or distribution authorized. ANY UNAUTHORIZED REPRODUCTION OR DISTRIBUTION IS A VIOLATION OF THE FEDERAL COPYRIGHT ACT AND THE LICENSE AGREEMENT, AND SUBJECT TO CIVIL AND CRIMINAL PENALTIES THEREUNDER.

ASTM—continued

F1924—12	Standard Specification for Plastic Mechanical Fittings for Use on Outside Diameter Controlled Polyethylene Gas Distribution Pipe and Tubing M2105.11.1
F1960—12	Specification for Cold Expansion Fittings with PEX Reinforcing Rings for Use with Cross-linked Polyethylene (PEX) Tubing . . . . . Table M2101.1, Table P2906.6
F1970—12	Standard Specification for Special Engineered Fittings, Appurtenances or Valves for Use in Poly (Vinyl Chloride) (PVC) or Chlorinated Poly (Vinyl Chloride) (CPVC) Systems . . . . . M2105.5, Table 2903.9.4
F1973—08	Standard Specification for Factory Assembled Anodeless Risers and Transition Fittings in Polyethylene (PE) and Polyamide 11 (PA 11) Fuel Gas Distribution Systems G2415.15.2
F1974—09	Specification for Metal Insert Fittings for Polyethylene/Aluminum/Polyethylene and Cross-linked Polyethylene/Aluminum/Cross-linked Polyethylene Composite Pressure Pipe . . . . . P2506.11.1, Table P2906.6
F1986—01 (2011)	Multilayer Pipe Type 2, Compression Joints for Hot and Cold Drinking Water Systems . . . . . Table P2906.4, Table P2906.5, Table P2906.6
F2080—12	Specification for Cold-expansion Fittings with Metal Compression-sleeves for Cross-linked Polyethylene (PEX) Pipe P2906.6
F2090—10	Specification for Window Fall Prevention Devices—with Emergency Escape (Egress) Release Mechanisms R310.1.1, R312.2.1, R312.2.2, R612.2, R612.3
F2098—08	Standard Specification for Stainless Steel Clamps for Securing SDR9 Cross-linked Polyethylene (PEX) Tubing to Metal Insert and Plastic Insert Fittings . . . . . Table M2101.1, Table P2906.6
F2159—11	Standard Specification for Plastic Insert Fittings Utilizing a Copper Crimp Ring for SDR9 Cross-linked Polyethylene (PEX) Tubing and SDR9 Polyethylene of Raised Temperature (PE-RT) Tubing . . . . . Table P2906.6
F2262—09	Standard Specification for Cross-linked Polyethylene/Aluminum/Cross-linked Polyethylene Tubing OD Controlled SDR9. . . . . Table P2906.4, Table P2906.5
F2389—10	Standard for Pressure-rated Polypropylene (PP) Piping Systems . . . . . Table M2105.12.1, Table P2906.4, Table P2906.5, Table P2906.6, P2906.10.1, Table AG101.1
F2434—09	Standard Specification for Metal Insert Fittings Utilizing a Copper Crimp Ring for Polyethylene/Aluminum/Cross-linked Polyethylene (PEX-AL-PEX) Tubing . . . . . Table P2906.6
F2623—08	Standard Specification for Polyethylene of Raised Temperature (PE-RT) SDRG Tubing . . . . . Table M2101.1, Table AG101.1
F2735—09	Standard Specification for Plastic Insert Fittings for SDR9 Cross-linked Polyethylene (PEX) and Polyethylene of Raised Temperature (PE-RT) Tubing . . . . . Table M2101.1, Table P2906.6
F2769—10	Polyethylene or Raised Temperature (PE-RT) Plastic Hot and Cold-Water Tubing and Distribution Systems. . . . . Table M2101.1, Table P2906.4, Table P2906.5, Table P2906.6, Table AG101.1
F2806—10	Standard Specification for Acrylonitrile-butadiene-styrene (ABS) Plastic Pipe (Metric SDR-PR) . . . . . Table M2101.1
F2855—12	Standard Specification for Chlorinated Poly (Vinyl Chloride)/ Aluminum/Chlorinated Poly (Vinyl Chloride) (CPVC AL CPVC) Composite Pressure Tubing . . . . . Table P2906.4, Table P2906.5, Table AG101.1
F2969—12	Standard Specification for Acrylonitrile-butadiene-styrene (ABS) IPS Dimensioned Pressure Pipe . . . . . Table M2101.1

AWC

American Wood Council
222 Catocin Circle, Suite 201
Leesburg, VA 20175

Standard reference number	Title	Referenced in code section number
AWC STJR—2015	Span Tables for Joists and Rafters	R502.3, R802.4, R802.5
AWC WFCM—2015	Wood Frame Construction Manual for One- and Two-family Dwellings	R301.1.1, R301.2.1.1, R602.10.8.2, R608.9.2, Figure R608.9(9), R608.10
ANSI AWC NDS—2015	National Design Specification (NDS) for Wood Construction—with 2005 Supplement	R404.2.2, R502.2, Table R503.1, R602.3, R608.9.2, Table R703.15.1, Table R703.15.2, R802.2
AWC PWF—2015	Permanent Wood Foundation Design Specification	R317.3.2, R401.1, R404.2.3

INTERNATIONAL CODE COUNCIL®
Copyright © 2015 ICC. ALL RIGHTS RESERVED. Accessed by David Dammon on Jun 21, 2017 12:30:52 PM pursuant to License Agreement with ICC. No further reproduction or distribution authorized. ANY UNAUTHORIZED REPRODUCTION OR DISTRIBUTION IS A VIOLATION OF THE FEDERAL COPYRIGHT ACT AND THE LICENSE AGREEMENT, AND SUBJECT TO CIVIL AND CRIMINAL PENALTIES THEREUNDER.

AWPA

American Wood Protection Association
P.O. Box 361784
Birmingham, AL 35236-1784

Standard reference number	Title	Referenced in code section number
C1—03	All Timber Products—Preservative Treatment by Pressure Processes	R902.2
M4—11	Standard for the Care of Preservative-treated Wood Products	R317.1.1, R318.1.2
U1—14	USE CATEGORY SYSTEM: User Specification for Treated Wood Except Section 6 Commodity Specification H	R317.1, R402.1.2, R504.3, R703.6.3, R905.7.5, Table R905.8.5, R905.8.6

AWS

American Welding Society
8669 NW 36 Street, #130
Doral, FL 33166

Standard reference number	Title	Referenced in code section number
A5.8M/A5.8—2011	Specifications for Filler Metals for Brazing and Braze Welding	P3003.6.1
ANSI/AWS A5.31M/A5.31—2012	Specification for Fluxes for Brazing and Braze Welding Edition: 2nd	M2103.3, M2202.2, P2906.14, M2103.3

AWWA

American Water Works Association
6666 West Quincy Avenue
Denver, CO 80235

Standard reference number	Title	Referenced in code section number
C104/A21.4—08	Cement-mortar Lining for Ductile-iron Pipe and Fittings for Water	P2906.4
C110/A21.10—12	Ductile-iron and Gray-iron Fittings	Table P2906.6,
C115/A21.15—11	Flanged Ductile-iron Pipe with Ductile-iron or Gray-iron Threaded Flanges	Table P2906.4
C151/A21.51—09	Ductile-iron Pipe, Centrifugally Cast, for Water	Table P2906.4
C153/A21.53—11	Ductile-iron Compact Fittings for Water Service	Table P2906.6
C500—09	Standard for Metal-seated Gate Valves for Water Supply Service	Table P2903.9.4
C504—10	Standard for Rubber-seated Butterfly Valves	Table P2903.9.4
C507—11	Standard for Ball Valves, 6 In. Through 60 In.	Table P2903.9.4
C510—07	Double Check Valve Backflow Prevention Assembly	Table P2902.3, P2902.3.6
C511—07	Reduced-pressure Principle Backflow Prevention Assembly	Table P2902.3, P2902.3.5, P2902.5.1
C901—08	Polyethylene (PE) Pressure Pipe and Tubing 1/2 in. (13 mm) through 3 in. (76 mm) for Water Service	P2906.4, Table AG101.1
C903—05	Polyethylene-aluminum-polyethylene & Crosslinked Polyethylene Composite Pressure Pipe, 1/2 in. (12 mm) through 2 in. (50 mm), for Water Service	Table M2101
C904—06	Cross-linked Polyethylene (PEX) Pressure Pipe, 1/2 in. (12 mm) through 3 in. (76 mm) for Water Service	P2906.4, Table AG101.1

CEN

European Committee for Standardization (EN)
Central Secretariat
Rue de Stassart 36
B-10 50 Brussels

Standard reference number	Title	Referenced in code section number
EN 15250-2007	Slow Heat Release Appliances Fired by Solid Fuel Requirements and Test Methods	R1002.5

INTERNATIONAL CODE COUNCIL®
Copyright © 2015 ICC. ALL RIGHTS RESERVED. Accessed by David Dammon on Jun 21, 2017 12:30:52 PM pursuant to License Agreement with ICC. No further reproduction or distribution authorized. ANY UNAUTHORIZED REPRODUCTION OR DISTRIBUTION IS A VIOLATION OF THE FEDERAL COPYRIGHT ACT AND THE LICENSE AGREEMENT, AND SUBJECT TO CIVIL AND CRIMINAL PENALTIES THEREUNDER.

CGSB

Canadian General Standards Board
Place du Portage 111, 6B1
11 Laurier Street
Gatineau, Quebec, Canada KIA 1G6

Standard reference number	Title	Referenced in code section number
CAN/CGSB-37.54—95	Polyvinyl Chloride Roofing and Waterproofing Membrane	R905.13.2
37-GP-52M—(1984)	Roofing and Waterproofing Membrane, Sheet Applied, Elastomeric	R905.12.2
37-GP-56M—(1980)	Membrane, Modified Bituminous, Prefabricated and Reinforced for Roofing—with December 1985 Amendment	Table R905.11.2

CISPI

Cast Iron Soil Pipe Institute
5959 Shallowford Road, Suite 419
Chattanooga, TN 37421

Standard reference number	Title	Referenced in code section number
301—04a	Standard Specification for Hubless Cast Iron Soil Pipe and Fittings for Sanitary and Storm Drain, Waste and Vent Piping Applications	Table P3002.1(1), Table P3002.1(2), Table P3002.2, Table P3002.3, Table P3302.1
310—04	Standard Specification for Coupling for Use in Connection with Hubless Cast Iron Soil Pipe and Fittings for Sanitary and Storm Drain, Waste and Vent Piping Applications	P3003.4.3

CPA

Composite Panel Association
19465 Deerfield Avenue, Suite 306
Leesburg, VA 20176

Standard reference number	Title	Referenced in code section number
ANSI A135.4—2012	Basic Hardboard	Table R602.3(2)
ANSI A135.5—2012	Prefinished Hardboard Paneling	R702.5
ANSI A135.6—2012	Engineered Wood Siding	R703.5
ANSI A135.7—2012	Engineered Wood Trim	R703.5
A208.1—2009	Particleboard	R503.3.1, R602.1.9, R605.1

CPSC

Consumer Product Safety Commission
4330 East West Highway
Bethesda, MD 20814-4408

Standard reference number	Title	Referenced in code section number
16 CFR, Part 1201—(2002)	Safety Standard for Architectural Glazing	R308.1.1, R308.3.1, Table R308.3.1(1)
16 CFR, Part 1209—(2002)	Interim Safety Standard for Cellulose Insulation	R302.10.3
16 CFR, Part 1404—(2002)	Cellulose Insulation	R302.10.3

INTERNATIONAL CODE COUNCIL®
Copyright © 2015 ICC. ALL RIGHTS RESERVED. Accessed by David Dammon on Jun 21, 2017 12:30:52 PM pursuant to License Agreement with ICC. No further reproduction or distribution authorized. ANY UNAUTHORIZED REPRODUCTION OR DISTRIBUTION IS A VIOLATION OF THE FEDERAL COPYRIGHT ACT AND THE LICENSE AGREEMENT, AND SUBJECT TO CIVIL AND CRIMINAL PENALTIES THEREUNDER.

CSA

CSA Group
8501 East Pleasant Valley Road
Cleveland, OH 44131-5516

Standard reference number	Title	Referenced in code section number
AAMA/WDMA/CSA 101/I.S.2/A440—11	North American Fenestration Standard/Specification for Windows, Doors and Unit Skylights	R308.6.9, R609.3, N1102.4.3
ANSI/CSA America FCI—2012	Stationary Fuel Cell Power Systems	M1903.1
ASME A112.3.4—2013/ CSA B45.9—13	Macerating Toilet Systems and Related Components	Table P2701.1, P3007.5
ASME A112.18.1—2012/ CSA B125.1—2012	Plumbing Supply Fittings	Table P2701.1, P2708.4, P2708.5, P2722.1, P2722.2, P2722.3, P2902.2, Table P2903.9.4
ASME A112.18.2—2011/ CSA B125.2—2011	Plumbing Waste Fittings	Table P2701.1, P2702.2
A112.18.6/ CSA B125.6—2009	Flexible Water Connectors	P2906.7
ASME A112.19.1—2013/ CSA B45.2—13	Enameled Cast-iron and Enameled Steel Plumbing Fixtures	Table 2701.1, P2711.1
ASME A112.19.2—2013/ CSA B45.1—13	Ceramic Plumbing Fixtures	Table P2701.1, P2705.1, P2711.1, P2712.1, P2712.2, P2712.9
ASME A112.19.3—2008/ CSA B45.4—08 (R2013)	Stainless Steel Plumbing Fixtures	Table P2701.1, P2705.1, P2711.1, P2712.1
ASSE 1016/ASME 112.1016/ CSA B125.16—2011	Performance Requirements for Automatic Compensating Valves for Individual Showers and Tub/Shower Combinations	Table P2701.1, P2708.4, P2722.2
A112.19.5—2011/ CSA B45.15—2011	Flush Valves and Spuds for Water-closets, Urinals and Tanks	Table P2701.1
A112.19.7—2012/ CSA B45.10—2012	Hydromassage Bathtub Systems	Table P2701.1
ASME A17.1/ CSA B44—2013	Safety Code for Elevators and Escalators	R321.1
CSA 8—93	Requirements for Gas Fired Log Lighters for Wood Burning Fireplaces—with revisions through January 1999	G2433.1
A257.1M—2009	Circular Concrete Culvert, Storm Drain, Sewer Pipe and Fittings	Table P3002.2
A257.2M—2009	Reinforced Circular Concrete Culvert, Storm Drain, Sewer Pipe and Fittings	Table P3002.2, P3003.13
A257.3M—2009	Joints for Circular Concrete Sewer and Culvert Pipe, Manhole Sections and Fittings Using Rubber Gaskets	P3003.5, P3003.18
B64.1.1—11	Vacuum Breakers, Atmospheric Type (AVB)	Table P2902.3, P2902.3.2
B64.1.2—11	Pressure Vacuum Breakers (PVB)	Table P2902.3, P2902.3.4
B64.1.3—11	Spill Resistant Pressure Vacuum Breakers (SRPVB)	P2902.3.2
B64.2—11	Vacuum Breakers, Hose Connection Type (HCVP)	Table P2902.3, P2902.3.2
B64.2.1—11	Hose Connection Vacuum Breakers (HCVB) with Manual Draining Feature	Table P2902.3, P2902.3.2
B64.2.1.1—11	Hose Connection Dual Check Vacuum Breakers (HCDVB)	Table P2902.3, P2902.3.2
B64.2.2—11	Vacuum Breakers, Hose Connection Type (HCVP) with Automatic Draining Feature	Table P2902.3, P2902.3.2
B64.3—11	Dual Check Backflow Preventers with Atmospheric Port (DCAP)	Table P2902.3, P2902.5.1
B64.4—11	Backflow Preventers, Reduced Pressure Principle Type (RP)	Table P2902.3, P2902.3.5, P2903.5.1
B64.4.1—11	Reduced Pressure Principle for Fire Sprinklers (RPF)	Table P2902.3, P2902.3.5
B64.5—11	Double Check Backflow Preventers (DCVA)	Table P2902.3, P2902.3.6
B64.5.1—11	Double Check Valve Backflow Preventers, Type for Fire Systems (DCVAF)	Table P2902.3, P2902.3.6
B64.6—11	Dual Check Valve Backflow Preventers (DuC)	Table P2902.3, P2902.3.7
B64.7—11	Laboratory Faucet Vacuum Breakers (LFVB)	Table P2902.3, P2902.3.2
B125.3—12	Plumbing Fittings	Table 2701.1, P2713.3, P2721.2, Table P2902.3, P2902.4.1, Table P2903.9.4
B137.1—13	Polyethylene (PE) Pipe, Tubing and Fittings for Cold Water Pressure Services	Table P2906.4, Table P2906.6
B137.2—13	Polyvinylchloride PVC Injection-moulded Gasketed Fittings for Pressure Applications	Table P2906.6
B137.3—13	Rigid Poly (Vinyl Chloride) (PVC) Pipe for Pressure Applications	Table P2906.4, Table 2906.6, P3003.9.2, Table AG101.1

INTERNATIONAL CODE COUNCIL®
Copyright © 2015 ICC. ALL RIGHTS RESERVED. Accessed by David Dammon on Jun 21, 2017 12:30:52 PM pursuant to License Agreement with ICC. No further reproduction or distribution authorized. ANY UNAUTHORIZED REPRODUCTION OR DISTRIBUTION IS A VIOLATION OF THE FEDERAL COPYRIGHT ACT AND THE LICENSE AGREEMENT, AND SUBJECT TO CIVIL AND CRIMINAL PENALTIES THEREUNDER.

CSA—continued

B137.5—13	Cross-linked Polyethylene (PEX) Tubing Systems for Pressure Applications . . . Table P2906.4, Table P2906.5, Table P2906.6, Table AG101.1
B137.6—13	Chlorinated polyvinylchloride CPVC Pipe, Tubing and Fittings For Hot- and Cold-water Distribution Systems . . . . . Table P2906.4, Table P2906.5, Table 2906.6, Table AG101.1
B137.9—13	Polyethylene/Aluminum/Polyethylene (PE-AL-PE) Composite Pressure Pipe Systems . . . . . Table M2101.1, P2506.11.1, Table P2906.4
B137.10—13	Cross-linked Polyethylene/Aluminum/Cross-linked Polyethylene (PE-AL-PE) Composite Pressure Pipe Systems . . . . . Table M2101.1, Table P2906.4, Table P2906.5, Table P2906.6, P2906.11.1
B137.11—13	Polypropylene (PP-R) Pipe and Fittings for Pressure Applications. . . . . Table P2906.4, Table 2906.5, Table P2906.6, Table AG101.1
B181.1—11	Acrylonitrile-butadiene-styrene (ABS) Drain, Waste and Vent Pipe and Pipe Fittings. . . . . Table P3002.1(1), Table P3002.1(2), Table P3002.3, P3003.3.2, P3003.8.2
B181.2—11	Polyvinylchloride (PVC) and chlorinated polyvinylchloride (CPVC) Drain, Waste and Vent Pipe and Pipe Fittings. . . . . Table P3002.1(1), Table P3002.1(2), P3003.9.2, P3003.14.2,P3008.2, Table P3302.1
B181.3—11	Polyolefin and polyvinylidene (PVDF) Laboratory Drainage Systems. . . . . Table P3002.1(1), Table P3002.1(2), Table P3002.2, Table P3002.3, P3003.11.1
B182.2—11	PSM Type polyvinylchloride (PVC) Sewer Pipe and Fittings. . . . Table P3002.2, Table P3002.3, Table P3302.1
B182.4—11	Profile polyvinylchloride (PVC) Sewer Pipe & Fittings . . . . . Table P3002.2, Table P3002.3, Table P3302.1
B182.6—11	Profile Polyethylene (PE) Sewer Pipe and Fittings for leak-proof Sewer Applications . . . . . Table P3302.1
B182.8—11	Profile Polyethylene (PE) Storm Sewer and Drainage Pipe and Fittings. . . . . Table P3302.1
B356—10	Water Pressure Reducing Valves for Domestic Water Supply Systems P2903.3.1
B483.1—14	Drinking Water Treatment Systems. P2909.1, P2909.2
B602—10	Mechanical Couplings for Drain, Waste and Vent Pipe and Sewer Pipe. P3003.3.1, P3003.4.3,P3003.5, P3003.9.1, P3003.10.1, P3003.12.2, P3003.13
CSA B45.5—11/ IAPMO Z124—11	Plastic Plumbing Fixtures. . . . . Table P2701.1, P2711.1, P2711.2, P2712.1
CSA C448 Series-02-CAN/CSA—2002	Design and Installation of Earth Energy Systems— First Edition; Update 2: October 2009; Consolidated Reprint 10/2009. . . . . Table M2105.4, Table M2105.5
O325—07	Construction Sheathing R503.2.1, R602.1.8, R604.1, R803.2.1
O437-Series—93	Standards on OSB and Waferboard (Reaffirmed 2006). R503.2.1, R602.1.8, R604.1, R803.2.1
UL/CSA/ANCE 60335-2-40—2012	Standard for Household and Similar Electrical Appliances, Part 2: Particular Requirements for Motor-compressors M1403.1, M1412.1, M1413.1

CSSB

Cedar Shake & Shingle Bureau
P. O. Box 1178
Sumas, WA 98295-1178

Standard reference number	Title	Referenced in code section number
CSSB—97	Grading and Packing Rules for Western Red Cedar Shakes and Western Red Shingles of the Cedar Shake and Shingle Bureau	R702.6, R703.6, Table R905.7.4, Table R905.8.5

DASMA

Door and Access Systems Manufacturers Association International
1300 Summer Avenue
Cleveland, OH 44115-2851

Standard reference number	Title	Referenced in code section number
108—12	Standard Method for Testing Garage Doors: Determination of Structural Performance Under Uniform Static Air Pressure Difference.	R609.14
115—12	Standard Method for Testing Garage Doors: Determination of Structural Performance Under Missile Impact and Cyclic Wind Pressure.	R301.2.1.2

INTERNATIONAL CODE COUNCIL®
Copyright © 2015 ICC. ALL RIGHTS RESERVED. Accessed by David Dammon on Jun 21, 2017 12:30:52 PM pursuant to License Agreement with ICC. No further reproduction or distribution authorized. ANY UNAUTHORIZED REPRODUCTION OR DISTRIBUTION IS A VIOLATION OF THE FEDERAL COPYRIGHT ACT AND THE LICENSE AGREEMENT, AND SUBJECT TO CIVIL AND CRIMINAL PENALTIES THEREUNDER.

DOC

United States Department of Commerce
1401 Constitution Avenue, NW
Washington, DC 20230

Standard reference number	Title	Referenced in code section number
PS 1—09	Structural Plywood	R404.2.1, Table R404.2.3, R503.2.1, R602.1.8, R604.1, R610.3.2, R803.2.1
PS 2—10	Performance Standard for Wood-based Structural-use Panels	R404.2.1, Table R404.2.3, R503.2.1, R602.1.8, R604.1, R610.3.2, Table 610.3.2, R803.2.1
PS 20—05	American Softwood Lumber Standard	R404.2.1, R502.1.1, R602.1.1, R802.1.1

DOTn

Department of Transportation
1200 New Jersey Avenue SE
East Building, 2nd floor
Washington, DC 20590

Standard reference number	Title	Referenced in code section number
49 CFR, Parts 192.281(e) & 192.283 (b) (2009)	Transportation of Natural and Other Gas by Pipeline: Minimum Federal Safety Standards	G2414.6.1

FEMA

Federal Emergency Management Agency
500 C Street, SW
Washington, DC 20472

Standard reference number	Title	Referenced in code section number
FEMA TB-2—08	Flood Damage-resistant Materials Requirements	R322.1.8
FEMA TB-11—01	Crawlspace Construction for Buildings Located in Special Flood Hazard Area	R408.7

FM

Factory Mutual Global Research
Standards Laboratories Department
1301 Atwood Avenue, P. O. Box 7500
Johnson, RI 02919

Standard reference number	Title	Referenced in code section number
4450—(1989)	Approval Standard for Class 1 Insulated Steel Deck Roofs—with Supplements through July 1992	R906.1
4880—(2010)	American National Standard for Evaluating Insulated Wall or Wall and Roof/Ceiling Assemblies, Plastic Interior Finish Materials, Plastic Exteriorv Building Panels, Wall/Ceiling Coating Systems, Interior and Exterior Finish Systems	R316.6

GA

Gypsum Association
6525 Belcrest Road, Suite 480
Hyattsville, MD 20782

Standard reference number	Title	Referenced in code section number
GA-253—12	Application of Gypsum Sheathing	Table R602.3(1)

INTERNATIONAL CODE COUNCIL®
Copyright © 2015 ICC. ALL RIGHTS RESERVED. Accessed by David Dammon on Jun 21, 2017 12:30:52 PM pursuant to License Agreement with ICC. No further reproduction or distribution authorized. ANY UNAUTHORIZED REPRODUCTION OR DISTRIBUTION IS A VIOLATION OF THE FEDERAL COPYRIGHT ACT AND THE LICENSE AGREEMENT, AND SUBJECT TO CIVIL AND CRIMINAL PENALTIES THEREUNDER.

HPVA

Hardwood Plywood & Veneer Association
1825 Michael Faraday Drive
Reston, Virginia 20190-5350

Standard reference number	Title	Referenced in code section number
ANSI/HP-1—2013	Standard for Hardwood and Decorative Plywood	R702.5

IAPMO

IAPMO
4755 E. Philadelphia Street
Ontario, CA 91761-USA

Standard reference number	Title	Referenced in code section number
CSA B45.5—11/ IAPMO Z124—11	Plastic Plumbing Fixtures	Table P2701.1, P2711.1, P2711.2, P2712.1

ICC

International Code Council, Inc.
500 New Jersey Avenue, NW
6th Floor
Washington, DC 20001

Standard reference number	Title	Referenced in code section number
IBC—15	International Building Code®	R101.2, R110.2, R202, R301.1.1, R301.1.3, R301.2.2.1.1, R301.2.2.1.2, R301.2.2.4, R301.3, R308.5, R320.1, R320.1.1, R403.1.8, Table R602.10.3(3), Table R606.12.2.1, R609.2, R802.1.5.4, R905.10.3, N1107.4, G2402.3
ICC/ANSI A117.1—09	Accessible and Usable Buildings and Facilities	R321.3
ICC 400—12	Standard on the Design and Construction of Log Structures	R301.1.1, 502.1.4, R602.1.4, R703.1, R802.1.3
ICC 500—14	ICC/NSSA Standard on the Design and Construction of Storm Shelters	R323.1
ICC 600—14	Standard for Residential Construction in High-wind Regions	R301.2.1.1
IECC—15	International Energy Conservation Code®	N1101.2, N1101.5, N1101.13.1
IFC—15	International Fire Code®	R102.7, R324.2, M2201.7, G2402.3, G2412.2
IFGC—15	International Fuel Gas Code®	G2401.1, G2402.3, G2423.1
IMC—15	International Mechanical Code®	N1103.2.1, N1103.6, G2402.3
IPC—15	International Plumbing Code®	Table R301.2(1), R903.4.1, G2402.3, R2601.1, Table P2902.3, P2902.5.5,
IPMC—15	International Property Maintenance Code®	R102.7
IPSDC—15	International Private Sewage Disposal Code®	R322.1.7
ISPSC—15	International Swimming Pool and Spa Code™	R326.1

ISO

International Organization for Standardization
1, ch. de la Voie - Creuse
Case postale 56
CH-1211 Geneva 20, Switzerland

Standard reference number	Title	Referenced in code section number
8336—2009	Fibre-cement Flat Sheets-product Specification and Test Methods	Table R503.2.1.1(1), Table R503.2.1.1(2), Table R602.3(2), Table R702.4.2, R703.10.1, R703.10.2
15874—2002	Polypropylene Plastic Piping Systems for Hot and Cold Water Installations	Table M2101.1

INTERNATIONAL CODE COUNCIL®
Copyright © 2015 ICC. ALL RIGHTS RESERVED. Accessed by David Dammon on Jun 21, 2017 12:30:52 PM pursuant to License Agreement with ICC. No further reproduction or distribution authorized. ANY UNAUTHORIZED REPRODUCTION OR DISTRIBUTION IS A VIOLATION OF THE FEDERAL COPYRIGHT ACT AND THE LICENSE AGREEMENT, AND SUBJECT TO CIVIL AND CRIMINAL PENALTIES THEREUNDER.

MSS

Manufacturers Standardization Society of the Valve and Fittings Industry
127 Park Street, Northeast
Vienna, VA 22180

Standard reference number	Title	Referenced in code section number
SP-42—09	Corrosion Resistant Gate, Globe, Angle and Check Valves with Flanged and Butt Weld Ends (Glasses 150, 300 & 600)	Table P2903.9.4
SP-58—09	Pipe Hangers and Supports—Materials, Design, Manufacture, Selection, Application and Installation	G2418.2
SP-67—11	Butterfly Valves	Table P2903.9.4
SP-70—11	Gray Iron Gate Valves, Flanged and Threaded Ends	Table P2903.9.4
SP-71—11	Gray Iron Swing Check Valves, Flanged and Threaded Ends	Table P2903.9.4
SP-72—10	Ball Valves with Flanged or Butt-Welding Ends for General Service	P2903.9.4
SP-78—11	Cast Iron Plug Valves, Flanged and Threaded Ends	Table P2903.9.4
SP-80—08	Bronze Gate, Globe, Angle and Check Valves	Table P2903.9.4
SP-110—10	Ball Valves, Threaded, Socket Welded, Solder Joint, Grooved and Flared Ends	Table P2903.9.4

NAIMA

North American Insulation Manufacturers Association
44 Canal Center Plaza, Suite 310
Alexandria, VA 22314

Standard reference number	Title	Referenced in code section number
AH 116—09	Fibrous Glass Duct Construction Standards, Fifth Edition	M1601.1.1

NFPA

National Fire Protection Association
1 Batterymarch Park
Quincy, MA 02269

Standard reference number	Title	Referenced in code section number
13—13	Installation of Sprinkler Systems	R302.3
13D—13	Standard for the Installation of Sprinkler Systems in One- and Two-family Dwellings and Manufactured Homes	R302.13, R313.1.1, R313.2.1, R325.5, P2904.1, P2904.6.1
13R—13	Standard for the Installation of Sprinkler Systems in Residential Occupancies Up to and Including Four Stories in Height	R325.5
31—11	Standard for the Installation of Oil-burning Equipment	M1701.1, M1801.3.1, M1805.3
58—14	Liquefied Petroleum Gas Code	G2412.2, G2414.6.2
70—14	National Electrical Code	E3401.1, E3401.2, E4301.1, Table E4303.2, E4304.3, E4304.4, R324.3
72—13	National Fire Alarm and Signaling Code	R314.1, R314.7.1
85—15	Boiler and Combustion Systems Hazards Code	G2452.1
211—13	Standard for Chimneys, Fireplaces, Vents and Solid Fuel Burning Appliances	R1002.5, G2427.5.5.1
259—13	Standard for Test Method for Potential Heat of Building Materials	R316.5.7, R316.5.8
275—13	Standard Method of Fire Tests for the Evaluation of Thermal Barriers	R316.4
286—15	Standard Methods of Fire Tests for Evaluating Contribution of Wall and Ceiling Interior Finish to Room Fire Growth	R302.9.4, R316.6
501—13	Standard on Manufactured Housing	R202
720—15	Standard for the Installation of Carbon Monoxide (CO) Detectors and Warning Equipment	R315.6.1, R315.6.2
853—15	Standard on the Installation of Stationary Fuel Cell Power Systems	M1903.1

INTERNATIONAL CODE COUNCIL®
Copyright © 2015 ICC. ALL RIGHTS RESERVED. Accessed by David Dammon on Jun 21, 2017 12:30:52 PM pursuant to License Agreement with ICC. No further reproduction or distribution authorized. ANY UNAUTHORIZED REPRODUCTION OR DISTRIBUTION IS A VIOLATION OF THE FEDERAL COPYRIGHT ACT AND THE LICENSE AGREEMENT, AND SUBJECT TO CIVIL AND CRIMINAL PENALTIES THEREUNDER.

NSF

NSF International
789 N. Dixboro
Ann Arbor, MI 48105

Standard reference number	Title	Referenced in code section number
14—2011	Plastics Piping System Components and Related Materials	M1301.4, P2609.3, P2908.3
41—2011	Nonliquid Saturated Treatment Systems (Composting Toilets)	P2725.1
42—2011	Drinking Water Treatment Units—Anesthetic Effects	P2909.1, P2909.3
44—2012	Residential Cation Exchange Water Softeners	P2909.1, P2909.3
50—2012	Equipment for Swimming Pools, Hot Tubs and Other Recreational Water Facilities	P2911.8.1
53—2011A	Drinking Water Treatment Units—Health Effects	P2909.1, P2909.3
58—2012	Reverse Osmosis Drinking Water Treatment Systems	P2909.2, P2909.3
61—2012	Drinking Water System Components—Health Effects	P2609.5, P2722.1, P2903.9.4, P2906.4, P2906.5, P2906.6, P2908.3
350—2011	Onsite Residential and Commercial Water Reuse Treatment Systems	P2910.6.1
358-1—2011	Polyethylene Pipe and Fittings for Water-based Ground Source "Geothermal" Heat Pump Systems	M2105.4, M2105.5, Table AG101.1
358-2—2012	Polypropylene Pipe and Fittings for Water-based Ground Source "Geothermal" Heat Pump Systems	M2105.5
359—2012	Valves for Crosslinked Polyethylene (PEX) Water Distribution Tubing Systems	Table P2903.9.4
372—2010	Drinking Water Systems Components—Lead Content	P2906.2.1

PCA

Portland Cement Association
5420 Old Orchard Road
Skokie, IL 60077

Standard reference number	Title	Referenced in code section number
100—12	Prescriptive Design of Exterior Concrete Walls for One- and Two-family Dwellings (Pub. No. EB241)	R301.2.2.2.4, R301.2.2.3.4, R404.1.3, R404.1.3.2.1, R404.1.3.2.2, R404.1.3.4, R404.1.4.2, R608.1, R608.2, R608.5.1, R608.9.2, R608.9.3

SBCA

Structural Building Components Association
6300 Enterprise Lane
Madison, WI 53719

Standard reference number	Title	Referenced in code section number
BCSI—2013	Building Component Safety Information Guide to Good Practice for Handling, Installing, Restraining & Bracing of Metal Plate Connected Wood Trusses	502.11.2, 802.10.3
CFS-BCSI—2008	Cold-formed Steel Building Component Safety Information (CFSBCSI) Guide to Good Practice for Handling, Installing & Bracing of Cold-formed Steel Trusses	505.1.3, 804.3.6
FS100—12	Standard Requirements for Wind Pressure Resistance of Foam Plastic Insulating Sheathing Used in Exterior Wall Covering Assemblies	R316.8

SMACNA

Sheet Metal & Air Conditioning Contractors National Assoc. Inc.
4021 Lafayette Center Road
Chantilly, VA 22021

Standard reference number	Title	Referenced in code section number
SMACNA—10	Fibrous Glass Duct Construction Standards (2003)	M1601.1.1, M1601.4.1
SMACNA—15	HVAC Duct Construction Standards—Metal and Flexible 4th Edition (ANSI)	M1601.4.1

INTERNATIONAL CODE COUNCIL®
Copyright © 2015 ICC. ALL RIGHTS RESERVED. Accessed by David Dammon on Jun 21, 2017 12:30:52 PM pursuant to License Agreement with ICC. No further reproduction or distribution authorized. ANY UNAUTHORIZED REPRODUCTION OR DISTRIBUTION IS A VIOLATION OF THE FEDERAL COPYRIGHT ACT AND THE LICENSE AGREEMENT, AND SUBJECT TO CIVIL AND CRIMINAL PENALTIES THEREUNDER.

SRCC

Solar Rating & Certification Corporation
400 High Point Drive, Suite 400
Cocoa, FL 32926

Standard reference number	Title	Referenced in code section number
SRCC 100—13	Standard 100 for Solar Collectors	M2301.3.1
SRCC 300—13	Standard 300 for Solar Water Heating Systems	M2301.2.3, M2301.4, M2301.2.6, M2301.2.8
SRCC 600—13	Standard 600 for Solar Concentrating Collectors	M2301.3.1

TMS

The Masonry Society
105 South Sunset Street, Suite Q
Longmont, CO 80501

Standard reference number	Title	Referenced in code section number
402—2013	Building Code Requirements for Masonry Structures	R404.1.2, R606.1, R606.1.1, R606.2.3.2, R606.12.1, R606.12.2.3.1, R606.12.3.1, Table R703.4, 703.12
403—2013	Direct Design Handbook for Masonry Structures	R606.1, R606.1.1, R606.12.1, R606.12.3.1
602—2013	Specification for Masonry Structures	R404.1.2, R606.2.9, R606.2.12, R606.12.3.1, R703.12

TPI

Truss Plate Institute
218 N. Lee Street, Suite 312
Alexandria, VA 22314

Standard reference number	Title	Referenced in code section number
TPI 1—2014	National Design Standard for Metal-plate-connected Wood Truss Construction	R502.11.1, R802.10.2

UL

UL LLC
333 Pfingsten Road
Northbrook, IL 60062

Standard reference number	Title	Referenced in code section number
17—2008	Vent or Chimney Connector Dampers for Oil-fired Appliances—with revisions through January 2010	M1802.2.2
55A—04	Materials for Built-up Roof Coverings	R905.9.2
58—14	Liquefied Petroleum Gas Code	M2201.1
80—2007	Steel Tanks for Oil-burner Fuel—with revisions August 2009	M2201.1
103—2010	Factory-built Chimneys for Residential Type and Building Heating Appliances—with revisions through July 2012	R202, R1005.3, G2430.1
127—2011	Factory-built Fireplaces	R1001.11, R1004.1, R1004.4, R1004.5, R1005.4, G2445.7
174—04	Household Electric Storage Tank Water Heaters—with revisions through September 2012	M2005.1
180—2012	Liquid-level Indicating Gauges for Oil Burner Fuels and Other Combustible Liquids	M2201.5
181—05	Factory-made Air Ducts and Air Connectors—with revisions through May 2003	M1601.1.1, M1601.4.1
181A—2013	Closure Systems for Use with Rigid Air Ducts and Air Connectors—with revisions through December 1998	M1601.2, M1601.4.1
181B—2013	Closure Systems for Use with Flexible Air Ducts and Air Connectors—with revisions through August 2003	M1601.4.1
217—06	Single- and Multiple-station Smoke Alarms—with revisions through April 2012	R314.1.1, R315.1.1
263—2011	Standards for Fire Test of Building Construction and Materials	Table 302.1(1), Table R302.1(2), R302.2, R302.3, R302.4.1, R302.11.1, Table R312.1(1), R606.2.2

INTERNATIONAL CODE COUNCIL®
Copyright © 2015 ICC. ALL RIGHTS RESERVED. Accessed by David Dammon on Jun 21, 2017 12:30:52 PM pursuant to License Agreement with ICC. No further reproduction or distribution authorized. ANY UNAUTHORIZED REPRODUCTION OR DISTRIBUTION IS A VIOLATION OF THE FEDERAL COPYRIGHT ACT AND THE LICENSE AGREEMENT, AND SUBJECT TO CIVIL AND CRIMINAL PENALTIES THEREUNDER.

UL—continued

268—2009	Smoke Detectors for Fire Alarm Systems R314.7.1, R314.7.4, R315.6.4
325—02	Door, Drapery, Gate, Louver and Window Operations and Systems—with revisions through June 2013 . . . . . R309.4
343—2008	Pumps for Oil-burning Appliances—with revisions through June 2013 . . . . . M2204.1
378—06	Draft Equipment—with revisions through January 2010 . . . . . M1804.2.6
441—10	Gas Vents G2426.1
508—99	Industrial Control Equipment—with revisions through March 2013 . . . . . M1411.3.1
536—97	Flexible Metallic Hose—with revisions through June 2003 . . . . . M2202.3
641—2010	Type L, Low-temperature Venting Systems—with revisions through May 2013 . . . . . R202, R1003.11.5, M1804.2.4, G2426.1
651—2011	Schedule 40 and Schedule 80 Rigid PVC Conduit and Fittings—with revisions through March 2012 . . . . . G2414.6.3
705—04	Standard for Power Ventilators—with revisions through March 2012 . . . . . M1502.4.4
723—08	Standard for Test for Surface Burning Characteristics of Building Materials—with revisions through September 2010. . . . . R202, R302.9.3, R302.9.4, R302.10.1, R302.10.2, R316.3, R316.5.9, R316.5.11, R507.3.2, R802.1.5, M1601.3, M1601.5.2
726—95	Oil-fired Boiler Assemblies—with revisions through April 2011. . . . . M2001.1.1, M2006.1
727—06	Oil-fired Central Furnaces—with revisions through April 2010 . . . . . M1402.1
729—03	Oil-fired Floor Furnaces—with revisions through August 2012 . . . . . M1408.1
730—03	Oil-fired Wall Furnaces—with revisions through August 2012 . . . . . M1409.1
732—95	Oil-fired Storage Tank Water Heaters—with revisions through April 2010. . . . . M2005.1
737—2011	Fireplaces Stoves M1414.1, M1901.2
790—04	Standard Test Methods for Fire Tests of Roof Coverings—with revisions through October 2008. . . . . R302.2.2, R902.1
795—2011	Commercial-industrial Gas Heating Equipment—with Revisions through September 2012 . . . . . G2442.1, G2452.1
834—04	Heating, Water Supply and Power Boilers—Electric—with revisions through January 2013. . . . . M2001.1.1
842—07	Valves for Flammable Fluids—with revisions through October 2012 . . . . . M2204.2
858—05	Household Electric Ranges—with revisions through April 2012 . . . . . M1901.2
875—09	Electric Dry-bath Heaters with revisions through November 2011. . . . . M1902.2
896—93	Oil-burning Stoves—with revisions through August 2012 . . . . . M1410.1
923—2013	Microwave Cooking Appliances M1504.1
959—2010	Medium Heat Appliance Factory-built Chimneys. R1005.6
1026—2012	Electric Household Cooking and Food Serving Appliances M1901.2
1040—96	Fire Test of Insulated Wall Construction—with revisions through October 2012 . . . . . R316.6
1042—2009	Electric Baseboard Heating Equipment—with Revisions through June 2013. . . . . M1405.1
1256—02	Fire Test of Roof Deck Construction—with revisions through January 2007. . . . . R906.1
1261—01	Electric Water Heaters for Pools and Tubs—with revisions through July 2012 . . . . . M2006.1
1479—03	Fire Tests of Through-Penetration Firestops—with revisions through October 2012. . . . . R302.4.1.2
1482—2011	Solid-Fuel-type Room Heaters. R1002.2, R1002.5, M1410.1
1618—09	Wall Protectors, Floor Protectors, and Hearth Extensions—with revisions through May 2013 . . . . . R1004.2, M1410.2
1693—2010	Electric Radiant Heating Panels and Heating Panel Sets—with revisions through October 2011. . . . . M1406.1
1703—02	Flat-plate Photovoltaic Modules and Panels—with revisions through November 2014. . . . . R324.3.1, R902.4, R905.16.5, R907.5
1715—97	Fire Test of Interior Finish Material—with revisions through January 2013 . . . . . R316.6
1738—2010	Venting Systems for Gas-burning Appliances, Categories II, III and IV—with revisions Through May 2011 . . . . . G2426.1
1741—2010	Inverters, Converters, Controllers and Interconnection System Equipment for use with Distributed Energy Resources R324.3
1777—07	Chimney Liners—with revisions through July 2009 . . . . . R1003.11.1, R1003.18, G2425.12, G2425.15.4, M1801.3.4
1995—2011	Heating and Cooling Equipment M1402.1, M1403.1, M1407.1, M1412.1, M1413.1
1996—2009	Electric Duct Heaters—with revisions through November 2011 . . . . . M1402.1, M1407.1
2034—08	Standard for Single- and Multiple-station Carbon Monoxide Alarms—with revisions through February 2009 . . . . . R314.1.1, R315.1.1
2075—2013	Standard for Gas and Vapor Detectors and Sensors R314.7.4, R315.6.1, R315.6.4
2158A—2010	Outline of Investigation for Clothes Dryer Transition Duct M1502.4.3
2523—09	Standard for Solid Fuel-fired Hydronic Heating Appliances, Water Heaters and Boilers—with revisions through February 2013 . . . . . M2005.1, M2001.1.1

INTERNATIONAL CODE COUNCIL®
Copyright © 2015 ICC. ALL RIGHTS RESERVED. Accessed by David Dammon on Jun 21, 2017 12:30:52 PM pursuant to License Agreement with ICC. No further reproduction or distribution authorized. ANY UNAUTHORIZED REPRODUCTION OR DISTRIBUTION IS A VIOLATION OF THE FEDERAL COPYRIGHT ACT AND THE LICENSE AGREEMENT, AND SUBJECT TO CIVIL AND CRIMINAL PENALTIES THEREUNDER.

UL—continued

Standard reference number	Title	Referenced in code section number
UL/CSA/ANCE 60335-2-40—2012	Standard for Household and Similar Electrical Appliances, Part 2: Particular Requirements for Motor-compressors	M1403.1, M1412.1, M1413.1

ULC

ULC
7 Underwriters Road
Toronto, Ontario, Canada M1R 3B4

Standard reference number	Title	Referenced in code section number
CAN/ULC S 102.2—2010	Standard Methods for Test for Surface Burning Characteristics of Building Materials and Assemblies	R302.10.1, R302.10.2

WDMA

Window & Door Manufacturers Association
2025 M Street, NW Suite 800
Washington, DC 20036-3309

Standard reference number	Title	Referenced in code section number
AAMA/WDMA/CSA 101/I.S2/A440—11	North American Fenestration Standard/ Specifications for Windows, Doors and Skylights	R308.6.9, R609.3, N1102.4.3
I.S. 11—13	Industry Standard Analytical Method for Design Pressure (DP) Ratings of Fenestration Products	R308.6.9.1, R609.3.1

INTERNATIONAL CODE COUNCIL®
Copyright © 2015 ICC. ALL RIGHTS RESERVED. Accessed by David Dammon on Jun 21, 2017 12:30:52 PM pursuant to License Agreement with ICC. No further reproduction or distribution authorized. ANY UNAUTHORIZED REPRODUCTION OR DISTRIBUTION IS A VIOLATION OF THE FEDERAL COPYRIGHT ACT AND THE LICENSE AGREEMENT, AND SUBJECT TO CIVIL AND CRIMINAL PENALTIES THEREUNDER.

Appendix A: Sizing and Capacities of Gas Piping

(This appendix is informative and is not part of the code. This appendix is an excerpt from the 2015 *International Fuel Gas Code*, coordinated with the section numbering of the *International Residential Code*.)

A.1 General piping considerations. The first goal of determining the pipe sizing for a fuel gas *piping* system is to make sure that there is sufficient gas pressure at the inlet to each *appliance*. The majority of systems are residential and the appliances will all have the same, or nearly the same, requirement for minimum gas pressure at the *appliance* inlet. This pressure will be about 5-inch water column (w.c.) (1.25 kPa), which is enough for proper operation of the *appliance* regulator to deliver about 3.5-inches water column (w.c.) (875 kPa) to the burner itself. The pressure drop in the *piping* is subtracted from the source delivery pressure to verify that the minimum is available at the *appliance*.

There are other systems, however, where the required inlet pressure to the different appliances may be quite varied. In such cases, the greatest inlet pressure required must be satisfied, as well as the farthest *appliance*, which is almost always the critical *appliance* in small systems.

There is an additional requirement to be observed besides the capacity of the system at 100-percent flow. That requirement is that at minimum flow, the pressure at the inlet to any *appliance* does not exceed the pressure rating of the *appliance* regulator. This would seldom be of concern in small systems if the source pressure is $^1/_2$ psi (14-inch w.c.) (3.5 kPa) or less but it should be verified for systems with greater gas pressure at the point of supply.

To determine the size of *piping* used in a gas *piping* system, the following factors must be considered:

(1) Allowable loss in pressure from *point of delivery* to *appliance*.

(2) Maximum gas demand.

(3) Length of *piping* and number of fittings.

(4) Specific gravity of the gas.

(5) Diversity factor.

For any gas *piping* system or special *appliance*, or for conditions other than those covered by the tables provided in this code such as longer runs, greater gas demands or greater pressure drops, the size of each gas *piping* system should be determined by standard engineering practices acceptable to the code official.

A.2 Description of tables.

A.2.1 General. The quantity of gas to be provided at each *outlet* should be determined, whenever possible, directly from the manufacturer's gas input Btu/h rating of the *appliance* that will be installed. In case the ratings of the appliances to be installed are not known, Table 402.2 shows the approximate consumption (in Btu per hour) of certain types of typical household appliances.

To obtain the cubic feet per hour of gas required, divide the total Btu/h input of all appliances by the average Btu heating value per cubic feet of the gas. The average Btu per cubic feet of the gas in the area of the installation can be obtained from the serving gas supplier.

A.2.2 Low pressure natural gas tables. Capacities for gas at low pressure [less than 2.0 psig (13.8 kPa gauge)] in cubic feet per hour of 0.60 specific gravity gas for different sizes and lengths are shown in Tables 402.4(1) and 402.4(2) for iron pipe or equivalent rigid pipe; in Tables 402.4(8) through 402.4(11) for smooth wall semirigid tubing; and in Tables 402.4(15) through 402.4(17) for corrugated stainless steel tubing. Tables 402.4(1) and 402.4(6) are based upon a pressure drop of 0.3-inch w.c. (75 Pa), whereas Tables 402.4(2), 402.4(9) and 402.4(15) are based upon a pressure drop of 0.5-inch w.c. (125 Pa). Tables 402.4(3), 402.4(4), 402.4(10), 402.4(11), 402.4(16) and 402.4(17) are special low-pressure applications based upon pressure drops greater than 0.5-inch w.c. (125 Pa). In using these tables, an allowance (in equivalent length of pipe) should be considered for any *piping* run with four or more fittings (see Table A.2.2).

A.2.3 Undiluted liquefied petroleum tables. Capacities in thousands of Btu per hour of undiluted liquefied petroleum gases based on a pressure drop of 0.5-inch w.c. (125 Pa) for different sizes and lengths are shown in Table 402.4(28) for iron pipe or equivalent rigid pipe, in Table 402.4(30) for smooth wall semi-rigid tubing, in Table 402.4(32) for corrugated stainless steel tubing, and in Tables 402.4(35) and 402.4(37) for polyethylene plastic pipe and tubing. Tables 402.4(33) and 402.4(34) for corrugated stainless steel tubing and Table 402.4(36) for polyethylene plastic pipe are based on operating pressures greater than $1^1/_2$ pounds per square inch (psi) (3.5 kPa) and pressure drops greater than 0.5-inch w.c. (125 Pa). In using these tables, an allowance (in equivalent length of pipe) should be considered for any *piping* run with four or more fittings [see Table A.2.2].

A.2.4 Natural gas specific gravity. Gas *piping* systems that are to be supplied with gas of a specific gravity of 0.70 or less can be sized directly from the tables provided in this code, unless the code official specifies that a gravity factor be applied. Where the specific gravity of the gas is greater than 0.70, the gravity factor should be applied.

Application of the gravity factor converts the figures given in the tables provided in this code to capacities for another gas of different specific gravity. Such application is accomplished by multiplying the capacities given in the tables by the multipliers shown in Table A.2.4. In case the exact specific gravity does not appear in the table, choose the next higher value specific gravity shown.

INTERNATIONAL CODE COUNCIL®
Copyright © 2015 ICC. ALL RIGHTS RESERVED. Accessed by David Dammon on Jun 21, 2017 12:30:52 PM pursuant to License Agreement with ICC. No further reproduction or distribution authorized. ANY UNAUTHORIZED REPRODUCTION OR DISTRIBUTION IS A VIOLATION OF THE FEDERAL COPYRIGHT ACT AND THE LICENSE AGREEMENT, AND SUBJECT TO CIVIL AND CRIMINAL PENALTIES THEREUNDER.

TABLE A.2.2
EQUIVALENT LENGTHS OF PIPE FITTINGS AND VALVES

		SCREWED FITTINGS[1]				90° WELDING ELBOWS AND SMOOTH BENDS[2]					
		45°/Ell	90°/Ell	180°close return bends	Tee	R/d = 1	R/d = $1^1/_3$	R/d = 2	R/d = 4	R/d = 6	R/d = 8
k factor =		0.42	0.90	2.00	1.80	0.48	0.36	0.27	0.21	0.27	0.36
L/d' ratio[4] *n* =		1 4	30	67	60	16	12	9	7	9	12
Nominal pipe size, inches	Inside diameter d, inches, Schedule 40[6]	L = Equivalent Length In Feet of Schedule 40 (Standard-weight) Straight Pipe[6]									
$^1/_2$	0.622	0.73	1.55	3.47	3.10	0.83	0.62	0.47	0.36	0.47	0.62
$^3/_4$	0.824	0.96	2.06	4.60	4.12	1.10	0.82	0.62	0.48	0.62	0.82
1	1.049	1.22	2.62	5.82	5.24	1.40	1.05	0.79	0.61	0.79	1.05
$1^1/_4$	1.380	1.61	3.45	7.66	6.90	1.84	1.38	1.03	0.81	1.03	1.38
$1^1/_2$	1.610	1.88	4.02	8.95	8.04	2.14	1.61	1.21	0.94	1.21	1.61
2	2.067	2.41	5.17	11.5	10.3	2.76	2.07	1.55	1.21	1.55	2.07
$2^1/_2$	2.469	2.88	6.16	13.7	12.3	3.29	2.47	1.85	1.44	1.85	2.47
3	3.068	3.58	7.67	17.1	15.3	4.09	3.07	2.30	1.79	2.30	3.07
4	4.026	4.70	10.1	22.4	20.2	5.37	4.03	3.02	2.35	3.02	4.03
5	5.047	5.88	12.6	28.0	25.2	6.72	5.05	3.78	2.94	3.78	5.05
6	6.065	7.07	15.2	33.8	30.4	8.09	6.07	4.55	3.54	4.55	6.07
8	7.981	9.31	20.0	44.6	40.0	10.6	7.98	5.98	4.65	5.98	7.98
10	10.02	11.7	25.0	55.7	50.0	13.3	10.0	7.51	5.85	7.51	10.0
12	11.94	13.9	29.8	66.3	59.6	15.9	11.9	8.95	6.96	8.95	11.9
14	13.13	15.3	32.8	73.0	65.6	17.5	13.1	9.85	7.65	9.85	13.1
16	15.00	17.5	37.5	83.5	75.0	20.0	15.0	11.2	8.75	11.2	15.0
18	16.88	19.7	42.1	93.8	84.2	22.5	16.9	12.7	9.85	12.7	16.9
20	18.81	22.0	47.0	105.0	94.0	25.1	18.8	14.1	11.0	14.1	18.8
24	22.63	26.4	56.6	126.0	113.0	30.2	22.6	17.0	13.2	17.0	22.6

(continued)

INTERNATIONAL CODE COUNCIL®
Copyright © 2015 ICC. ALL RIGHTS RESERVED. Accessed by David Dammon on Jun 21, 2017 12:30:52 PM pursuant to License Agreement with ICC. No further reproduction or distribution authorized. ANY UNAUTHORIZED REPRODUCTION OR DISTRIBUTION IS A VIOLATION OF THE FEDERAL COPYRIGHT ACT AND THE LICENSE AGREEMENT, AND SUBJECT TO CIVIL AND CRIMINAL PENALTIES THEREUNDER.

TABLE A.2.2—continued
EQUIVALENT LENGTHS OF PIPE FITTINGS AND VALVES

		MITER ELBOWS[3] (No. of miters)					WELDING TEES		VALVES (screwed, flanged, or welded)			
		1-45°	1-60°	1-90°	2-90°[5]	3-90°[5]	Forged	Miter[3]	Gate	Globe	Angle	Swing Check
k factor =		0.45	0.90	1.80	0.60	0.45	1.35	1.80	0.21	10	5.0	2.5
L/d' ratio[4] n =		15	30	60	20	15	45	60	7	333	167	83
Nominal pipe size, inches	Inside diameter d, inches, Schedule 40[6]	L = Equivalent Length In Feet of Schedule 40 (Standard-weight) Straight Pipe[6]										
1/2	0.622	0.78	1.55	3.10	1.04	0.78	2.33	3.10	0.36	17.3	8.65	4.32
3/4	0.824	1.03	2.06	4.12	1.37	1.03	3.09	4.12	0.48	22.9	11.4	5.72
1	1.049	1.31	2.62	5.24	1.75	1.31	3.93	5.24	0.61	29.1	14.6	7.27
1 1/4	1.380	1.72	3.45	6.90	2.30	1.72	5.17	6.90	0.81	38.3	19.1	9.58
1 1/2	1.610	2.01	4.02	8.04	2.68	2.01	6.04	8.04	0.94	44.7	22.4	11.2
2	2.067	2.58	5.17	10.3	3.45	2.58	7.75	10.3	1.21	57.4	28.7	14.4
2 1/2	2.469	3.08	6.16	12.3	4.11	3.08	9.25	12.3	1.44	68.5	34.3	17.1
3	3.068	3.84	7.67	15.3	5.11	3.84	11.5	15.3	1.79	85.2	42.6	21.3
4	4.026	5.04	10.1	20.2	6.71	5.04	15.1	20.2	2.35	112.0	56.0	28.0
5	5.047	6.30	12.6	25.2	8.40	6.30	18.9	25.2	2.94	140.0	70.0	35.0
6	6.065	7.58	15.2	30.4	10.1	7.58	22.8	30.4	3.54	168.0	84.1	42.1
8	7.981	9.97	20.0	40.0	13.3	9.97	29.9	40.0	4.65	22.0	111.0	55.5
10	10.02	12.5	25.0	50.0	16.7	12.5	37.6	50.0	5.85	278.0	139.0	69.5
12	11.94	14.9	29.8	59.6	19.9	14.9	44.8	59.6	6.96	332.0	166.0	83.0
14	13.13	16.4	32.8	65.6	21.9	16.4	49.2	65.6	7.65	364.0	182.0	91.0
16	15.00	18.8	37.5	75.0	25.0	18.8	56.2	75.0	8.75	417.0	208.0	104.0
18	16.88	21.1	42.1	84.2	28.1	21.1	63.2	84.2	9.85	469.0	234.0	117.0
20	18.81	23.5	47.0	94.0	31.4	23.5	70.6	94.0	11.0	522.0	261.0	131.0
24	22.63	28.3	56.6	113.0	37.8	28.3	85.0	113.0	13.2	629.0	314.0	157.0

For SI: 1 foot = 305 mm, 1 degree = 0.01745 rad.

Note: Values for welded fittings are for conditions where bore is not obstructed by weld spatter or backing rings. If appreciably obstructed, use values for "Screwed Fittings."

1. Flanged fittings have three-fourths the resistance of screwed elbows and tees.
2. Tabular figures give the extra resistance due to curvature alone to which should be added the full length of travel.
3. Small size socket-welding fittings are equivalent to miter elbows and miter tees.
4. Equivalent resistance in number of diameters of straight pipe computed for a value of (f - 0.0075) from the *relation* (n - k/4f).
5. For condition of minimum resistance where the centerline length of each miter is between d and 2 1/2 d.
6. For pipe having other inside diameters, the equivalent resistance can be computed from the above n values.

Source: Crocker, S. *Piping Handbook*, 4th ed., Table XIV, pp. 100-101. Copyright 1945 by McGraw-Hill, Inc. Used by permission of McGraw-Hill Book Company.

INTERNATIONAL CODE COUNCIL®
Copyright © 2015 ICC. ALL RIGHTS RESERVED. Accessed by David Dammon on Jun 21, 2017 12:30:52 PM pursuant to License Agreement with ICC. No further reproduction or distribution authorized. ANY UNAUTHORIZED REPRODUCTION OR DISTRIBUTION IS A VIOLATION OF THE FEDERAL COPYRIGHT ACT AND THE LICENSE AGREEMENT, AND SUBJECT TO CIVIL AND CRIMINAL PENALTIES THEREUNDER.

TABLE A.2.4
MULTIPLIERS TO BE USED WITH TABLES 402.4(1) THROUGH 402.4(22) WHERE THE SPECIFIC GRAVITY OF THE GAS IS OTHER THAN 0.60

SPECIFIC GRAVITY	MULTIPLIER	SPECIFIC GRAVITY	MULTIPLIER
0.35	1.31	1.00	0.78
0.40	1.23	1.10	0.74
0.45	1.16	1.20	0.71
0.50	1.10	1.30	0.68
0.55	1.04	1.40	0.66
0.60	1.00	1.50	0.63
0.65	0.96	1.60	0.61
0.70	0.93	1.70	0.59
0.75	0.90	1.80	0.58
0.80	0.87	1.90	0.56
0.85	0.84	2.00	0.55
0.90	0.82	2.10	0.54

A.2.5 Higher pressure natural gas tables. Capacities for gas at pressures 2.0 psig (13.8 kPa) or greater in cubic feet per hour of 0.60 specific gravity gas for different sizes and lengths are shown in Tables 402.4(5) through 402.4(7) for iron pipe or equivalent rigid pipe; Tables 402.4(12) to 402.4(14) for semirigid tubing; Tables 402.4(18) and 402.4(19) for corrugated stainless steel tubing; and Table 402.4(22) for polyethylene plastic pipe.

A.3 Use of capacity tables.

A.3.1 Longest length method. This sizing method is conservative in its approach by applying the maximum operating conditions in the system as the norm for the system and by setting the length of pipe used to size any given part of the *piping* system to the maximum value.

To determine the size of each section of gas *piping* in a system within the range of the capacity tables, proceed as follows (also see sample calculations included in this Appendix):

(1) Divide the *piping* system into appropriate segments consistent with the presence of tees, branch lines and main runs. For each segment, determine the gas load (assuming all appliances operate simultaneously) and its overall length. An allowance (in equivalent length of pipe) as determined from Table A.2.2 shall be considered for *piping* segments that include four or more fittings.

(2) Determine the gas demand of each *appliance* to be attached to the *piping* system. Where Tables 402.4(1) through 402.4(24) are to be used to select the *piping* size, calculate the gas demand in terms of cubic feet per hour for each *piping* system *outlet*. Where Tables 402.4(25) through 402.4(37) are to be used to select the *piping* size, calculate the gas demand in terms of thousands of Btu per hour for each *piping* system *outlet*.

(3) Where the *piping* system is for use with other than undiluted liquefied petroleum gases, determine the design system pressure, the allowable loss in pressure (pressure drop), and specific gravity of the gas to be used in the *piping* system.

(4) Determine the length of *piping* from the *point of delivery* to the most remote *outlet* in the building/*piping* system.

(5) In the appropriate capacity table, select the row showing the measured length or the next longer length if the table does not give the exact length. This is the only length used in determining the size of any section of gas *piping*. If the gravity factor is to be applied, the values in the selected row of the table are multiplied by the appropriate multiplier from Table A.2.4.

(6) Use this horizontal row to locate ALL gas demand figures for this particular system of *piping*.

(7) Starting at the most remote *outlet*, find the gas demand for that *outlet* in the horizontal row just selected. If the exact figure of demand is not shown, choose the next larger figure left in the row.

(8) Opposite this demand figure, in the first row at the top, the correct size of gas *piping* will be found.

(9) Proceed in a similar manner for each *outlet* and each section of gas *piping*. For each section of *piping*, determine the total gas demand supplied by that section.

Where a large number of *piping* components (such as elbows, tees and valves) are installed in a pipe run, additional pressure loss can be accounted for by the use of equivalent lengths. Pressure loss across any *piping* component can be equated to the pressure drop through a length of pipe. The equivalent length of a combination of only four elbows/tees can result in a jump to the next larger length row, resulting in a significant reduction in capacity. The equivalent lengths in feet shown in Table A.2.2 have been computed on a basis that the inside diameter corresponds to that of Schedule 40 (standard-weight) steel pipe, which is close enough for most purposes involving other schedules of pipe. Where a more specific solution for equivalent length is desired, this can be made by multiplying the actual inside diameter of the pipe in inches by $n/12$, or the actual inside diameter in feet by n (n can be read from the table heading). The equivalent length values can be used with reasonable accuracy for copper or brass fittings and bends although the resistance per foot of copper or brass pipe is less than that of steel. For copper or brass valves, however, the equivalent length of pipe should be taken as 45 percent longer than the values in the table, which are for steel pipe.

INTERNATIONAL CODE COUNCIL®
Copyright © 2015 ICC. ALL RIGHTS RESERVED. Accessed by David Dammon on Jun 21, 2017 12:30:52 PM pursuant to License Agreement with ICC. No further reproduction or distribution authorized. ANY UNAUTHORIZED REPRODUCTION OR DISTRIBUTION IS A VIOLATION OF THE FEDERAL COPYRIGHT ACT AND THE LICENSE AGREEMENT, AND SUBJECT TO CIVIL AND CRIMINAL PENALTIES THEREUNDER.

A.3.2 Branch length method. This sizing method reduces the amount of conservatism built into the traditional Longest Length Method. The longest length as measured from the meter to the furthest remote *appliance* is only used to size the initial parts of the overall *piping* system. The Branch Length Method is applied in the following manner:

(1) Determine the gas load for each of the connected appliances.

(2) Starting from the meter, divide the *piping* system into a number of connected segments, and determine the length and amount of gas that each segment would carry assuming that all appliances were operated simultaneously. An allowance (in equivalent length of pipe) as determined from Table A.2.2 should be considered for piping segments that include four or more fittings.

(3) Determine the distance from the *outlet* of the gas meter to the *appliance* furthest removed from the meter.

(4) Using the longest distance (found in Step 3), size each *piping* segment from the meter to the most remote *appliance outlet.*

(5) For each of these *piping* segments, use the longest length and the calculated gas load for all of the connected appliances for the segment and begin the sizing process in Steps 6 through 8.

(6) Referring to the appropriate sizing table (based on operating conditions and *piping* material), find the longest length distance in the first column or the next larger distance if the exact distance is not listed. The use of alternative operating pressures and/or pressure drops will require the use of a different sizing table, but will not alter the sizing methodology. In many cases, the use of alternative operating pressures and/or pressure drops will require the approval of both the code official and the local gas serving utility.

(7) Trace across this row until the gas load is found or the closest larger capacity if the exact capacity is not listed.

(8) Read up the table column and select the appropriate pipe size in the top row. Repeat Steps 6, 7 and 8 for each pipe segment in the longest run.

(9) Size each remaining section of branch *piping* not previously sized by measuring the distance from the gas meter location to the most remote *outlet* in that branch, using the gas load of attached appliances and following the procedures of Steps 2 through 8.

A.3.3 Hybrid pressure method. The sizing of a 2 psi (13.8 kPa) gas *piping* system is performed using the traditional Longest Length Method but with modifications. The 2 psi (13.8 kPa) system consists of two independent pressure zones, and each zone is sized separately. The Hybrid Pressure Method is applied as follows:

The sizing of the 2 psi (13.8 kPa) section (from the meter to the line regulator) is as follows:

(1) Calculate the gas load (by adding up the name plate ratings) from all connected appliances. (In certain circumstances the installed gas load can be increased up to 50 percent to accommodate future addition of appliances.) Ensure that the line regulator capacity is adequate for the calculated gas load and that the required pressure drop (across the regulator) for that capacity does not exceed $^{3}/_{4}$ psi (5.2 kPa) for a 2 psi (13.8 kPa) system. If the pressure drop across the regulator is too high (for the connected gas load), select a larger regulator.

(2) Measure the distance from the meter to the line regulator located inside the building.

(3) If there are multiple line regulators, measure the distance from the meter to the regulator furthest removed from the meter.

(4) The maximum allowable pressure drop for the 2 psi (13.8 kPa) section is 1 psi (6.9 kPa).

(5) Referring to the appropriate sizing table (based on *piping* material) for 2 psi (13.8 kPa) systems with a 1 psi (6.9 kPa) pressure drop, find this distance in the first column, or the closest larger distance if the exact distance is not listed.

(6) Trace across this row until the gas load is found or the closest larger capacity if the exact capacity is not listed.

(7) Read up the table column to the top row and select the appropriate pipe size.

(8) If there are multiple regulators in this portion of the *piping* system, each line segment must be sized for its actual gas load, but using the longest length previously determined above.

The low pressure section (all *piping* downstream of the line regulator) is sized as follows:

(1) Determine the gas load for each of the connected appliances.

(2) Starting from the line regulator, divide the piping system into a number of connected segments or independent parallel piping segments, and determine the amount of gas that each segment would carry assuming that all appliances were operated simultaneously. An allowance (in equivalent length of pipe) as determined from Table A.2.2 should be considered for piping segments that include four or more fittings.

INTERNATIONAL CODE COUNCIL®
Copyright © 2015 ICC. ALL RIGHTS RESERVED. Accessed by David Dammon on Jun 21, 2017 12:30:52 PM pursuant to License Agreement with ICC. No further reproduction or distribution authorized. ANY UNAUTHORIZED REPRODUCTION OR DISTRIBUTION IS A VIOLATION OF THE FEDERAL COPYRIGHT ACT AND THE LICENSE AGREEMENT, AND SUBJECT TO CIVIL AND CRIMINAL PENALTIES THEREUNDER.

(3) For each piping segment, use the actual length or longest length (if there are sub-branchlines) and the calculated gas load for that segment and begin the sizing process as follows:

(a) Referring to the appropriate sizing table (based on operating pressure and piping material), find the longest length distance in the first column or the closest larger distance if the exact distance is not listed. The use of alternative operating pressures and/or pressure drops will require the use of a different sizing table, but will not alter the sizing methodology. In many cases, the use of alternative operating pressures and/or pressure drops can require the approval of the code official.

(b) Trace across this row until the appliance gas load is found or the closest larger capacity if the exact capacity is not listed.

(c) Read up the table column to the top row and select the appropriate pipe size.

(d) Repeat this process for each segment of the piping system.

A.3.4 Pressure drop per 100 feet method. This sizing method is less conservative than the others, but it allows the designer to immediately see where the largest pressure drop occurs in the system. With this information, modifications can be made to bring the total drop to the critical *appliance* within the limitations that are presented to the designer.

Follow the procedures described in the Longest Length Method for Steps (1) through (4) and (9).

For each *piping* segment, calculate the pressure drop based on pipe size, length as a percentage of 100 feet (30 480 mm) and gas flow. Table A.3.4 shows pressure drop per 100 feet (30 480 mm) for pipe sizes from $^1/_2$ inch (12.7 mm) through 2 inches (51 mm). The sum of pressure drops to the critical *appliance* is subtracted from the supply pressure to verify that sufficient pressure will be available. If not, the layout can be examined to find the high drop section(s) and sizing selections modified.

Note: Other values can be obtained by using the following equation:

$$\text{Desired Value} = MBH \times \sqrt{\frac{\text{Desired Drop}}{\text{Table Drop}}}$$

For example, if it is desired to get flow through $^3/_4$-inch (19.1 mm) pipe at 2 inches/100 feet, multiply the capacity of $^3/_4$-inch (19.1 mm) pipe at 1 inch/100 feet by the square root of the pressure ratio:

$$147\ MBH \times \sqrt{\frac{2''\ \text{w.c.}}{1''\ \text{w.c.}}} = 147 \times 1.414 = 208\ MBH$$

(MBH = 1000 Btu/h)

A.4 Use of sizing equations. Capacities of smooth wall pipe or tubing can also be determined by using the following formulae:

(1)High Pressure [1.5 psi (10.3 kPa) and above]:

$$Q = 181.6\sqrt{\frac{D^5 \cdot (P_1^2 - P_2^2) \cdot Y}{C_r \cdot fba \cdot L}}$$

$$= 2237\ D^{2.623}\left[\frac{(P_1^2 - P_2^2) \cdot Y}{C_r \cdot L}\right]^{0.541}$$

(2)Low Pressure [Less than 1.5 psi (10.3 kPa)]:

$$Q = 187.3\sqrt{\frac{D^5 \cdot \Delta H}{C_r \cdot fba \cdot L}}$$

$$= 2313 D^{2.623}\left(\frac{\Delta H}{C_r \cdot L}\right)^{0.541}$$

where:

Q = Rate, cubic feet per hour at 60°F and 30-inch mercury column

D = Inside diameter of pipe, in.

P_1 = Upstream pressure, psia

P_2 = Downstream pressure, psia

Y = Superexpansibility factor = 1/supercompressibility factor

C_r = Factor for viscosity, density and temperature*

$$= 0.00354\ ST\left(\frac{Z}{S}\right)^{0.152}$$

Note: See Table 402.4 for Y and C_r for natural gas and propane.

TABLE A.3.4
THOUSANDS OF BTU/H (MBH) OF NATURAL GAS PER 100 FEET OF PIPE AT VARIOUS PRESSURE DROPS AND PIPE DIAMETERS

PRESSURE DROP PER 100 FEET IN INCHES W.C.	PIPE SIZES (inch)					
	$^1/_2$	$^3/_4$	1	$1^1/_4$	$1^1/_2$	2
0.2	31	64	121	248	372	716
0.3	38	79	148	304	455	877
0.5	50	104	195	400	600	1160
1.0	71	147	276	566	848	1640

For SI: 1 inch = 25.4 mm, 1 foot = 304.8 mm.

INTERNATIONAL CODE COUNCIL®
Copyright © 2015 ICC. ALL RIGHTS RESERVED. Accessed by David Dammon on Jun 21, 2017 12:30:52 PM pursuant to License Agreement with ICC. No further reproduction or distribution authorized. ANY UNAUTHORIZED REPRODUCTION OR DISTRIBUTION IS A VIOLATION OF THE FEDERAL COPYRIGHT ACT AND THE LICENSE AGREEMENT, AND SUBJECT TO CIVIL AND CRIMINAL PENALTIES THEREUNDER.

S = Specific gravity of gas at 60°F and 30-inch mercury column (0.60 for natural gas, 1.50 for propane), or = 1488μ

T = Absolute temperature, °F or = t + 460

t = Temperature, °F

Z = Viscosity of gas, centipoise (0.012 for natural gas, 0.008 for propane), or = 1488μ

fba = Base friction factor for air at 60°F (CF = 1)

L = Length of pipe, ft

ΔH = Pressure drop, in. w.c. (27.7 in. H_2O = 1 psi)

(For SI, see Section 402.4)

A.5 Pipe and tube diameters. Where the internal diameter is determined by the formulas in Section 402.4, Tables A.5.1 and A.5.2 can be used to select the nominal or standard pipe size based on the calculated internal diameter.

TABLE A.5.1
SCHEDULE 40 STEEL PIPE STANDARD SIZES

NOMINAL SIZE (inch)	INTERNAL DIAMETER (inch)	NOMINAL SIZE (inch)	INTERNAL DIAMETER (inch)
1/4	0.364	1 1/2	1.610
3/8	0.493	2	2.067
1/2	0.622	2 1/2	2.469
3/4	0.824	3	3.068
1	1.049	3 1/2	3.548
1 1/4	1.380	4	4.026

For SI: 1 inch = 25.4 mm.

A.6 Examples of piping system design and sizing.

A.6.1 Example 1: Longest length method. Determine the required pipe size of each section and *outlet* of the *piping* system shown in Figure A.6.1, with a designated pressure drop of 0.5-inch w.c. (125 Pa) using the Longest Length Method. The gas to be used has 0.60 specific gravity and a heating value of 1,000 Btu/ft^3 (37.5 MJ/m^3).

Solution:

(1) Maximum gas demand for *Outlet* A:

$$\frac{\text{Consumption (rating plate input, or Table 402.2 if necessary}}{\text{Btu of gas}} =$$

$$\frac{\text{35,000 Btu per hour rating}}{\text{1,000 Btu per cubic foot}} = 35 \text{ cubic feet per hour} = 35 \text{ cfh}$$

Maximum gas demand for *Outlet* B:

$$\frac{\text{Consumption}}{\text{Btu of gas}} = \frac{75{,}000}{1{,}000} = 75 \text{ cfh}$$

Maximum gas demand for *Outlet* C:

$$\frac{\text{Consumption}}{\text{Btu of gas}} = \frac{35{,}000}{1{,}000} = 35 \text{ cfh}$$

Maximum gas demand for *Outlet* D:

$$\frac{\text{Consumption}}{\text{Btu of gas}} = \frac{100{,}000}{1{,}000} = 100 \text{ cfh}$$

(2) The length of pipe from the *point of delivery* to the most remote *outlet* (A) is 60 feet (18 288 mm). This is the only distance used.

(3) Using the row marked 60 feet (18 288 mm) in Table 402.4(2):

(a) *Outlet* A, supplying 35 cfh (0.99 m^3/hr), requires 1/2-inch pipe.

TABLE A.5.2
COPPER TUBE STANDARD SIZES

TUBE TYPE	NOMINAL OR STANDARD SIZE (inches)	INTERNAL DIAMETER (inches)
K	1/4	0.305
L	1/4	0.315
ACR (D)	3/8	0.315
ACR (A)	3/8	0.311
K	3/8	0.402
L	3/8	0.430
ACR (D)	1/2	0.430
ACR (A)	1/2	0.436
K	1/2	0.527
L	1/2	0.545
ACR (D)	5/8	0.545
ACR (A)	5/8	0.555
K	5/8	0.652
L	5/8	0.666
ACR (D)	3/4	0.666
ACR (A)	3/4	0.680
K	3/4	0.745
L	3/4	0.785
ACR	7/8	0.785
K	1	0.995
L	1	1.025
ACR	1 1/8	1.025
K	1 1/4	1.245
L	1 1/4	1.265
ACR	1 3/8	1.265
K	1 1/2	1.481
L	1 1/2	1.505
ACR	1 5/8	1.505
K	2	1.959
L	2	1.985
ACR	2 1/8	1.985
K	2 1/2	2.435
L	2 1/2	2.465
ACR	2 5/8	2.465
K	3	2.907
L	3	2.945
ACR	3 1/8	2.945

For SI: 1 inch = 25.4 mm.

INTERNATIONAL CODE COUNCIL®
Copyright © 2015 ICC. ALL RIGHTS RESERVED. Accessed by David Dammon on Jun 21, 2017 12:30:52 PM pursuant to License Agreement with ICC. No further reproduction or distribution authorized. ANY UNAUTHORIZED REPRODUCTION OR DISTRIBUTION IS A VIOLATION OF THE FEDERAL COPYRIGHT ACT AND THE LICENSE AGREEMENT, AND SUBJECT TO CIVIL AND CRIMINAL PENALTIES THEREUNDER.

(b) *Outlet* B, supplying 75 cfh (2.12 m^3/hr), requires $^3/_4$-inch pipe.

(c) Section 1, supplying *Outlets* A and B, or 110 cfh (3.11 m^3/hr), requires $^3/_4$-inch pipe.

(d) Section 2, supplying *Outlets* C and D, or 135 cfh (3.82 m^3/hr), requires $^3/_4$-inch pipe.

(e) Section 3, supplying *Outlets* A, B, C and D, or 245 cfh (6.94 m^3/hr), requires 1-inch pipe.

(4) If a different gravity factor is applied to this example, the values in the row marked 60 feet (18 288 mm) of Table 402.4(2) would be multiplied by the appropriate multiplier from Table A.2.4 and the resulting cubic feet per hour values would be used to size the *piping*.

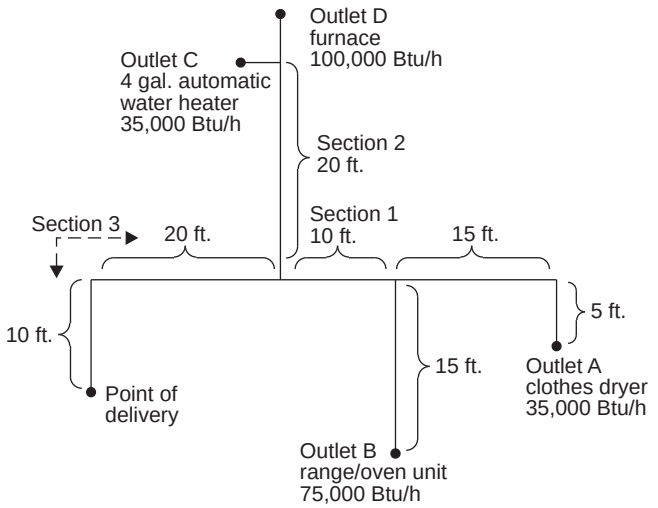

FIGURE A.6.1
PIPING PLAN SHOWING A STEEL PIPING SYSTEM

A.6.2 Example 2: Hybrid or dual pressure systems. Determine the required CSST size of each section of the *piping* system shown in Figure A.6.2, with a designated pressure drop of 1 psi (6.9 kPa) for the 2 psi (13.8 kPa) section and 3-inch w.c. (0.75 kPa) pressure drop for the 13-inch w.c. (2.49 kPa) section. The gas to be used has 0.60 specific gravity and a heating value of 1,000 Btu/ft^3 (37.5 MJ/ m^3).

Solution:

(1) Size 2 psi (13.8 kPa) line using Table 402.4(18).

(2) Size 10-inch w.c. (2.5 kPa) lines using Table 402.4(16).

(3) Using the following, determine if sizing tables can be used.

(a) Total gas load shown in Figure A.6.2 equals 110 cfh (3.11 m^3/hr).

(b) Determine pressure drop across regulator [see notes in Table 402.4(18)].

(c) If pressure drop across regulator exceeds $^3/_4$ psig (5.2 kPa), Table 402.4(18) cannot be used. Note: If pressure drop exceeds $^3/_4$ psi (5.2 kPa), then a larger regulator must be selected or an alternative sizing method must be used.

(d) Pressure drop across the line regulator [for 110 cfh (3.11 m^3/hr)] is 4-inch w.c. (0.99 kPa) based on manufacturer's performance data.

(e) Assume the CSST manufacturer has tubing sizes or EHDs of 13, 18, 23 and 30.

(4) Section A [2 psi (13.8 kPa) zone]

(a) Distance from meter to regulator = 100 feet (30 480 mm).

(b) Total load supplied by A = 110 cfh (3.11 m^3/hr) (furnace + water heater + dryer).

(c) Table 402.4(18) shows that EHD size 18 should be used.

Note: It is not unusual to oversize the supply line by 25 to 50 percent of the as-installed load. EHD size 18 has a capacity of 189 cfh (5.35 m^3/hr).

(5) Section B (low pressure zone)

(a) Distance from regulator to furnace is 15 feet (4572 mm).

(b) Load is 60 cfh (1.70 m^3/hr).

(c) Table 402.4(16) shows that EHD size 13 should be used.

(6) Section C (low pressure zone)

(a) Distance from regulator to water heater is 10 feet (3048 mm).

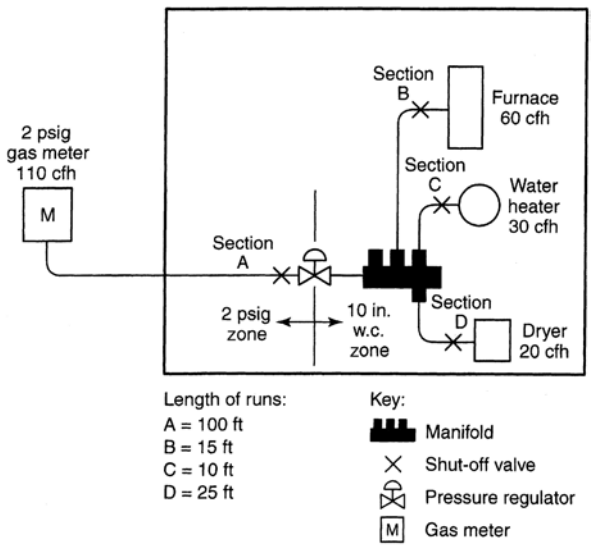

FIGURE A.6.2
PIPING PLAN SHOWING A CSST SYSTEM

INTERNATIONAL CODE COUNCIL®
Copyright © 2015 ICC. ALL RIGHTS RESERVED. Accessed by David Dammon on Jun 21, 2017 12:30:52 PM pursuant to License Agreement with ICC. No further reproduction or distribution authorized. ANY UNAUTHORIZED REPRODUCTION OR DISTRIBUTION IS A VIOLATION OF THE FEDERAL COPYRIGHT ACT AND THE LICENSE AGREEMENT, AND SUBJECT TO CIVIL AND CRIMINAL PENALTIES THEREUNDER.

(b) Load is 30 cfh (0.85 m^3/hr).

(c) Table 402.4(16) shows that EHD size 13 should be used.

(7) Section D (low pressure zone)

(a) Distance from regulator to dryer is 25 feet (7620 mm).

(b) Load is 20 cfh (0.57 m^3/hr).

(c) Table 402.4(16) shows that EHD size 13 should be used.

A.6.3 Example 3: Branch length method. Determine the required semirigid copper tubing size of each section of the *piping* system shown in Figure A.6.3, with a designated pressure drop of 1-inch w.c. (250 Pa) (using the Branch Length Method). The gas to be used has 0.60 specific gravity and a heating value of 1,000 Btu/ft^3 (37.5 MJ/m^3).

Solution:

(1) Section A

(a) The length of tubing from the *point of delivery* to the most remote *appliance* is 50 feet (15 240 mm), A + C.

(b) Use this longest length to size Sections A and C.

(c) Using the row marked 50 feet (15 240 mm) in Table 402.4(10), Section A, supplying 220 cfh (6.2 m^3/hr) for four appliances requires 1-inch tubing.

(2) Section B

(a) The length of tubing from the *point of delivery* to the range/oven at the end of Section B is 30 feet (9144 mm), A + B.

(b) Use this branch length to size Section B only.

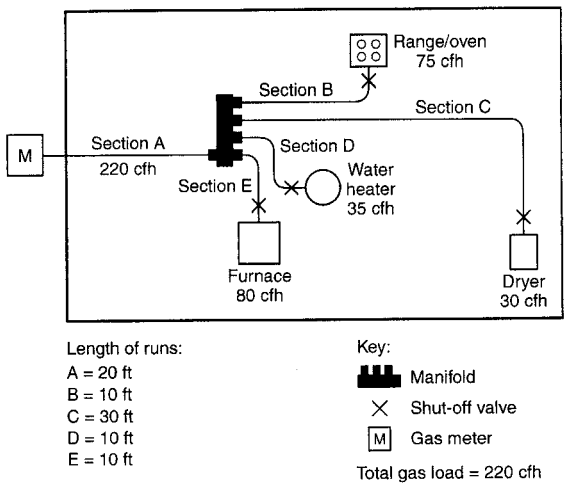

FIGURE A.6.3
PIPING PLAN SHOWING A COPPER TUBING SYSTEM

(c) Using the row marked 30 feet (9144 mm) in Table 402.4(10), Section B, supplying 75 cfh (2.12 m^3/hr) for the range/oven requires $^1/_2$-inch tubing.

(3) Section C

(a) The length of tubing from the *point of delivery* to the dryer at the end of Section C is 50 feet (15 240 mm), A + C.

(b) Use this branch length to size Section C.

(c) Using the row marked 50 feet (15 240 mm) in Table 402.4(10), Section C, supplying 30 cfh (0.85 m^3/hr) for the dryer requires $^3/_8$-inch tubing.

(4) Section D

(a) The length of tubing from the *point of delivery* to the water heater at the end of Section D is 30 feet (9144 mm), A + D.

(b) Use this branch length to size Section D only.

(c) Using the row marked 30 feet (9144 mm) in Table 402.4(10), Section D, supplying 35 cfh (0.99 m^3/hr) for the water heater requires $^3/_8$-inch tubing.

(5) Section E

(a) The length of tubing from the *point of delivery* to the furnace at the end of Section E is 30 feet (9144 mm), A + E.

(b) Use this branch length to size Section E only.

(c) Using the row marked 30 feet (9144 mm) in Table 402.4(10), Section E, supplying 80 cfh (2.26 m^3/hr) for the furnace requires $^1/_2$-inch tubing.

A.6.4 Example 4: Modification to existing piping system. Determine the required CSST size for Section G (retrofit application) of the *piping* system shown in Figure A.6.4, with a designated pressure drop of 0.5-inch w.c. (125 Pa) using the branch length method. The gas to be used has 0.60 specific gravity and a heating value of 1,000 Btu/ft^3 (37.5 MJ/m^3).

Solution:

(1) The length of pipe and CSST from the *point of delivery* to the retrofit *appliance* (barbecue) at the end of Section G is 40 feet (12 192 mm), A + B + G.

(2) Use this branch length to size Section G.

(3) Assume the CSST manufacturer has tubing sizes or EHDs of 13, 18, 23 and 30.

(4) Using the row marked 40 feet (12 192 mm) in Table 402.4(15), Section G, supplying 40 cfh (1.13 m^3/hr) for the barbecue requires EHD 18 CSST.

(5) The sizing of Sections A, B, F and E must be checked to ensure adequate gas carrying capacity since an *appliance* has been added to the *piping* system (see A.6.1 for details).

INTERNATIONAL CODE COUNCIL®
Copyright © 2015 ICC. ALL RIGHTS RESERVED. Accessed by David Dammon on Jun 21, 2017 12:30:52 PM pursuant to License Agreement with ICC. No further reproduction or distribution authorized. ANY UNAUTHORIZED REPRODUCTION OR DISTRIBUTION IS A VIOLATION OF THE FEDERAL COPYRIGHT ACT AND THE LICENSE AGREEMENT, AND SUBJECT TO CIVIL AND CRIMINAL PENALTIES THEREUNDER.

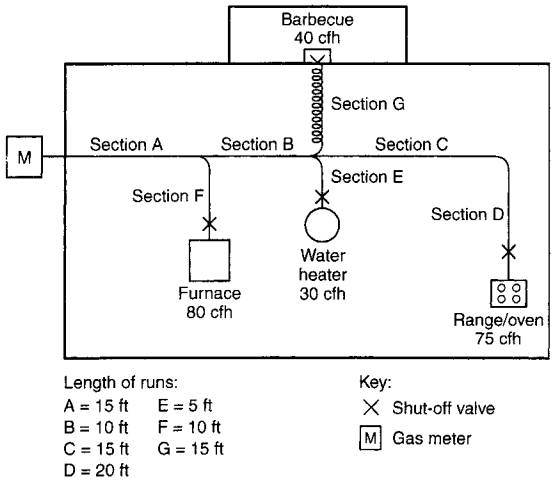

FIGURE A.6.4
PIPING PLAN SHOWING A MODIFICATION TO EXISTING PIPING SYSTEM

A.6.5 Example 5: Calculating pressure drops due to temperature changes. A test *piping* system is installed on a warm autumn afternoon when the temperature is 70°F (21°C). In accordance with local custom, the new *piping* system is subjected to an air pressure test at 20 psig (138 kPa). Overnight, the temperature drops and when the inspector shows up first thing in the morning the temperature is 40°F (4°C).

If the volume of the *piping* system is unchanged, then the formula based on Boyle's and Charles' law for determining the new pressure at a reduced temperature is as follows:

$$\frac{T_1}{T_2} = \frac{P_1}{P_2}$$

where:

T_1 = Initial temperature, absolute (T_1 + 459)

T_2 = Final temperature, absolute (T_2 + 459)

P_1 = Initial pressure, psia (P_1 + 14.7)

P_2 = Final pressure, psia (P_2 + 14.7)

$$\frac{(70 + 459)}{(40 + 459)} = \frac{(20 + 14.7)}{(P_2 + 14.7)}$$

$$\frac{529}{499} = \frac{34.7}{(P_2 + 14.7)}$$

$$(P_2 + 14.7) \times \frac{529}{499} = 34.7$$

$$(P_2 + 14.7) \times \frac{34.7}{1.060}$$

P_2 = 32.7 - 14.7

P_2 = 18 *psig*

Therefore, the gauge could be expected to register 18 psig (124 kPa) when the ambient temperature is 40°F (4°C).

A.6.6 Example 6: Pressure drop per 100 feet of pipe method. Using the layout shown in Figure A.6.1 and ΔH = pressure drop, in w.c. (27.7 in. H_2O = 1 psi), proceed as follows:

(1) Length to A = 20 feet, with 35,000 Btu/hr.

For $^1/_2$-inch pipe, $\Delta H = {}^{20\text{ feet}}/_{100\text{ feet}} \times 0.3$ inch w.c. = 0.06 in w.c.

(2) Length to B = 15 feet, with 75,000 Btu/hr.

For $^3/_4$-inch pipe, $\Delta H = {}^{15\text{ feet}}/_{100\text{ feet}} \times 0.3$ inch w.c. = 0.045 in w.c.

(3) Section 1 = 10 feet, with 110,000 Btu/hr. Here there is a choice:

For 1-inch pipe: $\Delta H = {}^{10\text{ feet}}/_{100\text{ feet}} \times 0.2$ inch w.c. = 0.02 in w.c.

For $^3/_4$-inch pipe: $\Delta H = {}^{10\text{ feet}}/_{100\text{ feet}} \times [0.5$ inch w.c. + ${}^{(110{,}000\text{ Btu/hr-}104{,}000\text{ Btu/hr})}/_{(147{,}000\text{ Btu/hr-}104{,}000\text{ Btu/hr})} \times (1.0$ inches w.c. - 0.5 inch w.c.)] = 0.1 × 0.57 inch w.c.≈ 0.06 inch w.c.

Note that the pressure drop between 104,000 Btu/hr and 147,000 Btu/hr has been interpolated as 110,000 Btu/hr.

(4) Section 2 = 20 feet, with 135,000 Btu/hr. Here there is a choice:

For 1-inch pipe: $\Delta H = {}^{20\text{ feet}}/_{100\text{ feet}} \times [0.2$ inch w.c. + ${}^{(14{,}000\text{ Btu/hr})}/_{(27{,}000\text{ Btu/hr})} \times 0.1$ inch w.c.] = 0.05 inch w.c.

For $^3/_4$-inch pipe: $\Delta H = {}^{20\text{ feet}}/_{100\text{ feet}} \times 1.0$ inch w.c. = 0.2 inch w.c.

Note that the pressure drop between 121,000 Btu/hr and 148,000 Btu/hr has been interpolated as 135,000 Btu/hr, but interpolation for the ¾-inch pipe (trivial for 104,000 Btu/hr to 147,000 Btu/hr) was not used.

(5) Section 3 = 30 feet, with 245,000 Btu/hr. Here there is a choice:

For 1-inch pipe: $\Delta H = {}^{30\text{ feet}}/_{100\text{ feet}} \times 1.0$ inches w.c. = 0.3 inch w.c.

For $1^1/_4$-inch pipe: $\Delta H = {}^{30\text{ feet}}/_{100\text{ feet}} \times 0.2$ inch w.c. = 0.06 inch w.c.

Note that interpolation for these options is ignored since the table values are close to the 245,000 Btu/hr carried by that section.

INTERNATIONAL CODE COUNCIL®
Copyright © 2015 ICC. ALL RIGHTS RESERVED. Accessed by David Dammon on Jun 21, 2017 12:30:52 PM pursuant to License Agreement with ICC. No further reproduction or distribution authorized. ANY UNAUTHORIZED REPRODUCTION OR DISTRIBUTION IS A VIOLATION OF THE FEDERAL COPYRIGHT ACT AND THE LICENSE AGREEMENT, AND SUBJECT TO CIVIL AND CRIMINAL PENALTIES THEREUNDER.

(6) The total pressure drop is the sum of the section approaching A, Sections 1 and 3, or either of the following, depending on whether an absolute minimum is needed or the larger drop can be accommodated.

Minimum pressure drop to farthest *appliance*:

ΔH = 0.06 inch w.c. + 0.02 inch w.c. + 0.06 inch w.c. = 0.14 inch w.c.

Larger pressure drop to the farthest *appliance*:

ΔH = 0.06 inch w.c. + 0.06 inch w.c. + 0.3 inch w.c. = 0.42 inch w.c.

Notice that Section 2 and the run to B do not enter into this calculation, provided that the appliances have similar input pressure requirements.

For SI units: 1 Btu/hr = 0.293 W, 1 cubic foot = 0.028 m^3, 1 foot = 0.305 m, 1 inch w.c. = 249 Pa.

INTERNATIONAL CODE COUNCIL®
Copyright © 2015 ICC. ALL RIGHTS RESERVED. Accessed by David Dammon on Jun 21, 2017 12:30:52 PM pursuant to License Agreement with ICC. No further reproduction or distribution authorized. ANY UNAUTHORIZED REPRODUCTION OR DISTRIBUTION IS A VIOLATION OF THE FEDERAL COPYRIGHT ACT AND THE LICENSE AGREEMENT, AND SUBJECT TO CIVIL AND CRIMINAL PENALTIES THEREUNDER.

INTERNATIONAL CODE COUNCIL®
Copyright © 2015 ICC. ALL RIGHTS RESERVED. Accessed by David Dammon on Jun 21, 2017 12:30:52 PM pursuant to License Agreement with ICC. No further reproduction or distribution authorized. ANY UNAUTHORIZED REPRODUCTION OR DISTRIBUTION IS A VIOLATION OF THE FEDERAL COPYRIGHT ACT AND THE LICENSE AGREEMENT, AND SUBJECT TO CIVIL AND CRIMINAL PENALTIES THEREUNDER.

Appendix B: Sizing of Venting Systems Serving Appliances Equipped with Draft Hoods, Category I Appliances, and Appliances Listed for Use with Type B Vents

(This appendix is informative and is not part of the *code*. This appendix is an excerpt from the 2015 *International Fuel Gas Code,* coordinated with the section numbering of the *International Residential Code.*)

EXAMPLES USING SINGLE APPLIANCE VENTING TABLES

Example 1: Single draft-hood-equipped appliance.

An installer has a 120,000 British thermal unit (Btu) per hour input *appliance* with a 5-inch-diameter draft hood outlet that needs to be vented into a 10-foot-high Type B vent system. What size vent should be used assuming (a) a 5-foot lateral single-wall metal vent connector is used with two 90-degree elbows, or (b) a 5-foot lateral single-wall metal vent connector is used with three 90-degree elbows in the vent system?

Solution:

Table 504.2(2) should be used to solve this problem, because single-wall metal vent connectors are being used with a Type B vent.

(a) Read down the first column in Table 504.2(2) until the row associated with a 10-foot height and 5-foot lateral is found. Read across this row until a vent capacity greater than 120,000 Btu per hour is located in the shaded columns *labeled* "NAT Max" for draft-hood-equipped appliances. In this case, a 5-inch-diameter vent has a capacity of 122,000 Btu per hour and can be used for this application.

(b) If three 90-degree elbows are used in the vent system, then the maximum vent capacity listed in the tables must be reduced by 10 percent (see Section 504.2.3 for single *appliance* vents). This implies that the 5-inch-diameter vent has an adjusted capacity of only 110,000 Btu per hour. In this case, the vent system must be increased to 6 inches in diameter (see calculations below).

122,000 (0.90) = 110,000 for 5-inch vent
From Table 504.2(2), Select 6-inch vent
186,000 (0.90) = 167,000; This is greater than the required 120,000. Therefore, use a 6-inch vent and connector where three elbows are used.

Example 2: Single fan-assisted appliance.

An installer has an 80,000 Btu per hour input fan-assisted *appliance* that must be installed using 10 feet of lateral connector attached to a 30-foot-high Type B vent. Two 90-degree elbows are needed for the installation. Can a single-wall metal vent connector be used for this application?

Solution:

Table 504.2(2) refers to the use of single-wall metal vent connectors with Type B vent. In the first column find the row associated with a 30-foot height and a 10-foot lateral. Read across this row, looking at the FAN Min and FAN Max columns, to find that a 3-inch-diameter single-wall metal vent connector is not recommended. Moving to the next larger size single wall connector (4 inches), note that a 4-inch-diameter single-wall metal connector has a recommended minimum vent capacity of 91,000 Btu per hour and a recommended maximum vent capacity of 144,000 Btu per hour. The 80,000 Btu per hour fan-assisted *appliance* is outside this range, so the conclusion is that a single-wall metal vent connector cannot be used to vent this *appliance* using 10 feet of lateral for the connector.

However, if the 80,000 Btu per hour input *appliance* could be moved to within 5 feet of the vertical vent, then a 4-inch single-wall metal connector could be used to vent the *appliance*. Table 504.2(2) shows the acceptable range of vent capacities for a 4-inch vent with 5 feet of lateral to be between 72,000 Btu per hour and 157,000 Btu per hour.

If the *appliance* cannot be moved closer to the vertical vent, then Type B vent could be used as the connector material. In this case, Table 504.2(1) shows that for a 30-foot-high vent with 10 feet of lateral, the acceptable range of vent capacities for a 4-inch-diameter vent attached to a fan-assisted *appliance* is between 37,000 Btu per hour and 150,000 Btu per hour.

INTERNATIONAL CODE COUNCIL®
Copyright © 2015 ICC. ALL RIGHTS RESERVED. Accessed by David Dammon on Jun 21, 2017 12:30:52 PM pursuant to License Agreement with ICC. No further reproduction or distribution authorized. ANY UNAUTHORIZED REPRODUCTION OR DISTRIBUTION IS A VIOLATION OF THE FEDERAL COPYRIGHT ACT AND THE LICENSE AGREEMENT, AND SUBJECT TO CIVIL AND CRIMINAL PENALTIES THEREUNDER.

Example 3: Interpolating between table values.

An installer has an 80,000 Btu per hour input *appliance* with a 4-inch-diameter draft hood outlet that needs to be vented into a 12-foot-high Type B vent. The vent connector has a 5-foot lateral length and is also Type B. Can this *appliance* be vented using a 4-inch-diameter vent?

Solution:

Table 504.2(1) is used in the case of an all Type B vent system. However, since there is no entry in Table 504.2(1) for a height of 12 feet, interpolation must be used. Read down the 4-inch diameter NAT Max column to the row associated with 10-foot height and 5-foot lateral to find the capacity value of 77,000 Btu per hour. Read further down to the 15-foot height, 5-foot lateral row to find the capacity value of 87,000 Btu per hour. The difference between the 15-foot height capacity value and the 10-foot height capacity value is 10,000 Btu per hour. The capacity for a vent system with a 12-foot height is equal to the capacity for a 10-foot height plus $^{2}/_{5}$ of the difference between the 10-foot and 15-foot height values, or 77,000 + $^{2}/_{5}$ (10,000) = 81,000 Btu per hour. Therefore, a 4-inch-diameter vent can be used in the installation.

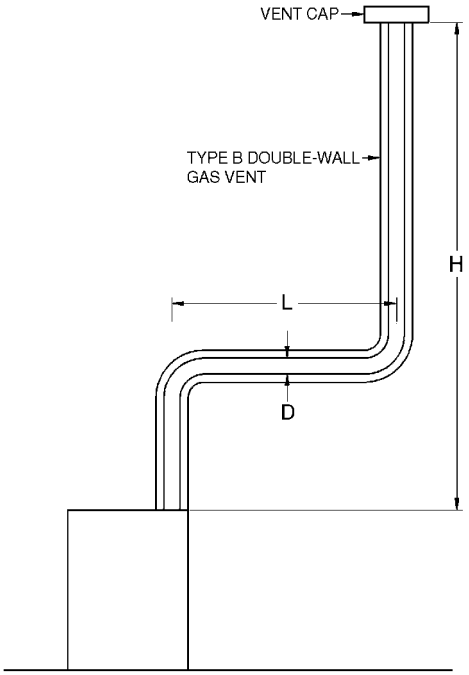

For SI: 1 foot = 304.8 mm, 1 British thermal unit per hour = 0.2931 W.

Table 504.2(1) is used when sizing Type B double-wall gas vent connected directly to the appliance.

Note: The appliance may be either Category I draft hood equipped or fan-assisted type.

FIGURE B-1
TYPE B DOUBLE-WALL VENT SYSTEM SERVING A SINGLE APPLIANCE WITH A TYPE B DOUBLE-WALL VENT

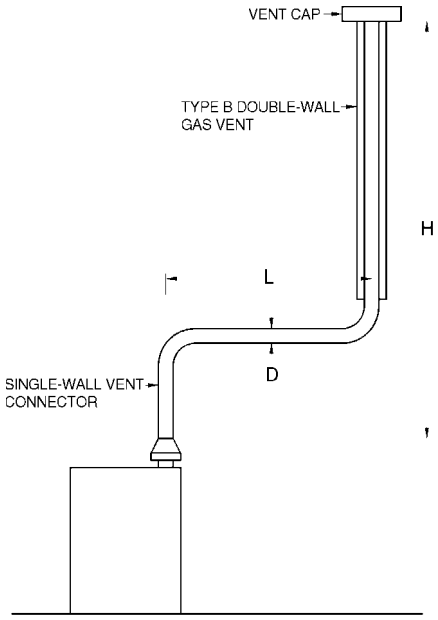

For SI: 1 foot = 304.8 mm, 1 British thermal unit per hour = 0.2931 W.

Table 504.2(2) is used when sizing a single-wall metal vent connector attached to a Type B double-wall gas vent.

Note: The appliance may be either Category I draft hood equipped or fan-assisted type.

FIGURE B-2
TYPE B DOUBLE-WALL VENT SYSTEM SERVING A SINGLE APPLIANCE WITH A SINGLE-WALL METAL VENT CONNECTOR

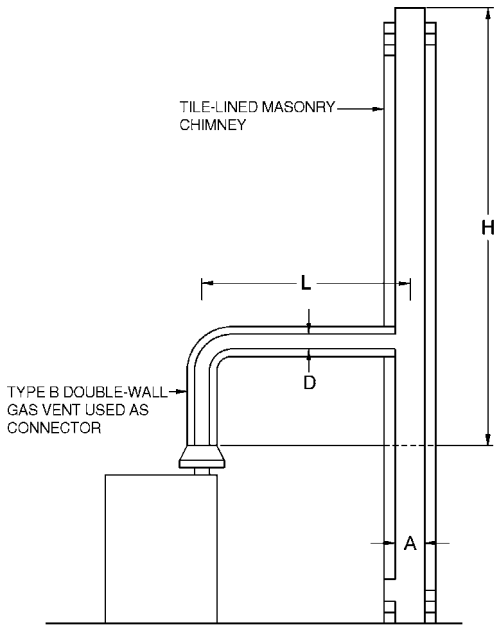

Table 504.2(3) is used when sizing a Type B double-wall gas vent connector attached to a tile-lined masonry chimney.

Note: "A" is the equivalent cross-sectional area of the tile liner.

Note: The appliance can be either Category I draft hood equipped or fan-assisted type.

FIGURE B-3
VENT SYSTEM SERVING A SINGLE APPLIANCE WITH A MASONRY CHIMNEY OF TYPE B DOUBLE-WALL VENT CONNECTOR

INTERNATIONAL CODE COUNCIL®
Copyright © 2015 ICC. ALL RIGHTS RESERVED. Accessed by David Dammon on Jun 21, 2017 12:30:52 PM pursuant to License Agreement with ICC. No further reproduction or distribution authorized. ANY UNAUTHORIZED REPRODUCTION OR DISTRIBUTION IS A VIOLATION OF THE FEDERAL COPYRIGHT ACT AND THE LICENSE AGREEMENT, AND SUBJECT TO CIVIL AND CRIMINAL PENALTIES THEREUNDER.

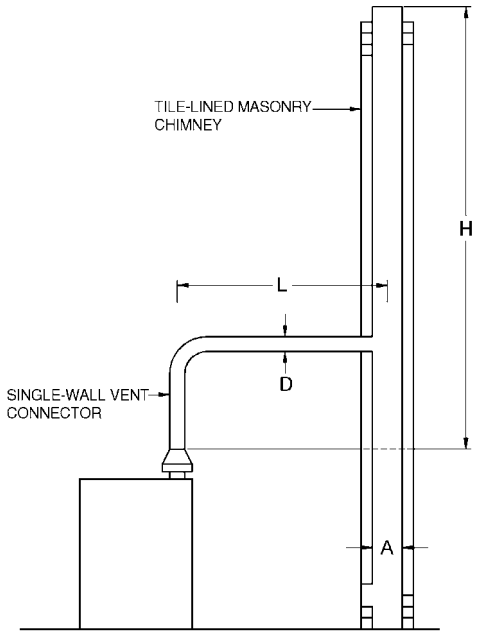

Table 504.2(4) is used when sizing a single-wall vent connector attached to a tile-lined masonry chimney.

Note: "A" is the equivalent cross-sectional area of the tile liner.

Note: The appliance can be either Category I draft hood equipped or fan-assisted type.

FIGURE B-4
VENT SYSTEM SERVING A SINGLE APPLIANCE USING A MASONRY CHIMNEY AND A SINGLE-WALL METAL VENT CONNECTOR

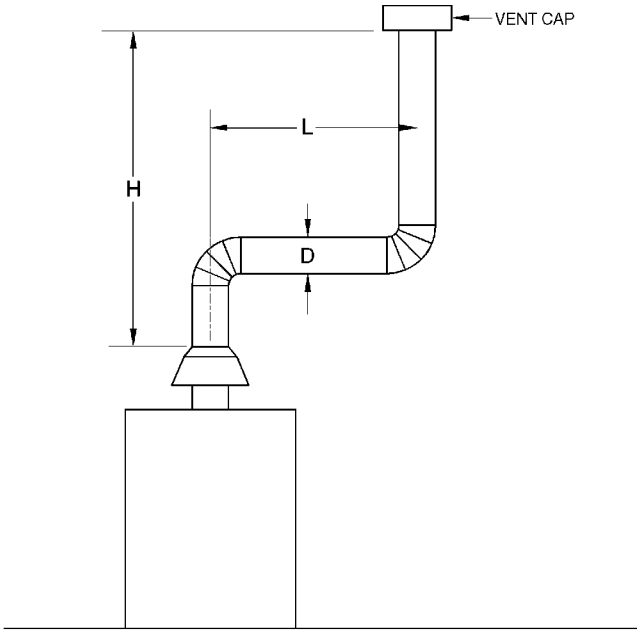

Asbestos cement Type B or single-wall metal vent serving a single draft-hood-equipped appliance [see Table 504.2(5)].

FIGURE B-5
ASBESTOS CEMENT TYPE B OR SINGLE-WALL METAL VENT SYSTEM SERVING A SINGLE DRAFT-HOOD-EQUIPPED APPLIANCE

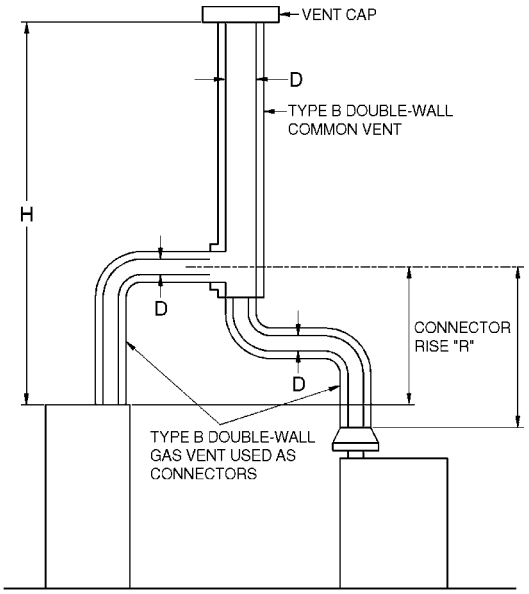

Table 504.3(1) is used when sizing Type B double-wall vent connectors attached to a Type B double-wall common vent.

Note: Each appliance can be either Category I draft hood equipped or fan-assisted type.

FIGURE B-6
VENT SYSTEM SERVING TWO OR MORE APPLIANCES WITH TYPE B DOUBLE-WALL VENT AND TYPE B DOUBLE-WALL VENT CONNECTOR

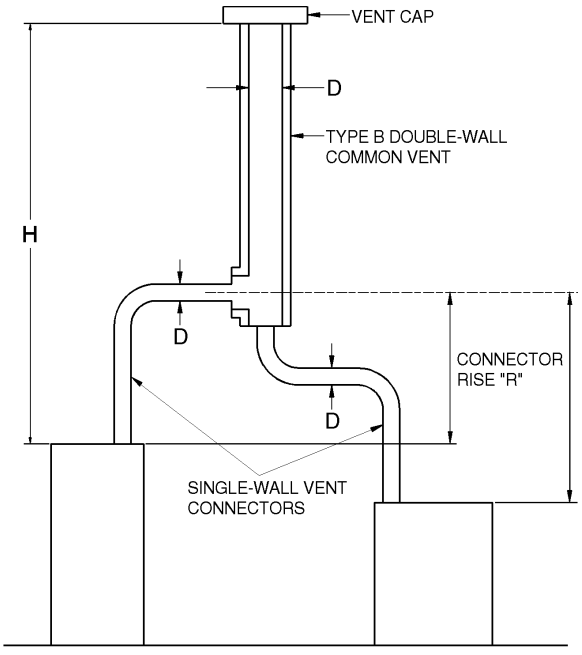

Table 504.3(2) is used when sizing single-wall vent connectors attached to a Type B double-wall common vent.

Note: Each appliance can be either Category I draft hood equipped or fan-assisted type.

FIGURE B-7
VENT SYSTEM SERVING TWO OR MORE APPLIANCES WITH TYPE B DOUBLE-WALL VENT AND SINGLE-WALL METAL VENT CONNECTORS

INTERNATIONAL CODE COUNCIL®
Copyright © 2015 ICC. ALL RIGHTS RESERVED. Accessed by David Dammon on Jun 21, 2017 12:30:52 PM pursuant to License Agreement with ICC. No further reproduction or distribution authorized. ANY UNAUTHORIZED REPRODUCTION OR DISTRIBUTION IS A VIOLATION OF THE FEDERAL COPYRIGHT ACT AND THE LICENSE AGREEMENT, AND SUBJECT TO CIVIL AND CRIMINAL PENALTIES THEREUNDER.

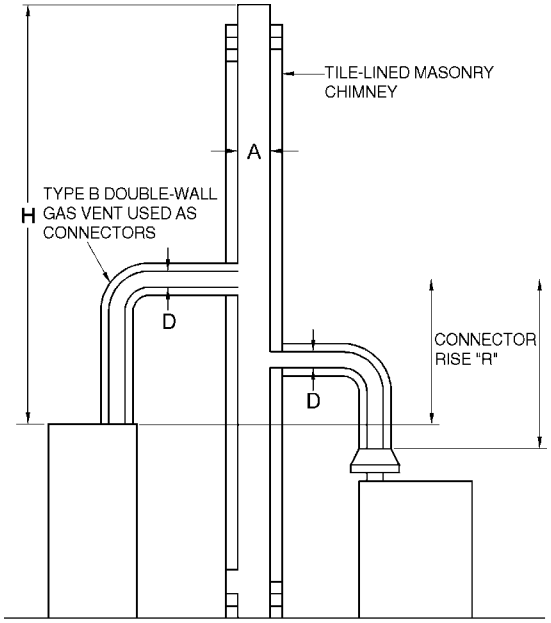

Table 504.3(3) is used when sizing Type B double-wall vent connectors attached to a tile-lined masonry chimney.

Note: "A" is the equivalent cross-sectional area of the tile liner.

Note: Each appliance can be either Category I draft hood equipped or fan-assisted type.

FIGURE B-8
MASONRY CHIMNEY SERVING TWO OR MORE APPLIANCES WITH TYPE B DOUBLE-WALL VENT CONNECTOR

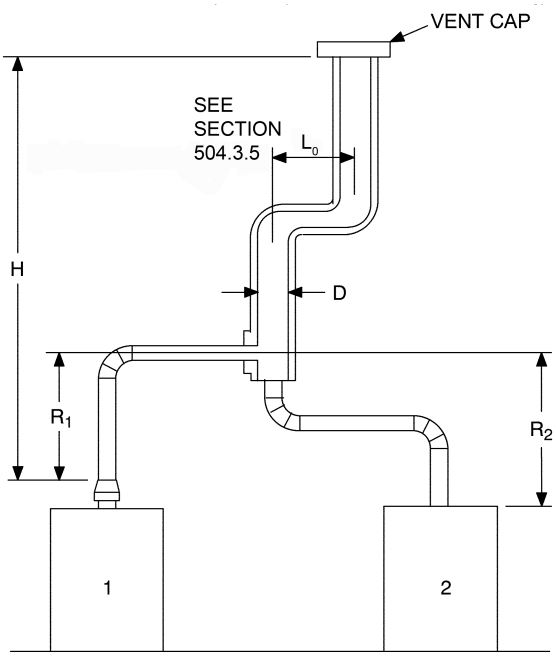

Asbestos cement Type B or single-wall metal pipe vent serving two or more draft-hood-equipped appliances [see Table 504.3(5)].

FIGURE B-10
ASBESTOS CEMENT TYPE B OR SINGLE-WALL METAL VENT SYSTEM SERVING TWO OR MORE DRAFT-HOOD-EQUIPPED APPLIANCES

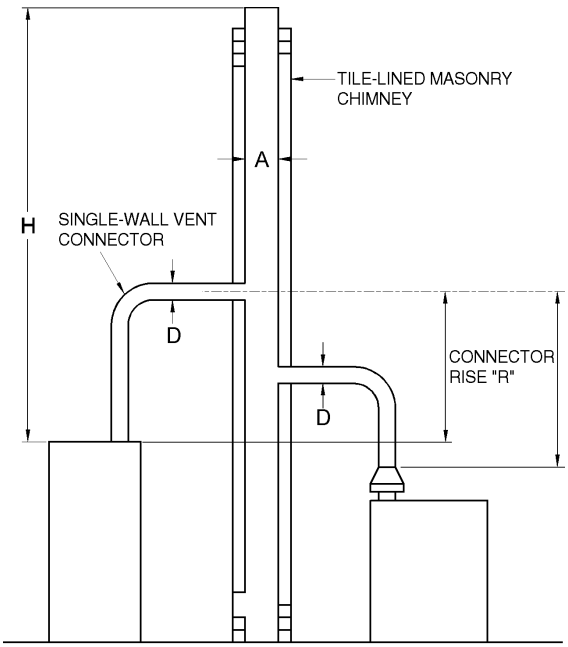

Table 504.3(4) is used when sizing single-wall metal vent connectors attached to a tile-lined masonry chimney.

Note: "A" is the equivalent cross-sectional area of the tile liner.

Note: Each appliance can be either Category I draft hood equipped or fan-assisted type.

FIGURE B-9
MASONRY CHIMNEY SERVING TWO OR MORE APPLIANCES WITH SINGLE-WALL METAL VENT CONNECTORS

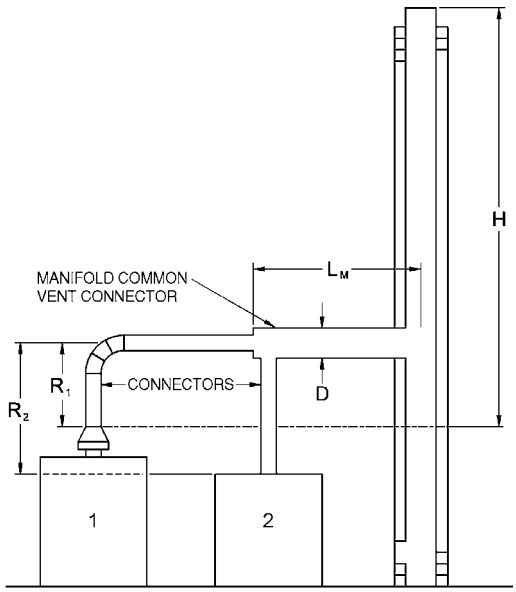

Example: Manifolded Common Vent Connector L_M shall be no greater than 18 times the common vent connector manifold inside diameter; i.e., a 4-inch (102 mm) inside diameter common vent connector manifold shall not exceed 72 inches (1829 mm) in length (see Section 504.3.4).

Note: This is an illustration of a typical manifolded vent connector. Different appliance, vent connector, or common vent types are possible. Consult Section 502.3.

FIGURE B-11
USE OF MANIFOLD COMMON VENT CONNECTOR

INTERNATIONAL CODE COUNCIL®
Copyright © 2015 ICC. ALL RIGHTS RESERVED. Accessed by David Dammon on Jun 21, 2017 12:30:52 PM pursuant to License Agreement with ICC. No further reproduction or distribution authorized. ANY UNAUTHORIZED REPRODUCTION OR DISTRIBUTION IS A VIOLATION OF THE FEDERAL COPYRIGHT ACT AND THE LICENSE AGREEMENT, AND SUBJECT TO CIVIL AND CRIMINAL PENALTIES THEREUNDER.

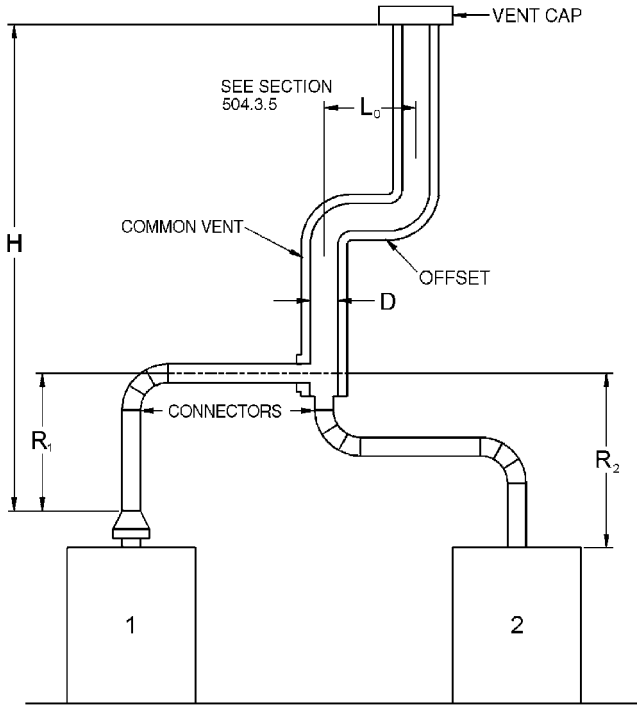

Example: Offset Common Vent

Note: This is an illustration of a typical offset vent. Different appliance, vent connector, or vent types are possible. Consult Sections 504.2 and 504.3.

FIGURE B-12
USE OF OFFSET COMMON VENT

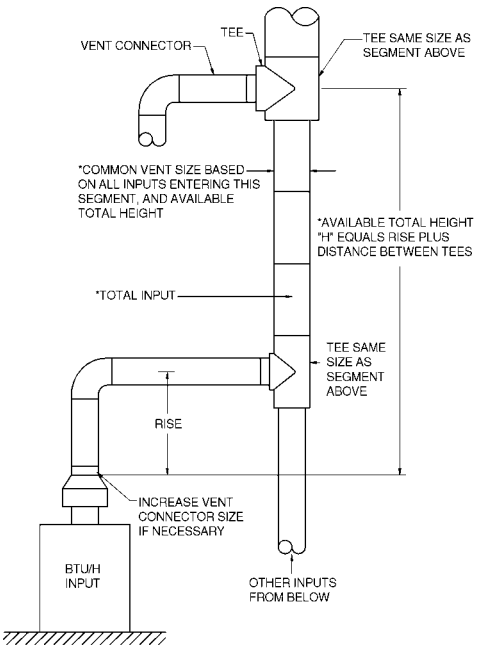

Vent connector size depends on:
- Input
- Rise
- Available total height "H"
- Table 504.3(1) connectors

Common vent size depends on:
- Combined inputs
- Available total height "H"
- Table 504.3(1) common vent

FIGURE B-13
MULTISTORY GAS VENT DESIGN PROCEDURE FOR EACH SEGMENT OF SYSTEM

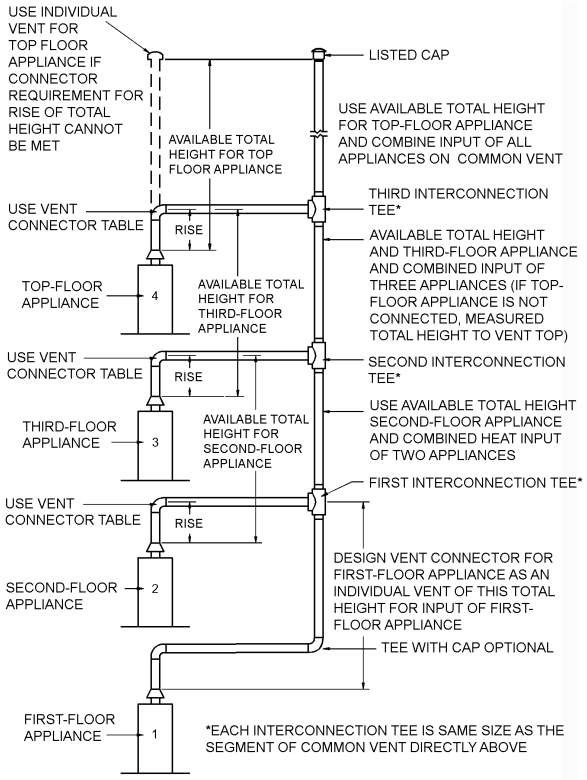

Principles of design of multistory vents using vent connector and common vent design tables (see Sections 504.3.11 through 504.3.17).

FIGURE B-14
MULTISTORY VENT SYSTEMS

INTERNATIONAL CODE COUNCIL®
Copyright © 2015 ICC. ALL RIGHTS RESERVED. Accessed by David Dammon on Jun 21, 2017 12:30:52 PM pursuant to License Agreement with ICC. No further reproduction or distribution authorized. ANY UNAUTHORIZED REPRODUCTION OR DISTRIBUTION IS A VIOLATION OF THE FEDERAL COPYRIGHT ACT AND THE LICENSE AGREEMENT, AND SUBJECT TO CIVIL AND CRIMINAL PENALTIES THEREUNDER.

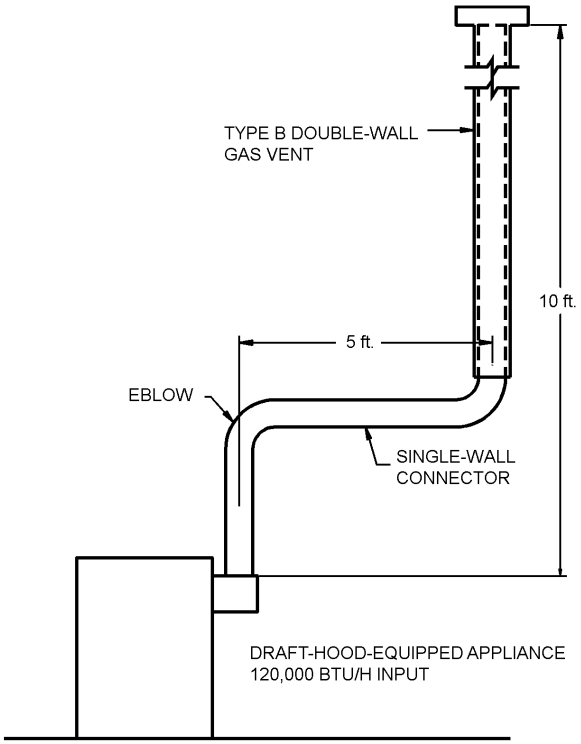

For SI: 1 foot = 304.8 mm, 1 British thermal unit per hour = 0.2931 W.

FIGURE B-15 (EXAMPLE 1)
SINGLE DRAFT-HOOD-EQUIPPED APPLIANCE

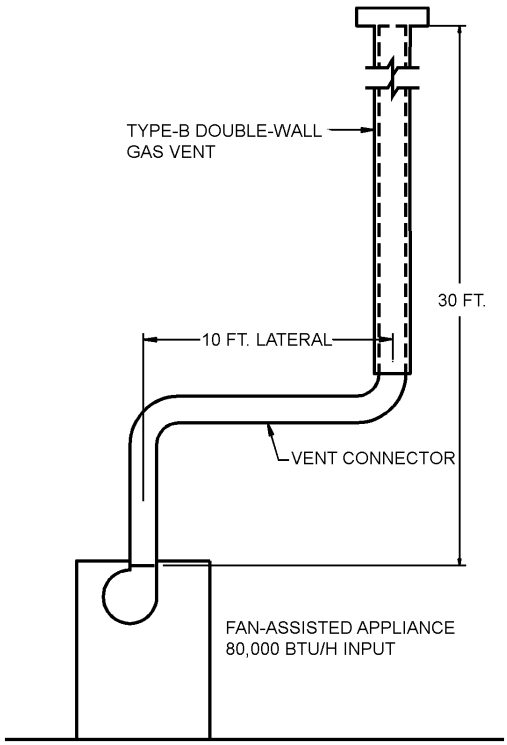

For SI: 1 foot = 304.8 mm, 1 British thermal unit per hour = 0.2931 W.

FIGURE B-16 (EXAMPLE 2)
SINGLE FAN-ASSISTED APPLIANCE

EXAMPLES USING COMMON VENTING TABLES

Example 4: Common venting two draft-hood-equipped appliances.

A 35,000 Btu per hour water heater is to be common vented with a 150,000 Btu per hour furnace using a common vent with a total height of 30 feet. The connector rise is 2 feet for the water heater with a horizontal length of 4 feet. The connector rise for the furnace is 3 feet with a horizontal length of 8 feet. Assume single-wall metal connectors will be used with Type B vent. What size connectors and combined vent should be used in this installation?

Solution:

Table 504.3(2) should be used to size single-wall metal vent connectors attached to Type B vertical vents. In the vent connector capacity portion of Table 504.3(2), find the row associated with a 30-foot vent height. For a 2-foot rise on the vent connector for the water heater, read the shaded columns for draft-hood-equipped appliances to find that a 3-inch-diameter vent connector has a capacity of 37,000 Btu per hour. Therefore, a 3-inch single-wall metal vent connector can be used with the water heater. For a draft-hood-equipped furnace with a 3-foot rise, read across the appropriate row to find that a 5-inch-diameter vent connector has a maximum capacity of 120,000 Btu per hour (which is too small for the furnace) and a 6-inch-diameter vent connector has a maximum vent capacity of 172,000 Btu per hour. Therefore, a 6-inch-diameter vent connector should be used with the 150,000 Btu per hour furnace. Since both vent connector horizontal lengths are less than the maximum lengths *listed* in Section 504.3.2, the table values can be used without adjustments.

In the common vent capacity portion of Table 504.3(2), find the row associated with a 30-foot vent height and read over to the NAT + NAT portion of the 6-inch-diameter column to find a maximum combined capacity of 257,000 Btu per hour. Since the two appliances total only 185,000 Btu per hour, a 6-inch common vent can be used.

Example 5a: Common venting a draft-hood-equipped water heater with a fan-assisted furnace into a Type B vent.

In this case, a 35,000 Btu per hour input draft-hood-equipped water heater with a 4-inch-diameter draft hood *outlet*, 2 feet of connector rise, and 4 feet of horizontal length is to be common vented with a 100,000 Btu per hour fan-assisted furnace with a 4-inch-diameter flue collar, 3 feet of connector rise, and 6 feet of horizontal length. The common vent consists of a 30-foot height of Type B vent. What are the recommended vent diameters for each connector and the common vent? The installer would like to use a single-wall metal vent connector.

Solution: [Table 504.3(2)].

Water Heater Vent Connector Diameter. Since the water heater vent connector horizontal length of 4 feet is less than the maximum value listed in Section 504.3.2, the venting table values can be used without adjustments. Using the Vent Connector Capacity portion of Table 504.3(2), read down the

INTERNATIONAL CODE COUNCIL®
Copyright © 2015 ICC. ALL RIGHTS RESERVED. Accessed by David Dammon on Jun 21, 2017 12:30:52 PM pursuant to License Agreement with ICC. No further reproduction or distribution authorized. ANY UNAUTHORIZED REPRODUCTION OR DISTRIBUTION IS A VIOLATION OF THE FEDERAL COPYRIGHT ACT AND THE LICENSE AGREEMENT, AND SUBJECT TO CIVIL AND CRIMINAL PENALTIES THEREUNDER.

Total Vent Height (*H*) column to 30 feet and read across the 2-foot Connector Rise (*R*) row to the first Btu per hour rating in the NAT Max column that is equal to or greater than the water heater input rating. The table shows that a 3-inch vent connector has a maximum input rating of 37,000 Btu per hour. Although this is greater than the water heater input rating, a 3-inch vent connector is prohibited by Section 504.3.21. A 4-inch vent connector has a maximum input rating of 67,000 Btu per hour and is equal to the draft hood *outlet* diameter. A 4-inch vent connector is selected. Since the water heater is equipped with a draft hood, there are no minimum input rating restrictions.

Furnace Vent Connector Diameter. Using the Vent Connector Capacity portion of Table 504.3(2), read down the Total Vent Height (*H*) column to 30 feet and across the 3-foot Connector Rise (*R*) row. Since the furnace has a fan-assisted combustion system, find the first FAN Max column with a Btu per hour rating greater than the furnace input rating. The 4-inch vent connector has a maximum input rating of 119,000 Btu per hour and a minimum input rating of 85,000 Btu per hour. The 100,000 Btu per hour furnace in this example falls within this range, so a 4-inch connector is adequate. Since the furnace vent connector horizontal length of 6 feet does not exceed the maximum value listed in Section 504.3.2, the venting table values can be used without adjustment. If the furnace had an input rating of 80,000 Btu per hour, then a Type B vent connector [see Table 504.3(1)] would be needed in order to meet the minimum capacity limit.

Common Vent Diameter. The total input to the common vent is 135,000 Btu per hour. Using the Common Vent Capacity portion of Table 504.3(2), read down the Total Vent Height (*H*) column to 30 feet and across this row to find the smallest vent diameter in the FAN + NAT column that has a Btu per hour rating equal to or greater than 135,000 Btu per hour. The 4-inch common vent has a capacity of 132,000 Btu per hour and the 5-inch common vent has a capacity of 202,000 Btu per hour. Therefore, the 5-inch common vent should be used in this example.

Summary. In this example, the installer can use a 4-inch-diameter, single-wall metal vent connector for the water heater and a 4-inch-diameter, single-wall metal vent connector for the furnace. The common vent should be a 5-inch-diameter Type B vent.

Example 5b: Common venting into a masonry chimney.

In this case, the water heater and fan-assisted furnace of Example 5a are to be common vented into a clay tile-lined masonry chimney with a 30-foot height. The chimney is not exposed to the outdoors below the roof line. The internal dimensions of the clay tile liner are nominally 8 inches by 12 inches. Assuming the same vent connector heights, laterals, and materials found in Example 5a, what are the recommended vent connector diameters, and is this an acceptable installation?

Solution:

Table 504.3(4) is used to size common venting installations involving single-wall connectors into masonry chimneys.

Water Heater Vent Connector Diameter. Using Table 504.3(4), Vent Connector Capacity, read down the Total Vent Height (*H*) column to 30 feet, and read across the 2-foot Connector Rise (*R*) row to the first Btu per hour rating in the

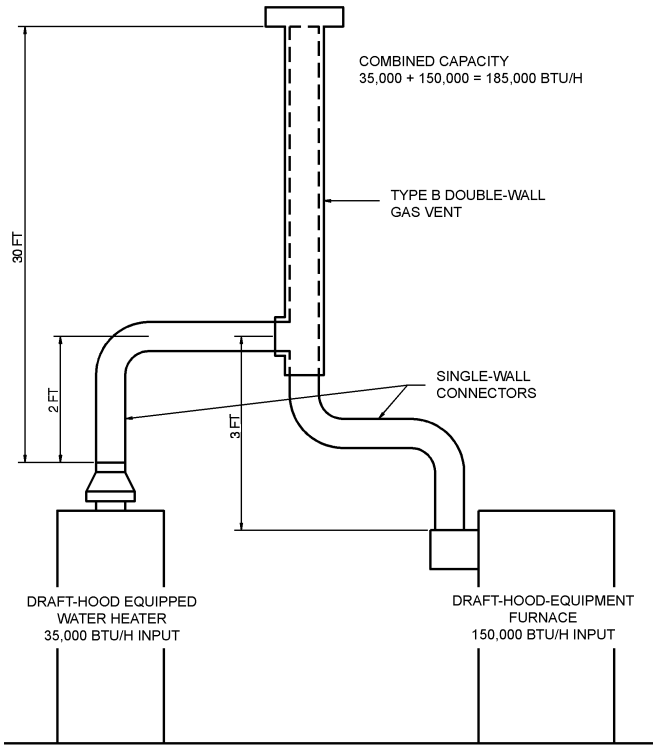

**FIGURE B-17 (EXAMPLE 4)
COMMON VENTING TWO DRAFT-HOOD-EQUIPPED APPLIANCES**

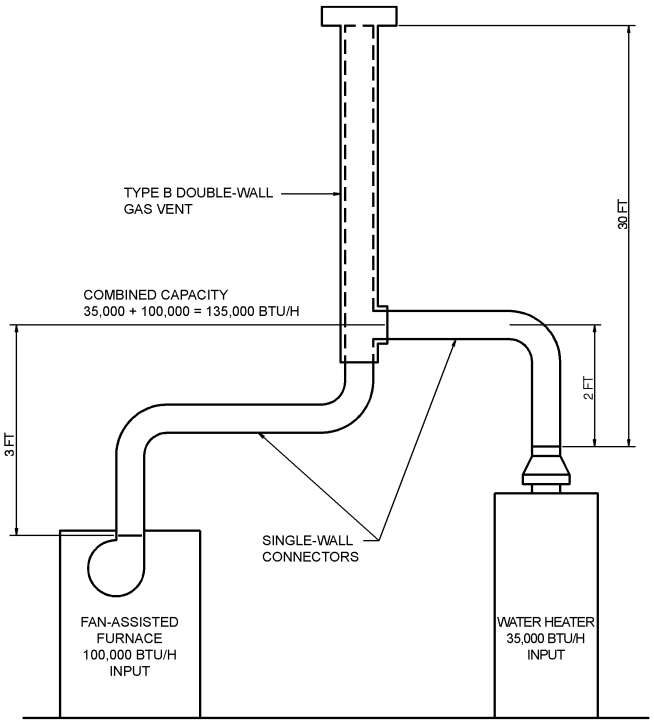

**FIGURE B-18 (EXAMPLE 5A)
COMMON VENTING A DRAFT HOOD WITH A FAN-ASSISTED FURNACE INTO A TYPE B DOUBLE-WALL COMMON VENT**

INTERNATIONAL CODE COUNCIL®
Copyright © 2015 ICC. ALL RIGHTS RESERVED. Accessed by David Dammon on Jun 21, 2017 12:30:52 PM pursuant to License Agreement with ICC. No further reproduction or distribution authorized. ANY UNAUTHORIZED REPRODUCTION OR DISTRIBUTION IS A VIOLATION OF THE FEDERAL COPYRIGHT ACT AND THE LICENSE AGREEMENT, AND SUBJECT TO CIVIL AND CRIMINAL PENALTIES THEREUNDER.

NAT Max column that is equal to or greater than the water heater input rating. The table shows that a 3-inch vent connector has a maximum input of only 31,000 Btu per hour while a 4-inch vent connector has a maximum input of 57,000 Btu per hour. A 4-inch vent connector must therefore be used.

Furnace Vent Connector Diameter. Using the Vent Connector Capacity portion of Table 504.3(4), read down the Total Vent Height (*H*) column to 30 feet and across the 3-foot Connector Rise (*R*) row. Since the furnace has a fan-assisted combustion system, find the first FAN Max column with a Btu per hour rating greater than the furnace input rating. The 4-inch vent connector has a maximum input rating of 127,000 Btu per hour and a minimum input rating of 95,000 Btu per hour. The 100,000 Btu per hour furnace in this example falls within this range, so a 4-inch connector is adequate.

Masonry Chimney. From Table B-1, the equivalent area for a nominal liner size of 8 inches by 12 inches is 63.6 square inches. Using Table 504.3(4), Common Vent Capacity, read down the FAN + NAT column under the Minimum Internal Area of Chimney value of 63 to the row for 30-foot height to find a capacity value of 739,000 Btu per hour. The combined input rating of the furnace and water heater, 135,000 Btu per hour, is less than the table value, so this is an acceptable installation.

Section 504.3.17 requires the common vent area to be no greater than seven times the smallest *listed appliance* categorized vent area, flue collar area, or draft hood outlet area. Both appliances in this installation have 4-inch-diameter outlets. From Table B-1, the equivalent area for an inside diameter of 4 inches is 12.2 square inches. Seven times 12.2 equals 85.4, which is greater than 63.6, so this configuration is acceptable.

Example 5c: Common venting into an exterior masonry chimney.

In this case, the water heater and fan-assisted furnace of Examples 5a and 5b are to be common vented into an exterior masonry chimney. The chimney height, clay tile liner dimensions, and vent connector heights and laterals are the same as in Example 5b. This system is being installed in Charlotte, North Carolina. Does this exterior masonry chimney need to be relined? If so, what corrugated metallic liner size is recommended? What vent connector diameters are recommended?

Solution:

In accordance with Section 504.3.20, Type B vent connectors are required to be used with exterior masonry chimneys. Use Tables 504.3(7a), (7b) to size FAN+NAT common venting installations involving Type-B double wall connectors into exterior masonry chimneys.

The local 99-percent winter design temperature needed to use Table 504.3(7b) can be found in the ASHRAE *Handbook of Fundamentals*. For Charlotte, North Carolina, this design temperature is 19°F.

Chimney Liner Requirement. As in Example 5b, use the 63 square inch Internal Area columns for this size clay tile liner. Read down the 63 square inch column of Table 504.3(7a) to the 30-foot height row to find that the combined *appliance* maximum input is 747,000 Btu per hour. The combined input rating of the appliances in this installation, 135,000 Btu per hour, is less than the maximum value, so this criterion is satisfied. Table 504.3(7b), at a 19°F design temperature, and at the same vent height and internal area used above, shows that the minimum allowable input rating of a space-heating appliance is 470,000 Btu per hour. The furnace input rating of 100,000 Btu per hour is less than this minimum value. So this criterion is not satisfied, and an alternative venting design needs to be used, such as a Type B vent shown in Example 5a or a *listed* chimney liner system shown in the remainder of the example.

In accordance with Section 504.3.19, Table 504.3(1) or 504.3(2) is used for sizing corrugated metallic liners in masonry chimneys, with the maximum common vent capacities reduced by 20 percent. This example will be continued assuming Type B vent connectors.

Water Heater Vent Connector Diameter. Using Table 504.3(1), Vent Connector Capacity, read down the Total Vent Height (*H*) column to 30 feet, and read across the 2-foot Connector Rise (*R*) row to the first Btu/h rating in the NAT Max column that is equal to or greater than the water heater input rating. The table shows that a 3-inch vent connector has a maximum capacity of 39,000 Btu/h. Although this rating is greater than the water heater input rating, a 3-inch vent connector is prohibited by Section 504.3.21. A 4-inch vent connector has a maximum input rating of 70,000 Btu/h and is equal to the draft hood outlet diameter. A 4-inch vent connector is selected.

Furnace Vent Connector Diameter. Using Table 504.3(1), Vent Connector Capacity, read down the Vent Height (*H*) column to 30 feet, and read across the 3-foot Connector Rise (*R*) row to the first Btu per hour rating in the FAN Max column that is equal to or greater than the furnace input rating. The 100,000 Btu per hour furnace in this example falls within this range, so a 4-inch connector is adequate.

Chimney Liner Diameter. The total input to the common vent is 135,000 Btu per hour. Using the Common Vent Capacity Portion of Table 504.3(1), read down the Vent Height (*H*) column to 30 feet and across this row to find the smallest vent diameter in the FAN+NAT column that has a Btu per hour rating greater than 135,000 Btu per hour. The 4-inch common vent has a capacity of 138,000 Btu per hour. Reducing the maximum capacity by 20 percent (Section 504.3.19) results in a maximum capacity for a 4-inch corrugated liner of 110,000 Btu per hour, less than the total input of 135,000 Btu per hour. So a larger liner is needed. The 5-inch common vent capacity *listed* in Table 504.3(1) is 210,000 Btu per hour, and after reducing by 20 percent is 168,000 Btu per hour. Therefore, a 5-inch corrugated metal liner should be used in this example.

Single-Wall Connectors. Once it has been established that relining the chimney is necessary, Type B double-wall vent connectors are not specifically required. This example could be redone using Table 504.3(2) for single-wall vent connectors. For this case, the vent connector and liner diameters would be the same as found above with Type B double-wall connectors.

INTERNATIONAL CODE COUNCIL®
Copyright © 2015 ICC. ALL RIGHTS RESERVED. Accessed by David Dammon on Jun 21, 2017 12:30:52 PM pursuant to License Agreement with ICC. No further reproduction or distribution authorized. ANY UNAUTHORIZED REPRODUCTION OR DISTRIBUTION IS A VIOLATION OF THE FEDERAL COPYRIGHT ACT AND THE LICENSE AGREEMENT, AND SUBJECT TO CIVIL AND CRIMINAL PENALTIES THEREUNDER.

TABLE B-1
MASONRY CHIMNEY LINER DIMENSIONS WITH CIRCULAR EQUIVALENTS[a]

NOMINAL LINER SIZE (inches)	INSIDE DIMENSIONS OF LINER (inches)	INSIDE DIAMETER OR EQUIVALENT DIAMETER (inches)	EQUIVALENT AREA (square inches)
4 × 8	$2^1/_2 \times 6^1/_2$	4	12.2
		5	19.6
		6	28.3
		7	38.3
8 × 8	$6^3/_4 \times 6^3/_4$	7.4	42.7
		8	50.3
8 × 12	$6^1/_2 \times 10^1/_2$	9	63.6
		10	78.5
12 × 12	$9^3/_4 \times 9\ ^3/_4$	10.4	83.3
		11	95
12 × 16	$9^1/_2 \times 13^1/_2$	11.8	107.5
		12	113.0
		14	153.9
16 × 16	$13^1/_4 \times 13^1/_4$	14.5	162.9
		15	176.7
16 × 20	13 × 17	16.2	206.1
		18	254.4
20 × 20	$16^3/_4 \times 16^3/_4$	18.2	260.2
		20	314.1
20 × 24	$16^1/_2 \times 20^1/_2$	20.1	314.2
		22 ×	380.1
24 × 24	$20^1/_4 \times 20^1/_4$	22.1	380.1
		24	452.3
24 × 28	$20^1/_4 \times 20^1/_4$	24.1	456.2
28 × 28	$24^1/_4 \times 24^1/_4$	26.4	543.3
		27	572.5
30 × 30	$25^1/_2 \times 25^1/_2$	27.9	607
		30	706.8
30 × 36	$25^1/_2 \times 31^1/_2$	30.9	749.9
		33	855.3
36 × 36	$31^1/_2 \times 31^1/_2$	34.4	929.4
		36	1017.9

For SI: 1 inch = 25.4 mm, 1 square inch = 645.16 m^2.

a. Where liner sizes differ dimensionally from those shown in Table B-1, equivalent diameters can be determined from published tables for square and rectangular ducts of equivalent carrying capacity or by other engineering methods.

INTERNATIONAL CODE COUNCIL®
Copyright © 2015 ICC. ALL RIGHTS RESERVED. Accessed by David Dammon on Jun 21, 2017 12:30:52 PM pursuant to License Agreement with ICC. No further reproduction or distribution authorized. ANY UNAUTHORIZED REPRODUCTION OR DISTRIBUTION IS A VIOLATION OF THE FEDERAL COPYRIGHT ACT AND THE LICENSE AGREEMENT, AND SUBJECT TO CIVIL AND CRIMINAL PENALTIES THEREUNDER.

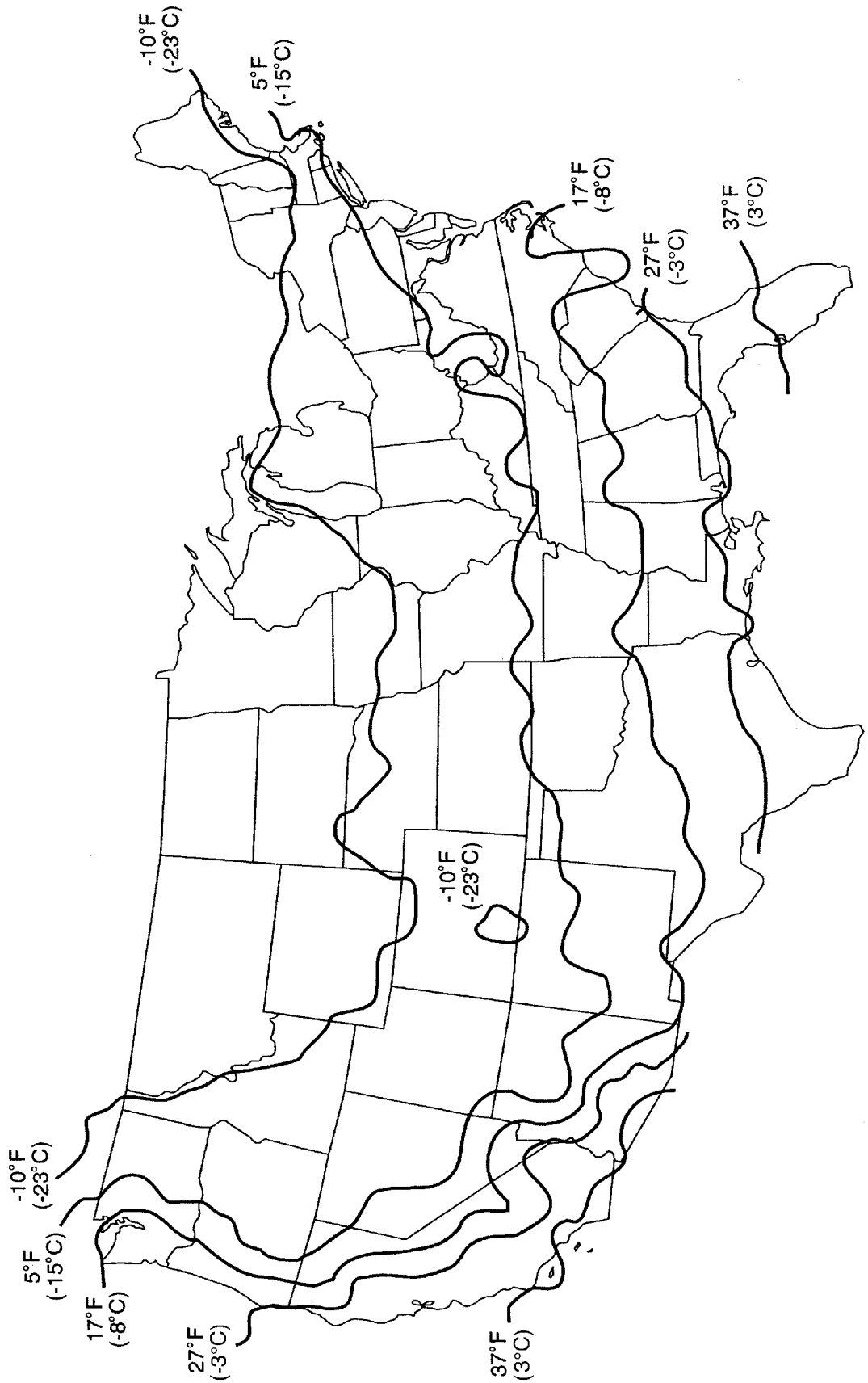

FIGURE B-19

INTERNATIONAL CODE COUNCIL®
Copyright © 2015 ICC. ALL RIGHTS RESERVED. Accessed by David Dammon on Jun 21, 2017 12:30:52 PM pursuant to License Agreement with ICC. No further reproduction or distribution authorized. ANY UNAUTHORIZED REPRODUCTION OR DISTRIBUTION IS A VIOLATION OF THE FEDERAL COPYRIGHT ACT AND THE LICENSE AGREEMENT, AND SUBJECT TO CIVIL AND CRIMINAL PENALTIES THEREUNDER.

Appendix C:
Exit Terminals of Mechanical Draft and Direct-vent Venting Systems

(This appendix is informative and is not part of the code. This appendix is an excerpt from the 2015 *International Fuel Gas Code,* coordinated with the section numbering of the *International Residential Code.*)

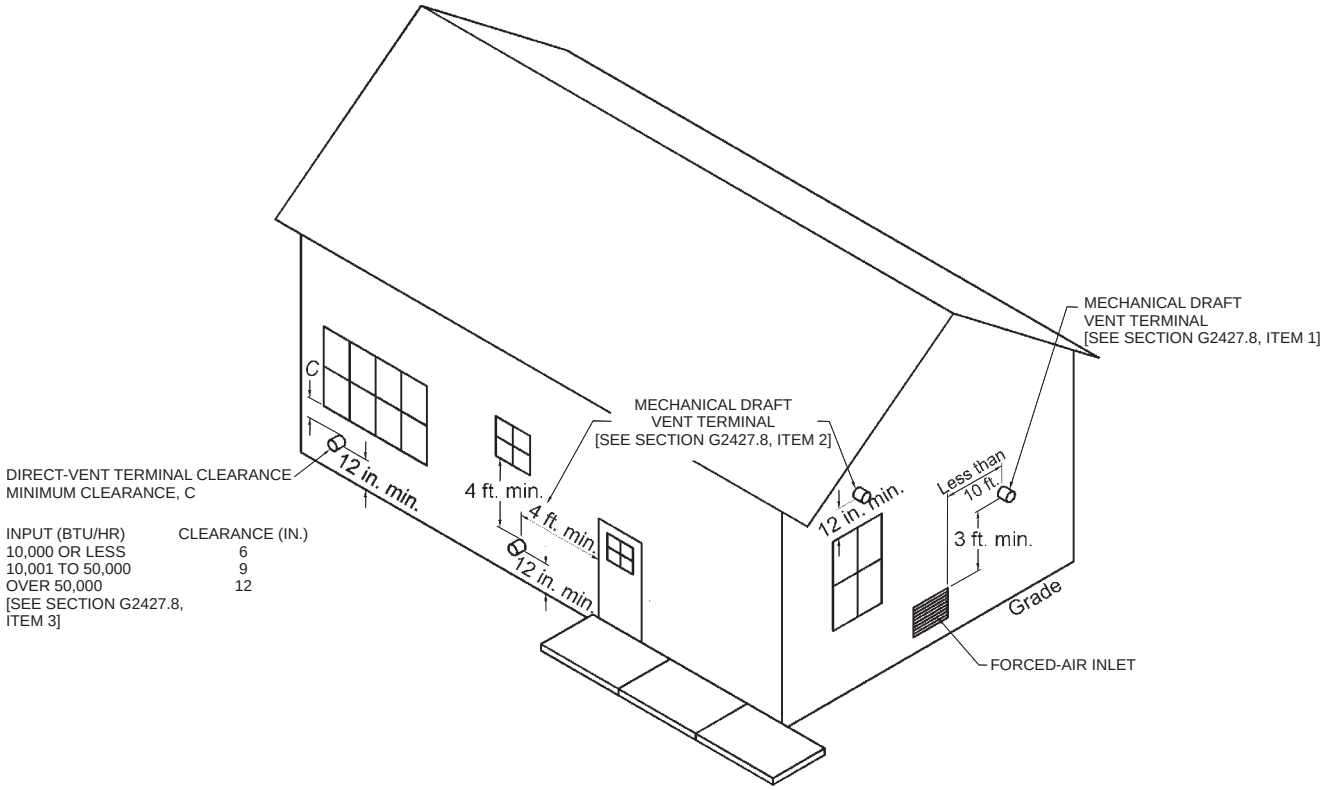

For SI: 1 inch = 25.4 mm, 1 foot = 304.8 mm, 1 British thermal unit per hour = 0.2931 W.

APPENDIX C
EXIT TERMINALS OF MECHANICAL DRAFT AND DIRECT-VENT VENTING SYSTEMS

INTERNATIONAL CODE COUNCIL®
Copyright © 2015 ICC. ALL RIGHTS RESERVED. Accessed by David Dammon on Jun 21, 2017 12:30:52 PM pursuant to License Agreement with ICC. No further reproduction or distribution authorized. ANY UNAUTHORIZED REPRODUCTION OR DISTRIBUTION IS A VIOLATION OF THE FEDERAL COPYRIGHT ACT AND THE LICENSE AGREEMENT, AND SUBJECT TO CIVIL AND CRIMINAL PENALTIES THEREUNDER.

INTERNATIONAL CODE COUNCIL®

Copyright © 2015 ICC. ALL RIGHTS RESERVED. Accessed by David Dammon on Jun 21, 2017 12:30:52 PM pursuant to License Agreement with ICC. No further reproduction or distribution authorized. ANY UNAUTHORIZED REPRODUCTION OR DISTRIBUTION IS A VIOLATION OF THE FEDERAL COPYRIGHT ACT AND THE LICENSE AGREEMENT, AND SUBJECT TO CIVIL AND CRIMINAL PENALTIES THEREUNDER.

Appendix D: Recommended Procedure for Safety Inspection of an Existing Appliance Installation

(This appendix is not a part of the requirements of this code and is included for informational purposes only. This appendix is an excerpt from the 2015 *International Fuel Gas Code*, coordinated with the section numbering of the *International Residential Code*.)

D.1 General. The following procedure is intended as a guide to aid in determining that an appliance is properly installed and is in a safe condition for continued use. Where a gas supplier performs an inspection, their written procedures should be followed.

D.1.1 Application. This procedure is intended for existing residential installations of a furnace, boiler, room heater, water heater, cooking appliance, fireplace appliance and clothes dryer. This procedure should be performed prior to any attempt to modify the appliance installation or building envelope.

D.1.2 Weatherization Programs. Before a building envelope is to be modified as part of a weatherization program, the existing appliance installation should be inspected in accordance with these procedures. After all unsafe conditions are repaired, and immediately after the weatherization is complete, the appliance inspections in D.5.2 are to be repeated.

D.1.3 Inspection Procedure. The safety of the building occupant and inspector are to be determined as the first step as described in D.2. Only after the ambient environment is found to be safe should inspections of gas piping and appliances be undertaken. It is recommended that all inspections described in D.3, D.4, and D.6, where the appliance is in the off mode, be completed and any unsafe conditions repaired or corrected before continuing with inspections of an operating appliance described in D.5 and D.6.

D.1.4 Manufacturer Instructions. Where available, the manufacturer's installation and operating instructions for the installed appliances should be used as part of these inspection procedures to determine if it is installed correctly and is operating properly.

D.1.5 Instruments. The inspection procedures include measuring for fuel gas and carbon monoxide (CO) and will require the use of a combustible gas detector (CGD) and a CO detector. It is recommended that both types of detectors be listed. Prior to any inspection, the detectors should be calibrated or tested in accordance with the manufacturer's instructions. In addition, it is recommended that the detectors have the following minimum specifications.

(1) Gas Detector*:* The CGD should be capable of indicating the presence of the type of fuel gas for which it is to be used (e.g. natural gas or propane). The combustible gas detector should be capable of the following:

a. *PPM:* Numeric display with a parts per million (ppm) scale from 1ppm to 900 ppm in 1 ppm increments.

b. *LEL:* Numeric display with a percent lower explosive limit (% LEL) scale from 0 percent to 100 percent in 1 percent increments.

c. *Audio:* An audio sound feature to locate leaks.

(2) CO Detector: The CO detector should be capable of the following functions and have a numeric display scale as follows:

a. *PPM:* For measuring ambient room and appliance emissions a display scale in parts per million (ppm) from 0 to 1,000 ppm in 1 ppm increments.

b. *Alarm:* A sound alarm function where hazardous levels of ambient CO is found (see D.2 for alarm levels)

c. *Air Free:* Capable of converting CO measurements to an air free level in ppm. Where a CO detector is used without an air free conversion function, the CO air free can be calculated in accordance with footnote 3 in Table D.6.

D.2 Occupant and Inspector Safety. Prior to entering a building, the inspector should have both a combustible gas detector (CGD) and CO detector turned on, calibrated, and operating. Immediately upon entering the building, a sample of the ambient atmosphere should be taken. Based on CGD and CO detector readings, the inspector should take the following actions:

(1) The CO detector indicates a carbon monoxide level of 70 ppm or greater [1]. The inspector should immediately notify the occupant of the need for themselves and any building occupant to evacuate; the inspector shall immediately evacuate and call 911.

(2) Where the CO detector indicates a reading between 30 ppm and 70 ppm[1]. The inspector should advise the occupant that high CO levels have been found and

[1] U.S. Consumer Product Safety Commission, *Responding to Residential Carbon Monoxide Incidents, Guidelines For Fire and Other Emergency Response Personnel*, Approved 7/23/02

INTERNATIONAL CODE COUNCIL®
Copyright © 2015 ICC. ALL RIGHTS RESERVED. Accessed by David Dammon on Jun 21, 2017 12:30:52 PM pursuant to License Agreement with ICC. No further reproduction or distribution authorized. ANY UNAUTHORIZED REPRODUCTION OR DISTRIBUTION IS A VIOLATION OF THE FEDERAL COPYRIGHT ACT AND THE LICENSE AGREEMENT, AND SUBJECT TO CIVIL AND CRIMINAL PENALTIES THEREUNDER.

recommend that all possible sources of CO should be turned off immediately and windows and doors opened. Where it appears that the source of CO is a permanently installed appliance, advise the occupant to keep the appliance off and have the appliance serviced by a qualified servicing agent.

(3) Where CO detector indicates CO below 30 ppm[1] the inspection can continue.

(4) The CGD indicates a combustible gas level of 20% LEL or greater. The inspector should immediately notify the occupant of the need for themselves and any building occupant to evacuate; the inspector shall immediately evacuate and call 911.

(5) The CGD indicates a combustible gas level below 20% LEL, the inspection can continue.

If during the inspection process it is determined a condition exists that could result in unsafe appliance operation, shut off the appliance and advise the owner of the unsafe condition. Where a gas leak is found that could result in an unsafe condition, advise the owner of the unsafe condition and call the gas supplier to turn off the gas supply. The inspector should not continue a safety inspection on an operating appliance, venting system, and piping system until repairs have been made.

D.3 Gas Piping and Connection Inspections.

(1) Leak Checks. Conduct a test for gas leakage using either a non-corrosive leak detection solution or a CGD confirmed with a leak detection solution.

The preferred method for leak checking is by use of gas leak detection solution applied to all joints. This method provides a reliable visual indication of significant leaks.

The use of a CGD in its audio sensing mode can quickly locate suspect leaks but can be overly sensitive indicating insignificant and false leaks. All suspect leaks found through the use of a CGD should be confirmed using a leak detection solution.

Where gas leakage is confirmed, the owner should be notified that repairs must be made. The inspection should include the following components:

a. All gas piping fittings located within the appliance space.

b. Appliance connector fittings.

c. Appliance gas valve/regulator housing and connections.

(2) *Appliance Connector*. Verify that the appliance connection type is compliant with Section G2422 of the *International Fuel Gas Code*. Inspect flexible appliance connections to determine if they are free of cracks, corrosion and signs of damage. Verify that there are no uncoated brass connectors. Where connectors are determined to be unsafe or where an uncoated brass connector is found, the appliance shutoff valve should be placed in the off position and the owner notified that the connector must be replaced.

(3) *Piping Support.* Inspect piping to determine that it is adequately supported, that there is no undue stress on the piping, and if there are any improperly capped pipe openings.

(4) *Bonding.* Verify that the electrical bonding of gas piping is compliant with Section G2411 of the *International Fuel Gas Code.*

D.4 Inspections to be performed with the Appliance Not Operating. The following safety inspection procedures are performed on appliances that are not operating. These inspections are applicable to all appliance installations.

(1) *Preparing for Inspection.* Shut off all gas and electrical power to the appliances located in the same room being inspected. For gas supply, use the shutoff valve in the supply line or at the manifold serving each appliance. For electrical power, place the circuit breaker in the off position or remove the fuse that serves each appliance. A lock type device or tag should be installed on each gas shutoff valve and at the electrical panel to indicate that the service has been shut off for inspection purposes.

(2) *Vent System Size and Installation.* Verify that the existing venting system size and installation are compliant with Chapter 5 of the *International Fuel Gas Code.* The size and installation of venting systems for other than natural draft and Category I appliances should be in compliance with the manufacturer's installation instructions. Inspect the venting system to determine that it is free of blockage, restriction, leakage, corrosion, and other deficiencies that could cause an unsafe condition. Inspect masonry chimneys to determine if they are lined. Inspect plastic venting system to determine that it is free of sagging and it is sloped in an upward direction to the outdoor vent termination.

(3) *Combustion Air Supply*. Inspect provisions for combustion air as follows:

a. *Non-Direct Vent Appliances*. Determine that non-direct vent appliance installations are compliant with the combustion air requirements in Section G2407 of the *International Fuel Gas Code*. Inspect any interior and exterior combustion air openings and any connected combustion air ducts to determine that there is no blockage, restriction, corrosion or damage. Inspect to determine that the upper horizontal combustion air duct is not sloped in a downward direction toward the air supply source.

b. *Direct Vent Appliances.* Verify that the combustion air supply ducts and pipes are securely fastened to direct vent appliance and determine that there are no separations, blockage, restriction,

[1] U.S. Consumer Product Safety Commission, *Responding to Residential Carbon Monoxide Incidents, Guidelines For Fire and Other Emergency Response Personnel,* Approved 7/23/02

INTERNATIONAL CODE COUNCIL®
Copyright © 2015 ICC. ALL RIGHTS RESERVED. Accessed by David Dammon on Jun 21, 2017 12:30:52 PM pursuant to License Agreement with ICC. No further reproduction or distribution authorized. ANY UNAUTHORIZED REPRODUCTION OR DISTRIBUTION IS A VIOLATION OF THE FEDERAL COPYRIGHT ACT AND THE LICENSE AGREEMENT, AND SUBJECT TO CIVIL AND CRIMINAL PENALTIES THEREUNDER.

corrosion or other damage. Determine that the combustion air source is located in the outdoors or to areas that freely communicate to the outdoors.

c. *Unvented Appliances*. Verify that the total input of all unvented room heaters and gas-fired refrigerators installed in the same room or rooms that freely communicate with each other does not exceed 20 Btu/hr/ft^3.

(4) *Flooded Appliances*. Inspect the appliance for signs that the appliance may have been damaged by flooding. Signs of flooding include a visible water submerge line on the appliance housing, excessive surface or component rust, deposited debris on internal components, and mildew-like odor. Inform the owner that any part of the appliance control system and any appliance gas control that has been under water must be replaced. All flood-damaged plumbing, heating, cooling and electrical appliances should be replaced.

(5) *Flammable Vapors*. Inspect the room/space where the appliance is installed to determine if the area is free of the storage of gasoline or any flammable products such as oil-based solvents, varnishes or adhesives. Where the appliance is installed where flammable products will be stored or used, such as a garage, verify that the appliance burner(s) is a minimum of 18" above the floor unless the appliance is listed as flammable vapor ignition resistant.

(6) *Clearances to Combustibles*. Inspect the immediate location where the appliance is installed to determine if the area is free of rags, paper or other combustibles. Verify that the appliance and venting system are compliant with clearances to combustible building components in accordance with Sections G2408.5, G2425.15.4, G2426.5, G2427.6.1, G2427.10.5 and other applicable sections of Section G2427.

(7) *Appliance Components.* Inspect internal components by removing access panels or other components for the following:

a. Inspect burners and crossovers for blockage and corrosion. The presence of soot, debris, and signs of excessive heating may indicate incomplete combustion due to blockage or improper burner adjustments.

c. Metallic and non-metallic hoses for signs of cracks, splitting, corrosion, and lose connections.

d. Signs of improper or incomplete repairs

e. Modifications that override controls and safety systems

f. Electrical wiring for loose connections; cracks, missing or worn electrical insulation; and indications of excessive heat or electrical shorting. Appliances requiring an external electrical supply should be inspected for proper electrical connection in accordance with the National Electric Code.

(8) *Placing Appliances Back in Operation*. Return all inspected appliances and systems to their preexisting state by reinstalling any removed access panels and components. Turn on the gas supply and electricity to each appliance found in safe condition. Proceed to the operating inspections in D.5 through D.6.

D.5 Inspections to be performed with the Appliance Operating. The following safety inspection procedures are to be performed on appliances that are operating where there are no unsafe conditions or where corrective repairs have been completed.

D.5.1 General Appliance Operation.

(1) *Initial Startup*. Adjust the thermostat or other control device to start the appliance. Verify that the appliance starts up normally and is operating properly.

Determine that the pilot(s), where provided, is burning properly and that the main burner ignition is satisfactory, by interrupting and re-establishing the electrical supply to the appliance in any convenient manner. If the appliance is equipped with a continuous pilot(s), test all pilot safety devices to determine whether they are operating properly by extinguishing the pilot(s) when the main burner(s) is off and determining, after 3 minutes, that the main burner gas does not flow upon a call for heat. If the appliance is not provided with a pilot(s), test for proper operation of the ignition system in accordance with the appliance manufacturer's lighting and operating instructions.

(2) *Flame Appearance*. Visually inspect the flame appearance for proper color and appearance. Visually determine that the main burner gas is burning properly (i.e., no floating, lifting, or flashback). Adjust the primary air shutter as required. If the appliance is equipped with high and low flame controlling or flame modulation, check for proper main burner operation at low flame.

(3) *Appliance Shutdown*. Adjust the thermostat or other control device to shut down the appliance. Verify that the appliance shuts off properly.

D.5.2 Test for Combustion Air and Vent Drafting for Natural Draft and Category I Appliances. Combustion air and vent draft procedures are for natural draft and category I appliances equipped with a draft hood and connected to a natural draft venting system.

(1) *Preparing for Inspection*. Close all exterior building doors and windows and all interior doors between the space in which the appliance is located and other spaces of the building that can be closed. Turn on any clothes dryer. Turn on any exhaust fans, such as range hoods and bathroom exhausts, so they will operate at maximum speed. Do not operate a summer exhaust fan. Close fireplace dampers and any fireplace doors.

(2) *Placing the Appliance in Operation*. Place the appliance being inspected in operation. Adjust the thermostat or control so the appliance will operate continuously.

INTERNATIONAL CODE COUNCIL®
Copyright © 2015 ICC. ALL RIGHTS RESERVED. Accessed by David Dammon on Jun 21, 2017 12:30:52 PM pursuant to License Agreement with ICC. No further reproduction or distribution authorized. ANY UNAUTHORIZED REPRODUCTION OR DISTRIBUTION IS A VIOLATION OF THE FEDERAL COPYRIGHT ACT AND THE LICENSE AGREEMENT, AND SUBJECT TO CIVIL AND CRIMINAL PENALTIES THEREUNDER.

(3) *Spillage Test*. Verify that all appliances located within the same room are in their standby mode and ready for operation. Follow lighting instructions for each appliance as necessary. Test for spillage at the draft hood relief opening as follows:

a. After 5 minutes of main burner operation, check for spillage using smoke.

b. Immediately after the first check, turn on all other fuel gas burning appliances within the same room so they will operate at their full inputs and repeat the spillage test.

c. Shut down all appliances to their standby mode and wait for 15 minutes.

d. Repeat the spillage test steps a through c on each appliance being inspected.

(4) Additional Spillage Tests: Determine if the appliance venting is impacted by other door and air handler settings by performing the following tests.

a. Set initial test condition in accordance with D.5.2 (1).

b. Place the appliance(s) being inspected in operation. Adjust the thermostat or control so the appliance(s) will operate continuously.

c. Open the door between the space in which the appliance(s) is located and the rest of the building. After 5 minutes of main burner operation, check for spillage at each appliance using smoke.

d. Turn on any other central heating or cooling air handler fan that is located outside of the area where the appliances are being inspected. After 5 minutes of main burner operation, check for spillage at each appliance using smoke. The test should be conducted with the door between the space in which the appliance(s) is located and the rest of the building in the open and in the closed position.

(5) Return doors, windows, exhaust fans, fireplace dampers, and any other fuel gas burning appliance to their previous conditions of use.

(6) If, after completing the spillage test it is believed sufficient combustion air is not available, the owner should be notified that an alternative combustion air source is needed in accordance with Section G2407 of the *International Fuel Gas Code.* Where it is believed that the venting system does not provide adequate natural draft, the owner should be notified that alternative vent sizing, design or configuration is needed in accordance with Chapter 24 of the *International Fuel Gas Code*. If spillage occurs, the owner should be notified as to its cause, be instructed as to which position of the door (open or closed) would lessen its impact, and that corrective action by a HVAC professional should be taken.

D.6 Appliance-Specific Inspections. The following appliance-specific inspections are to be performed as part of a complete inspection. These inspections are performed either with the appliance in the off or standby mode (indicated by "*OFF*") or on an appliance that is operating (indicated by "*ON*"). The CO measurements are to be undertaken only after the appliance is determined to be properly venting. The CO detector should be capable of calculating CO emissions in ppm air free.

(1) Forced Air Furnaces:

a. OFF. Verify that an air filter is installed and that it is not excessively blocked with dust.

b. OFF. Inspect visible portions of the furnace combustion chamber for cracks, ruptures, holes, and corrosion. A heat exchanger leakage test should be conducted.

c. ON. Verify both the limit control and the fan control are operating properly. Limit control operation can be checked by blocking the circulating air inlet or temporarily disconnecting the electrical supply to the blower motor and determining that the limit control acts to shut off the main burner gas.

d. ON. Verify that the blower compartment door is properly installed and can be properly re-secured if opened. Verify that the blower compartment door safety switch operates properly.

e. *ON*. Check for flame disturbance before and after blower comes on which can indicate heat exchanger leaks.

f. *ON*. Measure the CO in the vent after 5 minutes of main burner operation. The CO should not exceed threshold in Table D.6.

(2) Boilers:

a. OFF and ON. Inspect for evidence of water leaks around boiler and connected piping.

b. ON. Verify that the water pumps are in operating condition. Test low water cutoffs, automatic feed controls, pressure and temperature limit controls, and relief valves in accordance with the manufacturer's recommendations to determine that they are in operating condition.

c. ON. Measure the CO in the vent after 5 minutes of main burner operation. The CO should not exceed threshold in Table D.6.

(3) Water Heaters:

a. *OFF*. Verify that the pressure-temperature relief valve is in operating condition. Water in the heater should be at operating temperature.

b. OFF. Verify that inspection covers, glass, and gaskets are intact and in place on a flammable vapor ignition resistant (FVIR) type water heater.

c. ON. Verify that the thermostat is set in accordance with the manufacturer's operating instructions and measure the water temperature at the closest tub or sink to verify that it is no greater than 120ºF.

d. OFF. Where required by the local building code in earthquake prone locations, inspect that the

INTERNATIONAL CODE COUNCIL®
Copyright © 2015 ICC. ALL RIGHTS RESERVED. Accessed by David Dammon on Jun 21, 2017 12:30:52 PM pursuant to License Agreement with ICC. No further reproduction or distribution authorized. ANY UNAUTHORIZED REPRODUCTION OR DISTRIBUTION IS A VIOLATION OF THE FEDERAL COPYRIGHT ACT AND THE LICENSE AGREEMENT, AND SUBJECT TO CIVIL AND CRIMINAL PENALTIES THEREUNDER.

water heater is secured to the wall studs in two locations (high and low) using appropriate metal strapping and bolts.

e. ON. Measure the CO in the vent after 5 minutes of main burner operation. The CO should not exceed threshold in Table D.6.

(4) Cooking Appliances

a. *OFF*. Inspect oven cavity and range-top exhaust vent for blockage with aluminum foil or other materials.

b. *OFF*. Inspect cook top to verify that it is free from a build-up of grease.

c. *ON*. Measure the CO above each burner and at the oven exhaust vents after 5 minutes of burner operation. The CO should not exceed threshold in Table D.6.

(5) Vented Room Heaters

a. OFF. For built-in room heaters and wall furnaces, inspect that the burner compartment is free of lint and debris.

b. OFF. Inspect that furnishings and combustible building components are not blocking the heater.

a. ON. Measure the CO in the vent after 5 minutes of main burner operation. The CO should not exceed threshold in Table D.6.

(6) Vent-Free (unvented) Heaters

a. OFF. Verify that the heater input is a maximum of 40,000 Btu input, but not more than 10,000 Btu where installed in a bedroom, and 6,000 Btu where installed in a bathroom.

b. OFF. Inspect the ceramic logs provided with gas log type vent free heaters that they are properly located and aligned.

c. OFF. Inspect the heater that it is free of excess lint build-up and debris.

c. OFF. Verify that the oxygen depletion safety shutoff system has not been altered or bypassed.

d. ON. Verify that the main burner shuts down within 3 minutes by extinguishing the pilot light. The test is meant to simulate the operation of the oxygen depletion system (ODS).

e. ON. Measure the CO after 5 minutes of main burner operation. The CO should not exceed threshold in Table D.6.

(7) Gas Log Sets and Gas Fireplaces

a. OFF. For gas logs installed in wood burning fireplaces equipped with a damper, verify that the fireplace damper is in a fixed open position.

b. ON. Measure the CO in the firebox (log sets installed in wood burning fireplaces or in the vent (gas fireplace) after 5 minutes of main burner operation. The CO should not exceed threshold in Table D.6.

(8) Gas Clothes Dryer

a. *OFF*. Where installed in a closet, verify that a source of make-up air is provided and inspect that any make-up air openings, louvers, and ducts are free of blockage.

b. OFF. Inspect for excess amounts of lint around the dryer and on dryer components. Inspect that there is a lint trap properly installed and it does not have holes or tears. Verify that it is in a clean condition.

c. OFF. Inspect visible portions of the exhaust duct and connections for loose fittings and connections, blockage, and signs of corrosion. Verify that the duct termination is not blocked and that it terminates in an outdoor location. Verify that only approved metal vent ducting material is installed (plastic and vinyl materials are not approved for gas dryers).

d. ON. Verify mechanical components including drum and blower are operating properly.

e. ON. Operate the clothes dryer and verify that exhaust system is intact and exhaust is exiting the termination.

f. ON. Measure the CO at the exhaust duct or termination after 5 minutes of main burner operation. The CO should not exceed threshold in Table D.6.

TABLE D.6
CO THRESHOLDS

Central Furnace (all categories)	400 ppm[1] air free[2, 3]
Floor Furnace	400 ppm air free
Gravity Furnace	400 ppm air free
Wall Furnace (BIV)	200 ppm air free
Wall Furnace (Direct Vent)	400 ppm air free
Vented Room Heater	200 ppm air free
Vent-Free Room Heater	200 ppm air free
Water Heater	200 ppm air free
Oven/Boiler	225 ppm as measured
Top Burner	25 ppm as measured (per burner)
Clothes Dryer	400 ppm air free
Refrigerator	25 ppm as measured
Gas Log (gas fireplace)	25 ppm as measured in vent
Gas Log (installed in wood burning fireplace)	400 ppm air free in firebox

1. Parts per million
2. Air free emission levels are based on a mathematical equation (involving carbon monoxide and oxygen or carbon dioxide readings) to convert an actual diluted flue gas carbon monoxide testing sample to an undiluted air free flue gas carbon monoxide level utilized in the appliance certification standards. For natural gas or propane, using as-measured CO ppm and O2 percentage:

$$CO_{AFppm} = \left(\frac{20.9}{20.9 - O_2}\right) \times CO_{ppm}$$

(continued)

INTERNATIONAL CODE COUNCIL®
Copyright © 2015 ICC. ALL RIGHTS RESERVED. Accessed by David Dammon on Jun 21, 2017 12:30:52 PM pursuant to License Agreement with ICC. No further reproduction or distribution authorized. ANY UNAUTHORIZED REPRODUCTION OR DISTRIBUTION IS A VIOLATION OF THE FEDERAL COPYRIGHT ACT AND THE LICENSE AGREEMENT, AND SUBJECT TO CIVIL AND CRIMINAL PENALTIES THEREUNDER.

TABLE D.6—continued
CO THRESHOLDS

Where:

CO_{AFppm} = Carbon monoxide, air-free ppm

CO_{ppm} = As-measured combustion gas carbon monoxide ppm

O2 = Percentage of oxygen in combustion gas, as a percentage

3. An alternate method of calculating the CO air free when access to an oxygen meter is not available:

$$CO_{AFppm} = \left(\frac{UCO_2}{CO_2}\right) \times CO$$

Where:

UCO_2 = Ultimate concentration of carbon dioxide for the fuel being burned in percent for natural gas (12.2 percent) and propane (14.0 percent)

CO_2 = Measured concentration of carbon dioxide in combustion products in percent

CO = Measured concentration of carbon monoxide in combustion products in percent

INTERNATIONAL CODE COUNCIL®
Copyright © 2015 ICC. ALL RIGHTS RESERVED. Accessed by David Dammon on Jun 21, 2017 12:30:52 PM pursuant to License Agreement with ICC. No further reproduction or distribution authorized. ANY UNAUTHORIZED REPRODUCTION OR DISTRIBUTION IS A VIOLATION OF THE FEDERAL COPYRIGHT ACT AND THE LICENSE AGREEMENT, AND SUBJECT TO CIVIL AND CRIMINAL PENALTIES THEREUNDER.

Appendix E: Manufactured Housing Used as Dwellings

(The provisions contained in this appendix are not mandatory unless specifically referenced in the adopting ordinance.)

General Comments

Manufactured housing in the United States represents a major portion of housing construction. The criteria for the construction of the structure are governed by the National Manufactured Housing Construction and Safety Act. This act, in effect for quite some time, provides a minimum baseline for such structures no matter where they are installed; manufactured housing is constructed in a factory and not subject to inspection by the local jurisdiction when installed.

While this act may seem to cover the bulk of the construction of manufactured housing, it does not cover those areas related to the placement of the housing on the property. This appendix works in conjunction with the act in providing a complete set of regulations that can assure the owner and the jurisdiction alike that the structure is safe.

Section AE101 is the scope of the appendix. Section AE102 addresses the application of these criteria to existing manufactured housing. Section AE201 contains the definitions necessary for the proper interpretation of the regulations. Section AE301 discusses the type of work that requires permits for such installations. Section AE302 identifies the information needed on such permits. Section AE303 addresses permit issuance. Section AE304 contains the criteria for the establishment of fees for such permits. Section AE305 is the material on required permits. Section AE306 addresses when special inspections are necessary for the work regulated by this appendix, and Section AE307 discusses how to handle the connection to the utilities.

Section AE401 addresses the issues related to the occupancy of this type of housing. Section AE402 contains the provisions for locating the structure on the property. Section AE501 discusses the design of the foundation systems for manufactured housing. Section AE502 contains the specific criteria for the foundation system chosen. Section AE503 addresses the enclosure of the perimeter of the underfloor area. Section AE504 discusses the structural concerns of adding to such housing. Section AE505 identifies which set of regulations applies to building service equipment. Section AE506 is concerned with the path of egress that occupants will need to use in the event of an emergency. Section AE507 provides a cross reference to the HUD Safety Standards. Section AE601 provides more specific criteria for the use of various foundation systems. Section AE602 addresses the use of piers as foundation material. Section AE603 discusses the allowable height of such piers. Section AE604 refers the reader to the manufacturer's installation instructions for the use of anchors for the foundation system, and Section AE605 addresses the use of ties.

Purpose

This appendix provides a complete set of regulations in conjunction with federal law for the installation of manufactured housing. Application of the law and the provisions together provides safe housing.

SECTION AE101 SCOPE

AE101.1 General. These provisions shall be applicable only to a *manufactured home* used as a single *dwelling unit* installed on privately owned (nonrental) lots and shall apply to the following:

1. Construction, *alteration* and repair of any foundation system that is necessary to provide for the installation of a *manufactured home* unit.
2. Construction, installation, *addition*, *alteration*, repair or maintenance of the building service *equipment* that is necessary for connecting *manufactured homes* to water, fuel, or power supplies and sewage systems.
3. *Alterations, additions* or repairs to existing *manufactured homes*. The construction, *alteration*, moving, demolition, repair and use of accessory buildings and structures, and their building service *equipment*, shall comply with the requirements of the codes adopted by this *jurisdiction*.

These provisions shall not be applicable to the design and construction of *manufactured home*s and shall not be deemed to authorize either modifications or *additions* to *manufactured homes* where otherwise prohibited.

Exception: In addition to these provisions, new and replacement *manufactured home*s to be located in flood hazard areas as established in Table R301.2(1) of the *International Residential Code* shall meet the applicable requirements of Section R322 of the *International Residential Code*.

❖ This appendix discusses the use of the *International Residential Code*® (IRC®), which is to be used in con-

INTERNATIONAL CODE COUNCIL®
Copyright © 2015 ICC. ALL RIGHTS RESERVED. Accessed by David Dammon on Jun 21, 2017 12:30:52 PM pursuant to License Agreement with ICC. No further reproduction or distribution authorized. ANY UNAUTHORIZED REPRODUCTION OR DISTRIBUTION IS A VIOLATION OF THE FEDERAL COPYRIGHT ACT AND THE LICENSE AGREEMENT, AND SUBJECT TO CIVIL AND CRIMINAL PENALTIES THEREUNDER.

junction with federal laws that govern the construction of manufactured housing. Since some federal laws only cover the design and construction of the housing itself, other provisions must be used to address the design and construction of the foundation system, the connection to utilities, and the construction of accessory buildings. These issues have typically fallen under the adopted codes of the locality.

For installations in flood hazard areas, criteria in Section R322 apply, depending on whether the manufactured home is to be placed in a coastal high hazard area (V Zone) or Coastal A Zone where foundations will be exposed to wave impacts, or in flood hazard areas referred to as A Zones. Some riverine floodplains have identified floodways. Section R322.1.9 specifies that foundations and anchorage of manufactured homes located in floodways must be designed in accordance with ASCE 24. See FEMA P-85 for additional guidance and some pre-engineered foundation designs.

HUD's October 2007 final rule for the Model Manufactured Home Installation Standard (24 CFR, Part 3285) includes some provisions related to flood hazard areas. Manufacturers must clearly specify that their installation instructions and foundation specifications have either (a) been designed for flood-resistant considerations, in which case the conditions are to be listed (velocities, depths or wave action) and the design must be certified by a registered professional engineer or architect, or (b) not been designed to address flood loads, in which case the instructions must direct the installer to "obtain an alternate design prepared and certified by a registered professional engineer or registered architect for the support and anchorage." HUD places the burden on the installer to determine whether a home site is wholly or partly in a flood hazard area and to obtain additional designs, if needed.

SECTION AE102
APPLICATION TO EXISTING MANUFACTURED HOMES AND BUILDING SERVICE EQUIPMENT

AE102.1 General. *Manufactured homes* and their building service *equipment* to which *additions*, *alterations* or repairs are made shall comply with all the requirements of these provisions for new facilities, except as specifically provided in this section.

❖ This section discusses the use of this appendix for existing manufactured housing. As a general rule, this section requires that the activity must comply with the criteria for new construction; however, the following subsections contain many variances to that rule.

AE102.2 Additions, alterations or repairs. *Addition*s made to a *manufactured home* shall conform to one of the following:

1. Be certified under the National Manufactured Housing Construction and Safety Standards Act of 1974 (42 U.S.C. Section 5401, et seq.).
2. Be designed and constructed to comply with the applicable provisions of the National Manufactured Housing Construction and Safety Standards Act of 1974 (42 U.S.C. Section 5401, et seq.).
3. Be designed and constructed in compliance with the code adopted by this *jurisdiction*.

*Addition*s shall be structurally separated from the *manufactured home*.

Exception: A structural separation need not be provided when structural calculations are provided to justify the omission of such separation.

Alterations or repairs may be made to any *manufactured home* or to its building service *equipment* without requiring the existing *manufactured home* or its building service *equipment* to comply with all the requirements of these provisions, provided the *alteration* or repair conforms to that required for new construction, and provided further that no hazard to life, health or safety will be created by such *additions*, *alterations* or repairs.

Alterations or repairs to an existing *manufactured home*, which are nonstructural and do not adversely affect any structural member or any part of the building or structure having required fire protection, may be made with materials equivalent to those of which the *manufactured home* structure is constructed, subject to approval by the *building official*.

Exception: The installation or replacement of glass shall be required for new installations.

Minor *additions*, *alterations* and repairs to existing building service *equipment* installations may be made in accordance with the codes in effect at the time the original installation was made, subject to the approval of the *building official*, and provided such *additions*, *alterations* and repairs will not cause the existing building service *equipment* to become unsafe, insanitary or overloaded.

❖ This section discusses alterations, additions, and repairs to manufactured homes and is important because of confusion over the application of federal regulations to these topics. In many areas of the country, manufactured housing is ordered and installed, and a patio cover or a carport is added later. The jurisdiction then has to make a determination of which set of criteria applies. This section allows the use of any one of the three specified alternative methods of compliance for additions, making it clear that the National Manufactured Housing Construction and Safety Standards Act can apply, or the additions can be designed using the code that is adopted by the jurisdiction. See Section AE507.1 for alterations made to a manufactured home.

AE102.3 Existing installations. Building service *equipment* lawfully in existence at the time of the adoption of the applicable codes may have their use, maintenance or repair continued if the use, maintenance or repair is in accordance with the original design and no hazard to life, health or property has been created by such building service *equipment*.

❖ Existing building service equipment is generally "grandfathered" as an allowable condition when a

INTERNATIONAL CODE COUNCIL®
Copyright © 2015 ICC. ALL RIGHTS RESERVED. Accessed by David Dammon on Jun 21, 2017 12:30:52 PM pursuant to License Agreement with ICC. No further reproduction or distribution authorized. ANY UNAUTHORIZED REPRODUCTION OR DISTRIBUTION IS A VIOLATION OF THE FEDERAL COPYRIGHT ACT AND THE LICENSE AGREEMENT, AND SUBJECT TO CIVIL AND CRIMINAL PENALTIES THEREUNDER.

newer edition of a code is adopted, provided that a minimum level of safety is maintained. In most cases, that level is the set of criteria or the code under which the original building service equipment was installed. Unfortunately, there are a number of areas where codes have only recently been adopted. In those cases, the code official must apply those criteria that can be reasonably applied to an existing installation.

AE102.4 Existing occupancy. *Manufactured home*s that are in existence at the time of the adoption of these provisions may have their existing use or occupancy continued if such use or occupancy was legal at the time of the adoption of these provisions, provided such continued use is not dangerous to life, health and safety.

The use or occupancy of any existing *manufactured home* shall not be changed unless evidence satisfactory to the *building official* is provided to show compliance with all applicable provisions of the codes adopted by this *jurisdiction*. Upon any change in use or occupancy, the *manufactured home* shall cease to be classified as such within the intent of these provisions.

❖ Very much like the previous section, this section's provisions describe a minimum level of safety for the occupants of an existing structure. Also, if the occupancy is changed, evidence must be provided indicating that all applicable codes and standards are complied with by the new use.

AE102.5 Maintenance. All *manufactured homes* and their building service *equipment*, existing and new, and all parts thereof, shall be maintained in a safe and sanitary condition. All devices or safeguards which are required by applicable codes or by the *Manufactured Home* Standards shall be maintained in conformance to the code or standard under which it was installed. The owner or the owner's designated agent shall be responsible for the maintenance of *manufactured homes*, accessory buildings, structures and their building service *equipment*. To determine compliance with this section, the *building official* may cause any *manufactured home*, accessory building or structure to be reinspected.

❖ As with all structures, building service equipment, and parts, proper maintenance is vital to maintaining a safe and sanitary environment for the occupants. This section specifically designates the owner or her or his representative as being responsible for such maintenance. In order to determine if the structure and associated equipment are properly maintained, the code official can have an inspection done.

AE102.6 Relocation. *Manufactured home*s which are to be relocated within this *jurisdiction* shall comply with these provisions.

❖ This section is a clarification that even relocated manufactured housing must comply with these provisions.

SECTION AE201
DEFINITIONS

AE201.1 General. For the purpose of these provisions, certain abbreviations, terms, phrases, words and their derivatives shall be construed as defined or specified herein.

❖ These terms are necessary for the proper design and enforcement of this appendix. Any terms not listed herein will be found in Chapter 2 of this code, in the other *International Codes*® (I-Codes®), or will use their normally accepted meanings.

ACCESSORY BUILDING. Any building or structure or portion thereto, located on the same property as a *manufactured home*, which does not qualify as a *manufactured home* as defined herein.

❖ This definition addresses those structures that are not manufactured housing. An example would be a patio cover or shed.

BUILDING SERVICE EQUIPMENT. Refers to the plumbing, mechanical and electrical *equipment*, including piping, wiring, fixtures and other accessories which provide sanitation, lighting, heating, ventilation, cooling, fire protection and facilities essential for the habitable occupancy of a *manufactured home* or accessory building or structure for its designated use and occupancy.

❖ This term covers the plumbing, mechanical, and electrical equipment serving the manufactured home.

MANUFACTURED HOME. A structure transportable in one or more sections which, in the traveling mode, is 8 body feet (2438 body mm) or more in width or 40 body feet (12 192 body mm) or more in length or, when erected on site, is 320 or more square feet (30 m^2), and which is built on a permanent chassis and designed to be used as a *dwelling* with or without a permanent foundation when connected to the required utilities, and includes the plumbing, heating, air-conditioning and electrical systems contained therein; except that such term shall include any structure which meets all the requirements of this paragraph, except the size requirements and with respect to which the manufacturer voluntarily files a certification required by the Secretary of the U.S. Department of Housing and Urban Development (HUD) and complies with the standards established under this title.

For mobile homes built prior to June 15, 1976, a *label* certifying compliance with the *Standard for Mobile Homes*, NFPA 501, ANSI 119.1, in effect at the time of manufacture, is required. For the purpose of these provisions, a mobile home shall be considered a *manufactured home*.

❖ The term "Manufactured home" in the IRC is consistent with the HUD definition. An existing manufactured home requires a label certifying compliance with the Standard for Mobile Homes, NFPA 501, ANSI 119.1 if built prior to June 15, 1976. Included in this definition is everything that is built into the home.

INTERNATIONAL CODE COUNCIL®
Copyright © 2015 ICC. ALL RIGHTS RESERVED. Accessed by David Dammon on Jun 21, 2017 12:30:52 PM pursuant to License Agreement with ICC. No further reproduction or distribution authorized. ANY UNAUTHORIZED REPRODUCTION OR DISTRIBUTION IS A VIOLATION OF THE FEDERAL COPYRIGHT ACT AND THE LICENSE AGREEMENT, AND SUBJECT TO CIVIL AND CRIMINAL PENALTIES THEREUNDER.

MANUFACTURED HOME INSTALLATION. Construction which is required for the installation of a *manufactured home*, including the construction of the foundation system, required structural connections thereto and the installation of on-site water, gas, electrical and sewer systems and connections thereto which are necessary for the normal operation of the *manufactured home*.

❖ The components covered are those that have to be installed on the site prior to the arrival of the manufactured home. Included are the foundation systems, connections to the utilities, and anything else necessary for the operation of the home.

MANUFACTURED HOME STANDARDS. The *Manufactured Home Construction and Safety Standards* as promulgated by the HUD.

❖ This definition gives the title of the federal standard that is applicable for the construction of the manufactured home.

PRIVATELY OWNED (NONRENTAL) LOT. A parcel of real estate outside of a *manufactured home* rental community (park) where the land and the *manufactured home* to be installed thereon are held in common ownership.

❖ This is one of the few instances that an I-Code addresses ownership. This definition makes it clear that both the land and manufactured home are to be held by the same owner or owners.

SECTION AE301
PERMITS

AE301.1 Initial installation. A *manufactured home* shall not be installed on a foundation system, reinstalled or altered without first obtaining a *permit* from the *building official*. A separate *permit* shall be required for each *manufactured home* installation. When *approved* by the *building official*, such *permit* may include accessory buildings and structures, and their building service *equipment*, when the accessory buildings or structures will be constructed in conjunction with the *manufactured home* installation.

❖ This section specifies that a permit is needed for the installation, reinstallation or alteration of each manufactured home. See Section AE302.1 for the information that is required to apply for a permit. The permit process gives the jurisdiction the opportunity to verify that the manufactured home installation complies with the specified requirements in this appendix chapter.

AE301.2 Additions, alterations and repairs to a manufactured home. A *permit* shall be obtained to alter, remodel, repair or add accessory buildings or structures to a *manufactured home* subsequent to its initial installation. *Permit* issuance and fees therefor shall be in conformance to the codes applicable to the type of work involved.

An *addition* made to a *manufactured home*, as defined in these provisions, shall comply with these provisions.

❖ Any alteration, remodeling, repair, or addition to a manufactured home must have a permit. This section also coordinates with Section AE102.2, which discusses the application of the appendix provisions.

AE301.3 Accessory buildings. Except as provided in Section AE301.1, *permits* shall be required for all accessory buildings and structures, and their building service *equipment*. *Permit* issuance and fees therefor shall be in conformance to the codes applicable to the types of work involved.

❖ This section requires a separate permit for the construction/installation of all accessory structures. Any fee that is charged is intended to cover those services provided by the jurisdiction for the enforcement of the code.

AE301.4 Exempted work. A *permit* shall not be required for the types of work specifically exempted by the applicable codes. Exemption from the *permit* requirements of any of said codes shall not be deemed to grant authorization for any work to be done in violation of the provisions of said codes or any other laws or ordinances of this *jurisdiction*.

❖ Certain types of work are exempted from permit in most codes. See Section R105.2 for items that do not require a permit. This does not mean, however, that the exempted work does not have to meet the code. Such work must still comply with all applicable codes and standards.

SECTION AE302
APPLICATION FOR PERMIT

AE302.1 Application. To obtain a *manufactured home* installation *permit*, the applicant shall first file an application, in writing, on a form furnished by the *building official* for that purpose. At the option of the *building official*, every such application shall:

1. Identify and describe the work to be covered by the *permit* for which application is made.
2. Describe the land on which the proposed work is to be done by legal description, street address or similar description that will readily identify and definitely locate the proposed building or work.
3. Indicate the use or occupancy for which the proposed work is intended.
4. Be accompanied by plans, diagrams, computations and specifications, and other data as required in Section AE302.2.
5. Be accompanied by a soil investigation when required by Section AE502.2.
6. State the valuation of any new building or structure; or any *addition*, remodeling or *alteration* to an existing building.
7. Be signed by the permittee, or permittee's authorized agent, who may be required to submit evidence to indicate such authority.
8. Give such other data and information as may be required by the *building official*.

❖ This section lists the items that must be found on an application for a permit. The purpose of requiring this

INTERNATIONAL CODE COUNCIL®
Copyright © 2015 ICC. ALL RIGHTS RESERVED. Accessed by David Dammon on Jun 21, 2017 12:30:52 PM pursuant to License Agreement with ICC. No further reproduction or distribution authorized. ANY UNAUTHORIZED REPRODUCTION OR DISTRIBUTION IS A VIOLATION OF THE FEDERAL COPYRIGHT ACT AND THE LICENSE AGREEMENT, AND SUBJECT TO CIVIL AND CRIMINAL PENALTIES THEREUNDER.

information is so that the installation can be verified to comply with this appendix chapter.

AE302.2 Plans and specifications. Plans, engineering calculations, diagrams and other data as required by the *building official* shall be submitted in not less than two sets with each application for a *permit*. The *building official* may require plans, computations and specifications to be prepared and designed by an engineer or architect licensed by the state to practice as such.

Where no unusual site conditions exist, the *building official* may accept *approved* standard foundation plans and details in conjunction with the manufacturer's *approved* installation instructions without requiring the submittal of engineering calculations.

❖ The submittal of plans and other supporting information is necessary to verify that the manufactured home installation complies with all necessary codes and standards. Under certain circumstances the code official has the discretion to waive the submittal of engineering calculations.

AE302.3 Information on plans and specifications. Plans and specifications shall be drawn to scale on substantial paper or cloth, and shall be of sufficient clarity to indicate the location, nature and extent of the work proposed and shown in detail that it will conform to these provisions and all relevant laws, ordinances, rules and regulations. The *building official* shall determine what information is required on plans and specifications to ensure compliance.

❖ This section requires that the information necessary to verify the compliance of the installation of the manufactured home be provided on the submittal documents.

SECTION AE303
PERMITS ISSUANCE

AE303.1 Issuance. The application, plans and specifications, and other data filed by an applicant for *permit* shall be reviewed by the *building official*. Such plans may be reviewed by other departments of this *jurisdiction* to verify compliance with any applicable laws under their *jurisdiction*. If the *building official* finds that the work described in an application for a *permit*, and the plans, specifications and other data filed therewith, conform to the requirements of these provisions, and other data filed therewith conform to the requirements of these provisions and other pertinent codes, laws and ordinances, and that the fees specified in Section AE304 have been paid, the *building official* shall issue a *permit* therefor to the applicant.

When the *building official* issues the *permit* where plans are required, the *building official* shall endorse in writing or stamp the plans and specifications *APPROVED*. Such *approved* plans and specifications shall not be changed, modified or altered without authorization from the *building official*, and all work shall be done in accordance with the *approved* plans.

❖ This section requires that the code official issue a permit when the information submitted has been shown to comply with the applicable codes and standards. These plans are the approved set and there must be no alteration to them; otherwise, authorization from the code official is necessary.

AE303.2 Retention of plans. One set of *approved* plans and specifications shall be returned to the applicant and shall be kept on the site of the building or work at all times during which the work authorized thereby is in progress. One set of *approved* plans, specifications and computations shall be retained by the *building official* until final approval of the work.

❖ A set of the approved plans and specifications must be kept by the jurisdiction for a period of time that is typically set out in state law. These retained documents are very useful in resolving disputes that can arise during the construction process and beyond.

AE303.3 Validity of permit. The issuance of a *permit* or approval of plans and specifications shall not be construed to be a *permit* for, or an approval of, any violation of any of these provisions or other pertinent codes of any other ordinance of the *jurisdiction*. No *permit* presuming to give authority to violate or cancel these provisions shall be valid.

The issuance of a *permit* based on plans, specifications and other data shall not prevent the *building official* from thereafter requiring the correction of errors in said plans, specifications and other data, or from preventing building operations being carried on thereunder when in violation of these provisions or of any other ordinances of this *jurisdiction*.

❖ This section states the fundamental premise that the permit is only a license to proceed with the intended work. It is not a license to violate, cancel, or set aside any provisions of this code or any other law or regulation. This places the burden of complying with all codes and regulations on the permit applicant and not on the building official.

AE303.4 Expiration. Every *permit* issued by the *building official* under these provisions shall expire by limitation and become null and void if the work authorized by such *permit* is not commenced within 180 days from the date of such *permit*, or if the work authorized by such *permit* is suspended or abandoned at any time after the work is commenced for a period of 180 days. Before such work can be recommenced, a new *permit* shall be first obtained, and the fee therefor shall be one-half the amount required for a new *permit* for such work, provided no changes have been made or will be made in the original plans and specifications for such work, and provided further that such suspension or abandonment has not exceeded 1 year. In order to renew action on a *permit* after expiration, the permittee shall pay a new full *permit* fee.

Any permittee holding an unexpired *permit* may apply for an extension of the time within which work may commence under that *permit* when the permittee is unable to commence work within the time required by this section for good and satisfactory reasons. The *building official* may extend the time for action by the permittee for a period not exceeding 180 days upon written request by the permittee showing that circumstances beyond the control of the permittee have pre-

INTERNATIONAL CODE COUNCIL®
Copyright © 2015 ICC. ALL RIGHTS RESERVED. Accessed by David Dammon on Jun 21, 2017 12:30:52 PM pursuant to License Agreement with ICC. No further reproduction or distribution authorized. ANY UNAUTHORIZED REPRODUCTION OR DISTRIBUTION IS A VIOLATION OF THE FEDERAL COPYRIGHT ACT AND THE LICENSE AGREEMENT, AND SUBJECT TO CIVIL AND CRIMINAL PENALTIES THEREUNDER.

vented action from being taken. No *permit* shall be extended more than once.

❖ A permit becomes invalid under two separate conditions. The first is when work is not commenced within 180 days; the second is when such work has been suspended for 180 days or more. To reinstate the permit, a new permit must first be obtained, and one-half of the fees paid. If the builders know that they can run into a problem with having work delayed for 180 days or longer, then they can submit a request for an extension to the building official if the reason is a good one. The building official can extend the permit for up to an additional 180 day period. This can only happen once; after that a new permit must be obtained.

AE303.5 Suspension or revocation. The *building official* may, in writing, suspend or revoke a *permit* issued under these provisions whenever the *permit* is issued in error or on the basis of incorrect information supplied, or in violation of any ordinance or regulation or any of these provisions.

❖ As with any license to do work, a permit can be revoked or suspended if it has been shown that the permit has been issued in error or that erroneous information has been provided. A permit to do work cannot violate any codes, laws, or regulations imposed on such a project.

SECTION AE304
FEES

AE304.1 Permit fees. The fee for each *manufactured home* installation *permit* shall be established by the *building official*.

When *permit* fees are to be based on the value or valuation of the work to be performed, the determination of value or valuation under these provisions shall be made by the *building official*. The value to be used shall be the total value of all work required for the *manufactured home* installation plus the total value of all work required for the construction of accessory buildings and structures for which the *permit* is issued, as well as all finish work, painting, roofing, electrical, plumbing, heating, air conditioning, elevators, fire-extinguishing systems and any other permanent *equipment* which is a part of the accessory building or structure. The value of the *manufactured home* itself shall not be included.

❖ Each jurisdiction must establish a set of fees for permit issuance. The fees collected cover only the services provided by the city in regard to the enforcement of the code and other laws in relation to the work anticipated. There is additional guidance for the building officials in establishing the valuation of a project found in this section.

AE304.2 Plan review fees. When a plan or other data are required to be submitted by Section AE302.2, a plan review fee shall be paid at the time of submitting plans and specifications for review. Said plan review fee shall be as established by the *building official*. Where plans are incomplete or changed so as to require additional plan review, an additional plan review fee shall be charged at a rate as established by the *building official*.

❖ If the review of a set of construction documents is required to verify that the project is in compliance with the code, then an additional fee is imposed to cover the service of that review. If the plans are incomplete, then an additional fee is imposed to cover the additional plan review of the project. Each jurisdiction must establish a set of fees to be applied where plans are incomplete or changed.

AE304.3 Other provisions.

AE304.3.1 Expiration of plan review. Applications for which no *permit* is issued within 180 days following the date of application shall expire by limitation, and plans and other data submitted for review may thereafter be returned to the applicant or destroyed by the *building official*. The *building official* may extend the time for action by the applicant for a period not exceeding 180 days upon request by the applicant showing that circumstances beyond the control of the applicant have prevented action from being taken. No application shall be extended more than once. In order to renew action on an application after expiration, the applicant shall resubmit plans and pay a new plan review fee.

❖ This section is similar to the description of the expiration of permit in Section AE303.4. The applicant is given a period of time to complete the plan review process and obtain a permit for the work. There is an opportunity to extend this time period since it is understood that problems can be encountered while obtaining a permit.

AE304.3.2 Investigation fees—work without a permit.

AE304.3.2.1 Investigation. Whenever any work for which a *permit* is required by these provisions has been commenced without first obtaining said *permit*, a special investigation shall be made before a *permit* may be issued for such work.

❖ This fee is imposed to cover the services of reviewing a project after it has been commenced without a permit. Oftentimes work is covered or concealed by the time the inspection takes place, and the fees involved may have to reflect the difficulty of investigations to verify compliance with the codes and other regulations.

AE304.3.2.2 Fee. An investigation fee, in addition to the *permit* fee, shall be collected whether or not a *permit* is then or subsequently issued. The investigation fee shall be equal to the amount of the *permit* fee required. The minimum investigation fee shall be the same as the minimum fee established by the *building official*. The payment of such investigation fee shall not exempt any person from compliance with all other provisions of either these provisions or other pertinent codes or from any penalty prescribed by law.

❖ This section indicates that the building official must determine the fees involved for such investigations.

INTERNATIONAL CODE COUNCIL®
Copyright © 2015 ICC. ALL RIGHTS RESERVED. Accessed by David Dammon on Jun 21, 2017 12:30:52 PM pursuant to License Agreement with ICC. No further reproduction or distribution authorized. ANY UNAUTHORIZED REPRODUCTION OR DISTRIBUTION IS A VIOLATION OF THE FEDERAL COPYRIGHT ACT AND THE LICENSE AGREEMENT, AND SUBJECT TO CIVIL AND CRIMINAL PENALTIES THEREUNDER.

AE304.3.3 Fee refunds.

AE304.3.3.1 Permit fee erroneously paid or collected. The *building official* may authorize the refunding of any fee paid hereunder which was erroneously paid or collected.

❖ Any fees that were collected in error can be refunded to the applicants.

AE304.3.3.2 Permit fee paid when no work done. The *building official* may authorize the refunding of not more than 80 percent of the *permit* fee paid when no work has been done under a *permit* issued in accordance with these provisions.

❖ This section addresses the situation where a permit was issued and fees paid and the work was not begun. Eighty percent of such fees can be refunded to applicants by the building official. Twenty percent of the permit fee is retained to cover the administrative work that has already been done.

AE304.3.3.3 Plan review fee. The *building official* may authorize the refunding of not more than 80 percent of the plan review fee paid when an application for a *permit* for which a plan review fee has been paid is withdrawn or canceled before any plan reviewing is done.

The *building official* shall not authorize the refunding of any fee paid, except upon written application by the original permittee not later than 180 days after the date of the fee payment.

❖ If a plan review is not done and the permit withdrawn or canceled, then the building official can authorize the reimbursement of most of the fees paid. A refund request must be in writing.

SECTION AE305
INSPECTIONS

AE305.1 General. All construction or work for which a *manufactured home* installation *permit* is required shall be subject to inspection by the *building official*, and certain types of construction shall have continuous inspection by special inspectors as specified in Section AE306. A survey of the *lot* may be required by the *building official* to verify that the structure is located in accordance with the *approved* plans.

It shall be the duty of the *permit* applicant to cause the work to be accessible and exposed for inspection purposes. Neither the *building official* nor this *jurisdiction* shall be liable for expense entailed in the removal or replacement of any material required to allow inspection.

❖ This is one of the most important functions of a building department. This section authorizes the building official to have a project inspected for compliance with the approved documents and codes. The work must be exposed and accessible to the inspectors. If the work to be inspected is not exposed, the jurisdiction is not responsible for any expenses incurred for making the work exposed and accessible.

AE305.2 Inspection requests. It shall be the duty of the person doing the work authorized by a *manufactured home* installation *permit* to notify the *building official* that such work is ready for inspection. The *building official* may require that every request for inspection be filed at least one working day before such inspection is desired. Such request may be in writing or by telephone at the option of the *building official*.

It shall be the duty of the person requesting any inspections required, either by these provisions or other applicable codes, to provide access to and means for proper inspection of such work.

❖ It is the responsibility of the people doing the work to ask for inspections at the proper intervals. Also, the people doing the work need to provide the means for making such inspections. For example, this can be in the form of a ladder or other such device.

AE305.3 Inspection record card. Work requiring a *manufactured home* installation *permit* shall not be commenced until the *permit* holder or the *permit* holder's agent shall have posted an inspection record card in a conspicuous place on the premises and in such position as to allow the *building official* conveniently to make the required entries thereon regarding inspection of the work. This card shall be maintained in such position by the *permit* holder until final approval has been issued by the *building official*.

❖ The purpose of keeping the permit in a conspicuous location on the job site is to make it available for the inspector to make notes and keep track of the previous inspections.

AE305.4 Approval required. Work shall not be done on any part of the *manufactured home* installation beyond the point indicated in each successive inspection without first obtaining the approval of the *building official*. Such approval shall be given only after an inspection has been made of each successive step in the construction as indicated by each of the inspections required in Section AE305.5. There shall be a final inspection and approval of the *manufactured home* installation, including connections to its building service *equipment*, when completed and ready for occupancy or use.

❖ No work on the project can progress beyond a required inspection without having approval from the building official.

AE305.5 Required inspections.

AE305.5.1 Structural inspections for the manufactured home installation. Reinforcing steel or structural framework of any part of any *manufactured home* foundation system shall not be covered or concealed without first obtaining the approval of the *building official*. The *building official*, upon notification from the *permit* holder or the *permit* holder's agent, shall make the following inspections and shall either approve that portion of the construction as completed or shall notify the *permit* holder or the *permit* holder's agent wherein the same fails to comply with these provisions or other applicable codes:

1. Foundation inspection: To be made after excavations for footings are completed and any required reinforcing steel is in place. For concrete foundations, any required forms shall be in place prior to inspection. All materials

INTERNATIONAL CODE COUNCIL®
Copyright © 2015 ICC. ALL RIGHTS RESERVED. Accessed by David Dammon on Jun 21, 2017 12:30:52 PM pursuant to License Agreement with ICC. No further reproduction or distribution authorized. ANY UNAUTHORIZED REPRODUCTION OR DISTRIBUTION IS A VIOLATION OF THE FEDERAL COPYRIGHT ACT AND THE LICENSE AGREEMENT, AND SUBJECT TO CIVIL AND CRIMINAL PENALTIES THEREUNDER.

for the foundation shall be on the job, except where concrete from a central mixing plant (commonly termed "transit mixed") is to be used, the concrete materials need not be on the job. Where the foundation is to be constructed of *approved* treated wood, additional framing inspections as required by the *building official* may be required.

2. Concrete slab or under-floor inspection: To be made after all in-slab or under-floor building service *equipment*, conduit, piping accessories and other ancillary *equipment* items are in place but before any concrete is poured or the *manufactured home* is installed.
3. Anchorage inspection: To be made after the *manufactured home* has been installed and permanently anchored.

❖ The inspections specified in Section AE305.5 are the minimum thought necessary to verify the compliance of the installation. This section lists the structural inspections for the foundation, underfloor equipment, concrete slab, and anchorage of the manufactured home.

AE305.5.2 Structural inspections for accessory building and structures. Inspections for accessory buildings and structures shall be made as set forth in this code.

❖ This section suggests that the jurisdiction have the same inspections for accessory structures that it would have for any building.

AE305.5.3 Building service equipment inspections. All building service *equipment* which is required as a part of a *manufactured home* installation, including accessory buildings and structures authorized by the same *permit*, shall be inspected by the *building official*. Building service *equipment* shall be inspected and tested as required by the applicable codes. Such inspections and testing shall be limited to site construction and shall not include building service *equipment* which is a part of the *manufactured home* itself. No portion of any building service *equipment* intended to be concealed by any permanent portion of the construction shall be concealed until inspected and *approved*. Building service *equipment* shall not be connected to a water, fuel or power supply, or sewer system, until authorized by the *building official*.

❖ All equipment serving the manufactured home must be inspected. This section also requires that no connection be made to the utilities without the building official's approval.

AE305.5.4 Final inspection. When finish grading and the *manufactured home* installation, including the installation of all required building service *equipment*, is completed and the *manufactured home* is ready for occupancy, a final inspection shall be made.

❖ When all work is complete, this section requires one final inspection to verify that the approved plans have been followed. Once this inspection is approved, then the home is ready for occupancy.

AE305.6 Other inspections. In addition to the called inspections specified in Section AE305.5.4, the *building official* may make or require other inspections of any construction work to ascertain compliance with these provisions or other codes and laws which are enforced by the code enforcement agency.

❖ This section allows a building official to impose other inspections as may be necessary to verify compliance with this set of criteria or other laws and regulations.

SECTION AE306
SPECIAL INSPECTIONS

AE306.1 General. In addition to the inspections required by Section AE305, the *building official* may require the owner to employ a special inspector during construction of specific types of work as described in this code.

❖ A special inspector may be needed to verify compliance with the code. This could be due to the use of high strength concrete, special soil conditions or anchorage, or even flood plain installations.

SECTION AE307
UTILITY SERVICE

AE307.1 General. Utility service shall not be provided to any building service *equipment* which is regulated by these provisions or other applicable codes, and for which a *manufactured home* installation *permit* is required by these provisions, until *approved* by the *building official*.

❖ The building official must approve the final inspection before connection can be made to any utilities that serve the manufactured home.

SECTION AE401
OCCUPANCY CLASSIFICATION

AE401.1 Manufactured homes. A *manufactured home* shall be limited in use to a single *dwelling unit*.

❖ There can be instances of applications to change the use of the structure to something other than a dwelling. This chapter was not developed with that in mind, and in those cases the *International Building Code*® (IBC®) should be used.

AE401.2 Accessory buildings. Accessory buildings shall be classified as to occupancy by the *building official* as set forth in this code.

❖ The use of accessory structures is indeed accessory to the home, so the structures allowed would be those normally attached to such dwellings. Examples would be tool sheds, patio covers, carports, and gazebos.

SECTION AE402
LOCATION ON PROPERTY

AE402.1 General. *Manufactured homes* and accessory buildings shall be located on the property in accordance with applicable codes and ordinances of this *jurisdiction*.

❖ This section refers to other codes and laws that may be in effect for locating the manufactured home on the

INTERNATIONAL CODE COUNCIL®
Copyright © 2015 ICC. ALL RIGHTS RESERVED. Accessed by David Dammon on Jun 21, 2017 12:30:52 PM pursuant to License Agreement with ICC. No further reproduction or distribution authorized. ANY UNAUTHORIZED REPRODUCTION OR DISTRIBUTION IS A VIOLATION OF THE FEDERAL COPYRIGHT ACT AND THE LICENSE AGREEMENT, AND SUBJECT TO CIVIL AND CRIMINAL PENALTIES THEREUNDER.

site. Section R302 of the IRC also applies, as well as any zoning ordinance of the jurisdiction.

SECTION AE501
DESIGN

AE501.1 General. A *manufactured home* shall be installed on a foundation system which is designed and constructed to sustain within the stress limitations specified in this code and all loads specified in this code.

Exception: When specifically authorized by the *building official*, foundation and anchorage systems which are constructed in accordance with the methods specified in Section AE600 of these provisions, or in the HUD, *Permanent Foundations for Manufactured Housing*, 1984 Edition, Draft, shall be deemed to meet the requirements of this appendix.

❖ This section specifies that an appropriate foundation system be used for manufactured housing. The provided exception allows the use of special foundations when approved by the building official. These systems are called out in Section AE600 of this appendix chapter and in the United States Department of Housing and Urban Development Handbook: *Permanent Foundations for Manufactured Housing.*

AE501.2 Manufacturer's installation instructions. The installation instructions as provided by the manufacturer of the *manufactured home* shall be used to determine permissible points of support for vertical loads and points of attachment for anchorage systems used to resist horizontal and uplift forces.

❖ The installation instructions from the manufacturer of the housing must be followed. The code requirements of Section AE501.1 always apply, and where those foundations requirements are more stringent than the manufacturer's requirements, the code overrides the manufacturer's installation instructions. For example, the HUD Permanent Foundations document would override the manufacturer's installation instructions.

AE501.3 Rationality. Any system or method of construction to be used shall submit to a rational analysis in accordance with well-established principles of mechanics.

❖ Any structural system must comply with standard engineering practice.

SECTION AE502
FOUNDATION SYSTEMS

AE502.1 General. Foundation systems designed and constructed in accordance with this section may be considered a permanent installation.

❖ Foundation systems designed in accordance with this section are permanent installations. That is, they are not subject to any time limitations that may be imposed on temporary uses.

AE502.2 Soil classification. The classification of the soil at each *manufactured home* site shall be determined when required by the *building official*. The *building official* may require that the determination be made by an engineer or architect licensed by the state to conduct soil investigations.

The classification shall be based on observation and any necessary tests of the materials disclosed by borings or excavations made in appropriate locations. Additional studies may be necessary to evaluate soil strength, the effect of moisture variation on soil-bearing capacity, compressibility and expansiveness.

When required by the *building official*, the soil classification design-bearing capacity and lateral pressure shall be shown on the plans.

❖ The determination of the classification of soil at the manufactured-home site is the same as for buildings and structures that are constructed under any building code. It is left to the discretion of the local building official to determine if an investigation is necessary.

AE502.3 Footings and foundations. Footings and foundations, unless otherwise specifically provided, shall be constructed of materials specified by this code for the intended use and in all cases shall extend below the frost line. Footings of concrete and masonry shall be of solid material. Foundations supporting untreated wood shall extend at least 8 inches (203 mm) above the adjacent finish *grade*. Footings shall have a minimum depth below finished *grade* of 12 inches (305 mm) unless a greater depth is recommended by a foundation investigation.

Piers and bearing walls shall be supported on masonry or concrete foundations or piles, or other *approved* foundation systems which shall be of sufficient capacity to support all loads.

❖ This section requires that footings and foundations supporting manufactured housing extend both above and below ground a specified amount. These numbers are consistent with those found in IRC Sections R323.1 and R403.1.4. A footing that is not below the frost line would result in uneven frost heave movement and possible damage to the manufactured home.

AE502.4 Foundation design. When a design is provided, the foundation system shall be designed in accordance with the applicable structural provisions of this code and shall be designed to minimize differential settlement. Where a design is not provided, the minimum foundation requirements shall be as set forth in this code.

❖ This section states that a foundation design must follow the structural provisions of the IRC. If a design is not provided, then the prescriptive criteria in the appendix must be followed.

AE502.5 Drainage. Provisions shall be made for the control and drainage of surface water away from the *manufactured home*.

❖ Manufactured housing must meet the same criteria for drainage of surface water away from other buildings and structures as other structures in the IRC. Such water directed toward a structure would cause the decay of that structure.

INTERNATIONAL CODE COUNCIL®
Copyright © 2015 ICC. ALL RIGHTS RESERVED. Accessed by David Dammon on Jun 21, 2017 12:30:52 PM pursuant to License Agreement with ICC. No further reproduction or distribution authorized. ANY UNAUTHORIZED REPRODUCTION OR DISTRIBUTION IS A VIOLATION OF THE FEDERAL COPYRIGHT ACT AND THE LICENSE AGREEMENT, AND SUBJECT TO CIVIL AND CRIMINAL PENALTIES THEREUNDER.

AE502.6 Under-floor clearances—ventilation and access. A minimum clearance of 12 inches (305 mm) shall be maintained beneath the lowest member of the floor support framing system. Clearances from the bottom of wood floor joists or perimeter joists shall be as specified in this code.

Under-floor spaces shall be ventilated with openings as specified in this code. If combustion air for one or more heat-producing *appliance* is taken from within the under-floor spaces, ventilation shall be adequate for proper *appliance* operation.

Under-floor access openings shall be provided. Such openings shall be not less than 18 inches (457 mm) in any dimension and not less than 3 square feet (0.279 m^2) in area, and shall be located so that any water supply and sewer drain connections located under the *manufactured home* are accessible.

❖ This section requires a nominal amount of space for access to the underfloor area and for its proper ventilation. This section also specifies that all underfloor connections of the water supply system and the drainage system be accessible.

SECTION AE503
SKIRTING AND PERIMETER ENCLOSURES

AE503.1 Skirting and permanent perimeter enclosures. Skirting and permanent perimeter enclosures shall be installed only where specifically required by other laws or ordinances. Skirting, when installed, shall be of material suitable for exterior exposure and contact with the ground. Permanent perimeter enclosures shall be constructed of materials as required by this code for regular foundation construction.

Skirting shall be installed in accordance with the skirting manufacturer's installation instructions. Skirting shall be adequately secured to ensure stability, minimize vibration and susceptibility to wind damage, and compensate for possible frost heave.

❖ Skirting is not required by this appendix chapter. However, the skirting of the perimeter of the underfloor area of manufactured housing is required by other laws or ordinances in many areas of the United States. Such skirting is intended to hide unsightly areas and to prevent the intrusion of rodents. The manufacturer's installation instructions must be followed, and the materials themselves must be able to resist the effects of being installed outdoors.

AE503.2 Retaining walls. Where retaining walls are used as a permanent perimeter enclosure, they shall resist the lateral displacements of soil or other materials and shall conform to this code as specified for foundation walls. Retaining walls and foundation walls shall be constructed of *approved* treated wood, concrete, masonry or other *approved* materials or combination of materials as for foundations as specified in this code. Siding materials shall extend below the top of the exterior of the retaining or foundation wall, or the joint between the siding and enclosure wall shall be flashed in accordance with this code.

❖ This section applies where a continuous foundation wall is used, and the elevation of the exterior grade is different from the grade within the crawl space.

Also, this section requires that when skirting is used as a retaining wall, the material must be designed to withstand the loads imposed and the exposure to the earth itself.

SECTION AE504
STRUCTURAL ADDITIONS

AE504.1 General. Accessory buildings shall not be structurally supported by or attached to a *manufactured home* unless engineering calculations are submitted to substantiate any proposed structural connection.

Exception: The *building official* may waive the submission of engineering calculations if it is found that the nature of the work applied for is such that engineering calculations are not necessary to show conformance to these provisions.

❖ Additions to manufactured homes must be structurally independent of the housing itself. If not, an engineered design consistent with that of the manufacturer of the dwelling is acceptable. An exception is provided to allow for simple structures such as carports and some sheds to be added to the housing without engineering calculations.

SECTION AE505
BUILDING SERVICE EQUIPMENT

AE505.1 General. The installation, *alteration*, repair, replacement, *addition* to or maintenance of the building service *equipment* within the *manufactured home* shall conform to regulations set forth in the *Manufactured Home* Standards. Such work which is located outside the *manufactured home* shall comply with the applicable codes adopted by this *jurisdiction*.

❖ This section specifies which set of regulations are to be used for the installation, alteration, repair, replacement, addition to, or maintenance of any building service equipment that serves the home. The HUD Manufactured Home Construction and Safety Standards govern when the equipment is within the home.

SECTION AE506
EXITS

AE506.1 Site development. Exterior stairways and ramps which provide egress to the public way shall comply with the applicable provisions of this code.

❖ The path of egress from the home must comply with the means of egress criteria in the body of the IRC. See IRC Sections R311 through R316 for stairway and

INTERNATIONAL CODE COUNCIL®
Copyright © 2015 ICC. ALL RIGHTS RESERVED. Accessed by David Dammon on Jun 21, 2017 12:30:52 PM pursuant to License Agreement with ICC. No further reproduction or distribution authorized. ANY UNAUTHORIZED REPRODUCTION OR DISTRIBUTION IS A VIOLATION OF THE FEDERAL COPYRIGHT ACT AND THE LICENSE AGREEMENT, AND SUBJECT TO CIVIL AND CRIMINAL PENALTIES THEREUNDER.

ramp requirements. Any means of egress element within the structure of the manufactured housing itself is covered by the HUD safety standards.

AE506.2 Accessory buildings. Every accessory building or portion thereof shall be provided with exits as required by this code.

❖ Accessory buildings must have adequate means of egress for the occupants.

SECTION AE507
OCCUPANCY, FIRE SAFETY AND ENERGY CONSERVATION STANDARDS

AE507.1 General. *Alterations* made to a *manufactured home* subsequent to its initial installation shall conform to the occupancy, fire safety and energy conservation requirements set forth in the *Manufactured Home* Standards.

❖ This is a reference to the HUD safety standards for any alteration to manufactured housing.

SECTION AE600
SPECIAL REQUIREMENTS FOR FOUNDATION SYSTEMS

AE600.1 General. This section is applicable only where specifically authorized by the *building official.*

❖ This gives the building official the discretion to use the prescriptive criteria found in the following sections for the foundation system of manufactured housing. See Section AE501.1 for alternative HUD criteria that are commonly used.

SECTION AE601
FOOTINGS AND FOUNDATIONS

AE601.1 General. The capacity of individual load-bearing piers and their footings shall be sufficient to sustain all loads specified in this code within the stress limitations specified in this code. Footings, unless otherwise *approved* by the *building official,* shall be placed level on firm, undisturbed soil or an engineered fill which is free of organic material, such as weeds and grasses. Where used, an engineered fill shall provide a minimum load-bearing capacity of not less than 1,000 pounds per square foot (48 kN/m^2). Continuous footings shall conform to the requirements of this code. Section AE502 of these provisions shall apply to footings and foundations constructed under the provisions of this section.

❖ These are the general criteria for the design of foundation systems, similar to those found in Chapter 4. If fill is to be used for foundation support, the load-bearing capacity should be verified by field testing prior to foundation construction. Section AE502.3 requires the foundation to extend below the frost line.

SECTION AE602
PIER CONSTRUCTION

AE602.1 General. Piers shall be designed and constructed to distribute loads evenly. Multiple-section homes may have concentrated roof loads which will require special consideration. Load-bearing piers may be constructed utilizing one of the following methods listed. Such piers shall be considered to resist only vertical forces acting in a downward direction. They shall not be considered as providing any resistance to horizontal loads induced by wind or earthquake forces.

1. A prefabricated load-bearing device that is listed and *labeled* for the intended use.
2. Mortar shall comply with ASTM C270, Type M, S or N; this may consist of one part Portland cement, one-half part hydrated lime and four parts sand by volume. Lime shall not be used with plastic or waterproof cement.
3. A cast-in-place concrete pier with concrete having specified compressive strength at 28 days of 2,500 pounds per square inch (17 225 kPa).

Alternative materials and methods of construction may be used for piers which have been designed by an engineer or architect licensed by the state to practice as such.

Caps and leveling spacers may be used for leveling of the *manufactured home*. Spacing of piers shall be as specified in the manufacturer's installation instructions, if available, or by an *approved* designer.

❖ This section allows the use of devices that have been developed to provide the foundation for manufactured housing. These devices and other such products can only resist gravity loads. As always, an engineered foundation or a foundation that meets the requirements of the HUD Permanent Foundations document referenced in Section AE501.1 is acceptable.

SECTION AE603
HEIGHT OF PIERS

AE603.1 General. Piers constructed as indicated in Section AE602 may have heights as follows:

1. Except for corner piers, piers 36 inches (914 mm) or less in height may be constructed of masonry units, placed with cores or cells vertically. Piers shall be installed with their long dimension at right angles to the main frame member they support and shall have a minimum cross-sectional area of 128 square inches (82 560 mm^2). Piers shall be capped with minimum 4-inch (102 mm) *solid masonry* units or equivalent.
2. Piers between 36 and 80 inches (914 and 2032 mm) in height and all corner piers greater than 24 inches (610 mm) in height shall be at least 16 inches by 16 inches (406 mm by 406 mm) consisting of interlocking masonry units and shall be fully capped with minimum 4-inch (102 mm) *solid masonry* units or equivalent.

INTERNATIONAL CODE COUNCIL®
Copyright © 2015 ICC. ALL RIGHTS RESERVED. Accessed by David Dammon on Jun 21, 2017 12:30:52 PM pursuant to License Agreement with ICC. No further reproduction or distribution authorized. ANY UNAUTHORIZED REPRODUCTION OR DISTRIBUTION IS A VIOLATION OF THE FEDERAL COPYRIGHT ACT AND THE LICENSE AGREEMENT, AND SUBJECT TO CIVIL AND CRIMINAL PENALTIES THEREUNDER.

3. Piers greater than 80 inches (2032 mm) in height may be constructed in accordance with the provisions of Item 2, provided the piers shall be filled solid with grout and reinforced with four continuous No. 5 bars. One bar shall be placed in each corner cell of hollow masonry unit piers or in each corner of the grouted space of piers constructed of *solid masonry* units.
4. Cast-in-place concrete piers meeting the same size and height limitations of Items 1, 2 and 3 may be substituted for piers constructed of masonry units.

❖ Masonry or concrete piers have specific height limitations for stability. Minimum cross-sectional areas are also specified for adequate load-bearing capacity.

SECTION AE604
ANCHORAGE INSTALLATIONS

AE604.1 Ground anchors. Ground anchors shall be designed and installed to transfer the anchoring loads to the ground. The load-carrying portion of the ground anchors shall be installed to the full depth called for by the manufacturer's installation instructions and shall extend below the established frost line into undisturbed soil.

Manufactured ground anchors shall be listed and installed in accordance with the terms of their listing and the anchor manufacturer's instructions, and shall include the means of attachment of ties meeting the requirements of Section AE605. Ground anchor manufacturer's installation instructions shall include the amount of preload required and load capacity in various types of soil. These instructions shall include tensioning adjustments which may be needed to prevent damage to the *manufactured home*, particularly damage that can be caused by frost heave. Each ground anchor shall be marked with the manufacturer's identification and listed model identification number which shall be visible after installation. Instructions shall accompany each listed ground anchor specifying the types of soil for which the anchor is suitable under the requirements of this section.

Each *approved* ground anchor, when installed, shall be capable of resisting an allowable working load at least equal to 3,150 pounds (14 kN) in the direction of the tie plus a 50-percent overload [4,725 pounds (21 kN) total] without failure. Failure shall be considered to have occurred when the anchor moves more than 2 inches (51 mm) at a load of 4,725 pounds (21 kN) in the direction of the tie installation. Those ground anchors which are designed to be installed so that loads on the anchor are other than direct withdrawal shall be designed and installed to resist an applied design load of 3,150 pounds (14 kN) at 40 to 50 degrees from vertical or within the angle limitations specified by the home manufacturer without displacing the tie end of the anchor more than 4 inches (102 mm) horizontally. Anchors designed for the connection of multiple ties shall be capable of resisting the combined working load and overload consistent with the intent expressed herein.

When it is proposed to use ground anchors and the *building official* has reason to believe that the soil characteristics at a given site are such as to render the use of ground anchors advisable, or when there is doubt regarding the ability of the ground anchors to obtain their listed capacity, the *building official* may require that a representative field installation be made at the site in question and tested to demonstrate ground-anchor capacity. The *building official* shall approve the test procedures.

❖ Approved devices for anchoring manufactured housing is allowed by this section. The manufacturer's installation instructions must be followed. This section describes the conditions by which the anchors will be tested and designed. Building officials can either verify the information themselves or ask for a third party evaluation of the product to verify its compliance with these criteria.

The site soil condition must be suitable for the use of ground anchors. The capacity of a ground anchor is significantly affected by the soil moisture content. Pull-out and lateral load capacity should be verified by tests.

AE604.2 Anchoring equipment. Anchoring *equipment*, when installed as a permanent installation, shall be capable of resisting all loads as specified within these provisions. When the stabilizing system is designed by an engineer or architect licensed by the state to practice as such, alternative designs may be used, providing the anchoring *equipment* to be used is capable of withstanding a load equal to 1.5 times the calculated load. All anchoring *equipment* shall be listed and *labeled* as being capable of meeting the requirements of these provisions. Anchors as specified in this code may be attached to the main frame of the *manufactured home* by an *approved* $^{3}/_{16}$-inch-thick (4.76 mm) slotted steel plate anchoring device. Other anchoring devices or methods meeting the requirements of these provisions may be permitted when *approved* by the *building official*.

Anchoring systems shall be so installed as to be permanent. Anchoring *equipment* shall be so designed to prevent self-disconnection with no hook ends used.

❖ This section applies to the devices that hold the manufactured home to its ground anchors. This set of equipment should also be addressed in the approved manufacturer's installation instructions.

AE604.3 Resistance to weather deterioration. All anchoring *equipment*, tension devices and ties shall have a resistance to deterioration as required by this code.

❖ All anchorage devices and equipment must be able to withstand exposure to weather without deterioration.

AE604.4 Tensioning devices. Tensioning devices, such as turnbuckles or yoke-type fasteners, shall be ended with clevis or welded eyes.

❖ This section requires that the ends of tensioning devices for the anchorage system must have either clevises or welded eyes. Such eyes constitute a substantial connection and are required to resist a substantial tension load.

INTERNATIONAL CODE COUNCIL®
Copyright © 2015 ICC. ALL RIGHTS RESERVED. Accessed by David Dammon on Jun 21, 2017 12:30:52 PM pursuant to License Agreement with ICC. No further reproduction or distribution authorized. ANY UNAUTHORIZED REPRODUCTION OR DISTRIBUTION IS A VIOLATION OF THE FEDERAL COPYRIGHT ACT AND THE LICENSE AGREEMENT, AND SUBJECT TO CIVIL AND CRIMINAL PENALTIES THEREUNDER.

SECTION AE605
TIES, MATERIALS AND INSTALLATION

AE605.1 General. Steel strapping, cable, chain or other *approved* materials shall be used for ties. All ties shall be fastened to ground anchors and drawn tight with turnbuckles or other adjustable tensioning devices or devices supplied with the ground anchor. Tie materials shall be capable of resisting an allowable working load of 3,150 pounds (14 kN) with no more than 2-percent elongation and shall withstand a 50-percent overload [4,750 pounds (21 kN)]. Ties shall comply with the weathering requirements of Section AE604.3. Ties shall connect the ground anchor and the main structural frame. Ties shall not connect to steel outrigger beams which fasten to and intersect the main structural frame unless specifically stated in the manufacturer's installation instructions. Connection of cable ties to main frame members shall be $^{5}/_{8}$-inch (15.9 mm) closed-eye bolts affixed to the frame member in an *approved* manner. Cable ends shall be secured with at least two U-bolt cable clamps with the "U" portion of the clamp installed on the short (dead) end of the cable to ensure strength equal to that required by this section.

Wood floor support systems shall be fixed to perimeter foundation walls in accordance with provisions of this code. The minimum number of ties required per side shall be sufficient to resist the wind load stated in this code. Ties shall be as evenly spaced as practicable along the length of the *manufactured home* with the distance from each end of the home and the tie nearest that end not exceeding 8 feet (2438 mm). When continuous straps are provided as vertical ties, such ties shall be positioned at rafters and studs. Where a vertical tie and diagonal tie are located at the same place, both ties may be connected to a single anchor, provided the anchor used is capable of carrying both loads. Multiple-section *manufactured homes* require diagonal ties only. Diagonal ties shall be installed on the exterior main frame and slope to the exterior at an angle of 40 to 50 degrees from the vertical or within the angle limitations specified by the home manufacturer. Vertical ties which are not continuous over the top of the *manufactured home* shall be attached to the main frame.

❖ All tie material used must meet the minimum criteria found in this section. The fact that it does meet the criteria should be a part of the information submitted by the proponent of an approved evaluation by a third party. Tie systems are commonly pretested systems that are expressly manufactured for this purpose.

SECTION AE606
REFERENCED STANDARDS

ASTM C270—04 Specification for Mortar for Unit Masonry. AE602

NFPA 501—03 Standard on Manufactured Housing AE201

Bibliography

The following resource materials were used in the preparation of the commentary for this appendix of the code:

ASTM C270–04, *Standard Specification for Mortar for Unit Masonry.* West Conshohocken, PA: ASTM International, 2004.

National Manufactured Housing Construction and Safety Standards Act of 1974. (42 United States Code, Section 5401, et seq.).

NFPA 501–03, *Standard on Manufactured Housing.* Quincy, MA: National Fire Protection Association, 2003.

United States Department of Housing and Urban Development. *Permanent Foundations for Manufactured Housing.* Draft. Washington, D.C.: United States Department of Housing and Urban Development, 1984.

INTERNATIONAL CODE COUNCIL®
Copyright © 2015 ICC. ALL RIGHTS RESERVED. Accessed by David Dammon on Jun 21, 2017 12:30:52 PM pursuant to License Agreement with ICC. No further reproduction or distribution authorized. ANY UNAUTHORIZED REPRODUCTION OR DISTRIBUTION IS A VIOLATION OF THE FEDERAL COPYRIGHT ACT AND THE LICENSE AGREEMENT, AND SUBJECT TO CIVIL AND CRIMINAL PENALTIES THEREUNDER.

INTERNATIONAL CODE COUNCIL®

Copyright © 2015 ICC. ALL RIGHTS RESERVED. Accessed by David Dammon on Jun 21, 2017 12:30:52 PM pursuant to License Agreement with ICC. No further reproduction or distribution authorized. ANY UNAUTHORIZED REPRODUCTION OR DISTRIBUTION IS A VIOLATION OF THE FEDERAL COPYRIGHT ACT AND THE LICENSE AGREEMENT, AND SUBJECT TO CIVIL AND CRIMINAL PENALTIES THEREUNDER.

Appendix F:
Passive Radon Gas Controls

(The provisions contained in this appendix are not mandatory unless specifically referenced in the adopting ordinance.)

General Comments

Radon is a radioactive gas that has been identified as a cancer-causing agent. According to the Environmental Protection Agency (EPA), it is estimated to cause many thousands of deaths each year and increases the potential for lung cancer. Radon comes from the natural (radioactive) breakdown of uranium in soil, rock, and water and finds its way into the air. The primary concern of this appendix is the transfer of radon gases from the soil into the dwelling through openings in the floor system.

The provisions of this appendix regulate the design and construction of radon-resistant measures intended to reduce the entry of radon gases into the living space of residential buildings.

Section AF101 establishes the scope of Appendix F, Section AF102 defines the specific terms related to the appendix, and Section AF103 discusses the construction techniques for radon-resistant construction.

Purpose

In the case of residential construction, radon is created in the soil beneath the house. Varying from one area of the United States to another, even from one house to another, the amount of radon gas in the soil is based on the soil chemistry. Since the movement of radon from the soil into the living area of a residence is enhanced as the house warms, the areas of high radon potential are typically found in portions of the United States with colder climates. The construction of an effective and efficient radon mitigation system is necessary where the radon potential reaches a point considered unacceptable. This appendix establishes prescriptive provisions to reduce the amount of radon entering a dwelling unit from the soil beneath the residence.

SECTION AF101
SCOPE

AF101.1 General. This appendix contains requirements for new construction in *jurisdictions* where radon-resistant construction is required. These requirements are intended to provide a passive means of resisting radon gas entry and prepare the *dwelling* for post-construction radon mitigation, if necessary (see Figure AF102). Active construction techniques, rather than passive techniques, shall be permitted to be used where approved.

Inclusion of this appendix by *jurisdictions* shall be determined through the use of locally available data or determination of Zone 1 designation in Figure AF101 and Table AF101(1).

❖ Where adopted by the jurisdiction, the provisions of this appendix provide regulations for radon-resistant construction. The jurisdiction may choose to adopt this chapter based on available data, or, alternatively, through designation as a Zone 1 structure based on Figure AF101. Zone 1 areas have a relatively high potential for radon contamination, deemed to measure at more than 4 pCi/L. See Figure AF102 for illustrations of the four basic construction methods utilized in the code for radon mitigation.

SECTION AF102
DEFINITIONS

AF102.1 General. For the purpose of these requirements, the terms used shall be defined as follows:

❖ This section clarifies the terminology used in this appendix. The terms take on unique and specific meanings, with many of the terms used solely in the context of radon-resistant construction.

DRAIN TILE LOOP. A continuous length of drain tile or perforated pipe extending around all or part of the internal or external perimeter of a *basement* or crawl space footing.

❖ Much like a drainage system for moving water away from a foundation or basement wall, a drain tile loop can consist of either drain tile or perforated pipe. It can be located on the interior or exterior side of a crawl space or basement footing.

ENCLOSED CRAWL SPACE. A crawl space that is enclosed with foundation walls inclusive of any windows, doors, access openings and required vents.

❖ All walls enclosing a crawl space are not necessarily foundation walls. Some crawl space walls may be common to other interior spaces and such walls are allowed to be constructed as wood frame or other types of walls.

INTERNATIONAL CODE COUNCIL®
Copyright © 2015 ICC. ALL RIGHTS RESERVED. Accessed by David Dammon on Jun 21, 2017 12:30:52 PM pursuant to License Agreement with ICC. No further reproduction or distribution authorized. ANY UNAUTHORIZED REPRODUCTION OR DISTRIBUTION IS A VIOLATION OF THE FEDERAL COPYRIGHT ACT AND THE LICENSE AGREEMENT, AND SUBJECT TO CIVIL AND CRIMINAL PENALTIES THEREUNDER.

FIGURE AF101
EPA MAP OF RADON ZONES

a. pCi/L standard for picocuries per liter of radon gas. The U.S. Environmental Protection Agency (EPA) recommends that homes that measure 4 pCi/L and greater be mitigated.

The EPA and the U.S. Geological Survey have evaluated the radon potential in the United States and have developed a map of radon zones designed to assist *building officials* in deciding whether radon-resistant features are applicable in new construction.

The map assigns each of the 3,141 counties in the United States to one of three zones based on radon potential. Each zone designation reflects the average short-term radon measurement that can be expected to be measured in a building without the implementation of radon-control methods. The radon zone designation of highest priority is Zone 1. Table AF101 lists the Zone 1 counties illustrated on the map. More detailed information can be obtained from state-specific booklets (EPA-402-R-93-021 through 070) available through State Radon Offices or from EPA Regional Offices.

INTERNATIONAL CODE COUNCIL®
Copyright © 2015 ICC. ALL RIGHTS RESERVED. Accessed by David Dammon on Jun 21, 2017 12:30:52 PM pursuant to License Agreement with ICC. No further reproduction or distribution authorized. ANY UNAUTHORIZED REPRODUCTION OR DISTRIBUTION IS A VIOLATION OF THE FEDERAL COPYRIGHT ACT AND THE LICENSE AGREEMENT, AND SUBJECT TO CIVIL AND CRIMINAL PENALTIES THEREUNDER.

TABLE AF101(1)
HIGH RADON-POTENTIAL (ZONE 1) COUNTIES[a]

ALABAMA
Calhoun
Clay
Cleburne
Colbert
Coosa
Franklin
Jackson
Lauderdale
Lawrence
Limestone
Madison
Morgan
Talladega

CALIFORNIA
Santa Barbara
Ventura

COLORADO
Adams
Arapahoe
Baca
Bent
Boulder
Chaffee
Cheyenne
Clear Creek
Crowley
Custer
Delta
Denver
Dolores
Douglas
El Paso
Elbert
Fremont
Garfield
Gilpin
Grand
Gunnison
Huerfano
Jackson
Jefferson
Kiowa
Kit Carson
Lake
Larimer
Las Animas
Lincoln
Logan
Mesa
Moffat
Montezuma
Montrose
Morgan
Otero
Ouray
Park
Phillips
Pitkin
Prowers
Pueblo
Rio Blanco
San Miguel
Summit
Teller
Washington
Weld
Yuma

CONNECTICUT
Fairfield
Middlesex
New Haven
New London

GEORGIA
Cobb
De Kalb
Fulton
Gwinnett

IDAHO
Benewah
Blaine
Boise
Bonner
Boundary
Butte
Camas
Clark
Clearwater
Custer
Elmore
Fremont
Gooding
Idaho
Kootenai
Latah
Lemhi
Shoshone
Valley

ILLINOIS
Adams
Boone
Brown
Bureau
Calhoun
Carroll
Cass
Champaign
Coles
De Kalb
De Witt
Douglas
Edgar
Ford
Fulton
Greene
Grundy
Hancock
Henderson
Henry
Iroquois
Jersey
Jo Daviess
Kane
Kendall
Knox
La Salle
Lee
Livingston
Logan
Macon
Marshall
Mason
McDonough
McLean
Menard
Mercer
Morgan
Moultrie
Ogle
Peoria
Piatt
Pike
Putnam
Rock Island
Sangamon
Schuyler
Scott
Stark
Stephenson
Tazewell
Vermilion
Warren
Whiteside
Winnebago
Woodford

INDIANA
Adams
Allen
Bartholomew
Benton
Blackford
Boone
Carroll
Cass
Clark
Clinton
De Kalb
Decatur
Delaware
Elkhart
Fayette
Fountain
Fulton
Grant
Hamilton
Hancock
Harrison
Hendricks
Henry
Howard
Huntington
Jay
Jennings
Johnson
Kosciusko
LaGrange
Lawrence
Madison
Marion
Marshall
Miami
Monroe
Montgomery
Noble
Orange
Putnam
Randolph
Rush
Scott
Shelby
St. Joseph
Steuben
Tippecanoe
Tipton
Union
Vermillion
Wabash
Warren
Washington
Wayne
Wells
White
Whitley

IOWA
All Counties

KANSAS
Atchison
Barton
Brown
Cheyenne
Clay
Cloud
Decatur
Dickinson
Douglas
Ellis
Ellsworth
Finney
Ford
Geary
Gove
Graham
Grant
Gray
Greeley
Hamilton
Haskell
Hodgeman
Jackson
Jewell
Johnson
Kearny
Kingman
Kiowa
Lane
Leavenworth
Lincoln
Logan
Marion
Marshall
McPherson
Meade
Mitchell
Nemaha
Ness
Norton
Osborne
Ottawa
Pawnee
Phillips
Pottawatomie
Pratt
Rawlins
Republic
Rice
Riley
Rooks
Rush
Saline
Scott
Sheridan
Sherman
Smith
Stanton
Thomas
Trego
Wallace
Washington
Wichita
Wyandotte

KENTUCKY
Adair
Allen
Barren
Bourbon
Boyle
Bullitt
Casey
Clark
Cumberland
Fayette
Franklin
Green
Harrison
Hart
Jefferson
Jessamine
Lincoln
Marion
Mercer
Metcalfe
Monroe
Nelson
Pendleton
Pulaski
Robertson
Russell
Scott
Taylor
Warren
Woodford

MAINE
Androscoggin
Aroostook
Cumberland
Franklin
Hancock
Kennebec
Lincoln
Oxford
Penobscot
Piscataquis
Somerset
York

MARYLAND
Baltimore
Calvert
Carroll
Frederick
Harford
Howard
Montgomery
Washington

MASS.
Essex
Middlesex
Worcester

MICHIGAN
Branch
Calhoun
Cass
Hillsdale
Jackson
Kalamazoo
Lenawee
St. Joseph
Washtenaw

MINNESOTA
Becker
Big Stone
Blue Earth
Brown
Carver
Chippewa
Clay
Cottonwood
Dakota
Dodge
Douglas
Faribault
Fillmore
Freeborn
Goodhue
Grant
Hennepin
Houston
Hubbard
Jackson
Kanabec
Kandiyohi
Kittson
Lac Qui Parle
Le Sueur
Lincoln
Lyon
Mahnomen
Marshall
Martin
McLeod
Meeker
Mower
Murray
Nicollet
Nobles
Norman
Olmsted
Otter Tail
Pennington
Pipestone
Polk
Pope
Ramsey
Red Lake
Redwood
Renville
Rice
Rock
Roseau
Scott
Sherburne
Sibley
Stearns
Steele
Stevens
Swift
Todd
Traverse
Wabasha
Wadena
Waseca
Washington
Watonwan
Wilkin
Winona
Wright
Yellow Medicine

MISSOURI
Andrew
Atchison
Buchanan
Cass
Clay
Clinton
Holt
Iron
Jackson
Nodaway
Platte

MONTANA
Beaverhead
Big Horn
Blaine
Broadwater
Carbon
Carter
Cascade
Chouteau
Custer
Daniels
Dawson
Deer Lodge
Fallon
Fergus
Flathead
Gallatin
Garfield
Glacier
Granite
Hill
Jefferson
Judith Basin
Lake
Lewis and Clark
Madison
McCone
Meagher
Missoula
Park
Phillips
Pondera
Powder River
Powell
Prairie
Ravalli
Richland
Roosevelt
Rosebud
Sanders
Sheridan
Silver Bow
Stillwater
Teton
Toole
Valley
Wibaux
Yellowstone

INTERNATIONAL CODE COUNCIL®
Copyright © 2015 ICC. ALL RIGHTS RESERVED. Accessed by David Dammon on Jun 21, 2017 12:30:52 PM pursuant to License Agreement with ICC. No further reproduction or distribution authorized. ANY UNAUTHORIZED REPRODUCTION OR DISTRIBUTION IS A VIOLATION OF THE FEDERAL COPYRIGHT ACT AND THE LICENSE AGREEMENT, AND SUBJECT TO CIVIL AND CRIMINAL PENALTIES THEREUNDER.

TABLE AF101(1)—continued
HIGH RADON-POTENTIAL (ZONE 1) COUNTIES[a]

NEBRASKA
Adams
Boone
Boyd
Burt
Butler
Cass
Cedar
Clay
Colfax
Cuming
Dakota
Dixon
Dodge
Douglas
Fillmore
Franklin
Frontier
Furnas
Gage
Gosper
Greeley
Hamilton
Harlan
Hayes
Hitchcock
Hurston
Jefferson
Johnson
Kearney
Knox
Lancaster
Madison
Nance
Nemaha
Nuckolls
Otoe
Pawnee
Phelps
Pierce
Platte
Polk
Red Willow
Richardson
Saline
Sarpy
Saunders
Seward
Stanton
Thayer
Washington
Wayne
Webster
York

NEVADA
Carson City
Douglas
Eureka
Lander
Lincoln
Lyon
Mineral
Pershing
White Pine

NEW HAMPSHIRE
Carroll

NEW JERSEY
Hunterdon
Mercer
Monmouth
Morris
Somerset
Sussex
Warren

NEW MEXICO
Bernalillo
Colfax
Mora
Rio Arriba
San Miguel
Santa Fe
Taos

NEW YORK
Albany
Allegany
Broome
Cattaraugus
Cayuga
Chautauqua
Chemung
Chenango
Columbia
Cortland
Delaware
Dutchess
Erie
Genesee
Greene
Livingston
Madison
Onondaga
Ontario
Orange
Otsego
Putnam
Rensselaer
Schoharie
Schuyler
Seneca
Steuben
Sullivan
Tioga
Tompkins
Ulster
Washington
Wyoming
Yates

N. CAROLINA
Alleghany
Buncombe
Cherokee
Henderson
Mitchell
Rockingham
Transylvania
Watauga

N. DAKOTA
All Counties

OHIO
Adams
Allen
Ashland
Auglaize
Belmont
Butler
Carroll
Champaign
Clark
Clinton
Columbiana
Coshocton
Crawford
Darke
Delaware
Fairfield
Fayette
Franklin
Greene
Guernsey
Hamilton
Hancock
Hardin
Harrison
Holmes
Huron
Jefferson
Knox
Licking
Logan
Madison
Marion
Mercer
Miami
Montgomery
Morrow
Muskingum
Perry
Pickaway
Pike
Preble
Richland
Ross
Seneca
Shelby
Stark
Summit
Tuscarawas
Union
Van Wert
Warren
Wayne
Wyandot

PENNSYLVANIA
Adams
Allegheny
Armstrong
Beaver
Bedford
Berks
Blair
Bradford
Bucks
Butler
Cameron
Carbon
Centre
Chester
Clarion
Clearfield
Clinton
Columbia
Cumberland
Dauphin
Delaware
Franklin
Fulton
Huntingdon
Indiana
Juniata
Lackawanna
Lancaster
Lebanon
Lehigh
Luzerne
Lycoming
Mifflin
Monroe
Montgomery
Montour
Northampton
Northumberland
Perry
Schuylkill
Snyder
Sullivan
Susquehanna
Tioga
Union
Venango
Westmoreland
Wyoming
York

RHODE ISLAND
Kent
Washington

S. CAROLINA
Greenville

S. DAKOTA
Aurora
Beadle
Bon Homme
Brookings
Brown
Brule
Buffalo
Campbell
Charles Mix
Clark
Clay
Codington
Corson
Davison
Day
Deuel
Douglas
Edmunds
Faulk
Grant
Hamlin
Hand
Hanson
Hughes
Hutchinson
Hyde
Jerauld
Kingsbury
Lake
Lincoln
Lyman
Marshall
McCook
McPherson
Miner
Minnehaha
Moody
Perkins
Potter
Roberts
Sanborn
Spink
Stanley
Sully
Turner
Union
Walworth
Yankton

TENNESEE
Anderson
Bedford
Blount
Bradley
Claiborne
Davidson
Giles
Grainger
Greene
Hamblen
Hancock
Hawkins
Hickman
Humphreys
Jackson
Jefferson
Knox
Lawrence
Lewis
Lincoln
Loudon
Marshall
Maury
McMinn
Meigs
Monroe
Moore
Perry
Roane
Rutherford
Smith
Sullivan
Trousdale
Union
Washington
Wayne
Williamson
Wilson

UTAH
Carbon
Duchesne
Grand
Piute
Sanpete
Sevier
Uintah

VIRGINIA
Alleghany
Amelia
Appomattox
Augusta
Bath
Bland
Botetourt
Bristol
Brunswick
Buckingham
Buena Vista
Campbell
Chesterfield
Clarke
Clifton Forge
Covington
Craig
Cumberland
Danville
Dinwiddie
Fairfax
Falls Church
Fluvanna
Frederick
Fredericksburg
Giles
Goochland
Harrisonburg
Henry
Highland
Lee
Lexington
Louisa
Martinsville
Montgomery
Nottoway
Orange
Page
Patrick
Pittsylvania
Powhatan
Pulaski
Radford
Roanoke
Rockbridge
Rockingham
Russell
Salem
Scott
Shenandoah
Smyth
Spotsylvania
Stafford
Staunton
Tazewell
Warren
Washington
Waynesboro
Winchester
Wythe

WASHINGTON
Clark
Ferry
Okanogan
Pend Oreille
Skamania
Spokane
Stevens

W. VIRGINIA
Berkeley
Brooke
Grant
Greenbrier
Hampshire
Hancock
Hardy
Jefferson
Marshall
Mercer
Mineral
Monongalia
Monroe
Morgan
Ohio
Pendleton
Pocahontas
Preston
Summers
Wetzel

WISCONSIN
Buffalo
Crawford
Dane
Dodge
Door
Fond du Lac
Grant
Green
Green Lake
Iowa
Jefferson
Lafayette
Langlade
Marathon
Menominee
Pepin
Pierce
Portage
Richland
Rock
Shawano
St. Croix
Vernon
Walworth
Washington
Waukesha
Waupaca
Wood

WYOMING
Albany
Big Horn
Campbell
Carbon
Converse
Crook
Fremont
Goshen
Hot Springs
Johnson
Laramie
Lincoln
Natrona
Niobrara
Park
Sheridan
Sublette
Sweetwater
Teton
Uinta
Washakie

INTERNATIONAL CODE COUNCIL®
Copyright © 2015 ICC. ALL RIGHTS RESERVED. Accessed by David Dammon on Jun 21, 2017 12:30:52 PM pursuant to License Agreement with ICC. No further reproduction or distribution authorized. ANY UNAUTHORIZED REPRODUCTION OR DISTRIBUTION IS A VIOLATION OF THE FEDERAL COPYRIGHT ACT AND THE LICENSE AGREEMENT, AND SUBJECT TO CIVIL AND CRIMINAL PENALTIES THEREUNDER.

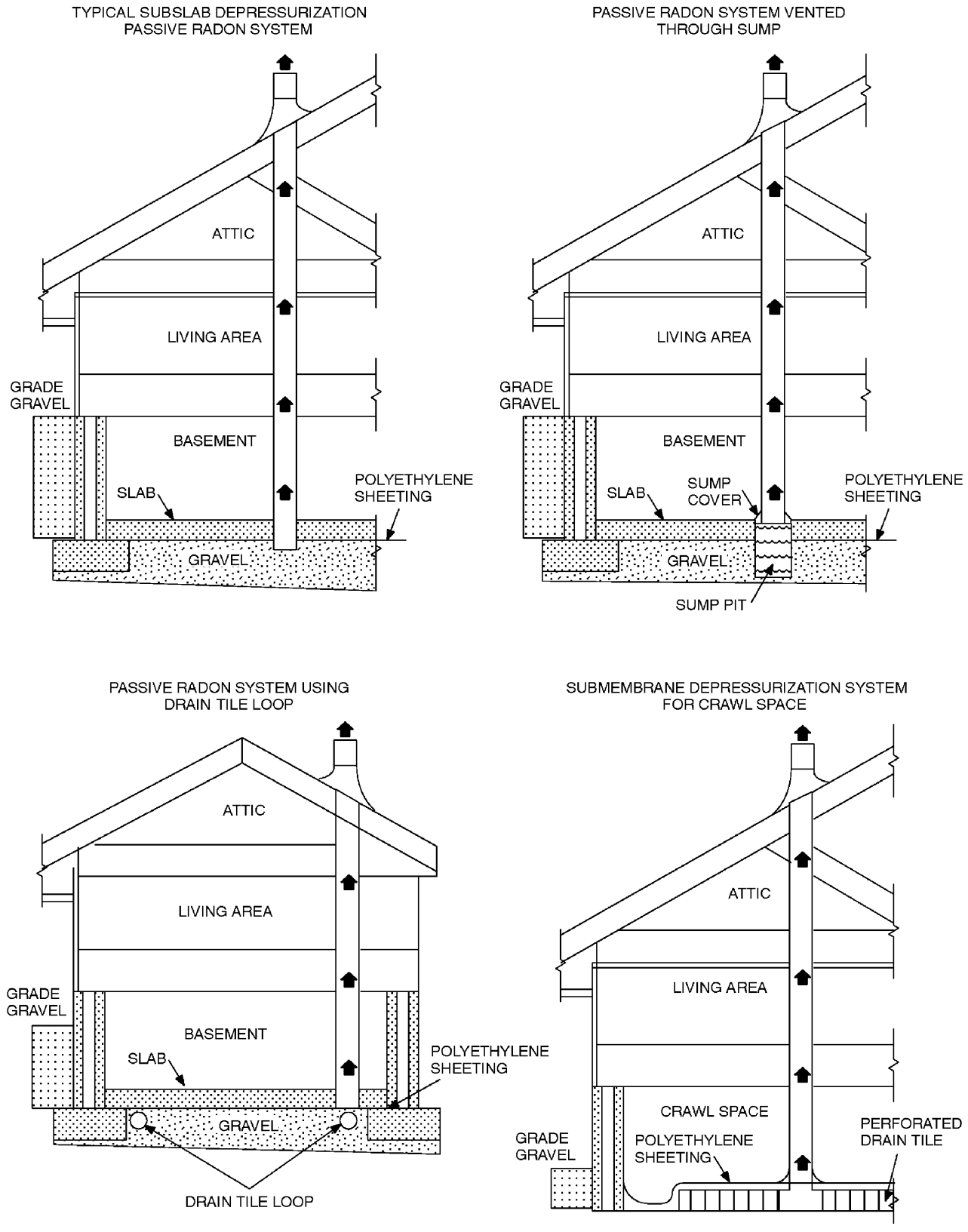

FIGURE AF102
RADON-RESISTANT CONSTRUCTION DETAILS FOR FOUR FOUNDATION TYPES

INTERNATIONAL CODE COUNCIL®
Copyright © 2015 ICC. ALL RIGHTS RESERVED. Accessed by David Dammon on Jun 21, 2017 12:30:52 PM pursuant to License Agreement with ICC. No further reproduction or distribution authorized. ANY UNAUTHORIZED REPRODUCTION OR DISTRIBUTION IS A VIOLATION OF THE FEDERAL COPYRIGHT ACT AND THE LICENSE AGREEMENT, AND SUBJECT TO CIVIL AND CRIMINAL PENALTIES THEREUNDER.

GAS-PERMEABLE LAYER. A gas-permeable layer shall consist of one of the following:

1. A uniform layer of clean aggregate that is not less than 4 inches (102 mm) thick. The aggregate shall consist of material that will pass through a 2-inch (51 mm) sieve and be retained by a $^1/_4$-inch (6.4 mm) sieve.
2. A uniform layer of sand (native or fill) that is not less than 4 inches (102 mm) thick and that is overlain by a soil gas collection mat or soil gas matting installed in accordance with the manufacturer's instructions.

❖ This definition contains detailed requirements for two different types of gas-permeable layers. Where a gas-permeable layer is required, it must comply with the requirements of this definition for either an aggregate or a sand-based layer.

RADON GAS. A naturally occurring, chemically inert, radioactive gas.

❖ A radioactive gas, radon occurs naturally. It is not detectable by sight, smell, or other human senses. As a gas, it can move readily through particles of soil, aggregate and small cracks and openings in foundation and slab-on-grade construction. It can accumulate under the slabs and foundations of homes where it can easily enter the living space through construction cracks and openings.

SOIL-GAS-RETARDER. A continuous membrane of 6-mil (0.15 mm) polyethylene used to retard the flow of soil gases into a *dwelling*.

❖ A membrane of 6-mil (0.15 mm) polyethylene is specifically identified as an acceptable material for retarding the flow of gas from the soil into a structure, if the polyethylene is applied in a continuous manner. Other membrane materials can aslo be used as soil-gas retarders if they provide equal or better protection.

SUBMEMBRANE DEPRESSURIZATION SYSTEM. A system designed to achieve lower submembrane air pressure relative to basement or crawl space air pressure by use of a vent drawing air from beneath the soil-gas-retarder membrane.

❖ Where a basement or crawl space is present, this system can be used in much the same manner as a subslab depressurization system. Shown in Figure AF102, this method draws air from beneath the soil-gas-retarder membrane and vents it to the exterior of the building.

SUBSLAB DEPRESSURIZATION SYSTEM (Passive). A system designed to achieve lower subslab air pressure relative to indoor air pressure by use of a vent pipe drawing air from beneath concrete floor slabs or other floor assemblies that are in contact with the ground.

❖ One of several methods available for mitigating radon entry into a dwelling unit, this passive system uses the convective movement of air to remove radon from the area below the slab. Illustrated in Figure AF102, this method uses a vertical vent pipe between the subslab area and the exterior of the building to draw air from the subslab area to the outside. By use of a vent pipe routed through the *conditioned* space of a building that connects the subslab area with outdoor air, the system relies on the convective flow of air upward in the vent to draw air from beneath the slab.

VENT PIPE. Not less than a 3-inch-diameter (76 mm) ABS or PVC gas-tight pipe extending from the gas permeable layer through the roof.

❖ This definition contains size and material requirements for vent pipes in a passive radon mitigation system.

SECTION AF103
PASSIVE RADON-RESISTANT SYSTEM REQUIREMENTS

AF103.1 General. The following components of a passive submembrane or subslab depressurization system shall be installed during construction.

❖ This section sets forth construction details designed to reduce radon movement from the soil to the interior of the building. Also see the four drawings in Figure AF102 that illustrate several basic construction methods for radon mitigation.

AF103.2 Entry routes. Potential radon entry routes shall be closed in accordance with Sections AF103.2.1 through AF103.2.8.

❖ This section identifies the various points at which radon may enter a building and specifies the appropriate methods for sealing or otherwise protecting the potential entry routes.

AF103.2.1 Floor openings. Openings around bathtubs, showers, water closets, pipes, wires or other objects that penetrate concrete slabs, or other floor assemblies, shall be filled with a polyurethane caulk or expanding foam applied in accordance with the manufacturer's instructions.

❖ It is typical for a floor slab or other type of floor assembly to be penetrated by underslab or underfloor plumbing, mechanical and electrical components. Polyurethane caulk or an equivalent sealant material must be installed at all penetrations created by the passage of piping, vents, conduit, cable, or other items penetrating the floor. The sealant is to be installed in accordance with the recommendations of the manufacturer.

AF103.2.2 Sumps. Sumps open to soil or serving as the termination point for subslab or exterior drain tile loops shall be covered with a gasketed or sealed lid. Sumps used as the suction point in a subslab depressurization system shall have a lid designed to accommodate the vent pipe. Sumps used as a floor drain shall have a lid equipped with a trapped inlet.

❖ A gasketed or sealed lid must be provided on any sump pit that serves as the end point for a subslab or exterior drain tile loop system. Such a lid is also required if the sump pit is open to the soil. The sump lid must be designed to accommodate the vent pipe where the sump is used as the suction point in a subslab decompression system. Where used as a floor

INTERNATIONAL CODE COUNCIL®
Copyright © 2015 ICC. ALL RIGHTS RESERVED. Accessed by David Dammon on Jun 21, 2017 12:30:52 PM pursuant to License Agreement with ICC. No further reproduction or distribution authorized. ANY UNAUTHORIZED REPRODUCTION OR DISTRIBUTION IS A VIOLATION OF THE FEDERAL COPYRIGHT ACT AND THE LICENSE AGREEMENT, AND SUBJECT TO CIVIL AND CRIMINAL PENALTIES THEREUNDER.

drain, the sump pit lid is to be equipped with a trapped inlet.

AF103.2.3 Foundation walls. Hollow block masonry foundation walls shall be constructed with a continuous course of *solid masonry*, one course of masonry grouted solid, or a solid concrete beam at or above *grade*. Where a brick veneer or other masonry ledge is installed, the course immediately below that ledge shall be *solid masonry*, one course of masonry grouted solid, or a solid concrete beam. Joints, cracks or other openings around penetrations of both exterior and interior surfaces of foundation walls below *grade* shall be filled with polyurethane caulk.

❖ Where the foundation is made up of hollow masonry units, it is necessary to provide a means to prohibit the flow of air and potential soil gas within the cavities of the block masonry. Several methods are identified, including the use of solid masonry or solid-grouted masonry for a minimum of one course. The solid barrier must be located at or above the finished ground surface to prevent gases that enter the wall cavity from traveling up and into the living spaces. In those situations where a ledge for brick, stone, or other masonry material is provided, the barrier must be located directly below the ledge.

All penetrations, joints (including the joints where foundation walls meet concrete slab-on-grade construction), cracks and other openings that occur below ground level in masonry, concrete, wood and other types of foundation walls are to be filled with polyurethane caulk or a similar type of flexible sealant. The required penetration and opening protection must be provided on both the interior and exterior sides of the foundation walls.

AF103.2.4 Dampproofing. The exterior surfaces of foundation walls below *grade* shall be dampproofed in accordance with Section R406.

❖ Dampproofing of the exterior surfaces of concrete and masonry block walls located below ground level must be done in accordance with the provisions of Section R406. A variety of methods are established for dampproofing concrete and masonry foundations.

AF103.2.5 Air-conditioning systems. Entry points, joints or other openings into air-conditioning systems in enclosed crawl spaces shall be sealed.

Exception: Systems with gasketed seams or that are otherwise sealed by the manufacturer.

❖ Unless sealed by the manufacturer or provided with gasketed seams to prevent leakage, air-conditioning systems located in crawl spaces must be field-sealed to eliminate the potential for air and gas to be drawn into the unit and distributed throughout the building.

AF103.2.6 Ducts. Ductwork passing through or beneath a slab within a *dwelling* shall be of seamless material unless the air-conditioning system is designed to maintain continuous positive pressure within such ducting. Joints in such ductwork shall be sealed.

Ductwork located in enclosed crawl spaces shall have seams and joints sealed by closure systems in accordance with Section M1601.4.1.

❖ Where ductwork passes through or is installed beneath a concrete floor slab, the ducts must be free of seams that may allow air and gas to enter the duct system. Seams are only permitted where it can be demonstrated that the air-handling equipment will maintain continuous positive pressure within the ducting. In such situations, the seams must be sealed to eliminate any air leakage.

The provision allows ductwork passing through a crawl space to have seams and joints, provided they are sealed by one of the methods prescribed in Section M106.4.1. This will allow the use of fibrous glass and seamed metal ducts and field-fabricated ductwork.

AF103.2.7 Crawl space access. Access doors and other openings or penetrations between *basements* and adjoining crawl spaces shall be closed, gasketed or sealed.

❖ The provisions of Section R408.4 mandate a minimum of one 18-inch by 24-inch (457 mm by 610 mm) opening to access a crawl space. Section M1305.1.4 addresses access to under-floor mechanical equipment. Where such openings or any other access points to the crawl space are provided, the doors or panels must be closed and gasketed to create an airtight separation.

AF103.3 Basements or enclosed crawl spaces with soil floors. In *dwellings* with *basements* or enclosed crawl spaces with soil floors, the following components of a passive submembrane depressurization system shall be installed during construction.

Exception: *Basements* or enclosed crawl spaces that are provided with a continuously operated mechanical exhaust system in accordance with Section R408.3.

❖ Where basements and crawl spaces have soil floors, a soil-gas-retarder, "T" fitting and vent pipe must be provided in accordance with Sections AF103.3.1 and AF103.3.2, respectively, except where a mechanical exhaust system that operates continuously is provided.

AF103.3.1 Soil-gas-retarder. The soil in *basements* and enclosed crawl spaces shall be covered with a soil-gas-retarder. The soil-gas-retarder shall be lapped not less than 12 inches (305 mm) at joints and shall extend to foundation walls enclosing the *basement* or crawl space. The soil-gas-retarder shall fit closely around any pipe, wire or other penetrations of the material. Punctures or tears in the material shall be sealed or covered with additional sheeting.

❖ An acceptable sheeting material must be installed on top of the gas-permeable base layer to serve as a soil-gas-retarder. In accordance with the requirements of the definition of "Soil-gas-retarder" in Section AF102.1, the material is to be a minimum 6-mil (0.15 mm) poly-

INTERNATIONAL CODE COUNCIL®
Copyright © 2015 ICC. ALL RIGHTS RESERVED. Accessed by David Dammon on Jun 21, 2017 12:30:52 PM pursuant to License Agreement with ICC. No further reproduction or distribution authorized. ANY UNAUTHORIZED REPRODUCTION OR DISTRIBUTION IS A VIOLATION OF THE FEDERAL COPYRIGHT ACT AND THE LICENSE AGREEMENT, AND SUBJECT TO CIVIL AND CRIMINAL PENALTIES THEREUNDER.

ethylene membrane or any other flexible sheeting that provides equivalent protection. The soil-gas-retarder resists the vertical flow of radon gas into the slab or other type of floor assembly. Therefore, the membrane must cover the entire floor area of the building, with joints adequately lapped and penetrations tightly sealed. Any tears, rips, or punctures are to be adequately repaired with additional sheeting material.

AF103.3.2 "T" fitting and vent pipe. A 3- or 4-inch "T" fitting shall be inserted beneath the soil-gas-retarder and be connected to a vent pipe. The vent pipe shall extend through the *conditioned space* of the *dwelling* and terminate not less than 12 inches (305 mm) above the roof in a location not less than 10 feet (3048 mm) away from any window or other opening into the *conditioned spaces* of the building that is less than 2 feet (610 mm) below the exhaust point.

❖ Prior to placement of the concrete floor slab, at least one radon vent pipe is to be embedded vertically into the aggregate or other approved permeable material. Each pipe must be at least 3 inches (76 mm) in diameter and constructed of a gas-tight material such as PVC or ABS in accordance with the requirements of the definition for vent pipe in Section AF102.1. An acceptable method of permanency is necessary so that the vent pipe is not moved from its location within the subslab material. This can be accomplished by providing a "T" fitting or any other approved equivalent method, or by insertion of the pipe directly into an interior perimeter drain tile loop. It is also acceptable to attach the vent pipe directly to a sealed sump provided the sump is exposed to the subslab aggregate or connected to the aggregate area by a drainage system.

The vent pipe must extend vertically through the building until it terminates at least 12 inches (305 mm) above the roof. In all cases, the termination point must be at least 10 feet (3048 mm) from any building opening that is located less than 2 feet (610 mm) below the exhaust point. The exhaust point also cannot be located within 10 feet (3048 mm) of any openings in nearby buildings.

AF103.4 Basements or enclosed crawl spaces with concrete floors or other floor systems and slab-on-grade dwellings. The following components of a passive subslab depressurization system shall be installed during construction in slab-on-*grade dwellings* or in *dwellings* with *basements* or crawl spaces with concrete or other floor systems.

❖ Where basements and crawlspaces are provided with concrete or other similar floor systems, a passive subslab depressurization system in accordance with the requirements of Sections AF103.4.1, AF103.4.2 and AF103.4.3 must be provided.

AF103.4.1 Sub-slab preparation. A layer of gas-permeable material shall be placed under concrete slabs and other floor systems that directly contact the ground and are within the walls of the dwelling.

❖ Where a subslab depressurization system is to be used, it is necessary to correctly prepare the base prior to installation of a soil-gas-retarder. The use of aggregate, sand overlaid with drainage matting, or any other approved gas-permeable material or system is required beneath all concrete slabs or similar floor systems in direct contact with the ground. The layer of material must be located so that it protects all interior floor areas of the building. In accordance with the requirements contained in the definition for gas-permeable layer, where aggregate is used, it must be placed in a uniform layer at least 4 inches (102 mm) thick. The definition also contains aggregate size details and requires that where sand is used, it be overlaid with a drainage matting material.

AF103.4.2 Soil-gas-retarder. A soil-gas-retarder shall be placed on top of the gas-permeable layer prior to casting the slab or placing the floor assembly. The soil-gas-retarder shall cover the entire floor area with separate sections lapped not less than 12 inches (305 mm). The soil-gas-retarder shall fit closely around any pipe, wire, or other penetrations of the material. Punctures or tears in the material shall be sealed or covered.

❖ An acceptable sheeting material must be installed on top of the gas-permeable base layer to serve as s soil-gas-retarder. See the definitions for gas-permeable layer and soil-gas-retarder in Section AF102.1. In accordance with the definition of soil-gas-retarder, the sheeting material is to be a minimum 6-mil (0.15 mm) polyethylene membrane or any other flexible sheeting that provides equivalent protection. The soil-gas-retarder resists the vertical flow of radon gas into the slab or other type of floor assembly. Therefore, the membrane must cover the entire floor area of the building, with joints adequately lapped and penetrations tightly sealed. Any tears, rips, or punctures are to be adequately repaired with additional sheeting material.

AF103.4.3 "T" fitting and vent pipe. Before a slab is cast or other floor system is installed, a "T" fitting shall be inserted below the slab or other floor system and the soil-gas-retarder. The "T" fitting shall be connected to a vent pipe. The vent pipe shall extend through the *conditioned space* of the *dwelling* and terminate not less than 12 inches (305 mm) above the roof in a location not less than 10 feet (3048 mm) away from any window or other opening into the *conditioned spaces* of the building that is less than 2 feet (610 mm) below the exhaust point.

❖ Prior to placement of the concrete floor slab, at least one radon vent pipe is to be embedded vertically into the aggregate or other approved permeable material. Each pipe must be at least 3 inches (76 mm) in diameter and constructed of a gas-tight material such as PVC or ABS in accordance with the requirements of the definition for "Vent pipe" in Section AF102.1. An acceptable method of permanency is necessary so that the vent pipe is not moved from its intended location within the subslab material. This is accomplished by providing a "T" fitting or any other approved equivalent method, or in accordance with the alternative methods described in Section AF103.5. Section AF103.5 allows insertion of the vent pipe directly into an interior perimeter drain tile loop, or attachment of

INTERNATIONAL CODE COUNCIL®
Copyright © 2015 ICC. ALL RIGHTS RESERVED. Accessed by David Dammon on Jun 21, 2017 12:30:52 PM pursuant to License Agreement with ICC. No further reproduction or distribution authorized. ANY UNAUTHORIZED REPRODUCTION OR DISTRIBUTION IS A VIOLATION OF THE FEDERAL COPYRIGHT ACT AND THE LICENSE AGREEMENT, AND SUBJECT TO CIVIL AND CRIMINAL PENALTIES THEREUNDER.

the vent pipe directly to a sealed sump, provided the sump is exposed to the subslab aggregate or connected to the aggregate area by a drainage system.

The vent pipe must extend vertically through the building until it terminates at least 12 inches (305 mm) above the roof. In all cases, the termination point must be at least 10 feet (3048 mm) from any building opening that is located less than 2 feet (610 mm) below the exhaust point. The exhaust point also cannot be located within 10 feet (3048 mm) of any openings in nearby buildings.

Also see the definition for gas-permeable layer in Section AF102.1 and its commentary.

AF103.5 Drain tile and sump used for depressurization. As an alternative to inserting a vent pipe into a "T" fitting, a vent pipe shall be permitted to be inserted directly into an interior perimeter drain tile loop or through a sump cover where the drain tile or sump is exposed to the gas-permeable layer.

❖ See the commentary to Section AF103.4.3.

AF103.6 Multiple vent pipes. In *dwellings* where interior footings or other barriers separate the gas-permeable layer, each area shall be fitted with an individual vent pipe. Vent pipes shall connect to a single vent that terminates above the roof or each individual vent pipe shall terminate separately above the roof.

❖ An individual vent pipe is required for each unique under-slab area that defines a separate gas-permeable layer, such as those spaces separated by interior footings. The vent pipes may terminate individually above the roof or may be connected to a single vent. Also see the definition for "Gas-permeable layer" in Section AF102.1 and its commentary.

AF103.7 Combination foundations. Where *basement* or crawl space floors are on different levels, each level shall have a separate vent pipe. Multiple vent pipes shall be permitted to be connected to a single vent pipe that terminates above the roof.

❖ Where the design of the structure combines a basement with a crawl space foundation, or a slab-on-grade floor with a crawl space foundation, separate radon vent pipes are to be provided for each individual type of foundation system. The vent piping must extend above the roof, either as individual vent terminations or as a single vent termination connected to the multiple vents.

AF103.8 Vent pipe drainage. Components of the radon vent pipe system shall be installed to provide positive drainage to the ground beneath the soil-gas-retarder.

❖ The manner of installation of a radon vent pipe system must be such that positive drainage is created to the ground beneath the floor slab or soil-gas-retarder.

AF103.9 Vent pipe identification. Exposed and visible interior vent pipes shall be identified with not less than one *label* on each floor and in accessible *attics*. The *label* shall read: "Radon Reduction System."

❖ Interior vent pipes installed as a portion of the radon venting system must be adequately identified to reduce the potential for improper use or modification of the venting system. The identification is required for every floor level and in all accessible attics where the radon vents are exposed and visible. At a minimum, the identification label must state: "Radon Reduction System."

AF103.10 Power source and access for future radon fan. To provide for future installation of a radon fan, an electrical circuit terminated in an *approved* box shall be installed during construction in the anticipated location of the radon fans. An accessible clear space 24 inches (610 mm) in diameter by 3 feet (914 mm) in height adjacent to the vent pipe shall be provided at the anticipated location of a future radon fan.

❖ It is possible that a passive depressurization system will be converted to an active system at some future time. In anticipation of such an occurrence, an electrical circuit must be provided to an approved box. The box should be located in the attic or other location that provides access to the vent pipe fans and an access opening to the location must be provided. This section provides specific minimum dimensions for the access opening. An additional electrical supply must be provided at the anticipated future locations of system failure alarms.

INTERNATIONAL CODE COUNCIL®
Copyright © 2015 ICC. ALL RIGHTS RESERVED. Accessed by David Dammon on Jun 21, 2017 12:30:52 PM pursuant to License Agreement with ICC. No further reproduction or distribution authorized. ANY UNAUTHORIZED REPRODUCTION OR DISTRIBUTION IS A VIOLATION OF THE FEDERAL COPYRIGHT ACT AND THE LICENSE AGREEMENT, AND SUBJECT TO CIVIL AND CRIMINAL PENALTIES THEREUNDER.

INTERNATIONAL CODE COUNCIL®

Copyright © 2015 ICC. ALL RIGHTS RESERVED. Accessed by David Dammon on Jun 21, 2017 12:30:52 PM pursuant to License Agreement with ICC. No further reproduction or distribution authorized. ANY UNAUTHORIZED REPRODUCTION OR DISTRIBUTION IS A VIOLATION OF THE FEDERAL COPYRIGHT ACT AND THE LICENSE AGREEMENT, AND SUBJECT TO CIVIL AND CRIMINAL PENALTIES THEREUNDER.

Appendix G:
Piping Standards for Various Applications

General Comments

This appendix is a valuable reference for designers to use when developing various piping systems for an application. This appendix is meant to be used as a starting point so that extensive research on piping is not necessary to begin a system design. Some applications require determination of friction losses of large piping networks before equipment sizing can be performed and as such, the internal sizes of piping (and the types of fittings that can be used for the selected piping) can greatly impact the size of equipment. This appendix provides a list of standards for various types of piping so that the details for the chosen piping can be easily found.

Note that most, but not all, of the standards in the table are recognized as part of the "base code" (see Chapter 44). Section AG102 indicates the standards that are not referenced in the code text of Chapters 1 through 43. Some of the standards in the table in this appendix might not be referenced in the code text of Chapters 1 through 43 for the application that the user has chosen the piping for. Any standards that are not specifically referenced in Chapters 1 through 43 code language for the specific application will have to be approved in accordance with Section R104.11. The mere existence of the "listing" of a standard in this table is not an indication that the material (as indicated by the standard) complies with the requirements of the code. This appendix is provided as only a convenience and does not imply code approval of any of these standards for any the indicated applications.

SECTION AG101
PLASTIC PIPING STANDARDS

AG101.1 Plastic piping. Table AG101.1 provides a list of plastic piping product standards for various applications.

❖ See the commentary to "General comments" for this appendix.

INTERNATIONAL CODE COUNCIL®
Copyright © 2015 ICC. ALL RIGHTS RESERVED. Accessed by David Dammon on Jun 21, 2017 12:30:52 PM pursuant to License Agreement with ICC. No further reproduction or distribution authorized. ANY UNAUTHORIZED REPRODUCTION OR DISTRIBUTION IS A VIOLATION OF THE FEDERAL COPYRIGHT ACT AND THE LICENSE AGREEMENT, AND SUBJECT TO CIVIL AND CRIMINAL PENALTIES THEREUNDER.

TABLE AG101.1
PLASTIC PIPING STANDARDS FOR VARIOUS APPLICATIONS[a,b]

APPLICATION	LOCATION	TYPE OF PLASTIC PIPING								
		ABS	CPVC	PE	PE-AL-PE	PE-RT	PEX	PEX-AL-PEX	PP	PVC
Central vacuum	System piping	—	—	—	—	—	—	—	—	ASTM F2158
Foundation drainage	System piping	ASTM F628	—	ASTM F405	—	—	—	—	—	ASTM D2665 ASTM D2729 ASTM D3034
Geothermal ground loop	System piping	—	ASTM D2846 ASTM F441 ASTM F442 ASTM F2855 CSA B137.6	ASTM D2239 ASTM D2737 ASTM D3035	ASTM F1282	ASTM F2623 ASTM F2769	ASTM F876 CSA B137.5	ASTM F1281	ASTM F2389 CSA B137.11	ASTM D1785 ASTM D2241 CSA B137.3
	Loop piping	—	—	ASTM D2239 ASTM D2737 ASTM D3035 NSF 358-1	ASTM F1282	ASTM F2623 ASTM F2769	ASTM F876 CSA B137.5	—	ASTM F2389 CSA B137.11	—
Gray water	Nonpressure distribution/ collection	ASTM F628	—	ASTM D2239 ASTM D2737 ASTM D3035 ASTM F2306	—	—	—	—	ASTM F2389 CSA B137.11	ASTM D1785 ASTM D2729 ASTM D2949 ASTM D3034 ASTM F891 ASTM F1760 CSA B137.3

(continued)

INTERNATIONAL CODE COUNCIL®
Copyright © 2015 ICC. ALL RIGHTS RESERVED. Accessed by David Dammon on Jun 21, 2017 12:30:52 PM pursuant to License Agreement with ICC. No further reproduction or distribution authorized. ANY UNAUTHORIZED REPRODUCTION OR DISTRIBUTION IS A VIOLATION OF THE FEDERAL COPYRIGHT ACT AND THE LICENSE AGREEMENT, AND SUBJECT TO CIVIL AND CRIMINAL PENALTIES THEREUNDER.

TABLE AG101.1—continued
PLASTIC PIPING STANDARDS FOR VARIOUS APPLICATIONS[a,b]

APPLICATION	LOCATION	TYPE OF PLASTIC PIPING								
		ABS	CPVC	PE	PE-AL-PE	PE-RT	PEX	PEX-AL-PEX	PP	PVC
Gray water	Pressure/ distribution	—	ASTM D2846 ASTM F441 ASTM F442 ASTM F2855 CSA B137.6	ASTM D2239 ASTM D2737 ASTM D3035	ASTM F1282	ASTM F2623 ASTM F2769	ASTM F876 CSA B137.5	ASTM F1281	ASTM F2389 CSA B137.11	ASTM D1785 ASTM D2241 CSA B137.3
Radiant cooling	Loop piping	—	ASTM D2846 ASTM F441 ASTM F442 ASTM F2855	ASTM D2239 ASTM D2737 ASTM D3035	ASTM F1282	ASTM F2623 ASTM F2769	ASTM F876 CSA B137.5	ASTM F1281	ASTM F2389 CSA B137.11	—
Radiant heating	Loop piping	—	ASTM D2846 ASTM F441 ASTM F442 ASTM F2855	—	ASTM F1282	ASTM F2623 ASTM F2769	ASTM F876 CSA B137.5	ASTM F1281	ASTM F2389 CSA B137.11	—
Rainwater harvesting	Nonpressure/ collection	ASTM F628	—	ASTM F1901	—	—	—	—	ASTM F2389 CSA B137.11	ASTM D1785 ASTM D2729 ASTM D2949 ASTM F891 ASTM F1760 CSA B137.3
	Pressure/ distribution	—	ASTM D2846 ASTM F441 ASTM F442 ASTM F2855 CSA B137.6	ASTM D2239 ASTM D2737 ASTM D3035	ASTM F1282	ASTM F2623 ASTM F2769	ASTM F876 CSA B137.5	ASTM F1281	ASTM F2389 CSA B137.11	ASTM D1785 ASTM D2241 CSA B137.3

(continued)

INTERNATIONAL CODE COUNCIL®
Copyright © 2015 ICC. ALL RIGHTS RESERVED. Accessed by David Dammon on Jun 21, 2017 12:30:52 PM pursuant to License Agreement with ICC. No further reproduction or distribution authorized. ANY UNAUTHORIZED REPRODUCTION OR DISTRIBUTION IS A VIOLATION OF THE FEDERAL COPYRIGHT ACT AND THE LICENSE AGREEMENT, AND SUBJECT TO CIVIL AND CRIMINAL PENALTIES THEREUNDER.

TABLE AG101.1—continued
PLASTIC PIPING STANDARDS FOR VARIOUS APPLICATIONS[a,b]

APPLICATION	LOCATION	TYPE OF PLASTIC PIPING								
		ABS	CPVC	PE	PE-AL-PE	PE-RT	PEX	PEX-AL-PEX	PP	PVC
Radon venting	System piping	ASTM F628	—	—	—	—	—	—	—	ASTM D1785 ASTM F891 ASTM F1760
Reclaimed water	Main to building service	—	ASTM D2846 ASTM F441 ASTM F442 ASTM F2855 CSA B137.6	ASTM D3035 AWWA C901 CSA B137.1	ASTM F1282	ASTM F2623 ASTM F2769	ASTM F876 AWWA C904 CSA B137.5	—	ASTM F2389 CSA B137.11	ASTM D1785 ASTM D2241 AWWA C905 CSA B137.3
	Pressure/ distribution/ irrigation	—	ASTM D2846 ASTM F441 ASTM F442 ASTM F2855 CSA B137.6	ASTM D2239 ASTM D2737 ASTM D3035	ASTM F1282	ASTM F2623 ASTM F2769	ASTM F876 CSA B137.5	ASTM F1281	ASTM F2389 AWWA C900 CSA B137.11	ASTM D1785 ASTM D2241 AWWA C900
Residential fire sprinklers[c]	Sprinkler piping	—	ASTM F441 ASTM F442 CSA B137.6 UL 1821	—	—	ASTM F2769	ASTM F876 CSA B137.5 UL 1821	—	ASTM F2389 CSA B137.11	—
Solar heating	Pressure/ distribution	—	ASTM D2846 ASTM F441 ASTM F442 ASTM F2855	—	—	ASTM F2623 ASTM F2769	ASTM F876 CSA B137.5	ASTM F1281	ASTM F2389 CSA B137.11	—

a. This table indicates manufacturing standards for plastic piping materials that are suitable for use in the applications indicated. Such applications support green and sustainable building practices. The system designer or the installer of piping shall verify that the piping chosen for an application complies with local codes and the recommendations of the manufacturer of the piping.
b. Fittings applicable for the piping shall be as recommended by the manufacturer of the piping.
c. Piping systems for fire sprinkler applications shall be listed for the application.

❖ See the commentary to "General comments" for this appendix.

INTERNATIONAL CODE COUNCIL®
Copyright © 2015 ICC. ALL RIGHTS RESERVED. Accessed by David Dammon on Jun 21, 2017 12:30:52 PM pursuant to License Agreement with ICC. No further reproduction or distribution authorized. ANY UNAUTHORIZED REPRODUCTION OR DISTRIBUTION IS A VIOLATION OF THE FEDERAL COPYRIGHT ACT AND THE LICENSE AGREEMENT, AND SUBJECT TO CIVIL AND CRIMINAL PENALTIES THEREUNDER.

SECTION AG102
REFERENCED STANDARDS

AG102.1 General.

ASTM

F1760—01(2011)	Standard Specification for Coextruded Poly (Vinyl Chloride) (PVC) Non-Pressure Plastic Pipe Having Reprocessed-Recycled Content
F1901—10	Standard Specification for Polyethylene (PE) Pipe and Fittings for Roof Drain Systems
F2158—08	Standard Specification for Residential Central-Vacuum Tube and Fittings
F2306—08	12" to 60" Annular Corrugated Profile-wall Polyethylene (PE) Pipe and Fittings for Gravity Flow Storm Sewer and Sub-surface Drainage Applications

AWWA

900—07	Polyvinyl chloride (PVC) Pressure Pipe and Fabricated Fittings, 4 in. through 12 in. (350 mm through 1200 mm), for Water Transmission and Distribution
905—10	Polyvinyl chloride (PVC) Pressure Pipe and Fabricated Fittings, 14 in. through 48 in. (100 mm through 300 mm)

UL

1821—2011	Standard for Thermoplastic Sprinkler Pipe and Fittings for Fire Protection Service

INTERNATIONAL CODE COUNCIL®
Copyright © 2015 ICC. ALL RIGHTS RESERVED. Accessed by David Dammon on Jun 21, 2017 12:30:52 PM pursuant to License Agreement with ICC. No further reproduction or distribution authorized. ANY UNAUTHORIZED REPRODUCTION OR DISTRIBUTION IS A VIOLATION OF THE FEDERAL COPYRIGHT ACT AND THE LICENSE AGREEMENT, AND SUBJECT TO CIVIL AND CRIMINAL PENALTIES THEREUNDER.

INTERNATIONAL CODE COUNCIL®

Copyright © 2015 ICC. ALL RIGHTS RESERVED. Accessed by David Dammon on Jun 21, 2017 12:30:52 PM pursuant to License Agreement with ICC. No further reproduction or distribution authorized. ANY UNAUTHORIZED REPRODUCTION OR DISTRIBUTION IS A VIOLATION OF THE FEDERAL COPYRIGHT ACT AND THE LICENSE AGREEMENT, AND SUBJECT TO CIVIL AND CRIMINAL PENALTIES THEREUNDER.

Appendix H: Patio Covers

(The provisions contained in this appendix are not mandatory unless specifically referenced in the adopting ordinance.)

General Comments

Patio covers and similar structures are regulated under the general provisions of the code unless this appendix chapter is adopted to address their design and construction. The provisions of this appendix address several specific areas where the general criteria of the code would establish more stringent requirements. The floor area below the patio cover is viewed independently from the remainder of the dwelling unit, with only a limited number of provisions. This appendix sets forth the regulations and limitations for patio covers. Section AH101 establishes the scope of Appendix H and the limitations on the uses of patio covers. Sections AH103 and AH104 describe the limitations for structures designated as patio covers as well as the effect a patio cover has on light and ventilation, emergency escape and rescue, and egress requirements. Section AH105 establishes the structural requirements for patio structures, including design load and footings. Section AH106 addresses the construction of patio covers without footings. Section AH107 contains the requirements for aluminum screen enclosures in hurricane-prone regions.

Purpose

In many climates, the interior living space of a dwelling unit is extended to create an outdoor living area. At times, a separate structure is constructed to create an outdoor area that is protected from the environment. Such structures are patio covers, with a limited number of requirements as set forth by this appendix. The provisions address those uses permitted in patio cover structures, the minimum design loads to be assigned for structural purposes, and the effect of the patio cover on egress and emergency escape or rescue from sleeping rooms.

SECTION AH101 GENERAL

AH101.1 Scope. Patio covers shall conform to the requirements of Sections AH101 through AH106.

❖ This appendix chapter regulates the design and construction of patio covers that are accessory to residential dwelling units.

AH101.2 Permitted uses. Patio covers shall be permitted to be detached from or attached to *dwelling units*. Patio covers shall be used only for recreational, outdoor living purposes, and not as carports, garages, storage rooms or habitable rooms.

❖ A patio cover may be constructed as a freestanding structure or may be attached directly to a dwelling unit. In either case, the acceptable uses of the floor area beneath the patio cover are limited. This section allows a patio cover to be used for recreational use only, as an outdoor living area. A further provision specifically prohibits use of the area under a patio cover for vehicle parking, general storage or habitable space.

SECTION AH102 DEFINITION

AH102.1 General. The following word and term shall, for the purposes of this appendix, have the meaning shown herein.

❖ Definitions of terms are sometimes needed to help in clarifying code requirements. The purpose of including the definition of patio covers here is that the term is used in this appendix. Therefore, for convenience, the definition is provided here as well as in Chapter 2.

PATIO COVER. A structure with open or glazed walls that is used for recreational, outdoor living purposes associated with a dwelling unit.

❖ Patio covers are open structures. As such, the special rules provided in this appendix deal with the concerns related to patio covers while at the same time providing less stringent requirements.

SECTION AH103 EXTERIOR WALLS AND OPENINGS

AH 103.1 Enclosure walls. Enclosure walls shall be permitted to be of any configuration, provided the open or glazed area of the longer wall and one additional wall is equal to at least 65 percent of the area below a minimum of 6 feet, 8 inches (2032 mm) of each wall, measured from the floor. Openings shall be permitted to be enclosed with any of the following:

1. Insect screening.
2. Approved translucent or transparent plastic not more than 0.125 inch (3.2 mm) in thickness.
3. Glass conforming to the provisions of Section R308.
4. Any combination of the foregoing.

❖ It is common for a portion of the covered area to be enclosed by solid wall construction, with the remainder

INTERNATIONAL CODE COUNCIL®
Copyright © 2015 ICC. ALL RIGHTS RESERVED. Accessed by David Dammon on Jun 21, 2017 12:30:52 PM pursuant to License Agreement with ICC. No further reproduction or distribution authorized. ANY UNAUTHORIZED REPRODUCTION OR DISTRIBUTION IS A VIOLATION OF THE FEDERAL COPYRIGHT ACT AND THE LICENSE AGREEMENT, AND SUBJECT TO CIVIL AND CRIMINAL PENALTIES THEREUNDER.

of the enclosure provided by glazing or screening. This section indicates that the minimum opening length of 65 percent only need be provided at a height of 80 inches (2032 mm) and below. Insect screening, approved minimum $^1/_8$-inch (3.2 mm) plastic panels, and glazing materials in compliance with Section R308 are permitted as enclosure materials.

AH103.2 Light, ventilation and emergency egress. Exterior openings required for light and ventilation shall be permitted to open into a patio structure conforming to Section AH101, provided that the patio structure shall be unenclosed if such openings are serving as emergency egress or rescue openings from sleeping rooms. Where such exterior openings serve as an exit from the *dwelling unit*, the patio structure, unless unenclosed, shall be provided with exits conforming to the provisions of Section R311 of this code.

❖ A common type of patio cover is one that has one wall of the dwelling unit as the enclosure. This is acceptable, as long as adequate light and ventilation are brought into the building and emergency egress is not blocked. In addition, if this is the exit to the dwelling unit, then the patio enclosure must provide the exit as well. The sections of R311 apply, including proper width of the exit, stairs, and level surface of the means of egress.

Due to the general openness required of patio structures, it is permissible to have the exterior openings required for light and ventilation purposes by Section R303 open into a patio cover structure. If the exterior openings are also required for emergency escape or rescue by the provisions of Section R310, the patio cover structure cannot be enclosed. Therefore, the allowances for full enclosure by insect screening, light-transmitting plastics, or glazing are not applicable. In addition, where an exit passes through the patio cover structure, the structure must be either unenclosed or provided with at least one complying exit.

SECTION AH104
HEIGHT

AH104.1 Height. Patio covers are limited to one-story structures not exceeding 12 feet (3657 mm) in height.

❖ In order to provide requirements that are limited or less stringent applications of the requirements otherwise imposed by the code, patio covers are limited to a height to one story and 12 feet.

SECTION AH105
STRUCTURAL PROVISIONS

AH105.1 Design loads. Patio covers shall be designed and constructed to sustain, within the stress limits of this code, all dead loads plus a vertical live load of not less than 10 pounds per square foot (0.48 kN/m^2), except that snow loads shall be used where such snow loads exceed this minimum. Such covers shall be designed to resist the minimum wind loads set forth in Section R301.2.1.

❖ In addition to the dead loads imposed on the structure, a minimum design live load of 10 pounds per square foot (0.48 kN/m^2) is to be used for vertical loading on patio covers. If the snow load provides for a higher design load, then it must be used as the design criteria. Any wind loads must also be considered in the design and construction of a patio cover.

AH105.2 Footings. In areas with a frostline depth of zero as specified in Table R301.2(1), a patio cover shall be permitted to be supported on a slab-on-*grade* without footings, provided the slab conforms to the provisions of Section R506, is not less than 3.5 inches (89 mm) thick and the columns do not support live and dead loads in excess of 750 pounds (3.34 kN) per column.

❖ Footings supporting a patio cover must extend below the frostline depth established by the jurisdiction. Where the frostline does not extend below ground level and is established as zero, the patio cover structure need only be supported by a slab on grade. Use of a concrete slab without footings is only permitted if the slab is at least 3.5 inches (89 mm) thick and in compliance with Section R506. In addition, the maximum loading supported by each column is limited to 750 pounds (3.34 kN), including both live loads and dead loads.

SECTION AH106
SPECIAL PROVISIONS FOR ALUMINUM SCREEN ENCLOSURES IN HURRICANE-PRONE REGIONS

AH106.1 General. Screen enclosures in *hurricane-prone regions* shall be in accordance with the provisions of this section.

❖ Because screened enclosures are open structures and many of them have solid roofs, they must be designed to withstand the wind loads in hurricane-prone regions of the country. Sections AH106.1.1 through AH106.5 provide guidance and minimum requirements for the design of these enclosures.

AH106.1.1 Habitable spaces. Screen enclosures shall not be considered *habitable spaces*.

❖ Screened enclosures are classified as nonhabitable spaces to avoid having to comply with some of the requirements for habitable spaces such as space heating. Obviously, if the owner encloses the space at a later date, compliance with all applicable code provisions for habitable spaces would be required.

AH106.1.2 Minimum ceiling height. Screen enclosures shall have a ceiling height of not less than 7 feet (2134 mm).

❖ The minimum ceiling height of 7 feet (2134 mm) is necessary because these enclosures are typically an addition to a house, and tying an enclosure into an existing roof while maintaining an adequate slope for run-off would make a $7^1/_2$-foot (2286 mm) ceiling difficult to

INTERNATIONAL CODE COUNCIL®
Copyright © 2015 ICC. ALL RIGHTS RESERVED. Accessed by David Dammon on Jun 21, 2017 12:30:52 PM pursuant to License Agreement with ICC. No further reproduction or distribution authorized. ANY UNAUTHORIZED REPRODUCTION OR DISTRIBUTION IS A VIOLATION OF THE FEDERAL COPYRIGHT ACT AND THE LICENSE AGREEMENT, AND SUBJECT TO CIVIL AND CRIMINAL PENALTIES THEREUNDER.

achieve. The code already permits other spaces such as bathrooms and kitchens to have 7-foot (2134 mm) ceilings, so applying this exception to screened enclosures, which are classified as nonhabitable, is reasonable.

AH106.2 Definition. The following word and term shall, for the purposes of this appendix, have the meaning shown herein.

SCREEN ENCLOSURE. A building or part thereof, in whole or in part self-supporting, and having walls of insect screening, and a roof of insect screening, plastic, aluminum or similar lightweight material.

❖ The definition of screen enclosures is provided to clarify that they do not have to be completely self-supporting and that the roof may be of screen or a lightweight, solid material such as aluminum.

AH106.3 Screen enclosures. Screen enclosures shall comply with Sections AH106.3.1 and AH106.3.2.

AH106.3.1 Thickness. Actual wall thickness of extruded aluminum members shall be not less than 0.040 inch (1.02 mm).

❖ This section specifies a minimum acceptable wall thickness for extruded aluminum members to provide the structural integrity of the screened enclosure during high windload periods.

AH106.3.2 Density. Screen density shall be not more than 20 threads per inch by 20 threads per inch mesh.

❖ This section specifies a maximum screen mesh density of 20 threads per inch by 20 threads per inch. A more dense screen mesh could develop more resistance to wind and result in failure of the structure due to increased loads. The minimum screen thread count is 16 per inch for window openings in the *International Property Maintenance Code*® (IPMC®).

AH106.4 Design. The structural design of screen enclosures shall comply with Sections AH106.4.1 through AH106.4.3.

AH106.4.1 Wind load. Structural members supporting screen enclosures shall be designed to support the minimum wind loads given in Tables AH106.4(1) and AH106.4(2) for the ultimate design wind speed, V_{ult}, determined from Figure AH106.4.1. Where any value is less than 10 pounds per square foot (psf) (0.479 kN/m^2) use 10 pounds per square foot (0.479 kN/m^2).

❖ The ultimate design wind speed used for design is determined from Table R301.2(1) or Figure R301.2(4). Wind exposure category is established on a site-specific basis in accordance with Section R301.2.1.4. Once the wind speed and exposure category is determined, the wind load from Table AH106.4(1), adjusted for height and exposure in accordance with Table AH106.4(2), is used to design the structural members of the screen enclosure.

TABLE AH106.4(1)
DESIGN WIND PRESSURES FOR SCREEN ENCLOSURE FRAMING[a, b, e, f, g, h]

LOAD CASE	WALL	ULTIMATE DESIGN WIND SPEED, V_{ult} (mph)									
		100	105	110	120	130	140	150	160	170	180
		Exposure Category B Design Pressure (psf)									
A[c]	Windward and leeward walls (flow thru) and windward wall (nonflow thru) L/W = 0-1	6	7	8	9	11	13	14	16	18	21
A[c]	Windward and leeward walls (flow thru) and windward wall (nonflow thru) L/W = 2	7	8	9	11	12	14	16	19	21	24
B[d]	Windward: Nongable roof	9	10	11	13	15	18	21	23	26	30
B[d]	Windward: Gable roof	11	13	14	16	19	22	26	29	33	37
	ROOF										
All[e]	Roof-screen	2	3	3	3	4	4	5	6	7	7
All[e]	Roof-solid	7	8	8	10	12	13	15	18	20	22

For SI: 1 mile per hour = 0.44 m/s, 1 pound per square foot = 0.0479 kPa, 1 foot = 304.8 mm.

a. Design pressure shall be not less than 10 psf in accordance with Section AH106.4.1.

b. Loads are applicable to screen enclosures with a mean roof height of 30 feet or less in Exposure B. For screen enclosures of different heights or exposure, the pressures given shall be adjusted by multiplying the table pressure by the adjustment factor given in Table AH106.4(2).

c. For Load Case A flow thru condition, the pressure given shall be applied simultaneously to both the upwind and downwind screen walls acting in the same direction as the wind. The structure shall also be analyzed for wind coming from the opposite direction. For the nonflow thru condition, the screen enclosure wall shall be analyzed for the load applied acting toward the interior of the enclosure.

d. For Load Case B, the table pressure multiplied by the projected frontal area of the screen enclosure is the total drag force, including drag on screen surfaces parallel to the wind, that must be transmitted to the ground. Use Load Case A for members directly supporting the screen surface perpendicular to the wind. Load Case B loads shall be applied only to structural members that carry wind loads from more than one surface.

e. The roof structure shall be analyzed for the pressure given occurring both upward and downward.

f. Table pressures are MWFRS loads. The design of solid roof panels and their attachments shall be based on component and cladding loads for enclosed or partially enclosed structures as appropriate.

g. Table pressures apply to 20-inch by 20-inch by 0.013-inch mesh screen. For 18-inch by 14-inch by 0.013-inch mesh screen, pressures on screen surfaces shall be permitted to be multiplied by 0.88. For screen densities greater than 20 inches by 20 inches by 0.013 inch, pressures for enclosed buildings shall be used.

h. Linear interpolation shall be permitted.

INTERNATIONAL CODE COUNCIL®
Copyright © 2015 ICC. ALL RIGHTS RESERVED. Accessed by David Dammon on Jun 21, 2017 12:30:52 PM pursuant to License Agreement with ICC. No further reproduction or distribution authorized. ANY UNAUTHORIZED REPRODUCTION OR DISTRIBUTION IS A VIOLATION OF THE FEDERAL COPYRIGHT ACT AND THE LICENSE AGREEMENT, AND SUBJECT TO CIVIL AND CRIMINAL PENALTIES THEREUNDER.

TABLE AH106.4(2)
ADJUSTMENT FACTOR FOR
BUILDING HEIGHT AND EXPOSURE

MEAN ROOF HEIGHT (feet)	EXPOSURE		
	B	C	D
15	1.00	1.21	1.47
20	1.00	1.29	1.55
25	1.00	1.35	1.61
30	1.00	1.40	1.66
35	1.05	1.45	1.70
40	1.09	1.49	1.74
45	1.12	1.53	1.78
50	1.16	1.56	1.81
55	1.19	1.59	1.84
60	1.22	1.62	1.87

For SI: 1 foot = 304.8 mm.

AH106.4.2 Deflection limit. For members supporting screen surfaces only, the total load deflection shall not exceed *l*/60. Screen surfaces shall be permitted to include not more than 25-percent solid flexible finishes.

❖ The deflection limit of l/60 is from the Aluminum Association, Standard ADM - 1, *Aluminum Design Manual*. The limit on solid flexible finishes that is permitted to be included in screen surfaces addresses elements such as kick plates.

AH106.4.3 Roof live load. The roof live load shall be not less than 10 psf (0.479 kN/m^2).

❖ The 10 psf minimum roof live load is the same as the roof live load for patio covers as specified in the IBC.

AH106.5 Footings. In areas with a frost line depth of zero, a screen enclosure shall be permitted to be supported on a concrete slab-on-*grade* without footings, provided the slab conforms to the provisions of Section R506, is not less than $3^1/_2$ inches (89 mm) thick and the columns do not support loads in excess of 750 pounds (3.36 kN) per column.

❖ This allowance, which permits the enclosures to be constructed without foundations, is due to the minor value of these structures and the lack of any substantive safety issues involved. This provision addresses the exemption of footings in regard to frost penetration; it does not address allowable load-bearing capacity of the soil.

Bibliography

The following resource materials were used in the preparation of the commentary for this appendix of the code.

IPMC–15 *International Property Maintenance Code.* Washington, DC: International Code Council, 2015.

ASCE 7–05, *Minimum Design Loads for Buildings and Other Structures.* Reston, VA: American Society of Civil Engineers, 2005.

Reinhold, T. A., J. D. Belcher, C. O. Everly and David Miller. *Wind Loads on Screen Enclosures.* Clemson, SC: Department of Civil Engineering, Clemson University, 2000.

INTERNATIONAL CODE COUNCIL®
Copyright © 2015 ICC. ALL RIGHTS RESERVED. Accessed by David Dammon on Jun 21, 2017 12:30:52 PM pursuant to License Agreement with ICC. No further reproduction or distribution authorized. ANY UNAUTHORIZED REPRODUCTION OR DISTRIBUTION IS A VIOLATION OF THE FEDERAL COPYRIGHT ACT AND THE LICENSE AGREEMENT, AND SUBJECT TO CIVIL AND CRIMINAL PENALTIES THEREUNDER.

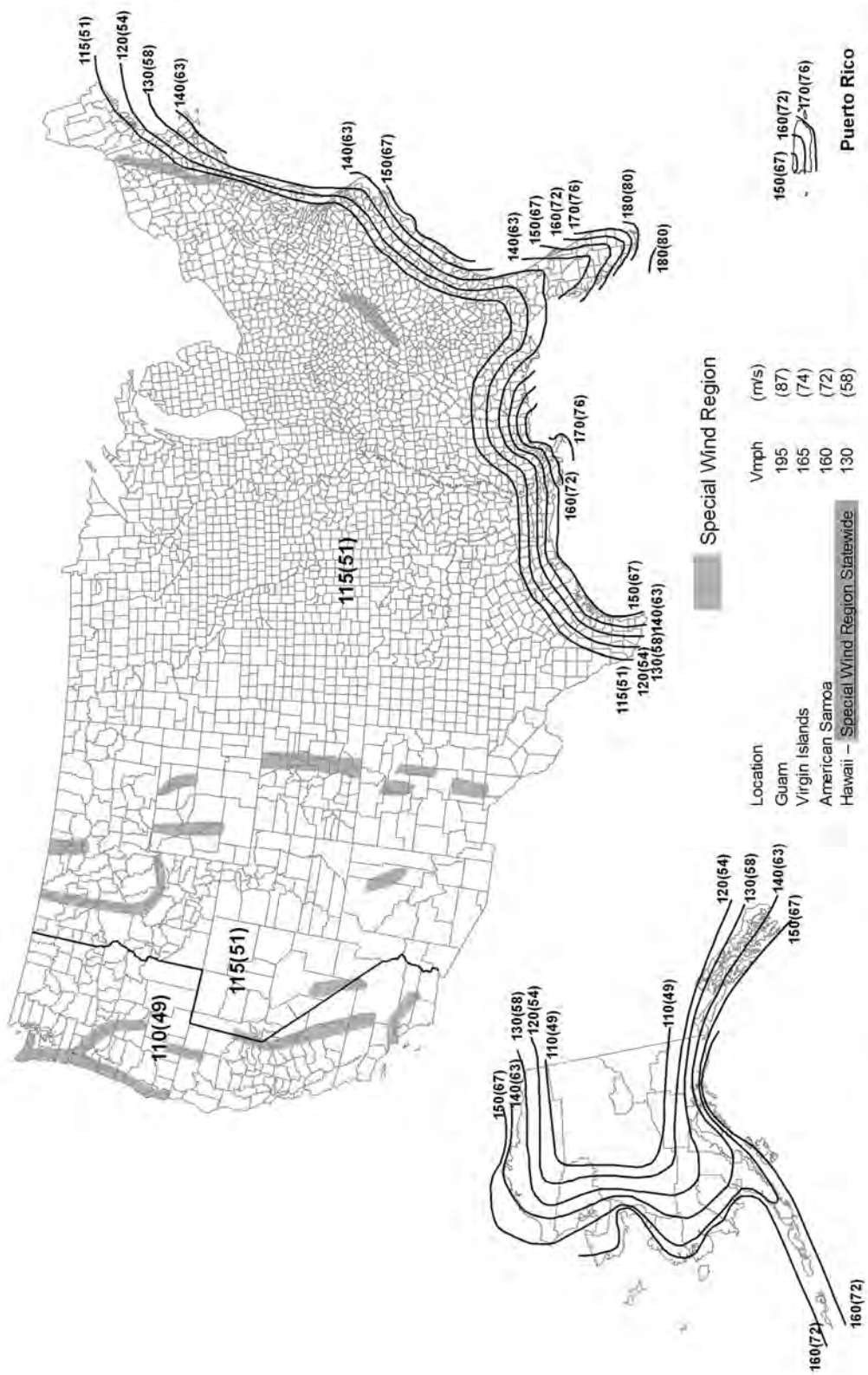

Notes:
1. Values are nominal design 3-second gust wind speeds in miles per hour (m/s) at 33 ft (10m) above ground for Exposure C category.
2. Linear interpolation between contours is permitted.
3. Islands and coastal areas outside the last contour shall use the last wind speed contour of the coastal area.
4. Mountainous terrain, gorges, ocean promontories, and special wind regions shall be examined for unusual wind conditions.
5. Wind speeds correspond to approximately a 7% probability of exceedance in 50 years (Annual Exceedance Probability = 0.00143, MRI = 700 Years).

FIGURE AH106.4.1
ULTIMATE DESIGN WIND SPEEDS FOR PATIO COVERS AND SCREEN ENCLOSURES

INTERNATIONAL CODE COUNCIL®
Copyright © 2015 ICC. ALL RIGHTS RESERVED. Accessed by David Dammon on Jun 21, 2017 12:30:52 PM pursuant to License Agreement with ICC. No further reproduction or distribution authorized. ANY UNAUTHORIZED REPRODUCTION OR DISTRIBUTION IS A VIOLATION OF THE FEDERAL COPYRIGHT ACT AND THE LICENSE AGREEMENT, AND SUBJECT TO CIVIL AND CRIMINAL PENALTIES THEREUNDER.

INTERNATIONAL CODE COUNCIL®

Copyright © 2015 ICC. ALL RIGHTS RESERVED. Accessed by David Dammon on Jun 21, 2017 12:30:52 PM pursuant to License Agreement with ICC. No further reproduction or distribution authorized. ANY UNAUTHORIZED REPRODUCTION OR DISTRIBUTION IS A VIOLATION OF THE FEDERAL COPYRIGHT ACT AND THE LICENSE AGREEMENT, AND SUBJECT TO CIVIL AND CRIMINAL PENALTIES THEREUNDER.

Appendix I:
Private Sewage Disposal

(The provisions contained in this appendix are not mandatory unless specifically referenced in the adopting ordinance.)

SECTION AI101
GENERAL

AI101.1 Scope. Private sewage disposal systems shall conform to the *International Private Sewage Disposal Code.*

INTERNATIONAL CODE COUNCIL®
Copyright © 2015 ICC. ALL RIGHTS RESERVED. Accessed by David Dammon on Jun 21, 2017 12:30:52 PM pursuant to License Agreement with ICC. No further reproduction or distribution authorized. ANY UNAUTHORIZED REPRODUCTION OR DISTRIBUTION IS A VIOLATION OF THE FEDERAL COPYRIGHT ACT AND THE LICENSE AGREEMENT, AND SUBJECT TO CIVIL AND CRIMINAL PENALTIES THEREUNDER.

INTERNATIONAL CODE COUNCIL®

Copyright © 2015 ICC. ALL RIGHTS RESERVED. Accessed by David Dammon on Jun 21, 2017 12:30:52 PM pursuant to License Agreement with ICC. No further reproduction or distribution authorized. ANY UNAUTHORIZED REPRODUCTION OR DISTRIBUTION IS A VIOLATION OF THE FEDERAL COPYRIGHT ACT AND THE LICENSE AGREEMENT, AND SUBJECT TO CIVIL AND CRIMINAL PENALTIES THEREUNDER.

Appendix J: Existing Buildings and Structures

(The provisions contained in this appendix are not mandatory unless specifically referenced in the adopting ordinance.)

General Comments

Appendix J contains the provisions for the repair, renovation, alteration and reconstruction of existing buildings and structures that are within the scope of the International Residential Code® (IRC®). The appendix, when adopted, includes or refers to all code requirements for existing buildings. The format of the appendix readily identifies the alternative methods of code compliance, developed to provide consistency with the purpose of the code.

Section AJ101 sets forth the intent and purpose of the appendix. Section AJ102 contains methods to obtain compliance with the appendix. Section AJ103 establishes the use of a preliminary meeting to discuss the proposed work. Section AJ104 sets forth the potential means for investigating and evaluating an existing building. Section AJ105 requires the identification of a work area on the permit. Section AJ201 establishes definitions for specific terms used in the appendix. Section AJ301 regulates repairs of existing buildings and structures. Section AJ401 addresses renovations of existing buildings and structures. Section AJ501 regulates alterations to existing buildings and structures, and Section AJ601 establishes requirements for reconstruction work in existing buildings and structures.

Purpose

Many existing residential buildings do not meet the code requirements that currently apply to new construction. Although these buildings are potentially salvageable, rehabilitation is often cost prohibitive because the building may not comply with all aspects of new construction requirements. At the same time, it is necessary to regulate construction activity in existing buildings that undergo repair, renovation, alteration, or reconstruction. Such activity represents an opportunity for the jurisdiction to determine both that new work conforms to the code (or the intent of the code) and that existing conditions either remain at their current level of compliance or are improved. To accomplish this objective and to make the rehabilitation process more available, this chapter allows for a controlled departure from full code compliance without compromising minimum life safety, fire safety, structural and environmental features of the rehabilitated building.

SECTION AJ101 PURPOSE AND INTENT

AJ101.1 General. The purpose of these provisions is to encourage the continued use or reuse of legally existing buildings and structures. These provisions are intended to permit work in existing buildings that is consistent with the purpose of this code. Compliance with these provisions shall be deemed to meet the requirements of this code.

❖ This section allows for residential structures to continue their existing use while permitting repair, renovation, alteration or reconstruction work that may not be in full compliance with the general provisions of the code. Although strict compliance with the general requirements in the code may be modified by the provisions of this chapter, the resultant work will be consistent with the intent and purpose criteria set forth in Chapter 1. As a rule, the general requirements of the code are applicable unless modified by the provisions of this appendix. Upon compliance with the provisions of this appendix, the work meets the requirements of the code.

AJ101.2 Classification of work. For purposes of this appendix, work in existing buildings shall be classified into the categories of repair, renovation, *alteration* and reconstruction. Specific requirements are established for each category of work in these provisions.

❖ This appendix addresses four unique and specific types of work that may occur on an existing residential structure. Each type is regulated independently based on the provisions of the chapter. Repairs, where work is performed to restore a building element or system back to working order, are regulated by Section AJ301. Renovation, the act of restoring a building element to its original condition, is addressed in Section AJ401. Section AJ501 deals with alterations, where elements, components or systems of the building are modified using new materials and methods, and Section AJ601 addresses reconstruction of existing building elements. Although these areas seem to overlap in their scope, each has unique characteristics that are identified and regulated by this appendix.

INTERNATIONAL CODE COUNCIL®
Copyright © 2015 ICC. ALL RIGHTS RESERVED. Accessed by David Dammon on Jun 21, 2017 12:30:52 PM pursuant to License Agreement with ICC. No further reproduction or distribution authorized. ANY UNAUTHORIZED REPRODUCTION OR DISTRIBUTION IS A VIOLATION OF THE FEDERAL COPYRIGHT ACT AND THE LICENSE AGREEMENT, AND SUBJECT TO CIVIL AND CRIMINAL PENALTIES THEREUNDER.

AJ101.3 Multiple categories of work. Work of more than one category shall be part of a single work project. Related work permitted within a 12-month period shall be considered to be a single work project. Where a project includes one category of work in one building area and another category of work in a separate and unrelated area of the building, each project area shall comply with the requirements of the respective category of work. Where a project with more than one category of work is performed in the same area or in related areas of the building, the project shall comply with the requirements of the more stringent category of work.

❖ It is not uncommon for two or more types of construction activity to be taking place at the same time, as part of a single work project. Under such conditions, there are two situations that may occur: 1. Where the categories of work are isolated in different areas of the building and unrelated to each other, each project area is regulated by the specific requirements of the work being performed; or 2. Where the multiple categories of work occur in the same project area, the more restrictive provisions of the categories apply.

SECTION AJ102
COMPLIANCE

AJ102.1 General. Regardless of the category of work being performed, the work shall not cause the structure to become unsafe or adversely affect the performance of the building; shall not cause an existing mechanical or plumbing system to become unsafe, hazardous, insanitary or overloaded; and unless expressly permitted by these provisions, shall not make the building any less compliant with this code or to any previously *approved* alternative arrangements than it was before the work was undertaken.

❖ The general limitation on any work done under the provisions of this chapter is that the level of safety, health and public welfare of the existing building must not be reduced by any work being performed. In the case of structural stability, the existing degree of structural strength must be maintained or increased. In general terms, the structure is not to be made unsafe. This requirement can be broadly interpreted because its application can vary case by case. To the extent that existing mechanical and plumbing systems are involved, the level of protection or sanitation must not be reduced.

Where this appendix chapter does not specifically modify the general provisions of the code, such provisions are applicable and conformance is required. Only in those areas where this chapter addresses specific materials or methods for specific elements, components or systems do the general code requirements not apply.

AJ102.2 Requirements by category of work. Repairs shall conform to the requirements of Section AJ301. Renovations shall conform to the requirements of Section AJ401. *Alterations* shall conform to the requirements of Section AJ501 and the requirements for renovations. Reconstructions shall conform to the requirements of Section AJ601 and the requirements for *alterations* and renovations.

❖ Depending on the category of work being performed, conformance to one or more groups of requirements is necessary. If the work is simply a repair job or a renovation, only the provisions of Section AJ301 or AJ401, respectively, are applicable. If the building is to undergo an alteration, the requirements of both Sections AJ401 and AJ501 must be applied. Section AJ601 must be used for reconstruction work.

AJ102.3 Smoke detectors. Regardless of the category of work, smoke detectors shall be provided where required by Section R314.3.1.

❖ The benefit of smoke detectors in residential buildings is unquestioned. Occupants of such buildings spend about one-third of the day asleep. The potential for a fire getting out of control before the occupants are awakened is quite probable, as reflected in statistics that indicate residential fire deaths far exceed those of any other building classification. As a result, the general provisions of Section R313.2.1 for smoke alarms are applicable in all cases and for all categories of work. This includes specific requirements where a dwelling unit undergoes interior alterations or repairs.

AJ102.4 Replacement windows. Regardless of the category of work, where an existing window, including the sash and glazed portion, or safety glazing is replaced, the replacement window or safety glazing shall comply with the requirements of Sections AJ102.4.1 through AJ102.4.3, as applicable.

❖ Replacement windows must comply with the applicable provisions for energy efficiency, safety glazing and emergency escape and rescue openings contained in Sections AJ102.4.1, AJ102.4.2 and AJ102.4.3.

AJ102.4.1 Energy efficiency. Replacement windows shall comply with the requirements of Chapter 11.

❖ Under all circumstances, a replacement window must comply with the energy efficiency provisions of Chapter 11. The provision is applicable only where the entire window is changed out, including the sash and glazing. Where such conditions exist, the new window is to have a maximum fenestration *U*-factor in compliance with Chapter 11. If the replacement window is in a hazardous location, safety glazing complying with Section R308 must be installed.

AJ102.4.2 Safety glazing. Replacement glazing in hazardous locations shall comply with the safety glazing requirements of Section R308.

❖ Just as for windows used in new construction, the glazing in replacement windows must comply with the safety glazing requirements of Section R308.

AJ102.4.3 Emergency escape and rescue openings. Where windows are required to provide emergency escape and rescue openings, replacement windows shall be exempt from the maximum sill height requirements of Section R310.1 and the

INTERNATIONAL CODE COUNCIL®
Copyright © 2015 ICC. ALL RIGHTS RESERVED. Accessed by David Dammon on Jun 21, 2017 12:30:52 PM pursuant to License Agreement with ICC. No further reproduction or distribution authorized. ANY UNAUTHORIZED REPRODUCTION OR DISTRIBUTION IS A VIOLATION OF THE FEDERAL COPYRIGHT ACT AND THE LICENSE AGREEMENT, AND SUBJECT TO CIVIL AND CRIMINAL PENALTIES THEREUNDER.

requirements of Sections R310.1.1, R310.1.2, R310.1.3 and R310.2 provided that the replacement window meets the following conditions:

1. The replacement window is the manufacturer's largest standard size window that will fit within the existing frame or existing rough opening. The replacement window shall be permitted to be of the same operating style as the existing window or a style that provides for an equal or greater window opening area than the existing window.
2. The replacement window is not part of a change of occupancy.
3. Window opening control devices complying with ASTM F2090 shall be permitted for use on windows required to provide emergency escape and rescue openings.

❖ The emergency escape and rescue opening requirements for replacement windows are not as stringent as those for windows that are used in new construction. Most of these differences are due to the fact that it is often difficult and cost prohibitive to change the opening size of windows in order to comply with current opening requirements that may differ significantly from the code under which a dwelling was originally built. Replacement windows are not required to comply with the sill height requirements of Section R310.1 and the requirements of Sections R310.1.2, R310.1.3 and R310.2 if all of the provisions of Items 1 through 3 to Section AJ102.4.3 are satisfied.

AJ102.4.4 Window control devices. Where window fall prevention devices complying with ASTM F2090 are not provided, window opening control devices complying with ASTM F2090 shall be installed where an existing window is replaced and where all of the following apply to the replacement window:

1. The window is operable.
2. The window replacement includes replacement of the sash and the frame.
3. The top of the sill of the window opening is at a height less than 24 inches (610 mm) above the finished floor.
4. The window will permit openings that will allow passage of a 4-inch-diameter (102 mm) sphere where the window is in its largest opened position.
5. The vertical distance from the top of the sill of the window opening to the finished grade or other surface below, on the exterior of the building, is greater than 72 inches (1829 mm).

The window opening control device, after operation to release the control device allowing the window to fully open, shall not reduce the minimum net clear opening area of the window unit.

❖ Similar to the provisions for replacement windows related to emergency escape and rescue opening requirements, the provisions for replacement windows as related to window control devices are not as stringent as those for windows that are used in new construction. This is due to the fact that it is often difficult and cost prohibitive to change the opening size of windows in order to comply with current opening requirements that may differ significantly from the code under which a dwelling was originally built. Replacement window installations are required to comply with this section only if all of the items listed in Section AJ102.4.4 are applicable. Put another way, if the one or more of the items listed are not applicable for a particular replacement window installation, a window control device is not required to be installed.

AJ102.5 Flood hazard areas. Work performed in existing buildings located in a flood hazard area as established by **Table** R301.2(1) shall be subject to the provisions of Section R105.3.1.1.

❖ Long-term reduction in exposure to flood hazards is one of the reasons floodplain development is regulated. If additions, alterations or repairs of an existing building, including repair of damage from any cause, constitute substantial improvement or repair of substantial damage, the existing building is to be brought into compliance as required in Section R105.3.1.1 (see commentary, Section R105.3.1.1). Improvements are deemed to be "substantial" if the cost, including the value of labor as well as donated labor and materials, equals or exceeds 50 percent of the market value of the building before the improvements are made. Damage is considered to be "substantial" where the cost of restoring a damaged building to its predamage condition equals or exceeds 50 percent of the market value of the building before the damage occurred (for additional guidance, refer to FEMA P-259 and FEMA P-758).

AJ102.6 Equivalent alternatives. Work performed in accordance with the *International Existing Building Code* shall be deemed to comply with the provisions of this appendix. These provisions are not intended to prevent the use of any alternative material, alternative design or alternative method of construction not specifically prescribed herein, provided that any alternative has been deemed to be equivalent and its use authorized by the *building official*.

❖ Work that complies with the *International Existing Building Code*© (IEBC®) is deemed to comply with this appendix.

A comprehensive regulatory document such as a construction code cannot envision and then address all future innovations in the industry. As a result, the code must be applicable to, and provide a basis for, the approval of a number of newly developed, innovative materials, systems and methods for which no code text or referenced standards yet exist. The building official is expected to exercise sound technical judgment in accepting materials, systems or methods that, while not anticipated by the code text, can be demonstrated to offer equivalent performance. By virtue of this section, the code regulates new and innovative construction practices while contributing to the safety of building occupants.

INTERNATIONAL CODE COUNCIL®
Copyright © 2015 ICC. ALL RIGHTS RESERVED. Accessed by David Dammon on Jun 21, 2017 12:30:52 PM pursuant to License Agreement with ICC. No further reproduction or distribution authorized. ANY UNAUTHORIZED REPRODUCTION OR DISTRIBUTION IS A VIOLATION OF THE FEDERAL COPYRIGHT ACT AND THE LICENSE AGREEMENT, AND SUBJECT TO CIVIL AND CRIMINAL PENALTIES THEREUNDER.

AJ102.7 Other alternatives. Where compliance with these provisions or with this code as required by these provisions is technically infeasible or would impose disproportionate costs because of construction or dimensional difficulties, the building official shall have the authority to accept alternatives. These alternatives include materials, design features and operational features.

❖ The building official may accept alternative solutions involving materials, design features or operational features where compliance with the code provisions creates practical difficulties. A practical difficulty, in this context, means it is technically infeasible to meet the code requirements, or the costs involved in providing code compliance are highly disproportionate to the overall cost of the work. It is up to the building official to evaluate the legitimacy of these two exemptions from the general requirements. This section identifies construction or dimensional difficulties as a basis for using these modifications.

AJ102.8 More restrictive requirements. Buildings or systems in compliance with the requirements of this code for new construction shall not be required to comply with any more restrictive requirement of these provisions.

❖ Where the existing building is in compliance with the requirements of the code for new construction, it is not necessary to comply with any higher level requirements as set forth in this appendix. If the work to be performed is in compliance with the general provisions of the code, as would be required of a newly constructed building, there is no reason to require a higher level of performance for existing structures.

AJ102.9 Features exceeding code requirements. Elements, components and systems of existing buildings with features that exceed the requirements of this code for new construction, and are not otherwise required as part of *approved* alternative arrangements or deemed by the *building official* to be required to balance other building elements not complying with this code for new construction, shall not be prevented by these provisions from being modified as long as they remain in compliance with the applicable requirements for new construction.

❖ Unless used as a portion of an alternative solution as an equivalency, modifications to existing elements, components, or systems need only meet the requirements of the code for new construction. Even though the modification may actually reduce the previous level of compliance, the modification is acceptable if it does not reduce compliance to a level below that accepted for new work.

SECTION AJ103
PRELIMINARY MEETING

AJ103.1 General. If a building *permit* is required at the request of the prospective *permit* applicant, the *building official* or his or her designee shall meet with the prospective applicant to discuss plans for any proposed work under these provisions prior to the application for the *permit*. The purpose of this preliminary meeting is for the *building official* to gain an understanding of the prospective applicant's intentions for the proposed work, and to determine, together with the prospective applicant, the specific applicability of these provisions.

❖ Where the provisions of the code are performance provisions, such as those set forth in this appendix for existing buildings, the party or parties involved with the anticipated work must meet with the building official at the onset of the project to discuss any concerns or questions. Those issues that may be interpreted or applied in various ways must be addressed so that the position of the jurisdiction is understood.

This section indicates that the issues must be discussed prior to application for a building permit, with an emphasis on the scope of the work and the applicability of the code provisions for existing buildings. The effort should be cooperative, with input and discussion by both the building official and the potential permit applicant.

SECTION AJ104
EVALUATION OF AN EXISTING BUILDING

AJ104.1 General. The *building official* shall have the authority to require an existing building to be investigated and evaluated by a registered *design professional* in the case of proposed reconstruction of any portion of a building. The evaluation shall determine the existence of any potential nonconformities to these provisions, and shall provide a basis for determining the impact of the proposed changes on the performance of the building. The evaluation shall use the following sources of information, as applicable:

1. Available documentation of the existing building.
    1.1. Field surveys.
    1.2. Tests (nondestructive and destructive).
    1.3. Laboratory analysis.

Exception: Detached one- or two-family dwellings that are not irregular buildings under Section R301.2.2.2.5 and are not undergoing an extensive reconstruction shall not be required to be evaluated.

❖ It is possible that the nature of the reconstruction work requires an evaluation of the existing building by a registered design professional. Based on the investigation and evaluation of the existing conditions in the building or a portion thereof, the building official is able to analyze the work that must take place to comply with the provisions of the code. The need for an evaluation is determined by the building official based on each situation. In addition, the code recognizes that such an evaluation is unnecessary for single- or two-family dwelling units of conventional construction unless the building is undergoing a major reconstruction.

The evaluation should focus on those existing conditions that are not in conformance with the code and its intended purpose, as well as determining how the

INTERNATIONAL CODE COUNCIL®
Copyright © 2015 ICC. ALL RIGHTS RESERVED. Accessed by David Dammon on Jun 21, 2017 12:30:52 PM pursuant to License Agreement with ICC. No further reproduction or distribution authorized. ANY UNAUTHORIZED REPRODUCTION OR DISTRIBUTION IS A VIOLATION OF THE FEDERAL COPYRIGHT ACT AND THE LICENSE AGREEMENT, AND SUBJECT TO CIVIL AND CRIMINAL PENALTIES THEREUNDER.

proposed modifications will address building performance. All resources that may assist in the investigation and evaluation of the existing conditions must be considered along with the three general sources identified in the code.

SECTION AJ105
PERMIT

AJ105.1 Identification of work area. The work area shall be clearly identified on the *permits* issued under these provisions.

❖ Once the limits of one or more work areas have been established based on the scope of the work involved, the work areas must be properly identified and clearly described. The provisions of this appendix are typically limited to those portions of the building characterized as the work areas. The work areas must be described in satisfactory detail on any permits so that all parties have a consistent understanding of the area limits.

SECTION AJ201
DEFINITIONS

AJ201.1 General. For purposes of this appendix, the terms used are defined as follows.

❖ This section clarifies the terminology used in this appendix. The terms take on very specific meanings that are often different from the way they are typically used.

ALTERATION. The reconfiguration of any space; the *addition* or elimination of any door or window; the reconfiguration or extension of any system; or the installation of any additional *equipment*.

❖ Where the work is extensive enough to cause a change in the layout of a building or a portion thereof, the work is an alteration. This activity could include taking an existing space and changing the configuration of the floor plan by adding or removing walls or partitions. Additional rooms may be created or multiple rooms could be transformed into a single room or area. As a result of such an alteration, the exiting system may be modified or the occupant load revised.

Where an additional door or window is installed, or where an existing door or window is removed, the work is an alteration. An alteration is also an increase to any system of the building, including the expansion of any electrical wiring, plumbing piping or mechanical ducts. If additional equipment, such as another electrical panel or HVAC unit, is installed in an existing building, the installation must be regulated as an alteration.

CATEGORIES OF WORK. The nature and extent of construction work undertaken in an existing building. The categories of work covered in this appendix, listed in increasing order of stringency of requirements, are repair, renovation, *alteration* and reconstruction.

❖ This term describes the four types of construction activity that are regulated by this appendix chapter. The code sets forth specific criteria for each of the defined types of work, with each category placed in a hierarchical position based on the mandated level of requirements. The least restrictive category of work is defined as repair, with an increased degree of regulation for renovations and an even higher level for alterations. The most stringent requirements are applicable for work categorized as reconstruction.

DANGEROUS. Where the stresses in any member; the condition of the building, or any of its components or elements or attachments; or other condition that results in an overload exceeding 150 percent of the stress allowed for the member or material in this code.

❖ Although this term is recognized in general terms as a situation that is unsafe, perilous or likely to cause injury or death, for the purposes of this appendix it is much more narrow in scope. It is limited to a structural condition where the structural member or material is subjected to a load significantly higher than that which it is designed to support.

EQUIPMENT OR FIXTURE. Any plumbing, heating, electrical, ventilating, air-conditioning, refrigerating and fire protection *equipment*; and elevators, dumb waiters, boilers, pressure vessels, and other mechanical facilities or installations that are related to building services.

❖ A multitude of building service components are included in the definition of equipment or fixtures. These include elements of the plumbing, mechanical and electrical systems, as well as fire protective features that are installed in the building.

LOAD-BEARING ELEMENT. Any column, girder, beam, joist, truss, rafter, wall, floor or roof sheathing that supports any vertical load in addition to its own weight, or any lateral load.

❖ The structural components of a building that carry loads other than their own are load-bearing elements. These include members that carry gravity loads, lateral loads or both. The definition lists the various elements that are load-bearing where they support more than their own weight.

MATERIALS AND METHODS REQUIREMENTS. Those requirements in this code that specify material standards; details of installation and connection; joints; penetrations; and continuity of any element, component or system in the building. The required quantity, fire resistance, flame spread, acoustic or thermal performance, or other performance attribute is specifically excluded from materials and methods requirements.

❖ Materials standards, installation details and similar specific requirements make up the materials and

INTERNATIONAL CODE COUNCIL®
Copyright © 2015 ICC. ALL RIGHTS RESERVED. Accessed by David Dammon on Jun 21, 2017 12:30:52 PM pursuant to License Agreement with ICC. No further reproduction or distribution authorized. ANY UNAUTHORIZED REPRODUCTION OR DISTRIBUTION IS A VIOLATION OF THE FEDERAL COPYRIGHT ACT AND THE LICENSE AGREEMENT, AND SUBJECT TO CIVIL AND CRIMINAL PENALTIES THEREUNDER.

methods requirements. On the other hand, performance-related requirements tend to be excluded by definition.

RECONSTRUCTION. The reconfiguration of a space that affects an exit, a renovation or *alteration* where the work area is not permitted to be occupied because existing means-of-egress and fire protection systems, or their equivalent, are not in place or continuously maintained; or there are extensive *alterations* as defined in Section AJ501.3.

❖ The most stringent requirements for the four categories of work are assigned to reconstruction activities. Reconstruction causes a high level of concern because of its impact on fire and life safety. Where an existing exit is affected, the existing level of egress or fire protection is not acceptable or extensive alterations are to be undertaken, the work is considered as reconstruction.

REHABILITATION. Any repair, renovation, *alteration* or reconstruction work undertaken in an existing building.

❖ This is the general term for describing any or all of the four categories of work involved on an existing building.

RENOVATION. The change, strengthening or *addition* of load-bearing elements; or the refinishing, replacement, bracing, strengthening, upgrading or extensive repair of existing materials, elements, components, *equipment* or fixtures. Renovation does not involve reconfiguration of spaces. Interior and exterior painting are not considered refinishing for purposes of this definition, and are not renovation.

❖ A renovation can occur for either structural or nonstructural work. The definition includes structural members that are replaced, modified or added to a building, as well as nonstructural materials that are changed in some form. The act of renovation focuses on specific elements rather than the reconfiguration of floor area.

REPAIR. The patching, restoration or minor replacement of materials, elements, components, *equipment* or fixtures for the purposes of maintaining those materials, elements, components, *equipment* or fixtures in good or sound condition.

❖ The least-stringent requirements for the four categories of work on existing building regulate repairs. Repair work maintains elements and systems of buildings in sound condition. Repair activities do not change the configuration of the space, nor do they address new construction or equipment.

WORK AREA. That portion of a building affected by any renovation, *alteration* or reconstruction work as initially intended by the owner and indicated as such in the *permit*. Work area excludes other portions of the building where incidental work entailed by the intended work must be performed, and portions of the building where work not initially intended by the owner is specifically required by these provisions for a renovation, *alteration* or reconstruction.

❖ The work area must be correctly identified to define the extent of the rehabilitation activities. Most of the requirements in this appendix are applicable only to the work area under consideration and do not apply to other portions of the building. The work area, determined at the time of permitting, is limited to that part of the building affected by the rehabilitation work.

SECTION AJ301
REPAIRS

AJ301.1 Materials. Except as otherwise required herein, work shall be done using like materials or materials permitted by this code for new construction.

❖ There are two possible options for materials used in repair work on an existing building. Unless prohibited by other provisions of the section, it is acceptable to use materials consistent with those that are already present. This allowance follows the general concept that the repair work is making the building no more unsafe or hazardous than it was prior to the work being done. Instead of using the same type of materials, the code permits the use of any materials currently allowed by the code.

AJ301.1.1 Hazardous materials. Hazardous materials no longer permitted, such as asbestos and lead-based paint, shall not be used.

❖ It is generally possible to repair a structure, its components and its systems with materials consistent with those materials that were used previously. However, where materials that are now considered hazardous are involved in the repair work, they may no longer be used. For example, the code identifies asbestos and lead-based paint as two hazardous materials that cannot be used in the repair process. Certain materials previously considered acceptable for building construction are a threat to the health of the occupants.

AJ301.1.2 Plumbing materials and supplies. The following plumbing materials and supplies shall not be used:

1. All-purpose solvent cement, unless *listed* for the specific application.
2. Flexible traps and tailpieces, unless *listed* for the specific application.
3. Solder having more than 0.2 percent lead in the repair of potable water systems.

❖ Specific methods and materials of plumbing installations are identified as no longer acceptable because of their negative impact on public health and safety. Where such existing materials and supplies are a part of the repair of a plumbing element or system, alternate materials must be used. The use of all-purpose solvent cement is permitted for plumbing repair work only if listed for the specific application. The same is true for flexible traps and flexible tailpieces.

AJ301.2 Water closets. Where any water closet is replaced with a newly manufactured water closet, the replacement water closet shall comply with the requirements of Section P2903.2.

❖ Where a new water closet replaces an existing water closet, the new fixture must be designed for a maximum water consumption of 1.6 gallons (6 L) for each

INTERNATIONAL CODE COUNCIL®
Copyright © 2015 ICC. ALL RIGHTS RESERVED. Accessed by David Dammon on Jun 21, 2017 12:30:52 PM pursuant to License Agreement with ICC. No further reproduction or distribution authorized. ANY UNAUTHORIZED REPRODUCTION OR DISTRIBUTION IS A VIOLATION OF THE FEDERAL COPYRIGHT ACT AND THE LICENSE AGREEMENT, AND SUBJECT TO CIVIL AND CRIMINAL PENALTIES THEREUNDER.

flushing cycle. Addressing environmental concerns, this limitation assists in reducing the amount of water consumed during the ongoing use of the building.

AJ301.3 Electrical. Repair or replacement of existing electrical wiring and *equipment* undergoing repair with like material shall be permitted.

Exceptions:

1. Replacement of electrical receptacles shall comply with the requirements of Chapters 34 through 43.
2. Plug fuses of the Edison-base type shall be used for replacements only where there is not evidence of overfusing or tampering in accordance with the applicable requirements of Chapters 34 through 43.
3. For replacement of nongrounding-type receptacles with grounding-type receptacles and for branch circuits that do not have an *equipment* grounding conductor in the branch circuitry, the grounding conductor of a grounding-type receptacle outlet shall be permitted to be grounded to any accessible point on the grounding electrode system, or to any accessible point on the grounding electrode conductor, as allowed and described in Chapters 34 through 43.

❖ Under most conditions, it is acceptable to repair existing electrical installations with the same types of wiring materials and electrical equipment as were used previously. However, this section identifies three conditions where additional criteria must be considered. Electrical receptacles must comply as for new construction as described in Chapters 34 through 43. Edison-base-type plug fuses can be replaced with like fuses only if it can be shown that no tampering or overfusing has occurred. Alternate methods of grounding are also set forth when nongrounding-type receptacles are replaced.

SECTION AJ401
RENOVATIONS

AJ401.1 Materials and methods. The work shall comply with the materials and methods requirements of this code.

❖ The general provisions of the code are to be used for renovation work. There are several modifications to these provisions for door and window dimensions, interior finish materials, and the parapets of unreinforced masonry buildings assigned to a high seismic design category.

AJ401.2 Door and window dimensions. Minor reductions in the clear opening dimensions of replacement doors and windows that result from the use of different materials shall be allowed, whether or not they are permitted by this code.

❖ During many renovation projects, it is common for existing doors and windows to be removed and replaced. Quite often the new doors and windows are of different materials and do not provide the same clear opening dimensions as the originals. Reductions in opening dimensions beyond those allowed by the code are permitted if they are minor. Even though not specifically defined, a minor reduction would remain consistent with the intent and purpose of the provisions.

AJ401.3 Interior finish. Wood paneling and textile wall coverings used as an interior finish shall comply with the flame spread requirements of Section R302.9.

❖ Where wood paneling or textile wall covering materials are being replaced in a renovation project, the new materials must be in compliance with the provisions of Section R302.9 R315. The new interior finishes are to be regulated for flame spread and smoke development as they are for new construction.

AJ401.4 Structural. Unreinforced masonry buildings located in Seismic Design Category D_2 or E shall have parapet bracing and wall anchors installed at the roofline whenever a reroofing *permit* is issued. Such parapet bracing and wall anchors shall be of an *approved* design.

❖ When reroofing work requiring a building permit takes place on an unreinforced masonry building located in Seismic Design Category D_2 or E, it may be necessary to strengthen the parapet by providing bracing in an approved manner. In addition, wall anchors must be provided at the roof line. The existing parapet and wall anchors should be evaluated to determine the extent of the structural strengthening needed. The scope of the structural work and the methods of compliance are to be approved by the building official.

SECTION AJ501
ALTERATIONS

AJ501.1 Newly constructed elements. Newly constructed elements, components and systems shall comply with the requirements of this code.

Exceptions:

1. Openable windows may be added without requiring compliance with the light and *ventilation* requirements of Section R303.
2. Newly installed electrical *equipment* shall comply with the requirements of Section AJ501.5.

❖ Where the alteration of any portion of a building includes new construction, the work must be accomplished in accordance with the requirements of the code. An exception permits the installation of openable windows as additional features without requiring adherence to the light and ventilation provisions of Section R303. In addition, new electrical components and equipment need comply only with the requirements of Section AJ501.5.

AJ501.2 Nonconformities. The work shall not increase the extent of noncompliance with the requirements of Section AJ601, or create nonconformity to those requirements that did not previously exist.

❖ The extent of noncompliance is limited in regard to stairways, handrails, guards, interior finish materials and dwelling separation walls as addressed in Section AJ601. In addition, nonconformity must not be created

INTERNATIONAL CODE COUNCIL®
Copyright © 2015 ICC. ALL RIGHTS RESERVED. Accessed by David Dammon on Jun 21, 2017 12:30:52 PM pursuant to License Agreement with ICC. No further reproduction or distribution authorized. ANY UNAUTHORIZED REPRODUCTION OR DISTRIBUTION IS A VIOLATION OF THE FEDERAL COPYRIGHT ACT AND THE LICENSE AGREEMENT, AND SUBJECT TO CIVIL AND CRIMINAL PENALTIES THEREUNDER.

regarding any requirements that did not previously exist.

AJ501.3 Extensive alterations. Where the total area of all of the work areas included in an *alteration* exceeds 50 percent of the area of the *dwelling unit*, the work shall be considered to be a reconstruction and shall comply with the requirements of these provisions for reconstruction work.

Exception: Work areas in which the *alteration* work is exclusively plumbing, mechanical or electrical shall not be included in the computation of the total area of all work areas.

❖ If the amount of construction activity in a dwelling unit involves more than 50 percent of the unit's floor area, the stringency of the requirements is increased. The category of work is reconstruction, with the requirements for both alterations and reconstruction to be followed. This increase to a higher-level category is not required where the alteration consists only of plumbing, mechanical or electrical work.

AJ501.4 Structural. The minimum design loads for the structure shall be the loads applicable at the time the building was constructed, provided that a dangerous condition is not created. Structural elements that are uncovered during the course of the *alteration* and that are found to be unsound or dangerous shall be made to comply with the applicable requirements of this code.

❖ As building codes have progressed over the years, structural design values have been reviewed and modified. Unless a dangerous condition will be created, it is permissible to use the minimum structural design loads in place at the time the building was constructed.

As the alteration of the building is progressing, there may be occasions where structural elements are exposed and found to be damaged, unsound or otherwise dangerous. In such situations, it is mandatory that structural integrity of the building components be achieved. All necessary steps must be taken to ensure that the applicable structural requirements of the code are met.

AJ501.5 Electrical equipment and wiring.

AJ501.5.1 Materials and methods. Newly installed electrical *equipment* and wiring relating to work done in any work area shall comply with the materials and methods requirements of Chapters 34 through 43.

Exception: Electrical *equipment* and wiring in newly installed partitions and ceilings shall comply with the applicable requirements of Chapters 34 through 43.

❖ In any work area, electrical equipment and wiring installed must comply with the requirements of Chapters 33 through 42. Such requirements are also applicable in the construction of new walls, partitions and ceiling systems.

AJ501.5.2 Electrical service. Service to the *dwelling unit* shall be not less than 100 ampere, three-wire capacity and service *equipment* shall be dead front having no live parts exposed that could allow accidental contact. Type "S" fuses shall be installed where fused *equipment* is used.

Exception: Existing service of 60 ampere, three-wire capacity, and feeders of 30 ampere or larger two- or three-wire capacity shall be accepted if adequate for the electrical load being served.

❖ It is typical that minimum 100-ampere service be provided to each dwelling unit that is undergoing alteration of electrical service. However, where it can be determined that the service loading does not exceed 60 amperes, an existing 60-ampere service is acceptable.

AJ501.5.3 Additional electrical requirements. Where the work area includes any of the following areas within a *dwelling unit*, the requirements of Sections AJ501.5.3.1 through AJ501.5.3.5 shall apply.

❖ This section sets forth additional requirements for specified enclosed spaces, kitchens, laundry rooms, ground-fault circuit interruption and lighting outlets in conjunction with work areas of dwelling units.

AJ501.5.3.1 Enclosed areas. Enclosed areas other than closets, kitchens, *basements*, garages, hallways, laundry areas and bathrooms shall have not less than two duplex receptacle outlets, or one duplex receptacle outlet and one ceiling- or wall-type lighting outlet.

❖ Those areas and rooms typically viewed as habitable spaces must be provided with at least two duplex receptacle outlets or one duplex receptacle outlet and a ceiling- or wall-type lighting outlet. A minimum number of receptacles must be available to reduce the potential for dangerous electrical conditions.

AJ501.5.3.2 Kitchen and laundry areas. Kitchen areas shall have not less than two duplex receptacle outlets. Laundry areas shall have not less than one duplex receptacle outlet located near the laundry *equipment* and installed on an independent circuit.

❖ To reduce the possibility that dangerous conditions are created in kitchen and laundry areas, a minimum number of receptacle outlets is mandated. In the kitchen, at least two duplex receptacle outlets are required. Near laundry equipment, a minimum of one duplex receptacle outlet is mandated. The receptacle outlet in the laundry area must be located on an independent circuit.

AJ501.5.3.3 Ground-fault circuit-interruption. Ground-fault circuit-interruption shall be provided on newly installed receptacle outlets if required by Chapters 34 through 43.

❖ The installation of ground-fault circuit interruption for all new receptacle outlets is covered by the provisions of Chapters 34 through 43. Those locations in new construction identified by the code to be protected by ground-fault circuit interruption are the same in alterations to existing buildings, but interruption is required only in those locations where new receptacle outlets are installed.

AJ501.5.3.4 Lighting outlets. Not less than one lighting outlet shall be provided in every bathroom, hallway, stairway,

INTERNATIONAL CODE COUNCIL®
Copyright © 2015 ICC. ALL RIGHTS RESERVED. Accessed by David Dammon on Jun 21, 2017 12:30:52 PM pursuant to License Agreement with ICC. No further reproduction or distribution authorized. ANY UNAUTHORIZED REPRODUCTION OR DISTRIBUTION IS A VIOLATION OF THE FEDERAL COPYRIGHT ACT AND THE LICENSE AGREEMENT, AND SUBJECT TO CIVIL AND CRIMINAL PENALTIES THEREUNDER.

attached garage and detached garage with electric power to illuminate outdoor entrances and exits, and in utility rooms and *basements* where these spaces are used for storage or contain *equipment* requiring service.

❖ Lighting outlets are to be installed in a variety of specific locations identified by this section. Areas where at least one lighting outlet is required include bathrooms, hallways, stairways and attached garages. Detached garages provided with electrical power must have facilities for illuminating exterior entrances and exits. Basements and utility rooms used as storage areas or to house equipment that must be serviced must also be provided with at least one lighting outlet.

AJ501.5.3.5 Clearance. Clearance for electrical service *equipment* shall be provided in accordance with Chapters 34 through 43.

❖ All electrical equipment is to be provided with the necessary working space and other clearances as set forth in Chapters 34 through 43.

AJ501.6 Ventilation. Reconfigured spaces intended for occupancy and spaces converted to habitable or occupiable space in any work area shall be provided with *ventilation* in accordance with Section R303.

❖ Adequate ventilation, by either natural or mechanical means, must be provided in occupiable spaces located within a work area. The requirement is applicable to spaces that are altered in shape or size, as well as those areas that are converted to habitable space. The ventilation requirements of Section R303 provide the minimum ventilation criteria that are to be used.

AJ501.7 Ceiling height. *Habitable spaces* created in existing *basements* shall have ceiling heights of not less than 6 feet, 8 inches (2032 mm), except that the ceiling height at obstructions shall be not less than 6 feet 4 inches (1930 mm) from the *basement* floor. Existing finished ceiling heights in nonhabitable spaces in *basements* shall not be reduced.

❖ This section permits owners of older homes to create habitable space in basements. In existing basements, many times it is technically and structurally infeasible to modify an existing ceiling height to comply with the code for new construction. This section recognizes that the minimum ceiling heights easily achievable in new construction are often impossible to provide in basements of older homes and will allow homeowners to finish off their basements.

AJ501.8 Stairs.

❖ Sections AJ501.8.1 through AJ501.8.3 permit maintaining current width, headroom and landing size on existing basement stairways when alterations are made to the stairway or to other portions of the basement. In existing basements, many times it is technically and structurally infeasible to modify an existing stairway to comply with the code for new construction. The provisions of this section do not require a homeowner to replace or modify their existing basement stairs simply because the space at the bottom of the stairs is being renovated. Because Section R102.7.1 specifically states that alterations shall not result in an unsafe building, this section does not preclude the building official from requiring the replacement of stairs considered substandard or hazardous.

AJ501.8.1 Stair width. Existing *basement* stairs and handrails not otherwise being altered or modified shall be permitted to maintain their current clear width at, above and below existing handrails.

❖ See the commentary to Section AJ501.8.

AJ501.8.2 Stair headroom. Headroom height on existing *basement* stairs being altered or modified shall not be reduced below the existing stairway finished headroom. Existing *basement* stairs not otherwise being altered shall be permitted to maintain the current finished headroom.

❖ See the commentary to Section AJ501.8.

AJ501.8.3 Stair landing. Landings serving existing *basement* stairs being altered or modified shall not be reduced below the existing stairway landing depth and width. Existing *basement* stairs not otherwise being altered shall be permitted to maintain the current landing depth and width.

❖ See the commentary to Section AJ501.8.

SECTION AJ601
RECONSTRUCTION

AJ601.1 Stairways, handrails and guards.

AJ601.1.1 Stairways. Stairways within the work area shall be provided with illumination in accordance with Section R303.6.

❖ Stairways located in the work area of a building undergoing reconstruction activities must be illuminated in accordance with Section R303.7. The provisions set forth two options for locating the light sources. In addition, the required locations of lighting control switches are specified.

AJ601.1.2 Handrails. Every required exit stairway that has four or more risers, is part of the means of egress for any work area, and is not provided with at least one handrail, or in which the existing handrails are judged to be in danger of collapsing, shall be provided with handrails designed and installed in accordance with Section R311 for the full length of the run of steps on not less than one side.

❖ The handrail requirements of Section R311 apply to reconstruction work only in certain circumstances. The stairway under consideration must be a required exit element for a work area of the building and consist of at least four risers. Either there are no handrails provided for the stairway, or the existing rail or rails are unsafe because of the possibility of collapse. If all of these conditions exist, a complying handrail is to be installed on at least one side of the stairway.

Handrail height, continuity, termination, clearance, and gripping surface must all be reviewed for conformance with the provisions of Section R311.

INTERNATIONAL CODE COUNCIL®
Copyright © 2015 ICC. ALL RIGHTS RESERVED. Accessed by David Dammon on Jun 21, 2017 12:30:52 PM pursuant to License Agreement with ICC. No further reproduction or distribution authorized. ANY UNAUTHORIZED REPRODUCTION OR DISTRIBUTION IS A VIOLATION OF THE FEDERAL COPYRIGHT ACT AND THE LICENSE AGREEMENT, AND SUBJECT TO CIVIL AND CRIMINAL PENALTIES THEREUNDER.

AJ601.1.3 Guards. Every open portion of a stair, landing or balcony that is more than 30 inches (762 mm) above the floor or *grade* below, is part of the egress path for any work area, and does not have *guards*, or in which the existing *guards* are judged to be in danger of collapsing, shall be provided with *guards* designed and installed in accordance with Section R312.

❖ The guard requirements of Section R312 apply to reconstruction work only in certain circumstances. The guard under consideration must be serving a walking surface at least 30 inches (762 mm) above the floor below and located along an exit path for a work area of the building. Either there is no guard provided or the existing guard creates an unsafe condition because of the potential for collapse. If all of these conditions exist, a complying guard is to be installed as protection at the elevation change.

Guard height and opening limitations must be reviewed for compliance with the provisions of Section R312.

AJ601.2 Wall and ceiling finish. The interior finish of walls and ceilings in any work area shall comply with the requirements of Section R302.9. Existing interior finish materials that do not comply with those requirements shall be removed or shall be treated with an *approved* fire-retardant coating in accordance with the manufacturer's instructions to secure compliance with the requirements of this section.

❖ In a reconstruction work area, all wall and ceiling finish materials must be in compliance with the flame spread and smoke-development limitations of Section R302.9 R315. The flame spread classification is limited to 200, with a maximum smoke-developed index of 450. Where the existing interior finish materials do not comply with these requirements, the materials are to be removed or treated with an approved fire retardant coating. Where the treatment method is used to obtain compliance, the manufacturer's instructions must be followed.

AJ601.3 Separation walls. Where the work area is in an attached *dwelling unit*, walls separating *dwelling units* that are not continuous from the foundation to the underside of the roof sheathing shall be constructed to provide a continuous fire separation using construction materials consistent with the existing wall or complying with the requirements for new structures. Performance of work shall be required only on the side of the wall of the *dwelling unit* that is part of the work area.

❖ Where reconstruction work takes place in a dwelling unit that is attached to one or more additional dwelling units, the wall or walls separating the units are to be continuous from the foundation to the underside of the roof deck. If such conditions do not exist, the wall must be extended to the roof sheathing to maintain the necessary separation of the units. The materials used in the wall construction must be at least equivalent to those of the existing wall, or alternatively, as required for new construction. There is no requirement for work to be done outside the work area; therefore, the wall construction need be provided only on the side of the dwelling where the actual work area occurs.

AJ601.4 Ceiling height. *Habitable spaces* created in existing *basements* shall have ceiling heights of not less than 6 feet, 8 inches (2032 mm), except that the ceiling height at obstructions shall be not less than 6 feet 4 inches (1930 mm) from the *basement* floor. Existing finished ceiling heights in non-habitable spaces in *basements* shall not be reduced.

❖ This section permits owners of older homes to create habitable space in basements. In existing basements, many times it is technically and structurally infeasible to modify an existing basement ceiling height to comply with the code for new construction. This section recognizes that the minimum ceiling heights easily achievable in new construction are often impossible to provide in basements of older homes and will allow homeowners to finish off their basements.

Bibliography

The following resource materials were used in the preparation of the commentary for this appendix of the code:

FEMA P-758, *Substantial Improvement/Substantial Damage Desk Reference*. Frederick, MD: Federal Emergency Management Agency, 2010.

FEMA P-259, *Engineering Principles and Practices for Retrofitting Flood Prone Residential Structures*. Frederick, MD: Federal Emergency Management Agency, 2012.

INTERNATIONAL CODE COUNCIL®

Copyright © 2015 ICC. ALL RIGHTS RESERVED. Accessed by David Dammon on Jun 21, 2017 12:30:52 PM pursuant to License Agreement with ICC. No further reproduction or distribution authorized. ANY UNAUTHORIZED REPRODUCTION OR DISTRIBUTION IS A VIOLATION OF THE FEDERAL COPYRIGHT ACT AND THE LICENSE AGREEMENT, AND SUBJECT TO CIVIL AND CRIMINAL PENALTIES THEREUNDER.

Appendix K: Sound Transmission

(The provisions contained in this appendix are not mandatory unless specifically referenced in the adopting ordinance.)

General Comments

Regulation of sound transmission bears directly on the psychological and long-term physical well-being of a building's occupants. By implementing the minimum sound transmission criteria set forth in this appendix, a jurisdiction can assist in providing a more livable environment for the occupants.

Section AK101 is a general overview of the requirements for limiting sound transmission. Section AK102 establishes the specific provisions for air-borne sound insulation in wall and floor/ceiling assemblies. Section AK103 establishes the specific provisions for structure-borne sound transfer in floor/ceiling assemblies.

Purpose

In an effort to appropriately regulate the environmental and physiological aspects of habitable spaces within dwelling units, the code addresses a variety of conditions. In addition to the fundamental requirements for adequate lighting, ventilation and sanitation, regulations are often desirable to control the transmission of sound and noise between individual dwelling units within a multiple-family residential building. The provisions of this appendix set forth a minimum Sound Transmission Class (STC) rating for common walls and floor-ceiling assemblies between dwelling units. In addition, a minimum Impact Insulation Class (IIC) rating is also established to limit structure-borne sound through common floor-ceiling assemblies separating dwelling units.

SECTION AK101 GENERAL

AK101.1 General. Wall and floor-ceiling assemblies separating *dwelling units*, including those separating adjacent *townhouse* units, shall provide air-borne sound insulation for walls, and both air-borne and impact sound insulation for floor-ceiling assemblies.

❖ Because noise transmission can be quantified, and noise affects the quality of life, the code incorporates regulations that address noise transmission in multiple-family residential construction. To provide for an acceptable degree of livability in structures housing two or more dwelling units, the code mandates a minimum level of sound insulation between units. In such residential structures, the occupants of a dwelling unit typically have little control over noise generated in other units. Where the dwelling units are separated by a common floor-ceiling assembly, both air-borne sound and structure-borne sound are present. Where a common wall system separates the units, only air-borne sound is regulated. The components of construction regulated are those through which noise is primarily transmitted.

SECTION AK102 AIR-BORNE SOUND

AK102.1 General. Air-borne sound insulation for wall and floor-ceiling assemblies shall meet a sound transmission class (STC) rating of 45 when tested in accordance with ASTM E90. Penetrations or openings in construction assemblies for piping; electrical devices; recessed cabinets; bathtubs; soffits; or heating, ventilating or exhaust ducts shall be sealed, lined, insulated or otherwise treated to maintain the required ratings. *Dwelling unit* entrance doors, which share a common space, shall be tight fitting to the frame and sill.

❖ The code requires common walls and floor-ceiling assemblies between dwelling units to have a minimum sound transmission. The higher the number (rating), the higher the resistance (less sound transmission). Standard architectural wall and floor-ceiling construction assemblies have been tested for sound transmission ratings, and reference to the construction specifications will yield such information. Air-borne sound, such as a voice or music, is transferred through the air.

As a rule, vertical assemblies meeting the requirements of this section consist of double walls or walls containing insulation similar to exterior walls. Horizontal assemblies typically contain some type of insulating materials within the assembly or resilient furring channels to isolate the ceiling membrane from the structural members of the floor construction.

AK102.1.1 Masonry. The sound transmission class of concrete masonry and clay masonry assemblies shall be calculated in accordance with TMS 0302 or determined through testing in accordance with ASTM E90.

❖ This section provides an alternate to testing masonry walls to ASTM E90.This section permits calculation of the air-borne STC for various concrete masonry and clay masonry wall assemblies. The calculation must be in accordance with TMS 0302. The methods in TMS 0302 are derived from testing of masonry wall assemblies in accordance with ASTM E90.

INTERNATIONAL CODE COUNCIL®
Copyright © 2015 ICC. ALL RIGHTS RESERVED. Accessed by David Dammon on Jun 21, 2017 12:30:52 PM pursuant to License Agreement with ICC. No further reproduction or distribution authorized. ANY UNAUTHORIZED REPRODUCTION OR DISTRIBUTION IS A VIOLATION OF THE FEDERAL COPYRIGHT ACT AND THE LICENSE AGREEMENT, AND SUBJECT TO CIVIL AND CRIMINAL PENALTIES THEREUNDER.

SECTION AK103
STRUCTURAL-BORNE SOUND

AK103.1 General. Floor/ceiling assemblies between *dwelling units,* or between a *dwelling unit* and a public or service area within a structure, shall have an impact insulation class (IIC) rating of not less than 45 when tested in accordance with ASTM E492.

❖ The IIC rating is a measure of an assembly's ability to resist sound transmission. The higher the number (rating), the higher the resistance (less sound transmission). Floors between dwelling units are required to have a minimum IIC rating of 45.

Usually, carpeted floor assemblies meet the minimum requirement for an IIC rating of 45. Other areas with hard-surfaced finishes may require additional treatment or insulation to comply with these requirements.

Various resource documents containing STC ratings and IIC ratings are listed in the bibliography. These sources, or any other similar sources, can be submitted as a basis for approval once it is demonstrated to the building official that the data are based on ASTM E90 and ASTM E492.

SECTION AK104
REFERENCED STANDARDS

ASTM

ASTM E90—04 Test Method for Laboratory Measurement of Air-borne Sound Transmission Loss of Building Partitions and Elements. AK102

ASTM E492—09 Specification for Laboratory Measurement of Impact Sound Transmission through Floor-ceiling Assemblies Using the Tapping Machine. AK103

The Masonry Society

TMS 0302—12 Standard for Determining the Sound Transmission Class Rating for Masonry Walls. AK102.1.1

Bibliography

The following resource materials were used in the preparation of the commentary for this appendix of the code:

ASTM E90–04, *Standard Test Method for Laboratory Measurement of Air-borne Sound Transmission Loss of Building Partitions and Elements*. West Conshohocken, PA: ASTM International, 2004.

ASTM E492–04, *Standard Specification for Laboratory Measurement of Impact Sound Transmission through Floor-ceiling Assemblies using the Tapping Machine*. West Conshohocken, PA: ASTM International, 2004.

BIA TN 5A–83, *Sound Insulation-clay Masonry Walls*. Reston, VA: Brick Institute of America, 1983.

Gypsum Association. GA 600-97: *Fire-resistance Design Manual*. 15th Edition. Washington, D.C.: Gypsum Association, 1997.

National *Concrete Masonry Association. NCMA TEK 69A–78: New Data on Sound Reduction with Concrete Masonry Walls*. Herndon, VA: National Concrete Masonry Association, 1978.

TMS 302–07, *Standard for Determining the Sound Transmission Class Rating for Masonry Walls*. Boulder, CO: The Masonry Society, 2007.

INTERNATIONAL CODE COUNCIL®

Copyright © 2015 ICC. ALL RIGHTS RESERVED. Accessed by David Dammon on Jun 21, 2017 12:30:52 PM pursuant to License Agreement with ICC. No further reproduction or distribution authorized. ANY UNAUTHORIZED REPRODUCTION OR DISTRIBUTION IS A VIOLATION OF THE FEDERAL COPYRIGHT ACT AND THE LICENSE AGREEMENT, AND SUBJECT TO CIVIL AND CRIMINAL PENALTIES THEREUNDER.

Appendix L: Permit Fees

(The provisions contained in this appendix are not mandatory unless specifically referenced in the adopting ordinance.)

TOTAL VALUATION	FEE
$1 to $ 500	$24
$501 to $2,000	$24 for the first $500; plus $3 for each additional $100 or fraction thereof, up to and including $2,000
$2,001 to $40,000	$69 for the first $2,000; plus $11 for each additional $1,000 or fraction thereof, up to and including $40,000
$40,001 to $100,000	$487 for the first $40,000; plus $9 for each additional $1,000 or fraction thereof, up to and including $100,000
$100,001 to $500,000	$1,027 for the first $100,000; plus $7 for each additional $1,000 or fraction thereof, up to and including $500,000
$500,001 to $1,000,000	$3,827 for the first $500,000; plus $5 for each additional $1,000 or fraction thereof, up to and including $1,000,000
$1,000,001 to $5,000,000	$6,327 for the first $1,000,000; plus $3 for each additional $1,000 or fraction thereof, up to and including $5,000,000
$5,000,001 and over	$18,327 for the first $5,000,000; plus $1 for each additional $1,000 or fraction thereof

INTERNATIONAL CODE COUNCIL®
Copyright © 2015 ICC. ALL RIGHTS RESERVED. Accessed by David Dammon on Jun 21, 2017 12:30:52 PM pursuant to License Agreement with ICC. No further reproduction or distribution authorized. ANY UNAUTHORIZED REPRODUCTION OR DISTRIBUTION IS A VIOLATION OF THE FEDERAL COPYRIGHT ACT AND THE LICENSE AGREEMENT, AND SUBJECT TO CIVIL AND CRIMINAL PENALTIES THEREUNDER.

INTERNATIONAL CODE COUNCIL®
Copyright © 2015 ICC. ALL RIGHTS RESERVED. Accessed by David Dammon on Jun 21, 2017 12:30:52 PM pursuant to License Agreement with ICC. No further reproduction or distribution authorized. ANY UNAUTHORIZED REPRODUCTION OR DISTRIBUTION IS A VIOLATION OF THE FEDERAL COPYRIGHT ACT AND THE LICENSE AGREEMENT, AND SUBJECT TO CIVIL AND CRIMINAL PENALTIES THEREUNDER.

Appendix M: Home Day Care—R-3 Occupancy

(The provisions contained in this appendix are not mandatory unless specifically referenced in the adopting ordinance.)

General Comments

This appendix provides means of egress and smoke detection requirements for a Group R-3 Occupancy that is to be used as a home day care for more than five children who receive custodial care for less than 24 hours.

This appendix sets forth the means of egress requirements that are unique to a home day care, such as two exits required, fenced yards, type of fencing, guards for decks and type of locks and latches for exits. This appendix also requires installation of smoke detectors.

Section AM101 describes a home day care operated within a dwelling and defines the limitation of the occupancy. Section AM102 addresses definitions. Section AM103 establishes the specific provisions for the means of egress unique to a home day care. Section AM104 contains the provisions for smoke detectors.

Purpose

This appendix is strictly for guidance and/or adoption by those jurisdictions that have Licensed Home Care Provider laws and statutes that allow more than five children to be cared for in a person's home.

Several states have laws for Licensed Home Care Providers that will allow more than five children to be cared for in a person's home. Many state jurisdictions require documentation from the local jurisdictions stating that the applicant has complied with the local planning and building department zoning and building codes. Typically, a state jurisdiction will allow six full-time children and two or more part-time children. The part-time child care is usually before and after school hours. The *International Building Code*® (IBC®) regulates Group I-4 day care facilities in Section 308.5 and states, "A facility such as the above with five or fewer persons shall be classified as a Group R-3," Section 308.5.2 child care facility works with more than five children. When directed to the code, one finds that there are no requirements for day care operations in a Group R-3. When a jurisdiction adopts this appendix, the provisions in IBC Sections 308.5 and 308.5.2 should be considered also.

SECTION AM101 GENERAL

AM101.1 General. This appendix shall apply to a home day care operated within a *dwelling*. It is to include buildings and structures occupied by persons of any age who receive custodial care for less than 24 hours by individuals other than parents or guardians or relatives by blood, marriage, or adoption, and in a place other than the home of the person cared for.

SECTION AM102 DEFINITION

EXIT ACCESS. That portion of a means-of-egress system that leads from any occupied point in a building or structure to an exit.

SECTION AM103 MEANS OF EGRESS

AM103.1 Exits required. If the occupant load of the residence is more than nine, including those who are residents, during the time of operation of the day care, two exits are required from the ground-level *story*. Two exits are required from a home day care operated in a *manufactured home* regardless of the occupant load. Exits shall comply with Section R311.

AM103.1.1 Exit access prohibited. An exit access from the area of day care operation shall not pass through bathrooms, bedrooms, closets, garages, fenced rear *yards* or similar areas.

> **Exception:** An exit may discharge into a fenced *yard* if the gate or gates remain unlocked during day care hours. The gates may be locked if there is an area of refuge located within the fenced *yard* and more than 50 feet (15 240 mm) from the *dwelling*. The area of refuge shall be large enough to allow 5 square feet (0.5 m^2) per occupant.

AM103.1.2 Basements. If the *basement* of a *dwelling* is to be used in the day care operation, two exits are required from the *basement* regardless of the occupant load. One of the exits may pass through the *dwelling* and the other must lead directly to the exterior of the *dwelling*.

> **Exception:** An emergency and escape window complying with Section R310 and which does not conflict with Section AM103.1.1 may be used as the second means of egress from a *basement*.

AM103.1.3 Yards. If the *yard* is to be used as part of the day care operation it shall be fenced.

AM103.1.3.1 Type of fence and hardware. The fence shall be of durable materials and be at least 6 feet (1529 mm) tall, completely enclosing the area used for the day care opera-

INTERNATIONAL CODE COUNCIL®
Copyright © 2015 ICC. ALL RIGHTS RESERVED. Accessed by David Dammon on Jun 21, 2017 12:30:52 PM pursuant to License Agreement with ICC. No further reproduction or distribution authorized. ANY UNAUTHORIZED REPRODUCTION OR DISTRIBUTION IS A VIOLATION OF THE FEDERAL COPYRIGHT ACT AND THE LICENSE AGREEMENT, AND SUBJECT TO CIVIL AND CRIMINAL PENALTIES THEREUNDER.

tions. Each opening shall be a gate or door equipped with a self-closing and self-latching device to be installed at a minimum of 5 feet (1528 mm) above the ground.

Exception: The door of any *dwelling* which forms part of the enclosure need not be equipped with self-closing and self-latching devices.

AM103.1.3.2 Construction of fence. Openings in the fence, wall or enclosure required by this section shall have intermediate rails or an ornamental pattern that do not allow a sphere 4 inches (102 mm) in diameter to pass through. In addition, the following criteria must be met:

1. The maximum vertical clearance between *grade* and the bottom of the fence, wall or enclosure shall be 2 inches (51 mm).
2. Solid walls or enclosures that do not have openings, such as masonry or stone walls, shall not contain indentations or protrusions, except for tooled masonry joints.
3. Maximum mesh size for chain link fences shall be $1^1/_4$ inches (32 mm) square, unless the fence has slats at the top or bottom which reduce the opening to no more than $1^3/_4$ inches (44 mm). The wire shall be not less than 9 gage [0.148 inch (3.8 mm)].

AM103.1.3.3 Decks. Decks that are more than 12 inches (305 mm) above *grade* shall have a guard in compliance with Section R312.

AM103.2 Width and height of an exit. The minimum width of a required exit is 36 inches (914 mm) with a net clear width of 32 inches (813 mm). The minimum height of a required exit is 6 feet, 8 inches (2032 mm).

AM103.3 Type of lock and latches for exits. Regardless of the occupant load served, exit doors shall be openable from the inside without the use of a key or any special knowledge or effort. When the occupant load is 10 or less, a night latch, dead bolt or security chain may be used, provided such devices are openable from the inside without the use of a key or tool, and mounted at a height not to exceed 48 inches (1219 mm) above the finished floor.

AM103.4 Landings. Landings for stairways and doors shall comply with Section R311, except that landings shall be required for the exterior side of a sliding door when a home day care is being operated in a Group R-3 occupancy.

SECTION AM104
SMOKE DETECTION

AM104.1 General. Smoke detectors shall be installed in *dwelling* units used for home day care operations. Detectors shall be installed in accordance with the approved manufacturer's instructions. If the current smoke detection system in the *dwelling* is not in compliance with the currently adopted code for smoke detection, it shall be upgraded to meet the currently adopted code requirements and Section AM103 before day care operations commence.

AM104.2 Power source. Required smoke detectors shall receive their primary power from the building wiring when that wiring is served from a commercial source and shall be equipped with a battery backup. The detector shall emit a signal when the batteries are low. Wiring shall be permanent and without a disconnecting switch other than those required for overcurrent protection. Required smoke detectors shall be interconnected so if one detector is activated, all detectors are activated.

AM104.3 Location. A detector shall be located in each bedroom and any room that is to be used as a sleeping room, and centrally located in the corridor, hallway or area giving access to each separate sleeping area. When the *dwelling* unit has more than one *story*, and in *dwellings* with *basements*, a detector shall be installed on each *story* and in the *basement*. In *dwelling* units where a *story* or *basement* is split into two or more levels, the smoke detector shall be installed on the upper level, except that when the lower level contains a sleeping area, a detector shall be installed on each level. When sleeping rooms are on the upper level, the detector shall be placed at the ceiling of the upper level in close proximity to the stairway. In *dwelling* units where the ceiling height of a room open to the hallway serving the bedrooms or sleeping areas exceeds that of the hallway by 24 inches (610 mm) or more, smoke detectors shall be installed in the hallway and the adjacent room. Detectors shall sound an alarm audible in all sleeping areas of the *dwelling* unit in which they are located.

INTERNATIONAL CODE COUNCIL®
Copyright © 2015 ICC. ALL RIGHTS RESERVED. Accessed by David Dammon on Jun 21, 2017 12:30:52 PM pursuant to License Agreement with ICC. No further reproduction or distribution authorized. ANY UNAUTHORIZED REPRODUCTION OR DISTRIBUTION IS A VIOLATION OF THE FEDERAL COPYRIGHT ACT AND THE LICENSE AGREEMENT, AND SUBJECT TO CIVIL AND CRIMINAL PENALTIES THEREUNDER.

Appendix N:
Venting Methods

(This appendix is informative and is not part of the code. This appendix provides examples of various venting methods.)

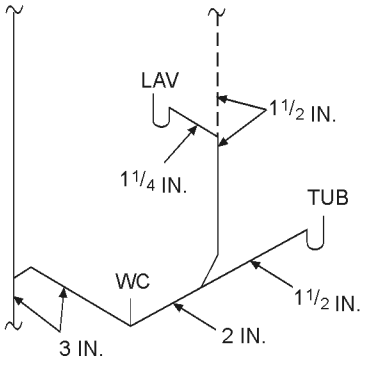

A. TYPICAL SINGLE-BATH ARRANGEMENT

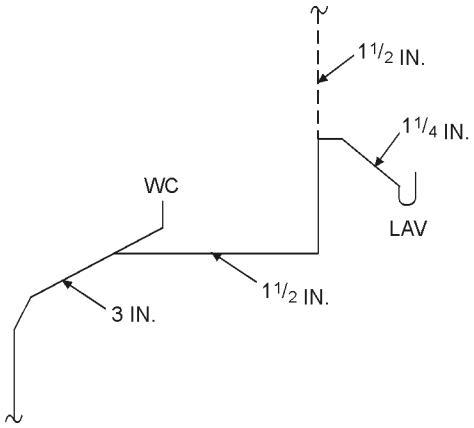

B. TYPICAL POWDER ROOM

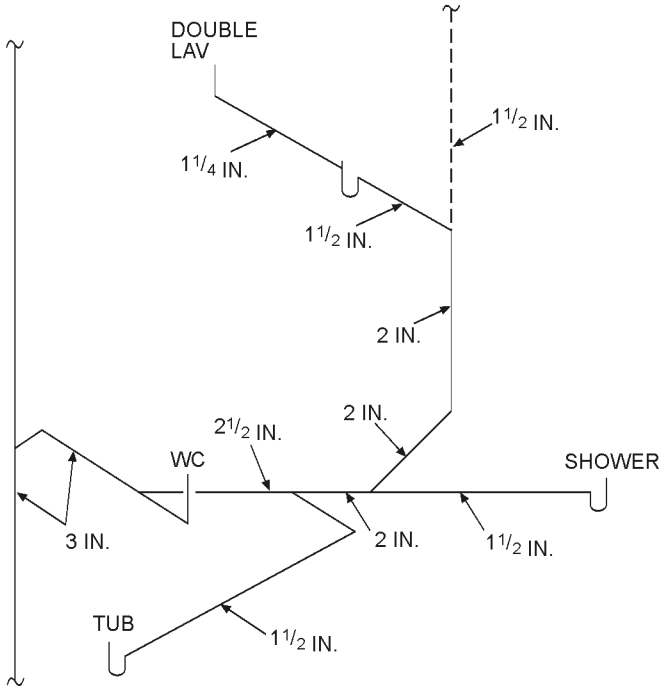

C. MORE ELABORATE SINGLE-BATH ARRANGEMENT

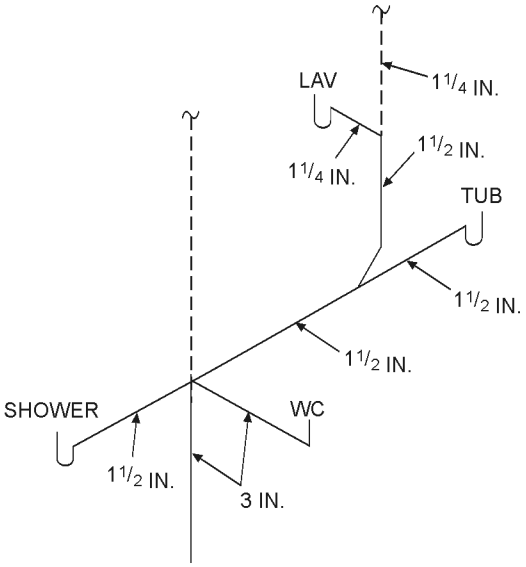

D. COMBINATION WET AND STACK VENTING WITH STACK FITTING

For SI: 1 inch = 25.4 mm.

FIGURE N1
TYPICAL SINGLE-BATH WET-VENT ARRANGEMENTS

INTERNATIONAL CODE COUNCIL®
Copyright © 2015 ICC. ALL RIGHTS RESERVED. Accessed by David Dammon on Jun 21, 2017 12:30:52 PM pursuant to License Agreement with ICC. No further reproduction or distribution authorized. ANY UNAUTHORIZED REPRODUCTION OR DISTRIBUTION IS A VIOLATION OF THE FEDERAL COPYRIGHT ACT AND THE LICENSE AGREEMENT, AND SUBJECT TO CIVIL AND CRIMINAL PENALTIES THEREUNDER.

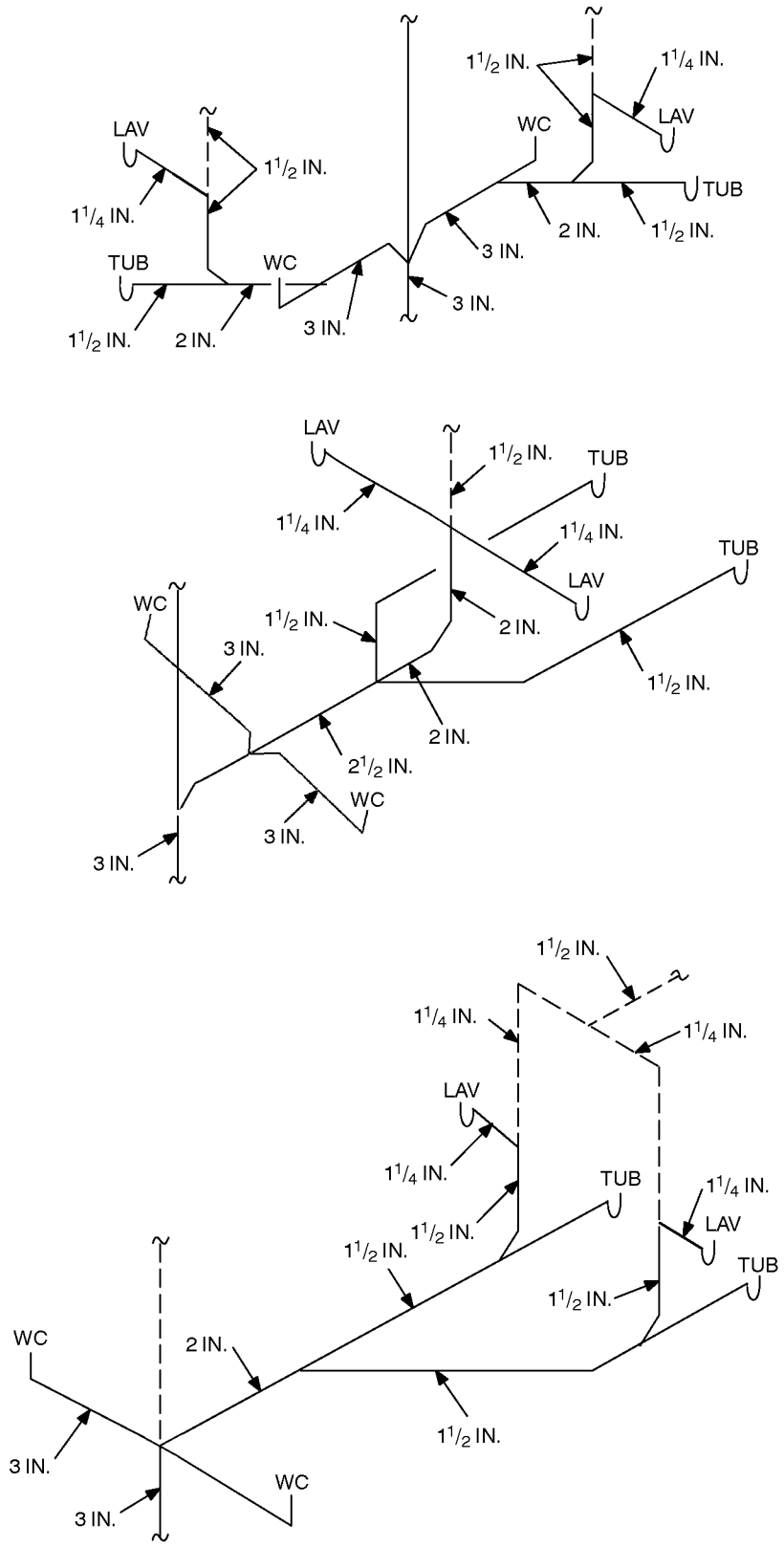

For SI: 1 inch = 25.4 mm.

FIGURE N2
TYPICAL DOUBLE-BATH WET-VENT ARRANGEMENTS

INTERNATIONAL CODE COUNCIL®
Copyright © 2015 ICC. ALL RIGHTS RESERVED. Accessed by David Dammon on Jun 21, 2017 12:30:52 PM pursuant to License Agreement with ICC. No further reproduction or distribution authorized. ANY UNAUTHORIZED REPRODUCTION OR DISTRIBUTION IS A VIOLATION OF THE FEDERAL COPYRIGHT ACT AND THE LICENSE AGREEMENT, AND SUBJECT TO CIVIL AND CRIMINAL PENALTIES THEREUNDER.

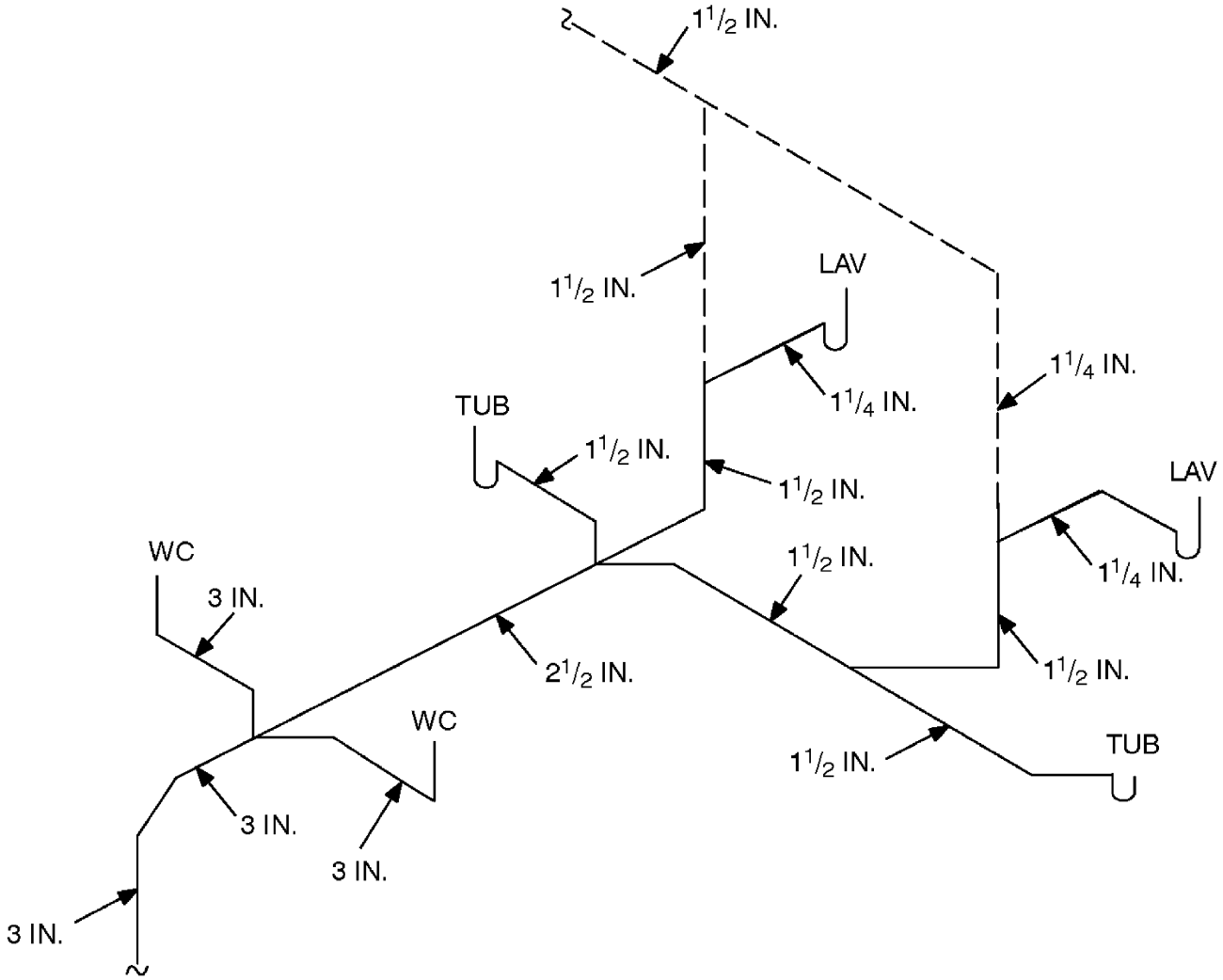

For SI: 1 inch = 25.4 mm.

FIGURE N3
TYPICAL HORIZONTAL WET VENTING

INTERNATIONAL CODE COUNCIL®
Copyright © 2015 ICC. ALL RIGHTS RESERVED. Accessed by David Dammon on Jun 21, 2017 12:30:52 PM pursuant to License Agreement with ICC. No further reproduction or distribution authorized. ANY UNAUTHORIZED REPRODUCTION OR DISTRIBUTION IS A VIOLATION OF THE FEDERAL COPYRIGHT ACT AND THE LICENSE AGREEMENT, AND SUBJECT TO CIVIL AND CRIMINAL PENALTIES THEREUNDER.

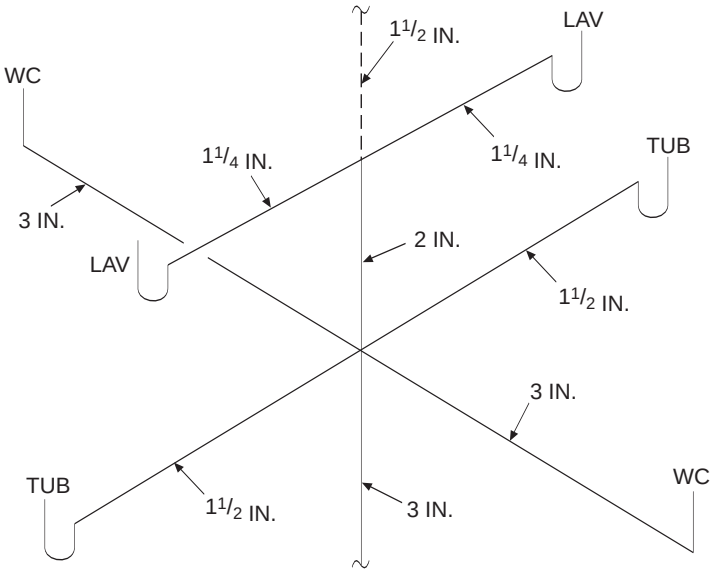

A. VERTICAL WET VENTING

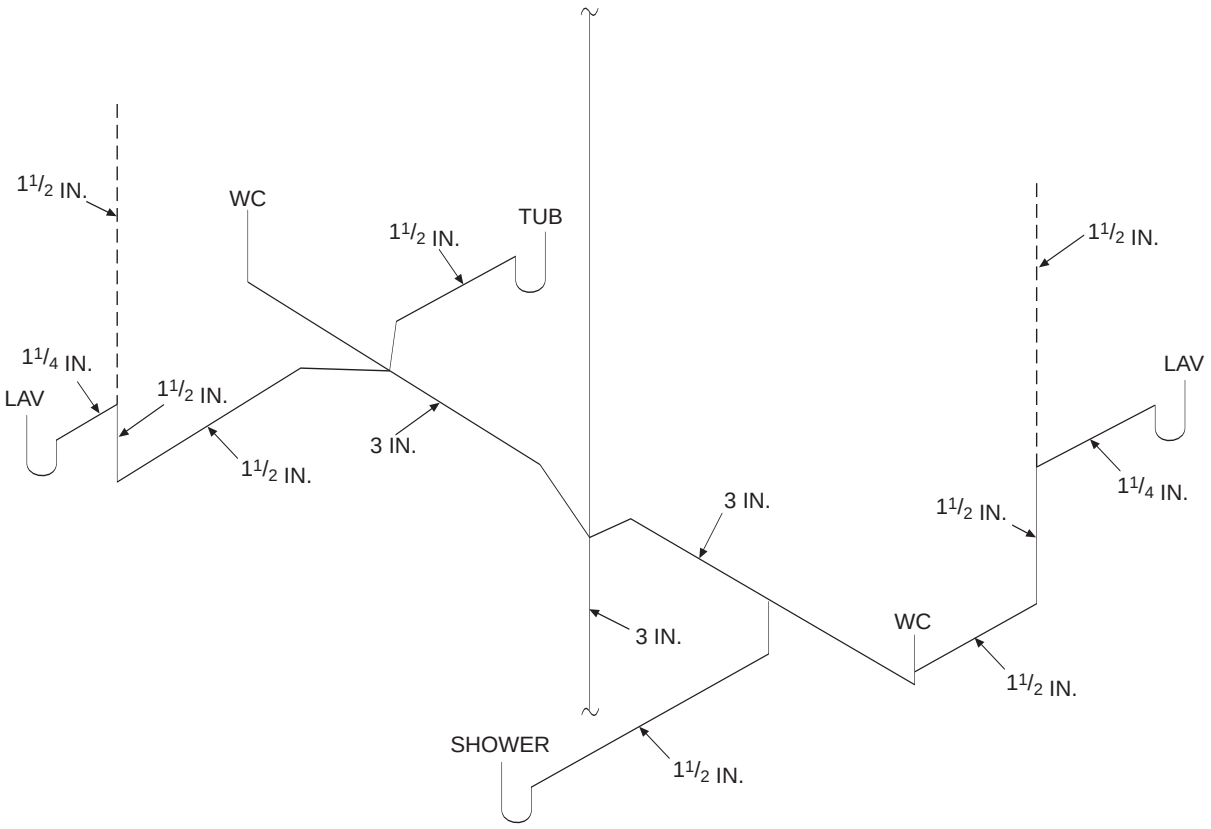

B. HORIZONTAL WET VENTING

For SI: 1 inch = 25.4 mm.

FIGURE N4
TYPICAL METHODS OF WET VENTING

INTERNATIONAL CODE COUNCIL®
Copyright © 2015 ICC. ALL RIGHTS RESERVED. Accessed by David Dammon on Jun 21, 2017 12:30:52 PM pursuant to License Agreement with ICC. No further reproduction or distribution authorized. ANY UNAUTHORIZED REPRODUCTION OR DISTRIBUTION IS A VIOLATION OF THE FEDERAL COPYRIGHT ACT AND THE LICENSE AGREEMENT, AND SUBJECT TO CIVIL AND CRIMINAL PENALTIES THEREUNDER.

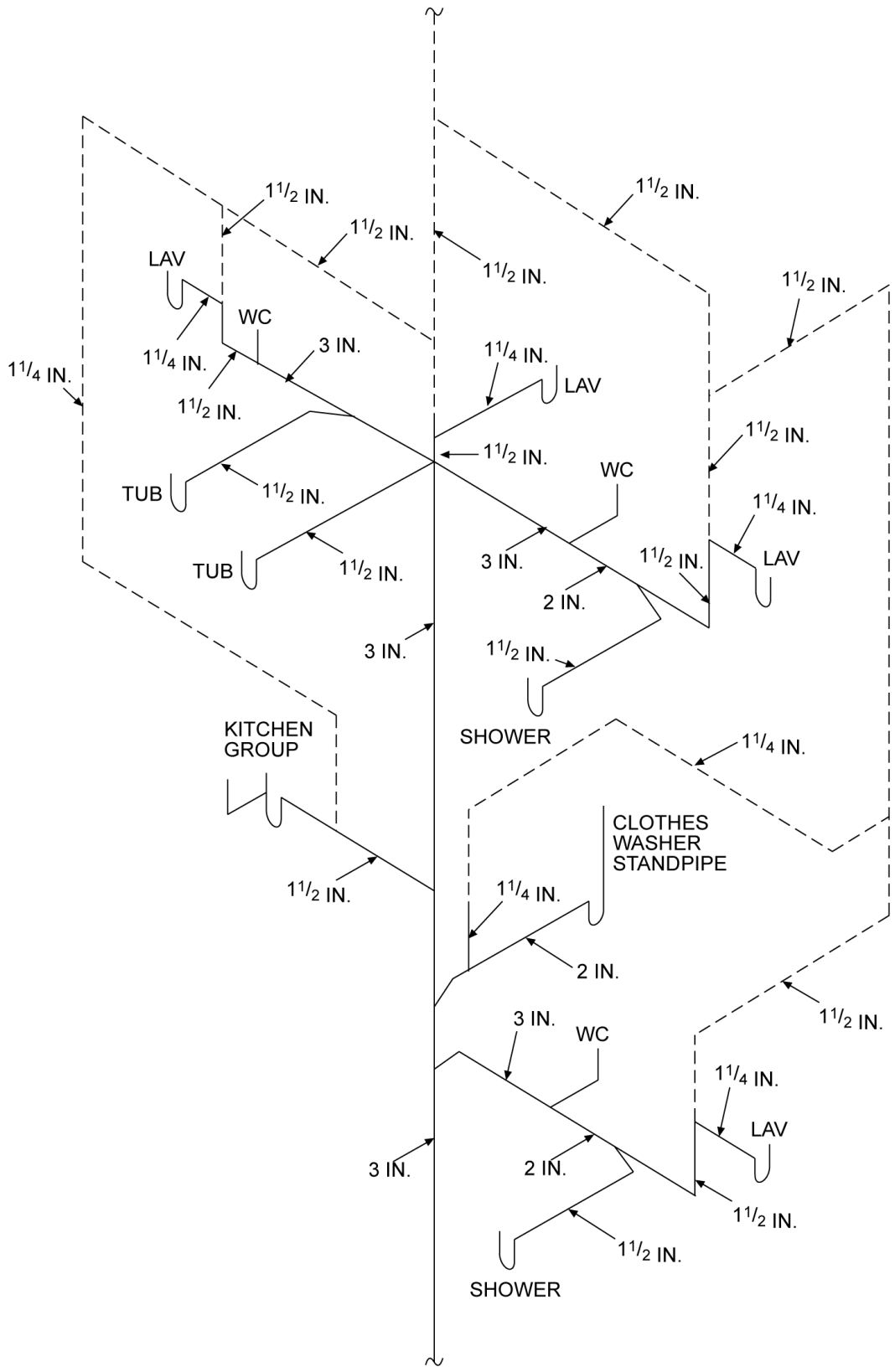

For SI: 1 inch = 25.4 mm.

FIGURE N5
SINGLE STACK SYSTEM FOR A TWO-STORY DWELLING

INTERNATIONAL CODE COUNCIL®
Copyright © 2015 ICC. ALL RIGHTS RESERVED. Accessed by David Dammon on Jun 21, 2017 12:30:52 PM pursuant to License Agreement with ICC. No further reproduction or distribution authorized. ANY UNAUTHORIZED REPRODUCTION OR DISTRIBUTION IS A VIOLATION OF THE FEDERAL COPYRIGHT ACT AND THE LICENSE AGREEMENT, AND SUBJECT TO CIVIL AND CRIMINAL PENALTIES THEREUNDER.

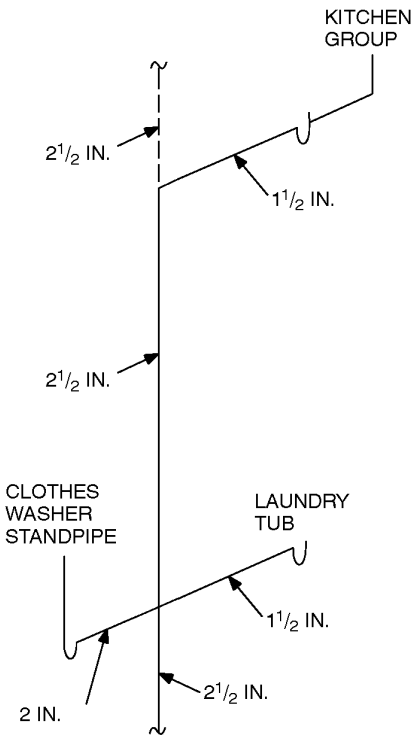

For SI: 1 inch = 25.4 mm.

FIGURE N6
WASTE STACK VENTING

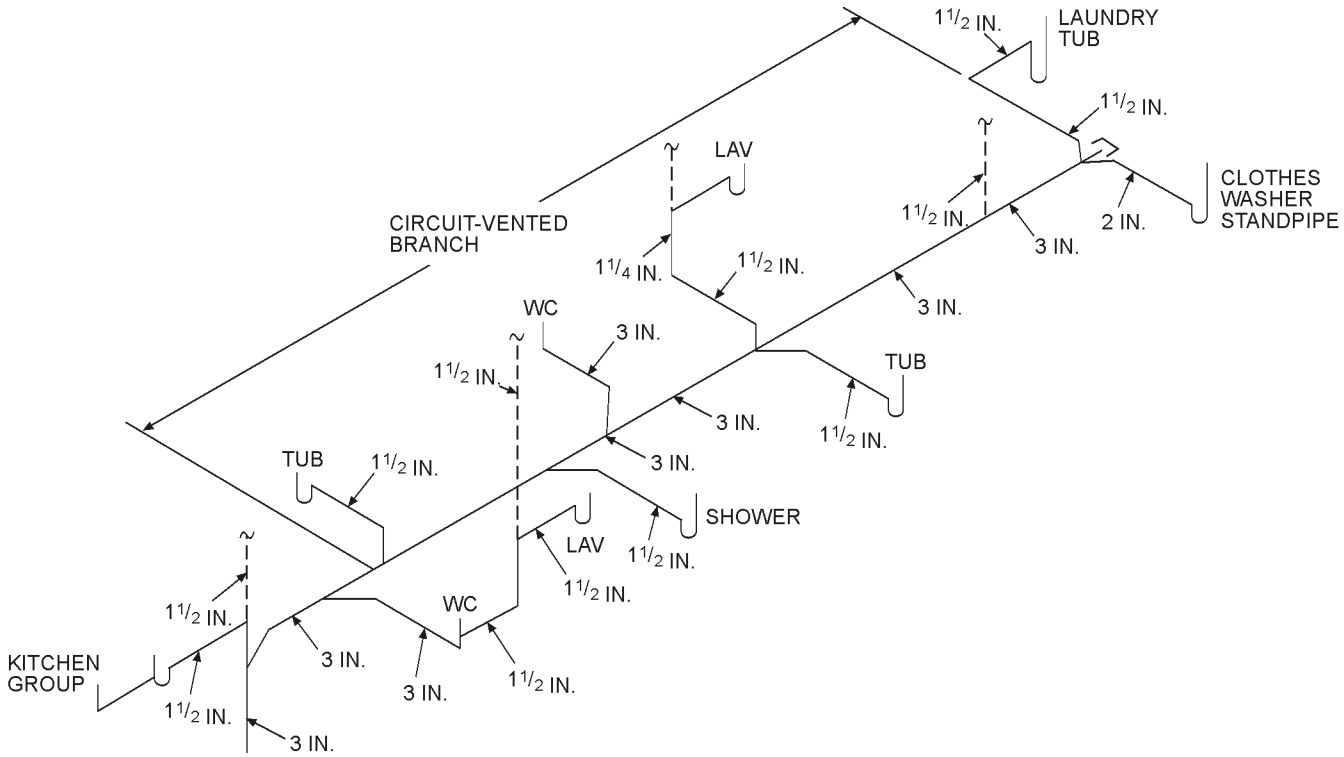

For SI: 1 inch = 25.4 mm.

FIGURE N7
CIRCUIT VENT WITH ADDITIONAL NONCIRCUIT-VENTED BRANCH

INTERNATIONAL CODE COUNCIL®
Copyright © 2015 ICC. ALL RIGHTS RESERVED. Accessed by David Dammon on Jun 21, 2017 12:30:52 PM pursuant to License Agreement with ICC. No further reproduction or distribution authorized. ANY UNAUTHORIZED REPRODUCTION OR DISTRIBUTION IS A VIOLATION OF THE FEDERAL COPYRIGHT ACT AND THE LICENSE AGREEMENT, AND SUBJECT TO CIVIL AND CRIMINAL PENALTIES THEREUNDER.

Appendix O:
Automatic Vehicular Gates

(The provisions contained in this appendix are not mandatory unless specifically referenced in the adopting ordinance.)

SECTION AO101
GENERAL

AO101.1 General. The provisions of this appendix shall control the design and construction of automatic vehicular gates installed on the lot of a one- or two-family dwelling.

SECTION AO102
DEFINITION

AO102.1 General. For the purposes of these requirements, the term used shall be defined as follows and as set forth in Chapter 2.

VEHICULAR GATE. A gate that is intended for use at a vehicular entrance or exit to the lot of a one- or two-family dwelling, and that is not intended for use by pedestrian traffic.

SECTION AO103
AUTOMATIC VEHICULAR GATES

AO103.1 Vehicular gates intended for automation. Vehicular gates intended for automation shall be designed, constructed and installed to comply with the requirements of ASTM F 2200.

AO103.2 Vehicular gate openers. Vehicular gate openers, where provided, shall be listed in accordance with UL 325.

INTERNATIONAL CODE COUNCIL®
Copyright © 2015 ICC. ALL RIGHTS RESERVED. Accessed by David Dammon on Jun 21, 2017 12:30:52 PM pursuant to License Agreement with ICC. No further reproduction or distribution authorized. ANY UNAUTHORIZED REPRODUCTION OR DISTRIBUTION IS A VIOLATION OF THE FEDERAL COPYRIGHT ACT AND THE LICENSE AGREEMENT, AND SUBJECT TO CIVIL AND CRIMINAL PENALTIES THEREUNDER.

INTERNATIONAL CODE COUNCIL®
Copyright © 2015 ICC. ALL RIGHTS RESERVED. Accessed by David Dammon on Jun 21, 2017 12:30:52 PM pursuant to License Agreement with ICC. No further reproduction or distribution authorized. ANY UNAUTHORIZED REPRODUCTION OR DISTRIBUTION IS A VIOLATION OF THE FEDERAL COPYRIGHT ACT AND THE LICENSE AGREEMENT, AND SUBJECT TO CIVIL AND CRIMINAL PENALTIES THEREUNDER.

Appendix P: Sizing of Water Piping System

(The provisions contained in this appendix are not mandatory unless specifically referenced in the adopting ordinance.)

SECTION AP101 GENERAL

AP101.1 Scope.

AP101.1.1 This appendix outlines two procedures for sizing a water piping system (see Sections AP103.3 and AP201.1). The design procedures are based on the minimum static pressure available from the supply source, the head changes in the system caused by friction and elevation, and the rates of flow necessary for operation of various fixtures.

AP101.1.2 Because of the variable conditions encountered in hydraulic design, it is impractical to specify definite and detailed rules for sizing of the water piping system. Accordingly, other sizing or design methods conforming to good engineering practice standards are acceptable alternatives to those presented herein.

SECTION AP102 INFORMATION REQUIRED

AP102.1 Preliminary. Obtain the necessary information regarding the minimum daily static service pressure in the area where the building is to be located. If the building supply is to be metered, obtain information regarding friction loss relative to the rate of flow for meters in the range of sizes likely to be used. Friction loss data can be obtained from most manufacturers of water meters.

AP102.2 Demand load.

AP102.2.1 Estimate the supply demand of the building main and the principal branches and risers of the system by totaling the corresponding demand from the applicable part of Table AP103.3(3).

AP102.2.2 Estimate continuous supply demands, in gallons per minute (gpm) (L/m), for lawn sprinklers, air conditioners, etc., and add the sum to the total demand for fixtures. The result is the estimated supply demand for the building supply.

SECTION AP103 SELECTION OF PIPE SIZE

AP103.1 General. Decide from Table P2903.1 what is the desirable minimum residual pressure that should be maintained at the highest fixture in the supply system. If the highest group of fixtures contains flushometer valves, the pressure for the group should be not less than 15 pounds per square inch (psi) (103.4 kPa) flowing. For flush tank supplies, the available pressure should be not less than 8 psi (55.2 kPa) flowing, except blowout action fixtures must not be less than 25 psi (172.4 kPa) flowing.

AP103.2 Pipe sizing.

AP103.2.1 Pipe sizes can be selected using the following procedure or by use of other design methods conforming to acceptable engineering practice that are *approved* by the *building official*. The sizes selected must not be less than the minimum required by this code.

AP103.2.2 Water pipe sizing procedures are based on a system of pressure requirements and losses, the sum of which must not exceed the minimum pressure available at the supply source. These pressures are as follows:

1. Pressure required at fixture to produce required flow. See Sections P2903.1 of this code and Section 604.3 of the *International Plumbing Code*.
2. Static pressure loss or gain (due to head) is computed at 0.433 psi per foot (9.8 kPa/m) of elevation change.

   Example: Assume that the highest fixture supply outlet is 20 feet (6096 mm) above or below the supply source. This produces a static pressure differential of 8.66 psi (59.8 kPa) loss [20 feet by 0.433 psi per foot (2096 mm by 9.8 kPa/m)].
3. Loss through water meter. The friction or pressure loss can be obtained from meter manufacturers.
4. Loss through taps in water main.
5. Loss through special devices, such as filters, softeners, backflow prevention devices and pressure regulators. These values must be obtained from the manufacturer.
6. Loss through valves and fittings. Losses for these items are calculated by converting to the *equivalent length* of piping and adding to the total pipe length.
7. Loss caused by pipe friction can be calculated where the pipe size, pipe length and flow through the pipe are known. With these three items, the friction loss can be determined. For piping flow charts not included, use manufacturers' tables and velocity recommendations.

Note: For all examples, the following metric conversions are applicable.

1 cubic foot per minute = 0.4719 L/s.

1 square foot = 0.0929 m^2.

1 degree = 0.0175 rad.

1 pound per square inch = 6.895 kPa.

1 inch = 25.4 mm.

1 foot = 304.8 mm.

1 gallon per minute = 3.785 L/m.

INTERNATIONAL CODE COUNCIL®
Copyright © 2015 ICC. ALL RIGHTS RESERVED. Accessed by David Dammon on Jun 21, 2017 12:30:52 PM pursuant to License Agreement with ICC. No further reproduction or distribution authorized. ANY UNAUTHORIZED REPRODUCTION OR DISTRIBUTION IS A VIOLATION OF THE FEDERAL COPYRIGHT ACT AND THE LICENSE AGREEMENT, AND SUBJECT TO CIVIL AND CRIMINAL PENALTIES THEREUNDER.

AP103.3 Segmented loss method. The size of water service mains, branch mains and risers by the segmented loss method, must be determined by knowing the water supply demand [gpm (L/m)], available water pressure [psi (kPa)] and friction loss caused by the water meter and *developed length* of pipe [feet (m)], including the *equivalent length* of fittings. This design procedure is based on the following parameters:

1. The calculated friction loss through each length of pipe.
2. A system of pressure losses, the sum of which must not exceed the minimum pressure available at the street main or other source of supply.
3. Pipe sizing based on estimated peak demand, total pressure losses caused by difference in elevation, equipment, *developed length* and pressure required at the most remote fixture; loss through taps in water main; losses through fittings, filters, backflow prevention devices, valves and pipe friction.

Because of the variable conditions encountered in hydraulic design, it is impractical to specify definite and detailed rules for the sizing of the water piping system. Current sizing methods do not address the differences in the probability of use and flow characteristics of fixtures between types of occupancies. Creating an exact model of predicting the demand for a building is impossible and final studies assessing the impact of water conservation on demand are not yet complete. The following steps are necessary for the segmented loss method.

1. **Preliminary.** Obtain the necessary information regarding the minimum daily static service pressure in the area where the building is to be located. If the building supply is to be metered, obtain information regarding friction loss relative to the rate of flow for meters in the range of sizes to be used. Friction loss data can be obtained from manufacturers of water meters. Enough pressure must be available to overcome all system losses caused by friction and elevation so that plumbing fixtures operate properly. Section 604.6 of the *International Plumbing Code* requires that the water distribution system be designed for the minimum pressure available taking into consideration pressure fluctuations. The lowest pressure must be selected to guarantee a continuous, adequate supply of water. The lowest pressure in the public main usually occurs in the summer because of lawn sprinkling and supplying water for air-conditioning cooling towers. Future demands placed on the public main as a result of large growth or expansion should be considered. The available pressure will decrease as additional loads are placed on the public system.
2. **Demand load.** Estimate the supply demand of the building main and the principal branches and risers of the system by totaling the corresponding demand from the applicable part of Table AP103.3(3). When estimating peak demand, sizing methods typically use water supply fixture units (w.s.f.u.) [see Table AP103.3(2)]. This numerical factor measures the load-producing effect of a single plumbing fixture of a given kind. The use of fixture units can be applied to a single basic probability curve (or table), found in the various sizing methods [see Table AP103.3(3)]. The fixture units are then converted into a gpm (L/m) flow rate for estimating demand.

   2.1. Estimate continuous supply demand in gpm (L/m) for lawn sprinklers, air conditioners, etc., and add the sum to the total demand for fixtures. The result is the estimated supply demand for the building supply. Fixture units cannot be applied to constant-use fixtures, such as hose bibbs, lawn sprinklers and air conditioners. These types of fixtures must be assigned the gpm (L/m) value.
3. **Selection of pipe size.** This water pipe sizing procedure is based on a system of pressure requirements and losses, the sum of which must not exceed the minimum pressure available at the supply source. These pressures are as follows:

   3.1. Pressure required at the fixture to produce required flow. See Section P2903.1 of this code and Section 604.3 of the *International Plumbing Code*.

   3.2. Static pressure loss or gain (because of head) is computed at 0.433 psi per foot (9.8 kPa/m) of elevation change.

   3.3. Loss through a water meter. The friction or pressure loss can be obtained from the manufacturer.

   3.4. Loss through taps in water main [see Table AP103.3(4)].

   3.5. Loss through special devices, such as filters, softeners, backflow prevention devices and pressure regulators. These values must be obtained from the manufacturers.

   3.6. Loss through valves and fittings [see Tables AP103.3(5) and AP103.3(6)]. Losses for these items are calculated by converting to the *equivalent length* of piping and adding to the total pipe length.

   3.7. Loss caused by pipe friction can be calculated where the pipe size, pipe length and flow through the pipe are known. With these three items, the friction loss can be determined using Figures AP103.3(2) through AP103.3(7). Where using charts, use pipe inside diameters. For piping flow charts not included, use manufacturers' tables and velocity recommendations. Before attempting to size any water supply system, it is necessary to gather preliminary information including available pressure, piping material, select design velocity, elevation differences and *developed length* to the most remote fixture. The water supply system is divided into sections at major changes in elevation or where branches lead to fixture groups. The peak demand must be determined in each part of the hot and cold water supply system. The expected flow through each section is determined in w.s.f.u. and con-

INTERNATIONAL CODE COUNCIL®
Copyright © 2015 ICC. ALL RIGHTS RESERVED. Accessed by David Dammon on Jun 21, 2017 12:30:52 PM pursuant to License Agreement with ICC. No further reproduction or distribution authorized. ANY UNAUTHORIZED REPRODUCTION OR DISTRIBUTION IS A VIOLATION OF THE FEDERAL COPYRIGHT ACT AND THE LICENSE AGREEMENT, AND SUBJECT TO CIVIL AND CRIMINAL PENALTIES THEREUNDER.

verted to gpm (L/m) flow rate. Sizing methods require determination of the "most hydraulically remote" fixture to compute the pressure loss caused by pipe and fittings. The hydraulically remote fixture represents the most downstream fixture along the circuit of piping requiring the most available pressure to operate properly. Consideration must be given to all pressure demands and losses, such as friction caused by pipe, fittings and equipment; elevation; and the residual pressure required by Table P2903.1. The two most common and frequent complaints about water supply system operation are lack of adequate pressure and noise.

Problem: What size Type L copper water pipe, service and distribution will be required to serve a two-story factory building having on each floor, back-to-back, two toilet rooms each equipped with hot and cold water? The highest fixture is 21 feet above the street main, which is tapped with a 2-inch corporation cock at which point the minimum pressure is 55 psi. In the building *basement*, a 2-inch meter with a maximum pressure drop of 11 psi and 3-inch reduced pressure principle backflow preventer with a maximum pressure drop of 9 psi are to be installed. The system is shown in Figure AP103.3(1). To be determined are the pipe sizes for the service main, and the cold and hot water distribution pipes.

Solution: A tabular arrangement such as shown in Table AP103.3(1) should first be constructed. The steps to be followed are indicated by the tabular arrangement itself as they are in sequence, Columns 1 through 10 and Lines A through L.

Step 1

Columns 1 and 2: Divide the system into sections breaking at major changes in elevation or where branches lead to fixture groups. After Point B [see Figure AP103.3(1)], separate consideration will be given to the hot and cold water piping. Enter the sections to be considered in the service and cold water piping in Column 1 of the tabular arrangement. Column 1 of Table AP103.3(1) provides a line-by-line, recommended tabular arrangement for use in solving pipe sizing.

The objective in designing the water supply system is to ensure an adequate water supply and pressure to all fixtures and equipment. Column 2 provides the psi (kPa) to be considered separately from the minimum pressure available at the main. Losses to take into consideration are the following: the differences in elevations between the water supply source and the highest water supply outlet; meter pressure losses; the tap in main loss; special fixture devices, such as water softeners and backflow prevention devices; and the pressure required at the most remote fixture outlet.

The difference in elevation can result in an increase or decrease in available pressure at the main. Where the water supply outlet is located above the source, this results in a loss in the available pressure and is subtracted from the pressure at the water source. Where the highest water supply outlet is located below the water supply source, there will be an increase in pressure that is added to the available pressure of the water source.

Column 3: Using Table AP103.3(3), determine the gpm (L/m) of flow to be expected in each section of the system. These flows range from 28.6 to 108 gpm. Load values for fixtures must be determined as w.s.f.u. and then converted to a gpm rating to determine peak demand. Where calculating peak demands, the w.s.f.u. are added and then converted to the gpm rating. For continuous flow fixtures, such as hose bibbs and lawn sprinkler systems, add the gpm demand to the intermittent demand of fixtures. For example, a total of 120 w.s.f.u. is converted to a demand of 48 gpm. Two hose bibbs × 5 gpm demand = 10 gpm. Total gpm rating = 48.0 gpm + 10 gpm = 58.0 gpm demand.

Step 2

Line A: Enter the minimum pressure available at the main source of supply in Column 2. This is 55 psi (379.2 kPa). The local water authorities generally keep records of pressures at different times of the day and year. The available pressure can also be checked from nearby buildings or from fire department hydrant checks.

Line B: Determine from Table P2903.1 the highest pressure required for the fixtures on the system, which is 15 psi (103.4 kPa), to operate a flushometer valve. The most remote fixture outlet is necessary to compute the pressure loss caused by pipe and fittings, and represents the most downstream fixture along the circuit of piping requiring the available pressure to operate properly as indicated by Table P2903.1.

Line C: Determine the pressure loss for the meter size given or assumed. The total water flow from the main through the service as determined in Step 1 will serve to aid in the meter selected. There are three common types of water meters; the pressure losses are determined by the American Water Works Association Standards for displacement type, compound type and turbine type. The maximum pressure loss of such devices takes into consideration the meter size, safe operating capacity [gpm (L/m)] and maximum rates for continuous operations [gpm (L/m)]. Typically, equipment imparts greater pressure losses than piping.

Line D: Select from Table AP103.3(4) and enter the pressure loss for the tap size given or assumed. The loss of pressure through taps and tees in psi (kPa) is based on the total gpm (L/m) flow rate and size of the tap.

Line E: Determine the difference in elevation between the main and source of supply and the highest fixture on the system. Multiply this figure, expressed in feet (mm), by 0.43 psi. Enter the resulting psi (kPa) loss on Line E. The difference in elevation between the water supply source and the highest water supply outlet has a significant impact on the sizing of the water supply system. The difference in elevation usually results in a loss in the available pressure because the water supply outlet is generally located above the water supply source. The loss is caused by the pressure required to lift the water to the outlet. The pressure loss is subtracted from the pressure at the water

INTERNATIONAL CODE COUNCIL®
Copyright © 2015 ICC. ALL RIGHTS RESERVED. Accessed by David Dammon on Jun 21, 2017 12:30:52 PM pursuant to License Agreement with ICC. No further reproduction or distribution authorized. ANY UNAUTHORIZED REPRODUCTION OR DISTRIBUTION IS A VIOLATION OF THE FEDERAL COPYRIGHT ACT AND THE LICENSE AGREEMENT, AND SUBJECT TO CIVIL AND CRIMINAL PENALTIES THEREUNDER.

source. Where the highest water supply outlet is located below the water source, there will be an increase in pressure that is added to the available pressure of the water source.

Lines F, G and H: The pressure losses through filters, backflow prevention devices or other special fixtures must be obtained from the manufacturer or estimated and entered on these lines. Equipment, such as backflow prevention devices, check valves, water softeners, instantaneous, or tankless water heaters, filters and strainers, can impart a much greater pressure loss than the piping. The pressure losses can range from 8 to 30 psi.

Step 3

Line I: The sum of the pressure requirements and losses that affect the overall system (Lines B through H) is entered on this line. Summarizing the steps, all of the system losses are subtracted from the minimum water pressure. The remainder is the pressure available for friction, defined as the energy available to push the water through the pipes to each fixture. This force can be used as an average pressure loss, as long as the pressure available for friction is not exceeded. Saving a certain amount for available water supply pressures as an area incurs growth, or because of the aging of the pipe or equipment added to the system is recommended.

Step 4

Line J: Subtract Line I from Line A. This gives the pressure that remains available from overcoming friction losses in the system. This figure is a guide to the pipe size that is chosen for each section, incorporating the total friction losses to the most remote outlet (measured length is called *developed length*).

Exception: Where the main is above the highest fixture, the resulting psi (kPa) must be considered a pressure gain (static head gain) and omitted from the sums of Lines B through H and added to Line J.

The maximum friction head loss that can be tolerated in the system during peak demand is the difference between the static pressure at the highest and most remote outlet at no-flow conditions and the minimum flow pressure required at that outlet. If the losses are within the required limits, every run of pipe will be within the required friction head loss. Static pressure loss is at the most remote outlet in feet × 0.433 = loss in psi caused by elevation differences.

Step 5

Column 4: Enter the length of each section from the main to the most remote outlet (at Point E). Divide the water supply system into sections breaking at major changes in elevation or where branches lead to fixture groups.

Step 6

Column 5: Where selecting a trial pipe size, the length from the water service or meter to the most remote fixture outlet must be measured to determine the *developed length*. However, in systems having a flushometer valve or temperature-controlled shower at the topmost floors, the *developed length* would be from the water meter to the most remote flushometer valve on the system. A rule of thumb is that size will become progressively smaller as the system extends farther from the main source of supply. A trial pipe size can be arrived at by the following formula:

Line J: (Pressure available to overcome pipe friction) × 100/*equivalent length* of run total *developed length* to most remote fixture × percentage factor of 1.5 (Note: a percentage factor is used only as an estimate for friction losses imposed for fittings for initial trial pipe size) = psi (average pressure drop per 100 feet of pipe).

For trial pipe size, see Figure AP103.3(3) (Type L copper) based on 2.77 psi and 108 gpm = $2^{1}/_{2}$ inches. To determine the *equivalent length* of run to the most remote outlet, the *developed length* is determined and added to the friction losses for fittings and valves. The *developed lengths* of the designated pipe sections are as follows:

A-B	54 feet
B-C	8 feet
C-D	13 feet
D-E	150 feet

Total *developed length* = 225 feet

The *equivalent length* of the friction loss in fittings and valves must be added to the *developed length* (most remote outlet). Where the size of fittings and valves is not known, the added friction loss should be approximated. A general rule that has been used is to add 50 percent of the *developed length* to allow for fittings and valves. For example, the *equivalent length* of run equals the *developed length* of run (225 feet × 1.5 = 338 feet). The total *equivalent length* of run for determining a trial pipe size is 338 feet.

Example: 9.36 (pressure available to overcome pipe friction) × 100/338 (*equivalent length* of run = 225 × 1.5) = 2.77 psi (average pressure drop per 100 feet of pipe).

Step 7

Column 6: Select from Table AP103.3(6) the *equivalent lengths* for the trial pipe size of fittings and valves on each pipe section. Enter the sum for each section in Column 6. (The number of fittings to be used in this example must be an estimate). The *equivalent length* of piping is the *developed length* plus the *equivalent lengths* of pipe corresponding to the friction head losses for fittings and valves. Where the size of fittings and valves is not known, the added friction head losses must be approximated. An estimate for this example is found in Table AP.1.

Step 8

Column 7: Add the figures from Columns 4 and 6, and enter in Column 7. Express the sum in hundreds of feet.

INTERNATIONAL CODE COUNCIL®
Copyright © 2015 ICC. ALL RIGHTS RESERVED. Accessed by David Dammon on Jun 21, 2017 12:30:52 PM pursuant to License Agreement with ICC. No further reproduction or distribution authorized. ANY UNAUTHORIZED REPRODUCTION OR DISTRIBUTION IS A VIOLATION OF THE FEDERAL COPYRIGHT ACT AND THE LICENSE AGREEMENT, AND SUBJECT TO CIVIL AND CRIMINAL PENALTIES THEREUNDER.

Step 9

Column 8: Select from Figure AP103.3(3) the friction loss per 100 feet of pipe for the gpm flow in a section (Column 3) and trial pipe size (Column 5). Maximum friction head loss per 100 feet is determined on the basis of the total pressure available for friction head loss and the longest *equivalent length* of run. The selection is based on the gpm demand, uniform friction head loss and maximum design velocity. Where the size indicated by the hydraulic table indicates a velocity in excess of the selected velocity, a size must be selected that produces the required velocity.

Step 10

Column 9: Multiply the figures in Columns 7 and 8 for each section and enter in Column 9.

Total friction loss is determined by multiplying the friction loss per 100 feet for each pipe section in the total *developed length* by the pressure loss in fittings expressed as *equivalent length* in feet (mm). Note: Section C-F should be considered in the total pipe friction losses only if greater loss occurs in Section C-F than in pipe Section D-E. Section C-F is not considered in the total *developed length*. Total friction loss in *equivalent length* is determined in Table AP.2.

Step 11

Line K: Enter the sum of the values in Column 9. The value is the total friction loss in *equivalent length* for each designated pipe section.

Step 12

Line L: Subtract Line J from Line K and enter in Column 10.

The result should always be a positive or plus figure. If it is not, repeat the operation using Columns 5, 6, 8 and 9 until a balance or near balance is obtained. If the difference between Lines J and K is a high positive number, it is an indication that the pipe sizes are too large and should be reduced, thus saving materials. In such a case, the operations using Columns 5, 6, 8 and 9 should be repeated.

The total friction losses are determined and subtracted from the pressure available to overcome pipe friction for the trial pipe size. This number is critical because it provides a guide to whether the pipe size selected is too large and the process should be repeated to obtain an economically designed system.

Answer: The final figures entered in Column 5 become the design pipe size for the respective sections. Repeating this operation a second time using the same sketch but considering the demand for hot water, it is possible to size the hot water distribution piping. This has been worked up as a part of the overall problem in the tabular arrangement used for sizing the service and water distribution piping. Note that consideration must be given to the pressure losses from the street main to the water heater (Section A-B) in determining the hot water pipe sizes.

TABLE AP.1

COLD WATER PIPE SECTION	FITTINGS/VALVES	PRESSURE LOSS EXPRESSED AS EQUIVALENT LENGTH OF TUBE (feet)	HOT WATER PIPE SECTION	FITTINGS/VALVES	PRESSURE LOSS EXPRESSED AS EQUIVALENT OF TUBE (feet)
A-B	3 – 2 1/2″ Gate valves	3	A-B	3 – 2 1/2″ Gate valves	3
	1 – 2 1/2″ Side branch tee	12	—	1 – 2 1/2″ Side branch tee	12
B-C	1 – 2 1/2″ Straight run tee	0.5	B-C	1 – 2″ Straight run tee	7
	—	—	—	1 – 2″ 90-degree ell	0.5
C-F	1 – 2 1/2″ Side branch tee	12	C-F	1 – 1 1/2″ Side branch tee	7
C-D	1 – 2 1/2″ 90-degree ell	7	C-D	1 – 1/2″ 90-degree ell	4
D-E	1 – 2 1/2″ Side branch tee	12	D-E	1 – 1 1/2″ Side branch tee	7

For SI: 1 inch = 25.4 mm, 1 foot = 304.8 mm, 1 degree = 0.01745 rad.

TABLE AP.2

PIPE SECTIONS	FRICTION LOSS EQUIVALENT LENGTH (feet)	
	Cold Water	Hot Water
A-B	0.69 × 3.2 = 2.21	0.69 × 3.2 = 2.21
B-C	0.085 × 3.1 = 0.26	0.16 × 1.4 = 0.22
C-D	0.20 × 1.9 = 0.38	0.17 × 3.2 = 0.54
D-E	1.62 × 1.9 = 3.08	1.57 × 3.2 = 5.02
Total pipe friction losses (Line K)	5.93	7.99

For SI: 1 foot = 304.8 mm.

INTERNATIONAL CODE COUNCIL®
Copyright © 2015 ICC. ALL RIGHTS RESERVED. Accessed by David Dammon on Jun 21, 2017 12:30:52 PM pursuant to License Agreement with ICC. No further reproduction or distribution authorized. ANY UNAUTHORIZED REPRODUCTION OR DISTRIBUTION IS A VIOLATION OF THE FEDERAL COPYRIGHT ACT AND THE LICENSE AGREEMENT, AND SUBJECT TO CIVIL AND CRIMINAL PENALTIES THEREUNDER.

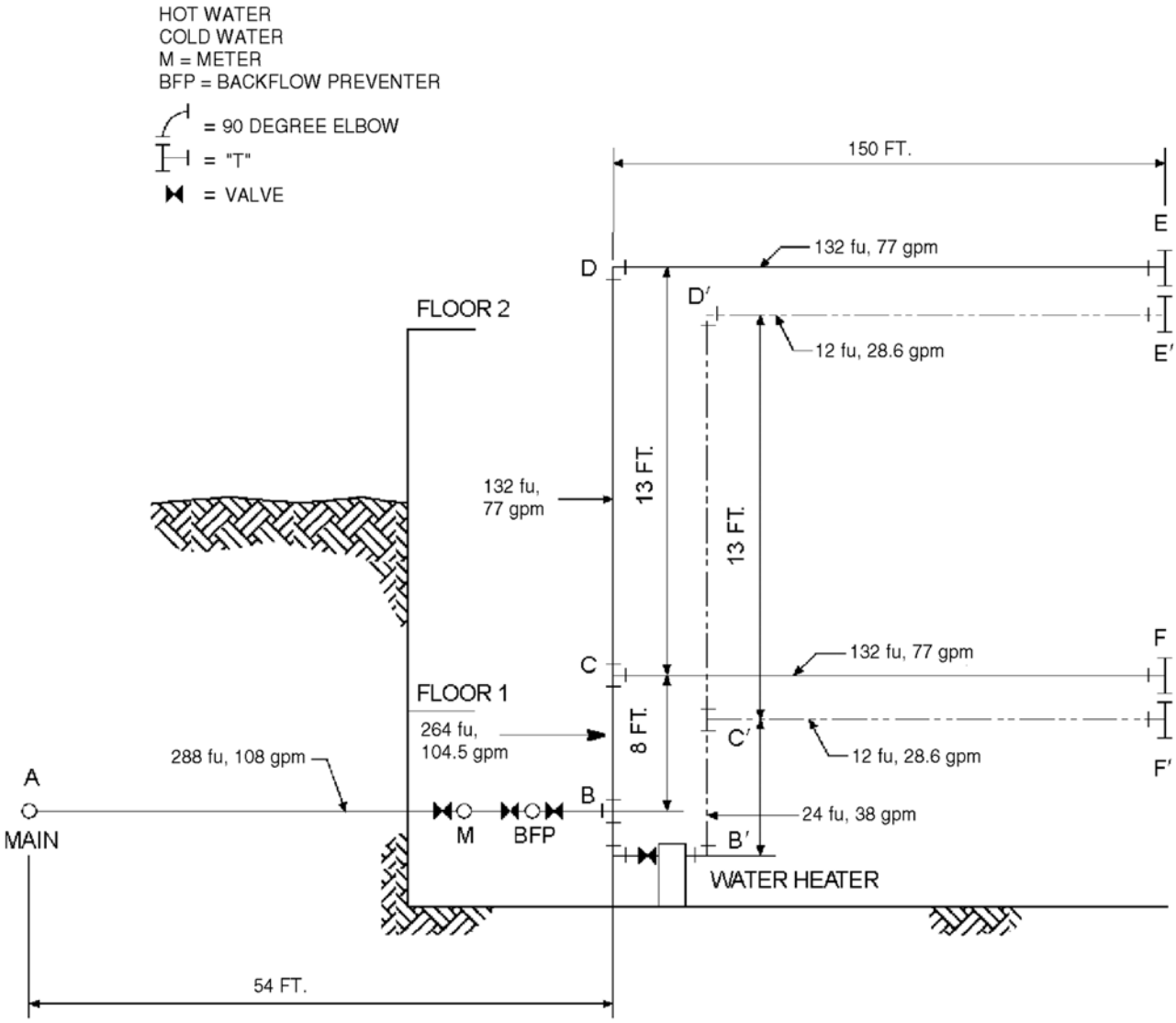

For SI: 1 foot = 304.8 mm, 1 gallon per minute = 3.785 L/m.

FIGURE AP103.3(1)
EXAMPLE—SIZING

INTERNATIONAL CODE COUNCIL®
Copyright © 2015 ICC. ALL RIGHTS RESERVED. Accessed by David Dammon on Jun 21, 2017 12:30:52 PM pursuant to License Agreement with ICC. No further reproduction or distribution authorized. ANY UNAUTHORIZED REPRODUCTION OR DISTRIBUTION IS A VIOLATION OF THE FEDERAL COPYRIGHT ACT AND THE LICENSE AGREEMENT, AND SUBJECT TO CIVIL AND CRIMINAL PENALTIES THEREUNDER.

Copyright © 2015 ICC. ALL RIGHTS RESERVED. Accessed by David Dammon on Jun 21, 2017 12:30:52 PM pursuant to License Agreement with ICC. No further reproduction or distribution authorized. ANY UNAUTHORIZED REPRODUCTION OR DISTRIBUTION IS A VIOLATION OF THE FEDERAL COPYRIGHT ACT AND THE LICENSE AGREEMENT, AND SUBJECT TO CIVIL AND CRIMINAL PENALTIES THEREUNDER.

TABLE AP103.3(1)
RECOMMENDED TABULAR ARRANGEMENT FOR USE IN SOLVING PIPE SIZING PROBLEMS

COLUMN	1	2	3	4	5	6	7	8	9	10
Line	Description	Pounds per square inch	Gallons per min through section	Length of section (feet)	Trial pipe size (inches)	Equivalent length of fittings and valves (feet)	Total equivalent length [(Col. 4 + Col. 6)/100 feet)]	Friction loss per 100 feet of trial size pipe (psi)	Friction loss in equivalent length Column 8 x Column 7 (psi)	Excess pressure over friction losses (psi)
A	Service and cold water distribution piping[a] — Minimum pressure available at main	55.00								
B	Highest pressure required at a fixture (see Table P2903.1)	15.00								
C	Meter loss 2″ meter	11.00								
D	Tap in main loss 2″ tap [see Table AP103.3(4)]	1.61								
E	Static head loss 21 ft × 0.43 psi/ft	9.03								
F	Special fixture loss backflow preventer	9.00								
G	Special fixture loss—Filter	0.00								
H	Special fixture loss—Other	0.00								
I	Total overall losses and requirements (Sum of Lines B through H)	45.64								
J	Pressure available to overcome pipe friction (Line A minus Line I)	9.36								
	Pipe section (from diagram) cold water distribution piping — A-B	288	108.0	54	$2^1/_2$	15.00	0.69	3.2	2.21	—
	B-C	264	104.5	8	$2^1/_2$	0.5	0.085	3.1	0.26	—
	C-D	132	77.0	13	$2^1/_2$	7.00	0.20	1.9	0.38	—
	C-F[b]	132	77.0	150	$2^1/_2$	12.00	1.62	1.9	3.08	—
	D-E[b]	132	77.0	150	$2^1/_2$	12.00	1.62	1.9	3.08	—
K	Total pipe friction losses (cold)		—	—	—	—	—	—	5.93	—
L	Difference (Line J minus Line K)		—	—	—	—	—	—	—	3.43
	Pipe section (from diagram) Hot water Distribution Piping — A′B′	288	108.0	54	$2^1/_2$	12.00	0.69	3.3	2.21	—
	B′C′	24	38.0	8	2	7.5	0.16	1.4	0.22	—
	C′D′	12	28.6	13	$1^1/_2$	4.0	0.17	3.2	0.54	—
	C′F′[b]	12	28.6	150	$1^1/_2$	7.00	1.57	3.2	5.02	—
	D′E′[b]	12	28.6	150	$1^1/_2$	7.00	1.57	3.2	5.02	—
K	Total pipe friction losses (hot)		—	—	—	—	—	—	7.99	—
L	Difference (Line J minus Line K)		—	—	—	—	—	—	—	1.37

For SI: 1 inch = 25.4 mm, 1 foot = 304.8 mm, 1 pound per square inch = 6.895 kPa, 1 gallon per minute = 3.785 L/m.

a. To be considered as pressure gain for fixtures below main (to consider separately, omit from “I” and add to “J”).

b. To consider separately, in Line K use Section C-F only if greater loss than the loss in Section D-E.

TABLE AP103.3(2)
LOAD VALUES ASSIGNED TO FIXTURES[a]

FIXTURE	OCCUPANCY	TYPE OF SUPPLY CONTROL	LOAD VALUES, IN WATER SUPPLY FIXTURE UNITS (w.s.f.u.)		
			Cold	Hot	Total
Bathroom group	Private	Flush tank	2.7	1.5	3.6
Bathroom group	Private	Flushometer valve	6.0	3.0	8.0
Bathtub	Private	Faucet	1.0	1.0	1.4
Bathtub	Public	Faucet	3.0	3.0	4.0
Bidet	Private	Faucet	1.5	1.5	2.0
Combination fixture	Private	Faucet	2.25	2.25	3.0
Dishwashing machine	Private	Automatic	—	1.4	1.4
Drinking fountain	Offices, etc.	$^3/_8$″ valve	0.25	—	0.25
Kitchen sink	Private	Faucet	1.0	1.0	1.4
Kitchen sink	Hotel, restaurant	Faucet	3.0	3.0	4.0
Laundry trays (1 to 3)	Private	Faucet	1.0	1.0	1.4
Lavatory	Private	Faucet	0.5	0.5	0.7
Lavatory	Public	Faucet	1.5	1.5	2.0
Service sink	Offices, etc.	Faucet	2.25	2.25	3.0
Shower head	Public	Mixing valve	3.0	3.0	4.0
Shower head	Private	Mixing valve	1.0	1.0	1.4
Urinal	Public	1″ flushometer valve	10.0	—	10.0
Urinal	Public	$^3/_4$″ flushometer valve	5.0	—	5.0
Urinal	Public	Flush tank	3.0	—	3.0
Washing machine (8 lb)	Private	Automatic	1.0	1.0	1.4
Washing machine (8 lb)	Public	Automatic	2.25	2.25	3.0
Washing machine (15 lb)	Public	Automatic	3.0	3.0	4.0
Water closet	Private	Flushometer valve	6.0	—	6.0
Water closet	Private	Flush tank	2.2	—	2.2
Water closet	Public	Flushometer valve	10.0	—	10.0
Water closet	Public	Flush tank	5.0	—	5.0
Water closet	Public or private	Flushometer tank	2.0	—	2.0

For SI: 1 inch = 25.4 mm, 1 pound = 0.454 kg.

a. For fixtures not listed, loads should be assumed by comparing the fixture to one listed using water in similar quantities and at similar rates. The assigned loads for fixtures with both hot and cold water supplies are given for separate hot and cold water loads, and for total load. The separate hot and cold water loads are three-fourths of the total load for the fixture in each case.

INTERNATIONAL CODE COUNCIL®
Copyright © 2015 ICC. ALL RIGHTS RESERVED. Accessed by David Dammon on Jun 21, 2017 12:30:52 PM pursuant to License Agreement with ICC. No further reproduction or distribution authorized. ANY UNAUTHORIZED REPRODUCTION OR DISTRIBUTION IS A VIOLATION OF THE FEDERAL COPYRIGHT ACT AND THE LICENSE AGREEMENT, AND SUBJECT TO CIVIL AND CRIMINAL PENALTIES THEREUNDER.

TABLE AP103.3(3)
TABLE FOR ESTIMATING DEMAND

SUPPLY SYSTEMS PREDOMINANTLY FOR FLUSH TANKS			SUPPLY SYSTEMS PREDOMINANTLY FOR FLUSHOMETERS		
Load	Demand		Load	Demand	
(w.s.f.u.)	(gpm)	(cfm)	(w.s.f.u.)	(gpm)	(cfm)
1	3.0	0.04104	—	—	—
2	5.0	0.0684	—	—	—
3	6.5	0.86892	—	—	—
4	8.0	1.06944	—	—	—
5	9.4	1.256592	5	15.0	2.0052
6	10.7	1.430376	6	17.4	2.326032
7	11.8	1.577424	7	19.8	2.646364
8	12.8	1.711104	8	22.2	2.967696
9	13.7	1.831416	9	24.6	3.288528
10	14.6	1.951728	10	27.0	3.60936
11	15.4	2.058672	11	27.8	3.716304
12	16.0	2.13888	12	28.6	3.823248
13	16.5	2.20572	13	29.4	3.930192
14	17.0	2.27256	14	30.2	4.037136
15	17.5	2.3394	15	31.0	4.14408
16	18.0	2.90624	16	31.8	4.241024
17	18.4	2.459712	17	32.6	4.357968
18	18.8	2.513184	18	33.4	4.464912
19	19.2	2.566656	19	34.2	4.571856
20	19.6	2.620128	20	35.0	4.6788
25	21.5	2.87412	25	38.0	5.07984
30	23.3	3.114744	30	42.0	5.61356
35	24.9	3.328632	35	44.0	5.88192
40	26.3	3.515784	40	46.0	6.14928
45	27.7	3.702936	45	48.0	6.41664
50	29.1	3.890088	50	50.0	6.684
60	32.0	4.27776	60	54.0	7.21872
70	35.0	4.6788	70	58.0	7.75344
80	38.0	5.07984	80	61.2	8.181216
90	41.0	5.48088	90	64.3	8.595624
100	43.5	5.81508	100	67.5	9.0234
120	48.0	6.41664	120	73.0	9.75864
140	52.5	7.0182	140	77.0	10.29336
160	57.0	7.61976	160	81.0	10.82808
180	61.0	8.15448	180	85.5	11.42964
200	65.0	8.6892	200	90.0	12.0312
225	70.0	9.3576	225	95.5	12.76644

(continued)

INTERNATIONAL CODE COUNCIL®
Copyright © 2015 ICC. ALL RIGHTS RESERVED. Accessed by David Dammon on Jun 21, 2017 12:30:52 PM pursuant to License Agreement with ICC. No further reproduction or distribution authorized. ANY UNAUTHORIZED REPRODUCTION OR DISTRIBUTION IS A VIOLATION OF THE FEDERAL COPYRIGHT ACT AND THE LICENSE AGREEMENT, AND SUBJECT TO CIVIL AND CRIMINAL PENALTIES THEREUNDER.

TABLE AP103.3(3)—continued
TABLE FOR ESTIMATING DEMAND

SUPPLY SYSTEMS PREDOMINANTLY FOR FLUSH TANKS			SUPPLY SYSTEMS PREDOMINANTLY FOR FLUSHOMETERS		
Load	Demand		Load	Demand	
(w.s.f.u.)	(gpm)	(cfm)	(w.s.f.u.)	(gpm)	(cfm)
250	75.0	10.026	250	101.0	13.50168
275	80.0	10.6944	275	104.5	13.96956
300	85.0	11.3628	300	108.0	14.43744
400	105.0	14.0364	400	127.0	16.97736
500	124.0	16.57632	500	143.0	19.11624
750	170.0	22.7256	750	177.0	23.66136
1,000	208.0	27.80544	1,000	208.0	27.80544
1,250	239.0	31.94952	1,250	239.0	31.94952
1,500	269.0	35.95992	1,500	269.0	35.95992
1,750	297.0	39.70296	1,750	297.0	39.70296
2,000	325.0	43.446	2,000	325.0	43.446
2,500	380.0	50.7984	2,500	380.0	50.7984
3,000	433.0	57.88344	3,000	433.0	57.88344
4,000	535.0	70.182	4,000	525.0	70.182
5,000	593.0	79.27224	5,000	593.0	79.27224

For SI: 1 gallon per minute = 3.785 L/m, 1 cubic foot per minute = 0.000471 m^3/s.

TABLE AP103.3(4)
LOSS OF PRESSURE THROUGH TAPS AND TEES IN POUNDS PER SQUARE INCH (psi)

GALLONS PER MINUTE	SIZE OF TAP OR TEE (inches)						
	$^5/_8$	$^3/_4$	1	$1^1/_4$	$1^1/_2$	2	3
10	1.35	0.64	0.18	0.08	—	—	—
20	5.38	2.54	0.77	0.31	0.14	—	—
30	12.10	5.72	1.62	0.69	0.33	0.10	—
40	—	10.20	3.07	1.23	0.58	0.18	—
50	—	15.90	4.49	1.92	0.91	0.28	—
60	—	—	6.46	2.76	1.31	0.40	—
70	—	—	8.79	3.76	1.78	0.55	0.10
80	—	—	11.50	4.90	2.32	0.72	0.13
90	—	—	14.50	6.21	2.94	0.91	0.16
100	—	—	17.94	7.67	3.63	1.12	0.21
120	—	—	25.80	11.00	5.23	1.61	0.30
140	—	—	35.20	15.00	7.12	2.20	0.41
150	—	—	—	17.20	8.16	2.52	0.47
160	—	—	—	19.60	9.30	2.92	0.54
180	—	—	—	24.80	11.80	3.62	0.68
200	—	—	—	30.70	14.50	4.48	0.84
225	—	—	—	38.80	18.40	5.60	1.06
250	—	—	—	47.90	22.70	7.00	1.31
275	—	—	—	—	27.40	7.70	1.59
300	—	—	—	—	32.60	10.10	1.88

For SI: 1 inch = 25.4 mm, 1 pound per square inch = 6.895 kPa, 1 gallon per minute = 3.785 L/m.

INTERNATIONAL CODE COUNCIL®
Copyright © 2015 ICC. ALL RIGHTS RESERVED. Accessed by David Dammon on Jun 21, 2017 12:30:52 PM pursuant to License Agreement with ICC. No further reproduction or distribution authorized. ANY UNAUTHORIZED REPRODUCTION OR DISTRIBUTION IS A VIOLATION OF THE FEDERAL COPYRIGHT ACT AND THE LICENSE AGREEMENT, AND SUBJECT TO CIVIL AND CRIMINAL PENALTIES THEREUNDER.

TABLE AP103.3(5)
ALLOWANCE IN EQUIVALENT LENGTHS OF PIPE FOR FRICTION LOSS IN VALVES AND THREADED FITTINGS (feet)

FITTING OR VALVE	PIPE SIZE (inches)							
	1/2	3/4	1	1 1/4	1 1/2	2	2 1/2	3
45-degree elbow	1.2	1.5	1.8	2.4	3.0	4.0	5.0	6.0
90-degree elbow	2.0	2.5	3.0	4.0	5.0	7.0	8.0	10.0
Tee, run	0.6	0.8	0.9	1.2	1.5	2.0	2.5	3.0
Tee, branch	3.0	4.0	5.0	6.0	7.0	10.0	12.0	15.0
Gate valve	0.4	0.5	0.6	0.8	1.0	1.3	1.6	2.0
Balancing valve	0.8	1.1	1.5	1.9	2.2	3.0	3.7	4.5
Plug-type cock	0.8	1.1	1.5	1.9	2.2	3.0	3.7	4.5
Check valve, swing	5.6	8.4	11.2	14.0	16.8	22.4	28.0	33.6
Globe valve	15.0	20.0	25.0	35.0	45.0	55.0	65.0	80.0
Angle valve	8.0	12.0	15.0	18.0	22.0	28.0	34.0	40.0

For SI: 1 inch = 25.4 mm, 1 foot = 304.8 mm, 1 degree = 0.0175 rad.

TABLE AP103.3(6)
PRESSURE LOSS IN FITTINGS AND VALVES EXPRESSED AS EQUIVALENT LENGTH OF TUBE[a] (feet)

NOMINAL OR STANDARD SIZE (inches)	FITTINGS				Coupling	VALVES			
	Standard Ell		90-degree Tee			Ball	Gate	Butterfly	Check
	90 Degree	45 Degree	Side Branch	Straight Run					
3/8	0.5	—	1.5	—	—	—	—	—	1.5
1/2	1	0.5	2	—	—	—	—	—	2
5/8	1.5	0.5	2	—	—	—	—	—	2.5
3/4	2	0.5	3	—	—	—	—	—	3
1	2.5	1	4.5	—	—	0.5	—	—	4.5
1 1/4	3	1	5.5	0.5	0.5	0.5	—	—	5.5
1 1/2	4	1.5	7	0.5	0.5	0.5	—	—	6.5
2	5.5	2	9	0.5	0.5	0.5	0.5	7.5	9
2 1/2	7	2.5	12	0.5	0.5	—	1	10	11.5
3	9	3.5	15	1	1	—	1.5	15.5	14.5
3 1/2	9	3.5	14	1	1	—	2	—	12.5
4	12.5	5	21	1	1	—	2	16	18.5
5	16	6	27	1.5	1.5	—	3	11.5	23.5
6	19	7	34	2	2	—	3.5	13.5	26.5
8	29	11	50	3	3	—	5	12.5	39

For SI: 1 inch = 25.4 mm, 1 foot = 304.8 mm, 1 degree = 0.01745 rad.

a. Allowances are for streamlined soldered fittings and recessed threaded fittings. For threaded fittings, double the allowances shown in the table. The equivalent lengths presented in the table are based on a C factor of 150 in the Hazen-Williams friction loss formula. The lengths shown are rounded to the nearest half-foot.

INTERNATIONAL CODE COUNCIL®
Copyright © 2015 ICC. ALL RIGHTS RESERVED. Accessed by David Dammon on Jun 21, 2017 12:30:52 PM pursuant to License Agreement with ICC. No further reproduction or distribution authorized. ANY UNAUTHORIZED REPRODUCTION OR DISTRIBUTION IS A VIOLATION OF THE FEDERAL COPYRIGHT ACT AND THE LICENSE AGREEMENT, AND SUBJECT TO CIVIL AND CRIMINAL PENALTIES THEREUNDER.

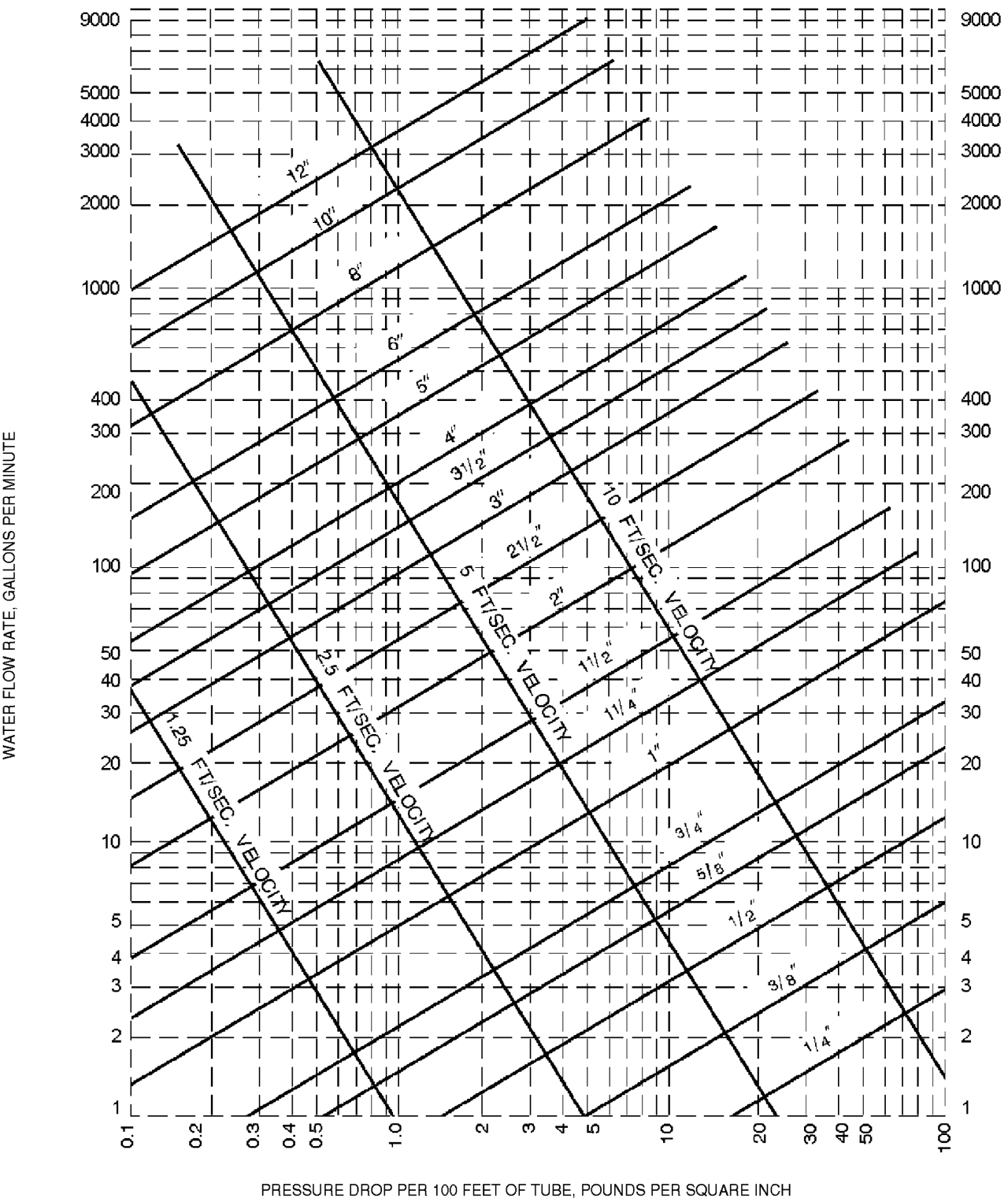

Note: Fluid velocities in excess of 5 to 8 feet per second are not usually recommended.

For SI: 1 inch = 25.4 mm, 1 foot = 304.8 mm, 1 gallon per minute = 3.785 L/m, 1 pound per square inch = 6.895 kPa, 1 foot per second = 0.305 m/s.

a. This figure applies to smooth new copper tubing with recessed (streamline) soldered joints and to the actual sizes of types indicated on the diagram.

FIGURE AP103.3(2)
FRICTION LOSS IN SMOOTH PIPE[a]
(TYPE K, ASTM B88 COPPER TUBING)

INTERNATIONAL CODE COUNCIL®
Copyright © 2015 ICC. ALL RIGHTS RESERVED. Accessed by David Dammon on Jun 21, 2017 12:30:52 PM pursuant to License Agreement with ICC. No further reproduction or distribution authorized. ANY UNAUTHORIZED REPRODUCTION OR DISTRIBUTION IS A VIOLATION OF THE FEDERAL COPYRIGHT ACT AND THE LICENSE AGREEMENT, AND SUBJECT TO CIVIL AND CRIMINAL PENALTIES THEREUNDER.

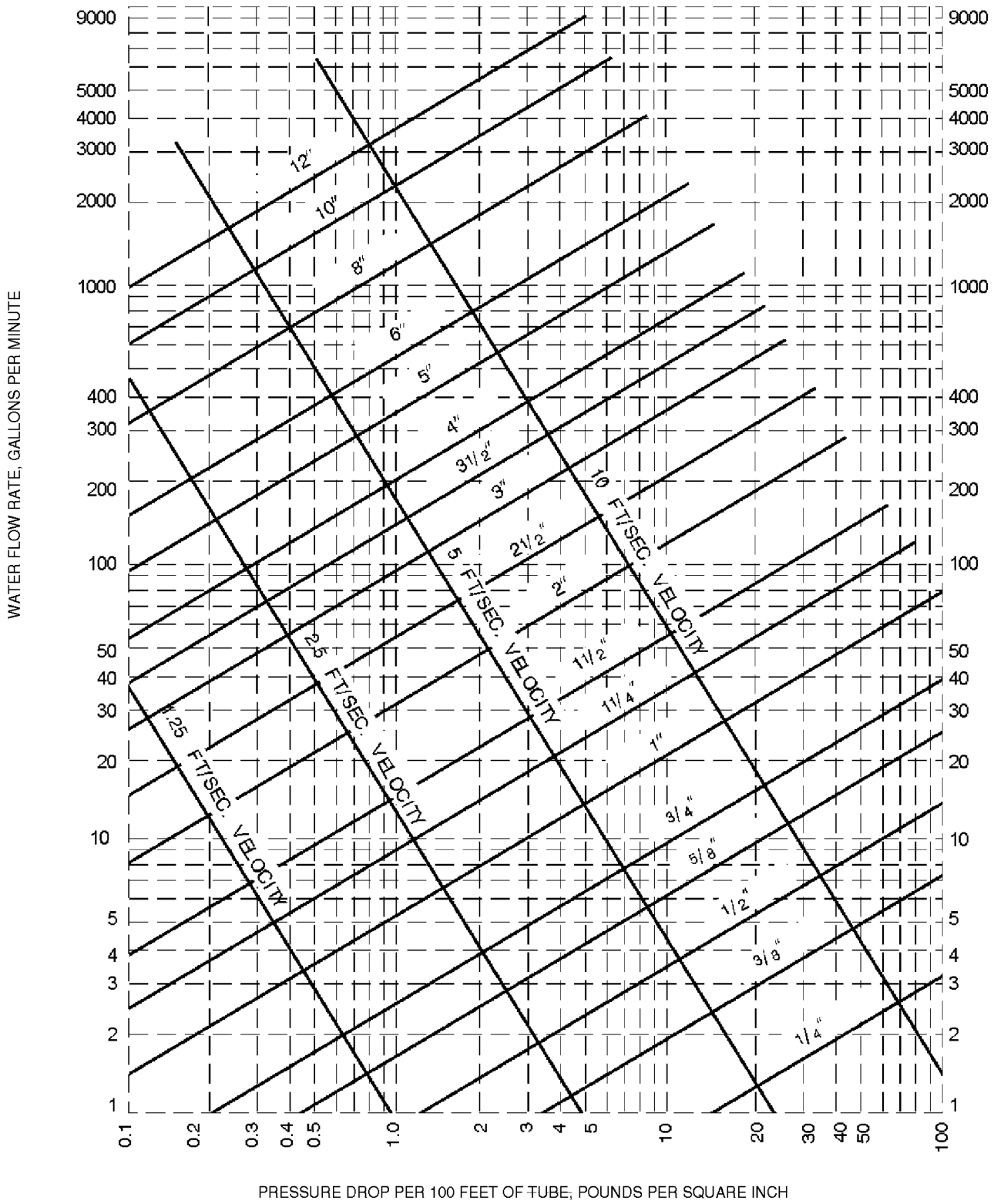

Note: Fluid velocities in excess of 5 to 8 feet per second are not usually recommended.

For SI: 1 inch = 25.4 mm, 1 foot = 304.8 mm, 1 gallon per minute = 3.785 L/m, 1 pound per square inch = 6.895 kPa, 1 foot per second = 0.305 m/s.

a. This figure applies to smooth new copper tubing with recessed (streamline) soldered joints and to the actual sizes of types indicated on the diagram.

FIGURE AP103.3(3)
FRICTION LOSS IN SMOOTH PIPE[a]
(TYPE L, ASTM B88 COPPER TUBING)

INTERNATIONAL CODE COUNCIL®
Copyright © 2015 ICC. ALL RIGHTS RESERVED. Accessed by David Dammon on Jun 21, 2017 12:30:52 PM pursuant to License Agreement with ICC. No further reproduction or distribution authorized. ANY UNAUTHORIZED REPRODUCTION OR DISTRIBUTION IS A VIOLATION OF THE FEDERAL COPYRIGHT ACT AND THE LICENSE AGREEMENT, AND SUBJECT TO CIVIL AND CRIMINAL PENALTIES THEREUNDER.

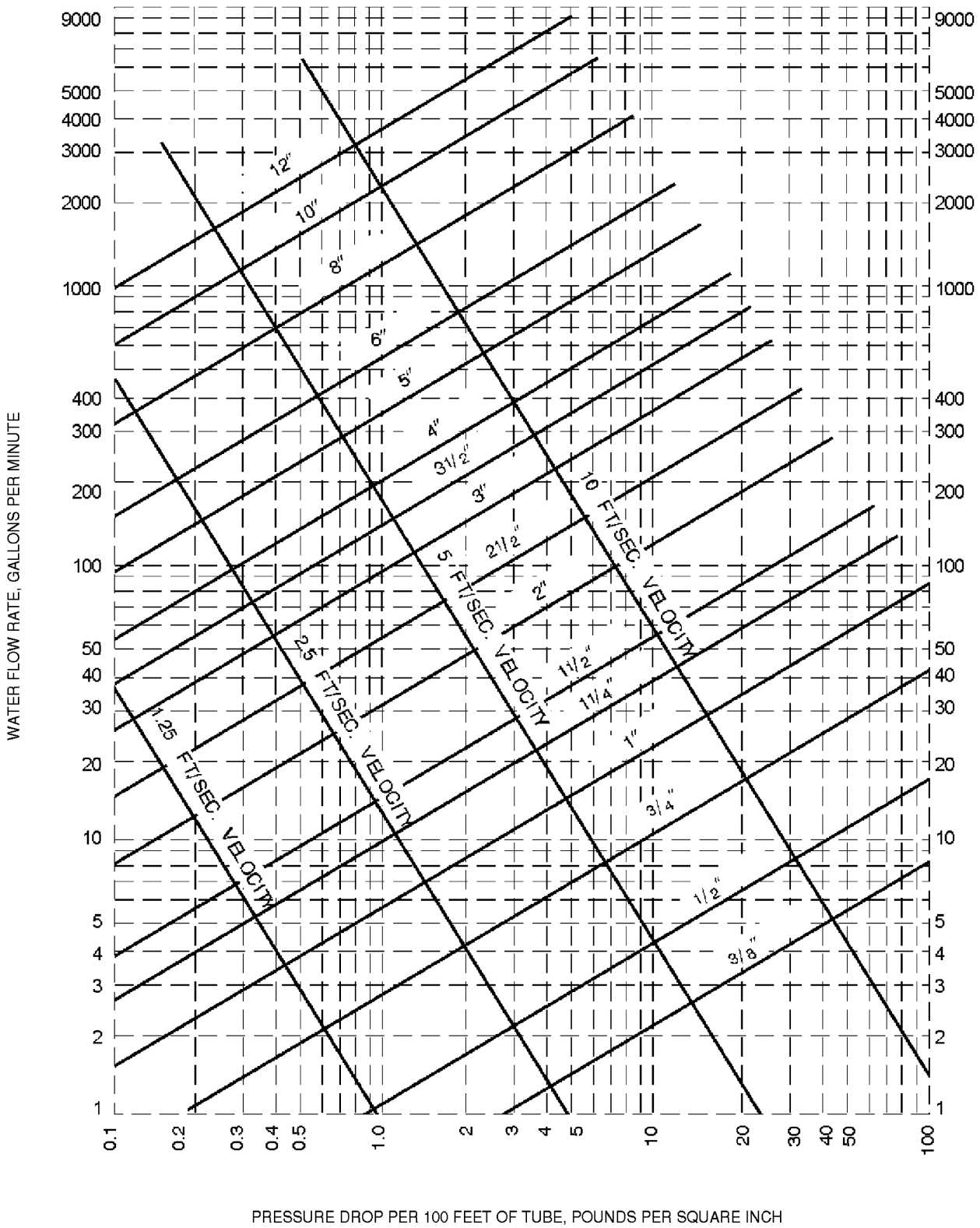

Note: Fluid velocities in excess of 5 to 8 feet per second are not usually recommended.

For SI: 1 inch = 25.4 mm, 1 foot = 304.8 mm, 1 gallon per minute = 3.785 L/m, 1 pound per square inch = 6.895 kPa, 1 foot per second = 0.305 m/s.

a. This figure applies to smooth new copper tubing with recessed (streamline) soldered joints and to the actual sizes of types indicated on the diagram.

FIGURE AP103.3(4)
FRICTION LOSS IN SMOOTH PIPE[a]
(TYPE M, ASTM B88 COPPER TUBING)

INTERNATIONAL CODE COUNCIL®
Copyright © 2015 ICC. ALL RIGHTS RESERVED. Accessed by David Dammon on Jun 21, 2017 12:30:52 PM pursuant to License Agreement with ICC. No further reproduction or distribution authorized. ANY UNAUTHORIZED REPRODUCTION OR DISTRIBUTION IS A VIOLATION OF THE FEDERAL COPYRIGHT ACT AND THE LICENSE AGREEMENT, AND SUBJECT TO CIVIL AND CRIMINAL PENALTIES THEREUNDER.

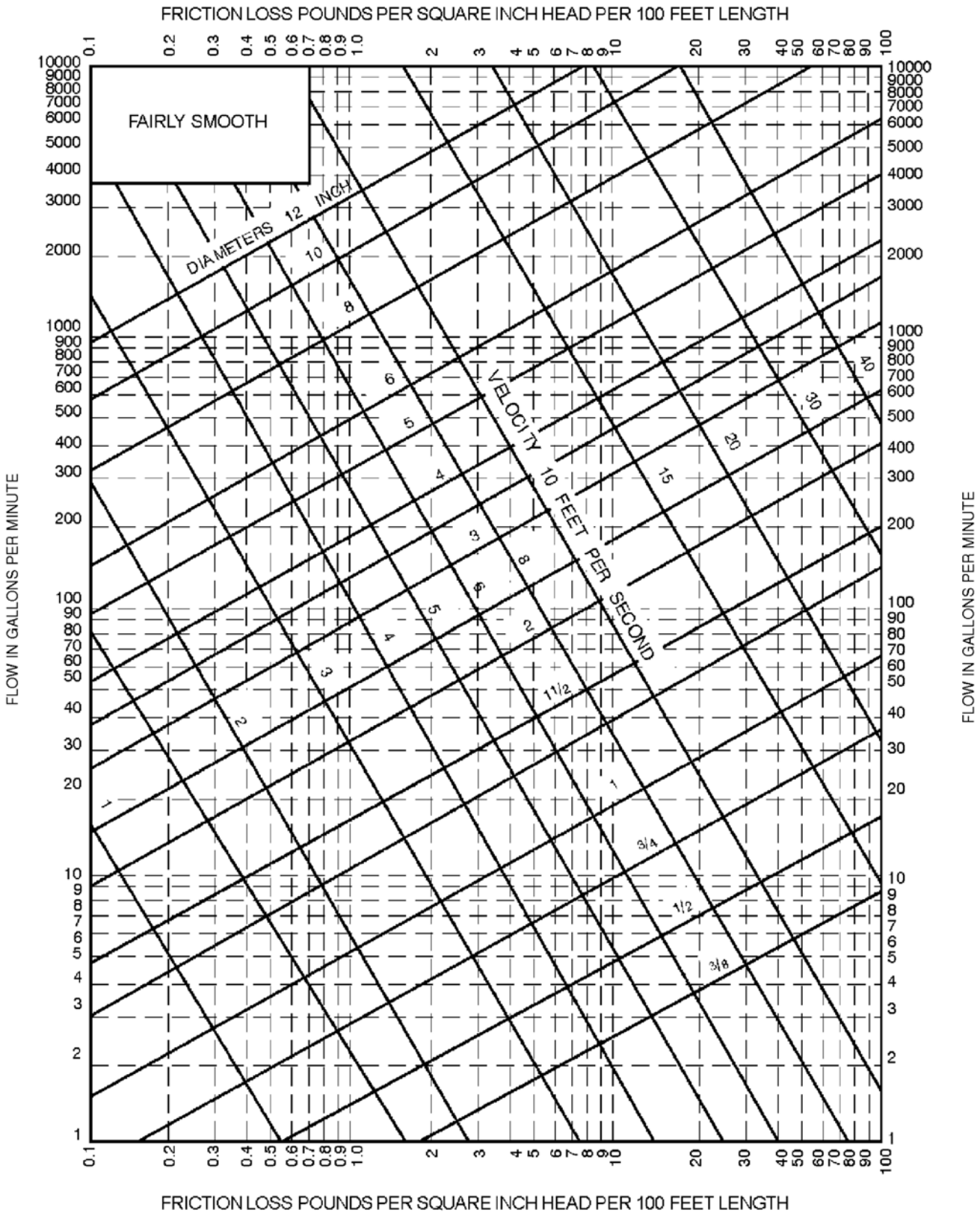

For SI: 1 inch = 25.4 mm, 1 foot = 304.8 mm, 1 gallon per minute = 3.785 L/m, 1 pound per square inch = 6.895 kPa, 1 foot per second = 0.305 m/s.
a. This figure applies to smooth new steel (fairly smooth) pipe and to actual diameters of standard-weight pipe.

FIGURE AP103.3(5)
FRICTION LOSS IN FAIRLY SMOOTH PIPE[a]

INTERNATIONAL CODE COUNCIL®
Copyright © 2015 ICC. ALL RIGHTS RESERVED. Accessed by David Dammon on Jun 21, 2017 12:30:52 PM pursuant to License Agreement with ICC. No further reproduction or distribution authorized. ANY UNAUTHORIZED REPRODUCTION OR DISTRIBUTION IS A VIOLATION OF THE FEDERAL COPYRIGHT ACT AND THE LICENSE AGREEMENT, AND SUBJECT TO CIVIL AND CRIMINAL PENALTIES THEREUNDER.

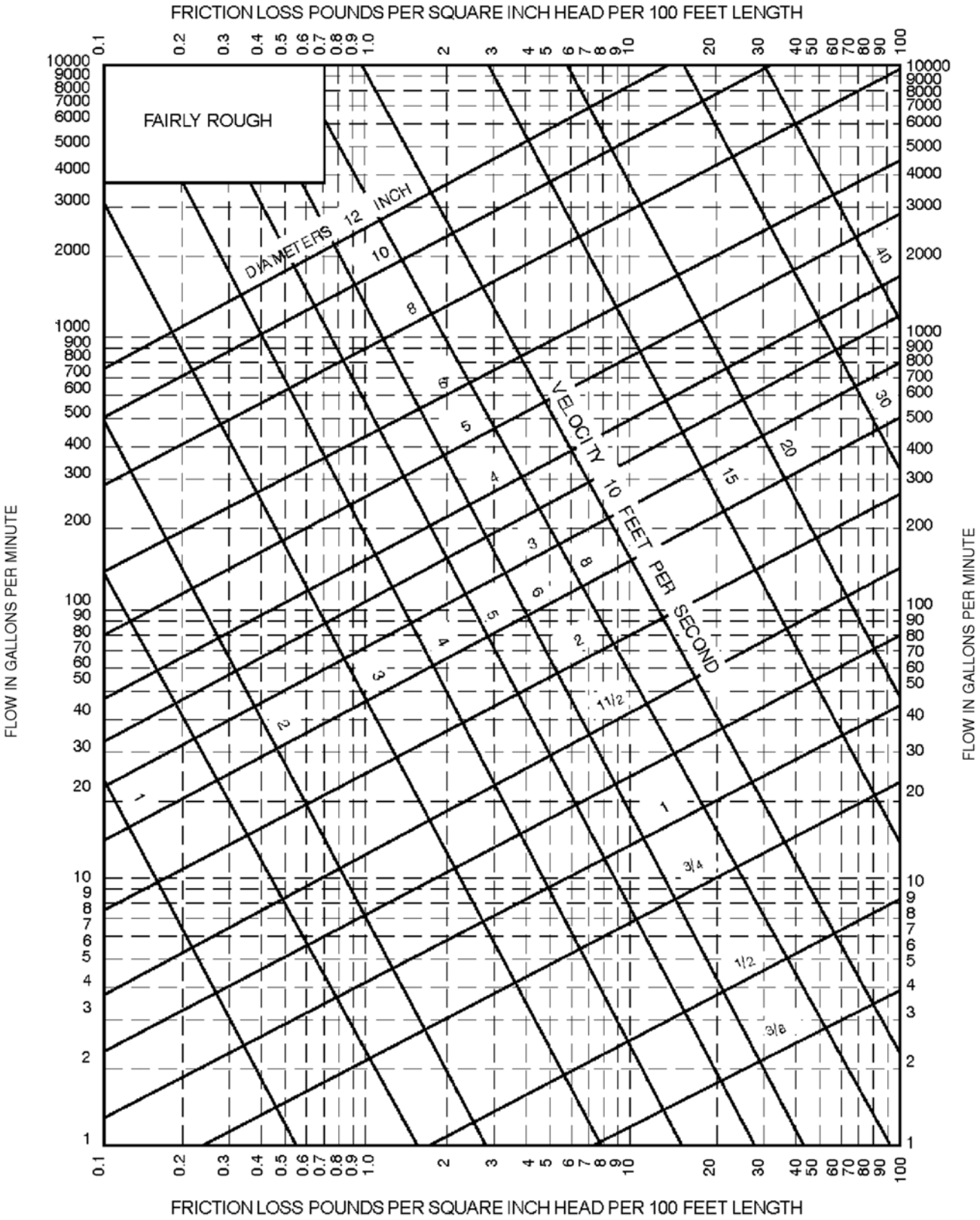

For SI: 1 inch = 25.4 mm, 1 foot = 304.8 mm, 1 gallon per minute = 3.785 L/m, 1 pound per square inch = 6.895 kPa, 1 foot per second = 0.305 m/s.

a. This figure applies to fairly rough pipe and to actual diameters which, in general, will be less than the actual diameters of the new pipe of the same kind.

FIGURE AP103.3(6)
FRICTION LOSS IN FAIRLY ROUGH PIPE[a]

INTERNATIONAL CODE COUNCIL®
Copyright © 2015 ICC. ALL RIGHTS RESERVED. Accessed by David Dammon on Jun 21, 2017 12:30:52 PM pursuant to License Agreement with ICC. No further reproduction or distribution authorized. ANY UNAUTHORIZED REPRODUCTION OR DISTRIBUTION IS A VIOLATION OF THE FEDERAL COPYRIGHT ACT AND THE LICENSE AGREEMENT, AND SUBJECT TO CIVIL AND CRIMINAL PENALTIES THEREUNDER.

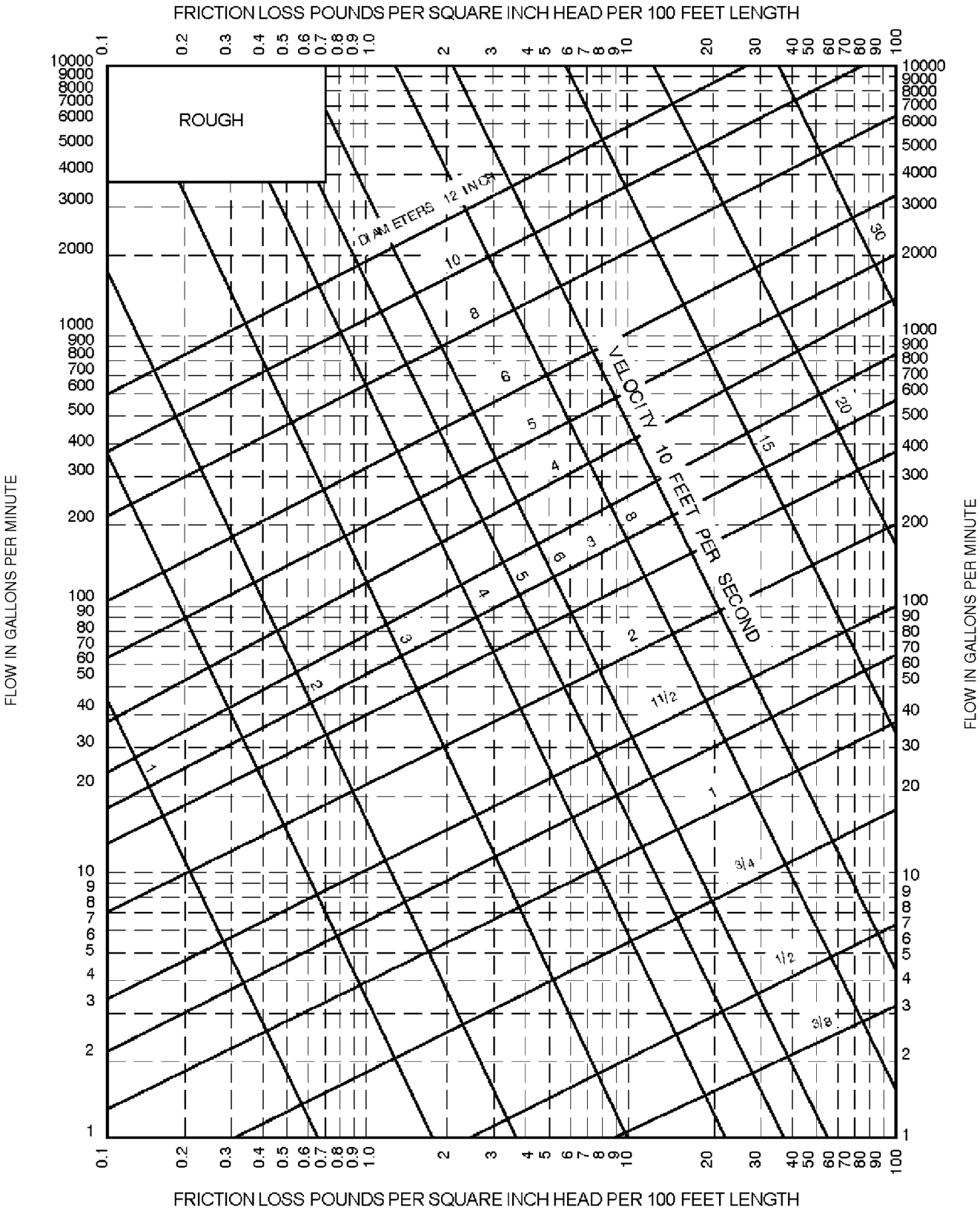

For SI: 1 inch = 25.4 mm, 1 foot = 304.8 mm, 1 gallon per minute = 3.785 L/m, 1 pound per square inch = 6.895 kPa, 1 foot per second = 0.305 m/s.

a. This figure applies to very rough pipe and existing pipe, and to their actual diameters.

FIGURE AP103.3(7)
FRICTION LOSS IN ROUGH PIPE[a]

INTERNATIONAL CODE COUNCIL®
Copyright © 2015 ICC. ALL RIGHTS RESERVED. Accessed by David Dammon on Jun 21, 2017 12:30:52 PM pursuant to License Agreement with ICC. No further reproduction or distribution authorized. ANY UNAUTHORIZED REPRODUCTION OR DISTRIBUTION IS A VIOLATION OF THE FEDERAL COPYRIGHT ACT AND THE LICENSE AGREEMENT, AND SUBJECT TO CIVIL AND CRIMINAL PENALTIES THEREUNDER.

SECTION AP201
SELECTION OF PIPE SIZE

AP201.1 Size of water-service mains, branch mains and risers. The minimum size water service pipe shall be $^{3}/_{4}$ inch (19.1 mm). The size of water service mains, branch mains and risers shall be determined according to water supply demand [gpm (L/m)], available water pressure [psi (kPa)] and friction loss caused by the water meter and *developed length* of pipe [feet (m)], including the *equivalent length* of fittings. The size of each water distribution system shall be determined according to the procedure outlined in this section or by other design methods conforming to acceptable engineering practice and *approved* by the *building official*:

1. Supply load in the building water distribution system shall be determined by the total load on the pipe being sized, in terms of w.s.f.u., as shown in Table AP103.3(2). For fixtures not listed, choose a w.s.f.u. value of a fixture with similar flow characteristics.
2. Obtain the minimum daily static service pressure [psi (kPa)] available (as determined by the local water authority) at the water meter or other source of supply at the installation location. Adjust this minimum daily static pressure [psi (kPa)] for the following conditions:
    2.1. Determine the difference in elevation between the source of supply and the highest water supply outlet. Where the highest water supply outlet is located above the source of supply, deduct 0.5 psi (3.4 kPa) for each foot (0.3 m) of difference in elevation. Where the highest water supply outlet is located below the source of supply, add 0.5 psi (3.4 kPa) for each foot (0.3 m) of difference in elevation.
    2.2. Where a water pressure-reducing valve is installed in the water distribution system, the minimum daily static water pressure available is 80 percent of the minimum daily static water pressure at the source of supply or the set pressure downstream of the water pressure-reducing valve, whichever is smaller.
    2.3. Deduct all pressure losses caused by special equipment, such as a backflow preventer, water filter and water softener. Pressure loss data for each piece of equipment shall be obtained through the manufacturer of the device.
    2.4. Deduct the pressure in excess of 8 psi (55 kPa) resulting from the installation of the special plumbing fixture, such as temperature-controlled shower and flushometer tank water closet. Using the resulting minimum available pressure, find the corresponding pressure range in Table AP201.1.
3. The maximum *developed length* for water piping is the actual length of pipe between the source of supply and the most remote fixture, including either hot (through the water heater) or cold water branches multiplied by a factor of 1.2 to compensate for pressure loss through fittings. Select the appropriate column in Table AP201.1 equal to or greater than the calculated maximum *developed length*.
4. To determine the size of the water service pipe, meter and main distribution pipe to the building using the appropriate table, follow down the selected "maximum *developed length*" column to a fixture unit equal to or greater than the total installation demand calculated by using the "combined" w.s.f.u. column of Table AP201.1. Read the water service pipe and meter sizes in the first left-hand column and the main distribution pipe to the building in the second left-hand column on the same row.
5. To determine the size of each water distribution pipe, start at the most remote outlet on each branch (either hot or cold branch) and, working back toward the main distribution pipe to the building, add up the w.s.f.u. demand passing through each segment of the distribution system using the related hot or cold column of Table AP201.1. Knowing demand, the size of each segment shall be read from the second left-hand column of the same table and the maximum *developed length* column selected in Steps 1 and 2, under the same or next smaller size meter row. In no case does the size of any branch or main need to be larger than the size of the main distribution pipe to the building established in Step 4.

INTERNATIONAL CODE COUNCIL®
Copyright © 2015 ICC. ALL RIGHTS RESERVED. Accessed by David Dammon on Jun 21, 2017 12:30:52 PM pursuant to License Agreement with ICC. No further reproduction or distribution authorized. ANY UNAUTHORIZED REPRODUCTION OR DISTRIBUTION IS A VIOLATION OF THE FEDERAL COPYRIGHT ACT AND THE LICENSE AGREEMENT, AND SUBJECT TO CIVIL AND CRIMINAL PENALTIES THEREUNDER.

TABLE AP201.1
MINIMUM SIZE OF WATER METERS, MAINS AND DISTRIBUTION PIPING BASED ON WATER SUPPLY FIXTURE UNIT VALUES (w.s.f.u.)

METER AND SERVICE PIPE (inches)	DISTRIBUTION PIPE (inches)	MAXIMUM DEVELOPMENT LENGTH (feet)									
Pressure Range 30 to 39 psi		40	60	80	100	150	200	250	300	400	500
3/4	1/2[a]	2.5	2	1.5	1.5	1	1	0.5	0.5	0	0
3/4	3/4	9.5	7.5	6	5.5	4	3.5	3	2.5	2	1.5
3/4	1	32	25	20	16.5	11	9	7.8	6.5	5.5	4.5
1	1	32	32	27	21	13.5	10	8	7	5.5	5
3/4	1 1/4	32	32	32	32	30	24	20	17	13	10.5
1	1 1/4	80	80	70	61	45	34	27	22	16	12
1 1/2	1 1/4	80	80	80	75	54	40	31	25	17.5	13
1	1 1/2	87	87	87	87	84	73	64	56	45	36
1 1/2	1 1/2	151	151	151	151	117	92	79	69	54	43
2	1 1/2	151	151	151	151	128	99	83	72	56	45
1	2	87	87	87	87	87	87	87	87	87	86
1 1/2	2	275	275	275	275	258	223	196	174	144	122
2	2	365	365	365	365	318	266	229	201	160	134
2	2 1/2	533	533	533	533	533	495	448	409	353	311

METER AND SERVICE PIPE (inches)	DISTRIBUTION PIPE (inches)	MAXIMUM DEVELOPMENT LENGTH (feet)									
Pressure Range 40 to 49 psi		40	60	80	100	150	200	250	300	400	500
3/4	1/2[a]	3	2.5	2	1.5	1.5	1	1	0.5	0.5	0.5
3/4	3/4	9.5	9.5	8.5	7	5.5	4.5	3.5	3	2.5	2
3/4	1	32	32	32	26	18	13.5	10.5	9	7.5	6
1	1	32	32	32	32	21	15	11.5	9.5	7.5	6.5
3/4	1 1/4	32	32	32	32	32	32	32	27	21	16.5
1	1 1/4	80	80	80	80	65	52	42	35	26	20
1 1/2	1 1/4	80	80	80	80	75	59	48	39	28	21
1	1 1/2	87	87	87	87	87	87	87	78	65	55
1 1/2	1 1/2	151	151	151	151	151	130	109	93	75	63
2	1 1/2	151	151	151	151	151	139	115	98	77	64
1	2	87	87	87	87	87	87	87	87	87	87
1 1/2	2	275	275	275	275	275	275	264	238	198	169
2	2	365	365	365	365	365	349	304	270	220	185
2	2 1/2	533	533	533	533	533	533	533	528	456	403

(continued)

INTERNATIONAL CODE COUNCIL®
Copyright © 2015 ICC. ALL RIGHTS RESERVED. Accessed by David Dammon on Jun 21, 2017 12:30:52 PM pursuant to License Agreement with ICC. No further reproduction or distribution authorized. ANY UNAUTHORIZED REPRODUCTION OR DISTRIBUTION IS A VIOLATION OF THE FEDERAL COPYRIGHT ACT AND THE LICENSE AGREEMENT, AND SUBJECT TO CIVIL AND CRIMINAL PENALTIES THEREUNDER.

TABLE AP201.1—continued
MINIMUM SIZE OF WATER METERS, MAINS AND DISTRIBUTION PIPING BASED ON WATER SUPPLY FIXTURE UNIT VALUES (w.s.f.u.)

METER AND SERVICE PIPE (inches)	DISTRIBUTION PIPE (inches)	MAXIMUM DEVELOPMENT LENGTH (feet)									
Pressure Range 50 to 60 psi		40	60	80	100	150	200	250	300	400	500
3/4	1/2[a]	3	3	2.5	2	1.5	1	1	1	0.5	0.5
3/4	3/4	9.5	9.5	9.5	8.5	6.5	5	4.5	4	3	2.5
3/4	1	32	32	32	32	25	18.5	14.5	12	9.5	8
1	1	32	32	32	32	30	22	16.5	13	10	8
3/4	1 1/4	32	32	32	32	32	32	32	32	29	24
1	1 1/4	80	80	80	80	80	68	57	48	35	28
1 1/2	1 1/4	80	80	80	80	80	75	63	53	39	29
1	1 1/2	87	87	87	87	87	87	87	87	82	70
1 1/2	1 1/2	151	151	151	151	151	151	139	120	94	79
2	1 1/2	151	151	151	151	151	151	146	126	97	81
1	2	87	87	87	87	87	87	87	87	87	87
1 1/2	2	275	275	275	275	275	275	275	275	247	213
2	2	365	365	365	365	365	365	365	329	272	232
2	2 1/2	533	533	533	533	533	533	533	533	533	486

METER AND SERVICE PIPE (inches)	DISTRIBUTION PIPE (inches)	MAXIMUM DEVELOPMENT LENGTH (feet)									
Pressure Range Over 60		40	60	80	100	150	200	250	300	400	500
3/4	1/2[a]	3	3	3	2.5	2	1.5	1.5	1	1	0.5
3/4	3/4	9.5	9.5	9.5	9.5	7.5	6	5	4.5	3.5	3
3/4	1	32	32	32	32	32	24	19.5	15.5	11.5	9.5
1	1	32	32	32	32	32	28	28	17	12	9.5
3/4	1 1/4	32	32	32	32	32	32	32	32	32	30
1	1 1/4	80	80	80	80	80	80	69	60	46	36
1 1/2	1 1/4	80	80	80	80	80	80	76	65	50	38
1	1 1/2	87	87	87	87	87	87	87	87	87	84
1 1/2	1 1/2	151	151	151	151	151	151	151	144	114	94
2	1 1/2	151	151	151	151	151	151	151	151	118	97
1	2	87	87	87	87	87	87	87	87	87	87
1 1/2	2	275	275	275	275	275	275	275	275	275	252
2	2	365	368	368	368	368	368	368	368	318	273
2	2 1/2	533	533	533	533	533	533	533	533	533	533

For SI: 1 inch = 25.4, 1 foot = 304.8 mm, 1 pound per square inch = 6.895 kPa.
a. Minimum size for building supply is a 3/4-inch pipe.

INTERNATIONAL CODE COUNCIL®
Copyright © 2015 ICC. ALL RIGHTS RESERVED. Accessed by David Dammon on Jun 21, 2017 12:30:52 PM pursuant to License Agreement with ICC. No further reproduction or distribution authorized. ANY UNAUTHORIZED REPRODUCTION OR DISTRIBUTION IS A VIOLATION OF THE FEDERAL COPYRIGHT ACT AND THE LICENSE AGREEMENT, AND SUBJECT TO CIVIL AND CRIMINAL PENALTIES THEREUNDER.

Appendix Q: Reserved

INTERNATIONAL CODE COUNCIL®
Copyright © 2015 ICC. ALL RIGHTS RESERVED. Accessed by David Dammon on Jun 21, 2017 12:30:52 PM pursuant to License Agreement with ICC. No further reproduction or distribution authorized. ANY UNAUTHORIZED REPRODUCTION OR DISTRIBUTION IS A VIOLATION OF THE FEDERAL COPYRIGHT ACT AND THE LICENSE AGREEMENT, AND SUBJECT TO CIVIL AND CRIMINAL PENALTIES THEREUNDER.

INTERNATIONAL CODE COUNCIL®
Copyright © 2015 ICC. ALL RIGHTS RESERVED. Accessed by David Dammon on Jun 21, 2017 12:30:52 PM pursuant to License Agreement with ICC. No further reproduction or distribution authorized. ANY UNAUTHORIZED REPRODUCTION OR DISTRIBUTION IS A VIOLATION OF THE FEDERAL COPYRIGHT ACT AND THE LICENSE AGREEMENT, AND SUBJECT TO CIVIL AND CRIMINAL PENALTIES THEREUNDER.

Appendix R: Light Straw-clay Construction

(*The provisions contained in this appendix are not mandatory unless specifically referenced in the adopting ordinance.*)

General Comments

Mixtures of clay and straw known as clay-straw, straw-clay, and light straw-clay have been successfully used as a nonload-bearing wall infill material since 1950 in Europe and 1990 in the United States. The use of light straw-clay wall systems has seen a surge in popularity recently because of its attributes. These include light straw-clay's thermal performance (with its balance of mass and insulation) and its low environmental impact, using local, minimally processed materials that ultimately return to the earth without harm. Other beneficial qualities include the low cost of the raw materials and the easily-learned skills needed for installing the material.

Two heavier forms of wall construction using clay and straw have been used in various parts of the world for thousands of years. A monolithic clay and straw wall system known as cob has been used in what are now the United Kingdom, Africa, the Middle East and eastern North America. A system of woven wood or woven bamboo with applied clay and straw known as wattle and daub was in common use for centuries throughout Europe, Africa, Asia and North and South America. Both cob and wattle and daub continue to be utilized today. Many thousands of existing structures using cob or wattle and daub, dating back 300–400 years, have been continuously occupied, attesting to the durability of the materials of clay and straw.

Purpose

In the United States, residential and nonresidential structures using light straw-clay have been completed in 17 states, and most of those have been constructed with full permits and inspections. However, many of these structures have been constructed on a case-by-case basis without the benefit of a building code for light-straw clay construction.

As of 2014, only the states of New Mexico and Oregon had adopted guidelines or codes for light straw-clay construction. This appendix provides prescriptive and performance requirements for all aspects of nonbearing light straw-clay construction. This is especially important because most design professionals, code officials and builders are currently unfamiliar with this wall system.

The purpose of this appendix and its commentary is to provide requirements and guidance regarding construction utilizing straw and unfired clay, which are materials previously not addressed in the code. The nature of light straw-clay as a material and system demands compliance with certain requirements that differ from established practices with conventional materials and systems in the code. The commentary to this appendix is particularly useful in these instances because it explains the reasons for requirements that are new to users of the code and this appendix.

SECTION AR101 GENERAL

AR101.1 Scope. This appendix shall govern the use of light straw-clay as a nonbearing building material and wall infill system in Seismic Design Categories A and B.

❖ In Seismic Design Categories A and B, lateral loads due to wind govern the requirements for wall bracing. In Seismic Design Categories C, D_0, D_1 and D_2 seismic loading often governs. A building's performance when subjected to lateral wind forces is independent of the building's weight, whereas a building's performance when subjected to seismic forces is a function of the building's weight. A wood frame wall with light straw-clay infill is significantly heavier than a conventional wood frame wall for which the code's bracing requirements are formulated. Thus, this appendix is limited to use in Seismic Design Categories A and B, where the relative increased weight of light straw-clay walls is not relevant, and the bracing requirements in the code text and tables remain applicable.

Buildings using light straw-clay construction in Seismic Design Categories C, D_0, D_1 and D_2 are allowed if the building official finds that the proposed design satisfies the requirements of Section R104.11, Alternative materials, design and methods of construction and equipment. This would likely require an approved engineered design for wall bracing that accounts for the weight of light straw-clay walls. However, because this appendix is limited to Seismic Design Categories A and B for wall bracing requirements only, all other requirements of this appendix, where adopted, would apply to a building using light straw-clay construction in Seismic Design Categories C, D_0, D_1 and D_2.

In general, many variations of light straw-clay construction are possible and many have been practiced historically. Designs that do not comply with certain requirements in this appendix may be approved if the building official finds the proposed design satisfies Section R104.11 by means of equivalent alternatives to these requirements.

INTERNATIONAL CODE COUNCIL®
Copyright © 2015 ICC. ALL RIGHTS RESERVED. Accessed by David Dammon on Jun 21, 2017 12:30:52 PM pursuant to License Agreement with ICC. No further reproduction or distribution authorized. ANY UNAUTHORIZED REPRODUCTION OR DISTRIBUTION IS A VIOLATION OF THE FEDERAL COPYRIGHT ACT AND THE LICENSE AGREEMENT, AND SUBJECT TO CIVIL AND CRIMINAL PENALTIES THEREUNDER.

SECTION AR102
DEFINITIONS

AR102.1 General. The following words and terms shall, for the purposes of this appendix, have the meanings shown herein. Refer to Chapter 2 of the *International Residential Code* for general definitions.

CLAY. Inorganic soil with particle sizes of less than 0.00008 inch (0.002 mm) having the characteristics of high to very high dry strength and medium to high plasticity.

CLAY SLIP. A suspension of clay soil in water.

CLAY SOIL. Inorganic soil containing 50 percent or more clay by volume.

❖ The word "soil" is commonly associated with topsoil, which contains organic matter. Clay soil used for construction purposes is a nonfertile (inorganic) mineral subsoil that contains clay, silt and sand. Sections AR103.3.2 and AR103.4.1 and Commentary Figure AR103.3.2 describe methods for determining the suitability of this material for light straw-clay construction.

INFILL. Light straw-clay that is placed between the structural members of a building.

LIGHT STRAW-CLAY. A mixture of straw and clay compacted to form insulation and plaster substrate between or around structural and nonstructural members in a wall.

❖ The density range of light straw-clay is 10 to 50 pounds per cubic foot (160 to 801 kg/m^3).

NONBEARING. Not bearing the weight of the building other than the weight of the light straw-clay itself and its finish.

STRAW. The dry stems of cereal grains after the seed heads have been removed.

VOID. Any space in a light straw-clay wall in which a 2-inch (51 mm) sphere can be inserted.

SECTION AR103
NONBEARING LIGHT STRAW-CLAY CONSTRUCTION

AR103.1 General. Light straw-clay shall be limited to infill between or around structural and nonstructural wall framing members.

AR103.2 Structure. The structure of buildings using light straw-clay shall be in accordance with the *International Residential Code* or shall be in accordance with an *approved* design by a registered *design professional*.

AR103.2.1 Number of stories. Use of light straw-clay infill shall be limited to buildings that are not more than one *story above grade plane*.

Exception: Buildings using light straw-clay infill that are greater than one *story above grade plane* shall be in accordance with an approved design by a registered *design professional*.

AR103.2.2 Bracing. Wind shall be in accordance with Section R602.10 and shall use Method LIB. Walls with light straw-clay infill shall not be sheathed with solid sheathing.

❖ The "solid sheathing" prohibition in this section refers only to the application of sheathing that will inhibit air-drying of newly installed straw-clay material. Because light straw-clay is installed wet and is not fully dried to equilibrium (see Section AR103.5.1) before the application of plaster, any solid impermeable permanent sheathing that would inhibit its drying is prohibited.

AR103.2.3 Weight of light straw-clay. Light straw-clay shall be deemed to have a design dead load of 40 pounds per cubic foot (640 kg per cubic meter) unless otherwise demonstrated to the *building official*.

❖ Densities of light straw-clay can vary depending on wall design, project location and desired thermal properties. Historically, densities ranging from 10 to 50 pounds per cubic foot (160 to 801 kg/m^3) have been utilized. Structural engineering is not required for one-story light straw-clay structures that comply with the prescriptive structural requirements of the code and this appendix. However, structural calculations may be needed when departing from these requirements or may be otherwise advantageous.

Densities of light straw-clay stated in this appendix are for the straw-clay material only and do not include other elements such as the wall's plaster or other finish and its framing.

AR103.2.4 Reinforcement of light straw-clay. Light straw-clay shall be reinforced as follows:

1. Vertical reinforcing shall be not less than nominal 2-inch by 6-inch (51 mm by 152 mm) wood members at not more than 32 inches (813 mm) on center where the vertical reinforcing is nonload bearing and at 24 inches (610 mm) on center where it is load bearing. The vertical reinforcing shall not exceed an unrestrained height of 10 feet (3048 mm) and shall be attached at top and bottom in accordance with Chapter 6 of the this code. In lieu of these requirements, vertical reinforcing shall be in accordance with an *approved* design by a registered *design professional*.
2. Horizontal reinforcing shall be installed in the center of the wall at not more than 24 inches (610 mm) on center and shall be secured to vertical members. Horizontal reinforcing shall be of any of the following: $^3/_4$-inch (19.1 mm) bamboo, $^1/_2$-inch (12.7 mm) fiberglass rod, 1-inch (25 mm) wood dowel or nominal 1-inch by 2-inch (25 mm by 51 mm) wood.

❖ The term "reinforcement" in this section means a component of the wall system that contains or keeps the light straw-clay infill in place during construction and in service. This includes containment of the light straw-

INTERNATIONAL CODE COUNCIL®
Copyright © 2015 ICC. ALL RIGHTS RESERVED. Accessed by David Dammon on Jun 21, 2017 12:30:52 PM pursuant to License Agreement with ICC. No further reproduction or distribution authorized. ANY UNAUTHORIZED REPRODUCTION OR DISTRIBUTION IS A VIOLATION OF THE FEDERAL COPYRIGHT ACT AND THE LICENSE AGREEMENT, AND SUBJECT TO CIVIL AND CRIMINAL PENALTIES THEREUNDER.

clay where the wall is subjected to lateral out-of-plane wind or seismic forces as required by the code.

Item 1: Vertical reinforcing can be composed of nonload-bearing elements, with containment of the light straw-clay as their sole function, or elements that also serve a structural function, such as load-bearing studs. Vertical reinforcing and wall frame construction are based on the conventional wood framing requirements of Section R602, with similar methods and requirements for studs, plates and headers, etc. The main departure from the requirements in Section R602 in light straw-clay construction is the constraint on the use of solid sheathing, as noted in the commentary to Section AR103.2.2. This section is not intended to prohibit commonly accepted vertical reinforcing methods that are structurally equivalent to 2-inch by 6-inch solid wood members, such as "Larsen trusses" or similar composite members. Commentary Figures AR103.2.4(1), AR103.2.4(2) and AR103.2.4(3) show examples of wall framing for light straw-clay construction.

Item 2: Unlike the placement of steel reinforcing bar in typical concrete construction, which is used for tensile and shear reinforcing, horizontal reinforcing members in light straw-clay are used primarily for the doweling effects of the reinforcing within the wall system. The horizontal reinforcing helps: (1) Maintain overall integrity of the wall assembly during construction and in service; (2) Transfer of out-of-plane wind or seismic forces from the light straw-clay mass to the vertical reinforcing framing members and; (3) Control the vertical shrinkage and settling of the light straw-clay material as it dries. In practice, the horizontal reinforcing is placed while slightly compressing the moist straw-clay mix in order to limit "rebound" and help control shrinkage.

AR103.3 Materials. The materials used in light straw-clay construction shall be in accordance with Sections AR103.3.1 through AR103.3.4.

AR103.3.1 Straw. Straw shall be wheat, rye, oats, rice or barley, and shall be free of visible decay and insects.

❖ Straw, like wood, is composed primarily of cellulose and lignin. Construction-grade straw can be readily identified by visual examination. The best straw is composed of the dry (i.e., not having been wetted since cut) intact stems of wheat, rye, oats, rice or barley plants and must be free of visible decay and contaminants such as insects, fertile topsoil and green plant material, since mold and mildew can grow in the presence of these readily-digested food sources.

Straw is best harvested dry and kept dry until it is mixed with clay slip and installed. The straw will have a golden color and a glossy surface. Excessive exposure to moisture will result in straw with reduced color and gloss. This straw is not optimal for light straw-clay construction.

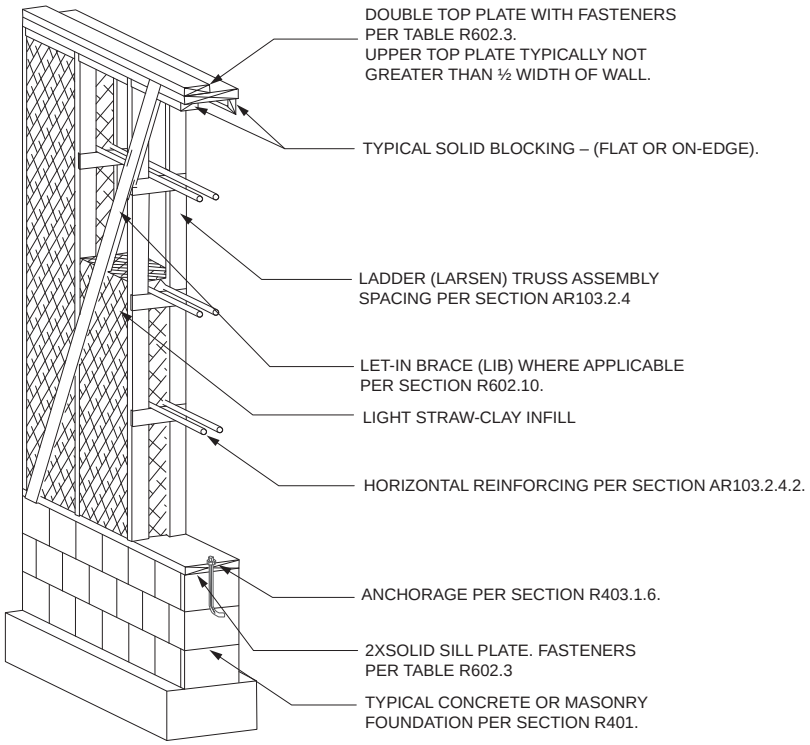

Figure AR103.2.4(1)
LIGHT STRAW-CLAY WALL WITH LARSEN TRUSS

INTERNATIONAL CODE COUNCIL®
Copyright © 2015 ICC. ALL RIGHTS RESERVED. Accessed by David Dammon on Jun 21, 2017 12:30:52 PM pursuant to License Agreement with ICC. No further reproduction or distribution authorized. ANY UNAUTHORIZED REPRODUCTION OR DISTRIBUTION IS A VIOLATION OF THE FEDERAL COPYRIGHT ACT AND THE LICENSE AGREEMENT, AND SUBJECT TO CIVIL AND CRIMINAL PENALTIES THEREUNDER.

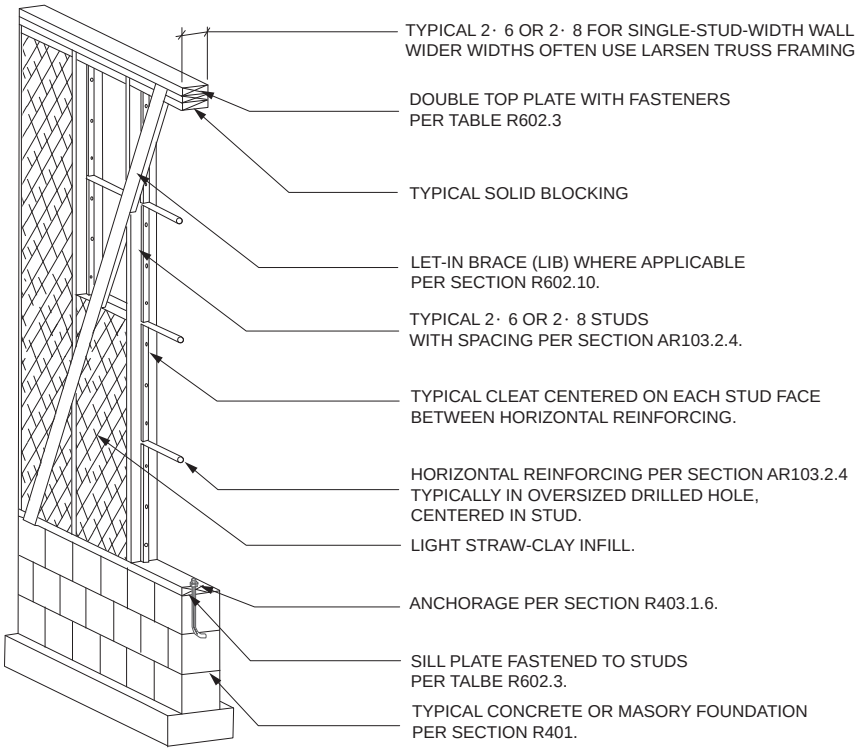

Figure AR103.2.4(2)
LIGHT STRAW-CLAY WALL WITH SINGLE-STUD WIDTH

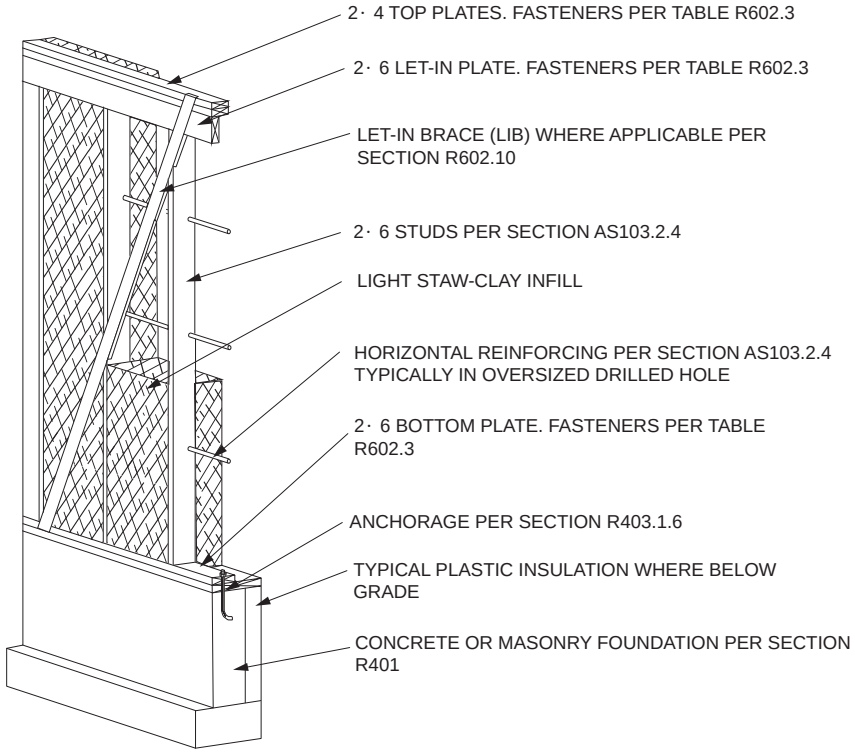

Figure AR103.2.4(3)
LIGHT STRAW-CLAY WALL WITH BLIND STUD

INTERNATIONAL CODE COUNCIL®
Copyright © 2015 ICC. ALL RIGHTS RESERVED. Accessed by David Dammon on Jun 21, 2017 12:30:52 PM pursuant to License Agreement with ICC. No further reproduction or distribution authorized. ANY UNAUTHORIZED REPRODUCTION OR DISTRIBUTION IS A VIOLATION OF THE FEDERAL COPYRIGHT ACT AND THE LICENSE AGREEMENT, AND SUBJECT TO CIVIL AND CRIMINAL PENALTIES THEREUNDER.

AR103.3.2 Clay soil. Suitability of clay soil shall be determined in accordance with the Figure 2 Ribbon Test or the Figure 3 Ball Test of the Appendix to ASTM E2392/E2392M.

❖ This section is intended to ensure that the quality of the clay slip used to make light straw-clay is suitable for the intended application. Clay soil appropriate for light straw-clay construction contains particles of sand and silt in addition to microscopic particles of clay; however, only the microscopic clay particles that form the protective bonds around and between the individual strands of straw ensure stability and longevity. The percentage of clay in the clay slip will determine the effectiveness of the coating and binding of the straw. See Commentary Figure AR103.3.2 for recommended mixture ratios and testing methods.

A ribbon or ball test, as stated in this section, is sufficient to determine suitability for wall densities between 30 and 50 pounds per cubic foot (480 to 801 kg/m^3). A lab test known as a "soil texture test" or "physical analysis test" yields an even more accurate analysis, giving precise percentages of clay, sand and silt.

A lab test that measures percentages of sand, silt and clay is strongly recommended for lower-density, higher-insulating light straw-clay mixes. This is because there is much less clay soil added to the mix, so the little clay soil present must have a relatively high percentage of clay to provide the protective bonds that ensure stability and longevity of the wall. Inexpensive soil texture or physical analysis tests are readily available through university cooperative extension and agricultural soil laboratories in most parts of the U.S. and Canada.

AR103.3.3 Clay slip. Clay slip shall be of sufficient viscosity such that a finger dipped in the slip and withdrawn remains coated with an opaque coating.

❖ This requirement is intended to provide a simple field method to verify that enough clay is present in the slip to achieve adequate coverage of the straw and ensure cohesive integrity of the installed light straw-clay mix. This test works for all densities of light straw-clay.

AR103.3.4 Light straw-clay mixture. Light straw-clay shall contain not less than 65 percent and not more than 85 percent straw, by volume of bale-compacted straw to clay soil. Loose straw shall be mixed and coated with clay slip such that there is not more than 5 percent uncoated straw.

❖ The intent of this section is to describe straw and clay percentages for densities in the 30 to 50 pounds per cubic foot range (480 to 801 kg/m^3). The percentage of straw described in this section means straw-plus-air in the wall. These percentages are not meant to limit higher percentages of straw-plus-air used in lighter mixes where the subsoil content in the wall is lower and meets the recommended testing in Commentary Figure AR103.3.2. Commentary Figure AR103.3.4 is useful for clarifying the percentages of components used to achieve the range of light straw-clay densities.

AR103.4 Wall construction. Light straw-clay wall construction shall be in accordance with the requirements of Sections AR103.4.1 through AR103.4.7.

AR103.4.1 Light straw-clay maximum thickness. Light straw-clay shall be not more than 12 inches (305 mm) thick, to allow adequate drying of the installed material.

❖ Historically, 12 inches (305 mm) has been considered the maximum wall thickness for straw-clay mixtures 30 pcf and greater. Current research suggests that a higher percentage of clay in the slip allows for lighter

DENSITY (pcf)	MINIMUM % CLAY IN SUBSOIL (1)	MINIMUM CLAY: SILT RATIO	CLAY TESTING METHOD (2)	MAXIMUM LIGHT STRAW-CLAY (thickness, inches)
10	70	3.5:1	A	15
12	46	1.7:1	A	15
13	40	1.33:.1	A	15
15	35	0.95:1	A	15
20	30	0.60:1	A	12
30	25	0.42:1	A or B	12
40	Test Method B	Test Method B	B	12
50	Test Method B	Test Method B	B	12

Courtesy of Douglas Piltingsrud@StrawClay.org. Used by permission.

1. The minimum percentage criteria may be met by using unprocessed raw clay subsoil or subsoil refined by removal of sand and silt.
2. Subsoil Testing Methods:
   a. Lab test for percent of clay, silt and sand via hydrometer method.
   b. Ribbon Test or the Figure 3 Ball Test in the appendix of ASTM E2392/E2392M.

Figure AR103.3.2
RATIOS AND TESTING OF LIGHT STRAW-CLAY MIXTURES

INTERNATIONAL CODE COUNCIL®
Copyright © 2015 ICC. ALL RIGHTS RESERVED. Accessed by David Dammon on Jun 21, 2017 12:30:52 PM pursuant to License Agreement with ICC. No further reproduction or distribution authorized. ANY UNAUTHORIZED REPRODUCTION OR DISTRIBUTION IS A VIOLATION OF THE FEDERAL COPYRIGHT ACT AND THE LICENSE AGREEMENT, AND SUBJECT TO CIVIL AND CRIMINAL PENALTIES THEREUNDER.

density straw-clay mixtures (with higher *R*-values) while still achieving adequate drying in walls up to 15 inches (381 mm) thick. Section AR103.4.1 is intended to ensure safe drying parameters for denser mixes (30 pcf and greater), and is not intended to limit the wall thickness for lighter mixtures where a history of successful drying of walls with lower densities that exceed 12 inches (305 mm) is demonstrated to the building official.

See Commentary Figure AR103.3.2 for the recommended maximum thicknesses for light straw-clay of various densities. This figure also shows the relationships between light straw-clay components and the recommended clay soil testing method for those densities.

AR103.4.2 Distance above grade. Light straw-clay and its exterior finish shall be not less than 8 inches (203 mm) above exterior finished *grade*.

AR103.4.3 Moisture barrier. An *approved* moisture barrier shall separate the bottom of light straw-clay walls from any masonry or concrete foundation or slab that directly supports the walls. Penetrations and joints in the barrier shall be sealed with an *approved* sealant.

❖ Moisture barriers to protect the straw-clay from the rising dampness inherent to masonry or concrete foundations include materials historically used for this purpose such as asphalt-impregnated roofing felt, plastic sheeting, elastomeric gasketing, clay, tar, and liquid-applied products manufactured for use as a moisture barrier over concrete or masonry.

AR103.4.4 Contact with wood members. Light straw-clay shall be permitted to be in contact with untreated wood members.

❖ Light straw-clay installation is similar to the installation of wet-blown cellulose insulation in that both are installed damp, dry in the following weeks, and then remain dry throughout their service life. In addition, clay has a long history of preserving wood. Clay is hydrophilic (i.e., water-attracting) and is highly water-blocking due to its strong surface bonding with any available water. Also, because of clay's very large total surface area (due to its layered microscopic structure), it has considerable capacity to capture and store water. Even when straw-clay is applied wet and in full contact with wood, the clay functions to pull water away from adjacent materials as the composite dries, including wood and its own straw fibers. In this way, and with its ability to act as a water barrier (e.g., clay is used to line ponds to prevent leakage), the clay keeps the moisture in adjacent materials below the levels necessary to support microbe growth (i.e., rot) and, therefore, acts as a preservative (see commentary, Section AR103.5.3).

AR103.4.5 Contact with nonwood structural members. Nonwood structural members in contact with light straw-clay shall be resistant to corrosion or shall be coated to prevent corrosion with an *approved* coating.

❖ A light straw-clay installation is similar to a wet-blown cellulose installation in that the material is damp only temporarily. This limited wetting is a common construction condition and standard coatings such as primer paint and electro-galvanizing are acceptable to prevent corrosion of nonwood structural members. In this section, the term "nonwood" is intended to mean metal that is susceptible to corrosion with prolonged exposure to moisture.

AR103.4.6 Installation. Light straw-clay shall be installed in accordance with the following:

1. Formwork shall be sufficiently strong to resist bowing where the light straw-clay is compacted into the forms.
2. Light straw-clay shall be uniformly placed into forms and evenly tamped to achieve stable walls free of voids. Light straw-clay shall be placed in lifts of not more

LIGHT STRAW-CLAY DENSITY (pcf)	STRAW (pcf)	SUBSOIL (pcf)	SUBSOIL (1) VOLUME %	STRAW (2) VOLUME %	AIR VOLUME %	STRAW + AIR VOLUME %	*R*-VALUE (hr/F°/cu.ft./ BTU/inch)
10	6.7	3.3	2.0	7.4	90.6	98.0	1.80
12	6.7	5.3	3.1	7.4	89.4	96.9	1.72
13	6.7	6.3	3.7	7.4	88.9	96.3	1.69
15	6.7	8.3	4.9	7.4	87.7	95.1	1.63
20	6.7	13.3	7.9	7.4	84.7	92.1	per AR104.1
30	6.7	23.3	13.8	7.4	78.7	86.2	per AR104.1
40	6.7	33.3	19.9	7.4	72.8	80.2	per AR104.1
50	6.7	43.3	25.7	7.4	66.9	74.3	per AR104.1

Courtesy of Douglas Piltingsrud@StrawClay.org. Used by permission.

1. Uses 168 pcf for subsoil specific (2.7 g/cc).
2. Uses 90 pcf for straw gravity (1.45 g/cc). Straw Volume % and associated columns may increase for 20 pcf walls and above due to the weight from additional subsoil.

Figure AR103.3.4
CHARACTERISTICS OF LIGHT STRAW-CLAY AT VARYING DENSITIES

INTERNATIONAL CODE COUNCIL®
Copyright © 2015 ICC. ALL RIGHTS RESERVED. Accessed by David Dammon on Jun 21, 2017 12:30:52 PM pursuant to License Agreement with ICC. No further reproduction or distribution authorized. ANY UNAUTHORIZED REPRODUCTION OR DISTRIBUTION IS A VIOLATION OF THE FEDERAL COPYRIGHT ACT AND THE LICENSE AGREEMENT, AND SUBJECT TO CIVIL AND CRIMINAL PENALTIES THEREUNDER.

than 6 inches (152 mm) and shall be thoroughly tamped before additional material is added.

3. Formwork shall be removed from walls within 24 hours after tamping, and walls shall remain exposed until moisture content is in accordance with Section AR103.5.1. Visible voids shall be patched with light straw-clay prior to plastering.

❖ **Item 1:** Commonly used formwork for light straw-clay installations includes plywood, OSB panels and solid wood boards; often in practice these materials are then repurposed as subflooring and roof sheathing. In contrast to poured concrete, which is liquid and extremely heavy, light straw-clay is semi-solid, lightweight and is placed using only a person's body weight to tamp it into place. Accordingly, the formwork for light straw-clay is typically constructed much more lightweight than concrete formwork. For example, it often uses only 2 × 4s for whalers and is attached temporarily with screws to the permanent wall framing as part of the formwork's structure and bracing.

Typically, formwork is first installed completely on one side of the wall, then incrementally on the other side from the bottom and then upward as the straw-clay is also incrementally placed. This allows a person to tamp the material standing partially inside the formwork, and allows for possible reuse of the lower forms ("slip forming") once the material in the form above is tamped in place (see commentary, Section AR103.4.6, Items 2 and 3).

Item 2: This item is intended to ensure the mix is compacted using light tamping only. It is also intended to achieve the desired density, consolidate the mix, ensure adhesion between stalks of straw and achieve wall integrity without crushing the straw stalks. Intact straw stalks and the air spaces inside and between them ensure that the maximum wall *R*-value is achieved for that density of mix. For this reason, compaction is not normally accomplished by mechanical means. Rather, it is done by a person standing inside the formwork and "walking in the forms" as the straw-clay mix is inserted. The installer ensures complete distribution of material to all corners, making sure that no voids are left, and uses his or her body weight to lightly compress the straw-clay to the desired density.

Item 3: This item is intended to allow the light straw-clay to begin drying as soon as possible after placement and to avoid the possibility of mold growth on the surface of the straw-clay beneath the forms. Forms can generally be removed as soon as the straw has "set" (i.e., moist stalks have relaxed into place). Optimum time is generally 1 to 4 hours after placement.

AR103.4.7 Openings in walls. Openings in walls shall be in accordance with the following:

1. Rough framing for doors and windows shall be fastened to structural members in accordance with the *International Residential Code*. Windows and doors shall be flashed in accordance with the *International Residential Code*.
2. An *approved* moisture barrier shall be installed at window sills in light straw-clay walls prior to installation of windows.

AR103.5 Wall finishes. The interior and exterior surfaces of light straw-clay walls shall be protected with a finish in accordance with Sections AR103.5.1 through AR103.5.5.

AR103.5.1 Moisture content of light straw-clay prior to application of finish. Light straw-clay walls shall be dry to a moisture content of not more than 20 percent at a depth of 4 inches (102 mm), as measured from each side of the wall, prior to the application of finish on either side of the wall. Moisture content shall be measured with a moisture meter equipped with a probe that is designed for use with baled straw or hay.

❖ This provision is intended to require sufficient drying of the straw-clay in order to achieve dimensional stability and a stable surface for a noncracking plaster application; however, a "full-dry" condition (in full equilibrium with ambient conditions) is not needed for successful plastering because plasters as required in Section AR103.5.2 are highly permeable and allow the straw-clay to continue drying after plastering.

It is not always possible to obtain consistent moisture meter readings if only a few locations are sampled. Sampling multiple locations yields more reliable information about the overall dryness, particularly as the less-dense mixes offer less surface contact area for the probes of electrical moisture meters. As an additional measure, vertical wall shrinkage should be observed as the material dries and plastering should begin only when shrinkage has stopped and any voids are filled. Depending on wind, temperature and humidity conditions, the time required for straw-clay to reach a plaster-ready state may vary from a few weeks to several months.

AR103.5.2 Plaster finish. Exterior plaster finishes shall be clay plaster or lime plaster. Interior plaster finishes shall be clay plaster, lime plaster or gypsum plaster. Plasters shall be permitted to be applied directly to the surface of the light straw-clay walls without reinforcement, except that the juncture of dissimilar substrates shall be in accordance with Section AR103.5.4. Plasters shall have a thickness of not less than $^1/_2$ inch (12.7 mm) and not more than 1 inch (25 mm) and shall be installed in not less than two coats. Exterior clay plaster shall be finished with a lime-based or silicate-mineral coating.

❖ The purpose of a lime-based or silicate-mineral coating over exterior clay plaster is to improve the plaster's resistance to erosion from weather. This section does not require exterior plaster, but rather describes its characteristics when used.

Some admixtures in clay plasters have a history of imparting desirable plaster characteristics, such as enhanced moisture resistance, durability and crack resistance. These admixtures include wheat paste, manure, casein and prickly pear juice. It is not the intent of this section to exclude the use of these or other admixtures that can demonstrate erosion resis-

INTERNATIONAL CODE COUNCIL®
Copyright © 2015 ICC. ALL RIGHTS RESERVED. Accessed by David Dammon on Jun 21, 2017 12:30:52 PM pursuant to License Agreement with ICC. No further reproduction or distribution authorized. ANY UNAUTHORIZED REPRODUCTION OR DISTRIBUTION IS A VIOLATION OF THE FEDERAL COPYRIGHT ACT AND THE LICENSE AGREEMENT, AND SUBJECT TO CIVIL AND CRIMINAL PENALTIES THEREUNDER.

tance from weather equivalent to lime-based or silicate-mineral coatings.

The centuries-old European predecessors and the light straw-clay buildings built to date in North America have all been constructed without the use of a water-resistive barrier. The light straw-clay materials in this appendix are highly vapor permeable, which allows passage of water vapor without harm to the wall. Code precedents exist for construction systems such as adobe construction and log construction, which do not require the use of a water-resistive barrier. In these systems, as in light straw-clay construction, there is sufficient moisture buffer capacity to hold and re-release moisture without damage to structural members or degradation of the wall due to weather-related moisture. For these reasons, a water-resistive barrier is not required in light straw-clay construction.

AR103.5.3 Separation of wood and plaster. Where wood framing occurs in light straw-clay walls, such wood surfaces shall be separated from exterior plaster with No.15 asphalt felt, Grade D paper or other approved material except where the wood is preservative treated or naturally durable.

Exception: Exterior clay plasters shall not be required to be separated from wood.

❖ Clay is hydrophilic (i.e., water-attracting, drawing moisture to it and away from adjacent materials) and is highly water-blocking due to its strong surface bonding with any available water. In addition, because of clay's very large total surface area (due to its layered microscopic structure), it has considerable capacity to capture and store water. Historical examples include the centuries-old half-timbered buildings still in use in Germany, with straw-clay infill and clay plasters in direct contact with the original wood frame structure. This combination of hydrophilic properties, water-blocking properties and water storage capacity protects adjacent materials that might otherwise be harmed by extended exposure to moisture. Because of this, clay plasters are not required to be separated from wood (see also commentary, Section AR103.4.4).

AR103.5.4 Bridging across dissimilar substrates. Bridging shall be installed across dissimilar substrates prior to the application of plaster. Acceptable bridging materials include: expanded metal lath, woven wire mesh, welded wire mesh, fiberglass mesh, reed matting or burlap. Bridging shall extend not less than 4 inches (102 mm), on both sides of the juncture.

❖ This section is intended to prevent cracking of the plaster where it spans across wall framing members or substrates that interrupt the face of the installed light straw-clay. The bridging materials provide greater tensile and shear strength for plasters in areas that are prone to differential movement and provide a material to which the plasters can mechanically bond across substrates that otherwise offer little or no means for bonding.

AR103.5.5 Exterior siding. Exterior wood, metal or composite material siding shall be spaced not less than $^3/_4$ inch (19.1 mm) from the light straw-clay such that a ventilation space is created to allow for moisture diffusion. The siding shall be fastened to wood furring strips in accordance with the manufacturer's instructions. Furring strips shall be spaced not more than 32 inches (813 mm) on center, and shall be securely fastened to the vertical wall reinforcing or structural framing. Insect screening shall be provided at the top and bottom of the ventilation space. An air barrier consisting of not more than $^3/_8$-inch-thick (9.5 mm) clay plaster or lime plaster shall be applied to the light straw-clay prior to the application of siding.

❖ Plaster installed in a continuous layer over the interior or exterior light straw-clay surface meets the intent of this section, which is to provide the required air barrier.

SECTION AR104
THERMAL INSULATION

AR104.1 R-value. Light straw-clay, where installed in accordance with this appendix, shall be deemed to have an *R*-value of 1.6 per inch.

❖ Current research indicates that *R*-value in light straw-clay varies predictably with density. Higher percentages of clay in the slip and improved quality control of the light straw-clay mix allows for lighter density straw-clay mixtures with higher *R*-values. These lighter mixtures are particularly well suited to colder climate regions. This appendix does not intend to limit the use of these lighter and more insulating mixtures. Commentary Figure AR103.3.4 summarizes the *R*-value findings for densities from 10 to 15 pounds per cubic foot from the 2004 USDA Forest Products Laboratory *Engineering Report of Light Clay Specimens* (see the bibliography) and may be used for calculating thermal performance for walls using these lighter density mixes. The *R*-value stated in Section AR104.1 and those in Commentary Figure AR103.3.4 are for the light straw-clay material only, and exclude any additional thermal resistance provided by plaster or other finish over the light straw-clay.

SECTION AR105
REFERENCED STANDARD

ASTM E2392/E2392M—10 Standard Guide for Design of Earthen Wall Building Systems AR103.3.2

Bibliography

The following resource materials were used in the preparation of the commentary for this appendix of the code:

Baker-Laporte, Paula, and Robert Laporte. *Econest, Creating Sustainable Sanctuaries of Clay, Straw and Timber*. Layton, UT: Gibbs Smith, 2005.

INTERNATIONAL CODE COUNCIL®
Copyright © 2015 ICC. ALL RIGHTS RESERVED. Accessed by David Dammon on Jun 21, 2017 12:30:52 PM pursuant to License Agreement with ICC. No further reproduction or distribution authorized. ANY UNAUTHORIZED REPRODUCTION OR DISTRIBUTION IS A VIOLATION OF THE FEDERAL COPYRIGHT ACT AND THE LICENSE AGREEMENT, AND SUBJECT TO CIVIL AND CRIMINAL PENALTIES THEREUNDER.

Duncan, Richard, PE. *Resistance to Out-Of-Plane-Lateral Forces of Light Straw Clay Wall Infill.*http://www.econesthomes.com/wp-content/uploads/2013/01/Light-Straw-Clay-Out-of-Plane-Study-FINAL_merged.pdf, 2013.

Host-Jablonski, L. *Typical Outline Specifications for a Northern Light Straw-Clay House*. In *The Affordable Natural House Contractor Training Reference Manual,* 2nd Edition. S. Thering ed. Madison, WI: University of Wisconsin–Extension, 2008.

Piltingsrud, D., and L. Host-Jablonski. *An Introduction to the Science of Northern Light Straw-Clay Construction*. In *The Affordable Natural House Contractor Training Reference Manual,* 2nd Edition. S. Thering, ed. Madison, WI: University of Wisconsin–Extension, 2008.

State of New Mexico Construction Industries Division Clay Straw Guidelines. Santa Fe, NM: State of NM CID publication, 2001.

StrawClay.org. Madison, Wisconsin: Design Coalition, Inc., 2014.

Thornton, J. *Initial Material Characterization of Straw Light Clay*. Ottawa, Ontario: Canada Mortgage and Housing Corporation, 2004.

USDA Forest Products Laboratory *Engineering Report of Light Clay Specimens: Thermal Conductivities for Design Coalition's Straw/Clay Formulations Extend Volhard's K-Value vs. Density Curve in Low Conductivity End.* Madison, WI: USDA Forest Products Laboratory, 2004.

2011 Oregon Reach Code—Section 1307. Country Club Hills, IL: International Code Council, Inc., 2012.

INTERNATIONAL CODE COUNCIL®
Copyright © 2015 ICC. ALL RIGHTS RESERVED. Accessed by David Dammon on Jun 21, 2017 12:30:52 PM pursuant to License Agreement with ICC. No further reproduction or distribution authorized. ANY UNAUTHORIZED REPRODUCTION OR DISTRIBUTION IS A VIOLATION OF THE FEDERAL COPYRIGHT ACT AND THE LICENSE AGREEMENT, AND SUBJECT TO CIVIL AND CRIMINAL PENALTIES THEREUNDER.

INTERNATIONAL CODE COUNCIL®

Copyright © 2015 ICC. ALL RIGHTS RESERVED. Accessed by David Dammon on Jun 21, 2017 12:30:52 PM pursuant to License Agreement with ICC. No further reproduction or distribution authorized. ANY UNAUTHORIZED REPRODUCTION OR DISTRIBUTION IS A VIOLATION OF THE FEDERAL COPYRIGHT ACT AND THE LICENSE AGREEMENT, AND SUBJECT TO CIVIL AND CRIMINAL PENALTIES THEREUNDER.

Appendix S:
Strawbale Construction

(*The provisions contained in this appendix are not mandatory unless specifically referenced in the adopting ordinance.*)

General Comments

Strawbale construction, a wall system using stacked bales of straw that are covered with plaster or other finish, originated in Nebraska in the late 1800s, as made possible by the invention of the baling machine. It was practiced regionally into the 1940s, and buildings from that first era, some over 100 years old, are still in service. After decades of nonuse, strawbale construction was rediscovered in the 1980s and utilized again in the American southwest. Since then it has been further developed and explored, subjected to considerable testing and researched regarding structural performance (under vertical loads, and lateral wind and seismic loads), moisture issues, fire resistance and thermal and acoustic properties.

Since the 1980s, the use of strawbale construction has steadily increased and there are now strawbale buildings in all 50 U.S. states, as well as in more than 50 countries throughout the world. It is estimated that there are over 1,000 strawbale buildings in California alone. Strawbale construction has been used primarily in the construction of residences, but it has also been used for schools, office buildings, wineries, retail buildings, a municipal police station and a federal post office. Most strawbale buildings have been one story, though many two- or three-story buildings have also been constructed and as many as eight-stories for a nonload-bearing strawbale apartment building in France. Over both its early and modern history, strawbale construction has proven, through testing and in practice, to be a safe, durable, resource- and energy-efficient and fully viable wall system (see Commentary Figure AS101 for typical load-bearing and typical post-and-beam strawbale wall systems with their basic components).

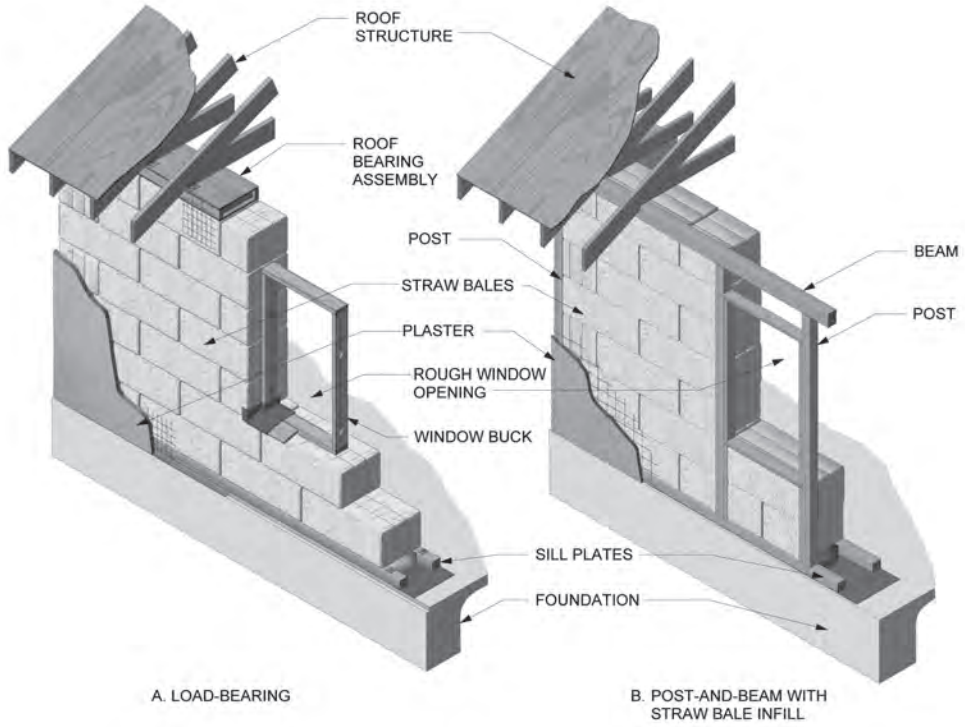

NOTE: SEE FIGURES AS105.3(1) THROUGH AS106.11(2) FOR DETAILED VIEWS AND INFORMATION. VARIATIONS OF THE STRAWBALE WALL SYSTEMS SHOWN IN FIGURE AS101 ARE COMMON.

Figure AS101
TYPICAL STRAWBALE WALL SYSTEMS

INTERNATIONAL CODE COUNCIL®
Copyright © 2015 ICC. ALL RIGHTS RESERVED. Accessed by David Dammon on Jun 21, 2017 12:30:52 PM pursuant to License Agreement with ICC. No further reproduction or distribution authorized. ANY UNAUTHORIZED REPRODUCTION OR DISTRIBUTION IS A VIOLATION OF THE FEDERAL COPYRIGHT ACT AND THE LICENSE AGREEMENT, AND SUBJECT TO CIVIL AND CRIMINAL PENALTIES THEREUNDER.

Purpose

As of 2014, only New Mexico, Oregon and North Carolina had adopted statewide strawbale building codes. California has legislated strawbale construction guidelines for voluntary adoption by local jurisdictions. In addition, nine U.S. cities or counties have adopted strawbale building codes. Three countries outside of the United States—Germany, France, and Belarus—have limited strawbale building codes. New Zealand has official guidelines for strawbale construction. In jurisdictions in the United States without a strawbale building code, strawbale buildings have been permitted on a case-by-case basis, often with little reliable guidance for building officials, builders and owners. This has been an impediment to strawbale construction's proper and broader use.

Most strawbale building codes that exist in the U.S. are derived from the first load-bearing strawbale code created for and adopted in 1996 by Tucson and Pima County, Arizona. One jurisdiction based its code on the State of New Mexico's nonload-bearing code, also adopted in 1996. Field experience, testing and research since 1996 have shown these codes to be deficient. They are often either too restrictive or not restrictive enough, and in some cases do not address important issues at all. The purpose of this appendix is to bring the practice of strawbale construction into alignment with current understanding and to unify disparate strawbale building codes, while providing flexibility to allow time-tested local and regional variations, as well as viable new variations as strawbale construction evolves.

SECTION AS101
GENERAL

AS101.1 Scope. This appendix provides prescriptive and performance-based requirements for the use of baled straw as a building material. Other methods of strawbale construction shall be subject to approval in accordance with Section 104.11 of this code. Buildings using strawbale walls shall comply with the this code except as otherwise stated in this appendix.

❖ Historically, many variations of strawbale construction have been practiced, influenced by climate, level of high wind or seismic risk, available materials, local building practices and regional architecture. Still more variations are possible. The intent of this appendix, through both prescriptive and performance-based requirements, is to be inclusive of as many safe and durable methods of strawbale construction as possible. (See Commentary Figure AS101 for typical load-bearing and post-and-beam strawbale walls with their basic components.)

Variations of strawbale construction that are not explicitly allowed by this appendix may or may not be viable and acceptable. Such methods should be evaluated by the local building official in accordance with Section R104.11 of the code.

All components and aspects of strawbale buildings other than their strawbale walls, including foundations, nonstrawbale walls, roof structure, energy efficiency and mechanical, plumbing and electrical systems, must comply with the code, unless this appendix states otherwise. See the commentary to Section AS105.6 for recommendations regarding plumbing in strawbale walls as related to moisture control.

Although there are no provisions in this appendix related to electrical wiring systems in strawbale walls, these installations must address the same code criteria as for other wall systems in the code, such as protection of wiring from damage after construction (e.g., separation of wiring from the surface of finishes to protect from inadvertent nailing), secure attachment of wiring or conduit systems and boxes and air sealing of electrical boxes and penetrations.

Decades of electrical installations in strawbale walls have yielded common practices, some of which have been codified in local or state strawbale building codes. Nonmetallic sheathed cable has been allowed with and without conduit, with frequency of attachment complying with the electrical code, to either wood framing members or to the bales using long wire "staples". Electrical boxes have been secured to either wood framing members or to 12-inch (305 mm) wooden stakes driven into the bales. Plaster mesh has also been used as a means of securing electrical boxes in strawbale walls. All wiring unprotected by conduit and armored cable has generally been required to be set back from the face of the strawbales at least $1^1/_2$ inches (38 mm), except where entering an electrical box.

SECTION AS102
DEFINITIONS

AS102.1 Definitions. The following words and terms shall, for the purposes of this appendix, have the meanings shown herein. Refer to Chapter 2 of the *International Residential Code* for general definitions.

BALE. Equivalent to straw bale.

❖ Many agricultural and nonagricultural materials are baled. However, in this appendix, the term bale is used to mean straw bale.

CLAY. Inorganic soil with particle sizes less than 0.00008 inch (0.002 mm) having the characteristics of high to very high dry strength and medium to high plasticity.

❖ Clay has been used for thousands of years as a building material. This includes unfired clay in adobe bricks, rammed earth walls, cob walls, earthen plasters and earthen floors, and fired clay in bricks, roofing tiles and floor and wall tiles. In all of these materials, clay is the binder, sometimes along with another binder such as lime or cement, that holds together other materials such as sand or straw. In this appendix, clay appears as a component of clay slip, straw-clay, clay plaster, and soil-cement plaster.

INTERNATIONAL CODE COUNCIL®
Copyright © 2015 ICC. ALL RIGHTS RESERVED. Accessed by David Dammon on Jun 21, 2017 12:30:52 PM pursuant to License Agreement with ICC. No further reproduction or distribution authorized. ANY UNAUTHORIZED REPRODUCTION OR DISTRIBUTION IS A VIOLATION OF THE FEDERAL COPYRIGHT ACT AND THE LICENSE AGREEMENT, AND SUBJECT TO CIVIL AND CRIMINAL PENALTIES THEREUNDER.

Clay for these purposes is obtained from inorganic subsoil with sufficient clay content, or can be obtained as a commercially bagged and quarried material. Clay subsoil typically contains particles of sand and silt in addition to clay. Two ways of determining the suitability of clay subsoil, for use in the materials in this appendix that contain clay, are the Figure 2 Ribbon Test and the Figure 3 Ball Test of the appendix to ASTM E2392/E2392M, *Standard Guide for Design of Earthen Wall Building Systems.*

CLAY SLIP. A suspension of clay particles in water.

❖ Clay slip is used to make straw-clay. It is also sometimes used to coat the bottom of the first course of bales to protect the straw against potential moisture intrusion. For walls that will receive a clay plaster finish, clay slip is sometimes applied to the face of a bale wall during construction to provide temporary protection against light rain, or immediately before application of the first coat of clay plaster for improved bonding to the straw. A simple way to determine if clay slip contains sufficient clay and is of sufficient viscosity for these purposes is to dip a finger in the slip. If upon withdrawal the finger remains covered with an opaque coating, the slip contains sufficient clay.

FINISH. Completed compilation of materials on the interior or exterior faces of stacked *bales*.

❖ See Section AS104 for acceptable finishes on strawbale walls.

FLAKE. An intact section of compressed *straw* removed from an untied *bale*.

❖ Industrialized baling machines push clumps of straw taken from the straw collection chamber tight toward the end of the bale chamber until the set bale length is achieved. The bale is then tied by the machine and the process is repeated.

In this process, the clumps of straw are flattened into 3- to 4-inch-thick (76 to 102 mm) mats known as flakes. When a bale is untied and pulled apart, the separation tends to occur between flakes, and the flakes tend to remain compressed and intact. Flakes of straw are often used in strawbale construction to fill voids between bales, or between bales and framing members in strawbale walls.

LAID FLAT. The orientation of a bale with its largest faces horizontal, its longest dimension parallel with the wall plane, its *ties* concealed in the unfinished wall and its *straw* lengths oriented across the thickness of the wall.

❖ See Commentary Figure AS102.1.

LOAD-BEARING WALL. A strawbale wall that supports more than 100 pounds per linear foot (1459 N/m) of vertical load in addition its own weight.

❖ The definition of this term is consistent with the definition of "Wall, load-bearing" for stud walls in the *International Building Code*® (IBC®).

MESH. An openwork fabric of linked strands of metal, plastic, or natural or synthetic fiber, embedded in plaster.

NONSTRUCTURAL WALL. Walls other than load-bearing walls or shear walls.

❖ The definition of this term is consistent with the definition in ASCE 7. ASCE 7 is one of the standards used as the basis for structural loads on buildings in the code and in the IBC.

In nonstructural strawbale walls, the straw bales are infill only and serve as enclosure, insulation and as a substrate for plaster. The straw bales and their finish carry no superimposed vertical or in-plane lateral loads, and the bales can be in any orientation including laid flat, on-edge, or on-end (see Commentary Figure AS102.1). However, other elements in the same wall, such as wood or steel framing, or structural panels, may also carry such structural loads.

ON-EDGE. The orientation of a *bale* with its largest faces vertical, its longest dimension parallel with the wall plane, its *ties* on the face of the wall and its *straw* lengths oriented vertically.

❖ See Commentary Figure AS102.1.

PIN. A vertical metal rod, wood dowel or bamboo, driven into the center of stacked bales, or placed on opposite surfaces of stacked bales and through-tied.

❖ See the commentary to Section AS105.4.2.

PLASTER. Gypsum or cement plaster, as defined in Sections R702 and AS104, or clay plaster, soil-cement plaster, lime plaster or cement-lime plaster as defined in Section AS104.

PRECOMPRESSION. Vertical compression of stacked bales before the application of finish.

❖ See the commentary to Section AS106.12.1.

REINFORCED PLASTER. A plaster containing mesh reinforcement.

RUNNING BOND. The placement of *straw bales* such that the head joints in successive courses are offset not less than one-quarter the bale length.

❖ The definition of this term is consistent with the definition in the body of the code, except that straw bales are used in place of masonry units.

SHEAR WALL. A strawbale wall designed and constructed to resist lateral seismic and wind forces parallel to the plane of the wall in accordance with Section AS106.13.

❖ The term "shear wall" is used interchangeably with the term "braced wall panel" in this appendix.

SKIN. The compilation of plaster and reinforcing, if any, applied to the surface of stacked bales.

STRUCTURAL WALL. A wall that meets the definition for a load-bearing wall or shear wall.

❖ The definition of this term is consistent with the definition in ASCE 7. ASCE 7 is one of the standards used as the basis for structural loads on buildings in the code and in the IBC.

INTERNATIONAL CODE COUNCIL®
Copyright © 2015 ICC. ALL RIGHTS RESERVED. Accessed by David Dammon on Jun 21, 2017 12:30:52 PM pursuant to License Agreement with ICC. No further reproduction or distribution authorized. ANY UNAUTHORIZED REPRODUCTION OR DISTRIBUTION IS A VIOLATION OF THE FEDERAL COPYRIGHT ACT AND THE LICENSE AGREEMENT, AND SUBJECT TO CIVIL AND CRIMINAL PENALTIES THEREUNDER.

STACK BOND. The placement of straw bales such that head joints in successive courses are vertically aligned.

❖ The definition of this term is consistent with its definition in the code, except that straw bales are used in place of masonry units.

STRAW. The dry stems of cereal grains after the seed heads have been removed.

❖ See the commentary to Section AS103.3.7.

STRAW BALE. A rectangular compressed block of straw, bound by ties.

STRAWBALE. The adjective form of straw bale.

❖ Strawbale construction has historically been referred to as "straw bale", "straw-bale", or "strawbale" construction. Applying accepted English grammar, when used as an adjective, "straw-bale" is correct. However, the English language contains many compound adjectives that originated as two words, but became one word because of frequency and simplicity use. For these reasons the compound adjective "strawbale" is used in this appendix.

STRAW-CLAY. Loose straw mixed and coated with clay slip.

❖ Straw-clay is a material in the context of this appendix and should not be confused with the term light straw-clay construction, which is a nonload-bearing wall system described in Appendix R.

TIE. A synthetic fiber, natural fiber or metal wire used to confine a straw bale.

❖ See the commentary to Section AS103.3.

TRUTH WINDOW. An area of a strawbale wall left without its finish, to allow view of the straw otherwise concealed by its finish.

SECTION AS103
BALES

AS103.1 Shape. Bales shall be rectangular in shape.

❖ Straw bales as referred to in this appendix are rectangular in shape. Rectangular bales created by common industrialized baling machines fall into one of three size categories: "two-string," "three-string," and "jumbo." See the commentary to Sections AS103.2 and AS103.3 for information regarding bale dimensions in these categories. Round (cylindrical) bales have also been used for strawbale building, but are not covered in this appendix.

AS103.2 Size. Bales shall have a height and thickness of not less than 12 inches (305 mm), except as otherwise permitted or required in this appendix. Bales used within a continuous wall shall be of consistent height and thickness to ensure even distribution of loads within the wall system.

❖ This section states the minimum height and thickness (width) for straw bales used in strawbale construction, except that a larger minimum thickness is stated in Section AS106.13.1 for strawbale braced panels. There is no length requirement.

The most commonly used straw bales for building are known as "two-string" and "three-string" bales, named for the number of ties that hold each bale together (see Commentary Figure AS103.2). Their width and height dimensions are determined by the compression chamber of the baler. These two types of bales typically have dimensions as shown in Commentary Figure AS103.2. Of the three dimensions of a bale, the length can vary the most. Two-string and three-string bales are usually small and light enough to be handled by most able-bodied persons.

"Jumbo" bales have also been used for building. They are typically 3 or 4 feet × 4 feet × 8 feet (910 or

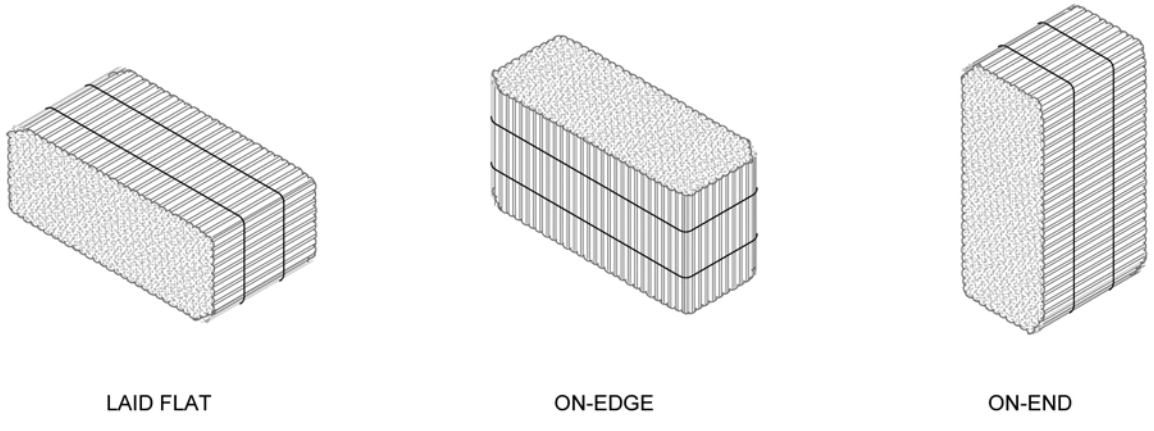

Figure AS102.1
BALE ORIENTATIONS

INTERNATIONAL CODE COUNCIL®
Copyright © 2015 ICC. ALL RIGHTS RESERVED. Accessed by David Dammon on Jun 21, 2017 12:30:52 PM pursuant to License Agreement with ICC. No further reproduction or distribution authorized. ANY UNAUTHORIZED REPRODUCTION OR DISTRIBUTION IS A VIOLATION OF THE FEDERAL COPYRIGHT ACT AND THE LICENSE AGREEMENT, AND SUBJECT TO CIVIL AND CRIMINAL PENALTIES THEREUNDER.

1220 mm × 1220 mm × 2440 mm), and can only be moved by mechanized equipment. Bales as small as 1 foot × 1 foot × 2 feet (305 mm × 305 mm × 610 mm) have been successfully used in strawbale construction, including for structural walls in one-story buildings.

This section also requires bales in a continuous wall to be of consistent height and thickness (again, no requirement for length). Like unit masonry, it is advantageous for the length of rectangular bales to be approximately twice their width. Thus, when stacking bales in a running bond, corners can be efficiently turned and half-bales efficiently used.

Although straw bales in industrialized countries are almost universally made with industrialized baling machines, manually compressed bales have been used in strawbale construction and are acceptable if the bales meet the requirements of Section AS103.

AS103.3 Ties. Bales shall be confined by synthetic fiber, natural fiber or metal ties sufficient to maintain required bale density. Ties shall be not less than 3 inches (76 mm) and not more than 6 inches (152 mm) from the two faces without ties and shall be spaced not more than 12 inches (305 mm) apart. Bales with broken ties shall be retied with sufficient tension to maintain required bale density.

❖ In strawbale construction, the ties that confine a bale serve two major functions: (1) To enable the bale to be easily moved and handled during construction, and (2) To keep the bale at its required density. If ties are removed (such as when making half-bales) or broken before installation, the bales must be retied to the density required by Section AS103.5.

Straw bales in industrialized agriculture are now tied almost exclusively with polypropylene ties, though steel wire ties are sometimes found. Any synthetic fiber, natural fiber (e.g., sisal or hemp) or metal wire ties that can maintain the required bale density is acceptable. The most commonly used bales for building are "two-string" and "three-string" bales, named for the number of ties used (see Commentary Figure AS103.2).

Some practitioners of strawbale construction intentionally cut ties on bales laid flat in nonstructural walls before plastering after courses of bales are sufficiently confined at their ends. The purpose is to allow the bales to expand along their length to fill gaps between bales or between bales and vertical framing, creating a more consistent insulating core and lathing surface. When ties are cut, a bale tends to expand only lengthwise and change in the other two dimensions is negligible, due to the nature of how baling machines create bales (see the commentary to the definition of "Flake").

AS103.4 Moisture content. The moisture content of bales at the time of application of the first coat of plaster or the installation of another finish shall not exceed 20 percent of the weight of the bale. The moisture content of bales shall be determined by use of a moisture meter designed for use with baled straw or hay, equipped with a probe of sufficient length to reach the center of the bale. Not less than 5 percent and not less than 10 bales used shall be randomly selected and tested.

❖ Field experience and laboratory testing have shown that as long as the moisture content of straw does not exceed 20 percent for prolonged periods of time, the straw will not degrade. Some studies have shown that degradation does not occur until 25 percent moisture content is reached. 20 percent moisture content is widely considered a safe maximum for straw in strawbale construction. However, practitioners of strawbale construction prefer a working range of 7-15 percent moisture content, which allows a margin for modest future wetting without degradation.

It is required that the bales have a moisture content of less than 20 percent at the time the walls are plas-

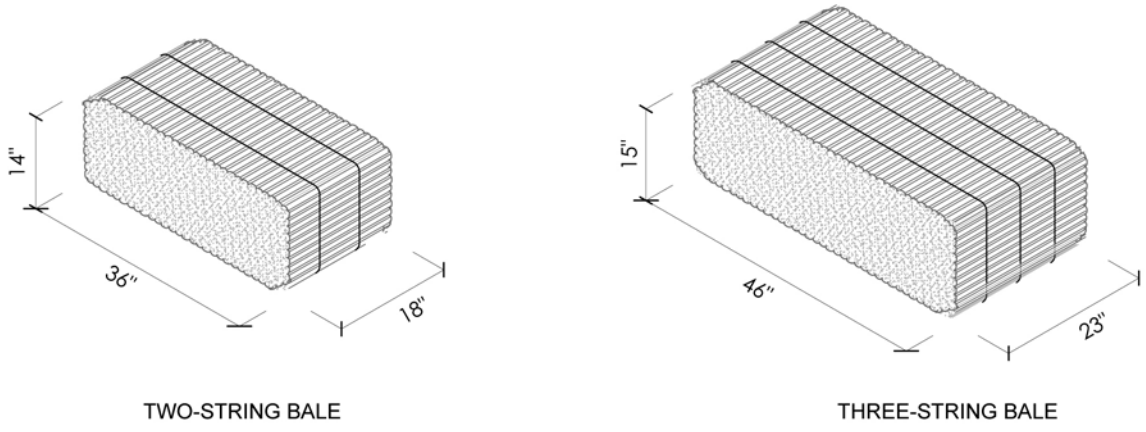

For SI: 1 inch = 25.4 mm.

Figure AS103.2
APPROXIMATE DIMENSIONS OF COMMON STRAW BALES

INTERNATIONAL CODE COUNCIL®
Copyright © 2015 ICC. ALL RIGHTS RESERVED. Accessed by David Dammon on Jun 21, 2017 12:30:52 PM pursuant to License Agreement with ICC. No further reproduction or distribution authorized. ANY UNAUTHORIZED REPRODUCTION OR DISTRIBUTION IS A VIOLATION OF THE FEDERAL COPYRIGHT ACT AND THE LICENSE AGREEMENT, AND SUBJECT TO CIVIL AND CRIMINAL PENALTIES THEREUNDER.

tered or receive another finish, but should also be below 20 percent at all stages. These stages include: at time of baling, in storage, in transport, at the job site and in service. Knowing or controlling the moisture content of bales before procurement or arrival on site can be difficult or impossible. Therefore, at procurement, bales that measure above 20 percent moisture content or that show visible signs of previous wetting, such as dark staining from microbial growth, should not be used for construction (see commentary, Section AS105.6).

The required method of determining whether bales are acceptable for construction is to test the quantity stated in this section with a moisture meter designed for use with baled straw or hay (see Commentary Figure AS103.4 for pictures of example moisture meters). The building official may specify how this is demonstrated. The bales tested must not exceed 20 percent moisture content, and their centers should be checked. If any of the bales tested show a moisture content higher than 20 percent, such bales should not be used for construction, and the building official may then specify how many more bales must be tested before accepting the entire lot of bales for construction.

Once the lot of bales is demonstrated to be acceptable, if bales with moisture content above 20 percent are subsequently discovered, such bales should not be used for construction.

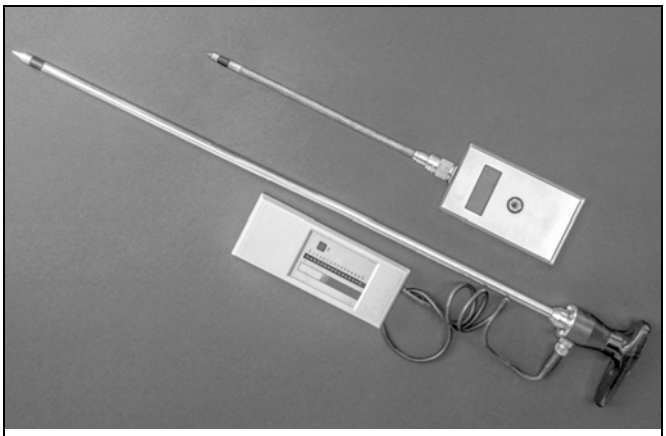

Figure AS103.4
EXAMPLE MOISTURE METERS FOR STRAW BALES

AS103.5 Density. Bales shall have a dry density of not less than 6.5 pounds per cubic foot (104 kg/cubic meter). The dry density shall be calculated by subtracting the weight of the moisture in pounds (kg) from the actual bale weight and dividing by the volume of the bale in cubic feet (cubic meters). Not less than 2 percent and not less than five bales to be used shall be randomly selected and tested on site.

❖ The required method of determining whether bales are of sufficient density for construction is to check the quantity stated in this section. The building official may specify how this is demonstrated.

The dry density is determined as follows: 1. Weigh the bale; 2. Find its percent moisture with a moisture meter designed for use with baled straw or hay; and 3. Calculate the volume of the bale in cubic feet by multiplying its length x width x height in feet.

Enter those numbers in the following equation, where A = total weight (lbs), B = percent moisture content, C = Volume (cu.ft.) and D = Dry Density (lbs/cu.ft):

$$[A - (B \times A)] \div C = D$$

For example: A two-string bale measuring 14 inches $\times$ 18 inches $\times$ 36 inches is determined to have a 12 percent moisture content and weighs 47 lbs. Its volume is 1.17 feet $\times$ 1.5 feet x 3 feet = 5.26 cu.ft. Therefore A = 47 lbs, B = 12, and C = 5.25 cu.ft. Substituting the numbers in the equation: $[47 - (.12 \times 47)]/5.26] = 7.86$ lb per cu.ft. dry density.

Field experience and testing have shown the density required in this section to be a minimum threshold for proper performance of strawbale walls in terms of insulation and structure and as a substrate for plaster. Most bales made by industrialized balers significantly exceed this density. See the commentary to Section AS103.3 for information regarding the practice of intentionally cutting the ties of installed bales.

AS103.6 Partial bales. Partial bales made after original fabrication shall be retied with ties complying with Section AR103.3.

❖ Partial or custom-size bales, most commonly half bales, are typically made on site when sizes other than a full-size bale are required. Also see the commentary to Section AS103.3.

AS103.7 Types of straw. Bales shall be composed of straw from wheat, rice, rye, barley or oat.

❖ Bales made of straw from the five named cereal grains have been successfully used in modern strawbale buildings on six continents since 1990. Straw is an agricultural byproduct baled after nutrient grains have been harvested and is commonly used for livestock bedding and erosion control.

Baled grasses such as hay or alfalfa must not be used. They are cultivated and baled as livestock feed, are baled green, contain nutrients that would support active decomposition by micro-organisms and are unacceptable for building.

AS103.8 Other baled material. The dry stems of other cereal grains shall be acceptable where approved by the building official.

❖ In addition to straw from the five cereal grains named in Section AS103.7, dry stalks from other plants such as flax have been successfully used for bales in strawbale buildings in North America. The building official can accept other baled dry plant material for construction where such material is demonstrated to be equivalent in performance to the types of straw allowed in Section AS103.7. Also see the commentary to Section AS103.7 for information regarding baled plants such as hay and alfalfa that are not acceptable for use in buildings.

INTERNATIONAL CODE COUNCIL®
Copyright © 2015 ICC. ALL RIGHTS RESERVED. Accessed by David Dammon on Jun 21, 2017 12:30:52 PM pursuant to License Agreement with ICC. No further reproduction or distribution authorized. ANY UNAUTHORIZED REPRODUCTION OR DISTRIBUTION IS A VIOLATION OF THE FEDERAL COPYRIGHT ACT AND THE LICENSE AGREEMENT, AND SUBJECT TO CIVIL AND CRIMINAL PENALTIES THEREUNDER.

SECTION AS104
FINISHES

AS104.1 General. Finishes applied to strawbale walls shall be any type permitted by this code, and shall comply with this section and with Chapters 3 and 7 of this code unless stated otherwise in this section.

❖ Historically, plaster has been the most common finish on strawbale walls. However, other cladding materials permitted by the code have also been used and are not prohibited by this appendix.

AS104.2 Purpose, and where required. Strawbale walls shall be finished so as to provide mechanical protection, fire resistance and protection from weather and to restrict the passage of air through the bales, in accordance with this appendix and this code. Vertical strawbale wall surfaces shall receive a coat of plaster not less than $^3/_8$ inch (10 mm) thick, or greater where required elsewhere in this appendix, or shall fit tightly against a solid wall panel. The tops of strawbale walls shall receive a coat of plaster not less than $^3/_8$ inch (10 mm) thick where straw would otherwise be exposed.

Exception: Truth windows shall be permitted where a fire-resistance rating is not required. Weather-exposed truth windows shall be fitted with a weather-tight cover. Interior truth windows in Climate Zones 5, 6, 7, 8 and Marine 4 shall be fitted with an air-tight cover.

❖ The requirement that vertical surfaces of strawbale walls receive a coat of plaster or fit tightly against a wall panel or other abutting material is intended to restrict air movement. Restriction of air movement across the surface of the bales, especially vertical movement, is important for inhibiting the potential spread of fire and for minimizing convective heat loss (see commentary, Section AS107). Restriction of air movement through the bales reduces the potential for convective heat transfer and migration of moist air through the wall assembly.

The requirement that exposed tops of strawbale walls receive a coat of plaster (where not covered tightly by materials such as wood framing, plywood, or gypsum board) is intended to protect the straw against fire and to inhibit air and moisture movement into the wall. Clay plaster has proven to be especially effective in managing moisture at the top of strawbale walls.

The exception to Section AS104.2 allows truth windows where a fire-resistance rating is not required. See the definition of "Truth window." The purpose of the air-tight cover requirement for interior truth windows in the indicated climate zones is to prevent condensation in the wall from warm, moist interior air bypassing the air barrier of the interior finish. Weather-tight and air-tight covers can be operable and can include a transparent material, such as glass or acrylic, to maintain the truth window's purpose, which is to display the straw in the wall. In the cover's closed position it must be weather-tight, or air-tight, as required. Also see Section AS105.6.2 and its commentary.

AS104.3 Vapor retarders. Class I and II vapor retarders shall not be used on a strawbale wall, nor shall any other material be used that has a vapor permeance rating of less than 3 perms, except as permitted or required elsewhere in this appendix.

❖ High vapor permeability of both interior and exterior finishes is desirable for strawbale walls to allow moisture migration through the wall and dispersion of any moisture that enters the wall. For this reason, Class I and Class II vapor retarders (≤1 perm, and ≤1 perm, and thus considered vapor barriers) are not allowed on strawbale walls, except in extreme situations as required in this appendix, where the importance of keeping water vapor from entering the wall exceeds the importance of enabling moisture to exit the wall.

There are two sections in this appendix where such a situation is defined. In Section AS105.6.2, a Class I or Class II vapor retarder is required on strawbale walls enclosing showers or steam rooms. In Section AS105.6.5, a Class II vapor retarder is required to separate straw bales from adjacent concrete or masonry.

The minimum specified permeance rating is intended to be the "wet bulb" perm rating of the material because it is under wet conditions that it is most important for the materials to be vapor permeable. Some materials have identical wet bulb and dry bulb perm ratings, whereas others, such as plywood, have substantially different wet bulb and dry bulb perm ratings. Unless identical, the dry bulb perm rating of a material is always lower than the wet bulb rating, and can be used to comply with this section if the wet bulb rating is unknown because the dry bulb rating will be conservative.

AS104.4 Plaster. Plaster applied to bales shall be any type described in this section, and as required or limited in this appendix. Plaster thickness shall not exceed 2 inches (51 mm).

❖ Plaster has been the most common finish on strawbale walls and as such is given particular attention in this appendix. This appendix contains provisions for two plaster types that also appear in the body of the code —gypsum plaster and cement plaster—and contains provisions for four plaster types that do not appear in the body of the code: clay plaster, soil-cement plaster, lime plaster and cement-lime plaster. Plasters used on structural walls must comply with Section AS106.6.

All of the plaster types contained in this appendix have been successfully used in strawbale construction. Each has comparative advantages and disadvantages in terms of compressive strength, durability, vapor permeability, moisture management, availability, cost, ease of application, acoustic properties, fire resistance and aesthetic qualities. The choice of plaster should be carefully considered based on the context and requirements of the building project. Such considerations are typically influenced by climate and the required or desired structural performance of the strawbale walls. Similar consideration should be given

INTERNATIONAL CODE COUNCIL®
Copyright © 2015 ICC. ALL RIGHTS RESERVED. Accessed by David Dammon on Jun 21, 2017 12:30:52 PM pursuant to License Agreement with ICC. No further reproduction or distribution authorized. ANY UNAUTHORIZED REPRODUCTION OR DISTRIBUTION IS A VIOLATION OF THE FEDERAL COPYRIGHT ACT AND THE LICENSE AGREEMENT, AND SUBJECT TO CIVIL AND CRIMINAL PENALTIES THEREUNDER.

when choosing between plaster and other finish materials or assemblies for strawbale walls.

The reason for limiting plaster thickness to 2 inches (51 mm) is that the additional weight of thicker plaster has potential structural consequences, especially in areas of high seismic risk. Thicker plaster may also unacceptably reduce vapor permeability depending on the plaster used; however, there are also potential benefits of thicker plaster, including improved thermal performance in some climates due to the increased mass. The building official may allow plaster thicker than 2 inches (51 mm) if deemed to present no significant additional risk. Also see the commentary to Section AS106.2.

AS104.4.1 Plaster and membranes. Plaster shall be applied directly to strawbale walls to facilitate transpiration of moisture from the bales, and to secure a mechanical bond between the skin and the bales, except where a membrane is allowed or required elsewhere in this appendix.

❖ Strawbale construction has historically been practiced with plaster applied directly to the stacked straw bales, without any membrane air barrier or water-resistive barrier between the plaster and the straw. This allows the plaster to mechanically bond with the straw, which is especially important for structural strawbale walls (see commentary, Section AS106.8). Also, under certain conditions, the presence of a membrane may impede the dispersion of moisture through the plaster to the interior or exterior.

It is important to note that while the code requires a water-resistive barrier for exterior cement plaster over wood-frame construction in accordance with Section R703.7.3, a water-resistive barrier is not required for cement plaster, or any exterior plaster allowed by this appendix, over strawbale walls. The moisture management characteristics of strawbale construction compared with wood-frame construction account for the differing requirements. In strawbale construction, the many tubular lengths of straw in the bale core give a strawbale wall considerably more capacity than a wood-frame wall to safely absorb, store and disperse moisture.

There are situations where a membrane is allowed or required by this appendix. For example, Section AS105.6.2 requires a Class I or Class II vapor retarder on strawbale walls enclosing showers or steam rooms. One means of achieving this is the installation of a membrane vapor retarder. See the commentary to Section AS105.6.1 for situations where a water-resistive barrier membrane is sometimes used between straw and plaster.

Installation of a membrane between the straw bales and plaster always requires mesh or lath that is adequately attached to the bales or through-tied to mesh or lath on the other side, including on nonstructural walls. This mesh or lath substitutes for the typical lathing bond between plaster and straw (see Section AS104.4.2) that is interrupted where a membrane is installed. Where mesh is required structurally, such attachment must be of an approved engineered design (see Section AS106.8).

AS104.4.2 Lath and mesh for plaster. The surface of the straw bales functions as lath, and other lath or mesh shall not be required, except as required for out-of-plane resistance by Table AS105.4 or for structural walls by Tables AS106.12 and AS106.13(1).

AS104.4.3 Clay plaster. Clay plaster shall comply with Sections AS104.4.3.1 through AS104.4.3.6.

AS104.4.3.1 General. Clay plaster shall be any plaster having a clay or clay-soil binder. Such plaster shall contain sufficient clay to fully bind the plaster, sand or other inert granular material, and shall be permitted to contain reinforcing fibers. Acceptable reinforcing fibers include chopped straw, sisal and animal hair.

❖ The relative amounts of soil and added sand in the plaster mix depend on the amount of clay, sand and silt in the clay soil. Experimentation or experience is necessary to determine mixes that are workable and that yield a cured plaster with minimal or no cracking and sufficient compressive strength for the application.

See the commentary to the definition of "Clay" regarding methods used to determine the suitability of clay soil for clay plasters.

In addition to the acceptable reinforcing fibers listed, hemp fiber and agave fibers also have a history of successful use.

AS104.4.3.2 Lath and mesh. Clay plaster shall not be required to contain reinforcing lath or mesh except as required in Tables AS105.4 and AS106.13(1). Where provided, mesh shall be natural fiber, corrosion-resistant metal, nylon, high-density polypropylene or other approved material.

AS104.4.3.3 Thickness and coats. Clay plaster shall be not less than 1 inch (25 mm) thick, except where required to be thicker for structural walls as described elsewhere in this appendix, and shall be applied in not less than two coats.

❖ The purposes of requiring a minimum of two coats for clay plaster include limiting through-cracks (where the second coat fills in or bridges any cracks in the first coat) and aiding in the drying of the plaster.

AS104.4.3.4 Rain-exposed. Clay plaster, where exposed to rain, shall be finished with lime wash, lime plaster, linseed oil or other *approved* erosion-resistant finish.

❖ Exception 2 in the definition of "Weather-exposed surfaces" in the IBC might be considered when determining whether a clay plaster should be regulated as "exposed to rain," subject to the evaluation of the building official, along with consideration of the local climate. That exception reads: "Walls or portions of walls beneath an unenclosed roof area, where located a horizontal distance from an open exterior opening equal to at least twice the height of the opening."

Lime plaster and lime wash over clay plaster should only be used with careful consideration of local climate,

INTERNATIONAL CODE COUNCIL®
Copyright © 2015 ICC. ALL RIGHTS RESERVED. Accessed by David Dammon on Jun 21, 2017 12:30:52 PM pursuant to License Agreement with ICC. No further reproduction or distribution authorized. ANY UNAUTHORIZED REPRODUCTION OR DISTRIBUTION IS A VIOLATION OF THE FEDERAL COPYRIGHT ACT AND THE LICENSE AGREEMENT, AND SUBJECT TO CIVIL AND CRIMINAL PENALTIES THEREUNDER.

materials and experience, as spalling can occur under certain conditions. Lime in the bonding coat of the clay plaster has been shown to decrease the chance of spalling of these lime-based protective coats.

AS104.4.3.5 Prohibited finish coat. Plaster containing Portland cement shall not be permitted as a finish coat over clay plasters.

❖ Finish coats of Portland cement plaster over clay plasters have a history of spalling and, therefore, are prohibited. In addition, cement plaster has a significantly lower vapor permeability than clay plaster and, without sufficient lime, risks reducing the vapor permeability of the plaster below the minimum 3 perm requirement of Section AS104.3.

As a matter of practice, an often-desired attribute of clay plaster is its high vapor permeability (16-19 perms per inch). Applying cement plaster, or any finish that significantly reduces its vapor permeability, runs counter to the intention. Other finishes that protect clay plaster from erosion without significantly reducing its vapor permeability are available and commonly used (see Section AS104.4.3.4 and its commentary).

AS104.4.3.6 Plaster additives. Additives shall be permitted to increase plaster workability, durability, strength or water resistance.

AS104.4.4 Soil-cement plaster. Soil-cement plaster shall comply with Sections AS104.4.4.1 through AS104.4.4.3.

AS104.4.4.1 General. Soil-cement plaster shall be composed of soil (free of organic matter), sand and not less than 10 percent and not more than 20 percent Portland cement by volume, and shall be permitted to contain reinforcing fibers.

❖ The relative amounts of soil and added sand in the plaster mix depend on the amount of clay, sand and silt in the soil. Experimentation or experience is necessary to determine mixes that are workable and that yield a cured plaster with minimal or no cracking and sufficient compressive strength for the application.

AS104.4.4.2 Lath and mesh. Soil-cement plaster shall use any corrosion-resistant lath or mesh permitted by this code, or as required in Section AS106 where used on structural walls.

AS104.4.4.3 Thickness. Soil-cement plaster shall be not less than 1 inch (25 mm) thick.

AS104.4.5 Gypsum plaster. Gypsum plaster shall comply with Section R702. Gypsum plaster shall be limited to use on interior surfaces of nonstructural walls, and as an interior finish coat over a structural plaster that complies with this appendix.

❖ The subsection of Section R702 that pertains to gypsum plaster is Section R702.2.1. Gypsum plaster, like all other plasters described in this appendix, can be applied directly to strawbale walls in accordance with Section AS104.4.2.

AS104.4.6 Lime plaster. Lime plaster shall comply with Sections AS104.4.6.1 and AS104.4.6.3.

AS104.4.6.1 General. Lime plaster is any plaster with a binder that is composed of calcium hydroxide (CaOH) including Type N or S hydrated lime, hydraulic lime, natural hydraulic lime or quicklime. Hydrated lime shall comply with ASTM C206. Hydraulic lime shall comply with ASTM C1707. Natural hydraulic lime shall comply with ASTM C141 and EN 459. Quicklime shall comply with ASTM C5.

AS104.4.6.2 Thickness and coats. Lime plaster shall be not less than $^{7}/_{8}$ inch (22 mm) thick, and shall be applied in not less than three coats.

AS104.4.6.3 On structural walls. Lime plaster on strawbale structural walls in accordance with Table AS106.12 or Table AS106.13(1) shall use a binder of hydraulic or natural hydraulic lime.

❖ For structural strawbale walls using lime plaster, the binder is required to be hydraulic or natural hydraulic lime because they develop the minimum compressive strength required by Table AS106.6.1 more reliably than nonhydraulic limes. However, the building official may decide to allow Type N or S hydrated lime, or quicklime for lime plasters on structural walls where such plasters are demonstrated to achieve the minimum required compressive strength through testing in accordance with Section AS106.6.1.

AS104.4.7 Cement-lime plaster. Cement-lime plaster shall be plaster mixes CL, F or FL, as described in ASTM C926.

AS104.4.8 Cement plaster. Cement plaster shall conform to ASTM C926 and shall comply with Sections R703.6.2, R703.6.4 and R703.6.5, except that the amount of lime in plaster coats shall be not less than 1 part lime to 6 parts cement to allow a minimum acceptable vapor permeability. The combined thickness of plaster coats shall be not more than $1^{1}/_{2}$ inches (38 mm) thick.

❖ Cement plaster is required to contain lime in the proportion stated in order to achieve a vapor permeability that is consistent with the minimum 3 perm requirement of Section AS104.3.

SECTION AS105
STRAWBALE WALLS—GENERAL

AS105.1 General. Strawbale walls shall be designed and constructed in accordance with this section. Strawbale structural walls shall be in accordance with the additional requirements of Section AS106.

❖ The provisions of this section apply to all strawbale walls, including nonstructural and structural walls (see the definitions of “Nonstructural wall” and “Structural wall”), except where a subsection states that the provision(s) apply only to nonstructural walls. In addition, structural strawbale walls must be designed and constructed in accordance with Section AS106.

INTERNATIONAL CODE COUNCIL®
Copyright © 2015 ICC. ALL RIGHTS RESERVED. Accessed by David Dammon on Jun 21, 2017 12:30:52 PM pursuant to License Agreement with ICC. No further reproduction or distribution authorized. ANY UNAUTHORIZED REPRODUCTION OR DISTRIBUTION IS A VIOLATION OF THE FEDERAL COPYRIGHT ACT AND THE LICENSE AGREEMENT, AND SUBJECT TO CIVIL AND CRIMINAL PENALTIES THEREUNDER.

AS105.2 Building requirements for use of strawbale nonstructural walls. Buildings using strawbale nonstructural walls shall be subject to the following limitations and requirements:

1. Number of stories: not more than one, except that two stories shall be allowed with an *approved* engineered design.
2. Building height: not more than 25 feet (7620 mm).
3. Wall height: in accordance with Table AS105.4.
4. Braced wall panel length, and increase in Seismic Design Categories C, D_0, D_1 and D_2: the required length of bracing for buildings using strawbale nonstructural walls shall comply with Section R602.10.3 of this code, with the additional requirements that Table 602.10.3(3) shall be applicable to buildings in Seismic Design Category C, and that the minimum total length of braced wall panels in Table R602.10.3(3) shall be increased by 60 percent.

❖ All buildings with nonstructural strawbale walls must employ a lateral force-resisting system in accordance with Section R602.10.3. For such buildings in Seismic Design Categories C, D_0, D_1 and D_2, the minimum total length of braced wall panels in Table R602.10.3(3) must be increased by 60 percent. This increase is due to the additional weight of strawbale walls (especially when finished with plaster on both sides) relative to wood-framed walls. This weight imposes additional seismic load on the lateral force-resisting system.

It is also possible for buildings with load-bearing strawbale walls to employ a conventional lateral force-resisting system. In Seismic Design Categories C, D_0, D_1 and D_2, the same increase in minimum total length of conventional braced wall panels described in Item 4 should apply.

Buildings employing strawbale braced wall panels as their lateral force-resisting system must comply with Section AS106.13. When used in Seismic Design Categories C, D_0, D_1 and D_2, the required total lengths of these strawbale braced wall panels in Table AS106.13(3) already account for the seismic load due to the weight of the plastered strawbale walls, therefore, no increase is necessary.

The 60-percent increase in Item 4 assumes a wall dead load of up to 60 psf. This is consistent with the wall dead load limit stipulated in Section AS106.2. Smaller wall dead loads, especially for strawbale walls with a nonplaster finish, could justify a smaller percentage increase if demonstrated in accordance with accepted engineering practice.

AS105.3 Sill plates. Sill plates shall support and be flush with each face of the straw bales above and shall be of naturally durable or preservative-treated wood where required by this code. Sill plates shall be not less than nominal 2 inches by 4 inches (51 mm by 102 mm) with anchoring complying with Section R403.1.6 and the additional requirements of Tables AS105.4 and AS106.6(1), where applicable.

❖ Although not required by this appendix, it is common and good practice to install continuous flashing that covers the joint between the bottom of the sill plate and its supporting material (e.g., concrete slab or foundation) and as a means of providing a capillary break where the plaster is supported by concrete or masonry. Such flashing should drain to the exterior. Examples of this flashing are shown in Commentary Figures AS105.3(1) and AS105.3(2).

The purpose of this flashing is to protect against intrusion of moisture that might accumulate near the bottom of the exterior plaster. If a water-resistive barrier is installed over the bales (e.g., under a finish other than plaster, between wood framing and plaster, or between the straw and plaster in some applications), it should lap over the flashing.

AS105.4 Out-of-plane resistance and unrestrained wall dimensions. Strawbale walls shall employ a method of out-of-plane resistance in accordance with Table AS105.4, and comply with its associated limits and requirements.

❖ Every strawbale wall must employ an acceptable method of out-of-plane resistance in accordance with this section. The maximum unrestrained height of any strawbale wall, both nonstructural and structural, is a function of its method of out-of-plane resistance, as well as other parameters included in Table AS105.4. The overall height of a strawbale wall can exceed the unrestrained height limits if it employs an approved horizontal restraint (see Table AS105.4, Note b) at an intermediate height between the sill plates and the top plate or roof bearing assembly.

One method of providing out-of-plane resistance for strawbale walls that is not listed in Table AS105.4 is the use of wood posts or studs, to which a sufficient number and distribution of bales are attached via wood stakes, gussets or other means, to provide out-of-plane stability under the design wind and seismic loads for the building and its location. This method is most commonly employed in post-and-beam structures with strawbale infill, using plasters without reinforcing mesh, or using nonplaster finishes. This method should be used only with an approved engineered design, unless a local history of acceptable experience exists.

AS105.4.1 Determination of out-of-plane loading. Out-of-plane loading for the use of Table AS105.4 shall be in terms of the design wind speed and seismic design category as determined in accordance with Sections R301.2.1 and R301.2.2 of this code.

AS105.4.2 Pins. Pins used for out-of-plane resistance shall comply with the following or shall be in accordance with an *approved* engineered design. Pins shall be external, internal or a combination of the two.

1. Pins shall be $^1/_2$-inch-diameter (12.7 mm) steel, $^3/_4$-inch-diameter (19.1 mm) wood or $^1/_2$-inch-diameter (12.7 mm) bamboo.
2. External pins shall be installed vertically on both sides of the wall at a spacing of not more than 24 inches (610 mm) on center. External pins shall have full lateral bearing on the sill plate and the top plate or roof-bearing element, and shall be tightly tied through the wall to an opposing pin with ties spaced not more than 32

INTERNATIONAL CODE COUNCIL®
Copyright © 2015 ICC. ALL RIGHTS RESERVED. Accessed by David Dammon on Jun 21, 2017 12:30:52 PM pursuant to License Agreement with ICC. No further reproduction or distribution authorized. ANY UNAUTHORIZED REPRODUCTION OR DISTRIBUTION IS A VIOLATION OF THE FEDERAL COPYRIGHT ACT AND THE LICENSE AGREEMENT, AND SUBJECT TO CIVIL AND CRIMINAL PENALTIES THEREUNDER.

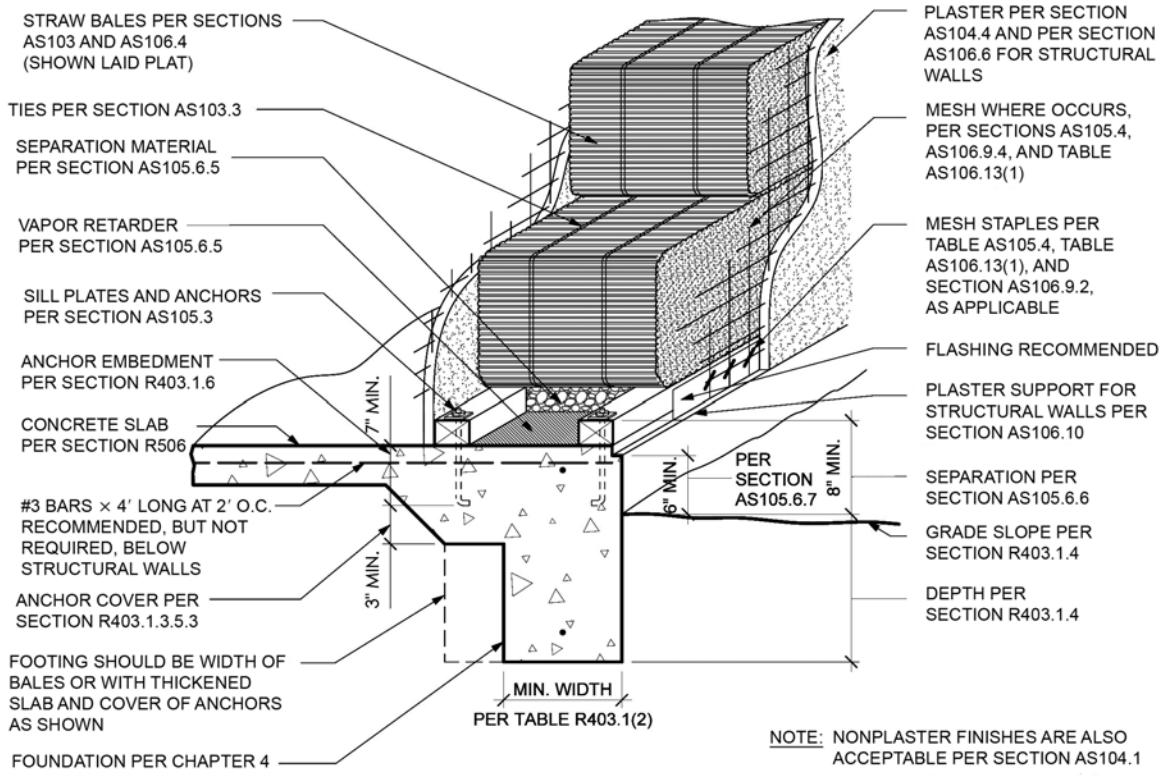

For SI:1 inch = 25.4 mm.

Figure AS105.3(1)
TYPICAL BASE OF PLASTERED STRAWBALE WALL ON CONCRETE SLAB AND FOOTING

inches (813 mm) apart and not more than 8 inches (203 mm) from each end of the pins.

3. Internal pins shall be installed vertically within the center third of the bales, at spacing of not more than 24 inches (610 mm) and shall extend from top course to bottom course. The bottom course shall be similarly connected to its support and the top course shall be similarly connected to the roof- or floor-bearing member above with pins or other *approved* means. Internal pins shall be continuous or shall overlap through not less than one bale course.

❖ The term "pin" (see definition of "Pin") comes from the once-common use of internal pins, typically made of steel reinforcing bar, in modern stawbale construction. In this method, the bales are skewered with steel bar as a means of stabilizing the walls during construction and to provide resistance to out-of-plane wind and seismic forces. The practice of internal pinning (with steel or other materials) has fallen into disuse by most practitioners of strawbale construction due to its greater difficulty and cost compared with other means of achieving the same or better wall stability. There is also debate among strawbale building practitioners regarding whether steel pins may be a location of potential condensation in some conditions.

The term "external pin" might be considered a misnomer relative to general use or understanding of the word "pin" (typically being inside another material), but it is commonly used terminology in strawbale construction.

AS105.5 Connection of light-framed walls to strawbale walls. *Light-framed* walls perpendicular to, or at an angle to a straw bale wall assembly, shall be fastened to the bottom and top wood members of the strawbale wall in accordance with requirements for wood or cold-formed steel *light-framed* walls in this code, or the abutting stud shall be connected to alternating straw bale courses with a $^{1}/_{2}$-inch diameter (12.7 mm) steel, $^{3}/_{4}$-inch-diameter (19.1 mm) wood or $^{5}/_{8}$-inch-diameter (15.9 mm) bamboo dowel, with not less than 8-inch (203 mm) penetration.

❖ The connection methods stated in this section are not meant to preclude the use of other common methods, such as an all-thread rod inserted through the abutting stud and bale wall, with a plywood washer on the opposite side of the bale and a steel nut and washer on both ends of the threaded rod.

INTERNATIONAL CODE COUNCIL®
Copyright © 2015 ICC. ALL RIGHTS RESERVED. Accessed by David Dammon on Jun 21, 2017 12:30:52 PM pursuant to License Agreement with ICC. No further reproduction or distribution authorized. ANY UNAUTHORIZED REPRODUCTION OR DISTRIBUTION IS A VIOLATION OF THE FEDERAL COPYRIGHT ACT AND THE LICENSE AGREEMENT, AND SUBJECT TO CIVIL AND CRIMINAL PENALTIES THEREUNDER.

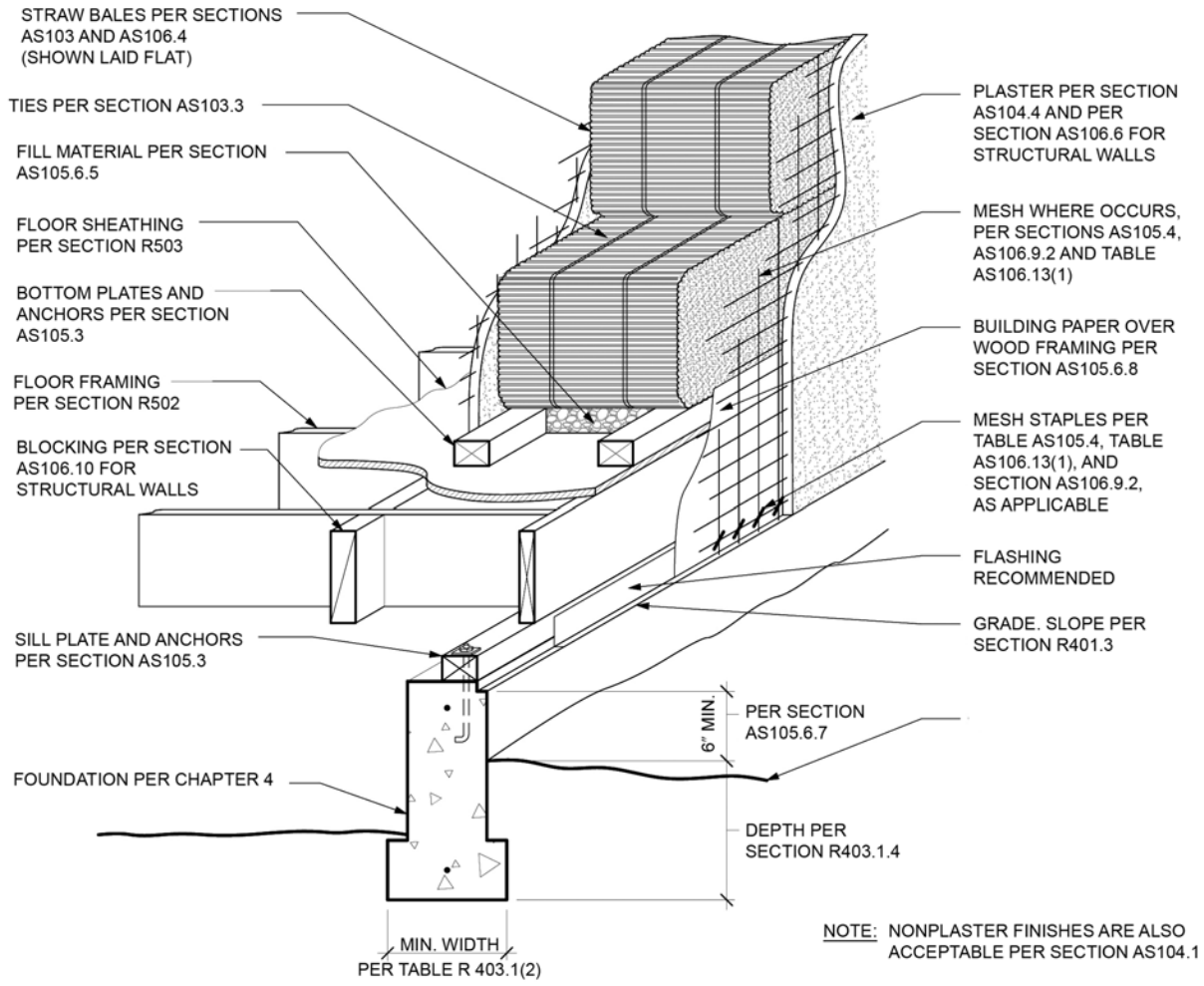

For SI: 1 inch = 25.4 mm.

Figure AS105.3(2)
TYPICAL BASE OF PLASTERED STRAWBALE WALL OVER RAISED FLOOR

AS105.6 Moisture control. Strawbale walls shall be protected from moisture intrusion and damage in accordance with Sections AS105.6.1 through AS105.6.8.

❖ Preventing intrusion of moisture into strawbale walls is important for maximizing service life and for maintaining the insulating value of the straw.

There is a colloquial metaphor commonly used by practitioners of strawbale construction that summarizes the basic principles for keeping a wall dry: "Good boots, a good hat, and a coat that breathes." This translates into keeping the bottom of the wall protected from ground and weather-related moisture, providing ample roof overhangs (especially in wet climates) to shield the wall and its openings from rain and providing a protective wall finish that is vapor permeable. This dictum is also considered to be wise advice for buildings constructed of wood frame and other materials.

Straw, like wood, is composed primarily of cellulose, hemicellulose and lignin. Straw and wood can last indefinitely as long as there is insufficient free moisture (moisture not bound in the material) to cause deterioration. If free moisture becomes available (generally when the moisture content of the material exceeds 20 percent) and other necessary environmental conditions exist—including temperatures above 50°F (10°C) and the presence of oxygen—then microbial degradation of the straw can occur. In buildings, the only practically controllable condition is the availability of free moisture.

Though straw and wood have similar material makeup, straw is more susceptible to damage from moisture over a shorter period of time. This is due to the greater surface area of the many lengths of tubular straw, compared with only the perimeter surface area of wood framing members. However, the greater surface area of straw also has the comparative advantage of potentially absorbing and storing more moisture before it becomes free moisture and causes degrada-

INTERNATIONAL CODE COUNCIL®
Copyright © 2015 ICC. ALL RIGHTS RESERVED. Accessed by David Dammon on Jun 21, 2017 12:30:52 PM pursuant to License Agreement with ICC. No further reproduction or distribution authorized. ANY UNAUTHORIZED REPRODUCTION OR DISTRIBUTION IS A VIOLATION OF THE FEDERAL COPYRIGHT ACT AND THE LICENSE AGREEMENT, AND SUBJECT TO CIVIL AND CRIMINAL PENALTIES THEREUNDER.

tion. This, combined with the much larger storage capacity of a continuous core of straw compared to the spaced framing members in a wood-framed wall, gives a strawbale wall significantly greater moisture management capacity.

Subsections AS105.6.1 through AS105.6.8 contain requirements to minimize the possibility of moisture intrusion into strawbale walls from common sources such as rain or snow and condensation (from uncontrolled flow of relatively warm, moist air into the wall). See the additional commentary after each subsection.

Potential sources that are not addressed in these subsections are leaks and condensation from plumbing pipes in the walls. While there is no requirement regarding plumbing pipes in this appendix, it is recommended and common practice to minimize the installation of supply and waste pipes in strawbale walls, or to install them at the bottom of the wall (between sill plates) or in a continuous sleeve that drains to the exterior.

In addition to the importance of preventing moisture from entering a strawbale wall, moisture must also be allowed to readily exit the wall. Thus, the finish on each side should be as vapor permeable as possible within the requirements of this appendix and the code. Sections AS105.6.1, AS105.6.2 and AS104.3 include minimum vapor permeability requirements for finishes and any associated vapor retarder or water-resistive barrier.

AS105.6.1 Water-resistant barriers and vapor permeance ratings. Plastered bale walls shall be constructed without any membrane barrier between straw and plaster to facilitate transpiration of moisture from the bales, and to secure a structural bond between straw and plaster, except as permitted or required elsewhere in this appendix. Where a water-resistant barrier is placed behind an exterior finish, it shall have a vapor permeance rating of not less than 5 perms, except as permitted or required elsewhere in this appendix.

❖ This section is intended to both facilitate transpiration of moisture out of the strawbale core through its finish and to allow a mechanical bond between plaster finishes and the straw. Some strawbale designs incorporate water-resistive barriers. This typically includes water-resistive barriers on the exterior face of bales below window sills, on the first course(s) of bales that are particularly exposed to weather-related moisture, behind nonplaster finishes, over sheathing, or as part of a rain screen. Where a water-resistive barrier is used, its vapor permeance rating must be at least 5 perms (which is the definition of vapor permeable in the code).

Where a water-resistive barrier is used behind a plaster finish on a structural wall, its mesh must be through-tied to the plaster skin on the other side by means of an approved engineered design (see Section AS106.8). Though not addressed in this appendix, where a water-resistive barrier is used behind plaster on a nonstructural wall, it should contain mesh or other lath that is adequately attached to the bale core or to the finish on the other side of the wall to ensure that the plaster will remain in place in normal service.

TABLE AS105.4
OUT-OF-PLANE RESISTANCE AND UNRESTRAINED WALL DIMENSIONS

METHOD OF OUT-OF-PLANE RESISTANCE[a]	FOR WIND DESIGN SPEEDS (mph)	FOR SEISMIC DESIGN CATEGORIES	UNRESTRAINED WALL DIMENSIONS, H[b]		MESH STAPLE SPACING AT BOUNDARY RESTRAINTS
			Absolute limit in feet	Limit based on bale thickness T[c] in feet (mm)	
Nonplaster finish or unreinforced plaster	≤ 100	A, B, C, D_0	$H \le 8$	$H \le 5T$	None required
Pins per Section AS105.4.2	≤ 100	A, B, C, D_0	$H \le 12$	$H \le 8T$	None required
Pins per Section AS105.4.2	≤ 110	A, B, C, D_0, D_1, D_2	$H \le 10$	$H \le 7T$	None required
Reinforced[c] clay plaster	≤ 110	A, B, C, D_0, D_1, D_2	$H \le 10$	$H \le 8T^{0.5}$ ($H \le 140T^{0.5}$)	≤ 6 inches
Reinforced[c] clay plaster	≤ 110	A, B, C, D_0, D_1, D_2	$10 < H \le 12$	$H \le 8T^{0.5}$ ($H \le 140T^{0.5}$)	≤ 4 inches[e]
Reinforced[c] cement, cement-lime, lime or soil-cement plaster	≤ 110	A, B, C, D_0, D_1, D_2	$H \le 10$	$H \le 9T^{0.5}$ ($H \le 157T^{0.5}$)	≤ 6 inches
Reinforced[c] cement, cement-lime, lime or soil-cement plaster	≤ 120	A, B, C, D_0, D_1, D_2	$H \le 12$	$H \le 9T^{0.5}$ ($H \le 157T^{0.5}$)	≤ 4 inches[e]

For SI: 1 inch = 25.4 mm, 1 foot = 304.8 mm.

a. Finishes applied to both sides of stacked bales. Where different finishes are used on opposite sides of a wall, the more restrictive requirements shall apply.

b. H = Stacked bale height in feet (mm) between sill plate and top plate or other *approved* horizontal restraint, or the horizontal distance in feet (mm) between *approved* vertical restraints. For load-bearing walls, H refers to vertical height only.

c. T = Bale thickness in feet (mm).

d. Plaster reinforcement shall be any mesh allowed in Table AS106.16 for the matching plaster type, and with staple spacing in accordance with this table. Mesh shall be installed in accordance with Section AS106.9.

e. Sill plate attachment shall be with $^5/_8$-inch anchor bolts or approved equivalent at not more than 48 inches on center where staple spacing is required to be ≤ 4 inches.

❖ See the commentary to Section AS105.4.2.

INTERNATIONAL CODE COUNCIL®
Copyright © 2015 ICC. ALL RIGHTS RESERVED. Accessed by David Dammon on Jun 21, 2017 12:30:52 PM pursuant to License Agreement with ICC. No further reproduction or distribution authorized. ANY UNAUTHORIZED REPRODUCTION OR DISTRIBUTION IS A VIOLATION OF THE FEDERAL COPYRIGHT ACT AND THE LICENSE AGREEMENT, AND SUBJECT TO CIVIL AND CRIMINAL PENALTIES THEREUNDER.

AS105.6.2 Vapor retarders. Wall finishes shall have an equivalent vapor permeance rating of a Class III vapor retarder on the interior side of exterior strawbale walls in Climate Zones 5, 6, 7, 8 and Marine 4, as defined in Chapter 11. Bales in walls enclosing showers or steam rooms shall be protected on the interior side by a Class I or Class II vapor retarder.

❖ The interior wall finish of exterior strawbale walls requires an equivalent vapor permeance rating of a Class III vapor retarder (> 1 perm and ≤ 10 perms) in the stated climate zones. This requirement is intended to prevent condensation in the wall in cold winter climates by retarding the passage of water vapor into the wall from interior air. However, sufficient vapor permeability of the interior finish is also important to allow migration of moisture from the wall to the interior under some conditions. This includes conditions that occur in many locations in the stated climate zones where interiors are mechanically cooled during warm, humid seasons.

Because of potentially conflicting seasonal demands in the stated climate zones, a balance between the vapor-retarding ability and the vapor permeability of the interior finish of exterior strawbale walls is desirable. Field experience of strawbale practitioners, coupled with principles of building science regarding moisture migration, dictate a perm rating in the upper half of a Class III vapor retarder (between 5 and 10 perms) is optimal for the interior finish of exterior strawbale walls in these climate zones.

In cold climates, the comparative vapor permeance of the interior and exterior finishes are at least as important as the vapor permeability of the interior finish alone. Although not a requirement in this appendix, it is recommended that the vapor permeance of the exterior finish of strawbale walls be greater than that of the interior finish. This will allow water vapor that is driven from the relatively warm and moist interior air toward the colder and drier exterior to continue out of the wall before accumulating and condensing.

The requirement for a Class I or Class II vapor retarder on walls enclosing showers or steam rooms applies to all climate zones and interior and exterior strawbale walls. The term "shower" means a shower or a combination tub/shower. Walls enclosing tubs without showers are not intended to be subject to this requirement.

Also see the commentary to Section AS104.3.

AS105.6.3 Penetrations in exterior strawbale walls. Penetrations in exterior strawbale walls shall be sealed with an *approved* sealant or gasket on the exterior side of the wall in all climate zones, and on the interior side of the wall in Climate Zones 5, 6, 7, 8 and Marine 4, as defined in Chapter 11.

❖ In all climate zones, sealing penetrations (e.g., by piping, conduit, electrical boxes or ventilation caps) in the exterior finish of strawbale walls helps minimize or prevent the intrusion of weather-related moisture into the straw core of the wall. In climate zones with cold winters, and in marine climate zones where the air is especially laden with moisture, sealing penetrations on the interior side of exterior walls is important to prevent warm, moist interior air from bypassing the air barrier of the interior finish of the wall, which could potentially condense in the bale core.

Window and door openings are considered large penetrations in exterior walls and are subject to the requirements of this section. The interfaces between window units and door units and exterior strawbale walls must be sealed on the exterior to protect against weather-related moisture intrusion. They must also be sealed on the interior in the listed climate zones in order to protect against intrusion of moisture from interior air. Window sills are subject to the requirements of Section AS105.6.4.

Windows and doors require particular attention to minimize moisture intrusion into the wall. Appropriate flashing measures should be taken and detailed according to the exterior finish (plaster or other cladding), the profile of any window or door trim and the location of the unit within the thickness of the strawbale wall. Common practice is to seal the plaster to the rough opening, which is in turn sealed to the window or door unit. Conventional "peel-and-stick" window flashings are often used to bridge from the window or door unit onto the surrounding bales at the jambs, head and sill.

Penetrations in strawbale walls that are not weather-exposed are not intended to require sealing on the exterior. However, penetrations in such walls must be sealed on the interior in Climate Zones 5, 6, 7, 8 and Marine 4. Exception 2 in the definition of "Weather-exposed surfaces" in the IBC might be used to determine whether a penetration in a strawbale wall is considered weather exposed, subject to the evaluation of the local building official, with additional consideration for the local climate. That exception reads, "Walls or portions of walls beneath an unenclosed roof area, where located a horizontal distance from an open exterior opening equal to at least twice the height of the opening."

AS105.6.4 Horizontal surfaces. Bale walls and other bale elements shall be provided with a water-resistant barrier at weather-exposed horizontal surfaces. The water-resistant barrier shall be of a material and installation that will prevent water from entering the wall system. Horizontal surfaces shall include exterior window sills, sills at exterior niches and buttresses. The finish material at such surfaces shall be sloped not less than 1 unit vertical in 12 units horizontal (8-percent slope) and shall drain away from bale walls and elements. Where the water-resistant barrier is below the finish material, it shall be sloped not less than 1 unit vertical in 12 units horizontal (8-percent slope) and shall drain to the outside surface of the bales wall's vertical finish.

❖ As with wood-frame walls, horizontal (or nearly horizontal) surfaces in or on strawbale walls can be vulnerable to weather-related moisture entering the wall. Window sills for windows that are recessed into the wall are especially vulnerable and should be carefully detailed and constructed to meet the prescriptive and performance criteria of this section. It is not uncommon for the

INTERNATIONAL CODE COUNCIL®
Copyright © 2015 ICC. ALL RIGHTS RESERVED. Accessed by David Dammon on Jun 21, 2017 12:30:52 PM pursuant to License Agreement with ICC. No further reproduction or distribution authorized. ANY UNAUTHORIZED REPRODUCTION OR DISTRIBUTION IS A VIOLATION OF THE FEDERAL COPYRIGHT ACT AND THE LICENSE AGREEMENT, AND SUBJECT TO CIVIL AND CRIMINAL PENALTIES THEREUNDER.

water-resistive barrier under window sills to lap over a vapor permeable water-resistive barrier that continues down the exterior face of the bales below in order to provide additional protection for those potentially vulnerable bales.

Horizontal surfaces in or on strawbale walls that are not weather-exposed do not require a water-resistive barrier. Exception 2 in the definition of "Weather-exposed surfaces" in the IBC might be used to determine whether a horizontal surface in a strawbale wall is considered weather-exposed, subject to the evaluation of the local building official, with additional consideration of the local climate. That exception reads, "Walls or portions of walls beneath an unenclosed roof area, where located a horizontal distance from an open exterior opening equal to at least twice the height of the opening."

Ample roof overhangs and wrap-around porch roofs are often employed by strawbale building practitioners, especially in wet climates and heavy snow fall areas, to protect walls and their openings from weather-related moisture intrusion.

AS105.6.5 Separation of bales and concrete. A sheet or liquid-applied Class II *vapor retarder* shall be installed between bales and supporting concrete or masonry. The bales shall be separated from the vapor retarder by not less than $^3/_4$ inch (19.1 mm), and that space shall be filled with an insulating material such as wood or rigid insulation, or a material that allows vapor dispersion such as gravel, or other approved insulating or vapor dispersion material. Sill plates shall be installed at this interface in accordance with Section AS105.3. Where bales abut a concrete or masonry wall that retains earth, a Class II vapor retarder shall be provided between such wall and the bales.

❖ A Class II vapor retarder is required to separate bales from supporting concrete or masonry to prevent "rising damp" from reaching the bales and potentially causing mold or mildew on the straw. Further, a minimum $^3/_4$-inch space is required between the vapor retarder and the straw and insulating or vapor dispersion material. Insulating materials help keep the underside of the first course of bales above dew point to avoid condensation on the straw. Vapor dispersion materials also allow safe dispersion of any moisture that might condense or otherwise reach the area at the base of the wall.

See Commentary Figure AS106(1) for a typical base-of-wall detail for slab-on-grade condition.

AS105.6.6 Separation of bales and earth. Bales shall be separated from earth by not less than 8 inches (203 mm).

❖ Straw, like wood, is subject to decay with prolonged exposure to excessive free moisture; therefore, straw bales are required to be separated from potentially moisture-laden earth by at least 8 inches (203 mm). This separation also reduces exposure of straw at the bottom of the wall to weather-related moisture, such as rain splash-back and snow melt. Greater separation is recommended in situations where excessive moisture exposure is expected due to local climate conditions.

AS105.6.7 Separation of exterior plaster and earth. Exterior plaster applied to straw bales shall be located not less than 6 inches (102 mm) above earth or 3 inches (51 mm) above paved areas.

❖ Section R703.7.2.1 requires the bottom of weep screeds for exterior cement plaster to be not less than 4 inches above the earth and 2 inches (51 mm) above paved areas. For exterior plaster applied to straw bales, Section AS105.6.7 requires the plaster to be not less than 6 inches (152 mm) above earth and 3 inches (51 mm) above paved areas. The additional comparative separation is to give greater assurance that exterior moisture at grade will not reach the straw. This separation requirement is for all exterior plasters allowed in this appendix, not only for cement plaster as referenced in Section R703.7.2.1.

Greater separation is recommended where excessive, weather-related moisture exposure, including rain splash-back, is expected due to local climatic conditions, and for weather-exposed clay plasters, even where protected by an erosion-resistant finish as required by Section AS104.4.3.4.

AS105.6.8 Separation of wood and plaster. Where wood framing or wood sheathing occurs on the exterior face of strawbale walls, such wood surfaces shall be separated from exterior plaster with two layers of Grade D paper, No. 15 asphalt felt or other *approved* material in accordance with Section R703.6.3.

Exceptions:

1. Where the wood is preservative treated or *naturally durable* and is not greater than $1^1/_2$ inches (38 mm) in width.
2. Clay plaster shall not be required to be separated from untreated wood that is not greater than $1^1/_2$ inches (38 mm) in width.

❖ A water-resistive barrier such as two layers of Grade D paper or No. 15 asphalt felt is required to separate exterior plaster from wood framing or sheathing due to the possibility of moisture penetrating the plaster and reaching the framing or sheathing. The water-resistive barrier protects the framing or sheathing from potential decay.

Also see Sections AS104.4.1 and AS106.8 and their commentary for information regarding where a water-resistive barrier between plaster and straw bales is not required.

A water-resistive barrier is not required under the conditions noted in Exception 1 because such materials are not susceptible to decay in the presence of moisture.

In Exception 2, a water-resistive barrier is not required between clay plaster and untreated wood because clay is hydrophilic (i.e., water-attracting, drawing moisture away from adjacent materials) and blocks passage of water due to its strong surface bonding with available moisture. Also, clay has considerable capacity to capture and store water due to the large surface area of its microscopic layers. This com-

INTERNATIONAL CODE COUNCIL®
Copyright © 2015 ICC. ALL RIGHTS RESERVED. Accessed by David Dammon on Jun 21, 2017 12:30:52 PM pursuant to License Agreement with ICC. No further reproduction or distribution authorized. ANY UNAUTHORIZED REPRODUCTION OR DISTRIBUTION IS A VIOLATION OF THE FEDERAL COPYRIGHT ACT AND THE LICENSE AGREEMENT, AND SUBJECT TO CIVIL AND CRIMINAL PENALTIES THEREUNDER.

bination of hydrophilic properties, water-blocking properties and water storage capacity protects adjacent materials that might otherwise be harmed by prolonged exposure to moisture.

The $1^1/_2$-inch (38 mm) maximum width in Exceptions 1 and 2 relates to the prevention of plaster cracking. Plasters (all types identified in this appendix) on strawbale walls have demonstrated the ability to span across $1^1/_2$-inch (38 mm) wide wood members without significant cracking, even when unreinforced and without the "slip sheet" effect of a water-resistive barrier between the plaster and the wood member. For wood members greater than $1^1/_2$ inches (38 mm) wide, a two-layered water-resistive barrier, along with an appropriate reinforcing mesh that extends at least 1 inch (25 mm) beyond the edges of the wood, has been shown to greatly reduce or eliminate plaster cracking in these locations.

AS105.7 Inspections. The *building official* shall inspect the following aspects of strawbale construction in accordance with Section R109.1:

1. Sill plate anchors, as part of and in accordance with Section R109.1.1.
2. Mesh placement and attachment, where mesh is required by this appendix.
3. *Pins*, where required by and in accordance with Section AS105.4.

❖ Items 2 and 3, regarding inspections for mesh and pins, are necessary only where their use is required by this appendix. Mesh or pins are considered required where used as a means of compliance with Section AS105.4 for out-of-plane resistance and for mesh in structural applications in accordance with Section AS106. Where mesh or pins are installed voluntarily, no inspection of their installation is required.

SECTION AS106
STRAWBALE WALLS—STRUCTURAL

AS106.1 General. Plastered strawbale walls shall be permitted to be used as structural walls in one-story buildings in accordance with the prescriptive provisions of this section.

❖ The provisions of Section AS106 apply to structural strawbale walls (load-bearing and/or shear walls) in one-story buildings. Some provisions in this section are also considered good practice for nonstructural walls and are identified as such in this commentary.

There are many examples of two-story buildings constructed with structural strawbale walls in the U.S and other countries. This section is not meant to prohibit such structures. However, they are outside of the prescriptive and performance structural requirements of this appendix and, as such, should be accompanied by an approved engineered design. Note that Section AS105.2, Item 4 allows nonstructural strawbale walls in two-story buildings with an approved engineered design.

Structural strawbale walls require a plaster finish (as prescribed in this section), as the plaster skins together with the strawbale core provide the structural capacity of the composite wall system. The plaster must be reinforced if the wall is used to resist shear. Shear walls (braced wall panels) may be utilized in load-bearing or nonload-bearing applications. In both load-bearing walls and shear walls, the strawbale core provides lateral bracing for the relatively thin plaster skin, while also serving as a backup load-carrying system should the plaster skins degrade.

AS106.2 Loads and other limitations. Live and dead loads and other limitations shall be in accordance with Section R301 of the *International Residential Code*. Strawbale wall dead loads shall not exceed 60 psf (2872 N/m^2) per face area of wall.

❖ The amount of bracing required for seismic loads is directly related to the weight of the structure. The dead load limit of 60 psf for strawbale walls is used to avoid potential overburden of the lateral load-resisting system in Seismic Design Categories C, D_0, D_1 and D_2. A larger wall dead load could be acceptable with an approved engineered design, but may require total braced wall panel lengths that are greater than the 60 percent stipulated in Section AS105.2, Item 4 for conventional braced wall panels.

The weight "per face area of wall" means the weight of all materials within a horizontally projected area from one face of the wall to the other. This includes finishes on both sides and the straw bale core.

For example, the weight per square foot of a strawbale wall with two-string bales laid flat and 1-inch-thick lime plaster on both sides would be determined as follows: First, determine the weight per cubic foot of a typical bale for the project (total bale weight / total bale volume). For this example, say: 47 lb/(1.16 feet $\times$ 1.5 feet $\times$ 3 feet) = 8.5 pcf. For this example assume the lime plaster weighs 130 pcf. Therefore the weight per square foot of the strawbale wall in this example is: (1 foot $\times$ 1 foot $\times$ 1.5 foot $\times$ 8.5 pcf) + 2(1 foot $\times$ 1 foot $\times$ $^1/_{12}$ foot $\times$ 130 pcf) = 12.75 lb + 21.67 lb = 34.42 psf.

AS106.3 Foundations. Foundations for plastered strawbale walls shall be in accordance with Chapter 4.

❖ Foundations that satisfy the requirements of Chapter 4 are acceptable for buildings with strawbale walls.

Three tables in the code are used to determine footing width and thickness, depending on the type of wall construction. Strawbale walls, with any finish allowed in this appendix, are closest to the weight of light-frame walls with brick veneer in Table R403.1(2); therefore, that table should be used.

See Commentary Figure AS105.3(1) for typical concrete slab-on-grade construction with monolithic foundation supporting a strawbale wall. The figure shows a strawbale structural wall with its required anchor bolts for exterior and interior sill plates and a thickened slab below the interior sill plate. This is necessary to provide the 7-inch (178 mm) embedment for the anchor bolts as required by Section R403.1.6 and the mini-

INTERNATIONAL CODE COUNCIL®
Copyright © 2015 ICC. ALL RIGHTS RESERVED. Accessed by David Dammon on Jun 21, 2017 12:30:52 PM pursuant to License Agreement with ICC. No further reproduction or distribution authorized. ANY UNAUTHORIZED REPRODUCTION OR DISTRIBUTION IS A VIOLATION OF THE FEDERAL COPYRIGHT ACT AND THE LICENSE AGREEMENT, AND SUBJECT TO CIVIL AND CRIMINAL PENALTIES THEREUNDER.

mum 3-inch (76 mm) cover for reinforcement as required by Section R403.1.3.5.3. Nonstructrual strawbale walls may also require anchor bolts for their sill plates, and therefore also may require a similar thickened slab.

For structural strawbale walls on a raised floor, Section AS106.10 requires an approved engineered design. See the commentary to that section for recommendations for raised floors supporting structural strawbale walls. Also, Commentary Figure AS105.3(2) illustrates the typical elements and configuration for a strawbale wall on a raised floor.

AS106.4 Configuration of bales. Bales in strawbale structural walls shall be laid flat or on-edge and in a running bond or stack bond, except that bales in structural walls with unreinforced plasters shall be laid in a running bond only.

AS106.5 Voids and stuffing. Voids between bales in strawbale *structural walls* shall not exceed 4 inches (102 mm) in width, and such voids shall be stuffed with flakes of straw or straw-clay, before application of finish.

❖ Stuffing of voids between bales and between bales and framing members is considered necessary for the structural performance of strawbale structural walls, as well as for the thermal performance of all exterior strawbale walls. The density of straw or straw-clay that fills voids should achieve the minimum required density for bales (see Section AS103.5) to the degree practicable. Also see the commentary to Section AS108.

AS106.6 Plaster on structural walls. Plaster on *load-bearing* walls shall be in accordance with Table AS106.12. Plaster on shear walls shall be in accordance with Table AS106.13(1).

❖ Requirements for plaster on strawbale structural walls are more stringent than for nonstructural applications. The term “shear wall” is used interchangeably with the term “braced wall panel” in this appendix.

AS106.6.1 Compressive strength. For plaster on strawbale structural walls, the building official is authorized to require a 2-inch (51mm) cube test conforming to ASTM C109 to demonstrate a minimum compressive strength in accordance with Table AS106.6.1.

❖ Minimum compressive strengths in Table AS106.6.1 are provided to clarify minimum expectations for builders and building officials. These minimum values relate (with appropriate factors of safety) to the allowable bearing capacities for walls with plaster types indicated in Table AS106.12, and to the minimum braced wall panel lengths for wall types indicated in Tables AS106.13(2) and AS106.13(3).

The minimum compressive strengths in Table AS106.6.1 are on the low end of the range of compressive strengths typical for each plaster type. As such, a building official may expect these values to be achieved without testing for a plaster made with good-quality materials and workmanship. However, the building official is authorized to require an ASTM C109 2-inch cube test to confirm a plaster's minimum compressive strength for structural strawbale walls.

Since ASTM C109 applies to the compressive strength testing of hydraulic cement mortars, the following modifications are needed for the testing of soil-cement and clay plasters:

(a) Soil-cement plaster samples must be cured in a moist environment in accordance with Section 10.5 of ASTM C109, and must not be immersed in lime-saturated water in accordance with the same section.

(b) Clay plaster samples must be dried to the approximate ambient moisture conditions of the project site, and must not be not cured in the moist or wet curing environments described in Section 10.5 of ASTM C109.

Rationale: Hydraulic cement mortar and the cement, cement-lime, lime, and soil-cement plasters described in this appendix all contain sand and hydraulic cement and/or hydraulic lime. These mixes develop their strength by hydration (a water-based chemical reaction, sometimes called curing) over time. Clay plaster develops its strength by drying, not by moist curing. Soil-cement plaster contains both hydraulic cement that must be moist cured and clay that must dry to an acceptable moisture content. As such it should be moist cured, but not immersed in water.

TABLE AS106.6.1
MINIMUM COMPRESSIVE STRENGTH FOR PLASTERS ON STRUCTURAL WALLS

PLASTER TYPE	MINIMUM COMPRESSIVE STRENGTH (psi)
Clay	100
Soil-cement	1000
Lime	600
Cement-lime	1000
Cement	1400

For SI: 1 pound per square inch = 6894.76 N/m^2.

AS106.7 Straightness of plaster. Plaster on strawbale structural walls shall be straight, as a function of the bale wall surfaces they are applied to, in accordance with all of the following:

1. As measured across the face of a bale, straw bulges shall not protrude more than $^3/_4$ inch (19.1 mm) across 2 feet (610 mm) of its height or length.
2. As measured across the face of a bale wall, straw bulges shall not protrude from the vertical plane of a bale wall more than 2 inches (51 mm) over 8 feet (2438 mm).
3. The vertical faces of adjacent bales shall not be offset more than $^3/_8$ inch (9.5 mm).

❖ The plaster on structural strawbale walls carries in-plane forces. Significant deviation from straightness may compromise a wall’s strength and structural performance. The requirements of Section AS106.7 are intended to ensure a minimum degree of straightness for the expected structural performance of the wall.

Note that some practitioners have constructed large-radius strawbale walls by curving bales laid flat. Such a wall can be considered to comply with this section and be used as a load-bearing wall if the wall’s plaster is straight vertically, and if it meets all other requirements in this appendix for load-bearing strawbale walls.

INTERNATIONAL CODE COUNCIL®
Copyright © 2015 ICC. ALL RIGHTS RESERVED. Accessed by David Dammon on Jun 21, 2017 12:30:52 PM pursuant to License Agreement with ICC. No further reproduction or distribution authorized. ANY UNAUTHORIZED REPRODUCTION OR DISTRIBUTION IS A VIOLATION OF THE FEDERAL COPYRIGHT ACT AND THE LICENSE AGREEMENT, AND SUBJECT TO CIVIL AND CRIMINAL PENALTIES THEREUNDER.

AS106.8 Plaster and membranes. Strawbale structural walls shall not have a membrane between straw and plaster, or shall have attachment through the bale wall from one plaster skin to the other in accordance with an *approved* engineered design.

❖ The application of plaster with no membrane between the straw and plaster allows the plaster to bond directly to the straw, thus allowing composite structural performance of the wall assembly. Specifically it allows: (a) The plaster to be well braced by the strawbale core; (b) the plaster to resist delamination from the straw core under load; and (c) the strawbale core to transfer shear forces from one plaster skin to the other. In circumstances where a membrane is required or desired, the mesh in one plaster skin must be through-tied to the mesh in the opposite plaster skin in accordance with an approved engineered design.

See the commentary to Section AS104.4.1 for information regarding membranes and issues of moisture management and the support of plaster on nonstructural walls.

AS106.9 Mesh. Mesh in plasters on strawbale structural walls, and where required by Table AS105.4, shall be installed in accordance with Sections AS106.9.1 through AS106.9.4.

❖ Mesh required on structural strawbale walls and mesh used as a method of out-of-plane resistance (in accordance with Table AS105.4) must be installed in accordance with all subsections of Section AS106.9. Where mesh is installed but not required, these provisions are recommended as good practice.

AS106.9.1 Mesh laps. Mesh required by Table AS105.4 or AS106.12 shall be installed with not less than 4-inch (102 mm) laps. Mesh required by Table AS106.13(1) or in walls designed to resist wind uplift of more than 100 plf (1459 N/m), shall run continuous vertically from sill plate to the top plate or roof-bearing element, or shall lap not less than 8 inches (203 mm). Horizontal laps in such mesh shall be not less than 4 inches (102 mm).

❖ Mesh "required by Table AS106.13(1)" refers to the wall types described in that table where used as braced wall panels to resist wind or seismic forces in accordance with Table AS106.13(2) or AS106.13(3). Mesh "in walls designed to resist uplift of more than 100 plf" refers to the use of mesh in accordance with Section AS106.14.

AS106.9.2 Mesh attachment. Mesh shall be attached with staples to top plates or roof-bearing elements and to sill plates in accordance with all of the following:

1. **Staples.** Staples shall be pneumatically driven, stainless steel or electro-galvanized, 16 gage with $1^{1}/_{2}$-inch (38 mm) legs, $^{7}/_{16}$-inch (11.1 mm) crown; or manually driven, galvanized, 15 gage with 1-inch (25 mm) legs. Other staples shall be permitted to be used as designed by a registered design professional. Staples into preservative-treated wood shall be stainless steel.
2. **Staple orientation.** Staples shall be firmly driven diagonally across mesh intersections at the required spacing.
3. **Staple spacing.** Staples shall be spaced not more than 4 inches (102 mm) on center, except where a lesser spacing is required by Table AS106.13(1) or Section AS106.14, as applicable.

❖ Mesh is required to be attached to a wall's horizontal boundary elements, such as roof-bearing elements and sill plates. Attachment to posts or studs (where present) is not required, but is recommended, particularly at vertical boundaries, such as wall corners or where a wall is interrupted by a window or door opening.

Staples are required to be stainless steel or galvanized steel to minimize or prevent corrosion of staples in the event that significant moisture is present. Where galvanized, Section R317.3.1 requires that the fasteners be hot-dipped, zinc coated galvanized steel. Staples are required to be stainless steel where driven into preservative-treated wood.

Installing staples diagonally across mesh intersections is important for strawbale braced wall panels (shear walls) in order to minimize slip of the mesh during load transfer between the mesh and the top and bottom plates, regardless of the direction of movement. This can also be important for transfer of loads for mesh used on load-bearing walls, or to resist out-of-plane loads or wind uplift loads. Diagonal stapling also helps limit splitting of the wood member, thus helping to maintain the strength of the connection. Diagonally placed staples are required for structural strawbale walls and are recommended good practice where mesh is used on strawbale walls.

AS106.9.3 Steel mesh. Steel mesh shall be galvanized, and shall be separated from preservative-treated wood by Grade D paper, No. 15 roofing felt or other *approved* barrier.

❖ Where steel mesh is used in structural strawbale plasters, it is required to be galvanized to reduce the potential for corrosion. Where galvanized, Section R317.3.1 requires that the fasteners be hot-dipped, zinc coated galvanized steel. The required separation of steel mesh from preservative-treated wood in this section is intended to prevent corrosion in the mesh.

AS106.9.4 Mesh in plaster. Required mesh shall be embedded in the plaster except where staples fasten the mesh to horizontal boundary elements.

❖ Required mesh must be embedded in the plaster so that they work together as a structural composite to resist in-plane forces. The plaster provides resistance to compressive forces and the mesh provides resistance to tensile and shear forces. The plaster helps resist deformation of the embedded mesh under load, while resolving diagonal tensile forces into alignment with the principal directions of the mesh.

Ideally, mesh is embedded in the middle third of the overall thickness of the plaster. In practice, deviation from ideal embedment can occur due to the irregular

INTERNATIONAL CODE COUNCIL®
Copyright © 2015 ICC. ALL RIGHTS RESERVED. Accessed by David Dammon on Jun 21, 2017 12:30:52 PM pursuant to License Agreement with ICC. No further reproduction or distribution authorized. ANY UNAUTHORIZED REPRODUCTION OR DISTRIBUTION IS A VIOLATION OF THE FEDERAL COPYRIGHT ACT AND THE LICENSE AGREEMENT, AND SUBJECT TO CIVIL AND CRIMINAL PENALTIES THEREUNDER.

surface of the bales and normal construction practices. Various spacers have been used to hold mesh away from the bales, and U-shaped wire "staples" or wire "through-ties" have been used to bring mesh closer to the bales and to help locate the mesh in the middle third of the plaster application.

Where the mesh is stapled to the top-of-wall member or assembly and to the sill plates, the mesh cannot be fully embedded in the plaster. Tested strawbale wall assemblies used as the basis for the structural provisions of this appendix were constructed using direct fastening of mesh to their horizontal boundary elements and not more than reasonable effort to locate the mesh in the middle third of their plasters.

AS106.10 Support of plaster skins. Plaster *skins* on strawbale structural walls shall be continuously supported along their bottom edge. Acceptable supports include: a concrete or masonry stem wall, a concrete slab-on-grade, a wood-framed floor blocked with an *approved* engineered design or a steel angle anchored with an *approved* engineered design. A weep screed as described in Section R702.8.2.1 is not an acceptable support.

❖ Plaster skins are much stiffer than the strawbale core of a strawbale wall and thus carry most of the applied load. The strawbale core provides lateral bracing to the relatively thin plaster skins.

Both vertical and lateral loads are delivered through the plaster skins to the skins' bottom edges. It is vital that the bottom edge of the plaster skins are supported in a way that is capable of delivering these loads to the foundation. Section AS106.10 describes acceptable ways of supporting plaster skins for structural strawbale walls. See Commentary Figure AS105.3(1) for typical plaster support on a concrete slab-on-grade with monolithic foundation, and Commentary Figure AS105.3(2) for typical plaster support for a raised floor condition.

Where structural strawbale walls are supported by a wood-framed floor, an approved engineered design is required. The requirement that these floors be blocked refers to blocking between joists that supports the interior plaster where floor joists run perpendicular to the wall. Where the joists run parallel to the wall, a joist directly below the interior plaster provides that support. Such blocking or joists should also support the interior sill plate of the wall, and all sill plates should have adequate attachment to the floor framing, so that the system maintains a continuous load path to the foundation. Where strawbale braced wall panels are used, the engineered design should also address any associated uplift in the floor system.

Note that the commonly used weep screed for cement plaster over wood sheathing, as described in Section R703.7.2.1, is not an acceptable structural support for strawbale construction. Conventional weep screeds are not designed to support structural loads; however, such a weep screed is acceptable for nonstructural strawbale walls.

AS106.11 Transfer of loads to and from plaster skins. Where plastered strawbale walls are used to support superimposed vertical loads, such loads shall be transferred to the plaster *skins* by continuous direct bearing or by an *approved* engineered design. Where plastered strawbale walls are used to resist in-plane lateral loads, such loads shall be transferred to the reinforcing mesh from the structural member or assembly above and to the sill plate in accordance with Table AS106.13(3).

❖ Section AS106.11 contains criteria for the transfer of loads to the top of load-bearing strawbale walls, to or from the top-of-wall structural members and to the sill plates of strawbale shear walls (braced wall panels). Prescriptive requirements for the sill plates are contained in Section AS105.3. There are no prescriptive requirements for the top-of-wall members or assemblies for structural or nonstructural strawbale walls.

Roof loads imposed on load-bearing strawbale walls require continuous direct bearing on the top edges of the plaster, or an engineered means of transferring the loads to the plaster skins. Commentary Figure AS106.11(1) shows an example of direct bearing onto the top edge of the plaster. Other configurations are also possible. Roof loads should be transferred approximately equally to both plaster skins, or only half the allowable bearing capacity should be used. See Section AS106.12.2 for information regarding concentrated loads.

One example of an engineered means of load transfer without direct bearing is from the roof bearing assembly through attached mesh into a plaster-mesh matrix, with approved calculations or test results demonstrating that the allowable capacity of the load-transfer system is greater than the design loads. Any system other than direct bearing should demonstrate a load path with sufficient capacity.

For strawbale walls used to resist in-plane lateral loads (wind or seismic), the load transferred from the structural member or assembly at the top of the wall through the required mesh and staples and into the required sill plate shall be as stipulated in Table AS106.13(1).

Historically, load-bearing strawbale walls have used some variation of a wooden box beam as a roof- or floor-bearing assembly at the top of the wall, though other members or assemblies have been used. Commentary Figure AS106.11(1) shows a generic box beam at the top of a load-bearing strawbale wall. Box beams and other roof-bearing assemblies can also serve as headers over wall openings, as indicated in Commentary Figure AS106.11(1). The figure also shows an example of locations for mesh attachment to the box beam when the strawbale wall is used as a braced wall panel (shear wall).

For nonstructural strawbale walls, the members at the top of the walls are typically the beams of a post-and-beam frame, where the top course of straw bales is infilled tightly against the underside of the beams, or notched to accommodate them. Commentary Figure AS106.11(2) shows a generic configuration of the top of a post-and-beam wall with strawbale infill. The figure also shows example locations for mesh attachment to the beams and roof assembly where the strawbale wall is used as a braced wall panel.

INTERNATIONAL CODE COUNCIL®
Copyright © 2015 ICC. ALL RIGHTS RESERVED. Accessed by David Dammon on Jun 21, 2017 12:30:52 PM pursuant to License Agreement with ICC. No further reproduction or distribution authorized. ANY UNAUTHORIZED REPRODUCTION OR DISTRIBUTION IS A VIOLATION OF THE FEDERAL COPYRIGHT ACT AND THE LICENSE AGREEMENT, AND SUBJECT TO CIVIL AND CRIMINAL PENALTIES THEREUNDER.

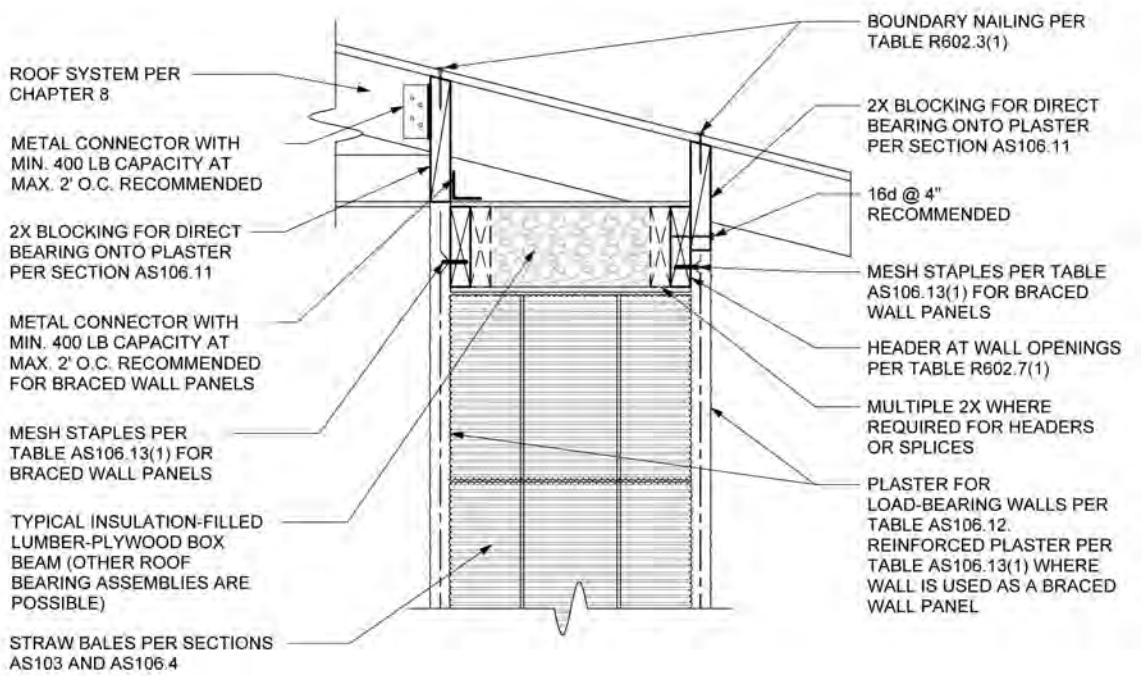

Figure AS106.11(1)
TYPICAL TOP LOAD-BEARING STRAWBALE WALL

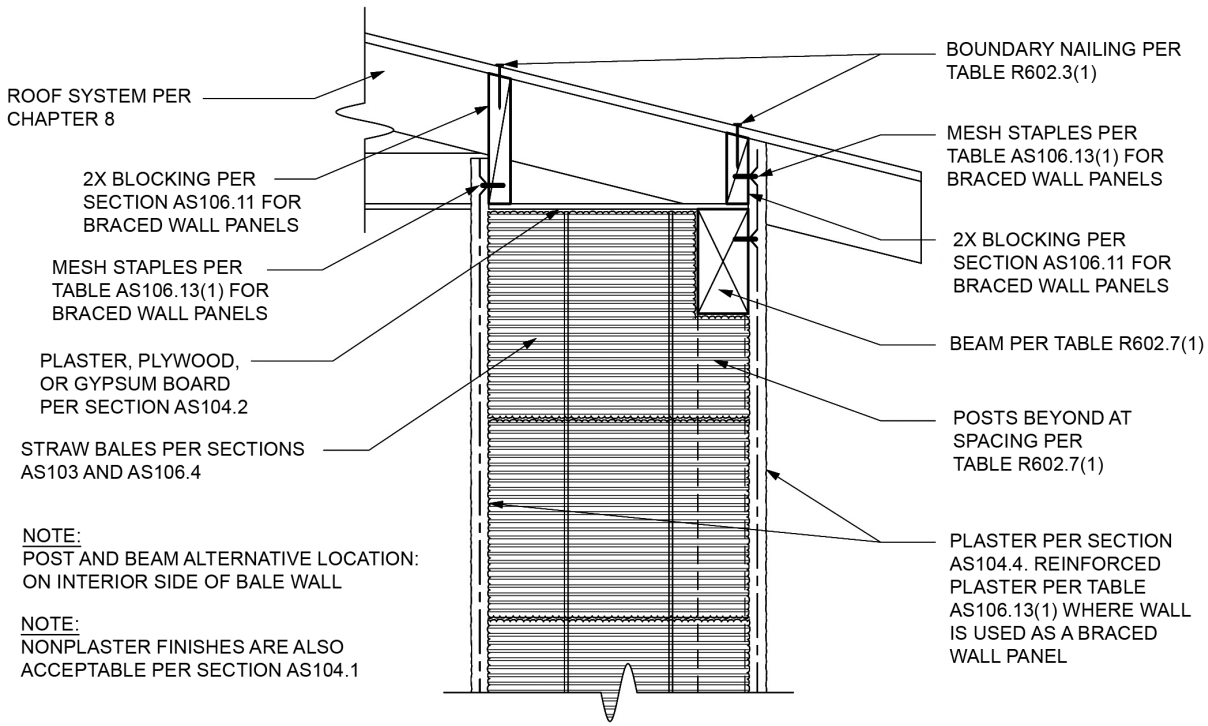

Figure AS106.11(2)
TYPICAL TOP OF POST-AND-BEAM WALL WITH PLASTERED STRAWBALE INFILL

INTERNATIONAL CODE COUNCIL®
Copyright © 2015 ICC. ALL RIGHTS RESERVED. Accessed by David Dammon on Jun 21, 2017 12:30:52 PM pursuant to License Agreement with ICC. No further reproduction or distribution authorized. ANY UNAUTHORIZED REPRODUCTION OR DISTRIBUTION IS A VIOLATION OF THE FEDERAL COPYRIGHT ACT AND THE LICENSE AGREEMENT, AND SUBJECT TO CIVIL AND CRIMINAL PENALTIES THEREUNDER.

AS106.12 Load-bearing walls. Plastered strawbale walls shall be permitted to be used as load-bearing walls in one-*story* buildings to support vertical loads imposed in accordance with Section R301, in accordance with and not more than the allowable bearing capacities indicated in Table AS106.12.

❖ See Commentary Figure AS106.11(1) for the top of a typical load-bearing wall. See Commentary Figures AS105.3(1) and AS105.3(2) for the base of a typical load-bearing wall over a slab-on-grade and for a raised wood-framed floor, respectively.

AS106.12.1 Precompression of load-bearing strawbale walls. Prior to application of plaster, walls designed to be load bearing shall be precompressed by a uniform load of not less than 100 plf (1459 N/m).

❖ The purpose of requiring precompression of load-bearing strawbale walls is to accelerate settling of the stacked straw bales before plaster is applied so that potential cracking of the plaster is minimized. The required 100 plf (1459 N/m) precompression is intended to be permanent and can be achieved by a variety of means, including vertically tensioned steel mesh fastened to sill plates and top plates, or tensioned packaging straps, or other tensile material looped under sill plates and over top plates. In many cases, the dead load of the roof on the wall (prior to plaster) may meet the 100 plf (1459 N/m) precompression requirement.

AS106.12.2 Concentrated loads. Concentrated loads shall be distributed by structural elements capable of distributing the loads to the bearing wall within the allowable bearing capacity listed in Table AS106.12 for the plaster type used.

❖ Roof-bearing members or assemblies must be used to distribute concentrated loads to avoid exceeding the allowable bearing capacity listed in Table AS106.12 for the plaster type used. The load transfer to the plaster skins must be by continuous direct bearing or with an approved engineered design, as required in Section AS106.11.

Concentrated loads commonly occur at both sides of a window or door opening. For openings not exceeding 4 feet, the header (typically as part of a continuous roof-bearing assembly) may be used to transfer the load over the first 2 feet on each side of the opening. For larger openings, studs or posts on each side of the opening are recommended. Headers must comply with Tables R602.7(1) and R602.7(2) and may be part of a continuous roof-bearing assembly.

Concentrated loads from a beam or post resting on the roof-bearing assembly can be considered to be carried by a 4-foot length of wall (2 feet on each side of the load) where the wall is unbroken by an opening.

Any uniform loads carried by a wall where a concentrated load is supported must be taken into account when determining whether the allowable bearing capacity of the wall is exceeded. Concentrated loads should be transferred approximately equally to both plaster skins, or only half the allowable bearing capacity should be used.

AS106.13 Braced panels. Plastered strawbale walls shall be permitted to be used as braced wall panels for one-story buildings in accordance with Section R602.10 of the *International Residential Code*, and with Tables AS106.13(1), AS106.13(2) and AS106.13(3). Wind design criteria shall be in accordance with Section R301.2.1. Seismic design criteria shall be in accordance with Section R301.2.2.

❖ Plastered strawbale walls can be used as braced wall panels (shear walls) to resist in-plane wind and/or seismic loads where they are constructed in accordance with Table AS106.13(1), and meet the minimum total lengths stipulated in Table AS106.13(2) for wind loads and Table AS106.13(3) for seismic loads.

Testing of plastered strawbale walls has demonstrated their ability to absorb and dissipate energy under extreme in-plane loading. The reinforced plaster provides an in-plane lateral load-resisting element with stiffness comparable to wood panels on light wood framing. The strawbale core braces the relatively thin plaster skins and provides significant backup capacity, including the ability to support superimposed gravity loads.

Conventional hold-downs are not required on strawbale braced wall panels to resist overturning from seismic or wind forces. The required reinforcing mesh and the weight of the roof and wall assemblies provide adequate resistance to overturning forces from seismic and wind loads.

AS106.13.1 Bale wall thickness. The thickness of the stacked bale wall without its plaster shall be not less than 15 inches (381 mm).

❖ The thickness of a strawbale wall contributes to its stability under strong ground shaking because: (a) The width of the bale ensures overlying bales are well supported as gaps open during in-plane rocking; (b) The width of the bale enhances out-of-plane strength and stiffness; and (c) lateral restoring forces are developed as walls rock out-of-plane. This section is not meant to restrict the use of two-string bales on edge [which typically result in a bale wall thickness of 14 inches (356 mm)] where a history of good experience exists and where wall-height-to-thickness requirements in Table AS105.4 are satisfied, particularly in Seismic Design Categories A and B. Walls with 12-inch-wide (305 mm) bales for use in small residential buildings have performed well in the field and in full-scale structural tests (Donovan, 2014, see the bibliography).

AS106.13.2 Sill plates. Sill plates shall be in accordance with Table AS106.13(1).

AS106.13.3 Sill plate fasteners. Sill plates shall be fastened with not less than $^{5}/_{8}$-inch-diameter (15.9 mm) steel anchor bolts with 3-inch by 3-inch by $^{3}/_{16}$-inch (76.2 mm by 76.2 mm by 4.8 mm) steel washers, with not less than 7-inch (177.8 mm) embedment in a concrete or masonry foundation, or shall be an approved equivalent, with the spacing shown in Table AS106.13(1). Anchor bolts or other fasteners into framed floors shall be of an approved engineered design.

INTERNATIONAL CODE COUNCIL®
Copyright © 2015 ICC. ALL RIGHTS RESERVED. Accessed by David Dammon on Jun 21, 2017 12:30:52 PM pursuant to License Agreement with ICC. No further reproduction or distribution authorized. ANY UNAUTHORIZED REPRODUCTION OR DISTRIBUTION IS A VIOLATION OF THE FEDERAL COPYRIGHT ACT AND THE LICENSE AGREEMENT, AND SUBJECT TO CIVIL AND CRIMINAL PENALTIES THEREUNDER.

TABLE AS106.12
ALLOWABLE SUPERIMPOSED VERTICAL LOADS (LBS/FOOT) FOR PLASTERED LOAD-BEARING STRAWBALE WALLS

WALL DESIGNATION	PLASTER[a] (both sides) Minimum thickness in inches each side	MESH[b]	STAPLES[c]	ALLOWABLE BEARING CAPACITY[d] (plf)
A	Clay $1^1/_2$	None required	None required	400
B	Soil-cement 1	Required	Required	800
C	Lime $^7/_8$	Required	Required	500
D	Cement-lime $^7/_8$	Required	Required	800
E	Cement $^7/_8$	Required	Required	800

For SI: 1 inch = 25.4mm, 1 pound per foot = 14.5939 N/m.

a. Plasters shall conform to Sections AS104.4.3 through AS104.4.8, AS106.7 and AS106.10.

b. Any metal mesh allowed by this appendix and installed in accordance with Section AS106.9.

c. In accordance with Section AS106.9.2, except as required to transfer roof loads to the plaster skins in accordance with Section AS106.11.

d. For walls with a different plaster on each side, the lower value shall be used.

❖ The allowable bearing capacities in Table AS106.12 are for strawbale walls with plaster on both sides. Plaster can be installed on one side only; however, the allowable bearing capacity is then half of that shown in the table.

TABLE AS106.13(1)
PLASTERED STRAWBALE BRACED WALL PANEL TYPES

WALL DESIGNATION	PLASTER[a] (both sides)		SILL PLATES[b] (nominal size in inches)	ANCHOR BOLT[c] SPACING (inches on center)	MESH[d] (inches)	STAPLE SPACING[e] (inches on center)
	Type	Thickness (minimum in inches each side)				
A1	Clay	1.5	2 × 4	32	None	None
A2	Clay	1.5	2 × 4	32	2 × 2 high-density polypropylene	2
A3	Clay	1.5	2 × 4	32	2 × 2 × 14 gage	4
B	Soil-cement	1	4 × 4	24	2 × 2 × 14 gage	2
C1	Lime	$^7/_8$	2 × 4	32	17-gage woven wire	3
C2	Lime	$^7/_8$	4 × 4	24	2 × 2 × 14 gage	2
D1	Cement-lime	$^7/_8$	4 × 4	32	17 gage woven wire	2
D2	Cement-lime	$^7/_8$	4 × 4	24	2 × 2 × 14 gage	2
E1	Cement	$^7/_8$	4 × 4	32	2 × 2 × 14 gage	2
E2	Cement	1.5	4 × 4	24	2 × 2 × 14 gage	2

SI: 1 inch = 25.4 mm

a. Plasters shall conform with Sections AS104.4.3 through AS104.4.8, AS106.7, AS106.8 and AS106.12.

b. Sill plates shall be Douglas fir-larch or southern pine and shall be *preservative treated* where required by the *International Residential Code*.

c. Anchor bolts shall be in accordance with Section AS106.13.3 at the spacing shown in this table.

d. Installed in accordance with Section AS106.9.

e. Staples shall be in accordance with Section AS106.9.2 at the spacing shown in this table.

❖ The strawbale braced wall panel types in Table AS106.13(1) are with plaster on both sides. Plaster is permitted to be installed on one side only if the minimum total braced wall panel lengths shown in Tables AS106.13(2) and AS106.13(3) are doubled.

For strawbale braced wall panels used to resist wind forces in accordance with Table AS106.13(2) or seismic forces in accordance with Table AS106.13(3), it is recommended that the mesh required in Table AS106.13(1) be supplemented by a 1-foot wide band of mesh along the sill plate with the same fastening as for the required mesh. This improves the transfer of forces to the sill plate.

Although strawbale braced wall panel type A1 appears in Table AS106.13(1), it is not listed as a braced wall panel type in Table AS106.13(2) for resisting wind loads or in Table AS106.13(3) for resisting seismic loads. Only mesh-reinforced plasters are used to resist in-plane lateral loads in this appendix.

INTERNATIONAL CODE COUNCIL®
Copyright © 2015 ICC. ALL RIGHTS RESERVED. Accessed by David Dammon on Jun 21, 2017 12:30:52 PM pursuant to License Agreement with ICC. No further reproduction or distribution authorized. ANY UNAUTHORIZED REPRODUCTION OR DISTRIBUTION IS A VIOLATION OF THE FEDERAL COPYRIGHT ACT AND THE LICENSE AGREEMENT, AND SUBJECT TO CIVIL AND CRIMINAL PENALTIES THEREUNDER.

TABLE AS106.13(2)
BRACING REQUIREMENTS FOR STRAWBALE BRACED WALL PANELS BASED ON WIND SPEED

• EXPOSURE CATEGORY B[d] • 25-FOOT MEAN ROOF HEIGHT • 10-FOOT EAVE-TO-RIDGE HEIGHT[d] • 10-FOOT WALL HEIGHT[d] • 2 BRACED WALL LINES[d]			MINIMUM TOTAL LENGTH (FEET) OF STRAWBALE BRACED WALL PANELS REQUIRED ALONG EACH BRACED WALL LINE[a, b, c, d]		
Basic wind speed (mph)	**Story location**	**Braced wall line spacing (feet)**	**Strawbale braced wall panel[e] A2, A3**	**Strawbale braced wall panel[e] C1, C2, D1**	**Strawbale braced wall panel[e] D2, E1, E2**
≤ 85	One-story building	10	6.4	3.8	3.0
		20	8.5	5.1	4.0
		30	10.2	6.1	4.8
		40	13.3	6.9	5.5
		50	16.3	7.7	6.1
		60	19.4	8.3	6.6
≤ 90	One-story building	10	6.4	3.8	3.0
		20	9.0	5.4	4.3
		30	11.2	6.4	5.1
		40	15.3	7.4	5.9
		50	18.4	8.1	6.5
		60	21.4	8.8	7.0
≤ 100	One-story building	10	7.1	4.3	3.4
		20	10.2	6.1	4.8
		30	14.3	7.2	5.7
		40	18.4	8.1	6.5
		50	22.4	9.0	7.1
		60	26.5	9.8	7.8
≤ 110	One-story building	10	7.8	4.7	3.7
		20	12.2	6.6	5.3
		30	17.3	7.9	6.3
		40	22.4	9.0	7.1
		50	26.5	9.8	7.8
		60	31.6	11.4	8.5

For SI: 1 inch = 25.4 mm, 1 foot = 305 mm, 1 mile per hour = 0.447 m/s.

a. Linear interpolation shall be permitted.

b. All *braced wall panels* shall be without openings and shall have an aspect ratio (H:L) ≤ 2:1.

c. Tabulated minimum total lengths are for *braced wall lines* using single braced wall panels with an aspect ratio (H:L) ≤ 2:1, or using multiple *braced wall panels* with *aspect ratios* (H:L) ≤ 1:1. For *braced wall lines* using two or more *braced wall panels* with an aspect ratio (H:L) > 1:1, the minimum total length shall be multiplied by the largest *aspect ratio* (H:L) of braced wall panels in that line.

d. Subject to applicable wind adjustment factors associated with "All methods" in Table R602.10.3(2)

e. Strawbale braced panel types indicated shall comply with Sections AS106.13.1 through AS106.13.3 and with Table AS106.13(1).

❖ The minimum total lengths of strawbale braced wall panels in Table AS106.13(2) are based on the basic wind speed at the building location (see the definition of "Basic wind speed" in the code). The basic wind speed can be determined by converting the ultimate design wind speed found in Figure R301.2(4)A to the nominal design wind speed in accordance with Section R301.2.1.3 and Table R301.2.1.3. Nominal design speed is equivalent to basic wind speed, therefore the converted value can be used as the basic wind speed in Table AS106.13(2). The required total length of strawbale braced wall panels may be determined by linear interpolation between the tabulated basic wind speeds, or by using the length for a higher basic wind speed. Alternatively, the building official may allow the basic wind speed to be determined from another source, such as Figure R301.2(4)A of the 2012 code.

Note c clarifies minimum total lengths of braced wall panel along each braced wall line in Table AS106.13(2). Where the required length is satisfied with a single braced wall panel, the aspect ratio (H:L) of the braced wall panel must not exceed 2:1. The required length may also be satisfied using multiple braced wall panels. If each of those braced wall panels has an aspect ratio not exceeding 1:1, the sum of their lengths must simply satisfy the required total length in the table. If any of those braced wall panels has an aspect ratio exceeding 1:1, the required total length must be increased by multiplying it by the largest aspect ratio (H:L) of the braced wall panels in that line.

Where a strawbale braced wall panel ends at a corner, the lengths of its plaster skins on opposite sides of the wall may differ. In such cases the braced wall panel length should be taken as the average of the two lengths.

INTERNATIONAL CODE COUNCIL®
Copyright © 2015 ICC. ALL RIGHTS RESERVED. Accessed by David Dammon on Jun 21, 2017 12:30:52 PM pursuant to License Agreement with ICC. No further reproduction or distribution authorized. ANY UNAUTHORIZED REPRODUCTION OR DISTRIBUTION IS A VIOLATION OF THE FEDERAL COPYRIGHT ACT AND THE LICENSE AGREEMENT, AND SUBJECT TO CIVIL AND CRIMINAL PENALTIES THEREUNDER.

TABLE AS106.13(3)
BRACING REQUIREMENTS FOR STRAWBALE BRACED WALL PANELS BASED ON SEISMIC DESIGN CATEGORY

• SOIL CLASS D[d] • WALL HEIGHT = 10 FEET[d] • 15 PSF ROOF-CEILING DEAD LOAD[d] • BRACED WALL LINE SPACING ≤ 25 FEET[d]			MINIMUM TOTAL LENGTH (FEET) OF STRAWBALE BRACED WALL PANELS REQUIRED ALONG EACH BRACED WALL LINE[a, b, c, d]	
Seismic Design Category	**Story location**	**Braced wall line length (feet)**	**Strawbale Braced Wall Panel[e] A2, C1, C2, D1**	**Strawbale Braced Wall Panel[e] B, D2, E1, E2**
C	One-story building	10	5.7	4.6
		20	8.0	6.5
		30	9.8	7.9
		40	12.9	9.1
		50	16.1	10.4
D_0	One-story building	10	6.0	4.8
		20	8.5	6.8
		30	10.9	8.4
		40	14.5	9.7
		50	18.1	11.7
D_1	One-story building	10	6.3	5.1
		20	9.0	7.2
		30	12.1	8.8
		40	16.1	10.4
		50	20.1	13.0
D_2	One-story building	10	7.1	5.7
		20	10.1	8.1
		30	15.1	9.9
		40	20.1	13.0
		50	25.1	16.3

For SI: 1 inch = 25.4 mm, 1 foot = 305 mm, 1 pound per square foot = 0.0479 kPa.

a. Linear interpolation shall be permitted.

b. *Braced wall panels* shall be without openings and shall have an *aspect ratio* (H:L) ≤ 2:1.

c. Tabulated minimum total lengths are for *braced wall lines* using single *braced wall panels* with an *aspect ratio* (H:L) ≤ 2:1, or using multiple *braced wall panels* with *aspect ratios* (H:L) ≤ 1:1. For *braced wall lines* using two or more *braced wall panels* with an aspect ratio (H:L) > 1:1, the minimum total length shall be multiplied by the largest *aspect ratio* (H:L) of *braced wall panels* in that line.

d. Subject to applicable seismic adjustment factors associated with "All methods" in Table R602.10.3(4), except "Wall dead load."

e. Strawbale *braced wall panel* types indicated shall comply with Sections AS106.13.1 through AS106.13.3 and Table AS106.13(1).

❖ For buildings located in Seismic Design Categories A and B, the minimum total length of braced wall panels is governed by the basic wind speed in accordance with Table AS106.13(2).

Buildings located in Seismic Design Categories C, D_0, D_1, and D_2 are also subject to wind loads. The required length of their bracing along each braced wall line is the greater value determined from Table AS106.13(2) or AS106.13(3), with applicable adjustment factors.

Soil Class D is assumed in these tables and in Table R602.10.3(3). Table R602.10.3(3) applies to wood-frame construction. For site-specific soil classes other than D, adjustments can be made to the minimum total length of strawbale braced wall panels, as is allowed for braced wall panels in wood-frame construction in accordance with Note b of Table R602.10.3(3).

Note c clarifies the minimum required total lengths of braced wall panels along each braced wall line in Table AS106.13(3). Where the required length is satisfied with a single braced wall panel, the aspect ratio (H:L) of the braced wall panel must not exceed 2:1. The required length may also be satisfied using multiple braced wall panels. If each of those braced wall panels has an aspect ratio not exceeding 1:1, the sum of their lengths must simply satisfy the required total length in the table. If any of those braced wall panels has an aspect ratio exceeding 1:1, the required total length must be increased by multiplying it by the largest aspect ratio (H:L) of the braced wall panels in that line.

Where a strawbale braced wall panel ends at a corner, the lengths of its plaster skins on opposite sides of the wall may differ. In such cases, the braced wall panel length should be taken as the average of the two lengths.

Braced wall panel designation A3 is not intended to be excluded from use in resisting seismic forces in accordance with Table AS106.13(3). If this panel type is used, the minimum total lengths should be 25 percent greater than the lengths required for braced wall panel designation A2.

INTERNATIONAL CODE COUNCIL®
Copyright © 2015 ICC. ALL RIGHTS RESERVED. Accessed by David Dammon on Jun 21, 2017 12:30:52 PM pursuant to License Agreement with ICC. No further reproduction or distribution authorized. ANY UNAUTHORIZED REPRODUCTION OR DISTRIBUTION IS A VIOLATION OF THE FEDERAL COPYRIGHT ACT AND THE LICENSE AGREEMENT, AND SUBJECT TO CIVIL AND CRIMINAL PENALTIES THEREUNDER.

AS106.14 Resistance to wind uplift forces. Plaster mesh in *skins* of strawbale walls that resist uplift forces from the roof assembly, as determined in accordance with Section R802.11, shall be in accordance with all of the following:

1. Plaster shall be any type and thickness allowed in Section AS104.
2. Mesh shall be any type allowed in Table AS106.13(1), and shall be attached to top plates or roof-bearing elements and to sill plates in accordance with Section AS106.9.2.
3. Sill plates shall be not less than nominal 2-inch by 4-inch (51 mm by 102 mm) with anchoring complying with Section R403.1.6.
4. Mesh attached with staples at 4 inches (51 mm) on center shall be considered to be capable of resisting uplift forces of 100 plf (1459 N/m) for each plaster skin.
5. Mesh attached with staples at 2 inches (51 mm) on center shall be considered to be capable of resisting uplift forces of 200 plf (2918 N/m) for each plaster skin.

❖ Section R802.11 gives wind-uplift-resistance requirements for roof assemblies. Mesh used to satisfy plaster reinforcement requirements for strawbale load-bearing walls or braced wall panels may also be used to resist wind uplift forces. Supplemental mesh may also be provided in the plaster of structural or nonstructural walls for this purpose alone.

Mesh must be adequately anchored as part of a complete load path in accordance with this section. Also see Section AS106.9.1, which indicates that mesh used in walls designed to resist wind uplift of more than 100 plf must run continuous vertically from sill plate to the top plate or roof-bearing element, or shall lap not less than 8 inches.

SECTION AS107
FIRE RESISTANCE

AS107.1 Fire-resistance rating. Strawbale walls shall be considered to be nonrated, except for walls constructed in accordance with Section AS107.1.1 or AS107.1.2. Alternately, fire-resistance ratings of strawbale walls shall be determined in accordance with Section R302 of the *International Residential Code*.

❖ Many variations of strawbale wall assemblies have been used in practice, but only two assemblies, tested in accordance with one of the two standards required for determining fire-resistance ratings of walls, are included in the appendix. These two assemblies, as described in Sections AS107.1.1 and AS107.1.2, can be used as fire-resistance-rated walls with their stated ratings, where a fire-resistance-rated wall is required by the code. All other strawbale wall assemblies, whether finished with plaster or another acceptable finish, are considered nonrated without further justification.

This section also refers to Sections R302 and 302.1 and Tables R302.1(1) and R302.1(2), which give minimum fire-resistance ratings for exterior walls in certain circumstances and state that such fire-resistance-rated walls must be tested in accordance with ASTM E119 or UL 263. The rated wall assemblies described in Sections AS107.1.1 and AS107.1.2 were tested in accordance with ASTM E119 at a certified testing laboratory.

Although only two strawbale wall assemblies are given fire-resistance ratings in this appendix (based on specific ASTM E119 tests), two decades of field experience with and testing of other assemblies, including European tests to German Institute for Standardization (DIN) standards, have more broadly shown plastered strawbale walls to be highly resistant to fire.

As with wood-frame construction or other assemblies that are flammable prior to being finished, straw bale walls are vulnerable to fire while the straw is exposed. However, because of the density of the bales and the limited oxygen within the compressed straw, even unplastered strawbale wall assemblies have shown good resistance to fire. Their burning characteristics have been compared to large wood timbers where charring occurs at the surface but the lack of oxygen and the insulating effect of the charred material greatly slows combustion beyond the charred surface.

An important fire-related issue that is not addressed in this section, but is addressed in other sections of this appendix, is that strawbale walls must not contain vertical spaces that could act as a chimney to spread fire across unprotected straw where an ignition source is present. This is mostly a matter of preventing fire from spreading to wood roof or floor framing above the wall because, although fire can spread quickly across the face of bales, the compressed bales generally do not contain sufficient oxygen to sustain a flame. Vertical spaces in a strawbale wall that must be eliminated include: (a) Space between the face of the stacked bales and their finish; (b) Space between bales (especially in a stack bond wall); and (c) Spaces between vertical framing members and the straw where straw bales are used as infill in a wood frame wall.

Section AS104.2 requires either a plaster finish on strawbale walls or that the bales “fit tightly against a solid wall panel” (such as plywood, fiberboard, or gypsum board). This is intended to address the condition described in “a” in the preceding paragraph. Section AS106.5 requires stuffing of voids for structural walls between bales, but this is important for all walls as a matter of fire blocking to address the conditions described in “b” and “c” in the preceding paragraph, both between bales and between bales and any vertical framing. Bales should be notched around framing members wherever possible, or the spaces should be stuffed with straw or straw-clay.

Section R302.10.1 provides requirements for the flame spread index and smoke-developed index for insulation in wall assemblies, roof-ceiling assemblies, crawl spaces and attics. Such materials must have a flame spread index not exceeding 25 and a smoke-developed index not exceeding 450, as tested in accordance with ASTM E84 or UL 723. Straw bales in exterior strawbale walls typically function as insulation

INTERNATIONAL CODE COUNCIL®
Copyright © 2015 ICC. ALL RIGHTS RESERVED. Accessed by David Dammon on Jun 21, 2017 12:30:52 PM pursuant to License Agreement with ICC. No further reproduction or distribution authorized. ANY UNAUTHORIZED REPRODUCTION OR DISTRIBUTION IS A VIOLATION OF THE FEDERAL COPYRIGHT ACT AND THE LICENSE AGREEMENT, AND SUBJECT TO CIVIL AND CRIMINAL PENALTIES THEREUNDER.

(among other functions) and thus are subject to this section. Although this issue for straw bales is not addressed in this appendix, an ASTM E84 test of unplastered straw bales conducted in an accredited testing laboratory in the year 2000 indicated a flame spread index of 10 and a smoke-developed index of 350, which satisfies the requirements of Section R302.10.1.

AS107.1.1 One-hour rated clay plastered wall. One-hour fire-resistance-rated nonload-bearing clay plastered strawbale walls shall comply with all of the following:

1. Bales shall be laid flat or on-edge in a running bond.
2. Bales shall maintain thickness of not less than 18 inches (457 mm).
3. Gaps shall be stuffed with straw-clay.
4. Clay plaster on each side of the wall shall be not less than 1 inch (25 mm) thick and shall be composed of a mixture of 3 parts clay, 2 parts chopped straw and 6 parts sand, or an alternative approved clay plaster.
5. Plaster application shall be in accordance with Section AS104.4.3.3 for the number and thickness of coats.

❖ See the commentary to Section AS107.1.

AS107.1.2 Two-hour rated cement plastered wall. Two-hour fire-resistance-rated nonload-bearing cement plastered strawbale walls shall comply with all of the following:

1. Bales shall be laid flat or on-edge in a running bond.
2. Bales shall maintain a thickness of not less than 14 inches (356 mm).
3. Gaps shall be stuffed with straw-clay.
4. $1^1/_2$-inch (38 mm) by 17-gage galvanized woven wire mesh shall be attached to wood members with $1^1/_2$-inch (38 mm) staples at 6 inches (152 mm) on center. 9 gage U-pins with not less than 8-inch (203 mm) legs shall be installed at 18 inches (457 mm) on center to fasten the mesh to the bales.
5. Cement plaster on each side of the wall shall be not less than 1 inch (25 mm) thick.
6. Plaster application shall be in accordance with Section AS104.4.8 for the number and thickness of coats.

❖ See the commentary to Section AS107.1.

AS107.2 Openings in rated walls. Openings and penetrations in bale walls required to have a fire-resistance rating shall satisfy the same requirements for openings and penetrations as prescribed in the *International Residential Code*.

AS107.3 Clearance to fireplaces and chimneys. Strawbale surfaces adjacent to fireplaces or chimneys shall be finished with not less than $^3/_8$-inch (10 mm) thick plaster of any type permitted by this appendix. Clearance from the face of such plaster to fireplaces and chimneys shall be maintained as required from fireplaces and chimneys to combustibles in Chapter 10, or as required by manufacturer's instructions, whichever is more restrictive.

❖ Section R1001.11 addresses the required clearances from masonry fireplaces to combustible materials, Section R1002.5 addresses the required clearances from masonry heaters to combustible materials and Section R1003.18 addresses the required clearances from masonry chimneys to combustible materials.

Strawbale walls must maintain those clearances to the face of the strawbale wall's required plaster. For factory-built fireplaces and chimneys, strawbale walls must maintain the clearances to combustible materials required by the manufacturer's installation instructions, from the fireplace or chimney to the face of the strawbale wall's required plaster.

These clearance requirements are more conservative for strawbale construction than for wood-frame construction, adding both a finish requirement and the resulting increased distance to the combustible material. Whereas wood framing is allowed to be directly exposed in these locations, this appendix requires the straw to be finished with plaster, and the distances are required to be to the face of the plaster, thereby increasing the distance to combustible material by the thickness of the plaster.

The requirement for a plaster finish is not intended to preclude the use of materials that afford similar protection, such as gypsum board, wood framing, or plywood, where those materials are tight against the straw.

SECTION AS108
THERMAL INSULATION

AS108.1 R-value. The unit *R*-value of a strawbale wall with bales laid flat is R-1.3 per inch of bale thickness. The unit *R*-value of a strawbale wall with bales on-edge is R-2 per inch of bale thickness.

❖ The unit *R*-values in this section are used for exterior strawbale walls to determine compliance with Section N1102.1.1 and Table N1102.1.1. Following the principles of Section N1102.1.2, only the *R*-value of the straw (as the cavity insulation) and any insulating sheathing, should be used when computing the *R*-value, not finishes such as plaster or siding. The computed *R*-value for the strawbale wall must be at least the *R*-value in Table N1102.1.1 in the column "Wood Frame Wall *R*-value," for the climate zone where the structure is located.

The unit *R*-values in this section reflect results from what is considered the most reliable thermal testing for strawbale walls to date—the 1998 guarded hot-box test at Oak Ridge National Laboratory. (See the bibliography at the end of this appendix for *Thermal Performance of Straw Bale Wall Systems*.)

Strawbale walls have been shown to have different unit *R*-values depending upon the orientation of the bales (i.e., laid flat or on-edge). This is because industrialized baling machines typically create bales where the strands of straw are predominantly oriented across the "width" of the bale (across its strings). Straw conducts heat more readily along than across its length (where more air pockets interrupt the flow of heat). Thus, the thermal resistance per inch of a bale on-edge is typically greater than that of a bale laid flat.

INTERNATIONAL CODE COUNCIL®
Copyright © 2015 ICC. ALL RIGHTS RESERVED. Accessed by David Dammon on Jun 21, 2017 12:30:52 PM pursuant to License Agreement with ICC. No further reproduction or distribution authorized. ANY UNAUTHORIZED REPRODUCTION OR DISTRIBUTION IS A VIOLATION OF THE FEDERAL COPYRIGHT ACT AND THE LICENSE AGREEMENT, AND SUBJECT TO CIVIL AND CRIMINAL PENALTIES THEREUNDER.

The unit *R*-values stated in this section should be considered accurate for typical bales. However, particular bales that show a predominant straw orientation differing from that described here might be reasonably considered to have unit *R*-values between the R-1.3 and R-2, respectively, for bales laid flat or on-edge.

Other factors that affect the thermal performance of a straw bale wall include bale density, adhesion of the facing materials (e.g., plaster) to the straw bales and homogeneity of the wall system. Although a minimum dry density of 6.5 lbs/cu.ft. is required, higher-density bales generally provide higher thermal performance. Additionally, good adhesion of a plaster finish to the straw bales reduces air infiltration, which helps maintain or increase the *R*-value of the assembly.

Finally, any gaps between bales, or between a bale and other wall elements such as framing members, should be tightly filled with straw or straw-clay. Otherwise a significant negative impact on the overall thermal performance of the wall assembly can occur. See Section AS106.5 for voids and stuffing. Stuffing of voids is mandated for structural walls between bales. Further, it is important for thermal performance of all exterior walls, between bales and between bales and framing members.

Though not explicitly addressed in this appendix, straw bales have been and may be used as insulation in nonstructural strawbale walls in any orientation, including laid flat, on-edge, and on-end (see Commentary Figure AS103.2). In nonstructural strawbale walls, elements in the same wall other than the bales and their plaster, such as wood or steel framing or structural panels, may carry structural loads.

In addition to their function as thermal insulation in walls, straw bales have been used as insulation in raised floors and ceilings. However, issues of structure and of protection from fire must be addressed where straw bales are used in these locations. The floor or ceiling structure must be adequate for carrying the additional weight of the bales, for both static and seismic loading. A complete load path to the foundation must be provided for these loads. For fire protection the bales must be tightly confined on all sides (similar to their required confinement in a wall system) by materials such as plaster, wood framing, plywood or gypsum board.

See the commentary to Section AS107.1 for information regarding the use of straw bales as insulation and how they satisfy the requirements of Section R302.10.1 for the flame spread index and smoke-developed index of insulation in wall assemblies, roof-ceiling assemblies, crawl spaces and attics.

SECTION AS109
REFERENCED STANDARDS

ASTM

C5—10	Standard Specification for Quicklime for Structural Purposes	AS104.4.6.1
C109/C 109M—12	Standard Test Method for Compressive Strength of Hydraulic Cement Mortars	AS106.6.1
C141/C 141M—09	Standard Specification for Hydrated Hydraulic Lime for Structural Purposes	AS104.4.6.1
C206—03	Standard Specification for Finishing Hydrated Lime	AS104.4.6.1
C926—12a	Standard Specification for Application of Portland Cement Based Plaster	AS104.4.7, AS104.4.8
C1707—11	Standard Specification for Pozzolanic Hydraulic Lime for Structural Purposes	AS104.4.6.1

EN

459—2010	Part 1: Building Lime. Definitions, Specifications and Conformity Criteria; Part 2: Test Methods	AS104.4.6.1

Bibliography

The following resource materials were used in the preparation of the commentary for this appendix of the code:

ASCE 7–10, *Minimum Design Loads for Buildings and Other Structures*. Reston, VA: American Society of Civil Engineers, 2010.

Aschheim, Mark, S. Jalali, C. Ash, K. Donahue, and M. Hammer. "Allowable Shears for Plastered Straw-Bale Walls." *Journal of Structural Engineering*. New York, NY: American Society of Civil Engineers, July 1, 2014.

Aschheim, Mark, Kevin Donahue, and Martin Hammer. *Strawbale Construction—Parts 1 & 2*, Structure Magazine. Chicago, IL: National Council of Structural Engineers Associations, September & October 2012.

ASTM C109–12, *Standard Test Method for Compressive Strength of Hydraulic Cement Mortars*. West Conshohocken, PA: ASTM International, 2012.

CMHC Technical Series 08-107, *Effect of Mesh and Bale Orientation on Strength of Straw Bale Walls*. Ottowa, Ontario: Canada Mortgage and Housing Corporation, 2008.

DOE-G010094–01, *House of Straw*. Washington DC: U.S. Department of Energy, Office of Energy Efficiency and Renewable Energy, 1995.

Donovan, Darcey. *Seismic Performance of Innovative Straw Bale Wall Systems*, NEES Research Report 2009-0666. Network for Earthquake Engineering Simulation, 2014. https://nees.org/warehouse/project/666

Eisenberg, David, and Martin Hammer. "Strawbale Construction and Its Evolution in Building Codes."

INTERNATIONAL CODE COUNCIL®
Copyright © 2015 ICC. ALL RIGHTS RESERVED. Accessed by David Dammon on Jun 21, 2017 12:30:52 PM pursuant to License Agreement with ICC. No further reproduction or distribution authorized. ANY UNAUTHORIZED REPRODUCTION OR DISTRIBUTION IS A VIOLATION OF THE FEDERAL COPYRIGHT ACT AND THE LICENSE AGREEMENT, AND SUBJECT TO CIVIL AND CRIMINAL PENALTIES THEREUNDER.

Building Safety Journal. Washington, DC: International Code Council, Inc., February 2014.

Hammer, Martin. "The Status of Straw-bale Codes and Permitting Worldwide," *The Last Straw Journal*. Lincoln, NB: Green Prairie Foundation, Issue #54, April 2006.

King, Bruce, et al. *Design of Straw Bale Buildings*. San Rafael, CA: Green Building Press, 2006.

King, Bruce. "Straw-Bale Construction: A Review of Testing and Lessons Learned to Date." *Building Safety Journal*. Washington, DC: International Code Council, Inc., May-June 2004.

King, Bruce. "Straw-Bale Construction: What Have We Learned?" *The Last Straw Journal*. Lincoln, NB: Green Prairie Foundation, Issue #53, Spring 2006.

Listiburek, Joseph. *Builder's Guide to Mixed Climates*. Newtown, CT: Taunton Press, Inc., 2000.

Lstiburek, Joseph. *Insulations, Sheathings and Vapor Retarders*, Research Report 0412. Westford, MA: Building Science Press, 2004.

Magwood, Chris. "Nylon Strapping for Pre-tensioning Bale Walls." *The Last Straw Journal*. Lincoln, NB: Green Prairie Foundation, Issue #53, Spring 2006.

Parker, Andrew, M. Aschheim, D. Mar, M. Hammer, and B. King. "Recommended Mesh Anchorage Details For Straw Bale Walls." *Journal of Green Building*. Glen Allen, VA: College Publishing, Vol.1, No.4, 2004.

Racusin, Jacob and Ace McArleton, *The Natural Building Companion*. White River Junction, VT: Chelsea Green Publishing, 2012.

Stone, Nehemiah. *Thermal Performance of Straw Bale Wall Systems*. San Rafael, CA: Ecological Building Network, 2003.

Straube, John. "Moisture Basics and Straw-Bale Moisture Basics." *The Last Straw Journal*. Lincoln, NB: Green Prairie Foundation, Issue #53, Spring 2006.

The Straw Bale Alternative Solutions Resource. The Province of British Columbia, Canada: Alternative Solutions Resource Initiative, 2013.

INTERNATIONAL CODE COUNCIL®

Copyright © 2015 ICC. ALL RIGHTS RESERVED. Accessed by David Dammon on Jun 21, 2017 12:30:52 PM pursuant to License Agreement with ICC. No further reproduction or distribution authorized. ANY UNAUTHORIZED REPRODUCTION OR DISTRIBUTION IS A VIOLATION OF THE FEDERAL COPYRIGHT ACT AND THE LICENSE AGREEMENT, AND SUBJECT TO CIVIL AND CRIMINAL PENALTIES THEREUNDER.

Appendix T: Recommended Procedure for Worst-case Testing of Atmospheric Venting Systems under N1102.4 or N1105 Conditions ≤ 5ACH$_{50}$

(This appendix is informative and is not part of the code.)

General Comments

Energy efficiency improvements often have a direct impact on the building pressure boundary affecting the safe operation of combustion equipment. Under certain conditions, reduced natural air-leakage coupled with the installation of atmospheric combustion appliances contribute to poor indoor air quality and possible health problems due to spillage, inadequate draft, or carbon monoxide concerns.

Purpose

This appendix is intended to provide guidance to builders, code officials and home performance contractors for worst-case testing of atmospheric venting systems to identify problems that weaken draft and restrict combustion air in existing buildings. Worst-case vent testing uses the home's exhaust fans, air-handling appliances and chimneys to create worst-case depressurization in the combustion appliance zone (CAZ). This appendix is basically a distilled version of predominant combustion safety test procedures for atmospherically vented appliances found in home performance programs across the country, such as the Enivironmental Protection Agency's Healthy Indoor Environments Protocols, and Home Performance with Energy Star; the Department of Energy's Workforce Guidelines for Home Energy Upgrades; Housing and Urban Development's Community Development Block Grants and Weatherization Assistance Programs; the Building Performance Institute's Technical Standards for the Building Analyst Professional; and the Residential Energy Services Network's Interim Guidelines for Combustion Appliance Testing and Writing Work Scopes. This is intended to take the combustion safety test procedures that are used most commonly by these home performance, weatherization, and beyond code programs, and reduce them to their simplest and most straightforward form for the purpose of combustion safety in field assessment through the use of building diagnostic tools.

SECTION T101
SCOPE

T101.1 General. This appendix is intended to provide guidelines for worst-case testing of atmospheric venting systems. Worst-case testing is recommended to identify problems that weaken draft and restrict combustion air.

SECTION T202
GENERAL DEFINITIONS

COMBUSTION APPLIANCE ZONE (CAZ). A contiguous air volume within a building that contains a Category I or II atmospherically vented appliance or a Category III or IV direct-vent or integral vent appliance drawing combustion air from inside the building or dwelling unit. The CAZ includes, but is not limited to, a mechanical closet, a mechanical room or the main body of a house or dwelling unit.

DRAFT. The pressure difference existing between the *appliance* or any component part and the atmosphere that causes a continuous flow of air and products of *combustion* through the gas passages of the *appliance* to the atmosphere.

Mechanical or induced draft. The pressure difference created by the action of a fan, blower or ejector that is located between the *appliance* and the *chimney* or vent termination.

Natural draft. The pressure difference created by a vent or *chimney* because of its height and the temperature difference between the *flue* gases and the atmosphere.

SPILLAGE. Combustion gases emerging from an appliance or venting system into the combustion appliance zone during burner operation.

SECTION T301
TESTING PROCEDURE

T301.1 Worst-case testing of atmospheric venting systems. Buildings or dwelling units containing a Category I or II atmospherically vented appliance; or a Category III or IV direct-vent or integral vent appliance drawing combustion air from inside of the building or dwelling unit, shall have the Combustion Appliance Zone (CAZ) tested for spillage, acceptable draft and carbon monoxide (CO) in accordance with this Section. Where required by the *code official*, testing shall be con-

INTERNATIONAL CODE COUNCIL®
Copyright © 2015 ICC. ALL RIGHTS RESERVED. Accessed by David Dammon on Jun 21, 2017 12:30:52 PM pursuant to License Agreement with ICC. No further reproduction or distribution authorized. ANY UNAUTHORIZED REPRODUCTION OR DISTRIBUTION IS A VIOLATION OF THE FEDERAL COPYRIGHT ACT AND THE LICENSE AGREEMENT, AND SUBJECT TO CIVIL AND CRIMINAL PENALTIES THEREUNDER.

ducted by an *approved* third party. A written report of the results of the test shall be signed by the party conducting the test and provided to the *code official*. Testing shall be performed at any time after creation of all penetrations of the *building thermal envelope* and prior to final inspection.

Exception: Buildings or dwelling units containing only Category III or IV direct-vent or integral vent appliances that do not draw combustion air from inside of the building or dwelling unit.

The enumerated test procedure as follows shall be complied with during testing:

1. Set combustion appliances to the pilot setting or turn off the service disconnects for combustion appliances. Close exterior doors and windows and the fireplace damper. With the building or dwelling unit in this configuration, measure and record the baseline ambient pressure inside the building or dwelling unit CAZ. Compare the baseline ambient pressure of the CAZ to that of the outside ambient pressure and record the difference (Pa).
2. Establish worst case by turning on the *clothes dryer* and all exhaust fans. Close interior doors that make the CAZ pressure more negative. Turn on the air handler, where present, and leave on if, as a result, the pressure in the CAZ becomes more negative. Check interior door positions again, closing only the interior doors that make the CAZ pressure more negative. Measure net change in pressure from the CAZ to outdoor ambient pressure, correcting for the base ambient pressure inside the home. Record "worst case depressurization" pressure and compare to Table T301.1(1).

   Where CAZ depressurization limits are exceeded under worst-case conditions in accordance with Table T301.1(1), additional combustion air shall be provided or other modifications to building air-leakage performance or exhaust appliances such that depressurization is brought within the limits prescribed in Table T301.1(1).
3. Measure worst-case spillage, acceptable draft and carbon monoxide (CO) by firing the fuel-fired appliance with the smallest Btu capacity first.
   a. Test for spillage at the draft diverter with a mirror or smoke puffer. An appliance that continues to spill flue gases for more than 60 seconds fails the spillage test.
   b. Test for CO measuring undiluted flue gases in the throat or flue of the appliance using a digital gauge in parts per million (ppm) at the 10-minute mark. Record CO ppm readings to be compared with Table T301.1(3) upon completion of Step 4. Where the spillage test fails under worst case, go to Step 4.
   c. Where spillage ends within 60 seconds, test for acceptable draft in the connector not less than 1 foot (305 mm), but not more than 2 feet (610 mm) downstream of the draft diverter. Record draft pressure and compare to Table T301.1(2).
   d. Fire all other CONNECTED appliances simultaneously and test again at the draft diverter of each appliance for spillage, CO and acceptable draft using procedures 3a through 3c.
4. Measure spillage, acceptable draft, and carbon monoxide (CO) under natural conditions—without *clothes dryer* and exhaust fans on—in accordance with the procedure outlined in Step 3, measuring the net change in pressure from worst case condition in Step 3 to natural in the CAZ to confirm the worst case depressurization taken in Step 2. Repeat the process for each appliance, allowing each vent system to cool between tests.
5. Monitor indoor ambient CO in the breathing zone continuously during testing, and abort the test where indoor ambient CO exceeds 35 ppm by turning off the appliance, ventilating the space, and evacuating the building. The CO problem shall be corrected prior to completing combustion safety diagnostics.
6. Make recommendations based on test results and the retrofit action prescribed in Table T301.1(3).

TABLE T301.1(1)
CAZ DEPRESSURIZATION LIMITS

VENTING CONDITION	LIMIT (Pa)
Category I, atmospherically vented water heater	–2.0
Category I or II atmospherically vented boiler or furnace common vented with a Category I atmospherically vented water heater	–3.0
Category I or II atmospherically vented boiler or furnace, equipped with a flue damper, and common vented with a Category I atmospherically vented water heater	–5.0
Category I or II atmospherically vented boiler or furnace alone	
Category I or II atmospherically vented, fan-assisted boiler or furnace common vented with a Category I atmospherically vented water heater	
Decorative vented, gas appliance	
Power vented or induced-draft boiler or furnace alone, or fan-assisted water heater alone	–15.0
Category IV direct-vented appliances and sealed combustion appliances	–50.0

For SI: 6894.76 Pa = 1.0 psi.

INTERNATIONAL CODE COUNCIL®
Copyright © 2015 ICC. ALL RIGHTS RESERVED. Accessed by David Dammon on Jun 21, 2017 12:30:52 PM pursuant to License Agreement with ICC. No further reproduction or distribution authorized. ANY UNAUTHORIZED REPRODUCTION OR DISTRIBUTION IS A VIOLATION OF THE FEDERAL COPYRIGHT ACT AND THE LICENSE AGREEMENT, AND SUBJECT TO CIVIL AND CRIMINAL PENALTIES THEREUNDER.

TABLE T301.1(2)
ACCEPTABLE DRAFT TEST CORRECTION

OUTSIDE TEMPERATURE (°F)	MINIMUM DRAFT PRESSURE REQUIRED (Pa)
< 10	–2.5
10 – 90	(Outside Temperature ÷ 40) – 2.75
> 90	–0.5

For SI: 6894.76 Pa = 1.0 psi.

TABLE T301.1(3)
ACCEPTABLE DRAFT TEST CORRECTION

CARBON MONOXIDE LEVEL (ppm)	AND OR	SPILLAGE AND ACCEPTABLE DRAFT TEST RESULTS	RETROFIT ACTION
0 – 25	and	Passes	Proceed with work
25 < × ≤ 100	and	Passes	Recommend that CO problem be resolved
25 < × ≤ 100	and	Fails in worst case only	Recommend an appliance service call and repairs to resolve the problem
100 < × ≤ 400	or	Fails under natural conditions	**Stop!** Work shall not proceed until appliance is serviced and problem resolved
> 400	and	Passes	**Stop!** Work shall not proceed until appliance is serviced and problem resolved
> 400	and	Fails under any condition	**Emergency!** Shut off fuel to appliance and call for service immediately

INTERNATIONAL CODE COUNCIL®
Copyright © 2015 ICC. ALL RIGHTS RESERVED. Accessed by David Dammon on Jun 21, 2017 12:30:52 PM pursuant to License Agreement with ICC. No further reproduction or distribution authorized. ANY UNAUTHORIZED REPRODUCTION OR DISTRIBUTION IS A VIOLATION OF THE FEDERAL COPYRIGHT ACT AND THE LICENSE AGREEMENT, AND SUBJECT TO CIVIL AND CRIMINAL PENALTIES THEREUNDER.

INTERNATIONAL CODE COUNCIL®

Copyright © 2015 ICC. ALL RIGHTS RESERVED. Accessed by David Dammon on Jun 21, 2017 12:30:52 PM pursuant to License Agreement with ICC. No further reproduction or distribution authorized. ANY UNAUTHORIZED REPRODUCTION OR DISTRIBUTION IS A VIOLATION OF THE FEDERAL COPYRIGHT ACT AND THE LICENSE AGREEMENT, AND SUBJECT TO CIVIL AND CRIMINAL PENALTIES THEREUNDER.

Appendix U: Solar-ready Provisions—Detached One- and Two-family Dwellings, Multiple Single-family Dwellings (Townhouses)

(The provisions contained in this appendix are not mandatory unless specifically referenced in the adopting ordinance.)

General Comments

This appendix is intended to support future potential improvements for detached one- and two-family dwellings, and multiple single-family dwellings for solar electric and solar thermal systems. This appendix does not require the installation of conduit, prewiring, or preplumbing. It does not require any specific physical orientation of the residential building. It does not require any increased load capacities for residential roofing systems. It does not require the redesign of plans.

Many building departments have been mandated by local regulations to accelerate permits and inspections for solar installation. Having important information and documentation available to the building department, solar contractor and homeowner will assist in supporting the accelerated working environment many municipalities have mandated.

The U.S. Department of Energy's (DOE) SunShot Initiative has set a goal to make solar energy cost competitive with other forms of energy by the year 2021, which would reduce installed costs of solar energy systems by about 75 percent. This initiative, combined with increased pressures on our energy supply and demand, should encourage and drive greater adoption of renewable energy systems on residential buildings.

Purpose

This appendix is intended to identify the areas of a residential building roof, called the solar ready zone, for potential future installation of renewable energy systems. The ability to plan ahead for possible future solar equipment starts with documenting necessary solar ready zone information on the plans, some of which may already be mandated in permit construction requirements. This appendix also requires the builder to post specific information about the home, for use by the homeowner(s).

The documentation of solar ready zones and roof load calculations (already performed during the design phase) will assist building departments as well as any future solar contractors seeking to install renewable energy systems on the roof. The builder/designer is knowledgeable on the intricacies of each model and plan and can easily identify unobstructed roof areas as well as spaces where conduit, wiring and plumbing can be routed from the roof to the respective utility areas. This will save building departments and solar designers time and effort when installing future solar systems. If a homeowner wishes to install a solar energy system later, this documentation can save thousands of dollars in labor, installation, design and integration of the solar system into the house.

SECTION U101 SCOPE

U101.1 General. These provisions shall be applicable for new construction where solar-ready provisions are required.

SECTION U102 GENERAL DEFINITIONS

SOLAR-READY ZONE. A section or sections of the roof or building overhang designated and reserved for the future installation of a solar photovoltaic or solar thermal system.

SECTION U103 SOLAR-READY ZONE

U103.1 General. New detached one- and two-family dwellings, and multiple single-family dwellings (townhouses) with not less than 600 square feet (55.74 m^2) of roof area oriented between 110 degrees and 270 degrees of true north shall comply with sections U103.2 through U103.8.

Exceptions:

1. New residential buildings with a permanently installed on-site renewable energy system.
2. A building with a solar-ready zone that is shaded for more than 70 percent of daylight hours annually.

U103.2 Construction document requirements for solar ready zone. Construction documents shall indicate the solar-ready *zone*.

U103.3 Solar-ready zone area. The total solar-ready *zone* area shall be not less than 300 square feet (27.87 m^2) exclusive of mandatory access or set back areas as required by the *International Fire Code*. New multiple single-family dwell-

INTERNATIONAL CODE COUNCIL®
Copyright © 2015 ICC. ALL RIGHTS RESERVED. Accessed by David Dammon on Jun 21, 2017 12:30:52 PM pursuant to License Agreement with ICC. No further reproduction or distribution authorized. ANY UNAUTHORIZED REPRODUCTION OR DISTRIBUTION IS A VIOLATION OF THE FEDERAL COPYRIGHT ACT AND THE LICENSE AGREEMENT, AND SUBJECT TO CIVIL AND CRIMINAL PENALTIES THEREUNDER.

ings (townhouses) three stories or less in height above grade plane and with a total floor area less than or equal to 2,000 square feet (185.8 m^2) per dwelling shall have a solar-ready *zone* area of not less than 150 square feet (13.94 m^2). The solar-ready *zone* shall be composed of areas not less than 5 feet (1.52 m) in width and not less than 80 square feet (7.44 m^2) exclusive of access or set back areas as required by the *International Fire Code*.

U103.4 Obstructions. Solar-ready *zones* shall be free from obstructions, including but not limited to vents, chimneys, and roof-mounted equipment.

U103.5 Roof load documentation. The structural design loads for roof dead load and roof live load shall be clearly indicated on the construction documents.

U103.6 Interconnection pathway. Construction documents shall indicate pathways for routing of conduit or plumbing from the solar-ready *zone* to the electrical service panel or service hot water system.

U103.7 Electrical service reserved space. The main electrical service panel shall have a reserved space to allow installation of a dual pole circuit breaker for future solar electric installation and shall be labeled "For Future Solar Electric." The reserved space shall be positioned at the opposite (load) end from the input feeder location or main circuit location.

U103.8 Construction documentation certificate. A permanent certificate, indicating the solar-ready *zone* and other requirements of this section, shall be posted near the electrical distribution panel, water heater or other conspicuous location by the builder or registered design professional.

INTERNATIONAL CODE COUNCIL®
Copyright © 2015 ICC. ALL RIGHTS RESERVED. Accessed by David Dammon on Jun 21, 2017 12:30:52 PM pursuant to License Agreement with ICC. No further reproduction or distribution authorized. ANY UNAUTHORIZED REPRODUCTION OR DISTRIBUTION IS A VIOLATION OF THE FEDERAL COPYRIGHT ACT AND THE LICENSE AGREEMENT, AND SUBJECT TO CIVIL AND CRIMINAL PENALTIES THEREUNDER.

Index

A

ABSORPTION COOLING EQUIPMENT M1412
ACCESS
To appliances M1305
To attic R807
To crawl space R408.4
To equipment M1401.2
To floor furnace M1408.4
To plumbing connections P2704
To plumbing fixtures P2705
To whirlpool pumps P2720.1
ACCESSIBLE
Definition R202
Readily accessible, definition R202
ACCESSORY STRUCTURE
Definition R202
ADDRESS (SITE) R319
ADMINISTRATIVE . . . . . Chapter 1
Authority R104
Entry R104.6
Inspections R109
Permits R105
Purpose R101.3
Violations R113
AIR
Combustion . . . . . Chapter 17, G2407
Combustion air, definition R202
Return M1602
AIR CONDITIONERS
Branch circuits E3702.11
Room air conditioners E3702.12
ALLOWABLE SPANS
Of floor joists R502.3, R505.3.2
Of headers R602.7, R603.6, R610.10
Of rafters and ceiling joists R802.4, R802.5, R804.3.1, R804.3.2
ALTERNATIVE MATERIALS (see MATERIALS) R104.11
AMPACITY E3501
ANCHOR BOLTS R403.1.6
APPEAL
Board of R112.1
Right of R112
APPLIANCE
Access to M1305
Attic M1305.1.3
Clearance for M1306
Connectors, fuel-gas . . . . . Chapter 24
Definition R202
Definition applied to electrical equipment E3501
Electrical appliance disconnection means E4101.5
Electrical appliance installation E4101
Equipment (general) . . . . . Chapter 14
Floor furnace M1408
Flue area R1003.14
Fuel-burning . . . . . Chapter 24
Heating and cooling . . . . . Chapter 14
Installation M1307
Labeling M1303
Open-top broiler units M1505.1
Outdoor G2454
Ranges M1901
Room heaters M1410
Special fuel-burning equipment . . . . . Chapter 19
Vented (decorative) . . . . . Chapter 24
Wall furnace M1409
Warm-air furnace M1402
Water heaters . . . . . Chapter 20, Chapter 24
APPLICATION
Plywood R703.3
APPROVAL
Mechanical M1302
APPROVED
Definition R202
Definition applied to electrical equipment E3501
ARC-FAULT CIRCUIT-INTERRUPTER E3902
AREA
Disposal, private sewage disposal P2602
Flue (appliances) R1003.14
Flue masonry R1003.15
ARMORED CABLE . . . . . Table E3801.2
ASPHALT SHINGLES R905.2
ATTACHMENT PLUG (PLUG CAP) (CAP)
Definition E3501
ATTIC
Access R807
AUTOMATIC FIRE SPRINKLER SYSTEMS . . . R313

B

BACKFILL
For piping P2604

INTERNATIONAL CODE COUNCIL®
Copyright © 2015 ICC. ALL RIGHTS RESERVED. Accessed by David Dammon on Jun 21, 2017 12:30:52 PM pursuant to License Agreement with ICC. No further reproduction or distribution authorized. ANY UNAUTHORIZED REPRODUCTION OR DISTRIBUTION IS A VIOLATION OF THE FEDERAL COPYRIGHT ACT AND THE LICENSE AGREEMENT, AND SUBJECT TO CIVIL AND CRIMINAL PENALTIES THEREUNDER.

BACKFLOW, DRAINAGE
Definition R202
BACKWATER VALVE R202
BASEMENT WALL
Definition R202
BATH AND SHOWER SPACES R307
BATHROOM
Exhaust M1507.4
Group . . . . . R202, Table P3004.1
BATHTUB
Enclosure P2713.2
Hydromassage E4209
Outlets for P2713.1
Whirlpool P2720
BEAM SUPPORTS R606.14
BEARING
Of joists R502.6
BIDETS P2721
BOILER
Definition R202
Requirements . . . . . Chapter 20
BONDING E3609, E4204
Definition applied to electrical installations E3501
BONDING JUMPER E3501
Bonding of service equipment E3609.2
Bonding to other systems E3609.3
Main bonding jumper E3607.5
Metal water piping bonding E3608.1.1
Sizing bonding jumpers E3609.5
BORED HOLES (see NOTCHING)
BOXES E3906
Nonmetallic boxes E3905.3
Support of boxes E3904.3
Where required E3905.1
BRANCH CIRCUIT . . . . . E3501, Chapter 37
Branch circuit ampacity E3701.2
Branch circuit ratings E3702
Branch circuits required E3703
BUILDING
Definition R202
Drain, definition R202
Existing, definition R202
Sewer, definition R202
BUILDING OFFICIAL
Definition R202
Inspection and tests of fuel-gas piping . . . . . Chapter 24
BUILDING PLANNING
Automatic fire sprinkler systems R313
Carbon monoxide alarms R315
Ceiling height R305
Decay protection R317
Design criteria R301
Emergency escape R310
Exterior wall R302.1
Fire-resistant construction R302
Foam plastic R316
Garages and carports R309
Glazing R308
Guardrails R312
Handrails R311.7.8, R311.8.3
Insulation R302.10
Landing R311.3, R311.3.1, R311.3.2, R311.5.1
Light, ventilation and heating R303
Means of egress R311
Minimum room area R304
Planning . . . . . Chapter 3
Plumbing fixture clearances R307
Radon protection . . . . . Appendix F
Ramps R311.8
Sanitation R306
Site address R319
Smoke alarms R314
Stairways R311.7
Storm shelters R323
Termite protection R318
BUILDING THERMAL ENVELOPE
Definition R202
BUILT-UP GIRDERS (see GIRDERS)
BUILT-UP ROOFING (see ROOFING)

C

CABINETS AND PANELBOARDS E3907
CAPACITY
Expansion tank M2003.2
CARBON MONOXIDE ALARMS R315
CARPORT R309.4
CEILING
Finishes R805
Height R305
CEILING FANS E4203.4
CENTRAL FURNACES (see FURNACES)
CHASES R606.8
CHIMNEYS
And fireplaces . . . . . Chapter 10
Caps R1003.9.1
Clearance R1003.18
Corbeling R1003.5
Crickets R1003.20
Design (masonry) R1003.1

INTERNATIONAL CODE COUNCIL®
Copyright © 2015 ICC. ALL RIGHTS RESERVED. Accessed by David Dammon on Jun 21, 2017 12:30:52 PM pursuant to License Agreement with ICC. No further reproduction or distribution authorized. ANY UNAUTHORIZED REPRODUCTION OR DISTRIBUTION IS A VIOLATION OF THE FEDERAL COPYRIGHT ACT AND THE LICENSE AGREEMENT, AND SUBJECT TO CIVIL AND CRIMINAL PENALTIES THEREUNDER.

Factory-built R1005
Fireblocking R1003.19
Flue area R1003.14, R1003.15
Flue lining R100311
Load R1003.8
Masonry and factory built, size M1805
Multiple flue R1003.14
Rain caps 1003.9.3
Spark arrestors R1003.9.2
Termination R1003.9
Wall thickness R1003.10

CIRCUIT BREAKER
Definition E3501

CLASS 2 CIRCUITS
Class 2 remote-control, signaling and power-limited circuits . . . . . Chapter 43

CLAY
Tiles R905.3

CLEANOUT
Definition R202
Drainage P3005.2
Masonry chimney R1003.17

CLEARANCE
Above cooking top M1901.1
For appliances M1306.1
For chimneys R1003.18
Reduction methods M1306.2
Vent connector M1803.3.4

CLEARANCES
Around electrical equipment E3405.1, E3604.1, E3604.2, E3604.3

CLOTHES CLOSETS
Lighting fixtures E4003.12

CLOTHES DRYERS . . . . . M1502, Chapter 24

CLOTHES WASHING MACHINES P2718

COLUMNS R407

COMBUSTIBLE
Materials R202

COMBUSTION AIR
Air . . . . . Chapter 17
Definition R202

COMMON VENT
Definition R202
Requirements M1801.11

CONCRETE
Compressive Strength R402.2
Floors (on ground) R506
Tile (roof) R905.3
Weathering . . . . . Figure R301.2(3), R402.2

CONCRETE-ENCASED ELECTRODE E3608.1.2

CONDUCTOR E3406
Ampacity E3705.1
Definition E3501
Identification E3407
Insulation E3406.5
Material E3406.2
Parallel E3406.6
Size E3406.3, E3704.1
Ungrounded E3603.1

CONDUIT BODY
Definition E3501

CONNECTION
Access to connections P2704
For fuel-burning appliances . . . . . Chapter 24
For fuel-oil piping M2202
Joints P2904
Plumbing fixture P2601.2
To water supply P2902.1

CONNECTIONS
Aluminum E3406.8
Device E3406.11.2

CONNECTOR
Chimney and vent M1803
Vent, definition R202

CONNECTOR, PRESSURE (SOLDERLESS)
Definition E3501

CONSTRUCTION
Cavity wall masonry R608
Flood-resistant R322
Floors . . . . . Chapter 5
Footings R403
Foundation material R402
Foundation walls R404
Foundations . . . . . Chapter 4
Masonry R606, R607, R608, R610
Roofs . . . . . Chapter 8
Steel framing R505, R603, R804
Wood framing R502, R602, R802
Walls . . . . . Chapter 6

CONTINUOUS LOAD
Definition E3501

CONTINUOUS WASTE
Definition R202

CONTROL
Devices . . . . . Chapter 24

CONTROLS
For forced-air furnaces . . . . . Chapter 24

COOKING UNIT, COUNTER-MOUNTED
Definition E3501

INTERNATIONAL CODE COUNCIL®
Copyright © 2015 ICC. ALL RIGHTS RESERVED. Accessed by David Dammon on Jun 21, 2017 12:30:52 PM pursuant to License Agreement with ICC. No further reproduction or distribution authorized. ANY UNAUTHORIZED REPRODUCTION OR DISTRIBUTION IS A VIOLATION OF THE FEDERAL COPYRIGHT ACT AND THE LICENSE AGREEMENT, AND SUBJECT TO CIVIL AND CRIMINAL PENALTIES THEREUNDER.

COOLING
Absorption cooling equipment M1412
Access to equipment M1401.2
Evaporative cooling equipment M1413
Installation M1401.1
Refrigeration cooling equipment M1404
Return air-supply source M1602
COPPER-CLAD ALUMINUM CONDUCTORS
Definition E3501
CORDS
Flexible E4101.3, E4202.2
CORROSION
Protection of metallic piping P2603.3
COURT
Definition R202
COVER REQUIREMENTS E3803.1
COVERING
Exterior R703
Interior R702
Roof . . . . . Chapter 9
Wall . . . . . Chapter 7
CRAWL SPACE R408
CRITERIA
Design R301
CROSS CONNECTION
Definition R202

D

DAMPER, VOLUME
Definition R202
DECAY
Protection against R317
DECK
Supported by exterior wall R507
Wood/plastic composite boards R507.3
DECORATIVE APPLIANCES
Outdoor G2454
Vented . . . . . Chapter 24
DEFINITIONS
Building R202
Electrical E3501
Mechanical system R202
Plumbing R202
DESIGN
Criteria R301
DIRECTIONAL
Fittings, plumbing P2707
DISCONNECTING MEANS
Definition E3501
DISHWASHING MACHINES P2717
DOORS
Egress R311.2
Exterior R311.3.2, R609
DRAFT HOOD
Definition R202
DRAFTSTOPPING R302.12, R502.12
DRAIN
Floor P2719
Shower receptors P2709
DRAINAGE
Cleanouts P3005.2
Foundation R405
Inspection and tests P2503
Storm drainage . . . . . Chapter 33
DRILLING AND NOTCHING (see NOTCHING)
DRINKING WATER TREATMENT P2909
DRIP LOOPS E3605.9.5
DRYERS
Domestic clothes M1502
DUCTS . . . . . Chapter 16
Installation M1601.4
Insulation N1103.2, M1601.3
Material M1601
System, definition R202
DWELLING
Definition R202, E3501
DWELLING UNIT
Definition R202, E3501
Separation R302.2, R302.3

E

EJECTORS (see SUMPS AND EJECTORS)
ELECTRICAL
Appliance (labeling) M1303
Inspection E3403
Vehicle charging E3702.13
ELECTRICAL METALLIC TUBING . . . . Table E3904.6
ELECTRICAL NONMETALLIC TUBING . . . . . Table E3904.6
ELECTRICAL RESISTANCE HEATERS
Baseboard convectors M1405
Duct heaters M1407
Radiant heating M1406
ELECTRODES
Grounding E3608
EMERGENCY ESCAPE R202, R310
ENCLOSURE
Definition E3501
ENERGY CONSERVATION . . . . . Chapter 11
ENTRY R104.6

INTERNATIONAL CODE COUNCIL®
Copyright © 2015 ICC. ALL RIGHTS RESERVED. Accessed by David Dammon on Jun 21, 2017 12:30:52 PM pursuant to License Agreement with ICC. No further reproduction or distribution authorized. ANY UNAUTHORIZED REPRODUCTION OR DISTRIBUTION IS A VIOLATION OF THE FEDERAL COPYRIGHT ACT AND THE LICENSE AGREEMENT, AND SUBJECT TO CIVIL AND CRIMINAL PENALTIES THEREUNDER.

EQUIPMENT
Definition applied to electrical equipment E3501
General, mechanical . . . . . Chapter 14
Heating and cooling . . . . . Chapter 14
EXCAVATIONS
For appliance installation M1305.1.4.2
EXISTING PLUMBING SYSTEMS P2502
EXTERIOR
Covering R703
Insulation finish systems R703.9
Lath R703.7.1
Plaster R703.7
EXTERIOR WALL
Construction R302.1
Definition R202
Fire-resistance rating R302.1

F

FACEPLATES E4001.11, E4002.4
FACTORY BUILT
Chimneys R1005, M1805
Fireplace stoves R1005.3
Fireplaces R1004
FASTENING . . . . . Table R602.3(1)
FAUCETS P2701
FAUCETS
Handle orientation P2722.2
Requirements P2701
FEEDER
Ampacity E3704.5
Conductor size E3704.1
Feeder neutral load E3704.3
Loads E3704.2
Requirements E3704
FENESTRATION
Definition R202
FINISHES
Flame spread and smoke density R302.9
For ceilings R805
Interior R302.9, R315, R702
FIRE-RESISTANT CONSTRUCTION R302
FIRE SPRINKLER SYSTEM
Inspections of P2904.8
Sizing of P2904.6
Sprinkler location P2904.1.1
FIREBLOCKING
Barrier between stories R302.11, R602.8
Chimney R1003.19
Fireplace R1001.12
FIREPLACES . . . . . Chapter 10
Clearance R1001.11
Corbeling R1001.8
Factory-built R1004
Fireblocking R1001.12
Walls R1001.5
FITTING
Definition applied to electrical installations E3501
FITTINGS
DWV piping P3002.3
Prohibited joints P3003.2
Water supply P2906.6
FIXTURE UNIT
Drainage, definition R202
Unit valves P2903.9.3
Water supply, definition R202
FIXTURES
Plumbing fixture, definition R202
Plumbing fixture, general . . . . . Chapter 27
Trap seals P3201.2
FLAME SPREAD INDEX R302.9, R302.10
FLASHING R703.8.5, R703.4, R903.2, R905
FLEXIBLE CORDS E3909, E4101.3, E4202.2
FLEXIBLE METAL CONDUIT E3801.1, E3908.8.1
FLOOD HAZARD AREA
Construction R322
Plumbing systems P2601.3
FLOOR DRAIN P2719
FLOOR FURNACE M1408
FLOORS
Concrete (on ground) R506
Steel framing R505
Treated-wood (on ground) R504
Wood framing R502
FLUE
Area R1003.14, R1003.15
Lining R1003.11, R1003.12
Multiple R1003.13
FOAM PLASTICS R316
FOOD-WASTE DISPOSERS
General P2716
Discharge connection to sink tailpiece P2707.1
FOOTINGS
Excavation for piping near P2604.4
Requirements R403
FORCED MAIN SEWER
Materials P3002.2
Testing P2503.4
FOOTINGS R403

INTERNATIONAL CODE COUNCIL®
Copyright © 2015 ICC. ALL RIGHTS RESERVED. Accessed by David Dammon on Jun 21, 2017 12:30:52 PM pursuant to License Agreement with ICC. No further reproduction or distribution authorized. ANY UNAUTHORIZED REPRODUCTION OR DISTRIBUTION IS A VIOLATION OF THE FEDERAL COPYRIGHT ACT AND THE LICENSE AGREEMENT, AND SUBJECT TO CIVIL AND CRIMINAL PENALTIES THEREUNDER.

FOUNDATIONS . . . . . Chapter 4
Cripple walls R602.9, R602.10.9, R602.11.2
Frost protection R403.1.4.1
Inspection R109.1.1
Walls R404
FRAME
Inspection R109.1.4
FREEZE PROTECTION OF PLUMBING P2603.6
FUEL-BURNING APPLIANCES (see APPLIANCE, definition)
Identification. . . . . Chapter 24
FUEL GAS . . . . . Chapter 24
FUEL OIL
Oil tanks. M2201
Piping, fittings and connections M2202
Pumps and valves M2204
FURNACES
Clearance of warm-air furnaces. M1402.2
Exterior M1401.4
Floor (see Floor Furnace)
Wall (see Wall Furnace)
Warm-air . . . . . M1402, Chapter 24
FUSES E3705.6

G

GARAGES R309
GAS
Appliance labeling . . . . . Chapter 24
GAS PIPING SYSTEM NOT TO BE USED AS GROUNDING ELECTRODE. . . . . Chapter 24
GIRDERS R502.5
GLAZING R308
Aggregate R303.1
Protection of openings. R301.2.1.2
GRADE
Definition R202
Of lumber. R502.1.1, R602.1.1, R802.1.1
Plane, definition. R202
Slope of piping, definition. R202
GRAYWATER
For subsurface irrigation P3009
Identification for P2901.2
Supply to fixtures. P2901.1
GROUND
Definition of electrical. E3501
Floors (on ground) R504, R506
Joint connection. P2906.8
GROUND-FAULT CIRCUIT-INTERRUPTER PROTECTION. E3902, E4203, E4206, E4207.2, E4208
GROUND SOURCE HEAT PUMP M2105
GROUNDED
Definition E3501
GROUNDED CONDUCTOR
Definition E3501
Identification. E3407
GROUNDED, EFFECTIVELY
Definition E3501
GROUNDING
Effective grounding path E3611.3
Of equipment E3908, E4205.1
GROUNDING CONDUCTOR
Definition E3501
Equipment E3501, E3607.3.1, E3908
GROUNDING ELECTRODE CONDUCTOR E3607.4
Connection. E3607.2, E3611
Definition E3501
Size E3603.4
GROUNDING ELECTRODE SYSTEM. E3608
GROUNDING ELECTRODES E3608, E3608.1
Resistance of E3608
GUARDED
Definition applied to electrical equipment E3501
GUARDING OF ENERGIZED PARTS E3404.9
GUARDS. R312
Definition R202
GYPSUM
Wallboard. R702.3

H

HABITABLE SPACE
Definition R202
HALLWAYS R311.6
HANDRAILS R311.7.8, R311.8.3
Definition R202
HAND SHOWER (see SHOWER)
HEADERS
SIP R610.10
Steel. R603.6
Wood R602.7
HEARTH R1001.9
Extension R1001.9, R1001.10
HEATERS
Baseboard M1405
Central furnaces. M1402
Duct M1407
Heat pumps M1403
Masonry R1002
Pool . . . . . .M2006, Chapter 24

INTERNATIONAL CODE COUNCIL®
Copyright © 2015 ICC. ALL RIGHTS RESERVED. Accessed by David Dammon on Jun 21, 2017 12:30:52 PM pursuant to License Agreement with ICC. No further reproduction or distribution authorized. ANY UNAUTHORIZED REPRODUCTION OR DISTRIBUTION IS A VIOLATION OF THE FEDERAL COPYRIGHT ACT AND THE LICENSE AGREEMENT, AND SUBJECT TO CIVIL AND CRIMINAL PENALTIES THEREUNDER.

Radiant M1406
Sauna . . . . . Chapter 24
Unvented G2445
Vented room . . . . . .M1410, Chapter 24
Water . . . . . Chapter 20, Chapter 28
HEATING R303.9
HEATING EQUIPMENT . . . . . Chapter 14
HEIGHT
Ceiling R305
HOLLOW-UNIT MASONRY (see MASONRY) R606.3.2.2, 606.13.1.2
HORIZONTAL
Pipe, definition R202
Vent length M1803.3.2
HOT TUBS . . . . . E4201, Appendix G
HOT WATER
Definition R202
Distribution pipe rating P2906.5
Distribution systems P2905
Heaters . . . . . .M2005, Chapter 24
Supplied to bathtubs P2713
Temperature actuated valves for P2724
HUB DRAIN (See WASTE RECEPTOR)
HYDROGEN GENERATING AND REFUELING M1307.4
HYDRONIC HEATING SYSTEMS
Baseboard convectors M2102
Boilers M2001
Expansion tanks M2003
Floor heating systems M2103
Operating and safety controls M2002
Piping systems installation M2101

I

IDENTIFIED
Definition applied to electrical equipment E3501
INDIVIDUAL
Branch circuit, definition E3501
Sewage disposal systems R202, P2602
Water supply and sewage disposal systems P2602
INLET
To masonry chimneys R1003.16
INLINE SANITARY WASTE VALVE P3101.2.1, P3201.6.1
INSPECTION
Card AE305.3
Excavation for piping P2604.1
Fuel-supply system . . . . . Chapter 24
Of plumbing system P2503
On site R109.1
INSTALLATION
Existing . . . . . Appendix J
Of appliances M1307
Of cooling and heating equipment M1401.1
Of ducts M1601.4
Of flue liners R1003.12
Of plumbing fixtures P2705
Of wall furnaces M1409.3
INSULATION R302.10
INTERIOR
Lath R702.2.3
Other finishes R702.5
Plaster R702.2
Wall covering . . . . . Chapter 7
INTERMEDIATE METAL CONDUIT . . . E3801, E3904
INTERRUPTING RATING E3404.2
Definition E3501
IRRIGATION (see SUBSURFACE IRRIGATION)

J

JOINTS, PIPE
And connections P2906, P3003
Slip P2704.1, P3005.2.9
JOIST
Bearing R502.6, R606.6.3.1
JUMPERS
Bonding E3609
JUNCTION BOXES E3905, E4206.9.1

K

KITCHEN
Definition R202
KITCHEN RECEPTACLES E3703.2, E3901

L

L VENT TERMINATION M1804.2.4
LABELED
Definition R202
Definition applied to electrical equipment E3501
LABELING
Appliances M1303
Definition R202
LAMPHOLDERS E4003, E4004
LANDINGS R311.3, R311.3.1, R311.7.6, R311.8.2
LATERAL SUPPORT . . . R502.7, R606.6.4, R607.5.2
LATH
Exterior R703.7.1
Interior R702.2.3

INTERNATIONAL CODE COUNCIL®
Copyright © 2015 ICC. ALL RIGHTS RESERVED. Accessed by David Dammon on Jun 21, 2017 12:30:52 PM pursuant to License Agreement with ICC. No further reproduction or distribution authorized. ANY UNAUTHORIZED REPRODUCTION OR DISTRIBUTION IS A VIOLATION OF THE FEDERAL COPYRIGHT ACT AND THE LICENSE AGREEMENT, AND SUBJECT TO CIVIL AND CRIMINAL PENALTIES THEREUNDER.

LAUNDRY CIRCUIT E3703.3
LAUNDRY TUBS
Drain connection to standpipe P2706.1.2.1
Requirements P2715
LAVATORIES P2711
Clearances R307
Waste outlets P2711.3
LEAD
Allowable amount, potable water components P2906.2
Bends and traps P3002.4.2
Caulked joints P3003.6.1
Flashing P3002.4.1
LIABILITY R104.8
LIGHT, VENTILATION AND HEATING R303
LIGHTING
Luminaire in clothes closets E4003.12
Luminaire installation E4004
Luminaries E4003, E4004, E4206
LIGHTING OUTLETS
Definition E3501
Required lighting outlets E3903
LINING
Flue R1003.11, R1003.12
LINTEL R606.10, R608.8, R703.8.3, R1001.7
LIQUID-TIGHT FLEXIBLE CONDUIT E3801.4, E3908.8.2
LISTED
Definition applied to electrical equipment E3501
LISTED AND LISTING
Definition applied to building and mechanical provisions R202
Mechanical appliances M1302.1
Potable water components P2609
LOAD
Additional R1003.8
Roof R301.6
Seismic risk map . . . . . Figure R301.2(2)
Snow load map . . . . . Figure R301.2(5)
Wind speed map . . . . . Figure R301.2(4)A
LOADS
Branch circuit loads E3702, E3703.6
Dead load R301.4
Feeder load E3704.2
Feeder neutral load E3704.3
Horizontal load AE602.1
Live load R301.5
Service load E3602.2
LOADS, LIVE AND DEAD
Definition R202
LOCATION
Of furnaces M1408.3, M1409.2
LOCATION (DAMP) (DRY) (WET)
Definitions E3501
LUMBER
Grade R502.1.1, R602.1.1, R802.1.1
LUMINAIRE E4004
Clearances E4004.8

M

MACERATING TOILET P2723
MAKEUP AIR M1503.4
MANUFACTURED HOME
Definition R202
Provisions . . . . . Appendix E
MASONRY
Anchorage R606.11
Cavity wall R606.13
Chases R606.8
General R606
Hollow unit R202, R606.3.2.2, R606.13.1.2
Inspection R109.1.4
Seismic requirements R606.12
Solid, definition R202
Veneer R703.8
Veneer attachment R703.3
MATERIALS
Alternative R104.11
Combustible R202, R1001.11, R1001.12, R1003.18, R1003.19
For ducts M1601
For fixture accessories P2702
For flue liners R1003.11
For fuel-supply systems . . . . . Chapter 24
For hearth extension R1001.9
For siding R703.5
Hydronic pipe M2101, M2103, M2104
Plumbing pipe P2906, P3002
MECHANICAL
Inspection R109.1.2
System requirements . . . . . Chapter 13
MEDIUM PRESSURE FUEL-GAS PIPING SYSTEM . . . . . Chapter 24
MEMBRANE
Penetration R302.4.2
Polyethylene R504.2.2, R506.2.3
Water-resistive R703.2
Waterproofing R406.2
METAL
Ducts . . . . . Chapter 16
Roof panels R905.10
Roof shingles R905.4

INTERNATIONAL CODE COUNCIL®
Copyright © 2015 ICC. ALL RIGHTS RESERVED. Accessed by David Dammon on Jun 21, 2017 12:30:52 PM pursuant to License Agreement with ICC. No further reproduction or distribution authorized. ANY UNAUTHORIZED REPRODUCTION OR DISTRIBUTION IS A VIOLATION OF THE FEDERAL COPYRIGHT ACT AND THE LICENSE AGREEMENT, AND SUBJECT TO CIVIL AND CRIMINAL PENALTIES THEREUNDER.

METAL-CLAD CABLE . . . . . Table E3701.2
METHODS
Water distribution pipe sizing . . . . . .Appendix P
MODIFICATIONS R104.10
MOISTURE CONTROL R702.7
MORTAR
Joints R606.3.1
MOTORS
Motor branch circuits E3702.6, E3702.7
MULTIPLE
Appliance venting systems M1801.11
Flues R1003.13
MULTIWIRE BRANCH CIRCUITS E3701.5

N

NONCOMBUSTIBLE MATERIAL
Definition R202
NONMETALLIC BOXES E3905.3, E3908.16
NONMETALLIC RIGID CONDUIT E3801.4
NONMETALLIC-SHEATHED CABLE E3705.4.4, E3801.4, E3905.3.1, E3908.8.3
NONPOTABLE WATER SYSTEMS . . . P2910, P2911, P2912, P2913
NOTCHING
Electrical E3402.1
For mechanical systems M1308
For plumbing piping P2603.2
Steel joists R505.2.5, R505.3.5, R804.2.5, R804.3.3
Steel studs R603.2.6, R603.3.4
Wood joists R502.8, R802.7.1
Wood studs R602.6
Wood top plates R602.6.1

O

OCCUPIED SPACE
Definition R202
OIL
Piping and connections M2202
Supply pumps and valves M2204
Tanks M2201
OPEN-TOP GAS BROILER UNITS M1505.1
OPENING
Requirements, combustion air . . . . . Chapter 17, Chapter 24
Waterproofing of piping penetrations P2606.1
OUTLET
Definition . . . . . .Chapter 24, E3501
OVEN, WALL-MOUNTED
Definition applied to electrical provisions E3501
OVERCURRENT
Definition E3501
OVERCURRENT PROTECTION E3705
OVERCURRENT-PROTECTION RATING E3705
OVERLOAD
Definition E3501

P

PANELBOARD
Definition E3501
PANELBOARDS E3706
Clearance and dedicated space E3405.2, E3405.3
Headroom E3405.3
PARALLEL PATH CONNECTION N1102.2.6 (R402.2.6)
PARAPETS R302.2.2, R606.4.4
PARTICLEBOARD
Floor R503.3
Walls R605
PERMITS R105
PIERS R606.7
Masonry R404.1.9
PIPE
Fittings P2702.2
Materials listing . . . . . .Table M2101.1, P2609
Protection P2603
Standards, drain, waste and vent. . . . . Table P3002.1(1), Table P3002.1(2)
Standards, sewer . . . . . Table P3002.2
Standards, water supply P2906
PIPING
Connections and materials . . .Table M2101.1, P2905
Drain, waste and vent P3002.1
Excavations next to footings P2604.4
Fuel-gas size determination . . . . . Chapter 24
Penetrations P2606
Protection P2603
Sizing methods, water distribution P2903.7
Support . . . . . .M2101.9, Chapter 24, P2605
PLANNING
Building . . . . . Chapter 3
PLANS R106
PLASTER
Exterior R703.7
Interior R702.2

INTERNATIONAL CODE COUNCIL®
Copyright © 2015 ICC. ALL RIGHTS RESERVED. Accessed by David Dammon on Jun 21, 2017 12:30:52 PM pursuant to License Agreement with ICC. No further reproduction or distribution authorized. ANY UNAUTHORIZED REPRODUCTION OR DISTRIBUTION IS A VIOLATION OF THE FEDERAL COPYRIGHT ACT AND THE LICENSE AGREEMENT, AND SUBJECT TO CIVIL AND CRIMINAL PENALTIES THEREUNDER.

PLENUM
Definition R202
Definition, electrical installations E3501
PLUMBING
Fixture clearances R307
Fixtures . . . . . Chapter 27
Inspection R109.1.2
Materials P2702.2, P2905, P3002
Requirements and definitions R202
System, definition R202
Third-party certification P2609.4
Traps . . . . . Chapter 32
Vents . . . . . Chapter 31
PLYWOOD
Application R703.5
Materials, walls R604
POTABLE WATER
Definition R202
Piping listing. P2609.4
PRECAST CONCRETE
Footings R403.4
Foundation material R402.3.1
Foundation walls R404.5
PRESSURE, WATER SUPPLY
Maximum P2903.3.1
Minimum P2903.3
PRIVATE
Sewage disposal system . . . . . Appendix I
PROHIBITED
Receptors P2706.3
Return air sources M1602.2
Traps P3201.5
Valves below grade P2903.9.5
Water closets P2712.1
PROTECTION
Against decay and termites R319, R320
Against radon. . . . . Appendix F
Of backflow preventers P2902.6
Of ferrous gas piping . . . . . Chapter 24
Of potable water supply P2902
PURLINS R802.5.1
PURPOSE. R101.3

R

***R*-VALUE**
Definition R202
RACEWAY
Definition E3501
Raceway installations E3904
Raceway seals E3601.5, E3803.6
Raceways as means of support E3904.4
RADON
Map . . . . . Appendix F
RAFTERS
Grade of lumber R802.1
Spans . . . . . R802.1.1, Tables R802.5.1(1) – R802.5.1(8)
RAIN TIGHT
Definition applied to electrical provisions E3501
RAINPROOF
Definition applied to electrical provisions E3501
RAINWATER
Identification for P2901.2
Supply to fixtures P2901.1
RAMPS R311.8
RANGES
Branch circuits for ranges E3702.9
RANGES AND OVENS
Vertical clearance above cooking top M1901.1
READILY ACCESSIBLE
Definition R202
Definition, electrical installations E3501
RECEPTACLE
Definition E3501
RECEPTACLE OUTLET
Definition E3501
Required outlets E3901
RECEPTACLES
Rating, type and installation E4002
RECEPTORS
Plumbing fixtures and traps . . . . . Chapter 27
Site-built materials P2709.2
Waste P2706
RECESSED LUMINAIRES E4003.5, E4003.12, E4004.8, E4004.9
RECLAIMED WATER
Identification for P2901.2
Supply to fixtures P2901.1
REQUIREMENTS
Connections for fuel-burning appliances. . . . . Chapter 24
Return air M1602
RESISTANCE TO GROUND
Electrodes E3608.4
RESISTANT SIDING MATERIAL (see MATERIALS)
RETURN-AIR M1602
RIDGE BOARD R802.3

INTERNATIONAL CODE COUNCIL®
Copyright © 2015 ICC. ALL RIGHTS RESERVED. Accessed by David Dammon on Jun 21, 2017 12:30:52 PM pursuant to License Agreement with ICC. No further reproduction or distribution authorized. ANY UNAUTHORIZED REPRODUCTION OR DISTRIBUTION IS A VIOLATION OF THE FEDERAL COPYRIGHT ACT AND THE LICENSE AGREEMENT, AND SUBJECT TO CIVIL AND CRIMINAL PENALTIES THEREUNDER.

RIGID METALLIC CONDUIT E3908
RIGID NONMETALLIC CONDUIT E3801.4
ROOF
Coverings R905
Drainage R903.4
Flashing R703.4, R903.2, R905
Steel framing R804
Wood framing R802
ROOF-CEILING CONSTRUCTION (see CONSTRUCTION) . . . . . Chapter 8
Wind uplift R802.11, R804.3.8
ROOFING
Built-up R905.9
Liquid-applied coating R905.15
Modified bitumen R905.11
Sprayed polyurethane foam R905.14
Thermoplastic single-ply R905.13
Thermoset single-ply R905.12
ROOM
Heaters, vented . . . . . M1410, Chapter 24
Minimum Sizes R304

S

SANITATION R306
SEISMIC RISK MAP . . . . . Figure R301.2(2)
SEPTIC TANK
Definition R202
SERVICE
Definition E3501
SERVICE CABLE
Definition E3501
SERVICE CONDUCTORS
Definition E3501
Drip loops E3605.9.5
Insulation E3605.1
Overload protection E3603.3
Rating of ungrounded service conductors E3602.1
Size E3603.1
SERVICE DISCONNECT
Location E3601.6.2
Marking of E3601.6.1
Maximum number of E3601.7
Rating of E3602.3
Required E3601.6
SERVICE DROP
Clearances E3604.1, E3604.2
Definition E3501
Point of attachment E3604.3
SERVICE-ENTRANCE CONDUCTORS, OVERHEAD SYSTEM
Definition E3501
SERVICE-ENTRANCE CONDUCTORS, UNDERGOUND SYSTEM
Definition E3501
SERVICE EQUIPMENT
Definition E3501
SERVICE LATERAL
Definition E3501
SERVICE LOAD E3602.2
SERVICE POINT
Definition E3501
SERVICE VOLTAGE RATING E3602.4
SERVICES . . . . . Chapter 36
SEWAGE
Disposal, private P2602
SEWER, BUILDING
Definition R202
Separation from water service . . P2604.2, P2906.4.1
Size P3005.4.2
Testing P2503.4
SHAKES
Wood R702.6, R703.6, R905.8
SHINGLE
Asphalt shingles R905.2
Metal R905.4
Slate R905.6
Wood R905.7
SHOWER
Control valve P2708.4
Control valve riser to shower head P2708.3
Compartment R307.2
Drain size P2708.2
Hand P2708.5
Receptor P2709
Stall dimensions P2708
Walls P2710
SHUTOFF VALVE (see VALVES)
SIDING
Exterior coverings R703
SINKS P2714
SITE
Address R319
Preparation R408.5, R504.2, R506.2
SIZE
Of combustion air openings . . . . . Chapter 17
Of rooms R304
Of trap P3201.7

INTERNATIONAL CODE COUNCIL®
Copyright © 2015 ICC. ALL RIGHTS RESERVED. Accessed by David Dammon on Jun 21, 2017 12:30:52 PM pursuant to License Agreement with ICC. No further reproduction or distribution authorized. ANY UNAUTHORIZED REPRODUCTION OR DISTRIBUTION IS A VIOLATION OF THE FEDERAL COPYRIGHT ACT AND THE LICENSE AGREEMENT, AND SUBJECT TO CIVIL AND CRIMINAL PENALTIES THEREUNDER.

SIZING METHODS
Water piping P2903.7
SKYLIGHTS R308.6
SLATE SHINGLES R905.6
SMOKE ALARMS R314
SMOKE-DEVELOPED INDEX R302.9, R302.10
SNOW LOAD MAP . . . . . Figure R301.2(5)
SOLAR ENERGY SYSTEMS M2301
SPANS
Steel (allowable) R505.3.2, R804.3.2.1
Wood (allowable) R502.3, R802.5
SPAS E4208
SPLICES E3406.11
SPLICES AND TAPS E3803.4
SPRINKLER (see FIRE SPRINKLER SYSTEMS)
STAIRWAYS R311.7
STANDARDS . . . . . Chapter 44, Appendix G
STANDPIPE (see WASTE RECEPTOR)
STEEL
Fireplace units R1001.5.1
Floor construction R505
Roof-ceiling construction R804
Walls R603
STORM SHELTERS R323
STORY
Definition R202
STOVES
Factory-built fireplace M1414
STRUCTURAL AND PIPING PROTECTION . . . P2603
STRUCTURAL INSULATED PANEL (SIP) R610
STUDS
Wood R602.2, R602.3
Spacing R602.3.1
Steel R603.2, R603.3
SUBSURFACE IRRIGATION SYSTEMS P3009
SUMPS AND EJECTORS P3007
SUMP PUMPS P3007.3.2, P3303
SUPPLY
Combustion air . . . . . Chapter 17, Chapter 24
Fuel systems . . . . . Chapter 24
Oil supply pumps and valves M2204
Required gas . . . . . Chapter 24
Return air M1602
Water . . . . . Chapter 29
SUPPORT
Of decks R507.2.2.1
Of ducts M1601.4.4
Of floor joists R502.6, R505.3.2
Of masonry chimneys R1003.2, R1003.3, R1003.4
Of pipe . . . . . M2101.9, Chapter 24, P2605
SUPPORT REQUIREMENTS FOR WIRING METHODS E3802.1
SWIMMING POOLS . . . . . Chapter 42, R326
SWITCHES
Definition E3501
Rating and application E4001
SYSTEMS
Mechanical venting . . . . . Chapter 18, Chapter 24
Plumbing, drainage, waste and venting . . . . . Chapter 25, Chapter 30, Chapter 31, Chapter 33

T

TAIL PIECES, PLUMBING FIXTURE P2703
TANK
For fuel oil-burning appliances M2201
Septic, definition R202
TEMPERATURE ISOLINES . . . . . Figure R301.2(1)
TEMPERATURE LIMITATIONS E3705.4
TERMINALS E3406.10
TERMINATION
Of chimneys R1003.9
Of vents (general) M1804.2
TERMITES
Infestation probability map . . . . . Figure R301.2(6)
Protection R318
TEST
For leaks in supply piping . . . . . Chapter 24
Of backflow preventers P2503.8
Of building sewers P2503.4
Of plumbing systems P2503
Of shower liner P2503.6
THICKNESS
Of chimney walls R1003.10
TIES
Veneer R703.8.4
TILE
Shingles (clay and concrete) R905.3
TOWNHOUSE
Definition R202
Scope R101.2
Separation R302.2
TRACK LIGHTING E4005
TRAP . . . . . Chapter 32
Arm, definition R202
Building P3201.1
Seal protection P3201.2.1
TRENCHING AND BACKFILLING P2604
TRUSSES
Steel R505.1.3, R804.3.6
Wood R502.11, R802.10

INTERNATIONAL CODE COUNCIL®
Copyright © 2015 ICC. ALL RIGHTS RESERVED. Accessed by David Dammon on Jun 21, 2017 12:30:52 PM pursuant to License Agreement with ICC. No further reproduction or distribution authorized. ANY UNAUTHORIZED REPRODUCTION OR DISTRIBUTION IS A VIOLATION OF THE FEDERAL COPYRIGHT ACT AND THE LICENSE AGREEMENT, AND SUBJECT TO CIVIL AND CRIMINAL PENALTIES THEREUNDER.

TYPE OF VENTING SYSTEMS REQUIRED . . . . Chapter 18, Chapter 24

U

***U*-FACTOR**
Definition R202
UNDER FLOOR
Access to furnaces M1305.1.4
Plenums M1601.5
Space R408
UNDERGROUND INSTALLATION REQUIREMENTS
Duct systems M1601.1.2
Electrical cable E3803
Wiring E4203.7
UNVENTED ATTIC ASSEMBLIES R806.5
UTILIZATION EQUIPMENT
Definition E3401

V

VALVES
Backwater P3008
Meter . . . . . Chapter 24
Oil-supply M2204
Relief, water heater P2804
Shutoff, fuel-gas . . . . . Chapter 24
Shutoff, fuel-oil M2204.2
Water heaters P2903.9.2
Water supply P2903.9
VAPOR RETARDERS R702.7
Definition R202
VENEER
Masonry R703.7
VENT
B or BW vent . . . . . Chapter 24
Definition . . . . . Chapter 24
L vent . . . . . M1804.2.4, Chapter 24
Plumbing system, definition R202
Termination M1804.2, M2203.5, P3103.5
VENTED
Decorative appliances . . . . . Chapter 24
Floor furnaces M1408
Room heaters M1410
Wall furnaces M1409
VENTILATION
Bathroom and kitchen M1507
For hydrogen systems M1307.4
Roof R806
Under floor R408.1
Whole house M1507.3
VENTING (MECHANICAL)
Chimney and vent connectors . . M1803, Chapter 24
Components . . . . . M1802, Chapter 24
General . . . . . M1801, Chapter 24
Required . . . . . M1801, M2203.4, Chapter 24
Systems . . . . . Chapter 18, Chapter 24
VENTING (PLUMBING)
Air admittance valves P3114
Circuit P3110
Combination waste and vent system P3111
Common P3107
Connections and grades P3104
Fixture P3105
Individual P3106
Island fixture P3112
Pipe sizing P3113
Stacks and stack vents P3102
Systems P3101
Terminals P3103
Waste stack P3109
Wet P3108
VERTICAL
Clearances above cooking top M1901.1
Pipe, definition R202
VIOLATIONS
And penalties R113
VOLTAGE
Definition E3501
VOLTAGE RATING (SERVICES) E3602.4
VOLTAGE TO GROUND
Definition E3501
VOLTAGES E3404.1

W

WALL FURNACE (see APPLIANCE)
General M1409.1
Installation M1409.3
Location M1409.2
WALLBOARD
Gypsum R702.3
WALLS
Bathtub compartments P2710
Bracing, steel R603.9
Bracing, wood R602.10
Construction . . . . . Chapter 6
Covering . . . . . Chapter 7
Cripple R602.9
Deflection R301.7

INTERNATIONAL CODE COUNCIL®
Copyright © 2015 ICC. ALL RIGHTS RESERVED. Accessed by David Dammon on Jun 21, 2017 12:30:52 PM pursuant to License Agreement with ICC. No further reproduction or distribution authorized. ANY UNAUTHORIZED REPRODUCTION OR DISTRIBUTION IS A VIOLATION OF THE FEDERAL COPYRIGHT ACT AND THE LICENSE AGREEMENT, AND SUBJECT TO CIVIL AND CRIMINAL PENALTIES THEREUNDER.

Exterior covering R703
Finishes R302.9, R702
Fireplace R1001.5
Foundation. R404
Insulating concrete form R608.3, R608.4, R608.5.3
Shower compartments. P2710
Steel framing R603
Structural insulated panels (SIP) R610
Thickness, masonry chimneys. R1003.10
Wood framing R602
WARM-AIR FURNACES M1402
Access to M1401.2
Clearance from M1402.2
WASTE
Clear water P2792.1
Continuous, definition R202
WASTE RECEPTOR
Hub drain P2706.1
Standpipe. P2706.1
Prohibited types P2706.3
WATER
Distribution system, definition R202
Heater, definition R202
Heaters . . . . . .Chapter 20, Chapter 24, Chapter 28
Individual supply and sewage disposal P2602
Piping sizing methods P2903
Pressure P2903.3
Service, separation from sewer P2604.2, P905.4.1
Supply and distribution . . . . . Chapter 29
Supply system, definition. R202
WATER CLOSET
Carriers for wall hung. P2702.4
Clearances for R306.1
Dual flushing P2712.1
Personal hygiene devices P2722.5
Seats P2712.7
Standards P2712.1
WATER HEATER
Drain water heater heat recovery units P2903.11
In garages P2801.5.2
Location P2801.3, P2801.4, P2801.5
Pan P2801.5
Plumbing requirements . . . . . Chapter 28
Relief valves P2804
Seismic bracing P2801.7
Solar thermal P2802, P2902.5.5
Thermal expansion from P2903.4
Used for space heating P2803
WATER TIGHT
Definition applied to electrical provisions E3501
WATERPROOFING
And dampproofing R406
Of openings through roofs and walls P2607
WEATHERPROOF
Definition applied to electrical provisions E3501
WELLS (see INDIVIDUAL WATER SUPPLY)
WHIRLPOOL BATHTUBS P2720
WHOLE-HOUSE VENTILATION M1507.3
WIND SPEED MAP. . . . . Figure R301.2(4)A
WINDOW. R609
Fall prevention R312.2
Opening limiting devices R312.2.2
WIRING METHODS . . . . . Chapter 37
WOOD
Floor construction. R502
Foundation walls R404.2
Roof-ceiling construction R802
Shakes R905.8
Shingles R905.7
Trusses R502.11, R802.10
Walls R602
WORKING SPACE E3606.2
Around electrical equipment. E3405.1, E3405.2
WORKMANSHIP, PLUMBING P2608

Y

YARD
Definition R202

INTERNATIONAL CODE COUNCIL®
Copyright © 2015 ICC. ALL RIGHTS RESERVED. Accessed by David Dammon on Jun 21, 2017 12:30:52 PM pursuant to License Agreement with ICC. No further reproduction or distribution authorized. ANY UNAUTHORIZED REPRODUCTION OR DISTRIBUTION IS A VIOLATION OF THE FEDERAL COPYRIGHT ACT AND THE LICENSE AGREEMENT, AND SUBJECT TO CIVIL AND CRIMINAL PENALTIES THEREUNDER.

ICC INTERNATIONAL CODE COUNCIL®

People Helping People Build a Safer World®

GET IMMEDIATE DOWNLOADS OF THE STANDARDS YOU NEED

Browse hundreds of industry standards adopted by reference. Available to you 24/7!

Count on ICC for standards from a variety of publishers, including:

ACI	CPSC	GYPSUM
AISC	CSA	HUD
ANSI	DOC	ICC
APA	DOJ	ISO
APSP	DOL	NSF
ASHRAE	DOTn	SMACNA
ASTM	FEMA	USC
AWC	GBI	

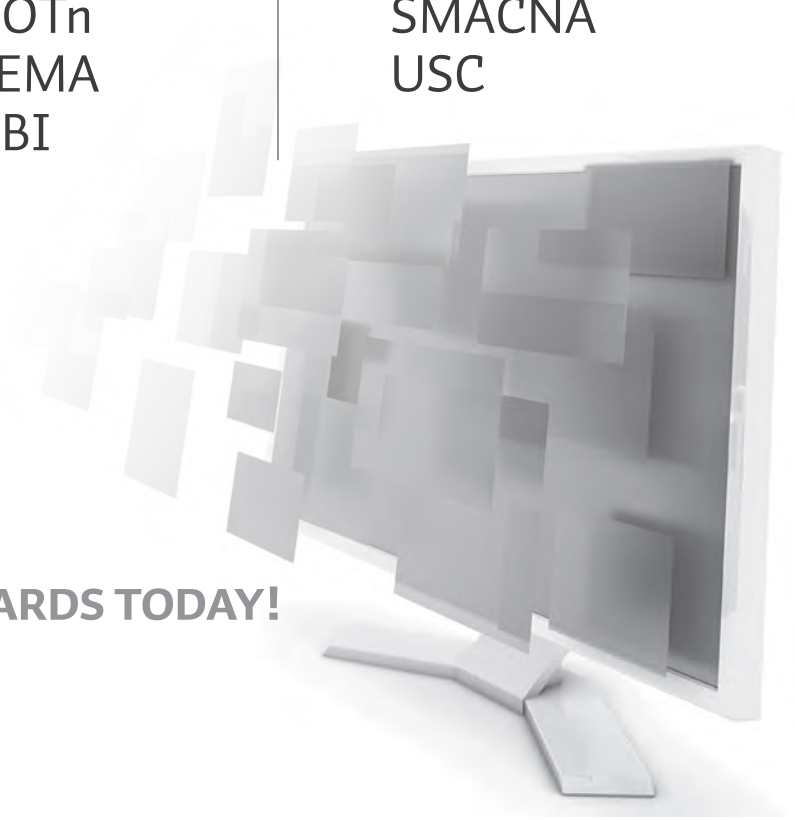

DOWNLOAD YOUR STANDARDS TODAY!
SHOP.ICCSAFE.ORG

15-11221

INTERNATIONAL CODE COUNCIL®

Copyright © 2015 ICC. ALL RIGHTS RESERVED. Accessed by David Dammon on Jun 21, 2017 12:30:52 PM pursuant to License Agreement with ICC. No further reproduction or distribution authorized. ANY UNAUTHORIZED REPRODUCTION OR DISTRIBUTION IS A VIOLATION OF THE FEDERAL COPYRIGHT ACT AND THE LICENSE AGREEMENT, AND SUBJECT TO CIVIL AND CRIMINAL PENALTIES THEREUNDER.

ICC INTERNATIONAL CODE COUNCIL®

People Helping People Build a Safer World®

Valuable Guides to Changes in the 2015 I-Codes®

NEW!

FULL COLOR! HUNDREDS OF PHOTOS AND ILLUSTRATIONS!

SIGNIFICANT CHANGES TO THE 2015 INTERNATIONAL CODES®

Practical resources that offer a comprehensive analysis of the critical changes made between the 2012 and 2015 editions of the codes. Authored by ICC code experts, these useful tools are "must-have" guides to the many important changes in the 2015 International Codes.



SIGNIFICANT CHANGES TO THE IBC, 2015 EDITION
#7024S15

SIGNIFICANT CHANGES TO THE IRC, 2015 EDITION
#7101S15

SIGNIFICANT CHANGES TO THE IFC, 2015 EDITION
#7404S15

SIGNIFICANT CHANGES TO THE IPC/IMC/IFGC, 2015 EDITION
#7202S15

Changes are identified then followed by in-depth discussion of how the change affects real world application. Photos, tables and illustrations further clarify application.

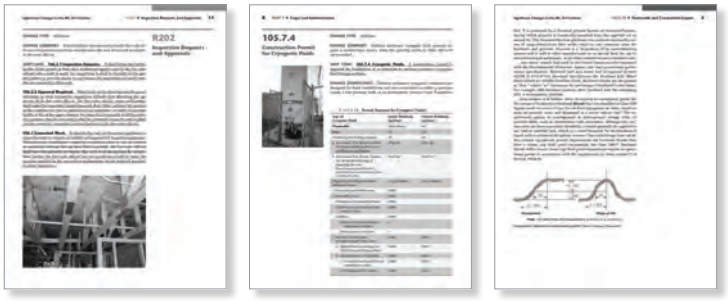

ORDER YOUR HELPFUL GUIDES TODAY!
1-800-786-4452 | www.iccsafe.org/books

HIRE ICC TO TEACH

Want your group to learn the Significant Changes to the I-Codes from an ICC expert instructor? Schedule a seminar today!

email: **ICCTraining@iccsafe.org** | phone: **1-888-422-7233 ext. 33818**

14-09379

INTERNATIONAL CODE COUNCIL®

Copyright © 2015 ICC. ALL RIGHTS RESERVED. Accessed by David Dammon on Jun 21, 2017 12:30:52 PM pursuant to License Agreement with ICC. No further reproduction or distribution authorized. ANY UNAUTHORIZED REPRODUCTION OR DISTRIBUTION IS A VIOLATION OF THE FEDERAL COPYRIGHT ACT AND THE LICENSE AGREEMENT, AND SUBJECT TO CIVIL AND CRIMINAL PENALTIES THEREUNDER.

ICC INTERNATIONAL CODE COUNCIL®

People Helping People Build a Safer World®

The International Code Council's Training and Education Department

Industry professionals look to ICC to provide the critical knowledge and experiences necessary to excel in today's challenging world. ICC's educational programs cover a broad spectrum of code and construction related topics, offering some of the highest quality instruction direct from the source.

INSTITUTES

Acquire Skills, Share Experiences, Earn CEUs

ICC's training institutes offer a comprehensive education experience and a great way to earn much needed CEUs. Learn best practices from the leading experts in the field, build your network of professional contacts and share experiences. Institutes are held across the country throughout the year. To see the full schedule go to www.iccsafe.org/training.

HIRE ICC TO TEACH

Bring ICC On-Site and Earn CEUs

Give your group the confidence they need to meet tough challenges head-on so they can reach their full potential. ICC's course catalog contains a wide variety of educational topics that are available for contract at a location of your choice. Customized training is also available to fit your needs. For our full course catalogue go to www.iccsafe.org/hireicc.

ICC ONLINE CAMPUS

Earn CEUs at Your Own Pace

Online courses offer access to a comprehensive training and education portal, providing you with an effective and convenient tool to enhance your professional skills. Courses are available anytime for 99 days following registration. Go to www.iccsafe.org/onlinecampus for our full offerings.

For more information about ICC's Training please contact us at **888-ICC-SAFE (422-7233) ext. 33818** or email us at **icctraining@iccsafe.org**.

15-10915

INTERNATIONAL CODE COUNCIL®

Copyright © 2015 ICC. ALL RIGHTS RESERVED. Accessed by David Dammon on Jun 21, 2017 12:30:52 PM pursuant to License Agreement with ICC. No further reproduction or distribution authorized. ANY UNAUTHORIZED REPRODUCTION OR DISTRIBUTION IS A VIOLATION OF THE FEDERAL COPYRIGHT ACT AND THE LICENSE AGREEMENT, AND SUBJECT TO CIVIL AND CRIMINAL PENALTIES THEREUNDER.

ICC INTERNATIONAL CODE COUNCIL®

People Helping People Build a Safer World®

2015 I-Code Essentials

This helpful series uses a straightforward, focused approach to explore code requirements with non-code language, allowing readers to gain confidence in their understanding of the material. Each book is an invaluable companion guide to the 2015 IBC, IRC, IFC or IECC for both new and experienced code users.

- **Detailed full-color illustrations enhance comprehension of code provisions**
- **A focused, concise approach facilitates understanding of the essential code provisions**
- **References to corresponding code sections provide added value as companion guides to the 2015 I-Codes**
- **Glossary of code and construction terms clarifies their meaning in the context of the code**



A

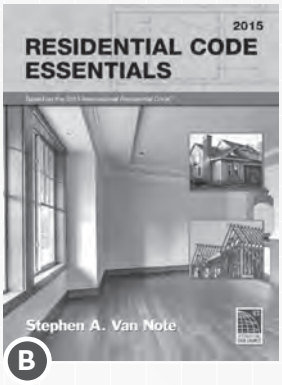

B

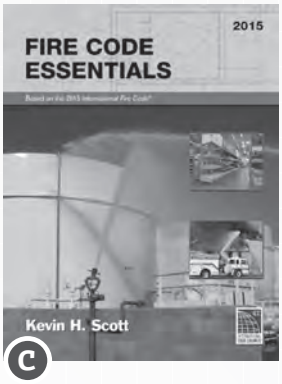

C

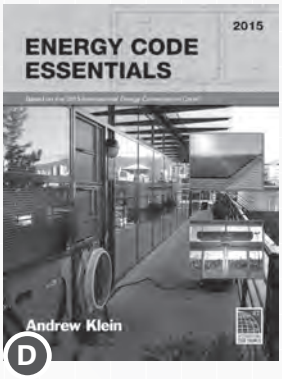

D

A. BUILDING CODE ESSENTIALS: BASED ON THE 2015 INTERNATIONAL BUILDING CODE

Explores those code provisions essential to understanding the application of the IBC in an easy-to-read format. The user-friendly approach of the text simplifies critical concepts so users can achieve a more complete understanding of the code's intent. Full-color illustrations, examples and simplified tables assist the reader in visualizing the code requirements. This up-to-date, step-by-step guide's topic organization reflects the intent of the IBC and facilitates understanding and application of the code provisions.

SOFT COVER #4031S15
PDF DOWNLOAD #8950P596

B. RESIDENTIAL CODE ESSENTIALS: BASED ON THE 2015 INTERNATIONAL RESIDENTIAL CODE

Explains those code provisions essential to understanding the application of the IRC to the most commonly encountered building practices. The information is presented in a user-friendly manner with an emphasis on technical accuracy and clear non-code language. Full-color illustrations, examples and simplified tables assist the reader in visualizing the code requirements.

SOFT COVER #4131S15
PDF DOWNLOAD #8950P59

C. FIRE CODE ESSENTIALS: BASED ON THE 2015 INTERNATIONAL FIRE CODE

Focuses on the essential provisions of the IFC for controlling ignition sources and fire hazards, fire department access to buildings, building uses and processes, fire protection and life safety systems, special processes and uses and hazardous materials.

SOFT COVER #4431S15
PDF DOWNLOAD #8950P59

D. ENERGY CODE ESSENTIALS: BASED ON THE 2015 INTERNATIONAL ENERGY CONSERVATION CODE®

Designed to provide a straightforward, easy-to-read companion guide to the IECC for both beginning and experienced code users. The text provides accurate information on critical energy code applications in the office and in the field for residential and commercial construction. The focused coverage examines those code provisions essential to understanding the application of the IECC to the most commonly encountered building practices and discusses the reasons behind the requirements.

SOFT COVER #4831S15
PDF DOWNLOAD #8950P651

ORDER YOUR I-CODE ESSENTIALS TODAY! 1-800-786-4452 | www.iccsafe.org/books

14-10387

INTERNATIONAL CODE COUNCIL®

Copyright © 2015 ICC. ALL RIGHTS RESERVED. Accessed by David Dammon on Jun 21, 2017 12:30:52 PM pursuant to License Agreement with ICC. No further reproduction or distribution authorized. ANY UNAUTHORIZED REPRODUCTION OR DISTRIBUTION IS A VIOLATION OF THE FEDERAL COPYRIGHT ACT AND THE LICENSE AGREEMENT, AND SUBJECT TO CIVIL AND CRIMINAL PENALTIES THEREUNDER.

IFC®

2015 CODE AND COMMENTARY

VOLUME 1

The complete IFC with commentary after each section



INTERNATIONAL CODE COUNCIL®

Copyright © 2015 ICC. ALL RIGHTS RESERVED. Accessed by David Dammon on Jun 21, 2017 12:30:52 PM pursuant to License Agreement with ICC. No further reproduction or distribution authorized. ANY UNAUTHORIZED REPRODUCTION OR DISTRIBUTION IS A VIOLATION OF THE FEDERAL COPYRIGHT ACT AND THE LICENSE AGREEMENT, AND SUBJECT TO CIVIL AND CRIMINAL PENALTIES THEREUNDER.

2015 IFC®

CODE AND COMMENTARY

VOLUME 1

The complete IFC with commentary after each section

ICC
INTERNATIONAL CODE COUNCIL®

INTERNATIONAL CODE COUNCIL®

Copyright © 2015 ICC. ALL RIGHTS RESERVED. Accessed by David Dammon on Jun 21, 2017 12:30:52 PM pursuant to License Agreement with ICC. No further reproduction or distribution authorized. ANY UNAUTHORIZED REPRODUCTION OR DISTRIBUTION IS A VIOLATION OF THE FEDERAL COPYRIGHT ACT AND THE LICENSE AGREEMENT, AND SUBJECT TO CIVIL AND CRIMINAL PENALTIES THEREUNDER.

2015 International Fire Code® Commentary

First Printing: July 2015

ISBN: 978-1-60983-286-5 (soft-cover edition)

COPYRIGHT © 2015
by
INTERNATIONAL CODE COUNCIL, INC.

ALL RIGHTS RESERVED. This 2015 *International Fire Code® Commentary—Volume I* is a copyrighted work owned by the International Code Council, Inc. Without advance written permission from the copyright owner, no part of this book may be reproduced, distributed or transmitted in any form or by any means, including, without limitation, electronic, optical or mechanical means (by way of example, and not limitation, photocopying, or recording by or in an information storage retrieval system). For information on permission to copy material exceeding fair use, please contact: Publications, 4051 Flossmoor Road, Country Club Hills, IL 60478. Phone 1-888-ICC-SAFE (422-7233).

Trademarks: "International Code Council," the "International Code Council" logo and the "International Fire Code" are trademarks of the International Code Council, Inc.

PRINTED IN THE U.S.A.

INTERNATIONAL CODE COUNCIL®

Copyright © 2015 ICC. ALL RIGHTS RESERVED. Accessed by David Dammon on Jun 21, 2017 12:30:52 PM pursuant to License Agreement with ICC. No further reproduction or distribution authorized. ANY UNAUTHORIZED REPRODUCTION OR DISTRIBUTION IS A VIOLATION OF THE FEDERAL COPYRIGHT ACT AND THE LICENSE AGREEMENT, AND SUBJECT TO CIVIL AND CRIMINAL PENALTIES THEREUNDER.

PREFACE

The principal purpose of the Commentary is to provide a basic volume of knowledge and facts relating to building construction as it pertains to the regulations set forth in the 2015 *International Fire Code*. The person who is serious about effectively designing, constructing and regulating buildings and structures will find the Commentary to be a reliable data source and reference to almost all components of the built environment.

As a follow-up to the *International Fire Code*, we offer a companion document, the *International Fire Code Commentary—Volume I*. Volume I covers Chapters 1 through 19 of the 2015 *International Fire Code*. The basic appeal of the Commentary is thus: it provides in a small package and at reasonable cost thorough coverage of many issues likely to be dealt with when using the *International Fire Code* — and then supplements that coverage with historical and technical background. Reference lists, information sources and bibliographies are also included.

Throughout all of this, effort has been made to keep the vast quantity of material accessible and its method of presentation useful. With a comprehensive yet concise summary of each section, the Commentary provides a convenient reference for regulations applicable to the construction of buildings and structures. In the chapters that follow, discussions focus on the full meaning and implications of the code text. Guidelines suggest the most effective method of application, and the consequences of not adhering to the code text. Illustrations are provided to aid understanding; they do not necessarily illustrate the only methods of achieving code compliance.

The format of the Commentary includes the full text of each section, table and figure in the code, followed immediately by the commentary applicable to that text. At the time of printing, the Commentary reflects the most up-to-date text of the 2015 *International Fire Code*. Each section's narrative includes a statement of its objective and intent, and usually includes a discussion about why the requirement commands the conditions set forth. Code text and commentary text are easily distinguished from each other. All code text is shown as it appears in the *International Fire Code*, and all commentary is indented below the code text and begins with the symbol ❖.

Readers should note that the Commentary is to be used in conjunction with the *International Fire Code* and not as a substitute for the code. The Commentary is advisory only; the code official alone possesses the authority and responsibility for interpreting the code.

Comments and recommendations are encouraged, for through your input, we can improve future editions. Please direct your comments to the Codes and Standards Development Department at the Chicago District Office.

The International Code Council would like to extend its thanks to the following individuals for their contributions to the technical content of this commentary:

Jeff Hugo
Elley Klausbruckner

INTERNATIONAL CODE COUNCIL®
Copyright © 2015 ICC. ALL RIGHTS RESERVED. Accessed by David Dammon on Jun 21, 2017 12:30:52 PM pursuant to License Agreement with ICC. No further reproduction or distribution authorized. ANY UNAUTHORIZED REPRODUCTION OR DISTRIBUTION IS A VIOLATION OF THE FEDERAL COPYRIGHT ACT AND THE LICENSE AGREEMENT, AND SUBJECT TO CIVIL AND CRIMINAL PENALTIES THEREUNDER.

INTERNATIONAL CODE COUNCIL®

Copyright © 2015 ICC. ALL RIGHTS RESERVED. Accessed by David Dammon on Jun 21, 2017 12:30:52 PM pursuant to License Agreement with ICC. No further reproduction or distribution authorized. ANY UNAUTHORIZED REPRODUCTION OR DISTRIBUTION IS A VIOLATION OF THE FEDERAL COPYRIGHT ACT AND THE LICENSE AGREEMENT, AND SUBJECT TO CIVIL AND CRIMINAL PENALTIES THEREUNDER.

Arrangement and Format of the 2015 IFC

Before applying the requirements of the IFC it is beneficial to understand its arrangement and format. The IFC, like other codes published by the International Code Council, is arranged and organized to follow sequential steps that generally occur during a plan review or inspection. The 2015 IFC is organized into seven Parts as illustrated in the tables below. Each Part represents a broad subject matter and includes the chapters that logically fit under the subject matter of each Part. It is also foreseeable that additional chapters will need to be added in the future as regulations for new processes or operations are developed. Accordingly, the reorganization was designed to accommodate such future chapters by providing reserved (unused) chapters in several of the Parts. This will allow the subject matter parts to be conveniently and logically expanded without requiring a major renumbering of the IFC chapters.

2015 ORGANIZATION OF THE IFC	
Parts and Chapters	**Subject Matter**
Part I – Chapters 1 and 2	Administrative and definitions
Part II – Chapters 3 and 4	General safety provisions
Part III – Chapters 5 through 11	Building and equipment design features
Part III – Chapters 12 through 19	Reserved for future use
Part IV – Chapters 20 through 37	Special occupancies and operations
Part IV – Chapters 38 through 49	Reserved for future use
Part V – Chapters 50 through 67	Hazardous materials
Part V – Chapters 68 through 79	Reserved for future use
Part VI – Chapter 80	Referenced standards
Part VII – Appendices A through M	Adoptable and informational appendices

The IFC requirements for fire-resistive construction, interior finish, fire protection systems, means of egress and construction safeguards are directly correlated to the chapters containing parallel requirements in the IBC, as follows:

IFC Chapter	Subject
7	Fire and smoke protection features
8	Interior finish, decorative materials and furnishings
9	Fire protection systems
10	Means of egress
33	Fire safety during construction and demolition

INTERNATIONAL CODE COUNCIL®
Copyright © 2015 ICC. ALL RIGHTS RESERVED. Accessed by David Dammon on Jun 21, 2017 12:30:52 PM pursuant to License Agreement with ICC. No further reproduction or distribution authorized. ANY UNAUTHORIZED REPRODUCTION OR DISTRIBUTION IS A VIOLATION OF THE FEDERAL COPYRIGHT ACT AND THE LICENSE AGREEMENT, AND SUBJECT TO CIVIL AND CRIMINAL PENALTIES THEREUNDER.

INTERNATIONAL CODE COUNCIL®
Copyright © 2015 ICC. ALL RIGHTS RESERVED. Accessed by David Dammon on Jun 21, 2017 12:30:52 PM pursuant to License Agreement with ICC. No further reproduction or distribution authorized. ANY UNAUTHORIZED REPRODUCTION OR DISTRIBUTION IS A VIOLATION OF THE FEDERAL COPYRIGHT ACT AND THE LICENSE AGREEMENT, AND SUBJECT TO CIVIL AND CRIMINAL PENALTIES THEREUNDER.

LEGISLATION

The *International Codes* are designed and promulgated to be adopted by reference by legislative action. Jurisdictions wishing to adopt the 2015 *International Fire Code Commentary* as an enforceable set of regulations for the safeguarding of life and property from fire and explosion hazards arising from the storage, handling and use of hazardous substances, materials and devices, and from conditions hazardous to life or property in the occupancy of buildings and premises should ensure that certain factual information is included in the adopting legislation at the time adoption is being considered by the appropriate governmental body. The following sample adoption legislation addresses several key elements, including the information required for insertion into the code text.

SAMPLE LEGISLATION FOR ADOPTION OF THE *INTERNATIONAL FIRE CODE* ORDINANCE NO._____

A**[N] [ORDINANCE/STATUTE/REGULATION]** of the **[NAME OF JURISDICTION]** adopting the 2015 edition of the *International Fire Code*, regulating and governing the safeguarding of life and property from fire and explosion hazards arising from the storage, handling and use of hazardous substances, materials and devices, and from conditions hazardous to life or property in the occupancy of buildings and premises in the **[NAME OF JURISDICTION]**; providing for the issuance of permits and collection of fees therefor; repealing **[ORDINANCE/STATUTE/REGULATION]** No. _____ of the **[NAME OF JURISDICTION]** and all other ordinances or parts of laws in conflict therewith.

The **[GOVERNING BODY]** of the **[NAME OF JURISDICTION]** does ordain as follows:

Section 1. That a certain document, three (3) copies of which are on file in the office of the **[TITLE OF JURISDICTION'S KEEPER OF RECORDS]** of **[NAME OF JURISDICTION]**, being marked and designated as the *International Fire Code*, 2015 edition, including Appendix Chapters **[FILL IN THE APPENDIX CHAPTERS BEING ADOPTED]** (see *International Fire Code* Section 101.2.1, 2015 edition), as published by the International Code Council, be and is hereby adopted as the Fire Code of the **[NAME OF JURISDICTION]**, in the State of **[STATE NAME]** regulating and governing the safeguarding of life and property from fire and explosion hazards arising from the storage, handling and use of hazardous substances, materials and devices, and from conditions hazardous to life or property in the occupancy of buildings and premises as herein provided; providing for the issuance of permits and collection of fees therefor; and each and all of the regulations, provisions, penalties, conditions and terms of said Fire Code on file in the office of the **[NAME OF JURISDICTION]** are hereby referred to, adopted, and made a part hereof, as if fully set out in this legislation, with the additions, insertions, deletions and changes, if any, prescribed in Section 2 of this ordinance.

Section 2. That the following sections are hereby revised:

Section 101.1. Insert: **[NAME OF JURISDICTION]**

Section 109.4. Insert: **[OFFENSE, DOLLAR AMOUNT, NUMBER OF DAYS]**

Section 111.4. Insert: **[DOLLAR AMOUNT IN TWO LOCATIONS]**

Section 3. That the geographic limits referred to in certain sections of the 2015 *International Fire Code* are hereby established as follows:

Section 5704.2.9.6.1 (geographic limits in which the storage of Class I and Class II liquids in above-ground tanks outside of buildings is prohibited): **[JURISDICTION TO SPECIFY]**

Section 5706.2.4.4 (geographic limits in which the storage of Class I and Class II liquids in above-ground tanks is prohibited): **[JURISDICTION TO SPECIFY]**

Section 5806.2 (geographic limits in which the storage of flammable cryogenic fluids in stationary containers is prohibited): **[JURISDICTION TO SPECIFY]**

Section 6104.2 (geographic limits in which the storage of liquefied petroleum gas is restricted for the protection of heavily populated or congested areas): **[JURISDICTION TO SPECIFY]**

Section 4. That **[ORDINANCE/STATUTE/REGULATION]** No. _____ of **[NAME OF JURISDICTION]** entitled **[FILL IN HERE THE COMPLETE TITLE OF THE LEGISLATION OR LAWS IN EFFECT AT THE PRESENT TIME SO THAT THEY WILL BE REPEALED BY SPECIFIC REFERENCE]** and all other ordinances or parts of laws in conflict herewith are hereby repealed.

Section 5. That if any section, subsection, sentence, clause or phrase of this legislation is, for any reason, held to be unconstitutional, such decision shall not affect the validity of the remaining portions of this ordinance. The **[GOVERNING BODY]** hereby declares that it would have passed this law, and each section, subsection, clause or phrase thereof, irrespective of the fact that any one or more sections, subsections, sentences, clauses and phrases be declared unconstitutional.

INTERNATIONAL CODE COUNCIL®
Copyright © 2015 ICC. ALL RIGHTS RESERVED. Accessed by David Dammon on Jun 21, 2017 12:30:52 PM pursuant to License Agreement with ICC. No further reproduction or distribution authorized. ANY UNAUTHORIZED REPRODUCTION OR DISTRIBUTION IS A VIOLATION OF THE FEDERAL COPYRIGHT ACT AND THE LICENSE AGREEMENT, AND SUBJECT TO CIVIL AND CRIMINAL PENALTIES THEREUNDER.

Section 6. That nothing in this legislation or in the Fire Code hereby adopted shall be construed to affect any suit or proceeding impending in any court, or any rights acquired, or liability incurred, or any cause or causes of action acquired or existing, under any act or ordinance hereby repealed as cited in Section 4 of this law; nor shall any just or legal right or remedy of any character be lost, impaired or affected by this legislation.

Section 7. That the **[JURISDICTION'S KEEPER OF RECORDS]** is hereby ordered and directed to cause this legislation to be published. (An additional provision may be required to direct the number of times the legislation is to be published and to specify that it is to be in a newspaper in general circulation. Posting may also be required.)

Section 8. That this law and the rules, regulations, provisions, requirements, orders and matters established and adopted hereby shall take effect and be in full force and effect **[TIME PERIOD]** from and after the date of its final passage and adoption.

INTERNATIONAL CODE COUNCIL®

Copyright © 2015 ICC. ALL RIGHTS RESERVED. Accessed by David Dammon on Jun 21, 2017 12:30:52 PM pursuant to License Agreement with ICC. No further reproduction or distribution authorized. ANY UNAUTHORIZED REPRODUCTION OR DISTRIBUTION IS A VIOLATION OF THE FEDERAL COPYRIGHT ACT AND THE LICENSE AGREEMENT, AND SUBJECT TO CIVIL AND CRIMINAL PENALTIES THEREUNDER.

TABLE OF CONTENTS

Part I—Administrative. 1-1

CHAPTER 1 SCOPE AND ADMINISTRATION . . . . . 1-1 – 1-38

PART 1—GENERAL PROVISIONS. 1-7

PART 2—ADMINISTRATIVE PROVISIONS. 1-11

CHAPTER 2 DEFINITIONS. . . . . 2-1 – 2-126

Part II—General Safety Provisions 3-1

CHAPTER 3 GENERAL REQUIREMENTS . . . . . 3-1 – 3-30

CHAPTER 4 EMERGENCY PLANNING AND PREPAREDNESS . . . . . 4-1 – 4-26

Part III—Building and Equipment Design Features. 5-1

CHAPTER 5 FIRE SERVICE FEATURES. . . . . 5-1 – 5-22

CHAPTER 6 BUILDING SERVICES AND SYSTEMS. . . . . 6-1 – 6-42

CHAPTER 7 FIRE AND SMOKE PROTECTION FEATURES . . . . . 7-1 – 7-6

CHAPTER 8 INTERIOR FINISH, DECORATIVE MATERIALS AND FURNISHINGS . . . . . 8-1 – 8-32

CHAPTER 9 FIRE PROTECTION SYSTEMS . . . . . 9-1 – 9-154

CHAPTER 10 MEANS OF EGRESS . . . . . 10-1 – 10-216

CHAPTER 11 CONSTRUCTION REQUIREMENTS FOR EXISTING BUILDINGS . . . . . 11-1 – 11-34

CHAPTERS 12 – 19 RESERVED

INDEX . . . . . INDEX-1 – INDEX-32

INTERNATIONAL CODE COUNCIL®

Copyright © 2015 ICC. ALL RIGHTS RESERVED. Accessed by David Dammon on Jun 21, 2017 12:30:52 PM pursuant to License Agreement with ICC. No further reproduction or distribution authorized. ANY UNAUTHORIZED REPRODUCTION OR DISTRIBUTION IS A VIOLATION OF THE FEDERAL COPYRIGHT ACT AND THE LICENSE AGREEMENT, AND SUBJECT TO CIVIL AND CRIMINAL PENALTIES THEREUNDER.

INTERNATIONAL CODE COUNCIL®
Copyright © 2015 ICC. ALL RIGHTS RESERVED. Accessed by David Dammon on Jun 21, 2017 12:30:52 PM pursuant to License Agreement with ICC. No further reproduction or distribution authorized. ANY UNAUTHORIZED REPRODUCTION OR DISTRIBUTION IS A VIOLATION OF THE FEDERAL COPYRIGHT ACT AND THE LICENSE AGREEMENT, AND SUBJECT TO CIVIL AND CRIMINAL PENALTIES THEREUNDER.

Part I—Administrative

Chapter 1: Scope and Administration

General Comments

This chapter addresses the administration and enforcement of the code. The objectives and mandate for enforcement are beyond the scope of this chapter. Before adopting the code, a state or local government must establish an agency with staff trained to administer and enforce the code. The administrative relationships, designation of the enforcement authority (fire code official), funding, training and certification of inspectors and scope of the enforcement program are determined by the adopting body.

Management personnel generally perform functions, such as planning, organizing, directing, controlling, analyzing and budgeting. Though the code administrator's duties may include all of these functions, this chapter takes a much narrower view of the code administrative function, dealing mainly with technical and legal areas. Fire prevention code administration must be considered in the context of a complex environment containing political, social, economic, technical and legal dimensions. Enforcement, too, is a broad, all-inclusive term that includes a range of activities aimed at identifying and eliminating hazards; in this case, hazards causing or contributing to a fire or impairing life safety.

Four functions are commonly associated with enforcement: inspecting, detecting, notifying and reporting [see Commentary Figure 1(1)]. This chapter describes the technical and legal requirements associated with administering a code enforcement program to achieve these functions. The examination of these concepts specifically provides a better understanding of the fire code official's authority, duties and liabilities.

Two main duties of the fire code official are administration and enforcement. In administration, the following concepts are most important:

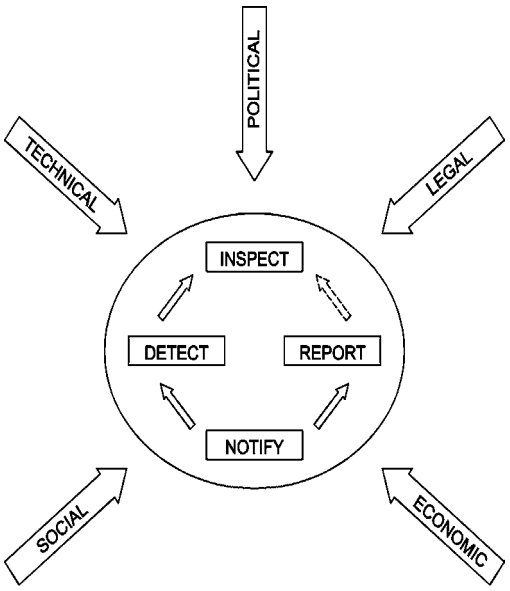

Figure 1(1)
CODE ENFORCEMENT ENVIRONMENT

Code Administrative Environment

Many administrative or management functions are not addressed in the code. Before the provisions of this document can be of any use, many basic questions must be answered. Jurisdictions adopting a code enforcement program are using discretionary powers to fulfill a community need. The need in the community must be clearly identified, the program mission clearly established and the most appropriate delivery system selected. To address the technical and legal demands of the code administrative environment, the code assumes that jurisdictions adopting the document are interested in protecting the health, safety and welfare of its citizens from the effects of fires and explosions. Additionally, the code assumes that these jurisdictions are authorized to use the police power of the state to receive these benefits. Finally, the code assigns principal responsibility for enforcing this document to the department or agency (fire department or fire prevention bureau) most frequently available to perform this mission.

The particular objectives and social or political mandate of a code enforcement program are not considered in the context of this document. These items, however, are often cited as the most frustrating problems faced by code administrators. Code enforcers often complain of being overwhelmed by demands for leniency or special consideration based on the economic, social or political effects of their decisions.

As stated, this chapter establishes ground rules for enforcing the code; however, these ground rules are only the technical and legal requirements binding both fire code officials and the general public. For guidance on the political, social and economic considerations associated with code enforcement activities, adopting

INTERNATIONAL CODE COUNCIL®
Copyright © 2015 ICC. ALL RIGHTS RESERVED. Accessed by David Dammon on Jun 21, 2017 12:30:52 PM pursuant to License Agreement with ICC. No further reproduction or distribution authorized. ANY UNAUTHORIZED REPRODUCTION OR DISTRIBUTION IS A VIOLATION OF THE FEDERAL COPYRIGHT ACT AND THE LICENSE AGREEMENT, AND SUBJECT TO CIVIL AND CRIMINAL PENALTIES THEREUNDER.

authorities must turn elsewhere; however, none of this is intended to imply that these considerations are absent from the code process. To the contrary, by establishing these requirements as "minimums," the ICC voting membership (see ICC Board of Directors Policy CP-28) has, through a democratic process of public hearings and debate, attempted to weigh these considerations carefully when deliberating, modifying and adopting the provisions appearing in this document. In the end, each jurisdiction must give careful consideration to how these requirements should be adopted; who should be responsible for enforcing them; how enforcement personnel should be trained; how the operation will be financed; and when and how to modify or change operations, if necessary. These considerations deserve careful, thorough public attention before a decision is made to adopt and enforce the code.

Scope and Applicability of the Code

The code applies to new and existing structures and premises as prescribed in Sections 102.1 and 102.2, in matters related to occupancy and maintenance for the protection of lives and property from fire. Conditions related to fire spread, occupant hazard protection and maintenance are regulated as follows:

Retroactivity: Because the code applies to both new and existing structures and premises as prescribed in Sections 102.1 and 102.2, the existing building provisions may be considered retroactive. Existing structures and premises built in compliance with the codes and standards in effect at the time of their original construction or alteration are not in all cases exempt from code compliance.

Other codes and standards: The code relies heavily on other codes and standards to specify a means of complying with its provisions, including, among others, the *International Building Code*® (IBC®), the *International Mechanical Code*® (IMC®), the *International Fuel Gas Code*® (IFGC®) and the standards referenced in the text. Additionally, other federal, state and local codes and ordinances may establish certain requirements related to fire protection and life safety. Code requirements are intended to complement other regulations. When conflicts arise between code provisions and the referenced standards, the code provisions apply. Where a standard provides additional technical detail or guidance beyond that provided in the related code text, the fire code official must use judgment when applying these provisions to prevent conflicts with the code provisions. If a conflict arises, it is the fire code official's duty to determine which provisions secure the code's intent. When a conflict between codes or other legal action causes a portion of this document to be "struck down," such action is not intended to invalidate the remaining code provisions. The severability of code provisions, however, does not imply that these same provisions should be considered or applied outside of their context as a part of the code.

Fire Code Official's Judgment

The code relies heavily not only on other codes and standards but also on the judgment and experience of the fire code official.

Approval: The code details occupancy and maintenance requirements; however, it relies heavily on performance criteria, as opposed to detailed specifications, to accomplish this task. The fire code official, therefore, must exercise judgment when approving or permitting operations, processes and procedures required by the code. Proof of compliance may include certification or labeling by independent testing laboratories; however, regardless of the conclusions of these external agencies and authorities, the fire code official remains the sole judge of what fulfills the intent of the code. This becomes particularly important when the fire code official is asked to evaluate equivalent methods and materials. Having piles of data may seem helpful, but the data may prove to be meaningless when it is considered in the context of the code's intent. Data in support of alternative methods and materials must demonstrate not only compliance with the code's intent but also relevance to the issues at hand. Evidence, such as a label or an independent laboratory test report, may sometimes be used inappropriately to support an application for recognition of equivalency. The fire code official must evaluate all submitted evidence to make sure it applies to its intended use, as well as to the code's intent. In an increasingly technical and litigious society, learning how to make such judgments may be the biggest challenge facing fire code officials. Relying on strict interpretations of intent or the "letter" of the code may be the conservative way, but conservative approaches may simply increase the social and political pressures confronting fire code officials. Decision-making aids employing contemporary computer technology permit a designer to propose more innovative and creative responses to complex problems. Fire code officials must begin to recognize, use and interpret these tools and data to maintain effective protection.These models permit designers to quickly and easily evaluate the relationships and performance of a variety of complex variables.

Another model that does not rely on a computer is NFPA 550 [see Commentary Figure 1(2)]. This model requires little training to use or understand and is an all-inclusive representation of the variables contributing to fire safety. The model may, therefore, serve as a useful tool for qualitatively evaluating the contribution of various approaches to an overall fire safety system. Once equivalent alternative methods have been identified using the Fire Safety Concepts Tree (see "General Comments" in Chapter 3), quantitative (cost/benefit) analyses may be applied.

INTERNATIONAL CODE COUNCIL®
Copyright © 2015 ICC. ALL RIGHTS RESERVED. Accessed by David Dammon on Jun 21, 2017 12:30:52 PM pursuant to License Agreement with ICC. No further reproduction or distribution authorized. ANY UNAUTHORIZED REPRODUCTION OR DISTRIBUTION IS A VIOLATION OF THE FEDERAL COPYRIGHT ACT AND THE LICENSE AGREEMENT, AND SUBJECT TO CIVIL AND CRIMINAL PENALTIES THEREUNDER.

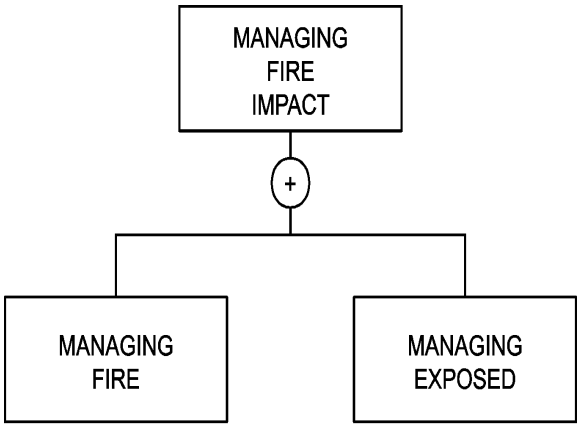

Figure 1(2)
SYSTEMS APPROACHES TO CODE COMPLIANCE

Fire Code Officials and Liability

Like all professionals, fire code officials are subject to legal action. The two most common legal actions that may be pursued against fire code officials are breach of contract lawsuits and tort claims. Tort claims, by far, are the most common lawsuits. These lawsuits allege that some damage, injury or harm (a tort) resulted from the actions of the fire code official. A successful tort claim must prove that the plaintiff was injured or harmed; that the fire code official had a legal duty or obligation to perform with respect to the plaintiff and that the cause of the plaintiff's injury was the fire code official's actions or inactions while performing these duties.

The Law of Torts includes the following:

The tort: Damages arising from the acts of fire code officials fall into two broad categories: property and personal [see Commentary Figure 1(3)]. Property torts involve the control, use, operation or ownership of personal and real property by private individuals. Personal torts involve physical, verbal or written assaults on the character, person, psyche or privacy of individuals. Such assaults or invasions may involve actual contact or threat of harm. For example, fire code officials' acts of commission may restrain business or trade activity, while acts of omission may fail to recognize that hazards need to be corrected, thus resulting in life or property losses.

Property	Personal
Trespass	Assault and Battery
Conversion	False Arrest or Imprisonment
Nuisance	Defamation, Slander and Libel

Source: Rosenbauer, D.L., *Introduction to Fire Protection Law*.

Figure 1(3)
TYPES OF TORTS

Two actions dominate lawsuits filed against enforcement authorities: Most lawsuits either allege improper acts by the fire code official (acts of commission) or failure to fulfill specified or implied legal obligations (acts of omission). In the former, plaintiffs usually seek temporary or permanent relief from a fire code official's decision. In these actions, plaintiffs usually allege improper interpretation or application of the code or its intent. Other lawsuits usually allege failure to exercise a reasonable standard of care in the performance of duties of the fire code official. In either type of lawsuit, and often in the case of omissions, plaintiffs seek compensatory and even punitive damages. Infringements on constitutional protections may be, though occurring infrequently, the basis for lawsuits against fire code officials. Common constitutional issues raised in lawsuits against fire code officials include violations of the Fourth Amendment's protection against unreasonable searches and seizures, the Sixth Amendment's due process protections and the Fourteenth Amendment's equal protection provisions. First Amendment rights guaranteed under freedom of association protections may be raised in cases involving public assembly occupancies, especially churches.

Condition of negligence: To prevail in a tort claim action, a plaintiff must demonstrate negligence on the part of the defendant. Negligence may be simple—a failure to exercise reasonable or adequate care when performing assigned duties (commonly known as misfeasance)—or it may be gross—represented by wanton, willful, reckless or malicious disregard for public safety. Criminal activities, including dereliction (nonfeasance) or the failure to perform required assigned duties, may be cause for claims of gross negligence. Likewise, malfeasance, the willful or malicious violation of a legal duty, may constitute grossly negligent behavior. The following three elements must be proven to sustain a claim of negligence: the defendant had a duty to act, the defendant failed to exercise the required standard of care in the performance of that duty and, as a result of that failure, damage was in incurred or harm was suffered by the plaintiff.

Duty to act: The code establishes few duties of the fire code official; instead, it places greatest emphasis on the responsibility of structure or premises owners and operators to perform their duties with adequate regard for public health, safety and welfare. The duties owed to the the public by the fire code official fall under the following categories: approvals, enforcement, personnel, inspections, investigations, reports and record keeping. Other duties may be assumed by fire code officials through the performance of their official duties. Recently, some courts have ruled that failure to perform timely reinspections or exhaust legal remedies against violators in fire code cases creates a special relationship between the fire code official and the occupants of properties in violation of the code, especially when the

INTERNATIONAL CODE COUNCIL®
Copyright © 2015 ICC. ALL RIGHTS RESERVED. Accessed by David Dammon on Jun 21, 2017 12:30:52 PM pursuant to License Agreement with ICC. No further reproduction or distribution authorized. ANY UNAUTHORIZED REPRODUCTION OR DISTRIBUTION IS A VIOLATION OF THE FEDERAL COPYRIGHT ACT AND THE LICENSE AGREEMENT, AND SUBJECT TO CIVIL AND CRIMINAL PENALTIES THEREUNDER.

occupants do not own the property and are not responsible for code compliance. Some court rulings have even implied that conducting inspections not otherwise required by the code constitutes an *ultra vires* (beyond the authority of) liability. Fire code officials should consult their jurisdiction's legal counsel to determine how these decisions, the jurisdiction's enforcement policies and the code provisions combined affect their enforcement program and jurisdictional and personal liabilities.

Standard of care: Taken together, the fire code official's duties are the basis for determining his or her standard of care. When assessing whether fire code officials have met this standard, judges and juries must determine whether they performed the required duties as reasonable, comparably trained and experienced fire code officials. Failure to meet the appropriate standard of care may be classified in three ways: nonfeasance, misfeasance or malfeasance. Nonfeasance is the failure to perform a required duty. Improper performance of a required duty constitutes misfeasance, and malicious or willful violation of a required duty is malfeasance. Of the three, misfeasance or simple negligence is the most common cause of action. The code and most tort claims either hold the government immune from specific claims of misfeasance or severely limit damage awards in such cases. For all purposes, sovereign immunity—the doctrine inherited from British common law mandating that "the King can do no wrong"—is obsolete. Similarly, courts in many states have abandoned the public duty doctrine, which states that a duty to all is a duty to no one. Holding that most code provisions and governmental regulations secure benefits for select groups, some state courts recognize that specific enforcement activities secure greater benefits for some members of the public than others. Such judicial reasoning holds that the inspector's duty applies to the individual who may be injured as a result of failure to detect a hazard or diligently pursue compliance. Moreover, this duty may include acts of omission, such as failure to perform required inspections. With courts today recognizing only limited immunity for government officials, fire code officials must become more aware of their duties and liabilities. Although tort claim acts limit damage awards, they still permit lawsuits to proceed against governmental officials and agencies to determine their responsibility for negligent acts. Claims of gross negligence arising from nonfeasance or malfeasance are less common than misfeasance actions but are predictably harder to defend. The code provides no relief from liability where the fire code official either fails to perform a required duty or acts *ultra vires*; that is, beyond his or her authority. The jurisdiction is generally immune from claims when its agents perform acts beyond the scope of their authority, unless such acts were implicitly endorsed by the government (explicit endorsement may constitute a discretionary governmental act and, similarly, immunize the government). Nonfeasance is considered a criminal offense in many jurisdictions. An employee's dereliction of duty exempts the jurisdiction from immunity under most circumstances, unless the employee's failure to perform was the direct result of explicit instructions from governmental superiors; however, the employee may be held criminally liable.

In addition to the Law of Torts, the following have an impact on fire code officials and liability:

Awards: Lawsuits may seek declarative judgments (injunctive relief or monetary awards) in favor of the plaintiff. Monetary awards fall into four categories: nominal, special, compensatory and punitive. The first purpose of monetary awards should be to the claimant or plaintiff for real losses. This is the purpose of compensatory and special damages. Compensatory awards reimburse the claimant or plaintiff for the direct costs resulting from the defendant's negligence or carelessness. Many times, a plaintiff will also seek additional compensation for the indirect results of the defendant's acts. Such special damage claims may result in additional compensation beyond that provided by compensatory damages. Punitive awards are intended to punish the defendant for the misdeed and discourage him or her from future unlawful activity. These awards are often held up as examples to the community as a whole and are a way to discourage unlawful activities by others. Nominal damage awards serve to assign blame in intentional tort cases when the facts of the case do not merit a substantial settlement.

Protection: The best protection against a lawsuit is professional conduct and preparation; that is, training, education and research. Lawsuits filed against public officials have become commonplace and are probably inevitable. In 1983, H. M. Markman suggested six rules to manage legal liability [see Commentary Figure 1(4)].

- **You cannot prevent someone from filing a lawsuit against you.**
- **Do not take the lawsuit personally.**
- **Understand your risk exposure or exposures.**
- **Be professional.**
- **You are not an insurer.**
- **Do not make stupid mistakes.**

Figure 1(4)
MARKMAN'S SIX RULES

Although no single rule should be considered more important than another, the last one is perhaps the best to remember. Everyone makes mistakes, so strive to learn from the mistakes rather than repeat them. Nonetheless, every mistake may be potential exposure. Acting professionally helps minimize exposure to error, especially when training, and common sense is encouraged. Using common sense, exercising reasonable care and acting professionally are no insurance against a lawsuit, but they all may provide considerable protection in the event a lawsuit is filed. No matter how hard

INTERNATIONAL CODE COUNCIL®
Copyright © 2015 ICC. ALL RIGHTS RESERVED. Accessed by David Dammon on Jun 21, 2017 12:30:52 PM pursuant to License Agreement with ICC. No further reproduction or distribution authorized. ANY UNAUTHORIZED REPRODUCTION OR DISTRIBUTION IS A VIOLATION OF THE FEDERAL COPYRIGHT ACT AND THE LICENSE AGREEMENT, AND SUBJECT TO CIVIL AND CRIMINAL PENALTIES THEREUNDER.

someone may try to avoid a lawsuit, someone may sue. When a lawsuit is filed, the most important things to remember are not to take it personally and not to forget the other five rules.

Enforcement

The enforcement duty of the fire code official's position is composed of four distinct functions: inspection, detection, notification and reporting. All four functions define phases in the enforcement process duties of fire code officials.

During the code enforcement process, structures or premises requiring inspections are identified. Inspectors are assigned and inspections are performed. During these inspections, any code violations found are usually noted. Then, the owner or occupant is verbally advised or notified that the deficiencies noted are code violations. To promote code compliance, the inspector may suggest remedial actions that may be taken to establish compliance. Finally, a written violation notice serving as further notice to the owner or occupant is issued. The written notice also serves as a permanent record or report of the inspection.

Inspection

Inspections are careful examinations of plans or premises for the presence of fire and life safety hazards. Upon observing a hazardous condition, the fire code official begins a process directed at correcting the situation. This may be accomplished by removing or eliminating the hazardous condition or providing some countermeasure designed to lessen its effects on the property, occupants or neighbors. Inspections should demonstrate a systematic method that keeps the inspection process in a proper perspective and recognizes that code enforcement is limited to legal and technical means of pursuing fire safety. Achieving fire safety objectives means using a balanced approach composed of some elements seeking to prevent ignitions and others attempting to control fire effects. Fire safety objectives are not defined by the code but rather by the users. Each jurisdiction must establish what risks and costs are reasonable while pursuing fire safety.

There may be as many different methods of conducting inspections as there are inspectors. No single method is necessarily the correct one; however, each method probably has some strong and weak points. The following three approaches can form the basis for any number of different inspection techniques.

Outside to inside: Beginning outside is not only logical but necessary. Inspectors too often neglect hazards and clues outside the building that suggest significant danger to the occupants. An inspector must ask the following question: "Do the things I see outside match those I see inside?" For example:

- Do doors identified as exits inside actually discharge outside to acceptable refuge areas or the public way?
- Are trash receptacles or other obstructions outside located so the effectiveness of exits is not reduced, or do receptacles alone pose a fire hazard?
- Does the site permit sufficient access for firefighter rescue operations and fire suppression?

Top to bottom: Once inside a structure, deciding where to start is more than a matter of preference. One question inspectors may ask is: "If completeness is the principal criterion, why not start at the bottom and work up?" The answer to this question is that walking down stairs is easier than walking up stairs. This easier path of travel allows the inspector to concentrate more completely on the inspection itself. After performing many inspections, there will not be a need for additional exercise obtained from beginning at the bottom.

General to specific: Without constructing a detailed inspection framework, many fire code officials find it helpful to move from the general to the specific when evaluating occupancies and hazards. This helps keep the whole problem in focus while preserving attention to detail. The inspector can focus on a specific problem without losing sight of the "big picture."

Detection

Systematic inspection procedures, like those described, should aid in the detection of code violations. By keeping the premises, processes or objectives in clear focus, the inspector keeps the task in context. A systematic inspection process implies not only organization but an understanding of the entire process. Achieving fire safety objectives means understanding how structures, premises, occupants and fire interact [see Commentary Figure 1(5)]. To keep the system in balance and prevent uncontrolled fires means understanding how people use structures and premises.

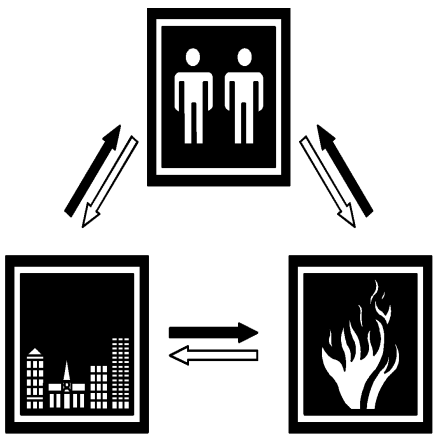

Figure 1(5)
HOW BUILDINGS, PEOPLE AND FIRE INTERACT

In such a context, a fire hazard is anything that either fails to prevent an uncontrolled fire or permits a fire to spread unchecked. Similarly, hazardous conditions are

INTERNATIONAL CODE COUNCIL®
Copyright © 2015 ICC. ALL RIGHTS RESERVED. Accessed by David Dammon on Jun 21, 2017 12:30:52 PM pursuant to License Agreement with ICC. No further reproduction or distribution authorized. ANY UNAUTHORIZED REPRODUCTION OR DISTRIBUTION IS A VIOLATION OF THE FEDERAL COPYRIGHT ACT AND THE LICENSE AGREEMENT, AND SUBJECT TO CIVIL AND CRIMINAL PENALTIES THEREUNDER.

those preventing occupants from escaping or fire fighters from entering a structure and premises to control a fire.

Notification

Inspection programs cannot identify and abate all hazards. Code enforcement alone cannot secure absolute protection for people and property. Further, many code requirements maintain or reinforce features not intended to prevent a fire but rather to minimize a fire's effects should one occur. Every inspection program, therefore, should consider the benefits of educating building owners and occupants about the hazards endangering their lives and property. Not only do such efforts help secure compliance with code requirements, but they are likely to secure long-term commitments to fire safety as well. Another equally apt metaphor describes the fire prevention process as the "Three E's": engineering, education and enforcement. A balanced approach composed of these three elements can be an especially effective way of achieving desired fire safety objectives.

Reporting

The first three elements of the code enforcement process are directed at identifying and eliminating hazards at their source. Reporting is intended to help document and reinforce the lessons learned from the previous three phases. The words, "If it's not written down, it didn't happen!" reinforce the message that reporting is just as important as any of the other three elements of the code enforcement system. Few people enjoy paperwork. Without documentation, however, prosecuting an effective code enforcement program becomes nearly impossible. Accurate, concise and timely records are essential for both legal and historical reasons. Documenting the inspection and violation history of a particular premises or owner is essential when prosecuting criminal actions under the code provisions.

Commentary Figure 1(6) illustrates a systems approach using data generated by fire incidents and inspections to direct code enforcement, public education activities or code development. This approach is equivalent to the one typically used to make ordinary decisions about problems with many competing solutions, to plan for the future and to consider the cost and benefits of these decisions.

Understanding the code administration process and the environment influencing it allows the fire code official to be more effective. Adhering to the provisions of Chapter 1 not only minimizes the fire code official's liability, but also provides an effective code enforcement program. Just as owners and occupants have obligations under the code, so does the fire code official. Following these procedures enables him or her to identify and respond to the community's needs, thus reducing the community's fire risk.

Purpose

Chapter 1 establishes provisions to ensure that code administration and enforcement is reasonable, appropriate and fair. This chapter outlines the duties and powers of the fire code official; the scope of the fire code official's authority to enforce the code; the applicability of the document and proofs of compliance; the means of securing compliance with its provisions and procedures for protecting due process rights of applicants, owners, occupants and others affected by the code provisions and the enforcement activities of the fire code official.

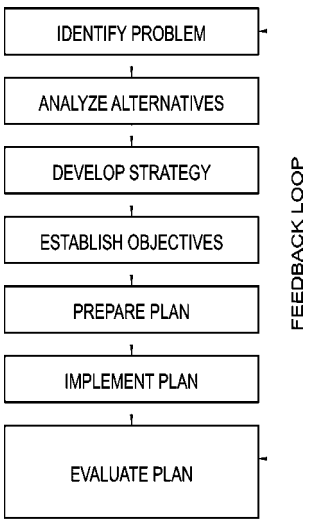

❖ This system is used mostly to solve everyday problems, weigh costs and benefits of alternatives, and plan responses to problems. It is also a helpful tool for responding to fire protection problems. As an example, fire data suggest the emergence of a trend toward more fires caused by misuse of auxiliary heating appliances. Alternative solutions include:

- A public education campaign on safe use of heaters.
- A targeted inspection program to identify and correct improper heating practices in homes and businesses.
- Doing nothing but hoping for warm weather.

The evaluation must consider a variety of complex factors and methods of measuring the success of each approach. Once an approach is selected and implemented, it must be evaluated to examine whether the desired reduction in fires occurs. If not, perhaps one of the other alternatives should be reexamined, or the problem should be redefined.

Figure 1(6)
NORMAL PLANNING APPROACH

INTERNATIONAL CODE COUNCIL®
Copyright © 2015 ICC. ALL RIGHTS RESERVED. Accessed by David Dammon on Jun 21, 2017 12:30:52 PM pursuant to License Agreement with ICC. No further reproduction or distribution authorized. ANY UNAUTHORIZED REPRODUCTION OR DISTRIBUTION IS A VIOLATION OF THE FEDERAL COPYRIGHT ACT AND THE LICENSE AGREEMENT, AND SUBJECT TO CIVIL AND CRIMINAL PENALTIES THEREUNDER.

PART 1—GENERAL PROVISIONS

SECTION 101
SCOPE AND GENERAL REQUIREMENTS

[A] 101.1 Title. These regulations shall be known as the *Fire Code* of **[NAME OF JURISDICTION]**, hereinafter referred to as "this code."

❖ This section identifies jurisdictional applicability in legal terms. The local jurisdiction is to insert its name into this section by including a modification to the code in the adopting ordinance. This will make the code applicable to the local jurisdiction. See page xxi of the code for a sample ordinance for adoption.

[A] 101.2 Scope. This code establishes regulations affecting or relating to structures, processes, premises and safeguards regarding all of the following:

1. The hazard of fire and explosion arising from the storage, handling or use of structures, materials or devices.
2. Conditions hazardous to life, property or public welfare in the occupancy of structures or premises.
3. Fire hazards in the structure or on the premises from occupancy or operation.
4. Matters related to the construction, extension, repair, alteration or removal of fire suppression or alarm systems.
5. Conditions affecting the safety of fire fighters and emergency responders during emergency operations.

❖ The code does not attempt to achieve perfection by requiring every conceivable or available safeguard for every structure, premises or operation within the scope of the code; rather, the code seeks to establish a minimum acceptable safety level to balance the many factors that must be considered, including loss statistics, relative hazard and the economic and social impact. The code is maintained through the use of a democratic code development process so that everyone affected by these minimum requirements has an equal opportunity to present his or her concern, both for and against any of the requirements.

The question is often asked, "Does the code apply only to buildings and facilities, or does it cover vehicles as well?" Though the scope text does not specifically mention vehicles, vehicles are intended to be covered by the terms of "... use of ... devices ..." and "... occupancy of ... structures or premises ..." in Items 1 and 2 of the section. It is clear that the code specifically intends to regulate vehicles because, in some cases, there are regulations in the code that are specific to vehicles, such as those in Sections 309 and 5706. However, in most cases, unless vehicles are specifically mentioned, provisions in the code would not apply to them (see also Section 904.12).

[A] 101.2.1 Appendices. Provisions in the appendices shall not apply unless specifically adopted.

❖ The code has several appendices, which provide additional information regarding the provisions in the code and additional regulations that are available for adoption if desired by the adopting jurisdiction. If the jurisdiction decides to include any of the appendices as part of the code, each of the appendices to be adopted must be specifically listed in the adoption ordinance for the code. A sample adoption ordinance is on page xxi of the code.

[A] 101.3 Intent. The purpose of this code is to establish the minimum requirements consistent with nationally recognized good practice for providing a reasonable level of life safety and property protection from the hazards of fire, explosion or dangerous conditions in new and existing buildings, structures and premises, and to provide a reasonable level of safety to fire fighters and emergency responders during emergency operations.

❖ Code requirements regulate conditions that are likely to cause or contribute to fires or explosions, endanger life or property if a fire occurs or contribute to the spread of a fire. The intent of the code is to regulate conditions related to the health, safety and welfare of the public, the fire fighters and other emergency responders called upon to conduct emergency operations in or on any building, structure or premises. Note that the code requirements are minimum (see commentary, Section 101.2 for a discussion on minimum requirements).

While the code does serve as a maintenance code for buildings constructed in accordance with the IBC, it has provisions that go far beyond maintenance of construction regulations for buildings. Much of the code prescribes construction regulations of several sorts, which can be seen throughout the code in the general provisions for safety and in special occupancies, processes and equipment. These regulations supplement the construction regulations in the IBC for cases where special hazards exist.

A common question that arises is, "Is it the intent of the code to apply to noncommercial structures?" Yes. The code applies to all structures within a jurisdiction, including residential occupancies, unless such occupancies are specifically excluded within the text of a particular code section. For example, Sections 503.1.1 and 507.1 require that all occupancies, including residential occupancies, be provided with fire apparatus access and a water supply for fire fighting. Though it is true that there are many provisions in the code that would not normally be applicable to a residential occupancy based on the scope of the particular provision, the overall application of the code is not limited to commercial structures (see the commentary to Section 503.1.1 and Appendix D107.1 for further discussion of this topic).

INTERNATIONAL CODE COUNCIL®
Copyright © 2015 ICC. ALL RIGHTS RESERVED. Accessed by David Dammon on Jun 21, 2017 12:30:52 PM pursuant to License Agreement with ICC. No further reproduction or distribution authorized. ANY UNAUTHORIZED REPRODUCTION OR DISTRIBUTION IS A VIOLATION OF THE FEDERAL COPYRIGHT ACT AND THE LICENSE AGREEMENT, AND SUBJECT TO CIVIL AND CRIMINAL PENALTIES THEREUNDER.

[A] 101.4 Severability. If a section, subsection, sentence, clause or phrase of this code is, for any reason, held to be unconstitutional, such decision shall not affect the validity of the remaining portions of this code.

❖ All sections of the code not invalidated by legal action remain in effect. While a dispute over a particular issue (such as hazardous materials quantity limitation) may have caused litigation that resulted in the provision being found unconstitutional, the remainder of the code is still applicable.

[A] 101.5 Validity. In the event any part or provision of this code is held to be illegal or void, this shall not have the effect of making void or illegal any of the other parts or provisions hereof, which are determined to be legal; and it shall be presumed that this code would have been adopted without such illegal or invalid parts or provisions.

❖ The code provisions are intended to be construed as severable. If any part of the code is ruled invalid by a court of competent jurisdiction, the remaining sections of the code are intended to stand as though the invalid section never existed. Fire code officials and adopting bodies should carefully and promptly evaluate the impact of any such ruling on ongoing enforcement activities and the remaining code provisions. Such changes that are necessary to preserve and protect the enforcement authority of the jurisdiction and the public should be instituted through legislative action as soon as practical. Additionally, the International Code Council® (ICC®) should be advised of court actions invalidating any code provisions. For the same reason local officials must evaluate the effects of court decisions, the influence of court decisions on the remainder of the code must be evaluated for national impact.

SECTION 102
APPLICABILITY

[A] 102.1 Construction and design provisions. The construction and design provisions of this code shall apply to:

1. Structures, facilities and conditions arising after the adoption of this code.
2. Existing structures, facilities and conditions not legally in existence at the time of adoption of this code.
3. Existing structures, facilities and conditions where required in Chapter 11.
4. Existing structures, facilities and conditions that, in the opinion of the *fire code official*, constitute a distinct hazard to life or property.

❖ This section establishes the scope of application of the code provisions that regulate construction and design. Construction and design requirements include, but are not limited to, the installation of fire protection systems; drainage and secondary containment facilities for hazardous materials; fire-resistive construction and the activities stated in Section 105.7 for which a construction permit is required.

Item 1 specifies that the construction and design code requirements apply to new construction that occurs following the adoption of the code.

Item 2 means that the construction and design code requirements are to apply to existing structures that did not have a certificate of occupancy at the time the code was adopted. An example would be a building that was built when there was no adopted construction code in the jurisdiction.

Item 3 refers to Chapter 11, "Construction Requirements for Existing Buildings," which was added in the 2009 edition of the code to assemble in a single location all of the construction and design code requirements that specifically target existing structures, facilities and conditions for retroactive application, which had previously been scattered throughout the code.

Item 4 generally requires the fire code official to determine that a "distinct hazard to life or property" exists prior to enforcing a construction and design code provision retroactively. Simply claiming that a violation exists because a building does not comply with the most recent edition of the code does not necessarily establish that a hazard actually exists. The fire code official should be prepared to demonstrate, based on evidence or case histories that would be defensible in a court of law, that a distinct hazard exists. This would be especially true where enforcement would result in substantial expense to the property owner or when a building has remained in compliance with the edition of the code under which it was originally constructed.

Further legal counsel should be consulted prior to the retroactive application of the code in order to establish the defensibility of the fire code official's determination in a court of law. Also, similar occupancies in the jurisdiction should be treated equally using a written policy to avoid the possibility of charges of selective enforcement.

[A] 102.2 Administrative, operational and maintenance provisions. The administrative, operational and maintenance provisions of this code shall apply to:

1. Conditions and operations arising after the adoption of this code.
2. Existing conditions and operations.

❖ This section specifies that the administrative, operational and maintenance requirements of the code apply to conditions and operations that exist when the code is adopted and new conditions and operations that begin after the code is adopted. Although Sections 102.1 and 102.2 are the controlling sections for retroactive application of the code to existing buildings, they do not provide for retroactive code application solely on the basis of a change in ownership or the occupying tenant. If a change in the occupancy group or the character of use occurs, the current edition of the code becomes enforceable. In such cases, Section 102.3 also applies.

INTERNATIONAL CODE COUNCIL®
Copyright © 2015 ICC. ALL RIGHTS RESERVED. Accessed by David Dammon on Jun 21, 2017 12:30:52 PM pursuant to License Agreement with ICC. No further reproduction or distribution authorized. ANY UNAUTHORIZED REPRODUCTION OR DISTRIBUTION IS A VIOLATION OF THE FEDERAL COPYRIGHT ACT AND THE LICENSE AGREEMENT, AND SUBJECT TO CIVIL AND CRIMINAL PENALTIES THEREUNDER.

[A] 102.3 Change of use or occupancy. Changes shall not be made in the use or occupancy of any structure that would place the structure in a different division of the same group or occupancy or in a different group of occupancies, unless such structure is made to comply with the requirements of this code and the *International Building Code*. Subject to the approval of the *fire code official*, the use or occupancy of an existing structure shall be allowed to be changed and the structure is allowed to be occupied for purposes in other groups without conforming to all of the requirements of this code and the *International Building Code* for those groups, provided the new or proposed use is less hazardous, based on life and fire risk, than the existing use.

❖ A change in occupancy in an existing structure may change the level of inherent hazards that the code was initially intended to address.

Regardless of whether the change is to an occupancy considered to be more or less hazardous, this section applies the provisions of the IBC for new construction to the existing structure with the new occupancy to match the specific requirements of the code to the specific hazards of the new occupancy. For example, a change from an existing Group M mercantile occupancy to a Group B business occupancy renders all Group B provisions applicable to all portions of the structure where the occupancy has changed, or that are adversely affected by the change.

[A] 102.4 Application of building code. The design and construction of new structures shall comply with the *International Building Code*, and any *alterations*, additions, changes in use or changes in structures required by this code, which are within the scope of the *International Building Code*, shall be made in accordance therewith.

❖ The code is the companion fire and life safety maintenance code to the IBC. Maintenance of other building features is governed by other *International Codes*® (I-Codes®). When existing buildings change occupancy group or are altered, increased in area or demolished, the IBC provisions must apply. When compliance with the code requires alterations, additions or modifications within the scope of the IBC, the IBC regulations and the building official's authority must prevail. This makes it essential that the code officials responsible for enforcing the building and fire codes establish a sound working relationship. Clear communication is essential to achieve compliance with the respective code officials' orders.

[A] 102.5 Application of residential code. Where structures are designed and constructed in accordance with the *International Residential Code*, the provisions of this code shall apply as follows:

1. Construction and design provisions of this code pertaining to the exterior of the structure shall apply including, but not limited to, premises identification, fire apparatus access and water supplies. Where interior or exterior systems or devices are installed, construction permits required by Section 105.7 of this code shall apply.
2. Administrative, operational and maintenance provisions of this code shall apply.

❖ This section clarifies the extent to which the *International Residential Code*® (IRC®) and the code are interrelated and how the provisions of the code apply to the development of one- and two-family dwelling projects built under the IRC.

The IRC is designed and intended for use as a stand-alone code for the construction of detached one- and two-family dwellings and townhouses not more than three stories in height. As such, the construction of detached one- and two-family dwellings and townhouses is regulated exclusively by the IRC and not subject to the provisions of any other I-Codes other than to the extent specifically referenced. Although the IRC regulates the construction of detached one- and two-family dwellings and townhouse structures, it does not regulate the design and construction of emergency access to and community fire protection for residential developments containing such dwelling structures. Accordingly, where the code is adopted, the design, construction, regulation and maintenance of fire apparatus access roads for servicing such residential developments must comply with the provisions of Section 503 and, if adopted, Appendix D. Also, the design, construction, regulation and maintenance of fire protection water supplies for servicing such residential developments must comply with the provisions of Section 507 and, if adopted, Appendices B and C. These specific requirements of the code are applicable because they include design and construction regulations that provide necessary emergency access and community fire protection for residential developments containing structures that are regulated within the scope of the IRC.

[A] 102.6 Historic buildings. The provisions of this code relating to the construction, *alteration*, repair, enlargement, restoration, relocation or moving of buildings or structures shall not be mandatory for existing buildings or structures identified and classified by the state or local jurisdiction as historic buildings where such buildings or structures do not constitute a distinct hazard to life or property. Fire protection in designated historic buildings shall be provided with an *approved* fire protection plan as required in Section 1103.1.1.

❖ This section provides a blanket exception from code requirements when the building in question has historic value. The most important criterion for application of this section is that the building must be recognized by a qualified party or agency as having historic significance. Usually this is done by a state or local authority after considerable scrutiny of the historical value of the building. Most, if not all, states have such authorities, as do many local jurisdictions. The agencies with such authority can be located at the state or local government level or through the

INTERNATIONAL CODE COUNCIL®
Copyright © 2015 ICC. ALL RIGHTS RESERVED. Accessed by David Dammon on Jun 21, 2017 12:30:52 PM pursuant to License Agreement with ICC. No further reproduction or distribution authorized. ANY UNAUTHORIZED REPRODUCTION OR DISTRIBUTION IS A VIOLATION OF THE FEDERAL COPYRIGHT ACT AND THE LICENSE AGREEMENT, AND SUBJECT TO CIVIL AND CRIMINAL PENALTIES THEREUNDER.

local chapter of the American Institute of Architects (AIA). This section does require an approved fire protection plan. More specifically reference is made to Section 1103.1.1, which provides some minimal requirements. Section 1103.1.1 requires a plan to be developed in accordance with NFPA 914. The reference to NFPA 914 provides specific guidance to code officials, design professionals and building owners as to the provisions that are applicable to fire protection plans for historic buildings in order to provide a reasonable level of building and life safety provisions.

[A] 102.7 Referenced codes and standards. The codes and standards referenced in this code shall be those that are listed in Chapter 80, and such codes and standards shall be considered to be part of the requirements of this code to the prescribed extent of each such reference and as further regulated in Sections 102.7.1 and 102.7.2.

❖ The use of referenced codes and standards to cover certain aspects of various occupancies and operations rather than write parallel or competing requirements into the code is a long-standing and successful code development principle. Often, however, questions and potential conflicts in the use of referenced codes and standards can arise, which can lead to inconsistent enforcement of the code. This section establishes the relationship between the code and the codes or standards that it references. A referenced code or standard or portion thereof is to be considered an enforceable extension of the code as if the specified content of the referenced code or standard were included in the body of the code. The extent to which the provisions of a referenced standard may be enforced is limited to those portions of the standard that are specifically identified in the code section that makes the reference. As an example of such limiting references, in regard to Chapter 57, "Flammable and Combustible Liquids," the question has been posed as to whether the entire referenced standard, NFPA 30, is applicable since it is referenced 30 times in Chapter 57. The answer is no. The applicability of NFPA 30 content would be limited to only the specific content indicated in the code section making the reference, e.g., Section 5703.6.2 limits the applicable NFPA 30 content to only Chapter 27 of that document; Section 5704.2.7 limits the applicable NFPA 30 content to only the tank design, fabrication and construction provisions of Chapters 21 and 22 or 23 of that document, and various other code sections such as 5704.2.7.8 and 5704.2.7.9 limit the reference to specifically enumerated sections of NFPA 30.

[A] 102.7.1 Conflicts. Where conflicts occur between provisions of this code and referenced codes and standards, the provisions of this code shall apply.

❖ Where a code section referencing a standard contains no content limitation, any applicable provisions of the standard may be applied to the extent that they do not conflict with similar provisions in the code or other I-Codes. See the commentary to Section 102.7.2 for further discussion of conflicting provisions.

[A] 102.7.2 Provisions in referenced codes and standards. Where the extent of the reference to a referenced code or standard includes subject matter that is within the scope of this code, the provisions of this code, as applicable, shall take precedence over the provisions in the referenced code or standard.

❖ This new section expands upon the provisions of Section 102.7.1 by making it clear that, even if a referenced standard contains requirements that parallel the code (or the other referenced I-Codes) in the standards own duly referenced section(s), the provisions of the code (or the other referenced I-Codes) will always take precedence. One of the most common examples of such conflicting provisions is that many referenced standards contain building construction requirements that may differ from the requirements of the IBC whose applicability is established in Section 102.4 of the code. In such cases, the IBC would supersede the standard.

[A] 102.8 Subjects not regulated by this code. Where applicable standards or requirements are not set forth in this code, or are contained within other laws, codes, regulations, ordinances or bylaws adopted by the jurisdiction, compliance with applicable standards of the National Fire Protection Association or other nationally recognized fire safety standards, as *approved*, shall be deemed as prima facie evidence of compliance with the intent of this code. Nothing herein shall derogate from the authority of the *fire code official* to determine compliance with codes or standards for those activities or installations within the *fire code official's* jurisdiction or responsibility.

❖ This section provides guidance for situations in which no specific standard is designated in the code or otherwise adopted by the jurisdiction. In this instance, compliance with the requirements of a standard of the NFPA or other nationally recognized standards can be approved by the fire code official.

[A] 102.9 Matters not provided for. Requirements that are essential for the public safety of an existing or proposed activity, building or structure, or for the safety of the occupants thereof, that are not specifically provided for by this code, shall be determined by the *fire code official*.

❖ Evolving technology in our society will sometimes result in a situation or circumstance that the code does not cover. The reasonable application of the code to such hazardous, unforeseen conditions is provided in this section. Clearly, such a section is needed and the fire code official's experience and judgment must be used. The section, however, does not override requirements that may be preferred when the code provides alternative methods. Additionally, the section can be used to implement the general performance-oriented language of the code in specific enforcement situations.

[A] 102.10 Conflicting provisions. Where there is a conflict between a general requirement and a specific requirement,

INTERNATIONAL CODE COUNCIL®
Copyright © 2015 ICC. ALL RIGHTS RESERVED. Accessed by David Dammon on Jun 21, 2017 12:30:52 PM pursuant to License Agreement with ICC. No further reproduction or distribution authorized. ANY UNAUTHORIZED REPRODUCTION OR DISTRIBUTION IS A VIOLATION OF THE FEDERAL COPYRIGHT ACT AND THE LICENSE AGREEMENT, AND SUBJECT TO CIVIL AND CRIMINAL PENALTIES THEREUNDER.

the specific requirement shall be applicable. Where, in a specific case, different sections of this code specify different materials, methods of construction or other requirements, the most restrictive shall govern.

❖ The provisions of this section provide guidance to both fire code officials and other code users on the application of the code when different sections specify different materials, methods of construction or other requirements.

The importance of this section should not be understated. It resolves the question of how to handle conflicts between the general and specific provisions found in the code or those instances where different sections specify different requirements. This section provides a necessary hierarchy for application of code provisions and clarifies code applications that would otherwise leave persistent questions and lead to debate. The code requires that where different sections of the code apply but contain different requirements, the most restrictive provisions shall govern. The code also resolves conflicts between the general requirements of any particular issue with any specific requirements of the same issue by indicating that the specific requirements take precedence over the general requirements.

[A] 102.11 Other laws. The provisions of this code shall not be deemed to nullify any provisions of local, state or federal law.

❖ Compliance with the requirements of the code does not entail authorization, approval or permission to violate the regulations of other local, state or federal laws. Other laws, ordinances and regulations not regulated or enforced by the fire code official could be in existence and enforced by another authority having jurisdiction over those provisions. Although the requirements may have similar provisions to those of the code, the work must be in conformance with the other regulations.

[A] 102.12 Application of references. References to chapter or section numbers, or to provisions not specifically identified by number, shall be construed to refer to such chapter, section or provision of this code.

❖ There are many instances in the code where a reference is merely a chapter number, section number or, in some cases, a provision not specified by number. In all such situations, these references are to the content of the code and not some other code or publication.

PART 2—ADMINISTRATIVE PROVISIONS

SECTION 103
DEPARTMENT OF FIRE PREVENTION

[A] 103.1 General. The department of fire prevention is established within the jurisdiction under the direction of the *fire code official*. The function of the department shall be the implementation, administration and enforcement of the provisions of this code.

❖ The traditional enforcement agency for the code is the fire department or fire prevention bureau of a state, county or municipal government. Such agencies usually perform administrative functions and provide public safety services related to fire protection; however, a variety of less-traditional arrangements have also been used to enforce the code, including private corporations, such as fire districts and fire companies employed by a local government to act as its agent; police and other law enforcement agencies; building, housing or zoning authorities; and community and economic development departments. Regardless of who is designated by the legislative or administrative authority to adopt and enforce the code, this section establishes the legal duty of the fire code official to enforce the code.

[A] 103.2 Appointment. The *fire code official* shall be appointed by the chief appointing authority of the jurisdiction; and the *fire code official* shall not be removed from office except for cause and after full opportunity to be heard on specific and relevant charges by and before the appointing authority.

❖ A fire code official's independence is essential so that public safety decisions are not based on political, economic or social expediency. This is not to say that social, political and economic considerations should not matter when deciding some code questions, but the interests of public health, safety and welfare must not be compromised to achieve such objectives. Protection of officials from removal from office without cause helps ensure that reasonable and competent professionals will be willing to serve.

[A] 103.3 Deputies. In accordance with the prescribed procedures of this jurisdiction and with the concurrence of the appointing authority, the *fire code official* shall have the authority to appoint a deputy *fire code official*, other related technical officers, inspectors and other employees.

❖ Most jurisdictions require more than one official to enforce the code. With the technical and legal demands on code enforcers increasing, additional personnel will certainly be required in this area to serve adequately the public interest. Though the professional qualifications of fire code officials are not detailed in the code, individuals appointed to code enforcement positions should be technically competent, motivated, well-adapted and possess good written and oral communication skills.

Many jurisdictions find it helpful, if not essential, to appoint an individual who is second-in-command and who would assume leadership of the organization in the absence of the chief code enforcement official.

[A] 103.4 Liability. The *fire code official*, member of the board of appeals, officer or employee charged with the enforcement of this code, while acting for the jurisdiction, in good faith and without malice in the discharge of the duties required by this code or other pertinent law or ordinance,

INTERNATIONAL CODE COUNCIL®
Copyright © 2015 ICC. ALL RIGHTS RESERVED. Accessed by David Dammon on Jun 21, 2017 12:30:52 PM pursuant to License Agreement with ICC. No further reproduction or distribution authorized. ANY UNAUTHORIZED REPRODUCTION OR DISTRIBUTION IS A VIOLATION OF THE FEDERAL COPYRIGHT ACT AND THE LICENSE AGREEMENT, AND SUBJECT TO CIVIL AND CRIMINAL PENALTIES THEREUNDER.

shall not thereby be rendered civilly or criminally liable personally, and is hereby relieved from all personal liability for any damage accruing to persons or property as a result of an act or by reason of an act or omission in the discharge of official duties.

❖ The fire code official, other department employees and members of the appeals board are not intended to be held liable, both civilly or criminally, for those actions performed in accordance with the code in a reasonable and lawful manner. However, the responsibility of the fire code official in this regard is subject to local, state and federal laws that may supersede this provision. This section further establishes that fire code officials (or subordinates) must not be liable for costs in any legal action instituted in response to the performance of lawful duties. Section 103.4.1 states that those costs are to be borne by the state, county or municipality, as applicable. The best way to be certain that the fire code official's action is a "lawful duty" is always to cite the applicable code section on which the enforcement action is based.

[A] 103.4.1 Legal defense. Any suit or criminal complaint instituted against any officer or employee because of an act performed by that officer or employee in the lawful discharge of duties and under the provisions of this code shall be defended by the legal representatives of the jurisdiction until the final termination of the proceedings. The *fire code official* or any subordinate shall not be liable for costs in an action, suit or proceeding that is instituted in pursuance of the provisions of this code; and any officer of the department of fire prevention, acting in good faith and without malice, shall be free from liability for acts performed under any of its provisions or by reason of any act or omission in the performance of official duties in connection therewith.

❖ Section 103.4 establishes that fire code officials or subordinates must not be liable for costs in any legal action, whether criminal or civil in nature, in response to the performance of lawful duties. This section states that these costs must be borne by the state or municipality. The best way to be certain that the fire code official's action is a lawful duty is to always cite the applicable code section substantiating the action.

SECTION 104
GENERAL AUTHORITY AND RESPONSIBILITIES

[A] 104.1 General. The *fire code official* is hereby authorized to enforce the provisions of this code and shall have the authority to render interpretations of this code, and to adopt policies, procedures, rules and regulations in order to clarify the application of its provisions. Such interpretations, policies, procedures, rules and regulations shall be in compliance with the intent and purpose of this code and shall not have the effect of waiving requirements specifically provided for in this code.

❖ The duty of the fire code official is to enforce the code. Because the fire code official must also act on all questions related to this responsibility, except as specifically exempted by statutory requirements or elsewhere in the code, the fire code official is the "authority having jurisdiction" for all matters relating to the code and its enforcement.

This section also gives the fire code official interpretation authority. Note, however, that the interpretations are to be consistent with the intent and purpose of the code and are not allowed to set aside any specific requirement in the code.

[A] 104.2 Applications and permits. The *fire code official* is authorized to receive applications, review *construction documents* and issue permits for construction regulated by this code, issue permits for operations regulated by this code, inspect the premises for which such permits have been issued and enforce compliance with the provisions of this code.

❖ The fire code official is obligated to receive, review and act on permit applications required by the code as detailed in Section 105. All permitted premises must be inspected either before or after the permit is issued to determine compliance with the code provisions and terms of the permit.

[A] 104.3 Right of entry. Where it is necessary to make an inspection to enforce the provisions of this code, or where the *fire code official* has reasonable cause to believe that there exists in a building or upon any premises any conditions or violations of this code that make the building or premises unsafe, dangerous or hazardous, the *fire code official* shall have the authority to enter the building or premises at all reasonable times to inspect or to perform the duties imposed upon the *fire code official* by this code. If such building or premises is occupied, the *fire code official* shall present credentials to the occupant and request entry. If such building or premises is unoccupied, the *fire code official* shall first make a reasonable effort to locate the *owner*, the owner's authorized agent or other person having charge or control of the building or premises and request entry. If entry is refused, the *fire code official* has recourse to every remedy provided by law to secure entry.

❖ This section establishes the right of the fire code official to enter the premises to make the permit inspections required by Section 105.2.2. Permit application forms typically include a statement in the certification signed by the applicant (who is the owner or owner's authorized agent) granting the fire code official the authority to enter areas covered by the permit to enforce related code provisions.

The right to enter other structures or premises is more limited. First, to protect the right of privacy, the owner or occupant must grant the building official permission before an interior inspection of the property can be conducted. Permission is not required for inspections that can be accomplished from within the public right-of-way. Second, such access may be denied by the owner or occupant. Unless the inspector has reasonable cause to believe that a violation of the code exists, access may be unattainable. Third, fire code officials must present proper identification (see Section 104.4) and request admittance during

INTERNATIONAL CODE COUNCIL®
Copyright © 2015 ICC. ALL RIGHTS RESERVED. Accessed by David Dammon on Jun 21, 2017 12:30:52 PM pursuant to License Agreement with ICC. No further reproduction or distribution authorized. ANY UNAUTHORIZED REPRODUCTION OR DISTRIBUTION IS A VIOLATION OF THE FEDERAL COPYRIGHT ACT AND THE LICENSE AGREEMENT, AND SUBJECT TO CIVIL AND CRIMINAL PENALTIES THEREUNDER.

reasonable hours—usually the normal business hours of the establishment—to be admitted. Fourth, inspections must be aimed at securing or determining compliance with the provisions and intent of the regulations that are specifically within the established scope of the fire code official's authority.

Searches to gather information for the purpose of enforcing other codes, ordinances or regulations are considered unreasonable and are prohibited by the Fourth Amendment to the U.S. Constitution. "Reasonable cause" in the context of this section must be distinguished from "probable cause," which is required to gain access to property in criminal cases. The burden of proof establishing reasonable cause may vary among jurisdictions. Usually, an inspector must show that the property is subject to inspection under the provisions of the code; that the interests of the public health, safety and welfare outweigh the individual's right to maintain privacy and that such an inspection is required solely to determine compliance with the provisions of the code.

Many jurisdictions do not recognize the concept of an administrative warrant and may require the fire code official to prove probable cause in order to gain access upon refusal. This burden of proof is usually more substantial, often requiring the fire code official to stipulate in advance why access is needed (usually access is restricted to gathering evidence for seeking an indictment or making an arrest); what specific item or information is sought; its relevance to the case against the individual subject; how knowledge of the relevance of the information or items sought was obtained; and how the evidence sought will be used. In all such cases, the right to privacy must always be weighed against the right of the fire code official to conduct an inspection to verify that public health, safety and welfare are not in jeopardy. Such important and complex constitutional issues should be discussed with the jurisdiction's legal counsel. Jurisdictions should establish procedures for securing the necessary court orders when an inspection is deemed necessary following a refusal.

[A] 104.3.1 Warrant. Where the *fire code official* has first obtained a proper inspection warrant or other remedy provided by law to secure entry, an *owner*, the *owner's* authorized agent or occupant or person having charge, care or control of the building or premises shall not fail or neglect, after proper request is made as herein provided, to permit entry therein by the *fire code official* for the purpose of inspection and examination pursuant to this code.

❖ Very simply, the requirements in this section specify that when the fire code official has obtained a warrant to inspect the property, the owner, owner's authorized agent or occupant is to allow the fire code official entry to do the inspection (see commentary, Section 104.3).

[A] 104.4 Identification. The *fire code official* shall carry proper identification when inspecting structures or premises in the performance of duties under this code.

❖ This section requires the fire code official (including, by definition, all authorized designees) to carry appropriate official identification in the course of conducting the duties of the position. Such official identification may take the form of a badge, an identification card or both and removes any question as to the purpose and authority of the inspector.

[A] 104.5 Notices and orders. The *fire code official* is authorized to issue such notices or orders as are required to affect compliance with this code in accordance with Sections 109.1 and 109.2.

❖ The fire code official is required to issue orders to abate illegal or hazardous conditions and to pursue correction or abatement of hazardous conditions by issuing legal notices and orders as described by the code. Courts are increasingly ruling that failure to follow up and pursue appropriate legal remedies promptly exposes both the fire code official and the jurisdiction to a liability in tort.

[A] 104.6 Official records. The *fire code official* shall keep official records as required by Sections 104.6.1 through 104.6.4. Such official records shall be retained for not less than 5 years or for as long as the structure or activity to which such records relate remains in existence, unless otherwise provided by other regulations.

❖ In keeping with the need for an efficiently conducted business practice, the fire code official must keep official records. Such documentation provides a valuable resource of information if questions arise throughout the life of the building and its occupants. The code requires that the construction documents be kept until the project is complete or for at least 5 years, whichever is longer.

[A] 104.6.1 Approvals. A record of approvals shall be maintained by the *fire code official* and shall be available for public inspection during business hours in accordance with applicable laws.

❖ Records of prior approvals may be needed to determine the status of an existing operation or for future validation of a specific condition.

[A] 104.6.2 Inspections. The *fire code official* shall keep a record of each inspection made, including notices and orders issued, showing the findings and disposition of each.

❖ Records of inspections are needed to support the issuance of a certificate of occupancy. The inspection records should document any code violations that were subsequently corrected.

104.6.3 Fire records. The fire department shall keep a record of fires occurring within its jurisdiction and of facts concerning the same, including statistics as to the extent of such fires

INTERNATIONAL CODE COUNCIL®
Copyright © 2015 ICC. ALL RIGHTS RESERVED. Accessed by David Dammon on Jun 21, 2017 12:30:52 PM pursuant to License Agreement with ICC. No further reproduction or distribution authorized. ANY UNAUTHORIZED REPRODUCTION OR DISTRIBUTION IS A VIOLATION OF THE FEDERAL COPYRIGHT ACT AND THE LICENSE AGREEMENT, AND SUBJECT TO CIVIL AND CRIMINAL PENALTIES THEREUNDER.

and the damage caused thereby, together with other information as required by the *fire code official*.

❖ Fire records provide a history of the fire experience of a facility and a cumulative record for all of the facilities of a jurisdiction. Fire records support consideration for construction code requirements based on the need to prevent additional fire occurrences.

[A] 104.6.4 Administrative. Application for modification, alternative methods or materials and the final decision of the *fire code official* shall be in writing and shall be officially recorded in the permanent records of the *fire code official*.

❖ The written approval of modifications or alternative materials and methods of construction or operation are needed to support the approval of these items in the future. This file could be used to verify that an existing condition had been previously approved.

[A] 104.7 Approved materials and equipment. Materials, equipment and devices *approved* by the *fire code official* shall be constructed and installed in accordance with such approval.

❖ The code is a compilation of criteria with which materials, equipment, devices and systems must comply to be acceptable for a particular application. The fire code official has a duty to evaluate such materials, equipment, devices and systems for code compliance and, when compliance is determined, approve them for use. As a result of this approval, the material, equipment, device or system must be constructed and installed in compliance with that approval, and with all the conditions and limitations considered as a basis for that approval. For example, the manufacturer's instructions and recommendations are to be followed if the approval of the material was based, even in part, on those instructions and recommendations.

The approval authority given to the fire code official is a significant responsibility and is a key to code compliance. The approval process is first technical and then administrative and must be approached that way. For example, if data to determine code compliance are required, such data should be in the form of test reports or engineering analysis—not simply taken from a sales brochure.

[A] 104.7.1 Material and equipment reuse. Materials, equipment and devices shall not be reused or reinstalled unless such elements have been reconditioned, tested and placed in good and proper working condition and *approved*.

❖ Used materials, equipment and devices are considered to have completed their life span; however, adequate substitutes are occasionally not available for existing items that still serve a useful and practical purpose. In such cases, existing used equipment should be approved, provided the application is consistent with the purpose for which the equipment was designed, the function is the same as the "new" item, if one were available, and the intended use can be demonstrated as not compromising the public's safety.

[A] 104.7.2 Technical assistance. To determine the acceptability of technologies, processes, products, facilities, materials and uses attending the design, operation or use of a building or premises subject to inspection by the *fire code official*, the *fire code official* is authorized to require the *owner* or owner's authorized agent to provide, without charge to the jurisdiction, a technical opinion and report. The opinion and report shall be prepared by a qualified engineer, specialist, laboratory or fire safety specialty organization acceptable to the *fire code official* and shall analyze the fire safety properties of the design, operation or use of the building or premises and the facilities and appurtenances situated thereon, to recommend necessary changes. The *fire code official* is authorized to require design submittals to be prepared by, and bear the stamp of, a registered design professional.

❖ No one person has the technical knowledge to evaluate all of the various operations and uses from a safety standpoint. This section provides the fire code official the authority to require the owner or owner's authorized agent to provide a technical opinion safety report. The report is to be prepared by parties that have the technical ability to evaluate the design of the facility or the operational process in question. A registered design professional is commonly used for these services. It is critical that the preparer of the report have the proper background and experience for the project since the credibility of the report depends on these qualifications.

[A] 104.8 Modifications. Where there are practical difficulties involved in carrying out the provisions of this code, the *fire code official* shall have the authority to grant modifications for individual cases, provided the *fire code official* shall first find that special individual reason makes the strict letter of this code impractical and the modification is in compliance with the intent and purpose of this code and that such modification does not lessen health, life and fire safety requirements. The details of action granting modifications shall be recorded and entered in the files of the department of fire prevention.

❖ The fire code official may amend or make exceptions to the code as needed to respond to "practical difficulties" in work on new or existing buildings. Consideration of a particular difficulty is to be based on the application of the owner and a demonstration that the intent of the code is satisfied. This section is not intended to allow a code provision to be set aside or ignored; rather, it is intended to provide for the acceptance of equivalent protection. Such modifications do not, however, extend to actions that are necessary to correct violations of the code. In other words, a code violation or the expense of correcting a code violation cannot constitute a practical difficulty.

Comprehensive written records are an essential part of an effective administrative system. Unless clearly written records of the considerations and documentation used in the modification process are created and maintained, subsequent enforcement action cannot be supported.

INTERNATIONAL CODE COUNCIL®
Copyright © 2015 ICC. ALL RIGHTS RESERVED. Accessed by David Dammon on Jun 21, 2017 12:30:52 PM pursuant to License Agreement with ICC. No further reproduction or distribution authorized. ANY UNAUTHORIZED REPRODUCTION OR DISTRIBUTION IS A VIOLATION OF THE FEDERAL COPYRIGHT ACT AND THE LICENSE AGREEMENT, AND SUBJECT TO CIVIL AND CRIMINAL PENALTIES THEREUNDER.

[A] 104.9 Alternative materials and methods. The provisions of this code are not intended to prevent the installation of any material or to prohibit any method of construction not specifically prescribed by this code, provided that any such alternative has been *approved*. The *fire code official* is authorized to approve an alternative material or method of construction where the *fire code official* finds that the proposed design is satisfactory and complies with the intent of the provisions of this code, and that the material, method or work offered is, for the purpose intended, at least the equivalent of that prescribed in this code in quality, strength, effectiveness, *fire resistance*, durability and safety. Where the alternative material, design or method of construction is not approved, the *fire code official* shall respond in writing, stating the reasons why the alternative was not approved.

❖ Performance requirements have replaced detailed specifications to permit ready substitution and integration of new technologies in the marketplace. The code is not intended to restrict or prevent the development or application of new technologies or applications of existing technologies, provided they meet the intent of the code to protect public health, safety and welfare. When new methods or materials are developed, they should be evaluated.

The fire code official has the authority to recognize alternative and equivalent methods and materials, provided they maintain the level of protection required by the code. One of the most frequent criticisms of codes is that their provisions apply too broadly to classes of occupancies and, therefore, are incapable of recognizing the inherent dissimilarities within occupancy groups. While some criticism may be justified, it is the fire code official's duty to evaluate scrupulously the conditions in each case, as well as judge whether the intent of the code (to provide the minimum acceptable level of protection to life and property) is met. Fire code officials should, therefore, be prepared to use decision aids, the appeal process and outside experts as needed to show that code requirements are met.

The last sentence is similar to that included in Section 105.2.1 when a permit application is rejected. The reason for this additional level of communication is that the nonapproval of an alternative method is not the same as the nonapproval of a permit. In other words, the permit application may have been approved but an alternative method might not be approved until a later date. However, the reasons for responding to the applicant in writing are the same. In order to ensure effective communication and due process of law, the reasons for denial are required to be in writing. Similar language is found in all of the I-Codes.

[A] 104.9.1 Research reports. Supporting data, where necessary to assist in the approval of materials or assemblies not specifically provided for in this code, shall consist of valid research reports from *approved* sources.

❖ When an alternative material or method is proposed for construction, it is incumbent upon the fire code official to determine whether the alternative is, in fact, equivalent to the methods prescribed by the code. Reports providing evidence of this equivalency are required to be supplied by an approved source, meaning a source that the fire code official finds to be reliable and accurate. The ICC Evaluation Service (ICC-ES) is an example of an agency that provides research reports for alternative materials and methods.

[A] 104.9.2 Tests. Where there is insufficient evidence of compliance with the provisions of this code, or evidence that a material or method does not conform to the requirements of this code, or in order to substantiate claims for alternative materials or methods, the *fire code official* shall have the authority to require tests as evidence of compliance to be made at no expense to the jurisdiction. Test methods shall be as specified in this code or by other recognized test standards. In the absence of recognized and accepted test methods, the *fire code official* shall approve the testing procedures. Tests shall be performed by an *approved* agency. Reports of such tests shall be retained by the *fire code official* for the period required for retention of public records.

❖ To provide the basis on which the fire code official can make a decision regarding an alternative material or method, sufficient technical data, test reports and documentation must be provided for evaluation. If evidence satisfactory to the fire code official indicates that the alternative material or construction method is equivalent to that required by the code, he or she may approve it. Any such approval cannot have the effect of waiving any requirements of the code. The burden of proof of equivalence lies with the applicant who proposes the use of alternative materials or methods.

The fire code official must require the submission of any appropriate information and data to assist in the determination of equivalency. This information must be submitted before a permit can be issued. The type of information required includes test data in accordance with referenced standards, evidence of compliance with the referenced standard specifications and design calculations. A research report issued by an authoritative agency is particularly useful in providing the fire code official with the technical basis for evaluation and approval of new and innovative materials and methods of construction. The use of authoritative research reports can greatly assist the fire code official by reducing the time-consuming engineering analysis necessary to review these materials and methods. Failure to substantiate adequately a request for the use of an alternative is a valid reason for the building official to deny a request. Any tests submitted in support of an application must have been performed by an agency approved by the fire code official based on evidence that the agency has the technical expertise, equipment and quality assurance to properly conduct and report the necessary testing. The test reports submitted to the fire code official must be retained in accordance with the requirements of Section 104.6.

INTERNATIONAL CODE COUNCIL®
Copyright © 2015 ICC. ALL RIGHTS RESERVED. Accessed by David Dammon on Jun 21, 2017 12:30:52 PM pursuant to License Agreement with ICC. No further reproduction or distribution authorized. ANY UNAUTHORIZED REPRODUCTION OR DISTRIBUTION IS A VIOLATION OF THE FEDERAL COPYRIGHT ACT AND THE LICENSE AGREEMENT, AND SUBJECT TO CIVIL AND CRIMINAL PENALTIES THEREUNDER.

104.10 Fire investigations. The *fire code official*, the fire department or other responsible authority shall have the authority to investigate the cause, origin and circumstances of any fire, explosion or other hazardous condition. Information that could be related to trade secrets or processes shall not be made part of the public record, except as directed by a court of law.

❖ The prompt and thorough investigation of fires is important for many reasons, not the least of which is the identification of incendiary fires and prosecution of arsonists. In such cases, the duty of the fire code official is clear—evidence must be preserved and leads pursued through criminal prosecution, if possible. However, a more important and frequently overlooked aspect of fire investigation is loss analysis. Whether or not the fire code official has jurisdiction to investigate incendiary fires and prosecute arsonists, it is extremely important that the enforcement agency be involved in the process of determining why fires occur; what can be done to prevent fires; how their effects can be lessened and how people behave once fires occur. Such lessons gleaned from past tragedies have influenced the code-development efforts of various organizations across the country

104.10.1 Assistance from other agencies. Police and other enforcement agencies shall have authority to render necessary assistance in the investigation of fires when requested to do so.

❖ When needed, the fire code official has the authority to ask for assistance from the police department or other enforcement agencies, such as fire code officials in nearby jurisdictions, to investigate fires.

104.11 Authority at fires and other emergencies. The fire chief or officer of the fire department in charge at the scene of a fire or other emergency involving the protection of life or property, or any part thereof, shall have the authority to direct such operation as necessary to extinguish or control any fire, perform any rescue operation, investigate the existence of suspected or reported fires, gas leaks or other hazardous conditions or situations, or take any other action necessary in the reasonable performance of duty. In the exercise of such power, the fire chief is authorized to prohibit any person, vehicle, vessel or thing from approaching the scene, and is authorized to remove, or cause to be removed or kept away from the scene, any vehicle, vessel or thing that could impede or interfere with the operations of the fire department and, in the judgment of the fire chief, any person not actually and usefully employed in the extinguishing of such fire or in the preservation of property in the vicinity thereof.

❖ This section describes the specific conditions of authority that are granted to the fire code official at a fire or other emergencies. The first half of the paragraph simply describes the fire code official's authority to carry out the fire operation at the site. The fire code official also needs to be able to control who and what is allowed to be at the site so that emergency operations are not hampered.

104.11.1 Barricades. The fire chief or officer of the fire department in charge at the scene of an emergency is authorized to place ropes, guards, barricades or other obstructions across any street, alley, place or private property in the vicinity of such operation so as to prevent accidents or interference with the lawful efforts of the fire department to manage and control the situation and to handle fire apparatus.

❖ This section gives the fire code official the authority to control access to the emergency site so that fire-fighting operations can occur without interference. This authority is also addressed in Section 104.11.

104.11.2 Obstructing operations. Persons shall not obstruct the operations of the fire department in connection with extinguishment or control of any fire, or actions relative to other emergencies, or disobey any lawful command of the fire chief or officer of the fire department in charge of the emergency, or any part thereof, or any lawful order of a police officer assisting the fire department.

❖ This section requires that fire department operations not be obstructed and that directions from the fire department official in command at the emergency site be carried out. This is necessary for efficient emergency operations.

104.11.3 Systems and devices. Persons shall not render a system or device inoperative during an emergency unless by direction of the fire chief or fire department official in charge of the incident.

❖ This section is an extension of the requirements in Section 104.11. The fire department official is in complete charge of the fire-fighting operation at the site. No person is to tamper with the equipment needed for the emergency.

SECTION 105
PERMITS

[A] 105.1 General. Permits shall be in accordance with Sections 105.1.1 through 105.7.18.

❖ This section includes the regulations covering permits, including a comprehensive list of the kinds of activities that require permits.

[A] 105.1.1 Permits required. A property owner or owner's authorized agent who intends to conduct an operation or business, or install or modify systems and equipment that are regulated by this code, or to cause any such work to be performed, shall first make application to the *fire code official* and obtain the required permit.

❖ This section identifies that the property owner or an owner's authorized agent is required to make application and obtain a permit. It is important that the owner or an owner's authorized agent performs this function to confirm that they are aware of and give consent for permitted operations that may include hazardous materials that could pollute or contaminate the property. See the commentary for permit fees (Section 113.1) and keeping permits on the premises and available for inspection (Section 105.3.5).

INTERNATIONAL CODE COUNCIL®
Copyright © 2015 ICC. ALL RIGHTS RESERVED. Accessed by David Dammon on Jun 21, 2017 12:30:52 PM pursuant to License Agreement with ICC. No further reproduction or distribution authorized. ANY UNAUTHORIZED REPRODUCTION OR DISTRIBUTION IS A VIOLATION OF THE FEDERAL COPYRIGHT ACT AND THE LICENSE AGREEMENT, AND SUBJECT TO CIVIL AND CRIMINAL PENALTIES THEREUNDER.

105.1.2 Types of permits. There shall be two types of permits as follows:

1. Operational permit. An operational permit allows the applicant to conduct an operation or a business for which a permit is required by Section 105.6 for either:
   1.1. A prescribed period.
   1.2. Until renewed or revoked.
2. Construction permit. A construction permit allows the applicant to install or modify systems and equipment for which a permit is required by Section 105.7.

❖ The types of activities that require an operational permit are listed in Section 105.6. Construction activities that require a permit are listed in Section 105.7.

105.1.3 Multiple permits for the same location. Where more than one permit is required for the same location, the *fire code official* is authorized to consolidate such permits into a single permit provided that each provision is listed in the permit.

❖ The code allows for a number of activities to be included on a single permit in order to decrease the paperwork for all concerned. In this instance, the permit must list in detail the activities that are covered by the combined permit.

[A] 105.1.4 Emergency repairs. Where equipment replacement and repairs must be performed in an emergency situation, the permit application shall be submitted within the next working business day to the *fire code official.*

❖ This section recognizes that, in some cases, emergency replacement and repair work must be done as quickly as possible, so it is not practical to take the necessary time to apply for and obtain approval. A permit for the work must be obtained the next day that the building department is open for business. Any work performed before the permit is issued must be done in accordance with the code and corrected if not approved by the fire code official. For example, if a concealed trap failed on a Sunday, the plumber could replace the trap at that time, but he would have to apply for a permit on Monday and have the repair pass an inspection.

[A] 105.1.5 Repairs. Application or notice to the *fire code official* is not required for ordinary repairs to structures, equipment or systems. Such repairs shall not include the cutting away of any wall, partition or portion thereof, the removal or change of any required *means of egress*, or rearrangement of parts of a structure affecting the egress requirements; nor shall any repairs include addition to, alteration of, replacement or relocation of any standpipe, fire protection water supply, *automatic sprinkler system*, fire alarm system or other work affecting fire protection or life safety.

❖ This section distinguishes between alterations, wherein the code is to be applicable, and ordinary repairs, which are maintenance activities that do not require a permit.

[A] 105.1.6 Annual permit. Instead of an individual construction permit for each alteration to an already *approved* system or equipment installation, the *fire code official* is authorized to issue an annual permit upon application therefor to any person, firm or corporation regularly employing one or more qualified tradespersons in the building, structure or on the premises owned or operated by the applicant for the permit.

❖ Some large buildings or industrial facilities require repair, replacement or alteration of systems and equipment on a frequent basis. This section allows the fire code official to issue an annual permit for such work. This relieves both the fire department and the owners of such facilities from the burden of filing and processing individual applications for this activity; however, there are restrictions on who is entitled to these permits. They can be issued only for work on a previously approved installation and only to an individual or corporation that employs persons specifically qualified in the trade for which the permit is issued. If tradespeople who perform the work involved are required to be licensed in the jurisdiction, only those persons would be permitted to perform the work. If trade licensing is not required, the fire code official must review and approve the qualifications of the persons who will perform the work. The annual permit can apply only to the individual property that is owned or operated by the applicant.

[A] 105.1.6.1 Annual permit records. The person to whom an annual permit is issued shall keep a detailed record of alterations made under such annual permit. The *fire code official* shall have access to such records at all times or such records shall be filed with the *fire code official* as designated.

❖ The work performed in accordance with an annual permit must be inspected by the fire code official, so it is necessary to know when and where such work was performed. This can be accomplished by having records of the work available to the building official either at the premises or in the official's office, as determined by the official.

[A] 105.2 Application. Application for a permit required by this code shall be made to the *fire code official* in such form and detail as prescribed by the *fire code official*. Applications for permits shall be accompanied by such plans as prescribed by the *fire code official*.

❖ Applications provided by the jurisdiction should be complete, concise and relevant. Though the burden of proof is on the applicant to supply all necessary information to determine compliance with the code provisions, it is the fire code official's duty to request sufficient information to make a reasonable and informed judgment prior to approving a permit.

[A] 105.2.1 Refusal to issue permit. If the application for a permit describes a use that does not conform to the requirements of this code and other pertinent laws and ordinances, the *fire code official* shall not issue a permit, but shall return

INTERNATIONAL CODE COUNCIL®
Copyright © 2015 ICC. ALL RIGHTS RESERVED. Accessed by David Dammon on Jun 21, 2017 12:30:52 PM pursuant to License Agreement with ICC. No further reproduction or distribution authorized. ANY UNAUTHORIZED REPRODUCTION OR DISTRIBUTION IS A VIOLATION OF THE FEDERAL COPYRIGHT ACT AND THE LICENSE AGREEMENT, AND SUBJECT TO CIVIL AND CRIMINAL PENALTIES THEREUNDER.

the application to the applicant with the refusal to issue such permit. Such refusal shall, where requested, be in writing and shall contain the reasons for refusal.

❖ This section directs the fire code official not to issue a permit if the application describes a use that does not conform to the requirements of the code. Note that this direction is not advisory. The fire code official would be in violation of the code if a permit were issued in such circumstances.

[A] 105.2.2 Inspection authorized. Before a new operational permit is *approved*, the *fire code official* is authorized to inspect the receptacles, vehicles, buildings, devices, premises, storage spaces or areas to be used to determine compliance with this code or any operational constraints required.

❖ The inspections described in this section are necessary for the fire code official to determine that the application for an operational permit complies with the code prior to issuing that permit. Operations may not proceed without an operational permit.

[A] 105.2.3 Time limitation of application. An application for a permit for any proposed work or operation shall be deemed to have been abandoned 180 days after the date of filing, unless such application has been diligently prosecuted or a permit shall have been issued; except that the *fire code official* is authorized to grant one or more extensions of time for additional periods not exceeding 90 days each. The extension shall be requested in writing and justifiable cause demonstrated.

❖ Permit applications lingering indefinitely in an incomplete condition can be an administrative nuisance to the fire code official, while also overburdening the filing system. This section establishes 180 days as the time limit for the permit applicant to provide the fire code official with sufficient information to evaluate the application and take appropriate action. 180 days should normally be more than enough time for an applicant to satisfy code requirements for submittal of construction documents and all other required information.

There may be circumstances, however, that could cause an application to age beyond 180 days prior to permit issuance, such as awaiting issuance of a report by a quality assurance agency. If the fire code official is satisfied that every effort is being made by the applicant to pursue the application, an extension of time would be acceptable.

[A] 105.2.4 Action on application. The *fire code official* shall examine or cause to be examined applications for permits and amendments thereto within a reasonable time after filing. If the application or the *construction documents* do not conform to the requirements of pertinent laws, the *fire code official* shall reject such application in writing, stating the reasons therefor. If the *fire code official* is satisfied that the proposed work or operation conforms to the requirements of this code and laws and ordinances applicable thereto, the *fire code official* shall issue a permit therefor as soon as practicable.

❖ While the fire code official has the duty to take all necessary and prudent actions to determine the applicant's compliance with the code, the evaluation must be completed promptly. Once the fire code official's review of the application is complete, either a permit will be issued or a written disapproval notice will be given. The disapproval notice must outline the reasons for rejection and should include a list of applicable code sections with which the applicant must comply to obtain approval.

[A] 105.3 Conditions of a permit. A permit shall constitute permission to maintain, store or handle materials; or to conduct processes that produce conditions hazardous to life or property; or to install equipment utilized in connection with such activities; or to install or modify any *fire protection system* or equipment or any other construction, equipment installation or modification in accordance with the provisions of this code where a permit is required by Section 105.6 or 105.7. Such permission shall not be construed as authority to violate, cancel or set aside any of the provisions of this code or other applicable regulations or laws of the jurisdiction.

❖ In effect, a permit is a contract or covenant between the jurisdiction and the applicant, allowing the applicant to operate, perform, conduct or direct a hazardous operation, process or occupancy. As with all contracts, the terms remain binding for a finite period. This process allows continual review of the applicant's compliance with the contract's terms. Failure to meet the terms of the contract may result in the applicant's forfeiture of the right to conduct or operate the process, operation or occupancy, and subsequently the fire code official may revoke the permit without further notice.

This section also states the fundamental premise that the permit is only a license to proceed with the work. It is not a license to violate, cancel or set aside any provisions of the code. This is significant because, even if there are errors or oversights in the permit approval process, the permit applicant, not the fire code official, is responsible for code compliance.

[A] 105.3.1 Expiration. An operational permit shall remain in effect until reissued, renewed or revoked, or for such a period of time as specified in the permit. Construction permits shall automatically become invalid unless the work authorized by such permit is commenced within 180 days after its issuance, or if the work authorized by such permit is suspended or abandoned for a period of 180 days after the time the work is commenced. Before such work recommences, a new permit shall be first obtained and the fee to recommence work, if any, shall be one-half the amount required for a new permit for such work, provided that changes have not been made and will not be made in the original construction documents for such work, and provided further that such suspension or abandonment has not exceeded one year. Permits are not transferable and any change in occupancy, operation, tenancy or ownership shall require that a new permit be issued.

❖ A construction permit is invalid when 180 days go by without any of the authorized work being done. The permit holder should be notified in writing that the permit is invalid, including the reasons why.

INTERNATIONAL CODE COUNCIL®
Copyright © 2015 ICC. ALL RIGHTS RESERVED. Accessed by David Dammon on Jun 21, 2017 12:30:52 PM pursuant to License Agreement with ICC. No further reproduction or distribution authorized. ANY UNAUTHORIZED REPRODUCTION OR DISTRIBUTION IS A VIOLATION OF THE FEDERAL COPYRIGHT ACT AND THE LICENSE AGREEMENT, AND SUBJECT TO CIVIL AND CRIMINAL PENALTIES THEREUNDER.

Permits are neither transferable nor assignable because they are agreements between two specific parties: the fire code official, who is acting for the jurisdiction, and the applicant. Any changes amending the application or terms of the original agreement will require a new application and permit approval.

[A] 105.3.2 Extensions. A permittee holding an unexpired permit shall have the right to apply for an extension of the time within which the permittee will commence work under that permit where work is unable to be commenced within the time required by this section for good and satisfactory reasons. The *fire code official* is authorized to grant, in writing, one or more extensions of the time period of a permit for periods of not more than 180 days each. Such extensions shall be requested by the permit holder in writing and justifiable cause demonstrated.

❖ The significant issue in this section is that an extension of time is to be granted when justifiable cause is demonstrated by the permit applicant. For example, a construction permit might be granted for certain equipment installation, but the equipment might not be received at the site until after the installation permit expires. To get a time extension, the applicant is to submit a request in writing to the fire code official, including a written explanation of why the work did not proceed within the permit time frame.

[A] 105.3.3 Occupancy prohibited before approval. The building or structure shall not be occupied prior to the *fire code official* issuing a permit and conducting associated inspections indicating the applicable provisions of this code have been met.

❖ The owner of an existing structure may request that the fire code official issue a certificate of occupancy for the structure, provided that there are no pending violations. A final inspection is usually done to verify that the work covered by the permit has been completed in accordance with the code.

[A] 105.3.4 Conditional permits. Where permits are required and upon the request of a permit applicant, the *fire code official* is authorized to issue a conditional permit to occupy the premises or portion thereof before the entire work or operations on the premises is completed, provided that such portion or portions will be occupied safely prior to full completion or installation of equipment and operations without endangering life or public welfare. The *fire code official* shall notify the permit applicant in writing of any limitations or restrictions necessary to keep the permit area safe. The holder of a conditional permit shall proceed only to the point for which approval has been given, at the permit holder's own risk and without assurance that approval for the occupancy or the utilization of the entire premises, equipment or operations will be granted.

❖ The fire code official is allowed to issue a conditional permit prior to the completion of all work. Such a permit is to be issued only when the building or structure is available for safe occupancy prior to full completion. The permit is intended to acknowledge that some building features may not be completed even though the building is safe for occupancy.

[A] 105.3.5 Posting the permit. Issued permits shall be kept on the premises designated therein at all times and shall be readily available for inspection by the *fire code official*.

❖ Note that this section does not require the permit to be posted, but it is to be kept on site at all times for inspection by the fire code official.

[A] 105.3.6 Compliance with code. The issuance or granting of a permit shall not be construed to be a permit for, or an approval of, any violation of any of the provisions of this code or of any other ordinance of the jurisdiction. Permits presuming to give authority to violate or cancel the provisions of this code or other ordinances of the jurisdiction shall not be valid. The issuance of a permit based on *construction documents* and other data shall not prevent the *fire code official* from requiring the correction of errors in the *construction documents* and other data. Any addition to or alteration of *approved construction documents* shall be *approved* in advance by the *fire code official*, as evidenced by the issuance of a new or amended permit.

❖ This section includes an important principle regarding construction documents. The fire code official has the authority to require that errors in construction be corrected, even if the construction is based on documents that were part of the applicant's submittal for a construction permit. Thus, the code requirements are not set aside by approved drawings that may include noncomplying items of construction. Any changes amending the application or construction of the original agreement will require a new application and permit approval.

[A] 105.3.7 Information on the permit. The *fire code official* shall issue all permits required by this code on an *approved* form furnished for that purpose. The permit shall contain a general description of the operation or occupancy and its location and any other information required by the *fire code official*. Issued permits shall bear the signature of the *fire code official* or other *approved* legal authorization.

❖ This section describes the form of the permit and requires that it be either signed by the fire code official or otherwise reflect the legal authorization of the jurisdiction. In many jurisdictions, permits are electronically generated and do not require a traditional signature.

[A] 105.3.8 Validity of permit. The issuance or granting of a permit shall not be construed to be a permit for, or an approval of, any violation of any of the provisions of this code or of any other ordinances of the jurisdiction. Permits presuming to give authority to violate or cancel the provisions of this code or other ordinances of the jurisdiction shall not be valid. The issuance of a permit based on *construction documents*, operational documents and other data shall not prevent the *fire code official* from requiring correction of errors in the documents or other data.

❖ This section states the fundamental premise that the permit is only a license to proceed with the work. It is

INTERNATIONAL CODE COUNCIL®
Copyright © 2015 ICC. ALL RIGHTS RESERVED. Accessed by David Dammon on Jun 21, 2017 12:30:52 PM pursuant to License Agreement with ICC. No further reproduction or distribution authorized. ANY UNAUTHORIZED REPRODUCTION OR DISTRIBUTION IS A VIOLATION OF THE FEDERAL COPYRIGHT ACT AND THE LICENSE AGREEMENT, AND SUBJECT TO CIVIL AND CRIMINAL PENALTIES THEREUNDER.

not a license to violate, cancel or set aside any provisions of the code. This is significant because it means that despite any errors or oversights in the approval process, the permit applicant, not the fire code official, is responsible for code compliance. Also, the permit can be revoked in accordance with Section 105.5.

[A] 105.4 Construction documents. *Construction documents* shall be in accordance with Sections 105.4.1 through 105.4.6.

❖ This section states the scope of the sections covering construction documents.

[A] 105.4.1 Submittals. *Construction documents* and supporting data shall be submitted in two or more sets with each application for a permit and in such form and detail as required by the *fire code official*. The *construction documents* shall be prepared by a registered design professional where required by the statutes of the jurisdiction in which the project is to be constructed.

Exception: The *fire code official* is authorized to waive the submission of *construction documents* and supporting data not required to be prepared by a registered design professional if it is found that the nature of the work applied for is such that review of *construction documents* is not necessary to obtain compliance with this code.

❖ A detailed description of the work for which an application is made must be submitted in the form and detail required by the fire code official. Construction documents are to be prepared by a registered design professional when required by state laws in effect in the jurisdiction. States have professional registration laws that specify the type of construction documents to be prepared by a registered design professional. The code relies on these state laws to determine when a registered design professional is required.

The requirement for the preparation of construction documents and the submittal of calculations is specified by the code in several chapters. For example, Section 901.2 specifies that construction documents and calculations are to be submitted for fire protection systems when required by the fire code official.

[A] 105.4.1.1 Examination of documents. The *fire code official* shall examine or cause to be examined the accompanying *construction documents* and shall ascertain by such examinations whether the work indicated and described is in accordance with the requirements of this code.

❖ The requirements of this section are related to those found in Section 105.2.4 regarding the action of the fire code official in response to a permit application. The fire code official can delegate review of the construction documents to subordinates as provided for in Section 103.3.

[A] 105.4.2 Information on construction documents. *Construction documents* shall be drawn to scale upon suitable material. Electronic media documents are allowed to be submitted where *approved* by the *fire code official*. *Construction documents* shall be of sufficient clarity to indicate the location, nature and extent of the work proposed and show in detail that it will conform to the provisions of this code and relevant laws, ordinances, rules and regulations as determined by the *fire code official*.

❖ Construction documents are not sketches. They are comprehensive drawings, drawn to scale, that provide the details to verify the work will comply with the code. The permit applicant must be familiar with the code requirements to prepare code-compliant construction documents. If the applicant is not familiar with the code, the construction documents will most likely not have sufficient detail to determine compliance and, thus, not be satisfactory as the basis for a permit.

[A] 105.4.2.1 Fire protection system shop drawings. Shop drawings for the fire protection system(s) shall be submitted to indicate compliance with this code and the *construction documents*, and shall be *approved* prior to the start of installation. Shop drawings shall contain all information as required by the referenced installation standards in Chapter 9.

❖ It is common for the fire protection contractor(s) for a project not to have been selected at the time a permit is issued; thus, detailed shop drawings for fire protection systems would not be available. Because they provide the information necessary to determine code compliance, as specified in the appropriate referenced standard in Chapter 9, detailed shop drawings for fire protection systems must be submitted and approved by the fire code official before the contractor can begin installing the system. For example, the professional responsible for the design of an automatic sprinkler system should determine that the water supply is adequate, but will not be able to prepare a final set of hydraulic calculations if the specific materials and pipe sizes, lengths and arrangements have not been identified. Once the installing contractor is selected, specific hydraulic calculations can be prepared. Factors such as classification of the hazard, amount of water supply available and the density or concentration to be achieved by the system are to be included with the submission of the shop drawings. Specific data sheets identifying sprinklers, pipe dimensions, power requirements for smoke detectors, etc., should also be included with the submission.

[A] 105.4.3 Applicant responsibility. It shall be the responsibility of the applicant to ensure that the *construction documents* include all of the fire protection requirements and the shop drawings are complete and in compliance with the applicable codes and standards.

❖ This requirement is similar to the one in Section 901.2 regarding construction documents for fire protection systems.

The requirement in this section regarding shop drawings applies to all types of shop drawings, not just those for fire protection systems. The permit applicant is responsible for the review of the shop drawings, not the fire code official. The permit appli-

INTERNATIONAL CODE COUNCIL®
Copyright © 2015 ICC. ALL RIGHTS RESERVED. Accessed by David Dammon on Jun 21, 2017 12:30:52 PM pursuant to License Agreement with ICC. No further reproduction or distribution authorized. ANY UNAUTHORIZED REPRODUCTION OR DISTRIBUTION IS A VIOLATION OF THE FEDERAL COPYRIGHT ACT AND THE LICENSE AGREEMENT, AND SUBJECT TO CIVIL AND CRIMINAL PENALTIES THEREUNDER.

cant is also responsible for seeing that the work on the job site complies with the code. Since a lot of the construction work is done in accordance with shop drawings, the applicant should review those drawings for code compliance to make sure field construction complies with the code.

[A] 105.4.4 Approved documents. *Construction documents approved* by the *fire code official* are *approved* with the intent that such *construction documents* comply in all respects with this code. Review and approval by the *fire code official* shall not relieve the applicant of the responsibility of compliance with this code.

❖ The applicant is responsible for making sure that construction complies with the code. If approved drawings include errors that do not comply with the code, the fire code official still has the authority to require that the errors be corrected. Thus, it is important that the permit applicant is familiar with code requirements to prevent preparation of construction documents that do not meet the code.

[A] 105.4.4.1 Phased approval. The *fire code official* is authorized to issue a permit for the construction of part of a structure, system or operation before the *construction documents* for the whole structure, system or operation have been submitted, provided that adequate information and detailed statements have been filed complying with pertinent requirements of this code. The holder of such permit for parts of a structure, system or operation shall proceed at the holder's own risk with the building operation and without assurance that a permit for the entire structure, system or operation will be granted.

❖ The fire code official has the authority to issue a partial permit to allow for the practice of "fast tracking" a job. Any construction under a partial permit is, as stated in the code, "at the holder's own risk" and "without assurance that a permit for the entire structure, system or operation will be granted." The fire code official is under no obligation to accept work or issue a complete permit in violation of the code, ordinances or statutes simply because a partial permit has been issued. "Fast tracking" puts an unusual administrative and technical burden on the fire code official. The purpose is to proceed with construction while the design continues for other aspects of the work. Coordinating and correlating the code aspects into the project in phases requires attention to detail and project tracking so that all code issues are addressed.

[A] 105.4.5 Amended construction documents. Work shall be installed in accordance with the *approved construction documents*, and any changes made during construction that are not in compliance with the *approved construction documents* shall be resubmitted for approval as an amended set of *construction documents*.

❖ Any amendments to the approved construction documents must be filed before constructing the amended item. In the broadest sense, amendments include all addenda, change orders, revised drawings and marked-up shop drawings. Fire code officials should maintain a policy that all amendments be submitted for review. Otherwise, a significant amendment may not be submitted, resulting in an activity that is not approved and that causes a needless delay in obtaining approval of the finished work.

[A] 105.4.6 Retention of construction documents. One set of *construction documents* shall be retained by the *fire code official* for a period of not less than 180 days from date of completion of the permitted work, or as required by state or local laws. One set of *approved construction documents* shall be returned to the applicant, and said set shall be kept on the site of the building or work at all times during which the work authorized thereby is in progress.

❖ It is important that a complete, current set of construction documents be kept on the job site at all times. Another set of construction documents is to be kept by the fire code official until final approval of the completed work. It is not unusual for state laws to establish records-retention criteria, and the intent of this section is to not only make the code consistent with such laws but also to provide a minimum post-construction retention period since the months immediately following construction completion are typically when most disputes arise that depend on the construction documents for resolution. The construction documents are part of the official records of the department and should be kept in accordance with Section 104.6.

[A] 105.5 Revocation. The *fire code official* is authorized to revoke a permit issued under the provisions of this code where it is found by inspection or otherwise that there has been a false statement or misrepresentation as to the material facts in the application or *construction documents* on which the permit or approval was based including, but not limited to, any one of the following:

1. The permit is used for a location or establishment other than that for which it was issued.
2. The permit is used for a condition or activity other than that listed in the permit.
3. Conditions and limitations set forth in the permit have been violated.
4. There have been any false statements or misrepresentations as to the material fact in the application for permit or plans submitted or a condition of the permit.
5. The permit is used by a different person or firm than the name for which it was issued.
6. The permittee failed, refused or neglected to comply with orders or notices duly served in accordance with the provisions of this code within the time provided therein.
7. The permit was issued in error or in violation of an ordinance, regulation or this code.

❖ The fire code official must revoke all permits shown to be based, all or in part, on any false statement or misinterpretation of fact. An applicant may subsequently

INTERNATIONAL CODE COUNCIL®
Copyright © 2015 ICC. ALL RIGHTS RESERVED. Accessed by David Dammon on Jun 21, 2017 12:30:52 PM pursuant to License Agreement with ICC. No further reproduction or distribution authorized. ANY UNAUTHORIZED REPRODUCTION OR DISTRIBUTION IS A VIOLATION OF THE FEDERAL COPYRIGHT ACT AND THE LICENSE AGREEMENT, AND SUBJECT TO CIVIL AND CRIMINAL PENALTIES THEREUNDER.

reapply for a permit. The code specifies seven specific conditions that allow the fire code official to revoke a permit.

105.6 Required operational permits. The *fire code official* is authorized to issue operational permits for the operations set forth in Sections 105.6.1 through 105.6.48.

❖ Sections 105.6.1 through 105.6.48 list the conditions requiring operational permits. Many of the items are stated in general terms, in which case the fire code official is to determine whether a specific operation is a significant hazard that requires a permit.

105.6.1 Aerosol products. An operational permit is required to manufacture, store or handle an aggregate quantity of Level 2 or Level 3 aerosol products in excess of 500 pounds (227 kg) net weight.

❖ See Chapter 51 for code requirements covering aerosol products (see commentary, Section 105.6).

105.6.2 Amusement buildings. An operational permit is required to operate a special amusement building.

❖ For requirements that apply to special amusement buildings, see Sections 202, 907.2.12 and 914.7.1, and Section 411 of the IBC (see commentary, Section 105.6).

105.6.3 Aviation facilities. An operational permit is required to use a Group H or Group S occupancy for aircraft servicing or repair and aircraft fuel-servicing vehicles. Additional permits required by other sections of this code include, but are not limited to, hot work, hazardous materials and flammable or combustible finishes.

❖ See Chapter 20 for aviation facility requirements (see commentary, Section 105.6).

105.6.4 Carbon dioxide systems used in beverage dispensing applications. An operational permit is required for carbon dioxide systems used in beverage dispensing applications having more than 100 pounds of carbon dioxide.

❖ A permit is required only for larger systems, having more than 100 pounds of carbon dioxide, where the hazard of release and possible asphyxiation is more likely. The amount correlates with the applicability of Section 5307. See commentaries for Sections 908.7 and 5307 for more detailed requirements.

105.6.5 Carnivals and fairs. An operational permit is required to conduct a carnival or fair.

❖ See Section 3103.3 for carnival requirements (see commentary, Section 105.6).

105.6.6 Cellulose nitrate film. An operational permit is required to store, handle or use cellulose nitrate film in a Group A occupancy.

❖ Although cellulose nitrate film is no longer in general use, there are a small number of locations in which this type of film is archived or restored for historical purposes. This section applies to those few locations (see Section 306 for cellulose nitrate film requirements).

105.6.7 Combustible dust-producing operations. An operational permit is required to operate a grain elevator, flour starch mill, feed mill, or a plant pulverizing aluminum, coal, cocoa, magnesium, spices or sugar, or other operations producing *combustible dusts* as defined in Chapter 2.

❖ See Chapter 22 for combustible dust-producing operations (see commentary, Section 105.6).

105.6.8 Combustible fibers. An operational permit is required for the storage and handling of *combustible fibers* in quantities greater than 100 cubic feet (2.8 m^3).

Exception: A permit is not required for agricultural storage.

❖ See Chapter 37 for combustible fiber requirements. The exception is for agricultural storage facilities where the hazard to persons is minimal (see Section 105.6).

105.6.9 Compressed gases. An operational permit is required for the storage, use or handling at *normal temperature and pressure* (NTP) of *compressed gases* in excess of the amounts listed in Table 105.6.9.

Exception: Vehicles equipped for and using *compressed gas* as a fuel for propelling the vehicle.

❖ See Chapter 53 for compressed gas requirements. The exception exempts vehicles equipped for compressed gas, since the code requirements for compressed gases do not apply to them.

TABLE 105.6.9
PERMIT AMOUNTS FOR COMPRESSED GASES

TYPE OF GAS	AMOUNT (cubic feet at NTP)
Corrosive	200
Flammable (except cryogenic fluids and liquefied petroleum gases)	200
Highly toxic	Any Amount
Inert and simple asphyxiant[a]	6,000
Oxidizing (including oxygen)	504
Pyrophoric	Any Amount
Toxic	Any Amount

For SI: 1 cubic foot = 0.02832 m^3.

a. For carbon dioxide used in beverage dispensing applications, see Section 105.6.4.

❖ When the use of compressed gases exceeds the amounts indicated in Table 105.6.9, an operational permit is required. The quantities in the table are at normal temperature and pressure (NTP) (see Chapter 53 for compressed gas requirements). A reference is provided to Section 105.6.4 addressing a specific requirement for systems having more than 100 pounds of carbon dioxide used for beverage dispensing.

INTERNATIONAL CODE COUNCIL®
Copyright © 2015 ICC. ALL RIGHTS RESERVED. Accessed by David Dammon on Jun 21, 2017 12:30:52 PM pursuant to License Agreement with ICC. No further reproduction or distribution authorized. ANY UNAUTHORIZED REPRODUCTION OR DISTRIBUTION IS A VIOLATION OF THE FEDERAL COPYRIGHT ACT AND THE LICENSE AGREEMENT, AND SUBJECT TO CIVIL AND CRIMINAL PENALTIES THEREUNDER.

105.6.10 Covered and open mall buildings. An operational permit is required for:

1. The placement of retail fixtures and displays, concession equipment, displays of highly combustible goods and similar items in the mall.
2. The display of liquid- or gas-fired equipment in the mall.
3. The use of open-flame or flame-producing equipment in the mall.

❖ The listed operations in a covered or open mall building require an operational permit, since they involve a significant hazard to the occupants. See Section 308 for open-flame regulations (see Section 105.6).

105.6.11 Cryogenic fluids. An operational permit is required to produce, store, transport on site, use, handle or dispense *cryogenic fluids* in excess of the amounts listed in Table 105.6.11.

Exception: Permits are not required for vehicles equipped for and using *cryogenic fluids* as a fuel for propelling the vehicle or for refrigerating the lading.

❖ See Chapter 55 for requirements regarding cryogenic fluids. The exception exempts vehicles using cryogenic fluids, since the code requirements do not apply to them.

TABLE 105.6.11
PERMIT AMOUNTS FOR CRYOGENIC FLUIDS

TYPE OF CRYOGENIC FLUID	INSIDE BUILDING (gallons)	OUTSIDE BUILDING (gallons)
Flammable	More than 1	60
Inert	60	500
Oxidizing (includes oxygen)	10	50
Physical or health hazard not indicated above	Any Amount	Any Amount

For SI: 1 gallon = 3.785 L.

❖ Where cryogenic fluids are used in excess of the amounts shown in Table 105.6.10, an operational permit is required. The listed amounts are significantly different inside or outside of a building, since the hazard is greatly reduced if a leak occurs outdoors.

105.6.12 Cutting and welding. An operational permit is required to conduct cutting or welding operations within the jurisdiction.

❖ See Chapter 35 for welding requirements (see commentary, Section 105.6).

105.6.13 Dry cleaning. An operational permit is required to engage in the business of dry cleaning or to change to a more hazardous cleaning solvent used in existing dry cleaning equipment.

❖ See Chapter 21 for dry cleaning regulations (see commentary, Section 105.6).

105.6.14 Exhibits and trade shows. An operational permit is required to operate exhibits and trade shows.

❖ The primary concern is to identify hazardous and highly flammable materials that could be involved in an exhibit or booth (see commentary, Section 105.6).

105.6.15 Explosives. An operational permit is required for the manufacture, storage, handling, sale or use of any quantity of *explosives*, *explosive materials*, fireworks or pyrotechnic special effects within the scope of Chapter 56.

Exception: Storage in Group R-3 occupancies of smokeless propellant, black powder and small arms primers for personal use, not for resale and in accordance with Section 5606.

❖ See Chapter 56 for requirements for explosives and fireworks (see commentary, Section 105.6 and Chapter 56).

The exception correlates the permit requirements for the possession, storage or use of smokeless propellant, black powder and small arms primers for personal use in Group R-3 residential occupancies with the scope of Chapter 56, as stated in Section 5601.1, Exception 4, and Section 5606.4. The exception is also consistent with NFPA 495, referenced in Chapter 56, which limits quantities allowed in residences, but allows for quantities in residences outside the scope of Chapter 56 to be regulated without a permit.

105.6.16 Fire hydrants and valves. An operational permit is required to use or operate fire hydrants or valves intended for fire suppression purposes that are installed on water systems and accessible to a fire apparatus access road that is open to or generally used by the public.

Exception: A permit is not required for authorized employees of the water company that supplies the system or the fire department to use or operate fire hydrants or valves.

❖ An operational permit is required for persons other than authorized employees of the water company or the fire department to operate fire hydrants or valves. This restriction is intended to make sure that the use will not result in a lack of water supply and pressure that may be needed for fire-fighting purposes. The exception allows water company employees or the fire department to use fire hydrants or valves without a permit. Such use is common in order to flush out the piping periodically. When fire departments or fire districts interact with water districts, they should communicate the need for the fire department to use the hydrants and valves for nonemergency situations, such as training. A notification procedure is needed to let the water district know of this planned use.

105.6.17 Flammable and combustible liquids. An operational permit is required:

1. To use or operate a pipeline for the transportation within facilities of flammable or *combustible liquids*.

INTERNATIONAL CODE COUNCIL®
Copyright © 2015 ICC. ALL RIGHTS RESERVED. Accessed by David Dammon on Jun 21, 2017 12:30:52 PM pursuant to License Agreement with ICC. No further reproduction or distribution authorized. ANY UNAUTHORIZED REPRODUCTION OR DISTRIBUTION IS A VIOLATION OF THE FEDERAL COPYRIGHT ACT AND THE LICENSE AGREEMENT, AND SUBJECT TO CIVIL AND CRIMINAL PENALTIES THEREUNDER.

This requirement shall not apply to the off-site transportation in pipelines regulated by the Department of Transportation (DOTn) nor does it apply to piping systems.

2. To store, handle or use Class I liquids in excess of 5 gallons (19 L) in a building or in excess of 10 gallons (37.9 L) outside of a building, except that a permit is not required for the following:

   2.1. The storage or use of Class I liquids in the fuel tank of a motor vehicle, aircraft, motorboat, mobile power plant or mobile heating plant, unless such storage, in the opinion of the *fire code official*, would cause an unsafe condition.

   2.2. The storage or use of paints, oils, varnishes or similar flammable mixtures where such liquids are stored for maintenance, painting or similar purposes for a period of not more than 30 days.

3. To store, handle or use Class II or Class IIIA liquids in excess of 25 gallons (95 L) in a building or in excess of 60 gallons (227 L) outside a building, except for fuel oil used in connection with oil-burning equipment.

4. To store, handle or use Class IIIB liquids in tanks or portable tanks for fueling motor vehicles at motor fuel-dispensing facilities or where connected to fuel-burning equipment.

   Exception: Fuel oil and used motor oil used for space heating or water heating.

5. To remove Class I or II liquids from an underground storage tank used for fueling motor vehicles by any means other than the *approved*, stationary on-site pumps normally used for dispensing purposes.

6. To operate tank vehicles, equipment, tanks, plants, terminals, wells, fuel-dispensing stations, refineries, distilleries and similar facilities where flammable and *combustible liquids* are produced, processed, transported, stored, dispensed or used.

7. To place temporarily out of service (for more than 90 days) an underground, protected above-ground or above-ground flammable or *combustible liquid* tank.

8. To change the type of contents stored in a flammable or *combustible liquid* tank to a material that poses a greater hazard than that for which the tank was designed and constructed.

9. To manufacture, process, blend or refine flammable or *combustible liquids*.

10. To engage in the dispensing of liquid fuels into the fuel tanks of motor vehicles at commercial, industrial, governmental or manufacturing establishments.

11. To utilize a site for the dispensing of liquid fuels from tank vehicles into the fuel tanks of motor vehicles, marine craft and other special equipment at commercial, industrial, governmental or manufacturing establishments.

❖ See Chapter 57 for regulations regarding flammable and combustible liquids (see commentary, Section 105.6).

105.6.18 Floor finishing. An operational permit is required for floor finishing or surfacing operations exceeding 350 square feet (33 m^2) using Class I or Class II liquids.

❖ The concern of this section is the proper use and handling of Class I or II liquids that are used in the floor-finishing process. If such liquids are not used, an operational permit is not required for floor finishing.

105.6.19 Fruit and crop ripening. An operational permit is required to operate a fruit- or crop-ripening facility or conduct a fruit-ripening process using ethylene gas.

❖ See Chapter 25 for regulations for fruit- and crop-ripening processes where ethylene gas is used (see commentary, Section 105.6).

105.6.20 Fumigation and insecticidal fogging. An operational permit is required to operate a business of fumigation or insecticidal fogging, and to maintain a room, vault or chamber in which a toxic or flammable fumigant is used.

❖ See Chapter 26 for fumigation and insecticidal fogging regulations within structures (see commentary, Section 105.6).

105.6.21 Hazardous materials. An operational permit is required to store, transport on site, dispense, use or handle hazardous materials in excess of the amounts listed in Table 105.6.21.

❖ See Chapter 50 for the general provisions regarding hazardous materials. Also see Chapters 51 through 67 for regulations regarding a specific hazardous material (see commentary, Section 105.6).

TABLE 105.6.21. See page 3-25.

❖ Where the amounts of hazardous materials in the table are exceeded, an operational permit is required. This applies to the storage, transportation on site, dispensing, use or handling of the hazardous materials that are listed in the table.

Table Notes a and b create parity for Class 3 oxidizer permit amounts with the adjustments to the maximum allowable quantity per control area (MAQ) specified in Table 5003.1.1(1), Note k. This eliminates the need for small apartment complexes and similar occupancies with swimming pools to obtain permits for normal pool maintenance using relatively small amounts of material.

105.6.22 HPM facilities. An operational permit is required to store, handle or use hazardous production materials.

❖ See Chapter 27 for regulations regarding semiconductor fabrication facilities (see commentary, Section 105.6).

INTERNATIONAL CODE COUNCIL®
Copyright © 2015 ICC. ALL RIGHTS RESERVED. Accessed by David Dammon on Jun 21, 2017 12:30:52 PM pursuant to License Agreement with ICC. No further reproduction or distribution authorized. ANY UNAUTHORIZED REPRODUCTION OR DISTRIBUTION IS A VIOLATION OF THE FEDERAL COPYRIGHT ACT AND THE LICENSE AGREEMENT, AND SUBJECT TO CIVIL AND CRIMINAL PENALTIES THEREUNDER.

TABLE 105.6.21
PERMIT AMOUNTS FOR HAZARDOUS MATERIALS

TYPE OF MATERIAL	AMOUNT
Combustible liquids	See Section 105.6.17
Corrosive materials	
Gases	See Section 105.6.9
Liquids	55 gallons
Solids	1000 pounds
Explosive materials	See Section 105.6.15
Flammable materials	
Gases	See Section 105.6.9
Liquids	See Section 105.6.17
Solids	100 pounds
Highly toxic materials	
Gases	See Section 105.6.9
Liquids	Any Amount
Solids	Any Amount
Oxidizing materials	
Gases	See Section 105.6.9
Liquids	
Class 4	Any Amount
Class 3	1 gallon[a]
Class 2	10 gallons
Class 1	55 gallons
Solids	
Class 4	Any Amount
Class 3	10 pounds[b]
Class 2	100 pounds
Class 1	500 pounds
Organic peroxides	
Liquids	
Class I	Any Amount
Class II	Any Amount
Class III	1 gallon
Class IV	2 gallons
Class V	No Permit Required
Solids	
Class I	Any Amount
Class II	Any Amount
Class III	10 pounds
Class IV	20 pounds
Class V	No Permit Required
Pyrophoric materials	
Gases	Any Amount
Liquids	Any Amount
Solids	Any Amount
Toxic materials	
Gases	See Section 105.6.9
Liquids	10 gallons
Solids	100 pounds
Unstable (reactive) materials	
Liquids	
Class 4	Any Amount
Class 3	Any Amount
Class 2	5 gallons
Class 1	10 gallons
Solids	
Class 4	Any Amount
Class 3	Any Amount
Class 2	50 pounds
Class 1	100 pounds
Water-reactive materials	
Liquids	
Class 3	Any Amount
Class 2	5 gallons
Class 1	55 gallons
Solids	
Class 3	Any Amount
Class 2	50 pounds
Class 1	500 pounds

For SI: 1 gallon = 3.785 L, 1 pound = 0.454 kg.

a. 20 gallons where Table 5003.1.1(1) Note k applies and hazard identification signs in accordance with Section 5003.5 are provided for quantities of 20 gallons or less.

b. 200 pounds where Table 5003.1.1(1) Note k applies and hazard identification signs in accordance with Section 5003.5 are provided for quantities of 200 pounds or less.

105.6.23 High-piled storage. An operational permit is required to use a building or portion thereof as a *high-piled storage area* exceeding 500 square feet (46 m^2).

❖ See Chapter 32 for high-piled storage provisions (see commentary, Section 105.6).

105.6.24 Hot work operations. An operational permit is required for hot work including, but not limited to:

1. Public exhibitions and demonstrations where hot work is conducted.
2. Use of portable hot work equipment inside a structure.

   Exception: Work that is conducted under a construction permit.
3. Fixed-site hot work equipment, such as welding booths.
4. Hot work conducted within a wildfire risk area.
5. Application of roof coverings with the use of an open-flame device.
6. Where *approved*, the *fire code official* shall issue a permit to carry out a hot work program. This program allows *approved* personnel to regulate their facility's hot work operations. The *approved* personnel shall be trained in the fire safety aspects denoted in this chapter and shall be responsible for issuing permits requiring compliance with the requirements found in Chapter 35. These permits shall be issued only to their employees or hot work operations under their supervision.

❖ See Chapter 35 for hot work regulations. The exception to Item 2 in this section recognizes that work done under a construction permit is already covered by that permit so an operational permit is not required (see commentary, Section 105.6).

105.6.25 Industrial ovens. An operational permit is required for operation of industrial ovens regulated by Chapter 30.

❖ See Chapter 30 for regulations regarding industrial ovens (see commentary, Section 105.6).

INTERNATIONAL CODE COUNCIL®
Copyright © 2015 ICC. ALL RIGHTS RESERVED. Accessed by David Dammon on Jun 21, 2017 12:30:52 PM pursuant to License Agreement with ICC. No further reproduction or distribution authorized. ANY UNAUTHORIZED REPRODUCTION OR DISTRIBUTION IS A VIOLATION OF THE FEDERAL COPYRIGHT ACT AND THE LICENSE AGREEMENT, AND SUBJECT TO CIVIL AND CRIMINAL PENALTIES THEREUNDER.

105.6.26 Lumber yards and woodworking plants. An operational permit is required for the storage or processing of lumber exceeding 100,000 board feet (8,333 ft^3) (236 m^3).

❖ See Chapter 28 for provisions for lumber yards and woodworking plants (see commentary, Section 105.6).

105.6.27 Liquid- or gas-fueled vehicles or equipment in assembly buildings. An operational permit is required to display, operate or demonstrate liquid- or gas-fueled vehicles or equipment in assembly buildings.

❖ See Section 314.4 for requirements regarding liquid- or gas-fueled vehicles inside buildings (see commentary, Section 105.6).

105.6.28 LP-gas. An operational permit is required for:

1. Storage and use of LP-gas.

   Exception: A permit is not required for individual containers with a 500-gallon (1893 L) water capacity or less or multiple container systems having an aggregate quantity not exceeding 500 gallons (1893 L), serving occupancies in Group R-3.

2. Operation of cargo tankers that transport LP-gas.

❖ See Chapter 61 for liquefied petroleum gas (LP-gas) regulations. The exception to Item 1 in this section exempts small tanks with an individual capacity of 500 gallons (1893 L) or multiple small tanks with an aggregate capacity of 500 gallons (1893 L) commonly found in residential service. A permit is required where the aggregate quantity of multiple small LP-gas containers exceeds 500 gallons (1893 L). It has become commonplace for LP-gas distributors to install LP-gas systems exceeding 500 gallons (1893 L) that consist of multiple containers in series with individual containers that do not exceed 500 gallons (1893 L), thereby avoiding the permit requirement. It is appropriate to require a permit at these locations given the significant hazard associated with these quantities. Item 2 covers cargo tankers, since they transport LP-gas onto premises covered by the code and, therefore, represent a potential hazard.

105.6.29 Magnesium. An operational permit is required to melt, cast, heat treat or grind more than 10 pounds (4.54 kg) of magnesium.

❖ See Section 5906 for the code requirements for magnesium (see commentary, Section 105.6).

105.6.30 Miscellaneous combustible storage. An operational permit is required to store in any building or upon any premises in excess of 2,500 cubic feet (71 m^3) gross volume of combustible empty packing cases, boxes, barrels or similar containers, rubber tires, rubber, cork or similar combustible material.

❖ See Section 315 for requirements for miscellaneous combustible material storage (see commentary, Section 105.6).

105.6.31 Motor fuel-dispensing facilities. An operational permit is required for the operation of automotive, marine and fleet motor fuel-dispensing facilities.

❖ See Chapter 23 for requirements for motor fuel-dispensing facilities (see commentary, Section 105.6).

105.6.32 Open burning. An operational permit is required for the kindling or maintaining of an open fire or a fire on any public street, alley, road, or other public or private ground. Instructions and stipulations of the permit shall be adhered to.

Exception: *Recreational fires.*

❖ See Section 307 for open burning provisions. Section 202 includes the definition of "Open burning." The exception exempts recreational fires, which are also defined in Section 202.

105.6.33 Open flames and torches. An operational permit is required to remove paint with a torch; or to use a torch or open-flame device in a wildfire risk area.

❖ See Section 308 for regulations regarding open flames (see commentary, Section 105.6).

105.6.34 Open flames and candles. An operational permit is required to use open flames or candles in connection with assembly areas, dining areas of restaurants or drinking establishments.

❖ See Section 308 for regulations regarding open flames (see commentary, Section 105.6).

105.6.35 Organic coatings. An operational permit is required for any organic-coating manufacturing operation producing more than 1 gallon (4 L) of an organic coating in one day.

❖ The manufacture of organic coatings is addressed in Chapter 29 (see commentary, Section 105.6).

105.6.36 Places of assembly. An operational permit is required to operate a place of assembly.

❖ Because of the higher occupant loads found in Group A occupancies, such occupancies justify an increased level of scrutiny, such as is provided through the permit process.

105.6.37 Private fire hydrants. An operational permit is required for the removal from service, use or operation of private fire hydrants.

Exception: A permit is not required for private industry with trained maintenance personnel, private fire brigade or fire departments to maintain, test and use private hydrants.

❖ The purpose of an operational permit for the removal of private fire hydrants is to see that adequate fire hydrants are maintained for use during a fire. The exception allows testing and use of private fire hydrants by trained private industry personnel without an operational permit.

INTERNATIONAL CODE COUNCIL®
Copyright © 2015 ICC. ALL RIGHTS RESERVED. Accessed by David Dammon on Jun 21, 2017 12:30:52 PM pursuant to License Agreement with ICC. No further reproduction or distribution authorized. ANY UNAUTHORIZED REPRODUCTION OR DISTRIBUTION IS A VIOLATION OF THE FEDERAL COPYRIGHT ACT AND THE LICENSE AGREEMENT, AND SUBJECT TO CIVIL AND CRIMINAL PENALTIES THEREUNDER.

105.6.38 Pyrotechnic special effects material. An operational permit is required for use and handling of pyrotechnic special effects material.

❖ See Chapter 56 for fireworks regulations. The definition of "Pyrotechnic special effects material" is listed in Section 56 (see commentary, Section 105.6).

105.6.39 Pyroxylin plastics. An operational permit is required for storage or handling of more than 25 pounds (11 kg) of cellulose nitrate (pyroxylin) plastics, and for the assembly or manufacture of articles involving pyroxylin plastics.

❖ See Chapter 65 for requirements regarding pyroxylin (cellulose nitrate) plastics (see commentary, Section 105.6).

105.6.40 Refrigeration equipment. An operational permit is required to operate a mechanical refrigeration unit or system regulated by Chapter 6.

❖ See Section 606 for mechanical refrigeration regulations (see commentary, Section 105.6).

105.6.41 Repair garages and motor fuel-dispensing facilities. An operational permit is required for operation of repair garages.

❖ See Chapter 23 for requirements for repair garages (see commentary, Section 105.6).

105.6.42 Rooftop heliports. An operational permit is required for the operation of a rooftop heliport.

❖ See Chapter 20 for aviation facility requirements. Section 2007 contains helistop and heliport requirements (see commentary, Section 105.6).

105.6.43 Spraying or dipping. An operational permit is required to conduct a spraying or dipping operation utilizing flammable or *combustible liquids*, or the application of combustible powders regulated by Chapter 24.

❖ See Chapter 24 for flammable finish requirements. Section 2404 contains the spray finishing provisions, Section 2405 addresses dipping operations and Section 2406 includes powder coating regulations (see commentary, Section 105.6).

105.6.44 Storage of scrap tires and tire byproducts. An operational permit is required to establish, conduct or maintain storage of scrap tires and tire byproducts that exceeds 2,500 cubic feet (71 m^3) of total volume of scrap tires, and for indoor storage of tires and tire byproducts.

❖ See Chapter 34 for regulations regarding tire rebuilding and tire storage (see Section 105.6).

105.6.45 Temporary membrane structures and tents. An operational permit is required to operate an air-supported temporary membrane structure, a temporary stage canopy or a tent having an area in excess of 400 square feet (37 m^2).

Exceptions:

1. Tents used exclusively for recreational camping purposes.
2. Tents open on all sides, which comply with all of the following:
   - 2.1. Individual tents having a maximum size of 700 square feet (65 m^2).
   - 2.2. The aggregate area of multiple tents placed side by side without a fire break clearance of not less than 12 feet (3658 mm) shall not exceed 700 square feet (65 m^2) total.
   - 2.3. A minimum clearance of 12 feet (3658 mm) to structures and other tents shall be provided.

❖ See Chapter 31 for requirements for tents and other membrane structures. The first exception in this section exempts recreational camping tents, since they are small, temporary and have few occupants. The second exception exempts relatively small tents that are very low hazard, since they are spaced at least 12 feet (3658 mm) apart (see also commentary, Section 3103.20).

105.6.46 Tire-rebuilding plants. An operational permit is required for the operation and maintenance of a tire-rebuilding plant.

❖ See Chapter 34 for regulations regarding tire rebuilding operations (see commentary, Section 105.6).

105.6.47 Waste handling. An operational permit is required for the operation of wrecking yards, junk yards and waste material-handling facilities.

❖ See Section 315 for miscellaneous combustible materials storage requirements, Section 5004 for provisions regarding the storage of hazardous materials and Section 2808 for provisions regarding yard waste and recycling facilities (see commentary, Section 105.6).

105.6.48 Wood products. An operational permit is required to store chips, hogged material, lumber or plywood in excess of 200 cubic feet (6 m^3).

❖ See Section 2808 for requirements regarding the storage and handling of wood chips, hogged material, fines, compost and raw product in association with yard waste and recycling facilities (see commentary, Section 105.6).

[A] 105.7 Required construction permits. The *fire code official* is authorized to issue construction permits for work as set forth in Sections 105.7.1 through 105.7.18.

❖ This section addresses conditions requiring a construction permit (see Section 105.6). Generally, a construction permit is required when a safety related system or hazardous material storage is installed or an existing system or facility is modified. Other sections of the code may also apply.

In some cases, the requirements in Sections 105.7.1 through 105.7.18 are stated in only general terms. In these instances, the fire code official is to

INTERNATIONAL CODE COUNCIL®
Copyright © 2015 ICC. ALL RIGHTS RESERVED. Accessed by David Dammon on Jun 21, 2017 12:30:52 PM pursuant to License Agreement with ICC. No further reproduction or distribution authorized. ANY UNAUTHORIZED REPRODUCTION OR DISTRIBUTION IS A VIOLATION OF THE FEDERAL COPYRIGHT ACT AND THE LICENSE AGREEMENT, AND SUBJECT TO CIVIL AND CRIMINAL PENALTIES THEREUNDER.

evaluate the scope of work involved for the modification or installation and determine whether a construction permit is required for the specific project.

[A] 105.7.1 Automatic fire-extinguishing systems. A construction permit is required for installation of or modification to an automatic fire-extinguishing system. Maintenance performed in accordance with this code is not considered to be a modification and does not require a permit.

❖ See Chapter 9 for fire protection system requirements. A construction permit is required for the installation or modification of an automatic fire-extinguishing system so that the work can be verified to meet the code requirements, since the system is obviously safety related (see commentary, Section 105.7).

[A] 105.7.2 Battery systems. A permit is required to install stationary storage battery systems having a liquid capacity of more than 50 gallons (189 L).

❖ See Sections 602.1 and 608 for battery system requirements (see commentary, Section 105.7).

[A] 105.7.3 Compressed gases. Where the compressed gases in use or storage exceed the amounts listed in Table 105.6.9, a construction permit is required to install, repair damage to, abandon, remove, place temporarily out of service, or close or substantially modify a *compressed gas* system.

Exceptions:

1. Routine maintenance.
2. For emergency repair work performed on an emergency basis, application for permit shall be made within two working days of commencement of work.

❖ See Chapter 53 for the requirements for compressed gas systems. Where the volume of the compressed gas presents a significant health hazard and the quantity exceeds the allowed amounts in Table 105.6.9, a permit is needed to trigger construction document submittal, document review and inspections of the work on the system. The exceptions exempt maintenance work and allow emergency work to proceed immediately.

[A] 105.7.4 Cryogenic fluids. A construction permit is required for installation of or *alteration* to outdoor stationary *cryogenic fluid* storage systems where the system capacity exceeds the amounts listed in Table 105.6.11. Maintenance performed in accordance with this code is not considered to be an *alteration* and does not require a construction permit.

❖ See Chapter 55 for the requirements for cryogenic fluids and Chapter 58 for the requirements for flammable cryogenic fluids. The application for a construction permit for cryogenic fluids is intended to trigger a plan review that will examine constraints on location and the requirements of Chapters 55 and 58.

[A] 105.7.5 Emergency responder radio coverage system. A construction permit is required for installation of or modification to emergency responder radio coverage systems and related equipment. Maintenance performed in accordance with this code is not considered to be a modification and does not require a construction permit.

❖ This section establishes that a permit must be obtained for the installation or modification of the emergency responder radio coverage system (ERRCS) to ensure that the work is done correctly and that any parts replacement will be compatible with the existing system components. Since the normal maintenance of a system typically would not involve alteration of the system, it would not require a permit.

[A] 105.7.6 Fire alarm and detection systems and related equipment. A construction permit is required for installation of or modification to fire alarm and detection systems and related equipment. Maintenance performed in accordance with this code is not considered to be a modification and does not require a construction permit.

❖ See Section 907 for fire alarm and detection requirements. A construction permit is required for installation or modification of these systems since they are obviously safety related. A permit is not required for maintenance when no modifications are made to the systems (see commentary, Section 105.7).

[A] 105.7.7 Fire pumps and related equipment. A construction permit is required for installation of or modification to fire pumps and related fuel tanks, jockey pumps, controllers and generators. Maintenance performed in accordance with this code is not considered to be a modification and does not require a construction permit.

❖ See Section 913 for requirements regarding fire pumps. A construction permit is required for modification or installation of equipment that is necessary to serve the sprinkler or standpipe system. This construction work must be monitored since these are safety-related systems (see commentary, Section 105.7).

[A] 105.7.8 Flammable and combustible liquids. A construction permit is required:

1. To install, repair or modify a pipeline for the transportation of flammable or *combustible liquids*.
2. To install, construct or alter tank vehicles, equipment, tanks, plants, terminals, wells, fuel-dispensing stations, refineries, distilleries and similar facilities where flammable and *combustible liquids* are produced, processed, transported, stored, dispensed or used.
3. To install, alter, remove, abandon or otherwise dispose of a flammable or *combustible liquid* tank.

❖ See Chapter 57 for provisions for flammable and combustible liquids. The intent of this section is to require a construction permit for any of the three activities listed, since flammable and combustible liquids are a significant hazard (see commentary, Section 105.7).

[A] 105.7.9 Gates and barricades across fire apparatus access roads. A construction permit is required for the instal-

INTERNATIONAL CODE COUNCIL®
Copyright © 2015 ICC. ALL RIGHTS RESERVED. Accessed by David Dammon on Jun 21, 2017 12:30:52 PM pursuant to License Agreement with ICC. No further reproduction or distribution authorized. ANY UNAUTHORIZED REPRODUCTION OR DISTRIBUTION IS A VIOLATION OF THE FEDERAL COPYRIGHT ACT AND THE LICENSE AGREEMENT, AND SUBJECT TO CIVIL AND CRIMINAL PENALTIES THEREUNDER.

lation of or modification to a gate or barricade across a fire apparatus access road.

❖ The permit gives the fire code official the ability to ensure that access requirements are met.

Current code requirements for gates and barricades include an approved method of locking/securing, proper dimensions and opening width, and proper devices for operation. See the commentary to Sections 503.5 and 503.6.

[A] 105.7.10 Hazardous materials. A construction permit is required to install, repair damage to, abandon, remove, place temporarily out of service, or close or substantially modify a storage facility or other area regulated by Chapter 50 where the hazardous materials in use or storage exceed the amounts listed in Table 105.6.21.

Exceptions:

1. Routine maintenance.
2. For repair work performed on an emergency basis, application for permit shall be made within two working days of commencement of work.

❖ A construction permit is needed for hazardous-material-related construction to ensure submittal of construction documents, document review and inspection of the work for code compliance. The exceptions provide exemptions for maintenance work and allow emergency work to proceed immediately, provided the permit application is submitted within two working days of starting the job.

[A] 105.7.11 Industrial ovens. A construction permit is required for installation of industrial ovens covered by Chapter 30.

Exceptions:

1. Routine maintenance.
2. For repair work performed on an emergency basis, application for permit shall be made within two working days of commencement of work.

❖ A construction permit is required for industrial oven installation so that the requirements in Chapter 30 for industrial ovens can be verified. The exceptions provide exemptions for maintenance work and allow emergency work to proceed immediately, provided the permit is applied for within two working days after work begins.

[A] 105.7.12 LP-gas. A construction permit is required for installation of or modification to an LP-gas system. Maintenance performed in accordance with this code is not considered to be a modification and does not require a permit.

❖ See Chapter 61 for the requirements for LP-gas storage, handling and transportation (see commentary, Section 105.7). Ordinary maintenance that does not involve modifications to the system does not require a construction permit.

[A] 105.7.13 Private fire hydrants. A construction permit is required for the installation or modification of private fire hydrants. Maintenance performed in accordance with this code is not considered to be a modification and does not require a permit.

❖ A construction permit is needed for the installation or modification of private fire hydrants so that they remain in service for fire protection purposes. The water flow rate and pressure capability need to be maintained. Ordinary maintenance that does not involve modifications does not require a construction permit.

[A] 105.7.14 Smoke control or smoke exhaust systems. Construction permits are required for installation of or alteration to smoke control or smoke exhaust systems. Maintenance performed in accordance with this code is not considered to be an alteration and does not require a permit.

❖ Smoke control and smoke exhaust systems are required fire protection systems by Chapter 9. A permit is necessary to ensure proper design and installation. Ordinary maintenance that does not involve modifications to the system does not require a construction permit.

[A] 105.7.15 Solar photovoltaic power systems. A construction permit is required to install or modify solar photovoltaic power systems. Maintenance performed in accordance with this code is not considered to be a modification and does not require a permit.

❖ Section 605.11 regulates solar photovoltaic power system installations on buildings. Because of the unique electrical and physical hazards they present to fire fighters and the impact such systems have on fire suppression operations, a permit is required. Ordinary maintenance that does not involve modifications to the system does not require a construction permit.

[A] 105.7.16 Spraying or dipping. A construction permit is required to install or modify a spray room, dip tank or booth. Maintenance performed in accordance with this code is not considered to be a modification and does not require a permit.

❖ See Chapter 24 for flammable finish requirements. The spray finishing requirements are in Section 2404, while dipping operations regulations are in Section 2405 (see commentary, Section 105.7). Ordinary maintenance that does not involve modifications does not require a construction permit.

[A] 105.7.17 Standpipe systems. A construction permit is required for the installation, modification or removal from service of a standpipe system. Maintenance performed in accordance with this code is not considered to be a modification and does not require a permit.

❖ See Section 905 for standpipe system requirements. Construction permits are required for standpipe systems because they are safety-related fire protection

INTERNATIONAL CODE COUNCIL®
Copyright © 2015 ICC. ALL RIGHTS RESERVED. Accessed by David Dammon on Jun 21, 2017 12:30:52 PM pursuant to License Agreement with ICC. No further reproduction or distribution authorized. ANY UNAUTHORIZED REPRODUCTION OR DISTRIBUTION IS A VIOLATION OF THE FEDERAL COPYRIGHT ACT AND THE LICENSE AGREEMENT, AND SUBJECT TO CIVIL AND CRIMINAL PENALTIES THEREUNDER.

systems. Ordinary maintenance that does not involve modifications to the system does not require a construction permit.

[A] 105.7.18 Temporary membrane structures and tents. A construction permit is required to erect an air-supported temporary membrane structure, a temporary stage canopy or a tent having an area in excess of 400 square feet (37 m^2).

Exceptions:

1. Tents used exclusively for recreational camping purposes.
2. Funeral tents and curtains, or extensions attached thereto, when used for funeral services.
3. Tents and awnings open on all sides, which comply with all of the following:
   - 3.1. Individual tents shall have a maximum size of 700 square feet (65 m^2).
   - 3.2. The aggregate area of multiple tents placed side by side without a fire break clearance of not less than 12 feet (3658 mm) shall not exceed 700 square feet (65 m^2) total.
   - 3.3. A minimum clearance of 12 feet (3658 mm) to structures and other tents shall be maintained.

❖ See Chapter 31 for requirements regarding tents and other membrane structures. The exceptions are for tents where the hazard is very low. They provide needed exemptions for tents used for recreational camping and funerals. Relatively small tents and awnings that are open on all sides and are located a minimum of 12 feet (3658 mm) apart are also exempt (see commentary, Section 3103.2).

SECTION 106
INSPECTIONS

[A] 106.1 Inspection authority. The *fire code official* is authorized to enter and examine any building, structure, marine vessel, vehicle or premises in accordance with Section 104.3 for the purpose of enforcing this code.

❖ The first part of this section establishes the right of the fire code official to enter the premises to make the permit inspections required by Section 104. Permit application forms typically include a statement in the certification signed by the applicant (who is the owner or owner's agent) granting the fire code official the authority to enter areas covered by the permit to enforce code provisions related to the permit.

The right to enter other structures or premises is more limited. First, to protect the right of privacy, the owner or occupant must grant the fire code official permission before the interior of the property can be inspected. Permission is not required for inspections that can be accomplished from within the public right-of-way. Second, such access may be denied by the owner or occupant. Unless the inspector has "reasonable cause" to believe that a violation of the code exists, access may be unattainable. Third, fire code officials must present proper identification (see Section 104.4) and request admittance during reasonable hours—usually the normal business hours of the establishment—to be admitted. Fourth, inspections must be aimed at securing or determining compliance with the provisions and intent of the regulations that are specifically within the established scope of the fire code official's authority. Searches to gather information for the purpose of enforcing other codes, ordinances or regulations are considered unreasonable and are prohibited by the Fourth Amendment to the U.S. Constitution.

Reasonable cause in the context of this section must be distinguished from probable cause, which is required to gain access to property in criminal cases. The burden of proof for establishing reasonable cause may vary among jurisdictions. Usually, an inspector must show that the property is subject to inspection under the provisions of the code (see Section 104), that the interests of the public health, safety and welfare outweigh the individual's right to maintain privacy and that such an inspection is required solely to determine compliance with the provisions of the code. Many jurisdictions do not recognize the concept of an administrative warrant, and may require the fire code official to prove probable cause in order to gain access upon refusal. This burden of proof is usually more substantial, often requiring the fire code official to stipulate in advance why access is needed (usually access is restricted to gathering evidence for seeking an indictment or making an arrest); what specific item or information is sought; its relevance to the case against the individual subject; how knowledge of the relevance of the information or items sought was obtained; and how the evidence sought will be used. In all such cases, the right to privacy must always be weighed against the right of the fire code official to conduct an inspection to determine whether the health, safety or welfare of the public is in jeopardy. Such important and complex constitutional issues should be discussed with the jurisdiction's legal counsel. Jurisdictions should establish procedures for securing the necessary court orders when an inspection is considered necessary following a refusal.

[A] 106.2 Inspections. The *fire code official* is authorized to conduct such inspections as are deemed necessary to determine the extent of compliance with the provisions of this code and to approve reports of inspection by *approved* agencies or individuals. Reports of such inspections shall be prepared and submitted in writing for review and approval. Inspection reports shall be certified by a responsible officer of such *approved* agency or by the responsible individual. The *fire code official* is authorized to engage such expert opinion as deemed necessary to report upon unusual, detailed or complex technical issues subject to the approval of the governing body.

❖ This section establishes the fire code official's authority to inspect buildings, structures or premises to ver-

INTERNATIONAL CODE COUNCIL®
Copyright © 2015 ICC. ALL RIGHTS RESERVED. Accessed by David Dammon on Jun 21, 2017 12:30:52 PM pursuant to License Agreement with ICC. No further reproduction or distribution authorized. ANY UNAUTHORIZED REPRODUCTION OR DISTRIBUTION IS A VIOLATION OF THE FEDERAL COPYRIGHT ACT AND THE LICENSE AGREEMENT, AND SUBJECT TO CIVIL AND CRIMINAL PENALTIES THEREUNDER.

ify that the requirements of the code are met or to accept written reports of inspections by an approved agency. The code does not, however, establish the frequency of inspections or even require that inspections be conducted, since the code does not presume to interpret or influence the adopting jurisdiction's political, social and economic priorities. Jurisdictions may establish their inspection priorities and frequencies based on a variety of factors, including the availability of inspection resources; the level of available fire suppression services; the value of premises to the community; or the potential disruption to community services or stability if a fire occurs. In summary, each community determines and assumes its own acceptable risk level.

In order to expand the available resources for inspection purposes, the fire code official is also authorized to approve a third-party agency that is regularly engaged in conducting relevant tests or furnishing inspection services. Approval of such an agency may be acquired through review of the résumés and references of the agency and its personnel, and analyzing the capacity and capability of the agency to perform the work. Additional guidance can be obtained by reviewing the provisions of Sections 1703 and 1704 of the IBC.

When unusual, extraordinary or complex technical issues arise relative to building safety, the fire code official has the authority to seek the opinion and advice of experts. Since this usually involves the expenditure of funds, the approval of the jurisdiction's chief administrative authority must be obtained.

[A] 106.2.1 Inspection requests. It shall be the duty of the holder of the permit or their duly authorized agent to notify the *fire code official* when work is ready for inspection. It shall be the duty of the permit holder to provide access to and means for inspections of such work that are required by this code.

❖ It is the responsibility of the permit holder or other authorized person, such as the contractor performing the work, to arrange for the required inspections when completed work is ready and to allow for sufficient time for the fire code official to schedule a visit to the site to prevent work from being concealed prior to being inspected. Access to the work to be inspected must be provided, including any special means such as a ladder to gain access.

[A] 106.2.2 Approval required. Work shall not be done beyond the point indicated in each successive inspection without first obtaining the approval of the *fire code official.* The *fire code official,* upon notification, shall make the requested inspections and shall either indicate the portion of the construction that is satisfactory as completed, or notify the permit holder or his or her agent wherein the same fails to comply with this code. Any portions that do not comply shall be corrected, and such portion shall not be covered or concealed until authorized by the *fire code official.*

❖ This section establishes that work cannot progress beyond the point of a required inspection without the fire code official's approval. Upon making the inspection, the fire code official must either approve the completed work or notify the permit holder or other responsible party of that which does not comply with the code. Approvals and notices of noncompliance must be in writing, as required by Section 109.3, to avoid any misunderstanding as to what is required. Any item not approved cannot be covered or concealed until it has been corrected and approved by the fire code official.

[A] 106.3 Concealed work. It shall be the duty of the permit applicant to cause the work to remain accessible and exposed for inspection purposes. Where any installation subject to inspection prior to use is covered or concealed without having first been inspected, the *fire code official* shall have the authority to require that such work be exposed for inspection. Neither the *fire code official* nor the jurisdiction shall be liable for expense entailed in the removal or replacement of any material required to allow inspection.

❖ This section addresses the procedure that is available to the fire code official for inspection of concealed work. In many jurisdictions, the contractor or permit holder of an operation or a construction project is to contact the local fire inspection authority when work is completed but still exposed to allow inspection. The section requires that any work to be concealed upon completion must remain exposed until an inspection is made. If the work requiring inspection is covered up before the inspection takes place, the fire code official has the authority to require removal of the concealing construction. The section also makes it clear that any expense incurred in removing or replacing material that conceals an item to be inspected is not the responsibility of either the fire code official or the jurisdiction. Obviously, this can be a time-consuming and expensive procedure that can be eliminated by good communication and cooperation between the contractor or permit holder and the fire code official.

[A] 106.4 Approvals. Approval as the result of an inspection shall not be construed to be an approval of a violation of the provisions of this code or of other ordinances of the jurisdiction. Inspections presuming to give authority to violate or cancel provisions of this code or of other ordinances of the jurisdiction shall not be valid.

❖ As with the issuance of permits (see commentary, Section 105.3), approval as a result of an inspection is not a license to violate the code. Further, approval in violation of the code does not relieve the applicant from complying with the code and is not valid. This is significant because even if there are errors or oversights in the approval process, the permit applicant or other recipient of the inspection, not the fire code official, is still responsible for code compliance.

INTERNATIONAL CODE COUNCIL®
Copyright © 2015 ICC. ALL RIGHTS RESERVED. Accessed by David Dammon on Jun 21, 2017 12:30:52 PM pursuant to License Agreement with ICC. No further reproduction or distribution authorized. ANY UNAUTHORIZED REPRODUCTION OR DISTRIBUTION IS A VIOLATION OF THE FEDERAL COPYRIGHT ACT AND THE LICENSE AGREEMENT, AND SUBJECT TO CIVIL AND CRIMINAL PENALTIES THEREUNDER.

SECTION 107
MAINTENANCE

[A] 107.1 Maintenance of safeguards. Where any device, equipment, system, condition, arrangement, level of protection, or any other feature is required for compliance with the provisions of this code, or otherwise installed, such device, equipment, system, condition, arrangement, level of protection, or other feature shall thereafter be continuously maintained in accordance with this code and applicable referenced standards.

❖ This section does not identify who is responsible for maintenance because that determination should be made in accordance with the legal documents created between owners and occupants, such as a lease. The owner of a structure or premises, however, is usually primarily responsible for its maintenance, since the owner stands to gain the most from a well-maintained property. One of the underlying assumptions is that maintaining a commercial property in good condition allows the owner to recoup a substantial portion of his or her investment in maintenance. There are three factors that may influence owners to comply with code requirements:

- Code compliance requires only a small additional investment in the property.
- The owner has a long-term interest in the property.
- The owner expects profitability after incurring the additional expense of complying with the code.

While all these factors represent economic incentives, fire code officials should be equally aware of potential disincentives to compliance, such as assessable value, expiring tax credits or historic, architectural or aesthetic criteria. The fire code official need not belabor the justifications for compliance, but should be prepared to acknowledge the owner's rationalizations for failure to comply.

This section also emphasizes that any "otherwise installed" system that currently exists must be maintained. For example, an existing fire protection system cannot be removed from a building just because it is not required in new or existing buildings by current codes.

[A] 107.2 Testing and operation. Equipment requiring periodic testing or operation to ensure maintenance shall be tested or operated as specified in this code.

❖ This section addresses periodic testing or operation to verify that the equipment can be expected to operate when needed. For example, see Section 901.6 for inspection and testing requirements for fire protection systems.

Test and inspection records must be available to the fire code official for verification that the tests and inspections required by the code and the referenced standards are in compliance.

If the fire code official requests, such records must be filed with the jurisdictional office.

[A] 107.2.1 Reinspection and testing. Where any work or installation does not pass an initial test or inspection, the necessary corrections shall be made so as to achieve compliance with this code. The work or installation shall then be resubmitted to the *fire code official* for inspection and testing.

❖ This section simply requires an installation to be of such quality that it will pass any tests or inspections required by the code. For example, if a fire alarm system did not pass the installation test upon completion of the system, the system is to be reworked until it passes the test.

[A] 107.3 Recordkeeping. A record of periodic inspections, tests, servicing and other operations and maintenance shall be maintained on the premises or other *approved* location for not less than 3 years, or a different period of time where specified in this code or referenced standards. Records shall be made available for inspection by the *fire code official*, and a copy of the records shall be provided to the *fire code official* upon request.

The *fire code official* is authorized to prescribe the form and format of such recordkeeping. The *fire code official* is authorized to require that certain required records be filed with the *fire code official*.

❖ Recordkeeping of testing, inspections, servicing and other operations and maintenance are critical to the successful application of this code. Proper and consistent recordkeeping will increase the safety to both building occupants and fire fighters. This section also makes it clear that records must be provided to the fire code official upon request and maintained for a period of not less than 3 years unless a different time interval is specified in the code or a referenced standard. Also, the fire code official is authorized to prescribe the form and format of such records. The recordkeeping requirements throughout the code have been specifically coordinated with this section.

[A] 107.4 Supervision. Maintenance and testing shall be under the supervision of a responsible person who shall ensure that such maintenance and testing are conducted at specified intervals in accordance with this code.

❖ Maintenance supervision is needed to verify that testing and general supervision is done regularly. Section 901.6 states code requirements regarding testing and maintenance of the fire protection systems.

107.5 Rendering equipment inoperable. Portable or fixed fire-extinguishing systems or devices, and fire-warning systems, shall not be rendered inoperative or inaccessible, except as necessary during emergencies, maintenance, repairs, *alterations*, drills or prescribed testing.

❖ If fire protection systems are going to be effective when needed, they must be in good operating condition. This section specifies those circumstances when they are allowed to be temporarily out of service. See Section 901.6 for code requirements regarding testing and maintenance of the fire protection systems.

[A] 107.6 Overcrowding. Overcrowding or admittance of any person beyond the *approved* capacity of a building or a

INTERNATIONAL CODE COUNCIL®
Copyright © 2015 ICC. ALL RIGHTS RESERVED. Accessed by David Dammon on Jun 21, 2017 12:30:52 PM pursuant to License Agreement with ICC. No further reproduction or distribution authorized. ANY UNAUTHORIZED REPRODUCTION OR DISTRIBUTION IS A VIOLATION OF THE FEDERAL COPYRIGHT ACT AND THE LICENSE AGREEMENT, AND SUBJECT TO CIVIL AND CRIMINAL PENALTIES THEREUNDER.

portion thereof shall not be allowed. The *fire code official*, upon finding any overcrowding conditions or obstructions in *aisles*, passageways or other *means of egress*, or upon finding any condition that constitutes a life safety hazard, shall be authorized to cause the event to be stopped until such condition or obstruction is corrected.

❖ The key to enforcing this provision successfully is good judgment. Rarely is it possible to count accurately the number of people in any given place of public assembly. Usually, the proprietors or operators of such events have no accurate estimate of the crowd size or they are unwilling to provide an estimate. Despite these difficulties, when the number of people is too large to permit aisles and required egress elements to remain clear or at least flow smoothly, remedies must be sought. In many instances, overcrowding can be remedied by simply preventing any more occupants from entering, thus limiting the potential hazard to those occupants already inside. If the fire code official determines that preventing further access will be insufficient in itself, he or she is authorized to order the owner or operator to stop the event until the hazardous condition is abated, the approved occupant load is reestablished and resumption of the event is authorized by the fire code official.

SECTION 108
BOARD OF APPEALS

[A] 108.1 Board of appeals established. In order to hear and decide appeals of orders, decisions or determinations made by the *fire code official* relative to the application and interpretation of this code, there shall be and is hereby created a board of appeals. The board of appeals shall be appointed by the governing body and shall hold office at its pleasure. The *fire code official* shall be an ex officio member of said board but shall not have a vote on any matter before the board. The board shall adopt rules of procedure for conducting its business, and shall render all decisions and findings in writing to the appellant with a duplicate copy to the *fire code official.*

❖ This section provides an objective forum for settling disputes regarding the application or interpretation of the code requirements. The board is required to issue a written decision to the appellant who brought the matter before the board and to the fire code official. Note that the fire code official is a nonvoting member of the board. The board of appeals is an effective decision-making body that is commonly used when the owner or owner's agent and the fire code official do not agree on a matter relating to the application of the code.

[A] 108.2 Limitations on authority. An application for appeal shall be based on a claim that the intent of this code or the rules legally adopted hereunder have been incorrectly interpreted, the provisions of this code do not fully apply, or an equivalent method of protection or safety is proposed. The board shall not have authority to waive requirements of this code.

❖ This section states the scope of the issues that are to be addressed by the board of appeals and limits its authority to ruling on these issues. Commonly, the issues relate to the applicability of the code or the interpretation of the code to a given situation. The board listens to both the person who filed the appeal and to the fire code official before ruling on the matter.

This section specifically states that the board does not have the authority to waive code requirements; however, the board has the authority to accept an alternative method of protection or safety if, in its view, it is equivalent to the specific requirement in the code.

[A] 108.3 Qualifications. The board of appeals shall consist of members who are qualified by experience and training to pass on matters pertaining to hazards of fire, explosions, hazardous conditions or *fire protection systems*, and are not employees of the jurisdiction.

❖ It is important that the decisions of the board of appeals are based purely on the technical merits involved in an appeal; it is not the place for policy or political deliberations. The members of the board of appeals are, therefore, expected to have experience in matters within the scope of the code and must be of the highest character, competence and status in their professions and the community at large. Appendix A of the code provides more detailed qualifications for board of appeals members and can be adopted by jurisdictions desiring that level of expertise (see commentary, Appendix A).

SECTION 109
VIOLATIONS

[A] 109.1 Unlawful acts. It shall be unlawful for a person, firm or corporation to erect, construct, alter, repair, remove, demolish or utilize a building, occupancy, premises or system regulated by this code, or cause same to be done, in conflict with or in violation of any of the provisions of this code.

❖ Section 109 establishes that compliance with the code is required, and what measures are to be taken for noncompliance.

[A] 109.2 Owner/occupant responsibility. Correction and abatement of violations of this code shall be the responsibility of the *owner* or the owner's authorized agent. Where an occupant creates, or allows to be created, hazardous conditions in violation of this code, the occupant shall be held responsible for the abatement of such hazardous conditions.

❖ Hazards related to use and occupancy, and not those related to fixed equipment or installations, fall within the scope of the occupants' responsibility. Owners or the owner's authorized agent, however, may become liable if they allow the unlawful operation or continua-

INTERNATIONAL CODE COUNCIL®
Copyright © 2015 ICC. ALL RIGHTS RESERVED. Accessed by David Dammon on Jun 21, 2017 12:30:52 PM pursuant to License Agreement with ICC. No further reproduction or distribution authorized. ANY UNAUTHORIZED REPRODUCTION OR DISTRIBUTION IS A VIOLATION OF THE FEDERAL COPYRIGHT ACT AND THE LICENSE AGREEMENT, AND SUBJECT TO CIVIL AND CRIMINAL PENALTIES THEREUNDER.

tion of a public nuisance on a property under their control, especially if they knowingly or willfully lease the property in violation of fire, zoning or building regulations.

The simple rule for determining what is the responsibility of the owner or owner's authorized agents, and what is the occupants' responsibility is whether the issue involves fixed equipment installations or if the structure is separate from those items related to occupancy. The owner or owner's authorized agent is usually responsible for the physical maintenance of the building or structure and its utilities and appurtenances (that is, building services and systems).

[A] 109.3 Notice of violation. Where the *fire code official* finds a building, premises, vehicle, storage facility or outdoor area that is in violation of this code, the *fire code official* is authorized to prepare a written notice of violation describing the conditions deemed unsafe and, where compliance is not immediate, specifying a time for reinspection.

❖ The fire code official has a duty to supply owners, agents or occupants with a written notice of code violations on the premises under their control. When possible, both the owner and the occupants should be made aware of hazardous conditions. Such notices constitute the first of several steps in the due process procedure. Violation notices must clearly indicate the defect and its location (including citation of the code section being violated), what must be done to correct the violation and the date of the reinspection. Owners, agents or occupants should also be supplied with information regarding penalties, permit applications and appeal procedures. The notice or order must be signed by the fire code official who issued it and he or she should provide a space for the owner, agent or occupants' signature to acknowledge receipt of the document. If possible, duplicate or triplicate copies should be prepared, with the original notice issued to the responsible party. Other copies should be maintained by the inspector and the departmental record keeper.

[A] 109.3.1 Service. A notice of violation issued pursuant to this code shall be served upon the *owner*, the owner's authorized agent, operator, occupant or other person responsible for the condition or violation, either by personal service, mail or by delivering the same to, and leaving it with, some person of responsibility upon the premises. For unattended or abandoned locations, a copy of such notice of violation shall be posted on the premises in a conspicuous place at or near the entrance to such premises and the notice of violation shall be mailed by certified mail with return receipt requested or a certificate of mailing, to the last known address of the *owner*, the owner's authorized agent, or occupant.

❖ Service methods are listed by order or preference. The first and best method is to personally serve the owners, owner's authorized agent or the occupant, in that order, at the premises cited, with a signature acknowledging receipt. The next-most desirable method is service to these same parties in the order indicated at their place of business when it is not the premises cited.

While post office delivery by ordinary first-class mail is acceptable, most jurisdictions prefer certified mail with return receipt, followed by a certificate of mailing; however, owners or owner's authorized agents familiar with the legal process will often refuse to accept certified mail. As a result, many jurisdictions follow up returned certified mail with a request for a certificate of mailing. A certificate of mailing includes certification by the mail carrier or post office that the item was physically delivered to the address indicated, but does not verify that the addressee actually took possession of the item. The least-desirable method of service is physically posting the premises with the violation notice. When service proves difficult, many jurisdictions pursue the mailing and posting service options simultaneously to exhaust all service methods. Jurisdictions should consult legal counsel about case law regarding legal service in their communities. The following methods are most common:

- Personal to violator.
- Personal to party at premises.
- Certified mail with return receipt.
- First-class mail with certificate of mailing.
- Posting at the premises.

[A] 109.3.2 Compliance with orders and notices. A notice of violation issued or served as provided by this code shall be complied with by the *owner*, the owner's authorized agent, operator, occupant or other person responsible for the condition or violation to which the notice of violation pertains.

❖ The party responsible for the condition that is in noncompliance is required by this section to bring the property into code compliance. See the remainder of Section 109 for what is to be done if this does not occur.

[A] 109.3.3 Prosecution of violations. If the notice of violation is not complied with promptly, the *fire code official* is authorized to request the legal counsel of the jurisdiction to institute the appropriate legal proceedings at law or in equity to restrain, correct or abate such violation or to require removal or termination of the unlawful occupancy of the structure in violation of the provisions of this code or of the order or direction made pursuant hereto.

❖ The duty to pursue legal remedies through judicial due process is established by this section. Local prosecutors and fire code officials should establish policies covering the following issues regarding judicial due process proceedings:

- Length of compliance period for representative violations.
- Quality or quantity of progress toward compliance warranting an extension or representing reasonable intent to comply.

INTERNATIONAL CODE COUNCIL®
Copyright © 2015 ICC. ALL RIGHTS RESERVED. Accessed by David Dammon on Jun 21, 2017 12:30:52 PM pursuant to License Agreement with ICC. No further reproduction or distribution authorized. ANY UNAUTHORIZED REPRODUCTION OR DISTRIBUTION IS A VIOLATION OF THE FEDERAL COPYRIGHT ACT AND THE LICENSE AGREEMENT, AND SUBJECT TO CIVIL AND CRIMINAL PENALTIES THEREUNDER.

- Whether court filings should be sought during the appeal application period.
- Rules for obtaining arrest warrants for code violations.
- Rules for obtaining administrative and criminal search warrants.

The cooperation of the police department and other law enforcement agencies should be coordinated in advance. When necessary to enforce code provisions, arrangements should be made to have police or other law enforcement personnel make arrests for code violations or ignoring lawful orders of the fire code official.

[A] 109.3.4 Unauthorized tampering. Signs, tags or seals posted or affixed by the *fire code official* shall not be mutilated, destroyed or tampered with, or removed, without authorization from the *fire code official*.

❖ This section states that tampering with signs, seals or tags posted at the property is a violation of the code. The safety of occupants may depend on warning signs posted by the fire code official remaining in place.

[A] 109.4 Violation penalties. Persons who shall violate a provision of this code or shall fail to comply with any of the requirements thereof or who shall erect, install, alter, repair or do work in violation of the *approved construction documents* or directive of the *fire code official*, or of a permit or certificate used under provisions of this code, shall be guilty of a **[SPECIFY OFFENSE]**, punishable by a fine of not more than **[AMOUNT]** dollars or by imprisonment not exceeding **[NUMBER OF DAYS]**, or both such fine and imprisonment. Each day that a violation continues after due notice has been served shall be deemed a separate offense.

❖ Penalties for code violations must be established in adopting legislation. The offense, dollar amount for the fine and maximum number of days of imprisonment are to be specific in the adopting ordinance of the jurisdiction. A sample adoption ordinance is on page xxi of the code.

The code does not establish penalties for violations. The jurisdiction's judicial and legislative bodies should work with the fire code official to establish reasonable and equitable penalties for violators. The penalties set for individual violations should be representative of the severity of the act committed and the culpability of the violator. Once served with a violation notice, the violator becomes guilty of a separate offense for each day the violation continues to exist; however, most prosecutors and courts are reluctant to impose this penalty for days during the compliance period. Many violators wrongly assume that the Seventh Amendment of the U.S. Constitution, which offers protection against double jeopardy, exempts them from compliance once they have paid or served their sentence for a previous fire code violation. This is certainly not the case. Most courts reinforce the compliance requirement in such cases by making compliance a condition for completing the sentence. Failure to comply with the judge's order mandating compliance may result in a contempt of court charge.

[A] 109.4.1 Abatement of violation. In addition to the imposition of the penalties herein described, the *fire code official* is authorized to institute appropriate action to prevent unlawful construction or to restrain, correct or abate a violation; or to prevent illegal occupancy of a structure or premises; or to stop an illegal act, conduct of business or occupancy of a structure on or about any premises.

❖ Even though the person who violated the code has paid any fine and served any sentence that may be imposed for the jurisdiction under Section 109.4, the fire code official has the right to require that the code violation be removed. If the violation is not abated, the fire code official has the right to prevent occupancy until the violation is addressed. Usually, the court will require that the violation be corrected as part of the sentence of noncompliance prior to the occupancy of the building.

SECTION 110
UNSAFE BUILDINGS

[A] 110.1 General. If during the inspection of a premises, a building or structure, or any building system, in whole or in part, constitutes a clear and inimical threat to human life, safety or health, the *fire code official* shall issue such notice or orders to remove or remedy the conditions as shall be deemed necessary in accordance with this section, and shall refer the building to the building department for any repairs, *alterations*, remodeling, removing or demolition required.

❖ The fire code official is required to order the correction or abatement of hazardous conditions within the scope of the code and to refer the building to the building department for those operations that are within the scope of that department. The conditions listed in Section 110.1.1 represent many of the most common hazardous conditions encountered. Specific requirements supporting each of these objectives are found throughout the code.

[A] 110.1.1 Unsafe conditions. Structures or existing equipment that are or hereafter become unsafe or deficient because of inadequate *means of egress* or which constitute a fire hazard, or are otherwise dangerous to human life or the public welfare, or which involve illegal or improper occupancy or inadequate maintenance, shall be deemed an unsafe condition. A vacant structure that is not secured against unauthorized entry as required by Section 311 shall be deemed unsafe.

❖ Courts have continually upheld the right of states and their authorized subdivisions to abate public nuisances, even by demolition, and bill or assess the property owner through a tax lien for their expenses. However, care must be exercised to maintain compliance with the due process and equal protection doctrines of the Fourth and Fourteenth Amendments of the U.S. Constitution. Jurisdictions should consult legal counsel and adopt appropriate guidelines

INTERNATIONAL CODE COUNCIL®
Copyright © 2015 ICC. ALL RIGHTS RESERVED. Accessed by David Dammon on Jun 21, 2017 12:30:52 PM pursuant to License Agreement with ICC. No further reproduction or distribution authorized. ANY UNAUTHORIZED REPRODUCTION OR DISTRIBUTION IS A VIOLATION OF THE FEDERAL COPYRIGHT ACT AND THE LICENSE AGREEMENT, AND SUBJECT TO CIVIL AND CRIMINAL PENALTIES THEREUNDER.

before engaging in a nuisance abatement program.

Uninhabited or abandoned buildings that are not secured against unauthorized entry as required by Section 311 have a very high probability of intentionally set fires. When fires occur in these buildings, they present a host of unusual hazards to fire fighters. Since the buildings are uninhabited, fires may develop for significant periods of time before they are detected and reported. Accordingly, such unsecured buildings are declared by this section to be unsafe and therefore subject to remediation as provided in Section 110 (see commentary, Section 311).

[A] 110.1.2 Structural hazards. Where an apparent structural hazard is caused by the faulty installation, operation or malfunction of any of the items or devices governed by this code, the *fire code official* shall immediately notify the building code official in accordance with Section 110.1.

❖ The fire code official is required to report structurally unsafe buildings to the building official to secure abatement of unsafe conditions. Courts have continually upheld the right of states and their authorized subdivisions to abate public nuisances, even by demolition, and bill or assess the property owner through a tax lien for their expenses. However, care must be exercised to maintain compliance with the due process and equal protection doctrines of the Fourth and Fourteenth Amendments of the U.S. Constitution.

[A] 110.2 Evacuation. The *fire code official* or the fire department official in charge of an incident shall be authorized to order the immediate evacuation of any occupied building deemed unsafe where such building has hazardous conditions that present imminent danger to building occupants. Persons so notified shall immediately leave the structure or premises and shall not enter or re-enter until authorized to do so by the *fire code official* or the fire department official in charge of the incident.

❖ The fire code official must immediately order the evacuation of any premises posing a clear and imminent threat to life or property. Building occupants who are warned must comply with the evacuation order without delay. Upon leaving the building, occupants may not reenter until authorization is given by the fire code official. Severe and immediate danger anticipated in this section dictates such extreme measures to protect public health, safety and welfare.

[A] 110.3 Summary abatement. Where conditions exist that are deemed hazardous to life and property, the *fire code official* or fire department official in charge of the incident is authorized to abate summarily such hazardous conditions that are in violation of this code.

❖ As indicated in the commentary to Section 110.1.1, the fire code official is authorized to seek abatement action by the building department and bill the owner for abatement costs. Obviously, this is an extreme measure and should be done only when the owner, operator or occupant does not take such measures under the requirements of Section 110.4.

[A] 110.4 Abatement. The *owner*, the owner's authorized agent, operator or occupant of a building or premises deemed unsafe by the *fire code official* shall abate or cause to be abated or corrected such unsafe conditions either by repair, rehabilitation, demolition or other *approved* corrective action.

❖ This section describes the usual circumstance in which a building has such critical violations that it is declared unsafe by the fire code official. The owner, owner's authorized agent, operator or occupant should take abatement measures to correct the unsafe condition. If this is not done promptly, the fire code official has the authority to directly abate the unsafe conditions and bill the owner for the abatement work in accordance with Sections 110.1.1 and 110.3.

SECTION 111
STOP WORK ORDER

[A] 111.1 Order. Where the *fire code official* finds any work regulated by this code being performed in a manner contrary to the provisions of this code, or in a dangerous or unsafe manner, the *fire code official* is authorized to issue a stop work order.

❖ The fire code official is authorized to issue a stop work order when the work does not comply with the code. Obviously, this is an extreme and costly measure that should be reserved for situations in which the violation is a serious safety hazard.

[A] 111.2 Issuance. A stop work order shall be in writing and shall be given to the *owner* of the property, or to the *owner's* authorized agent, or to the person doing the work. Upon issuance of a stop work order, the cited work shall immediately cease. The stop work order shall state the reason for the order, and the conditions under which the cited work is authorized to resume.

❖ The stop work order is to be in writing and must cite the reason for issuing the order.

Upon receipt of a violation notice from the fire code official, all construction activities identified in the notice must immediately cease, except as expressly permitted to correct the violation.

Construction activities that are outside of the scope of the issue involved with the stop work order are not affected and need not stop; thus, the scope of the order must be clearly stated.

[A] 111.3 Emergencies. Where an emergency exists, the *fire code official* shall not be required to give a written notice prior to stopping the work.

❖ This section gives the fire code official the authority to stop the work in dispute immediately when, in his or her opinion, there is an unsafe emergency condition that has been created by the work. The need for the written notice is suspended for this situation so that the work can be stopped immediately. After the work is stopped, immediate measures should be taken to correct the work at issue.

INTERNATIONAL CODE COUNCIL®
Copyright © 2015 ICC. ALL RIGHTS RESERVED. Accessed by David Dammon on Jun 21, 2017 12:30:52 PM pursuant to License Agreement with ICC. No further reproduction or distribution authorized. ANY UNAUTHORIZED REPRODUCTION OR DISTRIBUTION IS A VIOLATION OF THE FEDERAL COPYRIGHT ACT AND THE LICENSE AGREEMENT, AND SUBJECT TO CIVIL AND CRIMINAL PENALTIES THEREUNDER.

[A] 111.4 Failure to comply. Any person who shall continue any work after having been served with a stop work order, except such work as that person is directed to perform to remove a violation or unsafe condition, shall be liable to a fine of not less than **[AMOUNT]** dollars or more than **[AMOUNT]** dollars.

❖ The local jurisdiction is to designate the fine that is to apply to any person who continues work that is at issue, other than abatement work. The dollar amounts for the minimum and maximum fines are to be specified in the adopting ordinance. A sample adoption ordinance is on page xxi of the code.

SECTION 112
SERVICE UTILITIES

[A] 112.1 Authority to disconnect service utilities. The *fire code official* shall have the authority to authorize disconnection of utility service to the building, structure or system in order to safely execute emergency operations or to eliminate an immediate hazard. The *fire code official* shall notify the serving utility and, where possible, the *owner* or the owner's authorized agent and the occupant of the building, structure or service system of the decision to disconnect prior to taking such action. If not notified prior to disconnection, then the *owner*, the owner's authorized agent or occupant of the building, structure or service system shall be notified in writing as soon as practical thereafter.

❖ This section authorizes the fire code official to order the disconnection of building utilities that interfere with emergency operations or contribute to a public safety hazard. This section also provides that such an action must be preceded by written notice to the utility and the owner or owner's authorized agent and occupants of the building. When the hazard to the public health, safety or welfare is so imminent as to mandate immediate disconnection, this section makes it clear that the fire code official has the authority and even the obligation to cause disconnection without notice.

SECTION 113
FEES

[A] 113.1 Fees. A permit shall not be issued until the fees have been paid, nor shall an amendment to a permit be released until the additional fee, if any, has been paid.

❖ The code anticipates that jurisdictions will establish their own fee schedules. It is the intent that the fees collected by the department for permit issuance, plan review and inspection be adequate to cover the costs to the department in these areas. If the department has additional duties, then its budget will need to be supplemented from the general fund. This section requires that all fees be paid prior to permit issuance or release of an amendment to a permit. Since department operations are intended to be supported by fees paid by the user of department activities, it is important that these fees are received before incurring any expense. This philosophy has resulted in some departments having fees paid prior to the performance of two areas of work: plan review and inspection.

[A] 113.2 Schedule of permit fees. A fee for each permit shall be paid as required, in accordance with the schedule as established by the applicable governing authority.

❖ The jurisdiction is responsible for promulgating a schedule of fees to be charged for operational or construction permits. Permit fees should be established by law, such as in an ordinance adopting the code, a separate ordinance or a legally promulgated regulation, as required by state or local law. Fee schedules for operational permits should be based on an analysis of the amount of time and resources to be expended by the jurisdiction in administering the permit. Fee schedules for construction permits are often based on a valuation of the work to be performed. This concept is based on the proposition that the valuation of a project is related to the amount of work to be expended in plan review, inspections and administering the permit, plus an excess to cover the department overhead.

[A] 113.3 Work commencing before permit issuance. A person who commences any work, activity or operation regulated by this code before obtaining the necessary permits shall be subject to an additional fee established by the applicable governing authority, which shall be in addition to the required permit fees.

❖ The fire code official will incur certain costs (i.e., inspection time and administrative) when investigating and citing a person who has commenced work, activity or operation without having obtained a permit. The fire code official is, therefore, entitled to recover these costs by establishing a fee, in addition to that collected when the required permit is issued, to be imposed on the responsible party. Note that this is not a penalty, as described in Section 109.4, for which the person can also be liable.

[A] 113.4 Related fees. The payment of the fee for the construction, *alteration*, removal or demolition of work done in connection to or concurrently with the work or activity authorized by a permit shall not relieve the applicant or holder of the permit from the payment of other fees that are prescribed by law.

❖ The fees for a permit may be in addition to other fees required by the jurisdiction or others for related items, such as sewer connections, water service taps, driveways and signs and others. It cannot be construed that the fire code permit fee includes these other items.

[A] 113.5 Refunds. The applicable governing authority is authorized to establish a refund policy.

❖ This section allows for a refund of fees, which may be full or partial, typically resulting from the revocation, abandonment or discontinuance of a project or oper-

INTERNATIONAL CODE COUNCIL®
Copyright © 2015 ICC. ALL RIGHTS RESERVED. Accessed by David Dammon on Jun 21, 2017 12:30:52 PM pursuant to License Agreement with ICC. No further reproduction or distribution authorized. ANY UNAUTHORIZED REPRODUCTION OR DISTRIBUTION IS A VIOLATION OF THE FEDERAL COPYRIGHT ACT AND THE LICENSE AGREEMENT, AND SUBJECT TO CIVIL AND CRIMINAL PENALTIES THEREUNDER.

ation for which a permit has been issued and fees have been collected. The refund of fees should be related to the cost of enforcement services not provided because of the termination of the project or operation. The fire code official, when authorizing a fee refund, is authorizing the disbursement of public funds; therefore, the request for a refund should be in writing and for good cause.

Bibliography

The following resource materials were used in the preparation of the commentary for this chapter of the code:

2009 International Code Interpretations. Washington, DC: International Code Council, 2009.

Complete Revision History to the 2015 I-Codes. Washington, DC: International Code Council, 2014.

NFPA 550—07, *Fire Safety Concepts Tree*. Quincy, MA: National Fire Protection Association, 2007.

Robertson, J. C. and W.E. Koffel, Jr. *Fire Prevention Organization and Management. Course Guide*. Emmitsburg, MD: Executive Office of the President, U.S. Federal Emergency Management Agency, U.S. Fire Administration, National Fire Academy and Open Learning Fire Service Program, 1990.

Rosenbauer, D. L. *Introduction to Fire Protection Law*. Quincy, MA: National Fire Protection Association, 1978.

INTERNATIONAL CODE COUNCIL®

Copyright © 2015 ICC. ALL RIGHTS RESERVED. Accessed by David Dammon on Jun 21, 2017 12:30:52 PM pursuant to License Agreement with ICC. No further reproduction or distribution authorized. ANY UNAUTHORIZED REPRODUCTION OR DISTRIBUTION IS A VIOLATION OF THE FEDERAL COPYRIGHT ACT AND THE LICENSE AGREEMENT, AND SUBJECT TO CIVIL AND CRIMINAL PENALTIES THEREUNDER.

Chapter 2: Definitions

General Comments

All terms used in the code and their definitions are listed alphabetically in Chapter 2. While a defined term may be used in one chapter or another, the meaning provided in Chapter 2 is applicable throughout the code.

Where understanding of a term's definition is especially key to or necessary for understanding of a particular code provision, the term is shown in italics wherever it appears in the code. This is true only for those terms that have a meaning that is unique to the code. In other words, the generally understood meaning of a term or phrase might not be sufficient or consistent with the meaning prescribed by the code; therefore, it is essential that the code-defined meaning be known.

Guidance regarding tense, gender and plurality of defined terms as well as terms not defined in the code is also provided.

Purpose

Codes by their very nature are technical documents. Every word, term and punctuation mark can alter a sentence's meaning and, if misused, muddy its intent.

Further, the code, with its broad scope of applicability, includes terms that have a different meaning than the generally accepted meaning of the term. Additionally, these terms can have multiple meanings depending on the context or discipline in which they are being used.

For these reasons, maintaining a consensus on the specific meaning of terms contained in the code is essential. Chapter 2 performs this function by stating clearly what specific terms mean for the purpose of the code.

SECTION 201 GENERAL

201.1 Scope. Unless otherwise expressly stated, the following words and terms shall, for the purposes of this code, have the meanings shown in this chapter.

❖ This section contains the definitions for application of the code and the use of the words and terms is governed by the provisions of this section. This includes code-defined terms as well as those terms that are not.

201.2 Interchangeability. Words used in the present tense include the future; words stated in the masculine gender include the feminine and neuter; the singular number includes the plural and the plural, the singular.

❖ While the definitions are to be taken literally, gender and tense are to be considered interchangeable.

201.3 Terms defined in other codes. Where terms are not defined in this code and are defined in the *International Building Code*, *International Fuel Gas Code*, *International Mechanical Code* or *International Plumbing Code*, such terms shall have the meanings ascribed to them as in those codes.

❖ This section states that when a term is not defined in the code but is defined in another volume of the *International Code*® family, the meaning found in those codes can be used. This adds consistency to the application of the codes.

201.4 Terms not defined. Where terms are not defined through the methods authorized by this section, such terms shall have ordinarily accepted meanings such as the context implies. *Merriam Webster's Collegiate Dictionary, 11th Edition*, shall be considered as providing ordinarily accepted meanings.

❖ Another resource for defining words or terms not defined within the code or other *International Codes*® (I-Codes®) is simply their "ordinarily accepted meaning." With some words, a dictionary definition may be sufficient, if the definition is applied within an appropriate context. Not all dictionaries, however, define words the same and not all parts of this country apply the same meanings to all words. The dictionary referenced in this section provides a standardized resource for defining terms and establishing "ordinarily accepted" meanings of words, thus reducing the likelihood of inconsistent enforcement of the code.

Some terms used throughout the code may not be defined in Chapter 2 or in a dictionary. In those cases, the user should first turn to the definitions contained in the referenced standards (see Chapter 80) and then refer to published textbooks on the subject in question.

INTERNATIONAL CODE COUNCIL®
Copyright © 2015 ICC. ALL RIGHTS RESERVED. Accessed by David Dammon on Jun 21, 2017 12:30:52 PM pursuant to License Agreement with ICC. No further reproduction or distribution authorized. ANY UNAUTHORIZED REPRODUCTION OR DISTRIBUTION IS A VIOLATION OF THE FEDERAL COPYRIGHT ACT AND THE LICENSE AGREEMENT, AND SUBJECT TO CIVIL AND CRIMINAL PENALTIES THEREUNDER.

SECTION 202
GENERAL DEFINITIONS

[BG] 24-HOUR BASIS. The actual time that a person is an occupant within a facility for the purpose of receiving care. It shall not include a facility that is open for 24 hours and is capable of providing care to someone visiting the facility during any segment of the 24 hours.

❖ Care offered over a 24-hour basis is used to differentiate groups and levels of protection between institutional facilities that typically house patients for more than a day, such as hospitals, detoxification facilities, foster care and nursing homes, from other care facilities that keep patients for only part of a day, such as day cares, clinics, day surgery centers and outpatient facilities. To better understand how these concepts work together, see the definitions for "Ambulatory care facility," "Custodial care," "Medical care," "Personal care service" and "Incapable of self-preservation." Facilities that have patients/residents/customers that typically stay for 24 hours or more are considered to be providing care on a 24-hour care basis. However, a facility such as a day care or an urgent care facility, that operates 24 hours a day, would not be considered as providing care on a 24-hour basis if the clients did not stay 24 hours, but instead were in and out of the facility similar to one that closed for the night.

[BE] ACCESSIBLE MEANS OF EGRESS. A continuous and unobstructed way of egress travel from any *accessible* point in a building or facility to a *public way*.

❖ Accessible means of egress requirements are needed to provide those persons with physical disabilities or mobility impairments a means of egress to exit the building. Because of physical limitations, some occupants may need assistance to exit a building. See Section 1009 for requirements establishing areas where people can safely wait for assisted rescue. Chapter 4 also includes requirements in the fire safety and evacuation plans for specific planning to address occupants who may need assistance in evacuation during emergencies. In addition, Chapter 9 of the code includes requirements for emergency evacuation notification for persons with hearing and vision disabilities.

The accessible means of egress requirements may not be the same route as that required for ingress into the building [see Sections 1104 and 1105 of the *International Building Code*® (IBC®)]. For example, a two-story building requires one accessible route to connect all accessible spaces within the building. The accessible route to the second level is typically by an elevator. During a fire emergency, persons with mobility impairments on the second level would be moving to the exit stairways for assisted rescue, not back the way they came in, via the elevator.

[BE] ACCESSIBLE ROUTE. A continuous, unobstructed path that complies with Chapter 11 of the *International Building Code*.

❖ There are typically more physical barriers in the built environment to people with a mobility impairment than in any other category of disability. An accessible route enables a person with a mobility impairment to approach and utilize a facility's accessible fixtures and features. While there are a variety of mobility devices, the design and construction of an accessible route is based predominantly on provisions necessary for accessibility to a person using a wheelchair. Accessible routes are required for both ingress and egress (see Sections 1009 and 1104).

An accessible route must also be safe and usable by people with other disabilities and those without disabilities; therefore, requirements are set forth in consideration of those needs. For example, there are restrictions on objects that protrude into a circulation path in consideration not only of a person with a visual impairment but also the possibility of smoke limiting visibility during an emergency.

AEROSOL. A product that is dispensed from an aerosol container by a propellant.

Aerosol products shall be classified by means of the calculation of their chemical heats of combustion and shall be designated Level 1, Level 2 or Level 3.

Level 1 aerosol products. Those with a total chemical heat of combustion that is less than or equal to 8,600 British thermal units per pound (Btu/lb) (20 kJ/g).

Level 2 aerosol products. Those with a total chemical heat of combustion that is greater than 8,600 Btu/lb (20 kJ/g), but less than or equal to 13,000 Btu/lb (30 kJ/g).

Level 3 aerosol products. Those with a total chemical heat of combustion that is greater than 13,000 Btu/lb (30 kJ/g).

❖ The intent of the code is to regulate those aerosols that contain a flammable propellant, such as butane, isobutane or propane and cannot be protected easily. An aerosol product such as whipped cream is a water-based material with a nonflammable propellant (nitrous oxide) and would, therefore, not be regulated as a hazardous material. Many aerosols are water based and, while containing some flammable material, do not produce a threat to standard commodity protection scenarios. The contents of the aerosol container may be dispensed in the form of a mist, spray, foam, gel or aerated powder.

Because of the wide range of flammability of aerosol products, a classification system was established to determine the required level of fire protection. Categories are defined according to the aerosol's chemical heat of combustion expressed in Btus per pound (Btu/lb). Aerosol category classifications of Levels 1,

INTERNATIONAL CODE COUNCIL®
Copyright © 2015 ICC. ALL RIGHTS RESERVED. Accessed by David Dammon on Jun 21, 2017 12:30:52 PM pursuant to License Agreement with ICC. No further reproduction or distribution authorized. ANY UNAUTHORIZED REPRODUCTION OR DISTRIBUTION IS A VIOLATION OF THE FEDERAL COPYRIGHT ACT AND THE LICENSE AGREEMENT, AND SUBJECT TO CIVIL AND CRIMINAL PENALTIES THEREUNDER.

2 and 3 are used to avoid confusion with flammable liquid classifications.

Examples of Level 1 aerosol products are air fresheners, shaving gel and whipped cream. Level 1 aerosols are not regulated as a hazardous material and are essentially exempt from the requirements of Sections 307 and 414 of the IBC. Examples of Level 2 aerosols include some hair sprays and insect repellents. Level 3 aerosols include carburetor cleaner and other petroleum-based aerosols.

While aerosols are defined as hazardous materials, note that they are not listed in Table 5003.1.1(1) or 5003.1.1(2) [IBC Table 307.1(1) or 307.1(2)] as having a maximum allowable quantity per control area. As stated in Section 307.1, Exception 11 of the IBC, a building or structure used for aerosol storage is classified as Group S-1, provided the requirements of Chapter 51 of the code are satisfied; therefore, the Group H classification is not utilized since the design must satisfy Chapter 51 of the code in order to be in compliance.

It is important to note that, in dealing with aerosols, the designation of "flammable" on an aerosol can is strictly a consumer warning labeling and must not be confused with the aerosol level printed on the carton. This is important because there are instances where a Level 3 aerosol product requiring the highest level of sprinkler protection will not be flammable for consumer use, and conversely there are instances where a flammable aerosol may be a Level 1 aerosol product and could require only Class III commodity protection in accordance with NFPA 13.

AEROSOL CONTAINER. A metal can, or a glass or plastic bottle designed to dispense an aerosol.

❖ All design criteria for the aerosol container, including the maximum size and minimum strength, are set by the U.S. Department of Transportation (DOTn 49 CFR) and addressed in Section 5104. These container regulations are necessary for the safe transportation of aerosol products.

AEROSOL WAREHOUSE. A building used for warehousing aerosol products.

❖ Any building used primarily for storing large quantities of aerosol products would be considered an aerosol warehouse and would be subject to fire safety requirements that are consistent with the types of aerosol products stored and their known hazards. Commodities other than aerosol products are allowed to be stored in an aerosol warehouse in accordance with Chapter 51 (see Section 5104.4).

AGENCY. Any emergency responder department within the jurisdiction that utilizes radio frequencies for communication. This could include, but not be limited to, various public safety agencies such as fire departments, emergency medical services and law enforcement.

❖ This definition provides clarification as to the primary emergency responders that are intended to be included in the term, but does not rule out other responders who might also need the use of the emergency responders radio coverage system (ERRCS), based on the needs and policies of the adopting jurisdiction.

AGENT. A person who shall have charge, care or control of any structure as *owner*, or agent of the *owner*, or as executor, executrix, administrator, administratrix, trustee or guardian of the estate of the *owner*. Any such person representing the actual *owner* shall be bound to comply with the provisions of this code to the same extent as if that person was the *owner*.

❖ An agent, for purposes of the code, is a person who has full authority under the law to act for or represent the owner of a building subject to the provisions of the code. An agent acts by the authority of the person he or she represents and generally has the same powers as the person represented. It is commonplace for building owners to retain the services of management agents to conduct all affairs pertinent to their building, including code compliance.

[BG] AGRICULTURAL BUILDING. A structure designed and constructed to house farm implements, hay, grain, poultry, livestock or other horticultural products. This structure shall not be a place of human habitation or a place of employment where agricultural products are processed, treated or packaged, nor shall it be a place used by the public.

❖ This definition is needed for the proper application of the utility and miscellaneous occupancy group provisions. The use of the building is quite restricted such that buildings that include habitable or public spaces are not agricultural buildings by definition.

AGRO-INDUSTRIAL. A facility, or portion thereof, housing operations involving the transforming of raw agricultural products into intermediate or consumable products.

❖ This definition coordinates with the requirements in Chapter 28 that have been scoped to address facilities addressing the creation of these products. Providing this definition helps to understand what types of facilities are regulated by Sections 2808 and 2809.

[BG] AIR-INFLATED STRUCTURE. A structure that uses air-pressurized membrane beams, arches or other elements to enclose space. Occupants of such a structure do not occupy the pressurized areas used to support the structure.

❖ This type of membrane structure is characterized by multiple layers arranged such that air-pressurized membrane beams, arches or similar elements are formed. These elements are pressurized with air and form the membrane structure. Note that the occupants of the structure are not subjected to the pressurized areas, because the pressurization is in the structural elements, not within the space used by the occupants. This type of structure is generally much smaller than an air-supported structure and differs in that it depends for support on the inflation of balloon-like sections over, under or around the occupants. The occupants normally are found within a surrounding structure consisting of these inflated sections. Possibly the most common example of this kind of

INTERNATIONAL CODE COUNCIL®
Copyright © 2015 ICC. ALL RIGHTS RESERVED. Accessed by David Dammon on Jun 21, 2017 12:30:52 PM pursuant to License Agreement with ICC. No further reproduction or distribution authorized. ANY UNAUTHORIZED REPRODUCTION OR DISTRIBUTION IS A VIOLATION OF THE FEDERAL COPYRIGHT ACT AND THE LICENSE AGREEMENT, AND SUBJECT TO CIVIL AND CRIMINAL PENALTIES THEREUNDER.

structure is the "Moonwalk" children's entertainment structure, which has an inflated floor structure for children to play on and also inflated columns that support an overhead canopy and plastic mesh walls. Commentary Figure 202-A1 illustrates an air-inflated structure.

[BG] AIR-SUPPORTED STRUCTURE. A structure wherein the shape of the structure is attained by air pressure, and occupants of the structure are within the elevated pressure area. Air supported structures are of two basic types:

❖ An air-supported structure identifies those membrane structures that are completely pressurized for the purposes of supporting the membrane covering. Most "domed" sports arenas use air pressure within the structure to support the membrane covering. The membrane covering can consist of one layer or multiple layers; thus, air-supported structures are classified as either "single skin" or "double skin." Commentary Figure 202-A2 illustrates an air-supported structure.

Double skin. Similar to a single skin, but with an attached liner that is separated from the outer skin and provides an airspace which serves for insulation, acoustic, aesthetic or similar purposes.

❖ A double-skin, air-supported structure contains multiple layers of membrane sheathing. The membranes are usually separated by enough distance to allow for pressurized air or other materials to be inserted between the plies. The pressurized air or other materials usually serve to increase the insulating and acoustical properties.



Figure 202-A1
EXAMPLE OF AIR-INFLATED MEMBRANE STRUCTURE

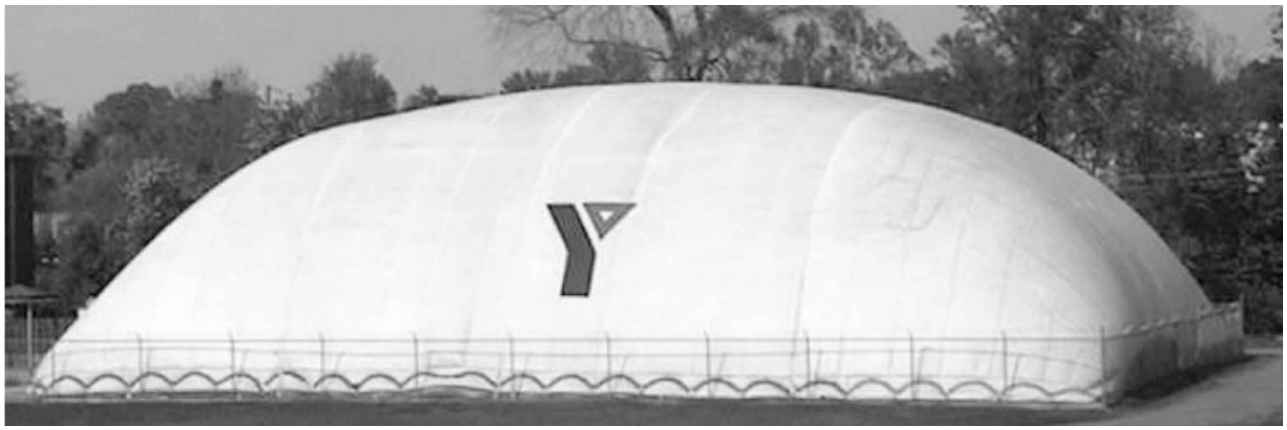

Figure 202-A2
AIR-SUPPORTED MEMBRANE STRUCTURE—SWIMMING POOL COVER

INTERNATIONAL CODE COUNCIL®
Copyright © 2015 ICC. ALL RIGHTS RESERVED. Accessed by David Dammon on Jun 21, 2017 12:30:52 PM pursuant to License Agreement with ICC. No further reproduction or distribution authorized. ANY UNAUTHORIZED REPRODUCTION OR DISTRIBUTION IS A VIOLATION OF THE FEDERAL COPYRIGHT ACT AND THE LICENSE AGREEMENT, AND SUBJECT TO CIVIL AND CRIMINAL PENALTIES THEREUNDER.

Single skin. Where there is only the single outer skin and the air pressure is directly against that skin.

❖ A single-skin, air-supported structure consists of just one membrane covering that is directly supported by the interior pressurized air. No other membranes are provided for insulating or acoustical purposes. If the membrane covering consists of several laminated plies, such an arrangement is still considered a single-skin, air-supported structure.

AIRCRAFT MOTOR-VEHICLE FUEL-DISPENSING FACILITY. That portion of property where flammable or *combustible liquids* or gases used as motor fuels are stored and dispensed from fixed automotive-type equipment into the fuel tanks of aircraft.

❖ Since the first edition of the code, Sections 2003.5 and 2006.1 have required that aircraft motor-vehicle fuel-dispensing facilities comply with Chapter 23. This definition, in addition to the scope statement in Section 2301.1, provides correlation with Chapter 20, making it clear that Chapter 23 does, in fact, apply to aircraft motor-vehicle fuel-dispensing facilities. While the text does not specify limitations on the types of aircraft involved, the typical aircraft that might be brought to a fixed fueling station that uses equipment similar to that used at automotive service stations, rather than fueling from hydrants or fuel tanker trucks that are used on larger aircraft, would likely be small general aviation-type aircraft.

AIRCRAFT OPERATION AREA (AOA). Any area used or intended for use for the parking, taxiing, takeoff, landing or other ground-based aircraft activity.

❖ Any area involving aircraft, whether moving or stationary, is known as the aircraft operating area. This area has special operating procedures and hazards.

AIRPORT. An area of land or structural surface that is used, or intended for use, for the landing and taking off of aircraft with an overall length greater than 39 feet (11 887 mm) and an overall exterior fuselage width greater than 6.6 feet (2012 mm), and any appurtenant areas that are used or intended for use for airport buildings and other airport facilities.

❖ Those structures and operations included in an airport are terminal buildings; maintenance hangars; runways; taxiways; loading and unloading of passengers, luggage and freight; and control towers with all the land involved in performing these functions.

[BE] AISLE. An unenclosed *exit access* component that defines and provides a path of egress travel.

❖ Aisles and aisle accessways are both utilized as part of the means of egress in facilities where tables, seats, displays or other furniture may limit the path of travel. The aisle accessways lead to the main aisles that lead to the exits from the space and building (see Commentary Figure 202-A3). While both may result in a confined path of travel, an aisle is an unenclosed component, while a corridor would be an enclosed component of the means of egress. See Sections 1018 and 1029 for requirements for aisles.

[BE] AISLE ACCESSWAY. That portion of an *exit access* that leads to an *aisle*.

❖ As illustrated in Commentary Figure 202-A3, an aisle accessway is intended for one-way travel or limited two-way travel. The space between tables, seats, displays or other furniture (i.e., aisle accessway) utilized for means of egress will lead to a main aisle. See Sections 1018 and 1029 for requirements for aisle accessways.

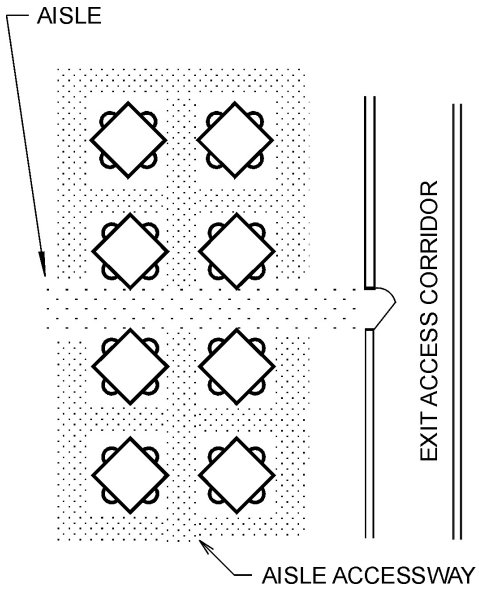

Figure 202-A3
AISLES AND AISLE ACCESSWAYS

ALARM, NUISANCE. See "Nuisance alarm."

ALARM DEVICE, MULTIPLE STATION. See "Multiple-station alarm device."

ALARM NOTIFICATION APPLIANCE. A fire alarm system component such as a bell, horn, speaker, light or text display that provides audible, tactile or visible outputs, or any combination thereof. See also "Audible alarm notification appliance" or "Visible alarm notification appliance."

❖ The code requires that fire alarm systems be equipped with approved alarm notification appliances so that in an emergency, the fire alarm system will notify the occupants of the need for evacuation or implementation of the fire emergency plan. Alarm notification devices required by the code are of two general types: visible and audible. Except for emergency voice/alarm communication systems, once the fire alarm system has been activated, all visible and audible communication alarms are required to activate. Emergency voice/alarm communication systems are special signaling systems that are activated selectively in response to specific emergency conditions but have the capability to be activated throughout the building if necessary.

INTERNATIONAL CODE COUNCIL®
Copyright © 2015 ICC. ALL RIGHTS RESERVED. Accessed by David Dammon on Jun 21, 2017 12:30:52 PM pursuant to License Agreement with ICC. No further reproduction or distribution authorized. ANY UNAUTHORIZED REPRODUCTION OR DISTRIBUTION IS A VIOLATION OF THE FEDERAL COPYRIGHT ACT AND THE LICENSE AGREEMENT, AND SUBJECT TO CIVIL AND CRIMINAL PENALTIES THEREUNDER.

ALARM SIGNAL. A signal indicating an emergency requiring immediate action, such as a signal indicative of fire.

❖ This is a general term for all types of supervisory and trouble signals. An example would be a supervisory (tamper) switch on a sprinkler control valve. It could also be the response to a specific device that is not part of the alarm notification system but causes a specific function, such as a smoke detector for elevator recall. The activation of the device does not necessarily indicate that there is a fire; however, the level of protection may have been compromised (see also the definitions of "Fire alarm signal" and "Supervisory signal").

ALARM VERIFICATION FEATURE. A feature of automatic fire detection and alarm systems to reduce unwanted alarms wherein smoke detectors report alarm conditions for a minimum period of time, or confirm alarm conditions within a given time period, after being automatically reset, in order to be accepted as a valid alarm-initiation signal.

❖ False fire (evacuation) alarms are a nuisance. For this reason the code specifies that alarms activated by smoke detectors are not to be sounded until the alarm signal is verified by cross-zoned detectors in a single protected area or by system features that will retard the alarm until the signal is determined to be valid. Valid alarm initiation signals can be determined by detectors that report alarm conditions for a minimum period of time or that, after being reset, continue to report an alarm condition. The alarm verification feature may not retard signal activation for a period of more than 60 seconds and must not apply to alarm-initiating devices other than smoke detectors (which may be connected to the same circuit). Alarm verification is not the same as presignal features that delay an alarm signal for more than 1 minute and that are allowed only where specifically permitted by the authority having jurisdiction.

ALCOHOL-BASED HAND RUB. An alcohol-containing preparation designed for application to the hands for reducing the number of viable microorganisms on the hands and containing ethanol or isopropanol in an amount not exceeding 95-percent by volume.

❖ Alcohol-based hand rub solutions are typically packaged in pump bottles or nonrefillable soft bladders for insertion into a wall-mounted pump dispenser. They are typically closed to the atmosphere with no mixing or refilling of containers, which makes the ignition of fugitive vapors very unlikely. See the commentary to Sections 5705.5 and 5705.5.1 for further information.

As part of ongoing research to control the outbreak of multiple-drug resistant bacteria, such as methicillin-resistant Staphylococcus aureus (MRSA) and vancoymin-resistant Enterococcus (VRE) and similar "super bugs," which are highly resistant to antibiotics, the U.S. Centers for Disease Control (CDC) and Food and Drug Administration (FDA) have continued to study the performance of alcohol-based hand rubs. As a result of their research, both agencies now recommend that the concentration of ethanol or isopropanol in alcohol-based hand rubs be increased to 95 percent by volume. The research found that a higher alcohol concentration offers much more virucidal activity when compared to alcohol-based hand rubs formulated with 70-percent alcohol by volume. To help protect health care workers, hospital patients and long-term care residents against health care-acquired infections, the definition of 11 alcohol-based hand rubs has been revised in the 2012 edition of the code to increase the permissible volume of ethyl or isopropyl alcohol from 70 to 95 percent. It should be noted that alcohol-based hand rubs formulated at this concentration are classified as Class IB flammable liquids.

Because of the increased volume of alcohol in alcohol-based hand rubs and to supplement the original fire test and modeling findings, the heat release rate and burning time of 95-percent ethanol were calculated using formulae found in the *SFPE Handbook of Fire Protection Engineering* and compared to weaker solutions found in older alcohol-based hand rubs. The calculations confirmed that 95-percent ethanol will exhibit the highest heat release (282 kW) when compared to more dilute ethanol/water solutions (146-240 kW) but exhibited the shortest duration pool fire (83 seconds versus 95 to 119 seconds) because the lack of water allowed quicker volatilization of the fuel.

ALCOHOL-BLENDED FUELS. Flammable liquids consisting of 10-percent or greater, by volume, ethanol or other alcohols blended with gasoline.

❖ Alcohols are polar compounds that exhibit increased moisture absorption, water solubility, polar solvency and solution conductivity relative to gasoline. Alcohol-gasoline blended fuels have unique properties that may affect dispensing equipment and hardware material compatibility and fire response. The most common alcohol blended fuel is E85, which consists of nominally 85-percent ethanol and 15-percent unleaded gasoline. The blending is usually done at the processing plant, or may be accomplished filling the delivery tanker with the designated percentage of each fuel required to achieve the desired percentage. In cold climates, the fuel blend may include more gasoline to improve vehicle performance. The properties of E85 are listed in Commentary Figure 202-A4. Ethanol is a flammable, colorless liquid with a faint alcohol odor. The color of ethanol fuel blends depends on the color of the gasoline in the blend. Blends may also have a gasoline-like odor. See the commentary to Section 2306.8 for a more detailed discussion of the hazards presented by these alternative fuels.

[A] ALTERATION. Any construction or renovation to an existing structure other than a repair or addition.

❖ The code utilizes this term to reflect construction operations intended for an existing building but not within the scope of an addition or repair [see the defi-

INTERNATIONAL CODE COUNCIL®
Copyright © 2015 ICC. ALL RIGHTS RESERVED. Accessed by David Dammon on Jun 21, 2017 12:30:52 PM pursuant to License Agreement with ICC. No further reproduction or distribution authorized. ANY UNAUTHORIZED REPRODUCTION OR DISTRIBUTION IS A VIOLATION OF THE FEDERAL COPYRIGHT ACT AND THE LICENSE AGREEMENT, AND SUBJECT TO CIVIL AND CRIMINAL PENALTIES THEREUNDER.

nitions of "Addition" and "Repair" in the IEBC). (see IBC Section 101.4.7 for a reference to the *International Existing Building Code*® (IEBC®)

[BE] ALTERNATING TREAD DEVICE. A device that has a series of steps between 50 and 70 degrees (0.87 and 1.22 rad) from horizontal, usually attached to a center support rail in an alternating manner so that the user does not have both feet on the same level at the same time.

❖ An alternating tread device is commonly used in areas that would otherwise be provided with a ladder where there is not adequate space for a full stairway. Where these devices are permitted is specifically listed (e.g., Section 1006.2.2.1). The device is used extensively in industrial facilities for worker access to platforms or equipment. Requirements are found in Section 1011.

[BG] AMBULATORY CARE FACILITY. Buildings or portions thereof used to provide medical, surgical, psychiatric, nursing or similar care on a less-than-24-hour basis to persons who are rendered incapable of self-preservation by the services provided.

❖ The code provides different requirements for outpatient clinics, ambulatory care facilities and hospitals. Ambulatory care facilities, while still classified as a Group B occupancy, have additional standards above those of an outpatient clinic primarily due to the fact that patients are temporarily unable to respond to emergencies because of the treatment processes (see commentary, Section 422 of the IBC). Ambulatory care facilities include day surgery centers and similar facilities where patients may receive fairly intensive treatment, but do not stay at the facility more than a few hours. If patients are receiving care on a 24-hour basis, such facilities would be defined as hospitals. (See definition of "24-hour basis.")

AMMONIUM NITRATE. A chemical compound represented by the formula NH_4NO_3.

❖ Ammonium nitrate is a fairly simple compound (NH_4NO_3) but one that has an extremely complex set of reactions in a fire. The history of ammonium nitrate has been marked by major fires and explosions. Certain characteristics have caused or contributed to these fires and explosions. The following properties of ammonium nitrate are similar to those of other nitrates: (1) it is an oxidizing agent—it contains available oxygen that can make ignition easier and cause a fire to burn with surprising intensity; (2) it is hygroscopic—absorbing moisture from the air or from substances it touches and (3) it is deliquescent—as it absorbs moisture, a portion will liquefy and nearby combustibles can become impregnated with an oxidizing salt.

ANNUNCIATOR. A unit containing one or more indicator lamps, alphanumeric displays or other equivalent means in which each indication provides status information about a circuit, condition or location.

❖ This refers to the panel that displays the status of the monitored fire protection systems and devices. It is not the fire alarm control unit; however, the control panel may function as an annunciator.

Vapor density	Ethanol vapor, like gasoline vapor, is denser than air and tends to settle in low areas. However, ethanol vapor disperses rapidly.
Solubility in water	Fuel ethanol will mix with water, but at high enough concentrations of water, the ethanol will separate from the water.
Energy content	For identical volumes, ethanol contains less energy than gasoline. On an energy basis, 1.0 gallon of E85 is equivalent to 0.72 gallons of gasoline.
Flame visibility	A fuel ethanol flame is less bright than a gasoline flame but is easily visible in daylight.
Specific gravity	Pure ethanol and ethanol blends are heavier than gasoline.
Conductivity	Ethanol and ethanol blends conduct electricity. Gasoline, by contrast, is an electrical insulator.
Toxicity	Ethanol is less toxic than gasoline or methanol. Carcinogenic compounds are not present in pure ethanol; however, because gasoline is used in the blend, E85 is considered to be potentially carcinogenic.
Flammability	At low temperatures, the vapor concentration in an E85 tank can fall into the flammable range. The temperature for flammable E85 vapors depends on the E85 volatility. Although less likely than with E85, gasoline tanks can also contain flammable vapors at extremely low temperature.
Fire fighting	Fuel ethanol fires, like all fires, should be taken seriously. An E85 fire should be handled like a gasoline fire. Use a CO_2 or dry chemical extinguisher that is marked B, BC or ABC. An alcohol-type or alcohol-resistant (ARF) foam may be used to effectively combat fuel ethanol fires. Never use water to control a fire involving high-concentration fuel ethanol such as E85.

For SI: 1 gallon = 3.785 L.

Figure 202-A4
PROPERTIES OF FUEL ETHANOL

INTERNATIONAL CODE COUNCIL®
Copyright © 2015 ICC. ALL RIGHTS RESERVED. Accessed by David Dammon on Jun 21, 2017 12:30:52 PM pursuant to License Agreement with ICC. No further reproduction or distribution authorized. ANY UNAUTHORIZED REPRODUCTION OR DISTRIBUTION IS A VIOLATION OF THE FEDERAL COPYRIGHT ACT AND THE LICENSE AGREEMENT, AND SUBJECT TO CIVIL AND CRIMINAL PENALTIES THEREUNDER.

[A] APPROVED. Acceptable to the *fire code official*.

❖ As related to the process of acceptance of building installations, including materials, equipment and construction systems, this definition identifies where the ultimate authority rests. Whenever this term is used, it intends that only the enforcing authority can accept a specific installation or component as complying with the code. For the IBC and *International Residential Code*® (IRC®), the "building official" is identified as the person responsible for administering its provisions. For the *International Fire Code*® (IFC®), the "fire code official" is identified as the person responsible for administering IFC provisions. For the *International Energy Conservation Code*® (IECC®), *International Fuel Gas Code*® (IFGC®), *International Green Construction Code*® (IgCC®), *International Mechanical Code*® (IMC®), *International Plumbing Code*® (IPC®), *International Property Maintenance Code*® (IPMC®), *International Swimming Pool and Spa Code*® (ISPSC®) and *International Wildfire-Urban Interface Code*® (IWUIC®), the "code official" is identified as the person responsible.

[BG] AREA, BUILDING. The area included within surrounding *exterior walls* (or *exterior walls* and *fire walls*) exclusive of vent shafts and *courts*. Areas of the building not provided with surrounding walls shall be included in the building area if such areas are included within the horizontal projection of the roof or floor above.

❖ Allowable building areas (as established by the provisions of Chapter 5 and Table 506.2 of the IBC) are a function of the potential fire hazard and the level of fire endurance of the building's structural elements, as defined by the types of construction in Chapter 6 of the IBC. A building area is the "footprint" of the building; that is, the area measured within the perimeter formed by the inside surface of the exterior walls. This excludes spaces that are inside this perimeter and open to the outside atmosphere at the top, such as open shafts and courts (see Section 1206 of the IBC). When a portion of the building has no exterior walls, the area regulated by Chapter 5 of the IBC is defined by the projection of the roof or floor above [see IBC Commentary Figure 202(5)]. The roof overhang on portions of a building where there are exterior enclosure walls does not add to the building area because the area is defined by exterior walls.

[BE] AREA OF REFUGE. An area where persons unable to use *stairways* can remain temporarily to await instructions or assistance during emergency evacuation.

❖ The area of refuge is a temporary waiting area used during emergency evacuations for persons who are unable to exit the building using the stairways. The fire safety plans (in accordance with Section 404) include the locations of areas of refuge so that the fire department will know where people may be waiting for rescue assistance. See Section 1009 for where areas of refuge are required at stairways and elevators. Areas of refuge have requirements for separation, size, signage, instructional information and two-way communication systems.

ARRAY. The configuration of storage. Characteristics considered in defining an array include the type of packaging, flue spaces, height of storage and compactness of storage.

❖ This term defines the configuration of storage, with its essential components being the manner in which the commodity is packaged (stored either in piled formation or on a rack storage system); the amount of flue space between formations of the commodity; height, width and length of any one array and compactness.

ARRAY, CLOSED. A storage configuration having a 6-inch (152 mm) or smaller width vertical flue space that restricts air movement through the stored commodity.

❖ The term "closed array" was effectively defined as the result of a number of fire tests. These tests were conducted with the sample test assembly array employing 6-inch-wide (152 mm) longitudinal flues and no transverse flues.

[BG] ATRIUM. An opening connecting two or more stories other than enclosed *stairways*, elevators, hoistways, escalators, plumbing, electrical, air-conditioning or other equipment, which is closed at the top and not defined as a mall. Stories, as used in this definition, do not include balconies within assembly groups or mezzanines that comply with Section 505 of the *International Building Code*.

❖ The definition identifies that an atrium is a floor opening or a series of floor openings that connect the environments of adjacent stories. The definition of "Atrium" excludes enclosed stairways, elevators, hoistways and other similar openings in order to clarify that those elements would not fall under the purview as to what is considered an atrium and, therefore, the associated requirements found in Section 404 of the IBC would not apply. What this does not preclude is the inclusion of elevators and open stairways within atriums. Such elements would need to be entirely within the atrium to meet the separation requirements found in Section 404.6 of the IBC. Building features, such as stairways, elevators, hoistways, escalators, plumbing, electrical, air conditioning or other equipment openings, are required to be enclosed in fire-resistance-rated shafts in accordance with Sections 712 and 713 of the IBC. Atriums are specified in Section 712.1.7 of the IBC to address openings in horizontal assemblies. An atrium is not defined by size or use. A series of floor openings that are enclosed with exterior walls, yet open at the roof, would be considered a court and would be exempt from the requirements of Section 404 of the IBC. Balconies associated with assembly occupancies and mezzanines are not considered individual stories that would contribute to the classification of a space as an atrium.

INTERNATIONAL CODE COUNCIL®
Copyright © 2015 ICC. ALL RIGHTS RESERVED. Accessed by David Dammon on Jun 21, 2017 12:30:52 PM pursuant to License Agreement with ICC. No further reproduction or distribution authorized. ANY UNAUTHORIZED REPRODUCTION OR DISTRIBUTION IS A VIOLATION OF THE FEDERAL COPYRIGHT ACT AND THE LICENSE AGREEMENT, AND SUBJECT TO CIVIL AND CRIMINAL PENALTIES THEREUNDER.

[BG] ATTIC. The space between the ceiling beams of the top story and the roof rafters.

❖ The definition of "Attic" identifies the specific portion of a building or structure for the purposes of determining the applicability of requirements that are specific to attics, such as ventilation (see Section 1203 of the IBC) and draftstopping (see Section 718 of the IBC). Additionally, the IBC has access requirements (see Section 1209 of the IBC) and uniformly distributed live load requirements (see Table 1607.1 of the IBC) for attics. An attic is considered the space or area located immediately below the roof sheathing within the roof framing system of a building. Pitched roof systems, such as gabled, hip, sawtoothed or curved roofs, all create spaces between the roof sheathing and ceiling membrane, which are considered attics.

AUDIBLE ALARM NOTIFICATION APPLIANCE. A notification appliance that alerts by the sense of hearing.

❖ Audible alarms that are part of a fire alarm system must be loud enough to be heard in every occupied space of a building. Section 907.5.2.1.1 prescribes the minimum sound pressure level for all audible alarm notification appliances depending on the occupancy of the building and the function of the space.

AUTOMATED RACK STORAGE. Automated rack storage is a stocking method whereby the movement of pallets, products, apparatus or systems are automatically controlled by mechanical or electronic devices.

❖ This definition for automated rack storage systems applies to storage and retrieval systems designed for movement of palletized loads commonly used in warehouses containing extra-high-rack storage of Class I-IV commodities over 40 feet (12 192 mm) in height or high-hazard commodities over 30 feet (9144 mm) in height. Conventional material handling equipment such as forklifts generally cannot be used above this height to safely retrieve or store palletized loads. It is not uncommon for these systems to be used in buildings with roof heights over 100 feet (30 480 mm). NFPA 13 has no limit on the height of storage racks. See also the commentary to Section 3209.4.

AUTOMATIC. As applied to fire protection devices, a device or system providing an emergency function without the necessity for human intervention and activated as a result of a predetermined temperature rise, rate of temperature rise or combustion products.

❖ This term, when used in conjunction with fire protection systems or devices, means that the system or device will perform its intended function without a person being present or performing any task in its control or operation. The device or system has the inherent capability to detect a developing fire condition and perform some predetermined function. Automatic devices and systems operate completely without human presence or intervention.

AUTOMATIC FIRE-EXTINGUISHING SYSTEM. An *approved* system of devices and equipment which automatically detects a fire and discharges an *approved* fire-extinguishing agent onto or in the area of a fire.

❖ This term is the generic name for all types of automatic fire-extinguishing systems, including the most common type—the automatic sprinkler system. See Section 904 for requirements for particular alternative automatic fire-extinguishing systems, such as wet-chemical, dry-chemical, foam, carbon dioxide, Halon, clean-agent systems and automatic water mist.

AUTOMATIC SMOKE DETECTION SYSTEM. A fire alarm system that has initiation devices that utilize smoke detectors for protection of an area such as a room or space with detectors to provide early warning of fire.

❖ Chapter 9 provides requirements for various automatic fire protection systems including automatic fire detection system, automatic sprinkler system, automatic fire alarm system, and automatic smoke detection system. Automatic smoke detection systems are required for various occupancies as specified in Section 907. They are required to increase the likelihood that fire is detected and occupants of the building are given an early warning of danger.

AUTOMATIC SPRINKLER SYSTEM. An *automatic sprinkler system*, for fire protection purposes, is an integrated system of underground and overhead piping designed in accordance with fire protection engineering standards. The system includes a suitable water supply. The portion of the system above the ground is a network of specially sized or hydraulically designed piping installed in a structure or area, generally overhead, and to which automatic sprinklers are connected in a systematic pattern. The system is usually activated by heat from a fire and discharges water over the fire area.

❖ An automatic sprinkler system is one type of automatic fire-extinguishing system. Automatic sprinkler systems are the most common, and their life safety attributes are widely recognized. The code specifies three types of automatic sprinkler systems: one installed in accordance with NFPA 13, one in accordance with NFPA 13R and the other in accordance with NFPA 13D. To be considered for most code design alternatives, a building automatic sprinkler system must be installed throughout in accordance with NFPA 13 (see Section 903.3.1.1).

In a fire, sprinklers automatically open and discharge water onto the fire in a spray pattern that is designed to contain or extinguish the fire. Originally, automatic sprinkler systems were developed just for the protection of buildings and their contents. Because of the development and improvements in sprinkler head response time and water distribution, however, automatic sprinkler systems are now also considered a life safety system. Proper operation of an automatic sprinkler system requires careful selection of the sprinkler heads so that water in sufficient quantity at adequate pressure and properly distrib-

INTERNATIONAL CODE COUNCIL®
Copyright © 2015 ICC. ALL RIGHTS RESERVED. Accessed by David Dammon on Jun 21, 2017 12:30:52 PM pursuant to License Agreement with ICC. No further reproduction or distribution authorized. ANY UNAUTHORIZED REPRODUCTION OR DISTRIBUTION IS A VIOLATION OF THE FEDERAL COPYRIGHT ACT AND THE LICENSE AGREEMENT, AND SUBJECT TO CIVIL AND CRIMINAL PENALTIES THEREUNDER.

uted will be available to suppress the fire. Note that the context of the use of the term "fire area" in the last sentence of the definition is to refer to the area in which the fire is occurring, not in the context of the defined term "fire area."

There are many different types of automatic sprinkler systems—wet pipe, dry pipe, preaction, antifreeze and various combinations. Sprinklers can be pendant, upright or sidewall and can be designed for standard or extended coverage. Additional information can be found in NFPA 13.

AUTOMATIC WATER MIST SYSTEM. A system consisting of a water supply, a pressure source and a distribution piping system with attached nozzles which, at or above a minimum operating pressure, defined by its listing, discharges water in fine droplets meeting the requirements of NFPA 750 for the purpose of the control, suppression or extinguishment of a fire. Such systems include wet-pipe, dry-pipe and pre-action types. The systems are designed as engineered, preengineered, local-application or total flooding systems.

❖ The code recognizes water mist systems as an alternative extinguishing system to automatic sprinkler systems. However, no exceptions, reductions or tradeoffs for water mist systems are granted or permitted by the code because such systems are not considered to be equivalent to automatic sprinkler systems. Automatic water mist systems have been approved by FM Global for occupancies similar to a Light Hazard Group (as defined by NFPA 13) and listed by UL for occupancies similar to Ordinary Hazard Group I (as defined by NFPA 13). These listings permit automatic water mist systems to be installed as the primary suppression systems in a variety of occupancy classifications.

Water mist systems are used for special applications where creating a heat absorbent vapor consisting of water droplets with a size of less than 1,000 microns at the discharge nozzle is the primary extinguishing method. These systems are typically used where water damage may be an issue or where water supplies are limited. The droplet size can be controlled by adjusting the discharge pressure through the nozzle. Creating a mist and an equal volume of water will create a larger total service area exposed to the fire and thus better facilitate the absorption of heat, allowing more water droplets to turn to steam more quickly and thus more effectively cool the room.

AUTOMOTIVE MOTOR FUEL-DISPENSING FACILITY. That portion of property where flammable or *combustible liquids* or gases used as motor fuels are stored and dispensed from fixed equipment into the fuel tanks of motor vehicles.

❖ Automotive motor fuel-dispensing facilities may be attended or unattended and they may take the form of the conventional motor fuel-dispensing facility, convenience store or other location that transfers fuel from a storage tank to the fuel tank of some type of motorized equipment. Motor fuel-dispensing facilities are classified in occupancy Group M by the IBC.

AVERAGE AMBIENT SOUND LEVEL. The root mean square, A-weighted sound pressure level measured over a 24-hour period, or the time any person is present, whichever time period is less.

❖ The ambient noise that can be expected depends on the occupancy of the building. To attract the attention of the occupants, the audible alarm devices must be heard above the ambient noise in the space. For this reason, the alarm devices must have minimum sound pressure levels above the average ambient sound level. Section 907.5.2.1.1 prescribes the minimum sound pressure levels for the audible alarm notification appliances for all occupancy conditions.

Although it is possible to measure the ambient sound within an occupied space, the alarm notification devices are usually designed and installed before buildings are occupied, thus it is typically a careful analysis of the types of uses within a space that will determine the average ambient sound level. If, after the building is occupied, the alarm notification devices are below expected audibility, a field measurement may be necessary to determine whether or not the design assumptions are correct.

[BG] AWNING. An architectural projection that provides weather protection, identity or decoration and is partially or wholly supported by the building to which it is attached. An awning is comprised of a lightweight frame structure over which a covering is attached.

❖ Similar to a canopy, an awning typically provides weather protection, signage or decoration. Its distinguishing characteristic is the lightweight frame structure. It is also supported, at least in part, by the building from which it projects. See Section 3105 of the IBC for general requirements and Section 3202 of the IBC for encroachment requirements. This definition helps to clarify the applicability of roof loads in Section 1607.12.4 of the IBC. Also see the definitions of "Retractable awning," "Canopy" and "Marquee" in the IBC.

[BE] BALANCED DOOR. A door equipped with double-pivoted hardware so designed as to cause a semicounter balanced swing action when opening.

❖ Balanced doors are commonly used to decrease the force necessary to open the door or to reduce the length of the door swing. Balanced doors typically reduce the clear opening width more than normally hinged doors (see Commentary Figure 202-B1 and Section 1010.1.10.2).

BALED COTTON. See "Cotton."

BALED COTTON, DENSELY PACKED. See "Cotton."

INTERNATIONAL CODE COUNCIL®
Copyright © 2015 ICC. ALL RIGHTS RESERVED. Accessed by David Dammon on Jun 21, 2017 12:30:52 PM pursuant to License Agreement with ICC. No further reproduction or distribution authorized. ANY UNAUTHORIZED REPRODUCTION OR DISTRIBUTION IS A VIOLATION OF THE FEDERAL COPYRIGHT ACT AND THE LICENSE AGREEMENT, AND SUBJECT TO CIVIL AND CRIMINAL PENALTIES THEREUNDER.

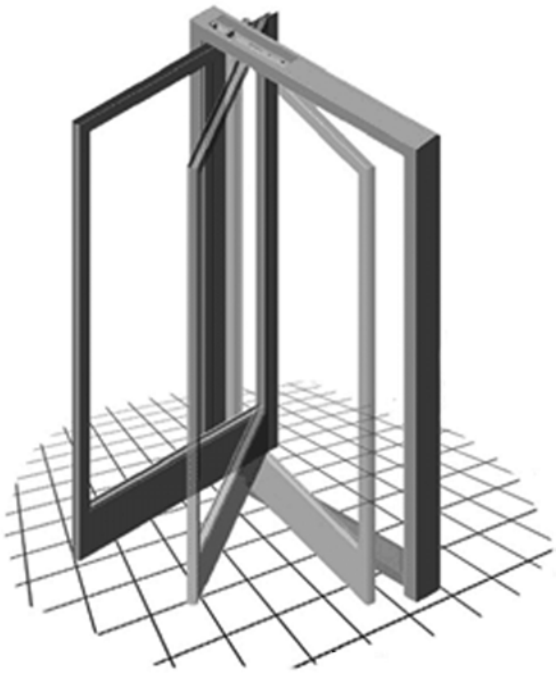

Figure 202-B1
BALANCED DOOR

BARRICADE. A structure that consists of a combination of walls, floor and roof, which is designed to withstand the rapid release of energy in an explosion and which is fully confined, partially vented or fully vented; or other effective method of shielding from *explosive materials* by a natural or artificial barrier.

❖ Barricade means effectively screening a building containing explosives by means of a natural or artificial barrier from a magazine, another building, a railway or a highway.

Artificial barricade. An artificial mound or revetment with a minimum thickness of 3 feet (914 mm).

❖ Barricade means effectively screening a building containing explosives by means of a natural or artificial barrier from a magazine, another building, a railway or a highway.

Natural barricade. Natural features of the ground, such as hills, or timber of sufficient density that the surrounding exposures that require protection cannot be seen from the magazine or building containing *explosives* when the trees are bare of leaves.

❖ Native land features capable of protecting adjacent buildings, people and property from blast effects if an explosion in a magazine occurs may qualify as reduced separation distances permitted by Table 5604.5.2(2). Trees and other ground cover must be thick enough for effective visual screening for the magazine when the branches are bare of leaves or other seasonal foliage.

BARRICADED. The effective screening of a building containing *explosive materials* from the magazine or other building, railway or highway by a natural or an artificial barrier. A straight line from the top of any sidewall of the building containing *explosive materials* to the eave line of any magazine or other building or to a point 12 feet (3658 mm) above the center of a railway or highway shall pass through such barrier.

❖ Natural or artificial barriers must exist or be constructed to qualify for the separation distance reductions allowed in Table 5604.5.2(2). These barriers are intended to provide protection for people and property equivalent to the larger separation distances by absorbing or deflecting blast effects and debris from explosions involving magazines. Commentary Figure 202-B2 illustrates the arrangement of natural and artificial barricades for protection from two 2,000-pound (908 kg) Type 1 magazines.

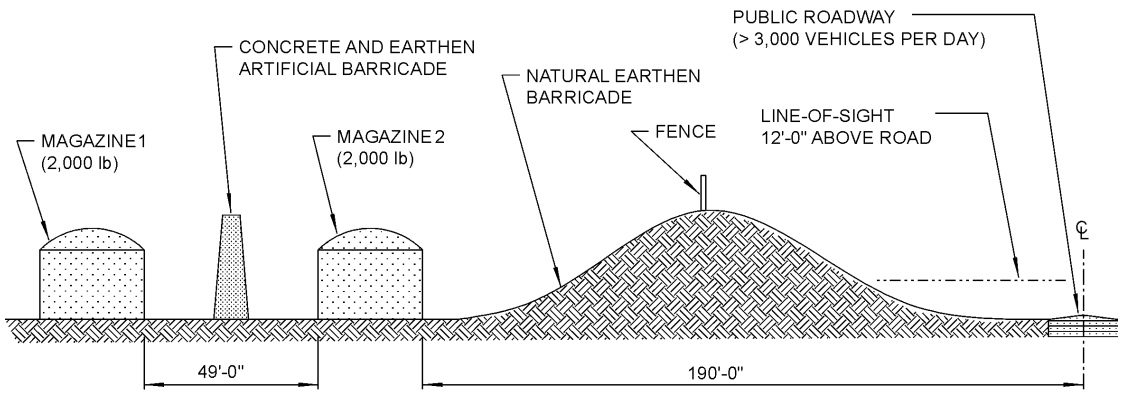

For SI: 1 inch = 25.4 mm, 1 foot = 304.8 mm, 1 pound = 1.454 kg.

Figure 202-B2
ARRANGEMENT OF BARRICADE

INTERNATIONAL CODE COUNCIL®
Copyright © 2015 ICC. ALL RIGHTS RESERVED. Accessed by David Dammon on Jun 21, 2017 12:30:52 PM pursuant to License Agreement with ICC. No further reproduction or distribution authorized. ANY UNAUTHORIZED REPRODUCTION OR DISTRIBUTION IS A VIOLATION OF THE FEDERAL COPYRIGHT ACT AND THE LICENSE AGREEMENT, AND SUBJECT TO CIVIL AND CRIMINAL PENALTIES THEREUNDER.

[BG] BASEMENT. A story that is not a story above grade plane.

❖ Unlike previous editions of the I-Codes where a story would be defined as a basement if any portion of the story was below grade, a basement is now defined as a story that has its floor surface below the adjoining ground level and that does not qualify as a story above grade plane (see the commentary to the definition of "Story above grade plane"). IBC Commentary Figure 202.2(7) illustrates the application of the definition of "Story above grade plane." Since a basement is not a story above grade, it does not contribute to the height of the building for the purpose of applying the allowable building height in stories from Table 504.4 of the IBC.

BATTERY SYSTEM, STATIONARY LEAD ACID. A system which consists of three interconnected subsystems:

1. A lead-acid battery.
2. A battery charger.
3. A collection of rectifiers, inverters, converters and associated electrical equipment as required for a particular application.

❖ The definition describes the completed battery system, consisting of all the components needed to make a functioning battery power system (see commentary, Section 608).

BATTERY TYPES.

Lithium-ion battery. A storage battery that consists of lithium ions embedded in a carbon graphite or nickel metal-oxide substrate. The electrolyte is a carbonate mixture or a gelled polymer. The lithium ions are the charge carriers of the battery.

❖ This definition describes a specific type of sealed, nonventing, recombinant storage batteries similar to nickel-metal hydride batteries, although they are not as durable. Lithium-ion batteries, also commonly known as "Li-ion" batteries, are typically lighter than other comparably sized types of rechargeable batteries which makes them a popular choice for portable devices and automotive applications. They hold their charge well, are generally durable and may be recharged many times. Like other types of sealed batteries with a high-viscocity, immobilized electrolyte, Li-ion batteries have the advantage of not requiring spill control safeguards and also pose a reduced fugitive gas hazard. Lithium-ion batteries, when exposed to prolonged hot conditions with inadequate ventilation, can rupture, ignite, or explode. In recent history, Li-ion batteries were the subject of a massive battery recall initiative by several computer and cell phone manufacturers due to the Li-ion batteries used in their products overheating from internal contamination defects and causing fires or burn injuries.

Lithium metal polymer battery. A storage battery that is comprised of nonaqueous liquid or polymerized electrolytes, which provide ionic conductivity between lithiated positive active material electrically separated from metallic lithium or lithiated negative active material.

❖ This definition describes lithium metal polymer (LMP) batteries, a specific type of sealed, nonventing storage battery similar to lithium-ion batteries and which are undergoing evaluation for use as stationary battery back-up systems to replace the currently used lead-acid and valve-regulated lead acid (VRLA) batteries. The LMP battery is similar to the Lithium-ion type in its characteristics (light, energy-dense, no liquid electrolyte, etc.). This technology is becoming more popular for deployment in outdoor cabinets and in buildings as well. Like lithium-ion batteries, LMP batteries use Lithium ions as the charge carrier. However, LMP batteries have more lithium because their anode is a solid thin foil of pure lithium encased in a plastic-like polymer that serves as the electrolyte. A significant advantage of LMP batteries is that they store more energy per unit of weight when compared to other batteries using nickel or lead anodes. Lithium is also an extremely lightweight metal when compared to other cathode or anode materials which results in a rechargeable battery with a high-energy density.

Even though LMP batteries should be recycled, they don't pose as much of an environmental hazard as lead-acid or Ni-Cad technologies if they are simply disposed. LMP batteries do not produce or liberate hydrogen or oxygen during their charging cycles and are, therefore, not classified as being recombinant or nonrecombinant. Since gases are not liberated from LMP batteries, the requirement in Section 608.2 for either vented caps or self-resealing flame arresting caps are not applicable. Because LMP batteries do not off-gas flammable or oxidizing gases while being charged, Section 608.6.1 does not require a mechanical ventilation system.

LMP batteries are constructed with an internal means of thermal runaway management which is required by Section 608.3. Each battery is equipped with an internal heating system that is located within the electrochemical stack of anodes and cathodes. This heating element ensures that the battery temperature limits are not exceeded when the battery is being charged or discharged.

These batteries contain no liquid electrolytes or electrolytes suspended in a gel or similar liquids. The electrolyte is a solid lithium-ion that is normally mixed with a rubber polymer that is located between the cathode and anode. Since these batteries do not contain any liquid, the code does not require spill control or a means of neutralization.

While LMP batteries do not have the potential for spills or discharging of hydrogen or oxygen, they still present a potential fire threat if they are somehow overheated and can be a threat to fire fighters because they will be connected to an energized circuit. Accordingly, Table 608.1 requires that the area housing these batteries be provided with signs com-

INTERNATIONAL CODE COUNCIL®
Copyright © 2015 ICC. ALL RIGHTS RESERVED. Accessed by David Dammon on Jun 21, 2017 12:30:52 PM pursuant to License Agreement with ICC. No further reproduction or distribution authorized. ANY UNAUTHORIZED REPRODUCTION OR DISTRIBUTION IS A VIOLATION OF THE FEDERAL COPYRIGHT ACT AND THE LICENSE AGREEMENT, AND SUBJECT TO CIVIL AND CRIMINAL PENALTIES THEREUNDER.

plying with Section 608.7 and a means of smoke detection complying with Section 608.9. Section 606.8 also requires batteries installed inside of buildings within seismically active areas be appropriately braced and anchored in accordance with the IBC.

Nickel cadmium (Ni-Cd) battery. An alkaline storage battery in which the positive active material is nickel oxide, the negative contains cadmium and the electrolyte is potassium hydroxide.

❖ This definition describes a specific type of nonrecombinant storage battery. Nickel-cadmium (Ni-Cd) batteries are durable and may be recharged many times. One of the hazards of storage batteries is overcharging and, in the case of Ni-Cd batteries, overcharging can produce either hydrogen gas or oxygen that could result in a rupture of the cell casing. Ni-Cd cells are, therefore, provided with safety venting caps to allow the generated gas to escape from inside the cell. See the commentary to Section 608.2 for further discussion of vents.

Nonrecombinant battery. A storage battery in which, under conditions of normal use, hydrogen and oxygen gasses created by electrolysis are vented into the air outside of the battery.

❖ Nonrecombinant batteries, also called flooded cell batteries, are those where the electrodes/plates are immersed in electrolyte, and the gases (hydrogen and oxygen) created during charging are vented to the atmosphere. These batteries require maintenance in the form of distilled water occasionally being added to the cells to bring the electrolyte back to its required level. The most familiar example of a flooded lead-acid cell is the 12-V automobile battery (see also the commentary to the definition of "Recombinant battery").

Recombinant battery. A storage battery in which, under conditions of normal use, hydrogen and oxygen gases created by electrolysis are converted back into water inside the battery instead of venting into the air outside of the battery.

❖ Recombinant batteries are designed so that the oxygen generated during charging is captured and recombined in the battery. This is called an oxygen recombination cycle and works well as long as the charge rate is not too high. An overly high charge rate could result in cell case rupture, thermal runaway or internal mechanical damage.

The VRLA battery is the most common type of recombinant battery. It was developed for stationary and telecommunication battery applications. These types of sealed batteries have a spring-controlled valve that vents gases at a predetermined pressure. Typical pressure thresholds are from 2 to 5 pounds per square inch gauge (psig) (14 to 34 kPa), depending on the battery design. Although the term "valve-regulated" is often used synonymously with describing sealed lead-acid batteries, not all sealed batteries are valve-regulated. Some battery designs employ replaceable vent plugs or other mechanisms to relieve excess pressure. Sealed batteries were developed to reduce the maintenance required for batteries in active service. Since electrolyte levels are preserved by trapping and recombining off-gases, there should not be any need to add distilled water over the life of the battery. These batteries are often misnamed "maintenance free." In fact, all maintenance practices applicable to unsealed-type batteries are applicable to sealed-type batteries. The only exception is that electrolyte levels cannot, and should not, need to be maintained.

Stationary storage battery. A group of electrochemical cells interconnected to supply a nominal voltage of DC power to a suitably connected electrical load, designed for service in a permanent location. The number of cells connected in a series determines the nominal voltage rating of the battery. The size of the cells determines the discharge capacity of the entire battery. After discharge, it may be restored to a fully charged condition by an electric current flowing in a direction opposite to the flow of current when the battery is discharged.

❖ The term "stationary storage battery" applies to all battery types made up of multiple electrochemical cells interconnected to supply a nominal voltage of direct current (DC) power. The batteries consist of a positive and a negative lead plate immersed in an electrolyte solution, which is considered a corrosive liquid. The definition includes both the vented type, in which hydrogen and oxygen are produced and vented, and the valve-regulated type, which is sealed to prevent the venting of the generated gases.

Stationary storage batteries come in a wide variety of designs for different applications. They are used for applications where power is necessary only on a standby or emergency basis. Stationary batteries are infrequently discharged. Stationary batteries remain on a continuous float charge so that they can be used on demand. The largest types of stationary batteries are those used for electrical load leveling. Load-leveling batteries store electrical energy for times of peak power demand and are taken off-line during times of low power demand. Such batteries are typically used for uninterrupted power supply (UPS) systems, emergency power or standby power applications and are manufactured in a variety of plate designs.

Valve-regulated lead-acid (VRLA) battery. A lead-acid battery consisting of sealed cells furnished with a valve that opens to vent the battery whenever the internal pressure of the battery exceeds the ambient pressure by a set amount. In VRLA batteries, the liquid electrolyte in the cells is immobilized in an absorptive glass mat (AGM cells or batteries) or by the addition of a gelling agent (gel cells or gelled batteries).

❖ Valve-regulated lead-acid (VRLA) batteries (sometimes referred to as "gel cells") differ substantially from flooded batteries in design, operation and potential hazard. VRLA-type batteries are uniquely different from the traditional liquid electrolyte lead-acid batter-

INTERNATIONAL CODE COUNCIL®
Copyright © 2015 ICC. ALL RIGHTS RESERVED. Accessed by David Dammon on Jun 21, 2017 12:30:52 PM pursuant to License Agreement with ICC. No further reproduction or distribution authorized. ANY UNAUTHORIZED REPRODUCTION OR DISTRIBUTION IS A VIOLATION OF THE FEDERAL COPYRIGHT ACT AND THE LICENSE AGREEMENT, AND SUBJECT TO CIVIL AND CRIMINAL PENALTIES THEREUNDER.

ies in that they have no liquid electrolyte to flow from the container if it were to break. Also, the VRLA batteries do not vent their off-gases to the atmosphere but rather implement an oxygen recombination cycle that minimizes the emissions of gas from the batteries during overcharging. Though these batteries are considered sealed, their design includes spring-controlled valves that vent gases at a pressure threshold of 2 to 5 psig (14 to 34 kPa). These batteries are sometimes mistakenly called "maintenance free"; however, they should be maintained in accordance with the manufacturer's instructions as with any other building system.

Vented (flooded) lead-acid battery. A lead-acid battery consisting of cells that have electrodes immersed in liquid electrolyte. Flooded lead-acid batteries have a provision for the user to add water to the cell and are equipped with a flame-arresting vent which permits the escape of hydrogen and oxygen gas from the cell in a diffused manner such that a spark, or other ignition source, outside the cell will not ignite the gases inside the cell.

❖ There are basically two types of lead-acid storage batteries, which are based on how they are constructed and vented: they are either vented (flooded) or sealed. Vented (flooded) and sealed batteries differ in how they dispose of the hydrogen (explosive in air at 4 percent by volume) and oxygen produced by electrolysis during their recharging (off-gassing). In a vented (flooded) battery, these gases are allowed to escape to the atmosphere. In a sealed battery, the gases are contained within the battery cell(s) and recombined with the electrolyte. Because the gases created during battery charging are vented to the atmosphere, distilled water must be added by the owner periodically to bring the electrolyte level back to that required by the battery specifications. One of the most common types of vented (flooded) lead-acid batteries is the automobile battery.

BIN BOX. A five-sided container with the open side facing an aisle. Bin boxes are self-supporting or supported by a structure designed so that little or no horizontal or vertical space exists around the boxes.

❖ Proprietary storage systems, such as bin box storage, are common in warehousing and manufacturing industries, such as automotive assembly plants and mail-order mercantile operations. Many bin box systems rely on the rigidity of adjacent bins and interlocking design for stability. Provisions for fastening the self-supporting units together to permit higher stacking are typical in most designs. Other bin box systems are designed in conjunction with a supporting rack system to minimize unusable space between bins. Bin boxes can be constructed of combustible materials, such as wood or cardboard, or of noncombustible materials such as metal.

BIOMASS. Plant- or animal-based material of biological origin excluding material embedded in geologic formations or transformed into fossils.

❖ This term is provided to coordinate with the requirements in Chapter 28 and the inclusion of these materials in the commodity classifications for high-piled combustible storage found in Chapter 32. These materials are becoming more prevalent and guidance is needed in terms of the hazards they pose and how they should be regulated.

BLAST AREA. The area including the blast site and the immediate adjacent area within the influence of flying rock, missiles and concussion.

❖ The area of a blast is affected by flying rock missiles, gases and concussion and also includes the blast site and the immediately adjacent area that is owned, leased or controlled by the blast operator.

BLAST SITE. The area in which *explosive materials* are being or have been loaded and which includes all holes loaded or to be loaded for the same blast and a distance of 50 feet (15 240 mm) in all directions.

❖ The area where explosive material is handled during loading, which includes 50 feet (15 240 mm) in all directions from loaded blast holes or holes to be loaded.

BLASTER. A person qualified in accordance with Section 3301.4 to be in charge of and responsible for the loading and firing of a blast.

❖ In general, the blaster should be qualified, experienced and of sound judgment when performing the duties of blasting. This person is authorized to use explosives for blasting purposes. The blaster is trained and experienced in the use of explosives and licensed by the department.

BLASTING AGENT. A material or mixture consisting of fuel and oxidizer, intended for blasting provided that the finished product, as mixed for use or shipment, cannot be detonated by means of a No. 8 test detonator when unconfined. Blasting agents are labeled and placarded as Class 1.5 material by US DOTn.

❖ This definition is derived from federal explosive regulations and is intended to distinguish blasting agents from more dangerous explosive materials on the basis of their propensity to mass detonate by initiation using a standard device.

[BE] BLEACHERS. Tiered seating supported on a dedicated structural system and two or more rows high and is not a building element (see "*Grandstand*").

❖ Bleachers, folding and telescopic seating and grandstands are essentially unique forms of tiered seating that are supported on a dedicated structural system. All types are addressed in ICC 300, *Standard on*

INTERNATIONAL CODE COUNCIL®
Copyright © 2015 ICC. ALL RIGHTS RESERVED. Accessed by David Dammon on Jun 21, 2017 12:30:52 PM pursuant to License Agreement with ICC. No further reproduction or distribution authorized. ANY UNAUTHORIZED REPRODUCTION OR DISTRIBUTION IS A VIOLATION OF THE FEDERAL COPYRIGHT ACT AND THE LICENSE AGREEMENT, AND SUBJECT TO CIVIL AND CRIMINAL PENALTIES THEREUNDER.

Bleachers, Folding and Telescopic Seating and Grandstands, the safety standard for these types of seating arrangements (see Section 1029.1.1). Bleachers can have backrests or just seatboards. The term "building element" used in Section 1029.1.1 is a defined term in the IBC, which is primarily used in conjunction with the structural elements regulated in Table 601 of the IBC. Bleachers have a separate structural system and are not considered a building element of the building or structure in which they are located. An individual bench seat directly attached to a floor system is not a bleacher. The terms "bleacher" and "grandstand" are basically interchangeable. There is no cut-off in size or number of seats that separates bleachers and grandstands.

[BG] BOARDING HOUSE. A building arranged or used for lodging for compensation, with or without meals, and not occupied as a single-family unit.

❖ A boarding house is a structure where the occupants are provided sleeping accommodations or meals and accommodations for a fee. The individual rooms used usually do not contain all of the permanent living provisions of a dwelling unit (e.g., permanent cooking facilities). Most often, the term "boarding house" describes a facility that is primarily for transient occupants; however, these facilities might also be used for nontransient purposes. Depending on the extent of transiency, a boarding house could be classified as Group R-1 when an occupant typically stays for not more than 30 days or Group R-2 when the length of stay is greater than 30 days. Boarding houses are distinct from lodging houses. Lodging houses allow transient guests within a residence that is also occupied by the owner or primary residents of the dwelling unit. Lodging houses are classified as Group R-3 occupancies.

BOILING POINT. The temperature at which the vapor pressure of a liquid equals the atmospheric pressure of 14.7 pounds per square inch absolute (psia) (101 kPa) or 760 mm of mercury. Where an accurate boiling point is unavailable for the material in question, or for mixtures which do not have a constant boiling point, for the purposes of this classification, the 20-percent evaporated point of a distillation performed in accordance with ASTM D 86 shall be used as the boiling point of the liquid.

❖ The purpose of the boiling point is to assist in classifying flammable liquids. The classification of flammable liquids is based on the flash point and the boiling point. When one compares a Class IA liquid and a Class IB liquid, the only difference in their definitions is the boiling point. The lower the boiling point of a flammable liquid, the greater the hazard due to increased vapor pressure at NTP. This information will be found in the material safety data sheet (MSDS) and must be evaluated by the fire code official.

BONFIRE. An outdoor fire utilized for ceremonial purposes.

❖ Bonfires are usually very large and are associated with a crowd activity. Failure to follow good safety practices with these fires can lead to serious injuries and property damage.

[BE] BREAKOUT. For revolving doors, a process whereby wings or door panels can be pushed open manually for *means of egress* travel.

❖ In addition to the swinging doors in the immediate area, revolving doors have a breakout feature as an additional safety requirement. The panels in the door can be operated manually to collapse or fold in the direction of egress during an emergency. This should increase the number of people that could exit per minute when not using the revolving door in the standard manner.

BRITISH THERMAL UNIT (BTU). The heat necessary to raise the temperature of 1 pound (0.454 kg) of water by 1°F (0.5565°C).

❖ This definition describes the English unit of heat used throughout the document. A British thermal unit (Btu) is used as a way to describe the heat content of combustibles. The metric equivalent of a Btu is a joule. This term should not be confused with heat release rate. Heat release rate would be described as Btu per second (joule per second = watt).

[A] BUILDING. Any structure used or intended for supporting or sheltering any use or occupancy.

❖ The code uses this term to identify those structures that provide shelter for a function or activity. See the definition for "Area, building" for situations when a single structure may be two or more "Buildings" created by fire walls.

BUILDING AREA. See "Area, building."

BUILDING HEIGHT. See "Height, building."

[A] BUILDING OFFICIAL. The officer or other designated authority charged with the administration and enforcement of the *International Building Code*, or a duly authorized representative.

❖ The statutory power to enforce the building code is normally vested in a building department of a state, county or municipality that has a designated enforcement officer termed the "building official" (see Section 103.1 of the IBC).

BULK OXYGEN SYSTEM. An assembly of equipment, such as oxygen storage containers, pressure regulators, safety devices, vaporizers, manifolds and interconnecting piping, that has a storage capacity of more than 20,000 cubic feet (566 m^3) of oxygen at *normal temperature and pressure (NTP)* including unconnected reserves on hand at the site. The bulk oxygen system terminates at the point where oxygen at service pressure first enters the supply line. The oxygen containers can be stationary or movable, and the oxygen can be stored as a gas or liquid.

❖ As indicated in Section 6301.1, NFPA 55 contains installation and maintenance requirements for bulk oxygen systems. NFPA 55 also has the requirements for the protection of bulk oxygen systems from potential fire exposures. Oxygen storage systems with less

INTERNATIONAL CODE COUNCIL®
Copyright © 2015 ICC. ALL RIGHTS RESERVED. Accessed by David Dammon on Jun 21, 2017 12:30:52 PM pursuant to License Agreement with ICC. No further reproduction or distribution authorized. ANY UNAUTHORIZED REPRODUCTION OR DISTRIBUTION IS A VIOLATION OF THE FEDERAL COPYRIGHT ACT AND THE LICENSE AGREEMENT, AND SUBJECT TO CIVIL AND CRIMINAL PENALTIES THEREUNDER.

than the capacities indicated in the definition are not required to comply with NFPA 55, but are regulated by this chapter.

BULK PLANT OR TERMINAL. That portion of a property where flammable or *combustible liquids* are received by tank vessel, pipelines, tank car or tank vehicle and are stored or blended in bulk for the purpose of distributing such liquids by tank vessel, pipeline, tank car, tank vehicle, portable tank or container.

❖ All of us have seen the large storage tanks surrounded by containment berms that constitute what is commonly called a "tank farm." A facility of this kind may consist of one tank or several tanks and typically receives, stores and dispenses anywhere from thousands of gallons to hundreds of thousands of gallons of flammable or combustible liquids daily.

BULK TRANSFER. The loading or unloading of flammable or *combustible liquids* from or between tank vehicles, tank cars or storage tanks.

❖ This term refers to the loading or unloading of a flammable or combustible liquid from or between storage tanks, tank vehicles or tank cars or any combination thereof. See also the definition of "Process transfer" and Section 5706.5. This transfer is for the storage or transportation of flammable or combustible liquids.

BULLET RESISTANT. Constructed so as to resist penetration of a bullet of 150-grain M2 ball ammunition having a nominal muzzle velocity of 2,700 feet per second (fps) (824 mps) when fired from a 30-caliber rifle at a distance of 100 feet (30 480 mm), measured perpendicular to the target.

❖ Tests to determine bullet resistance are to be conducted on test panels or empty magazines. The panels or magazines are to resist a penetration of five out of five shots placed independently of each other in an area at least 3 feet by 3 feet (0.9 m by 0.9 m). If hardwood or softwood is used, its water content is not to exceed 15 percent.

Where a magazine roof or ceiling is required to be bullet resistant, it must be constructed of materials comparable to the sidewalls or of other materials that can withstand the penetration of bullets fired at an angle of 45 degrees (0.79 rad) from perpendicular.

CANOPY. A structure or architectural projection of rigid construction over which a covering is attached that provides weather protection, identity or decoration, and may be structurally independent or supported by attachment to a building on one end and by not less than one stanchion on the outer end.

❖ A canopy can be either an architectural projection from a building, or it can be an independent structure. An example of the former is typically found covering an entrance walkway in front of a hotel or apartment building or perhaps a restaurant. An example of the latter is a canopy built over fuel pumps at a motor fuel-dispensing facility. This definition distinguishes a canopy from an awning which consists of a lightweight frame that is supported by the building from which it projects. In doing so, the definition clarifies the applicability of roof loads in Section 1607.12.4 of the IBC. See Section 3105 of the IBC for general requirements and Section 3202 of the IBC for encroachment requirements. Commentary Figures 202-C1, 202-C2 and 202-C3 illustrate types of canopies.



Figure 202-C1
EXAMPLE OF A FREE-STANDING MEMBRANE-COVERED CANOPY



Figure 202-C2
EXAMPLE OF A CANOPY SUPPORTED BY A BUILDING AND STANCHION

INTERNATIONAL CODE COUNCIL®
Copyright © 2015 ICC. ALL RIGHTS RESERVED. Accessed by David Dammon on Jun 21, 2017 12:30:52 PM pursuant to License Agreement with ICC. No further reproduction or distribution authorized. ANY UNAUTHORIZED REPRODUCTION OR DISTRIBUTION IS A VIOLATION OF THE FEDERAL COPYRIGHT ACT AND THE LICENSE AGREEMENT, AND SUBJECT TO CIVIL AND CRIMINAL PENALTIES THEREUNDER.



Figure 202-C3
EXAMPLE OF A FREE-STANDING MOTOR FUEL-DISPENSING FACILITY CANOPY

CARBON DIOXIDE EXTINGUISHING SYSTEM. A system supplying carbon dioxide (CO_2) from a pressurized vessel through fixed pipes and nozzles. The system includes a manual- or automatic-actuating mechanism.

❖ Carbon dioxide (CO_2) extinguishing systems are useful in extinguishing fires in specific hazards or equipment in occupancies where an inert electrically nonconductive medium is essential or desirable and where cleanup of other extinguishing agents, such as dry-chemical residue, presents a problem. The system works by displacing the oxygen in an enclosed area by flooding the space with carbon dioxide. To effectively flood the enclosure, automatic door and window closers and control dampers for the mechanical ventilation system must be installed.

These types of gaseous extinguishing systems have some inherent disadvantages that should be considered before selection. Because the oxygen is being displaced, occupants should not be in the space for a period after discharge, depending on the concentration of CO_2 to be achieved. Additionally, the discharge rate can result in a rapid increase in pressure within the space where the system is discharged. However, where water is not a desired means of suppression carbon dioxide and other gaseous suppression systems can be very effective. NFPA 12 contains minimum requirements for the design, installation, testing, inspection, approval, operation and maintenance of carbon dioxide extinguishing systems.

[BG] CARE SUITE. In Group I-2 occupancies, a group of treatment rooms, care recipient sleeping rooms and the support rooms or spaces and circulation space within the suite where staff are in attendance for supervision of all care recipients within the suite, and the suite is in compliance with the requirements of Section 407.4.4 of the *International Building Code*.

❖ Care suites are designed to allow for a group of rooms to function as a unit in the treatment and care of patients. Suites are recognized to be an effective tool to provide flexibility in reaching an exit access due to functional considerations. Suites are particularly useful in intensive care units and emergency department in-patient treatment areas. Suites allow staff to have clear and unobstructed supervision of patients/care recipients in specific treatment and sleeping rooms through the elimination of corridor width or rating requirements. The term is not intended to apply to day rooms or business sections of the hospital. This term is only applicable to suites of patient rooms in Group I-2 occupancies, and should not be confused with similar layouts in other parts of the hospital or within other occupancies that may be referred to as a "suite." Care suites are to meet the requirements of Section 407 of the IBC.

CARTON. A cardboard or fiberboard box enclosing a product.

❖ This term is commonly used when applying the high-piled storage requirements of Chapter 32 and also for packaging of aerosols in Chapter 51. This definition provides a consistent understanding of a word often used to describe packaging.

CEILING LIMIT. The maximum concentration of an airborne contaminant to which one may be exposed. The ceiling limits utilized are those published in DOL 29 CFR Part 1910.1000. The ceiling Recommended Exposure Limit (REL-C) concentrations published by the U.S. National Institute for Occupational Safety and Health (NIOSH), Threshold Limit Value-Ceiling (TLV-C) concentrations published by the American Conference of Governmental Industrial Hygienists (ACGIH), Ceiling Workplace Environmental Exposure Level (WEEL-Ceiling) Guides published by the American Industrial Hygiene Association (AIHA), and other *approved*, consistent measures are allowed as surrogates for hazardous substances not listed in DOL 29 CFR Part 1910.1000.

❖ This limit is the concentration at which immediate irritation to skin, respiratory system or both will occur. This is an important level for emergency personnel and workers to be aware of. Mechanical ventilation may be used to assist in keeping the working environment below these levels.

[A] CHANGE OF OCCUPANCY. A change in the use of a building or a portion of a building. A change of occupancy shall include any change of occupancy classification, any change from one group to another group within an occupancy classification or any change in use within a group for a specific occupancy classification.

❖ This term describes the condition when an existing building or structure is used for a different use or the same use with an increase in the level of activity (see Section 101.4.7 for a reference to the IEBC). This term is only applicable to existing buildings, never new ones. For example, Group B includes both beauty parlors and post offices. If a beauty shop moved into an old post office, while remaining a Group B building, there would be a change in the level of activity; therefore, this would be considered a change of occupancy.

INTERNATIONAL CODE COUNCIL®
Copyright © 2015 ICC. ALL RIGHTS RESERVED. Accessed by David Dammon on Jun 21, 2017 12:30:52 PM pursuant to License Agreement with ICC. No further reproduction or distribution authorized. ANY UNAUTHORIZED REPRODUCTION OR DISTRIBUTION IS A VIOLATION OF THE FEDERAL COPYRIGHT ACT AND THE LICENSE AGREEMENT, AND SUBJECT TO CIVIL AND CRIMINAL PENALTIES THEREUNDER.

CHEMICAL. An element, chemical compound or mixture of elements or compounds or both.

❖ Chemicals may be hazardous, in which case the buildings, processes and storage that use them are regulated, or they may be nonhazardous, in which case their storage is regulated. These regulations are typically found in the IBC, IMC, IPC, IFGC and the code.

CHEMICAL NAME. The scientific designation of a chemical in accordance with the nomenclature system developed by the International Union of Pure and Applied Chemistry, the Chemical Abstracts Service rules of nomenclature, or a name which will clearly identify a chemical for the purpose of conducting an evaluation.

❖ This name can be used to research the product in resource manuals to determine the hazard characteristics of the product. Some examples of resources are: National Toxicology Program (NTP), Chemical Hazards Response Information System (CHRIS) manual, Emergency Response Guidebook (ERG), MSDS, etc.

[M] CHIMNEY. A primarily vertical structure containing one or more flues for the purpose of carrying gaseous products of combustion and air from a fuel-burning appliance to the outdoor atmosphere.

❖ The IFGC and the IMC address the installation of chimneys and venting systems that are required to convey products of combustion from fuel-burning appliances to the atmosphere. The code regulates the maintenance of masonry chimneys in Section 603.6.1. Chimneys differ from metal vents in the materials from which they are constructed and the type of appliance they are designed to serve. Chimneys can vent much hotter flue gases than metal vents.

Factory-built chimney. A listed and labeled chimney composed of factory-made components, assembled in the field in accordance with manufacturer's instructions and the conditions of the listing.

❖ A factory-built chimney is a manufactured listed and labeled chimney that has been tested by an approved agency to determine its performance characteristics. Factory-built chimneys are manufactured in two basic designs: either a double-wall insulated design or a triple-wall air-cooled design. Both designs use stainless steel inner liners to resist the corrosive effects of combustion products.

Masonry chimney. A field-constructed chimney composed of solid masonry units, bricks, stones, or concrete.

❖ Masonry chimneys can have one or more flues within them, and are field constructed of brick, stone, concrete or fire-clay materials. Masonry chimneys can stand alone or be part of a masonry fireplace.

Metal chimney. A field-constructed chimney of metal.

❖ A metal chimney is an unlisted chimney constructed and installed in accordance with NFPA 211 and is sometimes referred to as a "smokestack." Metal chimneys are typically field constructed and installed in industrial structures.

CLEAN AGENT. Electrically nonconducting, volatile or gaseous fire extinguishant that does not leave a residue upon evaporation.

❖ The two categories of clean agents are halocarbon compounds and inert gas agents. Halocarbon compounds include bromine, carbon, chloride, fluorine, hydrogen and iodine. Halocarbon compounds suppress the fire through a combination of breaking the chemical chain reaction of the fire, reducing the ambient oxygen supporting the fire and reducing the ambient temperature of the fire origin to reduce the propagation of fire. The clean agents that are inert gas agents contain primary components consisting of helium, neon or argon, or a combination of all three. Inert gases work by reducing the oxygen concentration around the fire origin to a level that does not support combustion (see commentary, Section 904.10).

[BG] CLINIC, OUTPATIENT. Buildings or portions thereof used to provide medical care on a less-than-24-hour basis to persons who are not rendered incapable of self-preservation by the services provided.

❖ Outpatient clinics generally consist of doctors' offices where various medical services can be provided. These clinics typically function during normal business hours (i.e., less than 24 hours) and, unlike ambulatory care facilities, the patients are generally ambulatory and capable of self-preservation. This definition clarifies the difference between ambulatory surgery centers (ambulatory care facilities) and the typical doctor's office. In many cities, outpatient clinics are open at all hours to be available to people who work a variety of shifts. The term "urgent care" is often used to describe such facilities. An outpatient facility that is open 24/7 may still be classified as a Group B occupancy, provided all patients are outpatients and individual patients are not treated for periods in excess of 24 hours. The latter would describe a Group I-2 hospital. See the commentaries for Sections 407 and 422 of the IBC.

CLOSED CONTAINER. A container sealed by means of a lid or other device such that liquid, vapor or dusts will not escape from it under ordinary conditions of use or handling.

❖ A closed container is one that is sealed so that no vapors or dust can escape. The important difference in dealing with an open container and a closed container is that the open container is more dangerous and calls for more safety requirements. The fire tetrahedron is made up of fuel, heat, oxygen and a chain

INTERNATIONAL CODE COUNCIL®
Copyright © 2015 ICC. ALL RIGHTS RESERVED. Accessed by David Dammon on Jun 21, 2017 12:30:52 PM pursuant to License Agreement with ICC. No further reproduction or distribution authorized. ANY UNAUTHORIZED REPRODUCTION OR DISTRIBUTION IS A VIOLATION OF THE FEDERAL COPYRIGHT ACT AND THE LICENSE AGREEMENT, AND SUBJECT TO CIVIL AND CRIMINAL PENALTIES THEREUNDER.

reaction. In a closed container there is only the fuel part of the tetrahedron; in an open container, there is the fuel and oxygen sides of the tetrahedron. In this case, a closed container is less hazardous than an open container unless there is a leak.

CLOSED SYSTEM. The use of a solid or liquid hazardous material involving a closed vessel or system that remains closed during normal operations where vapors emitted by the product are not liberated outside of the vessel or system and the product is not exposed to the atmosphere during normal operations; and all uses of *compressed gases*. Examples of closed systems for solids and liquids include product conveyed through a piping system into a closed vessel, system or piece of equipment.

❖ This definition is used primarily with regard to hazardous materials. The difference between a closed system and an open system is whether the hazardous material involved in the process is exposed to the atmosphere. A closed system is inherently less hazardous than an open system due to the fact that vapors, dusts or similar materials are not normally released from closed systems. Because closed systems are less hazardous than open systems, credit is typically given to increase the maximum allowable quantities (MAQ) when systems are considered closed. Materials in closed or open systems are assumed to be "in use" as opposed to "in storage." Gases are always assumed to be in closed systems since they would be immediately dispersed in an open system if exposed to the atmosphere without some means of containment (see the definition of "Open system").

COLD DECK. A pile of unfinished cut logs.

❖ A cold deck is a pile of ranked logs that have different lengths. The lengths are usually greater than 8 feet (2438 mm) and up to 50 feet (15 240 mm) long.

COMBUSTIBLE DUST. Finely divided solid material which is 420 microns or less in diameter and which, when dispersed in air in the proper proportions, could be ignited by a flame, spark or other source of ignition. Combustible dust will pass through a U.S. No. 40 standard sieve.

❖ Combustible dusts are combustible solids in a finely divided state that are suspended in the air. An explosion hazard exists when the concentration of the combustible dust is within the explosive limits and exposed to an ignition source of sufficient energy and duration to initiate self-sustained combustion. A review of the occupancy classification for Group H-2 in Chapter 2 (based on IBC Section 307.4) indicates that combustible dusts are classified in that occupancy group. The intent of that section is that when combustible dust is determined by an engineering analysis to meet the definition parameter that, in a given occupancy, it is dispersed in air in the proper proportions so as to be ignitable by an ignition source, then the deflagration hazard is sufficient to classify the occupancy in Group H-2. Combustible dust, as a material, that does not rise to that defined level of hazard in a particular building would not cause the building or portion thereof housing the hazard to be classified in Group H-2, but rather in the group that is most appropriate for the particular operation.

The original tabular MAQ per control area for combustible dust, included in the legacy building and fire codes, was deleted because of its questionable value, given the complexities of dust explosion hazards. In the 2012 edition of the code, a row for combustible dust was added to Table 5003.1.1(1) along with a new Note q. The note reinforces the fact that determining a theoretical MAQ of combustible dust and the potential for a dust explosion requires a thorough evaluation and technical report based on the provisions of Section 104.7.2 of the code. Such determination is complex and requires evaluation far beyond the simple 1 pound per 1,000 cubic feet (16 g/m^3) MAQ previously used by the legacy codes. Critical factors, such as particle size, material density, humidity and oxygen concentration, play a major role in the evaluation of the dust hazard and are much too complex to be simply addressed.

COMBUSTIBLE FIBERS. Readily ignitable and free-burning materials in a fibrous or shredded form, such as cocoa fiber, cloth, cotton, excelsior, hay, hemp, henequen, istle, jute, kapok, oakum, rags, sisal, Spanish moss, straw, tow, wastepaper, certain synthetic fibers or other like materials. This definition does not include densely packed baled cotton.

❖ The basic component of all textiles is fibers. Fibers may be either natural or man-made. Cellulosic, protein and mineral fibers are considered natural fibers. Fibers produced by chemical processes (nylon, rayon, Orlon, etc.) are considered man-made. The definition clarifies that densely packed baled cotton is not to be considered a hazardous material. The density and packaging arrangements of cotton fibers meeting the definition of "Baled cotton, densely packed" in this section reduce the hazard of the material such that the hazardous materials provisions of the code need no longer apply.

COMBUSTIBLE GAS DETECTOR. An instrument that samples the local atmosphere and indicates the presence of ignitable vapors or gases within the flammable or explosive range expressed as a volume percent in air.

❖ This definition coordinates with the requirements in Section 3510 that provide procedures for undertaking hot work on tanks that have contained flammable or combustible liquids. One of the procedures required is the use of a combustible gas detector to evaluate the conditions of the space while hot work is occurring.

COMBUSTIBLE LIQUID. A liquid having a closed cup flash point at or above 100°F (38°C). Combustible liquids shall be subdivided as follows:

Class II. Liquids having a closed cup flash point at or above 100°F (38°C) and below 140°F (60°C).

INTERNATIONAL CODE COUNCIL®
Copyright © 2015 ICC. ALL RIGHTS RESERVED. Accessed by David Dammon on Jun 21, 2017 12:30:52 PM pursuant to License Agreement with ICC. No further reproduction or distribution authorized. ANY UNAUTHORIZED REPRODUCTION OR DISTRIBUTION IS A VIOLATION OF THE FEDERAL COPYRIGHT ACT AND THE LICENSE AGREEMENT, AND SUBJECT TO CIVIL AND CRIMINAL PENALTIES THEREUNDER.

Class IIIA. Liquids having a closed cup flash point at or above 140°F (60°C) and below 200°F (93°C).

Class IIIB. Liquids having closed cup *flash points* at or above 200°F (93°C).

The category of combustible liquids does not include *compressed gases* or *cryogenic fluids*.

❖ Combustible liquids differ from flammable liquids in that the closed-cup flash point of all combustible liquids is at or above 100°F (38°C) (see the definition of "Flash point"). There are three categories of combustible liquids. The range of their closed-cup flash point dictates the class of combustible liquid. The flash point range of 100°F (38°C) to 140°F (60°C) for Class II liquids was based on a possible indoor ambient temperature exceeding 100°F (38°C). Only a moderate degree of heating would be required to bring the liquid to its flash point at this temperature. Class III liquids, which have flash points higher than 140°F (60°C), would require a significant heat source above ambient temperature to reach their flash point (see the definition of "Flammable liquid"). Class IIIA has a closed-cup flash point range of 140°F (60°C) to 200°F (93°C). Class IIIB has a closed-cup flash point at or above 200°F (93°C). The term "combustible liquid" does not include liquefied compressed gases or cryogenic fluids. Compressed gases are regulated in Chapter 53 and cryogenic fluids are regulated in Chapter 55.

[M] COMMERCIAL COOKING APPLIANCES. Appliances used in a commercial food service establishment for heating or cooking food and which produce grease vapors, steam, fumes, smoke or odors that are required to be removed through a local exhaust ventilation system. Such appliances include deep fat fryers, upright broilers, griddles, broilers, steam-jacketed kettles, hot-top ranges, under-fired broilers (charbroilers), ovens, barbecues, rotisseries, and similar appliances. For the purpose of this definition, a food service establishment shall include any building or a portion thereof used for the preparation and serving of food.

❖ This definition is important in the application of Section 609, which requires a commercial kitchen hood above commercial cooking appliances. A definition of "Food service establishment" is included within this definition. "Food service" includes operations, such as preparing, handling, cleaning, cooking and packaging food items of any kind.

COMMERCIAL MOTOR VEHICLE. A motor vehicle used to transport passengers or property where the motor vehicle:

1. Has a gross vehicle weight rating of 10,000 pounds (454 kg) or more; or
2. Is designed to transport 16 or more passengers, including the driver.

❖ This definition clarifies what constitutes a "commercial vehicle." This term has often been misinterpreted in previous editions. These criteria are from the DOT 49 CFR; Part 390.5, and correlate with IBC Section 1607.7. Where vehicles of this size are present in buildings greater than 5,000 square feet (464 m^2) in area, the code requires an automatic sprinkler system be provided in repair garages, commercial parking garages and in Group S-1 storage occupancies (see Section 903.2).

COMMODITY. A combination of products, packing materials and containers.

❖ Commodity is a term used to identify the product being stored, its container or housing and the type of stackable mechanism (with or without pallet). Commodities and their containers are generally identified as classes, with each classification identifying the combustibility (potential fire hazard). The quantity and locations of each type of commodity will define the type of general and special fire protection and life safety requirements necessary for the building or structure. See the commentary for the various commodities in Section 3203.

[BE] COMMON PATH OF EGRESS TRAVEL. That portion of the *exit access* travel distance measured from the most remote point within a story to that point where the occupants have separate and distinct access to two *exits* or *exit access* doorways.

❖ The common path of egress travel is a concept used to refine travel distance criteria. A common path of travel is the route an occupant will travel where the one way in is also the one way out, similar to a dead-end corridor or single exit suite. Once occupants reach a point where two different routes are available, and the two different routes continue to two separate exits, then common path of travel is finished. The length of a common path of egress travel is limited so that the means of egress path of travel provides a choice before the occupant has traveled an excessive distance (see Section 1006). This reduces the possibility that, although the exits are remote from one another, a single fire condition will render both paths unavailable. The common path of egress travel is part of the overall exit access travel distance. To be compliant, the path of egress must meet criteria for both common path of egress travel and exit access travel distance.

[BE] COMMON USE. Interior or exterior circulation paths, rooms, spaces or elements that are not for public use and are made available for the shared use of two or more people.

❖ Some buildings include areas that are restricted to employees only or where public access is limited. Common-use spaces may be part of employee work areas but do not include public-use spaces. Any space that is shared by two or more persons, such as copy areas, break rooms, toilet rooms or circulation paths, are common use areas. A grade school classroom would be another example of a common-use space (see also the commentary for the definition of "Public-use areas" and "Employee work area").

INTERNATIONAL CODE COUNCIL®
Copyright © 2015 ICC. ALL RIGHTS RESERVED. Accessed by David Dammon on Jun 21, 2017 12:30:52 PM pursuant to License Agreement with ICC. No further reproduction or distribution authorized. ANY UNAUTHORIZED REPRODUCTION OR DISTRIBUTION IS A VIOLATION OF THE FEDERAL COPYRIGHT ACT AND THE LICENSE AGREEMENT, AND SUBJECT TO CIVIL AND CRIMINAL PENALTIES THEREUNDER.

COMPRESSED GAS. A material, or mixture of materials that:

1. Is a gas at 68°F (20°C) or less at 14.7 psia (101 kPa) of pressure; and
2. Has a *boiling point* of 68°F (20°C) or less at 14.7 psia (101 kPa) which is either liquefied, nonliquefied or in solution, except those gases which have no other health- or physical-hazard properties are not considered to be compressed until the pressure in the packaging exceeds 41 psia (282 kPa) at 68°F (20°C).

The states of a compressed gas are categorized as follows:

1. Nonliquefied compressed gases are gases, other than those in solution, which are in a packaging under the charged pressure and are entirely gaseous at a temperature of 68°F (20°C).
2. Liquefied compressed gases are gases that, in a packaging under the charged pressure, are partially liquid at a temperature of 68°F (20°C).
3. Compressed gases in solution are nonliquefied gases that are dissolved in a solvent.
4. Compressed gas mixtures consist of a mixture of two or more compressed gases contained in a packaging, the hazard properties of which are represented by the properties of the mixture as a whole.

❖ This term refers to all types of gases that are under pressure at normal room or outdoor temperatures inside their containers, including, but not limited to, flammable, nonflammable, highly toxic, toxic, cryogenic and liquefied gases. The vapor pressure limitations provide the distinction between a liquid and a gas.

COMPRESSED GAS CONTAINER. A pressure vessel designed to hold *compressed gases* at pressures greater than one atmosphere at 68°F (20°C) and includes cylinders, containers and tanks.

❖ Containers covered by this definition range from the small compressed air tanks carried by some road service trucks to the very large storage tanks mounted on permanent bases at industrial plants. Designs vary considerably depending on the gases they are intended to hold, whether they are designed for upright or horizontal mounting and the environment they will be used in.

COMPRESSED GAS SYSTEM. An assembly of equipment designed to contain, distribute or transport *compressed gases*. It can consist of a *compressed gas* container or containers, reactors and appurtenances, including pumps, compressors and connecting piping and tubing.

❖ This definition is intended to include every component used to convey the gas to or from manufacturing, storage and use facilities. System designs will vary widely depending on their intended use.

[BG] CONGREGATE LIVING FACILITIES. A building or part thereof that contains sleeping units where residents share bathroom and/or kitchen facilities.

❖ Congregate living facilities are those pertaining to group housing (i.e., dormitories, fraternities, convents) that combine individual sleeping quarters with communal facilities for food, care, sanitation and recreation. The number of occupants in the facility determines the appropriate occupancy classification. There are two thresholds: 10 and 16. A congregate living facility with 16 or fewer nontransient residents falls in the R-3 classification—for above 16 nontransient residents the classification is R-2. For transient residents, if there are 10 or fewer in the facility, it is also in the R-3 classification. If over 10 transient residents, it is an R-1 occupancy.

CONSTANTLY ATTENDED LOCATION. A designated location at a facility staffed by trained personnel on a continuous basis where alarm or supervisory signals are monitored and facilities are provided for notification of the fire department or other emergency services.

❖ These locations are intended to receive trouble, supervisory and fire alarm signals transmitted by the fire protection equipment installed within a protected facility. It is the intent of the code to have both an approved location and personnel who are acceptable to the fire code official responsible for actions taken when the fire protection system requires attention. The term “constantly attended” implies 24-hour surveillance of the system, at the designated location.

[A] CONSTRUCTION DOCUMENTS. The written, graphic and pictorial documents prepared or assembled for describing the design, location and physical characteristics of the elements of the project necessary for obtaining a permit.

❖ To determine whether proposed construction is in compliance with code requirements, sufficient information must be submitted to the fire code official for review. This definition describes in general which items are to be included in that documentation. This typically will include drawings (floor plans, elevations, sections, details, etc.), specifications and product information describing the proposed work. In the past, these documents were referred to as “plans and specifications.” Those terms are not broad enough to include all information, such as calculations or graphs.

CONTAINER. A vessel of 60 gallons (227 L) or less in capacity used for transporting or storing hazardous materials. Pipes, piping systems, engines and engine fuel tanks are not considered to be containers.

❖ This definition establishes the intended capacity of the container to avoid confusion with portable or stationary tanks. A container could include typical 55-gallon (208 L) drums or 2-ounce (59 ml) cans. It is

INTERNATIONAL CODE COUNCIL®
Copyright © 2015 ICC. ALL RIGHTS RESERVED. Accessed by David Dammon on Jun 21, 2017 12:30:52 PM pursuant to License Agreement with ICC. No further reproduction or distribution authorized. ANY UNAUTHORIZED REPRODUCTION OR DISTRIBUTION IS A VIOLATION OF THE FEDERAL COPYRIGHT ACT AND THE LICENSE AGREEMENT, AND SUBJECT TO CIVIL AND CRIMINAL PENALTIES THEREUNDER.

important to note the size difference between a drum and a barrel. A drum has a capacity of 55 U.S. gallons (208 L) and a barrel has a capacity of 42 U.S. gallons (158 L). These terms are sometimes reported incorrectly when determining the amount of storage in a facility.

CONTAINMENT SYSTEM. A gas-tight recovery system comprised of equipment or devices which can be placed over a leak in a *compressed gas* container, thereby stopping or controlling the escape of gas from the leaking container.

❖ A containment system consists of various components that will capture gases from a leaking container by being placed at the source of the leak.

CONTAINMENT VESSEL. A gas-tight recovery vessel designed so that a leaking *compressed gas* container can be placed within its confines thereby encapsulating the leaking container.

❖ A containment vessel is a closed unit that a leaking container can be placed in that will fully contain any unwanted release.

CONTINUOUS GAS DETECTION SYSTEM. A gas detection system where the analytical instrument is maintained in continuous operation and sampling is performed without interruption. Analysis is allowed to be performed on a cyclical basis at intervals not to exceed 30 minutes.

❖ This term refers to a system that is capable of constantly monitoring the presence of highly toxic or toxic compressed gases at or below the permissible exposure limit (PEL) for the gas. A continuous gas detection system will provide notification of a leak or rupture in a compressed gas cylinder or tank in a storage or use condition.

Numerous techniques exist for detecting and measuring gases. Two of the most common types of detection methods are briefly described below:

Colorimetric Detection (Chemcassette Detection): Colorimetric detection involves a circuit that is usually completed by the presence of an electrolyte within the cell itself. A carefully prepared reel of porous paper tape is impregnated with a chemical that will change color in the presence of the target gas—this reaction can be very specific to particular gases of interest. This tape is then positioned so that the sample of air or gas passes through a section of the tape. Color changes are measured optically and converted to a direct concentration value of the target gas.

Electrochemical Detection: Electrochemical cells work on the fuel-cell principle. As the target gas enters the cell, it reacts at the active electrode and generates a very small current, which flows through an external measuring circuit back to the counter electrode.

CONTROL AREA. Spaces within a building where quantities of hazardous materials not exceeding the *maximum allowable quantities per control area* are stored, dispensed, used or handled. See also the definition of "Outdoor control area."

❖ The use of control areas allows for the use and storage of hazardous materials without classifying the building or structure as a high-hazard Group H occupancy when the total quantity of hazardous materials in the entire building might exceed the MAQ. This concept is based on regulating the allowable quantities of hazardous materials in each control area by giving credit for further compartmentation through the use of fire barriers having a minimum fire-resistance rating of 1 hour. Maximum quantities of hazardous materials within each control area cannot exceed the MAQ for a given material. Thus, the quantities in each control area will be less than the MAQ, while the overall quantity in the entire building could exceed the MAQ (see commentary, Section 5003.8.3).

[BE] CORRIDOR. An enclosed *exit access* component that defines and provides a path of egress travel.

❖ Corridors are regulated in the code because they serve as principal elements of travel in many means of egress systems within buildings. Typically, corridors have walls that extend from the floor to the ceiling. They need not extend above the ceiling or have doors in their openings unless a fire-resistance rating is required (see Section 1020).

While both aisles and corridors may result in a confined path of travel, an aisle is an unenclosed component, while a corridor would be an enclosed component of the means of egress. The enclosed character of the corridor restricts the sensory perception of the user. A fire located on the other side of the corridor wall, for example, may not be as readily seen, heard or smelled by the occupants traveling through the egress corridor. The code does not specifically state what is considered "enclosed" when corridors are not fire-resistance rated. When an egress path is bounded by partial-height walls, such as work-station partitions in an office, issues would be if the walls provided a confined path of travel and limited fire recognition in adjacent spaces by restricting line of sight, hearing and smell.

CORRIDOR, OPEN-ENDED. See "Open-ended corridor."

CORROSIVE. A chemical that causes visible destruction of, or irreversible alterations in, living tissue by chemical action at the point of contact. A chemical shall be considered corrosive if, when tested on the intact skin of albino rabbits by the method described in DOTn 49 CFR 173.137, such chemical destroys or changes irreversibly the structure of the tissue at the point of contact following an exposure period of 4 hours. This term does not refer to action on inanimate surfaces.

❖ This definition is derived from DOT 49 CFR; Part 173. While corrosive materials may not pose a fire, explosion or reactivity hazard, they do pose a handling and storage problem. Corrosive materials, therefore, are

INTERNATIONAL CODE COUNCIL®
Copyright © 2015 ICC. ALL RIGHTS RESERVED. Accessed by David Dammon on Jun 21, 2017 12:30:52 PM pursuant to License Agreement with ICC. No further reproduction or distribution authorized. ANY UNAUTHORIZED REPRODUCTION OR DISTRIBUTION IS A VIOLATION OF THE FEDERAL COPYRIGHT ACT AND THE LICENSE AGREEMENT, AND SUBJECT TO CIVIL AND CRIMINAL PENALTIES THEREUNDER.

primarily considered a health hazard, and an occupancy containing such materials in excess of the maximum allowable quantity per control area (MAQ) is classified in Group H-4. It should be noted that many corrosive chemicals are also strong oxidizing agents that would require review as a multiple-hazard material in accordance with Section 5001.1.

COTTON.

Baled cotton. A natural seed fiber wrapped in and secured with industry-accepted materials, usually consisting of burlap, woven polypropylene, polyethylene or cotton or sheet polyethylene, and secured with steel, synthetic or wire bands, or wire; also includes linters (lint removed from the cottonseed) and motes (residual materials from the ginning process).

❖ Since Section 3705 deals with baled fibers, this definition of standard "Baled cotton" is being included only to distinguish it from "Baled cotton, densely packed" (see commentary to the definition of "Baled cotton, densely packed"). The Joint Cotton Industry Bale Packaging Committee (JCIBPC) is a committee that represents all parts of the cotton industry and sets standards and specifications for packaging of cotton bales that include bale density. The JCIBPC specifications for baling of cotton require that all cotton bales be secured with fixed length wire bands, polyester plastic strapping or cold-rolled high tensile steel strapping and then covered in fully coated woven polyolefin, polyethylene film or burlap.

Baled cotton, densely packed. Cotton, made into banded bales, with a packing density of not less than 22 pounds per cubic foot (360 kg/m^3), and dimensions complying with the following: a length of 55 inches (1397 mm), a width of 21 inches (533.4 mm) and a height of 27.6 to 35.4 inches (701 to 899 mm).

❖ Currently, over 99 percent of all U.S. cotton is pressed and stored as densely packed baled cotton, with bales meeting the weight and dimension requirements of ISO 8115. One reason that the cotton industry has chosen to use mostly such bales is because the bales are very difficult to ignite, which allows the industry to transport them without being labeled as "flammable solids" or "dangerous goods" by the national or international transport authorities. This definition should be used to distinguish such bales from other combustible fibers.

In order to counteract some erroneous information regarding the combustibility characteristics of densely packed cotton bales, flammability research was conducted on baled cotton. The research demonstrated that densely packed baled cotton meeting the size and weight requirements of ISO 8115 is not a hazardous material. In view of that data, the U.S. Department of Transportation (DOT) (U.S. Coast Guard), the United Nations (U.N.) and the International Maritime Organization (IMO) have all removed baled cotton from the list of hazardous materials and flammable solids, provided the cotton bales are the densely packed type that meet the standard noted above. The research conclusions were:

1. Standard cotton fiber "passed" the DOT spontaneous combustion test: the cotton did not exceed the oven temperature and was not classified as self-heating.
2. Cotton, as densely packed baled cotton, did not cause sustained smoldering propagation: an electric heater placed within the bale was unable to cause sustained smoldering propagation, due to the lack of oxygen inside the densely packed bale.
3. Cotton, as densely packed baled cotton, was exposed to ignition from a cigarette and a match and performed very well: no propagating combustion with either.
4. Cotton, as densely packed baled cotton, was exposed to ignition from the gas burner source in ASTM E1590 (also known as California Technical Bulletin 129) of 12 L/min of propane gas for 180 seconds and passed all the criteria, including mass loss of less than 1.36 kg (3 pounds), heat release rate less than 100 kW and total heat release of less than 25 MJ in the first 10 minutes of the test.

Seed cotton. Perishable raw agricultural commodity consisting of cotton fiber (lint) attached to the seed of the cotton plant, which requires ginning to become a commercial product.

❖ Before cotton can be spun into yarn or thread and woven into cloth, the fibers must be separated from their seeds by a cotton gin (short for "cotton engine") in a process called "cotton ginning," which takes seed cotton and converts it into cotton fibers that are then stored in bales. Thus, seed cotton is a perishable raw material without commercial value that is not stored, but exists simply as a step on the way from the cotton field to the gin plant. Seed cotton is held in modules on the way from the harvest to the ginning factory, and is neither a loose cotton fiber (it has not been converted into fibers yet) nor densely packed baled cotton. As such, it is still a perishable agricultural product.

In the typical harvesting process (for example, grain harvesting), threshing machines are used to separate the raw agricultural product into a product that can then be stored and marketed, such as use as food or animal feed, and a byproduct that is usually left in the field. The cotton ginning process is essentially the same as the grain harvesting process in that a raw agricultural product (seed cotton) is converted by specially designed equipment into products with commercial value. These products are: cotton fiber (that exits the ginning process packaged as densely packed cotton bales and is either stored in a cotton warehouse or shipped to a textile mill) and cotton-

INTERNATIONAL CODE COUNCIL®
Copyright © 2015 ICC. ALL RIGHTS RESERVED. Accessed by David Dammon on Jun 21, 2017 12:30:52 PM pursuant to License Agreement with ICC. No further reproduction or distribution authorized. ANY UNAUTHORIZED REPRODUCTION OR DISTRIBUTION IS A VIOLATION OF THE FEDERAL COPYRIGHT ACT AND THE LICENSE AGREEMENT, AND SUBJECT TO CIVIL AND CRIMINAL PENALTIES THEREUNDER.

seeds (that go either to cottonseed oil mills or are fed directly to dairy cattle).

[BG] COURT. An open, uncovered space, unobstructed to the sky, bounded on three or more sides by exterior building walls or other enclosing devices.

❖ Though not specifically identified in the definition, the provisions in the code for courts (Section 1206 of the IBC) are only applicable to those areas created by the arrangement of exterior walls and used to provide natural light or ventilation (see Section 1206.1 of the IBC and the definition of "Yard." See also the definition of "Egress court" for courts that are utilized for exit discharge.)

[BG] COVERED MALL BUILDING. A single building enclosing a number of tenants and occupants such as retail stores, drinking and dining establishments, entertainment and amusement facilities, passenger transportation terminals, offices, and other similar uses wherein two or more tenants have a main entrance into one or more malls. Anchor buildings shall not be considered as a part of the covered mall building. The term "covered mall building" shall include open mall buildings as defined below.

❖ The covered mall building is the entire area of the building (area of mall plus gross leasable area), excluding the anchor buildings. Passenger transportation terminals frequently are developed as wide concourses with small shops along the sides. For this reason, passenger transportation facilities are included. Transportation facilities used for freight or other purposes are not to be considered a covered mall building.

Mall. A roofed or covered common pedestrian area within a covered mall building that serves as access for two or more tenants and not to exceed three levels that are open to each other. The term "mall" shall include open malls as defined below.

❖ A mall is an interior, climate-controlled pedestrian way that is open to the tenant spaces within the mall building and typically connects to the anchor buildings. The term "mall" also includes open mall. Unless noted otherwise, an open mall must comply with all the provisions for a mall.

Open mall. An unroofed common pedestrian way serving a number of tenants not exceeding three levels. Circulation at levels above grade shall be permitted to include open exterior balconies leading to *exits* discharging at grade.

❖ A mall is an interior, climate-controlled pedestrian way that is open to the tenant spaces within the mall building and typically connects to the anchor buildings. The term "mall" also includes open mall. Unless noted otherwise, an open mall must comply with all the provisions for a mall.

Open mall building. Several structures housing a number of tenants such as retail stores, drinking and dining establishments, entertainment and amusement facilities, offices, and other similar uses wherein two or more tenants have a main entrance into one or more open malls. Anchor buildings are not considered as a part of the open mall building.

❖ An open mall building includes all of the buildings housing a number of tenants wherein two or more tenants have a main entrance into one or more open malls. Because the open mall is characterized by there not being a roof connecting one side of the pedestrian mall to the other, the covered mall "building" may actually be a collection of separate buildings which all rely on a shared pedestrian concourse for egress. Similar to the covered mall building, the open mall "building" does not include the anchor buildings. Unless noted otherwise, open mall buildings must comply with all the provisions for covered mall buildings.

CRITICAL CIRCUIT. A circuit that requires continuous operation to ensure safety of the structure and occupants.

❖ The purpose of this definition is to clarify the applicability of the provisions of Section 604.3 of the code. Critical circuits are those electrical circuits supplying power to systems and equipment that are vital to the safety of building occupants and to the operational continuity of safety systems such as fire alarm systems, security systems, emergency communication systems and similar systems identified throughout the code, most notably in sections pertaining to emergency power. Although the term "critical circuit" is used widely throughout many industry standards, there is no specific definition for the term. As such, this definition was created based on definitions found in NFPA 70 and is similar to the definition of "Critical Operations Power Systems (COPS)" in that standard (see the commentary to Section 604.3).

CRYOGENIC CONTAINER. A cryogenic vessel of any size used for the transportation, handling or storage of *cryogenic fluids*.

❖ This definition is necessary to differentiate containers that hold cryogenic fluids from those that are used for ordinary compressed gases as addressed in Chapter 53, flammable and combustible liquids as addressed in Chapter 57 or other liquid or gaseous hazardous materials. Because of the extreme pressures and temperatures, these containers are unique in construction (see also commentary for the definition of "Container").

CRYOGENIC FLUID. A fluid having a *boiling point* lower than -130°F (-89.9°C) at 14.7 pounds per square inch atmosphere (psia) (an absolute pressure of 101.3 kPa).

❖ This definition contains the criteria for determining whether Chapter 55 is applicable. If a fluid falls outside of these criteria, it would likely be treated as a compressed gas and addressed within Chapter 53 (see also the definition for "Compressed gas").

CRYOGENIC VESSEL. A pressure vessel, low-pressure tank or atmospheric tank designed to contain a *cryogenic fluid* on which venting, insulation, refrigeration or a combina-

INTERNATIONAL CODE COUNCIL®
Copyright © 2015 ICC. ALL RIGHTS RESERVED. Accessed by David Dammon on Jun 21, 2017 12:30:52 PM pursuant to License Agreement with ICC. No further reproduction or distribution authorized. ANY UNAUTHORIZED REPRODUCTION OR DISTRIBUTION IS A VIOLATION OF THE FEDERAL COPYRIGHT ACT AND THE LICENSE AGREEMENT, AND SUBJECT TO CIVIL AND CRIMINAL PENALTIES THEREUNDER.

tion of these is used in order to maintain the operating pressure within the design pressure and the contents in a liquid phase.

❖ Cryogenic vessels differ from basic containers in that they are designed for use as either a pressure vessel, a low-pressure tank or an atmospheric tank that regulates the operating pressure to maintain the fluid as a liquid. Such vessels not only contain the fluids but also play an active role in regulating the state of the fluids.

[BG] CUSTODIAL CARE. Assistance with day-to-day living tasks; such as assistance with cooking, taking medication, bathing, using toilet facilities and other tasks of daily living. Custodial care includes persons receiving care who have the ability to respond to emergency situations and evacuate at a slower rate and/or who have mental and psychiatric complications.

❖ Care facilities encompass a full spectrum of occupant acuity and support services and span a wide range of occupancy types, including Groups E, I, and R. There are three types of care defined in the IBC and IFC: personal, custodial, and medical.

- Personal care is on one end of the care spectrum. It occurs in Group E occupancies for child day care services for persons over $2^1/_2$ years of age. Occupants are supervised but do not need custodial or medical care.
- Custodial care occurs in Groups I-1, I-4 and R4, where occupants may be elderly or impaired, or require adult or child day care of any age. Care recipients may need daily living assistance such as cooking, cleaning, bathing or help with taking medications. Persons who receive custodial care may or may not require assistance with evacuation depending on the occupancy and the "condition" in the occupancy. See also the commentary to the definitions of Groups I-1, I-4 and R4.
- Medical care occurs in Group I-2 occupancies on the opposite end of the spectrum, where care recipients are incapable of self-preservation. They may be completely bedridden, meaning bed movement may be required during emergencies, and may be dependent on life support systems such as medical gases and emergency power to maintain life. This level of acuity is not allowed in custodial care or personal care.

There are two other key defining aspects of custodial care that also differentiate it from medical care. The first is the evacuation capability of custodial care recipients. Custodial care recipients' evacuation capabilities are limited by the occupancy classification criteria or the occupancy condition in which care occurs. Group I-1 Condition 1 and Group R-4 Condition 1 only includes occupants with the ability to self-evacuate. Group I-1 Condition 2 and Group R-4 Condition 2 includes limited assistance with evacuation. Group I-4 also assumes that the occupants may not be able to respond on their own during emergencies. The second differentiating aspect is that Group I-1 and R-4 custodial care recipients also participate in fire drills in accordance with the code, versus Group I-2 medical care that implements defend-in-place strategies during emergencies.

The level of care provided describes the condition and capabilities of an occupant which then indicates the appropriate standards for protection systems, both active and passive. See also the definitions of "24-hour basis," "Ambulatory care facility," "Detoxification facilities," "Foster care facilities," "Group home," "Hospitals and psychiatric hospitals," "Incapable of self-preservation," "Medical care," "Nursing homes" and "Personal care service."

CYLINDER. A pressure vessel designed for pressures higher than 40 psia (275.6 kPa) and having a circular cross section. It does not include a portable tank, multiunit tank car tank, cargo tank or tank car.

❖ As referenced in the code, cylinders are vessels containing flammable or nonflammable compressed gases. Gas cylinders are fabricated to comply with regulations specified by DOTn and are generally limited to a capacity equivalent to the volume of 1,000 pounds (454 kg) of water.

DAMPER. See "Fire damper" and "Smoke damper."

DAY BOX. A portable magazine designed to hold *explosive* materials and constructed in accordance with the requirements for a Type 3 magazine as defined and classified in Chapter 56.

❖ Day boxes are basically Type 3 magazines used to isolate in-process material from a workstation as a means to minimize the potential for involvement should an event occur within the immediate vicinity of the work area. See the commentary to Section 5604.5.1.3 for a more complete discussion of the use of day boxes.

DECORATIVE MATERIALS. All materials applied over the building interior finish for decorative, acoustical or other effect including, but not limited to, curtains, draperies, fabrics, streamers and all other materials utilized for decorative effect including, but not limited to, bulletin boards, artwork, posters, photographs, paintings, batting, cloth, cotton, hay, stalks, straw, vines, leaves, trees, moss and similar items, foam plastics and materials containing foam plastics. Decorative materials do not include wall coverings, ceiling coverings, floor coverings, ordinary window shades, interior finish and materials 0.025 inch (0.64 mm) or less in thickness applied directly to and adhering tightly to a substrate.

❖ Decorative materials have historically been characterized by easily ignitable materials that burn very rapidly and contribute to fire spread. In order to properly classify decorative materials, it is important to define the term and this definition captures the essential elements. The significance of this definition is to provide information as to what is not regulated as

INTERNATIONAL CODE COUNCIL®
Copyright © 2015 ICC. ALL RIGHTS RESERVED. Accessed by David Dammon on Jun 21, 2017 12:30:52 PM pursuant to License Agreement with ICC. No further reproduction or distribution authorized. ANY UNAUTHORIZED REPRODUCTION OR DISTRIBUTION IS A VIOLATION OF THE FEDERAL COPYRIGHT ACT AND THE LICENSE AGREEMENT, AND SUBJECT TO CIVIL AND CRIMINAL PENALTIES THEREUNDER.

decorative materials in the application of code requirements. While any dictionary would define floor coverings, window shades and wallpaper as being "decorative" in a building interior, they are not considered decorative materials for the flame-resistance testing to which the code requirements are intended to apply (see Section 807).

DEFLAGRATION. An exothermic reaction, such as the extremely rapid oxidation of a flammable dust or vapor in air, in which the reaction progresses through the unburned material at a rate less than the velocity of sound. A deflagration can have an explosive effect.

❖ Materials posing a deflagration hazard usually burn very quickly with an energy release from a chemical reaction in the form of intense heat. Confined deflagration hazards under pressure can result in an explosion. Most hazardous materials posing a severe deflagration hazard are classified as Group H-2.

DELUGE SYSTEM. A sprinkler system employing open sprinklers attached to a piping system connected to a water supply through a valve that is opened by the operation of a detection system installed in the same area as the sprinklers. When this valve opens, water flows into the piping system and discharges from all sprinklers attached thereto.

❖ A deluge system applies large quantities of water or foam throughout the protected area by means of a system of open sprinklers. In a fire, the system is activated by a fire detection system that makes it possible to apply water to a fire more quickly and to cover a larger area than with a conventional automatic sprinkler system, which depends on sprinklers being activated individually as the fire spreads. As the definition indicates, the sprinklers are open. There is no fusible link so when water is admitted into the system by the fire detection system, it flows through the piping and is immediately discharged through the sprinkler heads.

Deluge systems are particularly beneficial in hazardous areas where the fuel loads (combustible contents) are of such a nature that fire may grow with exceptional rapidity and possibly flash ahead of the operations of conventional automatic sprinklers.

DESIGN PRESSURE. The maximum gauge pressure that a pressure vessel, device, component or system is designed to withstand safely under the temperature and conditions of use expected.

❖ A container that is subjected to an internal pressure higher than its design pressure faces a high failure rate. If the container is used to store flammable liquids or gases, a boiling liquid expanding vapor explosion (BLEVE), which is a form of pressure-releasing explosion, may occur.

DETACHED BUILDING. A separate single-story building, without a *basement* or crawl space, used for the storage or use of hazardous materials and located an *approved* distance from all structures.

❖ This term refers to the type of structure that the code recognizes for using and storing Group H materials exceeding MAQ. A detached storage building is required only for Group H, as indicated in Table 5003.8.2 of the code or Table 415.6.2 of the IBC, and as may be required in Chapters 50 through 67 of the code.

DETEARING. A process for rapidly removing excess wet coating material from a dipped or coated object or material by passing it through an electrostatic field.

❖ Detearing applies to dip tank operations. It is the process of rapidly removing excess wet coating materials from an object.

DETECTOR, HEAT. A fire detector that senses heat, either abnormally high temperature or rate of rise, or both.

❖ In a fire, heat is released that causes the temperature in a room or space to increase. Automatic fire detectors that sense abnormally high temperature or rate of temperature rise are known as heat detectors. These include fixed temperature detectors, rate compensation detectors and rate-of-rise detectors. The code requires all automatic fire detectors to be smoke detectors, except that heat detectors tested and approved in accordance with NFPA 72 may be used as an alternative to smoke detectors in rooms and spaces where, during normal operation, products of combustion are present in sufficient quantity to actuate a smoke detector.

DETONATING CORD. A flexible cord containing a center core of high *explosive* used to initiate other *explosives*.

❖ Outwardly, detonating cord, or primacord, is somewhat similar to a safety fuse in size and appearance. But instead of being filled with black powder, detonating cord generally contains pentaerythritoltetranitrate (PETN). Like other explosives, primacord is generally set off by a blasting cap. It propagates a detonation at a rate of 9,000 yards per second (8.23 km/s), a little over 5 miles per hour (8.05 km/h). A length of detonating cord stretching from San Francisco to New York will explode over its entire length of 3,000 miles (4828.03 km) in about 10 minutes.

DETONATION. An exothermic reaction characterized by the presence of a shock wave in the material which establishes and maintains the reaction. The reaction zone progresses through the material at a rate greater than the velocity of sound. The principal heating mechanism is one of shock compression. *Detonations* have an *explosive* effect.

❖ Detonations are distinguished from deflagrations, which are produced by explosive gases, dusts, vapors and mists, by the speed with which they propagate a blast effect. Both detonations and deflagra-

INTERNATIONAL CODE COUNCIL®
Copyright © 2015 ICC. ALL RIGHTS RESERVED. Accessed by David Dammon on Jun 21, 2017 12:30:52 PM pursuant to License Agreement with ICC. No further reproduction or distribution authorized. ANY UNAUTHORIZED REPRODUCTION OR DISTRIBUTION IS A VIOLATION OF THE FEDERAL COPYRIGHT ACT AND THE LICENSE AGREEMENT, AND SUBJECT TO CIVIL AND CRIMINAL PENALTIES THEREUNDER.

tions may produce explosive results when they occur in a confined space.

DETONATOR. A device containing any initiating or primary *explosive* that is used for initiating *detonation*. A detonator shall not contain more than 154.32 grains (10 grams) of total *explosives* by weight, excluding ignition or delay charges. The term includes, but is not limited to, electric blasting caps of instantaneous and delay types, blasting caps for use with safety fuses, detonating cord delay connectors, and noninstantaneous and delay blasting caps which use detonating cord, shock tube or any other replacement for electric leg wires. All types of detonators in strengths through No. 8 cap should be rated at $1^1/_2$ pounds (0.68 kg) of explosives per 1,000 caps. For strengths higher than No. 8 cap, consult the manufacturer.

❖ These devices contain a primary explosive charge and are used to initiate other explosives. Detonators include, but are not limited to:

1. Electric detonators of instantaneous and delay types.
2. Detonators for use with safety fuses, detonating cord delay connectors and nonelectric instantaneous delay detonators that use detonating cord, shock tube or any other replacement for electric leg wires.

[BG] DETOXIFICATION FACILITIES. Facilities that provide treatment for substance abuse serving care recipients who are incapable of self-preservation or who are harmful to themselves or others.

❖ Persons in detoxification facilities may be physically incapable of self-preservation, or they may be confined within an area of a building for care or security purposes. See the commentary for the definition of "Occupancy Group I-2" and Section 407 of the IBC.

Care facilities encompass a full spectrum of acuity and support services and span a wide range of occupancy types including Groups B, E, I and R. The level of care provided describes the condition and capabilities of an occupant which, in turn, indicates appropriate standards for protection systems, both passive and active. See also the definitions for "24-hour basis," "Ambulatory care facility," "Group home," "Hospitals and psychiatric hospitals," "Incapable of self-preservation," "Medical care," "Nursing homes" and "Personal care service."

DIP TANK. A tank, vat or container of flammable or combustible liquid in which articles or materials are immersed for the purpose of coating, finishing, treating and similar processes.

❖ Dip tanks can be almost any size, depending on the size of the work pieces to be immersed. They may be equipped with a fire suppression system, as well as overflow and drain pipes, all of which are based on the tank size. Regardless of size, dip tanks must be constructed of noncombustible materials, equipped with an approved self-closing cover and properly ventilated (see Commentary Figure 202-D1).

DISCHARGE SITE. The immediate area surrounding the fireworks mortars used for an outdoor fireworks display.

❖ The area selected for the discharge of aerial shells must be located so that the trajectory of the shells does not come within 25 feet (7620 mm) of any overhead object. Ground display pieces must be located a minimum distance of 75 feet (22 860 mm) from spectator viewing areas and parking areas.

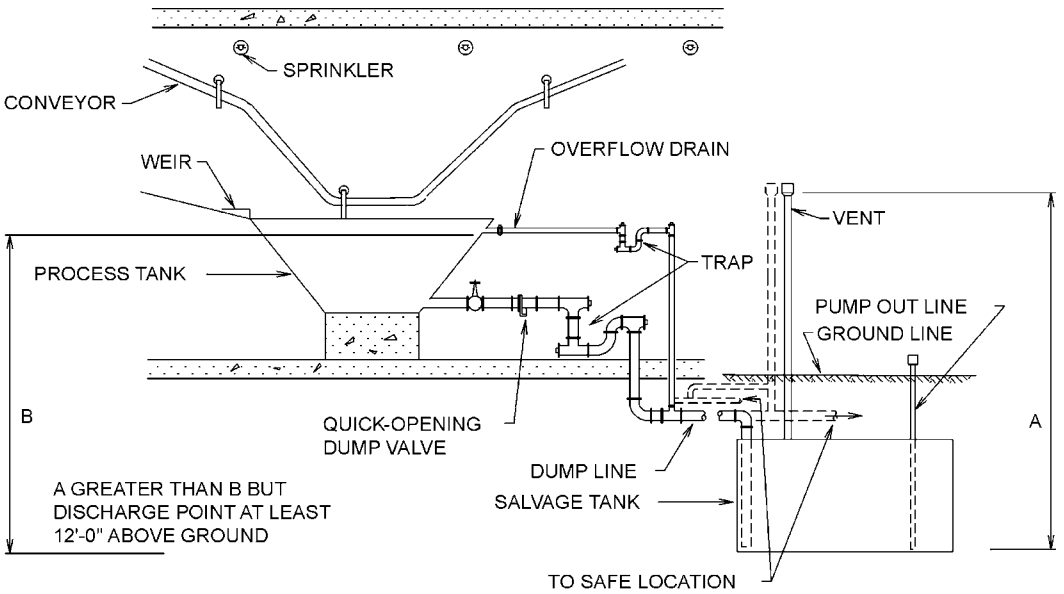

For SI: 1 foot = 304.8 mm.

Figure 202-D1
TYPICAL DIP TANK INSTALLATION

INTERNATIONAL CODE COUNCIL®
Copyright © 2015 ICC. ALL RIGHTS RESERVED. Accessed by David Dammon on Jun 21, 2017 12:30:52 PM pursuant to License Agreement with ICC. No further reproduction or distribution authorized. ANY UNAUTHORIZED REPRODUCTION OR DISTRIBUTION IS A VIOLATION OF THE FEDERAL COPYRIGHT ACT AND THE LICENSE AGREEMENT, AND SUBJECT TO CIVIL AND CRIMINAL PENALTIES THEREUNDER.

DISPENSING. The pouring or transferring of any material from a container, tank or similar vessel, whereby vapors, dusts, fumes, mists or gases are liberated to the atmosphere.

❖ This term refers to any transfer of a hazardous material from one container to another that is open to the atmosphere where liberation of the material in the forms listed in the definition occurs. See also the definitions for "Closed system" and "Handling."

DISPENSING DEVICE, OVERHEAD TYPE. A dispensing device that consists of one or more individual units intended for installation in conjunction with each other, mounted above a dispensing area typically within the motor fuel-dispensing facility canopy structure, and characterized by the use of an overhead hose reel.

❖ Dispensing devices are approved pieces of fixed equipment that control the dispensing of fuel through the dispensing hose connected to them. An overhead-type dispensing device is not to be confused with the conventional dispenser, often referred to as a "high-hose" dispenser, that is equipped with a dispensing hose connected at the top of the dispenser frame. The intent of this provision is to identify the overhead hose reel that has special requirements for the classification of electrical equipment in the vicinity of the reel in accordance with Chapter 8 of NFPA 30A.

DISPLAY SITE. The immediate area where a fireworks display is conducted. The display area includes the discharge site, the fallout area and the required separation distance from the mortars to spectator viewing areas. The display area does not include spectator viewing areas or vehicle parking areas.

❖ Where added safety precautions have been taken, or particularly favorable conditions exist, the fire code official can decrease the required separation distances upon demonstration that the hazard has been reduced or the risk has been properly protected. Where unusual or safety-threatening conditions exist, he or she can also increase the required separation distances as he or she deems necessary.

DOOR, BALANCED. See "Balanced door."

❖ See the commentary to definition of "Balanced door."

DOOR, DUTCH. See "Dutch door."

❖ See the commentary to definition of "Dutch door."

DOOR, LOW ENERGY POWER-OPERATED. See "Low energy power-operated door."

❖ See the commentary to definition of "Low energy power-operated door."

DOOR, POWER-ASSISTED. See "Power-assisted door."

❖ See the commentary to definition of "Power-assisted door."

DOOR, POWER-OPERATED. See "Power-operated door."

❖ See the commentary to definition of "Power-operated door."

DOORWAY, EXIT ACCESS. See "Exit access doorway."

❖ See the commentary to definition of "Exit access doorway."

[BG] DORMITORY. A space in a building where group sleeping accommodations are provided in one room, or in a series of closely associated rooms, for persons not members of the same family group, under joint occupancy and single management, as in college dormitories or fraternity houses.

❖ Dormitories typically consist of a large room serving as a community sleeping room or many smaller rooms grouped together and serving as private or semiprivate sleeping rooms (sleeping units). A typical setting for dormitories is on college campuses; however, sleeping areas of a fire station and similar lodging facilities for occupants not of the same family group are also considered dormitories. Dormitories most often are not the permanent residence of the occupants. They are typically occupied only for a designated period of time, such as a school year. Though limited, the period of occupancy is usually more than 30 days, which provides the occupant with a familiarity of the structure such that the occupancy is not considered transient. A dormitory is classified as Group R-2 (see the commentary to the definition of "Occupancy Group R-2").

Structures containing a dormitory often have a cafeteria or central eating area and common recreational areas. When such conditions exist, the structure must comply with the mixed occupancy provisions of Section 508 of the IBC.

DRAFT CURTAIN. A structure arranged to limit the spread of smoke and heat along the underside of the ceiling or roof.

❖ A draft curtain restricts the passage of smoke at roof or ceiling level. Located at the roof or ceiling, draft curtains are designed to compartmentalize the roof or ceiling area in order to limit the passage of smoke to a defined area and hinder its spread throughout the entire storage area. It has also been argued that such curtains help the activation of smoke and heat vents. They are not intended to have a fire-resistance rating. Draft curtains are often termed "curtain boards."

[BF] DRAFTSTOP. A material, device or construction installed to restrict the movement of air within open spaces of concealed areas of building components such as crawl spaces, floor/ceiling assemblies, roof/ceiling assemblies and attics.

❖ Draftstopping is required in concealed combustible spaces to limit the movement of air, smoke and other products of combustion. Draftstopping materials are permitted to be combustible based on the rationale that a large and thick enough combustible material will act as a hindrance against the free movement of air, flame/fire and products of combustion [see Commentary Figures 202-D2 and 202-D3 for typical draftstopping applications (also see Section 718 of the IBC)].

Although the term "draftstopping" would seem to imply that its primary purpose is to hinder the circula-

INTERNATIONAL CODE COUNCIL®
Copyright © 2015 ICC. ALL RIGHTS RESERVED. Accessed by David Dammon on Jun 21, 2017 12:30:52 PM pursuant to License Agreement with ICC. No further reproduction or distribution authorized. ANY UNAUTHORIZED REPRODUCTION OR DISTRIBUTION IS A VIOLATION OF THE FEDERAL COPYRIGHT ACT AND THE LICENSE AGREEMENT, AND SUBJECT TO CIVIL AND CRIMINAL PENALTIES THEREUNDER.

tion of air within the space, its intended purpose is to stop the movement of fire and products of combustion, as evidenced by the fact that draftstopping can be omitted in some cases when appropriate automatic sprinkler protection is installed (see Sections 718.3.2, 718.3.3, 718.4.2 and 718.4.3 of the IBC).

DRY-CHEMICAL EXTINGUISHING AGENT. A powder composed of small particles, usually of sodium bicarbonate, potassium bicarbonate, urea-potassium-based bicarbonate, potassium chloride or monoammonium phosphate, with added particulate material supplemented by special treatment

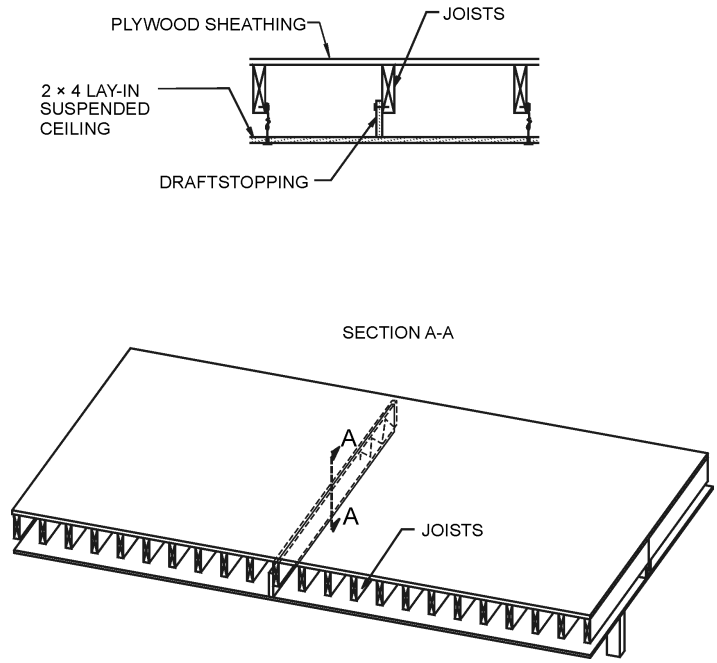

Figure 202-D2
EXAMPLE OF DRAFTSTOPPING

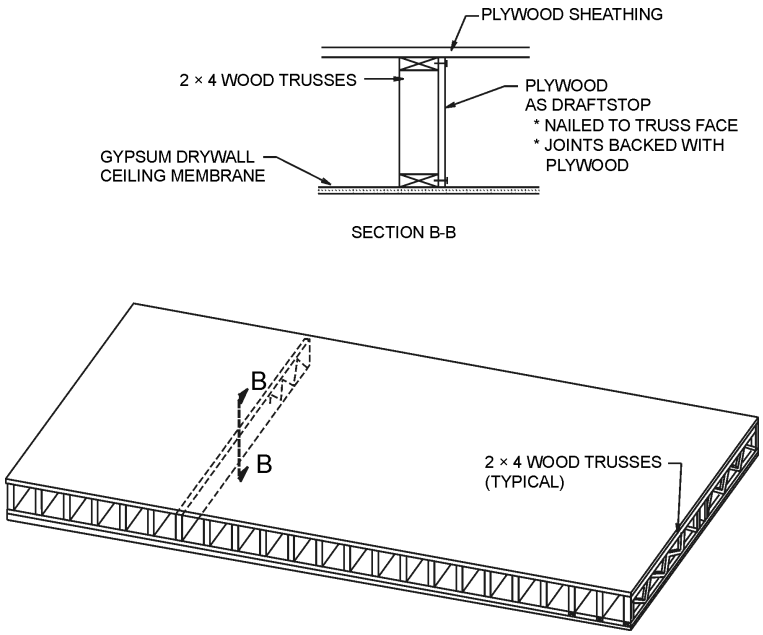

Figure 202-D3
EXAMPLE OF DRAFTSTOPPING

INTERNATIONAL CODE COUNCIL®
Copyright © 2015 ICC. ALL RIGHTS RESERVED. Accessed by David Dammon on Jun 21, 2017 12:30:52 PM pursuant to License Agreement with ICC. No further reproduction or distribution authorized. ANY UNAUTHORIZED REPRODUCTION OR DISTRIBUTION IS A VIOLATION OF THE FEDERAL COPYRIGHT ACT AND THE LICENSE AGREEMENT, AND SUBJECT TO CIVIL AND CRIMINAL PENALTIES THEREUNDER.

to provide resistance to packing, resistance to moisture absorption (caking) and the proper flow capabilities.

❖ A dry-chemical system extinguishes a fire by placing a chemical barrier between the fire and oxygen, which acts to smother a fire. This system is best known for protection for commercial ranges, commercial fryers and exhaust hoods. Wet-chemical extinguishing systems, however, are more commonly used for new installations in commercial cooking equipment.

The type of dry chemical to be used in the extinguishing system is a function of the hazard expected. The type of dry chemical used in a system must not be changed, unless it has been proven changeable by a testing laboratory; is recommended by the manufacturer of the equipment and is acceptable to the fire code official for the hazard expected. Additional guidance on the use of various dry-chemical agents can be found in NFPA 17, which gives minimum requirements for the design, installation, testing, inspection, approval, operation and maintenance of dry-chemical extinguishing systems.

DRY CLEANING. The process of removing dirt, grease, paints and other stains from such items as wearing apparel, textiles, fabrics and rugs by use of nonaqueous liquids (solvents).

❖ Dry cleaning is the process of cleaning textile-based items in a closed machine using solvents that are not water based; hence, the term "dry." This process generally consists of a "wash cycle" in which the item or items to be cleaned are placed in the machine with the dry cleaning solvent and tumbled for a predetermined length of time, followed by an "extraction cycle" in which the solvent is centrifugally removed from the clean items, not unlike the "spin" cycle of a washing machine. Recovery of remaining solvent and solvent vapors in the cleaned articles is accomplished in a "reclamation cycle," which involves heating the cleaned articles to vaporize the remaining solvent, which is then collected and condensed. Finally, an "aeration" or drying cycle occurs where warm air dries and deodorizes the cleaned articles. The dry cleaning process can also include the manual application of solvent and spotting compounds prior to the main cleaning process. See also the definitions of "Dry cleaning plant" and "Solvent or liquid classifications."

DRY CLEANING PLANT. A facility in which dry cleaning and associated operations are conducted, including the office, receiving area and storage rooms.

❖ The type of construction, occupancy group classification and other building requirements are determined by the type of solvent and machinery used in the cleaning process. The main hazards in a dry cleaning plant are the fire hazards of the flammable and combustible solvents and the health hazards of the chlorinated hydrocarbon solvents. See also the definitions of "Dry cleaning" and "Solvent or liquid classifications."

DRY CLEANING ROOM. An occupiable space within a building used for performing dry cleaning operations, the installation of solvent-handling equipment or the storage of dry cleaning solvents.

❖ The IBC defines an occupiable space as "a room or enclosed space designed for human occupancy....in which occupants are engaged at labor...." Within the context of Chapter 21, a dry cleaning room is primarily the room or space in which the actual dry cleaning process is conducted. Depending on the scope of the dry cleaning establishment, it could be a room or space within a large plant or could encompass the entire plant in smaller operations. Note that the focus of the term is on the presence of the dry cleaning solvent, whether it is in the cleaning process, being stored for future use within the room or space, or being transferred from storage containers to the dry cleaning machines. See also the definitions of "Dry cleaning," "Dry cleaning plant" and "Solvent or liquid classifications."

DRY CLEANING SYSTEM. Machinery or equipment in which textiles are immersed or agitated in solvent or in which dry cleaning solvent is extracted from textiles.

❖ This term focuses on the actual dry cleaning machines and solvent extractors that use or recover dry cleaning solvent. Systems are classified according to the hazards of the solvent they use. See the commentary to Sections 2103.2 and 2105 for additional discussion of dry cleaning system classification and operation, respectively. See also the definition of "Solvent or liquid classifications."

DUTCH DOOR. A door divided horizontally so that the top can be operated independently from the bottom.

❖ This definition is associated with the requirements in Section 1105.4.4.2.3 for existing Group I-2 occupancies. Dutch doors have been used in health care facilities for many years for various necessary operational reasons. Existing language in the IBC does not specifically address dutch doors. Their use is not prohibited, but if used, they must meet the requirements contained in IBC Section 407.3, including positive latching and limiting the transfer of smoke. The definition is provided for additional clarity as to what is considered a "dutch door."

[BG] DWELLING. A building that contains one or two *dwelling units* used, intended or designed to be used, rented, leased, let or hired out to be occupied for living purposes.

❖ Dwellings are buildings intended to serve as residences for one or two families. Dwellings can be owner-occupied or rented. The term "dwelling," which refers to the building itself, is defined to distinguish it from the term "dwelling unit," which is a single living

INTERNATIONAL CODE COUNCIL®
Copyright © 2015 ICC. ALL RIGHTS RESERVED. Accessed by David Dammon on Jun 21, 2017 12:30:52 PM pursuant to License Agreement with ICC. No further reproduction or distribution authorized. ANY UNAUTHORIZED REPRODUCTION OR DISTRIBUTION IS A VIOLATION OF THE FEDERAL COPYRIGHT ACT AND THE LICENSE AGREEMENT, AND SUBJECT TO CIVIL AND CRIMINAL PENALTIES THEREUNDER.

unit within a building. See also the definition for "Townhouse."

[BG] DWELLING UNIT. A single unit providing complete, independent living facilities for one or more persons, including permanent provisions for living, sleeping, eating, cooking and sanitation.

❖ A dwelling unit, as stated, is a residential unit that contains all of the necessary facilities for independent living. This provides a single, independent unit that serves a single family or single group of individuals. This terminology is used throughout the code for the determination of the application of various provisions. A dwelling unit is also distinguished from a sleeping unit which does not have all of the features of a dwelling unit and must comply with a different set of requirements (see the definition for "Sleeping unit"). A building containing one or more dwelling units is a "dwelling" (see the definitions for "Dwelling" and "Townhouse"). A building containing three or more dwelling units is regulated as a Group R-2 occupancy. The most common term used for such a building is an apartment house or condominium. To be considered a Group R-3, the structure must have one or two dwelling units, or be subdivided by fire walls between every unit or every two units.

EARLY SUPPRESSION FAST-RESPONSE (ESFR) SPRINKLER. A sprinkler *listed* for early suppression fast-response performance.

❖ The early suppression fast-response (ESFR) sprinkler head was originally designed to provide fire suppression for heat and fire situations that required a lower thermal response to activate the sprinkler head earlier than the standard sprinkler head. The ESFR sprinkler heads have a response time index (RTI) of 50 (meters-seconds) $^1/_2$ or less, compared to a standard sprinkler head, which has an RTI of 80 (meters-seconds) $^1/_2$ or more. ESFR sprinkler design requires the same concepts of sprinkler system design for it to react and suppress a fire when needed. The important difference is that ESFR systems are specifically designed to suppress a high-challenge fire versus simply controlling its growth.

[BE] EGRESS COURT. A court or *yard* which provides access to a *public way* for one or more *exits*.

❖ The egress court requirements address situations where the exit discharge portion of the means of egress passes through confined areas near the building and therefore faces a hazard not normally found in the exit discharge (see Section 1028.4).

ELECTROSTATIC FLUIDIZED BED. A container holding powder coating material that is aerated from below so as to form an air-supported expanded cloud of such material that is electrically charged with a charge opposite to that of the object to be coated. Such object is transported through the container immediately above the charged and aerated materials in order to be coated.

❖ Because the powder used in the electrostatic fluidized bed is not as finely divided as that used in electrostatic spray methods, it is not likely to create a dust explosion potential. Electrostatic fluidized beds allow for the coating of materials that then must be cured in a baking oven (see also Chapter 30). This method of coating is typically used for small pieces [dimensions less than 4 inches (102 mm)].

ELEVATOR GROUP. A grouping of elevators in a building located adjacent or directly across from one another that respond to a common hall call button(s).

❖ This definition clarifies the application of the emergency voice/alarm communication system requirements in Section 907.5.2.2 as to the locations, called "paging zones," where system speakers are required (see commentary, Section 907.5.2.2).

EMERGENCY ALARM SYSTEM. A system to provide indication and warning of emergency situations involving hazardous materials.

❖ Because of the potentially volatile nature of hazardous materials, an emergency alarm system is required outside of interior building rooms or areas containing hazardous materials in excess of the maximum allowable quantities permitted in Tables 5003.1.1(1) and 5003.1.1(2). The intent of the emergency alarm, upon actuation by an alarm-initiating device, is to alert the occupants to an emergency condition involving hazardous materials. The initiation of the emergency alarm can be by manual or automatic means depending on the hazard and the specific requirements for the type of hazard (see commentary, Sections 908, 5004.9 and 5005.4.4).

EMERGENCY CONTROL STATION. An *approved* location on the premises where signals from emergency equipment are received and which is staffed by trained personnel.

❖ This definition identifies the room or area located in the HPM facility that is used to receive various alarms and signals. The smoke detectors located in the building's recirculation ventilation ducts, the gas-monitoring/detection system and the telephone/fire protective signaling systems located outside of HPM storage rooms must all be connected to the emergency control station. The location of this station must be approved by the fire code official. An approved location should be based on personnel being able to adequately monitor the necessary alarms and signals and on the fire department being able to gain access quickly when responding to emergency situations. Additionally, the room must be occupied by persons who are trained to respond to the various alarms and signals.

[BE] EMERGENCY ESCAPE AND RESCUE OPENING. An operable window, door or other similar device that

INTERNATIONAL CODE COUNCIL®
Copyright © 2015 ICC. ALL RIGHTS RESERVED. Accessed by David Dammon on Jun 21, 2017 12:30:52 PM pursuant to License Agreement with ICC. No further reproduction or distribution authorized. ANY UNAUTHORIZED REPRODUCTION OR DISTRIBUTION IS A VIOLATION OF THE FEDERAL COPYRIGHT ACT AND THE LICENSE AGREEMENT, AND SUBJECT TO CIVIL AND CRIMINAL PENALTIES THEREUNDER.

provides for a means of escape and access for rescue in the event of an emergency.

❖ These are commonly windows that are sized and located such that they can be used to exit a building directly from a basement or bedroom during an emergency condition. The openings are also used by emergency personnel to rescue the occupants in a building (see Section 1030). Windows are never considered to be exit or exit access components for purposes of meeting minimum number of exit requirements. An emergency escape and rescue opening could be a type of door, such as a basement door with direct access to an exterior stairway or a door to a balcony. Bulkhead-style cellar doors could also be evaluated as possible emergency escape and rescue openings.

EMERGENCY EVACUATION DRILL. An exercise performed to train staff and occupants and to evaluate their efficiency and effectiveness in carrying out emergency evacuation procedures.

❖ This definition provides a consistent explanation of the purpose and extent of such activities. Without drilling the staff and occupants in the emergency procedures for which they have been trained, neither management nor the staff or occupants can adequately gauge their readiness to perform in a crisis mode.

EMERGENCY POWER SYSTEM. A source of automatic electric power of a required capacity and duration to operate required life safety, fire alarm, detection and ventilation systems in the event of a failure of the primary power. Emergency power systems are required for electrical loads where interruption of the primary power could result in loss of human life or serious injuries.

❖ This definition is intended to provide clarity for the fire code official as to exactly what systems are considered to be emergency power systems and is consistent with the definitions in NFPA 110 and NFPA 111. However, since the list of systems in the definition is not exhaustive, reference must be made to Section 604 of the code which provides the "where required" provisions. When the normal power supply to any of the indicated systems, or other systems designated by the code, fails, the emergency power system is to provide a specified degree and duration of illumination or power for systems and equipment that are essential for life safety. See the commentary to Section 604 for more detailed discussion on the difference between standby and emergency power.

EMERGENCY SHUTOFF VALVE. A valve designed to shut off the flow of gases or liquids.

❖ See the commentary following the definition of "Emergency shutoff valve, manual."

EMERGENCY SHUTOFF VALVE, AUTOMATIC. A fail-safe automatic-closing valve designed to shut off the flow of gases or liquids initiated by a control system that is activated by automatic means.

❖ See the commentary following the definition of "Emergency shutoff valve, manual."

EMERGENCY SHUTOFF VALVE, MANUAL. A manually operated valve designed to shut off the flow of gases or liquids.

❖ The term "emergency shutoff valve" has historically been used inconsistently throughout various sections in the code. There are fundamentally two types of shutoff valves commonly employed: manually operated or automatically operated. Those that are automatic can either fail open or fail closed. A valve that fails in the closed position is said to be "fail-safe." Automatic valves are actuated by a control system that may activate the valves either automatically or manually. The code requires the manual activation of controls that are used to operate automatic valves.

Three definitions are now provided for emergency valves to include the function of the valve itself and the two subsets that describe the two types encountered (e.g., manual or automatic). See also the commentary to the definitions of "Fail-safe" and "Remotely located, manually activated shutdown control."

EMERGENCY VOICE/ALARM COMMUNICATIONS. Dedicated manual or automatic facilities for originating and distributing voice instructions, as well as alert and evacuation signals pertaining to a fire emergency, to the occupants of a building.

❖ An emergency voice/alarm communication system is a special feature of fire alarm systems in buildings with special evacuation considerations, such as a high-rise building or a large assembly space. Emergency voice/alarm communication systems automatically communicate a fire emergency message to all occupants of a building on a general or selective basis. Such systems also enable the fire service to manually transmit voice instructions to the building occupants about a fire emergency condition and the action to be taken for evacuation or movement to another area of the building. Although most systems use prerecorded messages, some now use computer synthesized voices to communicate customized messages that are unique to the facility.

[BG] EMPLOYEE WORK AREA. All or any portion of a space used only by employees and only for work. *Corridors*, toilet rooms, kitchenettes and break rooms are not employee work areas.

❖ An employee work area is different in an office versus on a factory line. An employee work area will most likely expand past the station or desk where an employee performs his or her job. An employee work area could include common use spaces, but not public use spaces. Depending on the duties of the

INTERNATIONAL CODE COUNCIL®
Copyright © 2015 ICC. ALL RIGHTS RESERVED. Accessed by David Dammon on Jun 21, 2017 12:30:52 PM pursuant to License Agreement with ICC. No further reproduction or distribution authorized. ANY UNAUTHORIZED REPRODUCTION OR DISTRIBUTION IS A VIOLATION OF THE FEDERAL COPYRIGHT ACT AND THE LICENSE AGREEMENT, AND SUBJECT TO CIVIL AND CRIMINAL PENALTIES THEREUNDER.

employee, it may also include copy areas, stockrooms, filing areas, an assembly line, etc. (see also the commentary for the definitions of "Common use" and "Public-use areas").

Note that not all employee-only areas are considered part of employee work areas (i.e., bathrooms, corridors, breakrooms).

[BG] EQUIPMENT PLATFORM. An unoccupied, elevated platform used exclusively for mechanical systems or industrial process equipment, including the associated elevated walkways, *stairways*, *alternating tread devices* and ladders necessary to access the platform (see Section 505.3 of the *International Building Code*).

❖ A distinction is made between equipment platforms and mezzanines by way of this definition. Equipment platforms, covered in Section 505.3 of the IBC, are unoccupied and used exclusively for housing equipment and providing access thereto, and are not subject to the requirements for mezzanines. Their purpose could also be to allow access for maintenance, repair or modification of elevated or very large equipment. Equipment platforms allow efficient use of high bay areas by locating infrequently accessed equipment or processes overhead without the occupant load or increasing the hazard to occupants in the room. Elevated floor areas that do not meet this definition would be subject to the requirements for mezzanines.

EXCESS FLOW CONTROL. A fail-safe system or other *approved* means designed to shut off flow caused by a rupture in pressurized piping systems.

❖ This refers to a fail-safe valve or other approved device that is required on pressurized piping systems to prevent the uncontrolled release of excess quantities of hazardous liquids and gases if piping or valve failure occurs. To safeguard as much piping as practical, the device must be installed as close to the supply container as possible.

EXCESS FLOW VALVE. A valve inserted into a *compressed gas* cylinder, portable tank or stationary tank that is designed to positively shut off the flow of gas in the event that its predetermined flow is exceeded.

❖ Such a valve has the ability to shut down flow when the intended flow rate has been exceeded. Quite often, when the predetermined flow has been exceeded, a failure will occur.

EXHAUSTED ENCLOSURE. An appliance or piece of equipment which consists of a top, a back and two sides providing a means of local exhaust for capturing gases, fumes, vapors and mists. Such enclosures include laboratory hoods, exhaust fume hoods and similar appliances and equipment used to retain and exhaust locally the gases, fumes, vapors and mists that could be released. Rooms or areas provided with general ventilation, in themselves, are not exhausted enclosures.

❖ When a hazardous chemical is being dispensed or used, an exhausted enclosure can be used to reduce the exposure of personnel to a toxic or hazardous atmosphere. These enclosures have special requirements for protection (see Section 5003.8.5).

EXISTING. Buildings, facilities or conditions that are already in existence, constructed or officially authorized prior to the adoption of this code.

❖ This term is specifically defined to reduce any confusion regarding the application of the code to existing buildings, facilities and conditions. This definition would include anything that has already been in use, is already constructed or has been approved by the jurisdiction prior to the adoption of the code. If an occupancy changes use significantly, it may be considered new in some cases.

[BE] EXIT. That portion of a *means of egress* system between the *exit access* and the *exit discharge* or *public way*. Exit components include exterior exit doors at the *level of exit discharge*, *interior exit stairways* and *ramps*, *exit passageways*, *exterior exit stairways* and *ramps* and *horizontal exits*.

❖ Exits are the critical element of the means of egress system that the building occupants travel through to reach the exterior at the level of exit discharge. Exit stairways and ramps from upper and lower stories must be separated from adjacent areas with fire-resistance-rated construction. The fire-resistance-rated construction serves as a barrier between the fire and the means of egress and protects the occupants while they travel through the exit. Separation by fire-resistance-rated construction is not required, however, where the exit leads directly to the exterior at the level of exit discharge (e.g., exterior door at grade). Commentary Figure 202-E1 illustrates three different types of exits: interior exit stairway, exterior exit stairway and exterior exit door.

A horizontal exit, while not discharging to the outside, does discharge to another building or refuge area. The door to the refuge area is through a fire wall or fire barrier (see the definition for "Horizontal exit" and Section 1026).

[BE] EXIT ACCESS. That portion of a *means of egress* system that leads from any occupied portion of a building or structure to an *exit*.

❖ The exit access portion of the means of egress consists of all floor areas that lead from usable spaces within the building to the exit or exits serving that floor area. Crawl spaces and concealed attic and roof spaces are not considered to be part of the exit access. As shown in Commentary Figure 202-E2, the exit access begins at the furthest points within each room or space and ends at the entrance to the exit.

[BE] EXIT ACCESS DOORWAY. A door or access point along the path of egress travel from an occupied room, area or space where the path of egress enters an intervening room, *corridor*, *exit access stairway* or *ramp*.

❖ Exit access doorways are used to design many critical aspects of the means of egress including arrangement, number, separation, opening protection and

INTERNATIONAL CODE COUNCIL®
Copyright © 2015 ICC. ALL RIGHTS RESERVED. Accessed by David Dammon on Jun 21, 2017 12:30:52 PM pursuant to License Agreement with ICC. No further reproduction or distribution authorized. ANY UNAUTHORIZED REPRODUCTION OR DISTRIBUTION IS A VIOLATION OF THE FEDERAL COPYRIGHT ACT AND THE LICENSE AGREEMENT, AND SUBJECT TO CIVIL AND CRIMINAL PENALTIES THEREUNDER.

exit sign placement. The term "doorway" has traditionally been limited to those situations where an actual opening, either with or without a door, is present. With "access point," the term "exit access doorway" is inclusive of specific points in the means of egress which may not include a "door" such as when an unenclosed exit access stairway is used in the egress path.

[BE] EXIT ACCESS RAMP. A *ramp* within the *exit access* portion of the *means of egress* system.

❖ Unenclosed ramps may serve as part of the route for exit access when floor levels have changes in elevation. For the limited situations where exit access ramps can be used between stories, see Sections 1006.3 and 1019. Exit access elements are included in the travel distance requirements unless specifically exempted (i.e., open parking garages, outdoor facilities) (see Section 1017.3.1).

[BE] EXIT ACCESS STAIRWAY. A *stairway* within the *exit access* portion of the *means of egress* system.

❖ Unenclosed steps and stairways may serve as part of the route for exit access when floor levels have changes in elevation. For the limited situations where exit access stairways can be used between stories,

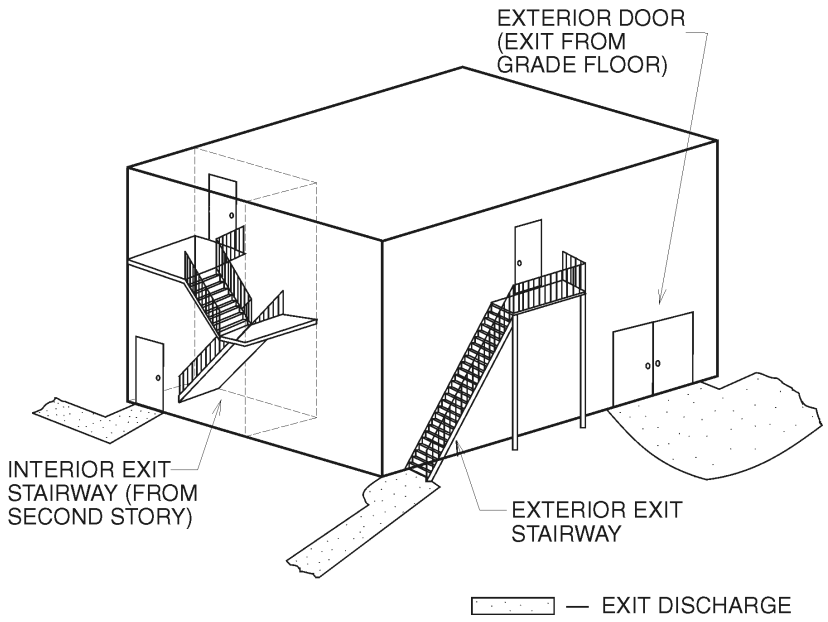

Figure 202-E1
EXIT

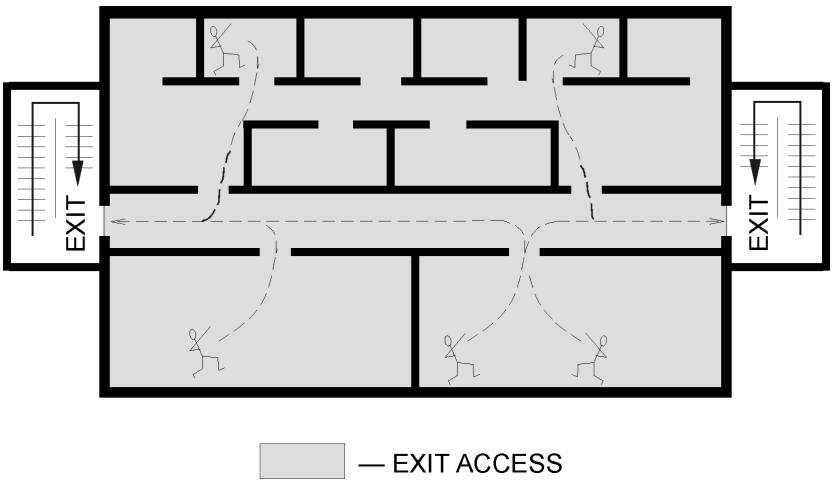

Figure 202-E2
EXIT ACCESS

INTERNATIONAL CODE COUNCIL®
Copyright © 2015 ICC. ALL RIGHTS RESERVED. Accessed by David Dammon on Jun 21, 2017 12:30:52 PM pursuant to License Agreement with ICC. No further reproduction or distribution authorized. ANY UNAUTHORIZED REPRODUCTION OR DISTRIBUTION IS A VIOLATION OF THE FEDERAL COPYRIGHT ACT AND THE LICENSE AGREEMENT, AND SUBJECT TO CIVIL AND CRIMINAL PENALTIES THEREUNDER.

see Sections 1006.3 and 1019. Exit access elements are included in the travel distance requirements unless specifically exempted (i.e., open parking garages, outdoor facilities) (see Section 1017.3.1).

[BE] EXIT DISCHARGE. That portion of a *means of egress* system between the termination of an *exit* and a *public way*.

❖ The exit discharge will typically begin when the building occupants reach the exterior at or very near grade level. It provides occupants with a path of travel away from the building. All components between the building and the public way are considered to be the exit discharge, regardless of the distance. In areas of sloping terrain, it is possible to have steps or stairs in the exit discharge leading to the public way. The exit discharge is part of the means of egress and, therefore, its components are subject to the requirements of the code (see Commentary Figures 202-E1 and 202-E3 and Section 1028).

[BE] EXIT DISCHARGE, LEVEL OF. The *story* at the point at which an *exit* terminates and an *exit discharge* begins.

❖ The term is intended to describe the story where the transition from exit to exit discharge occurs. At this level, the occupant needs only to move in a substantially horizontal path to move along exit discharge (see Commentary Figure 202-E4). Since the level is a volume rather than a horizontal plane, exterior exit steps may be part of the exit discharge when they provide access to the level that is closest to grade.

[BE] EXIT PASSAGEWAY. An *exit* component that is separated from other interior spaces of a building or structure by fire-resistance-rated construction and opening protectives, and provides for a protected path of egress travel in a horizontal direction to the *exit discharge*.

❖ This term refers to a horizontal portion of the means of egress that serves as an exit element. Since an exit passageway is considered an exit element, it must be protected and separated as required by the code for exits (see Section 1024). Exit passageways between a vertical exit enclosure and an exterior exit door are typically found on the level of exit discharge to provide a protected path from a centrally located exit stairway to the exit discharge. In taller buildings that reduce floor sizes as they move up (sometimes

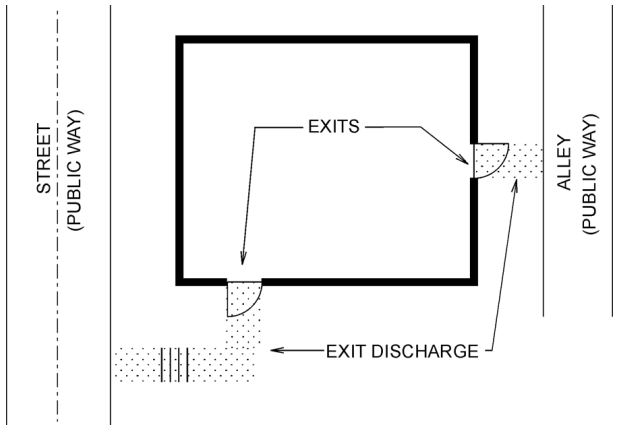

Figure 202-E3
EXIT DISCHARGE

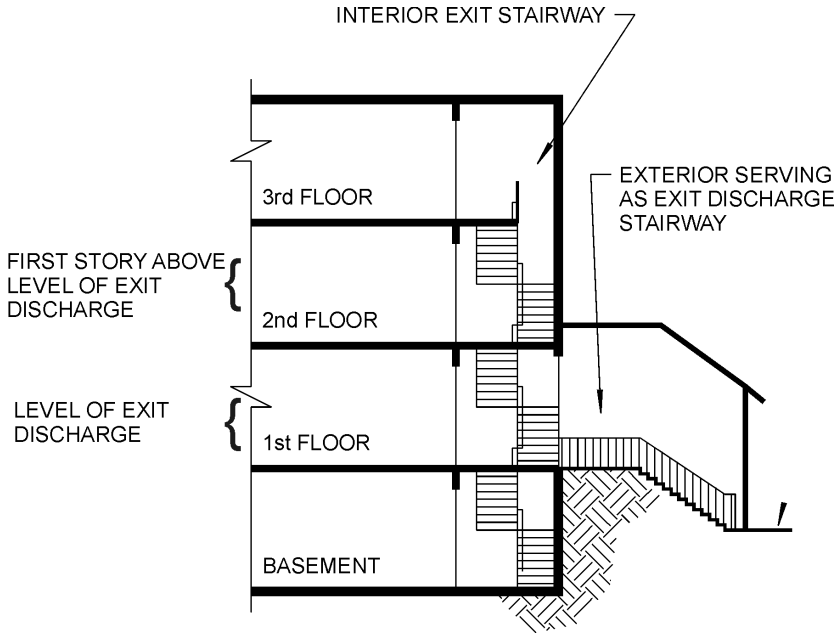

Figure 202-E4
EXIT DISCHARGE, LEVEL OF

INTERNATIONAL CODE COUNCIL®
Copyright © 2015 ICC. ALL RIGHTS RESERVED. Accessed by David Dammon on Jun 21, 2017 12:30:52 PM pursuant to License Agreement with ICC. No further reproduction or distribution authorized. ANY UNAUTHORIZED REPRODUCTION OR DISTRIBUTION IS A VIOLATION OF THE FEDERAL COPYRIGHT ACT AND THE LICENSE AGREEMENT, AND SUBJECT TO CIVIL AND CRIMINAL PENALTIES THEREUNDER.

called a wedding cake building), exit passageways are sometimes utilized at "transfer floors" where stairway shaft locations shift outward as the floor size increases. Exit passageways that lead to an exterior exit door are commonly used in malls to satisfy the travel distance in buildings having a large floor area.

EXPANDED PLASTIC. A foam or cellular plastic material having a reduced density based on the presence of numerous small cavities or cells dispersed throughout the material.

❖ Expanded plastic is a synthetic or natural organic material that, under high temperatures or pressures, can be shaped, formed and molded into any shape and maintain that shape at ambient temperatures. Plastics are combustible materials, some of which will give off toxic gases when exposed to fire. The most commonly recognized expanded plastic product is a disposable coffee cup. When plastic is expanded, it becomes much more susceptible to combustion due to the larger surface area of the material per unit weight.

EXPLOSION. An effect produced by the sudden violent expansion of gases, which may be accompanied by a shock wave or disruption, or both, of enclosing materials or structures. An explosion could result from any of the following:

1. Chemical changes such as rapid oxidation, *deflagration* or *detonation*, decomposition of molecules and runaway polymerization (usually *detonation*s).
2. Physical changes such as pressure tank ruptures.
3. Atomic changes (nuclear fission or fusion).

❖ Buildings containing materials that pose a threat of explosion are classified as Group H-1 when such materials are present in quantities exceeding the MAQ in Table 5003.1.1(1). Such buildings are required to be a detached storage building meeting the requirements of Section 415.6 of the IBC and Chapter 56 of the code.

EXPLOSIVE. A chemical compound, mixture or device, the primary or common purpose of which is to function by explosion. The term includes, but is not limited to, dynamite, black powder, pellet powder, initiating explosives, detonators, safety fuses, squibs, detonating cord, igniter cord, igniters and display fireworks, 1.3G.

The term "Explosive" includes any material determined to be within the scope of USC Title 18: Chapter 40 and also includes any material classified as an explosive other than consumer fireworks, 1.4G by the hazardous materials regulations of DOTn 49 CFR Parts 100-185.

❖ Explosives either detonate or deflagrate, rather than burn, when initiated by either heat, shock or electric current. Although these materials are normally designed and intended to be initiated by detonators under controlled conditions, heat, shock and electric current from uncontrolled sources may initiate these materials to produce an explosion.

High explosive. *Explosive material*, such as dynamite, which can be caused to detonate by means of a No. 8 test blasting cap where unconfined.

❖ High explosives can also deflagrate, but they are capable of even more. Before any appreciable amount of gas can escape and reduce the pressure, the body of the explosive is completely vaporized. The strength of a particular explosive depends on the amount of gas and heat it produces. At the very instant of their formation, the gases in a high-explosive state occupy only the original volume of the explosive material. Gas pressures can soar above 1 million pounds per square inch (psi); temperatures of 6,000°F (3316°C) and higher are common. Rapid expansion must occur and pressure waves move out at enormous velocities, often supersonic, doing tremendous damage.

Low explosive. *Explosive material* that will burn or deflagrate when ignited. It is characterized by a rate of reaction that is less than the speed of sound. Examples of low *explosives* include, but are not limited to, black powder, safety fuse, igniters, igniter cord, fuse lighters, fireworks, 1.3G and propellants, 1.3C.

❖ In low-explosive materials the burning rate is rapid but the created gases still have time to escape as the explosive is consumed. Gunpowder, for example, burns extremely rapidly and the gases are put to work, projecting an object out of a gun barrel. Pressures remain relatively low when the explosive is unconfined. Low explosive, like black powder, will deflagrate (burn intensely), producing a visible flame, such as a muzzle flash, but they do not ordinarily detonate.

Mass-detonating explosives. Division 1.1, 1.2 and 1.5 *explosives* alone or in combination, or loaded into various types of ammunition or containers, most of which can be expected to explode virtually instantaneously when a small portion is subjected to fire, severe concussion, impact, the impulse of an initiating agent or the effect of a considerable discharge of energy from without. Materials that react in this manner represent a mass explosion hazard. Such an *explosive* will normally cause severe structural damage to adjacent objects. Explosive propagation could occur immediately to other items of ammunition and *explosives* stored sufficiently close to and not adequately protected from the initially exploding pile with a time interval short enough so that two or more quantities must be considered as one for quantity-distance purposes.

❖ Mass-detonating explosives (typically stored in occupancies classified as Group H-1 by the IBC) present a detonation hazard, as do high explosives, and present a greater threat to adjacent objects and structures. The code, therefore, contains provisions in Table 5605.3 to deal with the separation distances for mass-explosion hazards.

INTERNATIONAL CODE COUNCIL®
Copyright © 2015 ICC. ALL RIGHTS RESERVED. Accessed by David Dammon on Jun 21, 2017 12:30:52 PM pursuant to License Agreement with ICC. No further reproduction or distribution authorized. ANY UNAUTHORIZED REPRODUCTION OR DISTRIBUTION IS A VIOLATION OF THE FEDERAL COPYRIGHT ACT AND THE LICENSE AGREEMENT, AND SUBJECT TO CIVIL AND CRIMINAL PENALTIES THEREUNDER.

UN/DOTn Class 1 explosives. The former classification system used by DOTn included the terms "high" and "low" *explosives* as defined herein. The following terms further define *explosives* under the current system applied by DOTn for all *explosive materials* defined as hazard Class 1 materials. Compatibility group letters are used in concert with the division to specify further limitations on each division noted (for example, the letter G identifies the material as a pyrotechnic substance or article containing a pyrotechnic substance and similar materials).

❖ The Department of Transportation (DOT) issued new regulations in 1991 based on the United Nations Recommendations on the Transportation of Dangerous Goods for the transportation of hazardous materials. DOT's hazardous materials requirements with respect to hazard communications, classifications and packaging of explosives were revised by the new regulations.

Division 1.1. *Explosives* that have a mass explosion hazard. A mass explosion is one which affects almost the entire load instantaneously.

Division 1.2. *Explosives* that have a projection hazard but not a mass explosion hazard.

Division 1.3. *Explosives* that have a fire hazard and either a minor blast hazard or a minor projection hazard or both, but not a mass explosion hazard.

Division 1.4. *Explosives* that pose a minor explosion hazard. The explosive effects are largely confined to the package and no projection of fragments of appreciable size or range is to be expected. An external fire must not cause virtually instantaneous explosion of almost the entire contents of the package.

Division 1.5. Very insensitive *explosives*. This division is comprised of substances that have a mass explosion hazard but which are so insensitive that there is very little probability of initiation or of transition from burning to *detonation* under normal conditions of transport.

Division 1.6. Extremely insensitive articles which do not have a mass explosion hazard. This division is comprised of articles that contain only extremely insensitive detonating substances and which demonstrate a negligible probability of accidental initiation or propagation.

❖ The DOT puts explosives in six classes according to the degree of hazard posed by the material (see Commentary Figure 202-E5). The most dangerous of these materials is capable of almost simultaneous detonation of all of the material in a single load or store. The least sensitive explosives produce blasts limited to the packages in which they are transported. This definition of "Explosive" includes materials such as: detonators, blasting agents and water gels. Examples of these materials are listed in DOTy 27, CFR 55.23.

EXPLOSIVE MATERIAL. The term "explosive" material means *explosives*, blasting agents and detonators.

❖ A list of explosive materials is maintained by the ATF pursuant to 18 USC, Chapter 40. This list (ATF Publication 5400.8) is available at no cost from the ATF Distribution Center, 7943 Angus Court, Springfield, VA 22153.

[BE] EXTERIOR EXIT RAMP. An *exit* component that serves to meet one or more *means of egress* design requirements, such as required number of *exits* or *exit access* travel distance, and is open to yards, courts or *public ways.*

❖ Requirements for an exterior exit ramp are different from those for an interior exit ramp. Exterior exit ramps are typically outside of the building, provide exits from levels above or below the level of exit discharge, and are exposed to at least some elements of weather. The protection requirements therefore are for the exterior walls between the building and the ramp, rather than interior walls. For the ramp requirements, see Section 1012. For specifics for exterior exit ramps, see Section 1027

[BE] EXTERIOR EXIT STAIRWAY. An *exit* component that serves to meet one or more *means of egress* design requirements, such as required number of *exits* or *exit access* travel distance, and is open to yards, courts or *public ways*.

❖ Requirements for an exterior exit stairway are different from those for an interior exit stairway. Exterior exit stairways are typically outside of the building,

BATF	OLD DOTn[a]	NEW DOTn[b, c]	Description
High Explosives	Class A Explosives	Division 1.1	Mass Explosion Potential
		Division 1.2	Projectile Hazard
Low Explosives	Class B Explosives	Division 1.3	Predominantly a Fire Hazard
	Class C Explosives	Division 1.4	No Significant Blast Hazard
Blasting Agents	Blasting Agents	Division 1.5	Very Sensitive Explosives
	Dangerous	Division 1.6	Extremely Insensitive Detonating Substances

a. Prior to September 30, 1991.

b. Effective October 1, 1991.

c. *International Fire Code* and new DOT classifications correlate.

Figure 202-E5
COMPARISON OF CLASSIFICATION SYSTEMS FOR EXPLOSIVE MATERIALS

INTERNATIONAL CODE COUNCIL®
Copyright © 2015 ICC. ALL RIGHTS RESERVED. Accessed by David Dammon on Jun 21, 2017 12:30:52 PM pursuant to License Agreement with ICC. No further reproduction or distribution authorized. ANY UNAUTHORIZED REPRODUCTION OR DISTRIBUTION IS A VIOLATION OF THE FEDERAL COPYRIGHT ACT AND THE LICENSE AGREEMENT, AND SUBJECT TO CIVIL AND CRIMINAL PENALTIES THEREUNDER.

provide exits from above or below the level of exit discharge, and are exposed to at least some elements of weather. The protection requirements therefore are for the exterior walls between the building and the stairway, rather than interior walls. For the stairway requirements, see Section 1011. For specifics for exterior exit stairways, see Section 1027.

[BF] EXTERIOR WALL. A wall, bearing or nonbearing, that is used as an enclosing wall for a building, other than a *fire wall*, and that has a slope of 60 degrees (1.05 rad) or greater with the horizontal plane.

❖ A wall is defined as an exterior element that encloses a structure and that has a slope equal to or greater than 60 degrees (1.05 rad) from the horizontal plane. Exterior enclosing elements with slopes less than this are generally subjected to more severe weather exposure than vertical surfaces and thus may experience a greater amount of water intrusion. These sloped surfaces, which may include elements, such as inset windowsills, sloped parapets and other architectural elements, should be designed to resist water penetration in a manner similar to a roof.

EXTRA-HIGH-RACK COMBUSTIBLE STORAGE. Storage on racks of Class I, II, III or IV commodities that exceed 40 feet (12 192 mm) in height and storage on racks of high-hazard commodities that exceed 30 feet (9144 mm) in height.

❖ This term was generated to address those storage areas that were of unusual height, and where that height would have an influence on the building or structure, the contents and the safeguards from the hazards of a fire or explosion. Extra-high-rack combustible storage is common to building occupancies that require a substantial amount of storage of commodities (supply) necessary to ensure that the process remains operational. An example of this type of storage is an automotive assembly plant where the rack storage contains a sufficient amount of material to service the assembly plant operation for several days or weeks.

FABRICATION AREA. An area within a semiconductor fabrication facility and related research and development areas in which there are processes using hazardous production materials. Such areas are allowed to include ancillary rooms or areas such as dressing rooms and offices that are directly related to the fabrication area processes.

❖ This definition describes the basic component of an HPM facility. The code uses this definition to set certain material limitations based on both quantity and density, and to require enclosure of the fabrication areas with fire-barrier assemblies in accordance with Section 707 of the IBC, or horizontal assemblies in accordance with Section 711 of the IBC. The fabrication area of an HPM facility is the area where the hazardous materials are actively handled and processed. The fabrication area includes accessory rooms and spaces, such as workstations and employee dressing rooms.

[A] FACILITY. A building or use in a fixed location including exterior storage areas for flammable and combustible substances and hazardous materials, piers, wharves, tank farms and similar uses. This term includes recreational vehicles, mobile home and manufactured housing parks, sales and storage lots.

❖ The scope of a fire code is broader than the scope of a building code, in that it addresses outdoor storage, tank farms, fire department access and similar activities. The term "facility" helps to more clearly define this scope to clarify the application of this code. As noted in the definition, a building would be included in the definition for "Facility." This definition differs from that used in Chapter 11 of the IBC, which addresses the topic of accessibility for those with disabilities.

FAIL-SAFE. A design condition incorporating a feature for automatically counteracting the effect of an anticipated possible source of failure; also, a design condition eliminating or mitigating a hazardous condition by compensating automatically for a failure or malfunction.

❖ This definition provides consistency of terminology among the 11 sections of the code that use the term. A fail-safe design can include an automatic emergency shutoff valve that is designed to close upon loss of power or a process upset condition. It may include an excess flow control valve or feature which is designed to stop the flow of a gas or liquid when a preset flow rate is exceeded. In most cases, the fail-safe condition would stop the movement or processing of hazardous materials. The definition is based on a combination of a definition from *Webster's Third New International Dictionary of the English Language, Unabridged* and NFPA 70E definitions of the term.

FALLOUT AREA. The area over which aerial shells are fired. The shells burst over the area, and unsafe debris and malfunctioning aerial shells fall into this area. The fallout area is the location where a typical aerial shell dud falls to the ground depending on the wind and the angle of mortar placement.

❖ The area described by this definition is a large, unoccupied open space that functions as a "safety zone" between the fireworks display launch area and the spectator areas and is included in the display site definition in this section. The layout of the fallout area is usually centered around the location of, and takes into account the launch angle of, the mortars used to launch the aerial displays. Local weather wind direction and speed forecasts may also affect the layout of the area. The fallout area provides a relatively safe area in which display debris and dud or malfunctioned shells may fall and is the starting point for the post-display inspection required by Section 5608.9. Within the fallout area, no spectators or vehicles should be allowed, and the area should be free of combustible materials that could be ignited by falling debris. In reviewing the fallout area site plan, the presence and location of trees, brush and other vege-

INTERNATIONAL CODE COUNCIL®
Copyright © 2015 ICC. ALL RIGHTS RESERVED. Accessed by David Dammon on Jun 21, 2017 12:30:52 PM pursuant to License Agreement with ICC. No further reproduction or distribution authorized. ANY UNAUTHORIZED REPRODUCTION OR DISTRIBUTION IS A VIOLATION OF THE FEDERAL COPYRIGHT ACT AND THE LICENSE AGREEMENT, AND SUBJECT TO CIVIL AND CRIMINAL PENALTIES THEREUNDER.

tation that could "hide" undetonated shells or be a fire ignition hazard should be considered. In some cases, it may be necessary to wet down the fallout area to further reduce the ignition hazard to vegetation by falling hot debris.

FALSE ALARM. The willful and knowing initiation or transmission of a signal, message or other notification of an event of fire when no such danger exists.

❖ The term "false alarm" can have several meanings beyond what this particular definition provides. This definition states that for the purposes of the code a false alarm is an unnecessary, intentional activation of a fire alarm system, signal or message. It would not include alarm activation as a result of a malfunctioning detector.

FINES. Small pieces or splinters of wood byproducts that will pass through a 0.25-inch (6.4 mm) screen.

❖ Fines range in size from sawdust to chips and are usually accumulated in piles.

FIRE ALARM. The giving, signaling or transmission to any public fire station, or company or to any officer or employee thereof, whether by telephone, spoken word or otherwise, of information to the effect that there is a fire at or near the place indicated by the person giving, signaling or transmitting such information.

❖ This is a general definition intended to clarify that a fire alarm is not simply a fire alarm system. This definition would allow a person's actions to be considered part of the fire alarm. The key is that a fire alarm notifies the correct persons or group of persons, such as the fire department or a central station, of a fire.

FIRE ALARM BOX, MANUAL. See "Manual fire alarm box."

FIRE ALARM CONTROL UNIT. A system component that receives inputs from automatic and manual fire alarm devices and may be capable of supplying power to detection devices and transponder(s) or off-premises transmitter(s). The control unit may be capable of providing a transfer of power to the notification appliances and transfer of condition to relays or devices.

❖ The fire alarm control unit (panel) acts as a point where all signals initiated within the protected building are received before the signal is transmitted to a constantly attended location. As the name implies, it also contains controls to test and manually activate or silence systems.

FIRE ALARM SIGNAL. A signal initiated by a fire alarm-initiating device such as a manual fire alarm box, automatic fire detector, waterflow switch or other device whose activation is indicative of the presence of a fire or fire signature.

❖ This signal is transmitted to a fire alarm control unit as a warning that requires immediate action. The personnel at the constantly attended location are trained to immediately respond to a fire alarm signal, which indicates the presence of a fire. A fire alarm signal assumes an actual fire has been detected (see the definition of "Alarm signal"). The fire alarm signal is not the signal used to notify the occupants of an emergency condition. Such an action would involve the audible alarm, visual alarm or emergency voice/alarm notification appliances.

FIRE ALARM SYSTEM. A system or portion of a combination system consisting of components and circuits arranged to monitor and annunciate the status of fire alarm or supervisory signal-initiating devices and to initiate the appropriate response to those signals.

❖ Fire alarm systems are installed in buildings to limit fire casualties and property losses by notifying the occupants of the building, the local fire department or both of an emergency condition. The alarm notification appliances associated with fire alarm systems are intended to be evacuation alarms. All fire alarm systems must be designed and installed to comply with NFPA 72. The term is among the most generic terms used in the code. It does not necessarily imply an automatic or manual system, nor does it identify what type of notification, if any, should be provided. The definition only indicates that an appropriate response must be provided but does not indicate what that response must be. The appropriate responses are identified within the respective sections of Section 907.

FIRE APPARATUS ACCESS ROAD. A road that provides fire apparatus access from a fire station to a facility, building or portion thereof. This is a general term inclusive of all other terms such as *fire lane*, public street, private street, parking lot lane and access roadway.

❖ Fire apparatus access roads are required to be all-weather surfaced roadways that are designed for the weight and type of emergency vehicle that may use the road. No specific surface material is required for a fire apparatus access roadway. It is up to the fire code official to decide whether the surface will support the load of the anticipated emergency vehicles in accordance with Section 503.2.3.

It should be noted that this is a general term intended to include any private roadway providing the required access to a building. As such, private driveways could be included and subject to the provisions of Section 503.

[BF] FIRE AREA. The aggregate floor area enclosed and bounded by *fire walls*, *fire barriers*, *exterior walls* or *horizontal assemblies* of a building. Areas of the building not provided with surrounding walls shall be included in the fire area if such areas are included within the horizontal projection of the roof or floor next above.

❖ This term is used to describe a specific and controlled area within a building that may consist of a portion of the floor area within a single story, one entire story or the combined floor area of several stories, depending on how these areas are enclosed and separated from other floor areas. Where a fire barrier with a fire-resistance rating in accordance with Section 707.3.10 of the IBC divides the floor area of a one-story building,

INTERNATIONAL CODE COUNCIL®
Copyright © 2015 ICC. ALL RIGHTS RESERVED. Accessed by David Dammon on Jun 21, 2017 12:30:52 PM pursuant to License Agreement with ICC. No further reproduction or distribution authorized. ANY UNAUTHORIZED REPRODUCTION OR DISTRIBUTION IS A VIOLATION OF THE FEDERAL COPYRIGHT ACT AND THE LICENSE AGREEMENT, AND SUBJECT TO CIVIL AND CRIMINAL PENALTIES THEREUNDER.

the floor area on each side of the wall would constitute a separate fire area. If a horizontal assembly separating the two stories in a two-story building is fire-resistance rated in accordance with Section 711.2.4 of the IBC, each story would be a separate fire area. In cases where mezzanines are present, the floor area of the mezzanine is included in the fire area calculations, even though the area of the mezzanine does not contribute to the building area calculations. See the commentary to Sections 707.3.10 and 711.2.4 of the IBC for further information. Note that, while fire walls are one way of creating fire areas, they are typically used to create separate buildings.

[BF] FIRE BARRIER. A fire-resistance-rated wall assembly of materials designed to restrict the spread of fire in which continuity is maintained.

❖ The term represents wall assemblies with a fire-resistance rating that are constructed in accordance with Section 707 of the IBC. Even though the definition applies to walls, horizontal assemblies can be fire barriers, also. See the definition of "Horizontal assembly" and the requirements in Section 711 of the IBC that apply to floor and roof assemblies designed to restrict the spread of fire.

FIRE CHIEF. The chief officer of the fire department serving the jurisdiction, or a duly authorized representative.

❖ This definition is necessary to note that when the term "fire chief" is used within the text of the code it is specifically referring to the chief officer of a fire department. This position can be delegated as necessary but must be appropriately authorized.

FIRE CODE OFFICIAL. The fire chief or other designated authority charged with the administration and enforcement of the code, or a duly authorized representative.

❖ Whoever holds the statutory power to enforce the fire code is termed the "fire code official." Normally, responsibility for this enforcement is assigned to a fire prevention bureau or related code enforcement department of the state, county or municipality. In the case of a fire department, the role of fire code official is most often given to the fire chief, the fire marshal or the fire inspector. Often with regard to the fire code, the fire code official will be the fire marshal or fire chief. In some cases, direct reference will be made to the fire chief within the code because some situations are specific to the actions of the fire department, such as authority at fire scenes.

FIRE COMMAND CENTER. The principal attended or unattended location where the status of detection, alarm communications and control systems is displayed, and from which the system(s) can be manually controlled.

❖ Fire command centers are communication centers, typically in high-rise buildings, where dedicated manual and automatic facilities are located for the origination, control and transmission of information and instructions pertaining to a fire emergency to the occupants (including fire department personnel) of the building. Fire command centers must provide facilities for the control and display of the status of all fire protection (detection, signaling, etc.) systems as well as critical building systems. These fire command centers must be located in secure areas as approved by the fire code official. Often, this is a location near the primary building entrance. Fire command centers may also be combined with other building operations and security facilities, when allowed by the fire code official; however, operating controls for use by the fire department must be clearly marked and not subject to tampering by unauthorized persons (see the commentary to Section 508.1 for further discussion).

[BF] FIRE DAMPER. A *listed* device installed in ducts and air transfer openings designed to close automatically upon detection of heat and resist the passage of flame. Fire dampers are classified for use in either static systems that will automatically shut down in the event of a fire, or in dynamic systems that continue to operate during a fire. A dynamic fire damper is tested and rated for closure under elevated temperature airflow.

❖ Fire dampers are used primarily in heating, ventilating and air-conditioning (HVAC) duct systems that pass through fire-resistance-rated walls or floors. Dampers may also be installed in rated walls independent of HVAC duct systems. Dampers are provided to maintain the fire-resistance rating of the penetrated assembly. Fire dampers are regulated by UL 555. See also the commentary to the definitions of "Damper" and "Smoke damper."

FIRE DEPARTMENT MASTER KEY. A limited issue key of special or controlled design to be carried by fire department officials in command which will open key boxes on specified properties.

❖ Several companies market emergency rapid entry systems and other accessories that use fire department master keys. These keys are used to open key boxes and entry gates, and turn on/off special switches that control electric gates and certain building functions, such as smoke control systems, fans and special processes. These keys are highly secure in their design and very difficult, if not impossible, to duplicate other than by the manufacturer.

FIRE DETECTOR, AUTOMATIC. A device designed to detect the presence of a fire signature and to initiate action.

❖ Automatic fire detectors include all approved devices designed to detect the presence of a fire and automatically initiate emergency action. These include smoke-sensing fire detectors, heat-sensing fire detectors, flame-sensing fire detectors, gas-sensing fire detectors and other fire detectors that operate on other principles as approved by the fire code official. Automatic fire detectors must be selected based on the type and size of fire to be detected and the response required. The automatic fire detector sends a signal to a processing unit to initiate some predetermined action. The processing unit may be internal to

INTERNATIONAL CODE COUNCIL®
Copyright © 2015 ICC. ALL RIGHTS RESERVED. Accessed by David Dammon on Jun 21, 2017 12:30:52 PM pursuant to License Agreement with ICC. No further reproduction or distribution authorized. ANY UNAUTHORIZED REPRODUCTION OR DISTRIBUTION IS A VIOLATION OF THE FEDERAL COPYRIGHT ACT AND THE LICENSE AGREEMENT, AND SUBJECT TO CIVIL AND CRIMINAL PENALTIES THEREUNDER.

the device as is the case with single-station smoke detectors or it may be an external unit as in the case of a fire alarm control unit. Automatic fire detectors must be approved, installed and tested to comply with the code and NFPA 72.

[BF] FIRE DOOR. The door component of a fire door assembly.

❖ A fire door is the primary component of a fire door assembly. The fire protection rating assigned to a tested fire door is only valid if the door is installed in a labeled frame with appropriate hardware. Installation requirements within the code reference NFPA 80, *Standard for Fire Doors and Other Opening Protectives*. Door ratings are expressed in minutes or hours. Field modification of doors are primarily limited to the mounting of listed hardware.

[BF] FIRE DOOR ASSEMBLY. Any combination of a fire door, frame, hardware and other accessories that together provide a specific degree of fire protection to the opening.

❖ Fire door assemblies, (door, frame and hardware) are required to be tested using the appropriate standard and then installed in accordance with NFPA 80. Side-hinged doors, hardware and frames are often manufactured separately with manufacturers' and listing agencies defining acceptable combinations of assembly components that have been tested together.

[BF] FIRE EXIT HARDWARE. Panic hardware that is *listed* for use on *fire door assemblies*.

❖ Where a door that is required to be of fire-resistance-rated construction also has panic hardware, the hardware is required to be listed for use on the fire door. Thus, fire door hardware has been tested to function properly when exposed to the effects of a fire (see the definition for "Panic hardware" and Section 1010.1.10).

FIRE LANE. A road or other passageway developed to allow the passage of fire apparatus. A fire lane is not necessarily intended for vehicular traffic other than fire apparatus.

❖ The term "fire lane" is synonymous with "fire apparatus access road"; however, the driving surface may not be the same as for a public road.

[BF] FIRE PARTITION. A vertical assembly of materials designed to restrict the spread of fire in which openings are protected.

❖ Fire partitions are used as wall assemblies to separate adjacent tenant spaces in covered mall buildings, dwelling units, and sleeping rooms, and to enclose corridors and elevator lobbies. Section 708 of the IBC establishes the construction requirements for fire partitions. The fire-resistance ratings, continuity requirements and opening protective requirements for fire partitions are usually less restrictive than those for fire barriers.

FIRE POINT. The lowest temperature at which a liquid will ignite and achieve sustained burning when exposed to a test flame in accordance with ASTM D92.

❖ The fire point is the lowest temperature at which a liquid will ignite and sustain burning for a minimum of 5 seconds (fire point) when exposed to the test flame under a specific barometric pressure according to ASTM D92.

[BF] FIRE PROTECTION RATING. The period of time that an opening protective assembly will maintain the ability to confine a fire as determined by tests prescribed in Section 716 of the *International Building Code*. Ratings are stated in hours or minutes.

❖ The term "fire protection rating" applies to the fire performance of an opening protective, such as a fire door, which is determined through tests performed in accordance with NFPA 252 or UL 10C.

FIRE PROTECTION SYSTEM. *Approved* devices, equipment and systems or combinations of systems used to detect a fire, activate an alarm, extinguish or control a fire, control or manage smoke and products of a fire or any combination thereof.

❖ A fire protection system is any approved device or equipment used singly or in combination, either manually or automatically, and that is intended to detect a fire, notify the building occupants of a fire or suppress the fire. Fire protection systems include fire suppression systems, standpipe systems, fire alarm systems, fire detection systems, smoke control systems and smoke vents. All fire protection systems must be approved by the fire code official and tested in accordance with the referenced standards and Section 901.6.

[BF] FIRE RESISTANCE. That property of materials or their assemblies that prevents or retards the passage of excessive heat, hot gases or flames under conditions of use.

❖ All materials offer some degree of fire resistance. A sheet of plywood has a low level of fire resistance as compared to a concrete block, which has a higher level of fire resistance. The fire resistance of a material or an assembly is evaluated by testing performed in accordance with ASTM E119. Tested materials will be assigned a fire-resistance rating consistent with the demonstrated performance.

[BF] FIRE-RESISTANCE RATING. The period of time a building element, component or assembly maintains the ability to confine a fire, continues to perform a given structural function, or both, as determined by the tests, or the methods based on tests, prescribed in Section 703 of the *International Building Code*.

❖ This refers to the period of time a building element, component or assembly maintains the ability to confine a fire, continues to perform a given structural

INTERNATIONAL CODE COUNCIL®
Copyright © 2015 ICC. ALL RIGHTS RESERVED. Accessed by David Dammon on Jun 21, 2017 12:30:52 PM pursuant to License Agreement with ICC. No further reproduction or distribution authorized. ANY UNAUTHORIZED REPRODUCTION OR DISTRIBUTION IS A VIOLATION OF THE FEDERAL COPYRIGHT ACT AND THE LICENSE AGREEMENT, AND SUBJECT TO CIVIL AND CRIMINAL PENALTIES THEREUNDER.

function, or both, as determined by tests or the methods based on tests, prescribed in Section 703 of the IBC.

The fire-resistance rating is developed using standardized test methods (i.e., ASTM E119, etc.). Assemblies rated under these tests are deemed to be able to perform their function for a specified period of time under specific fire conditions (standard time-temperature curve).

The fire-resistance rating is not intended to be a prediction of the actual length of time that an assembly will perform its intended function under actual fire conditions. Although the time-temperature curves of standardized fire test methods are usually selected to approximate at least some real-life fire conditions, the very wide range of actual fire conditions makes the listed fire-resistance rating more of a nominal, comparative index than a predictor of fire-resistance time in any given fire incident.

[BF] FIRE-RESISTANT JOINT SYSTEM. An assemblage of specific materials or products that are designed, tested and fire-resistance rated in accordance with either ASTM E 1966 or UL 2079 to resist for a prescribed period of time the passage of fire through joints made in or between fire-resistance-rated assemblies.

❖ In order to maintain the fire-resistant integrity of fire-resistance-rated assemblies, joints that occur within an assembly or between adjacent assemblies must be protected through an installation that has been tested in accordance with ASTM E1966 or UL 2079. Some common examples of applications where a fire-resistant joint system would be required are expansion joints in fire-resistance-rated floors or walls and the junction between fire-resistance-rated floors and walls (see Commentary Figure 202-F1 for examples). The regular joints that occur within a uniform assembly are most often tested as part of fire testing (e.g., in accordance with ASTM E119) for that entire assembly. The required details for these joints are specified in the listings for the underlying assembly. These joints do not need additional testing in accordance with ASTM E1966 or UL 2079. An example of such joints is the joints between individual sheets of gypsum board in a gypsum-sheathed stud wall. Consequently, other than the joints covering or filling the gaps within an assembly, the need for ASTM E1966 or UL 2079 tested joint systems is usually for the joints between dissimilar or adjacent assemblies.

FIRE SAFETY FUNCTIONS. Building and fire control functions that are intended to increase the level of life safety for occupants or to control the spread of the harmful effects of fire.

❖ In many cases, automatic fire detectors are installed even in buildings not required to have a fire alarm system. These fire detectors perform specific func-

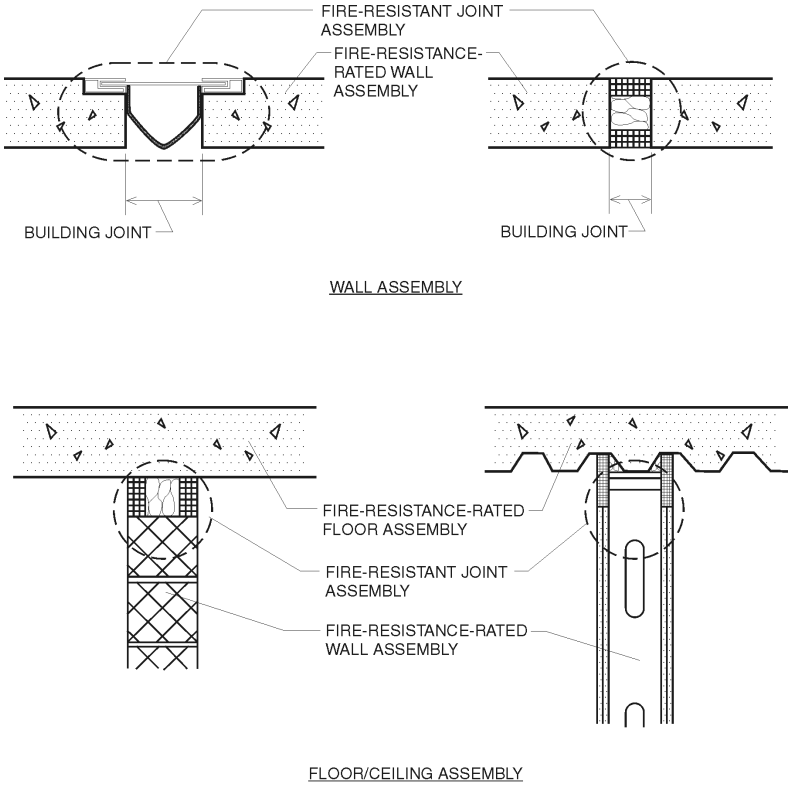

Figure 202-F1
EXAMPLES OF FIRE-RESISTANT JOINT SYSTEMS

INTERNATIONAL CODE COUNCIL®
Copyright © 2015 ICC. ALL RIGHTS RESERVED. Accessed by David Dammon on Jun 21, 2017 12:30:52 PM pursuant to License Agreement with ICC. No further reproduction or distribution authorized. ANY UNAUTHORIZED REPRODUCTION OR DISTRIBUTION IS A VIOLATION OF THE FEDERAL COPYRIGHT ACT AND THE LICENSE AGREEMENT, AND SUBJECT TO CIVIL AND CRIMINAL PENALTIES THEREUNDER.

tions, such as releasing door hold-open devices, activating elevator recall, smoke damper activation or air distribution system shutdown (see Section 907.3).

[BF] FIRE SEPARATION DISTANCE. The distance measured from the building face to one of the following:

1. The closest interior *lot line*.
2. To the centerline of a street, an alley or *public way*.
3. To an imaginary line between two buildings on the lot.

The distance shall be measured at right angles from the face of the wall.

❖ Fire separation distance is the distance from the exterior wall of the building to one of the three following locations, measured perpendicular to the exterior wall face: an interior lot line; the centerline of a street or public way; or an imaginary line between two buildings on the same property. The imaginary line can be located anywhere between the two buildings; it is the designer's choice, but once established, the location of the line applies to both buildings and cannot be revised.

The distance can vary with irregular-shaped lots and buildings. When applying the exterior wall requirements of Table 602 of the IBC, the required exterior wall fire-resistance rating might vary along a building side; for example, where the lot line is not parallel to the exterior wall. For further information, see Chapter 7 of the *IBC Commentary*.

[BF] FIRE WALL. A fire-resistance-rated wall having protected openings, which restricts the spread of fire and extends continuously from the foundation to or through the roof, with sufficient structural stability under fire conditions to allow collapse of construction on either side without collapse of the wall.

❖ Fire walls must meet the construction requirements in Section 706 of the IBC. The requirements for fire walls are much more restrictive than for fire barriers or fire partitions. The material constituting the fire wall must be noncombustible in all construction types except Type V. The vertical and horizontal continuity requirements are much more restrictive as are the opening protectives. A fire wall also has stringent requirements for continuity and for protection of any openings through it. A fire wall, unlike the fire barrier and fire partition, must be built so it will remain in place if the construction on either side of it collapses. However, the fire wall is not required to remain in place if construction on both sides of it collapses (i.e., the fire wall is not required to be a free-standing or cantilevered wall). Fire walls are used to divide a structure into separate buildings (see the definition of "Area, building"). To be considered separate buildings, the division must be vertical. The term "fire wall" applies to vertically constructed assemblies only and not to horizontal assemblies.

FIRE WATCH. A temporary measure intended to ensure continuous and systematic surveillance of a building or portion thereof by one or more qualified individuals for the purposes of identifying and controlling fire hazards, detecting early signs of unwanted fire, raising an alarm of fire and notifying the fire department.

❖ This term is used in several places throughout the code. A fire watch, sometimes referred to as standby personnel, provides temporary fire safety where there are potential hazards, such as during hot work operations or when fire protection systems are out of service. A fire watch is not simply to watch for a fire but also to prevent fire by identifying and controlling fire hazards, such as the separation of combustibles from areas where welding is to occur. A fire watch also provides a method of notifying the fire department if a fire should occur.

[BF] FIREBLOCKING. Building materials, or materials *approved* for use as fireblocking, installed to resist the free passage of flame to other areas of the building through concealed spaces.

❖ Fireblocking is required to hinder the concealed spread of flame, heat and other products of combustion within hollow spaces inside of walls or floor/ceiling assemblies. This is done by periodically subdividing that space, as indicated in Section 718.2 of the IBC, using construction materials that have some resistance to fire and by sealing the openings around penetrations through those materials.

Some fireblocking materials are permitted to be combustible based on the rationale that a substantial combustible material will provide a barrier adequate to perform the intended function (also see Section 718 of the IBC).

FIREWORKS. Any composition or device for the purpose of producing a visible or an audible effect for entertainment purposes by combustion, *deflagration* or *detonation* that meets the definition of 1.4G fireworks or 1.3G fireworks.

❖ This term refers to any device, other than a novelty or theatrical pyrotechnic article, intended to produce visible or audible effects by combustion, deflagration or detonation and any chemical compound or mechanically mixed preparation of an explosive or inflammable nature that is used for the purpose of making any manufactured fireworks and is not included in any other class of explosives.

Fireworks, 1.4G. Small fireworks devices containing restricted amounts of pyrotechnic composition designed primarily to produce visible or audible effects by combustion. Such 1.4G fireworks which comply with the construction, chemical composition and labeling regulations of the DOTn for Fireworks, UN 0336, and the U.S. Consumer Product Safety Commission as set forth in CPSC 16 CFR Parts 1500 and 1507, are not *explosive materials* for the purpose of this code.

❖ The requirements for storage, display and labeling depend on the correct application of this definition. This definition reflects the construction, chemical composition and labeling requirements of the U.S. Consumer Product Safety Commission (CPSC), found in Title 16, Code of Federal Regulations, Parts

INTERNATIONAL CODE COUNCIL®
Copyright © 2015 ICC. ALL RIGHTS RESERVED. Accessed by David Dammon on Jun 21, 2017 12:30:52 PM pursuant to License Agreement with ICC. No further reproduction or distribution authorized. ANY UNAUTHORIZED REPRODUCTION OR DISTRIBUTION IS A VIOLATION OF THE FEDERAL COPYRIGHT ACT AND THE LICENSE AGREEMENT, AND SUBJECT TO CIVIL AND CRIMINAL PENALTIES THEREUNDER.

1500 and 1507. Consumer 1.4G fireworks are not considered to be explosives subject to the provisions of Chapter 56. They are, however, subject to the fireworks regulations of the chapter.

Fireworks, 1.3G. Large fireworks devices, which are *explosive materials*, intended for use in fireworks displays and designed to produce audible or visible effects by combustion, *deflagration* or *detonation*. Such 1.3G fireworks include, but are not limited to, firecrackers containing more than 130 milligrams (2 grains) of explosive composition, aerial shells containing more than 40 grams of pyrotechnic composition and other display pieces which exceed the limits for classification as 1.4G fireworks. Such 1.3G fireworks are also described as Fireworks, UN 0335 by the DOTn.

❖ This category of fireworks represents a considerable life safety hazard in comparison to the consumer 1.4G fireworks. This definition reflects the construction, chemical composition and labeling requirements of the CPSC, found in Title 16, Code of Federal Regulations, Parts 1500 and 1507.

FIREWORKS DISPLAY. A presentation of fireworks for a public or private gathering.

❖ The areas selected for the discharge site, spectator viewing area, parking areas and the fallout area must be inspected and approved by the authority having jurisdiction.

[BG] FIXED BASE OPERATOR (FBO). A commercial business granted the right by the airport sponsor to operate on an airport and provide aeronautical services such as fueling, hangaring, tie-down and parking, aircraft rental, aircraft maintenance and flight instruction.

❖ Fixed base operator is a term of the aviation industry used to describe a firm that is permanently based at an airport and providing a variety of aircraft services. It is used in conjunction with Section 914.8.3 in the context of determining the appropriate level of fire suppression required in various aircraft hangars that will be found at an airport (see the commentary, Section 914.8.3).

[BE] FIXED SEATING. Furniture or fixtures designed and installed for the use of sitting and secured in place including bench-type seats and seats with or without back or arm rests.

❖ Fixed seating is secured to the floor or is a part of a seating system. Some of the varieties are bench seating, such as in bleachers, which can come with or without back rests; theater seating with arms for each viewer and seats that flip up; lecture halls with individual seats with tablet arms that are fixed or retractable; pew-type seating in courtrooms or churches; or booths in a restaurant. To allow appropriate egress from these spaces the occupant load tables allow for the individual seats to be counted to determine occupant load for the space. Space between the seats (i.e., aisle accessways) and aisles leading to the exits for these types of seating are addressed in Section 1029. Given their unique issues, bleachers, folding and telescopic seating and grandstands are referenced to ICC 300 in Section 1029.1.1.

[BF] FLAME SPREAD. The propagation of flame over a surface.

❖ The rate at which flames travel along the surface of a combustible finish material directly impacts the speed with which a fire spreads within a room or space, and is, therefore, regulated by Chapter 8.

[BF] FLAME SPREAD INDEX. A comparative measure, expressed as a dimensionless number, derived from visual measurements of the spread of flame versus time for a material tested in accordance with ASTM E84 or UL 723.

❖ The ASTM E84 (or UL 723) test method renders measurements of surface flame spread (and smoke density) in comparison with test results obtained by using select red oak as a control material. Red oak is used as a control material for furnace calibration because it is a fairly uniform grade of lumber that is readily available nationally, is uniform in thickness and moisture content, and generally gives consistent and reproducible results. The results of this test simply provide a relative understanding of flame spread potential. The flame spread index is sometimes abbreviated as FSI.

FLAMMABLE CRYOGENIC FLUID. A *cryogenic fluid* that is flammable in its vapor state.

❖ These fluids are flammable in a vapor stage or are to be considered as flammable. It may be possible for a fluid to be nonflammable in the liquid phase but flammable in the vapor stage. The vapor phase would be the more hazardous form of the material. Again, similar to the definition of "Cryogenic fluid," this describes the applicability of the code requirements. Flammability is dealt with in Chapter 58.

FLAMMABLE FINISHES. Coatings to articles or materials in which the material being applied is a flammable liquid, combustible liquid, combustible powder, fiberglass resin or flammable or combustible gel coating.

❖ This general definition is used to describe all the operations regulated in this chapter including spray applications, dip tank operations and powder-coating operations.

Refer to the definitions of "Combustible dust," "Combustible liquid" and "Flammable liquid." Note that although "combustible powder" is not defined in the code, the terms "combustible dust" and "combustible powder" have been used interchangeably. Also, the terms "gel" and "combustible gel" are not defined by the code. Gels or pastes and liquids are classified as liquids when classifying hazardous materials. For example, the flash point of a gel, paste or liquid determines the flammable or combustible classification of the product.

FLAMMABLE GAS. A material which is a gas at 68°F (20°C) or less at 14.7 pounds per square inch atmosphere

INTERNATIONAL CODE COUNCIL®
Copyright © 2015 ICC. ALL RIGHTS RESERVED. Accessed by David Dammon on Jun 21, 2017 12:30:52 PM pursuant to License Agreement with ICC. No further reproduction or distribution authorized. ANY UNAUTHORIZED REPRODUCTION OR DISTRIBUTION IS A VIOLATION OF THE FEDERAL COPYRIGHT ACT AND THE LICENSE AGREEMENT, AND SUBJECT TO CIVIL AND CRIMINAL PENALTIES THEREUNDER.

(psia) (101 kPa) of pressure [a material that has a *boiling point* of 68°F (20°C) or less at 14.7 psia (101 kPa)] which:

1. Is ignitable at 14.7 psia (101 kPa) when in a mixture of 13 percent or less by volume with air; or
2. Has a flammable range at 14.7 psia (101 kPa) with air of not less than 12 percent, regardless of the lower limit.

The limits specified shall be determined at 14.7 psi (101 kPa) of pressure and a temperature of 68°F (20°C) in accordance with ASTM E 681.

❖ The ASTM E681 test method covers the determination of the lower and upper concentration limits of chemicals having sufficient vapor pressure to form flammable mixtures in air at atmospheric pressure at the test temperature. The flammability limits depend on the test temperature and pressure. This test method is limited to an initial pressure of the local ambient or less, with a practical lower pressure limit of approximately 13 kPa (100 mm Hg). The maximum practical operating temperature of this equipment is approximately 302°F (150°C).

FLAMMABLE LIQUEFIED GAS. A liquefied *compressed gas* which, under a charged pressure, is partially liquid at a temperature of 68°F (20°C) and which is flammable.

❖ Flammable liqueified gases are widely useful because of their properties, including high heat output in combustion for most gases, high reactivity in chemical processing with other gases, extremely low temperatures available from some gases and the economy of handling them all in a compact form at high pressure or low temperature.

FLAMMABLE LIQUID. A liquid having a closed cup flash point below 100°F (38°C). Flammable liquids are further categorized into a group known as Class I liquids. The Class I category is subdivided as follows:

Class IA. Liquids having a flash point below 73°F (23°C) and having a *boiling point* below 100°F (38°C).

Class IB. Liquids having a *flash point* below 73°F (23°C) and having a *boiling point* at or above 100°F (38°C).

Class IC. Liquids having a *flash point* at or above 73°F (23°C) and below 100°F (38°C).

The category of flammable liquids does not include *compressed gases* or *cryogenic fluids*.

❖ Flammable liquids have a closed-cup flash point less than 100°F (38°C); the classification of Class I liquid into three classes is dependent on their flash point. The 100°F (38°C) flash point limitation for flammable liquids assumes possible indoor ambient temperature conditions of 100°F (38°C). The vapor pressure limitation of 40 pounds per square inch absolute (psia) (276 kPa) at 100°F (38°C) is the threshold for the definition of what constitutes a liquid for the purposes of classifying the material as a flammable or combustible liquid. Flammable liquids are classified into three classes based on a combination of their flash point and boiling point. Class IA has a flash point below 73°F (23°C) and a boiling point below 100°F (38°C). Class IB has a flash point below 73°F (23°C) and a boiling point at or above 100°F (38°C). Class IC has a flash point above 73°F (23°C) and below 100°F (38°C). Flammable liquids do not include compressed gases or cryogenic fluids. Compressed gases are regulated in Chapter 53 and cryogenic fluids are regulated in Chapter 55.

FLAMMABLE MATERIAL. A material capable of being readily ignited from common sources of heat or at a temperature of 600°F (316°C) or less.

❖ The primary focus of this term is to classify solid materials that are more hazardous than normal combustibles because of their susceptibility to ignition as flammable materials. Additionally, any material that will readily ignite at or below 600°F (316°C) would be considered flammable. The term "flammable materials" should not be confused with combustible materials.

FLAMMABLE SOLID. A solid, other than a blasting agent or *explosive*, that is capable of causing fire through friction, absorption of moisture, spontaneous chemical change or retained heat from manufacturing or processing, or which has an ignition temperature below 212°F (100°C) or which burns so vigorously and persistently when ignited as to create a serious hazard. A chemical shall be considered a flammable solid as determined in accordance with the test method of CPSC 16 CFR Part 1500.44, if it ignites and burns with a self-sustained flame at a rate greater than 0.0866 inch (2.2 mm) per second along its major axis.

❖ Flammable solids include various materials that either ignite readily, burn vigorously or are difficult to extinguish. Materials that may not ignite easily or burn vigorously in bulk form may do so in finely divided form. This is especially true of most flammable metals. Ignition sources for flammable solids include frictional heat from machining or cutting operations; absorption of moisture from air (as opposed to water-reactive materials forming flammable vapors when mixed with water); spontaneous chemical changes such as sublimation (the chemical process through which solids emit vapors without first changing phase to liquids); and heat absorbed during manufacturing processes like oil quenching or heat treating. Solid materials with ignition temperatures below 212°F (100°C) that ignite before melting are also considered flammable solids, as are materials burning robustly and persistently when ignited, including magnesium and coal. CPSC has developed a standard test method (CPSC 16 CFR 1500.44) that is referenced for determining when a material complies with the definition. Commentary Figure 202-F2 depicts the equipment and test method. A material burning at a rate greater than 0.1 inch (2.5 mm) per second is considered a flammable solid for the purpose of applying the requirements of this chapter.

Commentary Figure 202-F3 lists both the melting points and ignition temperatures for several pure metals in bulk form. These materials may ignite at much

INTERNATIONAL CODE COUNCIL®
Copyright © 2015 ICC. ALL RIGHTS RESERVED. Accessed by David Dammon on Jun 21, 2017 12:30:52 PM pursuant to License Agreement with ICC. No further reproduction or distribution authorized. ANY UNAUTHORIZED REPRODUCTION OR DISTRIBUTION IS A VIOLATION OF THE FEDERAL COPYRIGHT ACT AND THE LICENSE AGREEMENT, AND SUBJECT TO CIVIL AND CRIMINAL PENALTIES THEREUNDER.

lower temperatures when finely divided. Moreover, many metals, such as calcium, hafnium, plutonium, sodium, thorium and zirconium, will ignite in air under certain conditions. Thorium and plutonium will release radiation when they burn. Likewise, many metals react with each other in finely divided form. For example, iron or steel filings and fine magnesium particles, combined with frictional heat or cutting oil,

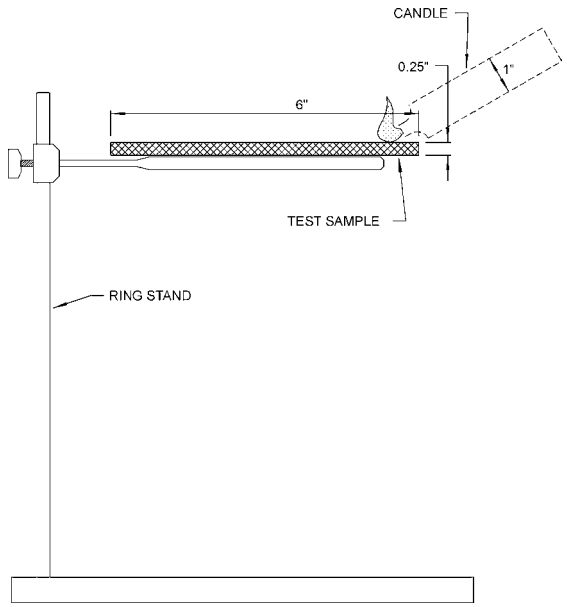

For SI: 1 inch = 25.4 mm.

Figure 202-F2
FLAMMABLE SOLID TEST METHOD

Material	Melting point (°F)	Ignition temperature (°F)
Aluminum[a]	1,220	1,832
Barium	1,337	347
Calcium	1,548	1,300
Hafnium	4,032	—
Iron[b]	2,795	1,706
Lithium	367	356
Magnesium	1,202	1,153
Plutonium	1,184	1,112
Potassium[c]	144	156
Sodium	208	239
Strontium	1,425	1,328
Thorium	3,353	932
Titanium	3,140	2,900
Uranium[d]	2,070	6,900
Zinc	786	1,652
Zinconium	3,326	2,552

For SI: °C = [(°F)-32]/1.8.

a. Above indicated temperature.

b. Ignition in oxygen.

c. Spontaneous ignition in moist air.

d. Below indicated temperature.

Figure 202-F3
MELTING AND IGNITION TEMPERATURES OF SELECTED PURE METALS IN SOLID FORM

INTERNATIONAL CODE COUNCIL®
Copyright © 2015 ICC. ALL RIGHTS RESERVED. Accessed by David Dammon on Jun 21, 2017 12:30:52 PM pursuant to License Agreement with ICC. No further reproduction or distribution authorized. ANY UNAUTHORIZED REPRODUCTION OR DISTRIBUTION IS A VIOLATION OF THE FEDERAL COPYRIGHT ACT AND THE LICENSE AGREEMENT, AND SUBJECT TO CIVIL AND CRIMINAL PENALTIES THEREUNDER.

can ignite in a thermite reaction. Aluminum, iron and steel are not usually recognized as combustible metals; however, aluminum, iron and steel can be ignited in powdered form. Rather than producing an open flame, both iron and steel produce a vigorous sparking reaction when ignited. On the other hand, aluminum may burn with explosive force.

Although the definition of "Flammable solid" could be literally interpreted as being applicable to a much wider variety of common materials (e.g., plastics, household items, toys, etc.) because ordinary combustible materials could fail the CPSC test, the definition text clearly limits its application to "chemicals." It is not the intent of this chapter to regulate such common-place materials or items because, practically speaking, such a sweeping application could result in many buildings, including Group R buildings, being classified or reclassified in Group H-3, which is certainly not the intent of the code. Commentary Figure 202-F4 describes fire hazards of selected common flammable solids that are regulated by this chapter.

FLAMMABLE VAPOR AREA. An area in which the concentration of flammable constituents (vapor, gas, fume, mist or dust) in air exceeds 25 percent of their lower flammable limit (LFL) because of the flammable finish processes operation. It shall include:

1. The interior of spray booths.
2. The interior of ducts exhausting from spraying processes.
3. Any area in the direct path of spray or any area containing dangerous quantities of air-suspended powder,

Material	Description
Carbon	
Carbon black	Carbon black is formed by combustion of certain gaseous hydrocarbons and hydrocarbon cracking. It is most hazardous after manufacture when particles may still be hot. Carbon black absorbs oxygen while cooling and smoldering may develop. After cooling, the material is not subject to spontaneous heating. A mixture of carbon black and oxidizable oils may produce heating.
Lamp black	Lamp black, a type of carbon black, is formed by incomplete burning of carbonaceous oils. It absorbs gases to some degree and has a strong affinity for liquids. It heats when in contact with drying oils and may ignite spontaneously soon after bagging begins.
Lead sulfocyanate	Burns slowly and decomposes to form flammable and toxic hydrogen disulfide and toxic carbon disulfide when heated.
Nitroaniline	Melts at 295°F with a flash point of 390°F. When in contact with organic materials, it may produce spontaneous ignition.
Nitrochlorobenzene	A solid material giving off flammable vapors when heated (sublimation).
Sulfides	
Antimony pentasulfide	Antimony pentasulfide is readily ignited when in contact with oxidizing materials and yields flammable and toxic hydrogen sulfide when in contact with strong acids.
Phosphorus pentasulfide	Phosphorus pentasulfide ignites readily and is subject to spontaneous heating in the presence of moisture. The ignition temperature is 287°F. Phosphorus pentasulfide produces toxic sulfur dioxide and phosphorus pentoxide when it burns, as well as flammable and toxic hydrogen sulfide when in contact with water.
Phosphorus sesquisulfide	Phosphorus sesquisulfide is highly flammable and ignites at 212°F to produce toxic sulfur dioxide.
Potassium and sodium sulfides	Both potassium and sodium sulfide are moderately flammable and they produce sulfur dioxide when burning and hydrogen sulfide comes in contact with acids.
Sulfur	The melting point is 234°F and the boiling point is 832°F with a flash point of 405°F. Sulfur vapors are highly flammable in air. Sulfur dust is a severe explosion hazard with ignition temperatures in the range of 274°F.
Naphthalene	Combustible in both solid and liquid form. Vapors and dusts form explosive mixtures in air.

For SI: °C = [(°F) - 32]/1.8.

Figure 202-F4
COMMON FLAMMABLE SOLIDS AND THEIR PROPERTIES

INTERNATIONAL CODE COUNCIL®
Copyright © 2015 ICC. ALL RIGHTS RESERVED. Accessed by David Dammon on Jun 21, 2017 12:30:52 PM pursuant to License Agreement with ICC. No further reproduction or distribution authorized. ANY UNAUTHORIZED REPRODUCTION OR DISTRIBUTION IS A VIOLATION OF THE FEDERAL COPYRIGHT ACT AND THE LICENSE AGREEMENT, AND SUBJECT TO CIVIL AND CRIMINAL PENALTIES THEREUNDER.

combustible residue, dust, deposits, vapor or mists as a result of spraying operations.

4. The area in the vicinity of dip tanks, drain boards or associated drying, conveying or other equipment during operation or shutdown periods.

The *fire code official* is authorized to determine the extent of the flammable vapor area, taking into consideration the material characteristics of the flammable materials, the degree of sustained ventilation and the nature of the operations.

❖ The extent of the flammable vapor area should be determined by the fire code official based on an evaluation of the coating process, the liquid being used, the ventilation rate in the area and other variables that might increase the hazard.

FLAMMABLE VAPORS OR FUMES. The concentration of flammable constituents in air that exceeds 25 percent of their lower flammable limit (LFL).

❖ Vapors or fumes are only considered flammable when there is a high enough concentration for an ignition to occur if exposed to an ignition source. The code specifically defines "Flammable" as being greater than 25 percent of the LFL.

FLASH POINT. The minimum temperature in degrees Fahrenheit at which a liquid will give off sufficient vapors to form an ignitable mixture with air near the surface or in the container, but will not sustain combustion. The flash point of a liquid shall be determined by appropriate test procedure and apparatus as specified in ASTM D 56, ASTM D 93 or ASTM D 3278.

❖ The flash point is the characteristic used in the classification of flammable and combustible liquids. The flash point is the minimum temperature of a liquid at which it gives off sufficient vapor to form an ignitable mixture with air above its surface. The Tag Closed Tester (ASTM D56), the Pensky-Martens Closed Tester (ASTM D93) and the Small Scale Closed-Cup Apparatus (ASTM D3278) are the referenced test procedures for determining the flash points of liquids. The applicability of the three test methods depends on the viscosity of the test liquid and the expected flash point.

FLEET VEHICLE MOTOR FUEL-DISPENSING FACILITY. That portion of a commercial, industrial, governmental or manufacturing property where liquids used as fuels are stored and dispensed into the fuel tanks of motor vehicles that are used in connection with such businesses, by persons within the employ of such businesses.

❖ This is sometimes referred to as "you own the tanks, you own the vehicles" motor fuel-dispensing facility. The intent is to allow greater fuel storage tank capacities and reduced separation distances between the dispenser and above-ground tanks when the operator has control of the entire operation, including the vehicles being fueled. In other words, the person dispensing the fuel is an employee of the facility operator. Motor fuel-dispensing facilities are classified in occupancy Group M by the IBC.

[BE] FLIGHT. A continuous run of rectangular treads, *winders* or combination thereof from one landing to another.

❖ Two points of clarification for stairways are addressed by the definition of "Flight." First, a flight is made up of the treads and risers that occur between landings. Therefore, a stairway connecting two stories that includes an intermediate landing consists of two flights. Secondly, the inclusion of winders within a stairway does not create multiple flights. Winders are simply treads within a flight and are often combined with rectangular treads within the same flight.

FLOAT. A floating structure normally used as a point of transfer for passengers and goods, or both, for mooring purposes.

❖ A float is a deck section that lays on top of or is attached to (or both) a buoyant material in the water. The sections are attached to each other and held in place by methods that are designed to keep the floats in place.

[BE] FLOOR AREA, GROSS. The floor area within the inside perimeter of the *exterior walls* of the building under consideration, exclusive of vent shafts and courts, without deduction for *corridors*, *stairways*, *ramps*, closets, the thickness of interior walls, columns or other features. The floor area of a building, or portion thereof, not provided with surrounding *exterior walls* shall be the usable area under the horizontal projection of the roof or floor above. The *gross floor area* shall not include shafts with no openings or interior courts.

❖ Gross floor area is that area measured within the perimeter formed by the inside surface of the exterior walls. The area of all occupiable and nonoccupiable spaces, including mechanical and elevator shafts, toilet rooms, closets, and mechanical equipment rooms, are included in the gross floor area. This area could also include any covered porches, carports or other exterior space intended to be used as part of the building's occupiable space. This gross and net floor areas are primarily used for the determination of occupant load in accordance with Table 1004.1.2.

[BE] FLOOR AREA, NET. The actual occupied area not including unoccupied accessory areas such as corridors, *stairways*, *ramps*, toilet rooms, mechanical rooms and closets.

❖ This net area is intended to be only the room areas that are used for specific occupancy purposes and does not include circulation areas, such as corridors, ramps or stairways, and service and utility spaces, such as toilet rooms and mechanical and electrical equipment rooms. Net floor area is typically measured between inside faces of walls within a room. Floor area, net and gross is utilized in Table 1004.1.2 to determine occupant load for a space.

INTERNATIONAL CODE COUNCIL®
Copyright © 2015 ICC. ALL RIGHTS RESERVED. Accessed by David Dammon on Jun 21, 2017 12:30:52 PM pursuant to License Agreement with ICC. No further reproduction or distribution authorized. ANY UNAUTHORIZED REPRODUCTION OR DISTRIBUTION IS A VIOLATION OF THE FEDERAL COPYRIGHT ACT AND THE LICENSE AGREEMENT, AND SUBJECT TO CIVIL AND CRIMINAL PENALTIES THEREUNDER.

FLUE SPACES.

Longitudinal flue space. The flue space between rows of storage perpendicular to the direction of loading.

❖ The longitudinal flue space is a continuous open area between a double row- or multiple-row-type rack storage system. The flue space is to be clear for a set dimension, as required in Table 3208.3, from the floor to the top of the highest commodity for the entire length of the rack system. The flue spaces are an important feature for automatic sprinkler systems to effectively suppress and potentially control the fire. Reducing or eliminating such spaces will potentially reduce, if not eliminate, sprinkler effectiveness (see Commentary Figure 202-F5).

Transverse flue space. The space between rows of storage parallel to the direction of loading.

❖ The transverse flue space is a continuous open area between commodities in single-row-, double-row- and multiple-row-type rack storage systems. The flue space is to be clear for a set dimension, as required in Table 3208.3, from the floor to the top of the highest commodity for the entire width of the rack system. The flue spaces are an important feature for automatic sprinkler systems to effectively suppress and potentially control the fire. Reducing or eliminating such spaces will potentially reduce, if not eliminate, sprinkler effectiveness (see Commentary Figure 202-F5).

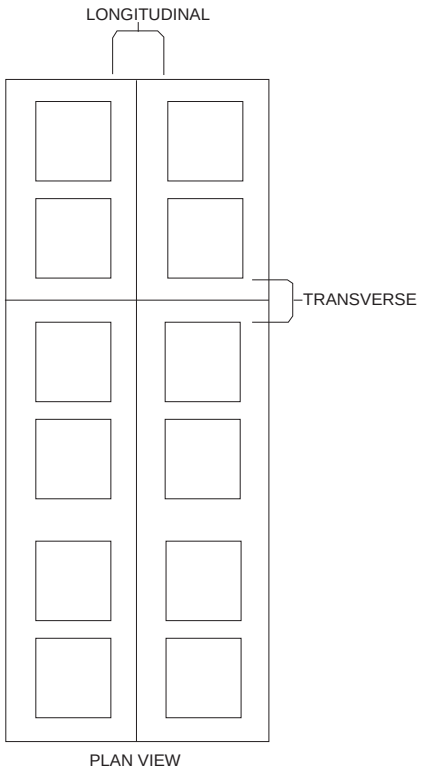

Figure 202-F5
FLUE SPACES

FLUIDIZED BED. A container holding powder coating material that is aerated from below so as to form an air-supported expanded cloud of such material through which the preheated object to be coated is immersed and transported.

❖ A fluidized bed differs from an electrostatic fluidized bed in that the fluidized bed uses an air stream instead of electrostatic charge. The air stream behaves like a fluid as the object is passed through it. Additionally, the object is preheated. In an electrostatic fluidized bed, the object is heated/cured in an oven after the coating process.

FOAM-EXTINGUISHING SYSTEM. A special system discharging a foam made from concentrates, either mechanically or chemically, over the area to be protected.

❖ Foam-extinguishing systems must be of an approved type and installed and tested to comply with NFPA 11, 11A and 16. All foams are intended to exclude oxygen from the fire, cool the area of the fire and insulate adjoining surfaces from heat caused by the fire. Foam systems are commonly used to extinguish flammable or combustible liquid fires (see commentary, Section 904.7). While water applied by an automatic sprinkler system can only act horizontally upon the surface that it reaches, foam-extinguishing agents have the ability to act vertically in addition to horizontally; and, unlike gaseous extinguishing agents, foam does not dissipate rapidly where there is no confined space. Thus, foam systems are also used where there is a need to fill a nonconfined space with extinguishing material as in the case of certain industrial applications.

[BE] FOLDING AND TELESCOPIC SEATING. Tiered seating having an overall shape and size that is capable of being reduced for purposes of moving or storing and is not a building element.

❖ Bleachers, folding and telescopic seating and grandstands are essentially unique forms of tiered seating that are supported on a dedicated structural system. All types are addressed in ICC 300, the safety standard for these types of seating arrangements. Folding and telescopic seating are commonly used in gymnasiums and sports arenas where the seating can be configured in a variety of ways for various types of events. “Building element” is a defined term in the IBC which is primarily used in conjunction with the structural elements regulated in Table 601 of the IBC. While telescopic seating may be attached to a wall, the system when pulled out or folded includes its main support system. Such seating is not considered a building element of the building or structure in which it is located (see Section 1029.1.1).

[BG] FOSTER CARE FACILITIES. Facilities that provide care to more than five children, $2^1/_2$ years of age or less.

❖ Foster care facilities are group homes where children live, not day care facilities. By being under $2^1/_2$ years of age, children are assumed not capable of self-preservation, thus there is a need for higher levels of active and passive protection in the building (see the

INTERNATIONAL CODE COUNCIL®
Copyright © 2015 ICC. ALL RIGHTS RESERVED. Accessed by David Dammon on Jun 21, 2017 12:30:52 PM pursuant to License Agreement with ICC. No further reproduction or distribution authorized. ANY UNAUTHORIZED REPRODUCTION OR DISTRIBUTION IS A VIOLATION OF THE FEDERAL COPYRIGHT ACT AND THE LICENSE AGREEMENT, AND SUBJECT TO CIVIL AND CRIMINAL PENALTIES THEREUNDER.

commentary to Occupancy Group I-2). Group homes with children over $2^1/_2$ years of age would be Group R-4 or I-1, depending on the number of children housed in the facility. The "more than five children" is intended to clarify that a foster care family would not be considered a Group I-2 facility. See also the definitions for "24-hour basis," "Custodial care," "Group home," "Incapable of self-preservation" and "Personal care service."

FUEL LIMIT SWITCH. A mechanism, located on a tank vehicle, that limits the quantity of product dispensed at one time.

❖ This definition pertains to mobile fueling operations regulated by Section 5706.5.4.5 and describes a limit control that prevents more than a specified amount of liquid fuel from being dispensed at one time from a tank vehicle used in the mobile fueling operation (see commentary, Section 5706.5.4.5).

FUMIGANT. A substance which by itself or in combination with any other substance emits or liberates a gas, fume or vapor utilized for the destruction or control of insects, fungi, vermin, germs, rats or other pests, and shall be distinguished from insecticides and disinfectants which are essentially effective in the solid or liquid phases. Examples are methyl bromide, ethylene dibromide, hydrogen cyanide, carbon disulfide and sulfuryl fluoride.

❖ Pesticides that are applied in gaseous form within a closed space and kill by inhalation are termed "fumigants." The basic fumigant material may be a volatile solid, liquid or gas. An example of a volatile solid fumigant is paradichlorobenzene. This substance, by the process of sublimation, fills a closed space with gas. It is marketed either as moth balls or moth cakes. Sublimation refers to the changing state from a solid to a gas without entering a liquid state. Many fumigants are flammable or combustible and all are toxic, posing health hazards that range from simply hazardous to deadly with minimal exposure.

FUMIGATION. The utilization within an enclosed space of a fumigant in concentrations that are hazardous or acutely toxic to humans.

❖ Fumigation sites are usually contained within a building but may also be at an outdoor location, aboard a vessel or in a vehicle. Soil fumigation can also be successful. The key to any fumigation is applying the appropriate fumigant for the correct duration, usually at least 8 hours for proper soaking to occur. The fumigant gas must penetrate every nook and cranny of the fumigation space or area; therefore, proper enclosure and sealing of the space or area is critical. Rooms can be sealed easily by caulking or taping doors, windows and ventilation openings. Entire structures can be sealed by encapsulation in plastic sheeting. Even trees can be isolated with an air-tight tent and soils can be fumigated by covering the area with plastic covers. Other sections of this commentary discuss operational safeguards for fumigation operations.

FURNACE CLASS A. An oven or furnace that has heat utilization equipment operating at approximately atmospheric pressure wherein there is a potential explosion or fire hazard that could be occasioned by the presence of flammable volatiles or combustible materials processed or heated in the furnace.

Note: Such flammable volatiles or combustible materials can, for instance, originate from the following:

1. Paints, powders, inks, and adhesives from finishing processes, such as dipped, coated, sprayed and impregnated materials.
2. The substrate material.
3. Wood, paper and plastic pallets, spacers or packaging materials.
4. Polymerization or other molecular rearrangements.

Potentially flammable materials, such as quench oil, water-borne finishes, cooling oil or cooking oils, that present a hazard are ventilated according to Class A standards.

❖ Ovens may also use a low-oxygen atmosphere to evaporate solvent. This kind of equipment has potential hazards involving the process material and heat generation.

FURNACE CLASS B. An oven or furnace that has heat utilization equipment operating at approximately atmospheric pressure wherein there are no flammable volatiles or combustible materials being heated.

❖ Even though no flammable, volatile or combustible materials are heated in this kind of oven, the process can still be a serious fire and explosion hazard.

FURNACE CLASS C. An oven or furnace that has a potential hazard due to a flammable or other special atmosphere being used for treatment of material in process. This type of furnace can use any type of heating system and includes a special atmosphere supply system. Also included in the Class C classification are integral quench furnaces and molten salt bath furnaces.

❖ These are units in which there is an explosion hazard because a special flammable atmosphere is being used for treatment of material in process. Within this class, an integral quench tank is used, which is a container that holds a quench medium into which a metalwork is immersed for various heat treatment processes. A molten bath furnace is a heated container that holds a melt or fusion into which metalwork is immersed for various heat treatment processes.

FURNACE CLASS D. An oven or furnace that operates at temperatures from above ambient to over 5,000°F (2760°C) and at pressures normally below atmospheric using any type of heating system. These furnaces can include the use of special processing atmospheres.

❖ These are generally referred to as vacuum furnaces because they operate below normal atmospheric pressure. Vacuum furnaces are described as either cold-wall furnaces, hot-wall furnaces, or furnaces

INTERNATIONAL CODE COUNCIL®
Copyright © 2015 ICC. ALL RIGHTS RESERVED. Accessed by David Dammon on Jun 21, 2017 12:30:52 PM pursuant to License Agreement with ICC. No further reproduction or distribution authorized. ANY UNAUTHORIZED REPRODUCTION OR DISTRIBUTION IS A VIOLATION OF THE FEDERAL COPYRIGHT ACT AND THE LICENSE AGREEMENT, AND SUBJECT TO CIVIL AND CRIMINAL PENALTIES THEREUNDER.

used for casting or melting of metal at temperatures up to 5,000°F (2760°C) or higher.

GAS CABINET. A fully enclosed, ventilated, noncombustible enclosure used to provide an isolated environment for *compressed gas* cylinders in storage or use. Doors and access ports for exchanging cylinders and accessing pressure-regulating controls are allowed to be included.

❖ This term refers to an assembly constructed and designed to protect compressed gas cylinders and associated equipment.

GAS DETECTION SYSTEM, CONTINUOUS. See "Continuous gas detection system."

GAS ROOM. A separately ventilated, fully enclosed room in which only *compressed gases* and associated equipment and supplies are stored or used.

❖ A gas room is an on-site built room that meets the construction requirements of the IBC. This room will require separation based on the amount of gases stored in the room.

GAS ROOM, HYDROGEN FUEL. See "Hydrogen fuel gas room."

❖ See the commentary to "Hydrogen fuel gas room."

GASEOUS HYDROGEN SYSTEM. An assembly of piping, devices and apparatus designed to generate, store, contain, distribute or transport a nontoxic, gaseous hydrogen-containing mixture having not less than 95-percent hydrogen gas by volume and not more than 1-percent oxygen by volume. Gaseous hydrogen systems consist of items such as *compressed gas* containers, reactors and appurtenances, including pressure regulators, pressure relief devices, manifolds, pumps, compressors and interconnecting piping and tubing and controls.

❖ This term includes the source of hydrogen and all piping and devices between the source and the equipment being used. The gas in a hydrogen system is above the upper flammable limit (UFL) and is therefore "too rich" to burn. Any leakage, however, can quickly create conditions that will be explosive under ambient conditions.

[BG] GRADE FLOOR OPENING. A window or other opening located such that the sill height of the opening is not more than 44 inches (1118 mm) above or below the finished ground level adjacent to the opening.

❖ Openings used for emergency escape or rescue are clearly easier to use the closer they are to grade. This definition specifies that the maximum sill height above the exterior adjacent grade must be no more than 44 inches (1118 mm) for an opening to qualify as a grade floor opening (see Section 1030.3).

[BG] GRADE PLANE. A reference plane representing the average of finished ground level adjoining the building at exterior walls. Where the finished ground level slopes away from the exterior walls, the reference plane shall be established by the lowest points within the area between the building and the *lot line* or, where the *lot line* is more than 6 feet (1829 mm) from the building, between the building and a point 6 feet (1829 mm) from the building.

❖ This term is used in the definitions of "Basement" and "Story above grade plane." It is critical in determining the height of a building and the number of stories above grade, which are regulated by Chapter 5 of the IBC, and in determining fire protection system requirements in Chapter 9. Since the finished ground surface adjacent to the building may vary (depending on site conditions), the mean average taken at various points around the building constitutes the grade plane.

Situations may arise where the ground adjacent to the building slopes away from the building because of site or landscaping considerations. In this case, the lowest finished ground level at any point between the building's exterior wall and a point 6 feet (1829 mm) from the building [or the lot line, if closer than 6 feet (1829 mm)] comes under consideration.

In the context of the code, the term "grade" means the finished ground level at the exterior walls. While the grade plane is a hypothetical horizontal plane derived as indicated above, the grade is that which actually exists or is intended to exist at the completion of site work. The only situation where the grade plane and the grade are identical is when the site is perfectly level for a distance of 6 feet (1829 mm) from all exterior walls. See the commentary to this definition in Chapters 2 and 5 of the IBC for a more detailed discussion and illustrations of sloping grade scenarios.

[BE] GRANDSTAND. Tiered seating supported on a dedicated structural system and two or more rows high and is not a building element (see "*Bleachers*").

❖ Bleachers, folding and telescopic seating and grandstands are essentially unique forms of tiered seating that are supported on a dedicated structural system. All types are addressed in the safety standard for these types of seating arrangements, ICC 300. Grandstands can be found at a county fair ground, along a parade route or within indoor facilities. Examples are sports arenas and public auditoriums, as well as places of religious worship and gallery-type lecture halls. "Building element" is a defined term in the IBC which is primarily used in conjunction with the structural elements regulated in Table 601 of the IBC. Grandstands have a separate structural system. Individual bench seats directly attached to a floor system are not a grandstand. The terms "bleacher" and "grandstand" are basically interchangeable. There is no cut-off in size or number of seats that separates bleachers and grandstands (see Section 1029.1.1).

[BG] GROUP HOME. A facility for social rehabilitation, substance abuse or mental health problems that contains a group housing arrangement that provides custodial care but does not provide medical care.

❖ The term "group home" is listed under Group I-1 and R-4 occupancies. See the commentary under "Custo-

INTERNATIONAL CODE COUNCIL®
Copyright © 2015 ICC. ALL RIGHTS RESERVED. Accessed by David Dammon on Jun 21, 2017 12:30:52 PM pursuant to License Agreement with ICC. No further reproduction or distribution authorized. ANY UNAUTHORIZED REPRODUCTION OR DISTRIBUTION IS A VIOLATION OF THE FEDERAL COPYRIGHT ACT AND THE LICENSE AGREEMENT, AND SUBJECT TO CIVIL AND CRIMINAL PENALTIES THEREUNDER.

dial care." The number of occupants would differentiate which occupancy classification is applicable to the facility. Residents live in a supervised living arrangement. Facilities can be for persons with developmental, emotional, mental or physical difficulties or for persons recovering from drugs or alcohol abuse. The intent of these facilities is to promote recovery, community integration and improved quality of life. While there may be security restrictions, occupants are not restrained (see the definition of Occupancy Group I-3 for restrained conditions). The focus is the increase in an individual's capacity to be successful in living, working, learning and social environments to the best of their ability. See also the commentary to "24-hour basis," "Custodial care," "Foster care facilities," "Incapable of self-preservation." "Personal care services" and "Nursing homes."

[BE] GUARD. A building component or a system of building components located at or near the open sides of elevated walking surfaces that minimizes the possibility of a fall from the walking surface to a lower level.

❖ Guards are sometimes mistakenly referred to as "guardrails." In actuality, the guard consists of the entire vertical portion of the barrier, not just the top rail (see commentary to "Handrail" and Section 1015). The purpose of guards is to minimize the potential for falls at dropoffs adjacent to walking surfaces. Loading requirements for guards are located in Section 1607.8 of the IBC.

[BG] GUEST ROOM. A room used or intended to be used by one or more guests for living or sleeping purposes.

❖ Lodging houses with five or fewer guest rooms are allowed by the IBC as Group R-3 occupancy. They are also permitted under the IRC. See the definitions of "Lodging house" and "Residential Group R-3" occupancies.

[BS] GYPSUM BOARD. Gypsum wallboard, gypsum sheathing, gypsum base for gypsum veneer plaster, exterior gypsum soffit board, predecorated gypsum board or water-resistant gypsum backing board complying with the standards listed in Tables 2506.2 and 2507.2 and Chapter 35 of the *International Building Code*.

❖ Gypsum board is the most commonly used material for interior wall covering. Gypsum board is also used for exterior sheathing, plaster lath and ceiling covering. Because it is installed in sheet form, it is less labor intensive and generally considered more cost effective than other wall and ceiling materials, such as plaster. Gypsum board requires a minimal amount of finishing and will readily accept paint, wallpaper, vinyl fabric, special textured paint and similar surface finish materials.

Gypsum board will be subject to severe failure when placed in direct contact with water or continuous moisture. For this reason, the code does not allow gypsum board to be used in wet areas unless it is provided with a finish material impervious to moisture.

[BG] HABITABLE SPACE. A space in a building for living, sleeping, eating or cooking. Bathrooms, toilet rooms, closets, halls, storage or utility spaces and similar areas are not considered habitable spaces.

❖ These spaces are normally considered inhabited in the course of residential living and provide the four basic characteristics associated with it: living, sleeping, eating and cooking. All habitable spaces are considered occupiable spaces, though other occupiable spaces, such as halls or utility rooms, are not considered habitable (see the definition of "Occupiable space" in the IBC).

HALOGENATED EXTINGUISHING SYSTEM. A fire-extinguishing system using one or more atoms of an element from the halogen chemical series: fluorine, chlorine, bromine and iodine.

❖ Halon is a colorless, odorless gas that inhibits the chemical reaction of fire. Halon extinguishing systems are useful in occupancies, such as computer rooms where an electrically nonconductive medium is essential or desirable and where cleanup of other extinguishing agents presents a problem. The halon extinguishing system must to be of an approved type and installed and tested to comply with NFPA 12A.

Halon extinguishing agents have been identified as a source of emissions resulting in the depletion of the stratospheric ozone layer. For this reason, production of new supplies of halon has been phased out. Alternative gaseous extinguishing agents, such as clean agents, have been developed as alternatives to halon.

HANDLING. The deliberate transport by any means to a point of storage or use.

❖ Handling is concerned with transporting hazardous materials within a building's means of egress. A hazardous material that is not in either storage or use is essentially being handled.

[BE] HANDRAIL. A horizontal or sloping rail intended for grasping by the hand for guidance or support.

❖ Handrails are provided along walking surfaces that lead from one elevation to another, such as ramps, and stairways. Handrails may be any shape in cross section provided that they can be gripped by hand for support and guidance and for checking possible falls on the adjacent walking surface. In addition to being necessary in normal day-to-day use, handrails are especially needed in times of emergency when the pace of egress travel is hurried and the probability for occupant instability while traveling along the sloped or stepped walking surface is greater. Handrails, by themselves, are not intended to be used in place of guards to limit falls at drop-offs. Where guards and handrails are used together, the handrail is a separate element typically attached to the inside surface of the guard. The top guard cannot be used as a required handrail, except within dwelling units where the height is restricted to that of a handrail (see Sec-

INTERNATIONAL CODE COUNCIL®
Copyright © 2015 ICC. ALL RIGHTS RESERVED. Accessed by David Dammon on Jun 21, 2017 12:30:52 PM pursuant to License Agreement with ICC. No further reproduction or distribution authorized. ANY UNAUTHORIZED REPRODUCTION OR DISTRIBUTION IS A VIOLATION OF THE FEDERAL COPYRIGHT ACT AND THE LICENSE AGREEMENT, AND SUBJECT TO CIVIL AND CRIMINAL PENALTIES THEREUNDER.

tion 1014). See the commentary to the definition of "Guard." For loading on handrails, see Section 1607.8 of the IBC.

HAZARDOUS MATERIALS. Those chemicals or substances which are *physical hazards* or *health hazards* as defined and classified in this chapter, whether the materials are in usable or waste condition.

❖ The term "hazardous materials" refers to materials posing either a physical or health hazard.

HAZARDOUS PRODUCTION MATERIAL (HPM). A solid, liquid or gas associated with semiconductor manufacturing that has a degree-of-hazard rating in health, flammability or instability of Class 3 or 4 as ranked by NFPA 704 and which is used directly in research, laboratory or production processes which have, as their end product, materials that are not hazardous.

❖ This definition identifies those specific materials that can be contained within an HPM facility. The restriction in the definition for only hazardous materials with a Class 3 or 4 rating is not intended to exclude materials that are less hazardous, but to clarify that materials of the indicated higher ranking are still permitted in an HPM facility without classifying the building as Groups H-1 through H-4. NFPA 704 is referenced to establish the degree of hazard ratings for all materials as related to health, flammability and instability risks. See Commentary Figure 202-H1 for a list of commonly used HPM and their hazard classifications.

HEALTH HAZARD. A classification of a chemical for which there is statistically significant evidence that acute or chronic health effects are capable of occurring in exposed persons. The term "health hazard" includes chemicals that are toxic, highly toxic and *corrosive*.

❖ Materials that pose risks to people from handling or exposure are considered health hazards. Even though the materials may also be flammable, those classified as health hazards either will not burn or will not pose a fire hazard similar to that of ordinary combustible materials. Materials that pose a health hazard may also pose a physical hazard and must comply with the requirements of the code applicable to both hazards. Toxins that attack specific organs are indicative of the other health-hazard materials regulated by this chapter. Hepatotoxins, such as carbon tetrachloride, are capable of causing liver damage and nephrotoxins, such as halogenated hydrocarbons, can cause kidney damage. Neurotoxins include mercury and calcium disulfide, which may produce toxic effects on the nervous system. Although the definition of "Health hazard" includes a reference to carcinogens, it is not the intent of this chapter to regulate carcinogens that are not otherwise classified as an irritant, sensitizer or other known health hazard, such as a target organ toxin. Federal regulations address the permitted workplace exposure conditions to known carcinogens.

HEAT DETECTOR. See "Detector, heat."

[BG] HEIGHT, BUILDING. The vertical distance from grade plane to the average height of the highest roof surface.

❖ This definition establishes the two points of measurement that determine the height of a building. This measurement is used to determine compliance with the building height limitations of Sections 503.1 and 504 and Tables 504.3 and 504.4, which limit building height both in terms of the number of stories and the number of feet between the two points of measurement.

The lower point of measurement is the grade plane (see the definition of "Grade plane"). The upper point of measurement is the roof surface of the building, with consideration given to sloped roofs (such as a hip or gable roof). In the case of sloped roofs, the average height would be used as the upper point of measurement, rather than the eave line or the ridge line. The average height of the roof is the mid-height between the roof eave and the roof ridge, regardless of the shape of the roof.

This definition also indicates that building height is measured to the highest roof surface. In the case of a building with multiple roof levels, the highest of the various roof levels must be used to determine the building height. If the highest of the various roof levels is a sloped roof, then the average height of that sloped roof must be used. The average height of multiple roof levels is not to be used to determine the building height. Where structures are divided into multiple buildings by fire walls, building height is determinable for each building separately.

The distance that a building extends above ground also determines the relative hazards of that building. Simply stated, a taller building presents relatively greater safety hazards than a shorter building for several reasons, including fire service access and time for occupant egress. The code specifically defines how building height is measured to enable various code requirements, such as type of construction and fire suppression, to be consistent with those relative hazards.

The term "height" is also used frequently in the code for other limitations related to, and sometimes not related to, "building height." For example, Section 1510 of the IBC limits the height of a penthouse above the top of the roof. Since a "Penthouse" is defined as a structure that is built above the roof of a building, it is above the point to which "Building height" is measured. Therefore a penthouse would not affect the measurement of building height and can be located above the maximum allowed roof height provided it complies with the limitations of Section 1510 of the IBC. Other provisions such as Section 1015 of the code and Section 1406 of the IBC specify requirements based on height, but such height is usually measured from a location other than grade plane and is not intended to be building height.

INTERNATIONAL CODE COUNCIL®
Copyright © 2015 ICC. ALL RIGHTS RESERVED. Accessed by David Dammon on Jun 21, 2017 12:30:52 PM pursuant to License Agreement with ICC. No further reproduction or distribution authorized. ANY UNAUTHORIZED REPRODUCTION OR DISTRIBUTION IS A VIOLATION OF THE FEDERAL COPYRIGHT ACT AND THE LICENSE AGREEMENT, AND SUBJECT TO CIVIL AND CRIMINAL PENALTIES THEREUNDER.

HELIPORT. An area of land or water or a structural surface that is used, or intended for use, for the landing and taking off of helicopters, and any appurtenant areas which are used, or intended for use, for heliport buildings and other heliport facilities.

❖ Heliports present special problems because they are frequently located in congested areas of cities, on roofs of buildings, near hospitals and on piers adjacent to water.

HELISTOP. The same as "Heliport," except that fueling, defueling, maintenance, repairs or storage of helicopters is not permitted.

❖ A helistop is a place for landing and taking off for helicopters with no procedures or operations occurring

Material	Description or Use	NFPA 704 Hazard Classification			
		Health	Flammability	Reactivity	Other
Acetic acid	Corrosive liquid used for wet etching (metal)	2	2	1	
Acetone	Flammable liquid used for wafer cleaning	1	3	0	
Ammonium fluoride	Corrosive for wet etching (oxide)	3	0	0	
Arsenic trichloride	Diffusion	3	0	1	~~W~~
Arsenic trioxide	Diffusion	4	0	0	
Arsine	Poison flammable gas used for epitaxial growth, diffusion and ion implanation	4	4	3	
Boron tribromide	Corrosive liquid used for diffusion	4	0	3	~~W~~
Boron trichloride	Nonflammable corrosive gas used for diffusion	4	0	1	~~W~~
Chlorine	Poison gas used for dry etching	3	0	0	0XY
Diborane	Highly reactive flammable gas used for diffusion	3	4	3	~~W~~
Dichlorosilane	Flammable liquefied gas used for epitaxial growth	4	4	4	
Gallium	Reactive metal used as a semiconductor crystal material	1	0	3	
Gallium arsenide	Reactive metal salt used as a semiconductor crystal material	3	0	0	
Gallium arsenide phosphide	Reactive metal salt used as a semiconductor crystal material	3	0	0	
Germanium	Reactive metal used as a semiconductor crystal material	0	0	3	
Hydrofluoric acid	Highly corrosive liquid or gas used for wet etching (oxide)	4	0	0	
Hydrogen peroxide[a]	Organic peroxide used for wafer cleaning	2	0	1	0XY
Isopropanol	Flammable liquid used for wafer cleaning	1	3	0	
Methanol	Flammable liquid used for wafer cleaning	1	3	0	
Nitric acid	Corrosive liquid used for wet etching (metal)	3	0	0	0XY
Oxygen (liquid)	Oxidizing gas used for oxidation	3	0	0	0XY
Phosphine	Flammable liquefied poison gas used for diffusion and ion implantation	4	4	4	
Phosphoric acid	Corrosive liquid used for wet etching (metal)	2	0	0	
Phosphorus oxychloride	Corrosive liquid used for diffusion	4	0	3	~~W~~
Phosphorus pentoxide	Corrosive solid sublimed for use in diffusion	4	0	3	~~W~~
Phosphorus tribromide	Corrosive liquid used for diffusion	4	0	3	~~W~~
Silane	Pyrophoric gas used for oxidation	2	4	4	
Silicon	Flammable solid (metal) used as a semiconductor crystal material	2	4	2	~~W~~
1, 1, 1-Trichloroethane	Mildly flammable solvent (difficult to ignite) used or wafer cleaning	2	1	0	
Tetrachlorosilane	Flammable liquid used for epitaxial growth	3	4	2	~~W~~

a. NFPA 704 values for 35 to 52 percent by weight (the most concentration) are listed. The reactivity hazard increases to 3 at concentrations above 52 percent.

Figure 202-H1
HAZARDOUS PRODUCTION MATERIALS (HPM) USED IN THE MANUFACTURE OF SEMICONDUCTORS

INTERNATIONAL CODE COUNCIL®
Copyright © 2015 ICC. ALL RIGHTS RESERVED. Accessed by David Dammon on Jun 21, 2017 12:30:52 PM pursuant to License Agreement with ICC. No further reproduction or distribution authorized. ANY UNAUTHORIZED REPRODUCTION OR DISTRIBUTION IS A VIOLATION OF THE FEDERAL COPYRIGHT ACT AND THE LICENSE AGREEMENT, AND SUBJECT TO CIVIL AND CRIMINAL PENALTIES THEREUNDER.

other than loading or off-loading of passengers or freight.

HI-BOY. A cart used to transport hot roofing materials on a roof.

❖ A hi-boy, also known as a hot carrier, is a wheeled tank used on the roof deck to move hot asphalt around the work area. Hi-boys are available in either insulated or noninsulated models, and typically hold either 30 or 55 gallons (114 or 208 L).

HIGH-PILED COMBUSTIBLE STORAGE. Storage of combustible materials in closely packed piles or combustible materials on pallets, in racks or on shelves where the top of storage is greater than 12 feet (3658 mm) in height. Where required by the *fire code official*, *high-piled combustible storage* also includes certain high-hazard commodities, such as rubber tires, Group A plastics, flammable liquids, idle pallets and similar commodities, where the top of storage is greater than 6 feet (1829 mm) in height.

❖ High-piled combustible storage has two distinct features not common to other storage areas: the large quantity of commodities (or products) and storage in a compact arrangement (density). The height values used to distinguish high-piled storage from general or incidental storage were largely based on fire tests [12 feet (3638 mm) for Class I–IV and 6 feet (1829 mm) for high hazard]. These tests were conducted to determine the effects of various configurations, quantities and classes of commodities as well as various fire protection features.

HIGH-PILED STORAGE AREA. An area within a building which is designated, intended, proposed or actually used for *high-piled combustible storage*.

❖ This term defines the area or space where the combustible commodity is actually located. The intent of defining this area is to differentiate such a space from any of the other more traditionally defined occupancies (for example, business, factory, etc.) and the amount of fire protection that is required in these unique spaces. Spaces not actually containing high-piled storage are not considered part of the high-piled storage area; thus, those areas would not need to be added into the aggregate area when applying Table 3206.2.

The definition is not clear as to how aisles are to be addressed. Section 3206.9 has several requirements related to aisles that are focused primarily upon access to exits and fire department access. NFPA 13, however, has specific aisle dimensions for rack storage, which are provided based upon testing of actual storage commodities and the performance of sprinkler systems. These aisles serve more as "fire breaks" to slow the spread of fire from storage array to storage array. Therefore, any aisles required by NFPA 13 would be required to be included when determining the actual high-piled storage area involving rack storage. See the commentary to Sections 3206.9 and 3206.3.2.1 for further discussion.

[BG] HIGH-RISE BUILDING. A building with an occupied floor located more than 75 feet (22 860 mm) above the lowest level of fire department vehicle access.

❖ Determining what qualifies as a high-rise building is a fairly unique measurement of height and is not based on the definition of "Building height." The critical measurement is from the lowest ground location where a fire department will be able to set its fire-fighting equipment to a floor level of occupied floors as shown in Commentary Figure 202-H2. It is not a measurement from grade plane to top of the building. The basis of the measurement is analyzing the capability of fighting a fire and rescuing occupants from the outside of the building. Once past a height of 75 feet (22 860 mm) above ground level, ground-based fire fighting will not be sufficient. High-rise buildings must comply with the requirements of Section 403.

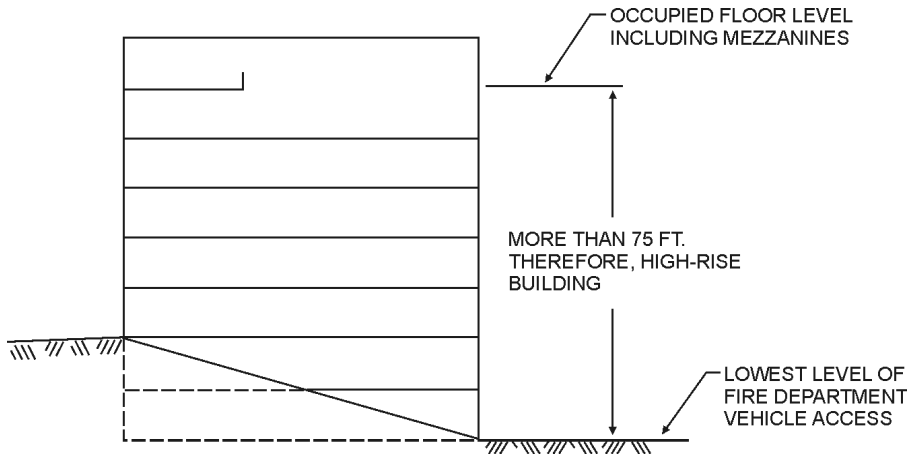

For SI: 1 foot = 304.8 mm.

Figure 202-H2
HIGH-RISE BUILDING

INTERNATIONAL CODE COUNCIL®
Copyright © 2015 ICC. ALL RIGHTS RESERVED. Accessed by David Dammon on Jun 21, 2017 12:30:52 PM pursuant to License Agreement with ICC. No further reproduction or distribution authorized. ANY UNAUTHORIZED REPRODUCTION OR DISTRIBUTION IS A VIOLATION OF THE FEDERAL COPYRIGHT ACT AND THE LICENSE AGREEMENT, AND SUBJECT TO CIVIL AND CRIMINAL PENALTIES THEREUNDER.

HIGH-VOLTAGE TRANSMISSION LINE. An electrical power transmission line operating at or above 66 kilovolts.

❖ High-voltage transmission lines are used to carry large amounts of electrical power (66,000 volts or more) over long distances, usually from a main power generation station to main substations, because the line losses are much smaller than with lower-voltage lines. They may also be used for electric power transmission from one central station to another for load sharing. The term "high voltage transmission line" as used in the context of the code is referring only to overhead conductors that are made of either copper or aluminum. In other contexts, the term could include underground lines as well.

HIGHLY TOXIC. A material which produces a lethal dose or lethal concentration which falls within any of the following categories:

1. A chemical that has a median lethal dose (LD_{50}) of 50 milligrams or less per kilogram of body weight when administered orally to albino rats weighing between 200 and 300 grams each.
2. A chemical that has a median lethal dose (LD_{50}) of 200 milligrams or less per kilogram of body weight when administered by continuous contact for 24 hours (or less if death occurs within 24 hours) with the bare skin of albino rabbits weighing between 2 and 3 kilograms each.
3. A chemical that has a median lethal concentration (LC_{50}) in air of 200 parts per million by volume or less of gas or vapor, or 2 milligrams per liter or less of mist, fume or dust, when administered by continuous inhalation for one hour (or less if death occurs within 1 hour) to albino rats weighing between 200 and 300 grams each.

Mixtures of these materials with ordinary materials, such as water, might not warrant classification as highly toxic. While this system is basically simple in application, any hazard evaluation that is required for the precise categorization of this type of material shall be performed by experienced, technically competent persons.

❖ This definition, as does the definition of "Toxic," gives very specific criteria in the form of lethal doses and lethal concentrations as administered to albino rats and albino rabbits. The lethal dosages are related to the ingestion and skin contact with materials, generally liquids and solids. The lethal concentrations are related to vapors, dusts, gases or mists as inhaled by albino rats. Inhalation can occur from either a gas, vapor or mist that is generated from highly toxic or toxic liquids. In some cases, a liquid may be considered highly toxic or toxic if ingested or if skin contact occurs, but vapors are not an inhalation hazard according to the criteria. These definitions give criteria to help determine what materials are regulated by this chapter and Chapter 50. Often, materials are listed as toxic or highly toxic, on MSDS, but may not necessarily meet these criteria. Instead, the terminology may be used to describe irritant characteristics of the material. For a list of common highly toxic materials, see Commentary Figure 202-H3.

HIGHLY VOLATILE LIQUID. A liquefied *compressed gas* with a *boiling point* of less than 68°F (20°C).

❖ This definition provides criteria for the classification of a material as being highly volatile, and provides correlation with the defined terms "Liquid" and "Cryogenic fluid." Basically, if the boiling point of a material is at room temperature or lower it would be considered volatile. The concern usually associated with highly volatile liquids is the volume of vapors released to the atmosphere. These vapors could be harmless, but many liquids, for example, may be corrosive, toxic or flammable. Additionally, vapors are more susceptible to ignition than liquids.

HIGHWAY. A public street, public alley or public road.

❖ Roads, alleys and similar thoroughfares or vehicular accessways on private property are not included in this definition. However, when private roadways adjacent to an explosives magazine or blasting site are commonly used for vehicular traffic by the public, the separation required should be the same as that required for public rights-of-way or public access should be suspended.

[A] HISTORIC BUILDINGS. Buildings that are listed in or eligible for listing in the National Register of Historic Places, or designated as historic under an appropriate state or local law.

❖ To be considered "historic," a building needs to be designated as such through a federal, state or local law. In addition, there are buildings that have been reviewed for eligibility to be listed as a national historic building. Those listed as eligible for national listing also are considered historic for the purposes of the code. Buildings that are within a historic district are not necessarily, themselves, historic buildings. The determination of their designation as historic would depend on the specifics of the listing of the historic area. The IEBC provides specific provisions applying to historic buildings.

HOGGED MATERIALS. Wood waste materials produced from the lumber production process.

❖ This term refers to mill waste that may include a mixture of bark, chips or dust along with other byproducts of trees. Material designated as hogged fuel is included in this category.

[M] HOOD. An air-intake device used to capture by entrapment, impingement, adhesion or similar means, grease and similar contaminants before they enter a duct system.

Type I. A kitchen hood for collecting and removing grease vapors and smoke.

❖ A kitchen exhaust system, which includes the hood serving a commercial cooking appliance, is a specialized exhaust system. A commercial cooking appliance can generate large quantities of air contaminants, such as grease vapors, smoke and

INTERNATIONAL CODE COUNCIL®
Copyright © 2015 ICC. ALL RIGHTS RESERVED. Accessed by David Dammon on Jun 21, 2017 12:30:52 PM pursuant to License Agreement with ICC. No further reproduction or distribution authorized. ANY UNAUTHORIZED REPRODUCTION OR DISTRIBUTION IS A VIOLATION OF THE FEDERAL COPYRIGHT ACT AND THE LICENSE AGREEMENT, AND SUBJECT TO CIVIL AND CRIMINAL PENALTIES THEREUNDER.

combustion byproducts. The descriptor "Type I" used in conjunction with the term "hood" refers to an exhaust system that is required for all cooking appliances that are used for commercial purposes and that produce grease-laden vapors or smoke.

Type II. A general kitchen hood for collecting and removing steam vapor, heat, odors and products of combustion.

❖ A Type II exhaust hood is considered a light-duty hood that would typically be installed over steam kettles, conventional ovens, food warmers, some types of enclosed pizza ovens, steam tables and dishwashing machines. A Type II hood is not intended for grease or smoke removal. The primary purpose of a Type II hood is to capture and remove water vapor, waste heat and any products of combustion that might be associated with the heating of the appliance, such as from fuel gas combustion.

[BF] HORIZONTAL ASSEMBLY. A fire-resistance-rated floor or roof assembly of materials designed to restrict the spread of fire in which continuity is maintained.

❖ A horizontal assembly is a component for completing compartmentation. Horizontal assemblies have all openings and penetrations protected equal to the rating for the fire-resistance-rated floor or roof assembly. Horizontal assemblies are regulated by Section 711 of the IBC.

[BE] HORIZONTAL EXIT. An *exit* component consisting of fire-resistance-rated construction and opening protectives intended to compartmentalize portions of a building thereby creating refuge areas that afford safety from fire and smoke from the area of fire origin.

❖ This term refers to a fire-resistance-rated wall that subdivides a structure into multiple compartments and provides an effective barrier to protect occupants from a fire condition within one of the compartments. After occupants pass through a horizontal exit, they must be provided not only with sufficient space to gather but also with access to another exit, such as an exterior door or exit stairway, through which they can exit the building. Commentary Figure 202-H4 depicts the exits serving a single building that is subdivided with a fire-resistance-rated wall (see Section 1026).

Material	Health	Flammability	Reactivity	Other	TLV/TWA Value[a]
Acrolein (CH_2:CHCHO)	3	3	2		0.1 ppm TLV/TWA
Adiponitrile (NC[CH_2]4CN)	4	2	0		
Allyl Alcohol (CH_2:$CHCH_2OH$)	3	3	2		2 ppm TLV/TWA
Benzotrifluoride ($C_6H_5CF_3$)	4	3	0		
Beryllium (Be)	4	1	0		2 mcg/m^3 TLV/TWA
Bromine (Br)	4	0	0	OXY	0.3 ppm TLV/TWA
Bromine Pentafluoride (BF_5)	4	0	3	OXY/~~W~~	0.1 ppm TLV/TWA
Chloropicrin (CCI_3NO_2)	4	0	3		0.1 ppm TLV/TWA
Cyanogen (NCCN)	4	4	2		10 ppm TLV/TWA
Dimethyl Sulfate ($CH_3OSO_2OCH_3$)	4	2	0		0.1 ppm TLV/TWA (skin—suspected carcinogen)
Ethylamine ($C_2H_5NH_2$)	3	4	0		10 ppm TLV/TWA
Epichlorhydrin (chloromethyl or oxirane) ([OCH_2CH]CH_2CI)	3	3	2		0.1 ppm TLV/TWA (skin)
Hydrazine, anhydrous (H_2NNH_2)	3	3	2		0.1 ppm TLV/TWA (skin—suspected carcinogen)
Hydrogen Cyanide, anhydrous (HCN)	4	4	2		10 ppm TLV-C
Hydrogen Fluoride (HF)	4	0	0		3 ppm TLV-C
Parathion ($[C_2H_5O]_2PSOC_6H_4NO_2$)	4	1	2		0.1 mg/m^3 TLV/TWA
Phenol (C_6H_5OH)	3	2	0		5 ppm TLV/TWA (skin)
Sodium Hydride (NaH)	3	3	2	~~W~~	
Sodium Peroxide (Na_2O_2)	3	0	2	~~W~~	
1,1,2-Trichloroethane ($CHCI_2CH_2CI$)—Not to be confused with 1,1,1-Trichloroethane	3	1	0		10ppm TLV/TWA (skin)

a. TLV/TWA means Threshold Limit Value/Time-weighted Average. See definition in Chapter 2 of the *International Mechanical Code*.

Figure 202-H3
COMMON HIGHLY TOXIC MATERIALS AND THEIR HAZARDS

INTERNATIONAL CODE COUNCIL®
Copyright © 2015 ICC. ALL RIGHTS RESERVED. Accessed by David Dammon on Jun 21, 2017 12:30:52 PM pursuant to License Agreement with ICC. No further reproduction or distribution authorized. ANY UNAUTHORIZED REPRODUCTION OR DISTRIBUTION IS A VIOLATION OF THE FEDERAL COPYRIGHT ACT AND THE LICENSE AGREEMENT, AND SUBJECT TO CIVIL AND CRIMINAL PENALTIES THEREUNDER.

[BG] HOSPITALS AND PSYCHIATRIC HOSPITALS. Facilities that provide care or treatment for the medical, psychiatric, obstetrical, or surgical treatment of inpatient care recipients that are incapable of self-preservation.

❖ Persons in hospital facilities may be physically incapable of self-preservation or at least extremely limited in their ability to evacuate. In psychiatric hospitals they may be confined within an area of a building for care or security purposes. In consideration of occupants' health, as well as safety, hospitals and nursing homes at least partially rely on defend-in-place strategies. See the commentary to Occupancy Group I-2 and Section 407 of the IBC.

Care facilities encompass a full spectrum of acuity and support services and span a wide range of occupancy types including Groups B, E, I and R. The level of care provided describes the condition and capabilities of an occupant which then indicates appropriate standards for protection systems, both passive and active. See also the definitions for "24-hour basis," "Care suite," "Custodial care," "Detoxification facilities," "Incapable of self-preservation," "Medical care" and "Nursing homes."

HOT WORK. Operations including cutting, welding, Thermit welding, brazing, soldering, grinding, thermal spraying, thawing pipe, installation of torch-applied roof systems or any other similar activity.

❖ This term describes the scope of what would be considered hot work as it is regulated in this chapter. The scope is broad and would include any activity that produces sparks, slag or other waste products. This would include both gas and electric methods. Torch-applied roof systems are also included.

HOT WORK AREA. The area exposed to sparks, hot slag, radiant heat, or convective heat as a result of the hot work.

❖ This definition helps to locate which areas would be considered part of the hot work area to better understand the level of susceptibility to ignition.

HOT WORK EQUIPMENT. Electric or gas welding or cutting equipment used for hot work.

❖ In the past, chapters dealing with hot work focused primarily on gas welding. Electric welding, though it does not deal with oxygen and fuel gases, still presents ignition hazards (see Commentary Figure 202-H5).

HOT WORK PERMITS. Permits issued by the responsible person at the facility under the hot work permit program permitting welding or other hot work to be done in locations referred to in Section 3503.3 and prepermitted by the *fire code official*.

❖ As applied in Chapter 35, this permit differs from a typical permit in that it is not directly issued by the fire code official. Instead, a hot work operations facility is given permission to designate a person, perhaps the



Figure 202-H5
TYPICAL WELDING CART

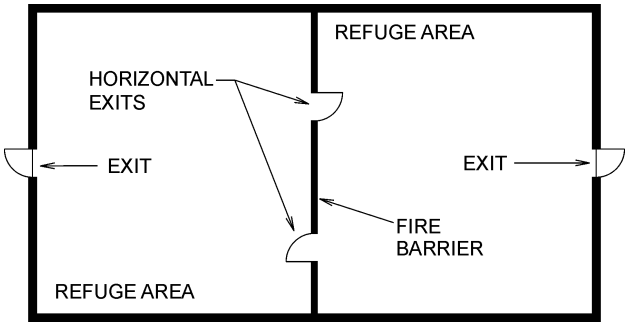

Figure 202-H4
HORIZONTAL EXIT

INTERNATIONAL CODE COUNCIL®
Copyright © 2015 ICC. ALL RIGHTS RESERVED. Accessed by David Dammon on Jun 21, 2017 12:30:52 PM pursuant to License Agreement with ICC. No further reproduction or distribution authorized. ANY UNAUTHORIZED REPRODUCTION OR DISTRIBUTION IS A VIOLATION OF THE FEDERAL COPYRIGHT ACT AND THE LICENSE AGREEMENT, AND SUBJECT TO CIVIL AND CRIMINAL PENALTIES THEREUNDER.

safety officer, to issue permits as needed. This results in flexibility for facilities where hot work is a common occurrence. These permits are issued under what is called a hot work program, which is also defined in this section.

HOT WORK PROGRAM. A permitted program, carried out by *approved* facilities-designated personnel, allowing them to oversee and issue permits for hot work conducted by their personnel or at their facility. The intent is to have trained, on-site, responsible personnel ensure that required hot work safety measures are taken to prevent fires and fire spread.

❖ This kind of program is described in the definition for "Hot work permits." This program allows someone on site to control the issuing of permits for hot work. The person who is charged with this responsibility must be trained in hot work operations and have the necessary authority. Having such a program at a facility encourages a better understanding of fire safety and perhaps more incentive to play an active role in the prevention of fires. This program reduces the administrative burden on the fire department and ensures that hot work operations can proceed as needed.

HPM FACILITY. See "Semiconductor fabrication facility."

HPM ROOM. A room used in conjunction with or serving a Group H-5 occupancy, where HPM is stored or used and which is classified as a Group H-2, H-3 or H-4 occupancy.

❖ An HPM room in a Group H-5 facility is used for the storage and use of HPM in excess of the MAQs permitted in Table 5003.1.1(1) or (2). The rooms are, therefore, considered a Group H-2, H-3 or H-4 occupancy, depending on the type of hazardous material (see Commentary Figure 202-S3).

HYDROGEN FUEL GAS ROOM. A room or space that is intended exclusively to house a *gaseous hydrogen system*.

❖ This term refers to an enclosed space used exclusively for a gaseous hydrogen system that requires construction and protection that are unique to the hazards associated with this use. The room itself may be considered as an incidental accessory occupancy or a Group H occupancy, depending on the amount of hydrogen in such rooms. The definition itself should not be interpreted to prevent hydrogen piping systems from serving distributed hydrogen-using equipment and appliances located elsewhere on site or in the building; however, the amount of hydrogen within such piping needs to be evaluated with respect to the MAQs in Table 5003.1.1(1).

IMMEDIATELY DANGEROUS TO LIFE AND HEALTH (IDLH). The concentration of air-borne contaminants that poses a threat of death, immediate or delayed permanent adverse health effects, or effects that could prevent escape from such an environment. This contaminant concentration level is established by the National Institute of Occupational Safety and Health (NIOSH) based on both toxicity and flammability. It generally is expressed in parts per million by volume (ppm v/v) or milligrams per cubic meter (mg/m^3). Where adequate data do not exist for precise establishment of IDLH concentrations, an independent certified industrial hygienist, industrial toxicologist, appropriate regulatory agency or other source *approved* by the *fire code official* shall make such determination.

❖ There are three general atmospheres that make up an IDLH toxic condition. These are toxic, flammable and oxygen deficient. In the absence of an IDLH value, the fire code official may consider using an estimated IDLH of 10 times the lower explosive limit (LEL) while an IDLH oxygen-deficient atmosphere is 19.5-percent oxygen or lower. The EPA has determined that 10 percent of the IDLH value is an acceptable level of concern for evaluating hazmat release concentrations and public protective options.

IMPAIRMENT COORDINATOR. The person responsible for the maintenance of a particular *fire protection system*.

❖ To minimize the time a fire protection system is out of service, the building owner or other designee is required to monitor impairment procedures (see commentary Section 901.7.1). This person has the responsibility for performing the actions necessary during the impairment and is the single point of contact for issues relating to the impairment; thus, it should be a person who has both authority and knowledge of the facility under consideration.

[BG] INCAPABLE OF SELF-PRESERVATION. Persons who, because of age, physical limitations, mental limitations, chemical dependency or medical treatment, cannot respond as an individual to an emergency situation.

❖ Patients/residents of nursing homes and hospitals may be in situations where they are unable to self-evacuate due to physical limitations arising from, for example, medication, operation, injury or connection to medical equipment.

Care facilities encompass a full spectrum of acuity and support services and span a wide range of occupancy types including Groups E, I and R. There are three types of care defined in the codes: personal, custodial and medical. The level of care provided describes the condition and capabilities of an occupant which then indicates appropriate standards for protection systems, both active and passive. See also the definitions for "24-hour basis," "Custodial care," "Detoxification facilities," "Foster care facilities," "Group home," "Hospitals and psychiatric hospitals," "Medical care," "Nursing home" and "Personal care services."

INCOMPATIBLE MATERIALS. Materials that, when mixed, have the potential to react in a manner which generates heat, fumes, gases or byproducts which are hazardous to life or property.

❖ Incompatible materials constitute a dangerous chemical combination whether in storage or in use. Determining which chemicals in combination pose a hazard is not always easy. MSDS may not provide all of the necessary information. When in doubt, the fire

INTERNATIONAL CODE COUNCIL®
Copyright © 2015 ICC. ALL RIGHTS RESERVED. Accessed by David Dammon on Jun 21, 2017 12:30:52 PM pursuant to License Agreement with ICC. No further reproduction or distribution authorized. ANY UNAUTHORIZED REPRODUCTION OR DISTRIBUTION IS A VIOLATION OF THE FEDERAL COPYRIGHT ACT AND THE LICENSE AGREEMENT, AND SUBJECT TO CIVIL AND CRIMINAL PENALTIES THEREUNDER.

code official should seek additional information from the manufacturer of the chemicals involved, the building owner or experts who are knowledgeable in industrial hygiene or chemistry. NFPA's *Fire Protection Guide to Hazardous Materials* also contains useful information on hazardous chemical reactions.

INERT GAS. A gas that is capable of reacting with other materials only under abnormal conditions such as high temperatures, pressures and similar extrinsic physical forces. Within the context of the code, inert gases do not exhibit either physical or *health hazard* properties as defined (other than acting as a simple asphyxiant) or hazard properties other than those of a *compressed gas*. Some of the more common inert gases include argon, helium, krypton, neon, nitrogen and xenon.

❖ The term "inert gas" is used in a number of sections throughout the code. For example, it is used in the exception to Section 2501.1, Sections 2906.4 and 2309.6.2, as well as in Chapters 50, 53, 57 and 64. The term "inert gas" is also used in the IMC and the IFGC without definition. This definition is not in conflict with the provisions found in either of these companion codes.

While inert gases do not present a physical hazard or health hazard as regulated by Chapter 50, inert gases are hazardous materials in the sense that they are simple asphyxiants that can cause injury or death by displacing oxygen. Any atmosphere containing 19.5 percent or less by volume of oxygen is considered oxygen deficient and inert gases can create such an environment. Inert gases are colorless, odorless, tasteless and are not irritating. As a result, the only means of detecting an oxygen-deficient atmosphere is through the use of gas detection equipment. Inert gases include argon, nitrogen, helium and carbon dioxide. Inert compressed gases and cryogenic fluids have other hazards, such as the potential energy within their containers. Because of these hazards, the provisions in Chapter 53 for compressed gases and Chapter 55 for cryogenic fluids are applicable regardless if the stored gas or cryogenic fluid is inert.

The definition includes an explanatory sentence intended to inform the user that inert gases do not react readily with other materials under normal temperatures and pressures, but it is possible for a reaction to occur. For example, even nitrogen combines with some of the more active metals such as lithium and magnesium to form nitrides, and at high temperatures it will also combine with hydrogen, oxygen and other elements. The inert gases neon, krypton and xenon are considered rare due to their scarcity. Although these gases are commonly referred to as inert gases, the formation of compounds is possible. For example, xenon combines with fluorine to form various fluorides, and with oxygen to form oxides. The compounds thus formed are crystalline solids.

By defining the term the likelihood of using gases that are not inert, including carbon dioxide, will be reduced.

INHABITED BUILDING. A building regularly occupied in whole or in part as a habitation for people, or any place of religious worship, schoolhouse, railroad station, store or other structure where people are accustomed to assemble, except any building or structure occupied in connection with the manufacture, transportation, storage or use of *explosive materials*.

❖ Building use need not conform to regular intervals or schedules to be considered inhabited if people routinely occupy the building. Those buildings at a storage or blasting site used for the manufacture, transportation or storage of explosive materials must be considered as magazines rather than inhabited buildings for the purpose of applying the provisions of Section 5604.

INITIATING DEVICE. A system component that originates transmission of a change-of-state condition, such as in a smoke detector, manual fire alarm box, or supervisory switch.

❖ All fire protection systems consist of devices, which upon use or actuation, will initiate the intended operation. A manual fire alarm box, for example, upon actuation will transmit a fire alarm signal. In the case of a single-station device, the initiating device and the notification appliance are one in the same.

INSECTICIDAL FOGGING. The utilization of insecticidal liquids passed through fog-generating units where, by means of pressure and turbulence, with or without the application of heat, such liquids are transformed and discharged in the form of fog or mist blown into an area to be treated.

❖ Insecticidal fogging as a means of pest control was developed during World War II as part of a program to use smoke-screen techniques for control of malaria-bearing mosquitos. The product of the fog-generating process is an aerosol, which is a suspension of liquid particles in air. Many insecticides used in the fogging process are flammable and pose a fire hazard requiring safeguards, such as the securing of all ignition sources during fogging and for up to 24 hours afterward.

Aerosol insecticides also pose a toxicity hazard; therefore, proper entry precautions for the fogged area should be observed.

[BE] INTERIOR EXIT RAMP. An exit component that serves to meet one or more means of egress design requirements, such as required number of exits or exit access travel distance, and provides for a protected path of egress travel to the exit discharge or public way.

❖ To qualify as an interior exit ramp the ramp must be enclosed with a fire-resistance-rated enclosure in order to provide a protected path between the exit access and exit discharge. This enclosure must extend directly to the exterior at grade; extend through an exit passageway to grade; or comply with one of the allowances for exit discharge through a lobby, vestibule or horizontal exit. Travel distance is measured to the entrance to the enclosure for the interior exit ramp. Ramps that are utilized by occupants for evacuation, but do not meet the provisions for exits, are considered exit access elements (see

INTERNATIONAL CODE COUNCIL®
Copyright © 2015 ICC. ALL RIGHTS RESERVED. Accessed by David Dammon on Jun 21, 2017 12:30:52 PM pursuant to License Agreement with ICC. No further reproduction or distribution authorized. ANY UNAUTHORIZED REPRODUCTION OR DISTRIBUTION IS A VIOLATION OF THE FEDERAL COPYRIGHT ACT AND THE LICENSE AGREEMENT, AND SUBJECT TO CIVIL AND CRIMINAL PENALTIES THEREUNDER.

"Exit access ramp"). For exterior exit ramp requirements, see Section 1027.

[BE] INTERIOR EXIT STAIRWAY. An exit component that serves to meet one or more means of egress design requirements, such as required number of exits or exit access travel distance, and provides for a protected path of egress travel to the exit discharge or public way.

❖ To qualify as an interior exit stairway, the ramp must be enclosed with a fire-resistance-rated enclosure in order to provide a protected path between the exit access and exit discharge. This enclosure must extend directly to the exterior at grade; extend through an exit passageway to grade; or comply with one of the allowances for exit discharge through a lobby, vestibule or horizontal exit. Travel distance is measured to the entrance to the enclosure for the interior exit stairway. Stairways that are utilized by occupants for evacuation, but do not meet the provisions for exits, are considered exit access elements (see "Exit access stairway"). For exterior exit stairway requirements, see Section 1027.

[BG] INTERIOR FINISH. Interior finish includes interior wall and ceiling finish and interior floor finish.

❖ This is a more general term that addresses all exposed surfaces, which includes walls, ceilings and floors. Interior finish material is exposed to the interior space enclosed by these building elements.

[BG] INTERIOR FLOOR-WALL BASE. Interior floor finish trim used to provide a functional or decorative border at the intersection of walls and floors.

❖ This definition, which addresses interior floor-wall base trim materials, provides an understanding and clarification of these types of products versus other interior trim materials. In many cases, floor covering material is just seamlessly turned-up or used at the intersection of the floor and the wall thus becoming the floor-wall base trim. Because of their location at the floor-line, floor-wall base materials are not likely to be involved in a fire until the floor covering is also involved, usually at room flashover. See also the commentary to Section 804.4.

[BG] INTERIOR WALL AND CEILING FINISH. The exposed interior surfaces of buildings, including but not limited to: fixed or movable walls and partitions; toilet room privacy partitions; columns; ceilings; and interior wainscoting, paneling or other finish applied structurally or for decoration, acoustical correction, surface insulation, structural *fire resistance* or similar purposes, but not including trim.

❖ A material that is applied to ceilings as well as walls, columns, partitions (including the privacy partitions in bathrooms that could pose a significant threat in larger bathrooms if unrated) and other vertical interior surfaces whether fixed or movable. The application of this material may be for structural, decorative, acoustical, structural fire resistance and other similar reasons. Trim, such as baseboard, door or window casing, is not considered interior wall and ceiling finish. Interior wall and ceiling finish is regulated by Section 803.

IRRITANT. A chemical which is not *corrosive*, but which causes a reversible inflammatory effect on living tissue by chemical action at the site of contact. A chemical is a skin irritant if, when tested on the intact skin of albino rabbits by the methods of CPSC 16 CFR Part 1500.41 for an exposure of four or more hours or by other appropriate techniques, it results in an empirical score of 5 or more. A chemical is classified as an eye irritant if so determined under the procedure listed in CPSC 16 CFR Part 1500.42 or other *approved* techniques.

❖ Materials classified as irritants include a wide range of materials that pose a health hazard with acute effects caused by short-term exposure. Exposure to irritants may result in a minor, troublesome injury at the point of contact; however, the injury usually heals without leaving a scar. In comparison, corrosives can cause permanent destruction of tissue at the point of contact—with a scar the likely result. Many household insecticides and pesticides are common irritants. The definition is derived from DOL 29 CFR 1910.1200.

[A] JURISDICTION. The governmental unit that has adopted this code under due legislative authority.

❖ The governmental unit such as a town, township, county or state that has the legal authority under state statues to adopt a building code.

KEY BOX. A secure device with a lock operable only by a fire department master key, and containing building entry keys and other keys that may be required for access in an emergency.

❖ The key box is part of an emergency entry system. The building owner/manager places a key box or key vault in an approved location on the exterior of the building or at the entrance to a facility, placing keys, access cards or security codes inside the box. The emergency responders can use their special fire department master key to enter the box, retrieve the contents and gain access to the building or facility. There are several different brands of highly secure key boxes available that are tested and listed as anti-theft devices. See the commentary to the definition of "Fire department master key" and Section 506.1 for further discussion.

[A] LABELED. Equipment, materials or products to which have been affixed a label, seal, symbol or other identifying mark of a nationally recognized testing laboratory, *approved* agency or other organization concerned with product evaluation that maintains periodic inspection of the production of the labeled items and whose labeling indicates either that the equipment, material or product meets identified standards or has been tested and found suitable for a specified purpose.

❖ The term "labeled" is not to be confused with the term "listed." A label is a marking or other identifying mark

INTERNATIONAL CODE COUNCIL®
Copyright © 2015 ICC. ALL RIGHTS RESERVED. Accessed by David Dammon on Jun 21, 2017 12:30:52 PM pursuant to License Agreement with ICC. No further reproduction or distribution authorized. ANY UNAUTHORIZED REPRODUCTION OR DISTRIBUTION IS A VIOLATION OF THE FEDERAL COPYRIGHT ACT AND THE LICENSE AGREEMENT, AND SUBJECT TO CIVIL AND CRIMINAL PENALTIES THEREUNDER.

that indicates approval from a nationally recognized testing laboratory, approved agency or other organization that evaluates products. A label is used to identify materials and assemblies that must bear the identification of the manufacturer, as well as a third-party quality control agency. The quality control agency allows the use of its label based on the results of periodic audits and inspections of the manufacturer's plant. This is one form of quality control. The code often requires labeled equipment and systems (see the definition for "Listed").

LEVEL OF EXIT DISCHARGE. See "Exit discharge, level of."

LIMITED SPRAYING SPACE. An area in which operations for touch-up or spot painting of a surface area of 9 square feet (0.84 m^2) or less are conducted.

❖ This definition is applicable only to small touch-up-type operations. The requirements in this chapter for limited spraying operations are for an occasional user of flammable/combustible liquids, as opposed to an area used continuously for spraying. An example of such an operation is a furniture distributor that uses a limited spraying space to touch up scratches on products before sale. The limited application method could utilize dedicated spray-finishing equipment or simply an aerosol can (see commentary, Section 2404.9).

LIQUEFIED NATURAL GAS (LNG). A fluid in the liquid state composed predominantly of methane and which may contain minor quantities of ethane, propane, nitrogen or other components normally found in natural gas.

❖ Liquefied natural gas (LNG) for motor vehicle fuel comes from the same source as compressed natural gas (CNG). Unlike liquefied petroleum gas (LP-gas), which changes from vapor to a liquid at room temperature by application of pressure, LNG has to be cooled for it to liquefy. LNG is usually in a liquid state at the dispensing station (see Section 2308).

LIQUEFIED PETROLEUM GAS (LP-gas). A material which is composed predominantly of the following hydrocarbons or mixtures of them: propane, propylene, butane (normal butane or isobutane) and butylenes.

❖ The definition of LP-gas is consistent with that found in NFPA 58, with one exception: NFPA 58 requires that the vapor pressure of an LP-gas mixture be less than or equal to that of commercial propane.

LIQUID. A material having a melting point that is equal to or less than 68°F (20°C) and a *boiling point* which is greater than 68°F (20°C) at 14.7 pounds per square inch absolute (psia) (101 kPa). Where not otherwise identified, the term "liquid" includes both flammable and *combustible liquids*.

❖ In dealing with liquids, two areas are important to check on the MSDS:

1. What is the specific gravity of the liquid? The specific gravity is the chemical's weight compared to the weight of an equal volume of water. If the specific gravity is lower than 1.0 (which is the specific gravity of water), the chemical will float. If it is higher than 1.0, it will sink. A flammable liquid that has a specific gravity lower than 1.0 will float on top of any fire-fighting water that is applied. It can then become a running fire as it floats on top of the water that is running off from the scene.
2. Will the chemical mix with water? If a chemical will mix with water, it limits the fire-fighting ability of water and another method of extinguishment should be considered.

LIQUID OXYGEN AMBULATORY CONTAINER. A container used for liquid oxygen not exceeding 0.396 gallons (1.5 liters) specifically designed for use as a medical device as defined by 21 USC Chapter 9 that is intended for portable therapeutic use and to be filled from its companion base unit, a liquid oxygen home care container.

❖ These containers are a smaller, portable version of the liquid oxygen (LOX) home care container defined elsewhere in this section. They are used by patients in need of continuous oxygen therapy to enhance their mobility and, thus, improve their lifestyle. See the commentary to the definition of "Liquid oxygen home care container" for a technical description of LOX containers. A key aspect in this definition is that these containers are considered medical devices by the U.S. Food and Drug Administration under the Code of Federal Regulations, Title 21— Federal Food, Drug and Cosmetic Act. LOX containers used as medical devices are unique in that they are intended for therapeutic use only and not for use in industrial applications. These containers include in their design all appurtenances, such as regulators, gauges, piping and controls, and require no external piping other than the application of disposable breathing apparatus (see Commentary Figure 202-L1).

LIQUID OXYGEN HOME CARE CONTAINER. A container used for liquid oxygen not exceeding 15.8 gallons (60 liters) specifically designed for use as a medical device as defined by 21 USC Chapter 9 that is intended to deliver gaseous oxygen for therapeutic use in a home environment.

❖ A LOX home care container is a cryogenic container equipped with a vaporizer, a pressure control system and a means of pressure relief. The container is constructed similar to a thermos bottle with the inner container generally constructed of stainless steel and installed within an outer container constructed of carbon steel or aluminum. The space between the inner and outer vessel is filled with an insulating material or may be placed in a negative pressure (vacuum). The insulation and space limits the heat transfer to the inner container. A vaporizer converts the LOX to oxygen gas, which flows through a pressure control system so the flow rate of oxygen is regulated. These containers can be used for stationary home oxygen therapy or, as indicated in the definition of "Liquid

INTERNATIONAL CODE COUNCIL®
Copyright © 2015 ICC. ALL RIGHTS RESERVED. Accessed by David Dammon on Jun 21, 2017 12:30:52 PM pursuant to License Agreement with ICC. No further reproduction or distribution authorized. ANY UNAUTHORIZED REPRODUCTION OR DISTRIBUTION IS A VIOLATION OF THE FEDERAL COPYRIGHT ACT AND THE LICENSE AGREEMENT, AND SUBJECT TO CIVIL AND CRIMINAL PENALTIES THEREUNDER.

oxygen ambulatory container," to refill the LOX ambulatory container. A key aspect in this definition is that these containers are also considered medical devices by the U.S. Food and Drug Administration under the Code of Federal Regulations, Title 21—Federal Food, Drug and Cosmetic Act. LOX containers used as medical devices are unique in that they are intended for therapeutic use only and not for use in industrial applications (see Commentary Figure 202-L2).

LIQUID STORAGE ROOM. A room classified as a Group H-3 occupancy used for the storage of flammable or *combustible liquids* in a closed condition.

❖ The Group H-3 occupancy classification for storage of flammable or combustible liquids in closed containers recognizes the hazardous nature of these materials.

LIQUID STORAGE WAREHOUSE. A building classified as a Group H-2 or H-3 occupancy used for the storage of flammable or *combustible liquids* in a closed condition.

❖ This definition clarifies both the occupancy group (Group H-2 or H-3, depending on the pressure of vessels stored) and that a liquid storage warehouse is a building as described in Section 5704.3.8. The term "liquid storage warehouse" is used in the code in Tables 903.2.11.6, 5704.3.6.3(2) and 5704.3.6.3(3) and Sections 2306.2.2, 5104.6, 5704.3.4.3 and 5704.3.1.1 through 5704.3.8.5. Note that the term "liquid storage warehouse" is not used in the IBC. See the commentary to Section 5704.3 for further information on these unique buildings.

[A] LISTED. Equipment, materials, products or services included in a list published by an organization acceptable to the *fire code official* and concerned with evaluation of products or services that maintains periodic inspection of production of listed equipment or materials or periodic evaluation of services and whose listing states either that the equipment, material, product or service meets identified standards or has been tested and found suitable for a specified purpose.

❖ The term "listed," which is not to be confused with "labeled," is a form of quality control. Essentially, a particular product, piece of equipment or system is evaluated or tested and the results are published in a list by agencies, such as approved testing laboratories and inspection agencies. Listed products and equipment are periodically inspected to maintain the listing. The code often requires listed equipment or systems (see also the definition for "Labeled").

The question is often asked whether the listing of a product can be voided or violated. The use of a listing mark applied to a product is authorized by the listing agency and is a "statement" by the product manufacturer that the product, as manufactured, met all appropriate requirements (such as the criteria contained in a test standard) at the time of manufacture and shipment to a point-of-use or point-of-sale. After that point in time, any alteration or modification may make it difficult for the fire code official or the listing agency to determine if the product meets the criteria by which its listing was originally attained. Listed products are subject to the review and approval of the fire code official. Where the fire code official determines that a field modification or alteration to the product is significant enough to call its impact on the listing into question, an evaluation in the field by the listing agency may be required in order to verify the compliance of the product with the original listing cri-



Figure 202-L1
LIQUID OXYGEN AMBULATORY CONTAINER
Copyright 2008 Chart Industries, Inc.
Used by permission, all rights reserved.



Figure 202-L2
LIQUID OXYGEN HOME CARE CONTAINER
Copyright 2008 Chart Industries, Inc.
Used by permission, all rights reserved.

INTERNATIONAL CODE COUNCIL®
Copyright © 2015 ICC. ALL RIGHTS RESERVED. Accessed by David Dammon on Jun 21, 2017 12:30:52 PM pursuant to License Agreement with ICC. No further reproduction or distribution authorized. ANY UNAUTHORIZED REPRODUCTION OR DISTRIBUTION IS A VIOLATION OF THE FEDERAL COPYRIGHT ACT AND THE LICENSE AGREEMENT, AND SUBJECT TO CIVIL AND CRIMINAL PENALTIES THEREUNDER.

teria. Such field evaluations or tests would be the responsibility of the owner with no expense to the jurisdiction (see the commentary to Section 104.9.2).

LOCKDOWN. An emergency situation, in other than a Group I-3 occupancy, requiring that the occupants be sheltered and secured in place within a building when normal evacuation would put occupants at risk.

❖ Buildings are developing "lockdown" plans in response to such security threats as terrorist attacks or shootings such as the events that have occurred at Columbine High School or Virginia Tech and other venues. In such incidents, security authorities recommend that building occupants be kept inside of the building behind locked doors until authorized to move by safety authorities. Sometimes, lockdown procedures can work in direct opposition to traditional life safety safeguards, particularly as pertains to maintaining a viable means of egress. Requirements have been added to the code on lockdown plans, lockdown drills and lockdown operations, not only in schools, but in all buildings where a lockdown plan is desired in order to reduce the conflicts between security and life safety (see Section 406.4).

[BG] LODGING HOUSE. A one-family dwelling where one or more occupants are primarily permanent in nature and rent is paid for guest rooms.

❖ The code establishes a lodging house as a Group R-3 occupancy where there are five or fewer guest rooms. This definition provides a distinction from Group R-1 occupancies where the occupants are expected to be transient. A lodging house has one or more occupants who are permanent; this is their home.

LONGITUDINAL FLUE SPACE. See "Flue space—longitudinal."

[A] LOT. A portion or parcel of land considered as a unit.

❖ A lot is a legally recorded parcel of land, the boundaries of which are described on a deed. When code requirements are based on some element of a lot (such as yard area or lot line location), it is the physical attributes of the parcel of land that the code is addressing, not issues of ownership. Adjacent lots owned by the same party are treated as if they were owned by different parties because ownership can change at any time. However, a group of platted lots or subdivision lots could be joined together and "considered as a unit" for the purposes of the code. For example, a collection of platted lots could be used as a single building lot for the construction of a covered mall and its associated anchor buildings. Local jurisdictions may require for taxing or other purposes that the lots be legally joined, or merged, as well.

A condominium form of building ownership, whether a residential or a commercial condominium, does not create separate lots (i.e., parcels of land) and such unit owners are treated as separate tenants, not separate lot owners. The lines separating one part of a condominium from another are not lot lines but lines indicating the limits of ownership. As such, walls constructed on lines separating condominium ownership would not need to be fire (or party) walls.

Legal property lines do not always constitute site boundaries (i.e., malls, condominiums, townhouses). A site could contain multiple legal "lot" divisions.

[A] LOT LINE. A line dividing one lot from another, or from a street or any public place.

❖ Lot lines are legally recorded divisions between two adjacent land parcels or lots. They are the reference point for the location of buildings for exterior separation and other code purposes (see the definition of "Lot").

[BE] LOW ENERGY POWER-OPERATED DOOR. Swinging door which opens automatically upon an action by a pedestrian such as pressing a push plate or waving a hand in front of a sensor. The door closes automatically, and operates with decreased forces and decreased speeds. See also "Power-assisted door" and "Power-operated door."

❖ There are basically three different doors that provide some type of power assistance for entry – low energy power-operated doors, power-assisted doors and power-operated doors. The low energy power-operated door is typically a side-swinging door that also operates as a manual door. However, the door has the additional feature of automatic operation when a person pushes on a plate or sensor located on a wall or post near the door [See IBC Commentary Figures 202(31), 202(32) and 202(33)]. The low energy power-assisted door and power-assisted door are operated by the user touching something; therefore, they both must comply with BMHA156.19.

LOW-PRESSURE TANK. A storage tank designed to withstand an internal pressure greater than 0.5 pound per square inch gauge (psig) (3.4 kPa) but not greater than 15 psig (103.4 kPa).

❖ This definition makes a differentiation between what is considered a low-pressure tank and what is considered a high-pressure tank. Low-pressure tanks are generally less hazardous than high-pressure tanks because the rate of release of cryogenic fluids is much lower.

LOWER EXPLOSIVE LIMIT (LEL). See "Lower flammable limit."

❖ See the commentary for the definition of "Lower flammable limit (LFL)."

LOWER FLAMMABLE LIMIT (LFL). The minimum concentration of vapor in air at which propagation of flame will occur in the presence of an ignition source. The LFL is sometimes referred to as LEL or lower explosive limit.

❖ LFL or LEL is the bottom limit on a flammability range, which is the range in which a flammable vapor is mixed with air in just the right percentages to allow combustion. This is an important concept because the requirement for ventilation is based on keeping the vapor concentrations outside of the flammability

INTERNATIONAL CODE COUNCIL®
Copyright © 2015 ICC. ALL RIGHTS RESERVED. Accessed by David Dammon on Jun 21, 2017 12:30:52 PM pursuant to License Agreement with ICC. No further reproduction or distribution authorized. ANY UNAUTHORIZED REPRODUCTION OR DISTRIBUTION IS A VIOLATION OF THE FEDERAL COPYRIGHT ACT AND THE LICENSE AGREEMENT, AND SUBJECT TO CIVIL AND CRIMINAL PENALTIES THEREUNDER.

range. The upper portion of the range is called the UEL, or upper explosive limit; another term that carries the same meaning is UFL, or upper flammable limit. As long as flammable vapors are not within the range between UFL and LFL, combustion is unlikely.

LP-GAS CONTAINER. Any vessel, including cylinders, tanks, portable tanks and cargo tanks, used for transporting or storing LP-gases.

❖ The definition of LP-gas container provides consistency with NFPA 58 and makes it clear that the containers being regulated in Chapter 61 of the code are specifically those used for the storage or transport of LP-gas, not the generic, 60 gallon (227.1 L) or less containers defined in Section 202 of the code.

An LP-gas container can be constructed as a cylinder, portable tank, stationary tank or as a cargo tank vehicle. Cylinders are generally constructed to the requirements of the DOT while stationary tanks, portable tanks and cargo tanks are generally constructed to the requirements of the ASME *Boiler and Pressure Vessel Code* for unfired pressure vessels. In addition to these requirements, LP-gas containers must also be constructed in accordance with the requirements in NFPA 58.

All LP-gas containers must meet the requirements contained in Chapter 5 of NFPA 58, which addresses all components used in the construction of container assemblies or complete LP-gas systems. These requirements include general provisions that are applicable to all containers, visual inspection requirements for DOT cylinders in stationary service, container service pressures, required openings for DOT cylinders and ASME containers, container markings and container appurtenances. A container appurtenance is a device installed in container openings for safety, control, or operating purposes. Appurtenances include a pressure relief device, one or more pressure regulators, an overfill prevention device, a manual shutoff valve, and a means of gauging the liquid level and the pressure inside the container. The types of appurtenances required for LP-gas containers are based on whether the container is constructed as a cylinder or tank. For stationary tanks, its volumetric capacity will dictate the required container appurtenances.

MAGAZINE. A building, structure or container, other than an operating building, *approved* for storage of *explosive materials*.

❖ Structures for the storage of explosive materials are not considered inhabited buildings for the purpose of applying Section 5604. Explosives, a necessary part of our industrialized society, must be transported from places of manufacture to a location of use. Somewhere along the line, they will probably have to be stored. This type of storage place is called a magazine.

Indoor. A portable structure, such as a box, bin or other container, constructed as required for Type 2, 4 or 5 magazines in accordance with NFPA 495, NFPA 1124 or DOTy 27 CFR Part 55 so as to be fire resistant and theft resistant.

❖ These magazines are sometimes found inside warehouses, wholesale houses and retail establishments on wheels or casters to allow easy movement when needed.

Type 1. A permanent structure, such as a building or igloo, that is bullet resistant, fire resistant, theft resistant, weather resistant and ventilated in accordance with the requirements of NFPA 495, NFPA 1124 or DOTy 27 CFR Part 55.

❖ The walls of a Type 1 magazine should be constructed of either masonry, metal or wood. The foundation should consist of brick, concrete, cement, block, stone or wood post. The floors should be constructed of nonsparking material and be strong enough to bear the weight of the maximum quantity to be stored. The listed standards give the sizes of material for each type of construction material.

Type 2. A portable or mobile structure, such as a box, skid-magazine, trailer or semitrailer, constructed in accordance with the requirements of NFPA 495, NFPA 1124 or DOTy 27 CFR Part 55 that is fire resistant, theft resistant, weather resistant and ventilated. If used outdoors, a Type 2 magazine is also bullet resistant.

❖ Construction of a Type 2 magazine may be either:

1. Wood [having sides, bottoms, and covers or doors constructed of 2-inch (51 mm) hardwood, well braced at corners and covered with sheet metal (not less than 26 gauge) with exposed nails countersunk].
2. Metal [having sides, bottoms and covers or doors constructed of 12-gauge (0.1046 inch) metal and lined inside with a nonsparking material. Edges of metal shall overlap sides at least 1 inch (25 mm)].

Type 3. A fire resistant, theft resistant and weather resistant "day box" or portable structure constructed in accordance with NFPA 495, NFPA 1124 or DOTy 27 CFR Part 55 used for the temporary storage of *explosive materials*.

❖ Construction of a Type 3 magazine may be of not less than 12-gauge (0.1046 inch) steel, lined with $^1/_2$-inch (12.7 mm) plywood or $^1/_2$-inch (12.7 mm) hardboard. The door or lid must overlap the door opening by at least 1 inch (25 mm).

Type 4. A permanent, portable or mobile structure such as a building, igloo, box, semitrailer or other mobile container that is fire resistant, theft resistant and weather resistant and constructed in accordance with NFPA 495, NFPA 1124 or DOTy 27 CFR Part 55.

❖ Construction of a Type 4 magazine may be of masonry, metal-covered wood, fabricated metal or a combination of these materials.

Type 5. A permanent, portable or mobile structure such as a building, igloo, box, bin, tank, semitrailer, bulk trailer,

INTERNATIONAL CODE COUNCIL®
Copyright © 2015 ICC. ALL RIGHTS RESERVED. Accessed by David Dammon on Jun 21, 2017 12:30:52 PM pursuant to License Agreement with ICC. No further reproduction or distribution authorized. ANY UNAUTHORIZED REPRODUCTION OR DISTRIBUTION IS A VIOLATION OF THE FEDERAL COPYRIGHT ACT AND THE LICENSE AGREEMENT, AND SUBJECT TO CIVIL AND CRIMINAL PENALTIES THEREUNDER.

tank trailer, bulk truck, tank truck or other mobile container that is theft resistant, which is constructed in accordance with NFPA 495, NFPA 1124 or DOTy 27 CFR Part 55.

❖ Restrictions on Type 5 outdoor storage facilities:

- Ground around the storage facility must slope away for drainage. Wheels must be removed from vehicles used as unattended storage facilities or they must be immobilized by kingpin locking devices.

❖ Restrictions on Type 5 indoor storage facilities:

- Blasting agents are not to be stored in any kind of indoor storage facility in a residence or dwelling.

MAGNESIUM. The pure metal and alloys, of which the major part is magnesium.

❖ Magnesium is a silvery-white combustible metal weighing only two-thirds as much as aluminum and having good structural properties when suitably alloyed. For this reason, magnesium alloys are used to a great extent in the construction of aircraft; automobiles and trucks; household appliances; furniture; office equipment, machine parts and numerous other applications. Powdered magnesium is used in signal flares and other fireworks to produce an intense white light.

The melting point of pure magnesium is 1,202°F (650°C). The ignition temperature is generally considered to be very close to the melting point, but ignition of magnesium in certain forms may occur at lower air temperatures. Magnesium ribbon and fine magnesium shavings can be ignited under some conditions at temperatures of 950°F (510°C), and very finely divided magnesium powder has been ignited at an air temperature below 900°F (482°C).

The ease of ignition of magnesium depends to a large extent upon the size and shape of the material as well as the intensity of the ignition source. The flame of a match may be sufficient to ignite magnesium ribbon, shavings or chips with thin feather edges, and a spark will ignite fine dust such as is produced in grinding operations. Heavier pieces, such as ingots or thick-walled castings, are difficult to ignite because heat is rapidly conducted away from a localized ignition source. If the entire piece of metal can be raised to the ignition temperature, however, self-sustained burning will occur.

Because the melting point of magnesium is low, the metal melts as it burns and, after some minutes of burning, produces puddles of molten magnesium. The production of molten metal will depend to a considerable extent on the physical condition of the material. Finely divided magnesium, such as shavings, dust and small scraps, will burn more rapidly and produce less molten metal than will an equal quantity of magnesium in the more solid form of ingots or castings.

Metal products marketed under a variety of trade names and designations and commonly referred to as "magnesium" may, in fact, be one of a large number of alloys containing widely differing percentages of magnesium, aluminum, zinc and manganese. Some of these alloys have melting points and ignition temperatures considerably lower than that of pure magnesium.

MALL. See "Covered mall building."

MANUAL FIRE ALARM BOX. A manually operated device used to initiate an alarm signal.

❖ Manual fire alarm boxes are commonly known as pull stations. Manual fire alarm boxes include all manual devices used to activate a manual fire alarm system and have many configurations, depending on the manufacturer. All manual fire alarm devices, however, must be approved and installed in accordance with NFPA 72 for the particular application. Manual fire alarm boxes may be combined in guard tour boxes.

MANUAL STOCKING METHODS. Stocking methods utilizing ladders or other nonmechanical equipment to move stock.

❖ Manual stocking methods do not require the use of mechanical means to stock and retrieve commodities. Commodities may be stocked or retrieved on foot where the commodity is accessible from a floor or landing, or through the use of a portable ladder or portable stair.

MARINA. Any portion of the ocean or inland water, either naturally or artificially protected, for the mooring, servicing or safety of vessels and shall include artificially protected works, the public or private lands ashore, and structures or facilities provided within the enclosed body of water and ashore for the mooring or servicing of vessels or the servicing of their crews or passengers.

❖ A marina is a protected area where the mooring of marine vessels occurs along with the associated operations to service the vessels, such as fueling, maintenance and repair facilities, ship chandlers, stores and restaurants, the launching of vessels and the loading of vessels with cargo or persons. Marine vessels moored in a marina are usually in close proximity to each other with floats of minimal widths, usually enough for people to walk on, and small carts to carry supplies that are to be loaded onto the vessels. The marina may offer out-of-water-storage, which is useful out of season and important in climates susceptible to freezing waters. Dry storage or "dry stacking" boat storage stores boats vertically in double, triple or even quadruple rack systems. Boats are placed into and retrieved from the storage racks with a forklift.

MARINE MOTOR FUEL-DISPENSING FACILITY. That portion of property where flammable or *combustible liquids* or gases used as fuel for watercraft are stored and dis-

INTERNATIONAL CODE COUNCIL®
Copyright © 2015 ICC. ALL RIGHTS RESERVED. Accessed by David Dammon on Jun 21, 2017 12:30:52 PM pursuant to License Agreement with ICC. No further reproduction or distribution authorized. ANY UNAUTHORIZED REPRODUCTION OR DISTRIBUTION IS A VIOLATION OF THE FEDERAL COPYRIGHT ACT AND THE LICENSE AGREEMENT, AND SUBJECT TO CIVIL AND CRIMINAL PENALTIES THEREUNDER.

pensed from fixed equipment on shore, piers, wharves, floats or barges into the fuel tanks of watercraft and shall include all other facilities used in connection therewith.

❖ A marine motor fuel-dispensing facility is not to be confused with a bulk marine terminal, which transfers fuel by way of flange-to-flange connections. A marine motor fuel-dispensing facility uses automotive-type dispensing equipment. Motor fuel-dispensing facilities are classified in Occupancy Group M by the IBC.

MATERIAL SAFETY DATA SHEET (MSDS). Information concerning a hazardous material which is prepared in accordance with the provisions of DOL 29 CFR Part 1910.1200 or in accordance with the provisions of a federally *approved* state OSHA plan.

❖ To comply with right-to-know legislation, building owners are required to provide or prepare a MSDS for all hazardous materials that may be on the premises. The MSDS is the single best source of information in dealing with the requirements of the IBC and the code.

MAXIMUM ALLOWABLE QUANTITY PER CONTROL AREA. The maximum amount of a hazardous material allowed to be stored or used within a *control area* inside a building or an outdoor *control area*. The maximum allowable quantity per control area is based on the material state (solid, liquid or gas) and the material storage or use conditions.

❖ Exceeding this amount, also referred to as the MAQ, will place the use area or building into a hazardous occupancy classification. See Tables 5003.1.1(1), 5003.1.1(2), 5003.1.1(3), 5003.1.1(4) and 5003.8.3.2.

[BE] MEANS OF EGRESS. A continuous and unobstructed path of vertical and horizontal egress travel from any occupied portion of a building or structure to a *public way*. A means of egress consists of three separate and distinct parts: the *exit access*, the *exit* and the *exit discharge*.

❖ The means of egress is the path traveled by building occupants to leave the building and the site on which it is located. It includes all interior and exterior elements that the occupants must utilize as they make their way from every room and usable space within the building to a public way such as a street or alley. The elements that make up the means of egress create the lifeline that occupants utilize to travel out of the structure and to a safe distance from the structure. The means of egress provisions of the code strive to provide a reasonable level of life safety in every structure. The means of egress provisions are subdivided into three distinct portions (see the definitions of "Exit access," "Exit" and "Exit discharge").

MECHANICAL STOCKING METHODS. Stocking methods utilizing motorized vehicles or hydraulic jacks to move stock.

❖ Mechanical stocking methods are generally associated with rack storage. The mass of the commodity, the height of the rack storage or the shear quantity of commodity on any one pallet will normally put stocking or retrieval beyond human reach or strength. Methods commonly employed for this type of operation are manned forklifts or unmanned mechanized storage and retrieval systems.

[BG] MEDICAL CARE. Care involving medical or surgical procedures, nursing or for psychiatric purposes.

❖ Persons who need medical care are likely to be incapable of self-preservation or at least extremely limited in their ability to evacuate. In consideration of occupants' health as well as safety, hospitals and nursing homes at least partially rely on defend-in-place strategies rather than evacuation. See also the commentary to Occupancy Group I-2.

Care facilities encompass a full spectrum of occupant acuity and support services, and span a wide range of occupancy types, including Groups E, I and R. There are three types of care defined in the codes: personal, custodial and medical. On the lower end of the care spectrum, i.e, personal care, is when occupants are supervised but do not need custodial or medical care. But, where occupants may be elderly or impaired, i.e., custodial care, they may need occasional daily living assistance, such as cooking and cleaning. Persons who receive custodial care may or may not require assistance with evacuation depending on the occupancy and conditions of the occupancy. On the opposite end of the care spectrum, persons receiving care may be completely bedridden and dependant on medical gases and emergency power to maintain life (i.e., medical care). The level of care provided describes the condition and capabilities of an occupant which then indicates appropriate standards for protection systems, both active and passive. See also the definitions for "24-hour basis," "Custodial care," "Detoxification facilities," "Foster care facilities," "Group home," "Hospitals and psychiatric hospitals," "Incapable of self-preservation," "Nursing homes" and "Personal care services."

MEMBRANE STRUCTURE. An air-inflated, air-supported, cable or frame-covered structure as defined by the *International Building Code* and not otherwise defined as a tent. See Chapter 31 of the *International Building Code*.

❖ This definition is broadly inclusive of all types of membrane structures, regardless of the supporting mechanism or structure, as defined in Chapter 2 of the IBC as "Air-inflated structure," "Air-supported structure," "Cable-restrained, air supported structure," "Membrane-covered cable structure" and "Membrane-covered frame structure." Note that tents are not included. See the definitions of "Air-inflated structure," "Air supported structure" and "Tent."

[BE] MERCHANDISE PAD. A merchandise pad is an area for display of merchandise surrounded by *aisles*, permanent fixtures or walls. Merchandise pads contain elements such as nonfixed and moveable fixtures, cases, racks, counters and partitions as indicated in Section 105.2 of the *International Building Code* from which customers browse or shop.

❖ Merchandise pads would most likely be found in large stores with changing displays of clothes or furniture.

INTERNATIONAL CODE COUNCIL®
Copyright © 2015 ICC. ALL RIGHTS RESERVED. Accessed by David Dammon on Jun 21, 2017 12:30:52 PM pursuant to License Agreement with ICC. No further reproduction or distribution authorized. ANY UNAUTHORIZED REPRODUCTION OR DISTRIBUTION IS A VIOLATION OF THE FEDERAL COPYRIGHT ACT AND THE LICENSE AGREEMENT, AND SUBJECT TO CIVIL AND CRIMINAL PENALTIES THEREUNDER.

This is not a raised display-only area. These areas allow customers to move between displays or racks. In regards to means of egress, merchandise pads could be considered analogous to areas of fixed seating or groups of tables. The aisle accessways are within the merchandise pad and lead to the aisles on the outside edges of the merchandise pads. Not all stores will contain merchandise pads (e.g., a typical grocery store with fixed shelves and aisles).

METAL HYDRIDE. A generic name for compounds composed of metallic element(s) and hydrogen.

❖ Hydride is the name given to the negative ion of hydrogen. With the exception of inert gases, every element in the Periodic Table of Elements can form a hydride. The hazards of hydrides will vary based on the elemental molecule to which the -H ion attaches itself.

A metal hydride is a metallic alloy that will adsorb and release hydrogen molecules. (The term "adsorb" means a taking up by physical or chemical forces of the molecules of hydrogen gas by the surfaces of solids with which they are in contact.) With metal hydrides, adsorption occurs when the hydrogen molecules accumulate on the surface of metal. Many of the metals used in metal hydride storage systems (MHSS) are designed to be reversible, meaning they can adsorb and release hydrogen from the system. The adsorption and release occurs when heat is transferred within the MHSS, which upsets the equilibrium condition between the hydrogen, the hydrogen-adsorbing alloy and the metal hydride system.

METAL HYDRIDE STORAGE SYSTEM. A *closed system* consisting of a group of components assembled as a package to contain metal-hydrogen compounds for which there exists an equilibrium condition where the hydrogen-absorbing metal alloy(s), hydrogen gas and the metal-hydrogen compound(s) coexist and where only hydrogen gas is released from the system in normal use.

❖ Metal hydride storage systems (MHSS) are another technological advancement in fuel-cell technology that is becoming a commonly used method for storing hydrogen and is an alternative to traditional compressed or cryogenic fluid storage methods for supplying hydrogen to fuel cells. A MHSS will release or adsorb hydrogen gas when the equilibrium condition is changed. Changes in the equilibrium condition cause the system to either release heat (exothermic) or absorb heat (endothermic). MHSSs designed in compliance with Section 5807 are designed so only hydrogen is released from or introduced into the system during its discharge or filling. The requirements in Section 5807 provide guidance to fire code officials and design professionals in the design, construction, inspection and testing of systems and components used as a MHSS (see Commentary Figure 202-M1).

[BG] MEZZANINE. An intermediate level or levels between the floor and ceiling of any story and in accordance with Section 505 of the *International Building Code*.

❖ A common design feature in factories, warehouses and mercantile buildings is an intermediate loft, or platform, between the story levels of a building. This type of feature, or mezzanine, can be found in buildings of all occupancies. The IBC must deal with whether this intermediate level is another story of the building or whether it can simply be treated as part of the story in which it is contained. The basic rule is that the intermediate level must be less than one-third of the area of the story below (of the room in which it is located) in order to be considered a mezzanine. Requirements for mezzanines are found in Section 505 of the IBC.

MOBILE FUELING. The operation of dispensing liquid fuels from tank vehicles into the fuel tanks of motor vehicles. Mobile fueling may also be known by the terms "Mobile fleet fueling," "Wet fueling" and "Wet hosing."

❖ This definition pertains to the fueling process regulated by Section 5706.5.4.5, wherein fuel is dispensed from the tank vehicle directly to the fuel tank of a vehicle (see commentary, Section 5706.5.4.5).



Figure 202-M1
METAL HYDRIDE STORAGE CONTAINER AND ITS METAL HYDRIDE CONTENT
Photo courtesy of Ovanics Hydrogen Systems, LLC

INTERNATIONAL CODE COUNCIL®
Copyright © 2015 ICC. ALL RIGHTS RESERVED. Accessed by David Dammon on Jun 21, 2017 12:30:52 PM pursuant to License Agreement with ICC. No further reproduction or distribution authorized. ANY UNAUTHORIZED REPRODUCTION OR DISTRIBUTION IS A VIOLATION OF THE FEDERAL COPYRIGHT ACT AND THE LICENSE AGREEMENT, AND SUBJECT TO CIVIL AND CRIMINAL PENALTIES THEREUNDER.

MORTAR. A tube from which fireworks shells are fired into the air.

❖ Mortars must be inspected carefully for defects, such as dents, bent ends, damaged interiors and damaged plugs, prior to placement and use. Defective mortars must not be used. Careful inspection of mortars is of particular importance for paper mortars that can sustain undetected damage to their interiors that can result in serious malfunctions.

MULTIPLE-STATION ALARM DEVICE. Two or more single-station alarm devices that can be interconnected such that actuation of one causes all integral or separate audible alarms to operate. A multiple-station alarm device can consist of one single-station alarm device having connections to other detectors or to a manual fire alarm box.

❖ This definition refers to a combination of similar or different types of alarm devices that could be interconnected. The actuation of any two devices, whether a smoke detector or manual fire alarm box, will activate the required audible alarms at all interconnected devices.

MULTIPLE-STATION SMOKE ALARM. Two or more single-station alarm devices that are capable of interconnection such that actuation of one causes the appropriate alarm signal to operate in all interconnected alarms.

❖ In occupancies with sleeping areas, occupants must be notified in a fire so that they can promptly evacuate the premises. In accordance with the requirements of NFPA 72, multiple-station smoke alarms are self-contained, smoke-activated alarm devices built in accordance with UL 217 that can be interconnected with other devices so that all integral or separate alarms will operate when any one device is activated.

NESTING. A method of securing flat-bottomed *compressed gas* cylinders upright in a tight mass using a contiguous three-point contact system whereby all cylinders within a group have not less than three points of contact with other cylinders, walls or bracing.

❖ Nesting is the placement of cylinders in tightly packed groups in which three sides of the group are comprised of walls or barriers and each cylinder is in contact with a wall or another cylinder in at least three places. It is generally considered an alternative to chaining or otherwise physically securing compressed gas cylinders (as required by Section 5303.5.3) under conditions of occupancy where cylinders must be readily moveable, such as in a filling plant.

Placing cylinders in multipoint contact with one another can reduce cylinder instability while affording the ready mobility required by an operation being conducted by trained personnel. Such a configuration is relatively secure for all cylinders involved because even those cylinders on the open side would have to be displaced from behind, i.e., an area within the nest itself. This reduces the potential for damage to the cylinder valve since a knockdown of the cylinder could result in leakage of hazardous gas or create a projectile situation.

One safety precaution that could reduce the likelihood of a cylinder on the face of the nest having a valve sheared is maintaining an open space in front of the nest, free of shelves, counters or other projections, which could act to break the valve on an overturning cylinder. Additionally, valve protection caps should be in place on the cylinders at all times when the cylinder is not connected, being filled or emptied (see Commentary Figure 202-N1).

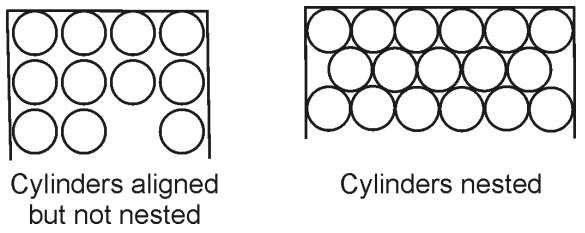

FIGURE 202-N1
NESTING OF CYLINDERS

NET EXPLOSIVE WEIGHT (net weight). The weight of *explosive material* expressed in pounds. The net explosive weight is the aggregate amount of *explosive material* contained within buildings, magazines, structures or portions thereof, used to establish quantity-distance relationships.

❖ This definition is included to correlate the use of the provisions of this chapter. The definition is based on Department of Defense (DOD) concepts; however, prescriptive requirements have been removed from the DOD definition and placed into the body of the code. The net explosive weight may vary depending on building construction; for example, in cases where appropriate barrier walls or appropriate distances have been employed to avoid propagation.

NORMAL TEMPERATURE AND PRESSURE (NTP). A temperature of 70°F (21°C) and a pressure of 1 atmosphere [14.7 psia (101 kPa)].

❖ Reaction by some chemicals is based on temperature and pressure. Understanding this relationship to normal room temperature and pressure (elevation) can provide information on the hazards for the chemical being considered.

[BE] NOSING. The leading edge of treads of *stairs* and of landings at the top of *stairway flights*.

❖ The front edge of the tread that is exposed to the users foot provides the visual clue for the placement of the foot in both ascent and descent. The nosings of a stair are a reference point for the measurement of as tread depth and riser height. The line connecting the nosings serves as the reference for the measurement of handrail and guard heights, as well as headroom. The code assures their uniformity by limiting

INTERNATIONAL CODE COUNCIL®
Copyright © 2015 ICC. ALL RIGHTS RESERVED. Accessed by David Dammon on Jun 21, 2017 12:30:52 PM pursuant to License Agreement with ICC. No further reproduction or distribution authorized. ANY UNAUTHORIZED REPRODUCTION OR DISTRIBUTION IS A VIOLATION OF THE FEDERAL COPYRIGHT ACT AND THE LICENSE AGREEMENT, AND SUBJECT TO CIVIL AND CRIMINAL PENALTIES THEREUNDER.

the projection of the tread and landing nosings that results in a stairway that is easy to use. If too large, they are a tripping hazard when walking up a stair. If too small in relation to tread depth, the effective tread depth required for heel clearance in descent is minimized. The code provides limits for both minimum and maximum nosing projections and establishes a minimum tread depth when no projection is required. An exception to these limits exists in the requirements for both alternating tread devices and ship ladders where an exaggerated projected tread depth, required to provide for reasonable foot room, is unique to the steeper gradient and functional use of these devices.

NOTIFICATION ZONE. See "Zone, notification."

NUISANCE ALARM. An alarm caused by mechanical failure, malfunction, improper installation or lack of proper maintenance, or an alarm activated by a cause that cannot be determined.

❖ A nuisance alarm is essentially any alarm that occurs as a result of a condition that does not arise during the normal operation of the equipment. A nuisance alarm is not the same as a false alarm. A person who intentionally initiates an alarm by using a manual pull station or a person who accidentally initiates a smoke detector is not initiating a nuisance alarm. A nuisance alarm is, by nature, a factor of the system itself. See commentary to the definition of "False alarm."

[BG] NURSING HOMES. Facilities that provide care, including both intermediate care facilities and skilled nursing facilities, where any of the persons are incapable of self-preservation.

❖ Persons in nursing homes may be physically incapable of self-preservation or at least extremely limited in their ability to evacuate. In dementia wards, they may be confined within an area of a building for care or security purposes. In consideration of occupants' health as well as safety, hospitals and nursing homes at least partially rely on defend-in-place strategies. See the commentary for Occupancy Group I-2 and Section 407 of the IBC.

Care facilities encompass a full spectrum of occupant acuity and support services, and span a wide range of occupancy types including Groups B, E, I and R. The level of care provided describes the condition and capabilities of an occupant which then indicates appropriate standards for protection systems, both passive and active. See also the definitions for "24-hour basis," "Care suite," "Custodial care," "Detoxification facilities," "Hospitals and psychiatric hospitals," "Incapable of self-preservation" and "Medical care."

OCCUPANCY CLASSIFICATION. For the purposes of this code, certain occupancies are defined as follows:

❖ The provisions of Sections 302 through 312 of the IBC control the classification of buildings and structures as to their use and occupancy. The purpose of those provisions is to provide rational criteria for the classification of various occupancies into groups based on their relative fire hazard and life safety properties. This is necessary because the IBC, as well as many provisions of the code, utilize occupancy group classification as a fundamental principle for differentiating code requirements related to fire and life safety protection. By organizing occupancies with similar fire hazard and life safety properties into occupancy groups, the IBC and the code have adopted the means to differentiate occupancies such that various fire protection and life safety requirements can be rationally organized and applied. Each specific group has an individual classification and represents a different characteristic and level of fire hazard that requires special code provisions to lessen the associated risks. See Chapter 3 of the IBC commentary for further discussion of occupancy groups and examples of how they are applied.

[BG] Assembly Group A. Assembly Group A occupancy includes, among others, the use of a building or structure, or a portion thereof, for the gathering of persons for purposes such as civic, social or religious functions; recreation, food or drink consumption; or awaiting transportation.

❖ Because of the arrangement and density of the occupant load associated with occupancies classified in the Group A assembly category, the potential for multiple fatalities and injuries from fire is comparatively high. For example, no other use listed in Section 302.1 of the IBC contemplates occupant loads as dense as 5 square feet (0.46 m^2) per person (see Table 1004.1.2). Darkened spaces in theaters, nightclubs and the like serve to increase hazards. In sudden emergencies, the congestion caused by large numbers of people rushing to exits can cause panic conditions. For these and many other reasons, there is a relatively high degree of hazard to life safety in assembly facilities. The relative hazards of assembly occupancies are reflected in the height and area limitations of Tables 504.3, 504.4 and 506.2 that are, in comparison, generally more restrictive than for buildings in other group classifications.

A room or space with an occupant load of 50 or more persons should not be automatically classified as a Group A; however, if a room or space is used for assembly purposes (i.e., gathering of persons for purposes such as civic, social or religious functions; recreation, food or drink consumption or awaiting transportation in accordance with Section 303.1) and the occupant load is 50 or more, Group A is likely to be the appropriate designation. Other uses can have an occupant load of more than 50 in a space or room; for example, a large office space, a grocery store or the main floor of a major retail business, but these are not assembly occupancies.

There are five specific assembly group classifications, Groups A-1 through A-5, described in this section. Where used in the code, the general term "Group A" is intended to include all five classifications.

INTERNATIONAL CODE COUNCIL®
Copyright © 2015 ICC. ALL RIGHTS RESERVED. Accessed by David Dammon on Jun 21, 2017 12:30:52 PM pursuant to License Agreement with ICC. No further reproduction or distribution authorized. ANY UNAUTHORIZED REPRODUCTION OR DISTRIBUTION IS A VIOLATION OF THE FEDERAL COPYRIGHT ACT AND THE LICENSE AGREEMENT, AND SUBJECT TO CIVIL AND CRIMINAL PENALTIES THEREUNDER.

The fundamental characteristics of all assembly occupancies are identified in this section. Structures that are designed or occupied for assembly purposes must be placed in one of the assembly group classifications. There are buildings and spaces which are used for assembly purposes, but are not classified as Assembly occupancies. These "exceptions" to this rule include small assembly buildings, tenant spaces and assembly spaces in mixed-use buildings. These exceptions to the Group A classification are addressed below.

> **[BG] Small buildings and tenant spaces**. A building or tenant space used for assembly purposes with an *occupant load* of less than 50 persons shall be classified as a Group B occupancy.

❖ There are often small establishments that typically serve food and have a few seats that technically meet the definition of an assembly Group A occupancy but due to the low occupant load pose a lower risk than a typical assembly occupancy. These types of buildings and tenant spaces are to be considered as Group B occupancies when the occupant load is determined to be less than 50 persons. Examples of this include small "fast food" establishments and small "mom-and-pop" cafes or coffee shops.

> **[BG] Small assembly spaces.** The following rooms and spaces shall not be classified as assembly occupancies:
>
> 1. A room or space used for assembly purposes with an *occupant load* of less than 50 persons and accessory to another occupancy shall be classified as a Group B occupancy or as part of that occupancy.
> 2. A room or space used for assembly purposes that is less than 750 square feet (70 m^2) in area and accessory to another occupancy shall be classified as a Group B occupancy or as part of that occupancy.

❖ Assembly rooms or spaces within larger buildings that house other uses are classified based upon their occupant loads. Where the occupant load of the assembly space is less than 50, or where the floor area of the space used for assembly purposes is less than 750 square feet (65 m^2), a classification of other than Group A is permitted. In both cases, the purpose of the assembly space must be accessory to the principal occupancy of the structure (i.e., the activities in the assembly space are subordinate and secondary to the primary occupancy). If either the occupant load or floor area requirement is satisfied and the purpose of the assembly space is accessory to the principal occupancy, the space is permitted to either be classified as a Group B occupancy or as part of the principal occupancy. In either case, the assembly space is not required to be less than 10 percent of the area of the story on which it is located as is specified for accessory occupancies in Section 508.2 of the IBC (IBC Interpretation No. 20-04).

The allowances given to assembly spaces in buildings containing multiple uses are a practical code consideration that permits a mixed-use condition to exist without requiring compliance with the provisions for mixed occupancies (see Section 508 of the IBC). Although the term "accessory" is used in describing the relationship of the uses, the intent of the term here is that the use of the space is related to, or part of, the main use of the space. These exceptions are not limited by the accessory use requirements found in Section 508.2 of the IBC.

Example 1: An office building, classified as a Group B occupancy, has a conference room used for staff meetings with an occupant load of 40 (see Commentary Figure 202-O1). The occupancy classification of a conference room is generally considered a Group A-3. Since the occupant load of the conference room is less than 50 and its function is clearly accessory to the business area, the room is permitted to be classified the same as the main occupancy, Group B.

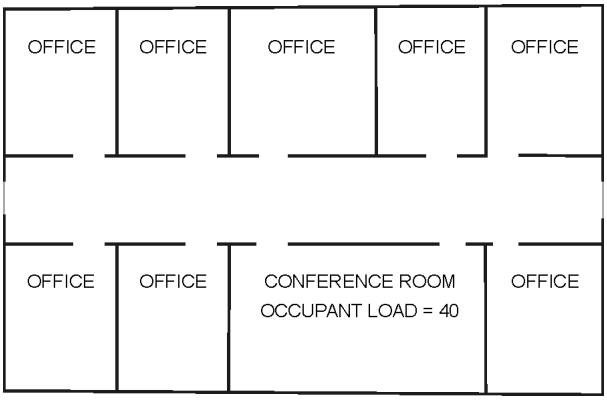

Figure 202-O1
ACCESSORY ASSEMBLY USE LIMITED BY OCCUPANT LOAD

Example 2: A 749-square-foot (70 m^2) assembly area is located adjacent to a mercantile floor area of 5,000 square feet (465 m^2) (see Commentary Figure 202-O2). Although the assembly use area occupies 15 percent of the 5,000-square-foot (465 m^2) floor area, it does not exceed 750 square feet (70 m^2) and is not considered a Group A occupancy, but rather is classified as part of the Group M occupancy.

> **[BG] Associated with Group E occupancies**. A room or space used for assembly purposes that is associated with a Group E occupancy is not considered a separate occupancy.

❖ A typical educational facility for students in the 12th grade and below invariably contains many types of assembly spaces other than classrooms, such as auditoriums, cafeterias, gymnasiums and libraries. Such assembly spaces in a Group E building are not

INTERNATIONAL CODE COUNCIL®
Copyright © 2015 ICC. ALL RIGHTS RESERVED. Accessed by David Dammon on Jun 21, 2017 12:30:52 PM pursuant to License Agreement with ICC. No further reproduction or distribution authorized. ANY UNAUTHORIZED REPRODUCTION OR DISTRIBUTION IS A VIOLATION OF THE FEDERAL COPYRIGHT ACT AND THE LICENSE AGREEMENT, AND SUBJECT TO CIVIL AND CRIMINAL PENALTIES THEREUNDER.

intended to be regulated as separate Group A occupancies, regardless of their floor area, but rather an extension of the Group E classification. It is worth mentioning, for such assembly functions to be considered part of the primary Group E occupancy, the assembly functions must be ancillary and supportive to the educational operation of the building. Otherwise, they would be classified into the appropriate Group A occupancy based upon their specific function. These assembly spaces, where classified as a portion of the Group E occupancy, are still considered as assembly in nature and must comply with assembly space requirements specified for accessibility and means of egress. However, often such school facilities are used for other functions, such as a meeting of a community service organization or a community crafts fair. These types of uses fall outside of the intent of this section and, therefore, such assembly spaces would need to be classified as a Group A.

[BG] Accessory with places of religious worship. Accessory religious educational rooms and religious auditoriums with *occupant loads* of less than 100 per room or space are not considered separate occupancies

❖ Places of religious worship are listed as a Group A-3 occupancy. In addition to the worship hall, it is common for such facilities to contain smaller rooms used for educational activities. This provision allows such spaces to be considered as part of the Group A-3 classification rather than create a mixed-occupancy condition. For example, classrooms are normally classified as Group E if occupied by persons of ages through the 12th grade, or as Group B if the education is provided to adults. These types of classrooms could be considered as a part of the Group A-3 occupancy under the provisions of this section. Where such rooms are used at certain times for other than as a religious auditorium or for religious education, Section 302 of the IBC requires that the requirements of each occupancy be applied.

[BG] Assembly Group A-1. Group A occupancy includes assembly uses, usually with fixed seating, intended for the production and viewing of performing arts or motion pictures including, but not limited to:

Motion picture theaters
Symphony and concert halls
Television and radio studios admitting an audience
Theaters

❖ Some of the characteristics of Group A-1 occupancies are large, concentrated occupant loads; low lighting levels; above-normal sound levels; and a moderate fuel load.

Group A-1 is characterized by two basic types of activities. The first type is one in which the facility is occupied for the production and viewing of theatrical or operatic performances. Facilities of this type ordinarily have fixed seating; a permanent raised stage; a proscenium wall and curtain; fixed or portable scenery drops; lighting devices; dressing rooms; mechanical appliances or other theatrical accessories and equipment (see Commentary Figure 202-O3).

The second type is one in which the structure is primarily occupied for the viewing of motion pictures. Facilities of this type ordinarily have fixed seating, no stage, a viewing screen, motion picture projection

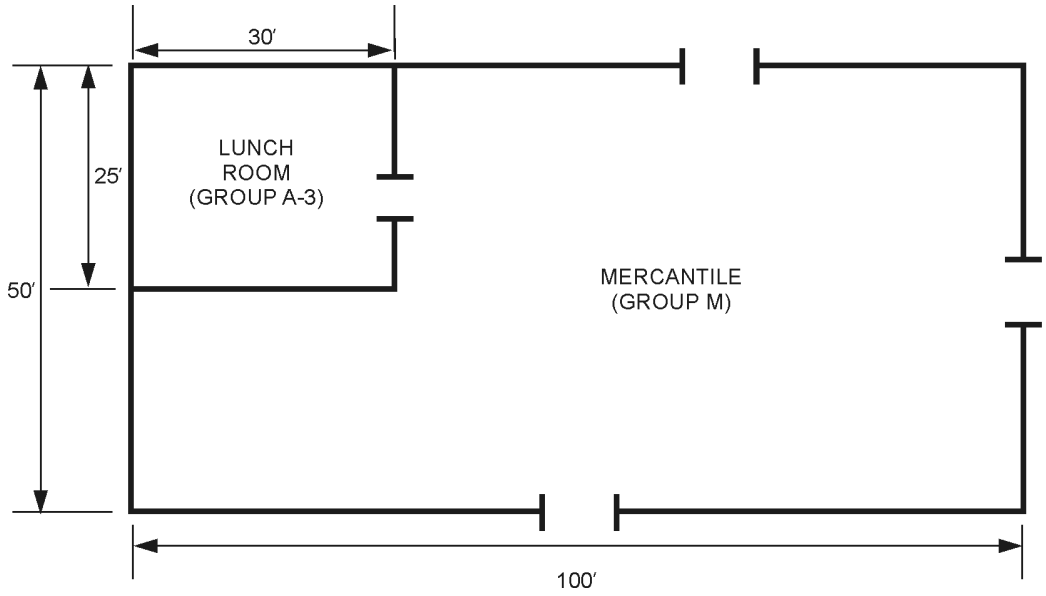

For SI: 1 foot = 304.8 mm, 1 square foot = 0.0929 m^2.

Figure 202-O2
ACCESSORY ASSEMBLY USE GREATER THAN 10 PERCENT OF FLOOR AREA BUT LESS THAN 750 FT.^{2}

INTERNATIONAL CODE COUNCIL®
Copyright © 2015 ICC. ALL RIGHTS RESERVED. Accessed by David Dammon on Jun 21, 2017 12:30:52 PM pursuant to License Agreement with ICC. No further reproduction or distribution authorized. ANY UNAUTHORIZED REPRODUCTION OR DISTRIBUTION IS A VIOLATION OF THE FEDERAL COPYRIGHT ACT AND THE LICENSE AGREEMENT, AND SUBJECT TO CIVIL AND CRIMINAL PENALTIES THEREUNDER.

booths and equipment (see Commentary Figure 202-O4).

Group A-1 presents a significant potential life safety hazard because of the large occupant loads and the concentration of people within confined spaces. The means of egress is an important factor in the design of such facilities. Theaters for the performing arts that require stages are considered particularly hazardous because of the amount of combustibles, such as curtains, drops, scenery, construction materials and other accessories normally associated with stage operation. As such, special protection requirements applicable to stages and platforms are provided in Section 410 of the IBC and Chapter 10 of the code.

[BG] Assembly Group A-2. Group A-2 occupancy includes assembly uses intended for food and/or drink consumption including, but not limited to:

Banquet halls
Casinos (gaming areas)
Night clubs
Restaurants, cafeterias and similar dining facilities (including associated commercial kitchens)
Taverns and bars

❖ Group A-2 includes occupancies in which people congregate in high densities for social entertainment, such as drinking and dancing (e.g., nightclubs, dance halls, banquet halls, cabarets, etc.) and food and drink consumption (e.g., restaurants). The unique-

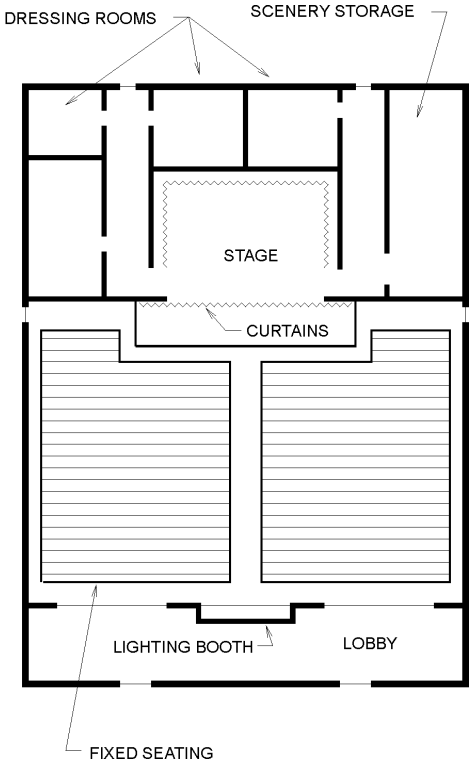

Figure 202-O3
GROUP A-1

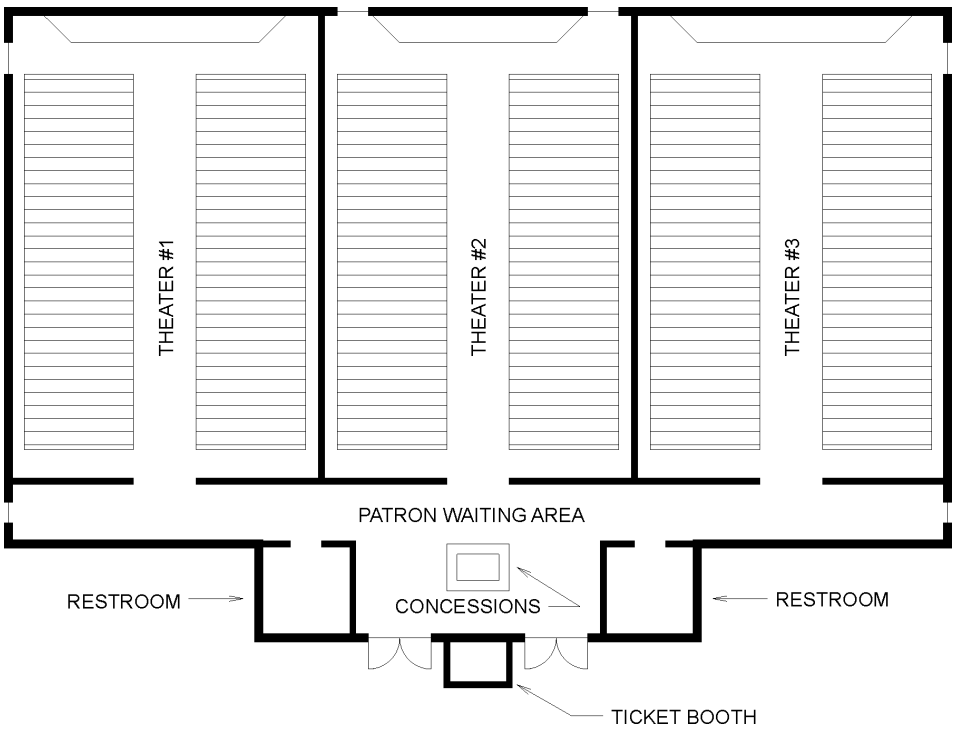

Figure 202-O4
GROUP A-1

INTERNATIONAL CODE COUNCIL®
Copyright © 2015 ICC. ALL RIGHTS RESERVED. Accessed by David Dammon on Jun 21, 2017 12:30:52 PM pursuant to License Agreement with ICC. No further reproduction or distribution authorized. ANY UNAUTHORIZED REPRODUCTION OR DISTRIBUTION IS A VIOLATION OF THE FEDERAL COPYRIGHT ACT AND THE LICENSE AGREEMENT, AND SUBJECT TO CIVIL AND CRIMINAL PENALTIES THEREUNDER.

ness of these occupancies is characterized by some or all of the following:

- Low lighting levels;
- Entertainment by a live band or recorded music generating above-normal sound levels;
- No theatrical stage accessories;
- Later-than-average operating hours;
- Tables and seating arranged or positioned so as to create ill-defined aisles;
- A specific area designated for dancing;
- Service facilities for alcoholic beverages and food; and
- High occupant load density.

The fire records are very clear in identifying that the characteristics listed above often cause a delayed awareness of a fire situation and confuse the appropriate response, resulting in an increased egress time and sometimes panic. Together, these factors may result in extensive life and property losses. These characteristics are only advisory in determining whether Group A-2 is the appropriate classification. Often, there are additional characteristics that are unique to a project, which also must be taken into consideration when a classification is made.

Example: The Downtown Club, a popular local nightclub/dance hall, features a different band every weekend (see Commentary Figure 202-O5). It is equipped with a bar and basic kitchen facilities so that beverages and appetizers can be served. There is a platform for a band to perform, a dance floor in front of the platform and numerous cocktail tables and chairs. The tables and chairs are not fixed, resulting in a hazardous arrangement because there are no distinct aisles. When the band performs, the house lights are dimmed and spotlights are keyed in on the performers. The club is equipped with a sound system that is used at loud levels. The club is open until 3:00 a.m.—the latest time the local jurisdiction will allow.

From this description of the Downtown Club, one can readily see that the appropriate classification is Group A-2. Sometimes, however, it is not this easy to determine the appropriate classification. In such cases, the building official must seek additional information regarding the functions of the building and each area within the building.

Two of the specific uses listed as Group A-2 occupancies are typically not considered as facilities primarily used for food and/or drink consumption, however, their classification as such has been deemed appropriate for varying reasons. The placement of casino gaming areas in the Group A-2 classification is because they share many hazard characteristics with night clubs and, to some extent, the other uses in the category. The presence of distracting lights, sounds and decorations, along with the potential for alcohol consumption, create an assembly environment that is best addressed under the Group A-2 provisions. The classification is specific to the gaming areas of a casino, therefore, other related uses, such as administrative, storage and lodging areas are to be individually classified based upon their specific use.

Although commercial kitchens do not pose the same conditions and concerns as the other uses classified as Group A-2, their classification as such recognizes the relationship that exists between the

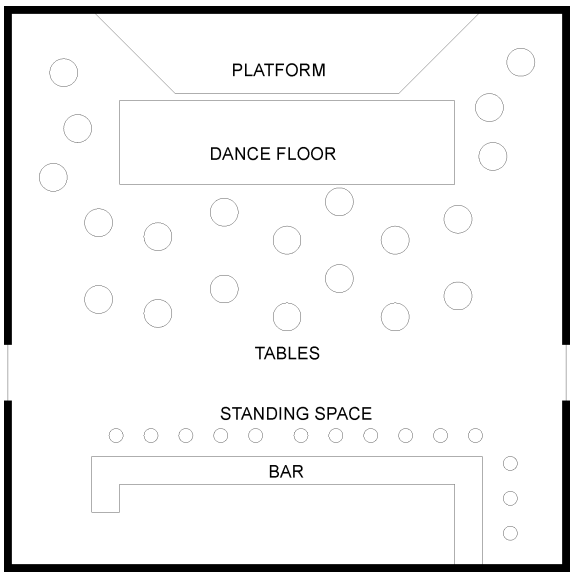

Figure 202-O5
GROUP A-2

INTERNATIONAL CODE COUNCIL®
Copyright © 2015 ICC. ALL RIGHTS RESERVED. Accessed by David Dammon on Jun 21, 2017 12:30:52 PM pursuant to License Agreement with ICC. No further reproduction or distribution authorized. ANY UNAUTHORIZED REPRODUCTION OR DISTRIBUTION IS A VIOLATION OF THE FEDERAL COPYRIGHT ACT AND THE LICENSE AGREEMENT, AND SUBJECT TO CIVIL AND CRIMINAL PENALTIES THEREUNDER.

dining and cooking areas. Providing a physical fire-resistive separation between the kitchen and the dining area that it serves is often found to be impractical. Assigning a single occupancy classification for both the commercial kitchen and its associated dining area eliminates any potential for an unnecessary mixed-occupancy condition. This single classification approach can also be applied where the occupant load of the dining area is below 50, allowing for a Group B classification. Under such circumstances, the kitchen would be considered an extension of the Group B dining facility.

[BG] Assembly Group A-3. Group A-3 occupancy includes assembly uses intended for worship, recreation or amusement and other assembly uses not classified elsewhere in Group A, including, but not limited to:

Amusement arcades
Art galleries
Bowling alleys
Community halls
Courtrooms
Dance halls (not including food or drink consumption)
Exhibition halls
Funeral parlors
Gymnasiums (without spectator seating)
Indoor swimming pools (without spectator seating)
Indoor tennis courts (without spectator seating)
Lecture halls
Libraries
Museums
Places of religious worship
Pool and billiard parlors
Waiting areas in transportation terminals

❖ Structures in which people assemble for the purpose of social activities (such as entertainment, recreation and amusement) that are neither classified in Group A-1 or A-2 nor appropriately classified in Group A-4 or A-5 are to be classified in Group A-3. Exhibition halls, libraries, dance halls (not including food and drink), places of religious worship, museums, gymnasiums, recreation centers, health clubs, fellowship halls, indoor shooting galleries, bowling centers and billiard halls are among the facilities often classified in Group A-3. Also, since they most nearly resemble this occupancy classification, public and private spaces used for assembly are often classified in Group A-3. These include large courtrooms, meeting rooms and conference centers. Similarly, lecture rooms located in colleges, universities or in schools for students above the 12th grade that have an occupant load of 50 or more are also classified in Group A-3, as well as structures in which people gather exclusively for worship and other religious purposes. Although such worship and religious purposes are without restriction to any particular sect or creed, the intent of the code is to limit Group A-3 classification to occupancies that are specifically related to worship services, devotions and religious rituals.

The fire hazard in terms of combustible contents (fuel load) in structures classified in Group A-3 is most often expected to be moderate to low. Since structures classified in Group A-3 vary widely as to the purpose for which they are used, the range of fuel load varies widely. For example, the fuel load in a library or an exhibition hall usually is considerably greater than that normally found in a gymnasium.

[BG] Assembly Group A-4. Group A-4 occupancy includes assembly uses intended for viewing of indoor sporting events and activities with spectator seating including, but not limited to:

Arenas
Skating rinks
Swimming pools
Tennis courts

❖ Structures provided with spectator seating in which people assemble to watch an indoor sporting event are to be classified as Group A-4. Arenas, skating rinks, swimming pools and tennis courts are among the facilities often classified as Group A-4. The distinguishing factor between Group A-4 and A-5 structures is whether the event is indoors or outdoors. Group A-4 facilities are limited to indoor structures only. The distinguishing factor between Group A-3 and A-4 facilities is the presence of a defined seating area. While Group A-3 facilities are indoors (i.e., tennis courts, swimming pools), they typically do not have a defined seating area in which to view the event. Only facilities that are both indoors and have a defined seating area are to be classified as Group A-4.

[BG] Assembly Group A-5. Group A-5 occupancy includes assembly uses intended for participation in or viewing outdoor activities including, but not limited to:

Amusement park structures
Bleachers
Grandstands
Stadiums

❖ Structures classified in Group A-5 are outdoor facilities where people assemble to view or participate in social and recreational activities (e.g., stadiums, grandstands, bleachers, coliseums). In order to qualify as an outdoor facility, the structure must be one where the products of combustion are freely and rapidly vented to the atmosphere (i.e., a structure without enclosures that would prevent the free movement of smoke from the occupied area to the outside). Any recreation facility that has exterior walls that enclose the facility and a roof that fully covers the area would not be classified in Group A-5, but rather in Group A-3 or A-4 depending on whether a seating area has been provided. In the case of a structure with a retractable roof, the more stringent occupancy classification (i.e., Group A-4) would be required.

Since occupancies classified in Group A-5 are primarily viewing and sports participation areas, the fuel load associated with them is very low (i.e., the structure itself and seats). Since the fuel load present is

INTERNATIONAL CODE COUNCIL®
Copyright © 2015 ICC. ALL RIGHTS RESERVED. Accessed by David Dammon on Jun 21, 2017 12:30:52 PM pursuant to License Agreement with ICC. No further reproduction or distribution authorized. ANY UNAUTHORIZED REPRODUCTION OR DISTRIBUTION IS A VIOLATION OF THE FEDERAL COPYRIGHT ACT AND THE LICENSE AGREEMENT, AND SUBJECT TO CIVIL AND CRIMINAL PENALTIES THEREUNDER.

relatively low and the expectation is that smoke will be quickly evacuated from the structure, the relative fire hazard of occupancies classified in Group A-5 is expected to be low. The life safety hazard from panic that might occur in an emergency, however, is a serious concern; hence, the capability of large crowds to exit the structure quickly and orderly during emergencies is an important design consideration (see Section 1029).

Both A-4 and A-5 occupancies will include a variety of uses that support the viewing of sports and similar activities. There will likely be luxury seating suites, locker rooms, toilet facilities and press boxes, which are clearly part of the overall uses of the facility. There may also be offices, food concession stands and merchandise stands which by their use are different occupancies, but are probably within the accessory occupancy limits established in Section 508.2 of the IBC. Because of the multitiered design of most Group A-4 and A-5 occupancies, the limit for accessory occupancies of 10 percent of the story will need to be creatively applied. There may be full-fledged restaurants that are in the same building, but may be open to guests not limited to those attending an event. A Group A-2 occupancy designation is likely the most appropriate classification, and the mixed occupancy conditions would most typically be addressed under the accessory occupancy provisions of Section 508.2 of the IBC.

[BG] Business Group B. Business Group B occupancy includes, among others, the use of a building or structure, or a portion thereof, for office, professional or service-type transactions, including storage of records and accounts. Business occupancies shall include, but not be limited to, the following:

Airport traffic control towers
Ambulatory care facilities
Animal hospitals, kennels and pounds
Banks
Barber and beauty shops
Car wash
Civic administration
Clinic-outpatient
Dry cleaning and laundries: pick-up and delivery stations and self-service
Educational occupancies for students above the 12th grade
Electronic data processing
Food processing establishments and commercial kitchens not associated with restaurants, cafeterias and similar dining facilities not more than 2,500 square feet (232 m^2) in area.
Laboratories: testing and research
Motor vehicle showrooms
Post offices
Print shops
Professional services (architects, attorneys, dentists, physicians, engineers, etc.)
Radio and television stations
Telephone exchanges
Training and skill development not in a school or academic program (This shall include, but not be limited to, tutoring centers, martial arts studios, gymnastics and similar uses regardless of the ages served, and where not classified as a Group A occupancy).

❖ The risks to life safety in the business occupancy classification are relatively low. Exposure to the potential effects of fire is limited because business-type facilities most often have low fuel loads, are normally occupied only during the daytime and, with some exceptions, are usually occupied for a set number of hours. The occupants, because of the nature of the use, are typically alert, ambulatory, conscious, aware of their surroundings and generally familiar with the building's features, particularly the means of egress. Historically, this occupancy has one of the better fire safety records for the protection of life and property.

This section identifies the general characteristics and lists examples of occupancies that are classified in Group B. Note that the description recognizes the need for limited storage spaces that are incidental to office occupancies. The accessory storage classified as a Group B occupancy is limited by Section 311.1.1 of the IBC to be no more than 10 percent of a given story of a building. Colleges (educational occupancies for students above grade 12) may have spaces that have an occupant load of more than 50 in a room, but are ancillary to the place of education and used only for programs directly associated with training and education programs (see Section 303.4 of the IBC). For college buildings, similar to other office buildings, if there are spaces with occupant loads of greater than 50, such as cafeterias or lecture halls, by the character of the space and the level of fire hazard, they would be appropriately classified as Group A-2 or A-3, respectively (see IBC Section 302.1). When lecture facilities for large groups (i.e., occupant load of 50 or more) are located within the same building where classrooms with an occupant load less than 50 are found, the building is a mixed occupancy (Groups A-3 and B) and is subject to the provisions of Section 508.

While civic administration covers a broad range of state and local government buildings, many such buildings will have a variety of uses and need to be considered under mixed occupancy provisions. Frequently police stations will include jails or holding cells. Fire stations will be a mix of offices, parking and maintenance facilities for the fire engines and living spaces for the fire fighters. Often a meeting room that is open to the public is also included. This type of facility is a mix of Group A, B, R and S occupancies.

Ambulatory care facilities are those used to provide medical, or similar care, on less than a 24-hour basis to patients who are rendered incapable of self-preservation (see the definition of that term). Frequently

INTERNATIONAL CODE COUNCIL®
Copyright © 2015 ICC. ALL RIGHTS RESERVED. Accessed by David Dammon on Jun 21, 2017 12:30:52 PM pursuant to License Agreement with ICC. No further reproduction or distribution authorized. ANY UNAUTHORIZED REPRODUCTION OR DISTRIBUTION IS A VIOLATION OF THE FEDERAL COPYRIGHT ACT AND THE LICENSE AGREEMENT, AND SUBJECT TO CIVIL AND CRIMINAL PENALTIES THEREUNDER.

called “day surgery centers” or “ambulatory surgical centers,” ambulatory care facilities perform procedures that render care recipients (patients) temporarily incapable of self-preservation due to the use of nerve blocks, sedation or anesthesia. Due to the condition of the care recipients, the need for medical staff to stabilize the patients before evacuation and the use of medical gases, such as oxygen and nitrous oxide, these types of facilities pose greater fire and life safety hazards than other business occupancies. Accordingly, additional fire protection and means of egress requirements specific to ambulatory care are provided in Section 422 of the IBC.

Facilities that provide medical services for inpatient care where the care recipients (patients) stay for more than 24 hours would be classified as Group I-2. Buildings used as sleep clinics would be classified as Group B since these spaces are not typical dwelling or sleeping units where people live, the occupants are assumed to be capable of self-preservation and the occupants are not living in a supervised environment. Although the patients in a sleep clinic may be sleeping, they can be easily awakened and alerted to an emergency as compared to the patients at an ambulatory care facility.

The code distinguishes between food processing operations that are not directly associated with a restaurant based on size. Those operations 2,500 square feet or smaller fall under the Group B classification. A small catering business would fall under this classification. Other food-related businesses that don't provide a space for their product to be eaten on site, such as a take-out pizza store and neighborhood bakery, would also fall under this classification. A commercial kitchen or food processing facility larger than 2,500 square feet would be classified as a Group F occupancy.

Training and skill development is classified as a Group B occupancy due to the similarity in use of spaces to education above the 12th grade and with professional consultation. Often unions provide training facilities for their members so they can keep up with new materials and updates of regulations. Other facilities can provide one-on-one tutoring such as remedial reading or math skills for students. Training or skill development can include those whose ages are typically associated with grades 12 or earlier. The determination of the appropriate classification requires the building official to consider whether the training is given as part of a traditional educational program. Examples provided by the code allow a range of size in the numbers receiving the training from a one-on-one tutoring situation to large classes of children learning martial arts or ballet. The presence of children does not automatically mean a classification as a Group E. Where the occupant load of a training classroom or space exceeds 50 occupants, a Group A classification may be appropriate for the space, especially if the space is to be used for different activities at different times. If the training room is used for a martial arts competition, with spectators, on an evening or weekend, then a Group A designation should also be considered.

[BG] Educational Group E. Educational Group E occupancy includes, among others, the use of a building or structure, or a portion thereof, by six or more persons at any one time for educational purposes through the 12th grade.

❖ The risks to life safety in this occupancy vary with the composition of the facilities and also with the ages of the occupants. In general, children require more safeguards than do older, more mature persons.

This section identifies the criteria for classification of a building in Group E. The two fundamental characteristics of a Group E facility are as follows:

1. The facility is occupied by more than five persons (excluding the instructor); and
2. The purpose of the facility is for educating persons at the 12th-grade level and below, but not including more than five occupants $2^1/_2$ years of age or younger.

It is common for a school to also have gymnasiums (Group A-3), auditoriums (Group A-1), libraries (Group A-3) and offices (Group B). Storage rooms might be classified as either a Group S-1 occupancy, or if less than 10 percent of a story, Group E (see Section 311.1.1 of the IBC). When this occurs, the building is considered as a mixed occupancy condition and is subject to the provisions of Section 508. In accordance with Section 303.1.3 of the IBC, assembly spaces, such as the gymnasium, auditorium, library and cafeteria, do not have to be considered separate occupancies if used for school purposes (see commentary below). For such assembly functions to be considered part of the primary Group E occupancy, the assembly functions must be ancillary and supportive to the educational operation of the building.

Occupancies used for the education of persons above the 12th grade level are not included in Group E. These facilities are occupied by adults who are not expected to require special supervision, direction or instruction in a fire or other emergency.

[BG] Accessory to places of religious worship. Religious educational rooms and religious auditoriums, which are accessory to places of religious worship in accordance with Section 508.3.1 of the *International Building Code* and have *occupant loads* of less than 100 per room or space shall be classified as Group A-3 occupancies.

❖ In places of religious worship, worship halls, religious educational rooms and religious auditoriums are often all provided in the same building complex. Such religious educational rooms and auditoriums are not to be considered separate occupancies (i.e., Group E). Where such rooms are used at certain times for other than as a religious auditorium or for religious

INTERNATIONAL CODE COUNCIL®
Copyright © 2015 ICC. ALL RIGHTS RESERVED. Accessed by David Dammon on Jun 21, 2017 12:30:52 PM pursuant to License Agreement with ICC. No further reproduction or distribution authorized. ANY UNAUTHORIZED REPRODUCTION OR DISTRIBUTION IS A VIOLATION OF THE FEDERAL COPYRIGHT ACT AND THE LICENSE AGREEMENT, AND SUBJECT TO CIVIL AND CRIMINAL PENALTIES THEREUNDER.

education, Section 302 requires that the requirements of each occupancy be applied.

> **[BG] Group E, day care facilities.** This group includes buildings and structures or portions thereof occupied by more than five children older than $2^1/_2$ years of age who receive educational, supervision or *personal care services* for less than 24 hours per day.

❖ Group E day care occupancies include facilities intended to be used for the care and supervision of more than five children older than $2^1/_2$ years of age where individual care is for a period of less than 24 hours per day. Day care centers are a special concern since they are generally occupied by preschool children who are less capable of responding to an emergency. The hazards found in a day care center are far greater than in normal educational facilities, not so much because of the occupant or fuel load, but because of the inability of the occupants to respond.

Children $2^1/_2$ years of age or younger usually are not able to recognize an emergency situation, respond appropriately or simply be able to egress without assistance; thus, facilities that have more than five children $2^1/_2$ years of age or younger are classified as child care facilities and considered to be Group I-4 unless the provisions of one of the subclassifications of that group allow for a different classification.

Locations where child care may be provided that would not be considered Group E, I-4 or I-2 are addressed in Sections 305.2.1 through 305.2.3 of the IBC.

> **[BG] Within places of worship.** Rooms and spaces within places of worship providing such care during religious functions shall be classified as part of the primary occupancy.

❖ Cry rooms and other types of child care areas within places of worship that are used for this purpose during a religious function need not be classified as Group E day care facilities. Such rooms and spaces may take on the classification of the primary occupancy, which in most cases would be Group A-3. The limited occupant load makes the need for classification as a Group E occupancy unnecessary. If the child care areas are used when there is not a service or other religious function going on simultaneously, such as for child day care during the week, the religious facility would be a mixed use building (see IBC commentary, Section 305.2 or 308.6).

> **[BG] Five or fewer children.** A facility having five or fewer children receiving such care shall be classified as part of the primary occupancy.

❖ Where a child care facility has no more than five children receiving care at any one time, the classification of the main occupancy may extend to the child care use. The limited number of occupants requiring care services does not warrant classification as a separate and distinct occupancy from that of the major use.

> **[BG] Five or fewer children in a dwelling unit.** A facility such as the above within a dwelling unit and having five or fewer children receiving such care shall be classified as a Group R-3 occupancy or shall comply with the *International Residential Code.*

❖ Where the child care services are performed within a single-family dwelling or within a dwelling unit of a two-family dwelling, residential provisions are applicable provided the number of children receiving care does not exceed five. The facility may be classified under the IBC as a Group R-3 occupancy or may be regulated under the provisions of the IRC. Where such a use occurs within a dwelling unit of a Group R-2 multifamily building, it is expected that the child care facility be considered as an extension of the primary Group R-2 classification as with five or fewer children.

> **[BG] Factory Industrial Group F.** Factory Industrial Group F occupancy includes, among others, the use of a building or structure, or a portion thereof, for assembling, disassembling, fabricating, finishing, manufacturing, packaging, repair or processing operations that are not classified as a Group H high-hazard or Group S storage occupancy.

❖ The purpose of this definition is to identify the characteristics of occupancies that are classified in the factory industrial group and to differentiate Groups F-1 and F-2. Because of the vast number of diverse manufacturing and processing operations in the industrial community, it is more practical to classify such facilities by their level of hazard rather than by their function. In industrial facilities, experience has shown that the loss of life or property is most directly related to fire hazards, particularly the fuel load contributed by the materials being fabricated, assembled or processed.

Statistics show that property losses are comparatively high in factory and industrial occupancies, but the record of fatalities and injuries from fire has been remarkably low. This excellent life safety record can, in part, be attributed to fire protection requirements of the code.

This definition requires that all structures that are used for fabricating, finishing, manufacturing, packaging, assembling or processing products or materials are to be classified in either Group F-1 (moderate hazard) or F-2 (low hazard). These classifications are based on the relative level of hazard for the types of materials that are fabricated, assembled or processed. Where the products and materials in a factory present an extreme fire, explosion or health hazard, such facilities are classified in Group H. It should be noted that the term “Group F” is not a specific occupancy, but is a term that collectively applies to Groups F-1 and F-2.

INTERNATIONAL CODE COUNCIL®
Copyright © 2015 ICC. ALL RIGHTS RESERVED. Accessed by David Dammon on Jun 21, 2017 12:30:52 PM pursuant to License Agreement with ICC. No further reproduction or distribution authorized. ANY UNAUTHORIZED REPRODUCTION OR DISTRIBUTION IS A VIOLATION OF THE FEDERAL COPYRIGHT ACT AND THE LICENSE AGREEMENT, AND SUBJECT TO CIVIL AND CRIMINAL PENALTIES THEREUNDER.

[BG] Factory Industrial F-1 Moderate-hazard occupancy. Factory industrial uses that are not classified as Factory Industrial F-2 Low Hazard shall be classified as F-1 Moderate Hazard and shall include, but not be limited to, the following:

Aircraft (manufacturing, not to include repair)
Appliances
Athletic equipment
Automobiles and other motor vehicles
Bakeries
Beverages; over 16-percent alcohol content
Bicycles
Boats
Brooms or brushes
Business machines
Cameras and photo equipment
Canvas or similar fabric
Carpets and rugs (includes cleaning)
Clothing
Construction and agricultural machinery
Disinfectants
Dry cleaning and dyeing
Electric generation plants
Electronics
Engines (including rebuilding)
Food processing and commercial kitchens not associated with restaurants, cafeterias and similar dining facilities more than 2,500 square feet (232 m^2) in area.
Furniture
Hemp products
Jute products
Laundries
Leather products
Machinery
Metals
Millwork (sash and door)
Motion pictures and television filming (without spectators)
Musical instruments
Optical goods
Paper mills or products
Photographic film
Plastic products
Printing or publishing
Refuse incineration
Shoes
Soaps and detergents
Textiles
Tobacco
Trailers
Upholstering
Wood; distillation
Woodworking (cabinet)

❖ Structures classified in Group F-1 (moderate hazard) are occupied for the purpose of the fabrication, finishing, manufacturing, packaging, assembly or processing of materials that are combustible or that use combustible products in the production process. Food processing facilities and commercial kitchens that are 2,500 square feet or smaller in area fall under the Group B occupancy category (see Section 304.1 of the IBC).

[BG] Factory Industrial F-2 Low-hazard Occupancy. Factory industrial uses involving the fabrication or manufacturing of noncombustible materials that, during finishing, packaging or processing do not involve a significant fire hazard, shall be classified as Group F-2 occupancies and shall include, but not be limited to, the following:

Beverages; up to and including 16-percent alcohol content
Brick and masonry
Ceramic products
Foundries
Glass products
Gypsum
Ice
Metal products (fabrication and assembly)

❖ Structures classified in Group F-2 (low hazard) are occupied for the purpose of the fabrication, manufacturing or processing of noncombustible materials. It is acceptable for noncombustible products to be packaged in a combustible material, provided that the fuel load contributed by the packaging is negligible when compared to the amount of noncombustible product. The use of a significant amount of combustible material to package or finish a noncombustible product, however, will result in a Group F-1 (moderate-hazard factory and industrial) classification.

To distinguish when the presence of combustible packaging constitutes a significant fuel load, possibly requiring the reclassification of the building or structure as Group F-1, a reasonable guideline to follow is the “single-thickness” rule, which is when a noncombustible product is put in one layer of packaging material.

Examples of acceptable conditions in Group F-2 are:

- Vehicle engines placed on wood pallets for transportation after assembly;
- Washing machines in corrugated cardboard boxes; and
- Soft-drink glass bottles packaged in pressed paper boxes.

Occupancies involving noncombustible items packaged in more than one layer of combustible packaging material are most appropriately classified in Group F-1.

Typical examples of packaging that would result in a Group F-1 classification are:

- Chinaware wrapped in corrugated paper and placed in cardboard boxes;
- Glassware set in expanded foam forms and placed in cardboard boxes; and

INTERNATIONAL CODE COUNCIL®
Copyright © 2015 ICC. ALL RIGHTS RESERVED. Accessed by David Dammon on Jun 21, 2017 12:30:52 PM pursuant to License Agreement with ICC. No further reproduction or distribution authorized. ANY UNAUTHORIZED REPRODUCTION OR DISTRIBUTION IS A VIOLATION OF THE FEDERAL COPYRIGHT ACT AND THE LICENSE AGREEMENT, AND SUBJECT TO CIVIL AND CRIMINAL PENALTIES THEREUNDER.

- Fuel filters individually packed in pressed paper boxes, placed by the gross in a cardboard box and stacked on a pallet for transportation.

Factories and industrial facilities often have offices and areas where large quantities of materials are kept in the same building as manufacturing operations, fabrication processes and assembly processes. The stock areas are classified as either Group S-1 or S-2, depending on the combustibility of the materials stored. Areas used for offices that do not qualify as accessory occupancies (see Section 508.2 of the IBC) are classified in Group B. When these combinations of occupancies occur, as well as other combinations of occupancies, the building is subject to the mixed occupancy provisions in Section 508 of the IBC.

High-hazard Group H. High-hazard Group H occupancy includes, among others, the use of a building or structure, or a portion thereof, that involves the manufacturing, processing, generation or storage of materials that constitute a physical or *health hazard* in quantities in excess of those allowed in *control areas* complying with Section 5003.8.3, based on the maximum allowable quantity limits for *control areas* set forth in Tables 5003.1.1(1) and 5003.1.1(2). Hazardous occupancies are classified in Groups H-1, H-2, H-3, H-4 and H-5 and shall be in accordance with this code and the requirements of Section 415 of the *International Building Code*. Hazardous materials stored or used on top of roofs or canopies shall be classified as outdoor storage or use and shall comply with this code.

❖ This occupancy classification identifies the various types of facilities contained in the high-hazard occupancy groups, e.g., those facilities where the storage of materials or the operations are deemed to be extremely hazardous to life and property, especially when they involve the use of significant amounts of highly combustible, flammable or explosive materials, regardless of their composition (i.e., solids, liquids, gases or dust). Although they are not explosive or highly flammable, other hazardous materials, such as corrosive liquids, highly toxic materials and poisonous gases, still present an extreme hazard to life. Many materials possess multiple hazards, whether physical or health related.

There is a wide range of high-hazard operations in the industrial community; therefore, it is more practical to categorize such facilities in terms of the degree of hazard they present, rather than attempt to define a facility in terms of its function. This method is similar to that used to categorize Group F factory and Group S storage occupancies.

Group H is handled as a separate classification because it represents an unusually high degree of hazard that is not found in the other occupancies. It is important to isolate those industrial or storage operations that pose the greatest dangers to life and property and to reduce such hazards by providing systems or elements of protection through the regulatory provisions of building codes. There are numerous provisions and exceptions throughout the code that cannot be used when one or more Group H occupancies are present.

Operations that, because of the materials utilized or stored, cause a building or portion of a building to be classified as a high-hazard occupancy are identified in this section. While buildings classified as Group H may not have a large occupant load, the unstable chemical properties of the materials contained on the premises constitute an above-average fuel load and serve as a potential danger to the surrounding area.

The dangers created by the high-hazard materials require special consideration for the abatement of the danger. The classification of a material as high hazard is based on information derived from National Fire Protection Association (NFPA) standards and the Code of Federal Regulations (DOL 29 CFR).

The wide range of materials utilized or stored in buildings creates an equally wide range of hazards to the occupants of the building, the building proper and the surrounding area. Since these hazards range from explosive to corrosive conditions, the high-hazard occupancy has been broken into four subclassifications: Groups H-1 through H-4. A fifth category, Group H-5, is used to represent structures that contain hazardous production material (HPM) facilities. Each of these subclassifications addresses materials that have similar characteristics and the protection requirements attempt to address the hazard involved. These subclassifications are defined by the properties of the materials involved with only occasional reference to specific materials. This performance-based criterion may involve additional research to identify a hazard, but it is the only way to remain current in a rapidly changing field. MSDS will be a major source for information.

Additional information on hazardous materials can be found in Section 415 as well as the commentary to the code.

This definition and Section 307.1 of the IBC acknowledge that a building is not classified as a high-hazard occupancy unless the MAQs per control area as prescribed in Tables 5003.1.1(1) and 5003.1.1(2) [IBC Tables 307.1(1) and 307.1(2)] are exceeded, subject to the applicable control area provisions of Section 5003.8.3 (IBC Section 414.2). The maximum quantity limitations per control area prescribed in Tables 5003.1.1(1) and 5003.1.1(2) [IBC Tables 307.1(1) and 307.1(2)] have been determined to be relatively safe when maintained in accordance with the code. Therefore, a building containing less than the MAQs specified would not be classified as a Group H occupancy but, rather, as the occupancy group it most nearly resembles. The materials in these tables are defined in detail in this chapter.

Section 5003.8.3 (IBC Section 414.2) establishes the control area concept for regulating hazardous materials. This concept would allow the maximum

INTERNATIONAL CODE COUNCIL®
Copyright © 2015 ICC. ALL RIGHTS RESERVED. Accessed by David Dammon on Jun 21, 2017 12:30:52 PM pursuant to License Agreement with ICC. No further reproduction or distribution authorized. ANY UNAUTHORIZED REPRODUCTION OR DISTRIBUTION IS A VIOLATION OF THE FEDERAL COPYRIGHT ACT AND THE LICENSE AGREEMENT, AND SUBJECT TO CIVIL AND CRIMINAL PENALTIES THEREUNDER.

allowable quantities of hazardous materials per control area in Tables 5003.1.1(1) and 5003.1.1(2) [IBC Tables 307.1(1) and 307.1(2)] to be exceeded within a given building without classifying the building as a high-hazard occupancy by utilizing a multiple control area approach. The permitted number of control areas, maximum percentage of allowable quantities of hazardous materials per control area and degree of fire separation between control areas are regulated by Section 5003.8.3 (IBC Section 414.2) (see the definition of "Control area" and the commentary to Section 5003.8.3).

This definition and Section 307.1 of the IBC also clarifiy that hazardous materials outside of the building envelope should be classified as outdoor storage. As such, hazardous material quantities on roofs or canopies are not included in evaluating the occupancy classification of a building or structure. Canopies used to support gaseous hydrogen systems must comply with Section 406.7.2.1 of the IBC.

Uses other than Group H. The storage, use or handling of hazardous materials as described in one or more of the following items shall not cause the occupancy to be classified as Group H, but it shall be classified as the occupancy that it most nearly resembles:

1. Buildings and structures occupied for the application of flammable finishes, provided that such buildings or areas conform to the requirements of Chapter 24 of this code and Section 416 of the *International Building Code*.
2. Wholesale and retail sales and storage of flammable and *combustible liquids* in mercantile occupancies conforming to Chapter 57.
3. Closed piping system containing flammable or *combustible liquids* or gases utilized for the operation of machinery or equipment.
4. Cleaning establishments that utilize *combustible liquid* solvents having a *flash point* of 140°F (60°C) or higher in *closed systems* employing equipment *listed* by an *approved* testing agency, provided that this occupancy is separated from all other areas of the building by 1-hour *fire barriers* in accordance with Section 707 of the *International Building Code* or 1-hour *horizontal assemblies* in accordance with Section 711 of the *International Building Code*, or both.
5. Cleaning establishments that utilize a liquid solvent having a *flash point* at or above 200°F (93°C).
6. Liquor stores and distributors without bulk storage.
7. Refrigeration systems.
8. The storage or utilization of materials for agricultural purposes on the premises.
9. Stationary batteries utilized for facility emergency power, uninterruptible power supply or telecommunication facilities, provided that the batteries are equipped with safety venting caps and ventilation is provided in accordance with the *International Mechanical Code*.
10. *Corrosive* personal or household products in their original packaging used in retail display.
11. Commonly used *corrosive* building materials.
12. Buildings and structures occupied for aerosol storage shall be classified as Group S-1, provided that such buildings conform to the requirements of Chapter 51.
13. Display and storage of nonflammable solid and nonflammable or noncombustible liquid hazardous materials in quantities not exceeding the *maximum allowable quantity per control area* in Group M or S occupancies complying with Section 5003.8.3.5.
14. The storage of black powder, smokeless propellant and small arms primers in Groups M and R-3 and special industrial explosive devices in Groups B, F, M and S, provided such storage conforms to the quantity limits and requirements of this code.

❖ The exceptions list indicates uses and conditions that are exempt from a high-hazard (Group H) classification because of the building's construction, use, the packaging of materials, the quantity of materials or the precautions taken to prevent fire. Even if a high-hazard material meets one of the exceptions, its storage and use must comply with the applicable provisions of the code and Section 414 of the IBC.

There are 14 cases where facilities would not be classified a Group H because of the specific type of material; how it is expected to be used or stored, or both; the building's construction and use; the packaging of materials; the quantity of materials or the precautions taken to prevent fire. Even if a high-hazard material meets one of these 14 cases, its storage and use must comply with the applicable provisions of Section 414 of the IBC and this code.

Item 1 exempts spray painting and similar operations within buildings from being classified as a high-hazard occupancy. This exception requires that all such operations, as well as the handling of flammable finishes, are in accordance with the provisions of Section 416 of the IBC and Chapter 24 of the code; therefore, an adequately protected typical paint spray booth in a factory (Group F-1) would not result in a high-hazard occupancy classification for either the building or the paint spray area.

Item 2 relies on the provisions of Section 5704.3.4.1 to regulate the storage of flammable and combustible liquids for wholesale and retail sales and storage in mercantile occupancies. The overall permitted amount of flammable and combustible liquids is dependent on the class of liquid, storage arrangement, container size and level of sprinkler protection. For nonsprinklered buildings, the maximum allowable quantity per control area permitted by Table

INTERNATIONAL CODE COUNCIL®
Copyright © 2015 ICC. ALL RIGHTS RESERVED. Accessed by David Dammon on Jun 21, 2017 12:30:52 PM pursuant to License Agreement with ICC. No further reproduction or distribution authorized. ANY UNAUTHORIZED REPRODUCTION OR DISTRIBUTION IS A VIOLATION OF THE FEDERAL COPYRIGHT ACT AND THE LICENSE AGREEMENT, AND SUBJECT TO CIVIL AND CRIMINAL PENALTIES THEREUNDER.

5704.3.4.1 is 1,600 gallons (6057 L) of Class IB, IC, II, and IIIA liquids with a maximum of 60 gallons (227 L) of Class IA liquids. Depending on storage and ceiling heights, buildings equipped with a sprinkler system with a minimum design density for an Ordinary Hazard Group 2 occupancy may have an aggregate total of 7,500 gallons (28 391 L) of Class IB, IC, II, and IIIA liquids with a maximum of 60 gallons (227 L) of Class IA liquids. The quantities of Class IB, IC, II and IIA liquids could be further increased depending on the potential storage conditions and enhanced degree of sprinkler protection (see Section 5703.3.4.1 for additional design information). Again, it should be noted, that despite the increased quantities which far exceed the base quantity limitations of Table 5003.1.1(1) [IBC Table 307.1(1)], compliance with this item would result in the building not being classified as a Group H occupancy.

Item 3 exempts from Group H classification closed systems that are used exclusively for the operation of machinery or equipment. The closed piping systems, which are essentially not open to the atmosphere, keep flammable or combustible liquids from direct exposure to external sources of ignition as well as prevent the users from coming in direct contact with liquids or harmful vapors. This item would include systems such as oil-burning equipment, piping for diesel fuel generators and LP-gas cylinders for use in forklift trucks.

Item 4 allows cleaning establishments that utilize a closed system for all combustible liquid solvents with a flash point at or above 140°F (60°C) to be classified as something other than Group H. The reference to using equipment listed by an approved testing laboratory does not mean that the entire system needs to be approved, but rather the individual pieces of equipment. As with any mechanical equipment or appliance, it should bear the label of an approved agency and be installed in accordance with the manufacturer's installation instructions (see the IMC).

Item 5 covers cleaning establishments that use solvents that have very high flash points [at least 200°F (93°C)] and that are exceedingly difficult to ignite. Such liquids can be used openly, but with due care.

Item 6 exempts all retail liquor stores and liquor distribution facilities from the high-hazard occupancy classification, even though most of the contents are considered combustible liquids. The item takes into account that alcoholic beverages are packaged in individual containers of limited size.

Item 7 refers to refrigeration systems that utilize refrigerants that may be flammable or toxic. Refrigeration systems do not alter the occupancy classification of the building, provided they are installed in accordance with the IMC. The IMC has specific limitations on the quantity and type of refrigerants that can be used, depending on the occupancy classification of the building.

Item 8 addresses materials that are used for agricultural purposes, such as fertilizers, pesticides, and fungicides, when used on the premises. Agricultural materials stored for direct or immediate use are not usually of large enough quantity that would constitute a large fuel load or an exceptionally hazardous condition. A group H classification is not appropriate for these situations.

Item 9 addresses battery storage rooms when used as part of an operating system, such as for providing standby power. The batteries used in installations of this type do not represent a significant health, safety or fire hazard. The electrolyte and battery casing contribute little fuel load to a fire. The release of hydrogen gas during the operation of battery systems is minimal. Ventilation in accordance with the IMC will disperse the small amounts of liberated hydrogen. This exception also assumes that rooms containing stationary storage battery systems are in compliance with Section 608 and the enclosure requirements of Table 509 of the IBC.

Without Item 10, certain products that technically are corrosive could cause grocery stores and other mercantile occupancies to be inappropriately classified as Group H-4. This item allows the MAQ in Table 5003.1.1(2) [IBC Table 307.1(2)] for corrosives to be exceeded in the retail display area. This would include such things as bleaches, detergents and other household cleaning supplies in normal-size containers.

Item 11 exempts the storage or manufacture of commonly used building materials, such as Portland cement, from being inappropriately classified as Group H.

Item 12 exempts from a Group H classification those buildings and structures used for the storage of aerosol products, provided they are protected in accordance with the provisions of Chapter 51 and NFPA 30B and the code. The aerosol storage requirements of the code referred to in this item are based on the provisions of NFPA 30B. Compliance with this item exempts buildings from complying with the code provisions for Group H, provided the storage of aerosol products complies with the applicable separation, storage limitations and sprinkler design requirements specified in the code and NFPA 30B.

Item 13 permits certain products found in mercantile and storage occupancies, which may be comprised of hazardous materials, to exceed the MAQ of Tables 5003.1.1(1) and 5003.1.1(2) [IBC Tables 307.1(1) and 307.1(2)]. The products, however, must be comprised of nonflammable solids or liquids that are nonflammable or noncombustible. Materials could include swimming pool chemicals, which are typically Class 2 or 3 oxidizers or industrial corrosive cleaning agents (see commentary, Section 5003.8.3.5).

Item 14 permits the base maximum allowable quantity per control area of black powder, smokeless propellant and small arms primers in Group M and R-3 occupancies to be exceeded, provided the material is stored in accordance with Chapter 56. The require-

INTERNATIONAL CODE COUNCIL®
Copyright © 2015 ICC. ALL RIGHTS RESERVED. Accessed by David Dammon on Jun 21, 2017 12:30:52 PM pursuant to License Agreement with ICC. No further reproduction or distribution authorized. ANY UNAUTHORIZED REPRODUCTION OR DISTRIBUTION IS A VIOLATION OF THE FEDERAL COPYRIGHT ACT AND THE LICENSE AGREEMENT, AND SUBJECT TO CIVIL AND CRIMINAL PENALTIES THEREUNDER.

ments are based on the provisions in NFPA 495. Similarly, special industrial explosive devices are found in a number of occupancies other than Group H (Groups B, F, M and S). Storage of these devices in accordance with the code is not required to have a high-hazard occupancy classification. Power drivers are commonly used in the construction industry, and there are stocks of these materials maintained for sale and use by the trade. The automotive airbag industry has evolved with the use of these devices, and they are located in automotive dealerships and personal use vehicles throughout society. The code currently exempts up to 50 pounds (23 kg) of these materials from regulation under Chapter 56.

High-hazard Group H-1. Buildings and structures containing materials that pose a *detonation* hazard shall be classified as Group H-1. Such materials shall include, but not be limited to, the following:

Detonable pyrophoric materials

Explosives:

Division 1.1
Division 1.2
Division 1.3
Division 1.4
Division 1.5
Division 1.6

Organic peroxides, unclassified detonable
Oxidizers, Class 4
Unstable (reactive) materials, Class 3 detonable, and Class 4

❖ The contents of occupancies in Group H-1 present a detonation hazard. Examples of materials that create this hazard are listed in the definition. The definitions for Group H-1 materials are listed in Section 5602 and defined in Chapter 2. Because of the explosion hazard potential associated with Group H-1 materials, occupancies in Group H-1, which exceed the MAQ indicated in Table 5003.1.1(1) [IBC Table 307.1(1)], are required to be located in detached one-story buildings without basements (see commentary to Section 5003.8.2 and IBC Sections 415.6.2, 415.7 and 508.3). Group H-1 occupancies cannot be located in a mixed occupancy building.

Occupancies containing explosives not classified as H-1. The following occupancies containing explosive materials shall be classified as follows:

1. Division 1.3 explosive materials that are used and maintained in a form where either confinement or configuration will not elevate the hazard from a mass fire hazard to mass explosion hazard shall be allowed in Group H-2 occupancies.
2. Articles, including articles packaged for shipment, that are not regulated as a Division 1.4 explosive under Bureau of Alcohol, Tobacco, Firearms and Explosives regulations, or unpackaged articles used in process operations that do not propagate a *detonation* or deflagration between articles shall be allowed in H-3 occupancies.

❖ There are certain explosive materials that pose a hazard level less than that anticipated for a Group H-1 occupancy. A Group H-2 classification is permitted for Division 1.3 explosive materials used or maintained under conditions where the hazard level will not rise from that of a mass fire hazard to a mass explosion hazard. A Group H-3 occupancy classification is permitted for packaged and unpackaged articles not regulated as Division 1.4 explosives by the Bureau of Alcohol, Tobacco, Firearms and Explosives (ATF), as well as unpackaged articles used in process operations, provided there is no concern regarding the propagation of a detonation or deflagration between the articles during process operations.

High-hazard Group H-2. Buildings and structures containing materials that pose a *deflagration* hazard or a hazard from accelerated burning shall be classified as Group H-2. Such materials shall include, but not be limited to, the following:

Class I, II or IIIA flammable or *combustible liquids* that are used or stored in normally open containers or systems, or in closed containers or systems pressurized at more than 15 pounds per square inch gauge (103.4 kPa)
Combustible dusts where manufactured, generated or used in such a manner that the concentration and conditions create a fire or explosion hazard based on information prepared in accordance with Section 414.1.3 of the *International Building Code*
Cryogenic fluids, flammable
Flammable gases
Organic peroxides, Class I
Oxidizers, Class 3, that are used or stored in normally open containers or systems, or in closed containers or systems pressurized at more than 15 pounds per square inch gauge (103.4 kPa)
Pyrophoric liquids, solids and gases, nondetonable
Unstable (reactive) materials, Class 3, nondetonable
Water-reactive materials, Class 3

❖ The contents of occupancies in Group H-2 present a deflagration or accelerated burning hazard. Examples of materials that create this hazard are listed. The definitions for Group H-2 materials are contained in Chapter 2 also. Because of the severe fire or reactivity hazard associated with these types of materials, proper classification is essential in determining the applicable requirements with regard to the mitigation of these hazards.

High-hazard Group H-3. Buildings and structures containing materials that readily support combustion or that pose a *physical hazard* shall be classified as Group H-3. Such materials shall include, but not be limited to, the following:

Combustible fibers, other than densely packed baled cotton, where manufactured, generated or used in

INTERNATIONAL CODE COUNCIL®
Copyright © 2015 ICC. ALL RIGHTS RESERVED. Accessed by David Dammon on Jun 21, 2017 12:30:52 PM pursuant to License Agreement with ICC. No further reproduction or distribution authorized. ANY UNAUTHORIZED REPRODUCTION OR DISTRIBUTION IS A VIOLATION OF THE FEDERAL COPYRIGHT ACT AND THE LICENSE AGREEMENT, AND SUBJECT TO CIVIL AND CRIMINAL PENALTIES THEREUNDER.

such a manner that the concentration and conditions create a fire or explosion hazard based on information prepared in accordance with Section 414.1.3 of the *International Building Code*

Consumer fireworks, 1.4G (Class C, Common)
Cryogenic fluids, oxidizing
Flammable solids
Organic peroxides, Class II and III
Oxidizers, Class 2
Oxidizers, Class 3, that are used or stored in normally closed containers or systems pressurized at 15 pounds per square inch gauge (103 kPa) or less
Oxidizing gases
Unstable (reactive) materials, Class 2
Water-reactive materials, Class 2

❖ The contents of occupancies in Group H-3 present a hazard inasmuch as they contain materials that readily support combustion or that present a physical hazard. Examples of materials that create this hazard are listed in the definition. The definitions for Group H-3 materials are contained in Chapter 2 also. While Group H-3 materials are generally less of a fire or reactivity hazard than Group H-2 materials, they still present a greater physical hazard than materials not currently regulated as high hazard.

High-hazard Group H-4. Buildings and structures containing materials that are *health hazards* shall be classified as Group H-4. Such materials shall include, but not be limited to, the following:

Corrosives
Highly toxic materials
Toxic materials

❖ The contents of occupancies in Group H-4 present a hazard inasmuch as they contain materials that are health hazards. Examples of these hazards are listed in this definition. The definitions for Group H-4 materials are contained in Chapter 2 also. While reference is made to chemicals that cause these hazards, the MSDS for these chemicals, which are furnished by the applicant, will need considerable subjective evaluation.

Some materials falling into the category of health hazard may also present a physical hazard and would, therefore, require the structure to be designed for multiple hazards in accordance with Section 5001.1 of the code and Section 307.8 of the IBC.

High-hazard Group H-5. Semiconductor fabrication facilities and comparable research and development areas in which hazardous production materials (HPM) are used and the aggregate quantity of materials is in excess of those listed in Tables 5003.1.1(1) and 5003.1.1(2) shall be classified as Group H-5. Such facilities and areas shall be designed and constructed in accordance with Section 415.11 of the *International Building Code*.

❖ HPM includes flammable liquids and gases, corrosives, oxidizers and, in many instances, highly toxic materials (see the definition for "Hazardous production material"). In determining the applicable requirements of other sections of the code, HPM facilities are considered to be Group H-5 occupancies. It is intended that the quantities of materials permitted in Table 2704.2.2.1 will take precedence over Tables 5003.1.1(1) and 5003.1.1(2).

[BG] Institutional Group I. Institutional Group I occupancy includes, among others, the use of a building or structure, or a portion thereof, in which care or supervision is provided to persons who are or are not capable of self-preservation without physical assistance or in which persons are detained for penal or correctional purposes or in which the liberty of the occupants is restricted. Institutional occupancies shall be classified as Group I-1, I-2, I-3 or I-4.

❖ Institutional occupancies are comprised of two basic types. The first, Group I-1, I-2 and I-4, relates to facilities that provide personal care, custodial care or medical care for people who, due to age; physical limitations; diseases; mental disabilities; or other infirmities, need a supervised environment (see the commentary for the definitions of "Custodial care," "Medical care" and "Personal care service"). This includes persons who are ambulatory and are capable of self-preservation as well as those who are restricted in their mobility or are totally immobile to the extent that they are incapable of self-preservation and therefore may need assistance to evacuate during an emergency situation, such as a fire. The IFC also addresses the idea of a defend-in-place protection option for hospitals and nursing homes (see the commentary for the definition of "Incapable of self-preservation" and Sections 403 and 404). The second type, Group I-3, relates primarily to detention and correctional facilities. Since security is the major operational consideration in these kinds of facilities, the occupants (inmates) are under some form of supervision and restraint and may be rendered incapable of self-preservation without direct intervention from staff in emergency situations due to locked cells and exits.

The degree of hazards in each type of institutional facility identified in this section varies respective to each kind of occupancy. The code addresses each occupancy separately and the regulatory provisions throughout the code provide the proper means of protection so as to produce an acceptable level of safety to life and property.

Groups I-1, I-2 and I-3 are further divided into "conditions" relative to unique aspects of the respective occupancies. Group I-1 and R-4 are closely related and are primarily distinguished by the number of persons residing in the facility (see Section 308.3).

Another of the distinguishing characteristics between the different Group I occupancies and other occupancies is when care is provided for a length of time exceeding 24-hours. The intent is that this criteria is not specific to the hours of operation of the facility, but the length of time that care is provided for the patients, residents or those in day care. For example, an outpatient clinic that is open 24 hours a day is a

INTERNATIONAL CODE COUNCIL®
Copyright © 2015 ICC. ALL RIGHTS RESERVED. Accessed by David Dammon on Jun 21, 2017 12:30:52 PM pursuant to License Agreement with ICC. No further reproduction or distribution authorized. ANY UNAUTHORIZED REPRODUCTION OR DISTRIBUTION IS A VIOLATION OF THE FEDERAL COPYRIGHT ACT AND THE LICENSE AGREEMENT, AND SUBJECT TO CIVIL AND CRIMINAL PENALTIES THEREUNDER.

Group B occupancy provided care recipients are treated as outpatients and there are no in-patients that would stay at the facility 24 hours or longer. Another example would be a "day care" facility that is open 24 hours to serve workers who work any shift and need to have children in "day care" while they work. Provided that individual children receive care for less than 24 hours, the occupancy would be classified as a Group I-4 or possibly a Group E.

Each individual facility will have unique characteristics or a combination of characteristics that should be considered when classifying it to one occupancy and condition or another. For example, some of the newer care facilities are offering a combination of care levels to allow for persons to age-in-place within the same complex. A facility could easily have a mix of occupancies such as one wing providing full-time nursing care (Group I-2 Condition 1), a second wing may provide assisted living care for residents with dementia so they may need direct physical contact from staff to react to an emergency (Group I-1 Condition 2), and yet a third wing may provide custodial care where residents are capable of responding to an emergency on their own (Group I-2 Condition 1). Health care and custodial care facilities are subject to many state and some local regulations. Such regulations may be a determining factor in deciding which IBC occupancy classification is appropriate.

> **[BG] Institutional Group I-1.** Institutional Group I-1 occupancy shall include buildings, structures or portions thereof for more than 16 persons, excluding staff, who reside on a 24-hour basis in a supervised environment and receive custodial care. Buildings of Group I-1 shall be classified as one of the occupancy conditions indicated below. This group shall include, but not be limited to, the following:
>
> Alcohol and drug centers
> Assisted living facilities
> Congregate care facilities
> Group homes
> Halfway houses
> Residential board and care facilities
> Residential board and custodial care facilities
> Social rehabilitation facilities

❖ Group I-4 and R-4 occupancies are similar facilities that differ only by the number of residents receiving care. Group I-1 and R-4 occupancies are based on four characterizations described in the occupancy classification: both are facilities where custodial care is provided, there is 24-hour-a day supervision and the occupancy is either Condition 1 or Condition 2. The difference is the number of persons receiving care and residing in such facilities: Group I-1 has greater than 16 residents; Group R-4 has six to 16 persons. Note that Group I-1 and R-4 occupancies are limited facilities where custodial care is provided and not where medical care is provided (see the commentary to "Custodial care" and "Medical care"). Both Group I-1 and R-4 occupancies list the same eight generic uses as example uses falling under the Group I-1/R-4 umbrella. Of these eight, only "Group home" is defined (see commentary to this definition). Some of these terms may be used in state and local regulations of care facilities. Caution should be taken before assuming that a state-defined "assisted living" facility should be classified under the IBC as a Group I-1 and R-4 occupancy.

Both Groups I-1 and R-4 include "conditions" to cover the variety of acuity and ability levels of custodial care recipients. Group I-1 Condition 1 and Group R-4 Condition 1 occupancies match requirements for previous editions of the code for Groups I-1 and R-4, before conditions were included. The intent of the conditions was to address the concerns that some residents may need limited assistance or verbal direction to evacuate. The building protection offered for Groups I-1 and R-4 occupancies in previous editions of the code is maintained in Condition 1. Some additional requirements were added for Condition 2. Note that this is custodial care. Where nursing care is provided, the facility is a Group I-2 Condition 1. The Condition 1 care recipients may be slower during evacuation but all are capable of emergency evacuation without any physical assistance from others; however, they require no more than only minor verbal queuing from others during emergencies, as might be expected in the general population. Condition 2 custodial care recipients are also slower to evacuate and include any care recipients who may require limited assistance during evacuation. Group I-1 Condition 2 and Group R-4 Condition 2 integrates additional protection features, such as smoke barriers to subdivide the building and increased automatic sprinkler requirements.

In Group I-1 Condition 2 and Group R-4 Condition 2 facilities, assistance with evacuation can occur either because of care recipients' physical or mental limitations, or both. The Condition 2 assistance with evacuation includes help getting out of bed into a wheelchair or walker, or help initiating ambulation. It includes continued physical assistance getting out of the building from a sleeping room, apartment or other rooms during an emergency. Assistance with evacuation includes assisting persons who may have resistance or confusion in response to an alarm, or require help with instructions. It can also include help for persons with short periods of impaired intermittent consciousness due to medications or illness. Custodial care Group I-1 Condition 2 and Group R-4 Condition 2 evacuation assistance is limited and does not include moving occupants in beds or stretchers during emergencies, as is allowed in Group I-2 medical care.

How individual state licensing agencies name, classify and regulate many of the uses listed in Groups I-1 and R-4 vary significantly from state to state and may not line up with the IBC classifications. It is for this reason that Group I-1 and R-4 lists of uses are included under the general occupancy classification and not under each "condition." The building

INTERNATIONAL CODE COUNCIL®
Copyright © 2015 ICC. ALL RIGHTS RESERVED. Accessed by David Dammon on Jun 21, 2017 12:30:52 PM pursuant to License Agreement with ICC. No further reproduction or distribution authorized. ANY UNAUTHORIZED REPRODUCTION OR DISTRIBUTION IS A VIOLATION OF THE FEDERAL COPYRIGHT ACT AND THE LICENSE AGREEMENT, AND SUBJECT TO CIVIL AND CRIMINAL PENALTIES THEREUNDER.

permit applicant should confirm how the specific state licensing regulations correlate to the code's care type, occupancy, condition, evacuation capability and number of persons receiving care. The permit application drawings should identify the five criteria, while specifically noting that the state licensing regulations limit occupants to only include Condition 1 criteria or allow Condition 2 criteria. Most assisted living facilities and many residential board and care facilities will be classified as Group I-1 Condition 1 or R-4 Condition 1. Generally, almost all specially designated Alzheimer's/memory care facilities providing custodial care will be classified as Group I-1 Condition 2 or Group R-4 Condition 2, due to the inability of some residents to recognize how to respond to an emergency situation. Note that nursing facilities with specialized dementia wings that provide medical care would be classified as Group I-2 Condition 1. Also, it is important to keep in mind that facilities that may be classified initially as Group I-1 Condition 1 (capable of self-preservation) or R-4 Condition 1 can very easily need to be reclassified as a Group I-1/R-4 Condition 2 or as a Group I-2 Condition 1 if the abilities of the persons receiving care change over time. Therefore, it is essential for the proponents of a new facility to present to the building official information regarding the full range of patients and residents expected at a facility both initially and over time.

The occupant load for occupancy classification purposes refers to the number of care recipients only. The number of guests or staff is not included. Note however, that the number of guests and staff is included for means of egress purposes.

For clarification purposes, a dormitory or apartment complex that houses only elderly people and has a nonmedically trained live-in manager is not classified as an institutional occupancy but, rather, as a residential occupancy (see the Group R definitions). A critical phrase in the code to consider when evaluating this type of facility is "live in a supervised residential environment." Such dormitories or apartment complexes may contain features, such as special emergency call switches, that are located in each dwelling unit, and that are monitored by health center staff. These emergency call switches are a convenience and do not necessarily indicate infirmity of the care recipients.

[BG] Condition 1. This occupancy condition shall include buildings in which all persons receiving custodial care who, without any assistance, are capable of responding to an emergency situation to complete building evacuation.

❖ See the general commentary to Group I-1 occupancies.

[BG] Condition 2. This occupancy condition shall include buildings in which there are any persons receiving custodial care who require limited verbal or physical assistance while responding to an emergency situation to complete building evacuation.

❖ See the general commentary to Group I-1 occupancies.

[BG] Six to 16 persons receiving custodial care. A facility housing not fewer than six and not more than 16 persons receiving custodial care shall be classified as Group R-4.

❖ Any building that has the characteristics of a Group I-1 occupancy but that has more than five and not more than 16 persons receiving custodial care is classified as Group R-4 (see Section 310.6). Ninety- eight percent of households in the U.S. have less than 16 occupants; thus the limit of 16 is considered appropriate for a residential occupancy. Similar to Group I-1, Group R-4 is also divided into a Condition 1 and Condition 2.

[BG] Five or fewer persons receiving custodial care. A facility with five or fewer persons receiving custodial care shall be classified as Group R-3 or shall comply with the *International Residential Code* provided an *automatic sprinkler system* is installed in accordance with Section 903.3.1.3 or with Section P2904 of the *International Residential Code*.

❖ Any building that has the characteristics of a Group I-1 occupancy (either Condition 1 or Condition 2, or both) but has five or fewer persons receiving custodial care is classified as Group R-3 (see Section 310.5) or may be constructed in accordance with the *International Residential Code*® (IRC®) (see IBC Section 310.5.1). When the code allows compliance in accordance with the IRC, the only requirements that would apply would be those of the IRC, including the installation of automatic sprinkler protection. The intent is to allow persons to be cared for in a residential or home environment, often under the care of family members. Please note similar provisions for Group E occupancies as well as Groups I-2 and I-4.

[BG] Institutional Group I-2. Institutional Group I-2 occupancy shall include buildings and structures used for medical care on a 24-hour basis for more than five persons who are not capable of self-preservation. This group shall include, but not be limited to, the following:

Foster care facilities
Detoxification facilities
Hospitals
Nursing homes
Psychiatric hospitals

❖ An occupancy classified in Group I-2 is characterized by three conditions: it is a health care facility where the level of care offered is medical care, there is 24-hour-a-day medical supervision for the individuals receiving care and patients/residents require physical assistance by staff or others to reach safety in an emergency situation (see the definitions for "24-hour basis," "Custodial care" and "Medical care," and the

INTERNATIONAL CODE COUNCIL®
Copyright © 2015 ICC. ALL RIGHTS RESERVED. Accessed by David Dammon on Jun 21, 2017 12:30:52 PM pursuant to License Agreement with ICC. No further reproduction or distribution authorized. ANY UNAUTHORIZED REPRODUCTION OR DISTRIBUTION IS A VIOLATION OF THE FEDERAL COPYRIGHT ACT AND THE LICENSE AGREEMENT, AND SUBJECT TO CIVIL AND CRIMINAL PENALTIES THEREUNDER.

five facility examples listed). Where a facility offers medical care instead of custodial care, it is assumed that residents may not be capable of self-preservation. This assessment of the level of care provided needs to be taken with caution and reliance on other state and federal guidelines and associated regulations may be necessary. Also, it is important to keep in mind that facilities that may be classified initially as Group I-1 Condition 1 (capable of self-preservation) or R-4 Condition 1 can very easily need to be reclassified as a Group I-1/R-4Condition 2 or as a Group I-2 Condition 1 if the abilities of the persons receiving care change over time. Therefore, it is essential for the proponents of a new facility to present information to the building official regarding the full range of patients and residents expected at a facility both initially and over time.

Due to the diversification of how medical care is provided in the five characteristic occupancies currently specified in the IBC for Group I-2 occupancies, the Group I-2 occupancy has been split into two basic conditions: Condition 1, long-term care (nursing homes) and Condition 2, short-term care (hospitals). Although both of these subsets are based on medical treatment and are occupancies within which the occupants are protected with a defend-in-place method of safety, changes in the delivery of care in the two different conditions has changed in the past 10-20 years. Some examples of these changes include:

- Within hospitals, there has been a general increase in the floor area per patient due to the increase in diagnostic equipment and the movement towards single-occupant patient rooms.
- Within nursing homes, there has been a trend to provide more residential-type accommodations, such as group/suite living, gathering areas and cooking facilities in residential areas.

The most common examples of facilities classified in Group I-2 are hospitals (Condition 2) and nursing homes (Condition 1). Other facilities included are detoxification facilities, foster care facilities and psychiatric hospitals. How individual state licensing agencies name, classify and regulate many of the uses listed in Groups I-2 varies significantly from state to state and may not line up with the IBC classifications. It is for this reason that the Group I-2 list of uses is included under the general occupancy classification and not under each "condition."

The benefit to the "condition" concept is that a majority of code requirements will still apply to all Group I-2 occupancies such as mechanical systems, property maintenance and rehabilitation, but will provide for the opportunity for specific code requirements that apply to the different levels of care and acuity that are found in different facility types; thus allowing for the establishment of specific code requirements that are based on the operation of the facility.

It is not uncommon to find dining rooms (Group A-2), staff offices (Group B), gift shops (Group M), laundries (Group F) and other nonmedically related areas in buildings otherwise classified as Group I-2. Where such other occupancies occur, the building is considered as a mixed occupancy and subject to the provisions of Section 508. In addition to the general requirements contained in this section, Section 407 contains specific requirements for Group I-2.

> **[BG] Occupancy Conditions.** Buildings of Group I-2 shall be classified as one of the following occupancy conditions:

❖ A distinction is made between Condition 1 and Condition 2 for Group I-2 occupancies. Section 407 of the IBC provides many requirements that apply to both conditions under the Group I-2 occupancy.

> **[BG] Condition 1.** This occupancy condition shall include facilities that provide nursing and medical care but do not provide emergency care, surgery, obstetrics, or in-patient stabilization units for psychiatric or detoxification, including, but not limited to, nursing homes and foster care facilities.

❖ The principal use in this category is nursing homes. Typically facilities providing long-term medical care but not the types of care typically found in hospitals. Foster care facilities, by Chapter 2 definition are those where children up to $2^1/_2$ years old receive care. Foster care for more than five infants and toddlers would also be classified as Group I-2 Condition 1. Foster care facilities that provide care for five or more children older than $2^1/_2$ would typically be Group I-1/R-4 Condition 1, based on supervised living and capability of the residents.

> **[BG] Condition 2.** This occupancy condition shall include facilities that provide nursing and medical care and could provide emergency care, surgery, obstetrics, or inpatient stabilization units for psychiatric or detoxification, including, but not limited to, hospitals.

❖ Hospitals and psychiatric hospitals are both included in the Condition 2 category of the I-2 occupancy. Treatment is usually for periods longer than 24 hours and provides medical care not typically available in long-term nursing care facilities.

> **[BG] Five or fewer persons receiving medical care.** A facility with five or fewer persons receiving medical care shall be classified as Group R-3 or shall comply with the *International Residential Code* provided an *automatic sprinkler system* is installed in accordance with Section 903.3.1.3 or with Section P2904 of the *International Residential Code*.

❖ Any facility that has the characteristics of a Group I-2 occupancy but does not have more than five persons receiving care at any one time is to be classified as a Group R-3 occupancy. As an option, the facility may

INTERNATIONAL CODE COUNCIL®
Copyright © 2015 ICC. ALL RIGHTS RESERVED. Accessed by David Dammon on Jun 21, 2017 12:30:52 PM pursuant to License Agreement with ICC. No further reproduction or distribution authorized. ANY UNAUTHORIZED REPRODUCTION OR DISTRIBUTION IS A VIOLATION OF THE FEDERAL COPYRIGHT ACT AND THE LICENSE AGREEMENT, AND SUBJECT TO CIVIL AND CRIMINAL PENALTIES THEREUNDER.

be designed and constructed under the provisions of the IRC, provided the building has a sprinkler system. The intent is to allow persons to be cared for in a residential, or home, environment, often under the care of family members. The persons receiving the care do not need to be capable of self-preservation. The sprinkler system is to comply with the requirements for an NFPA 13D system or those of Section P2904 of the IRC. Please note similar provisions for Group E occupancies as well as Groups I-1 and I-4.

[BG] Institutional Group I-3. Institutional Group I-3 occupancy shall include buildings and structures which are inhabited by more than five persons who are under restraint or security. A Group I-3 facility is occupied by persons who are generally incapable of self-preservation due to security measures not under the occupants' control. This group shall include, but not be limited to, the following:

Correctional centers
Detention centers
Jails
Prerelease centers
Prisons
Reformatories

Buildings of Group I-3 shall be classified as one of the following occupancy conditions:

❖ An occupancy classified in Group I-3 is characterized by three conditions: it is a location where persons are under restraint or where security is closely supervised, there are more than five such persons and they are not capable of self-preservation because the conditions of confinement are not under their control (i.e., they require assistance by the facilities' staff to reach safety in an emergency situation). For occupancy classification purposes, the provision refers to the number of persons being secured or restrained only. The number of guests or staff is not included. Please note, however, that the number of guests and staff is included for means of egress purposes.

Buildings that have these characteristics but that contain no more than five persons who are being secured or restrained are to be classified based upon the function to which they are associated. For example, the small holding cell in a Group B police station having only the one cell would simply be classified as a portion of the Group B occupancy. Regardless of the occupancy classification, the means of egress provisions for places of restraint are still applicable (see Chapter 10).

It is recognized that not all Group I-3 occupancies have the same level of restraint; thus, to distinguish these different levels, the code defines five different conditions of occupancy based on the degree of access to the exit discharge.

[BG] Condition 1. This occupancy condition shall include buildings in which free movement is allowed from sleeping areas and other spaces where access or occupancy is permitted to the exterior via *means of egress* without restraint. A Condition 1 facility is permitted to be constructed as Group R.

❖ Condition 1 areas are those where the occupants have unrestrained access to the exterior of the building. As such, a key or remote-control release device is not needed for any occupant to reach the exterior of the building (exit discharge) at any time. These types of buildings are referred to as "low-security facilities." A work-release center is a typical Condition 1 facility. Because of the lack of restraint associated with a Condition 1 building, it resembles a residential use more than a detention facility and, therefore, is permitted to be classified in Group R (see the definitions for "Group R" in this chapter).

[BG] Condition 2. This occupancy condition shall include buildings in which free movement is allowed from sleeping areas and any other occupied smoke compartment to one or more other smoke compartments. Egress to the exterior is impeded by locked *exits*.

❖ Condition 2 areas are those in which the movement of occupants is not controlled within the exterior walls of the building (i.e., the occupants have unrestrained access within the building). As such, there is free movement by the occupants between smoke compartments (as created by smoke barriers); however, the occupants must rely on someone else to allow them to exit the building to the area of discharge.

[BG] Condition 3. This occupancy condition shall include buildings in which free movement is allowed within individual smoke compartments, such as within a residential unit comprised of individual *sleeping units* and group activity spaces, where egress is impeded by remote-controlled release of *means of egress* from such smoke compartment to another smoke compartment.

❖ Condition 3 areas are those in which free movement by the occupants is permitted within an individual smoke compartment; however, movement of occupants from one smoke compartment (as created by smoke barriers) to another smoke compartment and from within the building to the exterior (exit discharge) is controlled by remote-release locking devices. As such, the occupants in the facility are dependent on the staff for their release from each smoke compartment or to the exterior (exit discharge).

[BG] Condition 4. This occupancy condition shall include buildings in which free movement is restricted from an occupied space. Remote-controlled release is provided to permit movement from *sleeping units*, activity spaces and other occupied areas within the smoke compartment to other smoke compartments.

❖ Condition 4 areas are those in which the movement of restrained persons from any room or space within a smoke compartment (as created by smoke barriers) to another smoke compartment or to the exterior (exit discharge) is controlled by remote release locking devices. Any movement within the facility requires

INTERNATIONAL CODE COUNCIL®
Copyright © 2015 ICC. ALL RIGHTS RESERVED. Accessed by David Dammon on Jun 21, 2017 12:30:52 PM pursuant to License Agreement with ICC. No further reproduction or distribution authorized. ANY UNAUTHORIZED REPRODUCTION OR DISTRIBUTION IS A VIOLATION OF THE FEDERAL COPYRIGHT ACT AND THE LICENSE AGREEMENT, AND SUBJECT TO CIVIL AND CRIMINAL PENALTIES THEREUNDER.

activation of a remote control lock system to release the designated area. The persons being restrained or secured within a Condition 4 area must rely on an activation system in the event of an emergency in order to evacuate the area.

Condition 4 facilities most often are penal facilities where the restrained persons are considered relatively safe to handle in large groups. As such, many persons can be released simultaneously from their individual sleeping areas when they need to travel to dining areas or move to another area.

> **[BG] Condition 5.** This occupancy condition shall include buildings in which free movement is restricted from an occupied space. Staff-controlled manual release is provided to permit movement from *sleeping units*, activity spaces and other occupied areas within the smoke compartment to other smoke compartments.

❖ Condition 5 areas are those in which the persons being secured or restrained are not allowed free movement to any other room or space within a smoke compartment (as created by smoke barriers) to another smoke compartment or to the exterior (exit discharge) unless the locking device controlling their area of confinement is manually released by a staff member. Once released from an individual space, a staff member is responsible for unlocking all doors from that location to the next smoke compartment. This is the most restrictive occupancy condition, as each secured person must be released on an individual basis and escorted to other areas.

Condition 5 facilities are most often used for maximum security or solitary confinement areas where the persons are considered to be dangerous to others, including staff members, and cannot safely be handled in large groups.

> **[BG] Institutional Group I-4, day care facilities.** Institutional Group I-4 shall include buildings and structures occupied by more than five persons of any age who receive custodial care for less than 24 hours by persons other than parents or guardians, relatives by blood, marriage, or adoption, and in a place other than the home of the person cared for. This group shall include, but not be limited to, the following:
>
> Adult day care
> Child day care

❖ Facilities that contain provisions for the custodial care of more than five persons of any age are classified as Group I-4 (see definitions of "Custodial care" and "Personal care service"). Group I-4 facilities are less restrictive in some of the requirements (e.g., height and area) than the other Group I occupancies. Group I-4 facilities are intended to be used to provide care for less than 24 hours. Day care facilities are not intended to be a full-time residence for the people receiving care. The staff members are assumed not to be related to the individuals in the day care facilities. The premise of the provisions is that the numbers receiving care are exclusive of staff. The care recipients in a Group I-4 occupancy are not expected to respond to an emergency without physical assistance from others. Group I-4 occupancies include both adult day care and child day care.

Adult care facilities are assumed to be for people other than children who require some type of custodial care (i.e., nonmedical). A facility where adults gather for social activities such as a community center or a YMCA is not an adult care facility (Group I) and would be regulated under other provisions of the code (Group A-3 or B). The classification of Group I-4 for an adult day care facility does not apply to facilities that provide personal care services for adults who are capable of responding to an emergency unassisted. In that case, the facility is simply classified into the occupancy group it most resembles. A facility providing a similar degree of custodial care for infants and toddlers on less than a 24-hour-per-day basis would be considered as a Group I-4 day care facility.

> **[BG] Classification as Group E.** A child day care facility that provides care for more than five but not more than 100 children $2^1/_2$ years or less of age, where the rooms in which the children are cared for are located on a *level of exit discharge* serving such rooms and each of these child care rooms has an *exit* door directly to the exterior, shall be classified as Group E.

❖ Children $2^1/_2$ years of age or less (i.e., infants and toddlers) typically are not capable of independently responding to an emergency and must be led or carried to safety. Under such circumstances, the infants and toddlers are considered nonambulatory. Therefore, a Group I-4 classification is given to those facilities where six or more infants and toddlers receive custodial care for less than 24 hours per day. A similar condition is found in foster care facilities (Group I-2 Condition 1) where infants and toddlers stay for extended periods of time. The distinguishing factor between the two occupancies is the amount of time the facility provides care for each individual. Group I-2 facilities provide care on a 24-hour basis, while in Group I-4 facilities individual care must be less than 24 hours. It is also assumed that medical care is not present in Group I-4 facilities.

A child care facility in which the number of infants and toddlers is greater than five but not more than 100 is permitted to be classified as Group E, provided the infants and toddlers are all located in rooms on the level of exit discharge that serves such rooms and all of the rooms have exit doors directly to the exterior. This exception is only applicable to rooms and spaces used for child care and is not intended to apply to accessory spaces such as restrooms, offices and kitchens. Many day care facilities primarily catering to those under primary school age tend to divide the children into three general categories based on state laws and regulations. These include infant, toddler and preschool.

Some variations do occur in that larger day care

INTERNATIONAL CODE COUNCIL®
Copyright © 2015 ICC. ALL RIGHTS RESERVED. Accessed by David Dammon on Jun 21, 2017 12:30:52 PM pursuant to License Agreement with ICC. No further reproduction or distribution authorized. ANY UNAUTHORIZED REPRODUCTION OR DISTRIBUTION IS A VIOLATION OF THE FEDERAL COPYRIGHT ACT AND THE LICENSE AGREEMENT, AND SUBJECT TO CIVIL AND CRIMINAL PENALTIES THEREUNDER.

facilities will have transition rooms for mobile infants or pre-K oriented rooms for those entering kindergarten. But, basically, there is a mixture of children $2^1/_2$ years or younger and older children. The older children can automatically be in a facility classified as a Group E occupancy, but for the younger children, the exception as discussed above would need to be applied to classify the entire occupancy as Group E. The total number of children can exceed 100 and the Group E classification is retained, provided that the number of children $2^1/_2$ years or younger is limited to 100 or fewer. The infant and toddler rooms would need to have exits directly to the outside on the level of exit discharge. If the exception is not applied, the entire facility would need to be classified as Group I-4 or a mixed occupancy classification would be necessary.

By permitting the facility to be classified as Group E, the building would not be required to be sprinklered unless the fire area was greater than 12,000 square feet (115 m^2). A Group I-4 facility would be required to be sprinklered regardless of the area. But as a Group E occupancy, panic hardware would be required in rooms and spaces exceeding 50 occupants.

> **[BG] Within a place of religious worship.** Rooms and spaces within places of religious worship providing such care during religious functions shall be classified as part of the primary occupancy.

❖ The Group I-4 provisions do not apply to places of religious worship simply providing care services during worship and related religious functions. If the space is used at other times simply as a day care facility, then it would be classified as Group I-4 or E, as applicable.

> **[BG] Five or fewer occupants receiving care.** A facility having five or fewer persons receiving custodial care shall be classified as part of the primary occupancy.

❖ Where five or fewer persons receive custodial care in a facility other than a dwelling unit, the classification of the care area is to be consistent with that of the primary occupancy. The limited number of care recipients reduces the hazard level to the point that classification as a Group I-4 occupancy is not warranted.

> **[BG] Five or fewer occupants receiving care in a dwelling unit.** A facility such as the above within a *dwelling unit* and having five or fewer persons receiving custodial care shall be classified as a Group R-3 occupancy or shall comply with the *International Residential Code.*

❖ Buildings that have five or fewer persons receiving custodial care within a dwelling unit are to be classified as Group R-3, or shall be constructed in accordance with the IRC. The assumption is that this type of activity is possible in a residential environment where one or more family members require the high level of care required by Group I-4. Please note similar provisions for Group E occupancies, as well as Groups I-1 and I-2.

> **[BG] Mercantile Group M.** Mercantile Group M occupancy includes, among others, the use of a building or structure or a portion thereof, for the display and sale of merchandise, and involves stocks of goods, wares or merchandise incidental to such purposes and accessible to the public. Mercantile occupancies shall include, but not be limited to, the following:
>
> Department stores
> Drug stores
> Markets
> Motor fuel-dispensing facilities
> Retail or wholesale stores
> Sales rooms

❖ Group M (mercantile) occupancies normally involve the display and sale of large quantities of combustible merchandise, and the fuel load in such facilities can be relatively high, potentially exposing the occupants (customers and sales personnel) to a high degree of fire hazard. Mercantile operations often attract large crowds (particularly in large department stores and covered malls and especially during weekends and holidays). There are two factors that alleviate the risks to life safety: the occupant load normally has a low-to-moderate density and the occupants are alert, mobile and able to respond in an emergency situation. The degree of openness and the organization of the retail displays found in most mercantile occupancies is generally orderly and does not present an unusual difficulty for occupant evacuation.

Contained in the definition are general descriptions of the kinds of occupancies that are classified in Group M. Mercantile buildings most often have both a moderate occupant load and a high fuel load, which are in the form of furnishings and the goods being displayed, stored and sold.

The key characteristics that differentiate occupancies classified in Group M from those in Group B are the larger quantity of goods or merchandise available for sale and the lack of familiarity of the occupants with the building, particularly its means of egress. To be classified in Group M, the goods that are on display must be accessible to the public. If a patron sees an item for sale, then that item is generally available for purchase at that time (i.e., there is a large stock of goods). If a store allows people to see the merchandise but it is not available on the premises, such as an automobile showroom, then the occupancy classification of business (Group B) should be considered. A mercantile building is accessible to the public, many of whom may not be regular visitors. A business building, however, is primarily occupied by regular employees who are familiar with the building arrangement and, most importantly, the exits. This awareness of the building and the exits can be an important factor in a fire emergency.

INTERNATIONAL CODE COUNCIL®
Copyright © 2015 ICC. ALL RIGHTS RESERVED. Accessed by David Dammon on Jun 21, 2017 12:30:52 PM pursuant to License Agreement with ICC. No further reproduction or distribution authorized. ANY UNAUTHORIZED REPRODUCTION OR DISTRIBUTION IS A VIOLATION OF THE FEDERAL COPYRIGHT ACT AND THE LICENSE AGREEMENT, AND SUBJECT TO CIVIL AND CRIMINAL PENALTIES THEREUNDER.

Where storage rooms are limited to a maximum of 100 square feet in area, Section 311.1.1 of the IBC allows such rooms to still be considered part of the primary occupancy, provided that the aggregate of such rooms does not exceed 10 percent of the story. Therefore many mercantile stores with stockroom areas will be considered a mixed use building for height and area, construction type and sprinkler requirements. Note that Table 508.4 of the IBC does not require a fire-resistance rating on the separation between Group M and S-1.

Automotive, fleet-vehicle, marine and self-service motor fuel-dispensing facilities, also defined in this chapter of the code, are classified in the mercantile occupancy group, as are the convenience stores often associated with such occupancies. Quick-lube, tune-up, muffler and tire shops are not included in this classification. Those facilities that typically conduct automotive service and repair work are treated as a repair garage (Group S-1), also defined in this chapter of the code.

Simply because a building containing a mercantile-type occupancy has a dense occupant load does not necessitate the need to classify the building as an assembly occupancy unless the activity includes an assembly-type area where purchasing of goods is a group activity versus individual shoppers independently considering and purchasing merchandise. For example, a building in which auction sales occur may have a highly concentrated occupant load where the sales occur but the definition describes mercantile occupancies as "the use of a building or structure or portion thereof for the display and sale of merchandise and involves stocks of goods, wares or merchandise incidental to such purposes and accessible to the public." However, in an auction, the activity is dominated by an assembly use of the space as people gather to conduct and participate in the auction. As such, auction spaces need to be assigned a Group A-3 occupancy (IBC Committee Interpretation No. 38-03). The presence of highly concentrated occupant loads does not in itself mandate an assembly use classification unless the activity is assembly in nature versus large numbers of people pursuing individual activities of acquisition.

[BG] Residential Group R. Residential Group R includes, among others, the use of a building or structure, or a portion thereof, for sleeping purposes when not classified as an Institutional Group I or when not regulated by the *International Residential Code* in accordance with Section 101.2 of the *International Building Code*.

❖ Residential occupancies represent some of the highest fire safety risks of any of the occupancies listed in Chapter 3 of the IBC. There are several reasons for this condition:

- Structures in the residential occupancy house the widest range of occupant types, i.e., from infants to the aged, for the longest periods of time. As such, residential occupancies are more susceptible to the frequency of careless acts of the occupants; therefore, the consequences of exposure to the effects of fire are the most serious.
- Most residential occupants are asleep approximately one-third of every 24-hour period. When sleeping, they are not likely to become immediately aware of a developing fire. Also, if awakened from sleep by the presence of fire, the residents often may not immediately react in a rational manner which could delay their evacuation.
- The fuel load in residential occupancies is often quite high, both in quantity and variety. Also, in the construction of residential buildings, it is common to use extensive amounts of combustible materials.
- Another portion of the fire problem in residential occupancies relates to the occupants' lack of vigilance in the prevention of fire hazards. In their own domicile or residence, people tend to relax and are often prone to allow fire hazards to go unabated; thus, in residential occupancies, fire hazards tend to accrue over an extended period of time and go unnoticed or are ignored.

Most of the nation's fire problems occur in Group R buildings and, in particular, one- and two-family dwellings, which account for more than 80 percent of all deaths from fire in residential occupancies and about two-thirds of all fire fatalities in all occupancies. One- and two-family dwellings also account for more than 80 percent of residential property losses from fire and more than one-half of all property losses from fire.

Because of the relatively high fire risk and potential for loss of life in buildings classified in Groups R-1 (hotels and motels) and R-2 (apartments and dormitories), the code has stringent provisions for the protection of life in these occupancies. Group R-3 occupancies, however, are not generally considered to be in the same domain and, thus, are not subject to the same level of regulatory control as is provided in other occupancies. Group R-3 facilities are one- or two-family dwellings where the occupants are generally more familiar with their surroundings, and, because they are single units or duplexes, tend to pose a lower risk of injury or death.

Because of the growing trend to care for people in a residential environment, residential care/assisted living facilities are also classified as Group R. Specifically, these facilities are classified as Group R-4. "Mainstreaming" people who are recovering from alcohol or drug addiction and people who are developmentally disabled is reported to have therapeutic and social benefits. A residential environment often fosters this mainstreaming.

Buildings in Group R are described herein. A building or part of a building is considered to be a residential occupancy if it is intended to be used for

INTERNATIONAL CODE COUNCIL®
Copyright © 2015 ICC. ALL RIGHTS RESERVED. Accessed by David Dammon on Jun 21, 2017 12:30:52 PM pursuant to License Agreement with ICC. No further reproduction or distribution authorized. ANY UNAUTHORIZED REPRODUCTION OR DISTRIBUTION IS A VIOLATION OF THE FEDERAL COPYRIGHT ACT AND THE LICENSE AGREEMENT, AND SUBJECT TO CIVIL AND CRIMINAL PENALTIES THEREUNDER.

sleeping accommodations (including residential care/assisted living facilities) and is not an institutional occupancy. Institutional occupancies are similar to residential occupancies in many ways; however, they differ from each other in that institutional occupants are in a supervised environment and, in the case of Group 1-2 and 1-3 occupancies, are under some form of restraint or physical limitation that makes them incapable of complete self-preservation. The number of these occupants who are under supervision or are incapable of self-preservation is the distinguishing factor for being classified as an institutional or residential occupancy.

The term "Group R" refers collectively to the four individual residential occupancy classifications: Groups R-1, R-2, R-3 and R-4. These classifications are differentiated in the code based on the following criteria: (1) whether the occupants are transient or nontransient in nature; (2) the type and number of dwellings contained in a single building; and (3) the number of occupants in the facility.

[BG] Residential Group R-1. Residential Group R-1 occupancies containing *sleeping units* where the occupants are primarily transient in nature, including:

Boarding houses (transient) with more than 10 occupants
Congregate living facilities (transient) with more than 10 occupants
Hotels (transient)
Motels (transient)

❖ R-1: The key characteristic of Group R-1 that differentiates it from other Group R occupancies is the number of transient occupants (i.e., those whose length of stay is not more than 30 days).

The most common building types classified in Group R-1 are hotels, motels and boarding houses. Group R-1 occupancies do not typically have cooking facilities in the unit. When a unit is not equipped with cooking facilities, it does not meet the definition of a "Dwelling unit" in Chapter 2 of the code. When this occurs, such units are treated as sleeping units for the application of code provisions. Sleeping units are required to be separated from each other by fire partitions and horizontal assemblies (see IBC Sections 420, 708 and 711). A recent trend in development is the construction of "extended-stay hotels." While these units may have all of the characteristics of a typical dwelling unit (i.e., cooking, living, sleeping, eating, sanitation), the length of stay is still typically not more than 30 days. As such, these buildings would still be classified as Group R-1. If the length of stay is more than 30 days, these buildings would be classified as Group R-2. If a hotel offers its rooms for short-term housing (i.e., more than 30 days), the facility must comply with the provision for both Group R-1 and R-2.

Other occupancies are often found in buildings classified in Group R-1. These occupancies include nightclubs (Group A-2), restaurants (Group A-2), gift shops (Group M), health clubs (Group A-3) and storage facilities (Group S-1). When this occurs, the building is a mixed occupancy and is subject to the provisions of Section 508 of the IBC.

Transient congregate living facilities and boarding houses with 10 or fewer occupants can be constructed to the standards of Group R-3 occupancies rather than the general category of Group R-1. The primary intent of this provision is to permit bed and breakfast-type facilities to be established in existing single-family (one-family) structures. In comparison to the provision under Group R-2 which permits congregate living facilities with fewer than 16 nontransient occupants to be built as a Group R-3, the Group R-3 "transient" facility is limited to 10 or fewer occupants in reflection of the limited number of occupants.

Lodging houses, while transient in nature and potentially having more than 10 occupants, are specifically listed under Group R-3. Lodging houses are defined and are typically bed-and-breakfast-type facilities.

[BG] Residential Group R-2. Residential Group R-2 occupancies containing *sleeping units* or more than two *dwelling units* where the occupants are primarily permanent in nature, including:

Apartment houses
Boarding houses (nontransient) with more than 16 occupants
Congregate living facilities (nontransient) with more than 16 occupants
Convents
Dormitories
Fraternities and sororities
Hotels (nontransient)
Live/work units
Monasteries
Motels (nontransient)
Vacation timeshare properties

❖ The length of the occupants' stay plus the arrangement of the facilities provided are the basic factors that differentiate occupancies classified in Group R-2 from other occupancies in Group R. The occupants of facilities or areas classified in Group R-2 are primarily nontransient, capable of self-preservation and share their means of egress in whole or in part with other occupants outside of their sleeping area or dwelling unit. Building types ordinarily classified in Group R-2 include apartments, boarding houses (when the occupants are not transient) and nontransient congregate living facilities, such as dormitories, where there are more than 16 occupants.

Individual dwelling units in Group R-2 are either rented by tenants or owned by the occupants. The code does not make a distinction between either type of tenancy. Residential condominiums are treated in the code the same as Group R-2 apartments. Such condominiums are based on shared ownership of a building and related facilities. While an individual owner will have exclusive rights to a certain unit, the

INTERNATIONAL CODE COUNCIL®
Copyright © 2015 ICC. ALL RIGHTS RESERVED. Accessed by David Dammon on Jun 21, 2017 12:30:52 PM pursuant to License Agreement with ICC. No further reproduction or distribution authorized. ANY UNAUTHORIZED REPRODUCTION OR DISTRIBUTION IS A VIOLATION OF THE FEDERAL COPYRIGHT ACT AND THE LICENSE AGREEMENT, AND SUBJECT TO CIVIL AND CRIMINAL PENALTIES THEREUNDER.

building, the lot the building sits upon, parking, common recreational facilities and similar features are owned in common by all the owners of individual dwelling units. In most cases condominiums do not establish separate lots and the walls between units are not setting on lot lines. Another type of shared ownership is referred to as a "co-op," short for cooperative. Occasionally a condominium will establish actual lots and lot lines distinguishing individual ownership. When the dwelling unit is located on a separate parcel of land, lot lines defining the parcel exist and the requirements for fire separation must be met.

Dormitories are generally associated with university or college campuses for use as student housing, but this is changing rapidly. Many dormitories are now being built as housing for elderly people who wish to live with other people their own age and who do not need 24-hour-a-day medical supervision. The only difference between the dormitory that has just been described and the dormitory found on a college campus is the age of its occupants. If the elderly people must have 24-hour-a-day medical supervision (i.e., a nurse or doctor on the premises), the building is no longer considered a residential occupancy but an institutional occupancy and would have to comply with the applicable provisions of the code for the appropriate Group I occupancy.

Similar to Group R-1, individual rooms in dormitories are sleeping units. When college classes are not in session, the rooms in dormitories are sometimes rented out for periods of less than 30 days to convention attendees and other visitors. When dormitories undergo this type of transient use, they more closely resemble Group R-1. A style of dormitory design that is being used more frequently is one where there are groups of sleeping units around a common living space, including shared bathrooms and sometimes a kitchen or kitchenette. At this time, the code does not indicate if these groups of rooms should be addressed as separate sleeping units or as a dwelling unit except for when counting units for determining the number of Accessible units required (see Section 1107.6.2.3.1 of the IBC).

Buildings containing dormitories often contain other occupancies, such as cafeterias or dining rooms (Group A-2), recreation rooms (Group A-3), offices (Group B) and meeting rooms (Group A-3). When this occurs, the building is considered a mixed occupancy and is subject to the provisions of Section 508 of the IBC.

Included in the listing of Group R-2 are live/work units. A live/work unit is a dwelling unit or sleeping unit in which a significant portion of the space includes a nonresidential use operated by the tenant. Reflecting a growing trend in urban neighborhoods and the reuse of existing buildings, live/work units must comply with the provisions of Section 419 of the IBC.

The intent of the congregate living facility reference is to better define when a congregate living facility is operating as a single-family home. Blended families are now commonplace and not necessarily defined strictly by blood or marriage. Small boarding houses, convents, dormitories, fraternities, sororities, monasteries and nontransient hotels and motels may be small enough to operate as a single-family unit and would be permitted to be constructed as Group R-3 occupancies as intended by the code. The threshold of 16 persons is consistent with the results of the most recent census, which showed that 98 percent of households in the U.S. that identified themselves as a single family have less than 16-occupants. The 16 occupant limit is also consistent with the limits of an NFPA 13D sprinkler system.

> **[BG] Residential Group R-3.** Residential Group R-3 occupancies where the occupants are primarily permanent in nature and not classified as Group R-1, R-2, R-4 or I, including:
>
> Boarding houses (nontransient) with 16 or fewer occupants
> Boarding houses (transient) with 10 or fewer occupants
> Buildings that do not contain more than two *dwelling units*
> Care facilities that provide accommodations for five or fewer persons receiving care
> Congregate living facilities (nontransient) with 16 or fewer occupants
> Congregate living facilities (transient) with 10 or fewer occupants
> Lodging houses with five or fewer guest rooms

❖ Group R-3 facilities include all detached one- and two-family dwellings and multiple (three or more) single-family dwellings (townhouses) more than three stories in height. Those buildings three or less stories in height are not classified as Group R-3 and are regulated by the IRC. Each pair of dwelling units in multiple single-family dwellings greater than three stories in height must be separated by fire walls (see Section 706 of the IBC) or by two exterior walls (see Table 602 of the IBC) in order to be classified as Group R-3. (Duplexes, buildings with two dwelling units, must be detached from other structures in order to be regulated by the IRC). A duplex attached to another duplex would be required to comply with the code and be classified as Group R-2 or R-3, depending on the presence of fire walls.

Buildings that are classified as Group R-3, while limited in height, are not limited in the allowable area per floor as indicated in Table 506.2.

Buildings that are one- and two-family dwellings and multiple single-family dwellings less than three stories in height and that contain another occupancy (e.g., Groups B, M, I-4) must be regulated as a mixed occupancy in accordance with the code and are not permitted to be regulated by the provisions of the IRC. However, some mixed use dwelling units may qualify as live/work units under Section 419 and be classified as a Group R-2 occupancy.

INTERNATIONAL CODE COUNCIL®
Copyright © 2015 ICC. ALL RIGHTS RESERVED. Accessed by David Dammon on Jun 21, 2017 12:30:52 PM pursuant to License Agreement with ICC. No further reproduction or distribution authorized. ANY UNAUTHORIZED REPRODUCTION OR DISTRIBUTION IS A VIOLATION OF THE FEDERAL COPYRIGHT ACT AND THE LICENSE AGREEMENT, AND SUBJECT TO CIVIL AND CRIMINAL PENALTIES THEREUNDER.

In addition, boarding houses and congregate living facilities with no more than 16 nontransient occupants or no more than 10 transient occupants are to be classified as Group R-3.

Group R-3 occupancies include small care facilities where care is provided to five or fewer persons. The intent is to allow persons to be cared for in a residential, or home, environment, often under the care of family members that is typical within a single-family-type home. Allowances for the Group R-3 classification of smaller care facilities are established in Group E, Group I-1, Group I-2 and Group I-4. Because the intent is to accommodate persons who might otherwise be in other group occupancies, including Group I-2, the Group R-3 care facility is not limited to only persons who are capable of self-preservation. The only limit is the number receiving care, not the total number of occupants in the dwelling unit. If two people are receiving care, and the rest of the family includes four others, totaling six occupants in the dwelling does classify the dwelling as a Group R-3 occupancy.

Lodging houses with five or fewer guest rooms can be classified as a Group R-3 occupancy or, under Section 310.5.2 of the IBC, can be constructed under the provisions of the IRC. The definition of "Lodging house" allows the rental of guest rooms to transients, provided that there are one or more occupants who are permanent in nature. While Section 310.5.2 requires owner occupancy of the dwelling unit in order for it to be built in compliance with the IRC, there is no owner occupancy requirement for lodging houses that comply with Group R-3 requirements. The broad intent of the lodging house provisions is to allow bed-and-breakfast and similar facilities under the Group R-3 category, even though transient housing generally falls under the Group R-1 classification. The limit is set to the number of guest rooms. There is no specified limit on the number of guests, the number of residents, or the combination of both.

> **[BG] Care facilities within a dwelling.** Care facilities for five or fewer persons receiving care that are within a single-family dwelling are permitted to comply with the *International Residential Code* provided an *automatic sprinkler system* is installed in accordance with Section 903.3.1.3 or Section P2904 of the *International Residential Code*.

❖ The Group R-3 definition already states that care facilities that accommodate five or fewer persons receiving care can be classified as a Group R-3 occupancy. The definitions of Group E, Group I-1, Group I-2 and Group I-4 each state the option of providing the care of five or fewer persons within a structure regulated under the IRC. The intent is to allow persons to be cared for in a residential, or home, environment, often under the care of family members that is typical within a single-family-type home. As stated for those care facilities allowed within the Group R-3 occupancy, the persons receiving care in a building designed according to the IRC are not limited to those who are capable of self-preservation. Similar to those for Groups I-1 and I-2, this definition specifies that such an IRC-regulated facility must be provided with an automatic sprinkler system.

> **[BG] Lodging houses.** Owner-occupied *lodging houses* with five or fewer guest rooms shall be permitted to be constructed in accordance with the *International Residential Code*.

❖ This section allows bed-and-breakfast-type hotels that are both owner-occupied and have five or fewer rooms to rent to be constructed under the IRC. There is no occupant load limitations for this option as there are for boarding houses or congregate residences. See the commentary to the definition of "Group R-3 occupancies."

> **[BG] Residential Group R-4.** Residential Group R-4 shall include buildings, structures or portions thereof for more than five but not more than 16 persons, excluding staff, who reside on a 24-hour basis in a supervised residential environment and receive custodial care. Buildings of Group R-4 shall be classified as one of the occupancy conditions indicated below. This group shall include, but not be limited to, the following:
>
> Alcohol and drug centers
> Assisted living facilities
> Congregate care facilities
> Group homes
> Halfway houses
> Residential board and care facilities
> Social rehabilitation facilities
>
> Group R-4 occupancies shall meet the requirements for construction as defined for Group R-3, except as otherwise provided for in the *International Building Code*.

❖ Where five to 16 residents live in a supervised environment and receive custodial care, such a facility is classified as Group R-4. Ninety-eight percent of households in the U.S. that identified themselves as single family have less than 16 occupants. The 16-occupant limit is also consistent with the limits of an NFPA 13D sprinkler system. Thus the limit to the number of residents to 16 was established as an appropriate limit considering that this facility will operate similar to a single-family home. Under federal housing laws regarding nondiscrimination, families cannot be determined by blood or marriage. If a Group R-4 occupancy is expanded or allowed to have more than 16 care recipients, the facility needs to be reclassified as a Group I-1 occupancy. The number of persons used in the determination includes those who receive care and is not intended to include staff.

Similar to Group I-1, a Group R-4 occupancy is also one of two conditions. In a Condition 1 facility, care recipients may be slower during evacuation but are capable of self-preservation. In a Condition 2 facility, care recipients may require limited assistance with evacuation during emergency situations. See also the commentary in Section 308.3 for Group

INTERNATIONAL CODE COUNCIL®
Copyright © 2015 ICC. ALL RIGHTS RESERVED. Accessed by David Dammon on Jun 21, 2017 12:30:52 PM pursuant to License Agreement with ICC. No further reproduction or distribution authorized. ANY UNAUTHORIZED REPRODUCTION OR DISTRIBUTION IS A VIOLATION OF THE FEDERAL COPYRIGHT ACT AND THE LICENSE AGREEMENT, AND SUBJECT TO CIVIL AND CRIMINAL PENALTIES THEREUNDER.

I-1 for a further detailed explanation of both Group I-1 and R-4 custodial care occupancies (also see the definition of "Custodial care").

Group R-4 facilities must satisfy the construction requirements of Group R-3. Facilities with five or fewer persons receiving care will be either a Group R-3 occupancy (see Section 310.5), or can be built under the IRC (see Section 310.5.1).

[BG] Condition 1. This occupancy condition shall include buildings in which all persons receiving custodial care, without any assistance, are capable of responding to an emergency situation to complete building evacuation.

❖ See the commentary to the definition of "Group R-4 occupancies."

[BG] Condition 2. This occupancy condition shall include buildings in which there are any persons receiving custodial care who require limited verbal or physical assistance while responding to an emergency situation to complete building evacuation.

❖ See the commentary to the definition of "Group R-4 occupancies."

[BG] Storage Group S. Storage Group S occupancy includes, among others, the use of a building or structure, or a portion thereof, for storage that is not classified as a hazardous occupancy.

❖ This definition requires that all structures (or parts thereof) designed or occupied for the storage of moderate- and low-hazard materials are to be classified in either Group S-1 (moderate hazard) or S-2 (low hazard). Small storage areas are inherent in almost any activity or occupancy.

The life safety problems in structures used for storage of moderate- and low-hazard materials are minimal because the number of people involved in a storage operation is usually small and normal work patterns require the occupants to be dispersed throughout the facility. The problems of fire safety, particularly as they relate to the protection of stored contents, are directly associated with the amount and combustibility of the materials (including packaging) that are housed on the premises.

Storage facilities typically contain significant amounts of combustible or noncombustible materials that are kept in a common area. Because of the combustion, flammability or explosive characteristics of certain materials, a structure (or portion thereof) that is used to store high-hazard materials which exceed the MAQs, or that does not meet one of the exceptions identified in Section 307.1 of the IBC, cannot be classified as Group S and is to be classified as Group H, high-hazard uses, and is to comply with Section 307 of the IBC.

Storage occupancies consist of two basic types: Groups S-1 and S-2, which are based on the properties of the materials being stored. The distinction between Groups S-1 and S-2 is similar to that between Groups F-1 and F-2, as outlined in those definitions.

[BG] Accessory storage spaces. A room or space used for storage purposes that is less than 100 square feet (9.3 m^2) in area and accessory to another occupancy shall be classified as part of that occupancy. The aggregate area of such rooms or spaces shall not exceed the allowable area limits of Section 508.2 of the *International Building Code*.

❖ This provision allows small storage rooms to be classified in the same occupancy group as the primary occupancy of a space. There are two limits, each space is limited to 100 square feet, and the aggregate of such spaces on any story is limited to 10 percent of the floor area. These small storage spaces could occur in any other occupancy, such as a Group B office building, a Group E classroom or a Group M retail store. Individual spaces in excess of 100 square feet would be classified as an S occupancy and the provisions of mixed occupancies (see Section 508) would come into play. Section 508.2 limits accessory occupancies on any story to 10 percent of the area of that story. The area of storage spaces would need to be totaled to determine if they can be classified as part of the main occupancy or may, in part, need to be classified as a Group S occupancy. As a separated mixed-use building, Table 508.4 does not require a separation between S-1 and F-1, B or M. Table 509 for incidental uses would require storage rooms in Group I-2 and ambulatory care facilities with an area over 100 square feet to be separated by fire barrier or horizontal assemblies with a fire-resistance rating of at least 1 hour.

[BG] Moderate-hazard storage, Group S-1. Storage Group S-1 occupancies are buildings occupied for storage uses that are not classified as Group S-2, including, but not limited to, storage of the following:

Aerosols, Levels 2 and 3
Aircraft hangar (storage and repair)
Bags: cloth, burlap and paper
Bamboos and rattan
Baskets
Belting: canvas and leather
Books and paper in rolls or packs
Boots and shoes
Buttons, including cloth covered, pearl or bone
Cardboard and cardboard boxes
Clothing, woolen wearing apparel
Cordage
Dry boat storage (indoor)
Furniture
Furs
Glues, mucilage, pastes and size
Grains
Horns and combs, other than celluloid
Leather
Linoleum
Lumber

INTERNATIONAL CODE COUNCIL®
Copyright © 2015 ICC. ALL RIGHTS RESERVED. Accessed by David Dammon on Jun 21, 2017 12:30:52 PM pursuant to License Agreement with ICC. No further reproduction or distribution authorized. ANY UNAUTHORIZED REPRODUCTION OR DISTRIBUTION IS A VIOLATION OF THE FEDERAL COPYRIGHT ACT AND THE LICENSE AGREEMENT, AND SUBJECT TO CIVIL AND CRIMINAL PENALTIES THEREUNDER.

Motor vehicle repair garages complying with the maximum allowable quantities of hazardous materials listed in Table 5003.1.1(1) (see Section 406.8 of the *International Building Code*)
Photo engravings
Resilient flooring
Silks
Soaps
Sugar
Tires, bulk storage of
Tobacco, cigars, cigarettes and snuff
Upholstery and mattresses
Wax candles

❖ Buildings in which combustible materials are stored and that burn with ease are classified in Group S-1, moderate-hazard storage occupancies. Examples of the kinds of materials that, when stored, are representative of occupancies classified in Group S-1 are listed in the definition.

As defined by the code, a repair garage is any structure used for servicing or repairing motor vehicles. Therefore, regardless of the extent of work done (e.g., quick-lube, tune-up, muffler and tire shops, painting, body work, engine overhaul), repair garages are classified as Group S-1 and must be in compliance with Section 406.8 of the IBC. In addition, to avoid a Group H classification, the amounts of hazardous materials in the garage must be less than the MAQ indicated in Tables 5003.1.1(1) and 5003.1.1(2) [IBC Tables 307.1(1) and 307.1(2)] of the code.

Aircraft hangars for storage, repair or both would be classified as Group S-1. This classification correlates with the actual use of such hangars which very frequently would include some level of repair work and also works with the requirements of NFPA 409. Aircraft hangers accessory to one- and two-family structures remain a Group U occupancy.

[BG] Low-hazard storage, Group S-2. Storage Group S-2 occupancies include, among others, buildings used for the storage of noncombustible materials such as products on wood pallets or in paper cartons with or without single thickness divisions; or in paper wrappings. Such products are permitted to have a negligible amount of plastic trim, such as knobs, handles or film wrapping. Storage uses shall include, but not be limited to, storage of the following:

Asbestos
Beverages up to and including 16-percent alcohol in metal, glass or ceramic containers
Cement in bags
Chalk and crayons
Dairy products in nonwaxed coated paper containers
Dry cell batteries
Electrical coils
Electrical motors
Empty cans
Food products
Foods in noncombustible containers
Fresh fruits and vegetables in nonplastic trays or containers
Frozen foods
Glass
Glass bottles, empty or filled with noncombustible liquids
Gypsum board
Inert pigments
Ivory
Meats
Metal cabinets
Metal desks with plastic tops and trim
Metal parts
Metals
Mirrors
Oil-filled and other types of distribution transformers
Parking garages, open or enclosed
Porcelain and pottery
Stoves
Talc and soapstones
Washers and dryers

❖ Buildings in which noncombustible materials are stored are classified as Group S-2, low-hazard storage occupancies. It is acceptable for stored noncombustible products to be packaged in combustible materials as long as the quantity of packaging is kept to an insignificant level.

As seen in Group F-1 and F-2 classifications, it is important to be able to distinguish when the presence of combustible packaging constitutes a significant fuel load. As such, a fuel load might require the building to be classified in Group S-1, moderate-hazard storage. A simple guideline to follow is the "single-thickness" rule, which is when a noncombustible product is put in one layer of packaging material.

Examples of materials qualified for storage in Group S-2 storage facilities are as follows:

- Vehicle engines placed on wood pallets for transportation after assembly.
- Washing machines in corrugated cardboard boxes.
- Soft-drink glass bottles packaged in pressed paper boxes.

Structures used to store noncombustible materials packaged in more than one layer of combustible packaging material are to be classified in Group S-1.

Examples of materials that, because of packaging, do not qualify for classification in Group S-2 are:

- Chinaware wrapped in corrugated paper and placed in cardboard boxes.
- Glassware set in expanded foam forms and placed in a cardboard box.
- Fuel filters individually packed in pressed paper boxes, placed by the gross in a cardboard box and then stacked on a wood pallet for transportation.

An area often related to Group S occupancies is Chapter 32, which regulates high-piled combustible

INTERNATIONAL CODE COUNCIL®
Copyright © 2015 ICC. ALL RIGHTS RESERVED. Accessed by David Dammon on Jun 21, 2017 12:30:52 PM pursuant to License Agreement with ICC. No further reproduction or distribution authorized. ANY UNAUTHORIZED REPRODUCTION OR DISTRIBUTION IS A VIOLATION OF THE FEDERAL COPYRIGHT ACT AND THE LICENSE AGREEMENT, AND SUBJECT TO CIVIL AND CRIMINAL PENALTIES THEREUNDER.

storage [storage over 12 feet (3658 mm) in height or 6 feet (1829 mm) if the material is considered high hazard]. Chapter 32 of the IFC is focused on not only the type of materials being stored but also the height and configuration of such storage. It is important to note that not all Group S occupancies will contain high-piled storage and that high-piled storage is not limited to Group S occupancies. High-piled storage can be found in occupancies such as Group H or F.

Open and enclosed parking garages are classified as Group S-2 occupancies as long as no repair activities occur in such buildings, as discussed in the commentary for this definition. A garage in a fire station, for example, that undertakes maintenance and repairs limited to cleaning, hose change, water fill, fire equipment upgrades or wheel removal for repair off premise would not constitute the same hazard associated with repair garages and would be appropriately classified as Group S-2.

[BG] Miscellaneous Group U. Buildings and structures of an accessory character and miscellaneous structures not classified in any specific occupancy shall be constructed, equipped and maintained to conform to the requirements of this code commensurate with the fire and life hazard incidental to their occupancy. Group U shall include, but not be limited to, the following:

Agricultural buildings
Aircraft hangar, accessory to a one- or two-family residence (see Section 412.5 of the *International Building Code*)
Barns
Carports
Fences more than 6 feet (1829 mm) high
Grain silos, accessory to a residential occupancy
Greenhouses
Livestock shelters
Private garages
Retaining walls
Sheds
Stables
Tanks
Towers

❖ This definition identifies the characteristics of occupancies classified in Group U. Structures that are classified in Group U are typically accessory to another building or structure and are not more appropriately classified in another occupancy. Miscellaneous storage buildings accessory to detached one- and two-family dwellings and multiple single-family dwellings (townhouses) not more than three stories in height, however, are intended to be designed and built in accordance with the IRC.

Structures classified as Group U, such as fences, equipment, foundations, retaining walls, etc., are somewhat outside the primary scope of the code (i.e., means of egress, fire resistance). They are not usually considered to be habitable or occupiable. Nevertheless, many code provisions do apply and need to be enforced (e.g., structural design and material performance).

Structures housing accessory equipment that is part of a utility or communications system are often classified as Group U occupancies when there is no intent that these structures be occupied except for servicing and maintaining the equipment within the structure. A pumphouse for a water or sewage system or an equipment building at the base of a telecommunications tower are examples of such buildings.

Group U occupancies are subject to the same structural loadings such as snow loads as other occupancies. This definition establishes that occupancies classified as utility and miscellaneous structures shall be constructed, equipped and maintained to conform to the code requirements that are commensurate with the fire and life hazards incidental to their occupancy. The structural design requirements for roofs are the minimum deemed necessary to withstand such elements. Allowing construction of a building with an accessory occupancy that could reasonably be expected to collapse under the snow loads known to prevail in certain area is not in the best interest of public safety.

[BG] OCCUPANT LOAD. The number of persons for which the *means of egress* of a building or portion thereof is designed.

❖ In addition to the limitation on the maximum occupant load for a space, the code also requires the determination of the occupant load that is to be utilized for the design of the means of egress system. The number for the floor area per occupant (occupant load factor) in Table 1004.1.2 reflects common and traditional occupant densities based on the empirical data for the density of similar spaces. This occupant load is also utilized to determine the required number of plumbing fixtures (see Chapter 29 of the IBC) and when automatic sprinkler systems or fire alarm and detection systems are required (see Chapter 9).

OPEN BURNING. The burning of materials wherein products of combustion are emitted directly into the ambient air without passing through a stack or chimney from an enclosed chamber. Open burning does not include road flares, smudge-pots and similar devices associated with safety or occupational uses typically considered open flames, *recreational fires* or use of portable outdoor fireplaces. For the purpose of this definition, a chamber shall be regarded as enclosed when, during the time combustion occurs, only apertures, ducts, stacks, flues or chimneys necessary to provide combustion air and permit the escape of exhaust gas are open.

❖ Open burning is any burning that takes place in an unenclosed space. Examples include burning of leaves or grass clippings, burning construction debris and fires built on the ground for warmth in cold weather. The burning of wood scraps in a steel drum or in a piece of culvert over which a supply of construction sand can be dumped and kept thawed is

INTERNATIONAL CODE COUNCIL®
Copyright © 2015 ICC. ALL RIGHTS RESERVED. Accessed by David Dammon on Jun 21, 2017 12:30:52 PM pursuant to License Agreement with ICC. No further reproduction or distribution authorized. ANY UNAUTHORIZED REPRODUCTION OR DISTRIBUTION IS A VIOLATION OF THE FEDERAL COPYRIGHT ACT AND THE LICENSE AGREEMENT, AND SUBJECT TO CIVIL AND CRIMINAL PENALTIES THEREUNDER.

common practice on construction sites in cold climates and could be evaluated by the fire code official as being an allowable "occupational use" as mentioned in the definition. The definition has also been revised to clarify that the use of portable outdoor fireplaces (also known as patio fireplaces) is specifically excluded, thus eliminating the confusion that previously existed as to how to treat those devices. See also the definition of "Recreational fire."

[BE] OPEN-ENDED CORRIDOR. An interior *corridor* that is open on each end and connects to an exterior *stairway* or *ramp* at each end with no intervening doors or separation from the *corridor*.

❖ Breezeway configurations are common in hotels and apartment buildings, especially in areas where being open to the outside air is considered an amenity. By essentially being open to the outside, the intent and level of safety is similar to an exterior egress balcony (see Section 1027.6, Exception 4 for requirements).

OPEN MALL. See "Covered mall building."

OPEN MALL BUILDING. See "Covered mall building."

[BG] OPEN PARKING GARAGE. A structure or portion of a structure with the openings as described in Section 406.5.2 of the *International Building Code* on two or more sides that is used for the parking or storage of private motor vehicles as described in Section 406.5 of the *International Building Code*.

❖ Open parking garages are defined as having uniformly distributed openings on no less than two sides totaling no less than 40 percent of the building perimeter. The aggregate area of the openings is to be a minimum of 20 percent of the total wall area of all perimeter walls (see the commentary to Section 406.5.2 of the IBC).

OPEN SYSTEM. The use of a solid or liquid hazardous material involving a vessel or system that is continuously open to the atmosphere during normal operations and where vapors are liberated, or the product is exposed to the atmosphere during normal operations. Examples of open systems for solids and liquids include dispensing from or into open beakers or containers, dip tank and plating tank operations.

❖ This definition is related primarily to hazardous materials use. Generally, an open system is one that will normally be open to the atmosphere; for example, a dip tank or dispensing or mixing of hazardous materials. Open systems are inherently more hazardous than closed systems. When evaluating the MAQs of hazardous materials and the associated requirements, open systems are more heavily regulated.

OPERATING BUILDING. A building occupied in conjunction with the manufacture, transportation or use of *explosive materials*. Operating buildings are separated from one another with the use of intraplant or intraline distances.

❖ Magazines are used for storage of explosive materials. Manufacturing or operating buildings used for the storage of explosives are not magazines and are not intended to be used for storage, although at times there may be storage incidental to the manufacturing function. This definition is included here to clarify this difference.

OPERATING LINE. A group of buildings, facilities or workstations so arranged as to permit performance of the steps in the manufacture of an *explosive* or in the loading, assembly, modification and maintenance of ammunition or devices containing *explosive materials*.

❖ This term is used by those engaged in the storage and manufacture of explosive materials, as well as with the regulators of these materials, including the DOD. The term is also consistent with terminology used by the DOD and the Institute of Makers of Explosives (IME). The term "operating line" is defined in relationship to operating buildings that may be grouped in such a manner so as to create a manufacturing process.

OPERATING PRESSURE. The pressure at which a system operates.

❖ This term is self-explanatory and is used in Chapters 9, 31, 55 and 60 of the code.

ORGANIC COATING. A liquid mixture of binders such as alkyd, nitrocellulose, acrylic or oil, and flammable and combustible solvents such as hydrocarbon, ester, ketone or alcohol, which, when spread in a thin film, convert to a durable protective and decorative finish.

❖ "Organic coatings" are defined as flammable and combustible paints and other protective or decorative coatings.

ORGANIC PEROXIDE. An organic compound that contains the bivalent -O-O- structure and which may be considered to be a structural derivative of hydrogen peroxide where one or both of the hydrogen atoms have been replaced by an organic radical. Organic peroxides can present an explosion hazard (*detonation* or *deflagration*) or they can be shock sensitive. They can also decompose into various unstable compounds over an extended period of time.

Class I. Describes those formulations that are capable of *deflagration* but not *detonation*.

Class II. Describes those formulations that burn very rapidly and that pose a moderate reactivity hazard.

Class III. Describes those formulations that burn rapidly and that pose a moderate reactivity hazard.

Class IV. Describes those formulations that burn in the same manner as ordinary combustibles and that pose a minimal reactivity hazard.

Class V. Describes those formulations that burn with less intensity than ordinary combustibles or do not sustain combustion and that pose no reactivity hazard.

Unclassified detonable. Organic peroxides that are capable of *detonation*. These peroxides pose an extremely high-explosion hazard through rapid explosive decomposition.

❖ The chemical structure of organic peroxides differs from that of hydrogen peroxide (an oxidizer) in that an

INTERNATIONAL CODE COUNCIL®
Copyright © 2015 ICC. ALL RIGHTS RESERVED. Accessed by David Dammon on Jun 21, 2017 12:30:52 PM pursuant to License Agreement with ICC. No further reproduction or distribution authorized. ANY UNAUTHORIZED REPRODUCTION OR DISTRIBUTION IS A VIOLATION OF THE FEDERAL COPYRIGHT ACT AND THE LICENSE AGREEMENT, AND SUBJECT TO CIVIL AND CRIMINAL PENALTIES THEREUNDER.

organic radical replaces the hydrogen atoms. Commentary Figure 202-O6 shows an example of this chemical structure in which a benzoyl radical (C_6H_5CO) in the widely used Class I organic peroxide benzoyl peroxide replaces the hydrogen atoms in hydrogen peroxide (H_2O_2). Organic chemicals are all carbon based. As a result, organic peroxides pose varying degrees of fire or explosion hazards in addition to their oxidizing properties.

The classification system in this chapter (see Commentary Figure 202-O7) is derived from a system developed by the Society of the Plastics Industry (Bulletin 19A).

OUTDOOR CONTROL AREA. An outdoor area that contains hazardous materials in amounts not exceeding the maximum allowable quantities of Table 5003.1.1(3) or Table 5003.1.1(4).

❖ This term refers to a storage area that is exposed to the elements (wind, rain, snow, etc.) that cannot exceed the MAQ listed in the code and the IBC. See Tables 5003.1.1(3), 5003.1.1(4) and Sections 5001 and 5003 of the code, and Section 414.6 in the IBC.

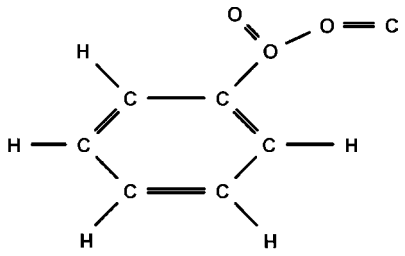

BENZOYL PEROXIDE



HYDROGEN PEROXIDE

Figure 202-O6
COMPARISON OF HYDROGEN PEROXIDE STRUCTURE WITH BENZOYL PEROXIDE

OUTPATIENT CLINIC. See "Clinic, outpatient."

OVERCROWDING. A condition that exists when either there are more people in a building, structure or portion thereof than have been authorized or posted by the *fire code official*, or when the *fire code official* determines that a threat exists to the safety of the occupants due to persons sitting and/or standing in locations that may obstruct or impede the use of *aisles*, passages, *corridors*, *stairways*, *exits* or other components of the *means of egress*.

❖ This definition notes that an unsafe condition exists when the actual number of people present in a building or a building space exceeds the maximum allowable occupant load of that building or space as determined and posted on the premises by the fire code official. Section 1004 of the code would allow a maximum occupant load of one person per every 5 square feet (0.5 m^2) of building area, as long as the egress components provide sufficient capacity for such a load. When that egress capacity is exceeded, then overcrowding exists. The definition also recognizes that, even though the number of occupants in a building or space may not be excessive, the inability of occupants to use the egress elements due to blockage by patrons is also a life safety hazard.

[A] OWNER. Any person, agent, operator, entity, firm or corporation having any legal or equitable interest in the property; or recorded in the official records of the state, county or municipality as holding an interest or title to the property; or otherwise having possession or control of the property, including the guardian of the estate of any such person, and the executor or administrator of the estate of such person if ordered to take possession of real property by a court.

❖ This term defines the person or other legal entity who is responsible for a building and its compliance with code requirements.

OXIDIZER. A material that readily yields oxygen or other oxidizing gas, or that readily reacts to promote or initiate combustion of combustible materials and, if heated or contaminated, can result in vigorous self-sustained decomposition.

Class 4. An oxidizer that can undergo an explosive reaction due to contamination or exposure to thermal or physical shock and that causes a severe increase in the burning

IFC	DOTn 49 CFR, PART 173.128(b)	HAZARD DESCRIPTION
Unclassified detonatable	Type A	Detonation hazard when confined
Class I	Type B	Deflagration hazard when confined
Class II	Type C and Type D	Mass fire hazard similar to flammable liquid[a]
Class III	Type E	Fire hazard similar to combustible liquid
Class IV	Type F	Little or no fire or reactivity hazard
Class V	Type G	No fire or reactivity hazard

a. Moderate detonation or deflagration hazard when heated under confinement.

Figure 202-O7
COMPARISON OF ORGANIC PEROXIDE CLASSIFICATION SYSTEMS

INTERNATIONAL CODE COUNCIL®
Copyright © 2015 ICC. ALL RIGHTS RESERVED. Accessed by David Dammon on Jun 21, 2017 12:30:52 PM pursuant to License Agreement with ICC. No further reproduction or distribution authorized. ANY UNAUTHORIZED REPRODUCTION OR DISTRIBUTION IS A VIOLATION OF THE FEDERAL COPYRIGHT ACT AND THE LICENSE AGREEMENT, AND SUBJECT TO CIVIL AND CRIMINAL PENALTIES THEREUNDER.

rate of combustible materials with which it comes into contact. Additionally, the oxidizer causes a severe increase in the burning rate and can cause spontaneous ignition of combustibles.

Class 3. An oxidizer that causes a severe increase in the burning rate of combustible materials with which it comes in contact.

Class 2. An oxidizer that will cause a moderate increase in the burning rate of combustible materials with which it comes in contact.

Class 1. An oxidizer that does not moderately increase the burning rate of combustible materials.

❖ The classification of oxidizers had its origins in the provisions of NFPA 430 and is consistent with Department of Transportation (DOT) hazardous materials regulations. Oxidizers, whether a solid, liquid or gas, yield oxygen or another oxidizing gas during a chemical reaction or readily react to oxidize combustibles and increase their burning rate. This characteristic is a result of the enrichment of the air to more than 21-percent oxygen content.

This enrichment is a hazard because an ordinary combustible material that will burn freely at the atmospheric oxygen level of 21 percent will burn more rapidly at higher concentrations of oxygen. The rate of reaction varies with the class of oxidizer. Specific classification of oxidizers is important because of the varying degree of hazard. Examples of oxidizers include liquid hydrogen peroxide, nitric acid, sulfuric acid and solids, such as sodium chlorite, chromic acid and calcium hypochlorite. Many commercially available swimming pool chemicals are examples of Class 2 or 3 oxidizers.

OXIDIZING CRYOGENIC FLUID. An oxidizing gas in the cryogenic state.

❖ This definition is provided to correlate with the title of Chapter 63 and Section 6304.2.1.1, which is consistent with code-style improvement of providing hazard-specific requirements in material-specific chapters in addition to the general material chapters, in this case Chapter 55. The primary focus of the oxidizing cryogenic fluid provisions in this chapter is liquid oxygen.

OXIDIZING GAS. A gas that can support and accelerate combustion of other materials more than air does.

❖ Oxidizing gases present essentially the same hazard characteristics as solids and liquids. Examples of oxidizing gases are oxygen, ozone and the oxides of nitrogen, fluorine and chlorine.

OZONE-GAS GENERATOR. Equipment which causes the production of ozone.

❖ Ozone is considered a highly toxic gas. Ozone generators are addressed separately in Section 6005 because the code has traditionally dealt with the storage and use of hazardous materials, but not the generation.

[BE] PANIC HARDWARE. A door-latching assembly incorporating a device that releases the latch upon the application of a force in the direction of egress travel. See also "Fire exit hardware."

❖ Panic hardware is commonly used in educational and assembly-type spaces where the number of occupants who would use a doorway during a short time frame in an emergency is high in relation to an occupancy with a less dense occupant load, such as an office building. The hardware is required so that the door can be easily opened during an emergency when pressure on a door from a crush of people could tender normal hardware inoperable. Not all types of panic hardware are permitted on doors required to be fire-protection rated (see the definition for "Fire exit hardware" and Section 1010.1.10).

PASS-THROUGH. An enclosure installed in a wall with a door on each side that allows chemicals, HPM, equipment, and parts to be transferred from one side of the wall to the other.

❖ A pass-through is similar to a sally port and is used to store and receive HPM for the fabrication area. The pass-through must be separated from the exit access corridor by fire-resistance-rated construction, including a fire-resistance-rated, self-closing fire door on each side, and be sprinklered.

[BG] PENTHOUSE. An enclosed, unoccupied rooftop structure used for sheltering mechanical and electrical equipment, tanks, elevators and related machinery, and vertical shaft openings.

❖ Any enclosed structure that is located above the surrounding roof surfaces can be considered a penthouse as long as it meets the criteria within Section 1510.2 of the IBC. By complying with these requirements, the penthouse is considered to not contribute to the height of the building, either in number of stories or feet above grade plane. If the proposed penthouse does not meet these requirements, it must be considered as an additional story of the building or structure.

PERMISSIBLE EXPOSURE LIMIT (PEL). The maximum permitted 8-hour time-weighted-average concentration of an air-borne contaminant. The exposure limits to be utilized are those published in DOL 29 CFR Part 1910.1000. The Recommended Exposure Limit (REL) concentrations published by the U.S. National Institute for Occupational Safety and Health (NIOSH), Threshold Limit Value-Time Weighted Average (TLV-TWA) concentrations published by the American Conference of Governmental Industrial Hygienists (ACGIH), Workplace Environmental Exposure Level (WEEL) Guides published by the American Industrial Hygiene Association (AIHA), and other *approved*, consistent measures are allowed as surrogates for hazardous substances not *listed* in DOL 29 CFR Part 1910.1000.

❖ The PEL is a maximum time-weighted concentration at which 95 percent of exposed, healthy adults suffer no adverse effects over a 40-hour workweek. The lower the PEL, the more toxic the substance.

INTERNATIONAL CODE COUNCIL®
Copyright © 2015 ICC. ALL RIGHTS RESERVED. Accessed by David Dammon on Jun 21, 2017 12:30:52 PM pursuant to License Agreement with ICC. No further reproduction or distribution authorized. ANY UNAUTHORIZED REPRODUCTION OR DISTRIBUTION IS A VIOLATION OF THE FEDERAL COPYRIGHT ACT AND THE LICENSE AGREEMENT, AND SUBJECT TO CIVIL AND CRIMINAL PENALTIES THEREUNDER.

[A] PERMIT. An official document or certificate issued by the *fire code official* that authorizes performance of a specified activity.

❖ The permit constitutes a license issued by the fire code official to proceed with a specific activity, such as construction of a building or conducting a certain type of business, in accordance with all applicable laws.

For the IBC and IRC, the "building official" is identified as the person responsible for issuing the permit. For the IFC, the "fire code official" is identified as the person responsible. For other I-Codes, the "code official" is identified as the person responsible.

[A] PERSON. An individual, heirs, executors, administrators or assigns, and also includes a firm, partnership or corporation, its or their successors or assigns, or the agent of any of the aforesaid.

❖ Corporations and other organizations listed in the definition are treated as persons under the law. Also, when the code provides for a penalty (see Section 109.4), the definition makes it clear that the individuals responsible for administering the activities of these various organizations are subject to these penalties.

[BG] PERSONAL CARE SERVICE. The care of persons who do not require medical care. Personal care involves responsibility for the safety of the persons while inside the building.

❖ Persons who need personal care may need supervision, but they are capable of self-preservation. See the commentary to Occupancy Group E day care.

Care facilities encompass a full spectrum of occupant acuity and support services and span a wide range of occupancy types including Groups E, I and R. There are three types of care defined in the codes: personal, custodial and medical. On the lower end of the care spectrum (i.e., personal care) is when occupants are supervised but do not need custodial or medical care. Where occupants may be elderly or impaired (i.e., custodial care), they may need occasional daily living assistance, such as cooking and cleaning. While occupants may take longer to evacuate than average, they are capable of self-preservation. On the opposite end of the care spectrum, persons receiving care may be completely bedridden and dependant on medical gases and emergency power to maintain life (i.e., medical care). The level of care provided describes the condition and capabilities of an occupant which then indicates appropriate standards for protection systems and building. See also the definitions for "24-hour basis," "Custodial care," "Detoxification facilities," "Foster care facilities," "Group home," "Hospitals and psychiatric hospitals," "Medical care," "Nursing home" and "Incapable of self-preservation."

PESTICIDE. A substance or mixture of substances, including fungicides, intended for preventing, destroying, repelling or mitigating pests and substances or a mixture of substances intended for use as a plant regulator, defoliant or desiccant. Products defined as drugs in the Federal Food, Drug and Cosmetic Act are not pesticides.

❖ Typically, pesticides are ranked in the toxic category of health hazards. They are primarily used to control a variety of pests.

[BE] PHOTOLUMINESCENT. Having the property of emitting light that continues for a length of time after excitation by visible or invisible light has been removed.

❖ Examples of photoluminescent material are paint and tape that are charged by exposure to light. When the lights are turned off, the product will "glow" in the dark. Products utilized to meet the requirements for luminous egress path markings in high-rise buildings (see Section 403.5.5 of the IBC and Section 1025) or exit signs (see Section 1013.5) may be photoluminescent or self-luminous. A variety of materials can comply with the referenced standards for egress path markings—UL 1994, *Standard for Safety of Low Level Path Marking and Lighting Systems* and ASTM E 2072, *Standard Specification for Photoluminescent (Phosphorescent) Safety Markings—and* for signs—UL 924, *Standard for Safety Emergency Lighting and Power Equipment*.

PHYSICAL HAZARD. A chemical for which there is evidence that it is a *combustible liquid*, *cryogenic fluid*, *explosive*, flammable (solid, liquid or gas), organic peroxide (solid or liquid), oxidizer (solid or liquid), oxidizing gas, pyrophoric (solid, liquid or gas), unstable (reactive) material (solid, liquid or gas) or water-reactive material (solid or liquid).

❖ Materials posing a detonation or deflagration hazard, or materials that readily support combustion, are considered physical hazards. Structures containing materials posing a physical hazard exceeding maximum allowable quantities are classified in Group H-1, H-2 or H-3. Materials posing a physical hazard may also present a health hazard.

PHYSIOLOGICAL WARNING THRESHOLD. A concentration of air-borne contaminants, normally expressed in parts per million (ppm) or milligrams per cubic meter (mg/m^3), that represents the concentration at which persons can sense the presence of the contaminant due to odor, irritation or other quick-acting physiological responses. When used in conjunction with the permissible exposure limit (PEL), the physiological warning threshold levels are those consistent with the classification system used to establish the PEL. See the definition of "Permissible exposure limit (PEL)."

❖ The term "physiological warning properties" is not defined. From a practical standpoint, the physiological warning properties are represented by a concentration of a contaminant that allows the average individual to sense its presence by a body warning signal including, but not limited to, odor, irritating effects such as stinging sensations, coughing, scratchy feeling in the throat, running of the eyes or nose and similar signals.

INTERNATIONAL CODE COUNCIL®
Copyright © 2015 ICC. ALL RIGHTS RESERVED. Accessed by David Dammon on Jun 21, 2017 12:30:52 PM pursuant to License Agreement with ICC. No further reproduction or distribution authorized. ANY UNAUTHORIZED REPRODUCTION OR DISTRIBUTION IS A VIOLATION OF THE FEDERAL COPYRIGHT ACT AND THE LICENSE AGREEMENT, AND SUBJECT TO CIVIL AND CRIMINAL PENALTIES THEREUNDER.

There may be a wide variability reported for some of the more common threshold levels including that of olfactory perception. Variations that may be encountered are due to a number of factors including the methods used in their determination, the population exposed and others. The requirements for gas detection established in the code are tied to the permissible exposure limit (PEL), and there are several methods for determining the PEL inherent in the definition of that term. Including this definition intends to link the determination of the physiological warning threshold level to the data used to determine the PEL. For example, the PEL as established by 29 CFR is primarily based on data developed by the American Conference of Governmental Industrial Hygienists (ACGIH) called "threshold limit values (TLVs)" as referenced in the definition of "Permissible exposure limit (PEL)". To substantiate the TLVs (PELs), the ACGIH publishes the Documentation of the Threshold Limit Values (TLVs®) and Biological Exposure Indices (BEIs®) where the user is provided with data used in their establishment. The significant commercially available toxic and highly toxic gases with published TLVs are listed by ACGIH, and perception thresholds are provided. These warning properties are considered, as evidenced by the documentation when the TLV and hence the PEL is established. It is appropriate that the data used in the base documents be used as the basis for determining the threshold level when such data is available. The use of data from other sources may be used in the absence of data within the system used for the establishment of the PEL, but where such data has been considered in determining the PEL such data should take precedent. By providing a definition for physiological warning threshold level and guidance as to how it is to be applied, the code user is given guidance that carries out the intent of the provisions for gas detection that have been established in the code. See the commentary to Section 6004.2.2.10 for further discussion of gas detection.

PIER. A structure built over the water, supported by pillars or piles, and used as a landing place, pleasure pavilion or similar purpose.

❖ A pier extends from land over the water to facilitate the loading and unloading of marine vessels with both people and cargo. Many piers also have commercial operations located on them. Piers are typically longer than they are wide and may be constructed of concrete, wood or other combustible materials. When wood materials are used, they are usually heavily coated or pressure treated with preservatives. Exposure to weather will cause the wood materials to dry out and be susceptible to ignition. Wood piers, being elevated structures, will burn freely due to the configuration and amount of exposed material available to burn.

PLACE OF RELIGIOUS WORSHIP. See "Religious worship, place of."

[M] PLENUM. An enclosed portion of the building structure, other than an occupiable space being conditioned, that is designed to allow air movement and thereby serve as part of an air distribution system.

❖ A plenum is part of an air distribution system and is usually concealed within the building construction. Plenums can be used for supply, return, exhaust, relief and ventilation air. They can occur in ceiling, attic or under-floor spaces, in mechanical equipment rooms (air handler rooms) and in stud and joist cavities. The definition clarifies that plenums are uninhabitable, unoccupiable cavities and interstitial spaces only; an unoccupiable room or space is not a plenum (see the commentary to Section 602 of the IMC for restrictions on the use of plenums).

PLOSOPHORIC MATERIAL. Two or more unmixed, commercially manufactured, prepackaged chemical substances including oxidizers, flammable liquids or solids, or similar substances that are not independently classified as *explosives* but which, when mixed or combined, form an *explosive* that is intended for blasting.

❖ Plosophoric materials, or plosophors, also are known as two-component or binary explosives. When plosophoric materials are mixed or combined at the point of use, the procedures recommended by the manufacturer should be strictly enforced. Mixed or combined plosophoric materials must be transported, stored and used in the same manner as explosives.

PLYWOOD AND VENEER MILLS. Facilities where raw wood products are processed into finished wood products, including waferboard, oriented strandboard, fiberboard, composite wood panels and plywood.

❖ Veneer mills are unique because the milling is done with knives rather than saws. Veneer logs are often air dried for an extended period of time before processing.

PORTABLE OUTDOOR FIREPLACE. A portable, outdoor, solid-fuel-burning fireplace that may be constructed of steel, concrete, clay or other noncombustible material. A portable outdoor fireplace may be open in design, or may be equipped with a small hearth opening and a short chimney or chimney opening in the top.

❖ This definition describes a fairly recent innovation that has often been treated as open burning. These devices function similar to a masonry or factory-built indoor fireplace except that they are portable, solid fuel-burning fireplaces designed to provide ambience and warmth in outdoor settings. They come in many styles and designs, both open and enclosed. Some designs are constructed of steel with screening around the firebox while others are made of concrete or clay with a small hearth opening and are equipped

INTERNATIONAL CODE COUNCIL®
Copyright © 2015 ICC. ALL RIGHTS RESERVED. Accessed by David Dammon on Jun 21, 2017 12:30:52 PM pursuant to License Agreement with ICC. No further reproduction or distribution authorized. ANY UNAUTHORIZED REPRODUCTION OR DISTRIBUTION IS A VIOLATION OF THE FEDERAL COPYRIGHT ACT AND THE LICENSE AGREEMENT, AND SUBJECT TO CIVIL AND CRIMINAL PENALTIES THEREUNDER.

with a short chimney or simply a chimney opening. Still others function as a fire pit on legs. The design will typically include a stand or legs to elevate the firebox above the surface upon which it is placed to provide clearance to combustible materials. Sections 307.4.3 and 307.5 of the code contain specific clearance and attendance requirements for these devices. See also the definitions of "Open burning" and "Recreational fire."

POWERED INDUSTRIAL TRUCK. A forklift, tractor, platform lift truck or motorized hand truck powered by an electrical motor or internal combustion engine. Powered industrial trucks do not include farm vehicles or automotive vehicles for highway use.

❖ This kind of vehicle includes forklift trucks and other similar vehicles used to move stock in warehouses, industrial buildings, large retail spaces, storage yards and loading docks. These vehicles are not licensed for highway travel and do not include farm machinery.

[BE] POWER-ASSISTED DOOR. Swinging door that opens by reduced pushing or pulling force on the door-operating hardware. The door closes automatically after the pushing or pulling force is released, and functions with decreased forces. See also "Low energy power-operated door" and "Power-operated door."

❖ There are basically three different types of doors that provide some type of power assistance for entry: low energy power-operated doors, power-assisted doors and power-operated doors. The power-assisted door is typically a side-swinging door that has the additional feature of powered assistance to move the door to the open position. When a door has power assistance, the force or effort it takes to open the door while it is being pushed or pulled is reduced as long as a user maintains pressure on the hardware. When the hardware is released, the door will move to the closed position. Power-assisted doors are typically used when a door is an unusual size or weight. The low-energy power-assisted door and power-assisted door both are operated by the user touching something; therefore, they both must comply with BMHA156.19.

[BE] POWER-OPERATED DOOR. Swinging, sliding, or folding door that opens automatically when approached by a pedestrian or opens automatically upon an action by a pedestrian. The door closes automatically and includes provisions such as presence sensors to prevent entrapment. See also "Low energy power-operated door" and "Power-assisted door."

❖ There are basically three different types of doors that provide some type of power assistance for entry: low energy power-operated doors, power-assisted doors and power-operated doors. The power-operated door can be a sliding, hinged or side-swinging door that operates automatically by either a motion sensor or sensor mat when someone approaches the door. Power-operated doors are most commonly installed at the busy entrances of commercial buildings. As a door with hands-free operation, the power-operated door must comply with BMHA156.10.

PRESSURE VESSEL. A closed vessel designed to operate at pressures above 15 psig (103 kPa).

❖ A pressure vessel used to contain hazardous materials must comply with the ASME *Boiler and Pressure Vessel Code* (BPVC), in accordance with Section 5003.2.1. Pressure vessels are constructed as cylindrical or spherical structures because such a design is safer, more economical, and it is easier to construct a vessel in these shapes to control axial and circumferential stresses. Pressure vessels can be constructed for either a horizontal (see Commentary Figure 202-P1) or vertical orientation (see Commentary Figure 202-P2). The design, construction and examination requirements for pressure vessels that are used for hazardous materials are contained in Section VIII, Division 1, of the BPVC, which sets forth requirements for unfired pressure vessels with design pressures up to 3,000 pounds per square inch gauge (psig) (20 685 kPa). For pressures over 3,000 psig (20 685 kPa), the alternative design rules in Division 2 or 3 of BPVC Section VIII must be applied. Pressure vessels are not listed by nationally recognized testing laboratories. Instead, when a pressure vessel is fabricated in accordance with the BPVC, the fabricator will employ an authorized inspector to perform examinations of the vessel to ensure it is constructed in accordance with the BPVC and the approved design drawings. The authorized inspector also verifies the proper materials of construction are selected, that welders have the appropriate certifications based on the welding methods used and that welds are performed in accordance with the approved welding procedures. The BPVC requires that all pressure vessels be equipped with a nameplate welded at a conspicuous location directly onto the shell of the vessel (or



Figure 202-P1
INSULATED HORIZONTAL PRESSURE VESSEL

INTERNATIONAL CODE COUNCIL®
Copyright © 2015 ICC. ALL RIGHTS RESERVED. Accessed by David Dammon on Jun 21, 2017 12:30:52 PM pursuant to License Agreement with ICC. No further reproduction or distribution authorized. ANY UNAUTHORIZED REPRODUCTION OR DISTRIBUTION IS A VIOLATION OF THE FEDERAL COPYRIGHT ACT AND THE LICENSE AGREEMENT, AND SUBJECT TO CIVIL AND CRIMINAL PENALTIES THEREUNDER.

onto a welded bracket if the pressure vessel will be insulated) that demonstrates the vessel was constructed in accordance with the requirements of ASME. In addition to the pressure vessel's nameplate, ASME also requires that a Manufacturer's Data Report for Pressure Vessels (ASME Form U-1) be prepared by the manufacturer to document the construction of the vessel and its compliance with the applicable edition of the BPVC. It is quite common in the establishment of new construction processes to purchase and install used pressure vessels. Given the safety factors required by the BPVC, properly selected and maintained pressure vessels can easily perform for decades provided they are operated within their design temperature and pressures, and are properly designed for external loads. Fire code officials should utilize the nameplate in conjunction with ASME Form U-1 to confirm that the installed vessel is constructed to the BPVC and use this documentation to demonstrate compliance with Section 5003.2.1. Pressure vessels that are not equipped with a nameplate should not be approved unless they are evaluated by a qualified engineer. In such instances, a technical report and opinion should be obtained in accordance with Section 104.7.2.



Figure 202-P2
VERTICAL PRESSURE VESSEL

PRIMARY CONTAINMENT. The first level of containment, consisting of the inside portion of that container which comes into immediate contact on its inner surface with the material being contained.

❖ In most cases, this definition pertains to those components of tanks, portable tanks and containers that are the main mechanism for the containment of liquid (the basic walls of the tank, portable tank or container). The term "secondary containment" refers to the containment provided when the primary containment fails.

[BG] PRIVATE GARAGE. A building or portion of a building in which motor vehicles used by the tenants of the building or buildings on the premises are stored or kept, without provisions for repairing or servicing such vehicles for profit.

❖ In Section 406 of the IBC, the code regulates two types of garages: private and public. Public garages are further separated into open or enclosed garages. Private garages are limited in size by Section 406.3 of the IBC and can be accessory to either residential or nonresidential uses. The definition is intended to help distinguish private garages from public garages. Carports are also addressed in Section 406.3 of the IBC.

PROCESS TRANSFER. The transfer of flammable or *combustible liquids* between tank vehicles or tank cars and process operations. Process operations may include containers, tanks, piping and equipment.

❖ The transfer of flammable or combustible liquids during any process operation may include the introduction of the flammable or combustible liquids into or within the process operation.

PROPELLANT. The liquefied or *compressed gas* in an aerosol container that expels the contents from an aerosol container when the valve is actuated. A propellant is considered flammable if it forms a flammable mixture with air, or if a flame is self-propagating in a mixture with air.

❖ The amount of flammable propellant content is important in properly classifying aerosol products, since it affects the overall chemical heat of combustion value. Common flammable propellants are hydrocarbons, such as butane, propane, isobutane or a combination of these.

PROXIMATE AUDIENCE. An audience closer to pyrotechnic devices than allowed by NFPA 1123.

❖ The separation distance of the pyrotechnic devices and the audience permitted by NFPA 1123 is in relationship to the shell size of the mortar. NFPA 1126 addresses the requirements for proximate audiences.

[B] PSYCHIATRIC HOSPITALS. See "Hospitals."

PUBLIC TRAFFIC ROUTE (PTR). Any public street, road, highway, navigable stream or passenger railroad that is used for through traffic by the general public.

❖ See the commentary to the definition of "Quantity-Distance (Q-D)."

INTERNATIONAL CODE COUNCIL®
Copyright © 2015 ICC. ALL RIGHTS RESERVED. Accessed by David Dammon on Jun 21, 2017 12:30:52 PM pursuant to License Agreement with ICC. No further reproduction or distribution authorized. ANY UNAUTHORIZED REPRODUCTION OR DISTRIBUTION IS A VIOLATION OF THE FEDERAL COPYRIGHT ACT AND THE LICENSE AGREEMENT, AND SUBJECT TO CIVIL AND CRIMINAL PENALTIES THEREUNDER.

[BE] PUBLIC-USE AREAS. Interior or exterior rooms or spaces that are made available to the general public.

❖ This term is utilized to describe all interior and exterior spaces or rooms that may be occupied by the general public for any amount of time. Spaces that are utilized by the general public may be located in facilities that are publicly or privately owned. Examples include the lobby in an office building, a high-school gymnasium with assembly seating, an open-air stadium, a multipurpose room, an exposition hall, a restaurant dining room, a health club, etc. (see also the commentary to the definitions of "Common use" and "Employee work area").

[A] PUBLIC WAY. A street, alley or other parcel of land open to the outside air leading to a street, that has been deeded, dedicated or otherwise permanently appropriated to the public for public use and which has a clear width and height of not less than 10 feet (3048 mm).

❖ The public way marks the termination of the exit discharge portion of the means of egress system. It is the final destination for occupants, and is presumed to be safe from the emergency occurring in the structure or it will directly connect to other routes so that occupants can move a distance away from the danger. The 10-foot (3048 mm) width is consistent with the exit discharge requirements in Section 1028.

PYROPHORIC. A chemical with an autoignition temperature in air, at or below a temperature of 130°F (54°C).

❖ The definition is derived from DOL 29 CFR Part 1910.1200. Pyrophoric materials, whether in a gas, liquid or solid form, are capable of spontaneous ignition at low temperatures. Pyrophoric materials, regardless of their physical state, may spontaneously ignite when exposed to air at normal or slightly elevated temperatures, even in small quantities. Many pyrophoric materials are also highly reactive with water. While even moist air may increase the possibility of ignition, the application of water may cause an explosive reaction (see commentary, Chapter 67).

PYROTECHNIC ARTICLE. A pyrotechnic device for use in the entertainment industry, which is not classified as fireworks.

❖ This definition refers to articles containing substances or a mixture of substances designed to produce heat, light, sound or smoke or a combination of such effects for theatrical purposes.

PYROTECHNIC COMPOSITION. A chemical mixture that produces visible light displays or sounds through a self-propagating, heat-releasing chemical reaction which is initiated by ignition.

❖ This definition parallels the definition in NFPA 1124, referenced in Section 5605.1. The term is used in the definition of "Display, 1.3G fireworks," and is the basis for establishing the allowable amounts in Table 5604.3.

PYROTECHNIC SPECIAL EFFECT. A visible or audible effect for entertainment created through the use of pyrotechnic materials and devices.

❖ Pyrotechnic special effects are widely used in motion-picture production to create all types of effects involving explosions, fires, light, smoke and sound concussions. The types of pyrotechnic materials used include flash powder, flash paper, gun cotton, black powder (gunpowder), smokeless powder, detonator explosives and many more. They are used in bullet hits (squibs), blank cartridges, flash pots, fuses, mortars, smoke pots, sparkle pots, etc.

The main problems of pyrotechnics include prematurely triggering the pyrotechnic effect; use of larger quantities or more dangerous materials than needed; causing a fire; lack of adequate fire-extinguishing capabilities and, of course, inadequately trained and experienced pyrotechnic operators. As a result of these risks, all pyrotechnic special effects are regulated at the federal, state and local level.

PYROTECHNIC SPECIAL-EFFECT MATERIAL. A chemical mixture used in the entertainment industry to produce visible or audible effects by combustion, *deflagration* or *detonation*. Such a chemical mixture predominantly consists of solids capable of producing a controlled, self-sustaining and self-contained exothermic chemical reaction that results in heat, gas sound, light or a combination of these effects. The chemical reaction functions without external oxygen.

❖ Pyrotechnic special effects materials are Division 1.3 explosives. They will burn but not explode, unless confined. Examples are black powder and pellet powder, safety fuses, igniters, igniter cord, fuse lighters, Division 1.3 special fireworks and Division 1.3 composite solid propellants.

PYROTECHNICS. Controlled exothermic chemical reactions timed to create the effects of heat, hot gas, sound, dispersion of aerosols, emission of visible light or a combination of such effects to achieve the maximum effect from the least volume of pyrotechnic composition.

❖ This definition describes special devices that are used to create entertainment, exhibition, demonstration or simulation through the controlled use of flame, sounds, aerosols or other special effects before a proximate audience (see Section 5608 and NFPA 1126).

QUANTITY-DISTANCE (Q-D). The quantity of *explosive material* and separation distance relationships providing protection. These relationships are based on levels of risk considered acceptable for the stipulated exposures and are tabulated in the appropriate Q-D tables. The separation distances specified afford less than absolute safety:

Inhabited building distance (IBD). The minimum separation distance between an operating building or magazine containing *explosive materials* and an inhabited building or site boundary.

INTERNATIONAL CODE COUNCIL®
Copyright © 2015 ICC. ALL RIGHTS RESERVED. Accessed by David Dammon on Jun 21, 2017 12:30:52 PM pursuant to License Agreement with ICC. No further reproduction or distribution authorized. ANY UNAUTHORIZED REPRODUCTION OR DISTRIBUTION IS A VIOLATION OF THE FEDERAL COPYRIGHT ACT AND THE LICENSE AGREEMENT, AND SUBJECT TO CIVIL AND CRIMINAL PENALTIES THEREUNDER.

Intermagazine distance (IMD). The minimum separation distance between magazines.

Intraline distance (ILD) or Intraplant distance (IPD). The distance to be maintained between any two operating buildings on an *explosives* manufacturing site when at least one contains or is designed to contain *explosives*, or the distance between a magazine and an operating building.

Minimum separation distance (D_o). The minimum separation distance between adjacent buildings occupied in conjunction with the manufacture, transportation, storage or use of *explosive materials* where one of the buildings contains *explosive materials* and the other building does not.

❖ This definition (with subdefinitions) correlates with tables to be used for distance determination, and also with the terminology used by those engaged in the storage and manufacture of explosive materials as well as with the regulators of these materials, including the DOD. The term is also consistent with terminology used by the DOD and the IME. The terms will bring a consistent set of terminologies to the code.

The definition "Quantity-Distance (Q-D)" is the relationship between a quantity of explosive material and the minimum separation distances required. The use of Q-D relationships to establish building siting is fundamentally used in the planning and occupancy of buildings used to contain explosive materials. Section 5601.2.3 (permit restrictions) authorizes the fire code official to limit the quantity of explosives at any given location. The limitations on quantity are typically derived based on the location of the explosives. The distances required vary depending on the sensitivity of the receptor. Distances are generally greater where the public or those not engaged in the manufacturing process are involved.

The subelements of the definition include terms that typically appear (or should appear) on building and site plans that are used to confirm that the siting for the structure used to contain the explosive material (building or magazine) is properly located. Acronyms (e.g., IBD, ILD, IMD, etc.) are typically used to describe the distance used to separate the explosives from receptors such as inhabited buildings, public traffic or transportation routes (highways), other storage (magazines) and the like.

Notwithstanding the tabular distance established by the Q-D tables integral to the explosives industry, there are occasions where ancillary buildings are needed to be constructed that do not contain explosive materials per se, where the ancillary building will encroach on the building containing explosive materials. D_o is a fire separation distance, and not unlike that used by the IBC to determine the location of "detached buildings." As the buildings regulated by the Q-D tables are required to be detached, a minimum separation distance is established. This distance is noted in Tables 5601.8.1(1) through 5601.8.1(3) with 50 feet (15 240 mm) established as the minimum for buildings containing materials with mass fire and fire hazards, and 60 feet (18 288 mm) established as the minimum for buildings containing materials with mass explosion hazards. From a practical standpoint, the D_o distances will apply only to facilities where the explosive quantities are near the minimums as the distances are increased rapidly with increases in material content.

The term "intraline" is used in this chapter in the definition of "Operating, building," and in Note a to Table 5605.3. The term "intraline distance (ILD)" (intra = within the line) is used synonymously with intraplant distance (IPD), although there are differences applied on military sites for the purpose of separating different operating lines. For example, on military sites, it is common to separate one operating line from another by the inhabited building distance. On the other hand, on commercial sites, it is common to produce multiple product lines within an associated building group and to separate the various buildings within the group by IPD. By equating the terms "IPD" and "ILD," commercial uses are provided with a level of protection that is designed to address building safety that is not product specific, but is designed to address the explosive nature of materials involved.

The term "intraplant" is used in the title of Section 5605.3, Table 5605.3 and in the definition of "Operating building." It is a unique term, and as such requires the supporting definition included here.

RAILWAY. A steam, electric or other railroad or railway that carriers passengers for hire.

❖ The definition of "Railway" is intended to minimize the exposure of passengers to danger if an explosion occurs involving an explosives magazine.

[BE] RAMP. A walking surface that has a running slope steeper than one unit vertical in 20 units horizontal (5-percent slope).

❖ This definition is needed to determine the threshold at which the ramp requirements apply to a walking surface. Walking surfaces steeper than specified in the definition are subject to the ramp requirements in Sections 1012 and 1029.

RAMP, EXIT ACCESS. See "Exit access ramp."

RAMP, EXTERIOR EXIT. See "Exterior exit ramp."

RAMP, INTERIOR EXIT. See "Interior exit ramp."

RAW PRODUCT. A mixture of natural materials such as tree, brush trimmings, or waste logs and stumps.

READY BOX. A weather-resistant container with a self-closing or automatic-closing cover that protects fireworks shells from burning debris. Tarpaulins shall not be considered as ready boxes.

❖ After delivery and prior to the display, shells must be separated according to size and their designation as salutes. Any display fireworks that will be temporarily stored at the display site during the fireworks display must be stored in ready boxes separated according to size and their designation as salutes.

INTERNATIONAL CODE COUNCIL®
Copyright © 2015 ICC. ALL RIGHTS RESERVED. Accessed by David Dammon on Jun 21, 2017 12:30:52 PM pursuant to License Agreement with ICC. No further reproduction or distribution authorized. ANY UNAUTHORIZED REPRODUCTION OR DISTRIBUTION IS A VIOLATION OF THE FEDERAL COPYRIGHT ACT AND THE LICENSE AGREEMENT, AND SUBJECT TO CIVIL AND CRIMINAL PENALTIES THEREUNDER.

[A] RECORD DRAWINGS. Drawings ("as builts") that document the location of all devices, appliances, wiring, sequences, wiring methods and connections of the components of a fire alarm system as installed.

❖ To verify that the system has been installed to comply with the code and applicable referenced standards, complete as-built drawings of the fire alarm system must be available on site for review.

RECREATIONAL FIRE. An outdoor fire burning materials other than rubbish where the fuel being burned is not contained in an incinerator, outdoor fireplace, portable outdoor fireplace, barbeque grill or barbeque pit and has a total fuel area of 3 feet (914 mm) or less in diameter and 2 feet (610 mm) or less in height for pleasure, religious, ceremonial, cooking, warmth or similar purposes.

❖ This kind of fire includes ordinary campfires and other small fires used for the activities listed. The definition has also been revised to clarify that the use of portable outdoor fireplaces (also known as patio fireplaces) is specifically included thus eliminating the confusion that previously existed as to how to treat those devices. See also the definition of "Open burning."

REDUCED FLOW VALVE. A valve equipped with a restricted flow orifice and inserted into a *compressed gas* cylinder, portable tank or stationary tank that is designed to reduce the maximum flow from the valve under full-flow conditions. The maximum flow rate from the valve is determined with the valve allowed to flow to atmosphere with no other piping or fittings attached.

❖ This is a valve that allows the maximum flow rate from a container to be reduced. For the reduction to be accurate, the maximum flow rate of a container must be known. The maximum flow rate must be determined without any piping or fittings attached to the container. This ensures that the reduction valve can actually achieve what is intended.

REFINERY. A plant in which flammable or *combustible liquids* are produced on a commercial scale from crude petroleum, natural gasoline or other hydrocarbon sources.

❖ A refinery is the facility that produces flammable or combustible liquids from raw materials.

REFRIGERANT. The fluid used for heat transfer in a refrigeration system; the refrigerant absorbs heat and transfers it at a higher temperature and a higher pressure, usually with a change of state.

❖ The refrigerant is the working fluid in refrigeration and air-conditioning systems. In vapor refrigeration cycles, refrigerants absorb heat from the load side at the evaporator and reject heat at the condenser. Aside from having suitable thermodynamic properties, the selection of a refrigerant must also take into consideration chemical stability, flammability, toxicity and environmental compatibility. Refrigeration is a result of the physical laws of vaporization (evaporation) of liquids. Basically, evaporation of liquid refrigerant is an endothermic process and condensing of vapors is an exothermic process.

[M] REFRIGERATING (REFRIGERATION) SYSTEM. A combination of interconnected refrigerant-containing parts constituting one closed refrigerant circuit in which a refrigerant is circulated for the purpose of extracting heat.

❖ Such systems include, at minimum, a pressure-imposing element or generator, an evaporator, a condenser and interconnecting piping. A single piece of equipment can contain multiple refrigeration systems (circuits).

[A] REGISTERED DESIGN PROFESSIONAL. An architect or engineer, registered or licensed to practice professional architecture or engineering, as defined by the statutory requirements of the professional registration laws of the state in which the project is to be constructed.

❖ This term is used throughout the code where a special level of expertise and knowledge is required. The definition clearly notes that each state defines its own professional registration laws. Legal qualifications for engineers and architects are established by the state having jurisdiction. Licensing and registration of engineers and architects are accomplished by written or oral examinations offered by states or by reciprocity (licensing in other states).

[BG] RELIGIOUS WORSHIP, PLACE OF. A building or portion thereof intended for the performance of religious services.

❖ This term has been added to the code for the purpose of making the code more broadly applicable to the worship facilities of all religions. Major religions for the world include Christianity, Islam, Hinduism, Buddhism and Judaism, which use different terms to describe the main space used for religious services. The intent in the code is for the same application for all similar types of religious facilities. The term also makes it clear that it defines the room or sanctuary for the performance of religious worship services and not retreat complexes, rectories, convents and classroom or office areas.

REMOTE EMERGENCY SHUTOFF DEVICE. The combination of an operator-carried signaling device and a mechanism on the tank vehicle. Activation of the remote emergency shutoff device sends a signal to the tanker-mounted mechanism and causes fuel flow to cease.

❖ This definition describes an important safety device used in the mobile fueling operation regulated by Section 5706.5.4.5 and describes a portable device that a tank vehicle driver may use to prevent an overfill spill during mobile fueling when the driver is out of immediate reach of the tanker shutoff controls (see commentary, Section 5706.5.4.5).

REMOTE SOLVENT RESERVOIR. A liquid solvent container enclosed against evaporative losses to the atmosphere during periods when the container is not being utilized, except for a solvent return opening not larger than 16 square

INTERNATIONAL CODE COUNCIL®
Copyright © 2015 ICC. ALL RIGHTS RESERVED. Accessed by David Dammon on Jun 21, 2017 12:30:52 PM pursuant to License Agreement with ICC. No further reproduction or distribution authorized. ANY UNAUTHORIZED REPRODUCTION OR DISTRIBUTION IS A VIOLATION OF THE FEDERAL COPYRIGHT ACT AND THE LICENSE AGREEMENT, AND SUBJECT TO CIVIL AND CRIMINAL PENALTIES THEREUNDER.

inches (10 322 mm^2). Such return allows pump-cycled used solvent to drain back into the reservoir from a separate solvent sink or work area.

❖ A remote solvent reservoir is the storage of flammable or combustible liquid in a container that is not in the same control area as the machine using the flammable or combustible liquid. The remote solvent reservoir is connected to the machine by piping or tubing.

REMOTELY LOCATED, MANUALLY ACTIVATED SHUTDOWN CONTROL. A control system that is designed to initiate shutdown of the flow of gases or liquids that is manually activated from a point located some distance from the delivery system.

❖ See the commentary to the definitions for "Emergency shutoff valves."

REPAIR GARAGE. A building, structure or portion thereof used for servicing or repairing motor vehicles.

❖ A repair garage may be part of a motor fuel-dispensing facility. The fuel-dispensing area will comply with the motor fuel-dispensing facility sections of this chapter and the repair garage area will comply with the repair garage section (see Section 2311) of this chapter. A marine pleasure craft dealership with a boat repair area will be classified as a repair garage. Motor vehicle repair garages are classified in occupancy Group S-1 by the IBC.

RESIN APPLICATION AREA. An area where reinforced plastics are used to manufacture products by hand lay-up or spray-fabrication methods.

❖ Glass fiber is used for reinforcement of plastics or polymers, and the resulting products are typically called glass fiber reinforced plastics or polymers (GFRP). It is common to use the acronym FRP (fiber reinforced polymers), which is applicable to all fiber-reinforced plastics or polymers.

RESPONSIBLE PERSON. A person trained in the safety and fire safety considerations concerned with hot work. Responsible for reviewing the sites prior to issuing permits as part of the hot work permit program and following up as the job progresses.

❖ This is the person designated to administer the hot work program (see that term's definition in this section) in Section 3503. Without this definition, the term "responsible person" is a vague descriptor. The definition includes the scope of responsibilities for this person.

RETAIL DISPLAY AREA. The area of a Group M occupancy open for the purpose of viewing or purchasing merchandise offered for sale. Individuals in such establishments are free to circulate among the items offered for sale which are typically displayed on shelves, racks or the floor.

❖ Products containing aerosol propellants range from hair spray to paint to pesticides, lubricants and adhesives. Most often, products of this kind are grouped on shelves, but may also be set out in aisle displays of stacked cartons with the top carton being "display cut" to show the product. A display cut carton, according to Section 3.3.26.2 of NFPA 30B, is a type of packaging in which the top and portions of the sides and front of the carton are removed to expose the product to the consumer.

ROLL COATING. The process of coating, spreading and impregnating fabrics, paper or other materials as they are passed directly through a tank or trough containing flammable or *combustible liquids*, or over the surface of a roller revolving partially submerged in a flammable or *combustible liquid*.

❖ Roll-coating methods apply material to flat work pieces, usually paper, cardboard, cloth or thin metals, using liquid-coated cylinders or rollers. Coating material may be applied to the rollers by rotating them in an open trough or pan or applying liquid to the space between two rollers. Please note that for this term to apply anywhere in the code, the tank or trough must contain flammable or combustible liquids.

The requirements in this chapter are for protection against, and mitigation in case of, a fire. In this case, the flammable vapors are typically heavier than air and may travel and spread a long distance unnoticed before reaching a potential ignition source and causing a vapor explosion or fire. In case of a fire within the tank or trough, there are additional concerns. The liquids are typically not water miscible and may overflow when the sprinkler system is activated or during the manual fire-fighting stages. This could spread the fire and liquids even farther.

RUBBISH (TRASH). Combustible and noncombustible waste materials, including residue from the burning of coal, wood, coke or other combustible material, paper, rags, cartons, tin cans, metals, mineral matter, glass crockery, dust and discarded refrigerators, and heating, cooking or incinerator-type appliances.

❖ The term "rubbish" is normally associated with combustible waste. In this code the term is much broader and would include noncombustible waste, such as metals. Generally, the scope of this definition includes anything that has been discarded.

SAFETY CAN. An *approved* container of not more than 5-gallon (19 L) capacity having a spring-closing lid and spout cover so designed that it will relieve internal pressure when subjected to fire exposure.

❖ Safety cans are commonly used where limited quantities of flammable and combustible liquids are required for manufacturing or research. The basic purpose of a safety can is to provide a safe and convenient means of transporting, dispensing and storing up to 5 gallons (19 L) of flammable and combustible liquids. All listed safety cans, regardless of material of construction, are required to be constructed as leak-tight containers. They must automatically vent any vapor if subjected to fire exposure at a pressure of 3 to 5 psig (20 685 to 34 475 kPa gauge) to prevent the container from being subjected to a deflagration

INTERNATIONAL CODE COUNCIL®
Copyright © 2015 ICC. ALL RIGHTS RESERVED. Accessed by David Dammon on Jun 21, 2017 12:30:52 PM pursuant to License Agreement with ICC. No further reproduction or distribution authorized. ANY UNAUTHORIZED REPRODUCTION OR DISTRIBUTION IS A VIOLATION OF THE FEDERAL COPYRIGHT ACT AND THE LICENSE AGREEMENT, AND SUBJECT TO CIVIL AND CRIMINAL PENALTIES THEREUNDER.

resulting from the increased vapor pressure of the liquid. Openings on safety cans must close automatically after being filled or dispensing a liquid. Finally, all listed safety cans must be designed so that a two-dimensional fire that could occur during dispensing cannot reach the pour opening and potentially extend into the safety can. This is commonly prevented by installing a flame arrestor in the container's inlet and outlet openings.

UL (Underwriters Laboratories) lists safety cans using UL 30 for metallic cans and UL 1313 for nonmetallic cans. Factory Mutual (FM) Global also issues listings and approvals for metallic and nonmetallic safety cans. UL and FM both limit the volume of metallic safety cans to 5 gallons (19 L) or less—nonmetallic safety cans are permitted to have a volume of 6.6 gallons (25 L). UL assigns a designation to safety cans based on the number of openings at the top of the container and container appurtenances. A Type I safety can, as shown in Commentary Figure 202-S1, is commonly a single-spout can designed for filling containers or tanks with large receiving openings. A Type II safety can, as shown in Commentary Figure 202-S2, has an integral flexible dispensing hose to control the transfer of the liquid. These safety cans have a second opening that serves as a pressure-vacuum vent which is also used to fill the safety can with liquid. Also see the commentary to Table 5003.1.1(1) and Section 5003.9.10.

[BE] SCISSOR STAIRWAY. Two interlocking *stairways* providing two separate paths of egress located within one *exit* enclosure.

❖ A scissor or interlocking stairway is sometimes used in high-rise buildings or to increase exit capacity of a stairwell enclosure. In this configuration, two independent stairway paths are located within the same exit enclosure and may or may not be visually open to one another. When interlocking stairways are separated from each other with compliant fire barriers and horizontal assemblies, they are not considered scissor stairways (see Section 1007.1.1).

SECONDARY CONTAINMENT. That level of containment that is external to and separate from primary containment.

❖ If a spill or leak from the primary means of containment occurs, an additional level of containment may be necessary to isolate the hazardous materials from adjoining areas or the environment.

SEED COTTON. See "Cotton."

SEGREGATED. Storage in the same room or inside area, but physically separated by distance from *incompatible materials*.

❖ The mixture of two or more chemicals can create a toxic or explosive chemical that is more dangerous than any of the individual chemicals. When chemicals are stored in the same room or storage area it is important to segregate them either by distance or by curbs that will prevent the chemicals from mixing in the case of a discharge.

[BF] SELF-CLOSING. As applied to a fire door or other opening, means equipped with an *approved* device that will ensure closing after having been opened.

❖ A self-closing opening protective refers to a fire or smoke door assembly equipped with a listed closer for doors that must be maintained in the normally closed position. When the door is opened and released, the self-closing feature returns the door to the closed position. It is important to distinguish between the terms "self-closing" and "automatic closing" because they are not interchangeable. "Automatic closing" refers to an opening protective that is



Figure 202-S1
TYPE I SAFETY CAN
Photo courtesy of
Justrite Manufacturing Co., LLC, Des Plaines, IL



Figure 202-S2
TYPE II SAFETY CAN
Photo courtesy of
Justrite Manufacturing Co., LLC, Des Plaines, IL

INTERNATIONAL CODE COUNCIL®
Copyright © 2015 ICC. ALL RIGHTS RESERVED. Accessed by David Dammon on Jun 21, 2017 12:30:52 PM pursuant to License Agreement with ICC. No further reproduction or distribution authorized. ANY UNAUTHORIZED REPRODUCTION OR DISTRIBUTION IS A VIOLATION OF THE FEDERAL COPYRIGHT ACT AND THE LICENSE AGREEMENT, AND SUBJECT TO CIVIL AND CRIMINAL PENALTIES THEREUNDER.

normally in the open position (see Section 716.5.9.2 of the IBC). Opening protectives with automatic closers are often held open and then returned to the closed position upon activation of fire detectors or smoke detectors or loss of power, which automatically releases the hold-open device allowing the door to close.

[BE] SELF-LUMINOUS. Illuminated by a self-contained power source, other than batteries, and operated independently of external power sources.

❖ Self-luminous products do not need an outside light source to charge them like photoluminescent materials do. Products utilized to meet the requirements for luminous egress path markings in high-rise buildings (see Section 403.5.5 of the IBC and Section 1025) or exit signs (see Section 1011.5) may be photoluminescent or self-luminous. A variety of materials can comply with the referenced standards, for egress path markings—UL 1994 and ASTM E2072—and for signs—UL 924.

SELF-PRESERVATION, INCAPABLE OF. See "Incapable of self-preservation."

SELF-SERVICE MOTOR FUEL-DISPENSING FACILITY. That portion of motor fuel-dispensing facility where liquid motor fuels are dispensed from fixed *approved* dispensing equipment into the fuel tanks of motor vehicles by persons other than a motor fuel-dispensing facility attendant.

❖ A self-service motor fuel-dispensing facility may be attended or, with the approval of the fire code official, unattended. A self-service motor fuel-dispensing facility is a facility where the fuel is dispensed by someone other than an employee of the facility operator. Motor fuel-dispensing facilities are classified in occupancy Group M by the IBC.

SEMICONDUCTOR FABRICATION FACILITY. A building or a portion of a building in which electrical circuits or devices are created on solid crystalline substances having electrical conductivity greater than insulators but less than conductors. These circuits or devices are commonly known as semiconductors.

❖ A semiconductor fabrication facility is a building or a portion of a building where semiconductors are produced. See Commentary Figure 202-S3 for an example of a typical floor plan of a semiconductor fabrication facility.

SERVICE CORRIDOR. A fully enclosed passage used for transporting HPM and purposes other than required *means of egress*.

❖ Though HPM facility occupants may be exposed to limited HPM quantities during the course of their employment, their means of egress are protected from the HPM hazards by confining the HPM being transferred to its own passageway. A service corridor is required only when the HPM must be carried from a storage room or external area to a fabrication area through a passageway.

SHELF STORAGE. Storage on shelves less than 30 inches (762 mm) deep with the distance between shelves not exceeding 3 feet (914 mm) vertically. For other shelving arrangements, see the requirements for rack storage.

❖ To be considered shelf storage, the shelving must be no deeper than 30 inches (762 mm) and must be sep-

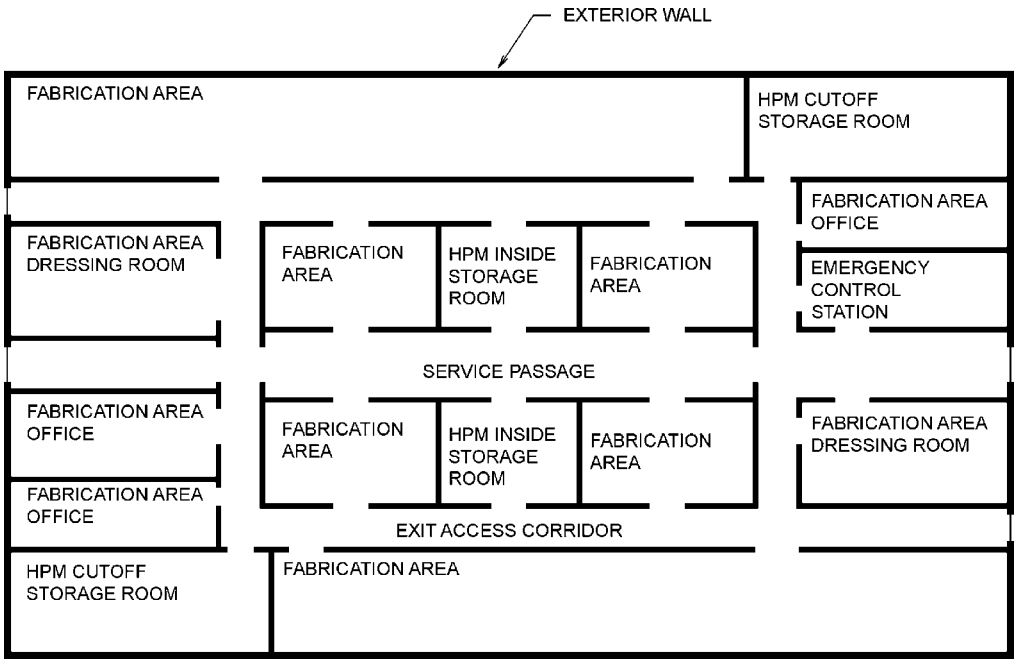

Figure 202-S3
TYPICAL COMPONENTS OF AN HPM FACILITY

INTERNATIONAL CODE COUNCIL®
Copyright © 2015 ICC. ALL RIGHTS RESERVED. Accessed by David Dammon on Jun 21, 2017 12:30:52 PM pursuant to License Agreement with ICC. No further reproduction or distribution authorized. ANY UNAUTHORIZED REPRODUCTION OR DISTRIBUTION IS A VIOLATION OF THE FEDERAL COPYRIGHT ACT AND THE LICENSE AGREEMENT, AND SUBJECT TO CIVIL AND CRIMINAL PENALTIES THEREUNDER.

arated by no more than 3 feet (914 mm) vertically. Further, shelf storage units must be separated horizontally by aisles not less than 30 inches (762 mm) wide to reduce the transfer of fire from one shelf unit across the aisle to another. The aisles also allow convenient access for fire department personnel to combat a fire and for salvage and debris removal after an incident.

SINGLE-STATION SMOKE ALARM. An assembly incorporating the detector, the control equipment and the alarm-sounding device in one unit, operated from a power supply either in the unit or obtained at the point of installation.

❖ A single-station smoke alarm is a self-contained alarm device that detects visible or invisible particles of combustion. Its function is to detect a fire in the immediate area of the detector location. Single-station smoke alarms are individual units with the capability to stand alone. Where the single-station smoke alarms are interconnected with other single-station devices they would be considered a multiple-station smoke alarm system. Single-station smoke alarms are not capable of notifying or controlling any other fire protection equipment or systems. They may be battery powered, directly connected to the building power supply or a combination of both. Single-station smoke alarms must be built to comply with UL 217 and are to be installed as required by Section 907.2.11.

[BG] SITE. A parcel of land bounded by a *lot line* or a designated portion of a public right-of-way.

❖ This definition establishes, for application of code requirements, the property within the boundaries of the site that is under the control of the owner. The owner can be held responsible for code compliance of the site and all facilities on it. Note that legal property lines do not always constitute site boundaries (i.e., malls, condominiums, townhouses). A site could contain multiple legal "lot" divisions.

[BG] SITE-FABRICATED STRETCH SYSTEM. A system, fabricated on site and intended for acoustical, tackable or aesthetic purposes, that is composed of three elements:

1. A frame constructed of plastic, wood, metal or other material used to hold fabric in place;
2. A core material (infill, with the correct properties for the application); and
3. An outside layer, comprised of a textile, fabric or vinyl, that is stretched taut and held in place by tension or mechanical fasteners via the frame.

❖ Site-fabricated stretch systems are interior finish materials that are pulled taut across walls or ceilings with a frame that holds a fabric and core. These systems are now being used extensively because they can stretch to cover decorative walls and ceilings with unusual looks and shapes. The systems consist of three parts: a fabric (or vinyl), a frame and an infill core material. This type of product is not exclusive to any particular manufacturer. It is important to point out that these materials are not curtains or drapes because they are not free hanging like curtains. See the commentary to Section 803.10.

SKY LANTERN. An unmanned device with a fuel source that incorporates an open flame in order to make the device airborne.

❖ This definition coordinates with Section 308.1.6, which prohibits the use of sky lanterns. This definition simply clarifies what is considered a sky lantern. Sky lanterns have the potential to start structure fires and wildfires. The two aspects of sky lanterns that are cause for concern are the open flame and that they freely float in the air without the ability for control from the ground. Typically they are also made of combustible materials such as paper.

[BG] SLEEPING UNIT. A room or space in which people sleep, which can also include permanent provisions for living, eating, and either sanitation or kitchen facilities but not both. Such rooms and spaces that are also part of a *dwelling unit* are not sleeping units.

❖ This definition is included to coordinate the Fair Housing Act Guidelines with the code. The definition for "Sleeping unit" clarifies the differences between sleeping units and dwelling units. In addition, using the term "sleeping unit" for spaces where people sleep will replace a multitude of other terms (i.e., patient room, cell, guest room) so that there is consistent application across occupancies. Some examples of sleeping units are hotel guestrooms, dormitories, bedrooms in boarding houses, patient sleeping rooms in hospitals, nursing homes or assisted living facilities, or housing cells in a jail. Another example would be a studio apartment with a kitchenette (i.e., countertop microwave, sink, refrigerator). Since the cooking arrangements are not the traditional permanent appliances (i.e., a cooktop, range or oven), this configuration would be considered a sleeping unit, and not a dwelling unit. As defined in the code, a dwelling unit must contain permanent facilities for living, sleeping, eating, cooking and sanitation.

SMALL ARMS AMMUNITION. A shotgun, rifle or pistol cartridge and any cartridge for propellant-actuated devices. This definition does not include military ammunition containing bursting charges or incendiary, trace, spotting or pyrotechnic projectiles.

❖ Small arms ammunition consists of cylindrical casings containing a small amount of smokeless powder. These items are usually designed to propel a missile or bullet at a target, but they may also be used in explosive actuated devices, such as nail guns and riveters. Individual cartridges are typically packed in paperboard boxes shipped in cardboard cartons. In a fire, these articles pose no mass detonation hazard and only a moderate (low-velocity) projectile hazard. The ATF definition of "Ammunition" also includes percussion caps and $^{3}/_{32}$-inch (2.4 mm) and other external burning pyrotechnic hobby fuses. Black powder

INTERNATIONAL CODE COUNCIL®
Copyright © 2015 ICC. ALL RIGHTS RESERVED. Accessed by David Dammon on Jun 21, 2017 12:30:52 PM pursuant to License Agreement with ICC. No further reproduction or distribution authorized. ANY UNAUTHORIZED REPRODUCTION OR DISTRIBUTION IS A VIOLATION OF THE FEDERAL COPYRIGHT ACT AND THE LICENSE AGREEMENT, AND SUBJECT TO CIVIL AND CRIMINAL PENALTIES THEREUNDER.

ammunition and black powder are not included in this definition.

SMALL ARMS PRIMERS. Small percussion-sensitive *explosive* charges, encased in a cap, used to ignite propellant powder.

❖ "Small arm primers" and "percussion caps" mean primers used for small arms ammunition.

SMOKE ALARM. A single- or multiple-station alarm responsive to smoke. See also "Single-station smoke alarm" and "Multiple-station smoke alarm."

❖ This is a general term that applies to both single- and multiple-station smoke alarms that are not part of an automatic fire detection system. It is the generic term for any device that both detects the products of combustion and initiates an alarm signal for occupant notification.

[BF] SMOKE BARRIER. A continuous membrane, either vertical or horizontal, such as a wall, floor, or ceiling assembly, that is designed and constructed to restrict the movement of smoke.

❖ A smoke barrier is a fire-resistance-rated assembly that is different from a fire partition, fire barrier or fire wall. Smoke barriers include walls and floor/ceiling assemblies that are constructed with a 1-hour fire-resistance rating and are one of the components in a smoke compartment. In Group I-2 and I-3 occupancies, smoke barriers are intended to create adjacent smoke compartments to which building occupants can be safely and promptly relocated during a fire, thus preventing the need to have complete and immediate egress from the building. For these occupancies, complete egress from the building would not be practical in most cases, due to restrictions on the mobility of the occupants. To maintain tenability in the adjacent smoke compartment, the smoke barrier is therefore intended to resist the spread of fire and hinder the movement of smoke. Smoke barriers are also used to compartment a building into separate smoke control zones when using the provisions of Section 909. The construction requirements for a smoke barrier provide resistance to the transmission of smoke.

[BG] SMOKE COMPARTMENT. A space within a building enclosed by *smoke barriers* on all sides, including the top and bottom.

❖ Smoke compartments create spaces that protect occupants from the products of combustion produced by a fire in an adjacent smoke compartment and to restrict smoke to the compartment of fire origin.

[BF] SMOKE DAMPER. A *listed* device installed in ducts and air transfer openings designed to resist the passage of smoke. The device is installed to operate automatically, controlled by a smoke detection system, and where required, is capable of being positioned from a *fire command center*.

❖ Similar to a fire damper, smoke dampers are intended to restrict the passage of smoke through ducts or openings in structural assemblies such as smoke barriers and corridor walls. They are also installed in smoke control systems. The smoke leakage rates of these devices are used to classify them in accordance with UL 555S. See also the commentary to the definitions of "Damper" and "Fire damper."

SMOKE DETECTOR. A *listed* device that senses visible or invisible particles of combustion.

❖ These devices are considered early warning devices and have saved many people from smoke inhalation and burns. Smoke detectors have a wide range of uses, from sophisticated fire detection systems for industrial and commercial uses to residential. A smoke detector is a device, typically listed in accordance with UL 268, that activates a fire alarm system. These system smoke detectors contain only the components required to detect the products of combustion and activate a fire alarm system and are, therefore, different from single- and multiple-station smoke alarms.

Smoke detectors typically consist of two types: ionization and photoelectric. An ionization detector contains a small amount of radioactive material that ionizes the air in a sensing chamber and causes a current to flow through the air between two charged electrodes. When smoke enters the chamber, the particles cause a reduction in the current. When the level of conductance decreases to a preset level, the detector responds with an alarm.

A photoelectric smoke detector consists primarily of a light source, a light beam and a photosensitive device. When smoke particles enter the light beam, they reduce the light intensity in the photosensitive device. When obscuration reaches a preset level, the detector initiates an alarm.

[BG] SMOKE-DEVELOPED INDEX. A comparative measure, expressed as a dimensionless number, derived from measurements of smoke obscuration versus time for a material tested in accordance with ASTM E 84.

❖ The ASTM E84 test method of measuring the density of smoke emitted from combustible materials determines the smoke-developed index. This value is only comparative and provides only a relative understanding of smoke generation potential. The smoke-developed index is sometimes abbreviated as SDI.

[BE] SMOKE-PROTECTED ASSEMBLY SEATING. Seating served by means of egress that is not subject to smoke accumulation within or under a structure.

❖ An example of smoke-protected assembly seating is an open outdoor grandstand or an indoor arena with a smoke control system. The code has less stringent requirements for certain aspects of smoke-protected assembly seating than for seating that is not smoke protected, since occupants are subject to less hazard from the accumulation of smoke and fumes during a fire event. For example, an assembly dead-end aisle is permitted to be longer for a smoke-protected assembly area. For smoke control system requirements, see Section 909.

INTERNATIONAL CODE COUNCIL®
Copyright © 2015 ICC. ALL RIGHTS RESERVED. Accessed by David Dammon on Jun 21, 2017 12:30:52 PM pursuant to License Agreement with ICC. No further reproduction or distribution authorized. ANY UNAUTHORIZED REPRODUCTION OR DISTRIBUTION IS A VIOLATION OF THE FEDERAL COPYRIGHT ACT AND THE LICENSE AGREEMENT, AND SUBJECT TO CIVIL AND CRIMINAL PENALTIES THEREUNDER.

SMOKELESS PROPELLANTS. Solid propellants, commonly referred to as smokeless powders, used in small arms ammunition, cannons, rockets, propellant-actuated devices and similar articles.

❖ This term refers to a propellant explosive from which there is little or no smoke when fired, including smokeless powder for cannons and smokeless powder for small arms.

[BF] SMOKEPROOF ENCLOSURE. An *interior exit stairway* designed and constructed so that the movement of the products of combustion produced by a fire occurring in any part of the building into the enclosure is limited.

❖ A smokeproof enclosure is intended to provide an effective barrier to the entry of smoke into an exit stairway, thereby offering an additional level of protection for occupants of high-rise and underground structures.

SOLID. A material that has a melting point and decomposes or sublimes at a temperature greater than 68°F (20°C).

❖ One of the three states of matter, solids must decompose (pyrolysis) before they can produce vapors that will support combustion. The surface area of a solid in relation to the heat source is a concern for fire fighters; the greater the surface being subjected to a heat source, the more rapid the pyrolysis.

SOLID BIOFUEL. Densified biomass made in the form of cubiform, polyhedral, polyhydric or cylindrical units, produced by compressing milled biomass.

❖ This definition coordinates with the definition of "Biomass" and the application of this term in Section 2809. Essentially these materials need to be treated the same as materials such as finished lumber. The materials are compressed biomass materials. Section 2809.4 exempts the solid biofuel inside of buildings from the fencing requirements in the same way traditional lumber is exempted. Without these terms it makes it difficult to know how to regulate such materials.

SOLID BIOMASS FEEDSTOCK. The basic materials of which solid biofuel is composed, manufactured or made.

❖ This explains the types of materials that make up solid biofuel. This clarifies how the requirements of Section 2809 are to be applied. In addition, these materials need to be treated in accordance with Section 2808 prior to becoming a "solid biofuel." These materials are processed in agro-industrial facilities (see the definition for "Agro-industrial").

SOLID SHELVING. Shelving that is solid, slatted or of other construction located in racks and which obstructs sprinkler discharge down into the racks.

❖ Solid shelving generally consists of nominal wood (lumber), plywood, particleboard or metal shelves that span between the supports of the storage system to support the commodities. Solid shelving creates a condition where the rack storage system is effectively divided into areas by the shelving. The shelving can potentially act as a protective barrier for a fire and from fire service hose streams by preventing the penetration of water into the fire area. As a result, the sprinkler system design will require an in-rack sprinkler system, in addition to the ceiling sprinkler system for water distribution, to penetrate the shelving barriers.

SOLVENT DISTILLATION UNIT. An appliance that receives contaminated flammable or *combustible liquids* and which distills the contents to remove contaminants and recover the solvents.

❖ A solvent distillation unit recycles flammable and combustible liquids by the condensation and collection of the vapors that are produced as the mixture is heated. The solvent distillation unit processes waste solvents in a separate, stand-alone batch, on-line batch or continuous systems. The distillation units heat the waste solvent to its boiling point. This causes the solvent to evaporate and the solvent vapors are then condensed in a separate container. The basic components of a distillation unit are the process chamber or boiler, the encapsulated heaters, a water-cooled chamber and associated piping and instrumentation. Temperature sensors monitor the temperature and help maintain the required distillation temperature. Disposable vessel liners can be used for simple collection and disposal of still bottoms. Vacuum pumps that can distill high-boiling solvents at lower temperatures are also available. Solvent distillation units having a distillation chamber capacity of 60 gallons (227 L) or less are listed under UL 2208. Solvent distillation units having a distillation chamber capacity greater than 60 gallons (227 L) must comply with Section 5705.4.2.

SOLVENT OR LIQUID CLASSIFICATIONS. A method for classifying solvents or liquids according to the following classes:

Class I solvents. Liquids having a *flash point* below 100°F (38°C).

Class II solvents. Liquids having a *flash point* at or above 100°F (38°C) and below 140°F (60°C).

Class IIIA solvents. Liquids having a *flash point* at or above 140°F (60°C) and below 200°F (93°C).

Class IIIB solvents. Liquids having a *flash point* at or above 200°F (93°C).

Class IV solvents. Liquids classified as nonflammable.

❖ These dry cleaning solvent classifications parallel the flammable and combustible liquid classifications defined in Chapter 57, with a notable exception that, while flammable liquids (Class I) are divided into three subclasses (Class IA, IB and IC) based on flash point and boiling point, Class I solvents are not. Solvent classifications, on the other hand, include a classification (Class IV) for those solvents considered to be nonflammable, whereas the flammable and combustible liquid classifications have no comparable category.

INTERNATIONAL CODE COUNCIL®
Copyright © 2015 ICC. ALL RIGHTS RESERVED. Accessed by David Dammon on Jun 21, 2017 12:30:52 PM pursuant to License Agreement with ICC. No further reproduction or distribution authorized. ANY UNAUTHORIZED REPRODUCTION OR DISTRIBUTION IS A VIOLATION OF THE FEDERAL COPYRIGHT ACT AND THE LICENSE AGREEMENT, AND SUBJECT TO CIVIL AND CRIMINAL PENALTIES THEREUNDER.

SPECIAL AMUSEMENT BUILDING. A building that is temporary, permanent or mobile that contains a device or system that conveys passengers or provides a walkway along, around or over a course in any direction as a form of amusement arranged so that the egress path is not readily apparent due to visual or audio distractions or an intentionally confounded egress path, or is not readily available because of the mode of conveyance through the building or structure.

❖ In general, a special amusement building is a building or portion thereof in which people gather (thus, an assembly occupancy) and in which egress is either not readily apparent due to distractions, is intentionally confounded (i.e., a maze) or is not readily available or where the occupants are moved through the building by way of a people mover system or are specifically directed through a walkway. Because of the nature of their use, these buildings contain special effects and other features that make it more difficult for occupants to determine when an emergency exists and where exits are located. The definition includes all such facilities, including portable and temporary structures. The hazard associated with such buildings is not related to the permanence or length of use; therefore, seasonal uses (such as "haunted houses" at Halloween) and portable uses (carnival attractions) are included if they meet the criteria in the definition. See also Section 411 of the IBC which regulates special amusement buildings.

SPECIAL INDUSTRIAL EXPLOSIVE DEVICE. An explosive power pack containing an *explosive* charge in the form of a cartridge or construction device. The term includes but is not limited to explosive rivets, explosive bolts, *explosive* charges for driving pins or studs, cartridges for *explosive*-actuated power tools and charges of *explosives* used in automotive air bag inflators, jet tapping of open hearth furnaces and jet perforation of oil well casings.

❖ Special industrial explosive devices are explosive-actuated power devices and propellant-actuated power devices. "Explosive-actuated device" means a tool or special mechanized device that is actuated by explosives. Examples of explosive-actuated power devices are jet tappers and jet perforators. "Propellant-actuated device" means a tool or special mechanized device or gas generator system that is actuated by a smokeless propellant or that releases and directs work through a smokeless propellant charge (also see commentary, Section 5601.1, Exception 6).

SPRAY BOOTH. A mechanically ventilated appliance of varying dimensions and construction provided to enclose or accommodate a spraying operation and to confine and limit the escape of spray vapor and residue and to exhaust it safely.

❖ Spray booths vary in construction, size and design. The definition is clear in that it can be a fully enclosed structure or it can be designed to contain the flammable or combustible vapors. An example of a fully enclosed structure is a spray booth where products are carried/carted into the booth for spraying operation and carted out once the operation is complete. This definition, however, also allows for what is typically described as "open-face booths," where the spray booth is enclosed on three sides and ventilated on the open side to confine the vapors to the spray booth area (see Commentary Figure 202-S4). An example of this is wood furniture finishing, where products such as wood tables are sprayed with stains and coating.

SPRAY ROOM. A room designed to accommodate spraying operations, constructed in accordance with the *International Building Code* and separated from the remainder of the building by a minimum 1-hour *fire barrier*.

❖ When spray booths cannot accommodate the spraying processes, because of size or for economic reasons, an entire room is dedicated to the process. In many cases, the oversprayed flammable/combustible liquids are allowed to remain on the floor until cleaned. These rooms have specific ventilation requirements to prevent the accumulation of vapors at the floor. See the commentary to Section 2404.3.1 for further discussion of spray rooms.

SPRAYING SPACE. An area in which dangerous quantities of flammable vapors or combustible residues, dusts or deposits are present due to the operation of spraying processes. The *fire code official* is authorized to define the limits of the spraying space in any specific case.

❖ Spraying spaces generally occur in one or a combination of three forms. The least desirable form is open floor area spraying, where the spraying area consists of an entire floor of a building without isolating the spraying operation. A better form is the spray room that isolates the spray operation by construction to less than an entire floor of the facility. The optimum form is a specially designed spray booth that isolates the operational hazards of spraying to an appropriately regulated space. Regardless of the form, all require special safeguards to address hazards, including adequate ventilation, fire suppression and management of overspray.

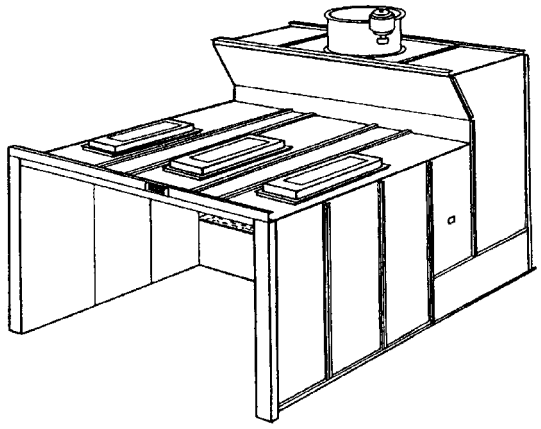

Figure 202-S4
TYPICAL PAINT SPRAY BOOTH

INTERNATIONAL CODE COUNCIL®
Copyright © 2015 ICC. ALL RIGHTS RESERVED. Accessed by David Dammon on Jun 21, 2017 12:30:52 PM pursuant to License Agreement with ICC. No further reproduction or distribution authorized. ANY UNAUTHORIZED REPRODUCTION OR DISTRIBUTION IS A VIOLATION OF THE FEDERAL COPYRIGHT ACT AND THE LICENSE AGREEMENT, AND SUBJECT TO CIVIL AND CRIMINAL PENALTIES THEREUNDER.

[BE] STAIR. A change in elevation, consisting of one or more risers.

❖ All steps, even a single step, are defined as a stair. This makes the stair requirements applicable to all steps unless specifically exempt in the code.

[BE] STAIRWAY. One or more *flights* of *stairs,* either exterior or interior, with the necessary landings and platforms connecting them, to form a continuous and uninterrupted passage from one level to another.

❖ It is important to note that this definition characterizes a stairway as connecting one level to another. The term "level" is not to be confused with "story." Steps that connect two levels, one of which is not considered a "story" of the structure, would be considered a stairway. For example, a set of steps between the basement level in an areaway and the outside ground level would be considered a stairway. A series of steps between the floor of a story and a mezzanine within that story would also be considered a stairway (see definitions for "Flight," "Stairway, exterior," "Stairway, interior" and "Interior exit stairway," and Sections 1011, 1019,1023 and 1027).

STAIRWAY, EXIT ACCESS. See "Exit access stairway."

STAIRWAY, EXTERIOR EXIT. See "Exterior exit stairway."

STAIRWAY, INTERIOR EXIT. See "Interior Exit Stairway."

STAIRWAY, SCISSOR. See "Scissor stairway."

[BE] STAIRWAY, SPIRAL. A *stairway* having a closed circular form in its plan view with uniform section-shaped treads attached to and radiating from a minimum-diameter supporting column.

❖ Spiral stairways are permitted as part of a means of egress in limited circumstances given in Section 1011.10. Spiral staircases could be used for supplemental/convenience stairways in other locations. Spiral stairways are commonly used where a small number of occupants use the stairway and the floor space for the stair is very limited. Spiral stairways are typically supported by a center pole. Requirements are found with stairways in Section 1011.10.

STANDBY POWER SYSTEM. A source of automatic electric power of a required capacity and duration to operate required building, hazardous materials or ventilation systems in the event of a failure of the primary power. Standby power systems are required for electrical loads where interruption of the primary power could create hazards or hamper rescue or fire-fighting operations.

❖ This definition is intended to provide clarity for the fire code official as to exactly what systems are considered to be standby power systems and is consistent with definitions in NFPA 110 and NFPA 111. However, since the list of systems in the definition is not exhaustive, reference must be made to Section 604 of the code which provides the "where required" provisions. When the normal power supply to any of the indicated systems, or other systems designated by the code, fails, the standby power system is to provide a specified degree and duration systems and equipment that are essential for life safety such as elevators and platform lifts, emergency responder radio coverage and smoke control systems. See the commentary to Section 604 for more detailed discussion on the difference between standby and emergency power.

STANDPIPE SYSTEM, CLASSES OF. Standpipe system classes are as follows:

❖ A standpipe system is typically an arrangement of vertical piping located in exit stairways that allows fire-fighting personnel to connect hand-carried hoses at each level to manually extinguish fires. Section 905 and NFPA 14 recognize three different classes of standpipe systems. For a further discussion of standpipe classes and types, see the commentary to Section 905.3.1.

Class I system. A system providing $2^1/_2$-inch (64 mm) hose connections to supply water for use by fire departments and those trained in handling heavy fire streams.

❖ A Class I standpipe system is intended for use by trained fire service personnel as a readily available water source for manual fire-fighting operations. A Class I standpipe system is equipped with only $2^1/_2$-inch (64 mm) hose connections to allow the fire service to attach the appropriate hose and nozzles. A Class I standpipe system is not equipped with hose stations, which include a cabinet, hose and nozzle.

Class II system. A system providing $1^1/_2$-inch (38 mm) hose stations to supply water for use primarily by the building occupants or by the fire department during initial response.

❖ A Class II standpipe system is intended for use by building occupants or by the fire department for manual suppression. The hose stations defined in NFPA 14 as part of the Class II standpipe system include a hose rack, hose nozzle, hose and hose connection. The intent of providing the hose is for use by properly trained personnel. Occupant-use hose stations should only be provided where they can be used by people who have been properly trained in the use of the hose and nozzle.

Class III system. A system providing $1^1/_2$-inch (38 mm) hose stations to supply water for use by building occupants and $2^1/_2$-inch (64 mm) hose connections to supply a larger volume of water for use by fire departments and those trained in handling heavy fire streams.

❖ A Class III standpipe system is intended for use by building occupants as well as trained fire service personnel. The $1^1/_2$-inch (38 mm) hose station is for use by the building occupants or fire department for manual fire suppression and the $2^1/_2$-inch (64 mm) hose connection is intended for use primarily by fire service personnel or those who have received training in the use of the larger hoses. Class III systems allow the

INTERNATIONAL CODE COUNCIL®
Copyright © 2015 ICC. ALL RIGHTS RESERVED. Accessed by David Dammon on Jun 21, 2017 12:30:52 PM pursuant to License Agreement with ICC. No further reproduction or distribution authorized. ANY UNAUTHORIZED REPRODUCTION OR DISTRIBUTION IS A VIOLATION OF THE FEDERAL COPYRIGHT ACT AND THE LICENSE AGREEMENT, AND SUBJECT TO CIVIL AND CRIMINAL PENALTIES THEREUNDER.

fire department to select the types of hose necessary based on the fire hazard present. If the fire is effectively controlled by an automatic sprinkler system, the smaller hose size may be all that is necessary for fire department mop up operations.

STANDPIPE, TYPES OF. Standpipe types are as follows:

❖ Section 905 recognizes five types of standpipe systems. The use of each type of system depends on specific occupancy conditions and the presence of an automatic sprinkler system. For a further discussion of standpipe classes and types, see the commentary to Section 905.3.1.

Automatic dry. A dry standpipe system, normally filled with pressurized air, that is arranged through the use of a device, such as a dry pipe valve, to admit water into the system piping automatically upon the opening of a hose valve. The water supply for an automatic dry standpipe system shall be capable of supplying the system demand.

❖ A typical automatic dry standpipe system has an automatic water supply retained by a dry pipe valve. The dry pipe valve clapper is kept in place by air placed in the standpipe system under pressure. Once a standpipe hose valve is opened, the air is released from the system, allowing water to fill the system through the dry pipe valve. This system is traditionally used in areas where the temperature falls below 40°F (4°C); where a wet system could freeze and possibly burst the pipe or simply not be available when needed.

Automatic wet. A wet standpipe system that has a water supply that is capable of supplying the system demand automatically.

❖ An automatic wet standpipe system is used in locations where the entire system would remain above 40°F (4°C). Because the system is pressurized with water, an immediate release of water occurs when a hose connection valve is opened. This is the most generally preferred type of standpipe but it is not necessarily the required type unless so stipulated.

Manual dry. A dry standpipe system that does not have a permanent water supply attached to the system. Manual dry standpipe systems require water from a fire department pumper to be pumped into the system through the fire department connection in order to supply the system demand.

❖ A manual dry standpipe system is filled with water only when the fire service is present. Typically, the fire service connects the discharge from a water source, such as a pumper truck, to the fire department connection of a manual dry standpipe system. When the fire service has suppressed the fire and is preparing to leave, the system is drained of the remaining water. Manual dry standpipe systems are commonly installed in open parking structures.

Manual wet. A wet standpipe system connected to a water supply for the purpose of maintaining water within the system but which does not have a water supply capable of delivering the system demand attached to the system. Manual wet standpipe systems require water from a fire department pumper (or the like) to be pumped into the system in order to supply the system demand.

❖ A manual wet standpipe system is connected to an automatic water supply, but the supply is not capable of providing the system demand. The manual wet system could be one that is connected with the sprinkler system such that it is capable of supplying the demand for the sprinkler system but not for the standpipe. The standpipe system demand is met when the fire service provides additional water through the fire department connection from the discharge of a water source, such as a pumper truck.

Semiautomatic dry. A dry standpipe system that is arranged through the use of a device, such as a deluge valve, to admit water into the system piping upon activation of a remote control device located at a hose connection. A remote control activation device shall be provided at each hose connection. The water supply for a semiautomatic dry standpipe system shall be capable of supplying the system demand.

❖ This type of dry standpipe is a special design that uses a solenoid-activated valve to retain the automatic water supply. Once the standpipe hose valve is opened, a signal is sent to the deluge valve retaining the automatic water supply to allow water to fill the system. This kind of system is used in areas where the temperature falls below 40°F (4°C), where a wet system would otherwise freeze. As such, there is no semiautomatic wet system type.

STATIC PILES. Piles in which processed wood product or solid biomass feedstock is mounded and is not being turned or moved.

❖ Static piles are long-term bulk storage piles that must be monitored for internal heat buildup. This term includes processed wood products but also addresses solid biomass feedstock. See the definition for "Solid biomass feedstock."

STEEL. Hot- or cold-rolled as defined by the *International Building Code*.

❖ This is a basic definition that clarifies that steel is either cold- or hot-rolled as defined by the IBC; however, the IBC does not specifically define cold- or hot-rolled steel but describes how it must be used.

STORAGE, HAZARDOUS MATERIALS. The keeping, retention or leaving of hazardous materials in closed containers, tanks, cylinders, or similar vessels; or vessels supplying operations through closed connections to the vessel.

❖ Storage of hazardous materials in a structure is governed either by the occupancy group that it is accessory to or by the hazard group that it is associated with. The determination of the occupancy class is based on the MAQs and the exceptions found in the IBC and the code.

INTERNATIONAL CODE COUNCIL®
Copyright © 2015 ICC. ALL RIGHTS RESERVED. Accessed by David Dammon on Jun 21, 2017 12:30:52 PM pursuant to License Agreement with ICC. No further reproduction or distribution authorized. ANY UNAUTHORIZED REPRODUCTION OR DISTRIBUTION IS A VIOLATION OF THE FEDERAL COPYRIGHT ACT AND THE LICENSE AGREEMENT, AND SUBJECT TO CIVIL AND CRIMINAL PENALTIES THEREUNDER.

[BG] STORY. That portion of a building included between the upper surface of a floor and the upper surface of the floor or roof next above (see "Basement," "Building height," "Grade plane" and "Mezzanine"). A story is measured as the vertical distance from top to top of two successive tiers of beams or finished floor surfaces and, for the topmost story, from the top of the floor finish to the top of the ceiling joists or, where there is not a ceiling, to the top of the roof rafters.

❖ All levels in a building that conform to this description are stories, including basements. A mezzanine is considered part of the story in which it is located. See Chapter 5 of the IBC for code requirements regarding limitations on the number of stories in a building as a function of the type of construction.

[BG] STORY ABOVE GRADE PLANE. Any story having its finished floor surface entirely above grade plane, or in which the finished surface of the floor next above is:

1. More than 6 feet (1829 mm) above grade plane; or
2. More than 12 feet (3658 mm) above the finished ground level at any point.

❖ The determination of the allowed height of a building under Section 504 of the IBC is based on the number of stories above grade plane. (See definitions of "Basement," "Building height" and "Grade plane.") The code establishes by this definition which stories of a building are those above grade plane. Clearly it includes those stories that are fully above grade plane. It also includes stories that may be partially below finished ground level, but the finished floor level is more than 6 feet (1829 mm) above grade plane. It also includes those floor levels that, due to an irregular terrain, have a finished floor level more than 12 feet (3658 mm) above finished ground level at any point surrounding the building. Any building level not qualifying as a story above grade plane is, by definition, a basement.

SUPERVISING STATION. A facility that receives signals and at which personnel are in attendance at all times to respond to these signals.

❖ The supervising station is the location where all fire protection-system-related signals are sent and where trained personnel are present to respond to an emergency. The supervising station may be an approved central station, a remote supervising station, a proprietary supervising station or other constantly attended location approved by the fire code official. Each type of supervising station must comply with the applicable specific provisions described in NFPA 72.

SUPERVISORY SERVICE. The service required to monitor performance of guard tours and the operative condition of fixed suppression systems or other systems for the protection of life and property.

❖ The supervisory service is responsible for maintaining the integrity of the fire protection system by notifying the supervising station of a change in protection system status.

Guard tours are recognized as a nonrequired (voluntary) system. If a guard tour is provided, the signals from that system can be transmitted through the supervisory service to the supervision station. Guard tours are not a required part of a fire alarm system.

SUPERVISORY SIGNAL. A signal indicating the need of action in connection with the supervision of guard tours, the fire suppression systems or equipment, or the maintenance features of related systems.

❖ Activation of a supervisory signal-initiating device transmits a signal indicating that a change in the status of the fire protection system has occurred and that action must be taken. These signals are the basis for the actions taken by the attendant at the supervising station. These signals do not indicate an emergency condition but indicate that a portion of the system is not functioning in the manner in which it should and that if the condition is not corrected it could impair the ability of the fire protection system to perform properly. A supervisory signal is also a part of the nonrequired guard tour system.

SUPERVISORY SIGNAL-INITIATING DEVICE. An initiating device such as a valve supervisory switch, water level indicator, or low-air pressure switch on a dry-pipe sprinkler system whose change of state signals an off-normal condition and its restoration to normal of a fire protection or life safety system; or a need for action in connection with guard tours, fire suppression systems or equipment, or maintenance features of related systems.

❖ The supervisory signal-initiating device detects a change in protection system status. Examples of a supervisory signal-initiating device include a flow switch to detect movement of water through the system and a tamper switch to detect when someone shuts off a water control valve.

SYSTEM. An assembly of equipment consisting of a tank, container or containers, appurtenances, pumps, compressors and connecting piping.

❖ As with tanks or containers, a system can be either open or closed. The difference between a closed system and an open system is whether the hazardous material involved in a process is exposed to the atmosphere. Materials in closed or open systems are assumed to be "in use" as opposed to "in storage." Gases are always assumed to be in closed systems, since they would be immediately dispersed in an open system if exposed to the atmosphere without some means of containment.

TANK. A vessel containing more than 60 gallons (227 L).

❖ This definition establishes the distinction between containers and tanks for purposes of code application, with a container being defined as a vessel of 60 gallons (227 L) or less capacity (see commentary to the definition of "Container").

TANK, ATMOSPHERIC. A storage tank designed to operate at pressures from atmospheric through 1.0 pound per

INTERNATIONAL CODE COUNCIL®
Copyright © 2015 ICC. ALL RIGHTS RESERVED. Accessed by David Dammon on Jun 21, 2017 12:30:52 PM pursuant to License Agreement with ICC. No further reproduction or distribution authorized. ANY UNAUTHORIZED REPRODUCTION OR DISTRIBUTION IS A VIOLATION OF THE FEDERAL COPYRIGHT ACT AND THE LICENSE AGREEMENT, AND SUBJECT TO CIVIL AND CRIMINAL PENALTIES THEREUNDER.

square inch gauge (760 mm Hg through 812 mm Hg) measured at the top of the tank.

❖ This type of tank is not designed for an internal pressure that exceeds atmospheric pressure. Most require some type of emergency venting system to assist in the relief of pressure in a fire.

TANK, PORTABLE. A packaging of more than 60-gallon (227 L) capacity and designed primarily to be loaded into or on or temporarily attached to a transport vehicle or ship and equipped with skids, mountings or accessories to facilitate handling of the tank by mechanical means. It does not include any cylinder having less than a 1,000-pound (454 kg) water capacity, cargo tank, tank car tank or trailers carrying cylinders of more than 1,000-pound (454 kg) water capacity.

❖ A portable tank must be movable without having to detach permanently mounted electrical controls for the pumping or dispensing systems.

TANK, PRIMARY. A *listed* atmospheric tank used to store liquid. See "Primary containment."

❖ The primary tank is the principal storage vessel for flammable and combustible liquids. The tank may use a secondary containment system or be installed in a dike area to control leaks and spills.

TANK, PROTECTED ABOVE GROUND. A tank *listed* in accordance with UL 2085 consisting of a primary tank provided with protection from physical damage and fire-resistive protection from a high-intensity liquid pool fire exposure. The tank may provide protection elements as a unit or may be an assembly of components, or a combination thereof.

❖ A protected above-ground tank is a shop-fabricated above-ground storage tank that has been subjected to a fire test that replicates an exposure to a 2-hour flammable liquid pool fire. Such tanks are constructed with integral secondary containment and are evaluated for vehicle impact and bullet resistance. All openings on a protected above-ground tank are located at the top of the storage tank which further limits the potential for liquid leaks—openings below the liquid level in these tanks are prohibited by the code. These tanks are listed as meeting the requirements of UL 2085, *Standard for Protected Aboveground Tanks for Flammable and Combustible Liquids*. Section 5704.2.9.7 has a number of requirements for protected above-ground tanks, including overfill protection that limits the volume of fuel oil to 95 percent of the tank's capacity, an informational sign that explains how the tank is to be filled and that the tank volume must be verified before the tank is filled, and a minimum 5-gallon (19 L) spill container at the tank fill connection to capture any fuel trapped in the fuel delivery hose. If the liquid piping extends below the top of the tank, Section 5704.2.9.7.9 requires the installation of an antisiphon valve. An antisiphon valve is designed to prevent the siphoning of liquid from the tank in the event a pipe or fitting fails and leaks liquid.

TANK, STATIONARY. Packaging designed primarily for stationary installations not intended for loading, unloading or attachment to a transport vehicle as part of its normal operation in the process of use. It does not include cylinders having less than a 1,000-pound (454 kg) water capacity.

❖ This type of tank is placed in a permanent location and typically has electrically mounted controls attached to a permanent power source.

TANK VEHICLE. A vehicle other than a railroad tank car or boat, with a cargo tank mounted thereon or built as an integral part thereof, used for the transportation of flammable or *combustible liquids*, LP-gas or hazardous chemicals. Tank vehicles include self-propelled vehicles and full trailers and semitrailers, with or without motive power, and carrying part or all of the load.

❖ Tank vehicles used for storage and transportation of hazardous chemicals over public roadways are governed by the DOTn.

TEMPORARY STAGE CANOPY. A temporary ground-supported membrane-covered frame structure used to cover stage areas and support equipment in the production of outdoor entertainment events.

❖ There were four high-profile temporary stage canopy collapses during the 2011 summer concert season: August 7 at Brady District Block Party, Tulsa Oklahoma; July 17 at the Cisco Ottawa Blues Festival in Ottawa, Canada; August 13 at the Indiana State Fairgrounds, which resulted in seven dead and 50 injured; and August 18 at the Pukkelpop Festival in Kiewit, Belgium. In the summer of 2012, a life was lost at a Radiohead concert in Toronto. All resulted in tremendous property damage and two in multiple fatalities. The obvious concern is for the safety of the performers and audiences, stage-hands, lighting technicians, security personnel and every other individual in proximity to a temporary stage.

Temporary stage canopies are very specialized and complex. The nature of the structures must accommodate a wide variety of changing components such as audio equipment, video walls and scenery. The entertainment industry is continually evolving with new ways to improve shows, creating larger and more complex spectacles.

Due to the unique design of temporary stage canopies, very specific requirements for these structures are necessary.

[BG] TENT. A structure, enclosure or shelter, with or without sidewalls or drops, constructed of fabric or pliable material supported by any manner except by air or the contents that it protects.

❖ Tents can be temporary or permanent structures. When permanent, they are regulated by Section 3104. When erected as temporary enclosures, they are regulated by Sections 3103 and 3104 (see also Chapter 31 of the IBC). Commentary Figure 202-T1 illustrates a tent.

INTERNATIONAL CODE COUNCIL®
Copyright © 2015 ICC. ALL RIGHTS RESERVED. Accessed by David Dammon on Jun 21, 2017 12:30:52 PM pursuant to License Agreement with ICC. No further reproduction or distribution authorized. ANY UNAUTHORIZED REPRODUCTION OR DISTRIBUTION IS A VIOLATION OF THE FEDERAL COPYRIGHT ACT AND THE LICENSE AGREEMENT, AND SUBJECT TO CIVIL AND CRIMINAL PENALTIES THEREUNDER.

THEFT RESISTANT. Construction designed to deter illegal entry into facilities for the storage of *explosive materials*.

❖ Theft-resistant designs are intended to provide security against illegal or unauthorized entry into magazines containing explosives. Security measures specified in this and subsequent sections require special tools, keys or excessive force to compromise the security measure.

TIMBER AND LUMBER PRODUCTION FACILITIES. Facilities where raw wood products are processed into finished wood products.

❖ Wood is still our most used structural material. With the ever increasing demand for wood products, growth of the forest products industry continues. Some woodworking facilities are a "one-man" shop while others employ as many as several thousand people.

TIRES, BULK STORAGE OF. Storage of tires where the area available for storage exceeds 20,000 cubic feet (566 m^3).

❖ This definition describes a storage space that is larger than what would be found in most typical mercantile and storage occupancies. Because of its size and the volume of combustible material it would house, it poses an extraordinary hazard for fire protection.

The volume is based on the legacy code definition which was based on 10,000 passenger vehicle tires weighing an average of 25 pounds (11 kg) each rather than the volume of the stored tires. Assuming a 24-inch by 24-inch space (610 mm by 610 mm) for an average passenger vehicle tire and a 6-inch (152 mm) thickness, the result is 20,000 cubic feet (566 m^3):

$$10{,}000 \text{ tires} \times 2 \text{ ft} \times 2 \text{ ft} \times 0.5 \text{ ft} = 20{,}000 \text{ ft}^3$$

The 20,000 cubic feet (566 m^3) represents the actual volume of stored materials based on an equivalent height and area for passenger vehicle tires as shown in the calculation above and does not include circulation area or other portions of the building. Rather, it focuses on how much of the material is present. Although the definition uses the term "area" rather than "volume," it is the volume that becomes the threshold consideration. Still, the area where the tires are stored implies the footprint used for storage. It is not the intent to apply this to areas outside of those used for bulk tire storage.

Buildings used for the bulk storage of tires are classified as Group S-1 occupancies in accordance with Section 311.2 of the IBC. All Group S-1 occupancies, regardless of square footage, must be equipped with an NFPA 13 automatic sprinkler system if used for the bulk storage of tires as required by Section 903.2.9.2. Chapter 34 of the code also requires that bulk tire storage buildings be further designed to comply with NFPA 13, and Chapter 32 of the code includes additional requirements for high-piled rubber tire storage as a high-hazard commodity (see commentary, Chapters 32 and 34).

TOOL. A device, storage container, workstation or process machine used in a fabrication area.

❖ A tool is basically any device or piece of equipment, including a workstation, in a fabrication area where hazardous materials are used, stored or handled.

TORCH-APPLIED ROOF SYSTEM. Bituminous roofing systems using membranes that are adhered by heating with a torch and melting asphalt back coating instead of mopping hot asphalt for adhesion.

❖ This is a very specific operation that relates to hot work that uses a torch to adhere the materials. It is not considered welding, but still falls within the definition of "Hot work" (see Commentary Figure 6104.3.1).

[A] TOWNHOUSE. A single-family *dwelling unit* constructed in a group of three or more attached units in which each unit extends from the foundation to roof and with open space on not less than two sides.

❖ This specific configuration of construction is called different things in different parts of the country, such



Figure 202-T1
EXAMPLE OF TENT STRUCTURE

INTERNATIONAL CODE COUNCIL®
Copyright © 2015 ICC. ALL RIGHTS RESERVED. Accessed by David Dammon on Jun 21, 2017 12:30:52 PM pursuant to License Agreement with ICC. No further reproduction or distribution authorized. ANY UNAUTHORIZED REPRODUCTION OR DISTRIBUTION IS A VIOLATION OF THE FEDERAL COPYRIGHT ACT AND THE LICENSE AGREEMENT, AND SUBJECT TO CIVIL AND CRIMINAL PENALTIES THEREUNDER.

as a rowhouse. A townhouse structure that meets the following four criteria is not regulated by the code but is regulated by the IRC. Those criteria are:

1. Each unit extends from foundation to roof with no vertical overlap of any parts of adjoining units.
2. Each unit must have open space on at least two sides (either two opposite or two adjoining sides).
3. Each unit must have a separate means of egress.
4. The building must not exceed three stories above grade plane.

If all of these criteria are met, then according to the exception to Section 101.2 of the IBC, the structure is within scope of the IRC. (It should also be noted that townhouses within the IRC must be separated by a wall or walls meeting specific criteria.) If a structure does not meet these four criteria, it will need to be regulated under the code and will either be classified as a Group R-2 or Group R-3 structure, depending on how the units are separated. A building containing three or more dwelling units is regulated as a Group R-2 occupancy. To be considered a Group R-3, the structure must have one or two dwelling units, or be subdivided by fire walls between every unit or every two units (see the definitions for "Area, building," "Dwelling" and "Dwelling unit"). Finally, the definition of "Townhouse" is not dependent on the presence of individual lots. A townhouse structure could be built with any number of attached units on the same lot, or it could be developed such that a property line lies at each common wall separating two units (see definition for "Lot").

TOXIC. A chemical falling within any of the following categories:

1. A chemical that has a median lethal dose (LD_{50}) of more than 50 milligrams per kilogram, but not more than 500 milligrams per kilogram of body weight when administered orally to albino rats weighing between 200 and 300 grams each.
2. A chemical that has a median lethal dose (LD_{50}) of more than 200 milligrams per kilogram but not more than 1,000 milligrams per kilogram of body weight when administered by continuous contact for 24 hours (or less if death occurs within 24 hours) with the bare skin of albino rabbits weighing between 2 and 3 kilograms each.
3. A chemical that has a median lethal concentration (LC_{50}) in air of more than 200 parts per million but not more than 2,000 parts per million by volume of gas or vapor, or more than 2 milligrams per liter but not more than 20 milligrams per liter of mist, fume or dust, when administered by continuous inhalation for 1 hour (or less if death occurs within 1 hour) to albino rats weighing between 200 and 300 grams each.

❖ See the commentary to the definition of "Highly toxic."

TRAFFIC CALMING DEVICES. Traffic calming devices are design elements of fire apparatus access roads such as street alignment, installation of barriers, and other physical measures intended to reduce traffic and cut-through volumes, and slow vehicle speeds.

❖ The definition for traffic calming is based on the definition provided by the Institute of Transportation Engineers. Many communities are facing increased traffic volumes. Both new and existing streets are experiencing higher vehicular volumes and speeds as drivers attempt to find "short cuts" to ease their commutes. Designers, planning departments and traffic engineering departments are increasingly turning to traffic calming measures to preserve the quality and enjoyment of life for their citizens.

In many communities a concern of home owners is the use of residential streets as an alternative route to minor and major thoroughfares. They are concerned about pedestrian safety, reducing vehicle speeds and the traffic volume on residential streets. On the other hand, property owners also want the lowest response time that is practical in the event of an emergency that requires a response by the fire or police department. In fact, response time is the primary measurement for quality of service used by the public. The installation of traffic calming devices competes with these two goals.

A number of studies have been conducted to evaluate the impact of traffic calming devices on the response time of fire and emergency medical services (EMS) apparatus. These studies found that traffic calming devices have no real impact on law enforcement vehicles because of their size however, depending on the method of traffic calming used (e.g., "round-abouts," "speed bumps," "speed pillows," narrowing of streets, winding roads rather than straight roads, etc.) and the vehicle type, response times for fire and emergency services generally are increased by these devices by 2 to 10 seconds. Studies have also found that the vehicle frames of fire and EMS apparatus can be damaged and emergency services personnel have been injured while responding over certain traffic calming devices. See the commentary to Section 503.4.1 for further discussion of traffic calming devices. See also Commentary Figures 202-T2 and 202-T3 for illustrations of several typical traffic calming devices.

[BG] TRANSIENT. Occupancy of a dwelling unit or sleeping unit for not more than 30 days.

❖ The intent of this definition is to establish a time parameter to differentiate between transient and nontransient as listed under Groups R-1 and R-2. Real estate law dictates that a lease must be created after

INTERNATIONAL CODE COUNCIL®
Copyright © 2015 ICC. ALL RIGHTS RESERVED. Accessed by David Dammon on Jun 21, 2017 12:30:52 PM pursuant to License Agreement with ICC. No further reproduction or distribution authorized. ANY UNAUTHORIZED REPRODUCTION OR DISTRIBUTION IS A VIOLATION OF THE FEDERAL COPYRIGHT ACT AND THE LICENSE AGREEMENT, AND SUBJECT TO CIVIL AND CRIMINAL PENALTIES THEREUNDER.

30 days and time periods greater than 30 days are typically how extended-stay hotels and motels rent to people.

Such a time period enables the occupant to become familiar with the surroundings and, therefore, become more accustomed to any hazards of the built environment than an overnight guest or a guest who stays for just a few days would be. Since nontransient occupancies do not have the same level of protection in the code as transient occupancies, it is important to determine what makes an occupancy transient so as to provide consistency in enforcement.

[BG] TRANSIENT AIRCRAFT. Aircraft based at another location and that is at the transient location for not more than 90 days.

❖ In place of the undefined term "private aircraft" previously used in the code, a defined term, "transient aircraft," was added in the 2009 edition. Transient aircraft are those that are merely visiting an airport as compared to those which are based at that location.



Figure 202-T2
SPEED PILLOW TRAFFIC CALMING DEVICE



Figure 202-T3
ROUNDABOUT TRAFFIC CALMING DEVICE

INTERNATIONAL CODE COUNCIL®
Copyright © 2015 ICC. ALL RIGHTS RESERVED. Accessed by David Dammon on Jun 21, 2017 12:30:52 PM pursuant to License Agreement with ICC. No further reproduction or distribution authorized. ANY UNAUTHORIZED REPRODUCTION OR DISTRIBUTION IS A VIOLATION OF THE FEDERAL COPYRIGHT ACT AND THE LICENSE AGREEMENT, AND SUBJECT TO CIVIL AND CRIMINAL PENALTIES THEREUNDER.

The definition is used in conjunction with Section 914.8.3 to establish the level of fire suppression needed in various aircraft hangars. Fixed base operators, especially at larger airports, will have distinct hangars that are used for repair and maintenance of aircraft. The hangars used by transient aircraft are primarily a storage place for aircraft based at another location. This better identifies the intent of this type of aircraft hangar. Most frequently, the owner that wants to develop an aircraft hangar that fits the Group II category, will do no "major maintenance" and will only "store" airplanes in their hangar (see the commentary, Section 914.8.3).

TRANSVERSE FLUE SPACE. See "Flue space—Transverse."

TRASH. See "Rubbish."

TROUBLE SIGNAL. A signal initiated by the fire alarm system or device indicative of a fault in a monitored circuit or component.

❖ This type of signal indicates that there has been an abnormal change in the normal status of the fire detection system or devices and that a response is required to determine the nature of the fault condition. The trouble signal is only associated with electronic portions of a fire protection system. Physical conditions such as a closed valve are monitored electronically and would report as a supervisory signal rather than a trouble signal. A valve supervisory switch or "tamper switch," for example, would perform such a function.

TUBE TRAILER. A semitrailer on which a number of tubular gas cylinders have been mounted. A manifold is typically provided that connects the cylinder valves enabling gas to be discharged from one or more tubes or cylinders through a piping and control system.

❖ Tube trailers are a common method of supplying compressed gases to a variety of industrial processes, and it is not uncommon to have more than one tube trailer on a site. Depending on the cylinder's length and maximum allowable working pressure (MAWP), a trailer may have as few as six or as many as 18 to 24 cylinders varying in length from 20 feet (6096 mm) for small tube trailers to 38 feet (11 582 mm) on jumbo tube trailers. The vessels are generally designed for MAWP between 2,800 to approximately 3,800 pounds per square inch (psi) (19 305 to 26 200 kPa), depending on the storage pressure. At such pressures, each cylinder can hold anywhere from 5,000 to 20,000 standard cubic feet (scf) (142 to 566 m^3), depending on the gas being stored. Tube trailers are subject to periodic inspections in accordance with U.S. Department of Transportation (DOTn) regulations and each new or substantially modified tube is required to successfully pass a substantial hydrostatic pressure test.

The transport of compressed gases by these road trailers, which are regulated by the DOTn as a bulk compressed gas source, is an established distribution method used widely in the industrial gas industry for the transport over short distances of relatively small volumes of inert, flammable, oxidizer, corrosive or toxic compressed gases and gas mixtures, including hydrogen, methane, oxygen, nitrogen, argon, helium, many fluorocarbons, hydrogen sulfide and hydrogen chloride.



Figure 202-T4
TUBE TRAILER

At one end of the trailer is a manifold to which each cylinder valve is connected so that one or more tubes can discharge gas into a piping and control system. The tube trailer is connected via the manifold to the building or process using the compressed gas [see Commentary Figure 202-T4 and commentary, Section 5303.7.11)].

TWENTY-FOUR HOUR BASIS. See "24-hour basis" before the "A" entries.

UNAUTHORIZED DISCHARGE. A release or emission of materials in a manner which does not conform to the provisions of this code or applicable public health and safety regulations.

❖ Remember that hazardous chemicals pose a threat to life and property only when release is not authorized, controlled or properly protected.

UNSTABLE (REACTIVE) MATERIAL. A material, other than an *explosive*, which in the pure state or as commercially produced, will vigorously polymerize, decompose, condense or become self-reactive and undergo other violent chemical changes, including explosion, when exposed to heat, friction or shock, or in the absence of an inhibitor, or in the presence of contaminants, or in contact with *incompatible materials*. Unstable (reactive) materials are subdivided as follows:

Class 4. Materials that in themselves are readily capable of *detonation* or explosive decomposition or explosive reaction at *normal temperatures and pressures*. This class includes materials that are sensitive to mechanical or localized thermal shock at *normal temperatures and pressures*.

Class 3. Materials that in themselves are capable of *detonation* or of explosive decomposition or explosive reaction

INTERNATIONAL CODE COUNCIL®
Copyright © 2015 ICC. ALL RIGHTS RESERVED. Accessed by David Dammon on Jun 21, 2017 12:30:52 PM pursuant to License Agreement with ICC. No further reproduction or distribution authorized. ANY UNAUTHORIZED REPRODUCTION OR DISTRIBUTION IS A VIOLATION OF THE FEDERAL COPYRIGHT ACT AND THE LICENSE AGREEMENT, AND SUBJECT TO CIVIL AND CRIMINAL PENALTIES THEREUNDER.

but which require a strong initiating source or which must be heated under confinement before initiation. This class includes materials that are sensitive to thermal or mechanical shock at elevated temperatures and pressures.

Class 2. Materials that in themselves are normally unstable and readily undergo violent chemical change but do not detonate. This class includes materials that can undergo chemical change with rapid release of energy at *normal temperatures and pressures*, and that can undergo violent chemical change at elevated temperatures and pressures.

Class 1. Materials that in themselves are normally stable but which can become unstable at elevated temperatures and pressure.

❖ The definition of an "Unstable (reactive) material" is based on NFPA 704. The different classes of unstable (reactive) material reflect the degree of susceptibility of the materials to release energy. Unstable (reactive) materials polymerize, decompose or become self-reactive when exposed to heat, air, moisture, pressure or shock. Separation from incompatible materials is essential to minimizing the hazards. Examples of unstable (reactive) materials include acetaldheyde, ammonium nitrate, ethylene oxide, hydrogen cyanide, nitromethane, perchloric acid, sodium perchlorate, vinyl acetate and acetic acid.

UNWANTED FIRE. A fire not used for cooking, heating or recreational purposes or one not incidental to the normal operations of the property.

❖ For the purposes of applying the code, a clarification is provided to note that certain fires present in buildings would be acceptable; for example, the normal operation of a water heater, a gas stove or a fireplace. The definition does not address whether a fire is intentional or unintentional (arson versus a welding accident, for example).

USE (MATERIAL). Placing a material into action, including solids, liquids and gases.

❖ This term refers to when a chemical or material is used in a process that forms another substance, whether it is hazardous or not, and when the chemical is used independently.

VAPOR PRESSURE. The pressure exerted by a volatile fluid as determined in accordance with ASTM D 323.

❖ Vapor pressure is a characteristic property of liquids and varies with their temperature. As the temperature of the liquid increases, more and more of the liquid enters the vapor stage. This increased pressure can cause an emergency vent to release, or, if the conditions are serious enough, can result in a BLEVE.

[M] VENTILATION. The natural or mechanical process of supplying conditioned or unconditioned air to, or removing such air from, any space.

❖ Ventilation is the process of moving air to or from building spaces. Ventilation requirements are used in the code to establish minimum levels of air movement within a building for the purposes of providing a healthful interior environment. Ventilation would include both natural (openable exterior windows and doors for wind movement) and mechanical (forced air with mechanical equipment) methods.

VESSEL. A motorized watercraft, other than a seaplane on the water, used or capable of being used as a means of transportation. Nontransportation vessels, such as houseboats and boathouses, are included in this definition.

❖ Vessels, in this definition, are motorized watercraft, but by dictionary definition, a vessel is "...a watercraft or structure with its equipment, whether self-propelled or not, that is used or capable of being used as a means of transportation in navigation or commerce on water..." The definition could include small rowboats and sailboats. No minimum or maximum length is specified. Houseboats and boathouses that would be occupied as dwelling or sleeping units are also included in the definition.

VISIBLE ALARM NOTIFICATION APPLIANCE. A notification appliance that alerts by the sense of sight.

❖ Visible alarm notification appliances are located anywhere an occupant notification system is required, in occupancies where occupants may be hearing impaired and in sleeping accommodations of Group I-1 and R-1 occupancies. These alarm notification devices must be located and oriented so that they will display alarm signals throughout the required space. Visible alarms, when provided, are typically installed in the public and common areas of buildings (see the commentary, Section 907.5.2.3).

WATER MIST SYSTEM, AUTOMATIC. See "Automatic water mist system."

WATER-REACTIVE MATERIAL. A material that explodes; violently reacts; produces flammable, toxic or other hazardous gases; or evolves enough heat to cause autoignition or ignition of combustibles upon exposure to water or moisture. Water-reactive materials are subdivided as follows:

Class 3. Materials that react explosively with water without requiring heat or confinement.

Class 2. Materials that react violently with water or have the ability to boil water. Materials that produce flammable, toxic or other hazardous gases, or evolve enough heat to cause autoignition or ignition of combustibles upon exposure to water or moisture.

Class 1. Materials that react with water with some release of energy, but not violently.

❖ Class 2 and 3 water-reactive materials can liberate significant quantities of heat and hazardous gases when reacting with water. Combustible water-reactive materials are capable of self-ignition. Even noncom-

INTERNATIONAL CODE COUNCIL®
Copyright © 2015 ICC. ALL RIGHTS RESERVED. Accessed by David Dammon on Jun 21, 2017 12:30:52 PM pursuant to License Agreement with ICC. No further reproduction or distribution authorized. ANY UNAUTHORIZED REPRODUCTION OR DISTRIBUTION IS A VIOLATION OF THE FEDERAL COPYRIGHT ACT AND THE LICENSE AGREEMENT, AND SUBJECT TO CIVIL AND CRIMINAL PENALTIES THEREUNDER.

bustible water-reactive materials pose a hazard because of the heat released during their reaction with water, which may be sufficient to ignite surrounding combustible materials. The description of each of the subdivisions is consistent with the approach used for the determination of water hazards in NFPA 704.

WET-CHEMICAL EXTINGUISHING AGENT. A solution of water and potassium-carbonate-based chemical, potassium-acetate-based chemical or a combination thereof, forming an extinguishing agent.

❖ This extinguishing agent is a suitable alternative to the use of a dry chemical, especially when protecting commercial kitchen range hoods. There is less cleanup time after system discharge. Wet chemical solutions are considered to be relatively harmless and normally have no lasting effect on the skin or respiratory system. These solutions may produce temporary irritation, which is usually mild and disappears when contact is eliminated. These systems must be pre-engineered and labeled. NFPA 17A applies to the design, installation, operation, testing and maintenance of wet-chemical extinguishing systems.

WET FUELING. See "Mobile fueling."

WET HOSING. See "Mobile fueling."

WHARF. A structure or bulkhead constructed of wood, stone, concrete or similar material built at the shore of a harbor, lake or river for vessels to lie alongside of, and to anchor piers or floats.

❖ A wharf is constructed along the shore and does not project significantly into the body of water as a pier would. Piers or floats may be attached to and project out from a wharf. Wharves may also have structures on them that support the use of the wharf.

WILDFIRE RISK AREA. Land that is covered with grass, grain, brush or forest, whether privately or publicly owned, which is so situated or is of such inaccessible location that a fire originating upon it would present an abnormally difficult job of suppression or would result in great or unusual damage through fire or such areas designated by the *fire code official*.

❖ This defined term provides clarification to Sections 105.6.24, Item 4, 105.6.32, 308.1.6 and 308.1.6.1 where the undefined term "hazardous fire area" had been used in previous editions of the code, leaving the fire code official with little or no guidance as to the code's intent. The source for this definition was a definition for the term "hazardous fire area" in the legacy *Uniform Fire Code*. However, in order to avoid conflict and confusion with the already-defined term "fire area," the new term and the indicated section texts were changed to "wildfire risk area."

[BE] WINDER. A tread with nonparallel edges.

❖ Winders are used as components of stairways that change direction, just as "fliers" (rectangular treads) are components in straight stairways. A winder performs the same function as a tread, but its shape allows the additional function of a gradual turning of the stairway direction. The tread depth of a winder at the walkline and the minimum tread depth at the narrow end control the turn made by each winder. Winders are not landings. Winder treads are limited to curved or spiral stairways with all groups but are all stairways within dwelling units (see Section 1011.5.3).

WIRELESS PROTECTION SYSTEM. A system or a part of a system that can transmit and receive signals without the aid of wire.

❖ These systems use radio frequency transmitting devices that comply with the special requirements for supervision of low-power wireless systems in NFPA 72. Wireless devices have the advantage of flexibility in positioning. Consequently, portable wireless notification devices are frequently used in existing facilities where visual devices are not present throughout.

WORKSTATION. A defined space or an independent principal piece of equipment using HPM within a fabrication area where a specific function, laboratory procedure or research activity occurs. *Approved* or *listed* hazardous materials storage cabinets, flammable liquid storage cabinets or gas cabinets serving a workstation are included as part of the workstation. A workstation is allowed to contain ventilation equipment, fire protection devices, detection devices, electrical devices and other processing and scientific equipment.

❖ In HPM facilities, workstations further subdivide a fabrication area and provide relatively self-contained, specialized areas where HPM processes are conducted. Workstation controls limit the quantity of materials and impose limitations on the design of these processes to include, but not be limited to, protection by local exhaust; sprinklers; automatic and emergency shutoffs; construction materials and HPM compatibility. Excess materials are prohibited and must be contained in storage rooms designed to accommodate such hazards.

[BG] YARD. An open space, other than a *court*, unobstructed from the ground to the sky, except where specifically provided by the *International Building Code*, on the lot on which a building is situated.

❖ This definition is used, similar to the definition of "Court," to establish the applicability of code requirements when yards are utilized for natural light or natural ventilation purposes (see Section 1206.1 of the IBC). Whereas a court is bounded on three or more sides with the building or structure, a yard is bounded on two or less sides by the building or structure. See also the definition of "Egress court."

ZONE. A defined area within the protected premises. A zone can define an area from which a signal can be received, an area to which a signal can be sent or an area in which a form of control can be executed.

❖ Zoning a system is important to emergency personnel in locating a fire. When an alarm is designated to a specific zone, it allows the fire service to immediately respond to the area where the fire is in progress

INTERNATIONAL CODE COUNCIL®
Copyright © 2015 ICC. ALL RIGHTS RESERVED. Accessed by David Dammon on Jun 21, 2017 12:30:52 PM pursuant to License Agreement with ICC. No further reproduction or distribution authorized. ANY UNAUTHORIZED REPRODUCTION OR DISTRIBUTION IS A VIOLATION OF THE FEDERAL COPYRIGHT ACT AND THE LICENSE AGREEMENT, AND SUBJECT TO CIVIL AND CRIMINAL PENALTIES THEREUNDER.

instead of searching the entire building for the origin of an alarm.

ZONE, NOTIFICATION. An area within a building or facility covered by notification appliances which are activated simultaneously.

❖ This definition is provided to clarify the code by making a clear distinction between fire alarm system initiation device zones required by Section 907.6.4 and the zones that may be designed into occupant notification device systems in a building. The term is used primarily in the exceptions for sprinkler systems found in the manual fire alarm system requirements in Section 907.2 and its subsections. Note that the code does not require audible and visible occupant notification device systems to be zoned; if such zones are provided, it is a matter of the system design engineers judgment. The voice paging component in high-rise building emergency voice/alarm communication systems are, however, required to be zoned in accordance with Section 907.5.2.2.

Bibliography

The following resource materials were used in the preparation of the commentary for this chapter of the code:

2009 International Code Interpretations. Washington, DC: International Code Council, 2009.

Babrauskas, V., "Heat Release Rates," Chapter 3-1, SFPE *Handbook of Fire Protection Engineering*, 4th Edition. Quincy, MA: National Fire Protection Association, 2008.

Bulletin 19A, *Suggested Relative Hazard Classification of Organic Peroxides*. Washington, DC: Society of the Plastics Industry, 1975.

Code Changes Resource Collection *International Building Code*/2012. Washington, DC: International Code Council, 2011.

Code Changes Resource Collection *International Fire Code*/2012. Washington, DC: International Code Council, 2011.

Fire Protection Guide to Hazardous Materials, 13th Edition. Quincy, MA: National Fire Protection Association, 2001.

Gottuk, D., and White D., "Liquid Fuel Fires," Chapter 2-15, *SFPE Handbook of Fire Protection Engineering*, 4th Edition. Quincy, MA: National Fire Protection Association, 2008.

INTERNATIONAL CODE COUNCIL®
Copyright © 2015 ICC. ALL RIGHTS RESERVED. Accessed by David Dammon on Jun 21, 2017 12:30:52 PM pursuant to License Agreement with ICC. No further reproduction or distribution authorized. ANY UNAUTHORIZED REPRODUCTION OR DISTRIBUTION IS A VIOLATION OF THE FEDERAL COPYRIGHT ACT AND THE LICENSE AGREEMENT, AND SUBJECT TO CIVIL AND CRIMINAL PENALTIES THEREUNDER.

INTERNATIONAL CODE COUNCIL®
Copyright © 2015 ICC. ALL RIGHTS RESERVED. Accessed by David Dammon on Jun 21, 2017 12:30:52 PM pursuant to License Agreement with ICC. No further reproduction or distribution authorized. ANY UNAUTHORIZED REPRODUCTION OR DISTRIBUTION IS A VIOLATION OF THE FEDERAL COPYRIGHT ACT AND THE LICENSE AGREEMENT, AND SUBJECT TO CIVIL AND CRIMINAL PENALTIES THEREUNDER.

Chapter 3: General Requirements

General Comments

Fire is always a concern, whether a building is under construction, is occupied for normal use or is undergoing renovation, restoration, expansion or demolition. But careful planning combined with common sense can make buildings and premises much safer, regardless of the occupancy or other activities at the site.

The primary focus of the requirements in this chapter is making sure the three elements necessary for a fire—ignition source, fuel and oxygen—do not come in contact with one another. NFPA 550 describes in great detail the features of fire safety systems and includes a logic tree called "The Fire Safety Concepts Tree" to graphically show all the possible means of achieving user-defined fire safety objectives. A portion of that tree is reproduced here as Commentary Figure 3 to show how to avoid fire ignition. Activities on this diagram that follow a plus sign (+), also known as an "or" gate, may be undertaken independently of each other to arrive at the desired goal. Alternatives following a dot (·), also known as an "and" gate, must be combined to achieve the desired result.

Commentary Figure 3 shows that eliminating any one of the three elements required for a fire to occur will prevent a fire from happening. If there is no ignition source, a fuel load of any size should not catch fire. If there is no fuel load, there is nothing for an ignition source to ignite. If there is little or no air available to sustain combustion, any fire ignited in a fuel load will quickly die.

The requirements and precautions outlined in this chapter, when applied using good judgment and the common sense mentioned above, will help to foster safety for everyone.

Purpose

The requirements and precautions contained in this chapter are intended to improve premises safety for everyone, including construction workers, tenants, operations and maintenance personnel and emergency response personnel.

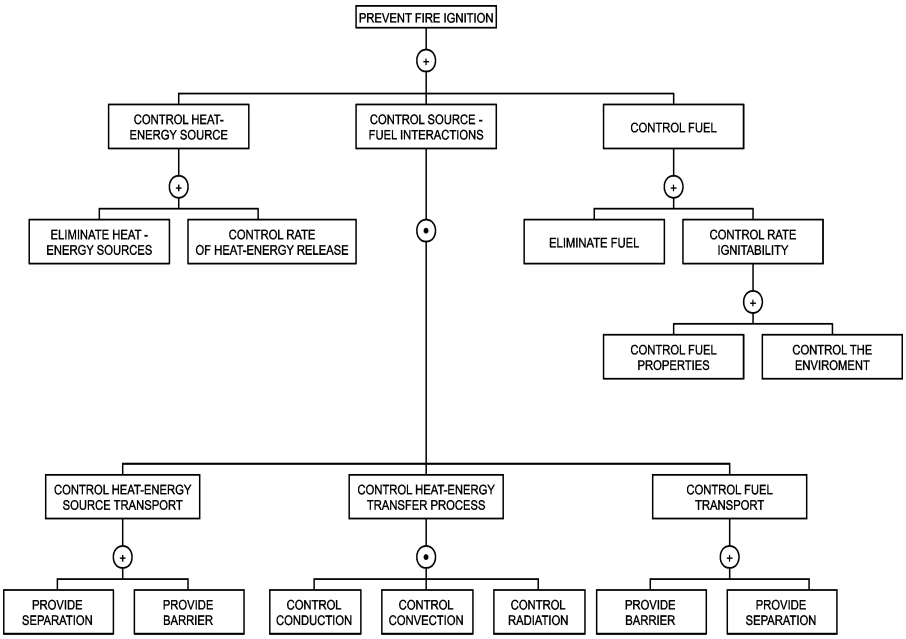

Figure 3
THE FIRE SAFETY CONCEPTS TREE

INTERNATIONAL CODE COUNCIL®
Copyright © 2015 ICC. ALL RIGHTS RESERVED. Accessed by David Dammon on Jun 21, 2017 12:30:52 PM pursuant to License Agreement with ICC. No further reproduction or distribution authorized. ANY UNAUTHORIZED REPRODUCTION OR DISTRIBUTION IS A VIOLATION OF THE FEDERAL COPYRIGHT ACT AND THE LICENSE AGREEMENT, AND SUBJECT TO CIVIL AND CRIMINAL PENALTIES THEREUNDER.

SECTION 301
GENERAL

301.1 Scope. The provisions of this chapter shall govern the occupancy and maintenance of all structures and premises for precautions against fire and the spread of fire and general requirements of fire safety.

❖ The requirements of Chapter 3 prescribe fire safety precautions for conditions that are likely to cause or contribute to the spread of fire in any building or structure or on any premises, regardless of occupancy.

301.2 Permits. Permits shall be required as set forth in Section 105.6 for the activities or uses regulated by Sections 306, 307, 308 and 315.

❖ Issuing permits gives the fire code official an opportunity to carefully evaluate and regulate hazardous operations. Applicants for permits should be required to demonstrate that their operations comply with the intent of the code before the permit is issued. See the commentary to Section 105.6 for a general discussion of operations requiring an operational permit.

SECTION 302
DEFINITIONS

302.1 Definitions. The following terms are defined in Chapter 2:

BONFIRE.

HI-BOY.

HIGH-VOLTAGE TRANSMISSION LINE.

OPEN BURNING.

PORTABLE OUTDOOR FIREPLACE.

POWERED INDUSTRIAL TRUCK.

RECREATIONAL FIRE.

SKY LANTERN.

❖ Definitions of terms can help in the understanding and application of the code requirements. This section directs the code user to Chapter 2 for the proper application of the indicated terms used in this chapter. Terms may be defined in Chapter 2 or in another *International Code*® (I-Code®) as indicated in Section 201.3, or the dictionary meaning may be all that is needed (see also commentary, Sections 201 through 201.4).

SECTION 303
ASPHALT KETTLES

303.1 Transporting. Asphalt (tar) kettles shall not be transported over any highway, road or street when the heat source for the kettle is operating.

Exception: Asphalt (tar) kettles in the process of patching road surfaces.

❖ The hazards of hauling a fired kettle of molten asphalt over public ways are obvious. Most asphalt kettles for roofing, paving and similar uses are currently liquefied petroleum gas (LP-gas) fired. Contractors often wish to keep asphalt in a liquid state to save time between jobs and when work is interrupted. Once asphalt is transformed from a solid to a liquid by heating, it retains much of its heat for some time, and although it becomes increasingly viscous as it cools, it remains fluid for a considerable time. Maintaining a fire under a kettle during transport is usually unnecessary and, therefore, prohibited, since little additional heat is required to return the asphalt to a usable consistency. An accident, flat tire or anything else that could cause the kettle to overturn, spilling the molten asphalt in the presence of an open flame, could lead to a serious fire. Even hitting potholes or other bumps in the road could cause the molten asphalt to splash out of the kettle, causing injury to people nearby or damage to property.

The exception for asphalt being used for road repair is necessary for efficient operations for work crews sealing pavement joints and performing similar roadway repairs.

303.2 Location. Asphalt (tar) kettles shall not be located within 20 feet (6096 mm) of any combustible material, combustible building surface or any building opening and within a controlled area identified by the use of traffic cones, barriers or other *approved* means. Asphalt (tar) kettles and pots shall not be utilized inside or on the roof of a building or structure. Roofing kettles and operating asphalt (tar) kettles shall not block *means of egress*, gates, roadways or entrances.

❖ Asphalt kettles sometimes catch fire. Having one located inside a building would present a serious smoke problem, as well as the fire hazards of asphalt spills flowing to lower floors or the release of LP-gas inside the building. Having one located next to quantities of combustible materials would also represent a fire hazard, as well as the possibility that splashes and splatters could damage construction materials beyond use. Keeping egress pathways and other travel lanes free of obstructions provides a needed

INTERNATIONAL CODE COUNCIL®
Copyright © 2015 ICC. ALL RIGHTS RESERVED. Accessed by David Dammon on Jun 21, 2017 12:30:52 PM pursuant to License Agreement with ICC. No further reproduction or distribution authorized. ANY UNAUTHORIZED REPRODUCTION OR DISTRIBUTION IS A VIOLATION OF THE FEDERAL COPYRIGHT ACT AND THE LICENSE AGREEMENT, AND SUBJECT TO CIVIL AND CRIMINAL PENALTIES THEREUNDER.

immediate exit from an area where an asphalt kettle-related incident might occur and enhances access to such areas for the fire department.

303.3 Location of fuel containers. Fuel containers shall be located not less than 10 feet (3048 mm) from the burner.

Exception: Containers properly insulated from heat or flame are allowed to be within 2 feet (610 mm) of the burner.

❖ This section reduces the likelihood that any gas or vapors escaping from fuel containers would be ignited by the open flame of the kettle burner and that the heat of the burner would cause overheating of the fuel containers.

The exception acknowledges the greater safety of insulated containers.

303.4 Attendant. An operating kettle shall be attended by not less than one employee knowledgeable of the operations and hazards. The employee shall be within 100 feet (30 480 mm) of the kettle and have the kettle within sight. Ladders or similar obstacles shall not form a part of the route between the attendant and the kettle.

❖ Having a trained attendant watch the kettle helps to create a safe operation. The attendant is usually responsible for making sure the asphalt is at the proper temperature, the level of liquid in the kettle is maintained at the required level and the fuel supply for the kettle burner is adequate. The attendant should watch for any change in the kettle that would signal the potential for a safety hazard, and adjust the burner output or other factors to keep the kettle in safe operating condition. The attendant is also often responsible for keeping the area surrounding the kettle free of combustible materials and other construction debris that could become a safety hazard.

303.5 Fire extinguishers. There shall be a portable fire extinguisher complying with Section 906 and with a minimum 40-B:C rating within 25 feet (7620 mm) of each asphalt (tar) kettle during the period such kettle is being utilized. Additionally, there shall be one portable fire extinguisher with a minimum 3-A:40-B:C rating on the roof being covered.

❖ This section defines the type and size of extinguisher that must be available for use, both on the ground near the kettle and on the roof level to which the asphalt is being applied. In the event of a kettle fire, water should not be used as an extinguishing agent because it could cause the molten asphalt to froth and possibly overflow the kettle or spatter over anything or anyone in the surrounding area. See also the commentary to Section 3317.3 for roofing operations during construction.

303.6 Lids. Asphalt (tar) kettles shall be equipped with tight-fitting lids.

❖ A tight-fitting lid on a hot kettle limits the air supply available to feed a kettle fire. Any fire that might start in a closed kettle will quickly burn itself out because of the limited amount of air available for combustion. The lid also helps prevent splashes and splatters that could cause personal injury.

303.7 Hi-boys. Hi-boys shall be constructed of noncombustible materials. Hi-boys shall be limited to a capacity of 55 gallons (208 L). Fuel sources or heating elements shall not be allowed as part of a hi-boy.

❖ Hi-boys are used on the roof of a building to transport hot asphalt from a point of supply near the edge of the roof to the site of the roofing application. Due to the hazards of molten asphalt discussed in Section 303.1, hi-boys are limited in size to control the maximum amount of potential spills on the roof, which could ignite and pose a high-challenge fire-suppression operation for the fire department. A limited size also enhances the movability and stability of the hi-boy, thus reducing the potential for a tip over. As a further safeguard against a fire incident, hi-boys are prohibited from being fired or equipped with a fuel source for firing. Hi-boys must also be constructed of noncombustible materials to enhance their durability and prevent the container from contributing fuel to a fire. Hi-boys should be well-maintained, including the frame; steering mechanism; tires or wheels; faucets and fill connections (see commentary, Section 202 for the definition of “Hi-boy”).

303.8 Roofing kettles. Roofing kettles shall be constructed of noncombustible materials.

❖ The requirement for noncombustible materials represents sound safety practice as well as good business practice. Portions of kettles constructed of combustible materials can be easily destroyed and could lead to larger fires. Replacement of destroyed kettles would be expensive. Paying for other fire damage would be even more costly.

Also note that roofing mops soaked in asphalt or pitch must never be left inside a building, near heating equipment or near combustible materials. These mops are subject to spontaneous heating no matter what material they are made of.

303.9 Fuel containers under air pressure. Fuel containers that operate under air pressure shall not exceed 20 gallons (76 L) in capacity and shall be *approved*.

❖ Limiting the size of pressurized fuel containers limits the probability of a container becoming a major fuel

INTERNATIONAL CODE COUNCIL®
Copyright © 2015 ICC. ALL RIGHTS RESERVED. Accessed by David Dammon on Jun 21, 2017 12:30:52 PM pursuant to License Agreement with ICC. No further reproduction or distribution authorized. ANY UNAUTHORIZED REPRODUCTION OR DISTRIBUTION IS A VIOLATION OF THE FEDERAL COPYRIGHT ACT AND THE LICENSE AGREEMENT, AND SUBJECT TO CIVIL AND CRIMINAL PENALTIES THEREUNDER.

source in case of a kettle fire. Requiring the use of approved containers gives the fire code official more control over the type and suitability of the vessel to be used under pressure.

SECTION 304
COMBUSTIBLE WASTE MATERIAL

304.1 Waste accumulation prohibited. Combustible waste material creating a fire hazard shall not be allowed to accumulate in buildings or structures or upon premises.

❖ Accumulated waste, trash, construction debris and other natural materials, such as grass clippings, leaves and shrubbery cuttings, can become a serious fire hazard. The three subsections that follow this general statement address the most common situations.

304.1.1 Waste material. Accumulations of wastepaper, wood, hay, straw, weeds, litter or combustible or flammable waste or rubbish of any type shall not be permitted to remain on a roof or in any *court*, yard, vacant lot, alley, parking lot, open space, or beneath a grandstand, *bleacher*, pier, wharf, manufactured home, recreational vehicle or other similar structure.

❖ This section considers the kind of waste material that is most likely to accumulate during construction, renovation, additions or demolition and is often referred to as "the housekeeping section." It prohibits disorderly, unkempt storage or accumulation of trash, waste rags, wastepaper, scrub brush and weeds, litter and other combustible materials. Litter and trash represent a serious fire hazard because of their ease of ignition and rapid heat release once ignited. The importance of maintaining property and buildings in good order seems obvious, but sloppy housekeeping still occurs and can be the cause of serious fires. In one of the most serious fires in recent years, improper storage of linseed-oil-soaked rags used to refinish paneling in a high-rise office building caused a fire that destroyed eight floors of the building and killed three fire fighters.

304.1.2 Vegetation. Weeds, grass, vines or other growth that is capable of being ignited and endangering property, shall be cut down and removed by the *owner* or occupant of the premises. Vegetation clearance requirements in urban-wildland interface areas shall be in accordance with the *International Wildland-Urban Interface Code*.

❖ Accumulations of natural waste, such as grass clippings, weed growth and shrubbery cuttings, are not only unsightly, but also represent a serious fire hazard. All too often these accumulations occur at or near fence lines that are adjacent to streets or alleys. This makes accidental ignition by a cigarette butt tossed from a passing vehicle a good possibility. Common sense tells us that removal of this kind of waste is beneficial. The rules of nearly all jurisdictions make waste control and removal the responsibility of the building or property owner, his or her agent, the tenant or the contractor if work is being done on the site. Uncontrolled vegetation growth poses substantial risk to areas designated as wildland-urban interface areas. Accordingly, such areas must comply with the provisions of the *International Wildland-Urban Interface Code*® (IWUIC®).

304.1.3 Space underneath seats. Spaces underneath grandstand and bleacher seats shall be kept free from combustible and flammable materials. Except where enclosed in not less than 1-hour fire-resistance-rated construction in accordance with the *International Building Code*, spaces underneath grandstand and bleacher seats shall not be occupied or utilized for purposes other than *means of egress*.

❖ Numerous fires in grandstands and stadiums have shown over the years that the accumulation of flammable or combustible materials under grandstand seating areas can lead to fire disasters. Except as noted in the *International Building Code*® (IBC®), areas under grandstand seating must be kept free of flammable materials, including accumulations of waste or trash. One of the best ways to prevent a fire is to make certain there is no fuel to feed one.

The IBC does allow space under the stands to be used for purposes other than means of egress if that space is separated from the seating area by construction having at least a 1-hour fire-resistance rating. The separation is intended to allow time for occupants in the seating to vacate if a fire should occur. The fire code official would usually have to approve plans for use of space under the stands for concession stands, sales areas or storage areas.

304.2 Storage. Storage of combustible rubbish shall not produce conditions that will create a nuisance or a hazard to the public health, safety or welfare.

❖ Storage of combustible rubbish either indoors or outdoors must be approved by the fire code official. Combustibles should be accumulated in noncombustible containers, such as metal trash cans with tight lids, steel barrels or steel dumpster bins, which should be removed from the site regularly. The use of plastic waste containers should be discouraged due to the extremely high fuel content of such materials, which can sometimes be several times the fuel content of the waste material they contain. Such containers could, under fire conditions, cause rapid fire spread and overtax sprinkler systems, where installed. This section mentions public health as well as safety and welfare, indicating concern over retention of decomposing organic waste as well as flammable and combustible materials.

304.3 Containers. Combustible rubbish, and waste material kept within or near a structure shall be stored in accordance with Sections 304.3.1 through 304.3.4.

❖ Proper containers must be used to improve the safety of indoor or outdoor storage (in close proximity to buildings) of trash and isolate readily combustible materials. This section introduces the more detailed requirements in Sections 304.3.1 through 304.3.4.

INTERNATIONAL CODE COUNCIL®
Copyright © 2015 ICC. ALL RIGHTS RESERVED. Accessed by David Dammon on Jun 21, 2017 12:30:52 PM pursuant to License Agreement with ICC. No further reproduction or distribution authorized. ANY UNAUTHORIZED REPRODUCTION OR DISTRIBUTION IS A VIOLATION OF THE FEDERAL COPYRIGHT ACT AND THE LICENSE AGREEMENT, AND SUBJECT TO CIVIL AND CRIMINAL PENALTIES THEREUNDER.

304.3.1 Spontaneous ignition. Materials susceptible to spontaneous ignition, such as oily rags, shall be stored in a *listed* disposal container. Contents of such containers shall be removed and disposed of daily.

❖ Disposal containers, often called "waste cans" or "oily rag cans," used for storage of materials that might auto-ignite as a result of the spontaneous combustion process must be tested and listed for that use by a recognized testing laboratory or agency and must bear a label showing that they have been tested, along with the name of the testing agency. Such containers are most commonly round and generally available in sizes ranging from 5 to 40 gallons (19 to 151 L). They are equipped with a manual or foot treadle-operated lid that opens to a maximum angle of 60 degrees (1.05 rad) and closes by gravity. These containers are designed to prevent continuing combustion of the contents if ignition occurs. Container design includes features that keep the can body containing waste from coming into contact with combustible surfaces of walls or floors (see commentary, Section 202, for the definition of "Listed"). Daily disposal of container contents reduces the amount of time that oily materials will lie dormant, generating internal heat that can lead to ignition. UL 32 provides further information on the construction, testing and listing of these containers.

304.3.2 Capacity exceeding 5.33 cubic feet. Containers with a capacity exceeding 5.33 cubic feet (40 gallons) (0.15 m^3) shall be provided with lids. Containers and lids shall be constructed of noncombustible materials or of combustible materials with a peak rate of heat release not exceeding 300 kW/m^2 where tested in accordance with ASTM E1354 at an incident heat flux of 50 kW/m^2 in the horizontal orientation.

Exception: Wastebaskets complying with Section 808.

❖ Requiring larger containers to meet stricter conditions is common sense. The larger the volume of waste each container holds, the larger the fire hazard. Isolating the containers from one another with lids helps reduce the possibility that a fire in one container will spread to nearby containers. The lid also helps to smother a fire within the container by limiting the oxygen available to feed it. Additionally, closed containers protect flammable and combustible materials from potential external ignition sources.

Combustible materials, used in such containers, must meet the performance criteria stated when tested in accordance with ASTM E1354. Most nonmetallic waste containers are manufactured from polyethylene, which has a fuel value of 20,050 Btu per pound (46 636 kJ/kg). In comparison, the fuel value of newsprint paper is 9,000 Btu per pound (20 934 kJ/kg). To contain combustible waste in another combustible material that has twice the fuel potential value makes little sense. This section will prohibit the use of larger, nonfire-retardant polyethylene trash containers within a structure. Several manufacturers have had the formulation for years to make a fire-retardant polyethylene.

The exception to this general provision points to more specific requirements for waste containers in Group I-3 facilities contained in Section 808.1.

304.3.3 Capacity exceeding 1.5 cubic yards. Dumpsters and containers with an individual capacity of 1.5 cubic yards [40.5 cubic feet (1.15 m^3)] or more shall not be stored in buildings or placed within 5 feet (1524 mm) of combustible walls, openings or combustible roof eave lines.

Exceptions:

1. Dumpsters or containers in areas protected by an *approved automatic sprinkler system* installed throughout in accordance with Section 903.3.1.1, 903.3.1.2 or 903.3.1.3.
2. Storage in a structure shall not be prohibited where the structure is of Type I or IIA construction, located not less than 10 feet (3048 mm) from other buildings and used exclusively for dumpster or container storage.

❖ Although waste containers of this size are nearly always constructed of welded steel because of the weight of the waste load, the very fact that the waste load is large makes the containers a large fire hazard. Keeping these large containers in the open and away from combustible construction is the obvious way to keep the fire hazard low.

Exception 1 permits storage of these large containers indoors if the area is protected by an approved sprinkler system. It would be up to the fire code official to determine the maximum quantities that could be stored under these conditions.

Exception 2 applies only to buildings that are of fire-resistance-rated construction and are used exclusively for container storage. Such facilities might be found in scrap yards or at recycling centers, but rarely, if ever, in other occupancies.

304.3.4 Capacity of 1 cubic yard or more. Dumpsters with an individual capacity of 1.0 cubic yard [200 gallons (0.76 m^3)] or more shall not be stored in buildings or placed within 5 feet (1524 mm) of combustible walls, openings or combustible roof eave lines unless the dumpsters are constructed of noncombustible materials or of combustible materials with a peak rate of heat release not exceeding 300 kW/m^2 where tested in accordance with ASTM E1354 at an incident heat flux of 50 kW/m^2 in the horizontal orientation.

Exceptions:

1. Dumpsters in areas protected by an *approved automatic sprinkler system* installed throughout in accordance with Section 903.3.1.1, 903.3.1.2 or 903.3.1.3.
2. Storage in a structure shall not be prohibited where the structure is of Type I or IIA construction, located

INTERNATIONAL CODE COUNCIL®
Copyright © 2015 ICC. ALL RIGHTS RESERVED. Accessed by David Dammon on Jun 21, 2017 12:30:52 PM pursuant to License Agreement with ICC. No further reproduction or distribution authorized. ANY UNAUTHORIZED REPRODUCTION OR DISTRIBUTION IS A VIOLATION OF THE FEDERAL COPYRIGHT ACT AND THE LICENSE AGREEMENT, AND SUBJECT TO CIVIL AND CRIMINAL PENALTIES THEREUNDER.

not less than 10 feet (3048 mm) from other buildings and used exclusively for dumpster or container storage.

❖ Medium-density polyethylene dumpsters up to 9 cubic yards [27 ft^3 (0.76 m^3)] in capacity and that have a fuel content of 20,020 Btu per pound (46 567 kJ/kg) [by comparison, municipal solid waste averages 4,500 Btu/lb (10 467 kJ/kg)] are now being distributed and used. Medium-density polyethylene is essentially equal to the fuel value for gasoline and becomes a burning liquid that spreads and flows when involved in a fire. As such, placing them 5 feet (1524 mm) away from a nearby structure will be of little value unless their flammability hazard is mitigated. This section does that by limiting container heat release rate and heat flux using the test parameters of ASTM E1354. The peak rate of heat release criterion is consistent with the one in Sections 304.3.2 and 808.1.

Exception 1 permits storage of these containers indoors if the area is protected by an approved sprinkler system. It would be up to the fire code official to determine the maximum quantities that could be stored under these conditions.

Exception 2 applies only to buildings that are of fire-resistance-rated construction and are used exclusively for waste container storage. Such facilities might be found in scrap yards or at recycling centers, but rarely, if ever, in other occupancies.

SECTION 305
IGNITION SOURCES

305.1 Clearance from ignition sources. Clearance between ignition sources, such as luminaires, heaters, flame-producing devices and combustible materials, shall be maintained in an *approved* manner.

❖ Establishing safe clearances will usually mean following the requirements of the IBC or other codes adopted by the jurisdiction as well as having the approval of the fire code official.

305.2 Hot ashes and spontaneous ignition sources. Hot ashes, cinders, smoldering coals or greasy or oily materials subject to spontaneous ignition shall not be deposited in a combustible receptacle, within 10 feet (3048 mm) of other combustible material including combustible walls and partitions or within 2 feet (610 mm) of openings to buildings.

Exception: The minimum required separation distance to other combustible materials shall be 2 feet (610 mm) where the material is deposited in a covered, noncombustible receptacle placed on a noncombustible floor, ground surface or stand.

❖ This section covers two different, but equally serious, ignition source problems. First, hot ashes, embers and cinders from fireplaces, stoves or other fireboxes must never be placed in a combustible container. This point seems almost too obvious to be mentioned, but every year fires are started when someone carelessly scoops ashes containing glowing embers into paper bags or cardboard cartons. It is also not uncommon to see construction scrap being burned in steel drums on construction sites in cold weather. Care must be taken when emptying ashes from those containers to make sure no hot coals get dumped on paper waste or other combustible materials.

The second problem, greasy or oily materials subject to spontaneous combustion, is addressed by requiring such materials to be placed in listed containers (see commentary, Section 304.3.1).

In both cases, safe distances must be maintained from combustible construction and building openings for added protection.

The exception recognizes the added protection of tight-fitting covers on noncombustible trash containers as well as the reduced fire hazard when the containers are placed on a noncombustible surface.

305.3 Open-flame warning devices. Open-flame warning devices shall not be used along an excavation, road, or any place where the dislodgment of such device might permit the device to roll, fall or slide on to any area or land containing combustible material.

❖ Open-flame warning devices other than fusees used to mark road accidents or other short-term emergencies are rarely used today. The old-fashioned kerosene pots used to mark construction hazards in dark areas have been largely replaced by “sawhorse” barriers with battery-powered flashing lights. But, even though use may be limited, the warning in this section is nonetheless real. One fusee not firmly fixed in the ground or on another stable surface can fall into a roadside ditch filled with dry weeds and cause a roadside fire that could spread into dry woodland or cropland, causing enormous fire damage. Likewise, a burned-out hand-held fusee that is carelessly tossed aside while still hot could ignite dry refuse.

305.4 Deliberate or negligent burning. It shall be unlawful to deliberately or through negligence set fire to or cause the burning of combustible material in such a manner as to endanger the safety of persons or property.

❖ The deliberate setting of fires, whether in a structure or in a waste container located where it could endanger a structure or its occupants, is normally considered arson, which is a felony that is punishable by a lengthy prison sentence. Fortunately, arson is not that common. More likely, a fire would be caused by carelessness or by someone not considering the consequences of his or her actions.

Regardless of the circumstances, fires must be avoided. Following the requirements in the code as well as those in the IBC will help to maintain a safe, fire-free site. On construction or demolition sites, secure fencing around the site and its waste containers is good protection. Following good housekeeping practices, including routine disposal of combustible materials, is also an excellent first line of protection against fire. An ignition source cannot cause damage

INTERNATIONAL CODE COUNCIL®
Copyright © 2015 ICC. ALL RIGHTS RESERVED. Accessed by David Dammon on Jun 21, 2017 12:30:52 PM pursuant to License Agreement with ICC. No further reproduction or distribution authorized. ANY UNAUTHORIZED REPRODUCTION OR DISTRIBUTION IS A VIOLATION OF THE FEDERAL COPYRIGHT ACT AND THE LICENSE AGREEMENT, AND SUBJECT TO CIVIL AND CRIMINAL PENALTIES THEREUNDER.

to property or endanger life unless there is a fuel load to be ignited.

305.5 Unwanted fire ignitions. Acts or processes that have caused repeated ignition of unwanted fires shall be modified to prevent future ignition.

❖ Many industrial processes have the potential to produce frequent nuisance fires that generate unwanted alarms necessitating emergency responses that risk the health and safety of fire fighters and citizens. This section empowers the fire code official to alter such processes to mitigate nuisance fires.

SECTION 306
MOTION PICTURE PROJECTION ROOMS AND FILM

306.1 Motion picture projection rooms. Electric arc, xenon or other light source projection equipment that develops hazardous gases, dust or radiation and the projection of ribbon-type cellulose nitrate film, regardless of the light source used in projection, shall be operated within a motion picture projection room complying with Section 409 of the *International Building Code*.

❖ The requirements in this section are specific to spaces housing equipment used to project cellulose acetate film, also called safety film, which is in common use today. This film has about the same fire hazard characteristics as paper of the same thickness and form. The equipment used to project the film, however, may also present fire or health hazards that can be minimized by proper construction of the room. Section 409 of the IBC covers these construction requirements in detail.

The older type of motion picture film was made of cellulose nitrate, which is also called pyroxylin, which presents a significantly greater fire hazard and, therefore, calls for stricter construction requirements, including sprinklers. These requirements are contained in Sections 6504 and 903.2.5.3. The greater hazard of cellulose nitrate film, which today is found mainly in museum collections and other archives or film preservation facilities, comes from the characteristic of the material to begin degrading at temperatures below its ignition temperature, causing a chemical reaction that can lead to spontaneous combustion. The combustion products of cellulose nitrate are both flammable and extremely toxic because they include oxides of nitrogen. Cellulose nitrate film burns at a rate that is as much as 15 times the rate of common combustibles.

306.2 Cellulose nitrate film storage. Storage of cellulose nitrate film shall be in accordance with NFPA 40.

❖ NFPA 40 contains minimum requirements for a reasonable level of protection for the storage and handling of cellulose nitrate film. The standard does not address the manufacture of the film because it has not been made in the United States since 1951.

SECTION 307
OPEN BURNING, RECREATIONAL FIRES AND PORTABLE OUTDOOR FIREPLACES

307.1 General. A person shall not kindle or maintain or authorize to be kindled or maintained any *open burning* unless conducted and *approved* in accordance with Sections 307.1.1 through 307.5.

❖ To control the hazards associated with it, open burning may not be authorized or undertaken without the approvals specified in Section 307. See the commentary to Section 202 for the definition of "Open burning" for a discussion of the types of burning intended to be regulated by this section.

307.1.1 Prohibited open burning. Open burning shall be prohibited when atmospheric conditions or local circumstances make such fires hazardous.

Exception: Prescribed burning for the purpose of reducing the impact of wildland fire when authorized by the *fire code official*.

❖ This section is intended to protect the public from irresponsible burning when it endangers the safety, health or welfare of persons near the burn site. The terms "offensive" and "objectionable" in the previous code edition were undefined and unreasonably subjective, making the prohibition of open burning due to smoke emissions unenforceable. Also, there is not a referenced standard that provides a method for measuring or otherwise determining when smoke emissions are "offensive or objectionable." In the absence of such guidance, the legal requirements for consistency of enforcement were unattainable.

Fundamentally and historically, the code has regulated fire hazards and not poor air quality caused by smoke from fires. Experience strongly suggests that the previous wording encouraged citizens to request intervention by the fire code official to resolve neighborhood disputes regarding smoke emissions from many forms of outdoor fires that citizens correctly or incorrectly believed to be "open burning" (e.g., recreational fires, bonfires, charcoal burners, etc.); such situations should be civil matters rather than unlawful acts subject to the penalties prescribed in Section 109.

The revised wording empowers the fire code official to prohibit open burning when such fires would, in fact, be hazardous because of measurable environmental factors, such as weather (e.g., wind, temperature, relative humidity) or fuel characteristics (e.g., fuel moisture content).

The exception allows for prescribed burning that is conducted in an effort to minimize the fuel load in wildland and interface areas. Such prescribed burning is a common practice and is done with great planning and forethought and includes safeguards for proper fire control. Annually, several million wildland acres are subjected to prescribed burning in the U.S. to eliminate hazardous fuels, alter vegetation to pro-

INTERNATIONAL CODE COUNCIL®
Copyright © 2015 ICC. ALL RIGHTS RESERVED. Accessed by David Dammon on Jun 21, 2017 12:30:52 PM pursuant to License Agreement with ICC. No further reproduction or distribution authorized. ANY UNAUTHORIZED REPRODUCTION OR DISTRIBUTION IS A VIOLATION OF THE FEDERAL COPYRIGHT ACT AND THE LICENSE AGREEMENT, AND SUBJECT TO CIVIL AND CRIMINAL PENALTIES THEREUNDER.

mote the growth of fuels that produce less heat and burn slower, improve the habitat for wildlife and vegetation, control nuisance pests, and improve access for replanting and other recreational activities. The ability for a fire agency to utilize prescribed burning operations in a season when the fire can be more easily controlled reduces the personnel and resources needed to control a wildland fire when it occurs, and increases the likelihood that fewer structures and lives will be lost to wildland fire.

307.2 Permit required. A permit shall be obtained from the *fire code official* in accordance with Section 105.6 prior to kindling a fire for recognized silvicultural or range or wildlife management practices, prevention or control of disease or pests, or a bonfire. Application for such approval shall only be presented by and permits issued to the *owner* of the land upon which the fire is to be kindled.

❖ This section defines a rather narrow range of purposes for which permits will be issued. Section 105.6.30 covers open-burning permits in general. This section restricts permissible fires to those used for silviculture (the cultivation of forests and shade trees); range or wildlife management; pest control; and bonfires as defined in the code. This section further restricts the permitting process to owners of the land on which the fire is to be kindled (see commentary, Section 301.2).

307.2.1 Authorization. Where required by state or local law or regulations, *open burning* shall only be permitted with prior approval from the state or local air and water quality management authority, provided that all conditions specified in the authorization are followed.

❖ This section requires permit applicants to comply with state and local regulations covering air and water quality as well as safety regulations established by the jurisdiction having authority.

307.3 Extinguishment authority. Where open burning creates or adds to a hazardous situation, or a required permit for open burning has not been obtained, the *fire code official* is authorized to order the extinguishment of the open burning operation.

❖ When the fire code official finds that open burning creates a hazardous condition such as the potential for igniting exposures or is unsafe because of atmospheric conditions, this section establishes the authority of the fire code official to order that the open burning fire be extinguished. Note that the fire department is not included in the extinguishment scenario but, rather, the section relies on the provisions of Section 109.3.2, which establishes who must comply with the extinguishment order, i.e., "...the owner, operator, occupant or other person responsible for the condition or violation…." This enhances public safety by not requiring the commitment of a piece of fire apparatus to extinguish an open-burning fire that is not an emergency (see commentary, Section 109.3.2).

307.4 Location. The location for *open burning* shall be not less than 50 feet (15 240 mm) from any structure, and provisions shall be made to prevent the fire from spreading to within 50 feet (15 240 mm) of any structure.

Exceptions:

1. Fires in *approved* containers that are not less than 15 feet (4572 mm) from a structure.
2. The minimum required distance from a structure shall be 25 feet (7620 mm) where the pile size is 3 feet (914 mm) or less in diameter and 2 feet (610 mm) or less in height.

❖ The 50-foot (15 240 mm) restriction applies to large fires in large open areas, such as those defined in Section 307.2. Exception 1 refers to fires that generally would be considerably smaller or would be controlled by the container in which they burn, presenting a reduced exposure risk to nearby buildings. Exception 2 allows a reduction in clearance from buildings based on the lesser hazard of fires that are limited in size.

307.4.1 Bonfires. A bonfire shall not be conducted within 50 feet (15 240 mm) of a structure or combustible material unless the fire is contained in a barbecue pit. Conditions that could cause a fire to spread within 50 feet (15 240 mm) of a structure shall be eliminated prior to ignition.

❖ Bonfires usually are large and associated with some kind of planned event (for example, a school pep rally, holiday celebration or camp celebration). This section restricts the location of these large fires to open areas in which sparks and burning embers would be unlikely to endanger structures and smoke would not be a significant hazard to public health. Allowing a bonfire in a barbeque pit automatically restricts the size of the fire to the fuel load that can be contained within the noncombustible fire pit.

307.4.2 Recreational fires. *Recreational fires* shall not be conducted within 25 feet (7620 mm) of a structure or combustible material. Conditions that could cause a fire to spread within 25 feet (7620 mm) of a structure shall be eliminated prior to ignition.

❖ Recreational fires are usually fairly small, but can still represent a significant fire hazard if the area in which they are kindled is not kept free of combustible trash and debris. Basic fire safety practices followed by campers make good guidelines. No fire should ever be kindled in a location where it would endanger structures or would be likely to ignite combustible materials close by.

307.4.3 Portable outdoor fireplaces. Portable outdoor fireplaces shall be used in accordance with the manufacturer's instructions and shall not be operated within 15 feet (3048 mm) of a structure or combustible material.

Exception: Portable outdoor fireplaces used at one- and two-family *dwellings*.

❖ Portable outdoor fireplaces (also known as patio fireplaces) designed to burn solid fuel are available at

INTERNATIONAL CODE COUNCIL®
Copyright © 2015 ICC. ALL RIGHTS RESERVED. Accessed by David Dammon on Jun 21, 2017 12:30:52 PM pursuant to License Agreement with ICC. No further reproduction or distribution authorized. ANY UNAUTHORIZED REPRODUCTION OR DISTRIBUTION IS A VIOLATION OF THE FEDERAL COPYRIGHT ACT AND THE LICENSE AGREEMENT, AND SUBJECT TO CIVIL AND CRIMINAL PENALTIES THEREUNDER.

retailers ranging from local grocery stores to big box retailers. Their widespread availability and use created considerable confusion for citizens and the fire service regarding if or how they were regulated by the code since Sections 307 and 308 were essentially silent on the use of this specific type of device. Fires in portable outdoor fireplaces could not be considered a "recreational fire" because critical to that definition is the concept that the fire is not contained in an incinerator, outdoor fireplace, barbeque grill or barbeque pit. It could then have been suggested that a portable outdoor fireplace is merely a type of "outdoor fireplace," but the code did not contain any references pertaining to where an outdoor fireplace could be located or operated. Since the use and hazards associated with operating such fireplaces are more consistent with the type of activities regulated in Section 307 than other types of open flames addressed in Section 308, specific regulations are now provided in Section 307.

This section makes it clear that the use of portable outdoor fireplaces is specifically regulated by the code. It prohibits the use of these devices within 15 feet (3048 mm) of any structure and is consistent with Section 307.4, Exception 1. Also, consistent with regulations for other appliances, this section relies upon compliance with the manufacturer's instructions for additional safeguards.

The exception exempts one- and two-family dwellings from the requirements of this section. In those occupancies, the level of familiarity and control exercised by the building occupants is recognized as offsetting the hazards of using these devices. There are practical difficulties involved in enforcing such regulations in one- and two-family dwellings as well.

307.5 Attendance. *Open burning*, bonfires, *recreational fires* and use of portable outdoor fireplaces shall be constantly attended until the fire is extinguished. A minimum of one portable fire extinguisher complying with Section 906 with a minimum 4-A rating or other *approved* on-site fire-extinguishing equipment, such as dirt, sand, water barrel, garden hose or water truck, shall be available for immediate utilization.

❖ This section reiterates basic common sense, but tends to be ignored quite often. Having one or more individuals responsible for keeping watch on a fire, even one of small size, is the first line of fire prevention. All too often news articles tell of wooden decks burning because hot embers from a charcoal grill fell unobserved onto the unprotected wooden surface, or of a huge brush or forest fire being caused by careless individuals who did not watch their campfires.

For practical purposes as well as for fire safety, some means of extinguishing a kindled fire should be kept close at hand. For small fires, a shovelful of dirt may be sufficient. For large fires, such as bonfires, large volumes of water may be necessary; however, no matter how much extinguishing equipment is available, it may prove useless unless someone is tending the fire and can sound an alarm.

SECTION 308
OPEN FLAMES

308.1 General. Open flame, fire and burning on all premises shall be in accordance with Sections 308.1.1 through 308.4.1 and with other applicable sections of this code.

❖ This section establishes the scope of the requirements of Section 308 as being applicable to both indoor and outdoor situations involving open flames.

308.1.1 Where prohibited. A person shall not take or utilize an open flame or light in a structure, vessel, boat or other place where highly flammable, combustible or explosive material is utilized or stored. Lighting appliances shall be well-secured in a glass globe and wire mesh cage or a similar *approved* device.

❖ This section intends to maintain separation between ignitable combustible materials and ignition sources that involve an open flame in any vessel, structure or occupancy.

308.1.2 Throwing or placing sources of ignition. A person shall not throw or place, or cause to be thrown or placed, a lighted match, cigar, cigarette, matches, or other flaming or glowing substance or object on any surface or article where it can cause an unwanted fire.

❖ This section recognizes the hazard caused by carelessness in disposing of smoking materials and other flaming or glowing objects. Smoking in bed or in situations where the smoker could forget about lighted smoking materials has caused large numbers of fires and fatalities over the years. Lack of attention to fireplaces and ash pits has caused great property loss as well. As one example, a three-story fraternity house at Iowa State University in Ames, Iowa, was completely destroyed by the fire that resulted from a burning log tumbling from an overflowing ash pit onto a combustible floor surface.

Lighted cigarettes discarded through the windows of moving vehicles each year cause grass, brush and forest fires that consume huge acreage in open country as well as dwellings and other structures.

308.1.3 Torches for removing paint. A person utilizing a torch or other flame-producing device for removing paint from a structure shall provide not less than one portable fire extinguisher complying with Section 906 and with a minimum 4-A rating, two portable fire extinguishers, each with a minimum 2-A rating, or a water hose connected to the water supply on the premises where such burning is done. The person doing the burning shall remain on the premises 1 hour after the torch or flame-producing device is utilized.

❖ Any time an open flame is used to soften old paint in preparation for removal, there is a risk of fire that must be covered by having approved fire extinguishers or a water source readily available. The requirement for a 1-hour fire watch after discontinuing the use of the open flame covers the possibility that paint fragments could still be hot enough to ignite flammable or combustible materials that might be lying around. It also considers the possibility that the flame used to remove

INTERNATIONAL CODE COUNCIL®
Copyright © 2015 ICC. ALL RIGHTS RESERVED. Accessed by David Dammon on Jun 21, 2017 12:30:52 PM pursuant to License Agreement with ICC. No further reproduction or distribution authorized. ANY UNAUTHORIZED REPRODUCTION OR DISTRIBUTION IS A VIOLATION OF THE FEDERAL COPYRIGHT ACT AND THE LICENSE AGREEMENT, AND SUBJECT TO CIVIL AND CRIMINAL PENALTIES THEREUNDER.

paint from a combustible base material could heat that material to its ignition temperature and leave an almost undetectable smolder that might burst into flames later. Safe and effective means for removing paint at lower temperatures, such as warm-air heat devices capable of generating high-temperature convection air, are readily available for sale or rent and far less likely to result in an ignition of combustible materials.

308.1.4 Open-flame cooking devices. Charcoal burners and other open-flame cooking devices shall not be operated on combustible balconies or within 10 feet (3048 mm) of combustible construction**.**

Exceptions:

1. One- and two-family *dwellings*.
2. Where buildings, balconies and decks are protected by an *automatic sprinkler system*.
3. LP-gas cooking devices having LP-gas container with a water capacity not greater than $2^1/_2$ pounds [nominal 1 pound (0.454 kg) LP-gas capacity].

❖ This section contains a strict prohibition on the use of charcoal-burning grills and other open-flame cooking devices in the locations described. Its intent is to mitigate the potential for hot embers to fall from the firebox of the cooking device and ignite a combustible surface, such as a wooden balcony or deck. The 10-foot (3048 mm) separation also reduces the likelihood that fire-starting or cooking flare-ups will come in contact with combustible wall construction that is easily ignited.

Since this section appears to regulate only the operation of the cooking devices, it is often asked if the devices can even be located or stored in the locations described. In the case of LP-gas fired grills using containers larger than those described in Exception 3, the answer is generally no, based on Section 6.20.11.2 of NFPA 58, which does not allow larger containers to be transported through an occupied building. See Sections 6101.1 and 6104.1 of the code for references to NFPA 58.

In the case of locating non-LP-gas-fired cooking devices, the location would have to be approved by the fire code official. Note that the prohibition in this section would also apply to gas grills connected to the building's fuel gas piping system since they are still open flame cooking devices. See also Section 603.4.2.1.1.

Exception 1 exempts one- and two-family dwellings from the requirements of this section and would allow the use of LP-gas barbeque grills of any size on balconies of such buildings. In those occupancies, the level of familiarity and control exercised by the building occupants is recognized as offsetting the hazards of using open-flame cooking devices. There are practical difficulties involved in enforcing such regulations in one- and two-family dwellings as well. Exception 2 recognizes the added protection provided by sprinklers. Exception 3 allows small LP-gas burning devices such as the tabletop grills or units that might be used in cooking within residential occupancies.

308.1.5 Location near combustibles. Open flames such as from candles, lanterns, kerosene heaters and gas-fired heaters shall not be located on or near decorative material or similar combustible materials.

❖ Each year in nearly every county and community in the country at least one house fire occurs that is caused by a gas-fired space heater igniting nearby combustibles. Accidents involving candles and lanterns used in both outdoor and indoor settings are not at all uncommon. In nearly all of these incidents, the exercise of common sense and the practice of keeping ignition sources and fuel packages well separated could have prevented property damage or loss of life.

308.1.6 Open-flame devices. Torches and other devices, machines or processes liable to start or cause fire shall not be operated or used in or upon wildfire risk areas, except by a permit in accordance with Section 105.6 secured from the *fire code official*.

Exception: Use within inhabited premises or designated campsites that are not less than 30 feet (9144 mm) from grass-, grain-, brush- or forest-covered areas.

❖ This section establishes the fire code official's authority to control through the permitting process the use of open flames in areas susceptible to fires. The term "wildfire risk area" is defined in Chapter 2 of the code and is applied to land covered with grass, grain, brush, forest or similar vegetation that, if ignited, could pose a severe fire danger to surrounding areas. The exception recognizes open ground that is free of combustible materials as an acceptable barrier to fire spread [see the *International Wildland-Urban Interface Code*® (IWUIC®) for further information].

308.1.6.1 Signals and markers. Flame-employing devices, such as lanterns or kerosene road flares, shall not be operated or used as a signal or marker in or upon wildfire risk areas.

Exception: The proper use of fusees at the scenes of emergencies or as required by standard railroad operating procedures.

❖ This section prohibits the use of flame-producing devices as signal or marker devices except for the use of fusees to mark the scene of an emergency or where routinely employed in railroad procedures, such as when a train is stopped across a roadway not protected by permanent signal lights.

308.1.6.2 Portable fueled open-flame devices. Portable open-flame devices fueled by flammable or combustible gases or liquids shall be enclosed or installed in such a manner as to prevent the flame from contacting combustible material.

Exceptions:

1. LP-gas-fueled devices used for sweating pipe joints or removing paint in accordance with Chapter 61.

INTERNATIONAL CODE COUNCIL®
Copyright © 2015 ICC. ALL RIGHTS RESERVED. Accessed by David Dammon on Jun 21, 2017 12:30:52 PM pursuant to License Agreement with ICC. No further reproduction or distribution authorized. ANY UNAUTHORIZED REPRODUCTION OR DISTRIBUTION IS A VIOLATION OF THE FEDERAL COPYRIGHT ACT AND THE LICENSE AGREEMENT, AND SUBJECT TO CIVIL AND CRIMINAL PENALTIES THEREUNDER.

2. Cutting and welding operations in accordance with Chapter 35.
3. Torches or flame-producing devices in accordance with Section 308.4.
4. Candles and open-flame decorative devices in accordance with Section 308.3.

❖ This section prohibits the use of portable devices in situations where they might be placed on unstable platforms or where they could be knocked over by human contact. The exceptions list the types of open-flame or heat-producing operations not regulated by this section but regulated elsewhere in the code.

308.1.6.3 Sky lanterns. A person shall not release or cause to be released an untethered sky lantern.

❖ Sky lanterns, variously known as Kongming lanterns, Chinese lanterns, fire balloons or fire parachutes, are typically made of paper and contain an open flame used to heat the air inside the device to make it airborne, similar to but on a much smaller scale than a hot air balloon. Once airborne, if these devices are untethered and their movement is thus unrestricted, they are subject to winds and other atmospheric conditions such that the location of the final landfall is completely unknown and uncontrolled by the user. Obviously, uncontrolled open flame devices descending out of the sky have a significant potential to start wildfires and structure fires.

308.1.7 Religious ceremonies. When, in the opinion of the *fire code official*, adequate safeguards have been taken, participants in religious ceremonies are allowed to carry hand-held candles. Hand-held candles shall not be passed from one person to another while lighted.

❖ This section has a very narrow application. As stated, only religious ceremonies are covered and the judgment of the fire code official is required for final approval. Prohibiting the passing of lighted candles from person to person is intended to minimize the opportunities for the candles to be dropped where they could become an ignition source for flammable or combustible materials or come into contact with clothing or hair. Spiritual significance may be attached to the use of candles in places of worship; therefore, the local fire code official should work closely with religious groups when enforcing this section.

308.1.7.1 Aisles and exits. Candles shall be prohibited in areas where occupants stand, or in an *aisle* or *exit*.

❖ This prohibition is intended to prevent accidents caused by lighted candles being knocked from their holders onto combustible furniture, carpeting or decorative materials. Candles are commonly found at seasonal religious observances where attendance often exceeds the norm. In case of an emergency, people must be able to move through the aisles toward the exits without risking the ignition of clothing, hair or decorations.

308.1.8 Flaming food and beverage preparation. The preparation of flaming foods or beverages in places of assembly and drinking or dining establishments shall be in accordance with Sections 308.1.8.1 through 308.1.8.5.

❖ The regulations in this section of the code are necessary to give the fire code official guidance in allowing the preparation of flaming food and beverages to be conducted in restaurants in a safe manner. These types of foods, sometimes referred to as "flambé foods," are prepared by adding a small amount of flammable or combustible liquid in the form of alcoholic beverages to the food and igniting it. Many restaurants prepare popular selected dishes, such as cherries jubilee, brandied peaches and flaming bananas, in this manner, usually tableside within close proximity of the customers. The proximity plus the intentional ignition of flammable liquids in a Group A occupancy make regulation of this process appropriate. Note that the regulations in this section are not intended to address a fuel source, such as Sterno, used to keep food warm.

308.1.8.1 Dispensing. Flammable or *combustible liquids* used in the preparation of flaming foods or beverages shall be dispensed from one of the following:

1. A 1-ounce (29.6 ml) container.
2. A container not exceeding 1-quart (946.5 ml) capacity with a controlled pouring device that will limit the flow to a 1-ounce (29.6 ml) serving.

❖ These dispensing provisions limit the amount of flammable or combustible liquid being transported around the restaurant for use in flaming food or beverage preparation in order to minimize the fuel potential in a fire incident involving such operations. Item 1 could be referring to a typical shot glass. Item 2 could be referring to a "jigger-pourer," which is a device that fits into the neck of a bottle and is intended to limit the per-pour quantity to 1 ounce.

308.1.8.2 Containers not in use. Containers shall be secured to prevent spillage when not in use.

❖ Securing the containers used in flaming food or beverage preparation while not in use reduces the likelihood of an accidental spill.

308.1.8.3 Serving of flaming food. The serving of flaming foods or beverages shall be done in a safe manner and shall not create high flames. The pouring, ladling or spooning of liquids is restricted to a maximum height of 8 inches (203 mm) above the receiving receptacle.

❖ Limiting the height from which flammable or combustible liquids are poured reduces the likelihood of a spill or overpour that might miss the target dish and be ignited by a table candle, smoking materials or another ignition source.

INTERNATIONAL CODE COUNCIL®
Copyright © 2015 ICC. ALL RIGHTS RESERVED. Accessed by David Dammon on Jun 21, 2017 12:30:52 PM pursuant to License Agreement with ICC. No further reproduction or distribution authorized. ANY UNAUTHORIZED REPRODUCTION OR DISTRIBUTION IS A VIOLATION OF THE FEDERAL COPYRIGHT ACT AND THE LICENSE AGREEMENT, AND SUBJECT TO CIVIL AND CRIMINAL PENALTIES THEREUNDER.

308.1.8.4 Location. Flaming foods or beverages shall be prepared only in the immediate vicinity of the table being serviced. They shall not be transported or carried while burning.

❖ This section prohibits movement or transport of "flambé foods" while they are burning in order to reduce the potential for incidents wherein the tray or dish might be dropped or tipped causing a spill of burning liquid, which, while limited in size, could lead to a panic reaction by restaurant patrons or, if spilled on a patron, could cause serious burn injuries.

308.1.8.5 Fire protection. The person preparing the flaming foods or beverages shall have a wet cloth towel immediately available for use in smothering the flames in the event of an emergency.

❖ Flaming-food preparation is a cooking hazard much the same as stovetop preparation. An efficient method for extinguishing a stovetop fire in a frying pan or similar utensil is to put the cover on the utensil to exclude oxygen. In flambé preparation, the food is prepared in a relatively small pan or even in the dish in which it will be served and in which the flames can be easily smothered by a wet towel. Note that this precautionary measure is in addition to the portable fire extinguishers to be provided in accordance with Section 906.

308.2 Permits required. Permits shall be obtained from the *fire code official* in accordance with Section 105.6 prior to engaging in the following activities involving open flame, fire and burning:

1. Use of a torch or flame-producing device to remove paint from a structure.
2. Use of open flame, fire or burning in connection with Group A or E occupancies.
3. Use or operation of torches and other devices, machines or processes liable to start or cause fire in or upon wildfire risk areas.

❖ This section establishes the authority of the fire code official to control the hazards of using open flames through the permitting process. The restrictions here do not prohibit the use of open-flame devices in the listed activities, but they do allow the fire code official to inspect plans and ongoing activities to make certain they are safe for the occupancy in which they are held. Permit applicants should be required to demonstrate that their regulated activities comply with the intent of the code before the permit is issued. See the commentary to Section 105.6 for a general discussion of operations requiring an operational permit and Sections 105.6.33 and 105.6.34 for a discussion of specific operational permits for the indicated regulated activities. The permit process also serves to notify the fire department of the increased hazard at particular locations.

308.3 Group A occupancies. Open-flame devices shall not be used in a Group A occupancy.

Exceptions:

1. Open-flame devices are allowed to be used in the following situations, provided *approved* precautions are taken to prevent ignition of a combustible material or injury to occupants:
   1.1. Where necessary for ceremonial or religious purposes in accordance with Section 308.1.7.
   1.2. On stages and platforms as a necessary part of a performance in accordance with Section 308.3.2.
   1.3. Where candles on tables are securely supported on substantial noncombustible bases and the candle flames are protected.
2. Heat-producing equipment complying with Chapter 6 and the *International Mechanical Code*.
3. Gas lights are allowed to be used provided adequate precautions satisfactory to the *fire code official* are taken to prevent ignition of combustible materials.

❖ The use of open-flame devices in Group A occupancies where large numbers of people gather for entertainment, instruction, food or drink consumption, deliberation, awaiting transportation or social or religious functions increases the likelihood of the occupants coming into contact with these devices and is, therefore, prohibited. Safe alternatives to open-flame devices should be used where practical, especially in restaurants and other assembly occupancies where the focus is on atmosphere rather than symbolism or religious significance.

Exception 1 refers to Sections 308.1.7 and 308.3.2 for use in religious and theatrical settings as well as permitting use on tabletops when properly secured and protected.

Exception 2 refers to building service heat-producing equipment that meets other code requirements.

Exception 3 covers gas lights installed with proper flame safeguards and with the approval of the fire code official. This kind of lighting is often a permanent installation that would be covered by additional code requirements.

308.3.1 Open-flame decorative devices. Open-flame decorative devices shall comply with all of the following restrictions:

1. Class I and Class II liquids and LP-gas shall not be used.
2. Liquid- or solid-fueled lighting devices containing more than 8 ounces (237 ml) of fuel must self-extinguish and not leak fuel at a rate of more than 0.25 teaspoon per minute (1.26 ml per minute) if tipped over.
3. The device or holder shall be constructed to prevent the spillage of liquid fuel or wax at the rate of more

INTERNATIONAL CODE COUNCIL®
Copyright © 2015 ICC. ALL RIGHTS RESERVED. Accessed by David Dammon on Jun 21, 2017 12:30:52 PM pursuant to License Agreement with ICC. No further reproduction or distribution authorized. ANY UNAUTHORIZED REPRODUCTION OR DISTRIBUTION IS A VIOLATION OF THE FEDERAL COPYRIGHT ACT AND THE LICENSE AGREEMENT, AND SUBJECT TO CIVIL AND CRIMINAL PENALTIES THEREUNDER.

than 0.25 teaspoon per minute (1.26 ml per minute) when the device or holder is not in an upright position.

4. The device or holder shall be designed so that it will return to the upright position after being tilted to an angle of 45 degrees (0.79 rad) from vertical.

   Exception: Devices that self-extinguish if tipped over and do not spill fuel or wax at the rate of more than 0.25 teaspoon per minute (1.26 ml per minute) if tipped over.

5. The flame shall be enclosed except where openings on the side are not more than 0.375-inch (9.5 mm) diameter or where openings are on the top and the distance to the top is such that a piece of tissue paper placed on the top will not ignite in 10 seconds.
6. Chimneys shall be made of noncombustible materials and securely attached to the open-flame device.

   Exception: A chimney is not required to be attached to any open-flame device that will self-extinguish if the device is tipped over.

7. Fuel canisters shall be safely sealed for storage.
8. Storage and handling of *combustible liquids* shall be in accordance with Chapter 57.
9. Shades, where used, shall be made of noncombustible materials and securely attached to the open-flame device holder or chimney.
10. Candelabras with flame-lighted candles shall be securely fastened in place to prevent overturning, and shall be located away from occupants using the area and away from possible contact with drapes, curtains or other combustibles.

❖ This class of open-flame devices includes items such as wall-mounted candles or torch sconces; bug-repellant candles in glass jars or metal cans; tabletop candles and oil lamps; free-standing torch holders and candelabras. The criteria for the use of this kind of device are all intended to enhance safety.

308.3.2 Theatrical performances. Where *approved*, open-flame devices used in conjunction with theatrical performances are allowed to be used when adequate safety precautions have been taken in accordance with NFPA 160.

❖ Theatrical performances typically occur on stages and involve large quantities of combustible materials. Hazards associated with stages can include: combustible scenery and lighting suspended overhead; scenic elements, contents and acoustical treatment on the back and sides of the stage; workshops, scene docks and dressing rooms located around the stage perimeter, and storage areas and property rooms located underneath the stage. Because of the inherent dangers associated with the introduction of open flames into such a fuel-rich environment, the use of open-flame devices in theatrical performances requires review, evaluation and the approval of the fire code official on a case-by-case basis and must be safeguarded in accordance with the provisions of NFPA 160. For further discussion of the special hazard nature of stages, see the commentary for Section 410 of the IBC.

308.4 Group R occupancies. Open flame, fire and burning in Group R occupancies shall comply with the requirements of Sections 308.1 through 308.1.6.3 and Section 308.4.1.

❖ This section establishes the applicability of the indicated requirements of Section 308 to open flame activities in Group R occupancies.

308.4.1 Group R-2 dormitories. Candles, incense and similar open-flame-producing items shall not be allowed in sleeping units in Group R-2 dormitory occupancies.

❖ This section provides the fire code official with the needed authority to control the introduction of potential ignition sources into Group R-2 dormitory occupancies and help to stop dorm fires before lives are endangered and potentially lost. Fire represents a significant risk to life and property in dormitory occupancies, particularly at residential schools, colleges and universities. The large number of young people living in close proximity to one another creates the potential for a relatively small fire to have serious and possibly fatal consequences.

Candle and incense use presents a significant life safety risk in the close confines of a typical residence hall. According to NFPA fire loss data, there is an average of 1,425 fires each year in dormitories, causing $6.3 million in direct property damage. The data show that candle fires alone cause a staggering $2.3 million in direct property damage each year in these occupancies, which makes them the most costly type of fire in a residence hall. Prohibiting the use of candles, incense and similar open flame items reduces the potential ignition sources for a fire, providing for a safer living environment.

SECTION 309
POWERED INDUSTRIAL TRUCKS AND EQUIPMENT

309.1 General. Powered industrial trucks and similar equipment including, but not limited to, floor scrubbers and floor buffers, shall be operated and maintained in accordance with Section 309.2 through 309.6.

❖ This section establishes the fire safety requirements for control of the hazards associated with powered industrial trucks and industrial equipment. Because these trucks or equipment may have either battery-powered electric motors or internal combustion engines using liquid or gaseous fuel, Sections 309.2 through 309.6 cover the fire safety aspects of both.

309.2 Battery chargers. Battery chargers shall be of an *approved* type. Combustible storage shall be kept not less than 3 feet (915 mm) from battery chargers. Battery charging shall not be conducted in areas accessible to the public.

❖ Battery chargers offer several safety challenges if they are not properly housed and operated. A battery that is connected to the charger with the poles

INTERNATIONAL CODE COUNCIL®
Copyright © 2015 ICC. ALL RIGHTS RESERVED. Accessed by David Dammon on Jun 21, 2017 12:30:52 PM pursuant to License Agreement with ICC. No further reproduction or distribution authorized. ANY UNAUTHORIZED REPRODUCTION OR DISTRIBUTION IS A VIOLATION OF THE FEDERAL COPYRIGHT ACT AND THE LICENSE AGREEMENT, AND SUBJECT TO CIVIL AND CRIMINAL PENALTIES THEREUNDER.

reversed can explode when charging power is turned on, which could result in corrosive liquid being sprayed over the charger room and anyone who happens to be in it. Aside from the possibility of serious bodily injury from flying debris or corrosive spray, eye damage from the spray is a critical consideration. There is also the possibility of energized charging leads shorting, arcing or fusing and causing sparks to become an ignition source for combustibles if they are not kept out of the area.

When a charger is properly connected and energized, the charging process causes generation of hydrogen and oxygen gases as well as acid or alkali fumes. These gases must be vented to prevent them from reaching ignitable or detonable levels (see commentary, Section 309.3). A typical battery charger arrangement is illustrated in Commentary Figure 309.2. Note that these battery chargers are outside of the scope of Section 608 and thus not subject to its provisions.

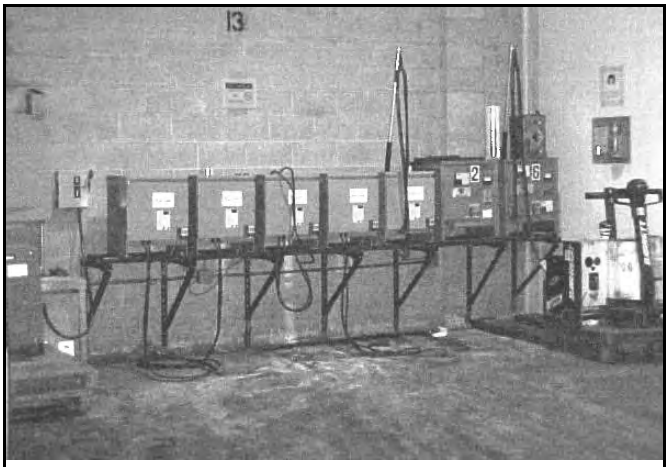

Figure 309.2
BATTERY CHARGERS FOR POWERED INDUSTRIAL TRUCKS

309.3 Ventilation. Ventilation shall be provided in an *approved* manner in battery-charging areas to prevent a dangerous accumulation of flammable gases.

❖ Charging lead-acid or nickel iron batteries is a process of electrolysis in which oxides created by operation of the battery are reduced to metal and redeposited on the electrode plates. The process results in the rejuvenation of the electrolyte in the battery and the emission of both oxygen and hydrogen gases as well as corrosive fumes. If these gases are allowed to accumulate in an enclosed space, they could eventually reach an ignitable or detonable level. Section 608.6 and the applicable provisions of the *International Mechanical Code*® (IMC®) describe one method of ventilation used to carry off and dilute the concentrations of hazardous gases. See the commentaries to Section 608.6 and its subsections.

309.4 Fire extinguishers. Battery-charging areas shall be provided with a fire extinguisher complying with Section 906 having a minimum 4-A:20-B:C rating within 20 feet (6096 mm) of the battery charger.

❖ Because of the electrical hazards associated with the battery-charging operation; the fuel load presented by the plastic battery cases and other area contents; and the potential for the presence of gases in the room, an appropriately sized portable fire extinguisher must be located within the battery-charging area. The extinguisher must be accessible with minimum travel.

309.5 Refueling. Powered industrial trucks using liquid fuel, LP-gas or hydrogen shall be refueled outside of buildings or in areas specifically *approved* for that purpose. Fixed fuel-dispensing equipment and associated fueling operations shall be in accordance with Chapter 23. Other fuel-dispensing equipment and operations, including cylinder exchange for LP-gas-fueled vehicles, shall be in accordance with Chapter 57 for flammable and *combustible liquids* or Chapter 61 for LP-gas.

❖ Because of the hazards associated with liquid fuel spills and gaseous fuel discharges, this section requires that powered industrial trucks be refueled outside where the vapors or gas can be readily dissipated. This section also allows the alternative of fueling inside of buildings where safeguards mitigate the hazards of the operation and the location is specifically approved for the use by the fire code official. Where fueling with liquid or gaseous fuel is done from fixed equipment, compliance with Chapter 23 of the code is required for both the fueling equipment and its operation because of the proven safeguards for such operations that are included in that chapter. Similarly, fueling equipment and operations for flammable or combustible liquids or LP-gas utilizing non-fixed equipment must be conducted in accordance with the applicable provisions of the appropriate material-specific chapter.

309.6 Repairs. Repairs to fuel systems, electrical systems and repairs utilizing open flame or welding shall be done in *approved* locations outside of buildings or in areas specifically *approved* for that purpose.

❖ Repairs that could create ignition sources or a fuel load for an ignition source must be done in indoor or outdoor locations that are designed specifically for vehicle repairs and that have been approved by the fire code official.

SECTION 310
SMOKING

310.1 General. The smoking or carrying of a lighted pipe, cigar, cigarette or any other type of smoking paraphernalia or material is prohibited in the areas indicated in Sections 310.2 through 310.8.

❖ This section states that smoking is prohibited in those areas designated in Sections 310.2 and 310.8. Before entering an area posted with “No Smoking”

INTERNATIONAL CODE COUNCIL®
Copyright © 2015 ICC. ALL RIGHTS RESERVED. Accessed by David Dammon on Jun 21, 2017 12:30:52 PM pursuant to License Agreement with ICC. No further reproduction or distribution authorized. ANY UNAUTHORIZED REPRODUCTION OR DISTRIBUTION IS A VIOLATION OF THE FEDERAL COPYRIGHT ACT AND THE LICENSE AGREEMENT, AND SUBJECT TO CIVIL AND CRIMINAL PENALTIES THEREUNDER.

signs, anyone carrying a lighted smoking product or device must extinguish the smoking material and properly dispose of the ashes and other residue. Suitable ashtrays should be available at the entry to "No Smoking" areas for disposal of the prohibited smoking materials.

310.2 Prohibited areas. Smoking shall be prohibited where conditions are such as to make smoking a hazard, and in spaces where flammable or combustible materials are stored or handled.

❖ Smoking can be prohibited wherever it would be a hazard in the judgment of the fire code official.

310.3 "No Smoking" signs. The *fire code official* is authorized to order the posting of "No Smoking" signs in a conspicuous location in each structure or location in which smoking is prohibited. The content, lettering, size, color and location of required "No Smoking" signs shall be *approved*.

Exception: In Group I-2 occupancies where smoking is prohibited, "No Smoking" signs are not required in interior locations of the facility where signs are displayed at all major entrances into the facility.

❖ The fire code official is not only authorized to designate where signs are to be posted, but is also responsible for establishing the specification for all aspects of those signs. A typical sign design is shown in Commentary Figure 310.3.

The exception provides correlation with NFPA 101 on this topic. Since the majority of healthcare facilities already prohibit smoking, where signs are posted at the main entrances, it is redundant and unnecessary to also require the signs to be posted throughout a facility that does not permit smoking, has a staff trained to monitor and policies in place to quickly stop or prevent the action (see Commentary Figure 310.3.)



Figure 310.3
NO SMOKING SIGN

310.4 Removal of signs prohibited. A posted "No Smoking" sign shall not be obscured, removed, defaced, mutilated or destroyed.

❖ Posted signs must remain in the locations designated by the fire code official and be readable at all times. Many, if not all, jurisdictions establish penalties for removing, obscuring, defacing or mutilating official signs.

310.5 Compliance with "No Smoking" signs. Smoking shall not be permitted nor shall a person smoke, throw or deposit any lighted or smoldering substance in any place where "No Smoking" signs are posted.

❖ Penalties are usually imposed for violating "no smoking" prohibitions. Smoking must be confined to approved areas, and discarded smoking materials must be deposited only in approved ashtrays or receptacles. Violation of this provision customarily constitutes a misdemeanor. Prosecution of misdemeanor offenses should be coordinated with the jurisdiction's legal counsel. Offense and penalty clauses, such as those included in Section 109, are required in order to prosecute infractions (see commentary, Section 109.3).

310.6 Ash trays. Where smoking is permitted, suitable noncombustible ash trays or match receivers shall be provided on each table and at other appropriate locations.

❖ Where smoking is permitted, smokers must have available a noncombustible ashtray or other receptacle where smoking materials can be safely deposited. These receptacles must be located on each table and other locations throughout the smoking area so that the smoker does not have to look for a place to discard used materials.

310.7 Burning objects. Lighted matches, cigarettes, cigars or other burning object shall not be discarded in such a manner that could cause ignition of other combustible material.

❖ Lighted matches, burning tobacco products and all other burning objects must be deposited in ashtrays or other approved noncombustible containers to separate these ignition sources from any potential fuel loads.

310.8 Hazardous environmental conditions. Where the *fire code official* determines that hazardous environmental conditions necessitate controlled use of smoking materials, the ignition or use of such materials in mountainous, brush-covered or forest-covered areas or other designated areas is prohibited except in *approved* designated smoking areas.

❖ This section gives the fire code official the authority to establish "no smoking" areas whenever and wherever environmental conditions are considered hazardous. This can include prohibiting burning dry grasses and leaves when lack of rain has rendered the environment dangerously dry or burning of specific materials when the smoke plume from the fire would endanger

INTERNATIONAL CODE COUNCIL®
Copyright © 2015 ICC. ALL RIGHTS RESERVED. Accessed by David Dammon on Jun 21, 2017 12:30:52 PM pursuant to License Agreement with ICC. No further reproduction or distribution authorized. ANY UNAUTHORIZED REPRODUCTION OR DISTRIBUTION IS A VIOLATION OF THE FEDERAL COPYRIGHT ACT AND THE LICENSE AGREEMENT, AND SUBJECT TO CIVIL AND CRIMINAL PENALTIES THEREUNDER.

the health or welfare of a population. The possibilities for determination of hazardous conditions are too numerous to itemize. The judgment of the fire code official, with the advice of other officials being sought as needed, is the determining factor. The fire code official can also exercise the discretion of designating areas in which smoking is permitted.

SECTION 311
VACANT PREMISES

311.1 General. Temporarily unoccupied buildings, structures, premises or portions thereof, including tenant spaces, shall be safeguarded and maintained in accordance with Sections 311.1.1 through 311.6.

❖ Vacant buildings or portions of buildings that are open at doors or windows pose fire safety and criminal trespass hazards to a community and are correctly declared to be unsafe buildings in Section 110.1.1. Such premises are often called an "attractive nuisance" to neighborhood children who may enter them to play or to other persons who may enter seeking shelter from the elements or to engage in potential criminal activities.

311.1.1 Abandoned premises. Buildings, structures and premises for which an *owner* cannot be identified or located by dispatch of a certificate of mailing to the last known or registered address, which persistently or repeatedly become unprotected or unsecured, which have been occupied by unauthorized persons or for illegal purposes, or which present a danger of structural collapse or fire spread to adjacent properties shall be considered abandoned, declared unsafe and abated by demolition or rehabilitation in accordance with the *International Property Maintenance Code* and the *International Building Code*.

❖ This section establishes the authority to dispose of by demolition or rehabilitation properties that pose a variety of public safety hazards when the owners of the property cannot be located by customary legal means. Because demolition and rehabilitation are regulated by the IBC, *International Property Maintenance Code*® (IPMC®) and applicable state laws, any action taken must be a carefully coordinated effort by all affected code officials in close relationship with the jurisdiction's legal counsel.

311.1.2 Tenant spaces. Storage and lease plans required by this code shall be revised and updated to reflect temporary or partial vacancies.

❖ The intent of this section is to keep storage and lease plans up to date so that the fire service will always have a complete picture of the kinds of hazards they might face in case of a fire, including vacant, unattended spaces.

311.2 Safeguarding vacant premises. Temporarily unoccupied buildings, structures, premises or portions thereof shall be secured and protected in accordance with **Sections** 311.2.1 through 311.2.3.

❖ This section lists a number of problems that commonly occur when buildings or portions of buildings remain vacant for long periods of time. It covers concerns for security, fire protection and fire separation in vacant spaces.

311.2.1 Security. Exterior and interior openings accessible to other tenants or unauthorized persons shall be boarded, locked, blocked or otherwise protected to prevent entry by unauthorized individuals. The *fire code official* is authorized to placard, post signs, erect barrier tape or take similar measures as necessary to secure public safety.

❖ Unauthorized or illegal activities in vacant buildings can lead to the presence of unanticipated fire loads susceptible to ready ignition and rapid fire spread, thus increasing the hazard to adjoining properties or spaces and fire department personnel (see commentary, Section 110.1.1). This section requires securing the openings of vacant buildings or spaces against unauthorized entry by any of the methods listed or by other equally effective means approved by the fire code official and provides that appropriate signage or other readily visible warnings to the public may be posted. For a suggested standard for boarding windows and doors, see IPMC Appendix A.

311.2.2 Fire protection. Fire alarm, sprinkler and stand-pipe systems shall be maintained in an operable condition at all times.

Exceptions:

1. Where the premises have been cleared of all combustible materials and debris and, in the opinion of the *fire code official*, the type of construction, *fire separation distance* and security of the premises do not create a fire hazard.
2. Where *approved* by the fire chief, buildings that will not be heated and where *fire protection systems* will be exposed to freezing temperatures, fire alarm and sprinkler systems are permitted to be placed out of service and standpipes are permitted to be maintained as dry systems (without an automatic water supply), provided the building has no contents or storage, and windows, doors and other openings are secured to prohibit entry by unauthorized persons.

❖ The basic requirement of this section is clearly stated. The on-site fire protection systems must be maintained whether the property is occupied or vacant. The systems would be subject to the same inspections in either case.

Exception 1 gives the fire code official the authority to determine whether vacant premises pose a significant hazard and lists criteria he or she can use in making that determination.

Exception 2 recognizes that systems located in unheated premises in cold climates could be ren-

INTERNATIONAL CODE COUNCIL®
Copyright © 2015 ICC. ALL RIGHTS RESERVED. Accessed by David Dammon on Jun 21, 2017 12:30:52 PM pursuant to License Agreement with ICC. No further reproduction or distribution authorized. ANY UNAUTHORIZED REPRODUCTION OR DISTRIBUTION IS A VIOLATION OF THE FEDERAL COPYRIGHT ACT AND THE LICENSE AGREEMENT, AND SUBJECT TO CIVIL AND CRIMINAL PENALTIES THEREUNDER.

dered inoperable by freezing and authorizes permission to disable those systems when the security of the premises and fire separation arrangements meet the code requirements stated in Sections 311.2.1 and 311.2.3. Since an inoperative fire protection system has a direct effect on the tactical approaches and operations of the fire department, this exception is only applicable where the fire chief of the jurisdiction has approved the securing of the system.

311.2.3 Fire separation. Fire-resistance-rated partitions, *fire barriers* and *fire walls* separating vacant tenant spaces from the remainder of the building shall be maintained. Openings, joints and penetrations in fire-resistance-rated assemblies shall be protected in accordance with Chapter 7.

❖ Fire-resistance-rated construction separating vacant spaces from the remainder of the building must be maintained to the satisfaction of the fire code official. The requirements for openings, joints and penetrations are covered in Chapter 7.

311.3 Removal of combustibles. Persons owning, or in charge or control of, a vacant building or portion thereof, shall remove therefrom all accumulations of combustible materials, flammable or combustible waste or rubbish and shall securely lock or otherwise secure doors, windows and other openings to prevent entry by unauthorized persons. The premises shall be maintained clear of waste or hazardous materials.

Exceptions:

1. Buildings or portions of buildings undergoing additions, *alterations*, repairs or change of occupancy in accordance with the *International Building Code*, where waste is controlled and removed as required by Section 304.
2. Seasonally occupied buildings.

❖ Property owners, their agents and persons leasing vacant spaces are responsible for preventing accumulations of flammable or combustible materials as well as for securing the vacant space against entry by unauthorized persons.

Exception 1 covers building situations in which larger amounts of flammable or combustible waste would reasonably be generated and cites code references to cover requirements in those situations.

Exception 2 allows reasonable accumulations of flammable or combustible materials in spaces that are occupied seasonally. For example, this exception would allow unattended off-season storage of stock for sale.

311.4 Removal of hazardous materials. Persons owning or having charge or control of a vacant building containing hazardous materials regulated by Chapter 50 shall comply with the facility closure requirements of Section 5001.6.

❖ This section gives the fire code official the authority to require property owners, their agents and their tenants to submit a facility closure plan, and make sure combustible and hazardous materials are removed from the premises. The requirements for the facility closure plan are given in Section 5001.6 (see Section 407.7).

311.5 Placards. Any vacant or abandoned buildings or structures determined to be unsafe pursuant to Section 110 of this code relating to structural or interior hazards shall be marked as required by Sections 311.5.1 through 311.5.5.

❖ Vacant or abandoned buildings are often of questionable structural integrity and have a very high probability of intentionally set fires. When fires occur in these buildings, they present a host of unusual hazards to fire fighters. Since the buildings are uninhabited, fires may develop for significant periods of time before they are detected and reported.

In December 1999, six professional fire fighters died after they became lost in a six-floor, maze-like, cold-storage and warehouse building while searching for two reportedly trapped people and fire extension. In the wake of this tragedy, the National Institute for Occupational Safety and Health (NIOSH) conducted a Fatality Assessment and Control Evaluation (FACE) as part of its Fire Fighter Fatality Investigation and Prevention Program and issued its findings in report FACE-99-F47 in September, 2000. NIOSH investigators concluded that, to reduce the risk of similar occurrences, fire departments should, among other recommendations, implement a program to "identify dangerous vacant buildings by affixing warning placards to entrance doorways or other openings where fire fighters may enter."

In order to improve fire-fighter safety when responding to incidents in buildings that have structural safety issues and have been declared to be unsafe due to being vacant or abandoned, this section establishes an information placarding system that will assist incident commanders in making personnel and equipment deployment decisions.

311.5.1 Placard location. Placards shall be applied on the front of the structure and be visible from the street. Additional placards shall be applied to the side of each entrance to the structure and on penthouses.

❖ Prominent positioning of warning placards where they can be readily seen by first-in fire companies or other emergency responders will assist in the initial incident size-up and resource assignments.

311.5.2 Placard size and color. Placards shall be 24 inches by 24 inches (610 mm by 610 mm) minimum in size with a red background, white reflective stripes and a white reflective border. The stripes and border shall have a 2-inch (51 mm) minimum stroke.

❖ In order to be truly effective in conveying the critical information about a building's structural stability, placards must be fabricated so as to be in bold contrast to their mounting surface. The required reflectivity will enhance placard visibility under low ambient light conditions where flashlights, spotlights or emergency vehicle warning lights may be the only light-emitting source.

INTERNATIONAL CODE COUNCIL®
Copyright © 2015 ICC. ALL RIGHTS RESERVED. Accessed by David Dammon on Jun 21, 2017 12:30:52 PM pursuant to License Agreement with ICC. No further reproduction or distribution authorized. ANY UNAUTHORIZED REPRODUCTION OR DISTRIBUTION IS A VIOLATION OF THE FEDERAL COPYRIGHT ACT AND THE LICENSE AGREEMENT, AND SUBJECT TO CIVIL AND CRIMINAL PENALTIES THEREUNDER.

311.5.3 Placard date. Placards shall bear the date of their application to the building and the date of the most recent inspection.

❖ Including the date of placard posting and the most recent inspection information on the placard will assist the incident commander in verifying the validity and currency of the building's status.

311.5.4 Placard symbols. The design of the placards shall use the following symbols:

1. ☐ This symbol shall mean that the structure had normal structural conditions at the time of marking.
2. ⧅ This symbol shall mean that structural or interior hazards exist and interior fire-fighting or rescue operations should be conducted with extreme caution.
3. ☒ This symbol shall mean that structural or interior hazards exist to a degree that consideration should be given to limit fire fighting to exterior operations only, with entry only occurring for known life hazards.
4. Vacant marker hazard identification symbols: The following symbols shall be used to designate known hazards on the vacant building marker. They shall be placed directly above the symbol.
   - 4.1. R/O—Roof open
   - 4.2. S/M—Stairs, steps and landing missing
   - 4.3. F/E—Avoid fire escapes
   - 4.4. H/F—Holes in floor

❖ The placard symbols required by this section are intended to provide clear information regarding the level of structural hazard facing personnel in the conduct of rescue and fire-fighting operations as of the inspection date on the placard. Upon considering the degree of hazards, incident commanders can restrict operations to strictly defensive or cautiously offensive.

311.5.5 Informational use. The use of these symbols shall be informational only and shall not in any way limit the discretion of the on-scene incident commander.

❖ This section simply states that the placards are but an operational tool and the scene incident commander is the final authority in applying the information provided by the placards to the situation at hand.

311.6 Unoccupied tenant spaces in mall buildings. Unoccupied tenant spaces in covered and open mall buildings shall be:

1. Kept free from the storage of any materials.
2. Separated from the remainder of the building by partitions of not less than 0.5-inch-thick (12.7 mm) gypsum board or an *approved* equivalent to the underside of the ceiling of the adjoining tenant spaces.
3. Without doors or other access openings other than one door that shall be kept key locked in the closed position except during that time when opened for inspection.
4. Kept free from combustible waste and be broomswept clean.

❖ This section (formerly Section 408.11.3) is primarily concerned with the hazards posed by tenant spaces that are not in use or that are not under the supervision of employees. These spaces are more likely to be targets of vandalism and possibly incendiary activity. Generally, a fire can grow unnoticed in such spaces as a result of the lack of supervision or activity in the space. To reduce these risks, this section contains several requirements that focus on reducing the fire ignition, growth and spread potential by limiting combustibles in the space, securing the space through the use of locks and installing fire separations constructed of $^1/_2$-inch-thick (12.7 mm) gypsum or similar materials. Note that mall buildings are required to be sprinklered throughout and that the systems in the tenant spaces must be independent of the mall area.

SECTION 312
VEHICLE IMPACT PROTECTION

312.1 General. Vehicle impact protection required by this code shall be provided by posts that comply with Section 312.2 or by other *approved* physical barriers that comply with Section 312.3.

❖ This section applies to those locations where a moving vehicle could strike a piece of equipment that contains fuel or is fuel fired. These applications include motor fuel-dispensing facilities, above-ground storage tanks and repair garages as well as other locations in which gas- or oil-fired equipment or appliances could be installed where they would be in harm's way. Additional requirements for equipment protection are contained in Chapter 3 of the IMC and Section 305 of the *International Fuel Gas Code*® (IFGC®). Acceptable impact protection is dependent upon location and physical arrangement of the equipment requiring protection and is not limited to guard posts only. As indicated in Section 312.3, protection could consist of walls, barricades, guardrails or elevated locations that provide the requisite level of protection and are approved by the fire code official.

312.2 Posts. Guard posts shall comply with all of the following requirements:

1. Constructed of steel not less than 4 inches (102 mm) in diameter and concrete filled.
2. Spaced not more than 4 feet (1219 mm) between posts on center.
3. Set not less than 3 feet (914 mm) deep in a concrete footing of not less than a 15-inch (381 mm) diameter.

INTERNATIONAL CODE COUNCIL®
Copyright © 2015 ICC. ALL RIGHTS RESERVED. Accessed by David Dammon on Jun 21, 2017 12:30:52 PM pursuant to License Agreement with ICC. No further reproduction or distribution authorized. ANY UNAUTHORIZED REPRODUCTION OR DISTRIBUTION IS A VIOLATION OF THE FEDERAL COPYRIGHT ACT AND THE LICENSE AGREEMENT, AND SUBJECT TO CIVIL AND CRIMINAL PENALTIES THEREUNDER.

4. Set with the top of the posts not less than 3 feet (914 mm) above ground.
5. Located not less than 3 feet (914 mm) from the protected object.

❖ This section lists five requirements that guard posts must satisfy. Typical installations of posts in service stations and other locations are shown in Commentary Figures 312.2(1) and 312.2(2). These guard posts are designed to resist impact from vehicles moving at low speeds, as they would be when pulling up to a fuel pump at a motor fuel-dispensing facility or into a service area in an indoor service facility or repair garage.

312.3 Other barriers. Barriers, other than posts specified in Section 312.2, that are designed to resist, deflect or visually deter vehicular impact commensurate with an anticipated impact scenario shall be permitted where *approved*.

❖ This section provides a true performance option to Section 312.2. The text deliberately establishes a broad set of goals that must be achieved by the designer to fit a site-specific application, and the requirement places the onus on the designer to demonstrate selection of a satisfactory design scenario and a suitable solution to achieve approval of the fire code official. Although it could be argued that Section 312.3 could simply be deleted in favor of relying on Section 104.9 (alternate materials and methods), it made more sense to include the suggested guidance in Section 312.3 of the code. Previously, the 12,000-pound resistance "force" prescribed by this section was actually a static load (i.e., a load with no associated impact velocity or acceleration) rather than an impact load. Without knowing an intended impact velocity, the kinetic energy resistance for a barrier cannot be accurately calculated. It is more appropriate for a performance requirement to accommodate determination of a suitable vehicle weight and impact speed to provide protection from moving vehicles as a design basis. Barriers other than posts could include walls, barricades or elevated locations for equipment (see Commentary Figure 312.3).

SECTION 313
FUELED EQUIPMENT

313.1 General. Fueled equipment including, but not limited to, motorcycles, mopeds, lawn-care equipment, portable generators and portable cooking equipment, shall not be stored, operated or repaired within a building.

Exceptions:

1. Buildings or rooms constructed for such use in accordance with the *International Building Code*.
2. Where allowed by Section 314.
3. Storage of equipment utilized for maintenance purposes is allowed in *approved* locations where the aggregate fuel capacity of the stored equipment does

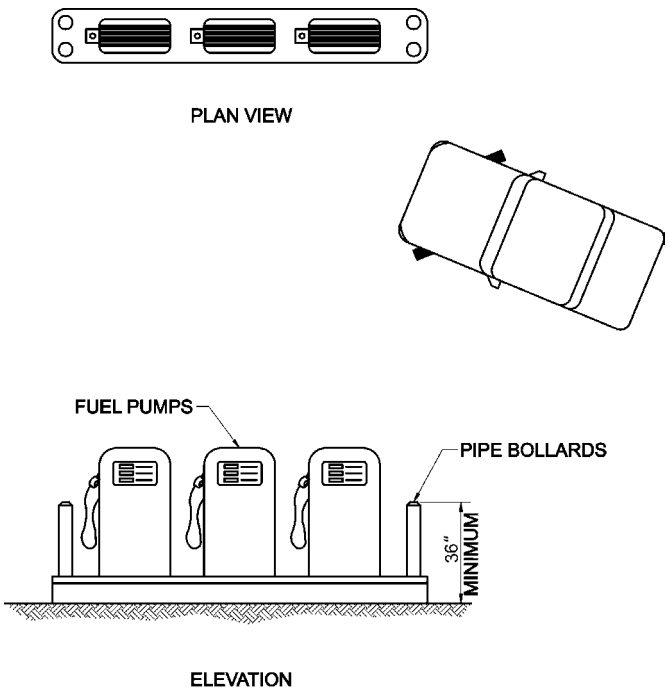

For SI: 1 inch = 25.4 mm.

Figure 312.2(1)
PUMP ISLAND PROTECTION

INTERNATIONAL CODE COUNCIL®
Copyright © 2015 ICC. ALL RIGHTS RESERVED. Accessed by David Dammon on Jun 21, 2017 12:30:52 PM pursuant to License Agreement with ICC. No further reproduction or distribution authorized. ANY UNAUTHORIZED REPRODUCTION OR DISTRIBUTION IS A VIOLATION OF THE FEDERAL COPYRIGHT ACT AND THE LICENSE AGREEMENT, AND SUBJECT TO CIVIL AND CRIMINAL PENALTIES THEREUNDER.

not exceed 10 gallons (38 L) and the building is equipped throughout with an *automatic sprinkler system* installed in accordance with Section 903.3.1.1.

❖ The restrictions in this section are similar to those in Section 314.4, but this section also regulates portable liquid- or gas-fueled cooking equipment, certain vehicles, the operation and repair of vehicles and equipment, and as storage (see commentary, Section 314.4). It has been documented that multiple fatalities occurred, related to natural disasters, as the result of the improper use and location of portable generators inside buildings. This section clarifies that portable generators are also not allowed to be used inside buildings except when utilized in accordance with one of the exceptions.

Exception 1 recognizes the increased safety afforded when these uses are isolated from other parts of the building with fire-resistance-rated construction in accordance with the IBC. Exception 2 defers to the other section of the code that also regulates fueled equipment covered by this section. Exception 3 recognizes the enhanced level of protection provided by an approved automatic sprinkler system by allowing fueled equipment to be stored inside in a location approved by the fire code official, up to an aggregate quantity of 10 gallons (38 L) of fuel. This exception provides consistency with Section 5704.3.4.4 of the code and, therefore, is applicable to flammable and combustible liquid fuels only; liquefied

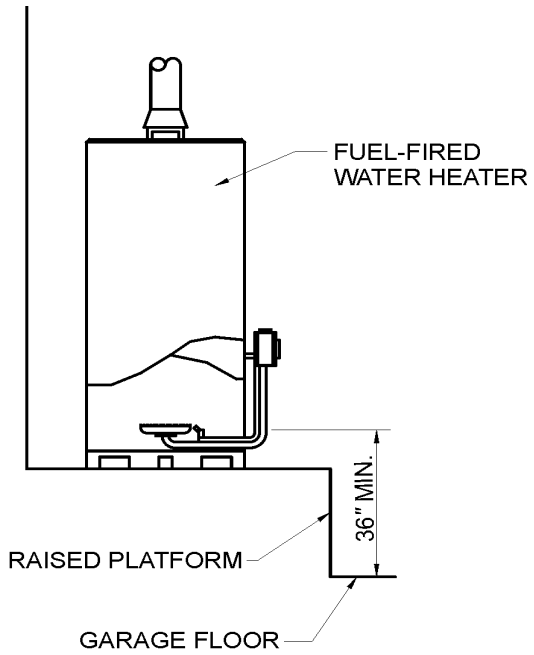

For SI: 1 inch = 25.4 mm.

Figure 312.3
ONE METHOD OF EQUIPMENT PROTECTION

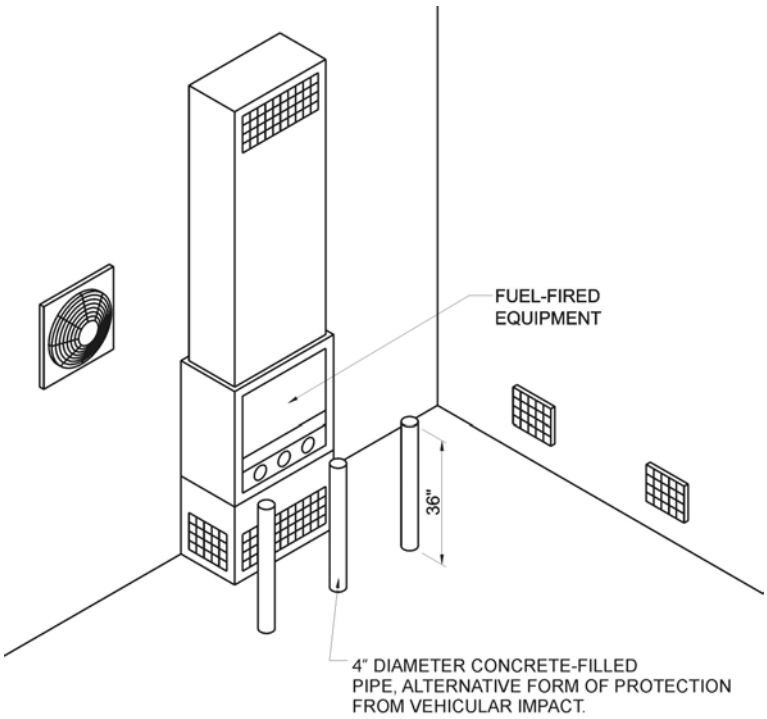

For SI: 1 inch = 25.4 mm.

Figure 312.2(2)
GUARD POST INSTALLATION IN PUBLIC REPAIR GARAGE

INTERNATIONAL CODE COUNCIL®
Copyright © 2015 ICC. ALL RIGHTS RESERVED. Accessed by David Dammon on Jun 21, 2017 12:30:52 PM pursuant to License Agreement with ICC. No further reproduction or distribution authorized. ANY UNAUTHORIZED REPRODUCTION OR DISTRIBUTION IS A VIOLATION OF THE FEDERAL COPYRIGHT ACT AND THE LICENSE AGREEMENT, AND SUBJECT TO CIVIL AND CRIMINAL PENALTIES THEREUNDER.

gas fuels are not included. Note also that the fuel quantities allowed by this exception are not to be counted when determining maximum allowable quantities in accordance with Table 5003.1.1(1), as indicated in Note p to that table.

313.1.1 Removal. The *fire code official* is authorized to require removal of fueled equipment from locations where the presence of such equipment is determined by the *fire code official* to be hazardous.

❖ This section gives the fire code official the authority to conduct inspections to determine whether vehicle operation, repair and storage in buildings comply with the requirements of this section and, if they do not, the authority to order the removal of fueled equipment from the building as a means of eliminating the hazard.

313.2 Group R occupancies. Vehicles powered by flammable liquids, Class II *combustible liquids* or compressed flammable gases shall not be stored within the living space of Group R buildings.

❖ Prohibiting storage of fuel-burning vehicles recognizes the hazards associated with having significant quantities of flammable or combustible liquids or compressed gases in inhabited spaces. Most vehicles that use liquid fuels have tanks that are not pressurized and are not vapor tight. Even a small leak over time can build to dangerous levels in enclosed spaces. For these reasons, this section prohibits the storage of gas- or liquid-fueled vehicles and equipment within the dwelling units or sleeping units of Group R buildings including their associated balconies.

SECTION 314
INDOOR DISPLAYS

314.1 General. Indoor displays constructed within any occupancy shall comply with Sections 314.2 through 314.4.

❖ Indoor displays of merchandise and the display of all manner of vehicles inside of buildings can create a number of hazards to building occupants, including blocked egress and rapid fire buildup. This section describes reasonable measures to reduce the hazards associated with indoor displays without prohibiting them.

314.2 Fixtures and displays. Fixtures and displays of goods for sale to the public shall be arranged so as to maintain free, immediate and unobstructed access to exits as required by Chapter 10.

❖ The reason for maintaining free and unobstructed access to exits in public shopping spaces is, of course, personal safety in times of emergency. Chapter 10 contains the requirements, criteria and guidelines for this purpose.

314.3 Highly combustible goods. The display of highly combustible goods, including but not limited to fireworks, flammable or *combustible liquids*, liquefied flammable gases, oxidizing materials, pyroxylin plastics and agricultural goods, in main *exit access aisles*, *corridors*, covered and open malls, or within 5 feet (1524 mm) of entrances to *exits* and exterior exit doors is prohibited where a fire involving such goods would rapidly prevent or obstruct egress.

❖ As stated in Chapter 10, all elements of the means of egress of any occupancy open to the public must be kept clear of obstructions and other hazards that could prevent the occupants from exiting the premises quickly in an emergency. Displaying the hazardous materials itemized in this section where their involvement in a fire would block exit pathways is prohibited for this reason. The hazards associated with each of the materials mentioned in the section are discussed in the commentary to Chapters 50 through 67.

314.4 Vehicles. Liquid- or gas-fueled vehicles, boats or other motorcraft shall not be located indoors except as follows:

1. Batteries are disconnected.
2. Fuel in fuel tanks does not exceed one-quarter tank or 5 gallons (19 L) (whichever is least).
3. Fuel tanks and fill openings are closed and sealed to prevent tampering.
4. Vehicles, boats or other motorcraft equipment are not fueled or defueled within the building.

❖ It has become commonplace for covered malls and larger retail stores to have various types of gas- or liquid-fueled vehicles on inside display, such as for promotional events or fire apparatus displays during Fire Prevention Week (see Commentary Figure 314.4). Because the hazards of such displays in a public building are similar to those in residential buildings, Section 314.4 parallels Section 313.1, Exception 2 (see commentary, Section 313.1).



Figure 314.4
INDOOR CAR DISPLAY

INTERNATIONAL CODE COUNCIL®
Copyright © 2015 ICC. ALL RIGHTS RESERVED. Accessed by David Dammon on Jun 21, 2017 12:30:52 PM pursuant to License Agreement with ICC. No further reproduction or distribution authorized. ANY UNAUTHORIZED REPRODUCTION OR DISTRIBUTION IS A VIOLATION OF THE FEDERAL COPYRIGHT ACT AND THE LICENSE AGREEMENT, AND SUBJECT TO CIVIL AND CRIMINAL PENALTIES THEREUNDER.

SECTION 315
GENERAL STORAGE

315.1 General. Storage shall be in accordance with Sections 315.2 through 315.5.

❖ This section addresses general safety precautions for the storage of any volume of materials, including those regulated elsewhere in the code. Where a material in storage is specifically regulated by another section of the code, then that section would apply in addition to any applicable provisions in Section 315. For example, if the stored material were baled waste paper awaiting recycling, the material-specific provisions of Section 5205 would apply. However, Section 5205 does not specifically regulate the vertical clearance of the stored baled waste paper to the ceiling or sprinkler heads nor does it regulate clearance from heaters or heating devices. Accordingly, the provisions of Sections 315.3 and 315.3.1 would apply. Also note that if the storage meets the definition of high-piled combustible storage in Section 202, the applicable provisions of Chapter 32 would also apply. Control of combustible waste material is covered in Sections 304.2 and 304.3.

315.2 Permit required. A permit for miscellaneous combustible storage shall be required as set forth in Section 105.6.

❖ This section establishes the requirement that an operational permit for storage of certain combustible materials must be obtained from the fire code official. Permit fees, if any, must be paid prior to the issuance of the permit. See Section 105 for additional information on permits. Note that a permit is required only for storage of combustible materials. Even though Section 315.3 regulates storage of both combustible and noncombustible materials, a permit is required only for miscellaneous types of combustible materials and then only when the storage volume exceeds 2,500 cubic feet (70.79 m^3), as specified in the permit requirements in Section 105.6.30. The storage of such combustible materials can easily fall into disarray, present a fire load out of proportion to the surroundings and be susceptible to ready ignition and rapid, uncontrolled combustion. Conversely, the orderly storage of mercantile stocks and goods, business records, etc., in piles, on shelving or in casework cabinets, for example, while regulated by Section 315, is not considered to be a hazard requiring a permit.

315.3 Storage in buildings. Storage of materials in buildings shall be orderly and stacks shall be stable. Storage of combustible materials shall be separated from heaters or heating devices by distance or shielding so that ignition cannot occur.

❖ The first sentence of this section makes it clear that it applies to all storage and that the stacks of stored materials must be stable in order to prevent pile or stack collapse that could obstruct means of egress aisles and impede fire-fighter access. The second sentence applies only to storage of combustible materials and the need for them to be separated from ignition sources. Throughout the code, the use of fire-resistance-rated construction and spatial separation distances to minimize fire hazards and fire spread is stated as a requirement for a variety of materials. It is not necessary to separate noncombustible materials from ignition sources because there is no combustible material hazard.

315.3.1 Ceiling clearance. Storage shall be maintained 2 feet (610 mm) or more below the ceiling in nonsprinklered areas of buildings or not less than 18 inches (457 mm) below sprinkler head deflectors in sprinklered areas of buildings.

❖ If the space is not equipped with sprinklers, the clearance between the stored materials and the ceiling must be 2 feet (610 mm) to allow manual hose streams to effectively reach the top of a burning pile as well as to project over and beyond adjacent piles to reach burning materials. Where sprinklers are installed, the 18-inch (457 mm) clearance permits timely activation of the sprinklers and allows unobstructed water distribution over the storage pile. Materials stored too close to sprinklers can not only prevent the heat of a fire from reaching the sprinkler fusible link but also inhibit water from reaching the seat of a fire once the sprinklers are activated.

In sprinklered areas of buildings, the question often arises as to whether storage on shelving can be installed on a wall not directly below sprinklers, with the storage extending above the level of a horizontal plane located 18 inches (457 mm) below the ceiling sprinkler deflector. Typically, storage on wall-mounted shelving functions the same as a wall with respect to its relationship to the automatic sprinklers installed at ceiling level and the relative obstruction it poses. As long as the storage is not directly below the sprinklers, the sprinkler clearance provisions of Section 315.2.1 would not apply. This is consistent with NFPA 13 annex notes on this topic.

Certain newer types of automatic sprinklers, because of their design or operating characteristics, may require greater clearance distances than the 18 inch (457 mm) minimum prescribed in this section. NFPA 13 and the sprinkler manufacturer's data should be consulted for specific information on the characteristics of the many different types of sprinklers that may be installed in a given building.

315.3.2 Means of egress. Combustible materials shall not be stored in exits or enclosures for stairways and ramps.

❖ As was stated in Section 314.3, all elements of the means of egress must be kept free of obstructions that could block an exit pathway and, thus, jeopardize occupants of the affected space. Chapter 10 offers more guidance on means of egress.

315.3.3 Equipment rooms. Combustible material shall not be stored in boiler rooms, mechanical rooms, electrical equipment rooms or in *fire command centers* as specified in Section 508.1.5.

❖ This section is intended is to keep ignition sources inherent in the use of certain indicated rooms (e.g.,

INTERNATIONAL CODE COUNCIL®
Copyright © 2015 ICC. ALL RIGHTS RESERVED. Accessed by David Dammon on Jun 21, 2017 12:30:52 PM pursuant to License Agreement with ICC. No further reproduction or distribution authorized. ANY UNAUTHORIZED REPRODUCTION OR DISTRIBUTION IS A VIOLATION OF THE FEDERAL COPYRIGHT ACT AND THE LICENSE AGREEMENT, AND SUBJECT TO CIVIL AND CRIMINAL PENALTIES THEREUNDER.

fuel-fired equipment, electrical panels) from coming into contact with combustible materials that might be stored in the rooms, whether the rooms are sprinklered or not. See also the commentary to Section 508.1.5 for storage prohibition in fire command centers and Section 605.3 for electrical equipment room clearance requirements and storage prohibition. Note that the IMC, Chapter 2, defines a "mechanical equipment/appliance room" as one in which nonfuel-fired mechanical equipment is located. Even though the ignition hazard is reduced in the absence of fuel-fired equipment in such rooms, they must be kept free of combustible storage to allow ready access for fire fighters and other authorized personnel to reach easily critical controls, such as power or equipment disconnects, in case of an emergency. Limited supplies of combustible materials related to mechanical room equipment (e.g., air distribution system filters) could be allowed but only in accordance with Section 315 of the code and with the specific approval of the fire code official. For additional discussion of requirements applicable to these and other specific occupancy rooms, see Section 509 of the IBC. Further discussion of the hazards of storage in boiler rooms can be found in Section 304 of the IMC.

315.3.4 Attic, under-floor and concealed spaces. Attic, under-floor and concealed spaces used for storage of combustible materials shall be protected on the storage side as required for 1-hour fire-resistance-rated construction. Openings shall be protected by assemblies that are self-closing and are of noncombustible construction or solid wood core not less than $1^3/_4$ inches (44.5 mm) in thickness. Storage shall not be placed on exposed joists.

Exceptions:

1. Areas protected by *approved automatic sprinkler system*s.
2. Group R-3 and Group U occupancies.

❖ This section recognizes the reality that attics, crawl spaces and similar unoccupied, concealed spaces in buildings are attractive to building occupants for storage of all kinds of combustible materials. Storage in such unattended and out-of-the-way spaces creates a hazardous condition by introducing a higher fire load to spaces that were neither designed nor intended for such a high-intensity use and in which a fire could rapidly develop unobserved until it had gained a considerable hold on the building. Placing stored combustibles on exposed joists also could hasten collapse of the joists in a fire, which could lead to flaming debris being dropped into the building space below the joists and possible collapse of all or part of the building structure.

The code provides alternatives to using such spaces for storage and, if they are used for storage, how they can be constructed to isolate the higher fire loads created. Since the intent is to protect against a fire in the storage area from endangering the other occupied areas of the building, the required 1-hour fire-resistance rating need only be achieved from the storage side. While any access openings in the 1-hour fire-resistant construction need not be rated, they must be self-closing and of either noncombustible construction or a minimum $1^3/_4$-inch (44 mm) thickness of solid wood core. Consistent with Section 102.4, any construction in connection with the concealed spaces regulated by this section must be in accordance with the IBC, especially Section 509.

Exception 1 recognizes the efficiency and reliability of automatic sprinklers as a trade-off for 1-hour fire-resistance-rated construction. This exception only requires the sprinkler system in the attic, under-floor or concealed space. Complete sprinkler protection throughout the building is not required in order to be in compliance with the exception.

Exception 2 exempts Group R-3 and U occupancies from the requirements of this section. In Group R-3, the level of familiarity and control exercised by the building occupants is recognized as offsetting the hazards of storage in concealed spaces. Because Group U occupancies are generally unoccupied, the hazards of miscellaneous storage are of little or no consequence to the few occupants that might be in such buildings. For further information on Group U occupancies, see Section 312 of the IBC and its commentary.

315.4 Outside storage. Outside storage of combustible materials shall not be located within 10 feet (3048 mm) of a lot line.

Exceptions:

1. The separation distance is allowed to be reduced to 3 feet (914 mm) for storage not exceeding 6 feet (1829 mm) in height.
2. The separation distance is allowed to be reduced where the *fire code official* determines that no hazard to the adjoining property exists.

❖ Outside storage of combustible materials, such as raw materials for production, idle pallets, dunnage and packaging, must be neat and compact. The requirement for a 10-foot (3048 mm) separation is consistent with storage area aisle width requirements throughout the code, often expressed as "one-half the pile height or 10 feet (3048 mm), whichever is greater." The requirement of this section is consistent with that concept, as is Section 315.3.2, which limits pile height to 20 feet (6096 mm). The intent of this section is to provide fire suppression access on all sides of storage arrangements and reduce the likelihood of the spread of fire to adjacent properties in the event of a pile collapse. Pile collapses will generally not involve a full-height topple-over of a pile but rather only a partial collapse. Accordingly, Exception 1 allows a reduction in separation distance where the pile height is substantially less than the separation requirement.

Exception 2 allows the fire code official to grant separation reductions when the combustibles are

INTERNATIONAL CODE COUNCIL®
Copyright © 2015 ICC. ALL RIGHTS RESERVED. Accessed by David Dammon on Jun 21, 2017 12:30:52 PM pursuant to License Agreement with ICC. No further reproduction or distribution authorized. ANY UNAUTHORIZED REPRODUCTION OR DISTRIBUTION IS A VIOLATION OF THE FEDERAL COPYRIGHT ACT AND THE LICENSE AGREEMENT, AND SUBJECT TO CIVIL AND CRIMINAL PENALTIES THEREUNDER.

judged to be no threat to adjoining property. Examples of such conditions could include storage where the combustible materials are enclosed in noncombustible containers, the presence of an impervious property line barrier or the provision of fixed fire protection equipment, such as deluge monitors, especially designed for rapid fire suppression and exposure protection.

315.4.1 Storage beneath overhead projections from buildings. Where buildings are protected by automatic sprinklers, the outdoor storage, display and handling of combustible materials under eaves, canopies or other projections or overhangs are prohibited except where automatic sprinklers are installed under such eaves, canopies or other projections or overhangs.

❖ The storage or display of combustible materials beneath unsprinklered canopies or other building projections attached to an otherwise fully sprinklered building could lead to a rapidly developing fire in the stored material, which could gain sufficient headway beyond the capability of the building sprinkler system to suppress it, should it spread into the building's interior. This section reinforces the requirements of NFPA 13 concerning the use of areas beneath building projections, such as eaves or canopies, for the storage or display of combustible materials where those locations are exempt from sprinkler protection as allowed in Section 8.15 of NFPA 13. NFPA 13 mandates that the scope of required sprinkler protection includes canopies or roofed-over areas attached to sprinklered buildings, unless these projections are constructed of noncombustible materials and the areas are not used for the storage, handling or display of combustible materials. Because NFPA 13 is a design standard and cannot be enforced as a maintenance document, this section essentially restates the NFPA 13 design requirement exception conditions in enforceable terms. Also note that, in the event that Appendix B of the code is adopted by a jurisdiction, areas used for the storage of combustible materials beneath a building's horizontally projecting elements must be included in the building area for purposes of determining the required fire flow.

315.4.2 Height. Storage in the open shall not exceed 20 feet (6096 mm) in height.

❖ Storage pile height limitations are a means of controlling the size of potential fires and reducing the tip-over potential as well as a way to facilitate the manual fire suppression process by keeping the top of the pile within reach of conventional fire-fighting and overhaul tools, such as the ground ladders carried by an engine company or the long pike poles carried by ladder companies. The 20-foot (6096 mm) storage pile height limitation also correlates with Section 315.3 and helps reduce the likelihood that a fire would jeopardize adjacent properties in the event of a pile collapse.

315.5 Storage underneath high-voltage transmission lines. Storage located underneath high-voltage transmission lines shall be in accordance with Section 316.6.2.

❖ High-voltage transmission lines are a special hazard requiring specific regulations to prevent them from being exposed to fire conditions that could cause them to fail or fall to the ground. This general section directs the code user to the section containing more specific requirements for this topic.

315.6 Storage in plenums. Storage shall not be permitted in plenums. Abandoned material in plenums shall be deemed to be storage and shall be removed. Where located in plenums, the accessible portion of abandoned cables that are not identified for future use with a tag shall be deemed storage and shall be removed.

❖ This section introduces a concept that has long been in NFPA 70 and NFPA 90A—that plenums (see Chapter 2 commentary to the definition of "Plenum") are intended specifically to be a part of the air distribution system. Plenums are also legitimately used for stringing communications and data cables as well as utility pipes, sprinkler pipes and similar items. However, such items often are not removed from the plenum when they become obsolete. For example, when an updated data system is installed in a facility (which can occur every 18 to 24 months), it is not unusual for old wires to be cut out of the system but left in place with a new wiring system added on top of them (see Commentary Figure 315.6).

The suspended ceiling tile systems that often enclose plenums are not intended to support any significant weight and can, therefore, easily be overwhelmed by the added weight of storage or abandoned materials such as cables (see commentary to IBC, Section 808.1.1.1). Recently, a plenum space fuel load study showed how the safety of fire fighters is compromised by the weight of these abandoned cables. It pointed out that plenum space fuel



Figure 315.6
ABANDONED DATA CABLE IN A PLENUM

INTERNATIONAL CODE COUNCIL®
Copyright © 2015 ICC. ALL RIGHTS RESERVED. Accessed by David Dammon on Jun 21, 2017 12:30:52 PM pursuant to License Agreement with ICC. No further reproduction or distribution authorized. ANY UNAUTHORIZED REPRODUCTION OR DISTRIBUTION IS A VIOLATION OF THE FEDERAL COPYRIGHT ACT AND THE LICENSE AGREEMENT, AND SUBJECT TO CIVIL AND CRIMINAL PENALTIES THEREUNDER.

loads and wiring issues are serious concerns for fire fighters during interior fire-fighting operations and its key recommendation was that abandoned wiring be removed.

Although the primary reason to require the removal of abandoned materials in plenums is the elimination of unnecessary weight, fire safety considerations should also be taken into account, as should the practical consideration that the HVAC design airflow through the plenum could be adversely affected. Such a requirement was long believed not to be enforceable primarily because fire code inspectors would rarely spend their time looking into plenums in existing buildings. However, the danger presented by the fire load of storage or abandoned materials is well-documented. Thus, there should be no significant difficulty in having inspectors identify the existence of abandoned products—especially abandoned cables—classify them as storage and require their removal. Note that only the "accessible portions" of abandoned cables must be removed because there is no intent to cause potential damage to the building or facility by attempting to remove cables or circuits that are strung through walls, floors or other building elements. Where some cables are left in place because they are intended to be reused at a future date, they must be clearly identified as such by affixing a tag. See also Section 605.12.

SECTION 316
HAZARDS TO FIRE FIGHTERS

316.1 Trapdoors to be closed. Trapdoors and scuttle covers, other than those that are within a *dwelling unit* or automatically operated, shall be kept closed at all times except when in use.

❖ Trapdoors and unguarded openings in floors and walkways must remain in the closed position or be designed to automatically close upon activation of the fire alarm system. Openings in floors or walkways can injure emergency responders, especially if vision is obscured.

316.2 Shaftway markings. Vertical shafts shall be identified as required by this section.

❖ This section was developed to prevent fire fighters from falling through shafts when entering buildings off ladders placed on the exterior of the building.

316.2.1 Exterior access to shaftways. Outside openings accessible to the fire department and that open directly on a hoistway or shaftway communicating between two or more floors in a building shall be plainly marked with the word SHAFTWAY in red letters not less than 6 inches (152 mm) high on a white background. Such warning signs shall be placed so as to be readily discernible from the outside of the building.

❖ Exterior wall openings that are accessible to fire fighters by way of ladders and aerial equipment and open directly into shafts or hoistways communicating between two or more floors must be clearly marked (see Commentary Figure 316.2.1).

316.2.2 Interior access to shaftways. Door or window openings to a hoistway or shaftway from the interior of the building shall be plainly marked with the word SHAFTWAY in red letters not less than 6 inches (152 mm) high on a white background. Such warning signs shall be placed so as to be readily discernible.

Exception: Marking shall not be required on shaftway openings that are readily discernible as openings onto a shaftway by the construction or arrangement.

❖ Openings into shaftways from the interior of the building pose a threat to fire fighters when visibility is poor. Interior shaft openings must be marked so that they are plainly visible from the interior of the building.

If fire fighters can readily identify an opening into a shaft by the way the opening is constructed, the shaft opening need not be marked, keeping in mind that

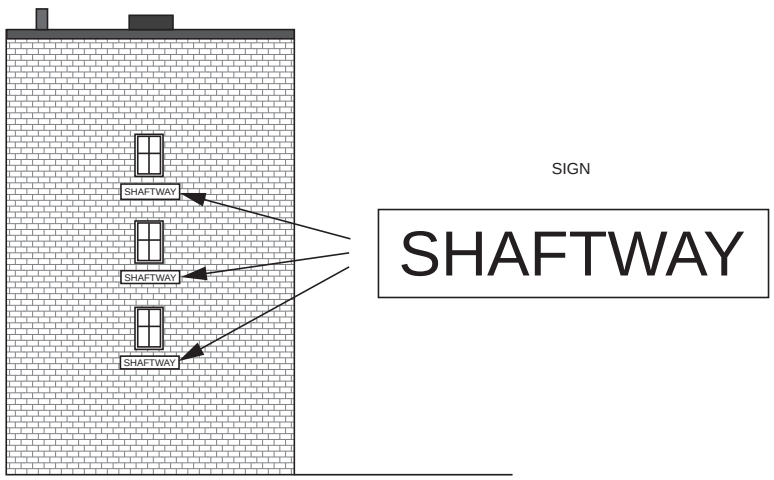

Figure 316.2.1
SHAFTWAY SIGNAGE

INTERNATIONAL CODE COUNCIL®
Copyright © 2015 ICC. ALL RIGHTS RESERVED. Accessed by David Dammon on Jun 21, 2017 12:30:52 PM pursuant to License Agreement with ICC. No further reproduction or distribution authorized. ANY UNAUTHORIZED REPRODUCTION OR DISTRIBUTION IS A VIOLATION OF THE FEDERAL COPYRIGHT ACT AND THE LICENSE AGREEMENT, AND SUBJECT TO CIVIL AND CRIMINAL PENALTIES THEREUNDER.

the fire fighter may be feeling his or her way in heavy smoke or darkness.

316.3 Pitfalls. The intentional design or *alteration* of buildings to disable, injure, maim or kill intruders is prohibited. A person shall not install and use firearms, sharp or pointed objects, razor wire, *explosives*, flammable or *combustible liquid* containers, or dispensers containing highly toxic, toxic, irritant or other hazardous materials in a manner that could passively or actively disable, injure, maim or kill a fire fighter who forcibly enters a building for the purpose of controlling or extinguishing a fire, rescuing trapped occupants or rendering other emergency assistance.

❖ This paragraph prohibits the use of "booby-traps" in buildings, for whatever reason, if they could injure or disable the emergency responder during the performance of his or her duties.

316.4 Obstructions on roofs. Wires, cables, ropes, antennas, or other suspended obstructions installed on the roof of a building having a roof slope of less than 30 degrees (0.52 rad) shall not create an obstruction that is less than 7 feet (2133 mm) high above the surface of the roof.

Exceptions:

1. Such obstruction shall be permitted where the wire, cable, rope, antenna or suspended obstruction is encased in a white, 2-inch (51 mm) minimum diameter plastic pipe or an approved equivalent.
2. Such obstruction shall be permitted where there is a solid obstruction below such that accidentally walking into the wire, cable, rope, antenna or suspended obstruction is not possible.

❖ Part of the intent of the code in Section 101.2 is to control conditions that can affect the safety of fire fighters and emergency responders during operations. One of these conditions is obstructions on the roofs of buildings. This section does not prohibit the installation of these items, but it requires that they be identified or protected. The primary concern is poorly identified or unidentified obstructions on building roofs that can become an entanglement hazard or, in the case of equipment such as cellular or wireless communication antennas, a potential pathway for stray current if the electrical ground is somehow compromised and an emergency responder comes into contact with it. These provisions will also help to protect maintenance workers as they are working on a rooftop.

This section addresses obstructions on building roofs and was developed to establish criteria for identifying such obstructions. It is applicable only to roofs with a slope of 30 degrees (0.52 rad) or less. This section requires that a means of identification, a barrier, or some other form of obstruction be provided when a guy wire, cable, or rope is less than 7 feet (2133 mm) above the roof level. The 7-foot (2133 mm) value is based on the potential of a firefighter in a smoke-obscured environment striking the cable or wire, especially in the head, neck or upper torso area. A common fire service slang term for this is "being clothes lined" and these events have resulted in serious injury from entanglement or falling from a roof, including permanent paralysis of fire fighters and other emergency responders.

Where the obstruction is located in the plane that is 7 feet (2133 mm) or less below the roof surface, Exception 1 allows the use of a protective collar such as a 2-inch (51 mm) diameter plastic pipe that is sleeved over the cable. Other options could include illuminating the cable, or providing reflective marking of the cable, wire or rope with a material similar to that used for marking of fire fighter clothing and gear. Any method that offers equivalency to the prescribed pipe sleeve can be approved by the fire code official upon demonstration of equivalency.

Exception 2 recognizes that solid obstructions such as screen walls or fencing can provide a physical barrier so that walking under the wire is not possible and can eliminate the need for protecting the emergency responders from roof obstructions that are less than 7 feet (2133 mm) above the roof level.

316.5 Security device. Any security device or system that emits any medium that could obscure a *means of egress* in any building, structure or premise shall be prohibited.

❖ Security devices that, when activated, emit a medium such as smoke or other aerosols into a building could obscure exits or confuse occupants, thus creating an inherently dangerous situation for the public and responding emergency personnel. In cases of activation of these devices, armed criminal perpetrators could be trapped inside buildings. Law enforcement personnel arriving on the scene could easily believe that a building is on fire and responding fire fighters could enter and be confronted by the perpetrator. Another danger is that false fire alarms could be transmitted automatically or by passers-by because of the appearance of smoke in the building. See also the commentary to Section 1031.2 regarding the reliability of exits.

316.6 Structures and outdoor storage underneath high-voltage transmission lines. Structures and outdoor storage underneath high-voltage transmission lines shall comply with Sections 316.6.1 and 316.6.2, respectively.

❖ This section introduces code provisions that address requirements for structure construction and material storage beneath high-voltage transmission lines (see definition in Section 202). The importance of such regulations and their impact on fire-fighter safety cannot be overstated. Among the various hazards fire fighters face in the course of duty are electrical hazards during fire suppression or rescue activities. Performing fire-ground operations near power lines may expose fire fighters to electric shock hazards through the following means, among others:

- Energized electrical lines or equipment obscured by dense smoke.
- Smoke and hot gases from a large fire creating a conductive path for electricity. When a fire is

INTERNATIONAL CODE COUNCIL®
Copyright © 2015 ICC. ALL RIGHTS RESERVED. Accessed by David Dammon on Jun 21, 2017 12:30:52 PM pursuant to License Agreement with ICC. No further reproduction or distribution authorized. ANY UNAUTHORIZED REPRODUCTION OR DISTRIBUTION IS A VIOLATION OF THE FEDERAL COPYRIGHT ACT AND THE LICENSE AGREEMENT, AND SUBJECT TO CIVIL AND CRIMINAL PENALTIES THEREUNDER.

burning under a high-voltage transmission line, electricity could arc from the conductor to the ground, endangering people and objects near the arc.

- Making accidental contact with power lines that are still energized.
- Overhead power lines falling on and energizing conductive equipment and materials located on the fire ground.
- Electrical currents flowing through the ground and extending several feet (ground gradient).
- Solid-stream water applications on or around energized or downed power lines or equipment.

The regulations in Sections 316.6.1 and 316.6.2 are intended to minimize the noted exposures by prohibiting buildings, structures and storage from being constructed or maintained beneath high-voltage transmission lines except under the strictest of conditions and only with the fire code official's approval.

316.6.1 Structures. Structures shall not be constructed within the utility easement beneath high-voltage transmission lines.

Exception: Restrooms and unoccupied telecommunication structures of noncombustible construction less than 15 feet (4572 mm) in height.

❖ Structure fires underneath high-voltage transmission lines could cause arcing and shock hazard. Fire-fighting operations can involve the use of elevated platforms or aerial ladder apparatus and other emergency equipment, personnel above ground and hose streams that may come in close proximity to high-voltage transmission lines. According to nationally recognized utility companies, manual de-energization of lines may take 20 minutes or longer to accomplish.

The exception recognizes that certain ancillary structures, such as restroom buildings and telecommunications structures, do not generally present a significant exposure threat to overhead power lines.

316.6.2 Outdoor storage. Outdoor storage within the utility easement underneath high-voltage transmission lines shall be limited to noncombustible material. Storage of hazardous materials including, but not limited to, flammable and *combustible liquids* is prohibited.

Exception: Combustible storage, including vehicles and fuel storage for backup power equipment serving public utility equipment, is allowed, provided that a plan indicating the storage configuration is submitted and *approved*.

❖ This section regulates the fire load that can be allowed to exist beneath overhead high-voltage transmission lines by restricting outdoor storage within the easement to only noncombustible materials. The exception recognizes that, in certain instances, combustible materials may need to be stored within the easement, such as for utility work on the power lines. Such materials storage must be strictly regulated through a plans submittal and review process and approval by the fire code official. This section also makes it clear that under no circumstances are hazardous materials allowed to be stored beneath the power lines.

SECTION 317
ROOFTOP GARDENS AND LANDSCAPED ROOFS

317.1 General. Rooftop gardens and landscaped roofs shall be installed and maintained in accordance with Sections 317.2 through 317.5 and Sections 1505 and 1507.16 of the *International Building Code.*

❖ Among the major elements of green building construction are energy conservation and preservation of natural resources such as water. Rooftop vegetation accomplishes both, in the form of gardens or using landscaping to cover part of a building roof. Roof gardens or landscaped roofs offer a number of savings to the building owner. For buildings constructed with a membrane-type roofing system, roof gardens or landscaping can increase the life of the roofing materials by almost 100 percent according to some studies. Depending on the design, roof area and local climate, research has found certain green roofs can reduce summer cooling loads by about 25 percent and in some cases have reduced heat gain by 95 percent. In addition to reduced energy costs, these reductions have the potential to reduce the size of HVAC equipment, which in turn lowers the capital costs for construction. These roofs and gardens can also reduce the sound pressure level inside of the building and are helpful in controlling storm water runoff.

Section 317 addresses rooftop gardens and landscaped roofs. The requirements in this section limit the area of roof gardens, require the use of roof assembles designed for severe fire exposures, and provide for the installation of a standpipe connection. It also sets forth requirements for establishing a maintenance plan for the vegetation installed on roof gardens or landscaped roofs. This section does not define what constitutes a roof garden or landscaped roof; however, its intent is to deal with the structural and fire safety concerns regarding construction that creates a green space on a building roof rather than the placement of a small roof garden.

This section references the requirements in Chapter 15 of the IBC for roof gardens and landscaped roofs. Section 1507.16 of the IBC requires compliance with the requirements of the code, Chapter 15 of the IBC and specific structural requirements in Chapter 16 of the IBC for special purpose roofs and landscaped roofs. The IBC requires roof gardens and landscaped roofs to be calculated at a minimum 20 pound/square foot (0.958 kN/m^2) uniform live load and that the weight of landscaping materials be considered as dead loads and computed assuming the rooftop soil is saturated.

In addition to the IBC structural requirements, roof

INTERNATIONAL CODE COUNCIL®
Copyright © 2015 ICC. ALL RIGHTS RESERVED. Accessed by David Dammon on Jun 21, 2017 12:30:52 PM pursuant to License Agreement with ICC. No further reproduction or distribution authorized. ANY UNAUTHORIZED REPRODUCTION OR DISTRIBUTION IS A VIOLATION OF THE FEDERAL COPYRIGHT ACT AND THE LICENSE AGREEMENT, AND SUBJECT TO CIVIL AND CRIMINAL PENALTIES THEREUNDER.

gardens and landscaped roofs can also require the installation of a Class A roof assembly. Section 317.1 of the code references the provisions in Section 1505 of the IBC, which sets forth the fire exposure ratings for roof assemblies. The IBC fire classification requirements for roof assemblies are based on the building's construction type, not on the classification of the building's occupancy. The minimum roof covering classification prescribed by the IBC is either a Class B or Class C roof assembly. The only time Class A roof assemblies are specified is when the jurisdiction has adopted Appendix D of the IBC and the building is located in a fire district or when required in the IWUIC. Section 1505.2 of the IBC requires Class A assemblies to be listed and identified as such by an approved testing agency, but because the IBC does not normally require the installation of Class A roof assemblies, the number of listed systems available to design professionals will be limited. Additional requirements on the design of green roofs are contained in the *International Green Construction Code*® (IgCC®). Another source of information on "green roofs" is contained in Property Loss Prevention Data Sheet 1-35, *Green Roof Systems*, published by FM Global.

317.2 Rooftop garden or landscaped roof size. Rooftop garden or landscaped roof areas shall not exceed 15,625 square feet (1450 m^2) in size for any single area with a maximum dimension of 125 feet (39 m) in length or width. A minimum 6-foot-wide (1.8 m) clearance consisting of a Class A-rated roof system complying with ASTM E108 or UL 790 shall be provided between adjacent rooftop gardens or landscaped roof areas.

❖ On large roofs, the code does not permit complete coverage of the roof with vegetation. This section limits the area of roof gardens or landscaping to an area not exceeding 15,625 square feet (1,450 m^2) and its maximum length or width dimension cannot exceed 125 feet (39 m). The 125-foot value is based on the typical amount of hose carried by fire departments for high-rise hose packs. If the area or dimension of a landscaped garden or roof exceeds the prescribed area or dimension limits, this section allows multiple landscaped areas when each is separated by a minimum 6-foot-wide (1.8 m) buffer space constructed as a Class A roof assembly. This buffer space will slow fire spread between multiple landscaped areas and will afford fire-fighter access to each separated segment and provide access to roof surface areas that may be used for fire department ventilation operations. Note that for buildings in which Section 905 requires the installation of a standpipe system, Section 905.3.8 will require the extension of a standpipe hose valve to the roof level serving the landscaped roof or roof garden.

317.3 Rooftop structure and equipment clearance. For all vegetated roofing systems abutting combustible vertical surfaces, a Class A-rated roof system complying with ASTM E108 or UL 790 shall be achieved for a minimum 6-foot-wide (1829 mm) continuous border placed around rooftop structures and all rooftop equipment including, but not limited to, mechanical and machine rooms, penthouses, skylights, roof vents, solar panels, antenna supports and building service equipment.

❖ Where a building utilizes combustible construction for the construction of penthouses, mechanical equipment or rooftop elevator machine rooms, this section requires a minimum 6-foot-wide (1.8 m) border constructed around the combustible construction. The buffer space is also constructed to the IBC requirements for a Class A roof assembly (see the commentary to Section 317.1). The buffer space is not required if the roof garden or landscaped roof is separated by more than 6 feet (1.8 m) from the combustible construction or when noncombustible construction is used. This buffer space will slow fire spread between landscaped areas and combustible construction and will afford fire fighter access.

317.4 Vegetation. Vegetation shall be maintained in accordance with Sections 317.4.1 and 317.4.2.

❖ This section introduces requirements for the maintenance of rooftop garden or landscaped roof areas to reduce the fire risk that could otherwise arise for buildings and exposure buildings because of the possible lack of maintenance. Basically, an unmaintained roof garden that catches fire could be likened to a brush fire being conducted on top of a building rather than on the ground, creating an increased exposure hazard since roof covering rating requirements are based on flying embers, not falling ones.

317.4.1 Irrigation. Supplemental irrigation shall be provided to maintain levels of hydration necessary to keep green roof plants alive and to keep dry foliage to a minimum.

❖ Care of rooftop vegetation by simple watering provides a basic line of defense against accumulation of dry biomass that can present a significant fire load if ignited. The frequency of watering is not specified due to the diverse moisture needs of the wide variety of planted materials possible on any given roof. The person responsible for the landscaped roof must determine the level of watering needed for this purpose and that information should be included in the maintenance plan authorized by Section 317.4.3.

317.4.2 Dead foliage. Excess biomass, such as overgrown vegetation, leaves and other dead and decaying material, shall be removed at regular intervals not less than two times per year.

❖ In order to manage the significant fuel load accumulation and fire hazard associated with dead or unkempt rooftop vegetation, this section sets a basic level of maintenance and regular removal of dead biomass, similar to that found in Section 304.1.2 for the maintenance of vegetation in and around a building (see commentary, Section 304.1.2).

317.4.3 Maintenance plan. The *fire code official* is authorized to require a maintenance plan for vegetation placed on

INTERNATIONAL CODE COUNCIL®
Copyright © 2015 ICC. ALL RIGHTS RESERVED. Accessed by David Dammon on Jun 21, 2017 12:30:52 PM pursuant to License Agreement with ICC. No further reproduction or distribution authorized. ANY UNAUTHORIZED REPRODUCTION OR DISTRIBUTION IS A VIOLATION OF THE FEDERAL COPYRIGHT ACT AND THE LICENSE AGREEMENT, AND SUBJECT TO CIVIL AND CRIMINAL PENALTIES THEREUNDER.

roofs due to the size of a roof garden, materials used or where a fire hazard exists to the building or exposures due to the lack of maintenance.

❖ This section authorizes the fire code official to require a maintenance plan that may be used to guide maintenance personnel and inspectors in the care and upkeep of vegetation to reduce the hazard of having highly combustible dead plantings on the roof. This is beneficial to determine if the roof garden will be maintained or is just a bunch of vegetation placed on the roof as a "do-it-yourself" project. The maintenance plan is also beneficial to determine what happens to a building that goes vacant or when the building owner does not keep up with maintenance.

317.5 Maintenance equipment. Fueled equipment stored on roofs and used for the care and maintenance of vegetation on roofs shall be stored in accordance with Section 313.

❖ This section simply sends the code user to Section 313 for appropriate storage regulations for fueled equipment (see commentary, Section 313).

SECTION 318
LAUNDRY CARTS

318.1 Laundry carts with a capacity of 1 cubic yard or more. Laundry carts with an individual capacity of 1 cubic yard [200 gallons (0.76 m^3)] or more, used in laundries within Group B, E, F-1, I, M and R-1 occupancies, shall be constructed of noncombustible materials or materials having a peak rate of heat release not exceeding 300 kW/m^2 at a flux of 50 kW/m^2 where tested in a horizontal orientation in accordance with ASTM E1354.

Exceptions:

1. Laundry carts in areas protected by an *approved automatic sprinkler system* installed throughout in accordance with Section 903.3.1.1.
2. Laundry carts in coin-operated laundries.

❖ The change from cooking with animal fat to vegetable oil has increased the number of spontaneous ignition fires. These fires occur frequently in laundry operations due to insufficient cool-down time in the laundry drying process and have been known to ignite in freshly folded linen, often contained in polyethylene laundry carts. Medium-density polyethylene laundry carts which have a fuel content of approximately 20,020 Btu per pound [27 ft^3 (0.76 m^3)] are commonly used in industrial, commercial and institutional laundry operations. This material is essentially equal to the fuel value for gasoline and becomes a burning liquid that spreads and flows when involved in a fire. As such, the cart flammability hazard must be mitigated. This section does that by limiting combustible container heat release rate and heat flux using the test parameters of ASTM E1354. The peak rate of heat release criterion is consistent with the one in Sections 304.3.2, 304.3.4 and 808.1. The efficacy of using these lesser-hazard carts has been demonstrated in several commercial and institutional fire incidents wherein the burning commercial dryer contents were emptied into an ASTM E1354 container and taken outside and overhauled without evacuation of the building, loss to the structure or damage to the container.

Exception 1 permits the use and storage of ordinary laundry carts in areas protected by an approved sprinkler system. It would be up to the fire code official to determine the maximum number that could be stored under these conditions.

Exception 2 recognizes that the small carts used in neighborhood coin laundries do not present the same hazard as those used in commercial-type operations because the clothes and other laundered items do not remain in the cart for a significant length of time.

Bibliography

The following resource materials were used in the preparation of the commentary for this chapter of the code:

Code Changes Resource Collection—2015 *International Fire Code*. Washington, DC: International Code Council, 2014.

FACE-99-F47, Six Career Fire Fighters Killed in Cold-storage and Warehouse Building Fire—Massachusetts. Washington, DC: National Institute for Occupational Safety and Health, September 2000.

NFPA 550-12, Fire Safety Concepts Tree. Quincy, MA: National Fire Protection Association, 2012.

Property Loss Prevention Data Sheet 1-35, *Green Roof Systems*. Johnston, RI: FM Global, 2011.

INTERNATIONAL CODE COUNCIL®
Copyright © 2015 ICC. ALL RIGHTS RESERVED. Accessed by David Dammon on Jun 21, 2017 12:30:52 PM pursuant to License Agreement with ICC. No further reproduction or distribution authorized. ANY UNAUTHORIZED REPRODUCTION OR DISTRIBUTION IS A VIOLATION OF THE FEDERAL COPYRIGHT ACT AND THE LICENSE AGREEMENT, AND SUBJECT TO CIVIL AND CRIMINAL PENALTIES THEREUNDER.

INTERNATIONAL CODE COUNCIL®
Copyright © 2015 ICC. ALL RIGHTS RESERVED. Accessed by David Dammon on Jun 21, 2017 12:30:52 PM pursuant to License Agreement with ICC. No further reproduction or distribution authorized. ANY UNAUTHORIZED REPRODUCTION OR DISTRIBUTION IS A VIOLATION OF THE FEDERAL COPYRIGHT ACT AND THE LICENSE AGREEMENT, AND SUBJECT TO CIVIL AND CRIMINAL PENALTIES THEREUNDER.

Chapter 4:
Emergency Planning and Preparedness

General Comments

This chapter is an expansion of the provisions found in the legacy fire codes used to develop the code. The overall approach has been to place all similar requirements into general sections. Unique occupancy and use-specific requirements are provided in Section 403.

This chapter first provides general scope and requirements for reporting emergencies and preventing interference with fire department activities in Section 401.

Section 403 provides detailed requirements based on occupancy. These requirements include seating plans for Group A occupancies. This section also establishes requirements for general public safety regarding fire watch personnel, crowd managers and planning requirements for public assemblages.

Section 404 provides detailed requirements for fire safety plans, fire evacuation plans and lockdowns.

The frequency and required documentation related to evacuation drills are addressed in Section 405. The minimum criteria for the training of occupants for emergency situations are found in Section 406. Section 407 provides requirements that apply to occupancies that contain hazardous materials. Some of the key elements are Hazardous Materials Inventory Statements (HMIS) and Hazardous Materials Management Plans (HMMP).

Purpose

In addition to the requirements found throughout the building and fire codes, this chapter focuses on the actions of occupants. These additional requirements are warranted based on higher levels of care related to the concentration of people; physical and mental capabilities of the occupants; lack of familiarity with a building; or the complexity and size of the building. These requirements are intended to improve the effectiveness of other measures required by the code and the *International Building Code*® (IBC®).

Basically, this chapter addresses human contributions to life safety in buildings when a fire or other emergency occurs. The requirements for continuous training and scheduled evacuation drills can be as important as the required periodic inspections and maintenance of built-in fire protection features. The level of preparation by the occupants also improves the emergency responders' abilities during an emergency.

The IBC focuses on built-in fire protection features, such as automatic sprinkler systems, fire-resistance-rated construction and properly designed egress systems. The human element is only indirectly addressed in the IBC, whereas this chapter fully addresses the human element. Traditionally, fire codes address the human element more directly in their role in the long-term maintenance of buildings and systems.

Chapters 3 and 6 through 10 of the code and Chapters 7 through 10 of the IBC set forth provisions for how and when buildings are to be properly equipped and maintained to prevent damage and loss of life in the event of a fire. These requirements are based on two complementary fire safety strategies: managing the fire and managing the occupants. These strategies are discussed in more detail in the commentary for Chapter 1.

Managing Fire

A fire can be either prevented or managed. This chapter of the code focuses on training and preparedness while also emphasizing prevention. In some cases, moving occupants to minimize their exposure to a hazard is difficult or impractical. In these situations, controlling or eliminating the hazard is preferable, especially while it is still manageable. In fact, this is the concept underlying all fire-suppression requirements. Successful fire control depends on building occupants recognizing the fire threat, deciding to respond, choosing how to respond and, in the case of choosing fire control, identifying, locating and using the correct method. All of these functions must promptly take place in that order. Failure to perform promptly may preclude alternative strategies; therefore, location and identification of fire extinguishers and occupant standpipe hose lines are provided so that incipient fire-fighting equipment is readily accessible to occupants. These appliances, however, are often difficult to operate, and regardless of experience, fighting fire is a difficult and dangerous task. This chapter prescribes training requirements that assist occupants who are expected to respond to incipient fires to be adequately prepared and trained.

Managing Occupants

The management of occupants is primarily moving them away from the hazard. Verifying that enough exits have ample capacity, are immediately accessible, adequately arranged, appropriately identified and suitably protected are only the first steps toward achieving functional life safety. Occupants must know not only where exits are, but also when and how to use them. For instance, studies have shown that people have a "learned irrelevance" to emergency exits. Learned irrelevance is a psychological phenomenon that occurs when a person is exposed to a stimulus but usually does not need to respond to it. Because of this phenomenon, most occupants are likely to exit the way they have

INTERNATIONAL CODE COUNCIL®
Copyright © 2015 ICC. ALL RIGHTS RESERVED. Accessed by David Dammon on Jun 21, 2017 12:30:52 PM pursuant to License Agreement with ICC. No further reproduction or distribution authorized. ANY UNAUTHORIZED REPRODUCTION OR DISTRIBUTION IS A VIOLATION OF THE FEDERAL COPYRIGHT ACT AND THE LICENSE AGREEMENT, AND SUBJECT TO CIVIL AND CRIMINAL PENALTIES THEREUNDER.

entered, whether it is the correct way or not; therefore, beyond designing the building with an adequate number of exits, a method of encouraging the use of the best exits must be developed. Identifying dangerous conditions, deciding how to act and responding appropriately and promptly are essential. Various factors and situations can make evacuation not only difficult but potentially impractical. All of these factors involve the interaction between the building, its systems and features, occupants and the fire. The code concentrates on the last two factors while the IBC regulates the first two factors. Planning for life safety requires a response to these factors by defining the life safety strategies that must be implemented, as well as the means to achieve them. Life safety factors, such as buildings, fire and people, are important in managing exposed occupants.

This chapter concentrates on planning and practicing the desired actions of building occupants when a fire occurs. The remainder of the code focuses on the behaviors and procedures that must be practiced or observed to prevent or control a fire. The best way to create a safe building environment is through fire prevention. No system can ensure complete protection of building occupants.

Fires are not the only emergencies necessitating the implementation of life safety strategies; therefore, this chapter describes requirements for preparing and implementing life safety plans and programs in occupancies with special life safety problems. These include occupancies in which the number of occupants or the arrangement or complexity of the building may make evacuation or removal from hazardous conditions difficult or impractical.

A reality of the 21st century in the wake of terrorist attacks and school and business shootings is a need to establish so-called “lockdown” procedures in order to protect and defend building occupants. While the code does not mandate the implementation of lockdown plans and procedures, it does provide some minimum standards such plans must meet when they are prepared.

Not all occupants of each building are equally capable of performing tasks essential to their safety. A growing awareness, not only of people with physical disabilities, but also of what constitutes a disability, has focused life safety on everyone. Federal health care policies and funding criteria have spurred the deinstitutionalization of people who were formerly confined to nursing homes and other traditional health care institutions. This has created a new category of occupancies—board and care homes (institutional, residential care; I-1)—while the number of beds provided in nursing homes and hospitals continues to grow. Similarly, technological advances have promoted the creation of larger and more complex buildings, including high rises, open malls, domed stadiums, mixed-use complexes and convention centers. All of these situations create special life safety problems that physical features alone cannot remedy. Additionally, these situations require that not only adequate physical accommodations be provided but also building occupants be trained to respond to emergencies in these facilities.

Life Safety

Life safety strategies involve the development of an explicit statement of a desired life safety outcome. This statement, once designed to the capabilities of the building occupants and the physical arrangement of the exits, becomes a life safety strategy. Such approaches stress defining a specific strategy or strategies for protecting occupants. Protection may include moving them (assisting), causing them to move (directing), defending them in place or a combination of these measures. An effective strategy must consider the number and capabilities of building occupants; the type, location and arrangement of building exits; the fire; its effects on the people and building; and the number, training and capability of staff to direct or perform fire evacuation or incipient fire-fighting duties. Each strategy, combined with effective planning and practice, becomes the means for achieving the desired life safety outcome.

The life safety strategies for a health care facility, a high-rise office building and a multiplex theater could vary considerably based on the specific characteristics of the use. First, while the number of occupants will be significant in each case, the actual number occupying the building may be varied. Similarly, the occupant density and location of people in the building will vary, as well as the physical arrangement of the building, which in the first example that follows may be assumed as primarily horizontal and, in the second, as principally vertical. The most profound difference will be the capabilities of the occupants. In high rises and theaters, building occupants will be expected to perform life safety behaviors themselves, while patients in a health care facility may require substantial assistance or need to defend in place. High-rise and theater occupants will differ from each other in their levels of familiarity with the building design. Further, in a theater, lighting conditions may interfere with the occupants’ ability to discern the path of egress travel.

In the first two examples, health care and high rise, removing all occupants from the building in the event of fire is impractical. In a high-rise building, occupants located above a fire are in greater danger than occupants located below the fire, since combustion products naturally rise. In a health care occupancy, the risk to most occupants is compounded by their weakened or disabled condition prior to the fire. In both of these examples, a life safety strategy should first address the needs of those at greatest risk by removing them from harm. Secondly, the life safety strategy

INTERNATIONAL CODE COUNCIL®
Copyright © 2015 ICC. ALL RIGHTS RESERVED. Accessed by David Dammon on Jun 21, 2017 12:30:52 PM pursuant to License Agreement with ICC. No further reproduction or distribution authorized. ANY UNAUTHORIZED REPRODUCTION OR DISTRIBUTION IS A VIOLATION OF THE FEDERAL COPYRIGHT ACT AND THE LICENSE AGREEMENT, AND SUBJECT TO CIVIL AND CRIMINAL PENALTIES THEREUNDER.

should stress separating endangered occupants and their immediate neighbors from danger until the hazard can be controlled or confined. As seen in each example, life safety strategies should also incorporate both partial relocation and defend-in-place concepts. In the health care facility, however, occupants will be moved horizontally to achieve this objective, while in high-rise buildings, occupants will be expected to move downward or upward to separate themselves from danger. In the case of a multiplex theater, occupants will usually be directed to the nearest exit; however, its location may not be known to all or some of them. Further, because employees in assembly occupancies must be trained in the proper use of portable fire extinguishers, the life safety strategy should include instruction in using these appliances to minimize occupant exposure to fire effects. The resulting life safety strategies for these occupancies may resemble the following:

Example 1 – Health Care Facility: Upon notice of fire, direct or assist evacuation and relocate occupants from the area of fire origin to an adjacent smoke compartment through horizontal exits. Remove the most critically ill patients and those with special needs to an area providing the most appropriate level of care.

Example 2 – High-rise Building: Direct occupants in the area or floor of fire origin to the nearest exits. Occupants on the fire floor, the floor above and the floor below will relocate sequentially up or down at least two floors. Occupants located two floors above and two floors below the fire floor will be sequentially relocated following movement of fire floor occupants.

Example 3 – Multiplex Theater: Announce exit locations and evacuation instructions prior to each movie. Over voice/alarm systems, direct occupants to nearest exit. Employees in the immediate vicinity of an incipient fire may attempt to control or extinguish it using a portable fire extinguisher after activating the fire alarm system.

Once the appropriate strategy has been defined, a plan can be expanded with little additional effort to form the backbone of a comprehensive life safety protocol. The following statements provide additional instructions for the aforementioned examples:

Example 1 – Health Care Facility: Monitor or reinforce fire barriers so that they provide adequate defense against fire until it is controlled and extinguished. Staff will report progress of the fire and relocation operation to the Private Branch Exchange (PBX) operator through the nurse call station in adjacent smoke compartments.

Example 2 – High-rise Building: Building fire manager will meet fire department personnel at the central control station located off the main lobby.

Example 3 – Multiplex Theater: Projectionist will stop films so that the alarm and evacuation instructions are heard and followed. Upon activation of the alarm, instructions are heard and followed while the on-duty manager telephones the fire department to confirm that the fire was reported. Ushers will follow occupants out of each auditorium as conditions permit, closing exit doors and preventing reentry. Upon completing assigned duties, all staff will report to the manager located in front of the lobby entrance.

These expanded statements certainly do not constitute a fully developed plan; however, with these elements of the life safety plan defined, details can be added to send the plan from preincident preparation through post-incident follow-up. A well-developed plan should include all or most of the following elements:

- Assignment of roles and responsibilities;
- Description of fire protection systems, including operating instructions, if appropriate;
- Building floor plans and sections;
- Seating diagrams and occupant load;
- Number, location and path of travel to exits;
- Emergency notification lists and procedures;
- Post-incident follow-up procedures, including salvage and insurance information; and
- Plan revision and evaluation procedures.

Once a plan is developed, reviewed and approved, it must be distributed, practiced and periodically revised.

SECTION 401
GENERAL

401.1 Scope. Reporting of emergencies, coordination with emergency response forces, emergency plans and procedures for managing or responding to emergencies shall comply with the provisions of this section.

Exception: Firms that have *approved* on-premises fire-fighting organizations and that are in compliance with *approved* procedures for fire reporting.

❖ This section describes the overall scope of Chapter 4, which notes that all procedures relating to reporting and managing fire and other emergencies be in accordance with this chapter. There is one exception recognizing organizations, such as large industrial sites, that have on-site fire brigades. The fire brigades and the associated reporting procedures must be approved by the fire code official.

401.2 Approval. Where required by this code, fire safety plans, emergency procedures and employee training programs shall be *approved* by the *fire code official*.

❖ To verify that emergency procedures, training and fire safety plans have taken all essential factors into

INTERNATIONAL CODE COUNCIL®
Copyright © 2015 ICC. ALL RIGHTS RESERVED. Accessed by David Dammon on Jun 21, 2017 12:30:52 PM pursuant to License Agreement with ICC. No further reproduction or distribution authorized. ANY UNAUTHORIZED REPRODUCTION OR DISTRIBUTION IS A VIOLATION OF THE FEDERAL COPYRIGHT ACT AND THE LICENSE AGREEMENT, AND SUBJECT TO CIVIL AND CRIMINAL PENALTIES THEREUNDER.

account, the plans and procedures must be approved by the fire code official.

401.3 Emergency responder notification. Notification of emergency responders shall be in accordance with Sections 401.3.1 through 401.3.3.

❖ This section simply states that the notification of emergency forces must comply with Section 401.3 and all of its subsections.

401.3.1 Fire events. In the event an unwanted fire occurs on a property, the *owner* or occupant shall immediately report such condition to the fire department.

❖ This section requires prompt notification of the fire department in the event of a fire emergency. Employees or other occupants are prohibited from delaying in any way the notification of the fire department.

401.3.2 Alarm activations. Upon activation of a fire alarm signal, employees or staff shall immediately notify the fire department.

❖ This section specifically requires immediate notification of the fire department or other emergency response groups when an alarm signal is activated in order to bring emergency forces in the shortest amount of time.

401.3.3 Delayed notification. A person shall not, by verbal or written directive, require any delay in the reporting of a fire to the fire department.

❖ Emergency plans and procedures must not include a requirement that employees report an alarm to a supervisor or similar person before calling the fire department. There can be no substitute for immediate notification of emergency forces because a quick response is the key to efficient and effective rescue and fire fighting.

401.4 Required plan implementation. In the event an unwanted fire is detected in a building or a fire alarm activates, the emergency plan shall be implemented.

❖ Sections 401.3.1 through 401.3.3 mandate the prompt notification of emergency responders whenever a fire alarm is activated or an actual fire or suspected fire occurs. Since the emergency plan is designed to safely and effectively deal with those circumstances and safeguard the occupants, it must be implemented simultaneously with emergency responder notification as required by this section.

401.5 Making false report. A person shall not give, signal or transmit a false alarm.

❖ Chapter 2 of the code defines a false alarm as an intentional activation of an alarm or notification of a fire or other emergency when no emergency exists. This would not include a malfunctioning alarm system. False alarms have the potential for causing confusion or panic among occupants of the affected premises, a situation that could lead to property damage, personal injury or death. False alarms also place fire fighters and other emergency personnel in potential danger during the unnecessary emergency response. This can jeopardize other lives and property in the community by committing emergency forces to a false situation when they might be needed at an actual emergency elsewhere.

401.6 Emergency evacuation drills. The sounding of a fire alarm signal and the carrying out of an emergency evacuation drill in accordance with the provisions of Section 405 shall be allowed.

❖ This section specifically allows fire alarm signals to be utilized as part of emergency evacuation drills. Without this provision, Section 401.3.1 would not allow the activation of the alarm signal during an emergency evacuation drill.

401.7 Unplanned evacuation. Evacuations made necessary by the unplanned activation of a fire alarm system or by any other emergency shall not be substituted for a required evacuation drill.

❖ This section makes it clear that unplanned evacuations will not be applied toward fulfillment of the number of drills required. Evacuation drills are intended to provide for an assessment of the adequacy of an emergency action plan and the response of the building occupants. Occupants may or may not be forewarned of a pending drill depending on the circumstances. Responsible staff prepares for and conducts the drills, a key aspect of which is having monitors in place to assess individual and group performance. An unplanned evacuation does not allow for effective monitoring of performance and, therefore, must not be counted as a required drill.

401.8 Interference with fire department operations. It shall be unlawful to interfere with, attempt to interfere with, conspire to interfere with, obstruct or restrict the mobility of or block the path of travel of a fire department emergency vehicle in any way, or to interfere with, attempt to interfere with, conspire to interfere with, obstruct or hamper any fire department operation.

❖ A potential hazard when fire departments respond to an emergency is the inability to perform operations because of physical obstructions, restricted mobility or human interference. This section prohibits any type of interference with emergency response operations. The delay of even a few minutes can cause serious property damage, injuries or fatalities.

SECTION 402
DEFINITIONS

402.1 Definitions. The following terms are defined in Chapter 2:

EMERGENCY EVACUATION DRILL.

LOCKDOWN.

❖ Definitions of terms can help in the understanding and application of the code requirements. This sec-

INTERNATIONAL CODE COUNCIL®
Copyright © 2015 ICC. ALL RIGHTS RESERVED. Accessed by David Dammon on Jun 21, 2017 12:30:52 PM pursuant to License Agreement with ICC. No further reproduction or distribution authorized. ANY UNAUTHORIZED REPRODUCTION OR DISTRIBUTION IS A VIOLATION OF THE FEDERAL COPYRIGHT ACT AND THE LICENSE AGREEMENT, AND SUBJECT TO CIVIL AND CRIMINAL PENALTIES THEREUNDER.

tion directs the code user to Chapter 2 for the proper application of the indicated terms used in this chapter. Terms may be defined in Chapter 2, in another *International Code*® (I-Code®) as indicated in Section 201.3, or the dictionary meaning may be all that is needed (see also commentary, Sections 201 through 201.4).

SECTION 403
EMERGENCY PREPAREDNESS REQUIREMENTS

403.1 General. In addition to the requirements of Section 401, occupancies, uses and outdoor locations shall comply with the emergency preparedness requirements set forth in Sections 403.2 through 403.12.3.3. Where a fire safety and evacuation plan is required by Sections 403.2 through 403.11.4, evacuation drills shall be in accordance with Section 405 and employee training shall be in accordance with Section 406.

❖ Section 403 contains the occupancy-specific requirements for emergency preparedness. This section primarly notes when a fire safety and evacuation plan is required, but also provides specific requirements as necessary. For instance, seating plans must be provided for Group A occupancies or, in the case of Group I-2 occupancies, specific requirements are provided for staff training. Section 403 also has a section with special requirements to address the need for fire watches and planning for large gatherings (see Section 403.12).

The occupancies addressed by this section were chosen based on the density and location of occupants, the layout of the building or the limitations of the occupants during an emergency. The *Evacuation Planning Guide for Stadiums* published by the U.S. Department of Homeland Security (DHS) provides useful guidance for evacuation planning in large assembly structures. The principles used in that document could also be applied to the other occupancy groups listed in this section. Two additional resources to better understand the evacuation needs of specific types of structures such as tall buildings and airports are the SFPE *Engineering Guide: Fire Safety for Very Tall Buildings* and *Egress Design Solutions*.

403.2 Group A occupancies. An *approved* fire safety and evacuation plan in accordance with Section 404 shall be prepared and maintained for Group A *occupancies*, other than those occupancies used exclusively for purposes of religious worship with an occupant load less than 2,000, and for buildings containing both a Group A occupancy and an atrium. Group A occupancies shall comply with Sections 403.2.1 through 403.2.4.

❖ Group A occupancies are a special concern because of the high density and number of occupants. Additionally, occupants in Group A occupancies are generally not very familiar with the building. Due to lack of losses associated with those attending religious worship services, such occupancies are given an exception to the application of these requirements of less than 2,000 people.

403.2.1 Seating plan. In addition to the requirements of Section 404.2, the fire safety and evacuation plans for assembly occupancies shall include a detailed seating plan, *occupant load* and *occupant load* limit. Deviations from the *approved* plans shall be allowed provided the *occupant load* limit for the occupancy is not exceeded and the *aisles* and exit accessways remain unobstructed.

❖ Proper planning for an assembly occupancy must consider the number, capacity and physical arrangement of exits. In turn, these factors will dictate how seating may be arranged to prevent obstruction of aisles and exits. The number of seats provided may not exceed what is permitted by the number, arrangement and capacity of exits. Floor area factors are only one element in determining whether the exit capacity is adequate. Additionally, the egress plan must be approved by the fire code official with a copy of the approved plan maintained on the premises for review by employees and inspectors. Many facilities have several approved plans to accommodate various situations and functions. The seating plan selected for any event should reflect the needs of the group and the requirement to keep aisles and exits clear. Deviations from an approved plan may be permitted only if they do not obstruct the complete egress path, including aisles and exits.

403.2.2 Announcements. In theaters, motion picture theaters, auditoriums and similar assembly occupancies in Group A used for noncontinuous programs, an audible announcement shall be made not more than 10 minutes prior to the start of each program to notify the occupants of the location of the exits to be used in the event of a fire or other emergency.

Exception: In motion picture theaters, the announcement is allowed to be projected upon the screen in a manner *approved* by the *fire code official*.

❖ Announcements are intended to familiarize occupants with life safety system features they may need to use if a fire occurs. Information is the most valuable commodity during fires and other emergencies; however, it is often difficult, if not impossible, to override the emotion and confusion caused by a fire or other emergency. Studies have generally shown, however, that occupants do not panic as once thought; therefore, it is imperative that occupants receive information necessary for them to make decisions before an emergency occurs. To convey information and motivate an adaptive response to fires or other emergencies, the message must stimulate interest and speak directly to the topic. Many movie theaters currently use “trailers” or “shorts” to market concession items, as well as fire safety. These messages can be especially effective if they are specific and adequately distinguished from other promotions.

INTERNATIONAL CODE COUNCIL®
Copyright © 2015 ICC. ALL RIGHTS RESERVED. Accessed by David Dammon on Jun 21, 2017 12:30:52 PM pursuant to License Agreement with ICC. No further reproduction or distribution authorized. ANY UNAUTHORIZED REPRODUCTION OR DISTRIBUTION IS A VIOLATION OF THE FEDERAL COPYRIGHT ACT AND THE LICENSE AGREEMENT, AND SUBJECT TO CIVIL AND CRIMINAL PENALTIES THEREUNDER.

Any message should reflect the life safety strategy and must point out specific features of the occupancy. Occupants in most theaters and auditoriums are usually expected to leave the building immediately upon notification of a fire using the nearest available exit. This is largely a reflection on the building type and arrangement of exits. In these cases, the locations of all exits must be identified. Raising the house lights along the egress path or modulating aisle lighting at appropriate times during the message can reinforce the message.

This section specifically requires an audible announcement, but the exception for motion picture theaters would allow the message to be visually displayed upon the screen as approved. A combination of both an audible and visual message would most likely be the most effective. This section also has a maximum time from the start of the show to provide such announcements;. An announcement that comes too early will lose its effectiveness.

403.2.3 Fire watch personnel. Fire watch personnel shall be provided where required by Section 403.12.1.

❖ This section links to Section 403.12.1, which establishes the authority of the fire code official to require a fire watch as necessary.

403.2.4 Crowd managers. Crowd managers shall be provided where required by Section 403.12.3.

❖ Assembly occupancies contain many occupants potentially unfamiliar with the building. The larger the number of occupants in a single space, the more critical that crowd managers be available to direct people. Section 403.12.3 requires crowd managers when a gathering exceeds 1,000 people.

403.3 Ambulatory care facilities. Ambulatory care facilities shall comply with the requirements of Sections 403.3.1 through 403.3.3 as well as 401 and 404 through 406.

❖ Ambulatory care facilities, similar to Group I-1 Condition 2 and Group I-2 occupancies, use a "defend-in-place" method of occupant protection. Defend in place is a widely used approach to protecting occupants who are bedridden, unconscious or otherwise unable to self-preserve in a fire event. The method relies on both active and passive fire protection systems as well as the actions of trained staff and responders. The heavy emphasis on staff action requires a comprehensive fire safety and evacuation plan. Any building containing an ambulatory healthcare occupancy will, by definition, contain occupants who may be incapable of self-preservation. The intent of the current IBC requirements for ambulatory care is to create a type of defend-in-place environment. Sections 403.3.1 through 403.3.4 provide requirements for ambulatory care that are more specific than those provided in Sections 404 and 405.

403.3.1 Fire evacuation plan. The fire safety and evacuation plan required by Section 404 shall include a description of special staff actions. This shall include procedures for stabilizing patients in a defend-in-place response, staged evacuation, or full evacuation in conjunction with the entire building if part of a multitenant facility.

❖ Fire safety and evacuation plans must be developed, reviewed and approved to support this strategy. The reference to "defend in place" is added in Section 404.2.2 to recognize the defend-in-place method. This is not a new concept. The IBC and legacy codes have been written to support this concept, and fire safety and evacuation plans must acknowledge this strategy. The term "defend in place" is defined in the IBC. Fire safety plans should describe in the life safety strategy the method of notifying occupants, including the use of a private-mode alarm system as allowed by code. Procedures for dealing with occupants in a defend-in-place strategy should also be described so that it is clear what the staff will be trained on and what the first responders should expect to encounter. Fire evacuation plans are required to describe the special actions of staff, especially staff that must stabilize a patient prior to moving. This will be the basis of the staff education and training. This will also help the code official understand the expected performance of the building. It is imperative that the building and fire official know the size and location of the facility as well as the number of patients who are incapable of self-preservation. This information will help the building official determine the proper classification and mitigations required. It will also allow the fire official to preplan the response for a particular building. Any special characteristics of the means of egress, such as path to the adjacent smoke compartment and special locking arrangements, should also be described to aid in verifying code compliance. Practically, these documents will be the basis for staff training as well.

403.3.2 Fire safety plan. A copy of the plan shall be maintained at the facility at all times. The plan shall include all of the following in addition to the requirements of Section 404:

1. Locations of patients who are rendered incapable of self-preservation.
2. Maximum number of patients rendered incapable of self-preservation.
3. Area and extent of each ambulatory care facility.
4. Location of adjacent smoke compartments or refuge areas, where required.
5. Path of travel to adjacent smoke compartments.
6. Location of any special locking, delayed egress or access control arrangements.

❖ This section sets out information required for the fire safety plan specific to ambulatory care facilities. Fire safety plans are required to show the location where incapable patients are likely to be. They are required to show the location of smoke compartments, routes of travel, patient movement elevators and any locking constraints that might affect the horizontal evacuation

INTERNATIONAL CODE COUNCIL®
Copyright © 2015 ICC. ALL RIGHTS RESERVED. Accessed by David Dammon on Jun 21, 2017 12:30:52 PM pursuant to License Agreement with ICC. No further reproduction or distribution authorized. ANY UNAUTHORIZED REPRODUCTION OR DISTRIBUTION IS A VIOLATION OF THE FEDERAL COPYRIGHT ACT AND THE LICENSE AGREEMENT, AND SUBJECT TO CIVIL AND CRIMINAL PENALTIES THEREUNDER.

of patients. All of these will be essential to robust staff training as well as operational planning for first responders.

403.3.3 Staff training. Employees shall be periodically instructed and kept informed of their duties and responsibilities under the plan. Records of instruction shall be maintained. Such instruction shall be reviewed by the staff not less than every two months. A copy of the plan shall be readily available at all times within the facility.

❖ In ambulatory care facilities, due to the condition of the occupants, the actions of the staff are critical to the success of the fire evacuation plan. Therefore, staff training on a regular basis is necessary. This section requires that the staff review the fire evacuation plan and fire safety plan regularly. These plans always need to be available for review.

403.3.4 Emergency evacuation drills. Emergency evacuation drills shall comply with Section 405. Emergency evacuation drills shall be conducted not less than four times per year.

Exceptions: The movement of patients to safe areas or to the exterior of the building is not required.

❖ This section requires not less than four evacuation drills each year. This requirement is more restrictive than what Table 405.2 would require. Therefore, although Table 405.2 requires only annual evacuation drills, they must be done four times a year. This is similar to what is required for Group I-2 occupancies. Such drills are limited to the employees. The exception emphasizes that patient participation is not required.

403.4 Group B occupancies. An *approved* fire safety and evacuation plan in accordance with Section 404 shall be prepared and maintained for buildings containing a Group B occupancy where the Group B occupancy has an *occupant load* of 500 or more persons or more than 100 persons above or below the lowest *level of exit discharge* and for buildings having an ambulatory care facility.

❖ This section requires a fire and evacuation plan when the number of occupants in a Group B occupancy becomes large. The increased risk when such occupants are not located on the level of exit discharge is also addressed. Generally, Group B occupancies are not used for sleeping and occupants are familiar with their surroundings. This section is for Group B occupancies that are not considered ambulatory care facilities. Ambulatory care facilities are also Group B occupancies but would be addressed more specifically by Section 403.3. Group F and M occupancies have the same occupant load and location trigger for fire safety and evacuation plans (see Sections 403.6 and 403.9).

403.5 Group E occupancies. An *approved* fire safety and evacuation plan in accordance with Section 404 shall be prepared and maintained for Group E occupancies and for buildings containing both a Group E occupancy and an atrium. Group E occupancies shall comply with Sections 403.5.1 through 403.5.3.

❖ Group E occupancies are among the primary occupancies requiring emergency evacuation drills. They are among the few occupancies that require all occupants to participate in evacuation drills. The effectiveness of pre-emergency planning in Group E occupancies has been significant, as evidenced by a remarkable decline in tragic fires in schools over the years. The evacuation skills learned by children in school are often carried with them into adulthood.

403.5.1 First emergency evacuation drill. The first emergency evacuation drill of each school year shall be conducted within 10 days of the beginning of classes.

❖ Group E occupants vary from year to year as children enter and leave grade levels. In addition, even though a child may be in the same school for a number of years, location within the building and leaders change. It is important, therefore, that the first evacuation drill occurs within the first 10 days of school. This provides students with nearly immediate training and the school and emergency responders with information about where problems exist. Additionally, in more recent years schools have been immersing students with disabilities into the general classroom. The location and number of these students vary each year. The ability to evacuate them must be assessed early in the school year.

403.5.2 Time of day. Emergency evacuation drills shall be conducted at different hours of the day or evening, during the changing of classes, when the school is at assembly, during the recess or gymnastic periods, or during other times to avoid distinction between drills and actual fires.

❖ If evacuation drills are done routinely, they will be easily distinguished as drills and not an actual fire. This is potentially dangerous because the behavior patterns will be different and actual preparedness for emergencies will be lessened. Time of day, therefore, should be varied whether it is convenient or not. A fire will not differentiate between a convenient and an inconvenient time.

403.5.3 Assembly points. Outdoor assembly areas shall be designated and shall be located a safe distance from the building being evacuated so as to avoid interference with fire department operations. The assembly areas shall be arranged to keep each class separate to provide accountability of all individuals.

❖ A key element in safe evacuation is the exit discharge portion of the evacuation route. Once occupants are outside the building, they need to be located far enough away to avoid further hazards. Additionally, there is a potential for people at the assembly point to interfere with the emergency operations of the fire department, which may not be present during an evacuation drill. Locations, therefore, need to be des-

INTERNATIONAL CODE COUNCIL®
Copyright © 2015 ICC. ALL RIGHTS RESERVED. Accessed by David Dammon on Jun 21, 2017 12:30:52 PM pursuant to License Agreement with ICC. No further reproduction or distribution authorized. ANY UNAUTHORIZED REPRODUCTION OR DISTRIBUTION IS A VIOLATION OF THE FEDERAL COPYRIGHT ACT AND THE LICENSE AGREEMENT, AND SUBJECT TO CIVIL AND CRIMINAL PENALTIES THEREUNDER.

ignated such that they avoid hazards and keep the evacuated occupants away from probable paths of emergency response. Also, to simplify accounting for the occupants once outside, the code requires each class to remain together as a group and separate from other classes.

403.6 Group F occupancies. An *approved* fire safety and evacuation plan in accordance with Section 404 shall be prepared and maintained for buildings containing a Group F occupancy where the Group F occupancy has an *occupant load* of 500 or more persons or more than 100 persons above or below the lowest *level of exit discharge*.

❖ Group F occupancies require a fire safety and evacuation plan under the same occupant load and location conditions as Group B and M occupancies. Essentially, when the occupant load begins to get large or increases on a level other than the level of exit discharge, such plans become more critical (see commentary, Section 403.4).

403.7 Group H occupancies. An *approved* fire safety and evacuation plan in accordance with Section 404 shall be prepared and maintained for Group H occupancies.

❖ This section requires that all Group H occupancies have a fire safety and evacuation plan. These occupancies, regardless of size or type, tend to contain significant hazards that make the need for preplanning critical. Semiconductor facilities have more specific requirements found in Section 403.7.1.

403.7.1 Group H-5 occupancies. Group H-5 occupancies shall comply with Sections 403.7.1.1 through 403.7.1.4.

❖ Group H-5 occupancies are semiconductor fabrication facilities. These types of facilities are unique in that they have a very large allowable area and house a significant amount of hazardous materials. Essentially, the building is divided into fabrication areas, hazardous production materials (HPM) rooms (which are Group H occupancy storage rooms) and networks of service corridors and spaces. The area of the building needs to be large to incorporate all of the operations needed by the semiconductor industry. To facilitate these operations, a special package of requirements and occupancy classification was created. This package is found within the occupancy requirements in the IBC and Chapter 27 of the code. As part of the package, special emergency preparedness and preparation are also required. Sections 403.7.1.1 through 403.7.1.4 provide specific requirements for emergency preparedness and preparation. These requirements are in addition to others pertaining to hazardous materials found in Section 407.

403.7.1.1 Plans and diagrams. In addition to the requirements of Section 404 and Section 407.6, plans and diagrams shall be maintained in *approved* locations indicating the approximate plan for each area, the amount and type of HPM stored, handled and used, locations of shutoff valves for HPM supply piping, emergency telephone locations and locations of exits.

❖ The requirements for plans and diagrams are in addition to those required in Sections 404 and 407. More specifically, the additional details required include the approximate plan for each area of the building. This includes the amount of HPM stored, handled and used in both the fabrication areas and the HPM rooms. Additionally, since it is typical that such facilities tend to pipe HPM throughout the building for efficiency, all shutoff valves must be identified. Finally, exits must be clearly marked. This is specifically necessary because many service corridors for the transport of materials are not considered part of the means of egress. These details will assist both the occupants and the emergency responders.

403.7.1.2 Plan updating. The plans and diagrams required by Sections 404, 403.7.1.1 and 407.6 shall be maintained up to date and the *fire code official* and fire department shall be informed of major changes.

❖ Semiconductor facilities are constantly changing because of the needs of new technology; therefore, the types and amounts of materials and their application are constantly changing. These changes must be accounted for within the plans and diagrams required in Sections 403.7.1.1 and 407; otherwise, the critical information needed by the emergency responders may not be available.

403.7.1.3 Emergency response team. Responsible persons shall be designated as an on-site emergency response team and trained to be liaison personnel for the fire department. These persons shall aid the fire department in preplanning emergency responses, identifying locations where HPM is stored, handled and used, and be familiar with the chemical nature of such material. An adequate number of personnel for each work shift shall be designated.

❖ This section is similar to Section 407.4, but has some specific requirements unique to semiconductor facilities. More specifically, liaisons familiar with the location of HPM and hazards related to those materials must be on site. For example, semiconductor facilities make use of silane gas, which is a pyrophoric material—it will instantly ignite when exposed to atmospheric conditions. Knowing the characteristics of the material, where it is located and the quantity used is critical to the responding emergency personnel.

403.7.1.4 Emergency drills. Emergency drills of the on-site emergency response team shall be conducted on a regular basis but not less than once every three months. Records of drills conducted shall be maintained.

❖ This section requires employees to conduct drills every 3 months to practice specific emergency procedures for the facilities. Again, this requirement is specific to semiconductor facilities because of their

INTERNATIONAL CODE COUNCIL®
Copyright © 2015 ICC. ALL RIGHTS RESERVED. Accessed by David Dammon on Jun 21, 2017 12:30:52 PM pursuant to License Agreement with ICC. No further reproduction or distribution authorized. ANY UNAUTHORIZED REPRODUCTION OR DISTRIBUTION IS A VIOLATION OF THE FEDERAL COPYRIGHT ACT AND THE LICENSE AGREEMENT, AND SUBJECT TO CIVIL AND CRIMINAL PENALTIES THEREUNDER.

unique layout and contents. The emergency responders rely heavily on the on-site actions of the employees because of their intimate knowledge of the site and the complexity of these buildings. Records must be maintained.

403.8 Group I occupancies. An *approved* fire safety and evacuation plan in accordance with Section 404 shall be prepared and maintained for Group I occupancies. Group I occupancies shall comply with Sections 403.8.1 through 403.8.3.4.

❖ Group I occupancies are those where occupants are often incapable of self-preservation due to their physical condition or they are physically able but under restraint. Therefore, fire safety and evacuation plans are critical and also have some specific needs unique from other occupancies.

403.8.1 Group I-1 occupancies. Group I-1 occupancies shall comply with Sections 403.8.1.1 through 403.8.1.7.

❖ A Group I-1 occupancy is one that houses more than 16 individuals who live in a supervised residential care facility on a 24-hour basis. This would include residential board and care homes, congregate care facilities, social rehabilitation facilities, alcohol and drug centers, assisted living facilities and convalescent facilities. Generally, occupants of these facilities are able to respond to an emergency with some assistance from staff. Note that there are two levels of Group I-1 occupancies (Condition 1 and Condition 2). These are further clarified in Section 202 but, essentially, those found in Condition 2 need additional protection due to an increased need for assistance.

403.8.1.1 Fire safety and evacuation plan. The fire safety and evacuation plan required by Section 404 shall include special employee actions, including fire protection procedures necessary for residents, and shall be amended or revised upon admission of any resident with unusual needs.

❖ This section is in addition to the general requirements found in Section 404. It specifies that requirements based on the particular needs of residents must be included as part of the plan. These plans must be reviewed each time a new occupant arrives to assess whether there are any special features that need to be included in the plan to address those particular needs. Group R-4 occupancies are being addressed in a similar manner (see Section 403.10.3.1).

403.8.1.1.1 Fire evacuation plan. The fire evacuation plan required by Section 404 shall include a description of special staff actions. In addition to the requirements of Section 404, plans in Group I-1 Condition 2 occupancies shall include procedures for evacuation through a refuge area in an adjacent smoke compartment and then to an exterior assembly point.

❖ Similar to ambulatory care facilities, the actions of the staff are critical and must be addressed beyond the requirements of Section 404. This is only applicable to Group I-1 Condition 2 occupancies where the residents depend more on the staff than they do in a Group I-1 Condition 1 occupancy. Group I-1 Condition 2 occupancies depend on the concept of smoke compartments similar to Group I-2 occupancies (see Section 420.4 of the *International Building Code*).

403.8.1.1.2 Fire safety plans. A copy of the fire safety plan shall be maintained at the facility at all times. Plans shall include the following in addition to the requirements of Section 404:

1. Location and number of resident sleeping rooms.
2. Location of special locking or egress control arrangements.

❖ This section requires that Group I-1 occupancies provide the location and number of residents sleeping and any special locking or egress control arrangements. This assists in search and rescue and understanding how the residents may be hampered in their evacuation. This information is critical for preplanning by both staff and the fire department. This applies to conditions of Group I-1 occupancies. The same requirement is provided for Group R-4 occupancies, which are essentially smaller Group I-1 occupancies.

403.8.1.2 Employee training. Employees shall be periodically instructed and kept informed of their duties and responsibilities under the plan. Such instruction shall be reviewed by employees at intervals not exceeding two months. A copy of the plan shall be readily available at all times within the facility.

❖ These types of facilities are normally occupied by people who have the ability to evacuate or relocate with a certain level of assistance from the staff; therefore, employee training is critical. Again, residents in Group I-1 Condition 2 occupancies will need more evacuation assistance than in Group I-1 Condition 1 occupancies. Group I-1 Condition 2 occupancies utilize the concept of smoke compartments. Additional training in this regard is necessary for employees. This section requires that training occur every 2 months because the needs of the occupants may change over time as certain physical or mental conditions progress or new occupants arrive.

403.8.1.3 Resident training. Residents capable of assisting in their own evacuation shall be trained in the proper actions to take in the event of a fire. In Group I-1 Condition 2 occupancies, training shall include evacuation through an adjacent smoke compartment and then to an exterior assembly point. The training shall include actions to take if the primary escape route is blocked. Where the resident is given rehabilitation or habilitation training, methods of fire prevention and actions to take in the event of a fire shall be a part of the rehabilitation training program. Residents shall be trained to assist each other in case of fire to the extent their physical and mental abilities permit them to do so without additional personal risk.

❖ As noted, Group I-1 occupants are capable of responding to an emergency but will most likely need direction from staff and perhaps physical assistance to ensure the appropriate response. This is more the

INTERNATIONAL CODE COUNCIL®
Copyright © 2015 ICC. ALL RIGHTS RESERVED. Accessed by David Dammon on Jun 21, 2017 12:30:52 PM pursuant to License Agreement with ICC. No further reproduction or distribution authorized. ANY UNAUTHORIZED REPRODUCTION OR DISTRIBUTION IS A VIOLATION OF THE FEDERAL COPYRIGHT ACT AND THE LICENSE AGREEMENT, AND SUBJECT TO CIVIL AND CRIMINAL PENALTIES THEREUNDER.

case with Group I-1 Condition 2 occupancies. Unlike other Group I occupancies, I-1 occupancies rely on the abilities of residents to take some level of responsibility for their own evacuation or relocation; therefore, training residents in these occupancies is critical. One major element that must be communicated to residents is what to do when the main exit route is blocked.

If residents are receiving rehabilitation or habilitation, fire prevention and appropriate actions to take during a fire should be communicated as part of the sessions. This section also requires the occupants to assist one another as long as a physical or mental condition would not limit their ability to do so.

Since Group I-1 Condition 2 occupancies utilize the concept of smoke compartments, occupants must be trained to evacuate to the adjacent smoke compartment to the refuge area.

403.8.1.4 Drill frequency. In addition to the evacuation drills required in Section 405.2, employees shall participate in drills an additional two times a year on each shift. Twelve drills with all occupants shall be conducted in the first year of operation. Drills are not required to comply with the time requirements of Section 405.4.

❖ Occupants of Group I-1 facilities need to be reminded often of evacuation procedures given their sometimes limited abilities to recall procedures, changes in the residents' abilities over time and the introduction of new residents to the facility. Therefore, this section requires more frequent drills than Table 405.2. Employees on each shift are required to participate in additional drills. Each shift potentially has different staff and also different conditions due to the time of day. Another very specific difference from Table 405.2 is that such facilities are required to have, essentially, monthly drills for the first year. Over time the occupants and staff will change, but this sets the tone for how the facility operates. This also increases staff awareness of procedures.

403.8.1.5 Drill times. Drill times are not required to comply with Section 405.4.

❖ This provides the flexibility to create an appropriate schedule that works with these facilities. The residents participate, making it slightly more difficult to follow Section 405.4.

403.8.1.6 Resident participation in drills. Emergency evacuation drills shall involve the actual evacuation of residents to a selected assembly point and shall provide residents with experience in exiting through all required exits. All required exits shall be used during emergency evacuation drills.

❖ This section clarifies that drills must include all occupants, not just staff. In other institutional occupancies where the occupants are not capable or it is not desirable to evacuate them on their own, inclusion of the residents in drills is not necessary. Since dependence is placed on the residents to react in Group I-1 occupancies, their involvement is critical. This section is designed to promote resident familiarity with all the exits that are available in the building. This will help residents understand that, during emergencies, there are multiple paths to safety. Note that, in Group I-1 Condition 2 occupancies, smoke compartments are used and occupants will typically need to simply move to the adjoining smoke compartment to defend in place.

403.8.1.7 Emergency evacuation drill deferral. In severe climates, the *fire code official* shall have the authority to modify the emergency evacuation drill frequency specified in Section 405.2.

❖ It is not appropriate to send residents of Group I-1 occupancies outside during extreme weather conditions unnecessarily. Generally, the occupants of such facilities have failing health or are more susceptible to illness than the average population. This section provides the authority to the fire code official to make adjustments for these reasons.

403.8.2 Group I-2 occupancies. Group I-2 occupancies shall comply with Sections 403.8.2.1 through 403.8.2.3 as well as 401 and 404 through 406.

❖ Group I-2 occupancies as well as ambulatory care facilities and Group I-1 Condition 2 occupancies use a "defend-in-place" method of occupant protection. Defend in place is a widely used approach to protect occupants who are bedridden, unconscious or otherwise unable to self-preserve in a fire event. The method relies on both active and passive fire protection systems as well as the actions of trained staff and responders. The heavy emphasis on staff action requires a comprehensive fire safety and evacuation plan. Any building containing an ambulatory healthcare occupancy will, by definition, contain occupants who may be incapable of self-preservation. The intent of the current IBC requirements for Group I-2 occupancies is to create a type of defend-in-place environment. Sections 403.8.2.1 through 403.8.2.3 provide requirements for Group I-2 occupancies that are more specific than what is provided in Sections 404 and 405.

403.8.2.1 Fire evacuation plans. The fire safety and evacuation plans required by Section 404 shall include a description of special staff *actions*. Plans shall include all of the following in addition to the requirements of Section 404.

1. Procedures for evacuation for patients with needs for containment or restraint and post-evacuation containment, where present.
2. A written plan for maintenance of the means of egress.
3. Procedure for a defend-in-place strategy.
4. Procedures for a full-floor or building evacuation, where necessary.

❖ Staff actions are critical to the success of a fire evacuation plan for Group I-2 occupancies; therefore, procedures need to be documented. In addition to the requirements of Section 404, this section provides four more-specific requirements for the fire evacua-

INTERNATIONAL CODE COUNCIL®
Copyright © 2015 ICC. ALL RIGHTS RESERVED. Accessed by David Dammon on Jun 21, 2017 12:30:52 PM pursuant to License Agreement with ICC. No further reproduction or distribution authorized. ANY UNAUTHORIZED REPRODUCTION OR DISTRIBUTION IS A VIOLATION OF THE FEDERAL COPYRIGHT ACT AND THE LICENSE AGREEMENT, AND SUBJECT TO CIVIL AND CRIMINAL PENALTIES THEREUNDER.

tion plan. These requirements include how patients are to be evacuated and documentation of maintenance plans for means of egress in such facilities. Procedures for defend-in-place strategy must be documented so that each shift is familiar with those strategies. Defend-in-place procedures depend upon the use of refuge areas that need to be maintained. In some cases, the defend-in-place evacuation may need to escalate to full-floor or building evacuation. Such evacuations need to be documented, as well.

403.8.2.2 Fire safety plans. A copy of the plan shall be maintained at the facility at all times. Plans shall include all of the following in addition to the requirements of Section 404:

1. Location and number of patient sleeping rooms and operating rooms.
2. Location of adjacent smoke compartments or refuge areas.
3. Path of travel to adjacent smoke compartments.
4. Location of special locking, delayed egress or access control arrangements.
5. Location of elevators utilized for patient movement in accordance with the fire safety plan, where provided.

❖ Fire safety plans should describe the method of notifying occupants, including the use of a private-mode alarm system as allowed by code. Procedures for dealing with occupants in a defend-in-place strategy should also be described so that it is clear what the staff will be trained on and what the first responders should expect to encounter. It is imperative that the building and fire code officials know the size and location of the facility as well as the number of patients who are incapable of self-preservation. This information will help the building official determine the proper classification and mitigations required. It will also allow the fire official to preplan the response for a particular building. Any special characteristics of the means of egress, such as path to the adjacent smoke compartment and special locking arrangements, should also be described to aid in verifying code compliance. Practically, these documents will be the basis for staff training as well.

403.8.2.3 Emergency evacuation drills. Emergency evacuation drills shall comply with Section 405.

Exceptions:

1. The movement of patients to safe areas or to the exterior of the building is not required.
2. Where emergency evacuation drills are conducted after visiting hours or where patients or residents are expected to be asleep, a coded announcement shall be an acceptable alternative to audible alarms.

❖ Group I-2 occupancies are required to comply with the evacuation drill frequency established in Section 405. However, Group I-2 occupancies do not evacuate occupants from the building but instead utilize a defend-in-place strategy. This is related to the conditions of the patients found in such facilities. Therefore, Exception 1 clarifies that evacuation to the exterior is not required. Exception 2 allows the use of coded signals for staff evacuation drills. This avoids disturbing patients or alarming visitors. The drills in such facilities do not involve the patients.

403.8.3 Group I-3 occupancies. Group I-3 occupancies shall comply with Sections 403.8.3.1 through 403.8.3.4.

❖ Group I-3 occupancies are institutional occupancies where the occupants are under restraint. Typically, the occupants are physically able but are restrained from moving freely. Several levels of restraint in such occupancies are described in more detail in Chapter 2 under the definition of "Group I-3 occupancies." As in Group I-2 occupancies, the only participants in drills will be staff. These requirements are in addition to the requirements of Sections 404 and 405.

403.8.3.1 Employee training. Employees shall be instructed in the proper use of portable fire extinguishers and other manual fire suppression equipment. Training of new employees shall be provided promptly upon entrance to duty. Refresher training shall be provided not less than annually.

❖ Group I-3 facilities are more likely to have incendiary activity; therefore, staff must be trained in the use of various fire protection equipment, including fire extinguishers. Additionally, any new employees must be immediately trained in the use of this equipment. Because of difficulties presented by relocating or evacuating confinees, fires should be managed, when practical, to minimize the threat to occupants. Since combustibles are strictly limited in most of these occupancies, accidental fires generally remain small—at least long enough to be manageable. Incendiary fires often pose greater challenges and generally reflect a breakdown in security discipline. Notwithstanding this problem, fire extinguisher training, and even incipient fire brigades, may be especially effective elements of a fire safety plan in restrained-care occupancies. This training is required of new employees before they can begin their official duties. This training must then be refreshed once a year.

403.8.3.2 Employee staffing. Group I-3 occupancies shall be provided with 24-hour staffing. An employee shall be within three floors or 300 feet (91 440 mm) horizontal distance of the access door of each resident housing area. In Group I-3 Conditions 3, 4 and 5, as defined in Chapter 2, the arrangement shall be such that the employee involved can start release of locks necessary for emergency evacuation or rescue and initiate other necessary emergency actions within 2 minutes of an alarm.

Exception: An employee shall not be required to be within three floors or 300 feet (91 440 mm) horizontal distance of the access door of each resident housing area in areas in which all locks are unlocked remotely and auto-

INTERNATIONAL CODE COUNCIL®
Copyright © 2015 ICC. ALL RIGHTS RESERVED. Accessed by David Dammon on Jun 21, 2017 12:30:52 PM pursuant to License Agreement with ICC. No further reproduction or distribution authorized. ANY UNAUTHORIZED REPRODUCTION OR DISTRIBUTION IS A VIOLATION OF THE FEDERAL COPYRIGHT ACT AND THE LICENSE AGREEMENT, AND SUBJECT TO CIVIL AND CRIMINAL PENALTIES THEREUNDER.

matically in accordance with Section 408.4 of the *International Building Code*.

❖ Group I-3 occupancies place a lot of importance on the actions of staff in emergencies. This section provides specific direction regarding the staff's locations and actions in an emergency. Staff members responsible for initiating the relocation or evacuation of confinees must be constantly alert to potential fire hazards and incipient fires. If a fire occurs, 2 minutes will seem like a long time to confined people. When a remote-release locking system is neither required nor provided, the number of locks requiring manual unlocking should be limited with due regard to staff and confinee safety. This may require additional staff to accomplish the unlocking procedure in a timely manner. This section does have a specific exception for systems that utilize a remote locking and unlocking system.

403.8.3.3 Notification. Provisions shall be made for residents in Group I-3 Conditions 3, 4 and 5, as defined in Chapter 2, to readily notify an employee of an emergency.

❖ Group I-3 occupancies under Use Conditions 3, 4 and 5 where the occupants are very limited in their freedom would be considered moderate- and high-security facilities. Because the occupants are so limited and could be located remotely from guards or other staff members as a result of confinement within a compartment, a method is necessary for staff notification of a fire. In open cell blocks, staff members may be within earshot of occupants but generally this requirement necessitates monitors, intercoms or other communication appliances.

403.8.3.4 Keys. Keys necessary for unlocking doors installed in a *means of egress* shall be individually identifiable by both touch and sight.

❖ Keys must be distinctive from one another so they may be promptly and reliably identified under emergency conditions. Fumbling for the right key can cost valuable seconds, and possibly lives, in the event of a fire (see Commentary Figure 403.8.3.4).

403.9 Group M occupancies. An *approved* fire safety and evacuation plan in accordance with Section 404 shall be prepared and maintained for buildings containing a Group M occupancy where the Group M occupancy has an *occupant load* of 500 or more persons or more than 100 persons above or below the lowest l*evel of exit discharge* and for buildings containing both a Group M occupancy and an atrium.

❖ This section requires a fire and evacuation plan when the number of occupants in a Group M occupancy becomes large. An increased risk is also addressed when such occupants are not located on the level of exit discharge. This is the same requirement as that provided for Group B and F occupancies. However, Group M occupants may not be quite as familiar with their surroundings but the staff in such facilities are available to direct occupants during an emergency. Also, this is an occupancy where people do not sleep (see Sections 403.4 and 403.6).

403.10 Group R occupancies. Group R occupancies shall comply with Sections 403.10.1 through 403.10.3.6.

❖ This section provides fire safety and evacuation plans specific to Group R-1, R-2 and R-4 occupancies. These are occupancies where people sleep, thus the need for fire safety and evacuation plans is more critical.

403.10.1 Group R-1 occupancies. An approved fire safety and evacuation plan in accordance with Section 404 shall be prepared and maintained for Group R-1 occupancies. Group R-1 occupancies shall comply with Sections 403.10.1.1 through 403.10.1.3.

❖ Group R-1 occupancies are residential occupancies that include hotels and boarding houses. These occupancies contain residents that are temporary in nature; therefore, they are more unfamiliar with their surroundings than Group R-2 and R-3 occupants. Sections 403.10.1.1 through 403.10.1.3 provide specific requirements that take into account characteristics of Group R-1 occupancies.

403.10.1.1 Evacuation diagrams. A diagram depicting two evacuation routes shall be posted on or immediately adjacent to every required egress door from each hotel or motel sleeping unit.

❖ This section requires an evacuation plan diagram to be posted in each hotel or motel sleeping unit. Both the format of the diagram and its location must be approved by the fire code official. This diagram is to display both a primary and a secondary exit route in case a fire or other obstacle blocks the primary route. The plan should be prepared so that the orientation of rooms in relation to the exits is accurately portrayed and easily discernible to the occupant. Often, additional safety information is included on the plan diagram, such as fire alarm box and fire extinguisher locations; however, those added items should not clutter the diagram to the extent that they detract from

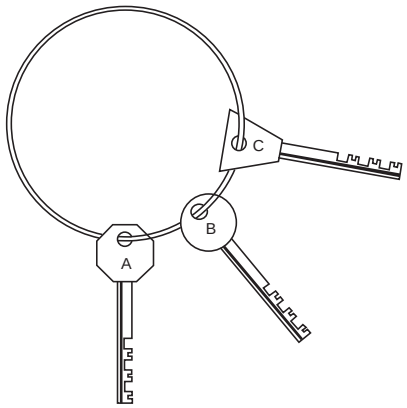

Figure 403.8.3.4
TACTILE CODING OF INSTITUTIONAL KEYS

INTERNATIONAL CODE COUNCIL®
Copyright © 2015 ICC. ALL RIGHTS RESERVED. Accessed by David Dammon on Jun 21, 2017 12:30:52 PM pursuant to License Agreement with ICC. No further reproduction or distribution authorized. ANY UNAUTHORIZED REPRODUCTION OR DISTRIBUTION IS A VIOLATION OF THE FEDERAL COPYRIGHT ACT AND THE LICENSE AGREEMENT, AND SUBJECT TO CIVIL AND CRIMINAL PENALTIES THEREUNDER.

the clarity of its primary purpose of showing exit routes and exit locations.

403.10.1.2 Emergency duties. Upon discovery of a fire or suspected fire, hotel and motel employees shall perform the following duties:

1. Activate the fire alarm system, where provided.
2. Notify the public fire department.
3. Take other action as previously instructed.

❖ This section contains specific actions employees are to take if a fire occurs. The requirement that they first activate the fire alarm and then call the fire department is intended to avoid a situation in which the employee first investigates or calls security. Immediate notification of the occupants facilitates evacuation or relocation as necessary. Notifying the fire department as early as possible will enable fire fighters to reach the building at an earlier stage in the fire.

403.10.1.3 Fire safety and evacuation instructions. Information shall be provided in the fire safety and evacuation plan required by Section 404 to allow guests to decide whether to evacuate to the outside, evacuate to an *area of refuge*, remain in place, or any combination of the three.

❖ The procedures for isolating occupants from a fire depend on the layout and overall fire protection design of a building. For example, a hotel in a high-rise building may be specifically designed to evacuate in phases; therefore, the occupants need to know the procedures to facilitate a smooth and organized reaction to a fire. The appropriate actions that are available should be communicated. Options may include occupants remaining in their rooms, evacuating or relocating.

403.10.2 Group R-2 occupancies. Group R-2 occupancies shall comply with Sections 403.10.2.1 through 403.10.2.3.

❖ Group R-2 occupancies are permanent residential occupancies that house multiple occupants in multiple dwelling units. Typically, this includes apartment buildings, dormitories and other related residential occupancies. Generally, the occupants tend to be familiar with their surroundings but may be sleeping when an emergency occurs. Sections 403.10.2.1 through 403.10.2.3 provide specific requirements in addition to the general requirements of Chapter 4. This section deals with Group R-2 occupancies generally and, more specifically, with Group R-2 college and university buildings.

403.10.2.1 College and university buildings. An *approved* fire safety and evacuation plan in accordance with Section 404 shall be prepared and maintained for Group R-2 college and university buildings. Group R-2 college and university buildings shall comply with Sections 403.10.2.1.1 and 403.10.2.1.2.

❖ This section establishes the applicability of certain provisions to college and university residence halls and dormitories classified in Group R-2. Fire represents a significant risk to life and property in dormitory occupancies, particularly at colleges and universities. The large number of young people living in close proximity to one another creates the potential for a relatively small fire to have serious and possibly fatal consequences. Applying these requirements in conjunction with the drills required by Table 405.2 will enhance the likelihood of occupants being familiar with exiting buildings under emergency conditions at varying times throughout the day.

403.10.2.1.1 First emergency evacuation drill. The first emergency evacuation drill of each school year shall be conducted within 10 days of the beginning of classes.

❖ The residents of Group R-2 college and dormitory occupancies typically change each year. It is important, therefore, that the first evacuation drill occurs within the first 10 days of school.

403.10.2.1.2 Time of day. Emergency evacuation drills shall be conducted at different hours of the day or evening, during the changing of classes, when school is at assembly, during recess or gymnastic periods or during other times to avoid distinction between drills and actual fires. One required drill shall be held during hours after sunset or before sunrise.

❖ If evacuation drills are done routinely, they will become easily distinguishable as drills and not an actual fire. This is potentially dangerous because the behavior patterns will be different and actual preparedness for an emergency will be lessened. Time of day, therefore, should be varied whether or not it is convenient. A fire will not differentiate between a convenient and an inconvenient time. At least one of the drills required by Table 405.2 must be conducted between sunset and sunrise so that residents can experience nighttime evacuation.

403.10.2.2 Emergency guide. Fire emergency guides shall be provided for Group R-2 occupancies. Guide contents, maintenance and distribution shall comply with Sections 403.10.2.2.1 through 403.10.2.2.3.

❖ The next few sections lay out the requirements for emergency guides for Group R-2 occupancies. This includes what is to be in the guide, obtaining approval from the fire code official and distribution requirements. The guide in general will better inform the residents and provide preplanning tools for the fire department.

403.10.2.2.1 Guide contents. A fire emergency guide shall describe the location, function and use of fire protection equipment and appliances accessible to residents, including fire alarm systems, smoke alarms and portable fire extinguishers. Guides shall include an emergency evacuation plan for each *dwelling unit*.

❖ The guide must contain the intended evacuation plan for each unit and information about the various fire protection features provided to occupants. Providing this information to residents increases the likelihood of a proper response, which in turn increases resident

INTERNATIONAL CODE COUNCIL®
Copyright © 2015 ICC. ALL RIGHTS RESERVED. Accessed by David Dammon on Jun 21, 2017 12:30:52 PM pursuant to License Agreement with ICC. No further reproduction or distribution authorized. ANY UNAUTHORIZED REPRODUCTION OR DISTRIBUTION IS A VIOLATION OF THE FEDERAL COPYRIGHT ACT AND THE LICENSE AGREEMENT, AND SUBJECT TO CIVIL AND CRIMINAL PENALTIES THEREUNDER.

safety and makes the fire department's job a little easier when responding to a scene.

403.10.2.2.2 Emergency guide maintenance. Emergency guides shall be reviewed and approved by the *fire code official*.

❖ This section makes it clear that the fire code official must sign off on the emergency guide contents. This will make fire department response consistent with the features of the building.

403.10.2.2.3 Emergency guide distribution. A copy of the emergency guide shall be given to each tenant prior to initial occupancy.

❖ This section requires that a guide illustrating the fire safety features of the building be provided to each dwelling unit. There is no purpose in having a guide to assist residents if there is no requirement that it be distributed. This must occur before they become occupants.

403.10.2.3 Evacuation diagrams for dormitories. A diagram depicting two evacuation routes shall be posted on or immediately adjacent to every required egress door from each dormitory *sleeping unit*. Evacuation diagrams shall be reviewed and updated as needed to maintain accuracy.

❖ The same concept is used for Group R-1 occupancies; this simply increases the information available to occupants. Group R-2 dormitory occupants are typically more transient than most occupants of Group R-2 occupancies (see commentary for Section 403.10.1.1).

403.10.3 Group R-4 occupancies. An *approved* fire safety and evacuation plan in accordance with Section 404 shall be prepared and maintained for Group R-4 occupancies. Group R-4 occupancies shall comply with Sections 403.10.3.1 through 403.10.3.6.

❖ A Group R-4 occupancy is a residential care/assisted living facility for more than five but not more than 16 residents. The occupants are similar to those found in a Group I-1 occupancy; therefore, they are capable of self-preservation but, may have mental or physical conditions that could impede their reactions.

403.10.3.1 Fire safety and evacuation plan. The fire safety and evacuation plan required by Section 404 shall include special employee actions, including fire protection procedures necessary for residents, and shall be amended or revised upon admission of a resident with unusual needs.

❖ This section is in addition to the general requirements found in Section 404. It specifies that requirements based on the particular needs of residents must be included as part of the plan. These plans must be reviewed each time a new occupant arrives to assess any special features that need to be included in the plan to address those particular needs. This is the same requirement as provided for Group I-1 occupancies.

403.10.3.1.1 Fire safety plans. A copy of the plan shall be maintained at the facility at all times. Plans shall include the following in addition to the requirements of Section 404:

1. Location and number of resident sleeping rooms.
2. Location of special locking or egress control arrangements.

❖ This section requires that fire safety plans in Group R-4 occupancies provide the location and number of residents sleeping and any special locking or egress control arrangements. This assists in search and rescue and understanding how the residents may be hampered in their evacuation. This information is critical for preplanning by both staff and the fire department. This is the same requirement as provided for Group I-1 occupancies (see Section 403.8.1.1.2).

403.10.3.2 Employee training. Employees shall be periodically instructed and kept informed of their duties and responsibilities under the plan. Records of instruction shall be maintained. Such instruction shall be reviewed by employees at intervals not exceeding two months. A copy of the plan shall be readily available at all times within the facility.

❖ These types of facilities are normally occupied by people who have the ability to evacuate or relocate with a certain level of assistance from the staff; therefore, employee training is critical. Residents of Group R-4 Condition 2 occupancies will need more assistance in evacuation than in Group R-4 Condition 1. This section requires that training occur every 2 months because the needs of the occupants may change over time as certain physical or mental conditions progress or new occupants arrive.

403.10.3.3 Resident training. Residents capable of assisting in their own evacuation shall be trained in the proper actions to take in the event of a fire. The training shall include actions to take if the primary escape route is blocked. Where the resident is given rehabilitation or habilitation training, methods of fire prevention and actions to take in the event of a fire shall be a part of the rehabilitation training program. Residents shall be trained to assist each other in case of fire to the extent their physical and mental abilities permit them to do so without additional personal risk.

❖ As noted, Group R-4 occupants are capable of responding to an emergency, but most likely will need direction from staff and perhaps physical assistance. This is more the case with Group R-4 Condition 2 occupancies. Group R-4 occupancies, similar to Group I-1 occupancies, rely on the abilities of residents to take some level of responsibility for their own evacuation or relocation; therefore, training residents in these occupancies is critical. One major element that must be communicated to residents is what to do when the main exit route is blocked.

If residents are receiving rehabilitation or habilitation, fire prevention and appropriate actions to take during a fire should be communicated as part of the sessions. This section also requires the occupants to

INTERNATIONAL CODE COUNCIL®
Copyright © 2015 ICC. ALL RIGHTS RESERVED. Accessed by David Dammon on Jun 21, 2017 12:30:52 PM pursuant to License Agreement with ICC. No further reproduction or distribution authorized. ANY UNAUTHORIZED REPRODUCTION OR DISTRIBUTION IS A VIOLATION OF THE FEDERAL COPYRIGHT ACT AND THE LICENSE AGREEMENT, AND SUBJECT TO CIVIL AND CRIMINAL PENALTIES THEREUNDER.

assist one another as long as a physical or mental condition would not limit their ability to do so.

Since Group I-1 Condition 2 occupancies utilize the concept of smoke compartments, occupants must be trained how to evacuate to the adjacent smoke compartment to the refuge area.

403.10.3.4 Drill frequency. In addition to the evacuation drills required in Section 405.2, employees shall participate in drills an additional two times a year on each shift. Twelve drills with all occupants shall be conducted in the first year of operation.

❖ Occupants of Group R-4 facilities need to be reminded often of evacuation procedures given their sometimes limited capabilities to recall procedures, changes in their abilities over time and the introduction of new residents to the facility. Therefore, this section requires more frequent drills than Table 405.2. Employees on each shift are required to participate in additional drills. Each shift potentially has different staff and also different conditions due to the time of day. Another very specific difference from Table 405.2 is that such facilities are required to have, essentially, monthly drills for the first year. Over time the occupants and staff will change, but this sets the tone for how the facility operates. This also increases staff awareness of procedures.

403.10.3.5 Drill times. Drill times are not required to comply with Section 405.4.

❖ This provides the flexibility to create an appropriate schedule that works with Group R-4 facilities. The residents participate, making it slightly more difficult to follow Section 405.4.

403.10.3.6 Resident participation in drills. Emergency evacuation drills shall involve the actual evacuation of residents to a selected assembly point and shall provide residents with experience in exiting through all required exits. All required exits shall be used during emergency evacuation drills.

Exception: Actual exiting from emergency escape and rescue windows shall not be required. Opening the emergency escape and rescue window and signaling for help shall be an acceptable alternative.

❖ This section clarifies that drills must include all occupants, not just the staff. Since dependence is placed on the residents to react in Group R-4 occupancies, their involvement is critical. This section is designed to promote resident familiarity with all the exits that are available in the building. This will help residents understand that, during emergencies, there are multiple paths to safety.

403.11 Special uses. Special uses shall be in accordance with Sections 403.11.1 through 403.11.4.

❖ The next several sections are focused on special uses that require fire safety and evacuation plans, including:

- Malls and mall buildings.
- High-rise buildings.
- Underground buildings.
- Occupant evacuation elevators.

403.11.1 Covered and open mall buildings. Covered and open mall buildings shall comply with the requirements of Sections 403.11.1.1 through 403.11.1.6.

❖ A covered mall building is a special use as described in Section 402 of the IBC and as defined in Chapter 2 of the code. Generally, a covered mall building is a single building housing multiple occupancies including, but not limited to, retail, assembly, drinking, dining and entertainment in which two or more tenants have a main entrance into a mall area. A mall area is also defined in Chapter 2 of the IBC as "a roofed or covered mall building that serves as access for two or more tenants and does not exceed three levels that are open to each other"; therefore, it presents some unique issues concerning fire department response to an emergency.

An open mall is an uncovered common pedestrian walk that is open to the sky above and to tenant spaces within the open mall building, and typically connects to the anchor buildings. Unless noted otherwise, open malls must comply with all IBC provisions. The open mall building includes all of the buildings wherein two or more tenants have a main entrance into one or more open malls. Because open malls are characterized by there not being a roof connecting one side of the pedestrian mall to the other, the open mall "building" may actually be a collection of separate buildings that all rely on a shared pedestrian concourse for egress. Similar to the covered mall building, the open mall "building" does not include the anchor buildings. Unless noted otherwise, open mall buildings have to comply with all provisions for covered mall buildings.

The requirements of Sections 403.11.1.1 through 403.11.1.6 are related primarily to the complexity of the building and provide appropriate information to emergency responders so they can more effectively respond to a fire or other emergency.

403.11.1.1 Malls and mall buildings exceeding 50,000 square feet. An *approved* fire safety and evacuation plan in accordance with Section 404 shall be prepared and maintained for covered malls exceeding 50,000 square feet (4645 m^2) in aggregate floor area and for open mall buildings exceeding 50,000 square feet (4645 m^2) in aggregate area within the perimeter line.

❖ The requirement for fire safety and evacuation plans for both covered malls and open malls is only applicable when such malls become larger. Smaller malls simplify the evacuation process and detailed information such as a lease plan is not required.

403.11.1.2 Lease plan. In addition to the requirements of Section 404.2.2, a lease plan that includes the following information shall be prepared for each covered and open mall building:

1. Each occupancy, including identification of tenant.

INTERNATIONAL CODE COUNCIL®
Copyright © 2015 ICC. ALL RIGHTS RESERVED. Accessed by David Dammon on Jun 21, 2017 12:30:52 PM pursuant to License Agreement with ICC. No further reproduction or distribution authorized. ANY UNAUTHORIZED REPRODUCTION OR DISTRIBUTION IS A VIOLATION OF THE FEDERAL COPYRIGHT ACT AND THE LICENSE AGREEMENT, AND SUBJECT TO CIVIL AND CRIMINAL PENALTIES THEREUNDER.

2. *Exits* from each tenant space.
3. Fire protection features, including the following:
   3.1. Fire department connections.
   3.2. *Fire command center*.
   3.3. Smoke management system controls.
   3.4. Elevators, elevator machine rooms and controls.
   3.5. Hose valve outlets.
   3.6. Sprinkler and standpipe control valves.
   3.7. Automatic fire-extinguishing system areas.
   3.8. Automatic fire detector zones.
   3.9. *Fire barriers*.

❖ Item 1 assists the emergency responders by requiring detailed documentation regarding the identification of each tenant, location and occupancy. This will let them locate the highest density of occupants and the types of hazards that may be anticipated.

Item 2 is the identification of exits. This will assist emergency responders in the identification of necessary access routes and how they may interact with the exits.

Item 3 is a report of the available fire protection features. These features, such as identification of the fire detector zones, will help responders quickly assess where a fire is located. If the mall has a smoke control system, access to the controls may be necessary; therefore, the location of those controls is critical. This information gives the fire department a general feel for how the building is intended to perform during a fire. This information is valuable in the sense that they will have more information to promote effective use of the fire protection features installed. If little information is provided, the fire department could actually disrupt the essential activation of a system, such as smoke control.

403.11.1.3 Lease plan approval. The lease plan shall be submitted to the *fire code official* for approval, and shall be maintained on site for immediate reference by responding fire service personnel.

❖ The lease plan must be approved. This allows the fire department to determine whether all necessary information, from the perspective of the responders, is addressed. Also, this section requires that the lease plan is available on site for use by the emergency responders.

403.11.1.4 Lease plan revisions. The lease plans shall be revised annually or as often as necessary to keep them current. Modifications or changes in tenants or occupancies shall not be made without prior approval of the *fire code official* and building official.

❖ This section provides the authority to require a review of the lease plan at least once each year. In addition, the fire code official has the authority to ask for more frequent reviews of the plan.

If a change occurs in the building, the lease plan may no longer be valid; therefore, this section requires that no changes to any tenant space be made without approval and review by the fire code official. These changes would have to be documented in the lease plan.

403.11.1.5 Tenant identification. Tenant identification shall be provided for secondary *exits* from occupied tenant spaces that lead to an *exit corridor* or directly to the exterior of the building. Tenant identification shall be posted on the exterior side of the *exit* or exit access door and shall identify the business name and address using plainly legible letters and numbers that contrast with their background.

Exception: Tenant identification is not required for anchor stores.

❖ Identifying secondary exits from tenant spaces that enter into an exit passageway or lead directly outside is a critical need for emergency responders. This identification needs to contain the business name and address. Having multiple tenants within a building makes this identification necessary. Anchor stores do not need these labels, since they are fairly recognizable without them.

403.11.1.6 Unoccupied tenant spaces. The fire safety and evacuation plan shall provide for compliance with the requirements for unoccupied tenant spaces in Section 311.

❖ This section addresses the hazards posed by a tenant space that is not in use or that is not under the supervision of employees. These spaces are more likely to be targeted by vandalism and possibly incendiary activity. Generally, a fire can grow unnoticed in such spaces as a result of the lack of supervision or activity in the space. This section simply references Section 311.6, where requirements dealing with vacant premises are found. To reduce the risks in unsupervised tenant spaces, several requirements in Section 311.6 focus on reducing the fire ignition, growth and spread potential by limiting combustibles in the space, securing the space through the use of locks and installing fire separations constructed of $^1/_2$-inch-thick (12.7 mm) gypsum or similar materials. Note that mall buildings are required to be sprinklered throughout and that the systems in the tenant spaces must be independent of the mall area.

403.11.2 High-rise buildings. An *approved* fire safety and evacuation plan in accordance with Section 404 shall be prepared and maintained for high-rise buildings.

❖ High-rise buildings can involve many different uses, such as business, assembly and residential. The types of occupancies on their own may or may not have specific requirements for fire safety and evacuation plans, but due to the fact that the building is tall, evacuation and fire safety become more complex. Such buildings tend to use phased evacuation, but may have other unique evacuation requirements such as the need for full-building evacuation or assisting those who cannot use stairways. The types of evacuation strategies for high rises vary. More detailed discussion on these strategies can be found in the SFPE *Engineering Guide: Fire Safety for Very*

INTERNATIONAL CODE COUNCIL®
Copyright © 2015 ICC. ALL RIGHTS RESERVED. Accessed by David Dammon on Jun 21, 2017 12:30:52 PM pursuant to License Agreement with ICC. No further reproduction or distribution authorized. ANY UNAUTHORIZED REPRODUCTION OR DISTRIBUTION IS A VIOLATION OF THE FEDERAL COPYRIGHT ACT AND THE LICENSE AGREEMENT, AND SUBJECT TO CIVIL AND CRIMINAL PENALTIES THEREUNDER.

Tall Buildings (ICC and SFPE 2013) and *Egress Design Solutions* (Tubbs and Meacham 2005).

403.11.3 Underground buildings. An *approved* fire safety and evacuation plan in accordance with Section 404 shall be prepared and maintained for underground buildings.

❖ Like high-rise buildings, underground buildings can contain a variety of uses. Those uses may not, on their own, require unique fire safety and evacuation plans, but since the building is located below grade, evacuation and fire fighting become more complex. Therefore, it is important that a fire safety and evacuation plan be required in accordance with Section 404. Note that Item 4 in Section 404.2.1 specifically addresses those unable to use the stairways.

403.11.4 Buildings using occupant evacuation elevators. In buildings using occupant evacuation elevators in accordance with Section 3008 of the *International Building Code*, the fire safety and evacuation plan and the training required by Sections 404 and 406, respectively, shall incorporate specific procedures for the occupants using such elevators.

❖ This is not a specific use but instead is an evacuation strategy that is very different than what the general public has been taught about the use of elevators during fires. The successful use of such elevators depends greatly on preplanning and training as to how they are to be used by building occupants. This section requires that when these elevators are used, specific procedures be worked into the fire safety and evacuation plans and into employee training. Note that Item 3 in Section 404.2.1 specifically requires these procedures to be included in the fire evacuation plans. It should be noted that this ties in with the requirements for high-rise buildings and how they are intended to be evacuated. As with high-rise buildings, a good resource for extensive discussion on occupant evacuation and evacuation using elevators can be found in the SFPE *Engineering Guide: Fire Safety for Very Tall Buildings* and *Egress Design Solutions* (Tubbs and Meacham 2005).

403.12 Special requirements for public safety. Special requirements for public safety shall be in accordance with Sections 403.12.1 through 403.12.3.3.

❖ The following requirements authorize a jurisdiction to require fire watches, address large public assemblies and provide specific requirements for crowd managers.

403.12.1 Fire watch personnel. Where, in the opinion of the *fire code official*, it is essential for public safety in a place of assembly or any other place where people congregate, because of the number of persons, or the nature of the performance, exhibition, display, contest or activity, the *owner*, agent or lessee shall provide one or more fire watch personnel, as required and *approved*. Fire watch personnel shall comply with Sections 403.12.1.1 and 403.12.1.2.

❖ Even though Chapter 31 requires standby personnel in tents and membrane structures because of the inherently higher life safety risks associated with such occupancies, this section gives the fire code official the authority to require fire watch personnel in indoor or outdoor venues where people congregate where the number of persons or the nature of the performance, exhibition, display, contest or activity is such that the presence of fire watch personnel are essential to public safety (see commentary, Section 202, definition of "Fire watch").

403.12.1.1 Duty times. Fire watch personnel shall remain on duty while places requiring a fire watch are open to the public, or when an activity requiring a fire watch is being conducted.

❖ This section establishes the key times a fire watch should be conducted. Once it is established that a fire watch is necessary, it is critical that it be conducted while the public in present. Also, it may be necessary for the fire watch to occur based upon a specific hazard or activity even while not open to the public.

403.12.1.2 Duties. On-duty fire watch personnel shall have the following responsibilities:

1. Keep diligent watch for fires, obstructions to *means of egress* and other hazards.
2. Take prompt measures for remediation of hazards and extinguishment of fires that occur.
3. Take prompt measures to assist in the evacuation of the public from the structures.

❖ Fire watch personnel provide temporary fire safety where there are potential fire and life safety hazards that could affect large numbers of assembled people. Such personnel does not simply watch for a fire but is also present to prevent fire by identifying and controlling fire hazards; monitoring and maintaining the availability of the means of egress; and taking initial action to suppress a fire should one occur. Fire watch personnel also provide a method of notifying the fire department if a fire should occur.

403.12.2 Public safety plan for gatherings. Where the *fire code official* determines that an indoor or outdoor gathering of persons has an adverse impact on public safety through diminished access to buildings, structures, fire hydrants and fire apparatus access roads or where such gatherings adversely affect public safety services of any kind, the *fire code official* shall have the authority to order the development of or prescribe a public safety plan that provides an *approved* level of public safety and addresses the following items:

1. Emergency vehicle ingress and egress.
2. Fire protection.
3. Emergency egress or escape routes.
4. Emergency medical services.
5. Public assembly areas.
6. The directing of both attendees and vehicles, including the parking of vehicles.
7. Vendor and food concession distribution.

INTERNATIONAL CODE COUNCIL®
Copyright © 2015 ICC. ALL RIGHTS RESERVED. Accessed by David Dammon on Jun 21, 2017 12:30:52 PM pursuant to License Agreement with ICC. No further reproduction or distribution authorized. ANY UNAUTHORIZED REPRODUCTION OR DISTRIBUTION IS A VIOLATION OF THE FEDERAL COPYRIGHT ACT AND THE LICENSE AGREEMENT, AND SUBJECT TO CIVIL AND CRIMINAL PENALTIES THEREUNDER.

8. The need for the presence of law enforcement.
9. The need for fire and emergency medical services personnel.

❖ This section is important because it grants the fire code official the authority to require the development of or to prescribe a specific plan for large gatherings. Such gatherings could include outdoor festivals, demonstrations or receptions. If such assemblies include the use of tents and canopies, Chapter 31 would also apply.

Again, the primary aim of this section is to address the fact that these large gatherings may hamper the ability of the fire department and other emergency responders to access and protect buildings and building occupants.

Further, this section provides some specific issues to be addressed, including: the direction of traffic; vendor and food concession distributors; and the need for law enforcement and medical services.

403.12.3 Crowd managers for gatherings exceeding 1,000 people. Where facilities or events involve a gathering of more than 1,000 people, crowd managers shall be provided in accordance with Sections 403.12.3.1 through 403.12.3.3.

❖ This section is similar to the requirement for standby personnel for tents in Section 3104.20. Large assemblies of people create the need for crowd management due to the increased potential for panic and fear in emergency situations. It is the intent of this section that crowd managers can be personnel already assigned and employed by the facility, provided that they are trained as crowd managers to fulfill this requirement. At the time of an emergency, the trained crowd managers would take on additional responsibilities to control and direct the audience or attendees in a safe manner.

403.12.3.1 Number of crowd managers. The minimum number of crowd managers shall be established at a ratio of one crowd manager for every 250 persons.

Exception: Where approved by the *fire code official*, the number of crowd managers shall be permitted to be reduced where the facility is equipped throughout with an *approved automatic sprinkler system* or based upon the nature of the event.

❖ The minimum number of crowd managers would be four, based on the minimum requirements of Section 403.12.3. Since the fire and life safety profile of a facility is improved where an automatic sprinkler system is installed throughout, the fire code official is authorized by this section to reduce the crowd manager-to-occupant ratio for events on a case-by-case basis (see commentary, Section 3104.20).

403.12.3.2 Training. Training for crowd managers shall be *approved*.

❖ Training is critical for crowd managers to be effective. This section provides the mechanism to ensure such training occurs. There are various crowd manager training courses available.

403.12.3.3 Duties. The duties of crowd managers shall include, but not be limited to:

1. Conduct an inspection of the area of responsibility and identify and address any egress barriers.
2. Conduct an inspection of the area of responsibility to identify and mitigate any fire hazards.
3. Verify compliance with all permit conditions, including those governing pyrotechnics and other special effects.
4. Direct and assist the event attendees in evacuation during an emergency.
5. Assist emergency response personnel where requested.
6. Other duties required by the *fire code official*.
7. Other duties as specified in the fire safety plan.

❖ The exact duties and responsibilities of individuals employed as crowd managers are not defined here other than the requirement that they be trained and present. They could serve as ushers, tour guides, service supervisors for table seating or in some other capacity related to making sure occupants are moved to or from assigned places in an orderly way. The key to the success of this section is that crowd managers must be trained in crowd management procedures appropriate to the activity being carried on in the facility and they must be present in the required numbers. Training of personnel and the duties assigned to them would have to be approved by the fire code official. See also the commentary to Section 3104.20 for further information on crowd managers.

SECTION 404
FIRE SAFETY, EVACUATION AND LOCKDOWN PLANS

404.1 General. Where required by Section 403, fire safety, evacuation and lockdown plans shall comply with Sections 404.2 through 404.4.1.

❖ This section simply states that all fire safety, evacuation and lockdown plans must comply with Section 404. Section 403 outlines, for many different occupancies and uses, when this section would apply. In addition, Section 403 provides specific requirements that are intended to be addressed along with the requirements in Section 404.

404.2 Contents. Fire safety and evacuation plan contents shall be in accordance with Sections 404.2.1 and 404.2.2.

❖ The two primary plans required by Section 404.3 are a fire evacuation plan and a fire safety plan. The fire evacuation plan focuses primarily on the procedures for the evacuation of the occupants in an emergency. The fire safety plan focuses on the overall understanding of the fire protection package of the building as it pertains to the layout of the building, the contents of the building, the means of egress system, the fire hazards and the identification of key contacts during an emergency.

INTERNATIONAL CODE COUNCIL®
Copyright © 2015 ICC. ALL RIGHTS RESERVED. Accessed by David Dammon on Jun 21, 2017 12:30:52 PM pursuant to License Agreement with ICC. No further reproduction or distribution authorized. ANY UNAUTHORIZED REPRODUCTION OR DISTRIBUTION IS A VIOLATION OF THE FEDERAL COPYRIGHT ACT AND THE LICENSE AGREEMENT, AND SUBJECT TO CIVIL AND CRIMINAL PENALTIES THEREUNDER.

404.2.1 Fire evacuation plans. Fire evacuation plans shall include the following:

1. Emergency egress or escape routes and whether evacuation of the building is to be complete by selected floors or areas only or with a defend-in-place response.
2. Procedures for employees who must remain to operate critical equipment before evacuating.
3. Procedures for the use of elevators to evacuate the building where occupant evacuation elevators complying with Section 3008 of the *International Building Code* are provided.
4. Procedures for assisted rescue for persons unable to use the general *means of egress* unassisted.
5. Procedures for accounting for employees and occupants after evacuation has been completed.
6. Identification and assignment of personnel responsible for rescue or emergency medical aid.
7. The preferred and any alternative means of notifying occupants of a fire or emergency.
8. The preferred and any alternative means of reporting fires and other emergencies to the fire department or designated emergency response organization.
9. Identification and assignment of personnel who can be contacted for further information or explanation of duties under the plan.
10. A description of the emergency voice/alarm communication system alert tone and preprogrammed voice messages, where provided.

❖ The primary focus of evacuation plans is to prepare for and define roles for evacuation and relocation of occupants during an emergency. The fire evacuation plan is important for both emergency responders and building or facility occupants. It focuses the occupants' activities on facilitating a smoother evacuation or relocation process and provides the fire department with critical information on the building and the location of the occupants. Keep in mind that these requirements apply to all occupancies listed in Section 404.2. The occupancy- and use-specific requirements are located within Section 403; therefore, the requirements listed here are general and will vary based on many factors, such as the occupants' mobility and familiarity with the building.

Item 1 requires that specific escape routes be defined. This is important because the building is generally designed to facilitate a particular pattern of evacuation or relocation in an emergency. For instance, as noted earlier, a high-rise building will most likely be evacuated in phases. If floors begin evacuating before intended, the evacuation of the occupants in the fire area may be delayed. Also, if everyone tries to use the same exits in a facility, such as a multiplex theater, evacuation of the building will be delayed. As stated earlier, studies have shown that people tend to exit the way they enter a building. Note that the code sometimes requires a certain level of redundancy to account for occupants using the same exits. For example, the IBC requires that the main exit of multiplex theaters be sized for at least half of the occupants even though plenty of egress width may be available elsewhere in the building. The more coordinated the plan, the more evenly the exits will be used.

Item 2 requires that specific procedures for evacuation be provided to those employees who must operate critical equipment before evacuation. These procedures are necessary to ensure a clear understanding to the occupant when evacuation is critical and the operation should be abandoned.

Item 3 requires that specific procedures be provided when occupant evacuation elevators are used. This is critical as each building may have unique aspects regarding the use of such elevators and the types of evacuations they may undertake.

Item 4 provides for the inclusion of procedures relative to those occupants unable to evacuate using the general egress features who, therefore, may need assisted rescue. It is important that there be adequate information and procedures established and available to staff and fire fighters so that assistance can be offered to anyone who needs help using the general means of egress as quickly as possible.

Item 5 simply states that a plan be developed to account for all occupants after evacuation or relocation. This is important not only to the occupants but also to the emergency responders to assess their actions when arriving at the scene.

Item 6 has two roles. First, it provides a designated person for occupants to look to for assistance in an emergency. This will reduce the stress of the situation. Second, when the emergency responders arrive they will have a specific contact to help them assess the situation. These contacts can also be beneficial to emergency responders when preplanning their response to that specific facility.

Item 7 requires that the notification to the occupants of the emergency be standardized. The approach will vary based on occupancy and use. For instance, all occupants in a multiplex theater would be notified, whereas in a correctional facility or hospital only staff will be notified. Also, if the method is standardized, it is easier to differentiate between emergency and nonemergency signals, which facilitates a smoother reaction when an emergency does occur.

Item 8 is focused on the notification of emergency responders. They are more likely to get the notification of an emergency if a standard protocol exists. This can vary from one occupancy or use to another, but as long as a straightforward, consistent method is used, it will facilitate a quicker response. Note that Section 401.3.2 requires direct contact with the fire department once the fire alarm signal is activated; therefore, no intermediate steps, such as an investigation, are allowed.

INTERNATIONAL CODE COUNCIL®
Copyright © 2015 ICC. ALL RIGHTS RESERVED. Accessed by David Dammon on Jun 21, 2017 12:30:52 PM pursuant to License Agreement with ICC. No further reproduction or distribution authorized. ANY UNAUTHORIZED REPRODUCTION OR DISTRIBUTION IS A VIOLATION OF THE FEDERAL COPYRIGHT ACT AND THE LICENSE AGREEMENT, AND SUBJECT TO CIVIL AND CRIMINAL PENALTIES THEREUNDER.

As with Item 6, Item 9 requires a specific contact who is familiar with the plan and how the building operates. This information is helpful for the emergency responders in their preplanning activities. Without a specific contact, the process of getting vital information can become much more difficult for the fire department. In a large building or facility, the safety officer or similar person is most appropriate for such a role.

Item 10 requires documentation of the voice/alarm communications system alert tone and preprogrammed voice messages. This provides emergency responders with a better understanding of the information provided to occupants to better assess the appropriate response. Additionally, if conditions in that building change, the plan can be evaluated to see whether this aspect of the notification system needs to be revised. For instance, if the procedures for evacuation have changed, the voice announcement may need to be revised.

404.2.2 Fire safety plans. Fire safety plans shall include the following:

1. The procedure for reporting a fire or other emergency.
2. The life safety strategy including the following:
   - 2.1. Procedures for notifying occupants, including areas with a private mode alarm system.
   - 2.2. Procedures for occupants under a defend-in-place response.
   - 2.3. Procedures for evacuating occupants, including those who need evacuation assistance.
3. Site plans indicating the following:
   - 3.1. The occupancy assembly point.
   - 3.2. The locations of fire hydrants.
   - 3.3. The normal routes of fire department vehicle access.
4. Floor plans identifying the locations of the following:
   - 4.1. Exits.
   - 4.2. Primary evacuation routes.
   - 4.3. Secondary evacuation routes.
   - 4.4. Accessible egress routes.
     - 4.4.1. Areas of refuge.
     - 4.4.2. Exterior areas for assisted rescue.
   - 4.5. Refuge areas associated with *smoke barriers* and *horizontal exits*.
   - 4.6. Manual fire alarm boxes.
   - 4.7. Portable fire extinguishers.
   - 4.8. Occupant-use hose stations.
   - 4.9. Fire alarm annunciators and controls.
5. A list of major fire hazards associated with the normal use and occupancy of the premises, including maintenance and housekeeping procedures.
6. Identification and assignment of personnel responsible for maintenance of systems and equipment installed to prevent or control fires.
7. Identification and assignment of personnel responsible for maintenance, housekeeping and controlling fuel hazard sources.

❖ This section requires an overall fire safety plan with emphasis on the building and building site layout and hazards. More specifically, information, such as the evacuation and relocation aspects of the building layout, needs to be clarified; the list of specific hazards associated with normal use of the building needs to be noted and fire department access road locations need to be provided.

This plan also includes identification of specific personnel charged with managing fire protection systems and equipment and with fire prevention duties, such as controlling combustibles on site. Having specific personnel assigned to perform this duty will work to increase the likelihood of these actions occurring.

The requirements of this plan provide the building owner and occupants a better understanding of how to react in an emergency and how to decrease the likelihood of an emergency occurring. Additionally, this report assists emergency responders during periodic inspections and evaluations of the plans and, more importantly, when responding to an emergency. Generally, buildings that have fairly rigid and well-maintained plans and procedures in place reduce not only the likelihood and magnitude of an incident within the jurisdiction but also the burden to emergency responders.

404.2.3 Lockdown plans. Where facilities develop a lockdown plan, it shall be in accordance with Sections 404.2.3.1 through 404.2.3.3.

❖ The provisions of this section introduce the requirements for plans and procedures for lockdowns (see commentary to the definition in Section 202). Note that the code does not require a lockdown plan; however, if a lockdown plan is developed, it must be strictly supervised in order to maintain occupant safety at an acceptable level. Many facilities are adopting procedures that can significantly affect fire and life safety, such as using the fire alarm system to signal a security emergency, locking doors with devices that prevent egress in violation of the provisions of Chapter 10 of the code, and chaining exit discharge doors from the inside to prevent occupants from leaving the building. It is important that plans for security threats do not include procedures that result in violations of life safety and actually increase the

INTERNATIONAL CODE COUNCIL®
Copyright © 2015 ICC. ALL RIGHTS RESERVED. Accessed by David Dammon on Jun 21, 2017 12:30:52 PM pursuant to License Agreement with ICC. No further reproduction or distribution authorized. ANY UNAUTHORIZED REPRODUCTION OR DISTRIBUTION IS A VIOLATION OF THE FEDERAL COPYRIGHT ACT AND THE LICENSE AGREEMENT, AND SUBJECT TO CIVIL AND CRIMINAL PENALTIES THEREUNDER.

hazard to the occupants. The sections that follow intend to establish the conditions for lockdown plans so that they will not decrease the level of life safety in the event of fire.

404.2.3.1 Lockdown plan contents. Lockdown plans shall be *approved* by the *fire code official* and shall include the following:

1. Initiation. The plan shall include instructions for reporting an emergency that requires a lockdown.
2. Accountability. The plan shall include accountability procedures for staff to report the presence or absence of occupants.
3. Recall. The plan shall include a prearranged signal for returning to normal activity.
4. Communication and coordination. The plan shall include an *approved* means of two-way communication between a central location and each secured area.

❖ Lockdown plans often include procedures for locking occupants into individual rooms within the building. If the lockdown plan is not reviewed for life safety precautions, it could have a negative impact on fire and life safety. To reduce the likelihood of an inadequate or substandard plan, approval of the plan by the fire code official is required.

In accordance with Item 1, the plan must include a well thought out list of exactly what types of situations will warrant the implementation of a lockdown and how and to whom those "trigger" situations will be reported. Key to the success of a lockdown is the ability to account for all building occupants. To increase the likelihood that everyone will be properly accounted for, Item 2 requires that specific accountability procedures to be followed by lockdown supervisors be included in the plan. When the reason for a lockdown has been mitigated and it is safe to again move about within or reenter a building, Item 3 requires that an "all-clear" signal must be done by an authorized person by a means used only for that purpose and readily recognizable as such. Item 4 requires that a central "command" location be preplanned and that a reliable means of two-way communication be provided in order to keep locked-down occupants apprised of the status of the situation, thus reducing their level of anxiety and the likelihood of panic.

Note that although the code does not assume simultaneous events, it would be advisable for the lockdown plan to include procedures to be followed if a fire alarm occurs during a lockdown.

404.2.3.2 Training frequency. The training frequency shall be included in the lockdown plan. The lockdown drills shall not substitute for any of the fire and evacuation drills required in Section 405.2.

❖ To utilize lockdown training and the lessons learned from it to the best advantage, training should be conducted on a regular basis to familiarize staff and occupants with the lockdown plan. Training should be designed and practiced to reinforce lockdown procedures as adaptive planned responses to stressful and potentially dangerous situations. It is important to note that lockdown training and drills may not be counted toward the required number of fire and evacuation drills so as not to diminish the impact of either (see also commentary, Section 406.3.3).

404.2.3.3 Lockdown notification. The method of notifying building occupants of a lockdown shall be included in the plan. The method of notification shall be separate and distinct from the fire alarm signal.

❖ Area-wide notification systems, ranging from low-tech sirens to text-message alerts on cell phones, are among several means of notification available for lockdown announcements. Whatever the method chosen for a particular occupancy, it must be separate and distinct from the building fire alarm system to avoid a miscue that could trigger an inappropriate response to a threatening situation unrelated to a fire.

404.3 Maintenance. Fire safety and evacuation plans shall be reviewed or updated annually or as necessitated by changes in staff assignments, occupancy or the physical arrangement of the building.

❖ In order to be of optimum value to a facility, plans must accurately reflect building conditions. Plans must be reviewed annually or when building changes affecting the instructions or procedures in the fire safety or emergency evacuation plan occur. Such a review should prompt an immediate revision and redistribution of the plan to all concerned parties, including emergency response personnel.

404.4 Availability. Fire safety and evacuation plans shall be available in the workplace for reference and review by employees, and copies shall be furnished to the *fire code official* for review upon request.

❖ This essentially requires that these plans be easily accessible to building occupants and the fire code official. If the plans are difficult to access, they are less likely to be updated when necessary and are more likely to be lost or forgotten. This places a burden on the emergency responders when planning methods of response, and puts the occupants of the building at a higher risk during an emergency. Having the documents readily available makes review and use for training occupants more likely.

404.4.1 Distribution. The fire safety and evacuation plans shall be distributed to the tenants and building service employees by the *owner* or *owner's* agent. Tenants shall distribute to their employees applicable parts of the fire safety plan affecting the employees' actions in the event of a fire or other emergency.

❖ Fire safety and evacuation plans are only effective when all building occupants have been informed of the contents of the plan. In the case of a multiple-tenant building, the plan must address individual tenant spaces. Distribution to all affected occupants is important for a coordinated response to an emergency.

INTERNATIONAL CODE COUNCIL®
Copyright © 2015 ICC. ALL RIGHTS RESERVED. Accessed by David Dammon on Jun 21, 2017 12:30:52 PM pursuant to License Agreement with ICC. No further reproduction or distribution authorized. ANY UNAUTHORIZED REPRODUCTION OR DISTRIBUTION IS A VIOLATION OF THE FEDERAL COPYRIGHT ACT AND THE LICENSE AGREEMENT, AND SUBJECT TO CIVIL AND CRIMINAL PENALTIES THEREUNDER.

This section requires that the building owner or the owner's agent distribute the plan to all tenants and building service employees. Since the owner or agent of the owner usually does not have direct access to the tenants' employees, the individual tenants would then have the responsibility to distribute the applicable portion of the plan to their employees. This provides for a wider distribution of the responsibility to plan for emergencies and to follow the requirements of the plan.

SECTION 405
EMERGENCY EVACUATION DRILLS

405.1 General. Emergency evacuation drills complying with Sections 405.2 through 405.9 shall be conducted not less than annually where fire safety and evacuation plans are required by Section 403 or where required by the *fire code official*. Drills shall be designed in cooperation with the local authorities.

❖ The fire safety and evacuation plans required by Sections 403 and 404 are critical components of life safety strategies in high-density occupancies and extraordinary buildings, such as high-rise buildings. Many times such plans are developed with the best of intentions and available expertise, but fail to adequately consider certain site- or area-specific conditions. Just as emergency operations and hazardous material response plans require operational drills to verify their continued viability and effectiveness, so too do evacuation plans require periodic implementation to gauge effectiveness in achieving their objectives. Since not all of the occupancies that are required to prepare and maintain fire safety and evacuation plans by Section 403 are required to conduct drills by Table 405.2, this section requires at least an annual drill to exercise the required plan.

An additional benefit of an annual drill is the enhanced recognition by occupants, particularly in the case of a high-rise structure, of the possibility of selected-floor evacuation. Given the generally heightened awareness following the events of September 11, 2001, building occupants understandably exhibit a greater reluctance to remain inside a building in the event of an emergency. A complete building evacuation may be unnecessary in a large number of cases and may actually work counter to effective fire-ground operations if uncontrolled. An annual drill in these instances would serve to reinforce the local jurisdiction's preferences regarding evacuation, as well as provide a verification tool that the plan, as developed, is functional and presents opportunities for critique and improvement. The use of an annual drill could easily be incorporated with specific additional training to satisfy the requirements in Section 406 as well.

405.2 Frequency. Required emergency evacuation drills shall be held at the intervals specified in Table 405.2 or more frequently where necessary to familiarize all occupants with the drill procedure.

❖ To utilize fire drills and the lessons that they teach to the best of their advantage, drills should be conducted on a regular basis to familiarize both staff and residents with the evacuation plan. The element of surprise is not necessarily of significant benefit in those occupancies where residents may be prone to maladaptive behavior. Drills should be designed and practiced to reinforce relocation or evacuation behaviors as adaptive planned responses to stressful and potentially dangerous situations. Drills should be scheduled so that all staff members on all shifts have an opportunity to participate in them. Practice makes perfect, and when it comes to effective egress, there is no substitute for fire drills at regular intervals so that all occupants are familiar with the plan's details and their particular responsibilities in implementing them. Truly effective drills test the plan by varying conditions and force occupants to adapt. Many conditions can combine to affect available safe egress time, and drills should incorporate some allowance for unanticipated conditions, such as delayed detection, rapid fire growth, reduced staffing or poor weather conditions, as may be appropriate for the occupancy. Discovering deficiencies in the evacuation plan should be encouraged, and every opportunity should be taken to improve the plans.

TABLE 405.2. See page 4-23.

❖ Table 405.2 provides varying evacuation drill frequencies based on building occupancy. The table also prescribes who should be involved in these drills. The level of participation is based on the type of occupancy. In some cases, this is further qualified by the number or location of such occupants with respect to the lowest level of fire department vehicle access. It is unreasonable, for example, in a Group A occupancy such as a hospital or correctional facility, to require the general public to participate in an evacuation drill. It is potentially dangerous to involve anyone but the employees in such drills.

The overall strategy for these occupancies is to provide a package of relevant information before an emergency and to have the employees facilitate and direct occupants during an emergency. The necessary participants in the drills are related to the overall emergency strategies for those buildings. Note that Group B, E, I-1 assisted living, I-4, R-2 and R-4 occupancies require that everyone be involved. This is related to the fact that occupants are generally able to evacuate. In the case of educational occupancies, drills serve as a learning tool for children to carry through their lives. Schools have generally stressed these drills because of large losses in fires, such as in 1958 at Our Lady of Angels School in Chicago. In terms of Group I-1, I-4 and R-4 facilities, the occupants generally are able to evacuate with some assis-

INTERNATIONAL CODE COUNCIL®
Copyright © 2015 ICC. ALL RIGHTS RESERVED. Accessed by David Dammon on Jun 21, 2017 12:30:52 PM pursuant to License Agreement with ICC. No further reproduction or distribution authorized. ANY UNAUTHORIZED REPRODUCTION OR DISTRIBUTION IS A VIOLATION OF THE FEDERAL COPYRIGHT ACT AND THE LICENSE AGREEMENT, AND SUBJECT TO CIVIL AND CRIMINAL PENALTIES THEREUNDER.

tance. In Group R-2 occupancies, the occupants are usually able-bodied and it is in their best interest to be familiar with the egress routes. More occupancy-specific discussion is provided in the commentary for

TABLE 405.2
FIRE AND EVACUATION DRILL
FREQUENCY AND PARTICIPATION

GROUP OR OCCUPANCY	FREQUENCY	PARTICIPATION
Group A	Quarterly	Employees
Group B[b]	Annually	All occupants
Group B[b, c] (Ambulatory care facilities)	Annually	Employees
Group B[b] (Clinic, outpatient)	Annually	Employees
Group E	Monthly[a]	All occupants
Group F	Annually	Employees
Group I-1	Semiannually on each shift	All occupants
Group I-2	Quarterly on each shift[a]	Employees
Group I-3	Quarterly on each shift[a]	Employees
Group I-4	Monthly on each shift[a]	All occupants
Group R-1	Quarterly on each shift	Employees
Group R-2[d]	Four annually	All occupants
Group R-4	Semiannually on each shift[a]	All occupants

a. In severe climates, the *fire code official* shall have the authority to modify the emergency evacuation drill frequency.
b. Emergency evacuation drills are required in Group B buildings having an *occupant load* of 500 or more persons or more than 100 persons above or below the lowest *level of exit discharge*.
c. Emergency evacuation drills are required in ambulatory care facilities in accordance with Section 403.3.
d. Emergency evacuation drills in Group R-2 college and university buildings shall be in accordance with Section 403.10.2.1. Other Group R-2 occupancies shall be in accordance with Section 403.10.2.2.

Section 403.

405.3 Leadership. Responsibility for the planning and conduct of drills shall be assigned to competent persons designated to exercise leadership.

❖ This section requires a focal point in the planning and execution of evacuation drills. Having a single point of contact streamlines the process and provides a necessary leadership role.

405.4 Time. Drills shall be held at unexpected times and under varying conditions to simulate the unusual conditions that occur in case of fire.

❖ If fire and emergency drills are a routine planned occurrence, they will not simulate actual reaction to an emergency but will provide an inaccurate and most likely optimistic outcome; therefore, the drills need to occur at random.

405.5 Record keeping. Records shall be maintained of required emergency evacuation drills and include the following information:

1. Identity of the person conducting the drill.
2. Date and time of the drill.
3. Notification method used.
4. Employees on duty and participating.
5. Number of occupants evacuated.
6. Special conditions simulated.
7. Problems encountered.
8. Weather conditions when occupants were evacuated.
9. Time required to accomplish complete evacuation.

❖ Documenting the frequency and efficiency of emergency evacuation drills not only aids the fire code official in verifying that drills complying with these provisions have been performed but may also help administrators identify trends in emergency evacuation drill performance. Accurate records help life safety planners determine the adequacy of their plans. Identifying issues such as problems encountered and weather conditions helps to further determine which elements create the largest delays and why.

405.6 Notification. Where required by the *fire code official*, prior notification of emergency evacuation drills shall be given to the *fire code official.*

❖ In some cases, the fire code official will want prior notification of evacuation drills because he or she may need to prepare for such an event. This section provides the fire code official with the authority to require such notification.

405.7 Initiation. Where a fire alarm system is provided, emergency evacuation drills shall be initiated by activating the fire alarm system.

❖ To simulate conditions normally experienced during an emergency, the emergency notification procedures, which would include a fire alarm system in many cases, must be used.

405.8 Accountability. As building occupants arrive at the assembly point, efforts shall be made to determine if all occupants have been successfully evacuated or have been accounted for.

❖ This requirement is key to the success of evacuation plans. If a method is not available to account for the occupants once evacuation or relocation is complete, search and rescue activities will be more difficult for the emergency responders. Also, it would be difficult to measure the success of the plan.

405.9 Recall and reentry. An electrically or mechanically operated signal used to recall occupants after an evacuation shall be separate and distinct from the signal used to initiate the evacuation. The recall signal initiation means shall be manually operated and under the control of the person in charge of the premises or the official in charge of the inci-

INTERNATIONAL CODE COUNCIL®
Copyright © 2015 ICC. ALL RIGHTS RESERVED. Accessed by David Dammon on Jun 21, 2017 12:30:52 PM pursuant to License Agreement with ICC. No further reproduction or distribution authorized. ANY UNAUTHORIZED REPRODUCTION OR DISTRIBUTION IS A VIOLATION OF THE FEDERAL COPYRIGHT ACT AND THE LICENSE AGREEMENT, AND SUBJECT TO CIVIL AND CRIMINAL PENALTIES THEREUNDER.

dent. Persons shall not reenter the premises until authorized to do so by the official in charge.

❖ This section is primarily aimed at the concern that occupants will be confused if similar signals are used to notify them of an alarm and for reentry. This confusion has the consequences of slowing or even halting evacuation during an actual emergency. Additionally, to make sure that occupants do not go back into the building prematurely, any reentry signal must be operated manually to avoid a situation where it automatically sounds. Finally, this section specifically prohibits reentry until authorization is provided by the official in charge at the scene.

SECTION 406
EMPLOYEE TRAINING AND RESPONSE PROCEDURES

406.1 General. Where fire safety and evacuation plans are required by Section 403, employees shall be trained in fire emergency procedures based on plans prepared in accordance with Section 404.

❖ In most cases, the success of an evacuation and fire safety plan hinges on the appropriate reactions of the building occupants. The main activity that building occupants must undertake is removing themselves from the hazards. In some cases, fire safety and evacuation plans involve additional actions by the employees of the facility. For instance, in the case of hospitals, the nurses and other hospital staff must relocate care recipients; therefore, specific training is required for those activities.

Additionally, employees must be trained based on the specific fire safety and fire evacuation plans.

406.2 Frequency. Employees shall receive training in the contents of fire safety and evacuation plans and their duties as part of new employee orientation and not less than annually thereafter. Records of training shall be maintained.

❖ This section requires that employee training occur during new employee indoctrination and annually thereafter. A record of this training must be provided to the fire code official when requested. This section provides a minimum criterion for the training frequency for all occupancies addressed by Chapter 4. Section 403 may require more restrictive training frequencies.

406.3 Employee training program. Employees shall be trained in fire prevention, evacuation and fire safety in accordance with Sections 406.3.1 through 406.3.4.

❖ This is a general section that requires all employees to be trained in fire prevention, evacuation and fire safety in accordance with the subsections that follow. These provisions are primarily intended as a mechanism to ensure that training occurs, not as a requirement for establishing training criteria.

406.3.1 Fire prevention training. Employees shall be apprised of the fire hazards of the materials and processes to which they are exposed. Each employee shall be instructed in the proper procedures for preventing fires in the conduct of their assigned duties.

❖ If a fire can be prevented, evacuation and relocation of the occupants will also be avoided. Employees must be made aware of the potential hazards related to their particular area of the facility and what can be done to avoid a hazardous situation. Having specific procedures increases the likelihood that proper fire prevention techniques will be followed. Generally, people tend to be unaware of many hazards unless they are alerted to them. An example is the use of space heaters.

406.3.2 Evacuation training. Employees shall be familiarized with the fire alarm and evacuation signals, their assigned duties in the event of an alarm or emergency, evacuation routes, areas of refuge, exterior assembly areas and procedures for evacuation.

❖ In the event that an emergency does occur, employees must be prepared to assist in the evacuation or relocation of occupants. This training will vary widely from one occupancy type to another. In a high-rise building only some of the occupants will be evacuated at a time, whereas a school will evacuate all occupants at once. This section requires that the training occurs.

406.3.3 Fire safety training. Employees assigned fire-fighting duties shall be trained to know the locations and proper use of portable fire extinguishers or other manual fire-fighting equipment and the protective clothing or equipment required for its safe and proper use.

❖ Any time employees are to take specific action during a fire event, proper training is required. This section holds the building owner or operator responsible for making sure the training occurs.

406.4 Emergency lockdown training. Where a facility has a lockdown plan, employees shall be trained on their assigned duties and procedures in the event of an emergency lockdown.

❖ If a facility goes to the trouble of creating a lockdown plan, it stands to reason that it would want its staff to be versed in the plan's contents. Training should be scheduled so that all staff members on all shifts or occupants, as applicable, have an opportunity to participate. Practice makes perfect, and when it comes to effective lockdowns, there is no substitute for training at regular intervals so that all staff and occupants are familiar with the plan's details and their particular responsibilities in implementing it. Drills should be scheduled to test the plan by varying conditions, forcing occupants to adapt and respond instinctively to emergencies without panicking and allowing the staff to identify weaknesses in the preparations.

Many conditions can conspire to affect lockdown success and drills should incorporate some allowance for unanticipated conditions as may be appropriate for the occupancy. Discovering deficiencies in

INTERNATIONAL CODE COUNCIL®
Copyright © 2015 ICC. ALL RIGHTS RESERVED. Accessed by David Dammon on Jun 21, 2017 12:30:52 PM pursuant to License Agreement with ICC. No further reproduction or distribution authorized. ANY UNAUTHORIZED REPRODUCTION OR DISTRIBUTION IS A VIOLATION OF THE FEDERAL COPYRIGHT ACT AND THE LICENSE AGREEMENT, AND SUBJECT TO CIVIL AND CRIMINAL PENALTIES THEREUNDER.

the plan should be encouraged, and every opportunity should be taken to improve the plans (see also commentary, Section 404.2.3.2).

SECTION 407
HAZARD COMMUNICATION

407.1 General. The provisions of Sections 407.2 through 407.7 shall be applicable where hazardous materials subject to permits under Section 5001.5 are located on the premises or where required by the *fire code official*.

❖ This section is specific to buildings and facilities that contain hazardous materials over the permitted amounts listed in Section 105.6. Knowledge related to which hazardous materials are on site is critical for several reasons. First, it assists emergency responders in knowing what to expect when responding to a scene. Second, it provides emergency responders with an idea of incidents that may occur at a building or facility. Lastly, it provides a better understanding to the occupants of the potential hazards present and how to avoid emergencies.

Facilities that store, use or handle hazardous materials on a large scale generally depend heavily on the actions of the employees to prevent or minimize hazardous materials incidents. Therefore, the occupants play a strong role in the overall protection of the building. These types of requirements would, in the past, have been found only within the hazardous materials section of the code. These provisions have also been located within this chapter because of the nature of the information. These requirements are aimed at preparing both the occupants and the emergency responders. Hazardous materials present a wide range of problems because of the significant variation of properties and reactions; therefore, a reference to these requirements has been included in Chapter 4. These specific provisions are found in Section 5001.

This section states that when subject to permit requirements, hazardous materials must also be addressed. This section has requirements for the submittal of Material Safety Data Sheets (MSDS); the labeling or marking of hazardous materials through placarding and related identification; training; the compilation, when required, of both HMIS and HMMP; and finally, the submittal of a closure plan when a facility is being shut down.

407.2 Material Safety Data Sheets. Material Safety Data Sheets (MSDS) for all hazardous materials shall be either readily available on the premises as a paper copy, or where *approved*, shall be permitted to be readily retrievable by electronic access.

❖ MSDS provide critical information about individual chemicals and their related hazards. This section requires that these data sheets be readily available on the premises or, where equivalent access can be achieved, as approved by the fire code official, they may be retrievable by electronic means. This allows availability for review by both employees and emergency responders. An appropriate location may be the security room at a facility or perhaps the main office. These sheets can potentially play a role in the response to an emergency. For example, if a chemical is noted as being water reactive on the MSDS, depending on the level of water reactivity, applying water to that spill may not be an appropriate response.

407.3 Identification. Individual containers of hazardous materials, cartons or packages shall be marked or labeled in accordance with applicable federal regulations. Buildings, rooms and spaces containing hazardous materials shall be identified by hazard warning signs in accordance with Section 5003.5.

❖ This section requires two activities related to the identification of hazardous materials. First, chemicals must be specifically labeled. Second, rooms or areas where the materials are located must be specifically labeled. In this case, the code essentially requires placarding as defined in Section 5003.5, which references NFPA 704.

407.4 Training. Persons responsible for the operation of areas in which hazardous materials are stored, dispensed, handled or used shall be familiar with the chemical nature of the materials and the appropriate mitigating actions necessary in the event of a fire, leak or spill. Responsible persons shall be designated and trained to be liaison personnel for the fire department. These persons shall aid the fire department in preplanning emergency responses and identification of where hazardous materials are located, and shall have access to Material Safety Data Sheets and be knowledgeable in the site emergency response procedures.

❖ This section requires training specific to the hazards of the materials located and used at a particular building or facility. As noted, the actions taken will vary based on the hazards associated with the materials. Additionally, this section requires a specific group of persons to be designated as points of contact for the fire department. Having specific points of contact is critical because it eases planning and response procedures. These contacts also provide the fire department with specific persons who are more familiar with the hazards of the building or facility. The fire department is charged with responding to many different businesses within a community. Having specified contacts at facilities containing hazardous materials helps them prepare and respond.

407.5 Hazardous Materials Inventory Statement. Where required by the *fire code official*, each application for a permit shall include a Hazardous Materials Inventory Statement (HMIS) in accordance with Section 5001.5.2.

❖ An HMIS is further described in Chapter 50 but is essentially a document listing all the hazardous materials found on site. This documentation includes information such as the type and amount of specific hazards associated with the material and how it is used. All of this information can be very important for emergency planning and preparedness. An HMIS is

INTERNATIONAL CODE COUNCIL®
Copyright © 2015 ICC. ALL RIGHTS RESERVED. Accessed by David Dammon on Jun 21, 2017 12:30:52 PM pursuant to License Agreement with ICC. No further reproduction or distribution authorized. ANY UNAUTHORIZED REPRODUCTION OR DISTRIBUTION IS A VIOLATION OF THE FEDERAL COPYRIGHT ACT AND THE LICENSE AGREEMENT, AND SUBJECT TO CIVIL AND CRIMINAL PENALTIES THEREUNDER.

required only if the fire code official specifically requires one. See Appendix H for further information on HMIS and HMMP preparation.

407.6 Hazardous Materials Management Plan. Where required by the *fire code official*, each application for a permit shall include a Hazardous Materials Management Plan (HMMP) in accordance with Section 5001.5.1. The *fire code official* is authorized to accept a similar plan required by other regulations.

❖ As with the HMIS, an HMMP is necessary only when the fire code official specifically requires one. This document is somewhat different from the HMIS in that it is geared to the layout of the building and the location and use of the hazardous materials. This document provides a better understanding of how the facility operates. This information in turn provides more detailed information to the emergency responders. This plan will also include such information as the location of aisles; the type and location of emergency equipment available; and location of specific shutoff valves and other operating equipment. The detailed requirements for HMMPs are located in Chapter 50. See Appendix H for further information on HMIS and HMMP preparation.

407.7 Facility closure plans. The permit holder or applicant shall submit to the *fire code official* a facility closure plan in accordance with Section 5001.6.3 to terminate storage, dispensing, handling or use of hazardous materials.

❖ It is important for emergency responders to be made aware of the closure of a plant that uses or stores hazardous materials. First, closure means a readjustment in their planning. Second, the extent of the closure must be communicated so that the emergency responders are made aware of hazards that may still be present. Any hazards that are still present may potentially be more dangerous since the facility is now unattended; therefore, the building owner must develop a plan that is acceptable to the fire code official. In some cases, a facility will be only temporarily closed, which would mean maintaining a permit and continuing inspections.

Bibliography

The following resource materials were used in the preparation of the commentary for this chapter of the code:

Evacuation Planning Guide for Stadiums. Washington, DC: U.S. Department of Homeland Security, 2008.

SFPE *Engineering Guide: Fire Safety for Very Tall Buildings* (ICC and SFPE 2013)

Egress Design Solutions (Tubbs and Meacham 2005).

INTERNATIONAL CODE COUNCIL®

Copyright © 2015 ICC. ALL RIGHTS RESERVED. Accessed by David Dammon on Jun 21, 2017 12:30:52 PM pursuant to License Agreement with ICC. No further reproduction or distribution authorized. ANY UNAUTHORIZED REPRODUCTION OR DISTRIBUTION IS A VIOLATION OF THE FEDERAL COPYRIGHT ACT AND THE LICENSE AGREEMENT, AND SUBJECT TO CIVIL AND CRIMINAL PENALTIES THEREUNDER.

Part III—Building and Equipment Design Features

Chapter 5: Fire Service Features

General Comments

The requirements of this chapter apply to all occupancies and pertain to access roads; access to building openings and roofs; premises identification; key boxes; hazards to fire fighters; fire protection water supplies; fire command centers; and fire department access to equipment.

Purpose

This chapter contains the requirements for fire service access to the property that is to be protected, including access roads, security devices and access through openings in the building.

The chapter also addresses fire-fighter hazards, the requirements for a fire department command center and fire-fighter access to equipment, such as fire suppression equipment, air-handling equipment, emergency power equipment and access to the roof. In addition, this chapter addresses the fire protection water supply.

SECTION 501 GENERAL

501.1 Scope. Fire service features for buildings, structures and premises shall comply with this chapter.

❖ This chapter contains requirements that will enable the fire service to respond to an emergency on the premises of a building or structure.

501.2 Permits. A permit shall be required as set forth in Sections 105.6 and 105.7.

❖ Permits must be obtained from the fire code official. Permit fees, if any, must be paid prior to the issuance of the permit. There are two types of permits: operational and construction. The operational permits required by this section are for the use or operation of fire protection valves and fire hydrants (see Section 105.6.16) or the use or removal from service of a private fire hydrant (see Section 105.6.37). The construction permit (see Section 105.7.13) allows the applicant to install or modify private fire hydrants. See Section 105 for additional information on permits.

501.3 Construction documents. *Construction documents* for proposed fire apparatus access, location of *fire lanes*, security gates across fire apparatus access roads and *construction documents* and hydraulic calculations for fire hydrant systems shall be submitted to the fire department for review and approval prior to construction.

❖ The integrity of the design of fire apparatus access roads and private fire hydrant systems is critical to successful fire department operations in protecting lives and property. Construction documents must be drawn to scale and clearly show the details of the indicated features in order for the fire department to properly evaluate fire service features and issue approvals. While this section is primarily for new installations, if a security gate was not on the original construction plans for fire apparatus access, this section reinforces that a security gate installed at a later time requires a construction plan to be submitted and approved prior to construction.

501.4 Timing of installation. Where fire apparatus access roads or a water supply for fire protection are required to be installed, such protection shall be installed and made serviceable prior to and during the time of construction except when *approved* alternative methods of protection are provided. Temporary street signs shall be installed at each street intersection where construction of new roadways allows passage by vehicles in accordance with Section 505.2.

❖ Buildings under construction are quite vulnerable to fire and other types of construction incidents, such as injuries from falling objects. Access roads and water for fire protection are essential for fire-fighting purposes. Temporary street signs are also valuable to emergency responders because the streets in new developments will most likely not be familiar to them or be on their maps.

Marked access roads and an emergency water supply should be in place before any large amount of combustible building materials is placed on site and before any construction is initiated.

INTERNATIONAL CODE COUNCIL®
Copyright © 2015 ICC. ALL RIGHTS RESERVED. Accessed by David Dammon on Jun 21, 2017 12:30:52 PM pursuant to License Agreement with ICC. No further reproduction or distribution authorized. ANY UNAUTHORIZED REPRODUCTION OR DISTRIBUTION IS A VIOLATION OF THE FEDERAL COPYRIGHT ACT AND THE LICENSE AGREEMENT, AND SUBJECT TO CIVIL AND CRIMINAL PENALTIES THEREUNDER.

SECTION 502
DEFINITIONS

502.1 Definitions. The following terms are defined in Chapter 2:

AGENCY.

FIRE APPARATUS ACCESS ROAD.

FIRE COMMAND CENTER.

FIRE DEPARTMENT MASTER KEY.

FIRE LANE.

KEY BOX.

TRAFFIC CALMING DEVICES.

❖ Definitions of terms can help in the understanding and application of code requirements. This section directs the code user to Chapter 2 for the proper application of the indicated terms used in this chapter. Terms may be defined in Chapter 2, or in another *International Code*® (I-Code®) as indicated in Section 201.3, or the dictionary meaning may be all that is needed (also see the commentary to Sections 201 through 201.4).

SECTION 503
FIRE APPARATUS ACCESS ROADS

503.1 Where required. Fire apparatus access roads shall be provided and maintained in accordance with Sections 503.1.1 through 503.1.3.

❖ This section introduces the requirements for dedicated fire apparatus access roads serving new and relocated buildings in the jurisdiction. The requirements are to be established in coordination with the local fire service to accommodate the jurisdiction's fire apparatus and equipment. The intent of the requirements is to provide the fire department with sufficient access to buildings to enable efficient fire suppression and rescue operations.

503.1.1 Buildings and facilities. *Approved* fire apparatus access roads shall be provided for every facility, building or portion of a building hereafter constructed or moved into or within the jurisdiction. The fire apparatus access road shall comply with the requirements of this section and shall extend to within 150 feet (45 720 mm) of all portions of the facility and all portions of the *exterior walls* of the first story of the building as measured by an *approved* route around the exterior of the building or facility.

Exceptions:

1. The *fire code official* is authorized to increase the dimension of 150 feet (45 720 mm) where any of the following conditions occur:
   1.1. The building is equipped throughout with an *approved automatic sprinkler system* installed in accordance with Section 903.3.1.1, 903.3.1.2 or 903.3.1.3.
   1.2. Fire apparatus access roads cannot be installed because of location on property, topography, waterways, nonnegotiable grades or other similar conditions, and an *approved* alternative means of fire protection is provided.
   1.3. There are not more than two Group R-3 or Group U occupancies.
2. Where approved by the *fire code official*, fire apparatus access roads shall be permitted to be exempted or modified for solar photovoltaic power generation facilities.

❖ This section establishes a requirement for a fire apparatus access road and the maximum distance from buildings or facilities to fire apparatus access roads. The provisions are intended to limit the maximum length of hose needed to reach any point along the exterior of a building or facility from a fire department vehicle. Large-area buildings may require a fire apparatus access road on all four sides. An access road is required to extend to within 150 feet (45 720 mm) of all portions along the exterior wall of the grade level story of each new or relocated building [see Commentary Figure 503.1.1(1)]. The 150-foot (45 720 mm) distance is based on the standard length of preconnected hoses carried on fire apparatus and is not intended to be measured to any point within the building.

A long, narrow building may require fire department access roads on two sides only, if all portions of the exterior of the grade level story are within 150 feet (45 720 mm) of the access road [see Commentary Figure 503.1.1(2)].

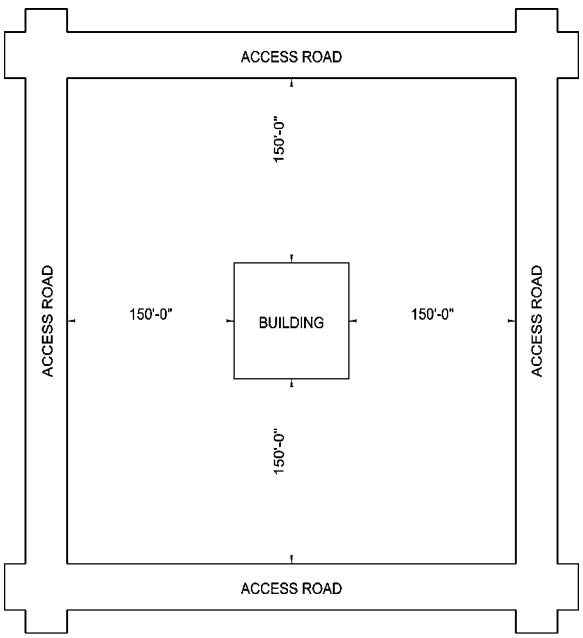

For SI: 1 foot = 304.8 mm.

Figure 503.1.1(1)
FIRE DEPARTMENT ACCESS—LARGE BUILDING

INTERNATIONAL CODE COUNCIL®
Copyright © 2015 ICC. ALL RIGHTS RESERVED. Accessed by David Dammon on Jun 21, 2017 12:30:52 PM pursuant to License Agreement with ICC. No further reproduction or distribution authorized. ANY UNAUTHORIZED REPRODUCTION OR DISTRIBUTION IS A VIOLATION OF THE FEDERAL COPYRIGHT ACT AND THE LICENSE AGREEMENT, AND SUBJECT TO CIVIL AND CRIMINAL PENALTIES THEREUNDER.

Small buildings may require an access road on one side only, if the access road is within 150 feet (45 720 mm) of all portions of the grade level floor [see Commentary Figure 503.1.1(3)].

In a case where new construction creates an addition ("...portion of a building hereafter constructed...") to an existing building, the new building as completed should be evaluated as it relates to compliance with this section because the new addition increases the fuel load and potential fire-fighting complications. An addition to a building may require the construction of a new fire apparatus access road or the reconfiguration of an existing fire apparatus access road. This is consistent with the prescriptive compliance method provisions of Section 402.1 of the *International Existing Building Code*® (IEBC®) [formerly Section 3403.1 of the *International Building Code*® (IBC®)] which require that the "...existing building together with the addition are no less conforming...than the existing building...was prior to the addition." This is also consistent with Section 1101.2 of the IEBC, which states, "An *addition* shall not create or extend any nonconformity in the *existing building* to which the *addition* is being made with regard to fire safety, means of egress, or the capacity of mechanical, plumbing, or electrical systems." In other words, an existing, nonconforming condition should not be made more nonconforming by construction of the addition. Note also that, since an addition is an increase in the area or height of an existing building, when a new building is erected immediately adjacent to an existing building, and they are separated by a fire wall constructed in accordance with Section 706 of the IBC, they are considered a separate building, not an addition to the existing structure. In that scenario, only the new building would be subject to this section. In any event, each case must be evaluated independently, especially if site topography or other conditions can slow or limit the response.

Condition 1.1 of Exception 1 states that the 150-foot (45 720 mm) distance may be increased, with the approval of the fire code official, when the building is equipped throughout with an NFPA 13, 13R or 13D automatic sprinkler system, as applicable. The code does not give the fire code official guidance on how much of an increase over 150 feet (45 720 mm) is reasonable. The fire code official must make the determination based on the response capabilities of his or her emergency response units and the anticipated magnitude of the incident.

The "alternative means" in Condition 1.2 of Exception 1 may include standpipes, automatic sprinklers, remote fire department connections or additional fire hydrants.

The Group R-3 facilities noted in Condition 1.3 of Exception 1 include one- and two-family dwellings and townhouses not falling within the scope of the *International Residential Code*® (IRC®); care facilities that accommodate five or fewer people; and congregate living facilities (nontransient) with 16 or fewer persons or congregate living facilities (transient) with 10 or fewer persons, among others. Group U occupancies are utility and miscellaneous accessory buildings or structures. Note that, since Section 903.2.8.1 requires that Group R-3 buildings be equipped throughout with automatic sprinkler systems, this condition is redundant with Condition 1.1. Note also that there is no exception for nonsprinklered buildings built under the IRC. See "Occupancy Classification" for the definitions of "Residential Group R" and "Miscellaneous Group U" in Section 202; the IRC Commentary, Section R101.2; and the IBC Commentary, Section 310.1.

Exception 2 addresses photovoltaic panel system/ array power generation facilities and provides guid-

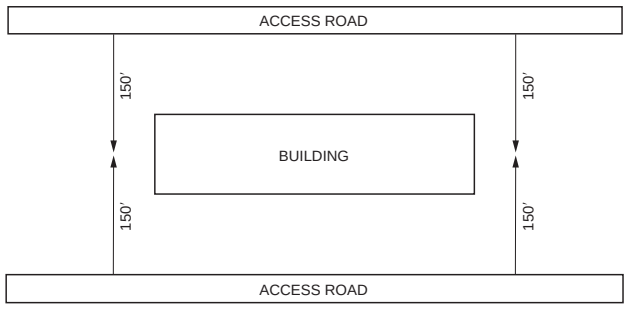

For SI: 1 foot = 304.8 mm.

Figure 503.1.1(2)
FIRE DEPARTMENT ACCESS ON TWO SIDES

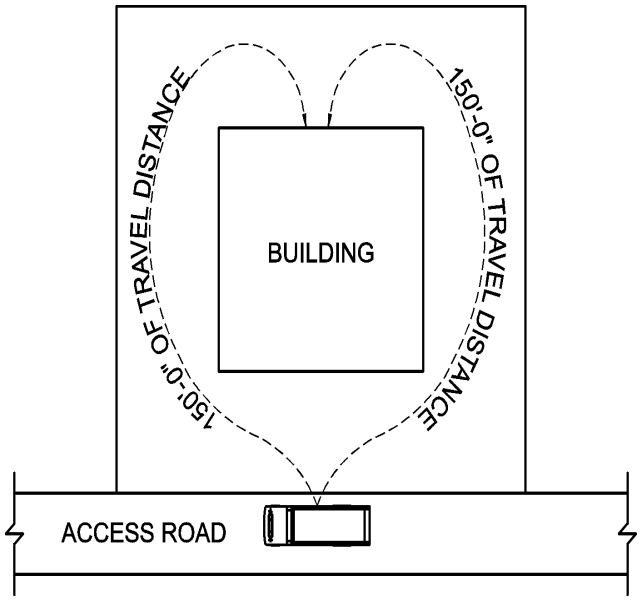

For SI: 1 foot = 304.8 mm.

Figure 503.1.1(3)
SMALL BUILDING ACCESS

INTERNATIONAL CODE COUNCIL®
Copyright © 2015 ICC. ALL RIGHTS RESERVED. Accessed by David Dammon on Jun 21, 2017 12:30:52 PM pursuant to License Agreement with ICC. No further reproduction or distribution authorized. ANY UNAUTHORIZED REPRODUCTION OR DISTRIBUTION IS A VIOLATION OF THE FEDERAL COPYRIGHT ACT AND THE LICENSE AGREEMENT, AND SUBJECT TO CIVIL AND CRIMINAL PENALTIES THEREUNDER.

ance to jurisdictions in determining if a fire apparatus road is needed for hazard mitigation or if it can be exempted. Consideration must be given to the purpose of fire apparatus access roads within these facilities and how the provisions would be applied. Several issues arise when applying Section 503 of the code to ground-mounted photovoltaic systems/ arrays. When considering the issues listed below, the fire code official should also consider other available code requirements that provide for appropriate hazard mitigation and risk reduction. Issues for consideration include:

1. Risk/hazard to be mitigated.
2. Risk/hazard to fire fighters or other emergency responders.
3. Interest of public safety and welfare.
4. Economics.
5. Intended access use.
6. Fuel load of the facility and adjacent areas that impact the facility.
7. Array configuration (tightly spaced, access aisles, height).
8. Actual hazard to public safety and welfare.

A question that often arises is whether code requirements pertaining to fire apparatus access roads are intended to be applicable to residential development sites upon which buildings are constructed under the provisions of the IRC. For information on this topic, see the commentary to Section 102.5.

Another question that arises is whether this section is intended to preclude locating a new building directly on a lot line, often referred to as a "zero lot line building." While it is true that some very large area buildings may require a fire apparatus access road on all four sides, this section does not specifically deal with exterior walls that may be located on the lot line in such buildings where the distance to a portion of that wall exceeds 150 feet (45 720 mm) from a fire apparatus access road. As such, the fire code official must determine the code's application in accordance with Section 102.9 and in consideration of the exception to this section.

In determining the application, however, it should be considered that, in order for the fire department access contemplated by this section to be effective, an exterior wall would need to have openings in it through which access to the interior of the building could be achieved by hose streams or personnel. In the case of an exterior wall constructed on a property line with a zero-foot fire separation distance, Table 602 of the IBC requires that such walls have a fire-resistance rating of between 1 and 3 hours (depending on the occupancy group assigned to the building) and IBC Section and Table 705.8 require that such walls be without any openings. As such, access to the first (or any) floor level of that exterior wall would appear to provide little or no tactical usefulness to the fire department, especially if code-complying access is provided to other sides of the building.

503.1.2 Additional access. The *fire code official* is authorized to require more than one fire apparatus access road based on the potential for impairment of a single road by vehicle congestion, condition of terrain, climatic conditions or other factors that could limit access.

❖ Additional access roads may be required by the fire code official based on his or her knowledge of traffic patterns, local weather conditions, terrain or the anticipated magnitude of a potential incident.

503.1.3 High-piled storage. Fire department vehicle access to buildings used for *high-piled combustible storage* shall comply with the applicable provisions of Chapter 32.

❖ Chapter 32 has special requirements for building access in occupancies with high-piled storage, but the requirements for fire apparatus access roads are the same as those required in this chapter.

503.2 Specifications. Fire apparatus access roads shall be installed and arranged in accordance with Sections 503.2.1 through 503.2.8.

❖ The dimensions of fire department access roads are based on the size, height and turning radius of emergency vehicles and the fact that emergency vehicles may be required to pass each other on the access road.

503.2.1 Dimensions. Fire apparatus access roads shall have an unobstructed width of not less than 20 feet (6096 mm), exclusive of shoulders, except for *approved* security gates in accordance with Section 503.6, and an unobstructed vertical clearance of not less than 13 feet 6 inches (4115 mm).

❖ The dimensions in this section are established to give fire apparatus continuous and unobstructed access to buildings and facilities.

This section requires that the unobstructed width of a fire apparatus access road must not be less than 20 feet (6096 mm). The intent of the minimum 20-foot (6096 mm) width is to provide space for fire apparatus to pass one another during fire-ground operations. The need to pass may occur when engines are parked for hydrant hook-up, laying hose or when trucks are performing aerial ladder operations. When an engine company is connected to a fire hydrant parallel to the curb using a front suction connection and using a side-discharge port on the pump, the horizontal distance that is needed to make a no-kink bend in the discharge fire hose can be considerable, especially when a large-diameter hose (LDH) is being used. The roadway width needed to accommodate such a common operational scenario would be the width of the apparatus plus the no-kink bending radius of the discharge hose, leaving minimal roadway width for other apparatus to squeeze by, if needed. Including adjacent road shoulders in the 20-foot (6096 mm) width measurement could yield substandard and inadequate driving surfaces for appara-

INTERNATIONAL CODE COUNCIL®
Copyright © 2015 ICC. ALL RIGHTS RESERVED. Accessed by David Dammon on Jun 21, 2017 12:30:52 PM pursuant to License Agreement with ICC. No further reproduction or distribution authorized. ANY UNAUTHORIZED REPRODUCTION OR DISTRIBUTION IS A VIOLATION OF THE FEDERAL COPYRIGHT ACT AND THE LICENSE AGREEMENT, AND SUBJECT TO CIVIL AND CRIMINAL PENALTIES THEREUNDER.

tus and, as such, shoulders are not to be included in the minimum width.

The minimum vertical clearance of 13 feet, 6 inches (4115 mm) is the standard clearance used for highway bridges and underpasses. The vertical clearance requirement would apply in cases where a building or portion of a building, such as a canopy or porte-cochere, projects over all or a portion of the required width of the fire apparatus access road. Conversely, if the full required width of the fire apparatus access road is provided outside of the footprint of the projecting building element, the vertical clearance requirement would not apply. It is not the intent of this section that all projecting elements be constructed with a 13-foot, 6-inch (4115 mm) vertical clearance, regardless of whether they encroach upon the required width of a fire apparatus access road. Appendix D contains additional guidance on fire apparatus access road dimensions. It is important to note that the appendices are not considered part of the code unless specifically adopted (see Section 1 of the sample adopting ordinance on page xxi of the code).

503.2.2 Authority. The *fire code official* shall have the authority to require or permit modifications to the required access widths where they are inadequate for fire or rescue operations or where necessary to meet the public safety objectives of the jurisdiction.

❖ Fire departments respond to many types of emergency situations and the jurisdictions they serve may have traffic safety criteria that impact the design of access roadways used by emergency response vehicles. This section authorizes the fire code official to require greater, or to allow lesser, access-width dimensions based on the size and maneuverability of the anticipated emergency response apparatus, including mutual-aid apparatus from neighboring communities or agencies, among other considerations.

503.2.3 Surface. Fire apparatus access roads shall be designed and maintained to support the imposed loads of fire apparatus and shall be surfaced so as to provide all-weather driving capabilities.

❖ This provision does not specify a particular type of surface. It is written in performance language; therefore, the surface must carry the load of the anticipated emergency response vehicles and be driveable in all kinds of weather.

The term “all-weather driving capabilities” would typically require some type of paved or hard surface. Gravel would be prone to problems in areas subject to heavy rain or in snowy climates where plowing could reduce the gravel roadbed to mud very quickly. Alternatives to concrete or asphalt, such as interlocking pavers, may be used when approved by the fire code official. Jurisdictions may benefit from developing a local policy outlining specific design requirements for fire apparatus access roads to clarify local interpretations of the section. The policy should include local requirements for surfacing and include acceptable surfacing materials.

503.2.4 Turning radius. The required turning radius of a fire apparatus access road shall be determined by the *fire code official.*

❖ The turning radius of an access road should be based on the turning radius of the anticipated responding emergency vehicles and must be approved by the fire code official.

503.2.5 Dead ends. Dead-end fire apparatus access roads in excess of 150 feet (45 720 mm) in length shall be provided with an *approved* area for turning around fire apparatus.

❖ In consideration of the hazards inherent in attempting to back emergency vehicles, especially larger ones such as tower ladders, out of a long dead-end roadway, this section is intended to create a safer situation by requiring that dead-end access roads over 150 feet long (45 720 mm) be equipped with an approved turnaround designed for the largest anticipated emergency-response vehicles. Appendix D contains examples of dead-end turnaround configurations. It is important to note that the appendices are not considered part of the code unless specifically adopted (see Section 1 of the sample adopting ordinance on page xxi of the code).

503.2.6 Bridges and elevated surfaces. Where a bridge or an elevated surface is part of a fire apparatus access road, the bridge shall be constructed and maintained in accordance with AASHTO HB-17. Bridges and elevated surfaces shall be designed for a live load sufficient to carry the imposed loads of fire apparatus. Vehicle load limits shall be posted at both entrances to bridges where required by the *fire code official.* Where elevated surfaces designed for emergency vehicle use are adjacent to surfaces that are not designed for such use, *approved* barriers, *approved* signs or both shall be installed and maintained where required by the *fire code official.*

❖ Bridges and elevated surfaces must be capable of carrying the weight of emergency response apparatus and must be marked with signage posting the weight limit of the bridge or elevated surface. Evaluation of bridges should be done in cooperation with the appropriate local or state agency having jurisdiction over private or public roadway bridges.

503.2.7 Grade. The grade of the fire apparatus access road shall be within the limits established by the *fire code official* based on the fire department’s apparatus.

❖ Generally, any grade exceeding 10 percent [e.g., greater than a 10-foot (3048 mm) rise in a 100-foot (30 480 mm) length] is required to have the approval of the fire code official. See Appendix D for additional guidance on fire apparatus access roads. Note that the appendices are not considered part of the code unless specifically adopted (see Section 1 of the sample adopting ordinance on page xxi of the code).

INTERNATIONAL CODE COUNCIL®
Copyright © 2015 ICC. ALL RIGHTS RESERVED. Accessed by David Dammon on Jun 21, 2017 12:30:52 PM pursuant to License Agreement with ICC. No further reproduction or distribution authorized. ANY UNAUTHORIZED REPRODUCTION OR DISTRIBUTION IS A VIOLATION OF THE FEDERAL COPYRIGHT ACT AND THE LICENSE AGREEMENT, AND SUBJECT TO CIVIL AND CRIMINAL PENALTIES THEREUNDER.

503.2.8 Angles of approach and departure. The angles of approach and departure for fire apparatus access roads shall be within the limits established by the *fire code official* based on the fire department's apparatus.

❖ The angle of approach is the angle between the ground and a line running from the bottom of the front tire to the lowest-hanging point directly in front of it, which is usually the front bumper of the apparatus. This angle gives an indication of how steep an incline the vehicle can clear when approaching that angle.

The angle of departure is the angle between the ground and a line running from the bottom of the rear tire to the lowest-hanging point directly behind it, which is usually the rear step/tailboard of the apparatus. Similar to the approach angle, this angle indicates how steep an incline the vehicle can clear when departing from that angle.

These design aspects of a fire apparatus access road are crucial to successful navigation by apparatus and must be tailored to accommodate each piece of fire apparatus of the jurisdiction. See Commentary Figure 503.2.8.

503.3 Marking. Where required by the *fire code official*, *approved* signs or other *approved* notices or markings that include the words NO PARKING—FIRE LANE shall be provided for fire apparatus access roads to identify such roads or prohibit the obstruction thereof. The means by which *fire lanes* are designated shall be maintained in a clean and legible condition at all times and be replaced or repaired when necessary to provide adequate visibility.

❖ Fire department access roads are normally designated on private property to provide fire service access; therefore, maintenance of the access roads, signage and any supplementary markings (pavement marking, curbs markings, etc.) are the responsibility of the owner of the property on which the fire apparatus road is located. Signage and supplemental markings should be in accordance with applicable local or state motor vehicle laws and should be enforced with the cooperation of the local police agency. Appendix D contains examples of signage. It is important to note that the appendices are not considered part of the code unless specifically adopted (see Section 1 of the sample adopting ordinance on page xxi of the code.

503.4 Obstruction of fire apparatus access roads. Fire apparatus access roads shall not be obstructed in any manner, including the parking of vehicles. The minimum widths and clearances established in Sections 503.2.1 and 503.2.2 shall be maintained at all times.

❖ To enforce "no parking" in fire apparatus access roads (fire lanes), the roads must be clearly marked. Some jurisdictions cite the building owner if the fire apparatus road is not properly marked and posted, and cite the vehicle for parking or blocking the access road if the access road is clearly marked. Other jurisdictions place the responsibility for marking the access roads, as well as the policing of "no parking" zones, on the building owner. In some states, motor vehicle laws may stipulate that fire apparatus access roads/fire lanes posted on private property may only be enforced by a traffic citation where an enforcement contract has been executed between the property owner and the local jurisdiction, that all markings be in accordance with the motor vehicle code and that the designated roadways be described in detail in the local "no parking" ordinances of the jurisdiction.

503.4.1. Traffic calming devices. Traffic calming devices shall be prohibited unless *approved* by the *fire code official*.

❖ This section prohibits the installation of traffic calming devices on fire apparatus access roads unless the devices are approved by the fire code official. What it doesn't do is detail how that approval is to be made within various jurisdictions. Each jurisdiction has its own traffic pattern emergency response challenges. The purpose of this requirement is to ensure that the fire department is part of this decision-making process. In most jurisdictions, the design and construction or review and approval of traffic calming devices is the responsibility of the municipal public works, transportation or engineering department. As a result, the fire code official and the appropriate engineering staff will need to work closely with one another to ensure that traffic calming devices, when approved, not only meet traffic engineering needs but also have the least impact on response time to emergencies. Traffic officials and fire code officials both have the responsibility to ensure that all public interests are properly considered in their decision-making process since both sets of officials have detailed regulations

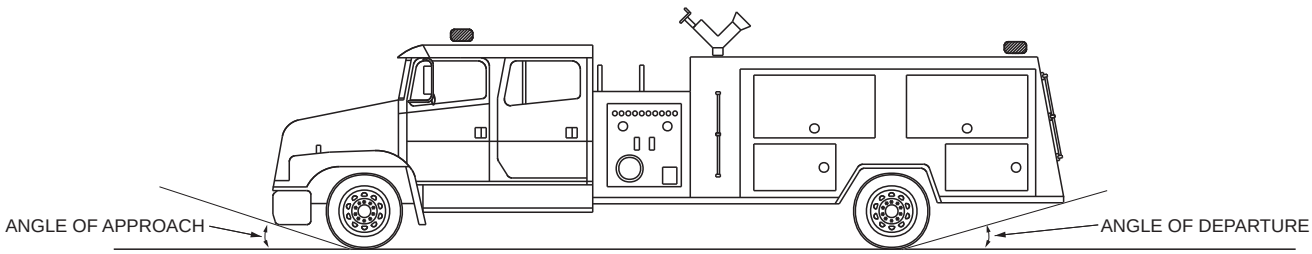

Figure 503.2.8
EXAMPLE OF ANGLES OF APPROACH AND DEPARTURE

INTERNATIONAL CODE COUNCIL®
Copyright © 2015 ICC. ALL RIGHTS RESERVED. Accessed by David Dammon on Jun 21, 2017 12:30:52 PM pursuant to License Agreement with ICC. No further reproduction or distribution authorized. ANY UNAUTHORIZED REPRODUCTION OR DISTRIBUTION IS A VIOLATION OF THE FEDERAL COPYRIGHT ACT AND THE LICENSE AGREEMENT, AND SUBJECT TO CIVIL AND CRIMINAL PENALTIES THEREUNDER.

to provide for those interests. See the commentary to the Section 202 definition of "Traffic calming device" for further discussion.

503.5 Required gates or barricades. The *fire code official* is authorized to require the installation and maintenance of gates or other *approved* barricades across fire apparatus access roads, trails or other accessways, not including public streets, alleys or highways. Electric gate operators, where provided, shall be *listed* in accordance with UL 325. Gates intended for automatic operation shall be designed, constructed and installed to comply with the requirements of ASTM F2200.

❖ The fire code official may require the installation and maintenance of gates or barricades across fire apparatus roads to prevent unauthorized vehicles from blocking or parking in the access road. The design and dimensions of the gates or barricades must be approved by the fire code official. Additionally, the gate or barricade must be operable or removable by the responding emergency units to provide them with quick access.

This section also addresses an important public safety issue regarding automatic operation of vehicular gates. Protection is needed from potential entrapment of individuals between an automatically moving gate and a stationary object or surface in close proximity to such gate. Gates intended for automation require specific design, construction and installation to accommodate entrapment protection to minimize or eliminate excessive gate gaps, openings and protrusions identified as contributing to the hazard of entrapments that have historically caused numerous serious injuries and deaths.

This section references two appropriate standards that deal with automatic gate safety: UL 325 and ASTM F2200. UL 325 is an ANSI-recognized safety standard containing provisions governing gate openers. Gate openers listed to the requirements of UL 325 provide an improved level of assurance that safety requirements have been met for such openers. ASTM F2200 is a consensus document containing provisions governing the construction of vehicular gates intended for automation, and has been harmonized with the applicable provisions of UL 325.

503.5.1 Secured gates and barricades. Where required, gates and barricades shall be secured in an *approved* manner. Roads, trails and other accessways that have been closed and obstructed in the manner prescribed by Section 503.5 shall not be trespassed on or used unless authorized by the *owner* and the *fire code official.*

Exception: The restriction on use shall not apply to public officers acting within the scope of duty.

❖ The owner may secure the fire apparatus access road and restrict its use to emergency vehicles only, if warranted. If there is a need to secure gates or barricades, jurisdictions may require a padlock or key switch (on electrically operated gates) designed for the same key as key boxes provided in accordance with Section 506. Occasionally, electronically operated gates are required to be provided with a backup mechanism or breakaway feature in case the primary operating means fails.

The exception makes it clear that the securing of fire apparatus access roads is not intended to impede the legitimate and necessary use of the road by duly authorized public officers, such as police officers or other municipal personnel.

503.6 Security gates. The installation of security gates across a fire apparatus access road shall be *approved* by the fire chief. Where security gates are installed, they shall have an *approved* means of emergency operation. The security gates and the emergency operation shall be maintained operational at all times. Electric gate operators, where provided, shall be *listed* in accordance with UL 325. Gates intended for automatic operation shall be designed, constructed and installed to comply with the requirements of ASTM F2200.

❖ This section does not require that security gates be installed, but since they can affect fire department operations, their installation must be approved by the fire chief. Where installed, security gates must be operable in an emergency by the emergency response units and the means of operation must be acceptable to the fire chief. Electrically operated gates should also include a manual method of operation (also see commentary, Section 503.5.1).

This section requires ongoing maintenance of security gates so that ready access to the roadway may be accomplished. If gates are not maintained in a manner that prevents appreciable delay of emergency response, the fire code official has the authority to have gates removed because they would be considered an obstruction of the required roadway width as regulated in Section 503.4.

This section also addresses an important public safety issue regarding automatic operation of vehicular gates. Protection is needed from potential entrapment of individuals between an automatically moving gate and a stationary object or surface in close proximity to such gate. Gates intended for automation require specific design, construction and installation to accommodate entrapment protection to minimize or eliminate excessive gate gaps, openings and protrusions identified as contributing to the hazard of entrapments that have historically caused numerous serious injuries and deaths.

This section references two appropriate standards that deal with automatic gate safety: UL 325 and ASTM F2200. UL 325 is an ANSI-recognized safety standard containing provisions governing gate openers. Gate openers listed to the requirements of UL 325 provide an improved level of assurance that safety requirements have been met for such openers. ASTM F2200 is a consensus document containing provisions governing the construction of vehicular gates intended for automation, and has been harmonized with the applicable provisions of UL 325.

INTERNATIONAL CODE COUNCIL®
Copyright © 2015 ICC. ALL RIGHTS RESERVED. Accessed by David Dammon on Jun 21, 2017 12:30:52 PM pursuant to License Agreement with ICC. No further reproduction or distribution authorized. ANY UNAUTHORIZED REPRODUCTION OR DISTRIBUTION IS A VIOLATION OF THE FEDERAL COPYRIGHT ACT AND THE LICENSE AGREEMENT, AND SUBJECT TO CIVIL AND CRIMINAL PENALTIES THEREUNDER.

SECTION 504
ACCESS TO BUILDING OPENINGS AND ROOFS

504.1 Required access. Exterior doors and openings required by this code or the *International Building Code* shall be maintained readily accessible for emergency access by the fire department. An *approved* access walkway leading from fire apparatus access roads to exterior openings shall be provided when required by the *fire code official.*

❖ The exterior openings referred to in this section are typically exit discharge doors, since such openings provide fire department access directly into the building or to a fire-resistance-rated enclosure from which to operate in multiple-story buildings. This section also includes access openings for rack or high-piled storage buildings required by Section 3206.6. Under certain circumstances, in order for emergency response personnel to get equipment from the emergency apparatus to the building, the fire code official is authorized to require approved walkways from the apparatus access road to the building openings on grade level.

504.2 Maintenance of exterior doors and openings. Exterior doors and their function shall not be eliminated without prior approval. Exterior doors that have been rendered nonfunctional and that retain a functional door exterior appearance shall have a sign affixed to the exterior side of the door with the words THIS DOOR BLOCKED. The sign shall consist of letters having a principal stroke of not less than $^3/_4$ inch (19.1 mm) wide and not less than 6 inches (152 mm) high on a contrasting background. Required fire department access doors shall not be obstructed or eliminated. Exit and *exit access* doors shall comply with Chapter 10. Access doors for *high-piled combustible storage* shall comply with Section 3206.6.1.

❖ This section pertains to emergency access openings and to all exterior doors that have a functional appearance from the outside but are not operable. Doors that are part of the required means of egress or that are required by Section 3206.6 must not be rendered unusable or blocked. Only doors not required by the code or the IBC for means of egress may be blocked or made unusable. Even then, they must be marked from the outside so that emergency personnel will not attempt to use them.

504.3 Stairway access to roof. New buildings four or more stories above grade plane, except those with a roof slope greater than four units vertical in 12 units horizontal (33.3-percent slope), shall be provided with a *stairway* to the roof. *Stairway* access to the roof shall be in accordance with Section 1011.12. Such *stairway* shall be marked at street and floor levels with a sign indicating that the *stairway* continues to the roof. Where roofs are used for roof gardens or for other purposes, *stairways* shall be provided as required for such occupancy classification.

❖ The stairway to the roof, required by this section, must comply with Sections 1011.12 through 1011.12.2. If the stairway to the roof serves as a means of egress from an occupied roof, then the stairway must be equipped with all the components of an exit stairway, such as the required riser and tread dimensions, handrails, etc. If the stairway to the roof is not required for roof egress, Section 1011.14 allows the stairway segment from the top floor to the roof to be an alternating tread device. The access to the roof is required for fire-fighter use and not the general public; therefore, the door leading to the roof may be secured in a manner approved by the fire code official with due consideration given to whether the door is an egress element for the roof. These provisions apply only to new buildings four or more stories in height (see commentary, Sections 1011.12 and 1023.9).

SECTION 505
PREMISES IDENTIFICATION

505.1 Address identification. New and existing buildings shall be provided with *approved* address identification. The address identification shall be legible and placed in a position that is visible from the street or road fronting the property. Address identification characters shall contrast with their background. Address numbers shall be Arabic numbers or alphabetical letters. Numbers shall not be spelled out. Each character shall be not less than 4 inches (102 mm) high with a minimum stroke width of $^1/_2$ inch (12.7 mm). Where required by the *fire code official*, address identification shall be provided in additional *approved* locations to facilitate emergency response. Where access is by means of a private road and the building cannot be viewed from the *public way*, a monument, pole or other sign or means shall be used to identify the structure. Address identification shall be maintained.

❖ Buildings must be provided and maintained with address identification that is easily identifiable by emergency responders from the emergency response vehicle. This should include the backs of buildings that face alleys or roads, since the emergency response unit may often be directed to the back entrance to a building, such as in a strip shopping center. The back door of each tenant space should have the numerical address and store name on or above the door.

This section also provides the fire code official with the authority to require additional address locations for facilities with unusual or problematic configurations, such as college or hospital campuses, strip malls, business parks, apartment complexes and other complex properties where identification of buildings is essential to emergency responders. The additional requirements proposed by the added language will assist various emergency responders in identifying specific addresses when an emergency response from locations other than the primary access point is required.

There are also situations where a building's setback from the street is so large that the building itself may not even be visible to emergency responders. In

INTERNATIONAL CODE COUNCIL®
Copyright © 2015 ICC. ALL RIGHTS RESERVED. Accessed by David Dammon on Jun 21, 2017 12:30:52 PM pursuant to License Agreement with ICC. No further reproduction or distribution authorized. ANY UNAUTHORIZED REPRODUCTION OR DISTRIBUTION IS A VIOLATION OF THE FEDERAL COPYRIGHT ACT AND THE LICENSE AGREEMENT, AND SUBJECT TO CIVIL AND CRIMINAL PENALTIES THEREUNDER.

such circumstances, this section requires that the road or driveway giving access to the building be marked to assist emergency responders in promptly identifying their access. It is important that such remote markings be reviewed and approved by the fire code official prior to installation.

505.2 Street or road signs. Streets and roads shall be identified with *approved* signs. Temporary signs shall be installed at each street intersection when construction of new roadways allows passage by vehicles. Signs shall be of an *approved* size, weather resistant and be maintained until replaced by permanent signs.

❖ The names of streets in new developments may not be on maps, making them hard for emergency responders to find. Temporary street signs must be installed before construction begins and replaced later with permanent signs.

SECTION 506
KEY BOXES

506.1 Where required. Where access to or within a structure or an area is restricted because of secured openings or where immediate access is necessary for life-saving or fire-fighting purposes, the *fire code official* is authorized to require a key box to be installed in an *approved* location. The key box shall be of an *approved* type listed in accordance with UL 1037, and shall contain keys to gain necessary access as required by the *fire code official*.

❖ The fire code official has the authority to require special key vaults when, in his or her opinion, the need for rapid entry into facilities warrants it. The key boxes or vaults are located on the exterior of the building for ready access, and are openable with a special master key in the possession of the emergency responders. See Commentary Figures 506.1(1) and 506.1(2) and the commentary to the definitions of "Key box" and "Fire department master key" in Section 202.

The section also specifies a level of security for key boxes. Where a rapid-entry key box is required, there is an obligation to make sure that the key box required or approved by the fire code official is secure to prevent the key box from becoming a security threat. This section addresses the issue of security by requiring an approved key box to be listed in accordance with UL 1037. The major key box manufacturers have their rapid entry devices listed under this standard.

Section 506.1 is a discretionary provision based on the jurisdiction's determination that the use of a key box is safer for fire fighters than performing manual forcible entry into a structure. If properly maintained in accordance with Section 506.2, a key box can also lower property losses because it expedites the entry of fire fighters into a structure without necessitating the damage associated with forcing entry. The decision for the use of key boxes rests solely with the fire code official.

506.1.1 Locks. An *approved* lock shall be installed on gates or similar barriers where required by the *fire code official*.

❖ The key box suppliers also have special padlocks and electronic key-operated switches that are controlled by the same fire department master key that opens the key vaults. These padlocks can be required by the fire code official for security gates (also see commentary, Sections 503.5, 503.5.1 and 503.6). The key-activated electronic switches may also be required for the control of certain equipment in the building, such as smoke control equipment, or to shut down a dangerous process.



Figure 506.1(1)
SURFACE-MOUNTED KEY BOX
(Photo courtesy of Knox Company)



Figure 506.1(2)
RECESSED-MOUNTED KEY BOX
(Photo courtesy of Knox Company)

INTERNATIONAL CODE COUNCIL®
Copyright © 2015 ICC. ALL RIGHTS RESERVED. Accessed by David Dammon on Jun 21, 2017 12:30:52 PM pursuant to License Agreement with ICC. No further reproduction or distribution authorized. ANY UNAUTHORIZED REPRODUCTION OR DISTRIBUTION IS A VIOLATION OF THE FEDERAL COPYRIGHT ACT AND THE LICENSE AGREEMENT, AND SUBJECT TO CIVIL AND CRIMINAL PENALTIES THEREUNDER.

506.1.2 Key boxes for nonstandardized fire service elevator keys. Key boxes provided for nonstandardized fire service elevator keys shall comply with Section 506.1 and all of the following:

1. The key box shall be compatible with an existing rapid entry key box system in use in the jurisdiction and *approved* by the *fire code official*.
2. The front cover shall be permanently labeled with the words "Fire Department Use Only—Elevator Keys."
3. The key box shall be mounted at each elevator bank at the lobby nearest to the lowest level of fire department access.
4. The key box shall be mounted 5 feet 6 inches (1676 mm) above the finished floor to the right side of the elevator bank.
5. Contents of the key box are limited to fire service elevator keys. Additional elevator access tools, keys and information pertinent to emergency planning or elevator access shall be permitted where authorized by the *fire code official*.
6. In buildings with two or more elevator banks, a single key box shall be permitted to be used where such elevator banks are separated by not more than 30 feet (9144 mm). Additional key boxes shall be provided for each individual elevator or elevator bank separated by more than 30 feet (9144 mm).

Exception: A single key box shall be permitted to be located adjacent to a *fire command center* or the non-standard fire service elevator key shall be permitted to be secured in a key box used for other purposes and located in accordance with Section 506.1.

❖ Many jurisdictions have elevators built prior to the introduction of a standardized elevator key and, as a result, each building with an elevator requires its own elevator key. The key is most likely to be based on the model of the elevator and the year it was manufactured. This section sets forth requirements to assist jurisdictions in managing the issue of having different elevator keys in different buildings. These provisions specify where the key box is to be located inside the building and require it to be compatible with the rapid-entry existing key boxes that may already be in use in the jurisdiction. The exception allows key box installation adjacent to a fire command center or in other locations where approved by the fire code official. See the commentary to Sections 607.8 through 607.8.4 for a discussion of standardized fire service elevator keys.

506.2 Key box maintenance. The operator of the building shall immediately notify the *fire code official* and provide the new key where a lock is changed or rekeyed. The key to such lock shall be secured in the key box.

❖ In most cases, the owner of a building cannot open the key vault or box and must call the fire code official to have someone open it to replace keys that have been changed. The building owner is responsible for maintaining the key box, as well as keeping the keys inside the box current.

SECTION 507
FIRE PROTECTION WATER SUPPLIES

507.1 Required water supply. An *approved* water supply capable of supplying the required fire flow for fire protection shall be provided to premises upon which facilities, buildings or portions of buildings are hereafter constructed or moved into or within the jurisdiction.

❖ This section requires that adequate fire protection water be provided to premises upon which new buildings are constructed or onto which a building is moved, from either outside of the jurisdiction or another location within the jurisdiction. Note that this section states that the water supply must be capable of supplying the required fire flow to the premises; however, the means by which the fire flow is supplied is determined by the policies of the jurisdiction, such as a pumper taking suction from a hydrant, tanker or lake (also see Appendices B and C for further information on fire flows and fire hydrants). It is important to note that the appendices are not considered part of the code unless specifically adopted (see Section 1 of the sample adopting ordinance on page xxi of the code). The phrase "... hereafter constructed or moved ..." used in this section (and in Appendices B and C, if duly adopted) limits the application of water supply provisions to only newly erected or relocated buildings, as opposed to existing buildings or existing remodeled buildings.

A question that often arises is whether the code's regulations pertaining to fire protection water supply are intended to be applicable to one- and two-family residential development sites upon which buildings are constructed under the provisions of the IRC. The IRC is intended to be a stand-alone code for the construction of detached one- and two-family dwellings and townhouses not more than three stories in height. As such, all of the provisions for the construction of buildings of those descriptions are to be regulated exclusively by the IRC and not by another I-Code. However, the IRC applies only to the construction of the structures of those buildings and not to the development of the site upon which such structures are built. Accordingly, where the code is adopted, its fire protection water supply provisions (including specifically adopted related appendices) apply. The code's requirements address only land development requirements for providing fire protection water supply to residential sites on the same basis as to the rest of the community (also see commentary, Sections 102.5 and 503.1.1).

507.2 Type of water supply. A water supply shall consist of reservoirs, pressure tanks, elevated tanks, water mains or

INTERNATIONAL CODE COUNCIL®
Copyright © 2015 ICC. ALL RIGHTS RESERVED. Accessed by David Dammon on Jun 21, 2017 12:30:52 PM pursuant to License Agreement with ICC. No further reproduction or distribution authorized. ANY UNAUTHORIZED REPRODUCTION OR DISTRIBUTION IS A VIOLATION OF THE FEDERAL COPYRIGHT ACT AND THE LICENSE AGREEMENT, AND SUBJECT TO CIVIL AND CRIMINAL PENALTIES THEREUNDER.

other fixed systems capable of providing the required fire flow.

❖ A good water supply consists of an adequate source of water, distribution system and proper pressure for delivery. If the water source is not reliable, it should not be considered as an acceptable water supply.

507.2.1 Private fire service mains. Private fire service mains and appurtenances shall be installed in accordance with NFPA 24.

❖ Private fire service mains are often installed on private property where facilities are located well away from municipal water distribution systems. Private hydrants may not be installed on mains less than 6 inches (152 mm) in diameter (see Section 5.2.1 of NFPA 24). Where installed, private fire service mains, private hydrants, control valves, hose houses and related equipment must be installed and maintained in accordance with NFPA 24. Private (yard) hydrants may be tested, painted and marked in accordance with NFPA 291 where approved by the fire code official and the fire department.

507.2.2 Water tanks. Water tanks for private fire protection shall be installed in accordance with NFPA 22.

❖ Water tanks for private fire protection may be required where municipal water systems do not exist or are incapable of supplying sprinkler or standpipe demand, or where Section 403.2 of the IBC or Section 903.3.5.2 of the code requires a secondary water supply for high-rise buildings in Seismic Design Category C, D, E or F. NFPA 22 and Section 1509.3 of the IBC govern the installation of water tanks on buildings. Pressure tanks must bear the label of an approved agency and be installed in accordance with the manufacturer's instructions.

507.3 Fire flow. Fire flow requirements for buildings or portions of buildings and facilities shall be determined by an *approved* method.

❖ Appendix B of the code, which sets forth minimum fire flow requirements for one- and two-family dwellings and commercial buildings, offers one method for determining fire flow and its duration that could be approved by the fire code official. In areas that do not have a water supply, such as rural areas with no conventional water storage and distribution system, the jurisdiction may chose to utilize the methods contained in NFPA 1142, *Standard on Water Supplies for Suburban and Rural Firefighting,* the *International Wildland-Urban Interface Code*® (IWUIC®), or the Insurance Services Office's *Guide for Determination of Needed Fire Flow*. Appendix Table B105.1 bases fire flow on the type of construction and the square footage of the fire flow calculation area. All calculations in the table are based on a 20-pounds-per-square-inch (psi) (138 kPa) residual pressure. Note that the provisions of Section B103 provide for increases, reductions and specific alternative methods for determining flows. In addition to Section B103, Sections 104.8 and 104.9 also provide the fire code official with authority concerning modifications and alternative methods. See the commentary to Appendix B for discussion of the fire flow requirements. It is important to note that the appendices are not considered part of the code unless specifically adopted (see Section 1 of the sample adopting ordinance on page xxi of the code).

507.4 Water supply test. The *fire code official* shall be notified prior to the water supply test. Water supply tests shall be witnessed by the *fire code official* or *approved* documentation of the test shall be provided to the *fire code official* prior to final approval of the water supply system.

❖ Whatever type of water supply is proposed in order to comply with Section 507.1, it must be tested in a manner that will verify it is capable of providing the required fire flow. The water supply system must be tested and the contractor is required to notify the fire code official prior to performing the test on the system. The fire code official will make the final approval by either witnessing the test or accepting the certification documentation. NFPA 291 contains recommended test methodology.

If the water supply system includes private fire service mains, NFPA 24, referenced in Section 507.2.1, contains the testing requirements for private fire service mains, as well as a test certificate form. It should be noted that the test certificate form has signature blocks only for the building owner's representative and the installing contractor's representative. There is no place on the form for the fire code official's signature, nor should he or she expose him or herself to liability of any kind for the installation by signing the form.

507.5 Fire hydrant systems. Fire hydrant systems shall comply with Sections 507.5.1 through 507.5.6.

❖ When fire hydrant systems are part of the approved water supply, the system must comply with this section.

507.5.1 Where required. Where a portion of the facility or building hereafter constructed or moved into or within the jurisdiction is more than 400 feet (122 m) from a hydrant on a fire apparatus access road, as measured by an *approved* route around the exterior of the facility or building, on-site fire hydrants and mains shall be provided where required by the *fire code official*.

Exceptions:

1. For Group R-3 and Group U occupancies, the distance requirement shall be 600 feet (183 m).
2. For buildings equipped throughout with an *approved automatic sprinkler system* installed in accordance with Section 903.3.1.1 or 903.3.1.2, the distance requirement shall be 600 feet (183 m).

❖ The intent of this section is that not more than 400 feet (122 m) of hose will have to be layed out to reach all portions of the exterior grade level of the building.

INTERNATIONAL CODE COUNCIL®
Copyright © 2015 ICC. ALL RIGHTS RESERVED. Accessed by David Dammon on Jun 21, 2017 12:30:52 PM pursuant to License Agreement with ICC. No further reproduction or distribution authorized. ANY UNAUTHORIZED REPRODUCTION OR DISTRIBUTION IS A VIOLATION OF THE FEDERAL COPYRIGHT ACT AND THE LICENSE AGREEMENT, AND SUBJECT TO CIVIL AND CRIMINAL PENALTIES THEREUNDER.

Each hydrant must be accessible to fire apparatus and the 400-foot (122 m) distance should be measured from the hydrant(s) to all portions of the exterior at ground level [see Commentary Figure 507.5.1(1)]. When on-site hydrants and mains are required to achieve compliance with the distance requirement, this section gives the fire code official the authority to determine and approve hydrant locations on the site.

This paragraph is not intended to prevent development in rural areas where fire hydrants are not available, as long as the fire code official has approved an alternative water supply. The alternative water supply could be a fire department water tanker or a static, all-weather water supply that is approved by the fire code official.

In recognition of the smaller relative size and fire hazard characteristics of one- and two-family dwellings and utility buildings, Exception 1 increases the 400-foot (122 m) distance to 600 feet (183 m) [see Commentary Figure 507.5.1(2)]. Note that the one- and two-family dwellings classified in Group R-3 are those that are not within the scope of the IRC. See Section 102.5.

In recognition of the proven efficiency of sprinklers in applying water directly on the seat of the fire for buildings equipped throughout with automatic sprinklers in accordance with NFPA 13 or NFPA 13R, as applicable, Exception 2 increases the 400-foot (122 m) distance to 600 feet (183 m) [see Commentary Figure 507.5.1(3)].

507.5.1.1 Hydrant for standpipe systems. Buildings equipped with a standpipe system installed in accordance with Section 905 shall have a fire hydrant within 100 feet (30 480 mm) of the fire department connections.

Exception: The distance shall be permitted to exceed 100 feet (30 480 mm) where *approved* by the *fire code official.*

❖ This section provides correlation with NFPA 14, Section 6.4.5.4, which requires that standpipe fire depart-

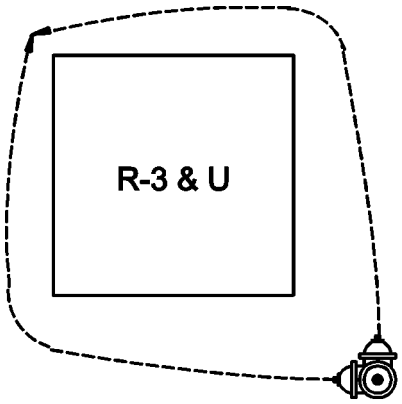

For SI: 1 foot = 304.8.

Figure 507.5.1(2)
HYDRANT LOCATION—GROUP R-3 AND U

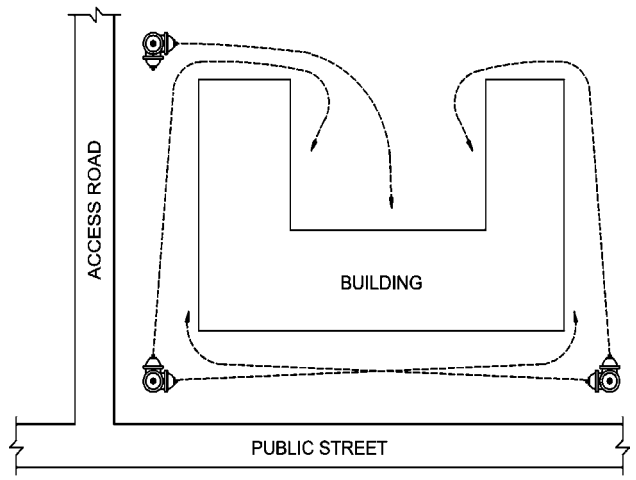

For SI: 1 foot = 304.8.

Figure 507.5.1(1)
HYDRANT LAYOUT TO MINIMIZE HOSE RUN

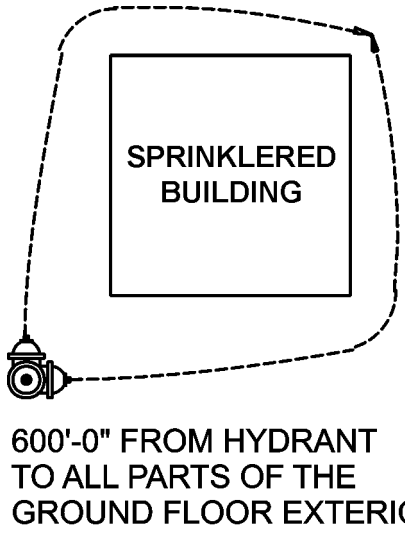

For SI: 1 foot = 304.8 mm.

Figure 507.5.1(3)
ACCEPTABLE HYDRANT
LOCATION WITH SPRINKLERS

INTERNATIONAL CODE COUNCIL®
Copyright © 2015 ICC. ALL RIGHTS RESERVED. Accessed by David Dammon on Jun 21, 2017 12:30:52 PM pursuant to License Agreement with ICC. No further reproduction or distribution authorized. ANY UNAUTHORIZED REPRODUCTION OR DISTRIBUTION IS A VIOLATION OF THE FEDERAL COPYRIGHT ACT AND THE LICENSE AGREEMENT, AND SUBJECT TO CIVIL AND CRIMINAL PENALTIES THEREUNDER.

ment connections be placed within 100 feet (30 m) of a fire hydrant, unless otherwise approved by the authority having jurisdiction. However, that requirement is frequently missed where site work and approval has been based only on the fire apparatus access road and fire protection water supply requirements in this chapter. With the requirement now included in this section, the code user is directed to this requirement during the site design review stage and not as an afterthought as has often happened during the building permit site plan review. The exception provides design flexibility but protects operational needs of the fire department by requiring the fire code official to approve any increase in distance between the fire department connection (FDC) and the hydrant. Note that this requirement is not applicable to sprinkler connections since NFPA 13 does not have a distance requirement to a fire hydrant for connections serving only sprinkler systems.

507.5.2 Inspection, testing and maintenance. Fire hydrant systems shall be subject to periodic tests as required by the *fire code official*. Fire hydrant systems shall be maintained in an operative condition at all times and shall be repaired where defective. Additions, repairs, *alterations* and servicing shall comply with *approved* standards. Records of tests and required maintenance shall be maintained.

❖ The fire code official has the authority to require periodic tests and to specify the frequency of such tests. The generally accepted procedure is to inspect hydrants annually for proper operation and drainage by opening and closing the hydrants and lubricating all threads. This section also requires that written inspection and maintenance records be kept. Such records should indicate the date and time and the name of the person conducting the inspection or maintenance. These records must be maintained by the owner and should be made available to the fire code official for review when requested. This requirement relieves the fire code official of the administrative burden of maintaining test records.

507.5.3 Private fire service mains and water tanks. Private fire service mains and water tanks shall be periodically inspected, tested and maintained in accordance with NFPA 25 at the following intervals:

1. Private fire hydrants of all types: Inspection annually and after each operation; flow test and maintenance annually.
2. Fire service main piping: Inspection of exposed, annually; flow test every 5 years.
3. Fire service main piping strainers: Inspection and maintenance after each use.

Records of inspections, testing and maintenance shall be maintained.

❖ NFPA 25 is the Standard for the Inspection, Testing and Maintenance of Water-based Fire Protection Systems. Chapter 7 of that standard covers private fire service mains and Chapter 9 covers water storage tanks. This section also requires that written inspection and maintenance records be kept. Such records should indicate the date and time and the name of the person conducting the inspection or maintenance. These records must be maintained by the owner and should be made available to the fire code official for review when requested. This requirement relieves the fire code official of the administrative burden of maintaining test records.

507.5.4 Obstruction. Unobstructed access to fire hydrants shall be maintained at all times. The fire department shall not be deterred or hindered from gaining immediate access to fire protection equipment or fire hydrants.

❖ Nothing can be allowed to be placed near a fire hydrant, FDC or control valve that would prevent responding fire fighters from immediately recognizing the device and gaining access to it. Plants and shrubs on public or private property are probably the most common object that can make fire hydrants, FDCs or fire protection system valves virtually invisible to responding fire apparatus engineers. In residential areas especially, some homeowners do not like “that ugly piece of iron” (i.e., a fire hydrant) in their yard, so they plant all manner of vegetation around it in an effort to hide it—a clear violation of this section. On construction sites, fire hydrants or FDCs are often hidden from view and access by deliveries of construction materials randomly dumped at the most convenient spot on the site without regard for the need of the fire department to gain immediate access to hydrants or FDCs.

507.5.5 Clear space around hydrants. A 3-foot (914 mm) clear space shall be maintained around the circumference of fire hydrants, except as otherwise required or *approved*.

❖ Care must be taken so that fences, utility poles, barricades and other obstructions do not prevent access to and operation of fire hydrants. A clear space of 3 feet (914 mm) must be maintained around hydrants (see Commentary Figure 507.5.5) to allow easy hose connections to the hydrant and the efficient use of hydrant wrenches, spanner wrenches and other tools needed by the apparatus engineer. It is not the intent of this section to allow any of the obstructions described in Section 507.5.4 to exist as long as they are kept 3 feet (914 mm) from the hydrant, FDC or valve.

Though not specifically mentioned in this section, it is also important that hydrants be installed with the center of the outlet cap nuts at least 18 inches (457 mm) above adjoining grade to accommodate the free turning of a hydrant wrench when removing the caps (see NFPA 24, Chapter 7, for further information).

507.5.6 Physical protection. Where fire hydrants are subject to impact by a motor vehicle, guard posts or other *approved* means shall comply with Section 312.

❖ Section 312 requires vehicle impact protection by placing steel posts filled with concrete around the hydrant (see Commentary Figure 507.5.6). Section

INTERNATIONAL CODE COUNCIL®
Copyright © 2015 ICC. ALL RIGHTS RESERVED. Accessed by David Dammon on Jun 21, 2017 12:30:52 PM pursuant to License Agreement with ICC. No further reproduction or distribution authorized. ANY UNAUTHORIZED REPRODUCTION OR DISTRIBUTION IS A VIOLATION OF THE FEDERAL COPYRIGHT ACT AND THE LICENSE AGREEMENT, AND SUBJECT TO CIVIL AND CRIMINAL PENALTIES THEREUNDER.

312 gives the specifications for the posts. Note that the provisions of Section 507.5.5 apply to the installation of posts or other protective features.

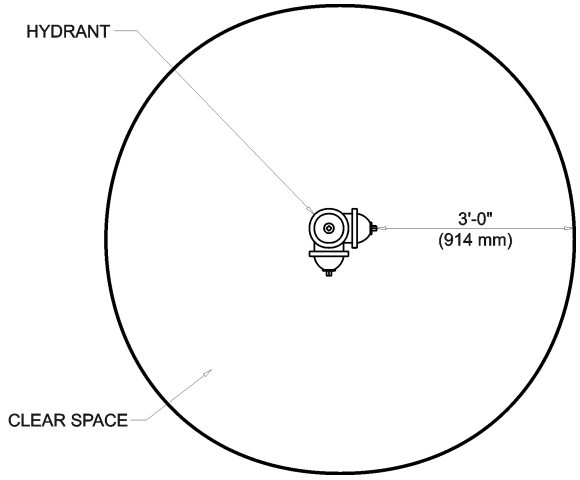

For SI: 1 foot = 304.8 mm.

Figure 507.5.5
HYDRANT CLEARANCE

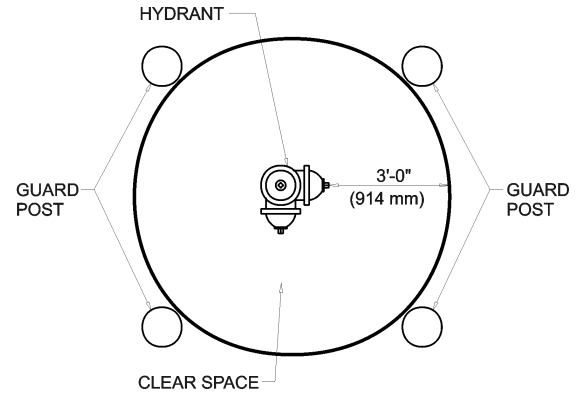

For SI: 1 foot = 304.8 mm.

Figure 507.5.6
HYDRANT IMPACT PROTECTION

SECTION 508
FIRE COMMAND CENTER

508.1 General. Where required by other sections of this code and in all buildings classified as high-rise buildings by the *International Building Code*, a *fire command center* for fire department operations shall be provided and shall comply with Sections 508.1.1 through 508.1.6.

❖ Fire-ground operations usually involve establishing an incident command post where the incident command officer can observe what is happening; control arriving personnel and equipment; and direct the resources and fire-fighting operations effectively. Because of the difficulties in controlling a fire in a high-rise building, an adequately sized, protected, readily accessible, separate room for this purpose within the building must be established to assist the incident command officer (see also the commentary to Section 202 for the definition of "Fire command center").

A fire command center is also required by Section 909.16 in buildings containing smoke-protected assembly seating to house the fire fighter's smoke control panel. Facilities with smoke-protected seating tend to be larger facilities that, at the very least, would already have a central security center that could also function as a fire command center where approved by the jurisdiction (see commentary, Section 909.16).

508.1.1 Location and access. The location and accessibility of the *fire command center* shall be *approved* by the fire chief.

❖ Because of its importance to fire suppression and rescue operations, the fire command center must be provided at a location that is acceptable to the fire department, usually near the front of the building near the main entrance, so that the first arriving command officer can access it quickly and undertake operations. Since fire-ground operations are based on local operational procedures, it is only reasonable that the fire chief of the jurisdiction have approval authority over the location of and access to the fire command center.

508.1.2 Separation. The *fire command center* shall be separated from the remainder of the building by not less than a 1-hour *fire barrier* constructed in accordance with Section 707 of the *International Building Code* or *horizontal assembly* constructed in accordance with Section 711 of the *International Building Code*, or both.

❖ Because of its importance to fire suppression and rescue operations, the fire command center must be separated from the remainder of the building by 1-hour fire barriers and horizontal assemblies, including opening protectives, to protect the room, its contents and occupants from an incident in adjacent areas of the building, and to limit noise and distractions during command operations within the room.

508.1.3 Size. The *fire command center* shall be not less than 200 square feet (19 m^2) in area with a minimum dimension of 10 feet (3048 mm).

❖ This section is intended to provide a minimum size and configuration of the fire command center that allows sufficient space for the necessary command personnel to effectively perform required tasks associated with a fire command center without interfering with each other. Fire command centers must be designed to accommodate several emergency response commanders wearing full protective equipment, provide space to review building emergency plans during incidents, colocate decision-makers within the incident command system (ICS), and interpret fire protection system and building system information generated by the features required by Section 508.1.5. Given the multiple uses of the fire command

INTERNATIONAL CODE COUNCIL®
Copyright © 2015 ICC. ALL RIGHTS RESERVED. Accessed by David Dammon on Jun 21, 2017 12:30:52 PM pursuant to License Agreement with ICC. No further reproduction or distribution authorized. ANY UNAUTHORIZED REPRODUCTION OR DISTRIBUTION IS A VIOLATION OF THE FEDERAL COPYRIGHT ACT AND THE LICENSE AGREEMENT, AND SUBJECT TO CIVIL AND CRIMINAL PENALTIES THEREUNDER.

center, a room any smaller would serve to compromise the effectiveness of incident management.

508.1.4 Layout approval. A layout of the *fire command center* and all features required by this section to be contained therein shall be submitted for approval prior to installation.

❖ The flow of critical tactical information into, within and out of a fire command center is, by its very nature, both high in volume and intense in nature, and has a direct bearing on the safety of building occupants and emergency response personnel at work at an incident. For that reason, the layout and arrangement of the fire command center must comport with the operational procedures of the local fire department to optimize the receipt, processing and dissemination of operational information and orders. Accordingly, the fire code official must review and approve the arrangement of the fire command center prior to the installation of any of the controls and features required by Section 508.1.5. Consistent with Section 508.1.1, given the operational importance of the fire command center, the fire code official should work closely with the jurisdiction's fire chief to make sure that all operational needs are identified and met during the design stages.

508.1.5 Storage. Storage unrelated to operation of the *fire command center* shall be prohibited.

❖ Fire command centers are unique rooms in unique buildings and are strictly reserved for emergency management operations. As such, they must be neat and orderly at all times so as not to obstruct or limit access to all of the system controls they contain. This section supports that need by prohibiting the storage within a fire command center of anything not directly related to the function of fire command.

508.1.6 Required features. The *fire command center* shall comply with NFPA 72 and shall contain the following features:

1. The emergency voice/alarm communication system control unit.
2. The fire department communications system.
3. Fire detection and alarm system annunciator.
4. Annunciator unit visually indicating the location of the elevators and whether they are operational.
5. Status indicators and controls for air distribution systems.
6. The fire fighter's control panel required by Section 909.16 for smoke control systems installed in the building.
7. Controls for unlocking *stairway* doors simultaneously.
8. Sprinkler valve and water-flow detector display panels.
9. Emergency and standby power status indicators.
10. A telephone for fire department use with controlled access to the public telephone system.
11. Fire pump status indicators.
12. Schematic building plans indicating the typical floor plan and detailing the building core, *means of egress*, *fire protection systems*, fire-fighter air-replenishment systems, fire-fighting equipment and fire department access, and the location of *fire walls*, *fire barriers*, *fire partitions*, *smoke barriers* and smoke partitions.
13. An *approved* Building Information Card that includes, but is not limited to, all of the following information:

    13.1. General building information that includes: property name, address, the number of floors in the building above and below grade, use and occupancy classification (for mixed uses, identify the different types of occupancies on each floor) and the estimated building population during the day, night and weekend;

    13.2. Building emergency contact information that includes: a list of the building's emergency contacts including but not limited to building manager, building engineer and their respective work phone number, cell phone number and e-mail address;

    13.3. Building construction information that includes: the type of building construction including but not limited to floors, walls, columns and roof assembly;

    13.4. *Exit access stairway* and *exit stairway* information that includes: number of *exit access stairways* and *exit stairways* in building; each *exit access stairway* and *exit stairway* designation and floors served; location where each *exit access stairway* and *exit stairway* discharges, *interior exit stairways* that are pressurized; *exit stairways* provided with emergency lighting; each *exit stairway* that allows reentry; *exit stairways* providing roof access; elevator information that includes: number of elevator banks, elevator bank designation, elevator car numbers and respective floors that they serve; location of elevator machine rooms, control rooms and control spaces; location of sky lobby; and location of freight elevator banks;

    13.5. Building services and system information that includes: location of mechanical rooms, location of building management system, location and capacity of all fuel oil tanks, location of emergency generator and location of natural gas service;

    13.6. *Fire protection system* information that includes: location of standpipes, location of fire pump room, location of fire department connections, floors protected by automatic sprinklers and location of different types of *automatic sprinkler systems* installed including but not limited to dry, wet and pre-action;

INTERNATIONAL CODE COUNCIL®
Copyright © 2015 ICC. ALL RIGHTS RESERVED. Accessed by David Dammon on Jun 21, 2017 12:30:52 PM pursuant to License Agreement with ICC. No further reproduction or distribution authorized. ANY UNAUTHORIZED REPRODUCTION OR DISTRIBUTION IS A VIOLATION OF THE FEDERAL COPYRIGHT ACT AND THE LICENSE AGREEMENT, AND SUBJECT TO CIVIL AND CRIMINAL PENALTIES THEREUNDER.

13.7. Hazardous material information that includes: location and quantity of hazardous material.

14. Work table.
15. Generator supervision devices, manual start and transfer features.
16. Public address system, where specifically required by other sections of this code.
17. Elevator fire recall switch in accordance with ASME A17.1.
18. Elevator emergency or standby power selector switch(es), where emergency or standby power is provided.

❖ The fire command center must contain all equipment necessary to enable the incident commander to monitor or control fire protection and other building service systems as listed in this section (also see commentary, Section 909.16). This room houses fire protection, smoke control and building system controls, as well as a work space for emergency responders. The room also contains schematic plans and a work table so that responders have the basic layout and geometry of the building and can identify locations of utility controls, standby or emergency power systems, and where hazardous materials are stored or used. Providing concise information in a uniform format is essential to fire fighters and emergency responders and improves their ability to utilize building systems to their advantage. This was confirmed during the National Institute of Science and Technology (NIST) investigations of the World Trade Center attacks on September 11, 2001. The Final Report on the collapse of the World Trade Center contained 30 key recommendations compiled by NIST designed to address the building vulnerabilities learned in that tragedy. Three of those 30 recommendations embrace increasing situational awareness and emergency communications of first responders in large-scale emergencies. As a result of that investigation, this section includes an Item 13 that prescribes requirements for the Building Information Card (BIC).

The BIC is divided into multiple information areas and is intended to be formatted as a single form to provide a quick, concise source of information about the building. The code does not prescribe any particular format or layout for the BIC and does not have any limits on the level of information required to satisfy the requirements. It should be recognized that the intent of the BIC is to provide an easily understood and consistent tool to emergency responders who are taking control of systems in high-rise and smoke-protected assembly buildings. Jurisdictions should develop a policy to ensure that BICs are prepared in a standard, consistent format to avoid confusing the responders, and yet provide the minimum information required so they can correctly and efficiently utilize all of the building features. The number and types of features required by this section can create a large volume of data, thus reinforcing the need for an approved layout as required by Section 508.1.4.

SECTION 509
FIRE PROTECTION AND UTILITY EQUIPMENT IDENTIFICATION AND ACCESS

509.1 Identification. Fire protection equipment shall be identified in an *approved* manner. Rooms containing controls for air-conditioning systems, sprinkler risers and valves, or other fire detection, suppression or control elements shall be identified for the use of the fire department. *Approved* signs required to identify fire protection equipment and equipment location shall be constructed of durable materials, permanently installed and readily visible.

❖ In an emergency, it is vitally important that the fire department and other emergency responders be able to quickly locate and access critical controls for fire protection systems. Obstructed or poorly marked equipment can cause delays in fire-fighting operations while fire fighters locate other hose stations and stretch additional hose, for example. Valves and other controls are often located in rooms or other enclosures. Their location must be clearly identified with written or pictographic signs, which must be clearly visible and legible. Signs using the NFPA 170 symbols for fire protection equipment can provide standardized markings throughout a jurisdiction. White reflective symbols on a red reflective background are effective. For exterior signs, heavy-gage, sign-grade aluminum is recommended. Interior signs may be constructed of plastic, light-gage aluminum or other approved, durable, water-resistant material. As a general rule, fire protection piping, cabinets, enclosures, wiring, equipment and accessories are red or are identified by red or red/white markings. The manner of identification is subject to the approval of the fire code official.

509.1.1 Utility identification. Where required by the *fire code official*, gas shutoff valves, electric meters, service switches and other utility equipment shall be clearly and legibly marked to identify the unit or space that it serves. Identification shall be made in an *approved* manner, readily visible and shall be maintained.

❖ This section provides the fire code official with the authority to require utility identification for services serving multiunit/multibuilding properties, including facilities, campuses, strip malls, business parks, residential properties and similar locations where identification of utilities is considered essential to emergency responders. Note that this section does not prescribe any particular design requirements for utility identification markings. It should be recognized that the intent of the markings is to provide an easily understood and consistent tool to emergency responders who must secure utilities during emergency operations. Jurisdictions should develop a policy to ensure that utility identification markings are prepared in a standard, consistent format to avoid

INTERNATIONAL CODE COUNCIL®
Copyright © 2015 ICC. ALL RIGHTS RESERVED. Accessed by David Dammon on Jun 21, 2017 12:30:52 PM pursuant to License Agreement with ICC. No further reproduction or distribution authorized. ANY UNAUTHORIZED REPRODUCTION OR DISTRIBUTION IS A VIOLATION OF THE FEDERAL COPYRIGHT ACT AND THE LICENSE AGREEMENT, AND SUBJECT TO CIVIL AND CRIMINAL PENALTIES THEREUNDER.

confusing the responders, and yet provide the minimum information required so they can correctly and efficiently utilize them.

509.2 Equipment access. *Approved* access shall be provided and maintained for all fire protection equipment to permit immediate safe operation and maintenance of such equipment. Storage, trash and other materials or objects shall not be placed or kept in such a manner that would prevent such equipment from being readily accessible.

❖ This section requires immediate access to and working space around all fire suppression, protection, and detection system devices and control elements necessary for fire department use. It further prohibits obstruction of such equipment by materials or objects that may prevent such equipment from being immediately accessed by emergency responders.

SECTION 510
EMERGENCY RESPONDER RADIO COVERAGE

510.1 Emergency responder radio coverage in new buildings. All new buildings shall have *approved* radio coverage for emergency responders within the building based upon the existing coverage levels of the public safety communication systems of the jurisdiction at the exterior of the building. This section shall not require improvement of the existing public safety communication systems.

Exceptions:

1. Where *approved* by the building official and the *fire code official*, a wired communication system in accordance with Section 907.2.13.2 shall be permitted to be installed or maintained instead of an *approved* radio coverage system.
2. Where it is determined by the *fire code official* that the radio coverage system is not needed.
3. In facilities where emergency responder radio coverage is required and such systems, components or equipment required could have a negative impact on the normal operations of that facility, the *fire code official* shall have the authority to accept an automatically activated emergency responder radio coverage system.

❖ The provisions of Section 510 are concerned with the reliability of portable radios used by emergency responders inside buildings. This is in keeping with the philosophy inherent in the I-Codes that, when a facility grows too large or complex for effective fire response, fire protection features must be provided within the building. While modeling and other techniques may provide a good prediction as to whether a building will interfere with radio communications, the reality is that it is unknown if a building will need to install any type of radio system enhancements until after the building is constructed. Determining factors may include construction type, shadows of other buildings, size of the structure, etc. Though this section does not offer specific types of buildings that should be targeted, discussions with public safety radio professionals found that, based on current radio technologies, these requirements should be applied in any building with one or more basements or below-grade building levels, underground buildings or buildings more than five stories in height.

Emergency responders use portable radios to communicate with other emergency responders, the incident commander and the public safety communications center. Building construction features and materials can absorb or block the radio frequency energy used to carry the signals inside or outside the building. Blockage or absorption of the radio frequency signal can prevent a critical message from an emergency responder from being received and acknowledged. Depending on the incident, this loss of information can place other emergency responders in greater danger, or may prevent an injured or disoriented emergency responder from communicating for assistance. The requirements apply to analog or digital radio systems and are applicable to all buildings.

This section requires that all buildings have approved radio coverage for emergency responders within the building. Approved radio coverage is based on the ability of the existing public safety communications system to transmit a signal inside and outside the building.

Where testing using the existing public safety communications system finds that the signal strengths are not satisfactory, Exception 1 allows for the alternative installation of a wired communication system in accordance with Section 907.2.13.2, which requires that such a system be designed in accordance with NFPA 72. When applying this exception, the concurrent approval of fire and building code officials is required.

Where testing using the existing public safety communications system finds that the signal strengths are satisfactory, Exception 2 allows the fire code official to waive the requirements when it is determined that emergency responder radio coverage is not needed. This exception does not give any criteria as to buildings that can be exempted. However, discussions with public safety radio professionals found that, based on current radio technologies, most wood frame or mixed construction Group R-1 and R-2 occupancies, single-family dwellings, townhomes and buildings with an area less than 50,000 square feet (4645 m^2) without basements, should engender little concern for loss of radio signal strength inside the building or an inability to transmit to an outdoor receiver.

Exception 3 provides a means for the fire code official to allow the installation of a manual or automatic switch that turns on the emergency responder radio coverage system (ERRCS) when it is needed. These systems allow emergency responders to operate their radios inside telephone central offices (COs) or similar occupancies without disrupting telephone network

INTERNATIONAL CODE COUNCIL®
Copyright © 2015 ICC. ALL RIGHTS RESERVED. Accessed by David Dammon on Jun 21, 2017 12:30:52 PM pursuant to License Agreement with ICC. No further reproduction or distribution authorized. ANY UNAUTHORIZED REPRODUCTION OR DISTRIBUTION IS A VIOLATION OF THE FEDERAL COPYRIGHT ACT AND THE LICENSE AGREEMENT, AND SUBJECT TO CIVIL AND CRIMINAL PENALTIES THEREUNDER.

operations, including calls for service to a jurisdiction's public safety answering point via 9-1-1. Exception 3 also recognizes that operating public safety radio systems in certain buildings with electronic equipment sensitive to radio frequency (RF) energy can cause damage to the equipment, or worse, impact the operations of a local or regional computer network. One such occupancy is a telephone CO, which is where landline and cellular telephone signals are received and dispatched to the recipient caller. It is not uncommon for a telephone CO to be capable of receiving and processing over $^1/_4$ million telephone calls within a 1-minute period. Telephone COs serve an important public safety function because they process emergency or information calls routed via 9-1-1 to a jurisdiction's public safety answering point.

Exception 3 was written to address testing sponsored by the major telecommunications companies and performed at Underwriters Laboratories (UL). The purpose of the tests was to determine the impact of operating handheld radios within a telephone CO. Telephone COs contain an array of digital and analog equipment that receives and routes telephone calls. Some of the equipment, such as digital switches that receive and route calls over landline and cellular circuits, is sensitive to the RF energy generated by handheld radios. Testing by UL confirmed that portable radios programmed to operate in many of the public safety frequency ranges can cause severe service interruptions to equipment in telephone COs. The level of impact to the telephone CO equipment is dependent on the radio's wattage and its sphere of radiation at the antenna. Conversely, the impact of the telephone CO equipment and radio operation inside the building is also dependent on whether the equipment is electrically shielded or unshielded from stray RF energy.

510.2 Emergency responder radio coverage in existing buildings. Existing buildings shall be provided with *approved* radio coverage for emergency responders as required in Chapter 11.

❖ See the commentary to Section 1103.2.

510.3 Permit required. A construction permit for the installation of or modification to emergency responder radio coverage systems and related equipment is required as specified in Section 105.7.5. Maintenance performed in accordance with this code is not considered a modification and does not require a permit.

❖ A construction permit must be obtained in accordance with Section 105.7.5 prior to the installation of the ERRCS system and for any modification or alteration to the system to ensure that the work is done correctly and any parts replacement will be compatible with the existing system components. Note that normal maintenance required for the system would not require a permit.

510.4 Technical requirements. Systems, components and equipment required to provide the emergency responder radio coverage system shall comply with Sections 510.4.1 through 510.4.2.5.

❖ This section simply introduces Sections 510.4.1 through 510.4.2.5, which are the technical requirements for the ERRCS.

510.4.1 Radio signal strength. The building shall be considered to have acceptable emergency responder radio coverage when signal strength measurements in 95 percent of all areas on each floor of the building meet the signal strength requirements in Sections 510.4.1.1 and 510.4.1.2.

❖ This section introduces the minimum acceptable signal criteria that must be achieved and maintained throughout 95 percent of all areas on each floor of a building, as indicated in Sections 510.4.1.1 and 510.4.1.2.

510.4.1.1 Minimum signal strength into the building. A minimum signal strength of -95 dBm shall be receivable within the building.

❖ This section requires that a minimum signal strength of -95 dBm be received by radios inside the building. The "dBm" abbreviation represents a measured power level stated in decibels relative to 1 milliwatt (mW) and indicates the strength of the signal as compared to 1 mW.

510.4.1.2 Minimum signal strength out of the building. A minimum signal strength of -95 dBm shall be received by the agency's radio system when transmitted from within the building.

❖ This section requires that a minimum signal strength of -100 dBm to the outside of the building be receivable by the local public safety communications system. The "dBm" abbreviation represents a measured power level stated in decibels relative to 1 milliwatt (mW) and indicates the strength of the signal as compared to 1mW.

510.4.2 System design. The emergency responder radio coverage system shall be designed in accordance with Sections 510.4.2.1 through 510.4.2.5.

❖ This section simply introduces Sections 510.4.2.1 through 510.4.2.5 as the system design criteria for the ERRCS.

510.4.2.1 Amplification systems allowed. Buildings and structures that cannot support the required level of radio coverage shall be equipped with a radiating cable system, a distributed antenna system with Federal Communications Commission (FCC)-certified signal boosters, or other system approved by the *fire code official* in order to achieve the required adequate radio coverage.

❖ There are several methods to provide the amplification needed by fire departments in structures identified as needing ERRCS. Any of the indicated methods is acceptable. The code allows for new technologies that will provide the required radio coverage if approved by the fire code official.

510.4.2.2 Technical criteria. The *fire code official* shall maintain a document providing the specific technical infor-

INTERNATIONAL CODE COUNCIL®
Copyright © 2015 ICC. ALL RIGHTS RESERVED. Accessed by David Dammon on Jun 21, 2017 12:30:52 PM pursuant to License Agreement with ICC. No further reproduction or distribution authorized. ANY UNAUTHORIZED REPRODUCTION OR DISTRIBUTION IS A VIOLATION OF THE FEDERAL COPYRIGHT ACT AND THE LICENSE AGREEMENT, AND SUBJECT TO CIVIL AND CRIMINAL PENALTIES THEREUNDER.

mation and requirements for the emergency responder radio coverage system. This document shall contain, but not be limited to, the various frequencies required, the location of radio sites, effective radiated power of radio sites, and other supporting technical information.

❖ In order to effectively install such systems, the fire code official must provide basic information such as the frequency range to be supported. For example, a fire department may provide a requirement such as "the frequency range which must be supported shall be 806 MHz to 824 MHz and 851 MHz TO 869 MHz." The fire code official will likely need to provide a reference to the local communications center or provide details on radio sites in the jurisdiction.

510.4.2.3 Standby power. Emergency responder radio coverage systems shall be provided with standby power in accordance with Section 604. The standby power supply shall be capable of operating the emergency responder radio coverage system for a duration of not less than 24 hours.

❖ This section requires secondary power to operate the equipment in the case where the primary building power must be shutdown or is lost. The secondary power source, traditionally an engine-driven emergency generator or a backup battery system, must be capable of operating the in-building radio amplification system for a minimum 24-hour duration, which is significantly more than that of most life safety systems in the structure. The 24-hour value was selected to ensure the reliability of the signal boosters during long-term emergency operations such as response to natural disasters where utility-supplied electrical power is disabled. See also Section 604 of the code for secondary power system specifics and standards.

510.4.2.4 Signal booster requirements. If used, signal boosters shall meet the following requirements:

1. All signal booster components shall be contained in a National Electrical Manufacturer's Association (NEMA) 4-type waterproof cabinet.
2. Battery systems used for the emergency power source shall be contained in a NEMA 4-type waterproof cabinet.
3. The signal booster system and battery system shall be electrically supervised and monitored by a supervisory service, or when *approved* by the *fire code official*, shall sound an audible signal at a constantly attended location
4. Equipment shall have FCC certification prior to installation.

❖ If a building is equipped with a signal booster, this section requires that the amplifiers and the standby power source be located in a National Electrical Manufacturers Association (NEMA) Type 4 waterproof cabinet. A NEMA 4 cabinet is designed to protect personnel having incidental contact with the equipment and to protect the equipment from falling dirt, rain, snow and windblown dust, and both splashing and hose-directed water. This section also requires that a malfunction of the signal booster or its standby power source transmit a trouble signal to an approved central or proprietary station. The code official is authorized to allow the trouble signal to be transmitted to a constantly attended location. The system is also required to be certified by the Federal Communication Commission (FCC) prior to installation.

510.4.2.5 Additional frequencies and change of frequencies. The emergency responder radio coverage system shall be capable of modification or expansion in the event frequency changes are required by the FCC or additional frequencies are made available by the FCC.

❖ Because of potential changes in public safety radio frequency bands, the code requires the capability for changing the frequency in the future.

510.5 Installation requirements. The installation of the public safety radio coverage system shall be in accordance with Sections 510.5.1 through 510.5.4.

❖ This section simply introduces the installation requirement sections of the appendix.

510.5.1 Approval prior to installation. Amplification systems capable of operating on frequencies licensed to any public safety agency by the FCC shall not be installed without prior coordination and approval of the *fire code official*.

❖ The installation of ERRCS in a building is similar to other building features where review of the plans and installation is required and covered under a permit. Part of the approval process for amplification systems operating on frequencies licensed to a public safety agency requires approval of the local fire code official.

510.5.2 Minimum qualifications of personnel. The minimum qualifications of the system designer and lead installation personnel shall include both of the following:

1. A valid FCC-issued general radio operators license.
2. Certification of in-building system training issued by a nationally recognized organization, school or a certificate issued by the manufacturer of the equipment being installed.

These qualifications shall not be required where demonstration of adequate skills and experience satisfactory to the *fire code official* is provided.

❖ This section is to ensure that a qualified person designs and installs the ERRCS in the building. The qualification may be from a school program in communications or a manufacturer's training program. This section also allows the jurisdiction to accept a person or business upon adequate demonstration of skills and experience to the fire code official.

510.5.3 Acceptance test procedure. Where an emergency responder radio coverage system is required, and upon completion of installation, the building *owner* shall have the radio

INTERNATIONAL CODE COUNCIL®
Copyright © 2015 ICC. ALL RIGHTS RESERVED. Accessed by David Dammon on Jun 21, 2017 12:30:52 PM pursuant to License Agreement with ICC. No further reproduction or distribution authorized. ANY UNAUTHORIZED REPRODUCTION OR DISTRIBUTION IS A VIOLATION OF THE FEDERAL COPYRIGHT ACT AND THE LICENSE AGREEMENT, AND SUBJECT TO CIVIL AND CRIMINAL PENALTIES THEREUNDER.

system tested to verify that two-way coverage on each floor of the building is not less than 90 percent. The test procedure shall be conducted as follows:

1. Each floor of the building shall be divided into a grid of 20 approximately equal test areas.
2. The test shall be conducted using a calibrated portable radio of the latest brand and model used by the agency talking through the agency's radio communications system.
3. Failure of not more than two nonadjacent test areas shall not result in failure of the test.
4. In the event that three of the test areas fail the test, in order to be more statistically accurate, the floor shall be permitted to be divided into 40 equal test areas. Failure of not more than four nonadjacent test areas shall not result in failure of the test. If the system fails the 40-area test, the system shall be altered to meet the 90-percent coverage requirement.
5. A test location approximately in the center of each test area shall be selected for the test, with the radio enabled to verify two-way communications to and from the outside of the building through the public agency's radio communications system. Once the test location has been selected, that location shall represent the entire test area. Failure in the selected test location shall be considered failure of that test area. Additional test locations shall not be permitted.
6. The gain values of all amplifiers shall be measured and the test measurement results shall be kept on file with the building *owner* so that the measurements can be verified during annual tests. In the event that the measurement results become lost, the building *owner* shall be required to rerun the acceptance test to reestablish the gain values.
7. As part of the installation a spectrum analyzer or other suitable test equipment shall be utilized to ensure spurious oscillations are not being generated by the subject signal booster. This test shall be conducted at the time of installation and subsequent annual inspections.

❖ This section provides a testing procedure to be followed upon completion of system installation and prior to acceptance of the system by the jurisdiction. The building owner or agent is responsible to see that the ERRCS is functioning properly prior to the building being occupied. Note that if there are problems as a result of the testing, the test area is to be altered to provide more specific data on the strength of the signal-boosting capability of the system. Testing results are to be kept on file by the building owner for annual testing verification. If the testing results are lost, a retest of the building shall be required to determine compliance levels.

510.5.4 FCC compliance. The emergency responder radio coverage system installation and components shall also comply with all applicable federal regulations including, but not limited to, FCC 47 CFR Part 90.219.

❖ As with all radio systems, the ERRCS and its components must comply with all applicable FCC regulations.

510.6 Maintenance. The emergency responder radio coverage system shall be maintained operational at all times in accordance with Sections 510.6.1 through 510.6.3.

❖ This section simply introduces the installation requirements for the ERRCS.

510.6.1 Testing and proof of compliance. The emergency responder radio coverage system shall be inspected and tested annually or where structural changes occur including additions or remodels that could materially change the original field performance tests. Testing shall consist of the following:

1. In-building coverage test as described in Section 510.5.3.
2. Signal boosters shall be tested to verify that the gain is the same as it was upon initial installation and acceptance.
3. Backup batteries and power supplies shall be tested under load of a period of 1 hour to verify that they will properly operate during an actual power outage. If within the 1-hour test period the battery exhibits symptoms of failure, the test shall be extended for additional 1-hour periods until the integrity of the battery can be determined.
4. Other active components shall be checked to verify operation within the manufacturer's specifications.
5. At the conclusion of the testing, a report, which shall verify compliance with Section 510.5.3, shall be submitted to the *fire code official*.

❖ The testing of the signal boosters is to verify that the gain is equal to that produced during the initial acceptance, functional tests of the secondary power supply, and an inspection of any other components connected to the in-building amplification system. The inspection report must be submitted to the fire code official and requires documentation that the amplification system complies with the requirements in Section 510.5.3. This section authorizes the fire code official to require additional tests when structural changes or modifications occur that could materially change the performance of the signal boosting system.

510.6.2 Additional frequencies. The building *owner* shall modify or expand the emergency responder radio coverage system at his or her expense in the event frequency changes are required by the FCC or additional frequencies are made available by the FCC. Prior approval of a public safety radio coverage system on previous frequencies does not exempt this section.

❖ When additional frequencies are needed to change or expand the coverage of the ERRCS, the building

INTERNATIONAL CODE COUNCIL®
Copyright © 2015 ICC. ALL RIGHTS RESERVED. Accessed by David Dammon on Jun 21, 2017 12:30:52 PM pursuant to License Agreement with ICC. No further reproduction or distribution authorized. ANY UNAUTHORIZED REPRODUCTION OR DISTRIBUTION IS A VIOLATION OF THE FEDERAL COPYRIGHT ACT AND THE LICENSE AGREEMENT, AND SUBJECT TO CIVIL AND CRIMINAL PENALTIES THEREUNDER.

owner is the responsible person to ensure that the work is performed. Previous approvals of the system do not apply when changes are needed. Changes to the system are not exempt because of prior approval. If the change is needed, the work must be done.

510.6.3 Field testing. Agency personnel shall have the right to enter onto the property at any reasonable time to conduct field testing to verify the required level of radio coverage.

❖ Like all systems, ERRCS need to be tested to verify their continued sufficiency. Whether the test is an annual review of the system or an in-service familiarization test by an engine, truck or squad company, this section provides the ability of the personnel to enter the building at reasonable hours to test and operate the system. As with any inspection, the right of entry for testing the system is limited by constitutional constraints. See the commentary to Section 104.3 for further discussion on the right of entry.

Bibliography

The following resource materials were used in the preparation of the commentary for this chapter of the code:

2012 *International Code Interpretations*. Washington, DC: International Code Council, 2011.

Bunte, Leslie W., *Traffic Calming Programs and Emergency Response: A Competition of Two Public Goods*, unpublished thesis (M.P.A.), University of Texas at Austin, 2000.

Code Changes Resource Collection—2015 International Fire Code. Washington, DC: International Code Council, 2014.

Final Report of the National Construction Safety Team on the Collapses of the World Trade Center Towers. Washington, DC: National Institute of Standards & Technology, United States Government Printing Office, 2005.

INTERNATIONAL CODE COUNCIL®
Copyright © 2015 ICC. ALL RIGHTS RESERVED. Accessed by David Dammon on Jun 21, 2017 12:30:52 PM pursuant to License Agreement with ICC. No further reproduction or distribution authorized. ANY UNAUTHORIZED REPRODUCTION OR DISTRIBUTION IS A VIOLATION OF THE FEDERAL COPYRIGHT ACT AND THE LICENSE AGREEMENT, AND SUBJECT TO CIVIL AND CRIMINAL PENALTIES THEREUNDER.

INTERNATIONAL CODE COUNCIL®
Copyright © 2015 ICC. ALL RIGHTS RESERVED. Accessed by David Dammon on Jun 21, 2017 12:30:52 PM pursuant to License Agreement with ICC. No further reproduction or distribution authorized. ANY UNAUTHORIZED REPRODUCTION OR DISTRIBUTION IS A VIOLATION OF THE FEDERAL COPYRIGHT ACT AND THE LICENSE AGREEMENT, AND SUBJECT TO CIVIL AND CRIMINAL PENALTIES THEREUNDER.

Chapter 6:
Building Services and Systems

General Comments

This chapter focuses on building systems and services as they relate to potential safety hazards and when and how they should be installed. In some cases, many of the provisions are located in other portions of the code. This chapter brings together all building system- and service-related issues for convenience and provides a more systematic view of buildings. The following building services and systems are addressed:

- Fuel-fired appliances (Section 603).
- Emergency and standby power systems (Section 604).
- Electrical equipment, wiring and hazards, including solar photovoltaic power systems (Section 605).
- Mechanical refrigeration (Section 606).
- Elevator recall and maintenance (Section 607).
- Stationary storage battery systems (Section 608).
- Commercial kitchen hoods (Section 609).
- Commercial kitchen cooking oil storage tank systems (Section 610).
- Hyperbaric facilities (Section 611).

Some of the sections specifically deal with installation while others deal with reducing the hazards from the use of the services or systems. For example, Section 605 notes that using too many extension cords on the building electrical system may present a fire hazard. On the other hand, the discussion of elevator recall and maintenance in Section 607 simply states when and how recall is required.

Purpose

As technology progresses and societal expectations increase, building systems and services become more complex and numerous. The use of computers has resulted in a more frequent use of uninterruptible power supplies and emergency power, which are often powered through the use of lead-acid battery systems. In the past, these provisions were simply scattered throughout the code. These various building services and system requirements have been brought together in this chapter to simplify the code requirements and increase the likelihood that these elements are properly addressed.

SECTION 601
GENERAL

601.1 Scope. The provisions of this chapter shall apply to the installation, operation and maintenance of fuel-fired appliances and heating systems, emergency and standby power systems, electrical systems and equipment, mechanical refrigeration systems, elevator recall, stationary storage battery systems and commercial kitchen equipment.

❖ This section establishes the applicability of the chapter to a variety of building systems and services when they are being installed, during their operation and for long-term maintenance.

601.2 Permits. Permits shall be obtained for refrigeration systems, battery systems and solar photovoltaic power systems as set forth in Sections 105.6 and 105.7.

❖ Only three systems discussed in Chapter 6 require permits: the operation of refrigeration systems, the installation of storage battery systems and the installation of solar photovoltaic power systems. The permit for operation of refrigeration systems is intended to warn emergency responders that a potential hazard exists. This information will better equip them to respond to such a call. The permit for installation of a storage battery system or a solar photovoltaic power system ensures the proper safety requirements and features are installed (see commentary, Section 105).

SECTION 602
DEFINITIONS

602.1 Definitions. The following terms are defined in Chapter 2:

BATTERY SYSTEM, STATIONARY LEAD-ACID.

BATTERY TYPES.

COMMERCIAL COOKING APPLIANCES.

CRITICAL CIRCUIT.

EMERGENCY POWER SYSTEM.

HOOD.

Type I.

Type II.

INTERNATIONAL CODE COUNCIL®
Copyright © 2015 ICC. ALL RIGHTS RESERVED. Accessed by David Dammon on Jun 21, 2017 12:30:52 PM pursuant to License Agreement with ICC. No further reproduction or distribution authorized. ANY UNAUTHORIZED REPRODUCTION OR DISTRIBUTION IS A VIOLATION OF THE FEDERAL COPYRIGHT ACT AND THE LICENSE AGREEMENT, AND SUBJECT TO CIVIL AND CRIMINAL PENALTIES THEREUNDER.

REFRIGERANT.

REFRIGERATION SYSTEM.

STANDBY POWER SYSTEM.

❖ Definitions of terms can help in the understanding and application of the code requirements. This section directs the code user to Chapter 2 for the proper application of the indicated terms used in this chapter. Terms may be defined in Chapter 2, in another *International Code*® (I-Code®) as indicated in Section 201.3, or the dictionary meaning may be all that is needed (see also commentary, Sections 201 through 201.4).

SECTION 603
FUEL-FIRED APPLIANCES

603.1 Installation. The installation of nonportable fuel gas appliances and systems shall comply with the *International Fuel Gas Code*. The installation of all other fuel-fired appliances, other than internal combustion engines, oil lamps and portable devices such as blow torches, melting pots and weed burners, shall comply with this section and the *International Mechanical Code.*

❖ The code regulates the installation of portable gas-fired appliances and portable appliances fueled by methods other than gaseous fuels. The *International Mechanical Code*® (IMC®) and the *International Fuel Gas Code*® (IFGC®) do not cover portable appliances. The code also has provisions that apply to appliances that are not portable and use fuels other than gas.

603.1.1 Manufacturer's instructions. The installation shall be made in accordance with the manufacturer's instructions and applicable federal, state and local rules and regulations. Where it becomes necessary to change, modify or alter a manufacturer's instructions in any way, written approval shall first be obtained from the manufacturer.

❖ Compliance with the appliance manufacturer's installation instructions is a fundamental requirement of all I-Codes and those instructions are an enforceable extension of the code. Federal, state, county or municipal laws might supercede part of the installation instructions or could be applied in addition to the requirements in the instructions.

603.1.2 Approval. The design, construction and installation of fuel-fired appliances shall be in accordance with the *International Fuel Gas Code* and the *International Mechanical Code.*

❖ The code relies on the IMC and the IFGC for the coverage of appliance installations and contains only a limited number of requirements that apply in addition to those of the IMC and IFGC.

603.1.3 Electrical wiring and equipment. Electrical wiring and equipment used in connection with oil-burning equipment shall be installed and maintained in accordance with Section 605 and NFPA 70.

❖ Section 605 contains provisions intended to mitigate fire hazards and shock hazards associated with the use of existing appliances. NFPA 70 covers the installation of electrical appliances.

603.1.4 Fuel oil. The grade of fuel oil used in a burner shall be that for which the burner is *approved* and as stipulated by the burner manufacturer. Oil containing gasoline shall not be used. Waste crankcase oil shall be an acceptable fuel in Group F, M and S occupancies where utilized in equipment *listed* for use with waste oil and where such equipment is installed in accordance with the manufacturer's instructions and the terms of its listing.

❖ Different grades of fuel oil have different viscosities and chemical makeup. A burner and fuel mismatch could result in poor combustion, sooting and burner component failure. Oil burners are not designed to burn oil contaminated with chemicals of higher volatility. Appliances that consume used engine oil are allowed only in occupancies of low-occupant density (those without sleeping rooms) and where such appliances will likely be monitored and maintained by facility personnel. Used engine oil appliances use a specialized type of atomizing oil burner designed to burn dirty waste oil collected from internal combustion engine maintenance operations.

603.1.5 Access. The installation shall be readily accessible for cleaning hot surfaces; removing burners; replacing motors, controls, air filters, chimney connectors, draft regulators and other working parts; and for adjusting, cleaning and lubricating parts.

❖ The IMC and the IFGC require access for the initial installation as well as for the life of the appliance. Safe operation depends on observation and maintenance, which depend on adequate access to the appliances. In order for the installation to be considered readily accessible, personnel should be able to reach it without having to remove building elements or obstacles of any kind, or use climbing aids.

603.1.6 Testing, diagrams and instructions. After installation of the oil-burning equipment, operation and combustion performance tests shall be conducted to determine that the burner is in proper operating condition and that all accessory equipment, controls, and safety devices function properly.

❖ Testing of an appliance after installation is also required by the IMC and the appliance manufacturer's installation instructions.

603.1.6.1 Diagrams. Contractors installing industrial oil-burning systems shall furnish not less than two copies of diagrams showing the main oil lines and controlling valves, one copy of which shall be posted at the oil-burning equipment

INTERNATIONAL CODE COUNCIL®
Copyright © 2015 ICC. ALL RIGHTS RESERVED. Accessed by David Dammon on Jun 21, 2017 12:30:52 PM pursuant to License Agreement with ICC. No further reproduction or distribution authorized. ANY UNAUTHORIZED REPRODUCTION OR DISTRIBUTION IS A VIOLATION OF THE FEDERAL COPYRIGHT ACT AND THE LICENSE AGREEMENT, AND SUBJECT TO CIVIL AND CRIMINAL PENALTIES THEREUNDER.

and another at an *approved* location that will be accessible in case of emergency.

❖ For large systems, the piping and control valve layout may be complicated and extensive. In the event of an emergency, facility personnel or fire fighters might need access to control valves to protect piping and to limit the fire hazard.

603.1.6.2 Instructions. After completing the installation, the installer shall instruct the *owner* or operator in the proper operation of the equipment. The installer shall furnish the *owner* or operator with the name and telephone number of persons to contact for technical information or assistance and routine or emergency services.

❖ Appliances are more likely to be properly (safely) operated and maintained if the owner or operator is instructed in the operation of the equipment and given the necessary means to obtain technical and emergency services.

603.1.7 Clearances. Working clearances between oil-fired appliances and electrical panelboards and equipment shall be in accordance with NFPA 70. Clearances between oil-fired equipment and oil supply tanks shall be in accordance with NFPA 31.

❖ NFPA 70 requires working clearances around electrical equipment for protection of personnel. NFPA 31 requires clearances between appliances and oil-supply tanks to protect the oil tank from excessive heat and to lessen the fire hazard from any oil leakage.

603.2 Chimneys. Masonry chimneys shall be constructed in accordance with the *International Building Code*. Factory-built chimneys shall be installed in accordance with the *International Mechanical Code*. Metal chimneys shall be constructed and installed in accordance with NFPA 211.

❖ The *International Building Code*® (IBC®) regulates masonry chimney construction in Chapter 21. Factory-built chimneys are regulated by Section 805 of the IMC. Metal chimneys are distinct from factory-built chimneys, are industrial occupancy related (e.g., smokestacks) and are regulated by NFPA 211 (see IMC commentary, Section 806.1).

603.3 Fuel oil storage systems. Fuel oil storage systems shall be installed in accordance with this code. Fuel-oil piping systems shall be installed in accordance with the *International Mechanical Code*.

❖ The code regulates the storage of fuel oil. The IMC regulates installation of the fuel oil distribution piping system.

603.3.1 Fuel oil storage in outside, above-ground tanks. Where connected to a fuel-oil piping system, the maximum amount of fuel oil storage allowed outside above ground without additional protection shall be 660 gallons (2498 L). The storage of fuel oil above ground in quantities exceeding 660 gallons (2498 L) shall comply with NFPA 31.

❖ To limit the potential fire hazard resulting from oil spillage, the code sets a quantity limitation on unprotected storage. NFPA 31 requires protection, such as spill containment, for storage in excess of 660 gallons (2498 L). The storage of 660 gallons (2498 L) is allowed to be in any configuration of containers that does not exceed a total of 660 gallons (2498 L).

603.3.2 Fuel oil storage inside buildings. Fuel oil storage inside buildings shall comply with Sections 603.3.2.1 through 603.3.2.5 or Chapter 57.

❖ This section introduces Sections 603.3.2.1 through 603.3.2.5, which contain requirements for controlling the hazards associated with the storage of fuel oil inside of buildings. Fuel oil is defined in the IMC as "Kerosene or any hydrocarbon oil having a flash point not less than 100ºF (38ºC)." This would include Number 2 diesel fuel, which is classified as either a Class II or IIIA combustible liquid, depending on the refiner and the region where the fuel will be used. Number 2 diesel fuel is commonly used as a fuel source for diesel-driven electric generators.

The indicated sections have been revised to allow larger amounts of fuel oil in storage inside of buildings in response to increased fuel oil storage requirements for switch and data centers and similar telecommunications facilities. Such facilities are constructed to house large numbers of computers to serve as remote data centers for the protection of computer data or data switches for internet providers. To increase the likelihood that the data is always available, design professionals place a great deal of emphasis on the building's electrical power supply. These types of uses consume large amounts of electrical power. Accordingly, large generators are installed to ensure that service is not disrupted. These generators have fairly demanding fuel requirements. Consider, for example, that a single 2-megawatt (2 million watt) generator can have a fuel consumption rate of 3-4 gallons/minute under full electrical load conditions. As a result, these facilities require a large volume of fuel. The fuel storage is commonly located inside of a building because many of these facilities are located in commercial or other densely populated areas of a community.

603.3.2.1 Quantity limits. One or more fuel oil storage tanks containing Class II or III *combustible liquid* shall be permitted in a building. The aggregate capacity of all such tanks shall not exceed 660 gallons (2498 L).

Exception: The aggregate capacity limit shall be permitted to be increased to 3,000 gallons (11 356 L) of Class II or III liquid for storage in protected above-ground tanks complying with Section 5704.2.9.7, where all of the following conditions are met:

1. The entire 3,000-gallon (11 356 L) quantity shall be stored in protected above-ground tanks.
2. The 3,000-gallon (11 356 L) capacity shall be permitted to be stored in a single tank or multiple smaller tanks.

INTERNATIONAL CODE COUNCIL®
Copyright © 2015 ICC. ALL RIGHTS RESERVED. Accessed by David Dammon on Jun 21, 2017 12:30:52 PM pursuant to License Agreement with ICC. No further reproduction or distribution authorized. ANY UNAUTHORIZED REPRODUCTION OR DISTRIBUTION IS A VIOLATION OF THE FEDERAL COPYRIGHT ACT AND THE LICENSE AGREEMENT, AND SUBJECT TO CIVIL AND CRIMINAL PENALTIES THEREUNDER.

3. The tanks shall be located in a room protected by an *automatic sprinkler system* complying with Section 903.3.1.1.

❖ This section correlates with Table 5003.1.1(1), Note i and Section 5701.2, Item 4, of the code and Table 307.1(1), Note i, of the IBC. Further, this section contains a specific exception to the maximum special quantity of 660-gallon (2498 L) inside storage of combustible liquids, where connected to a closed fuel oil piping system. This would apply to most oil-fired stationary equipment in industrial, commercial and residential occupancies. Note that this provision applies only to the aggregate storage of fuel oil and does not include the capacity of the piping system.

Where the need for an aggregate indoor storage quantity of fuel oil connected to a closed fuel oil piping system exceeds the special amount of 660 gallons (2498 L), the exception may be applied. The exception allows an almost five-fold increase in the quantity of fuel oil stored by recognizing the increased level of safety provided by protected above-ground tanks listed in accordance with UL 2085. These tanks have extensive regulations in Chapter 57, and the listing requirements further document their safety. Included in the design requirements for these tanks are the ability to survive a 2-hour pool fire test conducted in accordance with the UL 1709 fire exposure protocol; a limitation that all penetrations must be made through the top of the tank (to avoid the risk of a gravity-fed leak that might be associated with a connection below liquid level); and that piping connected to the tank must be provided with anti-siphon controls where needed to prevent a siphon risk, among others. The safety level, which allows increased storage, is further enhanced by requiring the room in which the tank is installed to be equipped with an automatic sprinkler system. See the commentary to the Section 202 definition of "Tank, protected above ground" and Section 5704.2.9.7.

603.3.2.2 Restricted use and connection. Tanks installed in accordance with Section 603.3.2 shall be used only to supply fuel oil to fuel-burning or generator equipment installed in accordance with Section 603.3.2.4. Connections between tanks and equipment supplied by such tanks shall be made using closed piping systems.

❖ This section makes it clear that the fuel oil storage quantity limits in Section 603.3.2 are applicable only to fuel oil supplies for oil-burning equipment and generators and then only when connected to a fuel oil piping system supplying such equipment. Fuel oil piping systems are regulated by Chapter 13 of the IMC.

603.3.2.3 Applicability of maximum allowable quantity and control area requirements. The quantity of *combustible liquid* stored in tanks complying with Section 603.3.2 shall not be counted towards the maximum allowable quantity set forth in Table 5003.1.1(1), and such tanks shall not be required to be located in a *control area*.

❖ This section clearly states that the fuel oil quantity in Section 603.3.2 is a "special quantity" that is outside the scope of the maximum allowable quantity per control area (MAQ) provisions of Chapter 50, including any requirement to install the tank in a control area in accordance with Section 5003.8.3. Table 5003.1.1(1), Note i, is also correlated with these provisions and indicates that the MAQ provisions of the table do not apply to fuel oil storage complying with Section 603.3.2.

The origins of the "special quantity" were in an ad-hoc hazardous materials committee constituted by one of the legacy model code groups. As the committee developed updated regulations pertaining to flammable and combustible liquids, it concluded that a closed fuel oil storage and piping system feeding oil-fired building service equipment should not be penalized for providing sufficient fuel oil on-site for long-term operation of such systems. Accordingly, the ad-hoc committee, using NFPA 31 as a guide, created the original provisions of Section 603.3 and its subsections to provide that relief.

603.3.2.4 Installation. Tanks and piping systems shall be installed and separated from other uses in accordance with Section 915 and Chapter 13, both of the *International Mechanical Code*, as applicable.

Exception: Protected above-ground tanks complying with Section 5704.2.9.7 shall not be required to be separated from surrounding areas.

❖ Section 915 of the IMC addresses liquid-fueled internal combustion engines and turbines and permanently installed equipment and appliances powered by internal combustion engines and turbines. Engine-driven electrical generators for private use are becoming more popular, as are engine-driven cooling appliances and heat pumps. Such equipment is also used to power fire pumps, generators, water pumps, refrigeration machines and other stationary equipment. Section 915 of the IMC also references NFPA 37, which addresses the fire safety of this kind of equipment including requirements for enclosures, controls, fuel supplies, exhaust systems, cooling systems and combustion air.

Chapter 13 of the IMC complements the code's fuel oil storage provisions and regulates the design and installation of fuel oil piping systems. The regulations reference construction standards for above-ground and underground storage tanks, material standards for piping systems (both above ground and underground) and extensive requirements for the proper assembly of system piping and components.

The exception here, as in Section 603.3.2.1, recog-

INTERNATIONAL CODE COUNCIL®
Copyright © 2015 ICC. ALL RIGHTS RESERVED. Accessed by David Dammon on Jun 21, 2017 12:30:52 PM pursuant to License Agreement with ICC. No further reproduction or distribution authorized. ANY UNAUTHORIZED REPRODUCTION OR DISTRIBUTION IS A VIOLATION OF THE FEDERAL COPYRIGHT ACT AND THE LICENSE AGREEMENT, AND SUBJECT TO CIVIL AND CRIMINAL PENALTIES THEREUNDER.

nizes the increased safety provided by protected above-ground tanks. See the commentary to Section 603.3.2.1 for a discussion of those tanks and their enhanced safety.

603.3.2.5 Tanks in basements. Tanks in *basements* shall be located not more than two stories below grade plane.

❖ This section prohibits tank installations more than two stories below grade because the further an incident is below grade, the greater challenge for the fire department to mitigate it. This is consistent with the control area approach in Table 5003.8.3.2, which also limits control areas to two levels below grade.

603.3.3 Underground storage of fuel oil. The storage of fuel oil in underground storage tanks shall comply with NFPA 31.

❖ Section 603.3 does not require that fuel oil tanks be installed underground; however, there may be circumstances under which such an installation is either desirable or advisable. The code user is directed to NFPA 31 for specific requirements applicable to the installation of underground combustible liquid storage tanks.

603.4 Portable unvented heaters. Portable unvented fuel-fired heating equipment shall be prohibited in occupancies in Groups A, E, I, R-1, R-2, R-3 and R-4.

Exceptions:

1. *Listed* and *approved* unvented fuel-fired heaters, including portable outdoor gas-fired heating appliances, in one- and two-family *dwellings*.
2. Portable outdoor gas-fired heating appliances shall be allowed in accordance with Section 603.4.2.

❖ Portable unvented fuel-fired heating equipment refers to portable space heaters, such as LP-gas fired or kerosene-fueled appliances. This section would also apply to movable gas-fired appliances that connect to gas convenience outlets with gas hose connectors. This section does not apply to permanently installed appliances. Portable space-heating appliances are moved around at will by the occupants and might be placed too close to combustibles or where they are susceptible to being hit, tipped over, etc. Because of potential misuse, such appliances are considered an unacceptable risk in the listed, higher life hazard occupancies. Exception 1 is based on the assumption that, in one- and two-family dwellings, the occupants will take greater care in the use of such appliances. Exception 2 is based on the provisions of Section 603.4.2 and its subsections, which provide strict regulation of portable outdoor gas-fired heating appliances in all occupancies.

603.4.1 Prohibited locations. Unvented fuel-fired heating equipment shall not be located in, or obtain combustion air from, any of the following rooms or spaces: sleeping rooms, bathrooms, toilet rooms or storage closets.

❖ The intent of this section is to prevent fuel-fired appliances from being installed in rooms and spaces where the combustion process could pose a threat to occupants. Potential threats include depleted oxygen levels; elevated levels of carbon dioxide, nitrous oxides, carbon monoxide, and other combustion gases; ignition of combustibles; and elevated levels of flammable gases.

In small rooms, such as bedrooms and bathrooms, the doors are typically closed when the room is occupied, which could allow combustion gases to build up to life-threatening levels. In bedrooms, sleeping occupants would not be alert to or aware of impending danger. This section is parallel in its intent with Section 303.3 of both the IMC and the IFGC. Note that, as a subsection of Section 603.4, this section is addressing portable appliances in Groups A, E, I and R (see also IFGC commentary, Section 303.3).

603.4.2 Portable outdoor gas-fired heating appliances. Portable gas-fired heating appliances located outdoors shall be in accordance with Sections 603.4.2.1 through 603.4.2.3.4.

❖ This section introduces Sections 603.4.2.1 through 603.4.2.3.4, which contain requirements for controlling the hazards associated with portable gas-fired heating appliances located outdoors. In many jurisdictions, LP-gas-fired portable heaters, also called patio heaters, are being utilized in outdoor areas of restaurants, sidewalk cafes, hotel dining areas, outdoor smoking areas and retail sites in increasing numbers. These heaters are also readily available to consumers at local home and building supply locations. These sections provide regulations to allow for the conditional use of outdoor patio heaters and establishes general safety requirements for the storage and use of such heaters (see Commentary Figure 603.4.2).

603.4.2.1 Location. Portable outdoor gas-fired heating appliances shall be located in accordance with Sections 603.4.2.1.1 through 603.4.2.1.4.

❖ This section introduces Sections 603.4.2.1.1 through 603.4.2.1.4, which contain requirements for controlling the location hazards associated with portable outdoor gas-fired heating appliances, sometimes called “patio heaters.”

603.4.2.1.1 Prohibited locations. The storage or use of portable outdoor gas-fired heating appliances is prohibited in any of the following locations:

1. Inside of any occupancy where connected to the fuel gas container.
2. Inside of tents, canopies and membrane structures.
3. On exterior balconies.

Exception: As allowed in Section 6.20 of NFPA 58.

❖ These “patio heaters” are not designed or listed for indoor use because they are unvented appliances. The potential fire and life safety hazard of LP-gas warrants their prohibition inside of occupied buildings and structures, making this section consistent with the prohibitions of containers inside of buildings in NFPA 58.

INTERNATIONAL CODE COUNCIL®
Copyright © 2015 ICC. ALL RIGHTS RESERVED. Accessed by David Dammon on Jun 21, 2017 12:30:52 PM pursuant to License Agreement with ICC. No further reproduction or distribution authorized. ANY UNAUTHORIZED REPRODUCTION OR DISTRIBUTION IS A VIOLATION OF THE FEDERAL COPYRIGHT ACT AND THE LICENSE AGREEMENT, AND SUBJECT TO CIVIL AND CRIMINAL PENALTIES THEREUNDER.



Figure 603.4.2
PORTABLE OUTDOOR GAS-FIRED HEATING APPLIANCE/PATIO HEATER
(Photo courtesy of Infrared Dynamics, Yorba Linda, CA)

603.4.2.1.2 Clearance to buildings. Portable outdoor gas-fired heating appliances shall be located not less than 5 feet (1524 mm) from buildings.

❖ The 5-foot (1524 mm) separation reduces the likelihood that operating portable outdoor gas-fired heating appliances will come in contact with heat-damageable building surfaces or material that is easily ignited.

603.4.2.1.3 Clearance to combustible materials. Portable outdoor gas-fired heating appliances shall not be located beneath, or closer than 5 feet (1524 mm) to combustible decorations and combustible overhangs, awnings, sunshades or similar combustible attachments to buildings.

❖ The 5-foot (1524 mm) separation reduces the likelihood that operating portable outdoor gas-fired heating appliances will come in contact with combustible construction or material that is easily ignited.

603.4.2.1.4 Proximity to exits. Portable outdoor gas-fired heating appliances shall not be located within 5 feet (1524 mm) of *exits* or *exit discharges*.

❖ In order to not compromise the means of egress in a potential fire or other emergency evacuation scenario and to prevent LP-gas from entering the building and finding an ignition source in case of a leak, portable outdoor gas-fired heating appliances must be kept a minimum of 5 feet (1524 mm) from any exit or exit discharge.

603.4.2.2 Installation and operation. Portable outdoor gas-fired heating appliances shall be installed and operated in accordance with Sections 603.4.2.2.1 through 603.4.2.2.4.

❖ This section introduces Sections 603.4.2.2.1 through 603.4.2.2.4, which contain requirements for controlling the installation and operation hazards associated with portable outdoor gas-fired heating appliances.

603.4.2.2.1 Listing and approval. Only *listed* and *approved* portable outdoor gas-fired heating appliances utilizing a fuel gas container that is integral to the appliance shall be used.

❖ Even though portable outdoor gas-fired heating appliances can be listed under the standard ANSI Z83.26/CSA 2.37 for natural gas or LP-gas (propane) use, this section makes it clear that only appliances employing an integral LP-gas container can be used. The safety feature here is that the gas hoses used to connect natural gas-fired appliances to an external fuel source are eliminated, thus eliminating the hazard of wear-and-tear effects on the hose and the possibility of persons tripping over the hoses, the latter reducing the risk of personal injury or heaters tipping over. Another safety feature required by the ANSI standard is the connection between the LP-gas cylinder and the hose supplying the appliance's burner. The standard requires the hose connected to the appliance to be equipped with a Compressed Gas Association (CGA) 790 fitting as described in CGA V-1. A CGA 790 fitting provides three separate safety features. First, the fitting has a thermal link that is designed to activate at temperatures of 200°F to 250°F (93°C – 121°C), thus stopping the flow of LP-gas in the event of a fire. Second, the fitting requires a positive connection to the cylinder before LP-gas can flow into the appliance. Finally, the fitting is equipped with an internal excess flow control valve, which is designed to stop the flow of a gas or liquid in the event of hose or pipe rupture.

603.4.2.2.2 Installation and maintenance. Portable outdoor gas-fired heating appliances shall be installed and maintained in accordance with the manufacturer's instructions.

❖ Compliance with the appliance manufacturer's installation and maintenance instructions is a fundamental requirement of all I-Codes and those instructions are an enforceable extension of the code because they are typically an integral part of the appliances, listing, as required by Section 603.4.2.2.1. Federal, state, county or municipal laws might supercede part of the installation instructions or could be applied in addition to the requirements in the instructions.

INTERNATIONAL CODE COUNCIL®
Copyright © 2015 ICC. ALL RIGHTS RESERVED. Accessed by David Dammon on Jun 21, 2017 12:30:52 PM pursuant to License Agreement with ICC. No further reproduction or distribution authorized. ANY UNAUTHORIZED REPRODUCTION OR DISTRIBUTION IS A VIOLATION OF THE FEDERAL COPYRIGHT ACT AND THE LICENSE AGREEMENT, AND SUBJECT TO CIVIL AND CRIMINAL PENALTIES THEREUNDER.

603.4.2.2.3 Tip-over switch. Portable outdoor gas-fired heating appliances shall be equipped with a tilt or tip-over switch that automatically shuts off the flow of gas if the appliance is tilted more than 15 degrees (0.26 rad) from the vertical.

❖ For safety, listed commercial heaters feature a safety switch that immediately shuts the unit off if it senses that the heater is tilted more than 15 degrees (0.26 rad) from vertical. This is especially important given these heaters can be over 7 feet (2137 mm) tall and weigh over 80 pounds (36 kg), depending on the design or manufacturer. This safety feature reduces the likelihood of personal injury and the heating element coming into contact with combustible material.

603.4.2.2.4 Guard against contact. The heating element or combustion chamber of portable outdoor gas-fired heating appliances shall be permanently guarded so as to prevent accidental contact by persons or material.

❖ This safety feature reduces the likelihood of personal injury and the heating element coming into direct contact with persons or combustible material.

603.4.2.3 Gas containers. Fuel gas containers for portable outdoor gas-fired heating appliances shall comply with Sections 603.4.2.3.1 through 603.4.2.3.4.

❖ This section introduces Sections 603.4.2.3.1 through 603.4.2.3.4, which contain requirements for controlling the hazards associated with fuel gas containers for portable outdoor gas-fired heating appliances.

603.4.2.3.1 Approved containers. Only *approved* DOTn or ASME gas containers shall be used.

❖ This section is consistent with Chapter 61 and the provisions of NFPA 58, which is the LP-gas referenced standard in that chapter of the code. Using only DOTn and ASME containers increases the likelihood of the appliance being safe because the containers are built to exacting standards.

603.4.2.3.2 Container replacement. Replacement of fuel gas containers in portable outdoor gas-fired heating appliances shall not be conducted while the public is present.

❖ In order to avoid exposing the public to the potential for a gas leak during cylinder replacement, the portable outdoor gas-fired heating appliance being serviced must either be removed to a nonpublic area or the area in which it is being used must be cleared of patrons while the container exchange is in progress.

603.4.2.3.3 Container capacity. The maximum individual capacity of gas containers used in connection with portable outdoor gas-fired heating appliances shall not exceed 20 pounds (9 kg).

❖ The maximum size of the gas container to be used in portable outdoor gas-fired heating appliances is the same as those typically used in gas grills and is dictated by the listing standard.

603.4.2.3.4 Indoor storage prohibited. Gas containers shall not be stored inside of buildings except in accordance with Section 6109.9.

❖ Requirements for the storage of idle replacement containers of LP-gas are specified in this section. Indoor storage of 20-pound (9 kg) LP-gas cylinders in a building that is accessible to the public is a violation of Section 6109.9. Both ANSI Z83.26/CSA 2.37 and Section 603.4.2.3.3 limit the volume of the LP-gas containers to 20 pounds (9 kg). Containers must also be qualified to be filled in accordance with the requirements in NFPA 58. Section 6109 provides regulations for the storage of containers awaiting use, which is applicable to replacement containers for portable outdoor gas-fired heating appliances.

603.5 Heating appliances. Heating appliances shall be *listed* and shall comply with Sections 603.5.1 and 603.5.2.

❖ The IMC and the IFGC require that all space-heating appliances be listed and labeled.

603.5.1 Guard against contact. The heating element or combustion chamber shall be permanently guarded so as to prevent accidental contact by persons or material.

❖ The injury and ignition protection feature required by this section is typically designed into the appliance.

603.5.2 Heating appliance installation and maintenance. Heating appliances shall be installed and maintained in accordance with the manufacturer's instructions, the *International Building Code*, the *International Mechanical Code*, the *International Fuel Gas Code* and NFPA 70.

❖ Depending upon the type of fuel utilized, appliance installation and maintenance can be subject to the requirements of multiple codes, including the IBC, the IMC, the IFGC, and NFPA 70 in addition to the appliance manufacturer's instructions.

603.6 Chimneys and appliances. Chimneys, incinerators, smokestacks or similar devices for conveying smoke or hot gases to the outer air and the stoves, furnaces, fireboxes or boilers to which such devices are connected, shall be maintained so as not to create a fire hazard.

❖ A primary function of the code is to reduce or eliminate fire hazards through proper maintenance of appliances and systems that are potential fire and life safety hazards.

603.6.1 Masonry chimneys. Masonry chimneys that, upon inspection, are found to be without a flue liner and that have open mortar joints which will permit smoke or gases to be discharged into the building, or which are cracked as to be dangerous, shall be repaired or relined with a *listed* chimney liner system installed in accordance with the manufacturer's instructions or a flue lining system installed in accordance with the requirements of the *International Building Code* and appropriate for the intended class of chimney service.

❖ See Section 2113 of the IBC, Section 801.16 of the IMC and Sections 501.12, 501.13 and 503.5 of the IFGC for information on masonry chimney liners and masonry chimneys.

603.6.2 Metal chimneys. Metal chimneys which are corroded or improperly supported shall be repaired or replaced.

❖ See the commentary to Section 603.2.

INTERNATIONAL CODE COUNCIL®
Copyright © 2015 ICC. ALL RIGHTS RESERVED. Accessed by David Dammon on Jun 21, 2017 12:30:52 PM pursuant to License Agreement with ICC. No further reproduction or distribution authorized. ANY UNAUTHORIZED REPRODUCTION OR DISTRIBUTION IS A VIOLATION OF THE FEDERAL COPYRIGHT ACT AND THE LICENSE AGREEMENT, AND SUBJECT TO CIVIL AND CRIMINAL PENALTIES THEREUNDER.

603.6.3 Decorative shrouds. Decorative shrouds installed at the termination of factory-built chimneys shall be removed except where such shrouds are *listed* and *labeled* for use with the specific factory-built chimney system and are installed in accordance with the chimney manufacturer's instructions.

❖ This section is retroactive in that it requires removal of a previously installed trim item. Section 805.6 of the IMC and Section 503.5.4 of the IFGC prohibit the installation of decorative shrouds not meeting the listing criteria. The code addresses those noncomplying shrouds that were illegally installed (see IMC commentary, Section 805.6, and IFGC commentary, Section 503.5.4).

603.6.4 Factory-built chimneys. Existing factory-built chimneys that are damaged, corroded or improperly supported shall be repaired or replaced.

❖ Defective or inadequately supported chimneys could leak flue gas and could fail structurally, resulting in separation, collapse, a fire hazard and a life safety hazard. This section is consistent with the maintenance focus of the code.

603.6.5 Connectors. Existing chimney and vent connectors that are damaged, corroded or improperly supported shall be repaired or replaced.

❖ See the commentary to Section 603.6.4.

603.7 Discontinuing operation of unsafe heating appliances. The *fire code official* is authorized to order that measures be taken to prevent the operation of any existing stove, oven, furnace, incinerator, boiler or any other heat-producing device or appliance found to be defective or in violation of code requirements for existing appliances after giving notice to this effect to any person, *owner*, firm or agent or operator in charge of the same. The *fire code official* is authorized to take measures to prevent the operation of any device or appliance without notice when inspection shows the existence of an immediate fire hazard or when imperiling human life. The defective device shall remain withdrawn from service until all necessary repairs or *alterations* have been made.

❖ When a heat-producing appliance or system is determined to be unsafe, the fire code official is required to notify the owner or agent of the building as the first step in correcting the difficulty. This notice may describe the repairs and improvements necessary to correct the deficiency and keep the system in operation or require the unsafe equipment or system to be removed or replaced. The notice must specify a time frame in which the corrective actions must occur. Additionally, the notice should require the immediate response of the owner or agent.

If the owner or agent is not available, public notice of the declaration would be enough to comply with this section. The fire code official may also determine that the system must be disconnected to correct an unsafe condition and must give written notice to that effect; however, an immediate disconnection can be ordered if it is essential for protection of public health and safety.

603.7.1 Unauthorized operation. It shall be a violation of this code for any person, user, firm or agent to continue the utilization of any device or appliance (the operation of which has been discontinued or ordered discontinued in accordance with Section 603.7) unless written authority to resume operation is given by the *fire code official*. Removing or breaking the means by which operation of the device is prevented shall be a violation of this code.

❖ Appliances or systems removed from service in accordance with Section 603.7 may be sealed or otherwise secured in a manner approved by the fire code official and may only be returned to service upon written authorization of the fire code official.

603.8 Incinerators. Commercial, industrial and residential-type incinerators and chimneys shall be constructed in accordance with the *International Building Code*, the *International Fuel Gas Code* and the *International Mechanical Code*.

❖ See the commentary to Section 907.1 of the IMC, Section 606.1 of the IFGC and Section 2113 of the IBC.

603.8.1 Residential incinerators. Residential incinerators shall be of an *approved* type.

❖ Residential incinerators have gone out of use today but may still be found in older homes and in rural areas.

603.8.2 Spark arrestor. Incinerators shall be equipped with an effective means for arresting sparks.

❖ Spark arrestor chimney caps are designed with a screened outlet that prevents the escape of burning embers and particles.

603.8.3 Restrictions. Where the *fire code official* determines that burning in incinerators located within 500 feet (152 m) of mountainous, brush or grass-covered areas will create an undue fire hazard because of atmospheric conditions, such burning shall be prohibited.

❖ The fire code official must determine whether incinerator use would present an unacceptable risk of wild fires in timber, brush and grass-covered areas. For wildland-urban interface areas, see the *International Wildland-Urban Interface Code*® (IWUIC®). The local air-quality agency may also have restrictions.

603.8.4 Time of burning. Burning shall take place only during *approved* hours.

❖ The jurisdiction must determine the periods that would be safe for burning and those that would be unsafe. Consideration must be given to daylight, prevailing winds, ambient temperatures, impact on air quality, moisture levels and presence of observers and supervisory personnel.

603.8.5 Discontinuance. The *fire code official* is authorized to require incinerator use to be discontinued immediately if

INTERNATIONAL CODE COUNCIL®
Copyright © 2015 ICC. ALL RIGHTS RESERVED. Accessed by David Dammon on Jun 21, 2017 12:30:52 PM pursuant to License Agreement with ICC. No further reproduction or distribution authorized. ANY UNAUTHORIZED REPRODUCTION OR DISTRIBUTION IS A VIOLATION OF THE FEDERAL COPYRIGHT ACT AND THE LICENSE AGREEMENT, AND SUBJECT TO CIVIL AND CRIMINAL PENALTIES THEREUNDER.

the *fire code official* determines that smoke emissions are offensive to occupants of surrounding property or if the use of incinerators is determined by the *fire code official* to constitute a hazardous condition.

❖ The fire code official can prohibit incinerator use if it would be a nuisance or a health or fire hazard. Coordination with the local air-quality agency may also be necessary.

603.8.6 Flue-fed incinerators in Group I-2. In Group I-2 occupancies, the continued use of existing flue-fed incinerators is prohibited.

❖ This type of incinerator is hazardous and would not comply with current code requirements. This section is simply making sure that such incinerators are no longer used.

603.8.7 Incinerator inspections in Group I-2. Incinerators in Group I-2 occupancies shall be inspected not less than annually in accordance with the manufacturer's instructions. Inspection records shall be maintained on the premises and made available to the *fire code official* upon request

❖ Incinerators pose a hazard to the building and its occupants if not properly maintained. This is more of a concern in Group I-2 occupancies where the residents are at particular risk from such hazards.

603.9 Gas meters. Above-ground gas meters, regulators and piping subject to damage shall be protected by a barrier complying with Section 312 or otherwise protected in an *approved* manner.

❖ Vehicle impact protection is necessary to prevent gas leakage resulting from impact damage to gas service equipment. Protection can be accomplished by location alone or by the construction of barriers as prescribed by Section 312. Barriers would be required only where the gas service equipment is located where vehicle impact is likely to occur.

SECTION 604
EMERGENCY AND STANDBY POWER SYSTEMS

604.1 General. Emergency power systems and standby power systems required by this code or the *International Building Code* shall comply with Sections 604.1.1 through 604.1.8.

❖ This section simply states that all required emergency and standby power comply with various subsections. These subsections provide more detailed direction on how such systems are required to be installed. These provisions are consistent with the standards referenced by the code and provide the basic information to the code official.

604.1.1 Stationary generators. Stationary emergency and standby power generators required by this code shall be *listed* in accordance with UL 2200.

❖ The provisions of this section apply only to generator sets that are chosen and permanently installed for the purpose of providing an emergency or standby power supply for the required, fixed building facilities indicated in Section 604.2. Section 2.37 of UL 2200 defines a stationary unit as "An engine generator that is intended to be hard wired and/or permanently installed." The section would not apply to mobile units such as truck-, trailer- or skid-mounted or other nonfixed, nonpermanent units. Such nonpermanently installed units would not be approved for purposes of complying with the requirements of Section 604. Similarly, stationary generator sets that are installed for purposes other than to supply emergency or standby power required by the code would not be required to be listed to UL 2200.

604.1.2 Installation. Emergency power systems and standby power systems shall be installed in accordance with the *International Building Code,* NFPA 70, NFPA 110 and NFPA 111.

❖ Emergency power systems are intended to provide electrical power for life safety systems, such as egress illumination, emergency communications and processes involving the handling and use of hazardous materials. In other words, emergency power is required where the loss of normal power would endanger occupants. Such systems are covered in Article 700 of NFPA 70 and one of their key features is the required response time of 10 seconds or less. The time between loss of normal power and the provision of emergency power must be kept very short to prevent putting occupants at risk. This is especially important during an emergency event, such as a building fire, but is important at all times to prevent occupant panic, which could happen if a crowded building is suddenly plunged into darkness.

Standby power systems are covered in Article 701 of NFPA 70 and are intended to provide electrical power for loads not as critical in terms of transfer time as those requiring emergency power. Standby power loads include smoke control systems; certain elevators; certain hazardous material operations; smokeproof enclosure systems; illumination; heating, ventilating and air-conditioning (HVAC) systems; refrigeration and sewage pumps. Standby power systems must provide power within 60 seconds of failure of primary power.

Sources of power for emergency power systems (NFPA 70, Section 701-11) include storage batteries, generators, uninterruptible power supplies and separate services. Sources of power for standby systems include those allowed for emergency systems plus a source that is taken from a point of connection ahead of the normal service disconnecting means.

NFPA 110 addresses the performance criteria and "nuts and bolts" of emergency and standby power systems and separates them into types, classes and levels relative to maximum response time, minimum required operation time and life safety importance factor, respectively. NFPA 111 addresses stored emergency power supply systems and is similar in coverage to NFPA 110. Stored energy systems typically rely on batteries that store chemical energy.

INTERNATIONAL CODE COUNCIL®
Copyright © 2015 ICC. ALL RIGHTS RESERVED. Accessed by David Dammon on Jun 21, 2017 12:30:52 PM pursuant to License Agreement with ICC. No further reproduction or distribution authorized. ANY UNAUTHORIZED REPRODUCTION OR DISTRIBUTION IS A VIOLATION OF THE FEDERAL COPYRIGHT ACT AND THE LICENSE AGREEMENT, AND SUBJECT TO CIVIL AND CRIMINAL PENALTIES THEREUNDER.

604.1.3 Load transfer. Emergency power systems shall automatically provide secondary power within 10 seconds after primary power is lost, unless specified otherwise in this code. Standby power systems shall automatically provide secondary power within 60 seconds after primary power is lost unless specified otherwise in this code.

❖ These provisions are consistent with NFPA 70 and provide clarity to the code official regarding one of the key differences between standby and emergency power. This was discussed in more detail in the commentary to Section 604.1.2.

604.1.4 Load duration. Emergency power systems and standby power systems shall be designed to provide the required power for a minimum duration of 2 hours without being refueled or recharged, unless specified otherwise in this code.

❖ In order to properly design emergency and standby power systems, the minimum load duration must be known. This section provides a default minimum 2-hour duration for systems unless another load duration is specified. For instance, emergency responder radio coverage systems are required to provide standby power for 24 hours.

604.1.5 Uninterruptable power source. An uninterrupted source of power shall be provided for equipment where required by the manufacturer's instructions, the listing, this code or applicable referenced standards.

❖ In some cases an uninterruptable power supply is required. Uninterruptible power supplies are different from emergency and standby power supplies in that there is no transfer time allowed. This is necessary for equipment with volatile memories or that are generally sensitive to any loss of power. An uninterruptible power source must be provided if required by the equipment manufacturer's instructions; the listing of the equipment; the code; or applicable referenced standards, such as NFPA 72.

604.1.6 Interchangeability. Emergency power systems shall be an acceptable alternative for installations that require standby power systems.

❖ An emergency power system, given its more rapid transfer time, is an acceptable substitute for a standby power system. It will simply result in a faster-reacting system, which will only improve performance.

604.1.7 Group I-2 occupancies. In Group I-2 occupancies, where an essential electrical system is located in flood hazard areas established in Section 1612.3 of the *International Building Code* and where new or replacement essential electrical system generators are installed, the system shall be located and installed in accordance with ASCE 24.

❖ This provision provides a necessary link to ASCE 24 *Flood Resistant Design and Construction* for Group I-2 essential electrical systems. There have been losses of such systems due to flooding where the standard was not properly addressed. These types of facilities, such as hospitals and nursing homes, need to have continued operation during flood events. Hurricane Katrina was a good example of such power being lost during flooding. This provision will ensure that new Group I-2 occupancies installing such systems and those replacing systems that have been substantially damaged by a flood will be installed correctly.

ASCE 24 provides the designer with the minimum requirements and expected performance for the design and construction of buildings and structures in flood hazard areas. It is not a restatement of all of the National Flood Insurance Program regulations, but offers additional specificity, some additional requirements, and some limitations. Buildings designed according to ASCE 24 are better able to resist flood loads and flood damage. See the commentary to Section 1612.3 of the IBC for additional information on this topic.

604.1.8 Maintenance. Existing installations shall be maintained in accordance with the original approval and Section 604.4.

❖ In order for existing generators to continue to serve the purpose for which they were installed, they must be properly maintained. This section simply provides the mechanism to ensure this maintenance. The maintenance level is linked to the original installation approval. Section 604.4 provides detailed maintenance requirements.

604.2 Where required. Emergency and standby power systems shall be provided where required by Sections 604.2.1 through 604.2.16.

❖ Fires or natural events can cause the loss of utility power as a result of either damage to equipment and wiring or fire-fighter action to shut off power to eliminate sources of ignition and danger to personnel.

Sections 604.2.1 through 604.2.16 list locations throughout buildings and facilities where emergency or standby power is required. In some cases, the requirements are occupancy- or use-specific and in others the requirements are system- or equipment-specific. Generally, the requirements are related to life safety-oriented systems within buildings, such as a fire alarm system or elevators used for egress for those with disabilities. Recall that emergency and standby power systems have different characteristics, and subsequent sections will require one or the other (see commentary, Section 604.1.2).

604.2.1 Elevators and platform lifts. Standby power shall be provided for elevators and platform lifts as required in Sections 607.2, 1009.4, and 1009.5.

❖ Elevators can be a component of an accessible means of egress in accordance with Section 1009.4 and must, therefore, be dependable at all times. Without backup power, an elevator could be a dead end for someone with physical disabilities who is trying to egress a building (see commentary, Section 1009.4).

Platform lifts are allowed to be used as part of an accessible means of egress only when they are

INTERNATIONAL CODE COUNCIL®
Copyright © 2015 ICC. ALL RIGHTS RESERVED. Accessed by David Dammon on Jun 21, 2017 12:30:52 PM pursuant to License Agreement with ICC. No further reproduction or distribution authorized. ANY UNAUTHORIZED REPRODUCTION OR DISTRIBUTION IS A VIOLATION OF THE FEDERAL COPYRIGHT ACT AND THE LICENSE AGREEMENT, AND SUBJECT TO CIVIL AND CRIMINAL PENALTIES THEREUNDER.

allowed as part of an accessible route, in accordance with Section 1109.8, Items 1 through 10, of the IBC. When this is the case, the platform lift could be a dead end for someone with physical disabilities if power to the platform lift were to be lost; therefore, standby power is required, in accordance with Section 604 or ASME A18.1.

The reference to Section 607.2 addresses how standby power is to be provided to elevators where required elsewhere. These requirements are the same as those found in Section 3003 of the IBC. Primarily, these requirements apply to high-rise buildings (see commentary, IBC Section 403.4.8.3). Also note that the IBC has specific standby power requirements in Sections 3007.8 and 3008.8 for fire service access elevators and occupant evacuation elevators, respectively. These requirements are more restrictive than those found in Section 607.2 of the code and Section 3003 of the IBC. See commentary for Section 607.2.

604.2.2 Emergency alarm systems. Emergency power shall be provided for emergency alarm systems as required by Section 414 of the *International Building Code*.

❖ Emergency alarm systems required by Section 908 of the code and Section 908 of the IBC are systems that provide warning of dangerous conditions involving hazardous materials. Emergency alarm systems must be available at all times and therefore require the use of an emergency power system. See commentary for Section 908 of the code and Sections 414.5.2 and 908 of the IBC.

604.2.3 Emergency responder radio coverage systems. Standby power shall be provided for emergency responder radio coverage systems as required in Section 510.4.2.3. The standby power supply shall be capable of operating the emergency responder radio coverage system for a duration of not less than 24 hours.

❖ Loss of power during an emergency situation is likely and emergency responders will require the use of their radios for an extended period of time in many cases. This section and Section 510.4.2.3 require that standby power be available for 24 hours.

604.2.4 Emergency voice/alarm communication systems. Emergency power shall be provided for emergency voice/alarm communication systems as required in Section 907.5.2.2.5. The system shall be capable of powering the required load for a duration of not less than 24 hours, as required in NFPA 72.

❖ Emergency voice/alarm communication systems are required by Section 907.5.2.2.5 to include an emergency power source. Certain Group A occupancies and covered malls are two of the many occupancies and building types that require emergency voice/alarm communication systems.

604.2.5 Exit signs. Emergency power shall be provided for *exit* signs as required in Section 1013.6.3. The system shall be capable of powering the required load for a duration of not less than 90 minutes.

❖ Emergency power is warranted for exit signage illumination since guiding occupants to the exits is certainly a life safety function (see commentary, Section 1013.6.3). Note that this section specifies a time duration of not less than 90 minutes for exit sign illumination. This specific duration would take precedence over the general 2-hour duration specified in Section 604.1.4.

604.2.6 Group I-2 occupancies. Essential electrical systems for Group I-2 occupancies shall be in accordance with Section 407.10 of the *International Building Code*.

❖ Emergency power systems are required to comply with NFPA 99 by the Center for Medicare/Medicaid Services (CMS) in order for a federally licensed healthcare facility to receive federal reimbursement funds. Section 407.10 of the IBC provides a direct reference to NFPA 99 for the design and construction of emergency power systems in Group I-2. See the commentary to Section 407.10 of the IBC.

604.2.7 Group I-3 occupancies. Power-operated sliding doors or power-operated locks for swinging doors in Group I-3 occupancies shall be operable by a manual release mechanism at the door. Emergency power shall be provided for the doors and locks in accordance with Section 604.

Exceptions:

1. Emergency power is not required in facilities where provisions for remote locking and unlocking of occupied rooms in Occupancy Condition 4 are not required as set forth in the *International Building Code*.
2. Emergency power is not required where remote mechanical operating releases are provided.

❖ In an emergency situation involving power loss, occupants in detention and correctional facilities are at the mercy of door-locking mechanisms and those who control such locks; thus, emergency power is warranted. For a discussion of Exception 1, see the commentary to Sections 408.4.1 and 408.4.2 of the IBC. Exception 2 recognizes the use of mechanical operating releases controlled remotely as eliminating the need for emergency power.

604.2.8 Hazardous materials. Emergency and standby power shall be provided in occupancies with hazardous materials as required in the following sections:

1. Sections 5004.7 and 5005.1.5 for hazardous materials.
2. Sections 6004.2.2.8 and 6004.3.4.2 for highly toxic and toxic gases.
3. Section 6204.1.11 for organic peroxides.

❖ Where hazardous materials and processes are housed, occupant safety could be dependent on one or more ventilation, treatment, temperature control,

INTERNATIONAL CODE COUNCIL®
Copyright © 2015 ICC. ALL RIGHTS RESERVED. Accessed by David Dammon on Jun 21, 2017 12:30:52 PM pursuant to License Agreement with ICC. No further reproduction or distribution authorized. ANY UNAUTHORIZED REPRODUCTION OR DISTRIBUTION IS A VIOLATION OF THE FEDERAL COPYRIGHT ACT AND THE LICENSE AGREEMENT, AND SUBJECT TO CIVIL AND CRIMINAL PENALTIES THEREUNDER.

alarm or detection system. Thus, emergency or standby power is required, depending upon the nature of the material hazard presented (see commentary to code sections referenced in Items 1 through 3).

604.2.9 High-rise buildings. Standby power and emergency power shall be provided for high-rise buildings as required in Section 403 of the *International Building Code*, and shall be in accordance with Section 604.

❖ Occupants of high-rise buildings are at greater risk due to longer egress travel times, difficult fire-fighter access and the danger of vertical spread of fire and smoke. In accordance with this chapter and Sections 403.4.8, some loads in a high-rise building will require standby power and some will require emergency power (see commentary for Section 403.4.8 of the IBC).

604.2.10 Horizontal sliding doors. Standby power shall be provided for horizontal sliding doors as required in Section 1010.1.4.3. The standby power supply shall have a capacity to operate not fewer than 50 closing cycles of the door.

❖ Power-operated doors could be an obstruction to egress if the primary power supply fails; therefore, standby power is required to maintain door operation (see commentary, Section 1010.1.4.3).

604.2.11 Hydrogen fuel gas rooms. Standby power shall be provided for hydrogen fuel gas rooms as required by Section 5808.7.

❖ Ventilation and gas detection are critical to the ongoing safe operation of a hydrogen fuel gas room. Therefore, both ventilation and gas detection systems are required by Section 5808.7 to be provided with standby power. See the commentary to Section 5808.7.

604.2.12 Means of egress illumination. Emergency power shall be provided for *means of egress* illumination in accordance with Sections 1008.3 and 1104.5.1.

❖ The path of travel to all exits must be illuminated to guide occupants and allow for safe egress; therefore, emergency power for illumination is necessary (see commentary, Section 1008.3).

604.2.13 Membrane structures. Standby power shall be provided for auxiliary inflation systems in permanent membrane structures in accordance with Section 2702 of the *International Building Code*. Auxiliary inflation systems shall be provided in temporary air-supported and air-inflated membrane structures in accordance with Section 3103.10.4.

❖ Air-supported and air-inflated structures would collapse on the occupants if the inflation systems were to fail. Section 3102.8.1.1 of the IBC requires redundant inflation equipment that would be as worthless as the primary system in the event of power failure; therefore, standby power is required. Emergency power is required for all exit signs in temporary tents and membrane structures (see commentary, IBC Section 3102.8.2). Note that temporary air-supported and air-inflated membrane structures require auxiliary power. However, the auxiliary power is not specifically standby power in accordance with Section 604.1. Section 3103.10.4 sets out specific criteria as to how this is to be provided. The time it takes to provide this power is 60 seconds, which is the same transfer time required for standby power in Section 604.1.3.

604.2.14 Semiconductor fabrication facilities. Emergency power shall be provided for semiconductor fabrication facilities as required in Section 2703.15.

❖ Where hazardous materials are utilized in Group H-5 hazardous production materials (HPM) facilities, many systems are depended on to protect the occupants from exposure to hazardous materials, including exhaust/ventilation systems, gas cabinet exhaust systems, gas detection systems, alarm systems and suppression systems. Loss of power would endanger the occupants; thus, emergency power is essential for these occupancies. For the complete list of required systems, see Section 2703.15 and its commentary.

604.2.15 Smoke control systems. Standby power shall be provided for smoke control systems as required in Section 909.11.

❖ Smoke control systems are intended to maintain a tenable environment in certain buildings to allow the occupants ample time to evacuate or relocate to protected areas. As such, smoke control systems are life safety systems and must be dependable (see commentary, Section 909.11). Such systems are more likely to be needed during a power loss than typical building systems such as HVAC.

604.2.16 Underground buildings. Emergency and standby power shall be provided in underground buildings as required in Section 405 of the *International Building Code* and shall be in accordance with Section 604.

❖ In the event of power failure, occupants could be underground without light, ventilation and numerous required life safety systems. These structures are analogous to inverted high-rise buildings. See Sections 405.8.1 and 405.8.2 of the IBC, which require standby power and emergency power for specified loads, respectively.

604.3 Critical circuits. Cables used for survivability of required critical circuits shall be listed in accordance with UL 2196. Electrical circuit protective systems shall be installed in accordance with their listing requirements.

❖ The standard referenced, UL 2196, is the ANSI-approved standard for tests of fire-resistive cables. NFPA 20 (fire pumps) and NFPA 72 (fire alarm) include selective survivability requirements to assure integrity of certain critical circuits. NFPA 70 does not specify the applicable standard within the mandatory provisions of the code, but recognizes electrical circuit protective systems as alternatives to listed cables. An electrical circuit protective system is a field

INTERNATIONAL CODE COUNCIL®
Copyright © 2015 ICC. ALL RIGHTS RESERVED. Accessed by David Dammon on Jun 21, 2017 12:30:52 PM pursuant to License Agreement with ICC. No further reproduction or distribution authorized. ANY UNAUTHORIZED REPRODUCTION OR DISTRIBUTION IS A VIOLATION OF THE FEDERAL COPYRIGHT ACT AND THE LICENSE AGREEMENT, AND SUBJECT TO CIVIL AND CRIMINAL PENALTIES THEREUNDER.

assembly of components that must be installed according to the listing requirements and manufacturer's instructions in order to maintain the listing for the system. There are more than two dozen electrical circuit protective systems listed in the UL Fire Resistance Directory.

604.4 Maintenance. Emergency and standby power systems shall be maintained in accordance with NFPA 110 and NFPA 111 such that the system is capable of supplying service within the time specified for the type and duration required.

❖ This section introduces requirements for maintenance of all elements of emergency and standby power systems. The two standards referenced are for emergency and standby power systems and stored electrical energy emergency and standby power systems, respectively. NFPA 110 is geared toward power sources, such as diesel-driven generators, while NFPA 111 is geared toward power supplies, such as stationary lead-acid battery systems. See also Section 604.1.8, which requires the same system maintenance as was originally approved.

604.4.1 Schedule. Inspection, testing and maintenance of emergency and standby power systems shall be in accordance with an approved schedule established upon completion and approval of the system installation.

❖ Standby power and emergency power are useful only if they continue to work over the life of both the building and its associated equipment; therefore, this section specifically focuses on the maintenance of such systems. The primary specifications of these secondary power supplies are that they be able to supply power within the specified length of time.

This section requires that a specific schedule be created at the completion of the installation of the system to encourage regular maintenance of the power systems.

604.4.2 Records. Records of the inspection, testing and maintenance of emergency and standby power systems shall include the date of service, name of the servicing technician, a summary of conditions noted and a detailed description of any conditions requiring correction and what corrective action was taken. Such records shall be maintained.

❖ Documentation of maintenance is key, in that it highlights what specifically was inspected and tested and where potential problems exist. Also, the information about the inspector and inspection agency in the document allows for further reference in the future. This provides a level of accountability. These documents must be made available to the fire code official upon request.

As a result of a review of Recommendation 2(c) of the National Institute of Standards and Technology (NIST) Charleston, South Carolina Sofa Superstore Fire Report, changes were made to Sections 107.2 and 107.3, along with 49 other sections (including this section), to comprehensively address recordkeeping requirements. Section 107.3 provides standardized recordkeeping requirements for periodic inspection, testing, servicing and other operational and maintenance requirements of the code and makes it clear that records must be maintained on the premises or another approved location and that copies of records must be provided to the fire code official upon request. Section 107.3 also makes it clear that records must be maintained for a period of not less than 3 years unless a different time interval is specified in the code or a referenced standard, and that the fire code official is authorized to prescribe the form and format of such records. See the commentaries to Sections 107.2 and 107.3.

604.4.3 Switch maintenance. Emergency and standby power system transfer switches shall be included in the inspection, testing and maintenance schedule required by Section 604.4.1. Transfer switches shall be maintained free from accumulated dust and dirt. Inspection shall include examination of the transfer switch contacts for evidence of deterioration. When evidence of contact deterioration is detected, the contacts shall be replaced in accordance with the transfer switch manufacturer's instructions.

❖ One of the most important elements of emergency and standby power systems is the ability for the primary power to be switched to the secondary power supply within the specified time; therefore, this section pays specific attention to the long-term reliability of the transfer switches. This includes inspection for cleanliness and signs of deterioration.

604.5 Operational inspection and testing. Emergency power systems, including all appurtenant components, shall be inspected and tested under load in accordance with NFPA 110 and NFPA 111.

Exception: Where the emergency power system is used for standby power or peak load shaving, such use shall be recorded and shall be allowed to be substituted for scheduled testing of the generator set, provided that appropriate records are maintained.

❖ This section requires that emergency power systems be tested and inspected as specified in NFPA 110 and 111. There is an exception to testing emergency power when the emergency power system is either used for peak power periods or for standby power. The use during peak hours means that on a fairly regular basis the power supply will be tested. In terms of the use of emergency power for standby power, the capacity of both types of secondary power systems is the same. The two differ on when they will activate; therefore, testing the system as a standby power supply is adequate when the emergency power system is used as standby power.

604.5.1 Transfer switch test. The test of the transfer switch shall consist of electrically operating the transfer switch from the normal position to the alternate position and then return to the normal position.

❖ This section specifically prescribes the sequence of events for testing transfer switches. The switch must

INTERNATIONAL CODE COUNCIL®
Copyright © 2015 ICC. ALL RIGHTS RESERVED. Accessed by David Dammon on Jun 21, 2017 12:30:52 PM pursuant to License Agreement with ICC. No further reproduction or distribution authorized. ANY UNAUTHORIZED REPRODUCTION OR DISTRIBUTION IS A VIOLATION OF THE FEDERAL COPYRIGHT ACT AND THE LICENSE AGREEMENT, AND SUBJECT TO CIVIL AND CRIMINAL PENALTIES THEREUNDER.

move from the normal position to the alternate position and back again. As noted earlier in this commentary, emergency power must be available within a maximum of 10 seconds upon the loss of primary power, whereas standby power is to be available within 60 seconds. The transfer switches, therefore, must work within the specified time.

604.6 Emergency lighting equipment. Emergency lighting shall be inspected and tested in accordance with Sections 604.6.1 through 604.6.2.1.

❖ This section introduces the requirements for regular testing of emergency lighting equipment installed in accordance with Section 1008. While Section 604.4 requires that emergency power systems be inspected and tested in accordance with the referenced standards, NFPA 111 Section 1.1.4.1, Item 4, specifically exempts battery unit equipment from being covered by the maintenance provisions of that standard and NFPA 110 does not apply. These sections will fill that gap in maintenance coverage by providing for the testing of the most common type of emergency lighting found in smaller buildings, i.e., battery unit emergency lighting equipment (see Commentary Figure 604.6).

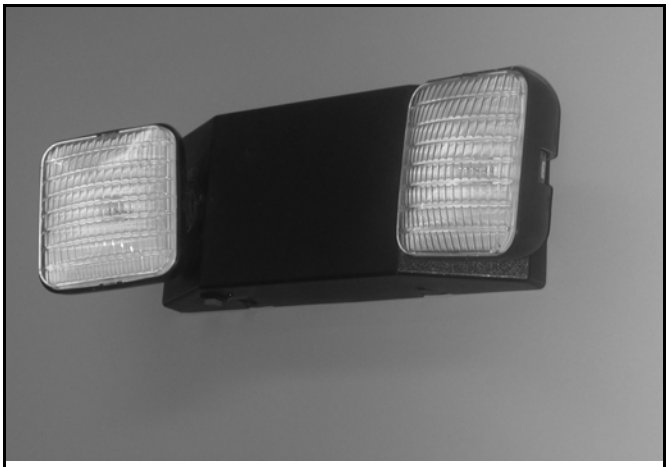

Figure 604.6
TYPICAL BATTERY UNIT EMERGENCY LIGHTING

604.6.1 Activation test. An activation test of the emergency lighting equipment shall be completed monthly. The activation test shall ensure the emergency lighting activates automatically upon normal electrical disconnect and stays sufficiently illuminated for not less than 30 seconds.

❖ This section requires a monthly 30-second function test of battery unit emergency lighting equipment to verify that the unit is holding a charge, that all connected bulbs or luminaires are operational and that the transfer switch functions properly. This test must be conducted by turning off the normal power supply circuit that serves the unit, not by simply pressing the "test" button on the unit. It is important to note that since NFPA 70 typically requires a lock-on device to be provided on branch circuit breakers powering unit equipment, those lock-ons must be reinstalled upon completion of the test.

604.6.1.1 Activation test record. Records of tests shall be maintained. The record shall include the location of the emergency lighting tested, whether the unit passed or failed, the date of the test and the person completing the test.

❖ Accurate, up-to-date records are required to document the history of equipment inspection, testing and maintenance. Record keeping is not intended simply to prove to the fire code official that required inspection, testing and maintenance are being performed, but to assist the owner or his or her agent in performing these functions. A well-kept log helps an owner or technician determine how the equipment is performing over time and assists the building owner in understanding the responsibilities associated with having this equipment installed in the building. These records must be kept on the premises of the affected building. Where a complex of buildings exists, a centralized location for record storage will aid the owner and the fire code official. Similarly, buildings, such as warehouses, that are typically unoccupied but are located adjacent to an occupied building, such as an office, can have their records maintained in the office building so that they are protected and secured.

As a result of a review of Recommendation 2(c) of the NIST Charleston, South Carolina Sofa Superstore Fire Report, changes were made to Sections 107.2 and 107.3, along with 49 other sections (including this section), to comprehensively address recordkeeping requirements. Section 107.3 provides standardized recordkeeping requirements for periodic inspection, testing, servicing and other operational and maintenance requirements of the code and makes it clear that records must be maintained on the premises or another approved location and that copies of records must be provided to the fire code official upon request. Section 107.3 also makes it clear that records must be maintained for a period of not less than 3 years unless a different time interval is specified in the code or a referenced standard, and that the fire code official is authorized to prescribe the form and format of such records. See the commentaries to Sections 107.2 and 107.3.

604.6.2 Power test. For battery-powered emergency lighting, a power test of the emergency lighting equipment shall be completed annually. The power test shall operate the emergency lighting for not less than 90 minutes and shall remain sufficiently illuminated for the duration of the test.

❖ Section 1008.3.4 requires that emergency lighting for means of egress have a duration of 90 minutes. This section complements that requirement by requiring a 90-minute operational test of battery units annually to verify the condition of the battery, unit-powered bulbs or luminaires and unit circuitry. As with the activation test in Section 604.6.1, this test should be conducted by turning off the normal power supply to the unit. The determination of whether the unit remains "suffi-

INTERNATIONAL CODE COUNCIL®
Copyright © 2015 ICC. ALL RIGHTS RESERVED. Accessed by David Dammon on Jun 21, 2017 12:30:52 PM pursuant to License Agreement with ICC. No further reproduction or distribution authorized. ANY UNAUTHORIZED REPRODUCTION OR DISTRIBUTION IS A VIOLATION OF THE FEDERAL COPYRIGHT ACT AND THE LICENSE AGREEMENT, AND SUBJECT TO CIVIL AND CRIMINAL PENALTIES THEREUNDER.

ciently illuminated" for the full 90-minute test should be based on the performance requirements for emergency lighting for means of egress established in Section 1008.3.5.

604.6.2.1 Power test record. Records of tests shall be maintained. The record shall include the location of the emergency lighting tested, whether the unit passed or failed, the date of the test and the person completing the test.

❖ See the commentary to Section 604.6.1.1.

604.7 Supervision of maintenance and testing. Routine maintenance, inspection and operational testing shall be overseen by a properly instructed individual.

❖ This section requires a minimum level of qualifications for the testing of emergency and standby power systems. Only trained personnel should do the testing and maintenance of these systems. This is consistent with Section 107.4. See the commentary to that section.

SECTION 605
ELECTRICAL EQUIPMENT, WIRING AND HAZARDS

605.1 Abatement of electrical hazards. Identified electrical hazards shall be abated. Identified hazardous electrical conditions in permanent wiring shall be brought to the attention of the responsible code official. Electrical wiring, devices, appliances and other equipment that is modified or damaged and constitutes an electrical shock or fire hazard shall not be used.

❖ Maintenance of electrical systems and services to achieve compliance with the requirements of NFPA 70 is required. The leading causes of electrical fires include inadequate or improper maintenance; nonconforming modifications to existing installations; failure to maintain clearances around electrical equipment and devices; and improper use of electrical equipment and devices. A detailed analysis of the causes of residential electrical fires by the U.S. Consumer Products Safety Commission suggests that misuse and improper modifications to conforming electrical systems are the leading causes of these fires.

605.2 Illumination. Illumination shall be provided for service equipment areas, motor control centers and electrical panelboards.

❖ Adequate lighting in electrical service distribution equipment areas is required to facilitate the location of the electrical service shutoff during a fire or other emergency and to minimize potential hazards during maintenance or repair work. Although not required, this lighting should be connected to an emergency or standby power source to permit continued illumination when power to service equipment is interrupted during maintenance repair activities or emergencies.

605.3 Working space and clearance. A working space of not less than 30 inches (762 mm) in width, 36 inches (914 mm) in depth and 78 inches (1981 mm) in height shall be provided in front of electrical service equipment. Where the electrical service equipment is wider than 30 inches (762 mm), the working space shall be not less than the width of the equipment. Storage of materials shall not be located within the designated working space.

Exceptions:

1. Where other dimensions are required or allowed by NFPA 70.
2. Access openings into attics or under-floor areas which provide a minimum clear opening of 22 inches (559 mm) by 30 inches (762 mm).

❖ Adequate clearance serves two important purposes: physical separation of combustibles from heat-producing electrical devices and equipment to minimize the possibility of ignition, and providing adequate work space to perform maintenance and repair work safely (see Commentary Figure 605.3). The exceptions note that NFPA 70 may allow different dimensions than those prescribed in this section. Additionally, the lack of space in areas such as attics and underfloor areas is recognized by also allowing a smaller opening width.

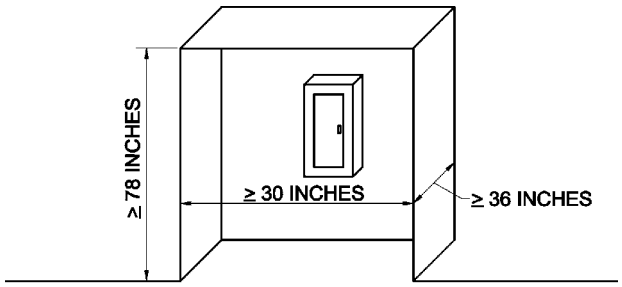

For SI: 1 inch = 25.4 mm.

Figure 605.3
REQUIRED CLEARANCES

605.3.1 Labeling. Doors into electrical control panel rooms shall be marked with a plainly visible and legible sign stating ELECTRICAL ROOM or similar approved wording. The disconnecting means for each service, feeder or branch circuit originating on a switchboard or panelboard shall be legibly and durably marked to indicate its purpose unless such purpose is clearly evident.

❖ In addition to the illumination required in Section 605.2, additional labeling is required for the electrical equipment to assist emergency responders in identifying and then shutting down electrical service controls during a fire or other emergency.

605.4 Multiplug adapters. Multiplug adapters, such as cube adapters, unfused plug strips or any other device not complying with NFPA 70 shall be prohibited.

❖ The intent of this section is to prohibit conditions that could lead to the overloading of building electrical cir-

INTERNATIONAL CODE COUNCIL®
Copyright © 2015 ICC. ALL RIGHTS RESERVED. Accessed by David Dammon on Jun 21, 2017 12:30:52 PM pursuant to License Agreement with ICC. No further reproduction or distribution authorized. ANY UNAUTHORIZED REPRODUCTION OR DISTRIBUTION IS A VIOLATION OF THE FEDERAL COPYRIGHT ACT AND THE LICENSE AGREEMENT, AND SUBJECT TO CIVIL AND CRIMINAL PENALTIES THEREUNDER.

cuits that, in turn, could result in a fire. The devices intended to be regulated by this section are referred to as a "multiplug adapter" but are more correctly identified as a "current tap." Underwriters Laboratories, Inc. (UL), in its Guide Information for the listing category EMDV, defines "current tap" as follows: "A male and female contact device that, when connected to an outlet receptacle or cord set, provides multiple outlets or outlet configurations. An outlet configuration may consist of a slot configuration, or provision for the connection of flexible cord." An adapter, on the other hand, is defined there as "a device that adapts one blade or slot configuration to another (including a grounding adapter for a nongrounding receptacle)." The term "cube adapter" (more correctly "cube tap") refers to the shape of the device, i.e., cube-shaped. They can also be known as "octopus taps."

Overcurrent protection interrupts power to an outlet only when connected loads exceed the current rating of the overcurrent device for a specified amount of time. When multiplug adaptors are used for several appliances, such devices may produce enough heat to ignite nearby combustibles in the time it takes to trip the overcurrent protection device. Simultaneous operation of many small loads may cause dangerous localized resistance heating without tripping the overcurrent protection device. Additionally, these devices may result in loose electrical connections because of the weight of the cords pulling on them.

The use of these devices may also indicate that the building's electrical wiring is inadequate for the connected loads or occupancy demands. These devices are intended for temporary use only, not at a fixed location or in place of wiring complying with NFPA 70.

The code does allow for the use of listed, relocatable power taps complying with specific criteria mentioned in Sections 605.4.1 through 605.4.3. Commentary Figure 605.4 shows the difference between a multiplug adapter and a power tap.

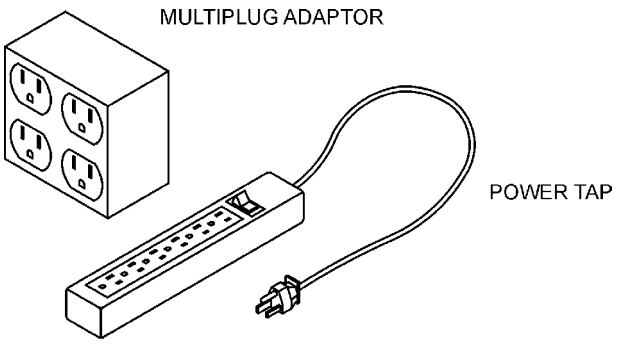

Figure 605.4
TYPICAL MULTIPLUG ADAPTER AND POWER TAP

605.4.1 Power tap design. Relocatable power taps shall be of the polarized or grounded type, equipped with overcurrent protection, and shall be *listed* in accordance with UL 1363.

❖ This section sets out the basic requirements for relocatable power taps (RPTs). The testing requirements of UL 1363 are applied to relocatable, cord-connected power taps rated at 250 volts AC or less and 20 amps or less. These devices are intended only for indoor use as a temporary extension of a branch circuit for general use to supply home workshop tools, computers, audio and video equipment, etc. They consist of an attachment plug and a length of flexible cord terminating in an enclosure containing one or more receptacles and may also be provided with fuses or other supplemental overcurrent protection, switches, line surge suppressors or indicator lights. The flexible cord length is dependent on the listing of the particular device, but power taps have been listed for lengths up to 25 feet (7620 mm). The scope of UL 1363 indicates that RPTs are neither intended to be connected in series nor used with medical equipment.

605.4.2 Power supply. Relocatable power taps shall be directly connected to a permanently installed receptacle.

❖ The restrictions on power taps are similar to those on extension cords. Power taps should not be used as a substitute for building wiring. Relocatable power taps are intended to be plugged directly into a permanently installed receptacle and are not intended to be connected in series or connected to other power taps or extension cords. They are also not intended for use outdoors, at construction sites and similar hard-use locations.

605.4.3 Installation. Relocatable power tap cords shall not extend through walls, ceilings, floors, under doors or floor coverings, or be subject to environmental or physical damage.

❖ To prevent use as a substitute for permanent wiring, power taps cannot be placed in locations such as within or through walls, under doors or on building surfaces, furnishings, cabinets or similar structures where they would be subject to physical damage. This section would prohibit relocatable power taps from being plugged into a receptacle in one room to power a device in another room.

605.5 Extension cords. Extension cords and flexible cords shall not be a substitute for permanent wiring. Extension cords and flexible cords shall not be affixed to structures, extended through walls, ceilings or floors, or under doors or floor coverings, nor shall such cords be subject to environmental damage or physical impact. Extension cords shall be used only with portable appliances.

❖ Frequent or improper use of extension cords in place of permanent fixed wiring is another indication of inadequate electrical wiring capacity or incompatible

INTERNATIONAL CODE COUNCIL®
Copyright © 2015 ICC. ALL RIGHTS RESERVED. Accessed by David Dammon on Jun 21, 2017 12:30:52 PM pursuant to License Agreement with ICC. No further reproduction or distribution authorized. ANY UNAUTHORIZED REPRODUCTION OR DISTRIBUTION IS A VIOLATION OF THE FEDERAL COPYRIGHT ACT AND THE LICENSE AGREEMENT, AND SUBJECT TO CIVIL AND CRIMINAL PENALTIES THEREUNDER.

demands (see Commentary Figure 605.5). Physical damage to extension cords caused by concealment or inadequate maintenance may result in localized resistance heating, shorts or ground faults.

The amount of electrical current that any extension cord can safely conduct is limited by the size of its conductor, its insulation type and its environment. This principle is often not understood by the general public. As a result, extension cords are commonly overloaded by connecting appliances and other loads in excess of the cord's capacity.

Overloading of extension cords causes an increase in the conductor's temperature. This increase in temperature can exceed the temperature rating of the conductor insulation, causing it to melt, decompose or burn. The burning insulation can ignite other combustible materials. The resulting loss of conductor insulation can also cause a short circuit or ground fault that can act as a source of ignition.The buildup of heat in an extension cord is often made worse by excessive cord length and by the insulating effect of rugs that often cover extension cords. Extension cords are much more susceptible to physical damage than permanent wiring. Damage to extension cords increases the likelihood of shorts and poor connections, both of which can cause a fire.

In addition to the fire hazard, extension cords pose a tripping hazard to occupants and, when damaged, can pose an electrical shock hazard. Securing flexible cords to a wall baseboard, door jambs, etc., with nails, staples or other fasteners to eliminate tripping hazards can create another dangerous condition by pinching or piercing the cord and causing shorts or faults that could lead to ignition.

Additionally, as a way of limiting the use of extension cords, their use is restricted to portable appliances. The reference to "portable" primarily denotes smaller, often-relocated appliances, such as a fan or a power tool. Extension cords must not be used with major appliances or equipment, such as refrigerators, which are obviously not portable. See the definitions for "Portable equipment" and "Portable appliance" in NFPA 70 Sections 520.2 and 550.2, respectively.

605.5.1 Power supply. Extension cords shall be plugged directly into an *approved* receptacle, power tap or multiplug adapter and, except for *approved* multiplug extension cords, shall serve only one portable appliance.

❖ This restriction means that multiple extension cords must not be connected to one another. Additionally, extension cords are limited to one appliance unless they are specifically approved multiplug extension cords.

605.5.2 Ampacity. The ampacity of the extension cords shall be not less than the rated capacity of the portable appliance supplied by the cord.

❖ Although most building occupants may have difficulty understanding ampacity, which is the amount of electrical current that a particular conductor is capable of handling without exceeding its temperature limits, it is extremely important. If an appliance demands a higher electrical current than the extension cord is intended to handle, the extension cord will be overloaded causing overheating and a potential fire. Familiarity with the types of extension cords available for sale and the general relationships to common appliances will help with the enforcement of this section.

605.5.3 Maintenance. Extension cords shall be maintained in good condition without splices, deterioration or damage.

❖ When extension cords are damaged, they become potential shock hazards and a source of ignition.

605.5.4 Grounding. Extension cords shall be grounded where serving grounded portable appliances.

❖ If an extension cord serves an appliance that requires a grounding conductor to avoid potential shock, that cord must provide a grounding conductor.

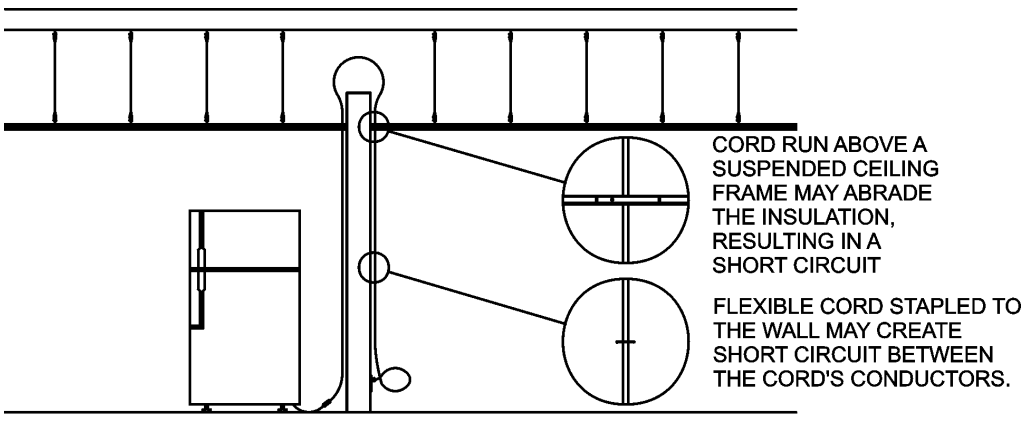

Figure 605.5
EXAMPLES OF UNACCEPTABLE PRACTICES

INTERNATIONAL CODE COUNCIL®
Copyright © 2015 ICC. ALL RIGHTS RESERVED. Accessed by David Dammon on Jun 21, 2017 12:30:52 PM pursuant to License Agreement with ICC. No further reproduction or distribution authorized. ANY UNAUTHORIZED REPRODUCTION OR DISTRIBUTION IS A VIOLATION OF THE FEDERAL COPYRIGHT ACT AND THE LICENSE AGREEMENT, AND SUBJECT TO CIVIL AND CRIMINAL PENALTIES THEREUNDER.

605.6 Unapproved conditions. Open junction boxes and open-wiring splices shall be prohibited. *Approved* covers shall be provided for all switch and electrical outlet boxes.

❖ Without covers, connections made in junction boxes may be subject to physical damage. Such damage may loosen electrical connections, resulting in high-resistance arcing. Switches and outlet boxes are subject to arcing from loose connections and reduced clearances between contacts as they age. Accumulation of dirt and debris in open electrical boxes creates an ignitable fuel concentration. Fires in open electrical boxes may spread to wire or cable insulation or other fuels in electrical and mechanical concealed spaces. Furthermore, unprotected electrical connections are electrical shock hazards to personnel working in concealed spaces.

605.7 Appliances. Electrical appliances and fixtures shall be tested and *listed* in published reports of inspected electrical equipment by an *approved* agency and installed and maintained in accordance with all instructions included as part of such listing.

❖ The fire code official should look for the listing mark of an approved testing or inspection agency on the appliance and may request the agency's published report showing the listing to verify that the appliance meets an applicable standard for electrical safety. Fire code officials experiencing difficulties interpreting the marking or listing of an agency, as in the case of a laboratory not located within the United States, should consult representatives of the agency or the U.S. Consumer Products Safety Commission (CPSC) for assistance.

605.8 Electrical motors. Electrical motors shall be maintained free from excessive accumulations of oil, dirt, waste and debris.

❖ Internal heating is commonly associated with the operation of electrical motors. Excessive accumulations of dust, oil, grease, dirt or other debris may be easily ignited by the internal frictional heating of electrical motor components.

605.9 Temporary wiring. Temporary wiring for electrical power and lighting installations is allowed for a period not to exceed 90 days. Temporary wiring methods shall meet the applicable provisions of NFPA 70.

> **Exception:** Temporary wiring for electrical power and lighting installations is allowed during periods of construction, remodeling, repair or demolition of buildings, structures, equipment or similar activities.

❖ In some cases, because of a specific need and the temporary nature of the need, temporary wiring is allowed for a period of not more than 90 days. This allowance is primarily aimed at needs such as for holiday lighting. The exception allows temporary wiring to exceed 90 days for certain activities, such as remodeling or general construction of a building. Section 590 of NFPA 70 contains specific requirements for temporary wiring.

The term "temporary wiring" is not referring here to the use of power taps or extension cords (see commentary, Sections 605.4 and 605.5). The requirements for temporary wiring are less restrictive than those for permanent wiring but are much more rigorous than the requirements for the use of power taps and extension cords.

605.9.1 Attachment to structures. Temporary wiring attached to a structure shall be attached in an *approved* manner.

❖ When wiring is specifically attached to a structure, care must be taken to make sure that the attachment will not damage the wiring in a way that would cause resistance heating in localized areas of the wiring (see commentary, Section 605.5).

605.10 Portable, electric space heaters. Where not prohibited by other sections of this code, portable, electric space heaters shall be permitted to be used in all occupancies other than Group I-2 and in accordance with Sections 605.10.1 through 605.10.4.

> **Exception:** The use of portable, electric space heaters in which the heating element cannot exceed a temperature of 212°F (100°C) shall be permitted in nonsleeping staff and employee areas in Group I-2 occupancies.

❖ Portable, electric space heaters are a readily available, commonly used source of supplementary heat for homes or workplaces, but should not be relied on to replace a building's fixed heating system. Because a portable, electric space heater's heating element operates at high temperatures, improper use of the heater creates a fire risk. This section provides minimum safety requirements for the use of portable, electric space heaters that have historically been carelessly or incorrectly installed or used. However, because Group I-2 occupancies have a higher life hazard that results in a longer evacuation time, the use of these devices in such occupancies is prohibited. These provisions also correlate the code with federal regulations for these facilities. The exception recognizes the reduced life hazard in nonpatient staff areas of Group I-2 occupancies; limiting the portable heater temperature will reduce the incidence of fire from these devices.

605.10.1 Listed and labeled. Only *listed* and *labeled* portable, electric space heaters shall be used.

❖ Using only tested, listed and labeled portable, electric space heaters provides both the consumer and the fire code official with an increased level of confidence that the heater has been thoroughly and carefully examined by an independent agency concerned with public safety. An important part of the product listing is the manufacturer's use and care booklet that should be read and carefully followed before using a portable, electric space heater for the first time and periodically thereafter. An appropriate standard that could be used to examine and list these heaters would be UL 1278.

INTERNATIONAL CODE COUNCIL®
Copyright © 2015 ICC. ALL RIGHTS RESERVED. Accessed by David Dammon on Jun 21, 2017 12:30:52 PM pursuant to License Agreement with ICC. No further reproduction or distribution authorized. ANY UNAUTHORIZED REPRODUCTION OR DISTRIBUTION IS A VIOLATION OF THE FEDERAL COPYRIGHT ACT AND THE LICENSE AGREEMENT, AND SUBJECT TO CIVIL AND CRIMINAL PENALTIES THEREUNDER.

605.10.2 Power supply. Portable, electric space heaters shall be plugged directly into an *approved* receptacle.

❖ Because of the amount of current required for an electric space heater, its listing will limit the length of the power supply cord provided with the unit to prevent overheating of the conductors. Using an extension cord or other temporary wiring device defeats the purpose of the limited-length cord and can lead to conductor overheating or damage to the heater itself. The heater's power supply cord should be kept away from high traffic areas to prevent the cord from being damaged or tripped over. Power supply cords should also not be run under rugs or furniture where they could be walked on or have heavy objects set on them. This could cause a damaged cord to overheat and cause a fire.

605.10.3 Extension cords. Portable, electric space heaters shall not be plugged into extension cords.

❖ See the commentaries to Sections 605.10.2 and 605.5.

605.10.4 Prohibited areas. Portable, electric space heaters shall not be operated within 3 feet (914 mm) of any combustible materials. Portable, electric space heaters shall be operated only in locations for which they are *listed*.

❖ Because portable electric space heaters have hot and arcing or sparking parts inside of them, adequate clearance from combustible materials must be maintained to avoid ignition of the combustibles. Likewise, flammable liquid vapors could be liberated during liquid transfer or in the event of a spill during travel to the heater where the arcing or sparking components could cause ignition.

605.11 Solar photovoltaic power systems. Solar photovoltaic power systems shall be installed in accordance with Sections 605.11.1 through 605.11.2, the *International Building Code* or *International Residential Code*, and NFPA 70.

❖ Among the most popular alternative energy sources are solar photovoltaic (PV) power systems. A number of United States electric utility power suppliers offer incentives for the installation of PV systems on buildings because such systems offer the property owners the ability to generate their own electricity and, in many cases, sell excess electricity back to the utility provider. Such an arrangement is a benefit to the utility provider because it reduces the provider's power generation demand, which in turn can control the rates that commercial and residential customers pay.

According to the U.S. Energy Information Administration, approximately 21,200 PV cells and modules were shipped domestically in 1999; by 2008, the number shipped was over 524,200. As the number of PV power systems increases, economy of scale will continue to reduce the systems costs, making them more common on commercial and residential buildings (see Commentary Figure 605.11).

PV systems are designed to convert light energy into direct current (DC) electricity. They have no moving parts and do not contain fluids. The light-to-electricity conversion begins at the PV cell, which is commonly a semiconductor device that generates electricity when exposed to light. To be effective, PV cells are assembled into PV modules, which are then assembled into PV panels. The panels are assembled onto a frame or a flexible substrate, which then can be affixed to the roof of buildings to create a PV array. The PV array and its modules are wired together and generally operate as a series electrical circuit. PV array are required by NFPA 70 to have a fuse or other means of branch-circuit protection to prevent them from being overloaded. While not required, a PV array is commonly equipped with a blocking diode. A blocking diode is analogous to a check valve in a piping system because it limits the direction the electrons can travel. The blocking diode prevents electrical current from one power supply from finding entry into another. In PV systems, the blocking diode protects each individual PV panel if other panels fail and prevents the withdrawal of electricity from the system during the nighttime (see Commentary Figure 605.11).

The ever-increasing demand for alternative power sources brings with it hazards to confront emergency responders. The greatest danger facing emergency responders operating in proximity to solar energy collection systems is the lack of knowledge needed to operate safely around these systems. Some of the potential hazards associated with PV systems are tripping hazards and falls for fire fighters operating on the roof, earlier roof collapse due to the added dead load and electric shock. The provisions of Sections 605.11 through 605.11.2 were developed to provide for the proper installation of PV systems and to address the potential hazards to fire fighters. This section requires compliance with the IBC or *International Residential Code*® (IRC®), as applicable, and NFPA 70.

Relevant provisions of the IBC and IRC are IBC Sections 1505, 1512 and 3111 and IRC Sections R324, R902, R905 and R907, as applicable.

The reference to NFPA 70 would require compliance with Section 690 of NFPA 70, which addresses requirements such as marking of equipment and the type of materials that are permitted. Section 605.11 focuses primarily on creating pathways where fire fighters can perform manual ventilation operations on roofs.

605.11.1 Access and pathways. Roof access, pathways, and spacing requirements shall be provided in accordance with Sections 605.11.1.1 through 605.11.1.3.3.

Exceptions:

1. Detached, nonhabitable Group U structures including, but not limited to, parking shade structures, carports, solar trellises and similar structures.

INTERNATIONAL CODE COUNCIL®
Copyright © 2015 ICC. ALL RIGHTS RESERVED. Accessed by David Dammon on Jun 21, 2017 12:30:52 PM pursuant to License Agreement with ICC. No further reproduction or distribution authorized. ANY UNAUTHORIZED REPRODUCTION OR DISTRIBUTION IS A VIOLATION OF THE FEDERAL COPYRIGHT ACT AND THE LICENSE AGREEMENT, AND SUBJECT TO CIVIL AND CRIMINAL PENALTIES THEREUNDER.

2. Roof access, pathways and spacing requirements need not be provided where the fire chief has determined that rooftop operations will not be employed.

❖ This section introduces a major element of PV system design: the requirement to provide access and paths so fire fighters can perform the important task of manual ventilation by cutting one or more holes in a building roof. The provisions in Sections 605.11.1.1 through 605.11.1.3.3 address the placement of PV arrays on building roofs. It should be noted that these requirements do not apply to buildings regulated by the IRC. See the commentary to Section 102.5 for a discussion of the relationship between the code and the IRC.

Exception 1 to this section recognizes that the installation of PV systems on detached Group U occupancy structures will not require ventilation and therefore does not need to be regulated by this section.

Exception 2 exempts PV arrays from the spacing requirements when the fire chief indicates that vertical manual ventilation practices will not be employed. Conditions that could be considered under this exception include, but are not limited to, proximity and type of adjacent exposures; alternative access opportunities (as from adjoining roofs); adequate ventilation opportunities beneath solar arrays that are sufficiently elevated, spaced or set back from other rooftop equipment; installation of automatic ventilation devices or new technology, methods, or other innovations that ensure adequate fire department access, pathways and ventilation opportunities. Note that a construction permit in accordance with Section 105.7.15 would still be required.

605.11.1.1 Roof access points. Roof access points shall be located in areas that do not require the placement of ground ladders over openings such as windows or doors, and located at strong points of building construction in locations where the access point does not conflict with overhead obstructions such as tree limbs, wires or signs.

❖ Roof access points are areas where ladder placement would not be over openings so as to obstruct ingress or egress of personnel, interfere with the use of openings for ventilation or expose the ground ladder and its users to heat, smoke or fire erupting from openings. Ladder placement must also be located at strong points of building construction so that there is less risk of collapse while fighting a fire. Overhead obstructions must also be taken into account. Having PV panels and modules limits the locations where fire fighters can place ladders, therefore it is more important that these factors be addressed as part of the installation process.

Although specific emphasis is not provided within this section, the fire code official should be involved in the determination of access points.

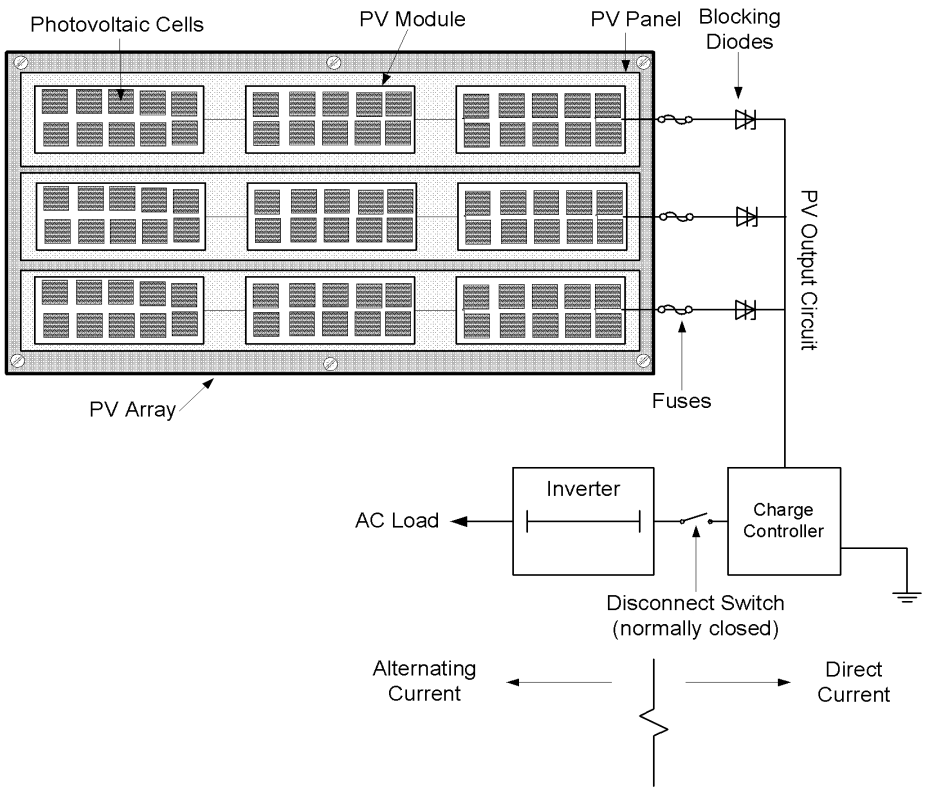

Figure 605.11
BASIC SCHEMATIC OF A PHOTOVOLTAIC SYSTEM

INTERNATIONAL CODE COUNCIL®
Copyright © 2015 ICC. ALL RIGHTS RESERVED. Accessed by David Dammon on Jun 21, 2017 12:30:52 PM pursuant to License Agreement with ICC. No further reproduction or distribution authorized. ANY UNAUTHORIZED REPRODUCTION OR DISTRIBUTION IS A VIOLATION OF THE FEDERAL COPYRIGHT ACT AND THE LICENSE AGREEMENT, AND SUBJECT TO CIVIL AND CRIMINAL PENALTIES THEREUNDER.

605.11.1.2 Solar photovoltaic systems for Group R-3 buildings. Solar photovoltaic systems for Group R-3 buildings shall comply with Sections 605.11.1.2.1 through 605.11.1.2.5.

Exception: These requirements shall not apply to structures designed and constructed in accordance with the *International Residential Code*.

❖ This section introduces the PV system access requirements for residential buildings (see Commentary Figure 605.11.1.2). Note that the Group R-3 buildings focused on are typically one- and two-family dwellings that fall outside the scope of the IRC. As noted in Section 605.11, the IRC addresses one- and two-family dwellings that fall within the scope of that code. The requirements in Section R324 are very similar to those found in Sections 605.11.1.2 through 605.11.1.2.5.



Figure 605.11.1.2
INSTALLATION OF A PV ARRAY ON AN R-3 OCCUPANCY

605.11.1.2.1 Size of solar photovoltaic array. Each photovoltaic array shall be limited to 150 feet (45 720 mm) by 150 feet (45 720 mm). Multiple arrays shall be separated by a 3-foot-wide (914 mm) clear access pathway.

❖ This section establishes a maximum size of the solar array. This provides a manageable size for fire fighters. Multiple arrays are permitted but must be separated by 3 feet between so that there is access between each array.

605.11.1.2.2 Hip roof layouts. Panels and modules installed on Group R-3 buildings with hip roof layouts shall be located in a manner that provides a 3-foot-wide (914 mm) clear access pathway from the eave to the ridge on each roof slope where panels and modules are located. The access pathway shall be at a location on the building capable of supporting the fire fighters accessing the roof.

Exception: These requirements shall not apply to roofs with slopes of two units vertical in 12 units horizontal (2:12) or less.

❖ Where PV arrays are installed on the roofs of Group R-3 buildings, a minimum 3-foot (914 mm) access pathway must be left from the eave to the roof ridge so fire fighters have an unobstructed area in which to cut ventilation openings. The exception exempts low-slope roofs (i.e., a slope that is 2:12 or less) because of the reduced hazards of such flatter roofs.

605.11.1.2.3 Single-ridge roofs. Panels and modules installed on Group R-3 buildings with a single ridge shall be located in a manner that provides two, 3-foot-wide (914 mm) access pathways from the eave to the ridge on each roof slope where panels and modules are located.

Exception: This requirement shall not apply to roofs with slopes of two units vertical in 12 units horizontal (2:12) or less.

❖ Where PV arrays are installed on the roofs of Group R-3 buildings, a minimum of two 3-foot (914 mm) access pathways must be left from the eave to the roof ridge so fire fighters have an unobstructed area in which to cut ventilation openings. The exception exempts low-slope roofs (i.e., a slope that is 2:12 or less) due to the reduced hazards of such flatter roofs.

605.11.1.2.4 Roofs with hips and valleys. Panels and modules installed on Group R-3 buildings with roof hips and valleys shall not be located closer than 18 inches (457 mm) to a hip or a valley where panels/modules are to be placed on both sides of a hip or valley. Where panels are to be located on only one side of a hip or valley that is of equal length, the panels shall be permitted to be placed directly adjacent to the hip or valley.

Exception: These requirements shall not apply to roofs with slopes of two units vertical in 12 units horizontal (2:12) or less.

❖ Where installed on both sides of a roof hip or valley, PV arrays on the roofs of Group R-3 buildings must be located so they create a minimum 3-foot (914 mm) clearance between the PV arrays on opposing sides of the roof hip or valley so fire fighters have a unobstructed area in which to cut ventilation openings. The exception exempts low-slope roofs (i.e., a slope that is 2:12 or less) because of the reduced hazards of such flatter roofs.

INTERNATIONAL CODE COUNCIL®
Copyright © 2015 ICC. ALL RIGHTS RESERVED. Accessed by David Dammon on Jun 21, 2017 12:30:52 PM pursuant to License Agreement with ICC. No further reproduction or distribution authorized. ANY UNAUTHORIZED REPRODUCTION OR DISTRIBUTION IS A VIOLATION OF THE FEDERAL COPYRIGHT ACT AND THE LICENSE AGREEMENT, AND SUBJECT TO CIVIL AND CRIMINAL PENALTIES THEREUNDER.

605.11.1.2.5 Allowance for smoke ventilation operations. Panels and modules installed on Group R-3 buildings shall be located not less than 3 feet (914 mm) from the ridge in order to allow for fire department smoke ventilation operations.

Exception: Panels and modules shall be permitted to be located up to the roof ridge where an alternative ventilation method *approved* by the fire chief has been provided or where the fire chief has determined vertical ventilation techniques will not be employed.

❖ Manual ventilation is most effective when accomplished at the highest portion of the roof above the fire. This section establishes an obstruction-free zone within 3 feet (914 mm) of the roof ridge in order to optimize the area available for effective ventilation, allowing for a 2-foot (609.6 mm) trench cut.

The exception addresses the fact that in some cases vertical ventilation techniques or alternative techniques will not be used. This allows the panels and modules to be located higher up on the roof. Note that Exception 2 to Section 605.11.1 makes a similar allowance.

605.11.1.3 Other than Group R-3 buildings. Access to systems for buildings, other than those containing Group R-3 occupancies, shall be provided in accordance with Sections 605.11.1.3.1 through 605.11.1.3.3.

Exception: Where it is determined by the fire code official that the roof configuration is similar to that of a Group R-3 occupancy, the residential access and ventilation requirements in Sections 605.11.1.2.1 through 605.11.1.2.5 shall be permitted to be used.

❖ This section introduces PV system access requirements for other than Group R-3 buildings. The exception recognizes that nonresidential buildings are often constructed in a residential configuration and authorizes the fire code official to allow the provisions for Group R-3 construction styles to be used. The access and ventilation requirements are not occupancy specific but are affected most by the construction configuration.

605.11.1.3.1 Access. There shall be a minimum 6-foot-wide (1829 mm) clear perimeter around the edges of the roof.

Exception: Where either axis of the building is 250 feet (76 200 mm) or less, the clear perimeter around the edges of the roof shall be permitted to be reduced to a minimum 4 foot wide (1290 mm).

❖ PV arrays installed on the roofs of nonresidential buildings must be located so they create a minimum 6-foot (1829 mm) clearance between the PV array and roof edge so fire fighters have an unobstructed area in which to move and operate when cutting ventilation openings. The exception provides some flexibility for smaller buildings where less access to the roof is needed, therefore a reduced width of 4 feet is acceptable. Nongravity-operated smoke and heat vents require more access by the fire department to provide ventilation and require a 4-foot width around the vent.

605.11.1.3.2 Pathways. The solar installation shall be designed to provide designated pathways. The pathways shall meet the following requirements:

1. The pathway shall be over areas capable of supporting fire fighters accessing the roof.
2. The centerline axis pathways shall be provided in both axes of the roof. Centerline axis pathways shall run where the roof structure is capable of supporting fire fighters accessing the roof.
3. Pathways shall be a straight line not less than 4 feet (1290 mm) clear to roof standpipes or ventilation hatches.
4. Pathways shall provide not less than 4 feet (1290 mm) clear around roof access hatch with not less than one singular pathway not less than 4 feet (1290 mm) clear to a parapet or roof edge.

❖ Pathways must be established in the design of the solar installation and meet the requirements listed in this section. Placing the pathways over or adjacent to structural elements of the building provides a stable walking platform for personnel who will likely be carrying additional heavy equipment up to the roof. Straight pathways with a 4-foot (1290 mm) clearance to tripping and other hazards help provide a safe working environment for personnel assigned to rooftop operations.

605.11.1.3.3 Smoke ventilation. The solar installation shall be designed to meet the following requirements:

1. Arrays shall be not greater than 150 feet (45 720 mm) by 150 feet (45 720 mm) in distance in either axis in order to create opportunities for fire department smoke ventilation operations.
2. Smoke ventilation options between array sections shall be one of the following:
   - 2.1. A pathway 8 feet (2438 mm) or greater in width.
   - 2.2. A 4-foot (1290 mm) or greater in width pathway and bordering roof skylights or gravity-operated dropout smoke and heat vents on not less than one side.
   - 2.3. A 4-foot (1290 mm) or greater in width pathway and bordering all sides of nongravity-operated dropout smoke and heat vents.
   - 2.4. A 4-foot (1290 mm) or greater in width pathway and bordering 4-foot by 8-foot (1290 mm by 2438 mm) "venting cutouts" every 20 feet (6096 mm) on alternating sides of the pathway.

❖ This section establishes design options for providing adequate space among and around the PV arrays for safe fire department ventilation operations. Note that skylights and gravity-operated smoke and heat vents are only required to provide access on one side. Skylights are not intended to serve a ventilation purpose. In addition, gravity-operated smoke and heat vents will automatically provide ventilation if needed. Non-

INTERNATIONAL CODE COUNCIL®
Copyright © 2015 ICC. ALL RIGHTS RESERVED. Accessed by David Dammon on Jun 21, 2017 12:30:52 PM pursuant to License Agreement with ICC. No further reproduction or distribution authorized. ANY UNAUTHORIZED REPRODUCTION OR DISTRIBUTION IS A VIOLATION OF THE FEDERAL COPYRIGHT ACT AND THE LICENSE AGREEMENT, AND SUBJECT TO CIVIL AND CRIMINAL PENALTIES THEREUNDER.

gravity-operated smoke and heat vents will require more intervention from the fire department, therefore more access to those vents will be needed.

605.11.2 Ground-mounted photovoltaic arrays. Ground-mounted photovoltaic arrays shall comply with Section 605.11 and this section. Setback requirements shall not apply to ground-mounted, free-standing photovoltaic arrays. A clear, brush-free area of 10 feet (3048 mm) shall be required for ground-mounted photovoltaic arrays.

❖ This section applies all requirements for rooftop PV systems to ground-mounted PV systems except for the access, pathway and smoke ventilation clearance requirements since the physical hazards of a ground-mounted system are reduced. For visibility and service and emergency access, a clear zone around the arrays is required.

605.12 Abandoned wiring in plenums. Accessible portions of abandoned cables in air-handling plenums shall be removed. Cables that are unused and have not been tagged for future use shall be considered abandoned.

❖ This section introduces a concept that has long been in NFPA 70 and NFPA 90A—that plenums (see Chapter 2 commentary to the definition of "Plenum") are intended specifically to be a part of the air distribution system. Plenums are also used legitimately for stringing communications and data cables as well as utility pipes, sprinkler pipes and similar items. However, such items often are not removed from the plenum when they become obsolete. For example, when an updated data system is installed in a facility (which can occur every 18 to 24 months), it is not unusual for old wires to be cut out of the system but left in place with a new wiring system added on top of them (see Commentary Figure 605.12).

The suspended ceiling tile systems that often enclose plenums are not intended to support any significant weight and can, therefore, easily be overwhelmed by the added weight of storage or abandoned materials such as cables (see commentary to IBC Section 808.1.1.1). Recently, a plenum space fuel load study showed how the safety of fire fighters is compromised by the weight of these abandoned cables. It pointed out that plenum space fuel loads and wiring issues are serious concerns for fire fighters during interior fire-fighting operations and its key recommendation was that abandoned wiring be removed.

Although the primary reason to require the removal of abandoned materials in plenums is the elimination of unnecessary weight, fire safety considerations should also be taken into account, as should the practical consideration that the HVAC design airflow through the plenum could be adversely affected. Such a requirement was long believed not to be enforceable primarily because fire code inspectors would rarely spend their time looking into plenums in existing buildings. However, the danger presented by the fire load of storage or abandoned materials is well-documented. Thus, there should be no significant difficulty in having inspectors identify the existence of abandoned products—especially abandoned cables—classify them as storage and require their removal. Note that only the "accessible portions" of abandoned cables must be removed because there is no intent to cause potential damage to the building or facility by attempting to remove cables or circuits that are strung through walls, floors or other building elements. Where some cables are left in place because they are intended to be reused at a future date, they must be clearly identified as such by affixing a tag. See also Section 315.6.

SECTION 606
MECHANICAL REFRIGERATION

[M] 606.1 Scope. Refrigeration systems shall be installed in accordance with the *International Mechanical Code*.

❖ Chapter 11 of the IMC, in conjunction with ASHRAE 15 and IIAR 2 provides complete coverage for the design, installation and maintenance of refrigeration systems.

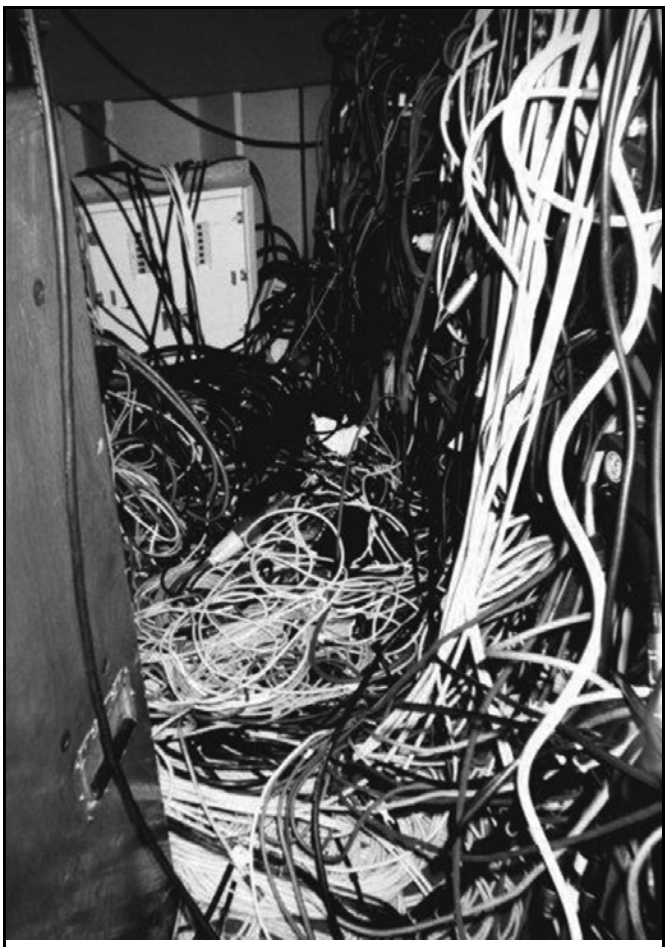

Figure 605.12
ABANDONED WIRING IN PLENUM

INTERNATIONAL CODE COUNCIL®
Copyright © 2015 ICC. ALL RIGHTS RESERVED. Accessed by David Dammon on Jun 21, 2017 12:30:52 PM pursuant to License Agreement with ICC. No further reproduction or distribution authorized. ANY UNAUTHORIZED REPRODUCTION OR DISTRIBUTION IS A VIOLATION OF THE FEDERAL COPYRIGHT ACT AND THE LICENSE AGREEMENT, AND SUBJECT TO CIVIL AND CRIMINAL PENALTIES THEREUNDER.

[M] 606.2 Refrigerants. The use and purity of new, recovered and reclaimed refrigerants shall be in accordance with the *International Mechanical Code*.

❖ Refrigeration equipment is designed to operate with a specific type or types of refrigerant. Using the wrong refrigerant or a contaminated refrigerant could cause equipment damage or loss of operating efficiency. Refrigerant types differ in how they react with system lubricants, seals, gaskets and other components.

Existing equipment may have to be converted to a different type of refrigerant or charged with refrigerant recovered from it or another system; however, it would be an unnecessary risk to charge new equipment with any refrigerant other than that specified by the equipment manufacturer. See the commentary to Section 1102.2 of the IMC.

[M] 606.3 Refrigerant classification. Refrigerants shall be classified in accordance with the *International Mechanical Code.*

❖ The classification of refrigerants is based on ASHRAE 34, which numbers and classifies refrigerants in accordance with their potential hazards. In the IMC, refrigerants are identified by their number, which is preceded by the letter "R" (for example, R-22). Trademark names of manufacturers, such as "Freon," are not used. The refrigerant number, name and chemical formula can be found in IMC Table 1103.1.

Each refrigerant is classified into a safety group that is based on two factors: flammability and toxicity. The safety group in which an individual refrigerant is classified relates to the potential hazard to building occupants and fire fighters and is one of the factors used to determine the maximum quantities of refrigerants allowed by the IMC. See the commentary to Section 1103.1 of the IMC.

[M] 606.4 Change in refrigerant type. A change in the type of refrigerant in a refrigeration system shall be in accordance with the *International Mechanical Code.*

❖ The intent of this section is to keep the local fire code official up-to-date on the status of large refrigeration systems and systems containing toxic and/or flammable refrigerants. See the commentary to Section 1101.8 of the IMC.

606.5 Access. Refrigeration systems having a refrigerant circuit containing more than 220 pounds (100 kg) of Group A1 or 30 pounds (14 kg) of any other group refrigerant shall be accessible to the fire department at all times as required by the *fire code official*.

❖ Where any one or more refrigeration circuits contain more than the specified quantity limits, the room or building housing the system or systems must be constructed with fire department access for emergency response, inspection and hazard assessment. Refrigerants of other than Group A1 tend to be more flammable or toxic. This section could require that the fire department be given keys to refrigeration machinery rooms and buildings.

606.6 Testing of equipment. Refrigeration equipment and systems having a refrigerant circuit containing more than 220 pounds (100 kg) of Group A1 or 30 pounds (14 kg) of any other group refrigerant shall be subject to periodic testing in accordance with Section 606.6.1. Records of tests shall be maintained. Tests of emergency devices or systems required by this chapter shall be conducted by persons trained and qualified in refrigeration systems.

❖ This section sets forth which refrigeration systems are subject to periodic testing and states that records of such testing must be maintained. Minimum qualifications are also required for testing personnel.

As a result of a review of Recommendation 2(c) of the NIST Charleston, South Carolina Sofa Superstore Fire Report, changes were made to Sections 107.2 and 107.3, along with 49 other sections (including this section), to comprehensively address recordkeeping requirements. Section 107.3 provides standardized recordkeeping requirements for periodic inspection, testing, servicing and other operational and maintenance requirements of the code and makes it clear that records must be maintained on the premises or another approved location and that copies of records must be provided to the fire code official upon request. Section 107.3 also makes it clear that records must be maintained for a period of not less than 3 years unless a different time interval is specified in the code or a referenced standard, and that the fire code official is authorized to prescribe the form and format of such records. See the commentaries to Sections 107.2, 107.3, 107.4 and 606.6.1.

606.6.1 Periodic testing. The following emergency devices or systems shall be periodically tested in accordance with the manufacturer's instructions and as required by the *fire code official*.

1. Treatment and flaring systems.
2. Valves and appurtenances necessary to the operation of emergency refrigeration control boxes.
3. Fans and associated equipment intended to operate emergency ventilation systems.
4. Detection and alarm systems.

❖ The devices and systems listed in this section are critical life safety and fire protection elements; therefore, it is imperative that they be tested periodically to assess their condition and dependability. Failure of the safety systems could lead to deadly consequences for building occupants and fire personnel entering the building in an emergency situation. See also the commentary to Section 1109.1 of the IMC.

606.7 Emergency signs. Refrigeration units or systems having a refrigerant circuit containing more than 220 pounds (100 kg) of Group A1 or 30 pounds (14 kg) of any other group refrigerant shall be provided with *approved* emergency

INTERNATIONAL CODE COUNCIL®
Copyright © 2015 ICC. ALL RIGHTS RESERVED. Accessed by David Dammon on Jun 21, 2017 12:30:52 PM pursuant to License Agreement with ICC. No further reproduction or distribution authorized. ANY UNAUTHORIZED REPRODUCTION OR DISTRIBUTION IS A VIOLATION OF THE FEDERAL COPYRIGHT ACT AND THE LICENSE AGREEMENT, AND SUBJECT TO CIVIL AND CRIMINAL PENALTIES THEREUNDER.

signs, charts and labels in accordance with NFPA 704. Hazard signs shall be in accordance with the *International Mechanical Code* for the classification of refrigerants listed therein.

❖ Signs, charts and labels are necessary to assist emergency response personnel in carrying out their duties to protect building occupants and protect themselves from the hazards associated with refrigerant chemicals (see IMC Table 1103.1).

606.8 Refrigerant detector. Machinery rooms shall contain a refrigerant detector with an audible and visual alarm. The detector, or a sampling tube that draws air to the detector, shall be located in an area where refrigerant from a leak will concentrate. The alarm shall be actuated at a value not greater than the corresponding TLV-TWA values shown in the *International Mechanical Code* for the refrigerant classification. Detectors and alarms shall be placed in *approved* locations. The detector shall transmit a signal to an *approved* location.

❖ Section 1105.3 of the IMC refers to the code for refrigerant detector requirements. Refrigerant detectors provide early warning of refrigerant leakage. Such leakage could result in a significant fire or health hazard if not discovered and stopped or if occupants are not evacuated from the building. Machinery rooms are required by the IMC where refrigerant quantities exceed specified limits.

Detector location is critical to early leakage warning and should comply with the detector manufacturer's instructions. The required detectors must be designed for application with the refrigerant or refrigerants used in the machinery room. Because machinery rooms are unattended most of the time, once the refrigerant gas is detected at the levels noted in this section, a local alarm must be initiated and a signal must be transmitted to an approved location remote from the machinery room, such as a security room or fire command center, or possibly to an on-duty, on-site technician via pager or cell phone. The alarm is intended to alert those both inside the area of detection and in the immediate vicinity to prevent harm to those outside the area of refrigerant gas release. The notification to an approved location provides timely information to those who must take a role in emergency response, whereas the local alarm is a warning for those in the vicinity of the release. As a first step in the mitigation of the hazards of fugitive refrigerant gas, the required detectors have the additional important role of activating the emergency ventilation/exhaust systems in the machinery rooms required by Sections 1105.6.3 and 1106.3 of the IMC (see the definition of "Machinery room" and Table 1103.1, both in the IMC).

606.9 Remote controls. Where flammable refrigerants are used and compliance with Section 1106 of the *International Mechanical Code* is required, remote control of the mechanical equipment and appliances located in the machinery room as required by Sections 606.9.1 and 606.9.2 shall be provided at an approved location immediately outside the machinery room and adjacent to its principal entrance.

❖ Emergency controls located outside of the machinery room enclosure will allow shutdown of the compressors and related equipment without requiring someone to enter the room and risk being exposed to refrigerant or fire. This arrangement would also permit equipment shutdown by fire-fighting personnel without the risk of fire spreading into or out of the fire-resistance-rated enclosure. The controls must be located near the entrance to the machinery room so that their location is conspicuous. The controls should be labeled and color coded so that their purpose is obvious. Such controls are customarily painted red to make them readily identifiable as emergency devices.

606.9.1 Refrigeration system emergency shutoff. A clearly identified switch of the break-glass type or with an *approved* tamper-resistant cover shall provide off-only control of refrigerant compressors, refrigerant pumps and normally closed automatic refrigerant valves located in the machinery room. Additionally, this equipment shall be automatically shut off when the refrigerant vapor concentration in the machinery room exceeds the vapor detector's upper detection limit or 25 percent of the LEL, whichever is lower.

❖ The intent of this section of the code is to provide a safe environment for emergency response personnel when responding to an incident in a refrigeration room. Shutting down compressors and related refrigeration equipment could be necessary to prevent a hazardous condition from worsening and to allow the room to be safely entered. The emergency "kill" switch must be a tamper-resistant type (similar to manual fire alarm boxes) that requires more than one action to actuate it. To prevent an accidental startup, the switch must be capable of only stopping the controlled machinery, not restarting it. The switch must not affect the operation of life safety systems, such as detectors and exhaust equipment, and must not affect room and egress lighting. In addition to the manual switch, the required refrigerant room detector must also shut down the same equipment when the vapor concentration exceeds the lesser of the detector's upper detection limit or 25 percent of the refrigerant's lower explosive limit (LEL).

606.9.2 Ventilation system. A clearly identified switch of the break-glass type or with an approved tamper-resistant cover shall provide on-only control of the machinery room ventilation fans.

❖ For the same reasoning stated in the commentary to Section 606.9.1, a remote switch is required that is not connected to the exhaust system. Although not specifically stated, the intent is for the remote control to activate the emergency mode of operation (see IMC commentary, Section 1106.5.2). To maximize the dependability of the exhaust systems, ASHRAE 15 requires that they be powered from independent dedicated electrical branch circuits.

INTERNATIONAL CODE COUNCIL®
Copyright © 2015 ICC. ALL RIGHTS RESERVED. Accessed by David Dammon on Jun 21, 2017 12:30:52 PM pursuant to License Agreement with ICC. No further reproduction or distribution authorized. ANY UNAUTHORIZED REPRODUCTION OR DISTRIBUTION IS A VIOLATION OF THE FEDERAL COPYRIGHT ACT AND THE LICENSE AGREEMENT, AND SUBJECT TO CIVIL AND CRIMINAL PENALTIES THEREUNDER.

606.10 Emergency pressure control system. Permanently installed refrigeration systems containing more than 6.6 pounds (3 kg) of flammable, toxic or highly toxic refrigerant or ammonia shall be provided with an emergency pressure control system in accordance with Sections 606.10.1 and 606.10.2.

❖ Technological advances in refrigeration system control equipment now make it possible to provide an automatic emergency control system to replace key functions of the traditional emergency control box. The automatic controls required by Sections 606.10.1 through 606.10.2.2 provide a means of mitigating an overpressure condition prior to operation of emergency pressure-relief vents and, most likely, prior to the arrival of emergency responders. The automatic valves also eliminate the need for emergency responders to decipher the condition of a system in an attempt to determine whether operation of manual crossover valves in an emergency control box would be of benefit in mitigating a system malfunction. The 6.6-pound (3 kg) threshold parallels existing provisions in Section 606.11. This section parallels Section 1105.9 of the IMC to increase the likelihood that designers don't miss this design requirement in the code. Note that these provisions are intended for permanently installed systems versus portable systems such as agricultural cooling trailers used in fields and at processing facilities. This is specifically clarified by the term "permanently installed."

Overall, these provisions add a requirement for a fully redundant safety control system in lieu of a manual system that has proven itself to be rarely, if ever, utilized by the fire service. This favorably resolves long-standing concerns regarding the potential for harm caused by an untrained person operating valves in an emergency control box. There is no condition where removal of refrigerant from a refrigeration system by the fire service is considered advisable. In contrast, automatic transfer of excess pressure to another zone of the system in conjunction with stopping the pressure source (i.e., the compressors) can safely mitigate an overpressure condition.

606.10.1 Automatic crossover valves. Each high- and intermediate-pressure zone in a refrigeration system shall be provided with a single automatic valve providing a crossover connection to a lower pressure zone. Automatic crossover valves shall comply with Sections 606.10.1.1 through 606.10.1.3.

❖ The requirement for a single crossover valve between systems is based on the traditional industry practice of providing a single manual crossover valve in the emergency control box. In the unlikely event that a fire causes an overpressure condition, allowing system zones to automatically interconnect creates a much larger heat sink to limit pressure buildup while safely containing refrigerant. If the exposure fire continues to grow, emergency relief vents can protect the refrigeration system and automatic reseating valves can automatically limit the release of refrigerant to the amount necessary to maintain the system within design limits. In contrast, most emergency responders would not possess the expertise to properly cycle a manual valve in an emergency control box to limit the release of refrigerant to the minimum amount necessary for safety.

606.10.1.1 Overpressure limit set point. Automatic crossover valves shall be arranged to automatically relieve excess system pressure to a lower pressure zone if the pressure in a high- or intermediate-pressure zone rises to within 90 percent of the set point for emergency pressure relief devices.

❖ This section provides a safety buffer between activation of the emergency pressure control system (EPCS) and operation of a relief valve. Because of variances in operational tolerances among relief valves and because some relief valves may begin to seep at 90 percent of their rated operating pressure, it is appropriate to have the EPCS shut down a system if system pressure rises to 90 percent of the relief valve set pressure. This further reduces the potential for any release from a system that has malfunctioned and overpressurized.

606.10.1.2 Manual operation. Where required by the *fire code official*, automatic crossover valves shall be capable of manual operation.

❖ This section authorizes the local fire code official to require manual control capabilities for the crossover valve. Although this provision is not regarded as necessary by the industry, it is recognized that some fire departments will prefer to have the manual control capability for backup.

606.10.1.3 System design pressure. Refrigeration system zones that are connected to a higher pressure zone by an automatic crossover valve shall be designed to safely contain the maximum pressure that can be achieved by interconnection of the two zones.

❖ This provision requires lower pressure zones to be capable of handling additional pressure added by a crossover condition without overpressurizing or operating the emergency relief vents on the lower zone. The legacy codes did not address this concern, given the assumption that someone operating a manual bypass valve in the emergency control box would be knowledgeable with regard to system limitations; however, this may or may not be true. Nevertheless, the legacy codes never required the low pressure side of the system to handle the high-side pressure, and as a result, some systems with emergency control boxes present the potential for an emergency responder to overpressurize a system zone by fully opening a manual crossover valve too quickly. The resulting overpressure condition could cause operation of a relief vent or even a failure in the piping system.

INTERNATIONAL CODE COUNCIL®
Copyright © 2015 ICC. ALL RIGHTS RESERVED. Accessed by David Dammon on Jun 21, 2017 12:30:52 PM pursuant to License Agreement with ICC. No further reproduction or distribution authorized. ANY UNAUTHORIZED REPRODUCTION OR DISTRIBUTION IS A VIOLATION OF THE FEDERAL COPYRIGHT ACT AND THE LICENSE AGREEMENT, AND SUBJECT TO CIVIL AND CRIMINAL PENALTIES THEREUNDER.

606.10.2 Automatic emergency stop. An automatic emergency stop feature shall be provided in accordance with Sections 606.10.2.1 and 606.10.2.2.

❖ This establishes applicability of the requirements for the additional safety feature of an emergency stop feature in refrigeration systems.

606.10.2.1 Operation of an automatic crossover valve. Operation of an automatic crossover valve shall cause all compressors on the affected system to immediately stop. Dedicated pressure-sensing devices located immediately adjacent to crossover valves shall be permitted as a means for determining operation of a valve. To ensure that the automatic crossover valve system provides a redundant means of stopping compressors in an overpressure condition, high-pressure cutout sensors associated with compressors shall not be used as a basis for determining operation of a crossover valve.

❖ The intent of this section is for the automatic crossover system to have a fully redundant means of stopping compressors. Compressors are ordinarily provided with automatic high-pressure cutout controls, but this section requires that these controls not be used to satisfy the requirement. An additional set of controls can be required to serve as a backup means of preventing a severe overpressure condition that could cause operation of an emergency relief vent.

606.10.2.2 Overpressure in low-pressure zone. The lowest pressure zone in a refrigeration system shall be provided with a dedicated means of determining a rise in system pressure to within 90 percent of the set point for emergency pressure relief devices. Activation of the overpressure sensing device shall cause all compressors on the affected system to immediately stop.

❖ The lowest pressure zone of a system cannot be arranged to bleed pressure to another system zone since crossing the lowest pressure zone to a higher pressure zone would most likely result in reverse flow. However, by providing a redundant emergency stop control, which would disengage the compressor, an overpressure condition should be automatically mitigated. Overpressure on a low-pressure zone would most likely result from a defrost line from the high side that is stuck in the open position, and stopping the compressor will disengage the pressure source for the defrost system. Note that compressors will only cut out if an overpressure condition occurs. If the emergency condition involves a leak on the low side, compressors will continue to operate, which is beneficial in pumping down the low side for this type of event.

606.11 Storage, use and handling. Flammable and combustible materials shall not be stored in machinery rooms for refrigeration systems having a refrigerant circuit containing more than 220 pounds (100 kg) of Group A1 or 30 pounds (14 kg) of any other group refrigerant. Storage, use or handling of extra refrigerant or refrigerant oils shall be as required by Chapters 50, 53, 55 and 57.

Exception: This provision shall not apply to spare parts, tools and incidental materials necessary for the safe and proper operation and maintenance of the system.

❖ Storage of materials could introduce additional hazards in rooms already considered to be hazardous because of large quantities of refrigerants in the system circuits and machines.

606.12 Discharge and termination of pressure relief and purge systems. Pressure relief devices, fusible plugs and purge systems discharging to the atmosphere from refrigeration systems containing flammable, toxic or highly toxic refrigerants or ammonia shall comply with Sections 606.12.3 through 606.12.5.

❖ Discharge systems are intended to treat, incinerate or absorb flammable or toxic refrigerants that would otherwise be released unaltered into the atmosphere. Release would result from the operation of pressure relief devices or intentional dumping of refrigerant in an emergency. Specific requirements are found in the subsections for each type of refrigeration system.

606.12.1 Standards. Refrigeration systems and the buildings in which such systems are installed shall be in accordance with ASHRAE 15.

❖ This section is simply making sure that all ammonia refrigeration systems comply with ASHRAE 15 in addition to the requirements of Section 606.12. This section parallels Section 1105.8 of the IMC, which also references ASHRAE 15.

606.12.1.1 Ammonia refrigeration. Refrigeration systems using ammonia refrigerant and the buildings in which such systems are installed shall comply with IIAR-2 for system design and installation and IIAR-7 for operating procedures.

❖ This reference provides appropriate referenced standards for refrigeration system design and installation and for operating procedures. These standards are considered essential for facilities with ammonia refrigeration systems as a basis of providing for the safety of these facilities, as well as surrounding communities.

606.12.2 Fusible plugs and rupture members. Discharge piping and devices connected to the discharge side of a fusible plug or rupture member shall have provisions to prevent plugging the pipe in the event the fusible plug or rupture member functions.

❖ This section is intended to ensure that, through the use of discharge piping and devices, the emergency pressure relief system will not become obstructed in the event that a fusible plug or rupture member operates and causes debris to be ejected into the relief system.

INTERNATIONAL CODE COUNCIL®
Copyright © 2015 ICC. ALL RIGHTS RESERVED. Accessed by David Dammon on Jun 21, 2017 12:30:52 PM pursuant to License Agreement with ICC. No further reproduction or distribution authorized. ANY UNAUTHORIZED REPRODUCTION OR DISTRIBUTION IS A VIOLATION OF THE FEDERAL COPYRIGHT ACT AND THE LICENSE AGREEMENT, AND SUBJECT TO CIVIL AND CRIMINAL PENALTIES THEREUNDER.

606.12.3 Flammable refrigerants. Systems containing more than 6.6 pounds (3 kg) of flammable refrigerants having a density equal to or greater than the density of air shall discharge vapor to the atmosphere only through an *approved* treatment system in accordance with Section 606.12.6 or a flaring system in accordance with Section 606.12.7. Systems containing more than 6.6 pounds (3 kg) of flammable refrigerants having a density less than the density of air shall be permitted to discharge vapor to the atmosphere provided that the point of discharge is located outside of the structure at not less than 15 feet (4572 mm) above the adjoining grade level and not less than 20 feet (6096 mm) from any window, ventilation opening or *exit*.

❖ Where they have a density greater than air (i.e., are heavier than air) and pose the hazard of collecting in low points, which could bring them into contact with ignition sources, flammable refrigerants (A2, B2, A3, B3) must be incinerated in a flaring system (see Section 6004.2.2.7.1). The second sentence of the provision is derived from ANSI/ASHRAE 15 and recognizes the reduced hazard of lighter-than-air flammable refrigerants by allowing them to discharge to the atmosphere without incineration or treatment since they would either dissipate into the air or flare at the point of discharge. Because of their flammability hazard, however, the point of discharge must be located out of reach from grade and well away from building openings. Note that these provisions apply only to systems that contain more than 6.6 pounds (3 kg) of refrigerant because systems containing smaller quantities are considered "small systems" and their relative hazard is considered insignificant.

606.12.4 Toxic and highly toxic refrigerants. Systems containing more than 6.6 pounds (3 kg) of toxic or highly toxic refrigerants shall discharge vapor to the atmosphere only through an *approved* treatment system in accordance with Section 606.12.6 or a flaring system in accordance with Section 606.12.7.

❖ Toxic refrigerants, like flammable refrigerants, must be treated to reduce their toxicity or be destroyed by incineration (see Section 6004.2.2.7.1).

606.12.5 Ammonia refrigerant. Systems containing more than 6.6 pounds (3 kg) of ammonia refrigerant shall discharge vapor to the atmosphere in accordance with one of the following methods:

1. Directly to atmosphere where the *fire code official* determines, on review of an engineering analysis prepared in accordance with Section 104.7.2, that a fire, health or environmental hazard would not result from atmospheric discharge of ammonia.
2. Through an *approved* treatment system in accordance with Section 606.12.6.
3. Through a flaring system in accordance with Section 606.12.7.
4. Through an *approved* ammonia diffusion system in accordance with Section 606.12.8.
5. By other *approved* means.

Exception: Ammonia/water absorption systems containing less than 22 pounds (10 kg) of ammonia and for which the ammonia circuit is located entirely outdoors.

❖ This section is more restrictive than ASHRAE 15 in that it requires the discharge to be treated in one of the listed methods. Item 1 recognizes that there are some cases, such as at remote facilities, where atmospheric discharge of ammonia would pose no danger to people or property. Further, it provides a basis in the code for permitting relief lines on ammonia refrigeration systems to discharge to the atmosphere when an appropriate analysis, accepted by the fire code official, has shown that such discharge can be accomplished safely. In such cases, a flaring or water diffusion system would serve no beneficial purpose, since ammonia is naturally biodegradable. Items 2 through 4 allow the use of one of three methods, including treatment systems, flaring system or an ammonia diffusion system.

Item 5 recognizes that engineered designs can be used to activate an alarm and automatically stop the leak rather than relying on manual means to stop the leak and a water tank to treat whatever release may occur before manual intervention can be accomplished.

The exception recognizes the reduced hazard in smaller systems where the ammonia circuit is completely outdoors.

606.12.6 Treatment systems. Treatment systems shall be designed to reduce the allowable discharge concentration of the refrigerant gas to not more than 50 percent of the IDLH at the point of exhaust. Treatment systems shall be in accordance with Chapter 60.

❖ See the commentary to Section 6004.2.2.7. "Immediately Dangerous to Life and Health (IDLH)" is defined in Section 202.

606.12.7 Flaring systems. Flaring systems for incineration of flammable refrigerants shall be designed to incinerate the entire discharge. The products of refrigerant incineration shall not pose health or environmental hazards. Incineration shall be automatic upon initiation of dis-charge, shall be designed to prevent blowback and shall not expose structures or materials to threat of fire. Standby fuel, such as LP-gas, and standby power shall have the capacity to operate for one and one-half the required time for complete incineration of refrigerant in the system. Standby electrical power, where required to complete the incineration process, shall be in accordance with Section 604.

❖ Destruction of refrigerant by incineration is supposed to render the discharge harmless, so obviously the flames and the combustion byproducts do not pose a hazard themselves. Because most refrigerants would not support combustion unaided, a fuel source is necessary to sustain incineration.

606.12.8 Ammonia diffusion systems. Ammonia diffusion systems shall include a tank containing 1 gallon of water for

INTERNATIONAL CODE COUNCIL®
Copyright © 2015 ICC. ALL RIGHTS RESERVED. Accessed by David Dammon on Jun 21, 2017 12:30:52 PM pursuant to License Agreement with ICC. No further reproduction or distribution authorized. ANY UNAUTHORIZED REPRODUCTION OR DISTRIBUTION IS A VIOLATION OF THE FEDERAL COPYRIGHT ACT AND THE LICENSE AGREEMENT, AND SUBJECT TO CIVIL AND CRIMINAL PENALTIES THEREUNDER.

each pound of ammonia (8.3 L of water for each 1 kg of ammonia) that will be released in 1 hour from the largest relief device connected to the discharge pipe. The water shall be prevented from freezing. The discharge pipe from the pressure relief device shall distribute ammonia in the bottom of the tank, but not lower than 33 feet (10 058 mm) below the maximum liquid level. The tank shall contain the volume of water and ammonia without overflowing.

❖ Ammonia is readily absorbed by water; therefore, an ammonia discharge into a water tank would be chemically held in the tank. The water tank may have to be heated to prevent it from freezing, which would block the discharge pipe and make the water useless for absorbing ammonia. The deeper the discharge pipe extends below the water surface, the greater the pressure the discharge would have to overcome to escape from the pipe. A 33-foot (10 058 mm) depth of water would exert a pressure approximately equal to sea level atmospheric pressure [14.7 psi (101 kPa)].

606.13 Discharge location for refrigeration machinery room ventilation. Exhaust from mechanical ventilation systems serving refrigeration machinery rooms containing flammable, toxic or highly toxic refrigerants, other than ammonia, capable of exceeding 25 percent of the LFL or 50 percent of the IDLH shall be equipped with *approved* treatment systems to reduce the discharge concentrations to those values or lower.

❖ In previous editions of the code, this section required the discharge of mechanical ventilation systems serving refrigeration machinery rooms utilizing anhydrous ammonia to be directed to a treatment system to reduce the toxicity to 50 percent of its IDLH value, the same as the more hazardous refrigerants. This section now permits the mechanical ventilation system to exhaust directly to the atmosphere when anhydrous ammonia is the refrigerant. Anhydrous ammonia is classified by Table 1103.1 of the IMC as a corrosive liquefied compressed gas. It is not a toxic or highly toxic gas, as defined in Section 202 of the code, nor does it meet the definition of a flammable gas. It has a vapor density of 0.597, making it lighter than air, and is extremely hygroscopic (a Latin word literally meaning "water seeking"), thus it aggressively absorbs water. Anhydrous ammonia's water-absorbing abilities can be of benefit to fire fighters, who can use hose or master streams to control anhydrous ammonia if it is leaking.

Exclusion of anhydrous ammonia from the requirement of this section also provides correlation with Section 1105.8 of the IMC, which addresses pressure relief systems for refrigeration systems. The IMC requires pressure relief devices be terminated in accordance with the requirements of American Society of Refrigeration and Air Conditioning Engineers (ASHRAE) Standard 15, Safety Standard for Refrigeration Systems. ASHRAE 15 requires pressure relief devices serving ammonia refrigeration equipment to be terminated outside of buildings and permits these devices to discharge to the atmosphere.

606.14 Notification of refrigerant discharges. The *fire code official* shall be notified immediately when a discharge becomes reportable under state, federal or local regulations in accordance with Section 5003.3.1.

❖ Emergency personnel must be informed of a discharge so that they can respond appropriately. The refrigerant discharge notification requirements of this section parallel those required for all hazardous materials in Section 5003.3.1. There is no reason for different requirements for refrigerants than for other hazardous materials.

606.15 Records. A record of refrigerant quantities brought into and removed from the premises shall be maintained.

❖ Emergency personnel must be able to maintain accurate assessments of the dangers they may face and the hazards the public may face in and around buildings housing refrigeration systems.

As a result of a review of Recommendation 2(c) of the NIST Charleston, South Carolina Sofa Superstore Fire Report, changes were made to Sections 107.2 and 107.3, along with 49 other sections (including this section), to comprehensively address recordkeeping requirements. Section 107.3 provides standardized recordkeeping requirements for periodic inspection, testing, servicing and other operational and maintenance requirements of the code and makes it clear that records must be maintained on the premises or another approved location and that copies of records must be provided to the fire code official upon request. Section 107.3 also makes it clear that records must be maintained for a period of not less than 3 years unless a different time interval is specified in the code or a referenced standard, and that the fire code official is authorized to prescribe the form and format of such records. See the commentaries to Sections 107.2 and 107.3.

606.16 Electrical equipment. Where refrigerants of Groups A2, A3, B2 and B3, as defined in the *International Mechanical Code*, are used, refrigeration machinery rooms shall conform to the Class I, Division 2 hazardous location classification requirements of NFPA 70.

Exception: Ammonia machinery rooms that are provided with ventilation in accordance with Section 1106.3 of the *International Mechanical Code*.

❖ This section mirrors the text of Section 1106.4 of the IMC and is included in the code because, in some jurisdictions, the fire code official is designated to inspect classified electrical equipment. A reference to classified electrical requirements here is consistent with the approach taken in Chapters 50 and 57 for other hazardous materials and flammable liquids, and it provides the fire code official with the provisions that are to be enforced.

The exception for ammonia refrigerant is consistent with requirements of NFPA 70 and is included here to avoid possible confusion regarding the need for classified electrical equipment in ammonia machinery rooms. Because ammonia can combust within a lim-

INTERNATIONAL CODE COUNCIL®
Copyright © 2015 ICC. ALL RIGHTS RESERVED. Accessed by David Dammon on Jun 21, 2017 12:30:52 PM pursuant to License Agreement with ICC. No further reproduction or distribution authorized. ANY UNAUTHORIZED REPRODUCTION OR DISTRIBUTION IS A VIOLATION OF THE FEDERAL COPYRIGHT ACT AND THE LICENSE AGREEMENT, AND SUBJECT TO CIVIL AND CRIMINAL PENALTIES THEREUNDER.

ited range of concentrations in the air, the fire code official might be led to believe that classified electrical equipment should be provided in ammonia storage and use areas; however, when such areas are ventilated to maintain ammonia vapor in a concentration that is outside of the flammable range, there is no need for classified electrical equipment.

SECTION 607
ELEVATOR OPERATION, MAINTENANCE AND FIRE SERVICE KEYS

607.1 Emergency operation. Existing elevators with a travel distance of 25 feet (7620 mm) or more shall comply with the requirements in Chapter 11. New elevators shall be provided with Phase I emergency recall operation and Phase II emergency in-car operation in accordance with ASME A17.1.

❖ Elevators are often used as a tool by emergency personnel when responding to fires and other emergencies. Due to these needs, the elevators must be capable of providing certain functions such as recall and emergency operation.

This section establishes requirements for both new and existing elevators. Existing elevators that travel 25 feet (635 mm) or more above or below the main level must, as a minimum, be equipped with emergency operation capabilities that comply with ASME A17.3 as required by Section 1103.3.2. New elevator installations are held to more restrictive guidelines for increased cost effectiveness and must have both emergency recall (Phase I) and emergency in-car operation (Phase II) to comply with ASME A17.1 for any amount of travel distance. The ASME standards are safety codes for elevators and escalators: ASME A17.3 is for existing elevators and ASME A17.1 for new elevator installations.

607.2 Standby power. In buildings and structures where standby power is required or furnished to operate an elevator, standby power shall be provided in accordance with Section 604. Operation of the system shall be in accordance with Sections 607.2.1 through 607.2.4.

❖ This section states how standby power is to be supplied to elevators when required by other sections, such as Section 604.2.17. The requirements from this section are the same as those located in Chapter 30 of the IBC.

607.2.1 Manual transfer. Standby power shall be manually transferable to all elevators in each bank.

❖ This section requires that whenever necessary, all elevators in each bank of elevators must be equipped for manual transfer to standby power. All elevators, however, would not need to operate on standby power at the same time; they would have to have manual transfer capability.

607.2.2 One elevator. Where only one elevator is installed, the elevator shall automatically transfer to standby power within 60 seconds after failure of normal power.

❖ When a building has a single elevator, it must be automatically transferred to standby power within 60 seconds. The 60 seconds is a reflection of the NFPA 70 requirements for standby power.

607.2.3 Two or more elevators. Where two or more elevators are controlled by a common operating system, all elevators shall automatically transfer to standby power within 60 seconds after failure of normal power where the standby power source is of sufficient capacity to operate all elevators at the same time. Where the standby power source is not of sufficient capacity to operate all elevators at the same time, all elevators shall transfer to standby power in sequence, return to the designated landing and disconnect from the standby power source. After all elevators have been returned to the designated level, not less than one elevator shall remain operable from the standby power source.

❖ When there is more than one elevator operating off of a common system, the elevators must all be transferred to standby power within 60 seconds. When only one elevator needs to be available during a loss of power, all elevators must still have the ability to run on standby power. Specifically, all elevators must initially connect to the standby power system and then, in sequence, return to the designated floor where all but one would be disconnected from the standby power.

607.2.4 Machine room ventilation. Where standby power is connected to elevators, the machine room ventilation or air conditioning shall be connected to the standby power source.

❖ This section reduces the likelihood that the equipment running the elevators will overheat during a loss of power because standby power is also required to power the ventilation or air conditioning for those areas. Note that this would also address machine spaces, control rooms and control spaces.

[BE] 607.3 Emergency signs. An *approved* pictorial sign of a standardized design shall be posted adjacent to each elevator call station on all floors instructing occupants to use the exit stairways and not to use the elevators in case of fire. The sign shall read: IN FIRE EMERGENCY, DO NOT USE ELEVATOR. USE EXIT STAIRS.

Exceptions:

1. The emergency sign shall not be required for elevators that are part of an accessible *means of egress* complying with Section 1009.4.
2. The emergency sign shall not be required for elevators that are used for occupant self-evacuation in accordance with Section 3008 of the *International Building Code*.

❖ Because of the needs of fire fighters and the possible risks posed by the use of elevators during a fire, sig-

INTERNATIONAL CODE COUNCIL®
Copyright © 2015 ICC. ALL RIGHTS RESERVED. Accessed by David Dammon on Jun 21, 2017 12:30:52 PM pursuant to License Agreement with ICC. No further reproduction or distribution authorized. ANY UNAUTHORIZED REPRODUCTION OR DISTRIBUTION IS A VIOLATION OF THE FEDERAL COPYRIGHT ACT AND THE LICENSE AGREEMENT, AND SUBJECT TO CIVIL AND CRIMINAL PENALTIES THEREUNDER.

nage is required that prohibits the use of elevators by building occupants during a fire emergency. The need to evacuate all occupants regardless of their physical abilities is becoming a more important issue and, in some cases, elevators are specifically used for such purposes. Elevators used as part of the means of egress must comply with Section 1009.4.

607.4 Fire service access elevator lobbies. Where fire service access elevators are required by Section 3007 of the *International Building Code*, fire service access elevator lobbies shall be maintained free of storage and furniture.

❖ The fire service access elevator in high-rise buildings over 120 feet (3657 mm) in height above fire department vehicle access, as now required by Section 403.6.1 of the IBC, is a tool which enhances fire fighters' abilities to gain access to the fire floor and undertake necessary operational staging activities in a protected area. This section complements the provisions of the fire service access elevator provisions contained in Section 3007 of the IBC by requiring that fire service access elevator lobbies always be fully and immediately accessible by the fire service without impediment by storage or furniture and the fire load that some items might present. It is not unusual, especially in Group R-1 occupancies, to see tables, chairs, sofas or the like placed in areas opposite elevator entrances for aesthetic purposes in what may now be a required fire service access elevator lobby. This section would prohibit that practice. It should also be noted that the provisions of this section apply to noncombustible storage and furnishings, as well as combustible (see the IBC commentary, Sections 403.6.1 and 3007).

607.5 Occupant evacuation elevator lobbies. Where occupant evacuation elevators are provided in accordance with Section 3008 of the *International Building Code*, occupant evacuation elevator lobbies shall be maintained free of storage and furniture.

❖ This section is similar in intent to Section 607.4 for fire service access elevators except that the focus is providing adequate space for those awaiting evacuation via the elevators. If storage or furnishings are allowed, it takes away from that space and also will cause more people to wait outside the protected lobby. Placing combustibles within the lobby also creates potential fire hazards.

607.6 Water protection of hoistway enclosures. Methods to prevent water from infiltrating into a hoistway enclosure required by Section 3007.4 and Section 3008.4 of the *International Building Code* shall be maintained.

❖ Sections 3007.4 and 3008.4 of the IBC require that hoistway openings be protected from water originating from sprinklers activated outside of the elevator lobby. This is critical to extend the use of elevators during a fire. The methods used are not prescribed in the IBC but often will require some level of maintenance to make sure they will be available during a fire. This section creates the maintenance mechanism.

607.7 Elevator key location. Keys for the elevator car doors and fire-fighter service keys shall be kept in an *approved* location for immediate use by the fire department.

❖ The fire service often responds to elevator emergencies and other emergencies that require the use or operation of the elevators and associated components. Most elevators will have at least five or six key-switched functions, including those for standby power transfer, Phase I emergency elevator recall (hall switch located in the elevator lobby at the designated level), Phase II in-cab emergency operation, inspection function, normal lighting and fan operation. Ready access to elevator keys is an important factor in the timely and efficient response to emergency situations. Because experience has shown that this important safety element is often overlooked, this section requires that elevator keys be kept in a location approved by the fire code official to ensure immediate access. Many elevator installers will provide, as part of their package, an elevator key box (see Commentary Figure 607.7), which will accommodate all of the required operating keys, plus an appropriate hoistway access key or tool for fire department use in accessing the hoistway in case of an elevator emergency. Elevator inspection reports should note the presence and locations of the keys. Inspectors may verify the availability of the keys during periodic fire safety inspections and prefire planning surveys.



Figure 607.7
TYPICAL ELEVATOR KEY BOX

607.8 Standardized fire service elevator keys. Buildings with elevators equipped with Phase I emergency recall, Phase II emergency in-car operation, or a fire service access eleva-

INTERNATIONAL CODE COUNCIL®
Copyright © 2015 ICC. ALL RIGHTS RESERVED. Accessed by David Dammon on Jun 21, 2017 12:30:52 PM pursuant to License Agreement with ICC. No further reproduction or distribution authorized. ANY UNAUTHORIZED REPRODUCTION OR DISTRIBUTION IS A VIOLATION OF THE FEDERAL COPYRIGHT ACT AND THE LICENSE AGREEMENT, AND SUBJECT TO CIVIL AND CRIMINAL PENALTIES THEREUNDER.

tor shall be equipped to operate with a standardized fire service elevator key approved by the *fire code official*.

Exception: The owner shall be permitted to place the building's nonstandardized fire service elevator keys in a key box installed in accordance with Section 506.1.2.

❖ When fire departments and other emergency response agencies respond to emergencies, their ability to quickly access the location of the emergency can be the deciding factor of a successful response. Elevators are increasingly being relied upon for emergency operations and their importance has been highlighted by adding Section 3007 to the IBC requiring the installation of fire service access elevators and providing requirements for the installation of occupant evacuation elevators. One of the difficulties the fire service and other emergency response agencies have when accessing facilities and attempting to use elevators is the number of nonstandardized keys that may not be available at the time of response. Even when emergency responders are provided the necessary keys in case of response, the correct key may have to be identified from a large collection of keys for any one building. In larger jurisdictions, the sheer number of keys makes possession of them unwieldy for the emergency responders. An elevator key is an important tool to fire fighters. The key allows fire fighters to access the interior of the shaft housing an elevator cabin to initiate rescue in case of a malfunction or the loss of building power. More often, an elevator key is used to capture and control an elevator in emergencies. This section establishes new requirements for elevator keys used by the fire service that will only apply to those buildings that have elevators with Phase I or Phase II emergency service or to those buildings equipped with a fire service access elevator.

The exception recognizes that many jurisdictions have elevators built prior to the introduction of a standard elevator key and, as a result, each building with an elevator requires its own elevator key, and authorizes the jurisdiction to require the installation of a key box to house nonstandardized elevator keys (see commentary, Section 506.1.2).

607.8.1 Requirements for standardized fire service elevator keys. Standardized fire service elevator keys shall comply with all of the following:

1. All fire service elevator keys within the jurisdiction shall be uniform and specific for the jurisdiction.Keys shall be cut to a uniform key code.
2. Fire service elevator keys shall be of a patent-protected design to prevent unauthorized duplication.
3. Fire service elevator keys shall be factory restricted by the manufacturer to prevent the unauthorized distribution of key blanks. Uncut key blanks shall not be permitted to leave the factory.
4. Fire service elevator keys subject to these rules shall be engraved with the words "DO NOT DUPLICATE."

❖ This section requires that keys for any new elevators installed in the jurisdiction use a unique but standard format, regardless of elevator manufacturer or model. Standardizing the type of elevator key creates a consistent arrangement for fire fighters who utilize the elevators for EMS incidents or for the deployment of personnel and equipment in a multiple-story fire fighting operation. The keys must be manufactured to prevent unauthorized duplication.

607.8.2 Access to standardized fire service keys. Access to standardized fire service elevator keys shall be restricted to the following:

1. Elevator owners or their authorized agents.
2. Elevator contractors.
3. Elevator inspectors of the jurisdiction.
4. *Fire code officials* of the jurisdiction.
5. The fire department and other emergency response agencies designated by the *fire code official*.

❖ Access to or possession of a key that can take control of an elevator in a building is an area of vulnerability for buildings that was not previously addressed with simple key designs being utilized. In addition to the limitations placed on the unauthorized duplication and distribution of standardized elevator keys in Section 607.8.3, this section specifies exactly to whom the keys will be accessible. This list includes only those persons who have a vested interest in the building, the elevator equipment or the protection of the building.

607.8.3 Duplication or distribution of keys. A person shall not duplicate a standardized fire service elevator key or issue, give, or sell a duplicated key unless in accordance with this code.

❖ This section provides for a level of security for the standardized key by prohibiting its unauthorized duplication and distribution. Note that Section 607.8.1 requires that keys be stamped or embossed with a duplication prohibition warning.

607.8.4 Responsibility to provide keys. The building owner shall provide up to three standardized fire service elevator keys where required by the *fire code official*, upon installation of a standardized fire service key switch or switches in the building.

❖ This section establishes the responsibility of the building owner to provide at least three keys of the same standard design when an elevator is equipped with Phase I and II fire-fighter service or is a fire service access elevator. Multiple keys allow fire companies to use multiple elevators to carry personnel and equipment to the fire floor or swiftly remove multiple injured or otherwise incapacitated persons from upper or lower floors.

INTERNATIONAL CODE COUNCIL®
Copyright © 2015 ICC. ALL RIGHTS RESERVED. Accessed by David Dammon on Jun 21, 2017 12:30:52 PM pursuant to License Agreement with ICC. No further reproduction or distribution authorized. ANY UNAUTHORIZED REPRODUCTION OR DISTRIBUTION IS A VIOLATION OF THE FEDERAL COPYRIGHT ACT AND THE LICENSE AGREEMENT, AND SUBJECT TO CIVIL AND CRIMINAL PENALTIES THEREUNDER.

SECTION 608
STATIONARY STORAGE BATTERY SYSTEMS

608.1 Scope. Stationary storage battery systems having an electrolyte capacity of more than 50 gallons (189 L) for flooded lead-acid, nickel cadmium (Ni-Cd) and valve-regulated lead-acid (VRLA), or more than 1,000 pounds (454 kg) for lithium-ion and lithium metal polymer, used for facility standby power, emergency power or uninterruptible power supplies shall comply with this section and Table 608.1.

❖ This section applies to certain sizes of stationary storage battery systems that are used for standby power, emergency power or uninterruptible power systems. It does not apply to individual stationary storage batteries such as are used in vehicles or other similar applications. The requirements apply to flooded lead-acid batteries having an electrolyte capacity of more than 50 gallons (189 L) and to VRLA, and to lithium-ion and lithium metal polymer batteries having an electrolyte capacity of more than 1,000 pounds (454 kg).

These requirements were developed in response to the concern that applying the generic hazardous materials requirements of the code to battery systems was inappropriate and unnecessary. Stationary storage batteries generally contain sulfuric acid, which is considered a corrosive liquid. In most cases, the battery system electrolyte would exceed the MAQs established in Chapter 50, which would lead to battery rooms being classified as a Group H occupancy. Generally, these types of systems have had a good safety record and, if the guidelines set out in Section 608 are followed, pose a very low hazard to the building, its occupants and emergency responders. In many cases, such systems are found in buildings with very low occupant loads, such as telephone company exchanges.

There are some very specific differences in the two types of batteries, recombinant and nonrecombinant, that should be understood in applying the requirements of Section 608. First, recombinant batteries are designed so that if punctured or damaged, they would not spill because the electrolyte is immobilized in an absorptive glass mat or by a gelling agent. Second, recombinant batteries do not routinely emit hydrogen gas to the atmosphere, as do nonrecombinant stationary storage batteries. Recombinant batteries vent hydrogen only when the internal pressure exceeds the ambient pressure; therefore, hydrogen release is still an issue and ventilation is still required.

Nonrecombinant (flooded) stationary storage batteries, on the other hand, are more likely to have a spill but routinely emit hydrogen to the atmosphere and thus are not as highly subject to pressure buildup. Also, recombinant batteries are often used in locations where the flooded types have not traditionally been used, such as in cabinets in a business occupancy. Nonrecombinant batteries are more typically used in locations such as a phone company exchange with a low occupant load.

Table 608.1 provides a convenient summary of battery requirements contained in this section.

608.2 Safety caps. Safety caps for stationary storage battery systems shall comply with Sections 608.2.1 and 608.2.2.

❖ See the commentary to Sections 608.2.1 and 608.2.2 for discussion of these essential safety devices for batteries.

TABLE 608.1
BATTERY REQUIREMENTS

REQUIREMENT	NONRECOMBINANT BATTERIES		RECOMBINANT BATTERIES		OTHER BATTERIES
	Vented (Flooded) Lead Acid Batteries	Vented (Flooded) Nickel-Cadmium (Ni-Cd) Batteries	Valve Regulated Lead-Acid (VRLA) Cells	Lithium-Ion Cells	Lithium Metal Cells
Safety caps	Venting caps (608.2.1)	Venting caps (608.2.1)	Self-resealing flame-arresting caps (608.2.2)	No caps	No caps
Thermal runaway management	Not required	Not required	Required (608.3)	Not required	Required (608.3)
Spill control	Required (608.5)	Required (608.5)	Not required	Not required	Not required
Neutralization	Required (608.5.1)	Required (608.5.1)	Required (608.5.2)	Not required	Not required
Ventilation	Required (608.6.1; 608.6.2)	Required (608.6.1; 608.6.2)	Required (608.6.1; 608.6.2)	Not required	Not required
Signage	Required (608.7)	Required (608.7)	Required (608.7)	Required (608.7)	Required (608.7)
Seismic protection	Required (608.8)	Required (608.8)	Required (608.8)	Required (608.8)	Required (608.8)
Smoke detection	Required (608.9)	Required (608.9)	Required (608.9)	Required (608.9)	Required (608.9)

INTERNATIONAL CODE COUNCIL®
Copyright © 2015 ICC. ALL RIGHTS RESERVED. Accessed by David Dammon on Jun 21, 2017 12:30:52 PM pursuant to License Agreement with ICC. No further reproduction or distribution authorized. ANY UNAUTHORIZED REPRODUCTION OR DISTRIBUTION IS A VIOLATION OF THE FEDERAL COPYRIGHT ACT AND THE LICENSE AGREEMENT, AND SUBJECT TO CIVIL AND CRIMINAL PENALTIES THEREUNDER.

608.2.1 Nonrecombinant batteries. Vented lead-acid, nickel-cadmium or other types of nonrecombinant batteries shall be provided with safety venting caps.

❖ Pressures can build up within batteries as a result of the creation of hydrogen and oxygen, making a method of pressure relief necessary. The types of batteries regulated by this section vent hydrogen and oxygen to the atmosphere. Flooded batteries vent regularly whereas valve-regulated battery systems vent when the internal pressure exceeds ambient pressures. Because of this potential for pressure buildup, safety-venting caps are required. For additional information on nonrecombinant batteries, see the commentary to the definition of that term.

608.2.2 Recombinant batteries. VRLA batteries shall be equipped with self-resealing flame-arresting safety vents.

❖ Self-resealing vents are an integral part of the design of VRLA batteries. Flame-arresting vents are needed to prevent a static spark (or other flame source) outside the battery from propagating to the interior of the battery where oxygen or hydrogen may have accumulated during normal operation of the battery. For additional information on recombinant batteries, see the commentary to the definition of that term.

608.3 Thermal runaway. VRLA and lithium metal polymer battery systems shall be provided with a *listed* device or other *approved* method to preclude, detect and control thermal runaway.

❖ Under certain extreme conditions of high ambient temperature or charging rate, VRLA and lithium metal polymer batteries may experience a phenomenon known as "thermal runaway." This is a condition that occurs in a battery (especially valve-regulated types) when charging energy results in heat generation within the battery greater than the heat dissipated, causing an uncontrolled rise in battery temperature. Under these conditions, a battery may generate excessive heat that can cause failure through cell dry-out or, in rare cases, rupture or melting of the battery.

Lithium metal polymer batteries are constructed with an internal means of thermal runaway management. Each battery is equipped with an internal heating system that is located within the electrochemical stack of anodes and cathodes. This heating element ensures that the battery temperature limits are not exceeded when the battery is being charged or discharged. The thermal runaway management system and batteries are commonly listed in accordance with UL 1642 and UL 1989.

608.4 Room design and construction. Enclosure of stationary battery systems shall comply with the *International Building Code*. Battery systems shall be allowed to be in the same room with the equipment they support.

❖ This section requires that battery rooms meet the basic construction requirements of the IBC. Section and Table 509 of the IBC treat rooms housing stationary storage battery systems as incidental use areas based on the electrolyte capacity of the system. In that case, though no different occupancy group is assigned to it, the battery room's fire-resistance rating must be 1 or 2 hours, depending upon the occupancy group or groups from which it must be separated in the building in which it is located. The construction of the battery room must also comply with the material requirements of the IBC for the type of construction required for the building. Additionally, there is no requirement for separating the equipment that the battery system supports from the battery system itself.

608.4.1 Separate rooms. Where stationary batteries are installed in a separate equipment room accessible only to authorized personnel, they shall be permitted to be installed on an open rack for ease of maintenance.

❖ Ease of access to the battery system components is important for the safety of maintenance personnel. Where access to battery rooms is restricted to only authorized personnel, exposure to the public or building occupants is reduced, thus eliminating the need for any out-of-the-ordinary public safety arrangements of the system components.

608.4.2 Occupied work centers. Where a system of VRLA, lithium-ion, or other type of sealed, nonventing batteries is situated in an occupied work center, it shall be allowed to be housed in a noncombustible cabinet or other enclosure to prevent access by unauthorized personnel.

❖ In order to prevent tampering or accidental contact with the battery system when installed in an occupied work area, this section requires enclosure of the battery system in a cabinet. VRLA battery systems are often listed under UL 1778, which places similar design and construction requirements on cabinetized systems.

608.4.3 Cabinets. Where stationary batteries are contained in cabinets in occupied work centers, the cabinet enclosures shall be located within 10 feet (3048 mm) of the equipment that they support.

❖ Placing battery system cabinets within 10 feet (3048 mm) of the equipment served by the system will limit the number of devices that can be powered by the system due to the voltage drop associated with longer or multiple conductor runs. Having a substantial clearance between the battery cabinet and powered equipment also reduces the likelihood of an ignition in the event that battery gassing has occurred within the cabinet, which could result in an explosive mixture when air is introduced upon opening the cabinet for maintenance. The clearance required by this section will also enhance the safety of personnel who may have to secure and work on equipment served by the battery system by placing the secondary power supply near enough to the powered equipment to ensure line-of-sight supervision of the secured battery system during equipment repair or maintenance.

608.5 Spill control and neutralization. An *approved* method and materials for the control and neutralization of a

INTERNATIONAL CODE COUNCIL®
Copyright © 2015 ICC. ALL RIGHTS RESERVED. Accessed by David Dammon on Jun 21, 2017 12:30:52 PM pursuant to License Agreement with ICC. No further reproduction or distribution authorized. ANY UNAUTHORIZED REPRODUCTION OR DISTRIBUTION IS A VIOLATION OF THE FEDERAL COPYRIGHT ACT AND THE LICENSE AGREEMENT, AND SUBJECT TO CIVIL AND CRIMINAL PENALTIES THEREUNDER.

spill of electrolyte shall be provided in areas containing lead-acid, nickel-cadmium or other types of batteries with free-flowing liquid electrolyte. For purposes of this paragraph, a "spill" is defined as any unintentional release of electrolyte.

Exception: VRLA, lithium-ion, lithium metal polymer or other types of sealed batteries with immobilized electrolyte shall not require spill control.

❖ Batteries that contain a free-flowing liquid electrolyte pose the same containment problems as any other corrosive liquid hazardous material, but the containment and neutralization provisions in this section are performance based and neither specifically require spill control in the form of containment nor a specific method of neutralization. The quantity of neutralization material required to be available would be greater for these less-viscous electrolytes, however, because of their mobility and the rapidity with which they can spread and the potential scope of the spread. See the commentary to Section 5004.2.1 for further discussion of spill control strategies. The exception recognizes the reduced spill control hazard of sealed batteries that contain a higher-viscosity electrolyte.

608.5.1 Nonrecombinant battery neutralization. For battery systems containing lead acid, nickel cadmium or other types of batteries with free-flowing electrolyte, the method and materials shall be capable of neutralizing a spill of the total capacity from the largest cell or block to a pH between 5.0 and 9.0.

❖ This section is fairly performance-based and neither specifically requires spill control in the form of containment, nor a specific method of neutralization. Instead, it states that a capability to control and neutralize a spill equal to the liquid content of the largest single battery cell or block (not the whole battery) to a pH between 5.0 and 9.0 must be available. In the case of flooded lead-acid batteries, this may require initial containment followed by neutralization.

608.5.2 Recombinant battery neutralization. For VRLA or other types of batteries with immobilized electrolyte, the method and material shall be capable of neutralizing a spill of 3.0 percent of the capacity of the largest cell or block in the room to a pH between 5.0 and 9.0.

Exception: Lithium-ion and lithium metal polymer batteries shall not require neutralization.

❖ This section is fairly performance-based and neither specifically requires spill control in the form of containment, nor a specific method of neutralization. Instead, it states that a capability to control and neutralize a spill equal to the 3 percent of the liquid content of the largest single battery cell or block (not the whole battery) housed in the battery room to a pH between 5.0 and 9.0 must be available. Typically, either sodium-bicarbonate powder or a liquid buffering solution is provided within the room where the battery system is located for use by trained personnel.

The electrolyte in VRLA batteries is immobilized by either the addition of a gelling agent or by being absorbed in a fiberglass mat (i.e., a sponge). This immobilization creates a situation where a spill of the electrolyte is highly unlikely. A typical accident where a VRLA battery case is broken results in a slight drip or a slow ooze of material out of the battery that cannot be characterized as a spill. Accordingly, spill control, as prescribed in Section 608.5, for flooded lead-acid batteries is not necessary. The exception recognizes the reduced spill control hazard and accompanying neutralization needs of sealed batteries that contain a higher-viscosity electrolyte.

608.6 Ventilation. Ventilation of stationary storage battery systems shall comply with Sections 608.6.1 and 608.6.2.

❖ With good air circulation around a battery, hydrogen accumulation is normally not a problem. The gas mixture is explosive when hydrogen in air exceeds 4 percent by volume; however, if relatively large batteries are confined in small rooms, exhaust fans must be installed to vent the room constantly or to be turned on automatically when hydrogen accumulation exceeds a certain level. Battery cabinets must also be vented to the atmosphere. Sparks or flames can ignite these hydrogen mixtures above the LEL, so ignition sources must be carefully managed. See the commentary to Sections 608.6.1 and 608.6.2 for discussion of the ventilation requirements for battery rooms and cabinets.

608.6.1 Room ventilation. Ventilation shall be provided in accordance with the *International Mechanical Code* and the following:

1. For flooded lead-acid, flooded Ni-Cd and VRLA batteries, the ventilation system shall be designed to limit the maximum concentration of hydrogen to 1.0 percent of the total volume of the room; or
2. Continuous ventilation shall be provided at a rate of not less than 1 cubic foot per minute per square foot (1 $ft^3/min/ft^2$) [0.0051 $m^3/s \cdot m^2$] of floor area of the room.

   Exception: Lithium-ion and lithium metal polymer batteries shall not require additional ventilation beyond that which would normally be required for human occupancy of the space in accordance with the *International Mechanical Code.*

❖ Basic battery room ventilation, as with any other building area, must comply with the requirements of the IMC. Generally, with lead-acid battery systems, the main concern is the production of hydrogen and oxygen within an enclosed space. Hydrogen has a wide flammability range and is the lightest element on the Periodic Table of Elements, having an atomic number of 1. The gas mixture is explosive when the amount of hydrogen in air exceeds 4 percent by volume. To address the concern of hydrogen generation and containment in small areas, a minimum ventilation criterion is set. This section provides two methods of compliance from which the designer may

INTERNATIONAL CODE COUNCIL®
Copyright © 2015 ICC. ALL RIGHTS RESERVED. Accessed by David Dammon on Jun 21, 2017 12:30:52 PM pursuant to License Agreement with ICC. No further reproduction or distribution authorized. ANY UNAUTHORIZED REPRODUCTION OR DISTRIBUTION IS A VIOLATION OF THE FEDERAL COPYRIGHT ACT AND THE LICENSE AGREEMENT, AND SUBJECT TO CIVIL AND CRIMINAL PENALTIES THEREUNDER.

choose. The first is performance based and states that the maximum concentration of hydrogen must be limited to 1.0 percent of the total volume of the room. This method requires an analysis of plausible failure scenarios to justify the ventilation rate ultimately chosen. The second method simply requires continuous ventilation at a rate no less than 1 cubic foot per minute per square foot [1 $ft^3/min/ft^2$ or 0.0051 $m^3/(s \times m^2)$] of room area. The exception recognizes the reduced fugitive gas hazard of sealed batteries that contain a higher viscosity electrolyte.

608.6.2 Cabinet ventilation. Where VRLA batteries are installed inside a cabinet, the cabinet shall be *approved* for use in occupied spaces and shall be mechanically or naturally vented by one of the following methods:

1. The cabinet ventilation shall limit the maximum concentration of hydrogen to 1 percent of the total volume of the cabinet during the worst-case event of simultaneous "boost" charging of all the batteries in the cabinet.
2. Where calculations are not available to substantiate the ventilation rate, continuous ventilation shall be provided at a rate of not less than 1 cubic foot per minute per square foot [1 $ft^3/min/ft^2$ or 0.0051 $m^3/(s \cdot m^2)$] of floor area covered by the cabinet. The room in which the cabinet is installed shall be ventilated as required in Section 608.6.1.

❖ This section addresses the increasingly common practice of placing VRLA battery systems in cabinets. Ventilation of VRLA battery cabinets is treated in the same manner as VRLA battery rooms in Section 608.6.1 (see commentary, Section 608.6.1).

608.6.3 Supervision. Mechanical ventilation systems where required by Sections 608.6.1 and 608.6.2 shall be supervised by an *approved* central, proprietary or remote station service or shall initiate an audible and visual signal at a constantly attended on-site location.

❖ The ventilation systems in Sections 608.6.1 and 608.6.2 are required and reduce the likelihood that the concentration of hydrogen will reach 1 percent or present an explosion hazard. Without a supervised system or a signal at a constantly attended location, the required ventilation system could fail without warning, allowing hydrogen concentrations to build to hazardous levels.

Monitoring natural ventilation, which is specifically allowed by Section 608.6.2, is extremely difficult (if not impossible in some cases), extremely expensive and would force a huge financial burden on battery cabinet manufacturers to add mechanical ventilation systems, hydrogen detectors or flow sensors, for little or no apparent improvement in safety. Accordingly, this section mandates the supervision of both the required room and cabinet ventilation only where mechanical systems are employed to provide adequate notification of a system failure.

608.7 Signage. Signs shall comply with Sections 608.7.1 and 608.7.2.

❖ See the commentaries to Sections 608.7.1 and 608.7.2 for discussion of the hazard warning sign requirements for battery rooms.

608.7.1 Equipment room and building signage. Doors into electrical equipment rooms or buildings containing stationary battery systems shall be provided with *approved* signs. The signs shall state that:

1. The room contains energized battery systems.
2. The room contains energized electrical circuits.
3. The battery electrolyte solutions, where present, are *corrosive* liquids.

❖ Because of the possible hazards associated with exposure to corrosive electrolytes, energized electrical circuits and the presence of hydrogen and oxygen, specific signage is needed to make building occupants and emergency responders aware of the potential dangers in the building or areas thereof.

608.7.2 Cabinet signage. Cabinets shall have exterior labels that identify the manufacturer and model number of the system and electrical rating (voltage and current) of the contained battery system. There shall be signs within the cabinet that indicate the relevant electrical, chemical and fire hazards.

❖ Battery cabinets must be marked with technical data about the system so that emergency responders may properly judge the degree of hazard presented by the system. Because of the possible hazards associated with exposure to corrosive liquids, energized electrical circuits and the presence of hydrogen and oxygen, specific signage is needed to make building occupants and emergency responders aware of the potential dangers that could exist in the cabinet.

608.8 Seismic protection. The battery systems shall be seismically braced in accordance with the *International Building Code.*

❖ Because battery systems pose hazards of corrosive liquid spills and because they are used for essential standby power, emergency power or uninterruptible power supplies, this section requires seismic bracing of the systems. Generally, these systems are located in racks that carry a fairly heavy load because of the liquid contained within the batteries. Chapter 16 of the IBC contains seismic protection requirements.

608.9 Smoke detection. An *approved* automatic smoke detection system shall be installed in accordance with Section 907.2 in rooms containing stationary battery systems.

❖ Except for a fire involving hydrogen, battery room fires are likely to be slow-growing and smoldering; therefore, a smoke detection system is required for early detection and warning in accordance with Section 907.2.23 where the system electrolyte capacity exceeds 50 gallons (189 L).

INTERNATIONAL CODE COUNCIL®
Copyright © 2015 ICC. ALL RIGHTS RESERVED. Accessed by David Dammon on Jun 21, 2017 12:30:52 PM pursuant to License Agreement with ICC. No further reproduction or distribution authorized. ANY UNAUTHORIZED REPRODUCTION OR DISTRIBUTION IS A VIOLATION OF THE FEDERAL COPYRIGHT ACT AND THE LICENSE AGREEMENT, AND SUBJECT TO CIVIL AND CRIMINAL PENALTIES THEREUNDER.

SECTION 609
COMMERCIAL KITCHEN HOODS

[M] 609.1 General. Commercial kitchen exhaust hoods shall comply with the requirements of the *International Mechanical Code*.

❖ Rather than including detailed commercial hood requirements here, the code simply references the IMC for hood design (see IMC commentary, Section 507).

[M] 609.2 Where required. A Type I hood shall be installed at or above all commercial cooking appliances and domestic cooking appliances used for commercial purposes that produce grease vapors.

> **Exception:** A Type I hood shall not be required for an electric cooking appliance where an approved testing agency provides documentation that the appliance effluent contains 5 mg/m^3 or less of grease when tested at an exhaust flow rate of 500 cfm (0.236 m^3/s) in accordance with UL 710B.

❖ A Type I hood (see definition of "Hood, Type I" in Section 202) is required for all appliances used for commercial cooking as defined in Section 202. In addition to the specific cooking appliances identified in the definition, further examples of commercial cooking appliances that require a commercial kitchen exhaust system are griddles (flat or grooved); tilting skillets or woks; braising and frying pans; roasters; pastry ovens; pizza ovens; charbroilers; salamanders and upright broilers; infrared broilers and open-burner stoves; ranges; and barbecue equipment. Further, the definition of "Commercial cooking appliances" defines a food service establishment as "...any building or portion thereof used for the preparation and serving of food."

The term "grease" refers to animal and vegetable fats and oils that are used to cook foods or that are a byproduct of cooking foods. Cooking appliances are used for commercial purposes when the appliance is primarily used for the preparation of food for compensation, trade or services rendered. When the nature of the cooking produces grease or smoke, a Type I hood is required. The intent is not to require a Type I hood where there is a possibility of food being burned and producing smoke. For example, smoke that is produced when toast is burned does not mean that a Type I hood is required over a toaster.

Section 609 does not require exhaust hoods for cooking equipment or appliances installed outdoors where the grease-laden vapors, etc., discharge directly to the outside atmosphere, nor is this chapter intended to regulate cooking appliances installed in vehicles or towed trailers (see definition of "Commercial cooking appliances"). Note that cooking appliances installed outdoors but located under a roof should be evaluated for installation under a Type I hood just as if they were located inside a building having enclosing walls.

The exception recognizes the growing use of small electrical appliances used for cooking, such as in small sandwich shops and convenience stores, where little or no grease is produced. The installation of a Type I hood in these small establishments would create the expense of the hood and the energy costs of running the fan and tempering the makeup air where grease emissions are minimal or nonexistent. The grease emission threshold requirement is consistent with NFPA 96 and the testing procedure is done in accordance with Section 17 of UL 710B. In order for an appliance to qualify for use without a Type I hood it must be tested by an approved agency and shown that the effluent contains 5 mg/m^3 or less of grease when tested at an exhaust flow rate of 500 cfm. See also the IMC definitions of "Light-," "Medium-," "Heavy-" and "Extra-heavy duty cooking appliances" as well as IMC Section 507.2.

609.3 Operations and maintenance. Commercial cooking systems shall be operated and maintained in accordance with Sections 609.3.1 through 609.3.4.

❖ The provisions of this section introduce Sections 609.3.1 through 609.3.4, which contain requirements for controlling the hazards associated with the operation and maintenance of commercial cooking systems.

609.3.1 Ventilation system. The ventilation system in connection with hoods shall be operated at the required rate of air movement, and classified grease filters shall be in place when equipment under a kitchen grease hood is used.

❖ The hood must be designed to adequately collect and exhaust fumes, smoke and vapors from the area over which it is installed. To accomplish this, the hood must cause an airflow pattern that will sweep and direct the fumes, smoke and vapors from the cooking surfaces into the hood inlet.

The IMC specifies the minimum quantity of exhaust air necessary for effective removal of cooking vapors and the approximate amount of makeup air necessary for proper operation. The quantity of required exhaust is as much a function of the operational characteristics of the cooking equipment as it is a function of the size of the cooking surface or the exhaust hood opening area and the presence of walls and side panels. Manufacturer recommendations must be followed where applicable.

Approved grease filters prevent large amounts of grease from collecting in the hood, in exhaust ducts, on fan blades and at the exhaust system termination. The accumulation of grease can cause blockage in ducts, cause equipment failure and create a fire hazard. It therefore makes sense to have grease filters in place whenever commercial cooking equipment is used.

INTERNATIONAL CODE COUNCIL®
Copyright © 2015 ICC. ALL RIGHTS RESERVED. Accessed by David Dammon on Jun 21, 2017 12:30:52 PM pursuant to License Agreement with ICC. No further reproduction or distribution authorized. ANY UNAUTHORIZED REPRODUCTION OR DISTRIBUTION IS A VIOLATION OF THE FEDERAL COPYRIGHT ACT AND THE LICENSE AGREEMENT, AND SUBJECT TO CIVIL AND CRIMINAL PENALTIES THEREUNDER.

609.3.2 Grease extractors. Where grease extractors are installed, they shall be operated when the commercial-type cooking equipment is used.

❖ As noted in the commentary for Section 609.3.1, it is imperative that grease removal devices operate when commercial cooking equipment is used. Grease extractors and similar grease removal devices range from simple designs, such as a configuration of baffles, to elaborate hot water scrubbers and electrostatic precipitators. The devices must be installed to comply with the IMC and the manufacturer's installation instructions.

609.3.3 Cleaning. Hoods, grease-removal devices, fans, ducts and other appurtenances shall be cleaned at intervals as required by Sections 609.3.3.1 through 609.3.3.3.

❖ The provisions of this section introduce Sections 609.3.3.1 through 609.3.3.3, which contain requirements for controlling the hazards associated with grease accumulation in commercial cooking systems. This includes appliances that produce grease- laden vapors, the hood, any grease extractors, the exhaust duct and the exhaust fan. The date of the cleaning and the extent of the work performed must be documented and be maintained on the premises.

609.3.3.1 Inspection. Hoods, grease-removal devices, fans, ducts and other appurtenances shall be inspected at intervals specified in Table 609.3.3.1 or as *approved* by the *fire code official*. Inspections shall be completed by qualified individuals.

❖ A regular inspection schedule must be maintained to prevent the accumulation of grease residue within the exhaust system. The hood, grease removal devices, ducts, fans, fire suppression system discharge nozzles and other components of the system must be cleaned regularly to prevent excessive accumulation of grease. The frequency of such cleaning can vary depending on the amount and type of usage; however, at a minimum, the equipment must be inspected at the intervals indicated in Table 609.3.3.1. Commercial cooking equipment exhaust systems may be viewed in some respects as a combustible material conveying system inasmuch as the grease carried within the duct is very combustible under the right conditions. As such, the inspection of the system should be entrusted only to persons trained and qualified in system inspection practices. While there are no identified nationally recognized criteria for gauging if an individual is or is not qualified to perform this work, several companies have developed their own certification programs for establishing requirements for individuals who supervise the cleaning of commercial cooking operations. In any case, the fire code official will make the final determination in accordance with Section 102.8.

TABLE 609.3.3.1
COMMERCIAL COOKING SYSTEM INSPECTION FREQUENCY

TYPE OF COOKING OPERATIONS	FREQUENCY OF INSPECTION
High-volume cooking operations such as 24-hour cooking, charbroiling or wok cooking	3 months
Low-volume cooking operations such as places of religious worship, seasonal businesses and senior centers	12 months
Cooking operations utilizing solid fuel-burning cooking appliances	1 month
All other cooking operations	6 months

❖ Inspection frequencies are established in this table, which is based on the volume of cooking being performed, the type of cooking operation and the type of fuel used. The most restrictive requirement is for cooking operations using solid fuels, such as barbeque pits and meat smokers. When these or similar appliances use a solid fuel such as wood or charcoal, a minimum monthly inspection frequency is required. Cooking operations that use charbroilers or woks require a minimum 3-month inspection frequency, as do high volume cooking operations such as are found in 24-hour restaurants. The frequency of inspection is reduced to 12 months for lower intensity cooking activities including, but not limited to, seasonal businesses, places of worship and facilities for the care of senior citizens. All other cooking operations are subject to a 6-month inspection frequency. Depending on the nature of the commercial cooking activities, a single kitchen could have activities that require different inspection frequencies. For example, a restaurant that serves smoked meats would require that the appliance used for the preparation of the meat be inspected monthly, while other equipment would require inspection every 3 or 6 months, depending on the volume of cooking being performed.

609.3.3.2 Grease accumulation. If during the inspection it is found that hoods, grease-removal devices, fans, ducts or other appurtenances have an accumulation of grease, such components shall be cleaned in accordance with ANSI/IKECA C 10.

❖ Frequent cleaning of exhaust systems is essential to the fire safety of cooking establishments to eliminate the potentially flammable and highly dangerous collection of grease within the exhaust system. The most common cleaning method is hand scraping, which requires that a person remove the hood filters and the access doors in the exhaust ductwork and physically scrape the accumulated grease from the interior surfaces of the exhaust system. Done properly, this method is effective but far from perfect. Regular inspection and diligence by the owner and the fire

INTERNATIONAL CODE COUNCIL®
Copyright © 2015 ICC. ALL RIGHTS RESERVED. Accessed by David Dammon on Jun 21, 2017 12:30:52 PM pursuant to License Agreement with ICC. No further reproduction or distribution authorized. ANY UNAUTHORIZED REPRODUCTION OR DISTRIBUTION IS A VIOLATION OF THE FEDERAL COPYRIGHT ACT AND THE LICENSE AGREEMENT, AND SUBJECT TO CIVIL AND CRIMINAL PENALTIES THEREUNDER.

code official are needed to achieve the desired level of cleanliness of the exhaust system.

A frequently asked question about grease accumulation is, "How much of an accumulation is enough to warrant a cleaning?" Grease buildup in a commercial cooking exhaust system and the frequency with which the system must be cleaned depend on several factors, including but not limited to: the types of appliances under the hood, the type of grease-removal devices in use, exhaust velocity within the system, number of joints in the ductwork, changes in direction of the duct run, temperature of the grease-laden air being exhausted, efficiency of the exhaust fan and whether the duct is insulated or exposed to the outdoors. Just as the frequency of inspection in Table 609.3.3.1 varies based on the intensity of the cooking operation, so does the rate of grease accumulation. The referenced standard, ANSI/IKECA C-10, provides requirements to determine the frequency and necessity for commercial kitchen exhaust system cleaning through inspection procedures. In addition, the standard defines acceptable methods for cleaning exhaust systems and components and sets standards for acceptable cleanliness.

609.3.3.3 Records. Records for inspections shall state the individual and company performing the inspection, a description of the inspection and when the inspection took place. Records for cleanings shall state the individual and company performing the cleaning and when the cleaning took place. Such records shall be completed after each inspection or cleaning and maintained.

❖ Adequate records of inspections and cleanings not only provide documentation of the required inspections and the resulting cleanings but are also essential in establishing a workable cleaning schedule. A record of all cleaning must be maintained by the person or party responsible for the system. The records must indicate the method of cleaning and the time between cleanings as well as what components were cleaned.

As a result of a review of Recommendation 2(c) of the NIST Charleston, South Carolina Sofa Superstore Fire Report, changes were made to Sections 107.2 and 107.3, along with 49 other sections (including this section), to comprehensively address recordkeeping requirements. Section 107.3 provides standardized recordkeeping requirements for periodic inspection, testing, servicing and other operational and maintenance requirements of the code and makes it clear that records must be maintained on the premises or another approved location and that copies of records must be provided to the fire code official upon request. Section 107.3 also makes it clear that records must be maintained for a period of not less than 3 years unless a different time interval is specified in the code or a referenced standard, and that the fire code official is authorized to prescribe the form and format of such records. See the commentaries to Sections 107.2 and 107.3.

609.3.3.3.1 Tags. When a commercial kitchen hood or duct system is inspected, a tag containing the service provider name, address, telephone number and date of service shall be provided in a conspicuous location. Prior tags shall be covered or removed.

❖ This section details the markings required to visually confirm serviceability of commercial kitchen hood and duct systems. The text is consistent with the requirements set forth in ANSI/IKECA C-10, as referenced in Section 609.3.3.2.

609.3.4 Extinguishing system service. Automatic fire-extinguishing systems protecting commercial cooking systems shall be serviced as required in Section 904.12.6.

❖ See commentary, Section 904.12.6.

609.4 Appliance connection to building piping. Gas-fired commercial cooking appliances installed on casters and appliances that are moved for cleaning and sanitation purposes shall be connected to the piping system with an appliance connector listed as complying with ANSI Z21.69. The commercial cooking appliance connector installation shall be configured in accordance with the manufacturer's installation instructions. Movement of appliances with casters shall be limited by a restraining device installed in accordance with the connector and appliance manufacturer's instructions.

❖ This requirement is intended to end the practice of replacing listed flexible piping with residential flexible piping. Residential flexible piping is more easily damaged when the cooking equipment is moved for cleaning, thus causing a fire/life safety problem with gas leaks and fires. This section also intends to limit the distance the appliances can be moved for cleaning to further protect the connection.

SECTION 610
COMMERCIAL KITCHEN COOKING OIL STORAGE

610.1 General. Storage of cooking oil (grease) in commercial cooking operations utilizing above-ground tanks with a capacity greater than 60 gal (227 L) installed within a building shall comply with Sections 610.2 through 610.7 and NFPA 30. For purposes of this section, cooking oil shall be classified as a Class IIIB liquid unless otherwise determined by testing.

❖ In these times of increasing interest in alternative fuels, used cooking oil has benefits in that it can be recycled for commercial cooking operations. It can also be chemically modified into biodiesel and used as fuel for mobile or stationary equipment. Because it can be recycled and reused, many restaurants and similar businesses that perform commercial cooking operations have found that capturing used cooking oil reduces waste disposal costs. As a result, the food service industry is seeking options for the safe storage of waste cooking oils in buildings and, as such, there has arisen a large market for collecting and recycling used cooking oil (grease) from commercial

INTERNATIONAL CODE COUNCIL®
Copyright © 2015 ICC. ALL RIGHTS RESERVED. Accessed by David Dammon on Jun 21, 2017 12:30:52 PM pursuant to License Agreement with ICC. No further reproduction or distribution authorized. ANY UNAUTHORIZED REPRODUCTION OR DISTRIBUTION IS A VIOLATION OF THE FEDERAL COPYRIGHT ACT AND THE LICENSE AGREEMENT, AND SUBJECT TO CIVIL AND CRIMINAL PENALTIES THEREUNDER.

cooking operations. This is sometimes done using a system designed to store the used cooking oil on-site in an above-ground tank. These systems typically include wheeled recovery carts and hoses (see Commentary Figure 610.2) to assist in transferring the grease from the cooking appliance to the storage tank, and from the storage tank to a recovery truck. Some systems include heating elements that assist in keeping the grease in a form that is easily pumped to the recovery truck. This arrangement could create a problem if the system is not properly designed and installed. Without the requirements of Section 610 addressing the storage of cooking oils, many installations may not be installed with the safety features needed to protect employees and the public.

It should be noted that this section also addresses fresh cooking oil versus used, spent or inedible cooking oil. These oils need to be stored in tanks and related components that are food grade. That is why there are specific requirements for nonmetallic tanks. Most metallic tanks, as required by this section, could not meet these specifications.

This section also specifies that, for the application of these requirements, cooking oils are classified as Class IIIB liquids in accordance with the definition of "Combustible liquids" in Chapter 2 of the code. These liquids have a closed-cup-flash-point temperature greater than 200°F (93.33°C). Flash point and ignition temperatures for common cooking oils are shown in Commentary Figure 610.1 and the data confirms that this classification is correct.

Note that installation of the cooking oil storage tank and its piping will require a construction permit in accordance with Section 105.7.8.

610.2 Metallic storage tanks. Metallic cooking oil storage tanks shall be listed in accordance with UL 142 or UL 80, and shall be installed in accordance with the tank manufacturer's instructions.

❖ This section requires storage tanks for cooking oil storage to be listed as complying with either UL 142 or UL 80. Both standards are limited to shop-fabricated above-ground storage tanks (ASTs) designed to operate at atmospheric pressure. Both standards require tanks to be constructed of carbon steel meeting a certain specification and, before shipment, to be tested at the factory to confirm they are liquid tight. Tanks constructed to UL 80 have a maximum volume of 660 gallons (2271.25 L) versus UL 142, which does not limit the volume of ASTs. Installations of metallic ASTs for cooking oil storage also must comply with the manufacturer's installation instructions (see Commentary Figure 610.2).



Figure 610.2
COOKING OIL STORAGE TANK AND RECOVERY CART
(Photo courtesy of Darling International Inc., Irving, TX)

COOKING OIL TYPE	FLASH POINT TEMPERATURE (°F)	IGNITION TEMPERATURE (°F)
Canola oil	450	626
Corn oil	490	740
Cotton seed oil	486	650
Palm oil	323	600
Peanut oil	540	833
Soybean oil	549	833
Sunflower seed oil	550	Undetermined

For SI: °C = (°F - 32)/1.8.

Figure 610.1
COOKING OIL FLASH POINT AND IGNITION TEMPERATURES

INTERNATIONAL CODE COUNCIL®
Copyright © 2015 ICC. ALL RIGHTS RESERVED. Accessed by David Dammon on Jun 21, 2017 12:30:52 PM pursuant to License Agreement with ICC. No further reproduction or distribution authorized. ANY UNAUTHORIZED REPRODUCTION OR DISTRIBUTION IS A VIOLATION OF THE FEDERAL COPYRIGHT ACT AND THE LICENSE AGREEMENT, AND SUBJECT TO CIVIL AND CRIMINAL PENALTIES THEREUNDER.

610.3 Nonmetallic storage tanks. Nonmetallic cooking oil storage tanks shall be installed in accordance with the tank manufacturer's instructions and shall also comply with all of the following:

1. Tanks shall be listed for use with cooking oil, including maximum temperature to which the tank will be exposed during use.
2. Tank capacity shall not exceed 200 gallons (757 L) per tank.

❖ As discussed in Section 610.1, cooking oil that has not been previously used needs to be stored in food grade tanks. Typically, nonmetallic tanks are more appropriate for nonused cooking oil. These provisions are not limited to fresh cooking oil and can be utilized for used, spent and inedible cooking oils. This section sets out the requirements for basic construction and capacity of such tanks. Essentially, a listing for use with cooking oil is required, as is making sure that the maximum temperature limits associated with the tank match the application in which the tank is used.

The tanks are limited in size to 200 gallons. Metallic tanks have the potential for much larger capacities, as discussed in the commentary for Section 610.2.

610.4 Cooking oil storage system components. Cooking oil storage system components shall include but are not limited to piping, connections, fittings, valves, tubing, hose, pumps, vents and other related components used for the transfer of cooking oil, and are permitted to be of either metallic or nonmetallic construction.

❖ This section simply describes what components make up a cooking oil storage system. Section 610.4.1 addresses the design and construction requirements for these components. This section also notes that these components are permitted to be either metallic or nonmetallic. The allowance for types of materials will depend on the requirements in Section 610.4.1.

610.4.1 Design standards. The design, fabrication and assembly of system components shall be suitable for the working pressures, temperatures and structural stresses to be encountered by the components.

❖ The performance-based language provided in this section requires that it be determined that the system's intended use is consistent with all the components of the system.

610.4.2 Components in contact with heated oil. System components that come in contact with heated cooking oil shall be rated for the maximum operating temperatures expected in the system.

❖ Cooking oil storage system components may be exposed to elevated temperatures, such as when draining spent oil from deep fat fryers. Manufacturers must document that components can withstand the highest temperature to be expected during normal operations to avoid component deterioration or failure from heat exposure.

610.5 Tank venting. Normal and emergency venting shall be provided for cooking oil storage tanks.

❖ This section and the UL tank standards referenced in Section 610.2 require ASTs to be equipped with a normal vent and an emergency vent.

610.5.1 Normal vents. Normal vents shall be located above the maximum normal liquid line, and shall have a minimum effective area not smaller than the largest filling or withdrawal connection. Normal vents shall be permitted to vent inside the building.

❖ Tanks are vented to maintain the internal tank pressure within the design operating range. Low pressure can increase the generation of vapors while high pressure can damage the tank or piping system. Any pressure outside of the design pressure range (which could be caused if the vent line were not located above the highest level of liquid) can have an adverse effect on the operation of the system as well as the piping and equipment. This section is also consistent with Section 21.4.3 of NFPA 30.

While this section establishes the size of the normal vent line as being the same as the largest inflow or outflow connection, it should be noted that Section 21.4.3.3 of NFPA 30 also states that the minimum vent size must be $1^1/_4$ inches inside diameter.

Recognizing the reduced hazard of Class IIIB liquids, this section does not require the normal vent for a cooking oil AST installed indoors to be terminated outside the building. Note, however, that Section 5704.2.7.3.3 of the code allows this condition only where the tank is equipped with a normally closed pressure/vacuum vent.

610.5.2 Emergency vents. Emergency relief vents shall be located above the maximum normal liquid line, and shall be in the form of a device or devices that will relieve excessive internal pressure caused by an exposure fire. For nonmetallic tanks, the emergency relief vent shall be allowed to be in the form of construction. Emergency vents shall be permitted to vent inside the building.

❖ All ASTs for cooking oil storage require an emergency vent that will relieve excessive internal pressure caused by exposure to fires in accordance with Section 5704.2.7.4 of the code; however, the emergency vents for ASTs storing Class IIIB liquids are generally permitted to discharge inside the building in accordance with that section.

610.6 Heating of cooking oil. Electrical equipment used for heating cooking oil in cooking oil storage systems shall be listed to UL 499 and shall comply with NFPA 70. Use of electrical immersion heaters shall be prohibited in nonmetallic tanks.

❖ Many cooking oil storage tank systems will contain internal heaters to keep the oil above its melting temperature so that it can be efficiently removed by a recovery vacuum truck. This section requires that the electrical equipment associated with the heating of cooking oil be listed and its design and installation must comply with NFPA 70. Note that this section

INTERNATIONAL CODE COUNCIL®
Copyright © 2015 ICC. ALL RIGHTS RESERVED. Accessed by David Dammon on Jun 21, 2017 12:30:52 PM pursuant to License Agreement with ICC. No further reproduction or distribution authorized. ANY UNAUTHORIZED REPRODUCTION OR DISTRIBUTION IS A VIOLATION OF THE FEDERAL COPYRIGHT ACT AND THE LICENSE AGREEMENT, AND SUBJECT TO CIVIL AND CRIMINAL PENALTIES THEREUNDER.

does not require any temperature controls to ensure the cooking oil is not heated above its flash point temperature. See the commentary to Section 5701.5 for a discussion of the impact of heating combustible liquids above their flash point.

610.7 Electrical equipment. Electrical equipment used for the operation of cooking oil storage systems shall comply with NFPA 70.

❖ The phrase "cooking oil storage system" as used in this section could lead to the incorrect assumption that it is listed as a complete assembly of components. Fire code officials will need to evaluate the electrical equipment separately for compliance with the code and NFPA 70.

SECTION 611
HYPERBARIC FACILITIES

611.1 General. Hyperbaric facilities shall be inspected, tested and maintained in accordance with NFPA 99.

❖ Section 425 of the IBC requires that hyperbaric facilities, regardless of occupancy, comply with NFPA 99 for installation. This section provides the maintenance requirements so that such facilities continue to operate safely. The standard provides detailed responsibilities for testing and inspecting these facilities, such as requirements for an on-site hyperbaric safety director and for training.

611.2 Records. Records shall be maintained of all testing and repair conducted on the hyperbaric chamber and associated devices and equipment. Records shall be available to the *fire code official*.

❖ This section requires that records be kept to document compliance with the maintenance and testing requirements of NFPA 99 for the benefit of the facility owner and the fire code official.

As a result of a review of Recommendation 2(c) of the NIST Charleston, South Carolina Sofa Superstore Fire Report, changes were made to Sections 107.2 and 107.3, along with 49 other sections, to comprehensively address recordkeeping requirements. Section 107.3 provides standardized recordkeeping requirements for periodic inspection, testing, servicing and other operational and maintenance requirements of the code and makes it clear that records must be maintained on the premises or another approved location and that copies of records must be provided to the fire code official upon request. Section 107.3 also makes it clear that records must be maintained for a period of not less than 3 years unless a different time interval is specified in the code or a referenced standard, and that the fire code official is authorized to prescribe the form and format of such records. See the commentaries to Sections 107.2 and 107.3.

Bibliography

The following resource materials were used in the preparation of the commentary for this chapter of the code:

CGA V-1, *Standard Compressed Gas Cylinder Valve Outlet and Inlet Connections*. Chantilly, VA: Compressed Gas Association, 2005.

Code Changes Resource Collection—2015 International Fire Code. Washington, DC: International Code Council, 2014.

Commercial Cooking Operations–Application Guide. Washington, DC: International Code Council, 2010.

National Institute of Standards and Technology (NIST) Charleston, South Carolina Sofa Superstore Fire Report, June 18, 2007, NIST-SP 1118 Volume I, March 2011.

Solar Thermal, Table 2.1 Annual Shipments of Solar Thermal Collectors 1998-2007, Independent Statistics and Analysis, EIA. Washington, DC: U.S. Energy Information Administration, 2010.

INTERNATIONAL CODE COUNCIL®
Copyright © 2015 ICC. ALL RIGHTS RESERVED. Accessed by David Dammon on Jun 21, 2017 12:30:52 PM pursuant to License Agreement with ICC. No further reproduction or distribution authorized. ANY UNAUTHORIZED REPRODUCTION OR DISTRIBUTION IS A VIOLATION OF THE FEDERAL COPYRIGHT ACT AND THE LICENSE AGREEMENT, AND SUBJECT TO CIVIL AND CRIMINAL PENALTIES THEREUNDER.

Chapter 7:
Fire and Smoke Protection Features

General Comments

This chapter sets forth general fire safety precautions for existing buildings and structures. In general, these requirements are intended to maintain required fire-resistance ratings and limit fire spread.

Chapter 7 is divided into four sections. Section 701 gives the general scope of the chapter and provides the basis for enforcement of its provisions. Section 702 provides applicable definitions. Section 703 describes the required maintenance of fire-resistance-rated assemblies, opening protectives and fire doors. Section 704 defines the enclosure requirements for shafts in existing buildings.

Purpose

The maintenance of assemblies required to be fire-resistance rated is a key component in a passive fire protection philosophy. This chapter reinforces this component and further regulates floor openings, which are a leading cause of fire spread and smoke migration through buildings.

SECTION 701
GENERAL

701.1 Scope. The provisions of this chapter shall govern maintenance of the materials, systems and assemblies used for structural fire resistance and fire-resistance-rated construction separation of adjacent spaces to safeguard against the spread of fire and smoke within a building and the spread of fire to or from buildings. New buildings shall comply with the *International Building Code*.

❖This section establishes the scope of Chapter 7, introduces the requirements for maintaining the integrity of fire-resistance-rated assemblies (see Section 703) and prescribes the types of floor opening protection required in existing buildings (see Section 704). The provisions of Chapter 7 apply to the ongoing maintenance of the materials, assemblies and systems used to protect against the passage of fire and smoke within and between buildings. The assemblies outlined herein provide various degrees of protection. The required fire-resistance rating varies with the potential fire hazard associated with type of construction, occupancy, height and area of the building and degree of protection for different elements of the means of egress. The potential fire hazard associated with various occupancies is reflected in the *International Building Code*® (IBC®). Chapter 7 of the IBC provides the details and the extent of the protection (horizontal and vertical continuity); however, the actual fire-resistance-rated construction is mandated by provisions in Chapters 4, 5, 6, 7 and 10 of the IBC.

701.2 Unsafe conditions. Where any components in this chapter are not maintained and do not function as intended or do not have the *fire resistance* required by the code under which the building was constructed, remodeled or altered, such component(s) or portion thereof shall be deemed an unsafe condition, in accordance with Section 110.1.1. Components or portions thereof determined to be unsafe shall be repaired or replaced to conform to that code under which the building was constructed, remodeled, altered or this chapter, as deemed appropriate by the *fire code official*.

Where the extent of the conditions of components is such that any building, structure or portion thereof presents an imminent danger to the occupants of the building, structure or portion thereof, the *fire code official* shall act in accordance with Section 110.2.

❖This section is intended to clarify to code officials, designers, contractors and property owners that a building's fire-resistance-rated construction must be maintained at the original level of safety required by the codes that were applicable when the building was constructed or last remodeled. Failure to maintain fire-resistant components to that level of safety will result in the component being declared unsafe in accordance with Section 110.1.1 of the code and repair or restoration being required.

Code provisions, which require maintenance to a level of safety required by an often-unknown code or an unknown edition of a known code, are sometimes viewed as problematic and unenforceable. However, communities should have some record of when a building was constructed, and knowing the year of construction should make it relatively easy to determine an edition of the code that was published close to or prior to that year. In many communities, local historical societies can also be helpful in doing architectural historical research to determine the year of construction. These types of methods for determining the originally applicable code, if any, could be viewed

INTERNATIONAL CODE COUNCIL®
Copyright © 2015 ICC. ALL RIGHTS RESERVED. Accessed by David Dammon on Jun 21, 2017 12:30:52 PM pursuant to License Agreement with ICC. No further reproduction or distribution authorized. ANY UNAUTHORIZED REPRODUCTION OR DISTRIBUTION IS A VIOLATION OF THE FEDERAL COPYRIGHT ACT AND THE LICENSE AGREEMENT, AND SUBJECT TO CIVIL AND CRIMINAL PENALTIES THEREUNDER.

as haphazard and arbitrary, but they can be considered better than trying to make a building constructed 30, 50 or 100 years ago comply with today's requirements. In the event that no information of any kind can be found to shed light on an original construction date, this chapter provides for an acceptable level of safety and can be retroactively required where deemed appropriate by the fire code official.

This section also provides that where component conditions are so bad due to lack of maintenance as to constitute a clear and present threat to the safety of the occupants, the fire code official must take the steps required by Section 110.2.

SECTION 702
DEFINITIONS

702.1 Definitions. The following terms are defined in Chapter 2:

DRAFTSTOP.

FIRE-RESISTANT JOINT SYSTEM.

FIREBLOCKING.

❖Definitions of terms can help in the understanding and application of the code requirements. This section directs the code user to Chapter 2 for the proper application of the indicated terms used in this chapter. Terms may be defined in Chapter 2 or in another *International Code*® (I-Code®) as indicated in Section 201.3, or the dictionary meaning may be all that is needed (see also commentary, Sections 201 through 201.4).

SECTION 703
FIRE-RESISTANCE-RATED CONSTRUCTION

703.1 Maintenance. The required *fire-resistance rating* of fire-resistance-rated construction, including, but not limited to, walls, firestops, shaft enclosures, partitions, *smoke barriers*, floors, fire-resistive coatings and sprayed fire-resistant materials applied to structural members and fire-resistant joint systems, shall be maintained. Such elements shall be visually inspected by the *owner* annually and properly repaired, restored or replaced where damaged, altered, breached or penetrated. Records of inspections and repairs shall be maintained. Where concealed, such elements shall not be required to be visually inspected by the *owner* unless the concealed space is accessible by the removal or movement of a panel, access door, ceiling tile or similar movable entry to the space. Openings made therein for the passage of pipes, electrical conduit, wires, ducts, air transfer openings and holes made for any reason shall be protected with *approved* methods capable of resisting the passage of smoke and fire. Openings through fire-resistance-rated assemblies shall be protected by self- or automatic-closing doors of *approved* construction meeting the fire protection requirements for the assembly.

❖The code mandates that all equipment, systems, devices and safeguards required by the current and previously adopted codes be maintained in good working order (see Section 102.1). This section reiterates that requirement specifically for fire-resistance-rated assemblies in existing buildings.

Once a building is occupied, its component parts are often damaged, altered or penetrated for installation of new piping, wiring and the like. These actions may reduce the effectiveness of assemblies that must be fire-resistance rated. This section requires the building owner, annually, to visually inspect nonconcealed elements and that any damage to a fire-resistance-rated assembly be repaired in a manner that restores the original required performance characteristics. Concealed elements must be visually inspected if they may be accessed by a door, removable ceiling tile, access panel or the like. Similarly, if a fire-resistance-rated assembly is altered or penetrated, the alteration or penetration must comply with the applicable requirements of the IBC for the particular type of alteration or penetration.

This section also requires that written records of maintenance and repairs to rated assemblies must be kept and should indicate the date, time and the name of the person conducting the inspection or repair for each rated assembly. These records must be maintained by the owner and made available to the fire code official for review when requested. This requirement relieves the fire code official of the administrative burden of maintaining test records.

703.1.1 Fireblocking and draftstopping. Required *fireblocking* and draftstopping in combustible concealed spaces shall be maintained to provide continuity and integrity of the construction.

❖Fireblocking and draftstopping (see the Chapter 2 commentary for the definitions "Fireblocking" and "Draftstop") slow the spread of fire and the products of combustion through concealed spaces within a building. To fulfill their intended function, fireblocking and draftstopping must be properly maintained. Most frequently, damage or repairs to other building components, such as mechanical piping, results in fireblocking or draftstopping being removed and not properly replaced. This section specifically requires that when fireblocking and draftstopping required by the IBC are damaged, removed or otherwise altered, they must be replaced or restored.

703.1.2 Smoke barriers and smoke partitions. Required *smoke barriers* and smoke partitions shall be maintained to prevent the passage of smoke. Openings protected with *approved* smoke barrier doors or smoke dampers shall be maintained in accordance with NFPA 105.

❖Smoke barriers divide areas of a building into separate smoke compartments to create an area of safety for occupants. A smoke barrier is designed and installed in accordance with IBC Section 709 to resist fire and smoke spread so that occupants can be evacuated or relocated to adjacent smoke compartments (see the commentary to the definitions of "Smoke barrier" and "Smoke compartment" in Chap-

INTERNATIONAL CODE COUNCIL®
Copyright © 2015 ICC. ALL RIGHTS RESERVED. Accessed by David Dammon on Jun 21, 2017 12:30:52 PM pursuant to License Agreement with ICC. No further reproduction or distribution authorized. ANY UNAUTHORIZED REPRODUCTION OR DISTRIBUTION IS A VIOLATION OF THE FEDERAL COPYRIGHT ACT AND THE LICENSE AGREEMENT, AND SUBJECT TO CIVIL AND CRIMINAL PENALTIES THEREUNDER.

ter 2). This concept has proven effective in Group I-2 and I-3 occupancies, and Sections 407.5 and 408.6 of the IBC identify where smoke barriers are required in those occupancies. Smoke barriers may also be utilized in other applications, such as part of a smoke control system (see Section 909.5 of the code), separation of accessible areas of refuge in accessible means of egress (see Section 1009.6.4 of the code), compartmentation of underground buildings (see Section 405.4.2 of the IBC) and elevator lobbies in underground buildings (see Section 405.4.3 of the IBC), FSAE lobbies (3007.6.2) and occupant evacuation elevator lobbies (3008.6.2) among others. Other than the wall itself, all of the elements in the smoke barrier that can potentially allow smoke travel through the smoke barrier are required to have a quantified resistance to leakage. This includes doors, joints, through penetrations and dampers. The maximum leakage limits are as established in the individual code sections referenced above for each element. A smoke barrier is not intended or expected to be exposed to fire for extended periods and is, therefore, not required to have a fire-resistance rating exceeding 1 hour. Also, the occupancies in which smoke barriers are required are generally required to be sprinklered by Section 903 of the code. Smoke barriers are to be continuous from outside wall to outside wall and from the top of the foundation or floor/ceiling assembly below to the underside of the floor or roof sheathing, deck or slab. The provisions require the barrier to be continuous through all concealed and interstitial spaces, including suspended ceilings and the space between the ceiling and the floor or roof sheathing, deck or slab above. Smoke barriers are not required to extend through interstitial spaces if the space is designed and constructed such that fire and smoke will not spread from one smoke compartment to another; therefore, the construction assembly forming the bottom of the interstitial space must provide the required fire-resistance rating and be capable of resisting the passage of smoke from the spaces below.

Smoke partitions are nonrated walls that serve to resist the spread of fire and the unmitigated movement of smoke for an unspecified period of time. Their primary purpose is to prevent the ready and quick passage of smoke into corridors in Group I-2 or for elevator lobby protection in a sprinklered building. Unlike 1-hour fire-resistance-rated smoke barriers, unless required by the IBC, smoke partitions are not required to have a fire-resistance rating. Smoke partitions are intended to provide less protection than a smoke barrier, and therefore are not required to be continuous through the concealed spaces and through the ceiling. The construction of a smoke partition is prescribed in Section 710 of the IBC; however, the level of performance or a method of testing them is not provided.

Because these assemblies and their opening protectives are critical life safety components of a building, they must be maintained throughout the life of the building. Opening protective maintenance provisions for these types of assemblies are contained in NFPA 105. For further information on incidental uses, smoke barriers and smoke partitions, see the commentary to Sections 509, 709 and 710 of the IBC, respectively.

703.1.3 Fire walls, fire barriers and fire partitions. Required *fire walls*, *fire barriers* and *fire partitions* shall be maintained to prevent the passage of fire. Openings protected with *approved* doors or fire dampers shall be maintained in accordance with NFPA 80.

❖Fire walls, fire barriers and fire partitions are also key components in a passive fire- and life-safety design. Fire walls constructed in accordance with Section 706 of the IBC serve to create separate buildings (see the commentary to the definition of “Area, building” in Chapter 2 of the code); therefore, all applicable provisions of the code are applied individually to the building on each side of the fire wall. As such, the fire wall must also provide the same protection afforded by exterior walls, namely: structural integrity, structural independence and adequate fire resistance for exposure protection.

Fire barriers constructed in accordance with Section 707 of the IBC provide a higher degree of protection than fire partitions, but lack the inherent structural integrity of fire walls and, unlike fire partitions, there are no circumstances under which a fire barrier wall is permitted to terminate at a ceiling. Fire barriers are used for a variety of purposes, including but not limited to, separating exits and certain areas of refuge, mixed occupancies and incidental use areas, shafts, floor opening enclosures, hazardous materials control areas and fire areas. It is important to note that, since fire barriers are intended to provide a reliable subdivision of areas, the construction that structurally supports the assembly is required to provide and maintain at least the same hourly fire-resistance rating as the fire barrier being supported.

Fire partitions constructed in accordance with Section 708 of the IBC are wall assemblies that enclose exit access corridors; separate tenant spaces in covered malls, dwelling units and sleeping units; and separate elevator lobbies from the balance of a floor. Openings in fire partitions must be properly protected, but the total area of openings in a fire partition is not limited. Unlike the continuity requirements for fire walls and fire barriers, fire partition continuity must only be continuous from floor slab to the floor slab or roof deck above or to the ceiling of a fire-resistance-rated floor/ceiling or roof/ceiling assembly. Although fire partitions must normally be supported by construction having a comparable fire-resistance rating in buildings of Type IIB, IIIB and VB construction, as defined in the IBC, Section 708.4 of that code does not require such supportive construction for sleeping units and tenant separations and exit access corridor walls.

INTERNATIONAL CODE COUNCIL®
Copyright © 2015 ICC. ALL RIGHTS RESERVED. Accessed by David Dammon on Jun 21, 2017 12:30:52 PM pursuant to License Agreement with ICC. No further reproduction or distribution authorized. ANY UNAUTHORIZED REPRODUCTION OR DISTRIBUTION IS A VIOLATION OF THE FEDERAL COPYRIGHT ACT AND THE LICENSE AGREEMENT, AND SUBJECT TO CIVIL AND CRIMINAL PENALTIES THEREUNDER.

The IBC includes requirements for fire-resistance rating, continuity and opening and penetration protection in these types of assemblies. Because these assemblies and their opening protectives are critical life safety components of a building, they must be maintained throughout the life of the building. Opening protective maintenance provisions for these types of assemblies are contained in NFPA 80. For further information on fire walls, fire barriers and fire partitions, see the commentaries to Sections 706, 707 and 708 of the IBC, respectively.

703.2 Opening protectives. Opening protectives shall be maintained in an operative condition in accordance with NFPA 80. Where allowed by the *fire code official*, the application of field-applied labels associated with the maintenance of opening protectives shall follow the requirements of the *approved* third-party certification organization accredited for *listing* the opening protective. Fire doors and *smoke barrier* doors shall not be blocked or obstructed, or otherwise made inoperable. Fusible links shall be replaced promptly whenever fused or damaged. Fire door assemblies shall not be modified.

❖Openings in fire-resistance-rated assemblies must be protected to prevent the passage of fire in accordance with Section 716 of the IBC. After opening protectives are installed and approved, they may become damaged, corroded or otherwise less effective than required. This section specifically requires that all opening protectives required by the IBC be maintained in compliance with NFPA 80 so that they can perform their intended function, which is to prevent the passage of smoke, fire or combustion products through openings in fire-resistance-rated walls, ceilings and shafts during a fire emergency. Sections 703.2.2 and 703.2.3 of the code indicate specific points of inspection and enforcement regarding these doors. Prohibited modifications to fire door assemblies include the attachment of materials, cutting, boring holes or other alterations that could affect the performance of the door as a fire protection-rated assembly.

This section also addresses the very real issue of maintaining labeled opening protectives by requiring field-applied labels to follow the requirements of the third-party certification organization, which is accredited for listing the specific opening protective. The relabeling of existing fire doors is a common practice and due to the importance of the rating requirements a level of monitoring by a third party to ensure the labeling matches the rating of the door assembly is necessary.

In the listing documentation, there are specific criteria for field application of labels. One of the criteria is whether the local fire code official allows this practice, and this section provides guidance in this area to the fire code official. IBC Section 716.5.7.1 requires that new fire doors or new fire door assemblies must be labeled at the factory (see the definition of "Labeled" in Chapter 2 of the code). However, it is not uncommon for an existing fire door to have either a damaged or missing label, or a label that has been painted over or otherwise obscured. The fire code official needs to make a determination as to whether field application of the label is acceptable or not. If field application is allowed, then the certification organization can follow the proper criteria for labeling the opening protective.

Proper maintenance necessitates that the manufacturer's installation instructions and the listing organization's instructions are followed in order to maintain the listing and proper operation of the assemblies and devices as required by the code, the manufacturer and the listing organization.

703.2.1 Signs. Where required by the *fire code official*, a sign shall be permanently displayed on or near each fire door in letters not less than 1 inch (25 mm) high to read as follows:

1. For doors designed to be kept normally open: FIRE DOOR—DO NOT BLOCK.
2. For doors designed to be kept normally closed: FIRE DOOR—KEEP CLOSED.

❖Any door in a fire-resistance-rated wall assembly represents a potential "weak link" in maintaining the degree of compartmentation intended by the code. That is the reason for requiring a rated assembly. The IBC calls for adequate opening protection in the form of a door with a specified fire protection rating. This section allows the fire code official to require signage on or near the rated doors to make the occupants aware of the importance of the door as a fire- and life-safety feature. Also, see the commentary to Section 703.2.2 for a discussion on door closing and the improper use of props to hold doors open.

703.2.2 Hold-open devices and closers. Hold-open devices and automatic door closers, where provided, shall be maintained. During the period that such device is out of service for repairs, the door it operates shall remain in the closed position.

❖The only devices acceptable for holding fire doors open are fire-detector-activated automatic-closing devices that automatically close the doors (or allow the doors to swing closed using self-closing devices) in the event of a fire. Numerous devices, such as electromagnetic hold-opens, pneumatic systems and systems of pulleys and weights connected to a fusible link, are available.

The detection method for the closing device must be consistent with the purpose of the opening protective; that is, doors in smoke barriers must be activated by smoke detectors. Heat detectors or fusible links are adequate where maintenance of the fire-resistance rating alone is required.

Where smoke-detector-activated automatic door closers are used and the detectors are interconnected with a required fire alarm system, the devices and wiring methods must be checked for compatibility with the fire alarm system control panel before installation. Some fire alarm control equipment is compatible only with the manufacturer's automatic smoke

INTERNATIONAL CODE COUNCIL®
Copyright © 2015 ICC. ALL RIGHTS RESERVED. Accessed by David Dammon on Jun 21, 2017 12:30:52 PM pursuant to License Agreement with ICC. No further reproduction or distribution authorized. ANY UNAUTHORIZED REPRODUCTION OR DISTRIBUTION IS A VIOLATION OF THE FEDERAL COPYRIGHT ACT AND THE LICENSE AGREEMENT, AND SUBJECT TO CIVIL AND CRIMINAL PENALTIES THEREUNDER.

detectors. Fire detectors used for automatic door release service in buildings that are not equipped with a fire alarm system must comply with Section 907.3.

A common violation of fundamental safety principles, as well as this section of the code, is having wooden or rubber wedges, or kick-down-type door hold-opens prop open fire doors or smoke barrier doors. This renders them totally ineffective as opening protectives. Building maintenance personnel who do not understand the purpose of these doors often do this to aid movement of people, equipment or air in a hallway or other area without realizing the potential hazard to life safety if a fire were to occur. This violation is especially problematic as it pertains to means of egress stairwells or horizontal exit doors as well. For further information on door closing requirements for fire doors, see Section 716.5.9 of the IBC.

703.2.3 Door operation. Swinging fire doors shall close from the full-open position and latch automatically. The door closer shall exert enough force to close and latch the door from any partially open position.

❖Fire doors must be closed to be effective. Swinging fire doors should be frequently checked to make sure they close and latch on their own power from any position.

703.3 Ceilings. The hanging and displaying of salable goods and other decorative materials from acoustical ceiling systems that are part of a fire-resistance-rated horizontal assembly, shall be prohibited.

❖This section is only applicable to acoustical ceiling systems that are a component of an approved fire-resistance-rated floor/ceiling or roof/ceiling assembly required to be rated by the type of construction of the building. Fire-resistance-rated floor/ceiling and roof/ceiling assemblies must be tested using the methods in ASTM E119 to demonstrate a fire-resistance rating. Locating a substantial fuel load and additional weight directly beneath an acoustical ceiling, however, may expose the ceiling to a direct fire source and weight overload not contemplated in the ASTM E119 testing and that could breech the ceiling, which is an integral part of the tested assembly. Depending on the contribution of the ceiling to the overall fire-resistance rating, this may result in the assembly not functioning as the code intends or failing completely.

New acoustical ceiling systems, whether or not they are a component of an approved fire-resistance-rated assembly, are required to comply with Section 808 of the IBC. Section 808.1.1 of the IBC requires that acoustical ceiling systems comply with the manufacturer's installation instructions. Section 808.1.1.1 of the IBC further requires compliance with several ASTM standards that govern the installation of such systems. Those standards do not contemplate the addition of loads to the metal support framework of the system beyond the load of the system itself plus light fixtures, or other components that might be part of the approved design. Adding any weight to the system beyond that which it was designed for and approved by the building official could lead to failure of the system and should only be done after a review of the structural components by a registered design professional.

703.4 Testing. Horizontal and vertical sliding and rolling fire doors shall be inspected and tested annually to confirm proper operation and full closure. Records of inspections and testing shall be maintained.

❖Annual tests are intended to determine that required fire doors operate freely and close completely. Where fusible links are used as the releasing mechanism, the link may be temporarily removed rather than activated during testing. Fusible links in poor condition must be replaced as part of the maintenance of fire-resistance components. Smoke detectors and heat detectors other than fusible links must be tested as required by the manufacturer's instructions (see NFPA 72 for recommended testing procedures for various fire detectors).

This section also requires that written records of inspection and testing of opening protectives must be kept and should indicate the date, the time and the name of the person conducting the inspection or repair for each rated assembly. These records must be maintained by the owner and should be made available to the fire code official for review when requested. This requirement relieves the fire code official of the administrative burden of maintaining test records.

SECTION 704
FLOOR OPENINGS AND SHAFTS

704.1 Enclosure. Interior vertical shafts including, but not limited to, *stairways*, elevator hoistways, service and utility shafts, that connect two or more stories of a building shall be enclosed or protected as required in Chapter 11. New floor openings in existing buildings shall comply with the *International Building Code*.

❖Vertical openings that are not properly protected can act as a chimney for smoke, hot gases and products of combustion. Unprotected floor openings have been a major contributing factor in many large loss-of-life fires. Unless indicated otherwise, Chapter 11 retroactively requires the enclosure of vertical openings between floors with approved fire barriers. See commentary, Sections 1103.4 through 1103.4.10.

704.2 Opening protectives. Where openings are required to be protected, opening protectives shall be maintained self-closing or automatic-closing by smoke detection. Existing fusible-link-type automatic door-closing devices are permitted if the fusible link rating does not exceed 135°F (57°C).

❖This section requires that fire door assemblies provided for protection of openings in vertical enclosures be self-closing or automatic-closing in order to maintain the integrity of the vertical opening enclosure. This section also recognizes that some opening protectives in existing buildings may already be

INTERNATIONAL CODE COUNCIL®
Copyright © 2015 ICC. ALL RIGHTS RESERVED. Accessed by David Dammon on Jun 21, 2017 12:30:52 PM pursuant to License Agreement with ICC. No further reproduction or distribution authorized. ANY UNAUTHORIZED REPRODUCTION OR DISTRIBUTION IS A VIOLATION OF THE FEDERAL COPYRIGHT ACT AND THE LICENSE AGREEMENT, AND SUBJECT TO CIVIL AND CRIMINAL PENALTIES THEREUNDER.

equipped with heat-actuated closing devices rather than the smoke-detector-actuated devices otherwise required by the section. Such devices are allowed to continue in service, provided that the temperature rating of their fusible element is as low as is available [i.e., 135°F (57°C)] to provide the fastest possible operation in the event of a fire. In the event that an existing fusible link on an opening protective is rated higher than the maximum 135°F (57°C) allowed by this section, it would need to be removed and the door maintained as self-closing or be replaced with a smoke-detector-actuated closer in accordance with this section and Section 907.3. New opening protectives must comply with Section 716 of the IBC. See the commentary to that section for further information.

Bibliography

The following resource material was used in the preparation of the commentary for this chapter of the code:

Code Changes Resource Collection—2015 International Fire Code. Washington, DC: International Code Council, 2014.

INTERNATIONAL CODE COUNCIL®

Copyright © 2015 ICC. ALL RIGHTS RESERVED. Accessed by David Dammon on Jun 21, 2017 12:30:52 PM pursuant to License Agreement with ICC. No further reproduction or distribution authorized. ANY UNAUTHORIZED REPRODUCTION OR DISTRIBUTION IS A VIOLATION OF THE FEDERAL COPYRIGHT ACT AND THE LICENSE AGREEMENT, AND SUBJECT TO CIVIL AND CRIMINAL PENALTIES THEREUNDER.

Chapter 8: Interior Finish, Decorative Materials and Furnishings

General Comments

This chapter is consistent with the *International Building Code*® (IBC®), which regulates the interior finishes of buildings through the regulation of their flame spread potential. The code goes beyond interior finishes, also regulating furnishings and vegetation in buildings in certain occupancies. Additionally, the code addresses interior finishes and decorative materials in existing buildings.

This chapter is related to fire growth and spread potential in terms of the immediate effect on building occupants. The flame spread characteristics of certain materials will affect the potential fire scenarios within a building. Fire-resistance-rated construction, which is dealt with in Chapter 7 of both the IBC and this code, is more concerned with the spread of fire throughout the structure once the fire has reached a substantial size, with an emphasis on structural failure during a fire.

The regulation of flame spread can be traced back to large life-loss events, such as the Cocoanut Grove nightclub fire that killed 492 people in 1942. This fire was thought to have started when a light bulb in a basement cocktail lounge came in contact with the cotton cloth that had been applied to the ceiling for decorative purposes. Post-fire testing of the cotton cloth indicated that it had a flame spread rating of 2,500, more than 33 times the maximum allowable flame spread in today's codes. This factor, in addition to a series of problems with the egress system, led to one of the worst fire disasters in history. The need for these regulations was further emphasized after The Station nightclub fire in West Warwick, Rhode Island, where 100 people died in February 2003. The soundproofing material in the nightclub was not approved for such use and was a major factor in the fire growth.

In addition to flame spread ratings of surface materials, certain furnishing types and vegetation, such as Christmas trees, pose a significant fire hazard because of their potential fire size and intensity. The materials used in furnishings have changed dramatically from past materials and many more plastics are now used for both decoration and furnishings. Plastics not only burn more vigorously than materials like cotton and wood, but also produce more toxic fire effluents.

Purpose

The overall purpose of Chapter 8 is to regulate interior finishes, furnishings and vegetation so they do not significantly add to or create fire hazards in buildings. The provisions tend to aim at occupancies with specific risk characteristics, such as vulnerability of occupants, density of occupants, lack of familiarity with the building and societal expectations of importance. Since this is a fire code, there is an emphasis on both new and existing buildings.

More information on the development of this chapter and its sections, as well as all other revised provisions of the code, can be found in the *Complete Revision History to the 2015 I-Codes.*

SECTION 801 GENERAL

801.1 Scope. The provisions of this chapter shall govern interior finish, interior trim, furniture, furnishings, decorative materials and decorative vegetation in buildings. Existing buildings shall comply with Sections 803 through 808. New buildings shall comply with Sections 804 through 808, and Section 803 of the *International Building Code*.

❖This chapter reflects the same scope of issues as Chapter 8 of the IBC but has a slightly different emphasis. Fire codes are intended to address fire hazards of buildings and facilities over their life span; therefore, there is greater emphasis on the furnishings and contents of buildings and on the maintenance of flame spread indexes over time. Section 803 requires the same flame spread indexes as the IBC. Generally, regulating the combustibility of contents is a fairly difficult task once the building is occupied and is considered existing. Because of this difficulty, only some combustible contents and decorative materials are regulated in a limited number of occupancies. More specifically, the use of combustible furnishings, contents and decorative materials in Group A occupancies is addressed because of the high occupant load and the lack of familiarity of most occupants with the building. The type of furniture allowed in Group I occupancies is limited because of the vulnerability of the occupants and the likely fire scenarios that may occur when the building is nonsprinklered.

INTERNATIONAL CODE COUNCIL®
Copyright © 2015 ICC. ALL RIGHTS RESERVED. Accessed by David Dammon on Jun 21, 2017 12:30:52 PM pursuant to License Agreement with ICC. No further reproduction or distribution authorized. ANY UNAUTHORIZED REPRODUCTION OR DISTRIBUTION IS A VIOLATION OF THE FEDERAL COPYRIGHT ACT AND THE LICENSE AGREEMENT, AND SUBJECT TO CIVIL AND CRIMINAL PENALTIES THEREUNDER.

SECTION 802
DEFINITIONS

802.1 Definitions. The following terms are defined in Chapter 2:

FLAME SPREAD.

FLAME SPREAD INDEX.

INTERIOR FLOOR-WALL BASE.

SITE-FABRICATED STRETCH SYSTEM.

SMOKE-DEVELOPED INDEX.

❖Definitions of terms can help in the understanding and application of the code requirements. This section directs the code user to Chapter 2 for the proper application of the indicated terms used in this chapter. Terms may be defined in Chapter 2 or in another *International Code*® (I-Code®) as indicated in Section 201.3, or the dictionary meaning may be all that is needed (see commentary, Sections 201 through 201.4).

SECTION 803
INTERIOR WALL AND CEILING FINISH AND TRIM IN EXISTING BUILDINGS

803.1 General. The provisions of this section shall limit the allowable fire performance and smoke development of interior wall and ceiling finishes and interior wall and ceiling trim in existing buildings based on location and occupancy classification. Interior wall and ceiling finishes shall be classified in accordance with Section 803 of the *International Building Code*. Such materials shall be grouped in accordance with ASTM E84, as indicated in Section 803.1.1, or in accordance with NFPA 286, as indicated in Section 803.1.2.

Exceptions:

1. Materials having a thickness less than 0.036 inch (0.9 mm) applied directly to the surface of walls and ceilings.
2. Exposed portions of structural members complying with the requirements of buildings of Type IV construction in accordance with the *International Building Code* shall not be subject to interior finish requirements.

❖This section specifically addresses existing buildings, whereas Sections 804 through 808 address both new and existing buildings. This section provides two methods for compliance with interior wall and ceiling finish fire performance requirements. Both are fire test methods that address the potential for flame to spread.

The first test—ASTM E84, also known as the "Steiner tunnel" or the "tunnel test"—has been around for many years. The second test method referenced is NFPA 286, which is called a "room corner test." These two tests will be discussed further in the commentary for Sections 803.1.1 and 803.1.2, respectively. Requirements for interior wall and ceiling finishes and interior wall and ceiling trim within existing buildings are based upon occupancy. Section 803.3 and Table 803.3 address these occupancy limitations in more detail.

There are two exceptions to Section 803.1 that would allow materials without testing. They are very thin materials, less than or equal to 0.036 inch (0.9 mm) in thickness, when applied directly to the wall, and exposed structural members in Type IV construction. These exceptions are the same as those in the IBC.

Note that Section 803 also addresses the following:

- Textiles and expanded vinyl used as a wall or ceiling finish.
- Limitations on the use of foam.
- Polyethylene and polypropylene used as interior finish.
- Site-fabricated stretch systems.

803.1.1 Classification in accordance with ASTM E84. Interior finish materials shall be grouped in the following classes in accordance with their flame spread and smoke-developed index where tested in accordance with ASTM E84.

Class A: flame spread index 0–25; smoke-developed index 0–450.

Class B: flame spread index 26–75; smoke-developed index 0–450.

Class C: flame spread index 76–200; smoke-developed index 0–450.

❖Wall and ceiling interior finish and trim materials are required to have limits on flame spread and smoke-developed indexes as prescribed in Section 803.3, based upon occupancy. ASTM E84 is one of the tests available to demonstrate compliance with the requirements of Section 803. This test method has been around since 1944 [see Commentary Figure 803.1.1(1)]. It is the primary method used but, as noted earlier, NFPA 286 is an alternative test, which is discussed in the commentary for Section 803.1.2. ASTM E84 is intended to determine the relative burning behavior of materials on exposed surfaces, such as ceilings and walls, by visually observing the flame spread along the test specimen [see Commentary Figure 803.1.1(2)]. Flame spread and smoke density indexes are then reported. The test method is not appropriate for materials that are not capable of supporting themselves, or of being supported in the test tunnel. There may also be concerns with materials that drip, melt or delaminate and that are very thin. A distinction is made, therefore, for textile wall or ceiling coverings, expanded vinyl wall or ceiling coverings, wood veneers applied on site, foam plastic insulation materials, high density polyethene and polypropylene and site-fabricated stretch systems (see Sections 803.5, 803.6, 803.7 and 803.8, 803.9 and 803.10).

ASTM E84 establishes a flame spread index based on the area under a curve when the actual flame spread distance is plotted as a function of time. The code has divided the acceptable range of flame

INTERNATIONAL CODE COUNCIL®
Copyright © 2015 ICC. ALL RIGHTS RESERVED. Accessed by David Dammon on Jun 21, 2017 12:30:52 PM pursuant to License Agreement with ICC. No further reproduction or distribution authorized. ANY UNAUTHORIZED REPRODUCTION OR DISTRIBUTION IS A VIOLATION OF THE FEDERAL COPYRIGHT ACT AND THE LICENSE AGREEMENT, AND SUBJECT TO CIVIL AND CRIMINAL PENALTIES THEREUNDER.

spread indexes (0–200) into three classes: Class A (0–25), Class B (26–75) and Class C (76–200). For all three classes, the code has established a common acceptable range of smoke-developed index of 0–450. An indication of relative fire performance is as follows: an inorganic reinforced-cement board has a flame spread and smoke-developed index of zero, while select grade red oak wood flooring has a flame spread and smoke-developed index of 100. Not to preclude more detailed information resulting from an ASTM E84 test report, Commentary Figure 803.1.1(3) identifies the typical flame spread properties of certain building materials.

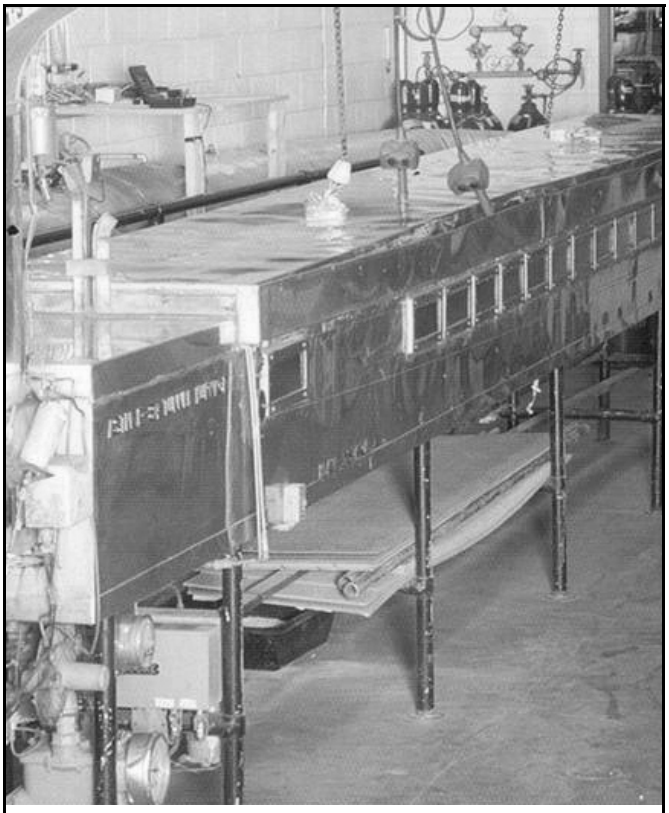

Figure 803.1.1(1)
ASTM E84 TUNNEL TEST



Figure 803.1.1(2)
FLAME IN TUNNEL TEST

803.1.2 Classification in accordance with NFPA 286. Interior wall or ceiling finishes shall be allowed to be tested in accordance with NFPA 286. Finishes tested in accordance with NFPA 286 shall comply with Section 803.1.2.1. Interior wall and ceiling finish materials tested in accordance with NFPA 286 and meeting the acceptance criteria of Section 803.1.2.1 shall be allowed to be used where a Class A classification in accordance with ASTM E84 is required.

❖The alternative test method for determining compliance for interior wall and ceiling finish and trim, other than textiles, is found in test standard NFPA 286. This test is known as a "room corner" fire test and is similar to that referenced for textile wall coverings in Section 803.5 (see NFPA 265) [see Commentary Figures 803.1.2(1) and 803.1.2(2)]. In this test, materials are mounted covering three walls of the compartment (excluding the wall containing the door) and the ceiling. In the case where testing is only for ceiling finish properties, the sample only needs to be mounted on the ceiling. Then a fire source consisting of a gas burner is placed in one corner, flush against both walls (furthest from the doorway) of the compartment with the following exposure conditions:

- 40 kilowatts (kW) for 5 minutes; then
- 160 kW for 10 minutes.

Material	Flame spread
Glass-fiber sound-absorbing blanks	15 to 30
Mineral-fiber sound-absorbing panels	10 to 25
Shredded wood fiberboard (treated)	20 to 25
Sprayed cellulose fibers (treated)	20
Aluminum (with baked enamel finish on one side)	5 to 10
Asbestos-cement board	0
Brick or concrete block	0
Cork	175
Gypsum board (with paper surface on both sides)	10 to 25
Northern pine (treated)	20
Southern pine (untreated)	130 to 190
Plywood paneling (untreated)	75 to 275
Plywood paneling (treated)	100
Carpeting	10 to 600
Concrete	0

Figure 803.1.1(3)
TYPICAL FLAME SPREAD OF COMMON MATERIALS

INTERNATIONAL CODE COUNCIL®
Copyright © 2015 ICC. ALL RIGHTS RESERVED. Accessed by David Dammon on Jun 21, 2017 12:30:52 PM pursuant to License Agreement with ICC. No further reproduction or distribution authorized. ANY UNAUTHORIZED REPRODUCTION OR DISTRIBUTION IS A VIOLATION OF THE FEDERAL COPYRIGHT ACT AND THE LICENSE AGREEMENT, AND SUBJECT TO CIVIL AND CRIMINAL PENALTIES THEREUNDER.

The test then measures heat release and smoke release through the collection of the fire effluents and measurement of oxygen concentrations in the exhaust duct. Heat release is calculated by the oxygen consumption principle, which has shown that heat release is a function of the decrease in oxygen concentration in the fire effluents. Thus, exhaust duct measurements include temperatures, pressures and smoke values for use in the calculations. Temperatures and heat fluxes are also measured in the room. This generally provides a more realistic understanding of the fire hazard associated with the materials (see also Section 803.5.1 for more details on the room corner test concept).

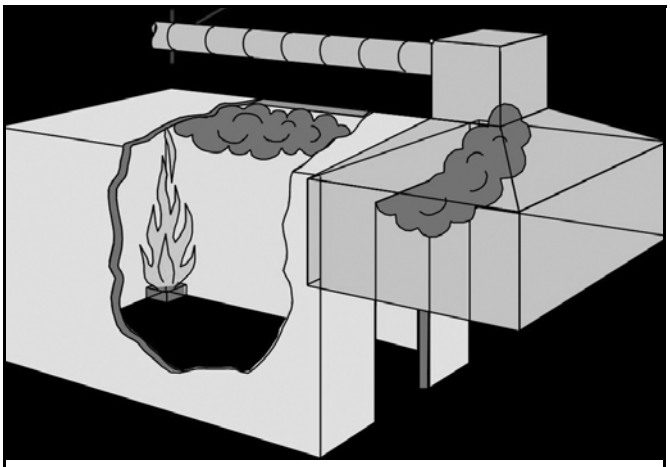

Figure 803.1.2(1)
ROOM CORNER TEST



Figure 803.1.2(2)
FLAME IN ROOM CORNER TEST

The NFPA 286 test method does not contain pass/fail criteria; however, the code provides such criteria in Section 803.1.2.1.

803.1.2.1 Acceptance criteria for NFPA 286. The interior finish shall comply with the following:

1. During the 40 kW exposure, flames shall not spread to the ceiling.
2. The flame shall not spread to the outer extremity of the sample on any wall or ceiling.
3. Flashover, as defined in NFPA 286, shall not occur.
4. The peak heat release rate throughout the test shall not exceed 800 kW.
5. The total smoke released throughout the test shall not exceed 1,000 m^2.

❖As noted in Section 803.1.2, there are two levels of exposure during an NFPA 286 fire test in order to better represent a growing fire: 40 kW fire size for 5 minutes and 160 kW for 10 minutes. The 40 kW exposure represents the beginning of a fire where the initial spread is critical; therefore, the stated criteria is that the fire cannot spread to the ceiling. The 160 kW exposure is obviously a more intense fire situation and the criteria relates to preventing flashover (as defined by NFPA 286) and the extent of flame spread throughout the entire test assembly. There is also a total smoke production criterion of 1,000 m^2. It should be noted that the criteria used in NFPA 286 and NFPA 265 to determine if flashover has occurred would include any two of the following:

- Heat release exceeds 1 mega watt (MW).
- Heat flux at the floor exceeds 20 kW/m^2.
- Average upper layer temperature exceeds 1112°F (600°C).
- Flames exit the doorway.
- Autoignition of paper target on the floor occurs.

It should be noted that there is an additional criteria when applying NFPA 286 for new buildings, which is a maximum peak heat release rate of 800 kW. The reasoning for this criterion relates to the fact that some poorer performing materials can achieve compliance with the flashover criteria but could have a higher peak heat release rate.

803.2 Stability. Interior finish materials regulated by this chapter shall be applied or otherwise fastened in such a manner that such materials will not readily become detached where subjected to room temperatures of 200°F (93°C) for not less than 30 minutes.

❖Interior finishes are not to become detached for a minimum of 30 minutes under exposure to elevated temperatures [200°F (93°C)]. No standard test method has yet been developed to evaluate this requirement. Some sections of the IBC, however, do offer some

INTERNATIONAL CODE COUNCIL®
Copyright © 2015 ICC. ALL RIGHTS RESERVED. Accessed by David Dammon on Jun 21, 2017 12:30:52 PM pursuant to License Agreement with ICC. No further reproduction or distribution authorized. ANY UNAUTHORIZED REPRODUCTION OR DISTRIBUTION IS A VIOLATION OF THE FEDERAL COPYRIGHT ACT AND THE LICENSE AGREEMENT, AND SUBJECT TO CIVIL AND CRIMINAL PENALTIES THEREUNDER.

additional guidance. For example, the performance of the method of attachment of finish materials during a fire-resistance test will usually be an adequate indication of performance. The stability criterion is necessary because, if these materials were to fall off of walls or the ceiling during a fire, they may contribute to the fire and increase the hazard beyond what is typically expected.

803.3 Interior finish requirements based on occupancy. Interior wall and ceiling finish shall have a flame spread index not greater than that specified in Table 803.3 for the group and location designated.

❖The requirements for flame spread indexes for interior finish materials applied to walls and ceilings are contained in Table 803.3. The referenced test for determining flame spread indexes is ASTM E84, which establishes a relative measurement of flame spread across the surface of the material. The classifications used in Table 803.3 are defined in Section 803.1.1 (see the commentary to Section 803.1.1 for additional information on the uses and limitations of the test procedure). Again, NFPA 286 can be used as an alternative to ASTM E84. Passing NFPA 286 means that the material would be considered to be equivalent to a Class A material.

TABLE 803.3. See below.

❖This table prescribes the minimum requirements for interior finishes applied to walls and ceilings; therefore, the use of a Class A material in an area that requires a minimum Class B material is always allowed. Likewise, when the table requires Class C materials, Classes A and B can also be used. The requirements are based on the use of the space. To determine the applicable criteria, first determine whether the space is an exit passageway, interior exit stairway or interior exit ramp; a corridor; or a room or

TABLE 803.3
INTERIOR WALL AND CEILING FINISH REQUIREMENTS BY OCCUPANCY[k]

GROUP	SPRINKLERED[l]			NONSPRINKLERED		
	Interior exit stairways and interior exit ramps and exit passageways[a, b]	Corridors and enclosure for exit access stairways and exit access ramps	Rooms and enclosed spaces[c]	Interior exit stairways and interior exit ramps and exit passageways[a, b]	Corridors and enclosure for exit access stairways and exit access ramps	Rooms and enclosed spaces[c]
A-1 & A-2	B	B	C	A	A[d]	B[e]
A-3[f], A-4, A-5	B	B	C	A	A[d]	C
B, E, M, R-1, R-4	B	C	C	A	B	C
F	C	C	C	B	C	C
H	B	B	C[g]	A	A	B
I-1	B	C	C	A	B	B
I-2	B	B	B[h, i]	A	A	B
I-3	A	A[j]	C	A	A	B
I-4	B	B	B[h, i]	A	A	B
R-2	C	C	C	B	B	C
R-3	C	C	C	C	C	C
S	C	C	C	B	B	C
U	No Restrictions			No Restrictions		

For SI: 1 inch = 25.4 mm, 1 square foot = 0.0929 m^2.

a. Class C interior finish materials shall be allowed for wainscoting or paneling of not more than 1,000 square feet of applied surface area in the grade lobby where applied directly to a noncombustible base or over furring strips applied to a noncombustible base and fireblocked as required by Section 803.11 of the *International Building Code*.

b. In exit enclosures of buildings less than three stories in height of other than Group I-3, Class B interior finish for nonsprinklered buildings and Class C for sprinklered buildings shall be permitted.

c. Requirements for rooms and enclosed spaces shall be based upon spaces enclosed by partitions. Where a fire-resistance rating is required for structural elements, the enclosing partitions shall extend from the floor to the ceiling. Partitions that do not comply with this shall be considered as enclosing spaces and the rooms or spaces on both sides shall be considered as one. In determining the applicable requirements for rooms and enclosed spaces, the specific occupancy thereof shall be the governing factor regardless of the group classification of the building or structure.

d. Lobby areas in Group A-1, A-2 and A-3 occupancies shall not be less than Class B materials.

e. Class C interior finish materials shall be allowed in Group A occupancies with an occupant load of 300 persons or less.

f. In places of religious worship, wood used for ornamental purposes, trusses, paneling or chancel furnishing shall be allowed.

g. Class B material is required where the building exceeds two stories.

h. Class C interior finish materials shall be allowed in administrative spaces.

i. Class C interior finish materials shall be allowed in rooms with a capacity of four persons or less.

j. Class B materials shall be allowed as wainscoting extending not more than 48 inches above the finished floor in corridors.

k. Finish materials as provided for in other sections of this code.

l. Applies when the vertical exits, exit passageways, corridors or rooms and spaces are protected by an approved automatic sprinkler system installed in accordance with Section 903.3.1.1 or 903.3.1.2.

INTERNATIONAL CODE COUNCIL®
Copyright © 2015 ICC. ALL RIGHTS RESERVED. Accessed by David Dammon on Jun 21, 2017 12:30:52 PM pursuant to License Agreement with ICC. No further reproduction or distribution authorized. ANY UNAUTHORIZED REPRODUCTION OR DISTRIBUTION IS A VIOLATION OF THE FEDERAL COPYRIGHT ACT AND THE LICENSE AGREEMENT, AND SUBJECT TO CIVIL AND CRIMINAL PENALTIES THEREUNDER.

enclosed space. Interior finishes in spaces that are not separated from a corridor (for example, waiting areas in business or health care facilities) must comply with the requirements for a corridor space. As shown in the table, the code places a higher emphasis on the allowable flame spread index for exits than for enclosed rooms because of the critical nature and relative importance of maintaining exit integrity to aid in building evacuation. Numerous notes amend the basic requirements of Table 803.3. Notes a through l apply only where specifically referenced in the table.

Note a
A limited amount of combustible wainscotting or other paneling material does not appreciably reduce the level of safety of an exit element; therefore, up to 1,000 square feet (93 m^2) of Class C wainscotting or paneling is permitted by Note a in a grade-level lobby used as an exit element when applied in accordance with Section 803.3 of the IBC.

Note b
This note allows the reduction of flame spread indexes in exit enclosures in buildings less than three stories high, not including Group I-3 occupancies. The time required to exit a building less than three stories is much shorter than that for taller buildings and enough time usually exists to use other exit enclosures.

Note c
Because the intended use of certain rooms in buildings is sometimes more hazardous than the group classification for the overall building, the finish classification must be determined by the group and occupancy classification for the room or area. Additionally, rooms or enclosed spaces not properly separated from one another must be looked at as a single space for the purposes of applying flame spread index requirements.

Note d
This note allows lobbies in Group A-1, A-2 and A-3 occupancies to be Class B instead of Class A. This is likely a result of the low fire load in such areas.

Note e
Note e recognizes that with a relatively small number of occupants, egress is accomplished more quickly and the activities tend to be more structured and manageable than with a large number of occupants. When the design occupant load is 300 or less in rooms or spaces of Group A-1 and A-2 occupancies, the interior finish materials may be Class C instead of Class B for rooms and enclosed spaces.

Note f
This note correlates with the allowance in Section 807.5.1.3 for places of religious worship.

Note g
The time required for exiting increases with the number of stories of the structure. Interior finish materials can play a major role in fire spread within a structure. Because of the materials stored and used within a Group H occupancy, interior wall and ceiling finish materials with high heat release (or flame spread) potential can have a significant impact on the way a fire spreads throughout the building. To abate the hazard of rapid fire growth, Note g places a further restriction of a minimum of a Class B classification on interior finishes of enclosed spaces within sprinklered buildings when the building exceeds two stories.

Note h
Spaces that are used as offices in Group I-2 and I-4 occupancies have a low occupant load, the activity in those spaces is generally not very hazardous and the occupants are not as vulnerable as the general population of those facilities, partially because of their knowledge of the exits; therefore, Class C materials are allowed in administrative spaces.

Note i
Rooms in Group I-2 and I-4 occupancies with low occupant loads (four or less) pose a low risk and are quickly evacuated; therefore, Class C finish materials are appropriate.

Note j
In Group I-3 occupancy corridors, Note j allows interior finish materials, such as wainscotting, that are a maximum height of 48 inches (1219 mm) above the floor to be Class B. This reduction from Class A is based on full-scale fire research demonstrating that Class B wall finish used on the lower 4 feet (1219 mm) of a corridor wall is not likely to spread fire because fire primarily spreads on ceilings and upper walls before affecting the lower portions of walls.

Note k
This note is referenced in the title of Table 803.3 and refers to other sections of the code that may have further restrictions or allowances for material classification for specific uses.

Note l
Sprinklered facilities provide more protection to occupants than nonsprinklered facilities. In many instances, materials with lower restrictions on fire performance may be used, as shown in Table 803.3. The footnote clarifies what areas of the building need to be sprinklered in order to qualify for these reductions in interior finish classifications.

803.4 Fire-retardant coatings. The required flame spread or smoke-developed index of surfaces in existing buildings shall be allowed to be achieved by application of *approved* fire-retardant coatings, paints or solutions to surfaces having a flame spread index exceeding that allowed. Such applications shall comply with NFPA 703 and the required fire-retardant properties shall be maintained or renewed in accordance with the manufacturer's instructions.

❖Many times, fire retardants can be used to reduce the flame spread index of a material that, without treatment, has an index higher than permissible. It should

INTERNATIONAL CODE COUNCIL®
Copyright © 2015 ICC. ALL RIGHTS RESERVED. Accessed by David Dammon on Jun 21, 2017 12:30:52 PM pursuant to License Agreement with ICC. No further reproduction or distribution authorized. ANY UNAUTHORIZED REPRODUCTION OR DISTRIBUTION IS A VIOLATION OF THE FEDERAL COPYRIGHT ACT AND THE LICENSE AGREEMENT, AND SUBJECT TO CIVIL AND CRIMINAL PENALTIES THEREUNDER.

be recognized that the most desirable situation is to have a material that has a specific flame spread rating or has been tested and passed in accordance with NFPA 286. It is also recognized that in existing buildings there are often situations where such an approach is not possible and the application of fire retardants is the only solution. Flame retardants may either be factory or field applied. A wide variety of proprietary flame retardants for field application are on the market. Both factory- and field-applied products may require reapplication to sustain the flame retardancy of a particular article. When reviewing an installation, the fire code official should require the owner or other responsible person to submit a manufacturer's or contractor's certificate documenting a given treatment. This documentation should specify if a particular treatment must be repeated and, if so, at what intervals. If no retreatment interval is specified, the manufacturer's or contractor's warranty should be recognized as the retreatment interval because it is the longest period for which that individual accepts responsibility for the product's performance. Fire code officials evaluating flame-retardant treatments should carefully evaluate the performance conditions of these preparations. Many of them are not intended to be exposed to direct sunlight, high humidity or weather. Flame-retardant treatment must be used or applied in a manner consistent with the manufacturer's instructions.

There are several methods of increasing the flame resistance of materials. The strategy is either to slow the ignition process or control combustion itself. Commentary Figure 803.4 lists various methods and whether they can be achieved in the field.

It should also be noted that in more recent times there has been growing concern over the use of polybrominated diphenyl ethers (PBDE) to achieve flame resistance due to the possible health effects. Some states, including California, have passed legislation to ban the use of such products. Several manufacturers have also begun a voluntary phase-out of such chemicals. Federal legislation is also under consideration.

803.5 Textiles. Where used as interior wall or ceiling finish materials, textiles, including materials having woven or nonwoven, napped, tufted, looped or similar surface, shall comply with the requirements of this section.

❖This section is primarily intended to apply to carpet and carpet-like wall or ceiling coverings that include textile materials having woven or nonwoven, napped, tufted, looped or similar surfaces. If not addressed, these easily ignitable materials can contribute extensively to a fire.

803.5.1 Textile wall or ceiling coverings. Textile wall or ceiling coverings shall comply with one of the following:

1. The wall or ceiling covering shall have a Class A flame spread index in accordance with ASTM E84 or UL 723, and be protected by automatic sprinklers installed in accordance with Section 903.3.1.1 or 903.3.1.2.
2. The wall covering shall meet the criteria of Section 803.5.1.1 when tested in the manner intended for use in

METHOD OF ACHIEVING FLAME RESISTANCE	APPROPRIATE USE	APPLICATION	OTHER INFORMATION
Chemical	Synthetics; Plastics	Chemical added during manufacturing process Example: Polymers	Actual chemical change occurs Changes the behavior of materials
Impregnation	Absorbent or porous materials; not wood (too dense)	In the field by spray or immersion	Sometimes done at wet pulp stage (Paper, acoustical tile and building panels)
Coating	Nonabsorbant materials Example: Wood paneling, ceiling tiles, etc.	In the field by spray, brush or roller application	Actively inhibits flame spread or simply provides a noncombustible surface Needs periodic renewal per manufacturer
Pressure Impregnation	Dense, nonabsorbent materials such as wood	Only during manufacturing	Replaces air pockets with fire-retardant solution Chemical deposits while drying Vacuum-pressure methods are used to impregnate materials Far more effective than impregnation alone

Figure 803.4
APPLIED FLAME-RETARDANT COATINGS

INTERNATIONAL CODE COUNCIL®
Copyright © 2015 ICC. ALL RIGHTS RESERVED. Accessed by David Dammon on Jun 21, 2017 12:30:52 PM pursuant to License Agreement with ICC. No further reproduction or distribution authorized. ANY UNAUTHORIZED REPRODUCTION OR DISTRIBUTION IS A VIOLATION OF THE FEDERAL COPYRIGHT ACT AND THE LICENSE AGREEMENT, AND SUBJECT TO CIVIL AND CRIMINAL PENALTIES THEREUNDER.

accordance with NFPA 265 using the product-mounting system, including adhesive, of actual use.

3. The wall or ceiling covering shall meet the criteria of Section 803.1.2.1 when tested in accordance with NFPA 286 using the product-mounting system, including adhesive, of actual use.

❖This section requires that textile materials on walls or ceilings have a Class A flame spread index and be located in a sprinklered area in accordance with NFPA 13 or 13R. As an alternative to a Class A flame spread index and sprinklers, testing in accordance with NFPA 265 may be used for textile wall coverings. Just as discussed for NFPA 286, NFPA 265 is known as a full-scale room corner fire test. This test helps to determine the contribution of textile wall coverings to overall fire growth and spread in a compartment fire. Past research conducted with this kind of configuration has shown that flame spread indexes produced by ASTM E84 or UL 723 may not reliably predict the fire behavior of textile wall coverings in realistic fire scenarios. Thus, NFPA 265 is based on a more reliable test procedure, developed at the University of California. The research findings are described in a report from the University of California Fire Research Laboratory titled, "Room Fire Experiments of Textile Wall Coverings." The NFPA 265 test is only slightly different from NFPA 286. NFPA 286 is more severe in three ways:

1. The gas diffusion burner used to expose the material on the wall in the room fire test starts with a heat release rate exposure of 40 kW for the first 5 minutes in both tests, but it is then followed by 150 kW for 10 minutes in NFPA 265 and 160 kW for 10 minutes in NFPA 286.
2. The gas burner is placed 2 inches (51 mm) from each of the walls in NFPA 265, whereas it is placed flush against both walls in NFPA 286.
3. The test sample is mounted on the walls only in NFPA 265, whereas it is mounted on both the walls and ceiling in NFPA 286.

A key result of the difference in intensity and location of the gas burner is that the burner flame does not reach the ceiling during the 150 kW exposure (while it does reach the ceiling during the 160 kW exposure in NFPA 286). Therefore, NFPA 265 is not considered suitable for testing ceiling coverings.

It should be noted that the code does not require measurement of smoke release from materials tested to NFPA 265 unless the material is newly introduced, but does have a smoke pass/fail criterion for NFPA 286. NFPA 265 has two test methods, but the code only allows the use of Method B. In the Method A test protocol, 2-foot-wide (610 mm) strips of the material are mounted on the two walls closest to the corner with the burner, whereas in the Method B test protocol the sample is mounted completely covering three walls (except for the wall containing the door). Therefore, Method B is more severe. This test method does not contain pass/fail criteria, just as NFPA 286 does not. The code therefore provides such criteria, based on the use of only the Method B test protocol from NFPA 265, in Section 803.5.1.1. It should be noted that the IBC also only allows the use of Method B from NFPA 265. The code applies to existing buildings and the IBC would only apply to new buildings with regard to this particular test.

803.5.1.1 Method B test protocol. During the Method B protocol, the textile wall covering or expanded vinyl wall covering shall comply with the following:

1. During the 40-kW exposure, flames shall not spread to the ceiling.
2. The flame shall not spread to the outer extremities of the samples on the 8-foot by 12-foot (203 by 305 mm) walls.
3. Flashover, as defined in NFPA 265, shall not occur.
4. For newly introduced wall and ceiling coverings, the total smoke released throughout the test shall not exceed 1,000 m^2.

❖The criteria are very similar to those used in NFPA 286. The pass/fail criteria in the code are as follows:

The flame cannot spread to the ceiling when the textile is exposed to the burner at 40 kW.

With the burner at 150 kW, the following criteria must be met:

- Flashover, as defined by NFPA 265, must not occur.
- The fire cannot reach the outer areas of the 8-foot by 12-foot (2438 mm by 8657 mm) wall.
- Newly introduced wall coverings are limited to a total smoke release of 1,000 m^2.

803.5.2 Newly introduced textile wall and ceiling coverings. Newly introduced textile wall and ceiling coverings shall comply with one of the following:

1. The wall or ceiling covering shall have a Class A flame spread index in accordance with ASTM E84 or UL 723, and be protected by automatic sprinklers installed in accordance with Section 903.3.1.1 or 903.3.1.2. Test specimen preparation and mounting shall be in accordance with ASTM E2404.
2. The wall covering shall meet the criteria of Section 803.5.1.1 when tested in the manner intended for use in accordance with NFPA 265 using the product-mounting system (including adhesive) of actual use.
3. The wall or ceiling covering shall meet the criteria of Section 803.1.2.1 when tested in accordance with NFPA 286 using the product-mounting system (including adhesive) of actual use.

❖This section is basically the same as Section 803.5.1 with one exception focused on preparing test specimens for the tunnel test (ASTM E84). The reason for this difference is that existing materials would possi-

INTERNATIONAL CODE COUNCIL®
Copyright © 2015 ICC. ALL RIGHTS RESERVED. Accessed by David Dammon on Jun 21, 2017 12:30:52 PM pursuant to License Agreement with ICC. No further reproduction or distribution authorized. ANY UNAUTHORIZED REPRODUCTION OR DISTRIBUTION IS A VIOLATION OF THE FEDERAL COPYRIGHT ACT AND THE LICENSE AGREEMENT, AND SUBJECT TO CIVIL AND CRIMINAL PENALTIES THEREUNDER.

bly be out of compliance since they were tested prior to the development of ASTM E2404, which has specific mounting requirements for materials during the test. It was felt reasonable in existing buildings to hold new textile wall and ceiling coverings to this higher standard. The correct specimen preparation and mounting method for textile, paper and vinyl wall and ceiling coverings tested in accordance with the ASTM E84 (Steiner tunnel) test is ASTM E2404. The ASTM E05 Committee on Fire Standards developed a standard practice for test specimen preparation and mounting, ASTM E2404, for textile, paper or vinyl wall or ceiling coverings specifically to provide a mandatory, standardized way of preparing test specimens and mounting them in the tunnel. This replaced optional guidance on mounting methods found in the appendix of ASTM E84 and ensures testing consistency.

This section also allows the use of NFPA 265 and NFPA 286 with the same criteria as cited in Section 803.5.1. Note that NFPA 265 is not applicable for the testing of ceiling materials due to the limitations of that test (see commentary, Section 803.5.1).

803.6 Expanded vinyl wall or ceiling coverings. Expanded vinyl wall or ceiling coverings shall comply with one of the following:

1. The wall or ceiling covering shall have a Class A flame spread index in accordance with ASTM E84 or UL 723, and be protected by automatic sprinklers installed in accordance with Section 903.3.1.1 or 903.3.1.2. Test specimen preparation and mounting shall be in accordance with ASTM E2404.
2. The wall covering shall meet the criteria of Section 803.5.1.1 when tested in the manner intended for use in accordance with NFPA 265 using the product-mounting system (including adhesive) of actual use.
3. The wall or ceiling covering shall meet the criteria of Section 803.1.2.1 when tested in accordance with NFPA 286 using the product-mounting system (including adhesive) of actual use.

❖This section contains the same criteria as Section 803.5.2 but is specific to expanded vinyl wall or ceiling coverings. It allows all three tests of ASTM E84 with products mounted in compliance with ASTM E2404 and in sprinklered buildings.

This section also differs in that it does not limit the requirements to newly introduced materials but instead will cover any expanded vinyl wall or ceiling coverings. See also the commentary to Sections 803.5.2 and 803.5.1.

803.7 Facings or wood veneers intended to be applied on site over a wood substrate. Facings or veneers intended to be applied on site over a wood substrate shall comply with one of the following:

1. The facing or veneer shall have a Class A, B or C flame spread index and smoke-developed index, based on the requirements of Table 803.3, in accordance with ASTM E84 or UL 723. Test specimen preparation and mounting shall be in accordance with ASTM E2404.
2. The facing or veneer shall meet the criteria of Section 803.1.2.1 when tested in accordance with NFPA 286 using the product-mounting system, including adhesive, described in Section 5.8.9 of NFPA 286.

❖This section addresses the correct mounting method for wall coverings in ASTM E84 (namely ASTM E2404), to detail the proper way to test facings or wood veneers intended to be applied over a wood substrate. They are to be treated the same way as any other wall or ceiling covering applied “on site” to a wood substrate, but differently from panels where the facing or veneer is applied in the factory over the wood substrate and the entire panel is installed. A separate proposal addresses factory-produced panels. This section allows the use of either ASTM E84 or NFPA 286. As noted, the ASTM E2404 mounting method must be applied if the ASTME E84 test method is chosen.

803.8 Foam plastic materials. Foam plastic materials shall not be used as interior wall and ceiling finish unless specifically allowed by Section 803.8.1 or 803.8.2. Foam plastic materials shall not be used as interior trim unless specifically allowed by Section 803.8.3.

❖This section allows foam plastic interior wall and ceiling finish materials to be used in accordance with Section 803.8.1 or 803.8.2. The ASTM E84 test has the potential to produce misleading fire test results when used to test foam plastic interior wall and ceiling finish materials. In particular, if the foam plastics have low density, the amount of material may be insufficient for the ASTM E84 Steiner tunnel test to properly evaluate the plastics’ flame spread characteristics. Moreover, if the foams are thermoplastic, they are likely to melt and fall away from the flame front when exposed in the test and provide artificially low flame spread information on the surface of the test sample, and thus give an inaccurate indication of the fire hazard. It was thus generally agreed, in the early 1970s, that foam insulation products should be assessed for combustibility with a test that represents more realistically the way the materials behave in actual applications, and tests, such as UL 1715, UL 1040, FM 4880 and NFPA 286, were developed for such purposes to be used instead of ASTM E84.

803.8.1 Combustibility characteristics. Foam plastic materials shall be allowed on the basis of fire tests that substantiate their combustibility characteristics for the use intended under actual fire conditions, as indicated in Section 2603.9 of the *International Building Code*. This section shall apply both to exposed foam plastics and to foam plastics used in conjunction with a textile or vinyl facing or cover.

❖This section requires that when foam plastics are used as interior wall or ceiling finish, they must meet the requirements of Section 2603.9 of the IBC. The IBC states that foam plastic is not permitted to be used exposed as interior finish unless it has been

INTERNATIONAL CODE COUNCIL®
Copyright © 2015 ICC. ALL RIGHTS RESERVED. Accessed by David Dammon on Jun 21, 2017 12:30:52 PM pursuant to License Agreement with ICC. No further reproduction or distribution authorized. ANY UNAUTHORIZED REPRODUCTION OR DISTRIBUTION IS A VIOLATION OF THE FEDERAL COPYRIGHT ACT AND THE LICENSE AGREEMENT, AND SUBJECT TO CIVIL AND CRIMINAL PENALTIES THEREUNDER.

tested under actual fire conditions. The IBC requires foam plastic insulation to be tested in accordance with a standard such as FM 4880, UL 1040, NFPA 286 or UL 1715, all of which are large-scale fire tests measuring heat release. NFPA 286 does not have pass/fail criteria; they are contained in Section 803.1.2 of the code. This section also clarifies that covering the foam plastic with a vinyl or textile cover (as is often done in high school gymnasiums) will not change the requirements, so that the same tests should be applied to the covered foam.

803.8.2 Thermal barrier. Foam plastic material shall be allowed if it is separated from the interior of the building by a thermal barrier in accordance with Section 2603.4 of the *International Building Code*.

❖Another option the code allows is to use foam plastic when it is separated from the room interior by means of a thermal barrier, so that the foam plastic is not exposed and is not actually used as interior finish. This section refers the user to Section 2603.4 of the IBC to address how this is to be accomplished. Section 2603.4 of the IBC requires a $^1/_2$-inch (12.7 mm) gypsum wallboard or equivalent thermal barrier. Section 2603.4 of the IBC also provides criteria for testing equivalent thermal barriers.

803.8.3 Trim. Foam plastic shall be allowed for trim in accordance with Section 804.2.

❖See the commentary to Section 804.2.

[BF] 803.9 High-density polyethylene (HDPE) and polypropylene (PP). Where high-density polyethylene or polypropylene is used as an interior finish it shall comply with Section 803.1.2.

❖High-density polyethylene (HDPE) and polypropylene (PP) are thermoplastics that give off considerable energy and produce a pooling flammable liquid fire when they burn. Recent full-scale room-corner tests of HDPE using NFPA 286 have demonstrated a significant hazard. These tests had to be terminated prior to the standard 15-minute duration due to flashover occurring while there was still much of the product left to burn. Extensive flammable liquid pool fires occurred during the tests, yet this same material, when tested in accordance with the tunnel test, ASTM E84, is often given a flame spread index of 25 or less. However, the resulting test is so intense some labs will not test HDPE partitions due to the damage such tests can do to the tunnel. This section ensures that when using HDPE partitions they will be formulated in such a manner as to reduce the hazard that they present by specifically requiring compliance with NFPA 286. The following are some of the data gleaned from one of the NFPA 286 tests: Peak Heat Release Rate 1733 kW; Total Heat Released 121 MJ; Peak Heat Flux to the Floor 35.2 kW/m^2; Peak Average Ceiling Temperature 805°C, 1481°F. Polypropylene is very similar in material and fire performance.

[BF] 803.10 Site-fabricated stretch systems. Where used as newly installed interior wall or interior ceiling finish materials, site-fabricated stretch systems containing all three components described in the definition in Chapter 2 shall be tested in the manner intended for use, and shall comply with the requirements of Section 803.1.1 or 803.1.2. If the materials are tested in accordance with ASTM E84 or UL 723, specimen preparation and mounting shall be in accordance with ASTM E2573.

❖Site-fabricated stretch systems are interior finish materials that are stretched taut across walls or ceilings with a frame that holds a fabric and core. These systems are now being used extensively because they can stretch to cover decorative walls and ceilings with unusual looks and shapes. The systems consist of three parts: a fabric (or vinyl), a frame and an infill core material. Therefore, they must be fire tested like all other interior wall and ceiling materials, using either ASTM E84 (the Steiner tunnel test) or NFPA 286 (the room-corner test). The ASTM Committee on Fire Standards (ASTM E05) has issued ASTM E2573, a standard practice for specimen preparation and mounting of site-fabricated stretch systems. It is not a test method but rather a mounting method that was developed specifically for use when testing these materials in the ASTM E84 Steiner tunnel test. Until now, there was no correct mandatory way to test these systems. The testing has often been done of each component separately instead of testing the composite system. That is an inappropriate way to test and not the safe way to conduct the testing. Now that a consensus standard method of testing exists, the code recognizes it.

It is important to note that these materials are not curtains or drapes because they are not free hanging like curtains. Therefore, it would be inappropriate for them to be tested using NFPA 701, a test for vertically hanging fabrics, or any other test that was developed for free-hanging materials.

As previously stated, it is important to test all components together. If the system in question does not contain all three components of site-fabricated stretch systems, then such systems should be tested in a manner appropriate to their use. In particular, systems that contain a stretch membrane only and no core material have been shown to behave very differently in a fire situation than site-fabricated stretch systems. It is important that the correct mounting method be used for each system.

SECTION 804
INTERIOR WALL AND CEILING TRIM AND INTERIOR FLOOR FINISH IN NEW AND EXISTING BUILDINGS

804.1 Interior trim. Material, other than foam plastic, used as interior trim in new and existing buildings shall have minimum Class C flame spread and smoke-developed indices,

INTERNATIONAL CODE COUNCIL®
Copyright © 2015 ICC. ALL RIGHTS RESERVED. Accessed by David Dammon on Jun 21, 2017 12:30:52 PM pursuant to License Agreement with ICC. No further reproduction or distribution authorized. ANY UNAUTHORIZED REPRODUCTION OR DISTRIBUTION IS A VIOLATION OF THE FEDERAL COPYRIGHT ACT AND THE LICENSE AGREEMENT, AND SUBJECT TO CIVIL AND CRIMINAL PENALTIES THEREUNDER.

when tested in accordance with ASTM E84 or UL 723, as described in Section 803.1.1. Combustible trim, excluding handrails and guardrails, shall not exceed 10 percent of the specific wall or ceiling areas to which it is attached.

❖In accordance with Section 801.1, Section 804.1 addresses both new and existing buildings whereas Section 803 is applicable only to existing buildings. In occupancies of any group, unless otherwise noted in the code, the minimum classification of all trim must be at least Class C. Additionally, combustible trim may not exceed 10 percent of the area of the individual wall or ceiling in which it is located. The 10-percent calculation does not need to include handrails and guardrails. Although a Class C flame spread index may be lower than the flame spread index required for a particular building or facility, this quantity of combustible material will not significantly increase the fuel load.

804.1.1 Alternative testing. When the interior trim material has been tested as an interior finish in accordance with NFPA 286 and complies with the acceptance criteria in Section 803.1.2.1, it shall not be required to be tested for flame spread index and smoke-developed index in accordance with ASTM E84.

❖This section is a clarification of the testing requirements for interior finishes. Chapter 8 of the IBC and Section 803.1.2 of the code already make it clear that any material that meets the criteria of Section 803.1.2.1 is permitted to be used for interior finish. The criteria for interior trim (whether a foam plastic or not) are basically just less severe and apply to smaller areas only. If the material is allowed to be used to cover the entire wall or ceiling, it is also allowed to be used to cover 10 percent of it.

804.2 Foam plastic. Foam plastic used as interior trim shall comply with Sections 804.2.1 through 804.2.4.

❖As noted in Section 803.8.3, foam plastic is allowed as interior trim under certain conditions. This section introduces Sections 804.2.1 through 804.2.4 which establish that some dense foam plastic materials may be used as interior trim if the thickness, width and area of coverage is specifically limited.

804.2.1 Density. The minimum density of the interior trim shall be 20 pounds per cubic foot (320 kg/m^3).

❖This section establishes a minimum density of 20 pounds per cubic foot (pcf) (320 kg/m^3) for foam interior trim. A minimum instead of a maximum density is specified because the denser the foam plastic material, the less likely it is that it will generate misleading ASTM E84 test results due to having insufficient material for fire testing of the foam.

804.2.2 Thickness. The maximum thickness of the interior trim shall be $^1/_2$ inch (12.7 mm) and the maximum width shall be 8 inches (203 mm).

❖Even though other trim materials are not limited in dimension, the maximum thickness and width of foam plastic trim is limited to $^1/_2$ inch (12.7 mm) and 8 inches (203 mm), respectively. These dimensions were selected because they were typical of the maximums being produced at the time this provision was included in the code.

804.2.3 Area limitation. The interior trim shall not constitute more than 10 percent of the specific wall or ceiling area to which it is attached.

❖Trim cannot constitute more than 10 percent of the individual area of the wall and ceiling of a room. This limitation is simply a restatement of the general requirement for all combustible trim, which appears in Section 804.1.

804.2.4 Flame spread. The flame spread index shall not exceed 75 where tested in accordance with ASTM E84 or UL 723. The smoke-developed index shall not be limited.

Exception: When the interior trim material has been tested as an interior finish in accordance with NFPA 286 and complies with the acceptance criteria in Section 803.1.2.1, it shall not be required to be tested for flame spread index in accordance with ASTM E84 or UL 723.

❖This section specifically calls out a numerical flame spread index limitation of 75 for foam plastic used as trim, which is a Class B flame spread index. The value of 75 was selected to be consistent with the requirement for foam plastic insulation, even though other materials used as trim are permitted to have flame spread indexes of up to 200 in many locations. No thermal barrier is required for the use of foam plastic as trim and the smoke-developed index is not limited. It should be noted that Section 2604 of the IBC, which regulates the use of foam plastic as trim for new construction, has essentially identical requirements to those found in this section. Neither this section nor Section 2603.4.1.11 of the IBC requires a thermal barrier for interior trim [see Commentary Figures 803.7.3(1) and 803.7.3(2)]. The exception recognizes the stringency of testing in accordance with NFPA 286 as being equivalent to this section.

804.3 New interior floor finish. New interior floor finish and floor covering materials in new and existing buildings shall comply with Sections 804.3.1 through 804.3.3.2.

Exception: Floor finishes and coverings of a traditional type, such as wood, vinyl, linoleum or terrazzo, and resilient floor covering materials that are not composed of fibers.

❖This section regulates the design and installation of floor finish and floor covering materials and is identical to Section 804 of the IBC. Since Section 804.3 is located within a section that could apply to both existing and new buildings it is specifically clarified that these requirements are only applicable to new flooring. Traditional floor coverings, such as wood, vinyl, terrazzo and other resilient floor covering material, must be exempt from this section since they generally contribute minimally to a fire. The focus is on textile floor coverings such as carpets.

INTERNATIONAL CODE COUNCIL®
Copyright © 2015 ICC. ALL RIGHTS RESERVED. Accessed by David Dammon on Jun 21, 2017 12:30:52 PM pursuant to License Agreement with ICC. No further reproduction or distribution authorized. ANY UNAUTHORIZED REPRODUCTION OR DISTRIBUTION IS A VIOLATION OF THE FEDERAL COPYRIGHT ACT AND THE LICENSE AGREEMENT, AND SUBJECT TO CIVIL AND CRIMINAL PENALTIES THEREUNDER.

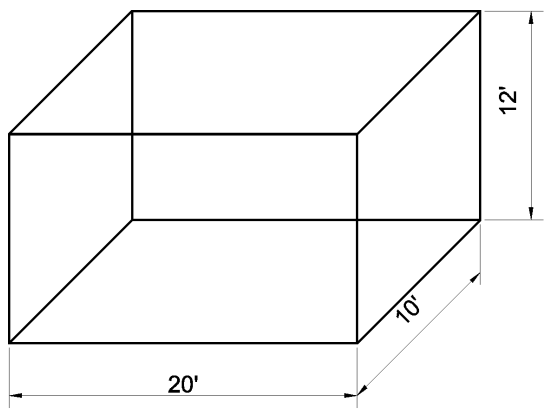

Wall area: 2 walls (20 × 12) + 2 walls (10 × 12 ft^2) = 720 ft^2

10% of walls = 720 × 0.10 = 72 ft^2

Decorative trim coverage = 72 ft^2

Ceiling 20 × 10 = 200 ft^2

10% of ceiling = 200 × 0.10 = 20

Decorative trim coverage = 20 ft^2

For SI: 1 foot = 304.8 mm, 1 square foot = 0.0929 m^2.

Figure 803.7.3(1)
FOAM PLASTIC DECORATIVE TRIM COVERAGE AREA

804.3.1 Classification. Interior floor finish and floor covering materials required by Section 804.3.3.2 to be of Class I or II materials shall be classified in accordance with NFPA 253. The classification referred to herein corresponds to the classifications determined by NFPA 253 as follows: Class I, 0.45 watts/cm^2 or greater; Class II, 0.22 watts/cm^2 or greater.

❖ The use of a classification system eliminates the need to state the actual critical radiant flux value for a product to meet the identification requirements of Section 804.3. Over the years, a classification system has been found to be much easier for the industry to follow and still provides the building official with the information required to verify compliance. The test required to measure the combustibility of floor coverings is NFPA 253. This standard is a radiant floor panel test, which basically simulates materials subjected to heat from a fire above. The primary concern with flooring is related to the spread of a fire that has already been ignited within a space or room to a different room. Commentary Figure 804.3.1 shows the test apparatus. The critical heat flux indicates the threshold value above which flame spread occurs in the testing environment.

804.3.2 Testing and identification. Interior floor finish and floor covering materials shall be tested by an *approved* agency in accordance with NFPA 253 and identified by a hang tag or other suitable method so as to identify the manufacturer or supplier and style, and shall indicate the interior floor finish or floor covering classification in accordance

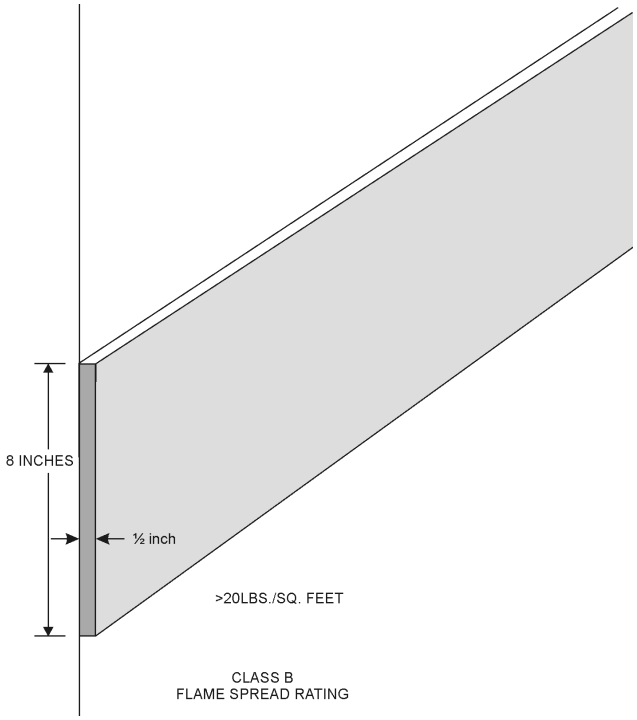

For SI: 1 foot = 304.8 mm, 1 pound per square foot = 4.882 kg/m^2.

Figure 803.7.3(2)
MAXIMUM DIMENSIONS—FOAM PLASTIC TRIM

INTERNATIONAL CODE COUNCIL®
Copyright © 2015 ICC. ALL RIGHTS RESERVED. Accessed by David Dammon on Jun 21, 2017 12:30:52 PM pursuant to License Agreement with ICC. No further reproduction or distribution authorized. ANY UNAUTHORIZED REPRODUCTION OR DISTRIBUTION IS A VIOLATION OF THE FEDERAL COPYRIGHT ACT AND THE LICENSE AGREEMENT, AND SUBJECT TO CIVIL AND CRIMINAL PENALTIES THEREUNDER.

with Section 804.3.1. Carpet-type floor coverings shall be tested as proposed for use, including underlayment. Test reports confirming the information provided in the manufacturer's product identification shall be furnished to the *fire code official* upon request.

❖The only method to ascertain that a floor meets the criteria of this section is to request a copy of the test report for the specific material being installed; therefore, it is critical that the carpeting be properly identified in order to verify that acceptable materials are being provided in the appropriate locations. The identification is to be provided on the material itself since a manufacturer's designation is required.

804.3.3 Interior floor finish requirements. New interior floor coverings materials shall comply with Sections 804.3.3.1 and 804.3.3.2, and interior floor finish materials shall comply with Section 804.3.1.

❖Sections 804.3.3.1 and 804.3.3.2 prescribe when the pill test for floor covering material is applicable and which occupancies and locations require a Class I or Class II classification in accordance with NFPA 253. Section 804.3.1 specifies the criteria for Classes I and II. More information about the specific test is discussed in Section 804.3.1. Generally the focus is on more critical areas, such as exit passageways, interior exit stairways and exit access corridors.

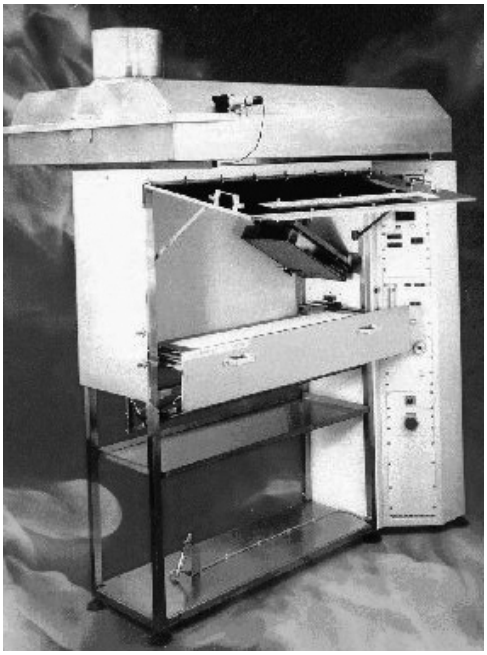

Figure 804.3.1
RADIANT FLOOR PANEL TEST (NFPA 253)

804.3.3.1 Pill test. In all occupancies, new floor covering materials shall comply with the requirements of the DOC FF-1 "pill test" (CPSC 16 CFR Part 1630) or of ASTM D2859.

❖DOC FF-1, also referred to as the "Methenamine Pill Test," was developed as a means of preventing the distribution of highly flammable soft floor coverings within the United States. The test essentially evaluates the performance of the floor covering when subject to a cigarette-type ignition by using a small methenamine tablet. All carpeting greater than 24 square feet (2.2 m^2) in area sold in the United States is required by federal law to pass this test procedure as a minimum.

804.3.3.2 Minimum critical radiant flux. In all occupancies, new interior floor finish and floor covering materials in enclosures for *stairways* and *ramps, exit passageways, corridors* and rooms or spaces not separated from *corridors* by full-height partitions extending from the floor to the underside of the ceiling shall withstand a minimum critical radiant flux. The minimum critical radiant flux shall be not less than Class I in Groups I-1, I-2 and I-3 and not less than Class II in Groups A, B, E, H, I-4, M, R-1, R-2 and S.

Exception: Where a building is equipped throughout with an *automatic sprinkler system* in accordance with Section 903.3.1.1 or 903.3.1.2, Class II materials shall be permitted in any area where Class I materials are required and materials complying with DOC FF-1 "pill test" (CPSC 16 CFR Part 1630) or with ASTM D2859 shall be permitted in any area where Class II materials are required.

❖This section prescribes the minimum requirements for interior floor finish materials that are used in interior exit stairways, exit passageways and exit access corridors. The criteria are based on the occupancy classification and the relationship of the space to the egress system. Similar to Table 803.3, the occupancy classification designation is meant to apply to the actual occupancy of the space and not necessarily the overall building classification.

Classifications I and II as used in this section are defined in Section 804.3.1 and are based on the results of the NFPA 253 test procedure.

Recognizing the ability of automatic sprinkler systems to control a fire and the minimal contribution of interior floor finishes to the early stages of fire growth, the exception allows the required interior floor finish ratings to be reduced when an automatic sprinkler system is provided throughout the building. The reference to Section 903.3.1.1 or 903.3.1.2 clarifies that the system is to be installed in accordance with NFPA 13 or 13R. In cases where Class II materials are required and an automatic sprinkler system is provided, the minimum requirement is that the material simply meet the DOC FF-1 test criteria.

INTERNATIONAL CODE COUNCIL®
Copyright © 2015 ICC. ALL RIGHTS RESERVED. Accessed by David Dammon on Jun 21, 2017 12:30:52 PM pursuant to License Agreement with ICC. No further reproduction or distribution authorized. ANY UNAUTHORIZED REPRODUCTION OR DISTRIBUTION IS A VIOLATION OF THE FEDERAL COPYRIGHT ACT AND THE LICENSE AGREEMENT, AND SUBJECT TO CIVIL AND CRIMINAL PENALTIES THEREUNDER.

804.4 Interior floor-wall base. Interior floor-wall base that is 6 inches (152 mm) or less in height shall be tested in accordance with NFPA 253 and shall be not less than Class II. Where a Class I floor finish is required, the floor-wall base shall be Class I. The classification referred to herein corresponds to the classifications determined by NFPA 253 as follows: Class I, 0.45 watt/cm^2 or greater; Class II, 0.22 watts/cm^2 or greater.

Exception: Interior trim materials that comply with Section 804.1.

❖In trimming out the interior of a building, rather than install separate baseboards or materials, in many cases the floor covering material is simply seamlessly turned up for a few inches or used at the intersection of the floor and the wall, thus becoming the floor-wall base trim. Previously, these materials could have been considered as interior trim in accordance with Section 804.1 and would have been required to be tested in accordance with ASTM E84 even though the floor covering may be required to be tested in accordance with NFPA 253. Based on the small amount of material used, it is very difficult to test these materials in a reliable manner, upside down in the ASTM E84 test method. This section addresses the issue of testing and regulation of wall base interior floor finish trim materials and eliminates the difficulty of testing these materials in a reliable manner.

Because of their location at the floor line, wall base materials are not likely to be involved in a fire until the floor covering is also involved, usually at room flashover. Thus, it is reasonable that wall base materials meet the same criteria as floor coverings. This is true since in some applications, for sanitary reasons, the floor covering is seamlessly turned up on the wall to form a wall base. Thus, the proposal specifies that the wall base be tested in accordance with NFPA 253 as required for floor coverings and has requirements for its use. This section also limits the height of the wall base such that its application is controlled in a similar manner as the 10-percent limitation for interior trim. The exception recognizes that some materials used as interior finish trim that meet the flammability requirements of Section 804.1 can be used in this specific application without the need for additional testing.

SECTION 805
UPHOLSTERED FURNITURE AND MATTRESSES IN NEW AND EXISTING BUILDINGS

❖Furnishings and contents are subjects that codes have not addressed very strongly in the past. Ultimately, the fire hazard potential within a building depends heavily upon what is in the building and where it is placed. First, the burning characteristics of the materials will vary and the location of the material will change the characteristics of a fire. For instance, a couch within a small compartment will create a much different fire event than the same couch burning in a large open atrium (see Commentary Figure 805.1). The compartment may be limited by the amount of oxygen available, while the atrium fire will be limited only by the amount of combustibles to burn because oxygen will be plentiful; therefore, the compartment is likely to reach flashover while the atrium will not. Generally, upholstered furniture and mattresses are the largest fire hazards in most residential buildings because mattresses or upholstered furniture are the only products typically present where people live that can cause room flashover on their own.

805.1 Group I-1, Condition 2. The requirements in Sections 805.1.1 through 805.1.2 shall apply to facilities in Group I-1, Condition 2.

❖This section introduces Sections 805.1.1 through 805.1.2.3 which contain requirements for controlling the hazards associated with upholstered furniture and mattresses in new and existing Group I-1, Condition 2 occupancies. Group I-1, Condition 2 occupancies contain, in a supervised setting, more than 16 persons on a 24-hour basis because of age, mental disability or other reasons. It should be noted that Group I-1, Condition 2 occupancies have occupants who need limited assistance both verbally and physically to evacuate whereas occupants of Group I-1, Condition 1 do not need such assistance. The provisions throughout the I-Codes differentiate between these two types of occupancy classifications. In general, these occupants are considered more vulnerable than the general population and have had a history of starting fires in beds or upholstered furniture. There is also more of a concern than with a Group I-2 occupancy over occupants having the ability to purposely start a fire. This is less likely in an assisted living setting but more likely in a halfway house setting; therefore, limitations on combustibility of upholstered furniture and mattresses are also required. Reducing ignitability and combustibility will significantly reduce the level of fire hazard. The requirements are slightly different than for Group I-2 occupancies in that different tests and performance criteria are required because of the nature of the hazards.

805.1.1 Upholstered furniture. Newly introduced upholstered furniture shall meet the requirements of Sections 805.1.1.1 through 805.1.1.3.

❖This section informs the user that two aspects of upholstered furniture are regulated: the ignitability by cigarettes and the maximum allowable heat release in accordance with ASTM E1537.

805.1.1.1 Ignition by cigarettes. Newly introduced upholstered furniture shall be shown to resist ignition by cigarettes as determined by tests conducted in accordance with one of the following:

1. Mocked-up composites of the upholstered furniture shall have a char length not exceeding 1.5 inches (38 mm) when tested in accordance with NFPA 261.

INTERNATIONAL CODE COUNCIL®
Copyright © 2015 ICC. ALL RIGHTS RESERVED. Accessed by David Dammon on Jun 21, 2017 12:30:52 PM pursuant to License Agreement with ICC. No further reproduction or distribution authorized. ANY UNAUTHORIZED REPRODUCTION OR DISTRIBUTION IS A VIOLATION OF THE FEDERAL COPYRIGHT ACT AND THE LICENSE AGREEMENT, AND SUBJECT TO CIVIL AND CRIMINAL PENALTIES THEREUNDER.

2. The components of the upholstered furniture shall meet the requirements for Class I when tested in accordance with NFPA 260.

❖This section focuses on the ignitability of furniture when exposed to lighted cigarettes and is consistent with Section 805.2.1.1 for Group I-2 occupancies and Section 805.3.1.1 for Group I-3 detention and correctional facilities. It offers an alternative test (NFPA 261) for approval of cigarette ignition resistance of newly introduced upholstered furniture in Group I-1 occupancies (board and care facilities). The same test method is already permitted for use in Group I-2 and I-3 occupancies. The difference between NFPA 260 and NFPA 261 is that NFPA 260 uses an overall classification system that looks at the cigarette ignition behavior of the individual components that may be found in upholstered furniture while NFPA 261 specifically looks at ignitability of a mock-up of upholstered furniture. It presents a method for study of the ignitability of the furniture mock-up and a technique to measure the char length, and limits the maximum char length to 1.5 inches (38.1 mm). In fact, results from NFPA 261 are more likely to be predictive of real fire behavior.

The previously existing exception to this section for upholstered furniture in rooms or spaces protected by an approved NFPA 13 automatic sprinkler system has been deleted because: a. Sprinklers have no effect on controlling smoldering ignition (ignition by cigarettes), since they require an increase in room temperature to act and there will be no increase in room temperature until well after the upholstered furniture which fails the cigarette test has erupted into flames; and b. Newly introduced upholstered furniture is very likely to meet smoldering ignition requirements. The trade association for manufacturers of residential upholstered furniture, Upholstered Furniture Action Council (UFAC), its sister organization, American Furniture Manufacturers Association (AFMA) and the trade association for manufacturers of institutional and contract upholstered furniture, Business and Institutional Furniture Manufacturers Association (BIFMA), require that their members comply with the smoldering resistance test. UFAC requires NFPA 260 (equivalent to ASTM E1353 and the UFAC test) and BIFMA requires NFPA 261 (equivalent to ASTM E1352). Note that this section does not affect existing upholstered furniture.

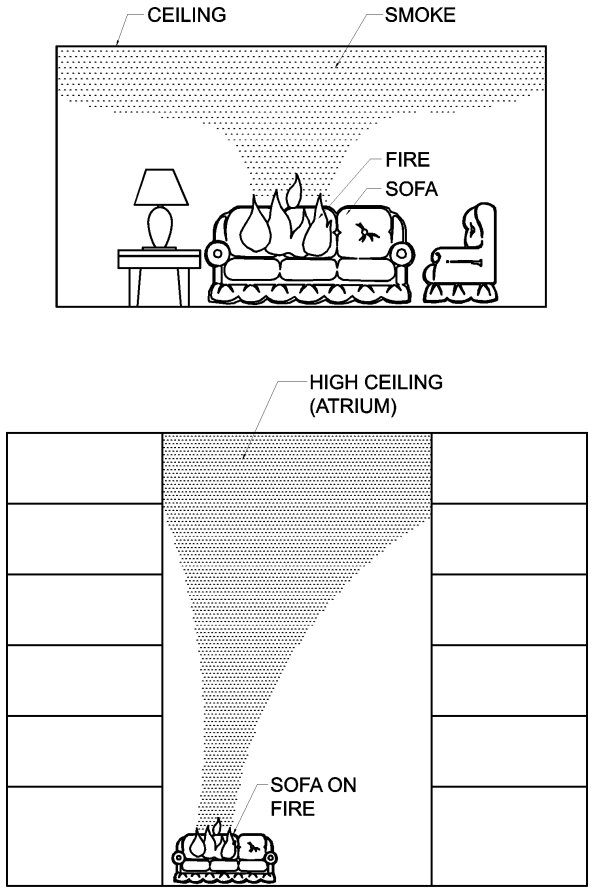

Figure 805.1
EFFECT OF LOCATION OF FIRE

INTERNATIONAL CODE COUNCIL®
Copyright © 2015 ICC. ALL RIGHTS RESERVED. Accessed by David Dammon on Jun 21, 2017 12:30:52 PM pursuant to License Agreement with ICC. No further reproduction or distribution authorized. ANY UNAUTHORIZED REPRODUCTION OR DISTRIBUTION IS A VIOLATION OF THE FEDERAL COPYRIGHT ACT AND THE LICENSE AGREEMENT, AND SUBJECT TO CIVIL AND CRIMINAL PENALTIES THEREUNDER.

805.1.1.2 Heat release rate. Newly introduced upholstered furniture shall have limited rates of heat release when tested in accordance with ASTM E1537 or California Technical Bulletin 133, as follows:

1. The peak rate of heat release for the single upholstered furniture item shall not exceed 80 kW.

   Exception: Upholstered furniture in rooms or spaces protected by an *approved automatic sprinkler system* installed in accordance with Section 903.3.1.1.

2. The total energy released by the single upholstered furniture item during the first 10 minutes of the test shall not exceed 25 megajoules (MJ).

   Exception: Upholstered furniture in rooms or spaces protected by an *approved automatic sprinkler system* installed in accordance with Section 903.3.1.1.

❖The two tests specified in this section measure the overall combustibility of furniture. When a building is sprinklered in accordance with NFPA 13, this section does not apply. Upholstered furniture must be tested to either ASTM E1537 or California Technical Bulletin 133 (which are basically the same test, but ASTM E1537 has no pass/fail criteria). This test uses a full-scale calorimeter, with the furniture item either in a standard room or under a hood. A full-scale calorimeter allows a representative piece of furniture to be burned and the products of combustion to be collected and analyzed in the exhaust duct by measuring gases (principally oxygen) in order to measure heat release. The test also measures weight loss during the test [see Commentary Figure 805.1.1.2(1) for a representation of the test]. The acceptance criteria set by the code are as follows:

- Peak heat release is limited to 80 kW; and
- Total energy (or heat) release within the first 10 minutes cannot exceed 25 mega joules (MJ).

Limitations are placed on the maximum intensity and fire effluents produced by restricting the peak heat release rate and the amount of combustibles actually burned. The total energy release of 25 MJ could be translated to a steady fire as follows, where:

X = Steady fire heat release rate expressed in kW:

X × 10 minutes = 25 MJ
(10 minutes = 600 sec and 25 MJ = 25,000 kJ)

X × 600 sec = 25,000 kJ

X = 25,000 kJ/600 sec = 41.66 kJ/sec

X = 41.66 kJ/sec = 41.66 kW ~ 42 kW heat release rate

A steady fire of 42 kW (133 kJ/sec) for 10 minutes will result in a total energy release of 25 MJ.

Because fires in more realistic conditions do not burn steadily and vary in their characteristics, the criterion is given in the form of a peak heat release rate and total energy release. To provide a better understanding, if the fire were burning at the maximum peak heat release rate of 80 kW for the first 10 minutes, the total energy output would be 75 MJ, [80 kW (kJ/sec) H 10 minutes (600 sec) = 48,000 kJ = 48 MJ], which is well over the criterion of 25 MJ. A fire burning at a steady rate from start to finish is not realistic because fires must go through an initial growth stage before a peak heat release rate will be reached, followed by a decay phase; therefore, because a realistic fire will not burn at the peak heat release rate from the start of the fire, it is possible for a piece of furniture to have a peak heat release rate of 80 kW and still stay within the 25 MJ limitation. Commentary Figure 805.1.1.2(2) demonstrates the difference between a steady fire and a more realistic unsteady fire. As stated in the exceptions, the heat release rates will not apply to buildings sprinklered in

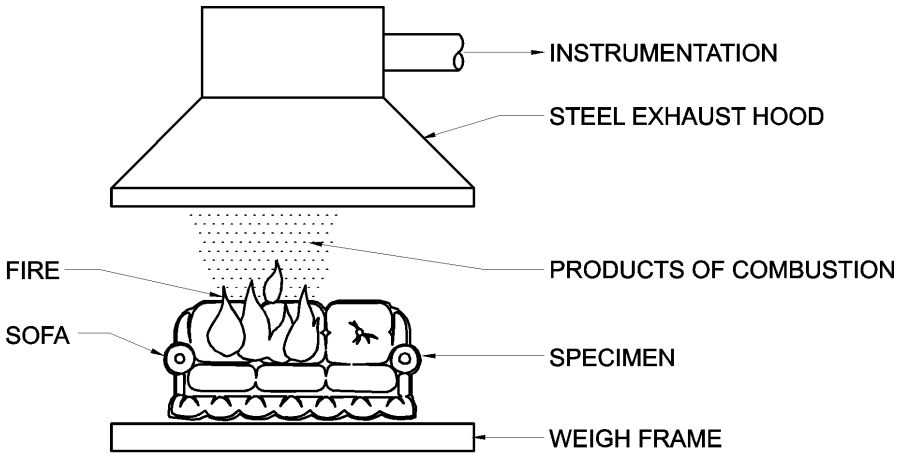

Figure 805.1.1.2(1)
TYPICAL FIRE TEST SETUP

INTERNATIONAL CODE COUNCIL®
Copyright © 2015 ICC. ALL RIGHTS RESERVED. Accessed by David Dammon on Jun 21, 2017 12:30:52 PM pursuant to License Agreement with ICC. No further reproduction or distribution authorized. ANY UNAUTHORIZED REPRODUCTION OR DISTRIBUTION IS A VIOLATION OF THE FEDERAL COPYRIGHT ACT AND THE LICENSE AGREEMENT, AND SUBJECT TO CIVIL AND CRIMINAL PENALTIES THEREUNDER.

accordance with NFPA 13. Sections 805.2.1.2 and 805.3.1.2 address the heat release rate limitations for upholstered furniture in the same manner. It should be noted that Section 805.3.1.2 does not reference California Technical Bulletin 133.

See also the commentary for mattresses in Section 805.1.2.

805.1.1.3 Identification. Upholstered furniture shall bear the label of an *approved* agency, confirming compliance with the requirements of Sections 805.1.1.1 and 805.1.1.2.

❖In order to achieve verifiable compliance, labeling by an approved agency is required. Otherwise, this information would be extremely difficult to verify in the field. See the commentary for the definition of "Labeled" in Section 202.

805.1.2 Mattresses. Newly introduced mattresses shall meet the requirements of Sections 805.1.2.1 through 805.1.2.3.

❖Sections 805.1.2.1 and 805.1.2.2 deal with the combustibility of mattresses. Section 805.1.2.1 focuses on initial ignition and the ability of a mattress to sustain a fire; Section 805.1.2.2 is focused primarily on the burning characteristics of mattresses.

805.1.2.1 Ignition by cigarettes. Newly introduced mattresses shall be shown to resist ignition by cigarettes as determined by tests conducted in accordance with DOC 16 CFR Part 1632 and shall have a char length not exceeding 2 inches (51 mm).

❖This section sets a maximum char length of 2 inches (51 mm) when the mattress is tested under DOC 16 CFR, Part 1632. This test is a mandatory regulation for all mattresses sold in the United States. More specifically, it is part of the regulations governed by the Consumer Products Safety Commission (CPSC) under the Department of Commerce (DOC). Sections 805.2.2.1 and 805.3.2.1 have the same reference and requirements for Group I-2 and I-3 occupancies. Thus, mattresses that fail to meet the 16 CFR 1632 test will be those sold either before the CPSC regulation went into effect (in 1972) or outside of the United States.

805.1.2.2 Heat release rate. Newly introduced mattresses shall have limited rates of heat release when tested in accordance with ASTM E1590 or California Technical Bulletin 129, as follows:

1. The peak rate of heat release for the single mattress shall not exceed 100 kW.

   Exception: Mattresses in rooms or spaces protected by an *approved automatic sprinkler system* installed in accordance with Section 903.3.1.1.

2. The total energy released by the single mattress during the first 10 minutes of the test shall not exceed 25 MJ.

   Exception: Mattresses in rooms or spaces protected by an *approved automatic sprinkler system* installed in accordance with Section 903.3.1.1.

❖As noted, an occupant smoking in bed and initiating a mattress fire is a major fire hazard in Group I-1, Condition 2 occupancies. This section, like Section 805.1.1.2, limits combustibility by restricting the peak heat release rate and on the total energy output in the first 10 minutes of burning. These limitations vary slightly from those for upholstered furniture. Each mattress is allowed a maximum heat release rate of 100 kW, whereas each upholstered furniture item is limited to 80 kW. The total energy (or heat) release limitation is the same as for upholstered furniture items, which is 25 MJ in the first 10 minutes. As with upholstered furniture, these restrictions are not applicable in buildings sprinklered in accordance with NFPA 13. The tests that determine the peak heat release rate and total energy (or heat) release are specific to mattresses. These tests are detailed in ASTM E1590 and California Technical Bulletin 129

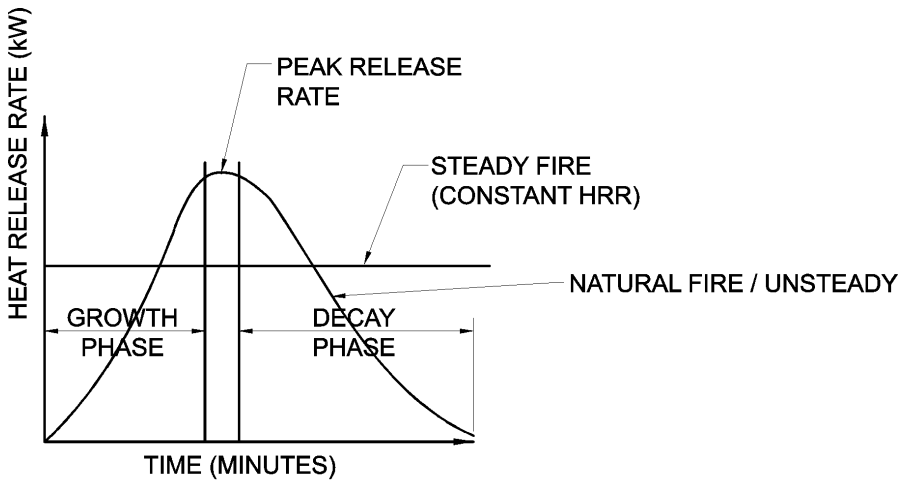

Figure 805.1.1.2(2)
STEADY VERSUS UNSTEADY FIRES

INTERNATIONAL CODE COUNCIL®
Copyright © 2015 ICC. ALL RIGHTS RESERVED. Accessed by David Dammon on Jun 21, 2017 12:30:52 PM pursuant to License Agreement with ICC. No further reproduction or distribution authorized. ANY UNAUTHORIZED REPRODUCTION OR DISTRIBUTION IS A VIOLATION OF THE FEDERAL COPYRIGHT ACT AND THE LICENSE AGREEMENT, AND SUBJECT TO CIVIL AND CRIMINAL PENALTIES THEREUNDER.

(which are the same test, except that ASTM E1590 does not have pass/fail criteria). These tests, like that referenced in Section 805.1.1.2, make use of a full scale calorimeter to measure the products of combustion. There are two differences between ASTM E1537 and ASTM E1590: the object being tested (see commentary, Section 805.1.1.2) and the ignition source. Both tests use a gas burner, but they are different in geometry, gas flow rate, duration of gas flow and position of flame application. Section 805.2.2.2 contains the same restrictions and testing requirements on combustibility for mattresses in Group I-2 occupancies, Section 805.3.2.2 for Group I-3 detention and correctional facilities and Section 805.4.2.2 for Group R-2 dormitories.

805.1.2.3 Identification. Mattresses shall bear the label of an *approved* agency, confirming compliance with the requirements of Sections 805.2.2.1 and 805.2.2.2.

❖This section provides the fire code official with a valuable tool in evaluating and approving mattresses in Group I-2 occupancies. In order to achieve verifiable compliance, labeling by an approved agency is required. Otherwise, this information would be extremely difficult to verify in the field. See the commentary for the definition of "Labeled" in Section 202.

805.2 Group I-2, nursing homes and hospitals. The requirements in Sections 805.2.1 through 805.2.2 shall apply to nursing homes and hospitals classified in Group I-2.

❖This section introduces Sections 805.2.1 through 805.2.2.3 which contain requirements for controlling the hazards associated with upholstered furniture and mattresses in new and existing Group I-2 occupancies. Occupants of nursing homes (Group I-2, Condition 1) and hospitals (Group I-2, Condition 2) are considered more vulnerable than the general population. Many of the patients of nursing homes and hospitals are confined because of respirators, IVs and other medical equipment and may not be capable of self-preservation. Hospital employees may have to make several trips into the fire area to assist in evacuating patients; therefore, it is imperative that every effort be made to preserve the integrity of the corridors and minimize the fuel loading caused by furnishings and contents, such as upholstered furniture and mattresses.

Historically, fires have been ignited through the use of cigarettes in bed or falling asleep while smoking in a chair. In addition to these hazards, such occupancies usually have additional medical oxygen sources within their rooms. This section, therefore, states several ignitability and combustibility limitations for upholstered furniture and mattresses that might be introduced into such occupancies.

805.2.1 Upholstered furniture. Newly introduced upholstered furniture shall meet the requirements of Sections 805.2.1.1 through 805.2.1.3.

❖This section informs the user that two aspects of upholstered furniture are regulated: the ignitability by cigarettes and the maximum allowable heat release in accordance with ASTM E1537.

805.2.1.1 Ignition by cigarettes. Newly introduced upholstered furniture shall be shown to resist ignition by cigarettes as determined by tests conducted in accordance with one of the following: (a) mocked-up composites of the upholstered furniture shall have a char length not exceeding 1.5 inches (38 mm) when tested in accordance with NFPA 261 or (b) the components of the upholstered furniture shall meet the requirements for Class I when tested in accordance with NFPA 260.

Exception: Upholstered furniture belonging to the patients in sleeping rooms of nursing homes (Group I-2), provided that a smoke detector is installed in such rooms. Battery-powered, single-station smoke alarms shall be allowed.

❖The exception allows nursing home patients to bring their furniture with them into their rooms without having to comply with the test requirements provided that the basic protection of a system smoke detector (in buildings equipped with a fire alarm system) or a battery-operated smoke alarm is present in the room (see commentary, Section 805.1.1.1). Note that all new Group I-2, Condition 1 occupancies are required to be equipped throughout with an automatic sprinkler system. Additionally, Section 1105.8 requires an automatic sprinkler system in existing Group I-2 occupancies. This requirement is retroactive, which means it applies regardless of whether work is being done to the building.

805.2.1.2 Heat release rate. Newly introduced upholstered furniture shall have limited rates of heat release when tested in accordance with ASTM E1537 or California Technical Bulletin 133, as follows:

1. The peak rate of heat release for the single upholstered furniture item shall not exceed 80 kW.

   Exception: Upholstered furniture in rooms or spaces protected by an *approved automatic sprinkler system* installed in accordance with Section 903.3.1.1.

2. The total energy released by the single upholstered furniture item during the first 10 minutes of the test shall not exceed 25 MJ.

   Exception: Upholstered furniture in rooms or spaces protected by an *approved automatic sprinkler system* installed in accordance with Section 903.3.1.1.

❖This section is identical to Section 805.1.1.2 and focuses on the potential heat release rate of upholstered furniture if a fire occurs (see commentary, Section 805.1.1.2).

805.2.1.3 Identification. Upholstered furniture shall bear the label of an *approved* agency, confirming compliance with the requirements of Sections 805.2.1.1 and 805.2.1.2.

❖In order to achieve verifiable compliance, labeling by an approved agency is required. Otherwise, this infor-

INTERNATIONAL CODE COUNCIL®
Copyright © 2015 ICC. ALL RIGHTS RESERVED. Accessed by David Dammon on Jun 21, 2017 12:30:52 PM pursuant to License Agreement with ICC. No further reproduction or distribution authorized. ANY UNAUTHORIZED REPRODUCTION OR DISTRIBUTION IS A VIOLATION OF THE FEDERAL COPYRIGHT ACT AND THE LICENSE AGREEMENT, AND SUBJECT TO CIVIL AND CRIMINAL PENALTIES THEREUNDER.

mation would be extremely difficult to verify in the field. See the commentary to the definition of "Labeled" in Section 202.

805.2.2 Mattresses. Newly introduced mattresses shall meet the requirements of Sections 805.2.2.1 through 805.2.2.3.

❖Sections 805.2.2.1 and 805.2.2.2 deal with the combustibility of mattresses. Section 805.2.2.1 focuses on initial ignition and the ability of a mattress to sustain a fire; Section 805.2.2.2 is focused primarily on the burning characteristics of mattresses.

805.2.2.1 Ignition by cigarettes. Newly introduced mattresses shall be shown to resist ignition by cigarettes as determined by tests conducted in accordance with DOC 16 CFR Part 1632 and shall have a char length not exceeding 2 inches (51 mm).

❖This section is the same as Sections 805.1.2.1 and 805.3.2.1 and requires compliance with DOC 16 CFR Part 1632 (see commentary, Section 805.1.2.1).

805.2.2.2 Heat release rate. Newly introduced mattresses shall have limited rates of heat release when tested in accordance with ASTM E1590 or California Technical Bulletin 129, as follows:

1. The peak rate of heat release for the single mattress shall not exceed 100 kW.

   Exception: Mattresses in rooms or spaces protected by an *approved automatic sprinkler system* installed in accordance with Section 903.3.1.1.

2. The total energy released by the single mattress during the first 10 minutes of the test shall not exceed 25 MJ.

   Exception: Mattresses in rooms or spaces protected by an *approved automatic sprinkler system* installed in accordance with Section 903.3.1.1.

❖This section is the same as Section 805.1.2.2 in limiting the maximum heat release rate and the total energy release (see commentary, Section 805.1.2.2).

805.2.2.3 Identification. Mattresses shall bear the label of an *approved* agency, confirming compliance with the requirements of Sections 805.2.2.1 and 805.2.2.2.

❖In order to achieve verifiable compliance, labeling by an approved agency is required. Otherwise, this information would be extremely difficult to verify in the field. See the commentary to the definition of "Labeled" in Section 202.

805.3 Group I-3, detention and correction facilities. The requirements in Sections 805.3.1 through 805.3.2 shall apply to detention and correction facilities classified in Group I-3.

❖This section introduces Sections 805.3.1 through 805.3.2.3, which contain requirements for controlling the hazards associated with upholstered furniture and mattresses in new and existing Group I-3 detention and correctional occupancies. These facilities have a higher likelihood of incendiary activities, and because of the restrictions on movement, the occupants are placed in a more vulnerable position than the general public; therefore, combustibility limitations are placed on furniture and mattresses.

805.3.1 Upholstered furniture. Newly introduced upholstered furniture shall meet the requirements of Sections 805.3.1.1 through 805.3.1.3

❖This section informs the user that two aspects of upholstered furniture are regulated: the ignitability by cigarettes and the maximum allowable heat release in accordance with ASTM E1537.

805.3.1.1 Ignition by cigarettes. Newly introduced upholstered furniture shall be shown to resist ignition by cigarettes as determined by tests conducted in accordance with one of the following:

1. Mocked-up composites of the upholstered furniture shall have a char length not exceeding 1.5 inches (38 mm) when tested in accordance with NFPA 261.
2. The components of the upholstered furniture shall meet the requirements for Class I when tested in accordance with NFPA 260.

❖These requirements are the same as those found in Sections 805.1.1.1 and 805.2.1.1 (see commentary, Section 805.1.1.1).

805.3.1.2 Heat release rate. Newly introduced upholstered furniture shall have limited rates of heat release when tested in accordance with ASTM E1537, as follows:

1. The peak rate of heat release for the single upholstered furniture item shall not exceed 80 kW.
2. The total energy released by the single upholstered furniture item during the first 10 minutes of the test shall not exceed 25 MJ.

❖See the commentary to Section 805.1.1.2.

805.3.1.3 Identification. Upholstered furniture shall bear the label of an *approved* agency, confirming compliance with the requirements of Sections 805.3.1.1 and 805.3.1.2.

❖In order to achieve verifiable compliance, labeling by an approved agency is required. Otherwise, this information would be extremely difficult to verify in the field. See the commentary to the definition of "Labeled" in Section 202.

805.3.2 Mattresses. Newly introduced mattresses shall meet the requirements of Sections 805.3.2.1 through 805.3.2.3.

❖Sections 805.3.2.1 and 805.3.2.2 deal with the combustibility of mattresses. Section 805.3.2.1 focuses on initial ignition and the ability of a mattress to sustain a fire; Section 805.3.2.2 focuses primarily on the burning characteristics of mattresses.

805.3.2.1 Ignition by cigarettes. Newly introduced mattresses shall be shown to resist ignition by cigarettes as determined by tests conducted in accordance with DOC 16 CFR Part 1632 and shall have a char length not exceeding 2 inches (51 mm).

❖This section is the same as Sections 805.1.2.1 and 805.3.2.1 and requires compliance with DOC 16 CFR Part 1632 (see commentary, Section 805.1.2.1).

INTERNATIONAL CODE COUNCIL®
Copyright © 2015 ICC. ALL RIGHTS RESERVED. Accessed by David Dammon on Jun 21, 2017 12:30:52 PM pursuant to License Agreement with ICC. No further reproduction or distribution authorized. ANY UNAUTHORIZED REPRODUCTION OR DISTRIBUTION IS A VIOLATION OF THE FEDERAL COPYRIGHT ACT AND THE LICENSE AGREEMENT, AND SUBJECT TO CIVIL AND CRIMINAL PENALTIES THEREUNDER.

805.3.2.2 Fire performance tests. Newly introduced mattresses shall be tested in accordance with Section 805.3.2.2.1 or 805.3.2.2.2.

❖This section provides two options for fire tests: ASTM E1590, which is a cone calorimeter test, and Annex A3 of ASTM F1085, which provides a simple burn test to determine how much mass the mattress will lose with this exposure.

805.3.2.2.1 Heat release rate. Newly introduced mattresses shall have limited rates of heat release when tested in accordance with ASTM E1590 or California Technical Bulletin 129, as follows:

1. The peak rate of heat release for the single mattress shall not exceed 100 kW.
2. The total energy released by the single mattress during the first 10 minutes of the test shall not exceed 25 MJ.

❖This section is the same as Section 805.1.2.2 in limiting the maximum heat release rate and the total energy (or heat) release (see commentary, Section 805.1.2.2).

805.3.2.2.2 Mass loss test. Newly introduced mattresses shall have a mass loss not exceeding 15 percent of the initial mass of the mattress where tested in accordance with the test in Annex A of ASTM F1085.

❖The test in Annex A3 of ASTM F1085 was developed originally for use in detention and correctional occupancies and is a very severe test that is a reasonable (and less expensive) alternative to ASTM E1590. This test is very simple, can be conducted at any facility and does not require the use of an instrumented fire test lab. The test can be described in a few words: it involves rolling up a mattress, placing it at an angle (for example by holding it with a brick), introducing newspaper into the volume surrounding the rolled up mattress and igniting the newspaper with a match.

If mattress materials melt away from the flame with flaming drips they may "pass" the ASTM E1590 test; however, melting would result in a failure of the ASTM F1085 Annex A test. In this test, the material that flames on the floor will keep burning the mattress itself.

Commentary Figure 805.3.2.2.2 provides a table that shows the results using the ASTM F1085 Annex A3 test for a number of mattresses in two studies (one in 1980 and one in 2003) and it also shows whether the mattresses meet the ASTM E1590 requirements in the code. It is clear from the table that mattresses will either burn up almost completely or lose very little mass. The ASTM F1085 test will not pass mattresses that fail ASTME E1590.

The test from Annex A3 of ASTM F1085 is also described in Section 10.2 of ASTM F1870 (Standard Guide for Selection of Fire Test Methods for the Assessment of Upholstered Furnishings in Detention and Correctional Facilities) as a test method "Designed for Detention and Correction Facilities."

805.3.2.3 Identification. Mattresses shall bear the label of an *approved* agency, confirming compliance with the requirements of Sections 805.3.2.1 and 805.3.2.2.

❖In order to achieve verifiable compliance, labeling by an approved agency is required. Otherwise, this information would be extremely difficult to verify in the field. See the commentary to the definition of "Labeled" in Section 202.

805.4 Group R-2 college and university dormitories. The requirements of Sections 805.4.1 through 805.4.2.3 shall apply to college and university dormitories classified in Group R-2, including decks, porches and balconies.

❖This section introduces Sections 805.4.1 through 805.4.2.3, which contain requirements for controlling the hazards associated with upholstered furniture and mattresses in new and existing Group R-2 college

MATTRESS	ASTM F1085 MASS LOSS %	ASTM E1590 PER SECTION 805.3.2.2.1 PASS OR FAIL
1 (2003)	1.22	Pass
2 (2003)	9.47	Pass
3 (2003)	3.30	Pass
4 (2003)	100	Fail
5 (2003)	100	Fail
1 (1980)	100	Fail
2 (1980)	100	Fail
3 (1980)	98.5	Fail
4 (1980)	91.1	Fail
5 (1980)	91	Fail
6 (1980)	83.1	Fail
7 (1980)	44.7	Fail
8 (1980)	3.0	Pass

Figure 805.3.2.2.2
ANNEX A3 ASTM F1085 TEST RESULTS

INTERNATIONAL CODE COUNCIL®
Copyright © 2015 ICC. ALL RIGHTS RESERVED. Accessed by David Dammon on Jun 21, 2017 12:30:52 PM pursuant to License Agreement with ICC. No further reproduction or distribution authorized. ANY UNAUTHORIZED REPRODUCTION OR DISTRIBUTION IS A VIOLATION OF THE FEDERAL COPYRIGHT ACT AND THE LICENSE AGREEMENT, AND SUBJECT TO CIVIL AND CRIMINAL PENALTIES THEREUNDER.

and university dormitories. Fire represents a significant risk to life and property in dormitory occupancies, particularly at residential schools, colleges and universities. The large number of young people living in close proximity to one another creates the potential for a relatively small fire to have serious and possibly fatal consequences. According to NFPA fire loss data, there are an average of 1,425 fires each year in dormitories causing $6.3 million in direct property damage. For these reasons, upholstered furniture and mattresses in dormitories must comply with the same requirements for fire performance as those in Group I-1, I-2 and I-3 occupancies. The test methods and criteria are identical to those in Sections 805.1, 805.2 and 805.3 of the code. Section 805.3.2.2.2 provides an option for a mass loss test for mattresses.

Note that this section also includes upholstered furniture and mattresses on porches, decks and balconies, which, for this particular occupancy, can be frequently found in such locations. Since the decks, porches or balconies are likely not sprinklered, this would severely limit or eliminate the allowance of such items in these areas. Many jurisdictions have specifically banned furniture such as couches from these areas. These provisions are not as strict but will limit the potential for fires to spread to the structure.

Section 805.4 provides the fire code official and college and university campus housing authorities with the needed authority to limit the combustibility of student-owned furnishings. Those furnishings can include both upholstered furniture and mattresses, which are the high-fuel items in Group R-2 dormitory occupancies. Strictly enforced, these provisions, coupled with the limitations on the use of open flames in Group R-2 dormitories found in Section 308.4.1, should provide a much-improved level of fire safety in these occupancies.

805.4.1 Upholstered furniture. Newly introduced upholstered furniture shall meet the requirements of Sections 805.4.1.1 through 805.4.1.3

❖This section informs the user that two aspects of upholstered furniture are regulated: the ignitability by cigarettes and the maximum allowable heat release in accordance with recognized standards.

805.4.1.1 Ignition by cigarettes. Newly introduced upholstered furniture shall be shown to resist ignition by cigarettes as determined by tests conducted in accordance with one of the following:

1. Mocked-up composites of the upholstered furniture shall have a char length not exceeding $1^1/_2$ inches (38 mm) when tested in accordance with NFPA 261.
2. The components of the upholstered furniture shall meet the requirements for Class I when tested in accordance with NFPA 260.

❖These requirements are the same as those found in Sections 805.1.1.1, 805.2.1.1 and 805.3.1.1 (see commentary, Section 805.1.1.1).

805.4.1.2 Heat release rate. Newly introduced upholstered furniture shall have limited rates of heat release when tested in accordance with ASTM E1537 or California Technical Bulletin 133, as follows:

1. The peak rate of heat release for the single upholstered furniture item shall not exceed 80 kW.

   Exception: Upholstered furniture in rooms or spaces protected by an *approved automatic sprinkler system* installed in accordance with Section 903.3.1.1.

2. The total energy released by the single upholstered furniture item during the first 10 minutes of the test shall not exceed 25 MJ.

   Exception: Upholstered furniture in rooms or spaces protected by an *approved automatic sprinkler system* installed in accordance with Section 903.3.1.1.

❖This section is identical to Sections 805.1.1.2 and 805.2.1.2 and focuses on the potential heat release rate of upholstered furniture if a fire occurs (see commentary, Section 805.1.1.2).

805.4.1.3 Identification. Upholstered furniture shall bear the label of an *approved* agency, confirming compliance with the requirements of Sections 805.4.1.1 and 805.4.1.2.

❖In order to achieve verifiable compliance, labeling by an approved agency is required. Otherwise, this information would be extremely difficult to verify in the field. See the commentary for the definition of "Labeled" in Section 202.

805.4.2 Mattresses. Newly introduced mattresses shall meet the requirements of Sections 805.4.2.1 through 805.4.2.3.

❖Sections 805.4.2.1 and 805.4.2.2 deal with the combustibility of mattresses. Section 805.4.2.1 focuses on initial ignition and the ability of a mattress to sustain a fire; Section 805.4.2.2 focuses primarily on the burning characteristics of mattresses.

805.4.2.1 Ignition by cigarettes. Newly introduced mattresses shall be shown to resist ignition by cigarettes as determined by tests conducted in accordance with DOC 16 CFR Part 1632 and shall have a char length not exceeding 2 inches (51 mm).

❖This section is the same as Sections 805.1.2.1, 805.2.2.1 and 805.3.2.1 and requires compliance

INTERNATIONAL CODE COUNCIL®
Copyright © 2015 ICC. ALL RIGHTS RESERVED. Accessed by David Dammon on Jun 21, 2017 12:30:52 PM pursuant to License Agreement with ICC. No further reproduction or distribution authorized. ANY UNAUTHORIZED REPRODUCTION OR DISTRIBUTION IS A VIOLATION OF THE FEDERAL COPYRIGHT ACT AND THE LICENSE AGREEMENT, AND SUBJECT TO CIVIL AND CRIMINAL PENALTIES THEREUNDER.

with DOC 16 CFR Part 1632 (see commentary, Section 805.1.2.1).

805.4.2.2 Heat release rate. Newly introduced mattresses shall have limited rates of heat release when tested in accordance with ASTM E1590 or California Technical Bulletin 129, as follows:

1. The peak rate of heat release for the single mattress shall not exceed 100 kW.

   Exception: Mattresses in rooms or spaces protected by an *approved automatic sprinkler system* installed in accordance with Section 903.3.1.1.

2. The total energy released by the single mattress during the first 10 minutes of the test shall not exceed 25 MJ.

   Exception: Mattresses in rooms or spaces protected by an *approved automatic sprinkler system* installed in accordance with Section 903.3.1.1.

❖This section is the same as Sections 805.1.2.2, 805.2.2.2 and 805.3.2.2.1 in limiting the maximum heat release rate and the total energy (or heat) release (see commentary, Section 805.1.2.2).

805.4.2.3 Identification. Mattresses shall bear the label of an *approved* agency, confirming compliance with the requirements of Sections 805.4.2.1 and 805.4.2.2.

❖In order to achieve verifiable compliance, labeling by an approved agency is required. Otherwise, this information would be extremely difficult to verify in the field. See the commentary to the definition of "Labeled" in Section 202.

SECTION 806
DECORATIVE VEGETATION IN NEW AND EXISTING BUILDINGS

806.1 Natural cut trees. Natural cut trees, where allowed by this section, shall have the trunk bottoms cut off not less than 0.5 inch (12.7 mm) above the original cut and shall be placed in a support device complying with Section 806.1.2.

❖This section focuses on the fire hazards posed by vegetation within a building. The majority of this section deals specifically with fresh Christmas trees. Natural cut trees, such as Christmas trees, within buildings pose a significant fire threat to occupants if they are not properly cared for. Because of the symmetric way in which these trees are normally groomed, the large surface area of the foliage and the amount of airspace throughout the branches, fires have the potential to burn very efficiently and vigorously if the tree is dry. The National Institute of Standards and Technology (NIST) website has the following statements: "The National Fire Protection Association (NFPA) reports that there are an estimated annual average of 210 home structure fires that begin with Christmas trees. Based on data from 2002 through 2005, these fires caused an average of 24 civilian deaths, 27 civilian injuries, and $13.3 million in direct property damage per year. The NFPA analysis also shows that although the number of Christmas tree fires is low, these fires represent a higher level of hazard. On average, one of every nine Christmas tree fires resulted in a fatality compared to an average of one death per 75 nonconfined home structure fires overall. Further, 49 percent of Christmas tree fires spread beyond the room of origin. The fires that spread beyond the room of origin caused 94 percent of the associated fatalities. The percentage of trees involved in structure fires represents an extremely small portion of the total number of natural Christmas trees sold in the United States each year, which is estimated at 30 million. The moisture content of each tree can play a dominant role in determining the fire hazard it represents. Properly maintaining a cut Christmas tree is important to retaining a high moisture content in the needles of the tree to limit accidental ignition and prevent rapid flame spread. A tree that has dry needles can readily ignite with a flaming source and generate heat release rates that are capable of causing flashover in residential scale rooms. The above statistics addressed home structure fires and natural Christmas trees, which are required by the IFC to be kept moist and fresh at all times."

In tests performed at NIST in 1999 to better understand the severity of Christmas tree fires, eight Scotch pine Christmas trees were placed in a room at 73°F (23°C) at approximately 50-percent relative humidity for approximately three weeks. Seven of the eight trees were given no additional moisture; the eighth tree was watered according to local rules for trees within business occupancies. This required the tree to be cut in a certain manner and placed in a stand with at least a 2-gallon (7.6 L) capacity. The seven dry trees were ignited and burned intensely; however, the tree that had been watered continuously throughout the three weeks could not be ignited. The peak heat releases from the dry trees ranged from approximately 1,600 kW to 5,000 kW within about 50 to 80 seconds of ignition [see Commentary Figure 806.1(1) for a summary of results and Commentary Figure 806.1(2) for a graphical representation of Test No. 3]. These test results demonstrate that the proper care for trees (i.e., making sure that the tree remains humid or wet) makes a significant difference on the fire hazard presented. This section requires at least $^1/_2$ inch (12.7 mm) of tree trunk to be removed above the original cut to optimize the tree's ability to absorb water to maintain a minimum level of moisture. This section also requires a support device (tree stand or equivalent) that meets the criteria of Section 806.1.2. Such devices are intended to bring the correct amount of moisture into contact with the tree. The specifics of this section cannot realistically be monitored in all buildings within a jurisdiction. The focus must be on occupancies

INTERNATIONAL CODE COUNCIL®
Copyright © 2015 ICC. ALL RIGHTS RESERVED. Accessed by David Dammon on Jun 21, 2017 12:30:52 PM pursuant to License Agreement with ICC. No further reproduction or distribution authorized. ANY UNAUTHORIZED REPRODUCTION OR DISTRIBUTION IS A VIOLATION OF THE FEDERAL COPYRIGHT ACT AND THE LICENSE AGREEMENT, AND SUBJECT TO CIVIL AND CRIMINAL PENALTIES THEREUNDER.

such as assembly or mercantile. All occupancies benefit, however, because there is now a method that a fire department could use to educate the general public on the treatment of Christmas trees. This tool can be helpful in fire prevention within a jurisdiction.

806.1.1 Restricted occupancies. Natural cut trees shall be prohibited within ambulatory care facilities and Group A, E, I-1, I-2, I-3, I-4, M, R-1, R-2 and R-4 occupancies.

Exceptions:

1. Trees located in areas protected by an *approved automatic sprinkler system* installed in accordance with Section 903.3.1.1 or 903.3.1.2 shall not be prohibited in Groups A, E, M, R-1 and R-2.
2. Trees shall be allowed within *dwelling units* in Group R-2 occupancies.

❖Although trees that have been properly watered and handled are less hazardous, there is still a concern that they should not be located in certain occupancies and specific uses. The occupancies listed in this section are those where the occupant load is high, occupants are vulnerable or the potential hazards that exist if the tree is not properly handled are too great. These occupancies and specific uses include ambulatory care facilities and Group A, E, I-1, I-2, I-3, I-4, M, R-1 and R-2 occupancies. There are exceptions for Group A, E, M, R-1 and R-2 occupancies when the trees are located in areas that are sprinklered in

TEST NO.	WEIGHT (kg)		HEIGHT (m)	WIDTH[a] (m)	MOISTURE CONTENT (%)
	Before Test	After Test			
1	17.2	6.8	2.6	1.7	30
2	15.9	8.2	2.7	1.3	27
3	20.0	6.8	2.3	1.7	30
4	9.5	5.0	2.5	1.2	30
5	19.1	8.6	2.5	1.7	28
6	12.7	7.7	2.5	1.1	32
7	18.6	7.7	3.1	1.5	25
8	28.1	28.1	2.7	1.4	36

(From NIST Report FR 4010)

a. The width is measured at the widest point of the tree.

Figure 806.1(1)
SUMMARY OF TREE PARAMETERS

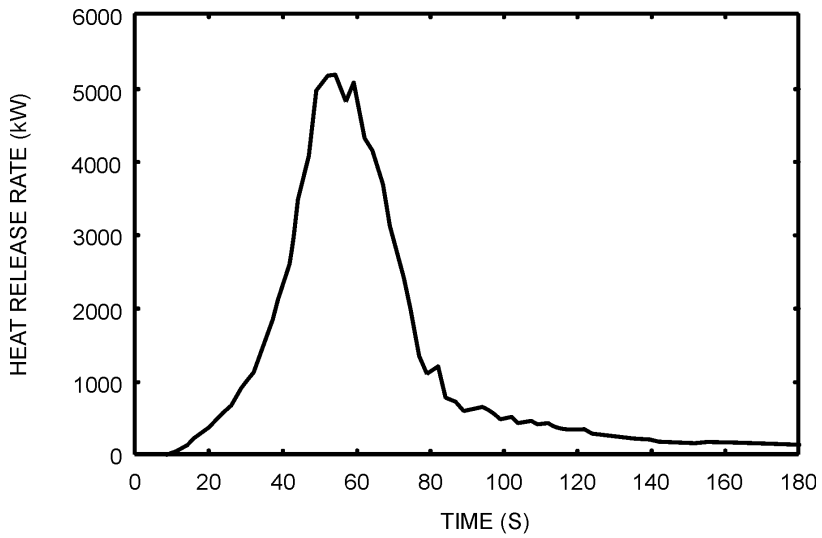

(From NIST Report FR 4010)

Figure 806.1(2)
GRAPH OF HEAT RELEASE RATE VERSUS TIME FOR TEST NUMBER 3

INTERNATIONAL CODE COUNCIL®
Copyright © 2015 ICC. ALL RIGHTS RESERVED. Accessed by David Dammon on Jun 21, 2017 12:30:52 PM pursuant to License Agreement with ICC. No further reproduction or distribution authorized. ANY UNAUTHORIZED REPRODUCTION OR DISTRIBUTION IS A VIOLATION OF THE FEDERAL COPYRIGHT ACT AND THE LICENSE AGREEMENT, AND SUBJECT TO CIVIL AND CRIMINAL PENALTIES THEREUNDER.

accordance with NFPA 13 or 13R, as applicable, and for trees within individual dwelling units in Group R-2. Essentially, the only occupancies that would be completely prohibited from having cut trees are institutional occupancies because of the vulnerability of the occupants and, in some cases, concerns for incendiary tendencies of some occupants.

806.1.2 Support devices. The support device that holds the tree in an upright position shall be of a type that is stable and that meets all of the following criteria:

1. The device shall hold the tree securely and be of adequate size to avoid tipping over of the tree.
2. The device shall be capable of containing a minimum two-day supply of water.
3. The water level, when full, shall cover the tree stem not less than 2 inches (51 mm). The water level shall be maintained above the fresh cut and checked not less than once daily.

❖This section is intended to prevent the tree from tipping over, potentially into an ignition source, and ensure that the support device is designed and used to keep the water supply to the tree at a useful level. More specifically, Item 1 requires the device to prevent the tree from tipping; Item 2 states that the device must be capable of holding a two-day water supply; and Item 3 requires a minimum coverage of water to 2 inches (51 mm) above the bottom of the stem. The water level must be checked at least once daily to verify that an adequate supply remains. The restrictions in Section 806.1.1 are in place because the provisions in Section 806.1.2 are generally difficult for a fire department to monitor. Having a sprinkler system or generally prohibiting natural cut trees in higher risk occupancies provides a redundancy to deal with the potential hazards.

806.1.3 Dryness. The tree shall be removed from the building whenever the needles or leaves fall off readily when a tree branch is shaken or if the needles are brittle and break when bent between the thumb and index finger. The tree shall be checked daily for dryness.

❖Lack of moisture is the primary problem with natural cut trees within buildings. This section describes a daily test to assist in evaluating whether the tree is considered too dry to remain in the building.

806.2 Artificial vegetation. Artificial decorative vegetation shall meet the flame propagation performance criteria of Test Method 1 or Test Method 2, as appropriate, of NFPA 701. Meeting the flame propagation performance criteria of Test Method 1 or Test Method 2, as appropriate, of NFPA 701 shall be documented and certified by the manufacturer in an *approved* manner. Alternatively, the artificial decorative vegetation item shall be tested in accordance with NFPA 289, using the 20 kW ignition source, and shall have a maximum heat release rate of 100 kW.

❖Much of the attention of Section 806 has been focused on natural vegetation, primarily Christmas trees. This section addresses artificial vegetation, which generally contains a high concentration of plastic material in the form of plastic artificial leaves. The goal, therefore, is to reduce initial ignitability by treating artificial vegetation with flame retardants to improve fire performance or to use materials that have inherently better fire performance. Artificial decorative vegetation is required by this section to be tested either to the flame propagation performance criteria of NFPA 701 or in accordance with NFPA 289 using the 20 kW ignition source and with a maximum allowed heat release rate of 100 kW.

NFPA 289 is a furniture calorimeter heat release fire test specifically developed for these types of products. NFPA 289 uses a propane gas burner as the ignition source. The 20 kW gas burner ignition source in NFPA 289 was specifically designed with the intent of being a substitute for UL 1975 and would be suitable as an ignition source for Christmas trees.

As discussed extensively in Section 806.1, there are substantial fire safety requirements for natural Christmas trees; however, testing in accordance with NFPA 701 was the only option until this requirement was added.

806.3 Obstruction of means of egress. The required width of any portion of a *means of egress* shall not be obstructed by decorative vegetation. Natural cut trees shall not be located within an exit, corridor, or a lobby or vestibule.

❖Decorative vegetation is often placed in a location that does not normally accommodate combustibles. This section restricts locations so that the vegetation does not block the egress width and increase the fire hazard in such areas. For example, this would likely prohibit trees in main lobby areas of a movie theater.

806.4 Open flame. Candles and open flames shall not be used on or near decorative vegetation. Natural cut trees shall be kept a distance from heat vents and any open flame or heat-producing devices at least equal to the height of the tree.

❖This section addresses the primary ignition hazards associated with decorative vegetation. More specifically, candles should never be placed on or near Christmas trees. Also, heat sources such as vents may pose an ignition hazard in addition to being a source of airflow that could dry out a tree, making it more susceptible to ignition.

806.5 Electrical fixtures and wiring. The use of unlisted electrical wiring and lighting on natural cut trees and artificial decorative vegetation shall be prohibited. The use of electrical wiring and lighting on artificial trees constructed entirely of metal shall be prohibited.

❖Decorations are quite often used year after year on Christmas trees. Some of this decor consists of lights that are not specifically listed and can fail and become very hot, potentially posing an ignition source. Additionally, this wiring may arc and create an ignition source. In fact, it has been found that many Christmas tree fires have actually been started by the decorative lights on them. Therefore, this section simply prohibits the use of unlisted wiring or light-

INTERNATIONAL CODE COUNCIL®
Copyright © 2015 ICC. ALL RIGHTS RESERVED. Accessed by David Dammon on Jun 21, 2017 12:30:52 PM pursuant to License Agreement with ICC. No further reproduction or distribution authorized. ANY UNAUTHORIZED REPRODUCTION OR DISTRIBUTION IS A VIOLATION OF THE FEDERAL COPYRIGHT ACT AND THE LICENSE AGREEMENT, AND SUBJECT TO CIVIL AND CRIMINAL PENALTIES THEREUNDER.

ing (such lights and ornaments are listed in accordance with UL 588). Additionally, because of the shock and ignition potential resulting from a short or direct contact of part of the tree with one of the light sockets, electrical wiring and lighting is not allowed on metal trees.

SECTION 807
DECORATIVE MATERIALS OTHER THAN DECORATIVE VEGETATION IN NEW AND EXISTING BUILDINGS

807.1 General. Combustible decorative materials, other than decorative vegetation, shall comply with Sections 807.2 through 807.5.6.

❖The requirements in this section apply to decorative materials other than vegetation. The bulk of the requirements in this section are applicable to all occupancy groups. Section 807.3 is applicable to all groups, except Group I-3, as combustible decorative materials are prohibited (See Section 807.5.4). Decorative materials must be noncombustible or meet the flame propagation performance criteria of Section 806.4 and NFPA 701. Note that Section 807.5 is occupancy based and addresses combustible decorative materials that may not comply with Section 807.3, such as artwork in classrooms. Instead, specific limitations on amounts and types of materials are provided. The occupancies addressed include Group A, E, I and R-2 dormitories.

807.2 Limitations. The following requirements shall apply to all occupancies:

1. Furnishings or decorative materials of an explosive or highly flammable character shall not be used.
2. Fire-retardant coatings in existing buildings shall be maintained so as to retain the effectiveness of the treatment under service conditions encountered in actual use.
3. Furnishings or other objects shall not be placed to obstruct exits, access thereto, egress therefrom or visibility thereof.
4. The permissible amount of noncombustible decorative materials shall not be limited.

❖This section addresses some basic hazards with certain finishes and materials associated with decorative materials. These are discussed below.

1. This is a general statement prohibiting furnishings and contents or decorative materials that pose an extreme fire potential. These materials tend to have a significant impact on fire size in a building.
2. In many cases, the IBC and the code allow use of certain combustible or flammable materials based on the application of a fire-retardant coating (see commentary, Section 803.4).
3. Similar to Section 806.3, this section prohibits any decorations or other objects from obstructing the means of egress, including visibility.
4. It is clarified that noncombustible decorative materials are not limited, as they pose no fire hazard. It is important that they comply with Item 3 in terms of obstruction of the means of egress.

807.3 Combustible decorative materials. In other than Group I-3, curtains, draperies, fabric hangings and other similar combustible decorative materials suspended from walls or ceilings shall comply with Section 807.4 and shall not exceed 10 percent of the specific wall or ceiling area to which they are attached.

Fixed or movable walls and partitions, paneling, wall pads and crash pads applied structurally or for decoration, acoustical correction, surface insulation or other purposes shall be considered *interior finish*, shall comply with Section 803 and shall not be considered *decorative materials* or furnishings.

Exceptions:

1. In auditoriums in Group A, the permissible amount of curtains, draperies, fabric hangings and other similar combustible decorative material suspended from walls or ceilings shall not exceed 75 percent of the aggregate wall area where the building is equipped throughout with an *approved automatic sprinkler system* in accordance with Section 903.3.1.1, and where the material is installed in accordance with Section 803.11 of the *International Building Code*.
2. In Group R-2 dormitories, within sleeping units and dwelling units, the permissible amount of curtains, draperies, fabric hangings and other similar decorative materials suspended from walls or ceilings shall not exceed 50 percent of the aggregate wall areas where the building is equipped throughout with an *approved automatic sprinkler system* installed in accordance with Section 903.3.1.
3. In Group B and M occupancies, the amount of combustible fabric partitions suspended from the ceiling and not supported by the floor shall comply with Section 807.4 and shall not be limited.

❖Meeting the flame propagation performance criteria of NFPA 701, which is required by Section 807.4, does not mean that materials will not burn, only that they are going to spread flame relatively slowly. These materials are, therefore, limited to a maximum of 10 percent of the total wall or ceiling area of the space under consideration. Unlike incidental trim, decorative materials are not necessarily distributed evenly throughout the room. Additionally, consideration of the long-term maintenance of the materials, including possible periodic retreatment, should be taken into account.

In any occupancy classification, when a movable wall, partition, paneling, wall pads or crash pads

INTERNATIONAL CODE COUNCIL®
Copyright © 2015 ICC. ALL RIGHTS RESERVED. Accessed by David Dammon on Jun 21, 2017 12:30:52 PM pursuant to License Agreement with ICC. No further reproduction or distribution authorized. ANY UNAUTHORIZED REPRODUCTION OR DISTRIBUTION IS A VIOLATION OF THE FEDERAL COPYRIGHT ACT AND THE LICENSE AGREEMENT, AND SUBJECT TO CIVIL AND CRIMINAL PENALTIES THEREUNDER.

cover larger areas, they need to be dealt with as interior finishes instead of as decorative materials.

The first two exceptions relate to the 10-percent limitation in Section 807.3. Exception 1 is for Group A auditoriums that would allow 75-percent coverage of the walls and ceilings (instead of the limit of 10 percent) if the space is sprinklered in accordance with NFPA 13 and the material is applied in accordance with Section 803.11 of the IBC.

Exception 2 allows an increased amount of decorative materials in Group R-2 dormitories. An allowance of up to 50 percent is provided as long as the building is equipped throughout with an automatic sprinkler system. The reference to Section 903.3.1 allows the use of a NFPA 13 or 13R system as applicable. This allowance is likely provided as it is more realistic to what is typically found in dormitories and is more easily managed from an enforcement standpoint. The sprinklers provide the necessary protection to allow such an increase.

Exception 3 of this section clarifies that, in Group B and M occupancies, fabric partitions suspended from the ceiling but not physically contacting the floor should be treated as decorative materials similar to curtains or draperies and comply with the flame propagation performance heat release criteria of Section 807.4. These partitions are also permitted to be unlimited. This is with or without the use of sprinklers within a building.

807.4 Acceptance criteria and reports. Where required to exhibit improved fire performance, curtains, draperies, fabric hangings and other similar combustible decorative materials suspended from walls or ceilings shall be tested by an *approved* agency and meet the flame propagation performance criteria of Test Method 1 or Test Method 2, as appropriate, of NFPA 701 or exhibit a maximum rate of heat release of 100 kW when tested in accordance with NFPA 289, using the 20 kW ignition source. Reports of test results shall be prepared in accordance with the test method used and furnished to the *fire code official* upon request.

❖One of the standard test methods used to evaluate the ability of a material to propagate flame is NFPA 701, which contains two test methods. Test 1 is less severe than Test 2 and uses smaller specimens. Test 1 is intended for lighter weight materials and single layer fabrics: the limit is a linear density of 700 g/m^2 (21 oz/yd^2). Test 2 is intended for higher density materials and multilayered fabrics. It also applies to vinyl-coated fabric blackout linings and lined draperies using any density, because they have been shown to give misleading results using Test 1. NFPA 701 sets out the types of materials, including fabrics that should be tested using each method.

Essentially, NFPA 701 provides a mechanism to distinguish between materials that allow flames to spread quickly and those that do not when using a small fire exposure.

Materials tested only to NFPA 701 are not permitted for use as interior finish materials, but instead are generally used as shades, swags, curtains and other similar materials. These tests are used to determine whether materials propagate flame beyond the area exposed to the ignition source. They are not intended to indicate whether the material tested will resist the propagation of flame under fire exposures more extreme than the test conditions.

It should be noted that the historic “small-scale test” is no longer accepted.

The other standard test method that can be used is NFPA 289. This test method quantifies the contribution of materials to heat and smoke release when subjected to different ignition sources. This test method also determines the potential for growth of a fire and the fire-spread of a given material when exposed to an ignition source in a controlled environment. See the commentary to Section 807.5.1.1 for a more detailed discussion of this test method.

807.5 Occupancy-based requirements. In occupancies specified, combustible decorative materials not complying with Section 807.3 shall comply with Sections 807.5.1 through 807.5.6.

❖The provisions of Sections 807.5.1 through 807.5.6 address the vulnerability of occupants by addressing hazards likely found in certain occupancies. Group A occupancies are generally densely populated with occupants being unfamiliar with their surroundings. Such occupancies are also more likely to contain a large amount of decorative materials, such as stage scenery or exhibit booths utilizing foam plastics. Group E, I and R-2 dormitories have the potential to deal with a large amount of decorative materials and storage. Occupants in Group E, I and R-2 dormitories are also considered more vulnerable than other occupancies, such as Group B or M, because of occupant age or infirmity and occupancies such as dormitories where the occupants sometimes place themselves at increased risks. Group I-3, as will be discussed, should not have any combustible decorative materials. It is important to stress that this section specifically addresses materials that do not meet the requirements of NFPA 701, as is required in Section 807.3.

807.5.1 Group A. In Group A occupancies, the requirements in Sections 807.5.1.1 through 807.5.1.4 shall apply.

❖The requirements in Sections 803.5.1.1 through 803.5.1.4 are specific to Group A occupancies. These particular requirements are fairly specific to activities and uses that occur in Group A occupancies, such as trade shows and movie theaters. Generally, fire hazards are moderate in Group A occupancies. The concerns are more closely related to the high occupant density and the occupants’ lack of familiarity with the building.

INTERNATIONAL CODE COUNCIL®
Copyright © 2015 ICC. ALL RIGHTS RESERVED. Accessed by David Dammon on Jun 21, 2017 12:30:52 PM pursuant to License Agreement with ICC. No further reproduction or distribution authorized. ANY UNAUTHORIZED REPRODUCTION OR DISTRIBUTION IS A VIOLATION OF THE FEDERAL COPYRIGHT ACT AND THE LICENSE AGREEMENT, AND SUBJECT TO CIVIL AND CRIMINAL PENALTIES THEREUNDER.

807.5.1.1 Foam plastics. Exposed foam plastic materials and unprotected materials containing foam plastic used for decorative purposes or stage scenery or exhibit booths shall have a maximum heat release rate of 100 kW when tested in accordance with UL 1975, or when tested in accordance with NFPA 289 using the 20 kW ignition source.

Exceptions:

1. Individual foam plastic items or items containing foam plastic where the foam plastic does not exceed 1 pound (0.45 kg) in weight.
2. Cellular or foam plastic shall be allowed for trim in accordance with Section 804.2.

❖As discussed in Section 803.8, foam plastics can produce misleading results when tested to ASTM E84. In some instances, they can burn vigorously and at high rates of heat release. Group A occupancies tend to contain materials for stages, movie theaters and exhibit halls. These uses will likely have combustible scenery or exhibit booths that contain foam plastics. Therefore, because the occupants are unlikely to be familiar with the premises, and the hazards presented by these combustibles can be high, a heat release rate limit of 100 kW, when tested in accordance with UL 1975 or NFPA 289, is placed on foam plastic materials used in Group A occupancies.

In the past, restrictions on the combustibility of materials were based on the heat content of the materials instead of the rate at which the heat content is released. The problem with using heat content (which can be equated to "potential energy" of the material) as the limitation criterion is that it does not provide a good understanding of the rate at which the "potential energy" is released. The rate at which heat is released is a more important characteristic of fire and is a measure of the intensity of the fire. UL 1975 and NFPA 289 are furniture calorimeter types of tests that assess the actual heat release rate based on the exposure of the foam plastics to a specific heat input (340-gram wood crib for UL 1975 and 20kW propane gas burner ignition source for NFPA 289) as specified in the test.

Some alternatives to testing are provided in the exceptions, which primarily focus on limiting the amount of combustibles. The exceptions give two prescriptive approaches with no direct relationship to the actual combustibility of the foam plastic except to limit the amount used. Exception 1 is related to plastic display items, such as a small statue. Exception 2 relates specifically to decorative trim and directs the code user to the requirements for that material found in Section 804.2 (see commentary, Section 804.2).

807.5.1.2 Motion picture screens. The screens upon which motion pictures are projected in new and existing buildings of Group A shall either meet the flame propagation performance criteria of Test Method 1 or Test Method 2, as appropriate, of NFPA 701 or shall comply with the requirements for a Class B interior finish in accordance with Section 803 of the *International Building Code*.

❖Movie screens are not considered interior finish and, therefore, would not be addressed by Chapter 8 of the IBC. These screens consist of a fabric base covered with a thin coating impregnated with reflective glass beads. Movie screens are generally fairly large and typically take up most of the front wall of a movie theater; therefore, the flame spread characteristics must be addressed. Because movie theaters tend to be densely occupied, a material with a high rate of flame spread can pose a significant hazard. Screens can comply in one of two ways. The screen must meet the applicable flame propagation performance criteria set out in NFPA 701 Test Method 1 or 2 (which focus on combustibles such as curtains, shades and window treatments, but are not appropriate for wall coverings), or qualify as a Class B interior finish material in accordance with ASTM E84. NFPA 286, which is also found in Section 803, would be a viable alternative for testing. It should be noted that the historic "small-scale test" in NFPA 701 is no longer accepted.

807.5.1.3 Wood use in places of religious worship. In places of religious worship, wood used for ornamental purposes, trusses, paneling or chancel furnishing shall not be limited.

❖Places of religious worship are generally open spaces. The occupants, because of the nature of the activities in these assemblies, tend to be orderly. For this reason, wood, which is a combustible material, is allowed extensively as a finish material without restriction.

807.5.1.4 Pyroxylin plastic. Imitation leather or other material consisting of or coated with a pyroxylin or similarly hazardous base shall not be used.

❖Use of pyroxylin plastics, also known as cellulose nitrate plastics, in Group A occupancies as imitation leather or other materials is strictly prohibited because of the normally high occupant loads of such occupancies. This type of material is very hazardous because it will begin decomposition at temperatures starting at 300°F (149°C), and has the potential to develop explosive atmospheres with high heat emission once it ignites. Because cellulose nitrate tends to become somewhat unstable and is easily ignitable, its use has generally declined. Specifically, use of cellulose nitrate for motion picture film was discontinued in 1951.

807.5.2 Group E. Group E occupancies shall comply with Sections 807.5.2.1 through 807.5.2.3.

❖Group E occupancies are occupancies used by six or more persons for educational purposes through the 12th grade or buildings and structures used for educational, supervision or personal care services for

INTERNATIONAL CODE COUNCIL®
Copyright © 2015 ICC. ALL RIGHTS RESERVED. Accessed by David Dammon on Jun 21, 2017 12:30:52 PM pursuant to License Agreement with ICC. No further reproduction or distribution authorized. ANY UNAUTHORIZED REPRODUCTION OR DISTRIBUTION IS A VIOLATION OF THE FEDERAL COPYRIGHT ACT AND THE LICENSE AGREEMENT, AND SUBJECT TO CIVIL AND CRIMINAL PENALTIES THEREUNDER.

more than five children over the age of $2^1/_2$ years. This section regulates the amount of combustibles within corridors, lobbies and classrooms by regulating clothing, personal effects and artwork.

807.5.2.1 Storage in corridors and lobbies. Clothing and personal effects shall not be stored in *corridors* and lobbies.

Exceptions:

1. *Corridors* protected by an *approved automatic sprinkler system* installed in accordance with Section 903.3.1.1.
2. *Corridors* protected by an *approved* fire alarm system installed in accordance with Section 907.
3. Storage in metal lockers, provided the minimum required egress width is maintained.

❖Materials, such as clothing, other personal effects and artwork, have the potential for creating a fire hazard within the main path of egress travel. This section allows the storage of clothing and other personal effects within these areas only if corridors and lobbies contain one of the following features:

- Sprinkler system.
- Fire alarm system.
- Metal lockers for storage.

The sprinkler system must meet the requirements of NFPA 13. The fire alarm system must be approved by the fire code official. The fire alarm system is intended to specifically focus on the contents of the corridors and would typically be a smoke detection system. The system is not intended to be required throughout.

807.5.2.2 Artwork in corridors. Artwork and teaching materials shall be limited on the walls of *corridors* to not more than 20 percent of the wall area.

❖Educational occupancies tend to display various artwork and related educational materials on the walls of classrooms and corridors. This section limits the potential combustibility levels of artwork in critical areas of the means of egress system; therefore, decorations or artwork can cover no more than 20 percent of the corridor walls. See Commentary Figure 807.5.2.2 for representation of the 20-percent coverage area.

807.5.2.3 Artwork in classrooms. Artwork and teaching materials shall be limited on walls of classrooms to not more than 50 percent of the specific wall area to which they are attached.

❖This is consistent with requirements for restrictions on artwork in the corridors. The limit is less restrictive at 50 percent versus the 20 percent that is permitted for corridors. This relates to the fact that the corridors make up the more critical portion of the exit access for the building.

807.5.3 Groups I-1 and I-2. In Group I-1 and I-2 occupancies, combustible *decorative materials* shall comply with Sections 807.5.3.1 through 807.5.3.4.

❖Sections 807.5.3.1 through 807.5.3.4 provide a series of requirements for care facilities where the occupants are at increased level of risk due to their physical and cognitive limitations. In Group I-1 and I-2 occupancies, the occupants are present 24 hours a day with varying levels of care depending on the type

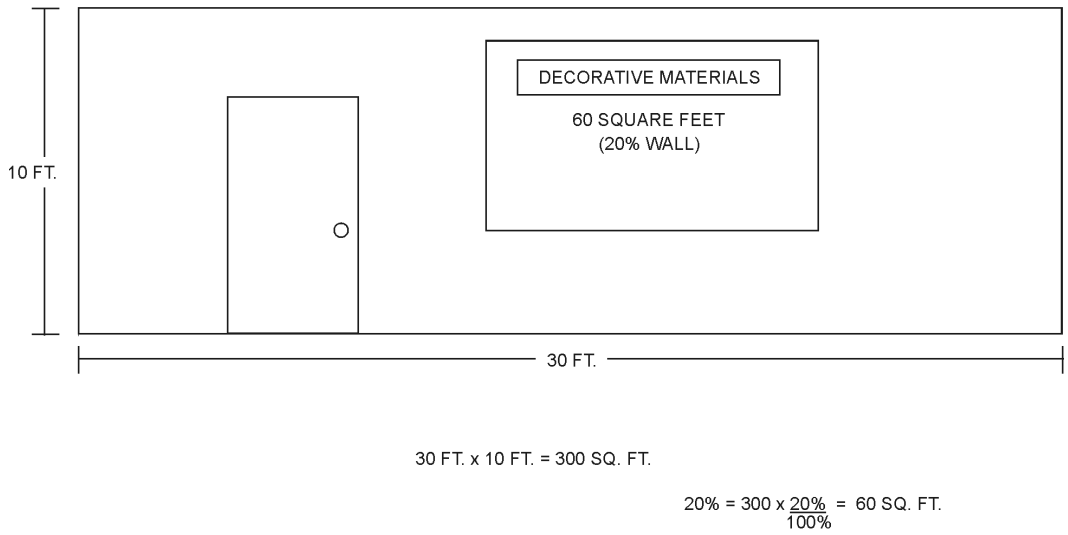

For SI: 1 foot = 304.8 mm, 1 square foot = 0.0929 m^2.

Figure 807.5.2.2
ARTWORK COVERAGE AREA EXAMPLE

INTERNATIONAL CODE COUNCIL®
Copyright © 2015 ICC. ALL RIGHTS RESERVED. Accessed by David Dammon on Jun 21, 2017 12:30:52 PM pursuant to License Agreement with ICC. No further reproduction or distribution authorized. ANY UNAUTHORIZED REPRODUCTION OR DISTRIBUTION IS A VIOLATION OF THE FEDERAL COPYRIGHT ACT AND THE LICENSE AGREEMENT, AND SUBJECT TO CIVIL AND CRIMINAL PENALTIES THEREUNDER.

of occupancy. Section 407.2.1 of the IBC allows waiting or similar areas to be open to corridors. These types of spaces typically have magazines, bulletin boards with paper notices tacked to them, and other combustible items not treated with flame retardants or tested to NFPA 701. Allowing a specified percentage of untreated, combustible decorative materials in Group I-1 and I-2 buildings equipped throughout with an automatic sprinkler system will not exceed the "ordinary occupancy" classification outlined in NFPA 13, nor does it increase the fire loading above what is currently permitted. These requirements offer consistent language to aid enforcement and a guide to providers to determine compliance within their facilities. The intent of these requirements is to eliminate the haphazard and inconsistent application of these provisions in facilities nationwide.

807.5.3.1 Group I-1 and I-2 Condition 1 within units. In Group I-1 and Group I-2 Condition 1 occupancies, equipped throughout with an *approved automatic sprinkler system* installed in accordance with Section 903.3.1.1, within sleeping units and dwelling units, combustible decorative materials placed on walls shall be limited to not more than 50 percent of the wall area to which they are attached.

❖This section is focused on the sleeping units and dwelling units within Group I-1, which are typically assisted living and similar occupancies, and Group I-2 Condition 1, which are nursing homes. Since the requirements are focused within the sleeping and dwelling unit, the requirements are more lenient than those associated with the main exit access. Similar to the artwork restrictions for classrooms, such spaces are permitted to have 50 percent of the wall area occupied by combustible decorative materials. It should be noted that Group I-2 occupancies require the retroactive installation of sprinklers in accordance with Section 1105.8. All new Group I occupancies require the installation of an automatic sprinkler system.

807.5.3.2 In Group I-1 and I-2 Condition 1 for areas other than within units. In Group I-1 and Group I-2 Condition 1 occupancies, equipped throughout with an *approved automatic sprinkler system* installed in accordance with Section 903.3.1.1, combustible decorative materials placed on walls in areas other than within dwelling and sleeping units shall be limited to not more than 30 percent of the wall area to which they are attached.

❖This section focuses on the same occupancies as Section 807.5.3.1, but on areas outside the sleeping and dwelling units. The allowance in sprinklered buildings is 30 percent versus the 50 percent in Section 807.5.3.1. These areas tend to expose a greater percentage of the building occupants to the hazards of combustible decorative materials. It should be noted that Group I-2 occupancies require the retroactive installation of sprinklers in accordance with Section 1105.8. All new Group I occupancies require the installation of an automatic sprinkler system.

807.5.3.3 In Group I-2 Condition 2. In Group I-2 Condition 2 occupancies, equipped throughout with an *approved automatic sprinkler system* installed in accordance with Section 903.3.1.1, combustible decorative materials placed on walls shall be limited to not more than 30 percent of the wall area to which they are attached.

❖This section is the same as Section 807.5.3.2, except that it is focused on hospitals—specifically, areas of the hospital where more occupants are exposed to combustible decorative materials. As noted in Sections 807.5.3.1 and 807.5.3.2, all Group I-2 occupancies require the retroactive installation of an automatic sprinkler system. Note that Section 1105.8 only requires sprinkler installation from the story containing the Group I-2 occupancy to the level of exit discharge.

807.5.3.4 Other areas in Groups I-1 and I-2. In Group I-1 and I-2 occupancies, in areas not equipped throughout with an *approved automatic sprinkler system*, combustible decorative materials shall be of such limited quantities that a hazard of fire development or spread is not present.

❖This section addresses Group I-1 and I-2 occupancies. The focus is on areas of such buildings where an automatic sprinkler system does not provide coverage. As noted, Group I-2 occupancies require the retroactive installation of an automatic sprinkler system but Group I-1 occupancies do not. Although Group I-2 occupancies should be provided with sprinklers, there may be transitional periods where this is not the case. This requirement in general is nonspecific and generally gives authority to the fire code official to address situations that appear hazardous.

807.5.4 Group I-3. In Group I-3, combustible *decorative materials* are prohibited.

❖Due to the nature of such occupancies, where occupants have a tendency to start fires, combustible decorative materials are prohibited.

807.5.5 Group I-4. Group I-4 occupancies shall comply with the requirements in Sections 807.5.5.1 through 807.5.5.3.

❖A Group I-4 day care facility is an occupancy that cares for people of any age for less than 24 hours per day. Most often, these facilities are for small children not yet able to attend school, but also included are adult day care facilities. These occupancies will have features similar to those of Group E occupancies; therefore, the same restrictions on combustibles in corridors, lobbies and classrooms exist. The key issue here is that the occupants of Group I-4 facilities are often not capable of self-preservation without some level of assistance; therefore, combustibles must be kept to a minimum, especially in critical portions of the means of egress system.

INTERNATIONAL CODE COUNCIL®
Copyright © 2015 ICC. ALL RIGHTS RESERVED. Accessed by David Dammon on Jun 21, 2017 12:30:52 PM pursuant to License Agreement with ICC. No further reproduction or distribution authorized. ANY UNAUTHORIZED REPRODUCTION OR DISTRIBUTION IS A VIOLATION OF THE FEDERAL COPYRIGHT ACT AND THE LICENSE AGREEMENT, AND SUBJECT TO CIVIL AND CRIMINAL PENALTIES THEREUNDER.

807.5.5.1 Storage in corridors and lobbies. Clothing and personal effects shall not be stored in *corridors* and lobbies.

Exceptions:

1. *Corridors* protected by an *approved automatic sprinkler system* installed in accordance with Section 903.3.1.1.
2. *Corridors* protected by an *approved* fire alarm system installed in accordance with Section 907.
3. Storage in metal lockers, provided the minimum required egress width is maintained.

❖See the commentary to Section 807.5.2.1.

807.5.5.2 Artwork in corridors. Artwork and teaching materials shall be limited on walls of *corridors* to not more than 20 percent of the wall area.

❖See the commentary to Section 807.5.2.2.

807.5.5.3 Artwork in classrooms. Artwork and teaching materials shall be limited on walls of classrooms to not more than 50 percent of the specific wall area to which they are attached.

❖See the commentary to Section 807.5.2.3.

807.5.6 Dormitories in Group R-2. In Group R-2 dormitories, within sleeping units and dwelling units, the combustible decorative materials shall be of limited quantities such that a hazard of fire development or spread is not present.

❖This section is consistent with the needs of facilities where occupants often take unnecessary risks. This provides a mechanism for the fire code official to limit the potential hazards in such sleeping units and dwelling units. Note that Section 807.3, Exception 2 allows up to 50 percent of the aggregate wall areas to contain decorative materials if an automatic sprinkler system is provided.

SECTION 808
FURNISHINGS OTHER THAN UPHOLSTERED FURNITURE AND MATTRESSES OR DECORATIVE MATERIALS IN NEW AND EXISTING BUILDINGS

808.1 Wastebaskets and linen containers in Group I-1, I-2 and I-3 occupancies. Wastebaskets, linen containers and other waste containers, including their lids, located in Group I-1, I-2 and I-3 occupancies shall be constructed of noncombustible materials or of materials that meet a peak rate of heat release not exceeding 300 kW/m^2 when tested in accordance with ASTM E1354 at an incident heat flux of 50 kW/m^2 in the horizontal orientation. Metal wastebaskets and other metal waste containers with a capacity of 20 gallons (75.7 L) or more shall be *listed* in accordance with UL 1315 and shall be provided with a noncombustible lid. Portable containers exceeding 32 gallons (121 L) shall be stored in an area classified as a waste and linen collection room and constructed in accordance with Table 509 of the *International Building Code*.

❖Although residents of Group I-1, I-2 and I-3 occupancies are generally closely monitored, there is an increased life safety risk in these facilities since in each type, the occupants have limited or no self-evacuation ability. Plastic containers can add a tremendous fuel load to a fire in a trash or linen container; many plastic containers will more than triple the fuel load in a fire situation. This section will control the fuel load for these containers that are used routinely throughout the facilities and will correlate the code with federal regulations for these facilities. Steps can be taken to reduce the impact of a fire once it has been ignited by limiting wastebaskets to those that can meet certain combustibility criteria in accordance with ASTM E1354. ASTM E1354 is a small-scale calorimeter test that measures heat flux output based on a given heat source. This concept is similar to that required in full-scale tests for upholstered furniture and mattresses in Section 805. It should be noted that this section is not focused on ignition prevention but instead assumes that ignition has occurred. The focus is reducing the contribution of the trash container to a fire.

Compliance with this test allows any material that can pass the test to be used. This may allow the use of fire-retardant plastics or other materials that will meet the criteria of the test. Generally, in larger areas of the facility, if a fire can be contained to a wastebasket, it will not spread but will simply burn out.

Since a larger wastebasket means a larger fire, this section also addresses larger metal wastebaskets by requiring compliance with UL 1315 and that they be equipped with a noncombustible lid. This increases the likelihood that the fire will stay contained to the wastebasket and possibly reduce the fire size by restricting the combustion process. The general performance of wastebaskets meeting the requirements of UL 1315 is as follows:

- Limit the external surface temperatures of the container bottom should their contents become ignited.
- Extinguish the fire.
- Contain the contents without contributing fuel to the fire.

See also the commentary to Sections 304.3.2, 304.3.4 and 318.1.

808.2 Waste containers with a capacity of 20 gallons or more in Group R-2 college and university dormitories. Waste containers, including their lids, located in Group R-2 college and university dormitories, and with a capacity of 20 gallons (75.7 L) or more, shall be constructed of noncombustible materials or of materials that meet a peak rate of heat release not exceeding 300 kW/m^2 when tested in accordance with ASTM E1354 at an incident heat flux of 50 kW/m^2 in the horizontal orientation. Metal wastebaskets and other metal waste containers with a capacity of 20 gallons (75.7 L) or more shall be *listed* in accordance with UL 1315 and shall be provided with a noncombustible lid. Portable containers exceeding 32 gallons (121 L) shall be stored in an area classified as a waste and linen collection room constructed in

INTERNATIONAL CODE COUNCIL®
Copyright © 2015 ICC. ALL RIGHTS RESERVED. Accessed by David Dammon on Jun 21, 2017 12:30:52 PM pursuant to License Agreement with ICC. No further reproduction or distribution authorized. ANY UNAUTHORIZED REPRODUCTION OR DISTRIBUTION IS A VIOLATION OF THE FEDERAL COPYRIGHT ACT AND THE LICENSE AGREEMENT, AND SUBJECT TO CIVIL AND CRIMINAL PENALTIES THEREUNDER.

accordance with Table 509 of the *International Building Code*.

❖This section is similar to Section 808.1, but is applicable to larger capacity containers (exceeding 20 gallons) and is focused on Group R-2 college and university dormitories. The large waste containers in college and university dormitories should comply with the same requirements as any waste container in Group I-2 and I-3 occupancies. Most nonmetallic waste containers are manufactured from polyethylene, which has a fuel value over double that of newsprint and can generate a high heat release rate fire. These waste containers hold combustible waste (much of which is paper) while having very combustible walls. See the commentary to Section 808.1 for more information on the test methods prescribed.

808.3 Signs. Foam plastic signs that are not affixed to interior building surfaces shall have a maximum heat release rate of 150 kW when tested in accordance with UL 1975, or when tested in accordance with NFPA 289 using the 20-kW ignition source.

Exception: Where the aggregate area of foam plastic signs is less than 10 percent of the floor area or wall area of the room or space in which the signs are located, whichever is less, subject to the approval of the *fire code official*.

❖This section correlates with the requirements in Section 402.6.4.4 of the IBC, which requires a limit on the combustibility of signs in covered mall buildings, though it should be noted that the requirements of the code are not specific to such buildings. The requirement of this section is that, when a foam plastic sign is tested in accordance with UL 1975 or NFPA 289 (see commentary, Section 807.5.1.1), a maximum heat release rate of 150 kW is allowed.

Note that smoke development is not part of the acceptance criteria.

The exception recognizes that a relatively small aggregate surface coverage of a room or space by these signs (i.e., when the aggregate area of foam plastic signs constitutes the lesser of 10 percent of the floor or wall area of the room or space in which the signs are located) does not present a sufficient enough hazard to require compliance with the section. However, specific approval by the fire code official is required.

808.4 Combustible lockers. Where lockers constructed of combustible materials are used, the lockers shall be considered interior finish and shall comply with Section 803.

Exception: Lockers constructed entirely of wood and noncombustible materials shall be permitted to be used wherever interior finish materials are required to meet a Class C classification in accordance with Section 803.1.1.

❖Traditionally, lockers in schools (high schools, middle schools, universities), clubs, swimming pools and gymnasiums were constructed of steel. In recent years, the use of lockers constructed of combustible materials has become prevalent. These lockers typically line an entire wall (for example, a corridor in a school) and are not regulated by the code. Lockers are not usually considered interior finish. The only other materials regulated by the code at present are interior trim, upholstered furniture, decorations, decorative vegetation, wastebaskets, linen containers and signs. Lockers do not fall into any of those categories.

Combustible lockers can present a significant fire load and, if ignited, are likely to spread fire the same way that interior finish materials spread fire. They are considered interior finish materials and regulated like all other interior finish materials for any occupancy. Plastic lockers have the benefit of being more immune to the effects of water from wet clothing and are generally very durable—but, with these benefits comes a fire hazard. The lockers by one manufacturer are constructed of $^{3}/_{8}$-inch-thick (9.52 mm) solid plastic bodies and heavy duty $^{1}/_{2}$-inch-thick (12.7 mm) doors. Typically the "solid plastic" used is either high-density polyethylene or polypropylene. Polypropylene, as discussed in the commentary to Section 803.9, is a thermoplastic that gives off considerable energy and produces a pooling flammable liquid fire when it burns.

Bibliography

The following resource material was used in the preparation of the commentary for this chapter of the code:

DeLauter, L., J. Lee, G. Roadarmel and D.W. Stroup. "Scotch Pine Christmas Tree Fire Tests." FR4010. Gaithersburg, MD: National Institute of Standards and Technology, US Department of Commerce, 1999.

INTERNATIONAL CODE COUNCIL®
Copyright © 2015 ICC. ALL RIGHTS RESERVED. Accessed by David Dammon on Jun 21, 2017 12:30:52 PM pursuant to License Agreement with ICC. No further reproduction or distribution authorized. ANY UNAUTHORIZED REPRODUCTION OR DISTRIBUTION IS A VIOLATION OF THE FEDERAL COPYRIGHT ACT AND THE LICENSE AGREEMENT, AND SUBJECT TO CIVIL AND CRIMINAL PENALTIES THEREUNDER.

INTERNATIONAL CODE COUNCIL®
Copyright © 2015 ICC. ALL RIGHTS RESERVED. Accessed by David Dammon on Jun 21, 2017 12:30:52 PM pursuant to License Agreement with ICC. No further reproduction or distribution authorized. ANY UNAUTHORIZED REPRODUCTION OR DISTRIBUTION IS A VIOLATION OF THE FEDERAL COPYRIGHT ACT AND THE LICENSE AGREEMENT, AND SUBJECT TO CIVIL AND CRIMINAL PENALTIES THEREUNDER.

Chapter 9:
Fire Protection Systems

General Comments

The requirements of Chapter 9 are just one aspect of the overall fire protection system of a building or structure. All fire protection requirements contained in the code must be considered as a package or overall system. Noncompliance with any part of the overall system may cause other parts of the system to fail, which may result in an increased loss of life and property from the reduced level of protection.

Every effort must be made to verify the proper design and installation of a given fire protection system, especially those that result in construction alternatives and other code trade-offs.

The requirements in Chapter 9 are active fire safety provisions. They are directed at containing and extinguishing a fire once it has erupted. This chapter parallels and duplicates much of Chapter 9 in the *International Building Code*® (IBC®). The code, however, contains additional specific provisions that are applicable only to existing buildings. It also contains periodic testing criteria that are not duplicated in the IBC. Proper testing, inspection and maintenance of the various systems are critical to establish the reliability of the system. Additionally, Chapter 9 references and adopts numerous National FIre Protection Association (NFPA) standards, including the acceptance testing criteria within the standard. The referenced standards will also contain more specific design and installation criteria than are found in this chapter. As noted in Section 102.7, where differences occur between code requirements and the referenced standard, the code provisions apply.

Purpose

Fire protection systems may serve one or more purposes in providing adequate protection from fire. Chapter 9 prescribes the minimum requirements for an active system or systems of fire protection to perform the following functions: detecting a fire; alerting the occupants or fire department of a fire emergency; controlling smoke and controlling or extinguishing the fire. Generally, the requirements are based on the occupancy, the height and the area of the building, because these are the factors that most affect fire-fighting capabilities and the relative hazard of a specific space or area.

SECTION 901
GENERAL

901.1 Scope. The provisions of this chapter shall specify where *fire protection systems* are required and shall apply to the design, installation, inspection, operation, testing and maintenance of all *fire protection systems*.

❖ Chapter 9 contains requirements for fire protection systems that may be installed or located in a building. These include automatic suppression systems; standpipe systems; fire alarm and detection systems; smoke control systems; smoke and heat vents and portable fire extinguishers. Besides indicating the conditions under which respective systems are required, this chapter contains the design, installation, maintenance, testing and operational criteria for fire protection systems. While the code requires proper maintenance for the reliability of the systems, the actual maintenance provisions (periodic testing, inspections and maintenance) may be contained in one of the referenced standards.

Chapter 9 is intended to apply to buildings of new construction or when deemed applicable because of a change in occupancy or an addition, unless specifically indicated to be applicable to existing buildings only. The scoping provisions in Chapter 1 should be consulted for determining the proper requirements for additions, alterations and remodelings.

This chapter also addresses the requirements for fire command centers, fire department connections, fire pumps and emergency radio systems. These features all directly relate to the proper function of fire protection systems.

901.2 Construction documents. The *fire code official* shall have the authority to require *construction documents* and calculations for all *fire protection systems* and to require permits be issued for the installation, rehabilitation or modification of any *fire protection system*. *Construction documents* for *fire protection systems* shall be submitted for review and approval prior to system installation.

❖ The construction documents and related calculations for all fire protection systems must be reviewed before a permit is issued. The review is performed to determine compliance with the code requirements and the applicable provisions in the referenced standards.

Typical shop drawings for fire protection systems are usually not prepared during the initial submittal for a construction permit. Many jurisdictions require a separate submittal and issue a separate permit to the con-

INTERNATIONAL CODE COUNCIL®
Copyright © 2015 ICC. ALL RIGHTS RESERVED. Accessed by David Dammon on Jun 21, 2017 12:30:52 PM pursuant to License Agreement with ICC. No further reproduction or distribution authorized. ANY UNAUTHORIZED REPRODUCTION OR DISTRIBUTION IS A VIOLATION OF THE FEDERAL COPYRIGHT ACT AND THE LICENSE AGREEMENT, AND SUBJECT TO CIVIL AND CRIMINAL PENALTIES THEREUNDER.

tractor installing the system (see Section 901.3). Factors, such as classification of the hazard, amount of agent or water supply available and the design criteria, including the density or concentration to be achieved by the system, are to be included with the shop drawings. Specific equipment data sheets identifying sprinklers, pipe dimensions, power requirements for smoke detectors, etc., must also be included with the submittal in addition to any required calculations. See also the commentary to Section 907.1.1 regarding fire alarm system construction documents and Section 907.1.2 regarding fire alarm system shop drawings.

901.2.1 Statement of compliance. Before requesting final approval of the installation, where required by the *fire code official*, the installing contractor shall furnish a written statement to the *fire code official* that the subject *fire protection system* has been installed in accordance with *approved* plans and has been tested in accordance with the manufacturer's specifications and the appropriate installation standard. Any deviations from the design standards shall be noted and copies of the approvals for such deviations shall be attached to the written statement.

❖ A certificate or other approved written statement must be submitted to the fire code official with the proper documentation from the installing contractor specifying that the fire protection system has been installed in accordance with the requirements of the code. The certificate should also indicate that all required inspections and tests of the system have been conducted at the time of application for a certificate of occupancy.

The written statement is to indicate that the system has been installed in accordance with code requirements. As previously stated, contractors may have certificates that specify the criteria of the referenced standards since many of them contain sample certificates. While such certificates may be used, the contractor is required to certify that the system complies with the provisions of the code, which in some instances may vary from the referenced standards. These variations and any other variations involved in the installation, whether by change order, variance or field condition, must also be included with the written statement.

901.3 Permits. Permits shall be required as set forth in Sections 105.6 and 105.7.

❖ Section 105 requires permits of two separate but related types. Section 105.6 requires an operational permit. These permits are required to conduct certain types of businesses or hazardous operations that require a higher level of scrutiny from the fire code official. The second type of permit, required by Section 105.7, is the construction permit, which is required for the installation and modification of all fire protection systems.

901.4 Installation. *Fire protection systems* shall be maintained in accordance with the original installation standards for that system. Required systems shall be extended, altered or augmented as necessary to maintain and continue protection where the building is altered, remodeled or added to. *Alterations* to *fire protection systems* shall be done in accordance with applicable standards.

❖ This section emphasizes that systems installed and maintained in compliance with the codes and standards in effect at the time they were placed in service must remain operational at all times. It is not the intent of the code to require existing systems that are otherwise not being altered to comply with current code and standard requirements. An existing system, even if it does not meet current standards, is allowed to continue in service as long as it continues to provide no less quality in service than what was originally in place. Hence, if an alteration or expansion of the system is proposed, the key is whether or not the level of protection afforded by the system is the same or greater than what it was before the alteration or expansion was considered. Any added sections of the system must meet the requirements for new fire protection according to the system involved.

901.4.1 Required fire protection systems. *Fire protection systems* required by this code or the *International Building Code* shall be installed, repaired, operated, tested and maintained in accordance with this code. A *fire protection system* for which a design option, exception or reduction to the provisions of this code or the *International Building Code* has been granted shall be considered to be a required system.

❖ Fire protection systems that are required by Chapter 9 or by another section of either the IBC or the code must be considered as required systems. The fire protection system is an integral component of the protection features of the building and must be properly installed, repaired, operated, tested and maintained in accordance with the code. Improperly installed or maintained systems can fail to provide the anticipated protection and, in some cases, create a hazard in itself.

Although the code may not require a fire protection system for a specific building or portion of a building because of its occupancy, the fire protection system would still be considered a required system if some other code alternative, exception or reduction was taken based on the installation of that fire protection system. For example, a typical small office building may not require an automatic sprinkler system solely because of its Group B occupancy classification. However, if an exit access corridor fire-resistance-rating reduction is taken as allowed by Table 1020.1 for buildings equipped throughout with an NFPA 13 sprinkler system, that sprinkler system is now considered a required system. Code trade-offs, exceptions, reductions or other design options are not unique to the IBC. Such tradeoffs occur more than 60 times in the code.

INTERNATIONAL CODE COUNCIL®
Copyright © 2015 ICC. ALL RIGHTS RESERVED. Accessed by David Dammon on Jun 21, 2017 12:30:52 PM pursuant to License Agreement with ICC. No further reproduction or distribution authorized. ANY UNAUTHORIZED REPRODUCTION OR DISTRIBUTION IS A VIOLATION OF THE FEDERAL COPYRIGHT ACT AND THE LICENSE AGREEMENT, AND SUBJECT TO CIVIL AND CRIMINAL PENALTIES THEREUNDER.

901.4.2 Nonrequired fire protection systems. A *fire protection system* or portion thereof not required by this code or the *International Building Code* shall be allowed to be furnished for partial or complete protection provided such installed system meets the applicable requirements of this code and the *International Building Code*.

❖ A building owner or designer may elect to install a fire protection system that is not required in the code. Even though such a system is not required, it must comply with the applicable requirements of Chapter 9. This requirement is based on the concept that any fire protection system not installed as required by the code is lacking because it could give a false impression of properly installed protection.

For example, if a building owner chooses to install sprinkler protection in a certain area and that protection is not required by any provisions of the code, the system must be installed in accordance with NFPA 13 or 13R, as applicable and other applicable requirements of the code, such as water supply and supervision. The extent of the protection provided would not be regulated. Once the system is installed, it is subject to the same code requirements for maintenance and testing with which any other system would be required to comply.

If the optional sprinkler system is intended to be used to provide alternatives found elsewhere in the code, the system would cease to be voluntary. In such a case, it becomes a required system and subject to Section 901.4.1.

901.4.3 Fire areas. Where buildings, or portions thereof, are divided into *fire areas* so as not to exceed the limits established for requiring a *fire protection system* in accordance with this chapter, such *fire areas* shall be separated by *fire barriers* constructed in accordance with Section 707 of the *International Building Code* or *horizontal assemblies* constructed in accordance with Section 711 of the *International Building Code*, or both, having a fire-resistance rating of not less than that determined in accordance with Section 707.3.10 of the *International Building Code*.

❖ This section provides specific guidance on how a building needs to be divided into fire areas in order to avoid requiring a fire protection system to be installed. A single occupancy group would require fire barriers or horizontal assemblies in order to create multiple fire areas (see Table 707.3.10 of the IBC), each having an area below the threshold for fire protection system installation.

901.4.4 Additional fire protection systems. In occupancies of a hazardous nature, where special hazards exist in addition to the normal hazards of the occupancy, or where the *fire code official* determines that access for fire apparatus is unduly difficult, the *fire code official* shall have the authority to require additional safeguards. Such safeguards include, but shall not be limited to, the following: automatic fire detection systems, fire alarm systems, automatic fire-extinguishing systems, standpipe systems, or portable or fixed extinguishers. Fire protection equipment required under this section shall be installed in accordance with this code and the applicable referenced standards.

❖ This section allows the fire code official to require fire protection safeguards beyond the minimum requirement of Chapter 9 when warranted by potential unsafe conditions. The provisions of the code cannot anticipate every occupancy condition. Hazardous material occupancies or buildings with limited fire department access are potentially a greater hazard to both building occupants and fire fighters. Any additional safeguards should be those needed to abate potential hazards. This section does not give the fire code official the right to require additional systems without cause. If the condition is adequately addressed by the code, then additional safeguards are not warranted. Should additional safeguards be deemed necessary, then the fire protection components regulated by this section must be considered required systems.

901.4.5 Appearance of equipment. Any device that has the physical appearance of life safety or fire protection equipment but that does not perform that life safety or fire protection function shall be prohibited.

❖ All required or provided life safety or fire protection-related equipment must be continued in use and be maintained to meet the requirements in effect at the time of the original installation. Nonrequired equipment that has been taken out of service or cannot function as intended must be dismantled and removed to prevent creating a false impression of protection.

Simply because a nonrequired system does not meet the current standards is neither cause to require its removal (see Section 901.4), nor a reason to require the system to be upgraded. As long as the system is maintained in the manner in which it was intended when installed, it can be allowed to continue.

901.4.6 Pump and riser room size. Where provided, fire pump rooms and *automatic sprinkler system* riser rooms shall be designed with adequate space for all equipment necessary for the installation, as defined by the manufacturer, with sufficient working space around the stationary equipment. Clearances around equipment to elements of permanent construction, including other installed equipment and appliances, shall be sufficient to allow inspection, service, repair or replacement without removing such elements of permanent construction or disabling the function of a required fire-resistance-rated assembly. Fire pump and *automatic sprinkler system* riser rooms shall be provided with a door(s) and an unobstructed passageway large enough to allow removal of the largest piece of equipment.

❖ Section 901.4.6 establishes that, where a pump or riser room is necessary, the rooms housing fire protection system risers or fire pumps and their components have adequate space to facilitate their maintenance. This section does not require the construction of a room to house fire protection systems;

INTERNATIONAL CODE COUNCIL®
Copyright © 2015 ICC. ALL RIGHTS RESERVED. Accessed by David Dammon on Jun 21, 2017 12:30:52 PM pursuant to License Agreement with ICC. No further reproduction or distribution authorized. ANY UNAUTHORIZED REPRODUCTION OR DISTRIBUTION IS A VIOLATION OF THE FEDERAL COPYRIGHT ACT AND THE LICENSE AGREEMENT, AND SUBJECT TO CIVIL AND CRIMINAL PENALTIES THEREUNDER.

however, if a room is provided, this section requires that it be adequately sized to allow for maintenance.

Instead of prescribing arbitrary dimensions, this provision bases the room area on clearances specified by the equipment manufacturers to ensure adequate space is available for its installation or removal. The design must provide enough area so that walls, finish materials and doors are not required to be removed during maintenance activities. The provision also prescribes that the size of the door serving a riser or pump room is of a size to accommodate the removal of the largest piece of equipment.

Given that the design of fire protection systems generally commences during the period that building construction drawings and specifications are being reviewed by the jurisdiction, it will be especially important for the building's designer to establish dialogue with the fire protection system contractor early in the design process to ensure that the room and at least one door can accommodate the largest equipment and provide the space needed for maintenance.

901.5 Installation acceptance testing. Fire detection and alarm systems, fire-extinguishing systems, fire hydrant systems, fire standpipe systems, fire pump systems, private fire service mains and all other *fire protection systems* and appurtenances thereto shall be subject to acceptance tests as contained in the installation standards and as *approved* by the *fire code official*. The *fire code official* shall be notified before any required acceptance testing.

❖ Fire protection systems must pass an acceptance test to determine that the system will operate as required by the code. Acceptance tests are usually part of the final inspection procedures. The referenced standards contain specific acceptance test procedures. In most instances, the acceptance test procedures require 100-percent operation of the testable system components to determine that they are operational and functioning as required. Often, the design professional may require additional testing that may be beyond the code requirements to verify that the system operates as designed. The design professional may also establish the appropriate testing criteria for special systems, such as smoke control systems. These proposed testing protocols, where not addressed elsewhere in the code, must be approved by the fire code official before being performed.

The inclusion of the requirement for acceptance tests in the code is not intended to assign responsibility for witnessing the tests. The responsibility to witness the acceptance test is an administrative issue that each municipality must address. Because the acceptance test is critical during design and construction and is a requirement of occupancy, the requirement is located in the code. The section also clarifies that it is the owner's responsibility to conduct the test and the role of the fire code official to witness the test. Typically, the owner will assign the responsibility of conducting the test to the installing contractor.

901.5.1 Occupancy. It shall be unlawful to occupy any portion of a building or structure until the required fire detection, alarm and suppression systems have been tested and *approved*.

❖ Partial occupancy of any structure must not be permitted unless all fire protection systems for the occupied areas have been tested and approved. Even so, the code assumes that full protection for all areas will be provided as quickly as possible. The installation of many fire protection systems and the associated code alternatives permitted for a given occupancy assume complete building protection and not just in the occupied areas. All partial occupancy conditions are subject to the final approval of the building official. Section 105.3.4 allows the fire code official to issue conditional occupancy permits.

If the building becomes vacant, this section would be applicable again. Here, occupancy is based on a certificate of occupancy. If the vacancy is in a tenant space of an otherwise fully protected building, then the fire protection system must be continued. The other tenants of the building are subject to the necessary continuation of the fire protection system. This is similar to partial occupancy. On the other hand, if a building is vacated completely and the certificate of occupancy is forfeited, then the entire building can be considered as unoccupied, and the fire protection systems can be discontinued. At such time, utilities can be disconnected and the building be declared nonhabitable. This option carries with it the burden of reuse because if the vacant, nonhabitable building is intended to be used again, it is subject to provisions in the IBC that would require the building to be certified as a new structure and may involve significant modifications in order to receive a new certificate of occupancy.

Often, insurance companies will require that automatic sprinkler systems be kept in operation during a vacancy. If such is the case, utilities will likely need to be kept in place in order to keep the system within operating temperature requirements. Buildings in which occupancy is discontinued for an extended period of time may be considered hazardous and require action to remediate the problem, possibly by demolition.

If the system being installed is a nonrequired system, then this section is not applicable and partial occupancy can be granted.

901.6 Inspection, testing and maintenance. Fire detection, alarm, and extinguishing systems, mechanical smoke exhaust systems, and smoke and heat vents shall be maintained in an operative condition at all times, and shall be replaced or repaired where defective. Nonrequired *fire protection systems* and equipment shall be inspected, tested and maintained or removed.

❖ Adequate maintenance, inspection and periodic testing of all fire protection systems, equipment and devices including equipment and systems related to mechanical smoke exhaust and smoke and heat

INTERNATIONAL CODE COUNCIL®
Copyright © 2015 ICC. ALL RIGHTS RESERVED. Accessed by David Dammon on Jun 21, 2017 12:30:52 PM pursuant to License Agreement with ICC. No further reproduction or distribution authorized. ANY UNAUTHORIZED REPRODUCTION OR DISTRIBUTION IS A VIOLATION OF THE FEDERAL COPYRIGHT ACT AND THE LICENSE AGREEMENT, AND SUBJECT TO CIVIL AND CRIMINAL PENALTIES THEREUNDER.

vents is necessary so that the systems are ready to perform their intended functions should fire occur.

An inspection consists of a visual check of a system or device to verify that it is in operating condition and free from defects or damage. Indicating valves, gauges and indicator lamps are a few of the features required by the codes to facilitate this activity. Obvious damage and the general condition of the system, particularly the presence of corrosion, both external and internal, must always be noted and recorded. Partially because they are less detailed, inspections are conducted more frequently than tests and maintenance. Because special knowledge and tools are not required, inspections may be performed by any reasonably competent person.

Periodic tests following standardized methods are intended to confirm the results of inspections, determine that all components function properly and that systems meet their original design specifications. Tools, devices or equipment are usually required for these tests.

Because tests are more detailed than inspections, they are usually conducted only once or twice per year in most cases. Some tests, however, may be required as frequently as bimonthly or quarterly (for example, some fire alarm system equipment) or as infrequently as 5-, 6- or 12-year intervals (for example, portable fire-extinguisher hydrostatic tests). Since specialized knowledge and equipment are required, testing is usually done by technicians or specialists trained in the proper conduct of the test methods involved.

Periodic maintenance keeps systems in good working order and may be used to repair damage or defects discovered during inspections or testing. Specialized tools and training are required to perform maintenance. Only properly trained technicians or specialists should perform required periodic maintenance. Most maintenance is required only as needed, but many manufacturers suggest or require regular periodic replacement of parts subject to wear or abuse.

Nonrequired fire protection systems, where installed, require the same level of maintenance as required systems. If required maintenance is not being done, there is no way to determine if the system will function as intended. Therefore, inadequately maintained, nonrequired systems must be removed to avoid creating a false impression of adequate protection.

901.6.1 Standards. *Fire protection systems* shall be inspected, tested and maintained in accordance with the referenced standards *listed* in Table 901.6.1.

❖ Specific requirements related to inspection practices, testing schedules and maintenance procedures are dependent on the type of fire protection system and its corresponding referenced NFPA standard as indicated in Table 901.6.1.

TABLE 901.6.1
FIRE PROTECTION SYSTEM MAINTENANCE STANDARDS

SYSTEM	STANDARD
Portable fire extinguishers	NFPA 10
Carbon dioxide fire-extinguishing system	NFPA 12
Halon 1301 fire-extinguishing systems	NFPA 12A
Dry-chemical extinguishing systems	NFPA 17
Wet-chemical extinguishing systems	NFPA 17A
Water-based fire protection systems	NFPA 25
Fire alarm systems	NFPA 72
Smoke and heat vents	NFPA 204
Water-mist systems	NFPA 750
Clean-agent extinguishing systems	NFPA 2001

❖ This table lists the NFPA referenced standards to be used for the inspection, testing and maintenance criteria for various fire protection systems. Many of the testing and maintenance requirements are included elsewhere in Chapter 9 of the code.

901.6.2 Records. Records of all system inspections, tests and maintenance required by the referenced standards shall be maintained.

❖ Accurate, up-to-date records are required to document the history of system inspection, testing and maintenance. Record keeping is not intended simply to prove to the fire code official that required inspection, testing and maintenance are being performed, but to assist the owner or his or her agent in performing these functions. A well-kept log helps an owner or technician determine how the system is performing over time and how changes inside and outside of the protected premises are affecting system performance. For example, automatic sprinkler system main drain test results may indicate whether the public water supply is being degraded by development, thereby impairing sprinkler system capabilities. Similarly, a history of accidental alarms at a specific smoke detector may indicate that the device requires cleaning or maintenance.

901.6.2.1 Records information. Initial records shall include the name of the installation contractor, type of components installed, manufacturer of the components, location and number of components installed per floor. Records shall also include the manufacturers' operation and maintenance instruction manuals. Such records shall be maintained for the life of the installation.

❖ When the fire protection systems are first installed, an accurate inventory must be compiled so that future owners and officials can refer back to the documents for maintenance and operational requirements. Additionally, if a recall is required, the installation inventory will be able to identify if any of the components subject to the recall are installed. By including the installation contractor's information in the list, a resolution of any legal aspects of defective components

INTERNATIONAL CODE COUNCIL®
Copyright © 2015 ICC. ALL RIGHTS RESERVED. Accessed by David Dammon on Jun 21, 2017 12:30:52 PM pursuant to License Agreement with ICC. No further reproduction or distribution authorized. ANY UNAUTHORIZED REPRODUCTION OR DISTRIBUTION IS A VIOLATION OF THE FEDERAL COPYRIGHT ACT AND THE LICENSE AGREEMENT, AND SUBJECT TO CIVIL AND CRIMINAL PENALTIES THEREUNDER.

can be more readily obtained. Also, if operations or maintenance change during the life of the installation and a public notice is provided, the building owner will have the information necessary to know and apply the new requirements. The requirement to collect and maintain this information is already within many of the standards referenced in the code. This requirement gives the fire code official enforcement language and assists the building owner in understanding the responsibilities associated with having these fire protection systems installed in the building.

901.7 Systems out of service. Where a required *fire protection system* is out of service, the fire department and the *fire code official* shall be notified immediately and, where required by the *fire code official*, the building shall be either evacuated or an *approved* fire watch shall be provided for all occupants left unprotected by the shutdown until the *fire protection system* has been returned to service.

Where utilized, fire watches shall be provided with not less than one *approved* means for notification of the fire department and their only duty shall be to perform constant patrols of the protected premises and keep watch for fires.

❖ The protection afforded by a required fire protection system must not be diminished in any existing building except for the purpose of conducting tests, maintenance or repairs. The length of service interruptions must be kept to a minimum. The fire department and the fire code official must be notified of any service interruptions. They must carefully evaluate the continued operation or occupancy of buildings and structures where protection is interrupted. Whenever possible, all unaffected portions of the system should be kept in service. Until protection is restored, hazardous processes or operations should be suspended and alternative special protection should be considered in addition to an approved fire watch.

The code text only addresses when a required system is placed out of service. However, if a system is in place, even though it is not required by the code or the IBC, it would be an appropriate courtesy to inform the fire department of any fire protection system being discontinued or temporarily taken out of service. If the nonrequired system is to be placed out of service for an extended period of time, the fire code official has the authority to address the condition under Section 901.4.5 and require that the system be either placed back into operation or removed so as not to create a false impression of protection.

901.7.1 Impairment coordinator. The building *owner* shall assign an impairment coordinator to comply with the requirements of this section. In the absence of a specific designee, the *owner* shall be considered the impairment coordinator.

❖ The impairment coordinator is the person responsible for maintaining the building fire protection systems. The impairment coordinator may be the building owner or other designee, such as the plant manager or building engineer, if he or she is trained to comply with the provisions of Section 901.7.

901.7.2 Tag required. A tag shall be used to indicate that a system, or portion thereof, has been removed from service.

❖ When any fire protection system is taken out of service, it must be clearly identified with a visible tag that indicates the conditions of the impairment and who to notify. The tag is intended to alert building occupants and fire department personnel that the system in question is impaired. It must remain visibly in place until full protection is restored.

901.7.3 Placement of tag. The tag shall be posted at each fire department connection, system control valve, fire alarm control unit, fire alarm annunciator and *fire command center*, indicating which system, or part thereof, has been removed from service. The *fire code official* shall specify where the tag is to be placed.

❖ This section specifies some of the impaired locations where a tag must be used. Tagging a fire department connection, for example, is intended to alert the responding fire department that a normal operating condition does not exist for the portion of the system beyond the connection. While it is also important to tag system control valves, an impairment tag in the sprinkler riser room may not get noticed until accessed by fire department personnel. The final location of all impairment tags is subject to the approval of the fire code official.

901.7.4 Preplanned impairment programs. Preplanned impairments shall be authorized by the impairment coordinator. Before authorization is given, a designated individual shall be responsible for verifying that all of the following procedures have been implemented:

1. The extent and expected duration of the impairment have been determined.
2. The areas or buildings involved have been inspected and the increased risks determined.
3. Recommendations have been submitted to management or the building *owner*/manager.
4. The fire department has been notified.
5. The insurance carrier, the alarm company, the building *owner*/manager and other authorities having jurisdiction have been notified.
6. The supervisors in the areas to be affected have been notified.
7. A tag impairment system has been implemented.
8. Necessary tools and materials have been assembled on the impairment site.

❖ This section specifies the procedures that must be followed in a thorough preplanned impairment program. These procedures must be followed whenever systems are purposely impaired, such as for routine sprinkler system alarm testing. Proper notification of responsible parties eliminates the chance of false alarms, reduces disruption of normal business activities and encourages quick resumption of normal operations.

INTERNATIONAL CODE COUNCIL®
Copyright © 2015 ICC. ALL RIGHTS RESERVED. Accessed by David Dammon on Jun 21, 2017 12:30:52 PM pursuant to License Agreement with ICC. No further reproduction or distribution authorized. ANY UNAUTHORIZED REPRODUCTION OR DISTRIBUTION IS A VIOLATION OF THE FEDERAL COPYRIGHT ACT AND THE LICENSE AGREEMENT, AND SUBJECT TO CIVIL AND CRIMINAL PENALTIES THEREUNDER.

901.7.5 Emergency impairments. Where unplanned impairments occur, appropriate emergency action shall be taken to minimize potential injury and damage. The impairment coordinator shall implement the steps outlined in Section 901.7.4.

❖ Unplanned impairments, of course, go beyond typical testing and maintenance procedures but are also not necessarily indicative of a fire event. For example, an unplanned emergency impairment might occur if a sprinkler head or pipe was found leaking or was accidentally impacted by a fork-lift truck. To reduce water damage and to repair the sprinkler system, the valve controlling the water supply to the affected area would need to be closed, thereby impairing protection to the area protected by that portion of the sprinkler system. The impairment coordinator must follow the procedures in Section 901.7.4 to restore protection in minimum time.

901.7.6 Restoring systems to service. When impaired equipment is restored to normal working order, the impairment coordinator shall verify that all of the following procedures have been implemented:

1. Necessary inspections and tests have been conducted to verify that affected systems are operational.
2. Supervisors have been advised that protection is restored.
3. The fire department has been advised that protection is restored.
4. The building *owner*/manager, insurance carrier, alarm company and other involved parties have been advised that protection is restored.
5. The impairment tag has been removed.

❖ Regardless of whether a system is taken out of service for either a planned impairment or for an emergency, this section specifies the procedures to follow when restoring a system to service. By following these procedures, all responsible parties who were informed of the initial impairment will also be made aware that the system is now fully operational. Restoring the system to service assumes the affected part of the system has been corrected and is in proper working condition.

901.8 Removal of or tampering with equipment. It shall be unlawful for any person to remove, tamper with or otherwise disturb any fire hydrant, fire detection and alarm system, fire suppression system or other fire appliance required by this code except for the purpose of extinguishing fire, training purposes, recharging or making necessary repairs or where *approved* by the *fire code official*.

❖ Tampering or otherwise unauthorized altering of any fire protection system or component is illegal. A person who unlawfully tampers with equipment could face potential criminal charges. Tampering could include intentionally pulling a manual fire alarm box when no emergency exists, playing with matches to set off a smoke detector or flowing a city fire hydrant. The use of fire protection systems, equipment and other fire appliances is limited to those people authorized to conduct repairs and maintenance unless approved by the fire code official.

901.8.1 Removal of or tampering with appurtenances. Locks, gates, doors, barricades, chains, enclosures, signs, tags or seals that have been installed by or at the direction of the *fire code official* shall not be removed, unlocked, destroyed, tampered with or otherwise vandalized in any manner.

❖ Tampering with or vandalizing appurtenances that are in place to prevent tampering with the system components is also prohibited. For example, sprinkler system control valves are routinely chained and locked in the open position in addition to being equipped with electronically monitored tamper switches. Gates at fire apparatus roads, authorized by Section 503.6 of the code, must not have the locks changed or operation altered unless approved by the fire code official. Any unauthorized removal or tampering with these types of devices is strictly prohibited.

901.8.2 Removal of existing occupant-use hose lines. The *fire code official* is authorized to permit the removal of existing occupant-use hose lines where all of the following conditions exist:

1. Installation is not required by this code or the *International Building Code*.
2. The hose line would not be utilized by trained personnel or the fire department.
3. The remaining outlets are compatible with local fire department fittings.

❖ The current code and the IBC do not require occupant-use hoses in as many locations as were required in previous editions of the codes and referenced standards. There also has been a shift in the philosophy of fire service leaders as to whether occupants should attempt to extinguish the fire via occupant-use hose stations or evacuate the structure. Most of the population is now being taught to evacuate the building, not to fight the fire. This shift is mainly due to the safety risk of having an untrained person attempting to fight a fire with more than a fire extinguisher. Another consideration was the ongoing cost to building owners to comply with maintenance and testing requirements for the hoses and their racks. Many jurisdictions have enacted local legislation or code changes to address this issue, and the addition of this new section updates the code to reflect conventional wisdom on this topic. This section provides safeguards in the form of several conditions for the fire code official to consider in formulating an approval for removal of occupant-use hoses. The first condition makes common sense where a new building of the same characteristics would not be required to have hose stations installed. The second condition assumes that there is not a trained fire brigade on the premises that might be qualified to use the hose stations as first responders

INTERNATIONAL CODE COUNCIL®
Copyright © 2015 ICC. ALL RIGHTS RESERVED. Accessed by David Dammon on Jun 21, 2017 12:30:52 PM pursuant to License Agreement with ICC. No further reproduction or distribution authorized. ANY UNAUTHORIZED REPRODUCTION OR DISTRIBUTION IS A VIOLATION OF THE FEDERAL COPYRIGHT ACT AND THE LICENSE AGREEMENT, AND SUBJECT TO CIVIL AND CRIMINAL PENALTIES THEREUNDER.

in, for example, an industrial setting. Condition 2 also recognizes that fire departments typically will not use private hose stations for fire attack due to the questionable quality of their maintenance. Condition 3 was included to ensure that any outlets that remain are useable by the fire department by requiring that their threads be compatible with local fire department fire hose fittings, such as American National Fire Hose Connection Screw Thread (NH).

901.9 Termination of monitoring service. For fire alarm systems required to be monitored by this code, notice shall be made to the *fire code official* whenever alarm monitoring services are terminated. Notice shall be made in writing, to the *fire code official* by the monitoring service provider being terminated.

❖ This section requires the monitoring service itself to notify the fire code official of service being terminated. Although the ultimate responsibility rests with the building owner, he or she is not cited in this section since if they discontinued the service, they would likely not understand the implications, and if they did would have no incentive to contact the fire code official.

901.10 Recall of fire protection components. Any *fire protection system* component regulated by this code that is the subject of a voluntary or mandatory recall under federal law shall be replaced with *approved*, *listed* components in compliance with the referenced standards of this code. The *fire code official* shall be notified in writing by the building *owner* when the recalled component parts have been replaced.

❖ This section provides the fire code official with a valuable tool for monitoring recalls. Under this provision, a code section can be cited that will allow the fire code official to enforce the provisions of the recall on systems within the jurisdiction. Product listings and compliance with reference standards are paramount in the effectiveness of fire protection systems. Companies may be under an agreement with federal agencies to "voluntarily" recall certain components or face legal action. While this is technically voluntary, it in no way reduces the need for the recall. To the extent that the company's livelihood depends on the recall being performed properly, the action is not voluntary. This section allows the fire code official to compel the building owner to comply with the recall and replace the component with one that is not subject to suspicion.

SECTION 902
DEFINITIONS

902.1 Definitions. The following terms are defined in Chapter 2:

ALARM NOTIFICATION APPLIANCE.

ALARM SIGNAL.

ALARM VERIFICATION FEATURE.

ANNUNCIATOR.

AUDIBLE ALARM NOTIFICATION APPLIANCE.

AUTOMATIC.

AUTOMATIC FIRE-EXTINGUISHING SYSTEM.

AUTOMATIC SMOKE DETECTION SYSTEM.

AUTOMATIC SPRINKLER SYSTEM.

AUTOMATIC WATER MIST SYSTEM.

AVERAGE AMBIENT SOUND LEVEL.

CARBON DIOXIDE EXTINGUISHING SYSTEM.

CLEAN AGENT.

COMMERCIAL MOTOR VEHICLE.

CONSTANTLY ATTENDED LOCATION.

DELUGE SYSTEM.

DETECTOR, HEAT.

DRY-CHEMICAL EXTINGUISHING AGENT.

ELEVATOR GROUP.

EMERGENCY ALARM SYSTEM.

EMERGENCY VOICE/ALARM COMMUNICATIONS.

FIRE ALARM BOX, MANUAL.

FIRE ALARM CONTROL UNIT.

FIRE ALARM SIGNAL.

FIRE ALARM SYSTEM.

FIRE AREA.

FIRE DETECTOR, AUTOMATIC.

FIRE PROTECTION SYSTEM.

FIRE SAFETY FUNCTIONS.

FIXED BASE OPERATOR (FBO).

FOAM-EXTINGUISHING SYSTEM.

HALOGENATED EXTINGUISHING SYSTEM.

IMPAIRMENT COORDINATOR.

INITIATING DEVICE.

MANUAL FIRE ALARM BOX.

MULTIPLE-STATION ALARM DEVICE.

MULTIPLE-STATION SMOKE ALARM.

NOTIFICATION ZONE.

NUISANCE ALARM.

PRIVATE GARAGE.

RECORD DRAWINGS.

SINGLE-STATION SMOKE ALARM.

SLEEPING UNIT.

SMOKE ALARM.

SMOKE DETECTOR.

STANDPIPE SYSTEM, CLASSES OF.

Class I system.

INTERNATIONAL CODE COUNCIL®
Copyright © 2015 ICC. ALL RIGHTS RESERVED. Accessed by David Dammon on Jun 21, 2017 12:30:52 PM pursuant to License Agreement with ICC. No further reproduction or distribution authorized. ANY UNAUTHORIZED REPRODUCTION OR DISTRIBUTION IS A VIOLATION OF THE FEDERAL COPYRIGHT ACT AND THE LICENSE AGREEMENT, AND SUBJECT TO CIVIL AND CRIMINAL PENALTIES THEREUNDER.

Class II system.

Class III system.

STANDPIPE, TYPES OF.

Automatic dry.

Automatic wet.

Manual dry.

Manual wet.

Semiautomatic dry.

SUPERVISING STATION.

SUPERVISORY SERVICE.

SUPERVISORY SIGNAL.

SUPERVISORY SIGNAL-INITIATING DEVICE.

TIRES, BULK STORAGE OF.

TRANSIENT AIRCRAFT.

TROUBLE SIGNAL.

VISIBLE ALARM NOTIFICATION APPLIANCE.

WET-CHEMICAL EXTINGUISHING AGENT.

WIRELESS PROTECTION SYSTEM.

ZONE.

ZONE, NOTIFICATION.

❖ Definitions of terms can help in the understanding and application of the code requirements. This section directs the code user to Chapter 2 for the proper application of the indicated terms used in this chapter. Terms may be defined in Chapter 2, in another *International Code*® as indicated in Section 201.3 or the dictionary meaning may be all that is needed (see also commentary, Sections 201 through 201.4).

Certain requirements in the code are based on code provisions in the IBC, *International Mechanical Code*® (IMC®) and *International Plumbing Code*® (IPC®). A review of definitions included in those codes will aid in the understanding of many of the requirements contained in the code.

SECTION 903
AUTOMATIC SPRINKLER SYSTEMS

903.1 General. *Automatic sprinkler systems* shall comply with this section.

❖ This section identifies the conditions requiring an automatic sprinkler system for all occupancies. The need for an automatic sprinkler system may depend on not only the occupancy but also the occupant load, fuel load, height and area of the building as well as fire-fighting capabilities. Section 903.2 addresses all occupancy conditions requiring an automatic sprinkler system. Section 903.3 contains the installation requirements for all sprinkler systems in addition to the requirements of NFPA 13, NFPA 13R and NFPA 13D. The supervision and alarm requirements for sprinkler systems are contained in Section 903.4, whereas Section 903.5 refers to testing and maintenance requirements for sprinkler systems found in Section 901 and NFPA 25. Section 903.6 addresses existing buildings and references Chapter 11.

Unless specifically allowed by the code or the IBC, residential sprinkler systems installed in accordance with NFPA 13R or NFPA 13D are not recognized for reductions or exceptions permitted by other sections of this code or the IBC. NFPA 13 systems provide the level of protection associated with adequate fire suppression for all occupancies. NFPA 13R and NFPA 13D systems are intended more to provide adequate time for egress but not necessarily for complete suppression of the fire. Commentary Figure 903.2 lists examples of where the various sprinkler thresholds differ in application.

The area values contained in this section are intended to apply to fire areas, which are comprised of all floor areas bounded by fire barriers, fire walls or exterior walls. The minimum required fire-resistance rating of fire barrier assemblies that define a fire area is specified in Table 707.3.10 of the IBC. Because the areas are defined as fire areas, fire barriers, horizontal assemblies, fire walls or exterior walls are the only acceptable means of subdividing a building into smaller areas instead of installing an automatic sprinkler system. Whereas fire barriers and exterior walls define multiple fire areas within a single building, a fire wall defines separate buildings within one structure. Also note that some of the threshold limitations result in a requirement to install an automatic sprinkler system throughout the building while others may require only specific fire areas to be sprinklered.

Another important point is that one fire area may include floor areas in more than one story of a building (see the commentary to the definition of “Fire area” in Section 202).

The application of mixed occupancies and fire areas must be carefully researched. Often the required separation between occupancies for the purposes of applying the separated mixed-use option in Section 508.4 of the IBC will result in a separation that is less than what is required to define the boundaries of a fire area. It is possible to have two different occupancies within a given fire area, treated as separated uses but with code requirements applicable to both occupancies since they are not separated by the rating required for fire areas.

903.1.1 Alternative protection. Alternative automatic fire-extinguishing systems complying with Section 904 shall be permitted instead of automatic sprinkler protection where recognized by the applicable standard and *approved* by the *fire code official.*

❖ This section permits the use of an alternative automatic fire-extinguishing system when approved by the fire code official as a means of compliance with the occupancy requirements of Section 903. Although the use of an alternative extinguishing system allowed by Section 904, such as a carbon dioxide

INTERNATIONAL CODE COUNCIL®
Copyright © 2015 ICC. ALL RIGHTS RESERVED. Accessed by David Dammon on Jun 21, 2017 12:30:52 PM pursuant to License Agreement with ICC. No further reproduction or distribution authorized. ANY UNAUTHORIZED REPRODUCTION OR DISTRIBUTION IS A VIOLATION OF THE FEDERAL COPYRIGHT ACT AND THE LICENSE AGREEMENT, AND SUBJECT TO CIVIL AND CRIMINAL PENALTIES THEREUNDER.

system or clean-agent system, would satisfy the requirements of Section 903.2, it would not be considered an acceptable alternative for the purposes of exceptions, reductions or other code alternatives that would be applicable if an automatic sprinkler system were installed.

903.2 Where required. *Approved automatic sprinkler systems* in new buildings and structures shall be provided in the locations described in Sections 903.2.1 through 903.2.12.

Exception: Spaces or areas in telecommunications buildings used exclusively for telecommunications equipment, associated electrical power distribution equipment, batteries and standby engines, provided those spaces or areas are equipped throughout with an automatic smoke detection system in accordance with Section 907.2 and are separated from the remainder of the building by not less than 1-hour *fire barriers* constructed in accordance with Section 707 of the *International Building Code* or not less than 2-hour *horizontal assemblies* constructed in accordance with Section 711 of the *International Building Code*, or both.

❖ Sections 903.2.1 through 903.2.12 identify the conditions requiring an automatic sprinkler system (see Commentary Figure 903.2). The type of sprinkler system must be one that is permitted for the specific occupancy condition. An NFPA 13R sprinkler system, for example, may not be installed to satisfy the sprinkler threshold requirements for a mercantile occupancy (see Section 903.2.7). As indicated in Section 903.3.1.2, the use of an NFPA 13R sprinkler system is limited to Group R occupancies not exceeding four stories in height.

There is one exception for those spaces or areas used exclusively for telecommunications equipment. The telecommunications industry has continually stressed the need for the continuity of telephone service, and the ability to maintain this service is of prime importance. This service is a vital link between the community and the various life safety services, including fire, police and emergency medical services. The integrity of this communications service can be jeopardized not only by fire, but also by water, from whatever the source.

It must be emphasized that the exception applies only to those spaces or areas that are used exclusively for telecommunications equipment. Historically, those spaces have a low incidence of fire events. Fires in telecommunications equipment are difficult to start and, if started, grow slowly, thus permitting early detection. Such fires are typically of the smoldering type, do not spread beyond the immediate area and generally self-extinguish.

Note, however, that this exception requires fire resistive separation from other portions of the building and, most importantly, that the building cannot qualify for any code trade-offs for fully sprinklered buildings.

903.2.1 Group A. An *automatic sprinkler system* shall be provided throughout buildings and portions thereof used as Group A occupancies as provided in this section. For Group A-1, A-2, A-3 and A-4 occupancies, the *automatic sprinkler system* shall be provided throughout the story where the *fire area* containing the Group A-1, A-2, A-3 or A-4 occupancy is located, and throughout all stories from the Group A occupancy to, and including, the *levels of exit discharge* serving the Group A occupancy. For Group A-5 occupancies, the *automatic sprinkler system* shall be provided in the spaces indicated in Section 903.2.1.5.

❖ Group A occupancies are characterized by a significant number of people who are not familiar with their surroundings. The requirement for a suppression system reflects the additional time needed for egress. The extent of protection is also intended to extend to the occupants of the assembly group from unobserved fires in other building areas located between the story containing the assembly occupancy and all levels of exit discharge serving such occupancies. The only exception to the coverage is for Group A-5 occupancies that are open to the atmosphere. Such occupancies require only certain aspects to be sprinklered, such as concession stands (see commentary, Section 903.2.1.5).

The requirement for sprinklers is based on the location and function of the space. It is not dependent on whether or not the area is provided with exterior walls. IFC Committee Interpretation No. 25-05 to this section discusses this issue and states, in part, that "where no surrounding exterior walls are provided along the perimeter of the building, the building area is used to identify and determine applicable fire area." Outdoor areas, such as pavilions and patios, may have no walls but will have an occupant load and other factors that identify the assembly occupancy as such. If any of the thresholds are reached requiring sprinkler protection, then sprinkler protection must be provided whether there are exterior walls or not.

903.2.1.1 Group A-1. An *automatic sprinkler system* shall be provided for *fire areas* containing Group A-1 occupancies and intervening floors of the building where one of the following conditions exists:

1. The *fire area* exceeds 12,000 square feet (1115 m^2).
2. The *fire area* has an *occupant load* of 300 or more.
3. The *fire area* is located on a floor other than a *level of exit discharge* serving such occupancies.
4. The *fire area* contains a multitheater complex.

❖ Group A-1 occupancies are identified as assembly occupancies with fixed seating, such as theaters. In addition to the high occupant load associated with these types of facilities, egress is further complicated by the possibility of low lighting levels customary during performances. The fuel load in these buildings is usually of a type and quantity that would support fairly rapid fire development and sustained duration.

Theaters with stages pose a greater hazard. Sections 410.7 and 410.8 of the IBC require stages to be equipped with an automatic sprinkler system and standpipe system, respectively. The proscenium opening must also be protected. These features com-

INTERNATIONAL CODE COUNCIL®
Copyright © 2015 ICC. ALL RIGHTS RESERVED. Accessed by David Dammon on Jun 21, 2017 12:30:52 PM pursuant to License Agreement with ICC. No further reproduction or distribution authorized. ANY UNAUTHORIZED REPRODUCTION OR DISTRIBUTION IS A VIOLATION OF THE FEDERAL COPYRIGHT ACT AND THE LICENSE AGREEMENT, AND SUBJECT TO CIVIL AND CRIMINAL PENALTIES THEREUNDER.

pensate for the additional hazards associated with stages in Group A-1 occupancies.

This section lists four conditions that require installing a suppression system in a Group A-1 occupancy. Condition 1 requires that, if any one fire area of Group A-1 exceeds 12,000 square feet (1115 m^2), the automatic sprinkler system is to be installed throughout the entire story where a Group A-1 occupancy is located, regardless of whether the building is divided into more than one fire area. However, if all the fire areas are less than 12,000 square feet (1115 m^2) (and less than the other thresholds) then sprinklers would not be required. Compartmentalization into multiple fire areas in compliance with Chapter 7 of the IBC is deemed an adequate alternative to sprinkler protection.

Occupancy	Threshold	Exception
All occupancies	Buildings with floor level > 55 feet above or below fire department vehicle access and occupant load ≥ 30	Open parking structures (F-2)
Assembly (A-1, A-3, A-4)	Fire area > 12,000 sq. ft. or fire area occupant load > 300 or fire area above/below level of exit discharge Multitheater complex (A-1 only)	None
Assembly (A-2)	Fire area > 5,000 sq. ft. or fire area occupant load ≥ 100 or fire area above/below level of exit discharge	None
Assembly (A-5)	Accessory areas > 1,000 sq. ft.	None
Ambulatory care facility (B)	≥ 4 care recipients incapable of self preservation or any care recipients incapable of self preservation above or below level of exit discharge	None
Educational (E)	Fire area > 12,000 sq. ft. or below level of exit discharge	Each classroom has exterior door at grade
Factory (F-1) Mercantile (M) Storage (S-1)	Fire area > 12,000 sq. ft. or fire area located > 3 stories above grade, or combined fire area > 24,000 sq. ft. Woodworking > 2,500 sq. ft. (F-1 only) Manufacture > 2,500 sq. ft. (F1), display and sale > 5,000 sq. ft. (M), storage > 2,500 sq. ft. (S-1) of upholstered furniture or mattresses. Bulk storage of tires > 20,000 cu. ft. (S-1 only)	None
High-hazard (H-1, H-2, H-3, H-4, H-5)	Sprinklers required	None
Institutional (I-1, I-2, I-3, I-4)	Sprinklers required	Daycare at level of exit discharge and each classroom has exterior exit door.
Residential (R)	Sprinklers required	None
Repair garage (S-1)	Fire area > 12,000 sq. ft. or > 2 stories above grade with fire area 10,000 sq. ft. or repair garage servicing vehicles in basement or servicing commercial motor vehicles in fire area > 5,000 sq. ft.	None
Parking garage (S-1)	Commercial motor vehicles parking area > 5,000 sq. ft.	None
Parking garage (S-2)	Fire area > 12,000 sq. ft. or fire area > 5,000 sq. ft. for storage of commercial motor vehicles; or beneath other groups.	Not if beneath Group R-3
Covered and open malls (914.2.1)	Sprinklers required	Attached open parking structures
High-rises (914.3.1)	Sprinklers required	Open garages; certain telecommunications equipment buildings
Unlimited area buildings (IBC 507)	A-3, A-4, B, F, M, S: 1 story. B, F, M, S: 2 story	One story F-2 or S-2

For SI: 1 foot = 304.8 mm, 1 square foot = 0.0929 m^2.

a. Thresholds located in Section 903.2 unless noted. See also Table 903.2.11.6 for additional required suppression systems.

Figure 903.2
SUMMARY OF OCCUPANCY-RELATED AUTOMATIC SPRINKLER THRESHOLDS[a]

INTERNATIONAL CODE COUNCIL®
Copyright © 2015 ICC. ALL RIGHTS RESERVED. Accessed by David Dammon on Jun 21, 2017 12:30:52 PM pursuant to License Agreement with ICC. No further reproduction or distribution authorized. ANY UNAUTHORIZED REPRODUCTION OR DISTRIBUTION IS A VIOLATION OF THE FEDERAL COPYRIGHT ACT AND THE LICENSE AGREEMENT, AND SUBJECT TO CIVIL AND CRIMINAL PENALTIES THEREUNDER.

Condition 2 establishes the minimum number of occupants for which an automatic sprinkler system is considered necessary. The determination of the actual occupant load must be based on Section 1004.

Condition 3 accounts for occupant egress delay when traversing a stairway, requiring a sprinkler system regardless of the size of occupant load. In such cases alternative emergency escape elements such as windows may not be available, making the suppression needs all the greater. It is not necessary for the occupant load to exceed 300 on a level other than the level of exit discharge serving such occupancy. Any number of Group A-1 occupants on the alternative level would be cause to apply the requirement for sprinklers. The text does not make reference to "story" but uses the term "floor," which could include mezzanines and basements.

Condition 4 states that a sprinkler system is required for multiplex theater complexes to account for the delay associated with the notification of adjacent compartmentalized spaces where the occupants may not be immediately aware of an emergency.

Note that as with Group A-2, A-3 and A-4 occupancies, when sprinklers are required they are required throughout the story where the Group A-2 fire area is located and throughout all intervening floors leading to all levels of exit discharge serving the Group A occupancy. See Section 903.2.1.

903.2.1.2 Group A-2. An *automatic sprinkler system* shall be provided for *fire areas* containing Group A-2 occupancies and intervening floors of the building where one of the following conditions exists:

1. The *fire area* exceeds 5,000 square feet (464 m^2).
2. The *fire area* has an *occupant load* of 100 or more.
3. The *fire area* is located on a floor other than a *level of exit discharge* serving such occupancies.

❖ Group A-2 assembly occupancies are intended for food or drink consumption, such as banquet halls, nightclubs and restaurants. Occupancies in Group A-2 involve life safety factors, such as a high occupant density, flexible fuel loading, movable furnishings and limited lighting; therefore, they must be protected with an automatic sprinkler system under any of the listed conditions.

In the case of an assembly use, the purpose of the automatic sprinkler system is to provide life safety from fire as well as preserving property. By requiring fire suppression in areas through which the occupants may egress, including the level of exit discharge serving such occupancies, the possibility of unobserved fire development affecting the occupant egress is minimized.

The 5,000-square-foot (464 m^2) threshold for the automatic sprinkler system reflects the higher degree of life safety hazard associated with Group A-2 occupancies. As alluded to earlier, Group A-2 occupancies could have low lighting levels, loud music, late hours of operation, dense seating with ill-defined aisles and alcoholic beverage service. These factors in combination could delay fire recognition, confuse occupant response and increase egress time.

Although the calculated occupant load for a 5,000 square-foot (465 m^2) space at 15 square feet (1.4 m^2) per occupant would be over 100, the occupant load threshold in Condition 2 is meant to reflect the concern for safety in these higher density occupancies. Although the major reason for establishing the occupant threshold at 100 was due to several recent nightclub incidents, the requirement is not limited to nightclubs or banquet facilities but to all Group A-2 occupancies. Any restaurant with an occupant load greater than 100 would require sprinkler protection as well. This includes fast food facilities with no low lighting or alcohol sales. The similar intent of Condition 3 is addressed in the commentary to Section 903.2.1.1.

Note that as with Group A-1 occupancies, when sprinklers are required they are required throughout the story where the Group A-2 fire area is located and throughout all intervening floors leading to all levels of exit discharge serving the Group A occupancy. See Section 903.2.1.

903.2.1.3 Group A-3. An *automatic sprinkler system* shall be provided for *fire areas* containing Group A-3 occupancies and intervening floors of the building where one of the following conditions exists:

1. The *fire area* exceeds 12,000 square feet (1115 m^2).
2. The *fire area* has an *occupant load* of 300 or more.
3. The *fire area* is located on a floor other than a *level of exit discharge* serving such occupancies.

❖ Group A-3 occupancies are assembly occupancies intended for worship, recreation or amusement and other assembly uses not classified elsewhere in Group A, such as churches, museums and libraries. While Group A-3 occupancies could potentially have a high occupant load, they normally do not have the same potential combination of life safety hazards associated with Group A-2 occupancies. As with most assembly occupancies, however, most of the occupants are typically not completely familiar with their surroundings. When any of the three listed conditions are applicable, an automatic sprinkler system is required throughout fire area containing the Group A-3 occupancy, including the entire story where the Group A-3 occupancy is located, and throughout all floors between the Group A occupancy and all exit discharges that serve that occupancy (see commentary, Sections 903.2.1 and 903.2.1.1).

903.2.1.4 Group A-4. An *automatic sprinkler system* shall be provided for *fire areas* containing Group A-4 occupancies and intervening floors of the building where one of the following conditions exists:

1. The *fire area* exceeds 12,000 square feet (1115 m^2).
2. The *fire area* has an *occupant load* of 300 or more.

INTERNATIONAL CODE COUNCIL®
Copyright © 2015 ICC. ALL RIGHTS RESERVED. Accessed by David Dammon on Jun 21, 2017 12:30:52 PM pursuant to License Agreement with ICC. No further reproduction or distribution authorized. ANY UNAUTHORIZED REPRODUCTION OR DISTRIBUTION IS A VIOLATION OF THE FEDERAL COPYRIGHT ACT AND THE LICENSE AGREEMENT, AND SUBJECT TO CIVIL AND CRIMINAL PENALTIES THEREUNDER.

3. The *fire area* is located on a floor other than a *level of exit discharge* serving such occupancies.

❖ Group A-4 occupancies are assembly uses intended for viewing of indoor sporting events and activities such as arenas, skating rinks and swimming pools. The occupant load density may be high depending on the extent and style of seating, such as bleachers or fixed seats, and the potential for standing-room viewing.

When any of the three listed conditions are applicable, an automatic sprinkler system is required throughout the fire area containing the Group A-4 occupancy, including the entire story where the Group A-4 occupancy is located, and throughout all floors between the Group A occupancy and all exit discharges that serve that occupancy (see commentary, Sections 903.2.1 and 903.2.1.1).

903.2.1.5 Group A-5. An *automatic sprinkler system* shall be provided for Group A-5 occupancies in the following areas: concession stands, retail areas, press boxes and other accessory use areas in excess of 1,000 square feet (93 m^2).

❖ Group A-5 occupancies are assembly uses intended for viewing of outdoor activities. This occupancy classification could include amusement park structures, grandstands and open stadiums. A sprinkler system is not required in the open area of Group A-5 occupancies because the buildings would not accumulate smoke and hot gases. A fire in open areas would also be obvious to all spectators.

Enclosed areas such as retail areas, press boxes and concession stands require sprinklers if they are in excess of 1,000 square feet (93 m^2). The 1,000-square-foot (93 m^2) accessory use area is not intended to be an aggregate condition but rather per space. Thus, a press box that is 2,500 square feet (232 m^2) in area would need to be subdivided into areas less than 1,000 square feet (93 m^2) each in order to be below the threshold for sprinklers. There is no specific requirement for the separation of these spaces. It is assumed, however, that the separation would be a solid barrier of some type but without a required fire-resistance rating.

The provision is meant to mirror that in Section 1029.6.2.3, which exempts press boxes and storage facilities less than 1,000 square feet (93 m^2) in area from sprinkler requirements in smoke-protected assembly seating areas.

903.2.1.6 Assembly occupancies on roofs. Where an occupied roof has an assembly occupancy with an *occupant load* exceeding 100 for Group A-2 and 300 for other Group A occupancies, all floors between the occupied roof and the *level of exit discharge* shall be equipped with an *automatic sprinkler system* in accordance with Section 903.3.1.1 or 903.3.1.2.

Exception: Open parking garages of Type I or Type II construction.

❖ Frequently, roof tops are being used and occupied as assembly occupancies. Building owners will provide an open air roof-top bar or lounge, or other use similar to a Group A-2 occupancy on the roof of a building. A roof does not meet the definition of a fire area. As such, protection of the occupants can be less than what would otherwise be required were the occupancy located on a floor rather than on the roof. In addition, even if a fire occurs within the building itself, it puts these occupants at risk. The provisions requiring sprinklers are based on the type and occupant load of the assembly occupancy located on the roof. The roof occupancy itself is not required to be sprinklered. The reference to Section 903.3.1.2 for NFPA 13R sprinkler systems is included since this use can occur on the roof of multifamily housing facilities.

The exception for open parking garages is consistent with the existing exception for open parking garages under Section 903.2.11.3 for "Buildings 55 feet or more in height." It is becoming more common in urban renewal areas throughout the U.S. that jurisdictions are asking developers to provide additional recreational spaces for their citizens to enjoy within their own communities. Because of the limited space available, it is not uncommon for such recreational spaces to be provided on the roofs of open parking garages. Based on the wording of this section, without the exception Group A-2 recreational spaces greater than 700 square feet in area (based on 7 square feet of area net per occupant) or other Group A occupancies greater than 1,500 square feet in area (based on 15 square feet of area net per occupant) would require the open parking garage below to be sprinklered, possibly with a dry pipe sprinkler system, that is initially a major cost to the project as well as a major on-going maintenance expense. Such an expense would most likely have an adverse effect on developers doing major city urban renewal projects by keeping them from agreeing to provide such amenities for the local jurisdiction.

Additionally, there is considerable data supporting the exception's elimination of automatic sprinkler systems in open parking garages. For example, two reports that evaluated fire behavior in parking garages are:

1. 2006 NFPA Fire Data Report, "Structure and Vehicle Fires in General Vehicle Parking Garages."

2. 2008 Parking Consultants Council Fire Safety Committee Report, "Parking Structure Fire Facts."

These reports provided the following conclusions:

- There was an average of only 660 fires per year in all types of parking garages in the U.S. This represented a mere 0.006 percent of all fires annually.

- There were no fire fatalities in open parking garages constructed of Construction Type I or II and an average of only 2 injuries per year.

INTERNATIONAL CODE COUNCIL®
Copyright © 2015 ICC. ALL RIGHTS RESERVED. Accessed by David Dammon on Jun 21, 2017 12:30:52 PM pursuant to License Agreement with ICC. No further reproduction or distribution authorized. ANY UNAUTHORIZED REPRODUCTION OR DISTRIBUTION IS A VIOLATION OF THE FEDERAL COPYRIGHT ACT AND THE LICENSE AGREEMENT, AND SUBJECT TO CIVIL AND CRIMINAL PENALTIES THEREUNDER.

- There was no structural damage in 98.7 percent of the fires in parking garages.
- Vehicle fires in parking garages typically do not spread from vehicle to vehicle. Fire spread from vehicle to vehicle occurred in only 7 percent of the incidents.

Automatic sprinkler systems are required in occupancies other than open parking garages to protect the assembly occupancy above the fire and to protect the means of egress. Based on the inherent fire safety provided by open parking garages of Type I or II construction, an automatic sprinkler system is not required when an assembly use is located on the roof.

903.2.1.7 Multiple fire areas. An *automatic sprinkler system* shall be provided where multiple fire areas of Group A-1, A-2, A-3 or A-4 occupancies share exit or *exit access* components and the combined *occupant load* of these fire areas is 300 or more.

❖ There are two conditions required to trigger the requirements of this section. The first is that exit or exit access components of Group A-1, A-2, A-3 or A-4 fire areas are shared. The second is that the combined occupant load of the fire areas that share these components exceeds 300 persons.

This section addresses the issue of multiple small assembly occupancies placed in a single story building and not triggering a sprinkler system requirement because of the installation of a rated corridor and separation walls. The code now requires that sprinkler systems be added when the convergence of more than 300 persons share an exit. This is consistent with the intent of automatic sprinkler systems being required for life safety and to maintain tenable exiting in a fire event. A fire event that is near an exit is the same whether there are 300 occupants in one room or three rooms with 100 occupants each sharing an exit. This is also consistent with the requirement in the "multitheater complex" for group A-1, which is a requirement for any time two or more theaters are in the same tenancy and does not consider occupant load as a trigger.

This will still allow those single story buildings with multiple tenancies that have separate exits and utilize the fire area separation concept; such as buildings with multiple restaurants with separate entrances and strip-style mall buildings.

903.2.2 Ambulatory care facilities. An *automatic sprinkler system* shall be installed throughout the entire floor containing an ambulatory care facility where either of the following conditions exist at any time:

1. Four or more care recipients are incapable of self-preservation, whether rendered incapable by staff or staff has accepted responsibility for care recipients already incapable.
2. One or more care recipients that are incapable of self-preservation are located at other than the level of exit discharge serving such a facility.

In buildings where ambulatory care is provided on levels other than the *level of exit discharge*, an *automatic sprinkler system* shall be installed throughout the entire floor where such care is provided as well as all floors below, and all floors between the level of ambulatory care and the nearest *level of exit discharge*, including the *level of exit discharge.*

❖ Ambulatory care facilities are Group B occupancies, which have an enhanced set of requirements that account for the fact that patients may be incapable of self-preservation and require rescue by other occupants or fire personnel. There are several aspects to the enhanced features, including smoke compartments, sprinklers and fire alarms. More specifically, the requirements for sprinklers are based on the presence of four or more care recipients at any given time that are incapable of self-preservation or any number of care recipients that are incapable of self-preservation located on a floor, other than the level of exit discharge, that serves the ambulatory care facility. The sprinkler requirement is limited to the floor area that contains the Group B ambulatory care facility and any floors between the ambulatory care facility and level of exit discharge (see commentary, Section 422 of the IBC).

903.2.3 Group E. An *automatic sprinkler system* shall be provided for Group E occupancies as follows:

1. Throughout all Group E *fire areas* greater than 12,000 square feet (1115 m^2) in area.
2. Throughout every portion of educational buildings below the lowest *level of exit discharge* serving that portion of the building.

   Exception: An *automatic sprinkler system* is not required in any area below the lowest *level of exit discharge* serving that area where every classroom throughout the building has not fewer than one exterior *exit* door at ground level.

❖ Group E occupancies are limited to educational purposes through the 12th grade and day care centers serving children older than $2^1/_2$ years of age. The 12,000-square-foot (1115 m^2) fire area threshold for the sprinkler system was established to allow smaller schools and day care centers to be nonsprinklered to minimize the economic impact on these facilities. The 12,000-square-foot (1115 m^2) threshold is similar to that used for several other occupancies, such as Group M occupancies.

Sprinklers would also be required in portions of the building located below the level of exit discharge serving that occupancy. However, there is an exception that would allow the omission of the automatic sprinkler system for the Group E fire area if there is a direct exit to the exterior from each classroom at ground level. The occupants must be able to go from the classroom directly to the outside without passing through intervening corridors, passageways or interior exit stairways.

INTERNATIONAL CODE COUNCIL®
Copyright © 2015 ICC. ALL RIGHTS RESERVED. Accessed by David Dammon on Jun 21, 2017 12:30:52 PM pursuant to License Agreement with ICC. No further reproduction or distribution authorized. ANY UNAUTHORIZED REPRODUCTION OR DISTRIBUTION IS A VIOLATION OF THE FEDERAL COPYRIGHT ACT AND THE LICENSE AGREEMENT, AND SUBJECT TO CIVIL AND CRIMINAL PENALTIES THEREUNDER.

903.2.4 Group F-1. An *automatic sprinkler system* shall be provided throughout all buildings containing a Group F-1 occupancy where one of the following conditions exists:

1. A Group F-1 *fire area* exceeds 12,000 square feet (1115 m^2).
2. A Group F-1 *fire area* is located more than three stories above grade plane.
3. The combined area of all Group F-1 *fire areas* on all floors, including any mezzanines, exceeds 24,000 square feet (2230 m^2).
4. A Group F-1 occupancy used for the manufacture of upholstered furniture or mattresses exceeds 2,500 square feet (232 m^2).

❖ Group F-1 occupancies must meet several different conditions as to when the fire area or occupancy must be sprinklered. The first three conditions are related to the difficulty of manually suppressing a fire involving a large area. Therefore, occupancies of Group F-1 must be protected throughout with an automatic sprinkler system if the fire area is in excess of 12,000 square feet (1115 m^2), if the total of all fire areas is in excess of 24,000 square feet (2230 m^2) or if the fire area is located more than three stories above grade plane. This is one of the few locations in the code where the total floor area of the building is aggregated for application of a code requirement. The stipulated conditions for when an automatic sprinkler system is required also apply to Group M (see Section 903.2.7) and S-1 (see Section 903.2.9) occupancies. Condition 4 for sprinklering a Group F-1 occupancy relates to the requirement for Group F-1 occupancies in excess of 2,500 square feet (232 m^2) that are used for the manufacture of upholstered furniture or mattresses. Note that this requirement is based simply upon the square footage of the Group F-1 occupancy and is not related to fire areas. Upholstered furniture has the potential for rapid growing and high-heat-release fires. This hazard is increased substantially when there are numerous upholstered furniture or mattresses being manufactured. Such fires put the occupants and emergency responders at risk. This requirement exists regardless of whether the upholstered furniture has passed any fire-retardant tests. See the commentary for Section 903.2.7 for more discussion on the subject of upholstered furniture. See the commentary to Section 903.2.9 for discussion of the formal interpretation and applicability to the code and IBC.

The following examples illustrate how the criteria of this section are intended to be applied:

- If a building contains a single fire area of Group F-1 and the fire area is 13,000 square feet (1208 m^2), an automatic sprinkler system is required throughout the entire building; however, if this fire area is separated into two fire areas and neither is in excess of 12,000 square feet (1115 m^2), an automatic fire sprinkler system is not required. To be considered separate fire areas, the areas must be separated by fire barriers or horizontal assemblies having a fire-resistance rating as required in Table 707.3.10.
- If a 30,000-square-foot (2787 m^2) Group F-1 building was equally divided into separate fire areas of 10,000 square feet (929 m^2) each, an automatic sprinkler system would still be required throughout the entire building. Because the aggregate area of all fire areas exceeds 24,000 square feet (2230 m^2), additional compartmentation will not eliminate the need for an automatic sprinkler system. However, the use of a fire wall to separate the structure into two buildings would reduce the aggregate area of each building to less than 24,000 square feet (2230 m^2) and each fire area to less than 12,000 square feet (1115 m^2), which would offset the need for an automatic sprinkler system.

903.2.4.1 Woodworking operations. An *automatic sprinkler system* shall be provided throughout all Group F-1 occupancy *fire areas* that contain woodworking operations in excess of 2,500 square feet in area (232 m^2) that generate finely divided combustible waste or use finely divided combustible materials.

❖ Because of the potential amount of combustible dust that could be generated during woodworking operations, an automatic sprinkler system is required throughout a fire area when it contains a woodworking operation that exceeds 2,500 square feet (232 m^2) in area. Facilities where woodworking operations take place, such as cabinet making, are considered Group F-1 occupancies. The intent of the phrase "finely divided combustible waste" is to describe particle concentrations that are in the explosive range (see Chapter 22 for discussion of dust-producing operations).

The extent of sprinkler coverage is only intended to be for the Group F-1 occupancy involved in the woodworking activity. If the fire area is larger than 2,500 square feet (232 m^2) but the woodworking area is less than 2,500 square feet (232 m^2), sprinklers are not required. It is not the intent to require the installation of sprinklers throughout the building but rather in the fire area where the hazard may be present.

903.2.5 Group H. *Automatic sprinkler systems* shall be provided in high-hazard occupancies as required in Sections 903.2.5.1 through 903.2.5.3.

❖ Group H occupancies are those intended for the manufacturing, processing or storage of hazardous materials that constitute a physical or health hazard. To be considered a Group H occupancy, the amount of hazardous materials is assumed to be in excess of the maximum allowable quantities permitted by Tables 5003.1.1(1) and 5003.1.1(2).

903.2.5.1 General. An *automatic sprinkler system* shall be installed in Group H occupancies.

❖ This section requires an automatic sprinkler system in all Group H occupancies. Even though in some

INTERNATIONAL CODE COUNCIL®
Copyright © 2015 ICC. ALL RIGHTS RESERVED. Accessed by David Dammon on Jun 21, 2017 12:30:52 PM pursuant to License Agreement with ICC. No further reproduction or distribution authorized. ANY UNAUTHORIZED REPRODUCTION OR DISTRIBUTION IS A VIOLATION OF THE FEDERAL COPYRIGHT ACT AND THE LICENSE AGREEMENT, AND SUBJECT TO CIVIL AND CRIMINAL PENALTIES THEREUNDER.

instances the hazard associated with the occupancy may be one that is not a fire hazard, an automatic sprinkler system is still required to minimize the potential for fire spreading to the high-hazard use; that is, the sprinklers protect the high-hazard area from fire outside the area. This section does not prohibit the use of an alternative automatic fire-extinguishing system in accordance with Section 904. When a water-based system is not compatible with the hazardous materials involved and thus creates a dangerous condition, an alternative fire-extinguishing system should be used. For example, combustible metals, such as magnesium and titanium, have a serious record of involvement with fire and are typically not compatible with water (see commentary, Chapter 59).

Where control areas are used to regulate the quantity of hazardous material within a building, the building is not considered a Group H occupancy. Unless a building would be required by some other code provision to be protected with sprinklers, control areas can be used to control the allowable quantities of hazardous materials in a building so as to not warrant a Group H classification and its mandatory sprinkler requirements.

903.2.5.2 Group H-5 occupancies. An *automatic sprinkler system* shall be installed throughout buildings containing Group H-5 occupancies. The design of the sprinkler system shall be not less than that required under the *International Building Code* for the occupancy hazard classifications in accordance with Table 903.2.5.2.

Where the design area of the sprinkler system consists of a *corridor* protected by one row of sprinklers, the maximum number of sprinklers required to be calculated is 13.

❖ Group H-5 occupancies are structures that are typically used as semiconductor fabrication facilities and comparable research laboratory facilities that use hazardous production materials (HPM). Many of the materials used in semiconductor fabrication present unique hazards. Many of the materials are toxic, while some are corrosive, water reactive or pyrophoric. Fire protection for these facilities is aimed at preventing incidents from escalating and producing secondary threats beyond a fire, such as the release of corrosive or toxic materials. Because of the nature of Group H-5 facilities, the overall amount of hazardous materials can far exceed the maximum allowable quantities given in Tables 5003.1.1(1) and 5003.1.1(2). Although the amount of HPM material is restricted in fabrication areas, the quantities of HPM in storage rooms normally will be in excess of those allowed by the tables. Additional requirements for Group H-5 facilities are located in Chapter 27 of the code and Section 415.11 of the IBC.

This section also specifies the sprinkler design criteria, based on NFPA 13, for various areas in a Group H-5 occupancy (see commentary, Table 903.2.5.2). When the corridor design area sprinkler option is used, a maximum of 13 sprinklers must be calculated. This exceeds the requirements of NFPA 13 for typical egress corridors, which require a maximum of either five or seven calculated sprinklers, depending on the extent of protected openings in the corridor. The increased number of calculated corridor sprinklers is based on the additional hazard associated with the movement of hazardous materials in corridors of Group H-5 facilities.

TABLE 903.2.5.2
GROUP H-5 SPRINKLER DESIGN CRITERIA

LOCATION	OCCUPANCY HAZARD CLASSIFICATION
Fabrication areas	Ordinary Hazard Group 2
Service corridors	Ordinary Hazard Group 2
Storage rooms without dispensing	Ordinary Hazard Group 2
Storage rooms with dispensing	Extra Hazard Group 2
Corridors	Ordinary Hazard Group 2

❖ Table 903.2.5.2 designates the appropriate occupancy hazard classification for the various areas within a Group H-5 facility. The listed occupancy hazard classifications correspond to specific sprinkler system design criteria in NFPA 13. Ordinary Hazard Group 2 occupancies, for example, require a minimum design density of 0.20 gpm/ft^2 (8.1 L/min/m^2) with a minimum design area of 1,500 square feet (139 m^2). An Extra Hazard Group 2 occupancy, in turn, requires a minimum design density of 0.40 gpm/ft^2 (16.3 L/min/m^2) with a minimum operating area of 2,500 square feet (232 m^2). The increased overall sprinkler demand for Extra Hazard Group 2 occupancies is based on the potential use and handling of substantial amounts of hazardous materials, such as flammable or combustible liquids.

903.2.5.3 Pyroxylin plastics. An *automatic sprinkler system* shall be provided in buildings, or portions thereof, where cellulose nitrate film or pyroxylin plastics are manufactured, stored or handled in quantities exceeding 100 pounds (45 kg).

❖ Cellulose nitrate (pyroxylin) plastics pose unusual and substantial fire risks. Pyroxylin plastics are the most dangerous and unstable of all plastic compounds. The chemically bound oxygen in their structure permits them to burn vigorously in the absence of atmospheric oxygen. Although these compounds produce approximately the same amount of energy as paper when they burn, pyroxylin plastics burn at a rate as much as 15 times greater than comparable common combustibles. When burning, these materials release highly flammable and toxic combustion byproducts. Consequently, cellulose nitrate fires are very difficult to control. Although this section specifies a sprinkler threshold quantity of 100 pounds (45.4 kg), the need for additional fire protection should be considered for pyroxylin plastics in any amount.

Although the code includes cellulose nitrate “film” in its requirements, cellulose nitrate motion picture film has not been used in the United States since the 1950s. All motion picture film produced since that

INTERNATIONAL CODE COUNCIL®
Copyright © 2015 ICC. ALL RIGHTS RESERVED. Accessed by David Dammon on Jun 21, 2017 12:30:52 PM pursuant to License Agreement with ICC. No further reproduction or distribution authorized. ANY UNAUTHORIZED REPRODUCTION OR DISTRIBUTION IS A VIOLATION OF THE FEDERAL COPYRIGHT ACT AND THE LICENSE AGREEMENT, AND SUBJECT TO CIVIL AND CRIMINAL PENALTIES THEREUNDER.

time is what is typically called "safety film." Consequently, the only application for this section relative to motion picture film is where it may be used in laboratories or storage vaults that are dedicated to film restoration and archives. The protection of these facilities is addressed in Sections 306.2 and 6504.2.

903.2.6 Group I. An *automatic sprinkler system* shall be provided throughout buildings with a Group I *fire area*.

Exceptions:

1. An *automatic sprinkler system* installed in accordance with Section 903.3.1.2 shall be permitted in Group I-1 Condition 1 facilities.
2. An *automatic sprinkler system* is not required where Group I-4 day care facilities are at the *level of exit discharge* and where every room where care is provided has not fewer than one exterior *exit* door.
3. In buildings where Group I-4 day care is provided on levels other than the *level of exit discharge*, an *automatic sprinkler system* in accordance with Section 903.3.1.1 shall be installed on the entire floor where care is provided, all floors between the level of care and the *level of exit discharge* and all floors below the level of exit discharge other than areas classified as an open parking garage.

❖ The Group I occupancy is divided into four individual occupancy classifications based on the degree of detention, supervision and physical mobility of the occupants. The evacuation difficulties associated with the building occupants creates the need to incorporate a defend-in-place philosophy of fire protection in occupancies of Group I. For this reason, all such occupancies are to be protected with an automatic sprinkler system. Note that this section is applicable to the entire building that contains a Group I occupancy.

Of particular note, this section encompasses all Group I-3 occupancies where more than five persons are detained (see Section 308.5 of the IBC). There has been considerable controversy concerning the use of automatic sprinklers in detention and correctional occupancies. Special design considerations can be taken into account to alleviate the perceived problems with sprinklers in sleeping units. Sprinklers that reduce the likelihood of vandalism as well as the potential to hang oneself are commercially available. Knowledgeable designers can incorporate certain design features to increase reliability and decrease the likelihood of damage to the system.

Group I-4 occupancies would include either adult-only care facilities or occupancies that provide personal care for more than five children, $2^1/_2$ years of age or younger, on a less than 24-hour basis. Because the degree of assistance and the time needed for egress cannot be gauged, an automatic sprinkler system is required.

There are three exceptions to this section. Exception 1 permits Group I-1 Condition 1 occupancies to be protected throughout with an NFPA 13R system instead of a NFPA 13 system. This is the lower risk condition for Group I-1 occupancies. Group I-1 Condition 2 occupancies would be required to use an NFPA 13 system.

Exception 2 exempts sprinkler systems completely if the day care center is at the level of exit discharge and every room has at least one exterior exit door. Note that day cares to which this section applies are considered by Section 308.6.1 of the IBC to be Group E occupancies. An automatic sprinkler system would not be required unless dictated by the requirements in Section 903.2.2 (see commentary, Section 308.6.1 of the IBC).

Exception 3 is also related to day cares that are still classified as Group I-4 by nature of the location in the building. In that case, an NFPA 13 system would be required on the floor where the center is located and all floors between and including the level of exit discharge. This is less stringent than the main requirement in Section 903.2.6 that requires the entire building to be sprinklered. As defined in Section 202, a Group I-4 child care facility located at the level of exit discharge and accommodating no more than 100 children, with each child care room having an exit directly to the exterior, would be classified as a Group E occupancy. See also IBC Section 308.6.1.

903.2.7 Group M. An *automatic sprinkler system* shall be provided throughout buildings containing a Group M occupancy where one of the following conditions exists:

1. A Group M *fire area* exceeds 12,000 square feet (1115 m^2).
2. A Group M *fire area* is located more than three stories above grade plane.
3. The combined area of all Group M *fire areas* on all floors, including any mezzanines, exceeds 24,000 square feet (2230 m^2).
4. A Group M occupancy used for the display and sale of upholstered furniture or mattresses exceeds 5,000 square feet (464 m^2).

❖ The sprinkler threshold requirements for Group M occupancies are identical to those of Group F-1 and S-1 occupancies (see commentary, Section 903.2.4). The one exception is that Group M occupancies are provided with an increased area for display of upholstered furniture and mattresses of 5,000 square feet (464 m2) versus 2,500 square feet (232 m2) required for Group F-1 and S-1 occupancies. As noted in the commentary for Group F-1 occupancies, upholstered furniture and mattresses have the potential for rapidly growing and high-heat-release fires. This hazard is increased substantially when there are numerous upholstered furniture items or mattresses on display. Such fires put the occupants and emergency responders at risk. This requirement exists regardless of whether the upholstered furniture has passed any fire-retardant tests.

The code does not specifically address what constitutes upholstered furniture, but by simple dictionary

INTERNATIONAL CODE COUNCIL®
Copyright © 2015 ICC. ALL RIGHTS RESERVED. Accessed by David Dammon on Jun 21, 2017 12:30:52 PM pursuant to License Agreement with ICC. No further reproduction or distribution authorized. ANY UNAUTHORIZED REPRODUCTION OR DISTRIBUTION IS A VIOLATION OF THE FEDERAL COPYRIGHT ACT AND THE LICENSE AGREEMENT, AND SUBJECT TO CIVIL AND CRIMINAL PENALTIES THEREUNDER.

definition, upholstered furniture has seats covered with padding, springs, webbing and fabric or leather covers. The code does not make any distinction between levels of padding and upholstery provided on furniture, which was intentional. The proponent's reason statement for code change F135-07/08 stated, in part, that "the American Home Furnishings Alliance (AHFA) and the National Home Furnishings Association (NHFA) have examined proposals for exempting vendors of certain constructions of furniture and concluded that such exemptions would be impractical for local code officials to enforce. This is the case because the internal construction of furniture cannot be established reliably without deconstructing it."

Note that, as with Group F-1 occupancies, the criteria is written such that any Group M occupancy, not the fire area, over 5,000 square feet (464 m^2) used for the display and sale of upholstered furniture and mattresses shall be sprinklered throughout. This is regardless of the quantity of upholstered furniture and mattresses actually available for purchase. The reason these requirements were placed into the IBC and the code was based on a large fire in Charleston, South Carolina that killed nine fire fighters. The facility was a combination furniture showroom and associated storage area. The building did not provide an automatic sprinkler system. See the commentary to Section 903.2.9 for discussion of a formal interpretation dealing with Group S-1 occupancies and applicability to the code and IBC.

Automatic sprinkler systems for mercantile occupancies are typically designed for an Ordinary Hazard Group 2 classification in accordance with NFPA 13. If high-piled storage (see Section 903.2.7.1) is anticipated; additional levels of fire protection may be required. Also, some merchandise in mercantile occupancies, such as aerosols, rubber tires, paints and certain plastic commodities, even at limited storage heights, are considered beyond the standard Class I through IV commodity classification assumed for mercantile occupancies in NFPA 13 and may warrant additional fire protection.

903.2.7.1 High-piled storage. An *automatic sprinkler system* shall be provided as required in Chapter 32 in all buildings of Group M where storage of merchandise is in high-piled or rack storage arrays.

❖ Regardless of the size of the Group M fire area, an automatic sprinkler system may be required in a high-piled storage area. High-piled storage includes piled, palletized, bin box, shelf or rack storage of Class I through IV combustibles to a height greater than 12 feet (3658 mm) and certain high-hazard commodities greater than 6 feet (1829 mm). Chapter 23 provides a package of requirements that may include sprinkler protection depending upon the size of the high-piled storage area. The design standard for the sprinkler protection of high-piled storage is NFPA 13. NFPA 13 addresses the many different types and configurations of high-piled storage.

903.2.8 Group R. An *automatic sprinkler system* installed in accordance with Section 903.3 shall be provided throughout all buildings with a Group R *fire area*.

❖ This section requires sprinklers in any building that contains a Group R fire area. This includes uses, such as hotels, apartment buildings, group homes and dormitories. There are no minimum criteria and no exceptions.

It should be noted that buildings constructed under the *International Residential Code*® (IRC®) are not included in Group R and would not, therefore, be subject to these particular requirements. The 2009 IRC required sprinklers in all new townhouses and, beginning January 1, 2011, all one- and two-family dwellings. The IRC is a stand-alone code for the construction of detached one- and two-family dwellings and multiple single-family dwellings (townhouses) no more than three stories in height with a separate means of egress and addresses the requirements for sprinklers in a different way. That is, all of the provisions for new construction that affect those buildings are to be covered exclusively by the IRC and are not to be covered by another *International Code*. Buildings that do not fall within the scope of the IRC would be classified in Group R and be subject to these provisions. This is stated clearly in IFC Committee Interpretation No. 29-03.

With respect to life safety, the need for a sprinkler system is dependent on the occupants' proximity to the fire and the ability to respond to a fire emergency. Group R occupancies could contain occupants who may require assistance to evacuate, such as infants, those with a disability or who may simply be asleep. While the presence of a sprinkler system cannot always protect occupants in residential buildings who are aware of the ignition and either do not respond or respond inappropriately, it can prevent fatalities outside of the area of fire origin regardless of the occupants' response. Section 903.3.2 requires quick-response or residential sprinklers in all Group R occupancies. Full-scale fire tests have demonstrated the ability of quick-response and residential sprinklers to maintain tenability from flaming fires in the room of fire origin.

Where a different occupancy is located in a building with a residential occupancy, the provisions of this section still apply and the entire building is required to be provided with an automatic sprinkler system regardless of the type of mixed-use condition considered. This is consistent with the mixed-use provisions in Chapter 5 of the IBC. The type of sprinkler system permitted in the different types of Group R occupancies is further clarified in Section 903.2.8.1 through 903.2.8.4.

903.2.8.1 Group R-3. An *automatic sprinkler system* installed in accordance with Section 903.3.1.3 shall be permitted in Group R-3 occupancies.

❖ R-3 occupancies are essentially one- and two-family dwellings that fall outside the scope of the IRC, thus

INTERNATIONAL CODE COUNCIL®
Copyright © 2015 ICC. ALL RIGHTS RESERVED. Accessed by David Dammon on Jun 21, 2017 12:30:52 PM pursuant to License Agreement with ICC. No further reproduction or distribution authorized. ANY UNAUTHORIZED REPRODUCTION OR DISTRIBUTION IS A VIOLATION OF THE FEDERAL COPYRIGHT ACT AND THE LICENSE AGREEMENT, AND SUBJECT TO CIVIL AND CRIMINAL PENALTIES THEREUNDER.

an NFPA 13D system is appropriate. It should be noted there is no restriction on the use of NFPA 13 or NFPA 13R systems.

[F] 903.2.8.2 Group R-4 Condition 1. An *automatic sprinkler system* installed in accordance with Section 903.3.1.3 shall be permitted in Group R-4 Condition 1 occupancies.

❖ Group R-4 Condition 1 is the lesser of the risk categories for Group R-4 occupants. The occupants are more capable of evacuating without assistance; therefore, they are treated no different than a Group R-3 occupancy.

[F] 903.2.8.3 Group R-4 Condition 2. An *automatic sprinkler system* installed in accordance with Section 903.3.1.2 shall be permitted in Group R-4 Condition 2 occupancies. Attics shall be protected in accordance with Section 903.2.8.3.1 or 903.2.8.3.2.

❖ In Group R-4 Condition 2 occupancies the occupants need more assistance evacuating a building; therefore, a more robust sprinkler system is required. An NFPA 13R system is required. It should be noted that there are some concerns with NFPA 13R systems not adequately addressing attic spaces as typically NFPA 13R systems focus primarily on the main habitable portion of the building. Specific compliance conditions are provided in Sections 903.2.8.3.1 and 908.2.8.3.2.

[F] 903.2.8.3.1 Attics used for living purposes, storage or fuel-fired equipment. Attics used for living purposes, storage or fuel-fired equipment shall be protected throughout with an *automatic sprinkler system* installed in accordance with Section 903.3.1.2.

❖ This section clarifies that, if the attic is used for living purposes or there are fuel-fired equipment and storage in these areas, full coverage in accordance with NFPA 13R is required.

[F] 903.2.8.3.2 Attics not used for living purposes, storage or fuel-fired equipment. Attics not used for living purposes, storage or fuel-fired equipment shall be protected in accordance with one of the following:

1. Attics protected throughout by a heat detector system arranged to activate the building fire alarm system in accordance with Section 907.2.10.
2. Attics constructed of noncombustible materials.
3. Attics constructed of fire-retardant-treated wood framing complying with Section 2303.2 of the *International Building Code*.
4. The *automatic sprinkler system* shall be extended to provide protection throughout the attic space.

❖ In attics where people are not expected and storage or fuel-fired equipment is not located, some protection is required on top of what NFPA 13R would require. Four different options of protection are provided. The first is simply to provide more warning time to the occupants if a fire should occur in the attic via a heat detector that activates the fire alarm system. The second is simply to reduce the risk of fire by requiring noncombustible construction materials. The third, similar to the second, is reducing the fire hazard by using fire-retardant-treated wood. This will slow the growth of a fire should one occur or prevent the start of a fire. The final option is simply to provide sprinkler protection to the attic. If a sprinkler system is provided in the attic, issues such as freezing temperatures need to be addressed.

[F] 903.2.8.4 Care facilities. An *automatic sprinkler system* installed in accordance with Section 903.3.1.3 shall be permitted in care facilities with five or fewer individuals in a single-family dwelling.

❖ This section is similar to Sections 903.2.8.1 and 903.2.8.2 and allows the use of an NFPA 13D system in place of an NFPA 13 or 13R system. In this case, it is specific to smaller care facilities with five or fewer residents. Again, while not technically a single-family dwelling, they are very similar in nature based on the type and actual use of the building.

903.2.9 Group S-1. An *automatic sprinkler system* shall be provided throughout all buildings containing a Group S-1 occupancy where one of the following conditions exists:

1. A Group S-1 *fire area* exceeds 12,000 square feet (1115 m^2).
2. A Group S-1 *fire area* is located more than three stories above grade plane.
3. The combined area of all Group S-1 *fire areas* on all floors, including any mezzanines, exceeds 24,000 square feet (2230 m^2).
4. A Group S-1 *fire area* used for the storage of commercial motor vehicles where the *fire area* exceeds 5,000 square feet (464 m^2).
5. A Group S-1 occupancy used for the storage of upholstered furniture or mattresses exceeds 2,500 square feet (232 m^2).

❖ An automatic sprinkler system must be provided throughout all buildings where the fire area containing a Group S-1 occupancy exceeds 12,000 square feet (1115 m^2); is more than three stories above grade plane; is a combined fire area, including all floors and mezzanines, exceeding 24,000 square feet (2230 m^2); or is used for the storage of commercial motor vehicles and exceeds 5,000 square feet (464 m^2). See the commentary for the definition of "Commercial motor vehicle" in Chapter 2.

The first three sprinkler threshold requirements for Group S-1 occupancies are identical to those of Groups F-1 and M (see commentary, Sections 903.2.4 and 903.2.7). Group S-1 occupancies, such as warehouses and self-storage buildings, are assumed to be used for the storage of combustible materials. While high-piled storage does not change the Group S-1 occupancy classification, sprinkler protection, if required, may have to comply with the additional requirements of Chapter 32. High-piled stock or rack storage in any occupancy must comply with the code and the IBC. The fifth sprinkler threshold is the same as for Group F-1 except that, in this case,

INTERNATIONAL CODE COUNCIL®
Copyright © 2015 ICC. ALL RIGHTS RESERVED. Accessed by David Dammon on Jun 21, 2017 12:30:52 PM pursuant to License Agreement with ICC. No further reproduction or distribution authorized. ANY UNAUTHORIZED REPRODUCTION OR DISTRIBUTION IS A VIOLATION OF THE FEDERAL COPYRIGHT ACT AND THE LICENSE AGREEMENT, AND SUBJECT TO CIVIL AND CRIMINAL PENALTIES THEREUNDER.

upholstered furniture and mattresses are being stored and not manufactured. Group M has a similar threshold, but is required for larger occupancies containing such items with an area of 5,000 square feet (464 m^2) versus what is required for Groups S-1 and F-1 occupancies of 2,500 square feet (232 m^2). See the commentary for Group M and Group F-1 occupancies for more discussion on this issue. Again, it is important to note that the threshold is based upon the square footage of the occupancy and not upon the size of the fire area. A formal interpretation (IFC Interpretation 20-14) has been issued on this section. The formal interpretation addresses self storage warehouses specifically and whether such a facility between 2,500 and 1,2000 square feet would require an automatic sprinkler system. This is based on the fact that upholstered furniture may be stored in such units. The response provided noted that a sprinkler system would be required based on the fact the requirements are focused on the square footage of the occupancy and are not based on fire area or the amount of upholstered furniture or mattresses present.

903.2.9.1 Repair garages. An *automatic sprinkler system* shall be provided throughout all buildings used as repair garages in accordance with Section 406.8 of the *International Building Code*, as shown:

1. Buildings having two or more stories above grade plane, including *basements*, with a *fire area* containing a repair garage exceeding 10,000 square feet (929 m^2).
2. Buildings not more than one story above grade plane, with a *fire area* containing a repair garage exceeding 12,000 square feet (1115 m^2).
3. Buildings with repair garages servicing vehicles parked in *basements*.
4. A Group S-1 *fire area* used for the repair of commercial motor vehicles where the *fire area* exceeds 5,000 square feet (464 m^2).

❖ Automatic sprinklers may be required in repair garages, depending on the quantity of combustibles present, their location and floor area. In addition, any Group S-1 fire area intended for the repair of commercial motor vehicles that exceeds 5,000 square feet (464 m^2) would require sprinklers. This is the same criteria as Group S-1 occupancies and Group S-2 enclosed parking garages storing commercial motor vehicles. Repair garages may contain significant quantities of flammable liquids and other combustible materials. These occupancies are typically considered Ordinary Hazard Group 2 occupancies as defined in NFPA 13. Portions of repair garages used for parts cleaning using flammable or combustible liquids may require automatic sprinkler protection. If quantities of hazardous materials exceed the limitations in Chapter 50 for maximum allowable quantities per control area, the repair garage would be reclassified as a Group H occupancy. Note that the term "Commercial motor vehicles" is specially defined in Chapter 2.

903.2.9.2 Bulk storage of tires. Buildings and structures where the area for the storage of tires exceeds 20,000 cubic feet (566 m^3) shall be equipped throughout with an *automatic sprinkler system* in accordance with Section 903.3.1.1.

❖ This section specifies when an automatic sprinkler system is required for the bulk storage of tires based on the volume of the storage area as opposed to a specific number of tires. Even in fully sprinklered buildings, tire fires pose significant problems to fire departments. Tire fires produce thick smoke and are difficult to extinguish by sprinklers alone. NFPA 13 contains specific fire protection requirements for the storage of rubber tires.

Whether the volume of tires is divided into different fire areas or not is irrelevant to the application of this section. If the total for all areas where tires are stored is great enough that the resultant storage volume exceeds 20,000 cubic feet (566 m^3), the building must be sprinklered throughout. See the commentary to Section 202 definition of "Tires, bulk storage of" for further information.

903.2.10 Group S-2 enclosed parking garages. An *automatic sprinkler system* shall be provided throughout buildings classified as enclosed parking garages in accordance with Section 406.6 of the *International Building Code* where either of the following conditions exists:

1. Where the *fire area* of the enclosed parking garage exceeds 12,000 square feet (1115 m^2).
2. Where the enclosed parking garage is located beneath other groups.

   Exception: Enclosed parking garages located beneath Group R-3 occupancies.

❖ Fire records have shown that fires in parking structures typically fully involve only a single automobile with minor damage to adjacent vehicles. An enclosed parking garage, however, does not allow the dissipation of smoke and hot gases as readily as an open parking structure, which is also considered a Group S-2 occupancy. If the enclosed parking garage has a fire area greater than 12,000 square feet (1115 m^2) or is located beneath another occupancy group, the enclosed parking garage must be protected with an automatic sprinkler system. This requirement that the enclosed parking garage located beneath other occupancy groups is required to be sprinklered is based on the potential for a fire to develop undetected, which would endanger the occupants of the other occupancy. The 12,000 square foot (1115 m^2) threshold is similar to other occupancies such as Groups M and S-1.

It should be noted that while open parking garages are considered a Group S-2 occupancy, they are not required by the provisions of this section to be equipped with an automatic sprinkler system.

The exception exempts enclosed garages in buildings where the garages are located below a Group R-3 occupancy. The exception is essentially moot since the code requires all buildings with a Group R occupancy to be sprinklered throughout. Because the entire

INTERNATIONAL CODE COUNCIL®
Copyright © 2015 ICC. ALL RIGHTS RESERVED. Accessed by David Dammon on Jun 21, 2017 12:30:52 PM pursuant to License Agreement with ICC. No further reproduction or distribution authorized. ANY UNAUTHORIZED REPRODUCTION OR DISTRIBUTION IS A VIOLATION OF THE FEDERAL COPYRIGHT ACT AND THE LICENSE AGREEMENT, AND SUBJECT TO CIVIL AND CRIMINAL PENALTIES THEREUNDER.

building with the residential occupancy is required to be sprinklered according to Sections 903.2.8, the garage would be sprinklered as well. It should be noted that if the Group R-3 was protected with an NFPA 13D system that the enclosed parking garage would not require sprinklers.

903.2.10.1 Commercial parking garages. An *automatic sprinkler system* shall be provided throughout buildings used for storage of commercial motor vehicles where the *fire area* exceeds 5,000 square feet (464 m^2).

❖ Because of the larger-sized vehicles involved in commercial parking structures, those housing commercial motor vehicles, as defined in Section 202, a more stringent sprinkler threshold is required. Bus garages may also be located adjacent to passenger terminals (Group A-3) that have a substantial occupant load. Commercial parking requires only a single vehicle in order to be classified as commercial parking.

The criterion for sprinkler protection is based on the size of the fire area and not the size of the commercial parking. If the commercial parking involves only 1,000 square feet (93 m^2) but the fire area exceeds 5,000 square feet (464 m^2), sprinkler protection is required.

903.2.11 Specific buildings areas and hazards. In all occupancies other than Group U, an *automatic sprinkler system* shall be installed for building design or hazards in the locations set forth in Sections 903.2.11.1 through 903.2.11.6.

❖ Sections 903.2.11.1 through 903.2.11.2 specify certain conditions under which an automatic sprinkler system is required, even in otherwise nonsprinklered buildings. As indicated, the listed conditions in the noted sections are applicable to all occupancies except Group U. Most structures that qualify as Group U do not typically have the type of conditions stipulated in Sections 903.2.11.1 through 903.2.11.1.3.

903.2.11.1 Stories without openings. An *automatic sprinkler system* shall be installed throughout all stories, including *basements*, of all buildings where the floor area exceeds 1,500 square feet (139.4 m^2) and where there is not provided not fewer than one of the following types of *exterior wall* openings:

1. Openings below grade that lead directly to ground level by an exterior *stairway* complying with Section 1009 or an outside ramp complying with Section 1010. Openings shall be located in each 50 linear feet (15 240 mm), or fraction thereof, of *exterior wall* in the story on at least one side. The required openings shall be distributed such that the lineal distance between adjacent openings does not exceed 50 feet (15 240 mm).
2. Openings entirely above the adjoining ground level totaling not less than 20 square feet (1.86 m^2) in each 50 linear feet (15 240 mm), or fraction thereof, of *exterior wall* in the story on at least one side. The required openings shall be distributed such that the lineal distance between adjacent openings does not exceed 50 feet (15 240 mm). The height of the bottom of the clear opening shall not exceed 44 inches (1118 mm) measured from the floor.

❖ Because of both the lack of openings in exterior walls for access by the fire department for fire fighting and rescue and the problems associated with venting the products of combustion during fire suppression operations, all stories which includes any basements of buildings that do not have adequate openings as defined in this section must be equipped with an automatic sprinkler system. This section applies to stories without sufficient exterior openings where the floor area exceeds 1,500 square feet (139 m^2) and where the building is not otherwise required to be fully sprinklered. The requirement for an automatic sprinkler system in this section applies only to the affected area and does not mandate sprinkler protection throughout the entire building.

Stories without openings, as defined in this section, are stories that do not have at least 20 square feet (1.9 m^2) of opening leading directly to ground level in each 50 lineal feet (15 240 mm) or fraction thereof on at least one side. Since exterior doors will provide openings of 20 square feet (1.9 m^2), or slightly less in some occupancies, exterior stairways and ramps in each 50 lineal feet (15 240 mm) are considered acceptable.

This section specifically states that the required openings be distributed such that the lineal distance between adjacent openings does not exceed 50 feet (15 240 mm). If the openings in the exterior wall are located without regard to the location of the adjacent openings, it is possible that segments of the exterior wall will not have the required access to the interior of the building for fire-fighting purposes. Any arrangement of required stairways, ramps or openings that results in a portion of the wall 50 feet (15 240 mm) or more in length with no openings to the exterior does not meet the intent of the code that access be provided in each 50 lineal feet (15 240 mm) (see Commentary Figure 903.2.11.1).

There is a further restriction on openings that are entirely above grade. More specifically, to support fire fighting operations, the openings need to be accessible and usable. Therefore, Item 2 specifies that the maximum sill height be 44 inches (1117.6 mm) above the floor. This height is consistent with the height provided for emergency escape and rescue windows in Section 1030.3.

One application of this section has been addressed in the *International Code Interpretations* and deals with automotive service shops that have below-grade service areas where employees perform oil changes and other minor maintenance services. The below-grade areas are typically open to the grade-level service bays via openings providing access to the underside of the vehicles without requiring the vehicle to be lifted into the air. Inasmuch as the below-grade space has no openings directly to the exterior, the question was asked if it would be regulated as a windowless story and thus be required to be equipped with an automatic

INTERNATIONAL CODE COUNCIL®
Copyright © 2015 ICC. ALL RIGHTS RESERVED. Accessed by David Dammon on Jun 21, 2017 12:30:52 PM pursuant to License Agreement with ICC. No further reproduction or distribution authorized. ANY UNAUTHORIZED REPRODUCTION OR DISTRIBUTION IS A VIOLATION OF THE FEDERAL COPYRIGHT ACT AND THE LICENSE AGREEMENT, AND SUBJECT TO CIVIL AND CRIMINAL PENALTIES THEREUNDER.

fire suppression system in accordance with Section 903.2.11.1.

The answer to that question is no. Due to the openness between the adjacent service levels, the below-grade area would be more appropriately regulated similar to a mezzanine rather than a story. A mezzanine is not regulated as a separate story but rather as part of the same story that it serves. Therefore, if the below-grade service level is in compliance with the applicable provisions of Section 505 of the IBC, the windowless story provisions of Section 903.2.11.1 would be evaluated based on the exterior wall openings of the main level and not the service mezzanine below. The direct interconnections provided between the two adjacent floor levels by multiple service openings provide access to the lower service area for fire-fighting and rescue operations. As such, it would not be regulated as a windowless story.

The requirement to sprinkler the basement is independent of mixed-use conditions. Whether the basement is separated or nonseparated is irrelevant to the need for sprinkler protection, nor does the requirement to provide sprinklers in the basement imply that sprinklers must be provided elsewhere. This requirement is applicable to the basement or any story without openings irrespective of other code provisions.

These provisions are also not based upon the size of a fire area but rather upon the size of the basement. Thus, subdividing the basement into multiple fire areas would have no effect on the requirement. However, one benefit of the multiple fire areas could be that each fire area could have a separate limited area sprinkler system with less than 20 sprinklers.

903.2.11.1.1 Opening dimensions and access. Openings shall have a minimum dimension of not less than 30 inches (762 mm). Such openings shall be accessible to the fire department from the exterior and shall not be obstructed in a manner such that fire fighting or rescue cannot be accomplished from the exterior.

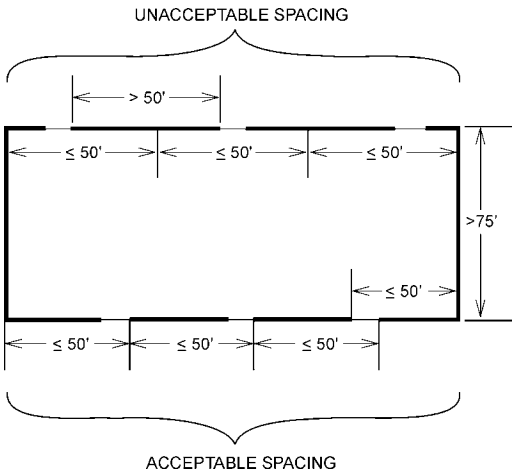

For SI: 1 foot = 304.8 mm.

Figure 903.2.11.1
SPACING OF OPENINGS IN STORIES OR BASEMENTS

❖ To qualify, an opening must not be less than 30 inches (762 mm) in least dimension and must be accessible to the fire department from the exterior. The minimum opening dimension gives fire department personnel access to the interior of the story or basement for fire-fighting and rescue operations and provides openings that are large enough to vent the products of combustion.

903.2.11.1.2 Openings on one side only. Where openings in a story are provided on only one side and the opposite wall of such story is more than 75 feet (22 860 mm) from such openings, the story shall be equipped throughout with an *approved automatic sprinkler system* or openings as specified above shall be provided on not fewer than two sides of the story.

❖ If openings are provided on only one side, an automatic sprinkler system would still be required if the opposite wall of the story is more than 75 feet (22 860 mm) from existing openings. An alternative to providing the automatic sprinkler system would be to design openings on at least two sides of the exterior of the building. As long as the story being considered is not a basement, the openings on two sides can be greater than 75 feet (22 860 mm) from any portion of the floor. In basements, if any portion is more than 75 feet (22 860 mm) from the openings, the entire basement must be equipped with an automatic sprinkler system, as indicated in Section 903.2.11.1.3. Providing openings on more than one wall allows cross ventilation to vent the products of combustion [see Commentary Figures 903.2.11.1.2(1-4)].

903.2.11.1.3 Basements. Where any portion of a *basement* is located more than 75 feet (22 860 mm) from openings required by Section 903.2.11.1, or where walls, partitions or other obstructions are installed that restrict the application of water from hose streams, the *basement* shall be equipped throughout with an *approved automatic sprinkler system*.

❖ The 75-foot (22 860 mm) distance is intended to be measured in the line of travel—not in a straight line perpendicular to the wall. Where obstructions, such as walls or other partitions, are present in a basement, the walls and partitions enclosing any room or space must have openings that provide an equivalent degree of fire department access to that provided by the openings prescribed in Section 903.2.11.1 for exterior walls. When obstructions, such as walls or partitions are installed in the basement, the ability to apply hose streams through these openings and reach the basement area is reduced or eliminated. The configuration and clear-opening requirements become useless when an interior wall or other obstruction is placed inside the basement. In that case, it is reasonable to require automatic fire sprinklers to provide adequate protection in the basement. If an equivalent degree of fire department access to all portions of the floor area is not provided, the basement would require an automatic sprinkler system.

INTERNATIONAL CODE COUNCIL®
Copyright © 2015 ICC. ALL RIGHTS RESERVED. Accessed by David Dammon on Jun 21, 2017 12:30:52 PM pursuant to License Agreement with ICC. No further reproduction or distribution authorized. ANY UNAUTHORIZED REPRODUCTION OR DISTRIBUTION IS A VIOLATION OF THE FEDERAL COPYRIGHT ACT AND THE LICENSE AGREEMENT, AND SUBJECT TO CIVIL AND CRIMINAL PENALTIES THEREUNDER.

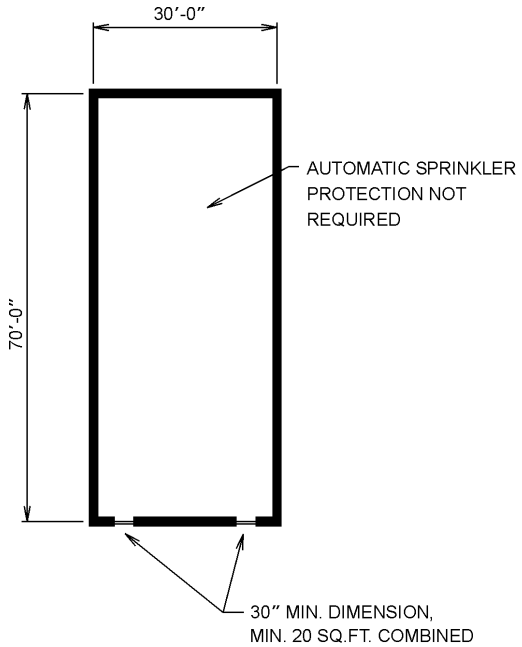

For SI: 1 inch = 25.4 mm, 1 foot = 304.8 mm,
1 square foot = 0.0929 m^2.

Figure 903.2.11.1.2(1)
OPENINGS IN STORIES OR BASEMENTS
Less than 75 feet from any point to an opening

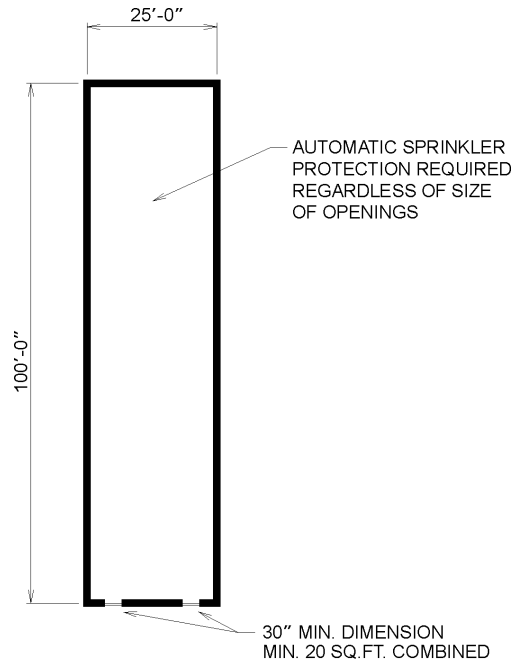

For SI: 1 inch = 25.4 mm, 1 foot = 304.8 mm,
1 square foot = 0.0929 m^2.

Figure 903.2.11.1.2(2)
OPENINGS IN STORIES OR BASEMENTS
More than 75 feet from any point to an opening

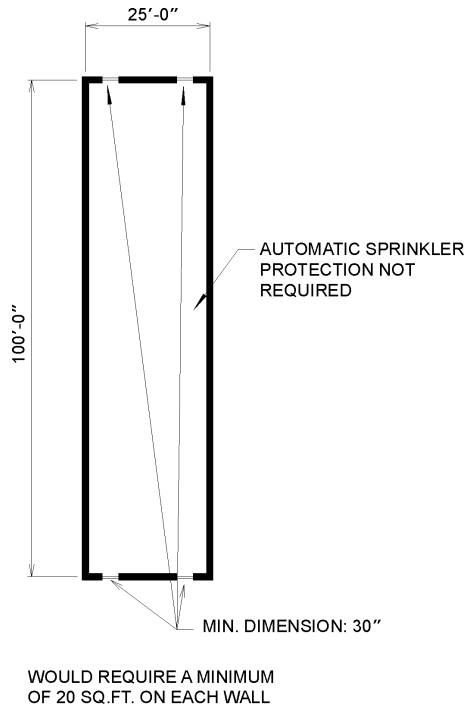

For SI: 1 inch = 25.4 mm, 1 foot = 304.8 mm,
1 square foot = 0.0929 m^2.

Figure 903.2.11.1.2(3)
OPENINGS IN STORIES OR BASEMENTS
Less than 75 feet from any point to an opening

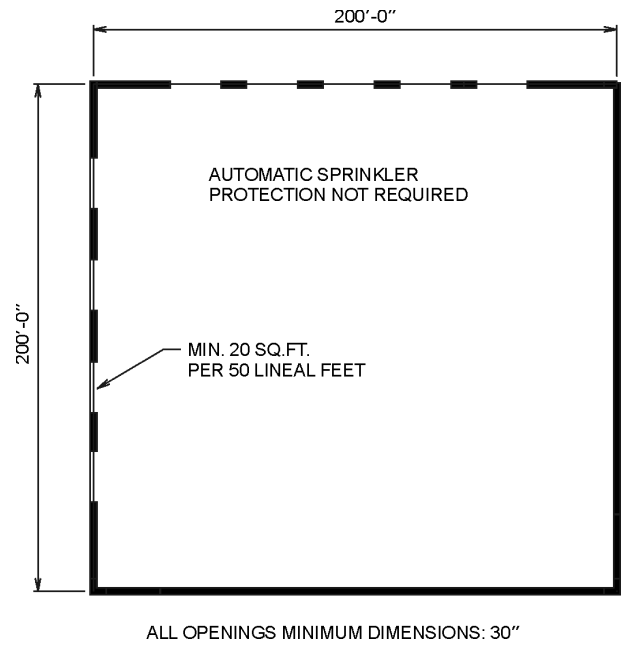

For SI: 1 inch = 25.4 mm, 1 foot = 304.8 mm,
1 square foot = 0.0929 m^2.

Figure 903.2.11.1.2(4)
OPENINGS IN STORIES OR BASEMENTS

INTERNATIONAL CODE COUNCIL®
Copyright © 2015 ICC. ALL RIGHTS RESERVED. Accessed by David Dammon on Jun 21, 2017 12:30:52 PM pursuant to License Agreement with ICC. No further reproduction or distribution authorized. ANY UNAUTHORIZED REPRODUCTION OR DISTRIBUTION IS A VIOLATION OF THE FEDERAL COPYRIGHT ACT AND THE LICENSE AGREEMENT, AND SUBJECT TO CIVIL AND CRIMINAL PENALTIES THEREUNDER.

903.2.11.2 Rubbish and linen chutes. An *automatic sprinkler system* shall be installed at the top of rubbish and linen chutes and in their terminal rooms. Chutes shall have additional sprinkler heads installed at alternate floors and at the lowest intake. Where a rubbish chute extends through a building more than one floor below the lowest intake, the extension shall have sprinklers installed that are recessed from the drop area of the chute and protected from freezing in accordance with Section 903.3.1.1. Such sprinklers shall be installed at alternate floors beginning with the second level below the last intake and ending with the floor above the discharge. Chute sprinklers shall be accessible for servicing.

❖ Gravity rubbish (waste) and linen chutes can present a significant hazard to building occupants if they are not properly installed and protected. Generally, these systems are installed in high-occupancy buildings where the occupants will be sleeping or are incapable of self-rescue such as in Group I, R-1 and R-2 occupancies. Secondly, for occupant convenience, openings to the chutes are commonly provided in areas accessible to the public and, in older buildings, the chute opening may be located in an exit access corridor. In comparison to other building shafts, gravity rubbish and linen chutes always contain fuel. As bags of waste debris or linen fall through the chute, they can deposit fluids such as waste cooking oil which adheres to the shaft surface. This waste material and other debris provide fuel that can support and accelerate vertical fire spread. The greatest accumulation of fuel will be in the termination room; however, a significant amount of fuel that covers the interior surface area of the chute will be found in the sections of chutes closest to the collection or termination room. Therefore, it is important that the automatic sprinklers be properly placed and protected so they are available in the event of a fire in the termination room and to protect waste compaction equipment where such equipment is installed.

Installation of gravity chutes for rubbish or linen requires compliance with the IBC, Chapter 6 of NFPA 82 and the code. Under the IBC and NFPA 82, Chapter 6, permanent rubbish and linen chutes are constructed inside of a fire-resistance-rated shaft assembly with a minimum 1-hour fire-resistance rating in buildings less than four stories in height; in buildings four or more stories in height, the fire-resistance rating is increased to 2 hours by Section 713.4 of the IBC. The design of the shaft system and its openings must also comply with the requirements in Sections 713.11 and 713.13 of the IBC, which requires the termination room receiving the discharged material to be separated from the building by a fire-resistance rating equivalent to that of the shaft that it serves.

Section 713.13.6 of the IBC requires the installation of an automatic sprinkler system in rubbish and linen chutes to comply with the requirements of Section 903.2.11.2. Section 903.2.11.2 correlates with the requirements in Chapter 21 of NFPA 13. Chapter 22 of NFPA 13 contains the special occupancy requirements for all buildings, including gravity waste and linen chutes. The provisions align the IBC and the code requirements with those in NFPA 82 and NFPA 13.

A critical term in this section is “extension.” The word was selected to address chutes installed in buildings of pedestal construction or other designs in which the fire-resistant construction shaft and chute pass through a less hazardous occupancy, such as a Group S-2 parking garage, or other floors that do not have access to the shaft. In these areas, chute openings are generally not provided. As a result, this section now contains a specific provision that may impose a requirement for sprinklers in the portion of the chute that serves as an extension beyond the last intake and the termination room or discharge area.

Because objects will be falling through the chute, the code requires the chute sprinklers to be recessed and protected from impact. Sprinklers are not required at every story housing a chute. The code requires automatic sprinklers at the top of the chute and at its termination. In addition, sprinkler heads are required at alternate floors within the chute with a head being installed at the floor level with the lowest intake point into the chute. Previously, these additional sprinkler heads were only required where the shaft extended through three or more floors. These revisions, plus the previously discussed requirements for extensions, may result in additional sprinkler heads within some shafts as compared to the previous requirements.

Sprinklers in chutes that are in locations subject to freezing require freeze protection in accordance with the requirements of Section 903.3.1.1 and, therefore, the NFPA 13 standard. This can be accomplished using a dry-pendant sprinkler or constructing a dry-pipe sprinkler system.

903.2.11.3 Buildings 55 feet or more in height. An *automatic sprinkler system* shall be installed throughout buildings that have one or more stories with an *occupant load* of 30 or more located 55 feet (16 764 mm) or more above the lowest level of fire department vehicle access, measured to the finished floor.

Exceptions:

1. Open parking structures.
2. Occupancies in Group F-2.

❖ Because of the difficulties associated with manual suppression of a fire in mid-rise buildings in excess of 55 feet (16 764 mm) above the lowest level of fire department vehicle access, an automatic sprinkler system is required throughout the building regardless of occupancy. Buildings that qualify for a sprinkler system under this section are not necessarily high-rise buildings as defined in Section 202 and are focused also on those with occupants located on the upper floors. These provisions apply only to buildings with occupied floors with an occupant load of 30 or more located on stories 55 feet (16 764 mm) or greater from fire department vehicle access. The 55 feet (16 764 mm) is measured to the finished floor (see Commentary Figure 903.2.11.3).

INTERNATIONAL CODE COUNCIL®
Copyright © 2015 ICC. ALL RIGHTS RESERVED. Accessed by David Dammon on Jun 21, 2017 12:30:52 PM pursuant to License Agreement with ICC. No further reproduction or distribution authorized. ANY UNAUTHORIZED REPRODUCTION OR DISTRIBUTION IS A VIOLATION OF THE FEDERAL COPYRIGHT ACT AND THE LICENSE AGREEMENT, AND SUBJECT TO CIVIL AND CRIMINAL PENALTIES THEREUNDER.

The listed exceptions are occupancies that, based on height only, do not require an automatic sprinkler system. Open parking structures are also exempt from the high-rise provisions of Section 403 of the IBC. Although an automatic sprinkler system is not required in open parking structures, a sprinkler system may still be needed, depending on the building construction type and the area and number of parking tiers (see Table 406.3.5 of the IBC).

903.2.11.4 Ducts conveying hazardous exhausts. Where required by the *International Mechanical Code*, automatic sprinklers shall be provided in ducts conveying hazardous exhaust or flammable or combustible materials.

Exception: Ducts where the largest cross-sectional diameter of the duct is less than 10 inches (254 mm).

❖ Section 510 of the IMC addresses the requirements for hazardous exhaust systems. To protect against the spread of fire within a hazardous exhaust system and to prevent a duct fire from involving the building, an automatic sprinkler system must be installed to protect the exhaust duct system. Where materials conveyed in the ducts are not compatible with water, alternative extinguishing agents should be used. The fire suppression requirement is intended to apply to exhaust systems having an actual fire hazard. An automatic sprinkler system in the duct would be of little value for an exhaust system that conveys only nonflammable or noncombustible materials, fumes, vapors or gases.

The exception recognizes the reduced hazard associated with smaller ducts and the impracticality of installing sprinkler protection. Another exception in the IMC indicates that laboratory hoods that meet specific provisions of the IMC are not required to be suppressed. Because the IMC is more specific in this regard, it should be consulted for the proper application of the exception.

903.2.11.5 Commercial cooking operations. An *automatic sprinkler system* shall be installed in commercial kitchen exhaust hood and duct systems where an *automatic sprinkler system* is used to comply with Section 904.

❖ An automatic suppression system is required for commercial kitchen exhaust hood and duct systems where required by Section 609 or by the IMC to have a Type I hood. Type I hoods are required for commercial cooking equipment that produces grease-laden vapors or smoke. Section 904.12 recognizes that alternative extinguishing systems other than an automatic sprinkler system may be used. Where an automatic sprinkler system is used for commercial cooking operations, it must comply with the requirements identified in Section 904.11.4.

903.2.11.6 Other required suppression systems. In addition to the requirements of Section 903.2, the provisions indicated in Table 903.2.11.6 require the installation of a fire suppression system for certain buildings and areas.

❖ In addition to Section 903.2, requirements for automatic fire suppression systems are also found elsewhere in the code as indicated in Table 903.2.11.6.

TABLE 903.2.11.6. See page 9-26.

❖ Table 903.2.11.6 identifies other sections of the code that require an automatic fire suppression system based on the specific occupancy or use because of the unique hazards of such use or occupancy. The table does not identify the various sections of the code that contain design alternatives based on the use of an automatic fire suppression system, typically an automatic sprinkler system.

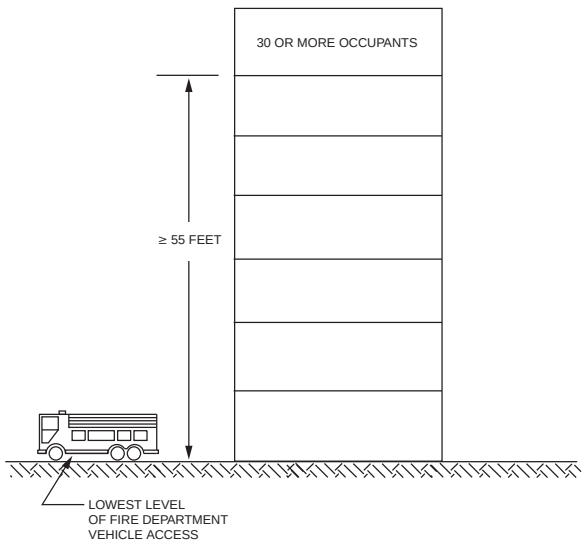

For SI: 1 foot = 304.8 mm.

Figure 903.2.11.3
SPRINKLER REQUIREMENTS: OCCUPANTS 55 FEET OR GREATER FROM FIRE DEPARTMENT VEHICLE ACCESS

INTERNATIONAL CODE COUNCIL®
Copyright © 2015 ICC. ALL RIGHTS RESERVED. Accessed by David Dammon on Jun 21, 2017 12:30:52 PM pursuant to License Agreement with ICC. No further reproduction or distribution authorized. ANY UNAUTHORIZED REPRODUCTION OR DISTRIBUTION IS A VIOLATION OF THE FEDERAL COPYRIGHT ACT AND THE LICENSE AGREEMENT, AND SUBJECT TO CIVIL AND CRIMINAL PENALTIES THEREUNDER.

TABLE 903.2.11.6
ADDITIONAL REQUIRED FIRE SUPPRESSION SYSTEMS

SECTION	SUBJECT
914.2.1	Covered and open mall buildings
914.3.1	High-rise buildings
914.4.1	Atriums
914.5.1	Underground structures
914.6.1	Stages
914.7.1	Special amusement buildings
914.8.2	Airport traffic control towers
914.8.3, 914.8.6	Aircraft hangars
914.9	Flammable finishes
914.10	Drying rooms
914.11.1	Ambulatory care facilities
1029.6.2.3	Smoke-protected assembly seating
1103.5.1	Pyroxylin plastic storage in existing buildings
1103.5.2	Existing Group I-2 occupancies
1103.5.3	Existing Group I-2 Condition 2 occupancies
1103.5.4	Pyroxylin plastics
2108.2	Dry cleaning plants
2108.3	Dry cleaning machines
2309.3.2.6.2	Hydrogen motor fuel-dispensing area canopies
2404.2	Spray finishing in Group A, E, I or R
2404.4	Spray booths and spray rooms
2405.2	Dip-tank rooms in Group A, I or R
2405.4.1	Dip tanks
2405.9.4	Hardening and tempering tanks
2703.10	HPM facilities
2703.10.1.1	HPM work station exhaust
2703.10.2	HPM gas cabinets and exhausted enclosures
2703.10.3	HPM exit access corridor
2703.10.4	HPM exhaust ducts
2703.10.4.1	HPM noncombustible ducts
2703.10.4.2	HPM combustible ducts
2807.3	Lumber production conveyor enclosures
2808.7	Recycling facility conveyor enclosures
3006.1	Class A and B ovens
3006.2	Class C and D ovens
Table 3206.2	Storage fire protection
3206.4	Storage
5003.8.4.1	Gas rooms
5003.8.5.3	Exhausted enclosures
5004.5	Indoor storage of hazardous materials
5005.1.8	Indoor dispensing of hazardous materials
5104.4.1	Aerosol warehouses
5106.3.2	Aerosol display and merchandising areas
5204.5	Storage of more than 1,000 cubic feet of loose combustible fibers
5306.2.1	Exterior medical gas storage room
5306.2.2	Interior medical gas storage room
5306.2.3	Medical gas storage cabinet
5606.5.2.1	Storage of smokeless propellant
5606.5.2.3	Storage of small arms primers
5704.3.7.5.1	Flammable and combustible liquid storage rooms
5704.3.8.4	Flammable and combustible liquid storage warehouses
5705.3.7.3	Flammable and combustible liquid Group H-2 or H-3 areas
6004.1.2	Gas cabinets for highly toxic and toxic gas
6004.1.3	Exhausted enclosures for highly toxic and toxic gas
6004.2.2.6	Gas rooms for highly toxic and toxic gas
6004.3.3	Outdoor storage for highly toxic and toxic gas
6504.1.1	Pyroxylin plastic storage cabinets
6504.1.3	Pyroxylin plastic storage vaults
6504.2	Pyroxylin plastic storage and manufacturing

(continued)

TABLE 903.2.11.6—continued
ADDITIONAL REQUIRED FIRE SUPPRESSION SYSTEMS

For SI: 1 cubic foot = 0.023 m^3.

903.2.12 During construction. *Automatic sprinkler systems* required during construction, *alteration* and demolition operations shall be provided in accordance with Section 3313.

❖ Chapter 14 of the code and Chapter 33 of the IBC address fire safety requirements during construction, alteration or demolition work. Working sprinkler systems should remain operative at all times unless it is absolutely necessary to shut down the system because of the proposed work. All sprinkler system impairments should be rectified as quickly as possible unless specific prior approval has been obtained from the fire code official. Buildings with a required sprinkler system should not be occupied unless the sprinkler system has been installed and tested consistent with Section 901.5.1. If the system must be placed out of service, the requirements of Section 901.7 are necessary to address the temporary impairment to the fire protection system.

903.3 Installation requirements. *Automatic sprinkler systems* shall be designed and installed in accordance with Sections 903.3.1 through 903.3.8.

❖ Specific design, installation and testing criteria are given for automatic sprinkler systems in the sections and subsections that follow, as well as an indication of the applicability of a nationally recognized standard in the area. The information required to complete a thorough review of an automatic sprinkler system is listed in Commentary Figure 903.3.

INTERNATIONAL CODE COUNCIL®
Copyright © 2015 ICC. ALL RIGHTS RESERVED. Accessed by David Dammon on Jun 21, 2017 12:30:52 PM pursuant to License Agreement with ICC. No further reproduction or distribution authorized. ANY UNAUTHORIZED REPRODUCTION OR DISTRIBUTION IS A VIOLATION OF THE FEDERAL COPYRIGHT ACT AND THE LICENSE AGREEMENT, AND SUBJECT TO CIVIL AND CRIMINAL PENALTIES THEREUNDER.

1. Information required on shop drawings includes:

— Name of owner and occupant
— Location, including street address
— Point of compass
— Graphic indication of scale
— Ceiling construction
— Full-height cross section
— Location of fire walls
— Location of partitions
— Occupancy of each area or room
— Location and size of blind spaces and closets
— Any questionable small enclosures in which no sprinklers are to be installed
— Size of city main in street, pressure and whether dead end or circulation and, if dead end, direction and distance to nearest circulating main, city main test results
— Other source of water supply, with pressure or elevation
— Make, type and orifice size of sprinkler
— Temperature rating and location of high-temperature sprinklers
— Limitations on extended coverage sprinklers or other special sprinkler types
— Number of sprinklers on each riser and on each system by floors and total area by each system on each floor
— Make, type, model and size of alarm or dry pipe valve
— Make, type, model and size of preaction or deluge valve
— Type and location of alarm bells
— Backflow prevention method and details
— Total number of sprinklers on each dry pipe system or preaction deluge system
— Approximate capacity in gallons or each dry pipe system
— Setting for pressure-reducing valves
— Pipe size, type, and schedule of wall thickness
— Cutting lengths of pipe (or center-to-center dimensions)
— Type of fittings, riser nipples and size, and all welds and bends
— Type and location of hangers, inserts and sleeves
— Calculations of loads and details for sway bracing
— All control valves, checks, drain pipes, flushing, and test pipes
— Size and location of standpipe risers and hose outlets
— Small hand-hose equipment
— Underground pipe size, length, location, weight, material, point of connection to city main; the type of valves, meters and valve pits; and the depth that top of the pipe is laid below grade
— Size and location of hydrants along with hose-houses
— Size and location of fire department connections
— When the equipment is to be installed as an addition to an old group of sprinklers without additional feed from the yard system, enough of the old system shall be indicated on the plans to show the total number of sprinklers to be supplied and to make all connections clear
— Information to be provided on the hydraulic nameplate
— Name, address and phone number of contractor and sprinkler designer
— Hydraulic reference points shall be shown by a number and/or letter designation and shall correspond with comparable reference points shown on the hydraulic calculation sheets
— System design criteria showing the minimum rate of water application (density), the design area of water application and the water required for hose streams both inside and outside
— Actual calculated requirements showing the total quantity of water and the pressure required at a common reference point for each system
— Elevation data showing elevations of sprinklers, junction points and supply or reference points
— Protected wall openings if room design method is used

2. Information required on calculations includes:

— Location
— Name of owner and occupant
— Building identification
— Description of hazard
— Name and address of contractor and designer
— Name of approving agency

3. System design requirements include:

— Design area of water application
— Minimum rate of water application (density)
— Area of sprinkler coverage
— Hazard or commodity classification
— Building height
— Storage height
— Storage method
— Total water requirements, as calculated, including allowance for hose demand water supply information and allowance for in-rack sprinklers
— Location and elevation static and residual test gauge with relation to the riser reference point
— Size and location of hydrants used for flow test data
— Flow location
— Static pressure, psi
— Residual pressure, psi
— Flow, gpm
— Date
— Time
— Test conducted by whom
— Sketch to accompany gridded system calculations to indicate flow quantities and directions for lines with sprinklers operated in the remote area

4. Additional information necessary for complete review includes:

— Sprinkler description and discharge constant (K-value)
— Hydraulic reference points
— Flow, gpm
— Pipe diameter (actual internal diameter)
— Pipe length
— Equivalent pipe length for fittings and components
— Friction loss in psi per foot of pipe
— Total friction loss between reference points
— Elevation difference between reference points
— Required pressure in psi at each reference point
— Velocity pressures and normal pressure if included in calculations
— Notes to indicate starting points, reference to other sheets or clarification of data
— Information on antifreeze solution (type and quantity)
— Water treatment system information including reason for treatment and program details

5. Included with the submittal must be a graph sheet showing water supply curves and system requirements including:

— Hose demand plotted on semilogarithmic graph paper so as to present a graphic summary of the complete hydraulic calculations
— Sprinkler system demand including in-rack sprinklers (if applicable)

Figure 903.3
SAMPLE SPRINKLER SYSTEM DRAWING AND DATA SUBMITTALS

INTERNATIONAL CODE COUNCIL®
Copyright © 2015 ICC. ALL RIGHTS RESERVED. Accessed by David Dammon on Jun 21, 2017 12:30:52 PM pursuant to License Agreement with ICC. No further reproduction or distribution authorized. ANY UNAUTHORIZED REPRODUCTION OR DISTRIBUTION IS A VIOLATION OF THE FEDERAL COPYRIGHT ACT AND THE LICENSE AGREEMENT, AND SUBJECT TO CIVIL AND CRIMINAL PENALTIES THEREUNDER.

903.3.1 Standards. Sprinkler systems shall be designed and installed in accordance with Section 903.3.1.1, unless otherwise permitted by Sections 903.3.1.2 and 903.3.1.3 and other chapters of this code, as applicable.

❖ Automatic sprinkler systems are to be installed to comply with the code and NFPA 13, 13R or 13D. As provided for in Section 102.7.1, where differences occur between the code and NFPA 13, 13R or 13D, the code applies. The fire code official also has the authority to approve the type of sprinkler system to be installed. See Commentary Figure 903.3.1 for typical design parameters for each type of sprinkler system.

This section also provides a pointer to other sections of the code that might provide more specific or detailed sprinkler requirements such as those found in Chapters 23 and 24 of the code.

903.3.1.1 NFPA 13 sprinkler systems. Where the provisions of this code require that a building or portion thereof be equipped throughout with an *automatic sprinkler system* in accordance with this section, sprinklers shall be installed throughout in accordance with NFPA 13 except as provided in Sections 903.3.1.1.1 and 903.3.1.1.2.

❖ NFPA 13 contains the minimum requirements for the design and installation of automatic water sprinkler systems and exposure protection sprinkler systems. The requirements contained in the standard include the character and adequacy of the water supply and the selection of sprinklers, piping, valves and all of the materials and accessories. The standard does not include detailed requirements for installation of private fire service mains and their appurtenances; installation of fire pumps or construction and installation of gravity and pressure tanks and towers.

NFPA 13 defines seven classifications or types of water sprinkler systems: wet pipe (see Commentary Figure 903.3.1.1); dry pipe; preaction or deluge; combined dry pipe and preaction; antifreeze systems; sprinkler systems that are designed for a special purpose and outside sprinklers for exposure protection. While numerous variables must be considered in selecting the proper type of sprinkler system, the wet-pipe sprinkler system is recognized as the most effective and efficient. The wet-pipe system is also the most reliable type of sprinkler system, because water under pressure is available at the sprinkler. Therefore, wet-pipe sprinkler systems are recommended wherever possible.

The extent of coverage and distribution of sprinklers is based on the NFPA 13 standard. Numerous conditions exist in the standard where sprinklers are specifically required and also where they may or may not be located. Once it is determined that the sprinkler system is to be in accordance with NFPA 13, that standard must be reviewed for installation details. For example, exterior spaces such as combustible canopies are required to be equipped with sprinklers according to Section 8.15.7 of NFPA 13 where the canopy extends for a distance of 4 feet (1219 mm) or more. A 3-foot (914 mm) combustible canopy would not require sprinklers nor would a 6-foot (1829 mm) canopy constructed of noncombustible materials, provided there is no combustible storage under the canopy.

Because installation is required to be in accordance with NFPA 13, if the standard allows for the omission of sprinklers in any location, then the building is still considered as being sprinklered throughout. For example, Section 8.15.8.1.1 of NFPA 13 allows sprinklers to be omitted from bathrooms in dwelling units in hotels and motels. If sprinklers are not provided in the bathrooms due to the conditions stipulated in NFPA 13, the building would still be considered as sprinklered throughout in accordance with the code, NFPA 13 and the IBC.

Exceptions for the use of NFPA 13R and 13D systems are addressed throughout the code when exceptions based upon the use of sprinklers are provided. More specifically, if the use of these other standards is appropriate, it will be noted within the exception. For a building to be considered "equipped throughout" with an NFPA 13 sprinkler system, complete protection must be provided in accordance with the referenced standard, subject to the exempt locations indicated in Section 903.3.1.1.1. See Commentary Figure 904.2.1 for examples of requirements modified through the use of sprinkler systems.

	NFPA 13	NFPA 13R	NFPA 13D
Extent of protection	Equip throughout (Section 903.3.1.1)	Occupied spaces (Section 903.3.1.2)	Occupied spaces (Section 903.3.1.3)
Scope	All occupancies	Low-rise residential	One- and two-family dwellings
Sprinkler design	Density/area concept	4-head design	2-head design
Sprinklers	All types	Residential only	Residential only
Duration	30 minutes (minimum)	30 minutes	10 minutes
Advantages	Property and life protection	Life safety/tenability	Life safety/tenability

Figure 903.3.1
NFPA 13, NFPA 13R, NFPA 13D SYSTEMS

INTERNATIONAL CODE COUNCIL®
Copyright © 2015 ICC. ALL RIGHTS RESERVED. Accessed by David Dammon on Jun 21, 2017 12:30:52 PM pursuant to License Agreement with ICC. No further reproduction or distribution authorized. ANY UNAUTHORIZED REPRODUCTION OR DISTRIBUTION IS A VIOLATION OF THE FEDERAL COPYRIGHT ACT AND THE LICENSE AGREEMENT, AND SUBJECT TO CIVIL AND CRIMINAL PENALTIES THEREUNDER.

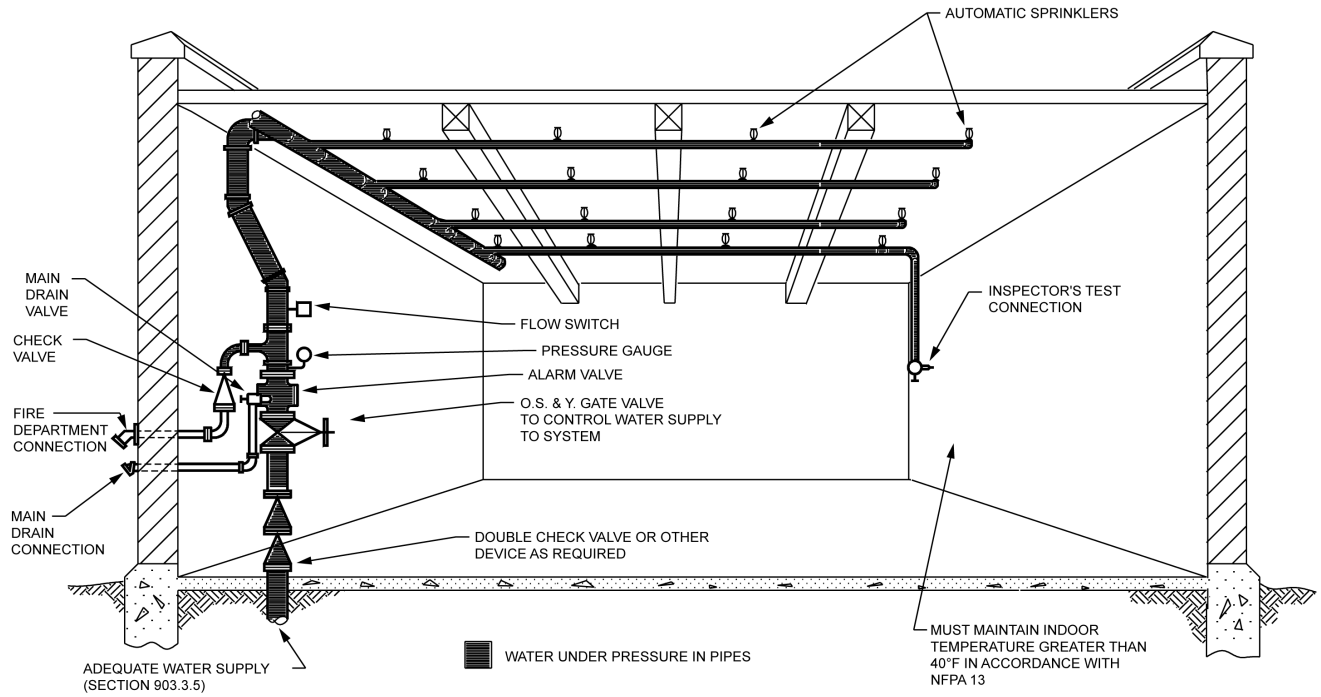

For SI: °C = [(°F) - 32]/1.8

Figure 903.3.1.1
TYPICAL WET PIPE SYSTEM

INTERNATIONAL CODE COUNCIL®
Copyright © 2015 ICC. ALL RIGHTS RESERVED. Accessed by David Dammon on Jun 21, 2017 12:30:52 PM pursuant to License Agreement with ICC. No further reproduction or distribution authorized. ANY UNAUTHORIZED REPRODUCTION OR DISTRIBUTION IS A VIOLATION OF THE FEDERAL COPYRIGHT ACT AND THE LICENSE AGREEMENT, AND SUBJECT TO CIVIL AND CRIMINAL PENALTIES THEREUNDER.

903.3.1.1.1 Exempt locations. Automatic sprinklers shall not be required in the following rooms or areas where such rooms or areas are protected with an *approved* automatic fire detection system in accordance with Section 907.2 that will respond to visible or invisible particles of combustion. Sprinklers shall not be omitted from a room merely because it is damp, of fire-resistance-rated construction or contains electrical equipment.

1. A room where the application of water, or flame and water, constitutes a serious life or fire hazard.
2. A room or space where sprinklers are considered undesirable because of the nature of the contents, where *approved* by the *fire code official*.
3. Generator and transformer rooms separated from the remainder of the building by walls and floor/ceiling or roof/ceiling assemblies having a *fire-resistance rating* of not less than 2 hours.
4. Rooms or areas that are of noncombustible construction with wholly noncombustible contents.
5. Fire service access elevator machine rooms and machinery spaces.
6. Machine rooms, machinery spaces, control rooms and control spaces associated with occupant evacuation elevators designed in accordance with Section 3008 of the *International Building Code*.

❖ This section allows the omission of sprinkler protection in certain locations if an approved automatic fire detection system is installed. Buildings in compliance with one of the five listed conditions would still be considered fully sprinklered throughout in compliance with the code and NFPA 13 and thus would be eligible for all applicable code alternatives, exceptions or reductions. Elimination of the sprinkler system in a sensitive area is subject to the approval of the fire code official.

Condition 1 addresses restrictions where the application of water could create a hazardous condition. For example, sprinkler protection is to be avoided where it is not compatible with certain stored materials (i.e., some water-reactive hazardous materials such as calcium carbide). Combustible metals, such as magnesium and aluminum, may burn so intensely that the use of water to attempt fire control will only intensify the reaction.

It is not the intent of Condition 2 to omit sprinklers solely because of a potential for water damage. A desire to not sprinkler a certain area (such as a computer room or operating room) does not fall within the limitations of the exception unless there is something unique about the space that would result in water being incompatible. A computer room can be adequately protected using an automatic sprinkler system or an alternative gaseous suppression agent system or a combination of these systems. The intent of Condition 2 is to consider whether or not the contents would react adversely to the application of water. It is important to note that the fire code official must approve the use of this item. Note also that with respect to computer rooms, NFPA 75–*Protection of Information Technology Equipment* (not a referenced standard), recognizes automatic sprinklers as the primary fire protection of computer rooms.

Condition 3 recognizes the low fuel load and low occupancy hazards associated with generator and transformer rooms and, therefore, allows the omission of sprinkler protection if the rooms are separated from adjacent areas by 2-hour fire-resistance-rated construction. This condition assumes the room is not used for any combustible storage. This condition is similar to Section 8.15.11.3 of NFPA 13, which exempts electrical equipment rooms from sprinkler protection, provided the room is dedicated to the use of dry-type electrical equipment, is constructed as a 2-hour fire-resistance-rated enclosure and is not used for combustible storage.

Condition 4 requires the construction of the room or area, as well as the contents, to be noncombustible. An example would be an area in an unprotected steel frame building (Type IIB construction) used for steel or concrete block storage. Neither involves any significant combustible packaging or sources of ignition, and few combustibles are present (see Commentary Figure 903.3.1).

Condition 5 addresses the concern for elevator machine rooms and machinery spaces associated with fire service access elevators as required for buildings with occupied floors greater than 120 feet (36.58 m) from the lowest level of fire department access by Sections 403.6.1 and 3007 of the IBC. These elevators need to work during fire situations and their operation cannot be threatened by the activation of a sprinkler in a machine room or space that may affect the operation of the elevator. Fire service access elevators are required to be continuously monitored at the fire command center in accordance with Section 3007.7 of the IBC.

Condition 6, similar to Condition 5, exempts sprinklers from the machine rooms and machinery spaces, control rooms and control spaces for occupant evacuation elevators. Like fire service access elevators, these elevators need to work during fire situations and their operation cannot be threatened by the activation of a sprinkler in a machine room or machinery spaces. Such elevators are required to be monitored at the fire command center in accordance with Section 3008.7 of the IBC.

903.3.1.1.2 Bathrooms. In Group R occupancies, other than Group R-4 occupancies, sprinklers shall not be required in bathrooms that do not exceed 55 square feet (5 m^2) in area and are located within individual *dwelling units* or *sleeping units*, provided that walls and ceilings, including the walls and ceilings behind a shower enclosure or tub, are of noncombustible or limited-combustible materials with a 15-minute thermal barrier rating.

❖ This provision was added to the code to reinstate an exception of NFPA 13 that had been in existence

INTERNATIONAL CODE COUNCIL®
Copyright © 2015 ICC. ALL RIGHTS RESERVED. Accessed by David Dammon on Jun 21, 2017 12:30:52 PM pursuant to License Agreement with ICC. No further reproduction or distribution authorized. ANY UNAUTHORIZED REPRODUCTION OR DISTRIBUTION IS A VIOLATION OF THE FEDERAL COPYRIGHT ACT AND THE LICENSE AGREEMENT, AND SUBJECT TO CIVIL AND CRIMINAL PENALTIES THEREUNDER.

since 1976 but deleted for all but dwelling units in motels and hotels (NFPA Section 8.15.8.1.1) from the 2013 edition of NFPA 13.

Although reinstating the small bathroom exception will have a limited impact on new construction because many modern bathrooms exceed the 55-square-foot area limit in the exception to accommodate wheelchair access, the more important consequence will be removing an unnecessary cost increase for building owners who choose to retrofit existing properties with small bathrooms that were built before it was common to provide wheelchair access. Codes and standards should not erect any unnecessary barriers to retrofitting sprinklers into existing properties, such as existing high-rise buildings.

In the 1976 edition of the Life Safety Code (NFPA 101), to encourage cost-effective fire protection systems for apartment buildings, Section 11-3.8.3.4.1 provided an exception to permit bathrooms that did not exceed 55-square-foot within individual dwelling units to omit sprinklers when the apartment building was sprinklered in accordance with NFPA 13. The basis of the 55-square-foot area is that this area accommodates a "typical" small bathroom that contains a standard tub, a toilet and a sink and nothing more. This exception was later duplicated from NFPA 101 into the 1991 edition of NFPA 13 with the understanding that the next edition of NFPA 101 (1994) could delete the exception, since NFPA 13 would have it covered. NFPA 101-1994 then, as planned, deleted the exception.

The history of apartment unit bathroom fires is statistically minimal. According to the recent NFPA *Home Structure Fire Report,* January 2009, Table 9B, "Reported Apartment Structure Fires by Area of Origin 2003-2006 Annual Averages", out of 113,000 fires/year, only 1600 (1 percent) are in bathrooms. Given that there are more than 35 years of experience with the bathroom sprinkler exception being in place (since it was put into NFPA 101 in 1976), it would certainly be reasonable to expect anecdotal or statistical experience to indicate the existence of a problem, if there were one.

903.3.1.2 NFPA 13R sprinkler systems. *Automatic sprinkler systems* in Group R occupancies up to and including four stories in height in buildings not exceeding 60 feet (18 288 mm) in height above grade plane shall be permitted to be installed throughout in accordance with NFPA 13R.

The number of stories of Group R occupancies constructed in accordance with Sections 510.2 and 510.4 of the *International Building Code* shall be measured from the horizontal assembly creating separate buildings.

❖ NFPA 13R contains design and installation requirements for a sprinkler system to aid in the detection and control of fires in low-rise (four stories or less) residential occupancies.

Sprinkler systems designed in accordance with NFPA 13R are intended to prevent flashover (total involvement) in the room of fire origin and to improve the chance for occupants to escape or be evacuated. The design criteria in NFPA 13R are similar to those in NFPA 13 except that sprinklers may be omitted from areas in which fatal fires in residential occupancies do not typically originate (bathrooms, closets, attics, porches, garages and concealed spaces).

A common question is whether a mixed occupancy building which contains a Group R occupancy could still use NFPA 13R for the design. If one of the mixed-use occupancies would require a sprinkler system throughout the building in accordance with NFPA 13, then a 13R system would not be allowed. If, however, the only reason a sprinkler system is being installed is because there is a Group R fire area, then a NFPA 13R system would be an appropriate design choice. The areas that are not classified as Group R would require protection in accordance with NFPA 13.

It must be noted that although the building would be considered sprinklered throughout in accordance with NFPA 13R, not all of the code sprinkler alternatives could be applied. Any alternative that requires the installation of an NFPA 13 system would not be applicable if a portion of the building utilizes an NFPA 13R system.

The code provisions that allow for an increase in building height according to Section 504.3 of the IBC do not compound this section. NFPA 13R is applicable to buildings that are up to four stories in height and 60 feet in height above grade plane. If the design of a residential building intends to take advantage of the sprinkler height increase so that the building is five stories or more, the sprinkler system must be an NFPA 13 system. Because this section limits the height to four stories, four stories is the maximum height for a building that can utilize an NFPA 13R system. This is consistent with the scoping provisions in the NFPA 13R standard.

The limitation of four stories in height is to be measured with respect to the established grade plane, which is consistent with IFC Interpretation No. 43-03. As such, a basement would not be considered a story above grade for purposes of determining the applicability of this section.

The second paragraph recognizes the application of the requirements of Sections 510.2 and 510.4 of the IBC which are essentially exceptions to the height and area requirements. This exception is based on providing a horizontal fire separation similar to the concept of a fire wall to create separate buildings. This establishes that the height in stories can be measured from the horizontal assembly instead of from grade plane. The height in feet would still be limited to being measured from grade plane. Such buildings are often referred to as "pedestal buildings."

903.3.1.2.1 Balconies and decks. Sprinkler protection shall be provided for exterior balconies, decks and ground floor patios of *dwelling units* and *sleeping units* where the building is of Type V construction, provided there is a roof or deck above. Sidewall sprinklers that are used to protect such areas

INTERNATIONAL CODE COUNCIL®
Copyright © 2015 ICC. ALL RIGHTS RESERVED. Accessed by David Dammon on Jun 21, 2017 12:30:52 PM pursuant to License Agreement with ICC. No further reproduction or distribution authorized. ANY UNAUTHORIZED REPRODUCTION OR DISTRIBUTION IS A VIOLATION OF THE FEDERAL COPYRIGHT ACT AND THE LICENSE AGREEMENT, AND SUBJECT TO CIVIL AND CRIMINAL PENALTIES THEREUNDER.

shall be permitted to be located such that their deflectors are within 1 inch (25 mm) to 6 inches (152 mm) below the structural members and a maximum distance of 14 inches (356 mm) below the deck of the exterior balconies and decks that are constructed of open wood joist construction.

❖ Balconies, decks and patios in buildings of Type V construction and used for Group R occupancies are required to have sprinkler protection when there is a roof or deck above. This is in addition to the requirements of NFPA 13R, which primarily addresses the life safety of occupants and not property protection. The intent is to address hazards such as grilling and similar activities. Since NFPA 13R does not require such coverage, there is potential that a fire on a balcony could grow much too large for the system within the building to handle. The concern is that a potential exterior balcony fire could spread to unprotected floor/ceiling assemblies and attic spaces and result in major property damage. Section 308.1.4 specifically addresses restrictions on open flame cooking devices used on combustible balconies.

Regardless of whether the exterior walking surface is attached to the building and called a balcony or is a freestanding structure such as a deck or patio the concern for fire ignition in the area adjacent to the exterior wall is the same. Sidewall sprinklers should be selected based on the area of coverage and climate. If the potential for freezing exists, a dry sidewall sprinkler should be used. Where the overhanging deck or balcony is extensive, an extended coverage sprinkler should be selected.

903.3.1.2.2 Open-ended corridors. Sprinkler protection shall be provided in *open-ended corridors* and associated *exterior stairways* and *ramps* as specified in Section 1027.6, Exception 3.

❖ This section is simply emphasizing the fact that, since there is no separation from the exterior exit stairways, sprinklers would be required when using an NFPA 13R system. Section 1027.6, Exception 3 allows the separation between the open-ended corridor and exterior exit stairway to be omitted, but only where several conditions are met. The primary condition is that the corridor be sprinklered. A definition of "Open-ended corridor" is provided in Chapter 2. See Commentary Figure 903.3.1.2.2 for an example of an open-ended corridor.

903.3.1.3 NFPA 13D sprinkler systems. *Automatic sprinkler systems* installed in one- and two-family *dwellings*; Group R-3; Group R-4 Condition 1 and *townhouses* shall be permitted to be installed throughout in accordance with NFPA 13D.

❖ NFPA 13D contains design and installation requirements for a sprinkler system to aid in the detection and control of fires in one- and two-family dwellings, mobile homes and townhouses. This section also specifically allows the use of an NFPA 13D system for occupancies classified as Group R-3 and Group R-4 Condition 1. Group R-3 are one- and two-family dwellings that fall outside the scope of the IRC and also those buildings housing small congregate living facilities and boarding houses. These facilities operate very similar to a single-family home and the level of the ability of the occupants is such that little assistance is needed for self-evacuation. This is consistent with the NFPA 13D requirements and is also consistent with FHA court cases based on nondiscrimination for group homes.

Similar to NFPA 13R, sprinkler systems designed in accordance with NFPA 13D are intended to prevent flashover (total involvement) in the room of fire origin and to improve the chance for occupants to escape or be evacuated. Although the allowable omission of sprinklers in certain areas of the dwelling unit in NFPA 13D is similar to that in NFPA 13R, the water supply requirements are less restrictive. NFPA 13D uses a two-head sprinkler design with a 10-minute duration requirement, while NFPA 13R uses a four-head sprinkler design with a 30-minute duration requirement. The decreased water supply requirement emphasizes the main intent of NFPA 13D to control the fire and maintain tenability during evacuation of the residence.

903.3.2 Quick-response and residential sprinklers. Where *automatic sprinkler systems* are required by this code, quick-response or residential automatic sprinklers shall be installed



Figure 903.3.1.2.2
OPEN-ENDED CORRIDOR

INTERNATIONAL CODE COUNCIL®
Copyright © 2015 ICC. ALL RIGHTS RESERVED. Accessed by David Dammon on Jun 21, 2017 12:30:52 PM pursuant to License Agreement with ICC. No further reproduction or distribution authorized. ANY UNAUTHORIZED REPRODUCTION OR DISTRIBUTION IS A VIOLATION OF THE FEDERAL COPYRIGHT ACT AND THE LICENSE AGREEMENT, AND SUBJECT TO CIVIL AND CRIMINAL PENALTIES THEREUNDER.

in all of the following areas in accordance with Section 903.3.1 and their listings:

1. Throughout all spaces within a smoke compartment containing care recipient *sleeping units* in Group I-2 in accordance with the *International Building Code.*
2. Throughout all spaces within a smoke compartment containing treatment rooms in ambulatory care facilities.
3. *Dwelling units* and *sleeping units* in Group I-1 and R occupancies.
4. Light-hazard occupancies as defined in NFPA 13.

❖ Quick-response and residential sprinklers are similar in nature. They use a lighter material for the operating mechanism, thus reducing the heat lag in the element. The faster the heat can be absorbed, the sooner the sprinkler will begin to discharge water. Quick-response sprinklers have shown that they operate up to 25 percent faster than traditional sprinklers and create conditions in the room of origin that significantly increase the tenability of the environment. In tests performed by Factory Mutual (FM) for the Federal Emergency Management Agency (FEMA), the gas temperature in the room of origin was 550°F (288°C) with quick-response sprinklers, while it was 1,470°F (799°C) for conventional sprinklers at the time of sprinkler activation. More importantly, while the carbon monoxide (CO) level was 1,860 ppm for conventional sprinklers, the CO level when tested with quick-response sprinklers was only around 350 ppm. Comparatively, the National Institute of Occupational Safety and Health (NIOSH) considers the IDLH (immediately dangerous to life and health) level of CO to be 1,200 ppm. Thus, quick-response sprinklers have been shown to add significantly to the life safety effects of standard sprinkler systems.

Condition 1 requires the use of approved quick-response or residential sprinklers in smoke compartments containing care recipient sleeping units in Group I-2 occupancies. Even though properly operating standard sprinklers are effective, the extent of fire growth and smoke production that can occur before sprinkler activation creates the need for early warning to enable faster response by care providers and initiation of egress that is critical in occupancies containing persons incapable of self-preservation. The faster response time associated with quick-response or residential sprinklers increases the probability that the sprinklers will actuate before the care recipient's life would be threatened by a fire in his or her room.

Condition 2 requires the use of approved quick-response or residential sprinklers in smoke compartments containing treatment rooms in ambulatory care facilities. The justification is the same as that for Condition 1. When there is a potential for care recipients to be incapable of self-preservation, the use of residential sprinkler or quick-response sprinklers are critical.

Because of the kind of occupants sleeping in Group R and I-1 occupancies, as indicated in Condition 3, a faster responding type of sprinkler is desirable. Similar to the first condition, because occupants will be sleeping, the use of quick-response sprinklers creates additional safety by reducing sprinkler response time, thereby increasing the time available for egress and allowing for the time necessary for occupants to wake up and recognize the emergency event.

Condition 4 recognizes light-hazard occupancies in accordance with NFPA 13. These could include restaurants, schools, office buildings, places of religious worship and similar occupancies where the fire load and potential heat release of combustible contents are low.

903.3.3 Obstructed locations. Automatic sprinklers shall be installed with due regard to obstructions that will delay activation or obstruct the water distribution pattern. Automatic sprinklers shall be installed in or under covered kiosks, displays, booths, concession stands or equipment that exceeds 4 feet (1219 mm) in width. Not less than a 3-foot (914 mm) clearance shall be maintained between automatic sprinklers and the top of piles of *combustible fibers*.

Exception: Kitchen equipment under exhaust hoods protected with a fire-extinguishing system in accordance with Section 904.

❖ To provide adequate sprinkler coverage, sprinkler protection must be extended under any obstruction that exceeds 4 feet (1219 mm) in width. Large air ducts are another common obstruction where sprinklers are routinely extended beneath the duct. The 3-foot (914 mm) storage clearance requirement for combustible fibers is caused by their potential high heat release. Most storage conditions require only a minimum 18-inch (457 mm) storage clearance to combustibles, depending on the type of sprinklers used and their actual storage conditions.

The exception recognizes that an alternative extinguishing system is permitted for commercial cooking systems in place of sprinkler protection for exhaust hoods that may be more than 4 feet (1219 mm) wide.

The application of this section is more critical to the ongoing use of the space. The obstruction conditions, therefore, should have already been addressed during plan review and installation inspection. This section gives the fire official and building owner adequate information to avoid the most typical obstruction- related issues in terms of proper sprinkler coverage.

903.3.4 Actuation. *Automatic sprinkler systems* shall be automatically actuated unless specifically provided for in this code.

❖ The intent of this section is to eliminate the need for occupant intervention during a fire. As such, it is assumed that it will not be necessary for a person to manually open a valve or perform some other physical activity in order to allow the sprinkler system to activate.

Wet-pipe and dry-pipe sprinkler systems, for exam-

INTERNATIONAL CODE COUNCIL®
Copyright © 2015 ICC. ALL RIGHTS RESERVED. Accessed by David Dammon on Jun 21, 2017 12:30:52 PM pursuant to License Agreement with ICC. No further reproduction or distribution authorized. ANY UNAUTHORIZED REPRODUCTION OR DISTRIBUTION IS A VIOLATION OF THE FEDERAL COPYRIGHT ACT AND THE LICENSE AGREEMENT, AND SUBJECT TO CIVIL AND CRIMINAL PENALTIES THEREUNDER.

ple, are essentially fail-safe systems in the sense that, if the system is in proper operating condition, it will operate once a sprinkler fuses. Dry systems have an inherent time lag for water to reach the sprinkler; therefore, the response is not as fast as for a wet-pipe system. Other types of sprinkler systems, such as preaction and deluge, rely on the actuation of a detection system to operate the sprinkler valve.

903.3.5 Water supplies. Water supplies for *automatic sprinkler systems* shall comply with this section and the standards referenced in Section 903.3.1. The potable water supply shall be protected against backflow in accordance with the requirements of this section and the *International Plumbing Code*. For connections to public waterworks systems, the water supply test used for design of fire protection systems shall be adjusted to account for seasonal and daily pressure fluctuations based on information from the water supply authority and as approved by the *fire code official*.

❖ To be effective, all sprinkler systems must have an adequate supply of water. The criteria for an acceptable water supply are contained in the standards referenced in Section 903.3.1. For example, NFPA 13 contains criteria for different types of water supplies as well as the methods to determine the pressure, flow capabilities and capacity necessary to get the intended performance from a sprinkler system. An acceptable water supply could consist of a reliable municipal supply, a gravity tank or a fire pump with a pressure tank or a combination of these.

This section also establishes the requirements for protecting the potable water system against a nonpotable source, such as stagnant water retained within the sprinkler piping. As stated in Section 608.16.4 of the IPC, an approved double check valve device or reduced pressure principle backflow preventer is required.

The other issue addressed by this section is fluctuations in water pressure. Information on pressure fluctuation is necessary to not only ensure that the minimum required pressure will be available for the automatic sprinkler system, but also to ensure that high pressures do not exceed the limitations of the sprinkler system. If the water pressure on a sprinkler system exceeds 100 psi, changes in the hanging methods are required. Also, if a fire pump is provided, it might be possible to exceed 175 psi, which is typically considered the maximum working pressure for a sprinkler system. These are just additional reasons why it is critical to account for pressure fluctuations in the water supply. Obviously, fire flows can be affected by this, as well as other water-based fire protection systems, such as standpipes, which require a minimum 100 psi at the roof of high-rise buildings and such may not be available due to pressure fluctuations. With regards to gathering of data, this requirement is simply intended to make sure that pressure fluctuations are addressed in accordance with the water supply authority to the extent that such information is available. Further authority is provided to the fire code official to accept other documentation.

903.3.5.1 Domestic services. Where the domestic service provides the water supply for the *automatic sprinkler system*, the supply shall be in accordance with this section.

❖ This section establishes the scope of domestic services for residential combination services. Essentially, compliance with Section 903.3.5 is required.

903.3.5.2 Residential combination services. A single combination water supply shall be allowed provided that the domestic demand is added to the sprinkler demand as required by NFPA 13R.

❖ NFPA 13R permits a common supply main to a building to serve both the sprinkler system and domestic services if the domestic demand is added to the sprinkler demand. NFPA 13R systems do not provide the same level of property protection as NFPA 13 systems.

903.3.6 Hose threads. Fire hose threads and fittings used in connection with *automatic sprinkler systems* shall be as prescribed by the *fire code official*.

❖ The threads on connections and fittings that the fire department will use to connect a hose must be compatible with the fire department threads.

Design documents must specify the type of thread to be used in order to be compatible with the local fire department equipment after consultation and coordination with the fire code official. The criteria typically apply to fire department connections for sprinkler and standpipe systems, standpipe hose connections, yard hydrants and wall hydrants.

The majority of fire departments in the United States use the American National Fire Hose Connection Screw Thread also commonly known as the national standard thread (NST) and NS. NFPA 1963 gives the screw thread dimensions and the thread size of threaded connections, with nominal sizes ranging from $^3/_4$ inch (19 mm) to 6 inches (152 mm) for the NS thread. Although efforts to standardize fire hose threads began after the Boston conflagration in 1872, there are still many different screw threads, some of which give the appearance of compatibility with the NH thread. While NFPA 1963 may be used as a guide, the code does not require that any particular standard be used. Rather, it is important that the fire code official be consulted for the appropriate thread selection. The intent is that the threads match those of the local department identically so that adapters are not required within the fire department's own district.

903.3.7 Fire department connections. Fire department connections for *automatic sprinkler systems* shall be installed in accordance with Section 912.

❖ Section 912, to which this section points, provides a comprehensive set of requirements for fire department connections (FDCs), reducing the opportunity

INTERNATIONAL CODE COUNCIL®
Copyright © 2015 ICC. ALL RIGHTS RESERVED. Accessed by David Dammon on Jun 21, 2017 12:30:52 PM pursuant to License Agreement with ICC. No further reproduction or distribution authorized. ANY UNAUTHORIZED REPRODUCTION OR DISTRIBUTION IS A VIOLATION OF THE FEDERAL COPYRIGHT ACT AND THE LICENSE AGREEMENT, AND SUBJECT TO CIVIL AND CRIMINAL PENALTIES THEREUNDER.

for any of its requirements to be overlooked. See the commentary to Section 912.

903.3.8 Limited area sprinkler systems. Limited area sprinkler systems shall be in accordance with the standards listed in Section 903.3.1 except as provided in Sections 903.3.8.1 through 903.3.8.5.

❖ The use of limited area sprinkler systems is restricted to cases in which the code requires a limited number of sprinklers to protect a specific hazard or area and not a complete automatic sprinkler system. For example, limited area sprinkler systems may be used to protect areas including, but not limited to, stages; storage and workshop areas; painting rooms; trash rooms and chutes; furnace rooms; kitchens and hazardous exhaust systems and incidental uses as regulated in Section 1105.3 of the code and Section 509 of the IBC.

903.3.8.1 Number of sprinklers. Limited area sprinkler systems shall not exceed six sprinklers in any single fire area.

❖ In the 2015 edition of the code, the number of sprinklers allowed on a limited area sprinkler system in a fire area has been reduced to only six. In previous editions, up to 19 sprinklers were allowed. This reduced number will limit the type of applications for such systems. In the past, 19 sprinklers may have been able to address an entire building, depending on the system design, more easily allowing the use of the domestic water supply.

903.3.8.2 Occupancy hazard classification. Only areas classified by NFPA 13 as Light Hazard or Ordinary Hazard Group 1 shall be permitted to be protected by limited area sprinkler systems.

❖ The use of limited area systems is restricted to only the two lowest hazard occupancy classifications in accordance with NFPA 13. Such systems are fairly limited and can only contain six sprinklers per fire area; because of this, the types of hazards should be limited.

903.3.8.3 Piping arrangement. Where a limited area sprinkler system is installed in a building with an automatic wet standpipe system, sprinklers shall be supplied by the standpipe system. Where a limited area sprinkler system is installed in a building without an automatic wet standpipe system, water shall be permitted to be supplied by the plumbing system provided that the plumbing system is capable of simultaneously supplying domestic and sprinkler demands.

❖ Two options are provided for how water to the limited area sprinkler system is to be supplied. If the building contains automatic wet standpipes, then the system must be supplied by the standpipe system. If there is no standpipe system available, connection to the domestic water supply is permitted. The water supply must be analyzed to determine if it is sufficient to supply simultaneously both domestic usage and the sprinkler system demand. This will mean looking at peak water use throughout the day. See Section 903.3.5 and the IPC.

903.3.8.4 Supervision. Control valves shall not be installed between the water supply and sprinklers unless the valves are of an *approved* indicating type that are supervised or secured in the open position.

❖ No shutoff valves are permitted in the sprinkler system piping unless the valves are specifically approved and are either supervised or secured in the open position. These restrictions increase the likelihood that the sprinkler system will be operational should a fire occur. Valve supervision or securing a valve in the open position are considered equally reliable by this section.

903.3.8.5 Calculations. Hydraulic calculations in accordance with NFPA 13 shall be provided to demonstrate that the available water flow and pressure are adequate to supply all sprinklers installed in any single *fire area* with discharge densities corresponding to the hazard classification.

❖ Hydraulic calculations are required to be in accordance with NFPA 13 to demonstrate that the water system is adequate to supply the sprinkler demand in any particular fire area.

903.4 Sprinkler system supervision and alarms. Valves controlling the water supply for *automatic sprinkler systems*, pumps, tanks, water levels and temperatures, critical air pressures and waterflow switches on all sprinkler systems shall be electrically supervised by a *listed* fire alarm control unit.

Exceptions:

1. *Automatic sprinkler systems* protecting one- and two-family *dwellings*.
2. Limited area sprinkler systems in accordance with Section 903.3.8.
3. *Automatic sprinkler systems* installed in accordance with NFPA 13R where a common supply main is used to supply both domestic water and the *automatic sprinkler system*, and a separate shutoff valve for the *automatic sprinkler system* is not provided.
4. Jockey pump control valves that are sealed or locked in the open position.
5. Control valves to commercial kitchen hoods, paint spray booths or dip tanks that are sealed or locked in the open position.
6. Valves controlling the fuel supply to fire pump engines that are sealed or locked in the open position.
7. Trim valves to pressure switches in dry, preaction and deluge sprinkler systems that are sealed or locked in the open position.

❖ The reliability data on automatic sprinkler systems clearly indicate that a closed valve is the leading cause of sprinkler system failure. There are also a number of other critical elements that contribute to successful sprinkler system operation, including, but not limited to, pumps, water tanks and air pressure maintenance devices; therefore, this section requires that the various critical elements that contribute to an

INTERNATIONAL CODE COUNCIL®
Copyright © 2015 ICC. ALL RIGHTS RESERVED. Accessed by David Dammon on Jun 21, 2017 12:30:52 PM pursuant to License Agreement with ICC. No further reproduction or distribution authorized. ANY UNAUTHORIZED REPRODUCTION OR DISTRIBUTION IS A VIOLATION OF THE FEDERAL COPYRIGHT ACT AND THE LICENSE AGREEMENT, AND SUBJECT TO CIVIL AND CRIMINAL PENALTIES THEREUNDER.

available water supply and to the function of the sprinkler system be electrically supervised.

Automatic sprinkler systems in one- and two-family dwellings are typically designed to comply with NFPA 13D, which does not require electrical supervision (see Exception 1).

Limited area sprinkler systems are generally supervised by their connection to the domestic water service, although the use of a supervised indicating valve is permitted. Compliance with Section 903.3.8 means that the alarm provisions of this section are not applicable to limited area systems. Consequently, limited area sprinkler systems do not require local alarms or supervision. Again, electrical supervision is required only if a control valve is installed between the riser control valve and the sprinkler system piping.

Similar to limited area sprinkler systems, electrical supervision is not required for NFPA 13R residential combination services when a shutoff valve is not installed (see Exception 3). NFPA 13R sprinkler systems are supervised in that the only way to shut off the sprinkler system is to also shut off the domestic water supply.

The valves discussed in Exceptions 4 through 7 can be sealed or locked in the open position because they do not control the sprinkler system water supply.

903.4.1 Monitoring. Alarm, supervisory and trouble signals shall be distinctly different and shall be automatically transmitted to an *approved* supervising station or, where *approved* by the *fire code official*, shall sound an audible signal at a constantly attended location.

Exceptions:

1. Underground key or hub valves in roadway boxes provided by the municipality or public utility are not required to be monitored.
2. Backflow prevention device test valves located in limited area sprinkler system supply piping shall be locked in the open position. In occupancies required to be equipped with a fire alarm system, the backflow preventer valves shall be electrically supervised by a tamper switch installed in accordance with NFPA 72 and separately annunciated.

❖ Automatic sprinkler systems must be supervised as a means of determining that the system is operational. A valve supervisory switch operating as a normally open or normally closed switch is usually used. NFPA 72 does not permit valve supervisory switches to be connected to the same zone circuit as the waterflow switch unless it is specifically arranged to actuate a signal that is distinctive from the circuit trouble condition signal.

Required sprinkler systems are to be monitored by an approved supervising service to comply with NFPA 72. Types of supervising stations recognized in NFPA 72 include central stations, remote supervising stations or proprietary supervising stations.

A central station is an independent off-site facility operated and maintained by personnel whose primary business is to furnish, maintain, record and supervise a signaling system. A proprietary system is similar to a central station system; however, a proprietary system is typically an on-site facility monitoring a number of buildings on the same site for the same owner. A remote station system has an alarm signal that is transmitted to a remote location acceptable to the authority having jurisdiction and that is attended 24 hours a day. The receiving equipment is usually located at a fire station, police station, regional emergency communications center or telephone answering service. An alternative use to the three previous supervising methods is an audible signal that can be transmitted to a constantly attended location approved by the fire code official.

Exception 1 recognizes that underground key or hub valves in roadway boxes are not normally supervised or required to be supervised by this section or NFPA 13.

Exception 2 acknowledges that local water utilities and environmental authorities in many instances require, by local ordinances, that backflow prevention devices be installed in limited-area sprinkler system piping. To make the testing and maintenance of backflow prevention devices easier, test valves are installed on each side of the device. These valves are typically indicating-type valves and can function as shutoff valves for the sprinkler system and, therefore, require some level of supervision.

Because these infrequently used valves may be the only feature of protection requiring supervision in occupancies not otherwise required to be equipped with a fire alarm system, Exception 2 permits these valves to be locked in the open position; however, if the occupancy is protected by a fire alarm system, these valves must be equipped with approved valve supervisory devices connected to the fire alarm control panel on a separate (supervisory) zone so that the supervisory signal is transmitted to the designated receiving station. Installation and testing of backflow preventers in sprinkler systems are regulated in Sections 312.10 (testing) and 608.16.4 (devices) of the IPC.

903.4.2 Alarms. An approved audible device, located on the exterior of the building in an *approved* location, shall be connected to each *automatic sprinkler system*. Such sprinkler waterflow alarm devices shall be activated by water flow equivalent to the flow of a single sprinkler of the smallest orifice size installed in the system. Where a fire alarm system is installed, actuation of the *automatic sprinkler system* shall actuate the building fire alarm system.

❖ The audible alarm, sometimes referred to as the "outside ringer" or "water-motor gong," sounds when the sprinkler system has activated. The alarm device may be electrically operated or it may be a true water-motor gong operated by a paddle-wheel-type attachment to the sprinkler system riser that responds to the flow of water in the piping. Though no longer the

INTERNATIONAL CODE COUNCIL®
Copyright © 2015 ICC. ALL RIGHTS RESERVED. Accessed by David Dammon on Jun 21, 2017 12:30:52 PM pursuant to License Agreement with ICC. No further reproduction or distribution authorized. ANY UNAUTHORIZED REPRODUCTION OR DISTRIBUTION IS A VIOLATION OF THE FEDERAL COPYRIGHT ACT AND THE LICENSE AGREEMENT, AND SUBJECT TO CIVIL AND CRIMINAL PENALTIES THEREUNDER.

alarm device of choice, water-motor gongs do have the advantage of not being subject to power failures within or outside the protected building (see Sections 6.9 and 8.17 of NFPA 13 for further information on these devices). The alarm must be installed on the exterior of the building in a location approved by the fire code official. This location is often in close proximity to the fire department connection (FDC), serving a collateral function of helping the responding fire apparatus engineer more promptly locate the FDC.

The alarm is not intended to be an evacuation alarm. The requirement is also not intended to be an indirect requirement for a fire alarm system. Unless a fire alarm system is required by some other code provision, only the exterior alarm device is required. However, when a fire alarm system is installed, the sprinkler system must be interconnected with the fire alarm system so that when the sprinkler system actuates, it sounds the evacuation alarms required for the fire alarm system.

The primary purpose of the exterior alarm is to notify people outside the building that the sprinkler system is in operation. Originally, it was to act as a supplemental alert so that passersby could notify the fire department of the condition. However, because the code now requires electronic supervision of sprinkler systems, that function is mostly moot. The exterior notification now primarily serves the function of alerting the arriving fire department of which building or sprinkler system is in operation before staging firefighting activities for the building.

903.4.3 Floor control valves. *Approved* supervised indicating control valves shall be provided at the point of connection to the riser on each floor in high-rise buildings.

❖ In high-rise buildings, sprinkler control valves with supervisory initiating devices must be installed at the point of connection to the riser on each floor. Sprinkler control valves on each floor are intended to permit servicing activated systems without impairing the water supply to large portions of the building.

903.5 Testing and maintenance. Sprinkler systems shall be tested and maintained in accordance with Section 901.

❖ Section 901 contains requirements for the testing and maintenance of sprinkler systems. Acceptance tests are necessary to verify that the system performs as intended by design and by the code. Periodic testing and maintenance are essential to verify that the level of protection designed into the building will be operational whenever a fire occurs. Water-based extinguishing systems must be tested and maintained as required by NFPA 25.

The time schedule for testing and maintenance is included in the various standards referenced in Section 901 and listed in Table 901.6.1. Such maintenance includes annual visual inspection of seismic bracing, periodic lubrication of valves and quarterly testing of water flow alarm devices. An ongoing program for such maintenance and testing should be established and reports prepared and maintained as noted in Section 901.6.2.

903.6 Where required in existing buildings and structures. An *automatic sprinkler system* shall be provided in existing buildings and structures where required in Chapter 11.

❖ Chapter 11 of this code, specifically Section 1103.5, requires sprinklers for existing buildings used for the manufacture and storage of pyroxylin plastics, in certain Group A-2 occupancies and in existing Group I-2 occupancies. See the commentary for Sections 1103.5.1 through 1103.5.4 for more detail on the retroactive sprinkler requirements.

SECTION 904
ALTERNATIVE AUTOMATIC FIRE-EXTINGUISHING SYSTEMS

904.1 General. Automatic fire-extinguishing systems, other than *automatic sprinkler systems*, shall be designed, installed, inspected, tested and maintained in accordance with the provisions of this section and the applicable referenced standards.

❖ Section 904 covers alternative fire-extinguishing systems that use extinguishing agents other than water. Alternative automatic fire-extinguishing systems include wet-chemical, dry-chemical, foam, carbon dioxide, halon and clean-agent suppression systems. In addition to the provisions of Section 904, the indicated referenced standards include specific installation, maintenance and testing requirements for all systems.

904.1.1 Certification of service personnel for fire-extinguishing equipment. Service personnel providing or conducting maintenance on automatic fire-extinguishing systems, other than *automatic sprinkler systems*, shall possess a valid certificate issued by an *approved* governmental agency, or other *approved* organization for the type of system and work performed.

❖ Maintenance of fire protection systems and devices are minimum Chapter 9 requirements. Fire protection systems, like other technologies, have advanced new designs which require a clear understanding of their construction and maintenance. To ensure that systems and devices are properly maintained, the code now requires individuals performing these activities be certified. Certification must be issue by an approved organization or governmental agency.

These provisions align the code with NFPA standards governing the design, construction, inspection and maintenance of alternative automatic fire-extinguishing systems and portable fire extinguishers. The personnel qualification requirements specified by the applicable NFPA standards for the various alternative automatic fire-extinguishing systems are summarized in Commentary Figure 904.1.1.

Several organizations offer certifications that will

INTERNATIONAL CODE COUNCIL®
Copyright © 2015 ICC. ALL RIGHTS RESERVED. Accessed by David Dammon on Jun 21, 2017 12:30:52 PM pursuant to License Agreement with ICC. No further reproduction or distribution authorized. ANY UNAUTHORIZED REPRODUCTION OR DISTRIBUTION IS A VIOLATION OF THE FEDERAL COPYRIGHT ACT AND THE LICENSE AGREEMENT, AND SUBJECT TO CIVIL AND CRIMINAL PENALTIES THEREUNDER.

confirm to code officials that individuals are qualified to perform maintenance on alternative automatic fire extinguishing systems and portable fire extinguishers. The International Code Council® (ICC®), in conjunction with the National Association of Fire Equipment Distributors, offers certifications to individuals who service and inspect portable fire extinguishers and pre-engineered alternative fire-extinguishing systems protecting commercial kitchen hoods or industrial equipment such as spray booths. The National Institute for Certification in Engineering Technologies (NICET) offers four progressive levels of certification for individuals who design, erect and inspect special hazard suppression systems. Special hazard suppression systems include all of the various systems recognized in Section 904 and Commentary Figure 904.1.1. Finally, most manufacturers of these systems offer corporate certifications to individuals who will design, install and inspect them. Such certifications are beneficial to code officials because they confirm the individuals are qualified to install or maintain fire protection equipment produced by a specific manufacturer.

904.2 Where permitted. Automatic fire-extinguishing systems installed as an alternative to the required *automatic sprinkler systems* of Section 903 shall be *approved* by the *fire code official*.

❖ One of the main considerations in selecting an extinguishing agent should be the compatibility of the agent with the hazard. The fire code official is responsible for approving an alternative extinguishing agent. The approval should be based on the compatibility of the agent with the hazard and the potential effectiveness of the agent to suppress a fire involving the hazards present.

904.2.1 Restriction on using automatic sprinkler system exceptions or reductions. Automatic fire-extinguishing systems shall not be considered alternatives for the purposes of exceptions or reductions allowed for *automatic sprinkler systems* or by other requirements of this code.

❖ Although Section 904.2 allows the use of alternative fire extinguishing systems with specific approval, this section prohibits the use of such systems to allow reductions or exceptions allowed for automatic sprinkler systems throughout the IBC. Therefore, the building will not be considered as equipped throughout with an automatic sprinkler system when using systems such as automatic water mist or other alternative systems (see Commentary Figure 904.2.1).

904.2.2 Commercial hood and duct systems. Each required commercial kitchen exhaust hood and duct system required by Section 609 to have a Type I hood shall be protected with an *approved* automatic fire-extinguishing system installed in accordance with this code.

❖ This section requires an effective suppression system to combat fire on the cooking surfaces of grease-producing appliances and within the hood and exhaust system of a commercial kitchen installation. Type I hoods, including the duct system, must be protected with an approved automatic fire-extinguishing system because they are used for handling grease-laden vapors or smoke, whereas Type II hoods handle fumes, steam, heat and odors. Type I hoods are typically required for commercial food heat-processing equipment, such as deep fryers, griddles, charbroilers, broilers and open burner stoves and ranges. For additional guidance on the requirements for Type I

NFPA STANDARD NUMBER & EDITION	SUBJECT	SECTION	PERSONNEL QUALIFICATION REQUIREMENT
12, 2011	Carbon dioxide	4.4.1.1	Specifications for carbon dioxide fire-extinguishing systems shall be prepared under the supervision of a person fully experienced and qualified in the design of carbon dioxide extinguishing systems and with the advice of the authority having jurisdiction.
12A, 2009	Halon 1301	5.1.2.1	Plans and calculations shall be submitted for approval to the authority having jurisdiction before installation begins. Their preparation shall be entrusted only to persons fully experienced and qualified in the design of Halon 1301 extinguishing systems.
17, 2013	Dry chemical	1.6	Only trained persons shall be considered competent to design or layout, install and service dry-chemical systems.
17A, 2013	Wet chemical	1.7	Only trained persons shall be considered competent to design or lay out, install, and service wet chemical systems.
2001, 2012	Clean agent	7.6.1	All persons who could be expected to inspect, test, maintain, or operate fire-extinguishing systems shall be thoroughly trained and kept thoroughly trained in the functions the persons are expected to perform.

Figure 904.1.1
PERSONNEL QUALIFICATION REQUIREMENTS BY TYPE OF FIRE-EXTINGUISHING AGENT

INTERNATIONAL CODE COUNCIL®
Copyright © 2015 ICC. ALL RIGHTS RESERVED. Accessed by David Dammon on Jun 21, 2017 12:30:52 PM pursuant to License Agreement with ICC. No further reproduction or distribution authorized. ANY UNAUTHORIZED REPRODUCTION OR DISTRIBUTION IS A VIOLATION OF THE FEDERAL COPYRIGHT ACT AND THE LICENSE AGREEMENT, AND SUBJECT TO CIVIL AND CRIMINAL PENALTIES THEREUNDER.

CODE SECTION[a]	MODIFICATION	NFPA 13	NPFA 13R	NFPA 13D
Increases				
504.3 and Table 504.3	Height increase in feet	yes	yes	no
504.4 and Table 504.4	Height increase in number of stories	yes	yes	no
506.2 and Table 506.2	Area increase	yes	yes	no
1005.3.1, 1005.3.2[b]	Egress width	yes	yes	no
Table 1017.2[b]	Travel distance	yes	yes	no
Rating Reductions				
Table 508.4	Separated occupancies	yes	no	no
708.3	Fire partitions (dwelling units, sleeping units)	yes	no	no
Table1020.1[b]	Corridor walls	yes	yes	no
Miscellaneous				
Tables 307.1(1), 307.1(2)	Hazardous material increase	yes	no	no
404.2	Atriums	yes	no	no
507.4, 507.5	Unlimited area buildings	yes	no	no
Table 705.8	Allowable area of openings	yes	no	no
705.8.5	Vertical separation of openings	yes	yes	no
718.3.2	Residential floor/ceiling draftstopping	yes	yes[c]	no
718.3.3	Nonresidential draftstopping	yes	no	no
718.4.2	Groups R-1, R-2 attic draftstopping	yes	yes[c]	no
718.4.3	Other group draftstopping	yes	no	no
Table 803.9	Interior finish	yes	yes	no
804.4.2	Floor finish	yes	yes	no
907.2.1 – 907.2.10[b]	Manual fire alarm system	yes (A, B, E, F, M)	yes (R-1, R-2)	no
1009.2.1[b]	Accessible egress	yes	yes	no
1028.1[b]	Exit discharge	yes	yes	no
1406.3	Balconies	yes	yes[c, d]	yes[c]

a. Section numbers refer to sections in the code.
b. Section numbers in Chapters 9 and 10 apply to both the IFC and the code.
c. Sprinkler protection must be extended to the affected areas.
d. For additional balcony requirements, see Section 903.3.1.2.1.

FIGURE 904.2.1
SELECTED EXAMPLES OF REQUIREMENTS MODIFIED THROUGH USE OF AUTOMATIC SPRINKLER SYSTEMS

INTERNATIONAL CODE COUNCIL®
Copyright © 2015 ICC. ALL RIGHTS RESERVED. Accessed by David Dammon on Jun 21, 2017 12:30:52 PM pursuant to License Agreement with ICC. No further reproduction or distribution authorized. ANY UNAUTHORIZED REPRODUCTION OR DISTRIBUTION IS A VIOLATION OF THE FEDERAL COPYRIGHT ACT AND THE LICENSE AGREEMENT, AND SUBJECT TO CIVIL AND CRIMINAL PENALTIES THEREUNDER.

and II hoods, see the commentary to Section 507 of the IMC.

904.3 Installation. Automatic fire-extinguishing systems shall be installed in accordance with this section.

❖ The installation of automatic fire-extinguishing systems must comply with the requirements of Sections 904.3.1 through 904.3.5 in addition to the installation criteria contained in the referenced standard for the proposed type of alternative extinguishing system.

904.3.1 Electrical wiring. Electrical wiring shall be in accordance with NFPA 70.

❖ NFPA 70 regulates the design and installation of electrical systems and equipment. All electrical work must also be in compliance with any specific electrical classifications and conditions contained in the referenced standards for each type of system.

Section 605 of the code and Chapter 27 of the IBC contain provisions that also reference NFPA 70. Those sections also contain additional information that must be applied when addressing electrical issues.

904.3.2 Actuation. Automatic fire-extinguishing systems shall be automatically actuated and provided with a manual means of actuation in accordance with Section 904.11.1. Where more than one hazard could be simultaneously involved in fire due to their proximity, all hazards shall be protected by a single system designed to protect all hazards that could become involved.

Exception: Multiple systems shall be permitted to be installed if they are designed to operate simultaneously.

❖ Section 904.3.2 requires alternative fire-extinguishing systems to be designed for automatic activation. Activation commonly occurs when a heat-, fire- or smoke-detection system operates. In Type I commercial kitchen hoods, Section 904.12 requires a manual and automatic means of activating the fire-extinguishing system. Designing a fire-extinguishing system to only operate upon manual actuation is prohibited by the IBC and many of the NFPA fire protection system standards.

The requirements for fire-extinguishing system actuation correlate with the requirements of NFPA 17 and NFPA 17A. The requirement prescribes that when a hazard is protected by two or more fire-extinguishing systems, all of the systems must be designed to operate simultaneously. The reason for the revision is that a typical alternative automatic fire-extinguishing system has a limited amount of fire-extinguishing agent. The amount of agent that is available is based on the area or volume of the hazard and the fire behavior of the fuel. Because the amount of agent is limited, the simultaneous operation of all the fire-extinguishing systems ensures that enough agent is applied to extinguish the fire and prevent its spread from the area of origin.

It is fairly common for a single hazard to be protected by two or more alternative automatic fire-extinguishing systems. For example, protection of a spray booth used for the application of flammable finishes using dry chemical commonly requires two or three alternative automatic fire-extinguishing systems. The reason is that many dry-chemical and all wet-chemical systems are preengineered systems. Utilizing listed nozzles, preengineered systems are designed and constructed based on the manufacturer's installation requirements. Because these systems are assembled using listed nozzles and extinguishing agents, one system may not be able to protect the spraying space and exhaust plenum. As a result, two or more systems may be required as a provision of an extinguishing system's listing to protect certain hazards.

Another example is commercial kitchen cooking operations. Consider a flat grill broiler and a deep-fat fryer located beneath the same Type I hood. It is quite common for each of these commercial cooking appliances to be protected by separate automatic fire-extinguishing systems. Based on the revision to Section 904.3.2, both extinguishing systems must simultaneously operate in the event a fire involves either of the example appliances (see commentary, Section 904.12.1).

904.3.3 System interlocking. Automatic equipment interlocks with fuel shutoffs, ventilation controls, door closers, window shutters, conveyor openings, smoke and heat vents and other features necessary for proper operation of the fire-extinguishing system shall be provided as required by the design and installation standard utilized for the hazard.

❖ Shutting off fuel supplies will eliminate potential ignition sources in the protected area. Automatic door and window closers and dampers for forced-air ventilation systems are intended to maintain the desired concentration level of the extinguishing agent in the protected area. See the commentary for Section 904.12.2 for information on system interconnections in commercial cooking fire-extinguishing systems.

904.3.4 Alarms and warning signs. Where alarms are required to indicate the operation of automatic fire-extinguishing systems, distinctive audible, visible alarms and warning signs shall be provided to warn of pending agent discharge. Where exposure to automatic-extinguishing agents poses a hazard to persons and a delay is required to ensure the evacuation of occupants before agent discharge, a separate warning signal shall be provided to alert occupants once agent discharge has begun. Audible signals shall be in accordance with Section 907.5.2.

❖ Safeguards are necessary to prevent injury or death to personnel in areas where the atmosphere will be made hazardous by oxygen depletion due to agent discharge in a confined space. The "where alarms are required" phrase is referring to requirements that will be found in the referenced installation standards indicated in Sections 904.5 through 904.12, as applicable. Predischarge alarms that will operate on fire detection system activation must be installed within and at entrances to the affected areas.

Where required by the appropriate installation stan-

INTERNATIONAL CODE COUNCIL®
Copyright © 2015 ICC. ALL RIGHTS RESERVED. Accessed by David Dammon on Jun 21, 2017 12:30:52 PM pursuant to License Agreement with ICC. No further reproduction or distribution authorized. ANY UNAUTHORIZED REPRODUCTION OR DISTRIBUTION IS A VIOLATION OF THE FEDERAL COPYRIGHT ACT AND THE LICENSE AGREEMENT, AND SUBJECT TO CIVIL AND CRIMINAL PENALTIES THEREUNDER.

dard(s), an extinguishing agent discharge delay feature shall also be provided to allow evacuation of personnel prior to agent discharge. Warning and instructional signs are also to be posted, preferably at the entrances to and within the protected area. See Section 4.5.6.1 of NFPA 12 for additional information on carbon dioxide system alarms, Section 4.3.5 of NFPA 12A for additional information on Halon system alarms and Section 4.3.5 of NFPA 2001 for additional information on clean agent system alarms.

904.3.5 Monitoring. Where a building fire alarm system is installed, automatic fire-extinguishing systems shall be monitored by the building fire alarm system in accordance with NFPA 72.

❖ Automatic fire-extinguishing systems need not be electrically supervised unless the building is equipped with a fire alarm system. This section recognizes the fact that a fire alarm system is not required in all buildings. However, because most alternative fire-extinguishing systems require the space to be evacuated before the system is discharged, they are equipped with evacuation alarms. Interconnection of the fire-extinguishing system evacuation alarm with the building evacuation alarm results in an increased level of hazard notification for the occupants in addition to the electrical supervision of the fire-extinguishing system.

904.4 Inspection and testing. Automatic fire-extinguishing systems shall be inspected and tested in accordance with the provisions of this section prior to acceptance.

❖ The completed installation must be tested and inspected to determine that the system has been installed in compliance with the code and will function as required. Full-scale acceptance tests must be conducted as required by the applicable referenced standard.

904.4.1 Inspection. Prior to conducting final acceptance tests, all of the following items shall be inspected:

1. Hazard specification for consistency with design hazard.
2. Type, location and spacing of automatic- and manual-initiating devices.
3. Size, placement and position of nozzles or discharge orifices.
4. Location and identification of audible and visible alarm devices.
5. Identification of devices with proper designations.
6. Operating instructions.

❖ This section identifies those items that need to be verified or visually inspected prior to the final acceptance tests. All equipment should be listed, approved and installed in accordance with the manufacturer's recommendations

904.4.2 Alarm testing. Notification appliances, connections to fire alarm systems and connections to *approved* supervising stations shall be tested in accordance with this section and Section 907 to verify proper operation.

❖ Components of fire-extinguishing systems related to alarm devices and their supervision must be tested before the system is approved. Alarm devices must be tested to satisfy the requirements of NFPA 72.

904.4.2.1 Audible and visible signals. The audibility and visibility of notification appliances signaling agent discharge or system operation, where required, shall be verified.

❖ This section requires verification upon completion of the system installation of the audibility and visibility of notification appliances in the area affected by the extinguishing agent discharge of the alternative automatic fire-extinguishing system.

904.4.3 Monitor testing. Connections to protected premises and supervising station fire alarm systems shall be tested to verify proper identification and retransmission of alarms from automatic fire-extinguishing systems.

❖ Where monitoring of fire-extinguishing systems is required, such as by Section 904.3.5, all connections related to the supervision of the system must be tested to verify they are in proper working order.

904.5 Wet-chemical systems. Wet-chemical extinguishing systems shall be installed, maintained, periodically inspected and tested in accordance with NFPA 17A and their listing. Records of inspections and testing shall be maintained.

❖ NFPA 17A contains minimum requirements for the design, installation, operation, testing and maintenance of wet-chemical preengineered extinguishing systems. Equipment that is typically protected with wet-chemical extinguishing systems includes restaurant, commercial and institutional hoods; plenums; ducts and associated cooking equipment. Strict compliance with the manufacturer's installation instructions is vital for a viable installation.

Wet-chemical solutions used in extinguishing systems are relatively harmless and there is usually no lasting significant effect on a person's skin, respiratory system or clothing. These solutions may produce a mild, temporary irritation but the symptoms will usually disappear when contact is eliminated.

This section also specifically requires that records be maintained of inspections and testing to increase the effectiveness of such systems. Without records of such inspections and testing, it is more difficult to determine if the systems will be effective when activated and when future inspection and testing is necessary.

904.5.1 System test. Systems shall be inspected and tested for proper operation at six-month intervals. Tests shall include a check of the detection system, alarms and releasing devices, including manual stations and other associated equipment. Extinguishing system units shall be weighed and the required amount of agent verified. Stored pressure-type

INTERNATIONAL CODE COUNCIL®
Copyright © 2015 ICC. ALL RIGHTS RESERVED. Accessed by David Dammon on Jun 21, 2017 12:30:52 PM pursuant to License Agreement with ICC. No further reproduction or distribution authorized. ANY UNAUTHORIZED REPRODUCTION OR DISTRIBUTION IS A VIOLATION OF THE FEDERAL COPYRIGHT ACT AND THE LICENSE AGREEMENT, AND SUBJECT TO CIVIL AND CRIMINAL PENALTIES THEREUNDER.

units shall be checked for the required pressure. The cartridge of cartridge-operated units shall be weighed and replaced at intervals indicated by the manufacturer.

❖ This section specifies the frequency for inspection and testing of wet-chemical extinguishing systems. The system and its essential components must be inspected and checked every six months to determine that the system is in full operating condition.

904.5.2 Fusible link maintenance. Fixed temperature-sensing elements shall be maintained to ensure proper operation of the system.

❖ Wet-chemical extinguishing systems are commonly used to protect commercial cooking equipment. The fusible metal alloy sensing elements are subject to the accumulation of grease or other contaminants that could affect the operation of the fusible link. The sensing elements must be inspected routinely and replaced as needed.

904.6 Dry-chemical systems. Dry-chemical extinguishing systems shall be installed, maintained, periodically inspected and tested in accordance with NFPA 17 and their listing. Records of inspections and testing shall be maintained.

❖ NFPA 17 contains the minimum requirements for the design, installation, testing, inspection, approval, operation and maintenance of dry-chemical extinguishing systems.

The fire code official has the authority to approve the type of dry-chemical extinguishing system to be used. NFPA 17 identifies three types of dry-chemical extinguishing systems: total flooding, local application and hand hose-line systems. Only total flooding and local application systems are considered automatic extinguishing systems.

The types of hazards and equipment that can be protected with dry-chemical extinguishing systems include: flammable and combustible liquids and combustible gases; combustible solids, which melt when involved in a fire; electrical hazards, such as transformers or oil circuit breakers; textile operations subject to flash surface fires; ordinary combustibles such as wood, paper or cloth and restaurant and commercial hoods, ducts and associated cooking appliance hazards, such as deep fat fryers and some plastics, depending on the type of material and configuration.

Total flooding dry-chemical extinguishing systems are used only where there is a permanent enclosure about the hazard that is adequate to enable the required concentration to be built up. The total area of unclosable openings must not exceed 15 percent of the total area of the sides, top and bottom of the enclosure. Consideration must be given to eliminating the probable sources of re-ignition within the enclosure because the extinguishing action of dry-chemical systems is transient.

Local application of dry-chemical extinguishing systems is to be used for extinguishing fires where the hazard is not enclosed or where the enclosure does not conform to the requirements for total flooding systems. Local application systems have successfully protected hazards involving flammable or combustible liquids, gases and shallow solids, such as paint deposits.

NFPA 17 also discusses preengineered dry-chemical systems consisting of components designed to be installed in accordance with pretested limitations as tested and labeled by a testing agency. Preengineered systems must be installed within the limitations that have been established by the testing agency and may include total flooding, local application or a combination of both types of systems.

The type of dry chemical used in the extinguishing system is a function of the hazard to be protected. The type of dry chemical used in a system should not be changed unless it has been proven changeable by a testing laboratory, is recommended by the manufacturer of the equipment and is acceptable to the fire code official for the hazard being protected. Additional guidance on the use of various dry-chemical agents can be found in NFPA 17.

This section also specifically requires that records be maintained of inspections and testing to increase the effectiveness of such systems. Without records of such inspections and testing, it is more difficult to determine if the systems will be effective when activated and when future inspection and testing is necessary.

904.6.1 System test. Systems shall be inspected and tested for proper operation at six-month intervals. Tests shall include a check of the detection system, alarms and releasing devices, including manual stations and other associated equipment. Extinguishing system units shall be weighed, and the required amount of agent verified. Stored pressure-type units shall be checked for the required pressure. The cartridge of cartridge-operated units shall be weighed and replaced at intervals indicated by the manufacturer.

❖ This section specifies the frequency for inspection and testing of dry-chemical extinguishing systems. The system and its essential components must be inspected and checked every six months to determine that the system is in full operating condition.

904.6.2 Fusible link maintenance. Fixed temperature-sensing elements shall be maintained to ensure proper operation of the system.

❖ Dry-chemical extinguishing systems are commonly used to protect commercial cooking systems and other hazardous use conditions. In these applications the fusible metal alloy sensing elements are subject to the accumulation of grease or other contaminants that could affect the operation of the fusible link. The sensing elements must be inspected routinely and replaced as needed.

904.7 Foam systems. Foam-extinguishing systems shall be installed, maintained, periodically inspected and tested in accordance with NFPA 11 and NFPA 16 and their listing. Records of inspections and testing shall be maintained.

INTERNATIONAL CODE COUNCIL®
Copyright © 2015 ICC. ALL RIGHTS RESERVED. Accessed by David Dammon on Jun 21, 2017 12:30:52 PM pursuant to License Agreement with ICC. No further reproduction or distribution authorized. ANY UNAUTHORIZED REPRODUCTION OR DISTRIBUTION IS A VIOLATION OF THE FEDERAL COPYRIGHT ACT AND THE LICENSE AGREEMENT, AND SUBJECT TO CIVIL AND CRIMINAL PENALTIES THEREUNDER.

❖ NFPA 11 covers the characteristics of foam-producing materials used for fire protection and the requirements for design, installation, operation, testing and maintenance of equipment and systems, including those used in combination with other fire-extinguishing agents. The minimum requirements are covered for flammable and combustible liquid hazards in local areas within buildings, storage tanks and indoor and outdoor processing areas.

Low-expansion foam is defined as an aggregation of air-filled bubbles resulting from the mechanical expansion of a foam solution by air with a foam-to-solution volume ratio of less than 20:1. It is most often used to protect flammable and combustible liquid hazards. Also, low-expansion foam may be used for heat radiation protection. Combined-agent systems involve the application of low-expansion foam to a hazard simultaneously or sequentially with dry-chemical powder.

NFPA 11 gives minimum requirements for the installation, design, operation, testing and maintenance of medium- and high-expansion foam systems. Medium-expansion foam is defined as an aggregation of air-filled bubbles resulting from the mechanical expansion of a foam solution by air or other gases with a foam-to-solution volume ratio of 20:1 to 200:1. High-expansion foam has a foam-to-solution volume ratio of 200:1 to approximately 1,000:1.

Medium-expansion foam may be used on solid fuel and liquid fuel fires where some degree of in-depth coverage is necessary (for example, for the total flooding of small, enclosed or partially enclosed volumes, such as engine test cells, transformer rooms, etc.). High-expansion foam is most suitable for filling volumes in which fires exit at various levels. For example, high-expansion foam can be used effectively against high-rack storage fires in enclosures such as in underground passages, where it may be dangerous to send personnel to control fires involving liquefied natural gas (LNG) and liquefied petroleum gas (LP-gas), and to provide vapor dispersion control for LNG and ammonia spills. High-expansion foam is particularly suited for indoor fires in confined spaces, since it is highly susceptible to wind and lack-of-confinement effects.

NFPA 16 contains the minimum requirements for open-head deluge-type foam-water sprinkler systems and foam-water spray systems. The systems are especially applicable to the protection of most flammable liquid hazards and have been used successfully to protect aircraft hangars and truck loading racks.

This section also specifically requires that records be maintained of inspections and testing to increase the effectiveness of such systems. Without records of such inspections and testing it is more difficult to determine if the systems will be effective when activated and when future inspection and testing is necessary.

904.7.1 System test. Foam-extinguishing systems shall be inspected and tested at intervals in accordance with NFPA 25.

❖ Although Section 904.7.1 references NFPA 25 as the standard for the inspection and testing of foam-extinguishing systems, NFPA 25 is limited to water-based extinguishing systems. NFPA 25 technically addresses only foam-water sprinkler systems as specified in NFPA 16. NFPA 11 should be consulted for inspection and testing intervals for low-, medium- and high-expansion foam systems.

As with other alternative fire-extinguishing systems, the inspection and testing of foam systems is necessary to determine that the system is fully operational. In addition to general maintenance of equipment, the condition of the foam concentrate and its storage tanks or containers should be inspected at least once a year to verify adequate quality. The desired concentration of the foam concentrate in a stagnant storage situation may deteriorate over time.

904.8 Carbon dioxide systems. Carbon dioxide extinguishing systems shall be installed, maintained, periodically inspected and tested in accordance with NFPA 12 and their listing. Records of inspections and testing shall be maintained.

❖ NFPA 12 provides minimum requirements for the design, installation, testing, inspection, approval, operation and maintenance of carbon dioxide extinguishing systems.

Carbon dioxide extinguishing systems are useful in extinguishing fires in specific hazards or equipment in occupancies where an inert electrically nonconductive medium is essential or desirable and where cleanup of other extinguishing agents, such as dry-chemical residue, presents a problem. Carbon dioxide systems have satisfactorily protected the following: flammable liquids; electrical hazards, such as transformers, oil switches, rotating equipment and electronic equipment; engines using gasoline and other flammable liquid fuels; ordinary combustibles, such as paper, wood and textiles and hazardous solids.

The fire code official has the authority to approve the type of carbon dioxide system to be installed. NFPA 12 defines four types of carbon dioxide systems: total flooding, local application, hand hose lines and standpipe and mobile supply systems. Only total flooding and local application systems are automatic suppression systems.

Total-flooding systems may be used where there is a permanent enclosure around the hazard that is adequate to allow the required concentration to be built up and maintained for the required period of time, which varies for different hazards. Examples of hazards that have been successfully protected by total flooding systems include rooms, vaults,

INTERNATIONAL CODE COUNCIL®
Copyright © 2015 ICC. ALL RIGHTS RESERVED. Accessed by David Dammon on Jun 21, 2017 12:30:52 PM pursuant to License Agreement with ICC. No further reproduction or distribution authorized. ANY UNAUTHORIZED REPRODUCTION OR DISTRIBUTION IS A VIOLATION OF THE FEDERAL COPYRIGHT ACT AND THE LICENSE AGREEMENT, AND SUBJECT TO CIVIL AND CRIMINAL PENALTIES THEREUNDER.

enclosed machines, ducts, ovens and containers and their contents.

Local application systems may be used for extinguishing surface fires in flammable liquids, gases and shallow solids where the hazard is not enclosed or the enclosure does not conform to the requirements for a total-flooding system. Examples of hazards that have been successfully protected by local application systems include dip tanks, quench tanks, spray booths, oil-filled electric transformers and vapor vents.

This section also specifically requires that records be maintained of inspections and testing to increase the effectiveness of such systems. Without records of such inspections and testing it is more difficult to determine if the systems will be effective when activated and when future inspection and testing is necessary.

904.8.1 System test. Systems shall be inspected and tested for proper operation at 12-month intervals.

❖ To determine adequate operation, carbon dioxide systems must be inspected and tested at least once a year.

904.8.2 High-pressure cylinders. High-pressure cylinders shall be weighed and the date of the last hydrostatic test shall be verified at six-month intervals. Where a container shows a loss in original content of more than 10 percent, the cylinder shall be refilled or replaced.

❖ Because of the potential of unobserved leaking high-pressure cylinders, they need to be weighed semi-annually to verify the concentration level is always within at least 10 percent of the original content.

904.8.3 Low-pressure containers. The liquid-level gauges of low-pressure containers shall be observed at one-week intervals. Where a container shows a content loss of more than 10 percent, the container shall be refilled to maintain the minimum gas requirements.

❖ A weekly visual observation of the liquid level gauges of low-pressure containers is required to verify that there has been no significant leakage.

904.8.4 System hoses. System hoses shall be examined at 12-month intervals for damage. Damaged hoses shall be replaced or tested. At five-year intervals, all hoses shall be tested.

❖ The maintenance of system hoses is essential to ensuring the reliability of their use in an emergency. Although system hoses need to be visually checked on an annual basis only, a complete pressure test as indicated in Section 904.8.4.1 must be performed every five years.

904.8.4.1 Test procedure. Hoses shall be tested at not less than 2,500 pounds per square inch (psi) (17 238 kPa) for high-pressure systems and at not less than 900 psi (6206 kPa) for low-pressure systems.

❖ Every five years, system hoses for both high-pressure/low-pressure systems must be pressure tested to verify they are still in proper operating condition. The test typically involves filling the hose with water. The hose is then pressurized at the desired test pressure for at least 1 minute to observe any potential distortions or leakage in the hose. All hose assemblies that do not pass the test should be marked, destroyed and replaced with new hose assemblies. Hose assemblies that pass the test should be marked, dated and returned to service.

904.8.5 Auxiliary equipment. Auxiliary and supplementary components, such as switches, door and window releases, interconnected valves, damper releases and supplementary alarms, shall be manually operated at 12-month intervals to ensure that such components are in proper operating condition.

❖ The effectiveness of the carbon dioxide extinguishing system is also dependent upon the operation of its auxiliary components. These components must also be manually operated at least once a year.

904.9 Halon systems. Halogenated extinguishing systems shall be installed, maintained, periodically inspected and tested in accordance with NFPA 12A and their listing. Records of inspections and testing shall be maintained.

❖ NFPA 12A contains minimum requirements for the design, installation, testing, inspection, approval, operation and maintenance of Halon 1301 extinguishing systems. Halon 1301 fire-extinguishing systems are useful in specific hazards, equipment or occupancies where an electrically nonconductive medium is essential or desirable and where cleanup of other extinguishing agents presents a problem.

Halon 1301 systems have satisfactorily protected gaseous and liquid flammable materials; electrical hazards, such as transformers, oil switches and rotating equipment; engines using gasoline and other flammable fuels; ordinary combustibles, such as paper, wood and textiles and hazardous solids. Halon 1301 systems have also satisfactorily protected electronic computers, data processing equipment and control rooms.

The fire code official has the authority to approve the type of halogenated extinguishing system to be installed. NFPA 12A defines two types of halogenated extinguishing systems: total flooding and local application. Total-flooding systems may be used where there is a fixed enclosure around the hazard that is adequate to enable the required halon concentration to be built up and maintained for the required period of time to enable the effective extinguishing of the fire. Total-flooding systems may provide fire protection for rooms, vaults, enclosed machines, ovens, containers, storage tanks and bins.

Local application systems are used where there is not a fixed enclosure around the hazard or where the fixed enclosure around the hazard is not adequate to enable an extinguishing concentration to be built up and maintained in the space. Hazards that may be successfully protected by local application systems include dip tanks, quench tanks, spray booths, oil-filled electric transformers and vapor vents.

Two other considerations in selecting the proper

INTERNATIONAL CODE COUNCIL®
Copyright © 2015 ICC. ALL RIGHTS RESERVED. Accessed by David Dammon on Jun 21, 2017 12:30:52 PM pursuant to License Agreement with ICC. No further reproduction or distribution authorized. ANY UNAUTHORIZED REPRODUCTION OR DISTRIBUTION IS A VIOLATION OF THE FEDERAL COPYRIGHT ACT AND THE LICENSE AGREEMENT, AND SUBJECT TO CIVIL AND CRIMINAL PENALTIES THEREUNDER.

extinguishing system are ambient temperature and the personnel hazards associated with the agent. The ambient temperature of the enclosure for a total-flooding system must be above 70°F (21°C) for halon 1301 systems. Special consideration must also be given to the use of halon systems when the temperatures are in excess of 900°F (482°C) because halon will readily decompose at such temperatures and the products of decomposition can be extremely irritating if inhaled, even in small amounts.

Halon 1301 total-flooding systems must not be used in concentrations greater than 10 percent in normally occupied areas. Where personnel cannot vacate the area within 1 minute, Halon 1301 total-flooding systems must not be used in normally occupied areas with concentrations greater than 7 percent. Halon 1301 total-flooding systems may be used with concentrations of up to 15 percent if the area is not normally occupied and the area can be evacuated within 30 seconds.

Therefore, the supply of halon is limited and new supplies of halogenated extinguishing agents will not be available in the future. Existing supplies of halon can, however, continue to be used in existing, undischarged systems or to recharge discharged systems. This newfound need for halon supplies has given rise to new industries geared to the ranking, recycling and reclamation of existing halon supplies. Alternative "clean agent" extinguishing agents have been developed to replace halogenated agents (see Section 904.10).

This section also specifically requires that records be maintained of inspections and testing to increase the effectiveness of such systems. Without records of such inspections and testing it is more difficult to determine if the systems will be effective when activated and when future inspection and testing is necessary.

904.9.1 System test. Systems shall be inspected and tested for proper operation at 12-month intervals.

❖ To determine proper operation, Halon systems must be inspected and tested at least once a year.

904.9.2 Containers. The extinguishing agent quantity and pressure of containers shall be checked at six-month intervals. Where a container shows a loss in original weight of more than 5 percent or a loss in original pressure (adjusted for temperature) of more than 10 percent, the container shall be refilled or replaced. The weight and pressure of the container shall be recorded on a tag attached to the container.

❖ Because of the potential for unobserved leakage of the Halon containers, they must be checked at least semi-annually to verify the original weight and pressure are within the designated tolerances. When necessary, containers must be refilled or replaced when the desired levels are not maintained. The containers should also be checked for evidence of corrosion or mechanical damage.

904.9.3 System hoses. System hoses shall be examined at 12-month intervals for damage. Damaged hoses shall be replaced or tested. At five-year intervals, all hoses shall be tested.

❖ Maintenance of system hoses is essential to ensuring the reliability of their use in an emergency. System hoses need to be visually checked annually. A complete pressure test as indicated in Section 904.9.3.1 must be performed every five years.

904.9.3.1 Test procedure. For Halon 1301 systems, hoses shall be tested at not less than 1,500 psi (10 343 kPa) for 600 psi (4137 kPa) charging pressure systems and not less than 900 psi (6206 kPa) for 360 psi (2482 kPa) charging pressure systems. For Halon 1211 hand-hose line systems, hoses shall be tested at 2,500 psi (17 238 kPa) for high-pressure systems and 900 psi (6206 kPa) for low-pressure systems.

❖ Every five years, system hoses must be pressure tested to verify they are still in proper operating condition. This section specifies the test pressure for the various types of Halon systems. The pressure test is intended to check for any potential distortion or leaking in the hose (see commentary, Section 904.8.4.1).

904.9.4 Auxiliary equipment. Auxiliary and supplementary components, such as switches, door and window releases, interconnected valves, damper releases and supplementary alarms, shall be manually operated at 12-month intervals to ensure such components are in proper operating condition.

❖ The effectiveness of halogenated extinguishing systems is also dependent upon the operation of its auxiliary components. These components must be manually operated at least once a year.

904.10 Clean-agent systems. Clean-agent fire-extinguishing systems shall be installed, maintained, periodically inspected and tested in accordance with NFPA 2001 and their listing. Records of inspections and testing shall be maintained.

❖ NFPA 2001 contains minimum requirements for the design, installation, testing, inspection and operation of clean-agent fire-extinguishing systems. A clean agent is an electrically nonconducting suppression agent that is volatile or gaseous at discharge and does not leave a residue on evaporation. Clean-agent fire-extinguishing systems are installed in locations that are enclosed and have openings in the protected area that can be sealed on activation of the alarm to provide effective clean-agent concentrations. A clean-agent fire-extinguishing system should not be installed in locations that cannot be sealed unless testing has shown that adequate concentrations can be developed and maintained.

The two categories of clean agents are halocarbon compounds and inert gas agents. Halocarbon compounds include bromine, carbon, chlorine, fluorine,

INTERNATIONAL CODE COUNCIL®
Copyright © 2015 ICC. ALL RIGHTS RESERVED. Accessed by David Dammon on Jun 21, 2017 12:30:52 PM pursuant to License Agreement with ICC. No further reproduction or distribution authorized. ANY UNAUTHORIZED REPRODUCTION OR DISTRIBUTION IS A VIOLATION OF THE FEDERAL COPYRIGHT ACT AND THE LICENSE AGREEMENT, AND SUBJECT TO CIVIL AND CRIMINAL PENALTIES THEREUNDER.

hydrogen and iodine. Halocarbon compounds suppress fire by a combination of breaking the chemical chain reaction of the fire, reducing the oxygen supporting the fire and reducing the ambient temperature of the fire origin to reduce the propagation of the fire. Inert gas agents contain primary components consisting of helium, neon, argon or a combination of these. Inert gases work by reducing the oxygen concentration around the fire origin to a level that does not support combustion.

Clean-agent fire-extinguishing systems were developed in response to the demise of halon as an acceptable fire-extinguishing agent because of its harmful effect on the environment. Although the original hope for a halon substitute was that these new clean agents could be directly and proportionally substituted for halon agents in existing systems (drop in replacements), research has shown that clean agents are less efficient in extinguishing fires than are the halons they were intended to replace and require approximately 60 percent more agent by weight and volume in storage to do the same job. Additionally, the physical and chemical characteristics of clean agents differ sufficiently from halon to require different nozzles in addition to the need for larger storage vessels. Existing piping systems should be salvaged for use with clean agents only if they are carefully evaluated and determined to be hydraulically compatible with the flow characteristics of the new agent.

This section also relies on strict adherence to the system manufacturer's design and installation instructions for code compliance. As with many of the alternative fire suppression systems covered in this chapter, clean-agent systems are, for the most part, subjected by their manufacturers to a testing and listing program conducted by an approved testing agency. In such testing and listing programs, the clean agent is listed for use with specific equipment and equipment is listed for use with specific clean agents. The resultant listings include reference to the manufacturer's installation manuals, thereby giving the fire code official another valuable resource for reviewing and approving clean-agent systems.

Although clean agents have found a limited market for local application uses, such as a replacement for Halon 1211 in portable fire extinguishers, their primary application is in total-flooding systems and they are available in both engineered and preengineered configurations.

Engineered clean-agent systems are specifically designed for protection of a particular hazard, whereas preengineered systems are designed to operate within predetermined limitations up to the noted maximums, thus allowing broader applicability to a variety of hazard applications.

Total flooding systems are used where there is a fixed enclosure around the hazard that is adequate to enable the required clean-agent concentration to build up and be maintained within the space long enough to extinguish the fire. Such applications can include vaults, ovens, containers, tanks, computer rooms, paint lockers or enclosed machinery. In selecting the clean agent to be used in a given application, careful consideration must be given to whether the protected area is a normally occupied space, because different agents have different levels of concentration at which they may be a health hazard to occupants of the area.

The fire code official has the authority to approve the type of clean-agent system to be installed and should become familiar with the unique characteristics and hazards of clean-agent extinguishing systems using all available resources on the subject.

This section also specifically requires that records be maintained of inspections and testing to increase the effectiveness of such systems. Without records of such inspections and testing it is more difficult to determine if the systems will be effective when activated and when future inspection and testing is necessary.

904.10.1 System test. Systems shall be inspected and tested for proper operation at 12-month intervals.

❖ To determine proper operation, all clean-agent systems must be inspected and tested at least once a year.

904.10.2 Containers. The extinguishing agent quantity and pressure of the containers shall be checked at six-month intervals. Where a container shows a loss in original weight of more than 5 percent or a loss in original pressure, adjusted for temperature, of more than 10 percent, the container shall be refilled or replaced. The weight and pressure of the container shall be recorded on a tag attached to the container.

❖ Because of the potential for unobserved leakage of the clean-agent containers, they must be checked at least semi-annually to verify the original weight and pressure are within the designated tolerances. When necessary, containers must be refilled or replaced when the desired levels are not maintained.

904.10.3 System hoses. System hoses shall be examined at 12-month intervals for damage. Damaged hoses shall be replaced or tested. All hoses shall be tested at five-year intervals.

❖ The maintenance of system hoses is essential to ensuring their reliability in an emergency. System hoses must be visually checked annually. A complete pressure test must be performed every five years.

904.11 Automatic water mist systems. *Automatic water mist systems* shall be permitted in applications that are consistent with the applicable listing or approvals and shall comply with Sections 904.11.1 through 904.11.3.

❖ This section provides the ability to use automatic water mist systems in specific applications. These installations are required to be consistent with the list-

INTERNATIONAL CODE COUNCIL®
Copyright © 2015 ICC. ALL RIGHTS RESERVED. Accessed by David Dammon on Jun 21, 2017 12:30:52 PM pursuant to License Agreement with ICC. No further reproduction or distribution authorized. ANY UNAUTHORIZED REPRODUCTION OR DISTRIBUTION IS A VIOLATION OF THE FEDERAL COPYRIGHT ACT AND THE LICENSE AGREEMENT, AND SUBJECT TO CIVIL AND CRIMINAL PENALTIES THEREUNDER.



Figure 904.11
WATER MIST NOZZLE DISCHARGE

ings or approvals to which such systems have been tested. See Commentary Figure 904.11.

904.11.1 Design and installation requirements. *Automatic water mist systems* shall be designed and installed in accordance with Sections 904.11.1.1 through 904.11.1.4.

❖ The subsections to follow provide the various installation and design requirements related to water mist systems. This relates to the systems themselves and the provisions for a reliable water supply.

904.11.1.1 General. *Automatic water mist systems* shall be designed and installed in accordance with NFPA 750 and the manufacturer's instructions.

❖ This section simply provides reference to the subsections with the detailed requirements related to the design and installation of water mist systems.

904.11.1.2 Actuation. *Automatic water mist systems* shall be automatically actuated.

❖ If a water mist system is used, it is required to be automatically activated.

904.11.1.3 Water supply protection. Connections to a potable water supply shall be protected against backflow in accordance with the *International Plumbing Code*.

❖ The water supply quality is more critical with automatic water mist systems than automatic sprinkler systems. Backflow prevention is required, as it would be for water supply for automatic sprinkler systems.

904.11.1.4 Secondary water supply. Where a secondary water supply is required for an *automatic sprinkler system*, an *automatic water mist system* shall be provided with an *approved* secondary water supply.

❖ Since these systems work to protect buildings and spaces in a fashion similar to a sprinkler system and possibly as an alternative to automatic sprinkler systems, the water supply must be appropriate. If an automatic sprinkler system is required to have a secondary water supply in accordance with Section 403.3.3 of the IBC, then the water mist system must also provide an approved secondary water supply.

904.11.2 Water mist system supervision and alarms. Supervision and alarms shall be provided as required for *automatic sprinkler systems* in accordance with Section 903.4.

❖ This section plays a similar role to an automatic sprinkler system with regard to supervision and alarms. It is critical to make sure valves are open. In addition, an alarm to notify of an activation must be provided as it is for a sprinkler system. Note that this is not intended to be an occupant notification system. See the commentary for Section 903.4.

904.11.2.1 Monitoring. Monitoring shall be provided as required for *automatic sprinkler systems* in accordance with Section 903.4.1.

❖ See the commentary to Sections 903.4.1 and 904.11.2.

904.11.2.2 Alarms. Alarms shall be provided as required for *automatic sprinkler systems* in accordance with Section 903.4.2.

❖ Again, this is not intended as occupant notification but instead is simply to alert someone that the system has activated. See commentary for Sections 903.4.2 and 904.11.2.

904.11.2.3 Floor control valves. Floor control valves shall be provided as required for *automatic sprinkler systems* in accordance with Section 903.4.3.

❖ See the commentary to Section 903.4.3.

904.11.3 Testing and maintenance. *Automatic water mist systems* shall be tested and maintained in accordance with Section 901.6.

❖ Testing and maintenance is critical to the long term viability of automatic water mist systems. See the commentary to Section 901.6.

904.12 Commercial cooking systems. The automatic fire-extinguishing system for commercial cooking systems shall be of a type recognized for protection of commercial cooking equipment and exhaust systems of the type and arrangement protected. Preengineered automatic dry- and wet-chemical extinguishing systems shall be tested in accordance with UL 300 and *listed* and *labeled* for the intended application. Other types of automatic fire-extinguishing systems shall be *listed* and *labeled* for specific use as protection for commercial cooking operations. The system shall be installed in accordance with this code, its listing and the manufacturer's installation instructions. Automatic fire-extinguishing systems of the following types shall be installed in accordance with the referenced standard indicated, as follows:

1. Carbon dioxide extinguishing systems, NFPA 12.
2. *Automatic sprinkler systems*, NFPA 13.

INTERNATIONAL CODE COUNCIL®
Copyright © 2015 ICC. ALL RIGHTS RESERVED. Accessed by David Dammon on Jun 21, 2017 12:30:52 PM pursuant to License Agreement with ICC. No further reproduction or distribution authorized. ANY UNAUTHORIZED REPRODUCTION OR DISTRIBUTION IS A VIOLATION OF THE FEDERAL COPYRIGHT ACT AND THE LICENSE AGREEMENT, AND SUBJECT TO CIVIL AND CRIMINAL PENALTIES THEREUNDER.

3. Foam-water sprinkler system or foam-water spray systems, NFPA 16.
4. Dry-chemical extinguishing systems, NFPA 17.
5. Wet-chemical extinguishing systems, NFPA 17A.

Exception: Factory-built commercial cooking recirculating systems that are tested in accordance with UL 710B and *listed*, *labeled* and installed in accordance with Section 304.1 of the *International Mechanical Code*.

❖ The history of commercial kitchen exhaust systems shows that the mixture of flammable grease and effluents carried by such systems and the potential for the cooking equipment to act as an ignition source contribute to a higher level of hazard for kitchen exhaust systems than is normally found in many other exhaust systems. Furthermore, fire in a grease exhaust duct can produce temperatures of 2,000°F (1093°C) or more and heat radiating from the duct can ignite nearby combustibles. As a result, the code requires exhaust systems serving grease-producing equipment to include fire suppression to protect the cooking surfaces, hood, filters and exhaust duct to confine a fire to the hood and duct system, thus reducing the likelihood of it spreading to the structure.

In addition to the general requirements of this section, five industry standards are referenced for the installation of fire-extinguishing systems protecting commercial food heat-processing equipment and kitchen exhaust systems. Design professionals should specify and design fire-extinguishing systems to comply with these referenced standards. Only the installation of fire-extinguishing systems is regulated by these references. Where preengineered automatic dry- and wet-chemical extinguishing systems are installed, they must be listed and labeled for the specific cooking operation and tested in accordance with UL 300. Design and construction requirements for the specific types of fire-extinguishing systems are found in the respective sections of the referenced standards.

Regulatory requirements for the approval and installation of fire-extinguishing systems are the same as the approval required for all mechanical equipment and appliances. This section, therefore, requires extinguishing systems to be listed and labeled by an approved agency and installed in accordance with their listing and the manufacturer's installation instructions.

The exception allows factory-built commercial cooking recirculating systems to be installed if they have been tested and listed in accordance with UL 710B. It is important that they be installed in accordance with the manufacturer's installation instructions so that the listing requirements are met. An improper installation could result in hazardous vapors being discharged back into the kitchen.

Commercial cooking recirculating systems consist of an electric cooking appliance and an integral or matched packaged hood assembly. The hood assembly consists of a fan, collection hood, grease filter, fire damper, fire-extinguishing system and air filter, such as an electrostatic precipitator. These systems are tested for fire safety and emissions. The grease vapor (condensible particulate matter) in the effluent at the system discharge is not allowed to exceed a concentration of 5.0 mg/m^3. Recirculating systems are not used with fuel-fired appliances because the filtering systems do not remove combustion products. Kitchens require ventilation in accordance with Chapter 4 of the IMC.

Although the provisions in Section 904.12 address many of the specifics for commercial kitchens, additional information regarding commercial cooking suppression systems is located in Sections 904.2 and 904.3. This information is supplemental to that and should be considered together in developing the design for commercial cooking suppression systems.

A question that is often asked about this section is whether it requires existing commercial cooking preengineered fire extinguishing systems to comply with UL 300. Generally, neither this section nor the retroactivity provisions contained in the referenced NFPA standards indicate that retroactive application is intended. The application of this section is subject to the applicability provisions of Section 102.1 of the code. As such, where an existing, previously approved, listed preengineered fire extinguishing system installed for the protection of commercial cooking operations has been, and continues to be, maintained in accordance with the manufacturer's installation and maintenance requirements and the applicable NFPA standard referenced on the extinguishing system unit and continues to comply with Sections 609.3.4, 901.4 and 901.6, no change to the system would be required. In the event, however, that a system can no longer comply with the provisions noted above, or if the changes described in Section 904.12.6.1 have taken place, it would then need to be brought into compliance with the applicable provisions of Section 904.12 and the referenced standards. Note that some extinguishing system manufacturers no longer provide service support, either directly or through their authorized agents, for certain older-model systems (e.g., replacement parts, etc.). Continuing manufacturer maintenance and service support of existing systems would be a key element in the determination of whether a system continues to meet the above requirements and should be investigated on a case-by-case basis with the respective system manufacturer (see Section 904.12.6.2).

Another question that is often asked is whether the requirements of this section apply to grease-producing appliances installed in a mobile commercial vending cart or catering truck. This section is not a "where required" section but, rather, contains "how-to" criteria once it is determined that a hood and a commercial kitchen hood and duct fire suppression system is required. Where a hood and duct fire suppression system is required depends on the type of cooking

INTERNATIONAL CODE COUNCIL®
Copyright © 2015 ICC. ALL RIGHTS RESERVED. Accessed by David Dammon on Jun 21, 2017 12:30:52 PM pursuant to License Agreement with ICC. No further reproduction or distribution authorized. ANY UNAUTHORIZED REPRODUCTION OR DISTRIBUTION IS A VIOLATION OF THE FEDERAL COPYRIGHT ACT AND THE LICENSE AGREEMENT, AND SUBJECT TO CIVIL AND CRIMINAL PENALTIES THEREUNDER.

operation being conducted and the type of hood that is required to be installed, as indicated in Section 609.2 of the code. That section is specific in requiring a Type I hood above all commercial cooking appliances as they are defined in Chapter 2. That definition limits the term to only appliances used in a commercial food service establishment and goes on to define such establishments as "…any building or portion thereof used for the preparation and serving of food." Accordingly, a typical food vendor's cart, catering truck with on-board cooking, or any other mobile or temporary food concessions, would not be included in that definition and as such, would be outside the scope of Section 101.2 of the IMC, or Section 609.2 or this section of the code.

904.12.1 Manual system operation. A manual actuation device shall be located at or near a *means of egress* from the cooking area not less than 10 feet (3048 mm) and not more than 20 feet (6096 mm) from the kitchen exhaust system. The manual actuation device shall be installed not more than 48 inches (1200 mm) nor less than 42 inches (1067 mm) above the floor and shall clearly identify the hazard protected. The manual actuation shall require a maximum force of 40 pounds (178 N) and a maximum movement of 14 inches (356 mm) to actuate the fire suppression system.

Exception: *Automatic sprinkler systems* shall not be required to be equipped with manual actuation means.

❖ The manual device, usually a pull station, mechanically activates the suppression system. The typical system uses a mechanical circuit of cables under tension to hold the system in the armed (cocked) mode. Melting of a fusible link or actuation of a manual pull station causes the cable to lose tension, which, in turn, starts the discharge of the suppression agent. The manual actuation device must be readily and easily usable by the building occupants; therefore, the device must not require excessive force or range of movement to cause actuation.

In order to allow the actuation device to be used most effectively, the specified mounting height is intended to be consistent with the NFPA 17A standards and be handicapped accessible. This includes the requirement to identify the actuation device with the hazard protected. Where multiple kitchen appliances are provided, properly identifying which device relates to which appliance is very important. Required signage should be readily visible in the hazard area and capable of conveying information quickly and concisely.

Manual actuation is not required for automatic sprinkler systems because the typical system design will employ closed heads and wet system piping. A manual actuation valve would serve no purpose because sprinkler heads are already supplied with pressurized water and will discharge water only when the individual fusible elements open the heads.

904.12.2 System interconnection. The actuation of the fire extinguishing system shall automatically shut down the fuel or electrical power supply to the cooking equipment. The fuel and electrical supply reset shall be manual.

❖ The actuation of any fire suppression system must automatically shut off all sources of fuel or power to all cooking equipment located beneath the exhaust hood protected by the suppression system. This requirement is intended to shut off all heat sources that could reignite or intensify a fire. Shutting off a fuel and power supply to cooking appliances will eliminate an ignition source and allow the cooking surfaces to cool down. This shutdown is accomplished with mechanical or electrical interconnections between the suppression system and a shutoff valve or switch located on the fuel or electrical supply.

Common fuel shutoff valves include mechanical-type gas valves and electrical solenoid-type gas valves. Contactor-type switches or shunt-trip circuit breakers can be used for electrically heated appliances. The fuel or electric source must not be automatically restored after the suppression system has been actuated.

Chemical-type fire-extinguishing systems discharge for only a limited time and can discharge only once before recharge and reset; therefore, precautions must be taken to prevent a fire from reigniting. After a fire is detected and the initial suppressant discharge begins, the fuel and power supply will be locked out, thereby preventing the operation of the appliances until all systems are again ready for operation. Fuel and power supply shutoff must be manually restored by resetting a mechanical linkage or holding (latching)-type circuit.

904.12.3 Carbon dioxide systems. Where carbon dioxide systems are used, there shall be a nozzle at the top of the ventilating duct. Additional nozzles that are symmetrically arranged to give uniform distribution shall be installed within vertical ducts exceeding 20 feet (6096 mm) and horizontal ducts exceeding 50 feet (15 240 mm). Dampers shall be installed at either the top or the bottom of the duct and shall be arranged to operate automatically upon activation of the fire-extinguishing system. Where the damper is installed at the top of the duct, the top nozzle shall be immediately below the damper. Automatic carbon dioxide fire-extinguishing systems shall be sufficiently sized to protect all hazards venting through a common duct simultaneously.

❖ This section states specific design requirements for nozzle locations, dampers and ducts for carbon dioxide extinguishing systems that may be used to protect commercial cooking systems. These requirements are intended to supersede similar, more general provisions in NFPA 12. Because carbon dioxide (CO_2) is a gaseous suppressant, dampers are required in the ductwork to define the atmosphere where the fire event would be. A specific concentration of CO_2 is

INTERNATIONAL CODE COUNCIL®
Copyright © 2015 ICC. ALL RIGHTS RESERVED. Accessed by David Dammon on Jun 21, 2017 12:30:52 PM pursuant to License Agreement with ICC. No further reproduction or distribution authorized. ANY UNAUTHORIZED REPRODUCTION OR DISTRIBUTION IS A VIOLATION OF THE FEDERAL COPYRIGHT ACT AND THE LICENSE AGREEMENT, AND SUBJECT TO CIVIL AND CRIMINAL PENALTIES THEREUNDER.

necessary and dampers are required to define and contain the suppressant. The discharge cools exposed surfaces in addition to depriving the fire of oxygen. Although not mentioned specifically in this section, the applicable provisions of NFPA 12 should also be applied because the system is a CO_2 system as referenced in Section 904.8.

904.12.3.1 Ventilation system. Commercial-type cooking equipment protected by an automatic carbon dioxide extinguishing system shall be arranged to shut off the ventilation system upon activation.

❖ Shutting down the ventilation system upon activation of the CO_2 extinguishing system maintains the desired concentration of carbon dioxide to suppress the fire. Leakage of gas from the protected area should be kept to a minimum. Where leakage is anticipated, additional quantities of carbon dioxide must be provided to compensate for any losses.

904.12.4 Special provisions for automatic sprinkler systems. *Automatic sprinkler systems* protecting commercial-type cooking equipment shall be supplied from a separate, readily accessible, indicating-type control valve that is identified.

❖ This section requires a separate control valve in the water line to the sprinklers protecting the cooking and ventilating system. The additional valve allows the flexibility to shut off the system for repairs or for cleanups after sprinkler discharge without taking the entire system out of service.

904.12.4.1 Listed sprinklers. Sprinklers used for the protection of fryers shall be tested in accordance with UL 199E, *listed* for that application and installed in accordance with their listing.

❖ Sprinklers specifically listed for such use must be used when protecting deep-fat fryers. These specially listed sprinklers use finer water droplets than standard spray sprinklers. The water spray lowers the temperature below a point where the fire can sustain itself and reduces the possibility of expanding the fire. UL 199E addresses these special sprinklers and includes performance tests for deep-fat fryer extinguishment and also deep-fat fryer cooking temperature splash. The selection of inappropriate sprinklers for deep-fat fryer protection can increase the hazards during water application rather than suppressing the fire.

904.12.5 Portable fire extinguishers for commercial cooking equipment. Portable fire extinguishers shall be provided within a 30-foot (9144 mm) distance of travel from commercial-type cooking equipment. Cooking equipment involving solid fuels or vegetable or animal oils and fats shall be protected by a Class K rated portable extinguisher in accordance with Section 904.12.5.1 or 904.12.5.2, as applicable.

❖ To combat a fire in its incipient stage, access to a manual means of extinguishment is critical. Although a 30-foot (9144 mm) maximum travel distance is specified, the location of the extinguisher should be a safe distance from the cooking equipment so that it will not become involved in the fire. Only Class K-rated extinguishers that have been tested on commercial cooking appliances can be used.

904.12.5.1 Portable fire extinguishers for solid fuel cooking appliances. Solid fuel cooking appliances, whether or not under a hood, with fireboxes 5 cubic feet (0.14 m3) or less in volume shall have a minimum 2.5-gallon (9 L) or two 1.5-gallon (6 L) Class K wet-chemical portable fire extinguishers located in accordance with Section 904.12.5.

❖ The fuels used in solid fuel-fired cooking appliances present significantly more potential burning surface area than the flat surface of a grill or deep fat fryer. This surface area is also often shielded by other solid fuel elements. As a result, a large extinguisher or two moderate-sized extinguishers are required. The $2^1/_2$-gallon (9 L) extinguisher roughly equates to a 2A rating. The K-rating is necessary rather than using a water-based agent because the discharge from water-based extinguishers is usually in the form of a straight stream rather than a less concentrated, flooding type of coverage. A straight stream can dislodge the burning solid fuel material and possibly spread the burning coals to other areas where they could pose both a secondary fire risk, as well as a life safety hazard. The same travel distance to an extinguisher is required for solid fuel extinguishers as for deep fat fryer extinguishers so that manual suppression can be provided if necessary in a reasonable time. See the commentary to Section 904.12.5.2 for further discussion of Class K extinguishers.

904.12.5.2 Class K portable fire extinguishers for deep fat fryers. Where hazard areas include deep fat fryers, listed Class K portable fire extinguishers shall be provided as follows:

1. For up to four fryers having a maximum cooking medium capacity of 80 pounds (36.3 kg) each: one Class K portable fire extinguisher of a minimum 1.5-gallon (6 L) capacity.
2. For every additional group of four fryers having a maximum cooking medium capacity of 80 pounds (36.3 kg) each: one additional Class K portable fire extinguisher of a minimum 1.5-gallon (6 L) capacity shall be provided.
3. For individual fryers exceeding 6 square feet (0.55 m^2) in surface area: Class K portable fire extinguishers shall be installed in accordance with the extinguisher manufacturer's recommendations.

❖ In recent years, commercial cooking operations have begun to use improved, more efficient deep fat fryer-type cooking appliances and more healthful, unsaturated cooking oils that require a much higher cooking temperature than the former saturated oils. The Class K extinguishing agent and extinguishers were developed to deal with this new hazard. Class K extinguishers use a wet-chemical, potassium acetate-based agent that has proven to be more effective in

INTERNATIONAL CODE COUNCIL®
Copyright © 2015 ICC. ALL RIGHTS RESERVED. Accessed by David Dammon on Jun 21, 2017 12:30:52 PM pursuant to License Agreement with ICC. No further reproduction or distribution authorized. ANY UNAUTHORIZED REPRODUCTION OR DISTRIBUTION IS A VIOLATION OF THE FEDERAL COPYRIGHT ACT AND THE LICENSE AGREEMENT, AND SUBJECT TO CIVIL AND CRIMINAL PENALTIES THEREUNDER.

fighting these fires and provides a cooling effect for the deep fat fryer hazard. Though primarily intended for cooking fires, many Class K extinguishers can also be effectively used on Class A, B and C hazards.

Class K fire extinguishers do not have letter ratings similar to other types of extinguishers. The capacity of the Class K extinguisher becomes the effective rating. Based on the extinguishing capability of a moderate sized Class K extinguisher the maximum quantity of typical fat frying medium can be determined. This quantity is determined by weight based on the typical deep fat fryer. A fryer capacity of 80 pounds (36 kg) can provide a surface area between $4^1/_2$ to 6 square feet (0.42 to 0.56 m^2), depending on the manufacturer. When the surface area exceeds 6 square feet (0.56 m^2), guidelines for Class K extinguishers are no longer applicable. Consequently, for the larger surface area fryers the size of Class K extinguisher should be based on the manufacturer's recommendations. Although not specifically indicated in the code text, the understanding is that if the weight capacity of the fryer exceeds 80 pounds (36 kg) but the surface area is less than 6 square feet (0.56 m^2), the manufacturer's recommendations should be applied for those conditions as well.

904.12.6 Operations and maintenance. Automatic fire-extinguishing systems protecting commercial cooking systems shall be maintained in accordance with Sections 904.12.6.1 through 904.12.6.3.

❖ Most fires in commercial kitchens involve the cooking appliance and exhaust system in some way. Proper operation of the system in accordance with the IMC, as well as routine maintenance can reduce the hazards related to the collection and removal of smoke and grease-laden vapors.

904.12.6.1 Existing automatic fire-extinguishing systems. Where changes in the cooking media, positioning of cooking equipment or replacement of cooking equipment occur in existing commercial cooking systems, the automatic fire-extinguishing system shall be required to comply with the applicable provisions of Sections 904.12 through 904.12.4.

❖ The provisions of Section 904.12 have long required new commercial cooking system preengineered fire extinguishing systems to be tested in accordance with UL 300 and listed and labeled for that use. The question has often arisen, however, as to whether or how those provisions should be applied to existing systems. This section provides guidance and adds clarity as to when existing automatic fire extinguishing systems protecting commercial cooking operations need to be modified, upgraded or replaced to meet UL 300 requirements. These provisions are thought to be consistent with provisions adopted by some states and local jurisdictions on this topic.

904.12.6.2 Extinguishing system service. Automatic fire-extinguishing systems shall be serviced at least every six months and after activation of the system. Inspection shall be by qualified individuals, and a certificate of inspection shall be forwarded to the *fire code official* upon completion.

❖ Range hood fire-extinguishing systems must be inspected and serviced at regular intervals to determine that they are ready to perform the intended function. Obviously, service is required after the suppression system discharges. The extent of service and maintenance depends on the type of fire-extinguishing system installed. The NFPA standard corresponding to the installed extinguishing agent should be consulted for additional service requirements (see commentary, Section 904.12).

904.12.6.3 Fusible link and sprinkler head replacement. Fusible links and automatic sprinkler heads shall be replaced at least annually, and other protection devices shall be serviced or replaced in accordance with the manufacturer's instructions.

Exception: Frangible bulbs are not required to be replaced annually.

❖ Because of the potential accumulation of grease or other contaminants that could adversely affect proper operation, fusible links and automatic sprinkler heads must be replaced at least annually. The sensing elements of the fusible link devices as well as the sprinkler heads must be routinely visually inspected and replaced as needed, at least annually.

The exception allows frangible bulb-type sprinklers to not be replaced as long as the annual examination shows no accumulation of grease or other contaminants.

904.13 Domestic cooking systems in Group I-2 Condition 1. In Group I-2 Condition 1 occupancies where cooking facilities are installed in accordance with Section 407.2.6 of the *International Building Code*, the domestic cooking hood provided over the cooktop or range shall be equipped with an automatic fire-extinguishing system of a type recognized for protection of domestic cooking equipment. Preengineered automatic extinguishing systems shall be tested in accordance with UL 300A and listed and labeled for the intended application. The system shall be installed in accordance with this code, its listing and the manufacturer's instructions.

❖ As nursing homes move away from institutional models, it is critical to have a functioning kitchen that can serve as the "hearth of the home." Instead of a large, centralized, institutional kitchen where all meals are prepared and delivered to a central dining room or the resident's room, the new "household model" nursing home uses decentralized kitchens and small dining areas to create the feeling and focus of home. For persons with dementia, it is particularly important to have spaces that look familiar, like the kitchen in their former home, to increase their understanding and ability to function at their highest level. This section addresses the fire protection system needs for these

INTERNATIONAL CODE COUNCIL®
Copyright © 2015 ICC. ALL RIGHTS RESERVED. Accessed by David Dammon on Jun 21, 2017 12:30:52 PM pursuant to License Agreement with ICC. No further reproduction or distribution authorized. ANY UNAUTHORIZED REPRODUCTION OR DISTRIBUTION IS A VIOLATION OF THE FEDERAL COPYRIGHT ACT AND THE LICENSE AGREEMENT, AND SUBJECT TO CIVIL AND CRIMINAL PENALTIES THEREUNDER.

kitchens. Note that these occupancies already contain quick response sprinklers. This section provides the requirements for the hood fire extinguishing system needed for the cooking hood located over the cook top or range. That system is required to be in compliance with UL 300A.

904.13.1 Manual system operation and interconnection. Manual actuation and system interconnection for the hood suppression system shall be in accordance with Sections 904.12.1 and 904.12.2, respectively.

❖ To manually activate such systems, the requirements of Sections 904.12.1 and 904.12.2 would apply. This provides for the location of the manual shut down and also directs what equipment and power needs to automatically shut down. See the commentary to Sections 904.12.1 and 904.12.2.

904.13.2 Portable fire extinguishers for domestic cooking equipment in Group I-2 Condition 1. A portable fire extinguisher complying with Section 906 shall be installed within a 30-foot (9144 mm) distance of travel from domestic cooking appliances.

❖ This requirement for a portable fire extinguisher relates to the added safety of allowing a residential-type kitchen in nursing homes. This provides another line of defense and the location is focused on the distance from the cooking appliances.

SECTION 905
STANDPIPE SYSTEMS

905.1 General. Standpipe systems shall be provided in new buildings and structures in accordance with Sections 905.2 through 905.10. In buildings used for *high-piled combustible storage*, fire protection shall be in accordance with Chapter 32.

❖ Standpipe systems are required in buildings to provide a quick, convenient water source for fire department use where hose lines would otherwise be impractical, such as in high-rise buildings. Standpipe systems can also be used prior to deployment of hose lines from fire department apparatus. The requirements for standpipes are based on practical requirements of typical fire-fighting operations and the nationally recognized standard NFPA 14.

The threads on connections to which the fire department may connect a hose must be compatible with the fire department hose threads (see commentary, Section 903.3.6). Chapter 32 requires a Class I standpipe system in exit passageways of buildings used for high-piled storage. Note that If a building containing high-piled storage does not contain an exit passageway then standpipes would not be required. High-piled storage involves the solid piled, bin box, palletized or rack storage of Class I through IV commodities over 12 feet (3658 mm) high. High-hazard commodities stored higher than 6 feet (1829 mm) are also considered high piled.

905.2 Installation standard. Standpipe systems shall be installed in accordance with this section and NFPA 14. Fire department connections for standpipe systems shall be in accordance with Section 912.

❖ This section requires the installation of standpipe systems to comply with the applicable provisions of NFPA 14 in addition to Section 905. NFPA 14 contains the minimum requirements for the installation of standpipe and hose systems for buildings and structures. The standard addresses additional requirements not addressed in the code, such as pressure limitations, minimum flow rates, piping specifications, hose connection details, valves, fittings, hangers and the testing and inspection of standpipes. The periodic inspection, testing and maintenance of standpipe systems must comply with NFPA 25.

Section 905 and NFPA 14 recognize three classes of standpipe systems: Class I, II or III. The type of system required depends on building height, building area, type of occupancy and the extent of automatic sprinkler protection. Section 905 also recognizes five types of standpipe systems: automatic dry, automatic wet, manual dry, manual wet and semiautomatic dry. The use of each type of system is limited to the building conditions and locations identified in Section 905.3. The classes and types of standpipe systems are defined in Section 202.

Section 912, to which this section points, provides a comprehensive set of requirements for FDCs reducing the opportunity for any of its requirements to be overlooked. See the commentary for Section 912.

905.3 Required Installations. Standpipe systems shall be installed where required by Sections 905.3.1 through 905.3.8. Standpipe systems are allowed to be combined with *automatic sprinkler systems*.

Exception: Standpipe systems are not required in Group R-3 occupancies.

❖ Standpipe systems are installed in buildings based on the occupancy, fire department accessibility and special conditions that may require manual fire suppression exceeding the capacity of a fire extinguisher. Standpipe systems are most commonly required for buildings that exceed the height threshold requirement in Section 905.3.1 or due to features of a specific occupancy or the building, such as covered and open mall buildings, stages and underground buildings.

This section also states that a standpipe system does not have to be separate from an installed sprinkler system. It is common practice in multistory buildings for the standpipe system risers to also serve as risers for the automatic sprinkler systems.

In these instances, precautions need to be taken so that the operation of one system will not interfere with the operation of the other system. Therefore, control valves for the sprinkler system must be installed where the sprinklers are connected to the standpipe riser at each floor level. This allows the

INTERNATIONAL CODE COUNCIL®
Copyright © 2015 ICC. ALL RIGHTS RESERVED. Accessed by David Dammon on Jun 21, 2017 12:30:52 PM pursuant to License Agreement with ICC. No further reproduction or distribution authorized. ANY UNAUTHORIZED REPRODUCTION OR DISTRIBUTION IS A VIOLATION OF THE FEDERAL COPYRIGHT ACT AND THE LICENSE AGREEMENT, AND SUBJECT TO CIVIL AND CRIMINAL PENALTIES THEREUNDER.

standpipe system to remain operational, even if the sprinkler system is shut off at the floor control valve.

The exception recognizes that standpipe systems in Group R-3 occupancies would be of minimal value to the fire department and would send the wrong message to the occupants of a dwelling unit. In the case of multiple single-family dwellings, each dwelling unit has a separate entrance and is separated from the other units by 1-hour fire partitions. These conditions permit ready access to fires and also provide for a degree of fire containment through compartmentation, which is not always present in other occupancies.

905.3.1 Height. Class III standpipe systems shall be installed throughout buildings where the floor level of the highest story is located more than 30 feet (9144 mm) above the lowest level of the fire department vehicle access, or where the floor level of the lowest story is located more than 30 feet (9144 mm) below the highest level of fire department vehicle access.

Exceptions:

1. Class I standpipes are allowed in buildings equipped throughout with an *automatic sprinkler system* in accordance with Section 903.3.1.1 or 903.3.1.2.
2. Class I manual standpipes are allowed in open parking garages where the highest floor is located not more than 150 feet (45 720 mm) above the lowest level of fire department vehicle access.
3. Class I manual dry standpipes are allowed in open parking garages that are subject to freezing temperatures, provided that the hose connections are located as required for Class II standpipes in accordance with Section 905.5.
4. Class I standpipes are allowed in *basements* equipped throughout with an *automatic sprinkler system*.
5. In determining the lowest level of fire department vehicle access, it shall not be required to consider either of the following:
   5.1. Recessed loading docks for four vehicles or less.
   5.2. Conditions where topography makes access from the fire department vehicle to the building impractical or impossible.

❖ Given the available manpower on the fire department vehicle, standard fire-fighting operations and standard hose sizes, a 30-foot (9144 mm) vertical distance is generally considered the maximum height to which a typical fire department engine company can practically and readily extend its hose lines. Thus, the maximum vertical travel (height) threshold is based on the time it would take a typical fire department engine (pumper) company to manually suppress a fire. The standpipe connection reduces the time needed for the fire department to extend hose lines up or down stairways to advance and apply water to the fire. For this use, a minimum Class III standpipe system is required.

With respect to the height of the building, the threshold is measured from the level at which the fire department can gain access to the building directly from its vehicle and begin vertical movement. Floor levels above grade are measured from the lowest level of fire department vehicle access to the highest floor level above [see Commentary Figure 905.3.1(1)]. If a building contains floor levels below

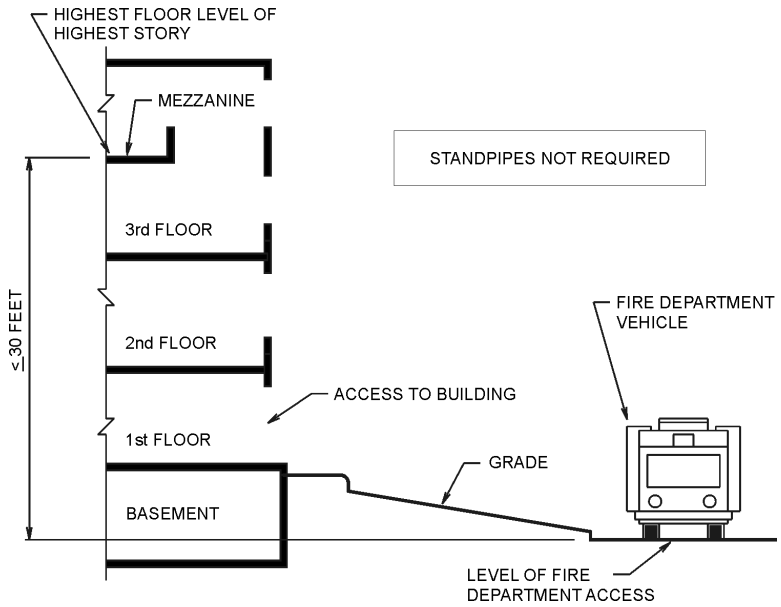

For SI: 1 inch = 25.4 mm, 1 foot = 304.8 mm.

Figure 905.3.1(1)
HEIGHT THRESHOLD FOR STANDPIPES

INTERNATIONAL CODE COUNCIL®
Copyright © 2015 ICC. ALL RIGHTS RESERVED. Accessed by David Dammon on Jun 21, 2017 12:30:52 PM pursuant to License Agreement with ICC. No further reproduction or distribution authorized. ANY UNAUTHORIZED REPRODUCTION OR DISTRIBUTION IS A VIOLATION OF THE FEDERAL COPYRIGHT ACT AND THE LICENSE AGREEMENT, AND SUBJECT TO CIVIL AND CRIMINAL PENALTIES THEREUNDER.

the level of fire department vehicle access, the measurement is made from the highest level of fire department vehicle access to the lowest floor level. In cases where a building has more than one level of fire department vehicle access, the most restrictive measurement is used because it is not known at which level the fire department will access the building. In other words, the vertical distance is to be measured from the more restrictive level of fire department vehicle access to the level of the highest (or lowest, if below) floor [see Commentary Figure 905.3.1(2)].

The threshold based on the height of the building is independent of the occupancy of the building, the area of the building or the presence of an automatic sprinkler system. This is based on the universal need to be able to provide a water supply for fire suppression in any building and on the limitations of the physical effort necessary to extend hose lines vertically.

Before discussing the exceptions it is important to understand the differences between the different classes and operational characteristics of standpipes. More detailed information is included in Section 202 for the definitions of the different classes and types of standpipes.

Standpipes can be dry or wet, manual, automatic or semiautomatic. Automatic systems can be either wet or dry. Manual systems can be either wet or dry. A semiautomatic system is always in association with a dry system.

The code is written such that it could be assumed the default is an automatic wet system. This is, however, not the case. The requirement is left to the design standard, NFPA 14. Section 5.4.1.1 of NFPA 14 indicates that Class I standpipes can be manual if the building is not high-rise. Section 5.4.1.4 of the standard indicates that a Class I standpipe must be wet except where the pipe is subject to freezing. Thus, where a Class I standpipe is installed, possibly as a part of Exception 1, the system can be manual wet if the building is not a high rise. This is consistent with IFC Committee Interpretation No. 33-03. As long as the building is not high rise, it can be provided with a Class I standpipe system that is manual wet.

Class II and III standpipes are required to be automatic-wet or semiautomatic wet except where the piping is subject to freezing according to Section 5.4.2 of NFPA 14. They cannot be manual. Only Class I standpipes can be manual and only be used under the conditions noted in this code. Note that other sections of the code may specify whether the system must be automatic or not. If the requirement is not noted elsewhere in the code, then the decision to use an automatic or manual system is left to the designer.

Exception 1 recognizes the fact that with a fully operational automatic sprinkler system, the time that the fire department has to extend hoses within the building is substantially increased and that the amount of effort required is greatly reduced. Consequently, a single Class I connection can be provided. The second, $1^1/_2$-inch (38 mm) connection is allowed to be omitted. NFPA 14 also has a similar provision but is more restrictive as it only eliminates the hose station and additionally requires a $2^1/_2$ inch by $1^1/_2$ inch (65 mm by 40 mm) reducer and a cap attached with a chain (Section 7.3.4.1 of NFPA 14). In accordance with Section 102.7, the code would take precedence and the reducer and cap would not be required.

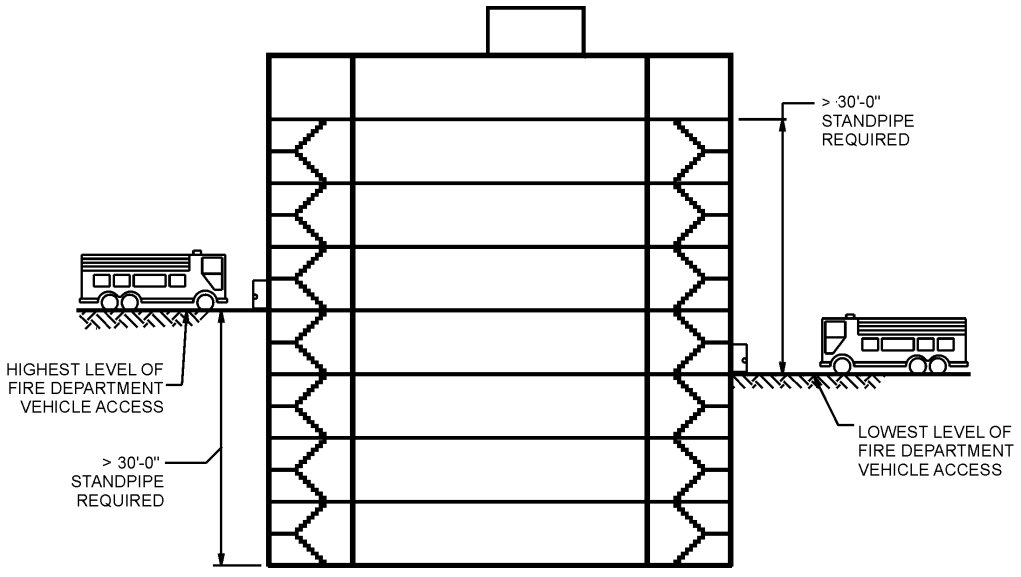

For SI: 1 inch = 25.4 mm, 1 foot = 304.8 mm.

Figure 905.3.1(2)
HEIGHT REQUIREMENTS FOR STANDPIPES WITH MULTIPLE LEVELS OF FIRE DEPARTMENT VEHICLE ACCESS

INTERNATIONAL CODE COUNCIL®
Copyright © 2015 ICC. ALL RIGHTS RESERVED. Accessed by David Dammon on Jun 21, 2017 12:30:52 PM pursuant to License Agreement with ICC. No further reproduction or distribution authorized. ANY UNAUTHORIZED REPRODUCTION OR DISTRIBUTION IS A VIOLATION OF THE FEDERAL COPYRIGHT ACT AND THE LICENSE AGREEMENT, AND SUBJECT TO CIVIL AND CRIMINAL PENALTIES THEREUNDER.

Exception 2 identifies one of the issues relative to open parking garages. This exception allows for the garage, when not more than 150 feet (45 720 mm) in height above the lowest level of fire department access, to have a wet standpipe but without additional operating pressure until the fire department connects and begins pumping into the system. This makes sense since normal operations typically do not begin until after the fire department is on the scene and has made its initial assessments. This is generally considered to be the maximum safe height for pumpers to overcome the hydrostatic head presented by 150 feet (45 720 mm) of water. Careful considerations should be made since not all fire departments have equipment capable of this type of pumping capacity.

Exception 3 is similar to the prior exception but with the added provision that the standpipe can be dry if subject to freezing, regardless of height. Because the standpipe will be without water and dependent upon the fire department to provide both water and pressure, standpipe outlets must be spaced more frequently, as noted in Section 905.5 for Class II standpipes so that fire fighters can connect and begin operations quicker. The exception does not require Class II outlets; only that the spacing be consistent with the requirement for Class II.

Exception 4 is similar to Exception 1 but only addresses sprinklers in the basement. Thus it is possible to use this exception if only the basement is protected by automatic sprinklers. However, Class I connections can only be provided in the basements—not on the upper floors. The exception cannot be used for stories above grade unless the entire building is sprinklered and, therefore, compliant with Exception 1.

Exception 5 provides additional information about what must be considered when determining building height with respect to the level of fire department vehicle access. The first item is a practical one that excludes loading docks of a limited size. The second item notes that although it may be possible to have a fire department vehicle arrive adjacent to the building at a low level, it may not be possible for the fire department to access the building from that level. An example of this condition would be where a road surface is located below a building constructed on a bluff. Although the fire department vehicles can approach from the lower road, fire department personnel cannot access the building from that lower level. Thus, the standpipe requirement would not be based on the road below the bluff.

905.3.2 Group A. Class I automatic wet standpipes shall be provided in nonsprinklered Group A buildings having an *occupant load* exceeding 1,000 persons.

Exceptions:

1. Open-air-seating spaces without enclosed spaces.
2. Class I automatic dry and semiautomatic dry standpipes or manual wet standpipes are allowed in buildings that are not high-rise buildings.

❖ The main concern in assembly occupancies with a high occupant load is evacuation. Many occupants may not be familiar with either their surroundings or the egress arrangement in the building. This section also assumes the building is not sprinklered; therefore, control and suppression of the fire is left to the fire department.

Exception 1 exempts open-air seating without enclosed spaces, such as grandstands and bleachers. In such occupancies, a buildup of smoke and hot gases is not possible because these structures are open to the atmosphere.

Exception 2 states that in lieu of a Class I automatic wet standpipe, automatic-dry and semiautomatic dry Class I standpipes are permitted in buildings that are not considered to be a high rise.

905.3.3 Covered and open mall buildings. Covered mall and open mall buildings shall be equipped throughout with a standpipe system where required by Section 905.3.1. Mall buildings not required to be equipped with a standpipe system by Section 905.3.1 shall be equipped with Class I hose connections connected to the *automatic sprinkler system* sized to deliver water at 250 gallons per minute (946.4 L/min) at the most hydraulically remote hose connection while concurrently supplying the automatic sprinkler system demand. The standpipe system shall be designed not to exceed a 50 pounds per square inch (psi) (345 kPa) residual pressure loss with a flow of 250 gallons per minute (946.4 L/min) from the fire department connection to the hydraulically most remote hose connection. Hose connections shall be provided at each of the following locations:

1. Within the mall at the entrance to each exit passageway or corridor.
2. At each floor-level landing within *interior exit stairways* opening directly on the mall.
3. At exterior public entrances to the mall of a covered mall building
4. At public entrances at the perimeter line of an open mall building.
5. At other locations as necessary so that the distance to reach all portions of a tenant space does not exceed 200 feet (60 960 mm) from a hose connection.

❖ Covered and open mall buildings are only required to have a standpipe system if Section 905.3.1 requires such features. If standpipes are not required due to building height, Class I hose connections that are connected to the automatic sprinkler system are still required. Also, to ensure that both the sprinkler system and hose connections will function at an acceptable level, the system must be sized for both the sprinkler demand and the hose connection demand. This section specifies a minimum flow rate and a

INTERNATIONAL CODE COUNCIL®
Copyright © 2015 ICC. ALL RIGHTS RESERVED. Accessed by David Dammon on Jun 21, 2017 12:30:52 PM pursuant to License Agreement with ICC. No further reproduction or distribution authorized. ANY UNAUTHORIZED REPRODUCTION OR DISTRIBUTION IS A VIOLATION OF THE FEDERAL COPYRIGHT ACT AND THE LICENSE AGREEMENT, AND SUBJECT TO CIVIL AND CRIMINAL PENALTIES THEREUNDER.

maximum pressure loss to the most remote hose connection so that the fire department can gain full use of the hose connection during a fire. Hose connections are required when a standpipe system is not at key locations, such as entrances to exit passageways and at entrances to the covered or open mall. Note that these locations are essentially the same locations required for Class I hose connections in Section 905.4, except that this section also requires that the distance of all portions of tenant spaces does not exceed 200 feet (60 960 mm) from a hose connection.

905.3.4 Stages. Stages greater than 1,000 square feet (93 m^2) in area shall be equipped with a Class III wet standpipe system with $1^1/_2$-inch and $2^1/_2$-inch (38 mm and 64 mm) hose connections on each side of the stage.

Exception: Where the building or area is equipped throughout with an *automatic sprinkler system*, a $1^1/_2$-inch (38 mm) hose connection shall be installed in accordance with NFPA 13 or in accordance with NFPA 14 for Class II or III standpipes.

❖ Because of the potentially large fuel load and three-dimensional aspect of the fire hazard associated with stages greater than 1,000 square feet (93 m^2) in area, Class III standpipes are required on each side of these large stages. The standpipes must be equipped with a $1^1/_2$-inch (38 mm) hose connection and a $2^1/_2$-inch (64 mm) hose connection. The $1^1/_2$-inch (38 m^2) connection is for the hose requirement in Section 905.3.4.1. The $2^1/_2$-inch (64 mm) connection is to provide greater flexibility for the fire department in its fire-fighting operations.

Stages, as used in this section, are those stages defined in Section 410.2 of the IBC, which include overhead hanging curtains, drops, scenery or stage effects other than lighting and sound. These were traditionally referred to as “legitimate stages.” It is not an appropriate application of this section to require standpipes for elevated areas in banquet rooms, or theatrical platforms where the higher fuel loads associated with a legitimate stage do not exist.

The exception recognizes the benefit of the building or area being sprinklered. If so, then only a single $1^1/_2$-inch (38 mm) connection is required. This hose connection is intended to be used by the fire department and apply less water from the hose due to the suppression activity of the sprinkler system. Hose threads must be compatible with those of the fire department as required in Section 903.3.6.

In a fully sprinklered building it is acceptable to supply the hose connections through the same standpipe as the sprinklers. This is reflected in the reference to both NFPA 13, which acknowledges this concept, and NFPA 14, which contains similar provisions. If the provisions of NFPA 14 are used, although the standpipe must be wet and Class II in its installation, the design of the water supply and interconnection of systems can be in accordance with the requirements for Class II as well as for Class III standpipes.

905.3.4.1 Hose and cabinet. The $1^1/_2$-inch (38 mm) hose connections shall be equipped with sufficient lengths of $1^1/_2$-inch (38 mm) hose to provide fire protection for the stage area. Hose connections shall be equipped with an *approved* adjustable fog nozzle and be mounted in a cabinet or on a rack.

❖ The $1^1/_2$-inch (38 mm) standpipe hose installed for stages greater than 1,000 square feet (93 m^2) in area is intended for use by stage personnel who have been trained to use it. The length of hose provided is a function of the size and configuration of the stage. This includes by definition the entire performance area and adjacent backstage and support areas not fire separated from the performance area. The effective reach of the fire stream from the fog nozzle is a function of the available water supply, and in particular, the pressure. Fog nozzles typically require 100 pounds per square inch (psi) (690 kPa) for optimum performance.

905.3.5 Underground buildings. Underground buildings shall be equipped throughout with a Class I automatic wet or manual wet standpipe system.

❖ Underground buildings present unique hazards to life safety because of their isolation and inaccessibility. Additional fire protection and fire fighting measures for the fire department are required to compensate for the lack of exterior access for fire suppression and rescue operations (see Section 405 of the IBC).

905.3.6 Helistops and heliports. Buildings with a rooftop *helistop* or *heliport* shall be equipped with a Class I or III standpipe system extended to the roof level on which the *helistop* or *heliport* is located in accordance with Section 2007.5.

❖ Buildings containing rooftop helistops or heliports are required to be equipped with a Class I or III standpipe. A heliport is a distinct hazard that will involve flammable fuels. In the event of an emergency, rapid deployment of hand hose lines will be necessary to attack a resulting fire, effectuate rescue and to protect exposures and the remainder of the building.

The requirement results in a standpipe system throughout the building, not just a connection at the roof level. This is critical in fire-fighting operations because many times the connection below the rooftop level may be needed just to gain access onto the roof. If the only connection is on the roof, it is of no use if the fire fighters cannot get to it.

Additionally, a heliport includes fueling operations. It is entirely possible for a spill to not only affect the rooftop, but also floors below as the liquid fuel spreads. The standpipe system will again be utilized in these situations.

Section 2007.5 requires a $2^1/_2$-inch (64 mm) standpipe outlet to be within 150 feet (45 675 mm) of all portions of the heliport or helistop area and be either Class I or III.

INTERNATIONAL CODE COUNCIL®
Copyright © 2015 ICC. ALL RIGHTS RESERVED. Accessed by David Dammon on Jun 21, 2017 12:30:52 PM pursuant to License Agreement with ICC. No further reproduction or distribution authorized. ANY UNAUTHORIZED REPRODUCTION OR DISTRIBUTION IS A VIOLATION OF THE FEDERAL COPYRIGHT ACT AND THE LICENSE AGREEMENT, AND SUBJECT TO CIVIL AND CRIMINAL PENALTIES THEREUNDER.

905.3.7 Marinas and boatyards. Standpipes in marinas and boatyards shall comply with Chapter 36.

❖ Section 3604.2 contains the specifics as to when standpipes are required at marinas. Marinas and boatyards have unique challenges for fire fighting. Although there is water readily available, it is not easily or effectively capable of being applied to a fire at such a facility. A fire in such facilities can spread from structure to structure and from vessel to vessel with no effective way to attack and control it. Section 3604.2 references NFPA 303 for the standpipe requirements and additionally requires that no point on the marina pier or float system exceed 150 feet (45 675 mm) from a standpipe hose connection (see commentary, Section 3604.2).

905.3.8 Rooftop gardens and landscaped roofs. Buildings or structures that have rooftop gardens or landscaped roofs and that are equipped with a standpipe system shall have the standpipe system extended to the roof level on which the rooftop garden or landscaped roof is located.

❖ This section requires that if the building is equipped with a standpipe system, whether or not such systems are required, it must be extended to a roof containing a garden or that is landscaped. These requirements relate to the requirements in Section 317 that address the increased fuel load being added to roofs.

905.4 Location of Class I standpipe hose connections. Class I standpipe hose connections shall be provided in all of the following locations:

1. In every required *interior exit stairway*, a hose connection shall be provided for each story above and below grade plane. Hose connections shall be located at an intermediate landing between stories, unless otherwise *approved* by the *fire code official*.
2. On each side of the wall adjacent to the *exit* opening of a horizontal *exit*.

   Exception: Where floor areas adjacent to a horizontal *exit* are reachable from an *interior exit stairway* hose connection by a 30-foot (9144 mm) hose stream from a nozzle attached to 100 feet (30 480 mm) of hose, a hose connection shall not be required at the horizontal *exit*.
3. In every *exit* passageway, at the entrance from the exit passageway to other areas of a building.

   Exception: Where floor areas adjacent to an exit passageway are reachable from an *interior exit stairway* hose connection by a 30-foot (9144 mm) hose stream from a nozzle attached to 100 feet (30 480 mm) of hose, a hose connection shall not be required at the entrance from the exit passageway to other areas of the building.
4. In covered mall buildings, adjacent to each exterior public entrance to the mall and adjacent to each entrance from an *exit* passageway or *exit corridor* to the mall. In open mall buildings, adjacent to each public entrance to the mall at the perimeter line and adjacent to each entrance from an exit passageway or exit corridor to the mall.
5. Where the roof has a slope less than four units vertical in 12 units horizontal (33.3-percent slope), a hose connection shall be located to serve the roof or at the highest landing of an *interior exit stairway* with access to the roof provided in accordance with Section 1011.12.
6. Where the most remote portion of a nonsprinklered floor or story is more than 150 feet (45 720 mm) from a hose connection or the most remote portion of a sprinklered floor or story is more than 200 feet (60 960 mm) from a hose connection, the *fire code official* is authorized to require that additional hose connections be provided in *approved* locations.

❖ Hose connections are required for the fire department to make use of the standpipe system. Since the fire department will typically access the building using the stairways, and most fire departments do not permit entry to the fire floor without an operating hose line, a hose connection must be installed for each floor level of each required enclosed stairway.

Item 1 also specifies that the hose connections are to be located at intermediate landings between stories. This reduces congestion at the stairway door and may reduce the hose lay distance. The hose connections, however, are still permitted at each story instead of at the intermediate landing if this arrangement is approved by the fire code official.

Because horizontal exits are also primary entrances to the fire floor, Item 2 states that hose connections must also be provided at each horizontal exit. The construction of the fire separation assembly used as the horizontal exit will protect the fire fighters while they are connecting to the standpipe system. The hose connections are to be located on each side of the horizontal exit to enable fire fighters to be in a protected area, regardless of the location of the fire. The exception acknowledges that there may already be a hose connection in close proximity to the horizontal exit if there is a stairway adjacent to the horizontal exit. The intent is to allow fewer standpipe outlets if the area can be adequately covered by the standpipes in stairways since those are the standpipes typically used by the fire department.

Item 3 states that an exit passageway in a building required to have a standpipe system is typically used as an extension of a required exit stairway. This allows use of the exit passageway for fire-fighting staging operations in the same way as an exit stair. The exception acknowledges that there may already be a hose connection in close proximity to the exit passageway. If there is a stairway containing a hose connection in close proximity to the exit passageway that can meet the 30-foot hose stream from a nozzle attached to 100 feet of hose then an additional standpipe is not required. The intent is to allow fewer standpipe outlets if the area can be adequately covered by the standpipes in stairways since those are the standpipes typically used by the fire department.

INTERNATIONAL CODE COUNCIL®
Copyright © 2015 ICC. ALL RIGHTS RESERVED. Accessed by David Dammon on Jun 21, 2017 12:30:52 PM pursuant to License Agreement with ICC. No further reproduction or distribution authorized. ANY UNAUTHORIZED REPRODUCTION OR DISTRIBUTION IS A VIOLATION OF THE FEDERAL COPYRIGHT ACT AND THE LICENSE AGREEMENT, AND SUBJECT TO CIVIL AND CRIMINAL PENALTIES THEREUNDER.

In covered and open mall buildings, Item 4 requires hose connections at each entrance to an exit passageway or exit corridor. In addition, covered mall buildings would be required to have connections at each exterior public entrance. Open malls would require connections at the public entrance perimeter line. These locations allow fire personnel to have a support line as soon as they enter the building.

Item 5 is consistent with NFPA 14 regarding the installation of Class I standpipe hose connections on the roofs of buildings. This requirement requires only one standpipe to extend to the roof level or highest landing of the stair serving the roof. This coordinates with Section 1011.12 which only requires one stairway to extend to the roof.

Hose connections in each exit stairway result in hose connections being located based on the travel distances permitted in Table 1017.2, which recognizes that most fire departments carry standpipe hose packs with 150 feet (45 720 mm) of hose or possibly with 100 feet (30 480 mm) of hose and an additional 50-foot (15 240 mm) section that could be easily connected.

With the typical travel distance permitted in nonsprinklered buildings of 200 feet (60 960 mm), reasonable coverage is provided when the effective reach of a fire stream is considered. Depending on the arrangement of the floor, however, all areas may not be effectively protected. Although this situation could easily be corrected by locating additional hose connections on the floor, such connections may rarely be used because of the difficulty in identifying their location during a fire and the fact that most fire departments require an operational hose line before they enter the fire floor. Because longer travel distances are allowed in sprinklered buildings, the problem is increased, but the need for prompt manual suppression is reduced by the presence of the sprinkler system. Item 6 gives the fire code official the authority to require additional hose connections if needed.

905.4.1 Protection. Risers and laterals of Class I standpipe systems not located within an *interior exit stairway* shall be protected by a degree of *fire resistance* equal to that required for vertical enclosures in the building in which they are located.

Exception: In buildings equipped throughout with an *approved automatic sprinkler system*, laterals that are not located within an *interior exit stairway* are not required to be enclosed within fire-resistance-rated construction.

❖ To minimize the potential for damage to the standpipe systems from a fire, the risers and laterals (i.e., the horizontal segments of standpipe system piping) must be located in an enclosure having the same fire-resistance rating as required for a vertical or shaft enclosure within the building. The required fire-resistance rating for the enclosure can be determined as detailed in Section 713.4 of the IBC.

The exception states that the enclosure for laterals is not required if the building is equipped throughout with an approved automatic sprinkler system. The potential for damage to the standpipe system is minimized by the protection provided by the sprinkler system. The automatic sprinkler system may be either an NFPA 13 or 13R system, depending on what was permitted for the building occupancy.

If the interior exit stairway is not required to have a rated enclosure, such as in an open parking garage, the laterals are similarly not required to be in an enclosure. The protection afforded the vertical riser in the stairway must be the same as that afforded the laterals. If the stairway is not required by other sections of the code to be located in a rated enclosure then the laterals are not required to be in rated protection either.

905.4.2 Interconnection. In buildings where more than one standpipe is provided, the standpipes shall be interconnected in accordance with NFPA 14.

❖ In cases where there are multiple Class I standpipe risers, the risers must be supplied from and interconnected to a common supply line. The required fire department connection must serve all of the sprinklers or standpipes in the building.

905.5 Location of Class II standpipe hose connections. Class II standpipe hose connections shall be accessible and shall be located so that all portions of the building are within 30 feet (9144 mm) of a nozzle attached to 100 feet (30 480 mm) of hose.

❖ Sections 905.5.1 through 905.5.3 specify the requirements for Class II standpipe hose connections. Class II standpipe systems are primarily intended for use by the building occupants.

This section for Class II standpipes does not specifically require hose stations and uses the term hose connection with a location based upon 100 feet (30 480 mm) of hose. However, the definition of Class II and III standpipes and Section 7.3.3.1 of NFPA 14 specifically require hose stations. Section 905.2 specifically references NFPA 14.

Although NFPA 14 requires a hose station, the decision as to whether a hose station is required may be one that is affected by the policies and procedures of the local fire department. It should be remembered that Class II hose connections and hose stations are intended for occupant use and not necessarily for fire department use. The fire department typically uses the Class I connection that is compatible with $2^1/_2$-inch (64 mm) hose.

905.5.1 Groups A-1 and A-2. In Group A-1 and A-2 occupancies with *occupant loads* of more than 1,000, hose connections shall be located on each side of any stage, on each side of the rear of the auditorium, on each side of the balcony and on each tier of dressing rooms.

❖ Because of the high occupant load density in Group A-1 and A-2 occupancies, providing additional means for controlling fires in their initial stage is important to enable prompt evacuation of the building. This section is independent of the Class I standpipe requirement for stages based on square footage as indicated in Section 905.3.4.

INTERNATIONAL CODE COUNCIL®
Copyright © 2015 ICC. ALL RIGHTS RESERVED. Accessed by David Dammon on Jun 21, 2017 12:30:52 PM pursuant to License Agreement with ICC. No further reproduction or distribution authorized. ANY UNAUTHORIZED REPRODUCTION OR DISTRIBUTION IS A VIOLATION OF THE FEDERAL COPYRIGHT ACT AND THE LICENSE AGREEMENT, AND SUBJECT TO CIVIL AND CRIMINAL PENALTIES THEREUNDER.

905.5.2 Protection. Fire-resistance-rated protection of risers and laterals of Class II standpipe systems is not required.

❖ Class II standpipe systems are normally not located in exit stairways; standpipe hose connections are located near the protected area to allow quick access. Therefore, it is likely that neither the risers nor the laterals would be located in any enclosure.

905.5.3 Class II system 1-inch hose. A minimum 1-inch (25 mm) hose shall be allowed to be used for hose stations in light-hazard occupancies where investigated and *listed* for this service and where *approved* by the *fire code official*.

❖ This section permits the use of 1-inch (25 mm) listed noncollapsible hose as an alternative to $1^1/_2$-inch (38 mm) hose, subject to the approval of the fire code official. This alternative is limited to light-hazard occupancies, such as office buildings and certain assembly occupancies that tend to have lower fuel loads, since a smaller hose can discharge less water.

905.6 Location of Class III standpipe hose connections. Class III standpipe systems shall have hose connections located as required for Class I standpipes in Section 905.4 and shall have Class II hose connections as required in Section 905.5.

❖ Class III standpipe systems that have both a $2^1/_2$-inch (64 mm) hose connection and a $1^1/_2$-inch (38 mm) hose connection must comply with the applicable requirements of Sections 905.4, 905.5 and 905.6. Thus, it is necessary to review and comply with all applicable provisions.

905.6.1 Protection. Risers and laterals of Class III standpipe systems shall be protected as required for Class I systems in accordance with Section 905.4.1.

❖ Because Class III standpipe systems are intended for use by fire-suppression personnel, they must be located in construction that has a fire-resistance rating equivalent to that of the vertical or shaft enclosure requirements of the building (see commentary, Section 905.4.1).

905.6.2 Interconnection. In buildings where more than one Class III standpipe is provided, the standpipes shall be interconnected in accordance with NFPA 14.

❖ As indicated in Section 905.4.2 for Class I standpipe systems, multiple standpipe risers must be interconnected with a common supply line. An indicating valve is typically installed at the base of each riser so that individual risers can be taken out of service without affecting the water supply or the operation of other standpipe risers.

905.7 Cabinets. Cabinets containing fire-fighting equipment, such as standpipes, fire hose, fire extinguishers or fire department valves, shall not be blocked from use or obscured from view.

❖ This section does not require that cabinets be provided to contain fire protection equipment. However, if they are provided, cabinets must be readily visible and accessible at all times. Sections 905.7.1 and 905.7.2 contain additional criteria for the construction and identification of the cabinets. Where cabinets are located in fire-resistance-rated assemblies, the integrity of the assembly must be maintained. Cabinet design for hose connections, control valves or other devices that require manual operation should be such that there is sufficient clearance between the cabinet body and the device to allow grasping of the device (quite likely with a gloved hand) and prompt operation of it.

905.7.1 Cabinet equipment identification. Cabinets shall be identified in an *approved* manner by a permanently attached sign with letters not less than 2 inches (51 mm) high in a color that contrasts with the background color, indicating the equipment contained therein.

Exceptions:

1. Doors not large enough to accommodate a written sign shall be marked with a permanently attached pictogram of the equipment contained therein.
2. Doors that have either an *approved* visual identification clear glass panel or a complete glass door panel are not required to be marked.

❖ This section specifies the minimum criteria to make the signs readily visible. Different color combinations may be approved by the fire code official if the color contrast between the letters and the background is vivid enough to make the sign visible at an approved distance. The exceptions address alternatives to letter signage if the cabinet is still conspicuously identified or the contents are readily visible.

905.7.2 Locking cabinet doors. Cabinets shall be unlocked.

Exceptions:

1. Visual identification panels of glass or other *approved* transparent frangible material that is easily broken and allows access.
2. *Approved* locking arrangements.
3. Group I-3 occupancies.

❖ Ready access to all fire-fighting equipment in the cabinet is essential. The exceptions, however, recognize the need to lock cabinets for security reasons and to prevent theft or vandalism (see also the commentary, Section 906.8).

905.8 Dry standpipes. Dry standpipes shall not be installed.

Exception: Where subject to freezing and in accordance with NFPA 14.

❖ Wet standpipe systems are preferred because they tend to be the most reliable type of standpipe system; therefore, dry standpipes are prohibited unless subject to freezing. For example, Class I manual standpipe systems, which do not have a permanent water supply, are permitted in open parking structures. This recognizes that open parking structures are not

INTERNATIONAL CODE COUNCIL®
Copyright © 2015 ICC. ALL RIGHTS RESERVED. Accessed by David Dammon on Jun 21, 2017 12:30:52 PM pursuant to License Agreement with ICC. No further reproduction or distribution authorized. ANY UNAUTHORIZED REPRODUCTION OR DISTRIBUTION IS A VIOLATION OF THE FEDERAL COPYRIGHT ACT AND THE LICENSE AGREEMENT, AND SUBJECT TO CIVIL AND CRIMINAL PENALTIES THEREUNDER.

heated and that most fires are limited to the vehicle of origin. The use of any dry standpipe system instead of a wet standpipe should take into consideration the added response time and its effect on the occupancy characteristics of the building.

905.9 Valve supervision. Valves controlling water supplies shall be supervised in the open position so that a change in the normal position of the valve will generate a supervisory signal at the supervising station required by Section 903.4. Where a fire alarm system is provided, a signal shall be transmitted to the control unit.

Exceptions:

1. Valves to underground key or hub valves in roadway boxes provided by the municipality or public utility do not require supervision.
2. Valves locked in the normal position and inspected as provided in this code in buildings not equipped with a fire alarm system.

❖ As with sprinkler systems, water control valves for standpipe systems must be electrically supervised as a means of determining that the system is operational (see commentary, Section 903.4).

Exception 1 recognizes that underground key or hub valves in roadway boxes are not normally supervised or need to be supervised whether the building contains a standpipe system or an automatic sprinkler system.

Exception 2 does not require the control valves for the standpipes to be electrically monitored if they are locked in the normal position and a fire alarm system is not installed in the building. When a fire alarm system is installed, the control valves for the standpipes must be electrically monitored and tied into the supervision required for the fire alarm system.

905.10 During construction. Standpipe systems required during construction and demolition operations shall be provided in accordance with Section 3313.

❖ As stated in Section 3313, at least one standpipe is required during construction of buildings four stories or more in height or during demolition of standpipe-equipped buildings. Standpipe systems must be accessible and operable during construction and demolition operations to assist in any potential fire (see commentary, Sections 3313.1 and 3313.2 of the code and Sections 3311.1 and 3311.2 of the IBC).

905.11 Existing buildings. Where required in Chapter 11, existing structures shall be equipped with standpipes installed in accordance with Section 905.

❖ This section simply refers to Chapter 11 which addresses all requirements that apply to existing buildings (see commentary, Section 1103.6).

SECTION 906
PORTABLE FIRE EXTINGUISHERS

906.1 Where required. Portable fire extinguishers shall be installed in all of the following locations:

1. In new and existing Group A, B, E, F, H, I, M, R-1, R-2, R-4 and S occupancies.

   Exception: In Group R-2 occupancies, portable fire extinguishers shall be required only in locations specified in Items 2 through 6 where each *dwelling unit* is provided with a portable fire extinguisher having a minimum rating of 1-A:10-B:C.
2. Within 30 feet (9144 mm) of commercial cooking equipment.
3. In areas where flammable or *combustible liquids* are stored, used or dispensed.
4. On each floor of structures under construction, except Group R-3 occupancies, in accordance with Section 3315.1.
5. Where required by the sections indicated in Table 906.1.
6. Special-hazard areas, including but not limited to laboratories, computer rooms and generator rooms, where required by the *fire code official*.

❖ Portable fire extinguishers (PFEs) are required in certain instances to give the occupants the means to suppress a fire in its incipient stage. The capability for manual fire suppression can contribute to the protection of the occupants, especially if there are evacuation difficulties associated with the occupancy or the specific hazard in the area. To be effective, personnel must be properly trained in the use of portable fire extinguishers.

Because of the high-hazard nature of building contents, portable fire extinguishers are required in occupancies in Group H.

Portable fire extinguishers are required in occupancies in Groups A, B, E, F, I, M, R-1, R-2, R-4 and S because of the need to control the fire in its early stages and because evacuation can be slowed by the density of the occupant load, the capability of the occupants to evacuate or the overall fuel load in the building. Because the IBC references the code for fire extinguisher requirements in new buildings, the code is applicable to new buildings.

Portable fire extinguishers are required in areas containing special hazards such as commercial cooking equipment and specific hazardous operations as indicated in Table 906.1. Because of the potentially extreme fire hazard associated with such areas or occupancy conditions, prompt extinguishment of the fire is critical.

INTERNATIONAL CODE COUNCIL®
Copyright © 2015 ICC. ALL RIGHTS RESERVED. Accessed by David Dammon on Jun 21, 2017 12:30:52 PM pursuant to License Agreement with ICC. No further reproduction or distribution authorized. ANY UNAUTHORIZED REPRODUCTION OR DISTRIBUTION IS A VIOLATION OF THE FEDERAL COPYRIGHT ACT AND THE LICENSE AGREEMENT, AND SUBJECT TO CIVIL AND CRIMINAL PENALTIES THEREUNDER.

Portable fire extinguishers are required in all buildings under construction, except in occupancies in Group R-3. The extinguishers are intended for use by construction personnel to suppress a fire in its incipient stages.

Portable fire extinguishers are also required in laboratories, computer rooms and other work spaces in which fire hazards may exist based on the use of the space. Many of these will be addressed by the required occupancy group criteria or by the specific hazard provisions of Table 906.1. Laboratories, for example, may not be considered Group H, but still use limited amounts of hazardous materials that would make manual means of fire extinguishment desirable.

The exception to Item 1 permits smaller PFEs in dwelling units of Group R-2 occupancies instead of larger PFEs in the common areas. Under the revised exception, the installation of 1-A:10-B:C PFEs within individual dwelling units that allows apartment owners to eliminate their installation in common areas such as corridors, laundry rooms and swimming pool areas. PFEs in these areas are susceptible to vandalism or theft. Another issue is that larger PFEs are more difficult for the infirm and elderly to safely deploy and operate. Note that the exception does not waive the ongoing maintenance requirement for PFEs within the dwelling units.

For the period of 2003 through 2007, NFPA reported that approximately 38,000 fires occurred annually in apartment buildings. Sixty percent of these fires occurred inside of dwelling units versus 14 percent that occur in common areas covered by Items 3 and 6 of Section 906.1. It is more logical to place PFEs inside of dwelling units versus common areas because it locates the extinguisher in an area where statistically most fires occur. If the occupant cannot control the fire using the PFE, he or she can escape and allow the automatic sprinkler system to operate and control the fire. This exception improves the safety of Group R-2 residents because it does not require them to leave a dwelling involved in a fire, find a PFE and then return to the fire-involved dwelling unit to attempt incipient fire attack.

Including this requirement in the code alerts designers and building officials that the extinguishers are required. This will allow designers to plan for thicker walls where recessed cabinets may be used or to design locations where the extinguishers will not project into or obstruct the egress or circulation path.

TABLE 906.1. See next column.

❖ Table 906.1 lists those sections of the code that represent specific occupancy conditions requiring portable fire extinguishers for incipient fire control. Wherever the code requires a fire extinguisher because of one of the listed occupancy conditions, it may identify the required rating of the extinguisher that is compatible with the hazard involved in addition to referencing Section 906.

TABLE 906.1
ADDITIONAL REQUIRED PORTABLE FIRE EXTINGUISHERS

SECTION	SUBJECT
303.5	Asphalt kettles
307.5	Open burning
308.1.3	Open flames—torches
309.4	Powered industrial trucks
2005.2	Aircraft towing vehicles
2005.3	Aircraft welding apparatus
2005.4	Aircraft fuel-servicing tank vehicles
2005.5	Aircraft hydrant fuel-servicing vehicles
2005.6	Aircraft fuel-dispensing stations
2007.7	Heliports and helistops
2108.4	Dry cleaning plants
2305.5	Motor fuel-dispensing facilities
2310.6.4	Marine motor fuel-dispensing facilities
2311.6	Repair garages
2404.4.1	Spray-finishing operations
2405.4.2	Dip-tank operations
2406.4.2	Powder-coating areas
2804.3	Lumberyards/woodworking facilities
2808.8	Recycling facilities
2809.5	Exterior lumber storage
2903.5	Organic-coating areas
3006.3	Industrial ovens
3104.12	Tents and membrane structures
3206.10	High-piled storage
3315.1	Buildings under construction or demolition
3317.3	Roofing operations
3408.2	Tire rebuilding/storage
3504.2.6	Welding and other hot work
3604.4	Marinas
3703.6	Combustible fibers
5703.2.1	Flammable and combustible liquids, general
5704.3.3.1	Indoor storage of flammable and combustible liquids
5704.3.7.5.2	Liquid storage rooms for flammable and combustible liquids
5705.4.9	Solvent distillation units
5706.2.7	Farms and construction sites—flammable and combustible liquids storage
5706.4.10.1	Bulk plants and terminals for flammable and combustible liquids
5706.5.4.5	Commercial, industrial, governmental or manufacturing establishments—fuel dispensing
5706.6.4	Tank vehicles for flammable and combustible liquids
5906.5.7	Flammable solids
6108.2	LP-gas

INTERNATIONAL CODE COUNCIL®
Copyright © 2015 ICC. ALL RIGHTS RESERVED. Accessed by David Dammon on Jun 21, 2017 12:30:52 PM pursuant to License Agreement with ICC. No further reproduction or distribution authorized. ANY UNAUTHORIZED REPRODUCTION OR DISTRIBUTION IS A VIOLATION OF THE FEDERAL COPYRIGHT ACT AND THE LICENSE AGREEMENT, AND SUBJECT TO CIVIL AND CRIMINAL PENALTIES THEREUNDER.

906.2 General requirements. Portable fire extinguishers shall be selected, installed and maintained in accordance with this section and NFPA 10.

Exceptions:

1. The distance of travel to reach an extinguisher shall not apply to the spectator seating portions of Group A-5 occupancies.
2. Thirty-day inspections shall not be required and maintenance shall be allowed to be once every 3 years for dry-chemical or halogenated agent portable fire extinguishers that are supervised by a *listed* and *approved* electronic monitoring device, provided that all of the following conditions are met:
   2.1. Electronic monitoring shall confirm that extinguishers are properly positioned, properly charged and unobstructed.
   2.2. Loss of power or circuit continuity to the electronic monitoring device shall initiate a trouble signal.
   2.3. The extinguishers shall be installed inside of a building or cabinet in a noncorrosive environment.
   2.4. Electronic monitoring devices and supervisory circuits shall be tested every 3 years when extinguisher maintenance is performed.
   2.5. A written log of required hydrostatic test dates for extinguishers shall be maintained by the *owner* to verify that hydrostatic tests are conducted at the frequency required by NFPA 10.
3. In Group I-3, portable fire extinguishers shall be permitted to be located at staff locations.

❖ NFPA 10 contains minimum requirements for the selection, installation and maintenance of portable fire extinguishers. Portable fire extinguishers are investigated and rated in conformance to NFPA 10 and listed under a variety of standards. Portable fire extinguishers must be labeled and rated for use on fires of the type, severity and hazard class protected.

NFPA 10 notes that more frequent inspections may be necessary where conditions warrant. For existing installations, a history of recent fires, vandalism, physical abuse and theft should be considered in determining if more frequent inspections are needed. For both existing and new facilities, determining the frequency of inspections should consider the environmental conditions in which the extinguisher will be located, including corrosiveness and temperature variations; and, the possibility of obstructions that may place the extinguisher out of reach in case of an emergency.

Exception 1 recognizes the openness to the atmosphere associated with Group A-5 occupancies. A fire in open areas is more obvious to all spectators. Group A-5 occupancies also do not accumulate smoke and hot gases because they are not enclosed spaces. These reasons, in addition to the large and expansive layout within seating areas, make it reasonable and practical not to apply the distance of travel to a PFE criteria in Group A-5. Revised distance of travel allowances would need to be approved by the fire code official. Group A-5 occupancies also tend to be more subject to the corrosive conditions of an outdoor environment, and may include freeze/thaw cycles that can be detrimental to fire extinguishers.

Exception 2 acknowledges a 30-day inspection interval similar to NFPA 10. An electronic monitoring device can determine whether or not the fire extinguisher is still present and whether or not its contents are still at the proper charge. The use of such devices, being relatively new, is allowed if it is limited to dry-chemical and halogenated agents with the additional safeguards noted in the list. Where inspection intervals may be at more frequent intervals, as discussed above, the use of electronic monitoring may have even greater benefit and is acknowledged as such in NFPA 10. The log, noted in the exception, can be a written log or a printout of the electronic log maintained by the electronic monitoring device. This exception provides the building owner with an alternative to the contract inspections popularly used.

Exception 3 recognizes that portable fire extinguishers located throughout the facility are at times tampered with, removed or used for weapons by inmates in a detention or correctional setting. This exception would protect the extinguishers from damage or removal by inmates while still making them available to staff and employees for use in an emergency situation.

906.2.1 Certification of service personnel for portable fire extinguishers. Service personnel providing or conducting maintenance on portable fire extinguishers shall possess a valid certificate issued by an *approved* governmental agency, or other *approved* organization for the type of work performed.

❖ Maintenance of fire protection systems and devices are minimum Chapter 9 requirements. Fire protection systems, like other technologies, have advanced new designs which require a clear understanding of their construction and maintenance. To ensure that systems and devices are properly maintained, the code now requires individuals performing these activities be certified. Certification must be issue by an approved organization or governmental agency.

These provisions align the code with NFPA standards governing the inspection and maintenance of portable fire extinguishers.

Qualifications for individuals who service portable fire extinguishers are established in the 2010 edition of NFPA 10. Section 7.1.2.1 of NFPA 10 requires individuals inspecting and servicing portable fire extinguishers be trained and certified to reliably perform these activities.

INTERNATIONAL CODE COUNCIL®
Copyright © 2015 ICC. ALL RIGHTS RESERVED. Accessed by David Dammon on Jun 21, 2017 12:30:52 PM pursuant to License Agreement with ICC. No further reproduction or distribution authorized. ANY UNAUTHORIZED REPRODUCTION OR DISTRIBUTION IS A VIOLATION OF THE FEDERAL COPYRIGHT ACT AND THE LICENSE AGREEMENT, AND SUBJECT TO CIVIL AND CRIMINAL PENALTIES THEREUNDER.

906.3 Size and distribution. The size and distribution of portable fire extinguishers shall be in accordance with Sections 906.3.1 through 906.3.4.

❖ Proper selection and distribution of portable fire extinguishers is essential to having adequate protection for the building structure and the occupancy conditions within. This section introduces the sections that provide those requirements. Determination of the desired type of portable fire extinguisher depends on the character of the fire anticipated, building occupancy, specific hazards and ambient temperature conditions [see commentary, Tables 906.3(1) and 906.3(2)].

906.3.1 Class A fire hazards. Portable fire extinguishers for occupancies that involve primarily Class A fire hazards, the minimum sizes and distribution shall comply with Table 906.3(1).

❖ Class A fires generally involve materials considered to be "ordinary combustibles," such as wood, cloth, paper, rubber and most plastics [see commentary, Table 906.3(1)].

TABLE 906.3(1)
FIRE EXTINGUISHERS FOR CLASS A FIRE HAZARDS

	LIGHT (Low) HAZARD OCCUPANCY	ORDINARY (Moderate) HAZARD OCCUPANCY	EXTRA (High) HAZARD OCCUPANCY
Minimum rated single extinguisher	2-A[c]	2-A	4-A[a]
Maximum floor area per unit of A	3,000 square feet	1,500 square feet	1,000 square feet
Maximum floor area for extinguisher[b]	11,250 square feet	11,250 square feet	11,250 square feet
Maximum distance of travel to extinguisher	75 feet	75 feet	75 feet

For SI: 1 foot = 304.8 mm, 1 square foot = 0.0929 m^2, 1 gallon = 3.785 L.

a. Two $2^1/_2$-gallon water-type extinguishers shall be deemed the equivalent of one 4-A rated extinguisher.

b. Annex E.3.3 of NFPA 10 provides more details concerning application of the maximum floor area criteria.

c. Two water-type extinguishers each with a 1-A rating shall be deemed the equivalent of one 2-A rated extinguisher for Light (Low) Hazard Occupancies.

❖ Table 906.3(1), which parallels Table 6.2.1.1 of NFPA 10, establishes the minimum number and rating of fire extinguishers for Class A fires in any particular occupancy. The occupancy classifications are further defined in NFPA 10. The maximum area that a single fire extinguisher can protect is determined based on the rating of the fire extinguisher. The distance of travel limitation of 75 feet (22 860 mm) is intended to be the actual walking distance along a normal path of travel to the extinguisher. For this reason, it is necessary to select fire extinguishers that comply with both the distribution criteria and travel distance limitation for a specific occupancy classification.

906.3.2 Class B fire hazards. Portable fire extinguishers for occupancies involving flammable or *combustible liquids* with depths of less than or equal to 0.25-inch (6.4 mm) shall be selected and placed in accordance with Table 906.3(2).

Portable fire extinguishers for occupancies involving flammable or *combustible liquids* with a depth of greater than 0.25-inch (6.4 mm) shall be selected and placed in accordance with NFPA 10.

❖ Class B fires involve flammable and combustible liquids, oil-based paints, alcohols, solvents, flammable gases and similar materials. Selection of these extinguishers is made based on the depth of the liquid that could become involved in a fire. If the depth is $^1/_4$-inch (6.35 mm) or less, selection is made using Table 906.3(2). Class B extinguishers for greater liquid depth, characterized in NFPA 10 as "appreciable depth," must be selected and installed in accordance with Section 6.3.2 of NFPA 10 [see commentary, Table 906.3(2)].

TABLE 906.3(2)
FLAMMABLE OR COMBUSTIBLE LIQUIDS WITH DEPTHS OF LESS THAN OR EQUAL TO 0.25-INCH[a]

TYPE OF HAZARD	BASIC MINIMUM EXTINGUISHER RATING	MAXIMUM DISTANCE OF TRAVEL TO EXTINGUISHERS (feet)
Light (Low)	5-B 10-B	30 50
Ordinary (Moderate)	10-B 20-B	30 50
Extra (High)	40-B 80-B	30 50

For SI: 1 inch = 25.4 mm, 1 foot = 304.8 mm.

a. For requirements on water-soluble flammable liquids and alternative sizing criteria, see Section 5.5 of NFPA 10.

❖ Fires involving flammable or combustible liquids present a severe hazard challenge regardless of occupancy. Table 906.3(2), which parallels Table 6.3.1.1 of NFPA 10, prescribes the minimum portable fire extinguisher requirements where flammable or combustible liquids are limited in depth [0.25 inch (6 mm) or less]. As can be seen in the table, the size of the extinguisher is directly related to the distance of travel to the extinguisher for each given occupancy classification. These fire extinguisher provisions are independent of whether other fixed automatic fire-extinguishing systems are installed. For occupancy conditions involving flammable or combustible liquids in potential depths greater than 0.25 inch (6 mm), the selection and spacing criteria of NFPA 10 must be used in addition to any applicable requirements in Chapter 57 and NFPA 30.

906.3.3 Class C fire hazards. Portable fire extinguishers for Class C fire hazards shall be selected and placed on the basis of the anticipated Class A or B hazard.

❖ Class C fires involve energized electrical equipment where the electrical nonconductivity of the extinguish-

INTERNATIONAL CODE COUNCIL®
Copyright © 2015 ICC. ALL RIGHTS RESERVED. Accessed by David Dammon on Jun 21, 2017 12:30:52 PM pursuant to License Agreement with ICC. No further reproduction or distribution authorized. ANY UNAUTHORIZED REPRODUCTION OR DISTRIBUTION IS A VIOLATION OF THE FEDERAL COPYRIGHT ACT AND THE LICENSE AGREEMENT, AND SUBJECT TO CIVIL AND CRIMINAL PENALTIES THEREUNDER.

ing agent is critical. The need for this class of extinguisher is simply based on the presence of the hazard in an occupancy and no numerical rating is required.

906.3.4 Class D fire hazards. Portable fire extinguishers for occupancies involving combustible metals shall be selected and placed in accordance with NFPA 10.

❖ Class D fires are fires involving flammable solids, the bulk of which are combustible metals, including, but not limited to magnesium, potassium, sodium and titanium. Most Class D extinguishers will have a special low velocity nozzle or discharge wand to gently apply the agent in large volumes to avoid disrupting any finely divided burning materials. Extinguishing agents are also available in bulk and can be applied with a scoop or shovel. While Class D extinguishers are often referred to as "dry chemical" fire extinguishers, they are more properly called "dry powder" fire extinguishers because their mechanism of extinguishment is by a smothering action rather than by chemical reaction with the combustion process.

There are several Class D fire-extinguisher agents available, some will handle multiple types of metal fires, others will not. Sodium carbonate-based extinguishers are used to control sodium, potassium, and sodium-potassium alloy fires but have limited use on other metals. This material smothers and forms a crust. Sodium chloride-based extinguishers contain sodium chloride salt and a thermoplastic additive. The plastic melts to form an oxygen-excluding crust over the metal, and the salt dissipates heat. This powder is useful on most alkali metals including magnesium, titanium, aluminum, sodium, potassium, and zirconium. Graphite based-extinguishers contain dry graphite powder that smothers burning metals. Unlike sodium chloride powder extinguishers, the graphite powder fire extinguishers can be used on very hot burning metal fires, such as lithium, but the powder will not stick to and extinguish flowing or vertical lithium fires. The graphite powder acts as a heat sink as well as smothering the metal fire. See the commentary to Section 5906.5.7 for a discussion of extinguishing flammable solid fires.

906.4 Cooking grease fires. Fire extinguishers provided for the protection of cooking grease fires shall be of an *approved* type compatible with the automatic fire-extinguishing system agent and in accordance with Section 904.12.5.

❖ The combination of high-efficiency cooking appliances and hotter burning cooking media creates a potentially severe fire hazard. Although commercial cooking systems must have an approved exhaust hood and be protected by an approved automatic fire-extinguishing system, a manual means of extinguishment is desirable to attack a fire in its incipient stage.

As indicated in Section 904.12.5, a Class K-rated portable fire extinguisher must be located within 30 feet (9144 mm) of travel distance of commercial-type cooking equipment. Class K-rated extinguishers have been specifically tested on commercial cooking appliances using vegetable or animal oils or fats. These portable fire extinguishers are usually of sodium bicarbonate or potassium bicarbonate dry-chemical type.

906.5 Conspicuous location. Portable fire extinguishers shall be located in conspicuous locations where they will be readily accessible and immediately available for use. These locations shall be along normal paths of travel, unless the *fire code official* determines that the hazard posed indicates the need for placement away from normal paths of travel.

❖ Fire extinguishers must be located in readily accessible locations along normal egress paths. This increases the occupants familiarity with the location of the fire extinguishers. When considering location, the most frequent occupants should be considered. These are the occupants who would become most familiar with the fire-extinguisher placement. For most buildings, it is the employees who are most familiar with their surroundings; therefore, a good understanding of employee operations is important for proper extinguisher placement.

906.6 Unobstructed and unobscured. Portable fire extinguishers shall not be obstructed or obscured from view. In rooms or areas in which visual obstruction cannot be completely avoided, means shall be provided to indicate the locations of extinguishers.

❖ Portable fire extinguishers must be located where they are readily visible at all times. If visual obstruction cannot be avoided, the location of the extinguishers must be marked by an approved means of identification. This could include additional signage, lights, arrows or other means approved by the fire code official. Unobstructed does not necessarily mean visible from all angles within the space. Often, columns or furnishings may obscure the extinguisher from one direction or another. These are not by themselves obstructions. The intent is that the extinguisher is not hidden but rather can be readily found. If the extinguisher is placed in the wall behind a door, it is clearly obstructed since it cannot be easily viewed. An extinguisher on a wall that is visible from most of the space would be considered unobstructed.

906.7 Hangers and brackets. Hand-held portable fire extinguishers, not housed in cabinets, shall be installed on the hangers or brackets supplied. Hangers or brackets shall be securely anchored to the mounting surface in accordance with the manufacturer's installation instructions.

❖ Portable fire extinguishers not housed in cabinets are usually mounted on walls or columns using securely fastened hangers. Brackets must be used where the fire extinguishers need to be protected from impact or other potential physical damage.

INTERNATIONAL CODE COUNCIL®
Copyright © 2015 ICC. ALL RIGHTS RESERVED. Accessed by David Dammon on Jun 21, 2017 12:30:52 PM pursuant to License Agreement with ICC. No further reproduction or distribution authorized. ANY UNAUTHORIZED REPRODUCTION OR DISTRIBUTION IS A VIOLATION OF THE FEDERAL COPYRIGHT ACT AND THE LICENSE AGREEMENT, AND SUBJECT TO CIVIL AND CRIMINAL PENALTIES THEREUNDER.

906.8 Cabinets. Cabinets used to house portable fire extinguishers shall not be locked.

Exceptions:

1. Where portable fire extinguishers subject to malicious use or damage are provided with a means of ready access.
2. In Group I-3 occupancies and in mental health areas in Group I-2 occupancies, access to portable fire extinguishers shall be permitted to be locked or to be located in staff locations provided the staff has keys.

❖ Cabinets housing fire extinguishers must not be locked in order to provide quick access in an emergency. Exception 1, however, allows the cabinets to be locked in occupancies where vandalism, theft or other malicious behavior is possible. Exception 2 also permits cabinets housing fire extinguishers to be locked or to be located in staff locations in Group I-3 occupancies and mental health areas in Group I-2 occupancies. Occupants in Group I-3 areas of jails, prisons or similar restrained occupancies should not have access to fire extinguishers because they could possibly be used as a weapon or be subject to vandalism. Staff adequately trained in the use of fire extinguishers are assumed to have ready access to the keys for the cabinets at all times

906.9 Extinguisher installation. The installation of portable fire extinguishers shall be in accordance with Sections 906.9.1 through 906.9.3.

❖ This section introduces the installation criteria for portable fire extinguishers based on the weight of the unit.

906.9.1 Extinguishers weighing 40 pounds or less. Portable fire extinguishers having a gross weight not exceeding 40 pounds (18 kg) shall be installed so that their tops are not more than 5 feet (1524 mm) above the floor.

❖ Due to the varying height and physical strength levels of persons who might be called upon to operate a portable fire extinguisher, the mounting height of the extinguisher must be commensurate with its weight so that it may be easily retrieved by anyone from its mounting location and placed into use.

906.9.2 Extinguishers weighing more than 40 pounds. Hand-held portable fire extinguishers having a gross weight exceeding 40 pounds (18 kg) shall be installed so that their tops are not more than 3.5 feet (1067 mm) above the floor.

❖ See the commentary to Section 906.9.1.

906.9.3 Floor clearance. The clearance between the floor and the bottom of installed hand-held portable fire extinguishers shall be not less than 4 inches (102 mm).

❖ The clearance between the floor and the bottom of installed hand-held extinguishers must not be less than 4 inches (102 mm) to facilitate cleaning beneath the unit and reduce the likelihood of the extinguisher becoming dislodged during cleaning operations (floor mopping, sweeping, etc.).

906.10 Wheeled units. Wheeled fire extinguishers shall be conspicuously located in a designated location.

❖ Wheeled fire extinguishers consist of a large-capacity (up to several hundred pounds of agent) fire extinguisher assembly (either stored-pressure or pressure transfer type) equipped with a carriage and wheels and discharge hose. They are constructed so that one able-bodied person could move the unit to the fire area and begin extinguishment unassisted. Wheeled fire extinguishers are capable of delivering greater flow rates and stream range for various extinguishing agents than hand-held portable fire extinguishers. Wheeled fire extinguishers are generally more effective in high-hazard areas and, as with any extinguisher, must be readily available and stored in an approved location. The wheeled fire extinguisher should be located a safe distance from the hazard area so that it will not become involved in the fire or access to it compromised by a fire. These units are typically found at airport fueling ramps, refineries, bulk plants and similar locations where high-challenge fires may be encountered. The extinguishing agents available in wheeled units include carbon dioxide, dry chemical, dry powder and foam.

SECTION 907
FIRE ALARM AND DETECTION SYSTEMS

907.1 General. This section covers the application, installation, performance and maintenance of fire alarm systems and their components in new and existing buildings and structures. The requirements of Section 907.2 are applicable to new buildings and structures. The requirements of Section 907.9 are applicable to existing buildings and structures.

❖ Fire alarm systems, which typically include manual fire alarm systems and automatic fire detection systems, must be installed in accordance with Section 907 and NFPA 72. As indicated in this section, only Section 907.9 is intended to be applicable to existing buildings and structures.

Manual fire alarm systems are installed in buildings to limit fire casualties and property losses. Fire alarm systems do this by promptly notifying the occupants of the building of an emergency, which increases the time available for evacuation. Similarly, when fire alarm systems are supervised, the fire department will be promptly notified and its response time relative to the onset of the fire will be reduced.

Automatic fire detection systems are required under certain conditions to increase the likelihood that a fire is detected and occupants are given an early warning. The detection system is a system of devices and associated hardware that activates the alarm system. The automatic detecting devices are to be smoke detectors, unless a condition exists that calls for the use of a different type of detector.

907.1.1 Construction documents. *Construction documents* for fire alarm systems shall be of sufficient clarity to indicate

INTERNATIONAL CODE COUNCIL®
Copyright © 2015 ICC. ALL RIGHTS RESERVED. Accessed by David Dammon on Jun 21, 2017 12:30:52 PM pursuant to License Agreement with ICC. No further reproduction or distribution authorized. ANY UNAUTHORIZED REPRODUCTION OR DISTRIBUTION IS A VIOLATION OF THE FEDERAL COPYRIGHT ACT AND THE LICENSE AGREEMENT, AND SUBJECT TO CIVIL AND CRIMINAL PENALTIES THEREUNDER.

the location, nature and extent of the work proposed and show in detail that it will conform to the provisions of this code, the *International Building Code* and relevant laws, ordinances, rules and regulations, as determined by the *fire code official*.

❖ Construction documents for fire alarm systems must be submitted for review to determine compliance with the code, the IBC and NFPA 72. All of the information required by this section may not be available during the design stage and initial permit process. Later submission of more detailed shop drawings may be required in accordance with Section 907.1.2. These provisions are intended to reflect the minimum scope of information needed to determine code compliance. When the work can be briefly described on the application form, the fire code official may utilize judgment in determining the need for more detailed documents.

907.1.2 Fire alarm shop drawings. Shop drawings for fire alarm systems shall be submitted for review and approval prior to system installation, and shall include, but not be limited to, all of the following where applicable to the system being installed:

1. A floor plan that indicates the use of all rooms.
2. Locations of alarm-initiating devices.
3. Locations of alarm notification appliances, including candela ratings for visible alarm notification appliances.
4. Design minimum audibility level for occupant notification.
5. Location of fire alarm control unit, transponders and notification power supplies.
6. Annunciators.
7. Power connection.
8. Battery calculations.
9. Conductor type and sizes.
10. Voltage drop calculations.
11. Manufacturers' data sheets indicating model numbers and listing information for equipment, devices and materials.
12. Details of ceiling height and construction.
13. The interface of fire safety control functions.
14. Classification of the supervising station.

❖ Since the fire protection contractor(s) may not have been selected at the time a permit is issued for construction of a building, detailed shop drawings for fire alarm systems may not be available. Because they provide the information necessary to determine code compliance, as specified in this section, they must be submitted and approved by the fire code official before the contractor can begin installing the system.

907.1.3 Equipment. Systems and components shall be *listed* and *approved* for the purpose for which they are installed.

❖ The components of the fire alarm system must be approved for use in the planned system. NFPA 72 requires all devices, combinations of devices, appliances and equipment to be labeled for their proposed use. The testing agency will test the components for use in various types of systems and stipulate the use of the component on the label. Evidence of listing and labeling of the system components must be submitted with the shop drawings. In some instances, the entire system may be labeled.

At least one major testing agency, Underwriters Laboratories, Inc. (UL), has a program in which alarm installation and service companies are issued a certificate and become listed by the agency as being qualified to design, install and maintain local, auxiliary, remote station or proprietary fire alarm systems. The listed companies may then issue a certificate showing that the system is in compliance with Section 907.Terms of the company certification by UL include the company being responsible for keeping accurate system documentation, including as-built record drawings, acceptance test records and complete maintenance records on a given system. The company is also responsible for the required periodic inspection and testing of the system under contract with the owner. A similar program has been available for many years for central station alarm service, whereas the UL program is relatively new to the industry. Even though this company and system listing program is not required by the code or NFPA 72, it can be a valuable tool for the fire code official in determining compliance with the referenced standard.

Another issue that must be considered is the compatibility of the system components as required by NFPA 72. The labeling of system components discussed above should include any compatibility restrictions for components. Compatibility is primarily an issue of the ability of smoke detectors and fire alarm control panels (FACPs) to function properly when interconnected and affects the two-wire type of smoke detectors, which obtain their operating power over the same pair of wires used to transmit signals to the FACP (the control unit initiating device circuits). Laboratories will test for component compatibility either by actual testing or by reviewing the circuit parameters of both the detector and the FACP. Generally, if both the two-wire detector and the FACP are of the same brand, there should not be a compatibility problem. Nevertheless, the fire code official must be satisfied that the components are listed as being compatible. Failure to comply with the compatibility requirements of NFPA 72 can lead to system malfunction or failure when it may be needed the most.

INTERNATIONAL CODE COUNCIL®
Copyright © 2015 ICC. ALL RIGHTS RESERVED. Accessed by David Dammon on Jun 21, 2017 12:30:52 PM pursuant to License Agreement with ICC. No further reproduction or distribution authorized. ANY UNAUTHORIZED REPRODUCTION OR DISTRIBUTION IS A VIOLATION OF THE FEDERAL COPYRIGHT ACT AND THE LICENSE AGREEMENT, AND SUBJECT TO CIVIL AND CRIMINAL PENALTIES THEREUNDER.

907.2 Where required—new buildings and structures. An *approved* fire alarm system installed in accordance with the provisions of this code and NFPA 72 shall be provided in new buildings and structures in accordance with Sections 907.2.1 through 907.2.23 and provide occupant notification in accordance with Section 907.5, unless other requirements are provided by another section of this code.

Not fewer than one manual fire alarm box shall be provided in an *approved* location to initiate a fire alarm signal for fire alarm systems employing automatic fire detectors or waterflow detection devices. Where other sections of this code allow elimination of fire alarm boxes due to sprinklers, a single fire alarm box shall be installed.

Exceptions:

1. The manual fire alarm box is not required for fire alarm systems dedicated to elevator recall control and supervisory service.
2. The manual fire alarm box is not required for Group R-2 occupancies unless required by the *fire code official* to provide a means for fire watch personnel to initiate an alarm during a sprinkler system impairment event. Where provided, the manual fire alarm box shall not be located in an area that is accessible to the public.

❖ This section specifies the occupancies or conditions in new buildings or structures that require some form of fire alarm system. The fire alarm system is either a manual fire alarm system (manual fire alarm boxes) or an automatic smoke detection system. These systems must, upon activation, provide occupant notification throughout the area protected by the system unless other alternative provisions are allowed by this section.

Manual fire alarm systems must be installed in certain occupancies depending on the number of occupants, capabilities of the occupants and height of the building. An automatic smoke detection system must be installed in those occupancies and conditions where the need to detect the fire is essential to evacuation or protection of the occupants. The requirements for automatic smoke detection are generally based on the evacuation needs of the occupants and whether the occupancy includes sleeping accommodations.

Fire alarm systems must be installed in accordance with the code and NFPA 72. NFPA 72 identifies the minimum performance, location, mounting, testing and maintenance requirements for fire alarm systems. Smoke detectors must be used, except when ambient conditions would prohibit their use. In that case other detection methods may be used. The manufacturer's literature will identify the limitations on the use of smoke detectors, including environmental conditions such as humidity, temperature and airflow.

Only certain occupancies are required to have either a manual fire alarm or automatic fire detection system installed (see Commentary Figure 907.2). The need for either system is generally determined by the number of occupants, the height of the building or the ability of the occupants for self-preservation.

Note that generally the fire alarm requirements are based upon occupancy and not on fire area. Commentary Figure 907.2 contains the conditions that require when either system must be installed in a building. The extent that an alarm system must be installed in a building once it has been determined that such a system is required is based on several factors. One, if it is the only occupancy in the building, then it would be required throughout the building. Two, if the building is a mixed occupancy, it can either be separated or nonseparated. If the occupancy is separated in accordance with Section 508.4 of the IBC, then the alarm system is only required within that separated portion of the building. If the building is considered a nonseparated, mixed occupancy building, then Section 508.3.1 of the IBC states that the code apply to each portion of the building based upon the occupancy classification of that space and the most restrictive provisions of Chapter 9 shall apply to the building or portion thereof in which the nonseparated occupancies are located. Therefore, if you had a Group A occupancy in a nonseparated mixed occupancy (containing other occupancies such as Group B and M) where the Group A occupancy exceeds an occupant load of 300, then the entire nonseparated mixed occupancy would require the alarm system. Note that Section 508.3.1 focuses on each space to determine occupancy and requirements. Once the occupant load is determined, then any requirements, such as fire alarms, would be required throughout.

The code does not address whether or not a nonseparated mixed occupancy has a completely independent means of egress such as in a strip mall. Additionally, in a building containing primarily Group A occupancies, the code does not clearly address whether such occupancies within a building should be looked at as an aggregate or individual space. This issue has been clarified in the 2012 edition of the code through the use of the fire area concept for Group A occupancies, but only for the basic manual fire alarm requirements in Section 907.2.1. The emergency voice/alarm communication requirements in Section 907.2.1.1 still simply provide a criteria of 1000 or more occupants in a Group A occupancy. A building with multiple Group A occupancies without using the concept of separation of egress paths would need to be reviewed in aggregate. Fire area separation could not be used to provide separation of occupancies in this case.

Commentary Figure 907.2 contains the threshold requirements for when a manual fire alarm system or an automatic fire detection system is required based on the occupancy group. It is important to remember that although the requirement for manual pull stations may not apply (e.g., sprinklered buildings), alarm and occupant notification may still be required. Sections 907.2.11 through 907.2.23 contain additional require-

INTERNATIONAL CODE COUNCIL®
Copyright © 2015 ICC. ALL RIGHTS RESERVED. Accessed by David Dammon on Jun 21, 2017 12:30:52 PM pursuant to License Agreement with ICC. No further reproduction or distribution authorized. ANY UNAUTHORIZED REPRODUCTION OR DISTRIBUTION IS A VIOLATION OF THE FEDERAL COPYRIGHT ACT AND THE LICENSE AGREEMENT, AND SUBJECT TO CIVIL AND CRIMINAL PENALTIES THEREUNDER.

ments for fire alarm systems depending on special occupancy conditions such as atriums, high-rise buildings or covered mall buildings.

The single manual fire alarm box required by this section is needed to provide a means of manually activating a fire alarm system that only contains automatic devices such as sprinkler waterflow switches or smoke detectors. Its primary use is for alarm system maintenance technicians to be able to manually activate the fire alarm system in the event of a fire during the time the system or portions of the system is down for maintenance. Note that this requirement is not subject to any of the exceptions in Sections 907.2.1 through 907.2.23 that might waive the need for manual fire alarm boxes in certain buildings.

Exception 1 recognizes the specialized nature of fire alarm systems installed only for emergency elevator control and supervision.

Exception 2 waives the single manual fire alarm box but gives the fire code official authority to require it in sprinklered buildings for use by fire watch personnel or sprinkler maintenance personnel to be able to manually activate the fire alarm system in the event of a fire during the time the sprinkler system is down for maintenance.

MANUAL FIRE ALARM SYSTEM	
Occupancy Group(s)	**Threshold**
Assembly (A-1, A-2, A-3, A-4, A-5)	All with an occupant load of > 300 (907.2.1)
Business (B)	Total Group B occupant load of > 500; or, > 100 above/below level of exit discharge; or, in Group B fire areas containing an ambulatory care facility (907.2.2)
Educational (E)	> 50 occupants (several exceptions for manual fire alarm box placement) (907.2.3)
Factory (F-1, F-2)	> 2 stories with occupant load of > 500 above/below lowest level of exit discharge (exception for sprinklers) (907.2.4)
High hazard (H)	Group H-5 and in occupancies for manufacture of organic coatings. (907.2.5)
Institutional (I-1, I-2, I-3, I-4)	All (exceptions for I-1 and I-2 manual fire alarm box placement and private mode signaling) (907.2.6)
Mercantile (M)	Total Group M occupant load of > 500; or, occupant load of >100 above/below level of exit discharge (907.2.7)
Hotels (R-1)	All (exceptions for < 2 stories with sleeping units having exit directly to exterior; sprinklers) (907.2.8.1)
Multi-family (R-2)	If units > 3 stories above lowest level of exit discharge; or, > 1 story below highest level of exit discharge; or, > 16 units (exceptions for < 2 stories with sleeping units having exit directly to exterior; sprinklers) open ended corridors/no corridor (907.2.9.1)
Residential care/assisted living (R-4)	All (exceptions for sprinklers, manual fire alarm boxes at staff locations, direct exit to exterior, less than 2 stories) (907.2.10.1)
AUTOMATIC SMOKE DETECTION SYSTEM	
Business (B) Ambulatory care facilities	Facility plus public use areas outside of it including public corridors and elevator lobbies (exception for sprinklers) (907.2.2.1)
High hazard (H)	Highly toxic gases, organic peroxides, oxidizers (907.2.5)
Institutional (I-1, I-2, I-3)	All, in specific areas by occupancy (907.2.6.1, 907.2.6.2, 907.2.6.3.3)
Hotels (R-1)	All, in interior corridors (exception for buildings without interior corridors and with sleeping units having exit directly to exterior) (907.2.8.2)
Residential care/assisted living (R-4)	All, in corridors, waiting areas open to corridors, nonsleeping area habitable spaces and kitchens (exceptions for sprinklers and sleeping units having exit directly to exterior) (907.2.10.2)
College and university buildings (R-2 dormatories)	Common spaces; laundry, mechanical and storage rooms; interior corridors. No interior corridors and each unit has direct exit access or exit.

Figure 907.2
SUMMARY OF MANUAL FIRE ALARM AND AUTOMATIC SMOKE DETECTION SYSTEM THRESHOLDS

INTERNATIONAL CODE COUNCIL®
Copyright © 2015 ICC. ALL RIGHTS RESERVED. Accessed by David Dammon on Jun 21, 2017 12:30:52 PM pursuant to License Agreement with ICC. No further reproduction or distribution authorized. ANY UNAUTHORIZED REPRODUCTION OR DISTRIBUTION IS A VIOLATION OF THE FEDERAL COPYRIGHT ACT AND THE LICENSE AGREEMENT, AND SUBJECT TO CIVIL AND CRIMINAL PENALTIES THEREUNDER.

907.2.1 Group A. A manual fire alarm system that activates the occupant notification system in accordance with Section 907.5 shall be installed in Group A occupancies where the occupant load due to the assembly occupancy is 300 or more. Group A occupancies not separated from one another in accordance with Section 707.3.10 of the *International Building Code* shall be considered as a single occupancy for the purposes of applying this section. Portions of Group E occupancies occupied for assembly purposes shall be provided with a fire alarm system as required for the Group E occupancy.

Exception: Manual fire alarm boxes are not required where the building is equipped throughout with an automatic sprinkler system installed in accordance with Section 903.3.1.1 and the occupant notification appliances will activate throughout the notification zones upon sprinkler water flow.

❖ Group A occupancies are typically occupied by a significant number of people who are not completely familiar with their surroundings. The provisions of this section address three separate situations regarding the application of the alarm requirements for Group A occupancies. The three situations addressed by the provisions are: (1) where an assembly occupancy and another occupancy are involved, (2) where multiple assembly areas exist in a building, and (3) where the assembly use occurs in and is a part of a Group E occupancy.

In situations where an assembly area and another occupancy are involved, the code specifies that it is the occupant load "due to the assembly occupancy" that would need to be 300 or more before the manual alarm system is required. For example, if the building is constructed with an assembly occupancy, such as a restaurant, with an occupant load of 250 and an adjacent office area with an occupant load of 100, the assembly space would not require an alarm system because the occupant load "due to the assembly occupancy" is less than 300. This is really simply a clarification of the way the provisions were intended to be applied. This would be the intended way to apply the provision whether the building was constructed using the accessory-, separated-, or nonseparated-occupancy requirements of Chapter 5 of the IBC.

In buildings that contain multiple assembly areas, the second portion of the code text requires that the aggregate occupant load of the assembly areas is used unless the spaces are separated as required for fire areas in Section 707.3.10 of the IBC. Consider two examples to address this portion of the requirements. In a multitheater complex, the auditoriums are generally not separated from each other by the 2-hour fire-resistance rating that Table 707.3.10 of the IBC would require; therefore, the aggregate occupant load of all of the assembly spaces would be combined to determine if the occupant load was 300 or more. If it was, then the manual alarm would be required in all of the assembly spaces. As another example, consider a strip mall shopping center with a restaurant at one end of the building with an occupant load of 200 and a different restaurant with an occupant load of 150 at the other end of the building. Even though these are two completely separate establishments and have an amount of retail occupancy between them, the occupant load of the assembly areas does exceed 300. Therefore, unless a 2-hour fire-resistance-rated separation complying with Section 707.3.10 of the IBC is provided somewhere between the two restaurants to separate them into different fire areas, a manual fire alarm would be required in the Group A occupancies. If a complying separation is provided at some point in the building, then each assembly space can be reviewed independently and would not require the installation of the alarm system. Be aware that the separation of assembly spaces or the need to aggregate the occupant loads from them could occur not only on the same floor within a building but also to assembly uses located on different stories.

The exception allows the omission of manual fire alarm boxes in buildings equipped throughout with an automatic sprinkler system if activation of the sprinkler system will activate the building evacuation alarms associated with the manual fire alarm system.

This section also permits assembly-type areas in Group E occupancies to comply with Section 907.2.3 instead of the requirements of this section. A typical high school, for example, contains many areas used for assembly purposes such as a gymnasium, cafeteria, auditorium or library; however, they all exist to serve as an educational facility as their main function. The exception does not eliminate the fire alarm system and occupant notification system, but rather permits them to be initiated automatically by the sprinkler waterflow switch(es) instead of by the manual fire alarm boxes. It also reduces the possibility of mischievous or malicious false alarms being turned on by manual fire alarm boxes in venues where large numbers of people congregate.

907.2.1.1 System initiation in Group A occupancies with an occupant load of 1,000 or more. Activation of the fire alarm in Group A occupancies with an *occupant load* of 1,000 or more shall initiate a signal using an emergency voice/alarm communications system in accordance with Section 907.5.2.2.

Exception: Where *approved*, the prerecorded announcement is allowed to be manually deactivated for a period of time, not to exceed 3 minutes, for the sole purpose of allowing a live voice announcement from an *approved*, constantly attended location.

❖ In order to afford authorized personnel the ability to selectively evacuate or manage occupant relocation in large assembly venues, this section requires the fire alarm system to operate through an emergency voice/alarm communications system. The exception allows the automatic alarm signals to be overridden for live voice instructions if the live voice instructions

INTERNATIONAL CODE COUNCIL®
Copyright © 2015 ICC. ALL RIGHTS RESERVED. Accessed by David Dammon on Jun 21, 2017 12:30:52 PM pursuant to License Agreement with ICC. No further reproduction or distribution authorized. ANY UNAUTHORIZED REPRODUCTION OR DISTRIBUTION IS A VIOLATION OF THE FEDERAL COPYRIGHT ACT AND THE LICENSE AGREEMENT, AND SUBJECT TO CIVIL AND CRIMINAL PENALTIES THEREUNDER.

do not exceed 3 minutes. The location from which the live voice announcement originates must be constantly attended and approved by the fire code official (see also commentary, Section 907.5.2.2). In terms of the applicability of this section, it is not as specific as Section 907.2.1. More specifically, the concept of fire areas does not apply. Credit is not given to reduce the occupant load through the use of the fire area concept (see commentary, Section 907.2).

907.2.1.2 Emergency voice/alarm communication system captions. Stadiums, arenas and grandstands required to caption audible public announcements shall be in accordance with Section 907.5.2.2.4.

❖ A 2008 U.S. Federal Court case prompted a change to the code and the IBC. The court ruled that persons with hearing impairments who attend events at stadiums, grandstands and arenas require a means of equivalent communications in lieu of the public address system. Providing occupant notification in these structures is challenging because of the building area and the number and diversity of occupants. Provisions were added in the code to require captioned messages in these buildings and grandstands when public address (PA) systems are prescribed by the accessibility requirements.

IBC Section 1108.2.7.3 sets forth requirements for audible PA systems in stadiums, arenas and grandstands. It requires that equivalent text information be provided to the audience and that the delivery time for these messages be the same as those broadcast from the PA system. These requirements apply to pre-recorded and real-time messages. Section 1108.2.7.3 of the IBC also requires captioning of messages in stadiums, arenas and grandstands that have more than 15,000 fixed seats.

Because messages being broadcast can include instructions to building or site occupants explaining the actions they need to take in the event of an emergency, the requirements of NFPA 72 are applicable for captioning systems. Such a system falls within the scope of Chapter 24 of NFPA 72, entitled "Emergency Communication Systems." NFPA 72 defines an emergency communications system (ECS) as a system designed for life safety that indicates the existence of an emergency and communicates the appropriate response and action. The ECS is required to be classified as either a one- or two-way path system. It can be within a building or over a wide area or can be targeted to a particular group of recipients. The messages that will be broadcast are based on an emergency response plan developed during a risk analysis by the project stakeholders and is approved by the fire code official.

The NFPA 72 ECS requirements are based on in-building or wide-area occupant notification. Wide-area systems could include the entire area of a jurisdiction. For a stadium, arena or grandstand captioning, NFPA 72 defines these as mass notification systems (MNS). In the context of the NFPA 72 requirements, this particular code change requires a one-way MNS where instructions are broadcast by personnel authorized to distribute messages. This could include firefighters during a fire event; the system could be used by law enforcement officers during a domestic terrorism incident or a weather event like a tornado warning.

The design of the compliant MNS in Chapter 24 of NFPA 72 is not prescriptive—a MNS is a performance-based design. Accordingly, fire code officials should require their design to be sealed by a registered professional engineer. Chapter 24 of the standard requires the preparation of a risk analysis based on the nature and anticipated risks of the facility. The risk analysis is part of the design brief, which will serve as the basis of the system design and is a required design document. NFPA 72 requires the following elements included in the risk analysis:

- The number of persons within the building, area, space, campus or region;
- The character of the occupancy, such as unique hazards and the rate at which the hazard can develop;
- The anticipated threats, including natural, technological and intentional events;
- The reliability and performance of the MNS;
- Security of the MNS and its components;
- How the building or staff implement the risk analysis, including the use of the MNS; and
- How emergency services, such as the fire service and law enforcement agencies, can employ the MNS.

In a stadium or arena, the captioning system is required to be a component of the emergency voice/communication alarm system (EV/ACS). Such a system is required by Section 907.2.1.1 in Group A occupancies with an occupant load of 1,000 or more.

The requirement in Section 907.5.2.2.4 specifies the captioning system would be connected to the EV/ACS. The fire alarm control unit will require a listed interface unit capable of displaying text messages. Textual visible appliances are allowed by NFPA 72 when used in conjunction with audible, visual or both types of notification appliances. In the public mode, textual visible appliances are located to ensure readability by the building occupants. Such a system can display messages using televisions or light-emitting diode (LED) marquee signs.

The design concept of MNS is relatively new in the design community. Captioning systems might utilize components that are not listed for fire alarm service so the design will be required to comply with Chapter 241 of NFPA 72 for textual visible notification appliances. Emergency textual messages take precedence over any nonemergency text messages. Under NFPA 72, these devices require a primary and secondary power supply. If the devices are not monitored for integrity or loss of communications by an autonomous control or a fire alarm control unit, the appliance

INTERNATIONAL CODE COUNCIL®
Copyright © 2015 ICC. ALL RIGHTS RESERVED. Accessed by David Dammon on Jun 21, 2017 12:30:52 PM pursuant to License Agreement with ICC. No further reproduction or distribution authorized. ANY UNAUTHORIZED REPRODUCTION OR DISTRIBUTION IS A VIOLATION OF THE FEDERAL COPYRIGHT ACT AND THE LICENSE AGREEMENT, AND SUBJECT TO CIVIL AND CRIMINAL PENALTIES THEREUNDER.

must clearly display its status. The size of characters displayed must comply with the requirements in NFPA 72. The NFPA 72 size, character and font requirements are based on the location of the display in relation to the height and distance from the persons viewing it.

907.2.2 Group B. A manual fire alarm system shall be installed in Group B occupancies where one of the following conditions exists:

1. The combined Group B *occupant load* of all floors is 500 or more.
2. The Group B *occupant load* is more than 100 persons above or below the lowest *level of exit discharge*.
3. The *fire area* contains an ambulatory care facility.

Exception: Manual fire alarm boxes are not required where the building is equipped throughout with an *automatic sprinkler system* installed in accordance with Section 903.3.1.1 and the occupant notification appliances will activate throughout the notification zones upon sprinkler water flow.

❖ Group B occupancies generally involve individuals or groups of people in separate office areas. As a result, the occupants are not necessarily aware of what is going on in other parts of the building. Group B buildings with large occupant loads, even in single-story buildings, or where a substantial number of occupants are above or below the level of exit discharge, increase the difficulty of alerting the occupants of a fire. This is especially true in nonsprinklered buildings with given occupant load thresholds. Group B occupancies include a specific use called ambulatory care facilities which present a higher level of life hazard than the typical Group B occupancy. The fact that the care recipients of such facilities may be rendered incapable of self-preservation for limited periods of time makes the need for a fire alarm system critical. Section 907.2.2 requires a manual alarm system any time a fire area contains a ambulatory care facility. See the commentary to Section 202, definition of "Ambulatory care facility" and Section 907.2.2.1.

The exception does not eliminate the fire alarm system, but rather permits it to be initiated automatically by the sprinkler waterflow switch(es) instead of by the manual fire alarm boxes.

907.2.2.1 Ambulatory care facilities. *Fire areas* containing ambulatory care facilities shall be provided with an electronically supervised automatic smoke detection system installed within the ambulatory care facility and in public use areas outside of tenant spaces, including public *corridors* and elevator lobbies.

Exception: Buildings equipped throughout with an *automatic sprinkler system* in accordance with Section 903.3.1.1 provided the occupant notification appliances will activate throughout the notification zones upon sprinkler water flow.

❖ Years ago, few surgical procedures were performed outside of a hospital. Today, complex outpatient surgeries conducted outside of a hospital are commonplace. They are performed in facilities often called "day surgery centers" or "ambulatory surgical centers" because patients are able to walk in and walk out the same day. Procedures render care recipients temporarily incapable of self-preservation by application of nerve blocks, sedation or anesthesia; however, they do typically recover quickly.

The IBC identifies health care Group I occupancies as including a 24-hour stay. Without a 24-hour stay, these surgery centers were classified as Group B, which allowed the care providers to render an unlimited number of people incapable of self-preservation with no more protection than a business office. Since these types of facilities contain distinctly different hazards to life safety than other Group B occupancies, they are now required to have a higher level of life safety and fire protection as evidenced by the requirements of this section, as well as Section 903.2.2 and the construction provisions of the code.

This section more specifically states that any time a fire area contains an ambulatory care facility, the fire area should be provided with a supervised smoke detection system in the ambulatory care facility and in public use areas outside of tenant spaces. Therefore, in a medical office building, for example, the ambulatory care facility contained within would have a full coverage system. The other offices in the building would not require smoke detection in the individual tenant spaces but instead in the public areas, such as lobby or lounge areas.

The exception does not eliminate the fire alarm system, but rather permits it to be initiated automatically by the sprinkler water flow switch(es) instead of by manual fire alarm boxes.

907.2.3 Group E. A manual fire alarm system that initiates the occupant notification signal utilizing an emergency voice/alarm communication system meeting the requirements of Section 907.5.2.2 and installed in accordance with Section 907.6 shall be installed in Group E occupancies. When *automatic sprinkler systems* or smoke detectors are installed, such systems or detectors shall be connected to the building fire alarm system.

Exceptions:

1. A manual fire alarm system is not required in Group E occupancies with an *occupant load* of 50 or less.
2. Emergency voice/alarm communication systems meeting the requirements of Section 907.5.2.2 and installed in accordance with Section 907.6 shall not be required in Group E occupancies with occupant loads of 100 or less, provided that activation of the manual fire alarm system initiates an *approved* occupant notification signal in accordance with Section 907.5.
3. Manual fire alarm boxes are not required in Group E occupancies where all of the following apply:

    3.1. Interior *corridors* are protected by smoke detectors.

INTERNATIONAL CODE COUNCIL®
Copyright © 2015 ICC. ALL RIGHTS RESERVED. Accessed by David Dammon on Jun 21, 2017 12:30:52 PM pursuant to License Agreement with ICC. No further reproduction or distribution authorized. ANY UNAUTHORIZED REPRODUCTION OR DISTRIBUTION IS A VIOLATION OF THE FEDERAL COPYRIGHT ACT AND THE LICENSE AGREEMENT, AND SUBJECT TO CIVIL AND CRIMINAL PENALTIES THEREUNDER.

3.2. Auditoriums, cafeterias, gymnasiums and similar areas are protected by *heat detectors* or other *approved* detection devices.

3.3. Shops and laboratories involving dusts or vapors are protected by *heat detectors* or other *approved* detection devices.

4. Manual fire alarm boxes shall not be required in Group E occupancies where all of the following apply:

4.1. The building is equipped throughout with an *approved automatic sprinkler system* installed in accordance with Section 903.3.1.1.

4.2. The emergency voice/alarm communication system will activate on sprinkler water flow.

4.3. Manual activation is provided from a normally occupied location.

❖ Section 404.2.3 addresses the development and implementation of lockdown plans. These requirements were developed to ensure that the level of life safety inside of the building is not reduced or compromised during a lockdown. In order for a building to safely function in a lockdown condition, the code requires a means of communication between the established central location and each secured area. Section 404.3.3.1 does not prescribe the means of communication, which could include the use of text messages to cell phones/mobile devices, e-mail messages or the use of preestablished audio or visual signals. The provisions in Section 404.2.3 are not specific to Group E occupancies—they are applicable to all occupancies that develop and implement lockdown plans.

Because of concerns of school campus safety serving kindergarten through 12th grade students, specific requirements were put into the 2012 edition of the IBC and the code for enhanced communication between the school administrators, teachers and students when a lockdown plan is activated in Group E occupancies. As a result, emergency voice/alarm communication systems (EV/ACS) are prescribed in Group E occupancies. Previously the code would have permitted the manual fire alarm system to use audible and visible alarm notification appliances and did not require the added capabilities that an EV/ACS provides.

This section sets forth the requirements for automatic fire alarm and detection system requirements in Group E occupancies and prescribes the installation of an EV/ACS as opposed to a traditional horn/strobe occupant notification system.

Exception 1 exempts Group E occupancies from requiring a fire alarm system when the occupant load is less than 50. This would exempt small day care centers that serve children older than $2^1/_2$ years of age or a small Sunday school classroom at a place of religious worship.

Exception 2 provides relief for smaller schools. If the occupant load is 100 or less, notification is not required to be via an emergency voice/alarm communication system. A school with 100 occupants only has a few classrooms of children. Communication is simplified and an emergency voice/alarm communication system is considered to be excessive.

Exception 3 exempts manual fire alarm boxes in interior corridors, laboratories, auditoriums, cafeterias, gymnasiums and similar spaces based on the installation of heat/smoke detectors. This is not an exception from the EV/ACS but simply an exemption of locations requiring manual fire alarm boxes. The applicability of Exception 2 is independent of whether an automatic sprinkler system is installed. If an automatic smoke detection system is installed, it must be connected to the building fire alarm system.

Exception 4 allows the omission of the manual fire alarm boxes in Group E occupancies equipped throughout with an automatic sprinkler system if the actuation of the sprinkler system will activate the EV/ACS. See Section 903.2.3 for sprinkler requirements in Group E buildings.

907.2.4 Group F. A manual fire alarm system that activates the occupant notification system in accordance with Section 907.5 shall be installed in Group F occupancies where both of the following conditions exist:

1. The Group F occupancy is two or more stories in height.
2. The Group F occupancy has a combined *occupant load* of 500 or more above or below the lowest *level of exit discharge*.

Exception: Manual fire alarm boxes are not required where the building is equipped throughout with an *automatic sprinkler system* installed in accordance with Section 903.3.1.1 and the occupant notification appliances will activate throughout the notification zones upon sprinkler water flow.

❖ This section is intended to apply to large multistory manufacturing facilities. For this reason, a manual fire alarm system would be required only if the building were at least two stories in height and had 500 or more occupants above or below the level of exit discharge. An unlimited area, two-story Group F occupancy complying with Section 507.5 of the IBC would be indicative of an occupancy requiring a manual fire alarm system.

Buildings in compliance with Section 507.5 of the IBC, and large manufacturing facilities in general, however, must be fully sprinklered and would thus be eligible for the exception. The exception does not eliminate the fire alarm system but rather permits it to be initiated automatically by the sprinkler system waterflow switch(es) instead of by the manual fire alarm boxes.

907.2.5 Group H. A manual fire alarm system that activates the occupant notification system in accordance with Section 907.5 shall be installed in Group H-5 occupancies and in occupancies used for the manufacture of organic coatings. An automatic smoke detection system shall be installed for

INTERNATIONAL CODE COUNCIL®
Copyright © 2015 ICC. ALL RIGHTS RESERVED. Accessed by David Dammon on Jun 21, 2017 12:30:52 PM pursuant to License Agreement with ICC. No further reproduction or distribution authorized. ANY UNAUTHORIZED REPRODUCTION OR DISTRIBUTION IS A VIOLATION OF THE FEDERAL COPYRIGHT ACT AND THE LICENSE AGREEMENT, AND SUBJECT TO CIVIL AND CRIMINAL PENALTIES THEREUNDER.

highly toxic gases, organic peroxides and oxidizers in accordance with Chapters 60, 62 and 63, respectively.

❖ Because of the nature and potential quantity of hazardous materials in Group H-5 occupancies, a manual means of activating an occupant notification system is essential for the safety of the occupants. In accordance with Section 2703.11, the activation of the alarm system must initiate a local alarm and transmit a signal to the emergency control station. The manual fire alarm system requirement for the building is in addition to the emergency alarm requirements in Section 2703.12 (see Section 908.2).

Occupancies involved in the manufacture of organic coatings present special hazardous conditions because of the unstable character of the materials, such as nitrocellulose. Good housekeeping and control of ignition sources is critical. Chapter 29 contains additional requirements for organic coating manufacturing processes.

This section also requires an automatic smoke detection system in certain occupancy conditions involving either highly toxic gases or organic peroxides and oxidizers. The need for the automatic smoke detection system may depend on the class of materials and additional levels of fire protection provided. This requirement also assumes the quantity of materials is in excess of the maximum allowable quantities shown in Tables 5003.1.1(1) and 5003.1.1(2).

907.2.6 Group I. A manual fire alarm system that activates the occupant notification system in accordance with Section 907.5 shall be installed in Group I occupancies. An automatic smoke detection system that activates the occupant notification system in accordance with Section 907.5 shall be provided in accordance with Sections 907.2.6.1, 907.2.6.2 and 907.2.6.3.3.

Exceptions:

1. Manual fire alarm boxes in *sleeping units* of Group I-1 and I-2 occupancies shall not be required at *exits* if located at all care providers' control stations or other constantly attended staff locations, provided such stations are visible and continuously accessible and that the distances of travel required in Section 907.4.2.1 are not exceeded.
2. Occupant notification systems are not required to be activated where private mode signaling installed in accordance with NFPA 72 is *approved* by the *fire code official* and staff evacuation responsibilities are included in the fire safety and evacuation plan required by Section 404.

❖ Because the protection and possible evacuation of the occupants in Group I occupancies are most often dependent on the response by care providers, occupancies in Group I must be protected with a manual fire alarm system and in certain instances, as described in Sections 907.2.6.1, 907.2.6.2 and 907.2.6.3, an automatic smoke detection system. In Group I-1, smoke alarms are also required in accordance with Section 907.6.1.1.

It is not the intent of this section to require a smoke detection system throughout all Group I occupancies. Smoke detectors are only generally required in the corridors and in waiting rooms that are open to corridors, unless noted otherwise. IFC Committee Interpretation No. 36-03 makes it clear that the Group I provisions only require a manual fire alarm system with smoke detectors in selected areas.

To reduce the potential for unwanted alarms, manual fire alarm boxes may be located at the care providers' control stations or another constantly attended location.

Exception 1 reduces the likelihood of accidental or malicious false alarm system activations by manual means by allowing the pull stations to be located in a more controlled area. It assumes the approved location is always accessible by care providers and within a distance of travel of 200 feet (60 960 mm).

Exception 2 allows the common practice in Group I occupancies of only notifying the care providers instead of all building occupants in the event of a fire, subject to the approval of the fire code official. In order to have confidence that the actions taken will be appropriate, the code also requires that the responsibilities of the staff be documented in the fire safety and evacuation plan for the facility. These requirements are found in Section 404. This will increase the likelihood for any staff training to be linked to the allowance of private mode signaling.

907.2.6.1 Group I-1. An automatic smoke detection system shall be installed in *corridors*, waiting areas open to *corridors* and *habitable spaces* other than *sleeping units* and kitchens. The system shall be activated in accordance with Section 907.5.

Exceptions:

1. For Group I-1 Condition 1 occupancies, smoke detection in *habitable spaces* is not required where the facility is equipped throughout with an *automatic sprinkler system* installed in accordance with Section 903.3.1.1.
2. Smoke detection is not required for exterior balconies.

❖ Occupancies in Group I-1 tend to be compartmentalized into small rooms so that a fire in one area of the building would not easily be noticed by occupants in another part of the building. Therefore, smoke detection is required in areas other than sleeping units and kitchens. Sleeping units are required by Section 907.2.6.1.1 to be equipped with single- and multiple station smoke alarms in accordance with Section 907.2.11.

Since Group I-1 occupancies may not be supervised by care providers and to reduce the likelihood that a fire within a waiting area open to the corridor or the corridor itself could develop beyond the incipient stage, thereby jeopardizing the building egress, these areas must be equipped with automatic smoke detection.

INTERNATIONAL CODE COUNCIL®
Copyright © 2015 ICC. ALL RIGHTS RESERVED. Accessed by David Dammon on Jun 21, 2017 12:30:52 PM pursuant to License Agreement with ICC. No further reproduction or distribution authorized. ANY UNAUTHORIZED REPRODUCTION OR DISTRIBUTION IS A VIOLATION OF THE FEDERAL COPYRIGHT ACT AND THE LICENSE AGREEMENT, AND SUBJECT TO CIVIL AND CRIMINAL PENALTIES THEREUNDER.

Exception 1 allows smoke detectors to be eliminated from habitable spaces of Group I-1 Condition 1 occupancies if the building is equipped throughout with an NFPA 13 automatic sprinkler system. The sprinkler system should control any fire and perform occupant notification through actuation of the waterflow switch and subsequent activation of the building alarm notification appliances. A sprinkler system is required for all Group I occupancies in accordance with Section 903.2.6. It should be noted that Group I-1 Condition 1 is the lower risk Group I-1 occupancy where residents are able to evacuate without assistance. See the commentary for Section 308.3 of the IBC.

Exception 2 allows for omitting smoke detectors from exterior balconies for environmental reasons and does not require the installation of an alternative type of detector. The exterior balconies are assumed to be sufficiently open to the atmosphere to readily allow the dissipation of smoke and hot gases.

907.2.6.1.1 Smoke alarms. Single- and multiple-station smoke alarms shall be installed in accordance with Section 907.2.11.

❖ As with dwelling units or sleeping units in any occupancy, this section requires that single- and multiple-station smoke alarms be installed in accordance with Section 907.2.11. Section 907.2.11.2 deals specifically with the requirements for Group I-1.

907.2.6.2 Group I-2. An automatic smoke detection system shall be installed in *corridors* in Group I-2 Condition 1 facilities and spaces permitted to be open to the *corridors* by Section 407.2 of the *International Building Code*. The system shall be activated in accordance with Section 907.4. Group I-2 Condition 2 occupancies shall be equipped with an automatic smoke detection system as required in Section 407 of the *International Building Code*.

Exceptions:

1. *Corridor* smoke detection is not required in smoke compartments that contain *sleeping units* where such units are provided with smoke detectors that comply with UL 268. Such detectors shall provide a visual display on the *corridor* side of each *sleeping unit* and shall provide an audible and visual alarm at the care providers' station attending each unit.
2. *Corridor* smoke detection is not required in smoke compartments that contain *sleeping units* where *sleeping unit* doors are equipped with automatic door-closing devices with integral smoke detectors on the unit sides installed in accordance with their listing, provided that the integral detectors perform the required alerting function.

❖ Automatic smoke detection is required in areas permitted to be open to corridors in occupancies classified as Group I-2 Condition 2 and corridors in Group I-2 Condition 1 occupancies (e.g., nursing homes, long-term care facilities and detoxification facilities). In recognition of quick-response sprinkler technology and the fact that the sprinkler system is electronically supervised, and because the doors to care recipient sleeping units are continuously supervised by care providers when in the open position, smoke detectors are not required for adequate fire safety in care recipient sleeping units.

In Group I-2 Condition 1 occupancies (e.g., nursing homes long-term care facilities and detoxification facilities), however, some redundancy is appropriate because such facilities typically have less control over furnishings and personal items, thereby resulting in a less predictable and usually higher fire hazard load than a Group I-2 Condition 2 occupancy (hospitals). Also, there is generally less care provider's supervision in these facilities than in other health care facilities and thus less control over care recipient smoking and other fire causes. Therefore, to provide additional protection against fires spreading from the room of origin, smoke detection is required in corridors of nursing homes, long-term care facilities and detoxification facilities.

Smoke detection is not required in corridors of other Group I-2 Condition 2 occupancies except where otherwise specifically required in the code. Similarly, because areas open to the corridor very often are the room of fire origin, and such areas are no longer required by the code to be under visual supervision by care providers, some redundancy to protection by the sprinkler system is requested. Accordingly, all areas open to corridors must be protected by an automatic smoke detection system. This requirement provides an additional level of protection against sprinkler system failures or lapses in care provider supervision.

These requirements are not applicable to Group I-2 Condition 2 occupancies (hospitals). The scope of this section clearly indicates that its provisions are only applicable to detoxification facilities and nursing homes. Hospitals are noted as being subject to the provisions in Section 407.2 of the IBC. IFC Committee Interpretation No. 37-03 addresses this issue. Section 407.2 of the IBC notes that smoke detection is only required for spaces open to corridors, such as waiting areas and mental health treatment areas where patients are not capable of self-preservation (see commentary, Section 407.2 of the IBC).

There are two exceptions to the requirement for an automatic fire detection system in corridors of nursing homes, long-term care facilities and detoxification facilities. Both exceptions provide an alternative method for redundant protection in care recipient sleeping units. For this reason, they provide either a backup to the notification of a fire or containment of fire in the room of origin.

Exception 1 requires smoke detectors in sleeping units that activate both a visual display on the corridor side of the care recipient sleeping unit and a visual and audible alarm at the care provider's station serving or attending the room. Detectors complying with UL 268 are intended for open area protection and for connection to a normal power supply or as part of a fire alarm system. This exception, however, is specifi-

INTERNATIONAL CODE COUNCIL®
Copyright © 2015 ICC. ALL RIGHTS RESERVED. Accessed by David Dammon on Jun 21, 2017 12:30:52 PM pursuant to License Agreement with ICC. No further reproduction or distribution authorized. ANY UNAUTHORIZED REPRODUCTION OR DISTRIBUTION IS A VIOLATION OF THE FEDERAL COPYRIGHT ACT AND THE LICENSE AGREEMENT, AND SUBJECT TO CIVIL AND CRIMINAL PENALTIES THEREUNDER.

cally designed not to require the detectors to activate the building fire alarm system where approved care recipient sleeping unit smoke detectors are installed and where visual and audible alarms are provided. This is in response to the concern over unwanted alarms. The required alarm signals will not necessarily indicate to care providers that a fire emergency exists because the care provider call system may typically be used to identify numerous conditions within the room.

Exception 2 addresses the situation where smoke detectors are incorporated within automatic door-closing devices. The units are acceptable as long as the required alarm functions are still provided. Such units are usually listed as combination door closer and hold-open devices.

907.2.6.3 Group I-3 occupancies. Group I-3 occupancies shall be equipped with a manual fire alarm system and automatic smoke detection system installed for alerting staff.

❖ Because of the evacuation difficulties associated with Group I-3 occupancies and the dependence on adequate staff response, a manual fire alarm system and an automatic fire detection system are required subject to the special occupancy conditions in Sections 907.2.6.3.1 through 907.2.6.3.3. This section recognizes that the evacuation of Group I-3 occupancies depends on an effective staff response. The requirements in Chapter 4 and specifically Section 403.8.3 of the code contain the requirements for an emergency plan, including employee training, staff availability, the need for occupants to notify staff and the need for the proper keys for unlocking doors for staff in Group I-3 occupancies.

907.2.6.3.1 System initiation. Actuation of an automatic fire-extinguishing system, *automatic sprinkler system*, a manual fire alarm box or a fire detector shall initiate an approved fire alarm signal that automatically notifies staff.

❖ This section specifies the systems that, upon activation, must initiate the required alarm signal immediately and automatically to the staff so that staff will respond in a timely manner.

907.2.6.3.2 Manual fire alarm boxes. Manual fire alarm boxes are not required to be located in accordance with Section 907.4.2 where the fire alarm boxes are provided at staff-attended locations having direct supervision over areas where manual fire alarm boxes have been omitted.

❖ Because of the potential for intentional false alarms and the resulting disruption to the facility, manual fire alarm boxes in Group I-3 occupancies may be either locked or made inaccessible to the occupants.

907.2.6.3.2.1 Manual fire alarms boxes in detainee areas. Manual fire alarm boxes are allowed to be locked in areas occupied by detainees, provided that staff members are present within the subject area and have keys readily available to operate the manual fire alarm boxes.

❖ The locking of manual fire alarm boxes is permitted only in areas where staff members are present and keys are readily available to them to unlock the boxes, or where the alarm boxes are located in a manned staff location that has direct supervision of the Group I-3 area.

907.2.6.3.3 Automatic smoke detection system. An automatic smoke detection system shall be installed throughout resident housing areas, including *sleeping units* and contiguous day rooms, group activity spaces and other common spaces normally accessible to residents.

Exceptions:

1. Other *approved* smoke detection arrangements providing equivalent protection, including, but not limited to, placing detectors in exhaust ducts from cells or behind protective guards *listed* for the purpose, are allowed when necessary to prevent damage or tampering.
2. *Sleeping units* in Use Conditions 2 and 3 as described in Section 308 of the *International Building Code*.
3. Smoke detectors are not required in *sleeping units* with four or fewer occupants in smoke compartments that are equipped throughout with an *automatic sprinkler system* installed in accordance with Section 903.3.1.1.

❖ Evacuation of Group I-3 facilities is impractical because of the need to maintain security. An automatic smoke detection system is therefore required to provide early warning of a fire.

As indicated in Exception 1, the installation of automatic smoke detectors must take into account the need to protect the detector from vandalism by residents. As a result, detectors may have to be located in return air ducts or be protected by a substantial physical barrier.

Since occupants in Use Condition 2 or 3 are not locked in their sleeping units, Exception 2 reduces the need for smoke detection.

Exception 3 allows smoke detectors to be omitted in sleeping units housing no more than four occupants on the basis that in a building that is protected throughout with an approved automatic sprinkler system, the system will provide both detection and suppression functions. Group I facilities are assumed to be fully sprinklered throughout in accordance with NFPA 13 as required by Section 903.2.6. The limitation of four occupants reduces the potential fuel load (mattresses, clothes, etc.) and the likelihood of involvement over an extended area.

INTERNATIONAL CODE COUNCIL®
Copyright © 2015 ICC. ALL RIGHTS RESERVED. Accessed by David Dammon on Jun 21, 2017 12:30:52 PM pursuant to License Agreement with ICC. No further reproduction or distribution authorized. ANY UNAUTHORIZED REPRODUCTION OR DISTRIBUTION IS A VIOLATION OF THE FEDERAL COPYRIGHT ACT AND THE LICENSE AGREEMENT, AND SUBJECT TO CIVIL AND CRIMINAL PENALTIES THEREUNDER.

907.2.7 Group M. A manual fire alarm system that activates the occupant notification system in accordance with Section 907.5 shall be installed in Group M occupancies where one of the following conditions exists:

1. The combined Group M *occupant load* of all floors is 500 or more persons.
2. The Group M *occupant load* is more than 100 persons above or below the lowest *level of exit discharge.*

Exceptions:

1. A manual fire alarm system is not required in covered or open mall buildings complying with Section 402 of the *International Building Code.*
2. Manual fire alarm boxes are not required where the building is equipped throughout with an *automatic sprinkler system* installed in accordance with Section 903.3.1.1 and the occupant notification appliances will automatically activate throughout the notification zones upon sprinkler water flow.

❖ Group M occupancies have the potential for large numbers of occupants who may not be familiar with their surroundings. The installation of a fire alarm system increases the ability to alert the occupants of a fire. Note that the occupant thresholds must be considered independently. If the total occupant load is 500 or more persons a manual fire alarm system is required. If more than 100 persons are above or below the level of exit discharge, a manual fire alarm system is required.

This section also specifies that the manual fire alarm boxes must, upon activation, provide occupant notification throughout the Group M occupancy.

The extent of fire alarm application is based upon the area in which the Group M occupancy is located. If the building is considered as a separated mixed occupancy then the fire alarm system is only required in the individual occupancy in which the occupant load exceeds the threshold quantity. The rest of the building would not require a fire alarm system. This approach is noted in Section 508.4.1 of the IBC, which states that each separated space must comply with the code based upon the occupancy classification of that portion of the building. If the Group M occupancy was part of a nonseparated mixed-use building, then the alarm system would be required in the entire building in accordance with Section 508.3.1 of the IBC. The determination as to when such a system is required would be based solely upon the Group M occupant load.

Exception 1 recognizes the increased level of fixed automatic protection inherently required in covered and open mall buildings including an automatic sprinkler system, and, possibly, a smoke control system. Covered and open mall buildings are also required to contain an emergency voice/alarm communication system (see Section 907.2.20).

Exception 2 does not eliminate the fire alarm system, but rather allows it to be initiated automatically by sprinkler system water flow switch(es) instead of by manual fire alarm boxes. Buildings with a fire area containing a Group M occupancy in excess of 12,000 square feet (1115 m^2) must be equipped with an automatic sprinkler system complying with Section 903.2.6.

907.2.7.1 Occupant notification. During times that the building is occupied, the initiation of a signal from a manual fire alarm box or from a waterflow switch shall not be required to activate the alarm notification appliances when an alarm signal is activated at a constantly attended location from which evacuation instructions shall be initiated over an emergency voice/alarm communication system installed in accordance with Section 907.5.2.2.

❖ Occupants in a mercantile occupancy may assume the alarm is a false alarm or act inappropriately and thus delay evacuation of the building. To prevent such a dangerous situation, the manual fire alarm system may be part of an EV/ACS. The signal is to be sent to a constantly attended location on site from which evacuation instructions can be given.

It should be noted that, although the alarm notification alternative allows for the manual use of an EV/ACS, the alternative does not remove the requirement for audible and visual notification devices.

907.2.8 Group R-1. Fire alarm systems and smoke alarms shall be installed in Group R-1 occupancies as required in Sections 907.2.8.1 through 907.2.8.3.

❖ Because residents of Group R-1 occupancies may be asleep and are usually transients who are unfamiliar with the building, and because such buildings contain numerous small rooms so that the occupants may not notice a fire in another part of the building, occupancies in Group R-1 must have a manual fire alarm system and an automatic smoke detection system installed throughout. Requirements for single- or multiple-station smoke alarms in sleeping units are contained in Section 907.2.11.1.

907.2.8.1 Manual fire alarm system. A manual fire alarm system that activates the occupant notification system in accordance with Section 907.5 shall be installed in Group R-1 occupancies.

Exceptions:

1. A manual fire alarm system is not required in buildings not more than two stories in height where all individual *sleeping units* and contiguous attic and crawl spaces to those units are separated from each other and public or common areas by not less than 1-hour *fire partitions* and each individual *sleeping unit* has an *exit* directly to a *public way*, *egress court* or yard.
2. Manual fire alarm boxes are not required throughout the building where all of the following conditions are met:

   2.1. The building is equipped throughout with an *automatic sprinkler system* installed in accordance with Section 903.3.1.1 or 903.3.1.2.

INTERNATIONAL CODE COUNCIL®
Copyright © 2015 ICC. ALL RIGHTS RESERVED. Accessed by David Dammon on Jun 21, 2017 12:30:52 PM pursuant to License Agreement with ICC. No further reproduction or distribution authorized. ANY UNAUTHORIZED REPRODUCTION OR DISTRIBUTION IS A VIOLATION OF THE FEDERAL COPYRIGHT ACT AND THE LICENSE AGREEMENT, AND SUBJECT TO CIVIL AND CRIMINAL PENALTIES THEREUNDER.

2.2. The notification appliances will activate upon sprinkler water flow.

2.3. Not fewer than one manual fire alarm box is installed at an *approved* location.

❖ This section is specific to manual fire alarm systems and requires such systems in all Group R-1 occupancies, with two exceptions.

Exception 1 eliminates the requirement for a manual fire alarm system if the sleeping units have an exit discharging directly to a public way, exit court or yard. Even though the building may be two stories in height, the sleeping units on each floor must have access directly to an approved exit at grade level. The use of an exterior exit access balcony with exterior stairs serving the second floor does not constitute an exit directly at grade. The minimum 1-hour fire-resistance rating required for adequate separation of the sleeping units must be maintained.

Exception 2 does not omit the fire alarm system but rather permits it to be initiated automatically by sprinkler system water flow switch(es) in lieu of manual fire alarm boxes. The sprinkler system must activate the occupant notification system and at least one manual fire alarm box shall be installed at an approved location. See the commentary to Section 907.2 for a discussion of the single manual fire alarm box.

The exceptions do not affect the independent provision in Section 907.2.11 for single- or multiple-station smoke alarms.

907.2.8.2 Automatic smoke detection system. An automatic smoke detection system that activates the occupant notification system in accordance with Section 907.5 shall be installed throughout all interior *corridors* serving *sleeping units*.

Exception: An automatic smoke detection system is not required in buildings that do not have interior *corridors* serving *sleeping units* and where each *sleeping unit* has a *means of egress* door opening directly to an *exit* or to an exterior *exit access* that leads directly to an *exit*.

❖ This section requires an automatic smoke detection system within interior corridors. Such systems make use of smoke detectors for alarm initiation in accordance with Section 907.2, with one exception.

The exception provides that automatic fire detectors are not required in motels and hotels that do not have interior corridors and in which sleeping units have a door opening directly to an exterior exit access that leads directly to the exits. The intent of the exception is that the exit access from the sleeping unit door be exterior and not require reentering the building prior to entering the exit. Since the exit access is outside, the need for detectors other than the smoke alarms required by Section 907.2.8.3 in sleeping units is greatly reduced.

907.2.8.3 Smoke alarms. Single- and multiple-station smoke alarms shall be installed in accordance with Section 907.2.11.

❖ The actual requirements for single- and multiple-station smoke alarms are located in Section 907.2.11. That section requires that the single- and multiple-station smoke alarms within sleeping units be connected to the emergency electrical system. Automatic activation of the fire alarm system is avoided to reduce unnecessary alarms within such buildings.

907.2.9 Group R-2. Fire alarm systems and smoke alarms shall be installed in Group R-2 occupancies as required in Sections 907.2.9.1 and 907.2.9.3.

❖ This section introduces the fire alarm system and smoke alarm requirements for Group R-2 occupancies. This includes Group R-2 occupancies in general and also Group R-2 college and university buildings.

907.2.9.1 Manual fire alarm system. A manual fire alarm system that activates the occupant notification system in accordance with Section 907.5 shall be installed in Group R-2 occupancies where any of the following conditions apply:

1. Any *dwelling unit* or *sleeping unit* is located three or more stories above the lowest *level of exit discharge*.
2. Any *dwelling unit* or *sleeping unit* is located more than one story below the highest *level of exit discharge* of *exits* serving the *dwelling unit* or *sleeping unit*.
3. The building contains more than 16 *dwelling units* or *sleeping units*.

Exceptions:

1. A fire alarm system is not required in buildings not more than two stories in height where all *dwelling units* or *sleeping units* and contiguous attic and crawl spaces are separated from each other and public or common areas by not less than 1-hour *fire partitions* and each *dwelling unit* or *sleeping unit* has an *exit* directly to a *public way*, *egress court* or yard.
2. Manual fire alarm boxes are not required where the building is equipped throughout with an *automatic sprinkler system* installed in accordance with Section 903.3.1.1 or 903.3.1.2 and the occupant notification appliances will automatically activate throughout the notification zones upon a sprinkler water flow.
3. A fire alarm system is not required in buildings that do not have interior *corridors* serving *dwelling units* and are protected by an *approved automatic sprinkler system* installed in accordance with Section 903.3.1.1 or 903.3.1.2, provided that *dwelling units* either have a *means of egress* door opening directly to an exterior *exit access* that leads directly to the *exits* or are served by open-ended *corridors* designed in accordance with Section 1027.6, Exception 3.

❖ The occupants of Group R-2 occupancies are not considered to be as transient as those of Group R-1, which increases the probability that residents can more readily notify each other of a fire. Therefore, Group R-1 occupancies must have a manual fire alarm system with audible and visual notification appliances subject to the exceptions in Section 907.2.8.1, whereas Group R-2 occupancies are

INTERNATIONAL CODE COUNCIL®
Copyright © 2015 ICC. ALL RIGHTS RESERVED. Accessed by David Dammon on Jun 21, 2017 12:30:52 PM pursuant to License Agreement with ICC. No further reproduction or distribution authorized. ANY UNAUTHORIZED REPRODUCTION OR DISTRIBUTION IS A VIOLATION OF THE FEDERAL COPYRIGHT ACT AND THE LICENSE AGREEMENT, AND SUBJECT TO CIVIL AND CRIMINAL PENALTIES THEREUNDER.

required to have only a manual fire alarm system as stipulated in one of the three listed conditions. The threshold conditions are meant to be applied independently of each other.

Exception 1 eliminates the requirement for a manual fire alarm system if the sleeping units have an exit discharging directly to a public way, exit court or yard. Even though the building may be two stories in height, the sleeping units on each floor must have access directly to an approved exit at grade level. The use of an exterior exit access balcony with exterior stairs serving the second floor does not constitute an exit directly at grade. The minimum 1-hour fire-resistance rating required for adequate separation of the sleeping units must be maintained.

Exception 2 does not omit the fire alarm system but rather permits it to be initiated automatically by sprinkler system water flow switch(es) in lieu of manual fire alarm boxes. The sprinkler system must activate the occupant notification system. This exception does not affect the independent provisions of Section 907.2.11.

Exception 3 allows the omission of a fire alarm system in fully sprinklered buildings (NFPA 13 or 13R) with no interior corridors and that exit directly to an exterior exit access or have open-ended corridors. The important thing to note is that the sprinkler system is not required to activate alarm notification appliances since a fire alarm system would not be required. Only the sprinkler alarms required by Section 903.4 would be required.

907.2.9.2 Smoke alarms. Single- and multiple-station smoke alarms shall be installed in accordance with Section 907.2.11.

❖ The actual requirements for single- and multiple-station smoke alarms are located in Section 907.2.11. That section requires that the single- and multiple-station smoke alarms within sleeping units be connected to the emergency electrical system. Automatic activation of the fire alarm system is avoided to reduce unnecessary alarms within such buildings.

907.2.9.3 Group R-2 college and university buildings. An automatic smoke detection system that activates the occupant notification system in accordance with Section 907.5 shall be installed in Group R-2 occupancies operated by a college or university for student or staff housing in all of the following locations:

1. Common spaces outside of *dwelling units* and *sleeping units.*
2. Laundry rooms, mechanical equipment rooms and storage rooms.
3. All interior corridors serving *sleeping units* or *dwelling units*.

   Exception: An automatic smoke detection system is not required in buildings that do not have interior *corridors* serving *sleeping units* or *dwelling units* and where each s*leeping unit* or *dwelling unit* either has a *means of egress* door opening directly to an exterior *exit access* that leads directly to an *exit* or a *means of egress* door opening directly to an *exit*.

Required smoke alarms in *dwelling units* and *sleeping units* in Group R-2 occupancies operated by a college or university for student or staff housing shall be interconnected with the fire alarm system in accordance with NFPA 72.

❖ This section requires an automatic smoke detection system in Group R-2 occupancies that are operated by a college or university to provide student or staff housing. It also requires the smoke alarms in individual units to be interconnected with the fire alarm system. This interconnection is only for the purpose of making occupants within each unit aware of the fire alarm activation in the building. The intent was not to activate the building fire alarm system by smoke alarms in each unit. This is more restrictive than a Group R-2 occupancy in general as typically the requirements are limited to a manual fire alarm system and smoke alarms in the individual sleeping or dwelling units.

The smoke detection system is focused on common areas, such as interior corridors, lounge areas, laundry, and areas such as mechanical rooms, which could be the source of a fire, especially in these specific types of Group R-2 occupancies.

In a study completed by the New York State Governor's Task Force on Campus Fire Safety it was cited that 43 percent of fires in college dormitories are located in dorm rooms or kitchens, leaving the other 57 percent to be located in areas that would not require smoke detection under the current code. The study also showed that there were approximately 300 fires on college campus over a three-year period while only 160 were reported to the fire department. The Center for Campus Fire Safety states 99 deaths have been "reported" in fires in student housing since 2000.

An NFPA study on student housing showed 3,300 structural fires in dormitories, fraternities, sororities and barracks between 2002 and 2005. Since 1980, there has been an increase of 3 percent in reported fires in dormitory-type occupancies, while there has been a 52-percent decrease in overall reported structural fires.

The requirements in this section are very similar to the recommendations of the study done in New York State. It is important to note that the recommendations for that study were specifically aimed at the properties of the colleges and universities so it was not the study's intent to cover off-campus housing in this particular regard. There were recommendations for off-campus housing, such as sororities and fraternities to have annual inspections. This particular distinction was not addressed in detail during the code development process initially; however, since this is somewhat of a continuation of requirements that were added into Chapter 4 of the 2006 edition of the IFC for emergency preparedness and planning, and those requirements were intended to deal with buildings that were college or university property, it

INTERNATIONAL CODE COUNCIL®
Copyright © 2015 ICC. ALL RIGHTS RESERVED. Accessed by David Dammon on Jun 21, 2017 12:30:52 PM pursuant to License Agreement with ICC. No further reproduction or distribution authorized. ANY UNAUTHORIZED REPRODUCTION OR DISTRIBUTION IS A VIOLATION OF THE FEDERAL COPYRIGHT ACT AND THE LICENSE AGREEMENT, AND SUBJECT TO CIVIL AND CRIMINAL PENALTIES THEREUNDER.

seemed reasonable to interpret that this requirement is also limited to the buildings that are college or university property and does not apply to Group R-2 occupancies that are not college or university property. This has since been clarified through the code development process and the section now specifically notes that the Group R-2 occupancies are specifically operated by a college or university.

The exception allows for the elimination of the smoke detection system in a specific situation where there are no interior corridors and the occupants essentially exit directly to the outside. The lack of interior corridors and exterior exits reduces the amount of smoke one unit will expose onto another. Note that smoke alarms within the units are still required by Section 907.2.11.2. Note also that it is entirely possible that some areas that are required to have smoke detection may have ambient conditions that warrant a different type of alarm-initiating device. Section 907.4.3 addresses this concern.

907.2.10 Group R-4. Fire alarm systems and smoke alarms shall be installed in Group R-4 occupancies as required in Sections 907.2.10.1 through 907.2.10.3.

❖ This section, based on the Group R-2 requirements for manual fire alarm systems and Group I-1 requirements for automatic smoke detection systems, contains manual fire alarm and automatic smoke detection system requirements for new Group R-4 occupancies. Reviewing the occupancy categories in Chapter 3 of the IBC, a Group R-4 can be considered either a small Group I-1 or a Group R-2 with occupants that have special needs or limitations. A further review found that both Group I-1 and Group R-2 occupancies have fire alarm requirements for new buildings, but Group R-4 did not, even though the code required a fire alarm system retroactively in existing Group R-4 occupancies (see Section 1103.7.7).

907.2.10.1 Manual fire alarm system. A manual fire alarm system that activates the occupant notification system in accordance with Section 907.5 shall be installed in Group R-4 occupancies.

Exceptions:

1. A manual fire alarm system is not required in buildings not more than two stories in height where all individual *sleeping units* and contiguous attic and crawl spaces to those units are separated from each other and public or common areas by not less than 1-hour *fire partitions* and each individual *sleeping unit* has an *exit* directly to a *public way*, *egress court* or yard.
2. Manual fire alarm boxes are not required throughout the building where all of the following conditions are met:
   2.1. The building is equipped throughout with an *automatic sprinkler system* installed in accordance with Section 903.3.1.1 or 903.3.1.2.
   2.2. The notification appliances will acti-vate upon sprinkler water flow.
   2.3. Not fewer than one manual fire alarm box is installed at an *approved* location.
3. Manual fire alarm boxes in resident or patient sleeping areas shall not be required at *exits* where located at all nurses' control stations or other constantly attended staff locations, provided such stations are visible and continuously accessible and that the distances of travel required in Section 907.4.2.1 are not exceeded.

❖ This section is specific to manual fire alarm systems and requires such systems in all Group R-4 occupancies, with three exceptions.

Exception 1 eliminates the requirement for a manual fire alarm system if the sleeping units have an exit discharging directly to a public way, exit court or yard. Even though the building may be two stories in height, the sleeping units on each floor must have access directly to an approved exit at grade level. The use of an exterior exit access balcony with exterior stairs serving the second floor does not constitute an exit directly at grade. The minimum 1-hour fire-resistance rating required for adequate separation of the sleeping units must be maintained.

Exception 2 does not omit the fire alarm system but rather permits it to be initiated automatically by sprinkler system water flow switch(es) in lieu of manual fire alarm boxes. The sprinkler system must activate the occupant notification system and at least one manual fire alarm box shall be installed at an approved location. See the commentary to Section 907.2 for a discussion of the single manual fire alarm box.

Exception 3 reduces the likelihood of accidental or malicious false alarm system activations by manual means by allowing the pull stations to be located in a more controlled area. It assumes the approved location is always accessible by staff and within a distance of travel of 200 feet (60 960 mm).

907.2.10.2 Automatic smoke detection system. An automatic smoke detection system that activates the occupant notification system in accordance with Section 907.5 shall be installed in *corridors*, waiting areas open to *corridors* and *habitable spaces* other than *sleeping units* and kitchens.

Exceptions:

1. Smoke detection in *habitable spaces* is not required where the facility is equipped throughout with an *automatic sprinkler system* installed in accordance with Section 903.3.1.1.
2. An automatic smoke detection system is not required in buildings that do not have interior *corridors* serving *sleeping units* and where each *sleeping unit* has a *means of egress* door opening directly to an *exit* or to an exterior *exit access* that leads directly to an exit.

❖ Occupancies in Group R-4 can be compartmentalized into small rooms so that a fire in one area of the

INTERNATIONAL CODE COUNCIL®
Copyright © 2015 ICC. ALL RIGHTS RESERVED. Accessed by David Dammon on Jun 21, 2017 12:30:52 PM pursuant to License Agreement with ICC. No further reproduction or distribution authorized. ANY UNAUTHORIZED REPRODUCTION OR DISTRIBUTION IS A VIOLATION OF THE FEDERAL COPYRIGHT ACT AND THE LICENSE AGREEMENT, AND SUBJECT TO CIVIL AND CRIMINAL PENALTIES THEREUNDER.

building would not easily be noticed by occupants in another part of the building. Therefore, smoke detection is required in areas other than sleeping units and kitchens. Sleeping units are required by Section 907.2.10.3 to be equipped with single- and multiple station smoke alarms in accordance with Section 907.2.11.

Since Group R-4 occupancies may not be supervised by staff and to reduce the likelihood that a fire within a waiting area open to the corridor or the corridor itself could develop beyond the incipient stage, thereby jeopardizing the building egress, these areas must be equipped with automatic smoke detection.

Exception 1 allows smoke detectors to be eliminated from habitable spaces if the building is equipped throughout with an NFPA 13 automatic sprinkler system. The sprinkler system should control any fire and perform occupant notification through actuation of the water flow switch and subsequent activation of the building alarm notification appliances. A sprinkler system is required for all Group R occupancies in accordance with Section 903.2.8.

The exception provides that automatic fire detectors are not required in buildings that do not have interior corridors and in which sleeping units have a door opening directly to an exterior exit access that leads directly to the exits. The intent of the exception is that the exit access from the sleeping unit door be exterior and not require reentering the building prior to entering the exit. Since the exit access is outside, the need for detectors other than the smoke alarms required by Section 907.2.10.3 in sleeping units is greatly reduced.

907.2.10.3 Smoke alarms. Single- and multiple-station smoke alarms shall be installed in accordance with Section 907.2.11.

❖ The actual requirements for single- and multiple-station smoke alarms are located in Section 907.2.11. That section requires that the single- and multiple-station smoke alarms within sleeping units be connected to the emergency electrical system. Automatic activation of the fire alarm system is avoided to reduce unnecessary alarms within such buildings.

907.2.11 Single- and multiple-station smoke alarms. *Listed* single- and multiple-station smoke alarms complying with UL 217 shall be installed in accordance with Sections 907.2.11.1 through 907.2.11.6 and NFPA 72.

❖ Single- and multiple-station smoke alarms have evolved as one of the most important fire safety features in residential and similar occupancies having sleeping occupants. The value of early fire warning in these occupancies has been repeatedly demonstrated in fires involving both successful and unsuccessful smoke alarm performance.

For successful smoke alarm operation and performance, single- and multiple-station smoke alarms must be listed in accordance with UL 217 and installed to comply with the code and Chapter 11 of NFPA 72, which contains the minimum requirements for the selection, installation, operation and maintenance of fire warning equipment for use in family living units. These devices are called "smoke alarms" rather than "smoke detectors" because they are independent of a fire alarm system and include an integral alarm notification device.

907.2.11.1 Group R-1. Single- or multiple-station smoke alarms shall be installed in all of the following locations in Group R-1:

1. In sleeping areas.
2. In every room in the path of the *means of egress* from the sleeping area to the door leading from the *sleeping unit*.
3. In each story within the *sleeping unit*, including *basements*. For *sleeping units* with split levels and without an intervening door between the adjacent levels, a smoke alarm installed on the upper level shall suffice for the adjacent lower level provided that the lower level is less than one full story below the upper level.

❖ Because the occupants of a sleeping unit or suite may be asleep and unaware of a fire developing in the room or in the egress path, single- or multiple-station smoke alarms must be provided in the sleeping unit and in any intervening room between the sleeping unit and the exit access door from the room. If the sleeping unit or suite involves more than one level, a smoke alarm must also be installed on every level. See the commentary to Section 202 definition of "Sleeping unit."

Smoke alarms are required in split-level arrangements, except those that meet the conditions described in Item 3. In accordance with Section 907.2.11.5, all smoke alarms within a sleeping unit or suite must be interconnected so that actuation of one alarm will actuate the alarms in all smoke alarms within the sleeping unit or suite.

907.2.11.2 Groups R-2, R-3, R-4 and I-1. Single or multiple-station smoke alarms shall be installed and maintained in Groups R-2, R-3, R-4 and I-1 regardless of *occupant load* at all of the following locations:

1. On the ceiling or wall outside of each separate sleeping area in the immediate vicinity of bedrooms.
2. In each room used for sleeping purposes.
3. In each story within a *dwelling unit*, including *basements* but not including crawl spaces and uninhabitable attics. In *dwellings* or *dwelling units* with split levels and without an intervening door between the adjacent levels, a smoke alarm installed on the upper level shall suffice for the adjacent lower level provided that the lower level is less than one full story below the upper level.

❖ Because the occupants of a dwelling unit may be asleep and unaware of a fire developing in the room or in an area within the dwelling unit that will affect their ability to escape, single- or multiple-station smoke alarms must be installed in every bedroom, in the vicinity of all bedrooms (e.g., hallways leading to

INTERNATIONAL CODE COUNCIL®
Copyright © 2015 ICC. ALL RIGHTS RESERVED. Accessed by David Dammon on Jun 21, 2017 12:30:52 PM pursuant to License Agreement with ICC. No further reproduction or distribution authorized. ANY UNAUTHORIZED REPRODUCTION OR DISTRIBUTION IS A VIOLATION OF THE FEDERAL COPYRIGHT ACT AND THE LICENSE AGREEMENT, AND SUBJECT TO CIVIL AND CRIMINAL PENALTIES THEREUNDER.

the bedrooms) and on each story of the dwelling unit (see Commentary Figure 907.2.11.2 and the commentary to Section 202 for the definition of "Dwelling unit").

If a sprinkler system was installed throughout the building in accordance with NFPA 13, 13R or 13D, if applicable, smoke alarms would still be required in the bedrooms even if residential sprinklers were used.

Smoke alarms are required in split-level arrangements. As required by Section 907.2.11.5, all smoke alarms within a dwelling unit must be interconnected so that actuation of one alarm will actuate the alarms in all detectors within the dwelling unit.

These provisions do not apply to one- and two-family dwellings and multiple single-family dwellings (townhouses) not more than three stories in height with a separate means of egress that are regulated by the IRC. The IRC is intended to be a stand-alone document but if the residential units do not fall within the scope of the IRC or for other reasons are intended to be subject to this code, then the requirements of this section would apply. IFC Committee Interpretation No. 42-03 addresses this condition and contains additional explanatory information about the IRC and its relationship to the other *International Codes*.

Although the occupants of a sleeping unit in a Group I-1 occupancy may be asleep, they are still considered capable of self-preservation. Regardless, smoke alarms are required in sleeping units. The exception allows single- or multiple-station smoke alarms to be eliminated in the room if an automatic fire detection system that includes in-room system smoke detectors is installed as required by Section 907.2.6.

907.2.11.3 Installation near cooking appliances. Smoke alarms shall not be installed in the following locations unless this would prevent placement of a smoke alarm in a location required by Section 907.2.11.1 or 907.2.11.2:

1. Ionization smoke alarms shall not be installed less than 20 feet (6096 mm) horizontally from a permanently installed cooking appliance.
2. Ionization smoke alarms with an alarm-silencing switch shall not be installed less than 10 feet (3048 mm) horizontally from a permanently installed cooking appliance.
3. Photoelectric smoke alarms shall not be installed less than 6 feet (1829 mm) horizontally from a permanently installed cooking appliance.

❖ This requirement is intended to reduce nuisance alarms attributed to locating smoke alarms in close proximity to cooking appliances and bathrooms in which steam is produced. These provisions are based on the findings in the Task Group Report "Minimum Performance Requirements for Smoke Alarm Detection Technology," February 22, 2008, and are consistent with similar requirements included in Section 29.8.3.4 of NFPA 72.

907.2.11.4 Installation near bathrooms. Smoke alarms shall be installed not less than 3 feet (914 mm) horizontally from the door or opening of a bathroom that contains a bathtub or shower unless this would prevent placement of a smoke alarm required by Section 907.2.11.1 or 907.2.11.2.

❖ See the commentary for Section 907.2.11.3. Sections 907.2.11.3 and 907.2.11.4 are provided to reduce nuisance alarms.

907.2.11.5 Interconnection. Where more than one smoke alarm is required to be installed within an individual *dwelling unit* or *sleeping unit* in Group R or I-1 occupancies, the smoke alarms shall be interconnected in such a manner that the activation of one alarm will activate all of the alarms in the individual unit. Physical interconnection of smoke alarms shall not be required where listed wireless alarms are

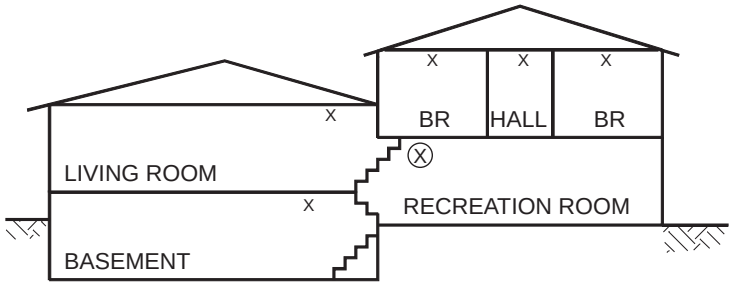

Figure 907.2.11.2
LOCATION OF SMOKE ALARMS IN A DWELLING UNIT

INTERNATIONAL CODE COUNCIL®
Copyright © 2015 ICC. ALL RIGHTS RESERVED. Accessed by David Dammon on Jun 21, 2017 12:30:52 PM pursuant to License Agreement with ICC. No further reproduction or distribution authorized. ANY UNAUTHORIZED REPRODUCTION OR DISTRIBUTION IS A VIOLATION OF THE FEDERAL COPYRIGHT ACT AND THE LICENSE AGREEMENT, AND SUBJECT TO CIVIL AND CRIMINAL PENALTIES THEREUNDER.

installed and all alarms sound upon activation of one alarm. The alarm shall be clearly audible in all bedrooms over background noise levels with all intervening doors closed**.**

❖ The installation of smoke alarms in areas remote from the sleeping area will be of minimal value if the alarm is not heard by the occupants. Interconnection of multiple smoke alarms within an individual dwelling unit or sleeping unit is required in order to alert a sleeping occupant of a remote fire within the unit before the combustion products reach the smoke alarm in the sleeping area and thus provide additional time for evacuation.

The term "interconnection" refers to either hardwired systems or listed wireless systems. UL has listed smoke detectors that use this technology. It is presumed that on safely evacuating the unit or room of fire origin, an occupant will notify other occupants by actuating the manual fire alarm system or using other available means. Section 907.7.1 addresses the testing of the smoke alarms to demonstrate that interconnection of such smoke alarms is properly functioning.

Similar requirements can now be found in the IRC, the *International Existing Building Code*® (IEBC®) and the code for both new and existing buildings to allow interconnection with wireless technology of smoke alarms. All wirelessly interconnected smoke alarms are listed to UL 217 and are classified by NFPA 72 as low-power systems.

907.2.11.6 Power source. In new construction, required smoke alarms shall receive their primary power from the building wiring where such wiring is served from a commercial source and shall be equipped with a battery backup. Smoke alarms with integral strobes that are not equipped with battery back-up shall be connected to an emergency electrical system in accordance with Section 604. Smoke alarms shall emit a signal when the batteries are low. Wiring shall be permanent and without a disconnecting switch other than as required for overcurrent protection.

Exception: Smoke alarms are not required to be equipped with battery backup where they are connected to an emergency electrical system that complies with Section 604.

❖ Smoke alarms are required to use AC as a primary power source and battery power as a secondary source to improve their reliability. For example, during a power outage, the probability of fire is increased because of the use of candles or lanterns for temporary light. Required backup battery power is intended to provide continued functioning of the smoke alarms. Smoke alarms are commonly designed to emit a recurring signal when batteries are low and need to be replaced.

Certain occupancies may already have an emergency electrical system in the building to monitor other building system conditions. The emergency electrical system provides a level of reliability equivalent to battery backup.

907.2.11.7 Smoke detection system. Smoke detectors listed in accordance with UL 268 and provided as part of the building fire alarm system shall be an acceptable alternative to single- and multiple-station *smoke alarms* and shall comply with the following:

1. The fire alarm system shall comply with all applicable requirements in Section 907.
2. Activation of a smoke detector in a *dwelling unit* or *sleeping unit* shall initiate alarm notification in the *dwelling unit* or *sleeping unit* in accordance with Section 907.5.2.
3. Activation of a smoke detector in a *dwelling unit* or *sleeping unit* shall not activate alarm notification appliances outside of the *dwelling unit* or *sleeping unit*, provided that a supervisory signal is generated and monitored in accordance with Section 907.6.6.

❖ This section specifically allows the use of an automatic smoke detection system as an alternative to smoke alarms. In the past, when this concept was proposed it was only specifically allowed through alternative method and materials approach (see Section 104.9 of the code) even though in concept it provides the same level of protection. Such systems provide the same safety features necessary for occupants but are simply part of a fire alarm system. Note that if a detector activates within a sleeping or dwelling unit, the occupant notification system is not intended to activate. This is consistent with the operation of smoke alarms. Item 3 specifically requires the notification to be only to occupants of the sleeping unit or dwelling unit.

907.2.12 Special amusement buildings. An automatic smoke detection system shall be provided in special amusement buildings in accordance with Sections 907.2.12.1 through 907.2.12.3.

❖ Special amusement buildings are buildings in which the means of egress is not readily apparent, is intentionally confounded or is not readily available. Special amusement buildings must also comply with the provisions of Section 411 of the IBC.

The approved automatic smoke detection system is required to provide early warning of a fire. The detection system is required regardless of the presence of staff in the building. The exception recognizes that the ambient conditions in some special amusement buildings may preclude the use of automatic smoke detectors. In those instances, an alternative detection device must be used for early detection of a fire.

907.2.12.1 Alarm. Activation of any single smoke detector, the *automatic sprinkler system* or any other automatic fire detection device shall immediately activate an audible and

INTERNATIONAL CODE COUNCIL®
Copyright © 2015 ICC. ALL RIGHTS RESERVED. Accessed by David Dammon on Jun 21, 2017 12:30:52 PM pursuant to License Agreement with ICC. No further reproduction or distribution authorized. ANY UNAUTHORIZED REPRODUCTION OR DISTRIBUTION IS A VIOLATION OF THE FEDERAL COPYRIGHT ACT AND THE LICENSE AGREEMENT, AND SUBJECT TO CIVIL AND CRIMINAL PENALTIES THEREUNDER.

visible alarm at the building at a constantly attended location from which emergency action can be initiated, including the capability of manual initiation of requirements in Section 907.2.12.2.

❖ Upon activation of either a smoke detector or other automatic fire detection device or the automatic sprinkler system, an alarm must activate both an audible and visible alarm at a constantly attended location. The staff at the location is expected to be capable of then providing the required egress illumination, stopping the conflicting or confusing sounds and distractions and activating the exit marking required by Section 907.2.12.2. The staff is also expected to be capable of preventing additional people from entering the building.

907.2.12.2 System response. The activation of two or more smoke detectors, a single smoke detector equipped with an alarm verification feature, the *automatic sprinkler system* or other *approved* fire detection device shall automatically do all of the following:

1. Cause illumination of the *means of egress* with light of not less than 1 footcandle (11 lux) at the walking surface level.
2. Stop any conflicting or confusing sounds and visual distractions.
3. Activate an *approved* directional *exit* marking that will become apparent in an emergency.
4. Activate a prerecorded message, audible throughout the special amusement building, instructing patrons to proceed to the nearest exit. Alarm signals used in conjunction with the prerecorded message shall produce a sound that is distinctive from other sounds used during normal operation.

❖ Once a fire has been detected, measures must be taken to stop the confusion or distractions. Additionally, the egress path must be illuminated and marked. These measures must occur automatically upon detection of the fire or sprinkler water flow. A prerecorded message that can be heard throughout the building instructing the occupants to proceed to the nearest exit must be automatically activated. The message and alarm signals should be designed to prevent panic. The prerecorded message capability is in addition to the EV/ACS requirement of Section 907.2.12.3. The wiring of all devices must comply with NFPA 72.

907.2.12.3 Emergency voice/alarm communication system. An emergency voice/alarm communication system, which is also allowed to serve as a public address system, shall be installed in accordance with Section 907.5.2.2 and be audible throughout the entire special amusement building.

❖ Because of the problem associated with evacuating special amusement buildings, an emergency voice/alarm communication system is required (see also Section 907.5.2.2). This section allows the system to also serve as a public address (PA) system to have the capability to alert the occupants of a fire and give them evacuation instructions. The system must be designed so that once the voice alarm is activated the typical public address function is superseded by the voice alarm. Because a manual override must be provided, it is possible that the same microphone used for the public address can be used for the override. However, a separate action would be necessary so that the override function can be used once the voice alarm is active.

907.2.13 High-rise buildings. High-rise buildings shall be provided with an automatic smoke detection system in accordance with Section 907.2.13.1, a fire department communication system in accordance with Section 907.2.13.2 and an emergency voice/alarm communication system in accordance with Section 907.5.2.2.

Exceptions:

1. Airport traffic control towers in accordance with Section 907.2.22 of this code and Section 412 of the *International Building Code*.
2. Open parking garages in accordance with Section 406.5 of the *International Building Code*.
3. Buildings with an occupancy in Group A-5 in accordance with Section 303.1 of the *International Building Code*.
4. Low-hazard special occupancies in accordance with Section 503.1.1 of the *International Building Code.*
5. Buildings with an occupancy in Group H-1, H-2 or H-3 in accordance with Section 415 of the *International Building Code*.
6. In Group I-1 and I-2 occupancies, the alarm shall sound at a constantly attended location and occupant notification shall be broadcast by the emergency voice/alarm communication system.

❖ High-rise buildings require additional fire protection systems because of the difficulties with smoke movement, egress time and fire department access. As a result, this section requires both an automatic fire alarm system and an EV/ACS (see commentary, Section 907.5.2.2). Exceptions 1 through 5 are the same as those in Section 403.1 of the IBC regarding the applicability of the high-rise provisions.

Exception 1 addresses airport traffic control towers and is based on the limited fuel load and the limited number of persons occupying the tower.

Open parking garages and places of outdoor assembly (Group A-5) are exempted by Exceptions 2 and 3, respectively, because of the free ventilation to the outside that exists in such structures.

In Exception 4, low-hazard special industrial occupancies may be exempted when approved by the fire code official. Such buildings should be evaluated based on the occupant load and the hazards of the occupancy and its contents to determine whether the protection features required by Section 403 of the IBC are necessary.

Buildings with occupancies in Groups H-1, H-2 and H-3 are excluded from the requirements of this sec-

INTERNATIONAL CODE COUNCIL®
Copyright © 2015 ICC. ALL RIGHTS RESERVED. Accessed by David Dammon on Jun 21, 2017 12:30:52 PM pursuant to License Agreement with ICC. No further reproduction or distribution authorized. ANY UNAUTHORIZED REPRODUCTION OR DISTRIBUTION IS A VIOLATION OF THE FEDERAL COPYRIGHT ACT AND THE LICENSE AGREEMENT, AND SUBJECT TO CIVIL AND CRIMINAL PENALTIES THEREUNDER.

tion by Exception 5 because the fire hazard characteristics of these occupancies have not yet been considered in high-rise buildings.

Exception 6 recognizes the supervised environment typical of institutional uses and the reliance placed on staff to act appropriately in an emergency. As is the case for most voice alarms, the key is in being able to deliver specific information to the people who can affect a safe egress–whether this is the public or employees, or both.

907.2.13.1 Automatic smoke detection. Automatic smoke detection in high-rise buildings shall be in accordance with Sections 907.2.13.1.1 and 907.2.13.1.2.

❖ This section simply introduces the fire alarm and detection system requirements for high-rise buildings.

907.2.13.1.1 Area smoke detection. Area smoke detectors shall be provided in accordance with this section. Smoke detectors shall be connected to an automatic fire alarm system. The activation of any detector required by this section shall activate the emergency voice/alarm communication system in accordance with Section 907.5.2.2. In addition to smoke detectors required by Sections 907.2.1 through 907.2.10, smoke detectors shall be located as follows:

1. In each mechanical equipment, electrical, transformer, telephone equipment or similar room that is not provided with sprinkler protection.
2. In each elevator machine room, machinery space, control room and control space and in elevator lobbies.

❖ Automatic smoke detectors are required in all high-rise buildings in certain locations so that a fire will be detected in its early stages of development. The detectors must be connected to the automatic fire alarm system and be capable of initiating operation of the EV/ACS.

This section divides the automatic smoke detection requirement into two categories. Smoke detectors must be installed in rooms that are not typically occupied. This includes rooms used for mechanical equipment, electrical equipment, transformer equipment and telephone equipment where such rooms do not have automatic sprinkler protection. In most cases, these rooms will have sprinkler protection by virtue of being in a high-rise building and will therefore not require smoke detectors. However, in elevator machine rooms, machinery spaces, control rooms, control spaces and elevator lobbies, smoke detectors are required regardless of sprinkler protection.

Note that smoke detection and smoke alarms may be required based upon occupancy related requirements elsewhere in Section 907.2.

[M] 907.2.13.1.2 Duct smoke detection. Duct smoke detectors complying with Section 907.3.1 shall be located as follows:

1. In the main return air and exhaust air plenum of each air-conditioning system having a capacity greater than 2,000 cubic feet per minute (cfm) (0.94 m^3/s). Such detectors shall be located in a serviceable area downstream of the last duct inlet.
2. At each connection to a vertical duct or riser serving two or more stories from a return air duct or plenum of an air-conditioning system. In Group R-1 and R-2 occupancies, a smoke detector is allowed to be used in each return air riser carrying not more than 5,000 cfm (2.4 m^3/s) and serving not more than 10 air-inlet openings.

❖ Smoke detectors must be installed in the main return air and exhaust air plenum of each air-conditioning system having a design capacity exceeding 2,000 cubic feet per minute (cfm) (0.94 m^3/s). Systems with design capacities equal to or less than 2,000 cfm (0.94 m^3/s) are exempt from this requirement because their small size limits their capacity for spreading smoke to parts of the building not already involved with fire.

The area that could be served by a 2,000-cfm (0.94 m^3) system (approximately 5 tons of cooling capacity) is comparatively small; therefore, the distribution of smoke in a system of that size would be minimal. Smoke detectors must be located so that they monitor the total airflow within the system. If a single detector is unable to sample the total airflow at all times, then multiple detectors are required. The smoke detectors must be made accessible for maintenance and inspection. Many failures and false alarms are caused by a lack of maintenance and cleaning of the smoke detectors.

Consistent with Section 606.2.3 of the IMC, return air risers serving two or more stories must have smoke detectors installed at each story. Item 2 allows permits the use of a single listed smoke detector in each return air riser in a Group R-1 or R-2 occupancy if the capacity of each riser does not exceed 5,000 cfm (2.4 m^3/s) and does not serve more than 10 air-inlet openings. This alternative recognizes that it is not as necessary in buildings dedicated to residential occupancies only to monitor the return air from each story prior to intermixing the return air in the common riser.

907.2.13.2 Fire department communication system. Where a wired communication system is *approved* in lieu of an emergency responder radio coverage system in accordance with Section 510, the wired fire department communication system shall be designed and installed in accordance with NFPA 72 and shall operate between a *fire command center* complying with Section 508, elevators, elevator lobbies, emergency and standby power rooms, fire pump rooms, areas of refuge and inside *interior exit stairways*. The fire department communication device shall be provided at each floor level within the *interior exit stairway*.

❖ High-rise buildings have posed a challenge to the traditional communication systems used by the fire service for fire-to-ground communications to assist fire ground officers in communicating with the fire fighters

INTERNATIONAL CODE COUNCIL®
Copyright © 2015 ICC. ALL RIGHTS RESERVED. Accessed by David Dammon on Jun 21, 2017 12:30:52 PM pursuant to License Agreement with ICC. No further reproduction or distribution authorized. ANY UNAUTHORIZED REPRODUCTION OR DISTRIBUTION IS A VIOLATION OF THE FEDERAL COPYRIGHT ACT AND THE LICENSE AGREEMENT, AND SUBJECT TO CIVIL AND CRIMINAL PENALTIES THEREUNDER.

working in various areas of the building. Where testing using the building's public safety communications system required by Section 510 of the code shows that the signal strengths are not satisfactory, Section 510.1, Exception 1 allows for the alternative of installation of a wired communication system designed in accordance with this section. The system must be capable of operating between the fire command center and every elevator, elevator lobby, emergency/standby power room, fire pump room, area of refuge and exit stairway. Note that this section does not offer specific criteria as to what constitutes an acceptable wired communication system or its components. It could be a component of an emergency voice/alarm communication system that complies with Section 907.5.2.2 or a building's telephone system. In any event, when applying Section 510.1, Exception 1 and this section, the concurrent approval of the fire and building code officials is required.

907.2.14 Atriums connecting more than two stories. A fire alarm system shall be installed in occupancies with an atrium that connects more than two stories, with smoke detection in locations required by a rational analysis in Section 909.4 and in accordance with the system operation requirements in Section 909.17. The system shall be activated in accordance with Section 907.5. Such occupancies in Group A, E or M shall be provided with an emergency voice/alarm communication system complying with the requirements of Section 907.5.2.2.

❖ Buildings containing an atrium that connects more than two stories are to be equipped with a fire alarm system that can be used to notify building occupants to begin evacuating in case of a fire. The other critical part of such fire alarm systems is to activate the smoke control system. The system is to be activated by smoke detection designed and installed in accordance with the rational analysis as required in Section 909.4. More specifically, smoke control systems are engineered systems that are activated by carefully placed and zoned smoke detection. If improperly designed and installed, the system may not be effective. For instance, wrongly placed or inappropriate smoke detection technology may not activate fast enough and the smoke control system would be overwhelmed. This section goes on to state that the alarm system must be initiated in accordance with Section 907.5, which requires that in buildings containing an atrium, the alarm system is to be initiated by the sprinkler system and any automatic or manual fire alarm-initiating devices found in the atrium as well as elsewhere in the building. It does not intend to require certain features to be installed within the atrium but rather is simply requiring that any such features present initiate the occupant notification system. It would not necessarily be appropriate to also initiate the smoke control system upon activation of the alarm system within a building containing an atrium (see Section 909.12.3). The alarm system needs to be carefully zoned in such buildings to avoid an inappropriate activation of the smoke control system from a space not associated with the atrium.

Groups A, E and M must have an emergency voice/alarm communication system that complies with Section 907.5.2.2 because of the number of persons to be evacuated and the lack of familiarity with the location of exits that is typical of occupants in Groups A and M.

907.2.15 High-piled combustible storage areas. An automatic smoke detection system shall be installed throughout *high-piled combustible storage* areas where required by Section 3206.5.

❖ Section 3206.5 requires an automatic fire detection system in high-piled combustible storage areas depending on the commodity class, the size of the high-piled storage area and the presence of an automatic sprinkler system. High-piled storage is the storage of Class I through IV commodities in piles, bin boxes, on pallets or in racks more than 12 feet (3658 mm) high or for high-hazard commodities stored higher than 6 feet (1829 mm). Chapter 32 and NFPA 13 contain additional requirements for all high-piled storage conditions.

907.2.16 Aerosol storage uses. Aerosol storage rooms and general-purpose warehouses containing aerosols shall be provided with an *approved* manual fire alarm system where required by this code.

❖ Section 3206.5 requires an automatic fire detection system in high-piled combustible storage areas depending on the commodity class, the size of the high-piled storage area and the presence of an automatic sprinkler system. High-piled storage is the storage of Class I through IV commodities in piles, bin boxes, on pallets or in racks more than 12 feet (3658 mm) high or for high-hazard commodities stored higher than 6 feet (1829 mm). Chapter 32 and NFPA 13 contain additional requirements for all high-piled storage conditions.

907.2.17 Lumber, wood structural panel and veneer mills. Lumber, wood structural panel and veneer mills shall be provided with a manual fire alarm system.

❖ Any facility using mechanical methods to process wood into finished products produces debris and the potential for combustible dust. Such facilities include mills that produce solid wood lumber and wood veneers as well as those that manufacture structural wood panels such as waferboard, oriented strandboard, composite wood panels or plywood. Good housekeeping and control of ignition sources are therefore essential. To aid in the quick evacuation of occupants in an emergency, Section 2804.2.1 requires a manual fire alarm system in lumber, wood structural panel and veneer mills that contain product dryers because of their potential as a source of ignition. A manual fire alarm system is not required, however, if the dryers and all other potential sources of ignition are protected by a supervised automatic sprinkler system.

INTERNATIONAL CODE COUNCIL®
Copyright © 2015 ICC. ALL RIGHTS RESERVED. Accessed by David Dammon on Jun 21, 2017 12:30:52 PM pursuant to License Agreement with ICC. No further reproduction or distribution authorized. ANY UNAUTHORIZED REPRODUCTION OR DISTRIBUTION IS A VIOLATION OF THE FEDERAL COPYRIGHT ACT AND THE LICENSE AGREEMENT, AND SUBJECT TO CIVIL AND CRIMINAL PENALTIES THEREUNDER.

907.2.18 Underground buildings with smoke control systems. Where a smoke control system is installed in an underground building in accordance with the *International Building Code*, automatic smoke detectors shall be provided in accordance with Section 907.2.18.1.

❖ As indicated in Section 405.5.2 of the IBC, each compartment of an underground building must have a smoke control/exhaust system that can be activated both automatically and manually. Floor levels more than 60 feet (18 288 mm) below the lowest level of exit discharge must be compartmented. Compartmentation is a key element in the egress and fire access plan for floor areas in an underground building. The smoke control system must not only facilitate egress during a fire, but also improve fire department access to the fire source by maintaining visibility that is otherwise impossible given the inability of the fire service to manually ventilate the underground portion of the building. (see the commentary to Section 405.4.1 of the IBC).

907.2.18.1 Smoke detectors. Not fewer than one smoke detector *listed* for the intended purpose shall be installed in all of the following areas:

1. Mechanical equipment, electrical, transformer, telephone equipment, elevator machine or similar rooms.
2. Elevator lobbies.
3. The main return and exhaust air plenum of each air-conditioning system serving more than one story and located in a serviceable area downstream of the last duct inlet.
4. Each connection to a vertical duct or riser serving two or more floors from return air ducts or plenums of heating, ventilating and air-conditioning systems, except that in Group R occupancies, a *listed* smoke detector is allowed to be used in each return air riser carrying not more than 5,000 cfm (2.4 m^3/s) and serving not more than 10 air inlet openings.

❖ Automatic smoke detectors are required in certain locations in all underground buildings so that a fire will be detected in its early stages of development. Underground buildings are similar to high-rise buildings in that they present an unusual hazard by being virtually inaccessible to exterior fire department suppression and rescue operations with the increased potential to trap occupants inside the structure. For this reason, the smoke detector location requirements for underground buildings are similar to those in Section 907.2.13.1 for high-rise buildings (see commentary, Section 907.2.13.1).

The requirement for a smoke detector in the main return and exhaust air plenum of an air-conditioning system in an underground building, however, differs from that of a high-rise building in that it is not a function of capacity [2,000 cfm (0.94 m^3/s)] but rather a function of whether the system serves more than one floor level. There is more concern over the threat of smoke movement from floor to floor because the products of combustion cannot be vented directly to the atmosphere.

907.2.18.2 Alarm required. Activation of the smoke control system shall activate an audible alarm at a constantly attended location.

❖ The audible alarm is required to notify qualified personnel immediately that the smoke control system has been activated and to put emergency procedures into action quickly.

907.2.19 Deep underground buildings. Where the lowest level of a structure is more than 60 feet (18 288 mm) below the finished floor of the lowest *level of exit discharge*, the structure shall be equipped throughout with a manual fire alarm system, including an emergency voice/alarm communication system installed in accordance with Section 907.5.2.2.

❖ The ability to communicate and offer warning of a fire can increase the time available for egress from the building. Underground structures located more than 60 feet (18 288 mm) below the level of exit discharge must therefore have a manual fire alarm system. An EV/ACS is also required as part of this system (see commentary, Section 907.5.2.2).

907.2.20 Covered and open mall buildings. Where the total floor area exceeds 50,000 square feet (4645 m^2) within either a covered mall building or within the perimeter line of an open mall building, an emergency voice/alarm communication system shall be provided. Emergency voice/alarm communication systems serving a mall, required or otherwise, shall be accessible to the fire department. The system shall be provided in accordance with Section 907.5.2.2.

❖ Because of the potentially large number of occupants and their unfamiliarity with their surroundings, an EV/ACS, accessible by the fire department, is required to aid in evacuation of covered mall buildings exceeding 50,000 square feet (4645 m^2) in total floor area or an open mall exceeding 50,000 square feet (4645 m^2) measured within the perimeter lines of the open mall. Anchor stores are not included as part of the covered or open mall building (see commentary, Section 202 definition of "Covered mall building").

907.2.21 Residential aircraft hangars. Not fewer than one single-station smoke alarm shall be installed within a residential aircraft hangar as defined in Chapter 2 of the *International Building Code* and shall be interconnected into the residential smoke alarm or other sounding device to provide an alarm that will be audible in all sleeping areas of the *dwelling*.

❖ Residential aircraft hangars are assumed to be on the same property as a one- or two-family dwelling. Section 412.5 of the IBC contains additional requirements for the construction of residential aircraft hangars. The hangar could be located immediately adjacent to the dwelling unit if it is separated by 1-hour fire-resistance-rated construction. Because of the potentially close proximity of the aircraft and its flammability and fuel source, at least one smoke alarm is required in the hangar that is interconnected

INTERNATIONAL CODE COUNCIL®
Copyright © 2015 ICC. ALL RIGHTS RESERVED. Accessed by David Dammon on Jun 21, 2017 12:30:52 PM pursuant to License Agreement with ICC. No further reproduction or distribution authorized. ANY UNAUTHORIZED REPRODUCTION OR DISTRIBUTION IS A VIOLATION OF THE FEDERAL COPYRIGHT ACT AND THE LICENSE AGREEMENT, AND SUBJECT TO CIVIL AND CRIMINAL PENALTIES THEREUNDER.

to the residential smoke alarms. It should be noted, however, that the requirement for a smoke alarm is also applicable to residential aircraft hangars that are detached from the dwelling unit. Because a minimum separation distance is not specified, a fire in the hangar could still present a serious fire hazard to the dwelling unit.

907.2.22 Airport traffic control towers. An automatic smoke detection system that activates the occupant notification system in accordance with Section 907.5 shall be provided in airport control towers in accordance with Sections 907.2.22.1 and 907.2.22.2.

Exception: Audible appliances shall not be installed within the control tower cab.

❖ Airport traffic control towers must be designed to comply with Section 412.3 of the IBC. These structures are unique in that they can be built to excessive heights and are often permitted to have one exit stairway. Section 412.3 of the IBC does require that airport traffic control towers with an occupied floor more than 35 feet above fire department vehicle access be equipped throughout with an automatic sprinkler system. The requirements for detection systems and associated occupant notification are addressed based on whether the airport traffic control tower is equipped throughout with an automatic sprinkler system and whether multiple exits are provided.

The exception recognizes the sensitive nature of the operations that take place in the cab located at the top of the tower and prohibits the installation of audible alarm notification devices there. Notification of occupants within the cab is to be by visual notification appliances only.

907.2.22.1 Airport traffic control towers with multiple exits and automatic sprinklers. Airport traffic control towers with multiple *exits* and equipped throughout with an *automatic sprinkler system* in accordance with Section 903.3.1.1 shall be provided with smoke detectors in all of the following locations:

1. Airport traffic control cab.
2. Electrical and mechanical equipment rooms.
3. Airport terminal radar and electronics rooms.
4. Outside each opening into *interior exit stairways*.
5. Along the single *means of egress* permitted from observation levels.
6. Outside each opening into the single *means of egress* permitted from observation levels.

❖ This section addresses airport traffic control towers that are equipped throughout with an automatic sprinkler system and provide multiple exits. The requirements are less restrictive than Section 907.2.22.2 because two important safety aspects are provided.

The first three items address occupiable or equipment-related rooms where the fires are more likely to start. The last two items address the paths of egress. Item 4 requires one detector outside each entrance to the interior stairway. Item 5 is specific to providing detection along the entire means of egress path from the observation levels.

907.2.22.2 Other airport traffic control towers. Airport traffic control towers with a single *exit* or where sprinklers are not installed throughout shall be provided with smoke detectors in all of the following locations:

1. Airport traffic control cab.
2. Electrical and mechanical equipment rooms.
3. Airport terminal radar and electronics rooms.
4. Office spaces incidental to the tower operation.
5. Lounges for employees, including sanitary facilities.
6. *Means of egress*.
7. Accessible utility shafts.

❖ This section addresses airport traffic control towers that have only a single exit or where an automatic sprinkler system is not provided. Essentially all the items addressed are the areas permitted in an airport traffic control tower in accordance with Section 412.3. Items 1 through 3 are the same as Section 907.2.22.1. These are the critical occupiable spaces and equipment spaces where fires have the greatest affect on the operation of airport traffic control towers. Since this is a single exit tower and possibly not equipped throughout with an automatic sprinkler system, other occupiable areas such as offices and lounges for employees must also provide smoke detection. Since there are limited exits or no systems able to control the fire, early warning of a fire becomes more critical. Item 6 requires smoke detection along the means of egress path. The intent is to address the exit access path leading to the interior exit stairway. Finally, Item 7 addresses potential for fires in any utility shaft that may be accessible to building occupants.

907.2.23 Battery rooms. An automatic smoke detection system shall be installed in areas containing stationary storage battery systems with a liquid capacity of more than 50 gallons (189 L).

❖ Stationary lead-acid battery systems are commonly used for standby power, emergency power or uninterrupted power supplies. The release of hydrogen gas during battery system operation is usually minimal. Adequate ventilation will disperse the small amounts of liberated hydrogen. Because standby power and emergency power systems control many important building emergency systems and functions, a supervised automatic smoke-detection system is required for early warning notification of a hazardous condition. Section 608 contains additional requirements, including the need for safety venting; room enclosure requirements; spill control and neutralization provisions; ventilation criteria; signage and seismic protection. Section 509 of the IBC also requires that such rooms in certain occupancies be separated by one hour construction.

INTERNATIONAL CODE COUNCIL®
Copyright © 2015 ICC. ALL RIGHTS RESERVED. Accessed by David Dammon on Jun 21, 2017 12:30:52 PM pursuant to License Agreement with ICC. No further reproduction or distribution authorized. ANY UNAUTHORIZED REPRODUCTION OR DISTRIBUTION IS A VIOLATION OF THE FEDERAL COPYRIGHT ACT AND THE LICENSE AGREEMENT, AND SUBJECT TO CIVIL AND CRIMINAL PENALTIES THEREUNDER.

907.3 Fire safety functions. Automatic fire detectors utilized for the purpose of performing fire safety functions shall be connected to the building's fire alarm control unit where a fire alarm system is required by Section 907.2. Detectors shall, upon actuation, perform the intended function and activate the alarm notification appliances or activate a visible and audible supervisory signal at a constantly attended location. In buildings not equipped with a fire alarm system, the automatic fire detector shall be powered by normal electrical service and, upon actuation, perform the intended function. The detectors shall be located in accordance with NFPA 72.

❖ When the code requires installation of automatic fire detectors to perform a specific function, such as elevator recall or smokeproof enclosure ventilation, or when detectors are installed to comply with a permitted alternative, such as door-closing devices, these detectors must be connected to the building's automatic fire alarm system if the building is required by the code to have such a system.

In addition to performing its intended function (for example, closing a door), if a detector is activated, it must also activate either the building alarm devices (if one is present) or a supervisory signal at a constantly attended location. This requirement recognizes that these detectors and the devices they control are part of the building fire protection system and are expected to perform as designed. If they are connected to a fire alarm system, they will have the supervision necessary for operational reliability. If they are not connected to and supervised by a fire alarm system, they still must be supervised through the constantly attended location.

An exception is provided for fire safety function detectors in buildings not required to have a fire alarm system. The fire safety function detectors must be powered by the building electrical system and be located as required by NFPA 72. Without this exception, these detectors could not be expected to perform as intended because there would be no power supply.

907.3.1 Duct smoke detectors. Smoke detectors installed in ducts shall be *listed* for the air velocity, temperature and humidity present in the duct. Duct smoke detectors shall be connected to the building's fire alarm control unit when a fire alarm system is required by Section 907.2. Activation of a duct smoke detector shall initiate a visible and audible supervisory signal at a *constantly attended location* and shall perform the intended fire safety function in accordance with this code and the *International Mechanical Code*. In facilities that are required to be monitored by a supervising station, duct smoke detectors shall report only as a supervisory signal and not as a fire alarm. They shall not be used as a substitute for required open area detection.

Exceptions:

1. The supervisory signal at a constantly attended location is not required where duct smoke detectors activate the building's alarm notification appliances.
2. In occupancies not required to be equipped with a fire alarm system, actuation of a smoke detector shall activate a visible and an audible signal in an *approved* location. Smoke detector trouble conditions shall activate a visible or audible signal in an *approved* location and shall be identified as air duct detector trouble.

❖ It is not the intent of this section to send a signal to the fire department or to activate the alarm notification devices within a building. Instead, this section requires that a supervisory signal be sent to a constantly attended location. Smoke detectors must be connected to a fire alarm system where such systems are installed. Connection to the fire alarm system will activate a visible and audible supervisory signal at a constantly attended location, which will alert building supervisory personnel that a smoke alarm has activated and will also provide electronic supervision of the duct detectors, thereby indicating any problems that may develop in the detector system circuitry or power supply.

Exception 1 allows activation of the building alarm notification appliances in place of a supervisory signal. Causing the occupant notification system to sound would alert the occupants of the building that an alarm condition exists within the air distribution system, thereby performing the same function as a supervisory signal sent to a constantly attended location.

Exception 2 recognizes the fact that not all buildings are required to have a fire alarm system. A visible and audible signal must be activated at an approved location that will alert building supervisory personnel to take action. Additionally, the duct smoke detectors must be electronically supervised to indicate trouble (system fault) in the detector system circuitry or power supply. A trouble condition must activate a distinct visible or audible signal at a location that will alert the responsible personnel.

907.3.2 Delayed egress locks. Where delayed egress locks are installed on *means of egress* doors in accordance with Section 1010.1.9.7, an automatic smoke or heat detection system shall be installed as required by that section.

❖ This section alerts the code user to additional requirements in Section 1010.1.9.7 that tie the operation of egress doors into the activation of an automatic fire detection system. A smoke or heat detection system is required to unlock delayed egress locks upon activation. The heat detection system can be the sprinkler system. For example, Section 1010.1.4.3 requires horizontal sliding doors used as a component of the means of egress, where required to be rated, to be self-closing or automatic-closing upon smoke detection. Also, electrically locked egress doors in occupancies as required by Section 1010.1.9.8 must be capable of being automatically unlocked by activation of an automatic fire detection system, if one is installed.

INTERNATIONAL CODE COUNCIL®
Copyright © 2015 ICC. ALL RIGHTS RESERVED. Accessed by David Dammon on Jun 21, 2017 12:30:52 PM pursuant to License Agreement with ICC. No further reproduction or distribution authorized. ANY UNAUTHORIZED REPRODUCTION OR DISTRIBUTION IS A VIOLATION OF THE FEDERAL COPYRIGHT ACT AND THE LICENSE AGREEMENT, AND SUBJECT TO CIVIL AND CRIMINAL PENALTIES THEREUNDER.

907.3.3 Elevator emergency operation. Automatic fire detectors installed for elevator emergency operation shall be installed in accordance with the provisions of ASME A17.1 and NFPA 72.

❖ This section provides correlation with Section 607.1 by making it clear that automatic fire detection devices used to initiate Phase I emergency recall of elevators are to be installed in accordance with both ASME A17.1 and NFPA 72.

907.3.4 Wiring. The wiring to the auxiliary devices and equipment used to accomplish the fire safety functions shall be monitored for integrity in accordance with NFPA 72.

❖ In order to provide a reasonable level of integrity and reliability to the installation of automatic fire detection devices and related equipment installed to perform various fire safety functions in accordance with Section 907.3, this section requires that all wiring interconnecting such devices and equipment be monitored for integrity in accordance with NFPA 72.

907.4 Initiating devices. Where manual or automatic alarm initiation is required as part of a fire alarm system, the initiating devices shall be installed in accordance with Sections 907.4.1 through 907.4.3.1.

❖ This section introduces Sections 907.4.1 through 907.4.3 which contain requirements for the various types of manual or automatic fire alarm initiating devices.

907.4.1 Protection of fire alarm control unit. In areas that are not continuously occupied, a single smoke detector shall be provided at the location of each fire alarm control unit, notification appliance circuit power extenders and supervising station transmitting equipment.

Exception: Where ambient conditions prohibit installation of smoke detector, a *heat detector* shall be permitted.

❖ This section requires a smoke detector at the fire alarm control unit. This is consistent with Section 10.4.4 of NFPA 72. This smoke detector will activate the fire alarm control unit and allow it to either notify occupants or transmit a signal to a remote monitoring location before the fire impairs the fire alarm control unit. The exception parallels Section 907.4.3 by allowing a heat detector to be installed in lieu of a smoke detector in areas where the ambient environment is hostile to smoke detectors and could lead to unwanted alarm activations. This exception is also allowed by NFPA 72.

907.4.2 Manual fire alarm boxes. Where a manual fire alarm system is required by another section of this code, it shall be activated by fire alarm boxes installed in accordance with Sections 907.4.2.1 through 907.4.2.6.

❖ This section specifies the requirements for manual fire alarm boxes that are part of a required manual fire alarm system.

907.4.2.1 Location. Manual fire alarm boxes shall be located not more than 5 feet (1524 mm) from the entrance to each *exit*. In buildings not protected by an *automatic sprinkler system* in accordance with Section 903.3.1.1 or 903.3.1.2, additional manual fire alarm boxes shall be located so that the *exit access* travel distance to the nearest box does not exceed 200 feet (60 960 mm).

❖ Manual fire alarm boxes must be located in the path of egress and be readily accessible to the occupants. They must be located within 5 feet (1524 mm) of the entrance to each exit on every story of the building. This would include the need to locate manual fire alarm boxes near each horizontal exit, as well as entrances to stairs and exit doors to the exterior.

Manual fire alarm boxes are located near exits so that an adequate number of devices are available in the path of egress to transmit an alarm in a timely manner. These locations also encourage the actuation of a manual fire alarm box on the fire floor prior to entering the stair, resulting in the alarm being received from the actual fire floor and not another floor along the path of egress.

The location also presumes that individuals will be evacuating the area where the fire originated. When evacuation of the fire area is unlikely, consideration could be given to putting manual fire alarm boxes in more convenient places. Examples of such instances would be officer stations in Group I-3 occupancies and care provider stations in Group I-2 occupancies.

The 200-foot (60 960 mm) travel distance limitation is consistent with the exit access travel distance permitted for most nonsprinklered occupancies. If the 200-foot (60 960 mm) travel distance to a manual fire alarm box is exceeded, even in a fully sprinklered building, additional manual fire alarm boxes would be required.

907.4.2.2 Height. The height of the manual fire alarm boxes shall be not less than 42 inches (1067 mm) and not more than 48 inches (1372 mm) measured vertically, from the floor level to the activating handle or lever of the box.

❖ Manual fire alarm boxes must be reachable by the occupants of the building. They must also be mounted high enough to reduce the likelihood of damage or false alarms from something accidentally striking the device. Therefore, manual fire alarm boxes must be mounted a minimum of 42 inches (1067 mm) and a maximum of 48 inches (1372 mm) above the floor level. The 48-inch (1372 mm) measurement corresponds to the maximum unobstructed side-reach height by a person in a wheelchair.

907.4.2.3 Color. Manual fire alarm boxes shall be red in color.

❖ Manual fire alarm boxes are to be painted or manufactured in a distinctive and traditional red color to provide a visual cue to help building occupants identify the device.

907.4.2.4 Signs. Where fire alarm systems are not monitored by a supervising station, an *approved* permanent sign shall be

INTERNATIONAL CODE COUNCIL®
Copyright © 2015 ICC. ALL RIGHTS RESERVED. Accessed by David Dammon on Jun 21, 2017 12:30:52 PM pursuant to License Agreement with ICC. No further reproduction or distribution authorized. ANY UNAUTHORIZED REPRODUCTION OR DISTRIBUTION IS A VIOLATION OF THE FEDERAL COPYRIGHT ACT AND THE LICENSE AGREEMENT, AND SUBJECT TO CIVIL AND CRIMINAL PENALTIES THEREUNDER.

installed adjacent to each manual fire alarm box that reads: WHEN ALARM SOUNDS—CALL FIRE DEPARTMENT.

Exception: Where the manufacturer has permanently provided this information on the manual fire alarm box.

❖ This section has limited application because, as indicated in Section 907.6.6, fire alarm systems generally must be monitored by an approved supervising station. When a system is not monitored, such as possibly a fire alarm system that is not required by code, adequate signage must be displayed to tell occupants what response actions must be taken. Most building occupants assume that when an alarm device is activated, the fire department will automatically be notified as well. The sign must be conspicuously located next to the manual fire alarm box unless the signage is mounted on the manual fire alarm box itself by the manufacturer.

907.4.2.5 Protective covers. The *fire code official* is authorized to require the installation of *listed* manual fire alarm box protective covers to prevent malicious false alarms or to provide the manual fire alarm box with protection from physical damage. The protective cover shall be transparent or red in color with a transparent face to permit visibility of the manual fire alarm box. Each cover shall include proper operating instructions. A protective cover that emits a local alarm signal shall not be installed unless *approved*. Protective covers shall not project more than that permitted by Section 1003.3.3.

❖ Although manual fire alarm boxes must be readily available to all occupants in buildings required to have a manual fire alarm system, this section allows the use of protective covers if they are approved by the fire code official. Protective covers are commonly used to reduce either the potential for intentional false alarms or vandalism. They also provide protection in locations where the manual fire alarm boxes may be exposed to physical damage, such as in gymnasiums, indoor tennis courts and the like.

907.4.2.6 Unobstructed and unobscured. Manual fire alarm boxes shall be accessible, unobstructed, unobscured and visible at all times.

❖ This section addresses the concern that manual fire alarm boxes be kept clear and unobstructed. It is recommended that a minimum of 3 feet (914 mm) be kept clear but more may be needed. NFPA 72 addresses the need for manual fire alarm boxes to be unobstructed in Section 17.14.8.2 and states that manual fire alarm boxes be conspicuous, unobstructed and accessible. This requirement will assist during the design, construction, inspection and future maintenance of manual fire alarm boxes when they are located where they will be provided with enough space to access and will not be obstructed.

907.4.3 Automatic smoke detection. Where an automatic smoke detection system is required it shall utilize smoke detectors unless ambient conditions prohibit such an installation. In spaces where smoke detectors cannot be utilized due to ambient conditions, *approved* automatic *heat detectors* shall be permitted.

❖ Smoke detectors must be used, except when ambient conditions would prohibit their use. This section would allow a heat detector to be installed in lieu of a smoke detector in areas where the ambient environment is hostile to smoke detectors and could lead to unwanted alarm activations. The smoke detector manufacturer's literature will identify the limitations on the use of smoke detectors, including environmental conditions such as humidity, temperature and airflow.

907.4.3.1 Automatic sprinkler system. For conditions other than specific fire safety functions noted in Section 907.3, in areas where ambient conditions prohibit the installation of smoke detectors, an *automatic sprinkler system* installed in such areas in accordance with Section 903.3.1.1 or 903.3.1.2 and that is connected to the fire alarm system shall be *approved* as automatic heat detection.

❖ This section states that automatic heat detection is not required when buildings are fully sprinklered in accordance with NFPA 13 or 13R. The presence of a sprinkler system exempts areas where a heat detector can be installed in place of a smoke detector, such as in storage or furnace rooms. The sprinkler head in this case essentially acts as a heat detection device. Note that this provision does not apply to the fire safety functions indicated in Section 907.3.

907.5 Occupant notification systems. A fire alarm system shall annunciate at the fire alarm control unit and shall initiate occupant notification upon activation, in accordance with Sections 907.5.1 through 907.5.2.3.3. Where a fire alarm system is required by another section of this code, it shall be activated by:

1. Automatic fire detectors.
2. Automatic sprinkler system waterflow devices.
3. Manual fire alarm boxes.
4. Automatic fire-extinguishing systems.

Exception: Where notification systems are allowed elsewhere in Section 907 to annunciate at a constantly attended location.

❖ This section makes it clear that fire alarm system activation begins first by activating the fire alarm control unit and then by notifying the occupants of an alarm condition and then goes on to introduce all of the components of an occupant notification system contained in Sections 907.5.1 through 907.5.2.3.3.

It also lists the system components that are to act as alarm initiation devices. The exception is a recognition that there are places in the code where an alternative to occupant notification is an alarm notification at a constantly attended location. The exception is intended to clarify the code so that there is no question as to whether this general provision for alarm activation is superseded by the other sections addressing the alarm notification at a constantly attended location.

INTERNATIONAL CODE COUNCIL®
Copyright © 2015 ICC. ALL RIGHTS RESERVED. Accessed by David Dammon on Jun 21, 2017 12:30:52 PM pursuant to License Agreement with ICC. No further reproduction or distribution authorized. ANY UNAUTHORIZED REPRODUCTION OR DISTRIBUTION IS A VIOLATION OF THE FEDERAL COPYRIGHT ACT AND THE LICENSE AGREEMENT, AND SUBJECT TO CIVIL AND CRIMINAL PENALTIES THEREUNDER.

907.5.1 Presignal feature. A presignal feature shall not be installed unless *approved* by the *fire code official* and the fire department. Where a presignal feature is provided, a signal shall be annunciated at a constantly attended location *approved* by the fire department, so that occupant notification can be activated in the event of fire or other emergency.

❖ A presignal feature on a fire alarm system allows the occupant notification devices to activate in selected, constantly attended locations only and from which human intervention is required to activate a general occupant notification signal. Alternatively, this feature can be programmed to delay the general alarm notification for more than one minute before it will automatically be activated by the control panel. In either presignal scenario, remote transmission of the alarm signal to the fire department is immediate. See NFPA 72 for additional information on the presignal feature.

Improper use of the presignal feature has been a contributing factor in several multiple-death fire incidents. In most instances, the staff failed to activate the general alarm quickly and the occupants of the building were unaware of the fire. Therefore, the use of a presignal feature is discouraged by the code. A presignal feature may be used only if it is approved by the fire code official and the fire department.

907.5.2 Alarm notification appliances. Alarm notification appliances shall be provided and shall be *listed* for their purpose.

❖ The code requires that fire alarm systems be equipped with approved alarm notification appliances so that in an emergency, the fire alarm system will notify the occupants of the need for evacuation or implementation of the fire emergency plan. Alarm notification devices required by the code are of two general types: visible and audible. Except for voice/alarm signaling systems, once the system has been activated, all visible and audible alarms are required to activate. Voice/alarm signaling systems are special signaling systems that are activated selectively in response to specific emergency conditions.

907.5.2.1 Audible alarms. Audible alarm notification appliances shall be provided and emit a distinctive sound that is not to be used for any purpose other than that of a fire alarm.

Exceptions:

1. Audible alarm notification appliances are not required in critical care areas of Group I-2 Condition 2 occupancies that are in compliance with Section 907.2.6, Exception 2.
2. A visible alarm notification appliance installed in a nurses' control station or other continuously attended staff location in a Group I-2 Condition 2 suite shall be an acceptable alternative to the installation of audible alarm notification appliances throughout the suite in Group I-2 Condition 2 occupancies that are in compliance with Section 907.2.6, Exception 2.
3. Where provided, audible notification appliances located in each occupant evacuation elevator lobby in accordance with Section 3008.9.1 of the *International Building Code* shall be connected to a separate notification zone for manual paging only.

❖ To attract the attention of building occupants, audible alarms must be distinctive, using a sound that is unique to the fire alarm system and used for no other purpose than alerting occupants to a fire emergency. Other emergencies, such as tornados, etc., must be signaled by another sound different from the fire signal.

Exception 1 recognizes that the occupants in critical care areas of Group I-2 occupancies are usually incapacitated. The audible alarms may have the effect of unnecessarily disrupting the care recipients specific term who are most likely not capable of self-preservation. Likewise, audible alarms in operating theaters of hospitals could be hazardous because an alarm activation could startle a surgeon during a delicate procedure. Critical care areas are also assumed to be adequately staffed at all times. Section 907.2.6 Exception 2 allows the use of private mode signaling in accordance with NFPA 72 and also requires that the staff evacuation responsibilities are included in the fire safety and evacuation plan. See commentary for Section 907.2.6. In private mode, as permitted by Section 907.2.6, there is still a requirement for an audible alarm notification from appliances, though at a much lower decibel level meant to alert staff of the alarm activation. Allowing the audible alarm to be eliminated from critical care areas (operating rooms) in exchange for a visual notification device is also not appropriate since the visual signal device also creates a distraction in critical care areas that may not be able to immediately stop a patient procedure. The emergency action plan would include provisions for alerting of critical area staff and the actions to be taken.

Exception 2 allows hospital care suites to eliminate audible alarms where visible alarm notification appliances are located at a continuously attended staff location or nurses control station. In a suite arrangement, the "control area" is the centrally manned location for staff monitoring patients in the separate rooms. An alarm indicator at this location will alert staff for response in a more effective and efficient manner. Similar to Exception 1, audible alarms can unnecessarily disrupt the care recipients. In addition, simply providing visible alarm notification throughout the suite is not appropriate. The patient's evacuation depends on staff, since they are not capable of self-preservation. As with Exception 1, compliance with Exception 2 to Section 907.2.6 would be required in order to take advantage of this exception.

Exception 3 is intended to address the concern that automatic emergency voice/alarm messages do not interfere with operation of the two-way communica-

INTERNATIONAL CODE COUNCIL®
Copyright © 2015 ICC. ALL RIGHTS RESERVED. Accessed by David Dammon on Jun 21, 2017 12:30:52 PM pursuant to License Agreement with ICC. No further reproduction or distribution authorized. ANY UNAUTHORIZED REPRODUCTION OR DISTRIBUTION IS A VIOLATION OF THE FEDERAL COPYRIGHT ACT AND THE LICENSE AGREEMENT, AND SUBJECT TO CIVIL AND CRIMINAL PENALTIES THEREUNDER.

tion associated with the occupant evacuation elevators. Live voice messages would be appropriate in the lobbies.

907.5.2.1.1 Average sound pressure. The audible alarm notification appliances shall provide a sound pressure level of 15 decibels (dBA) above the average ambient sound level or 5 dBA above the maximum sound level having a duration of not less than 60 seconds, whichever is greater, in every occupiable space within the building.

❖ To attract the attention of building occupants, this section requires that the distinctive audible alarms must be capable of being heard above the ambient noise level in a space. The indicated levels are considered the minimum pressure differential that will be perceivable by most people. It prescribes that the sound pressure level (SPL) for notification appliances shall be a minimum of 15 decibels measured in the A-scale (dBA) above the ambient SPL or 5 dBA above the maximum SPL in every space that can be occupied in a building. These SPLs are based on a minimum 1-minute measurement period. SPLs for Group R and I-1 occupancies, mechanical rooms and other occupancies are no longer stipulated as they had been in previous editions of the IBC.

The values mandated in Section 907.5.2.1.1 in previous editions of the code were not consistent with the notification appliance SPL requirements in NFPA 72. NFPA 72 requirements for the audible notification appliances are based on if the devices emit alert or evacuation tones, voice messages or audible notifications for exit markings. The provisions in Section 907.5.2.1.1 would apply to all notification appliances designed to operate in either public- or private-mode. In sleeping areas, the minimum SPL is no longer specified in Section 907.5.2.1.1; however, for smoke alarms, Section 907.2.11 and NFPA 72 require a minimum 75 dBA SPL at the pillow.

Also note that the 2010 American with Disabilities Act Standard for Accessible Design has an exception for medical care facilities following industry practice that will allow a dependence upon staff. The activation of either audible or visible alarms could be detrimental to the care recipients in locations like operating rooms and intensive or critical care units.

907.5.2.1.2 Maximum sound pressure. The maximum sound pressure level for audible alarm notification appliances shall be 110 dBA at the minimum hearing distance from the audible appliance. Where the average ambient noise is greater than 95 dBA, visible alarm notification appliances shall be provided in accordance with NFPA 72 and audible alarm notification appliances shall not be required.

❖ In no case may the sound pressure level exceed 110 dBA at the minimum hearing distance from the audible appliance. This is consistent with Americans with Disabilities Act (ADA) requirements. Sound pressures above that level can cause pain or even permanent hearing loss. In such cases, audible alarms are not required to be installed but visual alarms would be necessary to compensate for the lack of audibility.

It should also be noted that in certain work areas, the Occupational Safety and Health Administration (OSHA) requires employees to wear hearing protection, possibly preventing them from hearing an audible alarm. Additionally, the noise factor in these areas is high enough that an audible alarm may not be discernible. In these areas, as well as in others, the primary method of indicating a fire can be by a visible signal. Employees must be capable of identifying such a signal as indicating a fire.

907.5.2.2 Emergency voice/alarm communication systems. Emergency voice/alarm communication systems required by this code shall be designed and installed in accordance with NFPA 72. The operation of any automatic fire detector, sprinkler waterflow device or manual fire alarm box shall automatically sound an alert tone followed by voice instructions giving *approved* information and directions for a general or staged evacuation in accordance with the building's fire safety and evacuation plans required by Section 404. In high-rise buildings, the system shall operate on at least the alarming floor, the floor above and the floor below. Speakers shall be provided throughout the building by paging zones. At a minimum, paging zones shall be provided as follows:

1. Elevator groups.
2. *Interior exit stairways*.
3. Each floor.
4. *Areas of refuge* as defined in Chapter 2.

Exception: In Group I-1 and I-2 occupancies, the alarm shall sound in a constantly attended area and a general occupant notification shall be broadcast over the overhead page.

❖ The primary purpose of an EV/ACS is to provide dedicated manual and automatic facilities for the origination, control and transmission of information and instructions pertaining to a fire alarm emergency to the occupants of a building. This section identifies that notification speakers are required throughout the building with a minimum of one speaker in each paging zone when an EV/ACS is required. The system may sound a general alarm or be a selective system in which only selected areas of the building receive the alarm indication for staged evacuation. See Chapter 4 for evacuation plan requirements. The intent is to provide the capability to send out selective messages to individual areas; however, it does not prohibit the same message to be sent to all areas. In high-rise buildings, a minimum area of notification must include the alarming floor and the floors above and below it.

This section also identifies the minimum paging zone arrangement. This does not preclude further zone divisions for logical staged evacuation in accordance with an approved evacuation plan.

This section also indicates that the emergency voice/alarm system is to be initiated as all other fire alarm systems are initiated. The functional operation of the system begins with an alert tone (usually 3 to

INTERNATIONAL CODE COUNCIL®
Copyright © 2015 ICC. ALL RIGHTS RESERVED. Accessed by David Dammon on Jun 21, 2017 12:30:52 PM pursuant to License Agreement with ICC. No further reproduction or distribution authorized. ANY UNAUTHORIZED REPRODUCTION OR DISTRIBUTION IS A VIOLATION OF THE FEDERAL COPYRIGHT ACT AND THE LICENSE AGREEMENT, AND SUBJECT TO CIVIL AND CRIMINAL PENALTIES THEREUNDER.

10 seconds in duration) followed by the evacuation signal (message). It is important to remember that the voice alarm system is not an "audible alarm." It has its own specific criteria for installation and approval according to NFPA 72. Consequently, the sound pressure requirements for audible alarms do not apply to voice alarm systems. For voice alarm systems, the intent is communication and an understanding of what is being said, not volume.

The exception is similar to the one to Section 907.5.2.1 and recognizes the supervised environment typical of institutional uses and the reliance placed on staff to act appropriately in an emergency. As is the case for most voice alarms, the key is in being able to deliver specific information to the people who can affect a safe egress–whether this is the public or employees, or both.

907.5.2.2.1 Manual override. A manual override for emergency voice communication shall be provided on a selective and all-call basis for all paging zones.

❖ The intent of this section is to provide the ability to transmit live voice instructions over any previously initiated signals or pre-recorded messages for all zones. This would include the ability to override the voice message at once throughout the building or to be able to select individual paging zones for the message override.

907.5.2.2.2 Live voice messages. The emergency voice/ alarm communication system shall have the capability to broadcast live voice messages by paging zones on a selective and all-call basis.

❖ This would include the ability to provide the live voice message at once throughout the building or to be able to select individual paging zones to receive the message. Speakers used for background music must not be used unless specifically listed for fire alarm system use. NFPA 72 has additional requirements for the placement, location and audibility of speakers used as part of an emergency voice/alarm communication system.

907.5.2.2.3 Alternate uses. The emergency voice/ alarm communication system shall be allowed to be used for other announcements, provided the manual fire alarm use takes precedence over any other use.

❖ In certain circumstances which should be approved by the fire code officials, the emergency voice/alarm communications system could be used to convey information other than fire alarm-related items. This could include severe weather warnings that might require evacuation or relocation, lockdown instructions (see commentary, Section 404.2.3) and similar approved messages. In the event of such usage, the system must respond immediately to manual fire alarm box activations.

907.5.2.2.4 Emergency voice/alarm communication captions. Where stadiums, arenas and grandstands are required to caption audible public announcements in accordance with Section 1108.2.7.3 of the *International Building Code*, the emergency/voice alarm communication system shall be captioned. Prerecorded or live emergency captions shall be from an *approved* location constantly attended by personnel trained to respond to an emergency.

❖ This provision links the EV/ACS with the requirements for captioning in Section 1108.2.7.3 of the IBC. Section 1108.2.7.3 of the IBC requires that stadiums, arenas and grandstands have 15,000 fixed seats to provide captioning for audible announcements (see commentary, Section 907.2.1.2).

907.5.2.2.5 Emergency power. Emergency voice/ alarm communications systems shall be provided with emergency power in accordance with Section 604. The system shall be capable of powering the required load for a duration of not less than 24 hours, as required in NFPA 72.

❖ Because the emergency voice/alarm communication system is a critical aid in evacuating the building, the system must be connected to an approved emergency power source complying with Section 604. The section also clarifies that the duration of the load for EV/ACS is a minimum of 24 hours.

907.5.2.3 Visible alarms. Visible alarm notification appliances shall be provided in accordance with Sections 907.5.2.3.1 through 907.5.2.3.3.

Exceptions:

1. Visible alarm notification appliances are not required in *alterations*, except where an existing fire alarm system is upgraded or replaced, or a new fire alarm system is installed.
2. Visible alarm notification appliances shall not be required in *exits* as defined in Chapter 2.
3. Visible alarm notification appliances shall not be required in elevator cars.
4. Visual alarm notification appliances are not required in critical care areas of Group I-2 Condition 2 occupancies that are in compliance with Section 907.2.6, Exception 2.

❖ This section contains alarm system requirements for occupants who are hearing impaired. Visible alarm notification appliances are to be installed in conjunction with the audible devices and located and oriented so that they will display alarm signals throughout a space. It is not the intent of the code to offer visible alarm signals as an option to audible alarm signals. Both are required. However, the code acknowledges conditions when audible alarms may be of little or no value, such as when the ambient sound level exceeds 105 dBA. In such cases, Section 907.5.2.1, similar to NFPA 72, allows for visible alarm notification appliances in the area.

Exception 1 states that visible alarm devices are not required in previously approved existing fire alarm systems or as part of minor alterations to existing fire alarm systems. Extensive modifications to an existing fire alarm system such as an upgrade or replacement would require the installation of visible alarm devices even if the previous existing system neither had them

INTERNATIONAL CODE COUNCIL®
Copyright © 2015 ICC. ALL RIGHTS RESERVED. Accessed by David Dammon on Jun 21, 2017 12:30:52 PM pursuant to License Agreement with ICC. No further reproduction or distribution authorized. ANY UNAUTHORIZED REPRODUCTION OR DISTRIBUTION IS A VIOLATION OF THE FEDERAL COPYRIGHT ACT AND THE LICENSE AGREEMENT, AND SUBJECT TO CIVIL AND CRIMINAL PENALTIES THEREUNDER.

nor required them. The main reason is a combination of simple economics and practical application. Many existing systems that do not have visible signal devices do not have the wiring capability to include such devices in their small alterations. To make the necessary changes to the existing system virtually a total replacement of the existing system may need to take place. In many cases this is cost prohibitive. Thus, if the alteration is small, the system can be left as is, without the visual devices. The second consideration is scope. If the alternation involves only a limited area, it could be confusing to have part of the area equipped with visual devices and part without. This is not good practice, as the alarm could be confusing. If an entire floor is being altered, then it becomes subject to consideration for an upgrade to an alarm system with visual devices. If only an office is being remodeled, then the implication is that the upgrade to visual devices may not be warranted. This determination will be subjective in many cases and should be applied based on the life safety benefit and financial expenses involved and whether adequate audible devices are present for full coverage.

In Exception 2, visible alarm devices are not required in exit elements because of the potential distraction during evacuation. Exits, as defined in Chapter 2, could include interior exit stairways or exit passageways but not exit access corridors. In tall buildings, exiting may be phased based on alarm zone. If the alarm floor and adjacent floors are notified of the emergency but the remainder of the building is not, then a visual device in the stairway would be confusing to those people who may not be coming from the alarm floor.

Previously, some jurisdictions were requiring visible alarm notification appliances to be installed in elevator cars since there was no exception in the code or NFPA 72 to allow omission of this type of notification appliance in elevator cars. Exception 3 eliminates any confusion regarding the need to install visible notification appliances in elevator cars. The rationale for not installing visible notification appliances in elevator cars is the same as for interior exit stairways; high light intensity from these notification appliances may cause confusion and disorientation. Also, elevator passengers are “captive” in that they cannot respond to such devices until the elevator arrives at its destination or is recalled by the Phase I emergency operation feature, which could lead to passenger panic.

Exception 4 was added to eliminate visual alarm notification appliances in critical care areas of Group I-2 Condition 2 occupancies (hospitals) due to the hazards they may pose to the occupants. Such occupancies already have staff procedures in place during fires that more than compensate for visual alarm notification appliances. In addition, in these areas of the hospital the patients are not typically ambulatory. This allowance includes specific requirements for detailing of the staff evacuation responsibilities based on the requirements in Section 907.2.6. See also commentary to Exception 1 of Section 907.5.2.1.

907.5.2.3.1 Public use areas and common use areas. Visible alarm notification appliances shall be provided in *public use areas* and *common use areas*.

> **Exception:** Where employee work areas have audible alarm coverage, the notification appliance circuits serving the employee work areas shall be initially designed with not less than 20-percent spare capacity to account for the potential of adding visible notification appliances in the future to accommodate hearing-impaired employee(s).

❖ Visible alarm notification appliances must provide coverage in all areas open to the public, as well as all shared or common areas (e.g., corridors, public restrooms, shared offices, classrooms, medical exam rooms, etc.). Areas where visible alarm notification appliances are not required include private offices, mechanical rooms or similar spaces. The intent with this section is to replicate the provisions included in the Americans with Disabilities Act *Accessibility Guidelines for Buildings and Facilities* (ADAAG).

The exception allows employee work areas to provide only for spare capacity on notification circuits to allow for those with hearing impairments to be accommodated as necessary. This spare capacity is intended to eliminate the potential for overloading notification circuits when a hearing-impaired person is hired and needs to be accommodated, but reduces the initial construction cost as such alarm notification appliances may not be necessary in every situation.

907.5.2.3.2 Groups I-1 and R-1. Group I-1 and R-1 *dwelling units* or *sleeping units* in accordance with Table 907.5.2.3.2 shall be provided with a visible alarm notification appliance, activated by both the in-room smoke alarm and the building fire alarm system.

❖ Fire alarm systems in Group I-1 and R-1 sleeping accommodations must be equipped with visible alarms to the extent stated in Table 907.6.2.3.3. The visible alarm notification devices in these rooms are to be activated by both the required in-room smoke alarm and the building fire alarm system. All visible alarm notification appliances in a building, however, need not be activated by individual room detectors. It is not a requirement that the accessible sleeping units be provided with visible alarm notification appliances even though some elderly patients or residents may be both mobility and hearing impaired.

INTERNATIONAL CODE COUNCIL®
Copyright © 2015 ICC. ALL RIGHTS RESERVED. Accessed by David Dammon on Jun 21, 2017 12:30:52 PM pursuant to License Agreement with ICC. No further reproduction or distribution authorized. ANY UNAUTHORIZED REPRODUCTION OR DISTRIBUTION IS A VIOLATION OF THE FEDERAL COPYRIGHT ACT AND THE LICENSE AGREEMENT, AND SUBJECT TO CIVIL AND CRIMINAL PENALTIES THEREUNDER.

TABLE 907.5.2.3.2
VISIBLE ALARMS

NUMBER OF SLEEPING UNITS	SLEEPING ACCOMMODATIONS WITH VISIBLE ALARMS
6 to 25	2
26 to 50	4
51 to 75	7
76 to 100	9
101 to 150	12
151 to 200	14
201 to 300	17
301 to 400	20
401 to 500	22
501 to 1,000	5% of total
1,001 and over	50 plus 3 for each 100 over 1,000

❖ This table specifies the minimum number of sleeping units that are to be equipped with visible and audible alarms. The numbers are based on the total number of sleeping accommodations in the facility. The requirements in this table are intended to be consistent with the ADAAG.

907.5.2.3.3 Group R-2. In Group R-2 occupancies required by Section 907 to have a fire alarm system, all *dwelling units* and *sleeping units* shall be provided with the capability to support visible alarm notification appliances in accordance with Chapter 10 of ICC A117.1. Such capability shall be permitted to include the potential for future interconnection of the building fire alarm system with the unit smoke alarms, replacement of audible appliances with combination audible/visible appliances, or future extension of the existing wiring from the unit smoke alarm locations to required locations for visible appliances.

❖ At some time during the life of a Group R-2 building, one or more persons who are hearing impaired or deaf may reside in any given unit. As such, Group R-2 occupancies that are required to be equipped with a fire alarm system are also required to have the capability to support visual alarm notification appliances in accordance with Chapter 10 of ICC A117.1. This section is intended to provide guidance as to what is meant by "capability." If a hearing-impaired occupant moves into the dwelling unit, the audible alarm notification appliances are simply replaced with visual alarm notification appliances. The intent is if one or more hearing impaired individuals move into a dwelling unit or sleeping unit within a Group R-2 occupancy, the circuit serving the occupant alarm notification appliances must be capable of supplying the necessary amperage to provide the required power to the listed visual alarm notification device. The intent is to design the fire alarm and detection system so that the occupant notification appliance circuit can accommodate a limited number of visual alarm notification appliances operating at the required minimum amperage.

Note that this requirement includes all dwelling and sleeping units, not just those classified as either Type A or B as defined in Chapter 2 of the IBC. Sections 1006.2 through 1006.4.4 of ICC A117.1 address smoke and fire alarm system requirements as they pertain to accessible communication features. More specifically, Section 1006.2 of ICC A117 states that when unit smoke detection is provided, it shall provide audible notification appliances in compliance with NFPA 72. Section 1006.3 of ICC A117 is focused upon buildings where fire alarm systems are provided. If a fire alarm system is provided in the building, ICC A117.1 requires that the wiring be extended to a point within the unit in the vicinity of the smoke alarm or smoke detection system. Based upon the type of unit and the strategy used by the designer, this location may vary. Section 1006.4 of ICC A117 addresses the visible alarm notification appliance requirements specifically and has various issues it addresses, as follows:

1. Complies with Section 702 of ICC A117.1, which focuses on the requirements of NFPA 72 and that such notification devices be hardwired.
2. Addresses the fact that all visible notification devices be activated within the unit either when the smoke alarms in the unit activate or when that portion of the building fire alarm system in that portion of the building activate.
3. Allows the same visible notification for the smoke alarms in the unit and the building fire alarm system.
4. Prohibits the use of the visible notification for anything other than the operation of the smoke alarms in the unit or the building fire alarm system.

In terms of the specific capability requirements this section provides direction as to what may be meant by bringing the wiring to the unit. There has been confusion in the past and it has been interpreted that all units are required to be pre-wired for visible appliances, which was not the intent of ICC A117.1. More specifically, now the requirements provide essentially three options for future capability, as follows:

- Potential for future interconnection of the building fire alarm system with the unit smoke alarms.
- Replacement of audible appliance with combination audible/visible appliances.
- Extension of wiring from the unit smoke alarm locations to required locations of visible appliances.

It is important to remember that the location of visible notification devices, if installed, are driven by the requirements of NFPA 72 and may vary the approach taken, based upon the configuration of the space.

INTERNATIONAL CODE COUNCIL®
Copyright © 2015 ICC. ALL RIGHTS RESERVED. Accessed by David Dammon on Jun 21, 2017 12:30:52 PM pursuant to License Agreement with ICC. No further reproduction or distribution authorized. ANY UNAUTHORIZED REPRODUCTION OR DISTRIBUTION IS A VIOLATION OF THE FEDERAL COPYRIGHT ACT AND THE LICENSE AGREEMENT, AND SUBJECT TO CIVIL AND CRIMINAL PENALTIES THEREUNDER.

907.6 Installation and monitoring. A fire alarm system shall be installed and monitored in accordance with Sections 907.6.1 through 907.6.6.2 and NFPA 72.

❖ This section specifies the requirements for fire alarm system installation and monitoring and also references the installation requirements of NFPA 72.

907.6.1 Wiring. Wiring shall comply with the requirements of NFPA 70 and NFPA 72. Wireless protection systems utilizing radio-frequency transmitting devices shall comply with the special requirements for supervision of low-power wireless systems in NFPA 72.

❖ Wiring for fire alarm systems must be installed so that it is secure and will function reliably in an emergency. The code requires that the wiring for fire alarm systems meet the requirements of NFPA 70 and NFPA 72. This requirement is in addition to the general requirements for electrical installations set forth in Chapter 27 of the IBC. For reliability, systems that use radio-frequency transmitting devices for signal transmission are required to have supervised transmitting and receiving equipment that conforms to the special requirements contained in NFPA 72. This requirement is in addition to the general requirements for supervision in Section 907.6.6.

907.6.2 Power supply. The primary and secondary power supply for the fire alarm system shall be provided in accordance with NFPA 72.

Exception: Backup power for single-station and multiple-station smoke alarms as required in Section 907.2.11.6.

❖ The operation of fire alarm systems is essential to life safety in buildings and must be reliable in the event the normal power supply fails. For proper operation of fire alarm systems, this section requires that the primary and secondary power supplies comply with NFPA 72. This is in addition to the general requirements for electrical installations in Chapter 27 of the IBC. NFPA 72 offers three alternatives for secondary supply: a 24-hour storage battery; storage batteries with a 4-hour capacity; and a generator or multiple generators.

NFPA 72 requires that the primary and secondary power supplies for remotely located control equipment essential to the system operation must conform to the requirements for primary and secondary power supplies for the main system. Also, NFPA 72 contains requirements for monitoring the integrity of primary power supplies and requires a backup power supply.

907.6.3 Initiating device identification. The fire alarm system shall identify the specific initiating device address, location, device type, floor level where applicable and status including indication of normal, alarm, trouble and supervisory status, as appropriate.

Exceptions:

1. Fire alarm systems in single-story buildings less than 22,500 square feet (2090 m^2) in area.
2. Fire alarm systems that only include manual fire alarm boxes, waterflow initiating devices and not more than 10 additional alarm-initiating devices.
3. Special initiating devices that do not support individual device identification.
4. Fire alarm systems or devices that are replacing existing equipment.

❖ Current technology makes identification of alarm initiating devices much easier. This section takes advantage of this technology to improve the ability of emergency responders to rapidly identify the location and status of initiating devices at the time of an emergency. It will also help identify problematic alarm initiating devices and thus reduce nuisance alarms. It also eliminates the requirements for providing zone indication of system status. This is considered particularly important in high-rise buildings, where the number of initiating devices and the geometry of the building warrant a need for point monitoring of individual devices, which is not currently accommodated by single floor zones.

This section allows the fire code official the flexibility to not require individual detection device identification in smaller buildings where the source of alarm and trouble signals can be more easily determined.

The 22,500 square foot limitation noted in Exception 1 relates to the size of a typical fire alarm zone (see Section 907.6.4) and represents a small building. Exception 2 addresses manual fire alarm systems in which the location of initiation may not be an indicator of where the fire actually is or an automatic sprinkler waterflow alarm initiating device which could be annunciating an entire building. Along with a very limited number of other alarm initiating devices, Exception 3 recognizes that some devices will not work with this requirement. Finally, Exception 4 provides flexibility to existing system replacement. Replacement should be encouraged and requiring identification of alarm initiating device locations is considered onerous.

907.6.3.1 Annunciation. The initiating device status shall be annunciated at an *approved* on-site location.

❖ This section specifically notes that the alarm initiating device status of trouble versus alarm needs to be provided in an approved location to enable rapid identification of problematic devices or alarm conditions by first responders.

907.6.4 Zones. Each floor shall be zoned separately and a zone shall not exceed 22,500 square feet (2090 m^2). The length of any zone shall not exceed 300 feet (91 440 mm) in any direction.

Exception: *Automatic sprinkler system* zones shall not exceed the area permitted by NFPA 13.

❖ Since the fire alarm system also aids emergency personnel in locating the fire, the system must be zoned

INTERNATIONAL CODE COUNCIL®
Copyright © 2015 ICC. ALL RIGHTS RESERVED. Accessed by David Dammon on Jun 21, 2017 12:30:52 PM pursuant to License Agreement with ICC. No further reproduction or distribution authorized. ANY UNAUTHORIZED REPRODUCTION OR DISTRIBUTION IS A VIOLATION OF THE FEDERAL COPYRIGHT ACT AND THE LICENSE AGREEMENT, AND SUBJECT TO CIVIL AND CRIMINAL PENALTIES THEREUNDER.

to shorten response time to the fire location. Zoning is also critical if the fire alarm system initiates certain other fire protection systems or control features, such as smoke control systems.

At a minimum, each floor of a building must constitute one zone of the system. If the floor area exceeds 22,500 square feet (2090 m^2), additional zones per floor are required. The maximum length of a zone is 300 feet (91 440 mm).

The exception states that NFPA 13 defines the maximum areas to be protected by one sprinkler system and that the sprinkler system need not be designed to meet the 22,500-square-foot (2090 m^2) area limitations for a fire alarm system zone. For example, NFPA 13 permits a sprinkler system riser in a light-hazard occupancy to protect an area of 52,000 square feet (4831 m^2) per floor. In accordance with the exception, a single water flow switch, and consequently a single fire alarm system zone, would be acceptable. If other alarm-initiating devices are present on the floor, they would need to be zoned separately to meet the 22,500-square-foot (2098 m^2) limitation.

It is not intended that this section apply to sprinkler systems. This section only applies where a fire alarm system is required in accordance with Section 907. Unless the building is categorized as a high rise and must comply with Section 907.6.4.2, the code does not mandate the zoning of sprinkler systems per floor. With today's fully addressable fire alarm systems, each detector effectively becomes its own zone. The intent with zoning is to identify and limit the search area for fire alarm systems. Addressable devices will indicate the precise location of the alarm condition, thereby eliminating the need for the zoning contemplated by this section when approved by the fire code official in accordance with Section 104.9.

907.6.4.1 Zoning indicator panel. A zoning indicator panel and the associated controls shall be provided in an *approved* location. The visual zone indication shall lock in until the system is reset and shall not be canceled by the operation of an audible alarm-silencing switch.

❖ The zoning indicator panel, which can be the fire alarm control unit or a separate fire alarm annunciator panel (FAAP), must be installed in a location approved by the fire code official. One of the key considerations in determining panel placement is whether or not the panel is located to permit ready access by emergency responders. Once an alarm-initiating device within a zone has been activated, the annunciation of the zone must lock in until the system is reset.

907.6.4.2 High-rise buildings. In high-rise buildings, a separate zone by floor shall be provided for each of the following types of alarm-initiating devices where provided:

1. Smoke detectors.
2. Sprinkler waterflow devices.
3. Manual fire alarm boxes.
4. Other *approved* types of automatic fire detectiondevices or suppression systems.

❖ High-rise buildings must have a separate zone by floor for each indicated type of alarm-initiating device. Although this feature may be desirable in all buildings, the incremental cost difference is substantially higher in low-rise buildings in which basic fire alarm systems are installed. State-of-the-art fire alarm systems installed in high-rise buildings are addressable and by their nature automatically provide this minimum zoning.

907.6.5 Access. Access shall be provided to each fire alarm device and notification appliance for periodic inspection, maintenance and testing.

❖ Automatic fire detectors, especially smoke detectors, require periodic cleaning to reduce the likelihood of malfunction. Section 907.8 and NFPA 72 require inspection and testing at regular intervals. Access to perform the required inspections, necessary maintenance and testing is a particularly important consideration for those detectors that are installed within a concealed space, such as an air duct.

907.6.6 Monitoring. Fire alarm systems required by this chapter or by the *International Building Code* shall be monitored by an *approved* supervising station in accordance with NFPA 72.

Exception: Monitoring by a supervising station is not required for:

1. Single- and multiple-station smoke alarms required by Section 907.2.11.
2. Smoke detectors in Group I-3 occupancies.
3. *Automatic sprinkler systems* in one- and two-family dwellings.

❖ Fire alarm systems required by Section 907 or the IBC are required to be electrically supervised by one of the methods prescribed in NFPA 72.

Exception 1 exempts single- and multiple-station smoke alarms from being supervised due to the potential for unwanted false alarms.

Exception 2 recognizes a similar problem in Group I-3 occupancies. Accordingly, due to the concern over unwanted alarms, smoke detectors in Group I-3 occupancies need only sound an approved alarm signal that automatically notifies staff (see Section 907.2.6.3.1). Smoke detectors in such occupancies are typically subject to misuse and abuse, and frequent unwanted alarms would negate the effectiveness of the system.

Exception 3 clarifies that sprinkler systems in one- and two-family dwellings are not part of a dedicated fire alarm system and are typically designed in accordance with NFPA 13D, which does not require electrical supervision.

INTERNATIONAL CODE COUNCIL®
Copyright © 2015 ICC. ALL RIGHTS RESERVED. Accessed by David Dammon on Jun 21, 2017 12:30:52 PM pursuant to License Agreement with ICC. No further reproduction or distribution authorized. ANY UNAUTHORIZED REPRODUCTION OR DISTRIBUTION IS A VIOLATION OF THE FEDERAL COPYRIGHT ACT AND THE LICENSE AGREEMENT, AND SUBJECT TO CIVIL AND CRIMINAL PENALTIES THEREUNDER.

907.6.6.1 Automatic telephone-dialing devices. Automatic telephone-dialing devices used to transmit an emergency alarm shall not be connected to any fire department telephone number unless *approved* by the fire chief.

❖ Upon initiation of an alarm, supervisory or trouble signal, an automatic telephone-dialing device takes control of the telephone line for the reliability of transmission of all signals. The device, however, must not be connected to the fire department telephone number unless specifically approved by the fire department because that could disrupt any potential emergency (911) calls. NFPA 72 contains additional guidance on such devices including digital alarm-communicator systems.

907.6.6.2 Termination of monitoring service. Termination of fire alarm monitoring services shall be in accordance with Section 901.9.

❖ This section is simply an editorial cross-reference to highlight Section 901.9, which affects the monitoring requirements of Section 907.6.6 (see commentary, Section 901.9).

907.7 Acceptance tests and completion. Upon completion of the installation, the fire alarm system and all fire alarm components shall be tested in accordance with NFPA 72.

❖ A complete performance test of the fire alarm system must be conducted to determine that the system is operating as required by the code. The acceptance test must include a test of each circuit, alarm-initiating device, alarm notification appliance and any supplementary functions, such as activation of closers and dampers. The operation of the primary and secondary (emergency) power supplies must also be tested, as well as the supervisory function of the control panel. Section 901.5 assigns responsibility for conducting the acceptance tests to the owner or the owner's representative.

NFPA 72 contains specific acceptance test procedures. Additional guidance on periodic testing and inspection can be also obtained from Section 907.8 and NFPA 72.

907.7.1 Single- and multiple-station alarm devices. When the installation of the alarm devices is complete, each device and interconnecting wiring for multiple-station alarm devices shall be tested in accordance with the smoke alarm provisions of NFPA 72.

❖ To determine that smoke alarms have been properly installed and are ready to function as intended, they must be actuated during an acceptance test. The test also confirms that interconnected detectors will operate simultaneously as required. The responsibility for conducting the acceptance tests rests with the owner or the owner representative as stated in Section 901.5.

907.7.2 Record of completion. A record of completion in accordance with NFPA 72 verifying that the system has been installed and tested in accordance with the *approved* plans and specifications shall be provided.

❖ In accordance with NFPA 72, this section requires a written statement from the installing contractor that the fire alarm system has been tested and installed in compliance with the approved plans and the manufacturer's specifications. Any deviations from the approved plans or the applicable provisions of NFPA 72 are to be noted in the record of completion.

907.7.3 Instructions. Operating, testing and maintenance instructions and record drawings ("as builts") and equipment specifications shall be provided at an *approved* location.

❖ To permit adequate testing, maintenance and trouble-shooting of the installed fire alarm system, an owner's manual with complete installation instructions must be kept on site or in another approved location. The instructions include a description of the system, operating procedures and testing and maintenance requirements.

907.8 Inspection, testing and maintenance. The maintenance and testing schedules and procedures for fire alarm and fire detection systems shall be in accordance with Sections 907.8.1 through 907.8.5 and NFPA 72. Records of inspection, testing and maintenance shall be maintained.

❖ Fire alarms and fire detection systems are to be inspected, tested and maintained in accordance with Sections 907.8.1 through 907.8.5 and the applicable requirements of NFPA 72. It is the building owner's responsibility to keep these systems operable at all times.

907.8.1 Maintenance required. Where required for compliance with the provisions of this code, devices, equipment, systems, conditions, arrangements, levels of protection or other features shall thereafter be continuously maintained in accordance with applicable NFPA requirements or as directed by the *fire code official*.

❖ Periodic maintenance keeps systems in good working order or allows repair of defects discovered during inspections or testing. Because specialized tools and training are needed, only properly trained technicians or specialists should perform required periodic maintenance. Most maintenance is required only as needed, but many manufacturers suggest or require regular periodic replacement of parts subject to wear or abuse.

907.8.2 Testing. Testing shall be performed in accordance with the schedules in NFPA 72 or more frequently where required by the *fire code official*. Records of testing shall be maintained.

Exception: Devices or equipment that are inaccessible for safety considerations shall be tested during scheduled shutdowns where *approved* by the *fire code official*, but not less than every 18 months.

❖ NFPA 72 includes schedules for testing frequencies of fire alarm and fire detection systems and their

INTERNATIONAL CODE COUNCIL®
Copyright © 2015 ICC. ALL RIGHTS RESERVED. Accessed by David Dammon on Jun 21, 2017 12:30:52 PM pursuant to License Agreement with ICC. No further reproduction or distribution authorized. ANY UNAUTHORIZED REPRODUCTION OR DISTRIBUTION IS A VIOLATION OF THE FEDERAL COPYRIGHT ACT AND THE LICENSE AGREEMENT, AND SUBJECT TO CIVIL AND CRIMINAL PENALTIES THEREUNDER.

components. Periodic tests that follow standardized methods are intended to confirm the results of inspections, determine that all components function properly and that systems meet their original design specifications. Tools, devices or equipment are usually required to perform tests. Because tests are more detailed than inspections, they are usually done only once or twice per year in most cases. Some tests, however, may be required as frequently as bimonthly or quarterly. Because specialized knowledge and equipment are required, tests must usually be performed by technicians or specialists trained in the test methods involved.

Although Section 907.8.2 specifically addresses testing, NFPA 72 also contains schedules for visual inspection frequencies. An inspection consists of a visual check of a system or device to verify it is in operating condition and free from visible defects or damage.

Obvious damage and the general condition of the system must always be noted and recorded. Partly because of their cursory nature, inspections are conducted more frequently than tests and maintenance. Because special knowledge and tools are not required, inspections may be done by any competent person.

The exception recognizes the impracticality of testing every device or piece of equipment related to a fire alarm or fire detection system. Some devices may be inaccessible for safety considerations, such as those in continuous process operations. Testing, however, must be done during scheduled shutdowns.

907.8.3 Smoke detector sensitivity. Smoke detector sensitivity shall be checked within one year after installation and every alternate year thereafter. After the second calibration test, where sensitivity tests indicate that the detector has remained within its *listed* and marked sensitivity range (or 4-percent obscuration light grey smoke, if not marked), the length of time between calibration tests shall be permitted to be extended to not more than 5 years. Where the frequency is extended, records of detector-caused nuisance alarms and subsequent trends of these alarms shall be maintained. In zones or areas where nuisance alarms show any increase over the previous year, calibration tests shall be performed.

❖ Usually, changes in detector sensitivity are caused by inadequate maintenance. Regular sensitivity testing is intended to determine whether detectors require recalibration, maintenance or replacement. This section prescribes the intervals for testing smoke detector sensitivity. Where two successful tests have been conducted, the frequency of the calibration tests can be extended to a maximum of five years. This interval extension recognizes the stability of both the environment and the detector. However, if nuisance alarms occur during this time interval extension, calibration tests may be needed because of potential changes in the environment where the detector is located or in the performance of the detector itself.

907.8.4 Sensitivity test method. To verify that each smoke detector is within its *listed* and marked sensitivity range, it shall be tested using one of the following methods:

1. A calibrated test method.
2. The manufacturer's calibrated sensitivity test instrument.
3. *Listed* control equipment arranged for the purpose.
4. A smoke detector/control unit arrangement whereby the detector causes a signal at the control unit where the detector's sensitivity is outside its acceptable sensitivity range.
5. Another calibrated sensitivity test method acceptable to the *fire code official*.

Detectors found to have a sensitivity outside the *listed* and marked sensitivity range shall be cleaned and recalibrated or replaced.

Exceptions:

1. Detectors *listed* as field adjustable shall be permitted to be either adjusted within the *listed* and marked sensitivity range and cleaned and recalibrated or they shall be replaced.
2. This requirement shall not apply to single-station smoke alarms.

❖ This section prescribes acceptable test methods to verify that each smoke detector is within its listed and marked sensitivity range; any of the listed test methods may be used.

With regard to a calibration test method, many manufacturers have designed their devices to be tested by the application of a magnet at a test point on the outside of the detector. This activates a reed switch or pulls a fine wire into the detection chamber to simulate a predetermined level of obscuration.

Another test method may require that a test device such as a key-type tool be inserted in a test port. This either activates a test switch or produces the desired level of obscuration directly.

One detector manufacturer supplies an interface device for connecting a volt-ohm-amp meter to a test port. Pressing a button on the interface device permits a direct reading of detector chamber voltage in an alarm condition.

Other detectors must be removed and inserted in or connected to a device used to calibrate and test the device. The calibrated sensitivity test instrument must satisfy the manufacturer's recommendation for a specific detector.

Addressable/analog-type detectors produce direct readings of the chamber voltage by the control unit. Many of these systems permit sensitivity adjustments within acceptable limits from the control unit as well. This test method essentially allows remote sensitivity testing.

A system control/detector combination unit detects changes in the environment and in the detector by

INTERNATIONAL CODE COUNCIL®
Copyright © 2015 ICC. ALL RIGHTS RESERVED. Accessed by David Dammon on Jun 21, 2017 12:30:52 PM pursuant to License Agreement with ICC. No further reproduction or distribution authorized. ANY UNAUTHORIZED REPRODUCTION OR DISTRIBUTION IS A VIOLATION OF THE FEDERAL COPYRIGHT ACT AND THE LICENSE AGREEMENT, AND SUBJECT TO CIVIL AND CRIMINAL PENALTIES THEREUNDER.

comparing current readings to previously stored information in the memory of the control unit. Significant changes would indicate that the stability of either the environment or the detector has changed and that further maintenance or recalibration is required.

Any other method or device that permits the user to check the voltage drop across a smoke detection chamber is acceptable subject to the approval of the fire code official. Test devices should be manufactured and supplied by the smoke detector manufacturer.

Exception 1 recognizes that some smoke detectors may be listed as being field-adjustable. If, however, such devices cannot be adjusted to their listed sensitivity, then they must be replaced.

Exception 2 exempts single station smoke alarms from sensitivity testing because these devices are not designed with the same level of technical sophistication as system smoke detectors. Smoke alarm manufacturers also recommend that the devices be discarded and replaced at regular intervals to reduce the likelihood of failure.

907.8.4.1 Sensitivity testing device. Smoke detector sensitivity shall not be tested or measured using a device that administers an unmeasured concentration of smoke or other aerosol into the detector.

❖ Functional testing using smoke or a smoke substitute, such as aerosols, must comply with the manufacturer's recommended test procedures. A precisely measured amount of smoke or other aerosol product must be used to adequately determine detector sensitivity. Some detector manufacturers do not accept testing with aerosol products and void detector warranties when this product is used. The functional test method selected should not permanently affect detector performance.

907.8.5 Inspection, testing and maintenance. The building *owner* shall be responsible to maintain the fire and life safety systems in an operable condition at all times. Service personnel shall meet the qualification requirements of NFPA 72 for inspection, testing and maintenance of such systems. Records of inspection, testing and maintenance shall be maintained.

❖ This section clearly indicates that it is the responsibility of the building owner to maintain all fire alarm systems in proper working order. Often, an outside agency that employs adequately trained personnel will provide any maintenance and testing that is needed. NFPA 72 contains additional guidance on the qualifications for service personnel. Some examples include factory trained and certified individuals; individuals certified for fire alarm by the NICET or other individuals tested and certified by the local authority. Proper maintenance of fire alarm systems is essential so that the systems will perform as intended.

Inspection and test records provide a means for determining compliance with the requirements of the code. Inspectors should be prepared to determine that inspection, test and maintenance logs are accurate and complete. Records must include the nature of the activity or service performed; when the activity occurred; who performed the activity and who witnessed testing or approved the work upon completion.

907.9 Where required in existing buildings and structures. An *approved* fire alarm system shall be provided in existing buildings and structures where required in Chapter 11.

❖ Retroactive requirements for fire alarms are found in Section 1103.7. All the retroactive code requirements are found in Chapter 11 for convenience and to help with consistent enforcement.

SECTION 908
EMERGENCY ALARM SYSTEMS

908.1 Group H occupancies. Emergency alarms for the detection and notification of an emergency condition in Group H occupancies shall be provided as required in Chapter 50.

❖ Emergency alarm systems provide indication and warning of emergency situations involving hazardous materials. An emergency alarm system is required in all Group H occupancies as indicated in Sections 5004.9 and 5005.4.4 as well as Group H-5 HPM facilities as indicated in Section 908.2. The Group H occupancy classification assumes the storage or use of hazardous materials exceeds the maximum allowable quantities specified in Tables 5003.1.1(1) and 5003.1.1(2).

An emergency alarm system should include an emergency alarm-initiating device outside each interior door of hazardous material storage areas, a local alarm device and adequate supervision.

Even though ozone gas-generator rooms (Section 908.4), repair garages (Section 908.5) and refrigeration systems (Section 908.6) are not typically classified as Group H occupancies, the potential hazards associated with these occupancy conditions are great enough to require additional means of early warning detection.

908.2 Group H-5 occupancy. Emergency alarms for notification of an emergency condition in an HPM facility shall be provided as required in Section 2703.12. A continuous gas detection system shall be provided for HPM gases in accordance with Section 2703.13.

❖ In addition to hazardous material storage areas as regulated by Section 5004.9, Section 2703.12.1 also requires emergency alarms for service corridors, exit access corridors and interior exit stairways because of the potential transport of hazardous materials through these areas. Section 2703.13 requires a continuous gas detection system for early detection of leaks in areas where HPM gas is used. Gas detection systems are required to initiate a local alarm and

INTERNATIONAL CODE COUNCIL®
Copyright © 2015 ICC. ALL RIGHTS RESERVED. Accessed by David Dammon on Jun 21, 2017 12:30:52 PM pursuant to License Agreement with ICC. No further reproduction or distribution authorized. ANY UNAUTHORIZED REPRODUCTION OR DISTRIBUTION IS A VIOLATION OF THE FEDERAL COPYRIGHT ACT AND THE LICENSE AGREEMENT, AND SUBJECT TO CIVIL AND CRIMINAL PENALTIES THEREUNDER.

transmit a signal to the emergency control station upon detection (see commentary, Sections 2703.12 and 2703.13).

908.3 Highly toxic and toxic materials. Where required by Section 6004.2.2.10, a gas detection system shall be provided for indoor storage and use of highly toxic and toxic *compressed gases*.

❖ A gas detection system in the room or area utilized for indoor storage or the use of highly toxic or toxic gases provides early notification of a leak that is occurring before the escaping gas reaches hazardous exposure concentration levels. The exception recognizes that certain toxic compressed gases do not pose a severe exposure hazard. Those toxic gases whose properties under standard conditions are still below the 8-hour weighted average concentration for the permitted exposure limit (PEL) are exempt from the requirement for a gas detection system.

This section also specifies the discharge requirements for treatment system performance to establish a maximum allowable concentration of highly toxic or toxic gases at the point of discharge to the atmosphere. The concentration level of one-half the immediately dangerous to life and health (IDLH) limit represents a minimum acceptable level of dilution at the point of discharge where the location of discharge is away from the general public. Where the treatment system processes more than one type of compressed gas, the maximum allowable concentration must be based on the release rate, quantity and IDLH for the gas that poses the worst-case release scenario.

908.4 Ozone gas-generator rooms. A gas detection system shall be provided in ozone gas-generator rooms in accordance with Section 6005.3.2.

❖ To monitor the potential buildup of dangerous levels of ozone, a gas detection system is required to, upon actuation, shut off the generator and sound a local alarm. Ozone gas generators are commonly used in water treatment applications. The ozone gas-generator room should not be a normally occupied area or be used for the storage of combustibles or other hazardous materials. Section 6005 contains additional requirements for ozone gas generators.

908.5 Repair garages. A flammable-gas detection system shall be provided in repair garages for vehicles fueled by nonodorized gases in accordance with Section 2311.7.2.

❖ As indicated in Section 2311.7.2, an approved flammable-gas detection system is required for garages used for repair of vehicles fueled by nonodorized gases, such as hydrogen and nonodorized LNG. To prevent a hazardous potential buildup of flammable gas caused by normal leakage and use conditions, the flammable-gas detection system is required to activate when the level of flammable gas exceeds 25 percent of the lower explosive limit (LEL) (see commentary, Section 2311.7.2).

908.6 Refrigeration systems. Refrigeration system machinery rooms shall be provided with a refrigerant detector in accordance with Section 606.9.

❖ A refrigerant-specific detector is required for leak detection, early warning and actuation of emergency exhaust systems. Because most general machinery rooms are unoccupied for long periods of time, a refrigeration leak may go undetected, allowing a buildup of refrigerant that can pose a threat to building occupants and the maintenance personnel who must enter the machinery room. Also, the refrigerants may or may not be detectable by the sense of smell, depending on the chemical nature and concentration in the air of the refrigerant. This can be especially critical when a toxic refrigerant is used in the refrigeration system (see commentary, Section 606.8). Even where the refrigerant is not toxic, sufficient quantities can displace oxygen and create an untenable environment. Detection is necessary to avoid a condition where the oxygen level drops below safe levels.

908.7 Carbon dioxide (CO_2) systems. Emergency alarm systems in accordance with Section 5307.5.2 shall be provided where required for compliance with Section 5307.5.

❖ This is simply cross references to requirements in Chapter 53 related to the danger of CO_2 asphyxiation and intended to address fatal CO_2 poisoning incidents in restaurants where CO_2 leaked from large storage tanks for beverage mixing and displaced oxygen in these areas. See the commentary to Section 5307.5.

SECTION 909
SMOKE CONTROL SYSTEMS

909.1 Scope and purpose. This section applies to mechanical or passive smoke control systems where they are required for new buildings or portions thereof by provisions of the *International Building Code* or this code. The purpose of this section is to establish minimum requirements for the design, installation and acceptance testing of smoke control systems that are intended to provide a tenable environment for the evacuation or relocation of occupants. These provisions are not intended for the preservation of contents, the timely restoration of operations or for assistance in fire suppression or overhaul activities. Smoke control systems regulated by this section serve a different purpose than the smoke- and heat-venting provisions found in Section 910. Mechanical smoke control systems shall not be considered exhaust systems under Chapter 5 of the *International Mechanical Code*.

❖ This section is clarifying the intent of smoke control provisions, which is to provide a tenable environment to occupants during evacuation and relocation and not to protect the contents, enable timely restoration of operations or facilitate fire suppression and overhaul activities. There are provisions for high rise buildings in Section 403.4.7 of the IBC that are focused upon the removal of smoke for post fire and overhaul operations which is very different than the

INTERNATIONAL CODE COUNCIL®
Copyright © 2015 ICC. ALL RIGHTS RESERVED. Accessed by David Dammon on Jun 21, 2017 12:30:52 PM pursuant to License Agreement with ICC. No further reproduction or distribution authorized. ANY UNAUTHORIZED REPRODUCTION OR DISTRIBUTION IS A VIOLATION OF THE FEDERAL COPYRIGHT ACT AND THE LICENSE AGREEMENT, AND SUBJECT TO CIVIL AND CRIMINAL PENALTIES THEREUNDER.

smoke control provisions in Section 909. Another element addressed in this section is that smoke control systems serve a different purpose than smoke and heat vents (see Section 910). This eliminates any confusion that smoke and heat vents can be used as a substitution for smoke control. Additionally, a clarification is provided to note that smoke control systems are not considered an exhaust system in accordance with Chapter 5 of the IMC. This is due to the fact that such systems are unique in their operation and are not necessarily designed to exhaust smoke but are focused upon tenability for occupants during egress. It should be noted that the smoke control provisions are duplicated in Chapter 5 of the IMC.

It is important to note that these provisions only apply when smoke control is required by other sections of the code. The code requires smoke management within atrium spaces (see Section 404.5 of the IBC) and underground buildings (see Section 405.5 of the IBC). High-rise facilities require smokeproof exit enclosures in accordance with Sections 909.20 of the IBC and 1019.1.8 (see Section 403.5.4 of the IBC). Also, covered mall buildings that contain atriums that connect more than two stories require smoke control (see Section 402.7.2 of the IBC).

Section 909 focuses primarily on mechanical smoke control systems but there are many instances within the code were smoke is required to be managed in a passive way through the use of concepts such as smoke compartments. Smoke compartments are formed through the use of smoke barriers in accordance with Section 709 of the IBC. Smoke barriers can be used simply as a passive smoke management system or can be a design component of a mechanical smoke control system in accordance with Section 909. Some examples of occupancies requiring passive systems include hospitals, nursing and similar facilities (Group I-2 occupancies) and detention facilities (Group I-3 occupancies) (see Sections 407.5 and 408.6 of the IBC).

In some cases, mechanical smoke control in accordance with Section 909 is allowed as an option for compliance. More specifically if a Group I-3 contains windowless areas of the facility natural or mechanical smoke management is required (see Section 408.9 of the IBC).

In the last several years, smoke control provisions have become more complex. The reason is related to the fact that smoke is a complex problem, while a generic solution of six air changes has repeatedly and scientifically been shown to be inadequate. Six air changes per hour does not take into account factors such as buoyancy; expansion of gases; wind; the geometry of the space and of communicating spaces; the dynamics of the fire, including heat release rate; the production and distribution of smoke and the interaction of the building systems.

Smoke control systems can be either passive or active. Active systems are sometimes referred to as mechanical. Passive smoke control systems take advantage of smoke barriers surrounding the zone in which the fire event occurs or high bay areas that act as reservoirs to control the movement of smoke to other areas of the building. Active systems utilize pressure differences to contain smoke within the event zone or exhaust flow rates sufficient to slow the descent of the upper-level smoke accumulation to some predetermined position above necessary exit paths through the event zone. On rare occasions, there is also a possibility of controlling the movement of smoke horizontally by opposed airflow, but this method requires a specific architectural geometry to function properly that does not create an even greater hazard.

Essentially, there are three methods of mechanical or active smoke control that can be used separately or in combination within a design: pressurization, exhaust and, in rare and very special circumstances, opposed airflow.

Of course, all of these active approaches can be used in combination with the passive method.

Typically, the mechanical pressurization method is used in high-rise buildings when pressurizing stairways and for zoned smoke control. Pressurization is not practical in large open spaces such as atriums or malls, since it is difficult to develop the required pressure differences due to the large volume of the space.

The exhaust method is typically used in large open spaces such as atriums and malls. As noted, the pressurization method would not be practical within large spaces. The opposed airflow method, which basically uses a velocity of air horizontally to slow the movement of smoke, is typically applied in combination with either a pressurization method or exhaust method within hallways or openings into atriums and malls.

The application of each of these methods will be dependent on the specifics of the building design. Smoke control within a building is fundamentally an architecturally driven problem. Different architectural geometries first dictate the need or lack thereof for smoke control, and then define the bounds of available solutions to the problem.

909.2 General design requirements. Buildings, structures, or parts thereof required by the *International Building Code* or this code to have a smoke control system or systems shall have such systems designed in accordance with the applicable requirements of Section 909 and the generally accepted and well-established principles of engineering relevant to the design. The *construction documents* shall include sufficient information and detail to describe adequately the elements of the design necessary for the proper implementation of the smoke control systems. These documents shall be accompanied with sufficient information and analysis to demonstrate compliance with these provisions.

❖ This section simply states that when smoke control systems are required by the code, the design is required to be in accordance with the provisions of

INTERNATIONAL CODE COUNCIL®
Copyright © 2015 ICC. ALL RIGHTS RESERVED. Accessed by David Dammon on Jun 21, 2017 12:30:52 PM pursuant to License Agreement with ICC. No further reproduction or distribution authorized. ANY UNAUTHORIZED REPRODUCTION OR DISTRIBUTION IS A VIOLATION OF THE FEDERAL COPYRIGHT ACT AND THE LICENSE AGREEMENT, AND SUBJECT TO CIVIL AND CRIMINAL PENALTIES THEREUNDER.

this section. As noted in the commentary to Section 909.1, there are instances within the code that have smoke management systems that are purely passive in nature and do not reference Section 909.

This section stresses that such designs need to follow "generally accepted and well-established principles of engineering relevant to the design," essentially requiring a certain level of qualifications in the applicable areas of engineering to prepare such designs. The primary engineering disciplines tend to be fire engineering and mechanical engineering. It should be noted that each state in the U.S. typically requires minimum qualifications to undertake engineering design. Two important resources when designing smoke control systems are the International Code Council's (ICC) *Guide to Smoke Control in the 2006 IBC* and *American Society of Heating, Refrigerating and Air-Conditioning Engineers' (ASHRAE) Design of Smoke Management Systems*. Additionally, Section 909.8 requires the use of NFPA 92 for the design of smoke control systems using the exhaust method. This standard has many relevant aspects beyond the design that are beneficial. In particular, Annex B provides resources in terms of determination of fire size for design. ICC's *Guide to Smoke Control in the 2006 IBC* also provides guidance on design fires.

A key element covered in this section is the need for detailed and clear construction documents so that the system is installed correctly. In most complex designs, the key to success is appropriate communication to the contractors as to what needs to be installed. The more complex a design becomes, the more likely there is to be construction errors. Most smoke control systems are complex, which is why special inspections in accordance with Section 909.3 and Chapter 17 of the IBC are critical for smoke control systems. Additionally, in order for the design to be accepted, analyses and justifications need to be provided in enough detail to evaluate for compliance. Adequate documentation is critical to the commissioning, inspection, testing and maintenance of smoke control systems and significantly contributes to the overall reliability and effectiveness of such systems.

909.3 Special inspection and test requirements. In addition to the ordinary inspection and test requirements that buildings, structures and parts thereof are required to undergo, smoke control systems subject to the provisions of Section 909 shall undergo special inspections and tests sufficient to verify the proper commissioning of the smoke control design in its final installed condition. The design submission accompanying the *construction documents* shall clearly detail procedures and methods to be used and the items subject to such inspections and tests. Such commissioning shall be in accordance with generally accepted engineering practice and, where possible, based on published standards for the particular testing involved. The special inspections and tests required by this section shall be conducted under the same terms as in Section 1704 of the *International Building Code*.

❖ Due to the complexity and uniqueness of each design, special inspection and testing must be conducted. The designer needs to provide specific recommendations for special inspection and testing within his or her documentation. In fact, the code specifies in Chapter 17 of the IBC that special inspection agencies for smoke control have expertise in fire protection engineering, mechanical engineering and certification as air balancers. Since the designs are unique to each building, there probably will not be a generic approach available to inspect and test such systems. The designer can and should, however, use any available published standards or guides when developing the special inspection and testing requirements for that particular design. ICC's *Guide to Smoke Control in the 2006 IBC* provides some background on such inspections, Also, ASHRAE Guideline 5 is a good starting place but only as a general outline. In addition, NFPA 92A and NFPA 92B also have extensive testing, documentation and maintenance requirements that may be a good resource. NFPA 92B is referenced in Section 909.8 for the design of smoke control systems using the exhaust method. Each system will require a unique commissioning plan that can be developed only after careful and thoughtful examination of the final design and all of its components and interrelationships. Generally, these provisions may be included in design standards or engineering guides.

909.4 Analysis. A rational analysis supporting the types of smoke control systems to be employed, the methods of their operations, the systems supporting them and the methods of construction to be utilized shall accompany the *construction documents* submission and include, but not be limited to, the items indicated in Sections 909.4.1 through 909.4.7.

❖ This section indicates that simply determining airflow, exhaust rates and pressures to maintain tenable conditions is not adequate. There are many factors that could alter the effectiveness of a smoke control system, including stack effect, temperature effect of fire, wind effect, heating, ventilating and air-conditioning (HVAC) system interaction and climate, as well as the placement, quantity of inlets/outlets and velocity of supply and exhaust air. These factors are addressed in the sections that follow. Additionally, the duration of operation of any smoke control system is mandated at a minimum of 20 minutes or 1.5 times the egress time, whichever is less. The code cannot reasonably anticipate every conceivable building arrangement and condition the building may be subject to over its life and must depend on such factors being addressed through a rational analysis.

909.4.1 Stack effect. The system shall be designed such that the maximum probable normal or reverse stack effect will not adversely interfere with the system's capabilities. In deter-

INTERNATIONAL CODE COUNCIL®
Copyright © 2015 ICC. ALL RIGHTS RESERVED. Accessed by David Dammon on Jun 21, 2017 12:30:52 PM pursuant to License Agreement with ICC. No further reproduction or distribution authorized. ANY UNAUTHORIZED REPRODUCTION OR DISTRIBUTION IS A VIOLATION OF THE FEDERAL COPYRIGHT ACT AND THE LICENSE AGREEMENT, AND SUBJECT TO CIVIL AND CRIMINAL PENALTIES THEREUNDER.

mining the maximum probable stack effect, altitude, elevation, weather history and interior temperatures shall be used.

❖ Stack effect is the tendency for air to rise within a heated building when the temperature is colder on the exterior of the building. Reverse stack effect is the tendency for air to flow downward within a building when the interior is cooler than the exterior of the building. This air movement can affect the intended operation of a smoke control system. If stack effect is great enough, it may overcome the pressures determined during the design analyses and allow smoke to enter areas outside the zone of origin (see Commentary Figure 909.4.1).

909.4.2 Temperature effect of fire. Buoyancy and expansion caused by the design fire in accordance with Section 909.9 shall be analyzed. The system shall be designed such that these effects do not adversely interfere with the system's capabilities.

❖ This section requires that the design account for the effect temperature may have on the success of the system. When air or any gases are heated, they will expand. This expansion makes the gases lighter and, therefore, more buoyant. The buoyancy of hot gases is important when the design is to exhaust such gases from a location in or close to the ceiling; therefore, if sprinklers are part of the design, as required by Section 909, the gases may be significantly cooler than an unsprinklered fire, making it more difficult to remove the smoke and alter the plume dynamics. The fact that air expands when heated needs to be accounted for in the design.

When using the pressurization method, the expansion of hot gases needs to be accounted for, since it will take a larger volume of air to create the necessary pressure differences to maintain the area of fire origin in negative pressure. The expansion of the gases has the effect of pushing the hot gases out of the area of fire origin. Since sprinklers will tend to cool the gases, the effect of expansion is lower. The pressure differences required in Section 909.6.1 are specifically based on a sprinklered building. If the building is nonsprinklered, higher pressure differences may be required. The minimum pressure difference for certain unsprinklered ceiling height buildings is as follows:

Ceiling height (feet)	Minimum pressure difference (inch water gage)
9	0.10
15	0.14
21	0.18

This is a very complex issue that needs to be part of the design analysis. It needs to address the type and reaction of the fire protection systems, ceiling heights and the size of the design fire.

909.4.3 Wind effect. The design shall consider the adverse effects of wind. Such consideration shall be consistent with the wind-loading provisions of the *International Building Code.*

❖ The effect of wind on a smoke control system within a building is very complex. It is generally known that wind exerts a load upon a building. The loads are looked at as windward (positive pressure) and leeward (negative pressure). The velocity of winds will vary based on the terrain and the height above grade; therefore, the height of the building and surrounding obstructions will have an effect on these velocities. These pressures alter the operation of fans, especially propeller fans, thus altering the pressure differences and airflow direction in the building. There is not an easy solution to dealing with these effects. In fact, little research has been done in this area.

It should be noted that in larger buildings a wind study is normally undertaken for the structural design. The data from those studies can be used in the analysis of the effects on the pressures and airflow within the building with regard to the performance of the smoke control system.

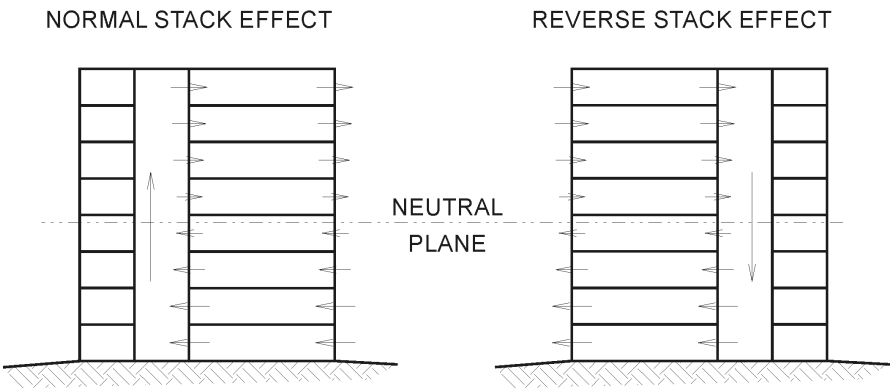

Figure 909.4.1
STACK EFFECT

INTERNATIONAL CODE COUNCIL®
Copyright © 2015 ICC. ALL RIGHTS RESERVED. Accessed by David Dammon on Jun 21, 2017 12:30:52 PM pursuant to License Agreement with ICC. No further reproduction or distribution authorized. ANY UNAUTHORIZED REPRODUCTION OR DISTRIBUTION IS A VIOLATION OF THE FEDERAL COPYRIGHT ACT AND THE LICENSE AGREEMENT, AND SUBJECT TO CIVIL AND CRIMINAL PENALTIES THEREUNDER.

909.4.4 Systems. The design shall consider the effects of the heating, ventilating and air-conditioning (HVAC) systems on both smoke and fire transport. The analysis shall include all permutations of systems status. The design shall consider the effects of the fire on the heating, ventilating and air-conditioning systems.

❖ If not properly configured to shut down or be included as part of the design, the HVAC system can alter the smoke control design. More specifically, if dampers are not provided between smoke zones within the HVAC system ducts, smoke could be transported from one zone to another. Additionally, if the HVAC system places more supply air than assumed for the smoke control system design, the velocity of the air may adversely affect the fire plume or a positive pressure may be created. Generally, an analysis of the smoke control design and the HVAC system in all potential modes should occur and be noted within the design documentation as well as incorporated into inspection, testing and maintenance procedures. This is critical as these systems need to be maintained and tested to help ensure that they operate and shut down systems as required.

909.4.5 Climate. The design shall consider the effects of low temperatures on systems, property and occupants. Air inlets and exhausts shall be located so as to prevent snow or ice blockage.

❖ This section is focused on properly protecting equipment from weather conditions that may affect the reliability of the design. For instance, extremely cold or hot air may damage critical equipment within the system when pulled directly from the outside. Some listings of duct smoke detectors are for specific temperature ranges; therefore, placing such detectors within areas exposed to extreme temperatures may void the listing. Also, the equipment and air inlets and outlets should be designed and located so as to not collect snow and ice that could block air from entering or exiting the building.

909.4.6 Duration of operation. All portions of active or engineered smoke control systems shall be capable of continued operation after detection of the fire event for a period of not less than either 20 minutes or 1.5 times the calculated egress time, whichever is greater.

❖ The intent of the smoke control provisions is to provide a tenable environment for occupants to either evacuate or relocate to a safe place. Evacuation and relocation activities include notifying occupants, possible investigation time for occupants, decision time and the actual travel time. In order to achieve this goal, the code has established 20 minutes or 1.5 times the calculated egress time, whichever is greater, as a minimum time for evacuation or relocation. Basically, this allows a designer to undertake an analysis to more closely determine the necessary time required. The code provides a safety factor of 1.5 times the egress time to account for uncertainty related to human behavior. It is stressed that the 20-minute duration as well as the calculated egress time, whichever approach is chosen, begins after the detection of the fire event and notification to the building occupants to evacuate has occurred, since occupants need to be alerted before evacuation can occur. The calculation of evacuation time needs to include delays with notification and the start of evacuation (i.e., premovement time, etc.). It is stressed that the code states 20 minutes or 1.5 times the egress time, whichever is greater (i.e., 20 minutes is a minimum). Egress of occupants can be addressed through hand calculations or through the use of computerized egress models. Some of the more advanced models can address a variety of factors, including the building layout, different sizes of people, different movement speeds and different egress paths available. With these types of programs, the actual time can be even more precisely calculated. Of course it is cautioned that in many cases these models provide the optimal time for egress. The safety factor of 1.5 within the code is intended to address many of these uncertainties.

Note that this section applies to all types of smoke control designed in accordance with Section 909. Also, most smoke control systems will typically have the ability to run for much longer than 20 minutes as they are on standby power and may be able to continue to achieve the tenability goals.

System response as required in Section 909.17 needs to be accounted for when determining the ability of the smoke control system to keep the smoke layer interface at the appropriate level (see commentary, Section 909.17).

909.4.7 Smoke control system interaction. The design shall consider the interaction effects of the operation of multiple smoke control systems for all design scenarios.

❖ The focus of this section is related to the interaction of multiple mechanical smoke control systems by asking for a specific analysis of the interaction of such systems similar to that required for the interaction of HVAC systems. Where hoistway pressurization is chosen as an option for compliance with the hoistway opening protection requirements, the potential exists for a pressurized stair system to also be present. These two systems need to be able to operate at the same time without a negative impact on either system. It is also possible that an atrium with a smoke control system is located in a building containing a stair pressurization system.

909.5 Smoke barrier construction. *Smoke barriers* required for passive smoke control and a smoke control system using the pressurization method shall comply with Section 709 of the *International Building Code*. *Smoke barriers* shall be constructed and sealed to limit leakage areas exclusive of protected openings. The maximum allowable leakage area shall be the aggregate area calculated using the following leakage area ratios:

1. Walls: $A/A_w = 0.00100$

INTERNATIONAL CODE COUNCIL®
Copyright © 2015 ICC. ALL RIGHTS RESERVED. Accessed by David Dammon on Jun 21, 2017 12:30:52 PM pursuant to License Agreement with ICC. No further reproduction or distribution authorized. ANY UNAUTHORIZED REPRODUCTION OR DISTRIBUTION IS A VIOLATION OF THE FEDERAL COPYRIGHT ACT AND THE LICENSE AGREEMENT, AND SUBJECT TO CIVIL AND CRIMINAL PENALTIES THEREUNDER.

2. Interior *exit stairways* and *ramps* and *exit passageways*: $A/A_w = 0.00035$
3. Enclosed *exit access stairways* and *ramps* and all other shafts: $A/A_w = 0.00150$
4. Floors and roofs: $A/A_F = 0.00050$

where:

A = Total leakage area, square feet (m^2).

A_F = Unit floor or roof area of barrier, square feet (m^2).

A_w = Unit wall area of barrier, square feet (m^2).

The leakage area ratios shown do not include openings due to gaps around doors and operable windows. The total leakage area of the *smoke barrier* shall be determined in accordance with Section 909.5.1 and tested in accordance with Section 909.5.2.

❖ Part of the strategy of smoke control systems, particularly smoke control systems using the pressurization method (often termed zoned smoke control) is the use of smoke barriers to divide a building into separate smoke zones (or compartments). This strategy is used in both passive and mechanical systems. It should be noted that not all walls, ceilings or floors would be considered smoke barriers. Only walls that designate separate smoke zones within a building need to be constructed as smoke barriers. This section is simply providing requirements for walls, floors and ceilings that are used as smoke barriers. It should be noted that it is possible that a smoke control system utilizing the exhaust method may not need to utilize a smoke barrier to divide the building into separate smoke zones; therefore, the evaluation of barrier construction and leakage area may not be necessary and as noted are primarily focused on designs using the pressurization method.

In order for smoke to not travel from one smoke zone to another, specific construction requirements are necessary in accordance with the code. It should be noted that openings such as doors and windows are dealt with separately within Section 909.5.3 from openings such as cracks or penetrations.

909.5.1 Total leakage area. Total leakage area of the barrier is the product of the *smoke barrier* gross area multiplied by the allowable leakage area ratio, plus the area of other openings such as gaps around doors and operable windows.

❖ It is impossible for walls and floors to be constructed that are completely free from openings that may allow the migration of smoke; therefore, leakage needs to be compensated for within the design by calculating the leakage area of walls, ceilings and floors. The factors provided in Section 909.5, which originate from ASHRAE's provisions on leaky buildings, are used to calculate the total leakage area. The total leakage area is then used in the design process to determine the proper amount of air to create the required pressure differences across these surfaces that form smoke zones.

Additionally, Section 909.5 provides ratios to determine the maximum allowable leakage in walls, interior exit stairways, shafts, floors and roofs. These leakage areas are critical in determining whether the proper pressure differences are provided when utilizing the pressurization method of smoke control. Pressure differences will decrease as the openings get larger.

909.5.2 Testing of leakage area. Compliance with the maximum total leakage area shall be determined by achieving the minimum air pressure difference across the barrier with the system in the smoke control mode for mechanical smoke control systems utilizing the pressurization method. Compliance with the maximum total leakage area of passive smoke control systems shall be verified through methods such as door fan testing or other methods, as *approved* by the *fire code official*.

❖ These leakage criteria need to be evaluated through testing. For the case of a pressurization system, pressure differences need to be verified when the system is in smoke control mode. In the case of passive smoke control systems, pressure testing through tests such as the door fan method is necessary.

909.5.3 Opening protection. Openings in *smoke barriers* shall be protected by automatic-closing devices actuated by the required controls for the mechanical smoke control system. Door openings shall be protected by fire door assemblies complying with Section 716.5.3 of the *International Building Code.*

Exceptions:

1. Passive smoke control systems with automatic-closing devices actuated by spot-type smoke detectors *listed* for releasing service installed in accordance with Section 907.3.
2. Fixed openings between smoke zones that are protected utilizing the airflow method.
3. In Group I-1 Condition 2, Group I-2 and ambulatory care facilities, where a pair of opposite-swinging doors are installed across a corridor in accordance with Section 909.5.3.1, the doors shall not be required to be protected in accordance with Section 716 of the *International Building Code*. The doors shall be close-fitting within operational tolerances and shall not have a center mullion or undercuts in excess of $^3/_4$-inch (19.1 mm) louvers or grilles. The doors shall have head and jamb stops and astragals or rabbets at meeting edges and, where permitted by the door manufacturer's listing, positive-latching devices are not required.
4. In Group I-2 and ambulatory care facilities, where such doors are special-purpose horizontal sliding, accordion or folding door assemblies installed in accordance with Section 1010.1.4.3 and are automatic closing by smoke detection in accordance with Section 716.5.9.3 of the *International Building Code.*
5. Group I-3.
6. Openings between smoke zones with clear ceiling heights of 14 feet (4267 mm) or greater and bank-

INTERNATIONAL CODE COUNCIL®
Copyright © 2015 ICC. ALL RIGHTS RESERVED. Accessed by David Dammon on Jun 21, 2017 12:30:52 PM pursuant to License Agreement with ICC. No further reproduction or distribution authorized. ANY UNAUTHORIZED REPRODUCTION OR DISTRIBUTION IS A VIOLATION OF THE FEDERAL COPYRIGHT ACT AND THE LICENSE AGREEMENT, AND SUBJECT TO CIVIL AND CRIMINAL PENALTIES THEREUNDER.

down capacity of greater than 20 minutes as determined by the design fire size.

❖ Similar to concerns of smoke leakage between smoke zones, openings may compromise the necessary pressure differences between smoke zones. Openings in smoke barriers, such as doors and windows, must be either constantly or automatically closed when the smoke control system is operating. This section requires that doors be automatically closed through the activation of an automatic closing device linked to the smoke control system. Essentially, when the smoke control system is activated, all openings are automatically closed. This most likely would mean that the mechanism that activates the smoke control system would also automatically close all openings. The smoke control system will be activated by a specifically zoned smoke detection or sprinkler system as required by Sections 909.12.3 and 909.12.4.

In terms of actual opening protection, Section 909.5.2 is simply referring the user to Section 716.5.3 of the IBC for specific construction requirements for doors located in smoke barriers. Note that smoke barriers are different from fire barriers, since the intended measure of performance is different. One is focused on fire spread from the perspective of heat, the other from the perspective of smoke passage. Smoke barriers do require a 1-hour fire-resistance rating.

There are several exceptions to this particular section. Exception 1 is specifically for passive systems. Passive systems, as noted, are systems in which there is no use of mechanical systems. Instead, the system operates primarily upon the configuration of barriers and layout of the building to provide smoke control. Passive systems can use spot-type detectors to close doors that constitute portions of a smoke barrier. Essentially, this means a full fire alarm system would not be required. Instead, single station detectors would be allowed to close the doors. Such doors would need to fail in the closed position if power is lost. The specifics as to approved devices would be found in NFPA 72.

Exception 2 is based on the fact that some systems take advantage of the opposed airflow method such that smoke is prevented from migrating past the doors. Therefore, since the design already accounts for potential smoke migration at these openings through the use of air movement, it is unnecessary to require the barrier to be closed.

Exception 3 is specifically related to the unique requirements for Group I-1 Condition 2, I-2 and ambulatory care occupancies. Essentially, a very specific alternative, which meets the functional needs of these occupancy types, is provided. Opposite swinging doors are allowed without meeting the specific requirements of Section 716. Note that Group I-2 and ambulatory care facilities do utilize the concept of smoke compartments which is a form of a passive smoke control system. The requirements of this section are focused on openings in smoke barriers that need to close on activation of a pressurization system.

Exception 4 provides a specific allowance for horizontal sliding doors in Group I-2 Condition 2 occupancies and ambulatory care occupancies. These doors are commonly used in such occupancies and have very specific installation requirements in Section 1010.1.4.3. These doors are an alternative to pivoted or side-hinged swinging type doors. This exception does require compliance with Section 716.5.9.3 for automatic closing upon detection of smoke.

Exception 5 allows an exemption from the automatic-closing requirements for all Group I-3 occupancies. This is related to the fact that facilities that have occupants under restraint or with specific security restrictions have unique requirements in accordance with Section 408 of the code. These requirements accomplish the intent of providing reliable barriers between each smoke zone since, for the most part, such facilities will have a majority of doors closed and in a locked position due to the nature of the facility. The staff very closely controls these types of facilities.

Exception 6 relates to the behavior of smoke. The assumption is that smoke rises due to the buoyancy of hot gases, and if the ceiling is sufficiently high, the smoke layer will be contained for a longer period of time before it begins to move into the next smoke zone. Therefore, it is not as critical that the doors automatically close. This allowance is dependent on the specific design fire for a building. See Section 909.9 for more information on design fire determination. Different size design fires create different amounts of smoke that, depending on the layout of the building, may migrate in different ways throughout the building. This section mandates that smoke cannot begin to migrate into the next smoke zone for at least 20 minutes. This is consistent with the 20-minute minimum duration of operation of smoke control systems required in Section 909.4.6. It should be noted that a minimum of 14-foot (4267 mm) ceilings are required to take advantage of this exception. This exception would require an engineering analysis.

909.5.3.1 Group I-1 Condition 2, Group I-2 and ambulatory care facilities. In Group I-1 Condition 2, Group I-2 and *ambulatory care facilities*, where doors are installed across a *corridor*, the doors shall be automatic closing by smoke detection in accordance with Section 716.5.9.3 of the *International Building Code* and shall have a vision panel with fire-protection-rated glazing materials in fire-protection-rated frames, the area of which shall not exceed that tested.

❖ Part of the alternative allowed for horizontal sliding doors in Exception 3 of Section 909.5.3 for Group I-1 Condition 2, Group I-2 and ambulatory care facilities is the requirement that vision panels be provided. These vision panels need to be approved fire-protection-rated glazing and be within frames of a size that does not exceed the frame size that was used for testing of the glazing.

INTERNATIONAL CODE COUNCIL®
Copyright © 2015 ICC. ALL RIGHTS RESERVED. Accessed by David Dammon on Jun 21, 2017 12:30:52 PM pursuant to License Agreement with ICC. No further reproduction or distribution authorized. ANY UNAUTHORIZED REPRODUCTION OR DISTRIBUTION IS A VIOLATION OF THE FEDERAL COPYRIGHT ACT AND THE LICENSE AGREEMENT, AND SUBJECT TO CIVIL AND CRIMINAL PENALTIES THEREUNDER.

909.5.3.2 Ducts and air transfer openings. Ducts and air transfer openings are required to be protected with a minimum Class II, 250°F (121°C) smoke damper complying with Section 717 of the *International Building Code*.

❖ Another factor that adds to the reliability of smoke barriers is the protection of ducts and air transfer openings within smoke barriers. Left open, these openings may allow the transfer of smoke between smoke zones. These ducts and air transfer openings most often are part of the HVAC system. Damper operation and the reaction with the smoke control system will be evaluated during acceptance testing. It should be noted that there are duct systems used within a smoke control design that are controlled by the smoke control system and should not automatically close upon detection of smoke via a smoke damper.

It should be noted that a smoke damper works differently than a fire damper. Fire dampers react to heat via a fusible link, while smoke dampers activate upon the detection of smoke. The smoke dampers used should be rated as Class II, 250°F (121°C). The class of the smoke damper refers to its level of performance relative to leakage. The temperature rating is related to its ability to withstand the heat of smoke resulting from a fire. It should be noted that although smoke barriers are only required to utilize smoke dampers, there may be many instances where a fire damper is also required. For instance, the smoke barrier may also be used as a fire barrier. Also, Section 717.5.3 of the IBC would require penetration of shafts to contain both a smoke and fire damper. Therefore, in some cases both a smoke damper and fire damper would be required. There are listings specific to combination smoke and fire dampers.

More specific requirements about dampers can be found in Chapter 7 of the IBC and Chapter 6 of the IMC.

909.6 Pressurization method. The primary mechanical means of controlling smoke shall be by pressure differences across *smoke barriers*. Maintenance of a tenable environment is not required in the smoke-control zone of fire origin.

❖ There are several methods or strategies that may be used to control smoke movement. One of these methods is pressurization, wherein the system primarily utilizes pressure differences across smoke barriers to control the movement of smoke. Basically, if the area of fire origin maintains a negative pressure, then the smoke will be contained to that smoke zone. A typical approach used to obtain a negative pressure is to exhaust the fire floor. This is a fairly common practice in high-rise buildings. Interior exit stairways also utilize the concept of pressurization by keeping the interior exit stairways under positive pressure. The pressurization method in large open spaces, such as malls and atria, is impractical since it would take a large quantity of supply air to create the necessary pressure differences. It should be noted that pressurization is mandated as the primary method for mechanical smoke control design but this is related to the primary methods historically used for smoke control in high rise buildings. Currently high-rise buildings do not require smoke control. Airflow and exhaust methods are only allowed when appropriate. The exhaust method is the most commonly applied method due to the use of the atrium provisions in Section 404.5 of the IBC.

The pressurization method does not require that tenable conditions be maintained in the smoke zone where the fire originates. Maintaining this area tenable would be impossible, based on the fact that pressures from the surrounding smoke zones would be placing a negative pressure within the zone of origin to keep the smoke from migrating.

Pressurization is used often with interior exit stairways. This method provides a positive pressure within the interior exit stairways to resist the passage of smoke. Stair pressurization is one method of compliance for stairways in high-rise or underground buildings where the floor surface is located more than 75 feet (22 860 mm) above the lowest level of fire department vehicle access or more than 30 feet (9144 mm) below the floor surface of the lowest level of exit discharge. It should be noted that there are two methods found in the code that address smoke movement—smokeproof enclosures or pressurized stairs. A smokeproof enclosure requires a certain fire-resistance rating along with access through a ventilated vestibule or an exterior balcony. The vestibule can be ventilated in two ways: using natural ventilation or mechanical ventilation as outlined in Sections 909.20.3 and 909.20.4 of the IBC. The pressurization method requires a sprinklered building and a minimum pressure difference of 0.15 inch (37 Pa) of water and a maximum of 0.35 inch (87 Pa) of water. These pressure differences are to be available with all doors closed under maximum stack pressures (see Sections 909.20 of the IBC and 1023.11 of the code for more details).

As noted, the pressurization method utilizes pressure differences across smoke barriers to achieve control of smoke. Sections 909.6.1 and 909.6.2 provide the criteria for smoke control design in terms of minimum and maximum pressure differences.

In summary, the pressurization method is used in two ways. The first is through the use of smoke zones where the zone of origin is exhausted, creating a negative pressure. The second is stair pressurization that creates a positive pressure within the stair to avoid the penetration of smoke. Note that the code allows the use of a smokeproof enclosure instead of pressurization.

909.6.1 Minimum pressure difference. The minimum pressure difference across a *smoke barrier* shall be 0.05-inch water gage (0.0124 kPa) in fully sprinklered buildings.

In buildings allowed to be other than fully sprinklered, the smoke control system shall be designed to achieve pressure

INTERNATIONAL CODE COUNCIL®
Copyright © 2015 ICC. ALL RIGHTS RESERVED. Accessed by David Dammon on Jun 21, 2017 12:30:52 PM pursuant to License Agreement with ICC. No further reproduction or distribution authorized. ANY UNAUTHORIZED REPRODUCTION OR DISTRIBUTION IS A VIOLATION OF THE FEDERAL COPYRIGHT ACT AND THE LICENSE AGREEMENT, AND SUBJECT TO CIVIL AND CRIMINAL PENALTIES THEREUNDER.

differences not less than two times the maximum calculated pressure difference produced by the design fire.

❖ The minimum pressure difference is established as 0.05-inch water gage (12 Pa) in fully sprinklered buildings. This particular criterion is related to the pressures needed to overcome buoyancy and the pressures generated by the fire, which include expansion. This particular criterion is based upon a sprinklered building. The pressure difference would need to be higher in a building that is not sprinklered. Additionally, the pressure difference needs to be provided based upon the possible stack and wind effects present.

909.6.2 Maximum pressure difference. The maximum air pressure difference across a *smoke barrier* shall be determined by required door-opening or closing forces. The actual force required to open *exit* doors when the system is in the smoke control mode shall be in accordance with Section 1010.1.3. Opening and closing forces for other doors shall be determined by standard engineering methods for the resolution of forces and reactions. The calculated force to set a side-hinged, swinging door in motion shall be determined by:

$$F = F_{dc} + K(WA\Delta P)/2(W - d) \quad \textbf{(Equation 9-1)}$$

where:

A = Door area, square feet (m^2).

d = Distance from door handle to latch edge of door, feet (m).

F = Total door opening force, pounds (N).

F_{dc} = Force required to overcome closing device, pounds (N).

K = Coefficient 5.2 (1.0).

W = Door width, feet (m).

ΔP = Design pressure difference, inches of water (Pa).

❖ The maximum pressure difference is based primarily upon the force needed to open and close doors. The code establishes maximum opening forces for doors. This maximum opening force cannot be exceeded, taking into account the pressure differences across a doorway in a pressurized environment. Essentially, based on the opening force requirements of Section 1010.1.3, the maximum pressure difference can be calculated in accordance with Equation 9-1. In accordance with Chapter 10, the maximum opening force of a door has three components, including:

- Door latch release:
  Maximum of 15 pounds (67 N)
- Set door in motion:
  Maximum of 30 pounds (134 N)
- Swing to full open position:
  Maximum of 15 pounds (67 N)

Equation 9-1 is used to calculate the total force to set the door into motion when in the smoke control mode; therefore, the limiting criteria would be 30 pounds (134 N). It should be noted that although the accessibility requirements related to door opening force are more restrictive in Section 404.2.8 of ICC A117.1 fire doors do not require compliance with these requirements.

909.6.3 Pressurized stairways and elevator hoistways. Where stairways or elevator hoistways are pressurized, such pressurization systems shall comply with Section 909 as smoke control systems, in addition to the requirements of Section 909.21 of this code and Section 909.20 of the *International Building Code*.

❖ The purpose of this section is to clarify that pressurized stairways and pressurized hoistways are smoke control systems and must be addressed in the same way that a pressurization system in accordance with Section 909.6 addresses such systems. This would require compliance with various sections but in particular the requirements for a rational analysis in accordance with Section 909.4.

909.7 Airflow design method. Where *approved* by the *fire code official*, smoke migration through openings fixed in a permanently open position, which are located between smoke control zones by the use of the airflow method, shall be permitted. The design airflow shall be in accordance with this section. Airflow shall be directed to limit smoke migration from the fire zone. The geometry of openings shall be considered to prevent flow reversal from turbulent effects. Smoke control systems using the airflow method shall be designed in accordance with NFPA 92.

❖ This method is only allowed when approved by the fire code official. As the title states, this method utilizes airflow to avoid the migration of smoke across smoke barriers. This has been referred to as opposed airflow. Specifically, this method is suited for the protection of smoke migration through doors and related openings fixed in a permanently open position. This method consists of providing a particular velocity of air based upon the temperature of the smoke and the height of the opening. The temperature of the smoke will depend on the design fire that is established for the particular building. The higher the temperature of the smoke and the larger the opening, the higher the velocity necessary to maintain the smoke from migrating into the smoke zone. It should be noted that the airflow method seldom works for large openings, since the velocity to oppose the smoke becomes too high. This method tends to work better for smaller openings, such as pass-through windows. Reference is made to NFPA 92 to determine the minimum velocity required to limit smoke spread.

909.7.1 Prohibited conditions. This method shall not be employed where either the quantity of air or the velocity of the airflow will adversely affect other portions of the smoke control system, unduly intensify the fire, disrupt plume dynamics or interfere with exiting. In no case shall airflow toward the fire exceed 200 feet per minute (1.02 m/s). Where the calculated airflow exceeds this limit, the airflow method shall not be used.

❖ The airflow method has a limitation on maximum velocity. This limitation is because air may distort the

INTERNATIONAL CODE COUNCIL®
Copyright © 2015 ICC. ALL RIGHTS RESERVED. Accessed by David Dammon on Jun 21, 2017 12:30:52 PM pursuant to License Agreement with ICC. No further reproduction or distribution authorized. ANY UNAUTHORIZED REPRODUCTION OR DISTRIBUTION IS A VIOLATION OF THE FEDERAL COPYRIGHT ACT AND THE LICENSE AGREEMENT, AND SUBJECT TO CIVIL AND CRIMINAL PENALTIES THEREUNDER.

flame and cause additional entrainment and turbulence; therefore, having a high velocity of air entering the zone of fire origin has the potential of increasing the amount of smoke produced. The velocity may also interact with other portions of the smoke control design. For instance, the pressure differences in other areas of the building may be altered, which may exceed the limitations of Sections 909.6.1 and 909.6.2. This section requires that when a velocity of over 200 feet per minute (1.02 m/sec) is calculated, the airflow method is not allowed. The solution may result in requiring a barrier such as a wall or door.

If the airflow design method is chosen to protect areas communicating with an atrium, the air added to the smoke layer needs to be accounted for in the exhaust rate.

909.8 Exhaust method. Where *approved* by the *fire code official*, mechanical smoke control for large enclosed volumes, such as in atriums or malls, shall be permitted to utilize the exhaust method. Smoke control systems using the exhaust method shall be designed in accordance with NFPA 92.

❖ This method is only allowed when approved by the building official. The primary application of the exhaust method is in large spaces, such as atriums and malls and is the most widely used method in the IBC. The strategy of this method is to keep the smoke layer at a certain level within the space. This is primarily accomplished through exhausting smoke. The amount of exhaust depends upon the design fire [see Commentary Figure 909.8(1)]. Essentially, fires produce different amounts and properties of smoke based on the material being burned, size of the fire and the placement of the fire; therefore, NFPA 92 is referenced for the design of such systems. NFPA 92 presents several ways to address the control of smoke, which includes the use of the following tools:

- Scale Modeling (Small scale testing)—Utilizes the concept of scaling to allow small scale tests to be conducted to understand the smoke movement within a space.
  - Benefits—More realistic understanding of smoke movement in spaces with unusual configurations or projections than algebraic calculations.
  - Disadvantages—Expensive and the application of results is limited to the uniqueness of the space being analyzed.
- Algebraic Calculations—Empirically derived (based upon testing) modeling in its simplest form.
  - Benefits—Simple, cost-effective analysis.
  - Disadvantages—Limited applicability due to the range of values they were derived from, only appropriate with certain types of design fires, typically over conservative outputs that increase equipment needs, equipment costs and can impact aesthetics and architectural design.
- Computer Modeling [Computational fluid dynamics (CFD) or zone models]—Combination of theory and empirical values to determine the smoke movement and fire induced conditions within a space and effectiveness of the smoke control system.
  - Benefits—More realistic understanding of smoke movement in spaces with unusual configurations or projections and less expensive than scale modeling. Helps sig-

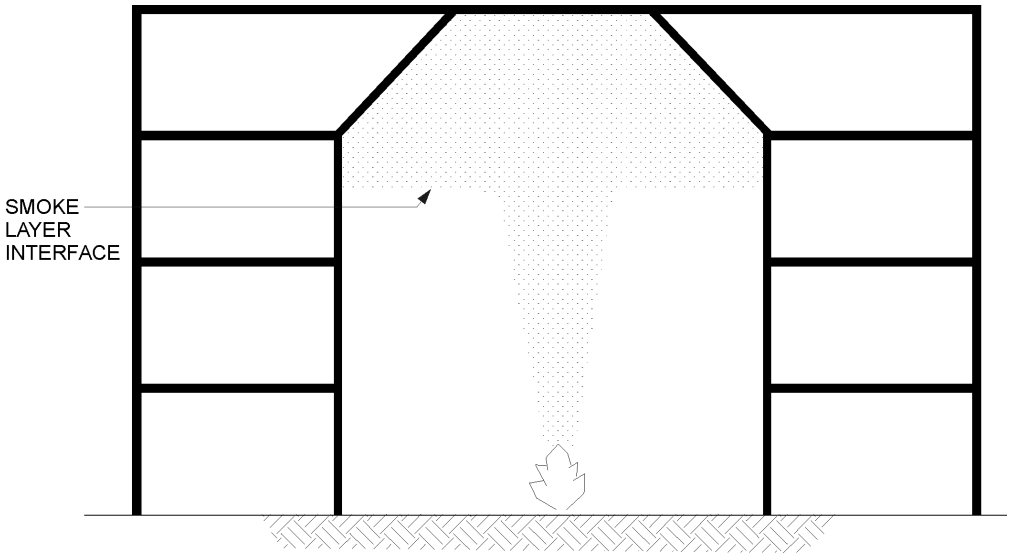

Figure 909.8(1)
SMOKE LAYER INTERFACE IN AN ATRIUM

INTERNATIONAL CODE COUNCIL®
Copyright © 2015 ICC. ALL RIGHTS RESERVED. Accessed by David Dammon on Jun 21, 2017 12:30:52 PM pursuant to License Agreement with ICC. No further reproduction or distribution authorized. ANY UNAUTHORIZED REPRODUCTION OR DISTRIBUTION IS A VIOLATION OF THE FEDERAL COPYRIGHT ACT AND THE LICENSE AGREEMENT, AND SUBJECT TO CIVIL AND CRIMINAL PENALTIES THEREUNDER.

nificantly in designing smoke control systems tailored to spaces and achieving cost-effective designs, and can help limit the impact to architectural design.

- Disadvantages—Computing time and cost can be longer than algebraic calculations but benefits typically outweigh this disadvantage. Early planning is important and can limit these adverse impacts.

In terms of computer modeling, as noted, there are essentially two methods that include zone models and CFD models. Zone models are based upon the unifying assumption that in any room or space where the effects of the fire are present there are distinct layers (hot upper layer, cool lower layer). In real life such distinct layers do not exist. Some examples of zone models used in such applications include Consolidated Model of Fire Growth And Smoke Transport (C-FAST) and Available Safe Egress Time (ASET). See Section 3-7 of the *SFPE Handbook of Fire Protection Engineering* for further information. CFD models take this much further and actually divide the space into thousands or millions of interconnected "cells" or "fields." The model then evaluates the fire dynamics and heat and mass in each individual cell and how it interacts with those adjacent to it. The use of such models becomes more accurate with more numerous and smaller cells but the computing power and expertise required is much higher than for zone models. As noted the use of either types of models can be advantageous but such use must be undertaken by someone qualified. Proper review and verification of the input and output is critical. The most popular model in the area of CFD with regard to fire is the Fire Dynamics Simulator (FDS) developed by NIST. Other models such as Fluent are sometimes used (Fluent Inc.).

Depending upon the space being evaluated some design strategies may provide a better approach than others. Past editions of the IBC smoke control provisions for the exhaust method mandated the use of the algebraic methods with a steady fire. This of course also mandated a mechanical system be used whereas NFPA 92 allows an overall review of smoke layer movement and whether the design goals, which in this case are mandated by the code, can be met. Therefore, if it can be shown that the smoke layer interface can be held at the 6 feet (1829 mm) as mandated in Section 909.8.1 for the design operation time required by Section 909.4.6 without mechanical ventilation then the space would comply with Section 909. NFPA 92 presents several design approaches. This allows more flexibility in design than that found in previous editions of the IBC.

NFPA 92B as a standard does not set the minimum smoke layer interface height or duration for system operation. Such criteria is found within Sections 909.8.1 and 909.4.6, respectively. See the commentary for those sections.

If the algebraic approach is used, consideration of three types of fire plumes may be required to determine which one is the most demanding in terms of smoke removal needs based upon the space being assessed. They include:

Axisymmetric plumes—Smoke rises unimpeded by walls, balconies or similar projections [see Commentary Figure 909.8(2)].

Balcony spill plumes—Smoke flows under and around edges of a horizontal projection [see Commentary Figure 909.8(3)].

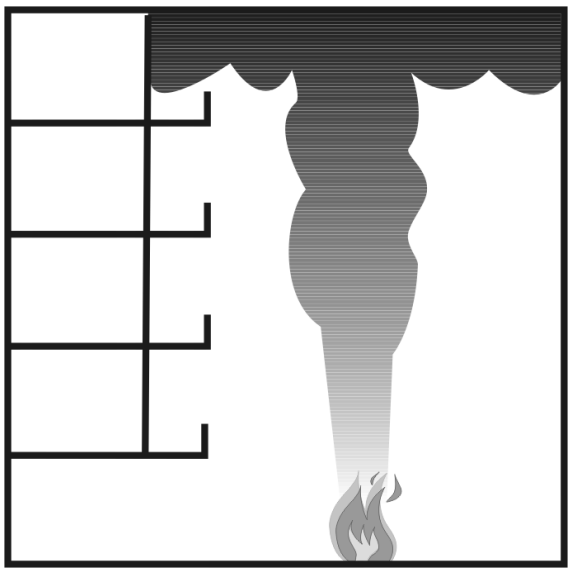

Figure 909.8(2)
AXISYMMETRICAL PLUME

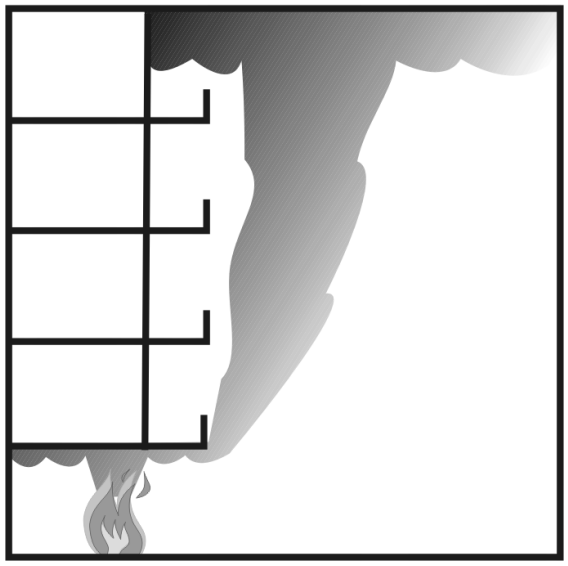

Figure 909.8(3)
BALCONY SPILL PLUME

INTERNATIONAL CODE COUNCIL®
Copyright © 2015 ICC. ALL RIGHTS RESERVED. Accessed by David Dammon on Jun 21, 2017 12:30:52 PM pursuant to License Agreement with ICC. No further reproduction or distribution authorized. ANY UNAUTHORIZED REPRODUCTION OR DISTRIBUTION IS A VIOLATION OF THE FEDERAL COPYRIGHT ACT AND THE LICENSE AGREEMENT, AND SUBJECT TO CIVIL AND CRIMINAL PENALTIES THEREUNDER.

Window plumes—Smoke flows through an opening into a large-volume space [see Commentary Figure 909.8(4)].

It should be noted that prior to the reference to NFPA 92 in the code, the balcony spill and window plume calculations had been eliminated from the smoke control requirements of the code due to concerns with the applicability of those calculations. The major difference is that NFPA 92 does not mandate the use of such equations as did previous editions of the IBC. The use of such equations will depend upon the design fires agreed upon for the particular design and whether an algebraic approach is chosen. These equations are used to determine a mass flow rate of smoke to ultimately determine the required exhaust volume for that space. If the potential for a balcony or window spill plumes are known to exist within the space, then appropriate measures need to be taken to address these, as they typically result in more onerous exhaust and supply requirements. Part of the reason for the initial deletion of these equations was the fact that such scenarios are not as likely or their impact is significantly reduced in sprinklered buildings. There is also some concern with the applicability of the balcony spill plume equation in a variety of applications. These potential fire scenarios and resulting plumes may further the need to undertake a CFD analysis to address such hazards more appropriately and effectively.

Another key aspect that NFPA 92 included within the algebraic methods is equations to determine that a minimum number of exhaust inlets are available to prevent plugholing. Plugholing occurs when air from below the smoke layer is pulled through the smoke layer into the smoke exhaust inlets. As such, if plugholing occurs, some of the fan capacity is used to exhaust air rather than smoke and thus can affect the ability to maintain the smoke layer at or above the design height. Scale modeling and computer fire modeling would demonstrate these potential problems during the testing and analysis, respectively [see Commentary Figure 909.8(5)].

It should be noted that this section specifically references NFPA 92 for the design of smoke control using the exhaust method. Therefore the

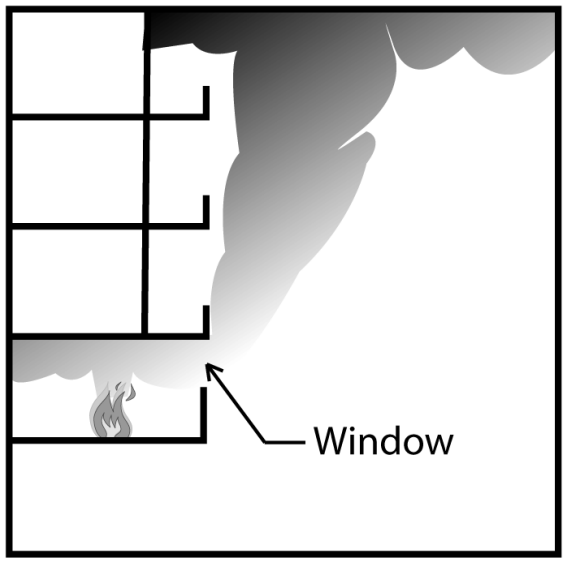

Figure 909.8(4)
WINDOW PLUME

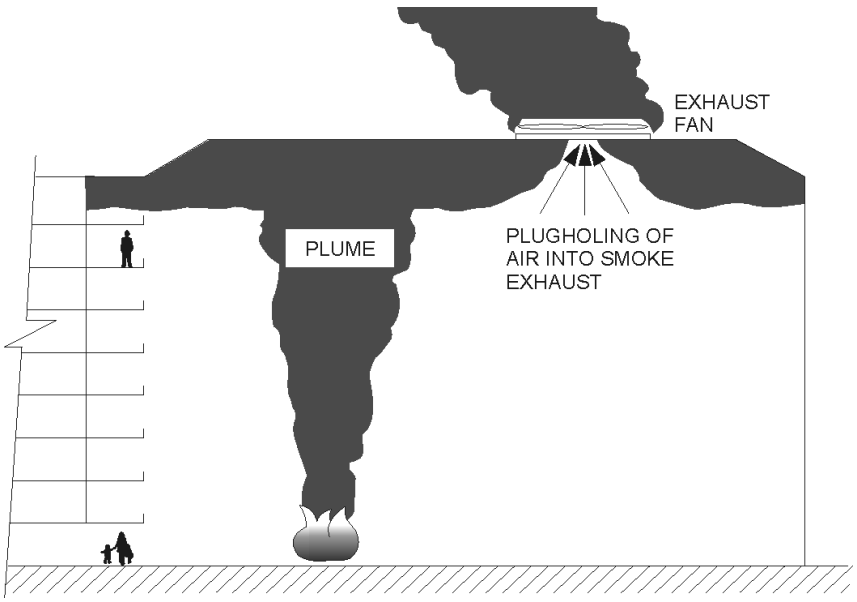

Figure 909.8(5)
PLUGHOLING

INTERNATIONAL CODE COUNCIL®
Copyright © 2015 ICC. ALL RIGHTS RESERVED. Accessed by David Dammon on Jun 21, 2017 12:30:52 PM pursuant to License Agreement with ICC. No further reproduction or distribution authorized. ANY UNAUTHORIZED REPRODUCTION OR DISTRIBUTION IS A VIOLATION OF THE FEDERAL COPYRIGHT ACT AND THE LICENSE AGREEMENT, AND SUBJECT TO CIVIL AND CRIMINAL PENALTIES THEREUNDER.

requirements in NFPA 92 related to testing, documentation and maintenance would not be applicable though they may be a good resource. Equipment and controls would be part of the design; therefore, related provisions of NFPA 92 would apply. Generally the IBC addresses equipment and controls in a similar fashion.

909.8.1 Smoke layer. The height of the lowest horizontal surface of the smoke layer interface shall be maintained not less than 6 feet (1829 mm) above a walking surface that forms a portion of a required egress system within the smoke zone.

❖ The design criteria to be used when applying NFPA 92B is to maintain the smoke layer interface at least 6 feet (1829 mm) above any walking surface that is considered part of the required egress within the particular smoke zone, such as an atrium, for 20 minutes or 1.5 times the calculated egress time (see Section 909.4.6). Chapter 10 considers the majority of occupiable space as part of the means of egress system. Also keep in mind that the criteria of 6 feet (1829 mm) does not apply just to the main floor surface of the mall or atrium but to any level where occupants may be exposed (for example, balconies) see Commentary Figure 909.8.1(1).

The code uses the terminology "lowest horizontal surface of the accumulating smoke layer interface." NFPA 92 has several definitions related to smoke layer, which include the following:

Smoke layer. The accumulated thickness of smoke below a physical of thermal barrier.

Smoke layer interface. The theoretical boundary between a smoke layer and the smoke-free air. (Note: This boundary is at the beginning of the transition zone.)

First indication of smoke. The boundary between the transition zone and the smoke-free air.

Transition zone. The layer between the smoke layer interface and the first indication of smoke in which the smoke layer temperature decreases to ambient.

The transition zone may be several feet thick (large open space) or may barely exist (small area with intense fire) [see also Commentary Figure 909.8.1(2)].

NFPA 92 provides algebraic equations to determine first indication of smoke but is limited to very specific conditions such as a uniform cross section, specific aspect ratios, steady or unsteady fires and no smoke exhaust operating. When using algebraic equations for smoke layer interface looking

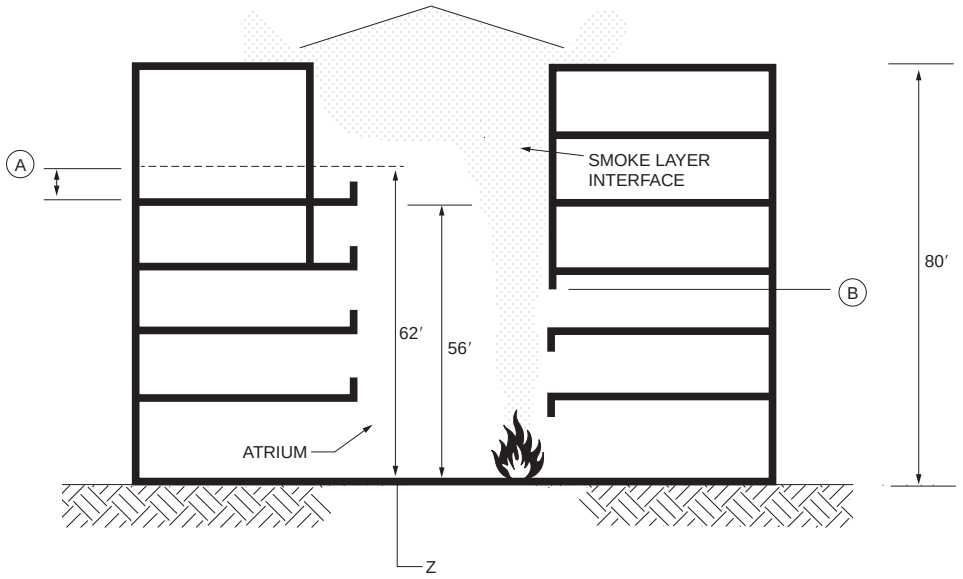

Z IS THE HEIGHT FROM ATRIUM FLOOR TO THE HIGHEST OF EITHER (A) OR (B):

(A) 6′-0″ ABOVE THE HIGHEST LEVEL OF EXIT ACCESS OPEN TO ATRIUM

(B) THE HIGHEST UNPROTECTED OPENING TO ATRIUM

For SI: 1 foot = 304.8 mm.

Figure 909.8.1(1)
EXAMPLE OF CRITICAL LEVEL OF SMOKE

INTERNATIONAL CODE COUNCIL®
Copyright © 2015 ICC. ALL RIGHTS RESERVED. Accessed by David Dammon on Jun 21, 2017 12:30:52 PM pursuant to License Agreement with ICC. No further reproduction or distribution authorized. ANY UNAUTHORIZED REPRODUCTION OR DISTRIBUTION IS A VIOLATION OF THE FEDERAL COPYRIGHT ACT AND THE LICENSE AGREEMENT, AND SUBJECT TO CIVIL AND CRIMINAL PENALTIES THEREUNDER.

at different types of plumes the smoke layer interface terminology is used and the user enters the desired smoke layer interface height. Zone models use simplifying assumptions so the layers are distinct from one another. In contrast, when CFD or scale modeling is used, the data must be analyzed to verify that the smoke layer interface is located at or above the 6 feet (1829 mm) during the event. This is not a simple analysis as CFD and scale modeling provide more detail on actual smoke behavior; therefore, the location of the smoke layer interface may not be initially clear without some level of analysis. Again it depends on the depth of the transition layer. This may require reviewing tenability within the transition zone. Tenability limits need to be agreed upon by the stakeholders involved. Using CFD or scale modeling would likely need to occur through the alternative methods and materials section (Section 104.9) due to the need to review tenability limits. It should be noted that NFPA 92 Annex A suggests that there are methods to determine where the smoke layer interface and first indication of smoke are located when undertaking CFD and scale modeling using a limited number of point measurements.

Also, Section 909.8.1 specifies a minimum distance for the smoke layer interface from any walking surface whereas Section 4.5.4.2 of NFPA 92 has provisions that simply allows the analysis to demonstrate tenability regardless of where the layer height is located above the floor. Defining tenability can be more difficult as there is not a standard definition as to what is considered tenable. Any design using that approach would need to be addressed through Section 104.9.

Note that the response time of the system components (detection, activation, ramp up time, shutting down HVAC, opening/closing doors and dampers, etc.) needs to be accounted for when analyzing the location of the smoke layer interface in relation to the duration of operations stated in Section 909.4.6 (see commentary, Section 909.17).

909.9 Design fire. The design fire shall be based on a rational analysis performed by the registered design professional and *approved* by the *fire code official*. The design fire shall be based on the analysis in accordance with Section 909.4 and this section.

❖ The design fire is the most critical element in the smoke control system design. The fire is what produces the smoke to be controlled by the system; thus, the size of the fire directly impacts the quantity of smoke being produced. This section ensures that the design fire be determined through a rational analysis by a registered design professional with knowledge in this area. Such professionals should have experience in the area of fire dynamics, fire engineering and general building design, including mechanical systems. When determining the design fire, the designer should work with various stakeholders to determine the types of hazards and combustible materials (fire scenarios) on a permanent as well as temporary basis (i.e., Christmas/holiday decorative materials or scenery, temporary art exhibits) that may be present throughout the use of the building once occupied. Those hazards then need to be translated to potential design fires to be used when determining the smoke layer interface height for the duration as determined by Section 909.4.6. See the commentary for Section 909.9.3 for potential sources when determining design fires.

This section also does not mandate the type of fire

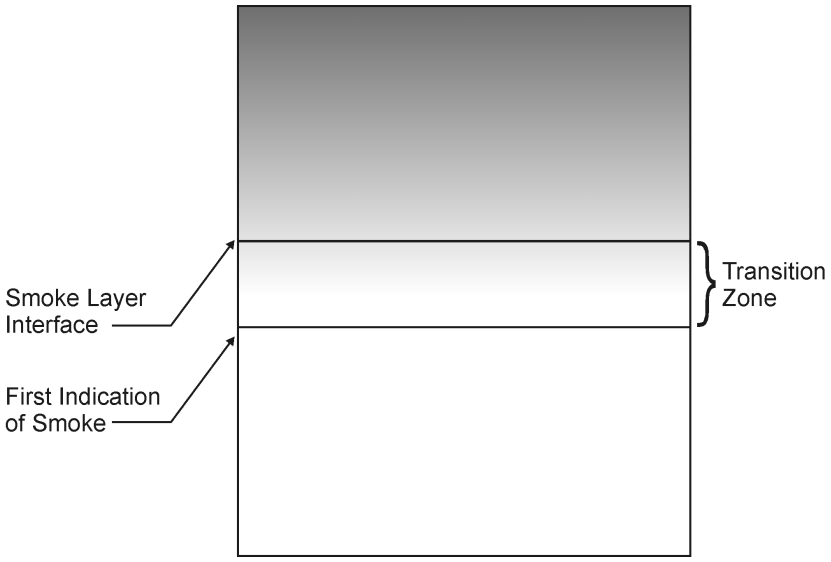

Figure 909.8.1(2)
SMOKE LAYER INTERFACE

INTERNATIONAL CODE COUNCIL®
Copyright © 2015 ICC. ALL RIGHTS RESERVED. Accessed by David Dammon on Jun 21, 2017 12:30:52 PM pursuant to License Agreement with ICC. No further reproduction or distribution authorized. ANY UNAUTHORIZED REPRODUCTION OR DISTRIBUTION IS A VIOLATION OF THE FEDERAL COPYRIGHT ACT AND THE LICENSE AGREEMENT, AND SUBJECT TO CIVIL AND CRIMINAL PENALTIES THEREUNDER.

(i.e., steady versus unsteady). A steady fire assumes a constant heat release rate over a period of time, where unsteady fires do not. An unsteady fire includes the growth and decay phases of the fire, as well as the peak heat release rate. An unsteady fire will hit a peak heat release rate when burning in the open, like an axisymmetric fire. An unsteady fire is a more realistic view of how fires actually burn. It should be noted that fires can be a combination of unsteady and steady fires when the sufficient fuel is available. In other words, the fire initially grows (unsteady) then reaches a steady state and burns for sometime at a particular heat release rate before decay occurs.

Design fire information should therefore typically include growth rate, peak heat release rate, duration and decay as well as information related to fire locations and products of combustion yield (CO, smoke, etc.) that are produced by the various design fires that are deemed credible for the space.

To provide an order of magnitude of fire sizes obtained from various combustibles, the following data from fire tests is provided. The following heat release rates, found in Section 3, Chapter 3-1 of the 4th edition of the *SFPE Handbook of Fire Protection Engineering*, are peak heat release rates:

Plastic trash bags/paper trash:
Approximately 120-350 kw

Latex foam pillow:
Approximately 120 kw

Dry Douglas fir Christmas tree:
Approximately 3000 kw at 20 percent moisture

Polyurethane foam (PVC Ticking material) Mattress:
approximately 2630 kw

Plywood wardrobe:
approximately 2900-6,400 kw

909.9.1 Factors considered. The engineering analysis shall include the characteristics of the fuel, fuel load, effects included by the fire and whether the fire is likely to be steady or unsteady.

❖ This section simply provides more detail on the factors that should be taken under consideration when determining the design fire size. To determine the appropriate fire size, an engineering analysis is necessary that takes into account the following elements: fuel (potential burning rates), fuel load (how much), effects included by the fire (smoke particulate size and density), steady or unsteady (burn steadily or simply peak and dissipate) and likelihood of sprinkler activation (based on height and distance from the fire).

909.9.2 Design fire fuel. Determination of the design fire shall include consideration of the type of fuel, fuel spacing and configuration.

❖ The design fire size may also be affected by surrounding combustibles, which may have the effect of increasing the fire size. More specifically, there is concern that if sufficient separation is not maintained between combustibles, then a larger design fire is likely. The code does not provide extensive detail on this as such determination is left to the rational analysis undertaken by the design professional. NFPA 92B provides one method in which you determine the critical separation distance, *R*. This is based upon fire size and the critical radiant heat flux for nonpiloted ignition. Nonpiloted ignition means the radiated heat from the fire without direct flame contact will ignite adjacent combustibles.

909.9.3 Heat-release assumptions. The analysis shall make use of best available data from *approved* sources and shall not be based on excessively stringent limitations of combustible material.

❖ This section is merely stressing the fact that data obtained for use in a rational analysis needs to come from relevant and appropriate sources. Data can be obtained from groups such as the NIST or from Annex B of NFPA 92B. Data from fire tests is available and is a good resource for such analysis. As noted earlier, such data is not prevalent [see also Chapter 8 ("Analysis of Design Fires") of the *Guide to Smoke Control in the 2006 IBC* and Section 3, Chapter 3-1 of the *SFPE Handbook of Fire Protection Engineering*].

909.9.4 Sprinkler effectiveness assumptions. A documented engineering analysis shall be provided for conditions that assume fire growth is halted at the time of sprinkler activation.

❖ This section raises a few questions regarding activation of sprinklers and their impact on the fire both in terms of their ability to "control" as well as "extinguish" a fire. The first is concerning an assumption that sprinklers will immediately control the fire as soon as they are activated (i.e., control results in limiting further growth and maintaining the heat release rate at approximately the same fire size as when the sprinklers activated). This assumption may be true in some cases, but for high ceilings the sprinkler may not activate or may be ineffective. Sprinklers may be ineffective in high spaces, since by the time they are activated the fire is too large to control. Essentially, the fire plume may push away and evaporate the water before it actually reaches the seat of the fire. Additionally the fire may be shielded from sprinkler spray so that insufficient quantities of water reach the fuel. These are common problems with high-piled storage as well as other fires including retail and has been shown in actual tests. Also, if the fire becomes too large before the sprinklers are activated, the available water supply and pressure for the system may be compromised. Additionally, based on the layout of the room and the movement of the fire effluents, the wrong sprinklers could be activated, which leads to a larger fire size and depletion of the available water supply and pressure.

Another issue is whether the sprinklers "control" or "extinguish" the fire. Typical sprinklers are assumed

INTERNATIONAL CODE COUNCIL®
Copyright © 2015 ICC. ALL RIGHTS RESERVED. Accessed by David Dammon on Jun 21, 2017 12:30:52 PM pursuant to License Agreement with ICC. No further reproduction or distribution authorized. ANY UNAUTHORIZED REPRODUCTION OR DISTRIBUTION IS A VIOLATION OF THE FEDERAL COPYRIGHT ACT AND THE LICENSE AGREEMENT, AND SUBJECT TO CIVIL AND CRIMINAL PENALTIES THEREUNDER.

only to control fires as opposed to extinguishing them. Sprinklers may be able to extinguish the fire, but it should not automatically be assumed. A fire that is controlled will achieve steady state and maintain a certain fire size, which is very different from a fire that is actually extinguished.

Based upon these concerns, each scenario needs to be looked at individually to determine whether sprinklers would be effective in halting the growth or extinguishing the fire. More specifically, the evaluation should include droplet size, density and area of coverage and should also be based on actual test results.

909.10 Equipment. Equipment including, but not limited to, fans, ducts, automatic dampers and balance dampers shall be suitable for their intended use, suitable for the probable exposure temperatures that the rational analysis indicates, and as *approved* by the *fire code official*.

❖ Section 909.10 and subsequent sections are primarily related to the reliability of the system components to provide a smoke control system that works according to the design. One of the largest concerns when using smoke control provisions is the overall reliability of the system. Such systems have many different components, such as smoke and fire dampers; fans; ducts and controls associated with such components. The more components a system has, the less reliable it becomes. In fact, one approach in providing a higher level of reliability is utilizing the normal building systems such as the HVAC to provide the smoke control system. Basically, systems used every day are more likely to be working appropriately, since they are essentially being tested daily; however, there are many components that are specific to the smoke control system, such as exhaust fans in an atrium or the smoke control panel.

Also, there is not a generic prescriptive set of requirements as to how all smoke control system elements should operate, since each design may be fairly unique. The specifics on operation of such a system need to be included within the design and construction documents. Most components used in smoke control systems are elements used in many other applications such as HVAC systems; therefore, the basic mechanisms of a fan used in a smoke control system may not be different, although they may be applied differently.

909.10.1 Exhaust fans. Components of exhaust fans shall be rated and certified by the manufacturer for the probable temperature rise to which the components will be exposed. This temperature rise shall be computed by:

$$T_s = (Q_c/mc) + (T_a) \qquad \textbf{(Equation 9-2)}$$

where:

c = Specific heat of smoke at smoke layer temperature, Btu/lb°F · (kJ/kg · K).

m = Exhaust rate, pounds per second (kg/s).

Q_c = Convective heat output of fire, Btu/s (kW).

T_a = Ambient temperature, °F (K).

T_s = Smoke temperature, °F (K).

Exception: Reduced T_s as calculated based on the assurance of adequate dilution air.

❖ Fans used for smoke control systems must be able to tolerate the possible elevated temperatures to which they will be exposed. Again, like many other factors this depends upon the specifics of the design fire. Essentially, Equation 9-2 requires the calculation of the potential temperature rise. The exhaust fans must be specifically rated and certified by the manufacturer to be able to handle these rises in temperature. There is an exception that allows reduction of the temperature if it can be shown that adequate temperature reduction will occur. In many cases if the exhaust fans are near the ceiling, the smoke will be much cooler than the value resulting from Equation 9-2 since the smoke may cool considerably by the time it reaches the ceiling. Also, sprinkler activation will assist in cooling the smoke further.

909.10.2 Ducts. Duct materials and joints shall be capable of withstanding the probable temperatures and pressures to which they are exposed as determined in accordance with Section 909.10.1. Ducts shall be constructed and supported in accordance with the *International Mechanical Code*. Ducts shall be leak tested to 1.5 times the maximum design pressure in accordance with nationally accepted practices. Measured leakage shall not exceed 5 percent of design flow. Results of such testing shall be a part of the documentation procedure. Ducts shall be supported directly from fire-resistance-rated structural elements of the building by substantial, noncombustible supports.

Exception: Flexible connections, for the purpose of vibration isolation, complying with the *International Mechanical Code* and that are constructed of *approved* fire-resistance-rated materials.

❖ The next essential component of a smoke control system is the integrity of the ducts to transport supply and exhaust air. The integrity of ducts is also important for an HVAC system, but is more critical in this case since it is not simply a comfort issue but one of life safety. The key concern with ducts in smoke control systems is that they can withstand elevated temperatures and that there will be minimal leakage. The concern with leakage is the potential of leaking smoke into another smoke zone or not providing the proper amount of supply air to support the system.

More specifically, all ducts need to be leak tested to 1.5 times the maximum static design pressure. The leakage resulting should be no more than 5 percent of the design flow. For example, a duct that has a design flow of 300 cubic feet per minute (cfm) (0.141 m^3/s) would be allowed 15 cfm (0.007 m^3/s) of leakage when exposed to a pressure equal to 1.5 times the design pressure for that duct. The tests should be

INTERNATIONAL CODE COUNCIL®
Copyright © 2015 ICC. ALL RIGHTS RESERVED. Accessed by David Dammon on Jun 21, 2017 12:30:52 PM pursuant to License Agreement with ICC. No further reproduction or distribution authorized. ANY UNAUTHORIZED REPRODUCTION OR DISTRIBUTION IS A VIOLATION OF THE FEDERAL COPYRIGHT ACT AND THE LICENSE AGREEMENT, AND SUBJECT TO CIVIL AND CRIMINAL PENALTIES THEREUNDER.

in accordance with nationally accepted practices. This criterion will often limit ductwork for smoke control systems to lined systems, since the amount of leakage in such systems is much less.

As part of the concern for possible exposure to fire and fire products, the ducts are required to be supported by way of substantial noncombustible supports connected to the fire-resistance-rated structural elements of the building. As noted, the system needs to able to run for 20 minutes starting from the detection of the fire. The supports are allowed to be other than noncombustible when they are flexible connections provided to mitigate the effects of vibration, perhaps as part of a building exposed to seismic loads. The flexible connections still need to be constructed of approved fire-resistance-rated materials.

NFPA 92B also references NFPA 90A for ducts conveying smoke and is part of the design requirements for exhaust systems.

As part of the concern for possible exposure to fire and fire products, the ducts are required to be supported by way of substantial noncombustible supports connected to the fire-resistance-rated structural elements of the building. As noted, the system needs to able to run for 20 minutes starting from the detection of the fire. The exception to this section is really more of an acknowledgement that flexible connections for vibration isolation are acceptable when constructed of approved fire-resistance-rated materials. More specifically, it is often necessary to use such connections for connecting the duct to the fan. These connections cannot necessarily meet the requirements of the main section, but are a minimal part of the ductwork and as long as they perform adequately with regard to fire resistance they are permitted. Note that the term "approved" is used to determine the required fire resistance, therefore, flexibility is provided. The code does not specifically address this determination but perhaps a relationship to the duration or operation and these flexible connections could be made to determine the necessary performance.

909.10.3 Equipment, inlets and outlets. Equipment shall be located so as to not expose uninvolved portions of the building to an additional fire hazard. Outside air inlets shall be located so as to minimize the potential for introducing smoke or flame into the building. Exhaust outlets shall be so located as to minimize reintroduction of smoke into the building and to limit exposure of the building or adjacent buildings to an additional fire hazard.

❖ The intent of this section is to minimize the likelihood of smoke being reintroduced into the building due to poorly placed outdoor air inlets and exhaust air outlets; therefore, placing one right next to another on the exterior of the building would be inappropriate. Additionally, wind and other adverse conditions should be considered when choosing locations for these inlets and outlets. Particular attention should be paid to introducing exhausted smoke into another smoke zone. Also, smoke should be exhausted in a direction that will not introduce it into surrounding buildings or facilities. Within the building itself, the supply air and exhaust outlets should also be strategically located. The exhaust inlets and supply air should be evenly distributed to reduce the likelihood of a high velocity of air that may disrupt the fire plume and also push smoke back into occupied areas. See the commentary for Section 909.8 for discussion on avoiding plugholing.

909.10.4 Automatic dampers. Automatic dampers, regardless of the purpose for which they are installed within the smoke control system, shall be *listed* and conform to the requirements of *approved* recognized standards.

❖ This section addresses the reliability of any dampers used within a smoke control system. This particular provision requires that the dampers be listed and conform to the appropriate recognized standards. More specifically, Section 717 of the IBC contains more detailed information on the specific requirements for smoke and fire dampers. Smoke and fire dampers should be listed in accordance with UL 555S and 555, respectively. Also, remember that each smoke control design is unique and the sequence and methods used to activate the dampers may vary from design to design. This information needs to be addressed in the construction documents.

Another factor to take into account, with regard to timing of the system, is the fact that some dampers react more quickly than others, simply due to the particular smoke damper characteristics. Additionally, during the commissioning of the system, the damper is going to be exposed to many repetitions. These repetitions need to be accounted for in the overall reliability of the system.

909.10.5 Fans. In addition to other requirements, belt-driven fans shall have 1.5 times the number of belts required for the design duty with the minimum number of belts being two. Fans shall be selected for stable performance based on normal temperature and, where applicable, elevated temperature. Calculations and manufac-turer's fan curves shall be part of the documentation procedures. Fans shall be supported and restrained by noncombustible devices in accordance with the structural design requirements of Chapter 16 of the *International Building Code.*

Motors driving fans shall not be operated beyond their nameplate horsepower (kilowatts) as determined from measurement of actual current draw and shall have a minimum service factor of 1.15.

❖ Part of the overall reliability requires that fans used to provide supply air and exhaust capacity will be functioning when necessary; therefore, a safety factor of 1.5 is placed upon the required belts for fans. All fans used as part of a smoke control system must provide 1.5 times the number of required belts with a minimum of two belts for all fans.

This section also points out that the fan chosen should fit the specific application. It should be able to

INTERNATIONAL CODE COUNCIL®
Copyright © 2015 ICC. ALL RIGHTS RESERVED. Accessed by David Dammon on Jun 21, 2017 12:30:52 PM pursuant to License Agreement with ICC. No further reproduction or distribution authorized. ANY UNAUTHORIZED REPRODUCTION OR DISTRIBUTION IS A VIOLATION OF THE FEDERAL COPYRIGHT ACT AND THE LICENSE AGREEMENT, AND SUBJECT TO CIVIL AND CRIMINAL PENALTIES THEREUNDER.

withstand the temperature rise as calculated in Section 909.10.1 and generally be able to handle typical exposure conditions, such as location and wind. For instance, propeller fans are highly sensitive to the effects of wind. When located on the windward side of a building, wall-mounted, nonhooded propeller fans are not able to compensate for wind effects. Additionally, even hooded propeller fans located on the leeward side of the building may not adequately compensate for the decrease in pressure caused by wind effects. In general, when designing a system, it should be remembered that field conditions might vary from the calculations; therefore, flexibility should be built into the design that would account for things, such as variations in wind conditions.

Finally, this section stresses that fan motors not be operated beyond their rated horsepower.

909.11 Standby power. Smoke control systems shall be provided with standby power in accordance with Section 604.

❖ This section references Section 604 for the specifics as to what is required for standby power. As with any life safety system, a level of redundancy with regard to power supply is required to enable the functioning of the system during a fire. The primary source is the building's normal power system. The secondary power system is by means of standby power. One of the key elements is that standby power systems are intended to operate within 60 seconds of loss of primary power. It should be noted that the primary difference between standby power and emergency power is that emergency power must operate within 10 seconds of loss of primary power versus 60 seconds.

909.11.1 Equipment room. The standby power source and its transfer switches shall be in a room separate from the normal power transformers and switch gears and ventilated directly to and from the exterior. The room shall be enclosed with not less than 1-hour fire barriers constructed in accordance with Section 707 of the *International Building Code* or horizontal assemblies constructed in accordance with Section 711 of the *International Building Code*, or both.

❖ This section requires isolation from normal building power systems via a 1-hour fire barrier, 1-hour horizontal assembly, or both, depending upon the location within the building. This increases the reliability and reduces the likelihood that a single event could remove both power supplies. The intent of the ventilation is focused on the proper function of the standby power source in terms of engine-driven generators having appropriate cooling air and combustion air. The requirement that it be from the outside is related to the protection of such ventilation from the effects of the fire.

909.11.2 Power sources and power surges. Elements of the smoke control system relying on volatile memories or the like shall be supplied with uninterruptable power sources of sufficient duration to span 15-minute primary power interruption. Elements of the smoke control system susceptible to power surges shall be suitably protected by conditioners, suppressors or other *approved* means.

❖ Smoke control systems have many components, sometimes highly sensitive electronics, that are adversely affected by any interruption in or sudden surges of power. Therefore, Section 909.11.1 requires that any components of a smoke control system, such as volatile memories, be supplied with an uninterruptible power system for the first 15 minutes of loss of primary power. Volatile memory components will lose memory upon any loss of power no matter how short the time period. Once the 15 minutes elapses, these elements can be transitioned to the already operating standby power supply.

With regard to components sensitive to power surges, they need to be provided with surge protection in the form of conditioners, suppressors or other approved means.

909.12 Detection and control systems. Fire detection systems providing control input or output signals to mechanical smoke control systems or elements thereof shall comply with the requirements of Section 907. Such systems shall be equipped with a control unit complying with UL 864 and *listed* as smoke control equipment.

❖ This section is focused on proper monitoring of the fire detection systems that activate the smoke control system through compliance with Section 907 and UL 864. This requires a specific listing of the fire alarm control unit as smoke control equipment. UL 864 has a subcategory (UUKL) specific to fire alarm control panels for smoke control system applications.

909.12.1 Verification. Control systems for mechanical smoke control systems shall include provisions for verification. Verification shall include positive confirmation of actuation, testing, manual override and the presence of power downstream of all disconnects. A preprogrammed weekly test sequence shall report abnormal conditions audibly, visually and by printed report. The preprogrammed weekly test shall operate all devices, equipment, and components used for smoke control.

Exception: Where verification of individual components tested through the preprogrammed weekly testing sequence will interfere with, and produce unwanted effects to, normal building operation, such individual components are permitted to be bypassed from the preprogrammed weekly testing, where *approved* by the *fire code official* and in accordance with both of the following:

1. Where the operation of components is bypassed from the preprogrammed weekly test, presence of power downstream of all disconnects shall be verified weekly by a listed control unit.
2. Testing of all components bypassed from the preprogrammed weekly test shall be in accordance with Section 909.20.6.

❖ This section addresses the function of the mechanical elements of the smoke control system once the

INTERNATIONAL CODE COUNCIL®
Copyright © 2015 ICC. ALL RIGHTS RESERVED. Accessed by David Dammon on Jun 21, 2017 12:30:52 PM pursuant to License Agreement with ICC. No further reproduction or distribution authorized. ANY UNAUTHORIZED REPRODUCTION OR DISTRIBUTION IS A VIOLATION OF THE FEDERAL COPYRIGHT ACT AND THE LICENSE AGREEMENT, AND SUBJECT TO CIVIL AND CRIMINAL PENALTIES THEREUNDER.

system is activated. In particular, there is a focus on verification of activities. Verification would include the following two aspects:

1. The system is able to verify actuations, testing, manual overrides and the presence of power downstream. This would require information reported back to the smoke control panel, which can be accomplished via the weekly test sequence or through full electronic monitoring of the system.
2. Conduct a preprogrammed weekly test that simulates an actual (smoke) event to test the components of the system. These components would include elements such as smoke dampers, fans and doors. Abnormal conditions need to be reported in three ways:
    a. Audibly;
    b. Visually; and
    c. Printed report.

It should be noted that electrical monitoring of the control components is not required (supervision). Such supervision verifies integrity of the conductors from a fire alarm control unit to the control system input. The weekly test is considered sufficient verification of system performance and is often termed end-to-end verification. In other words, the control system input provides the expected results. Verification can be accomplished through any sensor that is calibrated to distinguish between the difference between proper operation and a fault condition. For fans, proper operation means that the fan is moving air within the intent of its design. Fault conditions include power failure, broken fan belts, adverse wind effects, a locked rotor condition and/or filters or large ducts that are blocked causing significantly reduced airflow. In addition to differential pressure transmitters and sail switches, this can be accomplished by the present state of the art current sensors. More discussion on verification for elements such as ducts and fire doors is discussed in Chapter 9 of *A Guide to Smoke Control in the 2006 IBC*.

Also, the fact that a smoke control system is nondedicated (integrated with an HVAC system) does not mean that it is automatically being tested on a daily basis. It is cautioned that simply depending on occupant discomfort, for example, is sometimes an insufficient indicator of a fully functioning smoke control system. There may be various modes in which the HVAC system could operate that may not exercise the smoke control features and the sequence in which the system should operate. An example is an air-conditioning system operating only in full recirculating mode versus exhaust mode. This failure will likely not affect occupants and will not exercise the exhaust function. Plus, doors, which may be part of the smoke barrier, may not need to be closed in normal building operations but would need to be closed during smoke control system operation. This is why this section does not necessarily differentiate between dedicated and non-dedicated smoke control systems and requires the system components to be tested.

It is important to note that this weekly test sequence is not an actual smoke event and is only intended to activate the system to ensure that the components are working correctly.

The exception addresses the impracticality of requiring a weekly test for many buildings. For many systems, the weekly test requires the introduction of untreated air into the smoke zone. This can be impractical in areas with cold or hot climates, and for buildings that require close control of temperature and humidity, such as art museums and similar facilities. The introduction of the untreated air can also result in wasting energy to reheat, recool, humidify, or dehumidify the smoke control zone.

The intent of the exception is to provide means to verify that the required systems will be available when needed. The code requires control units to comply with UL 864, thus all components of the control system will be supervised. The exception includes requirements for verification of the power downstream of all disconnects such as power breakers, power disconnects, automatic transfer switches, motor starters, and motor controls. This will provide reasonable assurance that power will be available for all smoke control components, such as fans, dampers, doors, and windows. The exception also adds the semiannual requirement for a complete system test by reference to Section 909.20.6. This allows the building owner to schedule complete system testing on days that will reduce the impact to the building and energy needs. The combination of additional supervision and additional testing provides a reasonable alternative to weekly testing.

909.12.2 Wiring. In addition to meeting requirements of NFPA 70, all wiring, regardless of voltage, shall be fully enclosed within continuous raceways.

❖ Wiring is required to be placed within continuous raceways which provides an additional level of reliability for the system. The definition of the term "raceway" in NFPA 70 lists several acceptable types of complying raceway that can be used, however manufactured cable assemblies such as metal-clad cable (Type MC) or armored cable (Type AC) are not included.

909.12.3 Activation. Smoke control systems shall be activated in accordance with this section.

❖ The activation of a smoke control system is dependent on when such a system is required. Mechanical smoke control systems, which could include pressurization, airflow or exhaust methods, require an automatic activation mechanism. When using a passive system, which depends upon compartmentation, spot-type detectors are acceptable for the release of door closers and similar openings. Whereas with

INTERNATIONAL CODE COUNCIL®
Copyright © 2015 ICC. ALL RIGHTS RESERVED. Accessed by David Dammon on Jun 21, 2017 12:30:52 PM pursuant to License Agreement with ICC. No further reproduction or distribution authorized. ANY UNAUTHORIZED REPRODUCTION OR DISTRIBUTION IS A VIOLATION OF THE FEDERAL COPYRIGHT ACT AND THE LICENSE AGREEMENT, AND SUBJECT TO CIVIL AND CRIMINAL PENALTIES THEREUNDER.

more complex mechanical systems such activation needs to go beyond single station detectors and be part of an automatic coordinated system.

909.12.3.1 Pressurization, airflow or exhaust method. Mechanical smoke control systems using the pressurization, airflow or exhaust method shall have completely automatic control.

❖ Automatic activation of such systems is especially critical as tenability is much more difficult to achieve if a delay occurred waiting for manual activation of the system. See Sections 909.6 for the pressurization method, 909.7 for the airflow design method and 909.8 for the exhaust method.

909.12.3.2 Passive method. Passive smoke control systems actuated by *approved* spot-type detectors *listed* for releasing service shall be permitted.

❖ This section recognizes that a passive system does not address smoke containment through mechanical means; therefore, it does not need to be "automatically activated" except in cases where smoke barriers have openings. These openings would be required to have smoke detectors to close openings where required by the design. Although spot type detectors are technically automatic they are not part of a more coordinated system of activation as needed for mechanical smoke control systems. Such detectors are simply standalone devices that fail in the fail safe position. In other words if the power were lost a door on a magnetic hold would simply close.

909.12.4 Automatic control. Where completely automatic control is required or used, the automatic-control sequences shall be initiated from an appropriately zoned *automatic sprinkler system* complying with Section 903.3.1.1, manual controls that are readily accessible to the fire department and any smoke detectors required by the engineering analysis.

❖ When automatic activation is required, it must be accomplished by a properly zoned automatic sprinkler system and, if the engineering analysis requires them, smoke detectors. Manual control for the fire department needs to be provided. An important point with this particular requirement is that smoke control systems are engineered systems and a prescribed smoke detection system may not fit the needs of the specific design. Other types of detectors, such as beam detectors (within an atrium), may be used and could be more useful and be more practical from a maintenance standpoint. Also, it may not be practical or appropriate for the building's fire alarm system to activate such systems as it may alter the effectiveness of the system by pulling smoke through the building versus removing or containing the smoke. For example, a building with an atrium may have several floors below the space. If a fire occurs in one of the floors not associated with the atrium the atrium smoke control system could possibly pull smoke throughout the building if the detection is zoned incorrectly.

909.13 Control air tubing. Control air tubing shall be of sufficient size to meet the required response times. Tubing shall be flushed clean and dry prior to final connections and shall be adequately supported and protected from damage. Tubing passing through concrete or masonry shall be sleeved and protected from abrasion and electrolytic action.

❖ Control tubing is a method that uses pneumatics to operate components such as the opening and closing of dampers. Due to the sophistication of electronic systems today, control tubing is becoming less common.

These particular requirements provide the criteria for properly designing and installing control tubing. Essentially, it is up to the design professional to determine the size requirements and to properly design appropriate supports. This information needs to be detailed within the construction documents. Additionally, due to the effect of moisture and other contaminants on control tubing, it must be flushed clean then dried before installation.

909.13.1 Materials. Control air tubing shall be hard drawn copper, Type L, ACR in accordance with ASTM B 42, ASTM B 43, ASTM B 68, ASTM B 88, ASTM B 251 and ASTM B 280. Fittings shall be wrought copper or brass, solder type, in accordance with ASME B 16.18 or ASME B 16.22. Changes in direction shall be made with appropriate tool bends. Brass compression-type fittings shall be used at final connection to devices; other joints shall be brazed using a BCuP5 brazing alloy with solidus above 1,100°F (593°C) and liquidus below 1,500°F (816°C). Brazing flux shall be used on copper-to-brass joints only.

Exception: Nonmetallic tubing used within control panels and at the final connection to devices, provided all of the following conditions are met:

1. Tubing shall comply with the requirements of Section 602.2.1.3 of the *International Mechanical Code*.
2. Tubing and the connected device shall be completely enclosed within a galvanized or paint-grade steel enclosure having a minimum thickness of 0.0296 inch (0.7534 mm) (No. 22 gage). Entry to the enclosure shall be by copper tubing with a protective grommet of neoprene or Teflon or by suitable brass compression to male-barbed adapter.
3. Tubing shall be identified by appropriately documented coding.
4. Tubing shall be neatly tied and supported within the enclosure. Tubing bridging cabinets and doors or moveable devices shall be of sufficient length to avoid tension and excessive stress. Tubing shall be protected against abrasion. Tubing serving devices on doors shall be fastened along hinges.

❖ This section addresses the materials allowed for control air tubing along with approved methods of connection. All of this information needs to be documented, as it will be subject to review by the special inspector.

INTERNATIONAL CODE COUNCIL®
Copyright © 2015 ICC. ALL RIGHTS RESERVED. Accessed by David Dammon on Jun 21, 2017 12:30:52 PM pursuant to License Agreement with ICC. No further reproduction or distribution authorized. ANY UNAUTHORIZED REPRODUCTION OR DISTRIBUTION IS A VIOLATION OF THE FEDERAL COPYRIGHT ACT AND THE LICENSE AGREEMENT, AND SUBJECT TO CIVIL AND CRIMINAL PENALTIES THEREUNDER.

909.13.2 Isolation from other functions. Control tubing serving other than smoke control functions shall be isolated by automatic isolation valves or shall be an independent system.

❖ This section requires separation of control tubing used for other functions through the use of isolation valves or a completely separate system. This is due to the difference in requirements for control tubing used in a smoke control system versus other building systems. The isolation of the control air tubing for a smoke control system needs to be specifically noted on the construction documents.

909.13.3 Testing. Control air tubing shall be tested at three times the operating pressure for not less than 30 minutes without any noticeable loss in gauge pressure prior to final connection to devices.

❖ As part of the acceptance testing of the smoke control system, the control air tubing will be pressure tested three times the operating pressure for 30 minutes or more. The performance criteria as to whether the control tubing is considered a failure is when there is any noticeable loss in gauge pressure prior to final connection of devices during the 30-minute duration test.

909.14 Marking and identification. The detection and control systems shall be clearly marked at all junctions, accesses and terminations.

❖ This section requires that all portions of the fire detection system that activate the smoke control system be marked and identified appropriately. This includes all applicable fire alarm-initiating devices, the respective junction boxes, all data-gathering panels and fire alarm control panels. Additionally, all components of the smoke control system, which are not considered a fire detection system, are required to be properly identified and marked. This would include all applicable junction boxes, control tubing, temperature control modules, relays, damper sensors, automatic door sensors and air movement sensors.

909.15 Control diagrams. Identical control diagrams showing all devices in the system and identifying their location and function shall be maintained current and kept on file with the *fire code official*, the fire department and in the *fire command center* in a format and manner *approved* by the fire chief.

❖ The purpose of control diagrams is to provide consistent information on the system in several key locations, including the building department, the fire department and the fire command center. If a fire command center is not required or provided, the diagrams need to be located such that they can be readily accessed during an emergency. Some possible locations may be the security office, the building manager's office or, if possible, within the smoke control panel. This information is intended to assist in the use and operation of the smoke control system. The format of the control diagram is as approved by the fire chief. This is necessary since the fire department is the agency that will be using such a system during a fire and when the system is tested in the future. The more clearly the information is communicated, the more effective the smoke control system will be.

It should be noted that the fire department may want all smoke control systems within a jurisdiction to follow a particular protocol for control diagrams. Generally, the control diagrams should indicate the required reaction of the system in all scenarios. The status or position of every fan and damper in every scenario must be clearly identified.

909.16 Fire fighter's smoke control panel. A fire fighter's smoke control panel for fire department emergency response purposes only shall be provided and shall include manual control or override of automatic control for mechanical smoke control systems. The panel shall be located in a *fire command center* complying with Section 508 in high-rise buildings or buildings with smoke-protected assembly seating. In all other buildings, the fire fighter's smoke control panel shall be installed in an *approved* location adjacent to the fire alarm control panel. The fire fighter's smoke control panel shall comply with Sections 909.16.1 through 909.16.3.

❖ One of the elements that makes a smoke control system effective is that its activity is successfully communicated to the fire department and the fire department is able to manually operate the system. The following sections provide requirements for a control panel specifically for smoke control systems. This panel is required to be located within a fire command center when it is located in a high-rise building or there is smoke-protected seating. Section 403.4.6 of the IBC would require a fire command center for high-rise buildings. Smoke-protected seating does not require a fire command center in Chapter 10 but this provision would ensure that one exists and contains the smoke control panel. Facilities with smoke-protected seating tend to be larger facilities that, at the very least, would already have a central security center if not a fire command center as required by the jurisdiction. All other locations would only need to provide the panel in an approved location as long as it is located with the fire alarm panel. The specific location will depend on the needs of the fire department in that jurisdiction. The reason not all fire-fighter smoke control panels need to be located in a fire command center is that many smoke control systems are located in a building containing an atrium that may only be three stories in height. A 200-square-foot (19 m^2) fire command center would be excessive for such buildings. There are two components that include the requirements for the display and for the controls. This control panel will provide an ability to override any other controls whether manual or automatic within the building as they relate to the smoke control system.

Note that the publication *A Guide to Smoke Control in the 2006 IBC* goes into more detail about the fire fighter smoke control panel requirements.

INTERNATIONAL CODE COUNCIL®
Copyright © 2015 ICC. ALL RIGHTS RESERVED. Accessed by David Dammon on Jun 21, 2017 12:30:52 PM pursuant to License Agreement with ICC. No further reproduction or distribution authorized. ANY UNAUTHORIZED REPRODUCTION OR DISTRIBUTION IS A VIOLATION OF THE FEDERAL COPYRIGHT ACT AND THE LICENSE AGREEMENT, AND SUBJECT TO CIVIL AND CRIMINAL PENALTIES THEREUNDER.

909.16.1 Smoke control systems. Fans within the building shall be shown on the fire fighter's control panel. A clear indication of the direction of airflow and the relationship of components shall be displayed. Status indicators shall be provided for all smoke control equipment, annunciated by fan and zone and by pilot-lamp-type indicators as follows:

1. Fans, dampers and other operating equipment in their normal status—WHITE.
2. Fans, dampers and other operating equipment in their off or closed status—RED.
3. Fans, dampers and other operating equipment in their on or open status—GREEN.
4. Fans, dampers and other operating equipment in a fault status—YELLOW/AMBER.

❖ This section denotes what should be displayed on the control panel. The display is required to include all fans, an indication of the direction of airflow and the relationship of the components. Also, status lights are required, and this section sets out specific standardized colors to indicate normal status, closed status, open status and fault status. A standardized approach increases the likelihood that the fire department will be able to quickly become familiar with a system. Since the fire department has the ability to override the automatic functions of the system, this information is critical.

909.16.2 Smoke control panel. The fire fighter's control panel shall provide control capability over the complete smoke control system equipment within the building as follows:

1. ON-AUTO-OFF control over each individual piece of operating smoke control equipment that can also be controlled from other sources within the building. This includes *stairway* pressurization fans; smoke exhaust fans; supply, return and exhaust fans; elevator shaft fans; and other operating equipment used or intended for smoke control purposes.
2. OPEN-AUTO-CLOSE control over individual dampers relating to smoke control and that are also controlled from other sources within the building.
3. ON-OFF or OPEN-CLOSE control over smoke control and other critical equipment associated with a fire or smoke emergency and that can only be controlled from the fire fighter's control panel.

   Exceptions:

   1. Complex systems, where *approved*, where the controls and indicators are combined to control and indicate all elements of a single smoke zone as a unit.
   2. Complex systems, where *approved*, where the control is accomplished by computer interface using *approved*, plain English commands.

❖ This section sets the requirements as to which controls need to be provided for the fire department on the control panel.

There are two aspects to the controls. The controls will include on-auto-off and open-auto-close settings or will be strictly on-off or open-close. If the system or component can be set on automatic (auto), it can be controlled from other locations beyond the fire command center. This would include an automatic smoke detection system or by manual activation. If a control only contains on-off or open-close settings, the only way the system component can be controlled is in the fire command center.

It should be noted that components such as fans are usually associated with on-off-type controls, whereas components such as dampers are associated with open-close-type controls.

909.16.3 Control action and priorities. The fire fighter's control panel actions shall be as follows:

1. ON-OFF and OPEN-CLOSE control actions shall have the highest priority of any control point within the building. Once issued from the fire fighter's control panel, automatic or manual control from any other control point within the building shall not contradict the control action. Where automatic means are provided to interrupt normal, nonemergency equipment operation or produce a specific result to safeguard the building or equipment including, but not limited to, duct freezestats, duct smoke detectors, high-temperature cutouts, temperature-actuated linkage and similar devices, such means shall be capable of being overridden by the fire fighter's control panel. The last control action as indicated by each fire fighter's control panel switch position shall prevail. Control actions shall not require the smoke control system to assume more than one configuration at any one time.

   Exception: Power disconnects required by NFPA 70.

2. Only the AUTO position of each three-position fire-fighter's control panel switch shall allow automatic or manual control action from other control points within the building. The AUTO position shall be the NORMAL, nonemergency, building control position. Where a fire fighter's control panel is in the AUTO position, the actual status of the device (on, off, open, closed) shall continue to be indicated by the status indicator described in Section 909.16.1. Where directed by an automatic signal to assume an emergency condition, the NORMAL position shall become the emergency condition for that device or group of devices within the zone. Control actions shall not require the smoke control system to assume more than one configuration at any one time.

❖ This section clarifies that when a component of the system is placed in an on-off or open-close configuration, no other control point in the building, whether automatic or manual, can override the action established in the fire command center. If a system component is configured in auto mode, it can be controlled from locations within the building beyond the fire command center. Some controls are specifically

INTERNATIONAL CODE COUNCIL®
Copyright © 2015 ICC. ALL RIGHTS RESERVED. Accessed by David Dammon on Jun 21, 2017 12:30:52 PM pursuant to License Agreement with ICC. No further reproduction or distribution authorized. ANY UNAUTHORIZED REPRODUCTION OR DISTRIBUTION IS A VIOLATION OF THE FEDERAL COPYRIGHT ACT AND THE LICENSE AGREEMENT, AND SUBJECT TO CIVIL AND CRIMINAL PENALTIES THEREUNDER.

designed to only allow an action from the fire command center.

909.17 System response time. Smoke-control system activation shall be initiated immediately after receipt of an appropriate automatic or manual activation command. Smoke control systems shall activate individual components (such as dampers and fans) in the sequence necessary to prevent physical damage to the fans, dampers, ducts and other equipment. For purposes of smoke control, the fire fighter's control panel response time shall be the same for automatic or manual smoke control action initiated from any other building control point. The total response time, including that necessary for detection, shutdown of operating equipment and smoke control system startup, shall allow for full operational mode to be achieved before the conditions in the space exceed the design smoke condition. The system response time for each component and their sequential relationships shall be detailed in the required rational analysis and verification of their installed condition reported in the required final report.

❖ This particular section provides the criteria as to when the smoke control system is required to begin operation. Whether or not the activation is manual or automatic, this criteria clarifies that the system be initiated immediately. Also, it requires that components activate in a sequence that will not potentially damage the fans, dampers, ducts and other equipment. Unrealistic timing of the system has the potential of creating an unsuccessful system. Delays in the system can be seen in slow dampers, fans that ramp up or down, systems that poll slowly and intentional built-in delays. These factors can add significantly to the reaction time of the system and may hamper achieving the design goals.

The key element is that the system be fully operational before the smoke conditions exceed the design parameters. The design should include these possible delays when analyzing the smoke layer interface location. The sequence of events need to be justified within the design analysis and described clearly in the construction documents.

909.18 Acceptance testing. Devices, equipment, components and sequences shall be individually tested. These tests, in addition to those required by other provisions of this code, shall consist of determination of function, sequence and, where applicable, capacity of their installed condition.

❖ In order to achieve a certain level of performance, the smoke control system needs to be thoroughly tested. Section 909.18 requires that all devices, equipment components and sequences be individually tested.

909.18.1 Detection devices. Smoke or fire detectors that are a part of a smoke control system shall be tested in accordance with Chapter 9 in their installed condition. Where applicable, this testing shall include verification of airflow in both minimum and maximum conditions.

❖ Detection devices are required to be tested in accordance with the fire protection requirements found in Chapter 9. Also, since such detectors may be subject to higher air velocities than typical detectors, their operation needs to be verified in the minimum and maximum anticipated airflow conditions.

909.18.2 Ducts. Ducts that are part of a smoke control system shall be traversed using generally accepted practices to determine actual air quantities.

❖ This section requires ducts that are part of the smoke control system to be tested to show that the proper amount of air is flowing. It should be noted that Section 909.10.2 requires that the ducts be leak tested to 1.5 times the maximum design pressure. Such leakage is not allowed to exceed 5 percent of the design flow.

909.18.3 Dampers. Dampers shall be tested for function in their installed condition.

❖ This section notes that all dampers need to be inspected to meet the function for which they are installed. For instance, a damper that is to be open when the system is in smoke control mode should be verified to be open when testing the system. Also, a damper may have a specific timing associated with its operation that would need to be verified though testing.

909.18.4 Inlets and outlets. Inlets and outlets shall be read using generally accepted practices to determine air quantities.

❖ Similar to ducts, the appropriate amount of air that is entering or exiting the inlets and outlets, respectively, must be checked.

909.18.5 Fans. Fans shall be examined for correct rotation. Measurements of voltage, amperage, revolutions per minute and belt tension shall be made.

❖ This section requires the testing of fans for the following: correct rotation, voltage, amperage, revolutions per minute and belt tension. These features are key in having the system run as designed.

A common problem with fans is that they are often installed in the reverse direction. Also, to verify the reliability of the fans, elements such as the appropriate voltage and belt tension need to be tested.

909.18.6 Smoke barriers. Measurements using inclined manometers or other *approved* calibrated measuring devices shall be made of the pressure differences across *smoke barriers*. Such measurements shall be conducted for each possible smoke control condition.

❖ As discussed in Section 909.5.2, the testing of pressure differences across smoke barriers needs to be measured in the smoke control mode. As noted in Section 909.18.6, such testing is to be performed for every possible smoke control condition, and the measurements will be taken using an inclined manometer or other approved methods. Electronic devices are also available. Qualified individuals must calibrate these types of devices. Additionally, before using an alternative method of testing, the fire code official needs to approve such a method.

909.18.7 Controls. Each smoke zone equipped with an automatic-initiation device shall be put into operation by the actu-

INTERNATIONAL CODE COUNCIL®
Copyright © 2015 ICC. ALL RIGHTS RESERVED. Accessed by David Dammon on Jun 21, 2017 12:30:52 PM pursuant to License Agreement with ICC. No further reproduction or distribution authorized. ANY UNAUTHORIZED REPRODUCTION OR DISTRIBUTION IS A VIOLATION OF THE FEDERAL COPYRIGHT ACT AND THE LICENSE AGREEMENT, AND SUBJECT TO CIVIL AND CRIMINAL PENALTIES THEREUNDER.

ation of one such device. Each additional device within the zone shall be verified to cause the same sequence without requiring the operation of fan motors in order to prevent damage. Control sequences shall be verified throughout the system, including verification of override from the fire fighter's control panel and simulation of standby power conditions.

❖ This section requires the overall testing of the system. More specifically, each zone needs to individually initiate the smoke control system by the activation of an automatic initiation device. Once that has occurred, all other devices within each zone need to be verified that they will activate the system, but to avoid damage, the fans do not need to be activated.

In addition to determining that all the appropriate devices initiate the system, it must also be verified that all of the controls on the fire-fighter control panel initiate the appropriate aspects of the smoke control system, including the override capability.

Finally, the initiation and availability of the standby power system need to be verified.

909.18.8 Testing for smoke control. Smoke control systems shall be tested by a special inspector in accordance with Section 1705.18 of the *International Building Code*.

❖ Smoke control systems require special inspection since they are unique and complex life safety systems. Section 1705.18 of the IBC provides the same requirements for special inspection as presented in Sections 909.18.8.1 and 909.18.8.2.

909.18.8.1 Scope of testing. Testing shall be conducted in accordance with the following:

1. During erection of ductwork and prior to concealment for the purposes of leakage testing and recording of device location.
2. Prior to occupancy and after sufficient completion for the purposes of pressure-difference testing, flow measurements, and detection and control verification.

❖ Special inspections need to occur at two different stages during construction to facilitate the necessary inspections. The first round of special inspections occurs before concealment of the ductwork or fire protection elements. The special inspector needs to verify the leakage as noted in Section 909.10.2. Additionally, the location of all fire protection devices needs to be verified and documented at this time.

The second round of special inspections occurs just prior to occupancy. The inspections include the verification of pressure differences across smoke barriers as required in Sections 909.5.2 and 909.18.6, the verification of appropriate volumes of airflow as noted in the design and finally the verification of the appropriate operation of the detection and control mechanisms as required in Sections 909.18.1 and 909.18.7. These tests need to occur just prior to occupancy, since the test result will more clearly represent actual conditions. This also makes a robust design and quality assurance during construction critical as it is very costly and difficult in most cases to make changes at this stage. Note that the test does not actually place smoke into the space and demonstrate the smoke layer interface location. Instead, the testing is focused on all the elements of the design such as airflow and duct closure as prescribed by the specific design.

909.18.8.2 Qualifications. *Approved* agencies for smoke control testing shall have expertise in fire protection engineering, mechanical engineering and certification as air balancers.

❖ As noted in Section 909.3, special inspections are required for smoke control systems. This means a certain level of qualification that would include the need for expertise in fire protection engineering, mechanical engineering and certification as air balancers.

909.18.8.3 Reports. A complete report of testing shall be prepared by the approved agency. The report shall include identification of all devices by manufacturer, nameplate data, design values, measured values and identification tag or mark. The report shall be reviewed by the responsible registered design professional and, when satisfied that the design intent has been achieved, the responsible registered design professional shall sign, seal and date the report.

❖ Once the testing by the special inspector is complete, documentation of the activity is required. This documentation is to be prepared in the form of a report that identifies all devices by manufacturer, nameplate data, design values, measured values and identification or mark.

909.18.8.3.1 Report filing. A copy of the final report shall be filed with the *fire code official* and an identical copy shall be maintained in an *approved* location at the building.

❖ The report needs to be reviewed, approved and then signed, sealed and dated. This report is to be provided to the building official and a copy is also to remain in the building in an approved location. When a fire command center is required this is the best location for such documents. Otherwise, a location such as the security office or building manager's office might be appropriate.

909.18.9 Identification and documentation. Charts, drawings and other documents identifying and locating each component of the smoke control system, and describing their proper function and maintenance requirements, shall be maintained on file at the building as an attachment to the report required by Section 909.18.8.3. Devices shall have an *approved* identifying tag or mark on them consistent with the other required documentation and shall be dated indicating the last time they were successfully tested and by whom.

❖ Additional documentation that needs to be maintained includes charts, drawings and other related documentation that assists in the identification of each aspect of the smoke control system. This documentation is where information, such as the last time a device or component was successfully tested and by whom, is recorded. This will serve as the main

INTERNATIONAL CODE COUNCIL®
Copyright © 2015 ICC. ALL RIGHTS RESERVED. Accessed by David Dammon on Jun 21, 2017 12:30:52 PM pursuant to License Agreement with ICC. No further reproduction or distribution authorized. ANY UNAUTHORIZED REPRODUCTION OR DISTRIBUTION IS A VIOLATION OF THE FEDERAL COPYRIGHT ACT AND THE LICENSE AGREEMENT, AND SUBJECT TO CIVIL AND CRIMINAL PENALTIES THEREUNDER.

documentation for the system. Again, the fire command center, if required, is the most appropriate location for such information (see commentary, Section 909.18.8.3.1).

909.19 System acceptance. Buildings, or portions thereof, required by this code to comply with this section shall not be issued a certificate of occupancy until such time that the *fire code official* determines that the provisions of this section have been fully complied with and that the fire department has received satisfactory instruction on the operation, both automatic and manual, of the system and a written maintenance program complying with the requirements of Section 909.20.1 has been submitted and *approved* by the *fire code official*.

Exception: In buildings of phased construction, a temporary certificate of occupancy, as *approved* by the *fire code official*, shall be allowed, provided that those portions of the building to be occupied meet the requirements of this section and that the remainder does not pose a significant hazard to the safety of the proposed occupants or adjacent buildings.

❖ This section stipulates that the certificate of occupancy cannot be issued unless the smoke control system has been accepted. It is essential that the system be inspected and approved since it is a life safety system. There is an exception for buildings that are constructed in phases where a temporary certificate of occupancy is allowed. For example, a building where the portion requiring smoke control is not yet occupied so egress concerns through that space are not relevant. This space needs to be separated by smoke barriers (different smoke zone). The code also requires a maintenance program for smoke control systems since the long-term success of such systems depends heavily on proper maintenance in addition to rigorous acceptance testing. The IBC simply provides a reference to that section of the code.

909.20 Maintenance. Smoke control systems shall be maintained to ensure to a reasonable degree that the system is capable of controlling smoke for the duration required. The system shall be maintained in accordance with the manufacturer's instructions and Sections 909.20.1 through 909.20.6.

❖ Routine maintenance and testing of smoke control systems is essential to ensure their performance, as designed, under fire conditions. Maintenance practices must be consistent with the manufacturer's recommendations and as indicated in Sections 909.20.1 through 909.20.5. Note that Section 909.12.1 requires weekly preprogrammed tests which report abnormal conditions.

909.20.1 Schedule. A routine maintenance and operational testing program shall be initiated immediately after the smoke control system has passed the acceptance tests. A written schedule for routine maintenance and operational testing shall be established.

❖ Operational testing and maintenance must be performed on the smoke control system periodically to verify that it still operates as required by the approved design. A written schedule must be maintained.

909.20.2 Records. Records of smoke control system testing and maintenance shall be maintained. The record shall include the date of the maintenance, identification of the servicing personnel and notification of any unsatisfactory condition and the corrective action taken, including parts replaced.

❖ This section prescribes the desired content of the written record for the smoke control testing and maintenance program. Test results and maintenance activities should be clearly documented. The written record should be available for inspection and reviewed by the fire code official.

909.20.3 Testing. Operational testing of the smoke control system shall include all equipment such as initiating devices, fans, dampers, controls, doors and windows.

❖ Smoke control systems are made up of components and equipment that are an integral part of other building systems such as fire alarm systems, heating, ventilating and air-conditioning (HVAC) equipment and automatic sprinkler systems. For this reason, operational testing of all related system components must ensure that the system as a whole will perform as intended.

909.20.4 Dedicated smoke control systems. Dedicated smoke control systems shall be operated for each control sequence semiannually. The system shall be tested under standby power conditions.

❖ Because dedicated smoke control systems are designed for smoke control only, the operation of these systems does not adversely affect other building systems or operations. The control sequence for these systems must be tested semiannually to check for system component failures that may not get noticed because dedicated smoke control systems are independent of building HVAC systems.

909.20.5 Nondedicated smoke control systems. Non-dedicated smoke control systems shall be operated for each control sequence annually. The system shall be tested under standby power conditions.

❖ Contrary to dedicated smoke control systems identified in Section 909.20.4, smoke control systems that are not dedicated share system components with other building systems including the HVAC system. Consequently, testing of the control sequence of systems that are not dedicated can be done annually, rather than semiannually, because equipment failures related to other building systems would most likely be noticed and corrected when those other systems were tested or maintained.

Simply because a system is nondedicated does not guarantee that failures will be detected easier. This relates to the fact that when a system is in smoke control mode it may have very different demands than when simply operating as a traditional HVAC system (see commentary, Section 909.12).

INTERNATIONAL CODE COUNCIL®
Copyright © 2015 ICC. ALL RIGHTS RESERVED. Accessed by David Dammon on Jun 21, 2017 12:30:52 PM pursuant to License Agreement with ICC. No further reproduction or distribution authorized. ANY UNAUTHORIZED REPRODUCTION OR DISTRIBUTION IS A VIOLATION OF THE FEDERAL COPYRIGHT ACT AND THE LICENSE AGREEMENT, AND SUBJECT TO CIVIL AND CRIMINAL PENALTIES THEREUNDER.

909.20.6 Components bypassing weekly test. Where components of the smoke control system are bypassed by the preprogrammed weekly test required by Section 909.12.1, such components shall be tested semiannually. The system shall be tested under standby power conditions.

❖ This section is specifically linked to the exception in Section 909.12.1 that allows the elimination of the weekly test of the system. In order to allow the elimination of the weekly test, Section 909.12.1 provides additional monitoring features and requires more frequent testing of the overall system by a special inspector. This will primarily affect nondedicated systems which are currently only required to be tested annually. Dedicated systems are already required to be tested semiannually.

[BF] 909.21 Elevator hoistway pressurization alternative. Where elevator hoistway pressurization is provided in lieu of required enclosed elevator lobbies, the pressurization system shall comply with Sections 909.21.1 through 909.21.11.

❖ This section sets out the requirements for hoistway pressurization when used as a method to protect hoistway openings as required in Section 3006. The minimum and maximum pressures are similar to those for pressurized stairs in Section 909.20.5 of the IBC. The provisions are located in Section 909 to group all the smoke control techniques and requirements into the same section. This will promote more consistency in code application when addressing smoke control.

[BF] 909.21.1 Pressurization requirements. Elevator hoistways shall be pressurized to maintain a minimum positive pressure of 0.10 inch of water (25 Pa) and a maximum positive pressure of 0.25 inch of water (67 Pa) with respect to adjacent occupied space on all floors. This pressure shall be measured at the midpoint of each hoistway door, with all elevator cars at the floor of recall and all hoistway doors on the floor of recall open and all other hoistway doors closed. The pressure differential shall be measured between the hoistway and the adjacent elevator landing. The opening and closing of hoistway doors at each level must be demonstrated during this test. The supply air intake shall be from an outside, uncontaminated source located a minimum distance of 20 feet (6096 mm) from any air exhaust system or outlet.

Exceptions:

1. On floors containing only Group R occupancies, the pressure differential is permitted to be measured between the hoistway and a *dwelling unit* or *sleeping unit.*
2. Where an elevator opens into a lobby enclosed in accordance with Section 3007.6 or 3008.6 of the *International Building Code*, the pressure differential is permitted to be measured between the hoistway and the space immediately outside the door(s) from the floor to the enclosed lobby.
3. The pressure differential is permitted to be measured relative to the outdoor atmosphere on floors other than the following:
   3.1. The fire floor.
   3.2. The two floors immediately below the fire floor.
   3.3. The floor immediately above the fire floor.
4. The minimum positive pressure of 0.10 inch of water (25 Pa) and a maximum positive pressure of 0.25 inch of water (67 Pa) with respect to occupied floors is not required at the floor of recall with the doors open.

❖ This section states the minimum and the maximum positive pressure that must be achieved by the smoke control mechanical pressurization system. The minimum positive pressure is 0.10 inch of water column (0.02 kPa), the same as required for stairway pressurization in Section 909.20.5 of the IBC. The maximum pressure is 0.25 inch of water column (0.06 kPa) which is a little less than the maximum allowed for stairway pressurization. The minimum pressure is to ensure that the stack effect is overcome and the maximum pressure is an upper limit to ensure that the doors will operate properly. This section requires a test when the system is complete. The pressures are measured at the midpoint of each hoistway door with all elevator cars at the recall floor and all the hoistway doors open on that level. This simulates the Phase I recall requirements in Section 3003.2 of the IBC. Hoistway doors are then tested on each level to ensure proper operation.

The supply air intake for the pressurization system must be located at least 20 feet (6096 mm) away from any source of contamination to ensure that the hoistway remains tenable through the fire event or well into it before the elevators can no longer be used. Also, if smoke is drawn into the supply air, the system will only spread smoke and not prevent fire spread.

There are four exceptions to the requirements of this section. The first two provide exceptions as to where the pressure differential can be measured. Exception 3 allows the pressure differences only to be measured at the fire floor and several designated floors. Finally, Exception 4 allows the pressure differential measurement to be omitted for the floor of recall.

The first three exceptions originated from the City of Seattle, WA which has had a long history of requiring pressurized hoistways in high rise buildings to prevent smoke migration. In 2005, the City of Seattle Department of Planning & Development (DPD) convened a committee which included representatives from the industry, the Seattle Fire Department and DPD, to decide whether to recommend changes to

INTERNATIONAL CODE COUNCIL®
Copyright © 2015 ICC. ALL RIGHTS RESERVED. Accessed by David Dammon on Jun 21, 2017 12:30:52 PM pursuant to License Agreement with ICC. No further reproduction or distribution authorized. ANY UNAUTHORIZED REPRODUCTION OR DISTRIBUTION IS A VIOLATION OF THE FEDERAL COPYRIGHT ACT AND THE LICENSE AGREEMENT, AND SUBJECT TO CIVIL AND CRIMINAL PENALTIES THEREUNDER.

the high-rise smoke migration control requirements in place at that time. The committee also consulted with Dr. John Klote, who suggested the approach that Seattle eventually adopted with some small modifications. These requirements are an adaptation of the Seattle approach.

During the 2009/2010 code change cycle, a proposal was made to delete the hoistway pressurization requirements in the IBC without substitution (FS51-09/10), based on a study conducted by Drs. Miller and Beasley. This study showed that requiring the pressure differential of 0.10 inches of water column to be maintained at the recall floor with the elevator doors in the open position resulted in over-pressurization of all the other floors—meaning the current standards in the code cannot be met. Based on further modeling by Dr. Miller, the proponent for FS51-09/10 submitted a public comment introducing Seattle's requirements into the IBC. The reason statement for the public comment stated Dr. Miller "concluded that the 'Seattle approach' does indeed meet all the prescriptive requirements of the IBC 2009." The proposal and its public comment were ultimately withdrawn by the proponent in anticipation of further review of the overall elevator lobby provisions.

The intent of the code is to keep smoke out of the hoistway, so the pressure should be measured between the elevator hoistway and the elevator landing/lobby. However, Exception 1 allows the pressure to be measured between the hoistway and sleeping or dwelling units in residential buildings, since they are highly compartmented. In addition, the fire source is most likely to be in the dwelling or sleeping unit, and providing positive pressure in the corridor/hallway outside the units (via leakage through the elevator hoistway doors) will help reduce the smoke migrating from the affected unit. Exception 2, which is specific to elevator lobbies associated with fire service access elevators (FSAE) and occupant evacuation elevators, allows the pressure to be measured between the hoistway and the space on the outside of the smoke barrier that forms the lobby. It should be noted that hoistway pressurization is not a design alternative to enclosed lobbies for FSAEs and Occupant evacuation elevators. Enclosed elevator lobbies are always required for these types of elevators. This exception would only apply if such a system was provided.

Exception 3 allows the 0.10 inch water column pressure differential between the hoistway and the floor be met only on the four most critical floors—the floor of fire origin, the two floors immediately below, and one floor immediately above. For all other stories, the pressure differential is allowed to be measured between the hoistway and the outside of the building. The purpose of this requirement is to maintain a slightly positive pressure in the building relative to atmospheric pressure, so as to lower the neutral pressure plane in the building, which then reduces the driving force of stack effect. This exception is intended to be permitted to be used in conjunction with Exceptions 1 and 2. The engineers who design this system begin by modeling one floor as the "notionalized" fire floor, and designing the system (fans, dampers, etc.) accordingly. Each floor is subsequently modeled as the notionalized fire floor, and the system is checked to make sure the maximum and minimum pressure differentials are met. (Note that actual models may not have to be run for each floor, if it is clear the worst case has been covered.) Ultimately, the system will need to be designed so it will correctly configure itself for a fire originating on any floor in the building.

Exception 4 omits the need to measure the pressure differential at the floor of elevator recall where the door is typically open. Section 909.21.1 requires the pressure difference, prescribed for the pressurization alternative, to be measured at the midpoint of each hoistway door, with all elevator cars at the floor of recall and all hoistway doors on the floor of recall open and all other hoistway doors closed.

Elevator hoistway pressurization is intended to minimize smoke movement into an elevator shaft when a lobby is not provided. Meeting the required pressure difference on the recall floor with the hoistway doors open is not necessary, because the recall floor is protected by smoke detectors that will not allow the hoistway doors to open if smoke is present.

The pressurization method is based on using pressure differences produced by fans to minimize the spread of smoke across a barrier. A barrier will not exist on the recall floor when the hoistway doors are open and smoke detectors used for elevator recall prevent the doors from opening when smoke is present.

[BF] 909.21.1.1 Use of ventilation systems. Ventilation systems, other than hoistway supply air systems, are permitted to be used to exhaust air from adjacent spaces on the fire floor, two floors immediately below and one floor immediately above the fire floor to the building's exterior where necessary to maintain positive pressure relationships as required in Section 909.21.1 during operation of the elevator shaft pressurization system.

❖ This section allows the use of the general building HVAC system to exhaust air to create/maintain the required pressure differential. It is to be noted that the requirements of the rest of Section 909.21, in particular, Section 909.21.10 regarding protection of equipment, would still apply to these components.

[BF] 909.21.2 Rational analysis. A rational analysis complying with Section 909.4 shall be submitted with the *construction documents*.

❖ Section 909.4 recognizes that there are many factors involved in a smoke control system, including stack effect due to height, temperature effect of fire, wind effect, interaction of the HVAC system, the weather and the egress time, all of which must be evaluated. The report must be submitted with the permit docu-

INTERNATIONAL CODE COUNCIL®
Copyright © 2015 ICC. ALL RIGHTS RESERVED. Accessed by David Dammon on Jun 21, 2017 12:30:52 PM pursuant to License Agreement with ICC. No further reproduction or distribution authorized. ANY UNAUTHORIZED REPRODUCTION OR DISTRIBUTION IS A VIOLATION OF THE FEDERAL COPYRIGHT ACT AND THE LICENSE AGREEMENT, AND SUBJECT TO CIVIL AND CRIMINAL PENALTIES THEREUNDER.

ments. Most importantly, the duration of operation of the smoke control system is a function of 1.5 times the egress time or 20 minutes, whichever is less. More discussion on the duration of operation is found in the commentary for Section 909.4.6.

[BF] 909.21.3 Ducts for system. Any duct system that is part of the pressurization system shall be protected with the same *fire-resistance rating* as required for the elevator shaft enclosure.

❖ All ductwork necessary for hoistway pressurization must be protected from the effects of fire by enclosure in fire-resistance-rated construction equivalent to that required for the elevator hoistway shaft enclosure.

[BF] 909.21.4 Fan system. The fan system provided for the pressurization system shall be as required by Sections 909.21.4.1 through 909.21.4.4.

❖ This section details the requirements for the mechanical system used for pressurization of the hoistway enclosure.

[BF] 909.21.4.1 Fire resistance. Where located within the building, the fan system that provides the pressurization shall be protected with the same *fire-resistance rating* required for the elevator shaft enclosure.

❖ The only way to ensure that the mechanical pressurization system can operate during a fire is to locate it in a safe place. If located within the building, it must be in an enclosed room protected with the same fire-resistance-rated construction required for the hoistway enclosure.

[BF] 909.21.4.2 Smoke detection. The fan system shall be equipped with a smoke detector that will automatically shut down the fan system when smoke is detected within the system.

❖ The airflow must be free of smoke or it will only increase the likelihood of smoke spreading throughout the building. The smoke detector required by this section should be located on the intake side of the blower fan.

[BF] 909.21.4.3 Separate systems. A separate fan system shall be used for each elevator hoistway.

❖ This section requires that each hoistway enclosure have its own mechanical system. This provides a more redundant system and helps to increase the likelihood that fans will be operational during a fire.

[BF] 909.21.4.4 Fan capacity. The supply fan shall be either adjustable with a capacity of not less than 1,000 cfm (0.4719 m^3/s) per door, or that specified by a *registered design professional* to meet the requirements of a designed pressurization system.

❖ The fan capacity should be as specified by the registered design professional to meet the operational ranges of pressure at each door or be adjustable with a capacity of at least 1,000 cfm (0.4719 m^3/s) per hoistway door. In either case, it is subject to field testing and adjustments to meet the pressure ranges.

[BF] 909.21.5 Standby power. The pressurization system shall be provided with standby power in accordance with Section 604.

❖ The elevator hoistway pressurization system is an emergency system and must have provisions for standby power like other emergency systems. Section 604 states the requirements that standby power systems must meet. It is consistent with other smoke control systems required by Section 909 in that such systems have standby power as they are life-safety systems.

[BF] 909.21.6 Activation of pressurization system. The elevator pressurization system shall be activated upon activation of either the building fire alarm system or the elevator lobby smoke detectors. Where both a building fire alarm system and elevator lobby smoke detectors are present, each shall be independently capable of activating the pressurization system.

❖ This section requires that the pressurization system will be activated when the general building fire alarm system or an elevator lobby smoke detector is activated. All buildings using this pressurization option will more than likely be required to have both. High-rise buildings require elevator lobby smoke detectors, but other buildings may not. Section 909.12 requires smoke detectors to activate the pressurization system if the design requires it to operate to remove the smoke.

[BF] 909.21.7 Testing. Testing for performance shall be required in accordance with Section 909.18.8. System acceptance shall be in accordance with Section 909.19.

❖ Testing will be required to evaluate the performance of the completed system (see commentary, Sections 909.18 and 909.19).

[BF] 909.21.8 Marking and identification. Detection and control systems shall be marked in accordance with Section 909.14.

❖ See the commentary to Section 909.14.

[BF] 909.21.9 Control diagrams. Control diagrams shall be provided in accordance with Section 909.15.

❖ See the commentary to Section 909.15.

[BF] 909.21.10 Control panel. A control panel complying with Section 909.16 shall be provided.

❖ See the commentary to Section 909.16.

[BF] 909.21.11 System response time. Hoistway pressurization systems shall comply with the requirements for smoke control system response time in Section 909.17.

❖ See the commentary to Section 909.17.

INTERNATIONAL CODE COUNCIL®
Copyright © 2015 ICC. ALL RIGHTS RESERVED. Accessed by David Dammon on Jun 21, 2017 12:30:52 PM pursuant to License Agreement with ICC. No further reproduction or distribution authorized. ANY UNAUTHORIZED REPRODUCTION OR DISTRIBUTION IS A VIOLATION OF THE FEDERAL COPYRIGHT ACT AND THE LICENSE AGREEMENT, AND SUBJECT TO CIVIL AND CRIMINAL PENALTIES THEREUNDER.

SECTION 910
SMOKE AND HEAT REMOVAL

910.1 General. Where required by this code, smoke and heat vents or mechanical smoke removal systems shall conform to the requirements of this section.

❖ This section essentially requires either smoke and heat vents or a mechanical smoke removal system where required by Section 910.2. It should be noted that where high piled combustible storage is involved, Chapter 32 of the IFC also applies.

The purpose of smoke and heat vents or smoke removal systems has historically been related to the needs of fire fighters. More specifically, smoke and heat vents or smoke removal systems, when activated, have the potential effect of lifting the height of the smoke layer and providing more tenable conditions to undertake fire-fighting activities. Other potential benefits include a reduction in property damage and the creation of more tenable conditions for occupants.

These provisions are based upon research on the interaction of sprinklers, roof vents and draft curtains funded by the National Fire Protection Research Foundation (NFPRF) and conducted at Underwriters Laboratories (UL) in 1997/1998. This research is summarized in a document referred to as National Institute of Science and Technology Interagency Report (NISTIR) 6196-1 dated September,1998. The current provisions were also based on the following:

- Provisions for the use of roof vents in sprinklered buildings included in the 2010 and 2013 edition of NFPA 13, including the substantiation statement for the NFPA 13 roof vent provisions.
- The capability of standard spray sprinklers to both control and extinguish a fire within 30 minutes of sprinkler operation without supplemental fire department activity has been documented.
- Recommendations contained in National Institute for Occupational Safety and Health (NIOSH) 2005-132, *Preventing Injuries and Deaths of Fire Fighters Due to Truss Systems*, and NIOSH 2010-153, *Preventing Deaths and Injuries of Fire Fighters using Risk Management Principles at Structure Fires*.
- Recommendations contained in the Initial Report of the Federal Emergency Management Agency (FEMA)/National Fallen Firefighter Foundation (NFFF®) Firefighter Life Safety Summit held on April 14, 2004 in Tampa, Florida.

The primary purpose of smoke and heat removal from the perspective of the building code requirement is to assist fire-fighting operations after control of the fire has been achieved by the automatic sprinkler system. Automatic smoke and heat vents and automatic sprinkler systems were developed independently of one another and their interaction has been a concern for many years. Even today, there is no accepted method of analyzing their interaction and, therefore, the installation standards for each (NFPA 204 and NFPA 13, respectively) give cautions to the designers of buildings having both systems. Note that NFPA 204 is not referenced in Section 910.

A manually activated mechanical smoke removal system can perform the same function as roof vents. Mechanical smoke removal systems, as required in Section 910, provide fire-rated, grade-level enclosures for the control of the mechanical smoke removal system. This provides greater control of the system for the fire incident commander and reduces the need to place fire fighters on roofs or in other hazardous situations to operate smoke and heat venting systems. This methodology is consistent with the latest recommendations from NIOSH and NFFF for fire fighter safety, risk management and recommended fire- fighting tactics.

910.2 Where required. Smoke and heat vents or a mechanical smoke removal system shall be installed as required by Sections 910.2.1 and 910.2.2.

Exceptions:

1. Frozen food warehouses used solely for storage of Class I and II commodities where protected by an *approved automatic sprinkler system.*
2. Smoke and heat removal shall not be required in areas of buildings equipped with early suppression fast-response (ESFR) sprinklers.
3. Smoke and heat removal shall not be required in areas of buildings equipped with control mode special application sprinklers with a response time index of 50 $(m \cdot S)^{1/2}$ or less that are listed to control a fire in stored commodities with 12 or fewer sprinklers.

❖ Sections 910.2.1 and 910.2.2 provide the locations where such smoke removal or smoke and heat vents would be required. There are three overall exceptions to the application of Section 910.

Exception 1 recognizes the "building-within-a-building" nature of typical frozen food warehouses. As such, smoke from a fire within a freezer would be contained within the freezer, thus negating the usefulness of smoke and heat vents at the roof level.

Exception 2 recognizes the negative effect that smoke and heat vents can have on the operation of early suppression fast response (ESFR) sprinklers. Those negative effects include diverting heat away from the sprinklers, which could delay their activation or result in the activation of more sprinklers in areas away from the source of the fire, which may overwhelm the system.

Exception 3 recognizes a new category of automatic sprinkler that shares the key characteristics of ESFR sprinklers, i.e., thermal elements that have a response time index (RTI) of 50 or less and are listed to protect a design area that involves 12 or fewer sprinklers. These control mode special application (CMSA) sprinklers, while not called ESFR, still require similar precautions to ESFR sprinklers with

INTERNATIONAL CODE COUNCIL®
Copyright © 2015 ICC. ALL RIGHTS RESERVED. Accessed by David Dammon on Jun 21, 2017 12:30:52 PM pursuant to License Agreement with ICC. No further reproduction or distribution authorized. ANY UNAUTHORIZED REPRODUCTION OR DISTRIBUTION IS A VIOLATION OF THE FEDERAL COPYRIGHT ACT AND THE LICENSE AGREEMENT, AND SUBJECT TO CIVIL AND CRIMINAL PENALTIES THEREUNDER.

respect to not introducing unknowns, such as smoke and heat removal, that were not present in the full-scale fire tests that determined their listing parameters. Such unknowns can lead to sprinkler "skipping" and exceeding the 12 sprinkler design area, which was the exact concern that led to the ESFR-related provisions that are currently in this chapter and Chapter 32. Note that CMSA sprinklers must have both an RTI of 50 or less and be listed to control/suppress a fire with 12 or fewer sprinklers to qualify for this exception. Any sprinkler listed as "quick response" will satisfy the "50 RTI or less" criterion, based on the definition of "quick response" in NFPA 13 Section 3.6.4.7. The number of operating sprinklers will be indicated in the listing criteria for each sprinkler.

910.2.1 Group F-1 or S-1. Smoke and heat vents installed in accordance with Section 910.3 or a mechanical smoke removal system installed in accordance with Section 910.4 shall be installed in buildings and portions thereof used as a Group F-1 or S-1 occupancy having more than 50,000 square feet (4645 m^2) of undivided area. In occupied portions of a building equipped throughout with an *automatic sprinkler system* in accordance with Section 903.3.1.1, where the upper surface of the story is not a roof assembly, a mechanical smoke removal system in accordance with Section 910.4 shall be installed.

Exception: Group S-1 aircraft repair hangars.

❖ Large-area buildings with moderate to heavy fire loads present special challenges to the fire department in disposing of the smoke generated in a fire. In order to provide the fire department with the ability to rapidly and efficiently dispose of smoke in large-area Groups F-1 and S-1 buildings exceeding 50,000 square feet (4645 m^2) in undivided area without the exposure of personnel to the dangers associated with cutting ventilation holes in the roof, smoke and heat vents or a smoke removal system must be provided.

The code is not clear on what is meant by the term "undivided area." However the intent is to provide the ability to manage the smoke in large spaces. Draft curtains or potentially any physical separation (regardless of rating) would provide such division. Draft curtains are typically constructed of sheet metal, lath and plaster, gypsum board or other materials that resist the passage of smoke. Typically draft curtains are at least 6 feet deep (1829 mm) from the ceiling. To keep with the concern for managing smoke, the joints and connections should be smoke tight.

Based on the intent of "undivided area," a fire barrier, smoke barrier, fire partition or smoke partition would be more than what is required and would therefore be an acceptable method of dividing the area.

This requirement is independent of the requirements related to high-piled storage in Section 910.2.2. High-piled combustible storage is not occupancy-specific.

This section also addresses multistory buildings where the Group F-1 or S-1 occupancy is not the uppermost story and therefore would not have a roof in which to place smoke and heat vents. This section would require that a smoke removal system be installed. This issue was not clearly addressed in previous editions of the IBC.

910.2.2 High-piled combustible storage. Smoke and heat removal required by Table 3206.2 for buildings and portions thereof containing high-piled combustible storage shall be installed in accordance with Section 910.3 in unsprinklered buildings. In buildings and portions thereof containing high-piled combustible storage equipped throughout with an *automatic sprinkler system* in accordance with Section 903.3.1.1, a smoke and heat removal system shall be installed in accordance with Section 910.3 or 910.4. In occupied portions of a building equipped throughout with an *automatic sprinkler system* in accordance with Section 903.3.1.1 where the upper surface of the story is not a roof assembly, a mechanical smoke removal system in accordance with Section 910.4 shall be installed.

❖ This section requires smoke and heat removal as it is required in Chapter 32 for high piled combustible storage. Specifically, Table 3206.2 sets out when smoke and heat removal is required. If Table 3206.2 does not require such protection, compliance with Section 910 is not necessary. The requirement in Table 3206.2 is based primarily on the size of the high-piled combustible storage area and whether or not the area is equipped with an automatic sprinkler system.

There are several requirements provided within this section. The first addresses nonsprinklered high-piled storage areas. Such areas are required to use smoke and heat vents as mechanical smoke removal systems and are designed for use in sprinklered buildings. The rationale for this provision is that a mechanical smoke removal system capable of handling temperatures between 1,000° F and 2,000° F cannot be practically provided at a reasonable cost.

Where high-piled storage areas are equipped with an automatic sprinkler system, smoke and heat vents or a smoke removal system are required to comply with this section. However, if the high-piled storage area is located in a multistory building where the storage area is not located on the upper most story, this section requires that a smoke removal system be used. This was not clearly addressed in past editions of the code.

910.3 Smoke and heat vents. The design and installation of smoke and heat vents shall be in accordance with Sections 910.3.1 through 910.3.3.

❖ This section simply sets out the subsections that must be addressed to comply with the requirements for the installation of smoke and heat vents.

INTERNATIONAL CODE COUNCIL®
Copyright © 2015 ICC. ALL RIGHTS RESERVED. Accessed by David Dammon on Jun 21, 2017 12:30:52 PM pursuant to License Agreement with ICC. No further reproduction or distribution authorized. ANY UNAUTHORIZED REPRODUCTION OR DISTRIBUTION IS A VIOLATION OF THE FEDERAL COPYRIGHT ACT AND THE LICENSE AGREEMENT, AND SUBJECT TO CIVIL AND CRIMINAL PENALTIES THEREUNDER.

910.3.1 Listing and labeling. Smoke and heat vents shall be *listed* and labeled to indicate compliance with UL 793 or FM 4430.

❖ This section specifically requires that all smoke and heat vents be both listed and labeled in accordance with UL 793 or FM 4430. This provides consistency and a level of quality when smoke and heat vents are required. The standard addresses smoke and heat vents that automatically operate during fires via non-electrical means. Automatic vents listed and labeled to this standard can be operated both automatically and manually. There are two main mechanisms for activation that include a heat-responsive device or the action of a plastic cover shrinking and falling out of place, due to fire exposure.

910.3.2 Smoke and heat vent locations. Smoke and heat vents shall be located 20 feet (6096 mm) or more from adjacent *lot lines* and *fire walls* and 10 feet (3048 mm) or more from *fire barriers*. Vents shall be uniformly located within the roof in the areas of the building where the vents are required to be installed by Section 910.2, with consideration given to roof pitch, sprinkler location and structural members.

❖ This section has two functions, the first being to focus on hazards to adjacent buildings and the second being proper function of smoke and heat vents through proper placement.

In terms of adjacent properties, this section requires a minimum distance to lot lines and fire walls and then a minimum distance to fire barriers. The first set of distances focuses on separate buildings and exposures, whereas the distance to fire barriers is less restrictive since it focuses on different uses and occupancies within the same building (see Commentary Figure 910.3.2).

To enhance vent performance within the area containing the smoke and heat vents, such vents need to be uniformly spaced. Consideration of issues such as sprinkler location and roof pitch are also essential to proper vent location.

910.3.3 Smoke and heat vents area. The required aggregate area of smoke and heat vents shall be calculated as follows:

For buildings equipped throughout with an *automatic sprinkler system* in accordance with Section 903.3.1.1:

$$A_{VR} = V/9000 \qquad \textbf{(Equation 9-4)}$$

where:

A_{VR} = The required aggregate vent area (ft^2).

V = Volume (ft^3) of the area that requires smoke removal.

For unsprinklered buildings:

$$A_{VR} = AFA/50 \qquad \textbf{(Equation 9-5)}$$

where:

A_{VR} = The required aggregate vent area (ft^2).

A_{FA} = The area of the floor in the area that requires smoke removal.

❖ This section provides the design criteria to determine the area of smoke and heat vents required. The requirements are based on whether the area requiring smoke and heat vents is equipped with an automatic sprinkler system.

The design of roof vents in buildings protected by an automatic sprinkler system requires that the area

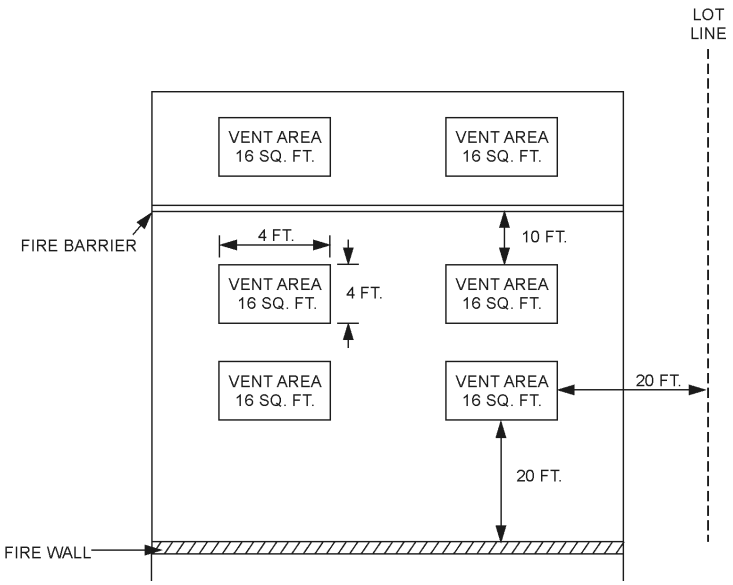

For SI: 1 foot = 304.8 mm, 1 square foot = 0.0929 m^2.

Figure 910.3.2
SMOKE AND HEAT VENT SPACING

INTERNATIONAL CODE COUNCIL®
Copyright © 2015 ICC. ALL RIGHTS RESERVED. Accessed by David Dammon on Jun 21, 2017 12:30:52 PM pursuant to License Agreement with ICC. No further reproduction or distribution authorized. ANY UNAUTHORIZED REPRODUCTION OR DISTRIBUTION IS A VIOLATION OF THE FEDERAL COPYRIGHT ACT AND THE LICENSE AGREEMENT, AND SUBJECT TO CIVIL AND CRIMINAL PENALTIES THEREUNDER.

of roof vents provide equivalent venting to that required for the mechanical smoke removal system (2 air changes per hour) based on an assumption that each square foot of vent area will provide 300 cubic feet per minute (cfm) of ventilation. The reason for this requirement is that the roof vents should at least provide venting equivalent to the minimum venting provided by the mechanical smoke removal system. A factor of 300 cfm of venting per square foot of vent area was included in the 2012 edition of the code, although the use of this conversion factor is questionable at best. The actual ventilation provided by each square foot of vent area will depend on the temperature differential between ambient conditions and the smoke layer under the roof deck or the pressure achieved if positive pressure ventilation is utilized. If the prescribed value is not practical for a given building design, designers have the option of demonstrating other values which provide the same performance under Section 104.9 of the code, which allows alternative methods and designs.

The design of roof vents in buildings not protected by a sprinkler system requires that the ratio of the area of the vents to the floor area be a minimum of 1:50. The rationale is that the case where roof vents will be provided without sprinkler protection will be rare: buildings which contain high-piled storage with an area between 2,500 and 12,000 square feet. Given that this situation will be rare, a complex analysis to determine the required area of roof vents was felt to be unnecessary. The ratio of vent area to floor area of 1:50 is conservative based on the requirements that were included in the 2012 code and the IBC.

910.4 Mechanical smoke removal systems. Mechanical smoke removal systems shall be designed and installed in accordance with Sections 910.4.1 through 910.4.7.

❖ Mechanical smoke removal systems are considered to be equivalent to smoke and heat vents in terms of code compliance. In multistory buildings, those areas requiring smoke and heat removal will require the use of a mechanical smoke removal system due to location on other than the uppermost story. This section provides the various design requirements for such systems.

910.4.1 Automatic sprinklers required. The building shall be equipped throughout with an approved *automatic sprinkler system* in accordance with Section 903.3.1.1.

❖ The rationale for this provision is that a mechanical smoke removal system capable of handling temperatures between 1,000° F and 2,000° F cannot be practically provided at a reasonable cost. Therefore, in order to allow the use of a mechanical smoke removal system, the building is required to be equipped throughout with an automatic sprinkler system.

910.4.2 Exhaust fan construction. Exhaust fans that are part of a mechanical smoke removal system shall be rated for operation at 221°F (105°C). Exhaust fan motors shall be located outside of the exhaust fan air stream.

❖ This section requires exhaust fan motors to be located out of the exhaust stream to protect the mechanical equipment from excessive heat. Provisions for the mechanical smoke removal system permit the system to be designed to handle air at ambient temperature, provided that the fan motors are located outside the air stream. The basis for this provision is the thermocouple temperature data for the large-scale fire tests conducted at UL in 1997/1998, specifically Tests P-1 and P-4. (In Tests P-1 and P-4, no vents opened so the ceiling temperatures recorded would be unaffected by the activation of vents. See pages 40 and 52 of the NISTIR 6196-1 report dated September,1998 for the thermocouple temperature data recorded as a function of time.)

The exposing temperatures and time periods were reviewed and not considered to pose a threat to the building structure, fans or power wiring.

The sprinkler activation times and ceiling temperature data for the five large-scale fire tests summarized in NISTIR 6196-1 indicate that the exposure of mechanical exhaust fans and ducts located at the ceiling to high temperatures will be relatively short. Since it is anticipated that the exhaust system will only be activated after the arrival of fire fighters at the scene (estimated to be 7 minutes or longer after ignition), ceiling temperatures should be reduced sufficiently to allow fans rated for only ambient temperatures to be used for the exhaust system.

910.4.3 System design criteria. The mechanical smoke removal system shall be sized to exhaust the building at a minimum rate of two air changes per hour based upon the volume of the building or portion thereof without contents. The capacity of each exhaust fan shall not exceed 30,000 cubic feet per minute (14.2 m^3/sec).

❖ Sections 910.4.3 and 910.4.3.1 specify the design requirement for the minimum number of air changes, maximum fan capacity and requirements for the provision of make-up air.

These provisions require that the mechanical smoke removal system be sized to provide a minimum exhaust rate of two air changes per hour based on the enclosed volume of the building space to be exhausted, without any deductions for the space occupied by storage or equipment. An exhaust rate of two air changes per hour is based on an analysis assuming a conservative approach using a Factory Mutual Research Corporation (FMRC) Standard Plastic Commodity (polystyrene cups in compartmented cartons). This commodity is recognized to represent a severe fire hazard of high density plastics.

In a calculation based on this commodity, a maximum of 68,960 cfm of smoke was generated by the design fire. Based on an empty building volume of 2.659 million cubic feet, the exhaust rate required to achieve two air changes per hour is 88,633 cfm.

INTERNATIONAL CODE COUNCIL®
Copyright © 2015 ICC. ALL RIGHTS RESERVED. Accessed by David Dammon on Jun 21, 2017 12:30:52 PM pursuant to License Agreement with ICC. No further reproduction or distribution authorized. ANY UNAUTHORIZED REPRODUCTION OR DISTRIBUTION IS A VIOLATION OF THE FEDERAL COPYRIGHT ACT AND THE LICENSE AGREEMENT, AND SUBJECT TO CIVIL AND CRIMINAL PENALTIES THEREUNDER.

Because no single fan can exceed 30,000 cfm, this building required five fans, each exhausting 25,570 cfm for a total of 127,850 cfm. This exceeds the minimum two air changes per hour by more than 40 percent. Even at the minimum required rate of two air changes per hour, the calculation results show that the mechanical smoke removal system will be capable of removing the smoke from the building faster than it will be generated, ultimately removing smoke from the building.

910.4.3.1 Makeup air. Makeup air openings shall be provided within 6 feet (1829 mm) of the floor level. Operation of makeup air openings shall be manual or automatic. The minimum gross area of makeup air inlets shall be 8 square feet per 1,000 cubic feet per minute (0.74 m^2 per 0.4719 m^3/s) of smoke exhaust.

❖ In order for a mechanical smoke removal system to work properly, makeup air at the proper location and volume of air need to be provided. Generally, makeup air inlets need to be located much lower than where the smoke is exhausted to get the proper movement of air. In this case, the required location is within 6 feet of the floor.

The derivation of the gross vent area is based on NFPA 92-2012. Specifically, Annex Section A-4.4.4.1.4 states that the maximum air velocity through the make-up air inlet is 1 m/sec or 200 ft/min. This is the same limitation found in Section 909.7.1, which is for the airflow method of smoke control. The area requirement is then derived as follows:

- Effective Vent Area = (1000 ft^3/min)/(200 ft/min) = 5 ft^2 per 1000 cfm
- Assume an orifice coefficient of 0.6
- Gross Vent Area = 5 ft^2/(0.6) = 8.33 ft^2 per 1000 cfm, which is rounded down due to the conservative nature of the requirement

The reason for this limitation is to prevent significant deflection of the plume, which will cause more air entrainment into the plume and more smoke production. This is the same limitation found in Section 909.7.1, which is for the airflow method of smoke control. This criterion is conservative as the requirement above assumes an active fire and the design philosophy for this requirement is to provide post-fire smoke exhaust.

910.4.4 Activation. The mechanical smoke removal system shall be activated by manual controls only.

❖ This section requires that mechanical systems are to be activated manually so that the fire department is in control of the system. In some situations, automatic operation could cause a fire to grow or spread, opening an excessive number of sprinklers. Automatic operation of the mechanical smoke removal system could also be detrimental to the operation of the sprinkler system in a manner similar to draft curtains. The effect of the automatic mechanical smoke removal system on sprinkler operation would depend on when the system was activated. The sooner the system is automatically activated, the greater the detrimental effect. The fire department will retain the option to shut down the exhaust system, as well.

910.4.5 Manual control location. Manual controls shall be located so as to be accessible to the fire service from an exterior door of the building and protected against interior fire exposure by not less than 1-hour *fire barriers* constructed in accordance with Section 707 of the *International Building Code* or *horizontal assemblies* constructed in accordance with Section 711 of the *International Building Code*, or both.

❖ This section establishes the required placement, access and protection of the manual controls to ensure the fire fighters will have quick and protected access to them.

910.4.6 Control wiring. Wiring for operation and control of mechanical smoke removal systems shall be connected ahead of the main disconnect in accordance with Section 701.12E of NFPA 70 and be protected against interior fire exposure to temperatures in excess of 1,000°F (538°C) for a period of not less than 15 minutes.

❖ Unless the mechanical smoke removal system also functions as a component of a smoke control system, standby power is not specifically required (see commentary, Sections 604 and 909.11). In order to provide an enhanced level of operational reliability, this section requires that the power supply to smoke exhaust fans must be provided from a circuit connected on the supply side (i.e., ahead of) the building's main electrical service disconnecting means. Note that this is one of the sources of standby power recognized by NFPA 70, Section 701.12(E). Such a circuit connected "ahead of the main" must still have its own approved overcurrent protection.

The provisions for the design of a mechanical smoke removal system indicate that wiring providing power to exhaust fans located in the interior of the building is to be protected by materials which will provide a 15-minute finish-rating protection. The ceiling temperature data collected in the five large-scale fire tests summarized in NISTIR 6196-1 (cited above) show that temperatures at the ceiling will be far less than the exposure temperatures defined by the ASTM E119 time-temperature curve and that the ceiling temperatures will rapidly decrease once sprinklers activate. The ceiling temperature data included in NISTIR 6196-1 indicates that providing 15-minute finish-rating protection for the interior electrical power supply is more than adequate to prevent damage to the power supply wiring for the exhaust system.

910.4.7 Controls. Where building air-handling and mechanical smoke removal systems are combined or where independent building air-handling systems are provided, fans shall automatically shut down in accordance with the *International Mechanical Code*. The manual controls provided for the smoke removal system shall have the capability to override

INTERNATIONAL CODE COUNCIL®
Copyright © 2015 ICC. ALL RIGHTS RESERVED. Accessed by David Dammon on Jun 21, 2017 12:30:52 PM pursuant to License Agreement with ICC. No further reproduction or distribution authorized. ANY UNAUTHORIZED REPRODUCTION OR DISTRIBUTION IS A VIOLATION OF THE FEDERAL COPYRIGHT ACT AND THE LICENSE AGREEMENT, AND SUBJECT TO CIVIL AND CRIMINAL PENALTIES THEREUNDER.

the automatic shutdown of fans that are part of the smoke removal system.

❖ This section requires that if a mechanical smoke removal system is integrated with a standard HVAC system, then the system must shut down upon detection of smoke as required by the IMC. This relates to the requirement in Section 910.4.4 that mechanical smoke removal systems shall be manually operated only.

The concern is that HVAC systems should not work against the intended operation of the smoke exhaust system. In some cases, the system may be a combination system where shutdown is not necessary or appropriate. It really depends on how the smoke exhaust system has been designed.

910.5 Maintenance. Smoke and heat vents and mechanical smoke removal systems shall be maintained in an operative condition in accordance with Section 910.5.1 or 910.5.2, respectively.

❖ Routine maintenance and testing of smoke removal systems is essential to ensure their performance, as designed, under fire conditions. Maintenance practices for these systems must be consistent with their design and any manufacturer's recommendations and as indicated in Section 910.5.1 or 910.5.2.

910.5.1 Smoke and heat vents. Smoke and heat vents shall be maintained in an operative condition in accordance with NFPA 204 and Section 910.5.1.1

❖ This section requires smoke and heat vents to be maintained in operating condition and incorporates NFPA 204 as the referenced standard for the maintenance of smoke and heat vents (see Section 901.6.1). Routine inspection, testing and maintenance of these devices is essential since they are typically only found in the largest commercial structures, and the amount of fire loading is usually very high (i.e., high-piled combustible storage). Ensuring that these devices are inspected, tested and maintained in proper working order by the building's owner also has positive effects on fire-fighter safety. These benefits include:

- Easy identification of the location of the fire within the structure.
- Release of excess heat within the structure.
- Decreasing fire severity.
- Increased visibility for fire fighters within the structure.
- Reduction of toxic products of combustion within the structure.

Additionally, the maintenance of these devices will have a mitigating effect on damage to the structure and/or its contents should a fire occur. These benefits include decreased likelihood of structural failure from heat retained within the structure and reduced damage to the structure and stored materials from smoke.

910.5.1.1 Fusible links. Fusible links for smoke and heat vents shall be replaced whenever fused, damaged or painted.

❖ The sensing elements of fusible link devices installed as part of smoke and heat vents must be routinely visually inspected and replaced as needed to increase the likelihood that the vents will operate in a timely fashion when needed.

910.5.2 Mechanical smoke removal systems. Mechanical smoke removal systems shall be maintained in accordance with the equipment manufacturer's maintenance instructions and Sections 910.5.2.1 through 910.5.2.4.

❖ The previously included reference to NFPA 204 for mechanical smoke removal systems was removed and replaced with the prescriptive testing and maintenance requirements in Sections 910.5.2.1 through 910.5.2.4. This was done because it was determined that the maintenance requirements in NFPA 204 were not specific enough to ensure the necessary maintenance of the mechanical smoke removal systems.

910.5.2.1 Frequency. Systems shall be operationally tested not less than once per year. Testing shall include the operation of all system components, including control elements.

❖ Annual operational exercising of the entire mechanical smoke removal system must be performed to verify that it still operates as required by the approved design.

910.5.2.2 Testing. Operational testing of the mechanical smoke removal system shall include all equipment such as fans, controls and make-up air openings.

❖ Because mechanical smoke removal systems are designed for smoke removal only, the operation of these systems does not adversely affect other building systems or operations. The control sequence for these systems must be included in the annual operational test to check for system component failures that may not get noticed because mechanical smoke removal systems are independent of building HVAC systems and operate only in emergency situations.

910.5.2.3 Schedule. A routine maintenance and operational testing program shall be initiated and a written schedule for routine maintenance and operational testing shall be established.

❖ Routine operational testing and maintenance must be performed on the mechanical smoke removal system periodically to verify that it still operates as required by the approved design. A written schedule must be established and maintained.

910.5.2.4 Written record. A written record of mechanical smoke exhaust system testing and maintenance shall be maintained on the premises. The written record shall include the date of the maintenance, identification of the servicing personnel and notification of any unsatisfactory condition and the corrective action taken, including parts replaced.

❖ This section prescribes the desired content of the written record for the mechanical smoke removal sys-

INTERNATIONAL CODE COUNCIL®
Copyright © 2015 ICC. ALL RIGHTS RESERVED. Accessed by David Dammon on Jun 21, 2017 12:30:52 PM pursuant to License Agreement with ICC. No further reproduction or distribution authorized. ANY UNAUTHORIZED REPRODUCTION OR DISTRIBUTION IS A VIOLATION OF THE FEDERAL COPYRIGHT ACT AND THE LICENSE AGREEMENT, AND SUBJECT TO CIVIL AND CRIMINAL PENALTIES THEREUNDER.

tem testing and maintenance program. Test results and maintenance activities should be clearly documented. The written record should be available for inspection and reviewed by the fire code official.

SECTION 911
EXPLOSION CONTROL

911.1 General. Explosion control shall be provided in the following locations:

1. Where a structure, room or space is occupied for purposes involving explosion hazards as identified in Table 911.1.
2. Where quantities of hazardous materials specified in Table 911.1 exceed the maximum allowable quantities in Table 5003.1.1(1).

Such areas shall be provided with explosion (*deflagration*) venting, explosion (*deflagration*) prevention systems or *barricades* in accordance with this section and NFPA 69, or NFPA 495 as applicable. *Deflagration* venting shall not be utilized as a means to protect buildings from *detonation* hazards.

❖ It is usually impractical to design a building to withstand the pressure created by an explosion. Therefore, this section requires an explosion relief system for structures, rooms or spaces with occupancies involving explosion hazards. Explosions may result from the overpressurization of a containing structure, by physical/chemical means or by a chemical reaction. During an explosion, a sudden release of a high-pressure gas occurs and the energy is dissipated in the form of a shock wave.

Structures, rooms or spaces with occupancies involving explosion hazards must be equipped with some method of explosion control as required by the material-specific requirements in the code. Table 911.1 also specifies when explosion control is required based on certain materials or occupancies where the quantities of hazardous materials involved exceed the maximum allowable quantities in Table 5003.1.1(1). Section 911 recognizes explosion (deflagration) venting and explosion (deflagration) prevention systems as acceptable methods of explosion control where appropriate. The use of barricades or other explosion protective devices, such as magazines, may be permitted as the means of explosion control where indicated in the code as an acceptable alternative and when approved by the fire code official.

TABLE 911.1. See page 9-136.

❖ This table designates when some methods of explosion control are required for specific material or special use conditions. This table applies when the quantities of hazardous materials involved exceed the maximum allowable quantities in Table 5003.1.1(1). Section 911.2 contains design criteria for explosion (deflagration) venting. Explosion prevention (suppression) systems, where used, must comply with NFPA 69. Barricade construction must be designed and installed to comply with NFPA 495. Chapters 50 through 67 of the code contain additional guidance on the applicability and design criteria for explosion control methods that depend on the specific type of hazardous material involved.

911.2 Required deflagration venting. Areas that are required to be provided with *deflagration* venting shall comply with the following:

1. Walls, ceilings and roofs exposing surrounding areas shall be designed to resist a minimum internal pressure of 100 pounds per square foot (psf) (4788 Pa). The minimum internal design pressure shall be not less than five times the maximum internal relief pressure specified in Item 5 of this section.
2. *Deflagration* venting shall be provided only in exterior walls and roofs.

   Exception: Where sufficient *exterior wall* and roof venting cannot be provided because of inadequate exterior wall or roof area, *deflagration* venting shall be allowed by specially designed shafts vented to the exterior of the building.
3. *Deflagration* venting shall be designed to prevent unacceptable structural damage. Where relieving a *deflagration*, vent closures shall not produce projectiles of sufficient velocity and mass to cause life threatening injuries to the occupants or other persons on the property or adjacent *public ways*.
4. The aggregate clear area of vents and venting devices shall be governed by the pressure resistance of the construction assemblies specified in Item 1 of this section and the maximum internal pressure allowed by Item 5 of this section.
5. Vents shall be designed to withstand loads in accordance with the *International Building Code*. Vents shall consist of any one or any combination of the following to relieve at a maximum internal pressure of 20 pounds per square foot (958 Pa), but not less than the loads required by the *International Building Code*:

   5.1. *Exterior walls* designed to release outward.

   5.2. Hatch covers.

   5.3. Outward swinging doors.

   5.4. Roofs designed to uplift.

   5.5. Venting devices *listed* for the purpose.
6. Vents designed to release from the *exterior walls* or roofs of the building when venting a *deflagration* shall discharge directly to the exterior of the building where an unoccupied space not less than 50 feet (15 240 mm) in width is provided between the exterior walls of the building and the lot line.

   Exception: Vents complying with Item 7 of this section.
7. Vents designed to remain attached to the building when venting a *deflagration* shall be so located that the discharge opening shall be not less than 10 feet (3048 mm)

INTERNATIONAL CODE COUNCIL®
Copyright © 2015 ICC. ALL RIGHTS RESERVED. Accessed by David Dammon on Jun 21, 2017 12:30:52 PM pursuant to License Agreement with ICC. No further reproduction or distribution authorized. ANY UNAUTHORIZED REPRODUCTION OR DISTRIBUTION IS A VIOLATION OF THE FEDERAL COPYRIGHT ACT AND THE LICENSE AGREEMENT, AND SUBJECT TO CIVIL AND CRIMINAL PENALTIES THEREUNDER.

vertically from window openings and *exits* in the building and 20 feet (6096 mm) horizontally from *exits* in the building, from window openings and *exits* in adjacent buildings on the same lot and from the lot line.

8. Discharge from vents shall not be into the interior of the building.

❖ This section prescribes the basic design criteria necessary for deflagration venting.

Deflagration venting limits the deflagration pressure in a certain area so that, in case of an explosion, the damage to that enclosed area is minimized or eliminated. Because there are so many variables involved for adequate deflagration venting, the parameters for each design should fit the individual situation. NFPA 68 contains additional guidance on the design and use of deflagration venting systems.

The area of the vent must be adequate to relieve the pressure before it reaches a level in excess of what can be withstood by the weakest building member. The vent area, therefore, is dependent on the actual construction of the enclosed area and the anticipated pressure. The vent panel should be of light-weight construction so that it can easily release at low pressures. Because the lightweight panels have little structural strength, railings may be required along the floor edge to prevent people or objects from falling against the panel.

Item 5 indicates that the vents are to be designed to relieve at a maximum internal pressure of 20 pounds per square foot (psf) (958 Pa) but not less

TABLE 911.1
EXPLOSION CONTROL REQUIREMENTS[f]

MATERIAL	CLASS	EXPLOSION CONTROL METHODS	
		Barricade construction	Explosion (deflagration) venting or explosion (deflagration) prevention systems
Hazard Category			
Combustible dusts[a]	—	Not required	Required
Cryogenic fluids	Flammable	Not required	Required
Explosives	Division 1.1 Division 1.2 Division 1.3 Division 1.4 Division 1.5 Division 1.6	Required Required Not required Not required Required Required	Not required Not required Required Required Not required Not required
Flammable gas	Gaseous Liquefied	Not required Not required	Required Required
Flammable liquids	IA[b] IB[c]	Not required Not required	Required Required
Organic peroxides	Unclassified detonable I	Required Required	Not permitted Not permitted
Oxidizer liquids and solids	4	Required	Not permitted
Pyrophoric	Gases	Not required	Required
Unstable (reactive)	4 3 detonable 3 nondetonable	Required Required Not required	Not permitted Not permitted Required
Water-reactive liquids and solids	3 2[e]	Not required Not required	Required Required
Special Uses			
Acetylene generator rooms	—	Not required	Required
Grain processing	—	Not required	Required
Liquefied petroleum gas distribution facilities	—	Not required	Required
Where explosion hazards exist[d]	Detonation Deflagration	Required Not required	Not permitted Required

a. Combustible dusts that are generated during manufacturing or processing. See definition of "Combustible dust" in Chapter 2.
b. Storage or use.
c. In open use or dispensing.
d. Rooms containing dispensing and use of hazardous materials where an explosive environment can occur because of the characteristics or nature of the hazardous materials or as a result of the dispensing or use process.
e. A method of explosion control shall be provided where Class 2 water-reactive materials can form potentially explosive mixtures.
f. Explosion venting is not required for Group H-5 Fabrication Areas complying with Chapter 27 and the *International Building Code*.

INTERNATIONAL CODE COUNCIL®
Copyright © 2015 ICC. ALL RIGHTS RESERVED. Accessed by David Dammon on Jun 21, 2017 12:30:52 PM pursuant to License Agreement with ICC. No further reproduction or distribution authorized. ANY UNAUTHORIZED REPRODUCTION OR DISTRIBUTION IS A VIOLATION OF THE FEDERAL COPYRIGHT ACT AND THE LICENSE AGREEMENT, AND SUBJECT TO CIVIL AND CRIMINAL PENALTIES THEREUNDER.

than the load design requirements in Chapter 16 of the IBC. In areas commonly subject to high winds, the release pressure has to be increased accordingly to prevent the vents from being actuated by wind forces. Even though the release pressure should be as low as practical, it must always be higher than the external wind pressure.

Venting devices must be located to discharge directly to the open air or to an unoccupied space at least 50 feet (15 240 mm) in width on the same lot. To minimize damage and maintain the integrity of the existing system, window openings and egress facilities are not to be within 10 feet (3048 mm) vertically or 20 feet (6096 mm) horizontally of the vent. The spatial distance will permit the pressure to decrease and not to cause additional damage.

911.3 Explosion prevention systems. Explosion prevention systems shall be of an *approved* type and installed in accordance with the provisions of this code and NFPA 69.

❖ Depending on the conditions of the anticipated explosion hazard, the use of an explosion prevention system may be an effective means of explosion control. An explosion prevention system is most effective in confined spaces or enclosures in which combustible gases, mists or dusts are subject to deflagration in a gas-phase oxidant. Explosion prevention systems are intended to prevent an explosion hazard by combating the process of combustion it its incipient stage.

NFPA 69 contains further information on the installation, operation and design considerations for explosion prevention systems. Explosion prevention systems are commonly used to protect laboratory equipment, such as reactor vessels, mills and dust collectors.

911.4 Barricades. *Barricades* shall be designed and installed in accordance with NFPA 495.

❖ As indicated in Table 911.1, depending on the type of materials involved, barricade construction may be an acceptable method of explosion control. Barricade construction is an effective method of screening a building containing explosives from other buildings, magazines or public rights-of-way. The barricade could be either natural or artificial, where applicable, as specified in NFPA 495.

SECTION 912
FIRE DEPARTMENT CONNECTIONS

912.1 Installation. Fire department connections shall be installed in accordance with the NFPA standard applicable to the system design and shall comply with Sections 912.2 through 912.7.

❖ An FDC is required as part of a water-based suppression system as the auxiliary water supply. These connections give the fire department the capability of supplying the necessary water to the automatic sprinkler or standpipe system at a sufficient pressure without pressurizing the underground supply. The FDC also serves as an alternative source of water should a valve in the primary water supply be closed. A fire department connection does not, however, constitute an automatic water source. See Commentary Figure 903.3.1.1 for a typical FDC arrangement on a wet pipe sprinkler system.

The requirements for the FDC depend on the type of sprinkler system installed and whether a standpipe system is installed. NFPA 13 and 13R, for example, include design considerations for FDCs that are an auxiliary water supply source for automatic sprinkler systems; NFPA 14 is the design standard to use for FDCs serving standpipe systems. Threads for FDCs to sprinkler systems, standpipes, yard hydrants or any other fire hose connection must be approved (NFPA 1963 may be utilized as part of the approval or as otherwise approved) and be compatible with the connections used by the local fire department (see commentary, Sections 903.3.6 and 905.1).

912.2 Location. With respect to hydrants, driveways, buildings and landscaping, fire department connections shall be so located that fire apparatus and hose connected to supply the system will not obstruct access to the buildings for other fire apparatus. The location of fire department connections shall be *approved* by the fire chief.

❖ This section specifies that the FDC must be located so that vehicles and hose lines will not interfere with access to the building for the use of other fire department apparatus. The location of potential connected hose lines to the FDC and hydrants must be preplanned with the fire department. Many fire departments have a policy restricting the distance that a FDC may be from a fire hydrant. Some also have policies that indicate the maximum distance from the nearest point of fire department vehicle access (often, the curb). Since fireground operations are based on local operational procedures, it is only reasonable that the fire chief of the jurisdiction have approval authority over the location of and access to the FDC.

Landscaping can also be a hindrance to fire department operations. Even where the FDC is visible, the extensive use of landscaping may make access difficult. Landscaping also changes over time. What may not have been an obstruction when it was planted can sometimes grow into an obstruction over time.

912.2.1 Visible location. Fire department connections shall be located on the street side of buildings, fully visible and recognizable from the street or nearest point of fire department vehicle access or as otherwise *approved* by the fire chief.

❖ FDCs must be readily visible and easily accessed. A local policy constituting what is readily visible and accessible needs to be established. While the intent is clearly understandable, its application can vary widely. A precise policy is the best way to avoid ambiguous directives that result in inconsistent and

INTERNATIONAL CODE COUNCIL®
Copyright © 2015 ICC. ALL RIGHTS RESERVED. Accessed by David Dammon on Jun 21, 2017 12:30:52 PM pursuant to License Agreement with ICC. No further reproduction or distribution authorized. ANY UNAUTHORIZED REPRODUCTION OR DISTRIBUTION IS A VIOLATION OF THE FEDERAL COPYRIGHT ACT AND THE LICENSE AGREEMENT, AND SUBJECT TO CIVIL AND CRIMINAL PENALTIES THEREUNDER.

arbitrary enforcement. Usually, the policy will address issues such as location on the outside of the building and proximity to fire hydrants.

Landscaping is often used to hide the FDCs from the public. This can greatly hamper the efforts of the fire department in staging operations and supplying water to the fire protection systems. Landscaping must be designed so that it does not obstruct the visibility of the FDC. Since fireground operations are based on local operational procedures, it is only reasonable that the fire chief of the jurisdiction have final approval authority over the visibility of and access to the FDC.

912.2.2 Existing buildings. On existing buildings, wherever the fire department connection is not visible to approaching fire apparatus, the fire department connection shall be indicated by an *approved* sign mounted on the street front or on the side of the building. Such sign shall have the letters "FDC" not less than 6 inches (152 mm) high and words in letters not less than 2 inches (51 mm) high or an arrow to indicate the location. Such signs shall be subject to the approval of the *fire code official*.

❖ The section acknowledges that FDCs on existing buildings may not always be readily visible from the street or nearest point of fire department vehicle access. In those instances, the location of the connection must be clearly marked with signage. The FDC may be located on the side of the building or in an alley, not visible to arriving fire-fighting forces. A sign is necessary so that those driving the arriving apparatus know where to maneuver the vehicle to get close to the FDC.

912.3 Fire hose threads. Fire hose threads used in connection with standpipe systems shall be *approved* and shall be compatible with fire department hose threads.

❖ There are several sections in the code which contain requirements for fire department connections. This section simply correlates with those requirements by further clarifying that fire hose threads for standpipe systems must be approved.

912.4 Access. Immediate access to fire department connections shall be maintained at all times and without obstruction by fences, bushes, trees, walls or any other fixed or moveable object. Access to fire department connections shall be *approved* by the fire chief.

Exception: Fences, where provided with an access gate equipped with a sign complying with the legend requirements of Section 912.5 and a means of emergency operation. The gate and the means of emergency operation shall be *approved* by the fire chief and maintained operational at all times.

❖ The FDC must be readily accessible to fire fighters and allow fire-fighting personnel an adequate area to maneuver a hose for the connection. Landscaping design must not block a clear view of the FDC from arriving fire department vehicles. Depending on the type of landscaping materials, an active maintenance program may be necessary to maintain ready access over time. This section also recognizes that the obstructing objects regulated here can be either fixed or movable (such as outdoor furnishings, shopping cart queue areas, etc.). Note that no specific dimension is given as was the case in previous editions of the code. This performance language avoids previous misinterpretations that the code intended to allow obstructions to FDC access as long as they were kept 3 feet (914 mm) away. Since fireground operations are based on local operational procedures, it is only reasonable that the fire chief of the jurisdiction have final approval authority over the access to the FDC.

The exception recognizes the practical fact that sometimes, security or other considerations make installation of a fence around a building necessary as long as the fence meets the stated criteria. The sign requirement intends to provide a visual location cue to approaching fire apparatus where the height of the fence may obscure the visibility of the FDC.

912.4.1 Locking fire department connection caps. The *fire code official* is authorized to require locking caps on fire department connections for water-based *fire protection systems* where the responding fire department carries appropriate key wrenches for removal.

❖ This section allows for the FDC caps to be equipped with locks as long as the fire departments that respond to that building or facility have the appropriate key wrenches. This avoids vandalism and affords a more functional FDC when needed. Locking caps, even more so than regular FDC caps, need proper maintenance so that they can be removed when required. Any time that an additional mechanical function is added to something that is exposed to the elements, it must be done with the understanding that the corrosive nature of the elements can place the FDC out of commission if the cap cannot be removed (see Commentary Figure 912.4.1).



Figure 912.4.1
LOCKING FDC CAPS
(Photo courtesy of Knox Company)

INTERNATIONAL CODE COUNCIL®
Copyright © 2015 ICC. ALL RIGHTS RESERVED. Accessed by David Dammon on Jun 21, 2017 12:30:52 PM pursuant to License Agreement with ICC. No further reproduction or distribution authorized. ANY UNAUTHORIZED REPRODUCTION OR DISTRIBUTION IS A VIOLATION OF THE FEDERAL COPYRIGHT ACT AND THE LICENSE AGREEMENT, AND SUBJECT TO CIVIL AND CRIMINAL PENALTIES THEREUNDER.

912.4.2 Clear space around connections. A working space of not less than 36 inches (914 mm) in width, 36 inches (914 mm) in depth and 78 inches (1981 mm) in height shall be provided and maintained in front of and to the sides of wall-mounted fire department connections and around the circumference of free-standing fire department connections, except as otherwise required or *approved* by the fire chief.

❖ Care must be taken so that fences, utility poles, barricades and other obstructions do not prevent access to and use of FDCs. A clear space of 3 feet (914 mm) must be maintained in front of and to either side of wall-mounted FDCs and around free-standing FDCs to allow easy hose connections to the fitting and efficient use of spanner wrenches and other tools needed by the apparatus engineer.

Though not specifically mentioned in this section, it is also important that FDCs be installed with the hose connections well above adjoining grade to accommodate the free turning of a spanner wrench when connecting hoses to the FDC.

912.4.3 Physical protection. Where fire department connections are subject to impact by a motor vehicle, vehicle impact protection shall be provided in accordance with Section 312.

❖ Section 312 requires vehicle impact protection by placing steel posts filled with concrete around the FDC. Section 312 gives the specifications for the posts.

912.5 Signs. A metal sign with raised letters not less than 1 inch (25 mm) in size shall be mounted on all fire department connections serving automatic sprinklers, standpipes or fire pump connections. Such signs shall read: AUTOMATIC SPRINKLERS or STANDPIPES or TEST CONNECTION or a combination thereof as applicable. Where the fire department connection does not serve the entire building, a sign shall be provided indicating the portions of the building served.

❖ The purpose of the sign is to provide the responding firefighters with the correct information on which portions of a building are served by the fire department connection. They identify the type of system or zone served by a given FDC. Many buildings include multiple sets of fire department connections which are not interconnected, such as separate connections for the building sprinkler system and the dry standpipe system in open parking structures. Some buildings may have only a partial sprinkler system, such as rehabilitated buildings where a sprinkler system is only installed on certain floors or a building that only has basement sprinklers in accordance with Section 903.2.11.

Signs may also distinguish FDCs from fire pump test headers. Usually, FDCs may be distinguished from fire pump test headers by the types of couplings provided. FDCs are customarily equipped with female couplings, while fire pump test headers usually have separately valved male couplings. Furthermore, fire pump test headers are equipped with one $2^1/_2$-inch (64 mm) outlet for each 250 gallon per minute (gpm) (16 L/s) of rated capacity.

Raised letters are required so that any repainting or fading of the colors on the sign will not affect its ability to be read. Each letter must be at least 1 inch (25 mm) in height so that the wording is clear. Often the wording may be abbreviated such that "AUTOMATIC SPRINKLERS" reads as "AUTO. SPKR." Existing signs may use language slightly different than that noted in the code. As long as the information is adequately communicated there should be no reason to require new signage to replace existing ones (see Commentary Figure 912.5).

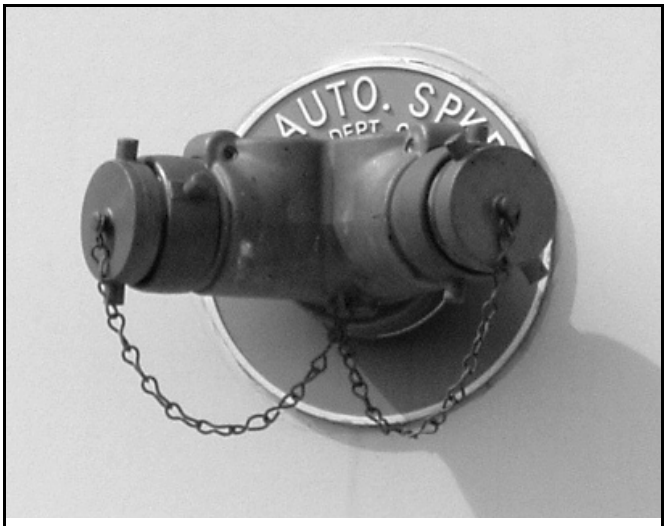

Figure 912.5
FIRE DEPARTMENT CONNECTION WITH SIGN

912.6 Backflow protection. The potable water supply to automatic sprinkler and standpipe systems shall be protected against backflow as required by the *International Plumbing Code*.

❖ Section 608.16.4 of the IPC requires all connections to automatic sprinkler systems and standpipe systems to be equipped with a means to protect the potable water supply. The means of backflow protection can be either a double check-valve assembly or a reduced pressure-principle backflow preventer. This, in general, assumes a FDC is required. For example, a limited-area sprinkler system off the domestic supply does not necessarily require a FDC and would not require backflow protection.

912.7 Inspection, testing and maintenance. Fire department connections shall be periodically inspected, tested and maintained in accordance with NFPA 25. Records of inspection, testing and maintenance shall be maintained.

❖ Because FDCs are components of a water-based extinguishing system, NFPA 25 is applicable. Inspections must determine that connections are unob-

INTERNATIONAL CODE COUNCIL®
Copyright © 2015 ICC. ALL RIGHTS RESERVED. Accessed by David Dammon on Jun 21, 2017 12:30:52 PM pursuant to License Agreement with ICC. No further reproduction or distribution authorized. ANY UNAUTHORIZED REPRODUCTION OR DISTRIBUTION IS A VIOLATION OF THE FEDERAL COPYRIGHT ACT AND THE LICENSE AGREEMENT, AND SUBJECT TO CIVIL AND CRIMINAL PENALTIES THEREUNDER.

structed, well-protected and in good working order. Plugs or covers must be installed to protect threads and pipe openings, and must be easily removed to permit connection of a fire hose.

Caps or plugs must be kept in place whenever the connection is not in use to discourage the insertion of objects into the connection openings. The interior of piping behind connection clappers must be checked for foreign material and obstructions.

Threads must be compatible with local fire service hose couplings and free of burrs, depressions and other flaws. Couplings must spin freely. Clappers, if installed in the pipe openings, must open easily and automatically return to the closed position.

Exposed piping, fittings, valves and couplings must be free of water where subject to freezing. Defects must be corrected without delay. These and other maintenance features are addressed in NFPA 25. This section also requires that written inspection and maintenance records be kept. Such records should indicate the date and time and the name of the person conducting the inspection or maintenance. These records must be maintained by the owner and should be made available to the fire code official for review when requested. This requirement relieves the fire code official of the administrative burden of maintaining test records.

SECTION 913
FIRE PUMPS

913.1 General. Where provided, fire pumps shall be installed in accordance with this section and NFPA 20.

❖ This section contains specific installation requirements for fire pumps supplying water to fire protection systems. Inspection, testing and maintenance requirements comply with NFPA 20 unless noted otherwise. Applicable maintenance standards are also identified.

Fire pumps are installed in sprinkler and standpipe systems to pressurize the water supply for the minimum required sprinkler and standpipe operation. They are considered a design feature or component of the system. Fire pumps can improve only the pressure of the incoming water supply, not the volume of water available.

When the volume from a water supply is not adequate to supply sprinkler or standpipe demand, water tanks for private fire protection, improvements in the size and capacity of fire mains or water distribution systems or all of these for the installation of a fire pump are needed.

When fire pumps are required to meet the pressure requirements of sprinkler and standpipe systems, they must be installed and tested in accordance with NFPA 20.

913.2 Protection against interruption of service. The fire pump, driver and controller shall be protected in accordance with NFPA 20 against possible interruption of service through damage caused by explosion, fire, flood, earthquake, rodents, insects, windstorm, freezing, vandalism and other adverse conditions.

❖ This section lists hazards that must be taken into account when determining the extent of protection required for the fire pump and its auxiliary equipment. A pump room in a building that is protected against the listed hazards in compliance with the IBC would be considered in compliance. Because fire pumps are also typically located in separate detached structures, geographical and security issues must also be considered.

913.2.1 Protection of fire pump rooms. Rooms where fire pumps are located shall be separated from all other areas of the building in accordance with Section 913.2.1 of the *International Building Code*.

❖ The purpose of this section is to require indoor fire pump room separation by fire barriers and horizontal assemblies in accordance with the requirements in the IBC. See the commentary to Section 913.2.1 of the IBC for a complete discussion of the requirements.

913.2.2 Circuits supplying fire pumps. Cables used for survivability of circuits supplying fire pumps shall be *listed* in accordance with UL 2196. Electrical circuit protective systems shall be installed in accordance with their listing requirements.

❖ This section is provided to better protect cables used for survivability of circuits associated with fire pumps by referencing the appropriate standard. UL 2196 is the ANSI approved standard for tests of fire resistive cables. NFPA 20 includes selective survivability requirements to assure integrity of certain critical circuits. NFPA 70 does not specify the applicable standard within its mandatory provisions, but recognizes electrical circuit protective systems as an alternate to listed cables. An electrical circuit protective system is a field assembly of components that must be installed according to the listing requirements and manufacturer's instructions in order to maintain the listing for the system. There are more than two dozen electrical circuit protective systems listed in the UL *Fire Resistance Directory*.

913.3 Temperature of pump room. Suitable means shall be provided for maintaining the temperature of a pump room or pump house, where required, above 40°F (5°C).

❖ As previously noted for sprinkler systems, standpipe systems and other water-based fire protection systems, pump rooms or pump houses must be maintained at a temperature of 40°F (4°C) or above to prevent the system from freezing.

INTERNATIONAL CODE COUNCIL®
Copyright © 2015 ICC. ALL RIGHTS RESERVED. Accessed by David Dammon on Jun 21, 2017 12:30:52 PM pursuant to License Agreement with ICC. No further reproduction or distribution authorized. ANY UNAUTHORIZED REPRODUCTION OR DISTRIBUTION IS A VIOLATION OF THE FEDERAL COPYRIGHT ACT AND THE LICENSE AGREEMENT, AND SUBJECT TO CIVIL AND CRIMINAL PENALTIES THEREUNDER.

913.3.1 Engine manufacturer's recommendation. Temperature of the pump room, pump house or area where engines are installed shall never be less than the minimum recommended by the engine manufacturer. The engine manufacturer's recommendations for oil heaters shall be followed.

❖ The engine manufacturer's recommendation must be compiled with where the temperature is higher than the minimum established in Section 913.3. Maintaining the desired engine temperature enhances the startability of the engine. Maintaining water heaters and oil heaters as required for diesel engines, for example, will improve the starting capabilities of the fire pump and reduce engine wear and the drain on batteries.

913.4 Valve supervision. Where provided, the fire pump suction, discharge and bypass valves, and isolation valves on the backflow prevention device or assembly shall be supervised open by one of the following methods:

1. Central-station, proprietary or remote-station signaling service.
2. Local signaling service that will cause the sounding of an audible signal at a constantly attended location.
3. Locking valves open.
4. Sealing of valves and *approved* weekly recorded inspection where valves are located within fenced enclosures under the control of the *owner*.

❖ As was the case with sprinkler systems, water control valves that are a part of the fire pump installation must be supervised in the open position so that the system is operational when needed and also to reduce the chance of a system failure (see commentary, Section 903.4). In most cases the required water-based extinguishing system, of which the fire pump is an integral component, will be electrically supervised. Locking or sealing valves open as the only means of supervision may not be permitted, depending on the type of valve. Section 903.4, for example, specifically exempts jockey pump control valves from being electrically supervised if they are sealed or locked in the open position.

913.4.1 Test outlet valve supervision. Fire pump test outlet valves shall be supervised in the closed position.

❖ Fire pump test outlet valves are for performance testing of the fire pump and do not control the available water supply to either a sprinkler system or a standpipe system. These valves are normally in a closed position and are supervised accordingly.

913.5 Testing and maintenance. Fire pumps shall be inspected, tested and maintained in accordance with the requirements of this section and NFPA 25. Records of inspection, testing and maintenance shall be maintained.

❖ Fire pumps require periodic maintenance so that they will perform as required. Monthly maintenance includes running the pump at churn to exercise the pump and driver. Pump packings and relief valve settings must be adjusted as needed.

Annually, the pump must be retested to verify its proper performance. Pressure, flow, revolutions per minute, voltage and, for electric motor-driven pumps, voltage and amperage readings must be recorded, plotted and compared with original design criteria. Upon completion of testing and maintenance, the pump must be left in the automatic-start condition, ready for service. Because a fire pump is a component of a water-based extinguishing system, NFPA 25 is applicable. If the fire pump is powered by a liquid fuel, such as diesel, it is important that the fuel supply be replenished as soon as possible after the test.

913.5.1 Acceptance test. Acceptance testing shall be done in accordance with the requirements of NFPA 20.

❖ Chapter 14 of NFPA 20 details the procedure for conducting a fire pump acceptance test. This test is run to determine that the installation matches the sprinkler or standpipe system design criteria, the approved shop drawings and the pump manufacturer's performance specifications. The test is to be conducted in the presence of the building official in accordance with Section 901.5 by the installing contractor and representatives of the pump manufacturer and the controller manufacturer. Where the pump engine and/or transfer switch are separately supplied components, their manufacturer representative must also be present

913.5.2 Generator sets. Engine generator sets supplying emergency or standby power to fire pump assemblies shall be periodically tested in accordance with NFPA 110. Records of testing shall be maintained.

❖ This section does not require emergency or standby power for all fire pump installations, but rather requires the testing of on-site generator sets that are used for emergency or standby power to fire pump assemblies. The need for emergency or standby power is typically based on occupancy conditions as indicated in the IBC. Section 403.4.8 of the IBC, for example, requires standby power for all electrically powered fire pumps in high-rise buildings. A generator set is recognized as a permissible standby power source. NFPA 110 prescribes the operational testing requirements, including load tests, as well as the periodic inspection and maintenance for generator sets.

913.5.3 Transfer switches. Automatic transfer switches shall be periodically tested in accordance with NFPA 110. Records of testing shall be maintained.

❖ Automatic transfer switches are self-acting equipment that is used to transfer power from a normal source of electrical supply to an alternative supply, such as an engine generator set. NFPA 110 requires a test on each automatic transfer switch that simulates failure of the normal power source. Upon failure, the automatic transfer switch must then automatically transfer the load to the emergency power supply. Manual transfer switches are not permitted as the only means to transfer power between the normal

INTERNATIONAL CODE COUNCIL®
Copyright © 2015 ICC. ALL RIGHTS RESERVED. Accessed by David Dammon on Jun 21, 2017 12:30:52 PM pursuant to License Agreement with ICC. No further reproduction or distribution authorized. ANY UNAUTHORIZED REPRODUCTION OR DISTRIBUTION IS A VIOLATION OF THE FEDERAL COPYRIGHT ACT AND THE LICENSE AGREEMENT, AND SUBJECT TO CIVIL AND CRIMINAL PENALTIES THEREUNDER.

supply and the alternative supply to the fire pump controller.

913.5.4 Pump room environmental conditions. Tests of pump room environmental conditions, including heating, ventilation and illumination, shall be made to ensure proper manual or automatic operation of the associated equipment.

❖ Maintaining suitable environmental conditions is essential to the proper starting capability, performance and safe operation of fire pumps and associated emergency power supplies, where required. Adequate ventilation, for example, is needed to maintain the ambient temperature in the pump room within the range recommended by the manufacturer for the emergency power supply equipment.

SECTION 914
FIRE PROTECTION BASED ON SPECIAL DETAILED REQUIREMENTS OF USE AND OCCUPANCY

914.1 General. This section shall specify where *fire protection systems* are required based on the detailed requirements of use and occupancy of the *International Building Code*.

❖ This section is intended to be a duplication of the fire protection system requirements included in Chapter 4 of the IBC located here in a single section of the code for ease of access by the user. It is organized based on the type of facility rather than the type of fire protection system required. Frequently, reference is made to other sections of the code where the requirements are to be found. Occasionally, administrative requirements are noted that do not appear in other sections. In all cases, the referenced section must be reviewed carefully since this section is intended to be subordinate to the main requirements found elsewhere in the code.

914.2 Covered and open mall buildings. Covered and open mall buildings shall comply with Sections 914.2.1 through 914.2.4.

❖ Various fire protection-related code sections from Section 402 of the IBC are included in the code so that the fire code official has convenient access to the necessary tools to address conditions and monitor new construction requirements related to fire protection systems in covered and open mall buildings. Not all covered and open mall provisions are included here. Specific information regarding kiosk placement, types of signage and other concerns are located in the IBC and can be consulted when the fire code official reviews the covered or open mall building. Although those provisions are not included here, they address issues that can have an adverse effect on the safety of occupants in the covered or open mall building.

914.2.1 Automatic sprinkler system. Covered and open mall buildings and buildings connected shall be equipped throughout with an automatic sprinkler system in accordance with Section 903.3.1.1, which shall comply with the all of the following:

1. The automatic sprinkler system shall be complete and operative throughout occupied space in the mall building prior to occupancy of any of the tenant spaces. Unoccupied tenant spaces shall be similarly protected unless provided with approved alternative protection.
2. Sprinkler protection for the mall of a covered mall building shall be independent from that provided for tenant spaces or anchor buildings.
3. Sprinkler protection for the tenant spaces of an open mall building shall be independent from that provided for anchor buildings.
4. Sprinkler protection shall be provided beneath exterior circulation balconies located adjacent to an open mall.
5. Where tenant spaces are supplied by the same system, they shall be independently controlled.

Exception: An *automatic sprinkler system* shall not be required in spaces or areas of open parking garages separated from the covered or open mall in accordance with Section 402.4.2.3 of the *International Building Code* and constructed in accordance with Section 406.5 of the *International Building Code*.

❖ The requirement for an automatic sprinkler system is found in Section 402.5 of the IBC. This reference provides the fire code official with the information and tools in order to work jointly with the building official in applying the sprinkler requirement for a covered and open mall building.

The covered or open mall building and connected buildings, such as anchor buildings, must be protected with an automatic sprinkler system to protect life and property effectively. As has been discussed throughout the section, numerous allowances (such as reduced tenant separations and elimination of area limitations) are based on the effectiveness of the automatic sprinkler system.

The sprinkler system is to be designed, installed, tested and maintained in accordance with Chapter 9 and NFPA 13. Additionally, the system must be installed such that any portion serving tenant spaces in a covered mall building may be shut down independently without affecting the operation of the systems protecting the mall area. This special feature is in recognition of the frequent need to shut down the system so that changes can be made to it as a result of tenant improvements and modifications.

In an open mall building, the sprinkler systems for the tenant spaces are to be separate from those provided for the anchor buildings. It is necessary that sprinkler protection for open mall buildings be extended to the underneath side of pedestrian walkways and exterior balconies used for circulation and egress purposes. Although the open mall itself

INTERNATIONAL CODE COUNCIL®
Copyright © 2015 ICC. ALL RIGHTS RESERVED. Accessed by David Dammon on Jun 21, 2017 12:30:52 PM pursuant to License Agreement with ICC. No further reproduction or distribution authorized. ANY UNAUTHORIZED REPRODUCTION OR DISTRIBUTION IS A VIOLATION OF THE FEDERAL COPYRIGHT ACT AND THE LICENSE AGREEMENT, AND SUBJECT TO CIVIL AND CRIMINAL PENALTIES THEREUNDER.

requires no sprinkler protection, it is important that those areas below overhead walkways be provided with sprinklers.

Section 909.12.4 requires operation of the sprinkler system to activate automatically the mechanical smoke control system (where an automatic control system is utilized). It is imperative that the zoning of the sprinkler system match the zoning of the smoke control system. This is necessary so that the area where water flow has occurred will also be the area from which smoke is removed.

The exception clarifies that sprinkler protection need not be extended to complying open parking garages that are adequately separated from the covered mall building, open mall building or anchor store. The allowance is consistent with the automatic sprinkler provisions of Section 903.2 where no sprinkler protection is required in open parking garages based on a Group S-2 occupancy classification.

914.2.2 Standpipe system. The covered and open mall building shall be equipped throughout with a standpipe system as required by Section 905.3.3.

❖ The standpipe requirements for covered and open mall buildings exist in the code, as well as in Section 402.7.1 of the IBC, which refers to Section 905 for the requirements. For additional information regarding the requirements, see the commentary for Section 905.3.3.

914.2.3 Emergency voice/alarm communication system. Where the total floor area exceeds 50,000 square feet (4645 m2) within either a covered mall building or within the perimeter line of an open mall building, an emergency voice/alarm communication system shall be provided. Emergency voice/alarm communication systems serving a mall, required or otherwise, shall be accessible to the fire department. The system shall be provided in accordance with Section 907.5.2.2.

❖ This section is identical to Section 402.7.4 of the IBC. In covered and open mall buildings, there is a need to be able to control the large number of people that may be present. This can best be done when specific instructions are conveyed. Covered and open malls that are less than 50,000 square feet (4645 m^2) in area are not required to be provided with an emergency voice alarm system. If a public address system is provided in a smaller mall, it can serve the same purpose. See the commentary to Section 907.5.2.2 for additional information.

914.2.4 Fire department access to equipment. Rooms or areas containing controls for air-conditioning systems, automatic fire-extinguishing systems, *automatic sprinkler systems* or other detection, suppression or control elements shall be identified for use by the fire department.

❖ Section 402.7.5 of the IBC also states this requirement. The intent is that the fire department be able to access those systems that are critical to fire protection as well as those parts of the mechanical system that can aid in control of the ventilation system to use as conditions warrant. The text is included here so that the fire code official has a means for applying the requirement and approving the means by which identification of the rooms or areas will be provided.

914.3 High-rise buildings. High-rise buildings shall comply with Sections 914.3.1 through 914.3.7.

❖ High-rise buildings have unique challenges that set them apart from other buildings. Section 403 of the IBC establishes multiple fire protection requirements for such buildings.

914.3.1 Automatic sprinkler system. Buildings and structures shall be equipped throughout with an *automatic sprinkler system* in accordance with Section 903.3.1.1 and a secondary water supply where required by Section 914.3.3.

Exception: An *automatic sprinkler system* shall not be required in spaces or areas of:

1. Open parking garages in accordance with Section 406.5 of the *International Building Code*.
2. Telecommunications equipment buildings used exclusively for telecommunications equipment, associated electrical power distribution equipment, batteries and standby engines, provided that those spaces or areas are equipped throughout with an automatic fire detection system in accordance with Section 907.2 and are separated from the remainder of the building by not less than 1-hour *fire barriers* constructed in accordance with Section 707 of the *International Building Code* or not less than 2-hour *horizontal assemblies* constructed in accordance with Section 711 of the *International Building Code*, or both.

❖ In order to provide protection for occupants and fire fighters, high-rise buildings are required to be equipped with an automatic sprinkler system. There are two exceptions that allow sprinkler protection to be omitted. Exception 1 is for an open parking garage that is a part of the high-rise building. This exception recognizes the relatively low life safety threat posed by fires in open parking garages. Additional information on open parking garages can be obtained in the commentary for Section 406 of the IBC.

Exception 2 acknowledges the water sensitivity of telecommunications systems. See commentary to the same exception in Section 903.2.

914.3.1.1 Number of sprinkler risers and system design. Each sprinkler system zone in buildings that are more than 420 feet (128 m) in height shall be supplied by no fewer than two risers. Each riser shall supply sprinklers on alternate floors. If more than two risers are provided for a zone, sprinklers on adjacent floors shall not be supplied from the same riser.

❖ The intent of this section is to increase the reliability of automatic sprinkler systems in very tall buildings, i.e., those that exceed 420 feet in height, by requiring a minimum of two risers for each sprinkler system zone. The difficulty of fighting fires in very tall buildings ranges from difficult to virtually impossible with

INTERNATIONAL CODE COUNCIL®
Copyright © 2015 ICC. ALL RIGHTS RESERVED. Accessed by David Dammon on Jun 21, 2017 12:30:52 PM pursuant to License Agreement with ICC. No further reproduction or distribution authorized. ANY UNAUTHORIZED REPRODUCTION OR DISTRIBUTION IS A VIOLATION OF THE FEDERAL COPYRIGHT ACT AND THE LICENSE AGREEMENT, AND SUBJECT TO CIVIL AND CRIMINAL PENALTIES THEREUNDER.

the sprinkler system impaired. Accordingly, the reliable functioning of sprinkler systems is critical. Various events could cause a sprinkler riser to be impaired, thereby leaving the structure vulnerable to fire. The NIST World Trade Center (WTC) Report documented that the proximate cause of the buildings collapse was a building contents fire that raged out of control, in part at least, because the building's automatic sprinkler systems were nonfunctional due to the initial aircraft attack. Events far less dramatic could knock out or make a sprinkler riser inoperative, thereby leaving the structure highly vulnerable to fire.

Recommendation 12 of the NIST WTC report calls for the redundancy of active fire suppression systems to be increased to accommodate the greater risks associated with increased building height and population. This section seeks to do that by requiring two risers designed such that, if one riser is taken out of service, the other will be able to supply sprinklers on the floors above and below. This will impede any fire spread and allow the fire department time to respond and extinguish the fire. At the Meridian Plaza fire in Philadelphia, the further spread of an out of control fire occurring on floors not protected by sprinklers was prevented by the operation of ten sprinklers when the fire reached a floor which had been retrofitted with sprinklers.

914.3.1.1.1 Riser location. Sprinkler risers shall be placed in interior exit stairways and ramps that are remotely located in accordance with Section 1015.2.

❖ This section requires the sprinkler risers to be located in protected interior exit stairways and ramps and specifies a separation distance to reduce the possibility that one incident could incapacitate both risers which is consistent with the approach used in the code for interior exit stairway separation. See commentary to Section 1007.

914.3.1.2 Water supply to required fire pumps. In buildings that are more than 420 feet (128 m) in *building height*, required fire pumps shall be supplied by connections to no fewer than two water mains located in different streets. Separate supply piping shall be provided between each connection to the water main and the pumps. Each connection and the supply piping between the connection and the pumps shall be sized to supply the flow and pressure required for the pumps to operate.

Exception: Two connections to the same main shall be permitted provided the main is valved such that an interruption can be isolated so that the water supply will continue without interruption through no fewer than one of the connections.

❖ Fire pumps are installed in sprinkler and standpipe systems to pressurize the water supply for the minimum required sprinkler and standpipe operation. Fire pumps are only "required" to meet the system needs. Therefore, whether a particular high-rise building includes fire pumps will depend on interaction of the height of the building, the local water system and the designs of the sprinkler and standpipe systems in the building (see Section 913 for more information on fire pumps).

The difficulty of fighting fires in very tall buildings ranges from hard to virtually impossible. Accordingly, the reliable functioning of required sprinkler and standpipe systems is critically important.

Recommendation 12 of the NIST WTC report called for the redundancy of active fire suppression systems to be increased to accommodate the greater risks associated with increasing building height and population. Where the systems require a fire pump and the building is more than 420 feet (128 m) in height, this section requires the fire pumps to be supplied by two water mains located in separate streets. The purpose of this is to increase the reliability of fire suppression systems in very tall buildings by requiring independent street-level water feeds such that the system will function as intended if one of those feeds is damaged or otherwise interrupted. Having two connections will greatly reduce the possibility of the loss of water due to a main break, given the valving which is a feature of a public water system. Each connection must be adequate to provide the flow and pressure needed for the fire pumps to operate. The exception is a performance-based provision that is not tied to any specific configuration.

914.3.2 Secondary water supply. An automatic secondary on-site water supply having a capacity not less than the hydraulically calculated sprinkler demand, including the hose stream requirement, shall be provided for high-rise buildings assigned to Seismic Design Category C, D, E or F as determined by the *International Building Code*. An additional fire pump shall not be required for the secondary water supply unless needed to provide the minimum design intake pressure at the suction side of the fire pump supplying the *automatic sprinkler system*. The secondary water supply shall have a duration of not less than 30 minutes as determined by the occupancy hazard classification in accordance with NFPA 13.

Exception: Existing buildings.

❖ The intent of this section is that a secondary water supply be provided on the high-rise building site in order to provide a high level of functional reliability for the fire protection systems if a seismic event disables the primary water supply for high-rise buildings assigned these Seismic Design categories. The categories are described in Section 1613 of the IBC.

The text's specific wording that the secondary supply be "on-site" rather than "to the site" would preclude the use, for example, of a secondary connection to the municipal supply to achieve compliance with this requirement.

The required amount of water is equal to the hydraulically calculated sprinkler demand plus hose stream demand for a minimum 30 minute period dependent on the appropriate occupancy hazard classification in NFPA 13.

INTERNATIONAL CODE COUNCIL®
Copyright © 2015 ICC. ALL RIGHTS RESERVED. Accessed by David Dammon on Jun 21, 2017 12:30:52 PM pursuant to License Agreement with ICC. No further reproduction or distribution authorized. ANY UNAUTHORIZED REPRODUCTION OR DISTRIBUTION IS A VIOLATION OF THE FEDERAL COPYRIGHT ACT AND THE LICENSE AGREEMENT, AND SUBJECT TO CIVIL AND CRIMINAL PENALTIES THEREUNDER.

Note that the beginning of Section 914.3.2 requires that the secondary water supply be automatic; in other words, switchover to the secondary water source cannot occur manually. This is consistent with the definitions of "Automatic sprinkler system" and "Classes of standpipe systems;" in that both systems are required to be connected to a reliable water supply.

Generally, this section does not automatically require a second fire pump, but, if necessary, an additional pump may be required. A second pump would be necessary if the secondary water supply does not provide the necessary water pressure for intake into the primary fire pump.

914.3.3 Fire alarm system. A fire alarm system shall be provided in accordance with Section 907.2.13.

❖ See the commentary to Section 907.2.13.

914.3.4 Automatic smoke detection. Smoke detection shall be provided in accordance with Section 907.2.13.1.

❖ Section 907.2.13 indicates specific locations where smoke detection is required for a high-rise building. These requirements are due to the fact that the building is a high rise and not necessarily dependent upon the occupancy within. There may be additional requirements in other sections of the code that require specific detection due to the occupancy.

914.3.5 Emergency voice/alarm communication system. An emergency voice/alarm communication system shall be provided in accordance with Section 907.5.2.2.

❖ Due to the size of high-rise buildings, an emergency voice/alarm communication is required so that specific commands can be given as necessary. See the commentary to Sections 907.2.13 and 907.5.2.2 for additional information.

914.3.6 Emergency responder radio coverage. Emergency responder radio coverage shall be provided in accordance with Section 510.

❖ The provisions of Section 510 are concerned with the reliability of portable radios used by emergency responders inside of buildings. This is in keeping with the philosophy inherent in the I-Codes that, when a facility grows too large or complex for effective fire response, fire protection features must be provided within the building. See the commentary to Section 510 for complete information on this topic.

914.3.7 Fire command. A *fire command center* complying with Section 508 shall be provided in a location *approved* by the fire department.

❖ Section 508 of the code contains the same information as Section 911 of the IBC on this subject. The fire command center must always be accessible to the fire service. See the commentary to Section 508 for additional information.

914.4 Atriums. Atriums shall comply with Sections 914.4.1 and 914.4.2.

❖ Atriums are addressed in Section 404 of the IBC, which identifies several fire protection systems that must be included in atriums. It is important to remember that these are requirements that are unique to the specific condition noted and the fire protection systems are a result of those conditions. These requirements are only partially related to the occupancies that may be present.

914.4.1 Automatic sprinkler system. An *approved automatic sprinkler system* shall be installed throughout the entire building.

Exceptions:

1. That area of a building adjacent to or above the atrium need not be sprinklered, provided that portion of the building is separated from the atrium portion by not less than a 2-hour *fire barrier* constructed in accordance with Section 707 of the *International Building Code* or *horizontal assemblies* constructed in accordance with Section 711 of the *International Building Code*, or both.
2. Where the ceiling of the atrium is more than 55 feet (16 764 mm) above the floor, sprinkler protection at the ceiling of the atrium is not required.

❖ Due to the possibility that smoke and fire could spread through an unprotected vertical opening, an automatic sprinkler system is required when an atrium is present in a building and must be installed throughout the building as a preventive measure. If, however, the atrium is treated more like a shaft and provided with a 2-hour enclosure, only the atrium itself must be sprinklered.

The assumption in Exception 1 is that the passive protection systems that isolate the atrium would be sufficient to compensate for the limited sprinkler coverage and be an acceptable alternative to sprinklers throughout the building.

Exception 2 allows for the omission of sprinklers in tall spaces for two reasons. First, due to the entrainment of cooler ambient air in the flame plume, the likelihood that sprinklers will activate diminishes greatly with increased atrium ceiling height. Secondly, the effectiveness of the sprinkler water discharging from such heights is also substantially diminished.

914.4.2 Fire alarm system. A fire alarm system shall be provided where required by Section 907.2.14.

❖ See the commentary for Section 907.2.14.

914.5 Underground buildings. Underground buildings shall comply with Sections 914.5.1 through 914.5.5.

❖ Section 405 of the IBC contains requirements for underground buildings. The fire protection features

INTERNATIONAL CODE COUNCIL®
Copyright © 2015 ICC. ALL RIGHTS RESERVED. Accessed by David Dammon on Jun 21, 2017 12:30:52 PM pursuant to License Agreement with ICC. No further reproduction or distribution authorized. ANY UNAUTHORIZED REPRODUCTION OR DISTRIBUTION IS A VIOLATION OF THE FEDERAL COPYRIGHT ACT AND THE LICENSE AGREEMENT, AND SUBJECT TO CIVIL AND CRIMINAL PENALTIES THEREUNDER.

necessary for this type of building are also found elsewhere in this chapter but are reiterated in the following sections. Underground buildings present unique hazards in that the path of egress is upward, in the same direction as vertical fire movement. Fires in such buildings are also more challenging for fire fighters since there is no opportunity for an exterior fire attack. See the commentary for Section 405 of the IBC for additional information.

914.5.1 Automatic sprinkler system. The highest *level of exit discharge* serving the underground portions of the building and all levels below shall be equipped with an *automatic sprinkler system* installed in accordance with Section 903.3.1.1. Water-flow switches and control valves shall be supervised in accordance with Section 903.4.

❖ Underground buildings have occupiable levels that are more than 30 feet (9144 mm) below the lowest level of exit discharge. This requirement from the IBC indicates that sprinklers are required for the portions of the building that are below ground and the story at the highest level of exit discharge. The provision does not require sprinklers for any stories that may be above the highest level of exit discharge. If sprinklers were required for those areas, it would be due to provisions in other sections of the code. In some respects, this is an expansion of the general provisions for windowless stories in Section 903.2.11.1.

914.5.2 Smoke control system. A smoke control system is required to control the migration of products of combustion in accordance with Section 909 and provisions of this section. Smoke control shall restrict movement of smoke to the general area of fire origin and maintain *means of egress* in a usable condition.

❖ One common application for an underground building is to use excavated caverns for storage. In such a condition, there is no roof from which the fire service can attempt to vent the "building." Because occupants must egress in the same direction that smoke will vent itself, and because there are few, if any, openings by which to vent smoke to the exterior, the need for smoke control is greater than for traditional buildings. This section adds a degree of clarity to the design requirements of Section 909 in that the intent is to contain smoke to the general area of origin. Any method identified in Section 909 can be used, given that the intent is to allow for egress and limit smoke spread to areas of the building that are not involved in the fire event. See Section 909 for additional commentary on smoke control.

914.5.3 Compartment smoke control system. Where compartmentation is required by Section 405.4 of the *International Building Code*, each compartment shall have an independent smoke control system. The system shall be automatically activated and capable of manual operation in accordance with Section 907.2.18.

❖ When buildings contain levels that are more than 60 feet below the lowest level of exit discharge, Section 405.4.1 of the IBC requires that there be at least two fire-resistance-rated compartments per floor and of approximately the same size. Because compartmentation exists, there is a need for additional safety with the smoke control system. Consequently, each compartment must have a smoke control system that is independent of that in the adjoining compartment. The word "independent" means that there can be no sharing of ductwork, mechanical equipment or power distribution. Connection to the standby system can be shared since that is consistent with the general intent of the smoke control system provisions in Section 909 and the IMC. See the commentary to Section 405.4 of the IBC.

914.5.4 Fire alarm system. A fire alarm system shall be provided where required by Sections 907.2.18 and 907.2.19.

❖ The threshold for requiring the fire alarm system is the same as that for compartmentation—an occupied floor level more than 60 feet (18 288 mm) below the level of exit discharge. The fire alarm requirements include the requirements for an emergency voice/alarm communication system. See the commentary to Sections 907.2.18 and 907.2.19 for additional information.

914.5.5 Standpipe system. The underground building shall be provided throughout with a standpipe system in accordance with Section 905.

❖ Section 905.3.1 requires a standpipe system when the building's lowest level is more than 30 feet (9144 mm) below the lowest level of fire department access. By definition, an underground building is one in which the lowest level is more than 30 feet (9144 mm) below the lowest level of exit discharge. One condition uses fire department vehicle access as the benchmark while the other uses the level of exit discharge. Care must be taken so that both conditions are addressed when determining standpipe system requirements for buildings that have levels below ground.

914.6 Stages. Stages shall comply with Sections 914.6.1 and 914.6.2.

❖ Section 410 of the IBC contains definitions and requirements for both stages and platforms. A stage, however, is a special condition according to the IBC. It does not mean, for example, that an elevated platform in the front of the banquet hall is intended to be regulated the same as a stage. The term "stage," as used here, is traditionally considered a "legitimate stage" –one with scenery drops and a gridiron above. See the commentary to Section 410 of the IBC for further information.

914.6.1 Automatic sprinkler system. Stages shall be equipped with an *automatic sprinkler system* in accordance with Section 903.3.1.1. Sprinklers shall be installed under the roof and gridiron and under all catwalks and galleries over the stage. Sprinklers shall be installed in dressing rooms, per-

INTERNATIONAL CODE COUNCIL®
Copyright © 2015 ICC. ALL RIGHTS RESERVED. Accessed by David Dammon on Jun 21, 2017 12:30:52 PM pursuant to License Agreement with ICC. No further reproduction or distribution authorized. ANY UNAUTHORIZED REPRODUCTION OR DISTRIBUTION IS A VIOLATION OF THE FEDERAL COPYRIGHT ACT AND THE LICENSE AGREEMENT, AND SUBJECT TO CIVIL AND CRIMINAL PENALTIES THEREUNDER.

former lounges, shops and storerooms accessory to such stages.

Exceptions:

1. Sprinklers are not required under stage areas less than 4 feet (1219 mm) in clear height utilized exclusively for storage of tables and chairs, provided the concealed space is separated from the adjacent spaces by Type X gypsum board not less than $^5/_8$ inch (15.9 mm) in thickness.
2. Sprinklers are not required for stages 1,000 square feet (93 m^2) or less in area and 50 feet (15 240 mm) or less in height where curtains, scenery or other combustible hangings are not retractable vertically. Combustible hangings shall be limited to a single main curtain, borders, legs and a single backdrop.
3. Sprinklers are not required within portable orchestra enclosures on stages.

❖ Stages contain significant quantities of combustible materials stored in, around and above the stage that are located in close proximity to large quantities of lighting equipment (i.e., scenery and lighting above the stage). There also is scenery on the sides and rear of the stage; shops located along the back and sides of the stage and storage, props, trap doors and lifts under the stage floor. This combination of fuel load and ignition sources increases the potential for a fire. As such, stages and accessory areas, such as dressing rooms, workshops and storerooms, are required to be protected with an automatic sprinkler system (see commentary, IBC Section 410.7).

Both of the exceptions are intended to be applied where the building would not otherwise be required to be provided with sprinklers. If the building must be sprinklered throughout then the two exceptions are moot. Sprinkler installations must be in accordance with NFPA 13 and placed as required by that standard.

Exception 1 allows simple storage in the space below the stage, a space traditionally used for table and chair storage. The space must be compartmentalized so that a minimal thermal barrier is provided between the stored material and the areas outside the space. If the height of the space exceeds 4 feet (1219 mm) or the materials stored are other than those associated with table and chair storage, then sprinklers must be provided.

Exception 2 recognizes that small stage settings do not pose the same risk as larger stages. In schools where the stage may only be an elevated portion at the end of the cafeteria, for example, the exception gives a basis for determining whether sprinkler protection is required or not. If scenery is simply manually set in place or moved horizontally, the large fuel loads associated with stages is not present.

914.6.2 Standpipe system. Standpipe systems shall be provided in accordance with Section 905.

❖ Due to the historic fires on stages of theaters, the code requires that a standpipe system be provided for all stages greater than 1,000 square feet (93 m^2) in area. The design requirements are dependent on the extent of sprinkler protection. See the commentary to Section 905.3.4 for additional information about the standpipe requirements.

914.7 Special amusement buildings. Special amusement buildings shall comply with Sections 914.7.1 and 914.7.2.

❖ A special amusement building is one in which the egress is not readily apparent, is intentionally confounded or is not readily available. Due to those characteristics, special fire protection features are required. See the commentary to Section 411 of the IBC for additional information about these types of facilities.

914.7.1 Automatic sprinkler system. Special amusement buildings shall be equipped throughout with an *automatic sprinkler system* in accordance with Section 903.3.1.1. Where the special amusement building is temporary, the sprinkler water supply shall be of an *approved* temporary means.

Exception: Automatic sprinklers are not required where the total floor area of a temporary special amusement building is less than 1,000 square feet (93 m^2) and the *exit access* travel distance from any point to an *exit* is less than 50 feet (15 240 mm).

❖ Special amusement buildings do not normally have a readily identifiable means of egress. Consequently additional time for safe egress may be necessary. A sprinkler system will minimize the potential hazard to occupants by controlling fire development (see commentary, IBC Section 411).

914.7.2 Automatic smoke detection. Special amusement buildings shall be equipped with an automatic smoke detection system in accordance with Section 907.2.12.

❖ Section 907.2.12 indicates that a smoke detection system is required for special amusement buildings. See the commentary to Section 907.2.12 for additional information.

914.8 Aircraft-related occupancies. Aircraft-related occupancies shall comply with Sections 914.8.1 through 914.8.6.

❖ Aircraft related occupancies include air traffic control towers, residential and commercial hangars and heliports and helistops. Hangars can be those for storage and "parking" of the aircraft or for repair and painting. All of these are addressed in Section 412 of the IBC.

While the following provisions do not identify fire protection requirements for heliports and helistops, Section 412.8 of the IBC requires that these facilities be designed in accordance with NFPA 418. That standard contains various provisions for fire protection including a foam fire-extinguishing system for rooftop landing pads and portable fire extinguishers. Section 2007 of the code contains fire protection requirements for helistops and heliports. Section 905.3.6 requires a standpipe system for helistops and heliports. Additional requirements for portable fire extinguishers in aviation facilities can be found in Section 2005 of the code.

INTERNATIONAL CODE COUNCIL®
Copyright © 2015 ICC. ALL RIGHTS RESERVED. Accessed by David Dammon on Jun 21, 2017 12:30:52 PM pursuant to License Agreement with ICC. No further reproduction or distribution authorized. ANY UNAUTHORIZED REPRODUCTION OR DISTRIBUTION IS A VIOLATION OF THE FEDERAL COPYRIGHT ACT AND THE LICENSE AGREEMENT, AND SUBJECT TO CIVIL AND CRIMINAL PENALTIES THEREUNDER.

914.8.1 Automatic smoke detection systems. Airport traffic control towers shall be provided with an automatic smoke detection system installed in accordance with Section 907.2.22.

❖ Airport traffic control towers are required to have an automatic fire detection system. Because the tower is designed so that people are elevated in the air, the vertical supports generally are narrow and contain little room for separated stairways. An early notification of a fire hazard is important in alerting the occupants so that fire safety operations can be begun as quickly as possible. An automatic detection system is therefore required. Section 907.2.22.1 applies specifically to towers where sprinklers are provided and there are at least two means of egress. Where there is only a single means of egress, Section 907.2.22.2 specifies the coverage of the fire detection systems. Section 907.2.22.2 also applies to towers which are not sprinkler protected although only towers of a height of less than 35 feet would be without sprinklers (see IBC Section 412.3.6). Where suppression is not required by the code, the detection system is vital for the safety of the occupants. No requirements are included in Chapter 11 of the code to address existing airport traffic control towers.

914.8.2 Automatic sprinkler system for new airport traffic control towers. Where an occupied floor is located more than 35 feet (10 668 mm) above the lowest level of fire department vehicle access, new airport traffic control towers shall be equipped with an *automatic sprinkler system* in accordance with Section 903.3.1.1.

❖ Sprinkler systems are required for all towers being constructed under Section 412.3.6 of the IBC once there is an occupied floor above 35 feet. This height was selected because shorter towers should be reachable by ladders typically found at rural fire stations and smaller airports. These are also the types of airports that would have the shorter control towers. Due to the absence of aerial ladders or means to reach higher elevations at these locations, additional levels of fire protection are required. As such, life safety is positively affected by limiting the chance of smoke/fire spread and flashover in the facility where delayed evacuation of the cab may be required. In addition, property protection to allow sooner reuse of the structure would be provided.

914.8.3 Fire suppression for aircraft hangars. Aircraft hangars shall be provided with a fire suppression system designed in accordance with NFPA 409, based upon the classification for the hangar given in Table 914.8.3.

Exception: Where a fixed base operator has separate repair facilities on site, Group II hangars operated by a fixed base operator used for storage of transient aircraft only shall have a fire suppression system, but the system shall be exempt from foam requirements.

❖ To minimize the fire hazards associated with aircraft hangars, most hangars are required to be protected with a fire suppression system. Where required, the fire suppression system must be designed and installed in accordance with the referenced standard, NFPA 409 which requires fire suppression based on the type and construction and the activities in a given hanger.

In the standard, the suppression requirements are broken down based on three categories: Group I, Group II and Group III hangars. Table 914.8.2 designates which Group designation applies to various sizes of fire areas within a hangar and the type of construction. For example a hanger which is 28,000 square feet (2601 m^2) in Type IIB construction would be a Group II hangar. Groups I and II hangers are required to have fire suppression as specified the NFPA 409. In general Group III hangers are exempt from providing fire suppression unless one (or more) of the hazardous operations listed in Section 914.8.3.1 occurs within the hangar. In these situations fire suppression based on the appropriate portion of the standard for either Group I or Group II is required.

The exception allows for Group II hangers that the foam requirements for fire suppression do not need to be provided if the hangar is essentially a parking garage for transient aircraft. The exception is only applicable where a larger airport facility has multiple hangars and separate hangars for repair operations.

TABLE 914.8.3. See page 9-149.

❖ This table is a correlation of the NFPA 409 construction and area limits with the IBC construction type requirements. It combines several tables in NFPA 409 into a single table that allows determination of the group type for aircraft hangars based on construction type and area before proceeding to the standard for the suppression requirements. Note a indicates that, regardless of size or construction type, any hangar with a door opening greater than 28 feet high (8534 mm) is required to have a fire suppression system as required for a Group I hangar. Note c provides a Group IV designation for any hangar located in a membrane structure.

914.8.3.1 Hazardous operations. Any Group III aircraft hangar in accordance with Table 914.8.3 that contains hazardous operations including, but not limited to, the following shall be provided with a Group I or II fire suppression system in accordance with NFPA 409 as applicable:

1. Doping.
2. Hot work including, but not limited to, welding, torch cutting and torch soldering.
3. Fuel transfer.
4. Fuel tank repair or maintenance not including defueled tanks in accordance with NFPA 409, inerted tanks or tanks that have never been fueled.
5. Spray finishing operations.
6. Total fuel capacity of all aircraft within the unsprinklered single *fire area* in excess of 1,600 gallons (6057 L).

INTERNATIONAL CODE COUNCIL®
Copyright © 2015 ICC. ALL RIGHTS RESERVED. Accessed by David Dammon on Jun 21, 2017 12:30:52 PM pursuant to License Agreement with ICC. No further reproduction or distribution authorized. ANY UNAUTHORIZED REPRODUCTION OR DISTRIBUTION IS A VIOLATION OF THE FEDERAL COPYRIGHT ACT AND THE LICENSE AGREEMENT, AND SUBJECT TO CIVIL AND CRIMINAL PENALTIES THEREUNDER.

7. Total fuel capacity of all aircraft within the maximum single *fire area* in excess of 7,500 gallons (28 390 L) for a hangar equipped throughout with an *automatic sprinkler system* installed in accordance with Section 903.3.1.1.

❖ Any of the operations listed in this section where they occur in a Group III hangar will require some level of fire suppression under NFPA 409. The hazardous operations on the list are straight forward. Additional information may be found as follows: Item 1 is discussed further in Section 914.8.4; Item 2 is regulated by Chapter 35; Items 3 and 4 are regulated by Chapter 57; Item 5 is regulated by Chapter 24.

914.8.3.2 Separation of maximum single fire areas. Maximum single *fire areas* established in accordance with hangar classification and construction type in Table 914.8.3 shall be separated by 2-hour *fire walls* constructed in accordance with Section 706 of the *International Building Code*. In determining the maximum single fire area as set forth in Table 914.8.3, ancillary uses that are separated from aircraft servicing areas by not less than a 1-hour *fire barrier* constructed in accordance with Section 707 of the *International Building Code* shall not be included in the area.

❖ Table 914.8.3 places a maximum size limit on hangars based on type of construction. For a hangar structure to exceed these sizes requires the construction of fire walls to establish fire areas than stay within the limits. This section is more stringent than the definition of "Fire areas" which allows fire barriers to establish a fire area. For hangers, the fire areas must be created by exterior walls of a building or a combination of exterior walls and fire walls. Note that there is some allowance for the use of fire barriers to create fire areas when separating ancillary uses such as business offices, maintenance shops and storage areas. The fire suppression requirements contained within NFPA 409 are primarily focused on the protection of aircraft within the servicing and storage area. The fire protection requirements in the ancillary areas are not as extensive as those required for the aircraft servicing and storage areas and less restrictive separations are considered appropriate. This allowance is consistent with NFPA 409 requirements.

914.8.4 Finishing. The process of "doping," involving the use of a volatile flammable solvent, or of painting shall be carried on in a separate detached building equipped with automatic fire-extinguishing equipment in accordance with Section 903.

❖ Doping is a type of lacquer used to protect, waterproof and make taut cloth surfaces of airplane wings. It is used on lighter-than-air, ultra-light and some light aircraft. It is essentially painting on fabric. Doping is not used on metallic surfaces; however, the use of flammable paints is also addressed in this section. When flammable finishes are applied, the process must occur in a separate building not attached to the hangar. Because the code text refers to Section 903 the intent is for an automatic sprinkler system to be installed, unless otherwise approved (see commentary, IBC Section 412.4.5).

914.8.5 Residential aircraft hangar smoke alarms. Smoke alarms shall be provided within residential aircraft hangars in accordance with Section 907.2.21.

❖ A residential aircraft hangar, as defined in Section 202 of the IBC, is ". . . an accessory building less than 2,000 square feet (186 m^2) and 20 feet (6096 mm) in height, constructed on a one- or two-family residential property where aircraft are stored. . ." The requirements for the residential hangar are very similar to that for a residential garage. The hangar can be either detached or attached. If attached, it must be separated from the dwelling by construction with not less than a 1-hour fire-resistance rating. Section 907.2.21 requires a minimum of one smoke alarm in a residential aircraft hangar. See the commentary to Section 907.2.21 for additional information.

TABLE 914.8.3
HANGAR FIRE SUPPRESSION REQUIREMENTS[a,b,c]

MAXIMUM SINGLE FIRE AREA (square feet)	INTERNATIONAL BUILDING CODE TYPE OF CONSTRUCTION								
	IA	IB	IIA	IIB	IIIA	IIIB	IV	VA	VB
> 40,001	Group I	Group I	Group I	Group I	Group I	Group I	Group I	Group I	Group I
40,000	Group II	Group II	Group II	Group II	Group II	Group II	Group II	Group II	Group II
30,000	Group III	Group II	Group II	Group II	Group II	Group II	Group II	Group II	Group II
20,000	Group III	Group III	Group II	Group II	Group II	Group II	Group II	Group II	Group II
15,000	Group III	Group III	Group III	Group II	Group III	Group II	Group III	Group II	Group II
12,000	Group III	Group III	Group III	Group III	Group III	Group III	Group III	Group II	Group II
8,000	Group III	Group III	Group III	Group III	Group III	Group III	Group III	Group III	Group II
5,000	Group III	Group III	Group III	Group III	Group III	Group III	Group III	Group III	Group III

For SI: 1 square foot = 0.0929 m^2, 1 foot = 304.8 mm.

a. Aircraft hangars with a door height greater than 28 feet shall be provided with fire suppression for a Group I hangar regardless of maximum fire area.

b. Groups shall be as classified in accordance with NFPA 409.

c. Membrane structures complying with Section 3102 of the *International Building Code* shall be classified as a Group IV hangar.

INTERNATIONAL CODE COUNCIL®
Copyright © 2015 ICC. ALL RIGHTS RESERVED. Accessed by David Dammon on Jun 21, 2017 12:30:52 PM pursuant to License Agreement with ICC. No further reproduction or distribution authorized. ANY UNAUTHORIZED REPRODUCTION OR DISTRIBUTION IS A VIOLATION OF THE FEDERAL COPYRIGHT ACT AND THE LICENSE AGREEMENT, AND SUBJECT TO CIVIL AND CRIMINAL PENALTIES THEREUNDER.

914.8.6 Aircraft paint hangar fire suppression. Aircraft paint hangars shall be provided with fire suppression as required by NFPA 409.

❖ To minimize the fire hazards associated with aircraft paint hangars, all such buildings are required to be protected with a fire suppression system. This requirement is applicable regardless of the size of the hangar in terms of height or area or the types and quantities of aircraft that are being cleaned or painted. The fire suppression system must be designed and installed in accordance with NFPA 409.

This section assumes the primary function of the hangar is as a paint hangar. Minor painting may constitute finishing in accordance with Section 914.8.4. While not referenced in the code, NFPA 410 provides additional guidance on aircraft maintenance, including the painting of aircraft.

914.9 Application of flammable finishes. An *automatic sprinkler system* or fire-extinguishing system shall be provided in all spray, dip and immersing spaces and storage rooms, and shall be installed in accordance with Chapter 9.

❖ Chapter 24 provides detailed information about spaces and rooms involved in the application of flammable finishes. This section references Chapter 9 for the appropriate type of fire-extinguishing system.

914.10 Drying rooms. Drying rooms designed for high-hazard materials and processes, including special occupancies as provided for in Chapter 4 of the *International Building Code*, shall be protected by an *approved* automatic fire-extinguishing system complying with the provisions of Chapter 9.

❖ This section reiterates the requirements from Section 417.4 of the IBC. See the commentary to Section 417.4 of the IBC for additional information.

914.11 Ambulatory care facilities. Occupancies classified as ambulatory care facilities shall comply with Sections 914.11.1 through 914.11.3.

❖ This section simply introduces the fire protection requirements for ambulatory care facilities. See also the commentary to Section 422 of the IBC.

914.11.1 Automatic sprinkler systems. An *automatic sprinkler system* shall be provided for ambulatory care facilities in accordance with Section 903.2.2.

❖ See the commentary to Section 903.2.2.

914.11.2 Manual fire alarm systems. A manual fire alarm system shall be provided for ambulatory care facilities in accordance with Section 907.2.2.

❖ See the commentary to Section 907.2.2.

914.11.3 Fire alarm systems. An automatic smoke detection system shall be provided for ambulatory care facilities in accordance with Section 907.2.2.1.

❖ See the commentary to Section 907.2.2.1.

SECTION 915
CARBON MONOXIDE DETECTION

915.1 General. Carbon monoxide detection shall be installed in new buildings in accordance with Sections 915.1.1 through 915.6. Carbon monoxide detection shall be installed in existing buildings in accordance with Section 1103.9.

❖ These provisions were added to this code and the IBC to be consistent with the requirements for carbon monoxide (CO) detectors in all new construction of one- and two-family dwellings that had been added to the IRC in the 2009 edition. Another reason for its approval was technical data in a 1998 article published by the *Journal of the American Medical Association* that stated that approximately 2,100 deaths occur annually as a result of CO poisoning. That annual number is based on the findings of a paper prepared by the U.S. Department of Health Centers for Disease Control (CDC). That paper documented epidemiological research by two CDC physicians who examined 56,133 death certificates over a 10-year period. Excluding suicides, homicides, structure fires and deaths resulting from CO poisoning in motor vehicles, the death rate steadily decreased for the sample period, from a value of 1513 people in 1979 to 878 in 1988. The highest death rates occurred in winter and among males, African Americans, the elderly and residents in northern states.

CO is a colorless, tasteless, odorless gas that interrupts the attachment of oxygen molecules to hemoglobin in blood cells and can cause headaches, confusion and dizziness. At higher concentrations, CO can cause loss of consciousness and eventual death. Exposures above 100 parts/million are dangerous to human health. It is not a toxic or highly toxic gas as defined in Chapter 2 but is classified as a flammable gas.

The provisions of Section 915 detail what occupancies require CO detection and where that detection is specifically to be located within the building. Also flexibility on the use of single- and multiple-station alarms versus CO detection systems is provided.

Retroactive requirements are found in Chapter 11. These requirements are essentially the same except that Group E classrooms are not addressed and the CO alarms can be battery powered.

915.1.1 Where required. Carbon monoxide detection shall be provided in Group I-1, I-2, I-4 and R occupancies and in classrooms in Group E occupancies in the locations specified in Section 915.2 where any of the conditions in Sections 915.1.2 through 915.1.6 exist.

❖ CO detection is provided to protect occupants of dwelling units and sleeping units within Group I-1, I-4, and R occupancies and classrooms in Group E occupancies. These are locations where occupants are

INTERNATIONAL CODE COUNCIL®
Copyright © 2015 ICC. ALL RIGHTS RESERVED. Accessed by David Dammon on Jun 21, 2017 12:30:52 PM pursuant to License Agreement with ICC. No further reproduction or distribution authorized. ANY UNAUTHORIZED REPRODUCTION OR DISTRIBUTION IS A VIOLATION OF THE FEDERAL COPYRIGHT ACT AND THE LICENSE AGREEMENT, AND SUBJECT TO CIVIL AND CRIMINAL PENALTIES THEREUNDER.

likely to be sleeping or that young children may be at risk. Sections 915.1.2 through 915.1.5 address the different scenarios that warrant CO detection and are more specific than past editions of the code and the IBC.

915.1.2 Fuel-burning appliances and fuel-burning fireplaces. Carbon monoxide detection shall be provided in *dwelling units*, *sleeping units* and classrooms that contain a fuel-burning appliance or a fuel-burning fireplace.

❖ This section clarifies that CO detection is required where the dwelling or sleeping unit or the classroom actually contains a fuel burning appliance or fuel burning fireplace. Section 915.1.3 discusses dwelling and sleeping units and classrooms that are served by fuel burning, forced-air furnaces.

915.1.3 Forced-air furnaces. Carbon monoxide detection shall be provided in *dwelling units*, *sleeping units* and classrooms served by a fuel-burning, forced-air furnace.

Exception: Carbon monoxide detection shall not be required in *dwelling units*, *sleeping units* and classrooms where carbon monoxide detection is provided in the first room or area served by each main duct leaving the furnace, and the carbon monoxide alarm signals are automatically transmitted to an approved location.

❖ This section addresses forced-air furnaces that physically move air. This source is more indirect than having the fuel-burning appliance or fuel-burning fireplace within the space itself but still creates a potential hazard.

The exception addresses the fact that if detection is provided more closely to the source, then further detection within dwelling units, sleeping units and Group E classrooms is not necessary provided that a CO alarm signal is transmitted to an approved location from which emergency actions can be initiated and occupants in the portions of the building more remote from the initial detection can be notified. The CO will continue to be generated until action is taken.

915.1.4 Fuel-burning appliances outside of dwelling units, sleeping units and classrooms. Carbon monoxide detection shall be provided in *dwelling units*, *sleeping units* and classrooms located in buildings that contain fuel-burning appliances or fuel-burning fireplaces.

Exceptions:

1. Carbon monoxide detection shall not be required in *dwelling units*, *sleeping units* and classrooms where there are no communicating openings between the fuel-burning appliance or fuel-burning fireplace and the *dwelling unit*, *sleeping unit* or classroom.
2. Carbon monoxide detection shall not be required in *dwelling units*, *sleeping units* and classrooms where carbon monoxide detection is provided in one of the following locations:
   2.1. In an approved location between the fuel-burning appliance or fuel-burning fireplace and the *dwelling unit*, *sleeping unit* or classroom.
   2.2. On the ceiling of the room containing the fuel-burning appliance or fuel-burning fireplace.

❖ This section focuses on the presence of fuel burning equipment in buildings containing dwelling units, sleeping units and classrooms but with the fuel burning equipment located outside of those areas. CO detection is required in every dwelling unit, sleeping unit and classroom, even if that equipment does not serve those spaces. A good example of this is a multistory hotel that has all electric HVAC in the sleeping units, but perhaps a fireplace in the lobby, forced air heating in the common area, and a boiler in an equipment room.

There are two exceptions provided that recognize, based upon several factors, that the CO is a very low risk to the spaces required to be protected by Section 915.

Exception 1 addresses buildings where there are no communicating openings between the location of the fuel burning appliance and dwelling units, sleeping units and classrooms. The intent is that if the appliance is not serving the space and has no communication with the space, CO should not enter those spaces. This covers situations where CO emanating from the fuel burning appliance has no direct path to a dwelling unit or sleeping unit, such as a water heater in an equipment room that only has access from the exterior of the building, and no openings through which the CO can get to dwelling units or sleeping units. An interior door, between the equipment room and a dwelling unit, even if it is self-closing, would not allow this exception to be used.

Exception 2 is similar to the exception to Section 915.1.3. This exception requires the installation of one or more CO alarms in approved locations between fuel burning appliances and the nearest dwelling unit, sleeping unit or classroom or on the ceiling of the room in which a fuel-burning appliance is located. CO alarms are only required where there are communicating openings including ducts, concealed spaces, interior hallways, stairs and spaces between the fuel-burning appliance or fuel burning fireplace and the dwelling unit or sleeping unit where air can flow from the appliance to the dwelling unit or sleeping unit.

915.1.5 Private garages. Carbon monoxide detection shall be provided in *dwelling units*, *sleeping units* and classrooms in buildings with attached private garages.

Exceptions:

1. Carbon monoxide detection shall not be required where there are no communicating openings between the private garage and the *dwelling unit*, *sleeping unit* or classroom.
2. Carbon monoxide detection shall not be required in *dwelling units*, *sleeping units* and classrooms located more than one story above or below a private garage.

INTERNATIONAL CODE COUNCIL®
Copyright © 2015 ICC. ALL RIGHTS RESERVED. Accessed by David Dammon on Jun 21, 2017 12:30:52 PM pursuant to License Agreement with ICC. No further reproduction or distribution authorized. ANY UNAUTHORIZED REPRODUCTION OR DISTRIBUTION IS A VIOLATION OF THE FEDERAL COPYRIGHT ACT AND THE LICENSE AGREEMENT, AND SUBJECT TO CIVIL AND CRIMINAL PENALTIES THEREUNDER.

3. Carbon monoxide detection shall not be required where the private garage connects to the building through an open-ended corridor.
4. Where carbon monoxide detection is provided in an approved location between openings to a private garage and *dwelling units*, *sleeping units* or classrooms, carbon monoxide detection shall not be required in the *dwelling units*, *sleeping units* or classrooms.

❖ This section addresses attached private garages. Private garages, a term defined in Chapter 2 of the code, are often sources of CO generation. When attached to a building containing dwelling units, sleeping units or classrooms in Group E, CO detection is required.

There are several exceptions to the requirement for CO detection. These are similar to those found in Sections 915.1.3 and 915.1.4.

Exception 1 is similar to Exception 1 in Section 915.1.4. If there are no communicating openings, then CO detection is not required. The likelihood of CO entering the dwelling units, sleeping units or classrooms is greatly reduced.

Exception 2 addresses buildings where the dwelling units, sleeping units and classrooms are two stories above or below the location of the fuel-burning appliance. The CO would need to travel through an entire story before reaching the areas of concern.

Exception 3 does not require CO alarms to be provided when the private garage is attached to the building by an open ended corridor (a term defined in Chapter 2 of the code and the IFC, and commonly called a breezeway). This allows the CO concentration to dissipate before becoming a hazard to building occupants.

Exception 4 is similar to the exception to Section 915.1.3 and recognizes that the detection can be located closer to the source of the hazard versus requiring detection in every dwelling unit, sleeping unit or classroom.

915.1.6 Exempt garages. For determining compliance with Section 915.1.5, an open parking garage complying with Section 406.5 of the *International Building Code* or an enclosed parking garage complying with Section 406.6 of the *International Building Code* shall not be considered a private garage.

❖ This section is only provided to distinguish open parking garages and enclosed parking garages from private garages. "Open parking garage" is a defined term in Section 202 of the code. "Private garage" is a defined term in Chapter 2 of the IBC.

915.2 Locations. Where required by Section 915.1.1, carbon monoxide detection shall be installed in the locations specified in Sections 915.2.1 through 915.2.3.

❖ Sections 915.2.1 through 915.2.3 provide more detail on where detection is specifically required to be installed. This is a clarification from previous editions. NFPA 720 does not provide detailed enough information as to where detection should be located so specific direction is provided in the code. In some cases, the locations differ from that provided in NFPA 720.

915.2.1 Dwelling units. Carbon monoxide detection shall be installed in *dwelling units* outside of each separate sleeping area in the immediate vicinity of the bedrooms. Where a fuel-burning appliance is located within a bedroom or its attached bathroom, carbon monoxide detection shall be installed within the bedroom.

❖ The language is similar to that required for smoke alarms but the detection is only required outside of each sleeping area. If the fuel-burning appliance is within the bedroom or the attached bathroom, detection is required within the bedroom itself. Commentary Figure 915.2.1 shows the layout of carbon monoxide alarms versus smoke alarms. Note that if they are combined (smoke and CO alarms) the smoke alarm placement would be more restrictive.

915.2.2 Sleeping units. Carbon monoxide detection shall be installed in *sleeping units*.

Exception: Carbon monoxide detection shall be allowed to be installed outside of each separate sleeping area in the immediate vicinity of the *sleeping unit* where the *sleeping unit* or its attached bathroom does not contain a fuel-burning appliance and is not served by a forced air furnace.

❖ The intent of this section is the same as Section 915.2.1, except that it is applicable to sleeping units. Sleeping units can be as simple as a hotel room or a suite-type layout. This allows the detection to be either in the sleeping area itself, as with a simple hotel room, or outside the sleeping area, as is the case for dwelling units.

915.2.3 Group E occupancies. Carbon monoxide detection shall be installed in classrooms in Group E occupancies. Carbon monoxide alarm signals shall be automatically transmitted to an on-site location that is staffed by school personnel.

Exception: Carbon monoxide alarm signals shall not be required to be automatically transmitted to an on-site location that is staffed by school personnel in Group E occupancies with an occupant load of 30 or less.

❖ This section clarifies that the detection is to be located within the classroom and that a signal from the CO detection be automatically transmitted to a location on-site where school personnel can react to the situation, such as the school office. The exception provides relief to small schools where it is very easy to communicate a hazardous situation throughout the building.

915.3 Detection equipment. Carbon monoxide detection required by Sections 915.1 through 915.2.3 shall be provided by carbon monoxide alarms complying with Section 915.4 or carbon monoxide detection systems complying with Section 915.5.

❖ This section provides the option of providing the CO detection through single- or multiple-station CO alarms or through a CO detection system. This is a similar concept to smoke alarms and smoke detec-

INTERNATIONAL CODE COUNCIL®
Copyright © 2015 ICC. ALL RIGHTS RESERVED. Accessed by David Dammon on Jun 21, 2017 12:30:52 PM pursuant to License Agreement with ICC. No further reproduction or distribution authorized. ANY UNAUTHORIZED REPRODUCTION OR DISTRIBUTION IS A VIOLATION OF THE FEDERAL COPYRIGHT ACT AND THE LICENSE AGREEMENT, AND SUBJECT TO CIVIL AND CRIMINAL PENALTIES THEREUNDER.

tion systems. Each type of CO detector is listed to a different UL standard depending on whether it is to be used as a stand-alone or interconnected detector (UL 2034) or a detector that is part of a CO detection system (UL 2075). Section 915.4 addresses CO alarms and Section 915.5 addresses CO detection systems.

915.4 Carbon monoxide alarms. Carbon monoxide alarms shall comply with Sections 915.4.1 through 915.4.3.

❖ If the option of using CO alarms is chosen, compliance is required with Sections 915.4.1 through 915.4.3. CO alarms can be stand-alone or interconnected (single- or multiple-station). Section 915 does not address whether such alarms are required to be interconnected.

CO alarms are designed to initiate an audible alarm when the level of CO is below that which can cause a loss of the ability to react to the dangers of CO exposure. UL specifies that CO alarms activate at a level where the CO concentration over a given period of time can achieve 10-percent carboxyhemoglobin (COHb) in the body. Ten-percent COHb will not cause physiological injury, but is a level at which increases in the CO concentration will begin to affect the human body.

915.4.1 Power source. Carbon monoxide alarms shall receive their primary power from the building wiring where such wiring is served from a commercial source, and when primary power is interrupted, shall receive power from a battery. Wiring shall be permanent and without a disconnecting switch other than that required for overcurrent protection.

Exception: Where installed in buildings without commercial power, battery-powered carbon monoxide alarms shall be an acceptable alternative.

❖ This section is very similar to that required for smoke alarms (i.e., Section 907.2.11.6). The power supply must be provided by the building with battery backup. As with smoke alarms, if commercial power is not available, battery power is acceptable.

915.4.2 Listings. Carbon monoxide alarms shall be listed in accordance with UL 2034.

❖ Single- or multiple-station CO alarms are required to be listed in accordance with UL 2034. This standard is specific to CO alarms that provide both detection and notification.

915.4.3 Combination alarms. Combination carbon monoxide/smoke alarms shall be an acceptable alternative to carbon monoxide alarms. Combination carbon monoxide/smoke alarms shall be listed in accordance with UL 2034 and UL 217.

❖ Since smoke alarms are required in many occupancies, often a single combination alarm is desired. In fact, in some jurisdictions the CO alarms are required to be combined with smoke alarms. To meet this requirement, the combination CO and smoke alarm must be listed to both UL 2034 and UL 217. See

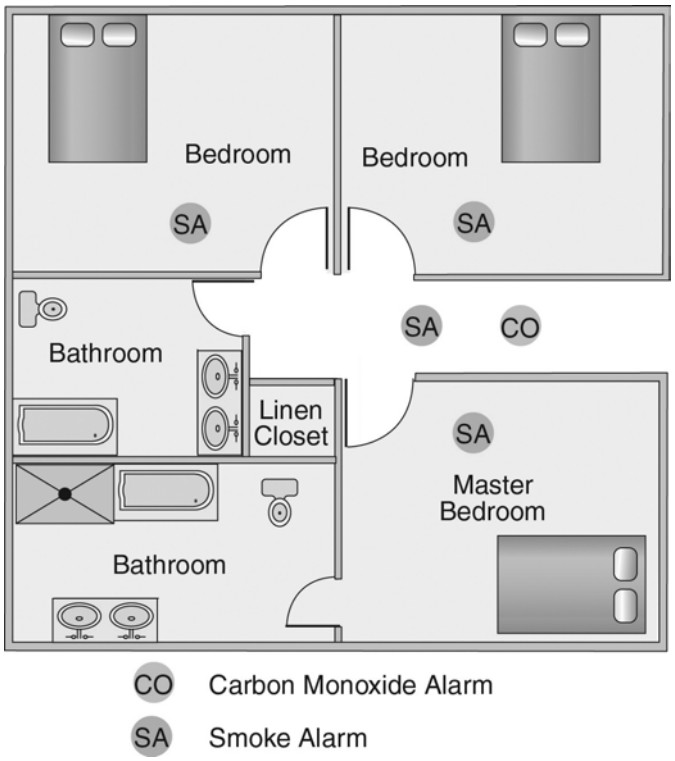

Figure 915.2.1
CARBON MONOXIDE ALARM PLACEMENT VERSUS SMOKE DETECTION PLACEMENT

INTERNATIONAL CODE COUNCIL®
Copyright © 2015 ICC. ALL RIGHTS RESERVED. Accessed by David Dammon on Jun 21, 2017 12:30:52 PM pursuant to License Agreement with ICC. No further reproduction or distribution authorized. ANY UNAUTHORIZED REPRODUCTION OR DISTRIBUTION IS A VIOLATION OF THE FEDERAL COPYRIGHT ACT AND THE LICENSE AGREEMENT, AND SUBJECT TO CIVIL AND CRIMINAL PENALTIES THEREUNDER.

Commentary Figure 915.4.3 for an example of a combination CO and smoke alarm.



Figure 915.4.3
COMBINATION CARBON MONOXIDE AND SMOKE ALARM

915.5 Carbon monoxide detection systems. Carbon monoxide detection systems shall be an acceptable alternative to carbon monoxide alarms and shall comply with Sections 915.5.1 through 915.5.3.

❖ If a CO detection system is preferred over CO alarms, compliance with Sections 915.5.1 through 915.5.3 is required.

915.5.1 General. Carbon monoxide detection systems shall comply with NFPA 720. Carbon monoxide detectors shall be listed in accordance with UL 2075.

❖ There are two standards applicable to CO detection systems. The systems are required to comply with NFPA 720 and the detectors themselves are required to comply with UL 2075.

915.5.2 Locations. Carbon monoxide detectors shall be installed in the locations specified in Section 915.2. These locations supersede the locations specified in NFPA 720.

❖ This section is provided to clarify that the locations required for CO detectors in Section 915.2 differ from NFPA 720 and that those locations will supersede the standard. This simply reaffirms the provisions of Section 1027.1 regarding conflicts between the code and a referenced standard.

915.5.3 Combination detectors. Combination carbon monoxide/smoke detectors installed in carbon monoxide detection systems shall be an acceptable alternative to carbon monoxide detectors, provided they are listed in accordance with UL 2075 and UL 268.

❖ Similar to CO alarms, there is often a desire or a requirement to combine smoke detection and CO detection systems. If the detectors themselves are combined, they need to be listed in accordance with both UL 2075 and UL 268. NFPA 720 requires the CO alarm be capable of transmitting a distinct audible signal that is different than the smoke alarm signal.

915.6 Maintenance. Carbon monoxide alarms and carbon monoxide detection systems shall be maintained in accordance with NFPA 720. Carbon monoxide alarms and carbon monoxide detectors that become inoperable or begin producing end-of-life signals shall be replaced.

❖ This section is simply a reference to the maintenance requirements of NFPA 720. In addition, when detectors become inoperable or start producing end-of-life signals, they are required to be replaced.

Bibliography

The following resource materials were used in the preparation of the commentary for this chapter of the code:

Americans With Disabilities Act (ADA) – Standard for Accessible Design 2010. Washington, DC: US Department of Justice,

ASHRAE Guideline 5-1994 (RA 2001), *Commissioning Smoke Management Systems*. Atlanta GA: American Society of Heating, Refrigerating and Air-Conditioning Engineers, 2001.

Cobb, Nathaniel and Ruth A. Etzel Ruth. "Unintentional Carbon Monoxide–Related Deaths in the United States, 1979 through 1988," *Journal of the American Medical Association*, August 7th, 1991, Vol. 266, No. 5, pp. 659-663.

Fire Protection Handbook, 19th edition. Quincy, MA: National Fire Protection Association, 2003.

International Code Interpretations. Washington, DC: International Code Council, 2009.

Grosshandler, William, *The Use of Portable Fire Extinguishers in Nightclubs*. Gaitherburg MD. National Institute of Science and Technology, July, 2008, pg. 5.

Klote, J. and D. Evans. *A Guide to Smoke Control in the 2006 IBC.* Washington, DC: International Code Council, 2007.

Klote, J. and J. Milke. *Principles of Smoke Management*. Atlanta, GA: American Society of Heating, Refrigerating and Air-Conditioning Engineers, 2002.

SFPE Engineering Guide to Performance-based Fire Protection Analysis and Design of Buildings. Quincy, MA: National Fire Protection Association, 2004.

The SFPE Handbook of Fire Protection Engineering; 4th edition. Quincy, MA: National Fire Protection Association, 2008.

INTERNATIONAL CODE COUNCIL®
Copyright © 2015 ICC. ALL RIGHTS RESERVED. Accessed by David Dammon on Jun 21, 2017 12:30:52 PM pursuant to License Agreement with ICC. No further reproduction or distribution authorized. ANY UNAUTHORIZED REPRODUCTION OR DISTRIBUTION IS A VIOLATION OF THE FEDERAL COPYRIGHT ACT AND THE LICENSE AGREEMENT, AND SUBJECT TO CIVIL AND CRIMINAL PENALTIES THEREUNDER.

Chapter 10: Means of Egress

General Comments

The general criteria set forth in Chapter 10 regulating the design of the means of egress are established as the primary method for protection of people in buildings. Chapter 10 provides the minimum requirements for means of egress in all buildings and structures. Both prescriptive and performance language is utilized in this chapter to provide for a basic approach in determining a safe exiting system for all occupancies. Chapter 10 addresses all portions of the egress system and includes design requirements as well as provisions regulating individual components. The requirements detail the size, arrangement, number and protection of means of egress components. Functional and operational characteristics also are specified, permitting safe use of components without special knowledge or effort.

This chapter provides a zonal approach to egress through regulation of an egress system's three parts: exit access, exit and exit discharge. Section 1001 includes administrative provisions. Section 1002 shows a list of defined terms that are primarily associated with Chapter 10. For commentary on these definitions, see Chapter 2.

Sections 1003 through 1015 include general provisions that apply to all three components. This includes general means of egress requirements; occupant loads; means of egress sizing; the number of exits and exit access doorways and their configuration; illumination for the means of egress; specific requirements for accessible means of egress; doors, gates and turnstiles; provisions for stairways and ramps along with their associated handrail and guard requirements; and exit signage (see commentary to Section 1003).

The exit access requirements are in Sections 1016 through 1021. This includes general exist access requirements, exit access travel distance; aisles (for other than assembly spaces); specific requirements for stairways and ramps that serve as part of the exit access; corridors; and egress balconies (see commentary, Section 1016).

The exit requirements are in Sections 1022 through 1027. Exit information includes provisions for exits; interior and exterior stairways and ramps that serve as an exit element; exit passageways; luminious egress path markings that are required on the exit stairways in high-rise buildings (see Section 403); and horizontal exits (see commentary, Section 1022).

The exit discharge requirements are in Section 1028.

Section 1029 includes those means of egress requirements that are unique to spaces used for assembly purposes.

Emergency escape and rescue opening requirements are in Section 1030.

Section 1002 through 1030 are duplicated text from Chapter 10 of the *International Building Code*® (IBC®) and are fully applicable to new buildings constructed after adoption of the code. The code has one additional section at the end of the chapter dealing with maintenance of the means of egress (see commentary, Section 1031). For means of egress requirements in existing buildings, refer to the *International Existing Building Code*® (IEBC®) or Chapter 11.

The evolution of means of egress requirements has been influenced by lessons learned from real fire incidents. While contemporary fires may reinforce some of these lessons, one must view each incident as an opportunity to assess critically the safety and reasonability of current regulations.

Cooperation among the developers of model codes and standards has resulted in agreement on many basic terms and concepts. The text of the code, including this chapter, is consistent with these national uniformity efforts.

National uniformity in an area such as means of egress has many benefits for the fire code official and other code users. At the top of the list are the lessons to be learned from experiences throughout the nation and the world, which can be reported in commonly used terminology and conditions that we can all relate to and clearly understand.

Purpose

A primary purpose of codes in general, and building and fire codes in particular, is to safeguard life in the presence of a fire. Integral to this purpose is the path of egress travel for occupants to escape and avoid a fire. Means of egress can be considered the lifeline of a building. The principles on which means of egress are based and that form the fundamental criteria for requirements are to provide a system:

1. That will give occupants alternative paths of travel to a place of safety to avoid fire.
2. That will shelter occupants from fire and the products of combustion.
3. That will accommodate all occupants of a structure.

INTERNATIONAL CODE COUNCIL®
Copyright © 2015 ICC. ALL RIGHTS RESERVED. Accessed by David Dammon on Jun 21, 2017 12:30:52 PM pursuant to License Agreement with ICC. No further reproduction or distribution authorized. ANY UNAUTHORIZED REPRODUCTION OR DISTRIBUTION IS A VIOLATION OF THE FEDERAL COPYRIGHT ACT AND THE LICENSE AGREEMENT, AND SUBJECT TO CIVIL AND CRIMINAL PENALTIES THEREUNDER.

4. That is clear, unobstructed, well marked and illuminated and in which all components are under the control of the user without requiring any tools, keys or special knowledge or effort.

History is marked with the loss of life from fire. Early as well as contemporary multiple fire fatalities can be traced to a compromise of one or more of the above principles.

Life safety from fire is a matter of successfully evacuating or relocating the occupants of a building to a place of safety. As a result, life safety is a function of time: time for detection, time for notification and time for safe egress. The fire growth rate over a period of time is also a critical factor in addressing life safety. Other sections of the code, such as protection of vertical openings (Chapter 7), interior finish (Chapter 8), fire suppression and detection systems (Chapter 9), also have an impact on life safety. Chapter 10 addresses the issues related to the means available to relocate or evacuate building occupants.

SECTION 1001
ADMINISTRATION

1001.1 General. Buildings or portions thereof shall be provided with a means of egress system as required by this chapter. The provisions of this chapter shall control the design, construction and arrangement of means of egress components required to provide an approved means of egress from structures and portions thereof. Sections 1003 through 1029 shall apply to new construction. Section 1030 shall apply to existing buildings.

Exception: Detached one- and two-family dwellings and multiple single-family dwellings (townhouses) not more than three stories above grade plane in height with a separate means of egress and their accessory structures shall comply with the *International Residential Code*.

❖ The minimum requirements for means of egress are to be incorporated in all structures as specified in this chapter. Application would be effective on the date the code is adopted and placed into effect.

The means of egress in an existing building that experiences a change of occupancy, such as from Group S-2 (storage) to A-3 (assembly), would require reevaluation for code compliance based on the new occupancy, as stated in *International Existing Building Code*® (IEBC®). Similarly, the means of egress in an existing occupancy of Group A-3 in which additional seating is to be provided, thereby increasing the occupant load, would require reevaluation for code compliance based on the increased occupant load.

Fundamental to the level of life safety in any building, whether it is new or many years old, is the provision for an adequate egress system. It is for that reason that Section 1104 is retroactively applicable to existing buildings that are not undergoing changes, as regulated by the IEBC. The means of egress in existing buildings must also be properly maintained in accordance with Section 1031 if the intended level of safety is to remain for the life of the building.

Reflecting the correlation and compatibility that is a hallmark of the *International Codes*® (I-Codes®), the exception makes it clear that the means of egress in buildings that are within the scope of the *International Residential Code*® (IRC®) are to comply with those requirements instead of Chapter 10.

1001.2 Minimum requirements. It shall be unlawful to alter a building or structure in a manner that will reduce the number of *exits* or the capacity of the *means of egress* to less than required by this code.

❖ A fundamental concept in life safety design is that the means of egress system is to be constantly available throughout the life of a building. Any change in the building or its contents, by physical reconstruction, alteration or a change of occupancy, is cause to review the resulting egress system. As a minimum, a building's means of egress is to be continued as initially approved. If a building or portion thereof has a change of occupancy, the complete egress system is to be evaluated and approved for compliance with the current code requirements for new occupancies (see IEBC).

The means of egress in an existing building that experiences a change of occupancy, such as from Group S-2 (storage) to A-3 (assembly), requires reevaluation for code compliance based on the new occupancy. Similarly, the means of egress in an existing occupancy of Group A-3 in which additional seating is to be provided, thereby increasing the occupant load, requires reevaluation for code compliance based on the increased load.

The temptation is to temporarily remove egress components or other fire protection or life safety features from service during an alteration or repair to or temporary occupancy of a building. During such times, a building is frequently more vulnerable to fire and the rapid spread of products of combustion. Either the occupants should not occupy those spaces where the means of egress has been compromised by the construction, or compensating fire safety features, providing equivalent safety for the occupants, should be considered. Occupants in adjacent areas may also require access to the egress facilities in the area under construction.

INTERNATIONAL CODE COUNCIL®
Copyright © 2015 ICC. ALL RIGHTS RESERVED. Accessed by David Dammon on Jun 21, 2017 12:30:52 PM pursuant to License Agreement with ICC. No further reproduction or distribution authorized. ANY UNAUTHORIZED REPRODUCTION OR DISTRIBUTION IS A VIOLATION OF THE FEDERAL COPYRIGHT ACT AND THE LICENSE AGREEMENT, AND SUBJECT TO CIVIL AND CRIMINAL PENALTIES THEREUNDER.

SECTION 1002
DEFINITIONS

1002.1 Definitions. The following terms are defined in Chapter 2:

ACCESSIBLE MEANS OF EGRESS.

AISLE.

AISLE ACCESSWAY.

ALTERNATING TREAD DEVICE.

AREA OF REFUGE.

BLEACHERS.

BREAKOUT.

COMMON PATH OF EGRESS TRAVEL.

CORRIDOR.

DOOR, BALANCED.

EGRESS COURT.

EMERGENCY ESCAPE AND RESCUE OPENING.

EXIT.

EXIT ACCESS.

EXIT ACCESS DOORWAY.

EXIT ACCESS RAMP.

EXIT ACCESS STAIRWAY.

EXIT DISCHARGE.

EXIT DISCHARGE, LEVEL OF.

EXIT, HORIZONTAL.

EXIT PASSAGEWAY.

EXTERIOR EXIT RAMP.

EXTERIOR EXIT STAIRWAY.

FIRE EXIT HARDWARE.

FIXED SEATING.

FLIGHT.

FLOOR AREA, GROSS.

FLOOR AREA, NET.

FOLDING AND TELESCOPIC SEATING.

GRANDSTAND.

GUARD.

HANDRAIL.

INTERIOR EXIT RAMP.

INTERIOR EXIT STAIRWAY.

LOW ENERGY POWER-OPERATED DOOR.

MEANS OF EGRESS.

MERCHANDISE PAD.

NOSING.

OCCUPANT LOAD.

OPEN-ENDED CORRIDOR.

PANIC HARDWARE.

PHOTOLUMINESCENT.

POWER-ASSISTED DOOR.

POWER-OPERATED DOOR.

PUBLIC WAY.

RAMP.

SCISSOR STAIRWAY.

SELF-LUMINOUS.

SMOKE-PROTECTED ASSEMBLY SEATING.

STAIR.

STAIRWAY.

STAIRWAY, SPIRAL.

WINDER.

❖ This section lists terms that are specifically associated with the subject matter of this chapter. It is important to emphasize that these terms are not exclusively related to this chapter, but may or may not also be applicable where the term is used elsewhere in the code.

Definitions of terms can help in the understanding and application of the code requirements. The purpose for including a list within this chapter is to provide more convenient access to terms that may have a specific or limited application within this chapter. For the complete definition and associated commentary, refer back to Chapter 2. Terms that are italicized provide a visual identification throughout the code that a definition exists for that term. The use and application of all defined terms are set forth in Section 201.

SECTION 1003
GENERAL MEANS OF EGRESS

1003.1 Applicability. The general requirements specified in Sections 1003 through 1015 shall apply to all three elements of the *means of egress* system, in addition to those specific requirements for the *exit access*, the *exit* and the *exit discharge* detailed elsewhere in this chapter.

❖ The requirements in the chapter address the three parts of a means of egress system: the exit access, the exit and the exit discharge. This section specifies that the requirements of Sections 1003 through 1015 apply to the components of all three parts of the system. For example, the stair tread and riser dimensions in Section 1009 apply to interior exit access stairways, such as those leading from a mezzanine, and also apply to enclosed exit stairways per Section 1022, exterior exit stairways per Section 1026 and steps in the exit discharge per Section 1027.

The following sections are applicable for all parts of the means of egress:

- Section 1003 deals with the path for means of egress to remain free of obstructions and tripping hazards.

INTERNATIONAL CODE COUNCIL®
Copyright © 2015 ICC. ALL RIGHTS RESERVED. Accessed by David Dammon on Jun 21, 2017 12:30:52 PM pursuant to License Agreement with ICC. No further reproduction or distribution authorized. ANY UNAUTHORIZED REPRODUCTION OR DISTRIBUTION IS A VIOLATION OF THE FEDERAL COPYRIGHT ACT AND THE LICENSE AGREEMENT, AND SUBJECT TO CIVIL AND CRIMINAL PENALTIES THEREUNDER.

- Section 1004 provides criteria for determining occupant loads for a space. These numbers are used for determining means of egress, as a threshold for some suppression requirements and to determine the required plumbing fixture count.
- Section 1005 deals with the required size (i.e., width) of the path of travel for emergency evacuation. It is important not to create a "bottleneck" that could increase the amount of time necessary for occupants to exit the buildings.
- Section 1006 deals with the number of ways out of a space or off a floor, either by exit elements or exit access elements.
- Section 1007 provides placement and remoteness requirements for the exit and exit access elements prescribed in Section 1006.
- Section 1008 deals with illumination for the path of travel for the means of egress. Both general lighting and emergency backup lighting are addressed.
- Section 1009 – Chapter 11 indicates how to get people with mobility impairments into a building. Section 1009 explains the options to allow people with mobility impairments to self-evacuate or how to arrange for assisted rescue. The accessible means of egress is an important part of the fire and safety evacuation plans (see Section 1001.4).
- Section 1010 includes requirements for doors, gates and turnstiles that are part of the path of travel from any occupied spaces. For example, doors that lead to a walk-in closet must comply with this section, but doors for reach-in closets are exempted.
- Section 1011 provides information on all types of stairways: interior and exterior and from one riser to stairways with multiple flights and landings. Stepped aisles for areas within assembly seating are specifically addressed in Section 1029. For protection of the stairways between stories, see Sections 1019, 1023 and 1027.
- Section 1012 deals with ramps. Ramped aisles serving assembly seating areas are specifically addressed in Section 1029. The ramp provisions are coordinated with ICC A117.1 and the 2010 Standard for Accessible Design [formerly the Americans with Disabilities Act Accessibility Guidelines (ADAAG), now referred to as the 2010 ADA Standard]. For protection of the ramp between stories, see Sections 1019, 1023 and 1027.
- Section 1013 describes where exit signs are required and what criteria they need to meet to be readily visible.
- Section 1014 describes handrail requirements for stairways and ramps. Handrails are important for guidance and to arrest a possible fall.
- Section 1015 provides criteria for the vertical portions of barriers that serve to protect people from possible falls at dropoffs greater than 30 inches (762 mm).

1003.2 Ceiling height. The *means of egress* shall have a ceiling height of not less than 7 feet 6 inches (2286 mm).

Exceptions:

1. Sloped ceilings in accordance with Section 1208.2.
2. Ceilings of *dwelling units* and *sleeping units* within residential occupancies in accordance with Section 1208.2.
3. Allowable projections in accordance with Section 1003.3.
4. *Stair* headroom in accordance with Section 1011.3.
5. Door height in accordance with Section 1010.1.1.
6. *Ramp* headroom in accordance with Section 1012.5.2.
7. The clear height of floor levels in vehicular and pedestrian traffic areas of public and private parking garages in accordance with Section 406.4.1.
8. Areas above and below *mezzanine* floors in accordance with Section 505.2.

❖ Generally, the specified ceiling height is the minimum allowed in any part of the egress path. The exceptions are intended to address conditions where the code allows the ceiling height to be lower than specified in this section.

This section is consistent with the minimum ceiling height for other areas as specified in Section 1208. The exceptions are pointers to the lower headroom areas permitted in the code. For example, the headroom above and below a mezzanine is 7 feet (2134 mm) minimum.

1003.3 Protruding objects. Protruding objects on *circulation paths* shall comply with the requirements of Sections 1003.3.1 through 1003.3.4.

❖ This section begins the provisions that apply to protruding objects and helps to improve awareness of these safety and accessibility-related provisions. The intent of the phrase "on circulation paths" is intended to allow for judgment determining where people walk versus all floor surfaces. For example, a drinking fountain in an alcove is over a floor, but it is not over a circulation path; therefore, it typically it would not be considered a protruding object.

1003.3.1 Headroom. Protruding objects are permitted to extend below the minimum ceiling height required by Section 1003.2 where a minimum headroom of 80 inches (2032 mm) is provided over any walking surface, including walks, *corri-*

INTERNATIONAL CODE COUNCIL®
Copyright © 2015 ICC. ALL RIGHTS RESERVED. Accessed by David Dammon on Jun 21, 2017 12:30:52 PM pursuant to License Agreement with ICC. No further reproduction or distribution authorized. ANY UNAUTHORIZED REPRODUCTION OR DISTRIBUTION IS A VIOLATION OF THE FEDERAL COPYRIGHT ACT AND THE LICENSE AGREEMENT, AND SUBJECT TO CIVIL AND CRIMINAL PENALTIES THEREUNDER.

dors, *aisles* and passageways. Not more than 50 percent of the ceiling area of a *means of egress* shall be reduced in height by protruding objects.

Exception: Door closers and stops shall not reduce headroom to less than 78 inches (1981 mm).

A barrier shall be provided where the vertical clearance is less than 80 inches (2032 mm) high. The leading edge of such a barrier shall be located 27 inches (686 mm) maximum above the floor.

❖ This provision is applicable to all routes that make up components of the means of egress. Specifically, the limitations in this section and those in Sections 1003.3.2 and 1003.3.3 provide a reasonable level of safety for people with vision impairments as well as during emergency events when vision may be obscured by smoke or low lighting.

Minimum dimensions for headroom clearance are specified in this section. The minimum headroom clearance over all walking surfaces or circulation paths is required to be maintained at 80 inches (2032 mm). This minimum headroom clearance is consistent with the requirements in Section 1011.3 for stairs and Section 1012.5.2 for ramps. Allowance must be made for door closers and stops, since their design and function necessitates placement within the door opening. The minimum headroom clearance for door closers and stops is allowed to be 78 inches (1981 mm) [see Commentary Figure 1003.3.1(1)]. The 2-inch (51 mm) projection into the doorway height is reasonable since these devices are normally mounted away from the center of the door opening, thus minimizing the potential for contact with a person moving through the opening. This is consistent with the exception to Section 1010.1.1.1.

The limitation on overhangs is of primary importance to individuals with visual impairments. When vertical clearance along a walking surface is less than 80 inches (2032 mm), such as underneath the stairway on the ground floor, some sort of barrier that is detectable by a person using a cane must be provided. This can be a full-height wall, a rail at or below 27 inches (686 mm), a planter, fixed seating, etc. A low curb is not effective as a barrier. A person with visual impairments might mistake it for a stair tread, step up onto it and strike their head. A rail at handrail height would not be detectable by a person using a cane, and he or she could possibly walk into the rail before detecting it. Also, when making decisions on the choice of type of barrier, keep in mind that persons of shorter stature and children have a detectable range that may be below 27 inches (686 mm) [see Commentary Figure 1003.3.1(2)].

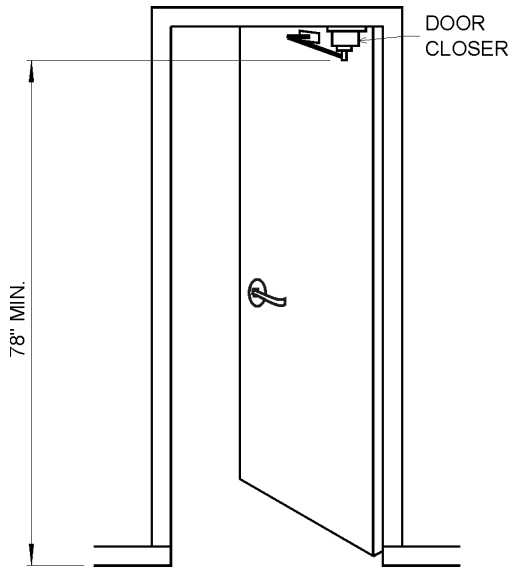

For SI: 1 inch = 25.4 mm.

Figure 1003.3.1(1)
DOOR CLOSER HEADROOM
PROTRUSIONS FOR WALKING SURFACES

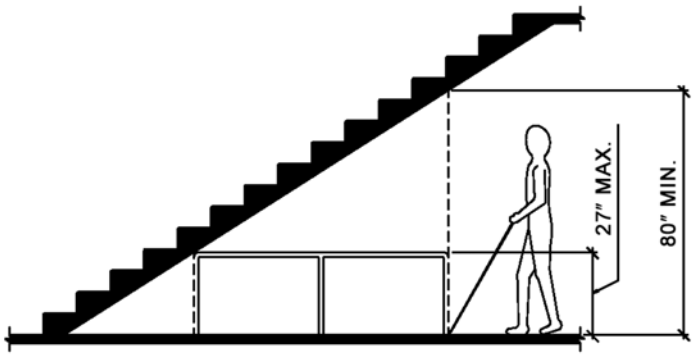

For SI: 1 inch = 25.4 mm.

Figure 1003.3.1(2)
REDUCED VERTICAL CLEARANCE

INTERNATIONAL CODE COUNCIL®
Copyright © 2015 ICC. ALL RIGHTS RESERVED. Accessed by David Dammon on Jun 21, 2017 12:30:52 PM pursuant to License Agreement with ICC. No further reproduction or distribution authorized. ANY UNAUTHORIZED REPRODUCTION OR DISTRIBUTION IS A VIOLATION OF THE FEDERAL COPYRIGHT ACT AND THE LICENSE AGREEMENT, AND SUBJECT TO CIVIL AND CRIMINAL PENALTIES THEREUNDER.

1003.3.2 Post-mounted objects. A free-standing object mounted on a post or pylon shall not overhang that post or pylon more than 4 inches (102 mm) where the lowest point of the leading edge is more than 27 inches (686 mm) and less than 80 inches (2032 mm) above the walking surface. Where a sign or other obstruction is mounted between posts or pylons and the clear distance between the posts or pylons is greater than 12 inches (305 mm), the lowest edge of such sign or obstruction shall be 27 inches (686 mm) maximum or 80 inches (2032 mm) minimum above the finished floor or ground.

Exception: These requirements shall not apply to sloping portions of *handrails* between the top and bottom riser of *stairs* and above the *ramp* run.

❖ Post-mounted objects, such as signs or some types of drinking fountains or phone boxes, are not permitted to overhang more than 4 inches (102 mm) past the post where the bottom edge is located higher than 27 inches (686 mm) above the walking surface [see Commentary Figure 1003.3.2(1)]. Since the minimum required height of doorways, stairways and ramps in the means of egress is 80 inches (2032 mm), protruding objects located higher than 80 inches (2032 mm) above the walking surface are not regulated. Protrusions that are located lower than 27 inches (686 mm) above the walking surface are also permitted since they are more readily detected by a person using a long cane, provided that the minimum required width of the egress element is maintained. This is consistent with the post-mounted objects requirements in Section 307.3 of ICC A117.1, *Accessible and Usable Buildings and Facilities*. The intent is to reduce the potential for accidental impact for a person who is visually impaired.

When signs are provided on multiple posts, the posts must be located closer than 12 inches (305 mm) apart, or the bottom edge of the sign must be lower than 27 inches (686 mm) so it is within detectable cane range or above 80 inches (2032 mm) so that it is above headroom clearances [see Commentary Figure 1003.3.2(2)].

The exception is intended for handrails that are located along the run of a stairway flight or ramp run. The extensions at the top and bottom of stairways and ramps must meet the requirements for protruding objects where people walk perpendicular to the stair or ramp.

1003.3.3 Horizontal projections. Objects with leading edges more than 27 inches (685 mm) and not more than 80 inches (2030 mm) above the floor shall not project horizontally more than 4 inches (102 mm) into the *circulation path*.

Exception: *Handrails* are permitted to protrude $4^1/_2$ inches (114 mm) from the wall.

❖ Protruding objects could slow the egress flow through a corridor or passageway and injure someone hurriedly passing by or someone with a visual impairment. Persons with a visual impairment who use a long cane for guidance must have sufficient warning of a protruding object. Where protrusions are located higher than 27 inches (686 mm) above the walking surface, the cane will most likely not encounter the protrusion before the person collides with the object.

Additionally, people with poor visual acuity or poor depth perception may have difficulty identifying protruding objects higher than 27 inches (686 mm). Therefore, objects such as lights, signs and door hardware, located between 27 inches (686 mm) and 80 inches (2032 mm) above the walking surface, are not permitted to extend more than 4 inches (102 mm) from each wall (see Commentary Figure 1003.3.3). The requirement for protrusions into the door clear width in Section 1010.1.1.1 is different because it deals with allowances for panic hardware on a door.

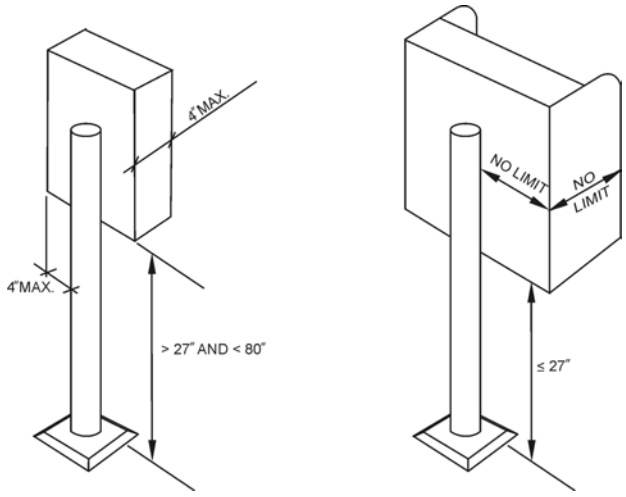

For SI: 1 inch = 25.4 mm.

Figure 1003.3.2(1)
POST-MOUNTED OBJECTS

INTERNATIONAL CODE COUNCIL®
Copyright © 2015 ICC. ALL RIGHTS RESERVED. Accessed by David Dammon on Jun 21, 2017 12:30:52 PM pursuant to License Agreement with ICC. No further reproduction or distribution authorized. ANY UNAUTHORIZED REPRODUCTION OR DISTRIBUTION IS A VIOLATION OF THE FEDERAL COPYRIGHT ACT AND THE LICENSE AGREEMENT, AND SUBJECT TO CIVIL AND CRIMINAL PENALTIES THEREUNDER.

It is not the intent of this section to prohibit columns, pilasters or wing walls to project into a corridor as long as adequate egress width is maintained. These types of structural elements are detectable by persons using a long cane.

The exception is an allowance for handrails when they are provided along a wall, such as in some hospitals or nursing homes. The $4^1/_2$-inch (114 mm) measurement is intended to be consistent with projections by handrails into the required width of stairways and ramps in Section 1014.8. There are additional requirements when talking about the required width (see Section 1005.2).

1003.3.4 Clear width. Protruding objects shall not reduce the minimum clear width of *accessible routes*.

❖ The intent of this section is to limit the projections into an accessible route so that a minimum clear width of 36 inches (914 mm) is maintained along the route. ICC A117.1 is referenced by Chapter 11 for technical requirements for accessibility. ICC A117.1, Section 403.5, allows the accessible route to be reduced in width to 32 inches (914 mm) for segments not to exceed 24 inches (635 mm) in length and spaced a minimum of 48 inches (1219 mm) apart. This allows for movement through a doorway or through a gap in planters or counters.

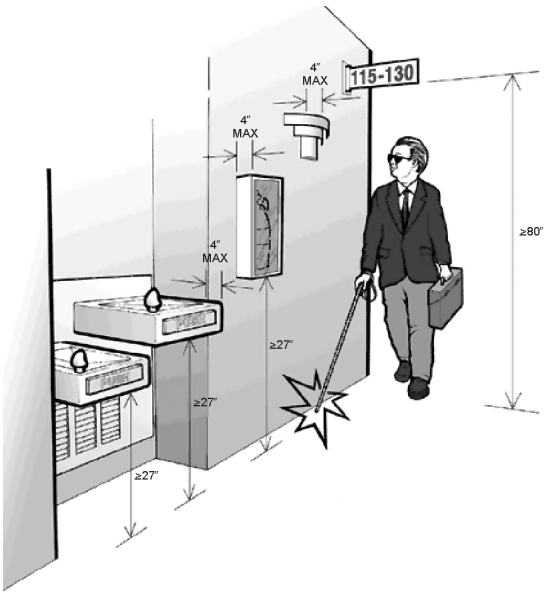

For SI: 1 inch = 25.4 mm.

Figure 1003.3.3
EXAMPLES OF HORIZONTAL PROJECTIONS

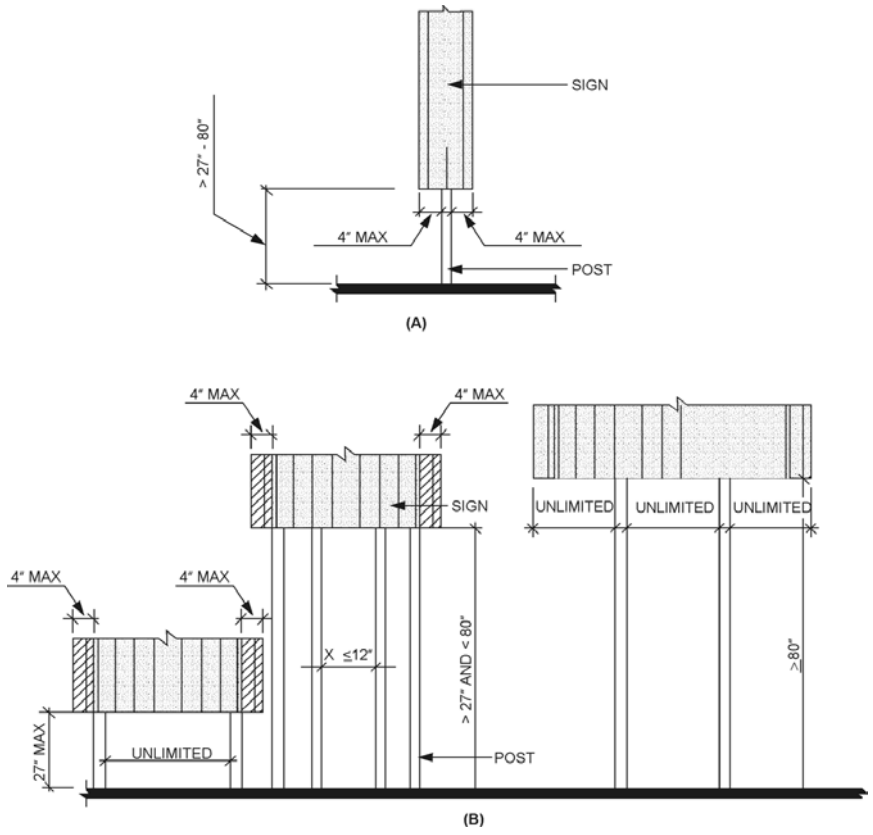

For SI: 1 inch = 25.4 mm.

Figure 1003.3.2(2)
POST-MOUNTED PROTRUDING OBJECTS

INTERNATIONAL CODE COUNCIL®
Copyright © 2015 ICC. ALL RIGHTS RESERVED. Accessed by David Dammon on Jun 21, 2017 12:30:52 PM pursuant to License Agreement with ICC. No further reproduction or distribution authorized. ANY UNAUTHORIZED REPRODUCTION OR DISTRIBUTION IS A VIOLATION OF THE FEDERAL COPYRIGHT ACT AND THE LICENSE AGREEMENT, AND SUBJECT TO CIVIL AND CRIMINAL PENALTIES THEREUNDER.

1003.4 Floor surface. Walking surfaces of the *means of egress* shall have a slip-resistant surface and be securely attached.

❖ As the pace of exit travel becomes hurried during emergency situations, the probability of slipping on smooth or slick floor surfaces increases. To minimize the hazard, all floor surfaces in the means of egress are required to be slip resistant. The use of hard floor materials with highly polished, glazed, glossy or finely finished surfaces should be avoided.

Field testing and uniform enforcement of the concept of slip resistance are not practical. One method used to establish slip resistance is that the static coefficient of friction between leather [Type 1 (Vegetable Tanned) of Federal Specification KK-L-165C] and the floor surface is greater than 0.5. Laboratory test procedures, such as ASTM D2047, can determine the static coefficient of resistance. Bulletin No. 4, "Surfaces," issued by the U.S. Architectural and Transportation Barriers Compliance Board (ATBCB or Access Board) contains further information regarding slip resistance.

1003.5 Elevation change. Where changes in elevation of less than 12 inches (305 mm) exist in the *means of egress*, sloped surfaces shall be used. Where the slope is greater than one unit vertical in 20 units horizontal (5-percent slope), *ramps* complying with Section 1012 shall be used. Where the difference in elevation is 6 inches (152 mm) or less, the *ramp* shall be equipped with either *handrails* or floor finish materials that contrast with adjacent floor finish materials.

Exceptions:

1. A single step with a maximum riser height of 7 inches (178 mm) is permitted for buildings with occupancies in Groups F, H, R-2, R-3, S and U at exterior doors not required to be *accessible* by Chapter 11.
2. A *stair* with a single riser or with two risers and a tread is permitted at locations not required to be *accessible* by Chapter 11 where the risers and treads comply with Section 1011.5, the minimum depth of the tread is 13 inches (330 mm) and not less than one *handrail* complying with Section 1014 is provided within 30 inches (762 mm) of the centerline of the normal path of egress travel on the *stair*.
3. A step is permitted in *aisles* serving seating that has a difference in elevation less than 12 inches (305 mm) at locations not required to be *accessible* by Chapter 11, provided that the risers and treads comply with Section 1029.13 and the *aisle* is provided with a *handrail* complying with Section 1029.15.

Throughout a story in a Group I-2 occupancy, any change in elevation in portions of the *means of egress* that serve nonambulatory persons shall be by means of a *ramp* or sloped walkway.

❖ Minor changes in elevation, such as a single step that is located in any portion of the means of egress (i.e., exit access, exit or exit discharge), may not be readily apparent during normal use or emergency egress and are considered to present a potential tripping hazard. Where the elevation change is less than 12 inches (305 mm), a ramp or sloped surface is specified to make the transition from higher to lower levels. This is intended to reduce accidental falls associated with the tripping hazard of an unseen step. Ramps must be constructed in accordance with Section 1012.1. Ramp provisions do not require handrails for ramps with a rise of 6 inches or less. However, the presence of the ramp must be readily apparent from the directions from which it is approached. Handrails are one method of identifying the change in elevation. In lieu of handrails, the surface of the ramp must be finished with materials that visually contrast with the surrounding floor surfaces. The walking surface of the ramp should contrast both visually and physically.

None of the exceptions are permitted along an accessible route required for either entry or egress from a space or building (see Section 1009 and Chapter 11).

Exception 1 allows up to a 7-inch (178 mm) step at exterior doors to avoid blocking the outward swing of the door by a buildup of snow or ice in locations that are not used by the public on a regular basis (see Commentary Figure 1003.5). This exception is coordinated with Exception 2 of Section 1010.1.5, and is only applicable in occupancies that have relatively low occupant densities, such as factory and industrial

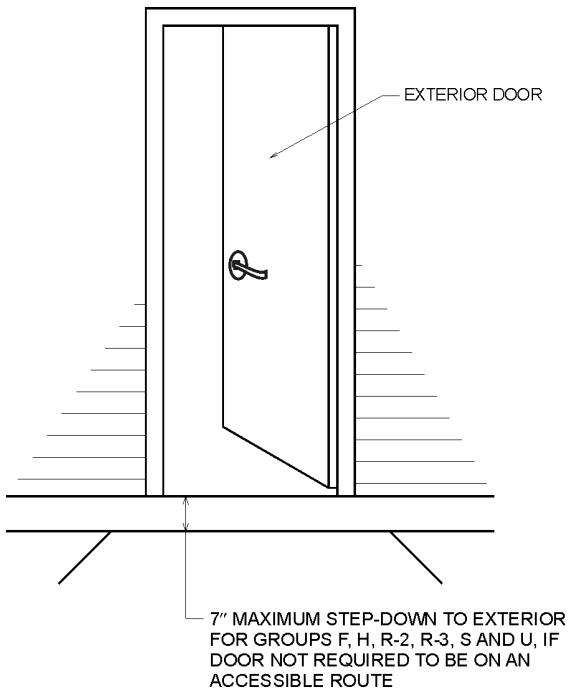

For SI: 1 inch = 25.4 mm.

Figure 1003.5
ELEVATION CHANGE

INTERNATIONAL CODE COUNCIL®
Copyright © 2015 ICC. ALL RIGHTS RESERVED. Accessed by David Dammon on Jun 21, 2017 12:30:52 PM pursuant to License Agreement with ICC. No further reproduction or distribution authorized. ANY UNAUTHORIZED REPRODUCTION OR DISTRIBUTION IS A VIOLATION OF THE FEDERAL COPYRIGHT ACT AND THE LICENSE AGREEMENT, AND SUBJECT TO CIVIL AND CRIMINAL PENALTIES THEREUNDER.

structures. This exception is not applicable to exterior doors that are required to serve as an accessible entrance or that are part of a required accessible route. If this exception is utilized at a Group R-2 or R-3 occupancy, the designer may want to consider the issues of potential tripping hazards if this is a common entrance for a large number of occupants.

Exception 2 allows the transition from higher to lower elevations to be accomplished through the construction of stairs with one or two risers. The pitch of the stairway, however, must be shallower than that required for typical stairways (see Section 1011.5.2). Since the total elevation change is limited to 12 inches (305 mm), each riser must be approximately 6 inches (152 mm) in height. The elevation change must be readily apparent from the directions from which it is approached. At least one handrail is required. It must be constructed in accordance with Section 1014 and located so as to provide a graspable surface from the normal walking path.

Exception 3 is basically a cross reference to the assembly provisions for stepped aisles in Section 1029.

None of the exceptions are permitted in a Group I-2 occupancy (e.g., nursing home, hospital) in areas where nonambulatory persons may need access. The mobility impairments of these individuals require additional consideration.

1003.6 Means of egress continuity. The path of egress travel along a *means of egress* shall not be interrupted by a building element other than a *means of egress* component as specified in this chapter. Obstructions shall not be placed in the minimum width or required capacity of a *means of egress* component except projections permitted by this chapter. The minimum width or required capacity of a *means of egress* system shall not be diminished along the path of egress travel.

❖ This section requires that the entire means of egress path be clear of obstructions that could reduce the egress path to below the minimum width at any point. The egress path is also not allowed to be reduced in width such that the design occupant load (required capacity) would not be served. Note, however, that the egress path could be reduced in width in situations where it is wider than required by the code based on the occupant load. For example, if the required width of a corridor was 52 inches (1321 mm) based on the number of occupants using the corridor and the corridor provided was 96 inches (2438 mm) in width, the corridor would be allowed to be reduced to the minimum required width of 52 inches (1321 mm) since that width would still serve the number of occupants required by the code. In the context of this section, a "means of egress component" would most likely be a door or doorway.

1003.7 Elevators, escalators and moving walks. Elevators, escalators and moving walks shall not be used as a component of a required *means of egress* from any other part of the building.

Exception: Elevators used as an accessible *means of egress* in accordance with Section 1009.4.

❖ Generally, the code does not allow elevators, escalators and moving sidewalks to be used as a required means of egress. The concern is that, because of possible power outages, escalators and moving sidewalks may not provide a safe and reliable means of egress that is available for use at all times.

Elevators are not typically used for unassisted evacuation during fire emergencies. However, in taller buildings, fire fighters use the elevators for both staging to fight the fire and assisted evacuation. They can verify that the shaft is not full of smoke, that the elevators will remain operational and, since they know the fire location, at which floors the elevator can be safely accessed. In accordance with the exception, elevators are allowed to be part of an accessible means of egress (i.e., assisted evacuation), provided they comply with the requirements of Section 1009.4. Where elevators are required to serve as part of the accessible means of egress is addressed in Section 1009.2.1. There are new provisions for fire service elevators and occupant evacuation elevators for high rises in Sections 403, 3007 and 3008. These specific provisions will provide a level of safety that would meet the intent of the means of egress provisions in Chapter 10.

SECTION 1004
OCCUPANT LOAD

1004.1 Design occupant load. In determining *means of egress* requirements, the number of occupants for whom *means of egress* facilities are provided shall be determined in accordance with this section.

❖ The design occupant load is the number of people intended to occupy a building or portion thereof at any one time; essentially the number for which the means of egress is to be designed. It is the largest number derived by the application of Sections 1004.1 through 1004.6. Occupant density is limited to ensure a reasonable amount of freedom of movement (see Section 1004.2). The design occupant load is also utilized to determine the required plumbing fixture count (see commentary, Chapter 29) and other building requirements, such as automatic sprinkler systems and fire alarm and detection systems (see Chapter 9).

The intent of this section is to indicate the procedure by which design occupant loads are determined. This is particularly important because accurate determination of design occupant load is fundamental to the proper design of any means of egress system.

INTERNATIONAL CODE COUNCIL®
Copyright © 2015 ICC. ALL RIGHTS RESERVED. Accessed by David Dammon on Jun 21, 2017 12:30:52 PM pursuant to License Agreement with ICC. No further reproduction or distribution authorized. ANY UNAUTHORIZED REPRODUCTION OR DISTRIBUTION IS A VIOLATION OF THE FEDERAL COPYRIGHT ACT AND THE LICENSE AGREEMENT, AND SUBJECT TO CIVIL AND CRIMINAL PENALTIES THEREUNDER.

1004.1.1 Cumulative occupant loads. Where the path of egress travel includes intervening rooms, areas or spaces, cumulative *occupant loads* shall be determined in accordance with this section.

❖ When occupants from an accessory area move through another area to exit, the combined number of occupants must be utilized to determine the capacity that the egress components must be designed to accommodate. It is not the intent of this section to "double count" occupants. For example, the means of egress from a lobby must be sized for the cumulative occupant load of the adjacent office spaces if the occupants must travel through the lobby to reach an exit. Likewise, if an adjacent room has an egress route independent of the lobby, the occupant load of that room would not be combined with the occupant loads of the other rooms that pass through the lobby. If a portion of the adjacent room's occupant load is to travel through the lobby, only that portion would be combined with the lobby occupant load for determining lobby egress (see Commentary Figure 1004.1.1). This is particularly important in determining the number of ways out of a space or off a story and the required capacity of those elements.

1004.1.1.1 Intervening spaces or accessory areas. Where occupants egress from one or more rooms, areas or spaces through others, the design *occupant load* shall be the combined *occupant load* of interconnected accessory or intervening spaces. Design of egress path capacity shall be based on the cumulative portion of *occupant loads* of all rooms, areas or spaces to that point along the path of egress travel.

❖ An example of intervening spaces could be small tenant spaces within a large mercantile. It is common for banks or coffee shops to be located within large grocery stores. Another example would be a dentist's office where people in the staff and exam room areas would egress through the reception area.

1004.1.1.2 Adjacent levels for mezzanines. That portion of the *occupant load* of a *mezzanine* with required egress through a room, area or space on an adjacent level shall be added to the *occupant load* of that room, area or space.

❖ The egress requirements for mezzanines that use exit access stairways to move to the ground level are handled similarly to those spaces with accessory areas addressed in Section 1004.1.1.1, versus the requirements for exiting from multiple stories in Sections 1004.1.1.3, 1005.4.1 and 1006. That is, that portion of the mezzanine occupant load that travels through the space below to get to the exit is to be added to the occupant load of the space on the floor below. The sizing and number of the egress components must reflect this combined occupant load. Section 505.2.3 contains additional criteria for the means of egress from mezzanines or a portion of it is enclosed.

1004.1.1.3 Adjacent stories. Other than for the egress components designed for convergence in accordance with Section

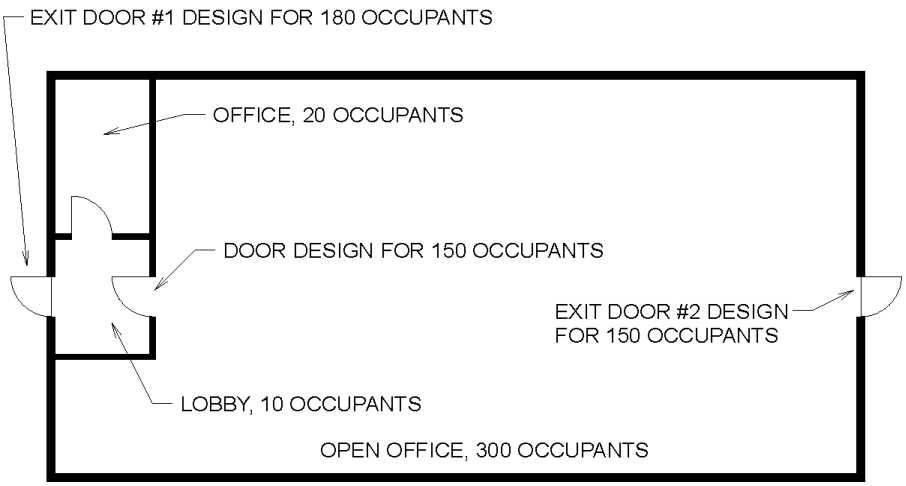

EXIT DOOR #1 DESIGN:

# OF OCCUPANTS FROM OPEN OFFICE	=	150
# OF OCCUPANTS FROM BUILDING OFFICE	=	20
# OF OCCUPANTS FROM LOBBY	=	10
TOTAL # OF OCCUPANTS (BY COMBINATION)	=	180

Figure 1004.1.1
COMBINED OCCUPANT LOAD FOR EGRESS DESIGN

INTERNATIONAL CODE COUNCIL®
Copyright © 2015 ICC. ALL RIGHTS RESERVED. Accessed by David Dammon on Jun 21, 2017 12:30:52 PM pursuant to License Agreement with ICC. No further reproduction or distribution authorized. ANY UNAUTHORIZED REPRODUCTION OR DISTRIBUTION IS A VIOLATION OF THE FEDERAL COPYRIGHT ACT AND THE LICENSE AGREEMENT, AND SUBJECT TO CIVIL AND CRIMINAL PENALTIES THEREUNDER.

1005.6, the *occupant load* from separate stories shall not be added.

❖ Second-floor egress requirements that use exit access stairways to move to the ground level are coordinated with the requirements for exiting from multiple stories found in Sections 1005.3.1, 1005.4.1 and 1006. That is, the portion of the second floor occupant load that travels through the floor below to the exit is not to be added to the occupant load of the space on the floor below as you would for a mezzanine. The sizing and number of the egress components do not have to reflect this combined occupant load. The exception to the rule is where there would be egress convergence of two stories at a level between the two stories (see Section 1005.6).

1004.1.2 Areas without fixed seating. The number of occupants shall be computed at the rate of one occupant per unit of area as prescribed in Table 1004.1.2. For areas without *fixed seating*, the occupant load shall be not less than that number determined by dividing the floor area under consideration by the *occupant load* factor assigned to the function of the space as set forth in Table 1004.1.2. Where an intended function is not listed in Table 1004.1.2, the *building official* shall establish a function based on a listed function that most nearly resembles the intended function.

Exception: Where *approved* by the *building official*, the actual number of occupants for whom each occupied space, floor or building is designed, although less than those determined by calculation, shall be permitted to be used in the determination of the design *occupant load*.

❖ The numbers for floor area per occupant load factor in Table 1004.1.2 reflect common and traditional occupant density based on empirical data for the density of similar spaces. The number determined using the occupant load factors in Table 1004.1.2 generally establishes the minimum occupant load for which the egress facilities of the rooms, spaces and building must be designed. The design occupant load is also utilized for other code requirements, such as determining the required plumbing fixture count (see commentary, Chapter 29) and other building requirements, including automatic sprinkler systems and alarm and detection systems (see Chapter 9).

It is difficult to predict the many conditions by which a space within a building will be occupied over time. An assembly banquet room in a hotel, for example, could be arranged with rows of chairs to host a business seminar one day and with mixed tables and chairs to host a dinner reception the next day. In some instances, the room will be arranged with no tables and very few chairs to accommodate primarily standing occupants. In such a situation, the egress facilities must safely accommodate the maximum number of persons permitted to occupy the space. When determining the occupant load of this type of occupancy, the various arrangements (e.g., tables and chairs, chairs only, standing space) should be recognized. The worst-case scenario should be utilized to determine the requirements for the means of egress elements. This is consistent with the requirements for multiple-use spaces addressed in Section 302.1.

While some of the values in the table utilize the net floor area, most utilize the gross floor area. See the commentary to Table 1004.1.2 and the definitions for "Floor area, gross" and "Floor area, net" in Chapter 2 for additional discussion and examples.

The occupant load determined in accordance with this section is typically the minimum occupant load on which means of egress requirements are to be based. Some occupancies may not typically contain an occupant load totally consistent with the occupant load density factors of Table 1004.1.2. The exception is intended to address the limited circumstances where the actual occupant load is less than the calculated occupant load. Previously, designing for a reduced occupant load was permitted only through the variance process. With this exception, the building official can make a determination if a design that would use the actual occupant load was permissible. The building official may want to create specific conditions for approval. For example, the building official could choose to permit the actual occupant load to be utilized to determine the plumbing fixture count, but not the means of egress or sprinkler design; the determination could be that the reduced occupant load may be utilized in a specific area, such as in the storage warehouse, but not in the factory or office areas. Another point to consider would be the potential of the space being utilized for different purposes at different times, or the potential of a future change of tenancy without knowledge of the building department. Any special considerations for such unique uses must be documented and justified. Additionally, the owner must be aware that such special considerations will impact the future use of the building with respect to the means of egress and other protection features.

TABLE 1004.1.2. See page 10-12.

❖ Table 1004.1.2 establishes minimum occupant densities based on the function or actual use of the space (not group classification).The table presents the maximum floor area allowance per occupant (i.e., occupant load factor) based on studies and counts of the number of occupants in typical buildings. The use of this table, then, results in the minimum occupant load for which rooms, spaces and the building must be designed. While an assumed normal occupancy may be viewed as somewhat less than that determined by the use of the table factors, such a normal occupant load is not necessarily an appropriate design criterion. The greatest hazard to the occupants occurs when an unusually large crowd is present. The code does not limit the occupant load density of an area, except as provided for in Section 1004.2, but once the occupant load is established, the means of egress must be designed for at least that capacity. If it is intended that the occupant load will exceed that calculated in accordance with the table, then the occupant load is to be

INTERNATIONAL CODE COUNCIL®
Copyright © 2015 ICC. ALL RIGHTS RESERVED. Accessed by David Dammon on Jun 21, 2017 12:30:52 PM pursuant to License Agreement with ICC. No further reproduction or distribution authorized. ANY UNAUTHORIZED REPRODUCTION OR DISTRIBUTION IS A VIOLATION OF THE FEDERAL COPYRIGHT ACT AND THE LICENSE AGREEMENT, AND SUBJECT TO CIVIL AND CRIMINAL PENALTIES THEREUNDER.

based on the estimated actual number of people, but not to exceed the maximum allowance in accordance with Section 1004.2. Therefore, the occupant load of the office or business areas in a storage warehouse or nightclub is to be determined using the occupant load factor most appropriate to that space—one person for each 100 square feet (9 m^2) of gross floor area.

The use of net and gross floor areas as defined in Chapter 2 is intended to provide a refinement in the occupant load determination. The gross floor area technique applied to a building only allows the deduction of the plan area of the exterior walls, vent shafts and interior courts from the plan area of the building.

The net floor area permits the exclusion of certain spaces that would be included in the gross floor area. The net floor area is intended to apply to the actual occupied floor areas. The area used for permanent building components, such as shafts, fixed equipment, thicknesses of walls, corridors, stairways, toilet rooms, mechanical rooms and closets, is not included in net floor area. For example, consider a restaurant dining area with dimensions measured from the inside of the enclosing walls of 80 feet by 60 feet (24 384 mm by 18 288 mm) (see Commentary Figure 1004.1.2). Within the restaurant area is a 6-inch (152 mm) privacy wall running the length of the room [80 feet by 0.5 feet = 40 square feet (3.7 m^2)], a fireplace [40 square feet (3.7 m^2)] and a cloak room [60 square feet (5.6 m^2)]. Each of these areas is deducted from the restaurant area, resulting in a net floor area of 4,660 square feet (433 m^2). Since the restaurant intends to have unconcentrated seating that involves loose tables and chairs, the resulting occupant load is 311 persons (4,660 divided by 15). As the definition of "Floor area, net" indicates, certain spaces are to be excluded from the gross floor area to derive the net floor area. The key point in this definition is that the net floor area is to include the actual occupied area and does not include spaces uncharacteristic of that occupancy.

In determining the occupant load of a building with mixed groups, each floor area of a single occupancy must be separately analyzed, such as required by Section 1004.6. The occupant load of the business portion of an office/warehouse building is determined at a rate of one person for each 100 square feet (9 m^2) of office space, whereas the occupant load of the warehouse portion is determined at the rate of one person for each 300 square feet (28 m^2). There may even be different uses within the same room. For example, a restaurant dining room would have seating but may also have a waiting area with standing room, a take-out window with a queue line or employee areas behind a bar or reception desk.

If a specific type of facility is not found in the table, the occupancy it most closely resembles should be utilized. For example, a training room in a business office may utilize the 20-square-feet (1.86 m^2) net established for educational classroom areas, or a dance or karate studio may use the occupant load for rinks and pools for the studio areas.

Table 1004.1.2 presents a method of determining

TABLE 1004.1.2
MAXIMUM FLOOR AREA ALLOWANCES PER OCCUPANT

FUNCTION OF SPACE	OCCUPANT LOAD FACTOR[a]
Accessory storage areas, mechanical equipment room	300 gross
Agricultural building	300 gross
Aircraft hangars	500 gross
Airport terminal	
Baggage claim	20 gross
Baggage handling	300 gross
Concourse	100 gross
Waiting areas	15 gross
Assembly	
Gaming floors (keno, slots, etc.)	11 gross
Exhibit Gallery and Museum	30 net
Assembly with fixed seats	See Section 1004.4
Assembly without fixed seats	
Concentrated (chairs only-not fixed)	7 net
Standing space	5 net
Unconcentrated (tables and chairs)	15 net
Bowling centers, allow 5 persons for each lane including 15 feet of runway, and for additional areas	7 net
Business areas	100 gross
Courtrooms—other than fixed seating areas	40 net
Day care	35 net
Dormitories	50 gross
Educational	
Classroom area	20 net
Shops and other vocational room areas	50 net
Exercise rooms	50 gross
H-5 Fabrication and manufacturing areas	200 gross
Industrial areas	
Inpatient treatment areas	240 gross
Outpatient areas	100 gross
Sleeping areas	120 gross
Kitchens, commercial	200 gross
Library	
Reading rooms	50 net
Stack area	100 gross
Mall buildings—covered and open	See Section 402.8.2
Mercantile	
Areas on other floors	60 gross
Basement and grade floor areas	30 gross
Storage, stock, shipping areas	300 gross
Parking garages	200 gross
Residential	200 gross
Skating rinks, swimming pools	
Rink and pool	50 gross
Decks	15 gross
Stages and platforms	15 net
Warehouses	500 gross

For SI: 1 square foot = 0.0929 m^2.

a. Floor area in square feet per occupant.

INTERNATIONAL CODE COUNCIL®
Copyright © 2015 ICC. ALL RIGHTS RESERVED. Accessed by David Dammon on Jun 21, 2017 12:30:52 PM pursuant to License Agreement with ICC. No further reproduction or distribution authorized. ANY UNAUTHORIZED REPRODUCTION OR DISTRIBUTION IS A VIOLATION OF THE FEDERAL COPYRIGHT ACT AND THE LICENSE AGREEMENT, AND SUBJECT TO CIVIL AND CRIMINAL PENALTIES THEREUNDER.

the absolute base minimum occupant load of a space that the means of egress is to accommodate.

The table occupant loads are based on the stereotypical configuration of spaces. For example, the dorm requirements were written based on dormitories with sleeping rooms with two to four students, a gang bathroom and a meeting/study lounge on each floor. Dormitory buildings that operate like army barracks may have a heavier occupant load, while facilities with groups of rooms with private bathrooms, living and even kitchenette areas may have a lower occupant load. Industrial facilities are based on typical fabricating plants. Warehouses are based on consistent in and out movement of product by employees. Factories with largely mechanized operations or warehouses that contain long-term storage are other examples where discussion with the building official and the application of the exception in Section 1004.1.2 might be considered.

In addition to the table, Section 402 contains the basis for calculating the occupant load of a covered mall building; however, Table 1004.1.2 should be used for determining the occupant load of each anchor store.

1004.2 Increased occupant load. The *occupant load* permitted in any building, or portion thereof, is permitted to be increased from that number established for the occupancies in Table 1004.1.2, provided that all other requirements of the code are met based on such modified number and the *occupant load* does not exceed one occupant per 7 square feet (0.65 m^2) of occupiable floor space. Where required by the *building official*, an *approved aisle*, seating or fixed equipment diagram substantiating any increase in *occupant load* shall be submitted. Where required by the *building official*, such diagram shall be posted.

❖ An increased occupant load is permitted above that developed by using Table 1004.1.2, for example, by utilizing the actual occupant load. However, if the occupant load exceeds that which is determined in accordance with Section 1004.1.2, the building official has the authority to require aisle, seating and equipment diagrams to confirm that all occupants have access to an exit, the exits provide sufficient capacity for all occupants and compliance with this section is attained.

The maximum area of 7 square feet (0.65 m^2) per occupant should allow for sufficient occupant movement in actual fire situations. This is not a conflict with the standing space provisions of 5 square feet (0.46 m^2) net in accordance with Table 1004.1.2. Standing space is typically limited to a portion of a larger area, such as the area immediately in front of the bar or the

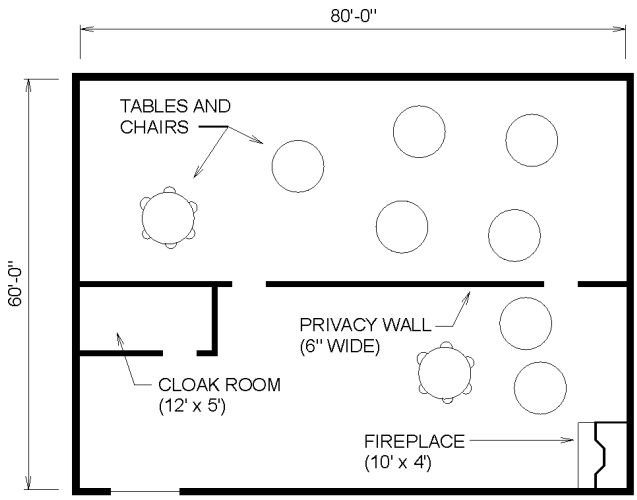

80' x 60' = 4,800 SQ.FT.

PRIVACY WALL:	40 SQ.FT.
FIREPLACE:	40 SQ.FT.
CLOAK ROOM:	60 SQ.FT.
TOTAL:	140 SQ.FT.

(TOTAL AREA WITHIN WALLS) - (EXCLUDED ITEMS) = (NET FLOOR AREA)
4,800 SQ.FT. - 140 SQ.FT. = 4,660 SQ.FT.

(NET FLOOR AREA)/(TABLE 1004.1.2 VALUE) = (OCCUPANT LOAD)
4,660 SQ.FT./15 SQ.FT. PER OCCUPANT = 311 OCCUPANTS

For SI: 1 inch = 25.4 mm, 1 foot = 304.8 mm, 1 square foot = 0.0929 m^2.

Figure 1004.1.2
TYPICAL NET FLOOR AREA OCCUPANT LOAD CALCULATION

INTERNATIONAL CODE COUNCIL®
Copyright © 2015 ICC. ALL RIGHTS RESERVED. Accessed by David Dammon on Jun 21, 2017 12:30:52 PM pursuant to License Agreement with ICC. No further reproduction or distribution authorized. ANY UNAUTHORIZED REPRODUCTION OR DISTRIBUTION IS A VIOLATION OF THE FEDERAL COPYRIGHT ACT AND THE LICENSE AGREEMENT, AND SUBJECT TO CIVIL AND CRIMINAL PENALTIES THEREUNDER.

waiting area in a restaurant, while the rest of the dining area would use 15 square feet (1.4 m^2) net per occupant.

1004.3 Posting of occupant load. Every room or space that is an assembly occupancy shall have the *occupant load* of the room or space posted in a conspicuous place, near the main *exit* or *exit access doorway* from the room or space. Posted signs shall be of an approved legible permanent design and shall be maintained by the owner or the owner's authorized agent.

❖ Each room or space used for an assembly occupancy is required to display the approved occupant load. The placard must be posted in a visible location (near the main entrance) (see Commentary Figure 1004.3 for an example of an occupant load limit sign).

The posting is required to provide a means by which to determine that the maximum approved occupant load is not exceeded. This permanent and readily visible sign provides a constant reminder to building personnel and is a reference for building officials during periodic inspections. The posted occupant load could also be an indication that the room was designed for a layout of just tables and chairs, not a layout of chairs only (see Section 302.1).

While the composition and organization of information in the sign are not specified, information must be recorded in a permanent manner. This means that a sign with changeable numbers would not be acceptable.



Figure 1004.3
EXAMPLE OF OCCUPANT LOAD LIMIT SIGN

1004.4 Fixed seating. For areas having *fixed seats* and *aisles*, the *occupant load* shall be determined by the number of *fixed seats* installed therein. The *occupant load* for areas in which *fixed seating* is not installed, such as waiting spaces, shall be determined in accordance with Section 1004.1.2 and added to the number of *fixed seats*.

The *occupant load* of *wheelchair spaces* and the associated companion seat shall be based on one occupant for each *wheelchair space* and one occupant for the associated companion seat provided in accordance with Section 1108.2.3.

For areas having *fixed seating* without dividing arms, the *occupant load* shall be not less than the number of seats based on one person for each 18 inches (457 mm) of seating length.

The *occupant load* of seating booths shall be based on one person for each 24 inches (610 mm) of booth seat length measured at the backrest of the seating booth.

❖ The occupant load in an area with fixed seats is readily determined. In spaces with a combination of fixed and loose seating, the occupant load is determined by a combination of the occupant density number from Table 1004.1.2 and a count of the fixed seats.

For bleachers, booths and other seating facilities without dividing arms, the occupant load is simply based on the number of people that can be accommodated in the length of the seat. Measured at the hips, an average person occupies about 18 inches (457 mm) on a bench. In a booth, additional space is necessary for "elbow room" while eating. In a circular or curved booth or bench, the measurement should be taken just a few inches from the back of the seat, which is where a person's hips would be located (see Commentary Figure 1004.4).

Some assembly spaces may have areas for standing or waiting. For example, some large sports stadiums have "standing room only" areas used for sell-out games. The Globe Theater in England has standing room in an area at the front of the theater. This section is not intended to assign an occupant load to the typical circulation aisles in an assembly space. Occupant load for wheelchair spaces should be based on the number of wheelchairs and companion seats that the space was designed for. As specified in Section 1004.6, if the wheelchair spaces may also be utilized for standing space or removable seating, the occupant load must be determined by the worst-case scenario.

1004.5 Outdoor areas. *Yards*, patios, *courts* and similar outdoor areas accessible to and usable by the building occupants shall be provided with *means of egress* as required by this chapter. The *occupant load* of such outdoor areas shall be assigned by the *building official* in accordance with the anticipated use. Where outdoor areas are to be used by persons in addition to the occupants of the building, and the path of egress travel from the outdoor areas passes through the building, *means of egress* requirements for the building shall be based on the sum of the *occupant loads* of the building plus the outdoor areas.

Exceptions:

1. Outdoor areas used exclusively for service of the building need only have one *means of egress*.

INTERNATIONAL CODE COUNCIL®
Copyright © 2015 ICC. ALL RIGHTS RESERVED. Accessed by David Dammon on Jun 21, 2017 12:30:52 PM pursuant to License Agreement with ICC. No further reproduction or distribution authorized. ANY UNAUTHORIZED REPRODUCTION OR DISTRIBUTION IS A VIOLATION OF THE FEDERAL COPYRIGHT ACT AND THE LICENSE AGREEMENT, AND SUBJECT TO CIVIL AND CRIMINAL PENALTIES THEREUNDER.

2. Both outdoor areas associated with Group R-3 and individual dwelling units of Group R-2.

❖ This section addresses the means of egress of outdoor areas such as yards, patios and courts. The primary concern is for those outdoor areas, used for functions that may include occupants other than the building occupants or the building occupants alone, where egress from the outdoor area is back through the building to reach the exit discharge. An example is an interior court of an office building where assembly functions are held during normal business hours for persons other than the building occupants. When court occupants must egress from the interior court back through the building, the building's egress system is to be designed for the building occupants, plus the assembly occupants from the interior court. Another example would be an outdoor dining area that exited back through the restaurant.

The occupant load is to be assigned by the building official based on use. It is suggested that the design occupant load be determined in accordance with Section 1004.1.2.

Exception 1 describes conditions where the occupant load is very limited, such as areas where an interior courtyard had strictly plants or mechanical equipment. If the courtyard was open for building occupants, other than maintenance personnel, to use the space, the space must be designed with the occupant loads in Table 1004.1.2. Balconies or patios associated with individual dwelling units, in Exception 2, would typically be used by the occupants of the unit. Means of egress can be back through the building in accordance with Section 1016.2.

1004.6 Multiple occupancies. Where a building contains two or more occupancies, the *means of egress* requirements shall apply to each portion of the building based on the occupancy of that space. Where two or more occupancies utilize portions of the same *means of egress* system, those egress components shall meet the more stringent requirements of all occupancies that are served.

❖ Since the means of egress systems are designed for the specific occupancy of a space, the provisions of this chapter are to be applied based on the actual occupancy conditions of the space served.

For example, a hospital is classified as Group I-2 and normally includes the associated administrative or business functions found in the same building. Chapter 3 would permit the entire building to be constructed to the more restrictive provisions for Group I-2; however, each area of the building need only have the means of egress designed in accordance with the actual occupancy conditions, such as Groups I-2 and B. If the corridor serves only the occupants in the business use (i.e., administrative staff), and is not intended to serve as a required means of egress for patients, the corridor need only be 36 or 44 inches (914 or 1118 mm) in width, depending on the occupant load.

Where the corridor is used by both Group I-2 and B occupancies, it must meet the most stringent require-

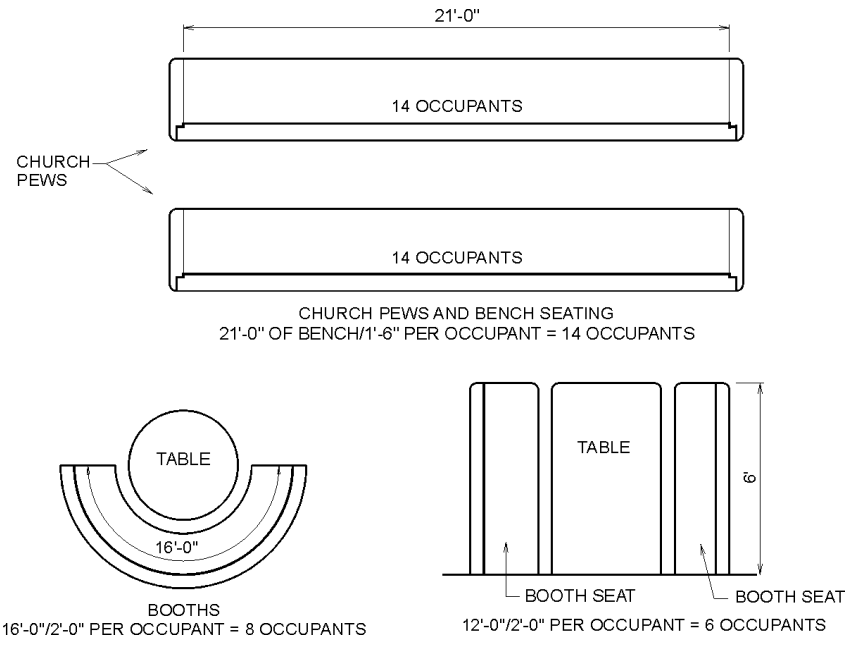

For SI: 1 inch = 25.4 mm, 1 foot = 304.8 mm.

Figure 1004.4
TYPICAL FIXED SEATING

INTERNATIONAL CODE COUNCIL®
Copyright © 2015 ICC. ALL RIGHTS RESERVED. Accessed by David Dammon on Jun 21, 2017 12:30:52 PM pursuant to License Agreement with ICC. No further reproduction or distribution authorized. ANY UNAUTHORIZED REPRODUCTION OR DISTRIBUTION IS A VIOLATION OF THE FEDERAL COPYRIGHT ACT AND THE LICENSE AGREEMENT, AND SUBJECT TO CIVIL AND CRIMINAL PENALTIES THEREUNDER.

ment. For example, if a corridor in the business area is also used for the movement of beds (i.e., exit access from a patient care area), it would need to be a minimum of 96 inches (2438 mm) in clear width.

SECTION 1005
MEANS OF EGRESS SIZING

1005.1 General. All portions of the *means of egress* system shall be sized in accordance with this section.

Exception: *Aisles* and *aisle accessways* in rooms or spaces used for assembly purposes complying with Section 1029.

❖ This section is a charging paragraph for sizing for the means of egress system in a tenant space, floor or building. The exception is based on the understanding that means of egress paths within assembly areas have unique criteria based on the high occupant load and possibility of stepped or sloped aisles.

1005.2 Minimum width based on component. The minimum width, in inches (mm), of any *means of egress* components shall be not less than that specified for such component, elsewhere in this code.

❖ The code requires the utilization of two methods to determine the minimum width of egress components. While this section provides a methodology for determining required widths based on the design occupant load calculated in accordance with Section 1004.1, other sections provide minimum widths of various components. The actual width that is provided is to be the larger of the two widths.

1005.3 Required capacity based on occupant load. The required capacity, in inches (mm), of the *means of egress* for any room, area, space or story shall be not less than that determined in accordance with Sections 1005.3.1 and 1005.3.2.

❖ For this section, the sum of the capacities of the means of egress components that serve each space must equal or exceed the occupant load of that space. For example, the combined width of all of the exit stairways from a floor needs to be considered to determine if the stairways have adequate capacity for everyone to evacuate the building. All elements must meet the minimum width requirements specified in other sections (e.g., Section 1010.1.1 for doors; Sections 1009.3 and 1011.2 for stairs).

This section establishes the necessary width of each egress component on a "per-occupant" basis. Means of egress components are separated between "stairs" and "other;" "other" being doors, doorways, corridors, ramps, aisles, etc.

The traditional unit of measurement of egress capacity was based on a "unit exit width" that was to simulate the body ellipse with a basic dimensional width of 22 inches (559 mm)—approximately the shoulder width of an average adult male. This unit exit width was combined with assumed egress movement (such as single file or staggered file) to result in an egress capacity per unit exit width for various occupancies. This assumption simplifies the dynamic egress process since contemporary studies have indicated that people do not egress in such precise and predictable movements. As traditionally used in the codes, the method of determining capacity per unit of clear width implies a higher level of accuracy than can realistically be achieved. The resulting factors preserve the features of the past practices that can be documented, while providing a more straightforward method of determining egress capacity.

1005.3.1 Stairways. The capacity, in inches, of *means of egress stairways* shall be calculated by multiplying the *occupant load* served by such *stairways* by a means of egress capacity factor of 0.3 inch (7.6 mm) per occupant. Where *stairways* serve more than one story, only the occupant load of each story considered individually shall be used in calculating the required capacity of the *stairways* serving that story.

Exceptions:

1. For other than Group H and I-2 occupancies, the capacity, in inches, of *means of egress stairways* shall be calculated by multiplying the *occupant load* served by such *stairways* by a means of egress capacity factor of 0.2 inch (5.1 mm) per occupant in buildings equipped throughout with an automatic sprinkler system installed in accordance with Section 903.3.1.1 or 903.3.1.2 and an *emergency voice/alarm communication* system in accordance with Section 907.5.2.2.
2. Facilities with *smoke-protected assembly seating* shall be permitted to use the capacity factors in Table 1029.6.2 indicated for stepped aisles for *exit access* or *exit stairways* where the entire path for *means of egress* from the seating to the *exit discharge* is provided with a smoke control system complying with Section 909.
3. Facilities with outdoor *smoke-protected assembly seating* shall be permitted to the capacity factors in Section 1029.6.3 indicated for stepped aisles for *exit access* or *exit stairways* where the entire path for *means of egress* from the seating to the *exit discharge* is open to the outdoors.

❖ The capacity factor for stairways is larger than "other egress components" because of the slowdown of travel to negotiate the steps. When the required occupant capacity of an egress component is determined, multiplication by the appropriate factor results in the required clear width of the component in inches, based on capacity. Similarly, if the clear width of a component is known, division by the appropriate factor results in the permitted capacity of that component.

Per Exception 1, other than in Group H or I-2, if the building is sprinklered and has an emergency voice/alarm communication system, the capacity factor for stairways is permitted to be reduced to 0.2 inches (5.1 mm) per occupant.

INTERNATIONAL CODE COUNCIL®
Copyright © 2015 ICC. ALL RIGHTS RESERVED. Accessed by David Dammon on Jun 21, 2017 12:30:52 PM pursuant to License Agreement with ICC. No further reproduction or distribution authorized. ANY UNAUTHORIZED REPRODUCTION OR DISTRIBUTION IS A VIOLATION OF THE FEDERAL COPYRIGHT ACT AND THE LICENSE AGREEMENT, AND SUBJECT TO CIVIL AND CRIMINAL PENALTIES THEREUNDER.

Smoke-protected seating is permitted to use a lower capacity number to determine the width of the egress components within the seating bowl. When designing the stepped aisles within the seating bowl, the provisions for Section 1029 are applicable. When designing components outside of the seating bowl, Section 1005.3 is applicable. Per Exceptions 2 and 3, if both the seating bowl and the entire route out of the building is smoke protected, the entire route can use the lower capacity numbers specified in Section 1029. For example, if an outdoor stadium has an enclosed concourse that spectators use to enter and exit the stadium seating, the smoke-protected capacity numbers can be used to design the stepped aisles in the stadium, but the higher numbers for stairways must be used to size the stairways in the concourse. Only if the concourse is also open to the outside air can the smoke-protected seating capacity numbers be used for the entire means of egress route. See the definition of "Smoke-protected assembly seating." See also Sections 1029.6.2 and 1029.6.3.

The following illustrate typical calculations for stairways from a nonsprinklered, two-story, two-exit office building:

1. Determine the minimum required stairway width with a second-floor occupant load of 350:
   - 350 occupants divided by 0.3 inch = 105 inches (2667 mm) minimum;
   - 105 inches divided by two stairways is $52^1/_2$ inches (1334 mm) minimum per stairway; or
   - Section 1009.1 prescribes that the width of an interior stairway cannot be less than 44 inches (1118 mm).

The capacity criteria are more restrictive and, therefore, the minimum required width for each stairway is $52^1/_2$ inches (1334 mm).

2. Determine the minimum required stairway width with a second-floor occupant load of 90:
   - 90 occupants divided by 0.3 inches (7.62 mm) = 27 inches (686 mm) minimum;
   - 27 inches (686 mm) divided by two stairways is $13^1/_2$ inches (343 mm); or
   - Section 1011.1 prescribes that the width of an interior stairway cannot be less than 44 inches (1118 mm). Note that the stair width reduction in Section 1011.2, Exception 1, is applicable only when the entire occupant load of a story is less than 50.

The minimum clear width requirements are more restrictive and, therefore, the minimum required width for each stairway is 44 inches (1118 mm).

The maximum capacity of a 44-inch (1118 mm) stairway is 44 inches divided by 0.3 inches (7.62 mm) per occupant = 146 occupants. Therefore, a floor level with two exit stairways could have 292 occupants before the capacity would control the stairway egress width.

Using the exception for sprinklered buildings, a 44-inch (1118 mm) stairway divided by 0.2 inches (5.08 mm) per occupant = 220 occupants. Therefore, a floor level with two exit stairways could have 440 occupants before the capacity would control the stairway egress width.

Keep in mind that accessible means of egress stairways in nonsprinklered buildings require a minimum clear width of 48 inches (1219 mm) between handrails.

1005.3.2 Other egress components. The capacity, in inches, of *means of egress* components other than *stairways* shall be calculated by multiplying the *occupant load* served by such component by a means of egress capacity factor of 0.2 inch (5.1 mm) per occupant.

Exceptions:

1. For other than Group H and I-2 occupancies, the capacity, in inches, of *means of egress* components other than *stairways* shall be calculated by multiplying the *occupant load* served by such component by a means of egress capacity factor of 0.15 inch (3.8 mm) per occupant in buildings equipped throughout with an automatic sprinkler system installed in accordance with Section 903.3.1.1 or 903.3.1.2 and an *emergency voice/alarm communication* system in accordance with Section 907.5.2.2.
2. Facilities with *smoke-protected assembly seating* shall be permitted to use the capacity factors in Table 1029.6.2 indicated for level or ramped *aisles* for *means of egress* components other than *stairways* where the entire path for *means of egress* from the seating to the *exit discharge* is provided with a smoke control system complying with Section 909.
3. Facilities with outdoor *smoke-protected assembly seating* shall be permitted to the capacity factors in Section 1029.6.3 indicated for level or ramped *aisles* for *means of egress* components other than *stairways* where the entire path for *means of egress* from the seating to the *exit discharge* is open to the outdoors.

❖ The capacity factor for "other egress components" (e.g., doors, gates, corridors, aisles, ramps) is less than stairways because of the slowdown of travel to negotiate the steps. When the required occupant capacity of an egress component is determined, multiplication by the appropriate factor results in the required clear width of the component in inches, based on capacity. Similarly, if the clear width of a component is known, division by the appropriate factor results in the permitted capacity of that component.

Per Exception 1, other than in Group H or I-2, if the building is sprinklered and has an emergency voice/alarm communication system, the capacity factor for doors, corridors, aisles, etc., is permitted to be reduced to 0.15 inches (3.8 mm) per occupant.

INTERNATIONAL CODE COUNCIL®
Copyright © 2015 ICC. ALL RIGHTS RESERVED. Accessed by David Dammon on Jun 21, 2017 12:30:52 PM pursuant to License Agreement with ICC. No further reproduction or distribution authorized. ANY UNAUTHORIZED REPRODUCTION OR DISTRIBUTION IS A VIOLATION OF THE FEDERAL COPYRIGHT ACT AND THE LICENSE AGREEMENT, AND SUBJECT TO CIVIL AND CRIMINAL PENALTIES THEREUNDER.

Smoke-protected seating is permitted to use a lower capacity number to determine the width of the egress components. When designing the ramped or level aisles and aisle accessways within the seating bowl, the provisions for Section 1029 are applicable. When designing components outside of the seating bowl, Section 1005.3 is applicable. Per Exceptions 2 and 3, if both the seating bowl and the entire route out of the building is smoke protected, the entire route can use the lower capacity numbers. For example, if an outdoor stadium has an enclosed concourse that spectators use to enter and exit the stadium seating, the smoke-protected capacity numbers can be used to design the ramped or level aisles in the stadium, but the higher numbers for other egress components must be used to size the corridors or ramps in the concourse. Only if the concourse is also open to the outside air can the smoke-protected seating capacity numbers be used for the entire means of egress route. See the definition of "Smoke-protected assembly seating." See also Sections 1029.6.2 and 1029.6.3.

For example, two exit access doorways from a room with an occupant load of 300 would each have a required capacity of not less than 150. Based on the minimum required clear door width [32-inch (813 mm) clear width per door divided by 0.2 inch (5.08 mm) per occupant = 160 occupants], two 32-inch (813 mm) clear width doors would meet both the minimum clear width (Section 1010.1.1) and the capacity requirements. Two exits from a space with an occupant load of 450 would each have a required capacity of not less than 225, necessitating more doors or larger door leaves.

Using the exception, the door capacity would increase [32-inch (813 mm) clear width per door divided by 0.15 inch (3.08 mm) per occupant = 213 occupants].

1005.4 Continuity. The minimum width or required capacity of the *means of egress* required from any story of a building shall not be reduced along the path of egress travel until arrival at the public way.

❖ The requirement that both the minimum widths and required capacity from any floor are to be provided all the way along the exit to the termination, typically down the stairway to the exterior exit door at the level of exit discharge, results in an egress width that is adequate for the exit discharge.

The sum total capacity of the exits that serve a floor is not to be less than the occupant load of the floor as determined by Section 1004.1. If an exit, such as a stairway, also serves a second floor and the required capacity of the exit serving the occupants of the second floor is greater than the first floor, the greater capacity would govern the egress components that the occupants of the floors share. For example, if an exit stairway serves two floors, with occupant loads of 300 on the lower floor and 500 on the upper floor, assuming that two stairways serve each floor, the two stairways would be designed for a capacity of 250 people each, using the upper-floor occupant load of 500 as the basis of determination. Note that the doors to the stairways on the lower floor would be designed for a capacity of 150 and the doors to the stairways on the upper floor would be designed for a capacity of 250. Reversing these two floors would result in the portion of the stairways that serves the upper floor to be designed for a capacity of 150 and the stairways that serve the lower floor to be designed for 250. Requiring the egress component to be designed for the largest tributary occupant load accommodates the worst-case situation.

Also note that the capacity of the exits is based on the occupant load of one floor. The occupant loads are not combined with other floors for the exit design. It is assumed that the peak demand or flow of occupants from more than one floor level at a common point in the means of egress will not occur simultaneously, except as provided for in Sections 1005.6 (Egress convergence) and 1004.1.1.2 (Adjacent levels for mezzanines).

1005.5 Distribution of minimum width and required capacity. Where more than one *exit*, or access to more than one *exit*, is required, the *means of egress* shall be configured such that the loss of any one *exit*, or access to one *exit*, shall not reduce the available capacity or width to less than 50 percent of the required capacity or width.

❖ It is critical that the distribution of both egress capacity and minimum width are examined. Where multiple means of egress are required, the loss of any one path cannot reduce the available capacity or width to less than 50 percent. The 50-percent minimum of the required egress capacity and width results in a fairly uniform distribution of egress paths. This requirement does not, however, require that the capacities be equally distributed when *more* than two means of egress are provided. An egress design with a dramatic imbalance of egress component capacities relative to occupant load distribution should be reviewed closely to avoid a needless delay in egressing a story or area. The balancing of the means of egress components, in accordance with the distribution of the occupant load, is reasonable and, in some cases, necessary for facilities having mixed occupancies with dramatically different occupant loads.

1005.6 Egress convergence. Where the *means of egress* from stories above and below converge at an intermediate level, the capacity of the *means of egress* from the point of convergence shall be not less than the largest minimum width or the sum of the required capacities for the *stairways* or *ramps* serving the two adjacent stories, whichever is larger.

❖ Convergence of occupants can occur whenever the occupants of an upper floor travel down and occupants of a lower floor travel up and meet at a common, intermediate egress component on the route to the exit discharge. The intermediate component may or may not be another occupiable floor and, most often, is an exit door [see Commentary Figures 1005.6(1) and 1005.6(2)].

INTERNATIONAL CODE COUNCIL®
Copyright © 2015 ICC. ALL RIGHTS RESERVED. Accessed by David Dammon on Jun 21, 2017 12:30:52 PM pursuant to License Agreement with ICC. No further reproduction or distribution authorized. ANY UNAUTHORIZED REPRODUCTION OR DISTRIBUTION IS A VIOLATION OF THE FEDERAL COPYRIGHT ACT AND THE LICENSE AGREEMENT, AND SUBJECT TO CIVIL AND CRIMINAL PENALTIES THEREUNDER.

The entire premise of egress convergence is based on the assumption of simultaneous notification (i.e., all occupants of all floors begin moving toward the exits at the same time). As illustrated in Commentary Figure 1005.6(3), the occupants of the first floor will have exited the building by the time most of the occupants of the second floor have reached the exit discharge door. However, as illustrated in Commentary Figure 1005.6(1), the occupants of a basement will reach the discharge door simultaneously with the second-floor occupants, thereby creating a bottleneck and the need for sizing the affected component for a larger combined occupant load.

An egress convergence situation can also be created when an intermediate floor level is not present, as illustrated in Commentary Figure 1005.6(2). Again,

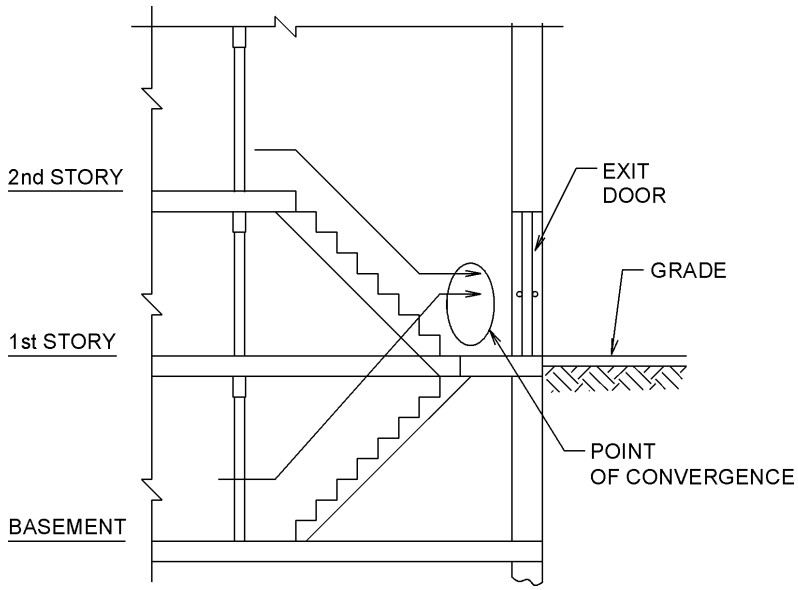

Figure 1005.6(1)
EGRESS CONVERGENCE AT FIRST STORY

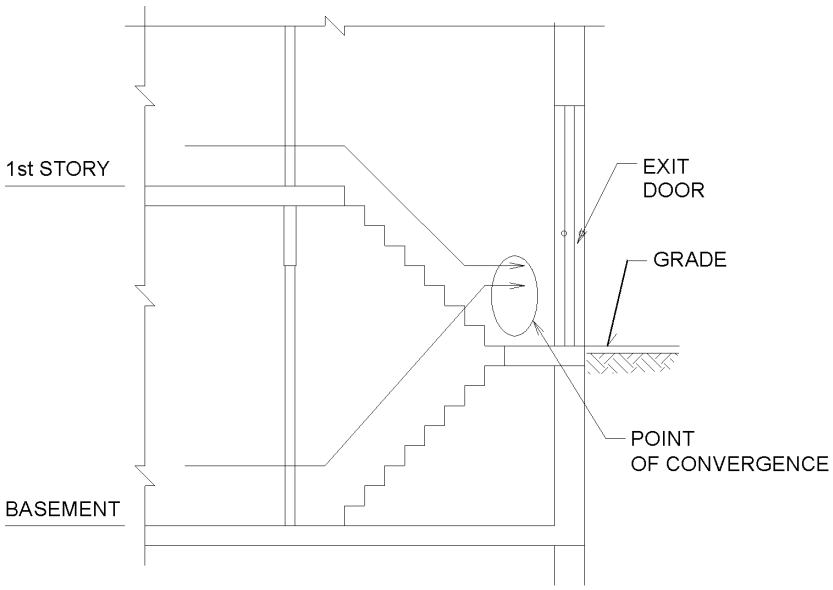

Figure 1005.6(2)
EGRESS CONVERGENCE AT INTERMEDIATE LEVEL

INTERNATIONAL CODE COUNCIL®
Copyright © 2015 ICC. ALL RIGHTS RESERVED. Accessed by David Dammon on Jun 21, 2017 12:30:52 PM pursuant to License Agreement with ICC. No further reproduction or distribution authorized. ANY UNAUTHORIZED REPRODUCTION OR DISTRIBUTION IS A VIOLATION OF THE FEDERAL COPYRIGHT ACT AND THE LICENSE AGREEMENT, AND SUBJECT TO CIVIL AND CRIMINAL PENALTIES THEREUNDER.

under the assumption of simultaneous notification, occupants of both floors would reach the exit discharge door at approximately the same time, invoking the requirements for increased egress capacity.

1005.7 Encroachment. Encroachments into the required *means of egress* width shall be in accordance with the provisions of this section.

❖ This section addresses maximum encroachment into the required width along the path of travel for means of egress. Types of encroachment are door leaves, door hardware, handrails, trim and protruding objects. These requirements are referenced for aisles (Section 1018.1), corridors (Section 1020.3), exit passageways (Section 1024.2) and exit courts (Section 1028.4.1). Along stairways, handrail projections are permitted per Section 1014.8.

1005.7.1 Doors. Doors, when fully opened, shall not reduce the required width by more than 7 inches (178 mm). Doors in any position shall not reduce the required width by more than one-half.

Exceptions:

1. Surface-mounted latch release hardware shall be exempt from inclusion in the 7-inch maximum (178 mm) encroachment where both of the following conditions exist:
   1.1. The hardware is mounted to the side of the door facing away from the adjacent wall where the door is in the open position.
   1.2. The hardware is mounted not less than 34 inches (865 mm) nor more than 48 inches (1219 mm) above the finished floor.
2. The restrictions on door swing shall not apply to doors within individual *dwelling units* and *sleeping units* of Group R-2 occupancies and *dwelling units* of Group R-3 occupancies.

❖ Projections or restrictions in the required width can impede and restrict occupant travel, causing egress to occur less efficiently than expected. The swinging of a door, such as from a room into a corridor, and any handrails along the route are permitted projections.

Historically, this section has looked at doors on one wall at a time. Doors located across the hall from one another are not considered additive when considering protrusion limits. Doors would not typically be opened to the full extent at exactly the same moment, nor can they remain open at 90 degrees and totally blocking the hall because of the maximum limitation of 7 inches (178 mm) when fully open (typically approaching 180 degrees). Regarding door encroachment, there are two tests. The arc created by the door's outside edge cannot project into more than one-half of the required corridor width. When opened to its fullest extent, the door cannot project more than 7 inches (178 mm) into the required width, which is the dimension of the leaf thickness excluding the hardware as shown in Commentary Figure 1005.7.1. Door hardware encroachment is addressed separately in Exception 1. These projections are permitted because they are considered to be temporary and do not significantly impede the flow. Occupants will compensate for the projection by a reduction in the natural cushion they retain between themselves and a boundary, known as the edge effect.

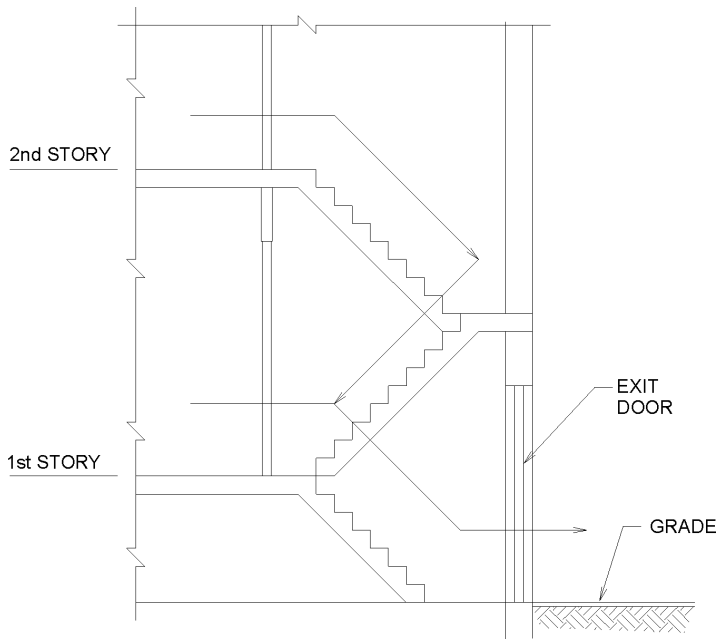

Figure 1005.6(3)
NO EGRESS CONVERGENCE

INTERNATIONAL CODE COUNCIL®
Copyright © 2015 ICC. ALL RIGHTS RESERVED. Accessed by David Dammon on Jun 21, 2017 12:30:52 PM pursuant to License Agreement with ICC. No further reproduction or distribution authorized. ANY UNAUTHORIZED REPRODUCTION OR DISTRIBUTION IS A VIOLATION OF THE FEDERAL COPYRIGHT ACT AND THE LICENSE AGREEMENT, AND SUBJECT TO CIVIL AND CRIMINAL PENALTIES THEREUNDER.

Per Exception 2, the door swing restrictions do not apply within dwelling units since the occupant load is very low. Based on the intent of this section, other situations that could be approved by the official having jurisdiction would be situations where the opening door would not block the egress, such as the door at the end of a corridor, or the room was not typically occupied, such as a janitor's closet.

The provision in Exception 1 indicates that hardware facing the corridor when the door is fully open need not be considered when determining the allowable door encroachment into a corridor of 7 inches (178 mm) maximum. The allowance is applicable provided the hardware is mounted within a height range of 34 inches to 48 inches (865 to 1220 mm), which is consistent with the range for means of egress door hardware height as established in Section 1010.1.9.2. Where hardware extends across a door, such as panic hardware, the 4-inch (102 mm) projection in the door opening is addressed in Section 1010.1.1.1.

1005.7.2 Other projections. *Handrail* projections shall be in accordance with the provisions of Section 1014.8. Other nonstructural projections such as trim and similar decorative features shall be permitted to project into the required width not more than $1^1/_2$ inches (38 mm) on each side.

Exception: Projections are permitted in corridors within Group I-2 Condition 1 in accordance with Section 407.4.3.

❖ Handrails are not required along corridors, level aisles, exit passageways and exit corridors; however, if provided, Section 1014.8 would be applicable. Handrails are sometimes provided along the hallways in hospitals or nursing homes to aid the residents. Bumper guards along the walls are not handrails.

Items such as baseboards, chair rails, pilasters, etc., are limited to protruding over the *required* width of the corridor a maximum of $1^1/_2$ inches (38 mm); however, once again, Section 1003.3.3 would be applicable when the corridor was wider than required.

The exception is in recognition of a situation unique to nursing homes (Group I-2, Condition 1). IBC Section 407.4.3 includes allowances for furniture in corridors to address the need of patients needing a place to sit to rest as well as the new style of design that emphasizes the residential aspects of the environment.

1005.7.3 Protruding objects. Protruding objects shall comply with the applicable requirements of Section 1003.3.

❖ This section is a reminder that protruding objects are applicable when looking at encroachments into a confined path of travel. The difference, however, is that door and other projections are applied to the required minimum width, while protruding object provisions apply to paths of travel even when wider than required.

SECTION 1006
NUMBER OF EXITS AND EXIT ACCESS DOORWAYS

1006.1 General. The number of *exits* or *exit access doorways* required within the *means of egress* system shall comply with the provisions of Section 1006.2 for spaces, including *mezzanines*, and Section 1006.3 for *stories*.

❖ The criteria in this section to determine the number of ways to leave rooms or spaces (including mezzanines) and stories are based on an empirical judgment of the associated risks.

1006.2 Egress from spaces. Rooms, areas or spaces, including *mezzanines*, within a *story* or *basement* shall be provided with the number of *exits* or access to *exits* in accordance with this section.

❖ This section dictates the minimum number of paths of travel an occupant is to have available to avoid a fire incident in the occupied room or space. While providing multiple egress doorways from every room is

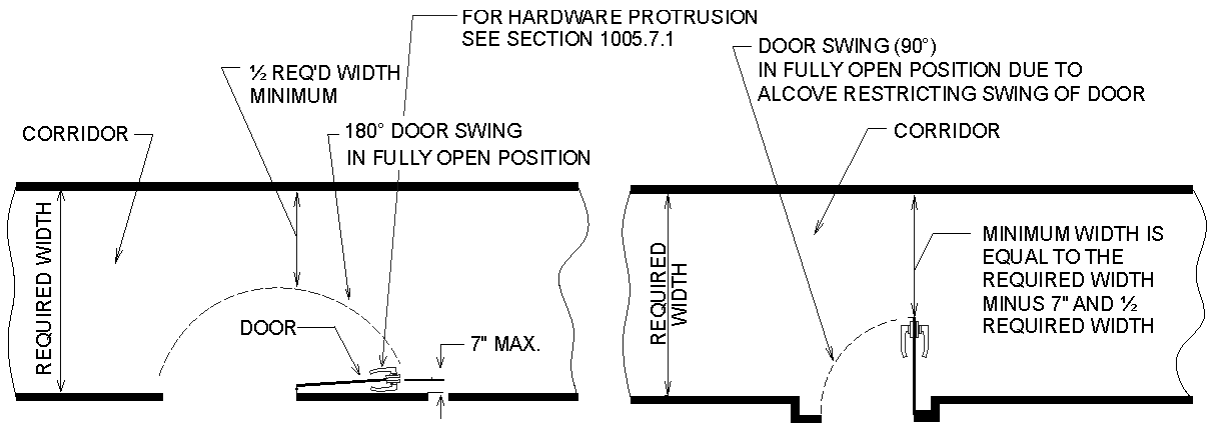

For SI: 1 inch = 25.4 mm, 1 degree = 0.01745 rad.

Figure 1005.7.1
TYPICAL DOOR RESTRICTIONS INTO PASSAGEWAY, AISLE AND CORRIDOR WIDTH

INTERNATIONAL CODE COUNCIL®
Copyright © 2015 ICC. ALL RIGHTS RESERVED. Accessed by David Dammon on Jun 21, 2017 12:30:52 PM pursuant to License Agreement with ICC. No further reproduction or distribution authorized. ANY UNAUTHORIZED REPRODUCTION OR DISTRIBUTION IS A VIOLATION OF THE FEDERAL COPYRIGHT ACT AND THE LICENSE AGREEMENT, AND SUBJECT TO CIVIL AND CRIMINAL PENALTIES THEREUNDER.

unrealistic, a point does exist where alternative egress paths must be provided based on the number of occupants at risk, the distance any one occupant must travel to reach a doorway and the relative hazards associated with the occupancy of the space. Generally, the number of egress doorways required from any room or space coincides with the occupant load threshold criteria set forth for the minimum number of exits required from a story (see Section 1006.3).

1006.2.1 Egress based on occupant load and common path of egress travel distance. Two *exits* or *exit access doorways* from any space shall be provided where the design *occupant load* or the *common path of egress travel* distance exceeds the values listed in Table 1006.2.1.

Exceptions:

1. In Group R-2 and R-3 occupancies, one *means of egress* is permitted within and from individual *dwelling units* with a maximum *occupant load* of 20 where the *dwelling unit* is equipped throughout with an *automatic sprinkler* system in accordance with Section 903.3.1.1 or 903.3.1.2 and the *common path of egress travel* does not exceed 125 feet (38 100 mm).
2. *Care suites* in Group I-2 occupancies complying with Section 407.4.

❖ This section dictates the minimum number of paths of travel an occupant is to have available to avoid a fire incident in the occupied room or space. While providing multiple egress doorways from every room is unrealistic, a point does exist where alternative egress paths must be provided based on the number of occupants at risk, the distance any one occupant must travel to reach a doorway and the relative hazards associated with the occupancy of the space. Generally, the number of egress doorways required from any room or space coincides with the occupant load threshold criteria set forth for determining the minimum number of exits required from a story (see Section 1006.3).

The limiting criteria in Table 1006.2.1 for rooms or spaces permitted to have a single exit access doorway are based on an empirical judgment of the associated risks.

If the occupants of a room are required to egress through another room, as permitted in Sections 1004.1.1.1 and 1016.2, the rooms are to be combined to determine if multiple doorways are required from the combined rooms. For example, if a suite of offices shares a common reception area, the entire suite with the reception area must meet both the occupant load and the travel distance criteria. The same logic would hold true for a space with a mezzanine (see Section 1004.1.1.2).

It should be noted that where two doorways are required, the remoteness requirement of Section 1007.1 is applicable.

The common path of travel is the distance measured from the most remote point in a space to the point in the exit path where the occupant has access to two required exits in separate directions. The distance limitations are applicable to all paths of travel that lead out of a space or building where two exits are required. An illustration of this distance is found in Commentary Figure 1006.2.1. The illustration reflects two examples of a common path of travel where the occupants at points A and B are able to travel in only one direction before they reach a point at which they have a choice of two paths of travel to the required exits from the building. Note that from point A, the occupants have two available paths, but these merge to form a single path out of the space. This is also

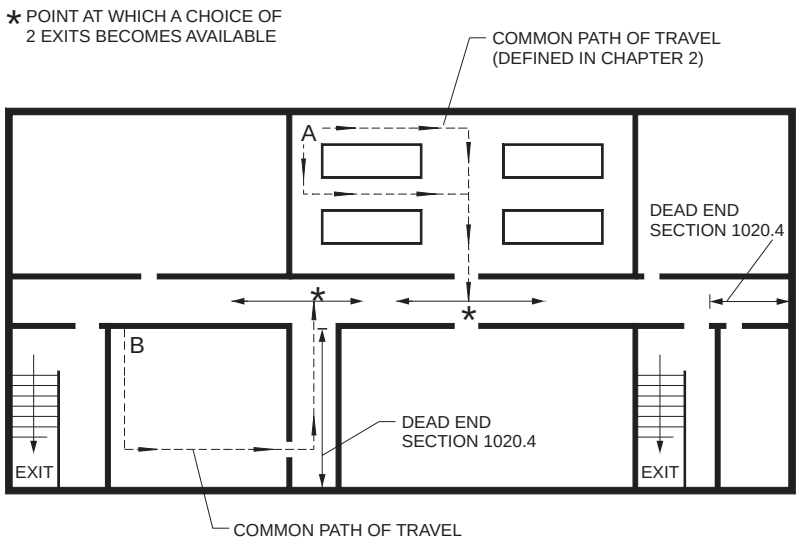

Figure 1006.2.1
COMMON PATH OF EGRESS TRAVEL

INTERNATIONAL CODE COUNCIL®
Copyright © 2015 ICC. ALL RIGHTS RESERVED. Accessed by David Dammon on Jun 21, 2017 12:30:52 PM pursuant to License Agreement with ICC. No further reproduction or distribution authorized. ANY UNAUTHORIZED REPRODUCTION OR DISTRIBUTION IS A VIOLATION OF THE FEDERAL COPYRIGHT ACT AND THE LICENSE AGREEMENT, AND SUBJECT TO CIVIL AND CRIMINAL PENALTIES THEREUNDER.

considered a common path of travel. The common path of travel is considered part of the overall travel distance limitations in Section 1017.2.

While a Group R-3 occupancy is typically a single-exit space, it is included in the table to address mixed-use buildings.

Exception 1 allows for individual dwelling units to be considered a space with one means of egress, provided they meet the same common path of travel requirements in Table 1006.2.1. If the building is sprinklered with an NFPA 13 or 13R system, the occupant load for the unit can be 20 (4,000-square-foot apartment/200 square feet per occupant = 20 occupants), whereas if the unit complies with the table, the occupant load is limited to 10 people per unit (2,000-square-foot apartment/200 square feet per occupant = 10 occupants).

Exception 2 allows for hospital patient rooms and care suites to egress in accordance with the specific criteria in IBC Section 407.4, including the common path of egress travel provisions (Table 1006.2.1, Note d). Other areas in Group I-2 occupancies are addressed in Table 1006.2.1.

TABLE 1006.2.1. See below.

❖ The table represents an empirical judgment of the risks associated with a single means of egress from a room or space based on the occupant load in the room, the travel distance to the exit access door and the inherent risks associated with the occupancy (such as occupant mobility, occupant familiarity with the building, occupant response and the fire growth rate). The number 49 is for consistency with other occupant load thresholds, such as panic hardware (see Section 1010.1.10).

Since the occupants of Groups I and R may be sleeping and, therefore, not able to detect a fire in its early stages without staff supervision or room detectors, the number of occupants in a single egress room or space is limited to 10. See the exceptions to Section 1006.2.1 for Group R-2 and R-3 individual units and Group I-2 patient rooms and care suites.

Because of the potential for rapidly developing hazardous conditions, the single egress condition in Groups H-1, H-2 and H-3 is limited to a maximum of three persons. Because the materials contained in Groups H-4 and H-5 do not represent the same fire hazard potential as those found in Groups H-1, H-2 and H-3, the occupant load for spaces with one means of egress is increased.

Because of the reduced occupant density in Group S and the occupants' normal familiarity with the building, the single egress condition is permitted with an occupant load of 29.

In nonsprinklered business, storage and utility buildings, the length of the common path of egress

TABLE 1006.2.1
SPACES WITH ONE EXIT OR EXIT ACCESS DOORWAY

OCCUPANCY	MAXIMUM OCCUPANT LOAD OF SPACE	MAXIMUM COMMON PATH OF EGRESS TRAVEL DISTANCE (feet)		
		Without Sprinkler System (feet)		With Sprinkler System (feet)
		Occupant Load		
		OL ≤ 30	OL > 30	
A[c], E, M	49	75	75	75[a]
B	49	100	75	100[a]
F	49	75	75	100[a]
H-1, H-2, H-3	3	NP	NP	25[b]
H-4, H-5	10	NP	NP	75[b]
I-1, I-2[d], I-4	10	NP	NP	75[a]
I-3	10	NP	NP	100[a]
R-1	10	NP	NP	75[a]
R-2	10	NP	NP	125[a]
R-3[e]	10	NP	NP	125[a]
R-4[e]	10	75	75	125[a]
S[f]	29	100	75	100[a]
U	49	100	75	75[a]

For SI: 1 foot = 304.8 mm.

NP = Not Permitted.

a. Buildings equipped throughout with an *automatic sprinkler system* in accordance with Section 903.3.1.1 or 903.3.1.2. See Section 903 for occupancies where *automatic sprinkler systems* are permitted in accordance with Section 903.3.1.2.

b. Group H occupancies equipped throughout with an *automatic sprinkler system* in accordance with Section 903.2.5.

c. For a room or space used for assembly purposes having *fixed seating*, see Section 1029.8.

d. For the travel distance limitations in Group I-2, see Section 407.4.

e. The length of *common path of egress travel* distance in a Group R-3 occupancy located in a mixed occupancy building or within a Group R-3 or R-4 *congregate living facility*.

f. The length of *common path of egress travel* distance in a Group S-2 *open parking garage* shall be not more than 100 feet.

INTERNATIONAL CODE COUNCIL®
Copyright © 2015 ICC. ALL RIGHTS RESERVED. Accessed by David Dammon on Jun 21, 2017 12:30:52 PM pursuant to License Agreement with ICC. No further reproduction or distribution authorized. ANY UNAUTHORIZED REPRODUCTION OR DISTRIBUTION IS A VIOLATION OF THE FEDERAL COPYRIGHT ACT AND THE LICENSE AGREEMENT, AND SUBJECT TO CIVIL AND CRIMINAL PENALTIES THEREUNDER.

travel is greater for single-exit spaces when the occupant load for that space is 30 or less. Business, factories and nontransient residential buildings get an increase in the common path of travel in recognition of the additional fire safety offered by a fully sprinklered building. While a Group R-4 is required to be sprinklered, the additional travel distance is not granted where they choose to use an NFPA 13D system as permitted in Section 903.3.1.3. Common path of egress travel does not apply to stories or buildings with one exit. The definition for "Common path" indicates the provisions are only applicable when access to two or more exits is required. See Section 1021.2 for travel limitations for single-exit one-, two- and three-story buildings and Section 1015.1 for spaces with one exit.

Note a indicates if the travel distance increase is based on an NFPA 13 or NFPA 13R sprinkler system being provided throughout the building, whichever is applicable to that occupancy. Where a Group R-4 occupancy can use an NFPA 13D system, the travel distance is indicated in the "without sprinkler system" column. The table does not currently provide information for a Group R-3 occupancy with an NFPA 13D system. Note b is a general reminder for special requirements for sprinklers in Group H.

The reference in Note c to Section 1029.8 is to allow for the unique common path of travel requirements in spaces with assembly seating, such as in a lecture room or sports facility.

Note d is a reference to the common path of travel provisions specific to Group I-2 care rooms and suites that are specifically addressed in IBC Section 407.4.

As indicated in Note e, while Group R-3 dwellings are typically only required to have one exit (see Section 1006.2.1 Exception 1 and Section 1006.3.2, Exception 5), there can be a situation where a Group R-3 unit is included in a mixed-use building. In these situations, the travel distance limitations for common path of travel in the table are applicable.

Note f is an allowance for the common path of travel in an open parking garage to be 100 feet (30 480 mm) when the occupant load is greater than 30 and there is no sprinkler system provided. This is in recognition of the minimal possibility of smoke accumulation due to the openness requirements and the low fuel loads for open parking garages.

1006.2.1.1 Three or more exits or exit access doorways. Three *exits* or *exit access doorways* shall be provided from any space with an occupant load of 501 to 1,000. Four *exits* or *exit access doorways* shall be provided from any space with an occupant load greater than 1,000.

❖ Large facilities with high occupant loads are required to have more than two exits leading from each story. This is so that at least one exit will be available in case of a fire emergency and to increase the likelihood that a large number of occupants can be accommodated by the remaining exits when one exit is not available. Section 1005.5 specifies that the loss of one exit must not reduce the available exit capacity by more than 50 percent. This is reiterated in Sections 1029.2 and 1029.3 for spaces with assembly seating with more than 300 occupants. Exits should be separated in accordance with Section 1007.1.2. While an equal distribution of exit capacity among all the exits is not required, a proper design would consider occupant load distribution as well as reasonable capacity distribution so as to avoid a severe dependence on one exit or bottlenecks in anticipated high-use areas.

1006.2.2 Egress based on use. The numbers of *exits* or access to *exits* shall be provided in the uses described in Sections 1006.2.2.1 through 1006.2.2.5.

❖ Five types of spaces, because of their levels of hazard, have egress requirements based on use rather than occupant load and travel distance.

1006.2.2.1 Boiler, incinerator and furnace rooms. Two *exit access doorways* are required in boiler, incinerator and furnace rooms where the area is over 500 square feet (46 m^2) and any fuel-fired equipment exceeds 400,000 British thermal units (Btu) (422 000 KJ) input capacity. Where two *exit access doorways* are required, one is permitted to be a fixed ladder or an *alternating tread device*. *Exit access doorways* shall be separated by a horizontal distance equal to one-half the length of the maximum overall diagonal dimension of the room.

❖ This section requires two exit access doorways for the specified mechanical equipment spaces because of the level of hazards in this type of space. A fixed ladder or an alternating tread device is permitted for service personnel to egress where two doorways are required. The remoteness of the exit access doorways specified in this section provides two paths of travel to exit the room so that if one doorway is not available, the alternate path can be used.

1006.2.2.2 Refrigeration machinery rooms. Machinery rooms larger than 1,000 square feet (93 m2) shall have not less than two *exits* or *exit access doorways*. Where two *exit access doorways* are required, one such doorway is permitted to be served by a fixed ladder or an *alternating tread device*. *Exit access doorways* shall be separated by a horizontal distance equal to one-half the maximum horizontal dimension of the room.

All portions of machinery rooms shall be within 150 feet (45 720 mm) of an *exit* or *exit access doorway*. An increase in *exit access* travel distance is permitted in accordance with Section 1017.1.

Doors shall swing in the direction of egress travel, regardless of the *occupant load* served. Doors shall be tight fitting and self-closing.

❖ The reasons for these requirements are the same as for Section 1006.2.2.1. Travel distance is to be limited in accordance with Section 1017.2. For example, the travel distance limit for a large refrigeration machinery room classified as Group F-1 that has a sprinkler system throughout the entire building in accordance

INTERNATIONAL CODE COUNCIL®
Copyright © 2015 ICC. ALL RIGHTS RESERVED. Accessed by David Dammon on Jun 21, 2017 12:30:52 PM pursuant to License Agreement with ICC. No further reproduction or distribution authorized. ANY UNAUTHORIZED REPRODUCTION OR DISTRIBUTION IS A VIOLATION OF THE FEDERAL COPYRIGHT ACT AND THE LICENSE AGREEMENT, AND SUBJECT TO CIVIL AND CRIMINAL PENALTIES THEREUNDER.

with NFPA 13 would be 250 feet (76 200 mm) based on Table 1017.2. The 150-foot (45 720 mm) maximum distance to an exit or exit access doorway that is specified in this section would not apply in this example. The 150-foot (45 720 mm) travel distance is intended to be applied where a sprinkler system is not installed and to shorten the time that occupants would be exposed to the hazards within the machinery room.

1006.2.2.3 Refrigerated rooms or spaces. Rooms or spaces having a floor area larger than 1,000 square feet (93 m^2), containing a refrigerant evaporator and maintained at a temperature below 68°F (20°C), shall have access to not less than two *exits* or *exit access doorways*.

Exit access travel distance shall be determined as specified in Section 1017.1, but all portions of a refrigerated room or space shall be within 150 feet (45 720 mm) of an *exit* or *exit access doorway* where such rooms are not protected by an approved *automatic sprinkler system*. Egress is allowed through adjoining refrigerated rooms or spaces.

Exception: Where using refrigerants in quantities limited to the amounts based on the volume set forth in the *International Mechanical Code*.

❖ Refrigeration rooms also have a higher hazard level. The exception is intended to apply if Chapter 11 of the *International Mechanical Code*® (IMC®) does not require a separate refrigeration machinery room due to the small amount of refrigerant used (see the commentary to Section 1104 of the IMC for further explanation of the machinery room requirements).

1006.2.2.4 Day care means of egress. Day care facilities, rooms or spaces where care is provided for more than 10 children that are $2^1/_2$ years of age or less, shall have access to not less than two *exits* or *exit access doorways*.

❖ Day care occupancies are limited to a maximum of 10 occupants for rooms or spaces with infants and toddlers before two exits are required from a room. This limit is in consideration of needing a quick means of egress for children who would need to be carried or led for evacuation (i.e., children under $2^1/_2$ years of age).

There is an exception for the Group I-4 classification in IBC Section 308.6.1 that allows day care facilities with up to 100 children $2^1/_2$ years of age or less with care rooms having direct access to the exterior to be classified as Group E. An exterior door to the outside from infant and toddler rooms can serve as the second exit to meet this section. It is not the intent that a day care classified as Group E, with children $2^1/_2$ years of age or less, could use the means of egress requirements for Group E for these rooms.

1006.2.2.5 Vehicular ramps. Vehicular ramps shall not be considered as an *exit access ramp* unless pedestrian facilities are provided.

❖ A vehicle-only ramp may be considered as one of the required exit access ramps if pedestrian walkways are provided along the ramp. The low-slope ramps that are lined with parking spaces are not considered vehicle ramps. In open parking garages, according to Section 1019.3, Exception 6, the exit access stairways and ramps are not required to be enclosed since an open parking structure is designed to permit the ready ventilation of the products of combustion to the outside by exterior wall openings (see IBC Section 406.5.2). Also, parking structures are characterized by open floor areas that allow the occupants to observe a fire condition and choose a travel path that would avoid the fire threat.

1006.3 Egress from stories or occupied roofs. The *means of egress* system serving any *story* or occupied roof shall be provided with the number of *exits* or access to *exits* based on the aggregate *occupant load* served in accordance with this section. The *path of egress travel* to an *exit* shall not pass through more than one adjacent *story*.

❖ Emergency evacuation from a multistory building will typically involve stairways or ramps as the vertical element for the means of egress route. The number of required ways off the story (via exit or exit access elements) is based on the occupant loads shown in Table 1006.3.1. These stairways and ramps must comply with the general provisions (Sections 1011 and 1012 respectively), and can be exit access (Section 1019) or exits (Section 1023 and 1027). When exit access stairways or ramps are part of that route, the measurement of the exit access travel distance will include travel from the most remote point on the floor, to and down the exit access stairway or ramp and from the bottom of the stairway or ramp to an enclosure for an exit stairway or ramp or exterior exit door (see Section 1017.3). Vertical travel is slower than horizontal travel, so the exit access stairway or ramp in a building with two or more exits should not be used for more than one story before an exit is reached.

1006.3.1 Egress based on occupant load. Each *story* and occupied roof shall have the minimum number of independent *exits*, or access to *exits*, as specified in Table 1006.3.1. A single *exit* or access to a single *exit* shall be permitted in accordance with Section 1006.3.2. The required number of *exits*, or *exit access stairways* or *ramps* providing access to *exits*, from any *story* or occupied roof shall be maintained until arrival at the *exit discharge* or a *public way*.

❖ This section starts out saying that every occupant on a story must have access to the required number of means of egress as specified:

- Per Table 1006.3.1—at least two means of egress per floor;
- Three means of egress for floors with greater than 500 occupants and four means of egress for floors with greater than 1,000 occupants;
- Per Sections 1006.3.2.1 and 1006.3.2.2—limited allowance for a single means of egress from a floor.

INTERNATIONAL CODE COUNCIL®
Copyright © 2015 ICC. ALL RIGHTS RESERVED. Accessed by David Dammon on Jun 21, 2017 12:30:52 PM pursuant to License Agreement with ICC. No further reproduction or distribution authorized. ANY UNAUTHORIZED REPRODUCTION OR DISTRIBUTION IS A VIOLATION OF THE FEDERAL COPYRIGHT ACT AND THE LICENSE AGREEMENT, AND SUBJECT TO CIVIL AND CRIMINAL PENALTIES THEREUNDER.

Saying "means of egress" instead of "exits" acknowledges that direct entrances to exits on each story are not always mandatory since access to exits (i.e., exit access stairways or ramps) on some stories is permissible within certain limitations. This allows some freedom of design when, for instance, required exit stairways may not be available without passing through other tenant spaces. The intent is to allow for a balance of security concerns providing adequate safety for emergency evacuation.

If a designer chooses to use horizontal exits instead of exit stairways or exit ramps, those specific provisions are addressed in Section 1026. For buildings built into a hillside, an exit door directly to the outside would also provide the same or better level of protection as an interior exit element. It is not the intent of this provision to prohibit horizontal exits or direct exterior exit doors as an option.

Once the number of means of egress is determined, those paths must remain available until occupants leave the building (see Commentary Figure 1006.3.1). The need for exits to be independent of each other cannot be overstated. Each occupant of each floor must be provided with the required number of exits without having to pass through one exit to gain access to another. Each exit is required to be independent of other exits to prohibit such areas from merging downstream and becoming, in effect, one exit.

TABLE 1006.3.1
MINIMUM NUMBER OF EXITS OR ACCESS TO EXITS PER STORY

OCCUPANT LOAD PER STORY	MINIMUM NUMBER OF EXITS OR ACCESS TO EXITS FROM STORY
1-500	2
501-1,000	3
More than 1,000	4

❖ Table 1006.3.1 specifies that the minimum number of exits available to each occupant of a floor is based on the total occupant load of that floor. This is so that at least one exit will be available in case of a fire emergency and to increase the likelihood that a larger number of occupants can be accommodated by the remaining exits when one exit is not available. While an equal distribution of exit capacity among all of the exits is not required, a proper design would not only balance capacity with the occupant load distribution, but also consider a reasoned distribution of capacity to avoid a severe dependence on one exit.

1006.3.2 Single exits. A single *exit* or access to a single *exit* shall be permitted from any *story* or occupied roof where one of the following conditions exists:

1. The *occupant load*, number of *dwelling units* and *exit access* travel distance do not exceed the values in Table 1006.3.2(1) or 1006.3.2(2).
2. Rooms, areas and spaces complying with Section 1006.2.1 with *exits* that discharge directly to the exte-

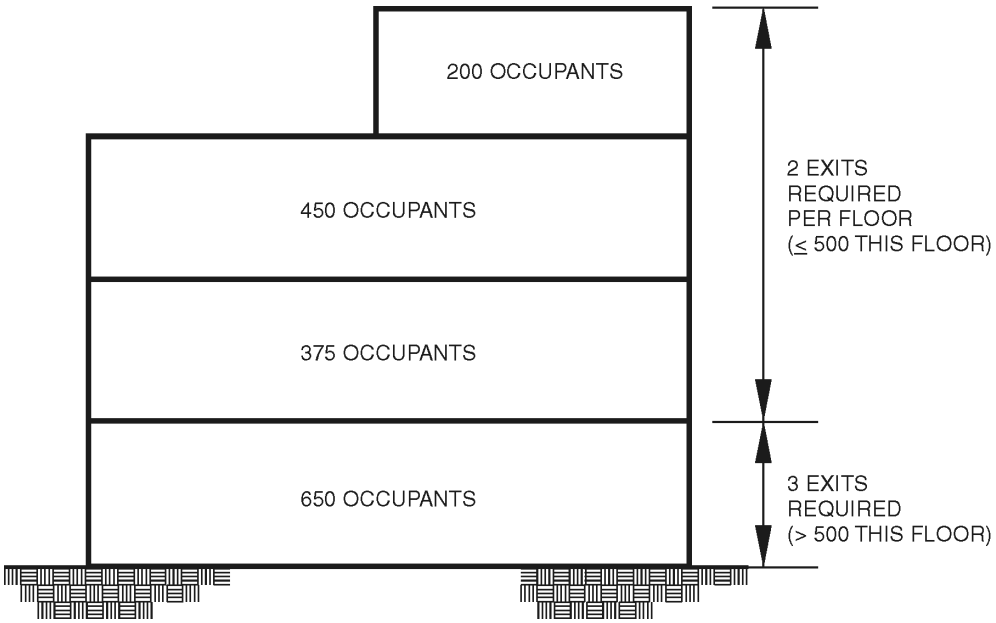

Figure 1006.3.1
NUMBER OF EXITS

INTERNATIONAL CODE COUNCIL®
Copyright © 2015 ICC. ALL RIGHTS RESERVED. Accessed by David Dammon on Jun 21, 2017 12:30:52 PM pursuant to License Agreement with ICC. No further reproduction or distribution authorized. ANY UNAUTHORIZED REPRODUCTION OR DISTRIBUTION IS A VIOLATION OF THE FEDERAL COPYRIGHT ACT AND THE LICENSE AGREEMENT, AND SUBJECT TO CIVIL AND CRIMINAL PENALTIES THEREUNDER.

rior at the *level of exit discharge*, are permitted to have one *exit* or access to a single *exit*.

3. Parking garages where vehicles are mechanically parked shall be permitted to have one *exit* or access to a single *exit*.
4. Group R-3 and R-4 occupancies shall be permitted to have one *exit* or access to a single *exit*.
5. Individual single-story or multistory *dwelling units* shall be permitted to have a single exit or access to a single *exit* from the *dwelling unit* provided that both of the following criteria are met:
   5.1. The *dwelling unit* complies with Section 1006.2.1 as a space with one *means of egress.*
   5.2. Either the *exit* from the *dwelling unit* discharges directly to the exterior at the *level of exit discharge*, or the *exit access* outside the dwelling unit's entrance door provides access to not less than two approved independent *exits*.

❖ The base assumption is that all stories of a building shall have access to at least two separate ways out for emergencies.

Single-exit stories can have access to an exit from any floor, therefore, single-exit stories can use an open exit access stairway for as many stories as permitted by Sections 1006.3.2 and 1019.3.3 provided they meet the exit access of travel distance limitations for that use in Sections 1006.2.1 and 1006.3.2 and Tables 1006.2.1, 1006.3.2(1) and 1006.3.2(2).

A story can have a single exit if the design meets one of the five items listed.

Item 1 states what situations permit one exit by a reference to Tables 1006.3.2(1) and 1006.3.2(2). If a story can meet the provisions for occupant load, number of units and travel distance in Table 1006.3.2(1) or 1006.3.2(2), then that story can have one means of egress. See the commentary for Tables 1006.3.2(1) and 1006.3.2(2) for information on single-exit buildings.

Item 2 references Table 1006.2.1 for single-exit spaces. Table 1006.2.1 is intended to be applicable to rooms and spaces on a floor, but not to an entire floor level. One of the main concerns has been that vertical travel takes longer than horizontal travel in emergency exiting situations. However, if the single-exit space can exit directly to the exterior rather than egress into an interior corridor, a higher level of safety is provided. While the term "building" limits the area addressed to that bordered by exterior walls or fire walls, a common application of Item 2 is on a tenant-by-tenant basis. For example, a single-story strip mall may not meet the provisions for a building with one means of egress but each tenant area meets the provisions for a space with one means of egress in accordance with Section 1006.1. This tenant could exist as either a stand-alone single-exit building or as a single-exit tenant space that exits into an interior corridor. Is it not just as safe to permit this tenant to exist as part of a larger building with the door exiting directly to the exterior? See also the commentary to Tables 1006.3.2(1) and 1006.3.2(2).

While not specifically stated in this section, there is a situation where the single means of egress can be used from a multilevel tenant space. When the combined occupant load of the space and a mezzanine meets the occupant load in Table 1006.2.1 and the common path of travel distance measured from the most remote point down the exit access stairway and to the exterior exit doorway, the ground floor space and its mezzanine can be considered a space with one means of egress.

Item 3 allows for one exit from all stories in a parking garage where the cars are mechanically parked. This is in recognition of the extremely low occupant load in this unique type of building. The single exit would be for maintenance and service personnel who could be on the different levels. Exit access travel would still have to meet Table 1017.2. If this facility is an open parking garage, it could have one exit access stairway compliant with Sections 1017.2, Exception 1, and 1006.3.2, Exception 1.

Group R-3 is limited to no more than two dwelling units per building. Often these units are townhouse style with direct exits at grade or one unit on top of another. Residents in Group R-3 and R-4 congregate residences typically operate as a single-family home. The Fair Housing Act includes no discrimination based on familial status (i.e., family cannot be determined by blood or marriage). Many court cases have been filed under the Fair Housing Act (FHA) requiring that group homes be permitted to operate similar to a single-family home as a point of nondiscrimination. For additional information on the FHA, see the commentaries at the beginning of Chapter 11 and under IBC Section 1107. In either configuration, per Item 4, each unit is required to have only one exit leading from the building. In a multistory unit, any interior stairway would be considered an exit access stairway (Section 1019.3, Exception 2) and would be part of the exit access travel distance in Table 1017.2.

Item 5 is based on decades of practice within an individual dwelling. Item 4 addresses single exits for a Group R-3 building; one or two apartments could be provided in a mixed-use building and still be considered Group R-3. This exception could be used within the unit. Multistory apartments may also be provided within Group R-2 high-rise residential buildings.

In Group R-2, R-3 and R-4 facilities with multistory dwelling units, the means of egress from a dwelling or sleeping unit is typically permitted to be from one level only. In a Group R-2 apartment- or townhouse-style building, if the building is sprinklered with an NFPA 13 or 13R system and the common path of travel from the most remote point on any level to the exit door from the unit itself is 125 feet (22 860 mm) maximum (see Section 1006.2.1), that unit may have only one means of egress. Section 1006.2.1, Exception 1, provides for an occupant load of 20, rather than the 10 occupants allowed in Table 1006.3(2).

INTERNATIONAL CODE COUNCIL®
Copyright © 2015 ICC. ALL RIGHTS RESERVED. Accessed by David Dammon on Jun 21, 2017 12:30:52 PM pursuant to License Agreement with ICC. No further reproduction or distribution authorized. ANY UNAUTHORIZED REPRODUCTION OR DISTRIBUTION IS A VIOLATION OF THE FEDERAL COPYRIGHT ACT AND THE LICENSE AGREEMENT, AND SUBJECT TO CIVIL AND CRIMINAL PENALTIES THEREUNDER.

Therefore, this could allow apartments of up to 4,000 square feet (185.81 m^2). An exit access stairway would be permitted within the unit as part of the exit access travel distance (Section 1019.3, Exception 2). Once the occupants exit the unit itself, however, they must be outside at grade or the floor level must have access to two or more means of egress for all tenants, depending on the number required for the building as a whole [see Commentary Figures 1006.3.2(1) and 1006.3.2(3)]. The common path of egress within the unit would be part of the overall exit access travel distance of 250 feet (45 720 mm) required in Table 1017.2). It is not the intent to allow this exception for apartment-style dwelling units in conjunction with the allowances for a single-exit building. The emergency escape and rescue opening addressed in Section 1029 does not count toward the required number of exits.

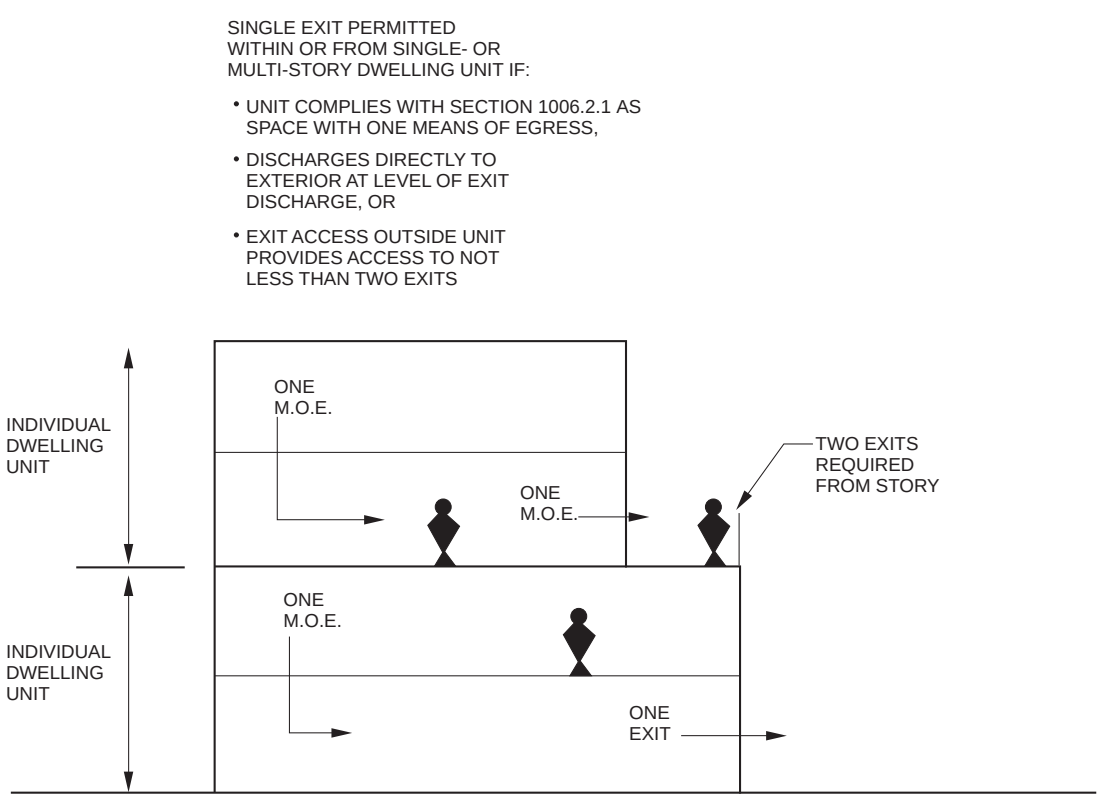

Figure 1006.3.2(1)
MULTISTORY DWELLING UNITS

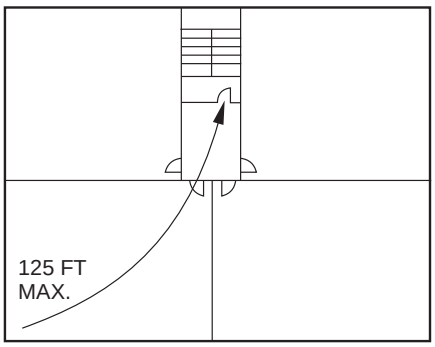

R-2 DWELLING UNITS

SECOND OR THIRD STORY
SINGLE EXIT PERMITTED

- MAXIMUM OF 4 UNITS AND 3 STORIES
- 125 FT. MAX. TRAVEL DISTANCE TO EXIT
- COMPLY WITH 1006.2.1, EXP 1. 20 OCCUPANTS MAX.

For SI: 1 foot = 304.8 mm.

Figure 1006.3.2(2)
EXAMPLE OF SINGLE-EXIT APARTMENT BUILDING

INTERNATIONAL CODE COUNCIL®
Copyright © 2015 ICC. ALL RIGHTS RESERVED. Accessed by David Dammon on Jun 21, 2017 12:30:52 PM pursuant to License Agreement with ICC. No further reproduction or distribution authorized. ANY UNAUTHORIZED REPRODUCTION OR DISTRIBUTION IS A VIOLATION OF THE FEDERAL COPYRIGHT ACT AND THE LICENSE AGREEMENT, AND SUBJECT TO CIVIL AND CRIMINAL PENALTIES THEREUNDER.

TABLE 1006.3.2(1). See below.

❖ Per Note b, this table addresses when single exits can be provided from stories in Group R-2 occupancies having dwelling units only, such as apartments and condominiums. For Group R-2 occupancies with sleeping units, such as dormitories, sororities, fraternities, convents, monasteries or boarding houses, see Table 1006.3.2(2). The second row is to clarify that buildings containing Group R-2 single-exit buildings cannot be four stories or taller. In addition to meeting the number of dwelling units per floor and exit access travel distance, these buildings must be equipped throughout with an NFPA 13 or 13R sprinkler system and an emergency escape and rescue opening must be provided in every bedroom (Note a). The exit access travel distance would be measured from the most remote point in the unit to the exit from the floor. This is different from the travel distance in Section 1006.2.1, Exception 1 where the travel distance is measured to the door of the unit. However, in order to be able to use the single-exit building provisions, each unit must also meet the single-exit space requirements, so the occupant load of each apartment is limited. See Commentary Figures 1006.3.2(2) and 1006.3.2(3) for examples of the differences. Formal committee interpretation 21-14 states that this table allows for groups of four units on a story to have access to a single exit. These units would have to be separated in accordance with IBC Section 420, but would not have to be separated by fire barriers or fire walls.

See the commentary to Table 1006.3.2(2) for additional discussion on single-exit building options.

This table is not intended to work in combination with Section 1006.3.2, Exception 5. That section requires a minimum of two exits from the floor.

TABLE 1006.3.2(2). See page 10-30.

❖ Buildings with one exit are permitted where the configuration and occupancy meet certain characteristics so as not to present an unacceptable fire risk to the occupants. Buildings that are relatively small in size have a shorter travel distance and fewer occupants; thus, having access to a single exit does not significantly compromise the safety of the occupants since they will also be alerted to and get away from the fire more quickly. It is important to note that the provisions in Section 1006.3.2 apply to individual stories. Multiple single-exit spaces or units may exist in the same building, including those cases where differing occupancies exist. Therefore, Tables 1006.3.2(1) and 1006.3.2(2) can address mixed occupancy buildings (see Section 1006.3.2.1).

Occupants of a story of limited size and configuration may have access to a single exit, provided that the building does not have more than one level below the first story above the grade plane. The limitation on the number of levels above and below the first story is intended to limit the vertical travel an occu-

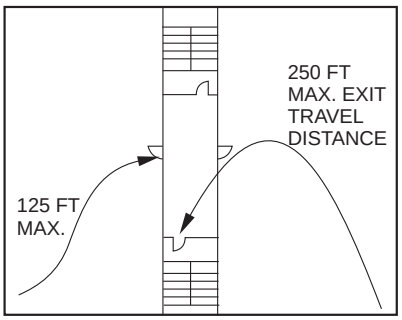

SINGLE EXIT WITHIN AND FROM UNIT

- 250 FT. MAX. EXIT TRAVEL DISTANCE
- NO LIMIT ON NUMBER OF UNITS
- 125 FT. MAX. COMMON PATH OF TRAVEL (TO APARTMENT DOOR)
- 20 OCCUPANT MAX. PER UNIT PER SECTION 1006.3.2, ITEM 5

For SI: 1 foot = 304.8 mm.

Figure 1006.3.2(3)
EXAMPLE OF SINGLE-EXIT APARTMENT WITHIN A TWO-EXIT BUILDING

TABLE 1006.3.2(1)
STORIES WITH ONE EXIT OR ACCESS TO ONE EXIT FOR R-2 OCCUPANCIES

STORY	OCCUPANCY	MAXIMUM NUMBER OF DWELLING UNITS	MAXIMUM COMMON PATH OF EGRESS TRAVEL DISTANCE
Basement, first, second or third story above grade plane	R-2[a, b]	4 dwelling units	125 feet
Fourth story above grade plane and higher	NP	NA	NA

For SI: 1 foot = 3048 mm.
NP = Not Permitted.
NA = Not Applicable.

a. Buildings classified as Group R-2 equipped throughout with an *automatic sprinkler system* in accordance with Section 903.3.1.1 or 903.3.1.2 and provided with *emergency escape and rescue openings* in accordance with Section 1030.

b. This table is used for R-2 occupancies consisting of *dwelling units*. For R-2 occupancies consisting of *sleeping units*, use Table 1006.3.2(2).

INTERNATIONAL CODE COUNCIL®
Copyright © 2015 ICC. ALL RIGHTS RESERVED. Accessed by David Dammon on Jun 21, 2017 12:30:52 PM pursuant to License Agreement with ICC. No further reproduction or distribution authorized. ANY UNAUTHORIZED REPRODUCTION OR DISTRIBUTION IS A VIOLATION OF THE FEDERAL COPYRIGHT ACT AND THE LICENSE AGREEMENT, AND SUBJECT TO CIVIL AND CRIMINAL PENALTIES THEREUNDER.

pant must accomplish to reach the exit discharge in a single-exit building (see Section 1006.3.2.2).

Only one exit is required from a story where permitted by Table 1006.3.2(1) or 1006.3.2(2) regardless of the number of exits required from other stories in the building. For example, a Group B occupancy on the second floor of a two-story building is only required to have one exit from the story, provided its occupant load does not exceed 29 and the maximum exit access travel distance to the exit stairway does not exceed 75 feet (22 860 mm). The number of occupants and travel distances on the first floor do not affect the determination of the second story as a single-exit story. Other stories are also regulated independently as to number of exits. For mixed-occupancy floors or floors where tenant spaces have separate exits, see Section 1006.3.2.1.

Tables 1006.3.2(1) and 1006.3.2(2) list the characteristics a building must have to be of single-exit construction, including occupancy, maximum height of building above grade plane, maximum occupants or dwelling units per floor and exit access travel distance per floor. The occupant load of each floor is determined in accordance with the provisions of Section 1004.1. The exit access travel distance is measured along the natural and unobstructed path to the exit, as described in Section 1017.3. If the occupant load or common path of travel is exceeded, two exits are required from each floor in the building.

The enclosure required for the exit in a two- or three-story, single-exit building is identical to any other complying exit (e.g., interior stairs, exterior stairs, etc.). Similarly, the fire-resistance rating required for opening protectives is identical to that required by IBC Section 716. Exit access stairways could be used in two-story buildings, with or without basements, where permitted by Sections 1019.3 and 1006.3.1.

Per Note c, Group R-2 sleeping units, such as congregate residences, fraternities, sororities, dormitories, convents or monasteries, use Table 1021.2(2). Table 1006.3.2(1) addresses dwelling units in Group R-2 occupancies. Effectively, this section allows for one-story congregate residences to have a single exit where there are 10 or fewer occupants on that first floor or basement. The travel distance from the most remote part of a unit to the exit must be less than 75 feet (22 860 mm). The maximum occupant load would limit the congregate residence to 2,000 square feet (185.81 m^2) maximum per floor. Per Note a, the congregate residence must be sprinklered throughout with an NFPA 13 or 13R system and all bedrooms must have an emergency escape and rescue opening (Section 1029.1). Alternatively, a congregate residence could use Section 1006.3.2, Item 4. Emergency escape windows would be required, but a single exit for upper floors would be allowed as well as an NFPA 13D sprinkler system where permitted by Section 903.2.8.

Table 1006.3.2(2) allows for two-story business, factory, mercantile and storage facilities to have a single-exit stairway or exit access stairway (see Section 1019.3) from the second floor if the space meets the maximums of 29 occupants and a 75-foot (22 860 mm) travel distance. The increased travel distance in Note b is not permitted for the second floor. However, there is an increase for travel distance permitted for Group S-2 open parking garages in Note d.

Table 1006.3.2(2) allows for a variety of single-story buildings, with or without basements, which meet the maximum occupant load and exit access travel distance specified. Exit access stairways from the basement would be a viable option where permitted by Section 1019.3.

Again, these tables are based on per-story criteria. These tables would also allow for mixed occupancies, such as four apartments over a restaurant or a business over a day care, as long as occupant loads

TABLE 1006.3.2(2)
STORIES WITH ONE EXIT OR ACCESS TO ONE EXIT FOR OTHER OCCUPANCIES

STORY	OCCUPANCY	MAXIMUM OCCUPANT LOAD PER STORY	MAXIMUM COMMON PATH OF EGRESS TRAVEL DISTANCE (feet)
First story above or below grade plane	A, B[b], E F[b], M, U	49	75
	H-2, H-3	3	25
	H-4, H-5, I, R-1, R-2[a, c], R-4	10	75
	S[b, d]	29	75
Second story above grade plane	B, F, M, S[d]	29	75
Third story above grade plane and higher	NP	NA	NA

For SI: 1 foot = 304.8 mm.

NP = Not Permitted.

NA = Not Applicable.

a. Buildings classified as Group R-2 equipped throughout with an *automatic sprinkler system* in accordance with Section 903.3.1.1 or 903.3.1.2 and provided with *emergency escape and rescue openings* in accordance with Section 1030.

b. Group B, F and S occupancies in buildings equipped throughout with an *automatic sprinkler system* in accordance with Section 903.3.1.1 shall have a maximum *exit access* travel distance of 100 feet.

c. This table is used for R-2 occupancies consisting of *sleeping units*. For R-2 occupancies consisting of *dwelling units*, use Table 1006.3.2(1).

d. The length of *exit access* travel distance in a Group S-2 *open parking garage* shall be not more than 100 feet.

INTERNATIONAL CODE COUNCIL®
Copyright © 2015 ICC. ALL RIGHTS RESERVED. Accessed by David Dammon on Jun 21, 2017 12:30:52 PM pursuant to License Agreement with ICC. No further reproduction or distribution authorized. ANY UNAUTHORIZED REPRODUCTION OR DISTRIBUTION IS A VIOLATION OF THE FEDERAL COPYRIGHT ACT AND THE LICENSE AGREEMENT, AND SUBJECT TO CIVIL AND CRIMINAL PENALTIES THEREUNDER.

and travel distances are met. Means of egress could be by a stairway through the floor below or a separate exterior stairway from the upper level. For additional information on a mixed-use floor, see Section 1006.3.2.1.

Formal code interpretation 21-14 states that this table allows for an exit configuration for multiple single-exit spaces for Groups B, M, F and S on the second floor where each group meets Table 1006.3.2(2).

1006.3.2.1 Mixed occupancies. Where one *exit*, or *exit access stairway* or *ramp* providing access to *exits* at other *stories*, is permitted to serve individual *stories*, mixed occupancies shall be permitted to be served by single *exits* provided each individual occupancy complies with the applicable requirements of Table 1006.3.2(1) or 1006.3.2(2) for that occupancy. Where applicable, cumulative *occupant loads* from adjacent occupancies shall be considered in accordance with the provisions of Section 1004.1. In each *story* of a mixed occupancy building, the maximum number of occupants served by a single *exit* shall be such that the sum of the ratios of the calculated number of occupants of the space divided by the allowable number of occupants indicated in Table 1006.3.2(2) for each occupancy does not exceed one. Where *dwelling units* are located on a story with other occupancies, the actual number of *dwelling units* divided by four plus the ratio from the other occupancy does not exceed one.

❖ Where multiple tenants or occupancies are located on a specific story, they are to be regulated by a "unity" formula if they want to use the same exit. If they have separate exits, they will be evaluated separately. This would allow for a second floor of a mixed-use occupancy to be evaluated similarly to Section 1016.2, which applies where multiple spaces combine. For example, the second story of a building houses two tenants, one business and one mercantile. Each tenant would be permitted a single, but separate, exit, provided each had an occupant load of less than 30 and a travel distance not exceeding 75 feet (22.860 m) (see Commentary Figure 1006.3.2, Option 2). However, if the tenants wanted to share the same single exit, the combined occupant load would have to be less than 30 (see Commentary Figure 1006.3.2.1, Option 3).

Where the mixed-use stories includes dwelling units, since four dwelling units are allowed per floor in a single-exit building, for the unity formula use 0.25 for one unit, 0.50 for two units and 0.75 for three units.

SECTION 1007
EXIT AND EXIT ACCESS DOORWAY CONFIGURATION

1007.1 General. *Exits, exit access doorways,* and *exit access stairways* and *ramps* serving spaces, including individual building *stories,* shall be separated in accordance with the provisions of this section.

❖ The final exits, as well as the doors, stairways and ramps that get occupants to those exits (exit access elements), need to be unobstructed and obvious at all times for occupants to evacuate the building safely in an emergency situation. This is consistent with the requirements in Section 1010.1 that exit or exit access doors are not to be concealed by curtains, drapes, decorations or mirrors. Whether the doors from the space are exit access doors leading to a hallway or actual exit doors leading to an exit enclosure or directly to the outside, they must be located in accordance with this section.

The need for exits from a space or story to be independent of each other cannot be overstated. Each occupant of each floor must be provided with the required number of exits without having to pass through one exit to gain access to another. Each exit is required to be independent of other exits to prohibit such areas from merging downstream and becoming, in effect, one exit.

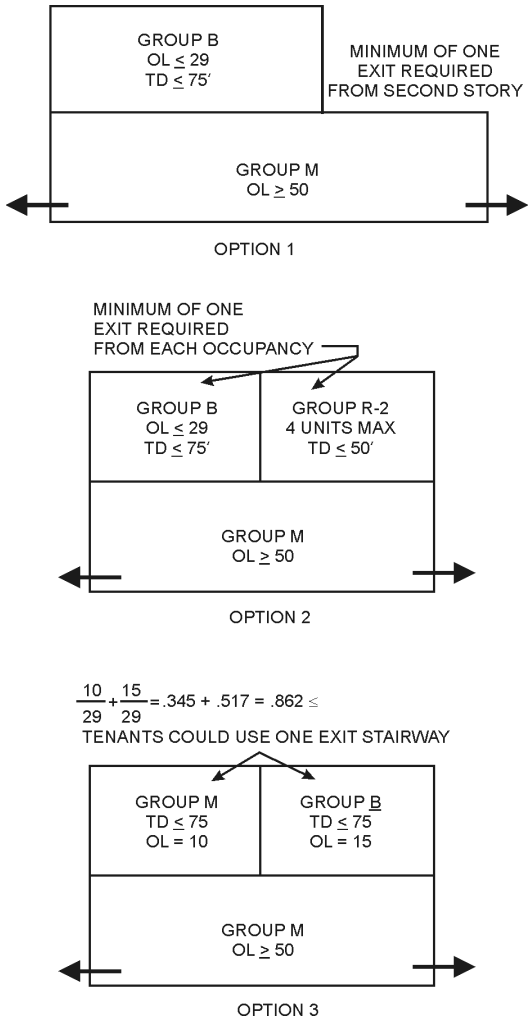

For SI: 1 foot = 304.8 mm.

Figure 1006.3.2.1
STORIES WITH ONE EXIT

INTERNATIONAL CODE COUNCIL®
Copyright © 2015 ICC. ALL RIGHTS RESERVED. Accessed by David Dammon on Jun 21, 2017 12:30:52 PM pursuant to License Agreement with ICC. No further reproduction or distribution authorized. ANY UNAUTHORIZED REPRODUCTION OR DISTRIBUTION IS A VIOLATION OF THE FEDERAL COPYRIGHT ACT AND THE LICENSE AGREEMENT, AND SUBJECT TO CIVIL AND CRIMINAL PENALTIES THEREUNDER.

The requirement for exits to be continuous is consistent with the exit termination requirements in Section 1023.3 and the exit discharge termination requirements in Section 1024.4. The intent is to provide safety in all portions of the exit by requiring continuity of the fire protection characteristics of the enclosure for the exit stairway or ramp. Exit passageways (see Section 1024) are a continuation of an exit enclosure. This would include, but not be limited to, the fire-resistance rating of the exit enclosure walls and the opening protection rating of the doors.

Section 1028.1, Exceptions 1 and 2, allows for an alternative for direct access to the outside via an intervening lobby or vestibule. Horizontal exits (see Section 1026), while not providing direct access to the outside of the structure, do move occupants to another "building" by moving through a fire wall (see Section 1026 and Section 1028.1, Exception 3) or into a refuge area protected by fire barriers and horizontal assemblies. Horizontal exits are commonly used in hospitals and jails for a defend-in-place type of protection.

1007.1.1 Two exits or exit access doorways. Where two *exits*, *exit access doorways*, *exit access stairways* or *ramps*, or any combination thereof, are required from any portion of the *exit access*, they shall be placed a distance apart equal to not less than one-half of the length of the maximum overall diagonal dimension of the building or area to be served measured in a straight line between them. Interlocking or *scissor stairways* shall be counted as one *exit stairway*.

Exceptions:

1. Where interior *exit stairways* or *ramps* are interconnected by a 1-hour fire-resistance-rated corridor conforming to the requirements of Section 1020, the required exit separation shall be measured along the shortest direct line of travel within the corridor.
2. Where a building is equipped throughout with an *automatic sprinkler system* in accordance with Section 903.3.1.1 or 903.3.1.2, the separation distance shall be not less than one-third of the length of the maximum overall diagonal dimension of the area served.

❖ This section provides a method to determine, quantitatively, remoteness between exits and exit access doors based on the dimensional characteristics of the space served. This measure has been common practice for some years with significant success. Very simply, the method involves determining the maximum dimension between any two points in a floor or a room (e.g., a diagonal between opposite corners in a rectangular room or building or the diameter in a circular room or building). If two doors or exits are required from the room or building (see Sections 1006.2 and 1006.3), the straight-line distance between the center of the thresholds of the doors must be at least one-half of the maximum dimension [see Commentary Figure 1007.1.1(1)].

While technical proof is not available to substantiate this method of determining remoteness, it has been found to be realistic and practical for most building designs. Buildings with exits in a center core and occupied spaces around the perimeter are addressed in Exception 1.

If a scissor stairway is utilized, regardless of the separation of the two entrances, the scissor stair may only be counted as one exit. Two independent stairways within the same enclosure could result in both stairways being usable in an emergency where smoke penetrates the single enclosure (see the definition for "Scissor stairways" in Chapter 2). Interlocking stairways that occur over the same building footprint but within separate enclosures are not "scissor stairways" and can count as two independent exits. Due to concern about smoke migration, careful review of the construction details and verification that they meet all the provisions for fire barriers and horizontal assemblies must be made. Of special concern would be the provisions for continuity, penetrations and joints.

The entrance to the enclosures for exit stairways or ramps shall meet the same arrangement as exit and exit access doorways. The need for exits to be independent of each other cannot be overstated.

In Exception 1, a method of permitting the distance between exits to be measured along a complying corridor connecting the enclosure for the exit stairway or ramp has served to mitigate the disruption to this design concept [see Commentary Figure 1007.1.1(2)].

As reflected in Exception 2, the protection provided by an automatic sprinkler system can reduce the threat of fire buildup so that the reduction in remoteness to one-third of the diagonal dimension is not unreasonable, based on the presumption that it provides the occupants with an acceptable level of safety from fire [see Commentary Figure 1007.1.1(3)]. The automatic sprinkler system must be installed throughout the building in accordance with NFPA 13 or 13R. This reduced separation (one-third diagonal) may also be used when applying the requirements of Exception 1.

In applying the provisions of this section, it is important to recognize any convergence of egress paths that may exist. Commentary Figure 1007.1.1(4) illustrates an assembly room with remotely located exit access doors, but the doors from the entire space are not considered remote in accordance with this section.

1007.1.1.1 Measurement point. The separation distance required in Section 1007.1.1 shall be measured in accordance with the following:

1. The separation distance to *exit* or *exit access doorways* shall be measured to any point along the width of the doorway.

INTERNATIONAL CODE COUNCIL®
Copyright © 2015 ICC. ALL RIGHTS RESERVED. Accessed by David Dammon on Jun 21, 2017 12:30:52 PM pursuant to License Agreement with ICC. No further reproduction or distribution authorized. ANY UNAUTHORIZED REPRODUCTION OR DISTRIBUTION IS A VIOLATION OF THE FEDERAL COPYRIGHT ACT AND THE LICENSE AGREEMENT, AND SUBJECT TO CIVIL AND CRIMINAL PENALTIES THEREUNDER.

2. The separation distance to *exit access stairways* shall be measured to the closest riser.
3. The separation distance to *exit access ramps* shall be measured to the start of the ramp run.

❖ Where exit access stairways are permitted to be unenclosed, the remoteness measurement for doorways shall begin at the center of the top riser of the unenclosed stairways; this is consistent with the exit access travel distance measurement in Section 1017.3. When enclosure is provided, distances are measured to the door of the enclosure. Typically, travel distance is measured to the center of the door, ramp or stairway; however, there is an allowance for that point to be at any location along the door, stairway or ramp. The intent is to reduce subjectivity in the determination of exit/exit access configuration. The result is that a designer could literally measure to the far extreme edge of the two doorways leading out of a room to meet the separation requirements.

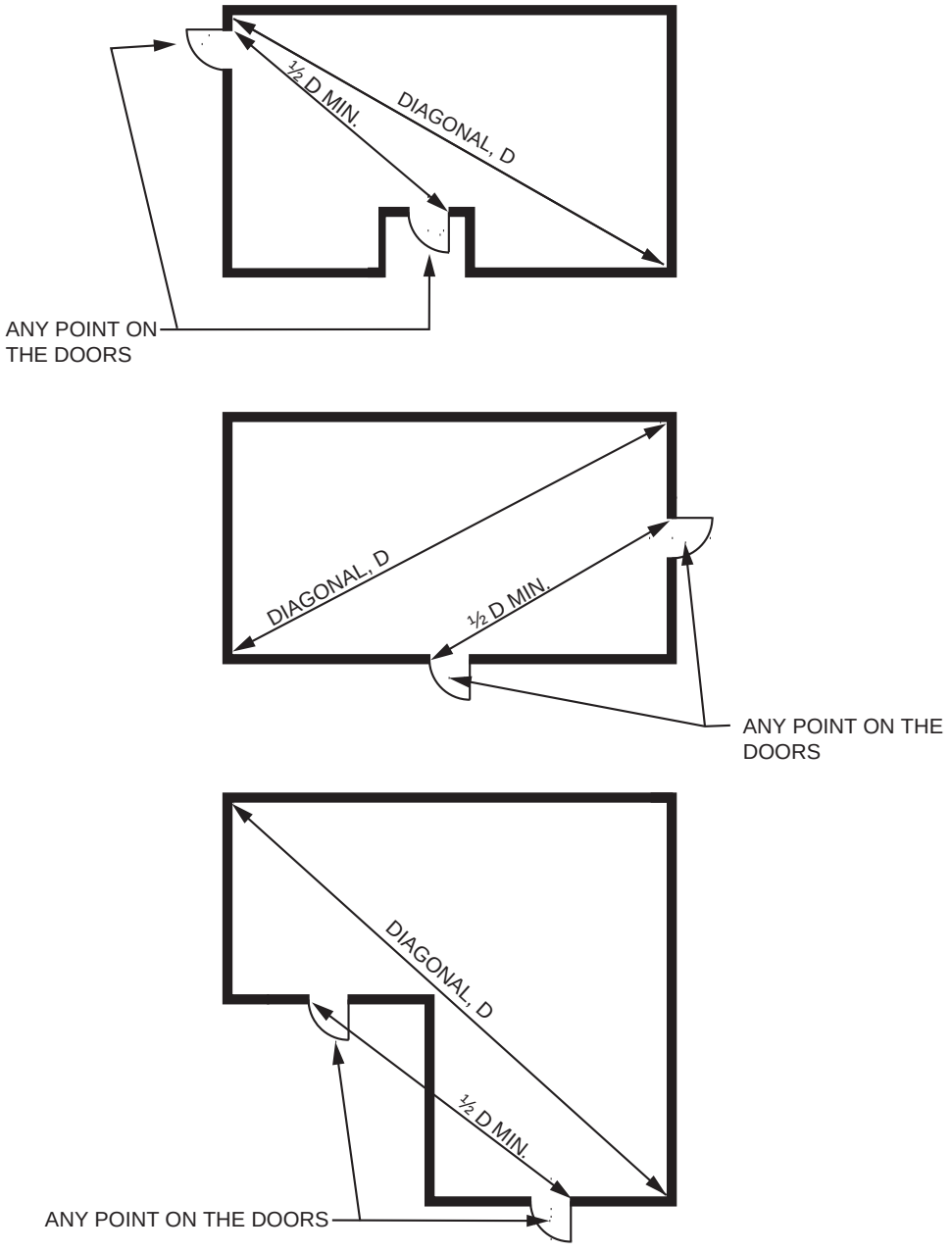

Figure 1007.1.1(1)
EXAMPLES OF REMOTENESS BETWEEN EXITS OR EXIT ACCESS DOORS FROM A ROOM OR BUILDING

INTERNATIONAL CODE COUNCIL®
Copyright © 2015 ICC. ALL RIGHTS RESERVED. Accessed by David Dammon on Jun 21, 2017 12:30:52 PM pursuant to License Agreement with ICC. No further reproduction or distribution authorized. ANY UNAUTHORIZED REPRODUCTION OR DISTRIBUTION IS A VIOLATION OF THE FEDERAL COPYRIGHT ACT AND THE LICENSE AGREEMENT, AND SUBJECT TO CIVIL AND CRIMINAL PENALTIES THEREUNDER.

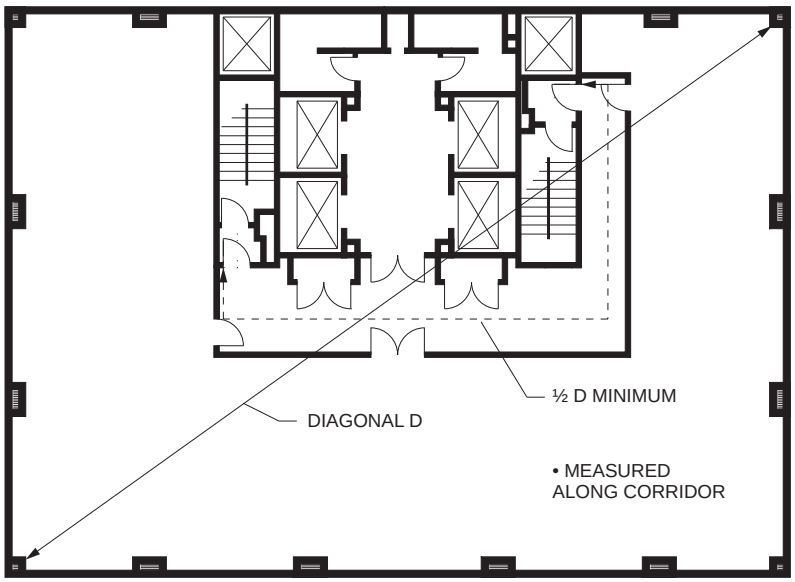

EXAMPLE:

DIAGONAL DIMENSION = 134′-0″
MIN. SEPARATION OF EXITS = 134′ ÷ 2 = 67″-0′

For SI: 1 inch = 25.4 mm, 1 foot = 304.8 mm.

Figure 1007.1.1(2)
REMOTENESS OF INTERCONNECTING BY A 1-HOUR FIRE-RESISTANCE-RATED CORRIDOR

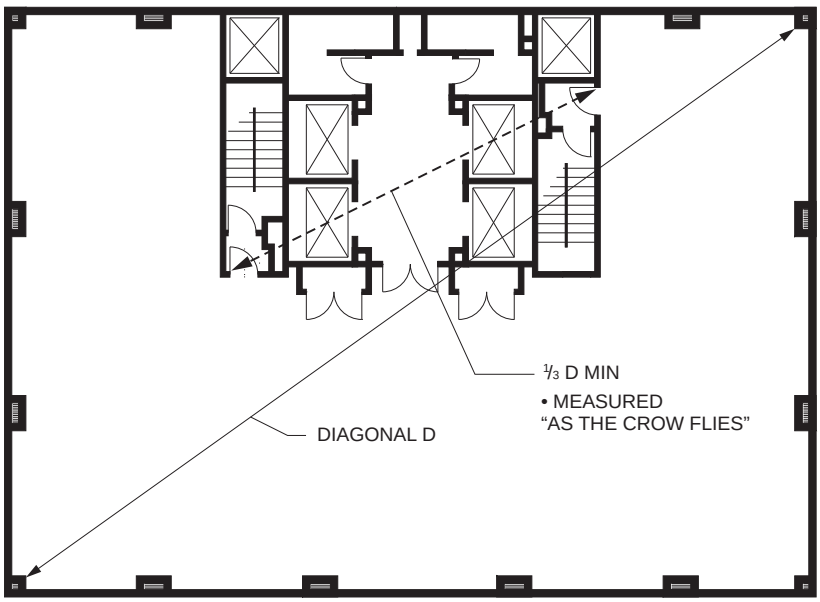

EXAMPLE:
DIAGONAL DIMENSION = 134′-0″
MIN. SEPARATION OF EXITS = 134′ ÷ 3 = 44′-8″

For SI: 1 inch = 25.4 mm, 1 foot = 304.8 mm.

Figure 1007.1.1(3)
REMOTENESS OF EXITS IN A BUILDING WITH AN AUTOMATIC SPRINKLER SYSTEM

INTERNATIONAL CODE COUNCIL®
Copyright © 2015 ICC. ALL RIGHTS RESERVED. Accessed by David Dammon on Jun 21, 2017 12:30:52 PM pursuant to License Agreement with ICC. No further reproduction or distribution authorized. ANY UNAUTHORIZED REPRODUCTION OR DISTRIBUTION IS A VIOLATION OF THE FEDERAL COPYRIGHT ACT AND THE LICENSE AGREEMENT, AND SUBJECT TO CIVIL AND CRIMINAL PENALTIES THEREUNDER.

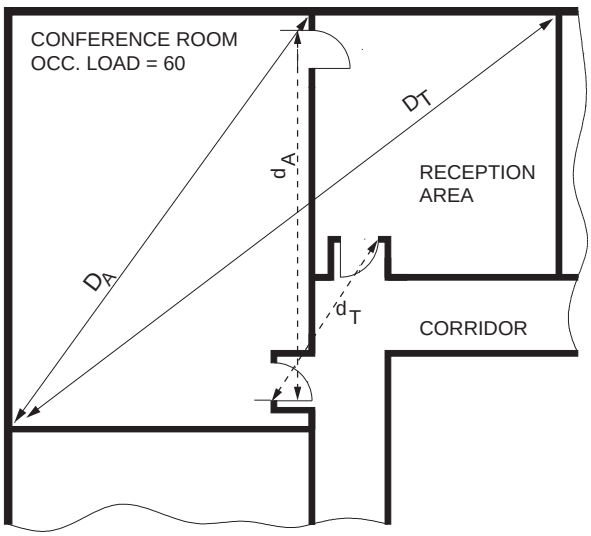

For SI: 1 inch = 25.4 mm, 1 foot = 304.8 mm.

Figure 1007.1.1(4)
REMOTE LOCATION OF EXIT ACCESS DOORS
(ADJOINING ROOMS)

1007.1.2 Three or more exits or exit access doorways. Where access to three or more *exits* is required, not less than two *exit* or *exit access doorways* shall be arranged in accordance with the provisions of Section 1007.1.1. Additional required *exit* or *exit access doorways* shall be arranged a reasonable distance apart so that if one becomes blocked, the others will be available.

❖ When there are three or more required exits from a building or exit access doors from a room, they are to be analyzed identically to the method described in Section 1007.1.1. Two of the exits or exit access doors must meet the remoteness test. Any additional exits or doors can be located anywhere within the floor plan that meets the code requirements, including independence, accessibility, capacity and continuity.

There is no specific separation requirement provided in Section 1007.1.2 for the third exit, but the exits must be located so that one fire event will not block two exits; thus, two doors immediately adjacent would not be acceptable. The appropriate separation is subjective and would be partially dependent on the layout of the space. Using some other provisions in the code for guidance can help. Section 1005.5 states that multiple means of egress need to be sized such that the loss of any one will not reduce the capacity below 50 percent. This intent is repeated for an assembly space with more than 300 occupants. Sections 1029.2 and 1029.3 can require this space to have a main exit that accommodates one-half of the total occupant load and then require the balance of the exits (means of egress) to provide for the remaining one-half of the occupant load. The “main exit” is typically the result of a single “main entrance” for fee or ticket entry. If there is not a main exit, the exceptions to both Sections 1029.2 and 1029.3 require the means of egress to be “distributed around the perimeter of the building.”

1007.1.3 Remoteness of exit access stairways or ramps. Where two *exit access stairways* or *ramps* provide the required *means of egress* to *exits* at another *story*, the required separation distance shall be maintained for all portions of such *exit access stairways* or *ramps*.

❖ The intent of these provisions are to prohibit open stairways and ramps that meet the separation distance at the first riser or start of the ramp run from converging toward one another such that the separation distance is reduced as the occupants follow the egress path to the lower level. Exit access stairways and ramps have to maintain the separation distance until the travel to the lower floor is complete (see Commentary Figure 1007.1.3).

INTERNATIONAL CODE COUNCIL®
Copyright © 2015 ICC. ALL RIGHTS RESERVED. Accessed by David Dammon on Jun 21, 2017 12:30:52 PM pursuant to License Agreement with ICC. No further reproduction or distribution authorized. ANY UNAUTHORIZED REPRODUCTION OR DISTRIBUTION IS A VIOLATION OF THE FEDERAL COPYRIGHT ACT AND THE LICENSE AGREEMENT, AND SUBJECT TO CIVIL AND CRIMINAL PENALTIES THEREUNDER.

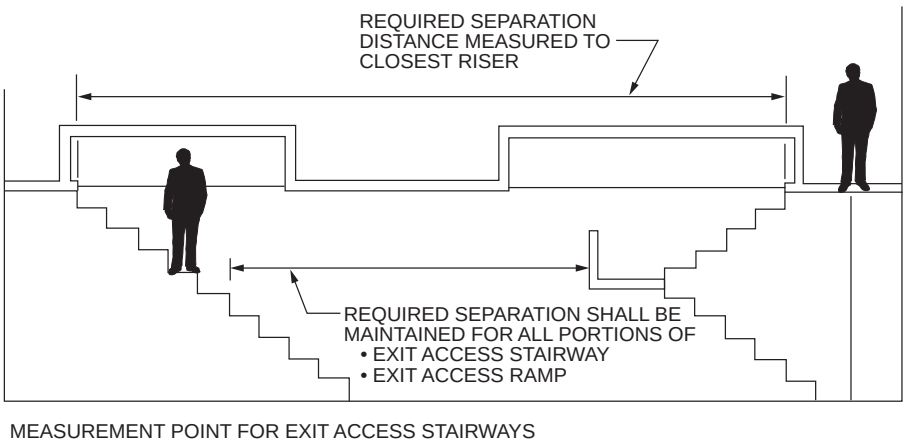

For SI: 1 inch = 25.4 mm, 1 foot = 304.8 mm.

Figure 1007.1.3
SEPARATION OF EXIT ACCESS STAIRWAYS AND RAMPS

1007.1.3.1 Three or more exit access stairways or ramps. Where more than two *exit access stairways* or *ramps* provide the required *means of egress*, not less than two shall be arranged in accordance with Section 1007.1.3.

❖ See the commentary to Section 1007.1.3, Remoteness of exit access stairways and ramps.

SECTION 1008
MEANS OF EGRESS ILLUMINATION

1008.1 Means of egress illumination. Illumination shall be provided in the *means of egress* in accordance with Section 1008.2. Under emergency power, means of egress illumination shall comply with Section 1008.3.

❖ This section is split into two distinct requirements: Section 1008.2 for egress lighting during typical lighting situations and Section 1008.3 for egress lighting for emergencies when the building has lost normal power.

1008.2 Illumination required. The *means of egress* serving a room or space shall be illuminated at all times that the room or space is occupied.

Exceptions:

1. Occupancies in Group U.
2. *Aisle accessways* in Group A.
3. *Dwelling units* and *sleeping units* in Groups R-1, R-2 and R-3.
4. *Sleeping units* of Group I occupancies.

❖ All portions of the means of egress serving a space must be illuminated by artificial lighting when that space is occupied, so that the paths of exit travel are always visible and available for evacuation of the occupants during emergencies. The intent is to allow portions of a building to have the lights turned off when that portion is unoccupied.

Three of the exceptions are for occupancies where the constant illumination of the means of egress would interfere with the use of space, such as sleeping areas or theater seating during a performance.

Bear in mind that means of egress lighting is not emergency lighting. For emergency lighting requirements, see Section 1008.3.

The high-rise provisions in IBC Section 403 utilize the means of egress lighting and emergency lighting in this section. High-rise buildings also require a secondary backup system of luminous egress path markings within enclosed exit stairways (Section 1025). Section 1025.5 requires the enclosed exit stairways to be illuminated for 60 minutes prior to the daily occupancy and during the entire time the building is occupied so that the self-luminous stripes can charge. In a building that is always occupied, such as a hospital or hotel, this would require at least some of the lights in the stairway to be on 24 hours per day.

1008.2.1 Illumination level under normal power. The *means of egress* illumination level shall be not less than 1 footcandle (11 lux) at the walking surface.

Exception: For auditoriums, theaters, concert or opera halls and similar assembly occupancies, the illumination at the walking surface is permitted to be reduced during performances by one of the following methods provided that the required illumination is automatically restored upon activation of a premises' fire alarm system:

1. Externally illuminated walking surfaces shall be permitted to be illuminated to not less than 0.2 footcandle (2.15 lux).
2. Steps, landings and the sides of ramps shall be permitted to be marked with self-luminous materials in

INTERNATIONAL CODE COUNCIL®
Copyright © 2015 ICC. ALL RIGHTS RESERVED. Accessed by David Dammon on Jun 21, 2017 12:30:52 PM pursuant to License Agreement with ICC. No further reproduction or distribution authorized. ANY UNAUTHORIZED REPRODUCTION OR DISTRIBUTION IS A VIOLATION OF THE FEDERAL COPYRIGHT ACT AND THE LICENSE AGREEMENT, AND SUBJECT TO CIVIL AND CRIMINAL PENALTIES THEREUNDER.

accordance with Sections 1025.2.1, 1025.2.2 and 1025.2.4 by systems listed in accordance with UL 1994.

❖ The intensity of lighting along the entire means of egress, including open plan spaces, aisles, corridors and passageways, exit stairways, exit doors and places of exit discharge at the walking surface or floor level must not be less than 1 footcandle (11 lux). One footcandle (11 lux) is approximately the same lighting level as found outdoors at twilight. It has been found that even this relatively low level of lighting renders enough visibility for occupants to evacuate a building safely.

It is important to note that this lighting level is measured at the floor in order to make the floor surface visible. Levels of illumination above the floor may be higher or lower, thus allowing lights along steps to be used rather than general area lighting.

The exception addresses assembly occupancies where low light level is needed for the function of the space. It is not the intent of the exception to require a fire alarm system but to require a connection to the egress lighting where a fire alarm system is provided. There are two options for that path lighting. Per Exception 1, the level of intensity of aisle lighting in such spaces may be reduced to 0.2 footcandle (2.15 lux), but only during the time of a performance. This intensity of illumination is sufficient to distinguish the aisles and stairs leading to the egress doors and not be a source of distraction during a performance. The option in Exception 2 allows for internally illuminated luminous path stripes (see Section 1025). Since the illumination in the space between shows and the duration of the shows may not be compatible with luminous path markings that charge from a light source, this option is currently not permitted.

1008.2.2 Exit discharge. In Group I-2 occupancies where two or more exits are required, on the exterior landings required by Section 1010.6.1, means of egress illumination levels for the exit discharge shall be provided such that failure of any single lighting unit shall not reduce the illumination level on that landing to less than 1 footcandle (11 lux).

❖ Section 1006.1, by requiring the means of egress to be illuminated, would include the exit discharge. Often, when moving to the outside of the building, the lighting from the parking lot or street lights will sufficiently light the exit discharge without additional lighting from the building itself. The transition moving from a lighted space to the outside may be an issue at the exit door, therefore, many facilities do provide a light over the exit door on the outside. For hospitals, the fixture provided must have at least two light bulbs, so that if one burns out, the other will still provide sufficient light for this transition.

This proposal was submitted by the Adhoc Health Care Committee, so it is limited to their scope of work. To reduce potential hazards at this important juncture, this could be considered best practice for other occupancies.

1008.3 Emergency power for illumination. The power supply for means of egress illumination shall normally be provided by the premises' electrical supply.

❖ The main routes for means of egress must be illuminated in times of emergency when the occupants must have a lighted path of exit travel in order to evacuate the building safely. The code is very specific in the description of the areas that are required to be illuminated by the emergency, not the standby power system (see Section 604.2.12).

1008.3.1 General. In the event of power supply failure in rooms and spaces that require two or more means of egress, an emergency electrical system shall automatically illuminate all of the following areas:

1. *Aisles*.
2. *Corridors*.
3. *Exit access stairways* and *ramps*.

❖ Where two means of egress are required from a room or space, emergency lighting must be provided along aisle corridors, exit access stairways and ramps. It is not the intent to require the entire space to be lit as during normal use situations addressed in Section 1008.2. However, the main egress paths out of the two exit spaces must be illuminated. This would always include the main corridor in a story with two exits required, and could include paths off that main corridor. For example, an aisle in an open office plan must be illuminated, but not the path within individual offices that egress through the open area. Exit access stairways from a mezzanine or from a second floor (as permitted by Section 1019.3) and the route from the bottom of the stairway to the exit must also be illuminated.

1008.3.2 Buildings. In the event of power supply failure in buildings that require two or more *means of egress*, an emergency electrical system shall automatically illuminate all of the following areas:

1. *Interior exit access stairways* and *ramps*.
2. *Interior* and *exterior exit stairways* and *ramps*.
3. *Exit passageways.*
4. Vestibules and areas on the level of discharge used for *exit discharge* in accordance with Section 1028.1.
5. Exterior landings as required by Section 1010.1.6 for *exit doorways* that lead directly to the e*xit discharge*.

❖ Where two or more exits are required from a story, essential portions of the interior egress system must be illuminated. This includes:

- Exit access stairways from a second floor (as permitted by Section 1019.3) as well as the route from the bottom of the stairway to the exit (see Section 1008.3.1).
- All exit stairways and ramps along their entire length.

INTERNATIONAL CODE COUNCIL®
Copyright © 2015 ICC. ALL RIGHTS RESERVED. Accessed by David Dammon on Jun 21, 2017 12:30:52 PM pursuant to License Agreement with ICC. No further reproduction or distribution authorized. ANY UNAUTHORIZED REPRODUCTION OR DISTRIBUTION IS A VIOLATION OF THE FEDERAL COPYRIGHT ACT AND THE LICENSE AGREEMENT, AND SUBJECT TO CIVIL AND CRIMINAL PENALTIES THEREUNDER.

- Exit passageways used in facilities with long travel distances, such as malls, or as an extension of the exit stairway enclosure.
- Means of egress systems that use exit balconies (see Section 1021) or open exterior exit stairways or ramps (see Section 1028).
- Interior exit discharge elements, such as lobbies and vestibules (see Section 1028.1), where stairways discharge into these elements instead of directly to the exterior of a building.
- Exterior portions of the exit discharge. Note that only the portion of the exterior discharge that is immediately adjacent to the building exit discharge door is required to have emergency illumination and not the entire exterior discharge path to the public way.

1008.3.3 Rooms and spaces. In the event of power supply failure, an emergency electrical system shall automatically illuminate all of the following areas:

1. Electrical equipment rooms.
2. Fire command centers.
3. Fire pump rooms.
4. Generator rooms.
5. Public restrooms with an area greater than 300 square feet (27.87 m^2).

❖ The intent of Items 1 through 4 is to have emergency lighting in areas significant for emergency responders or maintenance personnel who may be trying to locate and fix the loss of power issue for the building.

Item 5 requires an emergency light in large restrooms. Given the activity, people may need some illumination to quickly get themselves ready to be able to evacuate.

1008.3.4 Duration. The emergency power system shall provide power for a duration of not less than 90 minutes and shall consist of storage batteries, unit equipment or an on-site generator. The installation of the emergency power system shall be in accordance with Section 2702.

❖ So that there will be a continuing source of electrical energy for maintaining the illumination of the means of egress when there is a loss of the main power supply, the means of egress lighting system must be connected to an emergency electrical system that consists of storage batteries, unit equipment or an on-site generator. This emergency power-generating facility must be capable of supplying electricity for at least 90 minutes, thereby giving the occupants sufficient time to leave the premises. In most cases, where the loss of the main electrical supply is attributed to a malfunction in the distribution system of the electric power company, experience has shown that such power outages do not usually last as long as 90 minutes.

The IFC requirements for emergency power for emergency egress lighting and exit signage in existing buildings only require a 60-minute time duration. This is not a conflict, but rather recognition of the loss of battery storage capability over a length of time.

1008.3.5 Illumination level under emergency power. Emergency lighting facilities shall be arranged to provide initial illumination that is not less than an average of 1 footcandle (11 lux) and a minimum at any point of 0.1 footcandle (1 lux) measured along the path of egress at floor level. Illumination levels shall be permitted to decline to 0.6 footcandle (6 lux) average and a minimum at any point of 0.06 footcandle (0.6 lux) at the end of the emergency lighting time duration. A maximum-to-minimum illumination uniformity ratio of 40 to 1 shall not be exceeded. In Group I-2 occupancies, failure of any single lighting unit shall not reduce the illumination level to less than 0.2 footcandle (2.2 lux).

❖ This section provides the criteria of the illumination levels of the emergency lighting system. The initial average level for the main egress paths is the same as for the overall means of egress illumination in Section 1008.2.1. The reduction of illumination recognizes the performance characteristics over time of some types of power supplies, such as batteries. The minimum levels are sufficient for the occupants to egress from the building. In addition, the emergency lighting system is a secondary system that is spaced along the main egress routes. It will not provide the same level of general lighting over the route as what can be provided by the building lighting system.

The maximum illumination uniformity ratio of 40 means that the variation in the illumination levels is not to exceed that number. For example, a minimum of 0.06 footcandle (0.6 lux) would establish a maximum illumination of 2.4 footcandles (24 lux) in an adjacent area. This is to establish a variation limit such that the means of egress can be seen as a person walks from bright to darker areas along the egress path.

Group I-2 nursing homes and hospitals typically use a defend-in-place strategy for patients and residents who require assistance from a staff trained in the fire and safety evacuation plans. Given the possible critical nature of some of the patients and the need to move some people with life-sustaining equipment, there is an additional requirement that the lighting in the main corridors and along the exit path will always have some redundancy in the fixtures providing that illumination. This could be done with either two bulb fixtures, or locating emergency lighting fixtures close enough that if one burned out, light from fixtures on each side would overlap enough to not result in a dark spot.

SECTION 1009
ACCESSIBLE MEANS OF EGRESS

1009.1 Accessible means of egress required. Accessible *means of egress* shall comply with this section. *Accessible* spaces shall be provided with not less than one accessible *means of egress*. Where more than one *means of egress* are required by Section 1006.2 or 1006.3 from any *accessible*

INTERNATIONAL CODE COUNCIL®
Copyright © 2015 ICC. ALL RIGHTS RESERVED. Accessed by David Dammon on Jun 21, 2017 12:30:52 PM pursuant to License Agreement with ICC. No further reproduction or distribution authorized. ANY UNAUTHORIZED REPRODUCTION OR DISTRIBUTION IS A VIOLATION OF THE FEDERAL COPYRIGHT ACT AND THE LICENSE AGREEMENT, AND SUBJECT TO CIVIL AND CRIMINAL PENALTIES THEREUNDER.

space, each *accessible* portion of the space shall be served by not less than two accessible *means of egress*.

Exceptions:

1. Accessible *means of egress* are not required to be provided in existing buildings.
2. One accessible *means of egress* is required from an *accessible mezzanine* level in accordance with Section 1009.3, 1009.4 or 1009.5.
3. In assembly areas with ramped *aisles* or stepped *aisles*, one accessible *means of egress* is permitted where the *common path of egress travel* is *accessible* and meets the requirements in Section 1029.8.

❖ The Access Board has revised and updated its accessibility guidelines for buildings and facilities covered by the Americans with Disabilities Act of 1990 (ADA) and the Architectural Barriers Act of 1968 (ABA). The final ADA/ABA Guidelines, published by the Access Board in July 2004, serve as the basis for the minimum standards when adopted by other federal agencies responsible for issuing enforceable standards. The plan is to eventually use this new document in place of the Uniform Federal Accessibility Standard (UFAS) and ADAAG. The U.S. Department of Justice officially adopted the new federal requirements on September 15, 2010. The new name is the *2010 Standard for Accessible Design,* otherwise known as the 2010 ADA Standard. The 2010 ADA Standard, Section 207/F207, references the 2000 edition of the IBC with 2001 Supplement, as well as the 2003 edition of the IBC, for accessible means of egress requirements. The International Code Council® (ICC®) is very proud to be recognized for its work regarding accessible means of egress in this manner. Refer to the Access Board website (www.access-board.gov) for more specific information and the current status of this adoption process. Based on the date of the publication and the adoption process, later editions of the IBC are not specifically referenced; however, none of the later editions reduced the accessible means of egress requirements found in the referenced IBC editions, so they should be able to be considered as providing equivalent or better accessibility.

The accessible means of egress locations may not be near the accessible route used for ingress into the building (see Sections 1104 and 1105). For example, a two-story building requires one accessible route to connect all accessible spaces within the building. The accessible route to the second level is typically by an elevator. During a fire emergency, persons with mobility impairments on the second level should move to the exit stairways for assisted rescue, not back the way they came in via the elevator. Signage at the elevator will direct occupants to an exit stairway.

This section establishes the minimum requirements for means of egress facilities serving all spaces that are required to be accessible to people with physical disabilities. Previously, attention had been focused on response to the civil-rights-based issue of providing adequate access for people with physical disabilities into and throughout buildings. Concerns about life safety and evacuation of people with mobility impairments were frequently cited as reasons for not embracing widespread building accessibility, in the best interests of the disabled community.

The provisions for accessible means of egress are predominantly, though not exclusively, intended to address the safety of persons with a mobility impairment. These requirements reflect the balanced philosophy that accessible means of egress are to be provided for occupants who have gained access into the building but are incapable of independently utilizing the typical means of egress facilities, such as the exit stairways. By making such provisions, the code now addresses means of egress for all building occupants, with and without physical disabilities.

Any space that is not required by the code to be accessible in accordance with Chapter 11 is not required to be provided with accessible means of egress. This may include an entire story, a portion of a story, a mezzanine or an individual room. For example, a mechanical penthouse is not required to be accessible in accordance with Section 1103.2.9; therefore, the mechanical penthouse is not required to have an accessible means of egress.

In new construction and additions, at least two accessible means of egress are required. For example, in buildings, stories or spaces required by Section 1006.3.1 to have three or more exits or exit access doors, a minimum of two accessible means of egress is required. The accessibility requirements are based on the required means of egress from both individual spaces and the building as a whole. Therefore, facilities with multiple large assembly rooms, such as banquet halls or multiplex theaters where the second exit from the space is often a door directly to the outside, may require additional accessible means of egress from the building because of space requirements.

While there are no dispersement requirements specific to accessible means of egress or travel distance limitations where there is no area of refuge requirement (see Sections 1009.3, 1009.4 and 1009.6), the code requires all exits to be distinct, separated and independent. The main intent is that a person with mobility impairments will always have options. If not all exits are accessible, possible entrapment should be a consideration in determining which exits are to be made accessible. In most buildings, the upper floors will already have an accessible route to all stairways. On the first floor, if the issue is accessible exit discharge, see Section 1009.7.

An accessible means of egress is required to provide a continuous path of travel to a public way. This principle is consistent with the general requirements for all means of egress, as reflected in Section

INTERNATIONAL CODE COUNCIL®
Copyright © 2015 ICC. ALL RIGHTS RESERVED. Accessed by David Dammon on Jun 21, 2017 12:30:52 PM pursuant to License Agreement with ICC. No further reproduction or distribution authorized. ANY UNAUTHORIZED REPRODUCTION OR DISTRIBUTION IS A VIOLATION OF THE FEDERAL COPYRIGHT ACT AND THE LICENSE AGREEMENT, AND SUBJECT TO CIVIL AND CRIMINAL PENALTIES THEREUNDER.

1003.1 and in the definition of "Means of egress" in Chapter 2. This section also emphasizes the intent that accessible means of egress must be available to a person with a mobility impairment, such as a person using a wheelchair, scooter or walker. Some mobility impairments do not allow for self-evacuation along a stairway; therefore, utilization of the exit and exit discharge may require assistance. The safety and fire evacuation plans (see Sections 404 and 1001.4) require planning for all occupants of a building. This assistance is typically with the fire department or other trained personnel, either along the exit stairways or in buildings five stories or taller, with the elevator system or a combination of both (see commentary, Section 1009.2.1). It is required that accessible routes, areas of refuge and exterior areas of rescue assistance are indicated on these plans. These plans must be approved by the local fire official and reviewed annually.

The exceptions address special situations where accessible means of egress requirements need special consideration. Note that these are exceptions for accessible means of egress; not exceptions for accessible entrance requirements (see IBC Section 1105).

Exception 1 indicates that existing buildings undergoing alterations are not required to be provided with accessible means of egress as part of that alteration. In many cases, meeting the requirements for accessible means of egress, especially the 48-inch (1219 mm) clear stair width required in nonsprinklered buildings, would be considered technically infeasible. However, if an accessible means of egress was part of the original construction, it must be maintained in accordance with IEBC Section 410.2 or 705.1.

Exception 2 is a special consideration for mezzanines. The size of mezzanines is limited to a portion of the space below (see IBC Section 505). Most are open to the space below; thus, with the same atmosphere and line of sight, fire recognition is quicker than in a two-story situation. If the elevator used for ingress has not gone into fire department recall, that system could be used for self-evacuation. There are three different scenarios:

1. If the mezzanine is exempted from accessibility, such as a mechanical mezzanine (see Section 1103.2.9), or small enough not to be required to be accessed by an accessible route (see Section 1104.4, Exception 1), no accessible means of egress is required.

2. If a mezzanine is required to be accessible (see IBC Section 1104.4) and meets the provisions for spaces with one means of egress (see Section 1006.2), the exit access stairway must meet the provisions of Section 1009.3. Per Section 1009.3, Exception 1, this can be an open exit access stairway. Per Exception 4, in a nonsprinklered building, a designer would have the option of either an area of refuge or two-way communication at the elevator. Per Exception 5, in sprinklered buildings, the area of refuge would not be required.

3. If a mezzanine is required to be accessible (see IBC Section 1104.4) and is required to have two means of egress, at least one of the means of egress stairways must meet the provisions of Section 1009.3. Per Section 1009.3, Exception 1, this can be an open exit access stairway. Per Exception 4, in a nonsprinklered building, a designer would have the option of either an area of refuge or two-way communication at the elevator. Per Exception 5, in sprinklered buildings, the area of refuge would not be required. Practically speaking, in a sprinklered building, both stairways from the mezzanine will meet Section 1009.3.

While under Scenarios 2 and 3 it is optional to have the elevator meet the requirements of Section 1009.4, the provisions for standby power at elevators are based on fire department assisted rescue. This is an expensive option that would likely never be used during a fire event. Where platform lifts can be used in new construction (see IBC Section 1109.8), they are so limited that it is not likely that they will provide the accessible route to a mezzanine. If the platform lift serves as part of the route to the space, Section 1009.5 allows for platform lifts to serve as part of the accessible route for accessible means of egress when they have standby power.

Exception 3 is in consideration of the practical difficulties of providing accessible routes in assembly areas with sloped floors and stepped aisles. Rooms with more than 50 persons are required to have two means of egress; therefore, each accessible seating location is required to have access to two accessible means of egress. Depending on the slope of the seating arrangement, providing an accessible route to both distinct exits can be difficult to achieve, especially in small theaters. A maximum travel distance of 30 feet (9144 mm) for ambulatory persons moving from the last seat in dead-end aisles or from box-type seating arrangements to where they have access to a choice of means of egress routes has been established in Section 1029.8. In accordance with Exception 3, persons using wheelchair seating spaces have the same maximum 30-foot (9144 mm) travel distance from the accessible seating locations to a cross aisle or out of the room to an adjacent corridor or space where two choices for accessible means of egress are provided. Note that there are increases in travel distance for smoke-protected seating and small spaces, such as boxes, galleries or balconies. For additional information, see Section 1029.8.

1009.2 Continuity and components. Each required accessible *means of egress* shall be continuous to a *public way* and shall consist of one or more of the following components:

1. *Accessible routes* complying with Section 1104.

INTERNATIONAL CODE COUNCIL®
Copyright © 2015 ICC. ALL RIGHTS RESERVED. Accessed by David Dammon on Jun 21, 2017 12:30:52 PM pursuant to License Agreement with ICC. No further reproduction or distribution authorized. ANY UNAUTHORIZED REPRODUCTION OR DISTRIBUTION IS A VIOLATION OF THE FEDERAL COPYRIGHT ACT AND THE LICENSE AGREEMENT, AND SUBJECT TO CIVIL AND CRIMINAL PENALTIES THEREUNDER.

2. *Interior exit stairways* complying with Sections 1009.3 and 1023.
3. *Exit access stairways* complying with Sections 1009.3 and 1019.3 or 1019.4.
4. *Exterior exit stairways* complying with Sections 1009.3 and 1027 and serving levels other than the *level of exit discharge*.
5. Elevators complying with Section 1009.4.
6. Platform lifts complying with Section 1009.5.
7. *Horizontal exits* complying with Section 1026.
8. *Ramps* complying with Section 1012.
9. *Areas of refuge* complying with Section 1009.6.
10. Exterior areas for assisted rescue complying with Section 1009.7 serving exits at the *level of exit discharge*.

❖ This section identifies the various building features that can serve as elements of an accessible means of egress. Accessible routes are readily recognizable as to how they can provide accessible means of egress; however, some nontraditional principles have been established for the total concept of accessible means of egress. This is evident in that stairways and elevators are also identified as elements that can be part of an accessible means of egress. For example, elevators are generally not available for egress during a fire, while stairways are not independently usable by a person using a wheelchair. The concept of accessible means of egress includes the idea that evacuating people with a mobility impairment may require the assistance of others. In some situations, provisions are also included for creating an area of refuge or exterior areas of rescue assistance wherein people can safely await either further instructions or evacuation assistance. Larger refuge areas can also be established by utilizing horizontal exits. All of these elements can be arranged in the manner prescribed in this section to provide accessible means of egress.

It is important to note that the subjects of Item 10, exterior areas for assisted rescue, are intended to be used only at the level of exit discharge (see commentary in Chapter 2 for the defined term, "Level of exit discharge"). Exterior exit stairways that are from other floors are addressed by Item 4.

1009.2.1 Elevators required. In buildings where a required *accessible* floor is four or more *stories* above or below a *level of exit discharge*, not less than one required accessible *means of egress* shall be an elevator complying with Section 1009.4.

Exceptions:

1. In buildings equipped throughout with an *automatic sprinkler system* installed in accordance with Section 903.3.1.1 or 903.3.1.2, the elevator shall not be required on floors provided with a *horizontal exit* and located at or above the *levels of exit discharge*.
2. In buildings equipped throughout with an *automatic sprinkler system* installed in accordance with Section 903.3.1.1 or 903.3.1.2, the elevator shall not be required on floors provided with a *ramp* conforming to the provisions of Section 1012.

❖ Elevators are the most common and convenient means of providing access to the upper floors in multistory buildings. As such, elevators represent a prime candidate for accessible means of egress from such buildings, especially in light of the difficulties involved in carrying a person up or down a stairway for multiple levels. The primary consideration for elevators as an accessible means of egress is that the elevator will be available and protected during a fire event to allow for fire department assisted rescue. Typically it is not the intent that people use the elevator for self-evacuation due to the hazards associated with smoke in the elevator shaft or the elevator taking people to the floor with a direct fire hazard. There are some new technological advances for "fire service access elevators" and "occupant evacuation elevators" that are discussed in Sections 403, 3007 and 3008.

This section addresses where an elevator must serve as part of an accessible means of egress. See IBC Section 1104 for when elevators are required for the accessible route into a building. By a reference to Section 1009.4, both an area of refuge and a standby source of power for the elevator are required. The standby power requirement establishes a higher degree of reliability that the elevator will be available and usable by reducing the likelihood of power loss caused by fire or other conditions of power failure.

The code defines "Exit Discharge, Level of" as the story at which an exit terminates. In buildings having four or more stories above or below the level of exit discharge, it is unreasonable to rely solely on exit stairways for all of the required accessible means of egress. This is the point at which complete reliance on assisted evacuation down the stairs will not be effective or adequate because of the limited availability of either experienced personnel who are trained to carry people safely (e.g., fire fighters) or the availability of special devices (i.e., self-braking stairway descent equipment or evacuation chairs). In this case, the code requires that at least one elevator, serving all floors of the building, is to serve as one of the required accessible means of egress. This should not represent a hardship, since elevators are typically provided in such buildings for the convenience of the occupants.

On a flat site, "buildings with four or more stories above the level of exit discharge" would typically be a five-story building. The level of exit discharge is the entire first story level (not merely the plane or level of the first floor); therefore, the fifth floor is the fourth story above the level of exit discharge. In a building with multiple basements, a story four stories below the level of exit discharge would be the fourth basement level. The actual vertical distance is the same from the fifth floor above grade down to discharge, as it is from the fourth floor below grade up to discharge. The verbiage is such that a building built on a sloped site

INTERNATIONAL CODE COUNCIL®
Copyright © 2015 ICC. ALL RIGHTS RESERVED. Accessed by David Dammon on Jun 21, 2017 12:30:52 PM pursuant to License Agreement with ICC. No further reproduction or distribution authorized. ANY UNAUTHORIZED REPRODUCTION OR DISTRIBUTION IS A VIOLATION OF THE FEDERAL COPYRIGHT ACT AND THE LICENSE AGREEMENT, AND SUBJECT TO CIVIL AND CRIMINAL PENALTIES THEREUNDER.

can take into consideration that people may be exiting the building from different levels on different sides of the building (see Commentary Figure 1009.2.1).

Exception 1 establishes that accessible egress elevator service to floor levels at or above the level of exit discharge is not necessary under specified conditions. The conditions are that the building is equipped throughout with an automatic sprinkler system in accordance with NFPA 13 or NFPA 13R (see Section 903.3.1.1 or 903.3.1.2) and that floors not serviced by an accessible egress elevator are provided with a horizontal exit. The presence of an automatic sprinkler system significantly reduces the potential fire hazard and provides for increased evacuation time. The combination of automatic sprinklers and a horizontal exit provides adequate protection for the occupants despite their distance to the level of exit discharge. This exception does not apply to floor levels below the level of exit discharge, since such levels are typically below grade and do not have the added advantage of exterior openings that are available for fire-fighting or rescue purposes. This option is most often utilized when a defend-in-place approach to occupant protection is utilized, such as in a hospital, nursing home or jail. Keep in mind that the horizontal exit (see Section 1026) creates large refuge areas that have separation requirements and capacity requirements that exceed area of refuge requirements.

Exception 2 specifies that a building sprinklered throughout in accordance with NFPA 13 or NFPA 13R (see Section 903.3.1.1 or 903.3.1.2), with ramp access to each level, such as in a sports stadium, is not required to also have an elevator for accessible means of egress. The reasoning behind this is that the issue of carrying people down stairways does not occur because the ramps may be utilized instead.

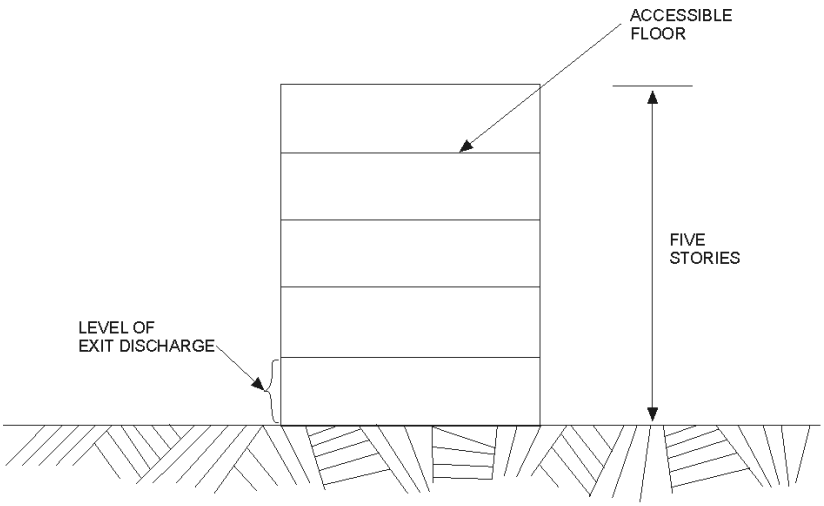

a) Four stories above the level of exit discharge

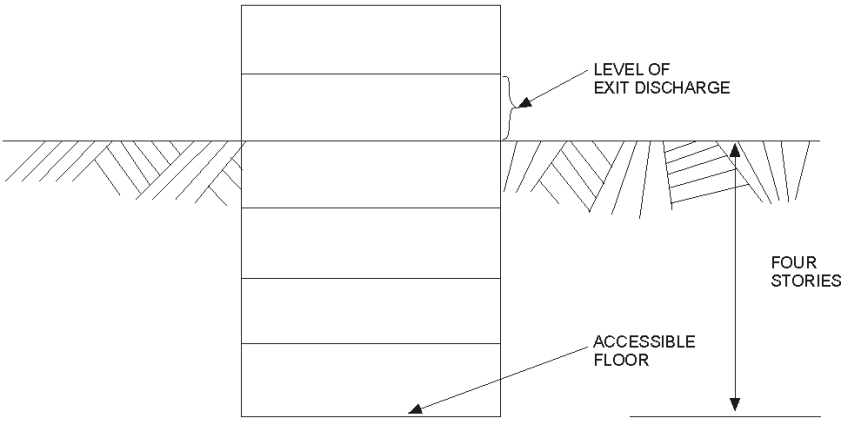

b) Four stories below the level of exit discharge

Figure 1009.2.1
ELEVATOR REQUIRED FOR ACCESSIBLE MEANS OF EGRESS

INTERNATIONAL CODE COUNCIL®
Copyright © 2015 ICC. ALL RIGHTS RESERVED. Accessed by David Dammon on Jun 21, 2017 12:30:52 PM pursuant to License Agreement with ICC. No further reproduction or distribution authorized. ANY UNAUTHORIZED REPRODUCTION OR DISTRIBUTION IS A VIOLATION OF THE FEDERAL COPYRIGHT ACT AND THE LICENSE AGREEMENT, AND SUBJECT TO CIVIL AND CRIMINAL PENALTIES THEREUNDER.

1009.3 Stairways. In order to be considered part of an accessible *means of egress*, a *stairway* between *stories* shall have a clear width of 48 inches (1219 mm) minimum between *handrails* and shall either incorporate an *area of refuge* within an enlarged floor-level landing or shall be accessed from an *area of refuge* complying with Section 1009.6. *Exit access stairways* that connect levels in the same *story* are not permitted as part of an accessible *means of egress*.

Exceptions:

1. *Exit access stairways* providing *means of egress* from *mezzanines* are permitted as part of an accessible *means of egress*.
2. The clear width of 48 inches (1219 mm) between *handrails* is not required in buildings equipped throughout with an *automatic sprinkler* system installed in accordance with Section 903.3.1.1 or 903.3.1.2.
3. The clear width of 48 inches (1219 mm) between *handrails* is not required for *stairways* accessed from a refuge area in conjunction with a *horizontal exit*.
4. *Areas of refuge* are not required at *exit access stairways* where two-way communication is provided at the elevator landing in accordance with Section 1009.8.
5. *Areas of refuge* are not required at *stairways* in buildings equipped throughout with an *automatic sprinkler system* installed in accordance with Section 903.3.1.1 or 903.3.1.2.
6. *Areas of refuge* are not required at *stairways* serving *open parking garages*.
7. *Areas of refuge* are not required for *smoke-protected assembly seating* areas complying with Section 1029.6.2.
8. *Areas of refuge* are not required at *stairways* in Group R-2 occupancies.
9. *Areas of refuge* are not required for *stairways* accessed from a refuge area in conjunction with a *horizontal exit*.

❖ This section addresses stairways between floor levels or to a mezzanine level (see Exception 1). The last sentence indicates that steps that connect raised or lowered areas on the same level are not permitted to be part of an accessible means of egress. People with mobility impairments cannot be asked to wait at the top of steps that may be anywhere in the building; they must be able to get to the stairways where the fire department will be coming into the building.

Stairways (exit or exit access) between floor levels, while not part of an accessible route, can serve as part of the accessible means of egress when they are used as part of an assisted evacuation route. The starting point for these requirements is that the stairways must be 48 inches (1219 mm) clear width between handrails; and either include or be accessed directly by a location where people can wait for assisted evacuation. This place to wait can be either an "area of refuge" (see Section 1009.6) or a "refuge area" created by a horizontal exit (see Exception 9 and Section 1026).

There are many mobility impairments that can limit or negate a person's ability to walk up and down the stairs. The taller the building, the higher the percentage of the population that will be affected. For example, an elderly person or a person with a broken foot may be able to get down a couple of flights, but not from an upper floor in a high-rise.

Note that this section is for exit stairways as addressed in Sections 1023 and 1027 and exit access stairways as addressed in Section 1019. Therefore, exit access stairways between stories can be considered part of an accessible means of egress, but exit access steps within the same level, such as steps in a corridor or room leading to an exit or exit access doorway, cannot. Stairways that lead from the level of exit discharge (see the commentary to Chapter 2 for the defined term, "Exit discharge, level of") to grade are considered part of the exit discharge. When the exit discharge is not accessible, the options are an interior area of refuge complying with Section 1009.6 or an exterior area of assisted rescue in accordance with Section 1009.7. Do not use the provisions in this section.

The dimension of 48 inches (1219 mm) clear width between handrails is sufficient to enable two or three persons to carry a person up or down to the level of exit discharge where access to a public way is afforded.

The enclosed exit stairway, in combination with an area of refuge, can provide for safety from fire in one of two ways. One approach is for the fire-resistance-rated stairway enclosure to afford the necessary safety. To accomplish this, the landing within the stairway enclosure must be able to contain the wheelchair. The concept is that the person in the wheelchair will remain on the stairway landing for a period of time awaiting further instructions or evacuation assistance; therefore, the stairway landing must be able to accommodate the wheelchair without obstructing the use of the stairway by other egressing occupants. An enlarged, story-level landing is required within the stairway enclosure and must be of sufficient size to accommodate the number of wheelchairs [see Section 1009.6 and Commentary Figure 1009.3(1)].

The other approach is to utilize an enclosed exit stairway that is accessed from an area of refuge complying with Section 1009.6. Under this approach, the stairway is made safe by virtue of its access being in an area that is separated and protected from the point of fire origin. An area of refuge can be created by constructing a vestibule adjacent and with direct access to the stair enclosure [see Section 1009.6 and Commentary Figure 1009.3(2)]. This is similar in theory to the approach of an enlarged landing within the stairway enclosure. Again, the general means of

INTERNATIONAL CODE COUNCIL®
Copyright © 2015 ICC. ALL RIGHTS RESERVED. Accessed by David Dammon on Jun 21, 2017 12:30:52 PM pursuant to License Agreement with ICC. No further reproduction or distribution authorized. ANY UNAUTHORIZED REPRODUCTION OR DISTRIBUTION IS A VIOLATION OF THE FEDERAL COPYRIGHT ACT AND THE LICENSE AGREEMENT, AND SUBJECT TO CIVIL AND CRIMINAL PENALTIES THEREUNDER.

egress path must be available past the wheelchair spaces.

Exceptions may be combined. Exceptions 2 through 9 are either the area of refuge or the 48-inch (1219 mm) stairway width requirement. It is very important to note that an exception for the area of refuge in Section 1009.3 or 1009.4 is not an exception for the accessible means of egress. The accessible route must be available to the stairway or elevator so that people with mobility impairments and emergency responders can meet up as soon as possible.

The exceptions are applicable to all stairways between stories (i.e., exit access, interior exit and exterior exit). The same stairway that serves the ambulatory population for between floor levels can also serve as part of the accessible means of egress. Open exit access stairway requirements for mezzanines and in assembly seating arrangements are addressed in Exceptions 2 and 3 to Section 1009.1.

While the last sentence of Section 1009.3 says that exit access stairways between levels cannot serve as part of an accessible means of egress, Exception 1 allows for exit access stairways between a floor level and a mezzanine. IBC Section 505.1 requires at least a 7-foot clearance below and above a mezzanine. Thus, while it is considered part of the floor below for other parts of the code, there are allowances for the height difference being similar to a story change in level and the difficulty of providing a ramp for that height. Therefore, the open exit access stairway from the mezzanine can serve as part of an accessible means of egress. In a sprinklered building, Exceptions 2 and 5 would allow for a narrower stairway and no area of refuge. In a nonsprinklered building, Exception 4 would allow for two-way communication at the elevator as an alternative to providing an area of refuge at the top of the open stairway.

Exceptions 2 and 5 are in recognition of the increased level of safety and evacuation time that are afforded in a sprinklered occupancy. The expectation is that a supervised system will reduce the threat of fire by reliably controlling and confining the fire to the immediate area of origin. There is also additional safety afforded by sprinkler system requirements for automatic notification when the system is activated. This has been substantiated by a study of accessible means of egress conducted for the General Services Administration (GSA). A report issued by the National Institute for Standards and Technology (NIST), NIST IR 4770, *Staging Areas for Persons with Mobility Limitations*, concluded that the operation of a properly designed sprinkler system eliminates the life threat to all building occupants, regardless of their individual physical abilities, and is a superior form of protection

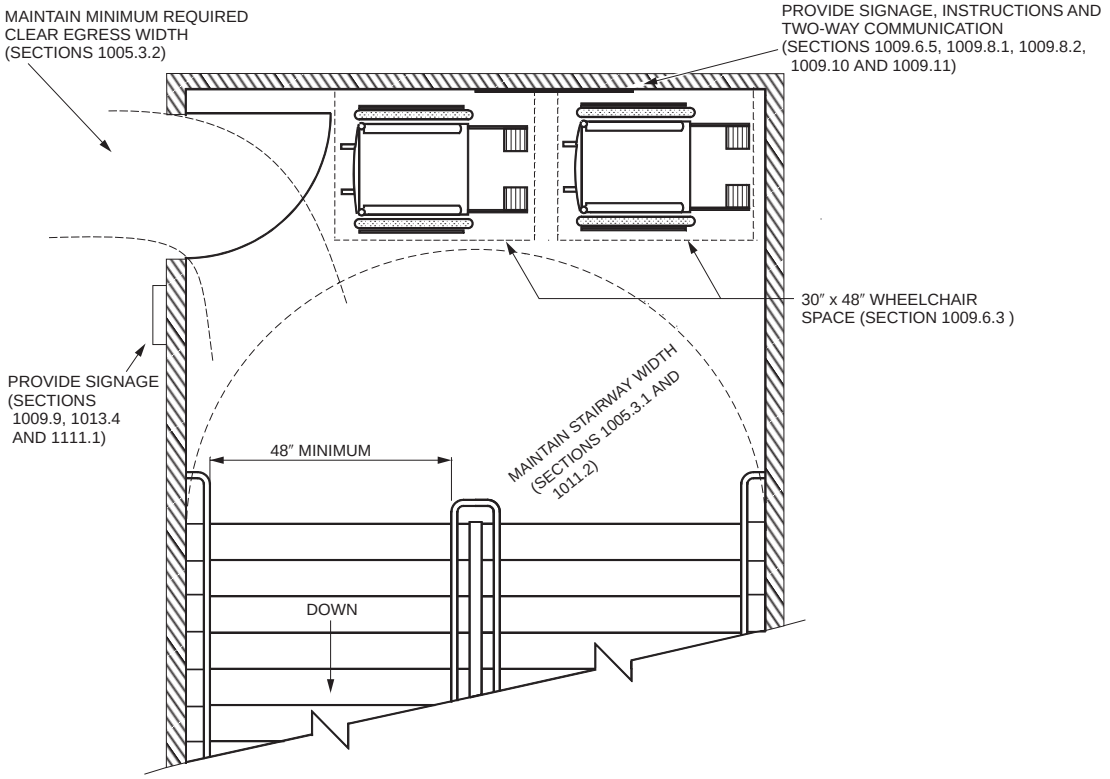

For SI: 1 inch = 25.4 mm.

Figure 1009.3(1)
ACCESSIBLE MEANS OF EGRESS STAIRWAY WITH ENLARGED STORY-LEVEL LANDING

INTERNATIONAL CODE COUNCIL®
Copyright © 2015 ICC. ALL RIGHTS RESERVED. Accessed by David Dammon on Jun 21, 2017 12:30:52 PM pursuant to License Agreement with ICC. No further reproduction or distribution authorized. ANY UNAUTHORIZED REPRODUCTION OR DISTRIBUTION IS A VIOLATION OF THE FEDERAL COPYRIGHT ACT AND THE LICENSE AGREEMENT, AND SUBJECT TO CIVIL AND CRIMINAL PENALTIES THEREUNDER.

as compared to areas of refuge. It was deemed that the ability of a properly designed and operational automatic sprinkler system to control a fire at its point of origin and to limit production of toxic products to a level that is not life-threatening to all occupants of the building, including persons with disabilities, eliminates the need for areas of refuge.

Exceptions 2 and 3 deal with stairway width. Exceptions 4 through 9 are exceptions for the area of refuge. These are not exceptions for the accessible route to the exit, just the area of refuge at the exit.

Exception 2 allows the stairway width to go back to the base requirements in Section 1011.2 in buildings sprinklered in accordance with NFPA 13 or NFPA 13R for both unenclosed and enclosed exit and exit access stairways (see Sections 1011, 1022 and 1027). Exception 2 is often used in conjunction with Exception 5. With the sprinkler system in place, there is more opportunity for the fire department to bring in evacuation chairs or possibly bring people to the elevator for evacuation, thus the extra width for carrying someone down the stairway is not needed. This is safer for both emergency responders and the evacuees.

Exception 5 is for the area of refuge for all exit access stairways (see Section 1011) and exit stairways, interior and exterior (see Sections 1023 and 1027), where the building is sprinklered throughout with an NFPA 13 or 13R system. Again, this is not an exception for the accessible route to the exit, just the area of refuge at the exit.

Exception 3 allows the stairway width to go back to the base requirements in Section 1011.2 when the stairway is within the refuge area created by a horizontal exit. This exception considers that the extra exiting time will permit the egress down the stairway to be more deliberate. Horizontal exits are often used in hospitals or jails when the defense scenario is defend in place rather than evacuation.

Exception 5 can be used in conjunction with Exception 9. In the case of a horizontal exit [see Commentary Figure 1009.3(3)], each floor area on either side of the exit is considered a refuge area (see commentary, Section 1026.1) by virtue of the construction and separation requirements for horizontal exits. The discharge area is always assumed to be the nonfire side and, therefore, is protected from fire. Therefore, per Exception 9, stairways within this refuge area are not required to have areas of refuge.

Exceptions 6 and 7 are for structures where the natural ventilation of the products of combustion will be afforded by the exterior openings or smoke protection required of such structures (see IBC Section 406.3 and Sections 909 and 1029.6.2 of the code).

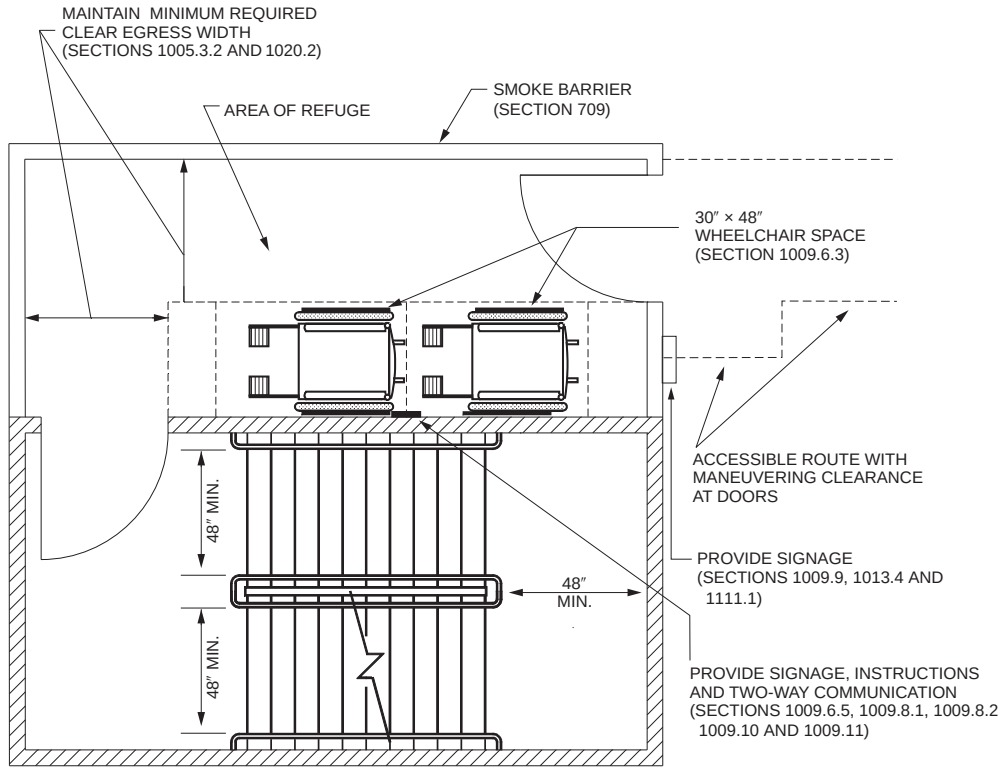

For SI: 1 inch = 25.4 mm.

Figure 1009.3(2)
ACCESSIBLE MEANS OF EGRESS STAIRWAY ACCESSED FROM AN AREA OF REFUGE

INTERNATIONAL CODE COUNCIL®
Copyright © 2015 ICC. ALL RIGHTS RESERVED. Accessed by David Dammon on Jun 21, 2017 12:30:52 PM pursuant to License Agreement with ICC. No further reproduction or distribution authorized. ANY UNAUTHORIZED REPRODUCTION OR DISTRIBUTION IS A VIOLATION OF THE FEDERAL COPYRIGHT ACT AND THE LICENSE AGREEMENT, AND SUBJECT TO CIVIL AND CRIMINAL PENALTIES THEREUNDER.

The most immediate hazard for occupants in a fire incident is exposure to smoke and fumes. Floor areas in open parking structures communicate sufficiently with the outdoors such that the need for protection from smoke is not necessary; therefore, open parking garages are exempted from the requirements for an area of refuge (see also the exception to Section 1009.6.4). Because of this level of natural ventilation, parking garage exit stairways are not required to be enclosed (see Section 1019.3, Exception 6). The logic for exterior sports facilities and smoke-protected seating is the same: if there is no accumulation of smoke, there is no need for areas of refuge, even when a sprinkler system is not included (see Section 1019.3, Exception 7).

Exception 8 is in recognition of the dwelling unit separation and fire-resistance-rated corridors in Group R-2 facilities (see IBC Section 420 and Section 1020 of the code). Effectively, each dwelling unit can serve as a protected area. Since the current text requires all Group R structures to be sprinklered (see Section 903.2.8), Exceptions 2 and 5 could also be utilized.

1009.4 Elevators. In order to be considered part of an accessible *means of egress*, an elevator shall comply with the emergency operation and signaling device requirements of Section 2.27 of ASME/CSA B44 A17.1. Standby power shall be provided in accordance with Chapter 27 and Section 3003. The elevator shall be accessed from an *area of refuge* complying with Section 1009.6.

Exceptions:

1. *Areas of refuge* are not required at the elevator in *open parking garages*.
2. *Areas of refuge* are not required in buildings and facilities equipped throughout with an *automatic sprinkler system* installed in accordance with Section 903.3.1.1 or 903.3.1.2.
3. *Areas of refuge* are not required at elevators not required to be located in a shaft in accordance with Section 712.
4. *Areas of refuge* are not required at elevators serving *smoke-protected assembly seating* areas complying with Section 1029.6.2.
5. *Areas of refuge* are not required for elevators accessed from a refuge area in conjunction with a *horizontal exit*.

❖ Elevators are the most common and convenient means of providing access to upper and lower floors in multistory buildings. As such, elevators represent a prime candidate for accessible means of egress from such buildings, especially in light of the difficulties involved in carrying a person in a wheelchair up or down a stairway. The primary consideration for elevators as an accessible means of egress is that the elevator will be available and protected during a fire event. See IBC Sections 403, 3007 and 3008 for new provisions in high-rise buildings for "fire service access elevators" and "occupant evacuation elevators."

This section addresses the use of an elevator as part of an accessible means of egress by requiring both a backup source of power for the elevator and access to the elevator from an area of refuge. For situations where elevators are required to be part of one of the accessible means of egress, see Section 1009.2.1. Note that an elevator lobby that is off a fire-resistance-rated corridor must also comply with Section 713.14 and IBC Chapter 30. The backup power requirement establishes a higher degree of reliability

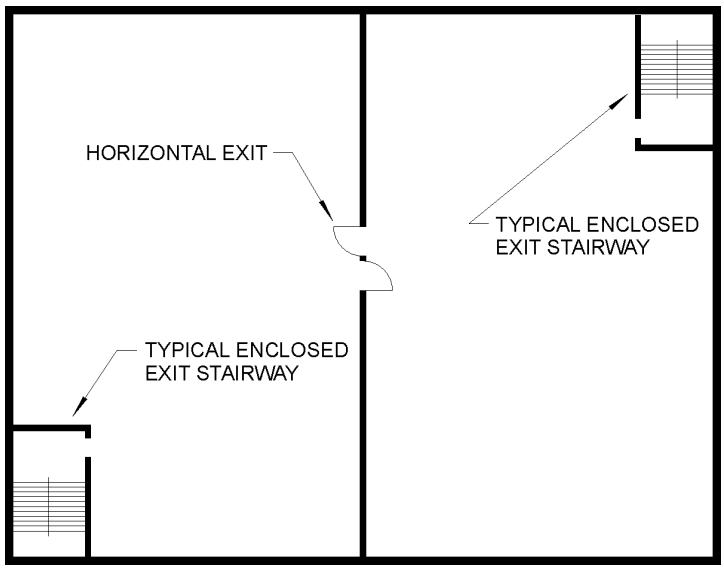

Figure 1009.3(3)
ACCESSIBLE MEANS OF EGRESS STAIRWAY ACCESSED FROM A HORIZONTAL EXIT

INTERNATIONAL CODE COUNCIL®
Copyright © 2015 ICC. ALL RIGHTS RESERVED. Accessed by David Dammon on Jun 21, 2017 12:30:52 PM pursuant to License Agreement with ICC. No further reproduction or distribution authorized. ANY UNAUTHORIZED REPRODUCTION OR DISTRIBUTION IS A VIOLATION OF THE FEDERAL COPYRIGHT ACT AND THE LICENSE AGREEMENT, AND SUBJECT TO CIVIL AND CRIMINAL PENALTIES THEREUNDER.

that the elevator will be available and usable by reducing the likelihood of power loss caused by fire or other conditions. Requiring access from an area of refuge affords the same degree of fire safety as described for stairways (see commentary, Section 1009.3). Additionally, the reference to Section 604.2 and IBC Section 3003 clarifies that the elevator will comply with the emergency operation features that relate to operating an elevator under fire conditions (see commentary, Section 604.2.1 and IBC Section 3003). Elevators on an accessible route are also required to meet the accessibility provisions of ICC A117.1 (see commentary, IBC Sections 1109.7 and 3001.3).

Exception 2 is for the area of refuge for all elevators where the building is sprinklered throughout with an NFPA 13 or 13R system. Again, this is not an exception for the accessible route to the exit, just the area of refuge at the elevator with standby power. Exception 2 is in recognition of the increased level of safety and evacuation time that is afforded in a sprinklered occupancy. The expectation is that a supervised system will reduce the threat of fire by reliably controlling and confining the fire to the immediate area of origin. There is also additional safety afforded by sprinkler system requirements for automatic notification when the system is activated. This has been substantiated by a study of accessible means of egress conducted for the GSA. NIST IR 4770 concluded that the operation of a properly designed sprinkler system eliminates the life threat to all building occupants, regardless of their individual physical abilities, and is a superior form of protection as compared to areas of refuge. It was deemed that the ability of a properly designed and operational automatic sprinkler system to control a fire at its point of origin and to limit production of toxic products to a level that is not life threatening to all occupants of the building, including persons with disabilities, eliminates the need for areas of refuge.

If a level in an open parking garage contains accessible parking spaces or is part of the route to and from those spaces, that level is required to have accessible means of egress. Exception 1, for open parking structures, is in recognition of the natural ventilation of the products of combustion that will be afforded by the exterior openings required of such structures (see IBC Section 406.5.2). The most immediate hazard for occupants in a fire incident is exposure to smoke and fumes. Floor areas in open parking structures are sufficiently exposed to the outdoors; thus, the need for protection from smoke is not necessary. Therefore, open parking garages are exempt from the requirements for an area of refuge to access an elevator that is utilized as part of the accessible means of egress. The same idea holds true for smoke-protected seating areas, in accordance with Exception 4. The protection offered by the smoke control system allows for adequate evacuation time before there is danger from smoke and fume accumulation.

Exception 3 allows elevators not required to be enclosed by IBC Section 712 to not have an area of refuge or be accessed by a horizontal exit. If there is no shaft enclosure around the elevator, construction of a smoke-tight compartment immediately in front of the elevator doors would be very difficult. While there are many items listed under IBC Section 712, combined with the height requirements in Section 1009.2.1, typically this would be elevators in atriums or in open and enclosed parking garages. Again, the nature of the location adjacent to an atrium or with the open ramps in parking garages would minimize the chances of smoke accumulation at the elevators.

In the case of a horizontal exit [see Commentary Figure 1009.3(3)], each floor area on either side of the exit is considered a refuge area (see commentary, Section 1026.1) by virtue of the construction and separation requirements for horizontal exits. The discharge area is always assumed to be the nonfire side and, therefore, is protected from fire. Therefore, per Exception 5, any elevator within this refuge area is not required to have areas of refuge.

1009.5 Platform lifts. Platform lifts shall be permitted to serve as part of an accessible *means of egress* where allowed as part of a required *accessible route* in Section 1109.8 except for Item 10. Standby power for the platform lift shall be provided in accordance with Chapter 27.

❖ Previously, there have been concerns about whether a platform lift will be reliably available at all times. However, ASME A18.1, the standard for platform lifts, no longer requires key operation. It is important to note that platform lifts are not prohibited by the code. They simply cannot be counted as a required accessible means of egress in other than locations where they are allowed as part of the accessible route into a space (see commentary, IBC Section 1109.8). When platform lifts are utilized as part of an accessible means of egress, they must come equipped with standby power. Per ASME A18.1, the standby power needs to be sufficient to run the platform lift for at least five round trips. Note that platform lifts cannot be used to meet accessible means of egress requirements for a situation that utilizes Section 1109.8, Item 10. Accessible means of egress must be provided at other locations.

IBC Section 1109.8, Item 10, recognizes that existing site constraints may make installation of a ramp or elevator infeasible. An example would be the situation of dealing with existing public sidewalks, easements and public ways in downtown urban areas. This situation would be most common in hilly areas where the street and sidewalk follow grade and the building's floor is level, resulting in steps up or down at entrances. The concern for allowing this as part of the accessible means of egress is due to standby power requiring only five cycles. If a platform lift was utilized to provide entry for a large building, or for a building with a large number of occupants that may use mobility devices, such as a hospital, it was

INTERNATIONAL CODE COUNCIL®
Copyright © 2015 ICC. ALL RIGHTS RESERVED. Accessed by David Dammon on Jun 21, 2017 12:30:52 PM pursuant to License Agreement with ICC. No further reproduction or distribution authorized. ANY UNAUTHORIZED REPRODUCTION OR DISTRIBUTION IS A VIOLATION OF THE FEDERAL COPYRIGHT ACT AND THE LICENSE AGREEMENT, AND SUBJECT TO CIVIL AND CRIMINAL PENALTIES THEREUNDER.

deemed that there might not be sufficient time or power for everyone to evacuate safely.

In existing buildings undergoing alterations, platform lifts are allowed as part of an accessible route into a building (see commentary, IEBC Sections 410.8.3 and 705.1.3) at any location as long as they are compliant with ASME A18.1. Note that accessible means of egress are not required in existing buildings undergoing an alteration or a change of occupancy (see Section 1007.1 and IEBC Sections 410.6 and 705.1).

1009.6 Areas of refuge. Every required *area of refuge* shall be accessible from the space it serves by an accessible *means of egress*.

❖ Areas of refuge, when provided, are an important component of fire and safety evacuation plans for buildings. These areas must be included in the plans required by Section 404 and IBC Section 1001.4.

An area of refuge is of no value as part of an accessible means of egress if it is not accessible. The code states an obvious but essential requirement: the path that leads to an area of refuge must qualify as an accessible means of egress. This provision is required so that there will be an accessible route leading from every accessible space to each required area of refuge. See Commentary Figure 1009.6.

1009.6.1 Travel distance. The maximum travel distance from any *accessible* space to an *area of refuge* shall not exceed the *exit access* travel distance permitted for the occupancy in accordance with Section 1017.1.

❖ For consistency in principle with the general means of egress design concepts, the code also limits the travel distance to the area of refuge. The limitation is the same distance as specified in Section 1017.2 for maximum exit access travel distance. This equates the maximum travel distance required to reach an exit with the maximum distance required to reach an area of refuge. It should be noted that an area of refuge is not necessarily an exit in the classic sense. For example, when the area of refuge is an enlarged, story-level landing within an exit stairway, the area of refuge is within the exit and the maximum travel distance for both the conventional exit and the accessible area of refuge is measured to the same point (the entrance to the exit stairway). If the area of refuge is a vestibule immediately adjacent to an enclosed exit stairway, the maximum travel distance for the required accessible means of egress is measured to the entrance of the area of refuge and, for the travel distance to the exit, to the entrance of the exit stairway (see Commentary Figure 1009.6). In the case of accessible means of egress with an elevator, the maximum travel distance may end up being measured along two different paths, with the only consistency between the conventional means of egress and the accessible means of egress being the maximum travel distance (see Commentary Figure 1009.6). The travel distance within an area of refuge is not directly regulated, but will be limited by the general provisions for maximum exit access travel distance, which are always applicable.

In summary, the code takes a reasonably consistent approach for both conventional and accessible means of egress by limiting the distance one must travel to reach a safe area from which further egress to a public way is available.

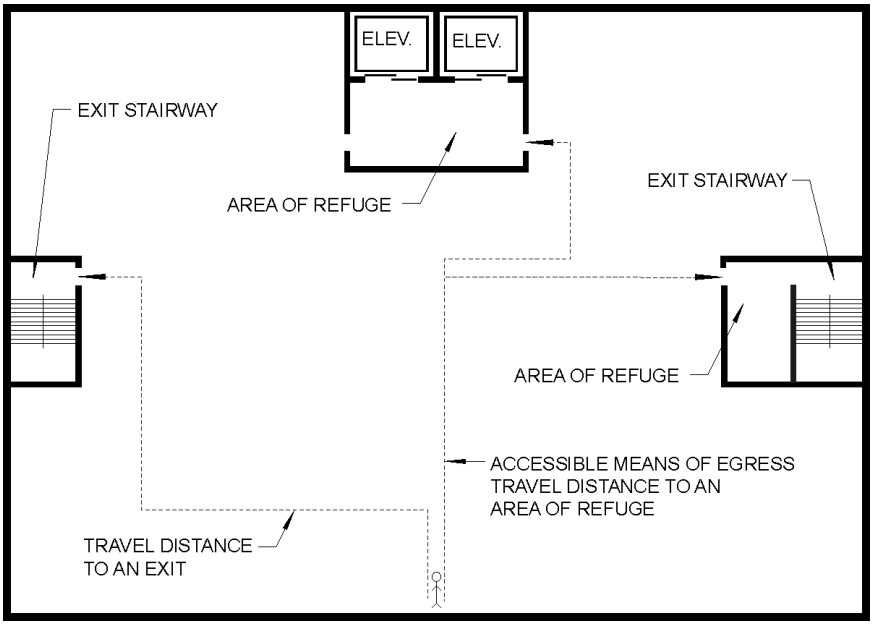

Figure 1009.6
SEPARATE TRAVEL DISTANCES TO AN AREA OF REFUGE

INTERNATIONAL CODE COUNCIL®
Copyright © 2015 ICC. ALL RIGHTS RESERVED. Accessed by David Dammon on Jun 21, 2017 12:30:52 PM pursuant to License Agreement with ICC. No further reproduction or distribution authorized. ANY UNAUTHORIZED REPRODUCTION OR DISTRIBUTION IS A VIOLATION OF THE FEDERAL COPYRIGHT ACT AND THE LICENSE AGREEMENT, AND SUBJECT TO CIVIL AND CRIMINAL PENALTIES THEREUNDER.

1009.6.2 Stairway or elevator access. Every required *area of refuge* shall have direct access to a *stairway* complying with Sections 1009.3 and 1023 or an elevator complying with Section 1009.4.

❖ To ensure that there is continuity in an accessible means of egress, the code requires that every area of refuge have direct access to either an exit stairway (see Section 1009.3) or an elevator (see Section 1009.4). This, again, may be viewed as stating the obvious, but it is necessary so that the egress layout does not involve entering an area of refuge and then having to leave that protected area before gaining access to a stairway or elevator. Once an occupant reaches the safety of an area of refuge, that level of protection must be continuous until the vertical transportation element (the stairway or elevator) is reached.

If one chooses to comply with accessible means of egress requirements by providing an accessible elevator with an area of refuge in the form of an elevator lobby, the elevator shaft and the lobby are required to be constructed in accordance with IBC Section 713.14 and IBC Chapter 30. The requirements provide additional assurance that the elevator will not be rendered unavailable because of smoke movement into the elevator shaft. If the elevator is in a refuge area that is formed by the use of a horizontal exit (i.e., fire walls or fire barriers in accordance with Section 1026.2) or smoke compartments formed by smoke barriers (see IBC Sections 407.5 and 408.6), it is presumed that the refuge area is relatively free from smoke; therefore, the extra protection of IBC Section 713.14 and IBC Chapter 30 may not be needed.

1009.6.3 Size. Each *area of refuge* shall be sized to accommodate one *wheelchair space* of 30 inches by 48 inches (762 mm by 1219 mm) for each 200 occupants or portion thereof, based on the *occupant load* of the *area of refuge* and areas served by the *area of refuge*. Such *wheelchair spaces* shall not reduce the *means of egress* minimum width or required capacity. Access to any of the required *wheelchair spaces* in an *area of refuge* shall not be obstructed by more than one adjoining *wheelchair space*.

❖ The number of wheelchair spaces that are required to be provided in an area of refuge is intended to represent broadly the expected population of the average building. As one point of measurement, a 1977 survey conducted by the National Center for Health indicated that one in 333 civilian, noninstitutionalized persons uses a wheelchair. The 1990 ADA currently utilizes the criterion of one space for each 200 occupants, based on the space served by the area of refuge. Given the variations and difficulties involved in accurately predicting a representative ratio for application to all occupancies, it was concluded that a requirement for one space for each 200 occupants based on the area of refuge itself, plus the areas served by the area of refuge, represents a reasonable criterion. Very few buildings would ever require more than four wheelchair spaces on a floor, since nearly all buildings with an occupant load greater than 400 per floor would be sprinklered and using Exception 5 in Section 1009.3.

Arrangement of the required wheelchair spaces is critical so as not to interfere with the means of egress for ambulatory occupants (see Section 1011.6). Since the design concept is that wheelchair occupants will move to the area of refuge and await further instructions or evacuation assistance, the spaces must be located so as not to reduce the required means of egress width of the stairway, door, corridor or other egress path through the exterior area of rescue.

In order to provide for orderly maneuvering of wheelchairs, this section states that access to any of the required wheelchair spaces cannot be obstructed by more than one adjoining wheelchair space. For example, this precludes an arrangement that three or more wheelchairs could be stacked down a dead-end corridor. This also effectively limits the difficulty any given wheelchair occupant would have in reaching or leaving a given wheelchair space, as well as providing easier access to all wheelchair spaces by persons providing evacuation assistance.

1009.6.4 Separation. Each *area of refuge* shall be separated from the remainder of the story by a *smoke barrier* complying with Section 709 or a *horizontal* exit complying with Section 1026. Each *area of refuge* shall be designed to minimize the intrusion of smoke.

Exceptions:

1. *Areas of refuge* located within an enclosure for *interior exit stairways* complying with Section 1023.
2. *Areas of refuge* in outdoor facilities where *exit access* is essentially open to the outside.

❖ The minimum standard for construction of an area of refuge is a smoke barrier, in accordance with Section 709. This establishes a minimum degree of performance by means of a 1-hour fire-resistance rating, including opening protectives and a minimum degree of performance against the intrusion of smoke into an enclosed area of refuge, as specified in Sections 709.4 and 709.5. By the nature of the connection to the stair enclosure or elevator shaft, the normal smoke barrier requirement for extension from exterior wall to exterior wall is replaced by connection to the shaft enclosure.

An alternative is to provide a refuge area created by a horizontal exit complying with Section 1026. Horizontal exits are formed by fire walls or fire barriers with a minimum fire-resistance rating of 2 hours. The horizontal exit separation must extend vertically through all levels of the building, unless floor assemblies have a fire-resistance rating of not less than 2 hours with no unprotected openings (see Section 1026.2). The other provisions for horizontal exits for additional egress elements, opening protection and capacity must also be complied with.

INTERNATIONAL CODE COUNCIL®
Copyright © 2015 ICC. ALL RIGHTS RESERVED. Accessed by David Dammon on Jun 21, 2017 12:30:52 PM pursuant to License Agreement with ICC. No further reproduction or distribution authorized. ANY UNAUTHORIZED REPRODUCTION OR DISTRIBUTION IS A VIOLATION OF THE FEDERAL COPYRIGHT ACT AND THE LICENSE AGREEMENT, AND SUBJECT TO CIVIL AND CRIMINAL PENALTIES THEREUNDER.

This section does not require an area of refuge within an exit stairway to be designed to prevent the intrusion of smoke. This was based on a study of areas of refuge conducted by the NIST for the GSA, which concluded that a story-level landing within a fire-resistance-rated exit stairway would provide a satisfactory staging area for evacuation assistance (see Exception 1).

Exception 2 is in recognition that, despite not being a sprinklered venue, where the entire facility is protected from smoke and fumes by the nature of being open to the outside a separation for areas of refuge is not required.

1009.6.5 Two-way communication. *Areas of refuge* shall be provided with a two-way communication system complying with Sections 1009.8.1 and 1009.8.2.

❖ If a building includes areas of refuge at the stairway or elevators, each area of refuge must include a two-way communication system. If the building uses one of the exceptions for areas of refuge, Section 1007.8 would still require a two-way communication system at the elevator. This way anyone needing assistance can communicate with a person at a constantly attended location to request evacuation assistance. This system is an important part of the fire and safety evacuation plans required by Section 404 and IBC Section 1001.4. See Sections 1009.8.1 and 1009.8.2 for specific requirements for this system.

1009.7 Exterior areas for assisted rescue. Exterior areas for assisted rescue shall be accessed by an *accessible route* from the area served.

Where the *exit discharge* does not include an *accessible route* from an *exit* located on the *level of exit discharge* to a *public way*, an exterior area of assisted rescue shall be provided on the exterior landing in accordance with Sections 1009.7.1 through 1009.7.4.

❖ Section 1009.2 requires the accessible means of egress to have an accessible route along the path for exit access, exit and exit discharge. Stairways that lead from the level of exit discharge (see the commentary to Chapter 2 for the defined term, "Exit discharge, level of") to grade are considered part of the exit discharge. When the exit discharge is not accessible, the options are an interior area of refuge complying with Section 1009.6 or an exterior area of assisted rescue in accordance with Section 1009.7. The provisions for stairways in Section 1009.3, including the exceptions for sprinklered buildings, are not an option to address nonaccessible exit discharge.

Exterior areas of assisted rescue are intended to be open-air locations for persons with physical disabilities to wait for assisted rescue. There must be an interior or exterior accessible route along the path of travel for access to this location. This allows a person unable to negotiate the exit discharge to get to a location where they can be quickly discovered by the fire department or other emergency responders.

In most situations, interior areas of refuge are not a positive alternative. Tenants tend to use such areas as convenient storage areas. Where persons with mobility impairments can wait for assisted rescue outside of the building, they are effectively protected from interior smoke and fumes—the deadliest of the fire hazards. Being immediately visible at an exit should also result in a shorter period of time before assisted rescue is achieved.

Exterior areas for assisted rescue, when provided, are an important component of the fire and safety evacuation plans for the buildings. These areas must be included in the plans required by Section 404 and IBC Section 1001.4.

The option under Section 1009.7 is commonly used only at the level of exit discharge for the second exit out the back of a building or tenant space. This will be either a single-story building, or the first level of a multistory building, where the secondary exit discharge is not accessible due to changes in elevation around the perimeter. If this is an exterior exit stairway (i.e., more than one story of vertical travel), the provisions in Section 1009.3 would be applicable.

Examples of this issue are:

Example 1:
A strip mall would have accessible entrances to each tenant in the front (Section 1105.6). Many have service entrances or loading bays across the back, so the second exit door leads to steps. A ramp installed for accessible exit discharge could: be a prohibitively large structure due to the elevation change; block access to the loading docks; get damaged by the maneuvering trucks; or, be impossible because of space restrictions in a narrow alley.

Example 2:
An office building has a second exit that leads to a concrete stoop and the exit discharge is sloped, is uneven or may be blocked by snow. This is just as impassible for a person using a wheelchair as a series of steps. Providing a sidewalk all the way to the front of the building may not be practical because of adjacent buildings or because someone could be travelling adjacent to a burning building.

Sections 1009.7.1 through 1009.7.4 provide criteria for a safe place to wait temporarily for assistance. These address size, separation/protection, openness and any steps leading from the exterior area for assisted rescue.

1009.7.1 Size. Each exterior area for assisted rescue shall be sized to accommodate *wheelchair spaces* in accordance with Section 1009.6.3.

❖ The exterior area for assisted rescue must have an enlarged landing area with space for at least one wheelchair for every 200 occupants that will be using that exit. The wheelchair spaces must be located so that they do not obstruct the general means of egress. If these spaces are confined by walls, guards

INTERNATIONAL CODE COUNCIL®
Copyright © 2015 ICC. ALL RIGHTS RESERVED. Accessed by David Dammon on Jun 21, 2017 12:30:52 PM pursuant to License Agreement with ICC. No further reproduction or distribution authorized. ANY UNAUTHORIZED REPRODUCTION OR DISTRIBUTION IS A VIOLATION OF THE FEDERAL COPYRIGHT ACT AND THE LICENSE AGREEMENT, AND SUBJECT TO CIVIL AND CRIMINAL PENALTIES THEREUNDER.

or edges, they must also meet the alcove provisions in ICC A117.1 so that persons using wheelchairs can maneuver into the space [see Commentary Figure 1009.7.1].

1009.7.2 Separation. Exterior walls separating the exterior area of assisted rescue from the interior of the building shall have a minimum *fire-resistance rating* of 1 hour, rated for exposure to fire from the inside. The fire-resistance-rated exterior wall construction shall extend horizontally 10 feet (3048 mm) beyond the landing on either side of the landing or equivalent fire-resistance-rated construction is permitted to extend out perpendicular to the exterior wall 4 feet (1220 mm) minimum on the side of the landing. The *fire-resistance-rated* construction shall extend vertically from the ground to a point 10 feet (3048 mm) above the floor level of the area for assisted rescue or to the roof line, whichever is lower. Openings within such *fire-resistance-rated* exterior walls shall be protected in accordance with Section 716.

❖ The protection provided by an exterior area for assisted rescue would be equivalent to that required for an interior area of refuge. Note that there is no exception for the exterior area of assisted rescue for buildings that contain sprinkler systems. The separation requirements are similar to exterior exit stairways, rated walls and protected openings for 10 feet (3048 mm) above, below and to the sides of the landing (see Sections 1023.7 and 1027.6). The exceptions for exterior exit stairway protection in Section 1027.6 would not be applicable where the area includes an exterior area for assisted rescue (see Commentary Figure 1009.7.2).

The current separation requirements address typical rear exit situations. Other locations may require alternative protection measures to "shield" an exterior area for assisted rescue. The principle of "wing" walls (as used at a fire wall extension) suggests an alternative to $^{3}/_{4}$-hour opening protectives at dock doors adjacent to an exterior area for assisted rescue.

Note that providing a rescue location 10 feet (3048 mm) away from an exterior wall does not serve as a viable alternative to a fire-resistance-rated exterior wall. Persons waiting for assistance must have a minimum level of shielding from a fire in the building.

A common situation is for the path of egress travel from the first floor to move through the bottom level of an enclosed exit stairway. If there are steps outside the exit door of the stairway, there is no accessible path for exit discharge. Where approved by the code official (see Section 104.9), the stairway enclosure could be considered equivalent to a protected exterior wall. It is assumed that the fire is in the building somewhere, not in the stairway. A person with a mobility impairment could be provided with a place to wait either inside the stairway enclosure, or outside the building with the stairway enclosure as the separation between them and the fire – as an alternative to Section 1009.7.2. The exterior wall of an interior exit stairway can be nonfire-resistance rated where permitted by Section 1023.7.

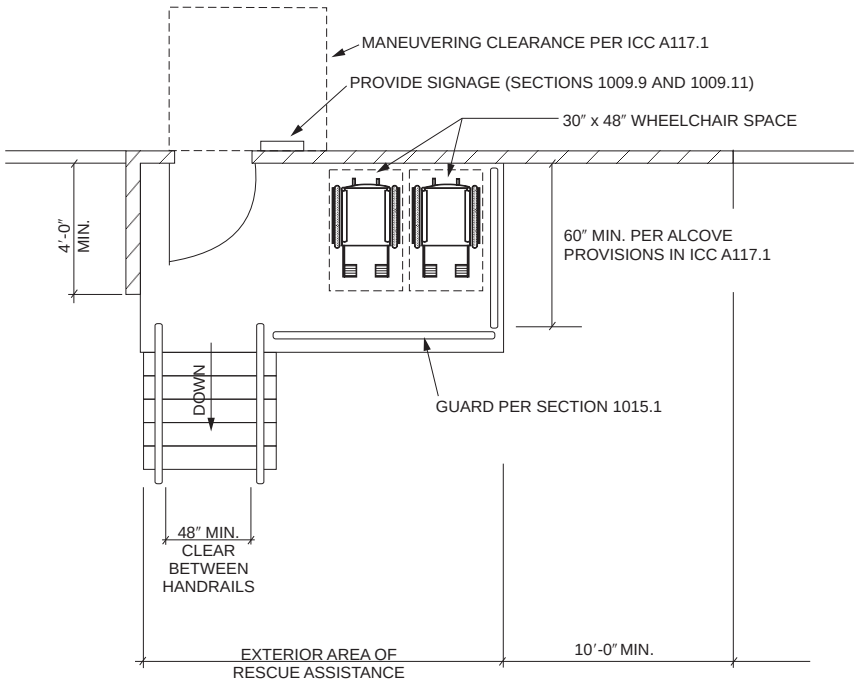

For SI: 1 inch = 25.4 mm, 1 foot = 304.8 mm.

Figure 1009.7.1
EXTERIOR AREA OF RESCUE ASSISTANCE—PLAN VIEW

INTERNATIONAL CODE COUNCIL®
Copyright © 2015 ICC. ALL RIGHTS RESERVED. Accessed by David Dammon on Jun 21, 2017 12:30:52 PM pursuant to License Agreement with ICC. No further reproduction or distribution authorized. ANY UNAUTHORIZED REPRODUCTION OR DISTRIBUTION IS A VIOLATION OF THE FEDERAL COPYRIGHT ACT AND THE LICENSE AGREEMENT, AND SUBJECT TO CIVIL AND CRIMINAL PENALTIES THEREUNDER.

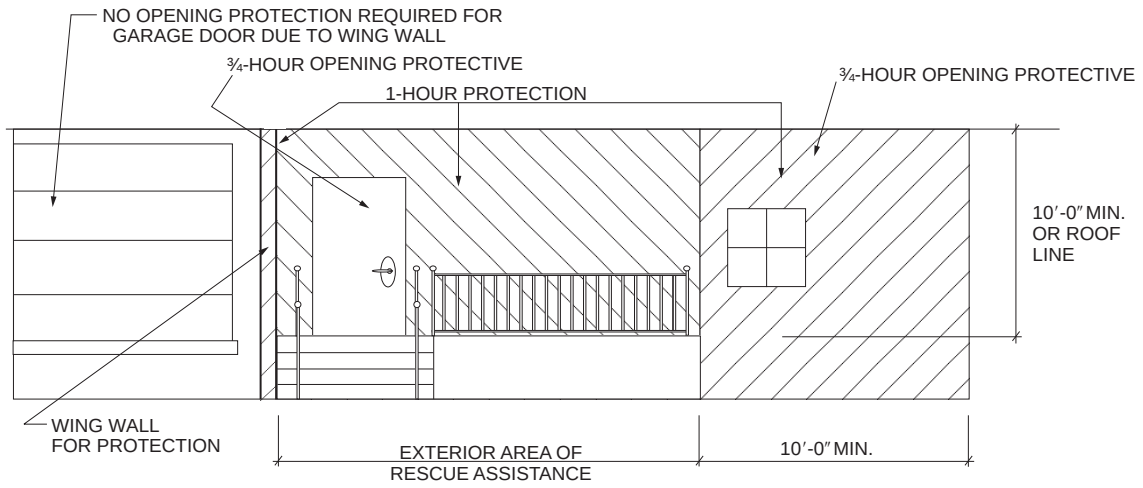

For SI: 1 inch = 25.4 mm, 1 foot = 304.8 mm.

Figure 1009.7.2
EXTERIOR AREA OF RESCUE ASSISTANCE—ELEVATION

1009.7.3 Openness. The exterior area for assisted rescue shall be open to the outside air. The sides other than the separation walls shall be not less than 50 percent open, and the open area shall be distributed so as to minimize the accumulation of smoke or toxic gases.

❖ The openness criteria for exterior areas of assisted rescue are similar to the requirements for exterior balconies. The purpose is to ensure that a person at an exterior area of rescue assistance is not in danger from smoke and fumes. The criteria are to address the situation where the rescue area is open to outside air, but a combination of roof overhangs and perimeter walls or guards could still trap enough smoke that the safety of the occupants would be jeopardized.

1009.7.4 Stairways. *Stairways* that are part of the *means of egress* for the exterior area for assisted rescue shall provide a clear width of 48 inches (1220 mm) between *handrails*.

Exception: The clear width of 48 inches (1220 mm) between *handrails* is not required at *stairways* serving buildings equipped throughout with an *automatic sprinkler system* installed in accordance with Section 903.3.1.1 or 903.3.1.2.

❖ Any steps that lead from an exterior area for assisted rescue to grade must have a clear width of 48 inches (1219 mm) between handrails. The additional width is to permit adequate room to assist a mobility-impaired person down the steps and to a safe location.

If the building is sprinklered, the exception allows for the stairway to utilize the minimum widths required in Section 1011.2. This is consistent with Section 1009.3, Exceptions 2 and 3.

1009.8 Two-way communication. A two-way communication system complying with Sections 1009.8.1 and 1009.8.2 shall be provided at the landing serving each elevator or bank of elevators on each accessible floor that is one or more stories above or below the *level of exit discharge*.

Exceptions:

1. Two-way communication systems are not required at the landing serving each elevator or bank of elevators where the two-way communication system is provided within *areas of refuge* in accordance with Section 1009.6.5.
2. Two-way communication systems are not required on floors provided with *ramps* conforming to the provisions of Section 1012.
3. Two-way communication systems are not required at the landings serving only service elevators that are not designated as part of the accessible *means of egress* or serve as part of the required *accessible route* into a facility.
4. Two-way communication systems are not required at the landings serving only freight elevators.
5. Two-way communication systems are not required at the landing serving a private residence elevator.

❖ Unless provided in areas of refuge, in multistory buildings a two-way communication system must be located at the elevator landing of each accessible floor level other than the level of exit discharge. The system is intended to offer a means of communication to individuals with mobility impairment, either permanent or temporary, who need assistance during an emergency situation. Such a system can be useful not only in the event of a fire, but also in the case of a natural or technological disaster by providing emergency responders with the location of individuals who will require assistance in being evacuated from floor levels above or below the discharge level. The ability

INTERNATIONAL CODE COUNCIL®
Copyright © 2015 ICC. ALL RIGHTS RESERVED. Accessed by David Dammon on Jun 21, 2017 12:30:52 PM pursuant to License Agreement with ICC. No further reproduction or distribution authorized. ANY UNAUTHORIZED REPRODUCTION OR DISTRIBUTION IS A VIOLATION OF THE FEDERAL COPYRIGHT ACT AND THE LICENSE AGREEMENT, AND SUBJECT TO CIVIL AND CRIMINAL PENALTIES THEREUNDER.

of emergency responders to locate persons needing assistance quickly is an important part of the fire and safety plan. The two-way communication system is a critical element in that plan.

Exception 1 exempts the requirement for locating the communication systems at the elevator landings where the building is provided with complying areas of refuge. Since areas of refuge are required by Section 1009.6.5 to be equipped with two-way communication systems, there is limited need to provide such additional systems at the elevator landings. However, where multistory buildings are not provided with areas of refuge, such as is the case with most sprinklered buildings, the installation of communications systems at the elevator landings is important to those individuals unable to negotiate egress stairways during an emergency. As a result, both sprinklered and nonsprinklered multistory buildings will be provided with the means for two-way communication at all accessible floor levels other than the level of exit discharge.

Exception 2 applies to floor levels that utilize ramps as vertical accessible means of egress elements. Where complying ramps are available for independent evacuation, such as occurs in a sports stadium, the two-way communication system is not required at the elevator landings.

Because persons at an exterior area of rescue assistance provided at ground level (i.e., level of exit discharge) are immediately visible and such locations are at high risk for vandalism, two-way communication systems are not required for exterior areas of assisted rescue.

If the option of horizontal exits is utilized, the code does not currently address whether a two-way communication system should be provided within a refuge area without an elevator. Since the horizontal exit is not typically recognizable by a person not familiar with the building plan, the most logical location for the two-way communication, if provided, would seem to be adjacent to the exit stairway that was located within the refuge area.

Exceptions 3, 4 and 5 address types of elevators where two way communications are not required. The two-way communication is intended for anyone to be able to communicate with emergency responders. If it is located in the lobby of the public elevator, a system at a back of house service elevator would be redundant and not easy for most occupants to find. A freight elevator cannot be part of an accessible route, so again, this is not the elevator that occupants would typically use. The ASME A17.1 limits the use of private residence elevators to within or serving individual dwelling units. If a person lives in a unit with an elevator, it is not unreasonable to expect them to address communication needs that may arise on their own, such as carrying a portable or cell phone with them.

1009.8.1 System requirements. Two-way communication systems shall provide communication between each required location and the *fire command center* or a central control point location *approved* by the fire department. Where the central control point is not a *constantly attended location*, a two-way communication system shall have a timed automatic telephone dial-out capability to a monitoring location or 9-1-1. The two-way communication system shall include both audible and visible signals.

❖ Use of an elevator, stair enclosure or other area of refuge as part of an accessible means of egress requires a person to wait for evacuation assistance or relevant instructions. The two-way communication system allows this person to inform emergency personnel of his or her location and to receive additional instructions or assistance as needed.

The arrangement and design of the two-way communication system is specified in Section 1009.8.1. In addition to the required locations specified in Section 1009.6.5 for areas of refuge or Section 1009.8 for elevator landings, a communication device is also required to be located in a high-rise building's fire command center or at a central control point whose location is approved by the fire department (see IBC Section 403.4.4 and Section 907.2.13.2 of the code). "Central control point" is not a defined term. However, given the intent and function of the two-way communication system, a central control point is a location where an individual answers the call for assistance and either provides or requests aid for a person who needs help. A suitable central control point is often not available in low-rise buildings or in a high-rise building where the central control point may not be manned on a 24-hour basis. In order that a caller may reach an appropriate emergency location, the fire department must approve the configuration of the system. A central control point could be the lobby of a building constantly staffed by a security officer, an alarm company, a public safety answering point such as a 9-1-1 center or a central supervising station in a Group I occupancy. There could be a combination solution—such as a system configured to automatically call 9-1-1 when the central control point within the building is not manned. The communication system provides visual signals for the hearing impaired and audible signals to assist the vision impaired.

1009.8.2 Directions. Directions for the use of the two-way communication system, instructions for summoning assistance via the two-way communication system and written identification of the location shall be posted adjacent to the two-way communication system. Signage shall comply with the ICC A117.1 requirements for visual characters.

❖ Guidance to the users of a two-way communication system is also specified. Operating instructions for the two-way communication system must be posted and the instructions are to include a means of identifying the physical location of the communication device. If a signal from a two-way communication system terminates to a public safety answering point, such as a fire department communication center, current 9-1-1 telephone technology only reports the

INTERNATIONAL CODE COUNCIL®
Copyright © 2015 ICC. ALL RIGHTS RESERVED. Accessed by David Dammon on Jun 21, 2017 12:30:52 PM pursuant to License Agreement with ICC. No further reproduction or distribution authorized. ANY UNAUTHORIZED REPRODUCTION OR DISTRIBUTION IS A VIOLATION OF THE FEDERAL COPYRIGHT ACT AND THE LICENSE AGREEMENT, AND SUBJECT TO CIVIL AND CRIMINAL PENALTIES THEREUNDER.

address of the location of the emergency—it does not report a floor or area from the address reporting the emergency. The "identification of the location" posted adjacent to the communication system should ensure that most discrete location information can be provided to the central control point. This will aid emergency responders, especially in high-rise buildings or corporate campuses with multiple multistory structures. The signage is not required to be raised letters or braille, but is required to meet the style, size and contrast requirements for visual signage in A117.1.

1009.9 Signage. Signage indicating special accessibility provisions shall be provided as shown:

1. Each door providing access to an *area of refuge* from an adjacent floor area shall be identified by a sign stating: AREA OF REFUGE.
2. Each door providing access to an exterior area for assisted rescue shall be identified by a sign stating: EXTERIOR AREA FOR ASSISTED RESCUE.

Signage shall comply with the *ICC A117.1* requirements for visual characters and include the International Symbol of Accessibility. Where exit sign illumination is required by Section 1013.3, the signs shall be illuminated. Additionally, visual characters, raised character and braille signage complying with ICC A117.1 shall be located at each door to an *area of refuge* and exterior area for assisted rescue in accordance with Section 1013.4.

❖ Signage enables an occupant to become aware of an area of refuge and/or the exterior area for rescue assistance. The assistance areas must provide signage on or above the door stating either "AREA OF REFUGE" or "EXTERIOR AREA FOR ASSISTED RESCUE" and includes the International Symbol of Accessibility. The approach that the code takes for identification of the area of refuge is comparable to the general provisions for identification of exits, including the requirement for lighted signage. Raised letters and braille stating "EXIT" are also required adjacent to the door for the benefit of persons with a visual impairment.

The current text does not clearly indicate how to identify a refuge area formed by a horizontal exit. In hospitals and jails, where this option is typically utilized, the location of the horizontal exits must be part of the staff training for the fire safety and evacuation plans.

1009.10 Directional signage. Directional signage indicating the location of all other *means of egress* and which of those are accessible *means of egress* shall be provided at the following:

1. At *exits* serving a required *accessible* space but not providing an approved accessible *means of egress*.
2. At elevator landings.
3. Within *areas of refuge*.

❖ The additional signage required by this section is intended to advise persons of the locations of all means of egress and which of those also serve as accessible means of egress. Since not all of the exits will necessarily be accessible means of egress, it is appropriate to provide this information at exit stairways and, particularly, at all elevators, regardless of whether they are part of an accessible means of egress. Directional signage is not required to meet raised character or braille signage requirements. Depending on the facility, this could be as simple as a basic block plan of the main corridors and stairways in the building in relation to the elevator.

1009.11 Instructions. In *areas of refuge* and exterior areas for assisted rescue, instructions on the use of the area under emergency conditions shall be posted. Signage shall comply with the ICC A117.1 requirements for visual characters. The instructions shall include all of the following:

1. Persons able to use the *exit stairway* do so as soon as possible, unless they are assisting others.
2. Information on planned availability of assistance in the use of *stairs* or supervised operation of elevators and how to summon such assistance.
3. Directions for use of the two-way communication system where provided.

❖ The instructions provided at the exterior area of rescue assistance and the areas of refuge will differ. The required instructions on the proper use of the area of refuge and the communication system provide a greater likelihood that the communication system will accomplish its intended function and occupants will behave as expected. A two-way communication system will not be of much value if a person in that area does not know how to operate it. Also, since the area of refuge is required by Section 1009.9 to be identified as such, ambulatory occupants may mistakenly conclude that they should remain in that area. The instructions remind ambulatory occupants that they should continue to egress as soon as possible.

For an exterior area of assisted rescue at grade level, a two-way communication system is not required so this portion of the instructions is not needed. However, instructions for any ambulatory persons to move to the exit discharge are still required, as well as information on how assistance will be provided at this location.

Since each building's means of egress and fire and safety evacuation plans are unique, specific requirements for verbiage are not indicated, but will depend on the situation. The signage is not required to be raised letters or braille, but is required to meet the style, size and contrast requirements for visual signage in A117.1.

SECTION 1010
DOORS, GATES AND TURNSTILES

1010.1 Doors. *Means of egress* doors shall meet the requirements of this section. Doors serving a *means of egress* system shall meet the requirements of this section and Section 1022.2. Doors provided for egress purposes in numbers

INTERNATIONAL CODE COUNCIL®
Copyright © 2015 ICC. ALL RIGHTS RESERVED. Accessed by David Dammon on Jun 21, 2017 12:30:52 PM pursuant to License Agreement with ICC. No further reproduction or distribution authorized. ANY UNAUTHORIZED REPRODUCTION OR DISTRIBUTION IS A VIOLATION OF THE FEDERAL COPYRIGHT ACT AND THE LICENSE AGREEMENT, AND SUBJECT TO CIVIL AND CRIMINAL PENALTIES THEREUNDER.

greater than required by this code shall meet the requirements of this section.

Means of egress doors shall be readily distinguishable from the adjacent construction and finishes such that the doors are easily recognizable as doors. Mirrors or similar reflecting materials shall not be used on *means of egress* doors. *Means of egress* doors shall not be concealed by curtains, drapes, decorations or similar materials.

❖ The general requirements for doors are in this section and the following subsections. The reference to Section 1022.2 is intended to emphasize that exterior exit doors must lead to a route that will allow a path to a public street or alley (see definition for "Public way"). A door that is intended to be used for egress purposes, even though that door may not be required by the code, is also required to meet the requirements of this section. An example may be an assembly occupancy where four doors would be required to meet the required capacity of the occupant load. But assume the designer elects to provide six doors for aesthetic reasons or occupant convenience. All six doors must comply with the requirements of this section.

Doors need to be easily recognizable for immediate use in an emergency condition. Thus, the code specifies that doors are not to be hidden in such a manner that a person would have trouble seeing where to egress.

1010.1.1 Size of doors. The required capacity of each door opening shall be sufficient for the *occupant load* thereof and shall provide a minimum clear width of 32 inches (813 mm). Clear openings of doorways with swinging doors shall be measured between the face of the door and the stop, with the door open 90 degrees (1.57 rad). Where this section requires a minimum clear width of 32 inches (813 mm) and a door opening includes two door leaves without a mullion, one leaf shall provide a clear opening width of 32 inches (813 mm). The maximum width of a swinging door leaf shall be 48 inches (1219 mm) nominal. *Means of egress* doors in a Group I-2 occupancy used for the movement of beds shall provide a clear width not less than $41^1/_2$ inches (1054 mm). The height of door openings shall be not less than 80 inches (2032 mm).

Exceptions:

1. The minimum and maximum width shall not apply to door openings that are not part of the required *means of egress* in Group R-2 and R-3 occupancies.
2. Door openings to resident *sleeping units* in Group I-3 occupancies shall have a clear width of not less than 28 inches (711 mm).
3. Door openings to storage closets less than 10 square feet (0.93 m^2) in area shall not be limited by the minimum width.
4. Width of door leaves in revolving doors that comply with Section 1010.1.4.1 shall not be limited.
5. Door openings within a *dwelling unit* or *sleeping unit* shall be not less than 78 inches (1981 mm) in height.
6. Exterior door openings in *dwelling units* and *sleeping units*, other than the required *exit* door, shall be not less than 76 inches (1930 mm) in height.
7. In other than Group R-1 occupancies, the minimum widths shall not apply to interior egress doors within a *dwelling unit* or *sleeping unit* that is not required to be an *Accessible unit*, *Type A unit* or *Type B unit*.
8. Door openings required to be *accessible* within *Type B units* shall have a minimum clear width of 31.75 inches (806 mm).
9. Doors to walk-in freezers and coolers less than 1,000 square feet (93 m^2) in area shall have a maximum width of 60 inches (1524 mm).
10. In Group R-1 *dwelling units* or *sleeping units* not required to be *Accessible units*, the minimum width shall not apply to doors for showers or saunas.

❖ The size of a door opening determines its capacity as a component of egress and its ability to fulfill its function in normal use. A door opening must meet certain minimum criteria as to its width and height in order to be used safely and to provide accessibility to people with physical disabilities. Doorways that are not in the means of egress are not limited in size by this section. However, doors that are used for egress purposes, including additional doors over and above the number of means of egress required by the code, are required to meet the requirements of this section unless one of the exceptions applies.

The minimum clear width of an egress doorway for occupant capacity is based on the portion of the occupant load (see Section 1004.1) intended to utilize the doorway for egress purposes, multiplied by the egress width per occupant from Section 1005.1. The capacity of a 32-inch (813 mm) clear width door is 32/0.2 = 160 occupants. The 0.15-inch (3.81 mm) allowance for capacity is permitted in sprinklered buildings (32/0.15 = 213 occupants). The clear width of a swinging door opening is the horizontal dimension measured between the face of the door and the door stops when the door is in the 90-degree (1.57 rad) position [see Commentary Figure 1010.1.1(1)].

Using the face of the door as the measurement point is consistent with the provisions of ICC A117.1 and the ADAAG Review Advisory Committee. Further, this measurement is not intended to prohibit other projections into the required clear width, such as latching or panic hardware [see the commentary to Section 1010.1.1.1 and Commentary Figure 1010.1.1(2) for further discussion on the specific projections allowed in the required clear width]. For nonswinging means of egress doors, such as a sliding

INTERNATIONAL CODE COUNCIL®
Copyright © 2015 ICC. ALL RIGHTS RESERVED. Accessed by David Dammon on Jun 21, 2017 12:30:52 PM pursuant to License Agreement with ICC. No further reproduction or distribution authorized. ANY UNAUTHORIZED REPRODUCTION OR DISTRIBUTION IS A VIOLATION OF THE FEDERAL COPYRIGHT ACT AND THE LICENSE AGREEMENT, AND SUBJECT TO CIVIL AND CRIMINAL PENALTIES THEREUNDER.

door, the clear width is to be measured from the face of the door jambs.

The minimum clear width in a doorway of 32 inches (813 mm) is to allow passage of a wheelchair as well as persons utilizing walking devices or other support apparatus. Similarly, because of the difficulties that a person with physical disabilities would have in opening a pair of doors simultaneously, the 32-inch (813 mm) minimum must be provided by a single door leaf.

Note that in some cases, with standard door construction and hardware, a 36-inch-wide (914 mm) door is the narrowest door that can be used while still providing the minimum clear width of 32 inches (813 mm). A standard 34-inch-wide (864 mm) door has less than a 32-inch (813 mm) clear opening depending on the thickness of the opposing doorstop, the door thickness and the type of hinge. The building designer must verify that the swinging door specified will in fact provide the required clear width.

A minimum clear width of $41^1/_2$ inches (1054 mm) is required for doors in any portion of Group I-2 where patients may need to be moved in beds. This is especially important for evacuating patients from the area in the event of a fire.

The maximum width for a means of egress door leaf in a swinging door is 48 inches (1219 mm) because larger doors are difficult to handle and are of sizes that typically are not fire tested. The maximum

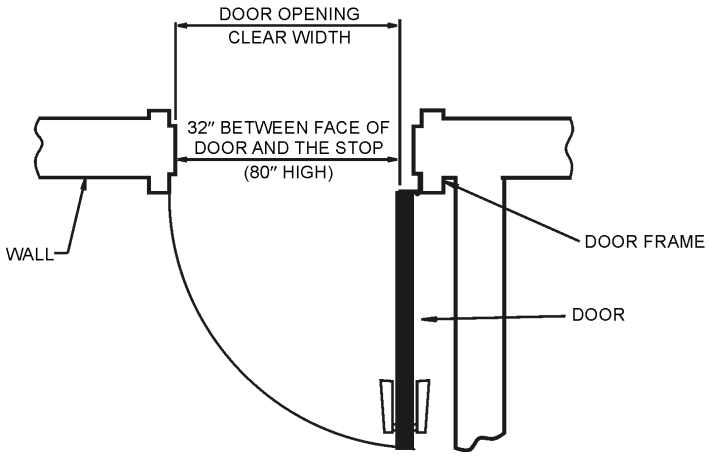

For SI: 1 inch = 25.4 mm.

Figure 1010.1.1(1)
TYPICAL DOOR OPENING CLEARANCE

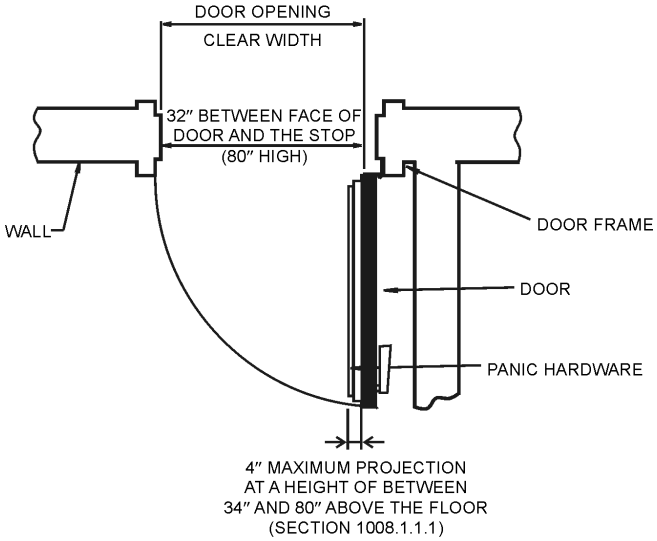

For SI: 1 inch = 25.4 mm.

Figure 1010.1.1(2)
TYPICAL DOOR OPENING CLEARANCE WITH PANIC HARDWARE

INTERNATIONAL CODE COUNCIL®
Copyright © 2015 ICC. ALL RIGHTS RESERVED. Accessed by David Dammon on Jun 21, 2017 12:30:52 PM pursuant to License Agreement with ICC. No further reproduction or distribution authorized. ANY UNAUTHORIZED REPRODUCTION OR DISTRIBUTION IS A VIOLATION OF THE FEDERAL COPYRIGHT ACT AND THE LICENSE AGREEMENT, AND SUBJECT TO CIVIL AND CRIMINAL PENALTIES THEREUNDER.

width only applies to swinging doors and not to horizontal sliding doors.

Minimum door heights are required to provide clear headroom for the users. A minimum height of 80 inches (2032 mm) has been empirically derived as sufficient for most users. Note that although the clear height of a doorway is not specified, typical door frame dimensions will render an opening very close to 80 inches (2032 mm) in clear height. The exception in Sections 1003.3.1 and 1010.1.1.1 allows for door closers and doorstops to be as low as 78 inches (1981 mm).

Exception 1 is very limited in scope and is primarily intended to permit decorative-type doors, e.g., café doors, in dwelling units. This exception addresses spaces that are provided with two or more doors when only one means of egress is required. These nonrequired doors are exempted from the minimum and maximum dimensions.

Exception 2 permits the continued use of doors to resident sleeping rooms (cells) in jails (Group I-3) to be a minimum of 28 inches (711 mm), according to current practices.

Exception 3 is for all occupancies. This exception permits doors to storage closets less than 10 square feet (0.9 m^2) in area to be less than 32 inches (813 mm). This provision is intended to include those closets that can be reached in an arm's length and thus do not require full passage into the closet to be functional.

Exception 4 permits the door leaves in a revolving door assembly to comply with Section 1010.1.4.1, which provides for adequate egress width when the revolving door is collapsed into a breakout position.

Exception 5 permits the doorway within a dwelling or sleeping unit to be a minimum of 78 inches (1981 mm) in clear height. This is deemed acceptable because of the familiarity persons in a dwelling or sleeping unit usually have with the egress system and the lack of adverse injury statistics relating to such doors. Note that this exception does not apply to exterior doors of a townhouse or the main entrance doors leading to the hallway in hotels or apartment buildings. However, exterior doors could use the limited exception for doorstops and closers in Sections 1003.3.1 and 1010.1.1.1.

Exception 6 permits exterior doorways to a dwelling or sleeping unit, except for the required exit door, to be a minimum of 76 inches (1930 mm) in clear height. Accordingly, the required exterior exit door to a dwelling or sleeping unit must be 80 inches (2032 mm) in height (exterior doors are not within the scope of Exception 5), but other exterior doors are allowed to be a height of only 76 inches (1930 mm). This provision allows for the continued use of 76-inch-high (1930 mm) sliding patio doors and swinging doors sized to replace such doors.

Exception 7 allows interior means of egress doors within dwelling or sleeping units to have a clear width less than 32 inches (813 mm). If the dwelling or sleeping unit is required to be an Accessible, Type A or Type B unit, this exception is not applicable. ICC A117.1 requires door openings within Accessible and Type A units to be 32 inches (813 mm) clear and doors within Type B units to be $31^3/_4$ inches (806 mm) clear. This exception is not applicable to Group R-1. The requirement for all doorways within a Group R-1 unit to be sized to provide access to persons with physical disabilities is applicable to both entrance doors to the units and all doors to rooms in the unit (e.g., bathroom doors). Because of the social interaction and visitation that often occur in lodging facilities, a door opening sized for accessibility (e.g., wheelchairs, walkers, canes, crutches) is deemed necessary to allow people with disabilities to visit a friend's, colleague's or relative's unit. In addition, wider doors provide an additional benefit to all persons handling luggage and bulky items, or for the situation when an Accessible unit is not available. This requirement for Group R-1 occupancies is consistent with the 2010 ADA Standard.

Exception 10 has put in an allowance for sauna and steam room doors in hotels rooms that are not Accessible units. The doors to the bathroom would still have to provide a 32-inch clear width.

Exception 8 addresses the clear width of doors within a Type B dwelling or sleeping unit. The $31^3/_4$-inch (806 mm) dimension effectively allows for 2-foot, 10-inch (864 mm) doors to be used inside the unit. Again, note that the exterior door to the garden-style apartments or the main door to the hallway from units in an apartment building are not covered by this exception. ICC A117.1 requires the exterior doors of Type B dwelling units to provide a 32-inch (813 mm) clear width. This is consistent with the correlative text in ICC A117.1 for Type B units. Refer to Chapter 11 for additional information related to Type B dwelling and sleeping units.

Exception 9 allows for doors on walk-in freezers and coolers that would allow for the use of small carts to move supplies in and out. Such doors would still have to meet the force requirements in Section 1010.1.3.

1010.1.1.1 Projections into clear width. There shall not be projections into the required clear width lower than 34 inches (864 mm) above the floor or ground. Projections into the clear opening width between 34 inches (864 mm) and 80 inches (2032 mm) above the floor or ground shall not exceed 4 inches (102 mm).

Exception: Door closers and door stops shall be permitted to be 78 inches (1980 mm) minimum above the floor.

❖ This section of the code provides specific allowances for projection into the required clear widths of means of egress doors. These allowances directly correspond with the method of measuring the required clear width of the door as specified in Section 1010.1.1. A reasonable range of projections for door hardware and trim has been established by these requirements. The use of the means of egress door by a wheelchair occupant will not be significantly

INTERNATIONAL CODE COUNCIL®
Copyright © 2015 ICC. ALL RIGHTS RESERVED. Accessed by David Dammon on Jun 21, 2017 12:30:52 PM pursuant to License Agreement with ICC. No further reproduction or distribution authorized. ANY UNAUTHORIZED REPRODUCTION OR DISTRIBUTION IS A VIOLATION OF THE FEDERAL COPYRIGHT ACT AND THE LICENSE AGREEMENT, AND SUBJECT TO CIVIL AND CRIMINAL PENALTIES THEREUNDER.

impacted by small projections located in inconspicuous areas. The key to these allowances is their location. Projections are allowed at a height between 34 inches (864 mm) and 80 inches (2032 mm). Below the 34-inch (864 mm) height, the code does not permit any projections since they would decrease the available width for wheelchair operation. The full 32-inch (813 mm) width must be provided at this location. At 34 inches (864 mm) and higher, projections of up to and including 4 inches (102 mm) are permitted. The 4-inch (102 mm) projection is consistent with the allowances of Section 1003.3.3. This section permits door hardware, such as panic hardware, to extend into the clear width, yet maintain accessibility for persons with physical disabilities [see Commentary Figure 1010.1.1(2)].

Allowance must be made for door closers and stops, since their design and function necessitates placement within the door opening. The minimum headroom clearance for door closers and stops is allowed to be 78 inches (1981 mm) [see Commentary Figure 1003.3.1(1)]. The 2-inch (51 mm) projection into the doorway height is reasonable since these devices are normally mounted away from the center of the door opening, thus minimizing the potential for contact with a person moving through the opening. This is consistent with the exception in Section 1003.3.1. Other items that are mounted at the top of the door opening, such as an electromagnetic lock on a pair of doors, would still require an 80-inch (2032 mm) minimum headroom.

While this section deals with door hardware projection within the clear door opening width, door hardware projection into the required width of corridors, aisles, exit passageways and exit discharge is addressed in Section 1005.7.1.

1010.1.2 Door swing. Egress doors shall be of the pivoted or side-hinged swinging type.

Exceptions:

1. Private garages, office areas, factory and storage areas with an *occupant load* of 10 or less.
2. Group I-3 occupancies used as a place of detention.
3. Critical or intensive care patient rooms within suites of health care facilities.
4. Doors within or serving a single *dwelling unit* in Groups R-2 and R-3.
5. In other than Group H occupancies, revolving doors complying with Section 1010.1.4.1.
6. In other than Group H occupancies, special purpose horizontal sliding, accordion or folding door assemblies complying with Section 1010.1.4.3.
7. Power-operated doors in accordance with Section 1010.1.4.2.
8. Doors serving a bathroom within an individual *sleeping unit* in Group R-1.
9. In other than Group H occupancies, manually operated horizontal sliding doors are permitted in a *means of egress* from spaces with an *occupant load* of 10 or less.

❖ Generally, egress doors are required to be the side-swinging type. The swinging hardware can be either a hinge or a pivot type (see the definition for "Balanced door"). Side-swinging doors are familiar to all occupants in the method of operation. Door designs with pivots are permitted by this section since the door action itself has little difference between the side-hinged-type door.

The code has several conditions where it allows doors that are not side-hinged-swinging types.

Examples of the doors permitted in Exception 1 are overhead garage doors and horizontal sliding doors. Exception 1 allows doors other than the swinging type for the listed uses where the number of occupants is very low.

Exception 2 allows for the sliding-type doors that are commonly used in prisons and jails.

Exception 3 allows for sliding doors between nursing areas and patient rooms in critical care and intensive care suites. Patients are not typically moving around on their own in these areas, visitors are extremely limited, the glass doors allow a better view for nurse supervision and the sliding option allows for equipment locations unaffected by door swing. See also IBC Section 407 and Sections 1010.1.9.6 and 1010.1.9.8 of the code for these types of areas.

Exception 4 allows for sliding-type doors or pocket-type doors within or serving individual units in a non-transient residential occupancy. Residents are typically familiar with the door operation. The use of sliding doors on the interior of dwelling units is permitted by the Fair Housing Accessibility Guidelines (FHAG) and by ICC A117.1 for Accessible, Type A and Type B units.

Exception 5 allows for revolving doors that meet the requirements of Section 1010.1.4.1. Revolving doors are not permitted for egress from high-hazard spaces.

Exception 6 allows for special-purpose horizontal sliding, accordion or folding doors that meet the requirements of Section 1010.1.4.3 to be used in the means of egress. The doors addressed by Section 101.4.3 are commonly in the normally-open position (hidden in their enclosure). In the event of fire or smoke, where these doors are installed in the means of egress, Section 1010.1.4.3 requires the doors to be power operated but also openable manually to the required minimum egress width. This exception is intended to allow wide span openings to be used in a means of egress.

Exception 7 allows for power-operated doors that meet the requirements of Section 1010.1.4.2. This is to enhance the movement of the general population as well as people with mobility impairments to areas

INTERNATIONAL CODE COUNCIL®
Copyright © 2015 ICC. ALL RIGHTS RESERVED. Accessed by David Dammon on Jun 21, 2017 12:30:52 PM pursuant to License Agreement with ICC. No further reproduction or distribution authorized. ANY UNAUTHORIZED REPRODUCTION OR DISTRIBUTION IS A VIOLATION OF THE FEDERAL COPYRIGHT ACT AND THE LICENSE AGREEMENT, AND SUBJECT TO CIVIL AND CRIMINAL PENALTIES THEREUNDER.

of safety without obstructions, since the specified doors afford simple operation by persons for both typical and emergency operation.

Exception 8 allows for pocket doors between the bathrooms and living or sleeping space within hotel rooms. Since the bathroom is most commonly placed immediately inside the entrance to the room, a side-swinging door could be an obstruction for a person entering carrying suitcases. Familiarity with these types of doors and minimal occupant loads makes this situation acceptable.

Exception 9 partially overlaps the allowances in Exception 1 for horizontal sliding doors by matching the 10 or less occupant load, but extends the use to all other groups except for high hazard. For example, some emergency rooms or clinics use glazed horizontal sliding doors to divide patient care rooms providing for increased privacy and infection control while still allowing visual supervision. Another example would be that a pocket door may be used for access to a bathroom within a private office. The allowance for such a manually operated horizontal sliding door provides greater design flexibility and efficiency, while at the same time maintaining an acceptable level of safety.

1010.1.2.1 Direction of swing. Pivot or side-hinged swinging doors shall swing in the direction of egress travel where serving a room or area containing an occupant load of 50 or more persons or a Group H occupancy.

❖ A side-hinged door must swing in the direction of egress travel where the required occupant capacity of the room is 50 or more. As such, a room with two doors and an occupant load of 99 would require both doors to swing in the direction of egress travel, even though each door has a calculated occupant usage of less than 50. At this level of occupant load, the possibility exists that, in an emergency situation, a compact line of people could form at a closed door that swings in a direction opposite the egress flow. This could delay or eliminate the first person's ability to open the door inward with the rest of the queue behind the person.

In a Group H occupancy, the threat of rapid fire buildup, or worse, is such that any delay in egress caused by door swing may jeopardize the opportunity for all occupants to evacuate the premises. For this reason, all egress doors in Group H occupancies are to swing in the direction of egress.

1010.1.3 Door opening force. The force for pushing or pulling open interior swinging egress doors, other than fire doors, shall not exceed 5 pounds (22 N). These forces do not apply to the force required to retract latch bolts or disengage other devices that hold the door in a closed position. For other swinging doors, as well as sliding and folding doors, the door latch shall release when subjected to a 15-pound (67 N) force. The door shall be set in motion when subjected to a 30-pound (133 N) force. The door shall swing to a full-open position when subjected to a 15-pound (67 N) force.

❖ The ability of all potential users to be physically capable of opening an egress door is a function of the forces required to open the door. The 5-pound (22 N) maximum force for pushing and pulling interior swinging doors without closers that are part of the means of egress inside a building is based on that which has been deemed appropriate for people with a physical limitation due to size, age or disability. The operating force is permitted to be higher for all exterior doors, interior swinging doors that are not part of the means of egress, doors that are part of the means of egress but also serve as opening protectives in fire-resistance-rated walls (i.e., fire doors), sliding doors and folding doors. This recognizes that doors with closers, particularly fire doors, require greater operating forces in order to close fully in an emergency where combustion gases may be exerting pressure on the door assembly. Similarly, exterior doors are exempted because air pressure differentials and strong winds may prevent doors from being fully automatically closed.

The opening force is different than the force to retract bolts or operate other types of door hardware. A maximum force of 15 pounds (67 N) is required for operating the latching mechanism. Once unlatched, a maximum force of 30 pounds (133 N) is applied to the latch side of the leaf to start the door in motion by overcoming its stationary inertia. Once in motion, it must not take more than 15 pounds (67 N) of force to keep the door in motion until it reaches its full open position and the required clear width is available. To conform to this requirement on a continual basis, door closers must be adjusted periodically and door fits must also be checked and adjusted when necessary.

1010.1.3.1 Location of applied forces. Forces shall be applied to the latch side of the door.

❖ See the commentary for door opening forces in Section 1010.1.3.

1010.1.4 Special doors. Special doors and security grilles shall comply with the requirements of Sections 1010.1.4.1 through 1010.1.4.4.

❖ This section simply defines the scope of the code requirements for special doors such as revolving doors, power-operated swinging doors, power-operated horizontal sliding doors and security grilles

1010.1.4.1 Revolving doors. Revolving doors shall comply with the following:

1. Revolving doors shall comply with BHMA A156.27 and shall be installed in accordance with the manufacturer's instructions.

INTERNATIONAL CODE COUNCIL®
Copyright © 2015 ICC. ALL RIGHTS RESERVED. Accessed by David Dammon on Jun 21, 2017 12:30:52 PM pursuant to License Agreement with ICC. No further reproduction or distribution authorized. ANY UNAUTHORIZED REPRODUCTION OR DISTRIBUTION IS A VIOLATION OF THE FEDERAL COPYRIGHT ACT AND THE LICENSE AGREEMENT, AND SUBJECT TO CIVIL AND CRIMINAL PENALTIES THEREUNDER.

2. Each revolving door shall be capable of *breakout* in accordance with BHMA A156.27 and shall provide an aggregate width of not less than 36 inches (914 mm).
3. A revolving door shall not be located within 10 feet (3048 mm) of the foot or top of *stairways* or escalators. A dispersal area shall be provided between the *stairways* or escalators and the revolving doors.
4. The revolutions per minute (rpm) for a revolving door shall not exceed the maximum rpm as specified in BHMA A156.27. Manual revolving doors shall comply with Table 1010.1.4.1(1). Automatic or power-operated revolving doors shall comply with Table 1010.1.4.1(2).
5. An emergency stop switch shall be provided near each entry point of power or automatic operated revolving doors within 48 inches (1220 mm) of the door and between 24 inches (610 mm) and 48 inches (1220 mm) above the floor. The activation area of the emergency stop switch button shall be not less than 1 inch (25 mm) in diameter and shall be red.
6. Each revolving door shall have a side-hinged swinging door that complies with Section 1010.1 in the same wall and within 10 feet (3048 mm) of the revolving door.
7. Revolving doors shall not be part of an *accessible route* required by Section 1009 and Chapter 11.

❖ Revolving doors must comply with all seven provisions.

Item 1: BHMA A156.27 is the revolving door industry standard and includes numerous safety-related requirements for revolving doors. For example, BHMA A156.27 requires manually operated revolving doors to contain governors to limit the rotational speed of the door. For automatic, or power-operated, revolving doors, BHMA A156.27 includes requirements for numerous sensors and switches, and complex motor controls to safely operate the door.

Item 2: One of the causes contributing to the loss of lives in the 1942 Cocoanut Grove fire in Boston was that the revolving doors at the club's entrance could not collapse (*breakout*) for emergency egress and there was not an alternative means of egress adjacent to the revolving doors. Thus, in the panic of the fire, the door became jammed and the club's occupants were trapped.

As a result of this fire experience, all revolving doors, including those for air structures, now are required to be equipped with a breakout feature. A breakout operation is where all leaves collapse parallel to each other and to the direction of egress [see Commentary Figure 1010.1.4.1(1)]. A breakout operation creates two openings of approximately equal width. The sum of the widths is not to be less than 36 inches (914 mm) so that a stream of pedestrians may use each side of the opening. BHMA A156.27 includes explicit breakout requirements for the wide range of sizes and configurations of manual and automatic revolving doors.

Item 3: If a stairway or escalator delivers users to a landing in front of a revolving door at a greater rate than the capacity of the door, a compact line of people will develop. Lines of people formed on a stairway or escalator create an unsafe situation, since stairways and escalators are not intended to be used as standing space for persons who may be waiting to use the revolving doors. Therefore, to avoid congestion at a revolving door that under normal operation has a maximum delivery capacity of users, a dispersal area is required between the stairways or escalators and the revolving doors to allow for the queuing of people as they enter the door. Accordingly, to create a dispersal area for users of a revolving door, the door is not to be placed closer than 10 feet (3048 mm) from the foot or top of a stairway or escalator.

Item 4: Door speeds also directly relate to the capacity of a revolving door, which is calculated by multiplying the number of leaves (wings) by the revolutions per minute (rpm). For example, if you have a four-leaf door (four-bay door) moving at 10 rpm, the door will allow 40 people to move in either direction in 1 minute. The larger revolving doors are designed to allow more than one person in each bay, and this should be taken into account when calculating the capacity of a revolving door.

Item 5: An emergency stop switch near each entry point of automatic or power-operated revolving doors provides a method to stop the door's operation.

Item 6: In case a revolving door malfunctions or becomes obstructed, the adjacent area is to be equipped with a conventional side-hinged door to provide users with an immediate alternative way to exit a building. The side-hinged door is intended to be

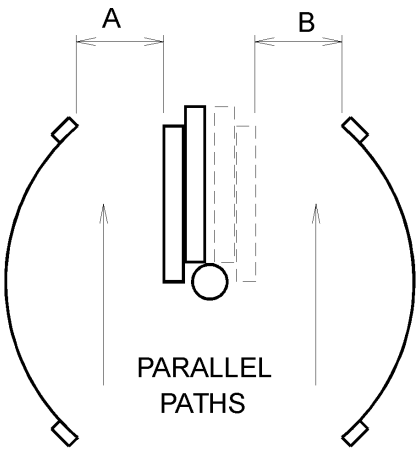

For SI: 1 inch = 25.4 mm.

Figure 1010.1.4.1(1)
REVOLVING DOORS IN BOOKFOLD POSITION

INTERNATIONAL CODE COUNCIL®
Copyright © 2015 ICC. ALL RIGHTS RESERVED. Accessed by David Dammon on Jun 21, 2017 12:30:52 PM pursuant to License Agreement with ICC. No further reproduction or distribution authorized. ANY UNAUTHORIZED REPRODUCTION OR DISTRIBUTION IS A VIOLATION OF THE FEDERAL COPYRIGHT ACT AND THE LICENSE AGREEMENT, AND SUBJECT TO CIVIL AND CRIMINAL PENALTIES THEREUNDER.

used as a relief device for people lined up to use the revolving door or who desire to avoid it because of a physical disability or other reason. It also can be used when the revolving door is obstructed or out of service. The swinging door is to be immediately adjacent to the revolving door so that its availability is obvious [see Commentary Figure 1010.1.4.1(2)]. A single swinging door can be located between side-by-side revolving doors in order to comply with this provision.

Item 7: While some revolving doors may be considered part of a means of egress, they cannot be considered part of a required accessible route for either ingress or egress. This requirement is consistent with ICC A117.1, which also prohibits revolving gates and turnstiles along the only accessible route. The side-swinging door required by Item 6 can serve as the accessible entrance or exit required by Section 1009 and IBC Section 1105.

A route through a hinged or sliding door differs remarkably from that provided through a revolving door. For a revolving door, the route includes a turn into the doorway, an arcing path of travel as the door revolves, followed by a change of direction when leaving the door. Items that may cause difficulty for anyone with mobility impairments could involve the overall doorway diameter, the number of leaves and their relative angle, and the configuration of the return walls surrounding the revolving door. Additionally, the speed of the door movement if motorized, or the force required for movement if not motorized, would be a concern for anyone who needed to keep both hands on their device to move forward (e.g., walker or wheelchair).

Automatic revolving doors, if large enough, may be usable by many people who use wheelchairs. However, the intent of this section is that these types of doors not be the only means of passage at an entrance or exit. An alternative door in full compliance with this section is considered necessary because some people with disabilities may be uncertain of the usability, or may not have enough strength or speed to use them. Although manufacturers have developed safety criteria, certain questions remain, such as the appropriate maximum and minimum speeds that would work for persons trying to maneuver a wheelchair through a revolving door.

Revolving doors range from (smaller) manually operated revolving door systems to automatic (power operated) revolving doors of small (8-foot) to large (24-foot) diameter. Three configurations of revolving doors are illustrated in Commentary FIgures 1010.1.4(3) through 1010.1.4(5).

TABLE 1010.1.4.1(1)
MAXIMUM DOOR SPEED MANUAL REVOLVING DOORS

REVOLVING DOOR MAXIMUM NOMINAL DIAMETER (FT-IN)	MAXIMUM ALLOWABLE REVOLVING DOOR SPEED (RPM)
6-0	12
7-0	11
8-0	10
9-0	9
10-0	8

For SI: 1 inch = 25.4 mm, 1 foot = 304.8 mm.

❖ See the commentary for Section 1010.1.4 and Table 1010.1.4.1(2).

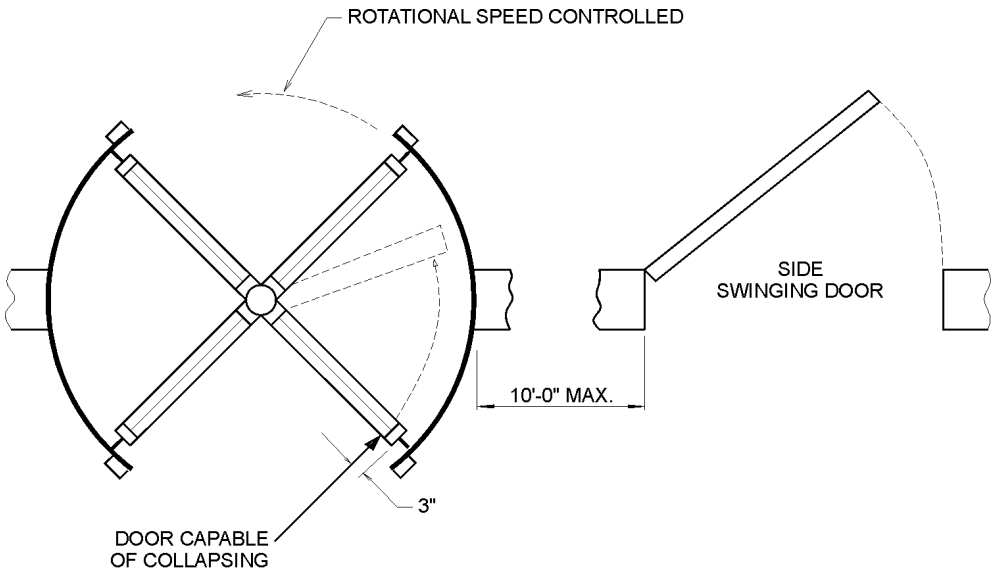

For SI: 1 foot = 304.8 mm.

Figure 1010.1.4.1(2)
TYPICAL REVOLVING DOOR/SIDE SWINGING DOOR ARRANGEMENT

INTERNATIONAL CODE COUNCIL®
Copyright © 2015 ICC. ALL RIGHTS RESERVED. Accessed by David Dammon on Jun 21, 2017 12:30:52 PM pursuant to License Agreement with ICC. No further reproduction or distribution authorized. ANY UNAUTHORIZED REPRODUCTION OR DISTRIBUTION IS A VIOLATION OF THE FEDERAL COPYRIGHT ACT AND THE LICENSE AGREEMENT, AND SUBJECT TO CIVIL AND CRIMINAL PENALTIES THEREUNDER.

TABLE 1010.1.4.1(2)
MAXIMUM DOOR SPEED AUTOMATIC OR POWER-OPERATED REVOLVING DOORS

REVOLVING DOOR MAXIMUM NOMINAL DIAMETER (FT-IN)	MAXIMUM ALLOWABLE REVOLVING DOOR SPEED (RPM)
8-0	7.2
9-0	6.4
10-0	5.7
11-0	5.2
12-0	4.8
12-6	4.6
14-0	4.1
16-0	3.6
17-0	3.4
18-0	3.2
20-0	2.9
24-0	2.4

For SI: 1 inch = 25.4 mm, 1 foot = 304.8 mm.

❖ Door speeds also directly relate to the capacity of a revolving door, which is calculated for smaller revolving doors by multiplying the number of leaves (wings) by the revolutions per minute (rpm). For example, if you have an 8-foot diameter four-leaf door (four-bay door) moving at 10 rpm, the door will allow 40 people to move in either direction in 1 minute. Larger revolving doors may be designed to allow for more than one person in each bay as the door rotates, which should be taken into account when determining maximum egress capacity of the revolving door.



Figure 1010.1.4.1(3)
EXAMPLE OF MANUAL REVOLVING DOOR (7-FOOT DIAMETER)

1010.1.4.1.1 Egress component. A revolving door used as a component of a *means of egress* shall comply with Section 1010.1.4.1 and the following three conditions:

1. Revolving doors shall not be given credit for more than 50 percent of the minimum width or required capacity.
2. Each revolving door shall be credited with a capacity based on not more than a 50-person *occupant load*.



Figure 1010.1.4.1(4)
EXAMPLE OF AUTOMATIC REVOLVING DOOR (8-FOOT DIAMETER)



Figure 1010.1.4.1(5)
EXAMPLE OF AUTOMATIC REVOLVING DOOR (20-FOOT DIAMETER)

INTERNATIONAL CODE COUNCIL®
Copyright © 2015 ICC. ALL RIGHTS RESERVED. Accessed by David Dammon on Jun 21, 2017 12:30:52 PM pursuant to License Agreement with ICC. No further reproduction or distribution authorized. ANY UNAUTHORIZED REPRODUCTION OR DISTRIBUTION IS A VIOLATION OF THE FEDERAL COPYRIGHT ACT AND THE LICENSE AGREEMENT, AND SUBJECT TO CIVIL AND CRIMINAL PENALTIES THEREUNDER.

3. Each revolving door shall provide for egress in accordance with BHMA A156.27 with a *breakout* force of not more than 130 pounds (578 N).

❖ A revolving door can be incorporated, to a very limited extent, in a means of egress. Compliance with these three additional conditions is required.

Condition 1 limits the exit capacity that revolving doors can provide in a building. This is so that 50 percent of the capacity has conventional egress components and is not dependent on mechanical devices or fail-safe mechanisms.

Condition 2 limits the capacity of any one revolving door for the same reasons as stated in Condition 1. Each revolving door is therefore limited to a 50-person capacity.

Condition 3 limits the breakout force to 130 pounds (578 N), as opposed to the 180-pound (792 N) value listed in Section 1010.1.4.1.2. Revolving doors used as means of egress are not permitted to have the breakout force exceed 130 pounds (578 N) under any circumstances.

1010.1.4.1.2 Other than egress component. A revolving door used as other than a component of a *means of egress* shall comply with Section 1010.1.4.1. The *breakout* force of a revolving door not used as a component of a *means of egress* shall not be more than 180 pounds (801 N).

Exception: A *breakout* force in excess of 180 pounds (801 N) is permitted if the collapsing force is reduced to not more than 130 pounds (578 N) when not less than one of the following conditions is satisfied:

1. There is a power failure or power is removed to the device holding the door wings in position.
2. There is an actuation of the *automatic sprinkler system* where such system is provided.
3. There is an actuation of a smoke detection system that is installed in accordance with Section 907 to provide coverage in areas within the building that are within 75 feet (22 860 mm) of the revolving doors.
4. There is an actuation of a manual control switch, in an approved location and clearly identified, that reduces the *breakout* force to not more than 130 pounds (578 N).

❖ This section addresses revolving doors that are not used to serve any portion of the occupant egress capacity. For example, where adjacent side-hinged doors have more than the required egress capacity, the revolving door would not be part of the required means of egress.

The maximum breakout force of 180 pounds (792 N), applied within 3 inches (76 mm) of the outer edge of a wing, is based on industry standards to accommodate normal use conditions and other forces that may act on the leaves, such as those caused by wind or air pressure. An exception for revolving doors that are not a component of a required means of egress allows the breakout force to exceed 180 pounds (792 N) in normal operating conditions provided that a force of not more than 130 pounds (578 N) is required whenever any one of the listed conditions is satisfied.

1010.1.4.2 Power-operated doors. Where *means of egress* doors are operated or assisted by power, the design shall be such that in the event of power failure, the door is capable of being opened manually to permit *means of egress* travel or closed where necessary to safeguard *means of egress*. The forces required to open these doors manually shall not exceed those specified in Section 1010.1.3, except that the force to set the door in motion shall not exceed 50 pounds (220 N). The door shall be capable of swinging open from any position to the full width of the opening in which such door is installed when a force is applied to the door on the side from which egress is made. Power-operated swinging doors, power-operated sliding doors and power-operated folding doors shall comply with BHMA A156.10. Power-assisted swinging doors and low-energy power-operated swinging doors shall comply with BHMA A156.19.

Exceptions:

1. Occupancies in Group I-3.
2. Horizontal sliding doors complying with Section 1010.1.4.3.
3. For a biparting door in the emergency breakout mode, a door leaf located within a multiple-leaf opening shall be exempt from the minimum 32-inch (813 mm) single-leaf requirement of Section 1010.1.1, provided a minimum 32-inch (813 mm) clear opening is provided when the two biparting leaves meeting in the center are broken out.

❖ For convenience purposes, power-operated doors are intended to facilitate the normal nonemergency flow of persons through a doorway. Where a power-operated or power-assisted door is also required to be an egress door, the door must conform to the requirements of this section. The essential characteristic is that the door is to be manually openable from any position to its full open position at any time, with or without a power failure or a failure of a door mechanism. Hence, both swinging and horizontal sliding doors, complying with this section, may be used, provided the door can be operated manually from any position as a swinging door and that the minimum required clear width for egress capacity is not less than 32 inches (813 mm). Note that the opening forces of Section 1010.1.3 are applicable, except that the 30-pound (133 N) force needed to set the door in motion is increased to 50 pounds (220 N) as an operational tolerance in the design of the power-operated door.

Definitions for the different types of power-operated doors were added to the 2015 IBC to help clarify which standard (BHMA A156.10 or BHMA A156.19) is applicable to which type of power-operated door.

Power-operated doors are required to comply with BHMA A156.10. These doors open automatically when approached by a person or upon an action by a person, close automatically and include provisions

INTERNATIONAL CODE COUNCIL®
Copyright © 2015 ICC. ALL RIGHTS RESERVED. Accessed by David Dammon on Jun 21, 2017 12:30:52 PM pursuant to License Agreement with ICC. No further reproduction or distribution authorized. ANY UNAUTHORIZED REPRODUCTION OR DISTRIBUTION IS A VIOLATION OF THE FEDERAL COPYRIGHT ACT AND THE LICENSE AGREEMENT, AND SUBJECT TO CIVIL AND CRIMINAL PENALTIES THEREUNDER.

such as presence sensors to prevent entrapment. *Low-energy power-operated doors* are required to comply with BHMA A56.19. These doors are always swinging doors which open automatically upon an action by a person such as pressing a push plate or waving a hand in front of a sensor. Additionally, these doors close automatically and operate with decreased forces and decreased speeds (compared to *power-operated doors*). Least common are *power-assisted doors*, which are required to comply with BHMA A156.19. These doors are swinging doors which open by reduced pushing or pulling force on the door-operating hardware, close automatically after the pushing or pulling force is released and function with decreased forces.

In accordance with Exception 1, power-operated doors in detention and correctional occupancies (Group I-3) are not required to be manually operable by the occupants (inmates) for security reasons, but otherwise are required to conform to IBC Section 408.

Exception 2 states that power-operated, special-purpose horizontal sliding accordion or folding doors that meet the requirements of Section 1010.1.4.3 are not required to meet the requirements of Section 1010.1.4.2. This is consistent with the option offered in Section 1010.1.2 by Exception 6.

Exception 3 allows an individual leaf of a four-panel biparting door to be less than 32 inches (813 mm) wide, provided 32 inches (813 mm) of clear space is available when the two center biparting leaves are broken out as part of the emergency breakaway feature.

1010.1.4.3 Special purpose horizontal sliding, accordion or folding doors. In other than Group H occupancies, special purpose horizontal sliding, accordion or folding door assemblies permitted to be a component of a *means of egress* in accordance with Exception 6 to Section 1010.1.2 shall comply with all of the following criteria:

1. The doors shall be power operated and shall be capable of being operated manually in the event of power failure.
2. The doors shall be openable by a simple method from both sides without special knowledge or effort.
3. The force required to operate the door shall not exceed 30 pounds (133 N) to set the door in motion and 15 pounds (67 N) to close the door or open it to the minimum required width.
4. The door shall be openable with a force not to exceed 15 pounds (67 N) when a force of 250 pounds (1100 N) is applied perpendicular to the door adjacent to the operating device.
5. The door assembly shall comply with the applicable *fire protection rating* and, where rated, shall be self-closing or automatic closing by smoke detection in accordance with Section 716.5.9.3, shall be installed in accordance with NFPA 80 and shall comply with Section 716.
6. The door assembly shall have an integrated standby power supply.
7. The door assembly power supply shall be electrically supervised.
8. The door shall open to the minimum required width within 10 seconds after activation of the operating device.

❖ Special purpose horizontal sliding, accordion or folding doors are permitted in the means of egress, in other than rooms or areas of Group H, under the conditions set forth in this section. Special purpose horizontal sliding, accordion or folding doors are not permitted to be used in Group H occupancies because of the potential for delaying or impeding egress from those areas and the additional risk to occupants in hazardous occupancies. Note that this section regulates doors that are part of the means of egress to meet a set of requirements different than Section 1010.1.4.2 (e.g., a power-operated horizontal sliding door that does not have “breakout” capabilities to allow the door panels to swing if power is lost). The doors addressed by Section 1010.1.4.3 are commonly in the normally open position (hidden in their enclosure).

All eight of the criteria listed in this section must be met for a special purpose horizontal sliding, accordion or folding door since there is a concern that it must be able to be easily opened to the minimum required width under all conditions.

Additionally, the door must be openable even if a force of 250 pounds (1100 N) is being applied perpendicular to it, as may occur if a group of people were pushing on it.

Since the doors are manually operable, they need not automatically open or close during a loss of power; however, a standby power supply must be provided. The primary power supply must be supervised so that an alarm is received at a constantly attended location (such as a security desk) on loss of the primary power. If the doors are also serving as opening protective (i.e., fire doors), they must be automatic closing or self-closing in accordance with IBC Section 716.

Since the maximum swinging door leaf width limitations of Section 1008.1.1 do not apply, a maximum opening time of 10 seconds is permitted. It should be noted, however, that the door need not open fully within the 10 seconds; rather, it must open to the minimum required width. For example, if the door is protecting an opening that is 10 feet (3048 mm) wide, but the minimum required width of the opening is 32 inches (813 mm) (as determined by Section 1008.1.1), the door need only open 32 inches (813 mm) within the 10-second criterion. In fact, the door may have controls such that the automatic opening feature only opens the door to a width of 32 inches (813 mm). If additional width is required, it can be accomplished by manual means and, possibly, by an additional activation of the operating device.

INTERNATIONAL CODE COUNCIL®
Copyright © 2015 ICC. ALL RIGHTS RESERVED. Accessed by David Dammon on Jun 21, 2017 12:30:52 PM pursuant to License Agreement with ICC. No further reproduction or distribution authorized. ANY UNAUTHORIZED REPRODUCTION OR DISTRIBUTION IS A VIOLATION OF THE FEDERAL COPYRIGHT ACT AND THE LICENSE AGREEMENT, AND SUBJECT TO CIVIL AND CRIMINAL PENALTIES THEREUNDER.

1010.1.4.4 Security grilles. In Groups B, F, M and S, horizontal sliding or vertical security grilles are permitted at the main *exit* and shall be openable from the inside without the use of a key or special knowledge or effort during periods that the space is occupied. The grilles shall remain secured in the full-open position during the period of occupancy by the general public. Where two or more *means of egress* are required, not more than one-half of the *exits* or *exit access doorways* shall be equipped with horizontal sliding or vertical security grilles.

❖ This section really functions as an exception to several sections, including Sections 1010.1.2 (Door swing) and 1010.1.9.3 (Locks and latches), and permits the use of these security grilles under conditions that are similar to those found in IBC Section 402 for covered mall buildings. These security grilles will be open when the space is occupied and will, therefore, not obstruct any egress path. Since the building may be partially used (e.g., team practice in a football stadium) when not fully occupied, no more than one-half of the exits from the building can be through security grilles.

1010.1.5 Floor elevation. There shall be a floor or landing on each side of a door. Such floor or landing shall be at the same elevation on each side of the door. Landings shall be level except for exterior landings, which are permitted to have a slope not to exceed 0.25 unit vertical in 12 units horizontal (2-percent slope).

Exceptions:

1. Doors serving individual *dwelling units* in Groups R-2 and R-3 where the following apply:
   1.1. A door is permitted to open at the top step of an interior *flight* of *stairs*, provided the door does not swing over the top step.
   1.2. Screen doors and storm doors are permitted to swing over *stairs* or landings.
2. Exterior doors as provided for in Section 1003.5, Exception 1, and Section 1022.2, which are not on an *accessible route*.
3. In Group R-3 occupancies not required to be *Accessible units*, *Type A units* or *Type B units*, the landing at an exterior doorway shall be not more than $7^3/_4$ inches (197 mm) below the top of the threshold, provided the door, other than an exterior storm or screen door, does not swing over the landing.
4. Variations in elevation due to differences in finish materials, but not more than $^1/_2$ inch (12.7 mm).
5. Exterior decks, patios or balconies that are part of *Type B dwelling units*, have impervious surfaces and that are not more than 4 inches (102 mm) below the finished floor level of the adjacent interior space of the dwelling unit.
6. Doors serving equipment spaces not required to be *accessible* in accordance with Section 1103.2.9 and serving an occupant load of five or less shall be permitted to have a landing on one side to be not more than 7 inches (178 mm) above or below the landing on the egress side of the door.

❖ Changes in floor surface elevation at a door, however small, often are slip or trip hazards. This is because persons passing through a door, including those who may have some mobility impairments, usually do not expect changes in floor surface elevation or are not able to recognize them because of the intervening door leaf. Under emergency conditions, a fall in a doorway could result not only in injury to the falling occupant but also interruption of orderly egress by other occupants. The exterior landing is allowed to slope to drain.

The size of this landing is set by Section 1010.1.6. In accordance with Exception 4, the floor surface elevation of the landing is to be at the same elevation plus or minus $^1/_2$ inch (12.7 mm) (see Commentary Figure 1010.1.5).

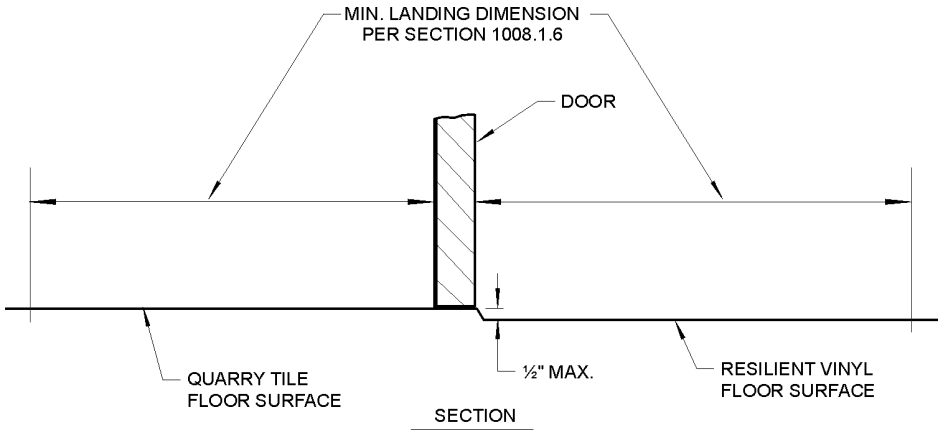

For SI: 1 inch = 25.4 mm.

Figure 1010.1.5
DOOR LANDINGS

INTERNATIONAL CODE COUNCIL®
Copyright © 2015 ICC. ALL RIGHTS RESERVED. Accessed by David Dammon on Jun 21, 2017 12:30:52 PM pursuant to License Agreement with ICC. No further reproduction or distribution authorized. ANY UNAUTHORIZED REPRODUCTION OR DISTRIBUTION IS A VIOLATION OF THE FEDERAL COPYRIGHT ACT AND THE LICENSE AGREEMENT, AND SUBJECT TO CIVIL AND CRIMINAL PENALTIES THEREUNDER.

Note that some of the exceptions indicate which direction the door swings to allow the exceptions while others do not limit the door swing direction.

Exception 1, which applies to nontransient residential occupancies, recognizes that occupants are familiar with the stair and landing arrangements. In Exception 1.1, an interior stairway can start immediately at the door, provided the door leaf does not swing over the stairway. Exception 1.2 clarifies that a screen door or storm door would not be considered the main door prohibited from swinging over the stairway by Exception 1.1.

Exception 2 references two other locations. Section 1003.5, Exception 1, permits a 7-inch (178 mm) change in elevation at exterior doors in Groups F, H, R-2, R-3, S and U if they are not on an accessible route. The door could swing in either direction for this exception and may actually be required to swing out in accordance with Section 1010.1.2. A reference to Section 1022.2 does not address a change in elevation but does address exterior exit doors.

In accordance with Exception 3, for a residential unit, the step-down is limited to $7^3/_4$ inches (197 mm) measured from the top of the threshold rather than the interior floor surface. In addition, the exterior door cannot swing over the exterior landing. A screen door or storm door could swing over the exterior landing. This is consistent with the exception to Section 1010.1.7.

Exception 4 addresses a change in floor finish material (see Commentary Figure 1010.1.5).

In accordance with Exception 5, Type B dwelling or sleeping units are not required to have level landings on both sides of some of the exterior doors. Please note that this exception is not applicable for the primary entrance door to the unit (see Section 1105.1.7). Exterior doors that open out onto an exterior deck, patio or balcony are allowed a 4-inch (102 mm) step down. Type B units are established by Chapter 11 for residential occupancies containing four or more dwelling or sleeping units. In order to use this exception, the exterior decks, patios or balconies must be of solid and impervious construction, such as concrete or wood. A 4-inch (102 mm) step from inside the unit down to the exterior surfaces is allowed for weather purposes. This allowance is consistent with the provisions of ICC A117.1 and Fair Housing Accessibility Guidelines (FHAG).

While Exception 2 would allow for exterior doors of Group F or S to have a step down, it would not have this same allowance for small equipment spaces within a building. Sometimes these rooms have a step down to allow for spills within the space to not leak out under the door. This space is not required to be accessible (see IBC Section 1103.2.9) and the space is only accessed by maintenance and service personnel, so a step down would not be a barrier.

1010.1.6 Landings at doors. Landings shall have a width not less than the width of the *stairway* or the door, whichever is greater. Doors in the fully open position shall not reduce a required dimension by more than 7 inches (178 mm). Where a landing serves an *occupant load* of 50 or more, doors in any position shall not reduce the landing to less than one-half its required width. Landings shall have a length measured in the direction of travel of not less than 44 inches (1118 mm).

Exception: Landing length in the direction of travel in Groups R-3 and U and within individual units of Group R-2 need not exceed 36 inches (914 mm).

❖ Door landings are at either side of the door. Landings can overlap floor surfaces within a room or corridor, overlap an exterior porch or balcony, or share the landings for stairways. The 7-inch (178 mm) encroachment and one-half required width limitations are consistent with Section 1005.7 for door encroachment. Section 1005.7 deals with egress width and capacity and is referenced from aisles (see Section 1018.1), corridors (see Section 1020.3), exit passageways (see Section 1024.2) and egress courts (see Section 1028.4.1).

This section also is intended to address landings at the entrance door to enclosed stairways (also see Section 1011.6 for stairway landings). The width of a landing at a door in a stairway is to be not less than the width of the stairway or the door, whichever is greater [see Commentary Figure 1011.6(4) for an example of these provisions].

No matter what size the door or stair landing is, door landings are to have the floor elevation requirements of Section 1010.1.5 extending at least 44 inches (1118 mm) in the direction of egress travel.

The reduction in landing length from 44 inches minimum to 36 inches minimum for certain residential occupancies allowed by the exception is in recognition of their low occupant load.

1010.1.7 Thresholds. Thresholds at doorways shall not exceed $^3/_4$ inch (19.1 mm) in height above the finished floor or landing for sliding doors serving *dwelling units* or $^1/_2$ inch (12.7 mm) above the finished floor or landing for other doors. Raised thresholds and floor level changes greater than $^1/_4$ inch (6.4 mm) at doorways shall be beveled with a slope not greater than one unit vertical in two units horizontal (50-percent slope).

Exceptions:

1. In occupancy Group R-2 or R-3, threshold heights for sliding and side-hinged exterior doors shall be permitted to be up to $7^3/_4$ inches (197 mm) in height if all of the following apply:
   1.1. The door is not part of the required *means of egress*.
   1.2. The door is not part of an *accessible route* as required by Chapter 11.
   1.3. The door is not part of an *Accessible unit*, *Type A unit* or *Type B unit*.
2. In *Type B units*, where Exception 5 to Section 1010.1.5 permits a 4-inch (102 mm) elevation change at the door, the threshold height on the exterior side of the door shall not exceed $4^3/_4$ inches (120

INTERNATIONAL CODE COUNCIL®
Copyright © 2015 ICC. ALL RIGHTS RESERVED. Accessed by David Dammon on Jun 21, 2017 12:30:52 PM pursuant to License Agreement with ICC. No further reproduction or distribution authorized. ANY UNAUTHORIZED REPRODUCTION OR DISTRIBUTION IS A VIOLATION OF THE FEDERAL COPYRIGHT ACT AND THE LICENSE AGREEMENT, AND SUBJECT TO CIVIL AND CRIMINAL PENALTIES THEREUNDER.

mm) in height above the exterior deck, patio or balcony for sliding doors or $4^1/_2$ inches (114 mm) above the exterior deck, patio or balcony for other doors.

❖ A threshold is a potential tripping hazard and a barrier to accessibility by people with mobility impairments. For these reasons, thresholds for all doorways, except exterior sliding doors serving dwelling units, are to be a maximum of $^1/_2$ inch (12.7 mm) high. Exterior sliding doors serving dwelling units, however, are permitted to be $^3/_4$ inch (19.1 mm) high because of practical design considerations, concern for deterioration of the doorway because of snow and ice buildup and lack of adequate drainage in severe climates. Raised threshold and floor level changes at doorways without beveled edge treatment [see Commentary Figure 1010.1.7(1)] are limited to $^1/_4$ inch (6.3 mm) high vertically.

Commentary Figures 1010.1.7(2), 1010.1.7(3) and 1010.1.7(4) illustrate configurations where the change in elevation is between $^1/_4$ inch (6.4 mm) and $^1/_2$ inch (12.7 mm). The slope of required beveled edges cannot exceed one unit vertical in two units horizontal (1:2 or 50-percent slope) but lesser slopes are fully compliant. This kind of threshold treatment provides for minimum obstructions for wheelchair users and limits the trip hazard for those with other mobility disabilities.

The first exception permits a $7^3/_4$-inch (197 mm) threshold at both side-swinging and sliding exterior doors in Group R-2 and R-3 buildings. However, this door cannot be part of the required means of egress out of a building; cannot be part of an accessible route required into a building or unit (see IBC Sections 1104 and 1105) and cannot serve an Accessible, Type A or Type B unit. The result would be that this exception would be permitted at the "back door," stoop or patio in single-family homes (see IBC Section 1103.2.3) or upper floor balconies within individual apartments in buildings without elevators (see IBC Section 1107). This terminology is consistent with the $7^3/_4$-inch (197 mm) step down in Section 1010.1.5, Exception 3; however, this exception is to the threshold requirements, not the landing elevations.

The second exception is for doors where a 4-inch step down is permitted in Type B dwelling units between the interior finished floor surface and the exterior surface of exterior decks, patios and balconies (Section 1010.1.5 Exception 5). This section would permit the height of the threshold itself to exceed $^1/_2$ or $^3/_4$ inch in height, as long as the resultant profile from the interior floor to the exterior surface is maintained.

The threshold itself can be higher than $^1/_2$ or $^3/_4$ inch measured from the outside. The additional height, however, is contained within the 4-inch step down. The height of the threshold is limited to $^1/_2$ inch or $^3/_4$ inch above the interior floor and the total height must not be more than $4^1/_2$ or $4^3/_4$ inches above the exterior surface, depending upon the type of door. If the threshold is greater than $^1/_4$ inch above the interior floor, it is to be beveled. See Commentary Figure 1010.1.7(5).



For SI: 1 inch = 25.4 mm.

Figure 1010.1.7(1)
VERTICAL CHANGES IN LEVEL

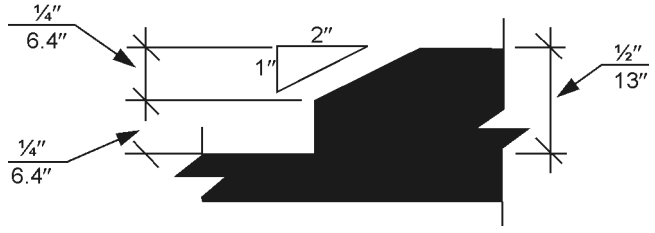

For SI: 1 inch = 25.4 mm.

Figure 1010.1.7(2)
BEVELED CHANGES IN LEVEL

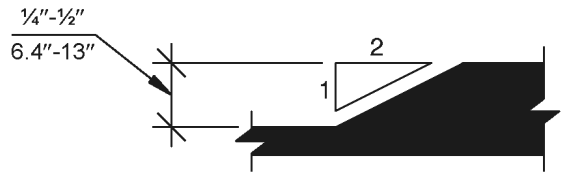

For SI: 1 inch = 25.4 mm.

Figure 1010.1.7(3)
BEVELED CHANGES IN LEVEL

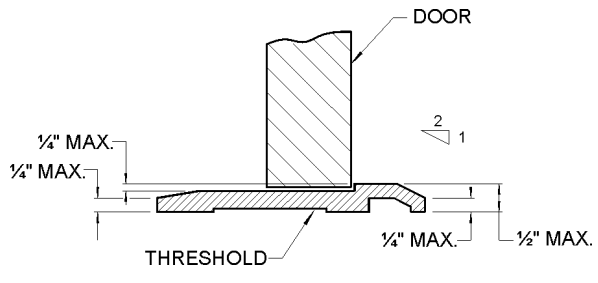

For SI: 1 inch = 25.4 mm.

Figure 1010.1.7(4)
DOOR THRESHOLD HEIGHT LIMITATIONS

INTERNATIONAL CODE COUNCIL®
Copyright © 2015 ICC. ALL RIGHTS RESERVED. Accessed by David Dammon on Jun 21, 2017 12:30:52 PM pursuant to License Agreement with ICC. No further reproduction or distribution authorized. ANY UNAUTHORIZED REPRODUCTION OR DISTRIBUTION IS A VIOLATION OF THE FEDERAL COPYRIGHT ACT AND THE LICENSE AGREEMENT, AND SUBJECT TO CIVIL AND CRIMINAL PENALTIES THEREUNDER.

1010.1.8 Door arrangement. Space between two doors in a series shall be 48 inches (1219 mm) minimum plus the width of a door swinging into the space. Doors in a series shall swing either in the same direction or away from the space between the doors.

Exceptions:

1. The minimum distance between horizontal sliding power-operated doors in a series shall be 48 inches (1219 mm).
2. Storm and screen doors serving individual *dwelling units* in Groups R-2 and R-3 need not be spaced 48 inches (1219 mm) from the other door.
3. Doors within individual *dwelling units* in Groups R-2 and R-3 other than within *Type A dwelling units*.

❖ Door arrangement is required to be such that an occupant's use of a means of egress doorway is not hampered by the operation of a preceding door located in the same line of travel so that the occupant flow can be smooth through the openings. Successive doors in a single egress path (i.e., in a series) can cause such interference. The 4-foot (1219 mm) clear distance between doors when the first door is open at 90 degrees allows an occupant, including a person using a wheelchair, to move past one door and its swing before beginning the operation of the next door [see Commentary Figure 1010.1.8(1)]. Note that where doors in a series are not arranged in a straight line, the intent of the code is to provide sufficient space to enable occupants to negotiate the second door without being encumbered by the first door's swing arc. To facilitate accessibility, the space between doors should provide sufficient clear space for a wheelchair [30 inches by 48 inches (762 mm by 1219 mm)] beyond the arc of the door swing [see Commentary Figure 1010.1.8(2)]. Additionally, the approach and access provisions of ICC A117.1 must be considered for all doors along an accessible route.

The exception is to permit horizontal sliding power-

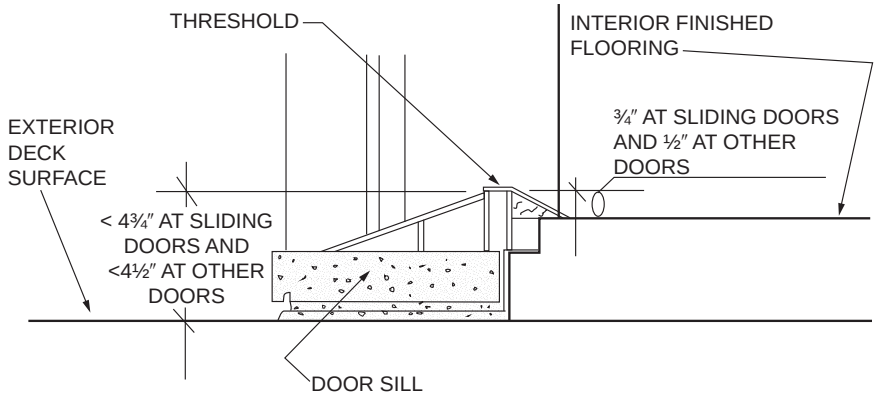

For SI: 1 inch = 25.4 mm.

Figure 1010.1.7(5)
EXAMPLE OF EXCEPTON 2

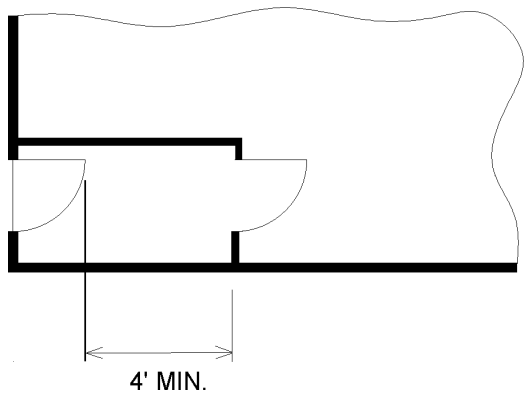

For SI: 1 foot = 304.8 mm.

Figure 1010.1.8(1)
SPACING OF DOORS IN SERIES

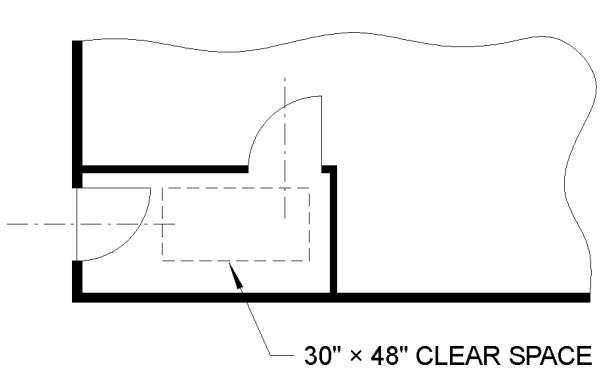

For SI: 1 inch = 25.4 mm.

Figure 1010.1.8(2)
SPACING OF DOORS IN SERIES

INTERNATIONAL CODE COUNCIL®
Copyright © 2015 ICC. ALL RIGHTS RESERVED. Accessed by David Dammon on Jun 21, 2017 12:30:52 PM pursuant to License Agreement with ICC. No further reproduction or distribution authorized. ANY UNAUTHORIZED REPRODUCTION OR DISTRIBUTION IS A VIOLATION OF THE FEDERAL COPYRIGHT ACT AND THE LICENSE AGREEMENT, AND SUBJECT TO CIVIL AND CRIMINAL PENALTIES THEREUNDER.

operated doors (see Section 1010.1.4.2) to be designed with a lesser distance between them in a series arrangement because they are customarily designed to open simultaneously or in sequence such that movement through them is unhampered. Storm and screen doors on residential dwelling units need not be spaced at 48 inches (1219 mm) since it would be impractical, and they do not operate the same as doors in a series. Doors within dwelling units of Group R-2 or R-3 that are not Type A dwelling units (see IBC Section 1107) are also permitted to have a lesser distance between doors, because the accessibility provisions do not apply. There are requirements in Chapter 10 of the ICC A117.1 for door arrangements within Accessible and Type A dwelling and sleeping units.

1010.1.9 Door operations. Except as specifically permitted by this section, egress doors shall be readily openable from the egress side without the use of a key or special knowledge or effort.

❖ When installed for security purposes, locks and latches can intentionally prohibit the use of an egress door and thus interfere with or prevent the egress of occupants at the time of a fire. While the security of property is important, the life safety of occupants is essential. Where security and life safety objectives conflict, alternative measures, such as those permitted by each of the exceptions in Section 1010.1.9.3, may be applicable.

Egress doors are permitted to be locked, but must be capable of being unlocked and readily openable from the side from which egress is to be made. The outside of a door can be key locked as long as the inside—the side from which egress is to be made—can be unlocked without the use of tools, keys or special knowledge or effort. For example, an unlocking operation that is integral with an unlatching operation is acceptable.

Examples of special knowledge would be a combination lock or an unlocking device or deadbolt in an unknown, unexpected or hidden location. Special effort would dictate the need for unusual and unexpected physical ability to unlock or make the door fully available for egress.

Where a pair of egress door leaves is installed, with or without a center mullion, the general requirement is that each leaf must be provided with its own releasing or unlatching device so as to be readily openable. Door arrangements or devices that depend on the release of one door before the other can be opened are not to be used except as permitted by Section 1010.1.9.4.

1010.1.9.1 Hardware. Door handles, pulls, latches, locks and other operating devices on doors required to be *accessible* by Chapter 11 shall not require tight grasping, tight pinching or twisting of the wrist to operate.

❖ Any doors that are located along an accessible route for ingress or egress must have door hardware that is easy to operate by a person with limited mobility or dexterity. This would include all elements of the door hardware used in typical door operation, such as door levers, locks, security changes, etc. This requirement is also an advantage for persons with arthritis in their hands. Items such as small, full-twist thumb turns or smooth circular knobs are examples of hardware that is not acceptable. There are many types latching or locking devices can be operated without tight grasping, tight pinching, or twisting of the wrist what would comply with the requirements of this section.

Some people with disabilities are unable to grasp objects with their hands or twist their wrists. Such people are unable to operate, or have great difficulty operating, door hardware other than lever-operated mechanisms, push-type mechanisms and U-shaped door pulls. Door hardware that can be operated with a closed fist or a loose grip accommodates the greatest range of users. Hardware operated by simultaneous hand and finger movement requires greater dexterity and coordination and should be avoided for doors along an accessible route (see Commentary Figure 1010.1.9.1).

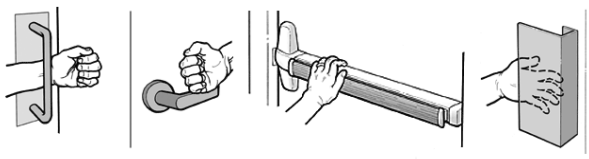

Figure 1010.1.9.1
DOOR HARDWARE

1010.1.9.2 Hardware height. Door handles, pulls, latches, locks and other operating devices shall be installed 34 inches (864 mm) minimum and 48 inches (1219 mm) maximum above the finished floor. Locks used only for security purposes and not used for normal operation are permitted at any height.

Exception: Access doors or gates in barrier walls and fences protecting pools, spas and hot tubs shall be permitted to have operable parts of the release of latch on self-latching devices at 54 inches (1370 mm) maximum above the finished floor or ground, provided the self-latching devices are not also self-locking devices operated by means of a key, electronic opener or integral combination lock.

❖ The requirements in this section place the door hardware at a level that is usable by most people, including a person using a wheelchair. The exception allows security locks to be placed at any height. An example would be an unframed glass door at the front door of a tenant space in a mall that has the lock near the floor level. The lock is only used when the store is not open for business. Such locks are not required for the normal operation of the door.

The exception permits a special allowance for security latches at pools, spas and hot tubs. The con-

INTERNATIONAL CODE COUNCIL®
Copyright © 2015 ICC. ALL RIGHTS RESERVED. Accessed by David Dammon on Jun 21, 2017 12:30:52 PM pursuant to License Agreement with ICC. No further reproduction or distribution authorized. ANY UNAUTHORIZED REPRODUCTION OR DISTRIBUTION IS A VIOLATION OF THE FEDERAL COPYRIGHT ACT AND THE LICENSE AGREEMENT, AND SUBJECT TO CIVIL AND CRIMINAL PENALTIES THEREUNDER.

cern is that the 48-inch (1219 mm) maximum height would place the security latch within reach of children. The 54-inch (1372 mm) maximum height is intended to override the maximum 48-inch (1219 mm) reach range in ICC A117.1. This compromise addresses concerns for children's safety and still maintains accessibility to a reasonable level. Based on the last phrase in the exception, if the gate hardware also had a locking function and a key or other similar device would be needed to unlock the hardware to allow unlatching the latch, then the exception to allow the hardware to be 54-inches (1372 mm) above the floor is not applicable. A reference to this exception is found in IBC Section 1109.13, Exception 7, for the accessibility requirements for operable parts. This is consistent with the 2010 Standard and ANSI/NSPI-8 1996, *Model Barrier Code for Residential Swimming Pools, Spas, and Hot Tubs*.

1010.1.9.3 Locks and latches. Locks and latches shall be permitted to prevent operation of doors where any of the following exist:

1. Places of detention or restraint.
2. In buildings in occupancy Group A having an *occupant load* of 300 or less, Groups B, F, M and S, and in *places of religious worship*, the main door or doors are permitted to be equipped with key-operated locking devices from the egress side provided:
   2.1. The locking device is readily distinguishable as locked.
   2.2. A readily visible durable sign is posted on the egress side on or adjacent to the door stating: THIS DOOR TO REMAIN UNLOCKED WHEN THIS SPACE IS OCCUPIED. The sign shall be in letters 1 inch (25 mm) high on a contrasting background.
   2.3. The use of the key-operated locking device is revokable by the *building official* for due cause.
3. Where egress doors are used in pairs, *approved* automatic flush bolts shall be permitted to be used, provided that the door leaf having the automatic flush bolts does not have a doorknob or surface-mounted hardware.
4. Doors from individual *dwelling* or *sleeping units* of Group R occupancies having an *occupant load* of 10 or less are permitted to be equipped with a night latch, dead bolt or security chain, provided such devices are openable from the inside without the use of a key or tool.
5. *Fire doors* after the minimum elevated temperature has disabled the unlatching mechanism in accordance with *listed fire door* test procedures.

❖ Where security and life safety objectives conflict, alternative measures, such as those permitted by each of the listed situations, may be applicable.

Item 1 is needed for jails and prisons or locations where someone must be kept inside for their own safety (i.e., dementia wards, psychiatric wards).

Item 2 permits a locking device, such as a double-cylinder dead bolt, on the main entrance door to a building or space. It must be immediately apparent that these doors are locked. For example, such locking devices may have an integral indicator that automatically reflects the "locked" or "unlocked" status of the device. In addition, a sign must be provided that clearly states that the door is to be unlocked when the building or space is occupied. The sign on or adjacent to the door not only reminds employees to unlock the door, but also advises the public that an unacceptable arrangement exists if one finds the door locked. Ideally, the individual who encounters the locked door will notify management and possibly the building official. Note that the use of the key-locking device is revocable by the building official. The locking arrangement is not permitted on any door other than the main exit and, therefore, the employees, security and cleaning crews will have access to other exits without requiring the use of a key. This allowance is not limited just to multiple-exit buildings but also to small buildings with one exit. This option is an alternative to the panic hardware required by Section 1010.1.10.

In Item 3, an automatic flush bolt device is one that is internal to the inactive leaf of a pair of doors. The device has a small "knuckle" that extends from the inactive leaf into an opening in the active leaf. When the active leaf is opened, the bolt is automatically retracted. When the active leaf is closed, the knuckle is pressed into the inactive leaf by the active leaf, extending the flush bolt(s), in the head or sill of the inactive leaf (see Commentary Figure 1010.1.9.3).

Automatic flush bolts on one leaf of a pair of egress doors are acceptable, provided the leaf with the automatic flush bolts is not equipped with a doorknob or other hardware that would imply to the user that the door leaf is unlatched independently of the companion leaf.

Item 4 addresses the need for security in residential dwelling and sleeping units such as hotel rooms, apartments, dormitory rooms or townhouses. The occupants are familiar with the operation of the indicated devices, which are intended to be relatively simple to operate without the use of a key or tool. Note that this item only applies to the door leading from individual dwelling or sleeping units in a building. This item would not be applicable for doors locked as part of a security system in a multiunit building.

Item 5 is in recognition of required test procedures (UL 10B or UL 10C) for listed fire doors, which include the disabling of the locking mechanism when a fire door is exposed to the elevated temperatures of a fire.

1010.1.9.4 Bolt locks. Manually operated flush bolts or surface bolts are not permitted.

Exceptions:

1. On doors not required for egress in individual *dwelling units* or *sleeping units*.
2. Where a pair of doors serves a storage or equipment room, manually operated edge- or surface-mounted bolts are permitted on the inactive leaf.

INTERNATIONAL CODE COUNCIL®
Copyright © 2015 ICC. ALL RIGHTS RESERVED. Accessed by David Dammon on Jun 21, 2017 12:30:52 PM pursuant to License Agreement with ICC. No further reproduction or distribution authorized. ANY UNAUTHORIZED REPRODUCTION OR DISTRIBUTION IS A VIOLATION OF THE FEDERAL COPYRIGHT ACT AND THE LICENSE AGREEMENT, AND SUBJECT TO CIVIL AND CRIMINAL PENALTIES THEREUNDER.

3. Where a pair of doors serves an *occupant load* of less than 50 persons in a Group B, F or S occupancy, manually operated edge- or surface-mounted bolts are permitted on the inactive leaf. The inactive leaf shall not contain doorknobs, panic bars or similar operating hardware.
4. Where a pair of doors serves a Group B, F or S occupancy, manually operated edge- or surface-mounted bolts are permitted on the inactive leaf provided such inactive leaf is not needed to meet egress capacity requirements and the building is equipped throughout with an *automatic sprinkler system* in accordance with Section 903.3.1.1. The inactive leaf shall not contain doorknobs, panic bars or similar operating hardware.
5. Where a pair of doors serves patient care rooms in Group I-2 occupancies, self-latching edge- or surface-mounted bolts are permitted on the inactive leaf provided that the inactive leaf is not needed to meet egress capacity requirements and the inactive leaf shall not contain doorknobs, panic bars or similar operating hardware.

❖ This section is applicable to doors that are required to be for means of egress purposes or are identified as a means of egress, such as by an "Exit" sign or other device. Doors, as well as a second leaf in a doorway that is provided for a purpose other than means of egress, such as for convenience or building operations, should be arranged or identified so as not to be mistaken as a means of egress. The use of manually operated flush bolts or surface bolts on means of egress doors have traditionally been prohibited because of the inability of users to quickly identify and operate such devices under emergency conditions.

This section prohibits installation of manually operated flush and surface bolts except in limited situations. The exceptions allowing the use of such hardware are intended to expand the use of manually operated edge- or surface-mounted bolts under specified conditions while maintaining an appropriate degree of safety for the building occupants. Flush and surface bolts represent locking devices that may be difficult to operate because of their location and operation (see Commentary Figure 1010.1.9.4).

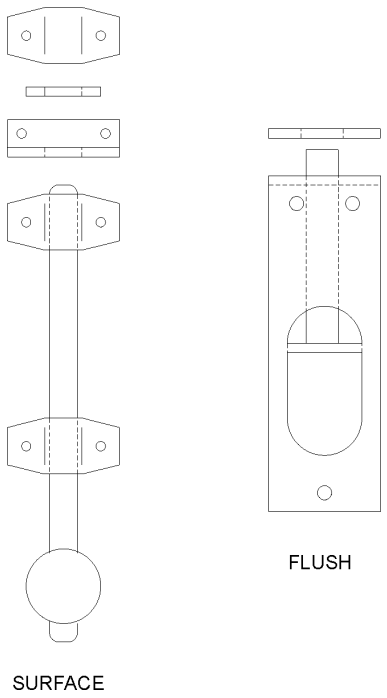

Figure 1010.1.9.4
TYPICAL MANUAL BOLT HARDWARE

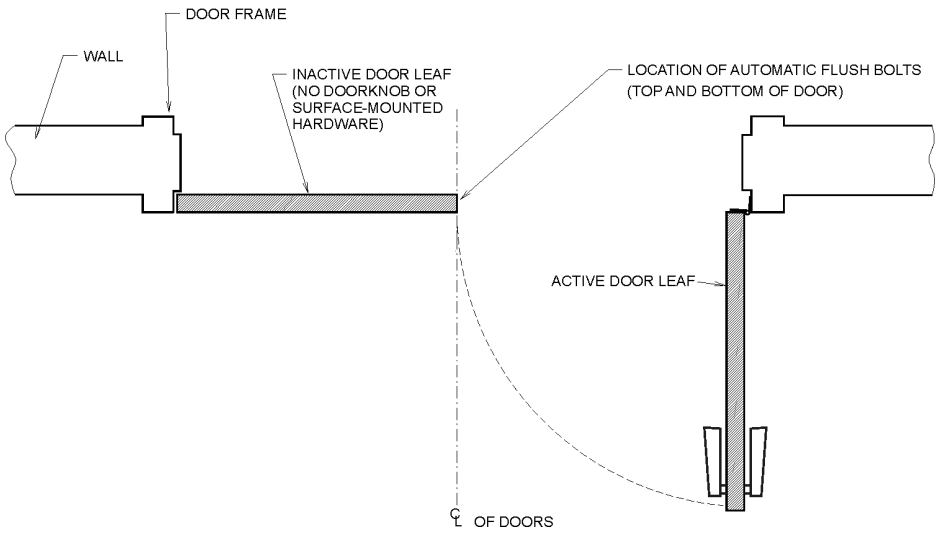

Figure 1008.1.9.3
SURFACE AND FLUSH BOLT LOCATIONS

INTERNATIONAL CODE COUNCIL®
Copyright © 2015 ICC. ALL RIGHTS RESERVED. Accessed by David Dammon on Jun 21, 2017 12:30:52 PM pursuant to License Agreement with ICC. No further reproduction or distribution authorized. ANY UNAUTHORIZED REPRODUCTION OR DISTRIBUTION IS A VIOLATION OF THE FEDERAL COPYRIGHT ACT AND THE LICENSE AGREEMENT, AND SUBJECT TO CIVIL AND CRIMINAL PENALTIES THEREUNDER.

Where edge-mounted or surface-mounted manually operated bolts are installed on the inactive leaf of a pair of doors, per the exceptions below, the manually operated bolts must have no effect on the egress operation of the active leaf.

Exception 1 allows manual flush bolts and surface bolts at some doors within an individual dwelling or sleeping unit. Even then, such bolts may only be used on doors not required for egress (see Section 1010.1.9.3, Item 4, for security of doors from individual dwelling and sleeping units).

Exception 2 provides for edge-mounted or surface-mounted bolts on the inactive leaf of a pair of doors from storage or equipment areas. Double doors are often provided to allow for the easy removal or replacement of large pieces of equipment or bulk movement of goods.

Exceptions 3 and 4 offer two options for limited doors in Group B, F and S occupancies. Again, the wider door is sometimes needed for the movement of equipment. Automatic flush bolts and removable center posts can be easily damaged and difficult to maintain in areas of frequent door usage. Revisions to the requirements for door hardware on such pairs of doors will increase building functionality while maintaining a very high degree of occupant safety.

In Exception 3, the number of occupants within the space must be less than 50, the active leaf must meet means of egress requirements and the inactive leaf must not have any operating hardware so that it could be mistaken for an egress door.

In accordance with Exception 4, if the Group B, F or S building is sprinklered throughout with an NFPA 13 system, the room served by the double door can have any occupant load if the inactive leaf is not required for egress capacity and has no operating hardware.

Exception 5 is in recognition of the need to move equipment into some patient sleeping and treatment rooms in hospital and nursing home environments. Again, the inactive leaf must not be needed for means of egress or have any operating hardware. This is consistent with IBC Section 407.1.1, which allows for staff to operate patient sleeping and treatment room doors during emergency events. The doors would still have to meet smoke barrier opening protective requirements. The clear width requirement of $41^1/_2$ inches (1054 mm) in Section 1010.1.1 would still have to be met with the active door leaf.

1010.1.9.5 Unlatching. The unlatching of any door or leaf shall not require more than one operation.

Exceptions:

1. Places of detention or restraint.
2. Where manually operated bolt locks are permitted by Section 1010.1.9.4.
3. Doors with automatic flush bolts as permitted by Section 1010.1.9.3, Item 3.
4. Doors from individual *dwelling units* and *sleeping units* of Group R occupancies as permitted by Section 1010.1.9.3, Item 4.

❖ The code prohibits the use of locks or latching devices that require more than one operation on any door required or used for egress, which could be a safety hazard in an emergency situation. The exceptions address locations where multiple locks or latching devices which require more than one operation are acceptable. See the referenced sections for additional commentary.

1010.1.9.5.1 Closet and bathroom doors in Group R-4 occupancies. In Group R-4 occupancies, closet doors that latch in the closed position shall be openable from inside the closet, and bathroom doors that latch in the closed position shall be capable of being unlocked from the ingress side.

❖ The intent of this provision is to address possible entrapment concerns in group homes. If a closet door has a door latch, the closet door must be openable from both inside and outside. This will ensure that someone cannot get stuck inside a closet by accident. If a closet does not latch, no interior hardware is required. In case a resident needs assistance in a bathroom, the bathroom door must have a type of hardware that would allow the door to be unlocked from the outside by staff. This requirement is unique to Group R-4. There are not similar requirements for other Group R occupancies, Group I-1 assisted living facilities or Group I-2 nursing homes; however, some assisted living or nursing home facilities install such devices to increase patient safety. Section 403.3.6 in the *International Plumbing Code*® (IPC®) prohibits the doors leading from multistall bathrooms from being lockable from the inside.

1010.1.9.6 Controlled egress doors in Groups I-1 and I-2. Electric locking systems, including electro-mechanical locking systems and electromagnetic locking systems, shall be permitted to be locked in the means of egress in Group I-1 or I-2 occupancies where the clinical needs of persons receiving care require their containment. Controlled egress doors shall be permitted in such occupancies where the building is equipped throughout with an *automatic sprinkler system* in accordance with Section 903.3.1.1 or an *approved automatic smoke* or *heat detection system* installed in accordance with Section 907, provided that the doors are installed and operate in accordance with all of the following:

1. The door locks shall unlock on actuation of the *automatic sprinkler system* or *automatic fire detection system*.
2. The door locks shall unlock on loss of power controlling the lock or lock mechanism.
3. The door locking system shall be installed to have the capability of being unlocked by a switch located at the *fire command center*, a nursing station or other approved location. The switch shall directly break power to the lock.

INTERNATIONAL CODE COUNCIL®
Copyright © 2015 ICC. ALL RIGHTS RESERVED. Accessed by David Dammon on Jun 21, 2017 12:30:52 PM pursuant to License Agreement with ICC. No further reproduction or distribution authorized. ANY UNAUTHORIZED REPRODUCTION OR DISTRIBUTION IS A VIOLATION OF THE FEDERAL COPYRIGHT ACT AND THE LICENSE AGREEMENT, AND SUBJECT TO CIVIL AND CRIMINAL PENALTIES THEREUNDER.

4. A building occupant shall not be required to pass through more than one door equipped with a controlled egress locking system before entering an exit.
5. The procedures for unlocking the doors shall be described and approved as part of the emergency planning and preparedness required by Chapter 4 of the *International Fire Code*.
6. All clinical staff shall have the keys, codes or other means necessary to operate the locking systems.
7. Emergency lighting shall be provided at the door.
8. The door locking system units shall be listed in accordance with UL 294.

Exceptions:

1. Items 1 through 4 shall not apply to doors to areas occupied by persons who, because of clinical needs, require restraint or containment as part of the function of a psychiatric treatment area.
2. Items 1 through 4 shall not apply to doors to areas where a *listed* egress control system is utilized to reduce the risk of child abduction from nursery and obstetric areas of a Group I-2 hospital.

❖ The intent of these provisions is to address the special safety needs for wards, units, or areas in assisted living facilities, nursing homes and hospitals where egress may need to be controlled for the safety of the occupants or where specialized protective measures are needed for patients. "Controlled egress" means simply that the ability of occupants, such as patients or residents, to leave a space is controlled by others, such as staff. The areas where controlled egress may be permitted include psychiatric areas, dementia units, Alzheimer's units, maternity units, and newborn nurseries. Code officials may also permit these provisions in other areas such as emergency departments or pediatric areas where the safety and/or security of the occupants are of primary concern. In all situations, there must be a balance between maintaining a safe and secure environment and providing for emergency egress.

The requirements of this section apply to locking systems controlling egress. The functions of an ingress control locking system are not addressed in the codes and are unrelated as long as egress is provided as required or permitted by this section and other applicable provisions of the code.

In areas where additional security may be a concern, a door hardware system may include an unlocking device, such as a keypad, card reader, eye scanner, thumbprint scanner or other credential device. Where these credential unlocking systems are only on the ingress side of a building or space, there are no limitations in the codes. Where these credential unlocking systems are on the egress side of a space (perhaps to monitor personnel movement), egress must be available through one of the locking systems addressed in Section 1010.1.9.7, 1010.1.9.8 or 1010.1.9.9. Such a credential unlocking device could also be included in the controlled locking arrangements of IBC Section 408.4 and Section 1010.1.9.6, Item 6 of the code.

IBC Section 907.6 requires a fire alarm system to be installed in accordance with the requirements of that section and NFPA 72. NFPA 72 includes specific requirements for unlocking doors in the direction of egress that are consistent with the requirements in this section for controlled egress locking systems. Additionally, NFPA 72 includes specific requirements and guidance for backup power where the backup power is used to keep these doors in a locked condition in the direction of egress.

Items 1 through 3 address when the controlled egress locks would be required to automatically unlock allowing unrestricted egress.

Item 4 requires that no occupant shall have to pass through more than one controlled egress lock before entering an exit.

Item 5 requires the procedures for unlocking the doors to be described, approved by the code official, and included in the emergency planning and preparedness plan required by Chapter 4 of the *International Fire Code*.

Item 6 requires clinical staff to have the means necessary to operate the controlled egress locking system, such as keys, codes, etc.

Item 7 requires emergency lighting at the controlled egress door to ensure visibility for egress during a possible power outage.

Item 8 requires the units of the controlled egress locking system to be listed to UL 294. The UL 294 Access Control Systems standard applies to construction, performance, and operation of systems which control passage through a door, and electrical, electronic, or mechanical units of these systems.

The first exception allows for the automatic unlocking requirements to be omitted for doors in a psychiatric treatment area in hospitals or nursing homes due to additional safety concerns for the residents.

The second exception allows for automatic unlocking requirements to be omitted where a listed egress control system is installed for the specific purposes of reducing child abductions from nursery and obstetric areas of hospitals.

1010.1.9.7 Delayed egress. Delayed egress locking systems shall be permitted to be installed on doors serving any occupancy except Group A, E and H in buildings that are equipped throughout with an *automatic sprinkler system* in accordance with Section 903.3.1.1 or an *approved automatic smoke* or *heat detection system* installed in accordance with Section 907. The locking system shall be installed and operated in accordance with all of the following:

1. The delay electronics of the delayed egress locking system shall deactivate upon actuation of the *automatic sprinkler system* or *automatic fire detection system*, allowing immediate, free egress.
2. The delay electronics of the delayed egress locking system shall deactivate upon loss of power controlling the

INTERNATIONAL CODE COUNCIL®
Copyright © 2015 ICC. ALL RIGHTS RESERVED. Accessed by David Dammon on Jun 21, 2017 12:30:52 PM pursuant to License Agreement with ICC. No further reproduction or distribution authorized. ANY UNAUTHORIZED REPRODUCTION OR DISTRIBUTION IS A VIOLATION OF THE FEDERAL COPYRIGHT ACT AND THE LICENSE AGREEMENT, AND SUBJECT TO CIVIL AND CRIMINAL PENALTIES THEREUNDER.

lock or lock mechanism, allowing immediate free egress.

3. The delayed egress locking system shall have the capability of being deactivated at the f*ire command center* and other *approved* locations.
4. An attempt to egress shall initiate an irreversible process that shall allow such egress in not more than 15 seconds when a physical effort to exit is applied to the egress side door hardware for not more than 3 seconds. Initiation of the irreversible process shall activate an audible signal in the vicinity of the door. Once the delay electronics have been deactivated, rearming the delay electronics shall be by manual means only.

   Exception: Where approved, a delay of not more than 30 seconds is permitted on a delayed egress door.

5. The egress path from any point shall not pass through more than one delayed egress locking system.

   Exception: In Group I-2 or I-3 occupancies, the egress path from any point in the building shall pass through not more than two delayed egress locking systems provided the combined delay does not exceed 30 seconds.

6. A sign shall be provided on the door and shall be located above and within 12 inches (305 mm) of the door exit hardware:

   6.1. For doors that swing in the direction of egress, the sign shall read: PUSH UNTIL ALARM SOUNDS. DOOR CAN BE OPENED IN 15 [30] SECONDS.

   6.2. For doors that swing in the opposite direction of egress, the sign shall read: PULL UNTIL ALARM SOUNDS. DOOR CAN BE OPENED IN 15 [30] SECONDS.

   6.3. The sign shall comply with the visual character requirements in ICC A117.1.

   Exception: Where approved, in Group I occupancies, the installation of a sign is not required where care recipients who because of clinical needs require restraint or containment as part of the function of the treatment area.

7. Emergency lighting shall be provided on the egress side of the door.
8. The delayed egress locking system units shall be listed in accordance with UL 294.

❖ The intent of these provisions is to address special needs where there are concerns about internal security. Delays in egress, as allowed in this section, are not considered detrimental to occupant evacuation. The intent of these provisions is also to address special needs where occupants may need to be protected from harm because of their own actions. For example, residents or patients in some Group I-1 or Group I-2 occupancies may present a danger to themselves of elopement from the building into traffic, weather and other environmental hazards.

Delayed egress locking systems are permitted for doors in a means of egress serving occupancies other than those in Groups A, E and H. Delayed egress locking systems are not permitted in assembly or educational occupancies because the resulting delay in egress is not acceptable given the greater number of occupants who may be unfamiliar with the space or of a young age. Also, the delay from Group H would be unreasonable given the potential for rapid fire buildup in such areas.

This locking system is called “delayed egress” because of Item 4, which permits a fixed amount of time to pass prior to allowing egress.

The requirements of this section apply to locking systems which delay egress. The functions of an ingress control locking system are unrelated and are not addressed as long as egress is provided as required or permitted by this section and other applicable provisions of the code.

The requirements of this section apply to electromagnetic locking systems which open on hardware activation. The functions of an ingress control locking system are not addressed in the codes and are unrelated as long as egress is provided as required or permitted by this section and other applicable provisions of the code.

In areas where additional security may be a concern, a door hardware system may include an unlocking device, such as a keypad, card reader, eye scanner, thumbprint scanner or other credential device. Where these credential unlocking systems are only on the ingress side of a building or space, there are no limitations in the codes. Where these credential unlocking systems are on the egress side of a space (perhaps to monitor personnel movement), egress must be available through one of the locking systems addressed in Section 1010.1.9.7, 1010.1.9.8 or 1010.1.9.9. Such a credential unlocking device could also be included in the controlled locking arrangements of IBC Section 408.4 and Section 1010.1.9.6, Item 6 of the code.

IBC Section 907.6 requires a fire alarm system to be installed in accordance with the requirements of that section and NFPA 72. NFPA 72 includes specific requirements for unlocking doors in the direction of egress that are consistent with the requirements in this section for delayed egress locking systems. Additionally, NFPA 72 includes specific requirements and guidance for backup power where the backup power is used to keep these doors in a locked condition in the direction of egress.

Because of the egress delay caused by the system on the egress door, the building must be provided throughout with compensating fire protection features to promptly warn occupants of a fire condition. All listed conditions must be met in order to permit use of a delayed egress locking system.

Item 1 interconnects the locking system with an automatic sprinkler system in accordance with NFPA 13 or, alternatively, an automatic fire detection sys-

INTERNATIONAL CODE COUNCIL®
Copyright © 2015 ICC. ALL RIGHTS RESERVED. Accessed by David Dammon on Jun 21, 2017 12:30:52 PM pursuant to License Agreement with ICC. No further reproduction or distribution authorized. ANY UNAUTHORIZED REPRODUCTION OR DISTRIBUTION IS A VIOLATION OF THE FEDERAL COPYRIGHT ACT AND THE LICENSE AGREEMENT, AND SUBJECT TO CIVIL AND CRIMINAL PENALTIES THEREUNDER.

tem in accordance with Section 907, which is required to be installed throughout the building. Such systems are to provide occupants with an early warning of a fire event, and thus additional time for egress. Note that actuation of the automatic sprinkler system or actuation of the automatic fire detection system must eliminate the delay of the delayed egress locking system so the door immediately allows egress (without delay).

Item 2 specifies the delay is to be eliminated on loss of power. Since the operation of the delayed egress locking system is dependent on electrical power, in the event of electrical power loss to the lock or locking mechanism, the doors must immediately allow egress (without delay).

Item 3 specifies that the delay in the delayed egress locking system is capable of being eliminated by a signal sent from a fire command center or other approved locations. Personnel at the fire command center location would normally be the first alerted to an emergency event and would be expected to take appropriate action to allow immediate egress at all doors equipped with delayed egress locking systems. Other locations may be alternates to or back up the fire command center. Item 3 facilitates remotely eliminating the delay in the delayed egress locking system in the event of a fire or in the event of other nonfire emergencies.

Item 4 specifies the operational characteristics of the delayed egress locking system. The delay timer of the system and the audible signal (alarm) at the door may be configured one of two ways. In some occupancies, the delay timer is initiated and the alarm sounded immediately upon an attempt to open the door by pushing on the panic bar, or causing a slight movement of the door. In other occupancies, to prevent nuisance alarms from inadvertent bumps or accidental contact, the initiation of the delay timer and sounding of the alarm may be deferred by up to 3 seconds, requiring the occupant to attempt to operate the door hardware for up to, but not more than, 3 seconds.

Once the delay timer starts, the door is required to be openable from the egress side in not more than 15 seconds (or not more than 30 seconds where approved by the code official, per the exception). At the end of the delay, the door's locking system is required to allow the door to be opened by the occupant operating the egress side door hardware (i.e. pushing on the panic bar), allowing egress. The unlocking cycle is irreversible; once it is started, it does not stop. Once the door is openable from the egress side at the end of the delay, it remains openable allowing immediate egress until someone comes to the door and manually rearms the delay. The first user to the door may face a delay, but after that other users would be able to exit immediately. A method of automatically rearming the delayed egress locking system at the door from a remote location such as a central control station or security office is not permitted.

The exception to Item 4 permits the building official to allow the time delay prior to allowing egress to be increased beyond 15 seconds, but not in excess of 30 seconds. This exception is more often granted for the safety/security of occupants (e.g., to reduce or prevent elopement of patients) than for loss or theft prevention.

Item 5 limits the egress path to not more than one door with a delayed egress locking system. However, the exception to Item 5 allows not more than two doors with delayed egress locking systems in Groups I-2 and I-3 with the delay of the two systems to be not more than 30 seconds total.

Having multiple doors can help with preventing resident elopement and yet the overall delay does not exceed the previously accepted time period. An example of where the two-door arrangement may be helpful is a multistory facility where both the door from the story and the door from the building could be controlled.

Item 6 requires a sign to inform occupants how to operate the delayed egress locking system and when that door will become available for egress. An undesirable consequence of the door not unlocking immediately is if the user assumes it will never be available for egress and then proceeds to another exit door. In some occupancies, delayed egress locking systems may be utilized on doors not required to swing in the direction of egress travel. Options 6.1 and 6.2 allow for signs appropriate for the swing of the door. The required sign is typically supplied with the delayed egress locking system. The reference to ICC A117.1 visual requirements would not require raised letters or braille, but would require readable text, with good finish and contrast. The exception in Item 6 allows the sign to be omitted if the clinical needs of occupants require restraint or containment, as these patients may be capable of reading and following the sign's instructions then potentially putting themselves in harm's way. Based on the level of staff training within these facilities, the need to protect the patients by preventing elopement and the facts that these systems are required to be interconnected with the sprinkler or fire detection systems and unlock upon loss of power, it was determined that eliminating the sign in these facilities is reasonable.

Item 7 requires emergency lighting on the egress side of the door so that the user can read the sign required by Item 5.

Item 8 requires the units of the delayed egress locking system to be listed to UL 294. The UL 294 Access Control Systems standard applies to construction, performance and operation of systems which control passage through a door, and electrical, electronic or mechanical units of these systems.

1010.1.9.8 Sensor release of electrically locked egress doors. The electric locks on sensor released doors located in a *means of egress* in buildings with an occupancy in Group A,

INTERNATIONAL CODE COUNCIL®
Copyright © 2015 ICC. ALL RIGHTS RESERVED. Accessed by David Dammon on Jun 21, 2017 12:30:52 PM pursuant to License Agreement with ICC. No further reproduction or distribution authorized. ANY UNAUTHORIZED REPRODUCTION OR DISTRIBUTION IS A VIOLATION OF THE FEDERAL COPYRIGHT ACT AND THE LICENSE AGREEMENT, AND SUBJECT TO CIVIL AND CRIMINAL PENALTIES THEREUNDER.

B, E, I-1, I-2, I-4, M, R-1 or R-2 and entrance doors to tenant spaces in occupancies in Group A, B, E, I-1, I-2, I-4, M, R-1 or R-2 are permitted where installed and operated in accordance with all of the following criteria:

1. The sensor shall be installed on the egress side, arranged to detect an occupant approaching the doors. The doors shall be arranged to unlock by a signal from or loss of power to the sensor.
2. Loss of power to the lock or locking system shall automatically unlock the doors.
3. The doors shall be arranged to unlock from a manual unlocking device located 40 inches to 48 inches (1016 mm to 1219 mm) vertically above the floor and within 5 feet (1524 mm) of the secured doors. Ready access shall be provided to the manual unlocking device and the device shall be clearly identified by a sign that reads "PUSH TO EXIT." When operated, the manual unlocking device shall result in direct interruption of power to the lock—independent of other electronics—and the doors shall remain unlocked for not less than 30 seconds.
4. Activation of the building *fire alarm system*, where provided, shall automatically unlock the doors, and the doors shall remain unlocked until the fire alarm system has been reset.
5. Activation of the building *automatic sprinkler system* or *fire detection system*, where provided, shall automatically unlock the doors. The doors shall remain unlocked until the *fire alarm system* has been reset.
6. The door locking system units shall be listed in accordance with UL 294.

❖ The intent of this section is to provide consistent requirements where an electronically locked door is unlocked by activating devices mounted somewhere other than on the door itself. The unlocking activation is designed to be from a passive action by the occupant (e.g., walking to the door triggering a sensor), but the system includes a required nearby manual unlocking device (such as a push button) as a secondary electrical lock release device.

This section permits doors in a means of egress and entrance doors to tenant spaces in occupancies of Groups A, B, E, I-1, I-2, I-4, M, R-1 and R-2 to be electronically secured (locked) to control ingress while maintaining the doors as a means of egress. Typically these systems are used in high-security areas where a record of who has entered and left a space is desired. Or this system may be used where there is a concern for elopement or child abduction (Group I-1, I-2 or I-4).

This section of the IBC does not limit the number of doors in a means of egress that may be equipped with sensor-released electrically locked doors.

IBC Section 907.6 requires that a fire alarm system, where provided, is installed in accordance with the requirements of that section and NFPA 72. NFPA 72 includes specific requirements for unlocking doors in the direction of egress, which are consistent with the requirements in this section for sensor release of electrically locked egress doors. Additionally, NFPA 72 includes specific requirements and guidance for backup power where the backup power is used to keep these doors in a locked condition.

The requirements of this section apply to locking systems with a sensor release. The functions of an ingress control locking system are not addressed in the codes and are unrelated as long as egress is provided as required or permitted by this section and other applicable provisions of the code.

In areas where additional security may be a concern, a door hardware system may include an unlocking device, such as a keypad, card reader, eye scanner, thumbprint scanner or other credential device. Where these credential unlocking systems are only on the ingress side of a building or space, there are no limitations in the codes. Where these credential unlocking systems are on the egress side of a space (perhaps to monitor personnel movement), egress must be available through one of the locking systems addressed in Section 1010.1.9.7, 1010.1.9.8 or 1010.1.9.9. Such a credential unlocking device could also be included in the controlled locking arrangements of IBC Section 408.4 and Section 1010.1.9.6, Item 6 of the code.

In areas where additional security may be a concern, a door hardware system may include a remote unlocking device, such as a keypad, card reader, eye scanner or thumbprint scanner. Where these systems are only on the ingress side of a building or space, there are no limitations in the codes. Where these systems are on the egress side of a space, free egress must still be available through one of the electromagnetic systems addressed in Section 11010.1.9.7, 1010.1.9.8 or 1010.1.9.9. Such a remote unlocking device could also be included in the controlled locking arrangements for IBC Section 408.4 and Section 1010.9.6 of the code.

Items 1 through 6 provide operational criteria to ensure egress during normal and emergency situations. Occupancies in Groups F, S and H are not included here because of their increased hazard caused by fuel load and other potentially life-threatening factors.

Item 1 requires that such doors be provided with an occupant sensor on the egress side of the door. These sensors typically operate on an infrared, microwave or sonic principle, but other technologies may be available. This sensor is required to automatically release the electrical lock on approach of an occupant from the egress side or when there is a loss of power to the sensor. This provision is written as "performance-based," where any means of sensor design can be utilized to cause the doors to unlock, allowing immediate egress. This section does not indicate at what distance the sensor should be set to operate. The sensor may be set to detect an approaching occupant in time to unlock the electrical

INTERNATIONAL CODE COUNCIL®
Copyright © 2015 ICC. ALL RIGHTS RESERVED. Accessed by David Dammon on Jun 21, 2017 12:30:52 PM pursuant to License Agreement with ICC. No further reproduction or distribution authorized. ANY UNAUTHORIZED REPRODUCTION OR DISTRIBUTION IS A VIOLATION OF THE FEDERAL COPYRIGHT ACT AND THE LICENSE AGREEMENT, AND SUBJECT TO CIVIL AND CRIMINAL PENALTIES THEREUNDER.

locks prior to the occupant reaching the door, to permit egress without the occupant realizing the doors were electrically locked. In other applications, the sensor may be set to require the occupant to be closer to the door prior to unlocking the electrical lock to allow egress.

Item 2 states that if there is a loss of power to the electrical lock or to the locking system, the electrical lock on the door must unlock. These doors are commonly secured with fail-safe devices which prioritize life safety over security (such as electromagnetic locks or fail-safe power bolts) so that the electrical locks on these doors will automatically unlock when power to the electrical locking device or locking system is interrupted. In some instances, the locking system controller may be powered from a different source than the electrical locking device itself. In these cases, a loss of power to the locking system controller (while power remains applied to the locking device) must also cause the electrical locking device on the egress door to automatically unlock.

Item 3 requires that there be a manual unlocking device (push button), within 5 feet of the door, mounted 40 to 48 inches above the floor, unobstructed and with a clearly identifiable sign that says "PUSH TO EXIT." When operated, the manual unlocking device is to directly interrupt, independent of other electronics, the power to the electrical lock and cause the doors to remain electrically unlocked for a minimum of 30 seconds. To achieve a minimum 30-second delay independent of other electronics, the push button unlocking device should be designed and installed to provide this delay. The 30-second minimum is to allow adequate time for an individual to operate the manual unlocking device and then to egress through the door.

Items 4 and 5 require the building fire alarm system, automatic fire detection system or sprinkler system, if provided, to be interfaced with the door's electric locking system to unlock automatically on activation. The electrical locks on the doors are to remain unlocked until the fire alarm system is reset, ensuring egress is not impeded by the electric locking system.

Item 6 requires the units of the locking system to be listed to UL 294. The UL 294 Access Control System standard applies to construction, performance, and operation of systems which control passage through a door, and electrical, electronic, or mechanical units of these systems.

To summarize, it is important to keep in mind that an egress door equipped with a sensor release system must always allow egress whether power is present or not. The egress door must be "fail-safe" and must assume this "fail-safe" condition when power is removed from any part of the senor release system. In other words, if the sensor release system loses power, the egress door must be capable of being opened. People must be kept from being involuntarily locked inside buildings.

1010.1.9.9 Electromagnetically locked egress doors. Doors in the *means of egress* in buildings with an occupancy in Group A, B, E, I-1, I-2, I-4, M, R-1 or R-2 and doors to tenant spaces in Group A, B, E, I-1, I-2, I-4, M, R-1 or R-2 shall be permitted to be locked with an electromagnetic locking system where equipped with hardware that incorporates a built-in switch and where installed and operated in accordance with all of the following:

1. The hardware that is affixed to the door leaf has an obvious method of operation that is readily operated under all lighting conditions.
2. The hardware is capable of being operated with one hand.
3. Operation of the hardware directly interrupts the power to the electromagnetic lock and unlocks the door immediately.
4. Loss of power to the locking system automatically unlocks the door.
5. Where *panic* or *fire exit hardware* is required by Section 1010.1.10, operation of the *panic* or *fire exit hardware* also releases the electromagnetic lock.
6. The locking system units shall be listed in accordance with UL 294.

❖ The intent of this section is to provide consistent requirements where an electromagnetic lock is released by door-mounted hardware such as a panic bar, lockset/latchset, or touch-sense bar, all of which would be equipped with an integral switch that, when actuated by the normal actions of opening the door, causes the electromagnetic lock to release allowing immediate egress. In the identified occupancy groups, doors in the means of egress are permitted to be locked with an electromagnetic locking system where equipped with door hardware that incorporates a built-in switch, provided all the specified conditions are met. Additionally, doors to tenant spaces of the identified occupancy groups may be equipped with electromagnetic locks, provided all of the specified conditions are met. The use of this type of locking system may provide for a greater degree of security preventing or controlling access or ingress than that offered by a door with mechanical locking devices alone. The allowance for electromagnetically locked egress doors is limited to low- and moderate-hazard occupancies where security may be a concern.

It may be important to note other "shall be permitted" locking arrangements in the code may also use electromagnetic locks as part of their system. Controlled egress locking systems (Section 1010.1.9.6), delayed egress locking systems (Section 1010.1.9.7), and sensor release of electrically locked door systems (Section 1010.1.9.8) all frequently use electromagnetic locks.

The requirements of this section apply to electromagnetic locking systems which open on hardware activation. The functions of an ingress control locking system are not addressed in the codes and are unre-

INTERNATIONAL CODE COUNCIL®
Copyright © 2015 ICC. ALL RIGHTS RESERVED. Accessed by David Dammon on Jun 21, 2017 12:30:52 PM pursuant to License Agreement with ICC. No further reproduction or distribution authorized. ANY UNAUTHORIZED REPRODUCTION OR DISTRIBUTION IS A VIOLATION OF THE FEDERAL COPYRIGHT ACT AND THE LICENSE AGREEMENT, AND SUBJECT TO CIVIL AND CRIMINAL PENALTIES THEREUNDER.

lated as long as egress is provided as required or permitted by this section and other applicable provisions of the code.

In areas where additional security may be a concern, a door hardware system may include an unlocking device, such as a keypad, card reader, eye scanner, thumbprint scanner or other credential device. Where these credential unlocking systems are only on the ingress side of a building or space, there are no limitations in the codes. Where these credential unlocking systems are on the egress side of a space (perhaps to monitor personnel movement), egress must be available through one of the locking systems addressed in Section 1010.1.9.7, 1010.1.9.8 or 1010.1.9.9. Such a credential unlocking device could also be included in the controlled locking arrangements of IBC Section 408.4 and Section 1010.1.9.6, Item 6 of the code.

When the occupant prepares to egress through the door, the method of operating the door hardware must be obvious, even under poor lighting conditions. The operation shall be accomplished through the use of a single motion and meet the general requirement that the door be readily openable without the use of special knowledge or effort. The release of the electromagnetic lock on the door must occur immediately on the operation of the door hardware by interrupting the power supply to the electromagnetic lock. This requirement is the same regardless of the type of door hardware: panic hardware, fire exit hardware, a latchset/lockset, or a touch-sense bar. As an additional safeguard, the loss of power to the locking system is required to automatically release the electromagnetic lock on the door.

A properly designed and installed electromagnetic locking system complying with the requirements of this section of the IBC may not be obvious to the occupants, as the door unlatches/unlocks (electromagnetically and mechanically) allowing egress through the normal operation of the door hardware (panic or fire exit hardware, latchset/lockset, or touch-sense bar). Considering these performance requirements, this section of the IBC does not include a requirement that the electromagnetic lock be unlocked (released) on activation of the building fire alarm system. Also, this section of the IBC does not limit the number of doors in the means of egress which may be equipped with electromagnetic locking systems.

The units of the electromagnetic locking system are required to be listed in accordance with UL 294. The UL 294 Access Control Systems standard applies to construction, performance, and operation of systems which control passage through a door, and electrical, electronic, or mechanical units of these systems. Where these special provisions are utilized, the requirements of Section 1010.1.10 regarding panic hardware remain applicable. In Group A and E occupancies having occupant loads of 50 or more, the door hardware must also comply with the requirements for panic hardware.

1010.1.9.10 Locking arrangements in correctional facilities. In occupancies in Groups A-2, A-3, A-4, B, E, F, I-2, I-3, M and S within correctional and detention facilities, doors in *means of egress* serving rooms or spaces occupied by persons whose movements are controlled for security reasons shall be permitted to be locked where equipped with egress control devices that shall unlock manually and by not less than one of the following means:

1. Activation of an *automatic sprinkler system* installed in accordance with Section 903.3.1.1.
2. Activation of an *approved manual fire alarm box*.
3. A signal from a *constantly attended location*.

❖ Correctional facilities can include a variety of uses where detainees may be gathered for eating, recreational activities, education, technical training, job training, etc. Correctional facilities can also contain types of support services, such as a store, storage areas or hospital area. Security is still a concern within these areas. This provision will allow the correctional facility to maintain security on all areas. Most commonly the doors would be opened by staff from a central control point under Item 3, but Items 1 and 2 allow for other alternatives in lower security facilities. This provision is not intended to apply to these groups when located outside of a detention or correctional facility.

1010.1.9.11 Stairway doors. Interior *stairway means of egress* doors shall be openable from both sides without the use of a key or special knowledge or effort.

Exceptions:

1. *Stairway* discharge doors shall be openable from the egress side and shall only be locked from the opposite side.
2. This section shall not apply to doors arranged in accordance with Section 403.5.3.
3. In *stairways* serving not more than four stories, doors are permitted to be locked from the side opposite the egress side, provided they are openable from the egress side and capable of being unlocked simultaneously without unlatching upon a signal from the *fire command center*, if present, or a signal by emergency personnel from a single location inside the main entrance to the building.
4. *Stairway exit* doors shall be openable from the egress side and shall only be locked from the opposite side in Group B, F, M and S occupancies where the only interior access to the tenant space is from a single *exit stairway* where permitted in Section 1006.3.2.
5. *Stairway exit* doors shall be openable from the egress side and shall only be locked from the opposite side in Group R-2 occupancies where the only

INTERNATIONAL CODE COUNCIL®
Copyright © 2015 ICC. ALL RIGHTS RESERVED. Accessed by David Dammon on Jun 21, 2017 12:30:52 PM pursuant to License Agreement with ICC. No further reproduction or distribution authorized. ANY UNAUTHORIZED REPRODUCTION OR DISTRIBUTION IS A VIOLATION OF THE FEDERAL COPYRIGHT ACT AND THE LICENSE AGREEMENT, AND SUBJECT TO CIVIL AND CRIMINAL PENALTIES THEREUNDER.

interior access to the *dwelling unit* is from a single *exit stairway* where permitted in Section 1006.3.2.

❖ Based on adverse fire experience where occupants have become trapped in smoke-filled stairway enclosures, stairway doors generally must be arranged to permit reentry into the building without the use of any tools, keys or special knowledge or effort. For security reasons, this restriction does not apply to the discharge door from the stairway enclosure to the outside or into an exit passageway (Exception 1). Section 403 for high-rise buildings permits locking doors from the stairway side, provided the doors are capable of being unlocked from a fire command station and there is a communication system within the stairway enclosure that allows contact with the fire command station (Exception 2).

Exception 3 addresses the need for security. The exception is limited to four-story buildings to provide a short travel distance to the stairway discharge door for the building occupants. In addition, to allow quick entrance for fire fighters and emergency responders, a means of simultaneously unlocking all of the doors by emergency personnel must be provided. This provision further requires that the stairway doors be unlocked without unlatching. Stairway doors will typically be fire door assemblies, and their continued latching is necessary to maintain the integrity of the fire-resistive separation for the exit enclosure. The remote unlocking signal shall be initiated from the fire command station, if provided, or a single point of signal initiation at an approved location inside the building's main entrance.

Exceptions 4 and 5 allow for stairways in single-exit buildings to have doorways that lead to multiple tenants and dwelling units. For security reasons, those doors can remain locked from the stairway side so no one can enter another tenant space or dwelling unit from the exit stairway.

1010.1.10 Panic and fire exit hardware. Doors serving a Group H occupancy and doors serving rooms or spaces with an *occupant load* of 50 or more in a Group A or E occupancy shall not be provided with a latch or lock other than *panic hardware* or *fire exit hardware*.

Exceptions:

1. A main *exit* of a Group A occupancy shall be permitted to be locking in accordance with Section 1010.1.9.3, Item 2.
2. Doors serving a Group A or E occupancy shall be permitted to be electromagnetically locked in accordance with Section 1010.1.9.9.

Electrical rooms with equipment rated 1,200 amperes or more and over 6 feet (1829 mm) wide, and that contain overcurrent devices, switching devices or control devices with *exit* or *exit access doors*, shall be equipped with *panic hardware* or *fire exit hardware*. The doors shall swing in the direction of egress travel.

❖ Doors that are part of a means of egress from the locations listed in this section shall not be provided with a latch or lock other than panic hardware or fire exit hardware unless one of the two exceptions is met. Fire exit hardware is essentially panic hardware with internal modifications for use on fire-rated doors. Also see the commentaries to the definitions for "Fire exit hardware" or "Panic hardware" and Sections 1010.1.10.1 and 1010.1.10.2.

For all Group H occupancies, regardless of the occupant load, if latching (or locking) hardware is installed, it must be panic hardware or fire exit hardware because of the physical hazards of these spaces.

For all doors that provide means of egress for rooms and spaces of assembly and educational (Group A and E) occupancies with an occupant load of 50 or more, if latching (or locking) hardware is installed, it must be panic hardware or fire exit hardware. This would include large assembly spaces in mixed-use buildings. These uses are characterized by higher occupant load densities. Whereas doors from an assembly or educational room with an occupant load of less than 50 do not require panic hardware or fire exit hardware, a door that provides means of egress for two or more such rooms would require panic hardware or fire exit hardware when the combination of spaces has a total occupant load of 50 or more.

The first exception clarifies that the provisions for key-locking hardware at the main exit in Group A occupancies are permitted instead of panic hardware at those specific locations. (For the Group A exception, see the commentary to Section 1010.1.9.3, Item 2.)

The second exception resolves a potential conflict with Section 1010.1.9.9, and specifically Item 5, which allows an electromagnetic lock to be installed in addition to panic or fire exit hardware where panic or fire exit hardware would be required as long as the operation of the panic hardware or fire exit hardware releases the electromagnetic lock.

Certain electrical rooms are required to have panic hardware. Refer to IBC Chapter 27 and *NFPA 70: National Electrical Code*® (NEC) for specific requirements for when panic hardware or fire exit hardware is required. This requirement is applicable only where multiple conditions are present. The type of room regulated creates a potentially hazardous environment. In the event of an electrical accident, the more immediate egress provided by the panic hardware is desirable.

1010.1.10.1 Installation. Where *panic* or *fire exit hardware* is installed, it shall comply with the following:

1. *Panic hardware* shall be *listed* in accordance with UL 305.
2. *Fire exit hardware* shall be *listed* in accordance with UL 10C and UL 305.
3. The actuating portion of the releasing device shall extend not less than one-half of the door leaf width.

INTERNATIONAL CODE COUNCIL®
Copyright © 2015 ICC. ALL RIGHTS RESERVED. Accessed by David Dammon on Jun 21, 2017 12:30:52 PM pursuant to License Agreement with ICC. No further reproduction or distribution authorized. ANY UNAUTHORIZED REPRODUCTION OR DISTRIBUTION IS A VIOLATION OF THE FEDERAL COPYRIGHT ACT AND THE LICENSE AGREEMENT, AND SUBJECT TO CIVIL AND CRIMINAL PENALTIES THEREUNDER.

4. The maximum unlatching force shall not exceed 15 pounds (67 N).

❖ As its name implies, panic hardware is special unlatching and unlocking hardware that is intended to simplify the unlatching and unlocking operation to a single, no more than 15-pound (67 N), force applied in the direction of egress [see Commentary Figures 1010.1.10.1(1) and (2)]. In a panic situation with a rush of persons trying to utilize a door, devices such as doorknobs or thumb turns may cause sufficient delay so as to create a crush at the door and prevent or slow the opening operation.

The locational specifications for the activating panel or bar are based on ready availability and access to the unlatching device. Note that the section requires the width of the actuating portion of the panic hardware or fire exit hardware to measure at least one-half the width of the door leaf. For example, on a 3-0 door (nominal 36 inches wide), the activating portion of the panic or fire hardware would measure at least 18 inches. Panic and fire exit hardware must be listed. UL 305, *Standard for Safety Panic Hardware*, includes construction and performance requirements dealing with endurance, emergency operation, elevated ambient exposure and low-temperature impact tests to ensure that the panic device operates properly (for panic hardware on a balanced door, see Section 1010.1.10.2). The activation device must be mounted between 34 inches and 48 inches (864 mm and 1219 mm) above the floor in accordance with Section 1010.1.9.2. Section 1010.1.1.1 allows the panic hardware to extend the full width of the door as long as it does not protrude more than 4 inches (102 mm) into the door's required minimum clear width.

Standard panic hardware or "listed panic hardware" is not approved for use on fire door assemblies. Panic hardware and fire exit hardware can be similar in appearance.

Where a fire door, such as to an exit stairway, is required to be equipped with panic hardware, the hardware must accomplish the dual objectives of panic hardware and continuity of the enclosure in which it is located—thus the reference to UL 10C, *Standard for Safety Positive Pressure Fire Tests of Door Assemblies*. In this case, fire exit hardware is to be provided that meets both objectives and requirements, since panic hardware is not tested for use on fire doors. There are standard test procedures designed to evaluate the performance of panic and fire exit hardware from the panic standpoint as well as from a fire protection standpoint. "Fire door assemblies" are defined in Section 716.5 as a combination of doors, frame, hardware and other accessories required to provide a specific degree of fire and smoke barrier protection to the opening in a fire wall, fire barrier, fire partition, smoke barrier or exterior wall required to have a fire-resistance rating.

Fire doors must close and positively latch in order to protect exit stairways, corridors and other areas of the building from the spread of smoke and fire. Additionally, fire doors are required to self-close and automatically latch after each use. Positive latching of fire doors is not related to the locking of the door and should never be confused with locking or security issues.

The requirement for positive latching means that dogging devices are not permitted on fire exit hardware. A dogging device is an option on the hardware

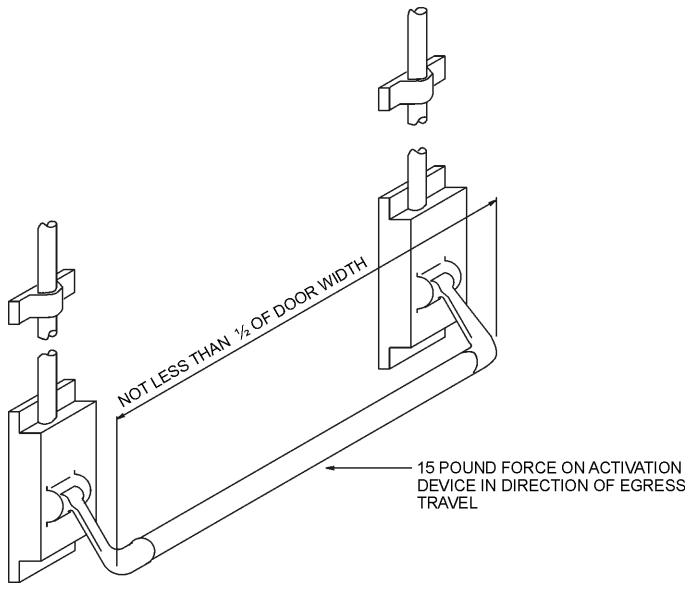

For SI: 1 pound = 4.4 N.

Figure 1010.1.10.1(1)
EXAMPLES OF TYPICAL PANIC HARDWARE

INTERNATIONAL CODE COUNCIL®
Copyright © 2015 ICC. ALL RIGHTS RESERVED. Accessed by David Dammon on Jun 21, 2017 12:30:52 PM pursuant to License Agreement with ICC. No further reproduction or distribution authorized. ANY UNAUTHORIZED REPRODUCTION OR DISTRIBUTION IS A VIOLATION OF THE FEDERAL COPYRIGHT ACT AND THE LICENSE AGREEMENT, AND SUBJECT TO CIVIL AND CRIMINAL PENALTIES THEREUNDER.

that allows for the panic hardware to be locked in the fully depressed position. A dogging device mechanically defeats the latching feature of panic hardware preventing the door from positively latching when in the closed position. The dogging device is typically manually activated with a small wrench or tool and is activated through a hole adjacent to the activation bar. Dogging capability is often provided on exterior doors that are intended as building entrances.

Fire exit hardware must be labeled. Typical locations are on either end of the hardware. Information on the label must include the words "listed" and "fire exit hardware" and indicate a control or serial number. The label on the fire door itself should indicate that it is a fire door suitable for use with fire exit hardware.

1010.1.10.2 Balanced doors. If *balanced doors* are used and *panic hardware* is required, the *panic hardware* shall be the push-pad type and the pad shall not extend more than one-half the width of the door measured from the latch side.

❖ The provisions for balanced doors ensure that the occupants push only on the latch side of the door since the hinge side of a balanced door pivots "against" the direction of egress (see the commentary for the definition of "Door, balanced" in Chapter 2).

1010.2 Gates. Gates serving the *means of egress* system shall comply with the requirements of this section. Gates used as a component in a *means of egress* shall conform to the applicable requirements for doors.

Exception: Horizontal sliding or swinging gates exceeding the 4-foot (1219 mm) maximum leaf width limitation are permitted in fences and walls surrounding a stadium.

❖ This section specifies that all requirements for doors also apply to gates, except that gates surrounding a stadium are allowed to exceed 4 feet (1219 mm) in width. Usually a large gate is required to adequately serve a stadium crowd for egress purposes.

1010.2.1 Stadiums. *Panic hardware* is not required on gates surrounding stadiums where such gates are under constant immediate supervision while the public is present, and where safe dispersal areas based on 3 square feet (0.28 m^2) per occupant are located between the fence and enclosed space. Such required safe dispersal areas shall not be located less than 50 feet (15 240 mm) from the enclosed space. See Section 1028.5 for *means of egress* from safe dispersal areas.

❖ Panic hardware is impractical for large gates that surround stadiums. Normally, these gates are opened and closed by the stadium's grounds crew, which is constantly in attendance during the use of such gates. The safe dispersal area requirement provides for the safety of the crowd if for some reason the gate is not open. The safe dispersal area is to be between the stadium enclosure and the surrounding fence and



Figure 1010.1.10.1(2)
EXAMPLES OF TYPICAL PANIC HARDWARE

INTERNATIONAL CODE COUNCIL®
Copyright © 2015 ICC. ALL RIGHTS RESERVED. Accessed by David Dammon on Jun 21, 2017 12:30:52 PM pursuant to License Agreement with ICC. No further reproduction or distribution authorized. ANY UNAUTHORIZED REPRODUCTION OR DISTRIBUTION IS A VIOLATION OF THE FEDERAL COPYRIGHT ACT AND THE LICENSE AGREEMENT, AND SUBJECT TO CIVIL AND CRIMINAL PENALTIES THEREUNDER.

the area to be occupied is not to be closer than 50 feet (15 240 mm) to the stadium enclosure.

See the commentary for Section 1028.5 for access to a safe dispersal area when access to a public way is not available.

1010.3 Turnstiles. Turnstiles or similar devices that restrict travel to one direction shall not be placed so as to obstruct any required *means of egress*.

Exception: Each turnstile or similar device shall be credited with a capacity based on not more than a 50-person *occupant load* where all of the following provisions are met:

1. Each device shall turn free in the direction of egress travel when primary power is lost and on the manual release by an employee in the area.
2. Such devices are not given credit for more than 50 percent of the required egress capacity or width.
3. Each device is not more than 39 inches (991 mm) high.
4. Each device has not less than $16^{1}/_{2}$ inches (419 mm) clear width at and below a height of 39 inches (991 mm) and not less than 22 inches (559 mm) clear width at heights above 39 inches (991 mm).

Where located as part of an *accessible route*, turnstiles shall have not less than 36 inches (914 mm) clear at and below a height of 34 inches (864 mm), not less than 32 inches (813 mm) clear width between 34 inches (864 mm) and 80 inches (2032 mm) and shall consist of a mechanism other than a revolving device.

❖ This section provides for a limited use of turnstiles to serve as a means of egress component. The exception to this section limits each turnstile to a maximum egress capacity of 50 persons. The turnstile must comply with all four listed items to be considered as serving any part of the occupant load for means of egress. The turnstiles must rotate freely both when there is a loss of power and when they are manually released. Note that the 50-person limit applies to each individual turnstile. These provisions are similar to the revolving door provisions in Section 1010.1.4.1.

If turnstiles are located along an accessible route, the route for persons using mobility devices must be something other than a revolving device, such as a swinging gate. A common example would be the turnstiles for automatic ticket taking, such as at the entrance to a mass transit platform.

1010.3.1 High turnstile. Turnstiles more than 39 inches (991 mm) high shall meet the requirements for revolving doors.

❖ Where a turnstile is higher than 39 inches (991 mm), the restriction to egress is much like a revolving door. Thus, the egress limitations for revolving doors in Section 1010.1.4.1 apply to this type of turnstile. If a high turnstile does not meet the revolving door requirements for doors that are an egress component, it is not to be included as serving a portion of the means of egress. It would be necessary to provide doors in these areas for egress. High turnstiles may not be part of an accessible route for ingress or egress.

1010.3.2 Additional door. Where serving an *occupant load* greater than 300, each turnstile that is not portable shall have a side-hinged swinging door that conforms to Section 1010.1 within 50 feet (15 240 mm).

❖ This section addresses a common egress condition for sports arenas where a number of turnstiles are installed for ticket taking. Portable turnstiles are moved from the egress path for proper exiting capacity. Permanent turnstiles are not considered as providing any of the required egress capacity when serving an occupant load greater than 300, no matter how many turnstiles are installed. Doors are required to provide occupants with a path of egress other than through the turnstiles. The doors are to be located within 50 feet (15 240 mm) of the turnstiles.

SECTION 1011
STAIRWAYS

1011.1 General. *Stairways* serving occupied portions of a building shall comply with the requirements of Sections 1011.2 through 1011.13. *Alternating tread devices* shall comply with Section 1011.14. Ship's ladders shall comply with Section 1011.15. Ladders shall comply with Section 1011.16.

Exception: Within rooms or spaces used for assembly purposes, stepped aisles shall comply with Section 1029.

❖ It is important for stairway safety that all stairways meet the provisions in this section. This would include all elevation changes using stairways; everything from one riser to multiple flights and landings between stories (see the definitions for "Stair" and "Stairway" in Chapter 2). These provisions will be applicable for interior exit access stairways, interior exit stairways and exterior exit stairways, as well as any steps along the paths for exit access or exit discharge. It is intended that this section be applicable to required stairways as well as what can be called "convenience" stairways.

It is important to understand the terminology. Exit stairways are stairways that provide a protected path of travel between the exit access and the exit discharge. Interior exit stairways are required to be enclosed in accordance with Section 1022. Exterior exit stairways are protected by the exterior wall of the building and must comply with Section 1027. Exit access stairways are typically unenclosed interior stairways and comply with Section 1019 when they provide access between stories. Exit access travel distance stops at an exit stairway enclosure, but includes any travel down an exit access stairway. Stairways that are outside and provide a route from the level of exit discharge to grade are considered part of the exit discharge. See the commentary in Chapter 2 for the defined term, "Exit discharge, level of."

Sections 1011.2 through 1011.13 provide criteria for the typical stairway. Special provisions are pro-

INTERNATIONAL CODE COUNCIL®
Copyright © 2015 ICC. ALL RIGHTS RESERVED. Accessed by David Dammon on Jun 21, 2017 12:30:52 PM pursuant to License Agreement with ICC. No further reproduction or distribution authorized. ANY UNAUTHORIZED REPRODUCTION OR DISTRIBUTION IS A VIOLATION OF THE FEDERAL COPYRIGHT ACT AND THE LICENSE AGREEMENT, AND SUBJECT TO CIVIL AND CRIMINAL PENALTIES THEREUNDER.

vided for curved stairways (Section 1011.9), spiral stairways (Section 1011.10), and stairways to the roof for fire department access and for elevator equipment service (Sections 1011.12 and 1011.13).

Items that provide vertical access similar to stairways are also addressed in this section: alternating tread devices (Section 1011.14), ship's ladders (Section 1011.15) and ladders (Section 1011.16). These devices are only permitted to provide access to very limited spaces.

The exception indicates that stepped aisles (previously called aisle stairs) are addressed in Section 1029. Having this exception at the beginning of the stairway section negated the need for repeated exceptions throughout the stairway provisions. While both stairways and stepped aisles are a series of treads and risers, how occupants move on and off and configurations are very different. Occupants leave and join stepped aisles along the entire run, while occupants only enter the stairways at the top and bottom. Stepped aisles have center handrails with breaks to allow for access into the seating, while most stairways have handrails on both sides. Stepped aisles can be nonuniform in some locations to allow for parabolic seating bowls, while with stairways, uniform tread and riser configurations are required. Section 1029 should be used for stepped aisles between and immediately adjacent to seating or where the steps are a direct continuation of the stepped aisles and lead to a level cross aisle or floor. Section 1011 is used for stairways that lead from the balcony, concourse or cross aisle to a floor level above or below the seating areas (see Sections 1011.5.2, 1011.5.4 and 1011.6).

1011.2 Width and capacity. The required capacity of *stairways* shall be determined as specified in Section 1005.1, but the minimum width shall be not less than 44 inches (1118 mm). See Section 1009.3 for accessible *means of egress stairways*.

Exceptions:

1. *Stairways* serving an *occupant load* of less than 50 shall have a width of not less than 36 inches (914 mm).
2. *Spiral stairways* as provided for in Section 1011.10.
3. Where an incline platform lift or stairway chairlift is installed on *stairways* serving occupancies in Group R-3, or within *dwelling units* in occupancies in Group R-2, a clear passage width not less than 20 inches (508 mm) shall be provided. Where the seat and platform can be folded when not in use, the distance shall be measured from the folded position.

❖ To provide adequate space for occupants traveling in opposite directions and to permit the intended full egress capacity to be developed, minimum dimensions are dictated for means of egress stairways. A minimum width of 44 inches (1118 mm) is required for stairway construction to permit two columns of users to travel in the same or opposite directions. The reference to Section 1005.1 is for the determination of stairway width based on the occupant load it will serve (i.e, capacity). The larger of the two widths is to be used.

Exception 1 recognizes the relatively small occupant loads of less than 50 that permit a staggered file of users when traveling in the same direction. When traveling in opposite directions, one column of users must stop their ascent (or descent) to permit the opposite column to continue. Again, considering the relatively small occupant loads, any disruption of orderly flow will be infrequent. The use of this exception is limited to buildings where the entire occupant load of each upper story and/or basement is less than 50.

Exception 2 permits a spiral stairway to have a minimum width of 26 inches (660 mm) when it conforms to Section 1011.10, on the basis that the configuration of a spiral stairway will allow nothing other than single-file travel.

Exception 3 addresses the use of inclined platform lifts or stairway chairlifts for individual dwelling units. For clarification on the types of lifts, see the commentary to IBC Section 1109.8. Both types of lifts may be installed to aid persons with mobility impairments in their homes. The code and ASME A18.1 allow for a reduction in the width of the stair to a minimum of 20 inches (508 mm) of clear passageway to be maintained on a stairway where a lift is located. If a portion of the lift, such as a platform or seat, can be folded, the minimum clear dimension is to be measured from the folded position. If the lift cannot be folded, then the 20 inches (508 mm) is measured from the fixed position. The track for these lifts typically extends 9 to 12 inches (229 to 305 mm) from the wall, making the 20-inch (508 mm) clear measurement actually 24 to 27 inches (610 to 686 mm) from the edge of the track.

The code does not have any specific provisions for where incline platform lifts are utilized along stairways in locations other than within dwelling units. IBC Section 1109.8 limits the use of platform lifts in new construction to mainly areas with minimal occupant loads or where elevators and ramps are impracticable. IEBC Section 410.8.3 and IBC Section 705.1.3 allow for platform lifts anywhere in existing buildings in order to gain accessibility for persons with mobility impairments. When in the closed and off position, the platform lifts should not block the clear width required for the stairway, or use of the handrails. The industry is currently working on different options to address the concern that the lift may be in operation during an event that requires evacuation.

1011.3 Headroom. *Stairways* shall have a headroom clearance of not less than 80 inches (2032 mm) measured vertically from a line connecting the edge of the *nosings*. Such headroom shall be continuous above the *stairway* to the point where the line intersects the landing below, one tread depth

INTERNATIONAL CODE COUNCIL®
Copyright © 2015 ICC. ALL RIGHTS RESERVED. Accessed by David Dammon on Jun 21, 2017 12:30:52 PM pursuant to License Agreement with ICC. No further reproduction or distribution authorized. ANY UNAUTHORIZED REPRODUCTION OR DISTRIBUTION IS A VIOLATION OF THE FEDERAL COPYRIGHT ACT AND THE LICENSE AGREEMENT, AND SUBJECT TO CIVIL AND CRIMINAL PENALTIES THEREUNDER.

beyond the bottom riser. The minimum clearance shall be maintained the full width of the *stairway* and landing.

Exceptions:

1. *Spiral stairways* complying with Section 1011.10 are permitted a 78-inch (1981 mm) headroom clearance.
2. In Group R-3 occupancies; within *dwelling units* in Group R-2 occupancies; and in Group U occupancies that are accessory to a Group R-3 occupancy or accessory to individual *dwelling units* in Group R-2 occupancies; where the *nosings* of treads at the side of a *flight* extend under the edge of a floor opening through which the *stair* passes, the floor opening shall be allowed to project horizontally into the required headroom not more than $4^3/_4$ inches (121 mm).

❖ This headroom requirement is necessary to avoid an obstruction to orderly flow and to provide visibility to the users so that the desired path of travel can be planned and negotiated. Height is a vertical measurement above every point along the stairway stepping and walking surfaces, with minimum height measured vertically from the tread nosing or from the surface of a landing or platform up to the ceiling [see Commentary Figure 1011.3(1)].

Section 1003.2 and IBC Section 1208.2 require a minimum ceiling height within a room of 7 feet, 6 inches (2307 mm). A bulkhead or doorway at the bottom of the stairway would be allowed to meet the minimum headroom height of 80 inches (2032 mm), as permitted in Section 1003.3.

Exception 1, allowing for a clear headroom of 6 feet, 6 inches (1981 mm) for spiral stairs, correlates with the provisions of Section 1011.10.

Exception 2 recognizes a common method of stairwell construction in which the stringer on the open side of a stair is supported by the same floor joists or wall that supports the edge of the opening through which the stairway passes to the floor above, thus resulting in the stairway being wider at the lower portion than at the top portion. In this case, headroom is not required for a distance of up to $4^3/_4$ inches (121 mm) measured horizontally from the edge of the opening above to the handrail or guard system, which limits the clear width on the lower open sides of the stairway. The $4^3/_4$ inches (121 mm) maximum is derived from the finished width of a typical 2 by 4 supporting wall and is not critical to obstructing orderly flow or visibility in the desired path of travel [see Commentary Figure 1011.3(2)].

1011.4 Walkline. The walkline across *winder* treads shall be concentric to the direction of travel through the turn and located 12 inches (305 mm) from the side where the *winders* are narrower. The 12-inch (305 mm) dimension shall be measured from the widest point of the clear *stair* width at the walking surface of the *winder*. Where *winders* are adjacent within the *flight*, the point of the widest clear *stair* width of the adjacent *winders* shall be used.

❖ This requirement is essential for smooth, consistent travel on stairs that turn with winder treads. It provides a standard location for the regulation of the uniform tread depth of winders. Because of the wide range of anthropometrics of stairway users, there is no one line that all persons will travel on stairs; however, the code recognizes a standard location of a walkline is essential to design and enforcement. Each footfall of the user through the turn can be associated with an arc to describe the path traveled. As a user ascends or descends the flight, the turning at each

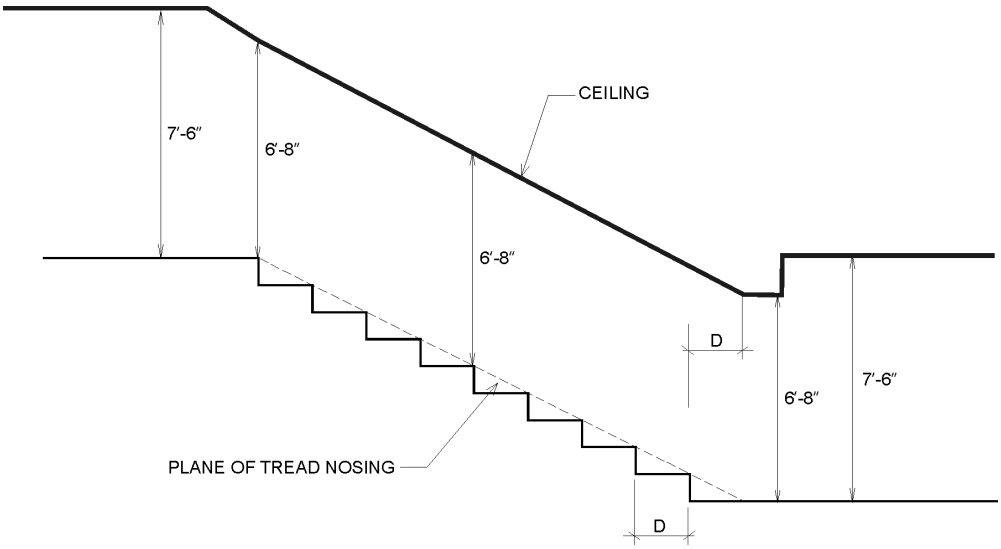

For SI: 1 inch = 25.4 mm, 1 foot = 304.8 mm.

Figure 1011.3(1)
STAIRWAY HEADROOM REQUIREMENTS

INTERNATIONAL CODE COUNCIL®
Copyright © 2015 ICC. ALL RIGHTS RESERVED. Accessed by David Dammon on Jun 21, 2017 12:30:52 PM pursuant to License Agreement with ICC. No further reproduction or distribution authorized. ANY UNAUTHORIZED REPRODUCTION OR DISTRIBUTION IS A VIOLATION OF THE FEDERAL COPYRIGHT ACT AND THE LICENSE AGREEMENT, AND SUBJECT TO CIVIL AND CRIMINAL PENALTIES THEREUNDER.

step should be consistent through the turn. The walkline is established concentric to, or having the same center (approximately parallel) as, the arc of travel of the user. The tread depth dimension at the walkline is one of two tread depths across the width of the stair at which winder tread depth is regulated, cited in Section 1011.5.2. The second is the minimum tread depth. Regulation at these two points controls the angularity of the turn and the configuration of the flight. In order to establish consistently shaped winders, tread depths must always be measured concentric to the arc of travel. The walkline is unique as the only line or path of travel where winder tread depth is controlled by the same minimum tread depth as rectangular treads. However, Exception 2 of Section 1011.5.4 recognizes that winder tread depth need not be compared to rectangular tread depths for dimensional uniformity in the same flight because the location of the walkline is chosen for the purpose of providing a standard and cannot be specific to the variety of actual paths followed by all users. This specific line location is determined by measuring along each nosing edge 12 inches (305 mm) from the extreme of the clear width of the stair at the surface of the winder tread or the limit of where the foot might be placed in use of the stair. If adjacent winders are present, the point of the widest clear stair width at the surface of the tread in the group of adjacent consecutive winders is used to provide the reference from which the 12-inch (305 mm) dimension will be measured along each nosing. The tread depth may be determined by measuring between adjacent nosings at these determined intersections of the nosings with the walkline. It is important to note that the clear stair width is only that portion of the stair width that is clear for passage. Portions of the stair beyond the clear width are not consequential to use of the stair, consistent travel or location of the walkline.

1011.5 Stair treads and risers. *Stair* treads and risers shall comply with Sections 1011.5.1 through 1011.5.5.3.

❖ The provisions for treads and risers contribute to the efficient use of the stairway, facilitating smooth and consistent travel. This section provides dimensional ranges and tolerances for the component elements to allow the flexibility required to design and construct a stair or a flight of stairs that are elements of a stairway. The allowed proportion of maximum riser height and minimum tread depth provide for a maximum angle of ascent but there is no maximum tread depth to consider with the minimum riser height that would define a minimum angle for a stairway. Nor is the proportion of riser height to tread depth compared with the limitations of the length of the user's stride on stairways, which is significantly foreshortened from the user's stride on the level. For this reason, care should be taken when incorporating larger tread depths and controlling the point at which a tread might be wide enough to require more than one step to cross, which can vary significantly when considering ascent and descent movement patterns. Especially in areas where all segments of the public might use the stairs, those persons requiring two smaller sequential steps to cross the tread would progress at significantly different rates than those who might be able to stretch or jump and lead to dangerous compli-



Figure 1011.3(2)
EXAMPLE OF SECTION 1011.3, EXCEPTION 2

INTERNATIONAL CODE COUNCIL®
Copyright © 2015 ICC. ALL RIGHTS RESERVED. Accessed by David Dammon on Jun 21, 2017 12:30:52 PM pursuant to License Agreement with ICC. No further reproduction or distribution authorized. ANY UNAUTHORIZED REPRODUCTION OR DISTRIBUTION IS A VIOLATION OF THE FEDERAL COPYRIGHT ACT AND THE LICENSE AGREEMENT, AND SUBJECT TO CIVIL AND CRIMINAL PENALTIES THEREUNDER.

cations, especially in egress. Of equal significance is the use of shorter risers without increasing tread depth resulting in a proportion that could cause overstepping. With these same limitations for proportion in mind, however, by controlling the minimum depth of rectangular treads and the minimum depth and angularity of winder treads, these components can control the configuration of the plan of a flight of stairs to provide for smooth and consistent travel.

Section 1011.5.1 provides for consistent identification of the surfaces that are to be measured. This is as critical to the users' experience throughout the built environment as it is to determining all the dimensions in this section as they must relate to each other and the ultimate design and construction of a safe stairway.

The remaining sections address the uniformity and essential attributes of the tread and riser. Of particular note is the nosing or leading edge of the tread. The nosing shape and projection affect the determination of the tread depth and the riser height and are regulated at all steps throughout the stairway, including the nosings at landings to provide for smooth and consistent travel. Furthermore, the line connecting the nosings is used to determine handrail height, guard height and headroom, causing consistent nosings to be a dependent integral of every element of the stairway design, construction and regulation.

1011.5.1 Dimension reference surfaces. For the purpose of this section, all dimensions are exclusive of carpets, rugs or runners.

❖ Carpets, rugs and runners, like furniture, are frequently changed by the occupants and are not regulated by the code. For this reason it is essential that the riser height and tread depth be regulated exclusive of these transitory surfaces to provide an enforceable standard. This practice minimizes the possible variation because of the removal of nonpermanent carpeting throughout the life of a structure and provides a standard enforcement methodology that will provide consistency across the build environment for all users. When owners or occupants add carpeting, rugs or runners, they need to add it to all tread and landing surfaces in the stairway. It is important that the tread and landing surfaces are consistent and comply with the code prior to the addition of carpet. This methodology of enforcement makes it unnecessary to reconstruct floor and stair elevations in the stairway when nonpermanent carpet surfaces are changed that do not require a building permit and eliminates the resulting variations in the built environment that will not comply with the tolerance in Section 1011.5.4 (see Commentary Figure 1011.5.1).

1011.5.2 Riser height and tread depth. *Stair* riser heights shall be 7 inches (178 mm) maximum and 4 inches (102 mm) minimum. The riser height shall be measured vertically between the *nosings* of adjacent treads. Rectangular tread depths shall be 11 inches (279 mm) minimum measured horizontally between the vertical planes of the foremost projection of adjacent treads and at a right angle to the tread's *nosing*. *Winder* treads shall have a minimum tread depth of 11 inches (279 mm) between the vertical planes of the foremost projection of adjacent treads at the intersections with the walkline and a minimum tread depth of 10 inches (254 mm) within the clear width of the *stair*.

Exceptions:

1. *Spiral stairways* in accordance with Section 1011.10.
2. *Stairways* connecting stepped *aisles* to cross *aisles* or concourses shall be permitted to use the riser/tread dimension in Section 1029.13.2.
3. In Group R-3 occupancies; within *dwelling units* in Group R-2 occupancies; and in Group U occupancies that are accessory to a Group R-3 occupancy or accessory to individual *dwelling units* in Group R-2 occupancies; the maximum riser height shall be $7^3/_4$ inches (197 mm); the minimum tread depth shall be 10 inches (254 mm); the minimum *winder* tread depth at the walkline shall be 10 inches (254 mm); and the minimum *winder* tread depth shall be 6 inches (152 mm). A *nosing* projection not less than $^3/_4$ inch (19.1 mm) but not more than $1^1/_4$ inches (32 mm) shall be provided on *stairways* with solid risers where the tread depth is less than 11 inches (279 mm).
4. See Section 403.1 of the *International Existing Building Code* for the replacement of existing *stairways*.
5. In Group I-3 facilities, *stairways* providing access to guard towers, observation stations and control rooms, not more than 250 square feet (23 m^2) in area, shall be permitted to have a maximum riser

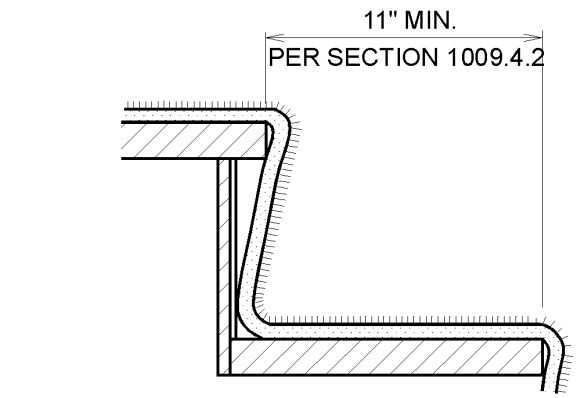

For SI: 1 inch = 25.4 mm.

Figure 1011.5.1
TREAD DEPTH MEASUREMENT

INTERNATIONAL CODE COUNCIL®
Copyright © 2015 ICC. ALL RIGHTS RESERVED. Accessed by David Dammon on Jun 21, 2017 12:30:52 PM pursuant to License Agreement with ICC. No further reproduction or distribution authorized. ANY UNAUTHORIZED REPRODUCTION OR DISTRIBUTION IS A VIOLATION OF THE FEDERAL COPYRIGHT ACT AND THE LICENSE AGREEMENT, AND SUBJECT TO CIVIL AND CRIMINAL PENALTIES THEREUNDER.

height of 8 inches (203 mm) and a minimum tread depth of 9 inches (229 mm).

❖ The riser height—the vertical dimension from tread surface to tread surface or tread surface to landing surface—is typically limited to not more than 7 inches (178 mm) or less than 4 inches (102 mm). The minimum tread depth—the horizontal distance from the leading edge (nosing) of one tread to the leading edge (nosing) of the next adjacent tread or landing—is typically limited to not less than 11 inches (279 mm) [see Commentary Figure 1011.5.2]. The minimum tread depth of 11 inches (279 mm) is intended to accommodate the largest shoe size found in 95 percent of the adult population, allowing for an appropriate overhang of the foot beyond the tread nosing while descending a stairway. Tread depths under 11 inches (279 mm) could cause a larger overhang (depending on the size of the foot) and could force users with larger feet to increase the angle of their foot to the line of travel while descending a stairway. Based on the probability of adequate foot placement, the rate of misstep with various step sizes and consideration for the user's comfort and energy expenditure, it was agreed that the 11-inch (279 mm) minimum tread depth and maximum 7-inch (178 mm) riser height resulted in the reasonable proportion of riser height and tread depth for stairway construction. A minimum riser height of 4 inches (102 mm) is considered to allow the visual identification of the presence of the riser in ascent or descent.

The precise location of rectangular tread depth and riser measurements is to be perpendicular to the tread's nosing or leading edge. This is to duplicate the user's anticipated foot placement in traveling the stairway.

The size for a winder tread is also considered for proper foot placement along the walkline [see Commentary Figure 1011.9 and the commentary for Section 1011.4]. The dimensional requirements are consistent with the straight tread.

The exceptions apply only to the extent of the text of each exception. For example, the entire text of Section 1011.5.2 is set aside for spiral stairways conforming to Section 1011.10 (see Exception 3). However, Exception 3 allows a different maximum riser and minimum tread under limited conditions, but retains the minimum riser height and measurement method of Section 1011.5.2.

The requirements for dimensional uniformity are found in Sections 1011.5.4 and 1011.5.4.1.

Exception 1 is for spiral staircases, a unique type of stairway. Section 1011.5.2 is not applicable to this stair type, again because of construction issues and limited applications. For a discussion on spiral staircases, see Section 1011.10.

Exception 2 provides a practical exception where assembly facilities are designed for viewing. See Sections 1029.13 through 1029.13.2.4 for assembly stepped aisle-walking surfaces. This exception is limited to when stairways are a direct continuation of the path of travel from the level cross aisle to the stepped aisles. It is not permitted for other stairways within the assembly space.

Exception 3 allows revisions to the 7 inches/11 inches (178 mm/279 mm) riser/tread requirements for Group R-3 and any associated utility (such as barns, connected garages or detached garages) and within individual units of Group R-2 and their associated utility areas (such as attached garages). This change is allowed because of the low occupant load and the high degree of occupant familiarity with the stairways. When this exception is taken for stairways that have

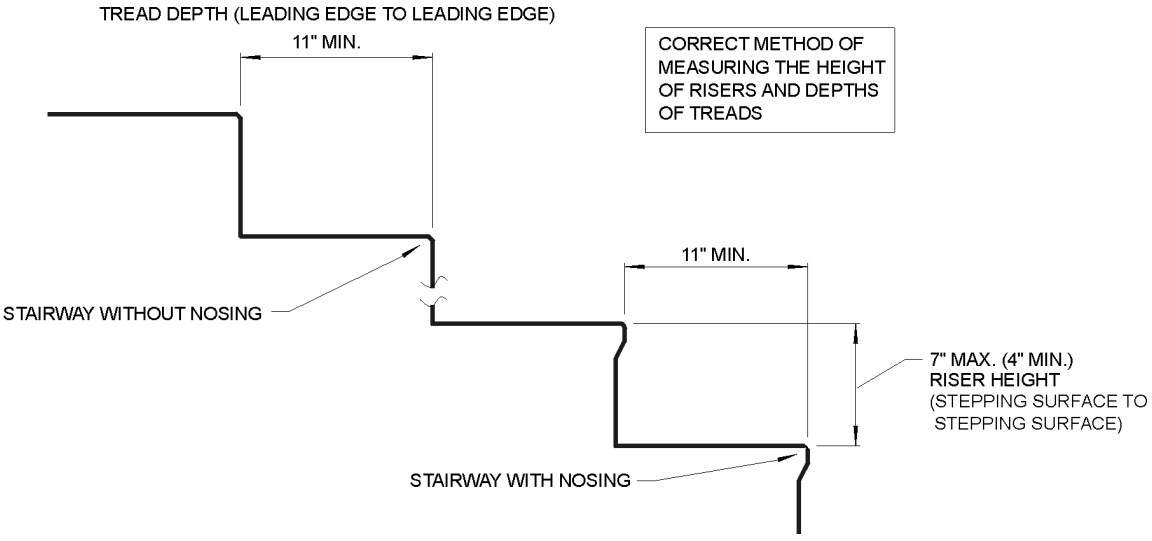

For SI: 1 inch = 25.4 mm.

Figure 1011.5.2
TREAD/RISER DIMENSIONS

INTERNATIONAL CODE COUNCIL®
Copyright © 2015 ICC. ALL RIGHTS RESERVED. Accessed by David Dammon on Jun 21, 2017 12:30:52 PM pursuant to License Agreement with ICC. No further reproduction or distribution authorized. ANY UNAUTHORIZED REPRODUCTION OR DISTRIBUTION IS A VIOLATION OF THE FEDERAL COPYRIGHT ACT AND THE LICENSE AGREEMENT, AND SUBJECT TO CIVIL AND CRIMINAL PENALTIES THEREUNDER.

solid risers, each tread is required to have a nosing projection with a minimum dimension of $^3/_4$ inch (19.1 mm) and maximum dimension of $1^1/_4$ inches (32 mm) where the tread depth is less than 11 inches (279 mm). Nosing projections are created where the nosing of the tread above extends beyond the trailing edge of the tread below or when a solid riser is angled under the tread above and connected to the trailing edge of the tread below. Nosing projections are not required for residential stairs with open risers and 10-inch (254 mm) treads. A nosing projection provides a greater stepping surface for those ascending the stairway. For users descending the stairway, the nosing projection allows the toe of the foot to be placed further away from the riser above, providing the necessary clearance for the heel of the foot as it swings down in an arc to its position on the tread (see Commentary Figure 1011.5.3).

Exception 4 allows for the replacement of an existing stair. Where a change of occupancy would require compliance with current standards, this exception allows a stairway that may be steeper than that permitted, provided it does not constitute a hazard [see *International Existing Building Code*® (IEBC®) Section 403.1].

Exception 5 allows steeper stairs in spaces of not more than 250 square feet (23 m^2) in correctional facilities (Group I-3) with a maximum riser height of 8 inches (203 mm) and a minimum tread depth of 9 inches (229 mm) because of the minimal occupant load and the familiarity of the users with the stairway. Although not stated in this exception, utilizing a nosing projection to provide effective tread depth, as stated in Exception 3 for tread depths less than 11 inches (279 mm), is a good design practice.

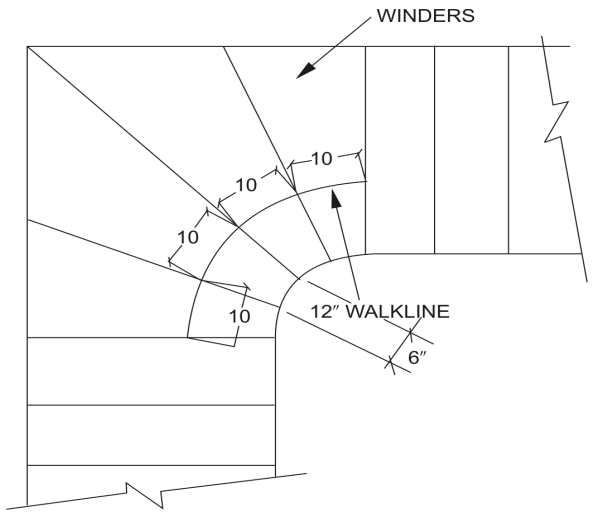

For SI: 1 inch = 25.4 mm.

Figure 1011.5.3
STAIR WINDERS WITHIN A DWELLING

1011.5.3 Winder treads. *Winder* treads are not permitted in *means of egress stairways* except within a *dwelling unit*.

Exceptions:

1. Curved *stairways* in accordance with Section 1011.9.
2. *Spiral stairways* in accordance with Section 1011.10.

❖ The intent of this section is to coordinate the general provisions for stairway tread and riser dimensions in Section 1011.5.2 with the provisions for winder treads permitted in curved and spiral stairways (see Sections 1011.9 and 1011.10). Winders are permitted in means of egress stairways within dwelling units where occupant loads are smaller and occupants have increased familiarity (see Commentary Figure 1011.5.3 and Section 1011.5.2, Exception 3). This is consistent with provisions in the *International Residential Code*® (IRC®).

Winders are used to change the direction of a flight by introducing a consistent incremental turn associated with each tread. The risk of injury in the use of stairways constructed with winders is considered to be greater than for stairways constructed as straight runs where users may be restricted by the presence of other users limiting visual clues or influencing the rate of travel. Additional user attention in the turn and the aid of the turn in arresting falls similar to turns at landings is also understood to negate this.

The employment of winders in stairway construction may necessitate the change of the user's gait in both ascent and descent where the tread depth of the winder is not equal to the tread depth of any rectangular treads in the same flight. For example, a person descending a straight flight of stairs will develop a particular gait conforming to the proportion of the riser height and tread depth that will be consistent throughout the flight. However, in a flight that includes winders and rectangular treads, the user must accommodate a change in the proportion of the riser height and tread depth as determined by the path of travel chosen. Visual clues are important to the users' instinctive responses to alter the path of travel, the length of the stride, or a combination of both that may result in nonconcentric movement. To ensure users of the visual clues necessary to alter their gait and limit the need to alter the path of travel in conditions of higher occupant loading, flights with winders must meet the specific safety provisions listed for curved or spiral stairways unless they are within a dwelling unit.

1011.5.4 Dimensional uniformity. *Stair* treads and risers shall be of uniform size and shape. The tolerance between the largest and smallest riser height or between the largest and smallest tread depth shall not exceed $^3/_8$ inch (9.5 mm) in any *flight* of *stairs*. The greatest *winder* tread depth at the

INTERNATIONAL CODE COUNCIL®
Copyright © 2015 ICC. ALL RIGHTS RESERVED. Accessed by David Dammon on Jun 21, 2017 12:30:52 PM pursuant to License Agreement with ICC. No further reproduction or distribution authorized. ANY UNAUTHORIZED REPRODUCTION OR DISTRIBUTION IS A VIOLATION OF THE FEDERAL COPYRIGHT ACT AND THE LICENSE AGREEMENT, AND SUBJECT TO CIVIL AND CRIMINAL PENALTIES THEREUNDER.

walkline within any *flight* of *stairs* shall not exceed the smallest by more than $^3/_8$ inch (9.5 mm).

Exceptions:

1. *Stairways* connecting stepped *aisles* to cross *aisles* or concourses shall be permitted to comply with the dimensional nonuniformity in Section 1029.13.2.
2. Consistently shaped *winders*, complying with Section 1011.5, differing from rectangular treads in the same *flight* of *stairs*.
3. Nonuniform riser dimension complying with Section 1011.5.4.1.

❖ Dimensional uniformity in the design and construction of stairways contributes to safe stairway use. When ascending or descending a stair, users establish a gait based on the instinctive expectation or "feel" that each step taken will be at the same height and will land in approximately the same position on the tread as the previous steps in the pattern. A change in tread or riser dimensions in a stairway flight in excess of the allowed dimensional tolerance can break the rhythm and cause a misstep, stumbling or physical strain that may result in a fall or serious injury. Therefore, this section limits the dimensional variations to a tolerance of $^3/_8$ inch (9.5 mm) between the largest and smallest riser or tread dimension in a flight of stairs. A "flight" of stairs is defined as a run of stairs between landings.

For special conditions of construction and as a practical matter, this section allows some greater variations in stairway tread and riser dimensions than the general limitations specified above.

Exception 1 provides a practical exception where assembly facilities are designed for viewing. See Sections 1029.13 through 1029.13.2.4 for assembly stepped aisle walking surfaces. This exception is limited to when stairways are a direct continuation of the path of travel from the level cross aisle to the stepped aisles. It is not permitted for other stairways within the assembly space.

Exception 2 addresses winder treads, which must be consistent along the walkline (see Commentary Figure 1011.5.4) when compared to other winder treads in the same flight but are not required to meet the tolerance when compared to the uniform dimension of rectangular treads in the same flight.

Exception 3 is in recognition of the situation where a stairway moves down to a surface that slopes up or down perpendicular to the stairway. See the commentary to Section 1105.4.1.

1011.5.4.1 Nonuniform height risers. Where the bottom or top riser adjoins a sloping *public way*, walkway or driveway having an established grade and serving as a landing, the bottom or top riser is permitted to be reduced along the slope to less than 4 inches (102 mm) in height, with the variation in height of the bottom or top riser not to exceed one unit vertical in 12 units horizontal (8-percent slope) of *stair* width. The *nosings* or leading edges of treads at such nonuniform height risers shall have a distinctive marking stripe, different from any other *nosing* marking provided on the *stair flight*. The distinctive marking stripe shall be visible in descent of the *stair* and shall have a slip-resistant surface. Marking stripes shall have a width of not less than 1 inch (25 mm) but not more than 2 inches (51 mm).

❖ This section addresses the situation where the bottom riser of a flight of stairways meets a sloped land-

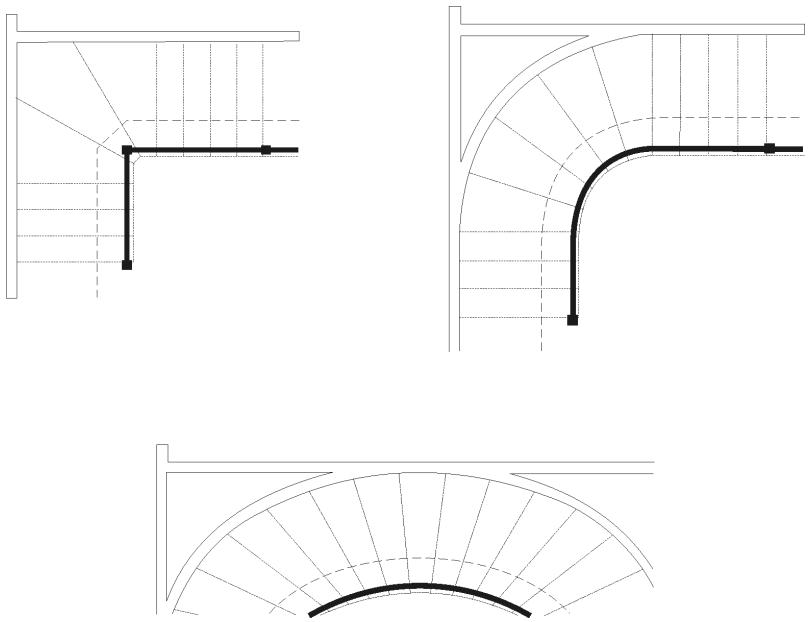

Figure 1011.5.4
CONSISTENTLY SHAPED WINDERS

INTERNATIONAL CODE COUNCIL®
Copyright © 2015 ICC. ALL RIGHTS RESERVED. Accessed by David Dammon on Jun 21, 2017 12:30:52 PM pursuant to License Agreement with ICC. No further reproduction or distribution authorized. ANY UNAUTHORIZED REPRODUCTION OR DISTRIBUTION IS A VIOLATION OF THE FEDERAL COPYRIGHT ACT AND THE LICENSE AGREEMENT, AND SUBJECT TO CIVIL AND CRIMINAL PENALTIES THEREUNDER.

ing, such as a public way, walk or driveway (see Commentary Figure 1011.5.4.1). Because the sidewalk landing is sloped perpendicular to the stairway run, stepping off the bottom tread on one side will result in a higher riser than stepping off the bottom tread on the other side. This is permitted provided the bottom riser is marked so that someone using the stairs will be aware of the hazard of a nonuniform riser.

1011.5.5 Nosing and riser profile. *Nosings* shall have a curvature or bevel of not less than $^1/_{16}$ inch (1.6 mm) but not more than $^9/_{16}$ inch (14.3 mm) from the foremost projection of the tread. Risers shall be solid and vertical or sloped under the tread above from the underside of the *nosing* above at an angle not more than 30 degrees (0.52 rad) from the vertical.

❖ The profiles of treads and risers contribute to stairway safety. The radius or bevel of the nosing eases the otherwise square edge of the tread and prevents irregular chipping and wear that can become a maintenance issue and seriously affect the safe use of the stair. The minimum curvature or bevel of $^1/_{16}$ inch (1.6 mm) eliminates a sharp square edge that will cause greater injury in falls and provides a certain contrast from the other surfaces of the stair for easier visual location of the start of the tread surface. The $^9/_{16}$-inch (14.3 mm) limit of beveling and maximum radius of curvature at the leading edge of the tread is intended to allow descending foot placement on a surface that does not pitch the foot forward or allow the ball of the foot to slide off the treads and ascending foot placement to slide onto the tread without catching on a square edge. This section also states that risers shall be solid; however, Section 1011.5.5.3 specifically states exceptions to this requirement that are to be applied. The sloping of risers allows the step profile to have a nosing projection without a lip that might cause a foot to catch when dragged up the face of the riser. Such designs are subject to the maximum nosing projection stated in Section 1011.5.5.1 that must be considered when choosing the angle to slope the riser.

1011.5.5.1 Nosing projection size. The leading edge (*nosings*) of treads shall project not more than $1^1/_4$ inches (32 mm) beyond the tread below.

❖ A nosing projection allows the descending foot to be placed further forward on the tread and the heel to then clear the nosing of the tread above as it swings down in an arc, landing on a tread that is effectively deeper than if no nosing projection is used. Nosing projections are so common in stair design that they are usually only noticed by users when they are absent since the lack of nose projection can affect one's gait. Treads with vertical risers are allowed with or without a nosing projection. A nosing projection may also be accommodated by slanting the riser under the tread above. The nosing projection is limited to $1^1/_4$ inch (32 mm) maximum. Treads designed with rounding or bevel on the underside would reduce the chance that a user's toe might catch while ascending the stairway (see Commentary Figure 1011.5.5.1).

1011.5.5.2 Nosing projection uniformity. *Nosing* projections of the leading edges shall be of uniform size, including the projections of the *nosing's* leading edge of the floor at the top of a *flight.*

❖ See the commentary to Section 1011.5.5.1.

1011.5.5.3 Solid risers. Risers shall be solid.

Exceptions:

1. Solid risers are not required for *stairways* that are not required to comply with Section 1009.3, provided that the opening between treads does not permit the passage of a sphere with a diameter of 4 inches (102 mm).
2. Solid risers are not required for occupancies in Group I-3 or in Group F, H and S occupancies other

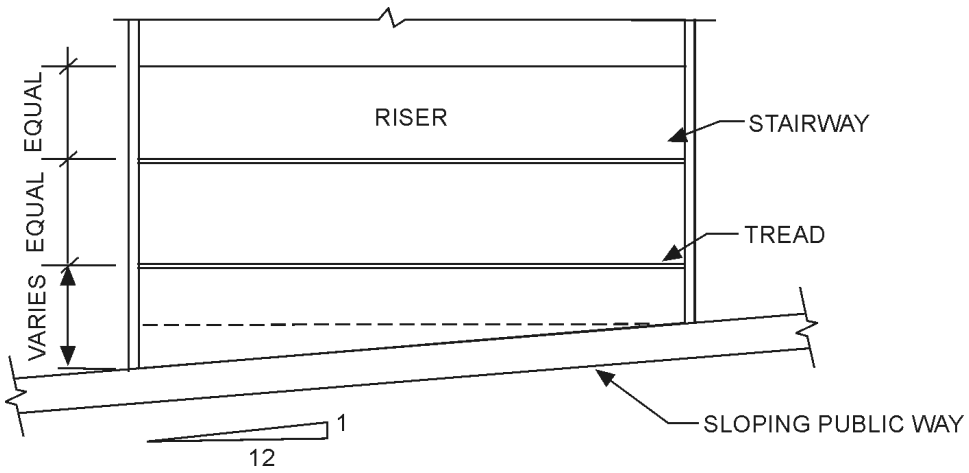

Figure 1011.5.4.1
SLOPED LANDING

INTERNATIONAL CODE COUNCIL®
Copyright © 2015 ICC. ALL RIGHTS RESERVED. Accessed by David Dammon on Jun 21, 2017 12:30:52 PM pursuant to License Agreement with ICC. No further reproduction or distribution authorized. ANY UNAUTHORIZED REPRODUCTION OR DISTRIBUTION IS A VIOLATION OF THE FEDERAL COPYRIGHT ACT AND THE LICENSE AGREEMENT, AND SUBJECT TO CIVIL AND CRIMINAL PENALTIES THEREUNDER.

than areas accessible to the public. There are no restrictions on the size of the opening in the riser.

3. Solid risers are not required for *spiral stairways* constructed in accordance with Section 1011.10.

❖ The code does not address when a riser could contain openings and still be considered "solid." However, the intent is so that someone would not catch their toe as they moved up the stairway (see the commentary for nosing projections in Section 1011.5.5). It is not the intent to prohibit risers made of grills or other designs where a toe would not catch. Grill stairways are often used in exterior locations to allow for the passage of snow or rain and decrease the chance of accumulation and possible slips and falls on the stairways.

Exception 1 allows the use of open risers on all stairs that are not part of an accessible means of egress. Where the riser is allowed to be open, the opening is limited to be consistent with the requirements for guards (see Commentary Figure 1011.5.5.3). While not required, the second option shown in Commentary Figure 1011.5.5.3 would limit the possibility of a toe catch as someone moved up the stairways and would be a safer design. The code does not reference ICC A117.1 for stairways, because stairways are not part of an accessible route; however, the code and standard provide opening limitations in tread surfaces. Section 1011.7.1 does allow for treads to have a maximum opening that allows for a $^1/_2$-inch (12.7 mm) sphere.

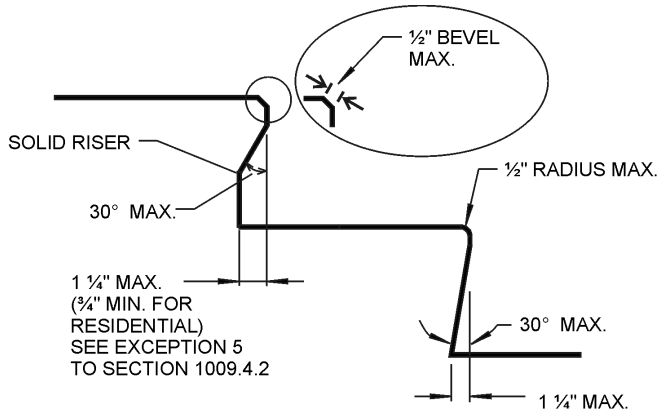

For SI: 1 inch = 25.4 mm, 1 degree = 0.01745 rad.

Figure 1011.5.5.1
TREAD/RISER PROFILE
(SOLID RISER)

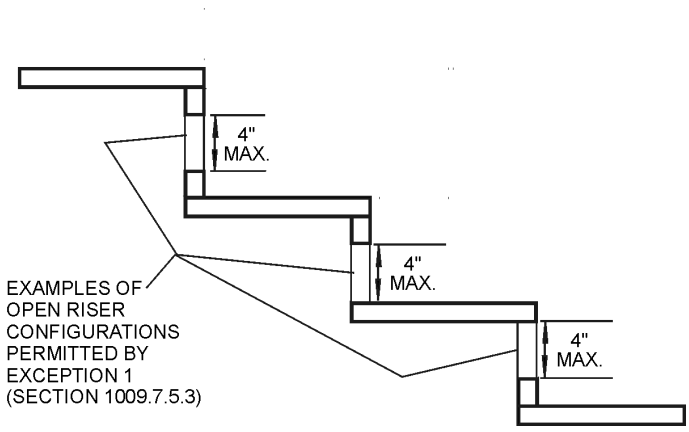

For SI: 1 inch = 25.4 mm.

Figure 1011.5.5.3
TREAD/RISER PROFILE
(OPEN RISER)

INTERNATIONAL CODE COUNCIL®
Copyright © 2015 ICC. ALL RIGHTS RESERVED. Accessed by David Dammon on Jun 21, 2017 12:30:52 PM pursuant to License Agreement with ICC. No further reproduction or distribution authorized. ANY UNAUTHORIZED REPRODUCTION OR DISTRIBUTION IS A VIOLATION OF THE FEDERAL COPYRIGHT ACT AND THE LICENSE AGREEMENT, AND SUBJECT TO CIVIL AND CRIMINAL PENALTIES THEREUNDER.

Exception 2 recognizes that open risers are commonly used for stairs in occupancies such as detention facilities, storage, industrial and high-hazard areas for practical reasons. In detention facilities, open risers provide a greater degree of security and supervision because people cannot effectively conceal themselves behind the stair. Factories, high-hazard buildings and storage facilities have areas where workers may need the open risers to decrease the chance of spillage, water or snow accumulating on the stairs. See Section 1011.7.1 for permitted openings in the treads.

Exception 3 recognizes open risers as necessary for adequate foot placement in spiral stairways. The 4-inch (102 mm) opening limitations of Exception 1 are not applicable to spiral stairways.

1011.6 Stairway landings. There shall be a floor or landing at the top and bottom of each *stairway*. The width of landings shall be not less than the width of *stairways* served. Every landing shall have a minimum width measured perpendicular to the direction of travel equal to the width of the *stairway*. Where the *stairway* has a straight run the depth need not exceed 48 inches (1219 mm). Doors opening onto a landing shall not reduce the landing to less than one-half the required width. When fully open, the door shall not project more than 7 inches (178 mm) into a landing. Where *wheelchair spaces* are required on the *stairway* landing in accordance with Section 1009.6.3, the *wheelchair space* shall not be located in the required width of the landing and doors shall not swing over the *wheelchair spaces*.

Exception: Where *stairways* connect stepped *aisles* to cross *aisles* or concourses, *stairway* landings are not required at the transition between *stairways* and stepped *aisles* constructed in accordance with Section 1029.

❖ A level portion of a stairway provides users with a place to rest in their ascent or descent, to enter a stairway and to adjust their gait before continuing. Landings also break up the run of a stairway, especially at a turn, to aid in the arrest of falls that may occur (see Section 1011.8).

The minimum size (width and depth) of all landings in a stairway is determined by the actual width of the stairway. If Section 1011.2 requires a stairway to have a width of at least 44 inches (1118 mm) and the stairway is constructed with that minimum width, then all landings serving that stairway must be at least 44 inches (1118 mm) wide and 44 inches (1118 mm) deep [see Commentary Figure 1011.6(1)]. If a stairway is constructed wider than required, landings must increase accordingly so as to not create a bottleneck situation in the egress travel. However, when a stairway is configured so that it has a straight run, the depth of the landing between flights in the direction of egress travel is not required to exceed 48 inches (1219 mm), even though the actual width of the stair may exceed 48 inches (1219 mm) [see Commentary Figure 1011.6(2)].

It is not the intent of this section to require that a stairway landing be shaped as a square or rectangle. A landing turning the stairway 90 degrees (1.57 rad) or more with a curved or segmented outside periphery would be permitted, as long as the landing provides an area described by an arc with a radius equal to the actual stairway width [see Commentary Figure 1011.6(3)]. In this case, the space necessary for means of egress will be available.

The last portion of the requirement limits the extent to which doors that swing onto landings may interfere or encroach upon the required landing space. This limits the arc of the door swing on a landing, so that the effect on the means of egress is minimized [see Commentary Figure 1011.6(4)]. This is consistent with a door opening into an exit access corridor in Section 1005.7. For safety reasons and to ensure the means of egress is continually available for everyone, where an area of refuge/wheelchair space must be located on a landing, the wheelchair spaces must not be within the required landing width and the entrance door to the stair enclosure may not swing over the wheelchair spaces [see Commentary Figure 1009.3(1)].

Exception 1 provides a practical exception where

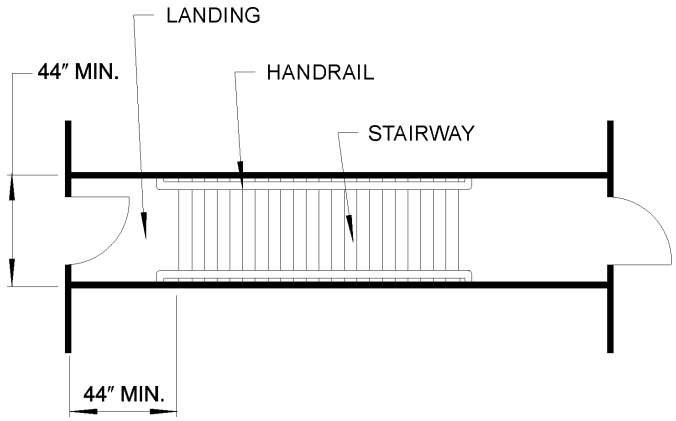

For SI: 1 inch = 25.4 mm.

Figure 1011.6(1)
TYPICAL LANDING DIMENSIONS STRAIGHT-RUN STAIRWAY

INTERNATIONAL CODE COUNCIL®
Copyright © 2015 ICC. ALL RIGHTS RESERVED. Accessed by David Dammon on Jun 21, 2017 12:30:52 PM pursuant to License Agreement with ICC. No further reproduction or distribution authorized. ANY UNAUTHORIZED REPRODUCTION OR DISTRIBUTION IS A VIOLATION OF THE FEDERAL COPYRIGHT ACT AND THE LICENSE AGREEMENT, AND SUBJECT TO CIVIL AND CRIMINAL PENALTIES THEREUNDER.

assembly facilities are designed for viewing. See Sections 1029.13 through 1029.13.2.4 for assembly stepped aisle walking surfaces. This exception is limited to when stairways are a direct continuation of the path of travel from the level cross aisle to the stepped aisles. It is not permitted for other stairways within the assembly space.

1011.7 Stairway construction. *Stairways* shall be built of materials consistent with the types permitted for the type of construction of the building, except that wood *handrails* shall be permitted for all types of construction.

❖ In keeping with the different levels of fire protection provided by each of the five basic types of construction designated in Chapter 6, the materials used for stairway construction must meet the appropriate combustibility/noncombustibility requirements indicated in Section 602 for the particular type of construction of the building in which the stairway is located. This is required whether or not the stair is part of the required means of egress. Any structure supporting the stairway and the stairway enclosure must be fire-resistance rated consistent with the construction type; however, the stairway components inside the enclosure need only comply with the material limits for the type of construction.

If desired, wood handrails may be used on the basis that the fuel load contributed by this combustible component of stairway construction is insignificant and will not pose a fire hazard.

1011.7.1 Stairway walking surface. The walking surface of treads and landings of a *stairway* shall not be sloped steeper than one unit vertical in 48 units horizontal (2-percent slope)

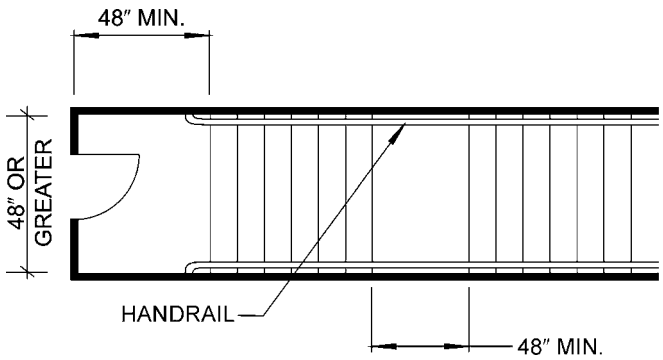

For SI: 1 inch = 25.4 mm.

Figure 1011.6(2)
TYPICAL LANDING DIMENSIONS STRAIGHT-RUN STAIRWAY WIDER THAN 48 INCHES

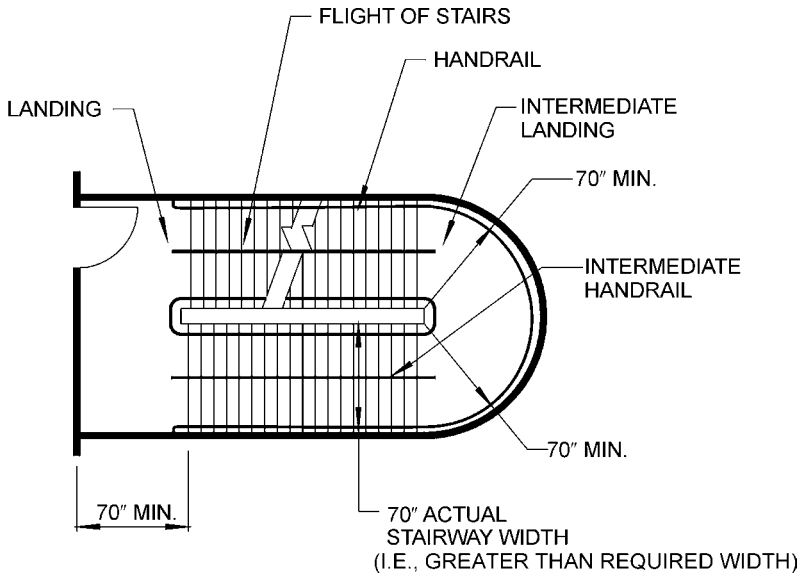

For SI: 1 inch = 25.4 mm.

Figure 1011.6(3)
REVERSING RUN STAIRWAY

INTERNATIONAL CODE COUNCIL®
Copyright © 2015 ICC. ALL RIGHTS RESERVED. Accessed by David Dammon on Jun 21, 2017 12:30:52 PM pursuant to License Agreement with ICC. No further reproduction or distribution authorized. ANY UNAUTHORIZED REPRODUCTION OR DISTRIBUTION IS A VIOLATION OF THE FEDERAL COPYRIGHT ACT AND THE LICENSE AGREEMENT, AND SUBJECT TO CIVIL AND CRIMINAL PENALTIES THEREUNDER.

in any direction. *Stairway* treads and landings shall have a solid surface. Finish floor surfaces shall be securely attached.

Exceptions:

1. Openings in *stair* walking surfaces shall be a size that does not permit the passage of $^1/_2$-inch-diameter (12.7 mm) sphere. Elongated openings shall be placed so that the long dimension is perpendicular to the direction of travel.
2. In Group F, H and S occupancies, other than areas of parking structures accessible to the public, openings in treads and landings shall not be prohibited provided a sphere with a diameter of $1^1/_8$ inches (29 mm) cannot pass through the opening.

❖ It is the intent of this section that both landing and stair treads be solid and level with firmly attached surface materials; however, the 1:48 slope should be adequate to allow for drainage to limit the chance for an accumulation of water where someone might slip.

The exceptions permit the use of open grate-type material or slotted grill for stairway treads and landings in two different situations.

Exception 1 allows for a maximum $^1/_2$-inch (12.7 mm) opening on stairway treads in public areas and serving any use (see Commentary Figure 1011.7.1). This is very beneficial on exterior stairways where snow, ice or water may accumulate. The $^1/_2$-inch (12.7 mm) limitation is based on the size of a crutch or cane tip and is consistent with ICC A117.1 and federal accessibility requirements. The opening limitation is also small enough that most shoe heels will not get stuck. If a slotted grill pattern is used, the slots must run side to side on the stairway tread, not nosing to back.

Exception 2 is applicable in factory, industrial, storage and high-hazard occupancies. This provision is intended to apply primarily to stairs that provide access to areas not required to be accessible, such as pits, catwalks, tanks, equipment platforms, roofs or mezzanines. Walking surfaces with limited-size openings are typically used because open grate-type material is less susceptible to accumulation of dirt, debris or moisture, as well as being more resistant to corrosion. Most commercially available grate material is manufactured with a maximum nominal 1-inch (25 mm) opening; therefore, the limitation that the openings not allow the passage of a sphere of $1^1/_8$ inches (29 mm) diameter allows the use of most material as well as accounting for manufacturing tolerances.

The allowances for openings in risers is addressed in Section 1011.5.5.3.



Figure 1011.7.1
OPEN TREAD IN ACCORDANCE WITH EXCEPTION 1

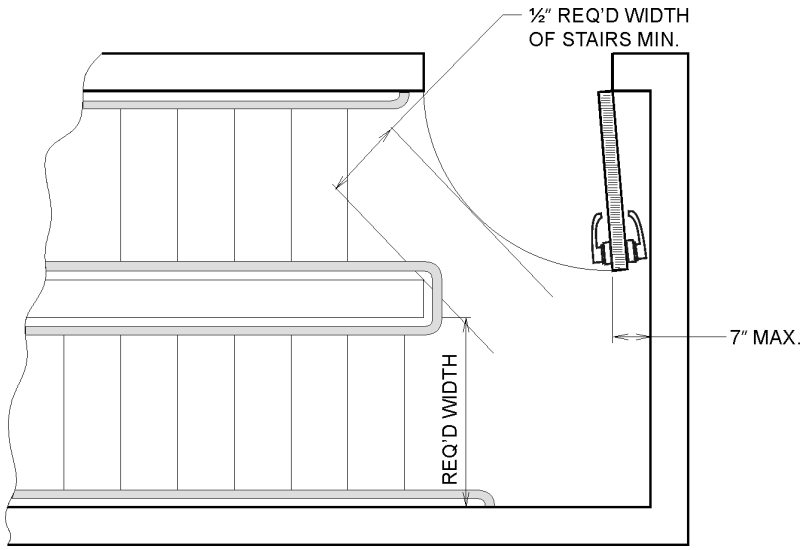

For SI: 1 inch = 25.4 mm.

Figure 1011.6(4)
DOOR CLEARANCE REQUIREMENTS IN STAIRWAY

INTERNATIONAL CODE COUNCIL®
Copyright © 2015 ICC. ALL RIGHTS RESERVED. Accessed by David Dammon on Jun 21, 2017 12:30:52 PM pursuant to License Agreement with ICC. No further reproduction or distribution authorized. ANY UNAUTHORIZED REPRODUCTION OR DISTRIBUTION IS A VIOLATION OF THE FEDERAL COPYRIGHT ACT AND THE LICENSE AGREEMENT, AND SUBJECT TO CIVIL AND CRIMINAL PENALTIES THEREUNDER.

1011.7.2 Outdoor conditions. Outdoor *stairways* and outdoor approaches to *stairways* shall be designed so that water will not accumulate on walking surfaces.

❖ Outdoor stairways and approaches to stairways are to be constructed with a slope that complies with Section 1011.7.1 or are required to be protected such that walking surfaces do not accumulate water. While not specifically stated, any interior locations, such as near a pool, should also have the stair designed to limit the accumulation of water in order to maintain slip resistance (see Section 1003.4).

Where exterior stairways are used in moderate or severe climates, there may also be a concern to protect the stairway from accumulations of snow and ice to provide a safe path of egress travel at all times. Maintenance of the means of egress requires an unobstructed path to allow for full instant use in case of a fire or emergency (see Section 1031.3). Typical methods for protecting these egress elements include roof overhangs or canopies; heated slabs; grated treads and landings; or, when approved by the building official, a reliable snow removal maintenance program.

1011.7.3 Enclosures under interior stairways. The walls and soffits within enclosed usable spaces under enclosed and unenclosed stairways shall be protected by 1-hour fire-resistance-rated construction or the fire-resistance rating of the stairway enclosure, whichever is greater. Access to the enclosed space shall not be directly from within the stairway enclosure.

Exception: Spaces under *stairways* serving and contained within a single residential dwelling unit in Group R-2 or R-3 shall be permitted to be protected on the enclosed side with $^1/_2$-inch (12.7 mm) gypsum board.

❖ This section addresses the fire hazard of storage under an interior stairway, whether it is an exit access stairway or exit stairway. The stairway must be protected from a storage area under it, even if the stair is not required to be enclosed. The section also requires that the storage area not open into a stairway enclosure. This limits the potential of a fire that starts in the storage area from affecting the means of egress. The exception provides specific criteria for separation for storage areas under an interior stairway for the indicated residential occupancies.

1011.7.4 Enclosures under exterior stairways. There shall not be enclosed usable space under *exterior exit stairways* unless the space is completely enclosed in 1-hour fire-resistance-rated construction. The open space under *exterior stairways* shall not be used for any purpose.

❖ If the space under an exterior stairway is to be used, such as for storage, the area below the stairway must be separated from the stairway with walls and a ceiling with a fire-resistance rating of at least 1 hour. If the space under the exterior stairway is open, it must remain free and clear. A fire occurring in this space would jeopardize the use of the stairway for exiting during an emergency.

1011.8 Vertical rise. A flight of stairs shall not have a vertical rise greater than 12 feet (3658 mm) between floor levels or landings.

Exception: Spiral stairways used as a means of egress from technical production areas.

❖ Between landings and platforms, the vertical rise is to be measured from one landing walking surface to another (see Commentary Figure 1011.8). The limited height provides a reasonable interval for users with physical limitations to rest on a level surface and also serves to alleviate potential negative psychological effects of long and uninterrupted stairway flights.

The exception allows for spiral stairways that only serve technical production areas to eliminate intermediate landings regardless of height. These stairways typically have limited use and serve areas such as catwalks or lighting booths in stadiums and theaters. In addition, there is the technical difficulty of maintaining proper headroom in a spiral stairway with an intermediate landing.

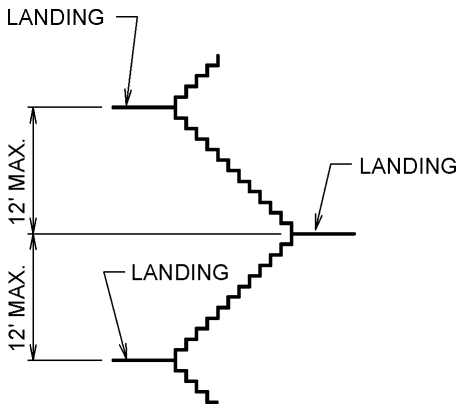

For SI: 1 foot = 304.8 mm.

Figure 1011.8
STAIRWAY RISE LIMITATION

1011.9 Curved stairways. Curved stairways with winder treads shall have treads and risers in accordance with Section 1011.5 and the smallest radius shall be not less than twice the minimum width or required capacity of the stairway.

Exception: The radius restriction shall not apply to curved stairways in Group R-3 and within individual dwelling units in Group R-2.

❖ Curved stairway construction consists of a series of winder treads that form a stairway configuration. Options are many, including circular, S-shaped, oval, elliptical, hourglass, etc. The commentary to Section 1011.5.3 regarding the possible event of nonconcentric movement on stairways with winders also applies to curved stairways. This type of stairway is allowed to be used as a component of a means of egress when tread and riser dimensions meet the require-

INTERNATIONAL CODE COUNCIL®
Copyright © 2015 ICC. ALL RIGHTS RESERVED. Accessed by David Dammon on Jun 21, 2017 12:30:52 PM pursuant to License Agreement with ICC. No further reproduction or distribution authorized. ANY UNAUTHORIZED REPRODUCTION OR DISTRIBUTION IS A VIOLATION OF THE FEDERAL COPYRIGHT ACT AND THE LICENSE AGREEMENT, AND SUBJECT TO CIVIL AND CRIMINAL PENALTIES THEREUNDER.

ments or exceptions of Section 1011.5. This section also requires that the shorter radius must be equal to or greater than twice the required width (see Section 1011.2) of the stairway to limit the degree of turning thereby expediting egress from higher occupancies (see Commentary Figure 1011.9).

The exception for residential units eliminates the minimum radius requirement where the occupants are familiar with the extent of the turning of the stair through the curve.

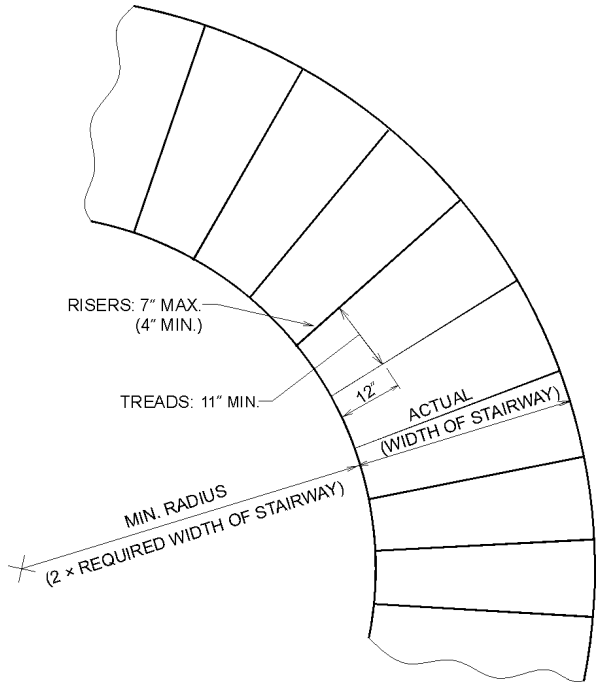

For SI: 1 inch = 25.4 mm.

Figure 1011.9
CURVED STAIRWAYS—MINIMUM DIMENSIONAL REQUIREMENTS

1011.10 Spiral stairways. *Spiral stairways* are permitted to be used as a component in the *means of egress* only within *dwelling units* or from a space not more than 250 square feet (23 m^2) in area and serving not more than five occupants, or from *technical production areas* in accordance with Section 410.6.

A *spiral stairway* shall have a $7^1/_2$-inch (191 mm) minimum clear tread depth at a point 12 inches (305 mm) from the narrow edge. The risers shall be sufficient to provide a headroom of 78 inches (1981 mm) minimum, but riser height shall not be more than $9^1/_2$ inches (241 mm). The minimum *stairway* clear width at and below the *handrail* shall be 26 inches (660 mm).

❖ Spiral stairways can be used within an individual dwelling unit, from small spaces in other occupancies and from technical production areas in spaces such as theaters. Spiral stairways are permitted to provide access between the levels within a live/work unit (see Section 419.3.2).

Spiral stairways are generally constructed with a fixed center pole that serves as either the primary or the only means of support from which pie-shaped treads radiate to form a winding stairway. The term "spiral" in the geometrical sense describes a curve that diminishes in radius and relates to the form of the stair as viewed in perspective from above or below; however, "spiral" does not describe the actual geometry of the stair. The unique turning of spiral stairs allows the center pole to act as the guard at the inside of the stair and the typically narrow width requires users to choose a walkline along the outer perimeter near the only required handrail. On spiral stairways of larger widths, where two users can pass and restrict access to the single handrail, the provision of a handrail at both sides should be considered.

The commentary to Section 1011.5.3 regarding the possible event of nonconcentric movement on stairways with winders also applies to spiral stairways. The nature of stairway construction is such that it does not serve well when used in emergencies that require immediate evacuation, nor does a spiral stairway configuration permit the handling of a large occupant load in an efficient and safe manner. Furthermore, it is impossible for fire service personnel to use a spiral stairway at the same time and in a direction opposite that being used by occupants to exit the premises, possibly causing a serious delay in firefighting operations. Therefore, this section allows only very limited use of spiral stairways when used as part of a required means of egress. Spiral stairways may be used in any occupancy as long as such stairways are not a component of a required means of egress.

Spiral stairways are required to have dimensional uniformity. The stairway must have a clear width of at least 26 inches (660 mm) at and below the handrail. The depth of the treads must not be less than $7^1/_2$ inches (191 mm) measured at a point that is 12 inches (305 mm) out from the narrow edge (see Commentary Figure 1011.10). Riser heights are required to be the same throughout the stairway, but are not to exceed $9^1/_2$ inches (241 mm). Minimum headroom of 6 feet, 6 inches (1981 mm) is required.

1011.11 Handrails. Stairways shall have handrails on each side and shall comply with Section 1014. Where glass is used to provide the handrail, the handrail shall comply with Section 2407.

Exceptions:

1. Stairways within dwelling units and spiral stairways are permitted to have a handrail on one side only.
2. Decks, patios and walkways that have a single change in elevation where the landing depth on each side of the change of elevation is greater than what is required for a landing do not require handrails.

INTERNATIONAL CODE COUNCIL®
Copyright © 2015 ICC. ALL RIGHTS RESERVED. Accessed by David Dammon on Jun 21, 2017 12:30:52 PM pursuant to License Agreement with ICC. No further reproduction or distribution authorized. ANY UNAUTHORIZED REPRODUCTION OR DISTRIBUTION IS A VIOLATION OF THE FEDERAL COPYRIGHT ACT AND THE LICENSE AGREEMENT, AND SUBJECT TO CIVIL AND CRIMINAL PENALTIES THEREUNDER.

3. In Group R-3 occupancies, a change in elevation consisting of a single riser at an entrance or egress door does not require handrails.
4. Changes in room elevations of three or fewer risers within dwelling units and sleeping units in Group R-2 and R-3 do not require handrails.

❖ Handrails are required along each side of a flight of stairs; however, handrails are not required along stairway landings. Handrail continuity and extensions that will overlap the landings are addressed in Sections 1014.4 and 1014.6.

Handrails have four recognized functions in stairway use. First, they serve to guide persons in ascent and descent along the path of egress travel, especially important for those with low vision, and in cases of fire where vision might be obscured by smoke. Second, they provide a tool for the user to exert stabilizing forces longitudinally (along the length of the rail), vertically and, most importantly, transversely (perpendicular) to the rail as the body transfers weight from side to side with each leg swing of the unique gait used on stairs. Third, they provide for pulling when arms are used to augment legs in ascent of steeper angles or when such climbing strategies result in more efficient use of the strengths of the user. Fourth, they are a tool that can be utilized to help in the arrest of a fall. In these capacities handrails serve to aid in the use of the stairway and are required on both sides of stairways in compliance with Section 1014 to allow passing users unencumbered access to a handrail. Finally, when glass is the material used to provide the handrail, it must comply with IBC Section 2407.

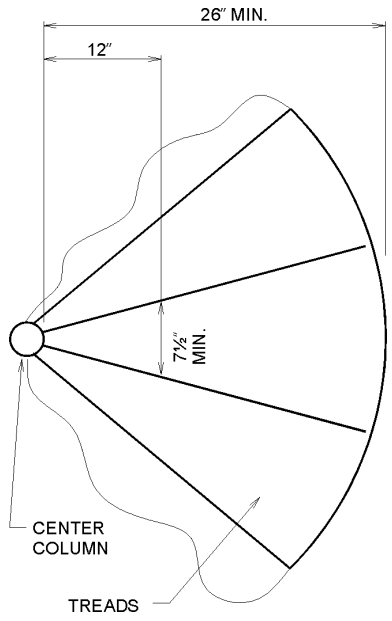

For SI: 1 inch = 25.4 mm.

Figure 1011.10
SPIRAL STAIRWAYS

Note that if the handrail extension is at a location that could be considered a protruding object, the handrail must return to the post at a height of less than 27 inches (686 mm) above the floor. Handrails along the stair runs are not considered protruding objects.

The exceptions state conditions where handrails are only required on one side or are not needed at all. By the nature of their construction, spiral stairways can only have a single handrail (see Exception 1). In accordance with Exceptions 1 and 4, within dwelling units, all stairways can have a handrail on one side only, and stairs with three or fewer rises are not required to have any handrails. Since "Stair" is defined as one or more risers, Exceptions 2 and 3 are necessary. Exception 3 exempts the single step at the front or back door of a Group R-3 dwelling unit (i.e., townhouse). Decks, patios and walkways often move down with the grade. When there are single steps, either off a patio or deck to grade, or along the surface, a handrail is not required (Exception 2, see Commentary Figure 1011.11). Many of these exceptions dealing with residential units are consistent with the IRC.

For guard requirements at stairways, see Section 1011.13.

1011.12 Stairway to roof. In buildings four or more stories above *grade plane*, one *stairway* shall extend to the roof surface unless the roof has a slope steeper than four units vertical in 12 units horizontal (33-percent slope).

Exception: Other than where required by Section 1011.12.1, in buildings without an occupied roof access to the roof from the top story shall be permitted to be by an *alternating tread device*, a ship's ladder or a permanent ladder.

❖ Because of safety considerations, roofs used for habitable purposes such as roof gardens, observation decks, sporting facilities (including jogging or walking



Figure 1011.11
EXAMPLE OF SECTION 1011.11, EXCEPTION 2

INTERNATIONAL CODE COUNCIL®
Copyright © 2015 ICC. ALL RIGHTS RESERVED. Accessed by David Dammon on Jun 21, 2017 12:30:52 PM pursuant to License Agreement with ICC. No further reproduction or distribution authorized. ANY UNAUTHORIZED REPRODUCTION OR DISTRIBUTION IS A VIOLATION OF THE FEDERAL COPYRIGHT ACT AND THE LICENSE AGREEMENT, AND SUBJECT TO CIVIL AND CRIMINAL PENALTIES THEREUNDER.

tracks and tennis courts) or similar uses, must be provided with conventional stairways that will serve as required means of egress. Access by ladders or an alternating tread device for such uses is not permitted.

In buildings four or more stories high, roofs that are not used for habitable purposes must be provided with ready access by conventional stairways or by an alternating tread device (see Section 1011.14). If this stair is also to provide access to an elevator penthouse on the roof, see additional requirements in Section 1011.12.1. Two reasons for this are access for roof or rooftop equipment repair and fire department access during a fire event. Sloping roofs with a rise greater than 4 inches (102 mm) for every 12 inches (305 mm) in horizontal measurement (4:12) are exempt from the requirements of this section because of the steepness of the construction and the inherent dangers to life safety.

While it is not specifically required that roof access be through an exit stairway enclosure, since part of the intent is for fire department access to the roof, it is strongly advised. Section 1023.9 requires signage at the level of exit discharge indicating whether the stairway has roof access.

1011.12.1 Stairway to elevator equipment. Roofs and penthouses containing elevator equipment that must be accessed for maintenance are required to be accessed by a stairway.

❖ The requirement for a stair to the roof for maintaining elevator equipment correlates the code with ASME A17.1/CSA B44, *Safety Code for Elevators and Escalators*. This referenced standard (see IBC Section 3001.2) has required stairs and a door to access elevator equipment since 1955. More specifically, Section 2.27.3.2.1 of ASME A17.1/CSA B44 states the following: "a stairway with a swinging door and platform at the top level, conforming to 2.7.3.3 shall be provided from the top floor of the building to the roof level. Hatch covers as a means of access to the roofs shall not be permitted." Alternating tread devices or ladders are not permitted as an alternative to the stairway for access to the elevator penthouse. This provision is more specific; therefore, while not prohibiting using the same stairway for access to the roof and the elevator penthouse (see Sections 1011.12 and 1011.12.2), access to that elevator penthouse must be via a stairway with door access, not an alternating tread device and hatch.

1011.12.2 Roof access. Where a stairway is provided to a roof, access to the roof shall be provided through a penthouse complying with Section 1510.2.

Exception: In buildings without an occupied roof, access to the roof shall be permitted to be a roof hatch or trap door not less than 16 square feet (1.5 m^2) in area and having a minimum dimension of 2 feet (610 mm).

❖ The purpose of the penthouse or stairway bulkhead requirement in this section is to protect the walking surface of the stairway to the roof. The exception provides for situations when roof access is only needed for service or maintenance purposes, and where the access may be permitted by alternatives such as alternating tread devices, ship's ladders or ladders.

1011.13 Guards. Guards shall be provided along stairways and landings where required by Section 1015 and shall be constructed in accordance with Section 1015. Where the roof hatch opening providing the required access is located within 10 feet (3049 mm) of the roof edge, such roof access or roof edge shall be protected by guards installed in accordance with Section 1015.

❖ While guards are required at the edge of a normally occupied roof by Section 1015, there is also a safety concern for roof areas that need to be accessed by service personnel, inspectors and emergency responders. This requirement for guards provides a minimum measure of safety when the roof access is close to the roof edge. This is consistent with the requirements at mechanical equipment in Section 1015.6 and 1015.7.

1011.14 Alternating tread devices. *Alternating tread devices* are limited to an element of a *means of egress* in buildings of Groups F, H and S from a mezzanine not more than 250 square feet (23 m^2) in area and that serves not more than five occupants; in buildings of Group I-3 from a guard tower, observation station or control room not more than 250 square feet (23 m^2) in area and for access to unoccupied roofs. *Alternating tread devices* used as a means of egress shall not have a rise greater than 20 feet (6096 mm) between floor levels or landings.

❖ This type of device is constructed in such a way that each tread alternates with each adjacent tread so that the device consists of a system of right-footed and left-footed treads (see Commentary Figure 1011.14).

The use of center stringer construction, half-treads and an incline that is considerably steeper than allowed for ordinary stairway construction makes the alternating tread device unique. However, because of its structural feature, only single-file use of the device (between handrails) is possible, thus preventing the occupants from passing one another. The pace of occupant travel is set by the slowest user, a condition that could become critical in an emergency situation. Furthermore, it is impossible for fire service personnel to use an alternating tread device at the same time and in a direction opposite that being used by occupants to exit the premises, possibly causing a serious delay in fire-fighting operations. For these reasons, this section greatly restricts the use of alternating tread devices as a means of egress. Alternating tread devices may be used in any occupancy as long as such stairways are not a component of a required means of egress.

Alternating tread devices are considered a modest improvement to ladder construction and, therefore, can be used as an unoccupied roof access in accordance with the requirements of Section 1011.12.

Alternating tread devices are permitted 20 feet (6096 mm) between landings given their limited appli-

INTERNATIONAL CODE COUNCIL®
Copyright © 2015 ICC. ALL RIGHTS RESERVED. Accessed by David Dammon on Jun 21, 2017 12:30:52 PM pursuant to License Agreement with ICC. No further reproduction or distribution authorized. ANY UNAUTHORIZED REPRODUCTION OR DISTRIBUTION IS A VIOLATION OF THE FEDERAL COPYRIGHT ACT AND THE LICENSE AGREEMENT, AND SUBJECT TO CIVIL AND CRIMINAL PENALTIES THEREUNDER.

cation and low occupant loads. In addition, it is recognized a vertical rise higher than the typical stairway is needed for these steeper devices which are used where space is often too restrictive for a regular stairway.

1011.14.1 Handrails of alternating tread devices. Handrails shall be provided on both sides of alternating tread devices and shall comply with Section 1014.

❖ For the safety of occupants, this section references the dimensional requirements for handrail locations to be used in conjunction with the special construction features of alternating tread devices provided in Section 1011.14. Because of the steepness of these devices, handrails on both sides are essential for safe functional use and additional clearances are required so that hand movement will not be encumbered by obstructions. Section 1015.3, Exception 5, permits the handrails along alternating tread devices to also serve as guards.

1011.14.2 Treads of alternating tread devices. *Alternating tread devices* shall have a minimum tread depth of 5 inches (127 mm), a minimum projected tread depth of $8^1/_2$ inches (216 mm), a minimum tread width of 7 inches (178 mm) and a maximum riser height of $9^1/_2$ inches (241 mm). The tread depth shall be measured horizontally between the vertical planes of the foremost projections of adjacent treads. The riser height shall be measured vertically between the leading edges of adjacent treads. The riser height and tread depth provided shall result in an angle of ascent from the horizontal of between 50 and 70 degrees (0.87 and 1.22 rad). The initial tread of the device shall begin at the same elevation as the platform, landing or floor surface.

Exception: *Alternating tread devices* used as an element of a *means of egress* in buildings from a mezzanine area not more than 250 square feet (23 m^2) in area that serves not more than five occupants shall have a minimum tread depth of 3 inches (76 mm) with a minimum projected tread depth of $10^1/_2$ inches (267 mm). The rise to the next alternating tread surface shall not exceed 8 inches (203 mm).

❖ Alternating tread stairways (see Section 1009.13) are required to have tread depths of at least 5 inches (127 mm). Tread projections are not to be less than $3^1/_2$ inches (89 mm) when measured from tread nosing to tread nosing [next adjacent tread to the left or right to provide a minimum projected tread depth of $8^1/_2$ inches (216 mm)] (see Commentary Figure 1011.14).

The risers are to be not more than $9^1/_2$ inches (241 mm) when measured from tread to alternating tread (next adjacent tread to the left or right). The rise between treads on the same side would be 19 inches (482 mm) maximum. Applying the limiting dimensions stated above results in a device with a very steep incline that is common to ladders; however, because the device may be walked facing down in descent, it is considered a type of stairway in the code.

Tread widths are required to be a minimum of 7 inches (178 mm) or more. With a center support, the total width will be more than 15 inches (381 mm).

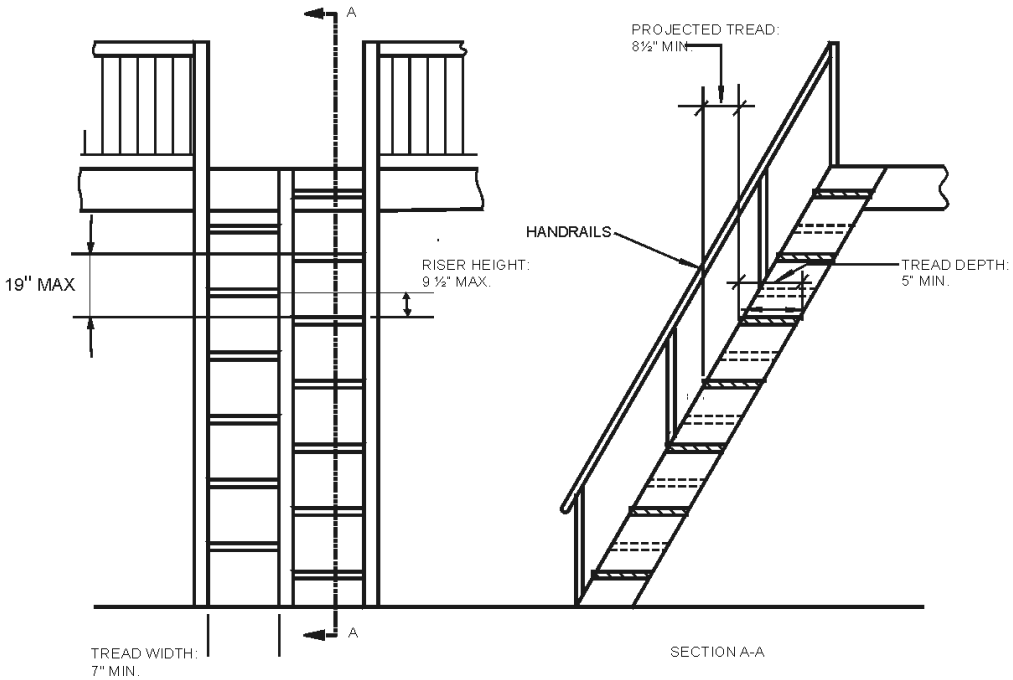

For SI: 1 inch = 25.4 mm.

Figure 1009.14
TYPICAL ALTERNATING TREAD DEVICE

INTERNATIONAL CODE COUNCIL®
Copyright © 2015 ICC. ALL RIGHTS RESERVED. Accessed by David Dammon on Jun 21, 2017 12:30:52 PM pursuant to License Agreement with ICC. No further reproduction or distribution authorized. ANY UNAUTHORIZED REPRODUCTION OR DISTRIBUTION IS A VIOLATION OF THE FEDERAL COPYRIGHT ACT AND THE LICENSE AGREEMENT, AND SUBJECT TO CIVIL AND CRIMINAL PENALTIES THEREUNDER.

Although no maximum width of the tread is stated, the device must be of a width to provide for functional use of both handrails at the same time in ascent and descent. For this same reason, handrail heights for alternating tread devices are modified from those stairways in Section 1014.2.

Just using the dimensions could result in an alternating tread device with an angle greater than 75 degrees (1.3 rad). In any case, the overall angle of the device must be between 50 and 70 degrees (0.87 and 1.22 rad).

For alternating tread devices used as a means of egress from small-area mezzanines as prescribed in the exception, the treads must project at least $7^1/_2$ inches (191 mm) as compared to the $3^1/_2$ inches (89 mm) stated above; treads are to be at least 3 inches (76 mm) in depth [compared to 5 inches (127 mm)] and risers are not to exceed 8 inches (203 mm) in height [compared to $9^1/_2$ inches (341 mm)].

1011.15 Ship's ladders. Ship's ladders are permitted to be used in Group I-3 as a component of a *means of egress* to and from control rooms or elevated facility observation stations not more than 250 square feet (23 m^2) with not more than three occupants and for access to unoccupied roofs. The minimum clear width at and below the *handrails* shall be 20 inches (508 mm).

❖ Ship's ladders can be used in correctional facilities for access to small control rooms, observation stations and unoccupied roofs. Where approved by the code official, ship's ladders could be used for access to unoccupied roofs in other occupancies. Ship's ladders are of similar gradient or pitch to alternating tread devices; however, the treads span the full width like that of a ladder rather than being staggered to either side (see Commentary Figure 1011.15).

1011.15.1 Handrails of ship's ladders. *Handrails* shall be provided on both sides of ship's ladders.

❖ Handrails are needed on both sides to assist in ascent and descent and the absence of a maximum width. Section 1015.3, Exception 5, permits the handrails along ship's ladders to also serve as guards.

1011.15.2 Treads of ship's ladders. Ship's ladders shall have a minimum tread depth of 5 inches (127 mm). The tread shall be projected such that the total of the tread depth plus the *nosing* projection is not less than $8^1/_2$ inches (216 mm). The maximum riser height shall be $9^1/_2$ inches (241 mm).

❖ See Commentary Figure 1011.5 for an example of this configuration.

1011.16 Ladders. Permanent ladders shall not serve as a part of the *means of egress* from occupied spaces within a building. Permanent ladders shall be permitted to provide access to the following areas:

1. Spaces frequented only by personnel for maintenance, repair or monitoring of equipment.
2. Nonoccupiable spaces accessed only by catwalks, crawl spaces, freight elevators or very narrow passageways.

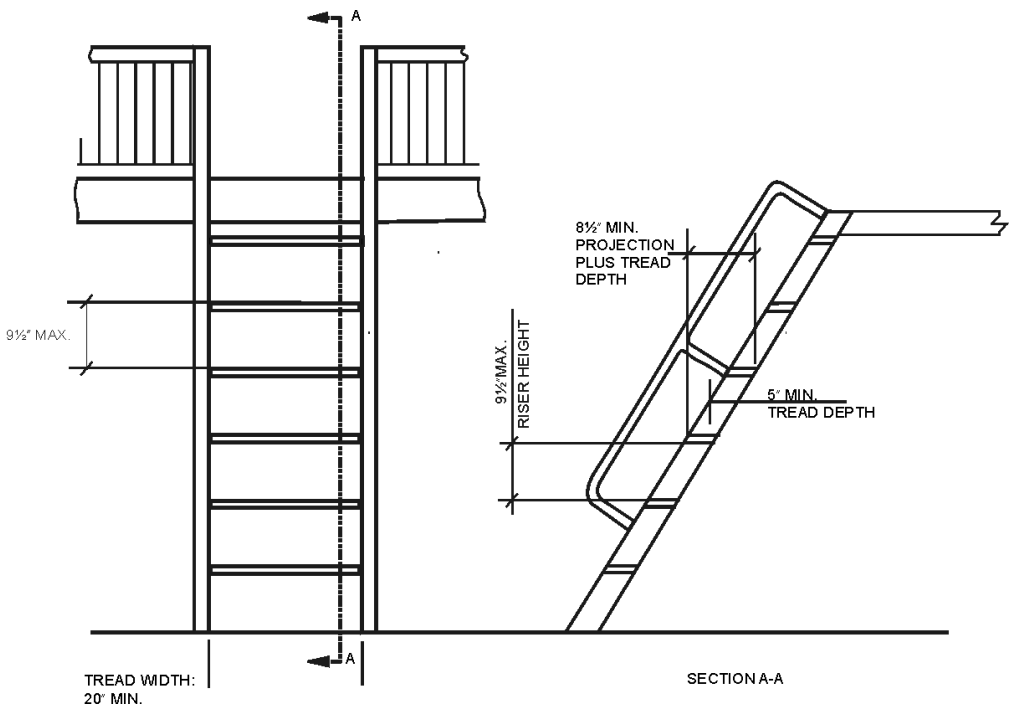

For SI: 1 inch = 25.4 mm.

Figure 1011.15
TYPICAL SHIP'S LADDER

INTERNATIONAL CODE COUNCIL®
Copyright © 2015 ICC. ALL RIGHTS RESERVED. Accessed by David Dammon on Jun 21, 2017 12:30:52 PM pursuant to License Agreement with ICC. No further reproduction or distribution authorized. ANY UNAUTHORIZED REPRODUCTION OR DISTRIBUTION IS A VIOLATION OF THE FEDERAL COPYRIGHT ACT AND THE LICENSE AGREEMENT, AND SUBJECT TO CIVIL AND CRIMINAL PENALTIES THEREUNDER.

3. Raised areas used primarily for purposes of security, life safety or fire safety including, but not limited to, observation galleries, prison guard towers, fire towers or lifeguard stands.
4. Elevated levels in Group U not open to the general public.
5. Nonoccupied roofs that are not required to have *stairway* access in accordance with Section 1011.12.1.
6. Ladders shall be constructed in accordance with Section 306.5 of the *International Mechanical Code*.

❖ Permanent ladders are permitted as a means of ingress and egress to very limited spaces. Typically, these spaces are not considered occupied and, as such, are not required to have a means of egress. While the term "technical production areas" is not used in this section, IBC Section 410.6.3.4, Item 6, allows for ladders to be used to access technical production areas. Item 6 of this section references the IMC for when ladders can be used to access mechanical equipment that is located in an elevated space or in a room. The details and construction requirements for a permanent ladder are also found in that section. This will help make sure that permanent ladders are safe and useable, while providing consistency for both the designer and the building official.

SECTION 1012
RAMPS

1012.1 Scope. The provisions of this section shall apply to ramps used as a component of a *means of egress.*

Exceptions:

1. Ramped *aisles* within assembly rooms or spaces shall comply with the provisions in Section 1029.
2. Curb ramps shall comply with ICC A117.1.
3. Vehicle ramps in parking garages for pedestrian *exit access* shall not be required to comply with Sections 1012.3 through 1012.10 where they are not an *accessible route* serving *accessible* parking spaces, other required *accessible* elements or part of an accessible *means of egress*.

❖ Ramps provide an alternative method of vertical means of access to or egress from a building. Ramps are required for access to building areas for persons who are mobility impaired (see Chapter 11) and for small changes in floor elevations that are a safety hazard in themselves (see Section 1003.5). All ramps intended for pedestrian usage, whether required or otherwise provided, must comply with the requirements of this section. The code considers any walking surface that has a slope steeper than one unit vertical in 20 units horizontal (5-percent slope) to be a ramp (see the definition for "Ramp" in Chapter 2).

As with stairways, it is important to understand the terminology. Exit ramps are ramps that provide a protected path of travel between the exit access and the exit discharge. Interior exit ramps are required to be enclosed in accordance with Section 1022. Exterior exit ramps are protected by the exterior wall of the building and must comply with Section 1027. Exit access ramps are typically unenclosed interior ramps and comply with Section 1019 when they provide access between stories. Exit access travel distance stops at an exit ramp enclosure, but includes any travel down an exit access ramp. Ramps that are outside and provide a route from the level of exit discharge to grade are considered part of the exit discharge. See the commentary in Chapter 2 for the defined term, "Exit discharge, level of."

Exception 1 indicates that ramped aisles are addressed in Section 1029. Having this exception at the beginning of the ramp section negated the need for repeated exceptions throughout the ramp provisions. While ramps and ramped aisles may look similar, configurations and how occupants move on and off those walking surfaces are very different. Occupants leave and join ramped aisles along the entire run, while occupants only enter the ramp at the top and bottom. Ramped aisles may have no or only one handrail in order to allow for access to the seats, while most ramps have handrails on both sides. Ramped aisles can have steeper slopes to allow for seating bowls to address line of sight. Section 1029 should be used for ramped aisles between and immediately adjacent to seating or where the ramps are a direct continuation of the ramped aisles and lead to a level cross aisle or floor. Section 1012 is used for ramps that lead from the balcony, concourse or cross aisle to a floor level above or below the seating areas.

Exception 2 references specific curb cut requirements found in Section 406 of ICC A117.1. It is important to realize there are different provisions for curb ramps and ramps. For example, a curb ramp can have a rise of any height and not require handrails. Ramps require handrails when the rise is more than 6 inches.

Exception 3 addresses parking garages. An accessible route is required to and from any accessible parking space, and all ramp provisions must be followed. However, ramps that provide access to and from nonaccessible spaces in the remainder of the parking garage need only comply with the provisions for slope and guard requirements. This permits nonaccessible portions of garages to be constructed as a continuous slope. Ramps that are strictly for vehicles, such as jump ramps, are not required to meet any of the ramp provisions.

1012.2 Slope. *Ramps* used as part of a *means of egress* shall have a running slope not steeper than one unit vertical in 12 units horizontal (8-percent slope). The slope of other pedestrian *ramps* shall not be steeper than one unit vertical in eight units horizontal (12.5-percent slope).

❖ Maximum slope is limited to facilitate the ease of ascent and to control the descent of persons with or without a mobility impairment. The maximum slope of a ramp in the direction of travel is limited to one unit

INTERNATIONAL CODE COUNCIL®
Copyright © 2015 ICC. ALL RIGHTS RESERVED. Accessed by David Dammon on Jun 21, 2017 12:30:52 PM pursuant to License Agreement with ICC. No further reproduction or distribution authorized. ANY UNAUTHORIZED REPRODUCTION OR DISTRIBUTION IS A VIOLATION OF THE FEDERAL COPYRIGHT ACT AND THE LICENSE AGREEMENT, AND SUBJECT TO CIVIL AND CRIMINAL PENALTIES THEREUNDER.

vertical in 12 units horizontal (1:12) (see Commentary Figure 1012.2). Ramps in existing buildings may be permitted to have a steeper slope at small changes in elevation (see Sections 410.8.5 and 705.1.4 of the IEBC). An example of a ramp that is not part of a means of egress and, therefore, allowed to be a maximum slope of 1:8, is a loading dock or delivery ramp where the ramp is not part of any required exit discharge.

1012.3 Cross slope. The slope measured perpendicular to the direction of travel of a *ramp* shall not be steeper than one unit vertical in 48 units horizontal (2-percent slope).

❖ The limitation of one unit vertical in 48 units horizontal on the slope across the direction of travel is to prevent a severe cross slope that would pitch a user to one side (see Commentary Figure 1012.2).

1012.4 Vertical rise. The rise for any *ramp* run shall be 30 inches (762 mm) maximum.

Because pushing a wheelchair up a ramp requires a great deal of energy, landings must be situated so that a person can rest after each 30-inch (762 mm) elevation change (see Commentary Figure 1012.2).

1012.5 Minimum dimensions. The minimum dimensions of *means of egress ramps* shall comply with Sections 1012.5.1 through 1012.5.3.

❖ These minimum dimension requirements allow the ramp to function as a means of egress and an accessible route.

1012.5.1 Width and capacity. The minimum width and required capacity of a *means of egress ramp* shall be not less than that required for *corridors* by Section 1020.2. The clear width of a *ramp* between *handrails*, if provided, or other permissible projections shall be 36 inches (914 mm) minimum.

❖ The requirements for the width of a means of egress ramp is based on the width required for minimum width [typically 36 inches (941 mm)] and the capacity based on the occupant load to be served (see Section 1005.3.2). Note that the clear width of 36 inches (914 mm) is required between the handrails and any other obstructions (e.g., handrail supports, curbs) for proper clearance for a person in a wheelchair. This is different from stairways where handrails are permitted to project into the required width. The 36-inch (914 mm) minimum clear width between handrails is consistent with ICC A117.1 and the federal 2010 ADA Standard.

1012.5.2 Headroom. The minimum headroom in all parts of the *means of egress ramp* shall be not less than 80 inches (2032 mm).

❖ The requirement for headroom on any part of an egress ramp is identical to the requirement of a conventional (nonspiral) stairway (see Section 1011.3). General headroom heights along the means of egress are addressed in Section 1003.2.

1012.5.3 Restrictions. *Means of egress ramps* shall not reduce in width in the direction of egress travel. Projections

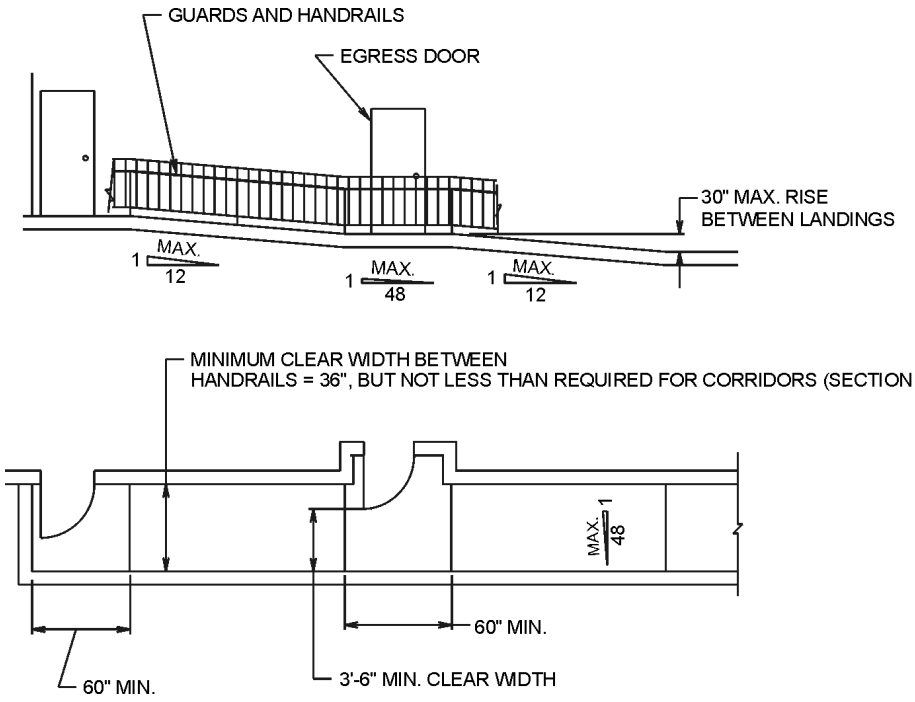

For SI: 1 inch = 25.4 mm, 1 foot = 304.8 mm.

Figure 1012.2
TYPICAL MEANS OF EGRESS RAMP

INTERNATIONAL CODE COUNCIL®
Copyright © 2015 ICC. ALL RIGHTS RESERVED. Accessed by David Dammon on Jun 21, 2017 12:30:52 PM pursuant to License Agreement with ICC. No further reproduction or distribution authorized. ANY UNAUTHORIZED REPRODUCTION OR DISTRIBUTION IS A VIOLATION OF THE FEDERAL COPYRIGHT ACT AND THE LICENSE AGREEMENT, AND SUBJECT TO CIVIL AND CRIMINAL PENALTIES THEREUNDER.

into the required *ramp* and landing width are prohibited. Doors opening onto a landing shall not reduce the clear width to less than 42 inches (1067 mm).

❖ The purpose of not allowing ramps to reduce in width in the direction of egress travel is to prevent a restriction that would interfere with the flow of occupants out of a facility. This would include ramp landings in accordance with Section 1012.6.2. Handrails are the only exception in accordance with Sections 1012.5.1 and 1014.8.

Doors that open onto a ramp landing, including those at the top and bottom landings, must not reduce the clear width to less than 42 inches (1067 mm). This is a more restrictive provision than for corridors that would permit the reduction to one-half the required width (see Section 1005.7). Since one of the purposes of a ramp is to accommodate persons with physical disabilities, it must provide the additional clear width for access by those confined to wheelchairs without the interference or potential blockage caused by the swing of a door (see Commentary Figures 1012.2 and 1012.5.3).

1012.6 Landings. *Ramps* shall have landings at the bottom and top of each *ramp*, points of turning, entrance, exits and at doors. Landings shall comply with Sections 1012.6.1 through 1012.6.5.

❖ Landings must be provided to allow users of a ramp to rest on a level floor surface and to adjust to the change in floor surface pitch.

Landings are required at the top and bottom of each ramp run (see Commentary Figure 1012.6). In addition, Section 1012.4 requires a landing every 30 inches (762 mm) of vertical rise of the ramp. The requirements for landings allow those occupants of the structure the ability to negotiate all changes in direction, and prepare themselves to either ascend or descend the ramp and to rest. If there is a door at the top or the bottom of the ramp, there are additional requirements in Section 1012.5.3 for door swing over the landing and Section 405 of ICC A117.1 for maneuvering space and turning space at the door.

1012.6.1 Slope. Landings shall have a slope not steeper than one unit vertical in 48 units horizontal (2-percent slope) in any direction. Changes in level are not permitted.

❖ Landings must be almost flat. This allows persons confined to a wheelchair to come to a complete stop without having to activate the brake or hold themselves stationary at the landing. The maximum slope or cross slope of the landing in any direction is 1:48 (see Commentary Figure 1012.2). This minimum slope is to allow for drainage to limit the accumulation of water on the landing surface.

1012.6.2 Width. The landing width shall be not less than the width of the widest *ramp* run adjoining the landing.

❖ The width of all landings must be consistently as wide as the widths of the ramp runs leading to them. Means of egress ramps cannot be reduced in width in the direction of egress travel. This is also applicable to the landings connecting the ramp runs (see Commentary Figure 1012.6).

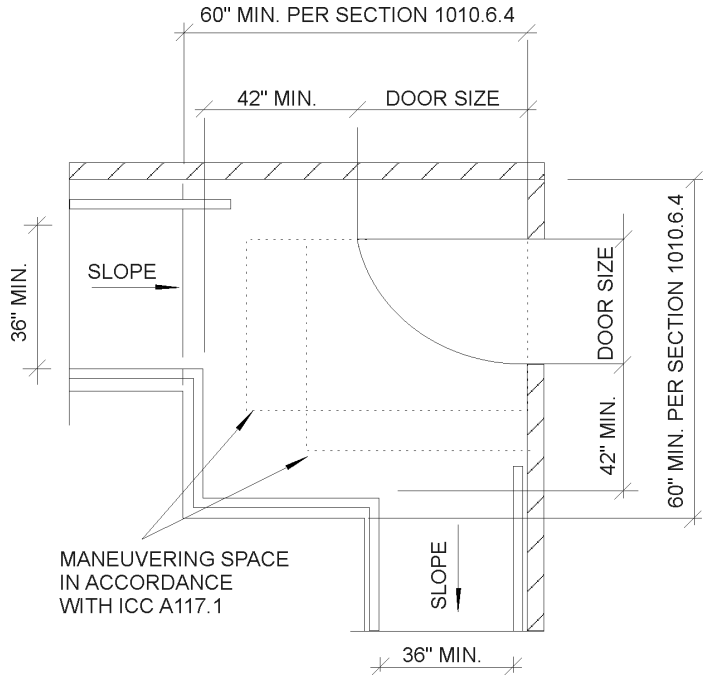

For SI: 1 inch = 25.4 mm.

Figure 1010.6.3
DOORWAY OPENING ONTO LANDING

INTERNATIONAL CODE COUNCIL®
Copyright © 2015 ICC. ALL RIGHTS RESERVED. Accessed by David Dammon on Jun 21, 2017 12:30:52 PM pursuant to License Agreement with ICC. No further reproduction or distribution authorized. ANY UNAUTHORIZED REPRODUCTION OR DISTRIBUTION IS A VIOLATION OF THE FEDERAL COPYRIGHT ACT AND THE LICENSE AGREEMENT, AND SUBJECT TO CIVIL AND CRIMINAL PENALTIES THEREUNDER.

1012.6.3 Length. The landing length shall be 60 inches (1525 mm) minimum.

Exceptions:

1. In Group R-2 and R-3 individual *dwelling* and *sleeping units* that are not required to be *Accessible units*, *Type A units* or *Type B units* in accordance with Section 1107, landings are permitted to be 36 inches (914 mm) minimum.
2. Where the *ramp* is not a part of an *accessible route*, the length of the landing shall not be required to be more than 48 inches (1220 mm) in the direction of travel.

❖ The landings for ramps must be at least 60 inches (1524 mm) long (see Commentary Figure 1012.6). This allows persons confined to wheelchairs a sufficient distance to stop and rest along with any persons who may be assisting them. This requirement is directly applicable to straight-run ramps that may require an intermediate landing at every 30 inches (762 mm) of vertical rise (see Commentary Figure 1012.2). If the landing is also to be used to negotiate a change in the ramp's direction, Section 1012.6.4 is applicable. If a door overlaps the landing, Section 1012.5.3 is applicable.

The exceptions provide for smaller landings in dwelling and sleeping units and other locations where the ramp is not part of an accessible route. Exception 1 is consistent with the IRC. Exception 2 would be applicable in areas such as service ramps and ramps serving assembly seating areas that do not contain any wheelchair spaces.

1012.6.4 Change in direction. Where changes in direction of travel occur at landings provided between *ramp* runs, the landing shall be 60 inches by 60 inches (1524 mm by 1524 mm) minimum.

Exception: In Group R-2 and R-3 individual *dwelling* or *sleeping units* that are not required to be *Accessible units*, *Type A units* or *Type B units* in accordance with Section 1107, landings are permitted to be 36 inches by 36 inches (914 mm by 914 mm) minimum.

❖ When a change in direction is made in the ramp at a landing, the landing must be a square of at least 60 inches (1524 mm). This allows the person confined to a wheelchair enough room to negotiate the turn with minimal effort. The length of the landing may need to exceed 60 inches (1524 mm) to match the widths of the two ramp runs. In any case, the landing would still need to be 60 inches (1524 mm) wide (see Commentary Figures 1012.5.3 and 1012.6). If a door overlaps the landing, Section 1012.5.3 is applicable. It is not the intent of this provision to prohibit curved ramps. As long as the cross slope meets the limitations in Section 1010.4, the curved ramp is permitted.

The exception provides for smaller landings in dwelling and sleeping units where the ramp is not part of an accessible route. This is consistent with requirements in the IRC.

1012.6.5 Doorways. Where doorways are located adjacent to a *ramp* landing, maneuvering clearances required by *ICC A117.1* are permitted to overlap the required landing area.

❖ This section specifies that the area required for maneuvering to open the door and the area of the landing are allowed to overlap. It is not necessary to provide the sum of the two area requirements (see Commentary Figure 1012.5.3). Requirements for maneuvering space and turning space at the top and bottom of ramps are found in Section 405 of ICC A117.1. ICC A117.1 requires a turning space at the top or bottom landing of a ramp where the door may be locked. This allows people to turn around to travel back along the ramp.

1012.7 Ramp construction. *Ramps* shall be built of materials consistent with the types permitted for the type of con-

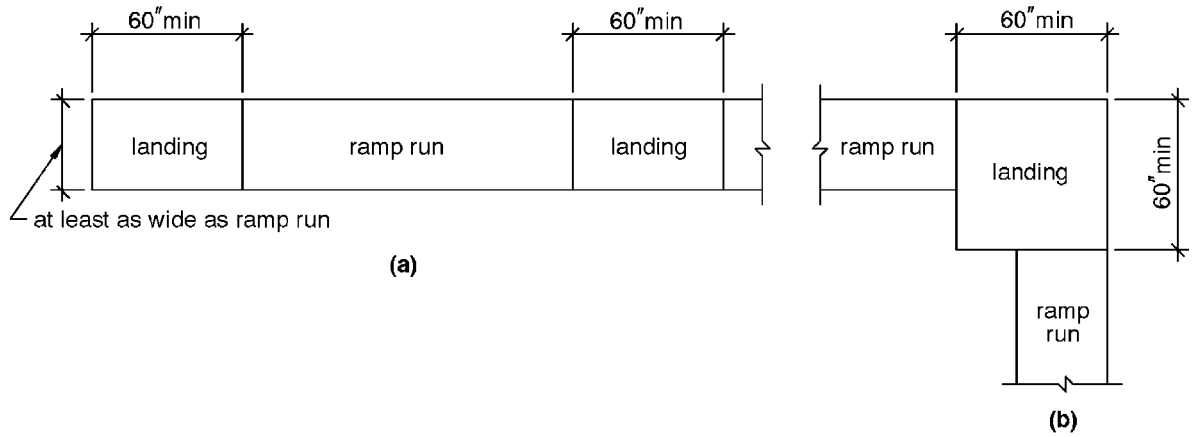

For SI: 1 inch = 25.4 mm.

Figure 1012.6
RAMP LANDINGS

INTERNATIONAL CODE COUNCIL®
Copyright © 2015 ICC. ALL RIGHTS RESERVED. Accessed by David Dammon on Jun 21, 2017 12:30:52 PM pursuant to License Agreement with ICC. No further reproduction or distribution authorized. ANY UNAUTHORIZED REPRODUCTION OR DISTRIBUTION IS A VIOLATION OF THE FEDERAL COPYRIGHT ACT AND THE LICENSE AGREEMENT, AND SUBJECT TO CIVIL AND CRIMINAL PENALTIES THEREUNDER.

struction of the building, except that wood *handrails* shall be permitted for all types of construction.

❖ Material requirements for the type of construction as required by Section 602 for floors are also the material requirements for ramp construction.

1012.7.1 Ramp surface. The surface of *ramps* shall be of slip-resistant materials that are securely attached.

❖ As the pace of exit travel becomes hurried during emergency situations, the probability of slipping on smooth or slick floor surfaces increases. To minimize the hazard, all floor surfaces in the means of egress are required to be slip resistant. The use of hard floor materials with highly polished, glazed, glossy or finely finished surfaces should be avoided. This is consistent with Section 1003.4.

Field testing and uniform enforcement of the concept of slip resistance is not practical. One method used to establish slip resistance is that the static coefficient of friction between leather [Type 1 (Vegetable Tanned) of Federal Specification KK-L-165C] and the floor surface is greater than 0.5. Laboratory test procedures such as ASTM D2047 can determine the static coefficient of resistance. Bulletin No. 4 entitled "Surfaces" issued by the U.S. Access Board (ATBCB) contains further information regarding slip resistance.

1012.7.2 Outdoor conditions. Outdoor *ramps* and outdoor approaches to *ramps* shall be designed so that water will not accumulate on walking surfaces.

❖ Outdoor ramps, landings and the approaches to the ramp must be sloped so that surfaces do not accumulate water so as to provide a safe path of egress travel at all times. While not specifically stated, any interior locations, such as near a pool, should also have the ramps designed to limit the accumulation of water in order to maintain slip resistance (see Sections 1003.4 and 1012.7.1).

Where exterior ramps are used in moderate or severe climates, there may also be a concern to protect the ramp from accumulations of snow and ice to provide a safe path of egress travel at all times, including inclement weather. Maintenance of the means of egress requires an unobstructed path to allow for full instant use in case of a fire or emergency (see Section 1031.3). Typical methods for protecting these egress elements include roof overhangs or canopies, heated slabs and, when approved by the building official, a reliable snow removal maintenance program.

1012.8 Handrails. *Ramps* with a rise greater than 6 inches (152 mm) shall have *handrails* on both sides. *Handrails* shall comply with Section 1014.

❖ To aid in the use of a ramp, handrails are to be provided. Handrails are intended to provide the user with a graspable surface for guidance and support. All ramps with a vertical rise greater than 6 inches (152 mm) between landings are to be provided with handrails on both sides [see Commentary Figures 1012.8(1) and 1014.2]. General strength requirements for handrails are found in Section 1014 with a reference to IBC Section 1607.8. Note that if the handrail extension is at a location that could be considered a protruding object, the handrail extension must return to the post at a height of less than 27 inches (686 mm) above the floor. Handrails along the ramp runs are not considered protruding objects.

Depending on the configuration of the ramp and the adjacent walking surface, ramps may require a combination of handrails, edge protection and guards. See Commentary Figures 1012.8(1), 1012.8(2), 1012.8(3) and 1012.8(4) for illustrations of some alternatives.

1012.9 Guards. *Guards* shall be provided where required by Section 1015 and shall be constructed in accordance with Section 1015.

❖ To protect the user from falls to surfaces below, guards are to be provided where the sides of a ramp or landing are more than 30 inches (762 mm) above

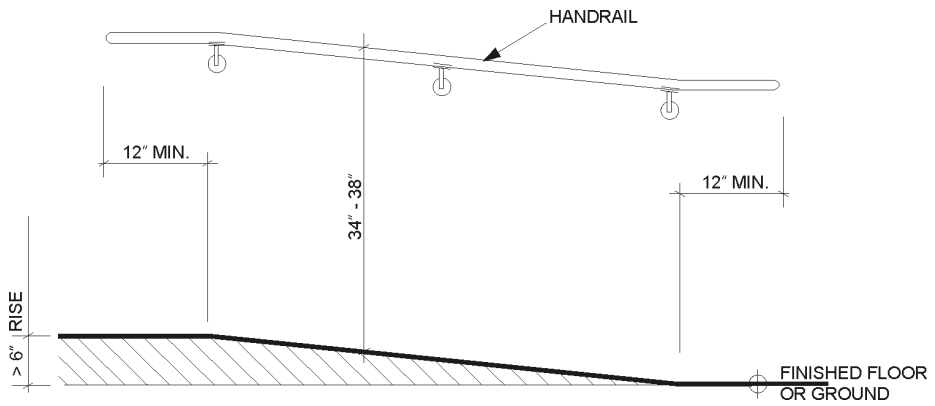

For SI: 1 inch = 25.4 mm.

Figure 1012.8(1)
RAMP WITH HANDRAIL AT WALL

INTERNATIONAL CODE COUNCIL®
Copyright © 2015 ICC. ALL RIGHTS RESERVED. Accessed by David Dammon on Jun 21, 2017 12:30:52 PM pursuant to License Agreement with ICC. No further reproduction or distribution authorized. ANY UNAUTHORIZED REPRODUCTION OR DISTRIBUTION IS A VIOLATION OF THE FEDERAL COPYRIGHT ACT AND THE LICENSE AGREEMENT, AND SUBJECT TO CIVIL AND CRIMINAL PENALTIES THEREUNDER.

the adjacent grade. Guards are to be constructed in accordance with Section 1015, including the minimum height of 42 inches (1067 mm) [see Commentary Figure 1012.8(4)].

Depending on the configuration of the ramp and the adjacent walking surface, ramps may require a combination of handrails, edge protection and guards. See Commentary Figures 1012.8(1), 1012.8(2), 1012.8(3) and 1012.8(4) for illustrations of some alternatives.

1012.10 Edge protection. Edge protection complying with Section 1012.10.1 or 1012.10.2 shall be provided on each side of *ramp* runs and at each side of *ramp* landings.

Exceptions:

1. Edge protection is not required on *ramps* that are not required to have *handrails*, provided they have flared sides that comply with the *ICC A117.1* curb ramp provisions.
2. Edge protection is not required on the sides of *ramp* landings serving an adjoining *ramp* run or *stairway*.

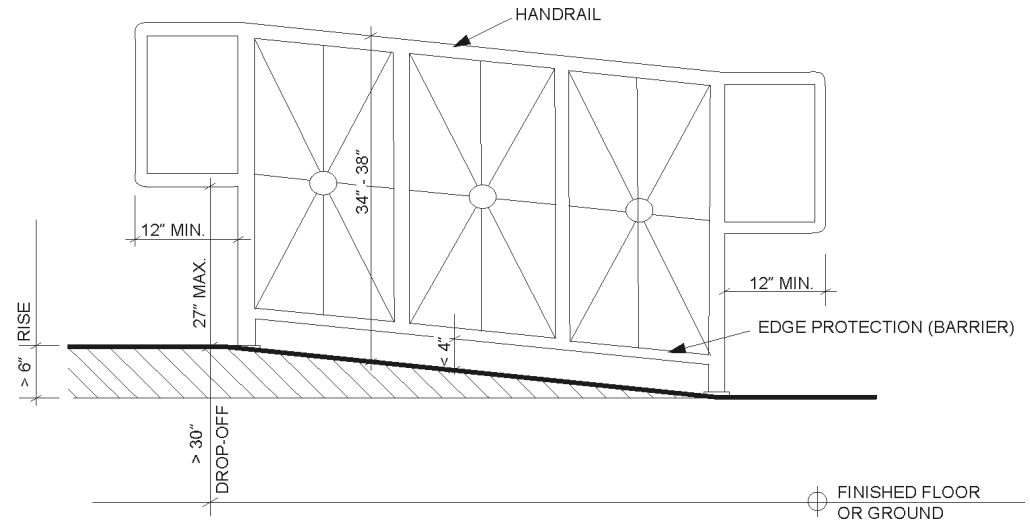

For SI: 1 inch = 25.4 mm.

Figure 1012.8(2)
RAMP WITH HANDRAIL AND BARRIER

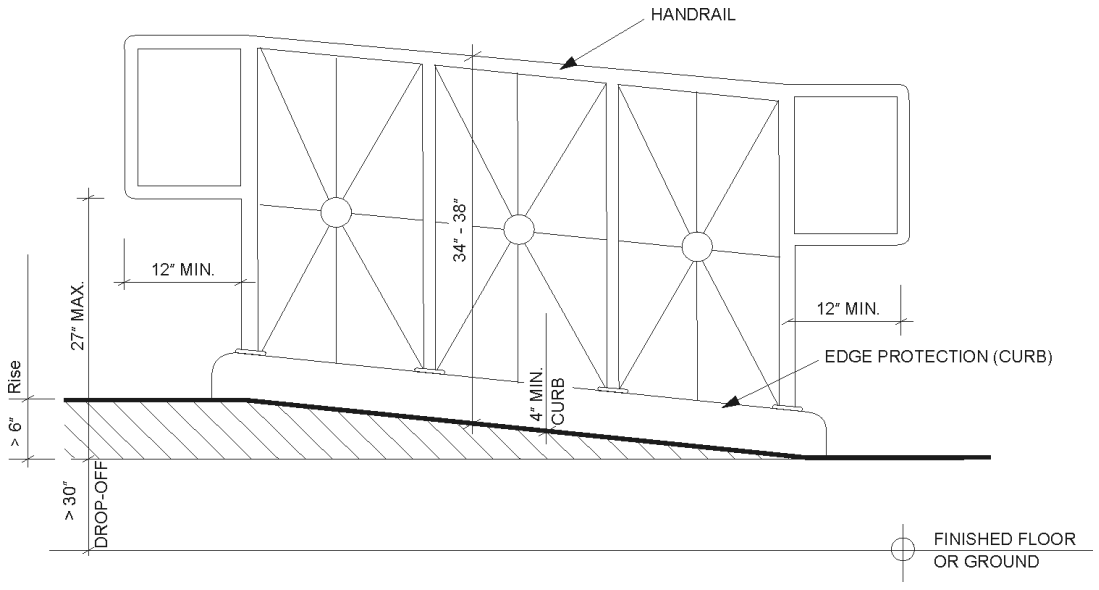

For SI: 1 inch = 25.4 mm.

Figure 1012.8(3)
RAMP WITH HANDRAIL AND CURB

INTERNATIONAL CODE COUNCIL®
Copyright © 2015 ICC. ALL RIGHTS RESERVED. Accessed by David Dammon on Jun 21, 2017 12:30:52 PM pursuant to License Agreement with ICC. No further reproduction or distribution authorized. ANY UNAUTHORIZED REPRODUCTION OR DISTRIBUTION IS A VIOLATION OF THE FEDERAL COPYRIGHT ACT AND THE LICENSE AGREEMENT, AND SUBJECT TO CIVIL AND CRIMINAL PENALTIES THEREUNDER.

3. Edge protection is not required on the sides of *ramp* landings having a vertical dropoff of not more than $^1/_2$ inch (12.7 mm) within 10 inches (254 mm) horizontally of the required landing area.

❖ This section of the code now addresses the comprehensive requirements for edge protection for all ramps. It must be noted that edge protection is not the same as the requirements for guards. The presence of a guard does not necessarily provide adequate edge protection and the presence of adequate edge protection does not satisfy the requirements for a guard. Edge protection is necessary to prevent the wheels of a wheelchair from leaving the ramp surface or becoming lodged between the edge of the ramp and any adjacent construction. For example, a ramp may be located relatively adjacent to the exterior wall of a building. However, between the ramp edge and the exterior wall, there is a strip of earth for landscape purposes. Without adequate edge protection, persons confined to wheelchairs could possibly have their wheels run off the side of the ramp into the landscape, causing them to tip. These requirements are consistent with Section 405 of ICC A117.1 and those in the federal 2010 ADA Standard.

Exception 1 allows a ramp to have minimal edge protection as long as its vertical rise is 6 inches (152 mm) or less. The exception is predicated on the ramp not needing any handrails, which is established by the provisions of Section 1012.8. Such a ramp would only need flared sides or returned curbs. Edge protection without handrails or guards could be a tripping hazard for ambulatory persons. For specific details of these types of edge protection, the provisions of Section 406 of ICC A117.1 for curb ramps must be followed.

Exception 2 reiterates that edge protection is not literally required entirely around a ramp landing. Obviously, edge protection is not required along that portion of the landing that directly adjoins a ramp run; it is only required along the the edges of the landing with a dropoff (other than steps of ramp runs).

Exception 3 states that edge protection is not required for those sides of a ramp landing directly adjacent to the ground surface that gently slopes away from the edge of the landing. If the grade adjacent to the ramp landing slopes no more than 1/2:10 (which equates to 1:20) away from the landing, additional edge protection is not required. Such a gradual slope would not be detrimental to persons confined to wheelchairs as they negotiate the ramp landing. Note that this exception is limited to landings, not the ramp surface itself. The ramp must meet the edge protection in Section 1012.10.1 or 1012.10.2.

Depending on the configuration of the ramp and the adjacent walking surface, ramps may require a combination of handrails, edge protection and guards. See Commentary Figures 1012.8(1), 1012.8(2), 1012.8(3) and 1012.8(4) for illustrations of some alternatives.

1012.10.1 Curb, rail, wall or barrier. A curb, rail, wall or barrier shall be provided to serve as edge protection. A curb shall be not less than 4 inches (102 mm) in height. Barriers

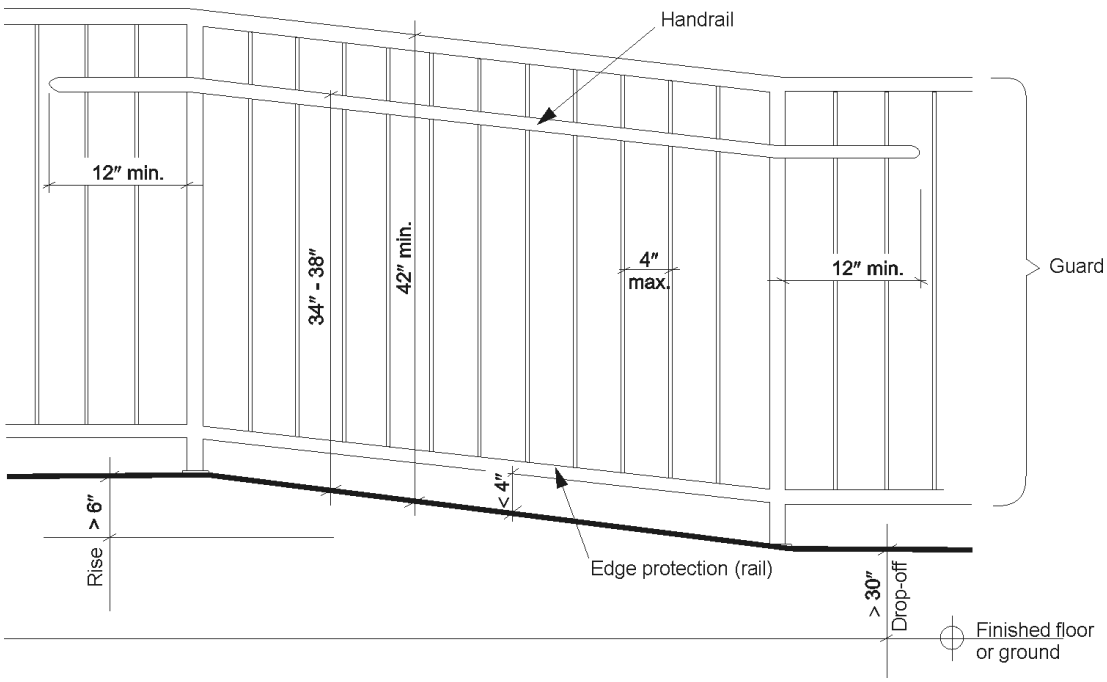

For SI: 1 inch = 25.4 mm.

Figure 1012.8(4)
RAMP WITH HANDRAIL AND GUARD

INTERNATIONAL CODE COUNCIL®
Copyright © 2015 ICC. ALL RIGHTS RESERVED. Accessed by David Dammon on Jun 21, 2017 12:30:52 PM pursuant to License Agreement with ICC. No further reproduction or distribution authorized. ANY UNAUTHORIZED REPRODUCTION OR DISTRIBUTION IS A VIOLATION OF THE FEDERAL COPYRIGHT ACT AND THE LICENSE AGREEMENT, AND SUBJECT TO CIVIL AND CRIMINAL PENALTIES THEREUNDER.

shall be constructed so that the barrier prevents the passage of a 4-inch-diameter (102 mm) sphere, where any portion of the sphere is within 4 inches (102 mm) of the floor or ground surface.

❖ Edge protection for ramps and ramp landings may be achieved with a built-up curb or other barrier, such as a rail, wall or guard. The barrier must be located near the surface of the ramp and landing such that a 4-inch-diameter (102 mm) sphere cannot pass through any openings. An example of an effective barrier would be the bottom rail of a guard system. If the bottom rail is located less than 4 inches (102 mm) above the ramp and landing surface, edge protection has been provided. If a curb option is used, the curb must be a minimum of 4 inches (102 mm) high. The curb or barrier prevents the wheel of a wheelchair from running off the edge of the surface and provides people with visual disabilities a toe stop at the edge of the walking surface (see Commentary Figure 1012.10.1).

1012.10.2 Extended floor or ground surface. The floor or ground surface of the *ramp* run or landing shall extend 12 inches (305 mm) minimum beyond the inside face of a *handrail* complying with Section 1014.

❖ An alternative to providing some type of barrier at the edge of the ramp (see Section 1012.10.1) is to make the ramp surface wider than the handrails provided at either side. The combination of the wider surface and the handrail barrier would assist in preventing a wheelchair or crutch tip from moving very far off the ramp during a temporary slip (see Commentary Figure 1012.10.1).

SECTION 1013
EXIT SIGNS

1013.1 Where required. *Exits* and *exit access* doors shall be marked by an *approved* exit sign readily visible from any direction of egress travel. The path of egress travel to *exits* and within *exits* shall be marked by readily visible exit signs to clearly indicate the direction of egress travel in cases where the *exit* or the path of egress travel is not immediately visible to the occupants. Intervening *means of egress* doors within *exits* shall be marked by exit signs. Exit sign placement shall be such that no point in an *exit access corridor* or *exit passageway* is more than 100 feet (30 480 mm) or the *listed* viewing distance for the sign, whichever is less, from the nearest visible exit sign.

Exceptions:

1. Exit signs are not required in rooms or areas that require only one *exit* or *exit access*.
2. Main exterior *exit* doors or gates that are obviously and clearly identifiable as *exits* need not have exit signs where *approved* by the *building official*.
3. Exit signs are not required in occupancies in Group U and individual *sleeping units* or *dwelling units* in Group R-1, R-2 or R-3.
4. Exit signs are not required in dayrooms, sleeping rooms or dormitories in occupancies in Group I-3.
5. In occupancies in Groups A-4 and A-5, exit signs are not required on the seating side of vomitories or openings into seating areas where exit signs are provided in the concourse that are readily apparent from the vomitories. Egress lighting is provided to identify each vomitory or opening within the seating area in an emergency.

❖ Where an occupancy has two or more required exits or exit accesses, the means of egress must be provided with illuminated signs that readily identify the location of, and indicate the path of travel to, the exits. The signs must be illuminated with letters reading "Exit." The illumination may be internal or external to the sign. The signs should be visible from all directions in the exit access route. In cases where the signs are not visible to the occupants because of turns in the corridor or for other reasons, additional illuminated signs must be provided indicating the direction of egress to an exit. Exit signs must be located so that, where required, the nearest one is within 100 feet (30 480 mm), of the sign's listed viewing distance. UL 924 permits exit signs to be listed with a viewing distance of less than 100 feet (30 480

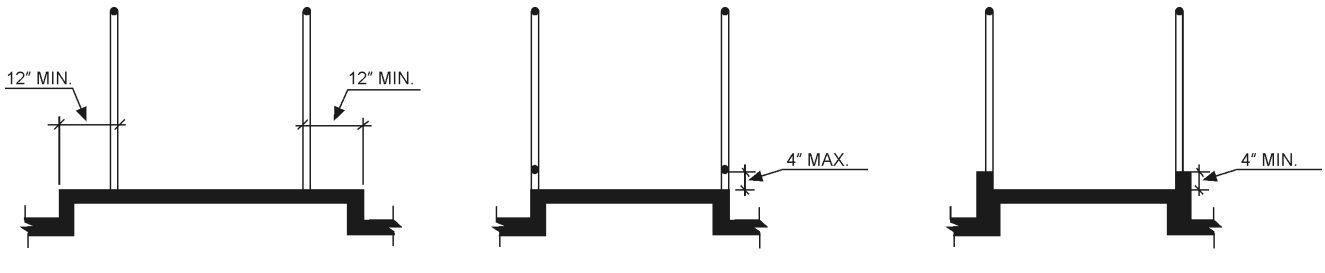

For SI: 1 inch = 25.4 mm.

Figure 1012.10.1
EDGE PROTECTION

INTERNATIONAL CODE COUNCIL®
Copyright © 2015 ICC. ALL RIGHTS RESERVED. Accessed by David Dammon on Jun 21, 2017 12:30:52 PM pursuant to License Agreement with ICC. No further reproduction or distribution authorized. ANY UNAUTHORIZED REPRODUCTION OR DISTRIBUTION IS A VIOLATION OF THE FEDERAL COPYRIGHT ACT AND THE LICENSE AGREEMENT, AND SUBJECT TO CIVIL AND CRIMINAL PENALTIES THEREUNDER.

mm) (see Section 1013.5). When a sign is listed for a viewing distance of less than 100 feet (30 480 mm) the label on the sign will indicate the appropriate viewing distance. If such a sign is used, the spacing of the signs should be based on the listed viewing distance.

Typically, once an occupant enters an exit enclosure, exit signs are no longer needed; however, in buildings with more complicated egress layouts, it is possible that the direction for egress travel within the exit is not immediately apparent. For example, exit passageways can be part of the path of exit travel at the level of exit discharge or transfer floors. Evacuees may hesitate or be confused when the vertical travel becomes horizontal travel, which may result in a delay in evacuation. In these situations, exit signs may be needed within the exit enclosure (see Commentary Figure 1013.1).

The exceptions identify conditions where exit signs are not necessary since they would not increase the safety of the egress path.

For Exceptions 1 and 3, the assumption is that the occupants are familiar enough with the space to know the way out and/or the exits are obvious. In addition, in most cases, the way out is the same as the way in.

In accordance with Exception 2, when the main exterior door through which occupants enter the building is obviously an exit, exit signs are not required. For example, a two-story Group B building has a main employee/customer entrance. The entrance consists of a storefront arrangement with glass doors and sidelights. The entrance is centrally located within the building. These main exterior exit doors can be quickly observed as being an exit and would not need to be marked with an exit sign.

In accordance with Exception 4, exit signs are not required in detainee living and sleeping room areas of Group I-3 buildings. In cases of emergency, occupants in Group I-3 are escorted by staff to the exits and to safety. exit sign materials can also be potential weapons when they are accessible to the detainees.

In the Group A-4 and A-5 occupancies described in Exception 5, the egress path is obvious and thus exit signs are not needed. Additionally, because of the configuration of the vomitories, the exit signs are not readily visible to the persons immediately adjacent to or above the vomitory.

1013.2 Floor-level exit signs in Group R-1. Where exit signs are required in Group R-1 occupancies by Section 1013.1, additional low-level exit signs shall be provided in all areas serving guest rooms in Group R-1 occupancies and shall comply with Section 1013.5.

The bottom of the sign shall be not less than 10 inches (254 mm) nor more than 12 inches (305 mm) above the floor level. The sign shall be flush mounted to the door or wall. Where mounted on the wall, the edge of the sign shall be within 4 inches (102 mm) of the door frame on the latch side.

❖ Because people may be sleeping and because most residents are transient (and thus unfamiliar with the space) in hotels (i.e., Group R-1), low-level exit signs must be provided for emergency exit routes from guestrooms. When smoke at the ceiling obscures the exit signs required by Section 1013.1, these signs will serve as a backup identification of the exit door. By the reference to Section 1013.5, these signs must be internally illuminated and listed and labeled in accordance with UL 924. It is not the intent of this section to require low level exit signs in the guestrooms. The low level exit signs are required only in areas where Section 1013.1 requires exit signs and only leading from the guestroom area, not throughout the entire hotel.

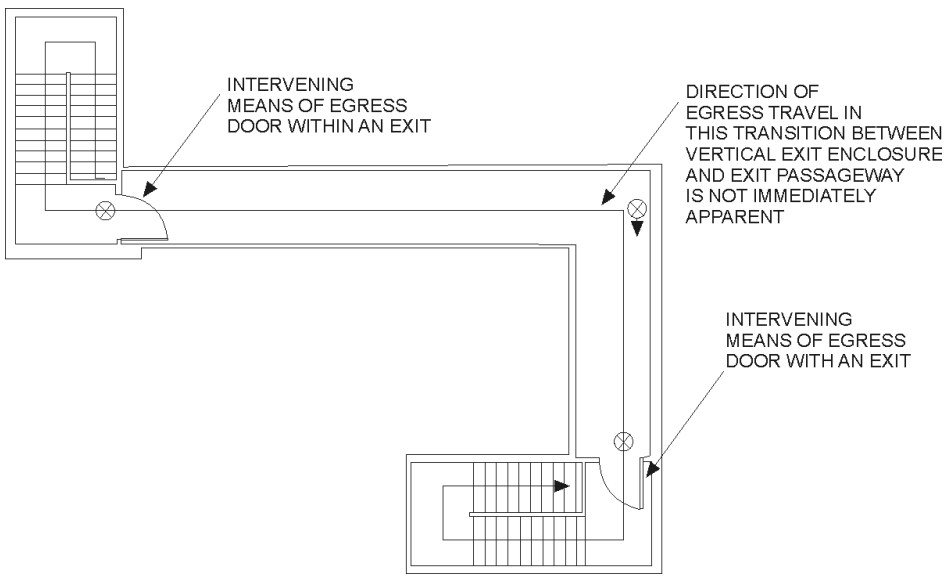

Figure 1013.1
EXIT SIGNS WITHIN AN EXIT ENCLOSURE

INTERNATIONAL CODE COUNCIL®
Copyright © 2015 ICC. ALL RIGHTS RESERVED. Accessed by David Dammon on Jun 21, 2017 12:30:52 PM pursuant to License Agreement with ICC. No further reproduction or distribution authorized. ANY UNAUTHORIZED REPRODUCTION OR DISTRIBUTION IS A VIOLATION OF THE FEDERAL COPYRIGHT ACT AND THE LICENSE AGREEMENT, AND SUBJECT TO CIVIL AND CRIMINAL PENALTIES THEREUNDER.

The exit signs must be mounted on the exit door itself or to the side of the exit door on the latch side. The height of the bottom of the exit sign will allow for exit signs not to conflict with accessible route requirements. ICC A117.1 requires doors on an accessible route to have a smooth surface for the bottom 10 inches (254 mm) so that someone could use the footplates on their wheelchair to assist in opening the door.

The requirements do not indicate what low-level signage is appropriate for exit signs that provide direction rather than at the exit. It is also not clear on how an exit sign on a door will be visible from down the corridor if the door is perpendicular to the direction of the hallway.

1013.3 Illumination. Exit signs shall be internally or externally illuminated.

Exception: Tactile signs required by Section 1013.4 need not be provided with illumination.

❖ This section simply provides the scope for illumination of regulated exit signs. Exit signs must be illuminated so that they are readily apparent in situations where the lights may be off or the building has lost power. Exit signs with raised letters and braille are specifically addressed in Section 1013.4.

1013.4 Raised character and braille exit signs. A sign stating EXIT in visual characters, raised characters and braille and complying with *ICC A117.1* shall be provided adjacent to each door to an *area of refuge*, an exterior area for assisted rescue, an *exit stairway* or *ramp*, an *exit passageway* and the *exit discharge*.

❖ The purpose of this sign is to serve as way finding for a person with vision impairments. This is in addition to the exit signs required by Section 1013.1.

"Tactile" is defined as "used for the sense of touch;" therefore, signage that has either raised letters or braille is considered tactile. For exit signage, visual, raised letters and braille are required. ICC A117.1 includes requirements for the sign and the correct placement. Typically, the sign is placed at about 4 feet, 6 inches (1375 mm) above the floor and on the wall at the latch side of the door. While not required to be illuminated by these provisions, illumination would be advantageous for a person with partial sight. High contrast is important (see Commentary Figure 1013.4).

This signage is needed to indicate which doors are serving as exits for those persons with visual impairments. Signs are needed on the required exit doors in the building: including at doors leading to an interior or exterior exit stairway or ramp; doors leading to an exit passageway; within the exit enclosures leading to the outside or to an exit passageway; and exit doors that lead directly to the outside.

While an area of refuge may be located within an enclosure for an exit stairway, Section 1009.3 also allows the area of refuge to be located immediately outside of the enclosure for the exit stairway. In this situation, exit signage with visual, raised letters and braille would be required both at the door leading into the area of refuge and the door leading to the exit stairway. Exterior areas for assisted rescue are typically located immediately outside of an exit door (see Section 1009.7).

This is not intended to preclude the signage from including additional information as long as "Exit" is first. For example, labeling the door to the exit enclosure as "Exit Stairway" would indicate to the visually impaired person that once they moved through the door they would be dealing with vertical travel. This could be considered an additional safety feature. This section is also referenced in IBC Section 1111.3. For additional way-finding signage inside the stairway enclosure, see Section 1023.9.

1013.5 Internally illuminated exit signs. Electrically powered, *self-luminous* and *photoluminescent* exit signs shall be *listed* and *labeled* in accordance with UL 924 and shall be installed in accordance with the manufacturer's instructions and Chapter 27. Exit signs shall be illuminated at all times.

❖ All exit signage must be listed and labeled as indicated in UL 924, *Standard for Safety of Emergency Lighting and Power Equipment*. Listed "Exit" signs are required by UL 924 to meet the same graphics, illumination and power sources defined in Sections 1013.6.1 through 1013.6.3 for externally illuminated signs. Internal illumination may be electrically powered or be of a self-luminous or photoluminescent product. Electrically powered would include LED, incandescent, fluorescent and electroluminescent types of signs. If a sign is photoluminescent, the "charging" source must be continually available (see the definitions in Chapter 2 for "Photoluminescent" and "Self-luminous"). "Exit" signs must be illuminated at all times, including when the building may not be fully occupied. If a fire occurs late at night, there may be cleaning crews or persons working overtime in the



Figure 1013.4
EXAMPLE OF EXIT SIGNAGE WITH VISUAL AND RAISED CHARACTERS WITH BRAILLE

INTERNATIONAL CODE COUNCIL®
Copyright © 2015 ICC. ALL RIGHTS RESERVED. Accessed by David Dammon on Jun 21, 2017 12:30:52 PM pursuant to License Agreement with ICC. No further reproduction or distribution authorized. ANY UNAUTHORIZED REPRODUCTION OR DISTRIBUTION IS A VIOLATION OF THE FEDERAL COPYRIGHT ACT AND THE LICENSE AGREEMENT, AND SUBJECT TO CIVIL AND CRIMINAL PENALTIES THEREUNDER.

building who will need to be able to find the exits. The reference to Section 604 is so the signs will be equipped with a connection to an emergency power supply.

1013.6 Externally illuminated exit signs. Externally illuminated exit signs shall comply with Sections 1013.6.1 through 1013.6.3.

❖ Externally illuminated exit signage must meet the graphic, illumination and emergency power requirements in the referenced sections. The requirements are the same as for internally illuminated signage.

1013.6.1 Graphics. Every exit sign and directional exit sign shall have plainly legible letters not less than 6 inches (152 mm) high with the principal strokes of the letters not less than $^3/_4$ inch (19.1 mm) wide. The word "EXIT" shall have letters having a width not less than 2 inches (51 mm) wide, except the letter "I," and the minimum spacing between letters shall be not less than $^3/_8$ inch (9.5 mm). Signs larger than the minimum established in this section shall have letter widths, strokes and spacing in proportion to their height.

The word "EXIT" shall be in high contrast with the background and shall be clearly discernible when the means of exit sign illumination is or is not energized. If a chevron directional indicator is provided as part of the exit sign, the construction shall be such that the direction of the chevron directional indicator cannot be readily changed.

❖ Every exit sign and directional sign located in the exit access or exit route is required to have a color contrast vivid enough to make the signs readily visible, even when not illuminated. Letters must be at least 6 inches (152 mm) high and their stroke not less than $^3/_4$ inch (19.1 mm) wide (see Commentary Figure 1013.6.1). The sizing of the letters is predicated on the readability of the wording from a distance of 100 feet (30 480 mm).

While red letters are common for exit signs, sometimes green on black is used in auditorium areas with low-lighting levels, such as theaters, because that color combination tends not to distract the audience's attention. It is more important that the exit sign be readily visible with respect to the background.

Exit signs may be larger than the minimum size specified; however, the standardized proportion of the letters must be maintained. Externally illuminated signage that is smaller could use the requirements in UL 924 for guidance; however, sign spacing would need to be adjusted, and alternative approval would be through the building official having jurisdiction.

A "chevron directional indicator" is the same as a directional arrow. The language is intended to be consistent with UL 924.

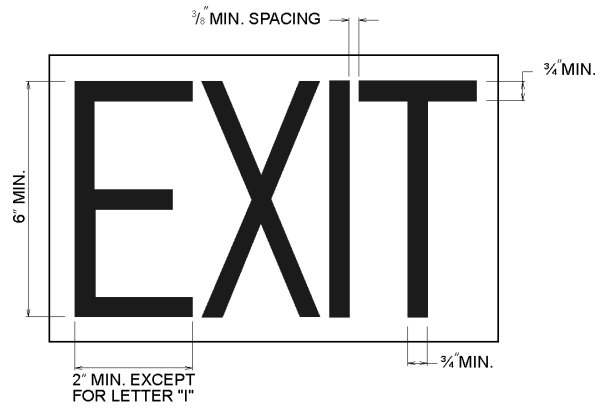

For SI: 1 inch = 25.4 mm.

Figure 1013.6.1
MINIMUM SIZES OF EXIT SIGNS

1013.6.2 Exit sign illumination. The face of an exit sign illuminated from an external source shall have an intensity of not less than 5 footcandles (54 lux).

❖ Every exit sign and directional sign must be continuously illuminated to provide a light intensity at the illuminated surface of at least 5 footcandles (54 lux). It is not a requirement that the exit signs be internally illuminated. An external illumination source with the power capabilities specified by Section 1013.6.3 is acceptable.

1013.6.3 Power source. Exit signs shall be illuminated at all times. To ensure continued illumination for a duration of not less than 90 minutes in case of primary power loss, the sign illumination means shall be connected to an emergency power system provided from storage batteries, unit equipment or an on-site generator. The installation of the emergency power system shall be in accordance with Chapter 27.

Exceptions:

1. *Approved* exit sign illumination means that provide continuous illumination independent of external power sources for a duration of not less than 90 minutes, in case of primary power loss, are not required to be connected to an emergency electrical system.
2. Group I-2 Condition 2 exit sign illumination shall not be provided by unit equipment battery only.

❖ Exit signs must be illuminated on a continuous basis so that when a fire emergency occurs, occupants will be able to identify the locations of the exits. The reliability of the power sources supplying the electrical energy required for maintaining the illumination of exit signs is important. When power interruptions occur, exit sign illumination must be obtained from an emergency power system. This does not imply that the sign must be internally illuminated. Whatever illumination system is used, whether internal or external, it must be connected to a system designed to pick up the power load required by the exit signs after loss of the normal power supply.

Per Exception 1, where self-luminous signs are used, connection to the emergency electrical supply system is not required. A trickle-charge battery to illuminate the exit sign is another option.

Exception 2 is really a more restrictive requirement for hospitals. Hospitals cannot only rely on equipment

INTERNATIONAL CODE COUNCIL®
Copyright © 2015 ICC. ALL RIGHTS RESERVED. Accessed by David Dammon on Jun 21, 2017 12:30:52 PM pursuant to License Agreement with ICC. No further reproduction or distribution authorized. ANY UNAUTHORIZED REPRODUCTION OR DISTRIBUTION IS A VIOLATION OF THE FEDERAL COPYRIGHT ACT AND THE LICENSE AGREEMENT, AND SUBJECT TO CIVIL AND CRIMINAL PENALTIES THEREUNDER.

batteries for the illumination of their exit signs. Typically, hospitals connect illumination of their exit signage to the emergency on-site generator.

The IFC requirements for emergency power for emergency egress lighting and exit signage in existing buildings only requires a 60-minute time duration. This is not a conflict, but rather recognition of the loss of battery storage capability over a length of time.

SECTION 1014
HANDRAILS

1014.1 Where required. *Handrails* serving *stairways*, *ramps*, stepped *aisles* and ramped *aisles* shall be adequate in strength and attachment in accordance with Section 1607.8. *Handrails* required for *stairways* by Section 1011.11 shall comply with Sections 1014.2 through 1014.9. *Handrails* required for *ramps* by Section 1012.8 shall comply with Sections 1014.2 through 1014.8. *Handrails* for stepped *aisles* and ramped *aisles* required by Section 1029.15 shall comply with Sections 1014.2 through 1014.8.

❖ Handrails are required at stairways and ramps. In all situations, they must be designed in accordance with the structural requirements in Section 1607.8. There are, however, distinct differences in how the handrail requirements are applied in stairways, ramps, stepped aisles and ramped aisles. The specific section references allow for this consideration. Where and how many handrails for stairways and ramps are specified in Sections 1003.5, 1011.11 and 1012.8. Where handrails are required in assembly seating for stepped aisles and ramped aisles is specified in Section 1029.15.

Stairways and their handrails are not part of an accessible route and are not subject to the stairway technical requirements in ICC A117.1. Standards are only referenced to the extent specified by the code (see Section 102.4).

Handrails are also very distinct from guards, even though they are sometimes incorrectly called "guardrails." The "handrail" is the element that is grasped during vertical travel for guidance, stabilization, pulling and as an aid in arresting a possible fall. Guards are located near the side of an elevated walking surface to minimize the possibility of a fall to a lower level and are discussed in Section 1015. However, in residential applications, in some locations in assembly seating and along alternating tread devices and ship's ladders, the top rail of a guard may also serve as a handrail (see Section 1015.3, Exceptions 3, 4 and 5, and Section 1029.16).

1014.2 Height. *Handrail* height, measured above *stair* tread *nosings*, or finish surface of *ramp* slope, shall be uniform, not less than 34 inches (864 mm) and not more than 38 inches (965 mm). *Handrail* height of *alternating tread devices* and ship's ladders, measured above tread *nosings*, shall be uniform, not less than 30 inches (762 mm) and not more than 34 inches (864 mm).

Exceptions:

1. Where handrail fittings or bendings are used to provide continuous transition between *flights*, the fittings or bendings shall be permitted to exceed the maximum height.
2. In Group R-3 occupancies; within *dwelling units* in Group R-2 occupancies; and in Group U occupancies that are associated with a Group R-3 occupancy or associated with individual *dwelling units* in Group R-2 occupancies; where handrail fittings or bendings are used to provide continuous transition between *flights*, transition at *winder* treads, transition from *handrail* to *guard*, or where used at the start of a *flight*, the *handrail* height at the fittings or bendings shall be permitted to exceed the maximum height.
3. *Handrails* on top of a guard where permitted along stepped aisles and ramped aisles in accordance with Section 1029.15.

❖ It has been demonstrated that for safe use, the height of handrails must not be less than 34 inches (864 mm) nor more than 38 inches (965 mm) above the leading edge of stairway treads, landings or other walking surfaces (see Commentary Figure 1014.2). This requirement is applicable for all uses, including handrails within a dwelling unit.

The fundamental stairway requirements are not appropriate for alternating tread devices and ship's ladders since they differ significantly from other types of stairways. The permitted range for handrail height for alternating tread devices and ship's ladders allows for a lower height above the tread nosings. The minimum required height is reduced from 34 inches (864 mm) to 30 inches (762 mm), with a maximum permitted height of 34 inches (864 mm). The special features of an alternating tread device or ship's ladder result in differences of handrail use, such as different arm posture, the hand gripping the handrail near a higher part of the body and the use of handrails under the arms for stabilization when descending. Therefore, a lower handrail height is more appropriate.

Exceptions 1 and 2 allow for the use of common fittings and bendings to provide for continuous transition of the handrail at specified turns and pitch changes in the stairway where the fitting or bending might exceed the maximum handrail height. In some cases, there is no reference for the height when the fitting or handrail might extend beyond the nosings at the intersection of adjoining flights. Exception 1 applies to all stairways between flights. This typically occurs at the center handrail at the landings on a dogleg or switchback stairway configuration. Although the handrails are not required on the land-

INTERNATIONAL CODE COUNCIL®
Copyright © 2015 ICC. ALL RIGHTS RESERVED. Accessed by David Dammon on Jun 21, 2017 12:30:52 PM pursuant to License Agreement with ICC. No further reproduction or distribution authorized. ANY UNAUTHORIZED REPRODUCTION OR DISTRIBUTION IS A VIOLATION OF THE FEDERAL COPYRIGHT ACT AND THE LICENSE AGREEMENT, AND SUBJECT TO CIVIL AND CRIMINAL PENALTIES THEREUNDER.

ing, the code requirement for handrail extensions or for handrail continuity often creates the need for some type of transition, especially at turns (see also Section 1014.6). This exception would allow for an easing or gooseneck riser over the landing to be used for a smooth transition of the handrail. The use of the new exceptions may permit a more gradual variation in the height even though it will allow for portions of the handrail to exceed the normal 38-inch (965 mm) maximum height. The belief is that handrail continuity is more important than staying within the height limitation.

Exception 2 applies to dwelling units with the intent to allow transition elements at common locations, such as the start of the flight, at winder treads or from handrail to guard at landings. Combined with the guard height reduction in Section 1015.3, Exception 1, the end result may be fewer transition pieces. This is consistent with provisions in the IRC.

Exception 3 is in recognition of the special allowances for the top rail of a guard to serve as a handrail in limited situations in an assembly seating area. See Section 1029.15 for specifics.

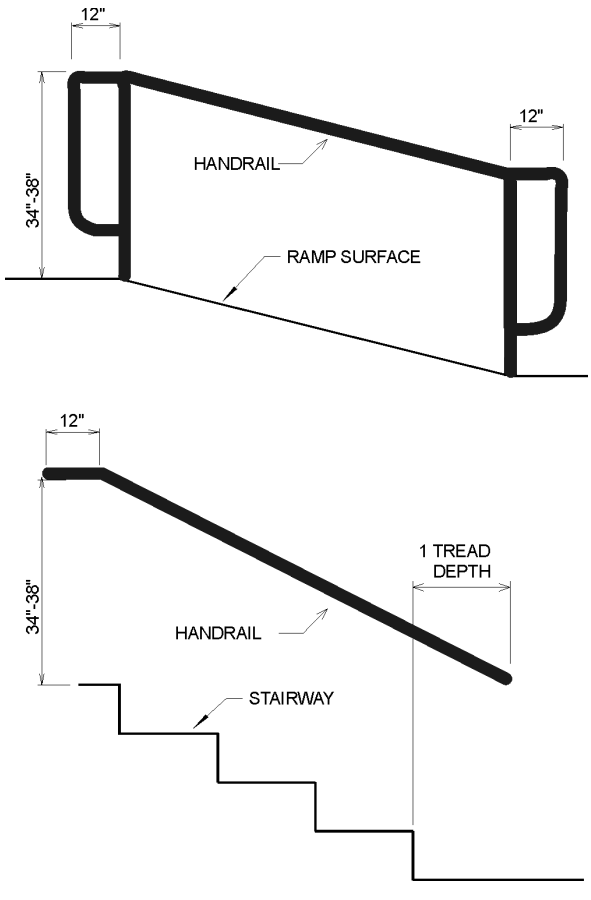

For SI: 1 inch = 25.4 mm.

Figure 1014.2
HANDRAIL REQUIREMENTS

1014.3 Handrail graspability. Required *handrails* shall comply with Section 1014.3.1 or shall provide equivalent graspability.

Exception: In Group R-3 occupancies; within *dwelling units* in Group R-2 occupancies; and in Group U occupancies that are accessory to a Group R-3 occupancy or accessory to individual *dwelling units* in Group R-2 occupancies; *handrails* shall be Type I in accordance with Section 1014.3.1, Type II in accordance with Section 1014.3.2 or shall provide equivalent graspability.

❖ The abilities to grasp a handrail firmly and slide a hand along the rail's gripping surface without meeting obstructions are important factors in the safe use of stairways and ramps. These properties are largely functions of the shape of the handrail. Handrails for stairways and ramps must meet the specifications of Section 1014.3.1 or be determined to have grasping properties and attributes equivalent to profiles allowed in Section 1014.3.1. Such determinations of equivalence are an allowed option made by local building officials based on the profile presented and the building official's evaluation of its properties. A complete evaluation will consider the four basic functions of a handrail: guidance, stabilization, pulling and aid in arresting a fall. The determination is best made by comparative use on stairs or ramps of properly mounted samples. Handrails that meet neither Type I nor Type II characteristics may be considered to have equivalent graspability. Complete evaluation will also consider the mounting of the handrail and understanding the interference of handrail mounts on the gripping surfaces of smaller profiles. For a discussion of this, see Section 1014.4.

The exception allows for an alternative, Type II handrails, within residential units and their associated structures. A handrail on common stairways within an apartment building or on the steps to the front door of a townhouse could not use this exception unless approved by the building official as being equivalent to Type I. The residential allowance is consistent with the IRC.

1014.3.1 Type I. *Handrails* with a circular cross section shall have an outside diameter of not less than $1^1/_4$ inches (32 mm) and not greater than 2 inches (51 mm). Where the *handrail* is not circular, it shall have a perimeter dimension of not less than 4 inches (102 mm) and not greater than $6^1/_4$ inches (160 mm) with a maximum cross-sectional dimension of $2^1/_4$ inches (57 mm) and minimum cross-sectional dimension of 1 inch (25 mm). Edges shall have a minimum radius of 0.01 inch (0.25 mm).

❖ Handrails have traditionally been regulated as either circular or noncircular rails. The noncircular rails have previously been limited to a maximum perimeter dimension of $6^1/_4$ inches (160 mm), with other limitations addressing minimum perimeter and minimum and maximum cross-sectional dimensions. These handrails shapes are now referred to as Type I handrails.

INTERNATIONAL CODE COUNCIL®
Copyright © 2015 ICC. ALL RIGHTS RESERVED. Accessed by David Dammon on Jun 21, 2017 12:30:52 PM pursuant to License Agreement with ICC. No further reproduction or distribution authorized. ANY UNAUTHORIZED REPRODUCTION OR DISTRIBUTION IS A VIOLATION OF THE FEDERAL COPYRIGHT ACT AND THE LICENSE AGREEMENT, AND SUBJECT TO CIVIL AND CRIMINAL PENALTIES THEREUNDER.

Type I handrails include circular cross sections with an outside diameter of at least $1^1/_4$ inches (32 mm) but not greater than 2 inches (51 mm). This limits the perimeter of the cross section such that the gripping surface incorporates the bottom of the rail. A handrail with either a very narrow or a large cross section is not graspable in a power grip by all able-bodied users and certainly not by those with hand-strength or flexibility deficiencies. A power grip typically accesses the bottom surface of the handrail, such as around a bar. A pinching grip is not as effective when there is a need to arrest a fall. An example of a pinching grip would be where a 2x4 stud on edge was used as a handrail. This would not comply with graspability concerns.

Noncircular Type I cross sections must meet the alternative noncircular criteria in this section, and the bottom of the rail must be considered part of the suitable gripping surface. Of note is that this criteria now includes a minimum cross section of 1 inch (25 mm) to provide for designs that reduce the interference of fingers and an opposing thumb that occurs when small objects are tightly grasped. Edges must be slightly rounded and not sharp. An example is shown in Commentary Figure 1014.3.1.

Ramp requirements in ICC A117.1 are referenced as part of the accessible route requirements in Chapter 11. Current handrail provisions are largely coordinated with the Type I handrail requirements in this section. Section 103 of ICC A117.1 would also permit alternative handrail shapes if they provided equivalent or better graspability.

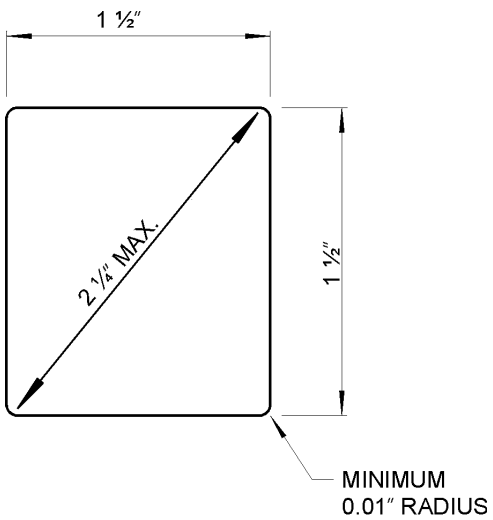

For SI: 1 inch = 25.4 mm.

Figure 1014.3.1
EXAMPLE OF TYPE I ALTERNATIVE HANDRAIL CONFIGURATION

1014.3.2 Type II. *Handrails* with a perimeter greater than $6^1/_4$ inches (160 mm) shall provide a graspable finger recess area on both sides of the profile. The finger recess shall begin within a distance of $^3/_4$ inch (19 mm) measured vertically from the tallest portion of the profile and achieve a depth of not less than $^5/_{16}$ inch (8 mm) within $^7/_8$ inch (22 mm) below the widest portion of the profile. This required depth shall continue for not less than $^3/_8$ inch (10 mm) to a level that is not less than $1^3/_4$ inches (45 mm) below the tallest portion of the profile. The width of the *handrail* above the recess shall be not less than $1^1/_4$ inches (32 mm) to not greater than $2^3/_4$ inches (70 mm). Edges shall have a minimum radius of 0.01 inch (0.25 mm).

❖ Handrail profiles having a perimeter dimension greater than $6^1/_4$ inches (160 mm), identified as Type II handrails, are acceptable within dwelling units and their associated structures when complying with all of the specific dimensional requirements.

Research has shown that Type II handrails have graspability that is essentially equal to or greater than the graspability of handrails meeting the long-accepted and codified shape and size now defined as Type I.

The key features of the graspability of Type II handrails are graspable finger recesses on both sides of the handrail. These recesses allow users to firmly grip a properly proportioned grasping surface on the top of the handrail, ensuring that the user can tightly retain a power-span grip on the handrail for all forces that are associated with attempts to arrest a fall.

This class of handrails incorporates a grip surface with controlled recesses for the purchase of the fingers and opposing thumb. These handrail shapes allow the use of power-span grips that need not encompass the bottom surfaces of the rail, allowing the design of taller cross sections that can eliminate the interference of mountings and provide a completely uninterrupted gripping surface for the user. The limits of the position and depth of the required recesses represent the minimum standard. Optimizing the design within the parameters with larger recesses and complete finger clearance from mountings will enhance the performance of these profiles. Although this standard allows design flexibility, it is important to follow the specifications accurately to comply. Each drawing in Commentary Figure 1014.3.2 illustrates the requirements of each sentence for clarity.

1014.4 Continuity. Handrail gripping surfaces shall be continuous, without interruption by newel posts or other obstructions.

Exceptions:

1. *Handrails* within *dwelling units* are permitted to be interrupted by a newel post at a turn or landing.
2. Within a *dwelling unit*, the use of a volute, turnout, starting easing or starting newel is allowed over the lowest tread.
3. Handrail brackets or balusters attached to the bottom surface of the *handrail* that do not project horizontally beyond the sides of the *handrail* within $1^1/_2$ inches (38 mm) of the bottom of the *handrail* shall not be considered obstructions. For each $^1/_2$ inch

INTERNATIONAL CODE COUNCIL®
Copyright © 2015 ICC. ALL RIGHTS RESERVED. Accessed by David Dammon on Jun 21, 2017 12:30:52 PM pursuant to License Agreement with ICC. No further reproduction or distribution authorized. ANY UNAUTHORIZED REPRODUCTION OR DISTRIBUTION IS A VIOLATION OF THE FEDERAL COPYRIGHT ACT AND THE LICENSE AGREEMENT, AND SUBJECT TO CIVIL AND CRIMINAL PENALTIES THEREUNDER.

(12.7 mm) of additional handrail perimeter dimension above 4 inches (102 mm), the vertical clearance dimension of $1^1/_2$ inches (38 mm) shall be permitted to be reduced by $^1/_8$ inch (3.2 mm).

4. Where *handrails* are provided along walking surfaces with slopes not steeper than 1:20, the bottoms of the handrail gripping surfaces shall be permitted to be obstructed along their entire length where they are integral to crash rails or bumper guards.
5. *Handrails* serving stepped *aisles* or ramped *aisles* are permitted to be discontinuous in accordance with Section 1029.15.1.

❖ Handrails must be usable for their entire length without requiring the users to release their grasp. Typically, when using the handrail while traveling the means of egress, an individual's arm is extended to lead the body with the hand forming a loose grip on the top and sides of the rail. If handrails are to be of service to users, they must be uninterrupted and continuous. Oversize newels, changes in the guard system, or excessive supports at the bottom of small perimeter handrails can cause interruption of the handrail, requiring the occupants to release their grip [see Commentary Figure 1014.4(1)]. Exception 1 allows the interruption of the handrail by a newel post at the intersection of two handrail sections at a turn within a flight or at a landing in dwelling units; however, this exception is not applicable to curved or spiral stairs. Exception 2 provides for familiar and historical handrail details, often combined with guards, that have been used for decades in dwelling units without substantiated detriment to the safety of the occupants. Exception 3 provides specifications for the attachment of brackets and balusters to the bottom of handrails to provide for minimum finger clearance such that they will not be considered obstructions. This method of handrail support limits interruptions of the grip surfaces at the bottom of smaller perimeter shapes that otherwise would deter or impede the user's ability to attain a stabilizing grip essential to safe stairway use. Larger handrail sizes permit shorter brackets since geometrically the finger clearance is still maintained [see Commentary Figure 1014.4(2)]. For example, a Type II handrail may elevate the fingertips completely above the supports, allowing the rail to be mounted by other means that do not obstruct when providing the clearances specified. Exception 4 allows for products that serve dual purposes, such as the bumper guard/handrail found in hospitals and nursing homes along corridors, to have a continuous bottom support. Since these are only permitted on slopes that are less than what is defined as a ramp, the handrails are more for assistance in mobility or balance rather than to arrest a fall.

Exception 5 references back to provisions for stepped and ramped aisles in assembly seating. Discontinuous handrails are permitted to allow for access to seats. Such discontinuous handrails must still extend the full run of the aisle stairs or ramp. See Section 1029.15.1.

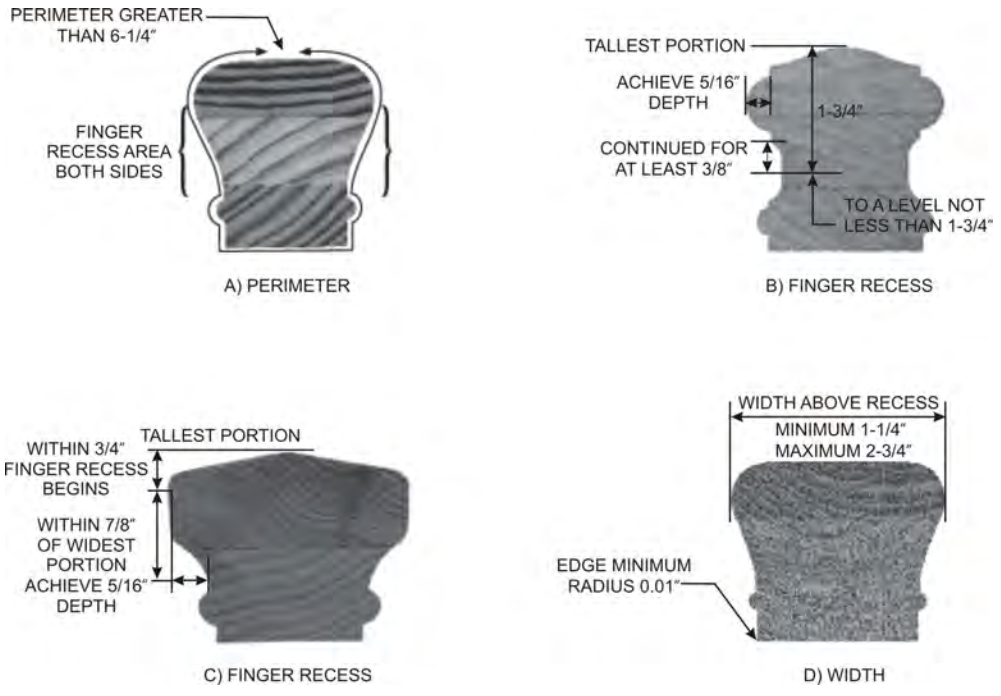

For SI: 1 inch = 25.4 mm.

Figure 1014.3.2
EXAMPLES OF TYPE II HANDRAIL CONFIGURATIONS

INTERNATIONAL CODE COUNCIL®
Copyright © 2015 ICC. ALL RIGHTS RESERVED. Accessed by David Dammon on Jun 21, 2017 12:30:52 PM pursuant to License Agreement with ICC. No further reproduction or distribution authorized. ANY UNAUTHORIZED REPRODUCTION OR DISTRIBUTION IS A VIOLATION OF THE FEDERAL COPYRIGHT ACT AND THE LICENSE AGREEMENT, AND SUBJECT TO CIVIL AND CRIMINAL PENALTIES THEREUNDER.

1014.5 Fittings. *Handrails* shall not rotate within their fittings.

❖ Fittings are those component pieces of a continuous handrail that are shaped or bent and attached to the longer sections of straight or curved handrail to provide for transition at changes in pitch, direction or to provide for termination of a continuous handrail. Fittings and handrails must be securely joined to ensure a stable handrail that does not allow any portion to rotate when grasped.

1014.6 Handrail extensions. *Handrails* shall return to a wall, *guard* or the walking surface or shall be continuous to the handrail of an adjacent *flight* of *stairs* or *ramp* run. Where *handrails* are not continuous between *flights*, the *handrails* shall extend horizontally not less than 12 inches (305 mm) beyond the top riser and continue to slope for the depth of one tread beyond the bottom riser. At *ramps* where *handrails* are not continuous between runs, the *handrails* shall extend horizontally above the landing 12 inches (305 mm) minimum beyond the top and bottom of *ramp* runs. The extensions of

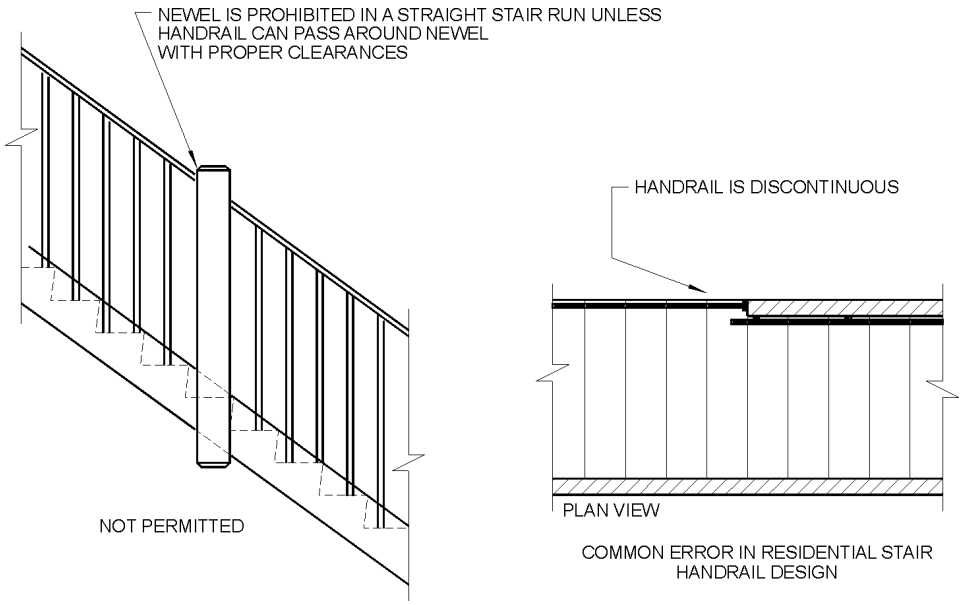

Figure 1014.4(1)
EXAMPLES OF PROHIBITED HANDRAIL DESIGNS

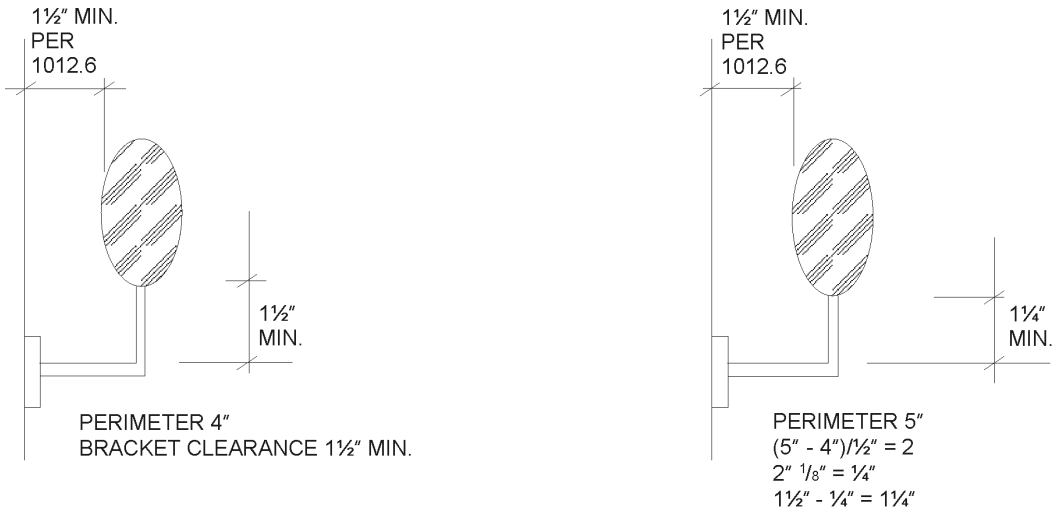

For SI: 1 inch = 25.4 mm.

Figure 1014.4(2)
REDUCED BRACKET EXTENSIONS EXAMPLE PER SECTION 1012.4, EXCEPTION 3

INTERNATIONAL CODE COUNCIL®
Copyright © 2015 ICC. ALL RIGHTS RESERVED. Accessed by David Dammon on Jun 21, 2017 12:30:52 PM pursuant to License Agreement with ICC. No further reproduction or distribution authorized. ANY UNAUTHORIZED REPRODUCTION OR DISTRIBUTION IS A VIOLATION OF THE FEDERAL COPYRIGHT ACT AND THE LICENSE AGREEMENT, AND SUBJECT TO CIVIL AND CRIMINAL PENALTIES THEREUNDER.

handrails shall be in the same direction of the *flights* of *stairs* at *stairways* and the *ramp* runs at *ramps*.

Exceptions:

1. *Handrails* within a *dwelling unit* that is not required to be *accessible* need extend only from the top riser to the bottom riser.
2. *Handrails* serving aisles in rooms or spaces used for assembly purposes are permitted to comply with the handrail extensions in accordance with Section 1029.15.
3. *Handrails* for *alternating tread devices* and ship's ladders are permitted to terminate at a location vertically above the top and bottom risers. *Handrails* for *alternating tread devices* are not required to be continuous between *flights* or to extend beyond the top or bottom risers.

❖ The purpose of return requirements at handrail ends is to prevent a person from catching an article of clothing or satchel straps, or from being injured by falling on the extended end of a handrail.

The length that a handrail extends beyond the top and bottom of a stairway, ramp or intermediate landing where handrails are not continuous to another stair flight or ramp run is an important factor for the safety of the users. An occupant must be able to grasp securely a handrail beyond the last riser of a stairway or the last sloped segment of a ramp. Handrail terminations that bend around a corner do not provide this stability; therefore, the handrail must extend in the direction of the stair flight or ramp run. The handrail extensions are not required where a user could keep his or her hand on the handrail, such as the continuous handrail at the landing of a switchback stairway or ramp (see Section 1014.2, Exception 1).

For stairways, handrails must be extended 12 inches (305 mm) horizontally beyond the top riser and sloped a distance of one tread depth beyond the bottom riser. For ramps, handrails must be extended 12 inches (305 mm) horizontally beyond the last sloped ramp segment at both the top and bottom locations. These handrail extensions are not only required at the top and bottom on both sides of stairways and ramps, but also at other places where handrails are not continuous, such as landings and platforms. These requirements are intended to reflect the current provisions of ICC A117.1 (see Commentary Figure 1014.2) and the 2010 ADA Standard. Note that if the handrail extension is at a location that could be considered a protruding object, the handrail must return to the post at a height of less than 27 inches (686 mm) above the floor (see Sections 1003.3.2 and 1003.3.3).

In accordance with Exception 1, handrail extensions are not required where a dwelling unit is not required to meet any level of accessibility (i.e., Accessible unit, Type A unit or Type B unit). Handrail extensions are permitted to end at a newel post or turnaround.

Exception 2 provides for handrails along ramped or stepped aisles in assembly seating configurations, such as in sports facilities, theaters and lecture halls. It is necessary to limit handrail extensions in assembly aisles so that circulation in cross aisles that run perpendicular to the stepped or sloped aisles is not compromised.

Exception 3 allows for the unique construction considerations for alternating tread devices and ship's ladders. Again, usage of these devices is very limited. Since alternative tread devices and ship's ladders are typically utilized as a safer alternative to a vertical ladder, they are often located in tight spaces where traditional-type stairs cannot be used or are not required. With a much steeper angle than traditional stairs and differing usage, handrail extensions and continuity provisions are not practical.

1014.7 Clearance. Clear space between a handrail and a wall or other surface shall be not less than $1^1/_2$ inches (38 mm). A handrail and a wall or other surface adjacent to the *handrail* shall be free of any sharp or abrasive elements.

❖ A clear space is needed between a handrail and the wall or other surface to allow the user to slide his or her hand along the rail with fingers in the gripping position without contacting the wall surface, which could have an abrasive texture. In climates where persons may be expected to be wearing heavy gloves during the winter, an open design with greater clearance would be desirable at an exterior stairway, or a stairway directly inside the entrance to a building. [See Commentary Figures 1014.4(2) and 1014.8(2) for an illustration of handrail clearance.]

1014.8 Projections. On *ramps* and on ramped *aisles* that are part of an *accessible route*, the clear width between *handrails* shall be 36 inches (914 mm) minimum. Projections into the required width of *aisles*, *stairways* and *ramps* at each side shall not exceed $4^1/_2$ inches (114 mm) at or below the handrail height. Projections into the required width shall not be limited above the minimum headroom height required in Section 1011.3. Projections due to intermediate *handrails* shall not constitute a reduction in the egress width. Where a pair of intermediate *handrails* are provided within the *stairway* width without a walking surface between the pair of intermediate *handrails* and the distance between the pair of intermediate *handrails* is greater than 6 inches (152 mm), the available egress width shall be reduced by the distance between the closest edges of each such intermediate pair of *handrails* that is greater than 6 inches (152 mm).

❖ Handrails may not project more than $4^1/_2$ inches (114 mm) into the required width of a stairway, so that the clear width of the passage will not be seriously reduced [see Commentary Figure 1014.8(1)]. This is consistent with Section 1003.3.3. This projection may exist below the handrail height as well [see Commentary Figure 1014.8(2)]. The projection can be greater

INTERNATIONAL CODE COUNCIL®
Copyright © 2015 ICC. ALL RIGHTS RESERVED. Accessed by David Dammon on Jun 21, 2017 12:30:52 PM pursuant to License Agreement with ICC. No further reproduction or distribution authorized. ANY UNAUTHORIZED REPRODUCTION OR DISTRIBUTION IS A VIOLATION OF THE FEDERAL COPYRIGHT ACT AND THE LICENSE AGREEMENT, AND SUBJECT TO CIVIL AND CRIMINAL PENALTIES THEREUNDER.

on stairways or ramps exceeding minimum width requirements.

The requirement for some stairways to have center handrails (Section 1014.9) could result in a single or double handrail down the center of the flight of stairs. Since these stairways are 60 inches (1525 mm) or wider, a center handrail would typically not be an obstruction and, therefore, would not reduce the capacity of the stairway. Schools and large assembly spaces commonly put in center handrails to aid in the flow up and down the stairs during peak usage times. If the center handrail is a double rail with a spacing of more than 6 inches (152mm), the width of the stairway many need to be adjusted to compensate for the loss of available width.

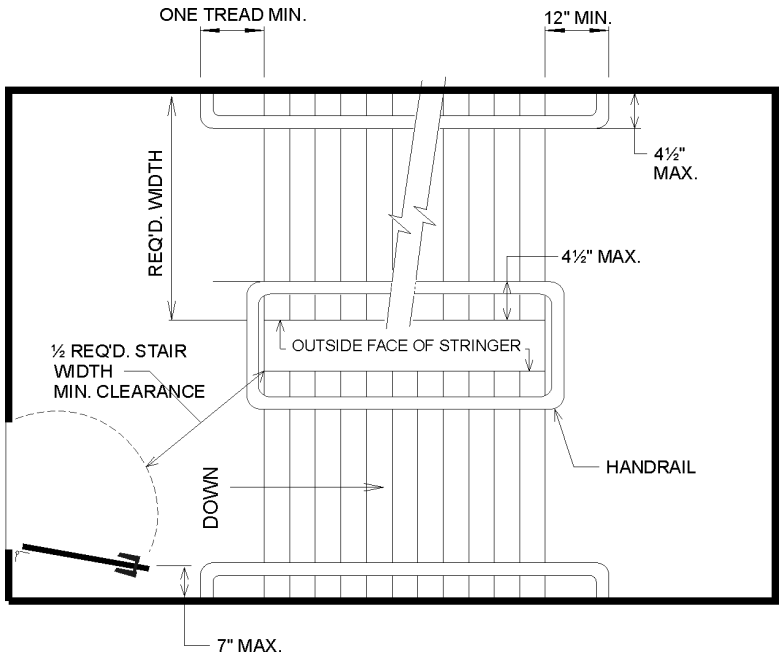

For SI: 1 inch = 25.4 mm.

Figure 1014.8(1)
TYPICAL HANDRAIL ARRANGEMENT

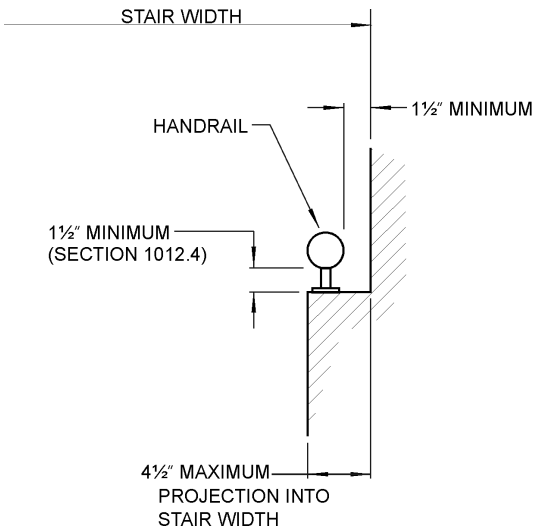

For SI: 1 inch = 25.4 mm.

Figure 1014.8(2)
PROJECTION OF HANDRAIL

INTERNATIONAL CODE COUNCIL®
Copyright © 2015 ICC. ALL RIGHTS RESERVED. Accessed by David Dammon on Jun 21, 2017 12:30:52 PM pursuant to License Agreement with ICC. No further reproduction or distribution authorized. ANY UNAUTHORIZED REPRODUCTION OR DISTRIBUTION IS A VIOLATION OF THE FEDERAL COPYRIGHT ACT AND THE LICENSE AGREEMENT, AND SUBJECT TO CIVIL AND CRIMINAL PENALTIES THEREUNDER.

1014.9 Intermediate handrails. *Stairways* shall have intermediate *handrails* located in such a manner that all portions of the *stairway* minimum width or required capacity are within 30 inches (762 mm) of a handrail. On monumental *stairs, handrails* shall be located along the most direct path of egress travel.

❖ In order to always be available to the user of the stairway, the maximum horizontal distance to a handrail from within the width required must not exceed 30 inches (762 mm). People tend to walk close to handrails, and if intermediate handrails are not provided for very wide stairways, the center portion of such stairways will normally receive less use. More importantly, in emergencies, the center portions of wide stairways with handrails would enhance egress travel rather than delay it by overcrowding at the sides with the handrails. This would especially be true under panic conditions where the use of wide interior stairways could become particularly hazardous.

The distance to the handrail applies to the "required" width of the stairway. If a stairway is greater than 60 inches (1524 mm) in width, but only 60 inches (1524 mm) total width is required based on occupant load (see Section 1005.3.1), intermediate handrails are not required. Adequate safety is provided since every user is within 30 inches (762 mm) of a handrail.

Monumental stairways are typically provided for architectural effect and may or may not be considered required egress stairs. The criteria for monumental egress stairways deal with the very wide stairway in relation to the required width. While handrails on both sides of the stairway may be sufficient to accommodate the required width, the handrails may not be near the stream of traffic or even apparent to the user. In this case, the handrails are to be placed in a location more reflective of the egress path (see Commentary Figure 1014.9).

SECTION 1015
GUARDS

1015.1 General. *Guards* shall comply with the provisions of Sections 1015.2 through 1015.7. Operable windows with sills located more than 72 inches (1829 mm) above finished grade or other surface below shall comply with Section 1015.8.

❖ Guards required along dropoffs must comply with the provisions for height, strength and opening limitations. Special provisions are provided for unique locations, such as screened-in porches, around mechanical equipment on platforms or roofs and at hatch openings.

Where there are operable windows on upper floors, there is a concern over the possibility of a child falling; thus, the placement of this requirement is in the guard section. Such windows must comply with Section 1015.8.

1015.2 Where required. *Guards* shall be located along open-sided walking surfaces, including *mezzanines*, *equipment platforms*, *aisles*, *stairs*, *ramps* and landings that are located more than 30 inches (762 mm) measured vertically to the floor or grade below at any point within 36 inches (914 mm) horizontally to the edge of the open side. *Guards* shall

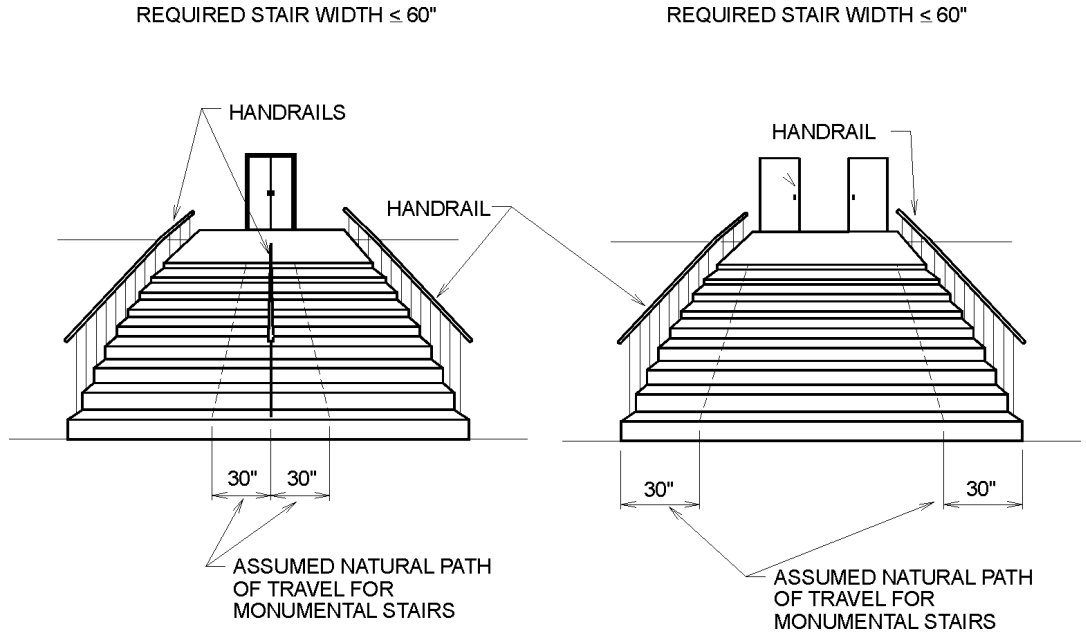

For SI: 1 inch = 25.4 mm.

Figure 1014.9
HANDRAILS FOR MONUMENTAL STAIRS

INTERNATIONAL CODE COUNCIL®
Copyright © 2015 ICC. ALL RIGHTS RESERVED. Accessed by David Dammon on Jun 21, 2017 12:30:52 PM pursuant to License Agreement with ICC. No further reproduction or distribution authorized. ANY UNAUTHORIZED REPRODUCTION OR DISTRIBUTION IS A VIOLATION OF THE FEDERAL COPYRIGHT ACT AND THE LICENSE AGREEMENT, AND SUBJECT TO CIVIL AND CRIMINAL PENALTIES THEREUNDER.

be adequate in strength and attachment in accordance with Section 1607.8.

Exception: *Guards* are not required for the following locations:

1. On the loading side of loading docks or piers.
2. On the audience side of *stages* and raised *platforms*, including *stairs* leading up to the *stage* and raised *platforms*.
3. On raised *stage* and *platform* floor areas, such as runways, *ramps* and side *stages* used for entertainment or presentations.
4. At vertical openings in the performance area of *stages* and *platforms*.
5. At elevated walking surfaces appurtenant to *stages* and *platforms* for access to and utilization of special lighting or equipment.
6. Along vehicle service pits not accessible to the public.
7. In assembly seating areas at cross aisles in accordance with Section 1029.16.2.

❖ Where one or more sides of a walking surface are open to the floor level or grade below, a guard system must be provided to minimize the possibility of occupants accidentally falling to the surface below. A guard is required only where the difference in elevation between the higher walking surface and the surface below is greater than 30 inches (762 mm). When the ground slopes away from the edge, the vertical distance from the walking surface to the grade or floor below must also be more than 30 inches (762 mm) on the lowest point within a 36-inch (914 mm) radius measured horizontally from the edge of the open-sided walking surface (see Commentary Figure 1015.2).

The loads for guard design are addressed in IBC Section 1607 and are typically 50 plf (222 N) along the top with a 200-pound (90.72 kg) concentrated force. If glazing is used as part of a guard system, or windows are located adjacent to stairways or ramps, the guard must also comply with Section 1015.2.1 (see Section 1015.2.1 and IBC Sections 1607.8 and 2407).

Most of the exceptions identify situations when guards are not practical, such as along loading docks, stages and their approaches, and vehicle service pits. Exception 7 references assembly spaces where a lower guard is permitted or the alternative of seat backs where the dropoff is adjacent to a cross aisle.

1015.2.1 Glazing. Where glass is used to provide a *guard* or as a portion of the *guard* system, the *guard* shall comply with Section 2407. Where the glazing provided does not meet the strength and attachment requirements of Section 1607.8, complying *guards* shall be located along glazed sides of open-sided walking surfaces.

❖ Glazing in guards may be infill or structural. The loads for guard design in Section 1015.2, which references IBC Section 1607, are typically 50 plf (222 N) along the top with a 200-pound (90.72 kg) concentrated force. Two different situations are addressed with glazing: where glazing is installed in a guard on the side of a stairway, ramp or landing; or when a stairway, ramp or landing is immediately adjacent to a window where the glazing has not been designed to resist the forces from a fall (see IBC Sections 1607.8 and 2407 and Commentary Figure 1015.2.1).

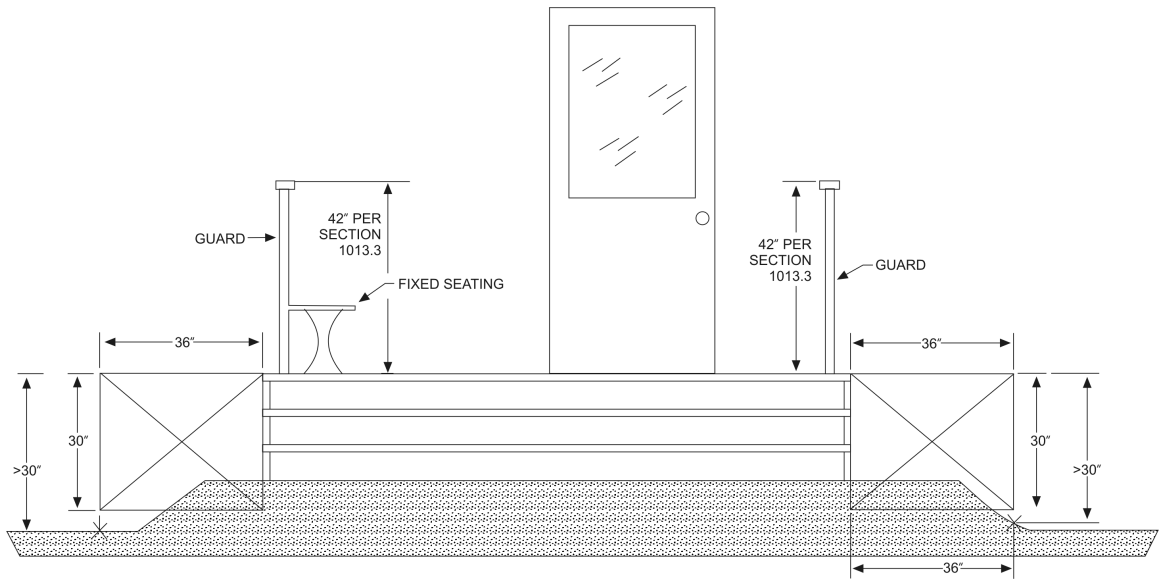

For SI: 1 inch = 25.4 mm.

Figure 1015.2
DROP-OFF MEASUREMENTS AND GUARD HEIGHT

INTERNATIONAL CODE COUNCIL®
Copyright © 2015 ICC. ALL RIGHTS RESERVED. Accessed by David Dammon on Jun 21, 2017 12:30:52 PM pursuant to License Agreement with ICC. No further reproduction or distribution authorized. ANY UNAUTHORIZED REPRODUCTION OR DISTRIBUTION IS A VIOLATION OF THE FEDERAL COPYRIGHT ACT AND THE LICENSE AGREEMENT, AND SUBJECT TO CIVIL AND CRIMINAL PENALTIES THEREUNDER.

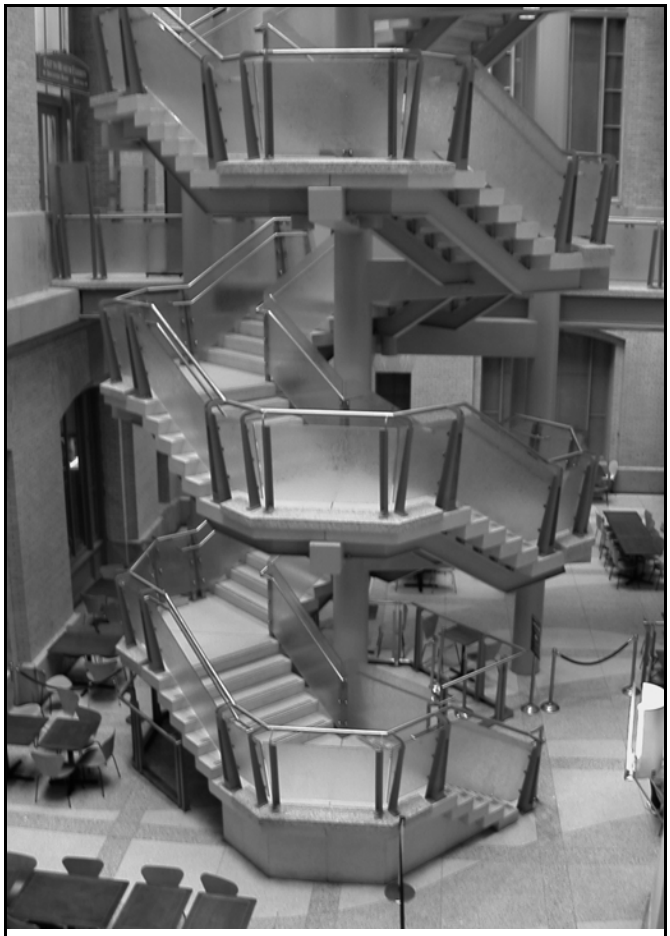

Figure 1015.2.1
GUARD SYSTEM WITH GLAZING

1015.3 Height. Required *guards* shall be not less than 42 inches (1067 mm) high, measured vertically as follows:

1. From the adjacent walking surfaces.
2. On *stairways* and stepped *aisles*, from the line connecting the leading edges of the tread *nosings*.
3. On *ramps* and ramped *aisles*, from the *ramp* surface at the *guard*.

Exceptions:

1. For occupancies in Group R-3 not more than three stories above grade in height and within individual *dwelling units* in occupancies in Group R-2 not more than three stories above grade in height with separate *means of egress*, required *guards* shall be not less than 36 inches (914 mm) in height measured vertically above the adjacent walking surfaces or adjacent *fixed seating*.
2. For occupancies in Group R-3, and within individual *dwelling units* in occupancies in Group R-2, *guards* on the open sides of *stairs* shall have a height not less than 34 inches (864 mm) measured vertically from a line connecting the leading edges of the treads.
3. For occupancies in Group R-3, and within individual *dwelling units* in occupancies in Group R-2, where the top of the *guard* also serves as a *handrail* on the open sides of *stairs*, the top of the *guard* shall be not less than 34 inches (864 mm) and not more than 38 inches (965 mm) measured vertically from a line connecting the leading edges of the treads.
4. The *guard* height in assembly seating areas shall comply with Section 1029.16 as applicable.
5. Along *alternating tread devices* and ship's ladders, *guards* where the top rail also serves as a *handrail* shall have height not less than 30 inches (762 mm) and not more than 34 inches (864 mm), measured vertically from the leading edge of the device tread *nosing*.

❖ Guards must not be less than 42 inches (1067 mm) in height as measured vertically from the top of the guard down to the sloped line connecting the leading edge of the tread along stairways or stepped aisles or to an adjacent walking surface for floors, ramps and ramped aisles [see Commentary Figures 1015.2, 1015.4(1) and (2) and 1012.8(4)]. Experience has shown that 42 inches (1067 mm) or more provides adequate height to minimize accidental falls in occupancies where crowding is more likely to occur. This puts the top of the guard above the center of gravity of the average adult. The height requirement is not intended to consider such items as planters or loose furniture next to the dropoff as walking surfaces. Because of safety concerns, the designer often chooses to install a barrier where there is a dropoff of less than 30 inches (762 mm). Decorative barriers may be utilized to support handrails or serve as part of the edge protection along a ramp. Where nonrequired guards/barriers are provided, provisions for guard height, openings and strength may be used for design, but are not required. It is common practice to follow the strength provisions, but not always the opening or height provisions for nonrequired guards.

Exception 1 measures the guard height differently. In Group R-2 and R-3 units that are three stories or less, where there is a fixed seat along the edge of deck or balcony, it is reasonable to consider the additional exposure for young children that may use the seat as standing or walking surfaces. In this situation, while the dropoff is measured from the floor, the guard height is measured from the top of the seat surface (see Commentary Figure 1015.3). Within dwelling units the incidence of the exposure to crowds and to egress from higher occupancy spaces is extremely limited, thus a minimum guard height of 36 inches (914 mm) is appropriate. Exception 1 is consistent with provisions in the 2012 IRC, however, the requirement to measure the guard height above a fixed seat has been deleted in the 2015 IRC.

Where the minimum guard height requirement is 42 inches (1067 mm), where both a guard and handrail are required, the handrail cannot be the top of the guard, but must be placed along the inside face of the

INTERNATIONAL CODE COUNCIL®
Copyright © 2015 ICC. ALL RIGHTS RESERVED. Accessed by David Dammon on Jun 21, 2017 12:30:52 PM pursuant to License Agreement with ICC. No further reproduction or distribution authorized. ANY UNAUTHORIZED REPRODUCTION OR DISTRIBUTION IS A VIOLATION OF THE FEDERAL COPYRIGHT ACT AND THE LICENSE AGREEMENT, AND SUBJECT TO CIVIL AND CRIMINAL PENALTIES THEREUNDER.

guard unless specifically permitted in Exceptions 2 through 5.

Exceptions 2 and 3 are for nontransient residential occupancies and only address guard heights along the stairways, not at other dropoffs such as balconies or second-floor landings. For Group R-2, these guard height exceptions are only permitted for stairways within individual dwelling units, not common stairways within the building. The handrail provisions allow some residential stairways to only have one handrail (see Section 1011.11). Exceptions 2 and 3 allow for a reduced guard height when the guard is also used as a handrail and when it just serves the purpose of a guard along a stairway. The reduced allowable guard height along stairways is consistent with current construction practice. Unless a dwelling could comply with Exception 1, the guard height along other dropoffs would have to be 42 inches (1067 mm) measured from the floor.

Exception 4 references the lower guards permitted at limited locations where a line of sight for assembly spaces is part of the consideration. There are also allowances in Section 1029.16 that would allow for the top of the guard to serve as a handrail.

Exception 5 permits a reduction in guard heights based on the limited used and unique design considerations for alternating tread devices and ship's ladders (see Sections 1011.14 and 1011.15).

1015.4 Opening limitations. Required *guards* shall not have openings that allow passage of a sphere 4 inches (102 mm) in diameter from the walking surface to the required *guard* height.

Exceptions:

1. From a height of 36 inches (914 mm) to 42 inches (1067 mm), *guards* shall not have openings that allow passage of a sphere $4^3/_8$ inches (111 mm) in diameter.
2. The triangular openings at the open sides of a *stair*, formed by the riser, tread and bottom rail shall not allow passage of a sphere 6 inches (152 mm) in diameter.
3. At elevated walking surfaces for access to and use of electrical, mechanical or plumbing systems or equipment, *guards* shall not have openings that allow passage of a sphere 21 inches (533 mm) in diameter.
4. In areas that are not open to the public within occupancies in Group I-3, F, H or S, and for *alternating tread devices* and ship's ladders, *guards* shall not have openings that allow passage of a sphere 21 inches (533 mm) in diameter.
5. In assembly seating areas, *guards* required at the end of aisles in accordance with Section 1029.16.4 shall not have openings that allow passage of a sphere 4 inches (102 mm) in diameter up to a height of 26 inches (660 mm). From a height of 26 inches (660 mm) to 42 inches (1067 mm) above the adjacent walking surfaces, *guards* shall not have openings that allow passage of a sphere 8 inches (203 mm) in diameter.
6. Within individual *dwelling units* and *sleeping units* in Group R-2 and R-3 occupancies, *guards* on the open sides of *stairs* shall not have openings that allow passage of a sphere $4^3/_8$ (111 mm) inches in diameter.

❖ The opening limitations in a guard are based on anthropometric research that indicates children in the 99th percentile who have developed to the point of being able to crawl will have chest depth and head

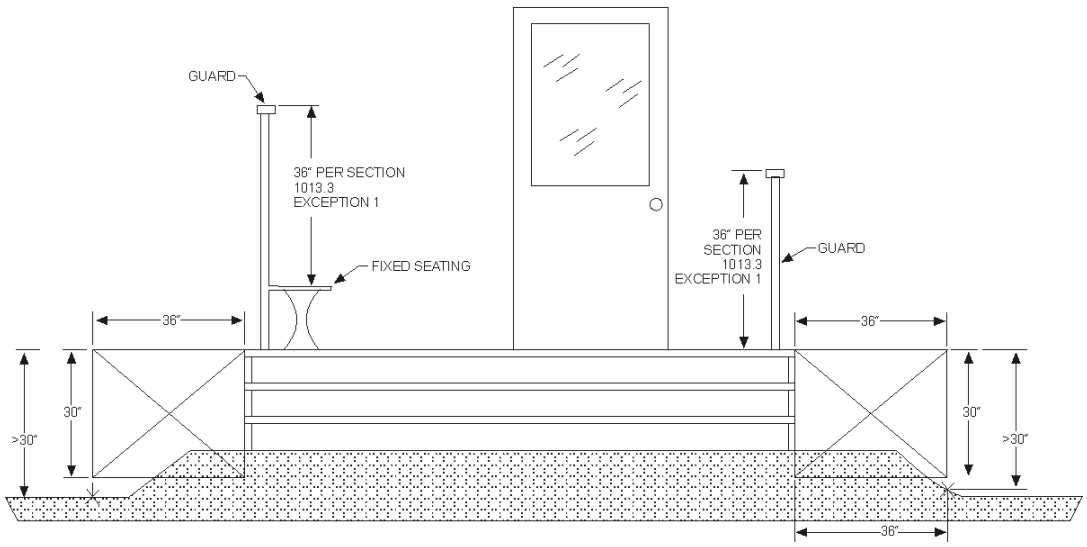

For SI: 1 inch = 25.4 mm.

Figure 1015.3
DROP OFF MEASUREMENTS AND GUARD HEIGHTS FOR TWO- AND THREE-STORY GROUPS R-3 AND R-2

INTERNATIONAL CODE COUNCIL®
Copyright © 2015 ICC. ALL RIGHTS RESERVED. Accessed by David Dammon on Jun 21, 2017 12:30:52 PM pursuant to License Agreement with ICC. No further reproduction or distribution authorized. ANY UNAUTHORIZED REPRODUCTION OR DISTRIBUTION IS A VIOLATION OF THE FEDERAL COPYRIGHT ACT AND THE LICENSE AGREEMENT, AND SUBJECT TO CIVIL AND CRIMINAL PENALTIES THEREUNDER.

size of at least $4^3/_4$ inches. Both the 4-inch (102 mm) and the $4^3/_8$-inch (111 mm) sphere rules are intended to provide an additional margin of safety. Note that the opening limitations are stated as preventing the passage of a sphere, requiring the openings to be smaller than the dimension stated.

Exception 1 allows the $4^3/_8$-inch (203 mm) opening limitation at heights where falling through the guard is not a risk for children of early development who cannot access the opening [i.e., above 36 inches (914 mm) in height] [see Commentary Figure 1015.4(1)].

Exception 2 allows a 6-inch (152 mm) opening limitation at openings formed by the riser, tread and bottom rail of guards at the open side of a stairway. The geometry of these openings is such that the entire body cannot pass through the triangular opening, and further limiting such openings is impractical to achieve with a sloped bottom member in the guard without intersecting the tread nosings [see Commentary Figure 1015.4(1)].

Exceptions 3 and 4 address areas where the presence of small children is unlikely and often prohibited. Guards along walkways leading to electrical, mechanical and plumbing systems or equipment and in occupancies in Groups I-3, F, H and S may be constructed in such a way that a sphere 21 inches (533 mm) in diameter will not pass through any of the openings [see Commentary Figure 1015.4(2)]. This requirement allows the use of one horizontal intermediate member with the standard top-of-guard height of 42 inches (1067 mm).

Exception 5, for the guard infill near the top of the aisle guard in assembly seating areas, is provided to reduce sightline problems in limited locations (see Section 1029.16.4).

Exception 6 recognizes a standard construction practice within residential units. In practicality this allows a stairway with the 7-inch riser height/11-inch tread depth (178 mm riser height/279 mm tread depth) step geometry to have two common $1^1/_4$-inch (32 mm) balusters per stair tread instead of three. Where the $7^3/_4$-inch riser height/10-inch tread depth (197 mm riser height/254 mm tread depth) step geometry (see Section 1011.5.2, Exception 3) is utilized, the two balusters would meet the 4-inch (102 mm) opening limitation and most profiled or turned balusters would meet the $4^3/_8$-inch (111 mm) sphere rule.

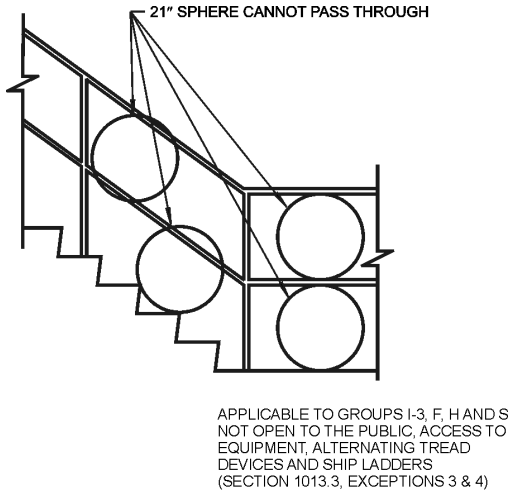

For SI: 1 inch = 25.4 mm.

Figure 1015.4(2)
GUARD OPENING LIMITATIONS, SECTION 1015.4, EXCEPTIONS 3 AND 4

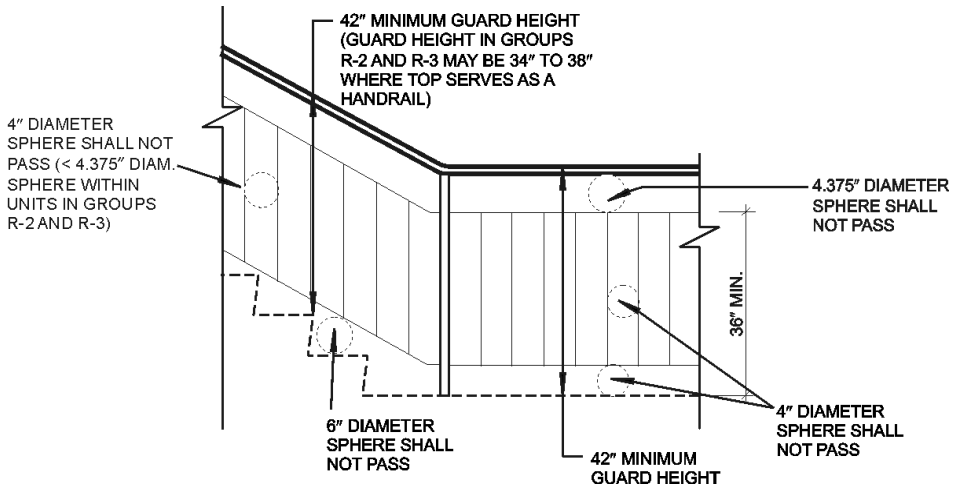

Note: Handrail not shown for clarity.
For SI: 1 inch = 25.4 mm.

Figure 1015.4(1)
GUARD HEIGHT AND OPENING LIMITATIONS

INTERNATIONAL CODE COUNCIL®
Copyright © 2015 ICC. ALL RIGHTS RESERVED. Accessed by David Dammon on Jun 21, 2017 12:30:52 PM pursuant to License Agreement with ICC. No further reproduction or distribution authorized. ANY UNAUTHORIZED REPRODUCTION OR DISTRIBUTION IS A VIOLATION OF THE FEDERAL COPYRIGHT ACT AND THE LICENSE AGREEMENT, AND SUBJECT TO CIVIL AND CRIMINAL PENALTIES THEREUNDER.

The provisions of guards are to minimize accidental falls through or over a guard. Opening limitations do not prohibit the use of horizontal members or ornamentation infill as guard components. Research has shown that no practical design for guard infill, including solid panels, can prevent climbing; but good design practices can greatly reduce the opportunity for small children to "climb" the guard [see Commentary Figure 1015.4(3)]. In this example, the handrail stops a child from climbing the guard.



Figure 1015.4(3)
EXAMPLE OF GUARD WITH HORIZONTAL MEMBERS

1015.5 Screen porches. Porches and decks that are enclosed with insect screening shall be provided with *guards* where the walking surface is located more than 30 inches (762 mm) above the floor or grade below.

❖ Insect screening located on the open sides of porches and decks does not provide an adequate barrier to reasonably protect an occupant from falling to the surface below. Guards are required on the open sides of porches and decks where the floor is located more than 30 inches (762 mm) above the surface below. The guards must comply with all of the provisions of Section 1015.

1015.6 Mechanical equipment, systems and devices. *Guards* shall be provided where various components that require service are located within 10 feet (3048 mm) of a roof edge or open side of a walking surface and such edge or open side is located more than 30 inches (762 mm) above the floor, roof or grade below. The *guard* shall extend not less than 30 inches (762 mm) beyond each end of such components. The *guard* shall be constructed so as to prevent the passage of a sphere 21 inches (533 mm) in diameter.

Exception: *Guards* are not required where permanent fall arrest/restraint anchorage connector devices that comply with ANSI/ASSE Z 359.1 are affixed for use during the entire roof covering lifetime. The devices shall be reevaluated for possible replacement when the entire roof covering is replaced. The devices shall be placed not more than 10 feet (3048 mm) on center along hip and ridge lines and placed not less than 10 feet (3048 mm) from the roof edge or open side of the walking surface.

❖ The purpose of this requirement is to protect workers from falls off of roofs or from open-sided walking surfaces when doing maintenance work on equipment. The guard opening is allowed to be up to 21 inches (533 mm) since children are not likely to be in such areas. Either the equipment should be located so that it is more than 10 feet from the roof edge, or a guard or raised parapet must be provided to prevent falls. The guard also has to extend at least 30 inches (762 mm) in all directions past the corners of the equipment (see Commentary Figure 1015.7).

The exception for the guards is an alternative of a personal fall arrest system with anchorage points, more commonly called tie down points for restraining harnesses. The code does not specify who has to provide the equipment that fits the maintenance crew and attaches to the system. If this option is chosen, when the roof covering is replaced, the system must also be reevaluated and possibly replaced. This system is more commonly used on sloped roofs while guards are more often used on flat roofs.

1015.7 Roof access. *Guards* shall be provided where the roof hatch opening is located within 10 feet (3048 mm) of a roof edge or open side of a walking surface and such edge or open side is located more than 30 inches (762 mm) above the floor, roof or grade below. The *guard* shall be constructed so as to prevent the passage of a sphere 21 inches (533 mm) in diameter.

Exception: *Guards* are not required where permanent fall arrest/restraint anchorage connector devices that comply with ANSI/ASSE Z 359.1 are affixed for use during the entire roof covering lifetime. The devices shall be reevaluated for possible replacement when the entire roof covering is replaced. The devices shall be placed not more than 10 feet (3048 mm) on center along hip and ridge lines and placed not less than 10 feet (3048 mm) from the roof edge or open side of the walking surface.

❖ The code already requires guards around equipment on the roof; this section is intended to provide the same level of safety at the hatch opening service personnel use to access the roof (see Commentary Figure 1015.7 and the commentary to Section 1015.6). While not specifically indicated for roof hatches, Section 1015.6 requires the guard to extend at least 30 inches (752 mm) past the corners of the equipment.

1015.8 Window openings. Windows in Group R-2 and R-3 buildings including *dwelling units*, where the top of the sill of an operable window opening is located less than 36 inches above the finished floor and more than 72 inches (1829 mm) above the finished grade or other surface below on the exterior of the building, shall comply with one of the following:

1. Operable windows where the top of the sill of the opening is located more than 75 feet (22 860 mm) above the finished grade or other surface below and that are pro-

INTERNATIONAL CODE COUNCIL®
Copyright © 2015 ICC. ALL RIGHTS RESERVED. Accessed by David Dammon on Jun 21, 2017 12:30:52 PM pursuant to License Agreement with ICC. No further reproduction or distribution authorized. ANY UNAUTHORIZED REPRODUCTION OR DISTRIBUTION IS A VIOLATION OF THE FEDERAL COPYRIGHT ACT AND THE LICENSE AGREEMENT, AND SUBJECT TO CIVIL AND CRIMINAL PENALTIES THEREUNDER.

vided with window fall prevention devices that comply with ASTM F2006.

2. Operable windows where the openings will not allow a 4-inch-diameter (102 mm) sphere to pass through the opening when the window is in its largest opened position.
3. Operable windows where the openings are provided with window fall prevention devices that comply with ASTM F2090.
4. Operable windows that are provided with window opening control devices that comply with Section 1015.8.1.

❖ The window limitations specified here are intended for Group R-2 and R-3 units. These facilities have the highest potential for infants and toddlers being present for an extended period of time. The requirement is intended to provide a level of protection to children and to help limit the chances of them falling through window openings. In most cases, these provisions are not applicable to first-floor windows. Typically, the 72 inches (1829 mm) to finished grade would make these provisions applicable for windows starting at the second floor. For windows in bedrooms that may also be required to serve as emergency escape and rescue openings, see Section 1030.

There are basically five options offered:

One option is to locate the window so that any opening is at least 36 inches (915 mm) above the floor. By raising the lowest operable portion of a window to 36 inches (915 mm) or more, the sill height is above the center of gravity of smaller children. The National Ornamental & Miscellaneous Metals Association (NOMMA) commissioned a paper on child safety related to falls. The report indicates that the standing center of gravity of children aged 2 to 3.5 years is 24.1 inches (612 mm) [50th percentile is 22.2 inches (564 mm)] and of children aged 3.5 to 4.5 years is 25.2 inches (640 mm) [50th percentile is 23.6 inches (599 mm)]. The 36-inch (915 mm) sill height was chosen to reduce the ability of a child to climb onto the sill, enabling the fall through the opening. Windows that are also to serve as emergency escape windows must also comply with Section 1030.3 sill height requirements for 44 inches (1118 mm) maximum. Note that Section R612.2 of the IRC requires a minimum sill height of 24 inches (610 mm).

A second option (Item 1) would be for windows with an opening lower than 36 inches (915 mm) to limit the opening to 4 inches (102 mm) maximum. This opening size is consistent with the guard opening provisions (see Section 1015.4). Many awning or hopper-type casement windows have control arms that limit the opening width.

The third option offered (Item 2) allows for fixed fall-prevention devices to be installed in accordance with ASTM F2006. The limitation for window sills over 75 feet (22 860 mm) is for consistency with Section 1.3 of ASTM F2006, which states: “This safety specification applies only to devices intended to be applied to windows installed at height of more than 75 feet above the ground level in multiple family dwelling buildings. This safety specification is not intended to apply to windows below 75 feet (22 860 mm) because all windows below 75 feet (22 860 mm) that are operable could be used as a possible secondary means of escape.” Since these devices will always prevent the opening of the window, they cannot be

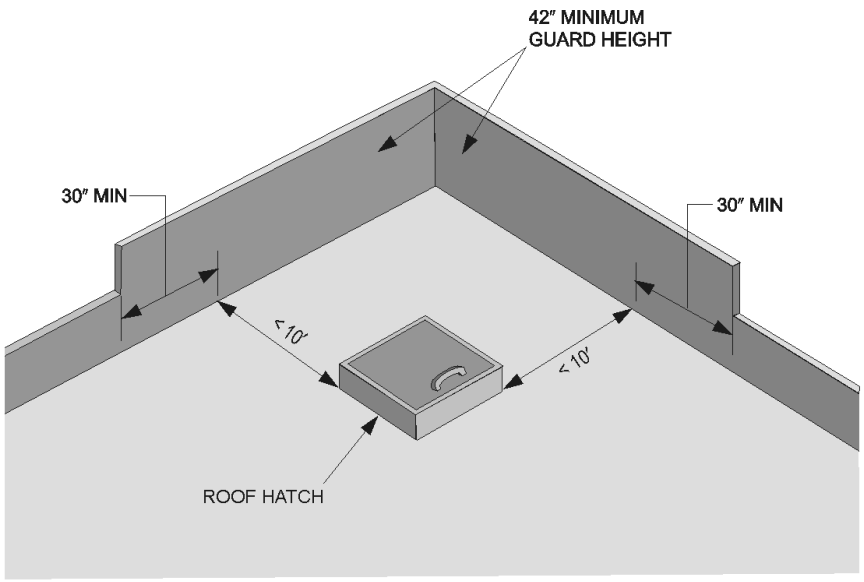

For SI: 1 inch = 25.4 mm, 1 foot = 304.8 mm.

Figure 1015.7
PROTECTION AT ROOF-HATCH OPENING

INTERNATIONAL CODE COUNCIL®
Copyright © 2015 ICC. ALL RIGHTS RESERVED. Accessed by David Dammon on Jun 21, 2017 12:30:52 PM pursuant to License Agreement with ICC. No further reproduction or distribution authorized. ANY UNAUTHORIZED REPRODUCTION OR DISTRIBUTION IS A VIOLATION OF THE FEDERAL COPYRIGHT ACT AND THE LICENSE AGREEMENT, AND SUBJECT TO CIVIL AND CRIMINAL PENALTIES THEREUNDER.

used for windows that are required to also serve as emergency escape openings.

ASTM F2090 includes window fall prevention devices (Item 3) and window opening control devices (Item 4) (see Section 1015.8.1). Window fall-prevention devices (such as a window guard) must be removable from the interior of the building so the window can be used for emergency escape. Window opening-control devices allow the window to be opened beyond 4 inches, so that a window can be used for emergency escape. This standard is specifically written for window openings within 75 feet (22 860 mm) of grade and specifically allows for windows to be used for emergency escape and rescue. Both the code and IRC reference ASTM F2090, *Specification for Window Fall Prevention Devices with Emergency Escape (Egress Release Mechanisms)*. This standard was updated in 2008 to address window opening control devices. Opening control devices allow for normal operation to result in a 4-inch (102 mm) maximum opening (Section 1015.8 and Section R612.4.1 of the IRC). This control device can be released from the inside to allow the window to be fully opened in order to comply with the emergency escape provisions in both the code (Section 1030.2) and IRC (Section R310.1.1).

Criteria have also been added to IEBC to address window opening controls in existing buildings.

1015.8.1 Window opening control devices. Window opening control devices shall comply with ASTM F2090. The window opening control device, after operation to release the control device allowing the window to fully open, shall not reduce the minimum net clear opening area of the window unit to less than the area required by Section 1030.2.

❖ See the commentary to Section 1015.8.

SECTION 1016
EXIT ACCESS

1016.1 General. The *exit access* shall comply with the applicable provisions of Sections 1003 through 1015. *Exit access* arrangement shall comply with Sections 1016 through 1021.

❖ Sections 1016 through 1021 include the design requirements for exit access and exit access components. The general requirements that also apply to the exit access are in Sections 1003 through 1015.

The following sections are included under exit access:

- Section 1016 deals with egress through intervening spaces, as well as travel and separation of the common path of travel to the exit.
- Section 1017 lists the total exit access travel distance from an occupied space to an exit. This distance includes the common path of travel addressed in Sections 1006.2.1 and 1006.3.2.
- Section 1018 takes a look at requirements for aisles and aisle accessways for occupancies other than assembly spaces. Aisle and aisle accessways in spaces used for assembly purposes are specifically addressed in Section 1029.
- Section 1019 provides criteria for when an open stairway between floors can serve as a required exit access stairway.
- Section 1020 deals with another type of confined part of the exit access path: corridors.
- Section 1021 addresses egress balconies, where the path of travel to the exterior exit stairway is partially open to the exterior.

1016.2 Egress through intervening spaces. Egress through intervening spaces shall comply with this section.

1. *Exit access* through an enclosed elevator lobby is permitted. Access to not less than one of the required *exits* shall be provided without travel through the enclosed elevator lobbies required by Section 3006. Where the path of exit access travel passes through an enclosed elevator lobby, the level of protection required for the enclosed elevator lobby is not required to be extended to the *exit* unless direct access to an *exit* is required by other sections of this code.
2. Egress from a room or space shall not pass through adjoining or intervening rooms or areas, except where such adjoining rooms or areas and the area served are accessory to one or the other, are not a Group H occupancy and provide a discernible path of egress travel to an *exit.*

   Exception: *Means of egress* are not prohibited through adjoining or intervening rooms or spaces in a Group H, S or F occupancy where the adjoining or intervening rooms or spaces are the same or a lesser hazard occupancy group.
3. An *exit access* shall not pass through a room that can be locked to prevent egress.
4. *Means of egress* from *dwelling units* or sleeping areas shall not lead through other sleeping areas, toilet rooms or bathrooms.
5. Egress shall not pass through kitchens, storage rooms, closets or spaces used for similar purposes.

   Exceptions:

   1. *Means of egress* are not prohibited through a kitchen area serving adjoining rooms constituting part of the same *dwelling unit* or *sleeping unit.*
   2. *Means of egress* are not prohibited through stockrooms in Group M occupancies where all of the following are met:

      2.1. The stock is of the same hazard classification as that found in the main retail area.

      2.2. Not more than 50 percent of the *exit access* is through the stockroom.

      2.3. The stockroom is not subject to locking from the egress side.

INTERNATIONAL CODE COUNCIL®
Copyright © 2015 ICC. ALL RIGHTS RESERVED. Accessed by David Dammon on Jun 21, 2017 12:30:52 PM pursuant to License Agreement with ICC. No further reproduction or distribution authorized. ANY UNAUTHORIZED REPRODUCTION OR DISTRIBUTION IS A VIOLATION OF THE FEDERAL COPYRIGHT ACT AND THE LICENSE AGREEMENT, AND SUBJECT TO CIVIL AND CRIMINAL PENALTIES THEREUNDER.

2.4. There is a demarcated, minimum 44-inch-wide (1118 mm) *aisle* defined by full- or partial-height fixed walls or similar construction that will maintain the required width and lead directly from the retail area to the *exit* without obstructions.

❖ This section allows adjoining spaces to be considered a part of the room or space from which egress originates, provided that there are reasonable assurances that the continuous egress path will always be available. The code does not limit the number of intervening or adjoining rooms through which egress can be made, provided that all other code requirements (e.g., travel distance, number of doorways, etc.) are met. An exit access route, for example, may be laid out such that an occupant leaves a room or space, passes through an adjoining space, enters an exit access corridor, passes through another room and, finally, into an exit [see Commentary Figure 1016.2(2)], as long as all other code requirements are satisfied.

The intent of Item 1 is to correlate the provision for corridor continuity (Section 1020.6) and elevator lobbies. This is especially important since elevator lobbies for fire service access elevators require direction connection to a stairway. Therefore, occupants may need to egress through an elevator lobby to get to the exit stairway. In a two-exit building, only one exit can be through an elevator lobby, but at the same time, the elevator lobby will not be considered an intervening room [see Commentary Figure 1020.6(3)]. This also clarifies that the protection requirements for corridors would not be put on top of protection requirements for the elevator lobbies.

The intent of Item 2 is not that the accessory space be limited to the 10-percent area in IBC Section 508.2.3, but that the spaces be interrelated so that doors between the spaces will not risk being blocked or locked. For example, a conference room and managers' offices could exit through the secretary's office to reach the exit access corridor; or several office spaces could exit through a common reception/lobby area. Requiring occupants to egress from an area and pass through an adjoining Group H that can be characterized by rapid fire buildup places them in an unreasonable risk situation [see Commentary Figure 1016.2(1)]; therefore, this illustrated egress path would be prohibited. As an exception to Item 2, in facilities that may contain a Group H area, buildings of Group H, S or F can exit through adjoining rooms or spaces that have the same or lesser hazard. For example, a person exiting from a Group H storage room (see IBC Section 415) could egress either through a similar Group H storage area or through the factory to get to an exit, but the person in the factory could not egress through the Group H storage rooms to get to the outside.

As expressed in Item 3, a common code enforcement problem is a locked door in the egress path. Twenty-five workers perished in September 1991 when they were trapped inside the Imperial Food Processing Plant in Hamlet, North Carolina, in part because of locked exit doors. As long as the egress door is readily openable in the direction of egress travel without the use of keys, special knowledge or effort (see Section 1010.1.9.5), the occupants can move unimpeded away from a fire emergency. Relying on an egress path through an adjacent dwelling unit to be available at all times is not a reasonable expectation. Egress through an adjacent business tenant space can be unreasonable given the security and privacy measures the adjacent tenant may take to secure such a space. However, egress through a reception area that serves a suite of offices of the same tenant is clearly accessible and is permitted.

Item 4 addresses concerns along the path of egress travel within individual dwelling or sleeping units. The concern once again is possible locking devices. Egress for one bedroom should not be through another bedroom or bathroom.

The concern in Item 5 is that kitchens, storage rooms and similar spaces may be subject to locking or blockage of the exit access path. This is not a gen-

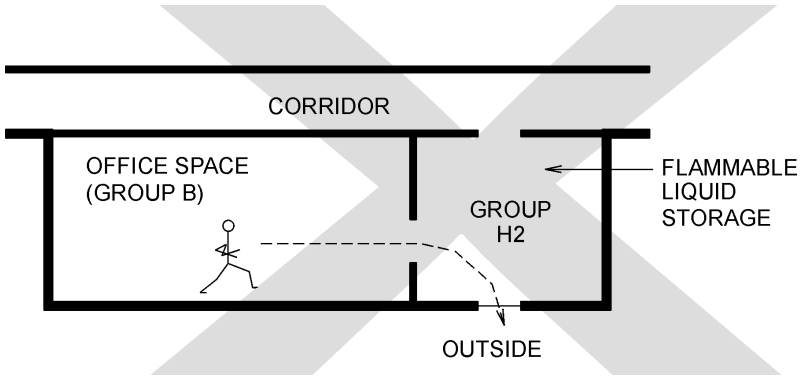

Figure 1016.2(1)
EGRESS PROHIBITED THROUGH GROUP H AREAS

INTERNATIONAL CODE COUNCIL®
Copyright © 2015 ICC. ALL RIGHTS RESERVED. Accessed by David Dammon on Jun 21, 2017 12:30:52 PM pursuant to License Agreement with ICC. No further reproduction or distribution authorized. ANY UNAUTHORIZED REPRODUCTION OR DISTRIBUTION IS A VIOLATION OF THE FEDERAL COPYRIGHT ACT AND THE LICENSE AGREEMENT, AND SUBJECT TO CIVIL AND CRIMINAL PENALTIES THEREUNDER.

eral provision for all Group S occupancies; therefore, it is not the intent of this provision to address the situation of egress for offices through an associated warehouse space. Item 5, Exception 1, does not apply this same prohibition to areas within dwelling or sleeping units. However, for other spaces, a customer means of egress should not be through the working portions of a commercial kitchen in a restaurant or the stock storage area of a storage room in a mercantile occupancy. A dedicated path must be established through such space. The four items listed in Item 5, Exception 2, are intended to provide measurable criteria to increase the likelihood that the exit access path of travel would always be available and identifiable through the stock room of a store. It is not acceptable to just mark the path on the floor. Whatever defines the route must permanently establish the egress path in a manner to maintain the minimum required unobstructed width.

1016.2.1 Multiple tenants. Where more than one tenant occupies any one floor of a building or structure, each tenant space, *dwelling unit* and *sleeping unit* shall be provided with access to the required *exits* without passing through adjacent tenant spaces, *dwelling units* and *sleeping units*.

Exception: The *means of egress* from a smaller tenant space shall not be prohibited from passing through a larger adjoining tenant space where such rooms or spaces of the smaller tenant occupy less than 10 percent of the area of the larger tenant space through which they pass; are the same or similar occupancy group; a discernible path of egress travel to an *exit* is provided; and the *means of egress* into the adjoining space is not subject to locking from the egress side. A required *means of egress* serving the larger tenant space shall not pass through the smaller tenant space or spaces.

❖ Where a floor is occupied by multiple tenants, each tenant must be provided with full and direct access to the required exits serving that floor without passing through another tenant space. Tenants typically lock the doors to their spaces for privacy and security. Should an egress door that is shared by both tenants be locked, occupants in one of the spaces could be trapped and unable to reach a secondary exit. Therefore, an egress layout where occupants from one tenant space travel through another tenant space to gain access to one of the required exits from that floor is prohibited.

This limitation is so that occupants from all tenant spaces will have unrestricted access to the required egress elements while maintaining the security and privacy of the individual tenants. This limitation is based on one of the fundamental principles of egress: to provide a means of egress where all components are capable of being used by the occupants without keys, tools, special knowledge or special effort (see Section 1010.1.9.5).

A common practice is to have a bank or small restaurant located within a large grocery store or department store. These can be separate tenants. In these situations, the small tenants are not open when the main store is closed. The intent of the exception is to allow those small tenants to egress through the large tenant. Since there may be times when the larger tenant is open and the smaller is closed (e.g., bank holidays), the larger tenant cannot exit through the smaller tenant.

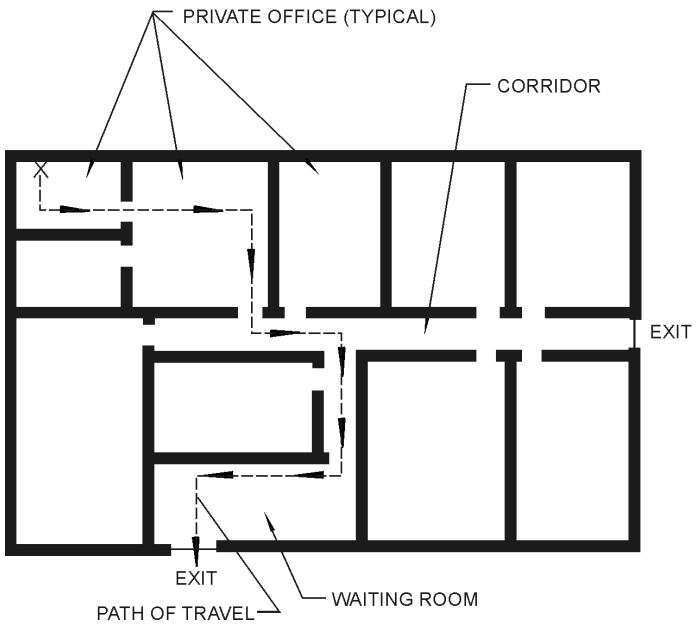

Figure 1016.2(2)
EGRESS THROUGH ADJOINING ROOMS AND SPACES

INTERNATIONAL CODE COUNCIL®
Copyright © 2015 ICC. ALL RIGHTS RESERVED. Accessed by David Dammon on Jun 21, 2017 12:30:52 PM pursuant to License Agreement with ICC. No further reproduction or distribution authorized. ANY UNAUTHORIZED REPRODUCTION OR DISTRIBUTION IS A VIOLATION OF THE FEDERAL COPYRIGHT ACT AND THE LICENSE AGREEMENT, AND SUBJECT TO CIVIL AND CRIMINAL PENALTIES THEREUNDER.

SECTION 1017
EXIT ACCESS TRAVEL DISTANCE

1017.1 General. Travel distance within the *exit access* portion of the *means of egress* system shall be in accordance with this section.

❖ "Exit access" is defined as "that portion of a means of egress system that leads from any occupied portion of a building or structure to an exit" (see the commentary for the definition in Chapter 2). Exit access includes rooms, spaces, aisles and corridors that an occupant would travel along to get to an exit. This can also include stairways and ramps between levels, or between stories where permitted by Section 1019. Doors and doorways along this route are exit access doorways, but may sometimes be called "exit doors." True exits for this exit access travel can be: 1. An exterior exit door at grade; 2. The door to an enclosure for an interior exit stairway, ramp or exit passageway; 3. The exit door leading to an exterior exit door or ramp; or 4. A door leading through a horizontal exit. How exit access travel distance is measured is one of the key differences between interior exit access stairways/ramps (see Section 1017.3.1) and interior exit stairways/ramps (see Section 1017.3).

It is important to understand the relationship between the common path of travel limitations of Sections 1006.2.1 and 1006.3.2 and the exit access travel distance limitations of this section. Measurements start at the same location, i.e., the most remote location in any occupied space. Both are measured in the exit access portion of the means of egress system. The common path of travel is measured to the point where the occupant has two distinct paths of travel, which will lead to two distinct exits. Travel distance is measured all the way until the exit is reached. The common path of travel measurement can end within a space or at a corridor where a single means of egress space (Section 1006.2.1) has its door to a corridor that provides access to two exits.

1017.2 Limitations. *Exit access* travel distance shall not exceed the values given in Table 1017.2.

❖ The table includes the travel distance measurements for buildings with or without sprinkler systems. "Not Permitted" is in support of the Chapter 9 requirements for all Group I and H occupancies to be sprinklered. While the other occupancies may also be required to be sprinklered, the exit access travel distance is indicated for existing buildings.

TABLE 1017.2. See next column.

❖ This table reflects the maximum distance a person is allowed to travel from any point in a building floor area to the nearest exit along a natural and unobstructed path. While quantitative determinations or formulas are not available to substantiate the tabular distances, empirical factors are utilized to make relative judgments as to reasonable limitations. Such considerations include the nature and fitness of the occupants; the typical configuration within the space; the level of fire hazard with respect to the specific uses of the facilities, including fire spread and the potential intensity of a fire. The inclusion of an automatic sprinkler system throughout the building can serve to control, confine or possibly eliminate the fire threat to the occupants so an increased travel distance is permitted. Increased travel distances are permitted when an automatic sprinkler system is installed in accordance with NFPA 13 or 13R.

[BE] TABLE 1017.2
EXIT ACCESS TRAVEL DISTANCE[a]

OCCUPANCY	WITHOUT SPRINKLER SYSTEM (feet)	WITH SPRINKLER SYSTEM (feet)
A, E, F-1, M, R, S-1	200	250[b]
I-1	Not Permitted	250[b]
B	200	300[c]
F-2, S-2, U	300	400[c]
H-1	Not Permitted	75[d]
H-2	Not Permitted	100[d]
H-3	Not Permitted	150[d]
H-4	Not Permitted	175[d]
H-5	Not Permitted	200[c]
I-2, I-3, I-4	Not Permitted	200[c]

For SI: 1 foot = 304.8 mm.

a. See the following sections for modifications to exit access travel distance requirements:
   Section 402.8 of the *International Building Code*: For the distance limitation in malls.
   Section 404.9 of the *International Building Code*: For the distance limitation through an atrium space.
   Section 407.4 of the *International Building Code*: For the distance limitation in Group I-2.
   Sections 408.6.1 and 408.8.1 of the *International Building Code*: For the distance limitations in Group I-3.
   Section 411.4 of the *International Building Code*: For the distance limitation in special amusement buildings.
   Section 412.7 of the *International Building Code*: For the distance limitations in aircraft manufacturing facilities.
   Section 1006.2.2.2: For the distance limitation in refrigeration machinery rooms.
   Section 1006.2.2.3: For the distance limitation in refrigerated rooms and spaces.
   Section 1006.3.2: For buildings with one *exit*.
   Section 1017.2.2: For increased distance limitation in Groups F-1 and S-1.
   Section 1029.7: For increased limitation in assembly seating.
   Section 3103.4 of the *International Building Code*: For temporary structures.
   Section 3104.9 of the *International Building Code*: For pedestrian walkways.
b. Buildings equipped throughout with an *automatic sprinkler system* in accordance with Section 903.3.1.1 or 903.3.1.2. See Section 903 for occupancies where *automatic sprinkler systems* are permitted in accordance with Section 903.3.1.2.
c. Buildings equipped throughout with an *automatic sprinkler system* in accordance with Section 903.3.1.1.
d. Group H occupancies equipped throughout with an *automatic sprinkler system* in accordance with Section 903.2.5.1.

INTERNATIONAL CODE COUNCIL®
Copyright © 2015 ICC. ALL RIGHTS RESERVED. Accessed by David Dammon on Jun 21, 2017 12:30:52 PM pursuant to License Agreement with ICC. No further reproduction or distribution authorized. ANY UNAUTHORIZED REPRODUCTION OR DISTRIBUTION IS A VIOLATION OF THE FEDERAL COPYRIGHT ACT AND THE LICENSE AGREEMENT, AND SUBJECT TO CIVIL AND CRIMINAL PENALTIES THEREUNDER.

When measuring travel distance, it is important to consider the natural path of travel [see Commentary Figure 1017.3(1)]. In many cases, the actual layout of furnishings and equipment is not known or is not identified on the plans submitted with the permit application. In such instances, it may be necessary to measure travel distance using the legs of a triangle instead of the hypotenuse [see Commentary Figure 1017.3(2)]. Since most people tend to migrate to more open spaces while egressing, measurement of the natural path of travel typically excludes floor areas within 1 foot (305 mm) of walls, corners, columns and other permanent construction. Where the travel path includes passage through a doorway, the natural route is generally measured through the centerline of the door openings.

The common path of travel addressed in Sections 1006.2.1 and 1006.3.2 is part of the overall exit access travel distance, with both starting at the same point. Common path of travel stops when the occupant has a choice of at least two exits, and overall travel distance stops when an occupant gets to the closest exit. The references in Note a are to sections where specific requirements are addressed—this can be an increase or decrease in travel distance.

Note a is a reference to other travel distance limitations in the code. Notes b and c are simply references to the allowed types of sprinkler system—NFPA 13 or 13R. Some travel distance increases are based on the type of sprinkler system provided. The table does not currently address a building with an NFPA 13D sprinkler system.

Note d addresses the sprinkler requirements in Group H. Group H occupancies are only required to be sprinklered within Group H and not throughout the building; therefore, Note d distinguishes this requirement from Notes b and c. The travel distance is the same if the path is through Group H or leaves Group H and continues through a nonsprinklered occupancy (see Section 1018.2, Item 2.)

1017.2.1 Exterior egress balcony increase. *Exit access* travel distances specified in Table 1017.2 shall be increased up to an additional 100 feet (30 480 mm) provided the last portion of the *exit access* leading to the *exit* occurs on an exterior egress balcony constructed in accordance with Section 1021. The length of such balcony shall be not less than the amount of the increase taken.

❖ This section allows an additional travel distance on exterior egress balconies since smoke disperses rapidly. Note that the length of the increase is not to be more than the length of the exterior balcony. For example, if the length of the balcony is 75 feet (22 860 mm), the additional travel distance is limited to 75 feet (22 860 mm). In order for the increase to apply, the exterior balcony must be located at the end of the path of egress travel and not in some other portion of the egress path.

1017.2.2 Group F-1 and S-1 increase. The maximum *exit access* travel distance shall be 400 feet (122 m) in Group F-1 or S-1 occupancies where all of the following conditions are met:

1. The portion of the building classified as Group F-1 or S-1 is limited to one story in height.
2. The minimum height from the finished floor to the bottom of the ceiling or roof slab or deck is 24 feet (7315 mm).
3. The building is equipped throughout with an *automatic sprinkler system* in accordance with Section 903.3.1.1.

❖ This section provides the criteria for an increased exit access travel distance of 400 feet in Group F-1 and S-1 occupancies when three criteria are met: the S-1/F-1 area is one story, has a ceiling height of at least 24 feet, and is sprinklered.

The travel distance increase is only applicable to portions of the building that are one story in height. This is not intended to preclude a building with a one-story storage warehouse or factory area and a two-story office or a mezzanine from also utilizing this section. The section is written so that the one-story limitation is only applicable to the area where the 400-foot travel distance is utilized.

The 24 feet of clearance is based on the "Fire Modeling Analysis Report" by Aon Fire Protection Engineering. The ceiling height is used to provide a volume for the smoke to accumulate during the fire and provide time for egress, much like the concept used for smoke-protected seating. Control mode sprinklers were utilized in the fire modeling to demonstrate the more conservative approach.

The building is required to sprinklered in accordance with NFPA 13 requirements. While not required, ESFR or specialty sprinklers would be more effective.

1017.3 Measurement. *Exit access* travel distance shall be measured from the most remote point within a story along the natural and unobstructed path of horizontal and vertical egress travel to the entrance to an *exit*.

Exception: In *open parking garages*, *exit access* travel distance is permitted to be measured to the closest riser of an *exit access stairway* or the closest slope of an *exit access ramp*.

❖ The length of travel, as measured from the most remote point within a structure to an exit, is limited to restrict the amount of time that the occupant is exposed to a potential fire condition [see Commentary Figure 1017.3(1)]. The route must be assumed to be the natural path of travel without obstruction. This commonly results in a rectilinear path similar to what can be experienced in most occupancies, such as a schoolroom or an office with rows of desks [see Commentary Figure 1017.3(2)]. The "arc" method, using an "as the crow flies" linear measurement, must be used with caution, as it seldom represents typical floor design and room layout and, in most cases, would not be the natural, unobstructed path.

The travel distance is measured from every occupi-

INTERNATIONAL CODE COUNCIL®
Copyright © 2015 ICC. ALL RIGHTS RESERVED. Accessed by David Dammon on Jun 21, 2017 12:30:52 PM pursuant to License Agreement with ICC. No further reproduction or distribution authorized. ANY UNAUTHORIZED REPRODUCTION OR DISTRIBUTION IS A VIOLATION OF THE FEDERAL COPYRIGHT ACT AND THE LICENSE AGREEMENT, AND SUBJECT TO CIVIL AND CRIMINAL PENALTIES THEREUNDER.

able point on a floor to the closest exit. While each occupant may be required to have access to a second or third exit, the travel distance limitation is only applicable to the distance to the nearest exit. In effect, this means that the distance an occupant must travel to the second or third exit is not regulated.

For exit access travel distances that include vertical elements, such as stairways or ramps, see Section 1017.3.1. For outdoor assembly seating, see Section 1029.7.

The exception provides for a travel distance terminating at the top of an open exit access stairway in an open parking structure (see Section 1019.3, Exception 6). This is appropriate in view of the low hazard and minimal possible smoke accumulation in these facilities. While Section 1006.3 does say that an open exit access stairway can only be used for one story, travel distance typically does include the exit access stairway. With the exception here for travel distance, the intent is to allow open parking garages to have open exit access stairways all the way down and out of the building. The number of means of egress requirements are met when the exit access travel distance requirement is met on each floor.

The distance of travel within an exit enclosure (e.g., enclosed interior exit stairway or ramp or exit passageway) and in the exit discharge portion of the means of egress are also not regulated. Section 1006.3.2 permits certain buildings to be provided with a single exit. In instances where there is a single exit, travel distances less than those permitted in Table 1017.2 apply [see Tables 1006.3(1) and 1006.3(2)].

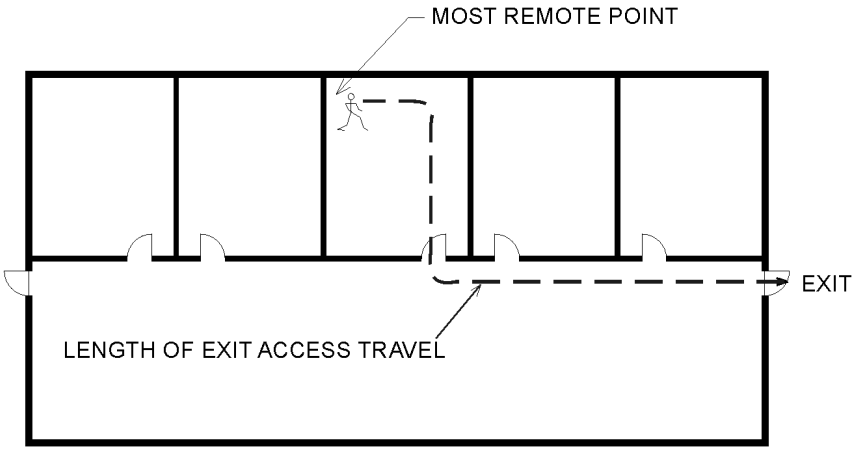

EXIT ACCESS TRAVEL IS MEASURED FROM THE MOST REMOTE POINT IN A BUILDING ALONG THE NATURAL UNOBSTRUCTED PATH OF TRAVEL TO AN EXIT.

Figure 1017.3(1)
LENGTH OF EXIT ACCESS TRAVEL

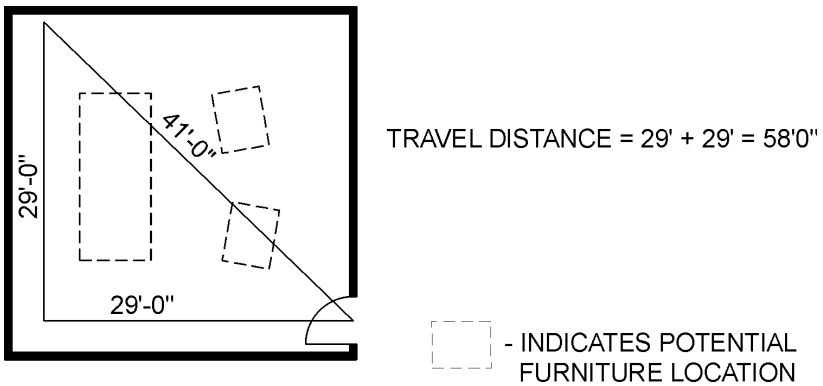

For SI: 1 inch = 25.4 mm, 1 foot = 304.8 mm.

Figure 1017.3(2)
MEASURING TRAVEL DISTANCE USING RECTILINEAR APPROACH

INTERNATIONAL CODE COUNCIL®
Copyright © 2015 ICC. ALL RIGHTS RESERVED. Accessed by David Dammon on Jun 21, 2017 12:30:52 PM pursuant to License Agreement with ICC. No further reproduction or distribution authorized. ANY UNAUTHORIZED REPRODUCTION OR DISTRIBUTION IS A VIOLATION OF THE FEDERAL COPYRIGHT ACT AND THE LICENSE AGREEMENT, AND SUBJECT TO CIVIL AND CRIMINAL PENALTIES THEREUNDER.

1017.3.1 Exit access stairways and ramps. Travel distance on *exit access stairways* or *ramps* shall be included in the *exit access* travel distance measurement. The measurement along *stairways* shall be made on a plane parallel and tangent to the *stair* tread *nosings* in the center of the *stair* and landings. The measurement along *ramps* shall be made on the walking surface in the center of the *ramp* and landings.

❖ Travel distance is measured along the exit access path. Exit access travel distance may include travel on an interior stairway or ramp if it is not enclosed and constructed to meet the definition of an exit (see Section 1023). An example of exit access stairways would be unenclosed exit access stairways from a mezzanine level, open exit access stairways from a second floor (see Section 1019.3, Exception 1), or steps along the path of travel in a split floor-level situation. An example of an open exit access ramp would be a ramp between levels or ramps leading from the upper levels in an open parking garage (see Section 1019.3, Exception 7). For the last example, Section 1016.3, Exception 1, allows for the exit access travel distance to be measured to the top of the ramp or stairway rather than down the ramp or stairway and to the exit.

When Section 1019.3 permits an exit access stairway to be unenclosed, the travel distance would also include travel down the open stairway and to an enclosed exit stairway, a horizontal exit or an exit door to the outside. An example of this would be an open exit stairway within an individual dwelling unit (see Section 1019.3, Exception 2) or an open exit stairway from a press box (see Section 1019.3, Exception 8).

SECTION 1018
AISLES

1018.1 General. *Aisles* and *aisle accessways* serving as a portion of the *exit access* in the *means of egress* system shall comply with the requirements of this section. *Aisles* or *aisle accessways* shall be provided from all occupied portions of the *exit access* that contain seats, tables, furnishings, displays and similar fixtures or equipment. The minimum width or required capacity of *aisles* shall be unobstructed.

Exception: Encroachments complying with Section 1005.7.

❖ This section addresses aisles and aisle accessways, primarily in occupancies other than assembly seating areas. Current provisions address aisles in all uses, but only address aisle accessways for assembly spaces and mercantile.

"Aisle accessway" is defined in Chapter 2 as "that portion of exit access that leads to an aisle." The term "Aisle" is defined in Chapter 2 as "an exit access component that defines and provides a path of egress travel." Given the many possible configurations of fixtures and furniture, both permanent and movable, the determination of where aisle accessways stop and aisles begin is often subject to interpretation.

Typically, the aisle accessways lead to the aisles, which in turn lead to the exits. Since the aisle serves as a path for means of egress similar to a corridor, the requirements for doors obstructing the aisle are the same (see Section 1005.7).

A cross reference back to Section 1005.7 from the exceptions for width in aisles (see Section 1018.1), corridors (see Section 1020.3), exit passageways (see Section 1024.2) and exit courts (see Section 1028.4.1) reinforces the fact that encroachment limits are generally applicable for these types of confined routes.

1018.2 Aisles in assembly spaces. *Aisles and aisle accessways* serving a room or space used for assembly purposes shall comply with Section 1029.

❖ The provisions for aisles and aisle accessways in spaces with assembly seating, such as restaurants, theaters and sports arenas, are unique. See Section 1029 for criteria.

1018.3 Aisles in Groups B and M. In Group B and M occupancies, the minimum clear aisle width shall be determined by Section 1005.1 for the *occupant load* served, but shall be not less than that required for corridors by Section 1020.2.

Exception: Nonpublic *aisles* serving less than 50 people and not required to be *accessible* by Chapter 11 need not exceed 28 inches (711 mm) in width.

❖ This requirement establishes aisle-width criteria for Group B and M occupancies based on the occupant load served by the aisle. While not providing as confined a path as corridors, the displays or equipment would limit the choice of paths, so the minimum width is the same as corridors (see Section 1020.2). The reference to Section 1005.1 would trigger a requirement for aisles wider than 44 inches (914 mm) when the anticipated occupant load that the aisle served was larger than 220 (44 inches/0.2 = 220 occupants for nonsprinklered buildings and 44 inches/0.15 = 293 occupants in sprinklered buildings). When an aisle allows for access to exits in two directions, the occupant load could be split, similar to corridors. The exception addresses aisles that may be found in an archival file room or stock storage racks.

For mercantile, if fixtures are permanent, such as in a typical grocery store or office cubicles in a business, the aisle provisions would be applicable throughout. In a situation where there were groups of displays separated by aisles, the area within the displays may be considered aisle accessways (see Section 1018.4).

1018.4 Aisle accessways in Group M. An *aisle accessway* shall be provided on not less than one side of each element within the *merchandise pad*. The minimum clear width for an *aisle accessway* not required to be *accessible* shall be 30 inches (762 mm). The required clear width of the *aisle accessway* shall be measured perpendicular to the elements and merchandise within the *merchandise pad*. The 30-inch

INTERNATIONAL CODE COUNCIL®
Copyright © 2015 ICC. ALL RIGHTS RESERVED. Accessed by David Dammon on Jun 21, 2017 12:30:52 PM pursuant to License Agreement with ICC. No further reproduction or distribution authorized. ANY UNAUTHORIZED REPRODUCTION OR DISTRIBUTION IS A VIOLATION OF THE FEDERAL COPYRIGHT ACT AND THE LICENSE AGREEMENT, AND SUBJECT TO CIVIL AND CRIMINAL PENALTIES THEREUNDER.

(762 mm) minimum clear width shall be maintained to provide a path to an adjacent *aisle* or *aisle accessway*. The *common path of egress travel* shall not exceed 30 feet (9144 mm) from any point in the *merchandise pad*.

Exception: For areas serving not more than 50 occupants, the *common path of egress travel* shall not exceed 75 feet (22 860 mm).

❖ The definition for "Merchandise pad" can be found in Chapter 2. The idea is that a merchandise pad contains movable displays and aisle accessways. A surrounding aisle or permanent walls or displays would define the extent of the merchandise pad. Large department stores will have numerous merchandise pads (see Commentary Figure 1018.3). In accordance with IBC Section 105.2, Item 13, movable cases, counters and partitions not over 5 feet, 9 inches (1753 mm) in height do not require a building permit to move, add or alter. Every element within a merchandise pad must adjoin a minimum 30-inch-wide (762 mm) aisle accessway on at least one side. Travel within a merchandise pad is limited, with a maximum common path of travel of 30 feet (9144 mm). The common path of travel limitation is extended to 75 feet (22 m) in those areas serving a maximum occupant load of 50.



Figure 1018.3
AISLES AND AISLE ACCESSWAYS IN MERCANTILE

1018.5 Aisles in other than assembly spaces and Groups B and M. In other than rooms or spaces used for assembly purposes and Group B and M occupancies, the minimum clear *aisle* capacity shall be determined by Section 1005.1 for the occupant load served, but the width shall be not less than that required for corridors by Section 1020.2.

Exception: Nonpublic *aisles* serving less than 50 people and not required to be *accessible* by Chapter 11 need not exceed 28 inches (711 mm) in width.

❖ Aisles can occur in other occupancies when there is a confined path of travel to the exit access or exit door leading from a space.

While not providing as confined a path as corridors, the displays or equipment would limit the choice of paths, so the minimum width is the same as corridors (see Section 1020.2). The reference to Section 1005.1 would trigger a requirement for aisles wider than 44 inches (914 mm) when the anticipated occupant load that the aisle served was larger than 220 (44 inches/0.2 = 220 occupants for nonsprinklered buildings and 44 inches/0.15 = 293 occupants in sprinklered buildings). When an aisle allows for access to exits in two directions, the occupant load could be split, similar to corridors. The exception addresses aisles that may be found in an archival file room or stock storage racks.

SECTION 1019
EXIT ACCESS STAIRWAYS AND RAMPS

1019.1 General. *Exit access stairways* and *ramps* serving as an *exit access* component in a *means of egress* system shall comply with the requirements of this section. The number of stories connected by *exit access stairways* and *ramps* shall include *basements*, but not *mezzanines*.

❖ This is a general scoping section. Exit access stairways can be between levels or between stories. Section 1019.3 addresses egress between stories. It is important to clarify that basements are considered a story, but not mezzanines. While the exit access travel distance would be measured along the open stairway or ramp for a change in level, a mezzanine, a basement or a second floor, a mezzanine is a space that is considered part of the room to which it is open and is addressed accordingly. Exit stairways are addressed under Sections 1023 and 1027. All stairways and ramps are required to comply with Sections 1011 and 1012, respectively.

1019.2 All occupancies. *Exit access stairways* and *ramps* that serve floor levels within a single story are not required to be enclosed.

❖ Exit access stairways and ramps between levels on the same story and between a story and an associated mezzanine are always permitted to be open unless they are part of a fire-resistance-rated corridor (see Section 1020.6).

1019.3 Occupancies other than Groups I-2 and I-3. In other than Group I-2 and I-3 occupancies, floor openings containing *exit access stairways* or *ramps* that do not comply with one of the conditions listed in this section shall be enclosed with a shaft enclosure constructed in accordance with Section 713.

1. *Exit access stairways* and *ramps* that serve or atmospherically communicate between only two stories. Such interconnected stories shall not be open to other stories.
2. In Group R-1, R-2 or R-3 occupancies, *exit access stairways* and *ramps* connecting four stories or less serving and contained within an individual *dwelling unit* or *sleeping unit* or *live/work unit.*

INTERNATIONAL CODE COUNCIL®
Copyright © 2015 ICC. ALL RIGHTS RESERVED. Accessed by David Dammon on Jun 21, 2017 12:30:52 PM pursuant to License Agreement with ICC. No further reproduction or distribution authorized. ANY UNAUTHORIZED REPRODUCTION OR DISTRIBUTION IS A VIOLATION OF THE FEDERAL COPYRIGHT ACT AND THE LICENSE AGREEMENT, AND SUBJECT TO CIVIL AND CRIMINAL PENALTIES THEREUNDER.

3. *Exit access stairways* serving and contained within a Group R-3 congregate residence or a Group R-4 facility are not required to be enclosed.
4. *Exit access stairways* and *ramps* in buildings equipped throughout with an *automatic sprinkler system* in accordance with Section 903.3.1.1, where the area of the vertical opening between stories does not exceed twice the horizontal projected area of the *stairway* or *ramp* and the opening is protected by a draft curtain and closely spaced sprinklers in accordance with NFPA 13. In other than Group B and M occupancies, this provision is limited to openings that do not connect more than four stories.
5. *Exit access stairways* and *ramps* within an *atrium* complying with the provisions of Section 404.
6. *Exit access stairways* and *ramps* in *open parking garages* that serve only the parking garage.
7. *Exit access stairways* and *ramps* serving open-air seating complying with the *exit access* travel distance requirements of Section 1029.7.
8. *Exit access stairways* and *ramps* serving the balcony, gallery or press box and the main assembly floor in occupancies such as theaters, *places of religious worship*, auditoriums and sports facilities.

❖ This section includes conditions which permit unprotected floor openings for exit access stairways and ramps. Groups I-2 and I-3 use smoke compartments as part of their defend-in-place strategies; as such, they are addressed separately in Section 1019.4.

The allowances listed are for "interior exit access stairways and ramps" that are between stories. Exit access stairways and ramps between elevation changes on the same story or serving mezzanines do not serve different stories; therefore, the enclosure requirements in this section are not applicable. The general provisions for stairways in Section 1011 and ramps in Section 1012 would be applicable. For simplicity in the commentary to Sections 1019.3 and 1019.4, when interior exit access stairways are mentioned, let it be understood that the same rules apply to interior exit access ramps.

The primary difference between "interior exit access stairways" and "interior exit stairways" is how exit access travel distance is measured (see Section 1017.3). Where a designer chooses to use an exit access stairway, the exit access travel distance includes travel along the slope of the exit access stairway, similar to stairways leading from an open mezzanine or steps at a change in level on a floor.

The base requirement is that exit access stairways between floors are protected in a similar manner as floor openings (see IBC Section 713). The enclosure is needed because a stairway penetrates the floor/ceiling assemblies between the levels, thus creating a vertical opening or shaft. In cases of fire, a vertical opening may act as a chimney, causing smoke, hot gases and light-burning products to flow upward (buoyant force). If an opening is unprotected, these products of combustion will be forced by positive pressure differentials to spread horizontally into the building spaces. There are exceptions for shaft protection around openings in IBC Section 712.1 or exit access stairways as permitted in this section in Items 1 through 8 (see also IBC Section 712.1.12).

Exit access stairways are not required to discharge directly to the exterior as are interior exit stairways (see Section 1023.3). Instead, exit access stairways are part of the route that leads to the exit (i.e., exterior exit door, horizontal exit or enclosed interior exit stairway). See the commentary to IBC Sections 712 and 713 for a discussion of other differences in protection permitted for the enclosure of exit access stairways versus exit stairways.

While this section does not state that exit access stairways cannot be used for any purpose other than means of egress (see Section 1021.1), the provisions for no obstructions in the path of travel or reduction of the capacity for means of egress (Section 1003.6) are applicable. If one of the items eliminating enclosures for a stairway is utilized, the exit access stairway openings would still have to meet the exit and exit access door separation requirement specified in Section 1006 for the space or floor.

It is important to remember that while exit access stairways may be open for multiple floors, Section 1006.3 states "Access to exits at other levels shall be from an adjacent story." However, single-exit buildings do allow for exit access from any story. Therefore, if there are provisions in both Sections 1006.3.3 and 1019.3, the exit access travel distance could be measured all the way down the open exit access stairway.

Item 1 allows an open exit access stairway when the opening is only between two floors. There cannot be any other unprotected openings that connect to other floors since this could create a staggered stack effect for the movement of smoke between multiple stories. In two-story buildings, this would allow for open stairways between the basement and ground level or between the first and second floors. Another example would be an open exit access stairway between the fifth and sixth floors of a building, provided there were no other unprotected openings between the fourth and fifth floor or the sixth and seventh floors. This is consistent with IBC Section 712.1.9 for openings between two stories.

In Item 2, for residential occupancies, exit access stairways within a single-family home or townhouse are not required to be enclosed because of the small occupant load and resident familiarity with the space. Examples of "within an individual dwelling or sleeping unit" would be a two-story hotel suite or a multistory apartment unit. See Section 1006.3.3, Items 3 and 7, for the allowance for these to be single-exit stories. Live/work units call for the egress to be designed for the "function served," and vertical opening are not required to be enclosed (see IBC Sections 419.3 and 419.4); therefore, it is appropriate to allow open exit

INTERNATIONAL CODE COUNCIL®
Copyright © 2015 ICC. ALL RIGHTS RESERVED. Accessed by David Dammon on Jun 21, 2017 12:30:52 PM pursuant to License Agreement with ICC. No further reproduction or distribution authorized. ANY UNAUTHORIZED REPRODUCTION OR DISTRIBUTION IS A VIOLATION OF THE FEDERAL COPYRIGHT ACT AND THE LICENSE AGREEMENT, AND SUBJECT TO CIVIL AND CRIMINAL PENALTIES THEREUNDER.

access stairways to serve the dwelling portion of the live/work unit. Note that IBC Section 712.1.2 limits any vertical opening within dwelling units, including stairways, to four stories or less.

Item 3 - A congregate residence would not be considered an individual dwelling unit so Item 2 would not be applicable; however, these small facilities operate similarly to a single-family home. Thus, they have an allowance for open exit access stairways for the same reasons as dwelling units in Item 2. See Section 1006.3.2, Item 4, which allows a single exit in Group R-3 and R-4 congregate residences. These congregate residences are limited to 16 occupants that are capable of self-preservation in IBC Sections 308.3.3, 310.5 and 310.6. If a facility offers medical care, it needs to comply with Section 1019.4.

Item 4 discusses buildings sprinklered throughout with an NFPA 13 system. The size of the opening is limited to twice the size of the stairway footprint. The opening must be protected with a draft curtain and closely spaced sprinklers (see Commentary Figure 1019.3). This allows for such an opening to extend the entire height of the building; however, to serve as part of the means of egress, the exit access stairway must still be able to meet the exit access travel distance and provide the number of exits or access to exits from each story (see Section 1006.3). This item is similar to what is permitted for escalators (see IBC Sections 712.1.3 and 712.1.3.1). The power-operated automatic shutter permitted in IBC Section 712.1.3.2 would not be an option for exit access stairways since they must be available for exit access travel. For groups other than business and mercantile, there is the additional limitation of a maximum of four stories.

Item 5 allows for exit access stairways to travel down through an atrium. Atriums often penetrate more than two floors. Atriums must meet the provisions in IBC Section 404 for sprinklers, fire alarms, smoke control, enclosure, limitations on flame spread

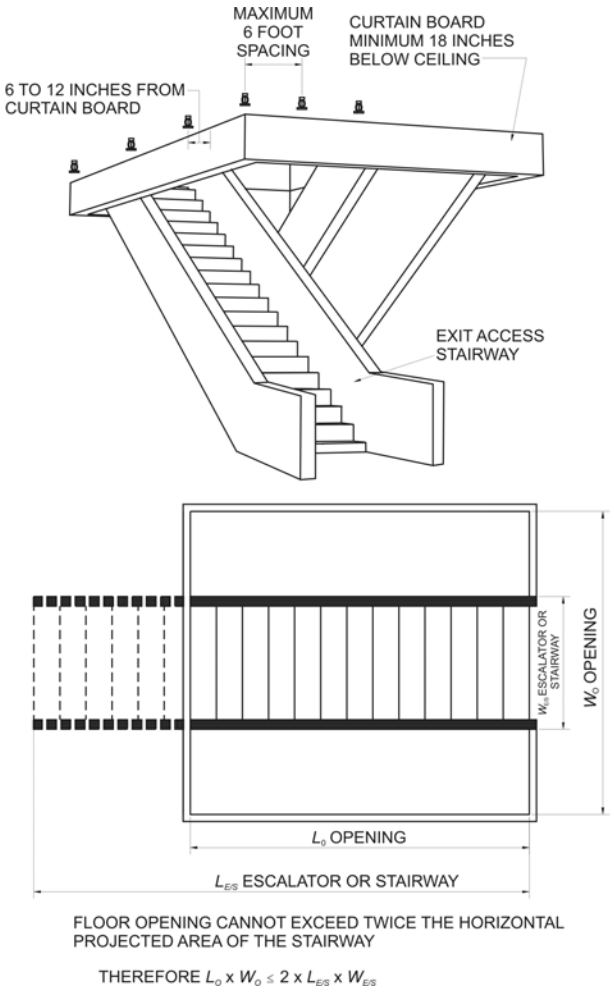

For SI: 1 inch = 25.4 mm, 1 foot = 304.8 mm.

Figure 1019.3
DRAFT CURTAIN, ITEM 4

INTERNATIONAL CODE COUNCIL®
Copyright © 2015 ICC. ALL RIGHTS RESERVED. Accessed by David Dammon on Jun 21, 2017 12:30:52 PM pursuant to License Agreement with ICC. No further reproduction or distribution authorized. ANY UNAUTHORIZED REPRODUCTION OR DISTRIBUTION IS A VIOLATION OF THE FEDERAL COPYRIGHT ACT AND THE LICENSE AGREEMENT, AND SUBJECT TO CIVIL AND CRIMINAL PENALTIES THEREUNDER.

and smoke development of interior finishes, and the reduction in the normal exit access travel distance. In no case can the exit access travel distance through the atrium, including travel along the stairway, be more than 200 feet (60 960 mm). If the stairway in the atrium serves as part of the required means of egress, each story must also meet the number of exits or access to exits required by Section 1006.

In Item 6, exit access stairways located in open parking structures are exempt from the enclosure requirements because of the ease of accessibility by the fire services, the natural ventilation of such structures, the low level of fire hazard, the small number of people using the structure at any one time and the excellent fire record of such structures. The exception to Section 1017.3 permits the exit access travel distance to be measured to the top step of the exit access stairway in open parking garages. In essence, open parking garages using this item can have open stairways for the full height of the building. By the travel distance being met at the top of the stairway, the means of egress requirements have been met.

In Item 7, stairways in outdoor facilities (i.e., Group A-5) in which the means of egress is essentially open to the outside need not be enclosed because of the ability to vent the fire to the outside. This item is coordinated with the requirements for open-air seating as regulated by Section 1028.7, which allows unlimited travel distance in noncombustible construction that has open-air seating and 400 feet in combustible construction.

Item 8 addresses the unique situation for large indoor assembly seating areas. Since press boxes, galleries and balconies all have the same atmosphere and fire recognition ability as the rest of the seating, the stairways serving these spaces are protected by the same system as the seating (e.g., open to the interior volume and smoke protected; open to the outside); therefore, it is logical to treat the access to these spaces the same as the seating bowl. Open exit access stairways can serve the press box where those stairways move the occupants directly from the press box into the seating bowl. See Sections 1029.5 and 1029.8 for the number of exit access stairways required.

1019.4 Group I-2 and I-3 occupancies. In Group I-2 and I-3 occupancies, floor openings between stories containing *exit access stairways* or *ramps* are required to be enclosed with a shaft enclosure constructed in accordance with Section 713.

Exception: In Group I-3 occupancies, *exit access stairways* or *ramps* constructed in accordance with Section 408 are not required to be enclosed.

❖ Groups I-2 and I-3 use smoke compartments as part of their defend-in-place strategies; as such, they are addressed separately in this section. Any openings in the floors must be protected the same as a shaft.

The exception allows for observation and security needs in detention facilities, and exit access stairways within a housing unit to not be required to be enclosed (see IBC Section 408.5.1). Section 1023.2 also includes a limited exception for enclosure of exit stairways within jails per IBC Section 408.3.8.

SECTION 1020
CORRIDORS

1020.1 Construction. *Corridors* shall be fire-resistance rated in accordance with Table 1020.1. The *corridor* walls required to be fire-resistance rated shall comply with Section 708 for *fire partitions*.

Exceptions:

1. A *fire-resistance rating* is not required for *corridors* in an occupancy in Group E where each room that is used for instruction has not less than one door opening directly to the exterior and rooms for assembly purposes have not less than one-half of the required *means of egress* doors opening directly to the exterior. Exterior doors specified in this exception are required to be at ground level.
2. A *fire-resistance rating* is not required for *corridors* contained within a *dwelling unit* or *sleeping unit* in an occupancy in Groups I-1 and R.
3. A *fire-resistance rating* is not required for *corridors* in *open parking garages*.
4. A *fire-resistance rating* is not required for *corridors* in an occupancy in Group B that is a space requiring only a single *means of egress* complying with Section 1006.2.
5. *Corridors* adjacent to the *exterior walls* of buildings shall be permitted to have unprotected openings on unrated *exterior walls* where unrated walls are permitted by Table 602 and unprotected openings are permitted by Table 705.8.

❖ It is not the intent of this section to require corridors. Once corridors are provided, so that occupants are limited to a confined path of travel, then these provisions apply.

The purpose of corridor enclosures is to provide fire protection to occupants as they travel the confined path, perhaps unaware of a fire buildup in an adjacent floor area. The base protection is a fire partition having a 1-hour fire-resistance rating (see Table 1020.1). The table allows a reduction or elimination of the fire-resistance rating depending on the occupant load and the presence of an NFPA 13 or 13R automatic sprinkler system throughout the building.

IBC Section 708 addresses the continuity of fire partitions serving as corridor walls. In addition to allowing the fire partitions to terminate at the underside of a fire-resistance-rated floor/ceiling or roof/ceiling assembly, the supporting construction need not have the same fire-resistance rating in buildings of Type IIB, IIIB and VB construction as specified in IBC Section 708. If such walls were required to be sup-

INTERNATIONAL CODE COUNCIL®
Copyright © 2015 ICC. ALL RIGHTS RESERVED. Accessed by David Dammon on Jun 21, 2017 12:30:52 PM pursuant to License Agreement with ICC. No further reproduction or distribution authorized. ANY UNAUTHORIZED REPRODUCTION OR DISTRIBUTION IS A VIOLATION OF THE FEDERAL COPYRIGHT ACT AND THE LICENSE AGREEMENT, AND SUBJECT TO CIVIL AND CRIMINAL PENALTIES THEREUNDER.

ported by fire-resistance-rated construction, the use of these construction types would be severely restricted when the corridors are required to have a fire-resistance rating. IBC Section 407.3 requires that corridor walls in Group I-2 occupancies that are required to have a fire-resistance rating must be continuous to the underside of the floor or roof deck above or at a smoke-limiting ceiling membrane. Continuity is required because of the defend-in-place protection strategy utilized in such buildings. Requirements for corridor construction within Group I-3 occupancies are found in IBC Section 408.8. Dwelling unit separation in Groups I-1, R-1, R-2 and R-3 is found in IBC Sections 420.2 and 420.3. Ambulatory care facilities have special requirements in IBC Section 422.2 when some of the patients can be incapable of self-preservation. For additional requirements for an elevator lobby that is adjacent to or part of a corridor, see the commentaries to IBC Sections 713.14 and 3006.

Exception 1 indicates a fire-resistance rating is not required for corridors in Group E when any room adjacent to the corridor that is used for instruction or assembly purposes has a door directly to the outside. The need for a fire-resistance-rated corridor is eliminated because these rooms are provided with an alternative egress path because of the requirement for exterior exits. This option is typically utilized in nonsprinklered buildings, such as day care facilities, since a sprinkler system would also allow for unrated corridors in Group E (see Table 1020.1). Grade schools and high schools have security concerns that sometimes make the outdoor exit for every classroom not a preferred option.

In accordance with Exception 2, a fire-resistance rating for a corridor contained within a single dwelling unit (e.g., apartment, townhouse) or sleeping unit (e.g., hotel guestroom, assistive living suite) is not required for practical reasons. It is unreasonable to expect fire doors and the associated hardware and closing devices to be within dwellings and similar occupancies.

Given the relatively smoke-free environment of open parking structures, Exception 3 does not require rated corridors in these types of facilities.

If an office suite is small enough that only one means of egress is required from the suite, Exception 4 indicates that a rated corridor would not be required in that area. The main corridor that connected these suites to the exits would be evaluated in accordance with Table 1020.1.

Exception 5 addresses when the exterior wall of a building is also the wall of the corridor. The exterior wall is not required to be rated by the corridor provisions where there is a sufficient fire separation distance for the exterior wall to be able to have unprotected openings. This is similar to the exterior wall for an enclosed interior exit stairway. The fire is assumed to be inside the building, so that is where the protection is required.

TABLE 1020.1
CORRIDOR FIRE-RESISTANCE RATING

OCCUPANCY	OCCUPANT LOAD SERVED BY CORRIDOR	REQUIRED FIRE-RESISTANCE RATING (hours)	
		Without sprinkler system	With sprinkler system[c]
H-1, H-2, H-3	All	Not Permitted	1
H-4, H-5	Greater than 30	Not Permitted	1
A, B, E, F, M, S, U	Greater than 30	1	0
R	Greater than 10	Not Permitted	0.5
I-2[a], I-4	All	Not Permitted	0
I-1, I-3	All	Not Permitted	1[b]

a. For requirements for occupancies in Group I-2, see Sections 407.2 and 407.3.

b. For a reduction in the *fire-resistance rating* for occupancies in Group I-3, see Section 408.8.

c. Buildings equipped throughout with an *automatic sprinkler system* in accordance with Section 903.3.1.1 or 903.3.1.2 where allowed.

❖ The required fire-resistance ratings of corridors serving adjacent spaces are provided in Table 1020.1. The fire-resistance rating is based on the group classification (considering characteristics such as occupant mobility, density and familiarity with the building as well as the fire hazard associated with the classification), the total occupant load served by the corridor and the presence of an automatic sprinkler system.

Where the corridor serves a limited number of people (second column in Table 1020.1), the fire-resistance rating is eliminated because of the limited size of the facility and the likelihood that the occupants would become aware of a fire buildup in sufficient time to exit the structure safely. The total occupant load that the corridor serves is used to determine the requirement for a rated corridor enclosure. The number of occupants served is the total occupants that will move into the corridor to egress. Corridors serving a total occupant load equal to or less than that indicated in the second column of Table 1020.1 are not required to be enclosed with fire-resistance-rated construction. For example, a corridor serving an occupant load of 30 or less in an unsprinklered Group B occupancy is not required to be enclosed with fire-resistance-rated construction. This example is illustrated in Commentary Figure 1020.1.

The purpose of corridor enclosures is to provide fire protection to occupants as they travel the confined path, perhaps unaware of a fire buildup in an adjacent floor area. The base protection is a fire partition having a 1-hour fire-resistance rating. The table allows a reduction or elimination of the fire-resistance rating depending on the occupant load and the presence of an NFPA 13 or 13R automatic sprinkler system throughout the building.

A common mistake is assuming a building is sprinklered throughout and utilizing the corridor rating reductions, when in fact certain requirements in NFPA 13 would not consider the building sprinklered throughout. For example, a health club installs a

INTERNATIONAL CODE COUNCIL®
Copyright © 2015 ICC. ALL RIGHTS RESERVED. Accessed by David Dammon on Jun 21, 2017 12:30:52 PM pursuant to License Agreement with ICC. No further reproduction or distribution authorized. ANY UNAUTHORIZED REPRODUCTION OR DISTRIBUTION IS A VIOLATION OF THE FEDERAL COPYRIGHT ACT AND THE LICENSE AGREEMENT, AND SUBJECT TO CIVIL AND CRIMINAL PENALTIES THEREUNDER.

sprinkler system, but chooses to eliminate the sprinklers over the swimming pool in accordance with the exception in IBC Section 507.4. Any corridors within the building that serve greater than 30 occupants must be rated because the building would not be considered sprinklered throughout in accordance with NFPA 13 requirements.

Note that because of the hazardous nature of occupancies in Groups H-1, H-2 and H-3, fire-resistance-rated corridors are required under all conditions. Regardless of the presence of a fire sprinkler system, a 1-hour-rated corridor enclosure is required in high-hazard occupancies with detonation, deflagration, accelerated burning, readily supported combustion or physical hazards. Group H-4 and H-5 occupancies that contain semiconductor fabrication materials or operations constituting a health hazard do not pose the same relative fire or explosion hazard as Group H-1, H-2 or H-3 materials. As such, in Group H-4 or H-5, where the corridor serves a total occupant load of 30 or less, a fire-resistance-rated enclosure is not required. The "not permitted" in the third column is in coordination with Section 903.2.5, which requires all Group H buildings to be fully sprinklered.

The code acknowledges that an automatic sprinkler system can serve to control or eliminate fire development that could threaten the exit access corridor. Most occupancies where sleeping rooms are not present (Groups A, B, E, F, M, S and U) are permitted to have nonfire-resistance-rated corridors if a sprinkler system is installed throughout the building in accordance with NFPA 13.

In residential facilities, the response time to a fire may be delayed because the residents may be sleeping. With this additional safety concern, the requirements for corridors are more restrictive than for nonresidential occupancies. If the corridor serves more than 10 occupants, it is required to be rated for 1 hour. If the building is sprinklered throughout with either an NFPA 13 or 13R system, then the rating of the corridor may be reduced to $^1/_2$ hour. Note the exception for fire-resistance-rated corridors within an individual dwelling or sleeping unit in Section 1020.1. Also note that the reduction in the rating of the corridor walls is not permitted when an NFPA 13D sprinkler system is provided.

While all Group I facilities are supervised environments, the level of supervision in Group I-2 and I-4 occupancies would permit assisted evacuation by staff in an emergency; therefore, corridors are not required to be rated. Corridors in Groups I-2 are also regulated by IBC Section 407.3. Because of the lower staff/resident ratio in Group I-1 and the limitation on free egress in Group I-3, corridors must have a 1-hour fire-resistance rating (see IBC Section 408.8 for a reduction in the corridors in Group I-3). The "not permitted" in the third column is in coordination with Section 903.2.6, which requires all Group I buildings to be fully sprinklered.

1020.2 Width and capacity. The required capacity of *corridors* shall be determined as specified in Section 1005.1, but the minimum width shall be not less than that specified in Table 1020.2.

> **Exception:** In Group I-2 occupancies, *corridors* are not required to have a clear width of 96 inches (2438 mm) in areas where there will not be stretcher or bed movement for access to care or as part of the defend-in-place strategy.

❖ The corridor widths specified in Table 1020.2 are long-established minimums originally derived from human dimensions, practical concerns, occupant loads and psychological considerations. Additional corridor capacity, when necessary for large crowds, is determined in accordance with Section 1005.

The number of occupants using a corridor for egress establishes the required capacity of a corridor, as well as for any specific portion of a multileg corridor system. Portions of a corridor system may differ in width for a variety of reasons not related to code minimums. The designer and building official are

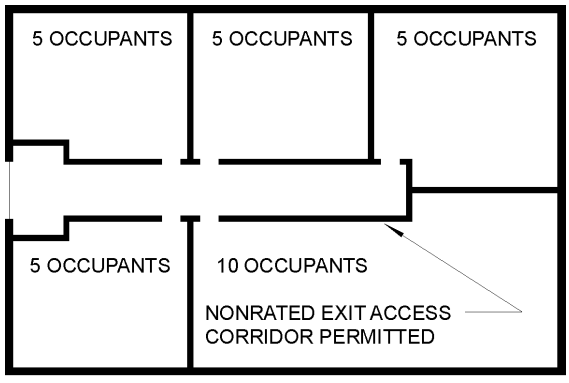

UNSPRINKLERED, SINGLE-EXIT GROUP B BUILDING

Figure 1020.1
APPLICATION OF TABLE 1020.1

INTERNATIONAL CODE COUNCIL®
Copyright © 2015 ICC. ALL RIGHTS RESERVED. Accessed by David Dammon on Jun 21, 2017 12:30:52 PM pursuant to License Agreement with ICC. No further reproduction or distribution authorized. ANY UNAUTHORIZED REPRODUCTION OR DISTRIBUTION IS A VIOLATION OF THE FEDERAL COPYRIGHT ACT AND THE LICENSE AGREEMENT, AND SUBJECT TO CIVIL AND CRIMINAL PENALTIES THEREUNDER.

expected to verify that corridor widths and corridor fire-resistance ratings are in accordance with Sections 1005 and 1020, whichever is more restrictive.

The required occupant capacity of a corridor is based on the total occupant load of the rooms and spaces served by the corridor as determined by Section 1004. Where a corridor is served by two exits in opposite directions, the corridor capacity is split to determine the minimum required width of those exits (i.e., exit door, exit stairway) at each end of the corridor. The total occupant load served by a corridor is not split to establish the corridor fire-resistance rating (see Section 1020.1) or the required capacity.

The exception is because of an item in Table 1020.2 that requires a 96-inch-wide (2438 mm) corridor in Group I-2 facilities. In a hospital, while this is required in the area of patient sleeping rooms and patient care areas, there are a large number of areas that will not be for the movement of beds, either for patient care or for the hospital's defend-in-place strategies. For example, the hospital may have office or therapy areas where patients are brought in walking on their own or using wheelchairs. Many nursing homes do not move patients in beds at all. The intent of the exception is to clarify that the 96-inch (2438 mm) corridor width is not a minimum for all corridors throughout a hospital or nursing home, but only in certain areas.

TABLE 1020.2
MINIMUM CORRIDOR WIDTH

OCCUPANCY	MINIMUM WIDTH (inches)
Any facilities not listed below	44
Access to and utilization of mechanical, plumbing or electrical systems or equipment	24
With an occupant load of less than 50	36
Within a *dwelling unit*	36
In Group E with a *corridor* having an occupant load of 100 or more	72
In *corridors* and areas serving stretcher traffic in occupancies where patients receive outpatient medical care that causes the patient to be incapable of self-preservation	72
Group I-2 in areas where required for bed movement	96

For SI: 1 inch = 25.4 mm.

❖ The widths of passageways, aisles and corridors are functional elements of building construction that allow the occupants to circulate freely and comfortably throughout the floor area under nonemergency conditions. Under emergency situations, the egress paths must provide the needed width to accommodate the number of occupants that must utilize the corridor for egress.

When the occupant load of the space exceeds 49, the minimum width of the passageway, aisle or corridor serving that space is required to be at least 44 inches (1118 mm) to permit two unimpeded parallel columns of users to travel in opposite directions. When the total occupant load served by a corridor is 49 or less, a minimum width of 36 inches (914 mm) is permitted and the users are expected to encounter some intermittent travel interference from fellow users, but the lower occupant load makes those occasions infrequent and tolerable. The 36-inch (914 mm) minimum width is also required within a dwelling unit.

Passageways that lead to building equipment and systems must be at least 24 inches (610 mm) in width to provide a means to access and service the equipment when needed. Because of the frequency of the servicing intervals and the limited number of occupants in these normally unoccupied areas, a reduced width is warranted. This minimum width criteria applies to many common situations, such as stage lighting and special-effects catwalks; catwalks leading to heating and cooling equipment; as well as passageways providing access to boilers, furnaces, transformers, pumps, piping and other equipment.

Except for small buildings, Group E occupancies are required to have minimum 72-inch-wide (1829 mm) corridors where the corridors serve educational areas. This width is needed not only for proper functional use, but also because of the edge effect caused by student lockers and other boundary attractions and objects. Service and other corridors outside of educational areas, such as an administrative area, would be regulated consistent with their use. Note that Section 1020.3 would not allow the wall lockers to overlap the required corridor width.

In Group I-2 occupancies, where the corridor is utilized during a fire emergency for moving patients confined to beds, it is required to be at least 96 inches (2438 mm) in clear width. This width requirement is applicable to all areas where there are patient sleeping rooms, and may also be required in some of the treatment room areas where in-house patients will be brought in on beds or rolling stretchers. This minimum width allows two rolling beds or stretchers to pass in a corridor and permits the movement of a bed/stretcher into the corridor through a room door. In Group I-2 and ambulatory care center areas, where the movement of beds is not anticipated, such as administrative and some outpatient areas of a hospital or clinic, the corridor would not be required to be 96 inches (2438 mm) wide. The minimum width would be determined by one of the appropriate applicable criteria. For outpatient medical care, where the patient may be incapable of self-preservation, such as some outpatient surgery areas or dialysis treatment areas, the 72-inch-wide (1829 mm) corridor is required. This would include Group I surgical areas, areas such as MRI suites or dialysis centers, emergency rooms or Group B ambulatory care centers.

INTERNATIONAL CODE COUNCIL®
Copyright © 2015 ICC. ALL RIGHTS RESERVED. Accessed by David Dammon on Jun 21, 2017 12:30:52 PM pursuant to License Agreement with ICC. No further reproduction or distribution authorized. ANY UNAUTHORIZED REPRODUCTION OR DISTRIBUTION IS A VIOLATION OF THE FEDERAL COPYRIGHT ACT AND THE LICENSE AGREEMENT, AND SUBJECT TO CIVIL AND CRIMINAL PENALTIES THEREUNDER.

1020.3 Obstruction. The minimum width or required capacity of *corridors* shall be unobstructed.

Exception: Encroachments complying with Section 1005.7.

❖ It is important to maintain required corridor width so that the path of travel to an exit is continually available and unobstructed. Because corridors tend to be lined with user passage doors, there are allowances under Section 1005.7. In no case may a door block more than 50 percent of the required corridor width. In addition, when fully open, the doors must not protrude more than 7 inches (178 mm) into the required width. Where doors swing out into the corridor, options would be to move doors back into alcoves or to provide corridors wider than the required width. The alcoves would have to be deep enough to also meet the 7-inch (118 mm) maximum protrusion when doors are open, or at least 29 inches (737 mm) deep. For an example of the wider corridor: a standard door is 36 inches (914 mm) wide, and the typical minimum corridor width is 44 inches (1118 mm). By adding the door leaf and half the required corridor width (36+22=58), a designer could provide a corridor width of 58 inches (1473 mm) and not have any issues with encroachment of doors. This is consistent with the provisions in aisles, corridors, stairways, ramps, exit passageways and exit discharge courts.

A cross reference back to Section 1005.7 from the exceptions for width in (see Section 1019.1), corridors (see Section 1020.3), aisles exit passageways (see Section 1024.2) and exit courts (see Section 1028.4.1) reinforces the fact that the protrusion limits provision is generally applicable for these types of confined routes.

1020.4 Dead ends. Where more than one *exit* or *exit access doorway* is required, the *exit access* shall be arranged such that there are no dead ends in *corridors* more than 20 feet (6096 mm) in length.

Exceptions:

1. In occupancies in Group I-3 of Condition 2, 3 or 4, the dead end in a *corridor* shall not exceed 50 feet (15 240 mm).
2. In occupancies in Groups B, E, F, I-1, M, R-1, R-2, R-4, S and U, where the building is equipped throughout with an *automatic sprinkler system* in accordance with Section 903.3.1.1, the length of the dead-end *corridors* shall not exceed 50 feet (15 240 mm).
3. A dead-end *corridor* shall not be limited in length where the length of the dead-end *corridor* is less than 2.5 times the least width of the dead-end *corridor*.

❖ The requirements of this section apply where a space is required to have more than one means of egress according to Section 1006.2.

Dead ends in corridors and passageways can seriously increase the time needed for an occupant, especially if unfamiliar with the space, to locate the exits. More importantly, dead ends will allow a single fire event to eliminate access to all of the exits by trapping the occupants in the dead-end area. A dead end exists whenever a user of the corridor or passageway has only one direction to travel to reach any building exit [see Commentary Figure 1020.4(1)]. While a preferred building layout would be one without dead ends, a maximum dead-end length of 20 feet (6096 mm) is permitted and is to be measured from the extreme point in the dead end to the point where occupants have a choice of two directions to separate exits. Having to go back only 20 feet (6096 mm) after coming to a dead end is not such a signifi-

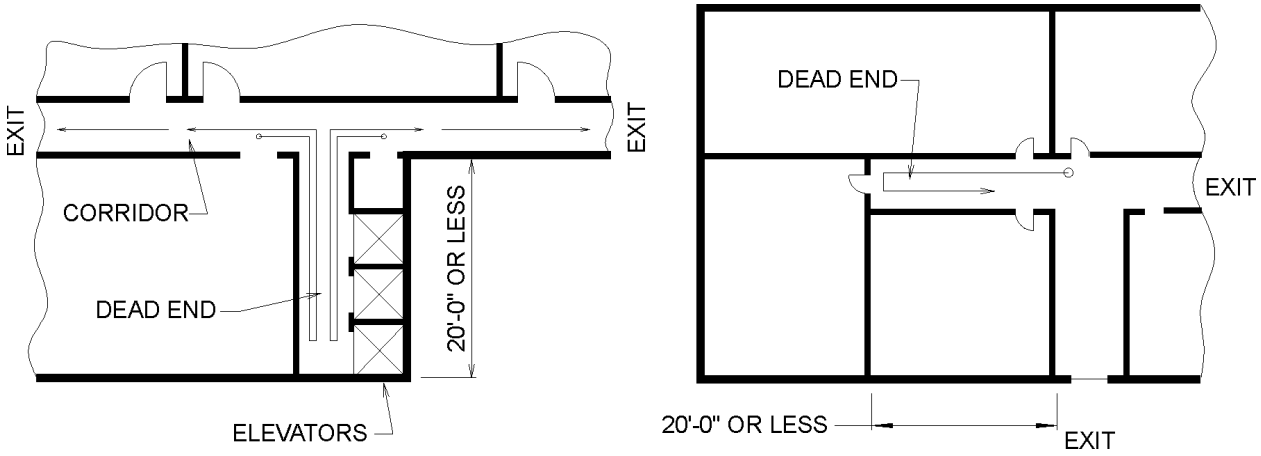

For SI: 1 inch = 25.4 mm, 1 foot = 304.8 mm.

Figure 1020.4(1)
ALLOWABLE DEAD-END CONDITIONS

INTERNATIONAL CODE COUNCIL®
Copyright © 2015 ICC. ALL RIGHTS RESERVED. Accessed by David Dammon on Jun 21, 2017 12:30:52 PM pursuant to License Agreement with ICC. No further reproduction or distribution authorized. ANY UNAUTHORIZED REPRODUCTION OR DISTRIBUTION IS A VIOLATION OF THE FEDERAL COPYRIGHT ACT AND THE LICENSE AGREEMENT, AND SUBJECT TO CIVIL AND CRIMINAL PENALTIES THEREUNDER.

cant distance as to cause a serious delay in reaching an exit during an emergency situation.

A dead end results whether or not egress elements open into it. A dead end is a hazard for occupants who enter the area from adjacent spaces, travel past an exit into a dead end or enter a dead end with the mistaken assumption that an exit is directly accessible from the dead end.

Note that IBC Section 402.8.6 deals with dead-end distances in a covered mall and assumes that, with a sufficiently wide mall in relation to its length, alternative paths of travel will be available in the mall itself to reach an exit (i.e., the common mall area is not to be construed as a corridor).

Under special conditions, exceptions to the 20-foot (6096 mm) dead-end limitation apply.

Exception 1 is permitted based on the considerations of the functional needs of Group I-3 Occupancy Condition 2, 3 or 4, the requirements for smoke compartmentalization in IBC Section 408.6 and the requirement for automatic sprinkler protection of the facility in Section 903.2.6.

Exception 2 recognizes the fire protection benefits and performance history of automatic fire sprinkler systems. While the degree of hazard in Group B, E, F, M, S and U occupancies does not initially require an automatic fire suppression system, the length of a dead-end corridor or passageway is permitted to be extended to 50 feet (15 240 mm) where an automatic fire sprinkler system in accordance with NFPA 13 is provided throughout the building. This exception is also permitted in Group I-1, R-1, R-2 and R-4 occupancies, but only when they use an NFPA 13 system, not an NFPA 13R system. In addition, these provisions are consistent with those in the IEBC and IFC in the regulation of dead-end corridors in existing buildings undergoing alterations. Dead-end provisions are not applicable in single-exit spaces; therefore, dead-end provisions are not applicable in Group R-3 and R-4 occupancies.

Exception 3 addresses the condition presented by "cul-de-sac" elevator lobbies directly accessible from exit access corridors. In such an elevator lobby, lengths of 20 to 30 feet (6096 to 9144 mm) are common for three- or four-car elevator banks. Typically, the width of this elevator lobby is such that the possibility of confusion with a path of egress is minimized. Below the $2^1/_2$:1 ratio, the dead end becomes so wide that it is less likely to be perceived as a corridor leading to an exit. For example, based on the $2^1/_2$:1 ratio limitation, a 25-foot-long (7620 mm) dead end over 10 feet (3048 mm) in width would not be considered a dead-end corridor [see Commentary Figure 1020.4(2)]. For additional elevator lobby requirements, see the commentaries to IBC Sections 713.14 and 3006.

1020.5 Air movement in corridors. *Corridors* shall not serve as supply, return, exhaust, relief or ventilation air ducts.

Exceptions:

1. Use of a *corridor* as a source of makeup air for exhaust systems in rooms that open directly onto such *corridors*, including toilet rooms, bathrooms, dressing rooms, smoking lounges and janitor closets, shall be permitted, provided that each such *corridor* is directly supplied with outdoor air at a rate greater than the rate of makeup air taken from the *corridor*.
2. Where located within a *dwelling unit*, the use of *corridors* for conveying return air shall not be prohibited.
3. Where located within tenant spaces of 1,000 square feet (93 m^2) or less in area, utilization of *corridors* for conveying return air is permitted.

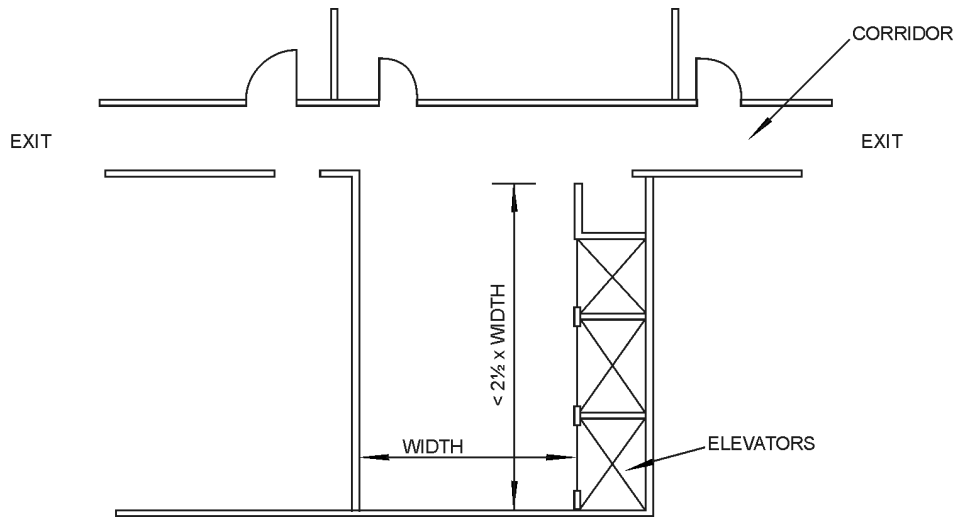

Figure 1020.4(2)
CORRIDOR LENGTH/WIDTH RATIO FOR DEAD-END CONSIDERATIONS

INTERNATIONAL CODE COUNCIL®
Copyright © 2015 ICC. ALL RIGHTS RESERVED. Accessed by David Dammon on Jun 21, 2017 12:30:52 PM pursuant to License Agreement with ICC. No further reproduction or distribution authorized. ANY UNAUTHORIZED REPRODUCTION OR DISTRIBUTION IS A VIOLATION OF THE FEDERAL COPYRIGHT ACT AND THE LICENSE AGREEMENT, AND SUBJECT TO CIVIL AND CRIMINAL PENALTIES THEREUNDER.

4. Incidental air movement from pressurized rooms within health care facilities, provided that the *corridor* is not the primary source of supply or return to the room.

❖ Two of the most critical elements of the means of egress are the required exit stairways and corridors. Exit stairways serve as protected areas in the building that provide occupants with safe passage to the level of exit discharge. Since required exits and corridors are critical elements in the means of egress, the potential spread of smoke and fire into these spaces must be minimized. The scope of this section is corridors. For requirements for the exits, see Section 1023.

The use of these corridors as part of the air distribution system could render those egress elements unusable. The intent is to have positive pressure in the corridors. Therefore, any air movement condition that could introduce smoke into these vital egress elements is prohibited. It is not the intent of this section to prohibit the air movement necessary for ventilation and space conditioning of corridors, but rather to prevent those spaces from serving as conduits for the distribution of air to, or the collection of air from, adjacent spaces. This restriction also extends to door transoms and door grilles that would allow the spread of smoke into a corridor. This limitation is not, however, intended to restrict slight pressure differences across corridor doors, such as a negative pressure differential maintained in kitchens to prevent odor migration into dining rooms. Note that air distribution via ducted systems located in or above corridors is acceptable since the corridor itself would not be functioning as a duct.

The four exceptions to this section identify conditions where a corridor can be utilized as part of the air distribution system. The exceptions apply only to exit access corridors, not to exit passageways.

Exception 1 addresses the common practice of using air from the corridor as makeup air for small exhaust fans in adjacent rooms. Where the corridor is supplied directly with outdoor air at a rate equal to or greater than the makeup air rate, negative pressure will not be created in the corridor with respect to the adjoining rooms and smoke would generally not be drawn into the corridor.

Regarding Exception 2, it is common practice to locate return air openings in the corridors of dwelling units and draw return air from adjoining spaces through the corridor. Such use of dwelling unit corridors for conveying return air is not considered to be a significant hazard and is permitted. Individual dwelling units are permitted to have unprotected openings between floors. Corridors within dwelling units that serve small occupant loads are short in length and are not required to be fire-resistance rated. For these reasons, the use of the corridor or the space above a corridor ceiling for conveying return air does not constitute an unacceptable hazard.

Exception 3 permits corridors located in small tenant spaces to be used for conveying return air based on the relatively low occupant load and the relatively short length of the corridor. These conditions do not pose a significant hazard. In the event of an emergency, the occupants of the space would tend to simply retrace their steps to the entrance.

Health care facilities require direct pressurization control of certain rooms to provide a clean and sterile environment for patients. For example, operating rooms and pharmacies are required to have positive air pressure in the room, resulting in a general air movement out of the room. This ensures that airborne contaminants do not infect a sterile procedure or supplies. Pressurization is achieved by supplying air at a greater or lesser rate than the return air. Exception 4 recognizes the need of infection control and clarifies that the corridor should not be the primary source of supply return. There should be supply and return air in the room.

1020.5.1 Corridor ceiling. Use of the space between the *corridor* ceiling and the floor or roof structure above as a return air plenum is permitted for one or more of the following conditions:

1. The *corridor* is not required to be of *fire-resistance-rated* construction.
2. The *corridor* is separated from the plenum by *fire-resistance-rated* construction.
3. The air-handling system serving the *corridor* is shut down upon activation of the air-handling unit *smoke detectors* required by the *International Mechanical Code*.
4. The air-handling system serving the *corridor* is shut down upon detection of sprinkler water flow where the building is equipped throughout with an *automatic sprinkler system*.
5. The space between the *corridor* ceiling and the floor or roof structure above the *corridor* is used as a component of an approved engineered smoke control system.

❖ This section identifies five different conditions where the space above the corridor ceiling is permitted to serve as a return air plenum. Since a return air plenum operates at a negative pressure with respect to the corridor, any smoke and gases within the plenum should be contained within that space. Conversely, a supply plenum operates at a positive pressure with respect to the corridor, thus increasing the likelihood that smoke and gases will infiltrate the corridor enclosure. Where any one of the five conditions is present, the use of the corridor ceiling space as a return air plenum is permitted. This is consistent with IMC Section 601.2.1.

Where the corridor is permitted to be constructed without a fire-resistance rating (see Section 1020.1), Item 1 permits the space above the ceiling to be utilized as a return air plenum without requiring it to be separated from the corridor with fire-resistance-rated construction.

INTERNATIONAL CODE COUNCIL®
Copyright © 2015 ICC. ALL RIGHTS RESERVED. Accessed by David Dammon on Jun 21, 2017 12:30:52 PM pursuant to License Agreement with ICC. No further reproduction or distribution authorized. ANY UNAUTHORIZED REPRODUCTION OR DISTRIBUTION IS A VIOLATION OF THE FEDERAL COPYRIGHT ACT AND THE LICENSE AGREEMENT, AND SUBJECT TO CIVIL AND CRIMINAL PENALTIES THEREUNDER.

Item 2 is only applicable to corridors that are required to be enclosed with fire-resistance-rated construction. Compliance with this item requires the plenum to be separated from the corridor by fire-resistance-rated construction equivalent to the rating of the corridor enclosure itself. Therefore, the ceiling membrane itself must provide the fire-resistance rating required of the corridor enclosure. IBC Section 708.4, Exception 3, is an example of this method of construction.

Items 3 and 4 recognize that the hazard associated with smoke spread through a plenum is minimized if the air movement is stopped.

It is not uncommon for an above-ceiling plenum to be utilized as part of the smoke removal system. This practice is permitted by Item 5. Because of the way these systems are designed, the higher equipment ratings and the power supply provisions, this is considered acceptable.

1020.6 Corridor continuity. *Fire-resistance-rated corridors* shall be continuous from the point of entry to an *exit*, and shall not be interrupted by intervening rooms. Where the path of egress travel within a *fire-resistance-rated corridor* to the exit includes travel along unenclosed *exit access stairways* or *ramps*, the *fire-resistance rating* shall be continuous for the length of the *stairway* or *ramp* and for the length of the connecting *corridor* on the adjacent floor leading to the *exit*.

Exceptions:

1. Foyers, lobbies or reception rooms constructed as required for *corridors* shall not be construed as intervening rooms.
2. Enclosed elevator lobbies as permitted by Item 1 of Section 1016.2 shall not be construed as intervening rooms.

❖ This section requires that where fire protection is offered by a corridor, it is to be continuous from the point of entry into the corridor to an exit. This is to protect occupants from the accumulation of smoke or fire exposure and to allow for sufficient time to evacuate the building. Where a corridor is served by two or more exits, only one of the exits is required to be accessed directly from the corridor. Other exits may be accessed through intervening spaces in accordance with Section 1016.2, provided that there is an opening protective at the end of the corridor to separate the rated corridor from the intervening rooms. Thus, occupants will always have their protected path to an exit, and at the same time a reasonable degree of design freedom is allowed [see Commentary Figures 1020.6(1) and 1020.6(3)].

When a level is permitted to have unenclosed exit access stairways in accordance with Section 1019.3, the corridor protection is required to continue down the exit access stairway to an enclosure for an interior exit stairway or to an exit door leading to the outside. Since the exit access stairway effectively becomes part of the corridor, doors would not be required at the top and bottom of the open exit access stairway as they are when entering enclosures for exit stairways.

Exception 1 allows a foyer, lobby or reception room to be located on the path of egress from a corridor or as part of the fire-resistance-rated corridor, provided the room has the same fire-resistance-rated walls and doors as required for the corridor. The use of this provision should be viewed as limiting the types of uses that may occur within the protected corridor. Occupied spaces within the corridor should have very limited uses and hazards. Foyers and lobbies are included in this exception based on the low fire hazard of the contents in such rooms [see Commentary Figure 1020.6(2)].

Another consideration is corridor continuity at an elevator opening. When an elevator opens into a cor-

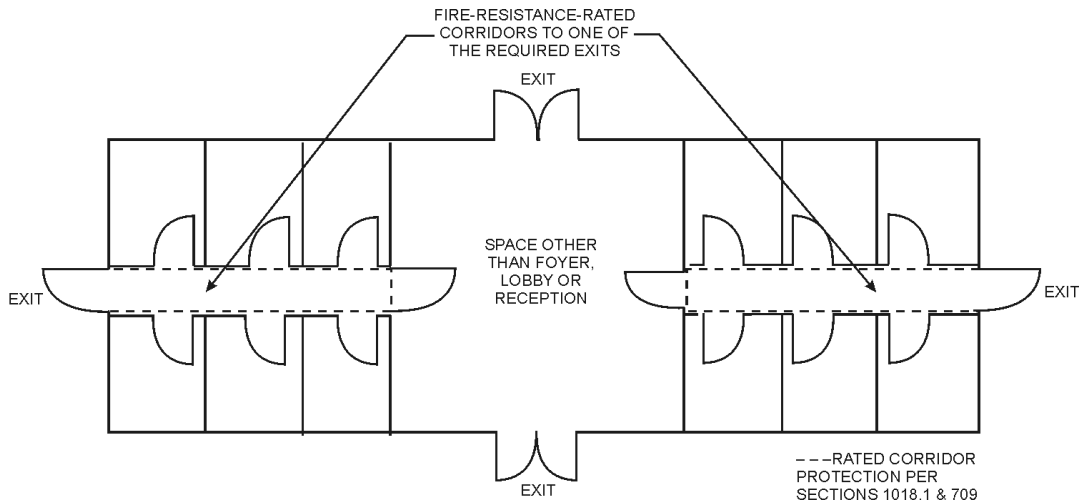

Figure 1020.6(1)
CORRIDOR CONTINUITY—EXAMPLE 1

INTERNATIONAL CODE COUNCIL®
Copyright © 2015 ICC. ALL RIGHTS RESERVED. Accessed by David Dammon on Jun 21, 2017 12:30:52 PM pursuant to License Agreement with ICC. No further reproduction or distribution authorized. ANY UNAUTHORIZED REPRODUCTION OR DISTRIBUTION IS A VIOLATION OF THE FEDERAL COPYRIGHT ACT AND THE LICENSE AGREEMENT, AND SUBJECT TO CIVIL AND CRIMINAL PENALTIES THEREUNDER.

ridor that is required to be of fire-resistance-rated construction, the opening between the elevator shaft and the corridor must be protected to meet not only the shaft's fire protection rating but also the additional smoke and draft protection requirements necessary to limit the spread of smoke into the corridor. This additional smoke and draft control requirement is found in IBC Section 716.5.3.1. Because elevator hoistway doors do not typically comply as smoke- and draft-control assemblies, they would not be able to open directly into a corridor that is required to have protected openings. The provisions in IBC Sections 713.14 and 3006 waiving the requirements for an elevator lobby do not waive the corridor opening protection requirements. Therefore, to maintain the integrity of the corridor, the elevator hoistway shaft doors opening into such rated corridors will need to be separated from the corridor by one of the following methods of protection:

1. A lobby needs to be provided with the appropriate walls and doors [see Commentary Figure 1020.6(4) and IBC Section 3006.3, Items 1 and 2] to separate the lobby from the corridor.
2. Additional doors must be provided at the hoistway [see Commentary Figure 1020.6(5) and

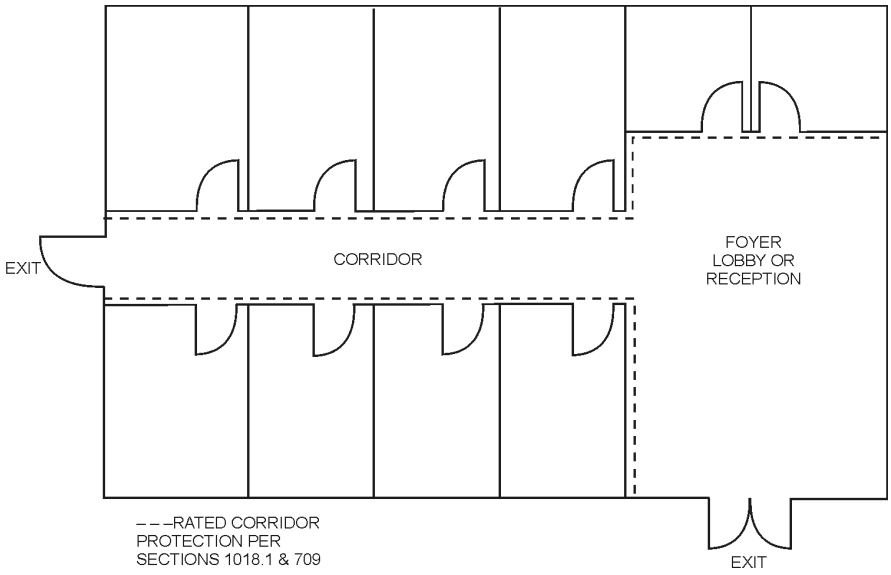

Figure 1018.6(2)
CORRIDOR CONTINUITY—EXAMPLE 2

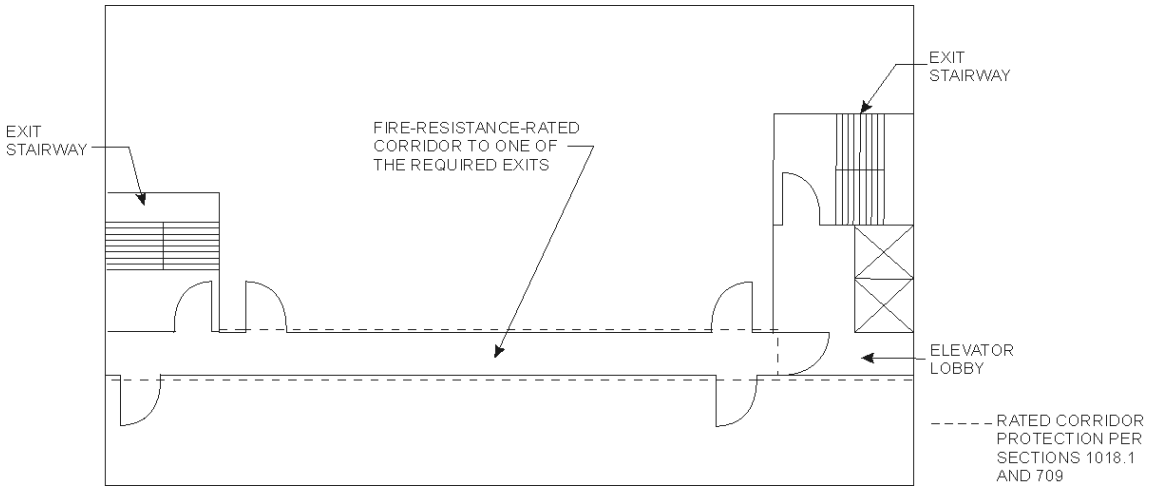

Figure 1020.6(3)
CORRIDOR CONTINUITY—EXAMPLE 3

INTERNATIONAL CODE COUNCIL®
Copyright © 2015 ICC. ALL RIGHTS RESERVED. Accessed by David Dammon on Jun 21, 2017 12:30:52 PM pursuant to License Agreement with ICC. No further reproduction or distribution authorized. ANY UNAUTHORIZED REPRODUCTION OR DISTRIBUTION IS A VIOLATION OF THE FEDERAL COPYRIGHT ACT AND THE LICENSE AGREEMENT, AND SUBJECT TO CIVIL AND CRIMINAL PENALTIES THEREUNDER.

IBC Section 3006.3, Item 3] that will protect the shaft openings the same as required for the corridor doors.

3. An elevator shaft door meeting both the smoke and draft protection requirements for corridor doors in IBC Section 716.5.3.1 and the appropriate fire protection rating of IBC Table 716.5 for the shaft must be provided.
4. The corridor must be separated from the lobby [see Commentary Figure 1020.6(6) and IBC Section 3006.3, Items 1 and 2]. Per Exception 2 of Section 1020.6, Option 4 is permitted for cor-

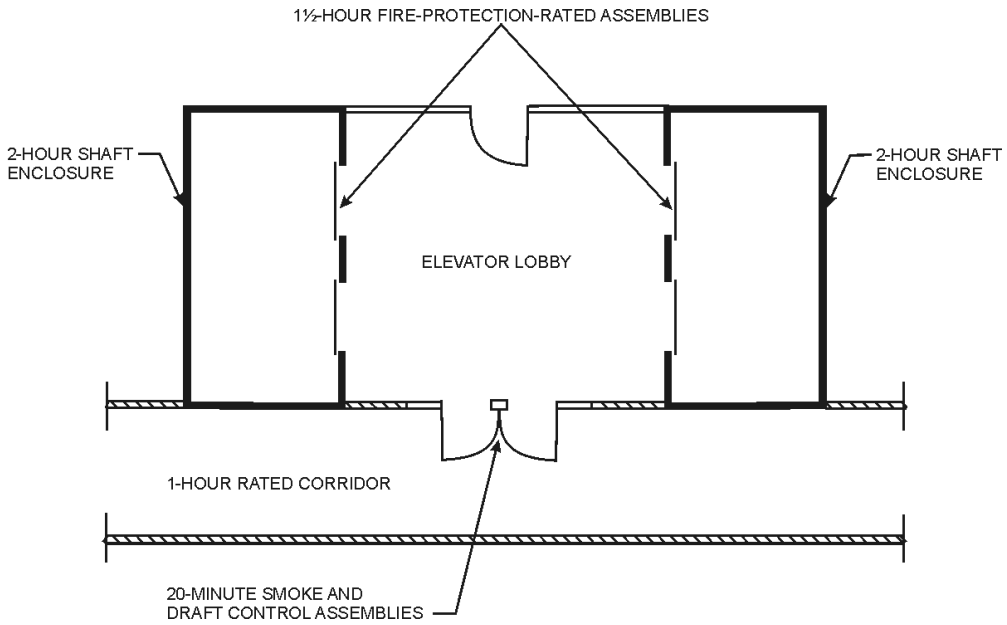

Figure 1018.6(4)
ELEVATOR LOBBY/CORRIDOR OPTION 1

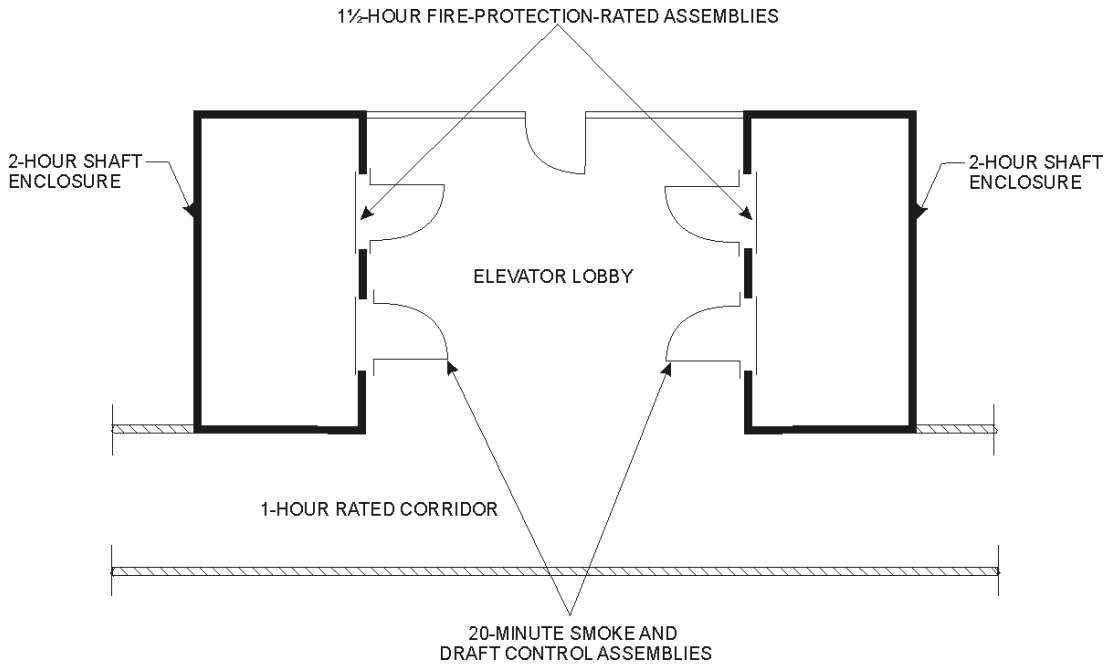

Figure 1020.6(5)
ELEVATOR LOBBY/CORRIDOR OPTION 2

INTERNATIONAL CODE COUNCIL®
Copyright © 2015 ICC. ALL RIGHTS RESERVED. Accessed by David Dammon on Jun 21, 2017 12:30:52 PM pursuant to License Agreement with ICC. No further reproduction or distribution authorized. ANY UNAUTHORIZED REPRODUCTION OR DISTRIBUTION IS A VIOLATION OF THE FEDERAL COPYRIGHT ACT AND THE LICENSE AGREEMENT, AND SUBJECT TO CIVIL AND CRIMINAL PENALTIES THEREUNDER.

ridor continuity since the elevator lobby is also not considered an intervening room. Section 1016.2, Item 1, states that at least one end of a fire-resistance-rated corridor leads directly to an exit without going through the lobby. Alternatively, the second means of egress serving the corridor can be an elevator lobby with direct access to an exit [see Commentary Figure 1020.6(3)].

5. The elevator hoistway can be pressurized so that smoke will not move up the shaft (see Section 3006.3, Item 4).

While many elevator hoistway shaft doors are tested and labeled for the 1-hour or $1^1/_2$-hour fire-resistance rating (see Section 716.5), very few, if any of the doors typically sold in the U.S. will also meet the smoke and draft requirements (see Section 716.5.3.1) that would allow them to open directly into a fire-resistance-rated corridor. Because of this, Items 1, 2 and 4 above will be the general methods for protecting such openings.

For additional explanation of the requirements for elevator lobbies that are adjacent to rated corridors, see Section 3006. For requirements for exit enclosures, see Section 1023.

SECTION 1021
EGRESS BALCONIES

1021.1 General. Balconies used for egress purposes shall conform to the same requirements as *corridors* for minimum width, required capacity, headroom, dead ends and projections.

❖ This section regulates balconies that are used as an exit access element. Requirements are the same as exit access corridors, except for the enclosure.

Where exterior egress balconies are used in moderate or severe climates, there may also be a concern to protect the egress balcony from accumulations of snow and ice to provide a safe path of egress travel at all times, including winter. Maintenance of the means of egress in the IFC requires an unobstructed path to allow for full instant use in case of a fire or emergency. Typical methods for protecting these egress elements include roof overhangs or canopies, a heated slab and, when approved by the building official, a reliable snow removal maintenance program.

1021.2 Wall separation. Exterior egress balconies shall be separated from the interior of the building by walls and opening protectives as required for *corridors*.

Exception: Separation is not required where the exterior egress balcony is served by not less than two *stairways* and a dead-end travel condition does not require travel past an unprotected opening to reach a *stairway*.

❖ An exterior exit access balcony has a valuable attribute in that the products of combustion may be freely vented to the open air. In the event of a fire in an adjacent space, the products of combustion would not be expected to build up in the balcony area as would commonly occur in an interior corridor. How-

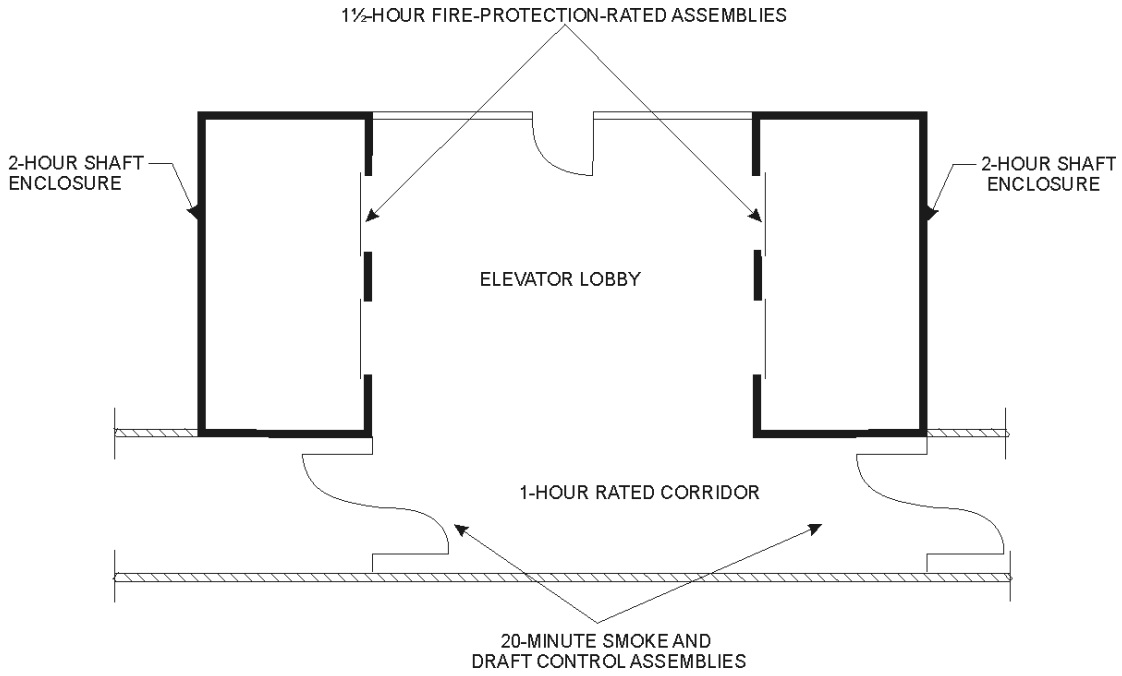

Figure 1020.6(6)
ELEVATOR LOBBY/CORRIDOR OPTION 3

INTERNATIONAL CODE COUNCIL®
Copyright © 2015 ICC. ALL RIGHTS RESERVED. Accessed by David Dammon on Jun 21, 2017 12:30:52 PM pursuant to License Agreement with ICC. No further reproduction or distribution authorized. ANY UNAUTHORIZED REPRODUCTION OR DISTRIBUTION IS A VIOLATION OF THE FEDERAL COPYRIGHT ACT AND THE LICENSE AGREEMENT, AND SUBJECT TO CIVIL AND CRIMINAL PENALTIES THEREUNDER.

ever, there is still a concern for the egress of occupants who must use the balcony for exit access, and, consequently, may have to pass the room or space where the fire is located. Therefore, an exterior exit access balcony is required to be separated from interior spaces by fire partitions, as is required for interior corridors. The other provisions of Section 1020 relative to dead ends and opening protectives also apply.

If there are no dead-end conditions that require travel past an unprotected opening and the balcony is provided with at least two stairways, then the wall separating the balcony from the interior spaces need not have a fire-resistance rating (see Commentary Figure 1021.2). Such an arrangement reduces the probability that occupants will need to pass the area with the fire to gain access to an exit.

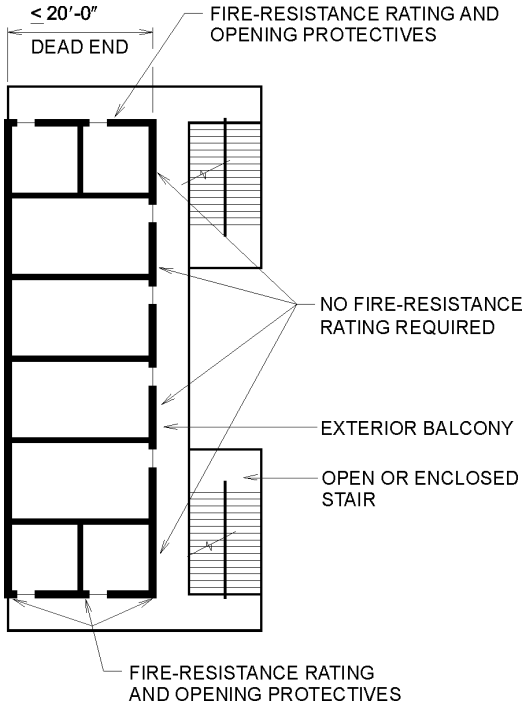

For SI: 1 inch= 25.4 mm, 1 foot = 304.8 mm.

Figure 1021.2
EGRESS BALCONIES

1021.3 Openness. The long side of an egress balcony shall be at least 50 percent open, and the open area above the *guards* shall be so distributed as to minimize the accumulation of smoke or toxic gases.

❖ This section provides an opening requirement that is intended to preclude the rapid buildup of smoke and toxic gases. A minimum of one side of the exterior balcony is required to have a minimum open exterior area of 50 percent of the side area of the balcony. The side openings are to be uniformly distributed along the length of the balcony.

1021.4 Location. Exterior egress balconies shall have a minimum *fire separation distance* of 10 feet (3048 mm) measured at right angles from the exterior edge of the egress balcony to the following:

1. Adjacent *lot lines*.
2. Other portions of the building.
3. Other buildings on the same lot unless the adjacent building *exterior walls* and openings are protected in accordance with Section 705 based on *fire separation distance*.

For the purposes of this section, other portions of the building shall be treated as separate buildings.

❖ The location requirements for exterior egress balconies given by this section protect the users of the egress balcony from the effects of a fire in another building on the same lot or an adjacent lot. The separation distance reduces the exposure to heat and smoke. If the egress balcony is closer than specified, then the adjacent buildings' exterior walls and openings are to be protected in accordance with IBC Section 705 so that the users of the egress balcony are protected. The reason for the required distance to a lot line is to provide for a future building that could be built on the adjacent lot. While buildings on the same lot can be considered one building for height and area limitations (see IBC Section 503.1.2), they must be separated by a minimum of 10 feet (3048 mm) if there is a path for exit discharge between them. The purpose of the last sentence is to clarify that an egress balcony needs a minimum 10-foot separation where a building wraps around on itself, such as a U-shaped building. It is not intended that the distance be measured to the imaginary lot line between buildings on the same lot.

Requirements are the same for exterior exit stairways and ramps. For an illustration of how exterior egress balconies and exterior exit stairways work together, see Commentary Figure 1027.5.

SECTION 1022
EXITS

1022.1 General. *Exits* shall comply with Sections 1022 through 1027 and the applicable requirements of Sections 1003 through 1015. An *exit* shall not be used for any purpose that interferes with its function as a *means of egress*. Once a given level of *exit* protection is achieved, such level of protection shall not be reduced until arrival at the *exit discharge*. *Exits* shall be continuous from the point of entry into the *exit* to the *exit discharge*.

❖ This group of sections is applicable to the "exit" portion of the three-part means of egress system. Sections 1003 through 1015 are also applicable to exits. The following sections are covered in this group:

- Section 1022 provides general requirements for exterior exit doorways.

INTERNATIONAL CODE COUNCIL®
Copyright © 2015 ICC. ALL RIGHTS RESERVED. Accessed by David Dammon on Jun 21, 2017 12:30:52 PM pursuant to License Agreement with ICC. No further reproduction or distribution authorized. ANY UNAUTHORIZED REPRODUCTION OR DISTRIBUTION IS A VIOLATION OF THE FEDERAL COPYRIGHT ACT AND THE LICENSE AGREEMENT, AND SUBJECT TO CIVIL AND CRIMINAL PENALTIES THEREUNDER.

- Section 1023 provides criteria for interior exit stairways and ramps.
- Section 1024 covers horizontal portions of the exit and exit passageways.
- Section 1025 is referenced by the high-rise provisions in IBC Section 403. This section addresses a backup system for means of egress lighting (see Section 1008). "Glow-in-the-dark" stripes identify steps, handrails, obstructions and doorways within the enclosure for interior exit stairways.
- Section 1026 discusses the option of horizontal exits. This type of system is most commonly used for buildings such as hospitals and jails where building evacuation is not always the best option.
- Section 1027 provides criteria for stairways or ramps that are primarily open to the exterior, thus reducing the chance of accumulation of smoke or fumes.

The use of required exterior exit doors, exit stairways, exit passageways and horizontal exits for any purpose other than exiting is prohibited, because it might interfere with use as an exit. This is *not* intended to prohibit a door or stairway being used as part of normal circulation patterns, such as the exit doors also serving as entrances, or using the stairway to move between floors when there is not an emergency. However, these spaces must not include furniture, storage or work space. For example, the use of an exit stairway landing for storage, vending machines, copy machines, displays or any purpose other than for exiting is not permitted. Such a situation could not only lead to obstruction of the path of exit travel, thereby creating a hazard to life safety, but if the contents consist of combustible materials, then the use of the stairway as a means of egress could be jeopardized by fire or smoke in the exit enclosure.

It is recognized that standpipe risers are provided within the stair enclosure and that vertical electrical conduit may be necessary for power or lighting. However, such risers must be located so as not to interfere with the required clear width of the exit. For example, a standpipe riser located in the corner of a stairway will not reduce the required clear radius of the landing. This also applies when the stairway landing is used as an area of refuge. The spaces for wheelchairs must not obstruct the general path of egress travel [see Commentary Figures 1009.3(1) and 1009.3(2)]. Electrical conduit and mechanical equipment are permitted when necessary to serve the exit enclosure.

In existing buildings, sometimes the only viable option for providing access into the space is a platform lift. These platform lifts can be located within the enclosure for the exit (see IEBC Section 410.8.3 and IBC Section 705.1.3). Regulations in ASME A18.1 would limit the potential for any concerns for platform lifts being a fuel load in an exit stairway. However, the platform lift must be located so that it is not an obstruction to the exit pathway. Typically, this is reviewed when the platform lift is in the off and folded position.

Sections 1022 through 1027 apply to all exits but do not apply to elements of the means of egress that are not actually exits, such as exit access stairways, ramps, corridors and passageways or elements of the exit discharge. Once an exit is entered, that same level of protection must be available until the occupants leave the building at the level of exit discharge. For exit discharge options for the enclosure, other than a door leading directly to the outside, see the requirements for exit passageways in Section 1024 or the options permitting usage of a lobby or vestibule in the exceptions to Section 1028.1.

1022.2 Exterior exit doors. Buildings or structures used for human occupancy shall have not less than one exterior door that meets the requirements of Section 1010.1.1.

❖ The purpose of this section is to specify that at least one exterior exit door is required to meet the door size requirements in Section 1010.1.1. It is not the intent of this section to specify the number of exit doors required, which is addressed in Section 1006.

1022.2.1 Detailed requirements. Exterior *exit* doors shall comply with the applicable requirements of Section 1010.1.

❖ The purpose of this section is simply to provide a cross reference from the exit section to all of the detailed requirements for doors that are included in Section 1010.1 and all of its subsections. For example, the requirements for door operation on exterior exit doors are controlled by Section 1010.1.9.

1022.2.2 Arrangement. Exterior *exit* doors shall lead directly to the *exit discharge* or the *public way*.

❖ The exterior exit door is to be the entry point of the exit discharge or lead directly to the public way. When a person reaches the exterior exit door, he or she is directly outside, where smoke and toxic gases are not a health hazard. Additionally, this section will keep exterior doors at other locations, such as to an egress balcony, from being viewed as an exit element.

SECTION 1023
INTERIOR EXIT STAIRWAYS AND RAMPS

1023.1 General. *Interior exit stairways* and *ramps* serving as an *exit* component in a *means of egress* system shall comply with the requirements of this section. *Interior exit stairways* and *ramps* shall be enclosed and lead directly to the exterior of the building or shall be extended to the exterior of the building with an *exit passageway* conforming to the requirements of Section 1024, except as permitted in Section 1028.1. An *interior exit stairway* or *ramp* shall not be used for any purpose other than as a *means of egress* and a circulation path.

❖ The first sentence is a general reference to the rest of the section. Sections 1023.2 through 1023.7 deal

INTERNATIONAL CODE COUNCIL®
Copyright © 2015 ICC. ALL RIGHTS RESERVED. Accessed by David Dammon on Jun 21, 2017 12:30:52 PM pursuant to License Agreement with ICC. No further reproduction or distribution authorized. ANY UNAUTHORIZED REPRODUCTION OR DISTRIBUTION IS A VIOLATION OF THE FEDERAL COPYRIGHT ACT AND THE LICENSE AGREEMENT, AND SUBJECT TO CIVIL AND CRIMINAL PENALTIES THEREUNDER.

with the construction of the walls and ceiling that enclose the exit stairway or exit ramp. Sections 1023.8 and 1023.9 deal with information required in the enclosure for safe exiting. Section 1023.10 provides criteria for stairways in high-rise or underground buildings where a smokeproof enclosure and pressurization of the stair tower are required (see IBC Sections 403.5.4 and 405.7.2).

Most exit stairways or ramps have an exterior door at the level of exit discharge that leads directly to the outside. From this doorway, there must be a path for exit discharge that leads to the public way; however, there are other options. Exit passageways are considered an extension of the exit enclosure. The stairway enclosure discharges into the exit passageway, which in turn leads to the outside of the building. There are limited allowances for the exit enclosure to discharge through a lobby or vestibule (see Section 1028.1, Exceptions 1 and 2). A stairway enclosure could also discharge through a horizontal exit (see Section 1028.1, Exception 3). The termination requirements are the same as stated in Section 1023.3.

It is important that an exit stairway or ramp not be used for any purpose other than as a means of egress. For example, there is a tendency to use stairway landings for storage purposes. Such a situation obstructs the path of exit travel and if the stored contents consist of combustible materials, the use of the exit stairway as part of the path for a means of egress may be jeopardized, creating a hazard to life safety. It is not the intent of these provisions to prohibit an exit stairway from being used as part of the normal building circulation system. If the tenants or building owner have security concerns that would prompt them to wish to limit stairway access, consult Section 1010.1.9.11.

It is not the intent of this provision to exclude inclined platform lifts in the enclosure for the stairway; however, it is important that when not in operation they do not block access to the exit stairway or handrails. The referenced technical standard, ASME A18.1, basically requires noncombustible elements, so there is not a fire load issue associated with the lifts. Platform lifts are an important option for providing accessibility in a building. IBC Section 1109.7 limits the use of platform lifts in new construction to mainly areas with minimal occupant loads or where elevators and ramps are impracticable. Platform lifts can be part of an accessible means of egress in limited situations (Section 1007.5). IEBC Section 410.8.3 and IBC Section 705.1.3 allow for platform lifts anywhere in existing buildings in order to gain accessibility for persons with mobility impairments. The industry is currently working on different options to address the concern that the lift may be in operation during an event that requires evacuation.

1023.2 Construction. Enclosures for *interior exit stairways* and *ramps* shall be constructed as *fire barriers* in accordance with Section 707 or *horizontal assemblies* constructed in accordance with Section 711, or both. *Interior exit stairway* and *ramp* enclosures shall have a *fire-resistance rating* of not less than 2 hours where connecting four stories or more and not less than 1 hour where connecting less than four stories. The number of stories connected by the *interior exit stairways* or *ramps* shall include any *basements*, but not any *mezzanines*. *Interior exit stairways* and *ramps* shall have a *fire-resistance rating* not less than the floor assembly penetrated, but need not exceed 2 hours.

Exceptions:

1. *Interior exit stairways* and *ramps* in Group I-3 occupancies in accordance with the provisions of Section 408.3.8.
2. *Interior exit stairways* within an *atrium* enclosed in accordance with Section 404.6.

❖ This section requires that all interior exit stairways or ramps are to be enclosed with rated walls (i.e., fire barriers) and floor/ceiling assemblies (i.e., horizontal assemblies). The fire-resistance rating required depends on the number of connected stories and the required fire-resistance rating of the penetrated floors. The minimum fire-resistance rating of an enclosure for an exit stairway or ramp is at least 1 hour. The fire-resistance rating of the enclosure must be increased to 2 hours if the stairway or ramp connects four or more stories or if it penetrates a floor system with a fire-resistance rating of 2 hours or more (see Table 602 for Type I construction). Note that the criteria are based on the number of stories connected by the stairway or ramp and not the height of the building. Therefore, a building that has three stories located entirely above the grade plane and a basement would require an enclosure with a 2-hour fire-resistance rating if the stairway or ramp connects all four stories. Where the floor construction penetrated by the enclosure has a fire-resistance rating, the enclosure must have the same minimum rating. For example, an enclosure that penetrates a 2-hour floor assembly must have a minimum fire-resistance rating of 2 hours, regardless of the number of stories the enclosure connects. The fire-resistance rating of an enclosure need never exceed 2 hours. If the floor assembly penetrated requires a minimum 3-hour fire-resistance rating, the enclosure rating is only required to be 2-hour fire-resistance rated. All linear voids at joints between fire-resistance-rated wall and floor/ceiling assemblies and where an enclosure would intersect with an exterior wall must be filled so that the integrity of the enclosure is maintained (see Section 715). The fire-resistance-rated requirements for enclosures for exit stairways and ramps are consistent with those for shaft enclosures and enclosures for exit access stairways and ramps.

The enclosure is needed because an exit stairway or ramp penetrates the floor/ceiling assemblies between the levels, thus creating a vertical opening or shaft. In cases of fire, a vertical opening may act as a chimney, causing smoke, hot gases and light-burning products to flow upward (buoyant force). If an opening

INTERNATIONAL CODE COUNCIL®
Copyright © 2015 ICC. ALL RIGHTS RESERVED. Accessed by David Dammon on Jun 21, 2017 12:30:52 PM pursuant to License Agreement with ICC. No further reproduction or distribution authorized. ANY UNAUTHORIZED REPRODUCTION OR DISTRIBUTION IS A VIOLATION OF THE FEDERAL COPYRIGHT ACT AND THE LICENSE AGREEMENT, AND SUBJECT TO CIVIL AND CRIMINAL PENALTIES THEREUNDER.

is unprotected, these products of combustion will be forced by positive pressure differentials to spread horizontally into the building spaces. There are exceptions for shaft protection around stairways and ramps that are not part of a required means of egress in IBC Section 712 or exit access stairways as permitted in Section 1019.3.

The enclosure of interior stairways or ramps with construction having a fire-resistance rating is intended to prevent the spread of fire from floor to floor. Another important purpose is to provide a safe path of travel for the building occupants and to serve as a protected means of access to the fire floor by fire department personnel. For this reason, Sections 1023.4 through 1023.6 limit the penetrations and openings permitted in the enclosure for an exit stairway or ramp.

For travel distance measurements at the exit stairways, see the commentary to Section 1017.3. While not specifically mentioned as an exception, Section 1027 for exterior exit stairways is considered to provide an equivalent level of protection to enclosed interior stairways.

Per Exception 1, because of security needs in detention facilities, one of the exit stairways is permitted to be glazed in a manner similar to atrium enclosures. Specific limitations and requirements are discussed in IBC Section 408.3.8. Exit access stairways within housing units are addressed in IBC Sections 408.5.1 and Section 1019.4 of the code.

Exception 2 is in consideration of an increased level of safety in an atrium. IBC Section 404 for atriums requires the space to be enclosed by a 1-hour passive enclosure and also protected by various active systems including fire suppression and smoke control features. The natural configuration of an atrium affords building occupants immediate views of the entire egress to the bottom of the atrium.

1023.3 Termination. *Interior exit stairways* and *ramps* shall terminate at an *exit discharge* or a *public way*.

Exception: A combination of *interior exit stairways, interior exit ramps* and *exit passageways,* constructed in accordance with Sections 1023.2, 1023.3.1 and 1024, respectively, and forming a continuous protected enclosure, shall be permitted to extend an *interior exit stairway* or *ramp* to the *exit discharge* or a *public way*.

❖ The intent of this section is to provide safety in all portions of the exit by requiring continuity of the fire protection characteristics of the enclosure for the exit stairway. Exit passageways (see Section 1024) are a continuation of the enclosure for the exit stairway. This would include, but not be limited to, the fire-resistance rating of the exit enclosure walls and the opening protection rating of the doors. While an exit passageway is most commonly found on the level of exit discharge as a means to connect a stairway enclosure to the exterior, in buildings that step back in footprint as the rise, the stairways may not be totally vertical shafts, but move out as they move down to keep the required separation distance. Exit passageways can be at any level to connect the stair towers. There are special exit signage considerations for this particular issue in Section 1013.1 (see Commentary Figure 1013.1).

Section 1028.1 would allow for an alternative for direct access to the outside via an intervening lobby or vestibule.

Horizontal exits (see Section 1026), while not providing direct access to the outside of the structure, do move occupants to another "building" by moving through a fire wall (see Sections 1026 and 1028.1, Exception 3) into a refuge area protected by fire barriers and horizontal assemblies. Horizontal exits are commonly used in hospitals and jails for a defend-in-place type of protection.

1023.3.1 Extension. Where *interior exit stairways* and *ramps* are extended to an *exit discharge* or a *public way* by an *exit passageway*, the *interior exit stairway* and *ramp* shall be separated from the *exit passageway* by a *fire barrier* constructed in accordance with Section 707 or a *horizontal assembly* constructed in accordance with Section 711, or both. The *fire-resistance rating* shall be not less than that required for the *interior exit stairway* and *ramp*. A *fire door* assembly complying with Section 716.5 shall be installed in the *fire barrier* to provide a *means of egress* from the *interior exit stairway* and *ramp* to the *exit passageway*. Openings in the *fire barrier* other than the *fire door* assembly are prohibited. Penetrations of the *fire barrier* are prohibited.

Exceptions:

1. Penetrations of the *fire barrier* in accordance with Section 1023.5 shall be permitted.
2. Separation between an *interior exit stairway* or *ramp* and the *exit passageway* extension shall not be required where there are no openings into the *exit passageway* extension.

❖ Once a person enters the enclosure surrounding an exit stairway, that same level of protection should be provided to them until they can leave the building. When an enclosure for an exit stairway connects to an exit passageway, either at the ground level or at an intermediate transition floor, the exit passageway must provide the same level of protection as the enclosure for the exit stairway, including fire-resistance of the walls, floor, ceiling and supporting construction and protection of any openings. At the junction between the enclosure for the exit stairway and the exit passageway, there must be both a rated fire barrier and a fire door. This has the additional benefit of preventing any smoke that may migrate into the exit passageway from also moving up the exit stairway or ramp. Permitted penetrations for the exit passageway are the same as those limitations set for the enclosure for the exit stairway. See Sections 1013.1 and 1025 for egress markings and signage within these types of spaces.

For the situation when an exit stairway is constructed as a smokeproof enclosure or a pressurized stairway, see Section 1023.10.1.

INTERNATIONAL CODE COUNCIL®
Copyright © 2015 ICC. ALL RIGHTS RESERVED. Accessed by David Dammon on Jun 21, 2017 12:30:52 PM pursuant to License Agreement with ICC. No further reproduction or distribution authorized. ANY UNAUTHORIZED REPRODUCTION OR DISTRIBUTION IS A VIOLATION OF THE FEDERAL COPYRIGHT ACT AND THE LICENSE AGREEMENT, AND SUBJECT TO CIVIL AND CRIMINAL PENALTIES THEREUNDER.

Exception 1—The penetrations for the exit passageway are allowed to be the same as permitted for the stairway enclosure.

Exception 2—The purpose in having a door at this interface in the existing requirement is to prevent smoke from a possible open door or other penetration in the passageway from traveling up the exit enclosure. This is prevented if there are no openings or penetrations in the exit passageway. Then the exit passageway is horizontal offset of the exit enclosure and does not propose the same hazard. Egress can proceed faster if there are no intermediate doors contained at the enclosure transitions.

1023.4 Openings. *Interior exit stairway* and *ramp* opening protectives shall be in accordance with the requirements of Section 716.

Openings in *interior exit stairways* and *ramps* other than unprotected exterior openings shall be limited to those necessary for *exit access* to the enclosure from normally occupied spaces and for egress from the enclosure.

Elevators shall not open into *interior exit stairways* and *ramps*.

❖ In order for fire doors to be effective, they must be in the closed position; therefore, the preferred arrangement is to install self-closing doors. Recognizing that operational practices often require doors to be open for an extended period of time, automatic-closing doors are permitted as long as this opening will not pose a threat to occupant safety and the doors will be self-latching. Automatic-closing devices enable the opening to be protected during a fire condition. The basic requirement for closing devices and specific requirements for automatic-closing and self-closing devices are given in NFPA 80. Automatic-closing doors that are provided at protected openings in exits are also required to close on the actuation of smoke detectors or loss of power to the smoke detectors (see Section 716.5.9.3).

The only openings that are permitted in fire-resistance-rated enclosures for exit stairways or ramps are doors that lead from normally occupied spaces into the enclosure and doors leading out of the enclosure to the outside. This restriction on openings essentially prohibits the use of windows in an exit enclosure except for those exterior windows that are not exposed to any hazards. This requirement is not intended to prohibit windows or other openings in the exterior walls of the exit enclosure. The verbiage "unprotected exterior openings" includes windows or doors not required to be protected by either IBC Section 705.8 or Section 1023.7 of the code. The only exception would be window assemblies that have been tested as wall assemblies in accordance with ASTM E119 or UL 263. The objective of this provision is to minimize the possibility of fire spreading into an enclosure and endangering the occupants or even preventing the use of the exit at a time when it is most needed. The limitation on openings applies regardless of the fire protection rating of the opening protective. The limitation on openings from normally occupied areas is intended to reduce the probability of a fire occurring in an unoccupied area, such as a storage closet, which has an opening into the stairway, thereby possibly resulting in fire spread into the stairway. Other spaces that are not normally occupied include, but are not limited to, toilet rooms, electrical/mechanical equipment rooms and janitorial closets. For connection between the vertical exit enclosure and an exit passageway, see Section 1023.3.1.

Elevators may not open into exit enclosures. The difficulty is to have elevator doors that can meet the opening protectives for a fire barrier, but still operate effectively as elevator doors. For additional information on elevator lobbies and doors, see the commentary for IBC Section 713.14, Section 1020.6 of the code and IBC Section 3006.

These opening limitations are very similar to those required for an exit passageway (see Section 1024.5).

1023.5 Penetrations. Penetrations into or through *interior exit stairways* and *ramps* are prohibited except for equipment and ductwork necessary for independent ventilation or pressurization, sprinkler piping, standpipes, electrical raceway for fire department communication systems and electrical raceway serving the *interior exit stairway* and *ramp* and terminating at a steel box not exceeding 16 square inches (0.010 m^2). Such penetrations shall be protected in accordance with Section 714. There shall not be penetrations or communication openings, whether protected or not, between adjacent *interior exit stairways* and *ramps*.

Exception: Membrane penetrations shall be permitted on the outside of the *interior exit stairway* and *ramp*. Such penetrations shall be protected in accordance with Section 714.3.2.

❖ This section specifically lists the items that are allowed to penetrate the walls and ceiling of the enclosure for the exit stairway. This is consistent for all types of enclosures for exits, including interior exit stairways or interior exit ramps and exit passageways (see Section 1024.6). In general, only portions of the building service systems that serve the enclosure are allowed to penetrate the enclosure. As indicated in the commentary to Section 1022.1, standpipe systems are commonly located in the exit stair enclosures. If two exit enclosures are adjacent to one another, there must be no penetrations between them, thereby limiting the chances of smoke being in both stairwells.

IBC Section 714 addresses through penetrations and membrane penetrations for fire-resistance-rated wall and floor/ceiling assemblies. The intent is to maintain the integrity of the enclosure for the exit access stairway. This section and Section 1023.6 are meant to work together. Penetrations in exterior walls are addressed in Section 1023.7.

The exception allows for electrical boxes, "Exit" signs or fire alarm pull stations to be installed on the outside of the enclosure, provided that the boxes are installed so that the required fire-resistance rating is not reduced (see IBC Section 714.3.2).

INTERNATIONAL CODE COUNCIL®
Copyright © 2015 ICC. ALL RIGHTS RESERVED. Accessed by David Dammon on Jun 21, 2017 12:30:52 PM pursuant to License Agreement with ICC. No further reproduction or distribution authorized. ANY UNAUTHORIZED REPRODUCTION OR DISTRIBUTION IS A VIOLATION OF THE FEDERAL COPYRIGHT ACT AND THE LICENSE AGREEMENT, AND SUBJECT TO CIVIL AND CRIMINAL PENALTIES THEREUNDER.

1023.6 Ventilation. Equipment and ductwork for *interior exit stairway* and *ramp* ventilation as permitted by Section 1023.5 shall comply with one of the following items:

1. Such equipment and ductwork shall be located exterior to the building and shall be directly connected to the *interior exit stairway* and *ramp* by ductwork enclosed in construction as required for shafts.
2. Where such equipment and ductwork is located within the *interior exit stairway* and *ramp*, the intake air shall be taken directly from the outdoors and the exhaust air shall be discharged directly to the outdoors, or such air shall be conveyed through ducts enclosed in construction as required for shafts.
3. Where located within the building, such equipment and ductwork shall be separated from the remainder of the building, including other mechanical equipment, with construction as required for shafts.

In each case, openings into the *fire-resistance-rated* construction shall be limited to those needed for maintenance and operation and shall be protected by opening protectives in accordance with Section 716 for shaft enclosures.

The *interior exit stairway* and *ramp* ventilation systems shall be independent of other building ventilation systems.

❖ The purpose of the requirements for ventilation system equipment and ductwork is to maintain the fire resistance of the enclosure for the exit stairway. The ventilation system serving the enclosure is to be independent of other building systems to prevent smoke in the enclosure from traveling to other areas of the building. This section and Section 1023.5 are meant to work together. Where ductwork penetrates the outside wall, if it is not required to be rated by Section 1023.7, then the duct does not require a fire and smoke damper. If the ductwork serving the shaft does penetrate a rated wall or rated floor/ceiling assembly, a fire and smoke damper would be required by IBC Section 717.5.3. Openings required for access to the ventilation system for maintenance and operation shall be protected in accordance with IBC Section 716.

1023.7 Interior exit stairway and ramp exterior walls. *Exterior walls* of the *interior exit stairway* or *ramp* shall comply with the requirements of Section 705 for *exterior walls*. Where nonrated walls or unprotected openings enclose the exterior of the *stairway* or *ramps* and the walls or openings are exposed by other parts of the building at an angle of less than 180 degrees (3.14 rad), the building *exterior walls* within 10 feet (3048 mm) horizontally of a nonrated wall or unprotected opening shall have a *fire-resistance rating* of not less than 1 hour. Openings within such *exterior* walls shall be protected by opening protectives having a *fire protection rating* of not less than $^3/_4$ hour. This construction shall extend vertically from the ground to a point 10 feet (3048 mm) above the topmost landing of the *stairway* or *ramp*, or to the roof line, whichever is lower.

❖ This section does not require exterior walls of an enclosure for an exit stairway or ramp to have the same fire-resistance rating as the interior walls. IBC Table 602 and IBC Section 705 establish when exterior walls are required to be rated and openings limited due to adjacent buildings or lot lines. This exposure is different from exterior load-bearing walls that are required to be rated because of the type of construction per IBC Table 601. What is unique to exterior walls at exit stairways is the need to stop fires from burning through an exterior wall adjacent to the enclosure, which may then jeopardize the occupant's ability to continue to use that exit stairway. Essentially, there are two alternatives where an exposure hazard exists: 1. Provide protection to the stairway by having a fire-resistance rating on its exterior wall; or 2. Provide a fire-resistance rating to the walls adjacent to the stairway. The ratings apply for a distance of 10 feet (3048 mm) measured horizontally and vertically from the stairway enclosure where those walls are at an angle of less than 180 degrees (3.14 rad) from the exterior wall portion of the enclosure [see Condition 1 in Commentary Figure 1023.7(1)]. When the adjacent exterior wall is protected in lieu of the stairway enclosure wall, the protection is to extend from the ground to a level of 10 feet (3048 mm) above the highest landing of the stairway. However, the protection is not required to extend beyond the normal roof line of the building.

The 180-degree (3.14 rad) angle criterion is based on the scenario where the exterior wall of the stair enclosure is in the same plane and flush with the exterior wall of the building [see Conditions 2 and 3 in Commentary Figure 1023.7(1)]. In this scenario, heat or fire would need to travel 180 degrees (3.14 rad) around in order to impinge on the stair. Based on studies of existing buildings, this 180-degree (3.14 rad) spread of fire does not appear to be a problem. This criterion is only applicable when the angle between the walls is 180 degrees (3.14 rad) or less.

As the fire exposure on the exterior is different than can be expected on the interior, the fire-resistance rating of the exterior wall is not required to exceed 1 hour, regardless of whether it is the stairway enclosure wall or the adjacent exterior wall, unless the exterior wall is required by other sections of the code to have a higher fire-resistance rating (see IBC Tables 601 and 602). The fire protection rating on any openings in the exterior wall of a stairway enclosure or adjacent exterior wall within 180 degrees (3.14 rad) is to be a minimum of $^3/_4$ hour [see Commentary Figure 1023.7(2)].

In a situation where the upper levels are smaller than lower levels, an interior stairway can end up having an exterior wall when it moves above the roof of the lower levels. In this situation, the question is the rating requirements for the exterior wall of the stairway over the roof. Therefore, the exterior wall of the stairway must meet the vertical opening provisions in IBC Section 705.8.6.

INTERNATIONAL CODE COUNCIL®
Copyright © 2015 ICC. ALL RIGHTS RESERVED. Accessed by David Dammon on Jun 21, 2017 12:30:52 PM pursuant to License Agreement with ICC. No further reproduction or distribution authorized. ANY UNAUTHORIZED REPRODUCTION OR DISTRIBUTION IS A VIOLATION OF THE FEDERAL COPYRIGHT ACT AND THE LICENSE AGREEMENT, AND SUBJECT TO CIVIL AND CRIMINAL PENALTIES THEREUNDER.

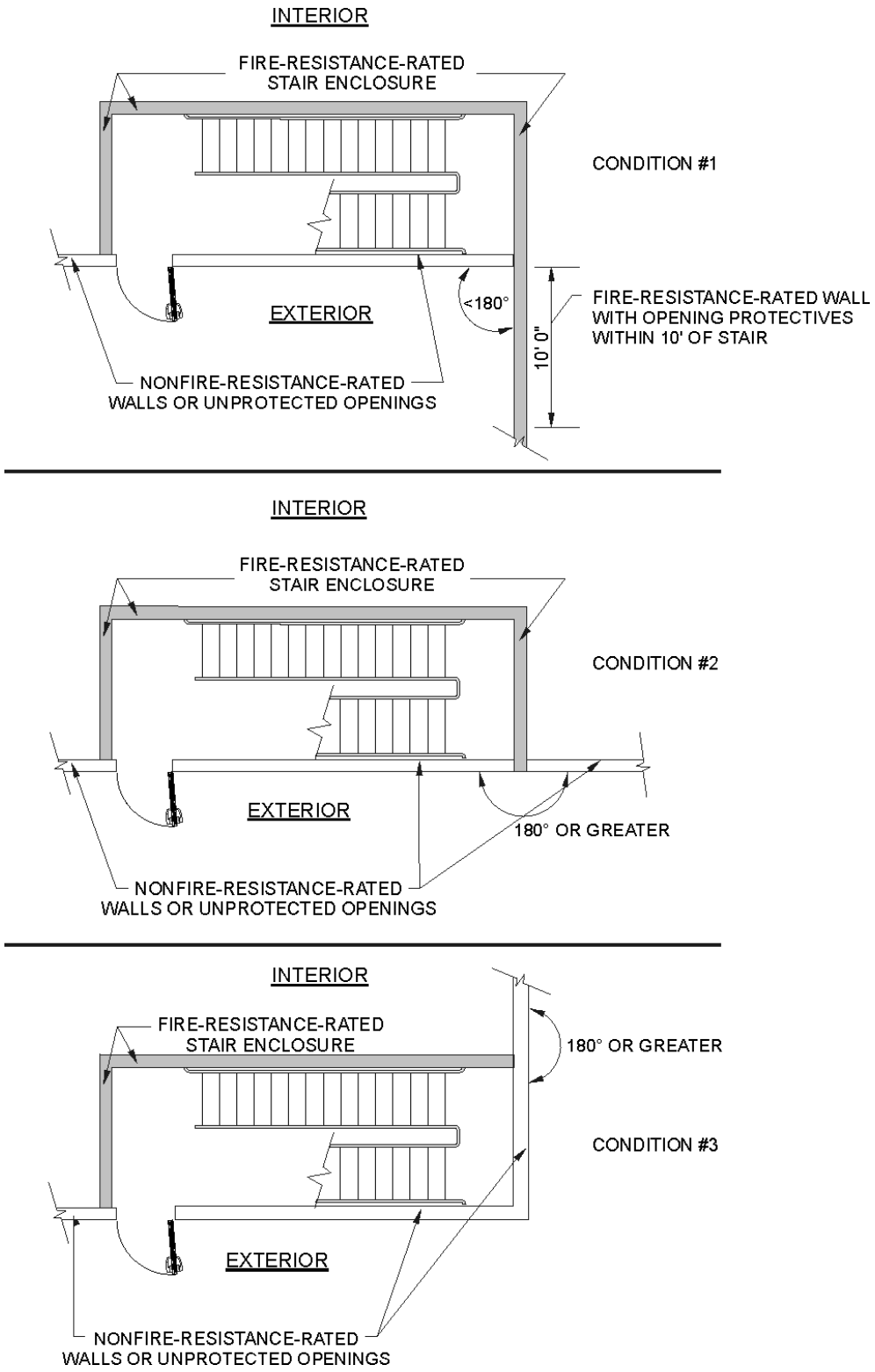

For SI: 1 foot = 304.8 mm, 1 degree = 0.01745 rad.

Figure 1023.7(1)
EXAMPLES OF EXTERIOR WALL PROTECTIVES

INTERNATIONAL CODE COUNCIL®
Copyright © 2015 ICC. ALL RIGHTS RESERVED. Accessed by David Dammon on Jun 21, 2017 12:30:52 PM pursuant to License Agreement with ICC. No further reproduction or distribution authorized. ANY UNAUTHORIZED REPRODUCTION OR DISTRIBUTION IS A VIOLATION OF THE FEDERAL COPYRIGHT ACT AND THE LICENSE AGREEMENT, AND SUBJECT TO CIVIL AND CRIMINAL PENALTIES THEREUNDER.

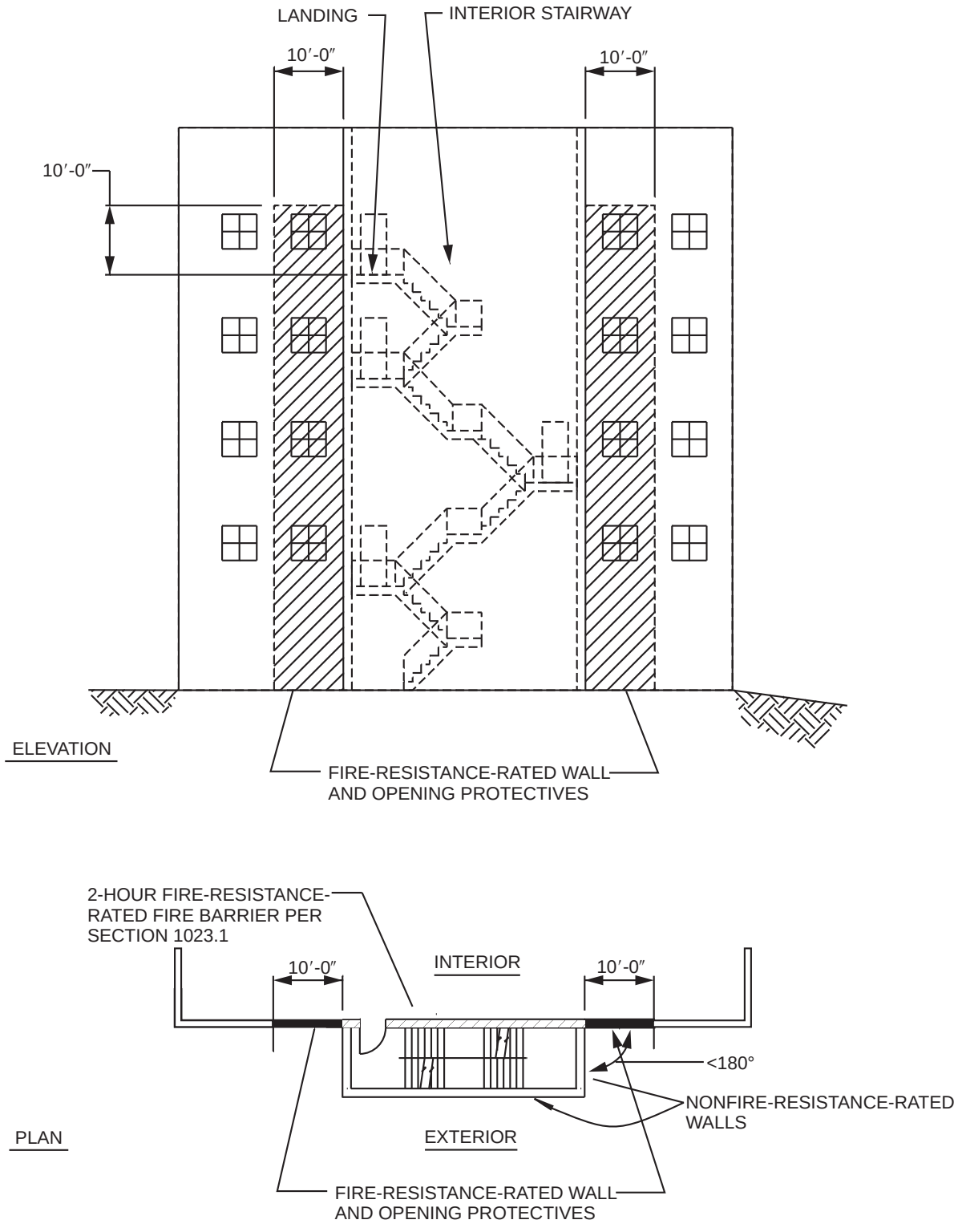

For SI: 1 foot = 304.8 mm, 1 degree = 0.01745 rad.

Figure 1023.7(2)
EXTERIOR WALL PROTECTION

INTERNATIONAL CODE COUNCIL®
Copyright © 2015 ICC. ALL RIGHTS RESERVED. Accessed by David Dammon on Jun 21, 2017 12:30:52 PM pursuant to License Agreement with ICC. No further reproduction or distribution authorized. ANY UNAUTHORIZED REPRODUCTION OR DISTRIBUTION IS A VIOLATION OF THE FEDERAL COPYRIGHT ACT AND THE LICENSE AGREEMENT, AND SUBJECT TO CIVIL AND CRIMINAL PENALTIES THEREUNDER.

1023.8 Discharge identification. An *interior exit stairway* and *ramp* shall not continue below its *level of exit discharge* unless an *approved* barrier is provided at the *level of exit discharge* to prevent persons from unintentionally continuing into levels below. Directional exit signs shall be provided as specified in Section 1013.

❖ So that building occupants using an exit stairway during an emergency situation will be prevented from going past the level of exit discharge, the run of the stairway is to be interrupted by a partition, door, gate or other approved means. These devices help the users of the stairway to recognize when they have reached the point that is the level of exit discharge. Exit signs, including raised letters and braille, are to be provided for occupant guidance at the door leading to the way out (i.e., directly to the exterior, or via an exit passageway, lobby or vestibule). Furthermore, signs are to be placed at each floor landing in all interior exit stairways connecting more than three floor levels, designating the level or story of the landings in accordance with Section 1023.9.

The code does not specify the type of material or construction of the barrier used to identify the level of exit discharge. The key issues to be considered in the selection and approval of the type of barrier to be used are: 1. Whether the barrier provides a visible and physical means of alerting occupants who are exiting under emergency conditions that they have reached the level of exit discharge; and 2. Whether the barrier is constructed of materials that are permitted by the construction type of the building. In an emergency situation, some occupants are likely to come in contact with the barrier during exiting before realizing that they are at the level of exit discharge. Therefore, the barrier should be constructed in a manner that is substantial enough to withstand the anticipated physical contact, such as pushing or shoving. It would be reasonable, as a minimum, to design the barrier to withstand the structural load requirements of IBC Section 1607.5 for interior walls and partitions. The barrier could be opaque (such as gypsum wallboard and stud framing) or not (such as a wire grid-type material).

The use of signage only or relatively insubstantial barriers, such as ropes or chains strung across the opening, is typically not sufficient to prevent occupants from attempting to continue past the level of exit discharge during an emergency.

Commentary Figure 1023.8 is an example of one method of discharge identification.

1023.9 Stairway identification signs. A sign shall be provided at each floor landing in an *interior exit stairway* and *ramp* connecting more than three stories designating the floor level, the terminus of the top and bottom of the *interior exit stairway* and *ramp* and the identification of the *stairway* or *ramp*. The signage shall also state the story of, and the direction to, the *exit discharge* and the availability of roof access from the *interior exit stairway* and *ramp* for the fire department. The sign shall be located 5 feet (1524 mm) above the floor landing in a position that is readily visible when the doors are in the open and closed positions. In addition to the *stairway* identification sign, a floor-level sign in visual characters, raised characters and braille complying with *ICC A117.1* shall be located at each floor-level landing adjacent to



Figure 1023.8
EXAMPLE OF A STAIRWAY BARRIER AT THE LEVEL OF EXIT DISCHARGE

INTERNATIONAL CODE COUNCIL®
Copyright © 2015 ICC. ALL RIGHTS RESERVED. Accessed by David Dammon on Jun 21, 2017 12:30:52 PM pursuant to License Agreement with ICC. No further reproduction or distribution authorized. ANY UNAUTHORIZED REPRODUCTION OR DISTRIBUTION IS A VIOLATION OF THE FEDERAL COPYRIGHT ACT AND THE LICENSE AGREEMENT, AND SUBJECT TO CIVIL AND CRIMINAL PENALTIES THEREUNDER.

the door leading from the *interior exit stairway* and *ramp* into the *corridor* to identify the floor level.

❖ This section discusses two distinct sign requirements that have totally different purposes.

Signs are to be placed at each floor landing in all exit stairways connecting more than three stories. The signs are to designate the level or story of the landings above or below the level of exit discharge. The purpose is to inform the occupants of their location with respect to the level of exit discharge as they use the stairway to leave the building. More importantly, it allows the fire service to locate and gain quick access to the fire floor. At each level, the direction to the exit discharge is required to be indicated. The identification of the level that is the exit discharge is also to be indicated at each level. The identification of the roof access availability is for the fire department (see Commentary Figure 1023.9.1). Roof access is required by Section 1011.13. For visibility, the signs are required to be located approximately 5 feet (1524 mm) above the floor surface and to be visible when the stairway door is open. The need to designate levels remaining to reach the level of exit discharge may mean that the numbering is other than the normal designation used by building management. For example, a designation of P1, P2, P3, etc., would not be acceptable for stairways in the basement parking garage, since in themselves they do not designate the floor level below the level of exit discharge.

To aid people with vision impairments, the floor designation must also be available in visual and raised letters and braille at each door. The intent is to let persons with vision impairments be able to find out what floor they are on without leaving the stairway enclosure. Visual and raised letters and braille signage indicating the door leading to the exterior is covered in Section 1013.4.



Figure 1023.9.1
STAIRWAY IDENTIFICATION SIGN

1023.9.1 Signage requirements. *Stairway* identification signs shall comply with all of the following requirements:

1. The signs shall be a minimum size of 18 inches (457 mm) by 12 inches (305 mm).
2. The letters designating the identification of the *interior exit stairway* and *ramp* shall be not less than $1^1/_2$ inches (38 mm) in height.
3. The number designating the floor level shall be not less than 5 inches (127 mm) in height and located in the center of the sign.
4. Other lettering and numbers shall be not less than 1 inch (25 mm) in height.
5. Characters and their background shall have a nonglare finish. Characters shall contrast with their background, with either light characters on a dark background or dark characters on a light background.
6. Where signs required by Section 1023.9 are installed in the *interior exit stairways* and *ramps* of buildings subject to Section 1025, the signs shall be made of the same materials as required by Section 1025.4.

❖ The requirements for stairway identification signage will provide for a consistent approach. The intent is to make signs visible and immediately recognizable to occupants and emergency responders using the stairway (see Commentary Figure 1023.9.1).

In addition, if the building is a high-rise and luminous egress path markings are required (see Section 1025.1), the stairway identification signage must also be self-luminous or photoluminescent. In order to also meet the contrast requirements in Item 5, typically the sign will have dark letters on a glow-in-the-dark background.

1023.10 Elevator lobby identification signs. At landings in *interior exit stairways* where two or more doors lead to the floor level, any door with direct access to an enclosed elevator lobby shall be identified by signage located on the door or directly adjacent to the door stating "Elevator Lobby." Signage shall be in accordance with Section 1023.9.1, Items 4, 5 and 6.

❖ This section is mainly related to fire service access elevators required in IBC Section 403.6.1 for a building with an occupied floor more than 120 feet (3048 mm) above the street. The elevator lobby is required to have direct access to an exit stairway (see IBC Section 3007.6.1). In addition, that same exit enclosure has to have access to the floor without going back through the elevator lobby (see IBC Section 3007.9.1). This leads to two doors at each floor landing. Elevator lobby signs identify the correct door though which fire fighters should access the floor so that lobby smoke protection is maintained.

Since typically the fire service access elevators will use the same lobby as the occupant evacuation elevators (when provided), this signage would effectively be

INTERNATIONAL CODE COUNCIL®
Copyright © 2015 ICC. ALL RIGHTS RESERVED. Accessed by David Dammon on Jun 21, 2017 12:30:52 PM pursuant to License Agreement with ICC. No further reproduction or distribution authorized. ANY UNAUTHORIZED REPRODUCTION OR DISTRIBUTION IS A VIOLATION OF THE FEDERAL COPYRIGHT ACT AND THE LICENSE AGREEMENT, AND SUBJECT TO CIVIL AND CRIMINAL PENALTIES THEREUNDER.

required for the doors in the stairway enclosure that lead to occupant evacuation elevator lobbies as well.

1023.11 Smokeproof enclosures. Where required by Section 403.5.4 or 405.7.2, *interior exit stairways* and *ramps* shall be *smokeproof enclosures* in accordance with Section 909.20.

❖ While smokeproof enclosures and pressurized stairways for exiting can, at the designer's option, be used in buildings of any occupancy, height or area, this section specifically requires smokeproof enclosures or pressurized stairways to be provided when either of two conditions occur.

The first condition requires all exit stairways in high-rise buildings [i.e., buildings with floor levels higher than 75 feet (22 860 mm) above the level of exit discharge (see IBC Section 403.5.4)] to be smokeproof enclosures or pressurized stairways. The reason for this provision is that in very tall buildings, often during fire emergencies, total and immediate evacuation of the occupants cannot be readily accomplished. In such situations, exit stairways become places of safety for the occupants and must be adequately protected with smokeproof enclosures or pressurization to provide a safe egress environment. In order to provide this safe environment, the enclosure must be constructed to resist the migration of smoke caused by the "stack effect." Stack effect occurs in tall enclosures such as chimneys, when a fluid such as smoke, which is less dense than the ambient air, is introduced into the enclosure. The smoke will rise because of the effects of buoyancy and will induce additional flow into the enclosure through openings of any size at the lower levels.

The second condition applies for underground buildings [i.e., when an occupiable floor level is located more than 30 feet (9144 mm) below the level of exit discharge (see IBC Section 405.7.2)]. Stairways serving those levels are also required to be protected by smokeproof enclosures or pressurization because underground portions of a building present unique problems in providing not only for life safety but also access for fire-fighting purposes. The choice of a 30-foot (9144 mm) threshold for this requirement is intended to provide a reasonable limitation on vertical travel distance before the requirement applies.

Detailed system requirements for a smokeproof enclosure or pressurization are in Section 909.20. Note that IBC Sections 403 and 405 each have exceptions for specific building types that are not to be regulated by those sections. Likewise, the requirements of this section do not apply to buildings identified in those exceptions.

1023.11.1 Termination and extension. A *smokeproof enclosure* shall terminate at an *exit discharge* or a *public way*. The *smokeproof enclosure* shall be permitted to be extended by an *exit passageway* in accordance with Section 1023.3. The *exit passageway* shall be without openings other than the *fire door assembly* required by Section 1023.3.1 and those necessary for egress from the *exit passageway*. The *exit passageway* shall be separated from the remainder of the building by 2-hour *fire barriers* constructed in accordance with Section 707 or *horizontal assemblies* constructed in accordance with Section 711, or both.

Exceptions:

1. Openings in the *exit passageway* serving a *smokeproof enclosure* are permitted where the *exit passageway* is protected and pressurized in the same manner as the *smokeproof enclosure*, and openings are protected as required for access from other floors.
2. The *fire barrier* separating the *smokeproof enclosure* from the *exit passageway* is not required, provided the *exit passageway* is protected and pressurized in the same manner as the *smokeproof enclosure.*
3. A *smokeproof enclosure* shall be permitted to egress through areas on the *level of exit discharge* or vestibules as permitted by Section 1028.

❖ The walls forming the smokeproof enclosure, which includes the stairway shaft and the vestibules, must be fire barriers having a fire-resistance rating of at least 2 hours. This level of fire endurance is specified because exit stairways in high-rise buildings serve as principal components of the egress system and as the source of fire service access to the fire floor. This supersedes any allowed reduction of enclosure rating, even if the stair from the level that is more than 30 feet (9144 mm) below exit discharge connects three stories or less. A pressurized stairway is a special case of a smokeproof enclosure; therefore, the requirements would be the same.

The first exception applies to openings in the exit passageway that are permitted, provided the exit passageway is protected and pressurized. If the exit stairway enclosure is connected to an exit passageway, Exception 2 allows the elimination of a door between, since this would interfere with the pressurization of the stairway and passageway as a combined exit system. In accordance with Exception 3, 50 percent of the stairways in smokeproof enclosures or pressurized stairways can use the exit discharge exceptions in Section 1028 to egress through a lobby or vestibule.

1023.11.2 Enclosure access. Access to the *stairway* or *ramp* within a *smokeproof enclosure* shall be by way of a vestibule or an open exterior balcony.

Exception: Access is not required by way of a vestibule or exterior balcony for *stairways* and *ramps* using the pressurization alternative complying with Section 909.20.5.

❖ See Commentary Figures 1023.11.2(1) and 1023.11.2(2) for illustrations of access to the smokeproof stairway or ramp by way of a vestibule or an exterior balcony. The purpose of this requirement is to keep the enclosure clear of smoke. Where a pressurized stairway is used, these elements are not necessary.

INTERNATIONAL CODE COUNCIL®
Copyright © 2015 ICC. ALL RIGHTS RESERVED. Accessed by David Dammon on Jun 21, 2017 12:30:52 PM pursuant to License Agreement with ICC. No further reproduction or distribution authorized. ANY UNAUTHORIZED REPRODUCTION OR DISTRIBUTION IS A VIOLATION OF THE FEDERAL COPYRIGHT ACT AND THE LICENSE AGREEMENT, AND SUBJECT TO CIVIL AND CRIMINAL PENALTIES THEREUNDER.

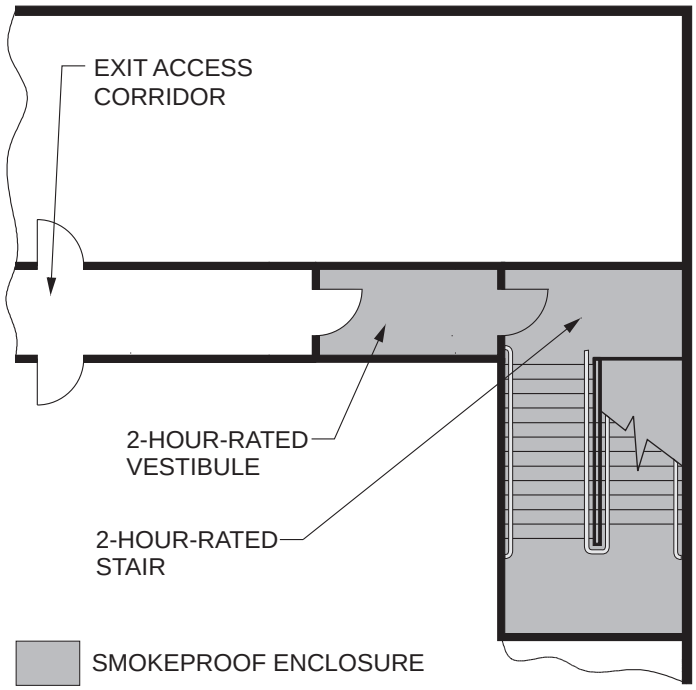

Figure 1023.11.2(1)
TYPICAL SMOKEPROOF ENCLOSURE ENTRY

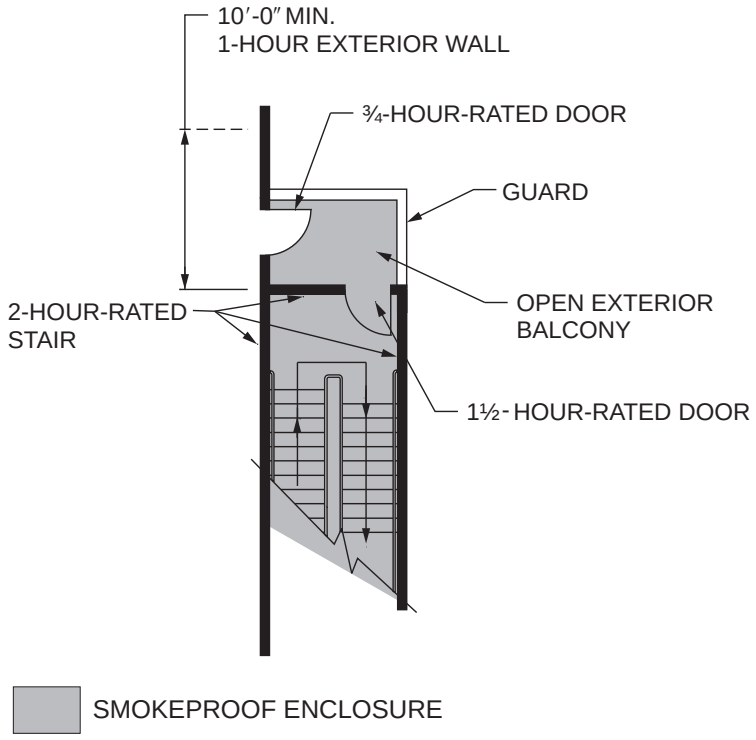

For SI: 1 foot = 304.8 mm.

Figure 1023.11.2(2)
TYPICAL SMOKEPROOF ENCLOSURE WITH OPEN BALCONY ARRANGEMENT

INTERNATIONAL CODE COUNCIL®
Copyright © 2015 ICC. ALL RIGHTS RESERVED. Accessed by David Dammon on Jun 21, 2017 12:30:52 PM pursuant to License Agreement with ICC. No further reproduction or distribution authorized. ANY UNAUTHORIZED REPRODUCTION OR DISTRIBUTION IS A VIOLATION OF THE FEDERAL COPYRIGHT ACT AND THE LICENSE AGREEMENT, AND SUBJECT TO CIVIL AND CRIMINAL PENALTIES THEREUNDER.

SECTION 1024
EXIT PASSAGEWAYS

1024.1 Exit passageways. *Exit passageways* serving as an exit component in a *means of egress* system shall comply with the requirements of this section. An *exit passageway* shall not be used for any purpose other than as a *means of egress* and a *circulation path*.

❖ This section provides acceptable methods of continuing the protected path of travel for building occupants. The building designer or owner is given different options for achieving this protected path of travel. See Commentary Figure 1024.1 for an illustration of an exit passageway arrangement. In the case of office buildings or similar structures, the exit stairways are often located at the central core or in line with the centrally located exit access corridors. Exit passageways may be used to connect the exit stair to the exterior exit door or to connect enclosures for exit stairways that are not vertically continuous. Such an arrangement provides great flexibility in the design use of the building. Without an exit passageway at the grade floor or the level of exit discharge, the occupants of the upper floors or basement levels would have to leave the safety of the exit stairway to travel to the exterior doors. Such a reduction of protection is not acceptable (see Section 1028 for exit discharge alternatives).

Exit passageways may also be used on their own in locations not connected with an enclosure for an exit stairway. The exit passageway is often used as a protected horizontal exit path, such as in a mall or unlimited area building. Sometimes on large floor plans, an exit passageway may be used to extend an exit into areas that would not otherwise be able to meet the travel distance requirements. Like exit stairways, there is no travel distance limitation within an exit passageway.

1024.2 Width. The required capacity of *exit passageways* shall be determined as specified in Section 1005.1 but the minimum width shall be not less than 44 inches (1118 mm), except that *exit passageways* serving an occupant load of less than 50 shall be not less than 36 inches (914 mm) in width. The minimum width or required capacity of *exit passageways* shall be unobstructed.

Exception: Encroachments complying with Section 1005.7.

❖ The width of an exit passageway is to be determined in accordance with Section 1005.1, based on the number of occupants served in the same manner as for corridors. The greater of the minimum required width or the width determined based on occupancy is to be used. In situations where the exit passageway also serves as an exit access corridor for the first floor, the corridor width must comply with the stricter requirement.

A cross reference back to Section 1005.7 from the exceptions for encroachments in the required width in aisles (see Section 1011.1), corridors (see Section 1020.3), exit passageways (see Section 1024.2) and exit courts (see Section 1028.4.1) reinforces the fact that the protrusion limits provision is generally applicable for these types of confined routes.

1024.3 Construction. *Exit passageway* enclosures shall have walls, floors and ceilings of not less than a 1-hour *fire-resistance rating*, and not less than that required for any connecting *interior exit stairway* or *ramp*. *Exit passageways* shall be constructed as *fire barriers* in accordance with Section 707 or *horizontal assemblies* constructed in accordance with Section 711, or both.

❖ The entire exit passageway enclosure is to be fire-resistance rated as specified. The floors and ceilings are required to be rated in addition to the walls. When used separately, a minimum 1-hour fire-resistance

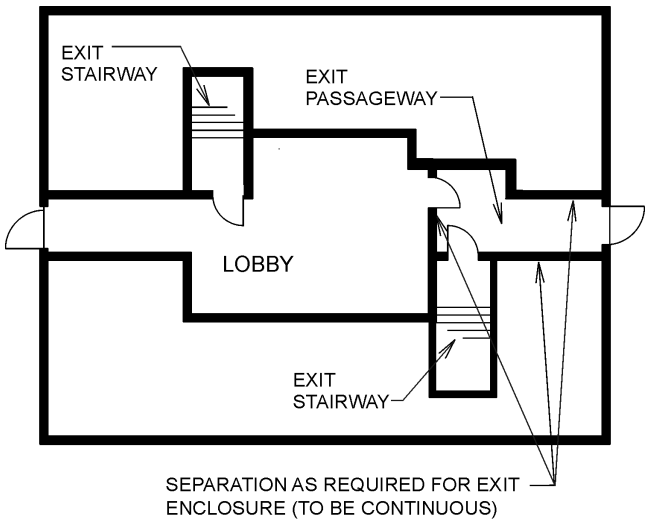

Figure 1024.1
ARRANGEMENT FOR LOBBY AND PASSAGEWAY

INTERNATIONAL CODE COUNCIL®
Copyright © 2015 ICC. ALL RIGHTS RESERVED. Accessed by David Dammon on Jun 21, 2017 12:30:52 PM pursuant to License Agreement with ICC. No further reproduction or distribution authorized. ANY UNAUTHORIZED REPRODUCTION OR DISTRIBUTION IS A VIOLATION OF THE FEDERAL COPYRIGHT ACT AND THE LICENSE AGREEMENT, AND SUBJECT TO CIVIL AND CRIMINAL PENALTIES THEREUNDER.

rating is required. Where extending an enclosure for an exit stairway, the rating must not be less than the enclosure for the exit stairway so that the degree of protection is kept at the same level. Remember that if the exit passageway extends over a lower level, such as a basement, all supporting construction is to have the same fire-resistance rating as the elements supported in accordance with the continuity requirements for fire barriers and horizontal assemblies (see IBC Sections 707.5 and 711.2.3). The continuity requirements would also be a concern for the rated ceiling of the exit passageway. An alternative for the ceiling of the exit passageway could be a top-of-shaft enclosure (see IBC Section 713.12).

1024.4 Termination. *Exit passageways* on the *level of exit discharge* shall terminate at an *exit discharge*. *Exit passageways* on other levels shall terminate at an *exit*.

❖ This is consistent with the exit continuity and enclosure requirements in Section 1023.3. Section 1023.3 has an exception that allows for combinations of interior exit stairways and ramps with the exit passageway. The intent of this section is to provide safety in all portions of the exit by requiring continuity of the fire protection characteristics of the enclosure for the exit stairway in combination with an exit passageway. This would include, but not be limited to, the fire-resistance rating of the enclosure walls for the exit stairways and the opening protection rating of the doors. When an exit passageway is supported by the structure, the supporting construction must be fire-resistance rated equal to the walls and floors of the passageway being supported.

Section 1028.1, Exceptions 1 and 2, allow for an alternative for direct access to the outside via an intervening lobby or vestibule.

Horizontal exits, while not providing direct access to the outside of the structure, do move occupants to another "building" by moving through a fire wall (see Sections 1026 and 1028.1, Exception 3) into a refuge area protected by fire barriers and horizontal assemblies. Horizontal exits are commonly used in hospitals and jails for a defend-in-place type of protection.

An exit passageway may be used to move between vertical enclosures for exit stairways. This may occur when a building is shaped like a wedding cake, so the stairway towers move outward as the building gets larger toward grade level. If this situation happens, it is very important to let occupants know how to proceed. See Section 1013.1 for exit signage requirements for within the exit passageways.

1024.5 Openings. *Exit passageway* opening protectives shall be in accordance with the requirements of Section 716.

Except as permitted in Section 402.8.7, openings in *exit passageways* other than unprotected exterior openings shall be limited to those necessary for *exit access* to the *exit passageway* from normally occupied spaces and for egress from the *exit passageway*.

Where an *interior exit stairway* or *ramp* is extended to an *exit discharge* or a *public way* by an *exit passageway*, the *exit passageway* shall comply with Section 1023.3.1.

Elevators shall not open into an *exit passageway*.

❖ In order for fire doors to be effective, they must be in the closed position; therefore, the preferred arrangement is to install self-closing doors. Recognizing that operational practices often require doors to be open for an extended period of time, automatic-closing doors are permitted as long as this opening will not pose a threat to occupant safety and the doors will be self-latching. Automatic-closing devices enable the opening to be protected during a fire condition. The basic requirement for closing devices and specific requirements for automatic-closing and self-closing devices are given in NFPA 80. Automatic-closing doors that protect openings into exits are also required to close on the actuation of smoke detectors or loss of power to the smoke detectors (see Section 716.5.9.3).

The requirements for exit passageways are very similar to those required for enclosures for interior exit stairways (see Section 1023.4). The only openings that are permitted in fire-resistance-rated exit passageways are doors that lead from normally occupied spaces, from the enclosure for the exit stairway and to the outside. This restriction on openings essentially prohibits the use of windows in an exit passageway except for those exterior windows that are not exposed to any hazards. This requirement is not intended to prohibit windows or other openings in the exterior walls of the exit enclosure. The verbiage "unprotected exterior openings" includes windows or doors not required to be protected by either IBC Section 705.8 or Section 1023.7 of the code. The only exception would be window assemblies that have been tested as wall assemblies in accordance with ASTM E119 and UL 263. The objective of this provision is to minimize the possibility of fire spreading into an exit passageway and endangering the occupants or even preventing the use of the exit at a time when it is most needed. The limitation on openings applies regardless of the fire protection rating of the opening protective. The limitation on openings from normally occupied areas is intended to reduce the probability of a fire occurring in an unoccupied area, such as a storage closet, that has an opening into the exit passageway, thereby resulting in smoke spreading into the exit passageway. Other spaces that are not normally occupied include, but are not limited to, toilet rooms, electrical/mechanical equipment rooms and janitorial closets. Note that exit passageways prohibit elevators from opening directly into the passageway. There are some exceptions for these unoccupied spaces in exit passageways in covered malls (see IBC Section 402.4.6).

The third paragraph addresses when the vertical enclosure for an exit stairway or ramp transitions to

INTERNATIONAL CODE COUNCIL®
Copyright © 2015 ICC. ALL RIGHTS RESERVED. Accessed by David Dammon on Jun 21, 2017 12:30:52 PM pursuant to License Agreement with ICC. No further reproduction or distribution authorized. ANY UNAUTHORIZED REPRODUCTION OR DISTRIBUTION IS A VIOLATION OF THE FEDERAL COPYRIGHT ACT AND THE LICENSE AGREEMENT, AND SUBJECT TO CIVIL AND CRIMINAL PENALTIES THEREUNDER.

the exit passageway. While the exit passageway is an extension of the protection offered by the vertical exit, there must still be a door (i.e., opening protective) between the bottom of the stairway or ramp enclosure and the exit passageway. This is to prevent any smoke that may migrate into the exit passageway from also moving up the exit stairway or ramp. This door is not required if the exit stairway and exit passageway are protected by pressurization (see Section 1023.10.1).

Elevators may not open into exit passageways. The difficulty is to have elevator doors that can meet the opening protectives for a fire barrier, but still operate effectively. For additional information on elevator lobbies and doors, see the commentary to IBC Sections 713.14 and 1020.6.

These opening limitations are very similar to those required for an exit enclosure (see Section 1023.3).

1024.6 Penetrations. Penetrations into or through an *exit passageway* are prohibited except for equipment and ductwork necessary for independent pressurization, sprinkler piping, standpipes, electrical raceway for fire department communication and electrical raceway serving the *exit passageway* and terminating at a steel box not exceeding 16 square inches (0.010 m2). Such penetrations shall be protected in accordance with Section 714. There shall not be penetrations or communicating openings, whether protected or not, between adjacent *exit passageways*.

Exception: Membrane penetrations shall be permitted on the outside of the *exit passageway*. Such penetrations shall be protected in accordance with Section 714.3.2.

❖ This section specifically lists the items that are allowed to penetrate an exit passageway. This is consistent for all types of exit enclosures, including enclosures for exit stairways or ramps (see Section 1023.5) and exit passageways. In general, only portions of the building service systems that serve the exit passageways are allowed to penetrate the exit passageway. IBC Section 714 addresses through penetrations and membrane penetrations for fire-resistance-rated wall and floor/ceiling assemblies. The intent is to maintain the integrity of the enclosure for the exit access stairway. If the ductwork serving the exit passageway penetrates a rated wall or floor/ceiling assembly, a fire and smoke damper is required by IBC Section 717.5.3. This requirement is not intended to prohibit windows in the exterior walls of exit passageways that are not required to be rated.

The exception allows for electrical boxes or fire alarm pull stations to be installed on the outside of the enclosure, provided that the boxes are installed so that the required fire-resistance rating is not reduced (see IBC Section 714.3.2).

1024.7 Ventilation. Equipment and ductwork for *exit passageway* ventilation as permitted by Section 1024.6 shall comply with one of the following:

1. The equipment and ductwork shall be located exterior to the building and shall be directly connected to the *exit passageway* by ductwork enclosed in construction as required for shafts.
2. Where the equipment and ductwork is located within the *exit passageway*, the intake air shall be taken directly from the outdoors and the exhaust air shall be discharged directly to the outdoors, or the air shall be conveyed through ducts enclosed in construction as required for shafts.
3. Where located within the building, the equipment and ductwork shall be separated from the remainder of the building, including other mechanical equipment, with construction as required for shafts.

In each case, openings into the fire-resistance-rated construction shall be limited to those needed for maintenance and operation and shall be protected by opening protectives in accordance with Section 716 for shaft enclosures.

Exit passageway ventilation systems shall be independent of other building ventilation systems.

❖ As a continuation of an exit stairway enclosure, an exit passageway has the same considerations for protection. While an exit passageway may look like a regular hallway, it is important that it be maintained as free of smoke as the exit stairway. See the commentary to Section 1023.6.

SECTION 1025
LUMINOUS EGRESS PATH MARKINGS

1025.1 General. *Approved* luminous egress path markings delineating the exit path shall be provided in *high-rise buildings* of Group A, B, E, I, M, and R-1 occupancies in accordance with Sections 1025.1 through 1025.5.

Exception: Luminous egress path markings shall not be required on the *level of exit discharge* in lobbies that serve as part of the exit path in accordance with Section 1028.1, Exception 1.

❖ Improved safety for individuals negotiating stairs during egress of a high-rise building is provided by improving the visibility of stair treads and handrails under emergency conditions. A second source of emergency power for exit illumination, exit signs and stair shaft pressurization systems in smokeproof enclosures is currently mandated for high-rise buildings. In the event of an emergency that disconnects utility power, the emergency power source should engage, causing the stair shaft to be illuminated and kept smoke free by the pressurization system. Unfortunately, such systems can fail under demand conditions. The provisions of Section 1025 add an additional level of safety to the egress path by requiring the installation of photoluminescent or self-illuminating marking systems that do not require electrical power and its associated wiring and circuits. An additional means for ensuring that occupants can safely egress a building via exit stairways is now available even if the emergency power supply and system fails to operate. The groups indicated have a high antici-

INTERNATIONAL CODE COUNCIL®
Copyright © 2015 ICC. ALL RIGHTS RESERVED. Accessed by David Dammon on Jun 21, 2017 12:30:52 PM pursuant to License Agreement with ICC. No further reproduction or distribution authorized. ANY UNAUTHORIZED REPRODUCTION OR DISTRIBUTION IS A VIOLATION OF THE FEDERAL COPYRIGHT ACT AND THE LICENSE AGREEMENT, AND SUBJECT TO CIVIL AND CRIMINAL PENALTIES THEREUNDER.

pated occupant load or occupants may not be as familiar with the space. Note that the provisions only require these markings within the enclosure for the exit stairway, exit ramp and the exit passageway used for enclosure continuation. The markings are not required before reaching the exit (i.e., exit access) or after leaving the exit (i.e., exit discharge).

The exception indicates that if the exit stairway enclosure discharges through the lobby (see Section 1028.1, Exception 1), the egress markings would not be required outside the stairway enclosure for the portion from the stairway enclosure to the door leading to the outside. If the exit stairway discharges through an exit passageway, the exit path markings must continue to the door leading to the outside. The current text is silent for the options of vestibules and horizontal exits, but since Sections 1025.1 through 1025.5 only address within the enclosure for the exit, and not the exit discharge, exit path markings in the vestibule or after the horizontal exit are not required.

1025.2 Markings within exit components. Egress path markings shall be provided in *interior exit stairways*, *interior exit ramps* and *exit passageways*, in accordance with Sections 1025.2.1 through 1025.2.6.

❖ Luminous egress path markings are required inside the enclosure for exit stairways or ramps for all floors. If the stairway connects to an exit passageway as part of the travel down to the level of exit discharge or on the level of exit discharge, the path markings must also be continued in the exit passageway.

The subsections include marking the tread nosings, the surrounding edges of landings and any exit passageways, handrails and any protruding objects within the protected enclosure.

All exit path markings are required to be solid and continuous stripes. A key requirement for marking systems is that their design must be uniform. The placement and dimensions of markings must be consistent along the entire exit stairway. By specifying a standard marking dimension, the requirements will ensure that the marking is visible during dark conditions and provides consistent and standard application in the design and enforcement of exit path markings. Markings installed on stair steps, perimeter demarcation lines and handrails must have a minimum width of 1 inch (25 mm). For stair steps and perimeter demarcation lines, their maximum width cannot exceed 2 inches (51 mm). The provisions for stair steps, perimeter demarcation lines and handrails allow the width of the marking to be reduced to less than 1 inch (25 mm) when marking stripes are listed in accordance with UL 1994.

1025.2.1 Steps. A solid and continuous stripe shall be applied to the horizontal leading edge of each step and shall extend for the full length of the step. Outlining stripes shall have a minimum horizontal width of 1 inch (25 mm) and a maximum width of 2 inches (51 mm). The leading edge of the stripe shall be placed not more than $^1/_2$ inch (12.7 mm) from the leading edge of the step and the stripe shall not overlap the leading edge of the step by not more than $^1/_2$ inch (12.7 mm) down the vertical face of the step.

Exception: The minimum width of 1 inch (25 mm) shall not apply to outlining stripes listed in accordance with UL 1994.

❖ Luminous stripes are required the full width of the stairway on all tread nosings and along the leading edge of stair landings. These demarcation lines serve to identify the transition from the stair steps to the landing, which is important to minimize the risk of a fall inside of a stairway enclosure that is not illuminated. In order to clearly identify the leading edge of the step, the front edge of the stripe must be within $^1/_2$ inch (13 mm) plus or minus of the leading edge of the tread (see Commentary Figure 1025.2.1).

The code does not specify any minimum slip-resistance requirements for luminous products installed on walking surfaces. However, Section 1003.4 requires all walking surfaces for means of egress to be slip resistant. Persons with vision impairments often rely on high-contrast elements to delineate changes in elevation such as that required in Sections 1011.5.4 and 1029.13.2.2. In medium light conditions, the luminous materials may be hard to discern. Luminous materials installed adjacent to dark contrasting materials may help with both situations.

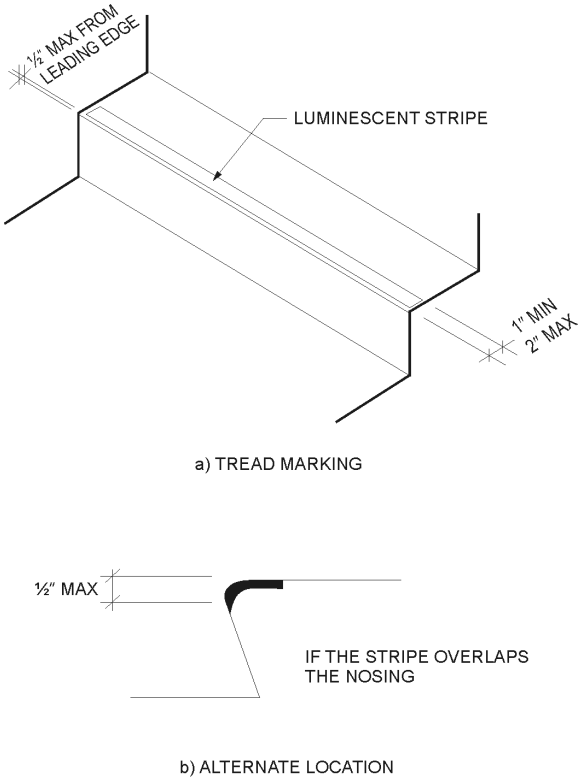

For SI: 1 inch = 25.4 mm.

Figure 1025.2.1
LEADING EDGE OF STEP AND LANDING

INTERNATIONAL CODE COUNCIL®
Copyright © 2015 ICC. ALL RIGHTS RESERVED. Accessed by David Dammon on Jun 21, 2017 12:30:52 PM pursuant to License Agreement with ICC. No further reproduction or distribution authorized. ANY UNAUTHORIZED REPRODUCTION OR DISTRIBUTION IS A VIOLATION OF THE FEDERAL COPYRIGHT ACT AND THE LICENSE AGREEMENT, AND SUBJECT TO CIVIL AND CRIMINAL PENALTIES THEREUNDER.

The provisions for stair steps, perimeter demarcation lines and handrails allow the width of the marking to be reduced to less than 1 inch (25 mm) when marking stripes are listed in accordance with UL 1994.

1025.2.2 Landings. The leading edge of landings shall be marked with a stripe consistent with the dimensional requirements for steps.

❖ The edge of the landing at the top of the steps must be marked in the same manner as the tread nosing so that a person can tell where the steps start. See the commentary to Section 1025.2.1 and Commentary Figure 1025.2.1.

1025.2.3 Handrails. *Handrails* and handrail extensions shall be marked with a solid and continuous stripe having a minimum width of 1 inch (25 mm). The stripe shall be placed on the top surface of the *handrail* for the entire length of the *handrail*, including extensions and newel post caps. Where *handrails* or handrail extensions bend or turn corners, the stripe shall not have a gap of more than 4 inches (102 mm).

Exception: The minimum width of 1 inch (25 mm) shall not apply to outlining stripes listed in accordance with UL 1994.

❖ The handrail must have a glow-in-the-dark stripe down the entire length. The 1-inch (25 mm) minimum width stripe must be on the top of the handrail so it can charge and maximize its visibility in the dark. Bends or turns may result in a break in the marking, which must not be more than 4 inches (102 mm) maximum (see Commentary Figure 1025.2.3).

The provisions for stair steps, perimeter demarcation lines and handrails allow the width of the marking to be reduced to less than 1 inch (25 mm) when marking stripes are listed in accordance with UL 1994.

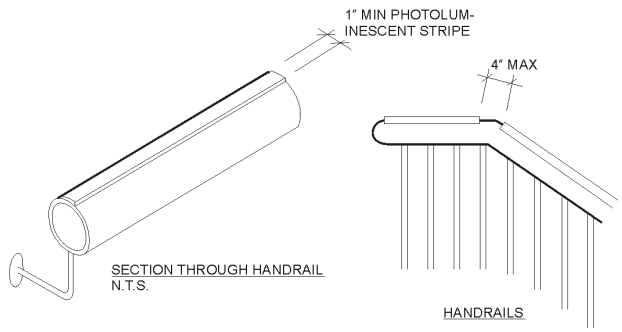

For SI: 1 inch = 25.4 mm.

Figure 1025.2.3
HANDRAIL MARKINGS

1025.2.4 Perimeter demarcation lines. Stair landings and other floor areas within *interior exit stairways*, *interior exit ramps* and *exit passageways*, with the exception of the sides of steps, shall be provided with solid and continuous demarcation lines on the floor or on the walls or a combination of both. The stripes shall be 1 to 2 inches (25 mm to 51 mm) wide with interruptions not exceeding 4 inches (102 mm).

Exception: The minimum width of 1 inch (25 mm) shall not apply to outlining stripes listed in accordance with UL 1994.

❖ In addition to the leading edge of the landing, the landing must have a luminous stripe all the way around the edge. If the enclosure includes any type of exit passageway, that corridor must also have a perimeter stripe. The stripe can be on the floor or on the wall at baseboard height (see Sections 1025.2.4.1 and 1025.2.4.2).

The provisions for stair steps, perimeter demarcation lines and handrails allow the width of the marking to be reduced to less than 1 inch (25 mm) when marking stripes are listed in accordance with UL 1994.

1025.2.4.1 Floor-mounted demarcation lines. Perimeter demarcation lines shall be placed within 4 inches (102 mm) of the wall and shall extend to within 2 inches (51 mm) of the markings on the leading edge of landings. The demarcation lines shall continue across the floor in front of all doors.

Exception: Demarcation lines shall not extend in front of *exit discharge* doors that lead out of an *exit* and through which occupants must travel to complete the exit path.

❖ Luminous stripes shall extend all the way around any stair landings. This section specifies the option of stripes on the floor (see Commentary Figure 1025.2.4.1). On a typical landing, the stripe will extend across the front of the door, indicating to someone moving down the stairway that they should continue (see Commentary Figure 1025.2.4.3). At the level of exit discharge the occupant has a different visual cue. The line should not extend in front of the door leading to the exterior (see Commentary Figure 1025.2.6). This should allow people to understand which door they need to move through to get to safety.

1025.2.4.2 Wall-mounted demarcation lines. Perimeter demarcation lines shall be placed on the wall with the bottom edge of the stripe not more than 4 inches (102 mm) above the finished floor. At the top or bottom of the *stairs*, demarcation lines shall drop vertically to the floor within 2 inches (51 mm) of the step or landing edge. Demarcation lines on walls shall transition vertically to the floor and then extend across the floor where a line on the floor is the only practical method of outlining the path. Where the wall line is broken by a door, demarcation lines on walls shall continue across the face of the door or transition to the floor and extend across the floor in front of such door.

Exception: Demarcation lines shall not extend in front of *exit discharge* doors that lead out of an *exit* and through which occupants must travel to complete the exit path.

❖ Luminous stripes that surround the stairway landings can be on the floor or on the wall. This section specifies the option of stripes on the wall (see Commen-

INTERNATIONAL CODE COUNCIL®
Copyright © 2015 ICC. ALL RIGHTS RESERVED. Accessed by David Dammon on Jun 21, 2017 12:30:52 PM pursuant to License Agreement with ICC. No further reproduction or distribution authorized. ANY UNAUTHORIZED REPRODUCTION OR DISTRIBUTION IS A VIOLATION OF THE FEDERAL COPYRIGHT ACT AND THE LICENSE AGREEMENT, AND SUBJECT TO CIVIL AND CRIMINAL PENALTIES THEREUNDER.

tary Figure 1025.2.4.2). See the commentary to Sections 1025.2.4 and 1025.2.4.1.

1025.2.4.3 Transition. Where a wall-mounted demarcation line transitions to a floor-mounted demarcation line, or vice versa, the wall-mounted demarcation line shall drop vertically to the floor to meet a complimentary extension of the floor-mounted demarcation line, thus forming a continuous marking.

❖ While the luminous perimeter stripes on a landing can be on either the wall or the floor, when they transition from one to another, the lines should appear continuous. See Section 1025.2.4.2 for special requirements for when the wall perimeter marking transitions to the floor stripe indicating the leading edge of the landing.

When perimeter lines cross a door frame, the lines can transition or stay on the same plain (see Commentary Figure 1025.2.4.3).

1025.2.5 Obstacles. Obstacles at or below 6 feet 6 inches (1981 mm) in height and projecting more than 4 inches (102 mm) into the egress path shall be outlined with markings not less than 1 inch (25 mm) in width comprised of a pattern of alternating equal bands, of luminous material and black, with the alternating bands not more than 2 inches (51 mm) thick and angled at 45 degrees (0.79 rad). Obstacles shall include, but are not limited to, standpipes, hose cabinets, wall projections and restricted height areas. However, such markings shall not conceal any required information or indicators including but not limited to instructions to occupants for the use of standpipes.

❖ Any obstacles within the stairway must be marked with a dashed line of diagonal slashes (see Commentary Figure 1025.2.5). The markings of obstacles are consistent with the intent of protruding object provisions in Section 1003.3. However, there is a difference in the height of 6 feet, 6 inches (1981 mm) instead of 6 feet, 8 inches (2032 mm). Items permit-

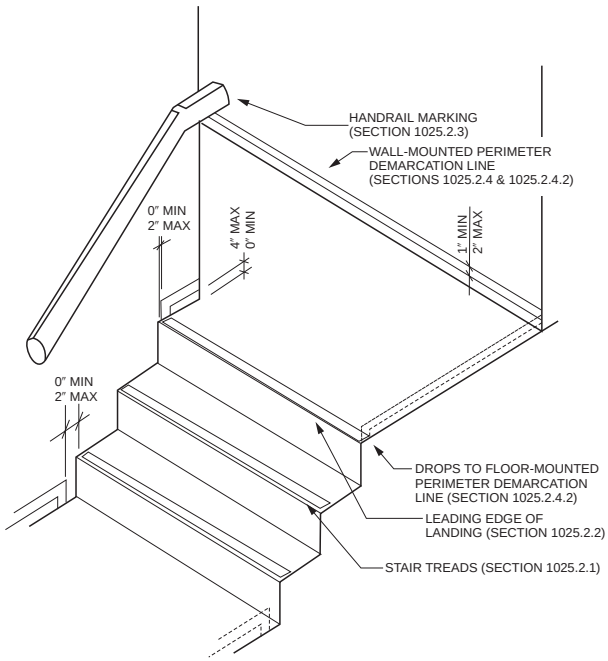

For SI: 1 inch = 25.4 mm.

Figure 1025.2.4.2
PERIMETER DEMARCATION LINES—
WALL-MOUNTED OPTION

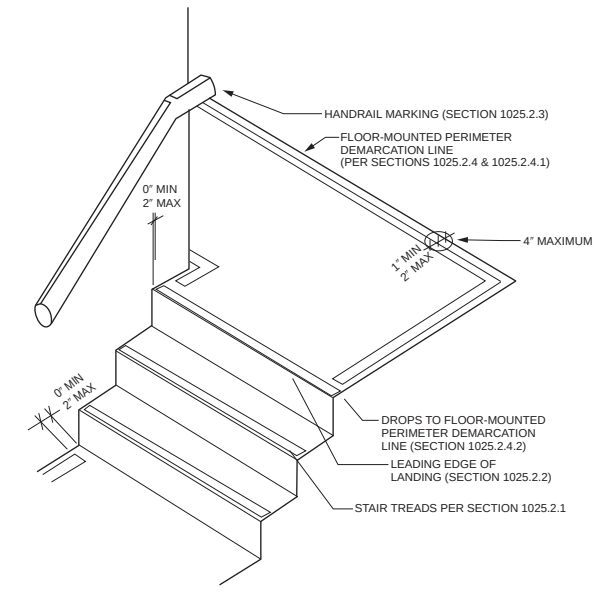

For SI: 1 inch = 25.4 mm.

Figure 1025.2.4.1
PERIMETER DEMARCATION LINES—
FLOOR-MOUNTED OPTION

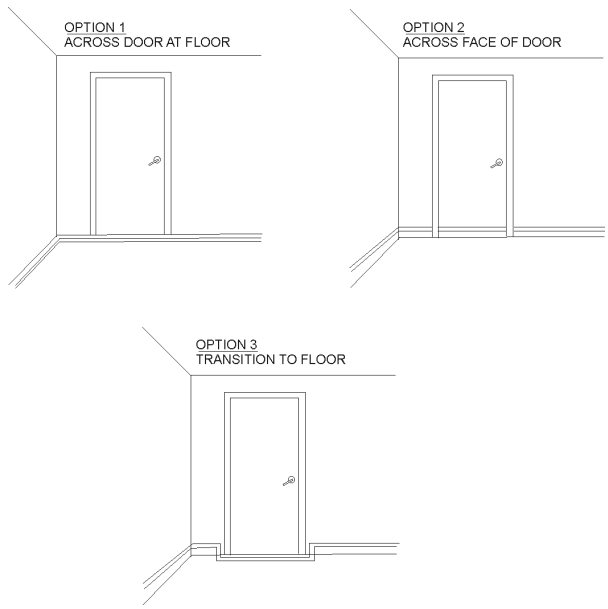

Figure 1025.2.4.3
PERIMETER DEMARCATION LINES—
OPTIONS AT DOORS INTO EXIT ENCLOSURES

INTERNATIONAL CODE COUNCIL®
Copyright © 2015 ICC. ALL RIGHTS RESERVED. Accessed by David Dammon on Jun 21, 2017 12:30:52 PM pursuant to License Agreement with ICC. No further reproduction or distribution authorized. ANY UNAUTHORIZED REPRODUCTION OR DISTRIBUTION IS A VIOLATION OF THE FEDERAL COPYRIGHT ACT AND THE LICENSE AGREEMENT, AND SUBJECT TO CIVIL AND CRIMINAL PENALTIES THEREUNDER.

ted within the enclosures for exit stairways are limited by Sections 1023.2 and 1023.5.

1025.2.6 Doors within the exit path. Doors through which occupants must pass in order to complete the exit path shall be provided with markings complying with Sections 1025.2.6.1 through 1025.2.6.3.

❖ Doors within an enclosure for an exit stairway can:

- Lead directly to the exterior.
- Pass through a horizontal exit (Section 1028.1, Exception 3).
- Lead to an exit passageway on the level of exit discharge, to a lobby or vestibule at the level of exit discharge (Section 1028.1, Exceptions 2 and 3).
- Lead to an exit passageway on a transition level.

Doors at these locations should be marked as indicated in the following three subsections. Combined with the landing markings not extending across the bottom of this door, this will provide several visual cues to indicate that this is the door to continue through to get out of the building (see Commentary Figure 1025.2.6).

The NIST egress study of the World Trade Center indicated that transition floors can cause delays in egress because people hesitate when it is unclear about which way they should continue. Effectively marking these doors in four different ways will decrease that hazard. Which doors to mark is consistent with the exit sign requirements within exit enclosures in Section 1013.1.

1025.2.6.1 Emergency exit symbol. The doors shall be identified by a low-location luminous emergency exit symbol complying with NFPA 170. The exit symbol shall be not less than 4 inches (102 mm) in height and shall be mounted on the door, centered horizontally, with the top of the symbol not higher than 18 inches (457 mm) above the finished floor.

❖ The door shall include a low luminous level exit symbol within 18 inches (457 mm) of the floor. For an example of the emergency exit symbol, see Commentary Figure 1025.2.6.1. The sign on the door can be just this symbol or it can also contain additional information such as a directional arrow or "EXIT."



For SI: 1 inch = 25.4 mm.

Figure 1025.2.6.1
EMERGENCY EXIT SYMBOL

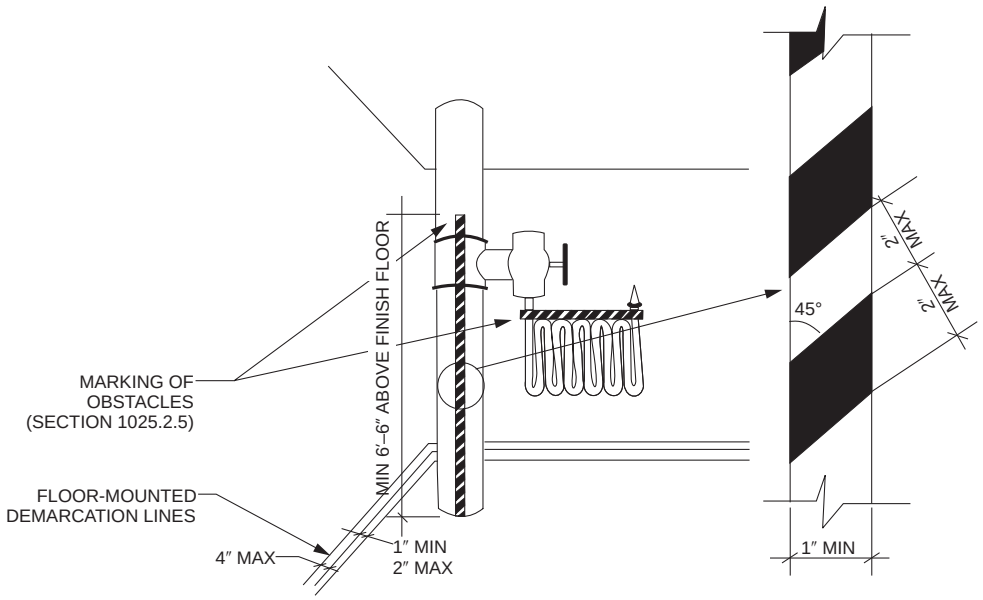

For SI: 1 foot = 304.8 mm, 1 inch= 25.4 mm;
1 degree = 0.01745 rad.

Figure 1025.2.5
OBSTACLE MARKINGS

INTERNATIONAL CODE COUNCIL®
Copyright © 2015 ICC. ALL RIGHTS RESERVED. Accessed by David Dammon on Jun 21, 2017 12:30:52 PM pursuant to License Agreement with ICC. No further reproduction or distribution authorized. ANY UNAUTHORIZED REPRODUCTION OR DISTRIBUTION IS A VIOLATION OF THE FEDERAL COPYRIGHT ACT AND THE LICENSE AGREEMENT, AND SUBJECT TO CIVIL AND CRIMINAL PENALTIES THEREUNDER.

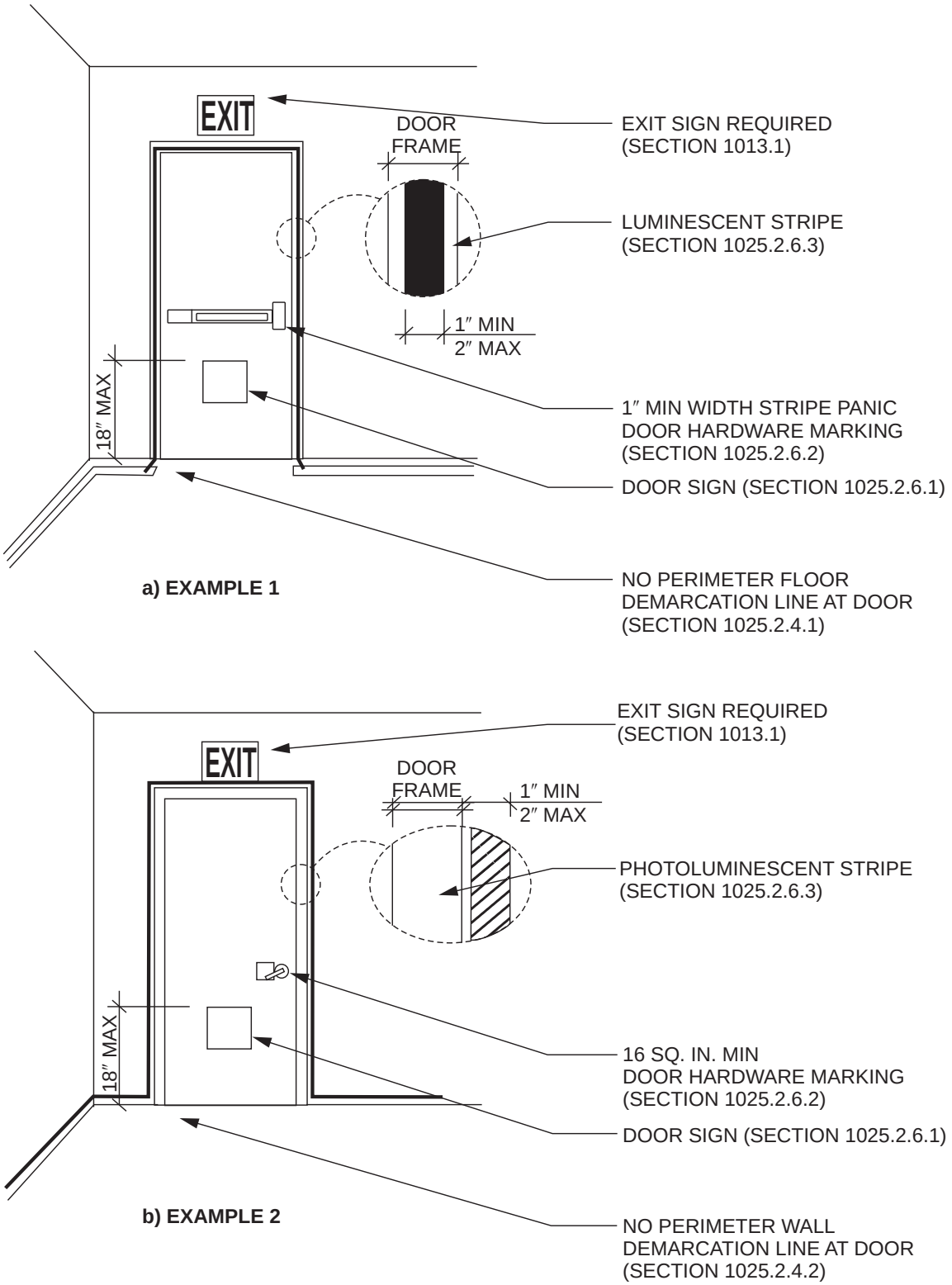

For SI: 1 inch = 25.4 mm,
1 square inch = 645.16 mm.

Figure 1025.2.6
EXAMPLES OF EXIT DOOR TO EXTERIOR OPTIONS

INTERNATIONAL CODE COUNCIL®
Copyright © 2015 ICC. ALL RIGHTS RESERVED. Accessed by David Dammon on Jun 21, 2017 12:30:52 PM pursuant to License Agreement with ICC. No further reproduction or distribution authorized. ANY UNAUTHORIZED REPRODUCTION OR DISTRIBUTION IS A VIOLATION OF THE FEDERAL COPYRIGHT ACT AND THE LICENSE AGREEMENT, AND SUBJECT TO CIVIL AND CRIMINAL PENALTIES THEREUNDER.

1025.2.6.2 Door hardware markings. Door hardware shall be marked with not less than 16 square inches (406 mm^2) of luminous material. This marking shall be located behind, immediately adjacent to, or on the door handle or escutcheon. Where a panic bar is installed, such material shall not be less than 1 inch (25 mm) wide for the entire length of the actuating bar or touchpad.

❖ Door hardware locations must be clearly visible. If a panic bar is used, a luminous stripe with a minimum width of 1 inch (25 mm) should be provided down the entire length of the activation bar/paddle [see Commentary Figure 1025.2.6, Example 1]. If lever hardware is used, a donut, square or rectangle with a minimum area of 16 square inches (10 322 mm^2) should be provided behind the hardware [see Commentary Figure 1025.2.6, Example 2]. There is also the option of marking the door handle itself, but it would be difficult to get 16 square inches (10 322 mm^2) of visible surface area. Plus, over time, a finish on the hardware has a greater chance of wearing off with normal use. The language allows the designer the freedom to decide (with wear and hardware options) which configuration would give the best results.

1025.2.6.3 Door frame markings. The top and sides of the door frame shall be marked with a solid and continuous 1-inch- to 2-inch-wide (25 mm to 51 mm) stripe. Where the door molding does not provide sufficient flat surface on which to locate the stripe, the stripe shall be permitted to be located on the wall surrounding the frame.

❖ Doors must be marked along the sides and top with stripes similar to those provided on the stair nosing. Door frames come in a variety of shapes. If there is not space on the door for the marking stripe, the stripe can be around the perimeter of the door [see Commentary Figure 1025.2.6, Examples 1 and 2].

1025.3 Uniformity. Placement and dimensions of markings shall be consistent and uniform throughout the same enclosure.

❖ All exit path markings are required to be solid and have continuous stripes. A key requirement for marking systems is that their design must be uniform. The placement and dimensions of markings must be consistent for the path of travel along the exit stairway. By specifying a standard marking dimension, the requirements will ensure that the marking is visible during dark conditions and provides consistent and standard application in the design and enforcement of exit path markings. Markings installed on stair steps, perimeter demarcation lines and handrails must have a minimum width of 1 inch (25 mm). For stair steps and perimeter demarcation lines, their maximum width cannot exceed 2 inches (51 mm). The provisions for stair steps, perimeter demarcation lines and handrails allow the width of the marking to be reduced to less than 1 inch (25 mm) when marking stripes are listed in accordance with UL 1994.

1025.4 Self-luminous and photoluminescent. Luminous egress path markings shall be permitted to be made of any material, including paint, provided that an electrical charge is not required to maintain the required luminance. Such materials shall include, but not be limited to, *self-luminous* materials and *photoluminescent* materials. Materials shall comply with either of the following standards:

1. UL 1994.
2. ASTM E2072, except that the charging source shall be 1 footcandle (11 lux) of fluorescent illumination for 60 minutes, and the minimum luminance shall be 30 milicandelas per square meter at 10 minutes and 5 milicandelas per square meter after 90 minutes.

❖ Products utilized to meet the requirements for luminous egress path markings in high-rise buildings (see IBC Section 411.7 and Section 1025 of the code) or exit signs (see Section 1013.5) may be photoluminescent or self-luminous (see definitions in Chapter 2). An example of photoluminescent material is paint or tape that is charged by exposure to light. When the lights are turned off, the product will "glow" in the dark. Self-luminous products do not need an outside light source to charge them like photoluminescent materials do.

A variety of materials can comply with the referenced standards for egress path markings (UL 1994, and ASTM E2072) and for signs (UL 924).

ASTM E2072 allows the use of paints and coatings, which can be useful because it avoids a potential tripping hazard, especially in locations where the surface substrate may not be even. The luminescence of the selected marking system must provide an illumination of 1 footcandle (11 lux) for 60 minutes, which is consistent with the requirement in Section 1008.2 for the illumination of walking surfaces. Section 1008.3 requires the emergency lighting system to have power for 90 minutes; however, because of normal battery considerations, the IFC only requires a 60-minute duration in existing buildings.

1025.5 Illumination. Where *photoluminescent* exit path markings are installed, they shall be provided with not less than 1 footcandle (11 lux) of illumination for not less than 60 minutes prior to periods when the building is occupied and continuously during occupancy.

❖ Analogous to rechargeable batteries, many photoluminescent egress path markings require exposure to light to perform properly. Thus, photoluminescent egress path markings must be exposed to a minimum 1 footcandle (11 lux) of light energy at the walking surface for at least 60 minutes prior to the building being occupied. The charging rate for photoluminescent egress path markings is based on the wattage of lamps used to provide egress path illumination. Therefore it is important to verify that the specified lamps have sufficient wattage to meet the specified time period. This requirement may be a concern for buildings developed with the IECC or trying for LEED certification.

INTERNATIONAL CODE COUNCIL®
Copyright © 2015 ICC. ALL RIGHTS RESERVED. Accessed by David Dammon on Jun 21, 2017 12:30:52 PM pursuant to License Agreement with ICC. No further reproduction or distribution authorized. ANY UNAUTHORIZED REPRODUCTION OR DISTRIBUTION IS A VIOLATION OF THE FEDERAL COPYRIGHT ACT AND THE LICENSE AGREEMENT, AND SUBJECT TO CIVIL AND CRIMINAL PENALTIES THEREUNDER.

Note that this requirement does not apply to self-luminous materials since these materials operate independently of the external power source. See the definitions for "Photoluminescent" and "Self-luminous" in Chapter 2.

SECTION 1026
HORIZONTAL EXITS

1026.1 Horizontal exits. *Horizontal exits* serving as an *exit* in a *means of egress* system shall comply with the requirements of this section. A *horizontal exit* shall not serve as the only *exit* from a portion of a building, and where two or more *exits* are required, not more than one-half of the total number of *exits* or total *exit* minimum width or required capacity shall be *horizontal exits*.

Exceptions:

1. *Horizontal exits* are permitted to comprise two-thirds of the required *exits* from any building or floor area for occupancies in Group I-2.
2. *Horizontal exits* are permitted to comprise 100 percent of the *exits* required for occupancies in Group I-3. Not less than 6 square feet (0.6 m^2) of accessible space per occupant shall be provided on each side of the *horizontal exit* for the total number of people in adjoining compartments.

❖ Horizontal exits can provide up to 50 percent of the exits from a given area of a building. The percentage is higher for Group I-2 and I-3 occupancies where the evacuation strategy is defend in place rather than direct egress (see Commentary Figure 1026.1 for a typical horizontal exit arrangement). However, a horizontal exit cannot serve as the only exit from a single exit space. Section 1026.4 allows for some areas to have all the exits from a space to be horizontal exits under specific conditions. A horizontal exit can be designed for either one-way or two-way operation, depending on the exiting needs of each side of the wall providing the horizontal exit.

A horizontal exit may be an element of a means of egress when in compliance with the requirements of this section. The actual horizontal exit is the protected door opening in a wall, or the open-air balcony or bridge that separates two areas of a building. A horizontal exit is often used in hospitals and in prisons where it is not feasible or desirable that all occupants exit the facility (see Chapter 2 for the definition of a "Horizontal exit").

Horizontal exits and their associated "refuge areas" are considered to provide the same or higher level of protection as an "area of refuge" for people who cannot use the egress system. Sections 1009.3 and 1009.4 allow for a horizontal exit or an area of refuge as alternatives. See these sections for exceptions for buildings with sprinkler systems and/or where the path of travel has protection from the accumulation of smoke (i.e., open parking garages, open air assembly seating, smoke-protected assembly seating).

1026.2 Separation. The separation between buildings or refuge areas connected by a *horizontal exit* shall be provided by a *fire wall* complying with Section 706; or by a *fire barrier* complying with Section 707 or a *horizontal assembly* complying with Section 711, or both. The minimum *fire-resistance rating* of the separation shall be 2 hours. Opening protectives in *horizontal exits* shall also comply with Section 716. Duct and air transfer openings in a *fire wall* or *fire barrier* that serves as a *horizontal exit* shall also comply with Section 717. The *horizontal exit* separation shall extend vertically through all levels of the building unless floor assemblies have a *fire-resistance rating* of not less than 2 hours with no unprotected openings.

Exception: A *fire-resistance rating* is not required at *horizontal exits* between a building area and an above-grade *pedestrian walkway* constructed in accordance with Section 3104, provided that the distance between connected buildings is more than 20 feet (6096 mm).

Horizontal exits constructed as *fire barriers* shall be continuous from *exterior wall* to *exterior wall* so as to divide completely the floor served by the *horizontal exit.*

❖ The basic concept of a horizontal exit is that during a fire emergency, the occupants of a floor will transfer from one fire area to another. Separation between areas of a building can be accomplished by a fire wall

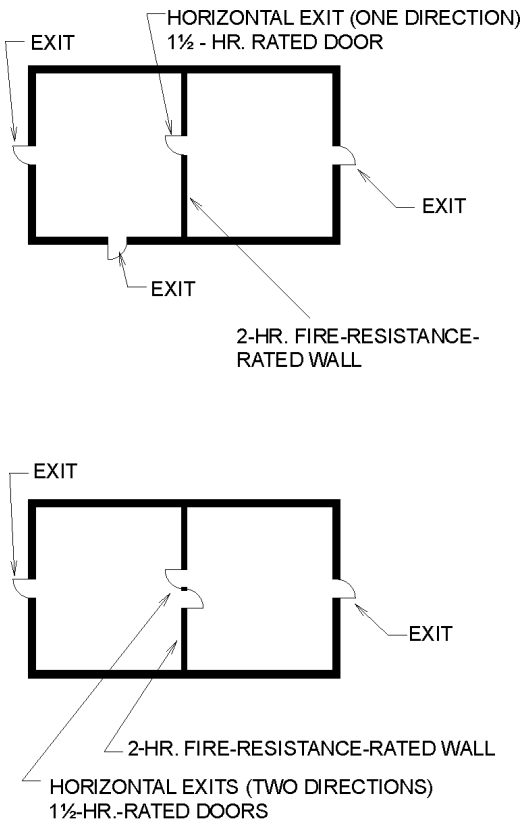

Figure 1026.1
TYPICAL HORIZONTAL EXITS

INTERNATIONAL CODE COUNCIL®
Copyright © 2015 ICC. ALL RIGHTS RESERVED. Accessed by David Dammon on Jun 21, 2017 12:30:52 PM pursuant to License Agreement with ICC. No further reproduction or distribution authorized. ANY UNAUTHORIZED REPRODUCTION OR DISTRIBUTION IS A VIOLATION OF THE FEDERAL COPYRIGHT ACT AND THE LICENSE AGREEMENT, AND SUBJECT TO CIVIL AND CRIMINAL PENALTIES THEREUNDER.

(see IBC Section 706), a fire barrier (see IBC Section 707), horizontal assemblies (see IBC Section 711) or a combination thereof, with a fire-resistance rating not less than 2 hours. Any fire shutters or fire doors must have an opening protective of not less than $1^1/_2$ hours (see IBC Table 716.5). Ducts and air transfer openings must comply with IBC Section 717.

In buildings of Groups I-2 and I-3, it may also be desirable (while not mandatory) for the horizontal exit to serve as a smoke barrier. In such cases, the wall containing the horizontal exit must also comply with the requirements for a smoke barrier (see IBC Section 709).

In order to decrease the amount of smoke able to migrate around the edges of a horizontal exit, the horizontal exit must extend from at least the floor to the deck above (i.e., fire barrier), as well as across the floor level from one side of the building to another. Moving up from floor to floor, there are two choices. One option is that the horizontal exit can extend vertically through all levels of the building (i.e., fire wall or fire barriers). The second option is to utilize fire barriers that are not aligned vertically (i.e., a combination of fire barriers and horizontal assemblies), but then the floor must have a 2-hour fire-resistance rating and no unprotected openings are permitted between any two refuge areas. The supporting construction would also have to be a minimum of 2 hours.

The exception is permitting a pedestrian walkway or sky bridge to act as a horizontal exit when buildings are at least 20 feet (6096 mm) apart.

1026.3 Opening protectives. *Fire doors* in *horizontal exits* shall be self-closing or automatic-closing when activated by a *smoke detector* in accordance with Section 716.5.9.3. Doors, where located in a cross-corridor condition, shall be automatic-closing by activation of a *smoke detector* installed in accordance with Section 716.5.9.3.

❖ For the safety of occupants using a horizontal exit, it is important for the doors to be fire doors that are self-closing or automatic-closing by activation of a smoke detector. Smoke detectors that initiate automatic-closing should be located at both sides of the doors (see the commentary to Section 907.3 for an additional explanation of the installation requirements). Any openings in the fire barriers or fire walls used as horizontal exits must be protected in coordination with the rating of the wall. There is a reference to IBC Section 716 for opening protectives.

1026.4 Refuge area. The refuge area of a *horizontal exit* shall be a space occupied by the same tenant or a public area and each such refuge area shall be adequate to accommodate the original *occupant load* of the refuge area plus the *occupant load* anticipated from the adjoining compartment. The anticipated *occupant load* from the adjoining compartment shall be based on the capacity of the *horizontal exit doors* entering the refuge area.

❖ The building area on the discharge side of a horizontal exit must serve as a refuge area for the occupants of both sides of the floor areas connected by the horizontal exit. Therefore, adequate space must be available on each side of the wall to hold the full occupant load of that side, plus the number of occupants from the other side that may be required to use the horizontal exit. Explaining the anticipated occupant load is easiest with an example. If one side of the horizontal exit contained an assembly space with 750 occupants, three exits would be required. If one of the exits through the horizontal exit was a double door, that double exit door would have a capacity of 320 (64 inches/0.2 = 320 occupants). Therefore, the refuge area must be sized for the occupant load in the space, plus the 320 people who might come through the horizontal exit. This is a higher number than would be anticipated if the occupant load of the assembly space was divided equally between the three exits, but it is also not the entire occupant load of the assembly space.

1026.4.1 Capacity. The capacity of the refuge area shall be computed based on a *net floor area* allowance of 3 square feet (0.2787 m^2) for each occupant to be accommodated therein.

Exceptions: The *net floor area* allowable per occupant shall be as follows for the indicated occupancies:

1. Six square feet (0.6 m^2) per occupant for occupancies in Group I-3.
2. Fifteen square feet (1.4 m^2) per occupant for ambulatory occupancies in Group I-2.
3. Thirty square feet (2.8 m^2) per occupant for nonambulatory occupancies in Group I-2.

❖ These refuge areas are meant to hold the occupants temporarily in a safe place until they can evacuate the premises in an orderly manner or, in the case of hospitals and like facilities, to hold bedridden patients and other nonambulatory occupants in a protected area until the fire emergency has ended. This is commonly referred to as a defend-in-place strategy. The size of the refuge area is based on the nature of the expected occupants. In the case of Group I-3, the area will be used to hold the occupants until deliberate egress can be accomplished with staff assistance or supervision. In other cases, it is assumed that the occupants simply wait in line to egress through the required exit facilities provided on the discharge side. Although similar language is used in describing the "area of refuge" for an accessible means of egress, Section 1009.6 specifies area requirements that are insufficient for use as a "refuge area" for a horizontal exit. Care must be taken when applying both principles to the same horizontal exit.

The 3-square-feet (0.28 m^2) per occupant requirement is based on the maximum permitted occupant density at which orderly movement to the exits is reasonable. The 30-square-feet (2.8 m^2) per hospital or nursing home patient requirement is based on the space necessary for a bed or litter. It should be noted that 30 square feet (2.8 m^2) is not based on the total

INTERNATIONAL CODE COUNCIL®
Copyright © 2015 ICC. ALL RIGHTS RESERVED. Accessed by David Dammon on Jun 21, 2017 12:30:52 PM pursuant to License Agreement with ICC. No further reproduction or distribution authorized. ANY UNAUTHORIZED REPRODUCTION OR DISTRIBUTION IS A VIOLATION OF THE FEDERAL COPYRIGHT ACT AND THE LICENSE AGREEMENT, AND SUBJECT TO CIVIL AND CRIMINAL PENALTIES THEREUNDER.

occupant load, as would be determined in accordance with Section 1004.1, but rather on the number of nonambulatory patients. The 15-square-foot (1.4 m^2) requirement for occupancies in Group I-2 facilities is based on each ambulatory patient having a staff attendant.

1026.4.2 Number of exits. The refuge area into which a *horizontal exit* leads shall be provided with *exits* adequate to meet the occupant requirements of this chapter, but not including the added *occupant load* imposed by persons entering the refuge area through *horizontal exits* from other areas. Not less than one refuge area exit shall lead directly to the exterior or to an *interior exit stairway* or *ramp*.

Exception: The adjoining compartment shall not be required to have a *stairway* or door leading directly outside, provided the refuge area into which a *horizontal exit* leads has *stairways* or doors leading directly outside and are so arranged that egress shall not require the occupants to return through the compartment from which egress originates.

❖ In a single-tenant facility, any of the spaces that are constantly available (i.e., not lockable) can be used as places of refuge. However, in spaces housing more than one tenant, public refuge areas, such as corridors or passageways, must be provided and be accessible at all times. This requirement is necessary because if a horizontal exit connected two areas occupied by different tenants, the tenants could (for privacy and security purposes) render the necessary free access through the horizontal exit ineffective. When the horizontal exit discharges into a public or common space, such as a corridor leading to an exit, each tenant can obtain the desired security.

Note that the capacity of exits (such as an exit stairway) from a refuge area into which a horizontal exit leads is required to be sufficient for the design occupant load in the area, and does not include those who come into the space from other areas via the horizontal exit. This is because the adjacent refuge area is of sufficient safety to house occupants during a fire or until the egress system is available.

The door through the horizontal exit and the second exit must meet the separation requirements in Section 1007.1.1. Measurement of the travel distance stops at the doorway that serves as the horizontal exit. There are no requirements for travel distance from the horizontal exit to the exit (i.e., exterior exit doorway, exit stairway or exit ramp) on the other side; however, the areas on each side need to be evaluated for all means of egress requirements individually.

When there is one horizontal exit and two fire compartments, at least one exit from each side of the horizontal exit must go directly to the outside of an exit stairway or ramp enclosure (see Commentary Figure 1026.1). The exception allows for a central building/fire area with access to two horizontal exits and no direct exterior exit door or exit stairway/ramp enclosure as long as the piece on each side has access to exterior exits or exit stairways/ramps (see Commentary Figure 1026.4.2).

SECTION 1027
EXTERIOR EXIT STAIRWAYS AND RAMPS

1027.1 Exterior exit stairways and ramps. *Exterior exit stairways* and *ramps* serving as an element of a required *means of egress* shall comply with this section.

❖ Stairways and ramps can be exit access, exit or exit discharge elements. Exterior exit access and exit dis-

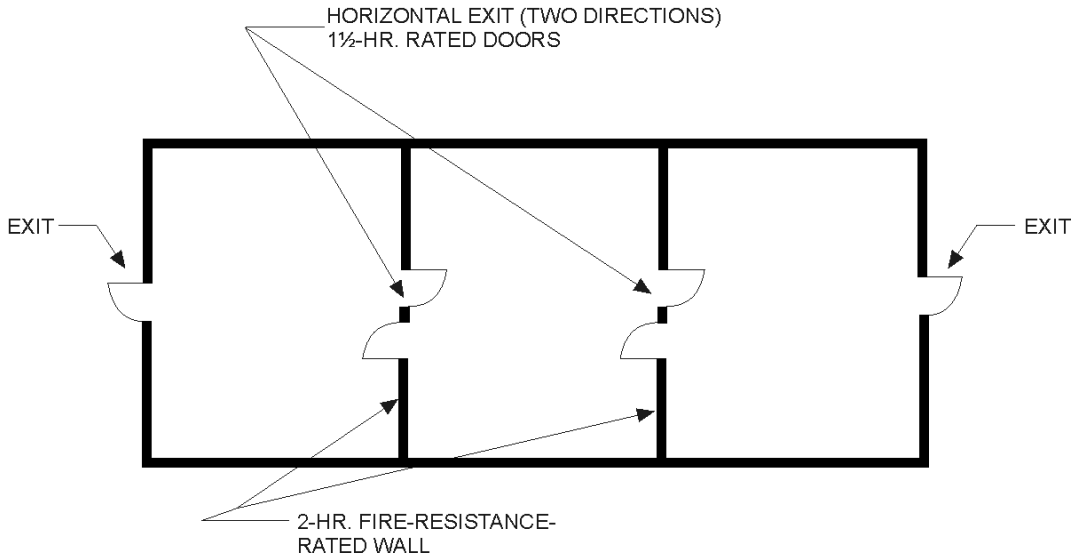

Figure 1026.4.2
REFUGE AREA EXCEPTION

INTERNATIONAL CODE COUNCIL®
Copyright © 2015 ICC. ALL RIGHTS RESERVED. Accessed by David Dammon on Jun 21, 2017 12:30:52 PM pursuant to License Agreement with ICC. No further reproduction or distribution authorized. ANY UNAUTHORIZED REPRODUCTION OR DISTRIBUTION IS A VIOLATION OF THE FEDERAL COPYRIGHT ACT AND THE LICENSE AGREEMENT, AND SUBJECT TO CIVIL AND CRIMINAL PENALTIES THEREUNDER.

charge stairways and ramps typically involve a change of elevation of less than a story. Exterior exit access stairways or ramps between stories must comply with Section 1019.3 and, where permitted as part of the required means of egress, are limited by Section 1006.3. Exit stairways and ramps traverse a full story or more. Interior exit stairways and ramps must be enclosed in accordance with Section 1023. This section addresses exterior stairways and ramps that function as exit elements.

Exterior exit stairways and ramps are an important element of the means of egress system and must be designed and constructed so that they will serve as a safe path of travel. The general requirements in Section 1011 also apply to exterior stairways (for ramp provisions, see Section 1012).

Outdoor stadiums and open parking garages are examples of buildings that may appear to have exterior exit stairways, but actually have open exit access stairways (Sections 1017, 1019 and 1029).

1027.2 Use in a means of egress. *Exterior exit stairways* shall not be used as an element of a required *means of egress* for Group I-2 occupancies. For occupancies in other than Group I-2, *exterior exit stairways* and *ramps* shall be permitted as an element of a required *means of egress* for buildings not exceeding six stories above *grade plane* or that are not *high-rise buildings*.

❖ This section specifies the conditions where exterior exit ramps or stairways can be used as required exits. Exterior exit stairways are not permitted for Group I-2 since quick evacuation of nonambulatory patients from buildings using exterior stairways is impractical. Some patients may not be capable of self-preservation and, therefore, may require assistance from staff. The period of evacuation of nonambulatory patients could become lengthy, especially in bad weather conditions.

Exterior stairways or ramps are not allowed to be required exits in buildings that exceed six stories in height because of the hazard of using such a stairway or ramp in poor weather. Some persons may not be willing to use such a stair due to vertigo. When confronted with a view from a great height, vertigo sufferers can become confused, disoriented and dizzy. They could injure themselves, become disoriented or refuse to move (freeze). In a fire situation, they could become an obstruction in the path of travel, possibly causing panic and injuries to other users of the exit.

1027.3 Open side. *Exterior exit stairways* and *ramps* serving as an element of a required *means of egress* shall be open on not less than one side, except for required structural columns, beams, *handrails* and *guards*. An open side shall have not less than 35 square feet (3.3 m^2) of aggregate open area adjacent to each floor level and the level of each intermediate landing. The required open area shall be located not less than 42 inches (1067 mm) above the adjacent floor or landing level.

❖ An important factor in exterior exit stairways or ramps is natural ventilation. Sufficient natural ventilation is necessary so that smoke will not be trapped above the stairway or ramp walking surfaces, thereby compromising safe egress.

The exterior exit stairway or ramp must have at least one of its sides directly facing an outer court, yard or public way. This will allow the products of combustion escaping from the interior of the building to quickly vent to the outdoor atmosphere and let the building occupants egress down the exterior exit stairway or ramp. Since exterior exit stairways or ramps are partially bounded by exterior walls, a minimum amount of exterior openness is specified by the code.

The openings on each and every floor level and landing must total 35 square feet (3.3 m^2) or greater. The openings for which credit is given must occur higher than 42 inches (1067 mm) above each floor and intermediate landing level. [The bottom edge of the opening is consistent with the height requirements for guards (see Section 1015.3)]. With a standard 8-foot (2438 mm) ceiling height minus the 42-inch-high (1067 mm) guard and a typical 8-foot-wide (2438 mm) opening, the result would be $4^1/_2$ feet x 8 feet = 36 square feet (3.34 m^2). Openings of this height and area readily dissipate the smoke buildup from the exterior exit stairway or ramp (see Commentary Figure 1027.3).

1027.4 Side yards. The open areas adjoining *exterior exit stairways* or *ramps* shall be either *yards*, *courts* or *public ways*; the remaining sides are permitted to be enclosed by the *exterior walls* of the building.

❖ This section simply specifies the type of areas that the exterior opening of the exterior exit stairway or ramp is to adjoin. These open spaces will enable the smoke to dissipate from the exterior exit stairway or ramp so it will be usable as a required exit. See Section 1027.3 for a discussion of the opening requirements. See Sections 1027.4 and 1206 for the minimum sizes of yards and courts.

1027.5 Location. *Exterior exit stairways* and *ramps* shall have a minimum fire separation distance of 10 feet (3048 mm) measured at right angles from the exterior edge of the *stairway* or *ramps*, including landings, to:

1. Adjacent *lot lines*.
2. Other portions of the building.
3. Other buildings on the same lot unless the adjacent building *exterior walls* and openings are protected in accordance with Section 705 based on *fire separation distance*.

INTERNATIONAL CODE COUNCIL®
Copyright © 2015 ICC. ALL RIGHTS RESERVED. Accessed by David Dammon on Jun 21, 2017 12:30:52 PM pursuant to License Agreement with ICC. No further reproduction or distribution authorized. ANY UNAUTHORIZED REPRODUCTION OR DISTRIBUTION IS A VIOLATION OF THE FEDERAL COPYRIGHT ACT AND THE LICENSE AGREEMENT, AND SUBJECT TO CIVIL AND CRIMINAL PENALTIES THEREUNDER.

For the purposes of this section, other portions of the building shall be treated as separate buildings.

❖ The location requirements of this section protect the users of the exterior exit stairway or ramp from the effects of a fire in another building on the same lot or an adjacent lot. The separation distance reduces the exposure to heat and smoke. If the exterior exit stairway or ramp is closer than specified, then adjacent buildings' exterior walls and openings are to be protected in accordance with IBC Section 705 so that the users of the exterior exit stairway or ramp are protected. The reason for a minimum required distance to a lot line is to provide for a future building that could be built on an adjacent lot. While buildings on the same lot can be considered one building for height and area limitations (see IBC Section 503.1.2), they must be separated by a minimum of 10 feet (3048 mm) if there is a path for exit discharge between them. The purpose of the last sentence is to clarify that an exterior exit stairway or ramp needs a minimum 10-foot separation where a building wraps around on itself, such as a U-shaped building. It is not intended that the distance be measured to an imaginary lot line between buildings on the same lot.

Requirements are the same for exterior egress balconies (Section 1021.4). For an illustration of exterior egress balconies and exterior exit stairways working together, see Commentary Figure 1027.5.

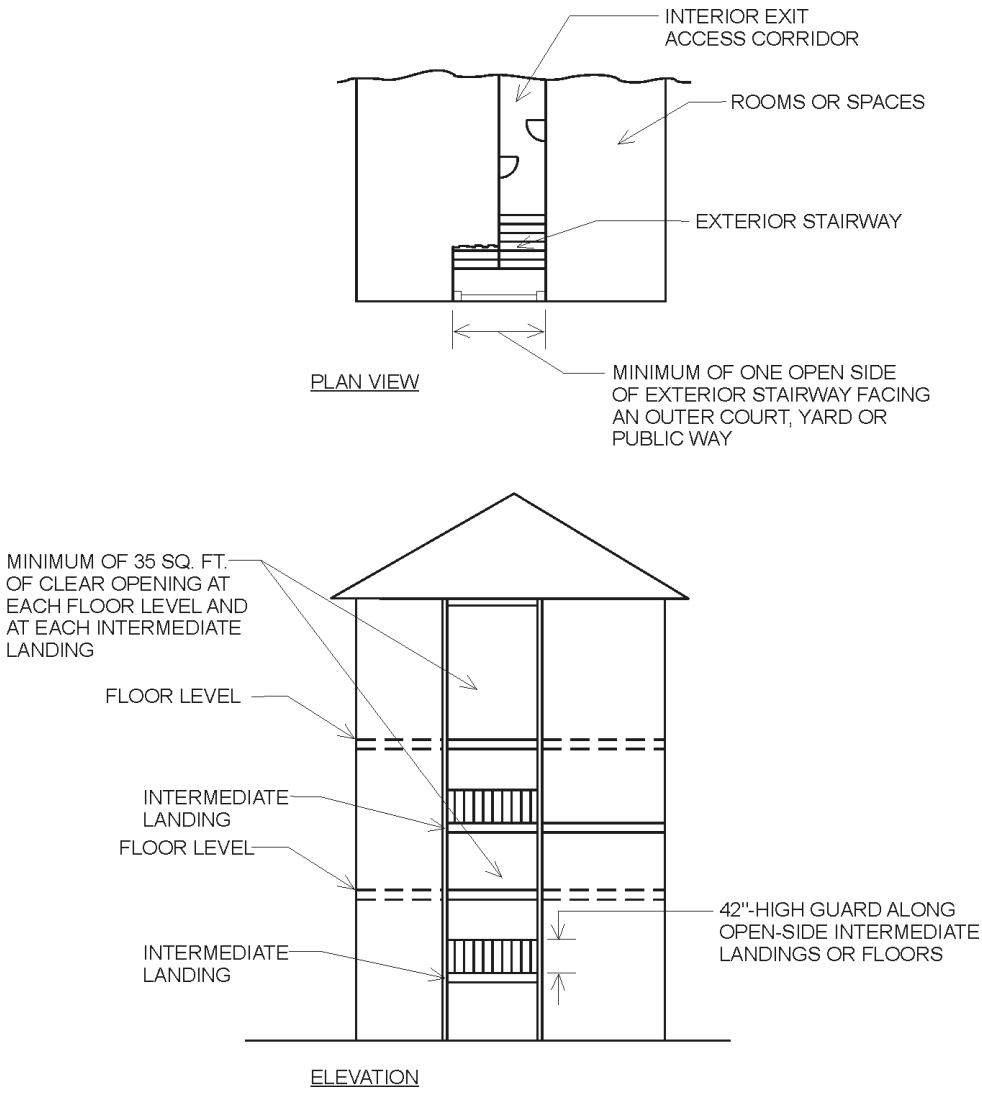

For SI: 1 inch= 25.4 mm;
1 square foot = 0.0929 mm.

Figure 1027.3
EXTERIOR STAIRWAY

INTERNATIONAL CODE COUNCIL®
Copyright © 2015 ICC. ALL RIGHTS RESERVED. Accessed by David Dammon on Jun 21, 2017 12:30:52 PM pursuant to License Agreement with ICC. No further reproduction or distribution authorized. ANY UNAUTHORIZED REPRODUCTION OR DISTRIBUTION IS A VIOLATION OF THE FEDERAL COPYRIGHT ACT AND THE LICENSE AGREEMENT, AND SUBJECT TO CIVIL AND CRIMINAL PENALTIES THEREUNDER.

1027.6 Exterior exit stairway and ramp protection. *Exterior exit stairways* and *ramps* shall be separated from the interior of the building as required in Section 1023.2. Openings shall be limited to those necessary for egress from normally occupied spaces. Where a vertical plane projecting from the edge of an *exterior exit stairway* or *ramp* and landings is exposed by other parts of the building at an angle of less than 180 degrees (3.14 rad), the exterior wall shall be rated in accordance with Section 1023.7.

Exceptions:

1. Separation from the interior of the building is not required for occupancies, other than those in Group R-1 or R-2, in buildings that are not more than two stories above *grade plane* where a *level of exit discharge* serving such occupancies is the first story above *grade plane*.
2. Separation from the interior of the building is not required where the *exterior exit stairway* or *ramp* is served by an *exterior exit ramp* or balcony that connects two remote *exterior exit stairways* or other *approved exits* with a perimeter that is not less than 50 percent open. To be considered open, the opening shall be not less than 50 percent of the height of the enclosing wall, with the top of the openings not less than 7 feet (2134 mm) above the top of the balcony.
3. Separation from the open-ended *corridor* of the building is not required for *exterior exit stairways* or *ramps*, provided that Items 3.1 through 3.5 are met:
   - 3.1. The building, including open-ended *corridors*, and *stairways* and *ramps*, shall be equipped throughout with an *automatic sprinkler system* in accordance with Section 903.3.1.1 or 903.3.1.2.
   - 3.2. The open-ended *corridors* comply with Section 1020.
   - 3.3. The open-ended *corridors* are connected on each end to an *exterior exit stairway* or *ramp* complying with Section 1027.
   - 3.4. The *exterior walls* and openings adjacent to the *exterior exit stairway* or *ramp* comply with Section 1023.7.
   - 3.5. At any location in an open-ended *corridor* where a change of direction exceeding 45 degrees (0.79 rad) occurs, a clear opening of not less than 35 square feet (3.3 m^2) or an *exterior stairway* or *ramp* shall be provided. Where clear openings are provided, they shall be located so as to minimize the accumulation of smoke or toxic gases.

❖ Exterior exit stairways or ramps must be protected from interior fires that may project through windows or other openings adjacent to the exit stairway or ramp, possibly endangering the occupants using this means of egress to reach grade. The protection of an exterior exit stairway or ramp is to be obtained by separating the exterior exit from the interior of the building using exterior walls having a fire-resistance rating of at least 1 hour with opening protectives. Consistent with the protection required in Sections 1023.2 and 1023.7 for interior exit stairways, the fire-resistance rating must be provided for a distance of 10 feet (3048 mm) horizontally and vertically from the ramp or stairway

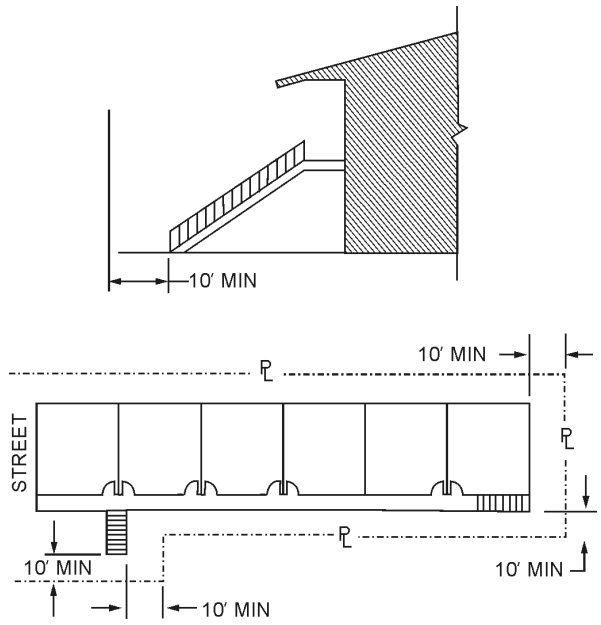

For SI: 1 foot = 304.8 mm.

Figure 1027.5
EXTERIOR BALCONY AND STAIRWAY ADJACENT TO LOT LINE

INTERNATIONAL CODE COUNCIL®
Copyright © 2015 ICC. ALL RIGHTS RESERVED. Accessed by David Dammon on Jun 21, 2017 12:30:52 PM pursuant to License Agreement with ICC. No further reproduction or distribution authorized. ANY UNAUTHORIZED REPRODUCTION OR DISTRIBUTION IS A VIOLATION OF THE FEDERAL COPYRIGHT ACT AND THE LICENSE AGREEMENT, AND SUBJECT TO CIVIL AND CRIMINAL PENALTIES THEREUNDER.

edges, and from the ground to a level of 10 feet (3048 mm) above the highest landing.

All window and door openings falling inside the 10-foot (3048 mm) horizontal separation distance as well as all window and door openings 10 feet (3048 mm) above the topmost landing and below the stairway must be protected with minimum $^{3}/_{4}$-hour fire protection-rated opening protectives [see Commentary Figure 1027.6(1)]. The last sentence is similar to Section 1023.7 except that instead of measuring the angle between the building exterior walls and the unprotected walls at the exterior of the stairway or ramp, the measurement is between the building exterior walls and a vertical projection for the planes of the guard of the exterior stairway and ramp including landings.

Openings within the width of the stairway must only be from normally occupied spaces. This is consistent with the requirements for vertical exit enclosures (see Sections 1023.4 and 1023.5).

Exception 1 indicates that opening protectives are not required for occupancies (other than Groups R-1 and R-2) that are two stories or less above grade when the level of exit discharge is at the lower story. The reason for this exception is that in cases of fire in low buildings, the occupants are usually able to evacuate the premises before the fire can emerge through exterior wall openings and endanger the exit ramp or stairways. In hotels and apartments, however, the occupants' response to a fire emergency could be significantly reduced because they may be either unfamiliar with the surroundings or sleeping.

Exception 2 allows the opening protectives to be

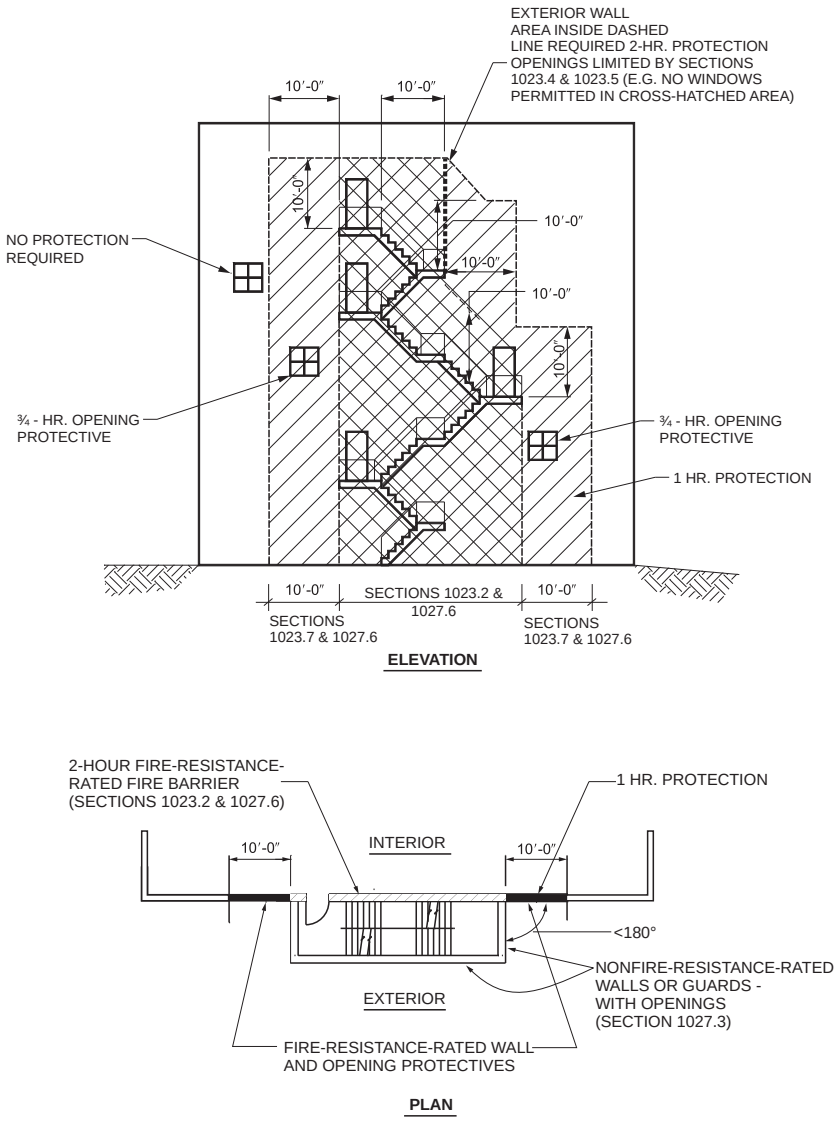

For SI: 1 foot = 304.8 mm.

Figure 1027.6(1)
PROTECTION OF EXTERIOR STAIRWAYS

INTERNATIONAL CODE COUNCIL®
Copyright © 2015 ICC. ALL RIGHTS RESERVED. Accessed by David Dammon on Jun 21, 2017 12:30:52 PM pursuant to License Agreement with ICC. No further reproduction or distribution authorized. ANY UNAUTHORIZED REPRODUCTION OR DISTRIBUTION IS A VIOLATION OF THE FEDERAL COPYRIGHT ACT AND THE LICENSE AGREEMENT, AND SUBJECT TO CIVIL AND CRIMINAL PENALTIES THEREUNDER.

omitted when an exterior exit access balcony is served by two exits and when the exits are remote from each other. Remoteness is regulated by Section 1007. This exception is applicable to all groups. In such instances, it is unlikely that the users of the exterior stairway or ramp will become trapped by fire, since they have the option of using the balcony to gain access to either of the two available exits, and the products of combustion will be vented directly to the outside (see Section 1021.1 regarding exterior balconies). At least one-half of the total perimeter of the exterior balcony must be permanently open to the outside. The requirement for at least one-half the height of that level to be open allows for columns, solid guards and architectural or decorative elements, such as arches. With the top of the opening at least 7 feet (2134 mm) above the walking surface, products of combustion can vent and allow occupant passage below the smoke layer [see Commentary Figure 1027.6(2)].

An open-ended corridor is not defined in Chapter 2. Exception 3 deletes the requirement for a separation between the interior of the building and the exterior wall area immediately adjacent to the exit stairway where an open-ended corridor (breezeway) interfaces with an exterior stairway or ramp. In other words, a door is not required between the exterior exit stairway and the open-ended corridor. The separation is not needed because of the NFPA 13 or 13R sprinkler system is required in all areas of the building, including the open-ended corridor. The other characteristics of the open-ended corridor described in this exception are needed so that it is safe to be used in the event of a fire. The requirements for an exterior stairway or ramp at each end, and the additional openings or exterior stairways or ramps where the open-ended corridor has a change of direction of greater than 45 degrees (0.79 rad), are for adequate ventilation of the open-ended corridor. The corridor may be required to be rated per Table 1020.1. The reference back to Section 1023.7 results in any exterior walls that form an angle less than 180 degrees (3.14 rad) from the side of the exterior exit stairway to be protected for a distance of 10 feet (3048 mm) [see Commentary Figure 1027.6(3)]. Exit access travel distance on an open-ended corridor is measured to the first riser of an exterior stair or the beginning slope of an exterior ramp.

Similar separation language is used in describing the exterior wall requirements for an exterior area for assisted rescue that is provided at an exit located above grade level. Where there are steps, they are merely part of the exit discharge, not exterior exit stairways as addressed in this section.

SECTION 1028
EXIT DISCHARGE

1028.1 General. *Exits* shall discharge directly to the exterior of the building. The *exit discharge* shall be at grade or shall provide a direct path of egress travel to grade. The *exit discharge* shall not reenter a building. The combined use of Exceptions 1 and 2 shall not exceed 50 percent of the number and minimum width or required capacity of the required exits.

Exceptions:

1. Not more than 50 percent of the number and minimum width or required capacity of *interior exit stairways* and *ramps* is permitted to egress through

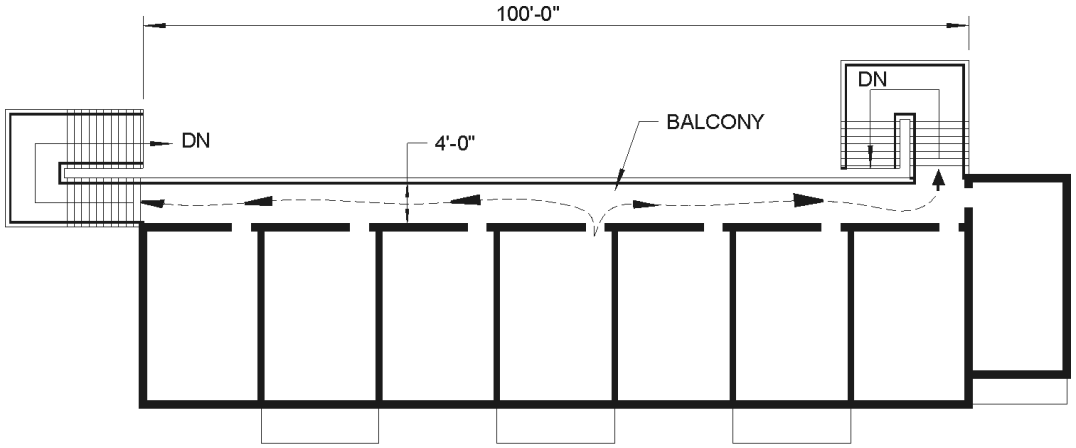

For SI: 1 foot = 304.8 mm.

Figure 1027.6(2)
EXTERIOR BALCONY WITH REMOTE STAIRWAYS

INTERNATIONAL CODE COUNCIL®
Copyright © 2015 ICC. ALL RIGHTS RESERVED. Accessed by David Dammon on Jun 21, 2017 12:30:52 PM pursuant to License Agreement with ICC. No further reproduction or distribution authorized. ANY UNAUTHORIZED REPRODUCTION OR DISTRIBUTION IS A VIOLATION OF THE FEDERAL COPYRIGHT ACT AND THE LICENSE AGREEMENT, AND SUBJECT TO CIVIL AND CRIMINAL PENALTIES THEREUNDER.

areas on the level of discharge provided all of the following conditions are met:

1.1. Discharge of *interior exit stairways* and *ramps* shall be provided with a free and unobstructed path of travel to an exterior *exit* door and such *exit* is readily visible and identifiable from the point of termination of the enclosure.

1.2. The entire area of the *level of exit discharge* is separated from areas below by construction conforming to the *fire-resistance rating* for the enclosure.

1.3. The egress path from the *interior exit stairway* and *ramp* on the *level of exit discharge* is protected throughout by an *approved automatic sprinkler system*. Portions of the *level of exit discharge* with access to the egress path shall be either equipped throughout with an *automatic sprinkler system* installed in accordance with Section 903.3.1.1 or 903.3.1.2, or separated from the egress path in accordance with the requirements for the enclosure of *interior exit stairways* or *ramps*.

1.4. Where a required *interior exit stairway* or *ramp* and an *exit access stairway* or *ramp* serve the same floor level and terminate at the same *level of exit discharge*, the termination of the *exit access stairway* or *ramp* and the *exit discharge* door of the *interior exit stairway* or *ramp* shall be separated by a distance of not less than 30 feet (9144 mm) or not less than one-fourth the length of the maximum overall diagonal dimension of the building, whichever is less. The distance shall be measured in a straight line between the *exit discharge* door from the *interior exit stairway* or *ramp* and the last tread of the *exit access stairway* or termination of slope of the *exit access ramp*.

2. Not more than 50 percent of the number and minimum width or required capacity of the *interior exit stairways* and *ramps* is permitted to egress through a

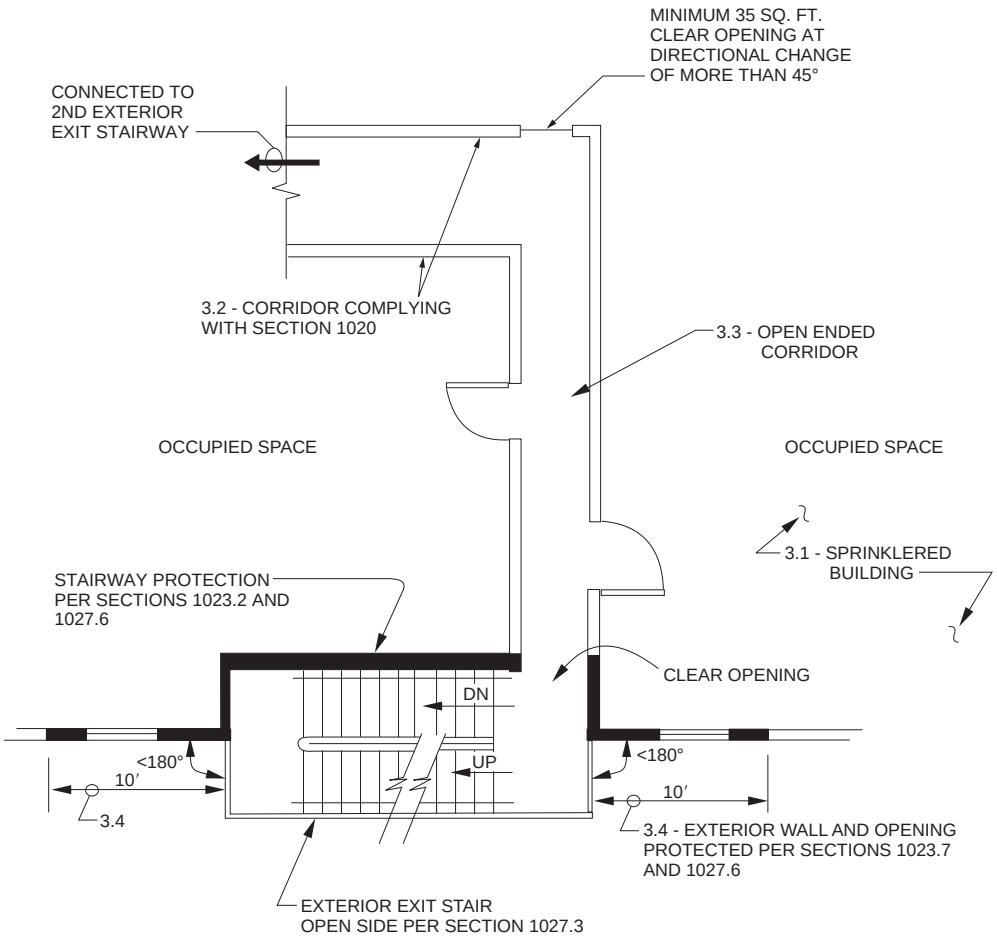

For SI: 1 foot = 304.8 mm.

Figure 1027.6(3)
EXAMPLE OF EXCEPTION 3

INTERNATIONAL CODE COUNCIL®
Copyright © 2015 ICC. ALL RIGHTS RESERVED. Accessed by David Dammon on Jun 21, 2017 12:30:52 PM pursuant to License Agreement with ICC. No further reproduction or distribution authorized. ANY UNAUTHORIZED REPRODUCTION OR DISTRIBUTION IS A VIOLATION OF THE FEDERAL COPYRIGHT ACT AND THE LICENSE AGREEMENT, AND SUBJECT TO CIVIL AND CRIMINAL PENALTIES THEREUNDER.

vestibule provided all of the following conditions are met:

2.1. The entire area of the vestibule is separated from areas below by construction conforming to the *fire-resistance rating* of the *interior exit stairway* or *ramp enclosure*.

2.2. The depth from the exterior of the building is not greater than 10 feet (3048 mm) and the length is not greater than 30 feet (9144 mm).

2.3. The area is separated from the remainder of the *level of exit discharge* by a *fire partition* constructed in accordance with Section 708.

Exception: The maximum transmitted temperature rise is not required.

2.4. The area is used only for *means of egress* and *exits* directly to the outside.

3. *Horizontal exits* complying with Section 1026 shall not be required to discharge directly to the exterior of the building.

❖ The exit discharge is the third piece of the means of egress system, which includes exit access, exit and exit discharge. The general provisions for means of egress in Sections 1003 through 1015 are applicable to the exit discharge. The basic provision is that exits must discharge directly to the outside of the building. The exit discharge is the path from the termination of the exit to the public way. When it is not practical to discharge directly to the outside, there are four alternatives: an exit passageway (see Section 1024), an exit discharge lobby (see Section 1028.1, Exception 1), an exit discharge vestibule (see Section 1028.1, Exception 2) or a horizontal exit (see Sections 1026 and 1028.1, Exception 3). While Exceptions 1 and 2 could be applicable for exit passageways and exit ramps, they are most often applied for exit stairways. The commentary for Section 1027 will be limited to interior exit stairways that are enclosed in accordance with Section 1023 (see Sections 1006 and 1019.3 for exit access stairway requirements). Up to 50 percent of the interior exit stairways in a building may use either Exception 1 or 2; therefore, neither exception is viable for a single-exit building. In a two- or three-exit building, either a lobby or a vestibule can be used for exit discharge for one of the exit stairways. In a four-exit building, two of the exit stairways can use either a lobby or a vestibule for exit discharge.

An interior exit discharge lobby is permitted to receive the discharge from an exit stairway in lieu of the stairway discharging directly to the exterior. A fire door must be provided at the point where the exit stairway discharges into the lobby. Without an opening protective between the stairway and a lobby, it would be possible for the stairway to be directly exposed to smoke movement from a fire in the lobby. The opening protective provides for full continuity of the vertical component of the exit arrangement. Additionally, in buildings where stair towers must be pressurized, pressurization would not be possible without a door at the lobby level.

An exit discharge lobby is the sole location recognized in the code where an exit element can be used for purposes other than pedestrian travel for means of egress. The lobby may contain furniture or decoration and nonoccupiable spaces may open directly into the lobby. The lobby, and all other areas on the same level that are not separated from the lobby by fire barriers consistent with the rating of the stair enclosure, must be sprinklered in accordance with an NFPA 13 or NFPA 13R system [see Commentary Figure 1028.1(1)]. If the entire level is sprinklered, no separation is required. In this case, the automatic sprinkler system is anticipated to control and (perhaps) eliminate the fire threat so as not to jeopardize the path of egress of the occupants. The lobby floor and any supporting construction must be rated the same as the stairway enclosure. If the lobby is slab on grade, this requirement is not applicable. This is consistent with the fundamental concept that an exit enclosure provides the necessary level of protection from adjacent areas. A path of travel through the lobby must be continually clear and available. The exit door leading out of the building must be visible and identifiable immediately when a person leaves the exit. This does not mean the exterior exit door must be directly in front of the door at the bottom of the stairway, but the intent is that it should be within the general range of vision. A person should not have to turn completely around or go around a corner to be able to see the way out.

Item 1.4 addresses when an exit access stairway and an exit stairway both discharge into the same lobby on the ground floor. For example, many hotels have meeting rooms on the level immediately above the lobby. This heavier occupant load, or circulation considerations, may result in an exit access stairway coming down from that second level into the same lobby that is being used for discharge from the upper floors for one of the required exit stairways. This limitation for a 30-foot (9144) separation is to prevent an exit access stairway and an exit stairway from termination too close together on the level of exit discharge. The intent is that one localized fire event in the lobby will not jeopardize the use of both means of egress components. The 30-foot or $^1/_4$ diagonal separation distances were based on the 30-foot or $^1/_4$ diagonal that is specified for separation of interior stairways in a high-rise building (see IBC Section 403.5.1). This measurement is taken only at the bottom of the exit access stairway and the door to the exit enclosure. It is not required to be maintained the entire length of the stairway as required for two exit access stairways in Section 1007.1.3. The enclosure of the exit stairway offers sufficient separation protection. The intent of the exception is to allow for glazing that meets the smoke partition requirements.

INTERNATIONAL CODE COUNCIL®
Copyright © 2015 ICC. ALL RIGHTS RESERVED. Accessed by David Dammon on Jun 21, 2017 12:30:52 PM pursuant to License Agreement with ICC. No further reproduction or distribution authorized. ANY UNAUTHORIZED REPRODUCTION OR DISTRIBUTION IS A VIOLATION OF THE FEDERAL COPYRIGHT ACT AND THE LICENSE AGREEMENT, AND SUBJECT TO CIVIL AND CRIMINAL PENALTIES THEREUNDER.

An exit is also allowed to discharge through a vestibule, provided it complies with the specified requirements of Exception 2. Vestibules utilizing this provision are not to be used for other purposes, such as access to closets, furniture/seating, drinking fountains, vending machines, etc. The vestibule floor and any supporting construction must be rated the same as the stairway enclosure. If the vestibule is slab on grade, this requirement is not applicable. The size of the vestibule is limited so that it cannot be used for other activities, and the travel distance from the exit stairway to the exterior exit doorway is limited [see Commentary Figures 1028.1(2) and 1028.1(3)]. The interior walls of the vestibule must be constructed as fire partitions with a fire-protection rating of at least 1 hour. IBC Section 708 does not reference a specific test standard for fire partitions. As such, fire partitions must comply with ASTM E119 or UL 263 per IBC Section 703.2 (see IBC Section 703.2 for additional commentary on the tests). ASTM E119 and UL 263 have a transmission of heat criterion for nonbearing partitions to be considered as having passed the test. The exception exempts fire partitions for the separation of a vestibule from having to comply with the transmission of heat criterion. Glass panels set in a metal frame can be used for the vestibule as long as they meet the rest of the ASTM E119 criteria.

Exception 3 acknowledges that horizontal exits offer refuge areas that will have access to an exit on the other side; therefore, a stairway that exits through a horizontal exit is not required to exit to the exterior. Many hospitals and correctional facilities use horizontal exits to "defend in place" rather than require an immediate building evacuation. There are exit stairways or exits available from the refuge areas, so occupants can move to the outside if needed (see Section 1026 for additional information).

1028.2 Exit discharge width or capacity. The minimum width or required capacity of the *exit discharge* shall be not less than the minimum width or required capacity of the *exits* being served.

❖ This section specifies the exit discharge width based on minimum width and the number of occupants exiting (capacity). The exit discharge is required to be designed for the occupant from all of the exits it serves. If the exit discharge serves two exits, it is to be designed for the sum of the occupants served by both exits. Note that the capacity of the exit discharge is not required to match the total provided capacity of both exits, which is typically higher than the sum of the occupants served by both exits.

1028.3 Exit discharge components. *Exit discharge* components shall be sufficiently open to the exterior so as to minimize the accumulation of smoke and toxic gases.

❖ An exit discharge component could be a large open space where people could discharge in a number of

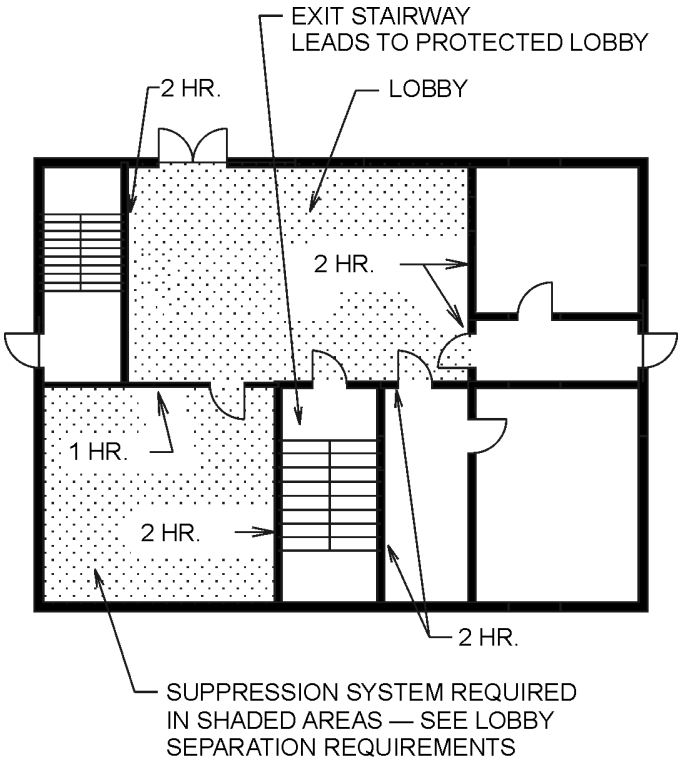

Figure 1028.1(1)
PROTECTION OF LOBBY WITH AN EXIT DISCHARGE

INTERNATIONAL CODE COUNCIL®
Copyright © 2015 ICC. ALL RIGHTS RESERVED. Accessed by David Dammon on Jun 21, 2017 12:30:52 PM pursuant to License Agreement with ICC. No further reproduction or distribution authorized. ANY UNAUTHORIZED REPRODUCTION OR DISTRIBUTION IS A VIOLATION OF THE FEDERAL COPYRIGHT ACT AND THE LICENSE AGREEMENT, AND SUBJECT TO CIVIL AND CRIMINAL PENALTIES THEREUNDER.

different directions or it could be limited to a narrower path by landscaping or walls (i.e., egress court). In all cases, the space must be open enough to the outside that smoke and fumes will vent upward and away from people evacuating the building.

1028.4 Egress courts. *Egress courts* serving as a portion of the *exit discharge* in the *means of egress* system shall comply with the requirements of Sections 1028.4.1 and 1028.4.2.

❖ A portion of the exit discharge that is partially confined by exterior walls or other elements that confine

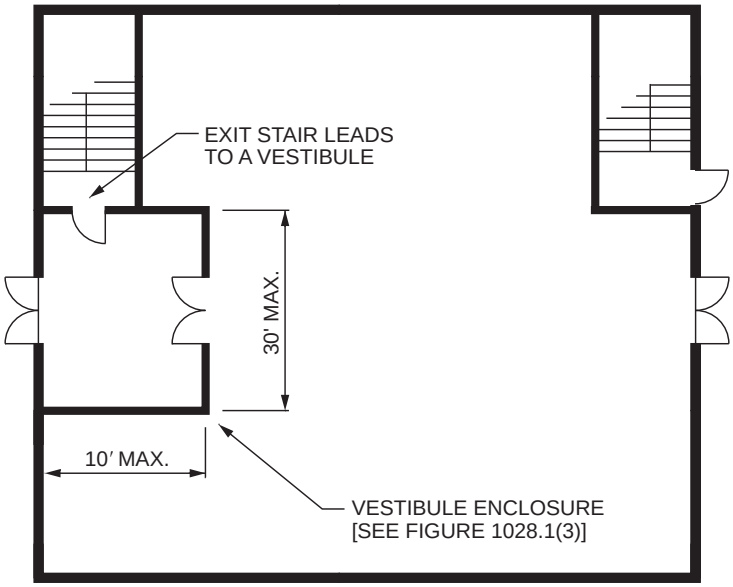

For SI: 1 foot = 304.8 mm.

Figure 1028.1(2)
VESTIBULE WITH EXIT DISCHARGE

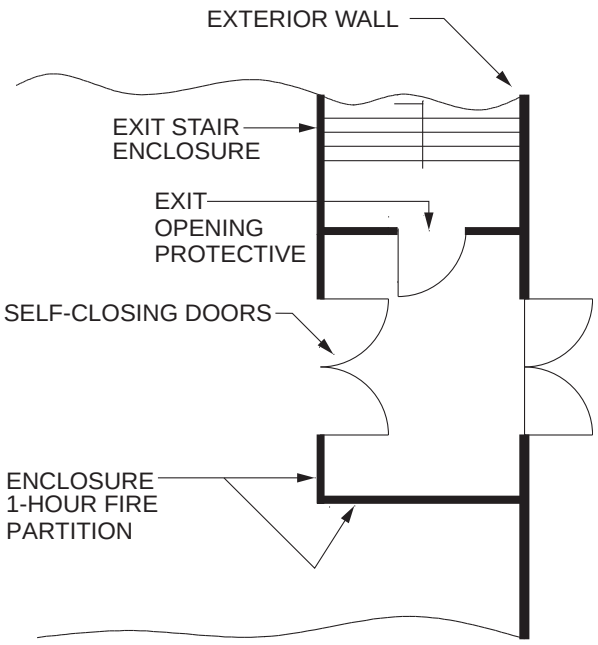

For SI: 1 inch = 25.4 mm.

Figure 1028.1(3)
SEPARATION DETAILS FOR VESTIBULE WITH EXIT DISCHARGE

INTERNATIONAL CODE COUNCIL®
Copyright © 2015 ICC. ALL RIGHTS RESERVED. Accessed by David Dammon on Jun 21, 2017 12:30:52 PM pursuant to License Agreement with ICC. No further reproduction or distribution authorized. ANY UNAUTHORIZED REPRODUCTION OR DISTRIBUTION IS A VIOLATION OF THE FEDERAL COPYRIGHT ACT AND THE LICENSE AGREEMENT, AND SUBJECT TO CIVIL AND CRIMINAL PENALTIES THEREUNDER.

the discharge path to a single narrow route is regulated as an egress court.

This section and the following subsections address the detailed requirements for egress courts. It is essential that exterior egress courts serving occupants from an exit to a public way be sufficiently open to prevent the accumulation of smoke and toxic gases in the event of a fire as well as wide enough to accommodate the number of occupants leaving in that direction.

See IBC Section 1206 for additional minimum width and openness requirements when yards and courts are needed for natural light or ventilation.

1028.4.1 Width or capacity. The required capacity of *egress courts* shall be determined as specified in Section 1005.1, but the minimum width shall be not less than 44 inches (1118 mm), except as specified herein. *Egress courts* serving Group R-3 and U occupancies shall be not less than 36 inches (914 mm) in width. The required capacity and width of *egress courts* shall be unobstructed to a height of 7 feet (2134 mm).

Exception: Encroachments complying with Section 1005.7.

Where an *egress court* exceeds the minimum required width and the width of such *egress court* is then reduced along the path of exit travel, the reduction in width shall be gradual. The transition in width shall be affected by a guard not less than 36 inches (914 mm) in height and shall not create an angle of more than 30 degrees (0.52 rad) with respect to the axis of the *egress court* along the path of egress travel. The width of the *egress court* shall not be less than the required capacity.

❖ The width of an exterior court is to be determined in the same fashion as for an interior corridor. The width is not to be less than required to serve the number of occupants from the exit or exits and not less than the minimum specified in this section (see also IBC Section 1206). A cross reference back to Section 1005.7 for obstructions in the width in aisles (see Section 1018.1), corridors (see Section 1020.3), exit passageways (see Section 1024.2) and exit courts (see Section 1028.4.1) reinforces the fact that the protrusion limits provision is generally applicable for these types of confined routes.

Many egress courts are significantly larger than required. Thus, the code allows such an egress court to decrease in width along the path of travel to the public way. The gradual transition requirement is so the flow of the occupants will be uniform without pockets of congestion. The transition requirements should be applied to egress courts where a reduction results in a width that is near the minimum based on the number of occupants served. It is this condition where the uniform flow of occupants is essential.

1028.4.2 Construction and openings. Where an *egress court* serving a building or portion thereof is less than 10 feet (3048 mm) in width, the *egress court* walls shall have not less than 1-hour *fire-resistance-rated* construction for a distance of 10 feet (3048 mm) above the floor of the *egress court*. Openings within such walls shall be protected by opening protectives having a fire protection rating of not less than $^3/_4$ hour.

Exceptions:

1. *Egress courts* serving an *occupant load* of less than 10.
2. *Egress courts* serving Group R-3.

❖ The purpose of this section is to protect the occupants served by the egress court from the building that they are exiting from. If occupants must walk closely by the exterior walls of the court, the walls are required to have the specified fire-resistance rating and the openings are required to be protected as specified. This requirement is only for the first 10 feet (3048 mm) above the level of the egress court since the exposure hazard from walls and openings above 10 feet (3048 mm) is reduced. The two exceptions provide for egress courts that serve a very low number of occupants and the specified residential occupancy where the protection requirement would be located.

1028.5 Access to a public way. The *exit discharge* shall provide a direct and unobstructed access to a *public way*.

Exception: Where access to a *public way* cannot be provided, a safe dispersal area shall be provided where all of the following are met:

1. The area shall be of a size to accommodate not less than 5 square feet (0.46 m^2) for each person.
2. The area shall be located on the same lot not less than 50 feet (15 240 mm) away from the building requiring egress.
3. The area shall be permanently maintained and identified as a safe dispersal area.
4. The area shall be provided with a safe and unobstructed path of travel from the building.

❖ There are instances where the path of travel to the public way is not safe or not achievable because of site constraints or security concerns. The provisions in this section specify what would constitute a safe area to allow occupants of a building to assemble in an emergency. The requirement of 5 square feet (0.28 m^2) would allow adequate space for standing persons as well as some space for persons in wheelchairs or on stretchers. Everyone who is expected to wait in this dispersal area for fire department assistance must be a minimum of 50 feet (15 240 mm) away from the building. This refuge must always remain open and not be used for parking, storage or temporary structures. A safe dispersal area is commonly found at schools or jails. Stadiums are more specifically addressed in Section 1010.2.1. Walls or fences may surround the building and part of the site due to other safety concerns. These walls and fences could stop occupants from reaching the public way.

INTERNATIONAL CODE COUNCIL®
Copyright © 2015 ICC. ALL RIGHTS RESERVED. Accessed by David Dammon on Jun 21, 2017 12:30:52 PM pursuant to License Agreement with ICC. No further reproduction or distribution authorized. ANY UNAUTHORIZED REPRODUCTION OR DISTRIBUTION IS A VIOLATION OF THE FEDERAL COPYRIGHT ACT AND THE LICENSE AGREEMENT, AND SUBJECT TO CIVIL AND CRIMINAL PENALTIES THEREUNDER.

SECTION 1029
ASSEMBLY

1029.1 General. A room or space used for assembly purposes that contains seats, tables, displays, equipment or other material shall comply with this section.

❖ Any room that is used for assembly purposes, regardless of the occupancy of the rest of the building, must comply with this section. Spaces used for assembly seating may appear in buildings of other occupancy types; for example, a library in a school, or a meeting room in an office building. This includes spaces with less than 50 occupants in other occupancies. For evaluation of the occupant load and the means of egress in these spaces, these spaces are regulated based on their function, rather than their occupancy group.

Although most of the provisions in Section 1029 focus on fixed seating auditoriums or theaters, this section also addresses loose seats, tables, displays, equipment, etc. Rooms or spaces used for assembly purposes contain elements that would affect the path of travel for the means of egress. These spaces require special consideration because of the larger occupant loads and possible low lighting (e.g., nightclubs, theaters), which can possibly lead to slower fire recognition or crowd concerns.

Since this section is extensive, here is a basic breakdown:

- Sections 1029.1.1 and 1029.1.1.1 deal with bleachers and grandstands.
- Sections 1029.3 through 1029.5 deal with number and dispersement of exits.
- Section 1029.6 and subsections discuss aisle widths based on the required capacity.
- Sections 1029.7 and 1029.8 are for travel distances and aisle accessways.
- Section 1029.9 deals with where aisles are required, minimum widths, and layouts. This includes provisions for where stairways are a direct continuation of a stepped aisle (Sections 1029.9.7 through 1029.10.3).
- Section 1029.11 discusses types of materials and walking surfaces.
- Section 1029.12 covers the aisle accessways that lead to the main aisles as they move through tables (Section 1029.12.1) and seating in rows (Section 1029.12.2).
- Section 1029.13 deals with slope, landings and edge protection for ramped aisles (Sections 1029.13.1 through 1029.13.1.3) and treads and risers for stepped aisles (Sections 1029.13.2 through 1029.13.2.4).
- Section 1029.14 discusses where seating needs to be fastened to the floor in order for aisles and accessways to be maintained.
- Section 1029.15 includes handrail provisions for ramped and stepped aisles.
- Section 1029.16 states where guards are required.

1029.1.1 Bleachers. *Bleachers*, *grandstands* and *folding and telescopic seating*, that are not building elements, shall comply with ICC 300.

❖ On February 24, 1999, the Bleacher Safety Act of 1999 was introduced in the House of Representatives. The bill, which cites the ICC and the code, authorizes the U.S. Consumer Product Safety Commission (CPSC) to issue a standard for bleacher safety. This was in response to concerns relative to accidents on bleacher-type structures. As a result, the CPSC developed and revised the *Guidelines for Retrofitting Bleachers*. The ICC Board of Directors decided that a comprehensive standard dealing with all aspects of both new and existing bleachers was warranted and authorized the formation of the ICC Consensus Committee on Bleacher Safety. The committee is composed of 12 members, including the requisite balance of general, user interest and producer interest.

ICC 300 was completed in December 2001, and submitted to ANSI on January 1, 2002. ICC 300 was reissued with some revisions in 2007 and 2012. While the term "bleachers" is generic, the standard addresses all aspects of tiered seating associated with bleachers, grandstands, and folding and telescopic seating. These types of seating are supported on dedicated structural systems, which in turn may sit on the ground or on a building floor system. Single seats or bench seats bolted down to a stepped floor are not considered a bleacher or grandstand and should comply with Section 1029. See the definitions in Chapter 2 for "Building element," "Bleachers," "Grandstands" and "Folding and telescopic seating." While ICC 300 is consistent and also relies on Chapter 10 of the code for some provisions, the standard addresses items specific to these types of seating arrangements. For example, the minimum number of exits from a bleacher is addressed in ICC 300, IBC Section 404.1; however, to determine the minimum number of exits from the room the bleacher is located in, Section 1006 is applicable. The bleacher standard references IBC Chapter 11 and ICC A117.1 for accessibility requirements.

The ICC 300 has minimum requirements for new, alterations, repair, operation and maintenance of bleacher systems. A bleacher or grandstand is defined as "Tiered seating supported on a dedicated structural system and two or more rows high and is not a building element." The intent of the terms "dedicated structural system" and "not a building element" in the definition is to recognize that bleacher systems sit on the floor or ground and have a support system separate from the building system. However, the bleacher could rely on the building system for lateral or gravity support. The intent of "two or more rows" is

INTERNATIONAL CODE COUNCIL®
Copyright © 2015 ICC. ALL RIGHTS RESERVED. Accessed by David Dammon on Jun 21, 2017 12:30:52 PM pursuant to License Agreement with ICC. No further reproduction or distribution authorized. ANY UNAUTHORIZED REPRODUCTION OR DISTRIBUTION IS A VIOLATION OF THE FEDERAL COPYRIGHT ACT AND THE LICENSE AGREEMENT, AND SUBJECT TO CIVIL AND CRIMINAL PENALTIES THEREUNDER.

so that a tiered floor system with a bench or row of seats on each tier would not be considered a bleacher.

The criteria in ICC 300 include provisions for construction; means of egress within the bleacher system; inspection and maintenance for existing bleachers; and for when seating systems are relocated.

1029.1.1.1 Spaces under grandstands and bleachers. Where spaces under *grandstands* or *bleachers* are used for purposes other than ticket booths less than 100 square feet (9.29 m^2) and toilet rooms, such spaces shall be separated by *fire barriers* complying with Section 707 and *horizontal assemblies* complying with Section 711 with not less than 1-hour *fire-resistance-rated* construction.

❖ Sometimes spaces under grandstands are used for other purposes such as bathrooms, concession stands, storage, etc. If that space caught on fire, it could jeopardize the safe evacuation options for persons on the bleachers. For safety, the spaces below must be separated from the bleachers by fire-resistance-rated construction. This is typically the roof and back walls of the concession stand or storage room. If the space below is either a small ticket booth or bathrooms of any size, the potential fire load is low enough that these spaces are not required to be separated.

Note that Section 903.2.1.5 requires enclosed spaces with an area of over 1,000 square feet (93 m^2) and under an outdoor bleacher system to be sprinklered.

While the path for means of egress passing under the bleachers (i.e., vomitory) is not specifically addressed in this section, when a bleacher system is outside, the capacity factors for determining minimum egress width [Table 404.5(3) of ICC 300] are based on the assumption that the egress route is essentially open to the outside and, therefore, has a limited chance for the accumulation of smoke along that route. Two of the three legacy codes specifically exempted open means of egress routes under bleachers from separation requirements.

1029.2 Assembly main exit. A building, room or space used for assembly purposes that has an *occupant load* of greater than 300 and is provided with a main *exit*, that main *exit* shall be of sufficient capacity to accommodate not less than one-half of the *occupant load*, but such capacity shall be not less than the total required capacity of all *means of egress* leading to the *exit*. Where the building is classified as a Group A occupancy, the main *exit* shall front on not less than one street or an unoccupied space of not less than 10 feet (3048 mm) in width that adjoins a street or *public way*. In a building, room or space used for assembly purposes where there is not a well-defined main *exit* or where multiple main *exits* are provided, *exits* shall be permitted to be distributed around the perimeter of the building provided that the total capacity of egress is not less than 100 percent of the required capacity.

❖ Assembly buildings, as well as other buildings including spaces that function as assembly spaces (e.g., the band classroom in a school, the training room in an office, the cafeteria in a large factory), present an unusual life safety problem that includes frequent higher occupant densities and, therefore, larger occupant loads and the opportunity for irrational mass response to a perceived emergency (i.e., panic). For this reason, the code requires a specific arrangement of the exits. Studies have indicated that in any emergency, occupants will tend to egress via the same path of travel used to enter the room and building. Therefore, a main entrance to the building or space must also be designed as the main exit to accommodate this behavior, even if the required exit capacity might be more easily accommodated elsewhere. The main entrance (and exit) must be sized to accommodate at least 50 percent of the total occupant load of the structure and must front on a large, open space, such as a street or lobby, for rapid dispersal of the occupants outside the building or space. The remaining exits must also accommodate at least 50 percent of the total occupant load from each level (see Commentary Figure 1029.2). The total occupant load includes those within the theater seating area, the foyer and any other space (e.g., ticket booth, concession stand, offices, storage and the like). When the assembly space is within a mixed use building, the intent is that the main exits from the space comply with these provisions for one-half the capacity, but not necessarily that they lead directly to the outside. Egress requirements from the building would depend on how it was anticipated for the assembly space occupants to disperse. For example, an office building may have a large training/conference room where the path of exit access travel from the room goes out a main exit from the space and then disseminates into the general floor egress system. The room exit access doors may need to meet the 50-percent criterion, but once the occupants leave the room and enter the general floor egress system, exit capacity can be dispersed.

The required width of the means of egress in places of assembly is more often determined by the occupant load than in most other occupancies. In other occupancies, the minimum required widths and the travel distances will often determine the required widths and locations of the exits.

This section only requires the main exit to accommodate 50 percent of the occupant load when there is a single main entrance. Therefore, a large stadium or civic center, in which there are numerous entrances (and exits), need not comply with the main entrance criteria.

1029.3 Assembly other exits. In addition to having access to a main *exit*, each level in a building used for assembly purposes having an *occupant load* greater than 300 and provided with a main *exit*, shall be provided with additional *means of egress* that shall provide an egress capacity for not less than one-half of the total *occupant load* served by that level and shall comply with Section 1007.1. In a building used for assembly purposes where there is not a well-defined main

INTERNATIONAL CODE COUNCIL®
Copyright © 2015 ICC. ALL RIGHTS RESERVED. Accessed by David Dammon on Jun 21, 2017 12:30:52 PM pursuant to License Agreement with ICC. No further reproduction or distribution authorized. ANY UNAUTHORIZED REPRODUCTION OR DISTRIBUTION IS A VIOLATION OF THE FEDERAL COPYRIGHT ACT AND THE LICENSE AGREEMENT, AND SUBJECT TO CIVIL AND CRIMINAL PENALTIES THEREUNDER.

exit or where multiple main *exits* are provided, *exits* for each level shall be permitted to be distributed around the perimeter of the building, provided that the total width of egress is not less than 100 percent of the required width.

❖ This section provides for the egress of one-half of the total occupant load by way of exits other than the main exit that is described in Section 1029.2. Assembly buildings, as well as other buildings including spaces that function as assembly spaces, that are provided with multiple entrances but no single main entrance do not provide a well-defined main exit; therefore, the total required exit width needs to be distributed around the perimeter of the space or building. Examples of these assemblies would be a school gymnasium or a large stadium or civic center in which there are numerous entrances (and exits).

1029.4 Foyers and lobbies. In Group A-1 occupancies, where persons are admitted to the building at times when seats are not available, such persons shall be allowed to wait in a lobby or similar space, provided such lobby or similar space shall not encroach upon the minimum width or required capacity of the *means of egress*. Such foyer, if not directly connected to a public street by all the main entrances or *exits*, shall have a straight and unobstructed *corridor* or path of travel to every such main entrance or *exit*.

❖ In theaters, people may arrive and wait for the next show while another group has yet to exit. This is extremely common in multiplex theater complexes. In every case, the main entrance (exit) and all other exits are to be constantly available for the entire building occupant load.

For example, because of the queuing of large crowds, particularly in theaters where a performance may be in progress and people must wait to attend the next one, standing space is often provided. For reasons of safety, such spaces cannot be located in or interfere with established paths of egress from the assembly areas. While a facility may choose to separate the route for means of egress using partitions or railings from the general lobby space to allow for easy traffic flow through the lobby to the street, it is not required to designate these areas (see Commentary Figure 1029.2).

1029.5 Interior balcony and gallery means of egress. For balconies, galleries or press boxes having a seating capacity of 50 or more located in a building, room or space used for assembly purposes, not less than two *means of egress* shall be provided, with one from each side of every balcony, gallery or press box.

❖ This section states the threshold where two means of egress are required based on the occupant load of the interior balcony, gallery or press box. Those two exits need to be dispersed. Section 1019.3, Exception 8, allows for both stairways to be unenclosed exit access stairways where they are effectively part of the main seating bowl. These requirements will ensure that at least one path of travel is always available and occupants face a minimum number of hazards.

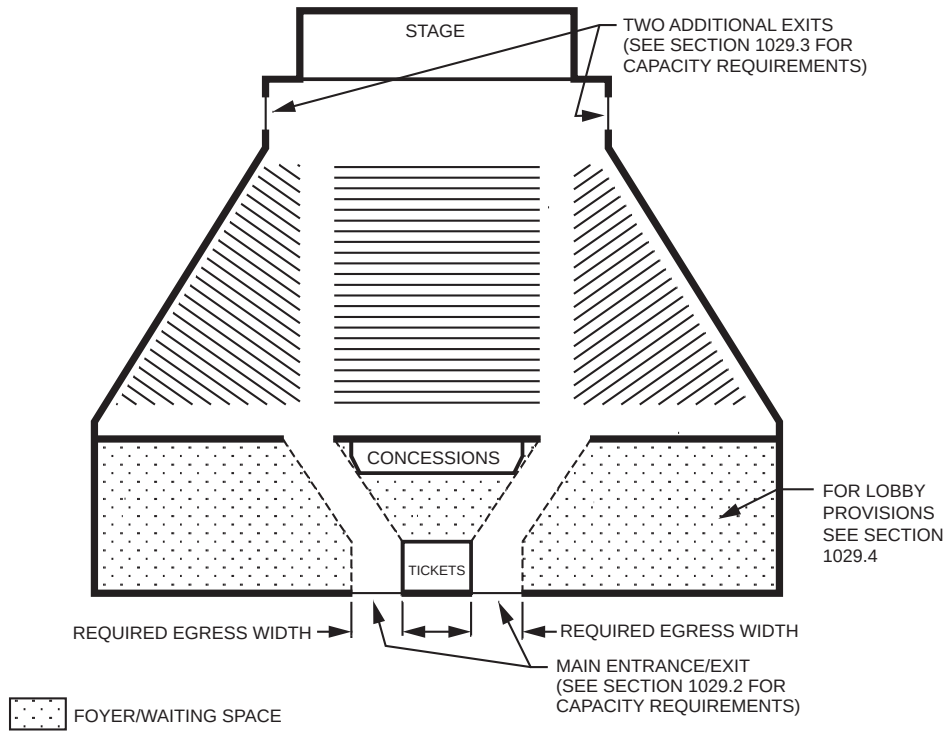

Figure 1029.2
GROUP A-1 WITH WAITING SPACE

INTERNATIONAL CODE COUNCIL®
Copyright © 2015 ICC. ALL RIGHTS RESERVED. Accessed by David Dammon on Jun 21, 2017 12:30:52 PM pursuant to License Agreement with ICC. No further reproduction or distribution authorized. ANY UNAUTHORIZED REPRODUCTION OR DISTRIBUTION IS A VIOLATION OF THE FEDERAL COPYRIGHT ACT AND THE LICENSE AGREEMENT, AND SUBJECT TO CIVIL AND CRIMINAL PENALTIES THEREUNDER.

For balconies, galleries or press boxes with 50 or fewer occupants, see Section 1029.8. When balconies, galleries or press boxes contain wheelchair spaces, the area must also meet the accessible means of egress requirements (Sections 1009.1, Exception 3, and 1029.8).

1029.6 Capacity of aisle for assembly. The required capacity of *aisles* shall be not less than that determined in accordance with Section 1029.6.1 where *smoke-protected assembly seating* is not provided and with Section 1029.6.2 or 1029.6.3 where *smoke-protected assembly seating* is provided.

❖ The means of egress width for spaces used for assembly is to be in accordance with this section and the referenced sections instead of the criteria specified in Section 1005 when dealing with the means of egress within the seating area. The width factors in Section 1029.6 and its subsections apply to those doorways, passageways, stepped aisles, ramped aisles and level aisles that are within the assembly seating areas.

The Board for the Coordination of Model Codes (BCMC) issued a report on means of egress dated June 10, 1985. The provisions in Section 1029 are based on this report. This report limits the application of these provisions to aisles and aisle accessways that provide exit access within the room or space with the assembly seating. This would include aisle accessways, level aisles, stepped aisles and ramped aisles. The primary concern for occupant safety would be that where the different provisions for the capacity requirements in Sections 1005 and 1029 were utilized, there would not be a bottleneck in the path of travel for means of egress. For example, a common configuration at football fields is to have the seating area raised several feet above grade. Where a step or series of steps leading to grade from a raised seating area are a continuation of the stepped aisle, the width of the stepped aisle between seats and the continuation without adjacent seats should be the same. In theaters, commonly the occupants leave the seating area for a concourse or lobby area that leads to exit stairways between floor levels. In this situation, the capacity requirement in Section 1005.3 would be applicable for the exit stairway. For the many situations between these two scenarios, the decision would be based on the configuration of the seating and exit stairways between levels.

For example, in a facility without smoke protection and an occupant load of 800, doorways would need to be calculated based on 0.20 inches (5.1 mm) per occupant (see Item 4 of Section 1029.6.1). An occupant load of 800 x 0.2 inches (4064 mm) = 160 inches (4064 mm) of egress width capacity, which translates into not less than five doors [assuming each with a minimum 32-inch (813 mm) clear opening]. This facility needs to have not less than three distinct means of egress (Section 1006.3). A main exit must accommodate not less than one-half of the occupant load (Section 1029.2). Therefore, the result would be not less than six doors: three located at the main exit and three others distributed to at least two other locations (Section 1029.3).

Different means of egress width criteria are also specified for assembly seating where smoke protection is provided versus areas where smoke protection is not provided. The egress width for smoke-protected seating is allowed to be less than for areas where smoke protection is not provided, since the smoke level is required to be maintained at least 6 feet (1829 mm) above the floor of the means of egress, according to Section 1029.6.2.1.

1029.6.1 Without smoke protection. The required capacity in inches (mm) of the *aisles* for assembly seating without smoke protection shall be not less than the *occupant load* served by the egress element in accordance with all of the following, as applicable:

1. Not less than 0.3 inch (7.6 mm) of *aisle* capacity for each occupant served shall be provided on stepped *aisles* having riser heights 7 inches (178 mm) or less and tread depths 11 inches (279 mm) or greater, measured horizontally between tread *nosings*.
2. Not less than 0.005 inch (0.127 mm) of additional *aisle* capacity for each occupant shall be provided for each 0.10 inch (2.5 mm) of riser height above 7 inches (178 mm).
3. Where egress requires stepped *aisle* descent, not less than 0.075 inch (1.9 mm) of additional *aisle* capacity for each occupant shall be provided on those portions of *aisle* capacity having no *handrail* within a horizontal distance of 30 inches (762 mm).
4. Ramped *aisles*, where slopes are steeper than one unit vertical in 12 units horizontal (8-percent slope), shall have not less than 0.22 inch (5.6 mm) of clear *aisle* capacity for each occupant served. Level or ramped *aisles*, where slopes are not steeper than one unit vertical in 12 units horizontal (8-percent slope), shall have not less than 0.20 inch (5.1 mm) of clear *aisle* capacity for each occupant served.

❖ This section prescribes the criteria needed to calculate the clear widths of aisles and aisle accessways in order to provide sufficient capacity to handle the occupant loads established by the "catchment areas" described in Section 1029.9.2. Clear width is to be measured to walls, edges of seating and tread edges.

The criteria for determining the required widths are based on analytical studies and field tests that used people to model egress situations [see Commentary Figures 1029.6.1(1) and 1029.6.1(2)].

Criterion 1 addresses the method for determining the required egress width for stepped aisles. This method corresponds with the requirements of Section 1005.3.1 for egress width per occupant of stairways in an unsprinklered building.

Criterion 2 addresses the method for determining the additional stepped aisle width required where the risers along that stepped aisle are greater than 7 inches (178 mm) high.

INTERNATIONAL CODE COUNCIL®
Copyright © 2015 ICC. ALL RIGHTS RESERVED. Accessed by David Dammon on Jun 21, 2017 12:30:52 PM pursuant to License Agreement with ICC. No further reproduction or distribution authorized. ANY UNAUTHORIZED REPRODUCTION OR DISTRIBUTION IS A VIOLATION OF THE FEDERAL COPYRIGHT ACT AND THE LICENSE AGREEMENT, AND SUBJECT TO CIVIL AND CRIMINAL PENALTIES THEREUNDER.

Criterion 3 addresses the method for determining the additional stepped aisle width where a handrail is not located within 30 inches (762 mm). With a center handrail, that would be stepped aisles wider than 60 inches (1524 mm). Side aisles have handrails along the wall. If the handrail is the top of the guard, then this requirement would apply to any side aisles greater than 30 inches (762 mm) wide. Because of the increased chance of falling and not being within reach of a handrail, the capacity per occupant is increased by 25 percent for the entire stepped aisle. For example, to calculate the capacity of a 72-inch-wide (1829 mm) stepped aisle, the answer would be 72 inches/0.375 inch = 192 occupants.

Criterion 4 addresses the method for determining the required widths for level or ramped and level means of egress. Where slopes are less than 1:12 (see definition for "Ramp"), the capacity requirements are also less. Level floors are quicker to negotiate than ramped surfaces for persons with limited mobility. Ramped aisle slopes are addressed in Section 1029.13.1.

These provisions are applicable within the seating area itself. When the occupants have left the seating bowl and have moved to stairways outside of the room, or have moved to cross aisles and then stairways or ramps leaving the balcony level, Section 1005.3 would be applicable. See Sections 1029.9.6.1 through 1029.10.3 for stairways that are a direct continuation of stepped aisles.

1029.6.2 Smoke-protected assembly seating. The required capacity in inches (mm) of the aisle for *smoke-protected assembly seating* shall be not less than the occupant load served by the egress element multiplied by the appropriate factor in Table 1029.6.2. The total number of seats specified shall be those within the space exposed to the same smoke-protected environment. Interpolation is permitted between the specific values shown. A life safety evaluation, complying with NFPA 101, shall be done for a facility utilizing the reduced width requirements of Table 1029.6.2 for *smoke-protected assembly seating.*

Exception: For outdoor *smoke-protected assembly seating* with an *occupant load* not greater than 18,000, the required capacity in inches (mm) shall be determined using the factors in Section 1029.6.3.

❖ Special consideration is given to facilities with features that will prevent the means of egress from being blocked by smoke. Facilities to be considered smoke protected by Sections 1029.6.2.1 through 1029.6.2.3 are permitted increases in travel distance, egress capacity, and dead-end aisle and row lengths. Smoke control increases allowable egress time. Typically, model codes based on research by Dr. John Fruin and others recognize the need for occupants exposed to the fire environment to evacuate to a safe

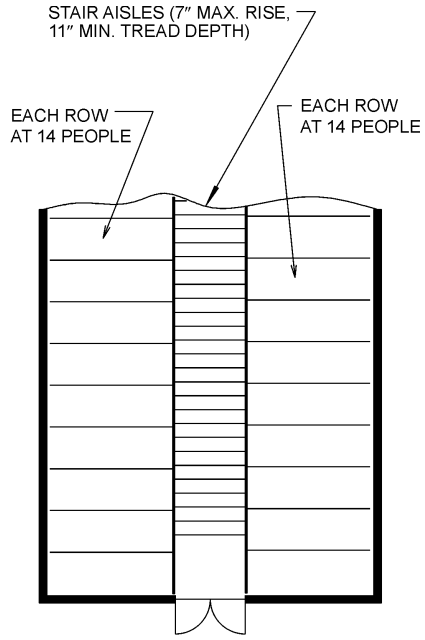

For SI: 1 inch = 25.4 mm.

Figure 1029.6.1(1)
COMPUTATION OF WIDTH FOR STEPPED AISLES

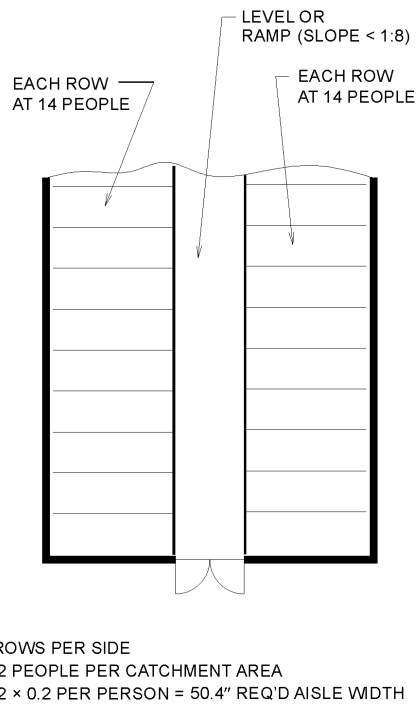

For SI: 1 inch = 25.4 mm.

Figure 1029.6.1(2)
COMPUTATION OF WIDTH FOR LEVEL, SLOPED OR RAMPED AISLES

INTERNATIONAL CODE COUNCIL®
Copyright © 2015 ICC. ALL RIGHTS RESERVED. Accessed by David Dammon on Jun 21, 2017 12:30:52 PM pursuant to License Agreement with ICC. No further reproduction or distribution authorized. ANY UNAUTHORIZED REPRODUCTION OR DISTRIBUTION IS A VIOLATION OF THE FEDERAL COPYRIGHT ACT AND THE LICENSE AGREEMENT, AND SUBJECT TO CIVIL AND CRIMINAL PENALTIES THEREUNDER.

area within 90 seconds of notification and to reach the exterior or enclosed exit stairway within 5 minutes. With the increases permitted for smoke-protected facilities, these times are effectively doubled since the time available for safe egress also increases.

The exception is a pointer to the specific criteria for outdoor seating areas. For outdoor stadiums with 18,000 seats or greater, use Table 1029.6.2.

TABLE 1029.6.2. See page 10-187.

❖ This section requires the egress component to be of adequate size to accommodate the occupant load. For smoke-protected seating, the egress width per occupant is based on Table 1029.6.2. Typically, the larger the facility, the higher the ceiling; therefore, more space for smoke containment is associated with more time for egress. The egress width per occupant for nonsmoke-protected seating is to be based on Section 1029.6.1 and is similar to the provisions in Section 1005.3.

Where the entire means of egress is smoke protected, the concourse and any stairways and ramps can also use the same capacity numbers (see Section 1005.3.1, Exception 2, and Section 1005.3.2, Exception 2) to determine egress width. If the concourse surrounding the smoke-protected seating bowl is not also smoke protected, the requirements in Sections 1005.3.2 and 1005.3.1 would be applicable to determine widths required for capacity of the concourse, stairways and ramps providing means of egress from the seating bowl to the exterior of the building. See Sections 1029.9.6.1 through 1029.10.3 for stairways that are a direct continuation of stepped aisles.

1029.6.2.1 Smoke control. *Aisles* and *aisle accessways* serving a *smoke-protected assembly seating* area shall be provided with a smoke control system complying with Section 909 or natural ventilation designed to maintain the smoke level not less than 6 feet (1829 mm) above the floor of the *means of egress*.

❖ The means of egress (aisles and aisle accessways) within the assembly seating area are required to have some type of smoke control system that will prevent smoke buildup from encroaching on the egress path. This may be a mechanical smoke control system, designed in accordance with Section 909, or natural ventilation as in open-air stadiums.

In either type of system, the major consideration is that a smoke-free environment be maintained at least 6 feet (1829 mm) above the floor of the means of egress for a period of at least 20 minutes.

1029.6.2.2 Roof height. A *smoke-protected assembly seating* area with a roof shall have the lowest portion of the roof deck not less than 15 feet (4572 mm) above the highest *aisle* or *aisle accessway*.

Exception: A roof canopy in an outdoor stadium shall be permitted to be less than 15 feet (4572 mm) above the highest *aisle* or *aisle accessway* provided that there are no objects less than 80 inches (2032 mm) above the highest *aisle* or *aisle accessway*.

❖ One element of a smoke-protected assembly seating facility is that the lowest portion of the roof is required to be at least 15 feet (4572 mm) above the highest aisle or aisle accessway. The objective of this provision is to have a minimum 6-foot (1829 mm) smoke-free height to accommodate safe egress through the area. The additional 9 feet (2743 mm) of height is to provide a volume of space that will act to dissipate smoke. The measurement of the height is shown in Commentary Figures 1029.6.2.2(1) and 1029.6.2.2(2).

1029.6.2.3 Automatic sprinklers. Enclosed areas with walls and ceilings in buildings or structures containing *smoke-protected assembly seating* shall be protected with an *approved automatic sprinkler system* in accordance with Section 903.3.1.1.

Exceptions:

1. The floor area used for contests, performances or entertainment provided the roof construction is more than 50 feet (15 240 mm) above the floor level and the use is restricted to low-fire-hazard uses.
2. Press boxes and storage facilities less than 1,000 square feet (93 m^2) in area.
3. Outdoor seating facilities where seating and the *means of egress* in the seating area are essentially open to the outside.

❖ If there are areas in the smoke-protected assembly seating structure enclosed by walls and ceilings, the entire structure is to be provided with an automatic sprin-

TABLE 1029.6.2
WIDTH OF AISLES FOR SMOKE-PROTECTED ASSEMBLY

TOTAL NUMBER OF SEATS IN THE SMOKEPROTECTED ASSEMBLY SEATING	INCHES OF CLEAR WIDTH PER SEAT SERVED			
	Stairs and aisle steps with handrails within 30 inches	Stairs and aisle steps without handrails within 30 inches	Passageways, doorways and ramps not steeper than 1 in 10 in slope	Ramps steeper than 1 in 10 in slope
Equal to or less than 5,000	0.200	0.250	0.150	0.165
10,000	0.130	0.163	0.100	0.110
15,000	0.096	0.120	0.070	0.077
20,000	0.076	0.095	0.056	0.062
Equal to or greater than 25,000	0.060	0.075	0.044	0.048

For SI: 1 inch = 25.4 mm.

INTERNATIONAL CODE COUNCIL®
Copyright © 2015 ICC. ALL RIGHTS RESERVED. Accessed by David Dammon on Jun 21, 2017 12:30:52 PM pursuant to License Agreement with ICC. No further reproduction or distribution authorized. ANY UNAUTHORIZED REPRODUCTION OR DISTRIBUTION IS A VIOLATION OF THE FEDERAL COPYRIGHT ACT AND THE LICENSE AGREEMENT, AND SUBJECT TO CIVIL AND CRIMINAL PENALTIES THEREUNDER.

kler designed to meet the requirements of NFPA 13.

Exception 1 indicates that the area over the playing field or performance area is not required to be sprinklered if the use of the floor area is restricted. If the facility is used for conventions, trade shows, displays or similar purposes, sprinklers are required throughout, since the occupancy would no longer be a low-fire-hazard use. A characteristic of a low-fire-hazard occupancy is that the fuel load caused by combustibles is approximately 2 pounds per square foot (9.8 kg/m^2) or less.

In order for the contest, performance or entertainment area to be nonsprinklered, the roof over that area must be at least 50 feet (15 240 mm) above the floor in addition to the floor area meeting the-low fire-hazard criteria. The 50-foot (15 240 mm) criterion was selected because the response time for sprinklers at this height is extremely slow. It is estimated that the response time for standard sprinklers [50 feet (15 240 mm) above a floor with a fire having a heat release rate of 5 British thermal units (Btu) per square foot per second] exceeds 15 minutes. Therefore, it is not reasonable to install sprinklers at that height with little expectation of timely activation [see Commen-

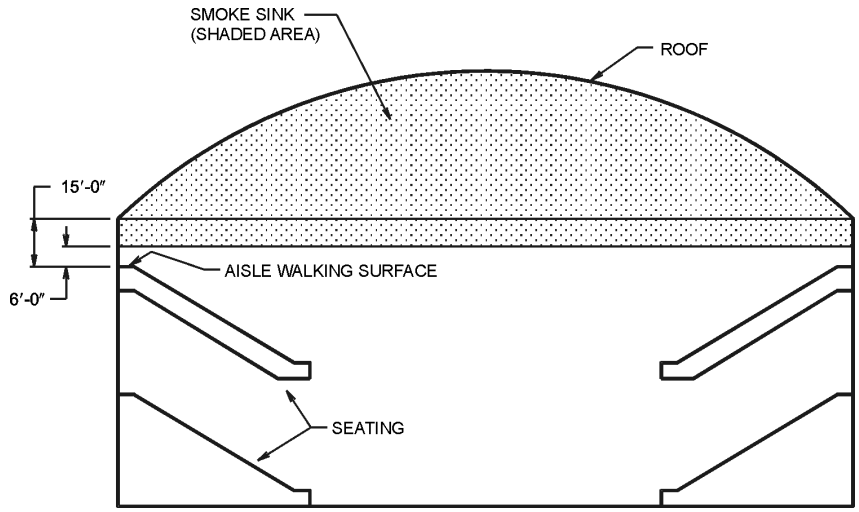

For SI: 1 foot = 304.8 mm.

Figure 1029.6.2.2(1)
ROOF HEIGHT (CONVEX DOME ROOF)

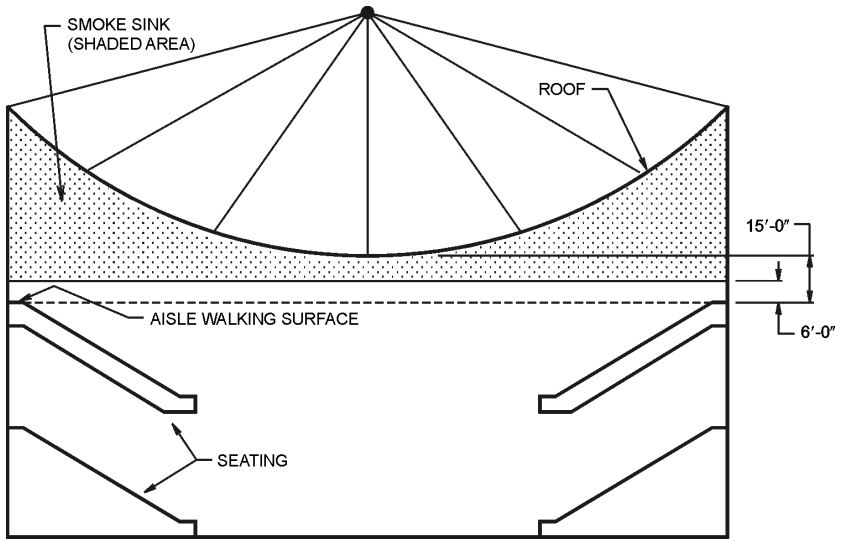

For SI: 1 foot = 304.8 mm.

Figure 1029.6.2.2(2)
ROOF HEIGHT (CONCAVE SUSPENDED ROOF)

INTERNATIONAL CODE COUNCIL®
Copyright © 2015 ICC. ALL RIGHTS RESERVED. Accessed by David Dammon on Jun 21, 2017 12:30:52 PM pursuant to License Agreement with ICC. No further reproduction or distribution authorized. ANY UNAUTHORIZED REPRODUCTION OR DISTRIBUTION IS A VIOLATION OF THE FEDERAL COPYRIGHT ACT AND THE LICENSE AGREEMENT, AND SUBJECT TO CIVIL AND CRIMINAL PENALTIES THEREUNDER.

tary Figure 1029.6.2.3(1)]. Note that if this exception is utilized, the tradeoffs for a fully sprinklered building, such as increased height and area limitations or decreased corridor ratings, are no longer permitted.

Exception 2 indicates that automatic sprinklers are not required in small spaces in buildings. Sprinklers are required in press box and storage areas of outdoor facilities when the area exceeds 1,000 square feet (93 m^2). The primary reason for sprinklers in these areas is that both are anticipated to have a relatively large combustible load when compared to the main seating and participant areas. Additionally, in the case of storage areas, there is an increased potential for an undetected fire condition to occur [see Commentary Figure 1029.6.2.3(2)].

Exception 3 provides for outdoor seating facilities where smoke entrapment is not a safety concern.

1029.6.3 Outdoor smoke-protected assembly seating. The required capacity in inches (mm) of *aisles* shall be not less than the total *occupant load* served by the egress element multiplied by 0.08 (2.0 mm) where egress is by stepped *aisle* and multiplied by 0.06 (1.52 mm) where egress is by level *aisles* and ramped *aisles*.

Exception: The required capacity in inches (mm) of *aisles* shall be permitted to comply with Section 1029.6.2 for the number of seats in the outdoor *smoke-protected assembly seating* where Section 1029.6.2 permits less capacity.

❖ This section lists the coefficients determining the width of aisles required for outdoor smoke-protected assembly seating areas. Note that the coefficients are significantly less when compared to the values in Section 1029.6.1 for assembly areas without smoke protection. The coefficients are also less than those for smoke-protected assembly seating in Table 1029.6.2 except for very large assembly areas. The exception in this section would apply where the coefficients in Table 1029.6.2 are less than those in this section.

Low coefficients are a result of the very low hazards for outdoor smoke-protected assembly areas and increased egress time. Where the entire means of egress is essentially open to the exterior, the concourse and any stairways and ramps can also use the same capacity numbers (see Section 1005.3.1, Exception 2, and Section 1005.3.2, Exception 2) to determine egress width. If the concourse surrounding the outdoor seating bowl is enclosed, the requirements in Sections 1005.3.2 and 1005.3.1 would be applicable to determine widths required for capacity of the concourse, stairways and ramps providing means of egress from the seating bowl to the exterior of the building. See Sections 1029.9.6.1 through 1029.10.3 for stairways that are a direct continuation of stepped aisles.

Generally, an outdoor assembly area meets the smoke control requirements of Section 1029.6.2 by natural ventilation and does not require an automatic sprinkler system according to Section 1029.6.2.3, Exception 3.

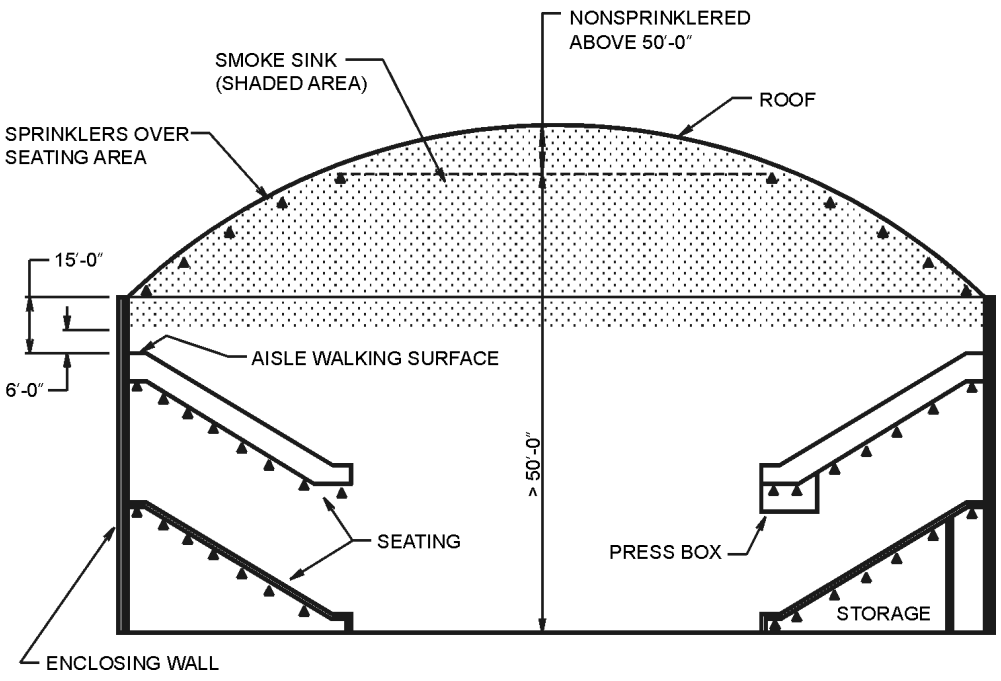

For SI: 1 foot = 304.8 mm.

Figure 1029.6.2.3(1)
INDOOR SEATING SPRINKLERED AREAS (CONVEX DOME ROOF)

INTERNATIONAL CODE COUNCIL®
Copyright © 2015 ICC. ALL RIGHTS RESERVED. Accessed by David Dammon on Jun 21, 2017 12:30:52 PM pursuant to License Agreement with ICC. No further reproduction or distribution authorized. ANY UNAUTHORIZED REPRODUCTION OR DISTRIBUTION IS A VIOLATION OF THE FEDERAL COPYRIGHT ACT AND THE LICENSE AGREEMENT, AND SUBJECT TO CIVIL AND CRIMINAL PENALTIES THEREUNDER.

1029.7 Travel distance. *Exits* and *aisles* shall be so located that the travel distance to an *exit* door shall be not greater than 200 feet (60 960 mm) measured along the line of travel in nonsprinklered buildings. Travel distance shall be not more than 250 feet (76 200 mm) in sprinklered buildings. Where *aisles* are provided for seating, the distance shall be measured along the *aisles* and *aisle accessways* without travel over or on the seats.

Exceptions:

1. *Smoke-protected assembly seating*: The travel distance from each seat to the nearest entrance to a vomitory or concourse shall not exceed 200 feet (60 960 mm). The travel distance from the entrance to the vomitory or concourse to a *stairway*, *ramp* or walk on the exterior of the building shall not exceed 200 feet (60 960 mm).
2. Open-air seating: The travel distance from each seat to the building exterior shall not exceed 400 feet (122 m). The travel distance shall not be limited in facilities of Type I or II construction.

❖ This section includes the travel distance limits for an assembly occupancy, which are the same as those in Table 1017.2 for Group A. The travel distance is to be measured along the same path the occupants would normally take to exit the facility.

Exception 1 provides an extended travel distance for smoke-protected assembly seating that meets the requirements of Sections 1029.6.2 through 1029.6.2.3.

Exception 2 applies to open-air seating areas where the smoke and fire hazard is very low. The Type I and II construction referred to in this exception is described in IBC Section 602.

1029.8 Common path of egress travel. The *common path of egress travel* shall not exceed 30 feet (9144 mm) from any seat to a point where an occupant has a choice of two paths of egress travel to two *exits*.

Exceptions:

1. For areas serving less than 50 occupants, the *common path of egress travel* shall not exceed 75 feet (22 860 mm).
2. For *smoke-protected assembly seating*, the *common path of egress travel* shall not exceed 50 feet (15 240 mm).

❖ The maximum travel distance down a single aisle accessway between rows of seating to a location where a patron would have two choices for a way out of the space is 30 feet (9144 mm). In smoke-protected seating, the common path of travel can be up to 50 feet (15 240 mm).

If the room or space (e.g., box, gallery or balcony) has 50 or fewer occupants, the travel distance can be increased to 75 feet (22 860 mm). For example, this allows for a path of travel from a box seat, out of the box and to a main aisle or even a corridor located outside the assembly room itself.

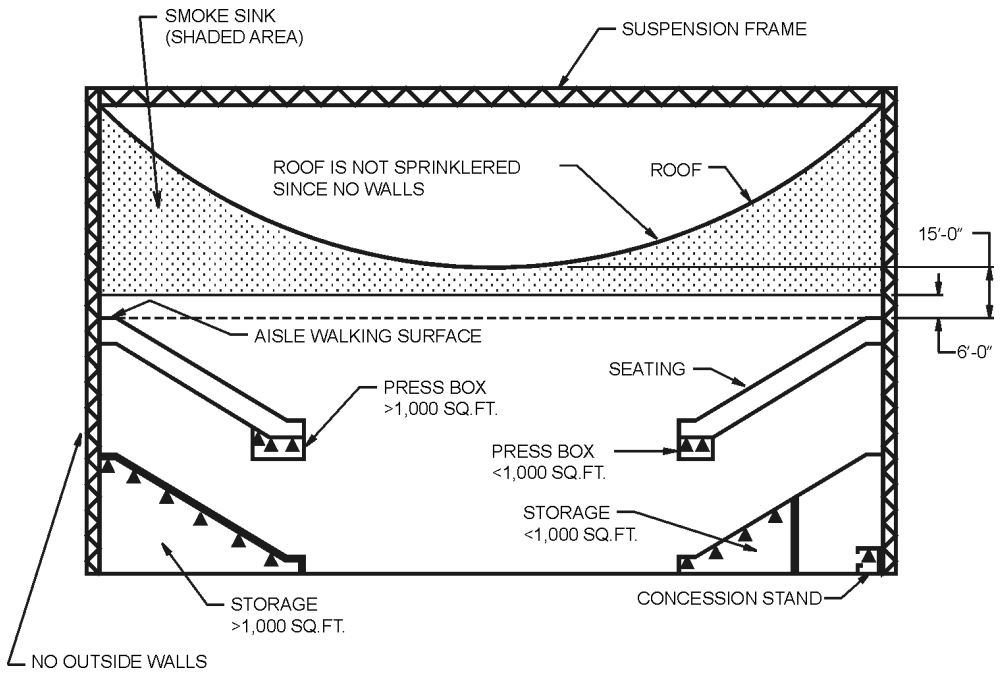

For SI: 1 foot = 304.8 mm,
1 square foot = 0.0929 m^2.

Figure 1029.6.2.3(2)
INDOOR SEATING SPRINKLERED AREAS (CONCAVE SUSPENDED ROOF)

INTERNATIONAL CODE COUNCIL®
Copyright © 2015 ICC. ALL RIGHTS RESERVED. Accessed by David Dammon on Jun 21, 2017 12:30:52 PM pursuant to License Agreement with ICC. No further reproduction or distribution authorized. ANY UNAUTHORIZED REPRODUCTION OR DISTRIBUTION IS A VIOLATION OF THE FEDERAL COPYRIGHT ACT AND THE LICENSE AGREEMENT, AND SUBJECT TO CIVIL AND CRIMINAL PENALTIES THEREUNDER.

When this section is referenced for accessible means of egress (see Section 1009.1, Exception 3), the utilization of Exception 1 would include the entire occupant load of the seating area, box, gallery or balcony, not just the number of wheelchair spaces and/or companion seats. Wheelchair spaces that are integrated into the general seating would have the same common path of travel distance of 30 feet (9144 mm) before the person needing the accessible route could choose two different paths for accessible means of egress. This provides the same level of protection for the persons in the accessible seating as provided for others within the space.

Sections 1006.2.1, 1006.3.2 and 1029.8 must be considered when determining the common path of travel requirements for a building. Section 1006.2.1 regulates the means of egress from a room or space. Section 1029.8, however, regulates the distance to a decision point within a room or space used for assembly seating where a single access row of seating is provided to a location where a patron would have two choices for a way out of the space.

1029.8.1 Path through adjacent row. Where one of the two paths of travel is across the *aisle* through a row of seats to another *aisle*, there shall be not more than 24 seats between the two *aisles*, and the minimum clear width between rows for the row between the two *aisles* shall be 12 inches (305 mm) plus 0.6 inch (15.2 mm) for each additional seat above seven in the row between *aisles*.

Exception: For *smoke-protected assembly seating* there shall be not more than 40 seats between the two *aisles* and the minimum clear width shall be 12 inches (305 mm) plus 0.3 inch (7.6 mm) for each additional seat.

❖ In establishing the point where the occupants of a row served by a single access aisle have two distinct paths of travel, the code allows one of those paths to be through the rows of an adjacent seating area or section. This requirement increases the row widths for the single-access seating section and the adjacent dual-access seating section. This allows the occupants to either travel down the single access aisle or readily traverse the oversized row widths to gain access to a second means of egress (see Commentary Figure 1029.8.1). This exception allows a greater number of seats spaced with a minimum clearance of 12 inches (305 mm) for smoke-protected assembly seating that complies with Sections 1029.6.2 through 1029.6.2.3 or Section 1029.6.3. For the base width requirements for single- and dual-access rows, see the commentary to Sections 1029.12.2 through 1029.12.2.2.

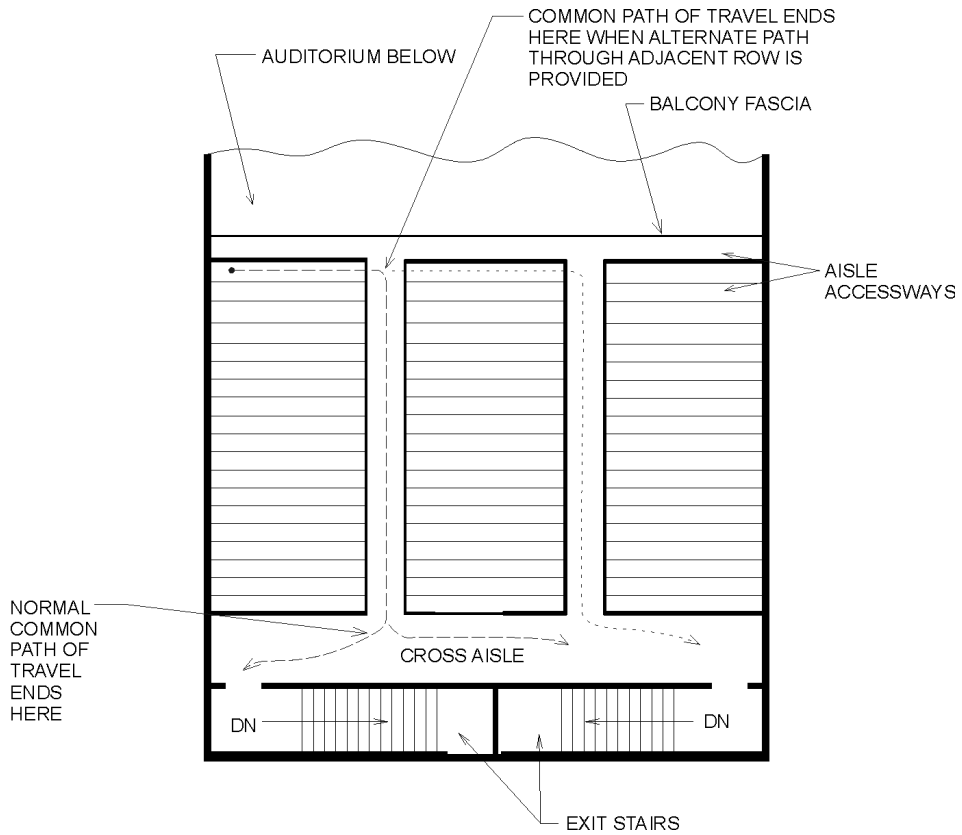

Figure 1029.8.1
PATH THROUGH ADJACENT ROWS

INTERNATIONAL CODE COUNCIL®
Copyright © 2015 ICC. ALL RIGHTS RESERVED. Accessed by David Dammon on Jun 21, 2017 12:30:52 PM pursuant to License Agreement with ICC. No further reproduction or distribution authorized. ANY UNAUTHORIZED REPRODUCTION OR DISTRIBUTION IS A VIOLATION OF THE FEDERAL COPYRIGHT ACT AND THE LICENSE AGREEMENT, AND SUBJECT TO CIVIL AND CRIMINAL PENALTIES THEREUNDER.

1029.9 Assembly aisles are required. Every occupied portion of any building, room or space used for assembly purposes that contains seats, tables, displays, similar fixtures or equipment shall be provided with *aisles* leading to *exits* or *exit access doorways* in accordance with this section.

❖ This section requires that each assembly space have designated aisles. For aisle accessway requirements, see Section 1029.10. For aisles in other occupancies, see Section 1018.

1029.9.1 Minimum aisle width. The minimum clear width for *aisles* shall comply with one of the following:

1. Forty-eight inches (1219 mm) for stepped *aisles* having seating on each side.

   Exception: Thirty-six inches (914 mm) where the stepped *aisles* serve less than 50 seats.

2. Thirty-six inches (914 mm) for stepped *aisles* having seating on only one side.

   Exception: Twenty-three inches (584 mm) between a stepped *aisle handrail* and seating where a stepped *aisle* does not serve more than five rows on one side.

3. Twenty-three inches (584 mm) between a stepped *aisle handrail* or *guard* and seating where the stepped *aisle* is subdivided by a mid-aisle *handrail*.

4. Forty-two inches (1067 mm) for level or ramped *aisles* having seating on both sides.

   Exceptions:

   1. Thirty-six inches (914 mm) where the *aisle* serves less than 50 seats.
   2. Thirty inches (762 mm) where the *aisle* does not serve more than 14 seats.

5. Thirty-six inches (914 mm) for level or ramped *aisles* having seating on only one side.

   Exception: For other than ramped *aisles* that serve as part of an *accessible route*, 30 inches (762 mm) where the ramped *aisle* does not serve more than 14 seats.

❖ The clear widths of aisles established by the formulas given in Section 1029.6 must not be less than the minimum width requirements of this section. The development of minimum width requirements is based on the association of aisle capacity with the path of exit travel as influenced by the different features of aisle construction. The purpose is to create an aisle system that would provide an even flow of occupant egress. The minimum width of the aisles is also based on an anticipated movement of people in two directions.

Items 1, 2 and 3 deal with stepped aisles. Items 4 and 5 deal with ramped and level aisles. Items 1, 3 and 4 deal with aisles with seating on both sides. Items 2 and 5 deal with aisles with seating on one side. Note that each exception is only applicable to the item directly above. For example, per Item 4, where there is seating on both sides, the minimum ramped or level aisle width is 42 inches (1219 mm), except where that aisle serves less than 50 seats it can be 36 inches (914 mm) wide (Exception 1) and where that aisle serves less than 15 seats it can be 30 inches (762 mm) wide (Exception 2).

1029.9.2 Aisle catchment area. The *aisle* shall provide sufficient capacity for the number of persons accommodated by the catchment area served by the *aisle*. The catchment area served by an *aisle* is that portion of the total space served by that section of the *aisle*. In establishing catchment areas, the assumption shall be made that there is a balanced use of all *means of egress*, with the number of persons in proportion to egress capacity.

❖ The determination of required aisle and aisle accessway width is a function of the occupant load. In calculating the required widths, the assumption is that in a system or network of aisles and aisle accessways serving an occupied area, people will normally exit the area in a way that will distribute the occupant load throughout the system in proportion to the egress capacity of the aisles and aisle accessways. Each aisle and aisle accessway would take its tributary share (catchment area) of the total occupant load (see Commentary Figure 1029.9.2).

In addition to the provisions in this section, the requirement for the capacity of the main exit and other exits must also be considered (see Sections 1029.2 and 1029.3). While this section assumes an equal distribution, Section 1029.2 requires that where the facility has a main exit, the main exit and the access thereto must be capable of handling 50 percent of the occupant load.

1029.9.3 Converging aisles. Where *aisles* converge to form a single path of egress travel, the required capacity of that path shall be not less than the combined required capacity of the converging aisles.

❖ Where one or more aisles or aisle accessways meet to form a single path of egress travel, that path must be sized to handle the combined occupant capacity of the converging aisles and aisle accessways (see Commentary Figure 1029.9.3). The reason for this requirement is to maintain the natural pace of travel all the way through the aisle accessways or aisles to the exits and to minimize the queuing of occupants.

This section requires combining the required occupant capacity of converging aisles and aisle accessways, but not necessarily the required widths. For example, if two 48-inch (1219 mm) aisles converge, the result need not be a 96-inch (2438 mm) aisle unless the 48-inch (1219 mm) width of the aisles is required based on the requirements of Section 1029.6 for the actual occupant load served. However, if the 48-inch (1219 mm) width is not based on the occupant load but is required to comply with the minimum aisle width requirements of Section 1029.9.1, the resulting aisle width must be sized for the total occupant load served by the converging aisles, as determined by Section 1029.6, but not less than the minimum widths of Section 1029.9.1.

INTERNATIONAL CODE COUNCIL®
Copyright © 2015 ICC. ALL RIGHTS RESERVED. Accessed by David Dammon on Jun 21, 2017 12:30:52 PM pursuant to License Agreement with ICC. No further reproduction or distribution authorized. ANY UNAUTHORIZED REPRODUCTION OR DISTRIBUTION IS A VIOLATION OF THE FEDERAL COPYRIGHT ACT AND THE LICENSE AGREEMENT, AND SUBJECT TO CIVIL AND CRIMINAL PENALTIES THEREUNDER.

1029.9.4 Uniform width and capacity. Those portions of *aisles*, where egress is possible in either of two directions, shall be uniform in minimum width or required capacity.

❖ Aisles that connect or lead to opposite exits must, at a minimum, be of uniform width throughout their entire lengths to allow for exit travel in two directions without creating a traffic bottleneck (see Commentary Figure 1029.9.4). They may need to be wider based on Section 1029.9.2 or 1029.9.3.

1029.9.5 Dead end aisles. Each end of an *aisle* shall be continuous to a cross *aisle*, foyer, doorway, vomitory, concourse or *stairway* in accordance with Section 1029.9.7 having access to an *exit*.

Exceptions:

1. Dead-end *aisles* shall be not greater than 20 feet (6096 mm) in length.
2. Dead-end *aisles* longer than 16 rows are permitted where seats beyond the 16th row dead-end *aisle* are not more than 24 seats from another *aisle*, measured along a row of seats having a minimum clear width of 12 inches (305 mm) plus 0.6 inch (15.2 mm) for each additional seat above seven in the row where seats have backrests or beyond 10 where seats are without backrests in the row.
3. For *smoke-protected assembly seating*, the dead end *aisle* length of vertical *aisles* shall not exceed a distance of 21 rows.
4. For *smoke-protected assembly seating*, a longer dead-end *aisle* is permitted where seats beyond the 21-row dead-end *aisle* are not more than 40 seats from another *aisle*, measured along a row of seats having an *aisle* accessway with a minimum clear width of 12 inches (305 mm) plus 0.3 inch (7.6 mm)

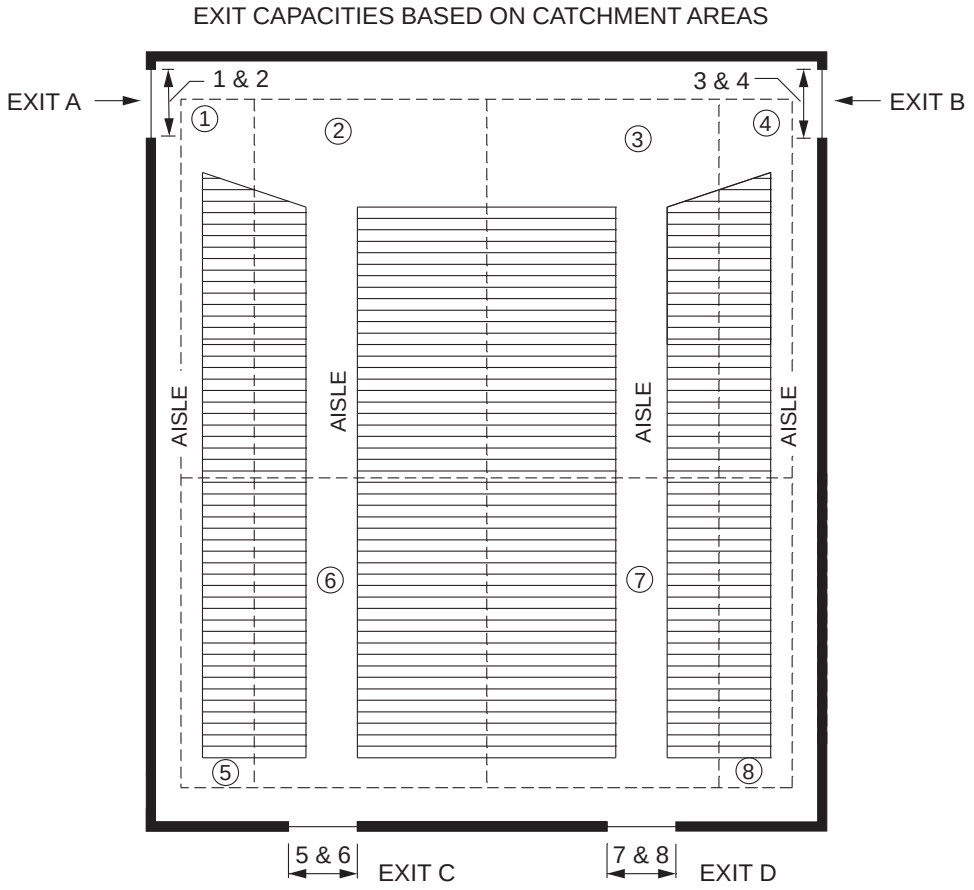

Figure 1029.9.2
TYPICAL AISLE CATCHMENTS

INTERNATIONAL CODE COUNCIL®
Copyright © 2015 ICC. ALL RIGHTS RESERVED. Accessed by David Dammon on Jun 21, 2017 12:30:52 PM pursuant to License Agreement with ICC. No further reproduction or distribution authorized. ANY UNAUTHORIZED REPRODUCTION OR DISTRIBUTION IS A VIOLATION OF THE FEDERAL COPYRIGHT ACT AND THE LICENSE AGREEMENT, AND SUBJECT TO CIVIL AND CRIMINAL PENALTIES THEREUNDER.

for each additional seat above seven in the row where seats have backrests or beyond 10 where seats are without backrests in the row.

❖ Both ends of a cross aisle must terminate at either an intersecting aisle, a foyer, a doorway or a vomitory (lane) that gives access to an exit(s). Each exception allows an aisle to have a dead end of limited length. Exceptions 1 and 2 address dead-end aisles in assembly spaces with or without smoke protection. Exceptions 3 and 4 address dead-end aisles only in smoke-protected assembly seating. In accordance with Exception 1, dead-end aisles (similar to corridors and passageways) that terminate at one end of a cross aisle or at a foyer, doorway or vomitory must not be more than 20 feet (6096 mm) in length. The intent of the row width requirements in the exceptions is to provide sufficient clear width between rows of seating to allow the occupants in times of emergency to pass quickly from a dead-end aisle to the aisle at the opposite end.

In Exception 2, the 0.6-inch (15 mm) increase beyond seven seats with backrests is consistent with the minimum width determined in accordance with Section 1029.12.2 for single access rows. The code recognizes that one dead-end aisle may not be usable, thus creating a single access row condition. There is a greater allowance for seating that looks similar to bleacher style seating. This is consistent with ICC 300 (see Section 1029.1.1).

Exceptions 3 and 4 allow longer dead-end aisles for smoke-protected assembly seating that complies with Sections 1029.6.2 through 1029.6.2.3 or Section 1029.6.3 (see Commentary Figure 1026.9.5). In Exception 4, there is a greater allowance for seating that looks similar to bleacher style seating. This is consistent with ICC 300 (see Section 1029.1.1).

The overall purpose of this section is to provide aisle/seating arrangements that would allow the occupants to seek safe and rapid passage to exits in case of fire or other emergency.

1029.9.6 Aisle measurement. The clear width for *aisles* shall be measured to walls, edges of seating and tread edges except for permitted projections.

Exception: The clear width of *aisles* adjacent to seating at tables shall be permitted to be measured in accordance with Section 1029.12.1.

❖ The clear width for stepped, ramped and level aisles is measured consistently with stairways and ramps to ensure a clear width for egress. The exception is dealing with aisles in dining areas and how to measure with loose tables and chairs.

1029.9.6.1 Assembly aisle obstructions. There shall not be obstructions in the minimum width or required capacity of *aisles.*

Exception: *Handrails* are permitted to project into the required width of stepped *aisles* and ramped *aisles* in accordance with Section 1014.8.

❖ Except for handrails, aisles are required to be clear of any obstructions so that the full width is available for egress purposes. Handrails are allowed to project into the required aisle width in the same manner as handrail projections in stairways.

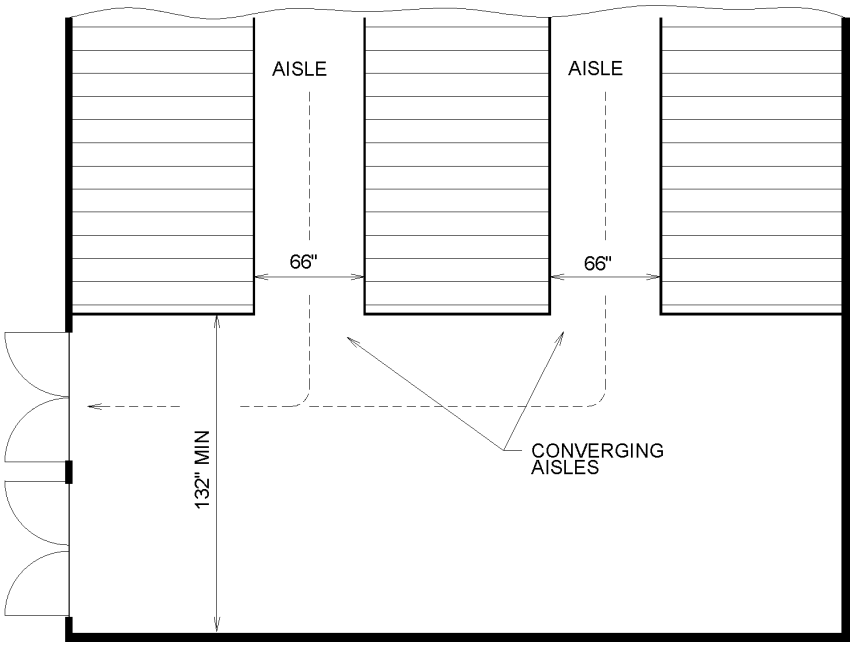

For SI: 1 inch = 25.4 mm.

Figure 1029.9.3
COMPUTATION OF EXIT PASSAGE FOR CONVERGING AISLES

INTERNATIONAL CODE COUNCIL®
Copyright © 2015 ICC. ALL RIGHTS RESERVED. Accessed by David Dammon on Jun 21, 2017 12:30:52 PM pursuant to License Agreement with ICC. No further reproduction or distribution authorized. ANY UNAUTHORIZED REPRODUCTION OR DISTRIBUTION IS A VIOLATION OF THE FEDERAL COPYRIGHT ACT AND THE LICENSE AGREEMENT, AND SUBJECT TO CIVIL AND CRIMINAL PENALTIES THEREUNDER.

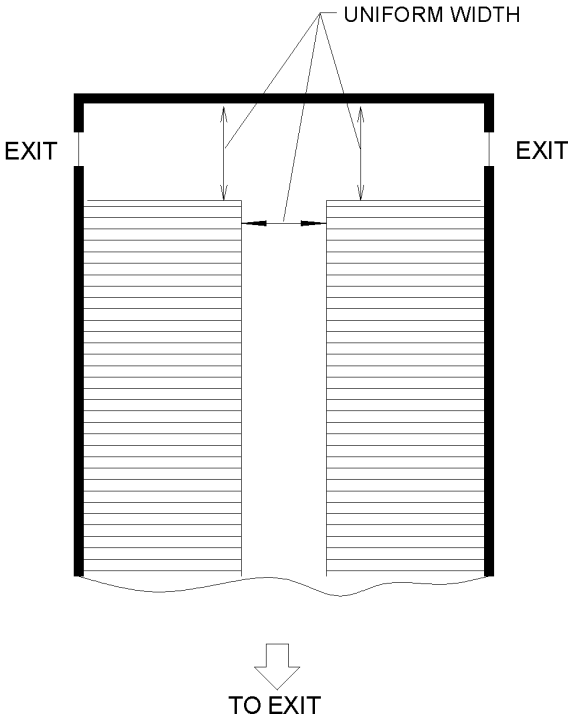

Figure 1029.9.4
AISLE WITH OPPOSITE EXITS

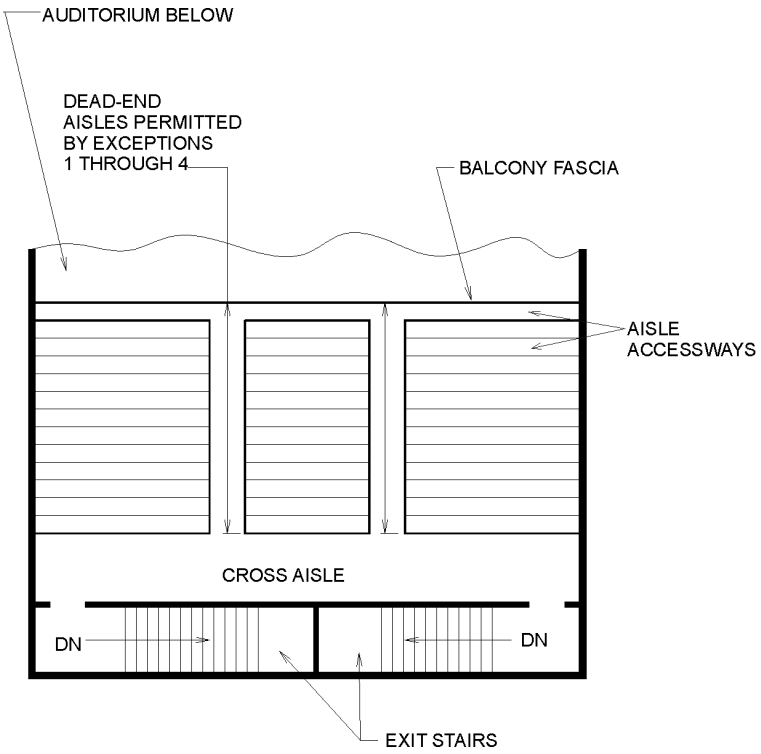

Figure 1029.9.5
TYPICAL BALCONY ARRANGEMENT

INTERNATIONAL CODE COUNCIL®
Copyright © 2015 ICC. ALL RIGHTS RESERVED. Accessed by David Dammon on Jun 21, 2017 12:30:52 PM pursuant to License Agreement with ICC. No further reproduction or distribution authorized. ANY UNAUTHORIZED REPRODUCTION OR DISTRIBUTION IS A VIOLATION OF THE FEDERAL COPYRIGHT ACT AND THE LICENSE AGREEMENT, AND SUBJECT TO CIVIL AND CRIMINAL PENALTIES THEREUNDER.

1029.9.7 Stairways connecting to stepped aisles. A *stairway* that connects a stepped *aisle* to a cross *aisle* or concourse shall be permitted to comply with the assembly *aisle* walking surface requirements of Section 1029.13. Transitions between *stairways* and stepped *aisles* shall comply with Section 1029.10.

❖ Stairways that are a direct continuation of a stepped aisle, either at the top or bottom of the stepped aisle, and provide access to a cross aisle, shall be handled the same way as a stepped aisle for treads and risers (see Section 1029.13). For the transitions between the stepped aisle and the stairway, see Section 1029.10. For examples, see Figures 1029.9.7(1) and 1029.9.7(2).

1029.9.8 Stairways connecting to vomitories. A *stairway* that connects a vomitory to a cross aisle or concourse shall be permitted to comply with the assembly *aisle* walking surface requirements of Section 1029.13. Transitions between *stairways* and stepped *aisles* shall comply with Section 1029.10.

❖ A vomitory is an entrance that pierces the back of a seating bowl of a theater or stadium that allows for entrance into the seating area. Stairways that provide a direct connection between that vomitory and an aisle or concourse shall be handled the same way as a stepped aisle for treads and risers (see Section 1029.13). For the transitions between the stepped aisle and the stairway, see Section 1029.10.

1029.10 Transitions. Transitions between *stairways* and stepped *aisles* shall comply with either Section 1029.10.1 or 1029.10.2.

❖ Line of sight in assembly seating is an important issue that needs to be balanced with safe egress for people seated in the assembly spaces. In order to maintain line of site, sometime it is necessary to have a transition between stairways and stepped aisles that does not meet the standard tread, riser and landing provisions for stairway. This section replaces the standard landing requirements for stairways with a transition tread/landing.

1029.10.1 Transitions and stairways that maintain stepped aisle riser and tread dimensions. Stepped *aisles*, transitions and *stairways* that maintain riser and tread dimensions shall comply with Section 1029.13 as one *exit access* component.

❖ Where the treads and risers on the stairway and the treads and risers on the stepped aisle are the same, the whole run can be considered as one long stepped aisle.

1029.10.2 Transitions to stairways that do not maintain stepped aisle riser and tread dimensions. Transitions to *stairways* from stepped *aisles* with riser and tread dimensions that differ from the *stairways* shall comply with Sections 1029.10.2.1 through 1029.10.3.

❖ Where the stepped aisle and directly connected stairways do not have the same tread and riser dimensions, there are options for the transition between the two sections. This transition is the tread(s) between the stepped aisle and the stairway.

1029.10.2.1 Stairways and stepped aisles in a straight run. Transitions where the *stairway* is a straight run from the stepped *aisle* shall have a minimum depth of 22 inches (559 mm) where the treads on the descending side of the transition have greater depth and 30 inches (762 mm) where the treads on the descending side of the transition have lesser depth.

❖ Typically, the treads on the stairway will have a smaller depth than the treads at the seating. Assuming that is the case, where the stairway is at the high end of the stepped aisle, a transition tread 22 inches (559 mm) in depth shall be provided between the stairway and the stepped aisle [see Commentary Figure 1029.10.2.1(1)]. Where the stairway is at the low



Figure 1029.9.7(1)
EXAMPLE OF A CONTINUATION OF A STEPPED AISLE UP TO A CROSS AISLE



Figure 1029.9.7(2)
EXAMPLE OF A CONTINUATION OF A STEPPED AISLE DOWN TO A FLOOR

INTERNATIONAL CODE COUNCIL®
Copyright © 2015 ICC. ALL RIGHTS RESERVED. Accessed by David Dammon on Jun 21, 2017 12:30:52 PM pursuant to License Agreement with ICC. No further reproduction or distribution authorized. ANY UNAUTHORIZED REPRODUCTION OR DISTRIBUTION IS A VIOLATION OF THE FEDERAL COPYRIGHT ACT AND THE LICENSE AGREEMENT, AND SUBJECT TO CIVIL AND CRIMINAL PENALTIES THEREUNDER.

end of the stepped aisle, a transition tread a minimum of 30 inches (762 mm) in depth shall be provided between the stepped aisle and the stairway [see Commentary Figure 1029.10.2.1(2)].

1029.10.2.2 Stairways and stepped aisles that change direction. Transitions where the *stairway* changes direction from the stepped *aisle* shall have a minimum depth of 11 inches (280 mm) or the stepped *aisle* tread depth, whichever is greater, between the stepped *aisle* and *stairway*.

❖ Where the stepped aisle takes a turn or takes a turn and becomes a stairway, the aisle width must be maintained (see Sections 1029.6 and 1029.9.1). The transition between the stepped aisle and the turn must continue the tread depth of the stepped aisle, or have a minimum depth of 11 inches (280 mm) to match the stairway treads, whichever is greater. There may be more than one transition between the stepped aisle and the turn [see Commentary Figures 1029.10.2.2(1) and 1029.10.2.2(2)].

1029.10.3 Transition marking. A distinctive marking stripe shall be provided at each *nosing* or leading edge adjacent to the transition. Such stripe shall be not less than 1 inch (25 mm), and not more than 2 inches (51 mm), wide. The edge marking stripe shall be distinctively different from the stepped *aisle* contrasting marking stripe.

❖ At these transitions there may be a change in riser height, even if the tread depth stayed the same. The stripe is to draw attention to the transition to reduce the chance of a trip and fall. This is different from the stripes required for the stepped aisles in Sections 1029.13.2.2.1 and 1029.13.2.3.

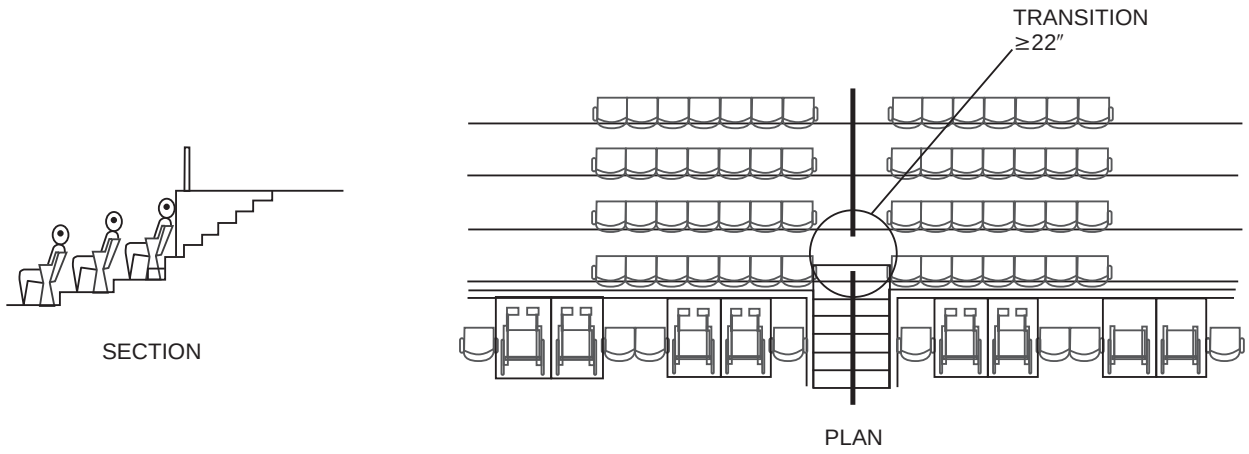

Figure 1029.10.2.1(1)
TRANSITION BETWEEN STAIRWAY AND STEPPED AISLE AT THE HIGHER END OF THE FLIGHT

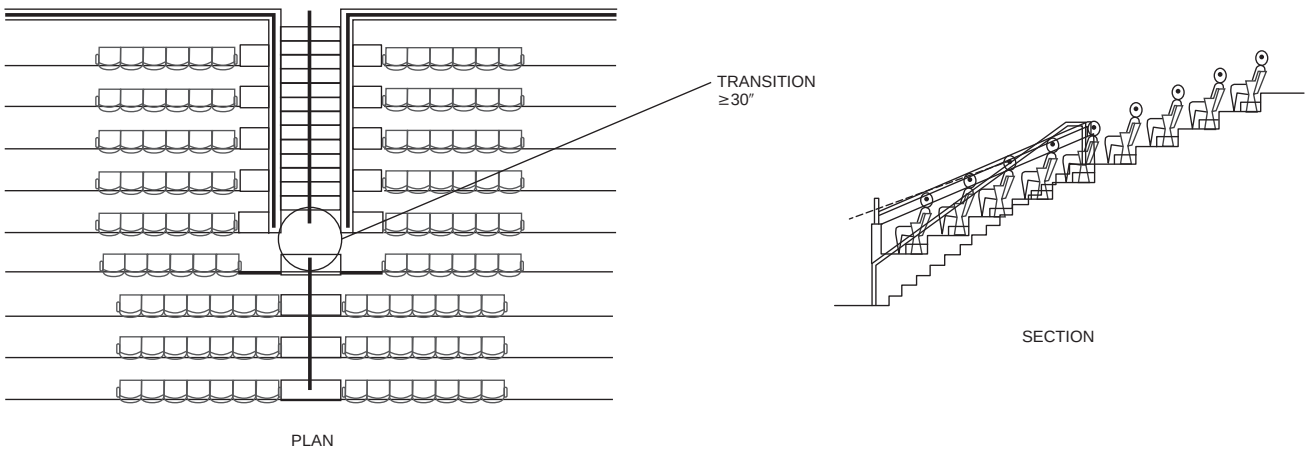

Figure 1029.10.2.1(2)
TRANSITION BETWEEN STEPPED AISLE AND STAIRWAY AND THE LOWER END OF THE FLIGHT

INTERNATIONAL CODE COUNCIL®
Copyright © 2015 ICC. ALL RIGHTS RESERVED. Accessed by David Dammon on Jun 21, 2017 12:30:52 PM pursuant to License Agreement with ICC. No further reproduction or distribution authorized. ANY UNAUTHORIZED REPRODUCTION OR DISTRIBUTION IS A VIOLATION OF THE FEDERAL COPYRIGHT ACT AND THE LICENSE AGREEMENT, AND SUBJECT TO CIVIL AND CRIMINAL PENALTIES THEREUNDER.

1029.11 Construction. *Aisles*, stepped *aisles* and ramped *aisles* shall be built of materials consistent with the types permitted for the type of construction of the building.

Exception: Wood *handrails* shall be permitted for all types of construction.

❖ The construction materials permitted for stepped, ramped and level aisles are consistent with stairways and ramps.

1029.11.1 Walking surface. The surface of *aisles*, stepped *aisles* and ramped *aisles* shall be of slip-resistant materials that are securely attached. The surface for stepped *aisles* shall comply with Section 1011.7.1.

❖ It is the intent of this section that for walking surfaces, stepped aisles will be addressed similar to stairways (Section 1011.7.1), level aisles the same as floors (Section 1003.4) and ramped aisles the same as ramps (Section 1012.7.1). See the commentary for these sections.

1029.11.2 Outdoor conditions. Outdoor *aisles*, stepped *aisles* and ramped *aisles* and outdoor approaches to *aisles*, stepped *aisles* and ramped *aisles* shall be designed so that water will not accumulate on the walking surface.

❖ Where stepped, ramped and level aisles are located in an outdoor situation, there is the same concern for the accumulation of ice and snow as there would be for exterior stairways or ramps. See Sections 1011.7.2 and 1012.7.2 regarding maximum slope to allow for drainage and when grated walking surfaces are permitted.

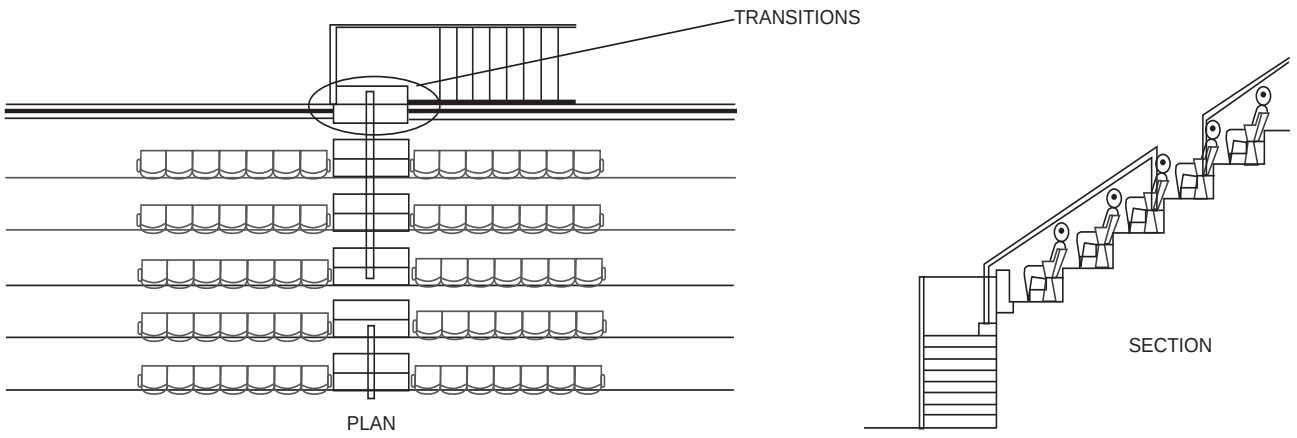

Figure 1029.10.2.2(1)
EXAMPLE OF A STEPPED AISLE TURNING TO A STAIRWAY

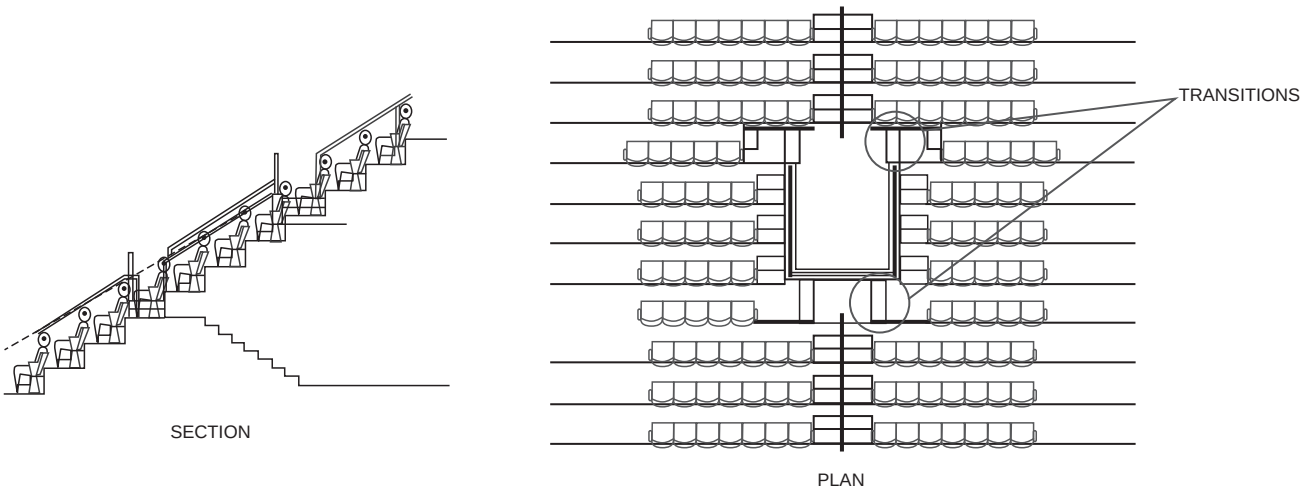

Figure 1029.10.2.2(2)
EXAMPLE OF TURNS IN A STEPPED AISLE

INTERNATIONAL CODE COUNCIL®
Copyright © 2015 ICC. ALL RIGHTS RESERVED. Accessed by David Dammon on Jun 21, 2017 12:30:52 PM pursuant to License Agreement with ICC. No further reproduction or distribution authorized. ANY UNAUTHORIZED REPRODUCTION OR DISTRIBUTION IS A VIOLATION OF THE FEDERAL COPYRIGHT ACT AND THE LICENSE AGREEMENT, AND SUBJECT TO CIVIL AND CRIMINAL PENALTIES THEREUNDER.

1029.12 Aisle accessways. *Aisle accessways* for seating at tables shall comply with Section 1029.12.1. *Aisle accessways* for seating in rows shall comply with Section 1029.12.2.

❖ Aisle accessways are paths for means of egress between rows of seats or between tables. The aisle accessway leads to aisles, which in turn lead toward exits from the space. This is the same idea as moving through a room full of furniture to a corridor to reach an exit. In both situations, the path for means of egress is confined. For aisle accessway requirements in other occupancies, see Section 1018.

1029.12.1 Seating at tables. Where seating is located at a table or counter and is adjacent to an *aisle* or *aisle accessway*, the measurement of required clear width of the *aisle* or *aisle accessway* shall be made to a line 19 inches (483 mm) away from and parallel to the edge of the table or counter. The 19-inch (483 mm) distance shall be measured perpendicular to the side of the table or counter. In the case of other side boundaries for *aisles* or *aisle accessways*, the clear width shall be measured to walls, edges of seating and tread edges.

Exception: Where tables or counters are served by *fixed seats*, the width of the *aisle* or *aisle accessway* shall be measured from the back of the seat.

❖ Most seating at tables should be adjacent to aisles or aisle accessways. In measuring the width of an aisle or aisle accessway for movable seating, the measurement is taken at a distance of 19 inches (483 mm) perpendicular to the side of the table or counter. This 19-inch (483 mm) space from the edge of the table or counter to the line where the aisle or aisle accessway measurement begins is intended to represent the space occupied by a typical seated occupant. This dimension is also considered to be adequate to accommodate seats with armrests that are too high to fit under the table where fixed seats are used. The aisle width is permitted to be measured from the back of the seat based on the exception. As indicated in Commentary Figure 1029.12.1, where seating abuts an aisle or aisle accessway, 19 inches (483 mm) must be added to the required aisle or aisle accessway width for seating on only one side and 38 inches (965 mm) for seating on both sides. When seating will not be adjacent to the aisles or aisle passageways, as is the case when tables are at an angle to the aisle or aisle accessway, the measurement may be taken to the edge of the seating, table, counter or tread. Sections 1029.12.1.1 and 1029.12.1.2 address width and travel along aisle accessways. For aisles between tables, see the general requirements for aisles in assembly spaces.

1029.12.1.1 Aisle accessway capacity and width for seating at tables. *Aisle accessways* serving arrangements of seating at tables or counters shall comply with the capacity requirements of Section 1005.1 but shall not have less than 12 inches (305 mm) of width plus $^1/_2$ inch (12.7 mm) of width for each additional 1 foot (305 mm), or fraction thereof, beyond 12 feet (3658 mm) of *aisle accessway* length measured from the center of the seat farthest from an *aisle*.

Exception: Portions of an *aisle accessway* having a length not exceeding 6 feet (1829 mm) and used by a total of not more than four persons.

❖ This section specifies two criteria for the determination of the required width of aisle accessways at tables: the requirements of Section 1005.1 for capacity based on the number of occupants and the option described in this section. The aisle accessway width is to be the wider of the two requirements. The aisle accessway width between tables is determined similarly to the aisle accessway between rows of seats that view an event.

The relationship of tables and seating sometimes results in a situation in which it is difficult to determine which chairs are served by which aisle accessway; therefore, the width of the aisle accessway is a func-

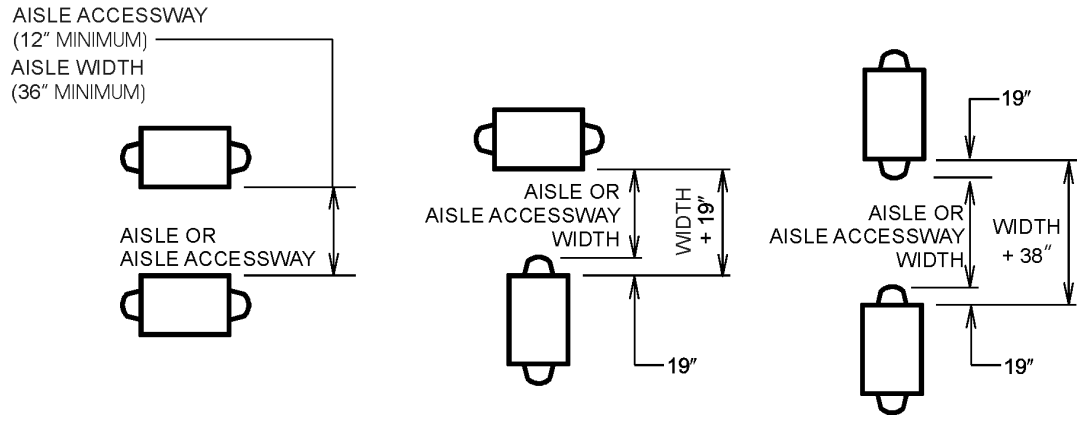

For SI: 1 inch = 25.4 mm.

Figure 1029.12.1
AISLE AND AISLE ACCESSWAY MEASUREMENT WITH SEATING AND TABLES

INTERNATIONAL CODE COUNCIL®
Copyright © 2015 ICC. ALL RIGHTS RESERVED. Accessed by David Dammon on Jun 21, 2017 12:30:52 PM pursuant to License Agreement with ICC. No further reproduction or distribution authorized. ANY UNAUTHORIZED REPRODUCTION OR DISTRIBUTION IS A VIOLATION OF THE FEDERAL COPYRIGHT ACT AND THE LICENSE AGREEMENT, AND SUBJECT TO CIVIL AND CRIMINAL PENALTIES THEREUNDER.

tion of the distance from the aisle. The same minimum 12 inches (305 mm) is used and is increased $^1/_2$ inch (12.7 mm) for each additional foot of travel beyond 12 feet (3658 mm).

Recognizing that the normal use of table and chair seating will require some clearance for access and service, the exception eliminates the minimum width criteria if the distance to the aisle [or an aisle accessway of at least 12 inches (305 mm)] is less than 6 feet (1829 mm) and the number of people served is not more than four. Therefore, the first 6 feet (1829 mm) are not required to meet any minimum width criteria. After the first 6 feet (1829 mm), the requirements for an aisle accessway will apply. The length of the aisle accessway is then restricted by Section 1029.12.1.2. When the maximum length of the aisle accessway is reached, an aisle, corridor or exit access door must be provided (see Commentary Figure 1029.12.1.1).

1029.12.1.2 Seating at table aisle accessway length. The length of travel along the *aisle accessway* shall not exceed 30 feet (9144 mm) from any seat to the point where a person has a choice of two or more paths of egress travel to separate *exits*.

❖ At some point in the exit access travel, it is necessary to reach an aisle complying with the minimum widths of Section 1029.9.1. Aisle accessway travel distance for seating at tables is not to exceed 30 feet (9144 mm), which may represent a dead-end condition (see Commentary Figure 1029.12.1.1).

More and more sports facilities are starting to add venues that include dining while watching the sporting event. At this time, the code does not include provisions for dining that occurs in smoke-protected areas.

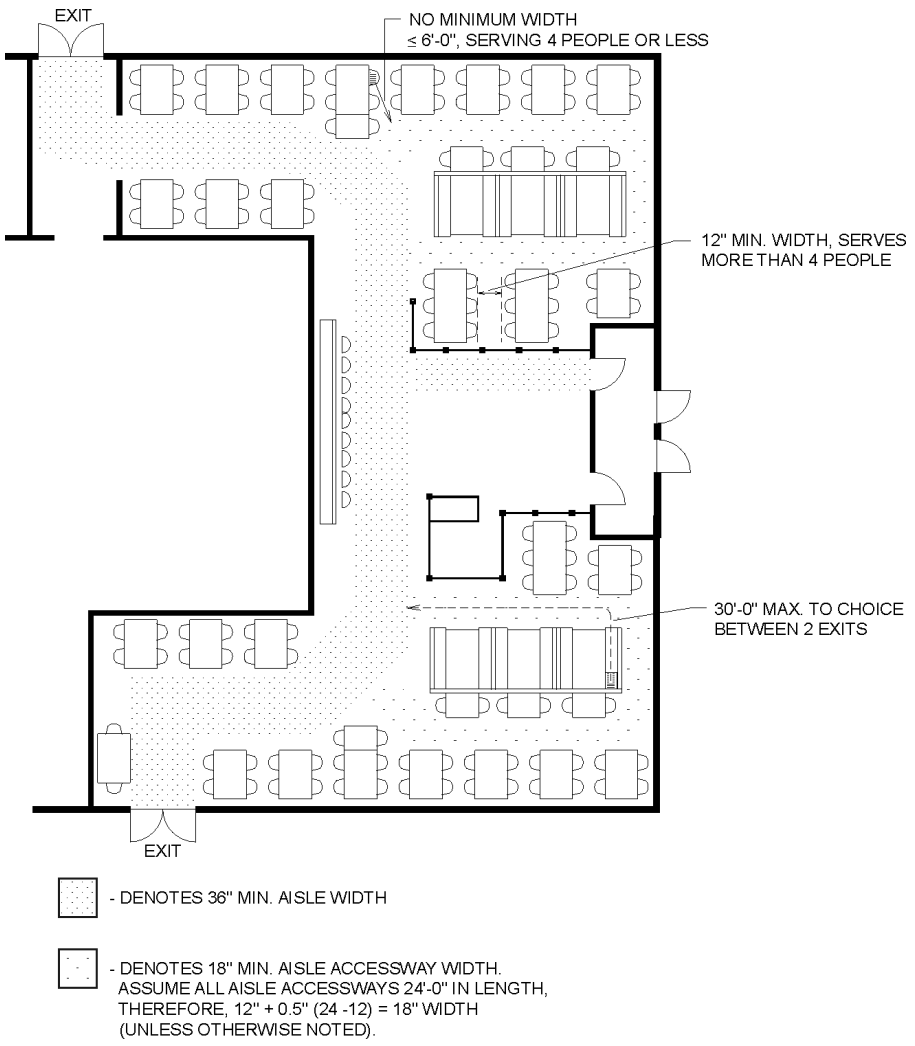

For SI: 1 inch = 25.4 mm, 1 foot = 304.8 mm.

Figure 1029.12.1.1
ACCESS FOR TABLES AND SEATING

INTERNATIONAL CODE COUNCIL®
Copyright © 2015 ICC. ALL RIGHTS RESERVED. Accessed by David Dammon on Jun 21, 2017 12:30:52 PM pursuant to License Agreement with ICC. No further reproduction or distribution authorized. ANY UNAUTHORIZED REPRODUCTION OR DISTRIBUTION IS A VIOLATION OF THE FEDERAL COPYRIGHT ACT AND THE LICENSE AGREEMENT, AND SUBJECT TO CIVIL AND CRIMINAL PENALTIES THEREUNDER.

1029.12.2 Clear width of aisle accessways serving seating in rows. Where seating rows have 14 or fewer seats, the minimum clear *aisle accessway* width shall be not less than 12 inches (305 mm) measured as the clear horizontal distance from the back of the row ahead and the nearest projection of the row behind. Where chairs have automatic or self-rising seats, the measurement shall be made with seats in the raised position. Where any chair in the row does not have an automatic or self-rising seat, the measurements shall be made with the seat in the down position. For seats with folding tablet arms, row spacing shall be determined with the tablet arm in the used position.

Exception: For seats with folding tablet arms, row spacing is permitted to be determined with the tablet arm in the stored position where the tablet arm when raised manually to vertical position in one motion automatically returns to the stored position by force of gravity.

❖ The requirements of this section are applicable to theater-type seating arrangements. This includes both "continental" and "traditional" seating arrangements. Theater-type seating is characterized by a number of seats arranged side by side and in rows. In this type of seating arrangement, the potential exists for a large number of occupants to be present in a confined environment where the ability of the occupants to move quickly is limited. In order to egress, people are required to move single file within a narrow row (i.e., aisle accessway) before reaching an aisle; both the aisle or aisle accessway limit movement toward an exit. To provide adequate passage between rows of seats, this section requires that the clear width between the back of a row to the nearest projection of the seating immediately behind must be at least 12 inches (305 mm) [see Commentary Figure 1029.12.2(1)]. Where chairs are manufactured with automatic or self-lifting seats, the minimum width requirement may be measured with the seats in a raised position. Commonly used in college lecture halls, seats with built-in tablet arms are provided so that students can take notes. For an example of a type of tablet arm that complies with the exception, see Commentary Figure 1029.12.2(2).

When tablet arm chairs are used, the required width is to be determined with the tablet arm in its usable position. The exception allows for folding tablet arms that fall back into the stored position when a person rises out of the seat. With seats occupied and tablets raised, students egressing en masse down the row would at most encounter one tablet to move out of the way. With these types of arms, the aisle accessway can be measured for the seat or arm as indicated in Commentary Figure 1029.12.2(1).

With respect to self-rising seats, ASTM F851 provides one method of determining acceptability.

1029.12.2.1 Dual access. For rows of seating served by *aisles* or doorways at both ends, there shall be not more than 100 seats per row. The minimum clear width of 12 inches (305 mm) between rows shall be increased by 0.3 inch (7.6 mm) for every additional seat beyond 14 seats where seats have backrests or beyond 21 where seats are without backrests.



For SI: 1 inch = 25.4 mm.

Figure 1029.12.2(2)
EXAMPLE OF FOLDING TABLET ARMS

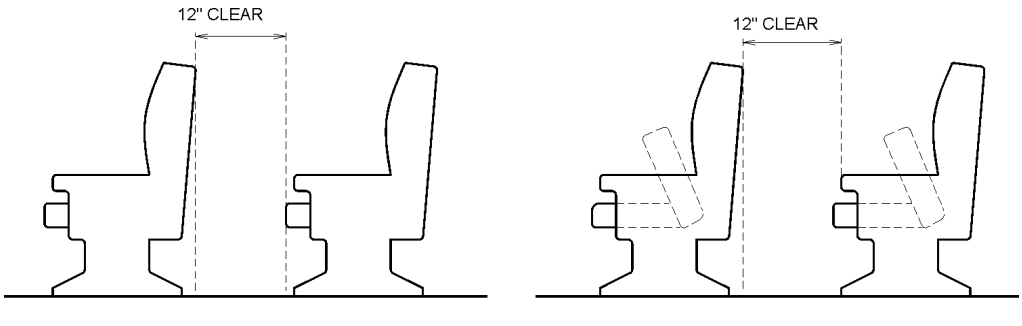

For SI: 1 inch = 25.4 mm.

Figure 1029.12.2(1)
MINIMUM REQUIRED ROW WIDTH CLEARANCE FOR AISLE ACCESSWAYS

INTERNATIONAL CODE COUNCIL®
Copyright © 2015 ICC. ALL RIGHTS RESERVED. Accessed by David Dammon on Jun 21, 2017 12:30:52 PM pursuant to License Agreement with ICC. No further reproduction or distribution authorized. ANY UNAUTHORIZED REPRODUCTION OR DISTRIBUTION IS A VIOLATION OF THE FEDERAL COPYRIGHT ACT AND THE LICENSE AGREEMENT, AND SUBJECT TO CIVIL AND CRIMINAL PENALTIES THEREUNDER.

The minimum clear width is not required to exceed 22 inches (559 mm).

Exception: For *smoke-protected assembly seating*, the row length limits for a 12-inch-wide (305 mm) *aisle accessway*, beyond which the *aisle accessway* minimum clear width shall be increased, are in Table 1029.12.2.1.

❖ Where rows of seating are served by aisles or doorways located at both ends of the path of row travel, the number of seats that may be used in a row may be up to, but not more than, 100 (continental seating) and the minimum required clear width aisle accessway of 12 inches (305 mm) between rows of seats must be increased by 0.3 inch (8 mm) for every additional seat with backrests beyond 14, but not more than a total of 22 inches (559 mm) (see Commentary Figure 1029.12.2.1). The increase for seating without backrests is to allow for bench seating similar to bleacher requirements in ICC 300 (see Section 1029.1.1). For example, in a row of 24 seats, the minimum clear width would compute to 15 inches (381 mm) [12 + (0.3 x 10)]. For a row of 34 seats, a clear width of 18 inches (457 mm) would be required. Increases in the clear width between rows of seats would occur up to a row of 46 seats. From 47 to 100 seats, a maximum clear width between rows of 22 inches (559 mm) would apply.

Since the row is to provide access to an aisle in both directions, the minimum width applies to the entire length of the row aisle accessway.

The exception allows more seats in a row with the minimum 12-inch (305 mm) seat spacing since safe egress time is extended for this condition.

When a second means of egress for occupants of a single access row is possible through an adjacent dual access row, see Section 1029.8.1.

TABLE 1029.12.2.1. See page 10-202.

❖ Table 1029.10.1 recognizes the increased egress time available in smoke-protected assembly seating areas. Therefore, the table permits greater lengths of rows that have the minimum 12 inches (305 mm) of clear width. When a row exceeds the lengths identified in the table, the row width is to be increased in accordance with Section 1029.12.2.1 [0.3 inch (8 mm) per additional seat] for dual-access rows and Section 1029.12.2.2 [0.6 inch (15 mm) per additional seat] for single-access rows. Column one in this table is based on the total number of seats contained within the assembly space, not the seats per level. The increase for seating without backrests is to allow for bench seating similar to bleacher requirements in ICC 300 (see Section 1029.1.1).

1029.12.2.2 Single access. For rows of seating served by an *aisle* or doorway at only one end of the row, the minimum clear width of 12 inches (305 mm) between rows shall be increased by 0.6 inch (15.2 mm) for every additional seat beyond seven seats where seats have backrests or beyond 10 where seats are without backrests. The minimum clear width is not required to exceed 22 inches (559 mm).

Exception: For *smoke-protected assembly seating*, the row length limits for a 12-inch-wide (305 mm) *aisle accessway*, beyond which the *aisle accessway* minimum clear width shall be increased, are in Table 1029.12.2.1.

❖ Where rows of seating are served by an aisle or doorway at only one end of a row, the minimum clear width of 12 inches (305 mm) between rows of seats must be increased by 0.6 inch (15 mm) for every additional seat beyond seven for seats with backrests, but not more than a total of 22 inches (559 mm) (see Commentary Figure 1029.12.2.2). The increase

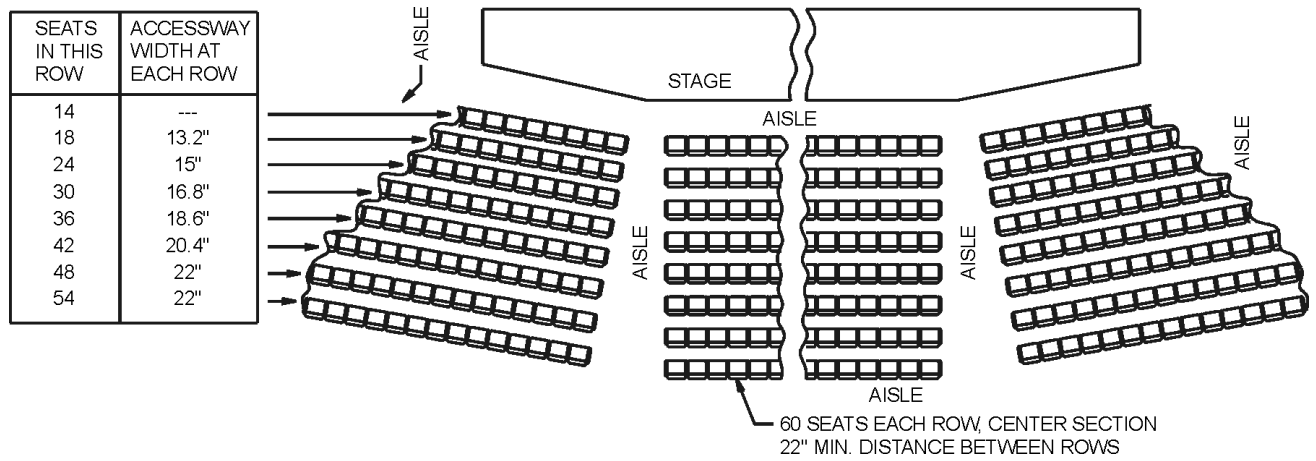

For SI: 1 inch = 25.4 mm.

Figure 1029.12.2.1
TYPICAL DUAL-ACCESS ROW—MINIMUM AISLE ACCESSWAY WIDTH

INTERNATIONAL CODE COUNCIL®
Copyright © 2015 ICC. ALL RIGHTS RESERVED. Accessed by David Dammon on Jun 21, 2017 12:30:52 PM pursuant to License Agreement with ICC. No further reproduction or distribution authorized. ANY UNAUTHORIZED REPRODUCTION OR DISTRIBUTION IS A VIOLATION OF THE FEDERAL COPYRIGHT ACT AND THE LICENSE AGREEMENT, AND SUBJECT TO CIVIL AND CRIMINAL PENALTIES THEREUNDER.

for seating without backrests is to allow for bench seating similar to bleacher requirements in ICC 300 (see Section 1029.1.1). While this section does not specify the maximum number of seats permitted in a row, the 30-foot (9144 mm) common path of travel limitation (see Section 1029.8) essentially restricts the single-access row to approximately 20 seats, based on an 18-inch (457 mm) width per seat. A row of 12 seats with backrests would compute to a required minimum width of 15 inches [12 + (0.5 x 5)]. Similarly, a row of 17 seats with backrests would require a clear width of 18 inches (457 mm) and so on. Since dual access is not provided, incremental increases would be permitted in the aisle accessway width as shown in Commentary Figure 1029.12.2.2. Incremental increases in the required width would occur up to the maximum number of seats, which is determined by the 30-foot (9144 mm) dead-end limitation.

The reason for increasing the row accessway widths incrementally with increases in the number of seats per row is to provide more efficient passage for the occupants who are using the aisle accessway. As a practical matter, where dual-access (see Section 1029.12.2.1) and single-access seating arrangements are used together, the largest computed clear width dimension would normally be applied by the designer to both arrangements so that the rows of seats will be in alignment. When a second means of egress for occupants of a single-access row is possible through an adjacent dual access row, see Section 1029.8.1.

1029.13 Assembly aisle walking surfaces. Ramped *aisles* shall comply with Sections 1029.13.1 through 1029.13.1.3. Stepped *aisles* shall comply with Sections 1029.13.2 through 1029.13.2.4.

❖ Assembly facilities such as theaters and auditoriums often require sloping or stepped floors to provide seated occupants with preferred sightlines for viewing presentations (for sightlines for wheelchair spaces, see IBC Section 1108.2). Aisles must, therefore, be designed to accommodate the changing elevations of the floor in such a manner that the path of travel will allow occupants to leave the area at a rapid pace with minimal possibilities for stumbling or falling during times of emergency.

[BE] TABLE 1029.12.2.1
SMOKE-PROTECTED ASSEMBLY AISLE ACCESSWAYS

TOTAL NUMBER OF SEATS IN THE SMOKE-PROTECTED ASSEMBLY SEATING	MAXIMUM NUMBER OF SEATS PER ROW PERMITTED TO HAVE A MINIMUM 12-INCH CLEAR WIDTH AISLE ACCESSWAY			
	Aisle or doorway at both ends of row		Aisle or doorway at one end of row only	
	Seats with backrests	Seats without backrests	Seats with backrests	Seats without backrests
Less than 4,000	14	21	7	10
4,000	15	22	7	10
7,000	16	23	8	11
10,000	17	24	8	11
13,000	18	25	9	12
16,000	19	26	9	12
19,000	20	27	10	13
22,000 and greater	21	28	11	14

For SI: 1 inch = 25.4 mm.

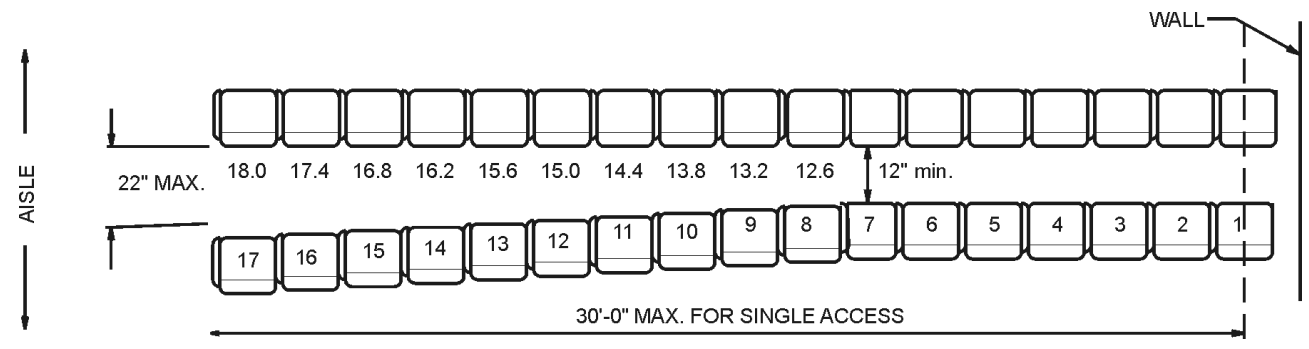

For SI: 1 inch = 25.4 mm, 1 foot = 304.8 mm.

Figure 1029.12.2.2
TYPICAL SINGLE-ACCESS ROW—MINIMUM AISLE ACCESSWAY WIDTH FOR SEATS WITH BACKRESTS

INTERNATIONAL CODE COUNCIL®
Copyright © 2015 ICC. ALL RIGHTS RESERVED. Accessed by David Dammon on Jun 21, 2017 12:30:52 PM pursuant to License Agreement with ICC. No further reproduction or distribution authorized. ANY UNAUTHORIZED REPRODUCTION OR DISTRIBUTION IS A VIOLATION OF THE FEDERAL COPYRIGHT ACT AND THE LICENSE AGREEMENT, AND SUBJECT TO CIVIL AND CRIMINAL PENALTIES THEREUNDER.

1029.13.1 Ramped aisles. *Aisles* that are sloped more than one unit vertical in 20 units horizontal (5-percent slope) shall be considered a ramped *aisle*. Ramped *aisles* that serve as part of an *accessible route* in accordance with Sections 1009 and 1108.2 shall have a maximum slope of one unit vertical in 12 units horizontal (8-percent slope). The slope of other ramped *aisles* shall not exceed one unit vertical in 8 units horizontal (12.5-percent slope).

❖ Similar to the definition for ramp in Chapter 2, aisles that slope 1:20 or less are considered sloped aisles, but are not ramps. Note that ramps that serve as part of an accessible route to and from accessible wheelchair spaces (Section 1009 and IBC Section 1108.2) must comply with the more restrictive requirements for ramps in Section 1012. This section requires that aisles with a gradient from 1:20 to 1:8 (12.5 percent slope) must meet the ramped aisle provisions in this section. Aisles with a gradient exceeding one unit vertical and eight units horizontal (12.5-percent slope) must consist of a series of treads and risers that comply with the requirements of stepped aisles in Section 1029.13.2.

1029.13.1.1 Cross slope. The slope measured perpendicular to the direction of travel of a ramped *aisle* shall not be steeper than one unit vertical in 48 units horizontal (2-percent slope).

❖ The limitation of one unit vertical in 48 units horizontal on the slope across the direction of travel is to prevent a severe cross slope that would pitch a user to one side (see Commentary Figure 1012.2).

1029.13.1.2 Landings. Ramped *aisles* shall have landings in accordance with Sections 1012.6 through 1012.6.5. Landings for ramped *aisles* shall be permitted to overlap required *aisles* or cross *aisles*.

❖ The reference for ramp landings to Sections 1012.6 through 1012.6.5 picks up the requirements for ramps to have a landing at the top and bottom of each run and when ramps change direction. This also includes requirements for landing slope, width and length. This does not pick up the requirement for ramps to have a landing at every 30 inches (762 mm) in rise as indicated in Section 1012.4. This is in consideration of the line of sight requirements for the different venues and the ability to provide a safe and smooth transition between the ramped aisles and the adjacent aisle accessways as patrons move into and out of their rows. A cross aisle or aisle can also serve as the ramp landing as long as it meets the 1:48 maximum slope provisions for landings.

1029.13.1.3 Edge protection. Ramped *aisles* shall have edge protection in accordance with Sections 1012.10 and 1012.10.1.

Exception: In assembly spaces with *fixed seating*, edge protection is not required on the sides of ramped *aisles* where the ramped *aisles* provide access to the adjacent seating and *aisle accessways*.

❖ Where an aisle has a dropoff on either side, it needs edge protection. In a seating venue, this would typically be the ramped aisle at the perimeter of the seating. This edge protection can be a wall, a horizontal rail that prevents the passage of a 4-inch (102 mm) sphere between the ramp surface and the rail, or a minimum 4-inch-high (102 mm) curb (see Commentary Figure 1012.10.1). Edge protection is not required between the ramped aisle and adjacent seating, including wheelchair seating spaces, as this could be a tripping hazard for people coming in and out of the rows.

1029.13.2 Stepped aisles. *Aisles* with a slope exceeding one unit vertical in eight units horizontal (12.5-percent slope) shall consist of a series of risers and treads that extends across the full width of *aisles* and complies with Sections 1029.13.2.1 through 1029.13.2.4.

❖ What must be recognized here is that stepped aisles are part of the floor construction and are intended to provide horizontal egress. Tread and riser construction for this purpose should not be directly compared to the requirements for treads and risers in conventional stairways that serve as means of vertical egress. Sometimes, because of design considerations, the gradient of an aisle is required to change from a level floor to a ramp and then to steps. In cases where there is no uniformity in the path of travel, occupants tend to be considerably more cautious, particularly in the use of stepped aisles, than they would normally be in the use of conventional stairways.

This section requires aisles with a slope of greater than 1:8 to use steps. Aisles with slopes of greater than 1:20 to 1:8 must comply with provisions for ramped aisles in Section 1029.13.1.

1029.13.2.1 Treads. Tread depths shall be not less than 11 inches (279 mm) and shall have dimensional uniformity.

Exception: The tolerance between adjacent treads shall not exceed $^{3}/_{16}$ inch (4.8 mm).

❖ Depths of treads are not to be less than 11 inches (279 mm) and uniform throughout each flight, except that a variance of not more than $^{3}/_{16}$ inch (4.8 mm) is permitted between adjacent treads to accommodate variations in construction. While the minimum tread depth provision is the same as the limiting dimension for treads in interior stairways (see Section 1011.5.2), it rarely applies in the construction of stepped aisles. A more common form of stepped aisle construction is to provide a tread depth equal to the back-to-back distance between rows of seats. This way the treads can be extended across the full length of the row and serve as a supporting platform for the seats. Other arrangements might require two treads between rows of seats, each tread equaling one-half of the depth of the seat row.

In theaters, for example, the back-to-back distance between rows of fixed seats usually ranges somewhere between 3 and 4 feet (914 and 1219 mm), depending on seat style and seat dimensions as well as the ease of passage between the rows (see Com-

INTERNATIONAL CODE COUNCIL®
Copyright © 2015 ICC. ALL RIGHTS RESERVED. Accessed by David Dammon on Jun 21, 2017 12:30:52 PM pursuant to License Agreement with ICC. No further reproduction or distribution authorized. ANY UNAUTHORIZED REPRODUCTION OR DISTRIBUTION IS A VIOLATION OF THE FEDERAL COPYRIGHT ACT AND THE LICENSE AGREEMENT, AND SUBJECT TO CIVIL AND CRIMINAL PENALTIES THEREUNDER.

mentary Figure 1029.13.2.1). The selection of single-tread or two-tread construction between rows of seats depends on the gradient and suitable riser height (see Section 1029.13.2.2), as needed for sightlines.

In comparing this section to Section 1029.13.2.2, it is significant to note the emphasis placed on the tread dimension. While not desirable, the code permits riser heights to deviate; however, tread dimensions must not vary beyond the $^{3}/_{16}$-inch (4.8 mm) tolerance.

1029.13.2.2 Risers. Where the gradient of stepped *aisles* is to be the same as the gradient of adjoining seating areas, the riser height shall be not less than 4 inches (102 mm) nor more than 8 inches (203 mm) and shall be uniform within each *flight*.

Exceptions:

1. Riser height nonuniformity shall be limited to the extent necessitated by changes in the gradient of the adjoining seating area to maintain adequate sightlines. Where nonuniformities exceed $^{3}/_{16}$ inch (4.8 mm) between adjacent risers, the exact location of such nonuniformities shall be indicated with a distinctive marking stripe on each tread at the *nosing* or leading edge adjacent to the nonuniform risers. Such stripe shall be not less than 1 inch (25 mm), and not more than 2 inches (51 mm), wide. The edge marking stripe shall be distinctively different from the contrasting marking stripe.
2. Riser heights not exceeding 9 inches (229 mm) shall be permitted where they are necessitated by the slope of the adjacent seating areas to maintain sightlines.

❖ In stepped aisles where the gradient of the aisle is the same as the gradient of the adjoining seating area, riser heights are not to be less than 4 inches (102 mm) nor more than 8 inches (203 mm) (see Commentary Figure 1029.13.2.2). For the safety of the occupants, risers should have uniform heights, where possible, throughout each flight. However, nonuniformity of riser heights is permitted in cases where changes to the gradient in the adjoining seating area

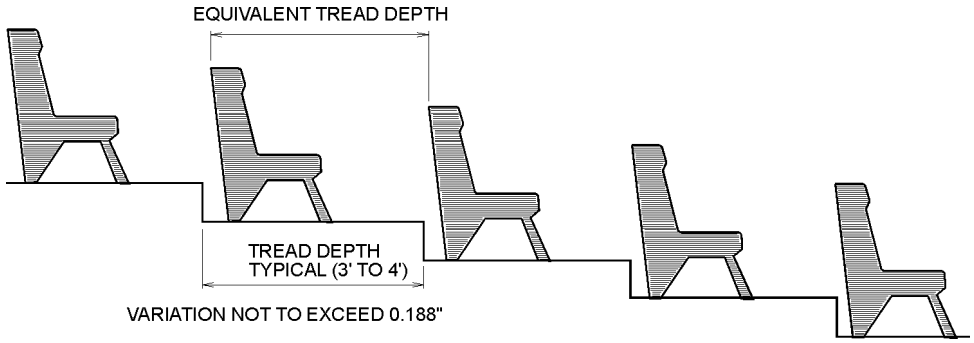

For SI: 1 inch = 25.4 mm, 1 foot = 304.8 mm.

Figure 1029.13.2.1
TYPICAL SEATING PLATFORMS ALSO USED AS STEPPING AISLES

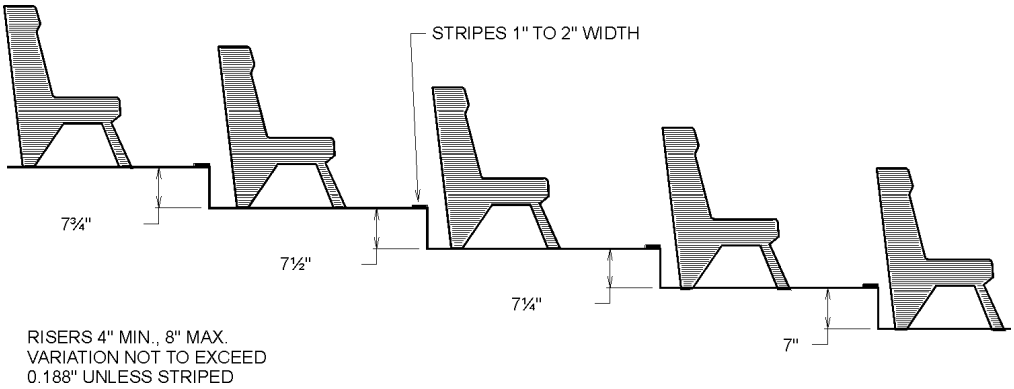

For SI: 1 inch = 25.4 mm.

Figure 1029.13.2.2
TYPICAL RISER CONSTRUCTION IN STEPPED AISLES

INTERNATIONAL CODE COUNCIL®
Copyright © 2015 ICC. ALL RIGHTS RESERVED. Accessed by David Dammon on Jun 21, 2017 12:30:52 PM pursuant to License Agreement with ICC. No further reproduction or distribution authorized. ANY UNAUTHORIZED REPRODUCTION OR DISTRIBUTION IS A VIOLATION OF THE FEDERAL COPYRIGHT ACT AND THE LICENSE AGREEMENT, AND SUBJECT TO CIVIL AND CRIMINAL PENALTIES THEREUNDER.

are required because of sightlines and other seating layout considerations.

Where variations in height exceed $^3/_{16}$ inch (4.8 mm) between adjacent risers, a distinctive marking stripe between 1 inch (25 mm) and 2 inches (51 mm) wide is to be located on the nosings of each tread as a visual warning to the occupants to be cautious. Frequently, this is done with "runway" lights. Note that this stripe must be different from the tread contrast marking stripes required for transitions in Section 1029.10.3 and the tread stripes in Section 1029.13.2.2.1. All of these stripes must be visible in lighted conditions; therefore, they are not required to comply with the provisions for luminous tread markings in Section 1025.

While the riser height may vary to adjust to sight lines of the associated seating, there is a maximum change for adjacent treads so that there is consistency in the flight (see Section 1029.13.2.2.1).

In comparing this section with Section 1029.13.2.1, it is significant to note the emphasis placed on the tread dimension. While not desirable, the code permits riser heights to deviate; however, Section 1029.13.2.1 does not permit tread dimensions to vary beyond the $^3/_{16}$-inch (4.8 mm) tolerance.

1029.13.2.2.1 Construction tolerances. The tolerance between adjacent risers on a stepped *aisle* that were designed to be equal height shall not exceed 3/16 inch (4.8 mm). Where the stepped *aisle* is designed in accordance with Exception 1 of Section 1029.13.2.2, the stepped *aisle* shall be constructed so that each riser of unequal height, determined in the direction of descent, is not more than 3/8 inch (9.5 mm) in height different from adjacent risers where stepped *aisle* treads are less than 22 inches (560 mm) in depth and 3/4 inch (19.1 mm) in height different from adjacent risers where stepped *aisle* treads are 22 inches (560 mm) or greater in depth.

❖ Where risers in a stepped aisle are consistent, the construction tolerance between adjacent treads allows for a maximum difference of $^3/_{16}$ inch (4.8 mm). Stairways allow for $^3/_8$ inch (9.5 mm), but this is for the flight of stairs (see Section 1011.5.4). Where the seating arrangement allows for unequal heights, the difference between adjacent risers is greater for situations with deeper treads. With a tread of 22 inches (560 mm) or greater, most people will be taking more than one step on each tread.

1029.13.2.3 Tread contrasting marking stripe. A contrasting marking stripe shall be provided on each tread at the *nosing* or leading edge such that the location of each tread is readily apparent when viewed in descent. Such stripe shall be not less than 1 inch (25 mm), and not more than 2 inches (51 mm), wide.

Exception: The contrasting marking stripe is permitted to be omitted where tread surfaces are such that the location of each tread is readily apparent when viewed in descent.

❖ The exception provides for the omission of the contrasting marking stripe where the tread is readily apparent, such as when aisle stair treads are provided with a roughened metal nosing strip or where lighted nosings occur. In this situation, the user is aware of the treads without the marking stripe. This stripe must be different from the marking stripe required for nonuniform risers in Section 1029.13.2.2.1and the tread contrast marking stripes required for transitions in Section 1029.10.3

These stripes must be visible in lighted conditions; therefore, these stripes are not required to comply with the provisions for luminous tread markings in Section 1025.

1029.13.2.4 Nosing and profile. *Nosing* and riser profile shall comply with Sections 1011.5.5 through 1011.5.5.3.

❖ The profiles of treads and risers contribute to stepped aisle safety. The radius or bevel of the nosing eases the otherwise square edge of the tread and prevents irregular chipping and wear that can become a maintenance issue and seriously affect the safe use of the stepped aisles. Since safety considerations for stepped aisles and stairways are the same for nosing and riser profiles, the provisions in stairways are referenced for this requirement.

1029.14 Seat stability. In a building, room or space used for assembly purposes, the seats shall be securely fastened to the floor.

Exceptions:

1. In a building, room or space used for assembly purposes or portions thereof without ramped or tiered floors for seating and with 200 or fewer seats, the seats shall not be required to be fastened to the floor.
2. In a building, room or space used for assembly purposes or portions thereof without ramped or tiered floors for seating, the seats shall not be required to be fastened to the floor.
3. In a building, room or space used for assembly purposes or portions thereof without seating at tables and without ramped or tiered floors for seating and with greater than 200 seats, the seats shall be fastened together in groups of not less than three or the seats shall be securely fastened to the floor.
4. In a building, room or space used for assembly purposes where flexibility of the seating arrangement is an integral part of the design and function of the space and seating is on tiered levels, not more than 200 seats shall not be required to be fastened to the floor. Plans showing seating, tiers and *aisles* shall be submitted for approval.
5. Groups of seats within a building, room or space used for assembly purposes separated from other seating by railings, *guards*, partial height walls or similar barriers with level floors and having not more than 14 seats per group shall not be required to be fastened to the floor.
6. Seats intended for musicians or other performers and separated by railings, *guards*, partial height

INTERNATIONAL CODE COUNCIL®
Copyright © 2015 ICC. ALL RIGHTS RESERVED. Accessed by David Dammon on Jun 21, 2017 12:30:52 PM pursuant to License Agreement with ICC. No further reproduction or distribution authorized. ANY UNAUTHORIZED REPRODUCTION OR DISTRIBUTION IS A VIOLATION OF THE FEDERAL COPYRIGHT ACT AND THE LICENSE AGREEMENT, AND SUBJECT TO CIVIL AND CRIMINAL PENALTIES THEREUNDER.

walls or similar barriers shall not be required to be fastened to the floor.

❖ The purpose of this section is to require that assembly seating be fastened to the floor where it would be a significant hazard if loose and subject to tipping over. The exceptions allow loose assembly seating for situations where the hazard is lower, such as floors where ramped or tiered seating is not used, where not more than 200 seats are used and for box seating arrangements and where a limited number of seats are within railings, guards or partial height walls.

1029.15 Handrails. Ramped *aisles* having a slope exceeding one unit vertical in 15 units horizontal (6.7-percent slope) and stepped *aisles* shall be provided with *handrails* in compliance with Section 1014 located either at one or both sides of the *aisle* or within the *aisle* width.

Exceptions:

1. *Handrails* are not required for ramped *aisles* with seating on both sides.
2. *Handrails* are not required where, at the side of the *aisle*, there is a *guard* with a top surface that complies with the graspability requirements of *handrails* in accordance with Section 1014.3.
3. *Handrail* extensions are not required at the top and bottom of stepped *aisles* and ramped *aisles* to permit crossovers within the *aisles*.

❖ For the safety of occupants, handrails must be provided in aisles where ramps exceed a gradient of one unit vertical in 15 units horizontal (6.67-percent slope) (see Commentary Figure 1029.15). All stepped aisles are required to have handrails. Handrails can be on one side, both sides or in the center of the aisle. Typically, handrails are in the center of the aisle when there is seating on both sides or on one side when the aisle is adjacent to the side walls of the room or a guard. While Sections 1011.11 and 1012.8 specify that handrails are required on both sides of stairways or ramps, the exceptions in Sections 1011.1 and 1012.1 and throughout Section 1014 allow for Section 1029.13 to be utilized for handrail location when dealing with stepped aisles, transitions and ramped aisles within assembly seating areas. This would include requiring handrails being within 30 inches (762 mm) (Section 1014.2) of the required stairway width. Safety for aisles with center handrails wider than 60 inches (1524 mm) and side aisles wider than 30 inches (762 mm) is specifically addressed with the capacity increases in Sections 1029.6.1 and 1029.6.2. What the reference to Section 1014 will require are the provisions for handrail height, graspability and fittings. Continuity, extensions, clearance and projections are more specifically addressed in Section 1029.9.1, this section and subsequent subsections.

Exception 1 omits the handrail requirements where ramped aisles are steeper, but the seats on both sides of the aisle effectively reduce the fall hazard.

Exception 2 allows handrails to be omitted where there is a guard at the side of the ramped or stepped aisle with a top rail that complies with the requirements for handrail graspability (see Section 1014.3). Note that the guard must meet the height and opening requirements specified in Section 1015 or 1029.16, as applicable.

While Section 1029.15.1 allows for discontinuous handrails, and Exception 3 (as well as Section 1014.6, Exception 2) exempts handrail extensions where they could block access to the seating, the handrail must extend the full run of the aisle stair. Stopping the handrail short of the bottom riser flight (except where permitted for mid-aisle handrails by Section 1029.15.3) would be considered a code violation. Handrails along the wall adjacent to stepped aisles or ramps should include the handrail extensions where feasible.

1029.15.1 Discontinuous handrails. Where there is seating on both sides of the *aisle*, the mid-aisle *handrails* shall be discontinuous with gaps or breaks at intervals not exceeding five rows to facilitate access to seating and to permit crossing

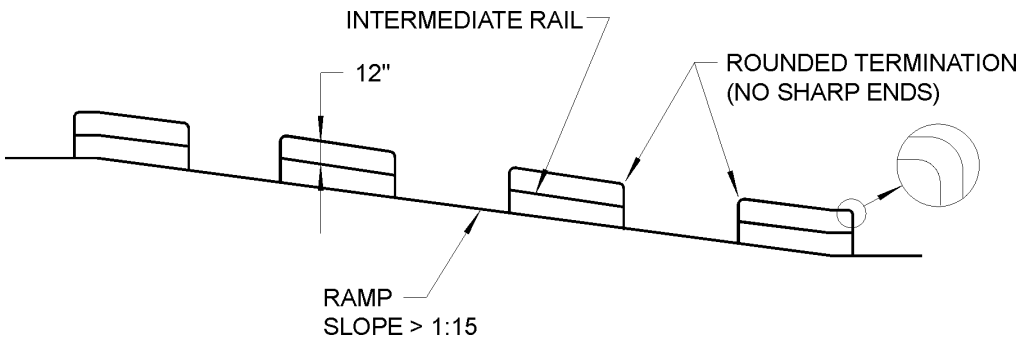

For SI: 1 inch = 25.4 mm.

Figure 1029.15
TYPICAL RAILING FOR RAMPED AISLES WITH RAILING IN THE AISLE

INTERNATIONAL CODE COUNCIL®
Copyright © 2015 ICC. ALL RIGHTS RESERVED. Accessed by David Dammon on Jun 21, 2017 12:30:52 PM pursuant to License Agreement with ICC. No further reproduction or distribution authorized. ANY UNAUTHORIZED REPRODUCTION OR DISTRIBUTION IS A VIOLATION OF THE FEDERAL COPYRIGHT ACT AND THE LICENSE AGREEMENT, AND SUBJECT TO CIVIL AND CRIMINAL PENALTIES THEREUNDER.

from one side of the *aisle* to the other. These gaps or breaks shall have a clear width of not less than 22 inches (559 mm) and not greater than 36 inches (914 mm), measured horizontally, and the mid-aisle *handrail* shall have rounded terminations or bends.

❖ Where aisles have seating on both sides, handrails may be located at the sides of the aisles, but are typically located in the center of the aisle. (Handrails on both sides of a stepped aisle will typically either block access to the aisle accessways or not be able to meet the gap requirements. Transitions per Section 1029.10 can have handrails on both sides or mid-width.) The width of each section of the subdivided aisle between the handrail and the edge of seating is to be not less than 23 inches (584 mm) measured to the handrail centerline (see Section 1029.9.1, Item 3).

For reasons of life safety in fire situations and also as a practical matter in the efficient use of the facility, a handrail down the middle of an aisle should not be continuous along its entire length. Crossovers must be provided by means of gaps or breaks in the handrail installation. Such openings must not be less than 22 inches (559 mm) or more than 36 inches (914 mm) wide, and must be provided at intervals not exceeding the distance of five rows of seats (see Commentary Figure 1029.15.1). All handrail terminations should be designed to have rounded ends or bends to avoid possible injury to the occupants (see Commentary Figure 1029.15).

1029.15.2 Handrail termination. *Handrails* located on the side of stepped *aisles* shall return to a wall, *guard* or the walking surface or shall be continuous to the *handrail* of an adjacent stepped *aisle flight*.

❖ The purpose of return requirements at handrail ends is to prevent a person from catching an article of clothing or satchel straps or from being injured by falling on the extended end of a handrail. When a handrail is on a wall adjacent to a stepped aisle, it can return the same as a handrail on a stairway.

1029.15.3 Mid-aisle termination. Mid-aisle *handrails* shall not extend beyond the lowest riser and shall terminate within 18 inches (381 mm), measured horizontally, from the lowest riser. *Handrail* extensions are not required.

Exception: Mid-aisle *handrails* shall be permitted to extend beyond the lowest riser where the *handrail* extensions do not obstruct the width of the cross *aisle*.

❖ The intent is to clarify how far a mid-aisle handrail can stop from the bottom of a stepped aisle and still allow for a person to get past the front of the rail to enter the first row of seating. Since the purpose of a handrail is to arrest a fall or provide stability for someone moving up or down the stepped aisle, the handrails should also not start so far back that someone could not reach the handrail from the cross aisle, or have to let go too soon before they get to the cross aisle. The intent of the exception is to allow for a mid-aisle handrail to have a bottom extension if it will not block the cross aisle. However, if a designer wants to not have a handrail extension in order to provide access to the front row of raised seats, the handrail must extend to at least 18 inches (381 mm) from the nosing of the bottom riser.

1029.15.4 Rails. Where mid-aisle *handrails* are provided in stepped *aisles*, there shall be an additional rail located approximately 12 inches (305 mm) below the *handrail*. The rail shall be adequate in strength and attachment in accordance with Section 1607.8.1.2.

❖ Handrail installations down the middle of an aisle must be constructed with intermediate rails located 12 inches (305 mm) below and parallel to main handrails. The rail below the handrail is to stop people from going under the handrail or swinging on the handrail (see Commentary Figure 1029.15). The lower rail is not intended to meet all handrail provisions for graspability; however, it does have to meet the same strength criteria as a handrail.

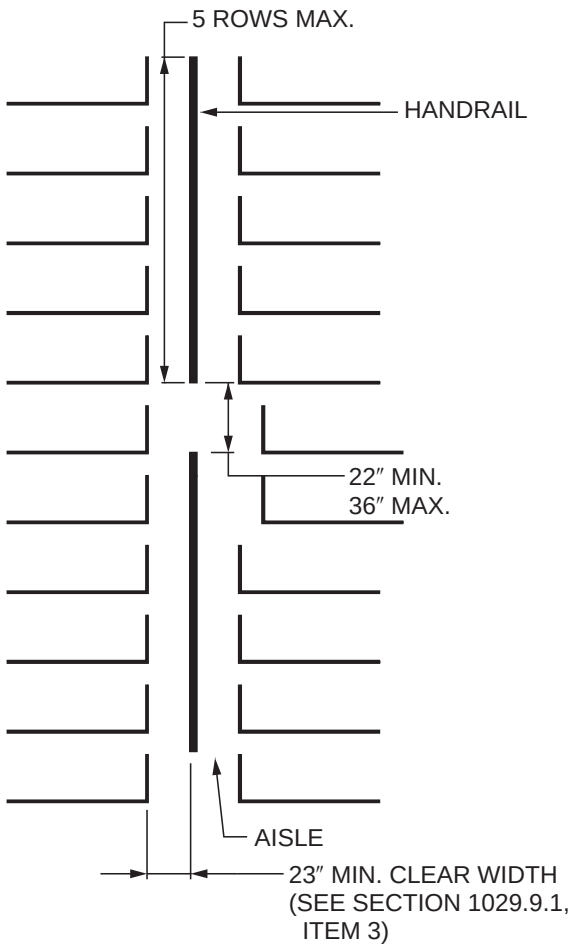

For SI: 1 inch = 25.4 mm.

Figure 1029.15.1
DISCONTINUOUS AISLE HANDRAILS

INTERNATIONAL CODE COUNCIL®
Copyright © 2015 ICC. ALL RIGHTS RESERVED. Accessed by David Dammon on Jun 21, 2017 12:30:52 PM pursuant to License Agreement with ICC. No further reproduction or distribution authorized. ANY UNAUTHORIZED REPRODUCTION OR DISTRIBUTION IS A VIOLATION OF THE FEDERAL COPYRIGHT ACT AND THE LICENSE AGREEMENT, AND SUBJECT TO CIVIL AND CRIMINAL PENALTIES THEREUNDER.

1029.16 Assembly guards. *Guards* adjacent to seating in a building, room or space used for assembly purposes shall be provided where required by Section 1015 and shall be constructed in accordance with Section 1015 except where provided in accordance with Sections 1029.16.1 through 1029.16.4. At *bleachers, grandstands* and *folding and telescopic seating, guards* must be provided where required by ICC 300 and Section 1029.16.1.

❖ This section establishes the scope of the guard provisions within assembly seating. Depending on the event, the sightline constraints can be for a wide viewing angle. For example, to see the entire football field, a person may have to look right and left. Good design will establish a balance between safety and sight issues that will need to be evaluated on a case-by-case basis.

Some situations unique to assembly make it necessary to strike a balance between safety requirements and line of sight issues. Section 1029.16.1 addresses the guards around the outside edge of a seating area, such as a bleacher or tiered seating arrangement that is on each side of a high-school football field, or along the first- and third-base lines at a baseball field. The perimeter guards are required for assembly seating addressed in Section 1029 and seating covered by ICC 300. The purpose of Section 1029.16.2 is to provide for occupant safety with guards along elevated cross aisles, typically in aisles that occupants use to move side to side across the seating bowl. If there is only an aisle accessway between the seats and the guard, typically found at the front of a balcony or raised section, then Section 1029.16.3 is applicable. If the aisle is moving down through the seating toward a dropoff, then Section 1029.16.4 is applicable.

1029.16.1 Perimeter guards. Perimeter *guards* shall be provided where the footboards or walking surface of seating facilities are more than 30 inches (762 mm) above the floor or grade below. Where the seatboards are adjacent to the perimeter, *guard* height shall be 42 inches (1067 mm) high minimum, measured from the seatboard. Where the seats are self-rising, *guard* height shall be 42 inches (1067 mm) high minimum, measured from the floor surface. Where there is an *aisle* between the seating and the perimeter, the *guard* height shall be measured in accordance with Section 1015.2.

Exceptions:

1. *Guards* that impact sightlines shall be permitted to comply with Section 1029.16.3.
2. *Bleachers, grandstands* and *folding and telescopic seating* shall not be required to have perimeter *guards* where the seating is located adjacent to a wall and the space between the wall and the seating is less than 4 inches (102 mm).

❖ The intent of perimeter guards is to address the risk of falling from the side and back of a seating area. This question is applicable for bleacher, grandstands and folding and telescopic seating addressed in ICC 300 and other assembly seating arrangements.

ICC 300 requires guards with 4-inch openings where the floor surface has an adjacent 30-inch dropoff (ICC 300, Section 408). The dropoff is measured from the floor rather than the seatboard because the ICC 300 committee did not believe it was appropriate to require guards in a two- or three-row bleacher system. For fixed seats and benches, the height for perimeter guards is measured from the seatboard, to address when people stand on the seats. Where seats are self-rising, the guard height would be measured from the floor. Self-rising seats have backs and are very difficult to stand on.

Exception 1 is to allow for the limited situation where guards at the sides of the seating may affect the line of sight in wide venues.

Exception 2 will permit bleacher systems constructed inside the building to use the building walls as perimeter guards if the opening between the bleacher and the wall is less than the opening permitted for guards.

1029.16.2 Cross aisles. Cross *aisles* located more than 30 inches (762 mm) above the floor or grade below shall have *guards* in accordance with Section 1015.

Where an elevation change of 30 inches (762 mm) or less occurs between a cross *aisle* and the adjacent floor or grade below, *guards* not less than 26 inches (660 mm) above the *aisle* floor shall be provided.

Exception: Where the backs of seats on the front of the cross *aisle* project 24 inches (610 mm) or more above the adjacent floor of the *aisle*, a *guard* need not be provided.

❖ The purpose of this section is to provide for occupant safety with guards along elevated cross aisles. The minimum height of the guard is a function of the cross-aisle elevation above the adjacent floor or grade below [i.e., 42 inches (1067 mm) high with more than a 30-inch (762 mm) dropoff and 26 inches (660 mm) high with a 30-inch (762 mm) or less dropoff]. When the seatbacks adjacent to cross aisles are a minimum of 24 inches (610 mm) above the floor level of the cross aisle, they will serve as the guard (see Commentary Figure 1029.16.3 for an illustration of the requirements in this section).

1029.16.3 Sightline-constrained guard heights. Unless subject to the requirements of Section 1029.16.4, a fascia or railing system in accordance with the *guard* requirements of Section 1015 and having a minimum height of 26 inches (660 mm) shall be provided where the floor or footboard elevation is more than 30 inches (762 mm) above the floor or grade below and the fascia or railing would otherwise interfere with the sightlines of immediately adjacent seating.

❖ The purpose of this section is to provide for occupant safety with guards along elevated seating for areas other than cross aisles, such as the front of a raised area or balcony level. The seats would only have an access aisle between the seat and the dropoff.

This section specifies a height of 26 inches (660 mm) for guards along fascias. The guard height and the dropoff are measured from the floor or footboard.

INTERNATIONAL CODE COUNCIL®
Copyright © 2015 ICC. ALL RIGHTS RESERVED. Accessed by David Dammon on Jun 21, 2017 12:30:52 PM pursuant to License Agreement with ICC. No further reproduction or distribution authorized. ANY UNAUTHORIZED REPRODUCTION OR DISTRIBUTION IS A VIOLATION OF THE FEDERAL COPYRIGHT ACT AND THE LICENSE AGREEMENT, AND SUBJECT TO CIVIL AND CRIMINAL PENALTIES THEREUNDER.

This is to provide a reasonable degree of safety while improving sightlines for persons seated immediately behind a fascia or balcony edge. The guard opening configuration must comply with Section 1015.3 (see Commentary Figure 1029.16.3 for an illustration of the requirements in this section).

1029.16.4 Guards at the end of aisles. A fascia or railing system complying with the *guard* requirements of Section 1015 shall be provided for the full width of the *aisle* where the foot of the *aisle* is more than 30 inches (762 mm) above the floor or grade below. The fascia or railing shall be a minimum of 36 inches (914 mm) high and shall provide a minimum 42 inches (1067 mm) measured diagonally between the top of the rail and the *nosing* of the nearest tread.

❖ This section applies only where the foot end of aisles (the lower end) is greater than 30 inches (762 mm) above the adjacent floor or grade below. This typically occurs where aisles move down through rows of seating to the front edge of a balcony or raised seating area. The guard must satisfy both of the specified height requirements to provide safety for persons at the end of the aisle in case someone trips moving down the stepped or ramped aisle. The 36-inch (914 mm) minimum height is measured from the floor vertically to the top of the guard. The minimum 42-inch (1067 mm) diagonal dimension from the nosing of the nearest stair tread to the top of the fascia or guard provides sufficient height to arrest a fall from the nearest aisle riser (see Commentary Figure 1029.16.3 for an illustration of the requirements in this section). The end result could be a guard with a vertical height of more than 36 inches (914 mm).

SECTION 1030
EMERGENCY ESCAPE AND RESCUE

1030.1 General. In addition to the *means of egress* required by this chapter, provisions shall be made for *emergency escape and rescue openings* in Group R-2 occupancies in accordance with Tables 1006.3.2(1) and 1006.3.2(2) and Group R-3 occupancies. *Basements* and sleeping rooms below the fourth story above *grade plane* shall have at least one exterior *emergency escape and rescue opening* in accordance with this section. Where *basements* contain one or more sleeping rooms, *emergency escape and rescue openings* shall be required in each sleeping room, but shall not be required in adjoining areas of the *basement*. Such openings shall open directly into a *public way* or to a *yard* or *court* that opens to a *public way*.

Exceptions:

1. *Basements* with a ceiling height of less than 80 inches (2032 mm) shall not be required to have *emergency escape and rescue openings*.
2. *Emergency escape and rescue openings* are not required from *basements* or sleeping rooms that have an *exit* door or *exit access* door that opens directly into a *public way* or to a *yard*, *court* or exterior exit balcony that opens to a *public way*.

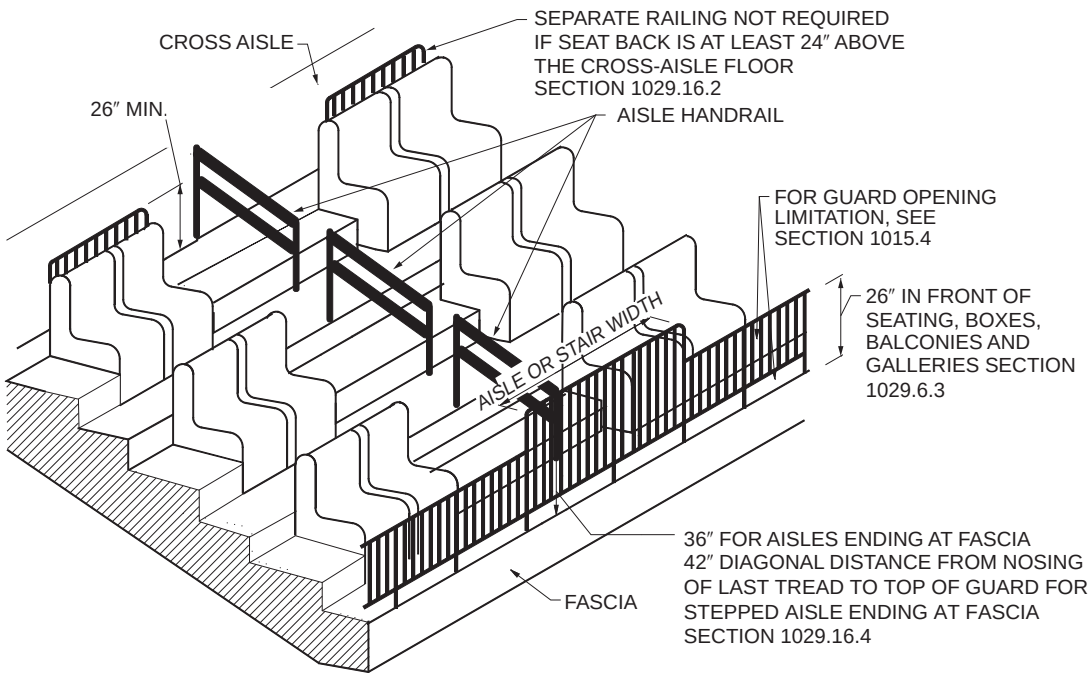

For SI: 1 inch = 25.4 mm.

Figure 1029.16.3
TYPICAL BALCONY GUARDS AT FASCIA

INTERNATIONAL CODE COUNCIL®
Copyright © 2015 ICC. ALL RIGHTS RESERVED. Accessed by David Dammon on Jun 21, 2017 12:30:52 PM pursuant to License Agreement with ICC. No further reproduction or distribution authorized. ANY UNAUTHORIZED REPRODUCTION OR DISTRIBUTION IS A VIOLATION OF THE FEDERAL COPYRIGHT ACT AND THE LICENSE AGREEMENT, AND SUBJECT TO CIVIL AND CRIMINAL PENALTIES THEREUNDER.

3. *Basements* without *habitable spaces* and having not more than 200 square feet (18.6 m^2) in floor area shall not be required to have *emergency escape and rescue openings*.

❖ Emergency escape and rescue openings (EERO) are required in single-exit residential buildings where occupants may be sleeping during a potential fire buildup (Groups R-2, R-3 and R-4). Group R-2 apartment buildings permitted to have a single exit from a story are required to have EERO by Table 1006.3.2(1), Note a. Group R-2 congregate residences permitted to have a single exit are required to have an EERO by Table 1006.3.2(2), Note a. All Group R-4 congregate residences would also be required to have EERO because Group R-4 follows Group R-3 provisions unless specifically mentioned otherwise (IBC Section 310.6).

All basements and each bedroom/sleeping room are to be provided with an exterior window or door that meets the minimum size requirements and is operable for emergency escape by methods that are obvious and clearly understood by all users. Sleeping rooms four stories or more above grade are not required to be so equipped, since fire service access at that height, as well as escape through such an opening, may not be practical or reliable. Since single-exit apartment buildings are limited to three stories and most Group R-3 and R-4 buildings are two or three stories, this limit is not applicable very often. Section 1018.3 limits Groups R-3 and R-4 to four stories where using a single open exit access stairway.

The provision for basements is in recognition that they typically have only a single means of egress without alternative routes through standard windows. Many times a basement is finished at a later time; therefore, as a safety precaution; at least one EERO is required in every basement. If bedrooms are provided within the basement, the location and number of EERO are determined by the bedrooms.

It is important to note that this window is only an element of escape and is not part of the means of egress required from the story unless it is a door conforming to normal egress requirements.

Exceptions 1 and 3 are intended to exempt basements that would not be likely to be finished as living space, and thus have sleeping rooms in them.

The intent of Exception 2 is to permit sleeping rooms with a door that has direct access to an exterior-type environment, such as a street or exit balcony, to not have an EERO. The open atmosphere of the escape route would increase the likelihood that the means of egress would be available even with the delayed response time for sleeping residents. This would also exempt walk-out basements that did not include bedrooms.

1030.2 Minimum size. *Emergency escape and rescue openings* shall have a minimum net clear opening of 5.7 square feet (0.53 m^2).

Exception: The minimum net clear opening for grade-floor *emergency escape and rescue openings* shall be 5 square feet (0.46 m^2).

❖ The dimensional criteria of the openings are intended to permit fire service personnel (in full protective clothing with a breathing apparatus) to enter from a ladder, as well as permit occupants to escape. The net clear opening area and minimum dimensions are intended to provide a clear opening through which an occupant can pass to escape the building or a fire fighter can pass to enter the building for rescue or fire suppression activities. Since the emergency escape windows must be usable to all occupants, including children and guests, the required opening dimensions must be achieved by the normal operation of the window from the inside (e.g., sliding, swinging or lifting the sash). It is impractical to assume that all occupants can operate a window that requires a special sequence of operations to achieve the required opening size. While most occupants are familiar with the normal operation by which to open the window, children and guests are frequently unfamiliar with any special procedures that may be necessary to remove or tilt the sashes. The time spent in comprehending the special operation unnecessarily delays egress from the bedroom and could lead to panic and further confusion. Thus, windows that achieve the required opening dimensions only through operations such as the removal of sashes or mullions are not permitted. It should be noted that the minimum area cannot be achieved by using both the minimum height and minimum width specified in Section 1030.2.1 (see Commentary Figure 1030.2).

1030.2.1 Minimum dimensions. The minimum net clear opening height dimension shall be 24 inches (610 mm). The minimum net clear opening width dimension shall be 20 inches (508 mm). The net clear opening dimensions shall be the result of normal operation of the opening.

❖ Note that both the minimum dimensions in this section and the minimum area requirements in Section 1030.2 apply. Thus, a grade-floor window that is only 24 inches (610 mm) in height must be 30 inches (762 mm) wide to meet the 5-square-foot (0.46 m^2) area requirement of Section 1030.2 for grade-floor window (see Commentary Figure 1030.2).

1030.3 Maximum height from floor. *Emergency escape and rescue openings* shall have the bottom of the clear opening not greater than 44 inches (1118 mm) measured from the floor.

❖ This section limits the height of the bottom of the clear opening to 44 inches (1118 mm) or less such

INTERNATIONAL CODE COUNCIL®
Copyright © 2015 ICC. ALL RIGHTS RESERVED. Accessed by David Dammon on Jun 21, 2017 12:30:52 PM pursuant to License Agreement with ICC. No further reproduction or distribution authorized. ANY UNAUTHORIZED REPRODUCTION OR DISTRIBUTION IS A VIOLATION OF THE FEDERAL COPYRIGHT ACT AND THE LICENSE AGREEMENT, AND SUBJECT TO CIVIL AND CRIMINAL PENALTIES THEREUNDER.

that it can be used effectively as an emergency escape (see Commentary Figure 1030.2).

Windows in Group R-2, R-3 and R-4 dwelling units may also have to meet window-opening limitations because of concerns about child falls (see Section 1015.8). Only some of the window opening-control devices will also work for emergency escape and rescue openings.

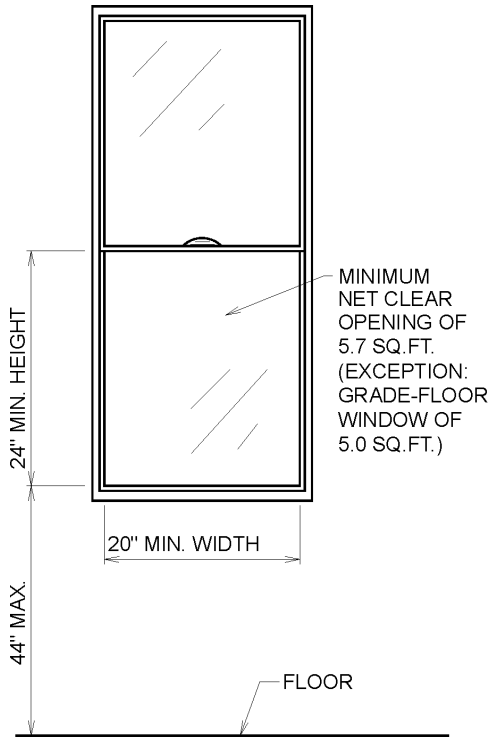

For SI: 1 inch = 25.4 mm, 1 square foot = 0.0929 m^2.

Figure 1030.2
EMERGENCY ESCAPE WINDOW

1030.4 Operational constraints. *Emergency escape and rescue openings* shall be operational from the inside of the room without the use of keys or tools. Bars, grilles, grates or similar devices are permitted to be placed over *emergency escape and rescue openings* provided the minimum net clear opening size complies with Section 1030.2 and such devices shall be releasable or removable from the inside without the use of a key, tool or force greater than that which is required for normal operation of the *emergency escape and rescue opening*. Where such bars, grilles, grates or similar devices are installed in existing buildings, *smoke alarms* shall be installed in accordance with Section 907.2.11 regardless of the valuation of the *alteration*.

❖ If security grilles, decorations or similar devices are installed on escape windows, such items must be readily removable to permit occupant escape without the use of any tools, keys or a force greater than that required for the normal operation of the window. This would include any window fall-prevention devices and window opening-control devices required by Section 1013.8.

Where bars, grilles, grates or other devices that prevent full operation of the window are placed over the emergency escape and rescue opening, it is important that they are easily removable. Thus, the requirements for ease of operation are the same as required for windows.

Windows in Group R-2, R-3 and R-4 dwelling units may also have to meet window opening limitations because of concerns about child falls (see Section 1015.8). Only some of the window opening-control devices will also work for emergency escape and rescue openings.

Where smoke alarms are not already provided and when items that could possibly slow the opening of emergency escape and rescue windows are installed in existing buildings, smoke alarms must also be installed. Smoke alarms are necessary to provide advance warning of a fire for safety purposes.

1030.5 Window wells. An *emergency escape and rescue opening* with a finished sill height below the adjacent ground level shall be provided with a window well in accordance with Sections 1030.5.1 and 1030.5.2.

❖ Emergency escape and rescue openings that are partially or completely below grade need to have window wells so that they can be used effectively (see Commentary Figure 1030.5).

1030.5.1 Minimum size. The minimum horizontal area of the window well shall be 9 square feet (0.84 m^2), with a minimum dimension of 36 inches (914 mm). The area of the window well shall allow the *emergency escape and rescue opening* to be fully opened.

❖ This section specifies the size of the window well that is needed for a rescue person in full protective clothing and breathing apparatus to use the rescue opening. The required 9 square feet (0.84 m^2) is the size of the window well. Thus, the window well must project away from the plane of the window at least 3 feet (914 mm), and the required dimension in the plane of the window along the wall is also 3 feet (914 mm) (see Commentary Figure 1030.5).

1030.5.2 Ladders or steps. Window wells with a vertical depth of more than 44 inches (1118 mm) shall be equipped with an *approved* permanently affixed ladder or steps. Ladders or rungs shall have an inside width of at least 12 inches (305 mm), shall project at least 3 inches (76 mm) from the wall and shall be spaced not more than 18 inches (457 mm) on center (o.c.) vertically for the full height of the window well. The ladder or steps shall not encroach into the required dimensions of the window well by more than 6 inches (152 mm). The ladder or steps shall not be obstructed by the *emergency escape and rescue opening*. Ladders or steps required by this section are exempt from the *stairway* requirements of Section 1011.

❖ This section specifies that a ladder or steps be provided for ease of getting into and out of window wells that are more than 44 inches (1118 mm) deep.

INTERNATIONAL CODE COUNCIL®
Copyright © 2015 ICC. ALL RIGHTS RESERVED. Accessed by David Dammon on Jun 21, 2017 12:30:52 PM pursuant to License Agreement with ICC. No further reproduction or distribution authorized. ANY UNAUTHORIZED REPRODUCTION OR DISTRIBUTION IS A VIOLATION OF THE FEDERAL COPYRIGHT ACT AND THE LICENSE AGREEMENT, AND SUBJECT TO CIVIL AND CRIMINAL PENALTIES THEREUNDER.

Usually, ladder rungs are embedded in the wall of the window well. The 44-inch (1118 mm) dimension is the depth of the window well, not the distance from the bottom of the window well to grade. Thus, if the floor of a window well is 40 inches (1016 mm) below grade, but the wall of the window well projects above grade by 6 inches (152 mm), steps or a ladder are required since the vertical depth is 46 inches (1168 mm).

It is important that the ladder not obstruct the operation of the emergency escape window (see Commentary Figure 1030.5).

SECTION 1031
MAINTENANCE OF THE MEANS OF EGRESS

1031.1 General. The *means of egress* for buildings or portions thereof shall be maintained in accordance with this section.

❖ This section introduces the provisions for the maintenance of the means of egress in all buildings and structures.

1031.2 Reliability. Required *exit accesses*, *exits* and *exit discharges* shall be continuously maintained free from obstructions or impediments to full instant use in the case of fire or other emergency when the building area served by the *means of egress* is occupied. An *exit* or *exit passageway* shall not be used for any purpose that interferes with a *means of egress*.

❖ It is important for safety that the pathway from any point in a building to the exit discharge be kept clear so that occupants can exit the building at any time without obstructions in the egress path. Such obstructions could include storage in the means of egress, which is specifically regulated by IBC Section 315.3.2. Similarly, handrails, stair treads, flooring materials, door hardware and other fixtures and finishes must be maintained in such a way as to prevent them from becoming hazards themselves.

The last sentence of this section provides correlation with Sections 1022.1, 1023.1 and 1024.1, which, in new buildings, prohibit the use of exits, interior exit stairway and ramp enclosures and exit passageway enclosures, respectively, for any purpose other than

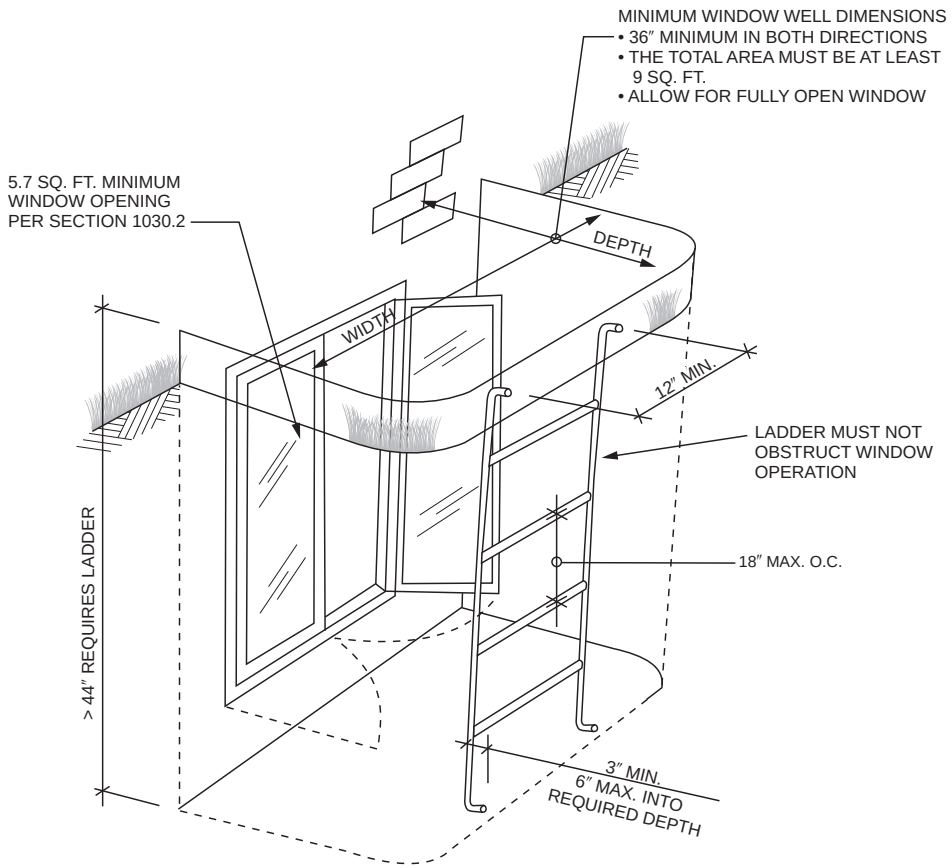

For SI: 1 inch = 25.4 mm, 1 square foot = 0.0929 m^2.

Figure 1030.5
WINDOW WELLS AT EMERGENCY ESCAPE WINDOWS

INTERNATIONAL CODE COUNCIL®
Copyright © 2015 ICC. ALL RIGHTS RESERVED. Accessed by David Dammon on Jun 21, 2017 12:30:52 PM pursuant to License Agreement with ICC. No further reproduction or distribution authorized. ANY UNAUTHORIZED REPRODUCTION OR DISTRIBUTION IS A VIOLATION OF THE FEDERAL COPYRIGHT ACT AND THE LICENSE AGREEMENT, AND SUBJECT TO CIVIL AND CRIMINAL PENALTIES THEREUNDER.

a means of egress. However, it is important that an exit, interior exit stairway or ramp enclosure or an exit passageway not be used for any purpose other than as a means of egress throughout the life of the building, not just when the building is built. For example, there is a tendency to use stairway enclosures for storage, furniture, vending machines, copy machines, displays and similar purposes. Such a situation can obstruct the path of exit travel. Further, if the contents consist of combustible materials or ignition sources, the use of the stairway as a means of egress may be jeopardized, creating a hazard to life safety. Note, however, that the restriction is not limited to situations where the contents are combustible because of the potential for obstruction and the inherent difficulties in limiting the materials to noncombustibles (see also commentary, Sections 1022.1, 1023.1 and 1024.1).

It is not the intent of this requirement to prohibit occupants from using the stairway exit passageway as a circulation route during normal operation.

1031.2.1 Security devices and egress locks. Security devices affecting *means of egress* shall be subject to approval of the *fire code official*. Security devices and locking arrangements in the means of egress that restrict, control, or delay egress shall be installed and maintained as required by this chapter.

❖ In our society, security is an ever-growing concern, and often the solutions to enhancing the security of buildings conflict with the life-safety concerns of building and fire codes. This section gives the fire code official an important measure of control over the installation or modification of security devices that could adversely effect the egress system of a building. See the commentary to Section 1008 for specifics on the different security hardware options permitted.

While this section focuses on physical impediments or obstructions to exit use, there are also security devices that emit smoke, mist or other confusing or debilitating media that could obscure exits, temporarily disable innocent occupants or result in mistaken false alarms (from passersby seeing the smoke or mist and thinking the building is on fire), which could affect fire fighter egress and safety. See the commentary to IBC Section 316.5 for a discussion of such devices.

1031.3 Obstructions. A *means of egress* shall be free from obstructions that would prevent its use, including the accumulation of snow and ice.

❖ Blocked exits are among the most common egress problems. Obstructions, impediments and storage or placement of articles in a manner that prevents access to or reduces the effective width of egress elements are prohibited. Such impediments may be movable or fixed. Maintenance of safe egress conditions implies keeping exits free of storage, decorations or debris that obstruct access or visibility. Complex egress paths may also violate the intent of this requirement by confusing or obscuring the path of travel. When inspecting, extra care should be taken to follow the egress path occupants must take in the event of an emergency from a number of points in the same manner. Holding open an egress door, thus giving fire unimpeded access to the path of egress, may pose an even greater hazard than blocking an exit.

Accumulations of snow and ice could prevent timely exiting from the building in the case of fire or other emergencies. Generally, if the exit is used regularly, the exit doorway area is kept free of ice and snow. Where a required exit is not used regularly, it may be necessary to protect the exit doorway area from the accumulation of ice and snow, either by construction of overhangs or enclosures, heated slabs or, when approved by the fire code official, by a reliable snow removal program that is aggressively enforced.

1030.3.1 Group I-2. In Group I-2, the required clear width for aisles, corridors and ramps that are part of the required means of egress shall comply with Section 1020.2. The facility shall have a plan to maintain the required clear width during emergency situations.

Exception: In areas required for bed movement, equipment shall be permitted in the required width where all the following provisions are met:

1. The equipment is low hazard and wheeled.
2. The equipment does not reduce the effective clear width for the means of egress to less than 5 feet (1525 mm).
3. The equipment is limited to:
   - 3.1 Equipment and carts in use;
   - 3.2 Medical emergency equipment;
   - 3.3 Infection control carts; and
   - 3.4 Patient lift and transportation equipment.
4. Medical emergency equipment and patient lift and transportation equipment, when not in use, is required to be located on one side of the corridor.
5. The equipment is limited in number to a maximum of one per patient sleeping room or patient care room within each smoke compartment.

❖ This is a procedural requirement. In a Group I-2 occupancy where beds are moved, the minimum corridor width is 8 feet. It is recognized that certain movable pieces of equipment will be present in the corridor during normal operations of the patient care units. This section limits the types and number of such pieces of equipment and the restrictions the equipment may impose on the means of egress. During emergencies, facilities must have an emergency management plan addressing the steps that must be taken by the facility and responding staff to ensure that the required 8-foot-wide corridor is kept clear of movable obstructions (see IBC Sections 404 and 405). The terminology is consistent with NFPA 101.

INTERNATIONAL CODE COUNCIL®
Copyright © 2015 ICC. ALL RIGHTS RESERVED. Accessed by David Dammon on Jun 21, 2017 12:30:52 PM pursuant to License Agreement with ICC. No further reproduction or distribution authorized. ANY UNAUTHORIZED REPRODUCTION OR DISTRIBUTION IS A VIOLATION OF THE FEDERAL COPYRIGHT ACT AND THE LICENSE AGREEMENT, AND SUBJECT TO CIVIL AND CRIMINAL PENALTIES THEREUNDER.

[B] 1031.4 Exit signs. *Exit* signs shall be installed and maintained in accordance with Section 1011. Decorations, furnishings, equipment or adjacent signage that impairs the visibility of *exit* signs, creates confusion or prevents identification of the *exit* shall not be allowed.

❖ The scoping provisions of Section 1001.1 restrict the applicability of Section 1013 to new construction. This section provides needed application of the provisions of Section 1013 to existing buildings as well. Exit signs are intended to stand out from their immediate background. Clutter and obstructions in the form of drapes, decorations, partitions and other signs may distract attention from properly placed exit signs. Careful attention should be paid to how occupants will view the sign from where they must begin the egress sequence. Certain lighting conditions can obscure the direct viewing and ready identification of exit signs.

1031.5 Nonexit identification. Where a door is adjacent to, constructed similar to and can be confused with a *means of egress* door, that door shall be identified with an *approved* sign that identifies the room name or use of the room.

❖ Many times doors have the appearance of being exit doors but do not lead to an egress path. In many cases, these doors only open into rooms with no other way out. In such cases, this section requires that the door be provided with "non-exit" door signage to warn occupants that it is not part of the means of egress. The exact name or use of the room should be indicated, such as "storage," "mechanical room," "electrical room" or similar verbiage. Note that this section is not specifically included in the new construction requirements for a building because it is difficult to determine potentially confusing non-exit doors during the plan review process. It is intended for use by the fire code official during maintenance inspections when the confusion becomes apparent.

1031.6 Finishes, furnishings and decorations. *Means of egress* doors shall be maintained in such a manner as to be distinguishable from the adjacent construction and finishes such that the doors are easily recognizable as doors. Furnishings, decorations or other objects shall not be placed so as to obstruct *exits*, access thereto, egress therefrom, or visibility thereof. Hangings and draperies shall not be placed over *exit* doors or otherwise be located to conceal or obstruct an *exit*. Mirrors shall not be placed on *exit* doors. Mirrors shall not be placed in or adjacent to any *exit* in such a manner as to confuse the direction of exit.

❖ Similar to Section 1010.1, this section establishes that existing egress doors need to be easily recognizable for immediate use in emergency situations throughout the life of the building. Thus, the code specifies that doors are not to be hidden in such a manner that a person would have trouble seeing where to egress. Displays, furnishings, finishes and decorations are frequently intended to create a mood or atmosphere; however, they often make familiar places confusing even to those who normally occupy them. Bright lights, vivid colors, mirrors and hanging material may significantly reduce contrast, impede visibility or confuse direction. It is not uncommon for a building owner to refinish the interior of an occupancy and paint or otherwise apply a matching finish to a door and the surrounding wall, making the door indistinguishable. This commonly occurs with murals that are painted on walls of corridors.

Tables, chairs, display cases, coat racks and similar movable objects placed in corridors or aisles may reduce required egress capacity or may require substantial effort to remove or negotiate quickly. Anything that slows egress may also impede access, particularly to fire fighters who may be called to rescue occupants or fight the fire. Similarly, anything that obscures the visibility of exit signs is prohibited by Section 1031.4.

1031.7 Emergency escape and rescue openings. Required *emergency escape and rescue openings* shall be maintained in accordance with the code in effect at the time of construction, and the following: Required *emergency escape and rescue openings* shall be operational from the inside of the room without the use of keys or tools. Bars, grilles, grates or similar devices are allowed to be placed over *emergency escape and rescue openings* provided the minimum net clear opening size complies with the code that was in effect at the time of construction and such devices shall be releasable or removable from the inside without the use of a key, tool or force greater than that which is required for normal operation of the *emergency escape and rescue opening*.

❖ In new construction, Section 1030.1 requires that in Group R-2 buildings with a single exit or in Group R-3 and R-4 dwellings, every sleeping room below the fourth story must have at least one operable window or exterior door approved for emergency escape or rescue. This section provides the necessary maintenance and utilization requirements for emergency escape openings.

Maintenance requirements are provided to increase the reliability of the emergency escape elements. Included are allowances to provide the emergency escape elements with security devices that retain the usability of the window or door while allowing a measure of security for the building occupants from intruders. Note that these provisions are applicable only to emergency escape openings required by the applicable building code in force when the building was constructed, in accordance with Section 1104.1.

The same blocking, locking and maintenance restrictions that apply to egress doors apply to emergency escape windows and doors. These egress components are frequently found blocked by furniture, fans and window air conditioners, especially in residential sleeping rooms. Inspections of other means of egress elements should include a look at basement escape windows and doors as well. Mechanical parts of exterior doors and windows are particularly susceptible to wear and tear and should

INTERNATIONAL CODE COUNCIL®
Copyright © 2015 ICC. ALL RIGHTS RESERVED. Accessed by David Dammon on Jun 21, 2017 12:30:52 PM pursuant to License Agreement with ICC. No further reproduction or distribution authorized. ANY UNAUTHORIZED REPRODUCTION OR DISTRIBUTION IS A VIOLATION OF THE FEDERAL COPYRIGHT ACT AND THE LICENSE AGREEMENT, AND SUBJECT TO CIVIL AND CRIMINAL PENALTIES THEREUNDER.

be the subject of frequent inspections and periodic preventive maintenance. Hinges must swing and handles must turn at all times so that they are ready to function when needed.

Since the emergency escape windows must be usable to all occupants, including children and guests, the required opening dimensions must be achieved by the normal operation of the window from the inside (e.g., sliding, swinging or lifting the sash). It is impractical to assume that all occupants can operate a window requiring a special sequence of operations to achieve the mandated opening size. While most occupants are familiar with the normal operation by which to open the window, children and guests are frequently unfamiliar with special procedures necessary to remove the sashes. The time spent in comprehending the special operation unnecessarily delays egress from the bedroom and could lead to panic and further confusion; thus, windows that achieve the required opening dimensions only by performing operations such as the removal of sashes or mullions are not permitted.

Not only are security devices or accessories frequently added to emergency escape windows to prevent entry, but too often the windows themselves are replaced with others that provide inadequate clearance or improper locking arrangements. Security grille designs are available to deter entry without compromising egress. Security bars, grilles or screens placed over emergency escape windows must also be releasable or removable from the inside without the use of a key, tool or force greater than what is required for normal operation of the window.

1031.8 Inspection, testing and maintenance. All two-way communication systems for *areas of refuge* shall be inspected and tested on a yearly basis to verify that all components are operational. When required, the tests shall be conducted in the presence of the *fire code official*. Records of inspection, testing and maintenance shall be maintained.

❖ Since these components are part of the fire protection features of a building, two-way communications systems should be tested in order to verify their operation. Communication is paramount for the occupant using the area of refuge; therefore, it is reasonable to verify the operation of the communication system just as is done for any other fire protection equipment. Many of these systems utilize an "acknowledge" light, and yearly testing would help to eliminate a potential failure of the communication system for something as critical, yet unassuming, as a burned-out bulb. See the commentary to Sections 1009.6.5 and 1009.8 for further discussion of these systems.

1031.9 Floor identification signs. The floor identification signs required by Sections 1023.9 and 1104.24 shall be maintained in an *approved* manner.

❖ This section provides correlation with Sections 1023.9 and 1104.24. The requirement for the maintenance of signs designating floor levels in interior stairway exit enclosures has equal importance in existing buildings. See the commentary to Section 1023.9 for further discussion of these signs.

Bibliography

The following resource materials were used in the preparation of the commentary for this chapter of the code:

24 CFR, *Fair Housing Accessibility Guidelines* (FHAG). Washington, DC: Department of Housing and Urban Development, 1991.

28 CFR Parts 35 and 36 Final Rule, *2010 Standard for Accessible Design*. Washington, DC: U.S. Department of Justice, September 15, 2010.

36 CFR Parts 1190 and 1191 Final Rule, *The Americans with Disabilities Act (ADA) Accessibility Guidelines; Architectural Barriers Act (ABA) Accessibility Guidelines*. Washington, DC: Architectural and Transportation Barriers Compliance Board, July 23, 2004.

Appendix B to Part 36, *Analysis and Commentary on the 2010 ADA Standards for Accessible Design*. Washington, DC: Department of Justice, September 15, 2010.

Architectural and Transportation Barriers Compliance Board, 42 USC 3601-88, *Fair Housing Amendments Act (FHAA).* Washington, DC: United States Code, 1988.

ASME A17.1-2013/CSA B44-13, *Safety Code for Elevators and Escalators*. New York: American Society of Mechanical Engineers, 2013.

ASME A18.1-2008, *Safety Standard for Platform Lifts and Stairway Chairlifts*. New York: American Society of Mechanical Engineers, 2008.

ASTM D 2047-04, *Standard Test Method for Static Coefficient of Friction Polish-coated Flooring Surfaces as Measured by the James Machine*. West Conshohocken, PA: ASTM International, 2004.

ASTM E 119-2012A, *Standard Test Methods for Fire Tests of Building Construction and Materials*. West Conshohocken, PA: ASTM International, 2012.

ASTM E 2072-10, *Standard Specification for Photoluminescent (Phosphorescent) Safety Markings*. West Conshohocken, PA: ASTM International, 2010.

ASTM F 851-87 (Reapproved 2005), *Standard Test Method for Self-rising Seat Mechanisms*. West Conshohocken, PA: ASTM International, 2005.

INTERNATIONAL CODE COUNCIL®
Copyright © 2015 ICC. ALL RIGHTS RESERVED. Accessed by David Dammon on Jun 21, 2017 12:30:52 PM pursuant to License Agreement with ICC. No further reproduction or distribution authorized. ANY UNAUTHORIZED REPRODUCTION OR DISTRIBUTION IS A VIOLATION OF THE FEDERAL COPYRIGHT ACT AND THE LICENSE AGREEMENT, AND SUBJECT TO CIVIL AND CRIMINAL PENALTIES THEREUNDER.

DOJ 28 CFR, Part 36 (Appendix A)-91, *ADA Accessibility Guidelines for Buildings and Facilities*. Washington, DC: U.S. Department of Justice, 1991.

DOJ 28 CFR, Part 36-91, *Americans with Disabilities Act* (ADA). Washington, DC: U.S. Department of Justice, 1991.

Final Report of the HUD Review of the Fair Housing Accessibility Requirements and the 2003 International Building Code (IBC). February 18, 2005 (Docket No FR-4943-N-02).

Final Report of the HUD Review of the Fair Housing Accessibility Requirements and the 2006 International Building Code (IBC). May 31, 2007 (Docket No FR-5136-N-01).

Fire Modeling Analysis Report. July 20. 2011 and *The Report to the California State Fire Marshal on Exit Access Travel Distance of 400 Feet by Task Group 400*, December 20, 2010 by Aon Fire Protection Engineering. The complete report can be found on the California State Fire Marshal's website at: http://osfm.fire.ca.gov/codedevelopment/pdf/2010interimcodeadoption/Part-9_ISOR_Attachment_A_rev20110720comp.pdf

HUD 24 CFR, Part 100, *Federal Fair Housing Accessibility Guidelines*. Washington, DC: U.S. Department of Housing and Urban Development.

NIST IR 4770-92, *Report on Staging Areas for Persons with Mobility Limitations*. Washington, DC: National Institute of Standards and Technology, 1992.

"Review of Fall Safety of Children Between the Ages of 18 months and 4 Years in Relation to Guards and Climbing in the Built Environment," prepared for the National Ornamental & Miscellaneous Metals Association (NOMMA). Upper Marlboro, MD: NAHB Research Center, Inc., 2007.

UL 10C-09, *Positive Pressure Fire Tests of Door Assemblies*. Northbrook, IL: Underwriters Laboratories, Inc., 2009.

UL 305-2012, *Panic Hardware*. Northbrook, IL: Underwriters Laboratories, Inc., 2012.

UL 924-06, *Standard for Safety Emergency Lighting and Power Equipment—with Revisions through 2009*. Northbrook, IL: Underwriters Laboratories, Inc., 2009.

UL 1994-04, *Standard for Luminous Egress Path Marking Systems—with Revisions through 2010*. Northbrook, IL: Underwriters Laboratories, Inc., 2010.

INTERNATIONAL CODE COUNCIL®

Copyright © 2015 ICC. ALL RIGHTS RESERVED. Accessed by David Dammon on Jun 21, 2017 12:30:52 PM pursuant to License Agreement with ICC. No further reproduction or distribution authorized. ANY UNAUTHORIZED REPRODUCTION OR DISTRIBUTION IS A VIOLATION OF THE FEDERAL COPYRIGHT ACT AND THE LICENSE AGREEMENT, AND SUBJECT TO CIVIL AND CRIMINAL PENALTIES THEREUNDER.

Chapter 11: Construction Requirements for Existing Buildings

General Comments

This chapter first appeared in the 2009 edition of the code, as Chapter 46. It brings many of the retroactive existing building fire protection and life safety requirements previously found in Chapters 7, 9 and 10 to one location for a more convenient and user-friendly enforcement tool. Requirements for premises identification of buildings remain in Chapter 5 and the existing building interior finish requirements remain in Chapter 8.

Excluding the general provisions and definitions, Chapter 11 is divided into four sections. Section 1103 addresses fire safety requirements for existing buildings. This includes protection of vertical openings in shafts and openings for escalators. Section 1103 also contains provisions requiring automatic sprinkler, standpipe, and fire alarm and detection systems in existing buildings. Section 1104 specifies the minimum means of egress requirements for existing buildings and is based on the provisions previously found in Section 1027. Section 1105 establishes construction requirements for existing Group I-2 occupancies. Section 1106 sets forth the requirements for fire department access to outdoor storage of tires, which is retroactive to any existing storage conditions.

Note that Section 1101.4 provides a level of reasonableness for enforcement of this chapter. It is not intended that existing conditions be immediately fixed, rather a process and timeline is worked through with the owner.

Purpose

The purposes of this chapter are to provide minimum construction requirements for existing buildings and to provide them in one place. Many newer buildings may already meet these requirements and no further action will be necessary. Those that do not meet these minimal construction requirements will need to address those deficiencies. It should be noted that interior finishes for existing buildings are dealt with separately in Chapter 8.

SECTION 1101 GENERAL

1101.1 Scope. The provisions of this chapter shall apply to existing buildings constructed prior to the adoption of this code.

❖ This section introduces Chapter 11 and indicates that it is applicable to all buildings constructed prior to the code's date of adoption.

1101.2 Intent. The intent of this chapter is to provide a minimum degree of fire and life safety to persons occupying existing buildings by providing minimum construction requirements where such existing buildings do not comply with the minimum requirements of the *International Building Code*.

❖ This chapter provides a single location for such requirements. Included is a quick-reference table (see Table 1103.1) to determine if there may be any requirements that would be applicable as the inspector is conducting the inspection. Each of the provisions in the code that refers to retroactive requirements now has a reference to this chapter.

Historically, there has been confusion as to when the construction provisions of Section 102.1 could be applied to an existing building. It has been said that in every case the fire code official must declare a "distinct hazard"; however, this is not correct. There are specific construction requirements for existing buildings provided by International Code Council® (ICC®) membership to address distinct hazards. Since the determination of a hazard is already accomplished, it is not necessary for the fire code official to repeat the process. Therefore, all of the requirements in Chapter 11 will apply to existing buildings.

Section 102.1, Item 3, also indicates that the retroactive construction provisions referred to are located in Chapter 11, thus clarifying which provisions in the code are actually construction provisions that should be applied to an existing building. Since only the provisions listed in this chapter would apply to an existing facility, all of the other construction provisions in the code apply to new construction. However, as has always been the case, the code official can still exercise judgment and declare a distinct hazard under Section 102.1, Item 4, for other items or operations not addressed in Chapter 11. See the commentary to Section 102.1 for further information.

Section 1104.1 makes it clear that existing buildings must still comply with the code under which the building was built or the minimum egress requirements in Section 1104, whichever is more restrictive.

INTERNATIONAL CODE COUNCIL®
Copyright © 2015 ICC. ALL RIGHTS RESERVED. Accessed by David Dammon on Jun 21, 2017 12:30:52 PM pursuant to License Agreement with ICC. No further reproduction or distribution authorized. ANY UNAUTHORIZED REPRODUCTION OR DISTRIBUTION IS A VIOLATION OF THE FEDERAL COPYRIGHT ACT AND THE LICENSE AGREEMENT, AND SUBJECT TO CIVIL AND CRIMINAL PENALTIES THEREUNDER.

In this fashion, a building will not be allowed to reduce the egress system protection or design from the original approval. Section 1104 is not as restrictive as requirements for new construction and allows for the continued use of existing buildings when the egress is at an acceptable standard, but not in complete compliance with the *International Building Code*® (IBC®).

1101.3 Permits. Permits shall be required as set forth in Sections 105.6 and 105.7 and the *International Building Code*.

❖ See the commentary to Section 105.7 and IBC Section 105.

1101.4 Owner notification. When a building is found to be in noncompliance with this chapter, the *fire code official* shall duly notify the *owner* of the building. Upon receipt of such notice, the *owner* shall, subject to the following time limits, take necessary actions to comply with the provisions of this chapter.

❖ See the commentary to Sections 109.3 and 109.3.2.

1101.4.1 Construction documents. *Construction documents* necessary to comply with this chapter shall be completed and submitted within a time schedule *approved* by the *fire code official.*

❖ See the commentary to Section 105.4 and its subsections.

1101.4.2 Completion of work. Work necessary to comply with this chapter shall be completed within a time schedule *approved* by the *fire code official.*

❖ See the commentary to Section 105.3.1 and IBC Section 105.3.2.

1101.4.3 Extension of time. The *fire code official* is authorized to grant necessary extensions of time when it can be shown that the specified time periods are not physically practical or pose an undue hardship. The granting of an extension of time for compliance shall be based on the showing of good cause and subject to the filing of an acceptable systematic plan of correction with the *fire code official.*

❖ See the commentary to Section 105.3.2.

SECTION 1102
DEFINITIONS

1102.1 Definitions. The following terms are defined in Chapter 2:

DUTCH DOOR.

EXISTING.

❖ Definitions of terms can help in the understanding and application of the code requirements. This section directs the code user to Chapter 2 for the proper application of the indicated terms used in this chapter. Terms may be defined in Chapter 2 or in another *International Code*® (I-Code®) as indicated in Section 201.3, or the dictionary meaning may be all that is needed (see also commentary, Sections 201 through 201.4).

SECTION 1103
FIRE SAFETY REQUIREMENTS FOR EXISTING BUILDINGS

1103.1 Required construction. Existing buildings shall comply with not less than the minimum provisions specified in Table 1103.1 and as further enumerated in Sections 1103.2 through 1103.10.

The provisions of this chapter shall not be construed to allow the elimination of *fire protection systems* or a reduction in the level of fire safety provided in buildings constructed in accordance with previously adopted codes.

Exceptions:

1. Where a change in fire-resistance rating has been approved in accordance with Section 803.6 of the *International Existing Building Code.*
2. Group U occupancies.

❖ This section reinforces the provisions of Section 1101.1 and points to the table that provides a tabular summary of the requirements of this chapter and how they apply to the various occupancy groups. With respect to existing fire protection systems, this section reinforces the provisions of Section 901.4, which emphasizes the principle that systems installed and maintained in compliance with the codes and standards in effect at the time they were placed in service must remain operational at the same level at all times.

The first exception recognizes an allowance provided in the *International Existing Building Code*® (IEBC®). Section 803.6 of the IEBC allows reductions in fire-resistance-rated construction if an automatic sprinkler system is added to a building. These reductions are required to be consistent with what is required in the IBC and also include extensive documentation and approval from the code official.

The second exception correlates with Table 1103.1, which does not include provisions for Group U occupancies (as defined in Section 202 and IBC Section 312), which are generally miscellaneous structures that do not pose the same life safety hazard as occupancies that are not classified in Group U.

1103.1.1 Historic buildings. Facilities designated as historic buildings shall develop a fire protection plan in accordance with NFPA 914. The fire protection plans shall comply with the maintenance and availability provisions in Sections 404.3 and 404.4.

❖ Section 102.6 generally does not require compliance with the code for historic buildings. However, that same section states that such buildings have a fire protection plan as required by this section. This plan will provide minimal ongoing safety for the occupants. This section also references back to the maintenance and availability requirements found in Chapter 4 to make sure the plans remain current and available to occupants and code officials.

INTERNATIONAL CODE COUNCIL®
Copyright © 2015 ICC. ALL RIGHTS RESERVED. Accessed by David Dammon on Jun 21, 2017 12:30:52 PM pursuant to License Agreement with ICC. No further reproduction or distribution authorized. ANY UNAUTHORIZED REPRODUCTION OR DISTRIBUTION IS A VIOLATION OF THE FEDERAL COPYRIGHT ACT AND THE LICENSE AGREEMENT, AND SUBJECT TO CIVIL AND CRIMINAL PENALTIES THEREUNDER.

TABLE 1103.1
OCCUPANCY AND USE REQUIREMENTS[a]

SECTION	USE			OCCUPANCY CLASSIFICATION																	
	High-rise	Atrium or covered mall	Under-ground building	A	B	E	F	H-1	H-2	H-3	H-4	H-5	I-1	I-2	I-3	I-4	M	R-1	R-2	R-3	R-4	S
1103.2	R	R	R	R	R	R	R	R	R	R	R	R	R	R	R	R	R	R	R	R	R	R
1103.3	R	—	R	R	R	R	R	R	R	R	R	R	R	R	R	R	R	R	R	R	R	R
1103.4.1	R	—	R	—	—	—	—	—	—	—	—	—	—	R	R	—	—	—	—	—	—	—
1103.4.2	R	—	R	R	R	R	R	R	R	R	R	R	R	—	—	R	R	R	R	—	R	R
1103.4.3	R	—	R	R	R	R	R	R	R	R	R	R	R	—	—	R	R	R	R	—	R	R
1103.4.4	—	R	—	—	—	—	—	—	—	—	—	—	—	—	—	—	—	—	—	—	—	—
1103.4.5	—	—	—	—	R	—	—	—	—	—	—	—	—	—	—	—	R	—	—	—	—	—
1103.4.6	—	—	—	R	—	R	R	R	R	R	R	R	R	R	R	R	—	R	R	R	R	R
1103.4.7	—	—	—	R	—	R	R	R	R	R	R	R	R	R	R	R	—	R	R	R	R	R
1103.4.8	R	—	R	R	R	R	R	R	R	R	R	R	R	—	—	R	R	R	R	R	R	R
1103.4.9	R	—	—	—	—	—	—	—	—	—	—	—	—	R	—	—	—	—	—	—	—	—
1103.5.1	—	—	—	R[c]	—	—	—	—	—	—	—	—	—	—	—	—	—	—	—	—	—	—
1103.5.2, 1103.5.3[b]	—	—	—	—	—	—	—	—	—	—	—	—	—	R	—	—	—	—	—	—	—	—
1103.5.4	—	—	—	R	R	R	R	R	R	R	R	R	R	R	R	R	R	R	R	R	R	R
1103.6.1	R	—	R	R	R	R	R	R	R	R	R	R	R	R	R	R	R	R	R	—	R	R
1103.6.2	R	—	R	R	R	R	R	R	R	R	R	R	R	R	R	R	R	R	R	—	R	R
1103.7.1	—	—	—	—	—	R	—	—	—	—	—	—	—	—	—	—	—	—	—	—	—	—
1103.7.2	—	—	—	—	—	—	—	—	—	—	—	—	R	—	—	—	—	—	—	—	—	—
1103.7.3	—	—	—	—	—	—	—	—	—	—	—	—	—	R	—	—	—	—	—	—	—	—
1103.7.4	—	—	—	—	—	—	—	—	—	—	—	—	—	—	R	—	—	—	—	—	—	—
1103.7.5	—	—	—	—	—	—	—	—	—	—	—	—	—	—	—	—	—	R	—	—	—	—
1103.7.6	—	—	—	—	—	—	—	—	—	—	—	—	—	—	—	—	—	—	R	—	—	—
1103.7.7	—	—	—	—	—	—	—	—	—	—	—	—	—	—	—	—	—	—	—	—	R	—
1103.8	—	—	—	—	—	—	—	—	—	—	—	—	R	—	—	—	—	R	R	R	R	—
1103.9	R	—	—	—	—	—	—	—	—	—	—	—	R	R	—	R	—	R	R	R	R	—
1104	R	R	R	R	R	R	R	R	R	R	R	R	R	R	R	R	R	R	R	R	R	R
1105	—	—	—	—	—	—	—	—	—	—	—	—	—	R	—	—	—	—	—	—	—	—
1106	—	—	—	—	—	—	—	—	—	—	—	—	—	R	—	—	—	—	—	—	—	—

a. Existing buildings shall comply with the sections identified as "Required" (R) based on occupancy classification or use, or both, whichever is applicable.
b. Only applies to Group I-2 Condition 2 as established by the adopting ordinance.
c. Only applies to Group A-2 occupancies.
R = The building is required to comply.

INTERNATIONAL CODE COUNCIL®
Copyright © 2015 ICC. ALL RIGHTS RESERVED. Accessed by David Dammon on Jun 21, 2017 12:30:52 PM pursuant to License Agreement with ICC. No further reproduction or distribution authorized. ANY UNAUTHORIZED REPRODUCTION OR DISTRIBUTION IS A VIOLATION OF THE FEDERAL COPYRIGHT ACT AND THE LICENSE AGREEMENT, AND SUBJECT TO CIVIL AND CRIMINAL PENALTIES THEREUNDER.

1103.2 Emergency responder radio coverage in existing buildings. Existing buildings that do not have approved radio coverage for emergency responders within the building, based upon the existing coverage levels of the public safety communication systems of the jurisdiction at the exterior of the building, shall be equipped with such coverage according to one of the following:

1. Where an existing wired communication system cannot be repaired or is being replaced, or where not approved in accordance with Section 510.1, Exception 1.
2. Within a time frame established by the adopting authority.

Exception: Where it is determined by the fire code official that the radio coverage system is not needed.

❖ This section specifies the requirements for emergency responder radio coverage in existing buildings. When radio coverage is not adequate, Section 510.1, Exception 1, allows for the installation of a wired communication system. However, in existing buildings that have such a system or may have taken that exception, in the event the wired communication system becomes inoperative and cannot be repaired or is undergoing extended repair or replacement, this section allows the fire code official to require the installation of an acceptable system.

Where an existing building is determined to have inadequate radio coverage based on the requirements of Section 510.4, Item 2 of this section allows the fire code official to establish a time frame for compliance with Section 510.1. There are times when prior to construction it will be difficult to confidently assure that radio coverage will not be affected by the building itself. That is the reason these requirements are also applicable to existing facilities.

1103.3 Existing elevators. Existing elevators, escalators and moving walks shall comply with the requirements of Sections 1103.3.1 and 1103.3.2.

❖ The following two sections provide retroactive requirements that apply to existing elevators and, to a certain extent, escalators and moving walkways. Note that Section 607 also deals with the ongoing operation and maintenance of elevators in buildings. That section also has requirements related to fire service keys.

1103.3.1 Elevators, escalators and moving walks. Existing elevators, escalators and moving walks in Group I-2 Condition 2 occupancies shall comply with ASME A17.3.

❖ This section is specific to Group I-2 Condition 2 occupancies (hospitals). Not only are existing elevators required to comply with ASME A17.3, but escalators and moving walks must also comply. Note that Section 3001.2 of the IBC would require ongoing maintenance of all elevators and conveying systems. This section specifies compliance with ASME A17.3, *Safety Code for Existing Elevators and Escalators,* for such maintenance.

The healthcare industry has historically been required to comply with regulations set forth by accreditation and certification agencies, such as The Joint Commission. ASME A17.3 has been referenced by guidelines adopted by The Joint Commission for over a decade and this requirement provides correlation of the code with the mandated healthcare industry standard.

The reference to ASME A17.3 requires that existing elevators, escalators, moving walks and their related operating equipment in Group I-2 Condition 2 occupancies comply with a minimum level of safety. Because the occupants of these types of facilities are often incapable of self-preservation, it is essential to provide ASME-mandated features for occupant safety including escalator and moving walk emergency stop buttons and automatic skirt obstruction stop features.

1103.3.2 Elevator emergency operation. Existing elevators with a travel distance of 25 feet (7620 mm) or more above or below the main floor or other level of a building and intended to serve the needs of emergency personnel for fire-fighting or rescue purposes shall be provided with emergency operation in accordance with ASME A17.3.

Exceptions:

1. Buildings without occupied floors located more than 55 feet (16 764 mm) above or 25 feet (7620 mm) below the lowest level of fire department vehicle access where protected at the elevator shaft openings with additional fire doors in accordance with Section 716.5 of the *International Building Code* and where all of the following conditions are met:
   1.1 The doors shall be provided with vision panels of approved fire protection-rated glazing so located as to furnish clear vision of the approach to the elevator. Such glazing shall not exceed 100 square inches (0.065 m2) in area.
   1.2 The doors shall be held open but be automatic-closing by activation of a fire alarm initiating device installed in accordance with the requirements of NFPA 72 as for Phase I Emergency Recall Operation, and shall be located at each floor served by the elevator; in the associated elevator machine room, control space, or control room; and in the elevator hoistway, where sprinklers are located in those hoistways.
   1.3 The doors, when closed, shall have signs visible from the approach area stating: WHEN THESE DOORS ARE CLOSED OR IN FIRE EMERGENCY, DO NOT USE ELEVATOR. USE EXIT STAIRWAYS.
2. Buildings without occupied floors located more than 55 feet (16 764 mm) above or 25 feet (7620 mm) below the lowest level of fire department vehicle access where provided with *automatic sprinkler systems* installed in accordance with Section 903.3.1.1 or 903.3.1.2.

INTERNATIONAL CODE COUNCIL®
Copyright © 2015 ICC. ALL RIGHTS RESERVED. Accessed by David Dammon on Jun 21, 2017 12:30:52 PM pursuant to License Agreement with ICC. No further reproduction or distribution authorized. ANY UNAUTHORIZED REPRODUCTION OR DISTRIBUTION IS A VIOLATION OF THE FEDERAL COPYRIGHT ACT AND THE LICENSE AGREEMENT, AND SUBJECT TO CIVIL AND CRIMINAL PENALTIES THEREUNDER.

3. Freight elevators in buildings provided with both *automatic sprinkler systems* installed in accordance with Section 903.3.1.1 or 903.3.1.2 and not less than one ASME 17.3-compliant elevator serving the same floors.

Elimination of previously installed Phase I emergency recall or Phase II emergency in-car systems shall not be permitted.

❖ This section establishes requirements for existing elevators. Existing elevators that travel 25 feet (7620 mm) or more above or below the main level must, as a minimum, be equipped with emergency operation capabilities that comply with ASME A17.3. New elevator installations are held to more restrictive guidelines for increased cost effectiveness and must have both emergency recall (Phase I) and emergency in-car operation (Phase II) to comply with ASME A17.1 for any amount of travel distance, as required by Section 607.1. The ASME standards are safety codes for elevators and escalators: ASME A17.3 for existing elevators and ASME A17.1 for new elevator installations. Automatic fire detection devices provided for Phase I emergency recall operation must be installed in accordance with Section 907.3.3.

There are several exceptions based on the expense of providing Phase I recall and Phase II emergency operation for existing elevators. ASME A17.3, Rule 211.3 (Firefighters' Service—Automatic Elevators) states, "All automatic (nondesignated attendant) operation elevators having a travel of 25 ft (7.62 m) or more above or below the designated level shall conform to the requirements of this Rule."

These changes are needed because of the excessive expense of compliance for many of these retrofits. Application of the mandatory Phase I and Phase II retrofits required by A17.3 triggers complete replacement of the elevator machinery at costs running into the hundreds of thousands of dollars. What is a relatively inexpensive fire safety feature in a new elevator installation can be unreasonably onerous when applied to existing elevators. It is therefore reasonable to codify alternate methods for building owners to meet the intent of the codes. It is important to note that the 25-foot travel threshold for an ASME A17.3 emergency operation retrofit is not mitigated by occupant load; number of stories; elevator use; building fire or smoke compartment conditions; the presence of sprinklers; or any building-specific operational firefighting considerations. For elevators installed prior to the adoption of newer elevator emergency operations features, many existing three-story buildings require retrofits; elevators in nonatmospherically segregated spaces such as low-rise atriums require retrofits; vintage freight elevators, regardless of maintenance condition or the ability of building occupants to access them, require retrofits. The problem of inflexible compliance options is magnified by the division of professional jurisdictions because elevator authorities typically do not have the expertise to assess fire risk on a total building basis; hence there is a need for the code to scope retroactive fire safety provisions.

By allowing for more affordable or effective alternatives to the Phase I and Phase II retrofits, less opposition should exist to adoption of ASME A17.3 and its other retroactive safety requirements such as safety bulkheads for hydraulic elevators and door restrictors, thereby enhancing overall elevator safety.

The intents of Phase I emergency recall are to prevent elevator users from being discharged at a floor that is engaged in a fire; to prevent occupants from accessing an elevator during a fire; and, in a detected fire condition, to return the elevator car to a designated floor for fire-fighter access for operations and rescue.

The intent of Phase II emergency in-car operation is to provide fire fighters the ability to operate the elevator for fire-fighting operations.

Exception 1 meets the intent of the code by:

- Providing an additional fire door, with a vision panel, between elevator occupants and a fire engaged floor. This protects occupants from car and hoistway doors automatically opening directly to a fire event. The vision panel lets occupants view fire risk and select another floor to travel to for egress. This door provides an additional barrier to smoke and water contamination of the hoistway and improves building compartmentation.
- Providing additional signs on the added door immediately at the elevator opening telling building occupants to not use the elevator when the door is closed. In other words, if you can read the sign you shouldn't use the elevator.
- Recognizing that common fire-fighting operations policy requires fire fighters to use the stairs to address any fire on the sixth floor or lower in a building; meaning that in low-rise buildings immediate fire-fighter access to the elevators is not as critical. The sixth floor of a building typically corresponds to the code's definition of a high-rise building as one with "an occupied floor located more than 75 feet (22 860 mm) above the lowest level of fire department vehicle access." This is broadly recognized as the elevation at which a compromise is achieved between the inherent hazard of using an elevator in a structural fire response and the need to respond in a timely way to the fire.

Exception 1 also tacitly acknowledges that these are not elevators that were ever "intended to serve the needs of emergency personnel for fire-fighting or rescue purposes," as the charging section states.

Locations of fire alarm-initiating devices used to initiate door closing are identical to those used to initiate Phase I operations via reference to NFPA 72 by ASME A17.3.

Exception 2 recognizes that there is no docu-

INTERNATIONAL CODE COUNCIL®
Copyright © 2015 ICC. ALL RIGHTS RESERVED. Accessed by David Dammon on Jun 21, 2017 12:30:52 PM pursuant to License Agreement with ICC. No further reproduction or distribution authorized. ANY UNAUTHORIZED REPRODUCTION OR DISTRIBUTION IS A VIOLATION OF THE FEDERAL COPYRIGHT ACT AND THE LICENSE AGREEMENT, AND SUBJECT TO CIVIL AND CRIMINAL PENALTIES THEREUNDER.

mented loss of life while in an elevator during a structural fire in a building protected with automatic fire sprinklers. It is reasonable that if an owner has already provided superior fire safety features in an existing building he or she will not be required to retrofit expensive fire safety features of limited value.

For buildings within the scope of the exception that are not already equipped with an automatic sprinkler system, Exception 2 provides an incentive to provide fire sprinklers.

The references to Sections 903.3.1.1 and 903.3.1.2 mean that only a fire sprinkler system installed in accordance with the appropriate technical standard will permit relaxation of the Phase I and Phase II emergency operations requirements.

Fifty-five feet was selected as the upper limit for the floor height of buildings for a couple of reasons. It was suggested that a height limit of roughly four stories would be preferable when considering response factors associated with ascertaining elevator occupant locations and conditions. Since 55 feet is the elevation at which automatic sprinkler protection is triggered, and since it roughly corresponds to four stories, it is offered as a suitable threshold.

Exception 3 recognizes that buildings having another elevator equipped with Phase I and Phase II emergency operations already meet the intent of Phase II fire-fighter operations provisions. The fire sprinkler requirement and the limited passenger use of freight elevators means that the likelihood of life loss in the freight elevator is very low. For buildings without fire sprinklers, this provision provides an incentive to install fire sprinkler systems.

The final paragraph of this section clarifies that previously installed Phase I emergency recall and Phase II emergency in-car operations are not to be removed.

1103.4 Vertical openings. Interior vertical openings, including but not limited to *stairways*, elevator hoistways, service and utility shafts, that connect two or more stories of a building, shall be enclosed or protected as specified in Sections 1103.4.1 through 1103.4.10.

❖ Vertical openings that are not properly protected can act as a chimney for smoke, hot gases and products of combustion. Unprotected floor openings have been a major contributing factor in many large loss-of-life fires. This section retroactively requires the enclosure of vertical openings between floors with approved fire barriers. The intent is to increase the level of safety in all buildings by enclosing unprotected floor openings and, thus, removing the avenue for unimpeded fire and smoke spread. In particular, the code is intended to ensure that means of egress in existing multiple-story buildings are given a reasonable level of protection.

Vertical communication between floors (including stairways, escalator openings, elevator hoistways, trash and laundry chutes, and other types of building service and mechanical shafts) can contribute significantly to fire and smoke spread because of "stack effect" (see Commentary Figure 1103.4). This section and Sections 1103.4.1 through 1103.4.7 require that interior shafts be enclosed with fire barriers of the fire-resistance rating indicated. These assemblies must be constructed and protected as required by the IBC. The allowance for sprinklers in the various sections recognizes the value of automatic sprinkler systems conforming to Section 903.3.1.1 (NFPA 13 system) or 903.3.1.2 (NFPA 13R system), as applicable.

1103.4.1 Group I-2 and I-3 occupancies. In Group I-2 and I-3 occupancies, interior vertical openings connecting two or more stories shall be protected with 1-hour fire-resistance-rated construction.

Exceptions:

1. In Group I-2, unenclosed vertical openings not exceeding two connected stories and not concealed within the building construction shall be permitted as follows:
   1.1. The unenclosed vertical openings shall be separated from other unenclosed vertical openings serving other floors by a smoke barrier.
   1.2. The unenclosed vertical openings shall be separated from corridors by smoke partitions.
   1.3. The unenclosed vertical openings shall be separated from other fire or smoke compartments on the same floors by a smoke barrier.

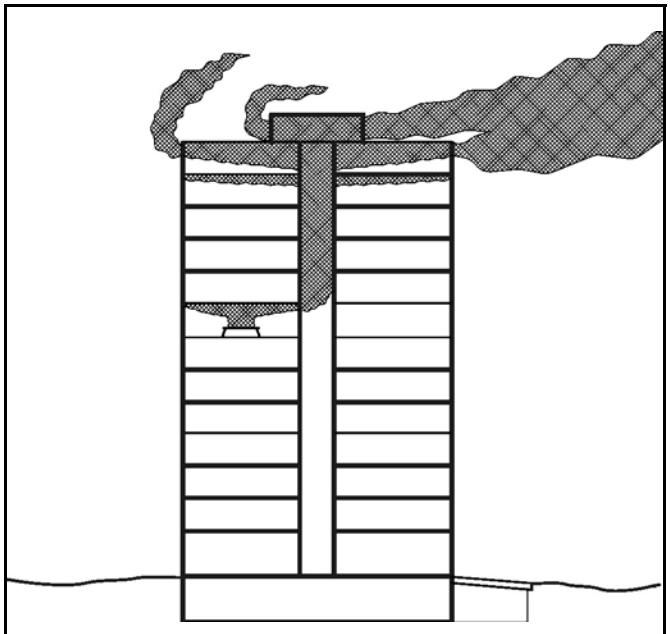

Figure 1103.4
STACK EFFECT AND SMOKE MIGRATION VIA VERTICAL SHAFTS

INTERNATIONAL CODE COUNCIL®
Copyright © 2015 ICC. ALL RIGHTS RESERVED. Accessed by David Dammon on Jun 21, 2017 12:30:52 PM pursuant to License Agreement with ICC. No further reproduction or distribution authorized. ANY UNAUTHORIZED REPRODUCTION OR DISTRIBUTION IS A VIOLATION OF THE FEDERAL COPYRIGHT ACT AND THE LICENSE AGREEMENT, AND SUBJECT TO CIVIL AND CRIMINAL PENALTIES THEREUNDER.

1.4. On other than the lowest level, the unenclosed vertical openings shall not serve as a required means of egress.

2. In Group I-2, atriums connecting three or more stories shall not require 1-hour fire-resistance-rated construction where the building is equipped throughout with an *automatic sprinkler system* installed in accordance with Section 903.3, and all of the following conditions are met:

2.1. For other than existing approved atriums with a smoke control system, where the atrium was constructed and is maintained in accordance with the code in effect at the time the atrium was created, the atrium shall have a smoke control system that is in compliance with Section 909.

2.2. Glass walls forming a smoke partition or a glass-block wall assembly shall be permitted when in compliance with Condition 2.2.1 or 2.2.2.

2.2.1. Glass walls forming a smoke partition shall be permitted where all of the following conditions are met:

2.2.1.1. Automatic sprinklers are provided along both sides of the separation wall and doors, or on the room side only if there is not a walkway or occupied space on the atrium side.

2.2.1.2. The sprinklers shall be not more than 12 inches (305 mm) away from the face of the glass and at intervals along the glass of not greater than 72 inches (1829 mm).

2.2.1.3. Windows in the glass wall shall be non-operating type.

2.2.1.4. The glass wall and windows shall be installed in a gasketed frame in a manner that the framing system deflects without breaking (loading) the glass before the sprinkler system operates.

2.2.1.5. The sprinkler system shall be designed so that the entire surface of the glass is wet upon activation of the sprinkler system with-out obstruction.

2.2.2. A fire barrier is not required where a glass-block wall assembly complying with Section 2110 of the *International Building Code* and having a 3/4-hour fire protection rating is provided.

2.3. Where doors are provided in the glass wall, they shall be either self-closing or automatic-closing and shall be constructed to resist the passage of smoke.

3. In Group I-3 occupancies, exit *stairways* or ramps and *exit access stairways* or *ramps* constructed in accordance with Section 408 in the *International Building Code.*

❖ This section specifically addresses vertical openings only for Group I-2 and I-3 occupancies. In nursing homes, hospitals and jails, the first response to a fire is to defend in place or move residents, patients or detainees to an adjacent smoke compartment. To maintain the separation needed to limit the spread of smoke, an increased level of protection is required. There are three exceptions to the requirement for 1-hour enclosure of vertical openings (for vertical openings in other occupancies, see Section 1103.4.8).

Exceptions 1 and 2 are applicable for Group I-2 occupancies (nursing homes and hospitals). The intent of Exceptions 1 and 2 is to more appropriately address floor openings in existing construction. Without these exceptions, the IBC would allow construction of a floor opening without a 1-hour fire barrier in certain specific cases. This also impacts all historical non-rated floor openings that have been reviewed, approved and maintained. Unrated vertical openings had been allowed in hospitals and nursing homes previously. Atriums have been installed with various types of smoke venting and removal systems over the past few decades. These exceptions attempt, while maintaining an appropriate level of protection, to address general requirements that have been broadly used throughout older editions of the building codes. These exceptions are consistent with federal regulations governing hospitals and nursing homes. It should be remembered that these provisions are retroactive. They apply regardless of whether an alteration is to be undertaken.

Exception 3 provides consistency with Exception 1 to Section 1023.2, which allows interior exit stairways in Group I-3 occupancies to be in accordance with Section 408.3.8 of the IBC. Being able to see into and out of a stairway enclosure is an important security feature.

INTERNATIONAL CODE COUNCIL®
Copyright © 2015 ICC. ALL RIGHTS RESERVED. Accessed by David Dammon on Jun 21, 2017 12:30:52 PM pursuant to License Agreement with ICC. No further reproduction or distribution authorized. ANY UNAUTHORIZED REPRODUCTION OR DISTRIBUTION IS A VIOLATION OF THE FEDERAL COPYRIGHT ACT AND THE LICENSE AGREEMENT, AND SUBJECT TO CIVIL AND CRIMINAL PENALTIES THEREUNDER.

1103.4.2 Three to five stories. In other than Group I-2 and I-3 occupancies, interior vertical openings connecting three to five stories shall be protected by either 1-hour fire-resistance-rated construction or an *automatic sprinkler system* shall be installed throughout the building in accordance with Section 903.3.1.1 or 903.3.1.2.

Exceptions:

1. Vertical opening protection is not required for Group R-3 occupancies.
2. Vertical opening protection is not required for open parking garages.
3. Vertical opening protection for escalators shall be in accordance with Section 1103.4.5, 1103.4.6 or 1103.4.7.
4. *Exit access stairways* and *ramps* shall be in accordance with Section 1103.4.8.

❖ See the commentary to Section 1103.4. The exceptions are consistent with the exceptions to the shaft enclosure requirements of the IBC. Exception 1 exempts single-family dwellings and small congregate residences from vertical opening enclosures because of occupant familiarity with the premises and the relatively small occupant load. Exception 2 recognizes that it would be impractical and unnecessary to enclose shafts in parking occupancies where open ramps are a fundamental design element. Exception 3 addresses escalator openings and refers to the applicable code sections that apply. Exception 4 recognizes that exit access stairways and ramps have various allowances that would not require enclosure. These allowances are consistent with Chapters 7 of the IBC and 10 (see Section 1103.4.8).

1103.4.3 More than five stories. In other than Group I-2 and I-3 occupancies, interior vertical openings connecting more than five stories shall be protected by 1-hour fire-resistance-rated construction.

Exceptions:

1. Vertical opening protection is not required for Group R-3 occupancies.
2. Vertical opening protection is not required for open parking garages.
3. Vertical opening protection for escalators shall be in accordance with Section 1103.4.5, 1103.4.6 or 1103.4.7.
4. *Exit access stairways* and *ramps* shall be in accordance with Section 1103.4.8.

❖ See the commentary to Section 1103.4. The exceptions are consistent with the exceptions to the shaft enclosure requirements of the IBC. Exception 1 exempts single-family dwellings and small congregate residences from vertical opening enclosures because of occupant familiarity with the premises and the relatively small occupant load. Exception 2 recognizes that it would be impractical and unnecessary to enclose shafts in parking occupancies where open ramps are a fundamental design element. Exception 3 addresses escalator openings and refers to the applicable code sections that apply. Exception 4 recognizes that exit access stairways and ramps have various allowances that would not require enclosure. These allowances are consistent with Chapters 7 of the IBC and 10 (see Section 1103.4.8).

1103.4.4 Atriums and covered malls. In other than Group I-2 and I-3 occupancies, interior vertical openings in a covered mall building or a building with an atrium shall be protected by either 1-hour fire-resistance-rated construction or an *automatic sprinkler system* shall be installed throughout the building in accordance with Section 903.3.1.1 or 903.3.1.2.

Exceptions:

1. Vertical opening protection is not required for Group R-3 occupancies.
2. Vertical opening protection is not required for open parking garages.
3. *Exit access stairways* and *ramps* shall be in accordance with Section 1103.4.8.

❖ See the commentary to Section 1103.4. The exceptions are consistent with the allowances for atrium and mall enclosure requirements of the IBC. Exception 1 exempts single-family dwellings and small congregate residences from vertical opening enclosures because of occupant familiarity with the premises and the relatively small occupant load. Exception 2 recognizes that it would be impractical and unnecessary to enclose shafts in parking occupancies where open ramps are a fundamental design element. Exception 3 recognizes that exit access stairways and ramps have various allowances that would not require enclosure. These allowances are consistent with Chapters 7 and 10 of the IBC and IBC Sections 402 and 404. Escalators within a mall are addressed in Sections 1103.4.5, 1103.4.6 and 1103.4.7 (see Section 1103.4.8).

1103.4.5 Escalators in Group B and M occupancies. In Group B and M occupancies, escalators creating vertical openings connecting any number of stories shall be protected by either 1-hour fire-resistance-rated construction or an *automatic sprinkler system* in accordance with Section 903.3.1.1 installed throughout the building, with a draft curtain and closely spaced sprinklers around the escalator opening.

❖ This section addresses escalator openings in Group B and M occupancies and provides the option of either enclosing the vertical opening with 1-hour construction or equipping the building throughout with an NFPA 13 sprinkler system with the vertical opening protected by draft curtains and closely spaced sprinklers. Section 8.15.4.2 of NFPA 13 provides specifications on the construction and installation of the draft curtains (“draftstops” in NFPA 13) and Section 8.15.4.3 provides installation criteria for the automatic sprinklers for protecting the opening. There is no limit to the number of stories connected by vertical openings protected by either option in this section. IBC

INTERNATIONAL CODE COUNCIL®
Copyright © 2015 ICC. ALL RIGHTS RESERVED. Accessed by David Dammon on Jun 21, 2017 12:30:52 PM pursuant to License Agreement with ICC. No further reproduction or distribution authorized. ANY UNAUTHORIZED REPRODUCTION OR DISTRIBUTION IS A VIOLATION OF THE FEDERAL COPYRIGHT ACT AND THE LICENSE AGREEMENT, AND SUBJECT TO CIVIL AND CRIMINAL PENALTIES THEREUNDER.

Section 712.1.3 contains similar, but more stringent, requirements for escalator openings in new buildings.

1103.4.6 Escalators connecting four or fewer stories. In other than Group B and M occupancies, escalators creating vertical openings connecting four or fewer stories shall be protected by either 1-hour fire-resistance-rated construction or an *automatic sprinkler system* in accordance with Section 903.3.1.1 or 903.3.1.2 shall be installed throughout the building, and a draft curtain with closely spaced sprinklers shall be installed around the escalator opening.

❖ In other than Group B and M occupancies, escalators creating vertical openings connecting four or fewer stories shall either be protected by 1-hour fire-resistance-rated construction or an *automatic sprinkler system* in accordance with Section 903.3.1.1 or 903.3.1.2 shall be installed throughout the building and a draft curtain with closely spaced sprinklers shall be installed around the escalator opening.

This section addresses escalator openings connecting a maximum of four stories in other than Group B and M occupancies. Similar to Section 1103.4.5, it provides the option of either enclosing the vertical opening with 1-hour construction or equipping the building throughout with an NFPA 13 or 13R sprinkler system with the vertical opening protected by draft curtains and closely spaced sprinklers. Section 8.15.4.2 of NFPA 13 provides specifications on the construction and installation of the draft curtains ("draftstops" in NFPA 13) and Section 8.15.4.3 provides installation criteria for the automatic sprinklers for protecting the opening also see commentary, Section 1103.4. IBC Section 712.1.3.1 contains similar, but more stringent, requirements for escalator openings in new buildings.

1103.4.7 Escalators connecting more than four stories. In other than Group B and M occupancies, escalators creating vertical openings connecting five or more stories shall be protected by 1-hour fire-resistance-rated construction.

❖ This section addresses escalator openings connecting five stories or more in other than Group B and M occupancies and provides no option to enclosing the vertical opening with 1-hour construction (see commentary, Section 1103.4). IBC Section 712.1.3 contains similar, but more stringent, requirements for escalator openings in new buildings.

1103.4.8 Occupancies other than Group I-2 and I-3. In other than Group I-2 and I-3 occupancies, floor openings containing *exit access stairways* or *ramps* that do not comply with one of the conditions listed in this section shall be protected by 1-hour fire-resistance-rated construction.

1. *Exit access stairways* and *ramps* that serve, or atmospherically communicate between, only two stories. Such interconnected stories shall not be open to other stories.
2. In Group R-1, R-2 or R-3 occupancies, *exit access stairways* and *ramps* connecting four stories or less serving and contained within an individual *dwelling unit* or *sleeping unit* or live/work unit.
3. *Exit access stairways* and *ramps* in buildings equipped throughout with an *automatic sprinkler system* in accordance with Section 903.3.1.1, where the area of the vertical opening between stories does not exceed twice the horizontal projected area of the *stairway* or *ramp*, and the opening is protected by a draft curtain and closely spaced sprinklers in accordance with NFPA 13. In other than Group B and M occupancies, this provision is limited to openings that do not connect more than four stories.
4. *Exit access stairways* and *ramps* within an atrium complying with the provisions of Section 404 of the *International Building Code*.
5. *Exit access stairways* and *ramps* in open parking garages that serve only the parking garage.
6. *Exit access stairways* and *ramps* serving open-air seating complying with the exit access travel distance requirements of Section 1029.7 of the *International Building Code*.
7. *Exit access stairways* and *ramps* serving the balcony, gallery or press box and the main assembly floor in occupancies such as theaters, places of religious worship, auditoriums and sports facilities.

❖ Vertical openings in Group I-2 and I-3 occupancies are specifically addressed in Section 1103.4.1. This section addresses vertical openings in other occupancies. There are many provisions for new construction in Chapter 10 that permit exit access stair floor openings without a fire rated enclosure. Without this section, many of these permitted floor openings would be required to be fire rated by this chapter. In addition, a building constructed under this code in full compliance with Chapter 10 would be in violation of Sections 1103.4 through 1103.4.7 upon issuance of the certificate of occupancy if these allowances were not provided. Clearly it was not the intent for Chapter 11 to contradict Chapter 10. This section notes all of the current conditions that allow an unenclosed exit access stair or ramp. All of these conditions originate from Section 1019. It is important to note that this section and these conditions only apply to exit access stairways and ramps. This section does not apply to exit stairways. Exit stairways are not exempted from enclosure.

1103.4.9 Waste and linen chutes. In Group I-2 occupancies, existing waste and linen chutes shall comply with Sections 1103.4.9.1 through 1103.4.9.5.

❖ This section is intended to clarify the allowable use and construction of chutes and incinerators in Group I-2 occupancies (hospitals and nursing homes). These items are used as integral parts of the operation of a healthcare facility, especially the waste or linen chutes. Some incinerators are still in use, but the requirements found in Sections 1103.4.9.1 through 1103.4.9.5 seek to separate them from other vertical openings, especially a trash chute, by requiring a separate discharge room from the incinerator.

INTERNATIONAL CODE COUNCIL®
Copyright © 2015 ICC. ALL RIGHTS RESERVED. Accessed by David Dammon on Jun 21, 2017 12:30:52 PM pursuant to License Agreement with ICC. No further reproduction or distribution authorized. ANY UNAUTHORIZED REPRODUCTION OR DISTRIBUTION IS A VIOLATION OF THE FEDERAL COPYRIGHT ACT AND THE LICENSE AGREEMENT, AND SUBJECT TO CIVIL AND CRIMINAL PENALTIES THEREUNDER.

Waste and linen chutes in other occupancies are addressed in Section 1103.4.8.

1103.4.9.1 Enclosure. Chutes shall be enclosed with 1-hour fire-resistance-rated construction. Opening protectives shall be in accordance with Section 716 of the *International Building Code* and have a fire protection rating of not less than 1 hour.

❖ At minimum, chutes must be enclosed with 1-hour fire-resistance-rated construction. This is consistent with Section 713.4 of the IBC for shaft enclosures for chutes connecting three stories or less. Openings other than chute access doors addressed in Section 1103.4.9.2 must meet IBC Section 716 requirements.

1103.4.9.2 Chute intakes. Chute intakes shall comply with Section 1103.4.9.2.1 or 1103.4.9.2.2.

❖ This section focuses on where chutes can be accessed throughout a building. There are two configurations addressed. The first, in Section 1103.4.9.2.1, addresses access from the corridor. Section 1103.4.9.2.2 then addresses chute intakes accessed from a chute intake room.

1103.4.9.2.1 Chute intake direct from corridor. Where intake to chutes is direct from a *corridor*, the intake opening shall be equipped with a chute-intake door in accordance with Section 716 of the *International Building Code* and having a fire protection rating of not less than 1 hour.

❖ In facilities that predate current requirements, some chute doors open into corridors. As it is not practical to reconstruct such chutes to meet modern standards, this section aims to directly address that situation by defining requirements for the chutes' safe maintenance. This configuration has a more direct effect on the safety of the occupants than those chute intakes addressed in Section 1103.4.9.2.2. Therefore, the opening must be in accordance with Section 716 of the IBC and be rated for at least 1 hour.

1103.4.9.2.2 Chute intake via a chute-intake room. Where the intake to chutes is accessed through a chute-intake room, the room shall be enclosed with 1-hour fire-resistance-rated construction. Opening protectives for the intake room shall be in accordance with Section 716 of the *International Building Code* and have a fire protection rating of not less than 3/4 hour. Opening protective for the chute enclosure shall be in accordance with Section 1103.4.9.1.

❖ This configuration provides a layer of protection to the building occupants by first entering a room that is protected with 1-hour fire-resistance-rated construction. The door rating is only required to be $^3/_4$ hour versus 1 hour as required in Section 1103.4.9.2.1. The door for the chute intake itself would still be required to be 1 hour.

1103.4.9.3 Automatic sprinkler system. Chutes shall be equipped with an *approved automatic sprinkler system* in accordance with Section 903.2.11.2.

❖ This section would retroactively require compliance with Section 903.2.11.2 for sprinkler placement within the chute.

1103.4.9.4 Chute discharge rooms. Chutes shall terminate in a dedicated chute discharge room. Such rooms shall be separated from the remainder of the building by not less than 1-hour fire-resistance-rated construction. Opening protectives shall be in accordance with Section 716 of the *International Building Code* and have a fire protection rating of not less than 1 hour.

❖ This section provides minimal requirements for protection of the chute discharge room. This provides a minimal separation requirement for existing chute discharge rooms. This is consistent with the requirements in Section 713.13.4 of the IBC for shafts connecting three stories or less in new construction. The rating of the door must also be 1 hour.

1103.4.9.5 Chute discharge protection. Chute discharges shall be equipped with a self-closing or automatic-closing opening protective in accordance with Section 716 of the *International Building Code* and having a fire protection rating of not less than 1 hour.

❖ This section requires that the chute discharge room continue the protection of the enclosure through opening protection. The discharge must also have a 1-hour fire protection rating and be self or automatically closing. This is consistent with the requirement of IBC Section 713.13.4 that the opening protection have the same rating as the enclosure. The opening must also be self closing or automatic closing.

1103.4.10 Flue-fed incinerators. Existing flue-fed incinerator rooms and associated flue shafts shall be protected with 1-hour fire-resistance-rated construction and shall not have other vertical openings connected with the space other than the associated flue. Opening protectives shall be in accordance with Section 716 of the *International Building Code* and have a fire protection rating of not less than 1 hour.

❖ Because of regulation from the EPA and other entities, flue-fed incinerators are frequently found abandoned or otherwise unused in existing buildings. This requirement is intended to separate and protect any potential hazard of inactive incinerator systems from the rest of the building.

1103.5 Sprinkler systems. An *automatic sprinkler system* shall be provided in existing buildings in accordance with Sections 1103.5.1 through 1103.5.3.

❖ This section introduces the retroactive sprinkler requirements of Sections 1103.5.1 through 1103.5.3.

1103.5.1 Group I-2. In Group I-2, an *automatic sprinkler system* shall be provided in accordance with Section 1105.8.

❖ This section is merely a pointer to the sprinkler requirements for Group I-2 occupancies found in Section 1105.8. Section 1105.8 requires an automatic sprinkler system to be retroactively installed in Group I-2 occupancies from the story containing the Group I-2 to the level of exit discharge. This requirement is less restrictive than what is found in Section 1103.5.2.

1103.5.2 Group I-2 Condition 2. In addition to the requirements of Section 1103.5.2, existing buildings of Group I-2

INTERNATIONAL CODE COUNCIL®
Copyright © 2015 ICC. ALL RIGHTS RESERVED. Accessed by David Dammon on Jun 21, 2017 12:30:52 PM pursuant to License Agreement with ICC. No further reproduction or distribution authorized. ANY UNAUTHORIZED REPRODUCTION OR DISTRIBUTION IS A VIOLATION OF THE FEDERAL COPYRIGHT ACT AND THE LICENSE AGREEMENT, AND SUBJECT TO CIVIL AND CRIMINAL PENALTIES THEREUNDER.

Condition 2 occupancy shall be equipped throughout with an *approved automatic sprinkler system* in accordance with Section 903.3.1.1. The *automatic sprinkler system* shall be installed as established by the adopting ordinance.

❖ This section is specific to hospitals and is more restrictive than the requirements of Sections 1103.5.1 and 1105.8. Instead of requiring the installation of an automatic sprinkler system from the story containing the Group I-2 Condition 2 occupancy to the level of exit discharge, this section requires the building to be equipped throughout with an automatic sprinkler system. This requirement, however, is based on the adopting ordinance establishing a date by which the automatic sprinkler system will be installed. Sprinkler systems are a vital safety system that protects building systems and components.

To ensure continuous operation in healthcare facilities, the installation of automatic sprinkler systems needs to be carefully planned so as to not adversely affect patient health. Accessing and exposing ceiling spaces can create conditions leading to infection and possibly death to patients with compromised immune systems. In many situations, hospitals may not be able to appropriately retrofit the installation of a fire suppression system; in those situations, a time frame is needed to replace facilities. The period for adoption of this proposed requirement has been left to the local authority having jurisdiction. Coordinating the timeframe for adoption with federal requirements is recommended. It is currently anticipated that the Centers for Medicaid and Medicare (the federal authority having jurisdiction) will require retroactive installation of automatic sprinkler systems in hospitals by the year 2021. However, the exact time frame was uncertain at the time of development of this requirement. Facilities will require lead time to meet this standard without adversely affecting the health of patients and disrupting patient care. These are the same factors that a jurisdiction should consider when choosing a date for adoption.

It should be also clear that this change is a separate measure that must be taken in addition to the current requirement. It is not intended to allow a facility to have a time frame for installing the current requirement (although jurisdictions may choose to do this). Nor is it intended to imply that the entire building containing a hospital should install an automatic sprinkler system immediately. At a minimum, a 3-year time frame is recommended for implementation of this requirement. This considers the process planning, capital approval, regulatory approval, design and installation of the sprinkler system. The capital-planning piece of a large-scale initiative such as a building-wide sprinkler system, normally spans multiple fiscal years.

1103.5.3 Pyroxylin plastics. An *automatic sprinkler system* shall be provided throughout existing buildings where cellulose nitrate film or pyroxylin plastics are manufactured, stored or handled in quantities exceeding 100 pounds (45 kg). Vaults located within buildings for the storage of raw pyroxylin shall be protected with an *approved automatic sprinkler system* capable of discharging 1.66 gallons per minute per square foot (68 L/min/m2) over the area of the vault.

❖ This section requires an approved automatic fire-extinguishing system in existing buildings used for the manufacture and storage of pyroxylin plastics. Cellulose nitrate (pyroxylin) plastics pose unusual and substantial fire risks. Pyroxylin plastics are the most dangerous and unstable of all plastic compounds. The chemically bound oxygen in their structure permits them to burn vigorously in the absence of atmospheric oxygen. Although these compounds produce approximately the same amount of energy as paper when they burn, pyroxylin plastics burn at a rate as much as 15 times greater than comparable common combustibles. When burning, these materials release highly flammable and toxic combustion byproducts. Consequently, cellulose nitrate fires are very difficult to control. Although this section specifies a sprinkler threshold quantity of 100 pounds (45 kg), the need for additional fire protection should be considered for pyroxylin plastics in any amount.

Although the code includes cellulose nitrate "film" in its requirements, cellulose nitrate motion picture film has not been used in the United States since the 1950s. All motion picture film produced since that time is what is typically called "safety film." Consequently, the only application for this section relative to motion picture film is where it may be used in laboratories or storage vaults that are dedicated to film restoration and archives. The protection of these facilities is addressed in Sections 306.2 and 6504.2.

Even though this section would permit an approved fire-extinguishing system in existing structures containing pyroxylin plastics, vaults must be protected by an approved automatic sprinkler system with a density of 1.66 gpm/ft^2 (68 L/min/m^2) over the entire area of the vault. The high sprinkler density recognizes the need to immerse the pyroxylin plastics in water to counteract the vigorous burn rate of these materials.

Note that in Table 1103.1, on the row for Section 1103.5.3, an "R" appears for all occupancy groups. In previous editions of the code, this table row reflected the rationale of the table's author of "anticipating" (guessing) where pyroxylin plastics might be used or found when, in actuality, it could be applicable to any or all occupancy groups. Even the text of this section does not list specific occupancies. Therefore, an "R" now appears in all occupancy group cells on the Section 1103.5.3 row.

1103.6 Standpipes. Existing structures shall be equipped with standpipes installed in accordance with Section 905 where required in Sections 1103.6.1 and 1103.6.2. The *fire code official* is authorized to approve the installation of manual standpipe systems to achieve compliance with this section where the responding fire department is capable of providing the required hose flow at the highest standpipe outlet.

❖ This section recognizes that some existing buildings do not have a standpipe system and introduces the

INTERNATIONAL CODE COUNCIL®
Copyright © 2015 ICC. ALL RIGHTS RESERVED. Accessed by David Dammon on Jun 21, 2017 12:30:52 PM pursuant to License Agreement with ICC. No further reproduction or distribution authorized. ANY UNAUTHORIZED REPRODUCTION OR DISTRIBUTION IS A VIOLATION OF THE FEDERAL COPYRIGHT ACT AND THE LICENSE AGREEMENT, AND SUBJECT TO CIVIL AND CRIMINAL PENALTIES THEREUNDER.

minimum requirements for existing buildings. In place of a standpipe system that has a water supply capable of supplying the system demand automatically, this section would permit the fire code official to approve the use of a manual standpipe system in an existing building if adequate hose flow is available when the fire department charges the system. The standpipe system may be either a manual dry or a manual wet system.

1103.6.1 Existing multiple-story buildings. Existing buildings with occupied floors located more than 50 feet (15 240 mm) above the lowest level of fire department access or more than 50 feet (15 240 mm) below the highest level of fire department access shall be equipped with standpipes.

❖ Although it would be inappropriate to require a standpipe system in an existing building to be designed based on the requirements of Section 905.3 for new construction, this section establishes a maximum height limitation for existing buildings regardless of occupancy beyond which a standpipe is required. The system is to be installed in accordance with Section 905. Many existing buildings may also not be equipped with an automatic sprinkler system. This section will, at least, provide some means of manual fire suppression in buildings where exterior fire department access is limited.

1103.6.2 Existing helistops and heliports. Existing buildings with a rooftop helistop or heliport located more than 30 feet (9144 mm) above the lowest level of fire department access to the roof level on which the helistop or heliport is located shall be equipped with standpipes in accordance with Section 2007.5.

❖ A heliport or helistop on a new or existing building is a distinct hazard that can involve flammable fuels and combustible cargo and present an immediate rescue situation. In the event of an emergency, rapid deployment of hand hose lines will be necessary to attack a resulting fire, effectuate rescue and to protect exposures and the remainder of the building. This section specifies that when existing buildings have a helistop or heliport on a rooftop location more than 30 feet (9144 mm) above the lowest level of fire department vehicle access, a standpipe system is required throughout the building, not just a hose connection at the roof level. This is critical in fire-fighting operations because, many times, the connection below the rooftop level may be needed to gain access to the roof. If the only connection is on the roof, it is of no use if the fire fighters cannot get to it. Additionally, a heliport includes fueling operations. It is entirely possible for a spill to not only affect the rooftop, but also floors below as the liquid fuel spreads. The standpipe system will again be utilized in these situations. Note that this section refers to Section 2007.5 for design and standpipe hose connection location for the rooftop heliport or helistop. See the commentary to Sections 905.3.6 and 2007.5 for further information.

1103.7 Fire alarm systems. An *approved* fire alarm system shall be installed in existing buildings and structures in accordance with Sections 1103.7.1 through 1103.7.7 and provide occupant notification in accordance with Section 907.5 unless other requirements are provided by other sections of this code.

Exception: Occupancies with an existing, previously *approved* fire alarm system.

❖ This section specifies the occupancy conditions when an approved fire alarm system is retroactively required in an existing building. These systems must, upon activation, provide occupant notification throughout the area protected by the system unless other alternative provisions, such as an emergency voice/alarm communication system, are allowed.

The exception recognizes the infeasibility of requiring existing, previously approved fire alarm systems to conform to current code requirements. The existing fire alarm system must be adequately tested and maintained in accordance with Section 901.6 and shown not to create a hazard.

A common concern in the application of the exception is in the scoping of the condition. Where the building is in use and continues in use as it was before, the exception is quite clear that no modifications are required if the existing system has been previously approved, regardless of how long ago that may have been. If there is an addition to the building, the addition must meet the requirements for new work and tie into the existing system if the existing system is capable of adequately handling the new devices. The addition is only adding devices and does not require the existing system to be upgraded.

If the building is altered, the alarm system must be altered in accordance with its original installation. For example, if the existing system does not include visual notification devices and the alteration includes remodeling to existing toilet rooms, there is no requirement for installing visual devices in the remodeled toilet rooms. If, on the other hand, the existing system is not capable of receiving new devices or relocated existing devices, then the replacement of the existing panel must be considered since the altered system would be less effective than before the alteration.

1103.7.1 Group E. A fire alarm system shall be installed in existing Group E occupancies in accordance with Section 907.2.3.

Exceptions:

1. A manual fire alarm system is not required in a building with a maximum area of 1,000 square feet (93 m2) that contains a single classroom and is located not closer than 50 feet (15 240 mm) from another building.
2. A manual fire alarm system is not required in Group E occupancies with an *occupant load* less than 50.

❖ Group E occupancies are limited to educational purposes through the 12th grade. Because of the typical age and maturity of the occupants, more time may be needed to safely evacuate the building. The require-

INTERNATIONAL CODE COUNCIL®
Copyright © 2015 ICC. ALL RIGHTS RESERVED. Accessed by David Dammon on Jun 21, 2017 12:30:52 PM pursuant to License Agreement with ICC. No further reproduction or distribution authorized. ANY UNAUTHORIZED REPRODUCTION OR DISTRIBUTION IS A VIOLATION OF THE FEDERAL COPYRIGHT ACT AND THE LICENSE AGREEMENT, AND SUBJECT TO CIVIL AND CRIMINAL PENALTIES THEREUNDER.

ment for retroactive installation of, at least, a fire alarm system recognizes that many existing, previously approved nonsprinklered educational facilities would most likely require sprinklers under current code provisions (see Section 903.2.3).

Although not limited to this use condition, Exception 1 recognizes the current use of mobile trailer-type facilities on site as additional educational classroom facilities. This exception does not exempt the main building, but it would exempt these auxiliary buildings of limited size that do not present an exposure hazard because of the required separation distance.

Exception 2 would exempt small day care centers that serve children older than 2 years of age, a small Sunday school classroom at a church or similar limited educational use areas (see commentary, Section 907.2.3).

1103.7.2 Group I-1. An automatic fire alarm system shall be installed in existing Group I-1 facilities in accordance with Section 907.2.6.1.

Exception: Where each sleeping room has a *means of egress* door opening directly to an exterior egress balcony that leads directly to the *exits* in accordance with Section 1021, and the building is not more than three stories in height.

❖ Group I-1 facilities are assumed to have more than 16 occupants who, because of their age, mental disability or other reasons, must live in a supervised environment 24 hours a day. This section would require existing Group I-1 occupancies to have an approved fire alarm system as required by Section 907.2.6.1.

The exception recognizes the increased degree of life safety resulting from having direct access to the exterior from the sleeping rooms. The occupants are not forced to evacuate through the interior of the building during a potential fire. The exterior egress balconies must be sufficiently open to the atmosphere and constructed to minimize the accumulation of smoke and toxic gases.

1103.7.3 Group I-2. In Group I-2, an automatic fire alarm system shall be installed in accordance with Section 1105.9.

❖ This section is simply a pointer to the specific requirements for Group I-2 occupancies found in Section 1105. Section 1105.9 addresses the need for a fire alarm system. See the commentary to Section 1105.9.

1103.7.4 Group I-3. An automatic and manual fire alarm system shall be installed in existing Group I-3 occupancies in accordance with Section 907.2.6.3.

❖ Because occupants may be restrained, leading to difficulties in evacuating, an approved fire alarm system is required in existing Group I-3 occupancies. The system must comply with Section 907.2.6.3 (see commentary, Section 907.2.6.3).

1103.7.5 Group R-1. A fire alarm system and smoke alarms shall be installed in existing Group R-1 occupancies in accordance with Sections 1103.7.5.1 through 1103.7.5.2.1.

❖ This section introduces the retroactive fire alarm system and smoke alarm requirements for Group R-1 transient occupancies such as hotels, motels, and boarding houses.

1103.7.5.1 Group R-1 hotel and motel manual fire alarm system. A manual fire alarm system that activates the occupant notification system in accordance with Section 907.5 shall be installed in existing Group R-1 hotels and motels more than three stories or with more than 20 *sleeping units.*

Exceptions:

1. Buildings less than two stories in height where all *sleeping units,* attics and crawl spaces are separated by 1-hour fire-resistance-rated construction and each *sleeping unit* has direct access to a *public way, egress court* or yard.
2. Manual fire alarm boxes are not required throughout the building where the following conditions are met:
   2.1. The building is equipped throughout with an *automatic sprinkler system* installed in accordance with Section 903.3.1.1 or 903.3.1.2.
   2.2. The notification appliances will activate upon sprinkler water flow.
   2.3. Not less than one manual fire alarm box is installed at an *approved* location.

❖ This section specifies the conditions when a fire alarm system is required in existing Group R-1 hotels and motels. The two main criteria are independent of each other in that a fire alarm system is required if the building is more than three stories above grade, regardless of the number of sleeping units, or contains 20 sleeping units, regardless of the number of stories. Occupants of these types of Group R-1 facilities are assumed to be more transient than the occupants of Group R-1 boarding and rooming houses regulated by Section 907.2.8.

Exception 1 recognizes the increased level of life safety afforded by adequate compartmentation using 1-hour fire-resistance-rated construction between sleeping units and direct exterior access for egress.

Exception 2 does not omit fire alarm systems but, rather, permits them to be initiated automatically by sprinkler system water flow switches in lieu of manual fire alarm boxes. The sprinkler system is to be equipped with local audible alarms that can be heard throughout the building and at least one manual fire alarm box installed at an approved location.

The exceptions do not affect the independent provision in Section 1103.8 for single- or multiple-station smoke alarms.

1103.7.5.1.1 Group R-1 hotel and motel automatic smoke detection system. An automatic smoke detection system that activates the occupant notification system in accordance with Section 907.5 shall be installed in existing Group R-1 hotels

INTERNATIONAL CODE COUNCIL®
Copyright © 2015 ICC. ALL RIGHTS RESERVED. Accessed by David Dammon on Jun 21, 2017 12:30:52 PM pursuant to License Agreement with ICC. No further reproduction or distribution authorized. ANY UNAUTHORIZED REPRODUCTION OR DISTRIBUTION IS A VIOLATION OF THE FEDERAL COPYRIGHT ACT AND THE LICENSE AGREEMENT, AND SUBJECT TO CIVIL AND CRIMINAL PENALTIES THEREUNDER.

and motels throughout all interior *corridors* serving sleeping rooms not equipped with an *approved*, supervised sprinkler system installed in accordance with Section 903.

Exception: An automatic smoke detection system is not required in buildings that do not have interior *corridors* serving *sleeping units* and where each sleeping unit has a *means of egress* door opening directly to an *exit* or to an exterior *exit access* that leads directly to an *exit.*

❖ This section requires an automatic smoke detection system within interior corridors serving unsprinklered sleeping rooms. Such systems make use of smoke detectors for alarm initiation, in accordance with Section 907.4.3, with one exception.

The exception provides that automatic smoke detection is not required in motels and hotels that do not have interior corridors and in which sleeping units have a door opening directly to an exterior exit access that leads directly to the exits. The intent of the exception is that the exit access from the sleeping unit door be exterior and not require reentering the building prior to entering the exit. Since the exit access is outside, the need for detectors other than in sleeping units is greatly reduced. Unlike Exception 1 to Section 1103.7.5.1, exit balconies and exterior stairs serving sleeping units are allowed.

1103.7.5.2 Group R-1 boarding and rooming houses manual fire alarm system. A manual fire alarm system that activates the occupant notification system in accordance with Section 907.5 shall be installed in existing Group R-1 boarding and rooming houses.

Exception: Buildings less than two stories in height where all *sleeping units*, attics and crawl spaces are separated by 1-hour fire-resistance-rated construction and each *sleeping unit* has direct access to a *public way*, *egress court* or yard.

❖ Group R-1 boarding and rooming houses are still assumed to be transient residential occupancies even though the functional use of a boarding and rooming house is different from that of a typical hotel or motel. Boarding and rooming houses tend to have more extended living arrangements and border on being classified as Group R-2 facilities. For this reason, this section requires Group R-1 boarding and rooming houses to be equipped with a manual fire alarm system regardless of the height of the building or number of sleeping rooms.

The exception recognizes the increased level of life safety afforded by adequate compartmentation using 1-hour fire-resistance-rated construction between sleeping units and direct exterior access for egress.

1103.7.5.2.1 Group R-1 boarding and rooming houses automatic smoke detection system. An automatic smoke detection system that activates the occupant notification system in accordance with Section 907.5 shall be installed in existing Group R-1 boarding and rooming houses throughout all interior *corridors* serving *sleeping units* not equipped with an *approved*, supervised sprinkler system installed in accordance with Section 903.

Exception: Buildings equipped with single-station smoke alarms meeting or exceeding the requirements of Section 907.2.11.1 and where the fire alarm system includes not less than one manual fire alarm box per floor arranged to initiate the alarm.

❖ This section requires an automatic smoke detection system within interior corridors serving unsprinklered sleeping rooms. Such systems make use of smoke detectors for alarm initiation, in accordance with Section 907.4.3, with one exception.

The exception provides that automatic fire detectors are not required in boarding and rooming houses where single-station smoke alarms complying with the minimum requirements of Section 907.2.11.1 and at least one manual fire alarm box per floor are installed. The single-station smoke alarms give the desired early warning notification to occupants and the manual fire alarm box is an additional means to activate the occupant notification system.

1103.7.6 Group R-2. A manual fire alarm system that activates the occupant notification system in accordance with Section 907.5 shall be installed in existing Group R-2 occupancies more than three stories in height or with more than 16 *dwelling* or *sleeping units.*

Exceptions:

1. Where each living unit is separated from other contiguous living units by *fire barriers* having a *fire-resistance rating* of not less than $^3/_4$ hour, and where each living unit has either its own independent *exit* or its own independent stairway or ramp discharging at grade.
2. A separate fire alarm system is not required in buildings that are equipped throughout with an *approved* supervised *automatic sprinkler system* installed in accordance with Section 903.3.1.1 or 903.3.1.2 and having a local alarm to notify all occupants.
3. A fire alarm system is not required in buildings that do not have interior *corridors* serving *dwelling units* and are protected by an *approved automatic sprinkler system* installed in accordance with Section 903.3.1.1 or 903.3.1.2, provided that *dwelling units* either have a *means of egress* door opening directly to an exterior *exit access* that leads directly to the *exits* or are served by open-ended *corridors* designed in accordance with Section 1027.6, Exception 3.
4. A fire alarm system is not required in buildings that do not have interior *corridors* serving *dwelling units*, do not exceed three stories in height and comply with both of the following:
   4.1. Each *dwelling unit* is separated from other contiguous *dwelling units* by *fire barriers*

INTERNATIONAL CODE COUNCIL®
Copyright © 2015 ICC. ALL RIGHTS RESERVED. Accessed by David Dammon on Jun 21, 2017 12:30:52 PM pursuant to License Agreement with ICC. No further reproduction or distribution authorized. ANY UNAUTHORIZED REPRODUCTION OR DISTRIBUTION IS A VIOLATION OF THE FEDERAL COPYRIGHT ACT AND THE LICENSE AGREEMENT, AND SUBJECT TO CIVIL AND CRIMINAL PENALTIES THEREUNDER.

having a *fire-resistance rating* of not less than $^3/_4$ hour.

4.2. Each *dwelling unit* is provided with hard-wired, interconnected smoke alarms as required for new construction in Section 907.2.11.

❖ This section specifies the conditions when a manual fire alarm system is required in existing Group R-2 apartment buildings based on height or the number of dwelling or sleeping units. Occupants of Group R-2 facilities tend to be more permanent than those in Group R-1 facilities.

Exception 1 recognizes the increased degree of life safety afforded by compartmentation using fire-resistance-rated construction and independent means of egress (see Section 907.2.9).

As indicated in Exception 2, existing buildings that are fully sprinklered in accordance with NFPA 13 or 13R do not need a manual fire alarm system if local alarms will sound upon activation of the sprinkler system. The exception essentially eliminates the need for manual fire alarm boxes if evacuation alarms can still be heard throughout the building upon sprinkler system water flow. Other alarm-initiating devices would similarly not be required if the water flow device will initiate the appropriate alarm. This exception does not affect the independent provision in Section 907.2.11.

Exception 3 mirrors Section 907.2.9, Exception 3, and recognizes the superior fire record of sprinklered multiple-family occupancies by allowing omission of a fire alarm system when a building is fully sprinklered, has no interior egress corridors and provides direct exterior egress from each dwelling unit. Note that in such buildings, rated fire separations are still required between units.

Exception 4 provides a reasonable alternative to retrofitting a manual fire alarm system in existing Group R-2 occupancy buildings not exceeding three stories in height and having exits that lead directly to the outside. Fire risk in apartments tends to be greatest for occupants inside the dwelling unit where a fire originates, and money spent to retrofit firesafety equipment in apartments is better spent within dwelling units, as opposed to common areas.

Countless existing apartment buildings have only a single smoke alarm in the common area. The code does not require retrofitting sleeping rooms with smoke alarms when such alarms weren't required at the time of construction. The lack of smoke alarms in bedrooms, and particularly the lack of interconnecting alarm signals, increases the risk of injury or death in a unit of fire origin and other units that experience smoke infiltration. An additional consequence may be delayed recognition of a fire event, which increases the risk of harm to other building occupants and may delay notification of the fire department. This exception also requires minimal separation from other units.

1103.7.7 Group R-4. A manual fire alarm system that activates the occupant notification system in accordance with Section 907.5 shall be installed in existing Group R-4 residential care/assisted living facilities in accordance with Section 907.2.10.1.

Exceptions:

1. Where there are interconnected smoke alarms meeting the requirements of Section 907.2.11 and there is not less than one manual fire alarm box per floor arranged to continuously sound the smoke alarms.
2. Other manually activated, continuously sounding alarms *approved* by the *fire code official.*

❖ Existing Group R-4 residential care/assisted living facilities must have a manual fire alarm system. Group R-4 residential care/assisted living facilities are defined in Section 202 as residential occupancies with more than five, but not more than 16, occupants living in a supervised environment.

Exception 1 allows the omission of the fire alarm system if installed interconnected smoke alarms can be manually activated by at least one manual fire alarm box on each floor.

Exception 2 allows the fire code official to approve alternative means of manually activating the alarms in place of a manual fire alarm box.

1103.8 Single- and multiple-station smoke alarms. Single- and multiple-station smoke alarms shall be installed in existing Group I-1 and R occupancies in accordance with Sections 1103.8.1 through 1103.8.3.

❖ This section introduces the requirements for the installation of smoke alarms in existing Group I-1 and R occupancies. These requirements recognize the benefit of installing smoke alarms in existing structures, but provide several exceptions for buildings that are not undergoing substantial renovations. These provisions also correlate with Section 704.2 of the *International Property Maintenance Code*® (IPMC®) for single- or multiple-station smoke alarm requirements for existing Group R dwellings.

1103.8.1 Where required. Existing Group I-1 and R occupancies shall be provided with single-station smoke alarms in accordance with Section 907.2.11. Interconnection and power sources shall be in accordance with Sections 1103.8.2 and 1103.8.3, respectively.

Exceptions:

1. Where the code that was in effect at the time of construction required smoke alarms and smoke alarms complying with those requirements are already provided.
2. Where smoke alarms have been installed in occupancies and dwellings that were not required to have them at the time of construction, additional smoke alarms shall not be required provided that the existing smoke alarms comply with requirements that were in effect at the time of installation.

INTERNATIONAL CODE COUNCIL®
Copyright © 2015 ICC. ALL RIGHTS RESERVED. Accessed by David Dammon on Jun 21, 2017 12:30:52 PM pursuant to License Agreement with ICC. No further reproduction or distribution authorized. ANY UNAUTHORIZED REPRODUCTION OR DISTRIBUTION IS A VIOLATION OF THE FEDERAL COPYRIGHT ACT AND THE LICENSE AGREEMENT, AND SUBJECT TO CIVIL AND CRIMINAL PENALTIES THEREUNDER.

3. Where smoke detectors connected to a fire alarm system have been installed as a substitute for smoke alarms.

❖ This section requires that Group I-1 and R occupancies be provided with single-station smoke alarms where they are not already provided. Reference is made to the new building requirements of Section 907.2.11 for the primary requirements; however, interconnection and power supply are more specifically addressed for existing buildings in Sections 1103.8.2 and 1103.8.3. Therefore, the basic requirement is that smoke alarms need to be provided in all locations required by Section 907.2.11, but several modified requirements related to interconnection of alarms and power supply are provided, recognizing the impracticality of such installations in existing conditions. Three exceptions are also provided to address possible scenarios where smoke alarms have already been installed but the installation does not meet the current code requirements, recognizing that the intent of the code is to permit existing smoke alarm installations to continue unchanged where they meet the code that was in effect at the time they were installed.

Exception 1 indicates that smoke alarms installed and maintained in accordance with the applicable code at the time of construction can continue unchanged. Exception 2 indicates that smoke alarms that were not required by the code at the time of construction, but were later installed can continue when they meet the requirements of the applicable code at the time of installation. Exception 3 indicates that smoke detectors connected to a fire alarm system may be used in lieu of smoke alarms.

In summary, this section requires the installation of smoke alarms in Group I-1 and R occupancies that do not currently have any smoke alarms. It does not require compliance with the current smoke alarm requirements if the building already has smoke alarms meeting requirements that were applicable when they were installed. The focus here is not to have the owner replace or revise his or her smoke alarms any time the code requirements for new construction change.

1103.8.2 Interconnection. Where more than one smoke alarm is required to be installed within an individual *dwelling* or *sleeping unit,* the smoke alarms shall be interconnected in such a manner that the activation of one alarm will activate all of the alarms in the individual unit. Physical interconnection of smoke alarms shall not be required where listed wireless alarms are installed and all alarms sound upon activation of one alarm. The alarm shall be clearly audible in all bedrooms over background noise levels with all intervening doors closed.

Exceptions:

1. Interconnection is not required in buildings that are not undergoing *alterations,* repairs or construction of any kind.
2. Smoke alarms in existing areas are not required to be interconnected where *alterations* or repairs do not result in the removal of interior wall or ceiling finishes exposing the structure, unless there is an attic, crawl space or *basement* available that could provide access for interconnection without the removal of interior finishes.

❖ This section, like Section 907.2.11.5, requires that when multiple-station smoke alarms are present, they are to be interconnected and be audible over background noises. This section also includes language that would allow listed wireless alarms to substitute for wired interconnection of the smoke alarms in both new and existing construction, making it clear that listed wireless systems comply with the code. Historically, while some code officials have not recognized wireless interconnection of smoke alarms as meeting the code requirement for interconnection, most have accepted them as their use has proliferated and their reliability shown. See the commentary to Section 907.2.11.5 for further information on interconnection.

Exception 1 does not require interconnection where the building is not undergoing any construction or repairs. Exception 2 clarifies to what extent the building must be undergoing construction before interconnection is required. Generally, the exceptions try to be reasonable based on the practicality of such installations; therefore, unless areas such as attics or crawl spaces can still be utilized while the interior finishes are being removed (e.g., drywall removed, exposing the studs), interconnection would not be required. Such renovations may only be limited to portions of a structure; therefore, complete interconnection may not be practical or possible. The intent is that additional walls, etc., should not be removed solely to interconnect the smoke alarms. Battery-powered alarms, as allowed by Section 1103.8.3, may be required to be interconnected when a building is not supplied by a commercial power source.

1103.8.3 Power source. Single-station smoke alarms shall receive their primary power from the building wiring provided that such wiring is served from a commercial source and shall be equipped with a battery backup. Smoke alarms with integral strobes that are not equipped with battery backup shall be connected to an emergency electrical system. Smoke alarms shall emit a signal when the batteries are low. Wiring shall be permanent and without a disconnecting switch other than as required for overcurrent protection.

Exceptions:

1. Smoke alarms are permitted to be solely battery operated in existing buildings where construction is not taking place.
2. Smoke alarms are permitted to be solely battery operated in buildings that are not served from a commercial power source.
3. Smoke alarms are permitted to be solely battery operated in existing areas of buildings undergoing

INTERNATIONAL CODE COUNCIL®
Copyright © 2015 ICC. ALL RIGHTS RESERVED. Accessed by David Dammon on Jun 21, 2017 12:30:52 PM pursuant to License Agreement with ICC. No further reproduction or distribution authorized. ANY UNAUTHORIZED REPRODUCTION OR DISTRIBUTION IS A VIOLATION OF THE FEDERAL COPYRIGHT ACT AND THE LICENSE AGREEMENT, AND SUBJECT TO CIVIL AND CRIMINAL PENALTIES THEREUNDER.

alterations or repairs that do not result in the removal of interior walls or ceiling finishes exposing the structure, unless there is an attic, crawl space or *basement* available that could provide access for building wiring without the removal of interior finishes.

❖ This section requires both a primary power supply from the building wiring, as well as a supervised battery backup. Wiring must be permanent and supplied from a circuit that is properly overcurrent-protected, but without any on-off switching capability. Currently, there are some smoke alarms on the market that have an integral visual alarm notification component (a strobe light) that do not have a built-in battery for the strobe. Thus, if the power for the building fails, the smoke detection and audible signal of the device may still operate, but the strobe will not. It is critical for rooms that may house those with hearing impairments and are equipped with these smoke alarms that the strobe be as reliable as the audible signal element. This section resolves that concern by requiring such smoke alarms to be connected to an emergency electrical system for the required backup power in accordance with Section 604.

This section is very similar to Section 907.2.11.2. The primary differences are the exceptions.

Exception 1 allows the use of batteries as the sole power source if no construction or related repairs are occurring in the building.

Exception 2 allows the use of batteries as the sole power source if there is no other power source available (i.e., the building is without an electric utility connection).

Exception 3 clarifies to what extent the building must be undergoing construction before connection to the building wiring is required. Generally, the exceptions try to be reasonable based on the practicality of such installations; therefore, unless areas such as attics or crawl spaces can be utilized for interstitial access for wiring while the interior finishes are being removed (e.g., drywall removed, exposing the studs), connection to the building wiring would not be required. Such renovations may only be limited to portions of a structure; therefore, adding permanent wiring may not be practical or possible. The intent is that additional walls, etc., should not be removed solely to connect the smoke alarms to the building wiring.

1103.9 Carbon monoxide alarms. Existing Group I-1, I-2, I-4 and R occupancies shall be equipped with carbon monoxide alarms in accordance with Section 915, except that the carbon monoxide alarms shall be allowed to be solely battery operated.

❖ This section requires CO alarms in accordance with the requirements of Section 915. Section 915 provides very specific requirements on placement. However, these CO alarms for existing buildings are permitted to be battery powered. This recognizes the need for such protection and the practicality of providing it in existing buildings. Also note that Section 915 addresses Group E occupancies. This section does not address Group E occupancies. See the commentary to Section 915 for more detail on alarm requirements and placement.

1103.10 Medical gases. Medical gases stored and transferred in health-care-related facilities shall be in accordance with Chapter 53.

❖ This section requires compliance with Chapter 53 compressed gases when medical gases are stored and transferred in existing healthcare related facilities. This will address several different types of occupancies including Group I-2 and ambulatory care facilities but can also address facilities such as a small dentist office. It was considered necessary to make sure that all existing facilities comply with these requirements to meet CMS guidelines. A general reference was made since the medical gas requirements of Section 5306 are only one aspect of the regulation of compressed gases.

SECTION 1104
MEANS OF EGRESS FOR EXISTING BUILDINGS

1104.1 General. *Means of egress* in existing buildings shall comply with the minimum egress requirements where specified in Table 1103.1 as further enumerated in Sections 1104.2 through 1104.25, and the building code that applied at the time of construction. Where the provisions of this chapter conflict with the building code that applied at the time of construction, the most restrictive provision shall apply. Existing buildings that were not required to comply with a building code at the time of construction shall comply with the minimum egress requirements where specified in Table 1103.1 as further enumerated in Sections 1104.2 through 1104.25.

❖ The primary concept of this section is to require existing buildings to comply with the specific means of egress requirements for new buildings except as modified by this section. Where an item is specifically addressed by Section 1104, the requirements of this section are intended to be special allowances for existing buildings to not fully meet the requirements for new buildings in Sections 1003 through 1030.

For example, the guard height requirements in Section 1104.6 include exceptions for the guard height requirement for new buildings in Section 1015.2. The requirements for existing buildings in Section 1104 are intended to be the same or less stringent than the comparable provisions for new buildings in Sections 1003 through 1030.

This section applies to most existing buildings. However, where a building has been built to meet the requirements of the building code in effect at the time of construction and, in the opinion of the fire code official, the means of egress is not hazardous, the building would meet the intent of this section. As such, none of the specific requirements in this section would apply.

INTERNATIONAL CODE COUNCIL®
Copyright © 2015 ICC. ALL RIGHTS RESERVED. Accessed by David Dammon on Jun 21, 2017 12:30:52 PM pursuant to License Agreement with ICC. No further reproduction or distribution authorized. ANY UNAUTHORIZED REPRODUCTION OR DISTRIBUTION IS A VIOLATION OF THE FEDERAL COPYRIGHT ACT AND THE LICENSE AGREEMENT, AND SUBJECT TO CIVIL AND CRIMINAL PENALTIES THEREUNDER.

In the absence of any evidence of compliance with a building code at the time the building was constructed, all provisions of Sections 1104.1 through 1104.25 apply. See Chapter 14 of the IEBC for a performance-based compliance alternative analysis regimen for existing buildings, especially Sections 1401.6.11 through 1401.6.15, which deal with the means of egress analysis. Chapter 19 of the ICC *Performance Code*® (ICC PC®) also provides a performance approach to means of egress evaluation.

1104.2 Elevators, escalators and moving walks. Elevators, escalators and moving walks shall not be used as a component of a required *means of egress.*

Exceptions:

1. Elevators used as an *accessible means of egress* where allowed by Section 1009.4.
2. Previously *approved* elevators, escalators and moving walks in existing buildings.

❖ This section is the same as Section 1003.7, except Exception 2 is added. Thus, an escalator or moving walk could be used as part of the required means of egress in an existing building if it had been previously approved by the fire code official.

1104.3 Exit sign illumination. Exit signs shall be internally or externally illuminated. The face of an exit sign illuminated from an external source shall have an intensity of not less than 5 footcandles (54 lux). Internally illuminated signs shall provide equivalent luminance and be *listed* for the purpose.

Exception: *Approved* self-luminous signs that provide evenly illuminated letters shall have a minimum luminance of 0.06 foot-lamberts (0.21 cd/m^2).

❖ This section is the same as Section 1013.3 for new buildings, except that Section 1013.3 includes an exception to illumination for tactile signs. The same exception should apply for existing buildings.

1104.4 Power source. Where emergency illumination is required in Section 1104.5, exit signs shall be visible under emergency illumination conditions.

Exception: *Approved* signs that provide continuous illumination independent of external power sources are not required to be connected to an emergency electrical system.

❖ This section requires that exit signs serving the occupancies listed in Section 1104.5 be illuminated during the use of emergency power for the means of egress. The comparable section for new buildings is Section 1013.6.3. Exit signs for all new building occupancies must be illuminated at all times and have an emergency power source.

1104.5 Illumination emergency power. Where *means of egress* illumination is provided, the power supply for *means of egress* illumination shall normally be provided by the premises' electrical supply. In the event of power supply failure, illumination shall be automatically provided from an emergency system for the following occupancies where such occupancies require two or more *means of egress*:

1. Group A having 50 or more occupants.

   Exception: Assembly occupancies used exclusively as a place of worship and having an *occupant load* of less than 300.

2. Group B buildings three or more stories in height, buildings with 100 or more occupants above or below a *level of exit discharge* serving the occupants or buildings with 1,000 or more total occupants.
3. Group E in interior *exit access* and *exit stairways* and *ramps*, *corridors*, windowless areas with student occupancy, shops and laboratories.
4. Group F having more than 100 occupants.

   Exception: Buildings used only during daylight hours and that are provided with windows for natural light in accordance with the *International Building Code*.

5. Group I.
6. Group M.

   Exception: Buildings less than 3,000 square feet (279 m^2) in gross sales area on one story only, excluding mezzanines.

7. Group R-1.

   Exception: Where each *sleeping unit* has direct access to the outside of the building at grade.

8. Group R-2.

   Exception: Where each *dwelling unit* or *sleeping unit* has direct access to the outside of the building at grade.

9. Group R-4.

   Exception: Where each *sleeping unit* has direct access to the outside of the building at ground level.

❖ Section 1008.3 requires emergency power for emergency egress lighting in all new buildings along aisles, corridors and stairways leading through or from spaces where two or more means of egress are required. This section requires emergency power for emergency egress lighting only for the listed occupancy conditions for existing buildings.

1104.5.1 Emergency power duration and installation. Emergency power for *means of egress* illumination shall be provided in accordance with Section 604. In other than Group I-2, emergency power shall be provided for not less than 60 minutes for systems requiring emergency power. In Group I-2, essential electrical systems shall comply with Sections 1105.5.1 and 1105.5.2.

❖ A 90-minute emergency power duration for emergency egress lighting is required by Section 1008.3 for new buildings. The emergency power system for

INTERNATIONAL CODE COUNCIL®
Copyright © 2015 ICC. ALL RIGHTS RESERVED. Accessed by David Dammon on Jun 21, 2017 12:30:52 PM pursuant to License Agreement with ICC. No further reproduction or distribution authorized. ANY UNAUTHORIZED REPRODUCTION OR DISTRIBUTION IS A VIOLATION OF THE FEDERAL COPYRIGHT ACT AND THE LICENSE AGREEMENT, AND SUBJECT TO CIVIL AND CRIMINAL PENALTIES THEREUNDER.

emergency egress lighting in existing buildings in other than Group I-2 occupancies, however, is to provide power for at least 60 minutes. This duration is consistent with Section 1104.1 and with the new building requirements of at least one of the legacy building codes. In Group I-2 occupancies, a reference is made to the specific, requirements found in Section 1105. More specifically, Section 1105.5.1 requires 90 minutes of power for emergency egress lighting and exit signs. Section 1105.5.2 requires that essential electrical power complies with NFPA 99, which covers a much wider use of emergency power needed in hospitals. See the commentary to Sections 1105.5.1 and 1105.5.2.

1104.6 Guards. Guards complying with this section shall be provided at the open sides of *means of egress* that are more than 30 inches (762 mm) above the floor or grade below.

❖ Where guards are required in this section, the requirements are the same as in Section 1015 for new buildings (see commentary, Section 1015.1). Sections 1104.6.1 and 1104.6.2 do provide allowances for the height and opening limitations that are less than required for new construction.

1104.6.1 Height of guards. Guards shall form a protective barrier not less than 42 inches (1067 mm) high.

Exceptions:

1. Existing guards on the open side of exit access and exit *stairways* and *ramps* shall be not less than 30 inches (760 mm) high.
2. Existing *guards* within *dwelling units* shall be not less than 36 inches (910 mm) high.
3. Existing *guards* in assembly seating areas.

❖ Guard height in new construction is typically 42 inches (1067 mm) minimum. In the legacy codes, there were allowances for guards to have the top rail at the height required for handrails when the guard was along a stairway or ramp (except for Group E). Exception 1 is in recognition of that allowance. Exceptions 2 and 3 are in recognition of the lower guard heights allowed within dwelling units (Section 1015.3 Exceptions 1, 2 and 3) and with assembly seating (Section 1029.16) for new construction.

1104.6.2 Opening limitations. Open *guards* shall have balusters or ornamental patterns such that a 6-inch-diameter (152 mm) sphere cannot pass through any opening up to a height of 34 inches (864 mm).

Exceptions:

1. At elevated walking surfaces for access to, and use of, electrical, mechanical or plumbing systems or equipment, guards shall have balusters or be of solid materials such that a sphere with a diameter of 21 inches (533 mm) cannot pass through any opening.
2. In occupancies in Group I-3, F, H or S, the clear distance between intermediate rails measured at right angles to the rails shall not exceed 21 inches (533 mm).
3. *Approved* existing open guards.

❖ Generally, this section allows maximum openings of 6 inches (152 mm) versus the maximum openings of 4 inches (102 mm) allowed by Section 1015.4. Exception 1 mirrors Section 1015.4, Exception 3, and Exception 2 mirrors Section 1015.4, Exception 4.

1104.7 Size of doors. The minimum width of each door opening shall be sufficient for the *occupant load* thereof and shall provide a clear width of not less than 28 inches (711 mm). Where this section requires a minimum clear width of 28 inches (711 mm) and a door opening includes two door leaves without a mullion, one leaf shall provide a clear opening width of 28 inches (711 mm). In ambulatory care facilities, doors serving as *means of egress* from patient treatment rooms or patient sleeping rooms shall provide a clear width of not less than 32 inches (813 mm). In Group I-2, *means of egress* doors where used for the movement of beds shall provide a clear width not less than $41^1/_2$ inches (1054 mm). The maximum width of a swinging door leaf shall be 48 inches (1219 mm) nominal. The height of door openings shall be not less than 80 inches (2032 mm).

Exceptions:

1. The minimum and maximum width shall not apply to door openings that are not part of the required *means of egress* in occupancies in Groups R-2 and R-3.
2. Door openings to storage closets less than 10 square feet (0.93 m^2) in area shall not be limited by the minimum width.
3. Width of door leafs in revolving doors that comply with Section 1010.1.1 shall not be limited.
4. Door openings within a *dwelling unit* shall be not less than 78 inches (1981 mm) in height.
5. Exterior door openings in *dwelling units*, other than the required *exit* door, shall be not less than 76 inches (1930 mm) in height.
6. *Exit access* doors serving a room not larger than 70 square feet (6.5 m^2) shall be not less than 24 inches (610 mm) in door width.
7. Door closers and door stops shall be permitted to be 78 inches (1980 mm) minimum above the floor.

❖ Generally, this section requires doors to be at least 28 inches (711 mm) wide versus the minimum width of 32 inches (813 mm) for new construction in Section 1010.1.1. The 32-inch clear width for patient treatment or sleeping within ambulatory care facilities is based on the nature of the activities within the space. In Group I-2 occupancies, the need to move patients in beds requires a width of $41^1/_2$ inches, consistent with new construction requirements. Other doors within ambulatory care facilities and Group I-2 occupancies could use the 28-inch width allowance.

INTERNATIONAL CODE COUNCIL®
Copyright © 2015 ICC. ALL RIGHTS RESERVED. Accessed by David Dammon on Jun 21, 2017 12:30:52 PM pursuant to License Agreement with ICC. No further reproduction or distribution authorized. ANY UNAUTHORIZED REPRODUCTION OR DISTRIBUTION IS A VIOLATION OF THE FEDERAL COPYRIGHT ACT AND THE LICENSE AGREEMENT, AND SUBJECT TO CIVIL AND CRIMINAL PENALTIES THEREUNDER.

The other provisions and exceptions in this section are the same as those in Section 1010.1.1 for new construction. Exceptions 2, 8, 9 and 10 of Section 1010.1.1 are not included in this section. Exception 2 is not needed since these provisions for existing buildings only require a 28-inch-wide (711 mm) door. Exception 8 relates to accessibility requirements that are not intended to be retroactively applied except within the context of the IEBC. Exceptions 9 and 10 are newer exceptions that have not been addressed in these retroactive provisions.

1104.8 Opening force for doors. The opening force for interior side-swinging doors without closers shall not exceed a 5-pound (22 N) force. The opening forces do not apply to the force required to retract latch bolts or disengage other devices that hold the door in a closed position. For other side-swinging, sliding and folding doors, the door latch shall release when subjected to a force of not more than 15 pounds (66 N). The door shall be set in motion when subjected to a force not exceeding 30 pounds (133 N). The door shall swing to a full-open position when subjected to a force of not more than 50 pounds (222 N). Forces shall be applied to the latch side.

❖ This section is similar to Section 1010.1.3. The allowance for fire doors to have a greater opening force in new construction has a broader context in this section, which allows for all doors with closers to not meet the 5-pound opening force. The maximum door-operating force in this section is less restrictive than that required in Section 1010.1.3 for new construction.

1104.9 Revolving doors. Revolving doors shall comply with the following:

1. A revolving door shall not be located within 10 feet (3048 mm) of the foot or top of *stairways* or escalators. A dispersal area shall be provided between the *stairways* or escalators and the revolving doors.
2. The revolutions per minute for a revolving door shall not exceed those shown in Table 1104.9.
3. Each revolving door shall have a conforming side-hinged swinging door in the same wall as the revolving door and within 10 feet (3048 mm).

Exceptions:

1. A revolving door is permitted to be used without an adjacent swinging door for street-floor elevator lobbies provided a stairway, escalator or door from other parts of the building does not discharge through the lobby and the lobby does not have any occupancy or use other than as a means of travel between elevators and a street.
2. Existing revolving doors where the number of revolving doors does not exceed the number of swinging doors within 20 feet (6096 mm).

❖ This section is comparable with Section 1010.1.4.1 for new buildings. The capability of collapsing to a width of 36 inches (914 mm) in Condition 2 of Section 1010.1.4.1 for new construction does not apply to existing revolving doors. The two exceptions in this section are not allowed for new construction.

TABLE 1104.9
REVOLVING DOOR SPEEDS

INSIDE DIAMETER (feet-inches)	POWER-DRIVEN-TYPE SPEED CONTROL (rpm)	MANUAL-TYPE SPEED CONTROL (rpm)
6-6	11	12
7-0	10	11
7-6	9	11
8-0	9	10
8-6	8	9
9-0	8	9
9-6	7	8
10-0	7	8

For SI: 1 inch = 25.4 mm, 1 foot = 304.8 mm.

❖ Table 1008.1.4.1 for new construction has a wider range of door sizes and often has a slower maximum speed allowance than this table.

1104.9.1 Egress component. A revolving door used as a component of a *means of egress* shall comply with Section 1104.9 and all of the following conditions:

1. Revolving doors shall not be given credit for more than 50 percent of the required egress capacity.
2. Each revolving door shall be credited with not more than a 50-person capacity.
3. Revolving doors shall be capable of being collapsed when a force of not more than 130 pounds (578 N) is applied within 3 inches (76 mm) of the outer edge of a wing.

❖ This section is similar to Section 1014.1.4.1.1 for new construction.

1104.10 Stair dimensions for existing stairways. Existing *stairways* in buildings shall be permitted to remain if the rise does not exceed 81/4 inches (210 mm) and the run is not less than 9 inches (229 mm). Existing *stairways* can be rebuilt.

Exception: Other *stairways approved* by the *fire code official*.

❖ This section includes a much less stringent criterion for stairway treads and risers than that in Section 1011.5.2. This section also allows existing stairways to be rebuilt. The tread and riser dimensions of the rebuilt stairway have additional allowances in Section 1104.10.1.

1104.10.1 Dimensions for replacement stairways. The replacement of an existing *stairway* in a structure shall not be required to comply with the new *stairway* requirements of Section 1009 where the existing space and construction will not allow a reduction in pitch or slope.

❖ This section is consistent with Section 403.1 of the IEBC. The intent of this section is that where an existing stairway was built with a steeper rise/run ratio

INTERNATIONAL CODE COUNCIL®
Copyright © 2015 ICC. ALL RIGHTS RESERVED. Accessed by David Dammon on Jun 21, 2017 12:30:52 PM pursuant to License Agreement with ICC. No further reproduction or distribution authorized. ANY UNAUTHORIZED REPRODUCTION OR DISTRIBUTION IS A VIOLATION OF THE FEDERAL COPYRIGHT ACT AND THE LICENSE AGREEMENT, AND SUBJECT TO CIVIL AND CRIMINAL PENALTIES THEREUNDER.

than permitted in the current code, the stairway can be replaced with the existing configuration. Enlarging the opening to achieve the current rise/run ratio and headroom would be considered technically infeasible. The principle is that not allowing for this option could result in stairways that were not maintained because they could not be brought up to current codes.

1104.11 Winders. Existing winders shall be allowed to remain in use if they have a minimum tread depth of 6 inches (152 mm) and a minimum tread depth of 9 inches (229 mm) at a point 12 inches (305 mm) from the narrowest edge.

❖ In new construction, winders are only permitted within dwelling units and along curved or spiral stairways (Sections 1011.5.3, 1011.9 and 1011.10). The tread size allowances for existing stairways are smaller than permitted for curved stairways.

1104.12 Curved stairways. Existing curved *stairways* shall be allowed to continue in use, provided the minimum depth of tread is 10 inches (254 mm) and the smallest radius shall be not less than twice the width of the *stairway*.

❖ For other than certain residential occupancies, this section has fewer requirements than Section 1011.9 for new construction. The relaxed requirements of the exception of Section 1011.9 apply to Group R-3 occupancies and individual dwelling units in Group R-2 occupancies.

1104.13 Stairway handrails. *Stairways* shall have *handrails* on at least one side. *Handrails* shall be located so that all portions of the *stairway* width required for egress capacity are within 44 inches (1118 mm) of a *handrail*.

Exception: *Aisle stairs* provided with a center *handrail* are not required to have additional *handrails*.

❖ Handrails are required on both sides, with certain exceptions, for new construction compared to the requirement for one side in this section. The 44-inch (1118 mm) dimension in this section is an increase from the 30-inch (762 mm) dimension in Section 1014.9 for new construction. Handrails for assembly occupancies in new construction are covered in Section 1029.15. See Section 1014 for handrail requirements for new construction.

1104.13.1 Height. *Handrail* height, measured above *stair* tread nosings, shall be uniform, not less than 30 inches (762 mm) and not more than 42 inches (1067 mm).

❖ The allowable range of handrail height installation in this section is broader than the 34 inches (834 mm) up to 38 inches (965 mm) allowed for new construction in Section 1014.2. This is in recognition of previous allowances for the handrail to be the top rail of a guard. This is still permitted for new construction in assembly seating (see Section 1029.15, Exception 2).

1104.14 Slope of ramps. *Ramp* runs utilized as part of a *means of egress* shall have a running slope not steeper than one unit vertical in 10 units horizontal (10-percent slope). The slope of other *ramps* shall not be steeper than one unit vertical in eight units horizontal (12.5-percent slope).

❖ The slope of means of egress ramps for new construction in Section 1012.2 is a maximum of 1:12. The steeper ramps of 1:8 slope in assembly aisles, as permitted by Section 1029.13 for new construction, should also apply to existing construction.

1104.15 Width of ramps. Existing *ramps* are permitted to have a minimum width of 30 inches (762 mm) but not less than the width required for the number of occupants served as determined by Section 1005.1. In Group I-2, *ramps* serving as a *means of egress* and used for the movement of patients in beds shall comply with Section 1105.5.4.

❖ Ramps for new construction in Section 1012.5.1 are required to have a minimum clear width of 36 inches (914 mm) between handrails compared to the 30-inch (762 mm) minimum ramp width requirement in this section (see commentary, Section 1012.5.1). This section also references the more specific requirements for Group I-2 occupancies in Section 1105.5.4. The minimum width required by that section is 48 inches. See the commentary to Section 1105.5.4.

1104.16 Fire escape stairways. Fire escape *stairways* shall comply with Sections 1104.16.1 through 1104.16.7.

❖ This section and the referenced sections provide detailed requirements for fire escape stairways. Fire escape stairways are allowed as a required means of egress only in an existing building, according to Section 405 of the IEBC. Sections 1104.16.1 through 1104.16.7 of the code are similar to Sections 405.1 through 405.5 of the IEBC.

1104.16.1 Existing means of egress. Fire escape *stairways* shall be permitted in existing buildings but shall not constitute more than 50 percent of the required *exit* capacity.

❖ Fire escapes are limited to serving 50 percent of the required exit capacity because they have minimum usability and are not appropriate for use by persons with limited physical capability.

1104.16.2 Protection of openings. Openings within 10 feet (3048 mm) of fire escape *stairways* shall be protected by opening protectives having a minimum $^{3}/_{4}$-hour *fire protection rating*.

Exception: In buildings equipped throughout with an *approved automatic sprinkler system*, opening protection is not required.

❖ It is important that openings in the vicinity of a fire escape are protected so that the fire escape will be usable during a fire. The exception for a sprinkler system takes into account the control of the fire by the sprinkler system.

1104.16.3 Dimensions. Fire escape *stairways* shall meet the minimum width, capacity, riser height and tread depth as specified in Section 1104.10.

❖ The riser height and tread depth requirement is the same as for existing stairways. The limits are speci-

INTERNATIONAL CODE COUNCIL®
Copyright © 2015 ICC. ALL RIGHTS RESERVED. Accessed by David Dammon on Jun 21, 2017 12:30:52 PM pursuant to License Agreement with ICC. No further reproduction or distribution authorized. ANY UNAUTHORIZED REPRODUCTION OR DISTRIBUTION IS A VIOLATION OF THE FEDERAL COPYRIGHT ACT AND THE LICENSE AGREEMENT, AND SUBJECT TO CIVIL AND CRIMINAL PENALTIES THEREUNDER.

fied in Section 1104.10; however, the minimum width and occupant capacity are not specified.

1104.16.4 Access. Access to a fire escape *stairway* from a *corridor* shall not be through an intervening room. Access to a fire escape *stairway* shall be from a door or window meeting the criteria of Section 1005.1. Access to a fire escape *stairway* shall be directly to a balcony, landing or platform. These shall not be higher than the floor or window sill level and not lower than 8 inches (203 mm) below the floor level or 18 inches (457 mm) below the window sill.

❖ This section establishes the arrangement of the fire escape to the building so that the fire escape can be easily reached. Access is not permitted through a room because the room could pose an unacceptable hazard or be locked. The elevation limits of the exterior landing, balcony or platform are to make the fire escape easily accessible.

1104.16.5 Materials and strength. Components of fire escape *stairways* shall be constructed of noncombustible materials. Fire escape *stairways* and balconies shall support the dead load plus a live load of not less than 100 pounds per square foot (4.78 kN/m2). Fire escape *stairways* and balconies shall be provided with a top and intermediate *handrail* on each side.

❖ The noncombustible construction requirement is so that the fire escape will be available for use during a fire. The loading of 100 pounds per square foot (psf) (4.78 kN/m^2) anticipates that a number of persons will be using the fire escape at the same time. To verify the ongoing viability of fire escape stairways, Section 1104.16.5.1 requires tests or field surveys to validate the capacity.

1104.16.5.1 Examination. Fire escape *stairways* and balconies shall be examined for structural adequacy and safety in accordance with Section 1104.16.5 by a registered design professional or others acceptable to the *fire code official* every 5 years, or as required by the *fire code official*. An inspection report shall be submitted to the *fire code official* after such examination.

❖ Fire escape stairways are typically prohibited in new construction but do constitute a means of egress component in many existing, multistory buildings. Neither the IBC nor the code contain a specific definition as to what actually constitutes fire escape stairways, and in previous editions of the codes no frequency for their inspection was established. This section establishes an inspection frequency for fire escape stairways and balconies erected on existing buildings. By design, fire escape stairways present a concern to code officials because the stairways, ladders, balconies and mechanical fasteners are commonly constructed of carbon or galvanized steel, which will rust, and this reduces their strength if they are not properly maintained. The evaluation is necessary to confirm that this exterior stairway egress component satisfies a minimum design load requirement prescribed in Section 1104.16.5; is properly maintained; and available for service in the event of an emergency that requires the occupants to egress the building.

Unless otherwise specified by the fire code official, an inspection of fire escape stairways and their balconies is required every 5 years to verify compliance with the structural requirements of Section 1104.16.5. The individual evaluating fire escapes is required to be a registered design professional as defined in Chapter 2 or an individual approved by the fire code official, and a report of the inspection must be provided to the fire code official.

1104.16.6 Termination. The lowest balcony shall not be more than 18 feet (5486 mm) from the ground. Fire escape *stairways* shall extend to the ground or be provided with counterbalanced *stairs* reaching the ground.

Exception: For fire escape *stairways* serving 10 or fewer occupants, an *approved* fire escape ladder is allowed to serve as the termination.

❖ This section controls the elevation of the lowest fire escape balcony. For fire escapes that serve 10 or fewer people, a ladder from the lowest balcony to the ground is permitted. In all other cases, the lower balcony is to be served by fire escape stairways. The counterbalance keeps the fire escape stairway up and off ground level when not in use.

1104.16.7 Maintenance. Fire escape *stairways* shall be kept clear and unobstructed at all times and shall be maintained in good working order.

❖ This section prohibits using the fire escape for outdoor storage or any other activity that could block its full and instant use. Fire escapes must be kept in good condition so they will be available for use (also see Section 1031.7).

1104.17 Corridor construction. Corridors serving an occupant load greater than 30 and the openings therein shall provide an effective barrier to resist the movement of smoke. Transoms, louvers, doors and other openings shall be kept closed or be self-closing. In Group I-2, corridors in areas housing patient sleeping or care rooms shall comply with Section 1105.4.

Exceptions:

1. *Corridors* in occupancies other than in Group H, that are equipped throughout with an *approved automatic sprinkler system*.
2. *Corridors* in occupancies in Group E where each room utilized for instruction or assembly has not less than one-half of the required *means of egress* doors opening directly to the exterior of the building at ground level.
3. *Corridors* that are in accordance with the *International Building Code*.

❖ This section relates to Section 1020.1 for new construction. This section requires the corridors to be an effective barrier to resist the movement of smoke. Section 1020.1 for new construction requires that corridors have a fire-resistance rating. Generally, solid

INTERNATIONAL CODE COUNCIL®
Copyright © 2015 ICC. ALL RIGHTS RESERVED. Accessed by David Dammon on Jun 21, 2017 12:30:52 PM pursuant to License Agreement with ICC. No further reproduction or distribution authorized. ANY UNAUTHORIZED REPRODUCTION OR DISTRIBUTION IS A VIOLATION OF THE FEDERAL COPYRIGHT ACT AND THE LICENSE AGREEMENT, AND SUBJECT TO CIVIL AND CRIMINAL PENALTIES THEREUNDER.

walls and doors that would resist smoke migration are the focus of this section. The walls or doors need not have a fire-resistance rating.

A pointer is provided to the requirements for Group I-2 occupancies in areas where such occupancies contain patient sleeping and care. Section 1105.4 provides specific requirements related to the separation requirements, allowable openings. See the commentary to Section 1105.4.

1104.17.1 Corridor openings. Openings in *corridor* walls shall comply with the requirements of the *International Building Code*.

Exceptions:

1. Where 20-minute fire door assemblies are required, solid wood doors not less than 1.75 inches (44 mm) thick or insulated steel doors are allowed.
2. Openings protected with fixed wire glass set in steel frames.
3. Openings covered with 0.5-inch (12.7 mm) gypsum wallboard or 0.75-inch (19.1 mm) plywood on the room side.
4. Opening protection is not required where the building is equipped throughout with an *approved automatic sprinkler system*.

❖ This section makes reference to the IBC requirements for corridor openings. Section 1020.1 specifies that corridors required to be fire-resistance rated are to be constructed according to Section 708 of the IBC for fire partitions. Section 708.6 of the IBC refers to Section 716 of the IBC for protected openings in smoke partitions. Thus, Section 716 of the IBC applies to existing buildings where a fire-resistance-rated corridor would be required for new construction, except where one of the exceptions in this section applies. The exceptions in this section provide a number of practical alternatives for existing buildings.

1104.18 Dead end corridors. Where more than one exit or exit access doorway is required, the *exit access* shall be arranged such that dead ends do not exceed the limits specified in Table 1104.18. In Group I-2, in smoke compartments containing patient sleeping rooms and treatment rooms, dead end *corridors* shall be in accordance with Section 1105.5.6.

Exception: A dead-end passageway or *corridor* shall not be limited in length where the length of the dead-end passageway or *corridor* is less than 2.5 times the least width of the dead-end passageway or *corridor*.

❖ This section references Table 1104.18 for the dead-end corridor limits for existing buildings. The dead-end limit for new construction is in Section 1020.4. That section includes the same exception that is in this section for existing buildings. Dead-end corridors are not a concern for conditions where the exception is satisfied because travel is not limited to a single path. Generally, the dead-end travel limits in Table 1104.18 are more liberal than those in Section 1020.4 for new construction. Note that Table 1104.18 refers to Section 1105.5.6 for Group I-2 occupancies with regard to dead-end corridor limits.

TABLE 1104.18. See page 11-24.

❖ This table contains the existing building limits for common path of travel, dead-end limit and travel distance limits. See the commentary to Sections 1104.18, 1104.19 and 1104.20 for a discussion regarding the table.

1104.19 Exit access travel distance. *Exits* shall be located so that the maximum length of exit access travel, measured from the most remote point to an *approved exit* along the natural and unobstructed path of egress travel, does not exceed the distances given in Table 1104.18.

❖ This section references Table 1104.18 for the exit access travel distance limits for existing buildings. The travel distance limits for new construction are in Section 1017.1. Generally, the travel distance limits in Table 1104.18 for existing construction are the same as those in Table 1017.2 for new construction, except for Group H and I occupancies.

1104.20 Common path of egress travel. The *common path of egress travel* shall not exceed the distances given in Table 1104.18.

❖ This section refers to Table 1104.18 for the common path of egress travel for existing buildings. The common path of egress travel limits for new construction are in Section 1006.2.1. Generally, the limits in Table 1104.18 for existing construction are the same as in Section 1006.2.1 for new construction.

1104.21 Stairway discharge identification. An interior *exit stairway* or *ramp* that continues below its *level of exit discharge* shall be arranged and marked to make the direction of egress to a *public way* readily identifiable.

Exception: *Stairways* that continue one-half story beyond their *levels of exit discharge* need not be provided with barriers where the *exit discharge* is obvious.

❖ The requirements of this section are less stringent than the discharge identification requirements for new construction in Section 1023.8. The new construction provisions require that a barrier be placed within the stairway to prevent persons from unintentionally continuing into the levels below the exit discharge. The exception in this section is also not included in the requirements for new construction.

1104.22 Exterior stairway protection. *Exterior exit stairways* shall be separated from the interior of the building as required in Section 1027.6. Openings shall be limited to those necessary for egress from normally occupied spaces.

Exceptions:

1. Separation from the interior of the building is not required for buildings that are two stories or less above grade where the *level of exit discharge* serving such occupancies is the first story above grade.
2. Separation from the interior of the building is not required where the exterior *stairway* is served by an

INTERNATIONAL CODE COUNCIL®
Copyright © 2015 ICC. ALL RIGHTS RESERVED. Accessed by David Dammon on Jun 21, 2017 12:30:52 PM pursuant to License Agreement with ICC. No further reproduction or distribution authorized. ANY UNAUTHORIZED REPRODUCTION OR DISTRIBUTION IS A VIOLATION OF THE FEDERAL COPYRIGHT ACT AND THE LICENSE AGREEMENT, AND SUBJECT TO CIVIL AND CRIMINAL PENALTIES THEREUNDER.

exterior balcony that connects two remote exterior *stairways* or other *approved exits*, with a perimeter that is not less than 50 percent open. To be considered open, the opening shall be not less than 50 percent of the height of the enclosing wall, with the top of the opening not less than 7 feet (2134 mm) above the top of the balcony.

3. Separation from the interior of the building is not required for an exterior *stairway* located in a building or structure that is permitted to have unenclosed interior *stairways* in accordance with Section 1023.
4. Separation from the open-ended corridors of the building is not required for exterior *stairways* provided that:
   4.1. The open-ended *corridors* comply with Section 1020.
   4.2. The open-ended *corridors* are connected on each end to an *exterior exit stairway* complying with Section 1027.
   4.3. At any location in an open-ended *corridor* where a change of direction exceeding 45 degrees (0.79 rad) occurs, a clear opening of not less than 35 square feet (3 m^2) or an exterior *stairway* shall be provided. Where clear openings are provided, they shall be located so as to minimize the accumulation of smoke or toxic gases.

❖ The exterior stairway requirements of this section are similar to those for new construction in Section 1027.1, except for Exception 1. Exception 1 in this section applies to all two-story buildings where the level of the exit discharge is the first story above

TABLE 1104.18
COMMON PATH, DEAD-END AND TRAVEL DISTANCE LIMITS (by occupancy)

OCCUPANCY	COMMON PATH LIMIT		DEAD-END LIMIT		TRAVEL DISTANCE LIMIT	
	Unsprinklered (feet)	Sprinklered (feet)	Unsprinklered (feet)	Sprinklered (feet)	Unsprinklered (feet)	Sprinklered (feet)
Group A	20/75[a]	20/75[a]	20[b]	20[b]	200	250
Group B[h]	75	100	50	50	200	300
Group E	75	75	20	50	200	250
Group F-1, S-1[d, h]	75	100	50	50	200	250
Group F-2, S-2[d, h]	75	100	50	50	300	400
Group H-1	25	25	0	0	75	75
Group H-2	50	100	0	0	75	100
Group H-3	50	100	20	20	100	150
Group H-4	75	75	20	20	150	175
Group H-5	75	75	20	50	150	200
Group I-1	75	75	20	50	200	250
Group I-2	Notes e, g	Notes e, g	Note f	Note f	150	200[c]
Group I-3	100	100	NR	NR	150[c]	200[c]
Group I-4 (Day care centers)	NR	NR	20	20	200	250
Group M (Covered or open mall)	75	100	50	50	200	400
Group M (Mercantile)	75	100	50	50	200	250
Group R-1 (Hotels)	75	75	50	50	200	250
Group R-2 (Apartments)	75	125	50	50	200	250
Group R-3 (One- and two-family)	NR	NR	NR	NR	NR	NR
Group R-4 (Residential care/assisted living)	NR	NR	NR	NR	NR	NR
Group U[h]	75	100	20	50	300	400

NR = No requirements.

For SI: 1 foot = 304.8 mm, 1 square foot = 0.0929 m^2.

a. 20 feet for common path serving 50 or more persons; 75 feet for common path serving less than 50 persons.
b. See Section 1029.9.5 for dead-end aisles in Group A occupancies.
c. This dimension is for the total travel distance, assuming incremental portions have fully utilized their allowable maximums. For travel distance within the room, and from the room exit access door to the exit, see the appropriate occupancy chapter.
d. See the *International Building Code* for special requirements on spacing of doors in aircraft hangars.
e. In Group I-2, separation of exit access doors within a care recipient sleeping room, or any suite that includes care recipient sleeping rooms, shall comply with Section 1105.5.7.
f. In Group I-2, in smoke compartments containing care recipient sleeping rooms and treatment rooms, dead-end corridors shall comply with Section 1105.5.6.
g. In Group I-2 Condition 2, care recipient sleeping rooms, or any suite that includes care recipient sleeping rooms, shall comply with Section 1105.6.
h. Where a tenant space in Group B, S and U occupancies has an occupant load of not more than 30, the length of a common path of egress travel shall not be more than 100 feet.

INTERNATIONAL CODE COUNCIL®
Copyright © 2015 ICC. ALL RIGHTS RESERVED. Accessed by David Dammon on Jun 21, 2017 12:30:52 PM pursuant to License Agreement with ICC. No further reproduction or distribution authorized. ANY UNAUTHORIZED REPRODUCTION OR DISTRIBUTION IS A VIOLATION OF THE FEDERAL COPYRIGHT ACT AND THE LICENSE AGREEMENT, AND SUBJECT TO CIVIL AND CRIMINAL PENALTIES THEREUNDER.

grade. In new buildings, Group R-1 and R-2 occupancies would not be allowed to apply this exception. Exception 3 has been deleted from the new construction requirements. Exception 4 does not have requirements for the building to be sprinklered or a reference to Section 1023.7 for exterior walls.

1104.23 Minimum aisle width. The minimum clear width of *aisles* shall be:

1. Forty-two inches (1067 mm) for aisle stairs having seating on each side.

   Exception: Thirty-six inches (914 mm) where the *aisle* serves less than 50 seats.

2. Thirty-six inches (914 mm) for stepped *aisles* having seating on only one side.

   Exceptions:

   1. Thirty inches (760 mm) for catchment areas serving not more than 60 seats.
   2. Twenty-three inches (584 mm) between a stepped aisle *handrail* and seating where an *aisle* does not serve more than five rows on one side.

3. Twenty inches (508 mm) between a stepped *aisle handrail* or *guard* and seating where the *aisle* is subdivided by the *handrail*.

4. Forty-two inches (1067 mm) for level or ramped *aisles* having seating on both sides.

   Exception: Thirty-six inches (914 mm) where the *aisle* serves less than 50 seats.

5. Thirty-six inches (914 mm) for level or ramped *aisles* having seating on only one side.

   Exception: Thirty inches (760 mm) for catchment areas serving not more than 60 seats.

6. In Group I-2, where *aisles* are used for movement of patients in beds, *aisles* shall comply with Section 1105.5.8.

❖ Items 1 through 5 in this section primarily provide the minimum aisle widths for assembly seating. Similar requirements for new construction are in Section 1029.9.1. Several of the exceptions in this section allow for narrower aisles than permitted in Section 1029.9.1; thus, the requirements for existing buildings are less stringent than those for new construction. Item 6 of this section is a pointer to the specific aisle requirements for Group I-2 occupancies where aisles are used for movement of people. See the commentary to Section 1105.5.8.

1104.24 Stairway floor number signs. Existing *stairways* shall be marked in accordance with Section 1023.9.

❖ This section requires that existing stairs be marked in the same manner as new stairways (see commentary, Section 1023.9). The signage includes important information for people evacuating the building as well emergency responders.

1104.25 Egress path markings. Existing high-rise buildings of Group A, B, E, I, M and R-1 occupancies shall be provided with luminous *egress* path markings in accordance with Section 1025.

Exception: Open, unenclosed stairwells in historic buildings designated as historic under a state or local historic preservation program.

❖ This section requires that luminous exit path markings be provided in existing buildings on the same basis as in new buildings to facilitate rapid egress and assist in full building evacuation. The text is based on Recommendations 17 and 18 of the National Institute of Standards and Technology's (NIST) report on the World Trade Center (WTC) tragedy. In New York City, after the first bombing of the WTC, requirements were instituted to require exit path markings in vertical exit enclosures in new and existing buildings. This section is taken directly from those requirements.

The marking requirement is only applicable to those buildings that have occupied floors exceeding 75 feet (22 860 mm) above the lowest level of fire department vehicle access. The cost impact on existing buildings is minor when considering the life safety benefit. Therefore, it is logical and affordable to provide existing high-rise buildings with the same protections afforded new high-rise structures.

Historically, code requirements for high-rise buildings were written under the assumption that the building would be evacuated floor by floor. In most instances, in a building with a full suppression system, only the floor where the fire is located and the floors immediately above and below would be evacuated. Acts of terrorism and accidental incidents, such as power failures, have made it necessary to consider design for full building evacuation that is as rapid as possible. This may be made necessary in response to events both within and outside the building. This provision is intended to facilitate the most rapid possible full building evacuation. See the commentary to Section 1025 for a more complete discussion of luminous egress path markings.

The exception takes into account the aesthetics and possible natural light in an open, unenclosed stairway in a historic building. Also, since the requirement is only applicable to high-rise buildings, the requirement would have limited application in historic structures.

SECTION 1105
CONSTRUCTION REQUIREMENTS FOR EXISTING GROUP I-2

1105.1 General. Existing Group I-2 shall meet all of the following requirements:

1. The minimum fire safety requirements in Section 1103.
2. The minimum mean of egress requirements in Section 1104.

INTERNATIONAL CODE COUNCIL®
Copyright © 2015 ICC. ALL RIGHTS RESERVED. Accessed by David Dammon on Jun 21, 2017 12:30:52 PM pursuant to License Agreement with ICC. No further reproduction or distribution authorized. ANY UNAUTHORIZED REPRODUCTION OR DISTRIBUTION IS A VIOLATION OF THE FEDERAL COPYRIGHT ACT AND THE LICENSE AGREEMENT, AND SUBJECT TO CIVIL AND CRIMINAL PENALTIES THEREUNDER.

3. The additional egress and construction requirements in Section 1105.

Where the provisions of this chapter conflict with the construction requirements that applied at the time of construction, the most restrictive provision shall apply.

❖ This section provides minimum requirements for existing Group I-2 occupancies. The intent is to increase the minimum safety requirements because of the fragile and sensitive populations within these facilities. These requirements are meant to be applied retroactively. These provisions align with the current approach by the Center for Medicaid and Medicare Services (CMS), the federal authority having jurisdiction. Hospitals are required by CMS to have a life safety survey on a regular basis. If the facility does not meet certain life safety minimums, they are required to upgrade their existing facility. This code change will align the code with those CMS minimum requirements and will hopefully lead to industry consolidation. These retroactive requirements are provided to assist code officials and surveyors during the ongoing regular inspection of hospital facilities and are consistent with the inspections required by federal laws for certification and reimbursement. The requirements reflect consideration of the minimum previously approved construction methods and provide jurisdictions the ability to adopt minimum retroactive provisions that have been vetted by the industry as well as code officials. In addition, these provisions are consistent with current national standards used by the federal government, providing a more uniform level of safety and eliminating many of the current code conflicts for existing facilities.

Several sources were reviewed to determine what the appropriate minimum bar should be, including the current building and fire codes, current CMS guidelines, and previous versions of the model codes. On all issues, enforcement agencies and the regulated facilities weighed in to ensure that these requirements were both necessary and achievable.

This particular section provides scoping for these provisions. Areas in hospitals and nursing homes not in patient care areas will use the general provisions in Sections 1103 and 1104. More restrictive provisions for hospitals or nursing homes are listed in Section 1105. As stated in the general comments at the beginning of this chapter and the commentary to Sections 1101.2 and 1103.5.2, where the buildings must upgrade, consideration of allowable time frames and procedures will need to be worked out between the authority having jurisdiction and those responsible for repairs and alterations in the nursing homes and hospitals.

1105.2 Construction. Group I-2 Condition 2 shall not be located on a floor level higher than the floor level limitation in Table 1105.2 based on the type of construction.

❖ Section 1105.2 is a retroactive limitation for the allowable height based on construction type because it is a key component of the regulatory approval for a health care facility. While most, if not all, existing hospitals were built to comply with these minimum construction requirements, many were built using methods that predated the current construction type matrix. The allowance for the occupancies, as stipulated in Table 1105.2, are less than that for new construction and are consistent with what is currently mandated for licensure for healthcare facilities.

1105.3 Incidental uses in existing Group I-2. Incidental uses associated with and located within existing single-occupancy or mixed-occupancy Group I-2 buildings and that generally pose a greater level of risk to such occupancies shall comply with the provisions of Sections 1105.3.1 through 1105.3.3.2.1. Incidental uses in Group I-2 occupancies are limited to those listed in Table 1105.3.

❖ Incidental use area provisions are applicable to new construction in Section 509 of the IBC; however, similar provisions are needed for existing Group I-2 occupancies since the hazards posed by such rooms or spaces are no different for existing buildings than for new. Section 1105.3 and Table 1105.3 are very similar to and based upon IBC Section 509 and Table 509, except that references to occupancies other than Group I-2 are not included. The basic requirements proposed for incidental uses in existing healthcare occupancies rely on the provisions of the IBC for specifics of construction and protection. Sections 1105.3.1 through 1105.3.3.2.1 are based on IBC Sections 509.2 through 509.4.2.1. These provisions will provide correlation with not only the IBC but also with the operational and CMS program standards for existing Group I-2 occupancies.

This specific section establishes the scope of Section 1105.3 and its applicability to Group I-2 occupancies. Incidental uses are rooms or areas that constitute special hazards or risks to life safety that are not typically addressed by the provisions for the occupancy group in which they occur, even though such rooms or areas may functionally be an extension of the primary use. Only those rooms or areas indicated in Table 1105 are to be regulated as incidental uses. Incidental uses can be located within both single-occupancy and mixed-occupancy buildings. The concern is that those areas designated as incidental uses pose a risk to the remainder of the building, and as such, some degree of protection is required. The nature of these incidental uses is such that they are small areas not frequented by building occupants, in which a fire could get underway and go unnoticed for a longer time than in a more frequently occupied part of the building.

1105.3.1 Occupancy classification. Incidental uses shall not be individually classified in accordance with Section 302.1 of the *International Building Code*. Incidental uses shall be included in the building occupancies within which they are located.

❖ Consistent with the IBC, this section expressly states that incidental uses are not considered as separate

INTERNATIONAL CODE COUNCIL®
Copyright © 2015 ICC. ALL RIGHTS RESERVED. Accessed by David Dammon on Jun 21, 2017 12:30:52 PM pursuant to License Agreement with ICC. No further reproduction or distribution authorized. ANY UNAUTHORIZED REPRODUCTION OR DISTRIBUTION IS A VIOLATION OF THE FEDERAL COPYRIGHT ACT AND THE LICENSE AGREEMENT, AND SUBJECT TO CIVIL AND CRIMINAL PENALTIES THEREUNDER.

and distinct occupancy classifications but, rather, are classified the same as the occupancies in which they are located. As an example, a waste and linen collection room in a hospital would be classified as a portion of the Group I-2 occupancy even though it may present a level of hazard more akin to a Group S-1 occupancy.

1105.3.2 Area limitations. Incidental uses shall not occupy more than 10 percent of the building area of the story in which they are located.

❖ The proposed floor area limitation of 10 percent for incidental uses emphasizes the ancillary nature of such rooms and areas and correlates with the IBC. Each incidental use would be limited to a maximum floor area of 10 percent of the floor area of the story in which it is located. Where there are two or more tenants located on the same story, the 10-percent limitation is based on the floor area of each individual tenant space rather than that of the entire story. The application of the limit on a tenant-by-tenant basis is consistent with the concept of incidental uses typically being ancillary only to a portion of the building (i.e., the specific tenant occupancy).

1105.3.3 Separation and protection. The incidental uses listed in Table 1105.3 shall be separated from the remainder of the building or equipped with an *automatic sprinkler system*, or both, in accordance with the provisions of that table.

❖ In addition to identifying those rooms or areas that warrant regulation as incidental uses, Table 1105.3 also indicates the required degree of protection or separation. The requirements identified in Table 1105.3 vary depending on the incidental use. In some cases, a specific type of separation and/or protection is required, while in others there is an option.

1105.3.3.1 Separation. Where Table 1105.3 specifies a fire-resistance-rated separation, the incidental uses shall be separated from the remainder of the building in accordance with Section 509.4.1 of the *International Building Code*.

❖ Where a fire-resistance rated separation would be required, the incidental use would need to be separated from other portions of the building in accordance with assemblies complying with the IBC.

1105.3.3.2 Protection. Where Table 1105.3 permits an *automatic sprinkler system* without a fire-resistance-rated separation, the incidental uses shall be separated from the remainder of the building by construction capable of resisting the passage of smoke in accordance with Section 509.4.2 of the *International Building Code*.

❖ In this section, where Table 1105.1 would allow protection by an automatic sprinkler system without a

TABLE 1105.2
FLOOR LEVEL LIMITATIONS FOR GROUP I-2 CONDITION 2

CONSTRUCTION TYPE	AUTOMATIC SPRINKLER SYSTEM	ALLOWABLE FLOOR LEVEL[a]			
		1	2	3	4 or more
IA	Note b	P	P	P	P
	Note c	P	P	P	P
IB	Note b	P	P	P	P
	Note c	P	P	P	P
IIA	Note b	P	P	P	NP
	Note c	P	NP	NP	NP
IIB	Note b	P	P	NP	NP
	Note c	NP	NP	NP	NP
IIIA	Note b	P	P	NP	NP
	Note c	P	NP	NP	NP
IIIB	Note b	P	NP	NP	NP
	Note c	NP	NP	NP	NP
IV	Note b	P	P	NP	NP
	Note c	NP	NP	NP	NP
VA	Note b	P	P	NP	NP
	Note c	NP	NP	NP	NP
VB	Note b	P	NP	NP	NP
	Note c	NP	NP	NP	NP

P = Permitted; NP = Not permitted.

a. Floor level shall be counted based on the number of stories above grade.

b. The building is equipped throughout with an automatic sprinkler system in accordance with Section 903.3.1.1.

c. The building is equipped with an automatic sprinkler system in accordance with Section 1105.8.

INTERNATIONAL CODE COUNCIL®
Copyright © 2015 ICC. ALL RIGHTS RESERVED. Accessed by David Dammon on Jun 21, 2017 12:30:52 PM pursuant to License Agreement with ICC. No further reproduction or distribution authorized. ANY UNAUTHORIZED REPRODUCTION OR DISTRIBUTION IS A VIOLATION OF THE FEDERAL COPYRIGHT ACT AND THE LICENSE AGREEMENT, AND SUBJECT TO CIVIL AND CRIMINAL PENALTIES THEREUNDER.

fire-resistance-rated separation, the construction enclosing the incidental use would still need to resist the passage of smoke. Construction details for resisting the passage of smoke are provided in the IBC. Note that this requirement is not specifying a smoke partition. The smoke partition requirements in IBC Section 710 are specific requirements that must be directly referenced.

1105.3.3.2.1 Protection limitation. Except as otherwise specified in Table 1105.2 for certain incidental uses, where an *automatic sprinkler system* is provided in accordance with Table 1105.3, only the space occupied by the incidental use need be equipped with such a system.

❖ This section makes it clear that the sprinkler systems stipulated in Table 1105.3 would be required for the incidental use area only.

1105.4 Corridor construction. In Group I-2, in areas housing patient sleeping or care rooms, *corridor* walls and the opening protectives therein shall provide a barrier designed to resist the passage of smoke in accordance with Sections 1105.4.1 through 1105.4.7.

❖ The focus of this section is specifically for corridor construction in patient care and sleeping room areas in Group I-2 occupancies. The construction of corridors is intended to provide protection that will resist the passage of smoke. The provisions address the type of materials required, fire resistance rating requirements, opening protection and corridor wall continuity.

Existing corridor construction should primarily be evaluated for its ability to resist or limit the transfer of smoke, regardless of the code at the time of construction. This is consistent with the defend-in-place scenario for patient protection during a fire event (see Section 405). Corridor walls, even if they were built 60 years ago, should be regularly assessed to confirm that they minimize the transfer of smoke. This section describes some criteria by which this can be assessed.

1105.4.1 Materials. The walls shall be of materials permitted by the building type of construction.

❖ This section simply requires that the materials used to construct the corridors be consistent with the type of construction. If it is a noncombustible construction (Type I or II), the walls must be constructed in accordance with Table 601 of the IBC unless Section 603 of the IBC provides any exceptions.

1105.4.2 Fire-resistance rating. Unless required elsewhere in this code, corridor walls are not required to have a fire-resistance rating.

❖ The key with corridor walls is more about the resistance of the passage of smoke and less about the fire resistance. This section clarifies that these walls are not required to be fire-resistance rated unless another requirement, such as for a smoke barrier or incidental use area separation, would prompt such fire-resistance rating.

TABLE 1105.3
INCIDENTAL USES IN EXISTING GROUP I-2 OCCUPANCIES

ROOM OR AREA	SEPARATION AND/OR PROTECTION
Furnace room where any piece of equipment is over 400,000 Btu per hour input	1 hour or provide automatic sprinkler system
Rooms with boilers where the largest piece of equipment is over 15 psi and 10 horsepower	1 hour or provide automatic sprinkler system
Refrigerant machinery room	1 hour or provide automatic sprinkler system
Hydrogen fuel gas rooms, not classified as Group H	2 hours
Incinerator rooms	2 hours and provide automatic sprinkler system
Paint shops not classified as Group H	2 hours; or 1 hour and provide automatic sprinkler system
Laboratories and vocational shops, not classified as Group H	1 hour or provide automatic sprinkler system
Laundry rooms over 100 square feet	1 hour or provide automatic sprinkler system
Patient rooms equipped with padded surfaces	1 hour or provide automatic sprinkler system
Physical plant maintenance shops	1 hour or provide automatic sprinkler system
Waste and linen collection rooms with containers with total volume of 10 cubic feet or greater	1 hour or provide automatic sprinkler system
Storage rooms greater than 100 square feet	1 hour or provide automatic sprinkler system
Stationary storage battery systems having a liquid electrolyte capacity of more than 50 gallons for flooded lead-acid, nickel cadmium or VRLA, or more than 1,000 pounds for lithium-ion and lithium metal polymer used for facility standby power, emergency power or uninterruptable power supplies	2 hours

For SI: 1 square foot = 0.0929 m^2, 1 pound per square inch (psi) = 6.9 kPa, 1 British thermal unit (Btu) per hour = 0.293 watts, 1 horsepower = 746 watts, 1 gallon = 3.785 L.

INTERNATIONAL CODE COUNCIL®
Copyright © 2015 ICC. ALL RIGHTS RESERVED. Accessed by David Dammon on Jun 21, 2017 12:30:52 PM pursuant to License Agreement with ICC. No further reproduction or distribution authorized. ANY UNAUTHORIZED REPRODUCTION OR DISTRIBUTION IS A VIOLATION OF THE FEDERAL COPYRIGHT ACT AND THE LICENSE AGREEMENT, AND SUBJECT TO CIVIL AND CRIMINAL PENALTIES THEREUNDER.

1105.4.3 Corridor wall continuity. *Corridor* walls shall extend from the top of the foundation or floor below to one of the following:

1. The underside of the floor or roof sheathing, deck or slab above.
2. The underside of a ceiling above where the ceiling membrane is constructed to limit the passage of smoke.
3. The underside of a lay-in ceiling system where the ceiling system is constructed to limit the passage of smoke and where the ceiling tiles weigh not less than 1 pound per square foot (4.88 kg/m^2)of tile.

❖ As discussed in Section 1105.4.2, providing a barrier is the key to corridor effectiveness. Section 1105.4.2 does not require a fire-resistance rating for existing corridors, but the separation that the corridor provides needs to be continuous to a point where the separated spaces are protected. This section provides three solutions to achieve this. The first focuses simply on extending all the way to the floor or roof sheathing, deck or slab above. The other options allow the separation to stop at the finished ceiling. The conditions of ending the separation at the ceiling membrane are conditioned on the ceiling being able to resist the passage of smoke. In the case of lay-in ceilings they must also meet the minimum weight requirement to increase the likelihood that they will stay in place.

1105.4.4 Openings in corridor walls. Openings in *corridor* walls shall provide protection in accordance with 1105.4.4.1 through 1105.4.4.3.

❖ Openings in corridor walls present the largest failures of such separations. This section addresses both windows and doors located in corridor walls. Again, these provisions are intended to address the condition of existing walls and may not be consistent with new construction.

1105.4.4.1 Windows. Windows in *corridor* walls shall be sealed to limit the passage of smoke, or the window shall be automatic-closing upon detection of smoke, or the window opening shall be protected by an automatic closing device that closes upon detection of smoke.

Exception: In smoke compartments not containing patient sleeping rooms, pass-through windows or similar openings shall be permitted in accordance with Section 1105.4.4.3.

❖ Windows must effectively employ one of the three following methods to resist the passage of smoke:

- Proper sealing.
- Automatic closing on detection of smoke (smoke detection system).
- Automatic closing by automatic closing device (single-station smoke detector).

The exception addresses lower risk areas where no patient sleeping rooms are present.

1105.4.4.2 Doors. Doors in *corridor* walls shall comply with Sections 1105.4.4.2.1 through 1105.4.4.2.3.

❖ This section addresses various different issues related to doors in corridor walls. These provisions provide some basic safety while providing flexibility in existing hospitals. As with the other provisions, these requirements and allowances are consistent with federal compliance requirements**.**

1105.4.4.2.1 Louvers. Doors in *corridor* walls shall not include louvers, transfer grills or similar openings.

Exception: Doors shall be permitted to have louvers, transfer grills or similar openings at toilet rooms or bathrooms; storage rooms that do not contain storage of flammable or combustible material; and storage rooms that are not required to be separated as incidental uses.

❖ Louvers, transfer grilles or similar openings present an increased risk of smoke passing into protected spaces. Therefore, these openings are generally prohibited. The exception addresses spaces where passage of smoke presents a reduced risk as such spaces are not typically occupied or their occupancy is limited.

1105.4.4.2.2 Corridor doors. Doors in *corridor* walls shall limit the transfer of smoke by complying with the following:

1. Doors shall be constructed of not less than $1^3/_4$ inch-thick (44 mm) solid bonded-core wood or capable of resisting fire not less than $^1/_3$ hour.

   Exception: Corridor doors in buildings equipped throughout with an automatic sprinkler system.
2. Frames for side-hinged swinging doors shall have stops on the sides and top to limit transfer of smoke.
3. Where provided, vision panels in doors shall be a fixed glass window assembly installed to limit the passage of smoke. Existing wired glass panels with steel frames shall be permitted to remain in place.
4. Door undercuts shall not exceed 1 inch (25 mm).
5. Doors shall be positive latching with devices that resist not less than 5 pounds (22.2 N). Roller latches are prohibited.
6. Mail slots or similar openings shall be permitted in accordance with Section 1105.4.4.3.

❖ This section provides the list of necessary requirements that existing doors in corridors must meet. Often the criteria provide some allowances not given for new construction. All criteria must be addressed if applicable.

Item 1 requires a door to be of substantial construction in nonsprinklered buildings. Either a $^1/_3$-hour fire-rated door is required or an equivalent door is prescribed. The exception allows no rating for the door in buildings equipped throughout with an automatic sprinkler system.

Item 2 requires frames to have stops on the sides and top to minimize the transfer of smoke on swinging doors.

INTERNATIONAL CODE COUNCIL®
Copyright © 2015 ICC. ALL RIGHTS RESERVED. Accessed by David Dammon on Jun 21, 2017 12:30:52 PM pursuant to License Agreement with ICC. No further reproduction or distribution authorized. ANY UNAUTHORIZED REPRODUCTION OR DISTRIBUTION IS A VIOLATION OF THE FEDERAL COPYRIGHT ACT AND THE LICENSE AGREEMENT, AND SUBJECT TO CIVIL AND CRIMINAL PENALTIES THEREUNDER.

Item 3 addresses vision panels. This item allows wired glass panels in steel frames to continue to be used where they would not be allowed in new construction.

Item 4 minimizes door undercuts to 1 inch to prevent additional smoke passage.

Item 5 addresses how such doors are required to latch. Roller latches are prohibited as they may be compromised during a fire event and lead to the door opening.

Item 6 is consistent with Section 1105.4.4.3 and allows mail slots or similar openings under certain conditions for doors in corridors.

1105.4.4.2.3 Dutch doors. Where provided, dutch doors shall comply with Section 1105.4.4.2.2. In addition, dutch doors shall be equipped with latching devices on either the top or bottom leaf to allow leaves to latch together. The space between the leaves shall be protected with devices such as astragals to limit the passage of smoke.

❖ Dutch doors have been used in health care facilities for many years for various necessary operational reasons. While the IBC does not specifically speak of dutch doors, their use is not prohibited but must meet the requirements contained in IBC Section 407.3, including positive latching and limiting the transfer of smoke. This section provides clarity for existing installations by giving specific guidance on the minimum acceptable requirements, including positive latching and smoke transfer, for their use in corridor walls. A definition is provided in Section 202 for further clarity.

1105.4.4.2.4 Self- or automatic-closing doors. Where self- or automatic-closing doors are required, closers shall be maintained in operational condition.

❖ This section is provided to make sure that self- or automatic-closing doors continue to be operational. If automatic-closing doors that are no longer operational are propped open, the function of the corridor is reduced. It is important to note that this section does not require self-closing or automatic-closing doors; it is simply requiring that they be maintained.

1105.4.4.3 Openings in corridor walls and doors. In other than smoke compartments containing patient sleeping rooms, mail slots, pass-through windows or similar openings shall not be required to be protected where the aggregate area of the openings between the *corridor* and a room are not greater than 80 square inches (51 613 mm2) and are located with the top edge of any opening not higher than 48 inches above the floor.

❖ This section is essentially an exception for existing mail slot, pass-through and similar openings that are commonly found in hospitals. These are needed for privacy, medication security and other operational needs. The restrictions on their location are consistent with federal requirements.

1105.4.5 Penetrations. The space around penetrating items shall be filled with an *approved* material to limit the passage of smoke.

❖ Penetrations, though smaller than door and window openings, can create locations for smoke to pass through and must be addressed. Group I-2 occupancies often have many pipes penetrating walls that must be addressed. Many smaller openings can lead to a larger overall area of smoke passage.

1105.4.6 Joints. Joints shall be filled with an *approved* material to limit the passage of smoke.

❖ Similar to penetrations, joints that are formed at the intersections of walls and floor/ceiling assemblies and roof assemblies can create other avenues of smoke passage. If not addressed, these small openings can lead to a hazard during building fires.

1105.4.7 Ducts and air transfer openings. The space around a duct penetrating a smoke partition shall be filled with an *approved* material to limit the passage of smoke. Air transfer openings in smoke partitions shall be provided with a smoke damper complying with Section 717.3.2.2 of the *International Building Code*.

Exception: Where the installation of a smoke damper will interfere with the operation of a required smoke control system in accordance with Section 909, approved alternative protection shall be utilized.

❖ Anytime a duct penetrates a wall, the space around the duct must be minimally protected to prevent smoke passage during fire. Group I-2 occupancies may have complex HVAC systems that can lead to a multitude of ducts passing through walls. Air transfer openings through corridor walls need to be protected with smoke dampers in accordance with IBC Section 717.3.2.2 unless such dampers will affect the performance of a smoke control system.

1105.5 Means of egress. In addition to the *means of egress* requirements in Section 1104, Group I-2 facilities shall meet the *means of egress* requirements in Section 1105.5.1 through 1105.5.8.

❖ These provisions are intended to provide minimal means of egress requirements specific to Group I-2 occupancies, where these occupancies work on a defend-in-place strategy and the needs are unique. Sections 1105.5.1 through 1105.5.8 address a variety of issues, such as exit signs, emergency illumination, door size, corridor width, dead ends and exit separation.

1105.5.1 Exit signs and emergency illumination. The power system for exit signs and emergency illumination for the *means of egress* shall provide power for not less than 90 minutes and consist of storage batteries, unit equipment or an on-site generator.

❖ Existing hospitals must provide 90 minutes of power for exit signs and emergency illumination. However,

INTERNATIONAL CODE COUNCIL®
Copyright © 2015 ICC. ALL RIGHTS RESERVED. Accessed by David Dammon on Jun 21, 2017 12:30:52 PM pursuant to License Agreement with ICC. No further reproduction or distribution authorized. ANY UNAUTHORIZED REPRODUCTION OR DISTRIBUTION IS A VIOLATION OF THE FEDERAL COPYRIGHT ACT AND THE LICENSE AGREEMENT, AND SUBJECT TO CIVIL AND CRIMINAL PENALTIES THEREUNDER.

this power can be provided via storage batteries where this would not be permitted by Exception 2 to Section 1013.6.3 for new buildings.

1105.5.2 Emergency power for operational needs. The essential electrical system shall be capable of supplying services in accordance with NFPA 99.

❖ This section takes the provisions of Section 1104.5.1 further by adding requirements from and references to NFPA 99. Similar to Section 604.3, it requires facility owners or operators to analyze the hazards in their particular region and prepare accordingly.

1105.5.3 Size of door. Means of egress doors used for the movement of patients in beds shall provide a minimum clear width of $41^1/_2$ inches (1054 mm). The height of the door opening shall be not less than 80 inches (2032 mm).

Exceptions:

1. Door closers and door stops shall be permitted to be 78 inches (1981 mm) minimum above the floor.
2. In Group I-2 Condition 1, existing means of egress doors used for the movement of patients in beds that provide a minimum clear width of 32 inches (813 mm) shall be permitted to remain.

❖ This section is consistent with Section 1104.7. It follows the format and requirements of Section 1010.1.1. There are two exceptions that allow the door closers and door stops to not meet the door-opening height. This is a reasonable allowance for existing buildings and is consistent with Exception 5 to Section 1010.1.1, which allows door-opening heights in dwelling units and sleeping units to be 78 inches. The second exception provides flexibility to Group I-2 Condition 1 occupancies such as nursing homes, which do not depend upon these door widths being available as frequently for bed movement.

1105.5.4 Ramps. In areas where *ramps* are used for movement of patients in beds, the clear width of the *ramp* shall be not less than 48 inches (1219 mm).

❖ This section, which is referenced from Section 1104.15, provides the width necessary for ramps in Group I-2 occupancies where beds are being moved. Section 1104.15 only requires a 30-inch width.

1105.5.5 Corridor width. In areas where *corridors* are used for movement of patients in beds, the clear width of the *corridor* shall be not less than 48 inches (1219 mm).

❖ This section is consistent with the width required for ramps in Section 1105.5.4 and is focused on the width required for the movement of beds. The requirement of 48 inches clear width is less restrictive than that required of new construction in Section 1020.2. New Group I-2 occupancies are required a 96-inch clear width.

1105.5.6 Dead-end corridors. In smoke compartments containing patient sleeping rooms and treatment rooms, dead-end *corridors* shall not exceed 30 feet (9144 mm) unless approved by the *fire code official*.

❖ The dead-end corridor requirements are specific to Group I-2 occupancies. Typically in new construction the dead-end corridor would be limited to 20 feet. This provides more flexibility but is consistent with the CMS requirements.

1105.5.7 Separation of exit access doors. Patient sleeping rooms, or any suite that includes patient sleeping rooms, of more than 1,000 square feet (92.9 m^2) shall have not less than two exit access doors placed a distance apart equal to not less than one-third of the length of the maximum overall diagonal dimension of the patient sleeping room or suite to be served, measured in a straight line between exit access doors.

❖ This requirement addresses the need for exit separation in larger patient sleeping rooms and suites. Once they become large enough, the need for two exits becomes more important. This section is less restrictive than Section 1007.1.1 by only requiring $^1/_3$ the diagonal of the space versus $^1/_2$. This requirement may result in the need for an additional exit access door in such spaces.

1105.5.8 Aisles. In areas where *aisles* are used for movement of patients in beds, the clear width of the *aisle* shall be not less than 48 inches (1219 mm).

❖ This requirement is consistent with the widths established for ramps and corridors in Sections 1105.5.4 and 1105.5.5, respectively. Again, this width is associated with areas where bed movement will occur.

1105.6 Smoke compartments. Smoke compartments shall be provided in existing Group I-2 Condition 2, in accordance with Sections 1105.6.1 through 1105.6.4.

❖ Smoke compartments are a key component of the defend-in-place strategy, a strategy where occupants are protected from fire without relocation, used in healthcare facilities to limit the movement of smoke. These compartments act as safe locations for patients by preventing the spread of smoke. Through compartmentalization, patients may remain safely in their rooms as fire suppression systems and fire responders extinguish the fire. Under severe fire conditions that threaten the immediate compartment area, patients may be evacuated horizontally to the safety of an adjacent compartment on the same floor. Being able to do this is critical since, because of the health status of many patients, their evacuation from the building might put them in danger. The proper design, construction and application of smoke compartments will provide added protection, buy valuable time and save lives of critically ill patients before a total evacuation may become necessary.

These requirements are provided to assist code officials and surveyors during the ongoing regular inspection of hospital facilities. These inspections are required by federal laws for certification and reim-

INTERNATIONAL CODE COUNCIL®
Copyright © 2015 ICC. ALL RIGHTS RESERVED. Accessed by David Dammon on Jun 21, 2017 12:30:52 PM pursuant to License Agreement with ICC. No further reproduction or distribution authorized. ANY UNAUTHORIZED REPRODUCTION OR DISTRIBUTION IS A VIOLATION OF THE FEDERAL COPYRIGHT ACT AND THE LICENSE AGREEMENT, AND SUBJECT TO CIVIL AND CRIMINAL PENALTIES THEREUNDER.

bursement. These requirements consider the minimum previously approved construction methods. This is consistent with the federal requirements to which these facilities are currently held. Sections 1105.6.1 through 1105.6.6 provide all the necessary elements for existing facilities.

1105.6.1 Design. Smoke barriers shall be provided to subdivide each story used for patients sleeping with an occupant load of more than 30 patients into not fewer than two smoke compartments.

❖ The defend-in-place concept is a basic minimum level of safety for these facilities. Every facility should be equipped with at least two smoke compartments for temporary relocation of patients. This section addresses acceptable configurations of smoke barrier walls and smoke barriers in existing hospitals for each story with sleeping rooms accommodating 30 or more patients.

1105.6.1.1 Refuge areas. Refuge areas shall be provided within each smoke compartment. The size of the refuge area shall accommodate the occupants and care recipients from the adjoining smoke compartment. Where a smoke compartment is adjoined by two or more smoke compartments, the minimum area of the refuge area shall accommodate the largest occupant load of the adjoining compartments.

The size of the refuge area shall provide the following:

1. Not less than 30 net square feet (2.8 m^2) for each care recipient confined to a bed or stretcher.
2. Not less than 15 square feet (1.4 m^2) for each resident in a Group I-2 using mobility assistance devices.
3. Not less than 6 square feet (0.56 m^2) for each occupant not addressed in Items 1 and 2.

Areas of spaces permitted to be included in the calculation of the refuge area are *corridors*, sleeping areas, treatment rooms, lounge or dining areas and other low-hazard areas.

❖ This section addresses adequate sizing of refuge areas. IBC Section 407.5.1 also includes requirements for sizing refuge areas. Otherwise, the provisions are fairly consistent.

1105.6.2 Smoke barriers. Smoke barriers shall be constructed in accordance with Section 709 of the *International Building Code*.

Exceptions:

1. Existing smoke barriers are permitted to remain where the existing smoke barrier has a minimum fire-resistance rating of $^1/_2$ hour.
2. Smoke barriers shall be permitted to terminate at an atrium enclosure in accordance with Section 404.6 of the *International Building Code*.

❖ Generally, compliance with the IBC is required for smoke barriers. However, the intent of the first exception is to bring noncompliant smoke barriers to at least $^1/_2$-hour fire-resistance rating. Previously approved smoke barriers are not intended to be reduced to $^1/_2$ hour. Chapter 7 requires maintenance of approved construction. The second exception addresses termination of the smoke barrier. Typically, smoke barriers are required to terminate at outside walls.

1105.6.3 Opening protectives. Openings in smoke barriers shall be protected in accordance with Section 716 of the *International Building Code*. Opening protectives shall have a minimum fire-protection-rating of $^1/_3$ hour.

Exception: Existing wired glass vision panels in doors shall be permitted to remain.

❖ This section addresses doors in smoke barriers in existing Group I-2 occupancies. This section requires compliance as applicable with Section 716. The rating of doors is required to be a minimum of 20 minutes. Openings in doors with wired glass are permitted to remain.

1105.6.4 Penetrations. Penetrations of smoke barriers shall comply with the *International Building Code*.

Exception: Approved existing materials and methods of construction.

❖ Penetrations, as with corridor construction, can be numerous and lead to smoke movement from one smoke compartment to another. This section requires that such penetrations be dealt with in accordance with the IBC. Sealing penetrations is a reasonable requirement to increase patient safety. There is some flexibility provided if such penetrations have already been addressed to the satisfaction of the fire code official.

1105.6.5 Joints. Joints made in or between smoke barriers shall comply with the *International Building Code*.

Exception: Approved existing materials and methods of construction.

❖ Joints formed by the intersection of smoke barriers and floor/ceiling and roof assemblies can often create gaps where smoke can spread. This simply requires compliance with the IBC to protect those joints. Similar to Section 1105.6.4 addressing penetrations, there is some flexibility provided if such joints have already been addressed to the satisfaction of the fire code official.

1105.6.6 Duct and air transfer openings. Penetrations in a smoke barrier by duct and air transfer openings shall comply with Section 717 of the *International Building Code*.

Exception: Where existing duct and air transfer openings in smoke barriers exist without smoke dampers, they shall be permitted to remain. Any changes to existing smoke dampers shall be submitted for review and approved in accordance with Section 717 of the *International Building Code*.

❖ Similar to penetrations and joints, where ducts and air transfer openings penetrate a smoke barrier they must be sealed in accordance with the IBC. IBC Section 717.5.5 requires a smoke damper unless Exception 2 to that section is met. Exception 2 to Section

INTERNATIONAL CODE COUNCIL®
Copyright © 2015 ICC. ALL RIGHTS RESERVED. Accessed by David Dammon on Jun 21, 2017 12:30:52 PM pursuant to License Agreement with ICC. No further reproduction or distribution authorized. ANY UNAUTHORIZED REPRODUCTION OR DISTRIBUTION IS A VIOLATION OF THE FEDERAL COPYRIGHT ACT AND THE LICENSE AGREEMENT, AND SUBJECT TO CIVIL AND CRIMINAL PENALTIES THEREUNDER.

717.5.5 recognizes a fully ducted system in a building equipped throughout with an automatic sprinkler system. See the commentary to IBC Section 717.5.5. The application of that exception is limited to Group I-2 Condition 2 occupancies.

The exception to this section recognizes that existing duct and air transfer openings may be permitted to remain without smoke dampers. Any modification of existing smoke dampers would have to go through the normal process for making an alteration to existing construction. The exception is not intended to allow the removal of existing smoke dampers but instead allow the continuance of existing conditions that did not require them.

1105.7 Group I-2 care suites. Care suites in existing Group I-2 Condition 2 occupancies shall comply with Sections 407.4.3 through 407.4.3.6.2 of the *International Building Code*.

❖ This proposal defines the requirements for care suites (both sleeping and nonsleeping) that are an integral design concept for many areas within a hospital. Typical uses include intensive care units, operating rooms, emergency departments and imaging departments. The suites allow for better and safer care than non-suite options. These provisions deal with common paths of travel, separation of exit access doors, and number of doors passed through (i.e., previously intervening rooms) in suites. See the commentary to Sections 407.4.3 through 407.4.3.6.2 of the IBC.

1105.8 Group I-2 automatic sprinkler system. An *automatic sprinkler system* installed in accordance with Section 903.3.1.1 shall be provided throughout existing Group I-2 fire areas. The sprinkler system shall be provided throughout the floor where the Group I-2 occupancy is located, and in all floors between the Group I-2 occupancy and the *level of exit discharge*.

❖ This section requires that an automatic sprinkler system be provided on the floor containing the Group I-2 occupancy and all floors between that level and the level of exit discharge. This is a general requirement for all Group I-2 occupancies. Automatic sprinkler protection of existing Group I-2 occupancies is of critical importance due to the nature of the occupants. In Group I-2 occupancies, the occupants are, by definition, considered not capable of self-preservation. The evacuation difficulties associated with these occupants create the need to incorporate a defend-in-place philosophy of fire protection in occupancies in Group I-2. For this reason, all such existing occupancies are to be protected with an automatic sprinkler system.

This is an especially important requirement for nursing homes. An NFPA report, *Facilities that Care for the Aged Including Nursing Homes and Residential Board and Care*, states, "The death rate per 1,000 fires was 82 percent lower when automatic suppression systems were present." The report further states, "Residents of these facilities are particularly vulnerable. The risk increases with increasing age. Consequently, the aged are considered a high-risk population. Institutional facilities that care for older adults must work diligently to prevent fires and to train staff and to equip the property (e.g., active systems) for effective response should a fire occur."

Note that Section 1103.5.3 requires an automatic sprinkler system be installed throughout the entire building containing a group I-2 Condition 2 occupancy. See the commentary to Section 1103.5.3 for more discussion on the intended application of that section.

1105.9 Group I-2 automatic fire alarm system. An automatic fire alarm system shall be installed in existing Group I-2 occupancies in accordance with Section 907.2.6.2.

Exception: Manual fire alarm boxes in patient sleeping areas shall not be required at *exits* if located at all nurses' control stations or other constantly attended staff locations, provided such stations are visible and continuously accessible and that travel distances required in Section 907.5.2.1 are not exceeded.

❖ Because care recipients may be incapable of self-evacuation and thus would rely on staff for assistance, an approved fire alarm system is required in existing Group I-2 occupancies. The system must comply with Section 907.2.6.2 (see commentary, Section 907.2.6.2). Note that Section 1105.8 requires sprinkler protection in existing Group I-2 occupancies and that the requirements of this section are in addition thereto.This provision is not intended to override the allowances for "private mode" in Section 907.2.6.2. Typical audible and visible alarms could be a detriment in some areas of a hospital, such as where patients are undergoing procedures.

1105.10 Essential electrical systems. Essential electrical systems in Group I-2 Condition 2 occupancies shall be in accordance with Sections 1105.10.1 and 1105.10.2.

❖ Both requirements within Sections 1105.10.1 and 1105.10.2 are specific to Group I-2 Condition 2 occupancies. This section addresses the requirements related to the needs of essential power and the reassessment to ensure that current installations will still meet the needs of the hospitals they support.

1105.10.1 Where required. In Group I-2 Condition 2 occupancies where life support is being provided, an essential electrical system shall be provided in accordance with NFPA 99.

❖ This section requires existing Group I-2 Condition 2 occupancies to provide essential electrical systems where life support is being provided. This section would require any buildings that would not be addressed by CMS but have similar risks to provide these necessary power resources. Buildings that are already approved through CMS are required to provide essential power.

INTERNATIONAL CODE COUNCIL®
Copyright © 2015 ICC. ALL RIGHTS RESERVED. Accessed by David Dammon on Jun 21, 2017 12:30:52 PM pursuant to License Agreement with ICC. No further reproduction or distribution authorized. ANY UNAUTHORIZED REPRODUCTION OR DISTRIBUTION IS A VIOLATION OF THE FEDERAL COPYRIGHT ACT AND THE LICENSE AGREEMENT, AND SUBJECT TO CIVIL AND CRIMINAL PENALTIES THEREUNDER.

1105.10.2 Installation and duration. In Group I-2 Condition 2 occupancies, the installation and duration of operation of existing essential electrical systems shall be based on a hazard vulnerability analysis conducted in accordance with NFPA 99.

❖ This section requires a reassessment of the essential electrical systems based on a hazard vulnerability analysis to make sure that the systems meet the needs of the facilities for emergencies. This requirement would apply whether or not the facility is being altered or has been damaged. If "substantial improvement" of the building occurs, per the IBC and IEBC definition, ASCE 24 would require this analysis. The flood provision section addresses such concerns as the location of equipment in a flood plain.

SECTION 1106
REQUIREMENTS FOR OUTDOOR OPERATIONS

1106.1 Tire storage yards. Existing tire storage yards shall be provided with fire apparatus access roads in accordance with Sections 1106.1.1 and 1106.1.2.

❖ This section introduces the fire apparatus access provisions that follow.

1106.1.1 Access to piles. Access roadways shall be within 150 feet (45 720 mm) of any point in the storage yard where storage piles are located not less than 20 feet (6096 mm) from any storage pile.

❖ See the commentary to Section 3406.2.

1106.1.2 Location within piles. Fire apparatus access roads shall be located within all pile clearances identified in Section 3405.4 and within all fire breaks required in Section 3405.5.

❖ See the commentary to Sections 3405.4 and 3405.5.

Bibliography

The following resource materials were used in the preparation of the commentary for this chapter of the code.

Ahrens, Marty. *Facilities that Care for the Aged Including Nursing Homes and Residential Board and Care*. Quincy, MA: National Fire Protection Association, 2006.

Complete Revision History to the 2015 I-Codes. Washington, DC: International Code Council, 2014.

INTERNATIONAL CODE COUNCIL®

Copyright © 2015 ICC. ALL RIGHTS RESERVED. Accessed by David Dammon on Jun 21, 2017 12:30:52 PM pursuant to License Agreement with ICC. No further reproduction or distribution authorized. ANY UNAUTHORIZED REPRODUCTION OR DISTRIBUTION IS A VIOLATION OF THE FEDERAL COPYRIGHT ACT AND THE LICENSE AGREEMENT, AND SUBJECT TO CIVIL AND CRIMINAL PENALTIES THEREUNDER.

CHAPTERS 12 through 19

RESERVED

INTERNATIONAL CODE COUNCIL®
Copyright © 2015 ICC. ALL RIGHTS RESERVED. Accessed by David Dammon on Jun 21, 2017 12:30:52 PM pursuant to License Agreement with ICC. No further reproduction or distribution authorized. ANY UNAUTHORIZED REPRODUCTION OR DISTRIBUTION IS A VIOLATION OF THE FEDERAL COPYRIGHT ACT AND THE LICENSE AGREEMENT, AND SUBJECT TO CIVIL AND CRIMINAL PENALTIES THEREUNDER.

INTERNATIONAL CODE COUNCIL®
Copyright © 2015 ICC. ALL RIGHTS RESERVED. Accessed by David Dammon on Jun 21, 2017 12:30:52 PM pursuant to License Agreement with ICC. No further reproduction or distribution authorized. ANY UNAUTHORIZED REPRODUCTION OR DISTRIBUTION IS A VIOLATION OF THE FEDERAL COPYRIGHT ACT AND THE LICENSE AGREEMENT, AND SUBJECT TO CIVIL AND CRIMINAL PENALTIES THEREUNDER.

INDEX

A

24-HOUR BASIS
Defined 202
ABANDONED PREMISES (see VACANT PREMISES)
ABANDONMENT
Flammable and combustible liquid tanks 5704.2.13
ACCEPTANCE TESTING
Fire protection system installations 901.5, 904.4, 907.8
Fire pumps 913.5.1
Flammable and combustible liquid tanks 5704.2.12.1
Single- and multiple-station smoke alarms 907.8.1
Smoke control systems 909.18
ACCESS, FIRE DEPARTMENT
Aviation facilities 2003.4
Construction and demolition sites 3310.1
Doors for 504.2, 3205.4, 3206.6.1
Equipment to 509
High-piled storage buildings 3206.6
Tire storage 3406
ACCESS ROADS, FIRE APPARATUS 503
Aviation facilities 2003.4
Bridges 503.2.6
Building openings and roofs 504
Defined 202
High-piled storage 3206.6
Lumber yards 2803.6, 2809.3
Obstructions 503.4
Tents and membrane structures 3103.8.1
ACCESSIBLE MEANS OF EGRESS 1009
Defined 202
Standby power 604.2.1
ACCESSIBLE ROUTE
Defined 202
ACETYLENE (see WELDING AND OTHER HOT WORK)
Gas 3505.4
Generators 3508
ADDRESS NUMBER (see PREMISES IDENTIFICATION)
ADMINISTRATION
Alternative methods and materials 104.9, 501.4
Applicability 102
Approval 104.6.1, 401.2, 603.1.2, 2307.2, 2308.2, 3101.2, 5706.4.7.1
Approved materials and equipment 104.7
Board of appeal 108.1
Emergencies 104.11
General 101
Inspections 104.6.2, 106
Maintenance 107
Permits 104.2, 105
Right of entry 104.3
Unsafe buildings 110
Violations 109
AEROSOL CONTAINER
Defined 202
Glass 5101.4
Plastic 5101.4, 5104.1.1
AEROSOL WAREHOUSE 5104.4
Defined 202
AEROSOLS . . . . . Chapter 51
Classification levels 5103.1
Classification of products . . . . . Table 5103.1
Defined 202
Inside storage 5104
Manufacturing facilities 5107
Nonsegregated storage . . . . . 5104.3.1, Table 5104.3.1
Outside storage 5105
Permit required 105.6.1
Retail display 5106
Segregated storage . . . . . 5104.3.2, Table 5104.3.2
AGENCY
Defined 202
AGENT
Defined 202
AGRICULTURAL BUILDING (Occupancy Group U)
Defined 202
Occupant load . . . . . Table 1004.1.2
AGRICULTURAL PRODUCTS 5203.4, 6001.1
AGRO-INDUSTRIAL
Byproducts 2801.1
Defined 202
Facilities 2804.1, 2808.1
AIR-INFLATED STRUCTURES (see TENTS AND OTHER MEMBRANE STRUCTURES)
Defined 202
Permit 105.6.4.5

INTERNATIONAL CODE COUNCIL®
Copyright © 2015 ICC. ALL RIGHTS RESERVED. Accessed by David Dammon on Jun 21, 2017 12:30:52 PM pursuant to License Agreement with ICC. No further reproduction or distribution authorized. ANY UNAUTHORIZED REPRODUCTION OR DISTRIBUTION IS A VIOLATION OF THE FEDERAL COPYRIGHT ACT AND THE LICENSE AGREEMENT, AND SUBJECT TO CIVIL AND CRIMINAL PENALTIES THEREUNDER.

AIR-SUPPORTED STRUCTURES (see TENTS AND OTHER MEMBRANE STRUCTURES) . . . . . Chapter 31
Defined 202
Permit 105.6.4.5
AIRCRAFT
Defueling 2006.5, 2006.18
Fueling 2006
Hangars 914.8.3
Maintenance 2004
AIRCRAFT MOTOR-VEHICLE FUEL-DISPENSING FACILITY 2006.1, 2301.1
Defined 202
AIRCRAFT OPERATION AREA (AOA)
Defined 202
Housekeeping in 2003.3
Smoking prohibited 2003.2
AIRCRAFT-RELATED OCCUPANCIES, FIRE PROTECTION FOR 914.8
AIRPORT
Defined 202
AIRPORT TRAFFIC CONTROL TOWERS 604.2.18, 907.2.13, 907.2.22, 914.8.1, 914.8.2
AISLE ACCESSWAY 1018.4
Defined 202
AISLE(S) 308.1.7.1, 1018
Assembly 1029
Cross 1029.16.2
Defined 202
Fixed seating 1004.4
Hazardous materials 5003.11.3.9
High-piled combustible storage 3205.4, 3206.9
Obstruction of 1031.3, 1031.5
Tents 3103.12.5
Travel distance 1029.7
Walking surface 1003.4
Width 1018.3, 1029.9.1, 1104.22, 3206.9.1, 5904.1.2
ALARM 903.4.2, 2405.9.3, 2703.13.2.1, 6004.2.2.10.1
Activations 401.3.2
Audible 907.5.2.1
Coded signals 408.8.3
Signals 903.4.1, 2703.12.3
Testing 901.5, 901.6, 904.4.2
Visible 907.5.2.3
Warning signs 904.3.4
ALARM NOTIFICATION APPLIANCE 907.5.2
Defined 202
ALARM, NUISANCE
Defined 202
ALARM SIGNAL
Defined 202
ALARM, SMOKE
Defined 202
ALARM VERIFICATION FEATURE
Defined 202
ALCOHOL-BASED HAND RUB 5001.1, 5705.5
Defined 202
ALCOHOL-BLENDED FUELS
Compatibility of components 2306.8.2
Defined 202
Dispensing 2306.8
Listed equipment 2306.8.1
ALTERATION
Defined 202
ALTERNATING TREAD DEVICE 1011.14
Defined 202
ALTERNATIVE AUTOMATIC FIRE-EXTINGUISHING SYSTEMS 904
ALTERNATIVE MATERIALS AND METHODS 104.9
AMBULATORY CARE FACILITY (Occupancy Group B)
Automatic sprinklers 903.2.2
Defined 202
Fire alarm systems 907.2.2.1
AMMONIA
Diffusion systems 606.12.6
Refrigerant 606.12.3
AMMONIUM NITRATE 5601.1.5
Defined 202
AMMUNITION, SMALL ARMS 5606
Defined 202
Storage and handling 105.6.14, 5601.2.1, 5604
AMUSEMENT BUILDING, SPECIAL (see SPECIAL AMUSEMENT BUILDING)
AMUSEMENT PARK STRUCTURES (Assembly, Group A-5)
Defined 202
ANNUNCIATOR
Defined 202
APPEALS, BOARD OF 108
APPENDICES 101.2.1
APPLIANCES 605.7
Chimneys 603.6
Commercial kitchen hoods 609
Cooking 5705.3.3
Fuel-fired 603
Gas piping connection 609.4

INTERNATIONAL CODE COUNCIL®
Copyright © 2015 ICC. ALL RIGHTS RESERVED. Accessed by David Dammon on Jun 21, 2017 12:30:52 PM pursuant to License Agreement with ICC. No further reproduction or distribution authorized. ANY UNAUTHORIZED REPRODUCTION OR DISTRIBUTION IS A VIOLATION OF THE FEDERAL COPYRIGHT ACT AND THE LICENSE AGREEMENT, AND SUBJECT TO CIVIL AND CRIMINAL PENALTIES THEREUNDER.

Heat-producing 2301.6
Heating 603.5, 605.10, 5705.3.3
Lighting 5705.3.3
Unsafe 603.7
APPLICABILITY (of the code) 102
APPROVED
Defined 202
ARC WELDING
(see WELDING AND OTHER HOT WORK)
AREA, BUILDING
Defined 202
AREA OF REFUGE 1009.6
Defined 202
ARRAY (storage) 3205.7, 3207.4
Defined 202
ARRAY, CLOSED (storage) 3205.7, 3207.4
Defined 202
ARTIFICIAL BARRICADE (see BARRICADE)
ASH TRAYS 310.6
ASHES, HOT 305.2
ASPHALT (TAR) KETTLES 303, 3317.2
ASPHYXIANT GASES 5004.7, 5307.1
ASSEMBLY OCCUPANCIES (Group A)
Aisles 1029
Announcements 403.2.2
Automatic sprinklers 903.2
Candles 308
Cellulose nitrate film 105.6.6, 306
Decorative materials 806, 807
Defined (Occupancy classification) 202
Doors 1010
Egress . . . . . Chapter 10
Emergency evacuation drill 4051
Employee training 406
Evacuation plans 404
Fire alarm systems 907.2.1
Fire safety plans 404
Furnishings 807.5.1
Interior finish 803
LP-gas installations . . . . . Chapter 61
Motion picture projection rooms 306.1
Multiple fire areas 903.2.1.7
Obstruction of exits 1031.3
Occupant load calculation 1004
On roofs 903.2.1.6
Open-flame devices 308.3
Panic hardware 1008.1.10
Permits required 105.6.36
Portable fire extinguishers 906
Posting maximum occupant load 1004.3
Prohibit smoking 310
Pyroxylin-coated fabric 807.5.1.4
Pyroxylin plastic motion picture film storage . . . 306.1
Seating 1029
Seating plan 403.2.1
Standpipe systems 905
Storage, flammable liquids 5704.3.4.2
Tents . . . . . Chapter 31
Vehicles in 3104.18.4
ASSISTED RESCUE AREAS, EXTERIOR 1009.7
ATRIUM
Defined 202
Sprinklers 903.2.8.3.1, 903.2.8.3.2
ATRIUM FIRE PROTECTION 907.2.14, 914.4
ATTIC
Defined 202
ATTIC STORAGE 315.2.4, 903.2.8.3.1
AUDIBLE ALARM NOTIFICATION APPLIANCE 907.5.2.1
Defined 202
AUTOMATED RACK STORAGE
Defined 202
Emergency shutdown 3209.4
AUTOMATIC
Defined 202
AUTOMATIC FIRE-EXTINGUISHING SYSTEM
(see FIRE-EXTINGUISHING SYSTEMS, ALTERNATIVE)
AUTOMATIC SMOKE DETECTION SYSTEM
Defined 202
AUTOMATIC SPRINKLER SYSTEM 2108.2, 2703.10, 2804.3, 3206.4, 3209.2, 3314, 6304.1.4
Aerosol warehouses 5104.4.1
Alarms 903.4.2, 2703.10.5
Basements 903.2.11.1.3
Chutes 1103.4.9.3
Defined 202
Dip-tank operations 2405.4
Gas rooms 5003.8.4.1
Group A 903.2.1, 1103.5.1
Group B 903.2.2
Group E 903.2.3
Group F-1 . . . . . 903.2.4
Group H 903.2.5
Group I 903.2.6, 1103.5.2, 1103.5.3
Group M 903.2.7
Group R 903.2.8
Group S-1 . . . . . 903.2.9
Group S-2 . . . . . 903.2.10
Hazardous exhaust ducts 903.2.11.4
High-piled storage 903.2.7.1

INTERNATIONAL CODE COUNCIL®
Copyright © 2015 ICC. ALL RIGHTS RESERVED. Accessed by David Dammon on Jun 21, 2017 12:30:52 PM pursuant to License Agreement with ICC. No further reproduction or distribution authorized. ANY UNAUTHORIZED REPRODUCTION OR DISTRIBUTION IS A VIOLATION OF THE FEDERAL COPYRIGHT ACT AND THE LICENSE AGREEMENT, AND SUBJECT TO CIVIL AND CRIMINAL PENALTIES THEREUNDER.

Hose threads 903.3.6
Installation requirements 903.3
Kitchen exhaust hood and ducts systems 903.2.11.5
Limited area 903.3.8
Monitoring 903.4
NFPA 13 sprinkler systems 903.3.1.1
NFPA 13D sprinkler systems 903.3.1.3
NFPA 13R sprinkler systems 903.3.1.2
Open-ended corridors 903.3.1.2.2
Pyroxylin plastics 903.2.4.3, 903.6.1, 1103.5.4
Repair garages 903.2.9.1
Riser rooms 901.4.6
Rubbish and linen chutes 903.2.11.2
Secondary water supply 914.3.2
Spray rooms 2404.4
Water supplies 903.3.5
Windowless stories 903.2.11.1
Woodworking operations 903.2.4.1
Zones 907.6.3

AUTOMATIC SPRINKLERS
Defined 202
Early Suppression Fast Response (ESFR) . . . . . 910.2, Table 3206.2, Table 3208.3, Table 5104.3.2.2, 5104.4.3
Obstructions to discharge 315.3.1, 903.3.3
Quick response (QR) . . . . . 903.3.2, Table 5704.3.6.3(5)
Residential 903.3.2

AUTOMATIC WATER MIST SYSTEM 904.11
Defined 202

AUTOMOBILE UNDERCOATING (see SPRAY FINISHING)

AUTOMOTIVE MOTOR FUEL-DISPENSING FACILITY . . . . . Chapter 23
Defined 202

AVERAGE AMBIENT SOUND LEVEL . . . 907.5.2.1.1
Defined 202

AVIATION FACILITIES . . . . . Chapter 20
(see also AIRCRAFT-RELATED OCCUPANCIES, FIRE PROTECTION FOR)
Cleaning parts 2004.3
Combustible storage 2003.6
Dispensing hoses and nozzles 2006.3.3
Dispensing of flammable and combustible liquids 2003.5
Fire protection 914.8
Fueling and defueling 2006
Portable fire extinguishers 2005
Radar equipment 2006.21

AWNING
Defined 202

B

BACKFLOW PREVENTION 903.3.5, 912.6
BALCONIES 308.3.1, 903.3.1.2.1, 1021

BALCONY, EXTERIOR
Defined 202

BARRICADE
Artificial defined (for explosives) 202
Defined (for explosives) 202
Fire apparatus access road 503.5, 503.5.1
Natural defined (for explosives) 202
Placement at fire scene 104.11.1

BARRICADED (explosives)
Defined 202

BASEMENT 603.3.2.5, 903.2.11.1.3, 905.3.1, 1006.3.2.2, 1030.1, 2311.4.3, 2903.1, 3003.1, 5704.3.5.1, 5705.3.7.2, 5704.6, 5706.4, 5904.1.3, 6103.2.1.1, 6109.7, 6204.1.8, 6304.1.7, 6604.1.5, 6704.1.5
Defined 202

BATTERY CHARGING (see POWERED INDUSTRIAL TRUCKS)

BATTERY SYSTEM, STATIONARY LEAD-ACID
Defined 202

BATTERY SYSTEM, STATIONARY STORAGE 608
Defined 202
Permit 105.7.2
Room design 608.4
Signs 608.7
Ventilation 608.6

BATTERY TYPES—Defined
Lithium-ion 202
Lithium metal polymer 202
Nickel cadmium 202
Nonrecombinant 202
Recombinant 202
Stationary storage 202
Valve-regulated lead acid 202
Vented (flooded) lead acid 202

BIN BOX 3208.1
Defined 202

BIOFUEL, SOLID (see SOLID BIOFUEL)

BIOMASS
Defined 202

BIOMASS FEEDSTOCK, SOLID (see SOLID BIOMASS FEEDSTOCK)

INTERNATIONAL CODE COUNCIL®
Copyright © 2015 ICC. ALL RIGHTS RESERVED. Accessed by David Dammon on Jun 21, 2017 12:30:52 PM pursuant to License Agreement with ICC. No further reproduction or distribution authorized. ANY UNAUTHORIZED REPRODUCTION OR DISTRIBUTION IS A VIOLATION OF THE FEDERAL COPYRIGHT ACT AND THE LICENSE AGREEMENT, AND SUBJECT TO CIVIL AND CRIMINAL PENALTIES THEREUNDER.

BLAST AREA
Defined 202
BLAST SITE
Defined 202
BLASTER
Defined 202
BLASTING AGENT (see also EXPLOSIVES AND FIREWORKS)
Defined 202
BLEACHERS 1029.1.1
Defined 202
Occupant load 1004.4
BOARDING HOUSE (Occupancy Group R)
Defined 202
BOILING POINT
Defined 202
BOND
For explosives 5601.2.4.1
For fireworks display 5601.2.4.2
BONDING AND GROUNDING 2104.2.4, 2106.3.4
Aircraft fueling 2006.3.7.1, 2006.5.2
CNG motor fuel-dispensing facilities 2308.8.1.2.4
Cryogenic fluids 5503.7.2
Organic coating 2904.3
Piping, valves and fittings 5706.4.7.6
Powdered coating 2406.6.4
Roll-coating operations 2405.11
Underground tanks 5706.6.1.8
Vessels 5705.3.2
BONFIRES 307.4.1
Defined 202
Permit 105.6.30, 307.2
BREAKAWAY PROTECTION (see EMERGENCY BREAKAWAY DEVICES)
BREAKOUT 1010.1.4
Defined 202
BREATHING APPARATUS 2603.3.2
BRIDGES (see ACCESS ROADS, FIRE APPARATUS)
BRITISH THERMAL UNIT (BTU)
Defined 202
BUILDING
Defined 202
Unsafe 110
Vacant (see **VACANT PREMISES**)
BUILDING INFORMATION CARD . . . . . 508.1.5(13)
BUILDING OFFICIAL 403.11.1.4, 510.1, 3105.2, 3105.5
Defined 202
BUILDING SERVICES AND SYSTEMS . . . . Chapter 6
BULK OXYGEN SYSTEM . . . . . Chapter 63
Defined 202
BULK PLANT OR TERMINAL 5706.4
Defined 202
BULK TRANSFER 5706.5
Defined 202
BULLET RESISTANT
Defined 202
BURNING (see OPEN BURNING)
BUTANE (see LIQUEFIED PETROLEUM GAS)
BUTYLENE (see LIQUEFIED PETROLEUM GAS)

C

CABINETS
Fire equipment 905.7, 906.8, 2005.7.1
Flammable liquid 5704.3.2
Hazardous material 5003.8.7
Ozone 6005.3.1
CABINETS, GAS 2703.3.5, 2703.10.2, 2703.13.1.3, 5003.8.6, 5306.2.3, 6004.1.2, 6406.2.2, 6406.4.1
CANDLES 105.6.34, 308, 806.4
CANOPY
Defined 202
CANOPY, TEMPORARY STAGE (see TEMPORARY STAGE CANOPY)
CAPTIONS, EMERGENCY VOICE/ALARM COMMUNICATION SYSTEM 907.5.2.2.4
CARBON DIOXIDE EXTINGUISHING SYSTEM
Commercial cooking systems 904.11
Defined 202
Emergency alarms for 908.7
Permit required 105.6.4
CARBON DIOXIDE SYSTEMS USED IN BEVERAGE DISPENSING 5307
CARBON MONOXIDE ALARMS AND DETECTION SYSTEMS 915, 1103.9
CARE, 24-HOUR (Occupancy Group I)
Defined 202
CARE FACILITY 903.2.8.4
CARE SUITE
Defined 202
CARNIVALS AND FAIRS
Permit required 105.6.5
Place of assembly tent 3103.3
CARTON
Combustible 5106.5
Defined 202
CEILING LIMIT
Defined 202

INTERNATIONAL CODE COUNCIL®
Copyright © 2015 ICC. ALL RIGHTS RESERVED. Accessed by David Dammon on Jun 21, 2017 12:30:52 PM pursuant to License Agreement with ICC. No further reproduction or distribution authorized. ANY UNAUTHORIZED REPRODUCTION OR DISTRIBUTION IS A VIOLATION OF THE FEDERAL COPYRIGHT ACT AND THE LICENSE AGREEMENT, AND SUBJECT TO CIVIL AND CRIMINAL PENALTIES THEREUNDER.

CELLULOSE NITRATE MOTION PICTURE FILM 105.6.6, 306
CELLULOSE NITRATE PLASTICS [see PYROXYLIN (CELLULOSE NITRATE) PLASTICS]
CERTIFICATION OF SERVICE PERSONNEL
Automatic fire-extinguishing systems 904.1.1
Portable fire extinguishers 906.2.1
CHANGE OF OCCUPANCY 102.3
Defined 202
CHANGE OF USE 102.3
CHEMICAL
Defined 202
CHEMICAL NAME
Defined 202
CHIMNEY 603.2, 603.6
Defined 202
Factory-built 603.6.4
Masonry 603.6.1
Metal 603.6.2
CHRISTMAS TREE (see DECORATIVE VEGETATION)
CHUTES, RUBBISH AND LINEN 903.2.11.2
CLASSIFICATION
Aerosols 5103
Commodity 3203
Dry cleaning plants and systems 2103.2
Dry cleaning solvent or liquid 202, 2103.1
Flammable and combustible liquids 202
Floor finish materials 804.3.1
Hazardous materials 5001.2
Occupancy 202
Refrigerant 606.3
CLEAN AGENT
Defined 202
CLEANING
Cooking equipment 609.3.3
Flammable liquids used for 2004.3
Powder coating 2406.5.1
Piping 3306.2
Repair garages 2311.2.1
Tanks 5706.7.2
Tire rebuilding buffing areas 3403.3
CLEARANCE
Storage to ceiling or sprinklers 315.2.1, 903.3.3, 5704.3.5.3
CLINIC, OUTPATIENT (Occupancy Group B)
Defined 202
CLOSED CONTAINER 5505.5.2
Defined 202
CLOSED SYSTEM 5705.3.7.6
Defined 202
CNG MOTOR FUEL-DISPENSING FACILITIES 2308
COLD DECK 2806.2
Defined 202
COLLEGE AND UNIVERSITY BUILDINGS, GROUP R-2 . . . . . 403.10.2.1, Table 405.2, 907.2.9.3
COMBUSTIBLE DUST
Defined 202
COMBUSTIBLE DUST-PRODUCING OPERATIONS . . . . . Chapter 22
Permit 105.6.7
COMBUSTIBLE FIBERS . . . . . Chapter 37
Defined 202
General precautions 3703
Permit 105.6.8
Portable fire extinguishers 3703.6
COMBUSTIBLE GAS DETECTOR 3510.2
Defined 202
COMBUSTIBLE LIQUID . . . . . 2306, 3104.17, Chapter 57
Classified locations 5703.1.2
Defined 202
Dispensing, use, mixing and handling 5705.3, 5705.3.8
Heated 5701.5
Indoor storage 5704.3.3
Mixtures 5701.5
Outdoor storage 5704.4
Permit 105.6.17, 105.7.8
Portable fire extinguisher 5706.2.7
Special operations 5706
Tank storage 5704.2
Waste control 5706.3.3
Wholesale and resale use 5704.3.6
COMBUSTIBLE MATERIAL STORAGE 105.6.30, 315, 2003.6
COMBUSTIBLE WASTE MATERIAL 304, 2505
At construction sites 3304.2
Containers 304.3
Storage 304.2
COMMERCIAL COOKING APPLIANCES
Defined 202
COMMERCIAL KITCHEN COOKING OIL STORAGE TANK SYSTEMS 610
COMMERCIAL KITCHEN HOODS 609
COMMERCIAL MOTOR VEHICLE 903.2.9
Defined 202
COMMODITY
Classifications 3203
Defined 202

INTERNATIONAL CODE COUNCIL®
Copyright © 2015 ICC. ALL RIGHTS RESERVED. Accessed by David Dammon on Jun 21, 2017 12:30:52 PM pursuant to License Agreement with ICC. No further reproduction or distribution authorized. ANY UNAUTHORIZED REPRODUCTION OR DISTRIBUTION IS A VIOLATION OF THE FEDERAL COPYRIGHT ACT AND THE LICENSE AGREEMENT, AND SUBJECT TO CIVIL AND CRIMINAL PENALTIES THEREUNDER.

COMMON PATH OF EGRESS TRAVEL . . . . . 1006.2.1, 1018.4, 1029.8, Table 1104.18.2
Defined 202
COMMON USE AREAS 907.5.2.3.1
Defined 202
COMPATIBILITY (Hazardous materials) (see INCOMPATIBLE MATERIALS)
COMPRESSED GAS . . . . . Chapter 53
Containers, cylinders, tanks 5303.1
Defined 202
Medical gas 5306
Not otherwise regulated 5308
Permit required 105.6.9
Requirements 5303
Storage 5304
Use and handling 5305
Wiring 5303.6
COMPRESSED GAS CONTAINER
Defined 202
COMPRESSED GAS SYSTEM
Defined 202
Motor fuel-dispensing facilities 2308
COMPRESSED NATURAL GAS (CNG) 5301.1
CONFLICTING PROVISIONS 102.9
CONGREGATE CARE FACILITY (Occupancy Group I)
Defined 202
CONGREGATE LIVING FACILITY (Occupancy Group R)
Defined 202
CONSTANTLY ATTENDED LOCATION 903.4.1, 907.2.1.1, 907.2.6, 907.2.7.1, 907.2.10.1, 907.2.12.1, 907.2.13, 907.2.18.2, 907.3, 907.3.1, 907.5, 907.5.1, 913.4, 5704.2.8.11
Defined 202
CONSTRUCTION AND DEMOLITION FIRE SAFETY . . . . . Chapter 33
CONSTRUCTION DOCUMENTS 105.4
Defined 202
CONSTRUCTION EQUIPMENT, MOTORIZED (see MOTORIZED CONSTRUCTION EQUIPMENT)
CONTAINER
Defined 202
CONTAINER AND PORTABLE TANK STORAGE . . . . . 5704.3, Table 5704.3.6.3(4), 5704.4, Table 5704.4.2
CONTAINMENT PALLETS
Flammable and combustible liquids 5704.4.3
Hazardous materials 5004.2.3
CONTAINMENT SYSTEM
Defined 202
CONTAINMENT VESSEL
Defined 202
CONTINUOUS GAS DETECTION SYSTEM (see GAS DETECTION SYSTEM, CONTINUOUS)
CONTROL AREAS 5003.8.3
Defined 202
COOKING
Appliances, commercial, defined 202
Commercial, automatic sprinkler systems 903.2.11.5
Commercial, fire-extinguishing systems 904.11
Commercial, hoods 609
Commercial, oil storage tank systems 610
Commercial, portable fire extinguishers 904.11.5
Devices, open-flame 308.1.4
Group I-2 . . . . . 904.13
On balconies 308.1.4
CORRIDOR 1020, 1104.17
Defined 202
Open-ended **(see OPEN-ENDED CORRIDOR)**
CORROSION PROTECTION
Cryogenic fluid containers 5503.1.3.2
Cryogenic fluid piping 5505.1.2.5
General 5703.6.5
Tanks and piping 5704.2.7.9, 5706.7.1
CORROSIVE
Defined 202
CORROSIVE MATERIALS . . . . . Chapter 54
Indoor storage 5404.1
Indoor use 5405.1
Outdoor storage 5404.2
Outdoor use 5405.2
Requirements 5403
COTTON, BALED . . . . . Table 5003.1.1(1), 3705
Defined 202
COTTON, DENSELY PACKED BALED . . . . . Table 5003.1.1(1)
Defined 202
COTTON, SEED 3703.4
Defined 202
COURT
Defined 202
COURT, EGRESS 1028.4
Defined 202
COVERED AND OPEN MALL BUILDINGS
Automatic sprinkler system 914.2.1
Defined 202
Emergency planning 403.11.1
Emergency voice/alarm communication system 907.2.20, 914.2.3

INTERNATIONAL CODE COUNCIL®
Copyright © 2015 ICC. ALL RIGHTS RESERVED. Accessed by David Dammon on Jun 21, 2017 12:30:52 PM pursuant to License Agreement with ICC. No further reproduction or distribution authorized. ANY UNAUTHORIZED REPRODUCTION OR DISTRIBUTION IS A VIOLATION OF THE FEDERAL COPYRIGHT ACT AND THE LICENSE AGREEMENT, AND SUBJECT TO CIVIL AND CRIMINAL PENALTIES THEREUNDER.

Permit 105.6.10
Standpipe system 905.3.3, 914.2.2
Tenant identification. 403.11.1.5
Unoccupied tenant spaces 311.6, 403.11.1.6
CRANKCASE OIL (see WASTE OIL)
CRITICAL CIRCUIT 604.3
Defined 202
CROP-RIPENING AND COLORING PROCESSES (see FRUIT AND CROP RIPENING)
CROWD MANAGERS 403.12.3, 3104.20.2
CRYOGENIC CONTAINER
Defined 202
Handling. 5505.5
Marking 5503.4
Security 5503.5
CRYOGENIC FLUIDS . . . . . Chapter 55
Containers 5503.1
Defined 202
Filling 5505.4
Flammable 5806
Indoor storage 5504.2
Indoor use 5505.2
Outdoor storage. 5504.3
Outdoor use 5505.3
Permit 105.6.11
Requirements 5503
Underground storage tanks 5504.4, 5504.5
CRYOGENIC VESSEL
Defined 202
CUSTODIAL CARE (Occupancy Group I)
Defined 202
CUTTING AND WELDING (see WELDING AND OTHER HOT WORK)
CYLINDER
Defined 202

D

DAMPER
Defined 202
DANGER, IMMINENT. 110.2
DAY BOX (Magazine, Type 3). 202
Defined 202
DEAD END 1020.4
DECK
Defined 202
DECORATIONS 805
Exit obstruction 1031.5
DECORATIVE MATERIALS. 807
Defined 202
DECORATIVE VEGETATION 806
DEFLAGRATION
Defined. 202
DEFUELING
Aircraft 2006.5
Hydrogen fuel tanks 2309.6
DELAYED EGRESS LOCKS 907.4.2, 1010.1.9.7
DELUGE SYSTEM 903.4, 2805.2
Defined. 202
DEMOLITION OF BUILDINGS FIRE SAFETY . . . . . Chapter 33
DESIGN PRESSURE
Defined. 202
DETACHED BUILDING
Defined. 202
Group H occupancies. 5003.8.2
Storage. . . . . 6204.1.1, 6304.1.1, Table 6304.1.2
DETEARING
Defined. 202
DETECTOR, HEAT
Defined. 202
DETONATING CORD
Defined. 202
DETONATION
Defined. 202
DETONATOR
Defined. 202
DETOXIFICATION FACILITY (Group I-2)
Defined. 202
DIP TANK 2405
Defined. 202
DIPPING OPERATIONS. 2405
DISCHARGE, EXIT (see EXIT DISCHARGE)
DISCHARGE OF HAZARDOUS MATERIAL (see RELEASE OF HAZARDOUS MATERIAL)
DISCHARGE SITE
Defined. 202
DISPENSING
Aircraft fueling 2006
Defined. 202
Fire extinguishers. 2305.5
Location 2303.1
Motor fuel-dispensing operations 2304
Requirements. 2305, 5005
DISPENSING DEVICE, OVERHEAD-TYPE
Defined. 202
DISPLAY SITE (Fireworks)
Defined. 202
DISPLAYS
Aerosol products 5106
Cellulose nitrate (pyroxylin) plastic 314.3, 6503.1

INTERNATIONAL CODE COUNCIL®
Copyright © 2015 ICC. ALL RIGHTS RESERVED. Accessed by David Dammon on Jun 21, 2017 12:30:52 PM pursuant to License Agreement with ICC. No further reproduction or distribution authorized. ANY UNAUTHORIZED REPRODUCTION OR DISTRIBUTION IS A VIOLATION OF THE FEDERAL COPYRIGHT ACT AND THE LICENSE AGREEMENT, AND SUBJECT TO CIVIL AND CRIMINAL PENALTIES THEREUNDER.

Fireworks 5608
Group M 5003.11
Indoor 314
Motor vehicles 314.4, 3104.18
Retail 5001.4, 5106, 5601.2.2
Storage 5003.11.3
DOOR, BALANCED 1010.1.10.2
Defined 202
DOOR, DUTCH 1105.4.4.2.3
Defined 202
DOOR, LOW ENGERY POWER-OPERATED 1010.1.4.2
Defined 202
DOOR, POWER-ASSISTED 1010.1.4.2
Defined 202
DOOR, POWER-OPERATED 1010.1.4.2, 1010.1.4.3
Defined 202
DOORWAY, EXIT ACCESS 1006
Defined 202
DORMITORIES (see OCCUPANCY CLASSIFICATION, Residential Group R and COLLEGE AND UNIVERSITY BUILDINGS, Group R-2)
DRAFT CURTAIN
Defined 202
Installation 1019.3, 1103.4.5, 1103.4.6, 1103.4.8, 5106.3.2
DRAFTSTOP
Defined 202
Maintenance 703.1.1
DRAINAGE CONTROL 2903.10, 2905.3, 5004.2.2.6, 5705.3.8.1, 5706.2.6, 5706.4.9
DRAINS
Dip-tank bottom 2405.3.2
Exhaust duct sprinkler system 2703.10.4.4.3
HPM liquids 2705.2.2.2
Magazines 5604.6.1
Outdoor cryogenic fluid storage containers 5504.3.1.3
Portable containers 5204.3.2.2
DRAPERIES 807.1, 1031.5
DRILLING, WELL 5706.3
DRY-CHEMICAL EXTINGUISHING AGENT
Defined 202
DRY CLEANING . . . . . Chapter 21
Classifications 2103.1
Defined 202
Fire protection 2108
Permit 105.6.13
Requirements, general 2104
Requirements, operating 2105
Solvent or liquid classifications 202
Spotting and pretreating 2106
Systems 2107
DRY CLEANING PLANT
Defined 202
DRY CLEANING ROOM
Defined 202
DRY CLEANING SYSTEM
Defined 202
DRYING APPARATUS 2404.6.1.2
DRYING OVENS (see INDUSTRIAL OVENS)
DRYING ROOMS 914.10
DUCT SMOKE DETECTORS 907.3.1
DUMPSTERS 304.3
DUST COLLECTION 5203.5, 5906.5.3
DUST EXPLOSION HAZARDS . . . . . Chapter 22, 2803
Explosion venting 2803.2.1
DWELLING
Defined 202
DWELLING UNIT
Defined 202

E

EARLY SUPPRESSION FAST-RESPONSE SPRINKLER (ESFR) (see AUTOMATIC SPRINKLERS)
EGRESS (see MEANS OF EGRESS)
ELECTRICAL EQUIPMENT 605
Aviation facilities 2006.14
Dust-producing machines 5906.5.5
Signs 605.3.1, 608.7.1
Workstations in HPM facilities 2703.7.2
ELECTROSTATIC APPARATUS 2407
ELECTROSTATIC FLUIDIZED BED
Defined 202
ELEVATOR GROUP
Defined 202
Emergency voice/alarm communication system in 907.5.2.2
ELEVATOR HOISTWAYS 704.1, 1103.4
Pressurization 909.21
Water protection 607.6
ELEVATOR KEYS, FIRE SERVICE (see KEYS, FIRE SERVICE ELEVATOR)
ELEVATOR KEYS, NONSTANDARDIZED FIRE SERVICE
Key boxes for 506.1.2

INTERNATIONAL CODE COUNCIL®
Copyright © 2015 ICC. ALL RIGHTS RESERVED. Accessed by David Dammon on Jun 21, 2017 12:30:52 PM pursuant to License Agreement with ICC. No further reproduction or distribution authorized. ANY UNAUTHORIZED REPRODUCTION OR DISTRIBUTION IS A VIOLATION OF THE FEDERAL COPYRIGHT ACT AND THE LICENSE AGREEMENT, AND SUBJECT TO CIVIL AND CRIMINAL PENALTIES THEREUNDER.

ELEVATOR RECALL/ EMERGENCY OPERATION 607
EMERGENCY ALARM SYSTEM 908, 5004.9, 5005.4.4
Defined 202
EMERGENCY BREAKAWAY DEVICES 2306.7.5.1, 2307.6.3
EMERGENCY CONTROL STATION 2703.1
Defined 202
EMERGENCY ESCAPE AND RESCUE OPENING 1030
Defined 202
EMERGENCY EVACUATION DRILL 405
Defined 202
Frequency . . . . . 405.2, Table 405.2
EMERGENCY LIGHTING EQUIPMENT
Inspection and testing 604.6
EMERGENCY PLANNING AND PREPAREDNESS . . . . . Chapter 4
EMERGENCY POWER SYSTEMS 604
Defined 202
EMERGENCY RELIEF VENTING 2306.6.2.5, 5704.2.7.4
EMERGENCY REPAIRS 105.1.4
EMERGENCY RESPONDER RADIO COVERAGE 510
In existing buildings 1103.2
Permit 105.7.5
EMERGENCY SHUTOFF VALVE 5003.2.2.1, 5503.4.6, 5505.3.2, 5803.1.3, 6303.1.2, 6403.1.1
Defined 202
EMERGENCY SHUTOFF VALVE, AUTOMATIC 2305.2.4, 2306.7.4, 5003.2.9.1, 5505.3.2, 5803.1.3, 5803.1.3.2, 6303.1.2, 6303.1.2.2, 6403.1.1, 6403.1.1.1, 6403.1.1.2
Defined 202
EMERGENCY SHUTOFF VALVE, MANUAL 2309.5.2, 2309.5.2.1, 5505.3.2, 5803.1.3, 5803.1.3.2, 6303.1.2, 6303.1.2.2, 6403.1.1, 6403.1.1.2
Defined 202
EMERGENCY VENTING FOR TANKS 610.5, 2306.5, 5704.2.7.4, 5704.2.9.6.1.1, 5704.2.9.6.1.2, 5704.2.9.6.3, 5704.2.9.7.2, 5706.2.4.2
EMERGENCY VOICE/ALARM COMMUNICATIONS 907.5.2.2
Atriums 907.2.14
Captions 907.5.2.2.4
Covered mall buildings 907.2.20
Deep underground buildings 907.2.19
Defined 202
Group A 907.2.1.1
High-rise building 907.2.13
Special amusement buildings 907.2.12.3
EMPLOYEE TRAINING 406
EMPLOYEE WORK AREA
Defined 202
ENTRY, RIGHT OF 104.3
EQUIPMENT, FUELED 312
EQUIPMENT PLATFORM
Defined 202
Guards required 1015.2
ESCALATOR OPENINGS (see FLOOR OPENINGS AND SHAFTS)
ESCAPE OPENINGS 1030
ESFR SPRINKLERS (see AUTOMATIC SPRINKLERS)
ETHYLENE
Gas 2503
Generators 2506
EVACUATION 110.2, 1703.3.4, 1704.3.5
EVACUATION DIAGRAMS 403.10.1.1, 403.10.2.3
EVACUATION DRILLS 405
Frequency . . . . . 405.2, Table 405.2
Notification 405.6
Recall and reentry 405.9
EVACUATION PLANS 404
EXCESS FLOW CONTROL
Defined 202
EXCESS FLOW VALVE
Defined 202
EXHAUSTED ENCLOSURE 5003.8.5
Defined 202
EXHIBIT GALLERY
Occupancy load . . . . . Table 1004.1.2
EXHIBITION HALLS (Occupancy Group A-3) . . . 202
EXHIBITS AND TRADE SHOWS 105.6.14
EXISTING
Defined 202
EXISTING BUILDINGS . . . . . Chapter 11
EXIT 1022
Defined 202
Enclosure 1023

INTERNATIONAL CODE COUNCIL®
Copyright © 2015 ICC. ALL RIGHTS RESERVED. Accessed by David Dammon on Jun 21, 2017 12:30:52 PM pursuant to License Agreement with ICC. No further reproduction or distribution authorized. ANY UNAUTHORIZED REPRODUCTION OR DISTRIBUTION IS A VIOLATION OF THE FEDERAL COPYRIGHT ACT AND THE LICENSE AGREEMENT, AND SUBJECT TO CIVIL AND CRIMINAL PENALTIES THEREUNDER.

Horizontal 1026
Number required 1006
Passageways 1024
EXIT ACCESS 1016
Defined 202
Doorway 202
Ramp 202
Stairway 202
EXIT DOORS, EXTERIOR 1022
EXIT RAMP, EXTERIOR 1006.3, 1008.3.2, 1027
Defined 202
EXIT STAIRWAY, EXTERIOR 1027
Defined 202
EXIT DISCHARGE 1028
Defined 202
EXIT DISCHARGE, LEVEL OF
Defined 202
EXIT ENCLOSURE 1022
Defined 202
EXIT, HORIZONTAL 1026
Defined 202
EXIT PASSAGEWAY 1024
Defined 202
EXPANDED PLASTIC . . . . . Figure 3203.7.4
Defined 202
EXPANDED VINYL WALL OR CEILING COVERINGS 803.6
EXPLOSION
Defined 202
EXPLOSION CONTROL 911, 2803.1, 2803.2.1, 2905.4, 5004.6, 5005.2.1.2, 5005.2.2.2, 5704.2.5, 5705.3.4, 5705.3.7.5.2, 5705.3.7.6.2, 5804.1.1, 5808.6, 6204.1.10, 6304.1.1, 6604.1.2, 6704.1.6
EXPLOSIVE MATERIAL . . . . . Chapter 56
Defined 202
EXPLOSIVES AND FIREWORKS . . . . . Chapter 56
Defined 202
Permits 105.6.15
EXTENSION CORDS 605.5
EXTERIOR ASSISTED RESCUE AREAS 1009.7
EXTERIOR WALL
Defined 202
EXTINGUISHERS (see FIRE EXTINGUISHERS, PORTABLE)
EXTRA-HIGH-RACK COMBUSTIBLE STORAGE
Approval 3208.5
Defined 202
Fire protection 3208.5.1

F

FABRICATION AREA 2705.2
Construction 2703.3.1
Defined 202
Electrical wiring and equipment 2703.7.1
Existing 2701.4
Gas detection 2703.13.1.1
Storage 2704.2
FACILITY
Defined 202
FAIL-SAFE 5003.2.2.1, 5004.7.2, 5005.1.5.1, 5005.1.11, 6004.2.2.7, 6004.2.2.8.1, 6204.1.11.1
Defined 202
FAIRS 105.6.5
FALLOUT AREA
Defined 202
FALSE ALARM
Defined 202
FEES 113
FILL PIPE CONNECTIONS 5704.2.9.5.2
FILM, CELLULOSE NITRATE MOTION PICTURE 306
Projection rooms 306.1
Storage 306.2
FINES (in woodworking operations) (see also VIOLATION PENALTIES)
Defined (in woodworking operations) 202
Storage and processing (in woodworking operations) 2808
FINISHED PRODUCTS 2909.6
FIRE ALARM
Defined 202
Reporting 401.3.2, 3309
FIRE ALARM BOX (see MANUAL FIRE ALARM BOX)
FIRE ALARM CONTROL UNIT
Defined 202
FIRE ALARM SIGNAL
Defined 202
FIRE ALARM SYSTEM
Annunciation 907.6.3.1, 907.6.4.1
Defined 202
Existing buildings 907.9, 1103.7
Maintenance 907.8
Monitoring 907.6.6
Notification appliances 907.5
Out of service 901.7
Permit 105.7.6
Power supply 907.6.2
Presignal feature 907.5.1
Telephone dialing devices 907.6.6.1

INTERNATIONAL CODE COUNCIL®
Copyright © 2015 ICC. ALL RIGHTS RESERVED. Accessed by David Dammon on Jun 21, 2017 12:30:52 PM pursuant to License Agreement with ICC. No further reproduction or distribution authorized. ANY UNAUTHORIZED REPRODUCTION OR DISTRIBUTION IS A VIOLATION OF THE FEDERAL COPYRIGHT ACT AND THE LICENSE AGREEMENT, AND SUBJECT TO CIVIL AND CRIMINAL PENALTIES THEREUNDER.

Testing 907.8
Where required, existing buildings 1103.7
Where required, new buildings 907.2
Zones 907.6.4
FIRE AND SMOKE PROTECTION FEATURES . . . . . Chapter 7
FIRE APPARATUS ACCESS ROAD 503
Defined 202
Gates and barricades 503.5, 503.6
Obstructions 503.4
FIRE AREA 901.4.3
Defined 202
FIRE BARRIER
Defined 202
Maintenance 703.1.3
FIRE CHIEF 104.11, 311.2.2, 503.6, 508.1.1, 605.11.1, 907.6.5.1, 909.15, 912.2, 912.3, 2603.3, 3209.4, 3308.2, 5706.2.1
Defined 202
FIRE CODE OFFICIAL
Defined 202
FIRE COMMAND CENTER 508
Defined 202
Storage prohibited 315.3.3, 508.1.5
FIRE DAMPER
Defined 202
FIRE DEPARTMENT COMMUNICATION SYSTEM 907.2.13.2
FIRE DEPARTMENT CONNECTIONS 903.3.7, 905.2, 912
FIRE DEPARTMENT MASTER KEY
Defined 202
FIRE DEPARTMENT NOTIFICATION [see NOTIFICATION (of fire department)]
FIRE DEPARTMENT OPERATIONS . . . 104.11, 401.4
FIRE DETECTOR, AUTOMATIC
Defined 202
FIRE DOOR
Defined 202
FIRE DOOR ASSEMBLY
Defined 202
FIRE DRILL (see EMERGENCY EVACUATION DRILL)
FIRE EQUIPMENT, TAMPERING WITH 901.8
FIRE ESCAPE STAIRWAYS 1104.16
FIRE EXIT HARDWARE 1010.1.10
Defined 202
FIRE EXTINGUISHERS, PORTABLE 906
Asphalt kettles 303.5
Aviation facilities 2005
Buildings under construction or demolition 3315
Commercial cooking equipment 904.11.5
Dry cleaning plants 2108.4
Flammable finishes 2404.4.1, 2405.4.2, 2406.4.2
Lumber yards 2804.2, 2808.8
FIRE-EXTINGUISHING SYSTEMS, ALTERNATIVE 904
Commercial cooking 904.12
Fire alarm system interconnection 904.3.5, 907.6
Flammable and combustible liquids 5704.3.7.5.1, 5704.3.8.4
Flammable finishing 2404.4, 2405.4.1, 2406.4, 2407.4
Hazardous materials 5005.1.8
Monitoring 904.3.5
Permit 105.7.1
Required 904.2
FIRE FIGHTERS
Hazards to 316
Pitfalls 316.3
Safety 101.3
FIRE FLOW REQUIREMENTS 507.3
FIRE HYDRANT
Obstruction 507.5.4
Permit 105.6.16, 105.6.37, 105.7.13
Standpipe system 507.5.1.1
Tampering 901.8
Testing 507.5.2, 901.5
FIRE INVESTIGATIONS 104.10
FIRE LANE
Defined 202
FIRE PARTITION
Defined 202
Maintenance 703.1.3
FIRE POINT
Defined 202
FIRE PROTECTION EQUIPMENT 509
FIRE PROTECTION RATING
Defined 202
FIRE PROTECTION SYSTEM . . . . . Chapter 9
Defined 202
Nonrequired 901.4.2
Out of service 901.7
Owner's responsibility during construction or demolition 3308
Permit 105.7.1, 105.7.5, 105.7.6, 105.7.14, 105.7.17
FIRE PUMP ROOMS 901.4.6, 913.2.1, 1008.3.3
FIRE PUMPS 105.7.7, 913

INTERNATIONAL CODE COUNCIL®
Copyright © 2015 ICC. ALL RIGHTS RESERVED. Accessed by David Dammon on Jun 21, 2017 12:30:52 PM pursuant to License Agreement with ICC. No further reproduction or distribution authorized. ANY UNAUTHORIZED REPRODUCTION OR DISTRIBUTION IS A VIOLATION OF THE FEDERAL COPYRIGHT ACT AND THE LICENSE AGREEMENT, AND SUBJECT TO CIVIL AND CRIMINAL PENALTIES THEREUNDER.

FIRE RECORDS 104.6.3
FIRE, RECREATIONAL (see RECREATIONAL FIRE)
FIRE, REPORTING OF UNWANTED 401.3, 3309
FIRE RESISTANCE
Defined 202
FIRE-RESISTANCE-RATED CONSTRUCTION . . . 703
FIRE-RESISTANCE RATING
Defined 202
FIRE-RESISTANT JOINT SYSTEM
Defined 202
FIRE-RETARDANT COATINGS 803.4
FIRE SAFETY DURING CONSTRUCTION AND DEMOLITION . . . . . Chapter 33
FIRE SAFETY FUNCTIONS 907.3
Defined 202
FIRE SAFTEY PLANS 404, 3404.5
FIRE SEPARATION DISTANCE
Defined 202
FIRE SERVICE ELEVATOR KEYS (see KEYS, FIRE SERVICE ELEVATOR)
FIRE SERVICE FEATURES . . . . . Chapter 5
FIRE, UNWANTED (see UNWANTED FIRE)
FIRE WALL
Defined 202
Maintenance 703.1.3
FIRE WATCH (see also STANDBY PERSONNEL)
Construction/demolition sites 3304.5
Defined 202
Fire protection impairments 901.7
Hot work 3504.2
Places of assembly 403.12.1
FIREBLOCKING
Defined 202
Maintenance 703.1.3
FIREPLACES, PORTABLE OUTDOOR (see PORTABLE OUTDOOR FIREPLACES)
FIREWORKS (see EXPLOSIVES AND FIREWORKS)
Defined 202
Prohibited 5601.1.3
Retail display and sale 5609.1
FIREWORKS DISPLAY
Damage from 5601.2.4.2
Defined 202
FIXED BASE OPERATOR
Defined 202
FIXED SEATING 1004.4
Defined 202
Occupant load factor 1004.1.2
FLAME ARRESTORS 5704.2.7.3.2
FLAME RETARDANT (see also FIRE-RETARDANT COATINGS)
Tents, air-supported, air-inflated and tensioned membrane structures 3104.2
FLAME SPREAD
Defined 202
FLAME SPREAD INDEX
Defined 202
FLAMING FOODS AND BEVERAGES 308.6
FLAMMABLE CRYOGENIC FLUID
Defined 202
FLAMMABLE FINISHES . . . . . Chapter 24
Defined 202
Dipping operations 2405
Electrostatic apparatus 2407
Floor surfacing 2410
Powder coating 2406
Protection of operations 2403
Spray finishing 2404
Ventilation 2404.7, 2405.7, 2406.7, 2407.7, 2409.6, 2410.5
FLAMMABLE GAS . . . . . Chapter 58
Defined 202
Nonodorized 2311.7.2
Prohibited for pipe cleaning 3306.2
Requirements 5803
Storage 3306.1, 5804
Use 3306.1, 5805
FLAMMABLE LIQUEFIED GAS
Defined 202
FLAMMABLE LIQUIDS . . . . . Chapter 57
Buildings under construction or demolition 3305
Classified locations 5703.1.1
Defined 202
Dispensing, use, mixing and handling 5705.3, 5705.3.8
In construction and demolition operations 3305
Indoor storage 5704.3.3
Labeling and signage 5703.5
Motor fuel 2306
Outdoor storage 5704.4
Permit 105.6.17, 105.7.8
Portable fire extinguisher 5706.2.7
Special operations 5706
Tank storage 5704.2
Tents, air-supported, air-inflated and tensioned membrane structures 3104.17
Waste control 5706.3.3
Wholesale and resale use 5704.3.6

INTERNATIONAL CODE COUNCIL®
Copyright © 2015 ICC. ALL RIGHTS RESERVED. Accessed by David Dammon on Jun 21, 2017 12:30:52 PM pursuant to License Agreement with ICC. No further reproduction or distribution authorized. ANY UNAUTHORIZED REPRODUCTION OR DISTRIBUTION IS A VIOLATION OF THE FEDERAL COPYRIGHT ACT AND THE LICENSE AGREEMENT, AND SUBJECT TO CIVIL AND CRIMINAL PENALTIES THEREUNDER.

FLAMMABLE MATERIAL
Defined 202
FLAMMABLE SOLID . . . . . Chapter 59
Defined 202
Indoor storage 5904.1
Magnesium 5906
Outdoor storage 5906
Requirements 5903
Use 5905
FLAMMABLE VAPOR AREA
Alarms 2404.8.1.1
Defined 202
Electrical equipment 2403.2.1
Ignition sources 2403.2
Ventilation 2404.7, 2405.7
Warning signs 2403.2.7
FLAMMABLE VAPORS OR FUMES
Defined 202
FLASH POINT
Defined 202
FLEET VEHICLE MOTOR FUEL-DISPENSING FACILITY
Defined 202
Tanks 2306.2.4.2
FLEXIBLE JOINTS 2306.7.9.1.4, 5703.6.9
FLIGHT (stairs)
Defined 202
FLOOR AREA, GROSS
Defined 202
FLOOR AREA, NET
Defined 202
FLOOR CONSTRUCTION 2309.5.1.1, 5004.2.1, 5004.12, 6003.1.4.1, 6304.1.3
FLOOR COVERING (interior finish) 804.3
FLOOR FINISHING 2410
Permit 105.6.18
FLOOR IDENTIFICATION SIGNS 1023.9, 1031.9, 1104.24
FLOOR OPENINGS AND SHAFTS 704, 1103.4
FLUE SPACES 3208.3
Defined 202
FLUIDIZED BED
Defined 202
FOAM-EXTINGUISHING SYSTEMS 904.7
Defined 202
FOAM PLASTICS 803.7, 804.2, 807.4.2.1, 808.3
FOGGING, INSECTICIDAL (see FUMIGATION AND INSECTICIDAL FOGGING)
FOLDING AND TELESCOPIC SEATING
Defined 202
FOSTER CARE FACILITIES (Occupancy Group I)
Defined 202
FRUIT AND CROP RIPENING . . . . . Chapter 25
Ethylene gas 2503
Heating 2504.5
Permit 105.6.19
Sources of ignition 2504
Warning signs 2507
FUEL-FIRED APPLIANCES 603
Chimneys 603.2, 603.6
Heating 603.5
Installation 603.1
FUEL LIMIT SWITCH
Defined 202
FUEL OIL
Grade 603.1.4
Storage 603.3
FUMIGANT
Defined 202
FUMIGATION AND INSECTICIDAL FOGGING . . . . . Chapter 26
Breathing apparatus 2603.3.2
Clean up 2603.6
Defined 202
Fire safety requirements 2603
Notification 2603.3
Permit 105.6.20
Sealing of buildings 2603.5
Warning signs 2603.3.1
Watch personnel 2603.3.3
FURNACE CLASS A, B, C, D
Defined 202
FURNISHINGS 808, 1031.6
FURNITURE, UPHOLSTERED 805, 903.2.4, 903.2.7, 903.2.9
FUSIBLE LINKS 703.2, 704.2, 904.5.2, 904.6.2, 904.12.6.3, 910.5.1.1

G

GARAGE (see REPAIR GARAGE)
GARAGING (see PARKING AND GARAGING)
GAS CABINET 2703.10.2, 2703.13.1.3, 5003.8.6, 5303.7.10, 5306.2.3, 6004.1.1,
Defined 202
GAS DETECTION SYSTEM, CONTINUOUS
Defined 202
Emergency alarm system 908
HPM gases 2703.13

INTERNATIONAL CODE COUNCIL®
Copyright © 2015 ICC. ALL RIGHTS RESERVED. Accessed by David Dammon on Jun 21, 2017 12:30:52 PM pursuant to License Agreement with ICC. No further reproduction or distribution authorized. ANY UNAUTHORIZED REPRODUCTION OR DISTRIBUTION IS A VIOLATION OF THE FEDERAL COPYRIGHT ACT AND THE LICENSE AGREEMENT, AND SUBJECT TO CIVIL AND CRIMINAL PENALTIES THEREUNDER.

Hydrogen motor fuel 2307.2
Ozone gas 6005.3.2
GAS DETECTOR (see COMBUSTIBLE GAS DETECTOR)
GAS METERS 603.9
GAS- OR LIQUID-FUELED VEHICLES 314.4, 3104.18
Permit 105.6.27
GAS ROOM 5003.8.4, 6004.2.2.6
Defined 202
GASEOUS HYDROGEN SYSTEM 5801.1
Defined 202
GATES
Means of egress 1010.2
GATES, FIRE APPARATUS ROAD 503.5, 503.6
Permit 105.7.9
GENERAL REQUIREMENTS . . . . . Chapter 3
GENERATORS
Acetylene 3508
Ethylene 2506
Ozone Gas 6005
Stationary 604.1.1
GLASS-FIBER-REINFORCED PLASTICS
Manufacturing 2409
Storage 2409.4
Ventilation 2409.6
GRADE FLOOR OPENING
Defined 202
GRADE PLANE
Defined 202
GRANDSTAND 1029.1.1, 1029.1.1.1
Defined 202
GROUP HOME (Occupancy Group R-4)
Defined 202
GUARD 1015, 1029.16, 1104.6
Defined 202
GUEST ROOM
Defined 202
GYPSUM BOARD
Defined 202

H

HABITABLE SPACE
Defined 202
HALOGENATED EXTINGUISHING SYSTEM
Defined 202
HAND RUB, ALCOHOL-BASED (see ALCOHOL-BASED HAND RUB)
HANDLING
Defined 202
HANDRAIL 1014
Defined 202
HANGARS, AIRCRAFT (see AIRCRAFT-RELATED OCCUPANCIES, FIRE PROTECTION FOR)
HANGERS, FIRE EXTINGUISHER 906.7
HARDENING TANKS 2405.9
HARDWARE, EXIT DOOR 1010.1.9
HARDWARE, PANIC 1010.1.10
HAY
Combustible fiber 5203.4
Combustible waste 304.1.1
Storage 3104.5, 5203.4
HAZARD COMMUNICATION 407
Hazardous Materials Inventory Statement 407.5, 5001.5.2
Hazardous Materials Management Plan 407.6 5001.5.1
Training 407.4
HAZARDOUS MATERIALS
Defined 202
Fire-extinguishing systems 5004.5, 5005.1.8
General . . . . . Chapter 50
Groups M and S 5003.11
Identification signs 5003.5
Mixtures 5001.2.1
Outdoor control areas 5003.12
Permit 105.6.21, 105.7.10
Personnel training 407.4
Power systems 604.2.8
Requirements 5003
Storage 5004
Use, dispensing and handling 5005
HAZARDOUS MATERIALS INVENTORY STATEMENT 407.5, 5001.5.2
HAZARDOUS MATERIALS MANAGEMENT PLAN 407.6, 5001.5.1
HAZARDOUS PRODUCTION MATERIAL (HPM)
Defined 202
Permit 105.6.22
HAZARDS TO FIRE FIGHTERS 316
HEALTH HAZARD . . . . . 5001.2.2.2, Table 5003.1.1(2), Table 5003.1.1(4)
Defined 202
HEAT VENTS (see SMOKE AND HEAT VENTS)
HEATERS, PATIO (see PORTABLE OUTDOOR GAS-FIRED HEATING APPLIANCES)
HEATERS, PORTABLE ELECTRIC SPACE . . 605.10
HEATERS, PORTABLE UNVENTED 603.4
HEATING APPLIANCES 603.5

INTERNATIONAL CODE COUNCIL®
Copyright © 2015 ICC. ALL RIGHTS RESERVED. Accessed by David Dammon on Jun 21, 2017 12:30:52 PM pursuant to License Agreement with ICC. No further reproduction or distribution authorized. ANY UNAUTHORIZED REPRODUCTION OR DISTRIBUTION IS A VIOLATION OF THE FEDERAL COPYRIGHT ACT AND THE LICENSE AGREEMENT, AND SUBJECT TO CIVIL AND CRIMINAL PENALTIES THEREUNDER.

HEATING EQUIPMENT, TEMPORARY, DURING CONSTRUCTION 3303
HEIGHT, BUILDING
Defined 202
HELIPORT 2007
Defined 202
Permit for rooftop heliport 105.6.42
HELISTOP 2007
Defined 202
HI-BOY
Construction 303.7
Defined 202
HIGH-PILED COMBUSTIBLE STORAGE . . . . . Chapter 32
Aisles 3206.9
Automated storage 3209
Automatic sprinklers 3206.4, 3209.2
Classifications, commodities 3203
Defined 202
Fire protection . . . . . 3206, Table 3206.2
Housekeeping 3205
Pallets 3206.4.1
Plastic pallets 3206.4.1.1
HIGH-PILED STORAGE AREA
Defined 202
Designations 3204
Permit 105.6.23
HIGH-RISE BUILDING
Automatic sprinkler system 903.2.11.3, 914.3.1
Automatic sprinkler system, floor control valves required 903.4.3
Automatic sprinkler system, secondary water supply required 914.3.2
Defined 202
Emergency responder radio coverage 914.3.5
Emergency voice/alarm communications system 907.2.13, 914.3.4
Fire alarm system 907.2.13, 914.3.2
Fire alarm system zoning 907.6.3.2
Fire command center 508.1, 914.3.6
Fire department communications system 907.2.13.2
Fire safety and evacuation plans 403.11.2
Smokeproof exit stairway enclosures 1023.11
Standby power system 604.2.10
Standpipe system 905.3.1
HIGH-VOLTAGE TRANSMISSION LINE
Defined 202
Storage under 315.5, 316.6
HIGHLY TOXIC AND TOXIC MATERIALS . . . . . Chapter 60
Compressed gases 6004
Defined 202
Indoor storage and use 6003.1
Outdoor storage and use 6003.2
Solids and liquids 6003
HIGHWAY
Defined 202
HISTORIC BUILDINGS 102.6
Defined 202
HOGGED MATERIALS 2807, 2808
Defined 202
HOOD 609
Defined 202
HORIZONTAL ASSEMBLY
Defined 202
HORIZONTAL PROJECTIONS 1003.3.3
HOSE 2307.5.2, 2310.3.3
Aircraft fueling 2006
Conductive 2006.5.2.1
Connections for standpipes 905.3.4.1, 905.4, 905.5, 905.6
Dispensing 2006.3.3, 2306.7.5
Protection 2006.7, 5706.6.1.11
Removal of occupant hose lines 901.8.2
System 904.8.4, 904.9.3, 904.10.3
Threads 903.3.6, 912.3
HOSPITALS AND PSYCHIATRIC HOSPITALS (Group I-2)
Defined 202
HOT WORK (see WELDING AND OTHER HOT WORK)
Defined 202
Permit 105.6.24
HOT WORK AREA
Defined 202
HOT WORK EQUIPMENT
Defined 202
HOT WORK PERMITS
Defined 202
HOT WORK PROGRAM
Defined 202
HPM FACILITY (see SEMICONDUCTOR FABRICATION FACILITY)
HPM ROOM
Defined 202
HYDRANTS (see FIRE HYDRANT)
HYDROGEN 5501.1, 5801.1
HYDROGEN FUEL GAS ROMS 5808
Defined 202
HYDROGEN MOTOR FUEL-DISPENSING FACILITIES 2309
HYPERBARIC FACILITIES 611

INTERNATIONAL CODE COUNCIL®
Copyright © 2015 ICC. ALL RIGHTS RESERVED. Accessed by David Dammon on Jun 21, 2017 12:30:52 PM pursuant to License Agreement with ICC. No further reproduction or distribution authorized. ANY UNAUTHORIZED REPRODUCTION OR DISTRIBUTION IS A VIOLATION OF THE FEDERAL COPYRIGHT ACT AND THE LICENSE AGREEMENT, AND SUBJECT TO CIVIL AND CRIMINAL PENALTIES THEREUNDER.

I

IDENTIFICATION
Alcohol-blended fuel-dispensing facilities . . . 2306.8.3
Building (address) . . . 505.1
Elevator lobby . . . 1023.10
Exit discharge . . . 1023.8, 1104.21
Floor level . . . 1023.9, 1031.9
Fire protection equipment . . . 509.1, 905.7.1
Hazardous materials . . . 5003.5, 5503.4, 5703.5.4, 6005.4.3
Hot work hazards . . . 3503.6
Streets and roads . . . 505.2
Tenant spaces in covered malls . . . 403.11.1.5
Utilities . . . 509.1.1
Vacant premises . . . 311.5.4
IGNITION SOURCES . . . 305, 3703.7
IMMEDIATELY DANGEROUS TO LIFE AND HEALTH (IDLH)
Defined . . . 202
IMPACT PROTECTION, VEHICLE . . . 312, 6107.4, 6109.13
IMPAIRMENT COORDINATOR . . . 901.7.1
Defined . . . 202
INCAPABLE OF SELF-PRESERVATION (Occupancy Group I)
Defined . . . 202
INCINERATORS . . . 603.8, 1103.4.10
Room egress . . . 1006.2.2.1
INCOMPATIBLE MATERIALS . . . 2704.3.3, 5003.9.8, 5003.10.3.6, 5003.11.3.7, 5004.2.2.2, 5004.2.2.6, 5004.4, 5005.1.1, 5303.7.1, 5303.7.11.1, 5704.2.6, 5704.3.3.2, 6404.1.4
Defined . . . 202
INCOMPATIBLE SURFACES . . . 6306.3.6.2
INDUSTRIAL OVENS . . . Chapter 30
Defined . . . 202
Fire protection . . . 3006
Fuel piping . . . 3004
Interlocks . . . 3005
Location . . . 3003
Operation and maintenance . . . 3007
Permit . . . 105.6.25, 105.7.11
INERT GAS . . . 2309.6.2, 2501.1, 2906.4, Table 5003.1.1(1), Table 5003.1.1(3), 5305.8, 5703.6.3.1, 5705.2.2
Defined . . . 202
INHABITED BUILDING
Defined . . . 202
INITIATING DEVICE
Defined . . . 202
Identification . . . 907.6.3
INSECTICIDAL FOGGING (see FUMIGATION AND INSECTICIDAL FOGGING)
INSPECTION . . . 104.6.2, 105.2.2, 106, 107.2.1, 901.6
Emergency and standby power system . . . 604.4
Fire department connections . . . 912.6
Fire hydrant . . . 507.5.2
Fireworks display . . . 5608.5.3, 5608.9
Hose . . . 3509.7
Magazines . . . 5604.9
Masonry chimneys . . . 603.6.1
Tents . . . 3103.7
INSTITUTIONAL OCCUPANCIES
Defined . . . 202
INTERCONNECTION
Fire-extinguishing systems with cooking appliances . . . 904.11.2
Smoke alarms . . . 907.2.11.3, 1103.7.2
Standpipe risers . . . 905.4.2
INTERIOR EXIT RAMP
Defined . . . 202
INTERIOR EXIT STAIRWAY
Defined . . . 202
INTERIOR FINISH . . . Chapter 8
Defined . . . 202
INTERIOR FLOOR-WALL BASE . . . 804.4
Defined . . . 202
INTERIOR WALL AND CEILING FINISH . . . 803, 804
Defined . . . 202
INTERIOR WALL AND CEILING FINISH AND TRIM . . . 803, 804
INVESTIGATIONS, FIRE . . . 104.10
IRRITANT
Defined . . . 202
Gases . . . 5004.7.1, 5308.1
ISO-BUTANE (see LIQUEFIED PETROLEUM GAS)

J

JURISDICTION
Defined . . . 202

INTERNATIONAL CODE COUNCIL®
Copyright © 2015 ICC. ALL RIGHTS RESERVED. Accessed by David Dammon on Jun 21, 2017 12:30:52 PM pursuant to License Agreement with ICC. No further reproduction or distribution authorized. ANY UNAUTHORIZED REPRODUCTION OR DISTRIBUTION IS A VIOLATION OF THE FEDERAL COPYRIGHT ACT AND THE LICENSE AGREEMENT, AND SUBJECT TO CIVIL AND CRIMINAL PENALTIES THEREUNDER.

K

KETTLES
[see ORGANIC COATING or ASPHALT (TAR) KETTLES]
KEY BOXES 506
Defined 202
Maintenance 506.2
Nonstandard fire service elevator keys 506.1.2
Required 506.1
KEYS, FIRE SERVICE ELEVATOR 607.8

L

LABELED
Defined 202
LADDERS 1006.2.2.1, 1006.2.2.2, 1011.15, 1030.5.2, 1104.16.6, 5704.1.8.15
LANDING
Defined 202
Ramps 1012.6, 1012.10
Stairs and stairways 1010.1.5, 1010.1.6, 1011.6, 1025.2.2, 1025.2.4
LANDSCAPED ROOFS
(see also ROOFTOP GARDENS 317
LAUNDRY CARTS 318.1
LEAD-ACID BATTERY SYSTEM, STATIONARY
(see BATTERY SYSTEMS, STATIONARY STORAGE)
LEAD-ACID BATTERY SYSTEM, VALVE-REGULATED (see BATTERY SYSTEMS, STATIONARY STORAGE)
LEAKS
Compressed gases 5303.12
Cryogenic fluids 5503.10
Explosive materials 5604.10
Flammable and combustible liquids 2006.11, 2305.2.3, 2306.7.7.1, 3305.6, 5703.3, 5703.6.3.1, 5704.2.7.10, 5704.2.11.5, 5706.6.1.1
Highly toxic and toxic materials 6004.2.2.3, 6004.2.2.4, 6004.3.2.2
LEVEL OF EXIT DISCHARGE
(see EXIT DISCHARGE, LEVEL OF)
LIABILITY 103.4
LIMITED SPRAYING SPACE
Defined 202
LINEN CHUTES 903.2.11.2
LINEN CONTAINERS 808.1
LIQUEFIED NATURAL GAS (LNG) 2311.7, 5301.1, 5501.1
Defined 202
LIQUEFIED PETROLEUM GAS (LP-gas) . . . . . Chapter 61
Container defined 202
Containers not in service 6110
Cooking devices 308.3.1.1
Cylinder exchange 6109
Defined 202
Dispensing and overfilling 6106
Fire protection 6108
Installation of equipment 6103
Location of containers . . . . . 6104, Table 6104.3
Motor fuel-dispensing facilities 2307
Parking and garaging of LPG-fueled vehicles 6111
Parking and garaging of tank vehicles 6111
Permit 105.6.28, 105.7.12
Prohibited use 6105
Storage 6109
LIQUID
Defined 202
LIQUID- OR GAS-FUELED VEHICLES 314.4, 2404.18
Permit 105.6.27
LIQUID LEVEL LIMIT CONTROL 5003.2.7, 5005.1.4.1, 5005.1.4.2
LIQUID OXYGEN AMBULATORY CONTAINER 6306.3.1, 6306.3.5, 6306.3.6.1
Defined 202
LIQUID OXYGEN HOME CARE CONTAINER 6306.3
Defined 202
LIQUID OXYGEN IN HOME HEALTH CARE 6306
LIQUID STORAGE ROOM 5704.3.7
Defined 202
LIQUID STORAGE WAREHOUSE 5704.3.8
Defined 202
LISTED
Defined 202
LOADING RACKS 5706.3.8, 5706.5.1.12
LOCKDOWN
Defined 202
Plans 404.2.3
LOCKERS, COMBUSTIBLE 808.4
LODGING HOUSE
Defined 202
Occupancy group 202
LONGITUDINAL FLUE SPACE (see FLUE SPACES)
LOT
Defined 202

INTERNATIONAL CODE COUNCIL®
Copyright © 2015 ICC. ALL RIGHTS RESERVED. Accessed by David Dammon on Jun 21, 2017 12:30:52 PM pursuant to License Agreement with ICC. No further reproduction or distribution authorized. ANY UNAUTHORIZED REPRODUCTION OR DISTRIBUTION IS A VIOLATION OF THE FEDERAL COPYRIGHT ACT AND THE LICENSE AGREEMENT, AND SUBJECT TO CIVIL AND CRIMINAL PENALTIES THEREUNDER.

LOT LINE
Defined 202
LOW-PRESSURE TANK
Defined 202
LOWER EXPLOSIVE LIMIT (LEL)
Defined 202
LOWER FLAMMABLE LIMIT (LFL)
Defined 202
LP-GAS (see LIQUEFIED PETROLEUM GAS)
LUMBER YARDS, AGRO-INDUSTRIAL, SOLID BIOMASS AND WOODWORKING FACILITIES . . . . . Chapter 28
Access plan 2803.7
Emergency plan 2808.10
Fire alarms 2804.1
Fire protection 2804
General 2803
Log storage areas 2806
Open yards 2803.1
Permit 105.6.26
Size of piles 2807.2, 2808.3
Waste removal 2803.3
LUMINOUS EGRESS PATH MARKINGS 1025, 1104.25

M

MAGAZINE
Defined 202
MAGNESIUM
Defined 202
Permit 105.6.29
Storage 5906.2, 5906.3, 5906.4
Use 5906.5
MAINTENANCE 107
MALL (see COVERED MALL BUILDING)
MANIFOLDS
Cylinders 3509.4
Identification 3509.5
Piping 3509
MANUAL FIRE ALARM BOX 907.4.2
Defined 202
MANUAL STOCKING METHODS
Defined 202
MANUFACTURE OF ORGANIC COATINGS . . . . . Chapter 29
MARINAS . . . . . Chapter 36
MARINE MOTOR FUEL-DISPENSING FACILITY 2310
Defined 202
Fire protection 2310.6
Fueling 2310.4
General 2310.1
Nozzles 2310.3.3
MARKING (see also PLACARDS; PLACARDING) 503.3, 909.14, 5003.5.1
Compressed gas 5303.2
Cryogenic containers 5503.4
Shaftway 507.2
Tank 5706.2.2
Warnings 5003.8.7.2
MATERIAL SAFETY DATA SHEET (MSDS) . . 5003.4
Aerosols 5101.3
Defined 202
Hazard communication 407.2
MATTRESSES (in Groups I and R) 805
MAXIMUM ALLOWABLE QUANTITY PER CONTROL AREA . . . . . Tables 5003.1.1(1) through 5003.1.1(4), 5003.11
Defined 202
MEANS OF EGRESS . . . . . Chapter 10, 1104, 3311
Accessible means of egress 1009
Assembly 1029
Bleachers 1029.1.1
Buildings under construction or demolition 3311
Corridors 1020, 1104.17
Defined 202
Egress court 202, 1028.4
Elevators, escalators and moving walks 1003.7, 1104.2
Emergency escape and rescue 1030
Existing buildings 1104
Exit access 1016
Exit discharge 1028
Exits 1005
Guards 1015, 1104.6
Handrails 1014
Illumination 1008, 1104.3
Locks, latches 1010.1.9.3
Maintenance of 1031
Membrane structures 3103.12
Obscuration of 316.4, 1031.4, 1031.6
Obstructions 1031.3, 1031.3.1
Ramps 1012
Signs 1013
Sizing 1005
Stairways 1001
Tents 3103.12
MECHANICAL REFRIGERATION (see REFRIGERATION SYSTEM)
MECHANICAL STOCKING METHODS 3206.9.1.1
Defined 202

INTERNATIONAL CODE COUNCIL®
Copyright © 2015 ICC. ALL RIGHTS RESERVED. Accessed by David Dammon on Jun 21, 2017 12:30:52 PM pursuant to License Agreement with ICC. No further reproduction or distribution authorized. ANY UNAUTHORIZED REPRODUCTION OR DISTRIBUTION IS A VIOLATION OF THE FEDERAL COPYRIGHT ACT AND THE LICENSE AGREEMENT, AND SUBJECT TO CIVIL AND CRIMINAL PENALTIES THEREUNDER.

MEDICAL CARE (Occupancy Group I)
Defined 202
MEDICAL GASES 5306
MEDICAL GAS SYSTEMS 5306.5
MEMBRANE STRUCTURE . . . . . Chapter 31
Defined 202
MERCHANDISE PAD 1018.4
Defined 202
METAL HYDRIDE AND METAL HYDRIDE STORAGE SYSTEMS 5807
Defined 202
METERS, GAS 603.9
MEZZANINE 1004.1.1.2
Ceiling height 1003.2
Defined 202
MILLS
Composite board 2805
Plywood 2805
Process 2806
Veneer 2805
MIRRORS 1010.1, 1031.6
MIXTURES (Hazardous materials) 5001.2.1
MOBILE FUELING 5706.5.4.5
Defined 202
MODIFICATIONS (of code requirements) 104.8
MONITORING (sprinkler and fire alarm systems) 903.4.1, 907.6.5
Hazardous materials 5004.2.2.5
Termination of 907.6.5.2
MORTAR
Defined 202
MOTION PICTURE PROJECTION ROOMS AND FILM 306
Film storage 306.2
MOTOR FUEL-DISPENSING FACILITIES (see also by type of fuel) . . . . 105.6.31, Chapter 23
MOTORIZED CONSTRUCTION EQUIPMENT 3316
MOVING WALKS 1103.3
MSDS (see MATERIAL SAFETY DATA SHEET)
MULTIPLE-STATION ALARM DEVICE
Defined 202
MULTIPLE-STATION SMOKE ALARM 907.2.11, 1103.8
Defined 202
MUSEUMS (Occupancy Group A-3)
Occupant load . . . . . Table 1004.1.2

N

NATURAL BARRICADE (see BARRICADE)
NATURAL CUT TREES . . . . . 806.1 through 806.1.3, 806.3
NESTING
Defined 202
NET EXPLOSIVE WEIGHT
Defined 202
NITROCELLULOSE 2908.1, 2909.4
NORMAL TEMPERATURE AND PRESSURE (NTP)
Defined 202
NOSING
Defined 202
NOTICE OF VIOLATION 109.2
NOTIFICATION (of Fire department/Fire code official) 401.3, 2006.11.5, 2304.3.6, 5003.3.1
NOTIFICATION (of Fumigation) 2603.3
NOTIFICATION APPLIANCE (see ALARM NOTIFICATION APPLIANCE)
NOTIFICATION ZONE (see ZONE, NOTIFICATION)
NOZZLES
Fuel delivery 2306.7.6
Fuel transfer 2006.3.3
Marine craft 2310.3.3
NUISANCE ALARM
Defined 202
NURSING HOME (Occupancy Group I-2)
Defined 202

O

OBSTRUCTIONS
Fire apparatus access roads 503.4
Fire department connections 912.3
Fire hydrants 507.5.4
Fire protection equipment 509.2, 2310.6.2
Fuel-dispensing view 2304.2.4
Manual fire alarm boxes 904.2.6
Means of egress 806.3, 1003.6, 1020.3, 1029.9.6, 1031.2, 1031.3, 1031.3.1, 1031.6
Portable fire extinguishers 906.6
On rooftops 316.4
Spraying operation ventilation 2404.7.4
Sprinkler discharge 315.2.1, 903.3.3

INTERNATIONAL CODE COUNCIL®
Copyright © 2015 ICC. ALL RIGHTS RESERVED. Accessed by David Dammon on Jun 21, 2017 12:30:52 PM pursuant to License Agreement with ICC. No further reproduction or distribution authorized. ANY UNAUTHORIZED REPRODUCTION OR DISTRIBUTION IS A VIOLATION OF THE FEDERAL COPYRIGHT ACT AND THE LICENSE AGREEMENT, AND SUBJECT TO CIVIL AND CRIMINAL PENALTIES THEREUNDER.

OCCUPANCY, CHANGE OF
(see CHANGE OF OCCUPANCY)
OCCUPANCY CLASSIFICATION
Defined 202
Assembly Group A
Defined 202
Business Group B
Defined 202
Educational Group E
Defined 202
Factory Industrial Group F
Defined 202
High-hazard Group H
Defined 202
Institutional Group I
Defined 202
Mercantile Group M
Defined 202
Miscellaneous Group U
Defined 202
Residential Group R
Defined 202
Storage Group S
Defined 202
OCCUPANT LOAD
Defined 202
Posting 1004.3
OIL-BURNING EQUIPMENT
(see FUEL-FIRED APPLIANCES)
OIL, COOKING 610
OIL, FUEL
(see FUEL OIL and COMBUSTIBLE LIQUID)
OIL, MOTOR (see COMBUSTIBLE LIQUID)
OIL, WASTE (see WASTE OIL)
OPEN BURNING 307
Defined 202
Permit 105.6.32, 307.2
Precautions in tire storage areas 3404.1
OPEN-ENDED CORRIDOR 903.3.1.2.2, 1027.6, 1104.22
Defined 202
OPEN FLAMES 308, 806.4, 2004.6, 2903.6, 5003.7.2, 5604.7.2, 5706.2.1
Devices 308.1.6
Group A occupancies 308.3
Permit 105.6.33, 105.6.34, 308.2
OPEN MALL AND OPEN MALL BUILDING
(see COVERED MALL BUILDING)
Defined 202
OPEN PARKING GARAGE
Defined 202
OPEN SYSTEM (hazardous materials)
Defined 202
OPERATING BUILDING
Defined 202
Separation distances 5605.3
OPERATING PRESSURE
Defined 202
ORDERS AND NOTICES 109.2.2
ORGANIC COATINGS . . . . . Chapter 29
Defined 202
Electrical equipment and protection 2904
General 2903
Kettles 2906
Manufacture . . . . . Chapter 29
Permit 105.6.35
Process structures 2905
ORGANIC PEROXIDE . . . . . 2408, Chapter 62
Defined 202
Indoor storage 6204.1
Outdoor storage . . . . . 6204.2, Table 6204.1.2, Table 6204.2.4
Requirements 6203
Use 6205
OUTDOOR CONTROL AREA
Defined 202
Hazardous materials 5003.12
OUTDOOR FIREPLACE, PORTABLE
(see PORTABLE OUTDOOR FIREPLACES)
OUTPATIENT CLINIC (Occupancy Group B)
Defined 202
OVENS (see INDUSTRIAL OVENS)
OVERCROWDING
Defined 202
Prohibited 107.6
OVERFILL PREVENTION AND PROTECTION 2006.18, 2306.6.2.3, 5704.2.7.5.8, 5704.2.8.18, 5704.2.9.7.5, 5704.2.11.4, 5706.4.6, 5706.6.1.5, 5706.8.3, 5706.8.5, 6106.2
OWNER
Defined 202
OXIDIZERS, OXIDIZING GASES AND OXIDIZING CRYOGENIC FLUIDS . . . . . Chapter 63
Defined 202
Indoor storage 6304.1
Outdoor storage 6304.2
Requirements 6303
Use 6305

INTERNATIONAL CODE COUNCIL®
Copyright © 2015 ICC. ALL RIGHTS RESERVED. Accessed by David Dammon on Jun 21, 2017 12:30:52 PM pursuant to License Agreement with ICC. No further reproduction or distribution authorized. ANY UNAUTHORIZED REPRODUCTION OR DISTRIBUTION IS A VIOLATION OF THE FEDERAL COPYRIGHT ACT AND THE LICENSE AGREEMENT, AND SUBJECT TO CIVIL AND CRIMINAL PENALTIES THEREUNDER.

OXIDIZING CRYOGENIC FLUID
Defined 202
OXIDIZING GAS
Defined 202
OXYGEN IN HOME HEALTH CARE 6306
OZONE-GAS GENERATOR 6005
Automatic shutdown 6005.5
Defined 202
Location 6005.3
Manual shutdown. 6005.6

P

PALLETS 3206.4.1
PALLETS, IDLE COMBUSTIBLE 2505, 3203.6, 5704.3.3.9
PALLETS, PLASTIC 3206.4.1.1
PANIC HARDWARE. 1008.1.10, 1008.2.1
Defined 202
PARKING AND GARAGING
Aircraft-fueling vehicles 2006.5.1.3, 2006.20
Flammable- and combustible-liquid tank vehicles 5706.6.2, 5706.6.3
LP-gas tank vehicles 6111
LP-gas-fueled vehicles 6111.3
PASS-THROUGH. 2703.3.2, 2703.10.3
Defined 202
PATIO HEATERS (see PORTABLE OUTDOOR GAS-FIRED HEATING APPLIANCES)
PENTHOUSE
Defined 202
PERMISSIBLE EXPOSURE LIMIT (PEL)
Defined 202
PERMITS 105
Annual 105.1.6
Defined 202
Hot work program 3503.3
PERSON
Defined 202
PERSONAL CARE SERVICE
Defined 202
PESTICIDE
Defined 202
PHOTOLUMINESCENT 1013.5, 1025, 1025.4, 1104.25
Defined 202
PHYSICAL HAZARD . . . . . 5007.2.2.1, Table 5003.1.1(1), Table 5003.1.1(3)
Defined 202
PIPELINES 5706.1
PIPING, VALVES AND FITTINGS
Flammable and combustible liquids 2306.6, 2306.7.9.1.3, 5706.4.7.6
Hazardous materials 5003.2.2
Highly toxic and toxic gases. 6004.2.2.5
Organic coating manufacturing 2907
Ozone-gas 6005
LP-gas in membrane structures. 3104.16.3
Protection from vehicles. 5003.9.3
PLACARDS; PLACARDING (see also SIGNS)
Cryogenic fluid containers 5503.4.2
Explosives 5604.6.5, 5604.6.5.2
Flammable and combustible liquid tanks 5703.5.3, 5704.2.3.2
Vacant buildings. 311.5
PLANS (see also CONSTRUCTION DOCUMENTS)
Diagrams 403.7.1.1
Evacuation 404.2.1
Facility closure 407.7
Fire safety 404.2.2
Hazardous materials management 5605.2.1
Lockdown. 404.2.3
Maintenance of. 5605.2.2
Prefire. 5608.2
Storage. 5704.4.1
PLASTICS
Cellulose nitrate . . . . . Chapter 65
Classifications of 3203.7
Foam 803.8, 804.2, 808.3
Manufacturing of glass-fiber-reinforced 2411
Pyroxylin. . . . . 105.6.39, 903.2.5.3, Chapter 65, 1103.5.4
PLENUM 315.6, 605.12
Defined. 202
PLOSOPHORIC MATERIAL 5605.1
Defined. 202
PLYWOOD AND VENEER MILLS
Defined. 202
Fire alarm system. 907.2.17, 2804.2
PORTABLE FIRE EXTINGUISHERS (see FIRE EXTINGUISHERS, PORTABLE)
PORTABLE OUTDOOR FIREPLACES 307.4.3, 307.5
Defined. 202
PORTABLE OUTDOOR GAS-FIRED HEATING APPLIANCES. 603.4.2
PORTABLE TANKS
Defined. 202
Design, construction and capacity 5704.3.1
Empty 5704.3.3.4

INTERNATIONAL CODE COUNCIL®
Copyright © 2015 ICC. ALL RIGHTS RESERVED. Accessed by David Dammon on Jun 21, 2017 12:30:52 PM pursuant to License Agreement with ICC. No further reproduction or distribution authorized. ANY UNAUTHORIZED REPRODUCTION OR DISTRIBUTION IS A VIOLATION OF THE FEDERAL COPYRIGHT ACT AND THE LICENSE AGREEMENT, AND SUBJECT TO CIVIL AND CRIMINAL PENALTIES THEREUNDER.

Flammable liquids 2306.2.5
Flow rate . . . . . 6004.2.2.7.5, Table 6004.2.2.7.5
Indoor storage 5704.3.3
Local exhaust 6004.2.2.4, 6004.3.2.3
Outdoor storage . . . . . 5704.4, Table 5704.4, 6004.3.4
Piles 5704.3.3.10, 5704.3.7.2.3
POSTING
Evacuation diagrams (Group R-1) 403.10.1.1, 403.10.23
Explosives and pyrotechnic amounts 5605.6.9
No smoking signs 310.3
Occupant load 1004.3, 5605.6.9
Permits 105.3.5
Tenant identification 403.11.1.5
POWDER COATING 2406
POWERED INDUSTRIAL TRUCKS 309
Battery charging 309.2
Defined 202
Fire extinguishers 309.4
Refueling 309.5
Repairs 309.6
Ventilation 309.3
PRECAUTIONS AGAINST FIRE 301.1, 3304, 3305.4, 3404
PREMISES IDENTIFICATION 505
PRESSURE VESSEL
Defined 202
PRESPOTTING (see DRY CLEANING)
PRIMARY CONTAINMENT
Defined 202
PRIMARY TANK
Defined 202
PRIVATE GARAGE 915.1.5
Defined 202
PROCESS
Piping 2907
Raw materials 2908, 2909
PROCESS TRANSFER
Defined 202
Operations 5706.5
PROPANE (see LIQUEFIED PETROLEUM GAS)
PROPELLANT (Aerosol)
Defined 202
PROPELLANT, SMOKELESS (see SMOKELESS PROPELLANT)
PROPYLENE (see LIQUEFIED PETROLEUM GAS)
PROTRUDING OBJECTS 1003.3
PROXIMATE AUDIENCE
Defined 202
Displays 5608.2.2
PSYCHIATRIC HOSPITAL (see HOSPITALS AND PSYCHIATRIC HOSPITALS)
PUBLIC ASSEMBLAGES AND EVENTS 403
PUBLIC USE AREAS 907.5.2.3.1
Defined 202
PUBLIC WAY 1027.5
Defined 202
PYROPHORIC
Defined 202
Indoor storage 6404.1
Materials . . . . . Chapter 64
Outdoor storage 6404.2
Requirements 6403
Use 6405
PYROTECHNIC ARTICLE
Defined 202
PYROTECHNIC COMPOSITION
Defined 202
PYROTECHNIC SPECIAL EFFECT
Defined 202
PYROTECHNIC SPECIAL EFFECTS MATERIAL
Defined 202
Permit 105.6.38
PYROTECHNICS
Defined 202
PYROXYLIN (CELLULOSE NITRATE) PLASTICS
Decorative materials 807.5.1.4
Fire protection system 903.2.5.3, 1103.5.4, 6504.2
Permit 105.6.39
Raw material 6504.1
Requirements 6503
Storage and handling 6504

Q

QUICK-RESPONSE (QR) SPRINKLERS (see AUTOMATIC SPRINKLERS)

R

RACK STORAGE 3108, 5104.4.3, 5704.3.3.6
RADIOACTIVE
Gases 5004.7, 5307.1
Materials 5004.3.1
RAILWAY
Defined 202
RAMPS 1012, 1023, 1027
Defined 202
RAW PRODUCT (Wood products)
Defined 202

INTERNATIONAL CODE COUNCIL®
Copyright © 2015 ICC. ALL RIGHTS RESERVED. Accessed by David Dammon on Jun 21, 2017 12:30:52 PM pursuant to License Agreement with ICC. No further reproduction or distribution authorized. ANY UNAUTHORIZED REPRODUCTION OR DISTRIBUTION IS A VIOLATION OF THE FEDERAL COPYRIGHT ACT AND THE LICENSE AGREEMENT, AND SUBJECT TO CIVIL AND CRIMINAL PENALTIES THEREUNDER.

Storage and processing 2808
REACTIVE MATERIALS [see UNSTABLE (REACTIVE) MATERIALS or WATER REACTIVE MATERIALS]
READY BOX 5608.5.5
Defined 202
RECALL, FIRE PROTECTION SYSTEM COMPONENT 901.9
RECORD DRAWINGS (fire alarm system) . . . 907.8.3
Defined 202
RECORDS/RECORD KEEPING 104.6, 104.6.3, 107.2.1, 107.3, 405.5, 604.3.2, 606.15, 901.6.2, 2006.5.3.2.2, 3210.1, 3503.5, 5003.3.1.1, 5603
RECREATIONAL FIRE 307.4.2
Defined 202
RECYCLING FACILITIES 2808
REDUCED FLOW VALVE 6004.2.2.7.5
Defined 202
REFERENCED STANDARDS . . . . . 102.7, Chapter 80
REFINERY
Defined 202
Petroleum 5706.7
REFRIGERANT 606.2
Classification 606.3
Defined 202
Detector 606.8
Discharge 606.12
Storage 606.11
Type 606.4
REFRIGERATION MACHINERY ROOMS 1006.2.2.2
REFRIGERATION SYSTEM 606.9.1
Defined 202
Permit 105.6.40
REFUGE AREA ASSOCIATED WITH SMOKE BARRIERS AND HORIZONTAL EXITS 404.2.2
REFUGE, AREA OF (see AREA OF REFUGE)
REGISTERED DESIGN PROFESSIONAL 104.7.2, 105.4.1, 909.9, 909.18.8.3
Defined 202
RELEASE OF HAZARDOUS MATERIAL 5003.3
REMOTE EMERGENCY SHUTOFF DEVICE
Defined 202
Use of 5706.5.4.5
REMOTE SOLVENT RESERVOIR 5705.3.6.2.3
Defined 202
REPAIRS 105.1.5
REPAIRS, EMERGENCY (see EMERGENCY REPAIRS)
REPAIR GARAGES 2311
Defined 202
Gas detection system 2311.7.2
LP-gas-fueled vehicles 6111.3
Permit 105.6.41
Sources of ignition 2311.3
Sprinklers required 903.2.9.1
Ventilation 2311.4.3
REPORTING
Aviation facilities fire extinguisher use 2005.8
Emergencies 401.1
Fire 3309
Fire alarm 3309
Leak 5704.2.7.10
Record keeping 5603
Research reports 104.9.1
RESIN APPLICATION AREA 2403.2.5, 2409.3, 2409.5, 2409.6
Defined 202
RESPONSE PROCEDURES 406
RESPONSIBLE PERSON
Defined 202
RETAIL DISPLAY AREA (for aerosols)
Defined 202
Manufacturing facilities 5107.1
Maximum quantities . . . . . 5106.2, Table 5106.2, Table 5106.3
REVOCATION OF PERMITS 105.5
RIGHT OF ENTRY 104.3
ROADWAYS, ACCESS FOR FIRE APPARATUS (see FIRE APPARATUS ACCESS ROAD)
ROCKETS AND ROCKETRY 5601.1.4
ROLL COATING
Defined 202
ROOF, LANDSCAPED (see ROOFTOP GARDENS)
ROOF VENTS 910
ROOFING OPERATIONS SAFEGUARDS 3317
ROOFS
Safeguarding operations 3317
Stairway access 504.3, 1009.14, 1009.16
ROOFTOP GARDENS AND LANDSCAPED ROOFS 317, 905.3.8
ROOFTOP HELIPORT (see HELIPORT)
RUBBISH (TRASH) 3304.2
Chutes, automatic sprinkler protection 903.2.11.2
Containers 304.3
Defined 202

INTERNATIONAL CODE COUNCIL®
Copyright © 2015 ICC. ALL RIGHTS RESERVED. Accessed by David Dammon on Jun 21, 2017 12:30:52 PM pursuant to License Agreement with ICC. No further reproduction or distribution authorized. ANY UNAUTHORIZED REPRODUCTION OR DISTRIBUTION IS A VIOLATION OF THE FEDERAL COPYRIGHT ACT AND THE LICENSE AGREEMENT, AND SUBJECT TO CIVIL AND CRIMINAL PENALTIES THEREUNDER.

S

SAFETY CAN 5003.9.10
Defined 202
SAFETY RULES (Explosives) 5603.7, 5605.6.6
SCISSOR STAIRWAY
Defined 202
Use of 1007.1.1
SCREEN PORCHES AND DECKS 1015.5
SEAT STABILITY 1029.14
SEATING, FOLDING AND TELESCOPIC . . . 1029.1.1
Defined 202
SECONDARY CONTAINMENT
Above-ground tanks 2306.5
Defined 202
Hazardous materials 5004.2, 5004.2.2, 5005.1.3, 5005.2.1.4, 5005.2.2.5, 5005.3.5, 5005.3.7
Indoor storage 5004.2.2.3
Outdoor storage 5004.2.2.4
Type II dry cleaning systems 2107.2.3
Underground tanks 5003.2.4.1
SECONDARY WATER SUPPLY (see WATER SUPPLY)
SECURITY DEVICES 316.4, 1031.2.1
SEGREGATED
Defined 202
SELF-CLOSING
Defined 202
SELF-LUMINOUS 1013.4, 1025.4
Defined 202
SELF-SERVICE MOTOR FUEL-DISPENSING FACILITY 2304
Defined 202
SEMICONDUCTOR FABRICATION FACILITY . . . . . Chapter 27
Automatic sprinkler system 2703.10
Defined 202
Emergency alarm system 2703.12
Emergency power 604.2.8, 2703.15
Manual fire alarm system 2703.11
Permit 105.6.22
Quantity limits . . . . . Table 2704.2.1
Storage 2704
Transportation and handling 2705.3
Use and handling 2705
SERVICE CORRIDOR 2703.3.8, 2703.9, 2703.12.1.1, 2705.3.3
Defined 202
SERVICE PERSONNEL, CERTIFICATION OF (see CERTIFICATION OF SERVICE PERSONNEL)
SERVICE UTILITIES 112
SHAFTS 704, 1103.4
SHAFTWAY MARKINGS 316.2
SHELF STORAGE 3207
Defined 202
Specialty storage 3210
SHOCK PADDING 5003.9.7
SHROUDS, DECORATIVE (on chimneys) . . . 603.6.3
SIGNS (see also PLACARDS; PLACARDING)
Access roads 5604.6.5.1
Alarms and warning 904.3.4, 2507, 2305.6, 2310.5.5.1, 2603.3.1, 5703.5.1
Electrical rooms 605.3.1
Electrostatic apparatus 2407.5.2
Emergency 606.7, 607.2
Exit 604.2.3, 1011, 2403.12.6
Fire alarm boxes 907.5.2.4
Fire department connection 912.4
Fire protection equipment rooms 509.1
Fire-resistance-rated construction 703.2.1
Foam plastic 808.2
Hazardous identification 5003.5, 5003.6, 5003.11.3.10, 5503.4.1
Illumination 1013.5
Marking 503.3
No smoking 310.3, 2305.3, 2308.8.1.2.6, 5003.7.1, 5704.2.3.1
Placards 311.5, 5604.6.5
Removal 310.4
Stairway exit 1013.5, 1013.6.2
Stationary storage battery systems 608.7
Storage tanks 5704.2.3, 5706.3.7
Street or road 505.2
Tampering with 109.2.4
Vacant buildings 311.5
Welding 2403.2.7
SILANE GAS 6401.1, 6404.2, 6405.3
SINGLE-STATION SMOKE ALARM . . 907.2.11, 1103.8
Defined 202
SITE
Defined 202
SITE-FABRICATED STRETCH SYSTEMS 803.9
Defined 202
SKY LANTERNS 308.1.6.3
Defined 202
SLEEPING UNIT
Defined 202
SMALL ARMS AMMUNITION AND SMALL ARMS AMMUNITION COMPONENTS 5606
Defined 202

INTERNATIONAL CODE COUNCIL®
Copyright © 2015 ICC. ALL RIGHTS RESERVED. Accessed by David Dammon on Jun 21, 2017 12:30:52 PM pursuant to License Agreement with ICC. No further reproduction or distribution authorized. ANY UNAUTHORIZED REPRODUCTION OR DISTRIBUTION IS A VIOLATION OF THE FEDERAL COPYRIGHT ACT AND THE LICENSE AGREEMENT, AND SUBJECT TO CIVIL AND CRIMINAL PENALTIES THEREUNDER.

SMALL ARMS PRIMERS
Defined 202
Group M 5606.5.1.3
Group R-3 . . . . . 5606.4.3
Storage 5606.5.2.3
SMOKE ALARM 907.2.11, 1030.4, 1103.8
Defined 202
Smoke detection system as alternative to 907.2.11.7
SMOKE AND HEAT VENTS 910, 3206.7
SMOKE BARRIERS
Construction 909.5
Defined 202
Maintenance 703.1.2
Opening protectives in 703.2, 909.5.2
Pressure differential 909.18.6
SMOKE COMPARTMENT
Defined 202
SMOKE CONTROL SYSTEMS 909
Permit 105.7.14
SMOKE DAMPER
Defined 202
SMOKE DETECTOR 907.2.13.1, 907.2.18.1, 907.4.1
Defined 202
SMOKE-DEVELOPED INDEX
Defined 202
SMOKE PARTITIONS 703.1.2
SMOKE-PROTECTED ASSEMBLY SEATING 1029.6.2
Defined 202
SMOKE REMOVAL 910.4
SMOKELESS PROPELLANTS
Defined 202
General 5606
Storage and handling 5604
SMOKEPROOF ENCLOSURE
Defined 202
SMOKING 310, 2003.2, 2006.3.8, 2310.5.5.1, 2403.2.6, 2803.5.3, 2903.7, 3304.1, 3404.3, 5003.7.1, 5704.2.3.1, 5706.6.1.9
Signs 310.3
SOLAR PHOTOVOLTAIC POWER SYSTEMS 605.11
Permit 105.7.15
SOLID (material state)
Defined 202
SOLID BIOFUEL 2809.4
Defined 202
SOLID BIOMASS FEEDSTOCK 2809.4
Defined 202
SOLID SHELVING
Defined 202
Fire protection 3208.2.2.1
Racks 3208.2.2
SOLVENT DISTILLATION UNIT 5705.4
Defined 202
SOLVENT OR LIQUID CLASSIFICATIONS, DRY CLEANING 2103
Defined 202
SPACE HEATERS 605.10, 3303
SPECIAL AMUSEMENT BUILDING
Defined 202
Exit access travel distance . . . . . Table 1017.2
Fire alarm system 907.2.12, 914.7.2
Permit 105.6.2
Sprinklers . . . . . Table 903.2.11.6, 914.7.1
SPECIAL INDUSTRIAL EXPLOSIVE DEVICE 5601.1
Defined 202
SPILL CONTROL
Carts and trucks 5003.10.3.4
Dry cleaning 2107.2.3
Flammable and combustible liquids 5703.4, 5704.3.7.3, 5704.3.8.2, 5704.4.3, 5705.3.7.5.3, 5705.3.7.6.3, 5705.3.8.1, 5706.2.6, 5706.5.1.5
Hazardous materials 5004.2, 5005.1.3, 5005.2.1.3, 5005.2.2.4, 5005.3.4, 5005.3.6
Lead-acid battery systems 608.5
Service stations and repair garages 2305.3
SPILLS 2004.4, 2009.4.2, 2310.5.2, 2404.18.5.3, 3305.6
SPONTANEOUS IGNITION HAZARDS 304.3.1, 305.2, 3304.2.4
SPOTTING (see DRY CLEANING)
SPRAY BOOTH
Areas adjacent to 2403.2.1.3
Construction 2404.3.2.1
Defined 202
Permit 105.6.43, 105.7.16
Ventilation 2403.3.5.2
SPRAY FINISHING 105.6.43, 105.7.16, 2404
SPRAY ROOM
Construction 2404.3.1
Defined 202
Permit 105.6.43, 105.7.16
Ventilation 2403.3.5.2
SPRAYING SPACE
Defined 202

INTERNATIONAL CODE COUNCIL®
Copyright © 2015 ICC. ALL RIGHTS RESERVED. Accessed by David Dammon on Jun 21, 2017 12:30:52 PM pursuant to License Agreement with ICC. No further reproduction or distribution authorized. ANY UNAUTHORIZED REPRODUCTION OR DISTRIBUTION IS A VIOLATION OF THE FEDERAL COPYRIGHT ACT AND THE LICENSE AGREEMENT, AND SUBJECT TO CIVIL AND CRIMINAL PENALTIES THEREUNDER.

SPRINKLER SYSTEM (see AUTOMATIC SPRINKLER SYSTEM)
STAGE CANOPY, TEMPORARY (see TEMPORARY STAGE CANOPY)
STAGES, FIRE PROTECTION FOR . . . 905.3.4, 914.6
STAIR
Defined . . . 202
STAIRWAY . . . 1011
Defined . . . 202
Identification . . . 1023.8, 1023.9, 1104.21, 1104.24
On flammable and combustible liquid loading racks . . . 5706.5.1.1.2
On flammable and combustible liquid storage tanks . . . 5704.2.9.4
STAIRWAY, EXTERIOR EXIT . . . 1027
Defined . . . 202
STAIRWAY, SPIRAL . . . 1011.10
Defined . . . 202
STANDBY PERSONNEL (see also FIRE WATCH) . . . 3104.20
STANDBY POWER SYSTEM . . . 604, 5005.1.5
Defined . . . 202
STANDPIPE SYSTEM, CLASSES OF
Defined . . . 202
STANDPIPE, TYPES OF
Defined . . . 202
STANDPIPES . . . 905
Buildings under construction/demolition . . . 3313
Dry . . . 905.8
Existing buildings . . . 1103.6, 1103.6.1
Heliports and helistops . . . 905.3.6, 1103.6.2, 2007.5
Landscaped roofs . . . 905.3.8
Permit . . . 105.7.17
Rooftop gardens . . . 905.3.8
STATIC PILES (wood products)
Defined . . . 202
Protection . . . 2808.6
STATIC PROTECTION . . . 5706.5.1.7
STATIONARY STORAGE BATTERY SYSTEMS (see BATTERY SYSTEM, STATIONARY STORAGE)
STEEL
Defined . . . 202
STILLS, DRY CLEANING . . . 2104.2.4, 2107.1
STORAGE
Aerosol, inside . . . 5104
Ammunition . . . 5606
Attics . . . 315.2.4
Automated . . . 3209
Boiler rooms . . . 315.2.3
Calcium carbide . . . 3507.1
Carousel . . . 3209.3
Combustible fibers, baled . . . 3705
Combustible fibers, detached structure . . . 3704.6
Combustible fibers, loose . . . 3704
Combustible liquids . . . 5704
Combustible materials . . . 105.6.30, 315, 2003.6
Compressed gas . . . 5304
Concealed spaces . . . 315.2.4
Corridors and lobbies in Group E . . . 807.5.2.1
Corrosive materials . . . 5404
Cryogenic fluids . . . 5504
Cylinder and container, welding . . . 3505.2
Electrical rooms . . . 315.2.3
Elevator (occupant evacuation) lobbies . . . 607.5
Explosives . . . 5604
Exterior, finished lumber . . . 2809
Fire command centers . . . 315.3.3, 508.1.6
Flammable gases . . . 5804
Flammable liquids . . . 5704
Flammable solids . . . 5904
Foam . . . 5704.2.9.2.2.1
Fuel oil . . . 603.3
Hazardous materials . . . 5004
Hazardous materials storage defined . . . 202
High-piled combustible . . . Chapter 32
Hogged material . . . 2807, 2808
Indoor . . . 315
Log areas . . . 2806
Loose combustible fibers . . . 5204
LP-gas . . . 6109
Means of egress . . . 315.2.2, 807.4.3.1, 1031.3
Mechanical refrigeration rooms . . . 606.10
Mechanical rooms . . . 315.2.3
Nitrocellulose . . . 2909.4
Organic peroxide . . . 2909.5, 6204
Outside . . . 315.3
Oxidizers . . . 6304
Plan . . . 5004.11.3.11
Plenums . . . 315.6
Pyrophoric materials . . . 6404
Pyroxylin (cellulose nitrate) plastics . . . 6504
Rack . . . 3208
Semiconductor fabrication facilities . . . 2704
Solid-piled and shelf . . . 3207
Specialty . . . 3210
Tank . . . 2909.2, 5704.2
Tire . . . 3405, 3409
Under floors . . . 315.2.4
Under high-voltage transmission lines . . . 315.4
Unstable (reactive) materials . . . 6604
Water-reactive solids and liquids . . . 6704

INTERNATIONAL CODE COUNCIL®
Copyright © 2015 ICC. ALL RIGHTS RESERVED. Accessed by David Dammon on Jun 21, 2017 12:30:52 PM pursuant to License Agreement with ICC. No further reproduction or distribution authorized. ANY UNAUTHORIZED REPRODUCTION OR DISTRIBUTION IS A VIOLATION OF THE FEDERAL COPYRIGHT ACT AND THE LICENSE AGREEMENT, AND SUBJECT TO CIVIL AND CRIMINAL PENALTIES THEREUNDER.

Wood chips 2807, 2808
STORAGE BATTERY SYSTEMS, STATIONARY 608
Permit 105.7.2
Room design 608.3
Signs 608.6
Ventilation 608.5
STORY
Defined 202
STORY ABOVE-GRADE PLANE
Defined 202
STRAW 2404.5, 2903.4
Waste material 304.1.1
SUB-ATMOSPHERIC PRESSURE GAS SYSTEMS (SAGS) 1803.16
SUMPS 5706.3.3
SUPERVISING STATION 903.4.1, 905.9
Defined 202
SUPERVISION 903.4, 905.9, 913.4
SUPERVISORY SERVICE
Defined 202
SUPERVISORY SIGNAL 903.4.1, 905.9
Defined 202
SUPERVISORY SIGNAL-INITIATING DEVICE
Defined 202
SYSTEM (hazardous materials)
Defined 202

T

TAGS 901.7.2, 901.7.3, 901.8.1, 904.9.2
TANK
Abandonment of 5704.2.13, 5704.2.13.1.4
Above-ground 2306.2.2, 2306.2.3, 2306.2.4, 3104.2.1, 5003.2.4.2, 5704.2.7.3.5.1, 5704.2.9, 5704.2.13.2
Anchoring 5704.2.8.5
Capacity 2305.1.2
Capacity, available 5704.2.9.7.5.2
Compressed gas 5303.1, 5303.4.2
Construction 5704.2.9.6.1
Cooking oil storage 610
Defective 5003.2.6.2
Defined 202
Design and construction 5003.2.1, 5704.2.7, 5704.2.9.6.1
Diking 5704.2.10.2
Discharge 5704.2.7.5.5.2
Dispensing 5706.2.8, 5706.5.4
Drainage control 2306.5
Empty 5003.2.5, 5704.3.3.4, 5704.4.8
Filling operations 2305.1, 5706.6.1.10
Fill pipe connections 5704.2.9.7.6
Hot work on 3510, 5704.2.7.6
Inside buildings 2306.2.2, 5704.2.9.5
Installation 5003.2.4, 5704.2.7
Lining 5704.2.7.11
Low-pressure 3202.1
Maintenance 2003.9
Manifolding 5704.2.7.3.5
Marking 5706.2.2
Openings 2306.6.2.1, 5704.2.7.5, 5704.2.9.10
Out of service 5003.2.6.1, 5704.2.13.1.1
Outside buildings 5704.2.9.5
Overfill protection 5704.2.7.5.8, 5704.2.9.7.6, 5704.2.11.4, 5706.6.1.5, 5706.8.3, 5706.8.5
Permanent and temporary 5706.2.4
Piping 2306.6.3
Piping, valves and fittings 2306.6.2
Portable 2306.2.5, 5704.3
Preparation for fueling 2310.5.6
Pressure 2409.3, 5704.2.7.2
Primary 202
Protected above-ground (see Above-ground)
Removal 5704.2.14
Repair, alteration or reconstruction 5704.2.7.6
Secondary containment 5704.2.9.7.3
Security 2306.3
Solvent storage 2107.3
Stationary 6004.2.2.7.4
Storage 2009.2, 5704, 5706.3.2.1, 5706.3.5
Testing 5704.2.12
Underground 2306.2.1, 5003.2.4.1, 5704.2.7.3.5.2, 5704.2.11, 5704.2.13.1
Vaults 2306.2.4, 5704.2.8
Vehicle 2009.3, 5706.5.1.15, 5706.5.1.16, 5706.6
Venting 5704.2.7.3, 5706.2.4.2
Water 507.2.2, 507.5.3
TANK, ATMOSPHERIC
Defined 202
TANK CARS (see also BULK TRANSFER) 5706.5.1
Loading racks or stations 2909.3, 5706.5.1.12
Use as storage tank 5704.2.2
TANK, PORTABLE
Defined 202
TANK, PRIMARY
Defined 202

INTERNATIONAL CODE COUNCIL®
Copyright © 2015 ICC. ALL RIGHTS RESERVED. Accessed by David Dammon on Jun 21, 2017 12:30:52 PM pursuant to License Agreement with ICC. No further reproduction or distribution authorized. ANY UNAUTHORIZED REPRODUCTION OR DISTRIBUTION IS A VIOLATION OF THE FEDERAL COPYRIGHT ACT AND THE LICENSE AGREEMENT, AND SUBJECT TO CIVIL AND CRIMINAL PENALTIES THEREUNDER.

TANK, PROTECTED ABOVE-GROUND
Defined 202
TANK, STATIONARY
Defined 202
TANK VEHICLE 2904.3.2, 5706.5.1.16.1, 5706.6
Aircraft fuel-servicing 2005.4
Certification. 5706.5.1.15
Construction 5003.2.1
Defined 202
Dispensing from 5706.2.8, 5706.5.4
Fire protection. 5706.6.4
Garaging. 5706.6.1, 6111.3
Loading racks or stations 2909.3
Operation 5706.6.1
Parking 5706.6.3, 6111
Smoking 5706.6.1.9
Stability. 5706.5.1.16
Use as storage tank 5704.2.2
TAR KETTLE [see ASPHALT (TAR) KETTLES]
TELEPHONE DIALING-DEVICES, AUTOMATIC 907.6.6.1
TEMPORARY HEATING EQUIPMENT 605.10, 3303
TEMPORARY STAGE CANOPY 3805
Defined 202
Permit 105.7.18
TEMPORARY WIRING 605.9, 3304.7
TENANT IDENTIFICATION (see COVERED AND OPEN MALL BUILDINGS)
TENANT SPACES, VACANT (see VACANT PREMISES)
TENTS AND OTHER MEMBRANE STRUCTURES. . . . . Chapter 31
Access 3103.8.1
Air-inflated structure 3102.1
Air-supported structure 3102.1, 3103.10
Approval 3103.2
Crowd managers 3104.20.2
Defined 202
Fire safety requirements. 3104.2
Generators 3104.19
Heating and cooking equipment. 3104.15
Location 3103.8.3
LP-gas 3104.16
Means of egress. 3103.12
Occupant load 3104.14
On buildings 3103.8.4
Permit 105.6.45, 105.7.18
Portable fire extinguisher 3104.8.12
Seating 3103.11
Structural stability 3103.9
Waste 3104.22
TESTING, ACCEPTANCE (see ACCEPTANCE TESTING)
THEFT RESISTANT 5604.5.1.2
Defined 202
TIMBER AND LUMBER PRODUCTION FACILITIES 2807
Defined 202
TIRE REBUILDING 3403
Permit 105.6.46
Precautions against fire 3404
TIRE STORAGE . . . . . Chapter 34
Access 3406
Fencing 3407
Indoor 3409
Outdoor. 3405
Permit 105.6.44
Precautions against fire 3404
TIRES, BULK STORAGE OF
Defined 202
TOOL (semiconductor fabrication)
Defined 202
TORCH-APPLIED ROOF SYSTEM
Defined 202
TORCHES 308.4
Permit 105.6.33
TOWNHOUSE
Defined 202
TOXIC
Defined 202
Materials
(see **HIGHLY TOXIC AND TOXIC MATERIALS**)
TRADE-OFFS FOR SPRINKLERS 904.2.1
TRAFFIC CALMING DEVICES 503.4.1
Defined 202
TRAINING, EMPLOYEE EMERGENCY 406
TRANSIENT
Defined 202
TRANSIENT AIRCRAFT 914.8.2
Defined 202
TRANSPORTATION
Hazardous materials 2705.3, 5003.10
LP-gas. 6101.1
TRANSVERSE FLUE SPACE (see FLUE SPACES)
TRASH (see RUBBISH)
TRAVEL DISTANCE, EXIT ACCESS 1016
TREATMENT SYSTEMS. 606.12.4, 2703.14.3, 6003.1.3, 6003.2.3.2, 6004.2.2.7, 6004.3.2.5
TREES (see NATURAL CUT TREES)

INTERNATIONAL CODE COUNCIL®
Copyright © 2015 ICC. ALL RIGHTS RESERVED. Accessed by David Dammon on Jun 21, 2017 12:30:52 PM pursuant to License Agreement with ICC. No further reproduction or distribution authorized. ANY UNAUTHORIZED REPRODUCTION OR DISTRIBUTION IS A VIOLATION OF THE FEDERAL COPYRIGHT ACT AND THE LICENSE AGREEMENT, AND SUBJECT TO CIVIL AND CRIMINAL PENALTIES THEREUNDER.

TROUBLE SIGNAL 903.4.1, 2311.7.2.3
Defined 202
TUBE TRAILERS 5303.7.11
Defined 202
TURNSTILES 1010
TWENTY-FOUR HOUR BASIS
Defined 202

U

UNAUTHORIZED DISCHARGE. . . 5003.3.1, 5706.2.6
Defined 202
UNDERGROUND BUILDINGS. . . . . 403.11.3, 604.2.16, 905.3.5, 907.2.18, 907.2.19, 914.5, Table 1103.1
UNLAWFUL ACTS 109.1
UNOCCUPIED TENANT SPACE 311.6
UNSAFE BUILDINGS (see BUILDING)
UNSAFE HEATING APPLIANCES 603.7
UNSTABLE (REACTIVE) MATERIAL . . . . Chapter 66
Defined 202
Indoor storage 6604.1
Outdoor storage 6604.2
Requirements 6603
Use 6605.1
UNVENTED HEATERS 603.4
UNWANTED FIRE
Defined 202
Ignitions 305.5
Reporting 401.3, 3309
UPHOLSTERED FURNITURE (see FURNITURE, UPHOLSTERED)
USE, CHANGE OF (see CHANGE OF USE)
USE (MATERIAL)
Defined 202
UTILITY IDENTIFICATION. 509.1.1

V

VACANT PREMISES 311
Abandoned 311.1.1
Fire protection systems 311.2.2
Placarding 311.5
Removal of hazardous materials 311.4
Safeguarding 311.2
Tenant spaces 311.1.2, 311.6, 403.11.1.6
Waste removal 311.3
VAPOR AREA, FLAMMABLE
Defined 202
VAPOR BALANCE SYSTEM. 2306.7.9.1
VAPOR PRESSURE
Defined 202
VAPOR-PROCESSING SYSTEM 2306.7.9.2, 5706.8
VAPOR-RECOVERY SYSTEM 2306.7.9, 5706.8
VEHICLE IMPACT PROTECTION (see IMPACT PROTECTION, VEHICLE)
VEHICLES 314.4
Compressed natural gas powered 2308
Gas-fueled 2404.18
Industrial 6103.2.2
Liquid-fueled 3104.18
LP-gas-powered 2307
Overfilling 2307.7
Storage of, in buildings 313.1
Tank 2909.3, 5704.2.2, 5706.5.1.15, 5706.5.1.16, 5706.6
VENTILATION
Battery systems 608.6
Defined 202
Dry cleaning 2104.2.1, 2105.2.3, 2106.3.3
Electrostatic equipment 2406.7
Exhaust 2703.14, 2703.15.2
Floor surfacing 2410.5
Hazardous materials 5003.8.4.2, 5003.8.5.2, 5003.8.6.2, 5005.2.1.1, 5005.2.2.2
Indoor dispensing 5005.1.9
Indoor storage areas 5004.3
Industrial ovens 3003.1
Powered industrial trucks 309.3
Process structures 2905.5
Refrigeration machinery room 606.13
Reinforced plastics manufacturing 2411.5
Repair garages 2311.4.3, 2311.7.1
Spray finishing 2404.1.4.3, 2404.2, 2404.2.4, 2404.6.3, 2406.10
VENTS, SMOKE AND HEAT (see SMOKE AND HEAT VENTS)
VIOLATION PENALTIES 109.3
VISIBLE ALARM NOTIFICATION APPLIANCE 907.5.2.3
Defined 202

W

WAREHOUSE
Aerosol . . . . . 5102.1, 5104.3.2, Table 5104.3.2, 5104.4
Liquid . . . . . 5104.6, Table 5704.3.6(2), Table 5704.3.6(3), 5704.3.8, 5704.3.8.5

INTERNATIONAL CODE COUNCIL®
Copyright © 2015 ICC. ALL RIGHTS RESERVED. Accessed by David Dammon on Jun 21, 2017 12:30:52 PM pursuant to License Agreement with ICC. No further reproduction or distribution authorized. ANY UNAUTHORIZED REPRODUCTION OR DISTRIBUTION IS A VIOLATION OF THE FEDERAL COPYRIGHT ACT AND THE LICENSE AGREEMENT, AND SUBJECT TO CIVIL AND CRIMINAL PENALTIES THEREUNDER.

WARNING SIGNS
Compressed gas vaults 5303.16.3
Explosives 5604.10.5, 5605.8.2
Fire-extinguishing systems 904.3.4
Flammable and combustible liquid vaults 5704.2.8.15
Flammable finish operations 2403.2.7
Flammable liquids storage 5703.5
Fruit and crop ripening 2507
Fuel dispensing 2305.6
Fumigation and insecticidal fogging 2603.3.1
Hazard communication (haz-mat) 407.3, 5003.5
Oxygen in home health care 6306.6
Shaftways 316.2.1, 316.2.2,
WARRANTS 104.3.1
WASTE MATERIALS, COMBUSTIBLE 105.6.47, 304, 3304.2
WASTE OIL 603.1.4, 2311.2.2
WASTEBASKETS AND WASTE CONTAINERS 304.3, 808.1, 3304.2.3
WATCH, FIRE (see FIRE WATCH)
WATER MIST SYSTEM (see AUTOMATIC WATER MIST SYSTEM)
WATER-REACTIVE MATERIAL . . . . . Chapter 67
Defined 202
Indoor storage 6704.1
Outdoor storage 6704.2
Requirements 6703
Use 6705
WATER SUPPLY
Buildings under construction or demolition, standpipes 3313
Fire protection 507, 3312
Required 507.1
Secondary for high-rise 914.3.2
Sprinklers 903.3.5
Standpipes 3313
Test 507.4
WEATHER PROTECTION 5004.13, 5005.3.9, 5608.5.2, 5704.4.7, 5705.3.8.4, 5706.5.1.2, 6003.2.5, 6004.3.3, 4104.2.2, 4105.2
WELDING AND OTHER HOT WORK . . . . . Chapter 35
Cutting 3505
Defined 202
Electric arc 3506
Flammable and combustible liquid tanks 3504.1.7, 3510, 5704.2.7.6
Gas 3505
Permit 105.6.12, 105.6.24
Requirements 3503, 3504
Tire storage yards 3404.2
Warning signs in flammable finish operations 2403.2.7
WELL DRILLING 5706.3
WET-CHEMICAL EXTINGUISHING AGENT . . . 904.5
Defined 202
WET FUELING (see MOBILE FUELING)
WET HOSING (see MOBILE FUELING)
WHARVES 2310.3.1, 2310.5.5, 5706.4.7
WILDFIRE RISK AREA 308.1.6, 308.2
Defined 202
WINDER 1011.5.3, 1011.9
Defined 202
WINDOW WELLS 1030.5
WINDOWLESS STORIES OR AREAS 903.2.11.1
WIRELESS PROTECTION SYSTEM 907.6.1
Defined 202
WIRING, ELECTRICAL
Abandoned in plenums 605.12
Hazards 605
WOOD PRODUCTS 105.4.48, 2807, 2808
WOOD VENEERS 803.7
WOODWORKING FACILITIES (see LUMBER YARDS AND WOODWORKING FACILITIES) 903.2.4.1
WORKSTATION (semiconductor manufacturing)
Defined 202

Y

YARD
Defined 202

Z

ZONE, FIRE ALARM 907.6.3
Defined 202
ZONE, NOTIFICATION
Defined 202
ZONING INDICATOR PANEL 907.6.3.1

INTERNATIONAL CODE COUNCIL®
Copyright © 2015 ICC. ALL RIGHTS RESERVED. Accessed by David Dammon on Jun 21, 2017 12:30:52 PM pursuant to License Agreement with ICC. No further reproduction or distribution authorized. ANY UNAUTHORIZED REPRODUCTION OR DISTRIBUTION IS A VIOLATION OF THE FEDERAL COPYRIGHT ACT AND THE LICENSE AGREEMENT, AND SUBJECT TO CIVIL AND CRIMINAL PENALTIES THEREUNDER.

INTERNATIONAL CODE COUNCIL®

Copyright © 2015 ICC. ALL RIGHTS RESERVED. Accessed by David Dammon on Jun 21, 2017 12:30:52 PM pursuant to License Agreement with ICC. No further reproduction or distribution authorized. ANY UNAUTHORIZED REPRODUCTION OR DISTRIBUTION IS A VIOLATION OF THE FEDERAL COPYRIGHT ACT AND THE LICENSE AGREEMENT, AND SUBJECT TO CIVIL AND CRIMINAL PENALTIES THEREUNDER.

ICC INTERNATIONAL CODE COUNCIL®

People Helping People Build a Safer World®

Valuable Guides to Changes in the 2015 I-Codes®

NEW!

FULL COLOR! HUNDREDS OF PHOTOS AND ILLUSTRATIONS!

SIGNIFICANT CHANGES TO THE 2015 INTERNATIONAL CODES®

Practical resources that offer a comprehensive analysis of the critical changes made between the 2012 and 2015 editions of the codes. Authored by ICC code experts, these useful tools are "must-have" guides to the many important changes in the 2015 International Codes.



SIGNIFICANT CHANGES TO THE IBC, 2015 EDITION
#7024S15

SIGNIFICANT CHANGES TO THE IRC, 2015 EDITION
#7101S15

SIGNIFICANT CHANGES TO THE IFC, 2015 EDITION
#7404S15

SIGNIFICANT CHANGES TO THE IPC/IMC/IFGC, 2015 EDITION
#7202S15

Changes are identified then followed by in-depth discussion of how the change affects real world application. Photos, tables and illustrations further clarify application.

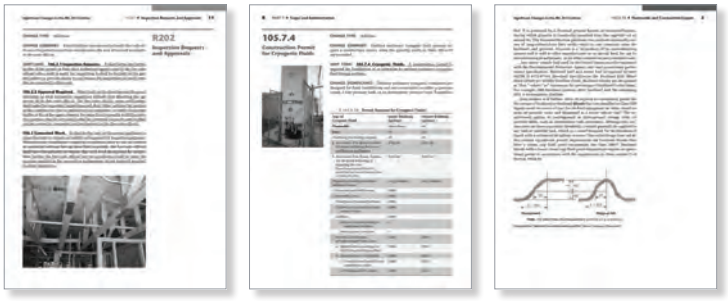

ORDER YOUR HELPFUL GUIDES TODAY!
1-800-786-4452 | www.iccsafe.org/books

HIRE ICC TO TEACH

Want your group to learn the Significant Changes to the I-Codes from an ICC expert instructor? Schedule a seminar today!

email: **ICCTraining@iccsafe.org** | phone: **1-888-422-7233 ext. 33818**

14-09379

INTERNATIONAL CODE COUNCIL®

Copyright © 2015 ICC. ALL RIGHTS RESERVED. Accessed by David Dammon on Jun 21, 2017 12:30:52 PM pursuant to License Agreement with ICC. No further reproduction or distribution authorized. ANY UNAUTHORIZED REPRODUCTION OR DISTRIBUTION IS A VIOLATION OF THE FEDERAL COPYRIGHT ACT AND THE LICENSE AGREEMENT, AND SUBJECT TO CIVIL AND CRIMINAL PENALTIES THEREUNDER.

ICC INTERNATIONAL CODE COUNCIL®

People Helping People Build a Safer World®

The International Code Council's Training and Education Department

Industry professionals look to ICC to provide the critical knowledge and experiences necessary to excel in today's challenging world. ICC's educational programs cover a broad spectrum of code and construction related topics, offering some of the highest quality instruction direct from the source.

INSTITUTES

Acquire Skills, Share Experiences, Earn CEUs

ICC's training institutes offer a comprehensive education experience and a great way to earn much needed CEUs. Learn best practices from the leading experts in the field, build your network of professional contacts and share experiences. Institutes are held across the country throughout the year. To see the full schedule go to www.iccsafe.org/training.

HIRE ICC TO TEACH

Bring ICC On-Site and Earn CEUs

Give your group the confidence they need to meet tough challenges head-on so they can reach their full potential. ICC's course catalog contains a wide variety of educational topics that are available for contract at a location of your choice. Customized training is also available to fit your needs. For our full course catalogue go to www.iccsafe.org/hireicc.

ICC ONLINE CAMPUS

Earn CEUs at Your Own Pace

Online courses offer access to a comprehensive training and education portal, providing you with an effective and convenient tool to enhance your professional skills. Courses are available anytime for 99 days following registration. Go to www.iccsafe.org/onlinecampus for our full offerings.

For more information about ICC's Training please contact us at **888-ICC-SAFE (422-7233) ext. 33818** or email us at **icctraining@iccsafe.org**.

15-10915

INTERNATIONAL CODE COUNCIL®

Copyright © 2015 ICC. ALL RIGHTS RESERVED. Accessed by David Dammon on Jun 21, 2017 12:30:52 PM pursuant to License Agreement with ICC. No further reproduction or distribution authorized. ANY UNAUTHORIZED REPRODUCTION OR DISTRIBUTION IS A VIOLATION OF THE FEDERAL COPYRIGHT ACT AND THE LICENSE AGREEMENT, AND SUBJECT TO CIVIL AND CRIMINAL PENALTIES THEREUNDER.

ICC INTERNATIONAL CODE COUNCIL®

People Helping People Build a Safer World®

Get Connected with the Best Code Resources and Member Benefits in the Industry

As a building professional, being connected to a Member-driven association that offers exclusive I-Code resources and training can play a vital role in building your career. No other building code association offers you more I-Code resources to help enhance your code knowledge and your career than the International Code Council® (ICC®).

Become an ICC Member now to take advantage of:

- Free code opinions from I-Codes experts
- Free I-Code book(s) or download to new Members*
- Discounts on I-Code resources, training and certification renewal
- Free access to employment opportunities in the ICC Career Center, including posting jobs
- Free benefits - Governmental Members: Your staff can receive free ICC benefits too*
- Great opportunities to network at ICC events
- ***Savings of up to 25% on code books & Training materials***

Get connected now! Visit our Member page at **www.iccsafe.org/membership** or call 1-888-ICC-SAFE (422-7233), ext. 33804 to join or learn more today!

*Some restrictions apply. Speak with an ICC Member Services Representative for details.



15-11222

INTERNATIONAL CODE COUNCIL®

Copyright © 2015 ICC. ALL RIGHTS RESERVED. Accessed by David Dammon on Jun 21, 2017 12:30:52 PM pursuant to License Agreement with ICC. No further reproduction or distribution authorized. ANY UNAUTHORIZED REPRODUCTION OR DISTRIBUTION IS A VIOLATION OF THE FEDERAL COPYRIGHT ACT AND THE LICENSE AGREEMENT, AND SUBJECT TO CIVIL AND CRIMINAL PENALTIES THEREUNDER.

ICC INTERNATIONAL CODE COUNCIL®

People Helping People Build a Safer World®

2015 I-Code Essentials

This helpful series uses a straightforward, focused approach to explore code requirements with non-code language, allowing readers to gain confidence in their understanding of the material. Each book is an invaluable companion guide to the 2015 IBC, IRC, IFC or IECC for both new and experienced code users.

- **Detailed full-color illustrations enhance comprehension of code provisions**
- **A focused, concise approach facilitates understanding of the essential code provisions**
- **References to corresponding code sections provide added value as companion guides to the 2015 I-Codes**
- **Glossary of code and construction terms clarifies their meaning in the context of the code**



A

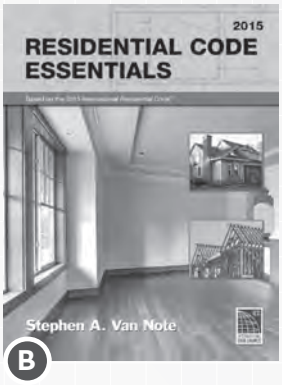

B

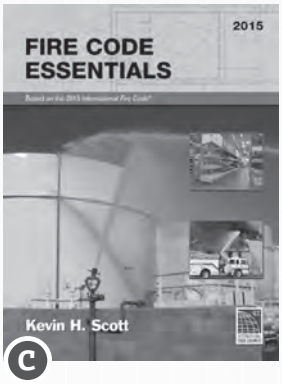

C

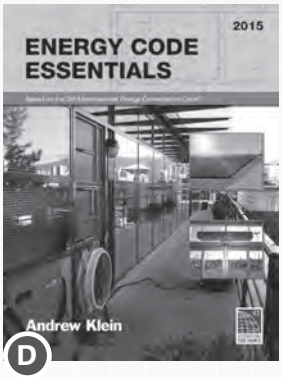

D

A. BUILDING CODE ESSENTIALS: BASED ON THE 2015 INTERNATIONAL BUILDING CODE

Explores those code provisions essential to understanding the application of the IBC in an easy-to-read format. The user-friendly approach of the text simplifies critical concepts so users can achieve a more complete understanding of the code's intent. Full-color illustrations, examples and simplified tables assist the reader in visualizing the code requirements. This up-to-date, step-by-step guide's topic organization reflects the intent of the IBC and facilitates understanding and application of the code provisions.

SOFT COVER #4031S15
PDF DOWNLOAD #8950P596

B. RESIDENTIAL CODE ESSENTIALS: BASED ON THE 2015 INTERNATIONAL RESIDENTIAL CODE

Explains those code provisions essential to understanding the application of the IRC to the most commonly encountered building practices. The information is presented in a user-friendly manner with an emphasis on technical accuracy and clear non-code language. Full-color illustrations, examples and simplified tables assist the reader in visualizing the code requirements.

SOFT COVER #4131S15
PDF DOWNLOAD #8950P59

C. FIRE CODE ESSENTIALS: BASED ON THE 2015 INTERNATIONAL FIRE CODE

Focuses on the essential provisions of the IFC for controlling ignition sources and fire hazards, fire department access to buildings, building uses and processes, fire protection and life safety systems, special processes and uses and hazardous materials.

SOFT COVER #4431S15
PDF DOWNLOAD #8950P59

D. ENERGY CODE ESSENTIALS: BASED ON THE 2015 INTERNATIONAL ENERGY CONSERVATION CODE®

Designed to provide a straightforward, easy-to-read companion guide to the IECC for both beginning and experienced code users. The text provides accurate information on critical energy code applications in the office and in the field for residential and commercial construction. The focused coverage examines those code provisions essential to understanding the application of the IECC to the most commonly encountered building practices and discusses the reasons behind the requirements.

SOFT COVER #4831S15
PDF DOWNLOAD #8950P651

ORDER YOUR I-CODE ESSENTIALS TODAY! 1-800-786-4452 | www.iccsafe.org/books

14-10387

INTERNATIONAL CODE COUNCIL®

Copyright © 2015 ICC. ALL RIGHTS RESERVED. Accessed by David Dammon on Jun 21, 2017 12:30:52 PM pursuant to License Agreement with ICC. No further reproduction or distribution authorized. ANY UNAUTHORIZED REPRODUCTION OR DISTRIBUTION IS A VIOLATION OF THE FEDERAL COPYRIGHT ACT AND THE LICENSE AGREEMENT, AND SUBJECT TO CIVIL AND CRIMINAL PENALTIES THEREUNDER.

2015 IFC®

CODE AND COMMENTARY

VOLUME 2

The complete IFC with commentary after each section



INTERNATIONAL CODE COUNCIL®

Copyright © 2015 ICC. ALL RIGHTS RESERVED. Accessed by David Dammon on Jun 21, 2017 12:30:52 PM pursuant to License Agreement with ICC. No further reproduction or distribution authorized. ANY UNAUTHORIZED REPRODUCTION OR DISTRIBUTION IS A VIOLATION OF THE FEDERAL COPYRIGHT ACT AND THE LICENSE AGREEMENT, AND SUBJECT TO CIVIL AND CRIMINAL PENALTIES THEREUNDER.

2015 IFC®

CODE AND COMMENTARY

VOLUME 2

The complete IFC with commentary after each section

ICC
INTERNATIONAL CODE COUNCIL®

INTERNATIONAL CODE COUNCIL®

Copyright © 2015 ICC. ALL RIGHTS RESERVED. Accessed by David Dammon on Jun 21, 2017 12:30:52 PM pursuant to License Agreement with ICC. No further reproduction or distribution authorized. ANY UNAUTHORIZED REPRODUCTION OR DISTRIBUTION IS A VIOLATION OF THE FEDERAL COPYRIGHT ACT AND THE LICENSE AGREEMENT, AND SUBJECT TO CIVIL AND CRIMINAL PENALTIES THEREUNDER.

2015 International Fire Code® Commentary

First Printing: July 2015

ISBN: 978-1-60983-286-5 (soft-cover edition)

COPYRIGHT © 2015
by
INTERNATIONAL CODE COUNCIL, INC.

ALL RIGHTS RESERVED. This 2015 *International Fire Code® Commentary—Volume II* is a copyrighted work owned by the International Code Council, Inc. Without advance written permission from the copyright owner, no part of this book may be reproduced, distributed or transmitted in any form or by any means, including, without limitation, electronic, optical or mechanical means (by way of example, and not limitation, photocopying, or recording by or in an information storage retrieval system). For information on permission to copy material exceeding fair use, please contact: Publications, 4051 Flossmoor Road, Country Club Hills, IL 60478. Phone 1-888-ICC-SAFE (422-7233).

Trademarks: "International Code Council," the "International Code Council" logo and the "International Fire Code" are trademarks of the International Code Council, Inc.

PRINTED IN THE U.S.A.

INTERNATIONAL CODE COUNCIL®

Copyright © 2015 ICC. ALL RIGHTS RESERVED. Accessed by David Dammon on Jun 21, 2017 12:30:52 PM pursuant to License Agreement with ICC. No further reproduction or distribution authorized. ANY UNAUTHORIZED REPRODUCTION OR DISTRIBUTION IS A VIOLATION OF THE FEDERAL COPYRIGHT ACT AND THE LICENSE AGREEMENT, AND SUBJECT TO CIVIL AND CRIMINAL PENALTIES THEREUNDER.

PREFACE

The principal purpose of the Commentary is to provide a basic volume of knowledge and facts relating to building construction as it pertains to the regulations set forth in the 2015 *International Fire Code*. The person who is serious about effectively designing, constructing and regulating buildings and structures will find the Commentary to be a reliable data source and reference to almost all components of the built environment.

As a follow-up to the *International Fire Code*, we offer a companion document, the *International Fire Code Commentary—Volume II*. Volume II covers Chapters 20 through 80 and Appendices A through M of the 2015 *International Fire Code*. The basic appeal of the Commentary is thus: it provides in a small package and at reasonable cost thorough coverage of many issues likely to be dealt with when using the *International Fire Code* — and then supplements that coverage with historical and technical background. Reference lists, information sources and bibliographies are also included.

Throughout all of this, effort has been made to keep the vast quantity of material accessible and its method of presentation useful. With a comprehensive yet concise summary of each section, the Commentary provides a convenient reference for regulations applicable to the construction of buildings and structures. In the chapters that follow, discussions focus on the full meaning and implications of the code text. Guidelines suggest the most effective method of application, and the consequences of not adhering to the code text. Illustrations are provided to aid understanding; they do not necessarily illustrate the only methods of achieving code compliance.

The format of the Commentary includes the full text of each section, table and figure in the code, followed immediately by the commentary applicable to that text. At the time of printing, the Commentary reflects the most up-to-date text of the 2015 *International Fire Code*. Each section's narrative includes a statement of its objective and intent, and usually includes a discussion about why the requirement commands the conditions set forth. Code text and commentary text are easily distinguished from each other. All code text is shown as it appears in the *International Fire Code*, and all commentary is indented below the code text and begins with the symbol ❖.

Readers should note that the Commentary is to be used in conjunction with the *International Fire Code* and not as a substitute for the code. The Commentary is advisory only; the code official alone possesses the authority and responsibility for interpreting the code.

Comments and recommendations are encouraged, for through your input, we can improve future editions. Please direct your comments to the Codes and Standards Development Department at the Chicago District Office.

The International Code Council would like to extend its thanks to the following individuals for their contributions to the technical content of this commentary:

Jeff Hugo
Elley Klausbruckner

INTERNATIONAL CODE COUNCIL®
Copyright © 2015 ICC. ALL RIGHTS RESERVED. Accessed by David Dammon on Jun 21, 2017 12:30:52 PM pursuant to License Agreement with ICC. No further reproduction or distribution authorized. ANY UNAUTHORIZED REPRODUCTION OR DISTRIBUTION IS A VIOLATION OF THE FEDERAL COPYRIGHT ACT AND THE LICENSE AGREEMENT, AND SUBJECT TO CIVIL AND CRIMINAL PENALTIES THEREUNDER.

INTERNATIONAL CODE COUNCIL®

Copyright © 2015 ICC. ALL RIGHTS RESERVED. Accessed by David Dammon on Jun 21, 2017 12:30:52 PM pursuant to License Agreement with ICC. No further reproduction or distribution authorized. ANY UNAUTHORIZED REPRODUCTION OR DISTRIBUTION IS A VIOLATION OF THE FEDERAL COPYRIGHT ACT AND THE LICENSE AGREEMENT, AND SUBJECT TO CIVIL AND CRIMINAL PENALTIES THEREUNDER.

Arrangement and Format of the 2015 IFC

Before applying the requirements of the IFC it is beneficial to understand its arrangement and format. The IFC, like other codes published by the International Code Council, is arranged and organized to follow sequential steps that generally occur during a plan review or inspection. The 2015 IFC is organized into seven Parts as illustrated in the tables below. Each Part represents a broad subject matter and includes the chapters that logically fit under the subject matter of each Part. It is also foreseeable that additional chapters will need to be added in the future as regulations for new processes or operations are developed. Accordingly, the reorganization was designed to accommodate such future chapters by providing reserved (unused) chapters in several of the Parts. This will allow the subject matter parts to be conveniently and logically expanded without requiring a major renumbering of the IFC chapters.

2015 ORGANIZATION OF THE IFC	
Parts and Chapters	**Subject Matter**
Part I – Chapters 1 and 2	Administrative and definitions
Part II – Chapters 3 and 4	General safety provisions
Part III – Chapters 5 through 11	Building and equipment design features
Part III – Chapters 12 through 19	Reserved for future use
Part IV – Chapters 20 through 37	Special occupancies and operations
Part IV – Chapters 38 through 49	Reserved for future use
Part V – Chapters 50 through 67	Hazardous materials
Part V – Chapters 68 through 79	Reserved for future use
Part VI – Chapter 80	Referenced standards
Part VII – Appendices A through M	Adoptable and informational appendices

The IFC requirements for fire-resistive construction, interior finish, fire protection systems, means of egress and construction safeguards are directly correlated to the chapters containing parallel requirements in the IBC, as follows:

IFC Chapter	Subject
7	Fire and smoke protection features
8	Interior finish, decorative materials and furnishings
9	Fire protection systems
10	Means of egress
33	Fire safety during construction and demolition

INTERNATIONAL CODE COUNCIL®
Copyright © 2015 ICC. ALL RIGHTS RESERVED. Accessed by David Dammon on Jun 21, 2017 12:30:52 PM pursuant to License Agreement with ICC. No further reproduction or distribution authorized. ANY UNAUTHORIZED REPRODUCTION OR DISTRIBUTION IS A VIOLATION OF THE FEDERAL COPYRIGHT ACT AND THE LICENSE AGREEMENT, AND SUBJECT TO CIVIL AND CRIMINAL PENALTIES THEREUNDER.

INTERNATIONAL CODE COUNCIL®
Copyright © 2015 ICC. ALL RIGHTS RESERVED. Accessed by David Dammon on Jun 21, 2017 12:30:52 PM pursuant to License Agreement with ICC. No further reproduction or distribution authorized. ANY UNAUTHORIZED REPRODUCTION OR DISTRIBUTION IS A VIOLATION OF THE FEDERAL COPYRIGHT ACT AND THE LICENSE AGREEMENT, AND SUBJECT TO CIVIL AND CRIMINAL PENALTIES THEREUNDER.

LEGISLATION

The *International Codes* are designed and promulgated to be adopted by reference by legislative action. Jurisdictions wishing to adopt the 2015 *International Fire Code Commentary* as an enforceable set of regulations for the safeguarding of life and property from fire and explosion hazards arising from the storage, handling and use of hazardous substances, materials and devices, and from conditions hazardous to life or property in the occupancy of buildings and premises should ensure that certain factual information is included in the adopting legislation at the time adoption is being considered by the appropriate governmental body. The following sample adoption legislation addresses several key elements, including the information required for insertion into the code text.

SAMPLE LEGISLATION FOR ADOPTION OF THE *INTERNATIONAL FIRE CODE* ORDINANCE NO._____

A**[N] [ORDINANCE/STATUTE/REGULATION]** of the **[NAME OF JURISDICTION]** adopting the 2015 edition of the *International Fire Code*, regulating and governing the safeguarding of life and property from fire and explosion hazards arising from the storage, handling and use of hazardous substances, materials and devices, and from conditions hazardous to life or property in the occupancy of buildings and premises in the **[NAME OF JURISDICTION]**; providing for the issuance of permits and collection of fees therefor; repealing **[ORDINANCE/STATUTE/REGULATION]** No. _____ of the **[NAME OF JURISDICTION]** and all other ordinances or parts of laws in conflict therewith.

The **[GOVERNING BODY]** of the **[NAME OF JURISDICTION]** does ordain as follows:

Section 1. That a certain document, three (3) copies of which are on file in the office of the **[TITLE OF JURISDICTION'S KEEPER OF RECORDS]** of **[NAME OF JURISDICTION]**, being marked and designated as the *International Fire Code*, 2015 edition, including Appendix Chapters **[FILL IN THE APPENDIX CHAPTERS BEING ADOPTED]** (see *International Fire Code* Section 101.2.1, 2015 edition), as published by the International Code Council, be and is hereby adopted as the Fire Code of the **[NAME OF JURISDICTION]**, in the State of **[STATE NAME]** regulating and governing the safeguarding of life and property from fire and explosion hazards arising from the storage, handling and use of hazardous substances, materials and devices, and from conditions hazardous to life or property in the occupancy of buildings and premises as herein provided; providing for the issuance of permits and collection of fees therefor; and each and all of the regulations, provisions, penalties, conditions and terms of said Fire Code on file in the office of the **[NAME OF JURISDICTION]** are hereby referred to, adopted, and made a part hereof, as if fully set out in this legislation, with the additions, insertions, deletions and changes, if any, prescribed in Section 2 of this ordinance.

Section 2. That the following sections are hereby revised:

Section 101.1. Insert: **[NAME OF JURISDICTION]**

Section 109.4. Insert: **[OFFENSE, DOLLAR AMOUNT, NUMBER OF DAYS]**

Section 111.4. Insert: **[DOLLAR AMOUNT IN TWO LOCATIONS]**

Section 3. That the geographic limits referred to in certain sections of the 2015 *International Fire Code* are hereby established as follows:

Section 5704.2.9.6.1 (geographic limits in which the storage of Class I and Class II liquids in above-ground tanks outside of buildings is prohibited): **[JURISDICTION TO SPECIFY]**

Section 5706.2.4.4 (geographic limits in which the storage of Class I and Class II liquids in above-ground tanks is prohibited): **[JURISDICTION TO SPECIFY]**

Section 5806.2 (geographic limits in which the storage of flammable cryogenic fluids in stationary containers is prohibited): **[JURISDICTION TO SPECIFY]**

Section 6104.2 (geographic limits in which the storage of liquefied petroleum gas is restricted for the protection of heavily populated or congested areas): **[JURISDICTION TO SPECIFY]**

Section 4. That **[ORDINANCE/STATUTE/REGULATION]** No. _____ of **[NAME OF JURISDICTION]** entitled **[FILL IN HERE THE COMPLETE TITLE OF THE LEGISLATION OR LAWS IN EFFECT AT THE PRESENT TIME SO THAT THEY WILL BE REPEALED BY SPECIFIC REFERENCE]** and all other ordinances or parts of laws in conflict herewith are hereby repealed.

Section 5. That if any section, subsection, sentence, clause or phrase of this legislation is, for any reason, held to be unconstitutional, such decision shall not affect the validity of the remaining portions of this ordinance. The **[GOVERNING BODY]** hereby declares that it would have passed this law, and each section, subsection, clause or phrase thereof, irrespective of the fact that any one or more sections, subsections, sentences, clauses and phrases be declared unconstitutional.

INTERNATIONAL CODE COUNCIL®
Copyright © 2015 ICC. ALL RIGHTS RESERVED. Accessed by David Dammon on Jun 21, 2017 12:30:52 PM pursuant to License Agreement with ICC. No further reproduction or distribution authorized. ANY UNAUTHORIZED REPRODUCTION OR DISTRIBUTION IS A VIOLATION OF THE FEDERAL COPYRIGHT ACT AND THE LICENSE AGREEMENT, AND SUBJECT TO CIVIL AND CRIMINAL PENALTIES THEREUNDER.

Section 6. That nothing in this legislation or in the Fire Code hereby adopted shall be construed to affect any suit or proceeding impending in any court, or any rights acquired, or liability incurred, or any cause or causes of action acquired or existing, under any act or ordinance hereby repealed as cited in Section 4 of this law; nor shall any just or legal right or remedy of any character be lost, impaired or affected by this legislation.

Section 7. That the **[JURISDICTION'S KEEPER OF RECORDS]** is hereby ordered and directed to cause this legislation to be published. (An additional provision may be required to direct the number of times the legislation is to be published and to specify that it is to be in a newspaper in general circulation. Posting may also be required.)

Section 8. That this law and the rules, regulations, provisions, requirements, orders and matters established and adopted hereby shall take effect and be in full force and effect **[TIME PERIOD]** from and after the date of its final passage and adoption.

INTERNATIONAL CODE COUNCIL®

Copyright © 2015 ICC. ALL RIGHTS RESERVED. Accessed by David Dammon on Jun 21, 2017 12:30:52 PM pursuant to License Agreement with ICC. No further reproduction or distribution authorized. ANY UNAUTHORIZED REPRODUCTION OR DISTRIBUTION IS A VIOLATION OF THE FEDERAL COPYRIGHT ACT AND THE LICENSE AGREEMENT, AND SUBJECT TO CIVIL AND CRIMINAL PENALTIES THEREUNDER.

TABLE OF CONTENTS

Part IV—Special Occupancies and Operations 20-1

CHAPTER 20 AVIATION FACILITIES . . . . . 20-1 – 20-18

CHAPTER 21 DRY CLEANING . . . . . 21-1 – 21-12

CHAPTER 22 COMBUSTIBLE DUST-PRODUCING OPERATIONS . . . . . 22-1 – 22-4

CHAPTER 23 MOTOR FUEL-DISPENSING FACILITIES AND REPAIR GARAGES . . . . . 23-1 – 23-44

CHAPTER 24 FLAMMABLE FINISHES . . . . . 24-1 – 24-36

CHAPTER 25 FRUIT AND CROP RIPENING . . . . . 25-1 – 25-4

CHAPTER 26 FUMIGATION AND INSECTICIDAL FOGGING . . . . . 26-1 – 26-6

CHAPTER 27 SEMICONDUCTOR FABRICATION FACILITIES . . . . . 27-1 – 27-22

CHAPTER 28 LUMBER YARDS AND AGRO-INDUSTRIAL, SOLID BIOMASS AND WOODWORKING FACILITIES . . . . . 28-1 – 28-8

CHAPTER 29 MANUFACTURE OF ORGANIC COATINGS . . . . . 29-1 – 29-10

CHAPTER 30 INDUSTRIAL OVENS . . . . . 30-1 – 30-4

CHAPTER 31 TENTS AND OTHER MEMBRANE STRUCTURES . . . . . 31-1 – 31-18

CHAPTER 32 HIGH-PILED COMBUSTIBLE STORAGE . . . . . 32-1 – 32-30

CHAPTER 33 FIRE SAFETY DURING CONSTRUCTION AND DEMOLITION . . . . . 33-1 – 33-10

CHAPTER 34 TIRE REBUILDING AND TIRE STORAGE . . . . . 34-1 – 34-6

CHAPTER 35 WELDING AND OTHER HOT WORK . . . . . 35-1 – 35-12

CHAPTER 36 MARINAS . . . . . 36-1 – 36-4

CHAPTER 37 COMBUSTIBLE FIBERS . . . . . 37-1 – 37-4

CHAPTERS 38 – 49 RESERVED

Part V—Hazardous Materials 50-1

CHAPTER 50 HAZARDOUS MATERIALS—GENERAL PROVISIONS . . . . . 50-1 – 50-54

INTERNATIONAL CODE COUNCIL®

Copyright © 2015 ICC. ALL RIGHTS RESERVED. Accessed by David Dammon on Jun 21, 2017 12:30:52 PM pursuant to License Agreement with ICC. No further reproduction or distribution authorized. ANY UNAUTHORIZED REPRODUCTION OR DISTRIBUTION IS A VIOLATION OF THE FEDERAL COPYRIGHT ACT AND THE LICENSE AGREEMENT, AND SUBJECT TO CIVIL AND CRIMINAL PENALTIES THEREUNDER.

CHAPTER 51 AEROSOLS . . . . . 51-1 – 51-16

CHAPTER 52 RESERVED

CHAPTER 53 COMPRESSED GASES . . . . . 53-1 – 53-18

CHAPTER 54 CORROSIVE MATERIALS . . . . . 54-1 – 54-4

CHAPTER 55 CRYOGENIC FLUIDS . . . . . 55-1 – 55-12

CHAPTER 56 EXPLOSIVES AND FIREWORKS . . . . . 56-1 – 56-34

CHAPTER 57 FLAMMABLE AND COMBUSTIBLE LIQUIDS . . . . . 57-1 – 57-86

CHAPTER 58 FLAMMABLE GASES AND FLAMMABLE CRYOGENIC FLUIDS . . . . . 58-1 – 58-14

CHAPTER 59 FLAMMABLE SOLIDS . . . . . 59-1 – 59-8

CHAPTER 60 HIGHLY TOXIC AND TOXIC MATERIALS . . . . . 60-1 – 60-20

CHAPTER 61 LIQUEFIED PETROLEUM GASES . . . . . 61-1 – 61-18

CHAPTER 62 ORGANIC PEROXIDES . . . . . 62-1 – 62-8

CHAPTER 63 OXIDIZERS, OXIDIZING GASES AND OXIDIZING CRYOGENIC FLUIDS . . . . . 63-1 – 63-12

CHAPTER 64 PYROPHORIC MATERIALS . . . . . 64-1 – 64-6

CHAPTER 65 PYROXYLIN (CELLULOSE NITRATE) PLASTICS . . . . . 65-1 – 65-4

CHAPTER 66 UNSTABLE (REACTIVE) MATERIALS . . . . . 66-1 – 66-6

CHAPTER 67 WATER-REACTIVE SOLIDS AND LIQUIDS . . . . . 67-1 – 67-6

CHAPTERS 68 – 79 RESERVED

***Part VI—Referenced Standards* 80-1**

CHAPTER 80 REFERENCED STANDARDS . . . . . 80-1 – 80-14

***Part VII—Appendices* A-1**

APPENDIX A BOARD OF APPEALS . . . . . A-1 – A-4

APPENDIX B FIRE-FLOW REQUIREMENTS FOR BUILDINGS . . . . . B-1 – B-8

APPENDIX C FIRE HYDRANT LOCATIONS AND DISTRIBUTION . . . . . C-1 – C-6

APPENDIX D FIRE APPARATUS ACCESS ROADS . . . . . D-1 – D-6

INTERNATIONAL CODE COUNCIL®

Copyright © 2015 ICC. ALL RIGHTS RESERVED. Accessed by David Dammon on Jun 21, 2017 12:30:52 PM pursuant to License Agreement with ICC. No further reproduction or distribution authorized. ANY UNAUTHORIZED REPRODUCTION OR DISTRIBUTION IS A VIOLATION OF THE FEDERAL COPYRIGHT ACT AND THE LICENSE AGREEMENT, AND SUBJECT TO CIVIL AND CRIMINAL PENALTIES THEREUNDER.

APPENDIX E HAZARD CATEGORIES. . . . . E-1 – E-14

APPENDIX F HAZARD RANKING . . . . . F-1 – F-4

APPENDIX G CRYOGENIC FLUIDS—WEIGHT AND VOLUME EQUIVALENTS . . . . . G-1 – G-4

APPENDIX H HAZARDOUS MATERIALS MANAGEMENT PLAN (HMMP) AND HAZARDOUS MATERIALS INVENTORY STATEMENT (HMIS) INSTRUCTIONS . . . . . H-1 – H-10

APPENDIX I FIRE PROTECTION SYSTEMS—NONCOMPLIANT CONDITIONS . . . . . I-1 – I-4

APPENDIX J BUILDING INFORMATION SIGNS . . . . . J-1 – J-4

APPENDIX K CONSTRUCTION REQUIREMENTS FOR EXISTING AMBULATORY CARE FACILITIES . . . . . K-1 – K-6

APPENDIX L REQUIREMENTS FOR FIRE FIGHTER AIR REPLENISHMENT SYSTEMS . . . . . L-1 – L-6

APPENDIX M HIGH-RISE BUILDINGS— RETROACTIVE AUTOMATIC SPRINKLER REQUIREMENT . . . . . M-1 – M-2

INDEX . . . . . INDEX-1 – INDEX-32

INTERNATIONAL CODE COUNCIL®

Copyright © 2015 ICC. ALL RIGHTS RESERVED. Accessed by David Dammon on Jun 21, 2017 12:30:52 PM pursuant to License Agreement with ICC. No further reproduction or distribution authorized. ANY UNAUTHORIZED REPRODUCTION OR DISTRIBUTION IS A VIOLATION OF THE FEDERAL COPYRIGHT ACT AND THE LICENSE AGREEMENT, AND SUBJECT TO CIVIL AND CRIMINAL PENALTIES THEREUNDER.

INTERNATIONAL CODE COUNCIL®
Copyright © 2015 ICC. ALL RIGHTS RESERVED. Accessed by David Dammon on Jun 21, 2017 12:30:52 PM pursuant to License Agreement with ICC. No further reproduction or distribution authorized. ANY UNAUTHORIZED REPRODUCTION OR DISTRIBUTION IS A VIOLATION OF THE FEDERAL COPYRIGHT ACT AND THE LICENSE AGREEMENT, AND SUBJECT TO CIVIL AND CRIMINAL PENALTIES THEREUNDER.

Part IV—Special Occupancies and Operations

Chapter 20: Aviation Facilities

General Comments

Safe and efficient operation of airports, heliports and aircraft service facilities requires a comprehensive understanding of fire safety and aviation activities. The principal nonflight operational hazards associated with aviation involve fuel, facilities and operations. Conflicts have developed in recent years between airport security and life safety requirements because of an increased concern about air piracy and terrorism. The Federal Aviation Administration (FAA) regulates airport and air carrier security operations. These regulations strictly limit access to the air operations area. Unauthorized individuals must be prevented from entering air operations areas during all operating conditions, including emergencies in the terminal building. Concurrently, airport designs have traditionally included large unconfined areas for the movement of people and their belongings. Because most contemporary passenger terminal buildings resemble covered malls, Section 402 of the *International Building Code*® (IBC®) permits passenger transportation terminals to comply with the requirements for a covered mall building and, in fact, includes them in the definition of "Covered mall building."

Purpose

Chapter 20 specifies minimum requirements for the fire-safe operation of airports, heliports and helistops. Safe use of flammable and combustible liquids during fueling and maintenance operations is emphasized. Availability of portable Class B:C-rated fire extinguishers for prompt control or suppression of incipient fires is required.

SECTION 2001 GENERAL

2001.1 Scope. Airports, heliports, helistops and aircraft hangars shall be in accordance with this chapter.

❖ This chapter discusses fire and life safety in the ground environment modes. These modes include aircraft maintenance, aircraft refueling, aircraft hangars, helistops and heliports.

2001.2 Regulations not covered. Regulations not specifically contained herein pertaining to airports, aircraft maintenance, aircraft hangars and appurtenant operations shall be in accordance with nationally recognized standards.

❖ If a regulation is not addressed in this chapter, one must go to a recognized standard for the regulation. Ground operations must be conducted in accordance with recognized standards.

2001.3 Permits. For permits to operate aircraft-refueling vehicles, application of flammable or combustible finishes and hot work, see Section 105.6.

❖ The process of issuing permits gives the fire code official an opportunity to carefully evaluate and regulate hazardous operations. Permit applicants should be required to demonstrate that their operations comply with the intent of the code before the permit is issued (see commentary, Section 105.6 for a general discussion of operations requiring a permit). The three operations listed in this section pose possible fire hazards because an ignition source close to them would create a hazardous situation. The operations must be reviewed for safety concerns and requirements.

SECTION 2002 DEFINITIONS

2002.1 Definitions. The following terms are defined in Chapter 2:

AIRCRAFT OPERATION AREA (AOA).

AIRPORT.

HELIPORT.

HELISTOP.

❖ Definitions of terms can help in the understanding and application of the code requirements. This section directs the code user to Chapter 2 for the proper application of the indicated terms used in this chapter. Terms may be defined in Chapter 2 or in another *International Code*® (I-Code®) as indicated in Section 201.3, or the dictionary meaning may be all that is needed (see also commentary, Sections 201 through 201.4).

INTERNATIONAL CODE COUNCIL®
Copyright © 2015 ICC. ALL RIGHTS RESERVED. Accessed by David Dammon on Jun 21, 2017 12:30:52 PM pursuant to License Agreement with ICC. No further reproduction or distribution authorized. ANY UNAUTHORIZED REPRODUCTION OR DISTRIBUTION IS A VIOLATION OF THE FEDERAL COPYRIGHT ACT AND THE LICENSE AGREEMENT, AND SUBJECT TO CIVIL AND CRIMINAL PENALTIES THEREUNDER.

SECTION 2003
GENERAL PRECAUTIONS

2003.1 Sources of ignition. Open flames, flame-producing devices and other sources of ignition shall not be permitted in a hangar, except in *approved* locations or in any location within 50 feet (15 240 mm) of an aircraft-fueling operation.

❖ Smoking and carrying any open-flame device within 50 feet (15 240 mm) of any fueling operation is prohibited because of flammable vapors that are likely to be present during fueling operations. Electrical equipment on aircraft is usually not approved for use in hazardous (classified) locations, and disconnection of electrical devices often produces sparks, possibly igniting flammable vapor-air mixtures. Consequently, fueling operations must be discontinued before connecting or disconnecting these devices.

2003.2 Smoking. Smoking shall be prohibited in aircraft-refueling vehicles, aircraft hangars and aircraft operation areas used for cleaning, paint removal, painting operations or fueling. "No Smoking" signs shall be provided in accordance with Section 310.

Exception: Designated and *approved* smoking areas.

❖ An aircraft hangar is simply a building that provides weather protection and shop space during aircraft maintenance and storage. In the maintenance process, many hazards are present. Smoking is prohibited in all areas where an aircraft is located because of the potential presence of fuel vapors. The exception gives the fire code official the authority to evaluate and approve designated smoking areas.

2003.3 Housekeeping. The aircraft operation area (AOA) and related areas shall be kept free from combustible debris at all times.

❖ Housekeeping should be a daily practice. The level of fire safety is greatly improved when areas are kept clean and neat. Make sure that all generated waste is removed from the building and safely disposed of each day. Additionally, keeping the areas in which aircraft operate free from debris reduces the likelihood of foreign object damage (FOD) to aircraft engines that could result in engine damage or catastrophic engine failure.

2003.4 Fire department access. Fire apparatus access roads shall be provided and maintained in accordance with Chapter 5. Fire apparatus access roads and aircraft parking positions shall be designed in a manner so as to preclude the possibility of fire vehicles traveling under any portion of a parked aircraft.

❖ Access by emergency vehicles is an important factor. Fire apparatus access roads must be wide enough, well-marked and unobstructed in accordance with Section 503. The access roads should also be arranged so there is no confusion over where emergency vehicles are to go in the event of a fire or rescue emergency in a building, on a runway or in an aircraft. Space between aircraft must be large enough to allow emergency response equipment access to buildings and the aircraft.

2003.5 Dispensing of flammable and combustible liquids. The dispensing, transferring and storage of flammable and *combustible liquids* shall be in accordance with this chapter and Chapter 57. Aircraft motor vehicle fuel-dispensing facilities shall be in accordance with Chapter 23.

❖ Section 2006 gives guidelines for dispensing fuel into an aircraft. Section 5706 also gives guidelines for dispensing flammable and combustible liquids. Chapter 23 applies when small general aviation-type aircraft and airport service vehicles are brought to a fueling station instead of being fueled from a vehicle. See the commentary to Section 202 for the definition of "Aircraft motor-vehicle fuel-dispensing facility."

2003.6 Combustible storage. Combustible materials stored in aircraft hangars shall be stored in *approved* locations and containers.

❖ Combustible materials storage is to be confined to cutoff rooms or approved metal containers with tight-fitting, self-closing or automatic-closing lids to limit the fuel load readily exposed within the hangar. Approved containers provided for oily rags and similar wastes are to be supplied throughout service areas and emptied every day. Combustible materials should be removed from the building as soon as possible.

2003.7 Hazardous material storage. Hazardous materials shall be stored in accordance with Chapter 50.

❖ Chapter 50 contains the requirements for storing hazardous materials. Requirements in Chapters 51 through 67 also apply to specific materials.

SECTION 2004
AIRCRAFT MAINTENANCE

2004.1 Transferring flammable and combustible liquids. Flammable and *combustible liquids* shall not be dispensed into or removed from a container, tank, vehicle or aircraft except in *approved* locations.

❖ Due to hazards presented by aviation fuels, as discussed in Section 2006, it is necessary that all storage, transfer or dispensing of flammable and combustible liquids be completed outside of and away from structures. This includes the emptying of fuel tanks and the rooftop refueling of helicopters. The large, undivided areas of aircraft hangars coupled with the dollar value of a single aircraft present an unusually high value at risk of loss due to a single fire incident, thus reinforcing the need for the strict regulation of fuels. Dispensing systems generally involve the transfer of liquid from fixed piping systems, drums or 5-gallon (19 L) cans into smaller end-use containers. Because the release of some vapor is practically unavoidable, dispensing must take place in designated areas.

INTERNATIONAL CODE COUNCIL®
Copyright © 2015 ICC. ALL RIGHTS RESERVED. Accessed by David Dammon on Jun 21, 2017 12:30:52 PM pursuant to License Agreement with ICC. No further reproduction or distribution authorized. ANY UNAUTHORIZED REPRODUCTION OR DISTRIBUTION IS A VIOLATION OF THE FEDERAL COPYRIGHT ACT AND THE LICENSE AGREEMENT, AND SUBJECT TO CIVIL AND CRIMINAL PENALTIES THEREUNDER.

2004.2 Application of flammable and combustible liquid finishes. The application of flammable or Class II *combustible liquid* finishes is prohibited unless both of the following conditions are met:

1. The application of the liquid finish is accomplished in an *approved* location.
2. The application methods and procedures are in accordance with Chapter 24.

❖ Application of flammable finishes must comply with Chapter 24. Most exterior aircraft painting is performed using spray apparatus, frequently in aircraft hangars. Usually, control of ignition sources, ventilation and the considerable volume of aircraft hangars is relied on to minimize the hazards typically associated with spraying in more confined areas where vapor-air mixtures can rapidly create an explosive mixture. Small parts and subassemblies should be removed and painted in approved spray booths or areas complying with the requirements of Chapter 24. Exterior painting should not be performed in aircraft hangars not protected throughout by approved automatic fire suppression systems. If systems are inoperable, exterior spray painting is not permitted; only interior painting using water-based products is permitted. Like small exterior parts and subassemblies, application of flammable finishes to removable interior components should be limited to approved spray booths or spray rooms.

2004.3 Cleaning parts. Class IA flammable liquids shall not be used to clean aircraft, aircraft parts or aircraft engines. Cleaning with other flammable and *combustible liquids* shall be in accordance with Section 5705.3.6.

❖ Class I flammable liquids with flash points below 100°F (38°C) must not be used for cleaning that typically liberates large quantities of flammable vapor and may leave a flammable residue that is easily ignited. Removable parts should be cleaned in approved parts-cleaning machines already tested and labeled for such a purpose. The hazards associated with cleaning an aircraft, aircraft parts and aircraft engines with Class IA flammable liquids are fires and explosions, potentially causing damaged property and loss of life. Section 5005.3.6 gives requirements for cleaning with Class I, II and IIIA liquids.

2004.4 Spills. Sections 2004.4.1 through 2004.4.3 shall apply to spills of flammable and *combustible liquids* and other hazardous materials. Fuel spill control shall also comply with Section 2006.11.

❖ The following procedures should be adhered to in the event a spill occurs. The specific requirements for fuel spill prevention are found in Section 2006.11.

2004.4.1 Cessation of work. Activities in the affected area not related to the mitigation of the spill shall cease until the spilled material has been removed or the hazard has been mitigated.

❖ All ongoing activity must stop in the area of a spill until the spill has been cleaned up and removed, since those ongoing activities may cause an ignition to occur. The area should be clear of all hazards before work is resumed.

2004.4.2 Vehicle movement. Aircraft or other vehicles shall not be moved through the spill area until the spilled material has been removed or the hazard has been mitigated.

❖ The movement of vehicles may create an ignition source for the flammable liquids that spilled. Stopping all movement of vehicles reduces the possibility of a fire or an explosion significantly.

2004.4.3 Mitigation. Spills shall be reported, documented and mitigated in accordance with the provisions of this chapter and Section 5003.3.

❖ Any fuel spill, whatever the amount, must be reported to the proper authorities and documented to record the spill details and what was done to clean up the spill. Chapter 50 gives specific procedures for handling a spill.

2004.5 Running engines. Aircraft engines shall not be run in aircraft hangars except in *approved* engine test areas.

❖ An approved engine test area should have proper ventilation, engine noise control and be separated from other areas of operation. Running engines could create ignition sources that could cause fire or explosions, as well as ventilation and noise hazards for the surrounding employees.

2004.6 Open flame. Repairing of aircraft requiring the use of open flames, spark-producing devices or the heating of parts above 500°F (260°C) shall only be done outdoors or in an area complying with the provisions of the *International Building Code* for a Group F-1 occupancy.

❖ No heat-producing, welding, cutting or blow-torch devices should be used inside hangars. Their use is restricted to areas that meet the requirements of a Group F-1 occupancy in the *International Mechanical Code*® (IMC®). Flare pots and other open-flame lights are also included in this category.

2004.7 Other aircraft maintenance. Maintenance, repairs, modifications, or construction performed upon aircraft not addressed elsewhere in this code shall be conducted in accordance with NFPA 410.

❖ Aircraft maintenance is often a hazardous procedure due to the inherent hazards of aircraft. NFPA 410 specifies minimum safety requirements to be performed during specific maintenance operations such as fuel or oxygen system maintenance, aircraft cleaning and hazardous operations such as defueling. It provides additional fire-safety requirements to sup-

INTERNATIONAL CODE COUNCIL®
Copyright © 2015 ICC. ALL RIGHTS RESERVED. Accessed by David Dammon on Jun 21, 2017 12:30:52 PM pursuant to License Agreement with ICC. No further reproduction or distribution authorized. ANY UNAUTHORIZED REPRODUCTION OR DISTRIBUTION IS A VIOLATION OF THE FEDERAL COPYRIGHT ACT AND THE LICENSE AGREEMENT, AND SUBJECT TO CIVIL AND CRIMINAL PENALTIES THEREUNDER.

plement the procedures already regulated by this chapter, as well as additional fire protection requirements for other specified procedures not regulated by this chapter. See the commentary to Section 102.7 for information on the proper application of referenced standards.

SECTION 2005
PORTABLE FIRE EXTINGUISHERS

2005.1 General. Portable fire extinguishers suitable for flammable or *combustible liquid* and electrical-type fires shall be provided as specified in Sections 2005.2 through 2005.6 and Section 906. Extinguishers required by this section shall be inspected and maintained in accordance with Section 906.

❖ Portable fire extinguishers (PFEs) must be approved for use on Class B and C fires. Placement and distribution of PFEs should conform to NFPA 10, NFPA 407 and Section 906 of the code. Generally, PFEs are required in the immediate vicinity of all flammable and combustible liquid storage; use and dispensing; welding and cutting; spray finishing and other maintenance operations, as well as on aircraft fueler and service vehicles.

It should be noted that Sections 2005.2, 2005.4, 2005.5 and 2005.6 specifically require B:C-rated PFEs on vehicles and in locations that are in close proximity to aircraft. This is because it has been reported by the National Safety Council that A:B:C-rated PFE chemicals pose a severe aircraft damage problem. While A:B:C-rated PFEs generally have an excellent fire-fighting capability and track record, the monoammonium-phosphate chemical extinguishing agent is highly corrosive to aluminum. This agent will melt and flow when it comes into contact with heated surfaces and, once it comes into contact with hot aluminum and works its way into the structural joints and crevices, it cannot be flushed out as the B:C dry-chemical agents can. Cleanup following use of an A:B:C-rated PFE on an aircraft could require disassembly of the aircraft to remove every remnant of the chemical to prevent hidden corrosion damage that could lead to structural failure.

2005.2 On towing vehicles. Vehicles used for towing aircraft shall be equipped with not less than one *listed* portable fire extinguisher complying with Section 906 and having a minimum rating of 20-B:C.

❖ Tow motors and other towing vehicles must be equipped with a PFE that is readily available if a fire occurs away from a service, maintenance or boarding area.

2005.3 On welding apparatus. Welding apparatus shall be equipped with not less than one *listed* portable fire extinguisher complying with Section 906 and having a minimum rating of 2-A:20-B:C.

❖ Consistent with Section 3504.2.6, a PFE is required on all welding apparatus so that it is readily available during welding or cutting operations outside a welding or cutting shop area.

2005.4 On aircraft fuel-servicing tank vehicles. Aircraft fuel-servicing tank vehicles shall be equipped with not less than two *listed* portable fire extinguishers complying with Section 906, each having a minimum rating of 20-B:C. A portable fire extinguisher shall be readily accessible from either side of the vehicle.

❖ Fuel-servicing tank vehicles for aircraft must have a PFE on each side of the vehicle. Both extinguishers must be easily accessible and not be obstructed. Each PFE must be effective for the extinguishment of a flammable liquid fire and also be effective for energized electrical components (see Commentary Figure 2006.3 – note the PFE on each side of the rear bumper).

2005.5 On hydrant fuel-servicing vehicles. Hydrant fuel-servicing vehicles shall be equipped with not less than one *listed* portable fire extinguisher complying with Section 906, and having a minimum rating of 20-B:C.

❖ Hydrant fuel-servicing vehicles must be equipped with one PFE that is effective for the extinguishment of a flammable liquid fire and is also effective for energized electrical components.

2005.6 At fuel-dispensing stations. Portable fire extinguishers at fuel-dispensing stations shall be located such that pumps or dispensers are not more than 75 feet (22 860 mm) from one such extinguisher. Fire extinguishers shall be provided as follows:

1. Where the open-hose discharge capacity of the fueling system is not more than 200 gallons per minute (13 L/s), not less than two *listed* portable fire extinguishers complying with Section 906 and having a minimum rating of 20-B:C shall be provided.
2. Where the open-hose discharge capacity of the fueling system is more than 200 gallons per minute (13 L/s) but not more than 350 gallons per minute (22 L/s), not less than one *listed* wheeled extinguisher complying with Section 906 and having a minimum extinguishing rating of 80-B:C, and a minimum agent capacity of 125 pounds (57 kg), shall be provided.
3. Where the open-hose discharge capacity of the fueling system is more than 350 gallons per minute (22 L/s), not less than two *listed* wheeled extinguishers complying with Section 906 and having a minimum rating of 80-B:C each, and a minimum capacity agent of 125 pounds (57 kg) of each, shall be provided.

❖ This section requires PFEs with ratings based on the anticipated discharge rate of a broken or ruptured fuel hose. NFPA 407 contains requirements for the inspection and maintenance of an aircraft fueling hose, including daily pre-use inspection and removal from service of obviously defective hoses. Despite these inspections, however, hoses and fittings can and do fail for a variety of reasons (e.g., unnoticed physical damage, coupling and fitting failure, overpressure rupture, etc.), resulting in a flailing hose,

INTERNATIONAL CODE COUNCIL®
Copyright © 2015 ICC. ALL RIGHTS RESERVED. Accessed by David Dammon on Jun 21, 2017 12:30:52 PM pursuant to License Agreement with ICC. No further reproduction or distribution authorized. ANY UNAUTHORIZED REPRODUCTION OR DISTRIBUTION IS A VIOLATION OF THE FEDERAL COPYRIGHT ACT AND THE LICENSE AGREEMENT, AND SUBJECT TO CIVIL AND CRIMINAL PENALTIES THEREUNDER.

"open butt" discharge of fuel under the full pressure of the fueling system. Such uncontrolled fuel discharge could flow under the aircraft; fueling vehicles; passenger stairs or ramps; baggage-handling equipment or in close proximity to building openings. If a hose were to rupture on top of an aircraft wing or a flailing hose were to spray fuel on vehicles, baggage carts, etc., the resulting hazard would increase beyond a simple spill fire. The large amount of property damage and potential for loss of life requires that sufficient PFEs of an adequate size be located in the fueling area. (Note: the PFEs required by this section are in addition to others required on vehicles that may be present in the fuel area.)

Considerations in locating PFEs during fueling operations include placing them out and upwind of the fuel-dispensing site and potential spill area, as well as within the access travel distance specified in NFPA 10 for extra-hazard locations. When two PFEs are required, they should be located close enough to each other so NFPA 10 access travel distances are not exceeded and a spill incident does not prevent access to or use of both appliances.

FAA regulations and NFPA 407 require refueling personnel to receive PFE and fire safety training. Annex A of NFPA 407 recommends that such training include live-fire exercises. Training should be adequately detailed so that supervisors are capable of properly indoctrinating their subordinates in fire safety essentials. Topics covered in the training program should include electrical bonding and grounding; maintenance of aircraft egress; emergency shutdown of fuel-servicing equipment; notification of emergency forces; and supporting emergency operations.

The low flow rate in Item 1 requires that at least two 20-B:C hand-held PFEs are provided. It also assumes that the trained personnel available will be able to handle the relatively small anticipated spill. Such PFEs typically discharge for up to ± 25 seconds for distances up to ± 20 feet (± 6096 mm).

Item 2 states that a ruptured hose discharging up to 350 gallons per minute (gpm) (1325 L/m) creates a potentially larger spill area and a more challenging fire for first-aid appliances. The higher "B" rating requires a quantity of extinguishing agent, usually dry chemical, that likely exceeds 50 pounds (28 kg), depending on the agent. Accordingly, a wheeled PFE will enable a single operator more mobility in moving the PFE for fire attack. The size of the wheeled unit, in addition to its longer discharge hose, allows the operator a greater agent discharge time, a higher agent flow rate, a greater agent discharge distance and more mobility in the hazardous area. The potential for such large fuel discharges increases the extinguishing requirements. For the same reasons discussed under Item 2, a minimum of two wheeled units are required to allow a more aggressive fire attack.

2005.7 Fire extinguisher access. Portable fire extinguishers required by this chapter shall be accessible at all times. Where necessary, provisions shall be made to clear accumulations of snow, ice and other forms of weather-induced obstructions.

❖ Unobstructed access to PFEs is essential. In colder climates, snow and ice may block access and must be removed because fire can occur at any time.

2005.7.1 Cabinets. Cabinets and enclosed compartments used to house portable fire extinguishers shall be clearly marked with the words FIRE EXTINGUISHER in letters not less than 2 inches (51 mm) high. Cabinets and compartments shall be readily accessible at all times.

❖ In an emergency, people can panic and become confused. Labeling cabinets where PFEs are housed with letters 2 inches high (51 mm) (often in red) makes the PFEs easier to locate.

2005.8 Reporting use. Use of a fire extinguisher under any circumstances shall be reported to the manager of the airport and the *fire code official* immediately after use.

❖ The fire code official is responsible for the investigation of fires within the jurisdiction and for maintaining records thereof. Likewise, the airport manager is responsible for all activities and events within the airport. Both persons must be notified of extinguisher use so the circumstances of the event can be investigated and appropriate follow-up procedures initiated to mitigate the hazard that resulted in the incident. Discharged PFEs must be promptly replaced with serviceable units.

SECTION 2006
AIRCRAFT FUELING

2006.1 Aircraft motor vehicle fuel-dispensing facilities. Aircraft motor vehicle fuel-dispensing facilities shall be in accordance with Chapter 23.

❖ Requirements for fuel-dispensing stations for aircraft motor vehicles are found in Chapter 23. This provision addresses the dispensing of fuel into small general aviation-type aircraft at stationary fuel-dispensing facilities that use equipment similar to that used at automotive service stations rather than fuel hydrants or fuel tanker trucks that are used on larger aircraft. See the commentary to Section 202 for the definition of "Aircraft motor vehicle fuel-dispensing facility."

2006.2 Airport fuel systems. Airport fuel systems shall be designed and constructed in accordance with NFPA 407.

❖ Aviation fuels present a wide range of hazards. The fuel, ambient temperature, control of ignition sources, drainage, availability of fire protection equipment and the experience and training of fuel-service personnel have the greatest influence over the outcome of fueling accidents. Consequently, this section references

INTERNATIONAL CODE COUNCIL®
Copyright © 2015 ICC. ALL RIGHTS RESERVED. Accessed by David Dammon on Jun 21, 2017 12:30:52 PM pursuant to License Agreement with ICC. No further reproduction or distribution authorized. ANY UNAUTHORIZED REPRODUCTION OR DISTRIBUTION IS A VIOLATION OF THE FEDERAL COPYRIGHT ACT AND THE LICENSE AGREEMENT, AND SUBJECT TO CIVIL AND CRIMINAL PENALTIES THEREUNDER.

NFPA 407, specifying requirements for the design and operation of fueling installations, vehicles and procedures.

At normal ambient temperatures, the kerosene-grade fuels are not readily ignitable, which may explain their popularity. When spilled on a warm aircraft apron, however, kerosene-grade fuels can be readily heated above their flash points. Once ignited, most aviation fuels exhibit relatively similar burning characteristics (see Commentary Figure 2006.2 for information on common aviation fuels).

Fuel spills are relatively uncommon occurrences compared to the daily number of refuelings that occur. Most fuel spills occur as the result of a slow or faulty internal shutoff valve that causes overfilling of the tank, resulting in fuel escaping through the tank vent point. To prevent or minimize such accidents, fuel shutoffs and fail-safe, self-closing valves should be exercised and inspected regularly. In addition, faulty valves and equipment should be removed from service and repaired or replaced immediately. All spills must be promptly reported to airport fire-fighting personnel and investigated to determine their cause.The most common ignition source in liquid fuel spills is static electricity. The kerosene and kerosene-gasoline blends are more electrostatically active than AVGAS, and transfer operations may generate considerable amounts of static electricity; therefore, prior to most fueling operations both the aircraft and refueler shall be independently grounded and then bonded to one another either by the filling hose or a separate bonding line (see commentary, Section 2006.5.2 and its subsections for further information).

2006.3 Construction of aircraft-fueling vehicles and accessories. Aircraft-fueling vehicles shall comply with this section and shall be designed and constructed in accordance with NFPA 407.

❖ The following sections apply to vehicles operated for refueling aircraft. The sections address transfer apparatus, pumps, dispensing, electrical equipment, venting and smoking. The design and construction of the vehicle tanks, trailers, piping, exhaust system, lighting, venting and safe operating procedures parallel those in NFPA 407, Chapter 2 (see Commentary Figure 2006.3).

2006.3.1 Transfer apparatus. Aircraft-fueling vehicles shall be equipped and maintained with an *approved* transfer apparatus.

❖ The transfer apparatus installed on the fuel-servicing vehicle must be approved and tested for transferring fuel into an aircraft. All sections involved in a flammable liquid feed system should be constructed and located to minimize a fire hazard.

	Gasoline	Kerosene Grades	Blends of Kerosene and Gasoline
Commercial Designation	AVGAS	JET A, JET A-1	JET B
Military Designation		JP-5, JP-6, JP-8	JP-4
Characteristics			
Freezing Point	-76°F	-49 to -58°F	-60°F
Vapor Pressure	5.5 to 7.0 psi	0.1 psi	2.0 to 3.0 psi
Flash Point (Closed-cup Method @ MSL)	-50°F	95 to 145°F	-10 to +30°F
Flash Point (Air-saturation Method)	-75 to -85°F	None	-60°F
Flammable Range Lower Upper Temperature Range	 1.5% 7.6% -50 to +30°F	 0.74% 5.32% 95 to 165°F	 1.16% 7.63% -10 to +100°F
Auto-ignition Temperature	825 to 960°F	440 to 475°F	470 to 480°F
Boiling Points Initial End	 110°F 325°F	 325°F 450°F	 135°F 485°F
Pool Rate of Flame Spread	700 to 800 feet per minute	≤ 100 feet per minute	700 to 800 feet per minute

Source: Brenneman, J.J. *Industrial Fire Hazards Handbook.*
For SI; 1 foot per minute = 0.00508 m/s, °C = [(°F) - 32]/1.8.

Figure 2006.2
PHYSICAL AND FLAMMABILITY CHARACTERISTICS OF AVIATION FUELS

INTERNATIONAL CODE COUNCIL®
Copyright © 2015 ICC. ALL RIGHTS RESERVED. Accessed by David Dammon on Jun 21, 2017 12:30:52 PM pursuant to License Agreement with ICC. No further reproduction or distribution authorized. ANY UNAUTHORIZED REPRODUCTION OR DISTRIBUTION IS A VIOLATION OF THE FEDERAL COPYRIGHT ACT AND THE LICENSE AGREEMENT, AND SUBJECT TO CIVIL AND CRIMINAL PENALTIES THEREUNDER.



Figure 2006.3
AIRCRAFT-FUELING VEHICLE

2006.3.1.1 Internal combustion type. Where such transfer apparatus is operated by an individual unit of the internal-combustion-motor type, such power unit shall be located as remotely as practicable from pumps, piping, meters, air eliminators, water separators, hose reels and similar equipment, and shall be housed in a separate compartment from any of the aforementioned items. The fuel tank in connection therewith shall be suitably designed and installed, and the maximum fuel capacity shall not exceed 5 gallons (19 L) where the tank is installed on the engine. The exhaust pipe, muffler and tail pipe shall be shielded.

❖ Isolation of an internal combustion engine from the fuel transfer system helps to control possible ignition sources. The ignition sources need to be shielded and equipment should be housed in separate compartments.

2006.3.1.2 Gear operated. Where operated by gears or chains, the gears, chains, shafts, bearings, housing and all parts thereof shall be of an *approved* design and shall be installed and maintained in an *approved* manner.

❖ The gears and other associated parts should be covered and protected from damage, whether the damage comes from environmental or mechanical sources. The design must be approved for the function. Maintenance should be scheduled to provide consistent and proper operation.

2006.3.1.3 Vibration isolation. Flexible connections for the purpose of eliminating vibration are allowed if the material used therein is designed, installed and maintained in an *approved* manner, provided such connections do not exceed 24 inches (610 mm) in length.

❖ Because hoses are the weak point in any system and they are necessary for flexible connections, they should be kept as short as possible. Hose length must not exceed 24 inches (610 mm).

2006.3.2 Pumps. Pumps of a positive-displacement type shall be provided with a bypass relief valve set at a pressure of not more than 35 percent in excess of the normal working pressure of such unit. Such units shall be equipped and maintained with a pressure gauge on the discharge side of the pump.

❖ A relief valve is needed on positive-displacement pumps to prevent high-pressure damage or an explosion within the fuel feed system. At 35 percent over the normal operating pressure the relief valve will allow the excess pressure to escape, thus preventing a dangerous situation. A pressure gauge also allows monitoring of pump operation to detect overpressure conditions.

2006.3.3 Dispensing hoses and nozzles. Hoses shall be designed for the transferring of hydrocarbon liquids and shall not be any longer than necessary to provide efficient fuel transfer operations. Hoses shall be equipped with an *approved* shutoff nozzle. Fuel-transfer nozzles shall be self-closing and designed to be actuated by hand pressure only. Notches and other devices shall not be used for holding a nozzle valve handle in the open position. Nozzles shall be equipped with a bonding cable complete with proper attachment for aircraft to be serviced.

❖ Nozzles having notches for holding a nozzle valve handle in the open position create the risk of an overflow/spill situation if the handle sticks in the open position. The shutoff nozzle also aids in the prevention of an overflow/spill situation. Bonding the nozzle to the aircraft helps to dissipate static electricity that is generated in the fueling operation.

2006.3.4 Protection of electrical equipment. Electric wiring, switches, lights and other sources of ignition, where located in a compartment housing piping, pumps, air eliminators, water separators, hose reels or similar equipment, shall be enclosed in a vapor-tight housing. Electrical motors located in such a compartment shall be of a type *approved* for use as specified in NFPA 70.

❖ Because electrical equipment can be a serious sparking source, precautions must be taken to eliminate this potential ignition source and fire hazard.

2006.3.5 Venting of equipment compartments. Compartments housing piping, pumps, air eliminators, water separators, hose reels and similar equipment shall be adequately ventilated at floor level or within the floor itself.

❖ Venting compartments housing this equipment provide both dilution air to keep possible air-vapor mixtures below the flammable range and airflow for dissipation of any vapors present.

2006.3.6 Accessory equipment. Ladders, hose reels and similar accessory equipment shall be of an *approved* type and constructed substantially as follows:

1. Ladders constructed of noncombustible material are allowed to be used with or attached to aircraft-fueling vehicles, provided the manner of attachment or use of such ladders is *approved* and does not constitute an additional fire or accident hazard in the operation of such fueling vehicles.

INTERNATIONAL CODE COUNCIL®
Copyright © 2015 ICC. ALL RIGHTS RESERVED. Accessed by David Dammon on Jun 21, 2017 12:30:52 PM pursuant to License Agreement with ICC. No further reproduction or distribution authorized. ANY UNAUTHORIZED REPRODUCTION OR DISTRIBUTION IS A VIOLATION OF THE FEDERAL COPYRIGHT ACT AND THE LICENSE AGREEMENT, AND SUBJECT TO CIVIL AND CRIMINAL PENALTIES THEREUNDER.

2. Hose reels used in connection with fueling vehicles shall be constructed of noncombustible materials and shall be provided with a packing gland or other device that will preclude fuel leakage between reels and fuel manifolds.

❖ Ladders made of noncombustible materials and that are securely attached help eliminate a potential spark ignition source, and limit the possibility of falling equipment breaking a component of the fuel system.

Hose reels constructed of noncombustible material help eliminate the possibility of an ignition source causing a fire hazard. The installation of a packing gland or other device helps eliminate the possibility of a fuel leak causing a fire hazard.

2006.3.7 Electrical bonding provisions. Transfer apparatus shall be metallically interconnected with tanks, chassis, axles and springs of aircraft-fueling vehicles.

❖ Fuel transfer vehicles must be bonded together as a unit. This helps to eliminate the electrostatic charge created by flowing fuel through pipes and hoses.

2006.3.7.1 Bonding cables. Aircraft-fueling vehicles shall be provided and maintained with a substantial heavy-duty electrical cable of sufficient length to be bonded to the aircraft to be serviced. Such cable shall be metallically connected to the transfer apparatus or chassis of the aircraft-fueling vehicle on one end and shall be provided with a suitable metal clamp on the other end, to be fixed to the aircraft.

❖ The fueling vehicle and the aircraft must be bonded together with a cable before making any fueling connection to the aircraft. This provides a conductive path to equalize the electrostatic charge between the fueling vehicle and the aircraft.

2006.3.7.2 Bonding cable protection. The bonding cable shall be bare or have a transparent protective sleeve and be stored on a reel or in a compartment provided for no other purpose. It shall be carried in such a manner that it will not be subjected to sharp kinks or accidental breakage under conditions of general use.

❖ Bonding cable that is worn, frayed or kinked cannot make good contact or provide a continuous path to eliminate the electrostatic charge. Bonding cables require special care in storage and handling.

2006.3.8 Smoking. Smoking in aircraft-fueling vehicles is prohibited. Signs to this effect shall be conspicuously posted in the driver's compartment of all fueling vehicles.

❖ Because flammable vapors being discharged during refueling can accumulate in closed areas, such as the driver's compartment of the fueling vehicle, smoking in that compartment is strictly prohibited. Signs must be posted conspicuously in the driver's compartment as a warning.

2006.3.9 Smoking equipment. Smoking equipment such as cigarette lighters and ash trays shall not be provided in aircraft-fueling vehicles.

❖ Because smoking is prohibited in fueling vehicles, the elimination of cigarette lighters and ashtrays reinforces this regulation.

2006.4 Operation, maintenance and use of aircraft-fueling vehicles. The operation, maintenance and use of aircraft-fueling vehicles shall be in accordance with Sections 2006.4.1 through 2006.4.4 and other applicable provisions of this chapter.

❖ Fuel-servicing equipment must comply with the requirements of the following sections and must be maintained in safe operating condition. Leaking or malfunctioning equipment must be removed from service.

2006.4.1 Proper maintenance. Aircraft-fueling vehicles and all related equipment shall be properly maintained and kept in good repair. Accumulations of oil, grease, fuel and other flammable or combustible materials is prohibited. Maintenance and servicing of such equipment shall be accomplished in *approved* areas.

❖ Fueling vehicles should be inspected every day. The accumulation of oil, grease or any other material creates a fire hazard if it is ignited by an ignition source. A clean, well-maintained fueling vehicle is a high priority in the line of fire-hazard prevention. The cleaning should take place in an area constructed and approved for such a task.

2006.4.2 Vehicle integrity. Tanks, pipes, hoses, valves and other fuel delivery equipment shall be maintained leak free at all times.

❖ All fuel delivery equipment should be checked every day for leaks. If a leak occurs, the probability of a fire occuring increases.

2006.4.3 Removal from service. Aircraft-fueling vehicles and related equipment that are in violation of Section 2006.4.1 or 2006.4.2 shall be immediately defueled and removed from service and shall not be returned to service until proper repairs have been made.

❖ Whenever a problem is discovered with the vehicle, tank, pipes, hoses, valves or any equipment related to aircraft fueling, the vehicle must be taken out of service immediately and repaired. Having a vehicle in service that is not working properly increases the potential for a fire.

INTERNATIONAL CODE COUNCIL®
Copyright © 2015 ICC. ALL RIGHTS RESERVED. Accessed by David Dammon on Jun 21, 2017 12:30:52 PM pursuant to License Agreement with ICC. No further reproduction or distribution authorized. ANY UNAUTHORIZED REPRODUCTION OR DISTRIBUTION IS A VIOLATION OF THE FEDERAL COPYRIGHT ACT AND THE LICENSE AGREEMENT, AND SUBJECT TO CIVIL AND CRIMINAL PENALTIES THEREUNDER.

2006.4.4 Operators. Aircraft-fueling vehicles that are operated by a person, firm or corporation other than the permittee or the permittee's authorized employee shall be provided with a legible sign visible from outside the vehicle showing the name of the person, firm or corporation operating such unit.

❖ A change in the operator, firm or corporation from the permit holder of a fueling vehicle requires notification. In addition to verbal or written communication, a sign that can be read from outside the vehicle must be posted on or in the vehicle notifying observers that a different person or organization is performing the procedure.

2006.5 Fueling and defueling. Aircraft-fueling and defueling operations shall be in accordance with Sections 2006.5.1 through 2006.5.5.

❖ This section covers the requirements for positioning and bonding the fueling vehicle. It also covers the requirements for training fuel transfer personnel and their responsibilities.

2006.5.1 Positioning of aircraft-fueling vehicles. Aircraft-fueling vehicles shall not be located, parked or permitted to stand in a position where such unit would obstruct egress from an aircraft should a fire occur during fuel-transfer operations. Aircraft-fueling vehicles shall not be located, parked or permitted to stand under any portion of an aircraft.

Exception: Aircraft-fueling vehicles shall be allowed to be located under aircraft wings during underwing fueling of turbine-engine powered aircraft.

❖ Safety of crew and passengers is always the highest priority. Fuel-service vehicles must not be positioned under any part of an aircraft and must always be in a location that leaves aircraft egress paths free of obstruction (see commentary, Section 2006.9, Item 4). The exception, applicable only to jet aircraft, recognizes that a number of factors, including the size of the aircraft, the location of fuel inlets and the length of hose on the tank truck, will dictate where aircraft fueling vehicles are necessarily located.

2006.5.1.1 Fueling vehicle egress. A clear path shall be maintained for aircraft-fueling vehicles to provide for prompt and timely egress from the fueling area.

❖ The requirement for a clear and unobstructed path in and out of the fueling area calls for cooperation between refueling crews and other ground support personnel to make sure the path exists. This allows for a safe, timely and efficient fueling operation.

2006.5.1.2 Aircraft vent openings. A clear space of not less than 10 feet (3048 mm) shall be maintained between aircraft fuel-system vent openings and any part or portion of an aircraft-fueling vehicle.

❖ Fuel vapors are released from fuel-system vent openings. The 10-foot (3048 mm) radius gives a distance sufficient for vapor dissipation.

2006.5.1.3 Parking. Prior to leaving the cab, the aircraft-fueling vehicle operator shall ensure that the parking brake has been set. Not less than two chock blocks not less than 5 inches by 5 inches by 12 inches (127 mm by 127 mm by 305 mm) in size and dished to fit the contour of the tires shall be utilized and positioned in such a manner as to preclude movement of the vehicle in any direction.

❖ This requirement for securing the fueling vehicle is an important safety consideration. Even a slight grade or dishing of the pavement could cause an unsecured vehicle to roll far enough to strain the fueling link into leaking, disconnecting or breaking, which would create the possibility of a spill and a hazardous situation.

2006.5.2 Electrical bonding. Aircraft-fueling vehicles shall be electrically bonded to the aircraft being fueled or defueled. Bonding connections shall be made prior to making fueling connections and shall not be disconnected until the fuel-transfer operations are completed and the fueling connections have been removed.

Where a hydrant service vehicle or cart is used for fueling, the hydrant coupler shall be connected to the hydrant system prior to bonding the fueling equipment to the aircraft.

❖ Bonding increases the likelihood that the receiving tank (aircraft or vehicle) and the fueling/defueling equipment have the same electrical potential and provides a path for the charges in all parts of the fueling system to neutralize. The bonding of the fuel vehicle and aircraft must be completed before any fuel is moved and must remain in place until after the fueling operation is complete.

2006.5.2.1 Conductive hose. In addition to the bonding cable required by Section 2006.5.2, conductive hose shall be used for all fueling operations.

❖ The use of conductive hose helps to prevent electrostatic discharge. It is not a substitute for required bonding.

2006.5.2.2 Bonding conductors on transfer nozzles. Transfer nozzles shall be equipped with *approved* bonding conductors that shall be clipped or otherwise positively engaged with the bonding attachment provided on the aircraft adjacent to the fuel tank cap prior to removal of the cap.

Exception: In the case of overwing fueling where no appropriate bonding attachment adjacent to the fuel fill port has been provided on the aircraft, the fueling operator shall touch the fuel tank cap with the nozzle spout prior to removal of the cap. The nozzle shall be kept in contact with the fill port until fueling is completed.

❖ This procedure provides a conductive path for equalizing the potential electrostatic charge between the aircraft and the transfer nozzle. Even if a clip or engaging mechanism is not provided, contact with the fill port must be maintained until the fueling process is complete.

2006.5.2.3 Funnels. Where required, metal funnels are allowed to be used during fueling operations. Direct contact

INTERNATIONAL CODE COUNCIL®
Copyright © 2015 ICC. ALL RIGHTS RESERVED. Accessed by David Dammon on Jun 21, 2017 12:30:52 PM pursuant to License Agreement with ICC. No further reproduction or distribution authorized. ANY UNAUTHORIZED REPRODUCTION OR DISTRIBUTION IS A VIOLATION OF THE FEDERAL COPYRIGHT ACT AND THE LICENSE AGREEMENT, AND SUBJECT TO CIVIL AND CRIMINAL PENALTIES THEREUNDER.

between the fueling receptacle, the funnel and the fueling nozzle shall be maintained during the fueling operation.

❖ Prevention of potential sparks that produce ignition sources for fires is the objective for keeping metal funnels in direct contact with fueling nozzles and receptacles at all times.

2006.5.3 Training. Aircraft-fueling vehicles shall be attended and operated only by persons instructed in methods of proper use and operation and who are qualified to use such fueling vehicles in accordance with minimum safety requirements.

❖ Only personnel trained in the proper and safe operation of the equipment, emergency controls and emergency procedures are allowed to fuel or defuel aircraft.

2006.5.3.1 Fueling hazards. Fuel-servicing personnel shall know and understand the hazards associated with each type of fuel dispensed by the airport fueling-system operator.

❖ Personnel performing fueling or defueling procedures must be familiar with every hazard that is in involved with each and every fuel that is dispensed.

2006.5.3.2 Fire safety training. Employees of fuel agents who fuel aircraft, accept fuel shipments or otherwise handle fuel shall receive *approved* fire safety training.

❖ Employees must be trained in and be aware of fire safety rules and precautions involving fuel-servicing processes. Training must be in areas involving vehicle integrity and placement; bonding of vehicles; aircraft; hose connections; valves; and fuel-process equipment. The training must be an approved in-depth program that is recognized by airport authorities.

2006.5.3.2.1 Fire extinguisher training. Fuel-servicing personnel shall receive *approved* training in the operation of fire-extinguishing equipment.

❖ Employees involved in fuel servicing must have adequate training with extinguishers to use them effectively in the event of an emergency (see commentary, Section 2005.6 for further information).

2006.5.3.2.2 Records. The airport fueling-system operator shall maintain records of all training administered to its employees.

❖ Training must be documented and records kept on premises for verification, if requested, that the personnel have received the proper training.

2006.5.4 Transfer personnel. During fuel-transfer operations, a qualified person shall be in control of each transfer nozzle and another qualified person shall be in immediate control of the fuel-pumping equipment to shut off or otherwise control the flow of fuel from the time fueling operations are begun until they are completed.

Exceptions:

1. For underwing refueling, the person stationed at the point of fuel intake is not required.
2. For overwing refueling, the person stationed at the fuel pumping equipment shall not be required where the person at the fuel dispensing device is within 75 feet (22 800 mm) of the emergency shutoff device; is not on the wing of the aircraft and has a clear and unencumbered path to the fuel pumping equipment; and the fuel dispensing line does not exceed 50 feet (15 240 mm) in length.

The fueling operator shall monitor the panel of the fueling equipment and the aircraft control panel during pressure fueling or shall monitor the fill port during overwing fueling.

❖ Two qualified trained individuals must perform fuel transfer procedures. One individual controls the nozzles. The other individual must be in the control area for flow monitoring and control; and immediate shutdown of fuel flow in case of an emergency (overfill, spill, fire, etc.). The exception for underwing fueling is appropriate because underwing operations require a liquid-tight connection that does not require constant monitoring to ensure freedom from spills and overflows. The four items that must be met in the overwing refueling process are meant for quick response in case a problem occurs. The individual must be completely alert to the fueling process and free from distractions if alone.

2006.5.5 Fuel flow control. Fuel flow-control valves shall be operable only by the direct hand pressure of the operator. Removal of the operator's hand pressure shall cause an immediate cessation of the flow of fuel.

❖ Deadman controls should be designed so that the operator, while wearing gloves, can hold them for the time required to complete the operation.

2006.6 Emergency fuel shutoff. Emergency fuel shutoff controls and procedures shall comply with Sections 2006.6.1 through 2006.6.4.

❖ The following sections address emergency fuel shutoff accessibility, fire department notification, determining cause if shutoff activates and testing procedures.

2006.6.1 Accessibility. Emergency fuel shutoff controls shall be readily accessible at all times when the fueling system is being operated.

❖ Emergency controls must be unobstructed whenever the fueling system is operating. Time should not be wasted having to move objects or material blocking access to the controls before fueling operations can be shut down in an emergency.

2006.6.2 Notification of the fire department. The fueling-system operator shall establish a procedure by which the fire department will be notified in the event of an activation of an emergency fuel shutoff control.

❖ A plan must be developed for notifying the fire department. The plan should be in a written format and reviewed with trained and certified employees in advance of fueling operations. Notification of the fire

INTERNATIONAL CODE COUNCIL®
Copyright © 2015 ICC. ALL RIGHTS RESERVED. Accessed by David Dammon on Jun 21, 2017 12:30:52 PM pursuant to License Agreement with ICC. No further reproduction or distribution authorized. ANY UNAUTHORIZED REPRODUCTION OR DISTRIBUTION IS A VIOLATION OF THE FEDERAL COPYRIGHT ACT AND THE LICENSE AGREEMENT, AND SUBJECT TO CIVIL AND CRIMINAL PENALTIES THEREUNDER.

department will have emergency responders on their way immediately in case fire or rescue operations are required.

2006.6.3 Determining cause. Prior to reestablishment of normal fuel flow, the cause of fuel shutoff conditions shall be determined and corrected.

❖ If for any reason the flow of fuel is discontinued by the emergency shutoff systems during fueling operations, the cause of the activation must be determined and the problem fixed before fuel flow is started again. Fuel flow may not be restarted if the cause of the shutdown is not determined. If fuel flow were restarted, the problem may occur again and more serious problems could develop.

2006.6.4 Testing. Emergency fuel shutoff devices shall be operationally tested at intervals not exceeding three months. The fueling-system operator shall maintain testing records.

❖ Testing of the emergency fuel shutoff devices increases the likelihood that the devices will function properly. Although three-month intervals are the maximum allowed, the test may be performed more frequently if desired. Records are required for documentation that the tests were performed. If an accident occurs, these records will be a great asset for verification that the devices were tested and operational.

2006.7 Protection of hoses. Before an aircraft-fueling vehicle is moved, fuel transfer hoses shall be properly placed on the *approved* reel or in the compartment provided, or stored on the top decking of the fueling vehicle if proper height rail is provided for security and protection of such equipment. Fuel-transfer hose shall not be looped or draped over any part of the fueling vehicle, except as herein provided. Fuel-transfer hose shall not be dragged when such fueling vehicle is moved from one fueling position to another.

❖ Accidents or fires may occur if hoses are not properly stored and handled. Sparks caused by metal nozzles or hose ends/couplings striking pavement when hoses are dragged from one area to another are a serious potential ignition source. Also, the hoses are least likely to be damaged if stored in proper locations.

2006.8 Loading and unloading. Aircraft-fueling vehicles shall be loaded only at an *approved* loading rack. Such loading racks shall be in accordance with Section 5706.5.1.12.

Exceptions:

1. Aircraft-refueling units are allowed to be loaded from the fuel tanks of an aircraft during defueling operations.
2. Fuel transfer between tank vehicles is allowed to be performed in accordance with Section 5706.6 when the operation is not less than 200 feet (60 960 mm) from an aircraft.

The fuel cargo of such units shall be unloaded only by *approved* transfer apparatus into the fuel tanks of aircraft, underground storage tanks or *approved* gravity storage tanks.

❖ Section 5706.5.1.12 addresses requirements for loading racks. Loading racks, platforms and stairs must be constructed of noncombustible materials. Buildings for pumps and buildings that shelter personnel can be part of the loading rack. The area within 25 feet (7620 mm) of a loading platform shall be electrically classified in accordance with Table 5703.1.1.

Transfer of fuel from one tank vehicle to another and from aircraft to vehicle is allowable using approved methods and procedures. At times, loading and unloading fuel from aircraft and refueling units is necessary when taking units out of service and when defueling an aircraft while preparing for maintenance or repair.

An aircraft refueling unit is normally loaded either for refueling an aircraft or for storage. Fuel must not be unloaded into any other type tank, structure or vehicle.

2006.9 Passengers. Passenger traffic is allowed during the time fuel transfer operations are in progress, provided the following provisions are strictly enforced by the *owner* of the aircraft or the *owner*'s authorized employee:

1. Smoking and producing an open flame in the cabin of the aircraft or the outside thereof within 50 feet (15 240 mm) of such aircraft shall be prohibited.

   A qualified employee of the aircraft *owner* shall be responsible for seeing that the passengers are not allowed to smoke when remaining aboard the aircraft or while going across the ramp from the gate to such aircraft, or vice versa.
2. Passengers shall not be permitted to linger about the plane, but shall proceed directly between the loading gate and the aircraft.
3. Passenger loading stands or walkways shall be left in loading position until all fuel transfer operations are completed.
4. Fuel transfer operations shall not be performed on the main *exit* side of any aircraft containing passengers except when the *owner* of such aircraft or a capable and qualified employee of such *owner* remains inside the aircraft to direct and assist the escape of such passengers through regular and emergency *exits* in the event fire should occur during fuel transfer operations.

❖ Special precautions must be taken to protect passengers during fueling operations. If passengers are permitted on or around the aircraft during refueling operations, an employee of the airline or a representative of the airport authority must remain on board and the specified precautions must be taken.

INTERNATIONAL CODE COUNCIL®
Copyright © 2015 ICC. ALL RIGHTS RESERVED. Accessed by David Dammon on Jun 21, 2017 12:30:52 PM pursuant to License Agreement with ICC. No further reproduction or distribution authorized. ANY UNAUTHORIZED REPRODUCTION OR DISTRIBUTION IS A VIOLATION OF THE FEDERAL COPYRIGHT ACT AND THE LICENSE AGREEMENT, AND SUBJECT TO CIVIL AND CRIMINAL PENALTIES THEREUNDER.

Aircraft fueling, servicing, baggage and cargo loading, movement and passenger boarding are generally conducted in and around the passenger terminal building on the aircraft apron. Aircraft refueling is often accomplished by special refueling vehicles acting like mobile gas stations, transferring fuel directly from their tanks to aircraft fuel tanks. Aircraft fuel tanks are usually topped off after each flight, unless they are making scheduled stops on a multistop flight.

Terminal building discharge to the aircraft apron is not permitted by FAA regulations; however, egress from the aircraft to the apron in the event of a fire or other emergency is permitted. Passengers and unauthorized personnel must be immediately accounted for and escorted from the aircraft operation area.

The terminal building is not required to be separated from the aircraft apron by fire-resistance-rated construction; however, it is considered good practice to take reasonable steps to prevent fire from fueling accidents or other mishaps. Portable fire extinguishers are required on the aircraft apron in accordance with Section 2005.

In Item 1, smoking and open flames are prohibited within and around the aircraft during refueling operations because of the potential for fuel vapors being present. The "No Smoking" signs located in the aircraft cabin must remain illuminated while the aircraft is parked at the gate during refueling operations.

Item 2 requires that deplaning passengers must proceed directly to the terminal and may not remain on the aircraft apron during refueling operations, cargo loading or other similar service functions in order to avoid potential injury.

In Item 3, egress stairways and passageways must remain connected or intact during refueling operations. These stairways and ramps are the primary exit if an emergency occurs during aircraft refueling operations.

Item 4 recognizes that maintenance and fueling operations represent the most serious fire safety concerns at airports and heliports. Fueling represents perhaps the greatest risk because it is commonly conducted near passenger and cargo handling areas and buildings, while maintenance operations are confined to hangars or designated outside maintenance areas. Fueling operations are to be conducted in a manner that avoids locating the refueler on the primary exit side of the aircraft. Airline employees or airport authorities are responsible for directing and assisting egress in the event of an emergency and must direct passengers to exits away from the fueling operation (see commentary, Section 2006.5.1).

2006.10 Sources of ignition. Smoking and producing open flames within 50 feet (15 240 mm) of a point where fuel is being transferred shall be prohibited. Electrical and motor-driven devices shall not be connected to or disconnected from an aircraft at any time fueling operations are in progress on such aircraft.

❖ The 50-foot (15 240 mm) distance is considered a safe distance from the fuel transfer operation for dissipation of any escaping vapors. Prohibiting open flames and smoking eliminates a prime ignition source (examples of open flame devices are lighted cigarettes, cigars, pipes, cigarette lighters, etc.). Because disconnection or connection of any electrical or motor-driven device could create a spark, these activities are not allowed during refueling.

2006.11 Fuel spill prevention and procedures. Fuel spill prevention and the procedures for handling spills shall comply with Sections 2006.11.1 through 2006.11.7.

❖ The following sections address equipment maintenance, fuel nozzles, fueling drums, fuel spill procedures, fire department notification and prohibited procedures for multiple fuel deliveries.

2006.11.1 Fuel-service equipment maintenance. Aircraft fuel-servicing equipment shall be maintained and kept free from leaks. Fuel-servicing equipment that malfunctions or leaks shall not be continued in service.

❖ Fuel-service equipment must not be used unless it is in proper repair and free of possible cracks, frays or breaks that could cause leaks. Defective equipment must be taken out of service and repaired.

2006.11.2 Transporting fuel nozzles. Fuel nozzles shall be carried utilizing appropriate handles. Dragging fuel nozzles along the ground shall be prohibited.

❖ An ignition source may be produced by dragging the nozzle. Using the appropriate handling devices eliminates both sparking and nozzle damage.

2006.11.3 Drum fueling. Fueling from drums or other containers having a capacity greater than 5 gallons (19 L) shall be accomplished with the use of an *approved* pump.

❖ The use of an approved pump for transferring fuel from drums with capacity in excess of 5 gallons (19 L) greatly reduces the possibility of spills.

2006.11.4 Fuel spill procedures. The fueling-system operator shall establish procedures to follow in the event of a fuel spill. These procedures shall be comprehensive and shall provide for all of the following:

1. Upon observation of a fuel spill, the aircraft-fueling operator shall immediately stop the delivery of fuel by releasing hand pressure from the fuel flow-control valve.
2. Failure of the fuel control valve to stop the continued spillage of fuel shall be cause for the activation of the appropriate emergency fuel shutoff device.
3. A supervisor for the fueling-system operator shall respond to the fuel spill area immediately.

❖ Safety and emergency procedures must be in place, and personnel must be trained on these procedures. Should a spill occur, the person operating the fuel delivery hose must immediately release hand pressure to stop fuel flow. If this action does not shut off fuel flow, the emergency shutoff device must be activated.

Fuel system supervisors and operators must be trained in the procedures they must follow in case of

INTERNATIONAL CODE COUNCIL®
Copyright © 2015 ICC. ALL RIGHTS RESERVED. Accessed by David Dammon on Jun 21, 2017 12:30:52 PM pursuant to License Agreement with ICC. No further reproduction or distribution authorized. ANY UNAUTHORIZED REPRODUCTION OR DISTRIBUTION IS A VIOLATION OF THE FEDERAL COPYRIGHT ACT AND THE LICENSE AGREEMENT, AND SUBJECT TO CIVIL AND CRIMINAL PENALTIES THEREUNDER.

a fuel spill. Supervisors must respond if a spill occurs and assist in containment and cleanup if necessary.

2006.11.5 Notification of the fire department. The fire department shall be notified of any fuel spill that is considered a hazard to people or property or which meets one or more of the following criteria:

1. Any dimension of the spill is greater than 10 feet (3048 mm).
2. The spill area is greater than 50 square feet (4.65 m^2).
3. The fuel flow is continuous in nature.

❖ Three criteria are given for determining when the fire department must be notified. Any amount of spill exceeding those criteria causes great concern and must be considered a fire hazard. The fire department must be notified because people and property are at risk if a spill ignites and causes explosion and fire.

2006.11.6 Investigation required. An investigation shall be conducted by the fueling-system operator of all spills requiring notification of the fire department. The investigation shall provide conclusive proof of the cause and verification of the appropriate use of emergency procedures. Where it is determined that corrective measures are necessary to prevent future incidents of the same nature, they shall be implemented immediately.

❖ Any spill must be investigated to determine the cause and whether the emergency action plan was properly carried out. If corrective measures are needed, they must be implemented immediately. This investigation should be looked upon as positive, potentially leading to a more efficient emergency action plan that could avoid future property damage and loss of life.

2006.11.7 Multiple fuel delivery vehicles. Simultaneous delivery of fuel from more than one aircraft-fueling vehicle to a single aircraft-fueling manifold is prohibited unless proper backflow prevention devices are installed to prevent fuel flow into the tank vehicles.

❖ Only one tank vehicle may be connected to any one aircraft-fueling manifold unless a means is provided that prevents fuel from flowing back into the tank vehicle because of a difference in the pumping pressure. Backflow from one tanker to another could result in fuel overflow from the receiving vehicle that would cause a major fuel spill.

2006.12 Aircraft engines and heaters. Operation of aircraft onboard engines and combustion heaters shall be terminated prior to commencing fuel service operations and shall remain off until the fuel-servicing operation is completed.

Exception: In an emergency, a single jet engine is allowed to be operated during fuel servicing where all of the following conditions are met:

1. The emergency shall have resulted from an onboard failure of the aircraft's auxiliary power unit.
2. Restoration of auxiliary power to the aircraft by ground support services is not available.
3. The engine to be operated is either at the rear of the aircraft or on the opposite side of the aircraft from the fuel service operation.
4. The emergency operation is in accordance with a written procedure *approved* by the *fire code official*.

❖ Operation of any aircraft engines or combustion heaters allows the possibility of an ignition source being produced. Even in the exceptions allowed in an emergency, care must be taken in preventing a possible fire hazard.

2006.13 Vehicle and equipment restrictions. During aircraft-fueling operations, only the equipment actively involved in the fueling operation is allowed within 50 feet (15 240 mm) of the aircraft being fueled. Other equipment shall be prohibited in this area until the fueling operation is complete.

Exception: Aircraft-fueling operations utilizing single-point refueling with a sealed, mechanically locked fuel line connection and the fuel is not a Class I flammable liquid.

A clear space of not less than 10 feet (3048 mm) shall be maintained between aircraft fuel-system vent openings and any part or portion of aircraft-servicing vehicles or equipment.

❖ To control the number and type of ignition sources to which the fueling operation might be exposed, no equipment, other than the equipment performing aircraft-servicing functions, is permitted within a 50-foot (15 240 mm) radius of the aircraft during the fueling of the aircraft. The space between service vehicles and equipment and the aircraft fuel vent must be no less than 10 feet (3048 mm) when using a single-point sealed mechanically locked fuel line connector.

2006.13.1 Overwing fueling. Vehicles or equipment shall not be allowed beneath the trailing edge of the wing when aircraft fueling takes place over the wing and the aircraft fuel-system vents are located on the upper surface of the wing.

❖ Equipment under the trailing edge of the wing could cause a fire hazard if a leak or spill were to occur. The fuel would run off the edge of the wing and the equipment could have an ignition source and cause a fire.

2006.14 Electrical equipment. Electrical equipment, including but not limited to, battery chargers, ground or auxiliary power units, fans, compressors or tools, shall not be operated, nor shall they be connected or disconnected from their power source, during fuel service operations.

❖ Even hand lamps used in the fuel-servicing operation must be approved for the proper hazardous location classification. The equipment could produce sparks that could be an ignition source.

INTERNATIONAL CODE COUNCIL®
Copyright © 2015 ICC. ALL RIGHTS RESERVED. Accessed by David Dammon on Jun 21, 2017 12:30:52 PM pursuant to License Agreement with ICC. No further reproduction or distribution authorized. ANY UNAUTHORIZED REPRODUCTION OR DISTRIBUTION IS A VIOLATION OF THE FEDERAL COPYRIGHT ACT AND THE LICENSE AGREEMENT, AND SUBJECT TO CIVIL AND CRIMINAL PENALTIES THEREUNDER.

2006.14.1 Other equipment. Electrical or other spark-producing equipment shall not be used within 10 feet (3048 mm) of fueling equipment, aircraft fill or vent points, or spill areas unless that equipment is intrinsically safe and *approved* for use in an explosive atmosphere.

❖ No equipment that produces a spark during its operation can be used within a 10-foot (3048 mm) radius of the fueling-operational equipment.

2006.15 Open flames. Open flames and open-flame devices are prohibited within 50 feet (15 240 mm) of any aircraft fuel-servicing operation or fueling equipment.

❖ Blow torches, welding and cutting equipment, and flare pots are a few examples of equipment that are not allowed within 50 feet (15 240 mm) of the fueling equipment or the fueling operation.

2006.15.1 Other areas. The *fire code official* is authorized to establish other locations where open flames and open-flame devices are prohibited.

❖ Depending on the situation, the fire code official may find other locations in which open flames and open-flame devices must be prohibited. Examples could be exposed flame heaters, portable gasoline or kerosene heaters.

2006.15.2 Matches and lighters. Personnel assigned to and engaged in fuel-servicing operations shall not carry matches or lighters on or about their person. Matches or lighters shall be prohibited in, on or about aircraft-fueling equipment.

❖ Because matches, lighters and smoking materials are an ignition hazard, these items are prohibited everywhere in the vicinity of aircraft fueling operations.

2006.16 Lightning procedures. The *fire code official* is authorized to require the airport authority and the fueling-system operator to establish written procedures to follow when lightning flashes are detected on or near the airport. These procedures shall establish criteria for the suspension and resumption of aircraft-fueling operations.

❖ Fuel-servicing procedures must cease when lightning flashes occur at or in the vicinity of the airport. The fueling supervisor and airport authority must establish a written procedure that sets the criteria for stopping and restarting fueling operations.

2006.17 Fuel-transfer locations. Aircraft fuel-transfer operations shall be prohibited indoors.

Exception: In aircraft hangars built in accordance with the provisions of the *International Building Code* for Group F-1 occupancies, aircraft fuel-transfer operations are allowed where either of the following conditions exist:

1. Necessary to accomplish aircraft fuel-system maintenance operations. Such operations shall be performed in accordance with nationally recognized standards.
2. The fuel being used has a *flash point* greater than 100°F (37.8°C).

❖ Aircraft fueling operations must be performed outdoors to minimize the accumulation of flammable vapors. The exception allows indoor fueling only under very specific and limited conditions.

2006.17.1 Position of aircraft. Aircraft being fueled shall be positioned such that any fuel system vents and other fuel tank openings are not less than:

1. Twenty-five feet (7620 mm) from buildings or structures other than jet bridges; and
2. Fifty feet (15 240 mm) from air intake vents for boiler, heater or incinerator rooms.

❖ Maintaining minimum distances between fueling operations and other aircraft or buildings allows any flammable vapors released during fueling to dissipate before encountering any possible ignition sources. These distances also provide protection against ignitable vapor concentrations getting to an ignition source in the event of a fuel spill.

2006.17.2 Fire equipment access. Access for fire service equipment to aircraft shall be maintained during fuel-servicing operations.

❖ A clear and unobstructed path is required for quick response for fire personnel. A quick response is essential in an emergency; however, an obstacle may create a delay in emergency operations.

2006.18 Defueling operations. The requirements for fueling operations contained in this section shall also apply to aircraft defueling operations. Additional procedures shall be established by the fueling-system operator to prevent overfilling of the tank vehicle used in the defueling operation.

❖ Transferring of fuel from an aircraft through a hose to a tank vehicle is generally the same process as fueling. The same requirements apply to defueling as to fuel servicing an aircraft. Operators must establish procedures and safeguards for prevention of overfilling the tank vehicle, which is a hazard when defueling.

2006.19 Maintenance of aircraft-fueling hose. Aircraft-fueling hoses shall be maintained in accordance with Sections 2006.19.1 through 2006.19.4.

❖ The following sections address the maintenance of aircraft fueling hose in terms of the frequency of inspections, recognizing damaged hose and repairing the hose before placing it back in service.

2006.19.1 Inspections. Hoses used to fuel or defuel aircraft shall be inspected periodically to ensure their serviceability and suitability for continued service. The fuel-service operator shall maintain records of all tests and inspections performed on fueling hoses. Hoses found to be defective or otherwise damaged shall be immediately removed from service.

❖ Regular inspections of fueling equipment are essential to maintaining serviceable systems. Records of these inspections are required to document inspection results. Damaged or defective items must be removed from service immediately for repair or replacement.

INTERNATIONAL CODE COUNCIL®
Copyright © 2015 ICC. ALL RIGHTS RESERVED. Accessed by David Dammon on Jun 21, 2017 12:30:52 PM pursuant to License Agreement with ICC. No further reproduction or distribution authorized. ANY UNAUTHORIZED REPRODUCTION OR DISTRIBUTION IS A VIOLATION OF THE FEDERAL COPYRIGHT ACT AND THE LICENSE AGREEMENT, AND SUBJECT TO CIVIL AND CRIMINAL PENALTIES THEREUNDER.

2006.19.1.1 Daily inspection. Each hose shall be inspected daily. This inspection shall include a complete visual scan of the exterior for evidence of damage, blistering or leakage. Each coupling shall be inspected for evidence of leaks, slippage or misalignment.

❖ Daily hose inspections are essential for prevention of leaks. Even minor damage to a hose, coupling, nozzle or other system part can lead to safety hazards.

2006.19.1.2 Monthly inspection. A more thorough inspection, including pressure testing, shall be accomplished for each hose on a monthly basis. This inspection shall include examination of the fuel delivery inlet screen for rubber particles, which indicates problems with the hose lining.

❖ During the monthly inspection, the hose again must be extended to its full length of operation. The area within 12 inches (305 mm) of the coupling must be examined for structural weakness by pressing and observing soft spots. Hoses must be pressure tested at operating pressure and observed for ballooning or twisting that would indicate a weakening of the hose carcass. Examination of the fuel inlet screen for rubber particles is a means of checking the condition of hose linings.

2006.19.2 Damaged hose. Hose that has been subjected to severe abuse shall be immediately removed from service. Such hoses shall be hydrostatically tested prior to being returned to service.

❖ If hose has been subjected to unusual abuse, it must be removed from service immediately as a safety precaution. Such hoses must be hydrostatically tested and inspected. If any soft spots or weakening of the hose is observed, the hose may not be returned to service.

2006.19.3 Repairing hose. Hoses are allowed to be repaired by removing the damaged portion and recoupling the undamaged end. When recoupling hoses, only couplings designed and *approved* for the size and type of hose in question shall be used. Hoses repaired in this manner shall be visually inspected and hydrostatically tested prior to being placed back in service.

❖ Damaged hoses can be repaired. The damaged portion must be cut off and the undamaged part recoupled. Two lengths from separate hoses may not be joined. To increase the likelihood that the repaired hose is leak tight, only couplings specifically designed for that type and size of hose can be used. Hydrostatic testing of the repaired hose increases efficiency and safety for fueling operations.

2006.19.4 New hose. New hose shall be visually inspected prior to being placed into service.

❖ Before any new hose assembly can be placed into service, it must be inspected visually for evidence of damage or wear and tear of any kind.

2006.20 Aircraft fuel-servicing vehicles parking. Unattended aircraft fuel-servicing vehicles shall be parked in areas that provide for both the unencumbered dispersal of vehicles in the event of an emergency and the control of leakage such that adjacent buildings and storm drains are not contaminated by leaking fuel.

❖ The fuel-servicing vehicles must be positioned so that they can be moved quickly if an emergency occurs. This may not only save the vehicle but also assist in a rapid response to an emergency situation and saving lives. Fuel leaking into storm drains causes not only environmental problems, but also a serious explosion hazard if vapor accumulates in the confines of a drain line.

2006.20.1 Parking area design. Parking areas for tank vehicles shall be designed and utilized such that a clearance of 10 feet (3048 mm) is maintained between each parked vehicle for fire department access. In addition, a minimum clearance of 50 feet (15 240 mm) shall be maintained between tank vehicles and parked aircraft and structures other than those used for the maintenance and/or garaging of aircraft fuel-servicing vehicles.

❖ This section regulates the design and use of outdoor parking areas for aircraft fueling vehicles. The requirement for a 10-foot (3048 mm) clearance between parked fueling vehicles permits ready access by fire department personnel and equipment in case of an emergency. The fire department may need the area to deploy hose in case of a fire or to walk through the area en route to an investigation of an emergency call. The 50-foot (15 240 mm) clearance requirement is to allow dispersion of flammable vapors in case of a leak before the vapors can enter nearby buildings or parked aircraft, and possibly reach an ignition source inside. Such clearance would not be required for buildings that have been approved by the fire code official in accordance with Section 5706.6.3 for the purpose of garaging or repairing aircraft fuel-servicing vehicles, based on the assumption that such buildings would have ignition sources safeguarded. This clearance also provides a measure of exposure protection for the parked vehicles in the event of a fire in the building or a parked aircraft.

2006.21 Radar equipment. Aircraft fuel-servicing operations shall be prohibited while the weather-mapping radar of that aircraft is operating.

Aircraft fuel-servicing or other operations in which flammable liquids, vapors or mists could be present shall not be conducted within 300 feet (91 440 mm) of an operating aircraft surveillance radar.

Aircraft fuel-servicing operations shall not be conducted within 300 feet (91 440 mm) of airport flight traffic surveillance radar equipment.

Aircraft fuel-servicing or other operations in which flammable liquids, vapors or mists could be present shall not be conducted within 100 feet (30 480 mm) of airport ground traffic surveillance radar equipment.

❖ The beam of radar equipment has been known to cause flammable vapor-air mixtures to ignite from electrical arcs or sparks from chance resonant (con-

INTERNATIONAL CODE COUNCIL®
Copyright © 2015 ICC. ALL RIGHTS RESERVED. Accessed by David Dammon on Jun 21, 2017 12:30:52 PM pursuant to License Agreement with ICC. No further reproduction or distribution authorized. ANY UNAUTHORIZED REPRODUCTION OR DISTRIBUTION IS A VIOLATION OF THE FEDERAL COPYRIGHT ACT AND THE LICENSE AGREEMENT, AND SUBJECT TO CIVIL AND CRIMINAL PENALTIES THEREUNDER.

tinuing) conditions. This ability of an arc to ignite flammable vapor-air mixtures depends on the total energy of the arc and the time lapse involved. The key factor in establishing safe distances between fueling operations, storage areas and radar antennas is the peak power output of the radar unit.

2006.21.1 Direction of radar beams. The beam from ground radar equipment shall not be directed toward fuel storage or loading racks.

Exceptions:

1. Fuel storage and loading racks in excess of 300 feet (91 440 mm) from airport flight traffic surveillance equipment.
2. Fuel storage and loading racks in excess of 100 feet (30 480 mm) from airport ground traffic surveillance equipment.

❖ Ground radar for approach control or traffic pattern surveillance is considered the most hazardous type of radar normally operated at an airport. The beam must not be directed toward fuel storage or loading racks because of the possible ignition sources (sparks, arcs) igniting flammable vapor-air mixtures. The exceptions are based on the arc energy emissions of the radars listed.

SECTION 2007
HELISTOPS AND HELIPORTS

2007.1 General. Helistops and heliports shall be maintained in accordance with Sections 2007.2 through 2007.8. Helistops and heliports on buildings shall be constructed in accordance with the *International Building Code*.

❖ The following sections address clearances of the touch-down areas, spillage of liquid fuels, exits, fire protection systems and approval of the FAA. Information for construction and design of heliports can be found in FAA A/C 150/5390-2A, as well as in the IBC (see Commentary Figure 2007.1).

2007.2 Clearances. The touchdown area shall be surrounded on all sides by a clear area having minimum average width at roof level of 15 feet (4572 mm) but no width less than 5 feet (1524 mm). The clear area shall be maintained.

❖ Most accidents involving helicopters occur during takeoff and landing procedures, with a significant number occurring at night or in bad weather. The clearance requirements are intended to limit the likelihood of the aircraft colliding with permanent features at the landing site.

2007.3 Flammable and Class II combustible liquid spillage. Landing areas on structures shall be maintained so as to

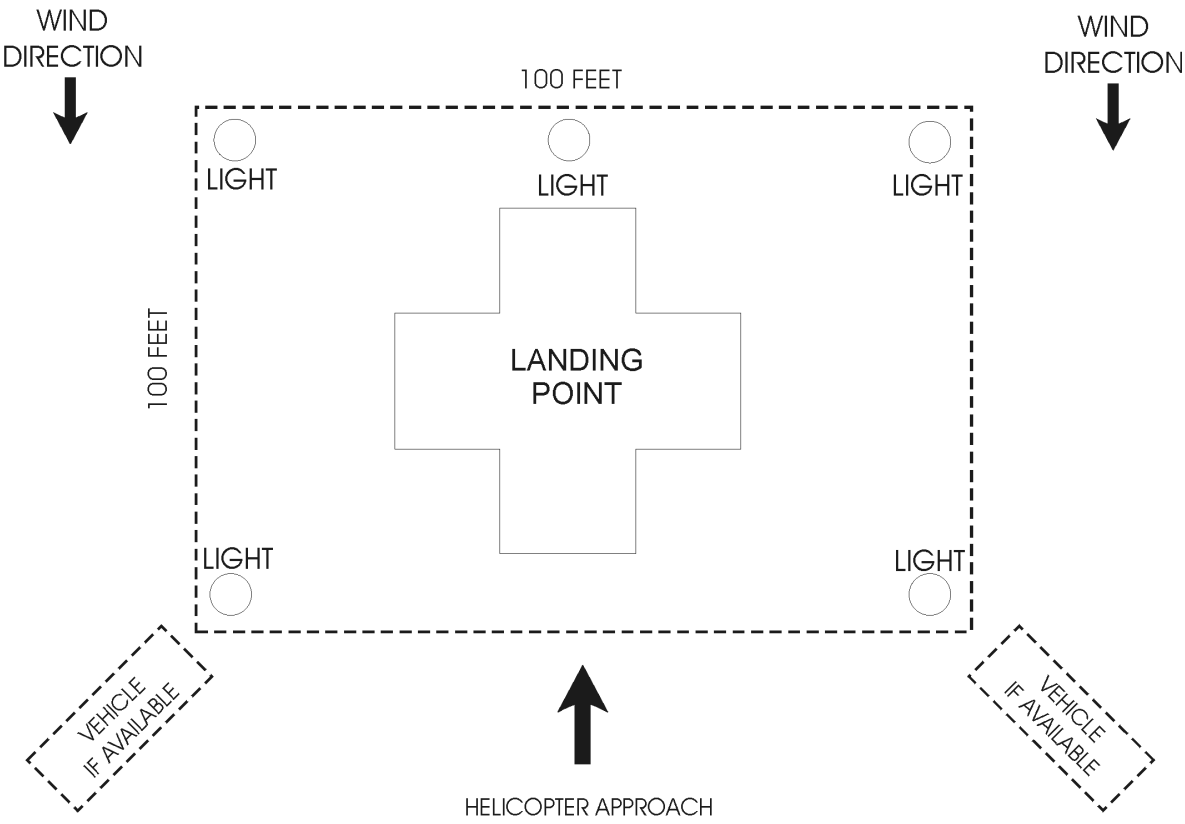

For SI: 1 foot = 304.8 mm.

Figure 2007.1
HELICOPTER LANDING AREA AT GRADE

INTERNATIONAL CODE COUNCIL®
Copyright © 2015 ICC. ALL RIGHTS RESERVED. Accessed by David Dammon on Jun 21, 2017 12:30:52 PM pursuant to License Agreement with ICC. No further reproduction or distribution authorized. ANY UNAUTHORIZED REPRODUCTION OR DISTRIBUTION IS A VIOLATION OF THE FEDERAL COPYRIGHT ACT AND THE LICENSE AGREEMENT, AND SUBJECT TO CIVIL AND CRIMINAL PENALTIES THEREUNDER.

confine flammable or Class II *combustible liquid* spillage to the landing area itself, and provisions shall be made to drain such spillage away from *exits* or *stairways* serving the helicopter landing area or from a structure housing such *exit* or *stairway*.

❖ Rooftop landing areas must be designed to prevent fuel spills from escaping the landing area and flowing into adjacent or lower building spaces that could contain ignition sources for the fuel vapors. The stairways and exits serving the landing area must also be protected from the effects of fuel spills to afford personnel a safe means of escape from any dangers developing on the landing area. To accomplish this task, some rooftop heliport structure designs drain the pad to the center of the landing area. Although it is not required by the code, such designs often provide some means of separating fuel runoff from storm water. Additionally, drip pans should be provided below the helicopter engine when the aircraft is parked with the engine off.

2007.4 Exits. *Exits* and *stairways* shall be maintained in accordance with Section 412.7 of the *International Building Code*.

❖ IBC Section 412.5 refers to Chapter 10 for exit requirements. The section also addresses landing platforms and roof area size and the number of exits required. At least two means of egress must be provided off the landing pad.

2007.5 Standpipe systems. A building with a rooftop helistop or heliport shall be provided with a Class I or III standpipe system extended to the roof level on which the helistop or heliport is located. All portions of the helistop and heliport area shall be within 150 feet (45 720 mm) of a $2^1/_2$-inch (63.5 mm) outlet on the standpipe system.

❖ A heliport is a distinct hazard that will involve flammable fuels. In the event of an emergency, rapid deployment of hand-held hose lines will be necessary to attack a resulting fire, effectuate rescue and protect exposures, as well as the remainder of the building.

Section 905.3.6 and this section require that when a helistop or heliport is provided on a rooftop location, a standpipe system is required throughout the building, with a $2^1/_2$-inch hose connection within 150 feet of all parts of the helistop or heliport at the roof level. This is critical in fire-fighting operations because many times the connection below the rooftop level may be needed just to gain access to the roof. If the only hose connection were on the roof, it would be of no use if the fire fighters could not get to it. Since a heliport includes liquid fueling operations, it is entirely possible for a spill to affect not only the rooftop area, but also the floors below as the liquid fuel spreads downward into the building. The standpipe system will again be utilized in these situations.

Class I standpipes serve $2^1/_2$-inch (63.5 mm) fire hose valves for fire department use. Class Ill standpipes have both $2^1/_2$-inch (63.5 mm) valves for fire department use and $1^1/_2$-inch (38 mm) fire hose cabinets for use by building occupants.

2007.6 Foam protection. Foam fire-protection capabilities shall be provided for rooftop heliports. Such systems shall be designed, installed and maintained in accordance with the applicable provisions of Sections 903, 904 and 905.

❖ A foam fire-extinguishing system must be designed and installed for protection of the rooftop landing pad. Factors considered in the design of the system are aircraft size, effectiveness of agent selected, time required to achieve control and time required to maintain control. Foam discharge rates must also be considered according to the type of foam selected.

2007.7 Fire extinguishers. Not less than one portable fire extinguisher having a minimum 80-B:C rating shall be provided for each permanent takeoff and landing area and for the aircraft parking areas. Installation, inspection and maintenance of these extinguishers shall be in accordance with Section 906.

❖ The portable fire extinguisher for the takeoff/landing area must be effective for the extinguishment of a flammable liquid fire and for energized electrical components.

2007.8 Federal approval. Before operating helicopters from helistops and heliports, approval shall be obtained from the Federal Aviation Administration.

❖ The FAA approves all installations of heliports and helistops. Design criteria can be found in FAA A/C 150/5390-2A.

Bibliography

The following resource material was used in the preparation of the commentary for this chapter of the code:

Code Changes Resource Collection—2015 International Fire Code. Washington, DC: International Code Council, 2014.

INTERNATIONAL CODE COUNCIL®
Copyright © 2015 ICC. ALL RIGHTS RESERVED. Accessed by David Dammon on Jun 21, 2017 12:30:52 PM pursuant to License Agreement with ICC. No further reproduction or distribution authorized. ANY UNAUTHORIZED REPRODUCTION OR DISTRIBUTION IS A VIOLATION OF THE FEDERAL COPYRIGHT ACT AND THE LICENSE AGREEMENT, AND SUBJECT TO CIVIL AND CRIMINAL PENALTIES THEREUNDER.

INTERNATIONAL CODE COUNCIL®
Copyright © 2015 ICC. ALL RIGHTS RESERVED. Accessed by David Dammon on Jun 21, 2017 12:30:52 PM pursuant to License Agreement with ICC. No further reproduction or distribution authorized. ANY UNAUTHORIZED REPRODUCTION OR DISTRIBUTION IS A VIOLATION OF THE FEDERAL COPYRIGHT ACT AND THE LICENSE AGREEMENT, AND SUBJECT TO CIVIL AND CRIMINAL PENALTIES THEREUNDER.

Chapter 21: Dry Cleaning

General Comments

Dry cleaning operations remove dirt, grease and other foreign substances from clothing, rugs, textiles and fabrics with solvents that are not water based, thus it is called "dry." These methods may involve several techniques, including immersion and agitation, brushing or scouring, or dual-phase processing, which replicate a laundering (soap and water) process using the same equipment. The solvents employed may be flammable or nonflammable and may present certain health hazards. Both the fire code official and fire service personnel should be aware of the health and flammablity hazards.

Concerns over flammability hazards and hazardous waste disposal have radically altered the nature of the dry cleaning business in the United States. Most plants currently use nonflammable solvents, such as perchloroethylene ("perc") or tetrachloroethylene, rather than Stoddard solvent, naphtha, kerosene, gasoline or specially compounded oils, which were favored in previous years. "Perc" had become the solvent of choice for the dry cleaning industry over the years because it is not only safer and faster, but does a much better job of cleaning, requires small equipment and is safe enough to be used in retail- or public-operated equipment. However, it has fallen into disfavor because of its carcinogenicity (see commentary, Section 2108.2).

Storage of flammable and combustible liquids must comply with the requirements of Chapter 57. Flammable solvent containers and processing equipment must be bonded and grounded during storage, handling and use to prevent buildup of static charges. Solvents must be used only in equipment approved for use with that specific class of solvent.

Purpose

The provisions of Chapter 21 are intended to reduce hazards associated with use of flammable and combustible dry cleaning solvents. These materials, like all volatile organic chemicals, generate significant quantities of static electricity and are thus readily ignitable. Many flammable and nonflammable dry cleaning solvents also possess health hazards when involved in a fire.

SECTION 2101 GENERAL

2101.1 Scope. Dry cleaning plants and their operations shall comply with the requirements of this chapter.

❖ Hazards associated with dry cleaning operations are addressed by the provisions of this chapter. Solvent storage hazards are addressed by Chapter 57.

2101.2 Permit required. Permits shall be required as set forth in Section 105.6.

❖ The process of issuing permits gives the fire code official an opportunity to carefully evaluate and regulate hazardous operations. Permit applicants should be required to demonstrate that their operations comply with the intent of the code before the permit is issued. See the commentary to Section 105.6 for a general discussion of operations requiring an operational permit and Section 105.6.13 for discussion of specific operational permits for dry cleaning plants and their operation.

SECTION 2102 DEFINITIONS

2102.1 Definitions. The following terms are defined in Chapter 2:

DRY CLEANING.

DRY CLEANING PLANT.

DRY CLEANING ROOM.

DRY CLEANING SYSTEM.

SOLVENT OR LIQUID CLASSIFICATIONS.

Class I solvents.

Class II solvents.

Class IIIA solvents.

Class IIIB solvents.

Class IV solvents.

❖ Definitions of terms can help in the understanding and application of the code requirements. This section directs the code user to Chapter 2 for the proper

INTERNATIONAL CODE COUNCIL®
Copyright © 2015 ICC. ALL RIGHTS RESERVED. Accessed by David Dammon on Jun 21, 2017 12:30:52 PM pursuant to License Agreement with ICC. No further reproduction or distribution authorized. ANY UNAUTHORIZED REPRODUCTION OR DISTRIBUTION IS A VIOLATION OF THE FEDERAL COPYRIGHT ACT AND THE LICENSE AGREEMENT, AND SUBJECT TO CIVIL AND CRIMINAL PENALTIES THEREUNDER.

application of the indicated terms used in this chapter. Terms may be defined in Chapter 2 or in another *International Code*® (I-Code®) as indicated in Section 201.3 or the dictionary meaning may be all that is needed (see also commentary, Sections 201 through 201.4).

SECTION 2103
CLASSIFICATIONS

2103.1 Solvent classification. Dry cleaning solvents shall be classified according to their *flash point*s as follows:

1. Class I solvents are liquids having a *flash point* below 100°F (38°C).
2. Class II solvents are liquids having a *flash point* at or above 100°F (38°C) and below 140°F (60°C).
3. Class IIIA solvents are liquids having a *flash point* at or above 140°F (60°C) and below 200°F (93°C).
4. Class IIIB solvents are liquids having a *flash point* at or above 200°F (93°C).
5. Class IV solvents are liquids classified as nonflammable.

❖ In order to establish regulations for mitigating the hazards of dry cleaning, the hazards of dry cleaning solvent must be identified and established. Because the liquid solvents used in dry cleaning operations, other than Class IV solvents, are either flammable or combustible, they are classified using the same criteria as those used to classify flammable and combustible liquids in Chapter 57.

Class I solvents are, by the definition in Chapter 57, flammable liquids because they have a closed-cup flash point of less than 100°F (38°C). The 100°F (38°C) flash point for flammable solvents assumes possible indoor ambient temperature conditions of 100°F (38°C), which means that the solvent could be used at or below its flash point under normal operating conditions in the dry cleaning plant. This solvent classification, however, includes no further subclassifications based on flash point and boiling point as does Chapter 57 for Class I flammable liquids.

Combustible solvents (Classes II and III) differ from flammable solvents in that the closed-cup flash point of all combustible liquids is at or above 100°F (38°C) (see commentary, definition of "Flash point" in Chapter 57). The range of flash point dictates the class of liquid solvent. The flash point range of 100°F (38°C) to 140°F (60°C) for Class II solvents is based on a possible indoor ambient temperature exceeding 100°F (38°C). Only a moderate degree of heating is required to bring the solvent to its flash point in this situation. Class III solvents, which have flash points higher than 140°F (38°C), require a significant heat source in addition to ambient temperature conditions to reach their flash point (see commentary, definition of "Flammable liquid" in Chapter 57).

2103.2 Classification of dry cleaning plants and systems. Dry cleaning plants and systems shall be classified based on the solvents used as follows:

1. Type I—systems using Class I solvents.
2. Type II—systems using Class II solvents.
3. Type III-A—systems using Class IIIA solvents.
4. Type III-B—systems using Class IIIB solvents.
5. Type IV—systems using Class IV solvents in which dry cleaning is not conducted by the public.
6. Type V—systems using Class IV solvents in which dry cleaning is conducted by the public.

Spotting and pretreating operations conducted in accordance with Section 2106 shall not change the type of the dry cleaning plant.

❖ Dry cleaning plants are classified based on the solvents they use and the hazards presented by them.

Type I dry cleaning systems are those systems using a Class I flammable liquid [flash point less than 100°F (38°C)] as a cleaning solvent, such as low flash-point [less than 50°F (10°C)] naphtha. Such plants are prohibited by Section 2104.1.

Type II dry cleaning systems are those systems using a Class II combustible liquid [flash points 100°F (38°C) to 140°F (60°C)] as a cleaning solvent, such as Stoddard solvent. NFPA 32 classifies the entire dry cleaning room of a Type II plant as a Class I, Division 2 hazardous (classified) location.

Type III-A dry cleaning systems are those systems using a Class IIIA combustible liquid as a cleaning solvent [flash point 140°F (60°C) to 200°F (93°C)].

Type III-B dry cleaning systems are those systems using a Class IIIB combustible liquid as a cleaning solvent [flash point greater than 200°F (93°C)], usually specially compounded oils.

Type IV dry cleaning systems are those systems using nonflammable solvents, and dry cleaning is done only by trained operators.

Type V dry cleaning systems are those systems using nonflammable solvent, typically perchloroethylene, and dry cleaning is done by the general public (e.g., at coin-operated laundries).

This section recognizes the practical need to have limited amounts of higher hazard solvents on hand in the plant for spotting and pretreating by not classifying the plant based on the highest hazard solvent that might be present in any quantity. See the commentary to Section 2106 for further information on spotting and pretreating operations.

2103.2.1 Multiple solvents. Dry cleaning plants using more than one class of solvent for dry cleaning shall be classified based on the numerically lowest solvent class.

❖ Ventilation, and electrical requirements in particular, vary considerably among various types of dry cleaning plants. Additionally, each type of dry cleaning equipment is designed for the hazards specific to the

INTERNATIONAL CODE COUNCIL®
Copyright © 2015 ICC. ALL RIGHTS RESERVED. Accessed by David Dammon on Jun 21, 2017 12:30:52 PM pursuant to License Agreement with ICC. No further reproduction or distribution authorized. ANY UNAUTHORIZED REPRODUCTION OR DISTRIBUTION IS A VIOLATION OF THE FEDERAL COPYRIGHT ACT AND THE LICENSE AGREEMENT, AND SUBJECT TO CIVIL AND CRIMINAL PENALTIES THEREUNDER.

solvent used. The greatest hazard determines the appropriate level of protection where a danger of accidental misuse exists.

The more volatile compounds, such as naphtha, Stoddard solvent and oils, may still be found in some specialized industrial dry cleaning plants to remove specific materials from work clothes. Although perchloroethylene and similar safety solvents are not flammable, they do present certain health hazards, especially under fire conditions. Commentary Figure 2103.2.1 lists some of the more common dry cleaning solvents with their physical, flammability and toxicity characteristics.

Perchloroethylene concentrations as low as 300 to 1,100 parts per million (ppm) under normal conditions may cause loss of coordination and impairment, while dizziness, drowsiness or loss of consciousness may result at higher concentrations. Perchloroethylene may also emit highly toxic and irritating fumes in a fire.

2103.3 Design. The occupancy classification, design and construction of dry cleaning plants shall comply with the applicable requirements of the *International Building Code*.

❖ This section makes it clear that dry cleaning plants are required to comply with the applicable provisions of the International Building Code® (IBC®) for their classification of occupancy, as well as their design and construction.

Dry cleaning operations are classified in Group B based on IBC Section 304.1 where only drop-off/pickup facilities are provided or where self-service dry cleaning is done by the public using Class V systems with Class IV solvents (see Sections 2103.1 and 2103.2 of the code). Nonself-service dry cleaning operations using other than flammable liquids in cleaning or dyeing operations are classified in moderate hazard industrial Group F-1 (see IBC Section 306.2) based on the classification and quantity of dry cleaning solvent used. The Group F-1 occupancy classification for dry cleaning plants is based on IBC Section 307.1, which provides two exceptions to classification in Group H for dry cleaning plants.

The first exception, Exception 4, states that plants utilizing Class IIIA solvents [flash point at or above 140°F (60°C)] in closed, testing laboratory-listed machines are exempt from being classified in Group H, provided that the plant is physically separated from all other portions of the building in which it is located by 1-hour fire barriers or horizontal assemblies, or both.

The second exception, Exception 5, states that plants utilizing Class IIIB solvents [flash point at or above 200°F (93°C)] that are difficult to ignite are exempt from being classified in Group H without further conditions. Such liquids can be used in open systems, but with due care.

Systems that do not meet the descriptions and exceptions above must be evaluated for possible classification in Group H based upon the type and quantity of solvent in storage use. If a Group H classification is warranted, IBC Section 415.9.3 requires compliance with the applicable provisions of the *International Plumbing Code*® (IPC®), the *International Mechanical Code*® (IMC®) and NFPA 32 for plant construction and system installation. Both NFPA 32 and the IMC specify mechanical exhaust ventilation rates for dry cleaning rooms.

The IPC specifies requirements for sanitary sewers and drains in laundries and where hazardous materials are used or stored.

SECTION 2104
GENERAL REQUIREMENTS

2104.1 Prohibited use. Type I dry cleaning plants shall be prohibited. Limited quantities of Class I solvents stored and used in accordance with this section shall not be prohibited in dry cleaning plants.

❖ This section flatly prohibits Class I dry cleaning plants (i.e., those that use Class I flammable liquids) because of the extreme flammability of such liquids. This section also recognizes the practical need to have limited amounts of Class I solvent on hand in the plant for spotting and pretreating, provided that it is stored and used in accordance with Chapter 57. See the commentary to Section 2106 for further information on spotting and pretreating operations.

2104.2 Building services. Building services and systems shall be designed, installed and maintained in accordance with this section and Chapter 6.

❖ Electrical and mechanical systems serving the dry cleaning plant must comply with the provisions of Sections 2104.2.1 through 2104.2.4 and the applicable provisions of Chapter 6.

CHEMICAL NAME	FLASH POINT	IGNITION TEMPERATURE	HEALTH[a]	FLAMMABILITY[a]	REACTIVITY[a]
Naptha	28° to 50°F	450°F	1	3	0
Perchloroethylene	None	None	2	0	0
Stoddard solvent	Above 100°F	444°F	0	2	0

For SI:°C = [(°F) - 32]/1.8.
a. Based on NFPA 704.

Figure 2103.2.1
CHARACTERISTICS OF DRY CLEANING SOLVENTS

INTERNATIONAL CODE COUNCIL®
Copyright © 2015 ICC. ALL RIGHTS RESERVED. Accessed by David Dammon on Jun 21, 2017 12:30:52 PM pursuant to License Agreement with ICC. No further reproduction or distribution authorized. ANY UNAUTHORIZED REPRODUCTION OR DISTRIBUTION IS A VIOLATION OF THE FEDERAL COPYRIGHT ACT AND THE LICENSE AGREEMENT, AND SUBJECT TO CIVIL AND CRIMINAL PENALTIES THEREUNDER.

2104.2.1 Ventilation. Ventilation shall be provided in accordance with Section 502 of the *International Mechanical Code* and DOL 29 CFR Part 1910.1000, where applicable.

❖ This section is intended to provide ventilation in dry cleaning plants that is adequate to protect plant employees and the public from the hazards associated with dry cleaning operations using any of the various classes of dry cleaning solvents, both in approved dry cleaning machines and in spotting and pretreating operations in the open. To achieve this objective, this section requires that mechanical ventilation systems comply with the provisions of IMC Section 502.6. Compliance with the applicable provisions of the Occupational Safety and Health Administration (OSHA) workplace regulations pertaining to air contaminants contained in DOL 29 CFR 1910.1000 is also required.

2104.2.2 Heating. In Type II dry cleaning plants, heating shall be by indirect means using steam, hot water or hot oil only.

❖ Open-flame heating appliances, such as unit heaters, must not be located in Type II dry cleaning plants because they could create conditions conducive to the ignition of any fugitive vapors from the Class II dry cleaning solvent used in these plants. Indirect steam, hot water or hot oil heat supplied from appliances located in rooms separated from the Type II dry cleaning plant or in separate buildings are examples of indirect heat methods.

2104.2.3 Electrical wiring and equipment. Electrical wiring and equipment in dry cleaning rooms or other locations subject to flammable vapors shall be installed in accordance with NFPA 70.

❖ To reduce the likelihood of a vapor ignition, electrical wiring and equipment located where flammable vapors might be released by malfunctioning equipment, rupture or breakage is typically classified as Class I, Division 1 equipment under the provisions of NFPA 70. This would include rooms or spaces containing closed-system dry cleaning equipment that, under normal conditions, keeps the solvent vapors confined within the equipment. For the same reason, in areas where flammable vapors are present under normal operating conditions, such as in spotting or pretreating areas, using Class I solvents in the open, in tubs or on soaking tables, electrical wiring and equipment must be classified as Class I, Division 1, equipment to meet the requirements of NFPA 70.

2104.2.4 Bonding and grounding. Storage tanks, treatment tanks, filters, pumps, piping, ducts, dry cleaning units, stills, tumblers, drying cabinets and other such equipment, where not inherently electrically conductive, shall be bonded together and grounded. Isolated equipment shall be grounded.

❖ Solvent containers and processing equipment during storage, handling and use must be bonded and grounded to prevent buildup of static charges, thus eliminating a common source of ignition for vapors emitted by flammable and combustible liquid solvents.

SECTION 2105
OPERATING REQUIREMENTS

2105.1 General. The operation of dry cleaning systems shall comply with the requirements of Sections 2105.1.1 through 2105.3.

❖ Section 2105 establishes requirements for the safe operation and maintenance of dry cleaning plants. The fire hazard associated with these plants has diminished significantly in recent years as fire protection, environmental and hazardous waste disposal concerns have caused the industry to move away from the use of flammable and combustible solvents. Poor housekeeping is the primary fire prevention concern these days.

2105.1.1 Written instructions. Written instructions covering the proper installation and safe operation and use of equipment and solvent shall be given to the buyer.

❖ This section applies to persons or firms that engage in wholesale or retail sales of dry cleaning equipment. Each piece of equipment sold must be accompanied by written instructions for the installation and operation of the equipment and for the safe storage, handling and use of the dry cleaning solvent for which it is designed.

2105.1.1.1 Type II, III-A, III-B and IV systems. In Type II, III-A, III-B and IV dry cleaning systems, machines shall be operated in accordance with the operating instructions furnished by the machinery manufacturer. Employees shall be instructed as to the hazards involved in their departments and in the work they perform.

❖ Safety in dry cleaning operations depends on employees being familiar with not only the dry cleaning machines and their operation as described in the written instructions required by Section 2105.1.1, but also understanding the hazards associated with and the proper methods of storing, handling, dispensing and using dry cleaning solvents within their respective work spaces. This section requires that employees be trained in all aspects of dry cleaning operations.

2105.1.1.2 Type V systems. Operating instructions for customer use of Type V dry cleaning systems shall be conspicuously posted in a location near the dry cleaning unit. A telephone number shall be provided for emergency assistance.

❖ Type V dry cleaning systems are operated by the general public rather than by trained employees as are Type II, III-A and III-B systems. Under ideal conditions, such operations should have an attendant to supervise cleaning activities and be available to answer questions on the proper operation of the machines. Most Type V systems, however, are not attended. For this reason, machine operating instruc-

INTERNATIONAL CODE COUNCIL®
Copyright © 2015 ICC. ALL RIGHTS RESERVED. Accessed by David Dammon on Jun 21, 2017 12:30:52 PM pursuant to License Agreement with ICC. No further reproduction or distribution authorized. ANY UNAUTHORIZED REPRODUCTION OR DISTRIBUTION IS A VIOLATION OF THE FEDERAL COPYRIGHT ACT AND THE LICENSE AGREEMENT, AND SUBJECT TO CIVIL AND CRIMINAL PENALTIES THEREUNDER.

tions must be posted prominently in the machine area where they can be seen readily by patrons. In addition, an emergency phone number must be posted prominently for patron use. Note that this section does not require a public telephone on the premises. With the proliferation of cellular technology, much of the public carries a cell phone that can be used in case of an emergency.

2105.1.2 Equipment identification. The manufacturer shall provide nameplates on dry cleaning machines indicating the class of solvent for which each machine is designed.

❖ Because dry cleaning machines are designed to be used only with a specific class of solvent, this information must be clearly displayed on a permanent nameplate affixed to the machine so that there can be no question of what solvent may be used in a given machine (also see commentary, Section 2105.1.4).

2105.1.3 Open systems prohibited. Dry cleaning by immersion and agitation in open vessels shall be prohibited.

❖ Dry cleaning is intended to be a closed-system process, with the cleaning solvent contained within the machinery. Pouring large quantities of combustible solvent into an open container to soak or agitate items being cleaned allows and increases the escape of combustible vapors or, in the case of Type IV systems, noncombustible but toxic vapors, and is, therefore, prohibited. Also see the commentary to Section 2106 for a discussion of spotting and pretreating in the open and special handling provisions that allow limited hand agitation in the open.

2105.1.4 Prohibited use of solvent. The use of solvents with a *flash point* below that for which a machine is designed or *listed* shall be prohibited.

❖ Dry cleaning equipment is designed and tested for use with specific classifications of solvents. This section mandates that equipment be used only with the class of solvent for which it has been designed. Equipment approved for higher flash-point or nonflammable solvents may not be equipped with many of the inherent safety features required for lower flash-point solvents.

2105.1.5 Equipment maintenance and housekeeping. Proper maintenance and operating practices shall be observed in order to prevent the leakage of solvent or the accumulation of lint. The handling of waste material generated by dry cleaning operations and the maintenance of facilities shall comply with the provisions of this section.

❖ Safe dry cleaning depends on safe, well-maintained equipment and good housekeeping practices. Because dry cleaning is intended to be a closed-system use, machines must be checked regularly for loose fittings and connections that could allow the leakage of a solvent and its vapors. Also, the lint that accumulates in the cleaning of textile materials must be regularly removed from lint traps and disposed of properly. This section requires that dry cleaning plants comply with the provisions of Sections 2105.1.5.1 through 2105.1.5.4.

2105.1.5.1 Floors. Class I and II liquids shall not be used for cleaning floors.

❖ This section prohibits the use of flammable and Class II combustible liquids for cleaning floors in dry cleaning plants for basically the same reasons that open soaking and agitation with solvents are prohibited by Section 2105.1.3: open use will allow flammable vapors to escape and accumulate. This effect is aggravated by the fact that in many instances, dry cleaning plants operate at high ambient temperatures that may be at or above the flash point of Class I or II liquids, thus forming an immediately ignitable mixture in air.

2105.1.5.2 Filters. Filter residue and other residues containing solvent shall be handled and disposed of in covered metal containers.

❖ The Environmental Protection Agency (EPA) has raised health and safety concerns about dry cleaning workers and people living near dry cleaners. Improper handling and disposal of dry cleaning solvents can pollute outdoor air, soil and water. Dry cleaning and laundry plants that might generate hazardous waste and be subject to Resource Conservation and Recovery Act (RCRA) requirements covering the generation, transportation and management of hazardous waste include: retail dry cleaning stores; industrial and linen supply plants with dry cleaning operations; self-service laundromats with dry cleaning equipment; or other facilities with dry cleaning operations. The volume of hazardous waste produced in these facilities often places them in the EPA category of “small quantity generator.” Proper storage and disposal of spent filters and other solvent-containing wastes (empty solvent containers, still residues from solvent distillation and water contaminated with cleaning solvent) as required by this section reduces the potential for the production of solvent vapors and environmental pollution.

2105.1.5.3 Lint. Lint and refuse shall be removed from traps daily, deposited in *approved* waste cans, removed from the premises, and disposed of safely. At all other times, traps shall be held securely in place.

❖ Lint is finely divided textile fiber sloughed off of articles being cleaned and is generated in large quantities in the dry cleaning process. As with any combustible material, the more finely it is divided, the more surface area of the material is available for ignition and the more readily it will ignite. For this reason, this hazard must be reduced by collection and removal of lint, as well as other combustible waste materials, at least daily, followed by proper disposal.

2105.1.5.4 Customer areas. In Type V dry cleaning systems, customer areas shall be kept clean.

❖ Coin-operated laundries and dry cleaning establishments are often unattended, which can lead to poor

INTERNATIONAL CODE COUNCIL®
Copyright © 2015 ICC. ALL RIGHTS RESERVED. Accessed by David Dammon on Jun 21, 2017 12:30:52 PM pursuant to License Agreement with ICC. No further reproduction or distribution authorized. ANY UNAUTHORIZED REPRODUCTION OR DISTRIBUTION IS A VIOLATION OF THE FEDERAL COPYRIGHT ACT AND THE LICENSE AGREEMENT, AND SUBJECT TO CIVIL AND CRIMINAL PENALTIES THEREUNDER.

housekeeping and hazardous conditions that could contribute to the start or spread of a fire. This section requires that reasonable housekeeping procedures be established and executed regularly to reduce this hazard.

2105.2 Type II systems. Special operating requirements for Type II dry cleaning systems shall comply with the provisions of Sections 2105.2.1 through 2105.2.3.

❖ Sections 2105.2.1 through 2105.2.3 contain operating procedures uniquely applicable to Type II dry cleaning systems because of their use of Class II solvents and the higher relative hazards associated with that use.

2105.2.1 Inspection of materials. Materials to be dry cleaned shall be searched thoroughly and foreign materials, including matches and metallic substances, shall be removed.

❖ To prevent damage to dry cleaning equipment and eliminate potential sources of ignition, such as matches being ignited or metallic objects striking a spark with dry cleaning machine parts, articles to be dry cleaned must be carefully screened for foreign objects that could create a hazardous condition.

2105.2.2 Material transfer. In removing materials from the washer, provisions shall be made for minimizing the dripping of solvent on the floor. Where materials are transferred from a washer to a drain tub, a nonferrous metal drip apron shall be placed so that the apron rests on the drain tub and the cylinder of the washer.

❖ To reduce the amount of Class II solvent lost during removal of cleaned articles from the dry cleaning machine, means must be provided to minimize the amount of solvent that drips on the plant floor and evaporates into hazardous vapors in the work space. This section describes one method of preventing solvent drips by placing a drain board between the dry cleaning machine and drain tubs. The drain board must be nonferrous to prevent potential metal-to-metal sparks during the transfer process.

2105.2.3 Ventilation. A mechanical ventilation system which is designed to exhaust 1 cubic foot of air per minute for each square foot of floor area [0.0058 $m^3/(s \cdot m^2)$] shall be installed in dry cleaning rooms and in drying rooms. The ventilation system shall operate automatically when the dry cleaning equipment is in operation and shall have manual controls at an *approved* location.

❖ This section intended to prevent solvent vapors from Type II dry cleaning systems from accumulating to an ignitable concentration in the room in which those appliances are located by providing adequate mechanical ventilation. The prescribed rate of mechanical ventilation will also help prevent the ambient temperature in the room from exceeding the flash point of the solvent being used in the cleaning process. It is not the intent that this system be classified as a "hazardous exhaust system" as addressed in IMC Section 510; however, consistent with IMC Section 502, this system must be independent of all other exhaust and ventilation systems.

The required ventilation rate of 1 cubic foot per minute (cfm) per square foot [0.0058 $m^3/(s \cdot m^2)$] of floor area is typical of that required in hazardous material-related areas where fugitive flammable vapors need dilution or removal. Although its exact technical origins remain obscure, it is thought to have been derived from a rule of thumb (possibly from the insurance industry) that established a ventilation requirement in flammable and combustible liquid use areas of six air changes per hour, which has proven to be effective over the years. Although this method provides effective ventilation and hazard reduction, moving that volume of air in industrial or storage buildings with larger-than-average floor-to-floor and floor-to-roof dimensions requires large, costly mechanical equipment installations and creates concerns over energy conservation. To deal with those concerns, a design ceiling height of 10 feet (3048 mm) was assumed in recognition of the fact that solvent vapors will gather at the lowest point in the room. Each square foot of building area, then, would represent 10 cubic feet (0.3 m^3) and, at the rate of six air changes per hour, 60 cubic feet (1.7 m^3) of air per hour would be moved, which yields 1 cfm per square foot [0.0058 $m^3/(s \cdot m^2)$] of room area.

To be effective, the exhaust equipment is required by this section to be interlocked with the dry cleaning equipment so that it operates whenever the dry cleaning equipment operates. Manual controls are also required for additional flexibility and reliability in the event that the mechanical system runs on after the dry cleaning system is shut down. The location of the controls is to be approved by the fire code official.

2105.3 Type IV and V systems. Type IV and V dry cleaning systems shall be provided with an automatically activated exhaust ventilation system to maintain a minimum of 100 feet per minute (0.51 m/s) air velocity through the loading door when the door is opened. Such systems for dry cleaning equipment shall comply with the *International Mechanical Code*.

Exception: Dry cleaning units are not required to be provided with exhaust ventilation where an exhaust hood is installed immediately outside of and above the loading door which operates at an airflow rate as follows:

$$Q = 100 \times A_{LD} \qquad \textbf{(Equation 21-1)}$$

where:

Q = flow rate exhausted through the hood, cubic feet per minute (m^3/s).

A_{LD} = area of the loading door, square feet (m^2).

❖ This section is intended to prevent solvent vapors from Type IV and V dry cleaning systems from escaping into the room where the appliances are located by

INTERNATIONAL CODE COUNCIL®
Copyright © 2015 ICC. ALL RIGHTS RESERVED. Accessed by David Dammon on Jun 21, 2017 12:30:52 PM pursuant to License Agreement with ICC. No further reproduction or distribution authorized. ANY UNAUTHORIZED REPRODUCTION OR DISTRIBUTION IS A VIOLATION OF THE FEDERAL COPYRIGHT ACT AND THE LICENSE AGREEMENT, AND SUBJECT TO CIVIL AND CRIMINAL PENALTIES THEREUNDER.

drawing the required exhaust airflow into the unit through the open door at the minimum velocity of 100 feet per minute (51 m/s). In this way, exposure of employees (in Type IV systems) or the public (in Type V systems) to potentially harmful solvent vapors is minimized. The exhaust capability contemplated by this section is integral with the dry cleaning unit, and its operation must be interlocked with the unit door to automatically start the required exhaust airflow as soon as the unit door is opened. It is not the intent that this system be classified as a "hazardous exhaust system" as addressed in IMC Section 510; however, consistent with IMC Section 502, this system must be independent of all other exhaust and ventilation systems.

The exception is a design alternative to achieve the goal of solvent vapor capture at the door opening through installation of what is often referred to as an "eyebrow hood" located immediately above the dry cleaning unit door opening. This enables the exhaust airflow to sweep across the loading door opening of the machine and capture any escaping solvent vapors. This kind of hood may be integral with the unit or may be an after-market-installed accessory to the unit. In either case, it must be either interlocked with the unit door to automatically start the required exhaust airflow as soon as the unit door is opened or operate continuously whenever the dry cleaning machine is in operation.

Since exhaust hoods are not designed for a constant air velocity in all parts of the hood, such as can be achieved by drawing air into a machine through a loading door opening, exhaust capability for this alternative design calculated in accordance with Equation 21-1 will be expressed as a flow rate rather than a fixed velocity. The fan will be drawing in a large volume of environmental air to achieve the prescribed exhaust airflow across the entire loading door opening. For example, applying the formula to a dry cleaning unit that has a 2-foot-diameter (610 mm) circular loading/unloading door, the exhaust flow rate (Q) would be calculated as follows:

$$Q = 100 \times A_{LD}$$

$$A_{LD} = \pi r^2; \text{ where } \pi = 3.14 \text{ and } r = 1, \text{ therefore}$$

$$Q = 100 \times (3.14 \times 1^2)$$

$$Q = 100 \times 3.14$$

$$Q = 314 \text{ cubic feet per minute}$$

It is not the intent that this system be classified as a "hazardous exhaust system" as addressed in IMC Section 510; however, consistent with IMC Section 502.1.3, this system must be independent of all other exhaust and ventilation systems.

SECTION 2106
SPOTTING AND PRETREATING

2106.1 General. Spotting and pretreating operations and equipment shall comply with the provisions of Sections 2106.2 through 2106.5.

❖ Spotting and pretreating operations consist of soaking or direct local application of cleaning solvents to articles about to be dry cleaned. These operations focus the solvent's cleaning power on the removal of more stubborn stains, such as those from grease, oils, makeup, paint, dirt or petroleum products (tar, asphalt sealer, etc). The operations typically take place on spotting tables or in scrubbing tubs in the open in the dry cleaning plant. Compliance with the requirements of Section 2106 will result in an acceptable level of safety for spotting and pretreating operations.

2106.2 Class I solvents. The maximum quantity of Class I solvents permitted at any work station shall be 1 gallon (4 L). Spotting or prespotting shall be permitted to be conducted with Class I solvents where they are stored in and dispensed from *approved* safety cans or in sealed DOT-approved metal shipping containers of not more than 1-gallon (4 L) capacity.

❖ This section allows up to 1 gallon (4 L) of Class I (flammable) solvent to be stored in its original shipping container or, where used for spotting or prespotting, stored in and dispensed from a safety can complying with UL 30 (see commentary, Sections 5005.1.10 and 5705.2.4).

2106.2.1 Spotting and prespotting. Spotting and pre-spotting shall be permitted to be conducted with Class I solvents where dispensed from plastic containers of not more than 1 pint (0.5 L) capacity.

❖ This section recognizes the use of U.S. Department of Transportation-approved plastic containers to ship and store chemicals used in dry cleaning plants, including spotting chemicals. Use of such containers is permitted by Section 5704.3.1 of the code and OSHA regulations for the storage of flammable and combustible liquids. Similar provisions also appear in Chapter 5 of NFPA 32. Note that the quantity limitation in this section is well below the use-open maximum allowable quantities (MAQ) for flammable liquids in Table 5003.1.1(1).

2106.3 Class II and III solvents. Scouring, brushing, and spotting and pretreating shall be permitted to be conducted with Class II or III solvents. The maximum quantity of Class II or III solvents permitted at any work station shall be 1 gallon (4 L). In other than Group H-2 occupancy, the aggregate quantities of solvents shall not exceed the maximum allowable quantity per control area for use-open system.

❖ This section allows Class II or Ill solvents to be used for spotting or pretreating and limits the quantity of

INTERNATIONAL CODE COUNCIL®
Copyright © 2015 ICC. ALL RIGHTS RESERVED. Accessed by David Dammon on Jun 21, 2017 12:30:52 PM pursuant to License Agreement with ICC. No further reproduction or distribution authorized. ANY UNAUTHORIZED REPRODUCTION OR DISTRIBUTION IS A VIOLATION OF THE FEDERAL COPYRIGHT ACT AND THE LICENSE AGREEMENT, AND SUBJECT TO CIVIL AND CRIMINAL PENALTIES THEREUNDER.

solvent that can be in use at a spotting or pretreating work station to 1 gallon (4 L) to reduce the likelihood of an unmanageable solvent spill. Aggregate quantities of spotting or pretreating solvent must not exceed the MAQ for open system use established by Table 5003.1.1(1), including the increases allowed for the sprinkler system required by Section 2108.2.

2106.3.1 Spotting tables. Scouring, brushing or spotting tables on which articles are soaked in solvent shall have a liquid-tight top with a curb on all sides not less than 1 inch (25 mm) high. The top of the table shall be pitched to ensure thorough draining to a $1^1/_2$-inch (38 mm) drain connected to an *approved* container.

❖ To reduce spills of spotting solvents during their open use, surfaces upon which the spotting is done must be designed to catch and route solvent to an approved container (preferably a closed one) for disposal or recycling.

2106.3.2 Special handling. Where *approved*, articles that cannot be washed in the usual washing machines are allowed to be cleaned in scrubbing tubs. Scrubbing tubs shall comply with the following:

1. Only Class II or III liquids shall be used.
2. The total amount of solvent used in such open containers shall not exceed 3 gallons (11 L).
3. Scrubbing tubs shall be secured to the floor.
4. Scrubbing tubs shall be provided with permanent $1^1/_2$-inch (38 mm) drains. Such drain shall be provided with a trap and shall be connected to an *approved* container.

❖ Although dry cleaning by immersion and agitation in open vessels is prohibited by Section 2105.1.3, there are isolated circumstances in which an article that needs dry cleaning cannot be cleaned in the conventional manner in an approved dry cleaning machine. This section establishes minimum safeguards intended to reduce the hazards associated with open cleaning in a scrubbing tub.

The first step in cleaning an article in the open is to secure the approval of the fire code official for the operation. This enables him or her to inspect the area where the open cleaning is to be done to verify that the housekeeping complies with this chapter, that all the safeguards required by this section are in place, that the ventilation requirements of Section 2106.3.3 are met, and that the bonding and grounding required by Section 2106.3.4 are in place.

Although limited use of Class I spotting solvents is allowed by Section 2106.3, this section makes it clear that dry cleaning in the open is limited to only Class II or III solvents because of their higher flash points. To avoid an unmanageable spill while still allowing a workable quantity of solvent in the scrubbing tub, Class II or III solvents are limited to only 3 gallons (11 L) in process, and then only in a tub that is firmly fixed in place by securing it to the floor in an approved manner. Solvents used in open dry cleaning processes must be captured in an approved (preferably closed) container for recycling or proper disposal.

2106.3.3 Ventilation. Scrubbing tubs, scouring, brushing or spotting operations shall be located such that solvent vapors are captured and exhausted by the ventilating system.

❖ When locating the spotting or pretreating operation within the plant, care must be taken to choose a location that will allow adequate airflow on all sides of the spotting or pretreating equipment to maximize the effectiveness of the exhaust ventilation system required by Section 2105.2.3 in preventing the accumulation of hazardous vapor concentrations.

2106.3.4 Bonding and grounding. Metal scouring, brushing and spotting tables and scrubbing tubs shall be permanently and effectively bonded and grounded.

❖ Solvent containers and processing equipment during storage, handling and use must be grounded to prevent buildup of static charges, thus eliminating a common source of ignition for vapors from flammable and combustible liquid solvents.

2106.4 Type IV systems. Flammable and combustible liquids used for spotting operations shall be stored in *approved* safety cans or in sealed DOTn-approved shipping containers of not more than 1 gallon (4 L) in capacity. Aggregate amounts shall not exceed 10 gallons (38 L).

❖ Type IV dry cleaning systems are those systems using nonflammable solvents where dry cleaning is done only by trained operators who must be familiar with solvent hazards. Up to an aggregate quantity of 10 gallons (38 L) of Class I, II or III spotting or pretreating solvents is allowed if the solvents comply with the minimum storage safeguard of being stored in their original shipping container or safety cans complying with UL 30 (see commentary, Sections 5005.1.10 and 5705.2.4).

2106.5 Type V systems. Spotting operations using flammable or *combustible liquids* are prohibited in Type V dry cleaning systems.

❖ Type V dry cleaning systems are those systems using nonflammable solvents where dry cleaning is done by the general public, such as in coin-operated laundries that may or may not be attended by qualified staff. To prevent exposing the general public to the hazards of spotting or pretreating operations using solvents more hazardous than the nonflammable solvents used in the Type V system itself, and to preclude any action that might violate Section 2105.1.4, this section prohibits spotting and pretreating operations altogether.

SECTION 2107
DRY CLEANING SYSTEMS

2107.1 General equipment requirements. Dry cleaning systems, including dry cleaning units, washing machines, stills, drying cabinets, tumblers and their appurtenances,

INTERNATIONAL CODE COUNCIL®
Copyright © 2015 ICC. ALL RIGHTS RESERVED. Accessed by David Dammon on Jun 21, 2017 12:30:52 PM pursuant to License Agreement with ICC. No further reproduction or distribution authorized. ANY UNAUTHORIZED REPRODUCTION OR DISTRIBUTION IS A VIOLATION OF THE FEDERAL COPYRIGHT ACT AND THE LICENSE AGREEMENT, AND SUBJECT TO CIVIL AND CRIMINAL PENALTIES THEREUNDER.

including pumps, piping, valves, filters and solvent coolers, shall be installed and maintained in accordance with NFPA 32. The construction of buildings in which such systems are located shall comply with the requirements of this section and the *International Building Code*.

❖ NFPA 32 contains provisions for the prevention and control of fire and explosion hazards incidental to dry cleaning operations for the protection of employees and the public. Likewise, the IBC regulates the construction of dry cleaning plant buildings based on the relative hazards of the occupancies. IBC Chapter 3 classifies dry cleaning pickup/drop-off stations and Type V dry cleaning systems in Occupancy Group B (business) because of their low-hazard nature. Type II, III and IV dry cleaning plants are classified in Occupancy Group F-1 (moderate-hazard factory-industrial) because they include or could include the processing of combustible textiles using combustible solvents and, on a limited basis, flammable liquids for spotting. Certain dry cleaning operations could be classified by the IBC in Group H, depending on the quantity of solvent present and the type of machines used. See the commentary to IBC Section 307.1 for further discussion of exceptions to Group H classifications.

2107.2 Type II systems. Type II dry cleaning and solvent tank storage rooms shall not be located below grade or above the lowest floor level of the building and shall comply with Sections 2107.2.1 through 2107.2.3.

Exception: Solvent storage tanks installed underground, in vaults or in special enclosures in accordance with Chapter 57.

❖ Type II dry cleaning systems are those systems using a Class II combustible liquid [flash point from 100°F (38°C) to 140°F (60°C)] as a cleaning solvent, sometimes at or above its lowest flash point under normal plant operating conditions. For this reason, this section prohibits the location of these systems and solvent storage at other than the level of fire department access or exit discharge (i.e., other than at grade). Because of the higher relative hazards of these systems and their solvents, locating them above or below the lowest grade floor level could affect rapid egress by employees, as well as rapid access to the system by fire fighters in case of an emergency.

2107.2.1 Fire-fighting access. Type II dry cleaning plants shall be located so that access is provided and maintained from one side for fire-fighting and fire control purposes in accordance with Section 503.

❖ The general design of fire apparatus access to buildings is regulated by Section 503. To give fire fighters timely access to the building, this section requires that the building containing the Type II system be accessible on at least one side. This is consistent with the provisions of Section 503.1.1, which allows access on only one side when a building is equipped throughout with an automatic sprinkler system as is required by Section 2108.2 for dry cleaning plants. Fire apparatus access must be kept unobstructed at all times and comply with the provisions of Section 503.

2107.2.2 Number of means of egress. Type II dry cleaning rooms shall have not less than two *means of egress* doors located at opposite ends of the room, not less than one of which shall lead directly to the outside.

❖ The number of exit or exit access doorways required from a room or space is regulated by Section 1015.1. That general section would not require two doors out of a Type II dry cleaning room classified in Occupancy Group F-1 unless it had an occupant load of more than 50 persons; that is, greater than 5,000 square feet (465 m^2) in area based on 100 square feet (9 m^2) per person in accordance with Table 1004.1.2. However, this section is specific to Type II dry cleaning rooms and supersedes general Group F egress requirements by requiring two doors out of the room, regardless of occupant load. Note that at least one of the doors must be an exit door that opens directly to the exit discharge or public way outside of the building. All doors must also comply with Section 1022.2.

This section also supersedes the general exit or exit access remoteness requirements of Section 1015.2 by mandating that the two means of egress doors from a Type II dry cleaning room be located at opposite ends of the room, rather than a distance apart equal to one-half the overall diagonal dimension of the room.

2107.2.3 Spill control and secondary containment. Curbs, drains or other provisions for spill control and secondary containment shall be provided in accordance with Section 5004.2 to collect solvent leakage and fire protection water and direct it to a safe location.

❖ To prevent the flow of Class II solvents to rooms or spaces adjoining the dry cleaning room, spill control complying with Section 5004.2 is required by this section. Care must be taken in the design of drainage and secondary containment systems to accurately calculate automatic sprinkler design discharge flow rates and fire suppression hand line [typically $1^1/_2$- or $1^3/_4$-inch (38 mm or 44 mm) hose] flows. Note that secondary containment provisions do not include control of the flammable, irritating or toxic vapors given off by the solvent. Care must be taken to minimize exposure to hazardous vapors. Runoff from spills or manual fire suppression activities may result in environmental contamination if not properly controlled (also see commentary, Section 5004.2).

2107.3 Solvent storage tanks. Solvent storage tanks for Class II, IIIA and IIIB liquids shall conform to the requirements of Chapter 57 and be located underground or outside, above ground.

Exception: As provided in NFPA 32 for inside storage or treatment tanks.

❖ Safe and proper storage of solvents is a paramount concern in the safe operation of a dry cleaning plant or facility. This section requires that combustible sol-

INTERNATIONAL CODE COUNCIL®
Copyright © 2015 ICC. ALL RIGHTS RESERVED. Accessed by David Dammon on Jun 21, 2017 12:30:52 PM pursuant to License Agreement with ICC. No further reproduction or distribution authorized. ANY UNAUTHORIZED REPRODUCTION OR DISTRIBUTION IS A VIOLATION OF THE FEDERAL COPYRIGHT ACT AND THE LICENSE AGREEMENT, AND SUBJECT TO CIVIL AND CRIMINAL PENALTIES THEREUNDER.

vents be stored in approved tanks located either underground or above ground outside the building, and references Chapter 57 for detailed requirements.

The exception recognizes the provisions contained in NFPA 32 governing the inside storage of solvents. While NFPA 32 allows the unenclosed indoor installation of up to three 1,500-gallon (5678 L) storage or treatment tanks of Class II solvent, it should be noted that, in accordance with the IBC, indoor storage of Class II solvents in excess of the MAQ indicated in IBC Table 307.1(1) would cause the dry cleaning facility to be classified in Group H-3.

SECTION 2108
FIRE PROTECTION

2108.1 General. Where required by this section, *fire protection systems*, devices and equipment shall be installed, inspected, tested and maintained in accordance with Chapter 9.

❖ To control the relative hazards posed by dry cleaning operations, this section requires the installation of a fire protection system and references Chapter 9 for installation and maintenance.

2108.2 Automatic sprinkler system. An *automatic sprinkler system* shall be installed in accordance with Section 903.3.1.1 throughout dry cleaning plants containing Type II, Type III-A or Type III-B dry cleaning systems.

Exceptions:

1. An *automatic sprinkler system* shall not be required in Type III-A dry cleaning plants where the aggregate quantity of Class III-A solvent in dry cleaning machines and storage does not exceed 330 gallons (1250 L) and dry cleaning machines are equipped with a feature that will accomplish any one of the following:
   1.1. Prevent oxygen concentrations from reaching 8 percent or more by volume.
   1.2. Keep the temperature of the solvent not less than 30°F (16.7°C) below the flash point.
   1.3. Maintain the solvent vapor concentration at a level lower than 25 percent of the lower explosive limit (LEL).
   1.4. Utilize equipment *approved* for use in Class I, Division 2 hazardous locations in accordance with NFPA 70.
   1.5. Utilize an integrated dry-chemical, clean agent or water-mist automatic fire-extinguishing system designed in accordance with Chapter 9.
2. An *automatic sprinkler system* shall not be required in Type III-B dry cleaning plants where the aggregate quantity of Class III-B solvent in dry cleaning machines and storage does not exceed 3,300 gallons (12 490 L).

❖ Section 903.2 contains the general "where required" criteria for the installation of automatic sprinklers in buildings. Section 2108.7 is more specific and would require an automatic sprinkler system throughout dry cleaning plants regardless of the size of the fire area. This is related to the hazard of relatively high fire loads coupled with the presence of combustible and possibly flammable liquids. These liquids may be in both open and closed system operations

Several exceptions to the requirement for sprinklers are included in this section of the code in part because several states have banned the use of the nonflammable dry cleaning fluid perchlorethylene or "perc" due to its carcinogenicity which already requires that plant operators purchase new equipment using alternative dry cleaning technology. The ICC voting membership approved the addition of the exceptions because its members felt that having a sprinkler requirement on top of that capital expense would be a business hardship and also because the nationally recognized standard, NFPA 32, already included such exceptions. Exception 1 recognizes that modern Type IIIA dry cleaning machines have intrinsic safety features that can prevent fires from starting within the dry cleaning machine and parallels Section 8.1.2.6 of NFPA 32. It recognizes the lesser relative hazard of plants using higher flash point [140°F to 299°F (60°C to 148.23)] Class IIIA dry cleaning solvents while maintaining a reasonable limit on aggregate solvent quantity and providing needed safety features. Exception 2 parallels Section 8.2.3.4 of NFPA 32 and recognizes the even lesser hazard of Class IIIB solvents having a very high flash point [at or above 200°F (93.33°C)] further decreasing the likelihood of accidental ignition. These exceptions were added to the code rather than relying on a reference to NFPA 32 so the inspector would not have to carry the referenced standard into the field. See also the commentary to Section 2103.3 and IBC Section 307.1, Exceptions 4 and 5 for further information.

2108.3 Automatic fire-extinguishing systems. Type II dry cleaning units, washer-extractors, and drying tumblers in Type II dry cleaning plants shall be provided with an *approved* automatic fire-extinguishing system installed and maintained in accordance with Chapter 9.

Exception: Where *approved*, a manual steam jet not less than $^{3}/_{4}$ inch (19 mm) with a continuously available steam supply at a pressure not less than 15 pounds per square inch gauge (psig) (103 kPa) is allowed to be substituted for the automatic fire-extinguishing system.

❖ Section 2108.2 focuses on the protection of the dry cleaning plant occupants and building. This section requires additional fire protection for dry cleaning

INTERNATIONAL CODE COUNCIL®
Copyright © 2015 ICC. ALL RIGHTS RESERVED. Accessed by David Dammon on Jun 21, 2017 12:30:52 PM pursuant to License Agreement with ICC. No further reproduction or distribution authorized. ANY UNAUTHORIZED REPRODUCTION OR DISTRIBUTION IS A VIOLATION OF THE FEDERAL COPYRIGHT ACT AND THE LICENSE AGREEMENT, AND SUBJECT TO CIVIL AND CRIMINAL PENALTIES THEREUNDER.

equipment using Class II solvent because of its lower flash point. Automatic fire-extinguishing systems for local, direct application of suppression media in the dry cleaning machinery must be installed in accordance with Section 904. The type of automatic fire-extinguishing system typically used (and required by NFPA 32) in this application is carbon dioxide, installed in accordance with Section 904.8, although approved dry chemical or gaseous-agent systems could also be used.

The exception recognizes the fire-smothering capabilities of steam. Although there is no recognized standard for the design of steam-smothering systems, the fact that steam is usually available in large quantities in dry cleaning plants makes it an inexpensive alternative to the more state-of-the-art fire-extinguishing systems. The design and installation of the steam jet(s) that must be available for personnel to manually use must be reviewed and approved by the fire code official. Because steam poses a serious burn hazard, the system design should minimize personnel exposure to this hazard.

2108.4 Portable fire extinguishers. Portable fire extinguishers shall be selected, installed and maintained in accordance with this section and Section 906. A minimum of two, 2-A:10-B:C portable fire extinguishers shall be provided near the doors inside dry cleaning rooms containing Type II, Type III-A and Type III-B dry cleaning systems.

❖ Portable fire extinguishers are intended only for fighting incipient fires. Employees should be trained in the proper selection and use of portable fire extinguishers. Both the extinguisher rating and the travel distance must be consistent with Section 906 and NFPA 10 for the moderate hazards expected in dry cleaning plants. Placing the extinguishers at the doors leading out of rooms containing Type II, III-A and III-B dry cleaning systems will enhance personnel safety by requiring them to travel toward the means of egress door to gain access to an extinguisher in case of a fire. The required size of the extinguisher(s) should give the operator sufficient agent capacity and discharge time to handle the magnitude of incipient fires expected.

INTERNATIONAL CODE COUNCIL®
Copyright © 2015 ICC. ALL RIGHTS RESERVED. Accessed by David Dammon on Jun 21, 2017 12:30:52 PM pursuant to License Agreement with ICC. No further reproduction or distribution authorized. ANY UNAUTHORIZED REPRODUCTION OR DISTRIBUTION IS A VIOLATION OF THE FEDERAL COPYRIGHT ACT AND THE LICENSE AGREEMENT, AND SUBJECT TO CIVIL AND CRIMINAL PENALTIES THEREUNDER.

INTERNATIONAL CODE COUNCIL®
Copyright © 2015 ICC. ALL RIGHTS RESERVED. Accessed by David Dammon on Jun 21, 2017 12:30:52 PM pursuant to License Agreement with ICC. No further reproduction or distribution authorized. ANY UNAUTHORIZED REPRODUCTION OR DISTRIBUTION IS A VIOLATION OF THE FEDERAL COPYRIGHT ACT AND THE LICENSE AGREEMENT, AND SUBJECT TO CIVIL AND CRIMINAL PENALTIES THEREUNDER.

Chapter 22: Combustible Dust-Producing Operations

General Comments

Problems associated with the production and handling of dusts were not widely recognized and understood until the twentieth century. Likewise, the need for adequate protection from dust explosions did not become widely accepted until the latter half of the twentieth century. A relatively incomplete understanding of the theoretical underpinnings of the explosion hazards of dusts is largely responsible for this lag.

The following factors affect the explosion hazards of dusts:

- Chemical composition of the dust.
- Geometry and size of the dust particles.
- Concentration of dust present in suspension (distance between dust particles or the mass of dust particles in a given volume).
- Nature and concentration of the oxidant, usually air.
- Moisture content of both the atmosphere and the dust.
- Minimum required ignition temperature or ignition energy of the dust and amount of time the two are in contact with each other.

Curiously, not all combustible dusts are explosible. The reasons for this are not very well understood. Explosion hazards of dusts are often defined by the lower and upper explosive limits, explosion pressures and explosion rates of various dusts. These values cannot be derived from the thermal properties of the dusts but rather must be determined by measurement. Combustible dusts may produce explosion pressures as great as 150 pounds per square inch gauge (psig) (103 kPa) and explosion pressure rise rates as high as 15,000 pounds per square inch (psi) per second (103 425 kPa).

Dust explosions usually produce flame fronts traveling at rates less than the speed of sound, and are, therefore, classified as deflagrations. High oxidizer concentrations or the presence of flammable gases may, however, produce detonations with shockwaves traveling in excess of the speed of sound preceding the flame front.

Unlike flammable gases and vapors, concentrations of explosive dusts exceeding stoichiometric quantities (the amount of fuel necessary to consume all the available oxidizer) produce more violent explosions up to the point at which dust concentrations approach several times the stoichiometric concentration.

In 1973, K.N. Palmer listed the following explosion protection measures. Formation of explosive dust suspensions is inevitable, and complete elimination of ignition sources cannot be relied on; therefore, implementing a combination of explosion protection strategies is strongly recommended. Such explosion protection measures include ignition prevention, suppression or containment of the primary explosion flame and allowing the explosion to take its full course in a safe manner.

Fire fighters are especially aware of the hazards of dust explosions in grain elevators in rural areas, but may not recognize the potential for dust explosions in a wide variety of other manufacturing operations. Dusts are produced and used in industrial applications ranging from water treatment to semiconductor manufacturing. The explosive force generated by a dust explosion is comparable to flammable vapor and gas explosions.

The following industries are involved in the production or handling of explosible dusts:

- Agricultural, including coffee, cornstarch, cottonseed, sugar and various grains.
- Chemical, including dye.
- Coal mining and use.
- Food (human and animal).
- Metals, including aluminum, magnesium, iron, manganese and various alloys.
- Pharmaceuticals.
- Plastics, including polyethylene resins, styrene polymer resins, epoxy resins and polycarbonate resins.
- Woodworking.

Conditions under which a combustible dust will produce an explosion are quite specific, though they are difficult to quantify. As a result, precautions to prevent dust explosions are often determined by assigning a particular dust to a hazard class. A sample of material is ignited under controlled conditions in a special test apparatus to determine the hazard class of a dust. The results of such tests were reported for common dusts by P. Field in his book *Dust Explosions*, which describes, in tabular form, the explosion data for selected combustible dusts. In each column, values of the table are derived experimentally using a special explosion apparatus. For each property, values are presented to fully describe the explosion characteristics of the given material. Dust hazard classes are expressed as ST-1 through ST-3, with ST-1 being the highest hazard, as portrayed in *The SFPE Handbook of Fire Protection Engineering*.

During the drafting of the code, combustible dust was not included in Table 5003.1.1(1) because of the inherent difficulty in establishing a maximum allowable quan-

INTERNATIONAL CODE COUNCIL®
Copyright © 2015 ICC. ALL RIGHTS RESERVED. Accessed by David Dammon on Jun 21, 2017 12:30:52 PM pursuant to License Agreement with ICC. No further reproduction or distribution authorized. ANY UNAUTHORIZED REPRODUCTION OR DISTRIBUTION IS A VIOLATION OF THE FEDERAL COPYRIGHT ACT AND THE LICENSE AGREEMENT, AND SUBJECT TO CIVIL AND CRIMINAL PENALTIES THEREUNDER.

tity (MAQ), and for determining if and when the MAQ had been exceeded. An occupancy with combustible dust is classified in Group H-2 in accordance with Section 307.4 of the *International Building Code*® (IBC®), with the exception of certain woodworking uses classified as Group F-1. Many spaces with combustible dust should be classified in Group H-2. However, others may fall into Group F or S, depending on the specifics of the process. Accordingly, in the 2012 edition of the code, a new row in Table 5003.1.1(1) added combustible dust to the MAQ table, so the code user would not miss this important hazard category. Note q directs the code user to pertinent sections in the code and the IBC to determine if a dust hazard exists by an engineering evaluation. The content of Note q is also included in IBC Section 307.4.

Purpose

Awareness and knowledge of the hazards of dusts and powders are less common than of flammable liquids and gases; however, explosions and fires involving dusts and powders are just as hazardous in many industrial settings. The requirements of this chapter seek to reduce the likelihood of dust explosions by managing the hazards of suspensions of ignitable dusts. Ignition source control and good housekeeping practices in occupancies containing dust-producing operations are emphasized.

SECTION 2201
GENERAL

2201.1 Scope. The equipment, processes and operations involving dust explosion hazards shall comply with the provisions of this chapter.

❖ This chapter details general requirements for the protection of properties and processes from explosions and deflagrations involving combustible dust residues and suspensions.

2201.2 Permits. Permits shall be required for *combustible dust*-producing operations as set forth in Section 105.6.

❖ The process of issuing permits gives the fire code official an opportunity to carefully evaluate and regulate hazardous operations. Permit applicants should be required to demonstrate that their operations comply with the intent of the code before the permit is issued. See the commentary to Section 105.6.6 for discussion of specific combustible dust-producing operations requiring an operational permit.

SECTION 2202
DEFINITION

2202.1 Definition. The following term is defined in Chapter 2:

COMBUSTIBLE DUST.

❖ Definitions of terms can help in the understanding and application of the code requirements. This section directs the code user to Chapter 2 for the proper application of the indicated term used in this chapter. Terms may be defined in Chapter 2 or in another *International Code*® (I-Code®) as indicated in Section 201.3, or the dictionary meaning may be all that is needed (see also commentary, Sections 201 through 201.4).

SECTION 2203
PRECAUTIONS

2203.1 Sources of ignition. Smoking or the use of heating or other devices employing an open flame, or the use of spark-producing equipment is prohibited in areas where *combustible dust* is generated, stored, manufactured, processed or handled.

❖ Smoking is prohibited in areas where dust explosion hazards exist. Welding and cutting must be confined to approved areas and subject to a hot work permit system and prior approval for each operation (see commentary, Chapter 35). Open-flame heating and spark-producing equipment, as well as other heat-producing devices, are prohibited. Torches and other open-flame devices are never to be used to remove accumulations of dust or dust residue. Electrical wiring, lighting and equipment where dust explosion hazards exist should be approved for use in Class II hazardous (classified) locations as regulated in NFPA 70.

2203.2 Housekeeping. Accumulation of *combustible dust* shall be kept to a minimum in the interior of buildings. Accumulated *combustible dust* shall be collected by vacuum cleaning or other means that will not place *combustible dust* into suspension in air. Forced air or similar methods shall not be used to remove dust from surfaces.

❖ Good housekeeping practices are extremely important in occupancies where combustible dust-producing operations are located. Ideally, minimizing the amount of fugitive combustible dust that accumulates in buildings should be accomplished by fixed equipment, such as physical enclosures for dust-producing machinery, and by approved dust collection systems designed to capture the dust at the point of generation. In its simplest form, a dust collection system can

INTERNATIONAL CODE COUNCIL®
Copyright © 2015 ICC. ALL RIGHTS RESERVED. Accessed by David Dammon on Jun 21, 2017 12:30:52 PM pursuant to License Agreement with ICC. No further reproduction or distribution authorized. ANY UNAUTHORIZED REPRODUCTION OR DISTRIBUTION IS A VIOLATION OF THE FEDERAL COPYRIGHT ACT AND THE LICENSE AGREEMENT, AND SUBJECT TO CIVIL AND CRIMINAL PENALTIES THEREUNDER.

consist of a shop vacuum cleaner connected to a woodworking machine, such as a table saw. In larger industrial applications, a ducted dust collection system can serve multiple machines or entire production lines. Such systems are considered to be hazardous exhaust systems and should be designed and installed in accordance with the *International Mechanical Code*® (IMC®).

It is important when removing accumulated combustible dust not to place it into suspension in the air, thus creating the potential for a dust explosion. Accordingly, this section requires that dust be collected by vacuum cleaning equipment or other approved means that will not disturb the accumulated dust. Dust should never be brushed from dust-loaded surfaces or be blown off with compressed air.

SECTION 2204
EXPLOSION PROTECTION

2204.1 Standards. The *fire code official* is authorized to enforce applicable provisions of the codes and standards listed in Table 2204.1 to prevent and control dust explosions.

❖ Because the pressure exerted by a combustible dust explosion typically ranges from 13 to 89 pounds per square inch (psi) (90 to 614 kPa), it is impractical to construct a building that will withstand such pressures. Therefore, a means of explosion relief or venting must be provided in accordance with Section 911 and the referenced standards. Additional guidance on the relative fire risk associated with various combustible dusts can be found in the referenced standards and the bibliographic material.

TABLE 2204.1. See below.

❖ Table 2204.1 references nine NFPA standards that detail specific precautions for a wide variety of dust explosion situations covering the broad spectrum of industries involved in dust-producing operations. These standards include the most common dust explosion hazards, and regulations for their prevention. Essentially, each of the referenced standards prescribes reasonable requirements for safety to life and property from fire and explosion. The standards also minimize the resulting damage should a fire or explosion occur. More specifically, the standards contain requirements for construction, ventilation, explosion venting, equipment, heating devices, dust control, fire protection and supplemental requirements related to electrical wiring and equipment; provisions concerning protection from sparks; cutting and welding; and smoking and signage regulations.

Unusual situations, especially those involving plastics, resins, pharmaceuticals and semiconductor dusts, should be carefully evaluated.

Bibliography

The following resource materials were used in the preparation of the commentary for this chapter of the code:

Field, P. *Dust Explosions*. New York: Elsevier, 1982.

Palmer, K. N. *Dust Explosions and Fires.* London, England: Chapman and Hall, 1973.

Report of Important Dust Explosions: A Record of Dust Explosions in the United States and Canada since 1860. Fire Record Department, compiler. Boston, MA: National Fire Protection Association, 1957.

TABLE 2204.1
EXPLOSION PROTECTION STANDARDS

STANDARD	SUBJECT
NFPA 61	Standard for the Prevention of Fires and Dust Explosions in Agricultural and Food Processing Facilities
NFPA 69	Standard on Explosion Prevention Systems
NFPA 70	National Electrical Code
NFPA 85	Boiler and Combustion System Hazards Code
NFPA 120	Standard for Fire Prevention and Control in Coal Mines
NFPA 484	Standard for Combustible Metals
NFPA 654	Standard for Prevention of Fire and Dust Explosions from the Manufacturing, Processing and Handling of Combustible Particulate Solids
NFPA 655	Standard for the Prevention of Sulfur Fires and Explosions
NFPA 664	Standard for the Prevention of Fires and Explosions in Wood Processing and Woodworking Facilities

INTERNATIONAL CODE COUNCIL®
Copyright © 2015 ICC. ALL RIGHTS RESERVED. Accessed by David Dammon on Jun 21, 2017 12:30:52 PM pursuant to License Agreement with ICC. No further reproduction or distribution authorized. ANY UNAUTHORIZED REPRODUCTION OR DISTRIBUTION IS A VIOLATION OF THE FEDERAL COPYRIGHT ACT AND THE LICENSE AGREEMENT, AND SUBJECT TO CIVIL AND CRIMINAL PENALTIES THEREUNDER.

INTERNATIONAL CODE COUNCIL®
Copyright © 2015 ICC. ALL RIGHTS RESERVED. Accessed by David Dammon on Jun 21, 2017 12:30:52 PM pursuant to License Agreement with ICC. No further reproduction or distribution authorized. ANY UNAUTHORIZED REPRODUCTION OR DISTRIBUTION IS A VIOLATION OF THE FEDERAL COPYRIGHT ACT AND THE LICENSE AGREEMENT, AND SUBJECT TO CIVIL AND CRIMINAL PENALTIES THEREUNDER.

Chapter 23: Motor Fuel-Dispensing Facilities and Repair Garages

General Comments

The requirements of this chapter apply to all occupancies that dispense any type of motor fuel and to automotive repair garages.

Purpose

This chapter contains provisions that regulate the storage and dispensing of liquid or gaseous motor fuels at public and private automotive and marine motor fuel-dispensing facilities, fleet vehicle motor fuel-dispensing facilities, aircraft motor-vehicle fuel-dispensing facilities and repair garages.

SECTION 2301 GENERAL

2301.1 Scope. Automotive motor fuel-dispensing facilities, marine motor fuel-dispensing facilities, fleet vehicle motor fuel-dispensing facilities, aircraft motor-vehicle fuel-dispensing facilities and repair garages shall be in accordance with this chapter and the *International Building Code*, *International Fuel Gas Code* and *International Mechanical Code*. Such operations shall include both those that are accessible to the public and private operations.

❖ Generally speaking, if liquid or gaseous motor fuels are dispensed from a storage tank, either above or below ground, into the fuel tank of a motor vehicle, marine craft or general aviation aircraft from fixed, automotive-type equipment, then the operation is within the scope of this chapter. See also the commentary to Section 202 for the definition of "Aircraft motor-vehicle fuel-dispensing facility."

2301.2 Permits. Permits shall be required as set forth in Section 105.6.

❖ The process of issuing permits gives the fire code official an opportunity to carefully evaluate and regulate hazardous operations. Permit applicants should be required to demonstrate that their operations comply with the intent of the code before the permit is issued. See the commentary to Section 105.6 for a general discussion of operations requiring an operational permit. The process also notifies the fire department of the need for prefire planning for the hazardous property.

2301.3 Construction documents. *Construction documents* shall be submitted for review and approval prior to the installation or construction of automotive, marine or fleet vehicle motor fuel-dispensing facilities and repair garages in accordance with Section 105.4.

❖ Construction documents, as defined in Section 202, must be drawn to scale with sufficient clarity to be understood by the fire code official, contractors and owners and must address the requirements of the code. State or local laws may require preparation of the construction documents by a registered design professional. See the commentary to Section 106.1 of the *International Building Code*® (IBC®).

2301.4 Indoor motor fuel-dispensing facilities. Motor fuel-dispensing facilities located inside buildings shall comply with the *International Building Code* and NFPA 30A.

❖ Generally speaking, this type of motor fuel-dispensing facility is found at parking garages where space is very limited and is subject to the approval of the fire code official. Chapter 7 of NFPA 30A is, in part, dedicated to the provisions that govern motor fuel-dispensing facilities inside buildings.

2301.4.1 Protection of floor openings in indoor motor fuel-dispensing facilities. Where motor fuel-dispensing facilities are located inside buildings and the dispensers are located above spaces within the building, openings beneath dispensers shall be sealed to prevent the flow of leaked fuel to lower building spaces.

❖ Floor openings in the dispensing area must be sealed if located over other spaces and drains, and designed to protect areas below from flammable and combustible liquid spills as well as anticipated water from fire hose streams. Drains are to be equipped with separators in accordance with the *International Plumbing Code*® (IPC®).

2301.5 Electrical. Electrical wiring and equipment shall be suitable for the locations in which they are installed and shall comply with Section 605, NFPA 30A and NFPA 70.

❖ Chapter 8 of NFPA 30A addresses electrical equipment at motor fuel-dispensing facilities and is correlated with NFPA 70. Electrical equipment must be approved for the particular hazards anticipated at motor fuel-dispensing facilities and the hazardous

INTERNATIONAL CODE COUNCIL®
Copyright © 2015 ICC. ALL RIGHTS RESERVED. Accessed by David Dammon on Jun 21, 2017 12:30:52 PM pursuant to License Agreement with ICC. No further reproduction or distribution authorized. ANY UNAUTHORIZED REPRODUCTION OR DISTRIBUTION IS A VIOLATION OF THE FEDERAL COPYRIGHT ACT AND THE LICENSE AGREEMENT, AND SUBJECT TO CIVIL AND CRIMINAL PENALTIES THEREUNDER.

nature of flammable and combustible liquids and gases.

2301.6 Heat-producing appliances. Heat-producing appliances shall be suitable for the locations in which they are installed and shall comply with NFPA 30A and the *International Fuel Gas Code* or the *International Mechanical Code*.

❖ Heat-producing appliances are ignition sources. Precautions must be taken when using such appliances around flammable and combustible liquids. NFPA 30A, the *International Mechanical Code*® (IMC®) and the *International Fuel Gas Code*® (IFGC®) all provide requirements for the safe use of these appliances.

SECTION 2302
DEFINITIONS

2302.1 Definitions. The following terms are defined in Chapter 2:

AIRCRAFT MOTOR-VEHICLE FUEL-DISPENSING FACILITY.

ALCOHOL-BLENDED FUELS.

AUTOMOTIVE MOTOR FUEL-DISPENSING FACILITY.

DISPENSING DEVICE, OVERHEAD TYPE.

FLEET VEHICLE MOTOR FUEL-DISPENSING FACILITY.

LIQUEFIED NATURAL GAS (LNG).

MARINE MOTOR FUEL-DISPENSING FACILITY.

REPAIR GARAGE.

SELF-SERVICE MOTOR FUEL-DISPENSING FACILITY.

❖ Definitions of terms can help in the understanding and application of the code requirements. This section directs the code user to Chapter 2 for the proper application of the indicated terms used in this chapter. Terms may be defined in Chapter 2 or in another *International Code*® (I-Code®) as indicated in Section 201.3, or the dictionary meaning may be all that is needed (see also commentary, Sections 201 through 201.4).

SECTION 2303
LOCATION OF DISPENSING DEVICES

2303.1 Location of dispensing devices. Dispensing devices shall be located as follows:

1. Ten feet (3048 mm) or more from *lot lines*.
2. Ten feet (3048 mm) or more from buildings having combustible exterior wall surfaces or buildings having noncombustible exterior wall surfaces that are not part of a 1-hour fire-resistance-rated assembly or buildings having combustible overhangs.

   Exception: Canopies constructed in accordance with the *International Building Code* providing weather protection for the fuel islands.
3. Such that all portions of the vehicle being fueled will be on the premises of the motor fuel-dispensing facility.
4. Such that the nozzle, when the hose is fully extended, will not reach within 5 feet (1524 mm) of building openings.
5. Twenty feet (6096 mm) or more from fixed sources of ignition.

❖ In order to reduce the likelihood of motor fuels coming into contact with ignition sources or posing a hazard to persons, adjoining property or on-site buildings, this section provides very specific dispenser location requirements in relation to buildings, lot lines and ignition sources.

Item 1
Commentary Figure 2303.1(1) shows the relationship of the dispenser to the lot line (see also commentary, Item 5).

Item 2
Commentary Figure 2303.1(2) shows the relationship of the dispenser to a building with a combustible exterior.

Item 3
Commentary Figure 2303.1(3) shows the location of the vehicle being fueled in relation to the motor fuel-

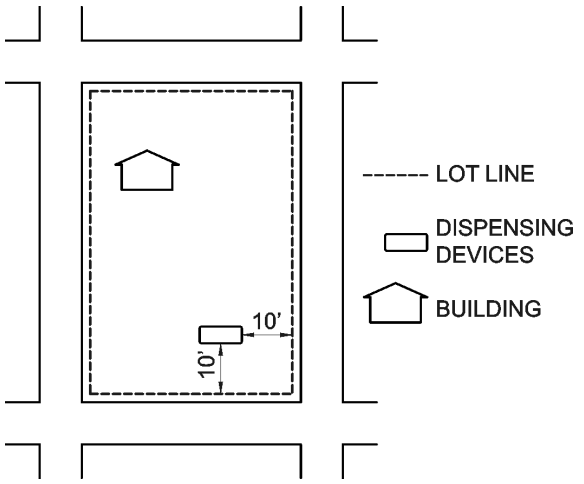

For SI: 1 foot = 304.8 mm.

Figure 2303.1(1)
LOCATION OF DISPENSING DEVICES

INTERNATIONAL CODE COUNCIL®
Copyright © 2015 ICC. ALL RIGHTS RESERVED. Accessed by David Dammon on Jun 21, 2017 12:30:52 PM pursuant to License Agreement with ICC. No further reproduction or distribution authorized. ANY UNAUTHORIZED REPRODUCTION OR DISTRIBUTION IS A VIOLATION OF THE FEDERAL COPYRIGHT ACT AND THE LICENSE AGREEMENT, AND SUBJECT TO CIVIL AND CRIMINAL PENALTIES THEREUNDER.

dispensing facility property lines. Note that this item is a dispenser location requirement or hose length limitation in that neither feature should be such that any portion of a vehicle could be off site while being fueled. In the past, it was not unusual to find dispensing devices installed on the sidewalk or near the curb in front of the motor fuel-dispensing facility so that vehicles could simply pull up to the curb and be fueled. This was especially true for motor fuel-dispensing facilities situated on very small sites. The intent of this requirement is similar to Item 4; that is, to keep the motor fuel from possible contact with off-site ignition sources. It also eliminates the hazard of an off-site vehicle being struck by another vehicle during fueling.

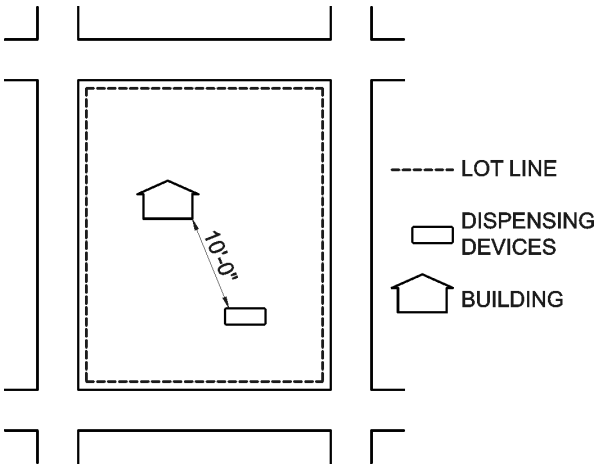

For SI: 1 foot = 304.8 mm.

Figure 2303.1(2)
LOCATION OF DISPENSING DEVICES

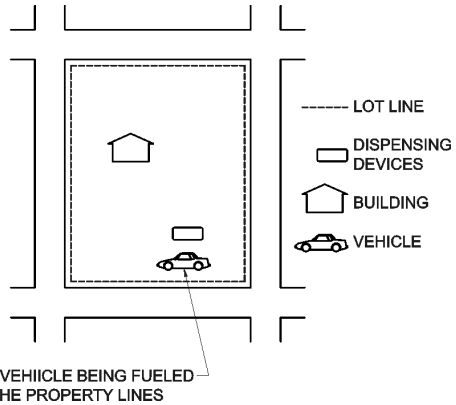

For SI: 1 foot = 304.8 mm.

Figure 2303.1(3)
LOCATION OF DISPENSING DEVICES

Item 4

Commentary Figure 2303.1(4) shows the relationship of the dispenser nozzle to a building opening. The intent of this requirement is similar to Item 3; that is, to keep the motor fuel from possible contact with ignition sources inside the building.

Item 5

Commentary Figure 2303.1(5) illustrates the area around a dispenser where fixed sources of ignition are prohibited. In planning and reviewing dispenser locations, the 20-foot (6096 mm) dimension should be correlated with Item 1 to prevent any fixed ignition sources beyond the property line from falling within the 20-foot (6096 mm) area required by this item.

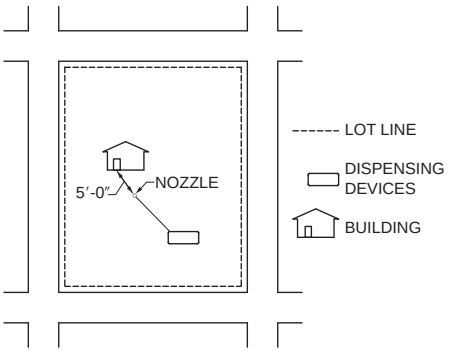

For SI: 1 foot = 304.8 mm.

Figure 2303.1(4)
LOCATION OF DISPENSING DEVICES

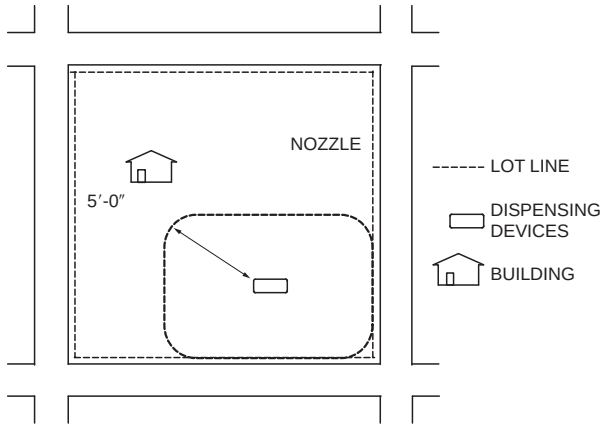

For SI: 1 foot = 304.8 mm.

Figure 2303.1(5)
LOCATION OF DISPENSING DEVICES

INTERNATIONAL CODE COUNCIL®
Copyright © 2015 ICC. ALL RIGHTS RESERVED. Accessed by David Dammon on Jun 21, 2017 12:30:52 PM pursuant to License Agreement with ICC. No further reproduction or distribution authorized. ANY UNAUTHORIZED REPRODUCTION OR DISTRIBUTION IS A VIOLATION OF THE FEDERAL COPYRIGHT ACT AND THE LICENSE AGREEMENT, AND SUBJECT TO CIVIL AND CRIMINAL PENALTIES THEREUNDER.

2303.2 Emergency disconnect switches. An *approved*, clearly identified and readily accessible emergency disconnect switch shall be provided at an *approved* location to stop the transfer of fuel to the fuel dispensers in the event of a fuel spill or other emergency. The emergency disconnect switch for exterior fuel dispensers shall be located within 100 feet (30 480 mm) of, but not less than 20 feet (6096 mm) from, the fuel dispensers. For interior fuel-dispensing operations, the emergency disconnect switch shall be installed at an *approved* location. Such devices shall be distinctly *labeled* as: EMERGENCY FUEL SHUTOFF. Signs shall be provided in *approved* locations.

❖ This section establishes the requirement for emergency disconnect switches to shut off the flow of fuel in an emergency and specifies where they are to be located for both exterior and interior applications. The emergency disconnect switch must be clearly visible and placed far enough away from the fuel dispenser so that the switch will be easily accessible without entering the fuel spill area, but not so far that it would take too long to get to the switch. The switch location must be prominently indicated by an approved sign and access to the switch must be free of any obstructions, such as displayed merchandise. Commentary Figure 2303.2 illustrates the zone in which the disconnect switch must be located.

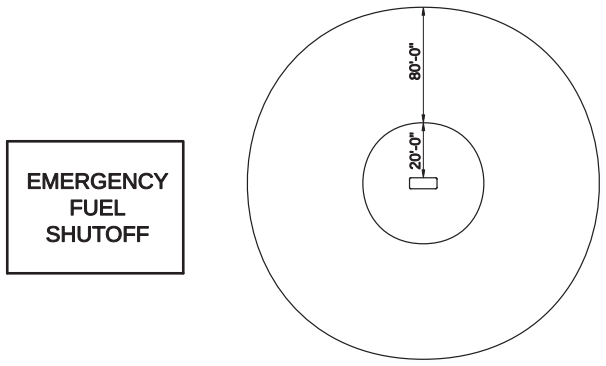

For SI: 1 foot = 304.8 mm.

Figure 2303.2
EMERGENCY DISCONNECT SWITCH

SECTION 2304
DISPENSING OPERATIONS

2304.1 Supervision of dispensing. The dispensing of fuel at motor fuel-dispensing facilities shall be conducted by a qualified attendant or shall be under the supervision of a qualified attendant at all times or shall be in accordance with Section 2304.3.

❖ Motor fuel-dispensing facilities must have a trained, qualified attendant on duty when the facility is open for business, unless the fire code official specifically approves an unattended location.

2304.2 Attended self-service motor fuel-dispensing facilities. Attended self-service motor fuel-dispensing facilities shall comply with Sections 2304.2.1 through 2304.2.5. Attended self-service motor fuel-dispensing facilities shall have not less than one qualified attendant on duty while the facility is open for business. The attendant's primary function shall be to supervise, observe and control the dispensing of fuel. The attendant shall prevent the dispensing of fuel into containers that do not comply with Section 2304.4.1, control sources of ignition, give immediate attention to accidental spills or releases, and be prepared to use fire extinguishers.

❖ An attendant trained in spill control, ignition source control, recognizing approved fuel containers and fire extinguishment is required to be in visual contact with the dispensing operation when the motor fuel-dispensing facility is open for business unless the fire code official has given approval for an unattended self-service facility. The attendant may perform other duties such as those of cashier as long as the attendant can supervise the dispensing operation and has immediate access to emergency shutoff controls. Note that the responsibility of supervision, observation and control of the dispensing operations includes enforcement of the procedures and rules in Sections 2305.6 and 2310.5.

2304.2.1 Special-type dispensers. *Approved* special-dispensing devices and systems such as, but not limited to, card- or coin-operated and remote-preset types, are allowed at motor fuel-dispensing facilities provided there is not less than one qualified attendant on duty while the facility is open to the public. Remote preset-type devices shall be set in the "off" position while not in use so that the dispenser cannot be activated without the knowledge of the attendant.

❖ Special dispensing devices that allow the customer to pay at the dispenser have become very popular. This provision requires that the dispenser be maintained in the off position so that the attendant is alerted before the fuel is dispensed and can, therefore, supervise the dispensing operation, making certain that the customer is placing fuel in an approved container and there are no sources of ignition in the area.

2304.2.2 Emergency controls. *Approved* emergency controls shall be provided in accordance with Section 2303.2.

❖ A clearly marked emergency fuel shutoff switch must be located no further than 100 feet (30 480 mm) from the dispenser and no closer than 20 feet (6096 mm) to the dispenser. The switch must be readily available to all persons and must cut off power to all dispensers and pumps.

2304.2.3 Operating instructions. Dispenser operating instructions shall be conspicuously posted in *approved* locations on every dispenser.

❖ Clearly understandable operating instructions for the use of the dispenser must be posted on the dispenser. The location must be approved by the fire code official. These operating instructions are in addition to the warnings required in Section 2305.6.

INTERNATIONAL CODE COUNCIL®
Copyright © 2015 ICC. ALL RIGHTS RESERVED. Accessed by David Dammon on Jun 21, 2017 12:30:52 PM pursuant to License Agreement with ICC. No further reproduction or distribution authorized. ANY UNAUTHORIZED REPRODUCTION OR DISTRIBUTION IS A VIOLATION OF THE FEDERAL COPYRIGHT ACT AND THE LICENSE AGREEMENT, AND SUBJECT TO CIVIL AND CRIMINAL PENALTIES THEREUNDER.

2304.2.4 Obstructions to view. Dispensing devices shall be in clear view of the attendant at all times. Obstructions shall not be placed between the dispensing area and the attendant.

❖ This provision does not specify a distance the attendant must be from the dispensing operation; however, the attendant must be able to clearly view the entire dispensing area from his or her workstation. In some cases, this is accomplished by closed-circuit television monitoring; however, the fire code official should carefully evaluate the clarity and resolution of the video image to verify that it meets the "clear view" requirement of this section. This section also prohibits the common practice of loading outside areas, including the dispenser islands, with displayed merchandise piled high enough so as to be a visual obstruction to the attendant.

2304.2.5 Communications. The attendant shall be able to communicate with persons in the dispensing area at all times. An *approved* method of communicating with the fire department shall be provided for the attendant.

❖ This is a two-part requirement. The first part requires that the attendant has the ability to communicate, for example, via intercom, with the person performing the dispensing. The second part requires the attendant to have some type of communication equipment that will allow him or her to immediately call the fire department in case of an emergency.

2304.3 Unattended self-service motor fuel-dispensing facilities. Unattended self-service motor fuel-dispensing facilities shall comply with Sections 2304.3.1 through 2304.3.7.

❖ An unattended self-service motor fuel-dispensing facility is allowed only with the specific approval of the fire code official. He or she should consider the location; exposures; the likelihood of vandalism; and how emergency equipment such as the emergency shutoff switch, portable fire extinguishers and the means of notifying the fire department in case of spill, fire or other emergency is going to be protected.

2304.3.1 General. Where *approved*, unattended self-service motor fuel-dispensing facilities are allowed. As a condition of approval, the *owner* or operator shall provide, and be accountable for, daily site visits, regular equipment inspection and maintenance.

❖ It is imperative that the owner/operator designates a responsible person to make daily site visits to the unattended self-service motor fuel-dispensing facility. All emergency equipment must be inspected for proper operation and availability to the customer. Vandalism is a major problem with unattended, self-service motor fuel-dispensing facilities. Vandals will trip the emergency fuel shutoff switch, and remove or discharge the fire-extinguishing equipment. This equipment must be maintained and made available to the person dispensing fuel. Also, a method of documenting the daily visits needs to be established and approved by the fire code official.

2304.3.2 Dispensers. Dispensing devices shall comply with Section 2306.7. Dispensing devices operated by the insertion of coins or currency shall not be used unless *approved*.

❖ The intent of this provision is to allow card or key-operated-type dispensers. Coin- or currency-type dispensers are allowed only with the approval of the fire code official.

2304.3.3 Emergency controls. *Approved* emergency controls shall be provided in accordance with Section 2303.2. Emergency controls shall be of a type that is only manually resettable.

❖ The emergency controls must be clearly identified and available to the person dispensing fuel. The controls or switch must be located no closer than 20 feet (6096 mm) to the dispenser and no farther than 100 feet (30 480 mm) from the dispenser. The switch must cut off power to all dispensers and pumps and must be manually resettable by the owner/operator. The intent is to prevent anyone from dispensing fuel until the problem has been corrected.

2304.3.4 Operating instructions. Dispenser operating instructions shall be conspicuously posted in *approved* locations on every dispenser and shall indicate the location of the emergency controls required by Section 2304.3.3.

❖ It is a special requirement for unattended self-service motor fuel-dispensing facilities that the location of the emergency control switch be included with the dispenser instructions and posted on the dispenser in an approved location.

2304.3.5 Emergency procedures. An *approved* emergency procedures sign, in addition to the signs required by Section 2305.6, shall be posted in a conspicuous location and shall read:

IN CASE OF FIRE, SPILL OR RELEASE

1. USE EMERGENCY PUMP SHUTOFF

2. REPORT THE ACCIDENT!

FIRE DEPARTMENT TELEPHONE NO._____

FACILITY ADDRESS _____

❖ Signs must be clearly posted giving the location of the emergency fuel shutoff switch, the fire department's telephone number and the motor fuel-dispensing facility address.

It is imperative that the person dispensing fuel at an unattended motor fuel-dispensing facility knows where the emergency control equipment is located. People not familiar with the area may not know the fire department's telephone number or the address of the motor fuel-dispensing facility; therefore, this information must be included on the sign.

2304.3.6 Communications. A telephone not requiring a coin to operate or other *approved*, clearly identified means to notify the fire department shall be provided on the site in a location *approved* by the *fire code official.*

❖ The intent of this section is to provide a means to call the fire department in an emergency without the use

INTERNATIONAL CODE COUNCIL®
Copyright © 2015 ICC. ALL RIGHTS RESERVED. Accessed by David Dammon on Jun 21, 2017 12:30:52 PM pursuant to License Agreement with ICC. No further reproduction or distribution authorized. ANY UNAUTHORIZED REPRODUCTION OR DISTRIBUTION IS A VIOLATION OF THE FEDERAL COPYRIGHT ACT AND THE LICENSE AGREEMENT, AND SUBJECT TO CIVIL AND CRIMINAL PENALTIES THEREUNDER.

of a coin or phone card. Many jurisdictions with 911 telephone systems have pay phones that do not require the use of a coin or card to dial 911; this type of coin-operated telephone would be allowed.

2304.3.7 Quantity limits. Dispensing equipment used at unsupervised locations shall comply with one of the following:

1. Dispensing devices shall be programmed or set to limit uninterrupted fuel delivery to 25 gallons (95 L) and require a manual action to resume delivery.
2. The amount of fuel being dispensed shall be limited in quantity by a preprogrammed card as *approved.*

❖ Limiting the amount of uninterrupted fuel delivered before another action is taken reduces the chances of a major fuel spill in the case of vandalism or equipment failure.

2304.4 Dispensing into portable containers. The dispensing of flammable or *combustible liquids* into portable *approved* containers shall comply with Sections 2304.4.1 through 2304.4.3.

❖ This section describes an approved container and states requirements for dispensing fuel into an approved container.

2304.4.1 Approved containers required. Class I, II and IIIA liquids shall not be dispensed into a portable container unless such container does not exceed a 6-gallon (22.7 L) capacity, is *listed* or of *approved* material and construction, and has a tight closure with a screwed or spring-loaded cover so designed that the contents can be dispensed without spilling. Liquids shall not be dispensed into portable or cargo tanks.

❖ Approved containers must be easily identified as fuel containers and constructed of materials that will maintain structural stability and resist spills. Flammable and combustible liquids should not be dispensed into portable or cargo tanks using conventional automotive dispensing equipment. If the tank is not properly grounded and the dispenser nozzle is not in contact with the tank, static electricity may build up and discharge between the nozzle and the tank. Note that this section is also intended to prohibit filling of a new class of portable gasoline containers that have entered the marketplace. These cans, some of which hold as much as 14 gallons (53 L) and weigh over 100 pounds (45 kg) when full, often include integrated hoses and dispensing nozzles, yet they do not comply with any Underwriters Laboratories (UL), American Society for Testing and Materials (ASTM) or similar recognized standard. Apparently, these cans are "certified" by the manufacturer as meeting United Nations/U.S. Department of Transportation (UN/DOT) standards for transportation, but it is questionable whether the safety standards required for transportation are adequate for storage and use of these products. For example, there are concerns about the ability of users to safely hoist these containers off of and onto vehicles to avoid static accumulation during filling, and the static charge will be greater than that experienced with smaller cans because there is more fuel transferred during filling. Given that UL 30, UL 1313 and ASTM F852 or ASTM F976 (the recognized standards for construction of portable gas containers) all limit container capacities to approximately 6 gallons (22.7 L), it makes sense for the code to also reflect this limitation.

2304.4.2 Nozzle operation. A hose nozzle valve used for dispensing Class I liquids into a portable container shall be in compliance with Section 2306.7.6 and be manually held open during the dispensing operation.

❖ A listed automatic-closing-type nozzle must be used for dispensing fuel into portable containers. The hold-open device must not be used because the automatic-closing feature may not function properly since it is designed to operate in the neck of an automobile fuel receiver. The fuel tank vent in an automobile terminates in the receiver neck and the blow-back of fuel coming from the vent is what normally triggers the automatic shutoff feature.

2304.4.3 Location of containers being filled. Portable containers shall not be filled while located inside the trunk, passenger compartment or truck bed of a vehicle.

❖ Portable fuel containers riding on carpets, mats or pickup truck bed liners can build up a charge of static electricity that could discharge to the dispenser hose nozzle if not properly grounded. In order to dissipate the static charge, the container must be removed from the vehicle and placed on the ground before fueling begins. The nozzle must be in contact with the container before discharging the fuel. See the commentary to Section 2305.6, Warnings 3 and 4, for additional discussion of static electricity.

SECTION 2305
OPERATIONAL REQUIREMENTS

2305.1 Tank filling operations for Class I, II or III liquids. Delivery operations to tanks for Class I, II or III liquids shall comply with Sections 2305.1.1 through 2305.1.3 and the applicable requirements of Chapter 57.

❖ History has shown that most accidents at motor fuel-dispensing facilities occur during the tank-filling operation. The provisions of this section address those operations.

2305.1.1 Delivery vehicle location. Where liquid delivery to above-ground storage tanks is accomplished by positive-pressure operation, tank vehicles shall be positioned not less than 25 feet (7620 mm) from tanks receiving Class I liquids and 15 feet (4572 mm) from tanks receiving Class II and IIIA liquids.

❖ Above-ground tanks are usually above the elevation of the fuel delivery truck, and the fuel must be pumped from the truck into the storage tank. The fuel is delivered in large volumes under pressure and most delivery trucks use a power take-off-driven pump that requires the truck engine to be running.

INTERNATIONAL CODE COUNCIL®
Copyright © 2015 ICC. ALL RIGHTS RESERVED. Accessed by David Dammon on Jun 21, 2017 12:30:52 PM pursuant to License Agreement with ICC. No further reproduction or distribution authorized. ANY UNAUTHORIZED REPRODUCTION OR DISTRIBUTION IS A VIOLATION OF THE FEDERAL COPYRIGHT ACT AND THE LICENSE AGREEMENT, AND SUBJECT TO CIVIL AND CRIMINAL PENALTIES THEREUNDER.

Because of this, the delivery truck and the storage tanks must be separated by the distances indicated so that venting vapors do not find their way to the running engine of the delivery vehicle and ignite.

2305.1.2 Tank capacity calculation. The driver, operator or attendant of a tank vehicle shall, before making delivery to a tank, determine the unfilled, available capacity of such tank by an *approved* gauging device.

❖ A gauge stick may be used to determine the quantity of fuel in a tank, but is impractical for use on an above-ground tank because the attendant would have to climb on top of the tank each time. In icy, wet or inclement weather this could be dangerous. It is more practical to install a fuel-level gauge accessible to the delivery operator on an above-ground tank.

After the driver places the delivery truck in position, he or she should record the ullage (i.e., the amount of liquid it would take to fill the tank) and set the delivery up for that amount of fuel. This is the first line of defense to prevent fuel spills (see also Section 5706.6.1.5 of the code).

2305.1.3 Tank fill connections. Delivery of flammable liquids to tanks more than 1,000 gallons (3785 L) in capacity shall be made by means of *approved* liquid- and vapor-tight connections between the delivery hose and tank fill pipe. Where tanks are equipped with any type of vapor recovery system, all connections required to be made for the safe and proper functioning of the particular vapor recovery process shall be made. Such connections shall be made liquid and vapor tight and remain connected throughout the unloading process. Vapors shall not be discharged at grade level during delivery.

❖ The delivery of Class I liquid motor fuel to either an above-ground or underground storage tank that exceeds 1,000 gallons (3785 L) in capacity must be through a liquid- and vapor-tight fitting to reduce the potential for the escape of flammable liquid or vapors at the point of connection. These fittings include liquid transfer lines and vapor recovery lines, which are designed to prevent the release of polluting, flammable fuel vapor during transfer. These requirements prohibit the extremely dangerous, but not uncommon, practice of delivery tanker operators not connecting vapor return hoses, thus allowing the vapors displaced during delivery to escape at grade level from the unmade connections. Incidents have been reported where the vapors have traveled to nearby buildings, found an ignition source and exploded (see also commentary, Section 5706.6.1.10).

2305.2 Equipment maintenance and inspection. Motor fuel-dispensing facility equipment shall be maintained in proper working order at all times in accordance with Sections 2305.2.1 through 2305.2.5.

❖ The provisions of this section address the requirements for maintaining safety equipment at dispensing operations.

2305.2.1 Inspections. Flammable and *combustible liquid* fuel-dispensing and containment equipment shall be periodically inspected where required by the *fire code official* to verify that the equipment is in proper working order and not subject to leakage. Records of inspections shall be maintained.

❖ This section authorizes the fire code official to require the inspection of equipment on a periodic basis, and identifies that the inspection is to verify the equipment is in proper working order and is not leaking. The importance of the inspections is supported by the requirement for an operational permit in Section 105.6.16, Item 10, for the dispensing of flammable and combustible liquids into motor vehicles. The frequency and nature of the inspections are to be determined by the fire code official. This section also requires that written inspection records be kept. Such records should indicate the date, time and name of the person conducting the inspection or maintenance. These records must be maintained by the owner and should be made available to the fire code official for review when requested. This requirement relieves the fire code official of the administrative burden of maintaining test records.

2305.2.2 Repairs and service. The *fire code official* is authorized to require damaged or unsafe containment and dispensing equipment to be repaired or serviced in an *approved* manner.

❖ In conjunction with the inspection process in Section 2305.2.1, this section authorizes the fire code official to require that damaged, worn or leaking equipment be serviced or repaired in an approved manner. Though not specifically required by the section, removal from service of equipment needing repair or replacement would be advisable if its continued use presents an increased hazard to the public or emergency personnel. Examples of conditions that could prompt the need for repair or servicing include, but are not limited to, equipment that shows signs of physical damage, internal and external corrosion, leakage, brittleness, aging or undue wear and tear.

2305.2.3 Dispensing devices. Where maintenance to Class I liquid dispensing devices becomes necessary and such maintenance could allow the accidental release or ignition of liquid, the following precautions shall be taken before such maintenance is begun:

1. Only persons knowledgeable in performing the required maintenance shall perform the work.
2. Electrical power to the dispensing device and pump serving the dispenser shall be shut off at the main electrical disconnect panel.
3. The emergency shutoff valve at the dispenser, where installed, shall be closed.
4. Vehicle traffic and unauthorized persons shall be prevented from coming within 12 feet (3658 mm) of the dispensing device.

❖ Dispensers are complex pieces of machinery made up of many listed parts. Certain components of the dispenser are sealed to prevent ignition of fuel

INTERNATIONAL CODE COUNCIL®
Copyright © 2015 ICC. ALL RIGHTS RESERVED. Accessed by David Dammon on Jun 21, 2017 12:30:52 PM pursuant to License Agreement with ICC. No further reproduction or distribution authorized. ANY UNAUTHORIZED REPRODUCTION OR DISTRIBUTION IS A VIOLATION OF THE FEDERAL COPYRIGHT ACT AND THE LICENSE AGREEMENT, AND SUBJECT TO CIVIL AND CRIMINAL PENALTIES THEREUNDER.

vapors. Therefore, it is imperative that the repair technician be qualified to perform work on the dispenser.

The dispenser and the pump are usually two separate and distinct pieces of equipment. In most cases, the pump is located at the tank, remote from the dispensers, and fuel is supplied under pressure to the dispenser. Therefore, it is imperative that power be disconnected to both the dispenser and the pump before work is begun.

As a safety measure, in case the remote pump kicks on, the dispenser emergency valve must be manually closed. This valve is located below the dispenser in the liquid supply piping. This valve is required in remote pumping systems by Section 2306.7.4.

The separation distance of 12 feet (3658 mm) is intended to keep the public and ignition sources away from possible fuel spills that may occur during the maintenance of dispensing devices.

2305.2.4 Emergency shutoff valves. Automatic emergency shutoff valves required by Section 2306.7.4 shall be checked not less than once per year by manually tripping the hold-open linkage.

❖ The emergency shutoff valve, also known as an impact valve, is located in the pit in the island below the dispenser, and consists of a shear section and a fusible link with a spring-loaded valve that must be manually tripped at least annually to verify that it is operable. See the commentary to Section 2306.7.4 for additional discussion of these valves.

2305.2.5 Leak detectors. Leak detection devices required by Section 2306.7.7.1 shall be checked and tested not less than annually in accordance with the manufacturer's specifications to ensure proper installation and operation.

❖ In a remote pumping system (where fuel is supplied under pressure to the dispenser) a leak detection device is required on the discharge/pressure side of the pump. The most common area to leak fuel is the piping between the storage tanks and the dispensers. Therefore, it is imperative that the required leak detection equipment be tested annually and maintained in an operable condition.

2305.3 Spill control. Provisions shall be made to prevent liquids spilled during dispensing operations from flowing into buildings. Acceptable methods include, but shall not be limited to, grading driveways, raising doorsills or other *approved* means.

❖ This provision is intended to prevent flammable and combustible liquids from entering buildings if a spill occurs. The spill control method must be approved by the fire code official and may be as simple as scoring the concrete pavement adjacent to the dispenser island (similar to highway "rumble strips") to retard the surface flow of spilled fuel.

If the spilled liquid is to be routed to a drain, the drain must be equipped with a sump and an oil-water separator to prevent the fuel from entering the storm drainage system. The oil-water separator must be installed in accordance with the IPC.

2305.4 Sources of ignition. Smoking and open flames shall be prohibited in areas where fuel is dispensed. The engines of vehicles being fueled shall be shut off during fueling. Electrical equipment shall be in accordance with NFPA 70.

❖ This provision is intended to control all ignition sources near fuel-dispensing operations. This includes smoking, matches, lighters or any other ignition source. Internal combustion engines must also be shut off during the fueling operation in accordance with Section 2305.6, Item 2. Electrical equipment in close proximity to the fueling operation, including the dispensing equipment, must be in accordance with NFPA 70 and Table 5703.1.1 of the code.

2305.5 Fire extinguishers. *Approved* portable fire extinguishers complying with Section 906 with a minimum rating of 2-A:20-B:C shall be provided and located such that an extinguisher is not more than 75 feet (22 860 mm) from pumps, dispensers or storage tank fill-pipe openings.

❖ A person should not have to travel more than 75 feet (22 860 mm) from a fuel dispenser, pump or a fill opening to reach an extinguisher. If the dispenser, pump and fill opening are in close proximity to each other, one extinguisher may satisfy the requirements.

2305.6 Warning signs. Warning signs shall be conspicuously posted within sight of each dispenser in the fuel-dispensing area and shall state the following:

1. No smoking.
2. Shut off motor.
3. Discharge your static electricity before fueling by touching a metal surface away from the nozzle.
4. To prevent static charge, do not reenter your vehicle while gasoline is pumping.
5. If a fire starts, do not remove nozzle—back away immediately.
6. It is unlawful and dangerous to dispense gasoline into unapproved containers.
7. No filling of portable containers in or on a motor vehicle. Place container on ground before filling.

❖ The warning sign must be legible and conspicuously posted in the dispensing area. The intent is to notify the dispenser operator of the dangers of each of the enumerated items. Warnings 1 and 2 intend to control the obvious ignition hazards of smoking and operating internal combustion engines in the presence of gasoline vapors.

Warnings 3 and 4 focus on the hazard of static electricity. People generally build up a charge of

INTERNATIONAL CODE COUNCIL®
Copyright © 2015 ICC. ALL RIGHTS RESERVED. Accessed by David Dammon on Jun 21, 2017 12:30:52 PM pursuant to License Agreement with ICC. No further reproduction or distribution authorized. ANY UNAUTHORIZED REPRODUCTION OR DISTRIBUTION IS A VIOLATION OF THE FEDERAL COPYRIGHT ACT AND THE LICENSE AGREEMENT, AND SUBJECT TO CIVIL AND CRIMINAL PENALTIES THEREUNDER.

static electricity through the friction between their clothing and the car seat while entering, leaving and driving a vehicle, especially in cold, dry weather. If that charge is not dissipated in accordance with Warning 3 prior to fueling the vehicle, it is likely that the static charge will arc the gap between the person's hand and the vehicle fill pipe as they start to remove the fill cap and possibly ignite the vapors. Warning 4 recognizes that even if the Warning 3 precaution is taken, reentering the vehicle while fueling can regenerate a static charge that will, in all likelihood, arc the gap between the driver's hand and the hose nozzle valve or between the vehicle fill pipe and the hose nozzle as the nozzle is being withdrawn and ignite the vapors. Renkes reported in 2006 that, between 1992 and 2006, 166 incidents of static ignition at motor fuel-dispensing facilities were reported to the Petroleum Equipment Institute (PEI) and 34 to the National Highway Traffic Safety Administration (NHTSA). Those incidents resulted in varying levels of damage to vehicles and property and varying degrees of injury to consumers intimate with the ignition scenarios.

In case of fire, Warning 5 cautions the customer not to remove the hose nozzle from the fill pipe, possibly expanding the extent of the fire. Moving away from the fire while at the same time keeping an eye on it is the precaution of choice.

Warning 6 correlates with the provisions for dispensing into approved portable containers in Section 2304.4. Section 2304.4.1 outlines the characteristics of approved portable containers. The intent of this warning is to not allow dispensing into random containers that might be available, such as plastic milk jugs, glass or plastic bottles, open pans, etc.

Warning 7 correlates with Section 2304.4.3 as to removing containers from vehicles and placing them on the ground to dissipate any static electricity buildup prior to fueling (see commentary, Section 2304.4.3).

2305.7 Control of brush and debris. Fenced and diked areas surrounding above-ground tanks shall be kept free from vegetation, debris and other material that is not necessary to the proper operation of the tank and piping system.

Weeds, grass, brush, trash and other combustible materials shall be kept not less than 10 feet (3048 mm) from fuel-handling equipment.

❖ Above-ground tanks must to be secured and inaccessible to the public. The secured area around the tanks must be kept clean and free of combustibles. The area around dispensers, remote pumps and fill openings must also be kept clean and free of combustibles for a distance of at least 10 feet (3048 mm). The intent is to prevent the accumulation of readily combustible materials near tanks and equipment that could contribute to a fire in the event of an ignition.

SECTION 2306
FLAMMABLE AND COMBUSTIBLE LIQUID MOTOR FUEL-DISPENSING FACILITIES

2306.1 General. Storage of flammable and *combustible liquids* shall be in accordance with Chapter 57 and Sections 2306.2 through 2306.6.3.

❖ The general requirements for storing flammable and combustible liquids are found in Chapter 57. The provisions specific to motor fuel-dispensing facilities are found in this section. Due to the activities in locations such as convenience stores, vehicle traffic and location of most motor fuel-dispensing facilities, the provisions for tank capacities, locations and dispensing equipment are more stringent in this chapter of the code than the general provisions found in Chapter 57. Accordingly, these specific regulations take precedence over the general provisions of Chapter 57.

2306.2 Method of storage. *Approved* methods of storage for Class I, II and III liquid fuels at motor fuel-dispensing facilities shall be in accordance with Sections 2306.2.1 through 2306.2.6.

❖ These provisions are specifically for motor fuel-dispensing facilities.

2306.2.1 Underground tanks. Underground tanks for the storage of Class I, II and IIIA liquid fuels shall comply with Chapter 57.

❖ This section relies on Chapter 57, which contains the requirements for the location and installation of underground tanks.

2306.2.1.1 Inventory control for underground tanks. Accurate daily inventory records shall be maintained and reconciled on underground fuel storage tanks for indication of possible leakage from tanks and piping. The records shall include records for each product showing daily reconciliation between sales, use, receipts and inventory on hand. Where there is more than one system consisting of tanks serving separate pumps or dispensers for a product, the reconciliation shall be ascertained separately for each tank system. A consistent or accidental loss of product shall be immediately reported to the *fire code official*.

❖ In addition to the leak detection requirements of Section 2305.2.5, this section requires another level of scrutiny for underground motor fuel storage tanks in the form of daily, documented reconciliation of inventory versus product sold to help detect leaks in underground tanks and piping. Loss in inventory should be reported immediately to the fire code official (see also Section 5704.2.11.5.1).

INTERNATIONAL CODE COUNCIL®
Copyright © 2015 ICC. ALL RIGHTS RESERVED. Accessed by David Dammon on Jun 21, 2017 12:30:52 PM pursuant to License Agreement with ICC. No further reproduction or distribution authorized. ANY UNAUTHORIZED REPRODUCTION OR DISTRIBUTION IS A VIOLATION OF THE FEDERAL COPYRIGHT ACT AND THE LICENSE AGREEMENT, AND SUBJECT TO CIVIL AND CRIMINAL PENALTIES THEREUNDER.

2306.2.2 Above-ground tanks located inside buildings. Above-ground tanks for the storage of Class I, II and IIIA liquid fuels are allowed to be located in buildings. Such tanks shall be located in special enclosures complying with Section 2306.2.6, in a liquid storage room or a liquid storage warehouse complying with Chapter 57, or shall be *listed* and *labeled* as protected above-ground tanks in accordance with UL 2085.

❖ This provision is intended to establish requirements for placing an above-ground tank inside a building. The options are:

- A tank in a special enclosure in accordance with Section 2306.2.6.
- A tank inside a liquid storage room in accordance with Section 5704.3.7.
- A tank inside a liquid storage warehouse in accordance with Section 5704.3.8.
- A protected above-ground tank in accordance with UL 2085.

2306.2.3 Above-ground tanks located outside, above grade. Above-ground tanks shall not be used for the storage of Class I, II or III liquid motor fuels, except as provided by this section.

1. Above-ground tanks used for outside, above-grade storage of Class I liquids shall be *listed* and *labeled* as protected above-ground tanks in accordance with UL 2085 and shall be in accordance with Chapter 57. Such tanks shall be located in accordance with Table 2306.2.3.
2. Above-ground tanks used for outside, above-grade storage of Class II or IIIA liquids shall be *listed* and *labeled* as protected above-ground tanks in accordance with UL 2085 and shall be installed in accordance with Chapter 57. Tank locations shall be in accordance with Table 2306.2.3.

   Exception: Other above-ground tanks that comply with Chapter 57 where *approved* by the *fire code official*.
3. Tanks containing fuels shall not exceed 12,000 gallons (45 420 L) in individual capacity or 48,000 gallons (181 680 L) in aggregate capacity. Installations with the maximum allowable aggregate capacity shall be separated from other such installations by not less than 100 feet (30 480 mm).
4. Tanks located at farms, construction projects, or rural areas shall comply with Section 5706.2.
5. Above-ground tanks used for outside above-grade storage of Class IIIB liquid motor fuel shall be *listed* and *labeled* in accordance with UL 142 or *listed* and *labeled* as protected above-ground tanks in accordance with UL 2085 and shall be installed in accordance with Chapter 57. Tank locations shall be in accordance with Table 2306.2.3.

❖ This section essentially prohibits the use of above-ground tanks for the storage of motor fuels unless they are in compliance with one of the five listed conditions. Where above-ground storage of flammable liquid motor fuel is desired, the intent of Item 1 is to allow the storage of flammable liquids in protected above-ground tanks only, listed and labeled in accordance with UL 2085 and in compliance with the applicable requirements of Section 5704.2.9.

Item 2 states that Class II or IIIA combustible liquids must be stored in either a UL 2085 protected above-ground tank or other above-ground tanks where approved by the fire code official.

In Item 3, the maximum aggregate capacity is the total capacity of all the individual tanks in one area. A separation distance of at least 100 feet (30 480 mm) must be placed between installations of the maximum aggregate capacities [see Commentary Figure 2306.2.3(1)]. The 100-foot (30 480 mm) separation distance is intended to protect multiple aggregate capacity installations from one another in the event of a fire or other emergency.

Item 4 provides an exception since the provisions of Section 5706.2 pertain to the permanent and temporary storage and dispensing of Class I (gasoline) and Class II (diesel and kerosene) for private use on farms and rural areas and at construction sites, earth-moving projects and gravel pits. See Section 5706.2 for maximum capacities and other provisions, and Sec-

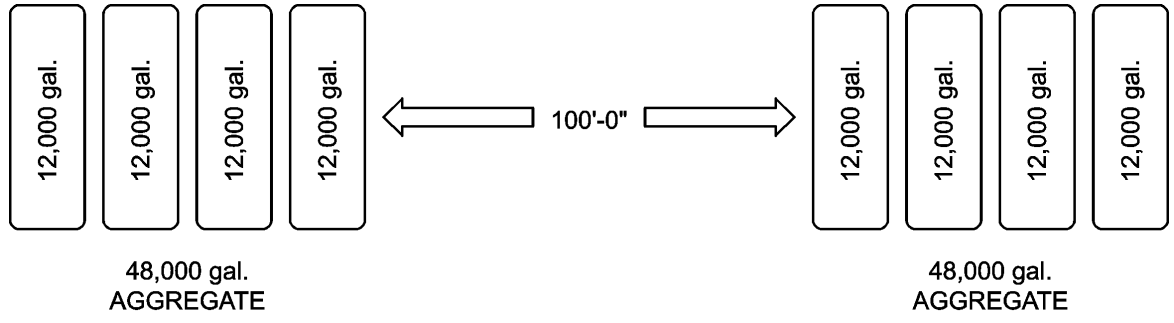

For SI: 1 foot = 304.8 mm, 1 gallon = 3.785 L.

Figure 2306.2.3(1)
ABOVE-GROUND TANKS LOCATED OUTSIDE ABOVE GRADE

INTERNATIONAL CODE COUNCIL®
Copyright © 2015 ICC. ALL RIGHTS RESERVED. Accessed by David Dammon on Jun 21, 2017 12:30:52 PM pursuant to License Agreement with ICC. No further reproduction or distribution authorized. ANY UNAUTHORIZED REPRODUCTION OR DISTRIBUTION IS A VIOLATION OF THE FEDERAL COPYRIGHT ACT AND THE LICENSE AGREEMENT, AND SUBJECT TO CIVIL AND CRIMINAL PENALTIES THEREUNDER.

tion 5706.2.4.4 for locations where above-ground tanks are prohibited.

An increasing number of facilities are establishing motor-vehicle fuel-dispensing stations for dispensing B100/B99 biodiesel, a Class IIIB liquid, into motor vehicles. In many cases these fueling stations are not set up as traditional motor fuel-dispensing stations but, rather, they consist of a small stand-alone fuel-dispensing operation using a 500- to 3,000-gallon (1893 to 11 356 L) fuel tank located near a drive-through espresso stand or mini market [see Commentary Figures 2306.2.3(2) and 2306.2.3(3)]. Chapter 23 previously had only minimal requirements for the installation of tanks and fueling operations for dispensing Class IIIB liquids into motor vehicles. This section now addresses the trend of dispensing of Class IIIB liquid motor fuels in a more comprehensive manner by providing, in Item 5, two options for tanks used for Class IIIB motor fuels, i.e., either an unprotected above-ground tank complying with UL 142 or a protected above-ground tank listed and labeled in accordance with UL 2085 and complying with the applicable requirements of Section 5704.2.9 of the code. This will eliminate the heretofore fairly common practice of dispensing Class IIIB motor fuels directly from plastic intermediate bulk container (often termed IBCs) totes (see Chapter 9 of NFPA 30 for information on such containers).

TABLE 2306.2.3. See below.

❖ This table provides the minimum physical separation requirements for above-ground motor fuel storage tanks of all types allowed by Sections 2306.2.3 and 2306.2.4, including those installed in vaults. Commentary Figure 2306.2.3(4) shows the spacing requirements for a protected, above-ground tank of 6,000 gallons (22 710 L) or less in accordance with UL 2085. Commentary Figure 2306.2.3(5) shows the spacing requirements for a protected above-ground tank greater than 6,000 gallons (22 710 L) in accordance with UL 2085. Commentary Figure 2306.2.3(6) shows the spacing requirements for a listed UL 142 above-ground tank regardless of whether it is a double-wall UL 142 tank or a single-wall UL 142 tank inside of a dike.



Figure 2306.2.3(2)
BIODIESEL FUELING KIOSK

TABLE 2306.2.3
MINIMUM SEPARATION REQUIREMENTS FOR ABOVE-GROUND TANKS

CLASS OF LIQUID AND TANK TYPE	INDIVIDUAL TANK CAPACITY (gallons)	MINIMUM DISTANCE FROM NEAREST IMPORTANT BUILDING ON SAME PROPERTY (feet)	MINIMUM DISTANCE FROM NEAREST FUEL DISPENSER (feet)	MINIMUM DISTANCE FROM LOT LINE THAT IS OR CAN BE BUILT UPON, INCLUDING THE OPPOSITE SIDE OF A PUBLIC WAY (feet)	MINIMUM DISTANCE FROM NEAREST SIDE OF ANY PUBLIC WAY (feet)	MINIMUM DISTANCE BETWEEN TANKS (feet)
Class I protected above-ground tanks	Less than or equal to 6,000	5	25[a]	15	5	3
	Greater than 6,000	15	25[a]	25	15	3
Class II and III protected above-ground tanks	Same as Class I	Same as Class I	Same as Class I[c]	Same as Class I	Same as Class I	Same as Class I
Tanks in vaults	0–20,000	0[b]	0	0[b]	0	Separate compartment required for each tank
Other tanks	All	50	50	100	50	3

For SI: 1 foot = 304.8 mm, 1 gallon = 3.785 L.

a. At fleet vehicle motor fuel-dispensing facilities, a minimum separation distance is not required.

b. Underground vaults shall be located such that they will not be subject to loading from nearby structures, or they shall be designed to accommodate applied loads from existing or future structures that can be built nearby.

c. For Class IIIB liquids in protected above-ground tanks, a minimum separation distance is not required.

INTERNATIONAL CODE COUNCIL®
Copyright © 2015 ICC. ALL RIGHTS RESERVED. Accessed by David Dammon on Jun 21, 2017 12:30:52 PM pursuant to License Agreement with ICC. No further reproduction or distribution authorized. ANY UNAUTHORIZED REPRODUCTION OR DISTRIBUTION IS A VIOLATION OF THE FEDERAL COPYRIGHT ACT AND THE LICENSE AGREEMENT, AND SUBJECT TO CIVIL AND CRIMINAL PENALTIES THEREUNDER.



Figure 2306.2.3(3)
BIODIESEL FUELER

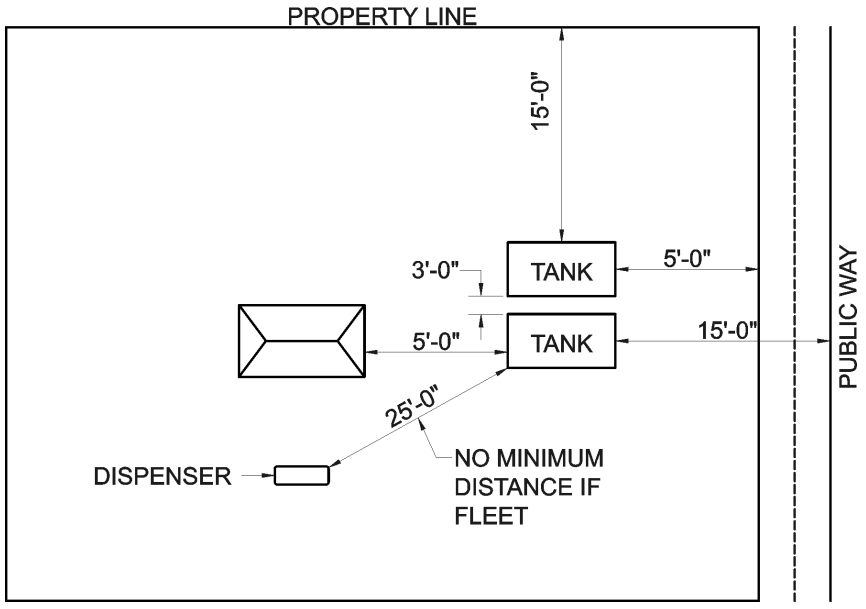

For SI: 1 foot = 304.8 mm, 1 gallon = 3.785 L.

Figure 2306.2.3(4)
6,000-GALLON OR LESS PROTECTED ABOVE-GROUND STORAGE TANKS STORING CLASS I, II OR III LIQUIDS

INTERNATIONAL CODE COUNCIL®
Copyright © 2015 ICC. ALL RIGHTS RESERVED. Accessed by David Dammon on Jun 21, 2017 12:30:52 PM pursuant to License Agreement with ICC. No further reproduction or distribution authorized. ANY UNAUTHORIZED REPRODUCTION OR DISTRIBUTION IS A VIOLATION OF THE FEDERAL COPYRIGHT ACT AND THE LICENSE AGREEMENT, AND SUBJECT TO CIVIL AND CRIMINAL PENALTIES THEREUNDER.

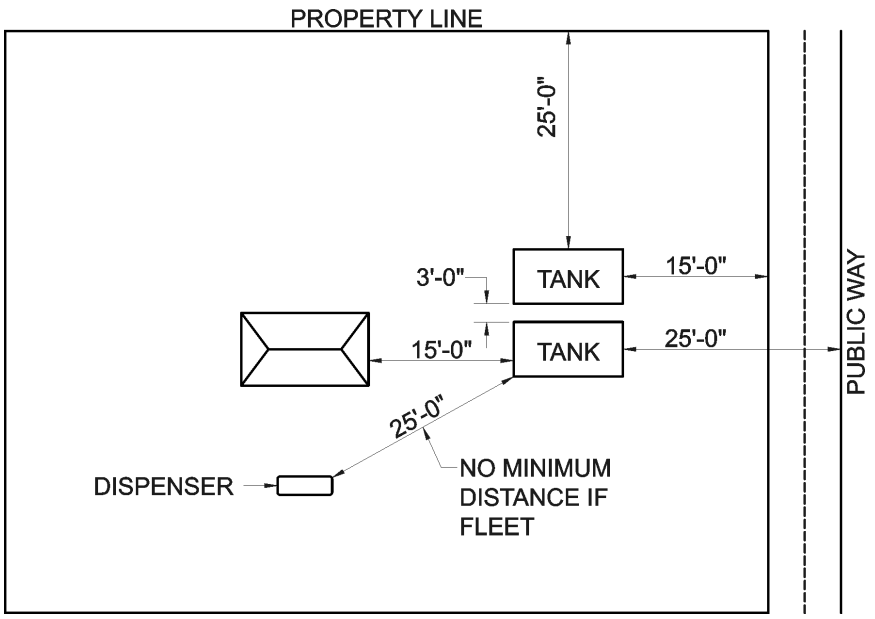

For SI: 1 foot = 304.8 mm, 1 gallon = 3.785 L.

Figure 2306.2.3(5)
GREATER THAN 6,000-GALLON PROTECTED ABOVE-GROUND STORAGE TANKS STORING CLASS I, II OR III LIQUIDS

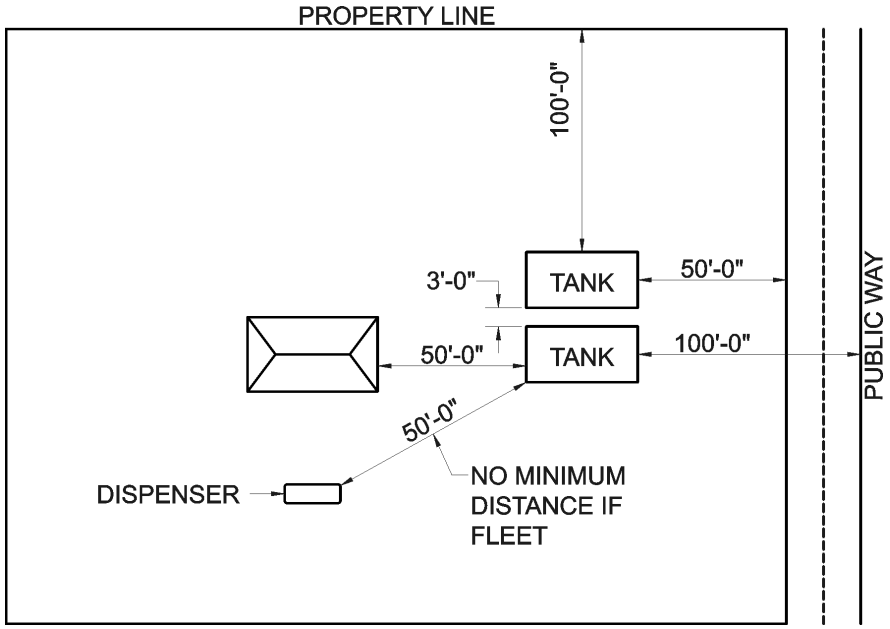

For SI: 1 foot = 304.8 mm.

Figure 2306.2.3(6)
ALL OTHER ABOVE-GROUND STORAGE TANKS STORING CLASS II OR III LIQUIDS ONLY

INTERNATIONAL CODE COUNCIL®
Copyright © 2015 ICC. ALL RIGHTS RESERVED. Accessed by David Dammon on Jun 21, 2017 12:30:52 PM pursuant to License Agreement with ICC. No further reproduction or distribution authorized. ANY UNAUTHORIZED REPRODUCTION OR DISTRIBUTION IS A VIOLATION OF THE FEDERAL COPYRIGHT ACT AND THE LICENSE AGREEMENT, AND SUBJECT TO CIVIL AND CRIMINAL PENALTIES THEREUNDER.

2306.2.4 Above-ground tanks located in above-grade vaults or below-grade vaults. Above-ground tanks used for storage of Class I, II or IIIA liquid motor fuels are allowed to be installed in vaults located above grade or below grade in accordance with Section 5704.2.8 and shall comply with Sections 2306.2.4.1 and 2306.2.4.2. Tanks in above-grade vaults shall also comply with Table 2306.2.3.

❖ The definition of an "Above-ground tank" is a tank without backfill. An underground tank receives strength from backfill. If the tank is not surrounded by backfill, the tank must be a listed and labeled above-ground tank. Therefore, a tank inside a vault, even if the vault is underground, must be a listed and labeled above-ground tank.

2306.2.4.1 Tank capacity limits. Tanks storing Class I and Class II liquids at an individual site shall be limited to a maximum individual capacity of 15,000 gallons (56 775 L) and an aggregate capacity of 48,000 gallons (181 680 L).

❖ This section places limitations on the capacities of tanks inside vaults. At motor fuel-dispensing facilities, the maximum capacity is 15,000 gallons (56 775 L) for a single tank and 48,000 gallons (181 680 L) aggregate capacity. The individual tank capacity allows the facility to receive the largest single product delivery that may be reasonably expected in a single tank. The aggregate capacity affords the facility the marketing flexibility it needs to carry for sale a wide range of motor fuels and specialty fuels, such as kerosene or diesel fuel.

2306.2.4.2 Fleet vehicle motor fuel-dispensing facilities. Tanks storing Class II and Class IIIA liquids at a fleet vehicle motor fuel-dispensing facility shall be limited to a maximum individual capacity of 20,000 gallons (75 700 L) and an aggregate capacity of 80,000 gallons (302 800 L).

❖ At fleet vehicle motor fuel-dispensing facilities (where the vehicles are used in connection with the fleet operator's business) the maximum storage capacity is 20,000 gallons (75 700 L) for a single tank and 80,000 gallons (302 800 L) aggregate. These higher capacities recognize that the relative hazard of fleet facilities is less than at public motor fuel-dispensing facilities because the fleet fuel of choice is typically diesel fuel, a Class II liquid, rather than gasoline, a Class IB liquid. The higher capacities also reduce the hazard of liquid transfer by reducing the number of times the storage tanks must be refilled. Note that the additional capacity in this section applies only to Class II and IIIA liquid fuels. Class I fuels would remain subject to the provisions of Section 2306.2.4.1.

2306.2.5 Portable tanks. Where approved by the fire code official, portable tanks are allowed to be temporarily used in conjunction with the dispensing of Class I, II or III liquids into the fuel tanks of motor vehicles or motorized equipment on premises not normally accessible to the public. The approval shall include a definite time limit.

❖ This section recognizes the need for allowing portable tanks to be used temporarily for fueling vehicles at locations that, because of topography or security, are not accessible to the general public, such as mining sites, logging camps, well-drilling sites, large rail yards, construction projects and the like. The key word here is "temporarily." If such sites require a permanent fueling facility, then all applicable provisions of the code apply. The fire code official retains control over such temporary uses since approval is required and a definite time limit on such operations is imposed.

2306.2.6 Special enclosures. Where installation of tanks in accordance with Section 5704.2.11 is impractical, or because of property or building limitations, tanks for liquid motor fuels are allowed to be installed in buildings in special enclosures in accordance with all of the following:

1. The special enclosure shall be liquid tight and vapor tight.
2. The special enclosure shall not contain backfill.
3. Sides, top and bottom of the special enclosure shall be of reinforced concrete not less than 6 inches (152 mm) thick, with openings for inspection through the top only.
4. Tank connections shall be piped or closed such that neither vapors nor liquid can escape into the enclosed space between the special enclosure and any tanks inside the special enclosure.
5. Means shall be provided whereby portable equipment can be employed to discharge to the outside any vapors that might accumulate inside the special enclosure should leakage occur.
6. Tanks containing Class I, II or IIIA liquids inside a special enclosure shall not exceed 6,000 gallons (22 710 L) in individual capacity or 18,000 gallons (68 130 L) in aggregate capacity.
7. Each tank within special enclosures shall be surrounded by a clear space of not less than 3 feet (910 mm) to allow for maintenance and inspection.

❖ Special enclosures (essentially concrete vaults) can solve installation difficulties on problematic motor fuel-dispensing facility sites by allowing tanks to be installed inside of the facility building. The intent of this provision is to:

- Protect the building from the tank in case there is a fire involving the tank.
- Protect the tank from the building in case there is a fire involving the building.
- Prevent vapors from accumulating in the space between the tank and the enclosure.

INTERNATIONAL CODE COUNCIL®
Copyright © 2015 ICC. ALL RIGHTS RESERVED. Accessed by David Dammon on Jun 21, 2017 12:30:52 PM pursuant to License Agreement with ICC. No further reproduction or distribution authorized. ANY UNAUTHORIZED REPRODUCTION OR DISTRIBUTION IS A VIOLATION OF THE FEDERAL COPYRIGHT ACT AND THE LICENSE AGREEMENT, AND SUBJECT TO CIVIL AND CRIMINAL PENALTIES THEREUNDER.

- Limit the capacity of the tank inside the enclosure.
- Provide room for a maintenance technician to enter the space between the tank and the enclosure.

2306.3 Security. Above-ground tanks for the storage of liquid motor fuels shall be safeguarded from public access or unauthorized entry in an *approved* manner.

❖ This section is intended to protect the above- ground tank from vandalism and at the same time allow enough room for fire fighters to maneuver around the tank.

2306.4 Physical protection. Guard posts complying with Section 312 or other *approved* means shall be provided to protect above-ground tanks against impact by a motor vehicle unless the tank is *listed* as a protected above-ground tank with vehicle impact protection.

❖ This provision seeks to prevent leaks and spills caused by vehicle impact. The provision recognizes that vehicle damage can be reduced by placing 4-inch (102 mm) steel posts filled with concrete and spaced on 4-foot (1219 mm) centers around the above-ground tank, or by using a listed protected above-ground tank with vehicle impact protection.

2306.5 Secondary containment. Above-ground tanks shall be provided with drainage control or diking in accordance with Chapter 57. Drainage control and diking is not required for *listed* secondary containment tanks. Secondary containment systems shall be monitored either visually or automatically. Enclosed secondary containment systems shall be provided with emergency venting in accordance with Section 2306.6.2.5.

❖ A single-walled, above-ground, UL 142 tank inside a dike, or a double-wall, secondary containment, above- ground tank with emergency relief vents for the inner tank and the interstitial space will provide the level of protection required by this section. Both styles of tanks are listed for above-ground use and both tanks meet the requirements for drainage control and diking.

2306.6 Piping, valves, fittings and ancillary equipment for use with flammable or combustible liquids. The design, fabrication, assembly, testing and inspection of piping, valves, fittings and ancillary equipment for use with flammable or *combustible liquids* shall be in accordance with Chapter 57 and Sections 2306.6.1 through 2306.6.3.

❖ The majority of leaks come from piping, valves, fittings and ancillary equipment, not from the tank itself. Therefore, this section is intended to reduce fuel spills by addressing the requirements for this equipment.

2306.6.1 Protection from damage. Piping shall be located such that it is protected from physical damage.

❖ Piping is easily damaged by vehicles and other equipment. Piping must be installed and located in a way that will minimize damage either by burying the pipe or protecting the pipe by some other physical means. More leaks come from piping than any other source.

2306.6.2 Piping, valves, fittings and ancillary equipment for above-ground tanks for Class I, II and III liquids. Piping, valves, fittings and ancillary equipment for above-ground tanks storing Class I, II and III liquids shall comply with Sections 2306.6.2.1 through 2306.6.2.6.

❖ Because above-ground tanks have a gravity head and some of the piping is always exposed above ground, special provisions apply to piping for above-ground tanks.

2306.6.2.1 Tank openings. Tank openings for above-ground tanks shall be through the top only.

❖ Tank openings must be through the top, above the liquid level, of an above-ground tank to reduce the risk of a liquid spill in the event of a piping failure.

2306.6.2.2 Fill-pipe connections. The fill pipe for above-ground tanks shall be provided with a means for making a direct connection to the tank vehicle's fuel-delivery hose so that the delivery of fuel is not exposed to the open air during the filling operation. Where any portion of the fill pipe exterior to the tank extends below the level of the top of the tank, a check valve shall be installed in the fill pipe not more than 12 inches (305 mm) from the fill-hose connection.

❖ The fill-pipe connection must be a liquid-tight connection, such as a cam-lock connection. The connection may be installed on top of the tank, which would require the fuel delivery person to climb on top of the tank, or the connection may be piped down to a lower level to prevent the delivery person from having to climb onto the tank. When the connection is piped down below the fuel level in the tank, a check valve must be installed in the location specified to prevent the discharge of fuel by siphon flow.

2306.6.2.3 Overfill protection. Overfill protection shall be provided for above-ground flammable and *combustible liquid* storage tanks in accordance with Sections 5704.2.7.5.8 and 5704.2.9.7.6.

❖ Overfill prevention is a major concern when dealing with above-ground tanks. The first step in preventing a spill is for the delivery truck operator to check the liquid level in the above-ground tank and set the truck up accordingly to fill the tank to the 90-percent level. The second prevention measure is the audible fill alarm that will sound an alarm when the tank reaches 90-percent capacity. The third level of prevention is for a device that will shut off the flow of liquid at 95-percent capacity.

An above-ground tank should be considered full at 90-percent capacity but under no circumstances should the tank be filled beyond 95-percent capacity.

The first thing the delivery driver should do after he or she properly positions the fuel delivery truck is to check and record the ullage (the amount of liquid required to fill the tank to 90-percent capacity).

The second line of defense to prevent an overfill is

INTERNATIONAL CODE COUNCIL®
Copyright © 2015 ICC. ALL RIGHTS RESERVED. Accessed by David Dammon on Jun 21, 2017 12:30:52 PM pursuant to License Agreement with ICC. No further reproduction or distribution authorized. ANY UNAUTHORIZED REPRODUCTION OR DISTRIBUTION IS A VIOLATION OF THE FEDERAL COPYRIGHT ACT AND THE LICENSE AGREEMENT, AND SUBJECT TO CIVIL AND CRIMINAL PENALTIES THEREUNDER.

an audible alarm set to go off when the tank reaches 90-percent capacity.

The third and final line of defense is the tank fill piping must be equipped with a device that will completely shut off the supply of liquid when the tank reaches 95 percent. This device is usually installed inside the tank fill opening and is part of the tank fill tube that extends down into the tank. The delivery operator should never rely on this device to determine when the tank is full; the delivery should have stopped at 90 percent. In the event that the delivery operator overfills the tank and the complete shutoff device closes, the tank delivery driver must have the means to drain the delivery hose without spilling the liquid on the ground.

As an alternative to the complete shutoff device, the code allows a device that will slow down the delivery rate when the tank reaches 90 percent. Once the tank reaches 90 percent, the rate of flow should slow down to a point where it will take 30 minutes to fill the tank to 95 percent.

2306.6.2.4 Siphon prevention. An *approved* antisiphon method shall be provided in the piping system to prevent flow of liquid by siphon action.

❖ Since piping connections to an above-ground tank must enter the tank through the top, this section requires that an approved anti-siphon device be installed in the liquid piping near the top of the tank to prevent liquid flow from the tank by siphon action if the supply pipe from the tank to the dispenser is damaged.

2306.6.2.5 Emergency relief venting. Above-ground storage tanks, tank compartments and enclosed secondary containment spaces shall be provided with emergency relief venting in accordance with Chapter 57.

❖ The emergency relief vent is the most important safety device installed on the tank. The emergency relief vent prevents the tank from overpressurizing in the event the tank is exposed to fire. In the case of a secondary containment above-ground tank there must be an emergency relief vent for each tank compartment and an emergency relief vent for the interstitial space.

2306.6.2.6 Spill containers. A spill container having a capacity of not less than 5 gallons (19 L) shall be provided for each fill connection. For tanks with a top fill connection, spill containers shall be noncombustible and shall be fixed to the tank and equipped with a manual drain valve that drains into the primary tank. For tanks with a remote fill connection, a portable spill container is allowed.

❖ The fill connection must be equipped with a spill-containment device that will hold at least 5 gallons (19 L). If the tank has a top-fill connection, the container must be noncombustible and attached directly to the tank and equipped with a drain valve that will allow any spilled liquid to be manually drained into the tank. If the tank is equipped with a remote-fill connection, the container must be located at the connection when a delivery connection is made to the fill pipe.

2306.6.3 Piping, valves, fittings and ancillary equipment for underground tanks. Piping, valves, fittings and ancillary equipment for underground tanks shall comply with Chapter 57 and NFPA 30A.

❖ Section 5703.6 and NFPA 30A address the provisions for piping connected to underground tanks:

- Galvanic and corrosion protection.
- Leak detection.
- Special materials.
- Piping supports.
- Backflow protection.
- Flexible connections.
- Testing.

2306.7 Fuel-dispensing systems for flammable or combustible liquids. The design, fabrication and installation of fuel-dispensing systems for flammable or *combustible liquid* fuels shall be in accordance with Sections 2306.7.1 through 2306.7.9.2.4. Alcohol-blended fuel-dispensing systems shall also comply with Section 2306.8.

❖ The fuel-dispensing system consists of all the equipment required to get the fuel from the tank into the vehicle being fueled. It consists of the pumps, piping, dispensers, hoses, nozzles, break-away devices and any other equipment required for a particular application. Alternative alcohol-blended fuels, while they are considered in this category of fuels, possess characteristics that require the systems for dispensing them to comply with additional requirements contained in Section 2306.8. The additional provisions are needed because this section requires certain dispensing system components to be listed, and listings for equipment dispensing alcohol-blended fuels, including E85, are not yet available from nationally recognized testing laboratories. These organizations are currently working with stakeholders to address corrosion and material compatibility issues associated with E85 and other alcohol-blended fuels. See the commentary to Section 2306.8 for further information.

2306.7.1 Listed equipment. Electrical equipment, dispensers, hose, nozzles and submersible or subsurface pumps used in fuel-dispensing systems shall be *listed*.

❖ The use of listed equipment and devices provides evidence that they have been evaluated by a third-party agency for safe use in the applications for which they are designed. This is especially important where flammable liquids are being transferred or dispensed. See also the commentary for the definition of "Listed" in Chapter 2 for further discussion.

2306.7.2 Fixed pumps required. Class I and II liquids shall be transferred from tanks by means of fixed pumps designed

INTERNATIONAL CODE COUNCIL®
Copyright © 2015 ICC. ALL RIGHTS RESERVED. Accessed by David Dammon on Jun 21, 2017 12:30:52 PM pursuant to License Agreement with ICC. No further reproduction or distribution authorized. ANY UNAUTHORIZED REPRODUCTION OR DISTRIBUTION IS A VIOLATION OF THE FEDERAL COPYRIGHT ACT AND THE LICENSE AGREEMENT, AND SUBJECT TO CIVIL AND CRIMINAL PENALTIES THEREUNDER.

and equipped to allow control of the flow and prevent leakage or accidental discharge.

❖ There are two basic types of fixed pumps. One is remote from the dispenser and delivers the fuel under pressure to the dispenser. The most common place to find this type of pump is at the tank. Because the fuel is being delivered to the dispenser under pressure, leak detection devices must be used and a shear valve with a fusible link must be installed in the sump under the dispenser.

The second type of pump is a suction pump mounted in the base of the dispenser. A shear valve and leak detection are not required on this type of pump. Section 2306.7.4 requires an emergency shutoff valve on dispensers equipped with remote pumps.

2306.7.3 Mounting of dispensers. Dispensing devices, except those installed on top of a protected above-ground tank that qualifies as vehicle-impact resistant, shall be protected against physical damage by mounting on a concrete island 6 inches (152 mm) or more in height, or shall be protected in accordance with Section 312. Dispensing devices shall be installed and securely fastened to their mounting surface in accordance with the dispenser manufacturer's instructions. Dispensing devices installed indoors shall be located in an *approved* position where they cannot be struck by an out-of-control vehicle descending a ramp or other slope.

❖ This provision addresses two alternatives to mounting dispensers so as to provide impact protection. One is to mount the dispenser on an elevated island and the other is to protect the dispenser in accordance with Section 312, which requires the dispenser to be protected by steel posts filled with concrete (see Commentary Figure 2306.7.3). Note that these provisions do not apply to dispensers mounted on top of a listed impact-resistant above-ground tank. Regardless of which of the above alternatives is chosen, the stability of an installed dispenser depends on its installation in accordance with the manufacturer's instructions, particularly with respect to ensuring that all bolts required to firmly mount the dispenser to the mounting surface are provided. It is not unusual to find dispensers with only half or fewer of their mounting bolts in place. Such a haphazard installation can make the dispenser piping and electrical conduits more susceptible to damage from a much less serious impact than might otherwise be tolerated if all bolts were in place or even from rocking action in high-wind conditions. This can lead to a liquid leak, an ignition from a damaged electrical circuit or both. NFPA 30A requires dispensers to be bolted to their mounting surface and UL 87 requires that two bolt holes be part of the dispenser base for dispensers not greater than 6 feet (1829 mm) tall, while four bolt holes are needed for dispensers over 6 feet (1829 mm) tall. These bolting requirements are for dispenser stability and piping protection and should not be considered part of the physical protection required by this section.

2306.7.4 Dispenser emergency shutoff valve. An *approved* automatic emergency shutoff valve designed to close in the event of a fire or impact shall be properly installed in the liquid supply line at the base of each dispenser supplied by a remote pump. The valve shall be installed so that the shear groove is flush with or within $^1/_2$ inch (12.7 mm) of the top of the concrete dispenser island and there is clearance provided for maintenance purposes around the valve body and operating parts. The valve shall be installed at the liquid supply line inlet of each overhead-type dispenser. Where installed, a vapor return line located inside the dispenser housing shall have a shear section or *approved* flexible connector for the liquid supply line emergency shutoff valve to function. Emergency shutoff valves shall be installed and maintained in accordance with the manufacturer's instructions, tested at the

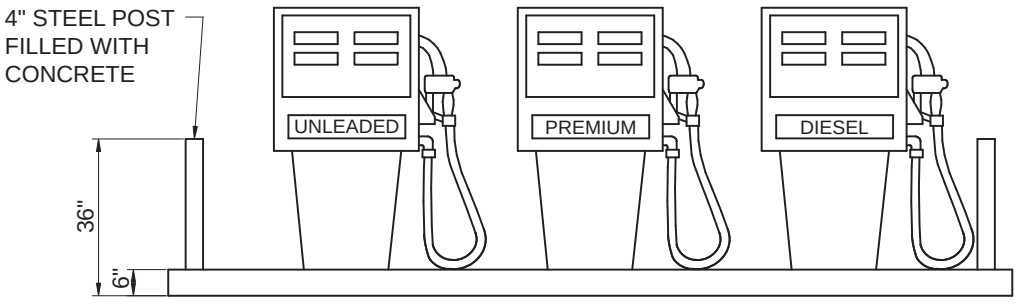

For SI: 1 inch = 25.4 mm.

Figure 2306.7.3
MOUNTING OF DISPENSERS

INTERNATIONAL CODE COUNCIL®
Copyright © 2015 ICC. ALL RIGHTS RESERVED. Accessed by David Dammon on Jun 21, 2017 12:30:52 PM pursuant to License Agreement with ICC. No further reproduction or distribution authorized. ANY UNAUTHORIZED REPRODUCTION OR DISTRIBUTION IS A VIOLATION OF THE FEDERAL COPYRIGHT ACT AND THE LICENSE AGREEMENT, AND SUBJECT TO CIVIL AND CRIMINAL PENALTIES THEREUNDER.

time of initial installation and not less than yearly thereafter in accordance with Section 2305.2.4.

❖ The dispenser emergency valve (shear valve) is designed to close automatically when the dispenser is knocked over or if the dispenser is involved in a fire. This so-called "impact" valve is intended to prevent the free flow of fuel in the event a dispenser is struck by a vehicle. This spring-loaded, fusible-link-operated device may also be tripped by a fire. The relatively low clearance of the shear groove above the top surface of the dispenser island and the manufacturer's requirement for a rigid mounting of the valve body are intended to enable the valve body to fracture at the shear groove upon impact, thus tripping the hold-open linkage and closing the valve.

These valves are only required on remote pumping systems (pump is on the tank). Suction system (pump is in dispenser) piping, if broken, will cause the system to lose prime, thus stopping liquid flow. Vapor recovery systems are usually interlocked with the liquid-dispensing system. Consequently, the vapor recovery breakaway design must be compatible with the liquid line shutoff so it functions as intended. Installation, maintenance, acceptance and periodic testing must conform to the manufacturer's instructions. UL 842 describes the tests performed on these valves (see Commentary Figure 2306.7.4). The valve must be tested annually by manually tripping the hold-open linkage in accordance with Section 2305.2.4.

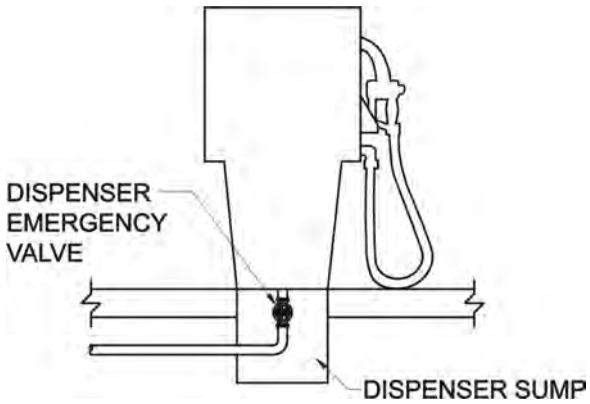

Figure 2306.7.4
DISPENSER EMERGENCY VALVES

2306.7.5 Dispenser hose. Dispenser hoses shall be not more than 18 feet (5486 mm) in length unless otherwise *approved*. Dispenser hoses shall be *listed* and *approved*. When not in use, hoses shall be reeled, racked or otherwise protected from damage.

❖ The 18-foot-maximum (5486 mm) length for dispenser hose has become a standard, although the original reason for the 18-foot (5486 mm) length had nothing to do with fire safety. It was a weights-and-measures requirement having to do with calibrating the dispenser to accurately give the volume of fuel delivered.

The fire code official should use caution when approving additional lengths of hose because the longer the hose, the harder it is to stow between uses, thus the more susceptible it is to damage by vehicles running over it if not properly stowed. Most dispenser hose-retrieving mechanisms are designed for 18-foot (5486 mm) hoses.

It is also important to remember that, when the hose is fully extended, the nozzle must not reach within 5 feet (1524 mm) of a building opening as regulated in Section 2303.1, Item 4.

2306.7.5.1 Emergency breakaway devices. Dispenser hoses for Class I and II liquids shall be equipped with a *listed* emergency breakaway device designed to retain liquid on both sides of a breakaway point. Such devices shall be installed and maintained in accordance with the manufacturer's instructions. Where hoses are attached to hose-retrieving mechanisms, the emergency breakaway device shall be located between the hose nozzle and the point of attachment of the hose-retrieval mechanism to the hose.

❖ This provision requires a breakaway device on dispenser hoses delivering gasoline, diesel and kerosene (Class I and II liquids). These devices are installed to prevent a pull-down of the motor fuel dispenser in the event a car drives away with the hose nozzle valve still in the car's fill pipe. The design of these valves is such that when they operate, the separated sections of the hose are sealed to prevent leakage of liquid from the hose. The placement of the breakaway device between the hose-retrieving mechanism clamp and the nozzle is important to the proper operation of the valve by preventing the pulling force of the driveoff from being transmitted via the retrieving cable directly to the dispenser. Commentary Figure 2306.7.5.1 shows a breakaway device installed between the nozzle and the hose-retrieving mechanism.

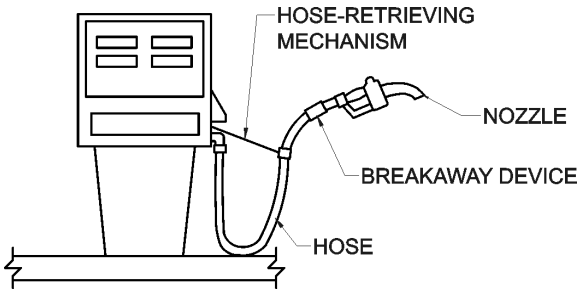

Figure 2306.7.5.1
BREAKAWAY DEVICES

2306.7.6 Fuel delivery nozzles. A listed automatic-closing-type hose nozzle valve with or without a latch-open device shall be provided on island-type dispensers used for dispensing Class I, II or III liquids.

INTERNATIONAL CODE COUNCIL®
Copyright © 2015 ICC. ALL RIGHTS RESERVED. Accessed by David Dammon on Jun 21, 2017 12:30:52 PM pursuant to License Agreement with ICC. No further reproduction or distribution authorized. ANY UNAUTHORIZED REPRODUCTION OR DISTRIBUTION IS A VIOLATION OF THE FEDERAL COPYRIGHT ACT AND THE LICENSE AGREEMENT, AND SUBJECT TO CIVIL AND CRIMINAL PENALTIES THEREUNDER.

Overhead-type dispensing units shall be provided with a *listed* automatic-closing-type hose nozzle valve without a latch-open device.

Exception: A *listed* automatic-closing-type hose nozzle valve with latch-open device is allowed to be used on overhead-type dispensing units where the design of the system is such that the hose nozzle valve will close automatically in the event the valve is released from a fill opening or upon impact with a driveway.

❖ A listed automatic-closing-type hose nozzle with or without a latch-open device is designed to automatically close when the fuel spits back through the vent line or if the hose nozzle were to fall out of the car fill pipe and strike the ground. When the nozzle is equipped with certain types of vapor recovery equipment, it is designed to shut off when the nozzle is removed from the vehicle. The nozzle on island-type dispensers may or may not be equipped with a latch-open device. The fire code official may want to consider the fact that when a latch-open device is not installed, the dispenser operator may use some unapproved device to hold the nozzle open.

The distinction between an overhead-type dispenser and an island-type dispenser is included in this section even though the overhead dispenser is rarely used. However, the concern was that since the hose is on a retractable reel built into the canopy, the nozzle would not strike the ground if it were to fall out of the vehicle and a latch-open device would fail to work, allowing dangerous, uncontrolled fuel spills.

The exception is that if the overhead-type dispenser hose mechanism is designed to allow the nozzle to strike the ground and automatically shut off or if the nozzle was equipped with vapor return bellows that would automatically shut off the nozzle if it was removed from the vehicle, the latch-open device would be approved.

2306.7.6.1 Special requirements for nozzles. Where dispensing of Class I, II or III liquids is performed, a listed automatic-closing-type hose nozzle valve shall be used incorporating all of the following features:

1. The hose nozzle valve shall be equipped with an integral latch-open device.
2. Where the flow of product is normally controlled by devices or equipment other than the hose nozzle valve, the hose nozzle valve shall not be capable of being opened unless the delivery hose is pressurized. If pressure to the hose is lost, the nozzle shall close automatically.

   Exception: Vapor recovery nozzles incorporating insertion interlock devices designed to achieve shut-off on disconnect from the vehicle fill pipe.
3. The hose nozzle shall be designed such that the nozzle is retained in the fill pipe during the filling operation.
4. The system shall include *listed* equipment with a feature that causes or requires the closing of the hose nozzle valve before the product flow can be resumed or before the hose nozzle valve can be replaced in its normal position in the dispenser.

❖ **Item 1**

This provision may seem to be in conflict with Section 2306.7.6, which requires a nozzle with or without a latch-open device. Hose nozzle valves are investigated and labeled by independent testing laboratories and are designed to shut off fuel flow automatically if dropped or jarred, or when fuel flows back into the nozzle spout (tank is full). Many jurisdictions have prohibited the use of latch-open-type hose nozzle valves at retail self-service stations, using the rationale that making customers hold the hose nozzle valve open during fueling would create a safer condition because they will be more alert during the fueling process. Not only does this section prohibit such a ban on a proven safety feature, but the fire record of self-service operations does not support this rationale. In fact, where factory-installed, latch-open devices (part of a tested, labeled hose nozzle valve assembly) are removed, it seems to challenge the creativity of customers in seeing how many different makeshift "hold-open" devices can be used to avoid having to hold manually the valve lever open. Such makeshift devices include gas caps, key rings, wallets, magazines, blocks of wood, rubber balls, etc. In one reported incident, a disposable cigarette lighter was used to prop open the hose nozzle valve lever only to strike a spark when the nozzle fell from the fill pipe. The resultant vapor ignition injured the customer and caused substantial damage to the service station and the customer's car. UL 842 describes several types of hose nozzle valves and latch-open features and the tests to which they are subjected.

Item 2

The statement, "When the flow of product is normally controlled by devices or equipment other than the hose nozzle valve," is referring to a prepay system; that is, a customer tells the person in the kiosk or convenience store how much fuel he or she wants and the dispenser shuts down and stops the flow, not the nozzle.

The exception addresses the fact that some vapor recovery nozzles are equipped with a bellows. When the nozzle is placed into the vehicle fill pipe, the bellows is compressed and the nozzle will operate. When the nozzle is removed, the bellows expands and the nozzle shuts off. The nozzle does not have to strike something to trigger the automatic shut-off; the nozzle shuts off as soon as the nozzle is removed.

Item 3

This device may be nothing more than a coil that looks like a spring around the dispenser nozzle spout. The spring tends to grip the lip of the vehicle's receiver and helps to prevent the nozzle from falling out of the vehicle receiver.

INTERNATIONAL CODE COUNCIL®
Copyright © 2015 ICC. ALL RIGHTS RESERVED. Accessed by David Dammon on Jun 21, 2017 12:30:52 PM pursuant to License Agreement with ICC. No further reproduction or distribution authorized. ANY UNAUTHORIZED REPRODUCTION OR DISTRIBUTION IS A VIOLATION OF THE FEDERAL COPYRIGHT ACT AND THE LICENSE AGREEMENT, AND SUBJECT TO CIVIL AND CRIMINAL PENALTIES THEREUNDER.

Item 4
This safety feature is intended to prevent a situation in which a customer could finish fueling without releasing the latch-open device and replace the nozzle in the dispenser boot. The next customer could then remove the nozzle from the dispenser boot, authorize the sale and, before getting the nozzle into the vehicle fill pipe, begin discharging fuel in the open, causing an unacceptable spill situation.

2306.7.7 Remote pumping systems. Remote pumping systems for liquid fuels shall comply with Sections 2306.7.7.1 and 2306.7.7.2.

❖ Remote pumping systems (sometimes referred to as "pressure systems") are systems in which liquid motor fuels are transferred from the storage tank to the dispensing devices by submersible pumps located at the storage tank rather than by suction pumps located within the dispensing device. The intent of this section is to require special safety devices on pumping systems that deliver fuel to the dispenser by pressure rather than suction.

2306.7.7.1 Leak detection. Where remote pumps are used to supply fuel dispensers, each pump shall have installed on the discharge side a *listed* leak detection device that will detect a leak in the piping and dispensers and provide an indication. A leak detection device is not required if the piping from the pump discharge to under the dispenser is above ground and visible.

❖ In remote pumping systems, the piping between the remote pump and the dispenser, because it is under pressure, is the number-one location of fuel spills caused by leaks. This section addresses both underground and above-ground piping. If the piping is underground, a line leak detector (LLD) must be installed on the discharge side of the remote pump. These devices detect piping leaks by monitoring the pressure in the dispensing system piping. If the LLD detects a pressure loss due to a leak, it will reduce the flow of product in the system to approximately 3 gallons per hour (14.33 L/h) at the hose nozzle as a visual indicator to the attendant that there is a system problem.

The reduced rate of flow fulfills this section's requirement that detection of a leak be indicated. While an electronic leak detection system could fulfill the requirements of this section, this section does not require electronic leak detection.

If the system piping is above ground where a leak would be immediately noticed and the piping can be visually inspected, the leak detection device is not required.

2306.7.7.2 Location. Remote pumps installed above grade, outside of buildings, shall be located not less than 10 feet (3048 mm) from lines of adjoining property that can be built upon and not less than 5 feet (1524 mm) from any building opening. Where an outside pump location is impractical, pumps are permitted to be installed inside buildings as provided for dispensers in Section 2301.4 and Chapter 57. Pumps shall be substantially anchored and protected against physical damage.

❖ Commentary Figure 2306.7.7.2 shows the minimum distances between an above-grade remote pump, lot lines and openings into a building. Where outside clearances cannot be achieved or are impractical in a given situation, above-grade remote pumps are allowed to be installed inside of buildings on the same basis as motor fuel dispensers.

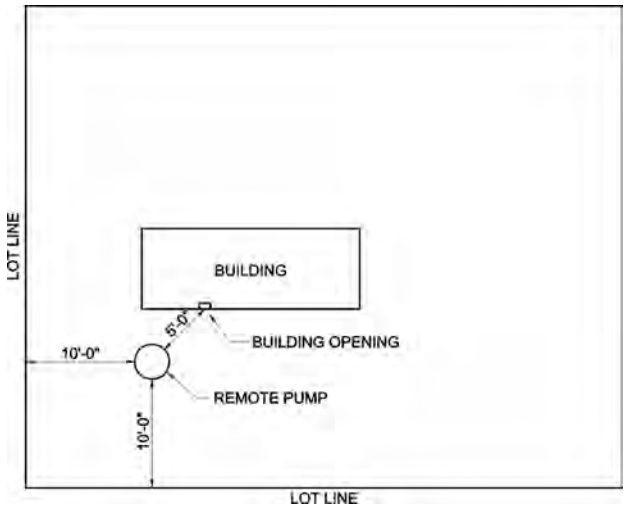

For SI: 1 foot = 304.8 mm.

Figure 2306.7.7.2
LOCATION OF ABOVE-GRADE REMOTE PUMPS

2306.7.8 Gravity and pressure dispensing. Flammable liquids shall not be dispensed by gravity from tanks, drums, barrels or similar containers. Flammable or *combustible liquids* shall not be dispensed by a device operating through pressure within a storage tank, drum or container.

❖ Delivering fuel by gravity is prohibited because the piping or hose between the tank and the nozzle could rupture or leak, causing the contents of the tank to spill. Tank pressurization is prohibited because the tanks will rupture when excessive pressure is applied. The maximum pressure at which an above-ground tank is tested is 5 pounds per square inch (psi) (34 kPa). Also, the application of air to the tank may lean out the very rich fuel vapors to the point where the atmosphere inside the tank is within the flammable range.

2306.7.9 Vapor-recovery and vapor-processing systems. Vapor-recovery and vapor-processing systems shall be in accordance with Sections 2306.7.9.1 through 2306.7.9.2.4.

❖ The following provisions address the requirements for vapor-recovery or vapor-processing systems. Because of clean-air environmental concerns, some jurisdictions prohibit fuel vapors displaced during tanker deliveries or routine fuel-dispensing operations from being

INTERNATIONAL CODE COUNCIL®
Copyright © 2015 ICC. ALL RIGHTS RESERVED. Accessed by David Dammon on Jun 21, 2017 12:30:52 PM pursuant to License Agreement with ICC. No further reproduction or distribution authorized. ANY UNAUTHORIZED REPRODUCTION OR DISTRIBUTION IS A VIOLATION OF THE FEDERAL COPYRIGHT ACT AND THE LICENSE AGREEMENT, AND SUBJECT TO CIVIL AND CRIMINAL PENALTIES THEREUNDER.

discharged into the atmosphere and require vapor-recovery or vapor-processing systems to prevent pollution. This section contains the provisions for returning the vapors to the tank or processing the vapors on site. Note that the code does not require these systems to be installed, but where they are installed, they must comply with these regulations.

2306.7.9.1 Vapor-balance systems. Vapor-balance systems shall comply with Sections 2306.7.9.1.1 through 2306.7.9.1.5.

❖ As fuel enters the fuel tank of the vehicle it displaces fuel vapors. The vapor-balance system simply captures these vapors and returns them to the storage tank.

2306.7.9.1.1 Dispensing devices. Dispensing devices incorporating provisions for vapor recovery shall be *listed* and *labeled*. Where existing *listed* or *labeled* dispensing devices are modified for vapor recovery, such modifications shall be *listed* by report by a nationally recognized testing laboratory. The listing by report shall contain a description of the component parts used in the modification and recommended method of installation on specific dispensers. Such report shall be made available on request of the *fire code official*.

Means shall be provided to shut down fuel dispensing in the event the vapor return line becomes blocked.

❖ Motor fuel dispensers equipped with vapor-recovery equipment must be listed and labeled by a recognized testing laboratory attesting that they will function properly when installed in accordance with the terms of their listing (see commentary for the definitions of "Listed" and "Labeled" in Chapter 2). When existing dispensing equipment is retrofitted with vapor-recovery equipment, the equipment being added must be listed to work with the existing equipment. In other words, a person cannot modify an existing dispensing device manufactured by one company with vapor-recovery component parts manufactured by the same or a different company unless a report from a recognized testing laboratory is submitted to the fire code official verifying that the retrofit components will work properly with the dispensing device. This is called "listed by report" and is a service provided by major testing laboratories to document equipment compatibility. The report from the testing laboratory must also include the installation instructions.

Means must be provided to shut down fuel dispensing in the event the vapor-return line becomes blocked. This provision is self-explanatory. To prevent vapors from entering the atmosphere, the dispensing operation must be stopped if the vapor return is blocked.

2306.7.9.1.2 Vapor-return line closeoff. An acceptable method shall be provided to close off the vapor return line from dispensers when the product is not being dispensed.

❖ To prevent vapors from escaping after dispensing has stopped, some type of device must be installed that will prevent vapors in the tank from escaping out of the return line. This could be accomplished by a one-way check valve.

2306.7.9.1.3 Piping. Piping in vapor-balance systems shall be in accordance with Sections 5703.6, 5704.2.9 and 5704.2.11. Nonmetallic piping shall be installed in accordance with the manufacturer's instructions.

Existing and new vent piping shall be in accordance with Sections 5703.6 and 5704.2. Vapor return piping shall be installed in a manner that drains back to the tank, without sags or traps in which liquid can become trapped. If necessary, because of grade, condensate tanks are allowed in vapor return piping. Condensate tanks shall be designed and installed so that they can be drained without opening.

❖ Section 5703.6 addresses the general requirements for piping. Section 5704.2.9 addresses piping for above-ground tanks, and Section 5704.2.11 lists the requirements for underground tanks. Special piping materials, as described in Section 5703.6.2.1, must be used underground or, if used above ground, must be protected from fire exposure.

The vent piping must comply with the general requirements of Section 5703.6, and the specific vent requirements of Section 5704.2.

2306.7.9.1.4 Flexible joints and shear joints. Flexible joints shall be installed in accordance with Section 5703.6.9.

An *approved* shear joint shall be rigidly mounted and connected by a union in the vapor return piping at the base of each dispensing device. The shear joint shall be mounted flush with the top of the surface on which the dispenser is mounted.

❖ Flexible joints must be listed, approved and installed in the following locations:

1. Where piping connects to underground piping.
2. Where piping ends at pump islands and vent risers.
3. At points where differential movement in the piping can occur.

The shear joint mentioned here serves the same function for the vapor-recovery lines as the dispenser emergency valve does for the pressurized fuel supply piping to the dispenser (see commentary, Section 2306.7.4). This shear valve must be securely mounted so that the shear groove is located flush or within $^1/_2$ inch (12.7 mm) of the surface of the dispenser island or top of the sump. This shear valve is designed to close in case of a dispenser fire or a dispenser knock-down.

2306.7.9.1.5 Testing. Vapor return lines and vent piping shall be tested in accordance with Section 5703.6.3.

❖ Section 5703.6.3 addresses the testing for flammable and combustible liquid piping.

INTERNATIONAL CODE COUNCIL®
Copyright © 2015 ICC. ALL RIGHTS RESERVED. Accessed by David Dammon on Jun 21, 2017 12:30:52 PM pursuant to License Agreement with ICC. No further reproduction or distribution authorized. ANY UNAUTHORIZED REPRODUCTION OR DISTRIBUTION IS A VIOLATION OF THE FEDERAL COPYRIGHT ACT AND THE LICENSE AGREEMENT, AND SUBJECT TO CIVIL AND CRIMINAL PENALTIES THEREUNDER.

2306.7.9.2 Vapor-processing systems. Vapor-processing systems shall comply with Sections 2306.7.9.2.1 through 2306.7.9.2.4.

❖ Where vapor-recovery systems capture the vapors and return them to the tank, vapor-processing systems do not return the vapors to the tank. Instead, they process the vapors either by refrigeration, absorption or burning them off.

2306.7.9.2.1 Equipment. Equipment in vapor-processing systems, including hose nozzle valves, vapor pumps, flame arresters, fire checks or systems for prevention of flame propagation, controls and vapor-processing equipment, shall be individually *listed* for the intended use in a specified manner.

Vapor-processing systems that introduce air into the underground piping or storage tanks shall be provided with equipment for prevention of flame propagation that has been tested and *listed* as suitable for the intended use.

❖ Unlisted vapor-processing equipment may not be used. Equipment that is used must be done in accordance with its listing.

Vapor-processing systems that introduce air into the underground piping or storage tanks must be provided with equipment for prevention of flame propagation that has been tested and listed as suitable for the intended use.

When blowers are used to introduce air, equipment, such as listed flame arresters, must be used to prevent vapors in the flammable range from being ignited.

2306.7.9.2.2 Location. Vapor-processing equipment shall be located at or above grade. Sources of ignition shall be located not less than 50 feet (15 240 mm) from fuel-transfer areas and not less than 18 inches (457 mm) above tank fill openings and tops of dispenser islands. Vapor-processing units shall be located not less than 10 feet (3048 mm) from the nearest building or *lot line* of a property that can be built upon.

Exception: Where the required distances to buildings, *lot lines* or fuel-transfer areas cannot be obtained, means shall be provided to protect equipment against fire exposure. Acceptable means shall include but not be limited to either of the following:

1. *Approved* protective enclosures, which extend not less than 18 inches (457 mm) above the equipment, constructed of fire-resistant or noncombustible materials.
2. Fire protection using an *approved* water-spray system.

❖ This section is intended to protect vapor-processing equipment from fire exposure, not to protect other structures or equipment from a fire involving the vapor-recovery equipment. Clearance to lot lines is intended to provide a measure of exposure protection to the vapor-processing equipment from potential off-site fires. The exception provides several acceptable clearance alternatives, recognizing that the required clearances cannot, in all cases, be achieved. This is especially true in the case of vapor-processing equipment being installed at established motor fuel-dispensing facilities where the area available for proper installation is not subject to design but, rather, to the existing site conditions. Note that where Exception 1 is approved, the resulting enclosure should be ventilated in an approved manner, similar to that required for physical protection enclosures by Section 2306.9.2.2.2.

2306.7.9.2.2.1 Distance from dispensing devices. Vapor-processing equipment shall be located not less than 20 feet (6096 mm) from dispensing devices.

❖ Twenty feet (6096 mm) is the extent of the Class I, Group D, Division 2, electrically classified area for flammable liquid fuel dispensers established by Article 500 of NFPA 70.

2306.7.9.2.2.2 Physical protection. Vapor-processing equipment shall be protected against physical damage by guardrails, curbs, protective enclosures or fencing. Where *approved* protective enclosures are used, *approved* means shall be provided to ventilate the volume within the enclosure to prevent pocketing of flammable vapors.

❖ Vapor-processing equipment must not only be physically protected from vehicles and other physical damage but, if the protection means includes an enclosure, the enclosed area must be adequately ventilated to prevent the accumulation of flammable vapors within where it could become a hazard to anyone entering the enclosure.

2306.7.9.2.2.3 Downslopes. Where a downslope exists toward the location of the vapor-processing unit from a fuel-transfer area, the *fire code official* is authorized to require additional separation by distance and height.

❖ If the vapor-processing equipment is situated downhill from the dispensers, vapors will be more likely to accumulate in or around the vapor-processing equipment from the fuel transfer area. Accordingly, the fire code official may require greater protection for the vapor-processing equipment.

2306.7.9.2.3 Installation. Vapor-processing units shall be securely mounted on concrete, masonry or structural steel supports on concrete or other noncombustible foundations. Vapor-recovery and vapor-processing equipment is allowed to be installed on roofs where *approved*.

❖ This provision is intended to require the vapor-processing equipment to be mounted on a noncombustible, substantial foundation.

2306.7.9.2.4 Piping. Piping in a mechanical-assist system shall be in accordance with Section 5703.6.

❖ Section 5703.6 addresses the provisions for flammable and combustible liquid piping.

2306.8 Alcohol-blended fuel-dispensing operations. The design, fabrication and installation of alcohol-blended fuel-dispensing systems shall be in accordance with Section 2306.7 and Sections 2306.8.1 through 2306.8.5.

❖ This section addresses hazards specifically related to the dispensing of alcohol-blended fuels as compared

INTERNATIONAL CODE COUNCIL®
Copyright © 2015 ICC. ALL RIGHTS RESERVED. Accessed by David Dammon on Jun 21, 2017 12:30:52 PM pursuant to License Agreement with ICC. No further reproduction or distribution authorized. ANY UNAUTHORIZED REPRODUCTION OR DISTRIBUTION IS A VIOLATION OF THE FEDERAL COPYRIGHT ACT AND THE LICENSE AGREEMENT, AND SUBJECT TO CIVIL AND CRIMINAL PENALTIES THEREUNDER.

to gasoline and the more established gasoline-alcohol blends ("gasohol"), which are treated the same as gasoline in the code.

The fuel-dispensing system consists of all equipment required to get the fuel from the tank into the vehicle being fueled. It consists of the pumps, piping, dispensers, hoses, nozzles, break-away devices and any other equipment required for a particular application. Alternative alcohol-blended fuels, although subject to the requirements of Section 2306.7 for flammable and combustible liquid fuel-dispensing equipment, possess characteristics that require the systems for dispensing them to comply with additional requirements contained in Sections 2306.8.1 through 2306.8.5. The additional provisions are needed because Section 2306.7.1 requires certain dispensing system components to be listed; however, listings for equipment dispensing alcohol-blended fuels, including E85, may not yet be available from nationally recognized testing laboratories. These organizations are currently working with stakeholders to address corrosion and material compatibility issues associated with E85 and other alcohol-blended fuels. In an initial step toward developing a listing standard, UL has developed an Outline of Investigation, UL 87A, for dispensing devices for gasoline/ethanol blend fuels. See also the commentary to Section 202 for the definition of "Alcohol-blended fuels" for further information.

2306.8.1 Listed equipment. Dispensers shall be *listed* in accordance with UL 87A. Hoses, nozzles, breakaway fittings, swivels, flexible connectors or dispenser emergency shutoff valves, vapor recovery systems, leak detection devices and pumps used in alcohol-blended fuel-dispensing systems shall be *listed* for the specific purpose.

❖ This section requires dispensing equipment to be listed in accordance with UL 87A. It also identifies dispensing system components that must be listed for use with alcohol-blended fuels. The UL 87A *Outline of Investigation for Power-Operated Dispensing Devices for Gasoline and Gasoline/Ethanol Blends with Nominal Ethanol Concentrations up to 85 Percent* was developed to cover dispensers intended for use with high-concentration ethanol blends. Listed dispensers and the related hanging hardware are listed for high-concentration ethanol blends, and are being installed across the United States.

2306.8.2 Compatibility. Dispensers shall be used only with the fuels for which they have been *listed* and which are marked on the product. Field-installed components including hose assemblies, breakaway fittings, swivel connectors and hose nozzle valves shall be provided in accordance with the listing and the marking on the unit.

❖ Dispensers and certain field-installed dispensing system components may be made of materials commonly used with gasoline but which may be incompatible with high-level alcohol blends and may degrade over time in their presence. Zinc, brass, lead and aluminum are some of the more sensitive metals. This section requires that, as added documentation, dispensers and their field-installed components be marked by the equipment manufacturer with the names of the fuels with which they are compatible, confirming their suitability for use with alcohol-blended fuels.

2306.8.3 Change of system contents. Fuel-dispensing systems subject to change in contents from gasoline to alcohol-blended fuels shall be subject to *fire code official* review and approval prior to commencing dispensing operations.

❖ This section provides the fire code official the authority to review and reapprove installations that convert from gasoline dispensing to alcohol-blended fuel dispensing. This allows for verification that the installation complies with the new requirements. It also ensures that the fire code official will know that new fuels will be present on a given site, which might impact local fire suppression operations, including the use of alcohol-resistant foam agents.

The same technologies used to store and dispense gasoline and diesel fuels are used for alcohol-based fuels because, like gasoline, they are liquid at ambient pressures and temperatures. However, only E85-compatible materials should be used in the storage and dispensing systems. In many cases, existing gasoline and diesel fuel systems may be converted to store and dispense E85. Most metal underground storage tanks that meet the U.S. Environmental Protection Agency (EPA) regulations can be used to store E85. Many underground fiberglass tanks that meet EPA standards may also be used to store E85.

If another type of fuel was stored in the tank that is to be converted for E85 use, the tank should be cleaned. During storage, particles and moisture can build up over time to form sludge or what is called "water bottoms." Since ethanol is miscible with water, when introducing E85 or another ethanol blend into a dirty storage tank, ethanol's "cleaning action" will mix with the water bottoms and remove the sludge, resulting in contaminated fuel. A simple tank cleaning will prevent any problems. There are several methods for cleaning sludge from storage tanks. Each of the cleaning methods should be completed by an approved company that is familiar with cleaning petroleum storage tanks. Note that a permit is required by Section 105.6.17, Item 8 to change stored contents.

2306.8.4 Facility identification. Facilities dispensing alcohol-blended fuels shall be identified by an *approved* means.

❖ This section addresses dispensing facility identification for alcohol-blended fuels. Identification of the facility is intended to promote first-responder awareness of the presence of alcohol-blended fuels.

According to the U.S. Department of Energy (DOE) *Handbook for Handling, Storing, and Dispensing E85*, each state, along with the U.S. Department of Trans-

INTERNATIONAL CODE COUNCIL®
Copyright © 2015 ICC. ALL RIGHTS RESERVED. Accessed by David Dammon on Jun 21, 2017 12:30:52 PM pursuant to License Agreement with ICC. No further reproduction or distribution authorized. ANY UNAUTHORIZED REPRODUCTION OR DISTRIBUTION IS A VIOLATION OF THE FEDERAL COPYRIGHT ACT AND THE LICENSE AGREEMENT, AND SUBJECT TO CIVIL AND CRIMINAL PENALTIES THEREUNDER.

portation (DOT), has developed signage to place at refueling stations. Code users should contact their individual state DOT to obtain the correct signage criteria for their area.

2306.8.5 Marking. Dispensers shall be marked in an *approved* manner to identify the types of alcohol-blended fuels to be dispensed.

❖ Identification of equipment for specific alcohol-blended fuels communicates the intended use of the installed equipment to both customers and emergency personnel. The Federal Trade Commission (FTC) requires a small sticker to be placed on the face of the fuel dispenser as close as possible to the price per unit of fuel. The sticker should have a black background with orange text (see Commentary Figure 2306.8.5).

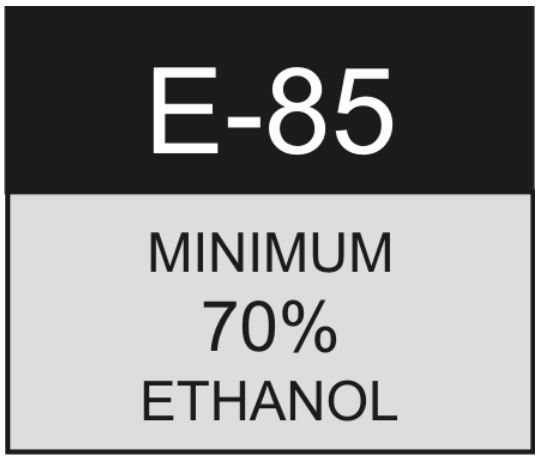

Figure 2306.8.5
ALCOHOL-BLENDED FUEL DISPENSER SIGN

2306.8.6 Maintenance and inspection. Equipment shall be maintained and inspected in accordance with Section 2305.2.

❖ Since a major concern with alcohol-blended fuels is their potentially degrading effect on system components, the equipment maintenance provisions of Section 2305.2 must be carefully followed.

SECTION 2307
LIQUEFIED PETROLEUM GAS MOTOR FUEL-DISPENSING FACILITIES

2307.1 General. Motor fuel-dispensing facilities for liquefied petroleum gas (LP-gas) fuel shall be in accordance with this section and Chapter 61.

❖ The federal government mandates that automakers move toward alternative fuels to replace conventional gasoline and diesel. One of the more popular alternative fuels is liquefied petroleum gas (LP-gas). As more vehicles use alternative fuels, codes will have to be modified to address the safe dispensing of these fuels. This section addresses the dispensing of LP-gas at motor fuel-dispensing facilities. Chapter 61 addresses the general provisions for LP-gas.

2307.2 Approvals. Storage vessels and equipment used for the storage or dispensing of LP-gas shall be *approved* or *listed* in accordance with Sections 2307.2.1 and 2307.2.2.

❖ All equipment used in connection with the storage and dispensing of LP-gas motor fuel must be either approved or listed, as specified in the following sections. The terms “approved” and “listed” are defined in Chapter 2. See the commentary to Chapter 2 for these defined terms for further information.

2307.2.1 Approved equipment. Containers, pressure relief devices (including pressure relief valves), pressure regulators and piping for LP-gas shall be *approved*.

❖ The equipment identified in this section must be approved by the fire code official.

2307.2.2 Listed equipment. Hoses, hose connections, vehicle fuel connections, dispensers, LP-gas pumps and electrical equipment used for LP-gas shall be *listed*.

❖ The equipment identified in this section must be listed.

2307.3 Attendants. Motor fuel-dispensing operations for LP-gas shall be conducted by qualified attendants or in accordance with Section 2307.6 by persons trained in the proper handling of LP-gas.

❖ LP-gas must be dispensed into a vehicle by trained and qualified persons. Unattended and self-service LP-gas stations that are open to the public are not allowed. Section 2307.6 does allow self-service as long as it is closed to the public; that is, the vehicles belong to the operator of the LP-gas-fueling facility and the persons dispensing the fuel are employees of the LP-gas-fueling operation and are properly trained.

2307.4 Location of dispensing operations and equipment. The point of transfer for LP-gas dispensing operations shall be separated from buildings and other exposures in accordance with the following:

1. Not less than 25 feet (7620 mm) from buildings where the *exterior wall* is not part of a fire-resistance-rated assembly having a rating of 1 hour or greater.
2. Not less than 25 feet (7620 mm) from combustible overhangs on buildings, measured from a vertical line dropped from the face of the overhang at a point nearest the point of transfer.
3. Not less than 25 feet (7620 mm) from the lot line of property that can be built upon.
4. Not less than 25 feet (7620 mm) from the centerline of the nearest mainline railroad track.
5. Not less than 10 feet (3048 mm) from public streets, highways, thoroughfares, sidewalks and driveways.

INTERNATIONAL CODE COUNCIL®
Copyright © 2015 ICC. ALL RIGHTS RESERVED. Accessed by David Dammon on Jun 21, 2017 12:30:52 PM pursuant to License Agreement with ICC. No further reproduction or distribution authorized. ANY UNAUTHORIZED REPRODUCTION OR DISTRIBUTION IS A VIOLATION OF THE FEDERAL COPYRIGHT ACT AND THE LICENSE AGREEMENT, AND SUBJECT TO CIVIL AND CRIMINAL PENALTIES THEREUNDER.

6. Not less than 10 feet (3048 mm) from buildings where the *exterior wall* is part of a fire-resistance-rated assembly having a rating of 1 hour or greater.

Exception: The point of transfer for LP-gas dispensing operations need not be separated from canopies that are constructed in accordance with the *International Building Code* and that provide weather protection for the dispensing equipment.

LP-gas containers shall be located in accordance with Chapter 61. LP-gas storage and dispensing equipment shall be located outdoors.

❖ Whereas Section 2303.1 regulates the location of dispensing devices, this section regulates the location of the point of transfer of the LP gas motor fuel into the vehicle fuel tank. The intent of the term "point of transfer" is to describe the location where LP-gas-fueling connections are made and broken and any location where LP-gas is vented during transfer or fueling operations. Whenever LP-gas is dispensed or transferred, there is always at least a "puff" of LP gas released at the point where the LP-gas dispensing hose connects to and disconnects from the vehicle fuel tank or other LP-gas container, and it is at those locations that a flammable mixture will exist, even if momentarily. This section intends to isolate these "movable locations" by regulating how far away from potential ignition sources or other properties they must remain under in all circumstances. This section is also in agreement with NFPA 58 with respect to separation distances.

The IBC has specific construction requirements for canopies located at motor fuel-dispensing facilities. The exception removes any separation requirements between the dispenser area and the canopy when the canopy is constructed in accordance to the special provision for canopies located at motor fuel-dispensing facilities.

Table 6104.3 lists the separation requirements for the containers in relation to buildings, public ways and property lines that are or might be built upon.

2307.5 Additional requirements for LP-gas dispensers and equipment. LP-gas dispensers and related equipment shall comply with the following provisions.

1. Pumps shall be fixed in place and shall be designed to allow control of the flow and to prevent leakage and accidental discharge.
2. Dispensing devices installed within 10 feet (3048 mm) of where vehicle traffic occurs shall be protected against physical damage by mounting on a concrete island 6 inches (152 mm) or more in height, or shall be protected in accordance with Section 312.
3. Dispensing devices shall be securely fastened to their mounting surface in accordance with the dispenser manufacturer's instructions.

❖ In order to reduce the likelihood of a leak or the accidental discharge of LP-gas, Item 1 requires that dispensing pumps be fixed in place and equipped with a means of controlling the flow of LP-gas. Similar to the provisions of Section 2306.7.3, Items 2 and 3 of this section address two alternatives for mounting dispensers so as to provide impact protection. One is to mount the dispenser on an elevated island. The other is to protect the dispenser in accordance with Section 312, which requires the dispenser to be protected by steel posts filled with concrete (see also Commentary Figure 2306.7.3). Regardless of which alternative is chosen, the stability and protection of an installed dispenser depends on its installation in accordance with the manufacturer's instructions.

2307.6 Installation of LP-gas dispensing devices and equipment. The installation and operation of LP-gas dispensing systems shall be in accordance with Sections 2307.6.1 through 2307.6.4 and Chapter 61. LP-gas dispensers and dispensing stations shall be installed in accordance with the manufacturer's specifications and their listing.

❖ This provision specifically addresses the requirements for valves, hoses and impact protection for LP-gas-dispensing equipment.

2307.6.1 Product control valves. The dispenser system piping shall be protected from uncontrolled discharge in accordance with the following:

1. Where mounted on a concrete base, a means shall be provided and installed within $^1/_2$ inch (12.7 mm) of the top of the concrete base that will prevent flow from the supply piping in the event that the dispenser is displaced from its mounting.
2. A manual shutoff valve and an excess flow-control check valve shall be located in the liquid line between the pump and the dispenser inlet where the dispensing device is installed at a remote location and is not part of a complete storage and dispensing unit mounted on a common base.
3. An excess flow-control check valve or an emergency shutoff valve shall be installed in or on the dispenser at the point at which the dispenser hose is connected to the liquid piping.
4. A *listed* automatic-closing type hose nozzle valve with or without a latch-open device shall be provided on island-type dispensers.

❖ The provisions of this section are similar to certain provisions in Section 2306.7 that are applicable to flammable and combustible liquid dispensers.

Item 1 is based on Section 2306.7.4, but since the hardware performance requirements in that section for gasoline and diesel dispensers differ from what is currently available for LP-gas dispenser systems, the text more closely resembles the performance requirements currently appearing in Section 6.3.9 of NFPA 30A, with the exception that the location for the protective means must be within $^1/_2$ inch of the top surface of the concrete island, as is required in Section 2306.7.4.

INTERNATIONAL CODE COUNCIL®
Copyright © 2015 ICC. ALL RIGHTS RESERVED. Accessed by David Dammon on Jun 21, 2017 12:30:52 PM pursuant to License Agreement with ICC. No further reproduction or distribution authorized. ANY UNAUTHORIZED REPRODUCTION OR DISTRIBUTION IS A VIOLATION OF THE FEDERAL COPYRIGHT ACT AND THE LICENSE AGREEMENT, AND SUBJECT TO CIVIL AND CRIMINAL PENALTIES THEREUNDER.

Item 2 is based on Section 6.25.3.11 of NFPA 58 and provides protection for the piping system where the storage container is located remotely from the dispenser. When the storage container and dispenser are separate components installed remotely from one another, the likelihood of pipe failure increases.

Item 3 is based on the requirements in Section 3.9.3.4 of NFPA 58. An excess flow-control check valve is one that senses the pressure before and after the LP-gas meter and closes when it senses a loss of the pressure differential such as would occur if the dispensing hose were to become disconnected or broken.

Item 4 is adapted from Section 2306.7.6 and is similar to Section 6.25.3.16 of NFPA 58. A listed (for LP-gas dispensing at motor fuel-dispensing facilities) automatic-closing-type hose nozzle with or without a latch-open device is designed to automatically close when it senses that the fuel tank is full. The hose nozzle on island-type dispensers may or may not be equipped with a latch-open device. The fire code official may want to consider the fact that when a latch-open device is not installed, the dispenser operator may use some unapproved device to hold the nozzle open.

2307.6.2 Hoses. Hoses and piping for the dispensing of LP-gas shall be provided with hydrostatic relief valves. The hose length shall not exceed 18 feet (5486 mm). An *approved* method shall be provided to protect the hose against mechanical damage.

❖ To prevent overpressurization of the hoses and piping, a relief valve must be installed in the system. The hose length is limited to 18 feet (5486 mm) to prevent excessive amounts of hose from lying on the ground and being damaged by vehicles. The general public is familiar with the 18-foot (5486 mm) length because of the 18-foot (5486 mm) requirement for liquid fuel-dispensing hoses in Section 2306.7.5 and they know where to position their vehicles for refueling. See the commentary to Section 2306.7.5 for further discussion of hose length.

2307.6.3 Emergency breakaway devices. Dispenser hoses shall be equipped with a *listed* emergency breakaway device designed to retain liquid on both sides of the breakaway point. Where hoses are attached to hose-retrieving mechanisms, the emergency breakaway device shall be located such that the breakaway device activates to protect the dispenser from being displaced.

❖ Similar to Section 2306.7.5.1 of the code and Section 6.25.4.2 of NFPA 58, this section requires a breakaway device on dispenser hoses delivering LP-gas motor fuel. These devices are installed to prevent a pull-down of the motor fuel dispenser in the event that a car drives away with the hose nozzle valve still attached to the car's fill pipe. The design of these valves is such that when they operate, the separated sections of the hose are sealed to prevent leakage of fuel from the hose.

This section differs from Section 2306.7.5.1 in that it does not specify the location of the emergency breakaway device connection to the hose. Where a hose is equipped with a hose retrieval mechanism, placing the breakaway device between the mechanism's clamp and nozzle is important to the proper operation of the valve by preventing the pulling force of the drive-off from being transmitted via the retrieving cable directly to the dispenser.

2307.6.4 Vehicle impact protection. Where installed within 10 feet of vehicle traffic, LP-gas storage containers, pumps and dispensers shall be protected in accordance with Section 2307.5, Item 2.

❖ This section is intended to prevent leaks and spills caused by vehicle impact by requiring vehicle impact protection in the form of a 6-inch concrete island or the installation of 4-inch-diameter (102 mm), concrete-filled steel posts on 4-foot (1219 mm) centers, 3 feet (914 mm) high. See Section 312 for more specific construction details, and the commentary to Section 2307.5, Item 2 for further discussion of such protection.

2307.7 Public fueling of motor vehicles. Self-service LP-gas dispensing systems, including key, code and card lock dispensing systems, shall be limited to the filling of permanently mounted containers providing fuel to the LP-gas powered vehicle.

The requirements for self-service LP-gas dispensing systems shall be in accordance with the following:

1. The arrangement and operation of the transfer of product into a vehicle shall be in accordance with this section and Chapter 61.
2. The system shall be provided with an emergency shutoff switch located within 100 feet (30 480 mm) of, but not less than 20 feet (6096 mm) from, dispensers.
3. The *owner* of the LP-gas motor fuel-dispensing facility or the owner's designee shall provide for the safe operation of the system and the training of users.
4. The dispenser and hose-end valve shall release not more than 1/8 fluid ounce (4 cc) of liquid to the atmosphere upon breaking the connection with the fill valve on the vehicle.
5. Portable fire extinguishers shall be provided in accordance with Section 2305.5.
6. Warning signs shall be provided in accordance with Section 2305.6.
7. The area around the dispenser shall be maintained in accordance with Section 2305.7.

❖ While the 2012 and earlier editions of the code prohibited self-service LP-gas motor fuel dispensing operated by the public, the 2015 edition allows public refueling from LP-gas dispensers. This revision occurred in response to new technologies available to safeguard refueling operations. If the vehicles being refueled do not belong to the owner of the fuel-dispensing facility and the fuel-dispensing operator is not an employee of the owner, the facility is consid-

INTERNATIONAL CODE COUNCIL®
Copyright © 2015 ICC. ALL RIGHTS RESERVED. Accessed by David Dammon on Jun 21, 2017 12:30:52 PM pursuant to License Agreement with ICC. No further reproduction or distribution authorized. ANY UNAUTHORIZED REPRODUCTION OR DISTRIBUTION IS A VIOLATION OF THE FEDERAL COPYRIGHT ACT AND THE LICENSE AGREEMENT, AND SUBJECT TO CIVIL AND CRIMINAL PENALTIES THEREUNDER.

ered to be "public." This section allows vehicle owners to refuel their own vehicles under the supervision of, or after having been trained by, the LP-gas motor fuel-dispensing facility owner or the owner's designee.

This section contains provisions for the safe operation of the facility and an emergency shutoff switch similar to the emergency shutoff switch required at motor fuel-dispensing facilities in Section 2303.2.



Figure 2307.7
PUBLIC LP-GAS FUEL DISPENSER

2307.8 Overfilling. LP-gas containers shall not be filled with LP-gas in excess of the volume determined using the fixed maximum liquid level gauge installed on the container, the volume determined by the overfilling prevention device installed on the container or the weight determined by the required percentage of the water capacity marked on the container.

❖ To prevent release of gas by pressure relief due to expansion of the gas, the LP-gas container must not be filled beyond the volume determined by one of the methods in this section.

SECTION 2308
COMPRESSED NATURAL GAS MOTOR FUEL-DISPENSING FACILITIES

2308.1 General. Motor fuel-dispensing facilities for compressed natural gas (CNG) fuel shall be in accordance with this section and Chapter 53.

❖ The federal government is mandating that automakers move toward alternative fuels to replace conventional gasoline and diesel. One of the more popular alternative fuels is compressed natural gas (CNG). As more vehicles use alternative fuels, codes will have to be modified to address the safe dispensing of these fuels. This section addresses the dispensing of CNG at motor fuel-dispensing facilities. Chapter 53 contains the general provisions for CNG.

2308.2 Approvals. Storage vessels and equipment used for the storage, compression or dispensing of CNG shall be *approved* or *listed* in accordance with Sections 2308.2.1 and 2308.2.2.

❖ All equipment used in connection with the storage and dispensing of CNG motor fuel must be either approved or listed, as specified in the following sections. The terms "Approved" and "Listed" are defined in Chapter 2. See the commentary to these defined terms for further information.

2308.2.1 Approved equipment. Containers, compressors, pressure relief devices (including pressure relief valves), and pressure regulators and piping used for CNG shall be *approved.*

❖ The equipment identified in this section must be approved by the fire code official. Listing of the specified components could be the basis for approval, but listing is not mandated. Any such components must be designed for the application and recommended for the application by the manufacturer.

2308.2.2 Listed equipment. Hoses, hose connections, dispensers, gas detection systems and electrical equipment used for CNG shall be *listed*. Vehicle-fueling connections shall be *listed* and *labeled*.

❖ The specified components must be listed and labeled by an approved testing agency as complying with the relevant product standards. As with all listed products, the testing/listing agency will apply its seal or mark to the product.

2308.3 Location of dispensing operations and equipment. Compression, storage and dispensing equipment shall be located above ground, outside.

Exceptions:

1. Compression, storage or dispensing equipment shall be allowed in buildings of noncombustible construction, as set forth in the *International Building Code*, that are unenclosed for three-quarters or more of the perimeter.
2. Compression, storage and dispensing equipment shall be allowed indoors or in vaults in accordance with Chapter 53.

❖ Because of the potential for leakage, the compression, storage and dispensing equipment must be located either outdoors or in a noncombustible, substantially open building, except as allowed by Chapter 53. This section allows compression, storage and dispensing equipment to be located:

1. Outdoors, above ground.
2. Inside noncombustible buildings where at least 75 percent of the wall area is open to the outside atmosphere.

INTERNATIONAL CODE COUNCIL®
Copyright © 2015 ICC. ALL RIGHTS RESERVED. Accessed by David Dammon on Jun 21, 2017 12:30:52 PM pursuant to License Agreement with ICC. No further reproduction or distribution authorized. ANY UNAUTHORIZED REPRODUCTION OR DISTRIBUTION IS A VIOLATION OF THE FEDERAL COPYRIGHT ACT AND THE LICENSE AGREEMENT, AND SUBJECT TO CIVIL AND CRIMINAL PENALTIES THEREUNDER.

3. Indoors or in vaults in accordance with Chapter 53, which, in turn, references NFPA 52 and Section 413 of the IFGC.

2308.3.1 Location on property. In addition to the requirements of Section 2303.1, compression, storage and dispensing equipment not located in vaults complying with Chapter 53 shall be installed as follows:

1. Not beneath power lines.
2. Ten feet (3048 mm) or more from the nearest building or *lot line* that could be built on, public street, sidewalk or source of ignition.

   Exception: Dispensing equipment need not be separated from canopies that are constructed in accordance with the *International Building Code* and that provide weather protection for the dispensing equipment.
3. Twenty-five feet (7620 mm) or more from the nearest rail of any railroad track and 50 feet (15 240 mm) or more from the nearest rail of any railroad main track or any railroad or transit line where power for train propulsion is provided by an outside electrical source, such as third rail or overhead catenary.
4. Fifty feet (15 240 mm) or more from the vertical plane below the nearest overhead wire of a trolley bus line.

❖ Natural gas is lighter than air. The requirements for the location of the equipment that compresses and dispenses the gas must take this into consideration. The separation distances from overhead ignition sources should be noted.

2308.4 Private fueling of motor vehicles. Self-service CNG-dispensing systems, including key, code and card lock dispensing systems, shall be limited to the filling of permanently mounted fuel containers on CNG-powered vehicles.

In addition to the requirements in Section 2305, the *owner* of a self-service CNG motor fuel-dispensing facility shall ensure the safe operation of the system and the training of users.

❖ Unlike LP-gas self-service dispensing stations, CNG self-service dispensing systems can be open to the public. The owner of the system must provide for the training of any users of the system.

2308.5 Pressure regulators. Pressure regulators shall be designed and installed or protected so that their operation will not be affected by the elements (freezing rain, sleet, snow or ice), mud or debris. The protection is allowed to be an integral part of the regulator.

❖ The pressure regulator must be protected from the elements and is intended to prevent the overpressurization of the vehicle fuel tank and the delivery hose. Pressure regulator failure could result in dangerous overpressure and the opening of relief valves; therefore, they must be dependable. The regulator vent is susceptible to blockage by debris and ice.

2308.6 Valves. Gas piping to equipment shall be provided with a remote, readily accessible manual shutoff valve.

❖ Shutoff valves allow isolation of components for service, repair, replacement and emergency shutdown (see the definition of "Ready access" in the IFGC). This valve is independent of the emergency shutdown device required by Section 2308.7.

2308.7 Emergency shutdown control. An emergency shutdown control shall be located within 75 feet (22 860 mm) of, but not less than 25 feet (7620 mm) from, dispensers and shall also be provided in the compressor area. Upon activation, the emergency shutdown system shall automatically shut off the power supply to the compressor and close valves between the main gas supply and the compressor and between the storage containers and dispensers.

❖ CNG systems take natural gas from the utility supply line, compress it to very high pressures and store the compressed gas in vessels from which the dispensers draw the gas for transfer to the vehicle onboard containers. The emergency shutdown device must be located no farther than 75 feet (22 860 mm) from and no closer than 25 feet (7620 mm) to the dispensers. An additional shutdown device must be located near the compressors; the compressors may be remote from the dispensers. The shutdown device must disconnect the power to the compressors, must actuate automatic valves that isolate the gas supply from the compressors and isolate the storage vessels from the dispenser, thus limiting accidental gas discharge.

2308.8 Discharge of CNG from motor vehicle fuel storage containers. The discharge of CNG from motor vehicle fuel cylinders for the purposes of maintenance, cylinder certification, calibration of dispensers or other activities shall be in accordance with Sections 2308.8.1 through 2308.8.1.2.6.

❖ The equipment referred to in this section is the fixed equipment located at the CNG motor fuel-dispensing facility. Periodically, equipment must be maintained, certified and recalibrated. To do this, the CNG must be discharged from the system. This section regulates how the discharge must be done.

2308.8.1 Methods of discharge. The discharge of CNG from motor vehicle fuel cylinders shall be accomplished through a closed transfer system in accordance with Section 2308.8.1.1 or an *approved* method of atmospheric venting in accordance with Section 2308.8.1.2.

❖ The intentional discharge of gas from vehicle containers is done for several reasons, including vehicle repairs, certification of container integrity and container replacement. The gas must be discharged in a safe manner as dictated by either Section 2308.8.1.1 or 2308.8.1.2. The vehicle storage container is referred to as a "vessel" and as a "cylinder" in the text to follow.

2308.8.1.1 Closed transfer system. A documented procedure that explains the logical sequence for discharging the

INTERNATIONAL CODE COUNCIL®
Copyright © 2015 ICC. ALL RIGHTS RESERVED. Accessed by David Dammon on Jun 21, 2017 12:30:52 PM pursuant to License Agreement with ICC. No further reproduction or distribution authorized. ANY UNAUTHORIZED REPRODUCTION OR DISTRIBUTION IS A VIOLATION OF THE FEDERAL COPYRIGHT ACT AND THE LICENSE AGREEMENT, AND SUBJECT TO CIVIL AND CRIMINAL PENALTIES THEREUNDER.

cylinder shall be provided to the *fire code official* for review and approval. The procedure shall include what actions the operator will take in the event of a low-pressure or high-pressure natural gas release during the discharging activity. A drawing illustrating the arrangement of piping, regulators and equipment settings shall be provided to the *fire code official* for review and approval. The drawing shall illustrate the piping and regulator arrangement and shall be shown in spatial relation to the location of the compressor, storage vessels and emergency shutdown devices.

❖ A closed transfer system uses the same basic components as a dispensing system and withdraws the gas from the vehicle container, storing it in vessels. Drawings and a description of the sequence of operation of the transfer system must be provided to the fire code official for approval. This information may then be shared with the fire department for use in case of an emergency where CNG cylinders might need to be discharged.

2308.8.1.2 Atmospheric venting. Atmospheric venting of CNG shall comply with Sections 2308.8.1.2.1 through 2308.8.1.2.6.

❖ The six subsections that follow provide the conditions and requirements under which gas is allowed to be discharged to the atmosphere. Such discharge should be avoided wherever practical because: 1. There is an inherent hazard in doing so; 2. Methane is an air contaminant and 3. Natural resources should never be wasted. A closed transfer system is the preferable way to remove gas from vehicle containers.

2308.8.1.2.1 Plans and specifications. A drawing illustrating the location of the vessel support, piping, the method of grounding and bonding, and other requirements specified herein shall be provided to the *fire code official* for review and approval.

❖ Plans of the proposed atmospheric venting apparatus and piping system must be reviewed by the fire code official and approved before atmospheric venting can take place.

2308.8.1.2.2 Cylinder stability. A method of rigidly supporting the vessel during the venting of CNG shall be provided. The selected method shall provide not less than two points of support and shall prevent the horizontal and lateral movement of the vessel. The system shall be designed to prevent the movement of the vessel based on the highest gas-release velocity through valve orifices at the vessel's rated pressure and volume. The structure or appurtenance shall be constructed of noncombustible materials.

❖ Vehicle CNG containers (vessels) can hold extremely high pressures, which, if released quickly, can produce large thrust forces that would propel the container like a rocket. Natural gas does not liquefy at normal ambient temperatures; therefore, in order to hold the required amount of fuel on board the vehicle, the gaseous fuel must be compressed to extreme pressures of up to 3,600 pounds per square inch absolute (psia) (24 736 kPa).

2308.8.1.2.3 Separation. The structure or appurtenance used for stabilizing the cylinder shall be separated from the site equipment, features and exposures and shall be located in accordance with Table 2308.8.1.2.3.

❖ This section is intended to separate the combustible vapor produced by venting from buildings, building openings, lot lines, public ways, vehicles, CNG compressor and storage vessels and CNG dispensers. This precaution is reasonable considering the potential hazard of working with highly pressurized containers of a flammable gas.

TABLE 2308.8.1.2.3
SEPARATION DISTANCE FOR ATMOSPHERIC VENTING OF CNG

EQUIPMENT OR FEATURE	MINIMUM SEPARATION (feet)
Buildings	25
Building openings	25
CNG compressor and storage vessels	25
CNG dispensers	25
Lot lines	15
Public ways	15
Vehicles	25

For SI: 1 foot = 304.8 mm.

❖ The distances listed in Table 2308.8.1.2.3 are the distances between the equipment or feature and the termination of the vent opening where the gas is entering the atmosphere.

2308.8.1.2.4 Grounding and bonding. The structure or appurtenance used for supporting the cylinder shall be grounded in accordance with NFPA 70. The cylinder valve shall be bonded prior to the commencement of venting operations.

❖ "Grounding" means to intentionally connect to the earth. This could be accomplished by installing a conductor between the cylinder support and the building grounding electrode system. "Bonding" means to join metallic parts together to form a continuous electrical pathway. Grounding and bonding required by this section are intended to control sparking that could result from current flow produced by voltage differentials across parts of the venting set-up and the building components. Grounding the venting setup and attaching a bonding jumper to the cylinder valve will put all such components and the building components at the same voltage potential, thereby reducing the possibility of sparks that could ignite flammable vapors or harm the cylinder assembly. The provisions of this section will also help prevent the buildup of static electrical charges that could be a source of ignition.

2308.8.1.2.5 Vent tube. A vent tube that will divert the gas flow to atmosphere shall be installed on the cylinder prior to commencement of the venting and purging operation. The vent tube shall be constructed of pipe or tubing materials *approved* for use with CNG in accordance with Chapter 53.

INTERNATIONAL CODE COUNCIL®
Copyright © 2015 ICC. ALL RIGHTS RESERVED. Accessed by David Dammon on Jun 21, 2017 12:30:52 PM pursuant to License Agreement with ICC. No further reproduction or distribution authorized. ANY UNAUTHORIZED REPRODUCTION OR DISTRIBUTION IS A VIOLATION OF THE FEDERAL COPYRIGHT ACT AND THE LICENSE AGREEMENT, AND SUBJECT TO CIVIL AND CRIMINAL PENALTIES THEREUNDER.

The vent tube shall be capable of dispersing the gas not less than 10 feet (3048 mm) above grade level. The vent tube shall not be provided with a rain cap or other feature that would limit or obstruct the gas flow.

At the connection fitting of the vent tube and the CNG cylinder, a *listed* bidirectional *detonation* flame arrester shall be provided.

❖ The cylinder must be discharged through a vent tube/pipe constructed of a material compatible with the gas and that has the strength to withstand the pressure to which it will be exposed. The pressure that the vent will be exposed to must be calculated based on the size of the vent tube, the length of the vent, the friction loss through the vent and the maximum pressure and discharge rate of the cylinder. Vent failure could cause injury resulting from projectile debris and could cause a severe fire/explosion hazard. This section is intended to divert the vented vapor upward and away from any potential ignition source.

2308.8.1.2.6 Signage. *Approved* "No Smoking" signs complying with Section 310 shall be posted within 10 feet (3048 mm) of the cylinder support structure or appurtenance. *Approved* CYLINDER SHALL BE BONDED signs shall be posted on the cylinder support structure or appurtenance.

❖ The purpose of this section is to prevent ignition sources caused by smoking and stray currents. The provision requires two signs: a "No Smoking" sign and a sign reminding the operator that the cylinder must be bonded to divert stray electrical currents.

SECTION 2309
HYDROGEN MOTOR FUEL-DISPENSING AND GENERATION FACILITIES

2309.1 General. Hydrogen motor fuel-dispensing and generation facilities shall be in accordance with this section and Chapter 58. Where a fuel-dispensing facility includes a repair garage, the repair operation shall comply with Section 2311.

❖ The federal government is mandating that automakers move toward alternative fuels to replace conventional gasoline and diesel. Hydrogen is one alternative fuel likely to grow in popularity.

The United States Department of Energy (DOE), in accordance with the Hydrogen Future Act of 1996, supports a program based on an industry-led cost-sharing approach called the Hydrogen Energy Program. In some markets, government agencies have mandated that automakers move ahead with production of alternative-fuel vehicles to help offset the atmospheric implications of an economy almost entirely driven by petroleum-based fuels, and facilitate a shift to renewable energy supplies. Hydrogen is one of those alternative fuels, and the commercial products industry is responding. As more vehicles use alternative fuels, codes will have to be modified to address the safe use, dispensing, storage and generation of hydrogen fuels.

Section 2309, along with the provisions of Chapter 58, clearly defines gaseous hydrogen refueling and generating stations within the scope of the code and provides fire code officials with the necessary tools to create a safe consumer environment as the use of hydrogen as a motor fuel increases.

In many cases, the hydrogen fuel is utilized, with air, within a fuel cell to produce electricity and, in some cases, cogenerate heat. Typically, fire code officials will be faced with two classes of equipment—those that generate hydrogen (for use by other devices) and those that utilize hydrogen as their energy input.

Often, hydrogen will be utilized in a manner similar to the current use of natural gas, but two important differences that must be noted. First, while both hydrogen and natural gas are lighter than air, hydrogen is lighter, more diffusive and more buoyant than natural gas. This means that in well-ventilated situations (e.g., outdoors) hydrogen will dissipate more quickly than natural gas, and much more quickly than either propane or gasoline, both of which have fumes that are heavier than air and will linger at an accident scene or release site. However, hydrogen and natural gas can both accumulate in unventilated pockets at the top of indoor structures and could represent a risk in such situations. Similarly, propane and gasoline fumes can accumulate at the floor level in unventilated spaces, posing a different risk. Thus, ignition sources must be regulated at the top of any unventilated spaces for hydrogen and natural gas, while also being regulated near the floor for gasoline or propane vehicles indoors. Second, hydrogen is odorless, colorless and burns with a flame that is not visible to the human eye. This means it is unlikely, without appropriate instrumentation, that people will be able to detect unsafe conditions if they develop (similar to a carbon monoxide buildup in a structure).

It is important to note that a given volume of natural gas has more than three times the energy of the same volume of hydrogen. Therefore, a given volume of pipe containing natural gas will contain the same energy (potential hazard) as a three-times larger volume of hydrogen.

2309.2 Equipment. Equipment used for the generation, compression, storage or dispensing of hydrogen shall be designed for the specific application in accordance with Sections 2309.2.1 through 2309.2.3.

❖ All equipment used in connection with the storage and dispensing of hydrogen motor fuel must be either approved or listed, as specified in the following sections. The terms "approved" and "listed" are defined in Chapter 2. See the commentary to these defined terms for further information.

INTERNATIONAL CODE COUNCIL®
Copyright © 2015 ICC. ALL RIGHTS RESERVED. Accessed by David Dammon on Jun 21, 2017 12:30:52 PM pursuant to License Agreement with ICC. No further reproduction or distribution authorized. ANY UNAUTHORIZED REPRODUCTION OR DISTRIBUTION IS A VIOLATION OF THE FEDERAL COPYRIGHT ACT AND THE LICENSE AGREEMENT, AND SUBJECT TO CIVIL AND CRIMINAL PENALTIES THEREUNDER.

2309.2.1 Approved equipment. Cylinders, containers and tanks; pressure relief devices, including pressure valves; hydrogen vaporizers; pressure regulators; and piping used for gaseous hydrogen systems shall be designed and constructed in accordance with Chapters 53, 55 and 58.

❖ The equipment identified in this section must be approved by the fire code official. Listing of the specified components could be the basis for approval, but listing is not mandated. Any such components must be designed and recommended for the application by the manufacturer.

Design requirements for various types of storage vessels, pressure relief devices (including pressure valves), hydrogen vaporizers, pressure regulators and piping used for hydrogen, are directly dependent on the type, conditions of use and quantity of material involved. This section is intended to rely on design requirements for this equipment as referenced in Sections 5303 and 5503 and NFPA 55.

2309.2.2 Listed or approved equipment. Hoses, hose connections, compressors, hydrogen generators, dispensers, detection systems and electrical equipment used for hydrogen shall be *listed* or *approved* for use with hydrogen. Hydrogen motor-fueling connections shall be *listed* and *labeled* or *approved* for use with hydrogen.

❖ The specified components must be listed and labeled by an approved testing agency as complying with the relevant product standards or they must be approved by the fire code official. As with all listed products, the testing/listing agency will apply its seal or mark to the product. However, although piping, hoses, hose connections, compressors, hydrogen generators, dispensers, detection systems and electrical equipment used for hydrogen service should be built to recognized standards and be compatible with the material handled, this equipment may not always be listed or listed and labeled given the evolving nature of hydrogen technologies. Accordingly, this section provides an alternative provision that the equipment be approved and provides the fire code official with a means to regulate hydrogen equipment installations. It is also consistent with Section 5003.2.3, which mandates that equipment and machinery associated with the use of hazardous materials be listed or approved.

ASME B31.3 or CGA G-5.4, which references ASME B31.3, may be appropriate for design and construction of the piping involved in hydrogen service and both are examples of common standards employed by industry for piping, tubing and associated distribution equipment involving hazardous materials. Though not specifically referenced here, there are other American Society of Mechanical Engineers (ASME) and industry standards providing further guidance that are considered appropriate for many aspects of gaseous and liquefied hydrogen systems.

2309.2.3 Electrical equipment. Electrical installations shall be in accordance with NFPA 70.

❖ This section addresses electrical equipment at hydrogen motor fuel-dispensing facilities and is correlated with NFPA 70. Electrical equipment must be approved for the particular hazards anticipated at hydrogen motor fuel-dispensing facilities.

2309.3 Location on property. In addition to the requirements of Section 2303.1, dispensing equipment shall be located in accordance with Sections 2309.3.1 through Section 2309.3.2.

❖ In order to reduce the likelihood of hydrogen motor fuels coming into contact with ignition sources or posing a hazard to persons, adjoining property or on-site buildings, this section provides equipment location requirements in relation to outdoor equipment, canopies and overhead power lines.

2309.3.1 Location of operations and equipment. Generation, compression, storage and dispensing equipment shall be located in accordance with Sections 2309.3.1.1 through 2309.3.1.5.5.

❖ Because of the physical characteristics of hydrogen and the potential for leakage, generation, compression, storage and dispensing equipment must be located above ground outdoors or indoors under rigidly controlled equipment or separation requirements, all in accordance with Sections 2309.3.1.1 through 2309.3.1.5.5.

2309.3.1.1 Outdoors. Generation, compression, or storage equipment shall be allowed outdoors in accordance with Chapter 58 and NFPA 2.

❖ This section requires that hydrogen generation, compression and storage equipment installed outdoors be provided with the minimum separations prescribed by Chapter 58 and NFPA 2.

2309.3.1.2 Indoors. Generation, compression, storage and dispensing equipment shall be located in indoor rooms or areas constructed in accordance with the requirements of the *International Building Code*, the *International Fuel Gas Code*, the *International Mechanical Code* and NFPA 2.

❖ The overriding theme of the indoor location requirements for the generation, compression, storage or dispensing of hydrogen motor fuel is to never permit the maximum concentration of flammable contaminants in air to exceed 25 percent of the lower flammable limit (LFL) for hydrogen during the period that a credible leak exists. This can be accomplished using natural or mechanical means to maintain adequate ventilation to prevent a hazardous buildup of hydrogen gas in buildings or confined spaces.

INTERNATIONAL CODE COUNCIL®
Copyright © 2015 ICC. ALL RIGHTS RESERVED. Accessed by David Dammon on Jun 21, 2017 12:30:52 PM pursuant to License Agreement with ICC. No further reproduction or distribution authorized. ANY UNAUTHORIZED REPRODUCTION OR DISTRIBUTION IS A VIOLATION OF THE FEDERAL COPYRIGHT ACT AND THE LICENSE AGREEMENT, AND SUBJECT TO CIVIL AND CRIMINAL PENALTIES THEREUNDER.

2309.3.1.2.1 Maintenance. Gaseous hydrogen systems and detection devices shall be maintained in accordance with the manufacturer's instructions.

❖ Key to the safety requirements for the generation, compression, storage or dispensing of hydrogen motor fuel is the ongoing maintenance of the systems and their safety devices. The best approach to proper maintenance is following the instructions and recommendations of the company that made the equipment, as required by this section.

2309.3.1.2.2 Smoking. Smoking shall be prohibited in hydrogen cutoff rooms. "No Smoking" signs shall be provided at all entrances to hydrogen fuel gas rooms.

❖ Establishing "No Smoking" zones in, around and at the entrance to hydrogen fuel gas rooms is another means of controlling a common ignition source. Section 5003.7.1, Item 4 requires signage within the room or area where flammable materials are stored, dispensed or used. Unless the entire facility is designated as a "No Smoking" facility, entrance doors to flammable gas areas are required to be posted (see Section 5003.7.1, Item 3).

There are a multitude of other instances where flammable gases are used where posting should be provided to warn users of the potential presence of hydrogen prior to entering a room or area in which they are present. Posting at the entrance to the room or area in which hydrogen is compressed or generated provides early warning of the hazard prior to entering the space. Signage on the outside entrances to such areas, as well as inside the area, is warranted. Signs should be in accordance with Section 310.

2309.3.1.2.3 Ignition source control. Open flames, flame-producing devices and other sources of ignition shall be controlled in accordance with Chapter 58.

❖ See the commentary to Section 5803.1.4.

2309.3.1.2.4 Housekeeping. Hydrogen fuel gas rooms shall be kept free from combustible debris and storage.

❖ Hydrogen fuel gas rooms are, by definition, "...intended exclusively to house a gaseous hydrogen system." This section is key to maintaining that limitation by prohibiting unnecessary combustible fuel loads in the rooms.

2309.3.1.3 Gaseous hydrogen storage. Storage of gaseous hydrogen shall be in accordance with Chapters 53 and 58.

❖ Although Section 2309 includes substantial safeguards for the generation, compression, storage or dispensing of hydrogen motor fuel, gaseous hydrogen is also classified as a flammable gas requiring compliance with Chapter 58 and possesses compressed gas hazards requiring compliance with Chapter 53.

2309.3.1.4 Liquefied hydrogen storage. Storage of liquefied hydrogen shall be in accordance with Chapters 55 and 58.

❖ Although Section 2309 includes substantial safeguards for the generation, compression, storage or dispensing of hydrogen motor fuel, stored liquefied hydrogen is also classified as a flammable cryogenic fluid requiring compliance with Chapter 55, which in turn requires compliance with NFPA 55. Chapter 58 is referenced because it includes requirements for underground liquid hydrogen storage tanks.

2309.3.1.5 Canopy tops. Gaseous hydrogen compression and storage equipment located on top of motor fuel-dispensing facility canopies shall be in accordance with Sections 2309.3.1.5.1 through 2309.3.1.5.5, Chapters 53 and 58 and the *International Fuel Gas Code*.

❖ This section allows for the optional placement of hydrogen generation, compression and storage equipment on top of motor fuel-dispensing facility overhead canopies. Overhead placement enhances safety because the equipment remains removed from possible vehicular impact and ground-level ignition sources. This option has gained popularity, especially in more congested urban areas where real estate prices prohibit the purchase of sufficient property to meet the separation requirements of Section 2309.3.2.5.1 for new motor fuel-dispensing facilities. Similarly, existing motor fuel-dispensing facilities that might wish to expand their operations to include hydrogen are usually "land locked" and would benefit from using their existing canopy tops in the manner described in this section.

2309.3.1.5.1 Construction. Canopies shall be constructed in accordance with the motor fuel-dispensing facility canopy requirements of Section 406.7 of the *International Building Code*.

❖ IBC Section 406.7.2 regulates motor fuel-dispensing facility canopies and includes special requirements for canopies used to support hydrogen motor fuel equipment. See the commentary to that section for additional information.

2309.3.1.5.2 Fire-extinguishing systems. Fuel-dispensing areas under canopies shall be equipped throughout with an *approved automatic sprinkler system* in accordance with Section 903.3.1.1. The design of the sprinkler system shall be not less than that required for Extra Hazard Group 2 occupancies. Operation of the sprinkler system shall activate the emergency functions of Sections 2309.3.1.5.3 and 2309.3.1.5.4.

❖ This section requires the same scope of sprinkler protection for the area under canopies as is required for buildings with walls, i.e., "equipped throughout" as defined in NFPA 13 (referenced in Section 903.3.1.1) with an Extra Hazard Group 2 design. The automatic sprinkler system is to protect the canopy top-mounted hydrogen equipment from any fire scenario that could

INTERNATIONAL CODE COUNCIL®
Copyright © 2015 ICC. ALL RIGHTS RESERVED. Accessed by David Dammon on Jun 21, 2017 12:30:52 PM pursuant to License Agreement with ICC. No further reproduction or distribution authorized. ANY UNAUTHORIZED REPRODUCTION OR DISTRIBUTION IS A VIOLATION OF THE FEDERAL COPYRIGHT ACT AND THE LICENSE AGREEMENT, AND SUBJECT TO CIVIL AND CRIMINAL PENALTIES THEREUNDER.

develop in the fueling area below. In areas subject to freezing, the automatic sprinkler system must be protected from freezing in an approved manner consistent with NFPA 13. Note that because of the very specific requirement for an automatic sprinkler system in this section, the alternative automatic fire-extinguishing system provisions of Section 904 would not apply.

2309.3.1.5.3 Emergency discharge. Operation of the *automatic sprinkler system* shall activate an automatic emergency discharge system, which will discharge the hydrogen gas from the equipment on the canopy top through the vent pipe system.

❖ As part of protecting the hydrogen equipment mounted on top of the canopy from a fire developing below, this section requires that an approved emergency discharge system be provided to "dump" the hydrogen content of the system safely into the atmosphere in the event of water flow in the automatic sprinkler system.

2309.3.1.5.4 Emergency shutdown control. Operation of the *automatic sprinkler system* shall activate the emergency shutdown control required by Section 2309.5.3.

❖ Whereas Section 2309.3.2.6.2.1 requires a precautionary hydrogen "dump" from the canopy-mounted hydrogen equipment when the automatic sprinkler system operates, this section provides additional protection to the hydrogen equipment by requiring that the emergency shutoff required by Section 2309.5.3 be automatically activated upon water flow in the automatic sprinkler system. This would complement the automatic emergency discharge required by Section 2309.3.2.6.2.1 by automatically disconnecting the power supply to the hydrogen storage, compression and dispensing equipment, thus preventing the system from contributing any residual hydrogen to a fire or trying to replenish the hydrogen supply.

2309.3.1.5.5 Signage. *Approved* signage having 2-inch (51 mm) block letters shall be affixed at *approved* locations on the exterior of the canopy structure stating: CANOPY TOP HYDROGEN STORAGE.

❖ The signs required by this section provide a visual warning to the fire department or other first responders that the canopy includes the presence of hydrogen storage, compression and dispensing equipment. Sign locations must be decided on a case-by-case basis but at a minimum must be posted so as to be readily visible from all possible tactical approaches used by the fire department. Based on site configuration and conditions, multiple signs could be required.

2309.3.2 Canopies. Dispensing equipment need not be separated from canopies of Type I or II construction that are constructed in a manner that prevents the accumulation of hydrogen gas and in accordance with Section 406.7 of the *International Building Code.*

❖ IBC Section 406.7.2 has specific construction requirements for canopies located at motor fuel-dispensing facilities. This section removes any separation requirements between the dispenser area and the canopy when the canopy is constructed in accordance to the special provision for canopies located at motor fuel-dispensing facilities. Note that this section places a condition on the application of IBC canopy construction requirements (i.e., that the canopy be sufficiently open to preclude the accumulation of hydrogen in its construction).

2309.4 Dispensing into motor vehicles at self-service hydrogen motor fuel-dispensing facilities. Self-service hydrogen motor fuel-dispensing systems, including key, code and card lock dispensing systems, shall be limited to the filling of permanently mounted fuel containers on hydrogen-powered vehicles.

In addition to the requirements in Section 2311, the *owner* of a self-service hydrogen motor fuel-dispensing facility shall provide for the safe operation of the system through the institution of a fire safety plan submitted in accordance with Section 404, the training of employees and operators who use and maintain the system in accordance with Section 406, and provisions for hazard communication in accordance with Section 407.

❖ This section provides regulations for the dispensing of gaseous hydrogen. The dispensing facility owner must demonstrate minimum competency and control of the dispensing of hydrogen, including training and supervision for the employees and operators who use and maintain the system.

2309.4.1 Dispensing systems. Dispensing systems shall be equipped with an overpressure protection device set at not greater than 140 percent of the service pressure of the fueling nozzle it supplies.

❖ This section provides the overpressure protection of the vehicle fuel system by the fuel-dispensing system. The Canadian Standards Association (CSA) publishes a hydrogen dispensing standard, CSA-HGV 4.1. These provisions were written prior to this standard being published. Nearly all of the hydrogen fuel cell vehicles that are currently deployed or will be deployed in the near future rely on the fuel dispenser for overpressure protection. Similar language appears in NFPA 52 and in some state hydrogen storage and dispensing rules.

2309.5 Safety precautions. Safety precautions at hydrogen motor fuel-dispensing and generation facilities shall be in accordance with Sections 2309.5.1 through 2309.5.3.1.

❖ This section establishes a minimum level of safety for hydrogen motor fuel generation and dispensing.

INTERNATIONAL CODE COUNCIL®
Copyright © 2015 ICC. ALL RIGHTS RESERVED. Accessed by David Dammon on Jun 21, 2017 12:30:52 PM pursuant to License Agreement with ICC. No further reproduction or distribution authorized. ANY UNAUTHORIZED REPRODUCTION OR DISTRIBUTION IS A VIOLATION OF THE FEDERAL COPYRIGHT ACT AND THE LICENSE AGREEMENT, AND SUBJECT TO CIVIL AND CRIMINAL PENALTIES THEREUNDER.

2309.5.1 Protection from vehicles. Guard posts or other *approved* means shall be provided to protect hydrogen storage systems and use areas subject to vehicular damage in accordance with Section 312.

❖ This provision seeks to prevent hydrogen leaks or catastrophic releases caused by vehicle impact. The provision recognizes that vehicle damage can be reduced by placing 4-inch (102 mm) steel posts filled with concrete and spaced on 4-foot (1219 mm) centers, among other requirements of Section 312, around the hydrogen storage system.

2309.5.1.1 Vehicle fueling pad. The vehicle shall be fueled on noncoated concrete or other *approved* paving material having a resistance not exceeding 1 megohm as determined by the methodology specified in EN 1081.

❖ This section provides a requirement that addresses the potential for stray currents that can ignite hydrogen when it is used as a motor vehicle fuel. The same requirement is also found in IBC Section 406.7.1. Motor vehicles can acquire an electrostatic charge while traveling. The resistance offered by the tires through an uncoated concrete surface is low enough that this charge dissipates to ground very quickly (seconds or less). However, under dry conditions, an asphalt surface may offer sufficient resistance that the charge will not dissipate in a timely manner. A small number of incidents have occurred in Europe where a nonabsorbent polymer, having unusually high resistance, was used at motor fuel-dispensing facilities to prevent soil contamination from gasoline spills. Therefore, paved surfaces that result in a resistance greater than 1 megohm should not be used.

Fueling surfaces for hydrogen-powered vehicles should be at least as protective regarding electrostatic discharge (ESD) issues as those fueling surfaces used for petroleum-powered vehicles. This section provides precautions to dissipate static electricity built up on the vehicle from driving before the driver's door is opened upon arrival at the fueling facility to initiate refueling. Plain concrete is allowed for construction of the fueling pad with no resistance measurements needed; however, an alternative material can be used as long as it has a measured resistance less than or equal to 1 megohm. Both the concrete and 1 megohm criteria are cited from the American Petroleum Institute (API) RP 2003. NFPA 77 also points out that a resistance of 1 megohm or less is considered adequate to dissipate any charges. The 1 megohm requirement is also found in Section 5706.5.1.7 as a maximum electrical resistance requirement for loading racks transferring liquid petroleum products into cargo tank vehicles. That requirement has been consistently shown to be a reliable value and design basis for ensuring stray currents are sent to ground.

The referenced standard, EN 1081 is the available standard applicable to measuring the resistance of vehicle fueling pads. It establishes the testing criteria for surface coverings that may be used if the fueling surface is not concrete or is a coated concrete. Tests are performed in the laboratory and again in the field upon installation of the vehicle fueling pad to demonstrate if the installed material has an electrical resistance of less than 1 megohm. For vehicle fueling pads with an area less than 107 square feet (9.9 m²), EN 1081 requires at least three tests. For vehicle fueling pads with a larger area, the standard specifies the number of tests shall be established by the owner and the individual or company contractually obligated to perform the tests.

2309.5.2 Emergency shutoff valves. A manual emergency shutoff valve shall be provided to shut down the flow of gas from the hydrogen supply to the piping system.

❖ To prevent spillage and to allow servicing of equipment, a remote accessible manual shutoff valve must be installed. This valve is independent of the emergency shutdown equipment required in Section 2309.5.3.

2309.5.2.1 Identification. Manual emergency shutoff valves shall be identified and the location shall be clearly visible, accessible and indicated by means of a sign.

❖ In order to be effective, the manual emergency shutoff valve must be clearly and prominently identified by a sign that will achieve those goals in all types of weather. Section 5003.6 provides some guidance on signage that could be used as a basis for the design of the required sign.

2309.5.3 Emergency shutdown controls. In addition to the manual emergency shutoff valve required by Section 2309.5.2, a remotely located, manually activated emergency shutdown control shall be provided. An emergency shutdown control shall be located within 75 feet (22 860 mm) of, but not less than 25 feet (7620 mm) from, dispensers and hydrogen generators.

❖ Two emergency shutdown devices must be installed, one in the compressor area in accordance with Section 2309.5.2 and the other no closer than 25 feet (7620 mm) or farther than 75 feet (22 860 mm) from the dispenser. These distances are such that the emergency shutdown control is, at its furthest, no further from the hydrogen dispensers or generators than a portable fire extinguisher would be but not close enough to put personnel at risk of injury in the event of an emergency.

2309.5.3.1 System requirements. Activation of the emergency shutdown control shall automatically shut off the power supply to all hydrogen storage, compression and dispensing equipment; shut off natural gas or other fuel supply to the hydrogen generator; and close valves between the main supply and the compressor and between the storage containers and dispensing equipment.

❖ Emergency shutdown controls must shut down the power supply to the hydrogen storage, compression and dispensing equipment and close the valves leading to and from the compressor and between the storage containers and dispensers in the event of an

INTERNATIONAL CODE COUNCIL®
Copyright © 2015 ICC. ALL RIGHTS RESERVED. Accessed by David Dammon on Jun 21, 2017 12:30:52 PM pursuant to License Agreement with ICC. No further reproduction or distribution authorized. ANY UNAUTHORIZED REPRODUCTION OR DISTRIBUTION IS A VIOLATION OF THE FEDERAL COPYRIGHT ACT AND THE LICENSE AGREEMENT, AND SUBJECT TO CIVIL AND CRIMINAL PENALTIES THEREUNDER.

emergency. Activation of any one emergency shutdown device would activate total shutdown of all generation and dispensing operations on site.

2309.6 Defueling of hydrogen from fuel storage containers. The discharge or defueling of hydrogen from fuel storage tanks for the purpose of maintenance, cylinder certification, calibration of dispensers or other activities shall be in accordance with Sections 2309.6.1 through 2309.6.1.2.4.

❖ Because of the emerging use of alternative fuels and the differences in their properties, repair garages must be designed for the anticipated vehicles and the materials fueling them. Section 2311 includes the provisions for many different fuels, including lighter-than-air fuels. Accordingly, if a repair garage makes hydrogen, which is a lighter-than-air fuel, available for dispensing to motor vehicles, the repair garage must also meet the applicable requirements and hazard-mitigation criteria for servicing hydrogen-fueled vehicles. These requirements were formerly located in Section 2311.8 and were applicable only to motor vehicle fuel storage containers. The benefit of relocating these requirements and modifying the language to apply to "fuel storage," instead of "motor vehicle fuel storage" is that the ability to defuel hydrogen is needed when repair and servicing of the fixed hydrogen fuel compression, storage and dispensing equipment located at these facilities becomes necessary.

2309.6.1 Methods of discharge. The discharge of hydrogen from fuel storage tanks shall be accomplished through a closed transfer system in accordance with Section 2309.6.1.1 or an *approved* method of atmospheric venting in accordance with Section 2309.6.1.2.

❖ The intentional discharge of gas from vehicle containers is done for several reasons, including vehicle repairs, certification of the container integrity and container replacement. The gas must be discharged in a safe manner as dictated by either Section 2311.8.1.1 or 2311.8.1.2. The vehicle storage container is referred to as a "vessel" and as a "cylinder" in the text to follow.

2309.6.1.1 Closed transfer system. A documented procedure that explains the logic sequence for discharging the storage tank shall be provided to the *fire code official* for review and approval. The procedure shall include what actions the operator is required to take in the event of a low-pressure or high-pressure hydrogen release during discharging activity. Schematic design documents shall be provided illustrating the arrangement of piping, regulators and equipment settings. The *construction documents* shall illustrate the piping and regulator arrangement and shall be shown in spatial relation to the location of the compressor, storage vessels and emergency shutdown devices.

❖ A closed transfer system uses the same basic components as a dispensing system and withdraws the gas from the vehicle container and stores it in vessels. Drawings and a description of the sequence of operation of the transfer system must be provided to the fire code official for approval. This information may then be shared with the fire department for use in case of an emergency where hydrogen cylinders might need to be discharged.

2309.6.1.2 Atmospheric venting of hydrogen from fuel storage containers. Where atmospheric venting is used for the discharge of hydrogen from fuel storage tanks, such venting shall be in accordance with Sections 2309.6.1.2.1 through 2309.6.1.2.1.4.

❖ The subsections that follow provide the conditions and requirements under which hydrogen is allowed to be discharged to the atmosphere. Such discharge should be avoided wherever practical because there is an inherent hazard in doing so and because resources should never be wasted. A closed transfer system is the preferable way to remove hydrogen from vehicle containers.

2309.6.1.2.1 Defueling equipment. Equipment used for defueling shall be listed and labeled or *approved* for the intended use.

❖ The hazards of hydrogen are such that using "jerry-rigged" tools and equipment could have disastrous results. As a further precaution, all defueling equipment must be both listed and labeled for that purpose.

2309.6.1.2.1.1 Manufacturer's equipment required. Equipment supplied by the manufacturer shall be used to connect the storage tanks to be defueled to the vent pipe system.

❖ Since the manufacturer provides the necessary equipment and fittings to mate tanks and containers to the vent system, only that equipment is to be used. The use of incompatible equipment could result in an unexpected gas discharge and possible ignition.

2309.6.1.2.1.2 Vent pipe maximum diameter. Defueling vent pipes shall have a maximum inside diameter of 1 inch (25 mm).

❖ When discharging hydrogen to the atmosphere, it is important that the size of the vent pipe be such that it will provide sufficient discharge velocity to disperse the hydrogen in the air.

2309.6.1.2.1.3 Maximum flow rate. The maximum rate of hydrogen flow through the vent pipe system shall not exceed 1,000 cfm at NTP (0.47 m^3/s) and shall be controlled by means of the manufacturer's equipment, at low pressure and without adjustment.

❖ When gas flows through piping, friction with the pipe wall generates heat. Limiting the flow rate limits the amount of heat generated by the flow of gas.

2309.6.1.2.1.4 Isolated use. The vent pipe used for defueling shall not be connected to another venting system used for any other purpose.

❖ To avoid contamination or the reaction of potentially incompatible materials, this section requires that the defueling vent pipe be dedicated to hydrogen-only use.

INTERNATIONAL CODE COUNCIL®
Copyright © 2015 ICC. ALL RIGHTS RESERVED. Accessed by David Dammon on Jun 21, 2017 12:30:52 PM pursuant to License Agreement with ICC. No further reproduction or distribution authorized. ANY UNAUTHORIZED REPRODUCTION OR DISTRIBUTION IS A VIOLATION OF THE FEDERAL COPYRIGHT ACT AND THE LICENSE AGREEMENT, AND SUBJECT TO CIVIL AND CRIMINAL PENALTIES THEREUNDER.

2309.6.1.2.2 Construction documents. *Construction documents* shall be provided illustrating the defueling system to be utilized. Plan details shall be of sufficient detail and clarity to allow for evaluation of the piping and control systems to be utilized and include the method of support for cylinders, containers or tanks to be used as part of a closed transfer system, the method of grounding and bonding and other requirements specified herein.

❖ Construction documents, as defined in Section 202, must be drawn to scale with sufficient clarity to be understood by the fire code official, contractors and owners and must address the requirements of the code. State or local laws may require preparation of the construction documents by a registered design professional (see the commentary to IBC Section 106.1 for further information).

2309.6.1.2.3 Stability of cylinders, containers and tanks. A method of rigidly supporting cylinders, containers or tanks used during the closed transfer system discharge or defueling of hydrogen shall be provided. The method shall provide not less than two points of support and shall be designed to resist lateral movement of the receiving cylinder, container or tank. The system shall be designed to resist movement of the receiver based on the highest gas-release velocity through valve orifices at the receiver's rated service pressure and volume. Supporting structures or appurtenances used to support receivers shall be constructed of noncombustible materials in accordance with the *International Building Code*.

❖ Vehicle hydrogen fuel containers can hold extremely high pressures, which, if released quickly, can produce large thrust forces that would propel the container like a rocket. Hydrogen does not liquefy at normal ambient temperatures; therefore, in order to hold the required amount of fuel on board the vehicle, the gaseous fuel must be compressed to extreme pressures of 3,000 to 5,000 psia (20 613 to 34 355 kPa).

2309.6.1.2.4 Grounding and bonding. Cylinders, containers or tanks and piping systems used for defueling shall be bonded and grounded. Structures or appurtenances used for supporting the cylinders, containers or tanks shall be grounded in accordance with NFPA 70. The valve of the vehicle storage tank shall be bonded with the defueling system prior to the commencement of discharge or defueling operations.

❖ "Grounding" means to intentionally connect to the earth. This could be accomplished by installing a conductor between the cylinder support and the building grounding electrode system. Bonding means to join metallic parts together to form a continuous electrical pathway. Grounding and bonding required by this section are intended to control sparking that could result from current flow produced by voltage differentials across parts of the venting setup and the building components. Grounding the venting setup and attaching a bonding jumper to the cylinder valve will put all such components and the building components at the same voltage potential, thereby reducing the possibility of sparks that could ignite flammable vapors or harm the cylinder assembly. The provisions of this section will also help prevent the buildup of static electrical charges that could be a source of ignition.

2309.6.2 Repair of hydrogen piping. Piping systems containing hydrogen shall not be opened to the atmosphere for repair without first purging the piping with an inert gas to achieve 1-percent hydrogen or less by volume. Defueling operations and exiting purge flow shall be vented in accordance with Section 2309.6.1.2.

❖ To prevent the release of flammable hydrogen gas to the atmosphere and to prevent an explosive hydrogen-air mixture (above 1-percent hydrogen based on the pipe volume) within system piping, this section requires that piping be purged with an inert gas before being disconnected and repaired.

2309.6.3 Purging. Each individual manufactured component of a hydrogen generating, compression, storage or dispensing system shall have a label affixed as well as a description in the installation and owner's manuals describing the procedure for purging air from the system during startup, regular maintenance and for purging hydrogen from the system prior to disassembly (to admit air).

For the interconnecting piping between the individual manufactured components, the pressure rating must be not less than 20 times the absolute pressure present in the piping when any hydrogen meets any air.

❖ This section places the burden of the purging requirement on the equipment manufacturer. Commensurately, these requirements can be verified by the fire code official before, during and after installation. Requirements for rating the interconnecting piping at 20 times the initial pressure reduces the likelihood that a detonation will rupture the vent piping.

2309.6.3.1 System purge required. After installation, repair or maintenance, the hydrogen piping system shall be purged of air in accordance with the manufacturer's procedure for purging air from the system.

❖ Reliable purging procedures are essential to the safe use of hydrogen gas systems. This section requires that the system manufacturer's purge method be used. Such methods could include any of several methodologies in common use in the industry, as outlined in ASME B31.3 (see commentary, IFGC Section 705.3). The continuous flow method uses a continuous flow of the inert purge gas to remove the hydrogen gas and prevent air or moisture from entering the system. The dilution method uses a sequence of pressurization and venting. This sequence is repeated several times and is very effective in removing gas from dead-end piping, such as pressure gauge lines.

INTERNATIONAL CODE COUNCIL®
Copyright © 2015 ICC. ALL RIGHTS RESERVED. Accessed by David Dammon on Jun 21, 2017 12:30:52 PM pursuant to License Agreement with ICC. No further reproduction or distribution authorized. ANY UNAUTHORIZED REPRODUCTION OR DISTRIBUTION IS A VIOLATION OF THE FEDERAL COPYRIGHT ACT AND THE LICENSE AGREEMENT, AND SUBJECT TO CIVIL AND CRIMINAL PENALTIES THEREUNDER.

SECTION 2310
MARINE MOTOR FUEL-DISPENSING FACILITIES

2310.1 General. The construction of marine motor fuel-dispensing facilities shall be in accordance with the *International Building Code* and NFPA 30A. The storage of Class I, II or IIIA liquids at marine motor fuel-dispensing facilities shall be in accordance with this chapter and Chapter 57.

❖ This section contains code provisions for marine fuel-dispensing facilities that use automotive-type dispensing equipment. This section does not address bulk fuel transfer facilities that use flange-to-flange connections between the shore and the marine vessel.

2310.2 Storage and handling. The storage and handling of Class I, II or IIIA liquids at marine motor fuel-dispensing facilities shall be in accordance with Sections 2310.2.1 through 2310.2.3.

❖ This section introduces provisions for the storage and handling of Class I, II and IIIA flammable and combustible liquids at marine motor fuel-dispensing facilities. Class IIIB combustible liquids do not have specific regulations in the sections that follow because of their relatively low hazard due to their higher flash points.

2310.2.1 Class I, II or IIIA liquid storage. Class I, II or IIIA liquids stored inside of buildings used for marine motor fuel-dispensing facilities shall be stored in *approved* containers or portable tanks. Storage of Class I liquids shall not exceed 10 gallons (38 L).

Exception: Storage in liquid storage rooms in accordance with Section 5704.3.7.

❖ This section addresses the storage of flammable and combustible liquids inside marine motor fuel-dispensing facility buildings. The provision limits the storage of Class I liquids (e.g., gasoline) to 10 gallons (38 L), unless the building has a flammable and combustible liquid storage room constructed in accordance with the code.

2310.2.2 Class II or IIIA liquid storage and dispensing. Class II or IIIA liquids stored or dispensed inside of buildings used for marine motor fuel-dispensing facilities shall be stored in and dispensed from *approved* containers or portable tanks. Storage of Class II and IIIA liquids shall not exceed 120 gallons (454 L).

❖ The storage and dispensing inside of marine motor fuel-dispensing facility buildings of Class II (e.g., diesel or kerosene) or IIIA liquids is limited to 120 gallons (454 L) in aggregate. Lubricating oils and gear lubricants (Class III B) are not limited by this provision.

2310.2.3 Heating equipment. Heating equipment installed in Class I, II or IIIA liquid storage or dispensing areas shall comply with Section 2301.6.

❖ When flammable and combustible liquids are stored or dispensed inside of marine motor fuel-dispensing facility buildings, heating equipment must comply with Section 2301.6, which references NFPA 30A, the IFGC and the IMC.

2310.3 Dispensing. The dispensing of liquid fuels at marine motor fuel-dispensing facilities shall comply with Sections 2310.3.1 through 2310.3.5.

❖ The dispensing of fuel at a marine service station requires special consideration because of the location of the dispensing equipment on piers and floating docks, and the movement of the pier or dock in relationship to the shore. Dispensing of fuel at marinas generally requires longer dispensing hoses and greater quantities of fuel.

2310.3.1 General. Wharves, piers or floats at marine motor fuel-dispensing facilities shall be used exclusively for the dispensing or transfer of petroleum products to or from marine craft, except that transfer of essential ship stores is allowed.

❖ This section restricts the use of the area adjacent to the fuel-dispensing area to the exclusive use of transferring fuel, with the exception of transferring essential ships' stores. This provision is not intended to restrict the berthing and other uses on the pier or floating structure away from the fuel-transferring docking area. Fuel-dispensing hoses must not be stretched over one vessel to reach another; that is, one vessel cannot be docked parallel and alongside another vessel while taking on fuel.

2310.3.2 Supervision. Marine motor fuel-dispensing facilities shall have an attendant or supervisor who is fully aware of the operation, mechanics and hazards inherent to fueling of boats on duty whenever the facility is open for business. The attendant's primary function shall be to supervise, observe and control the dispensing of Class I, II or IIIA liquids or flammable gases.

❖ Because of the uniqueness of dispensing fuel at marinas and the inherent dangers, the dispensing must be supervised by a trained attendant or supervisor who knows how to control fuel spills, eliminate possible ignition sources, operate emergency shutoff equipment and notify emergency responders.

2310.3.3 Hoses and nozzles. Dispensing of Class I, II or IIIA liquids into the fuel tanks of marine craft shall be by means of an *approved*-type hose equipped with a *listed* automatic-closing nozzle without a latch-open device.

Hoses used for dispensing or transferring Class I, II or IIIA liquids, when not in use, shall be reeled, racked or otherwise protected from mechanical damage.

❖ The automatic-closing-type nozzle is designed to operate with automotive-type fuel receivers. Many marine craft are not equipped with automotive-type fuel receivers with the vent line terminating in the receiver tube. It is the fuel returning in the vent line that shuts off the automatic-type nozzle. Therefore, the latch-open device must not be used on marine craft.

Hoses at marinas are not restricted to an 18-foot-maximum (5486 mm) length as are those at automotive motor fuel-dispensing facilities. Therefore, the

INTERNATIONAL CODE COUNCIL®
Copyright © 2015 ICC. ALL RIGHTS RESERVED. Accessed by David Dammon on Jun 21, 2017 12:30:52 PM pursuant to License Agreement with ICC. No further reproduction or distribution authorized. ANY UNAUTHORIZED REPRODUCTION OR DISTRIBUTION IS A VIOLATION OF THE FEDERAL COPYRIGHT ACT AND THE LICENSE AGREEMENT, AND SUBJECT TO CIVIL AND CRIMINAL PENALTIES THEREUNDER.

longer hoses are more susceptible to damage and must be properly protected by being placed on a rack or rolled on a reel. It is also wise to mark the nozzle to identify it with a certain dispenser. Because of the length of hose, the operator may attempt to use the wrong nozzle when multiple dispensers are on the pier.

2310.3.4 Portable containers. Dispensing of Class I, II or IIIA liquids into containers, other than fuel tanks, shall be in accordance with Section 2304.4.1.

❖ See the commentary to Section 2304.4.1.

2310.3.5 Liquefied petroleum gas. Liquefied petroleum gas cylinders shall not be filled at marine motor fuel-dispensing facilities unless *approved*. *Approved* storage facilities for LP-gas cylinders shall be provided. See also Section 2307.

❖ Many marine vessels use LP-gas for heating and cooking. LP-gas cylinders may not be refilled at a marina, unless specifically approved by the fire code official. Section 2307 has requirements for dispensing LP-gas at motor fuel-dispensing facilities, and this section can be used by the fire code official in making the decision on whether to approve the dispensing of LP-gas at marinas.

2310.4 Fueling of marine vehicles at other than approved marine motor fuel-dispensing facilities. Fueling of floating marine craft at other than a marine motor fuel-dispensing facility shall comply with Sections 2310.4.1 and 2310.4.2.

❖ This section introduces the requirements for dispensing motor fuels into marine vehicles at locations other than approved marine motor fuel-dispensing facilities.

2310.4.1 Class I liquid fuels. Fueling of floating marine craft with Class I fuels at other than a marine motor fuel-dispensing facility is prohibited.

❖ The dispensing of fuel into floating marine craft at locations other than approved marine motor fuel-dispensing facilities is limited to Class II and Ill liquids (e.g., diesel fuel) in accordance with Section 2310.4.2. Because of the inherent dangers of Class I liquid fuels (very low flash point, high vapor pressure, low specific gravity, etc.), gasoline must be dispensed only at approved marine motor fuel-dispensing facilities complying with this chapter.

2310.4.2 Class II or III liquid fuels. Fueling of floating marine craft with Class II or III fuels at other than a marine motor fuel-dispensing facility shall be in accordance with all of the following:

1. The premises and operations shall be *approved* by the *fire code official*.
2. Tank vehicles and fueling operations shall comply with Section 5706.6.
3. The dispensing nozzle shall be of the *listed* automatic-closing type without a latch-open device.
4. Nighttime deliveries shall only be made in lighted areas.
5. The tank vehicle flasher lights shall be in operation while dispensing.
6. Fuel expansion space shall be left in each fuel tank to prevent overflow in the event of temperature increase.

❖ Because of their lesser hazard characteristics, Class II and III liquid marine vehicle motor fuels are allowed to be dispensed at other than a marine motor fuel-dispensing facility but must be dispensed in accordance with all of the six special provisions, which provide a level of safety in keeping with that required for a marine motor fuel-dispensing facility.

2310.5 Fire prevention regulations. General fire safety regulations for marine motor fuel-dispensing facilities shall comply with Sections 2310.5.1 through 2310.5.7.

❖ This section contains special provisions regarding fire safety at marinas.

2310.5.1 Housekeeping. Marine motor fuel-dispensing facilities shall be maintained in a neat and orderly manner. Accumulations of rubbish or waste oils in excessive amounts shall be prohibited.

❖ This provision limits fuel sources that may readily ignite if subjected to an ignition source or may spontaneously combust.

2310.5.2 Spills. Spills of Class I, II or IIIA liquids at or on the water shall be reported immediately to the fire department and jurisdictional authorities.

❖ The key point in this requirement is to immediately report spills. Petroleum products have a lower specific gravity than water; thus, they will float on the surface of the water and a small amount of fuel can be spread over a large area of water.

2310.5.3 Rubbish containers. Containers with tight-fitting or self-closing lids shall be provided for temporary storage of combustible debris, rubbish and waste material. The rubbish containers shall be constructed entirely of materials that comply with any one of the following:

1. Noncombustible materials.
2. Materials that meet a peak rate of heat release not exceeding 300 kW/m^2 when tested in accordance with ASTM E 1354 at an incident heat flux of 50 kW/m^2 in the horizontal orientation.

❖ Rubbish containers can be constructed of metal or other noncombustible materials, including materials that have been shown to be safe by meeting a very severe fire test, like those required by Section 808 for Group I-1, I-2 and I-3 occupancies. Note that the requirement covers all types of rubbish and is not intended to address spills of combustible or flammable liquids (or Class I, II or IIIA liquids) covered by Section 2310.5.2. The best fire extinguisher for a fire in a sturdy trash can is the lid. A tight-fitting lid will extinguish the fire by starving the fire of oxygen. Furthermore, if the lid is in place, the combustibles are not likely to ignite in the first place.

INTERNATIONAL CODE COUNCIL®
Copyright © 2015 ICC. ALL RIGHTS RESERVED. Accessed by David Dammon on Jun 21, 2017 12:30:52 PM pursuant to License Agreement with ICC. No further reproduction or distribution authorized. ANY UNAUTHORIZED REPRODUCTION OR DISTRIBUTION IS A VIOLATION OF THE FEDERAL COPYRIGHT ACT AND THE LICENSE AGREEMENT, AND SUBJECT TO CIVIL AND CRIMINAL PENALTIES THEREUNDER.

2310.5.4 Marine vessels and craft. Vessels or craft shall not be made fast to fuel docks serving other vessels or craft occupying a berth at a marine motor fuel-dispensing facility.

❖ The intent of this provision is to prevent two or more vessels from mooring alongside each other at a fuel dock. If an accident happens at a marine fuel-dispensing facility, the vessels should be able to cast off their docking lines and get underway without having to untie another vessel. Also, the fuel-dispensing hose should never cross one vessel to get to another.

2310.5.5 Sources of ignition. Construction, maintenance, repair and reconditioning work involving the use of open flames, arcs or spark-producing devices shall not be performed at marine motor fuel-dispensing facilities or within 50 feet (15 240 mm) of the dispensing facilities, including piers, wharves or floats, except for emergency repair work *approved* in writing by the *fire code official*. Fueling shall not be conducted at the pier, wharf or float during the course of such emergency repairs.

❖ The intent of this requirement is to control possible ignition sources within 50 feet (15 240 mm) of the fuel-dispensing area. In order to control the common ignition hazard of smoking, all hot work within 50 feet (15 240 mm) of a fuel-dispensing area requires a permit from the fire code official in writing and the fuel-dispensing operation must be placed out of service.

2310.5.5.1 Smoking. Smoking or open flames shall be prohibited within 50 feet (15 240 mm) of fueling operations. "No Smoking" signs complying with Section 310 shall be posted conspicuously about the premises. Such signs shall have letters not less than 4 inches (102 mm) in height on a background of contrasting color.

❖ "No Smoking" signs must be conspicuously placed around the fuel-dispensing area.

2310.5.6 Preparation of tanks for fueling. Boat *owners* and operators shall not offer their craft for fueling unless the tanks being filled are properly vented to dissipate fumes to the outside atmosphere.

❖ Most liquid fuel vapors are heavier than air. Therefore, the vapors, if not properly vented to the atmosphere, will accumulate in the vessel's bilges, causing a very dangerous explosion hazard.

2310.5.7 Warning signs. Warning signs shall be prominently displayed at the face of each wharf, pier or float at such elevation as to be clearly visible from the decks of marine craft being fueled. Such signs shall have letters not less than 3 inches (76 mm) in height on a background of contrasting color bearing the following or *approved* equivalent wording:

WARNING

NO SMOKING—STOP ENGINE WHILE FUELING,
SHUT OFF ELECTRICITY

DO NOT START ENGINE UNTIL AFTER BELOW
DECK SPACES ARE VENTILATED.

❖ One of the greatest dangers in dispensing fuel into marine craft is the accumulation of explosive vapors in the vessel's bilges and below-deck spaces. The intent here is to warn the vessel operators to control ignition sources until the bilges and below-deck spaces have been cleared of explosive vapors.

2310.6 Fire protection. Fire protection features for marine motor fuel-dispensing facilities shall comply with Sections 2310.6.1 through 2310.6.4.

❖ This section addresses the requirements for fire protection at marine fuel-dispensing facilities.

2310.6.1 Standpipe hose stations. Fire hose, where provided, shall be enclosed within a cabinet, and hose stations shall be labeled: FIRE HOSE—EMERGENCY USE ONLY.

❖ Section 2310.1 states that the construction requirements for marine motor fuel-dispensing facilities will be found in the IBC and NFPA 30A. NFPA 30A states that marine fuel-dispensing facilities that are located on piers that extend more than a 500-foot (152 400 mm) travel distance from shore are required to have a Class III standpipe installed in accordance with NFPA 14.

2310.6.2 Obstruction of fire protection equipment. Materials shall not be placed on a pier in such a manner as to obstruct access to fire-fighting equipment or piping system control valves.

❖ The intent of this section is to make all fire protection equipment, including means for turning off fuel supply lines in an emergency, readily accessible in an emergency.

2310.6.3 Access. Where the pier is accessible to vehicular traffic, an unobstructed roadway to the shore end of the wharf shall be maintained for access by fire apparatus.

❖ See Chapter 5 and Appendix D for guidance on fire apparatus access roads.

2310.6.4 Portable fire extinguishers. Portable fire extinguishers in accordance with Section 906, each having a minimum rating of 20-B:C, shall be provided as follows:

1. One on each float.
2. One on the pier or wharf within 25 feet (7620 mm) of the head of the gangway to the float, unless the office is within 25 feet (7620 mm) of the gangway or is on the float and an extinguisher is provided thereon.

❖ Section 906 lists the requirements for where and how to mount the portable fire extinguishers. They should be conspicuous and unobstructed.

SECTION 2311
REPAIR GARAGES

2311.1 General. Repair garages shall comply with this section and the *International Building Code*. Repair garages for vehicles that use more than one type of fuel shall comply with the applicable provisions of this section for each type of fuel used.

Where a repair garage includes a motor fuel-dispensing facility, the fuel-dispensing operation shall comply with the

INTERNATIONAL CODE COUNCIL®
Copyright © 2015 ICC. ALL RIGHTS RESERVED. Accessed by David Dammon on Jun 21, 2017 12:30:52 PM pursuant to License Agreement with ICC. No further reproduction or distribution authorized. ANY UNAUTHORIZED REPRODUCTION OR DISTRIBUTION IS A VIOLATION OF THE FEDERAL COPYRIGHT ACT AND THE LICENSE AGREEMENT, AND SUBJECT TO CIVIL AND CRIMINAL PENALTIES THEREUNDER.

requirements of this chapter for motor fuel-dispensing facilities.

❖ Because of the popularity of alternative fuels and the differences in their properties, repair garages must be designed for the anticipated vehicles and the fuels contained in them. This section includes the provisions for many of the different fuels.

If the repair garage dispenses fuel into vehicles, the repair garage must also meet the requirements for a motor fuel-dispensing facility based on the fuels available.

2311.2 Storage and use of flammable and combustible liquids. The storage and use of flammable and *combustible liquids* in repair garages shall comply with Chapter 57 and Sections 2311.2.1 through 2311.2.4.

❖ For obvious reasons, the storage of flammable and combustible liquids is always a concern, especially inside buildings. Chapter 57 lists the provisions for the storage and quantity limitations on flammable and combustible liquids. This section addresses specific uses associated with repair garages.

2311.2.1 Cleaning of parts. Cleaning of parts shall be conducted in *listed* and *approved* parts-cleaning machines in accordance with Chapter 57.

❖ Section 5705.3.6 refers to the cleaning operation, the equipment and the quantity limits associated with parts cleaning. Caution must be used when cleaning automotive parts because they may contain Class I liquids that may contaminate the cleaning solvents.

2311.2.2 Waste oil, motor oil and other Class IIIB liquids. Waste oil, motor oil and other Class IIIB liquids shall be stored in *approved* tanks or containers, which are allowed to be stored and dispensed from inside repair garages.

❖ In addition to waste oil and virgin motor oil, other Class IIIB liquids typically found in repair garages include antifreeze, lubricating oils and greases, power steering fluid, brake fluid, transmission fluid and certain formulations of windshield washer fluid.

Storage tanks for Class IIIB liquids inside buildings must be approved above-ground tanks as required by Section 5704.2, Item 2, and Section 5704.2.7 (e.g., meeting the requirements of UL 142, UL 2080 or UL 2085 as listed in Section 4.2.3.1.1 of NFPA 30). Containers for Class IIIB liquids inside buildings must also be of an approved type as required by Section 5704.3.1 of the code and Section 6.2.1 of NFPA 30.

2311.2.2.1 Tank location. Tanks storing Class IIIB liquids in repair garages are allowed to be located at, below or above grade, provided that adequate drainage or containment is provided.

❖ The intent of this section is to allow storage of Class IIIB liquids inside when spill protection is provided, as determined by the fire code official. Though the section is not specifically referenced, guidance on this topic may be found in the commentary to Section 5004.2.

2311.2.2.2 Liquid classification. Crankcase drainings shall be classified as Class IIIB liquids unless otherwise determined by testing.

❖ The declaration of crankcase drainings (waste oil) as being a Class IIIB liquid originated in the 1990 edition of NFPA 30A and resulted from a testing project sponsored by one of the major "quick lube" chains wherein almost 300 waste oil samples from across the nation were actually tested to determine their flash point. The results of the testing indicated that the average flash point determined by the tests was 343°F (173°C), with the lowest flash point result being 296°F (147°C), thus placing all the samples in the Class IIIB liquid category. Based on similar testing results on virgin motor oil conducted in 1976 by the U.S. DOE, it can be concluded that waste motor oil is no more hazardous than fresh motor oil. The waste oil testing project dispelled an old concern that the flash point of used motor oil could be much lower than Class IIIB due to the unknown impact of the variety of impurities that it can contain. See the commentary to Section 5701.5 for a discussion of how the mixing of liquids is regulated.

This section also provides for investigative testing of waste oil if it is suspected that volatile foreign substances, such as raw gasoline, may have been put into a waste oil tank or container in such quantities as to dangerously lower the liquid's flash point. Some repair garages, in a well-meaning effort to prevent improper disposal of waste gasoline by homeowners, have accepted waste gasoline into their waste oil storage tank or container. In one such incident, the amount of waste gasoline accepted apparently reduced the flash point of the stored liquid to a much more volatile level. An employee of the repair garage apparently went to check the liquid level in the basement tank by opening and looking into one of the fill openings. A spark was apparently accidentally produced near the opening, explosively igniting the vapors and resulting in the employee's death and substantial damage to the shop. Therefore, care must be taken that repair garage owners and employees do not accept anything from the public for disposal in their waste oil tank unless they are absolutely certain that it is a Class IIIB liquid.

2311.2.3 Drainage and disposal of liquids and oil-soaked waste. Garage floor drains, where provided, shall drain to *approved* oil separators or traps discharging to a sewer in accordance with the *International Plumbing Code*. Contents of oil separators, traps and floor drainage systems shall be collected at sufficiently frequent intervals and removed from the premises to prevent oil from being carried into the sewers.

❖ This section does not require floor drains but, rather, requires the installation of oil separators or traps when floor drains are provided. Oil separators must be installed in accordance with IPC Sections 1003.4 through 1003.4.2.2. See the commentary to the listed sections of the IPC for further information.

INTERNATIONAL CODE COUNCIL®
Copyright © 2015 ICC. ALL RIGHTS RESERVED. Accessed by David Dammon on Jun 21, 2017 12:30:52 PM pursuant to License Agreement with ICC. No further reproduction or distribution authorized. ANY UNAUTHORIZED REPRODUCTION OR DISTRIBUTION IS A VIOLATION OF THE FEDERAL COPYRIGHT ACT AND THE LICENSE AGREEMENT, AND SUBJECT TO CIVIL AND CRIMINAL PENALTIES THEREUNDER.

2311.2.3.1 Disposal of liquids. Crankcase drainings and liquids shall not be dumped into sewers, streams or on the ground, but shall be stored in *approved* tanks or containers in accordance with Chapter 57 until removed from the premises.

❖ Careless disposal of crankcase drainings by dumping them into sewers, waterways or simply on the ground can lead to dangerous, sometimes deadly and always costly environmental damage. Do-it-yourself weekend oil-changers sometimes take a course of least effort, as noted above, when disposing of their spent motor oil rather than keeping it in an approved container until the next community hazardous materials collection day sponsored by the local environmental protection agency. Another means of proper disposal for home-generated waste oil could be taking it to a local repair garage that will allow it to be added to its approved waste oil storage tank for a modest fee.

2311.2.3.2 Disposal of oily waste. Self-closing metal cans shall be used for oily waste.

❖ This provision refers to the storage of oily rags, etc. See the commentary to Section 304.3.1 for further discussion of waste cans.

2311.2.4 Spray finishing. Spray finishing with flammable or *combustible liquids* shall comply with Chapter 24.

❖ Chapter 24 regulates the spraying of flammable and combustible finishes and requires a permit from the fire code official. The spray operation must comply with Section 2404.

2311.3 Sources of ignition. Sources of ignition shall not be located within 18 inches (457 mm) of the floor and shall comply with Chapters 3 and 35.

❖ No open flame device or other sources of ignition may be within 18 inches (457 mm) of the floor in a repair garage. Flammable and combustible vapors found in repair garages are heavier than air and will accumulate below the 18-inch (457 mm) level.

2311.3.1 Equipment. Appliances and equipment installed in a repair garage shall comply with the provisions of the *International Building Code,* the *International Mechanical Code* and NFPA 70.

❖ Special care must be taken in selecting and installing appliances and equipment in repair garages due to the 18-inch (457 mm) hazard zone identified in Section 2311.3. Electrical equipment must be suitable for classified hazardous locations. Appliances, such as furnaces, must be installed with their fire boxes above the 18-inch (457 mm) hazard zone to reduce the likelihood of them becoming an ignition source for flammable vapors that may have escaped and settled to the floor. See the commentary to the applicable sections of the IBC and the IMC for further information.

2311.3.2 Smoking. Smoking shall not be allowed in repair garages except in *approved* locations.

❖ Smoking is a common ignition hazard that does not occur within 18 inches (457 mm) of the floor but can drop hot ashes into the 18-inch (457 mm) hazard zone near the floor with the potential to ignite any accumulated vapors.

2311.4 Below-grade areas. Pits and below-grade work areas in repair garages shall comply with Sections 2311.4.1 through 2311.4.3.

❖ Note that this section describes this area as a pit or a below-grade work area and not a basement.

2311.4.1 Construction. Pits and below-grade work areas shall be constructed in accordance with the *International Building Code.*

❖ Construction requirements are found in the IBC.

2311.4.2 Means of egress. Pits and below-grade work areas shall be provided with *means of egress* in accordance with Chapter 10.

❖ Section 202 defines a "Motor vehicle repair garage" as a moderate-hazard storage occupancy.

Section 1006 allows one means of egress if the building is a storage occupancy with only one level below grade, the occupancy load is less than 30 occupants and the travel distance does not exceed 100 feet (30 500 mm) for a single-story storage occupancy.

2311.4.3 Ventilation. Where Class I liquids or LP-gas are stored or used within a building having a *basement* or pit wherein flammable vapors could accumulate, the *basement* or pit shall be provided with mechanical ventilation in accordance with the *International Mechanical Code,* at a minimum rate of $1^1/_2$ cubic feet per minute per square foot (cfm/ft^2) [$0.008\ m^3/(s \cdot m^2)$] to prevent the accumulation of flammable vapors.

❖ A ventilation system must be installed in any below-grade area where flammable and combustible vapors might accumulate. The ventilation system must be in operation any time the repair garage is open for business, if a vehicle is left parked over the pit when the garage is closed for business or anytime there is a chance that vapors may accumulate in the below-grade area.

2311.5 Preparation of vehicles for repair. For vehicles powered by gaseous fuels, the fuel shutoff valves shall be closed prior to repairing any portion of the vehicle fuel system.

Vehicles powered by gaseous fuels in which the fuel system has been damaged shall be inspected and evaluated for fuel system integrity prior to being brought into the repair garage. The inspection shall include testing of the entire fuel delivery system for leakage.

❖ Gaseous fuels include such fuels as LP-gas and CNG, among other gases. If a leak is detected in the fuel system, it must be stopped or the system purged of fuel before the vehicle can be brought into the garage. The intent is to prevent fuel gases from entering the garage area.

Although vehicles equipped with LP-gas systems for other than propulsion are not specifically

INTERNATIONAL CODE COUNCIL®
Copyright © 2015 ICC. ALL RIGHTS RESERVED. Accessed by David Dammon on Jun 21, 2017 12:30:52 PM pursuant to License Agreement with ICC. No further reproduction or distribution authorized. ANY UNAUTHORIZED REPRODUCTION OR DISTRIBUTION IS A VIOLATION OF THE FEDERAL COPYRIGHT ACT AND THE LICENSE AGREEMENT, AND SUBJECT TO CIVIL AND CRIMINAL PENALTIES THEREUNDER.

addressed in this section, (e.g., cooking, etc., in a recreational vehicle), they should be prepared for repair in accordance with Section 6111.3 of the code and Section 6.24.9 of NFPA 58.

2311.6 Fire extinguishers. Fire extinguishers shall be provided in accordance with Section 906.

❖ A motor vehicle repair garage is classified as a moderate-hazard storage occupancy. See Table 906.3(1) for the size and placement of portable fire extinguishers.

2311.7 Repair garages for vehicles fueled by lighter-than-air fuels. Repair garages for the conversion and repair of vehicles that use CNG, liquefied natural gas (LNG), hydrogen or other lighter-than-air motor fuels shall be in accordance with Sections 2311.7 through 2311.7.2.3 in addition to the other requirements of Section 2311.

Exceptions:

1. Repair garages where work is not performed on the fuel system and is limited to exchange of parts and maintenance not requiring open flame or welding on the CNG-, LNG-, hydrogen- or other lighter-than-air-fueled motor vehicle.
2. Repair garages for hydrogen-fueled vehicles where work is not performed on the hydrogen storage tank and is limited to the exchange of parts and maintenance not requiring open flame or welding on the hydrogen-fueled vehicle. During the work, the entire hydrogen fuel system shall contain a quantity that is less than 200 cubic feet (5.6 m^3) of hydrogen.

❖ Repair garages that install and repair CNG, liquefied natural gas (LNG), hydrogen or other lighter-than-air motor fuels must be equipped with ventilation and gas detection systems in accordance with Sections 2311.7.1 through 2311.7.2.3.

An example of Exception 1 would be a garage that works on automobile mufflers, brakes and shock absorbers and does not repair the fuel systems. This type of garage would not have to comply with this section even if the vehicles being repaired are equipped with lighter-than-air fuel systems.

Exception 2 allows work on hydrogen-fueled vehicles (but not on the fuel system of the vehicles) to be conducted provided there is no open flame in use and the vehicle's hydrogen fuel system contains not more than 200 cubic feet of the gas, which is less than 20 percent of the flammable gas MAQ in Table 5003.1.1(1). This would also eliminate the need for an operating permit for these repairs since the permit threshold amount in Section 105.6.9 and Table 105.6.9 is greater than pounds. This exception is intended to be consistent with NFPA 2 requirements on this topic.

In either exception, the fuel shutoff valve must be closed before any maintenance or repair work may begin, as required by Section 2307.5.

2311.7.1 Ventilation. Repair garages used for the repair of natural gas- or hydrogen-fueled vehicles shall be provided with an *approved* mechanical ventilation system. The mechanical ventilation system shall be in accordance with the *International Mechanical Code* and Sections 2311.7.1.1 and 2311.7.1.2.

Exception: Repair garages with natural ventilation when *approved*.

❖ This section is intended to prevent the accumulation of lighter-than-air flammable and combustible gases inside the repair garage.

An example of natural ventilation that a fire code official may approve at his or her discretion is a repair garage with at least two opposite sides open all the way to the ceiling. The two opposite sides would allow for cross ventilation. Having the walls open to the ceiling would prevent lighter-than-air gases from accumulating at the ceiling level. The ceiling would have to be sealed to prevent gasses from entering the attic space; otherwise, mechanical ventilation would be required.

2311.7.1.1 Design. Indoor locations shall be ventilated utilizing air supply inlets and exhaust outlets arranged to provide uniform air movement to the extent practical. Inlets shall be uniformly arranged on exterior walls near floor level. Outlets shall be located at the high point of the room in exterior walls or the roof.

Ventilation shall be by a continuous mechanical ventilation system or by a mechanical ventilation system activated by a continuously monitoring natural gas detection system or, for hydrogen, a continuously monitoring flammable gas detection system, each activating at a gas concentration of not more than 25 percent of the lower flammable limit (LFL). In all cases, the system shall shut down the fueling system in the event of failure of the ventilation system.

The ventilation rate shall be not less than 1 cubic foot per minute per 12 cubic feet [0.00139 $m^3 \times (s \cdot m^3)$] of room volume.

❖ This section is intended to provide uniform ventilation throughout the garage area that will exchange at least 1 cubic foot (0.03 m^3) of air for every 12 cubic feet (0.34 m^3) of room volume every minute. In garages servicing CNG- or LNG-fueled vehicles, the ventilation must be continuous or be operated by a natural gas detection system. If the repair garage services hydrogen-fueled vehicles, the ventilation must be continuous or be operated by a continuously monitoring flammable gas detection system. In garages servicing vehicles fueled by all manner of lighter-than-air fuels, both types of systems would be required. Both systems must have an activation threshold of not more than 25 percent of the LFL of their respective gas.

2311.7.1.2 Operation. The mechanical ventilation system shall operate continuously.

Exceptions:

1. Mechanical ventilation systems that are interlocked with a gas detection system designed in accordance with Sections 2311.7.2 through 2311.7.2.3.

INTERNATIONAL CODE COUNCIL®
Copyright © 2015 ICC. ALL RIGHTS RESERVED. Accessed by David Dammon on Jun 21, 2017 12:30:52 PM pursuant to License Agreement with ICC. No further reproduction or distribution authorized. ANY UNAUTHORIZED REPRODUCTION OR DISTRIBUTION IS A VIOLATION OF THE FEDERAL COPYRIGHT ACT AND THE LICENSE AGREEMENT, AND SUBJECT TO CIVIL AND CRIMINAL PENALTIES THEREUNDER.

2. Mechanical ventilation systems in repair garages that are used only for repair of vehicles fueled by liquid fuels or odorized gases, such as CNG, where the ventilation system is electrically interlocked with the lighting circuit.

❖ The intent of this provision is to prevent the accumulation of lighter-than-air gases inside vehicle repair garages.

2311.7.2 Gas detection system. Repair garages used for repair of vehicles fueled by nonodorized gases including, but not limited to, hydrogen and nonodorized LNG, shall be provided with a flammable gas detection system.

❖ Some gases contain additives that produce pungent odors for easy recognition. If the vehicle contains fuel systems that do not use these odorized gases, a gas detection system must be installed.

2311.7.2.1 System design. The flammable gas detection system shall be *listed* or *approved* and shall be calibrated to the types of fuels or gases used by vehicles to be repaired. The gas detection system shall be designed to activate when the level of flammable gas exceeds 25 percent of the lower flammable limit (LFL). Gas detection shall be provided in lubrication or chassis service pits of repair garages used for repairing nonodorized LNG-fueled vehicles.

❖ The flammable gas detection system is designed to produce an alarm or signal when exposed to different concentrations of gases or vapor. This section requires quick-lube-type facilities that change oil and lubricate vehicles to install gas detection systems in the pit area if they service vehicles that are equipped with LNG fuel systems using nonodorized LNG.

2311.7.2.1.1 Gas detection system components. Gas detection system control units shall be *listed* and *labeled* in accordance with UL 864 or UL 2017. Gas detectors shall be *listed* and *labeled* in accordance with UL 2075 for use with the gases and vapors being detected.

❖ This section requires gas detection equipment to be listed in accordance with UL 2075 for use with the different gases it will detect. Under UL 2075, a set of flammable gases and concentrations, measured in parts per million (ppm), is developed for each detector or sensor, and the manufacturer is required to provide information as to what gases and concentrations the device is designed to detect. Tests under the standard then verify the performance of each detector or sensor for each gas it is designed to detect. The gases that the equipment will detect may be shown in the manufacturer's instructions rather than on the product. This section is also intended to ensure that gas detection system control components are listed in accordance with nationally recognized safety standards. These standards include a comprehensive set of construction and performance requirements that are used to evaluate and list gas detection system control units and gas detectors.

2311.7.2.2 Operation. Activation of the gas detection system shall result in all the following:

1. Initiation of distinct audible and visual alarm signals in the repair garage.
2. Deactivation of all heating systems located in the repair garage.
3. Activation of the mechanical ventilation system, where the system is interlocked with gas detection.

❖ The intent of this section is to identify the equipment that the gas detection system must activate in the event the system detects the presence of gas above 25 percent of the LFL.

2311.7.2.3 Failure of the gas detection system. Failure of the gas detection system shall result in the deactivation of the heating system, activation of the mechanical ventilation system where the system is interlocked with the gas detection system and cause a trouble signal to sound in an *approved* location.

❖ This section requires all equipment that the gas detector would normally activate when it detects gas to also activate if the detector fails.

2311.8 Defueling equipment required at vehicle maintenance and repair facilities. Facilities for repairing hydrogen fuel systems on hydrogen-fueled vehicles shall have equipment to defuel vehicle storage tanks. Where work must be performed on a vehicle's fuel storage tank for the purpose of maintenance, repair or cylinder certification, defueling and purging shall be conducted in accordance with Section 2309.6.

❖ It only makes sense that, if a motor vehicle repair garage offers service for hydrogen-powered vehicles, it must have the proper equipment available for all aspects of that purpose. Section 2309.6 and its subsections (formerly located in Section 2311.8) contain all the requirements for defueling operations. See the commentary to those sections.

Bibliography

The following resource materials were used in the preparation of the commentary for this chapter of the code:

Code Changes Resource Collection—2015 International Fire Code. Washington, DC: International Code Council, 2014.

CGA G-5.4—05, *Standard for Hydrogen Piping Systems at Consumer Locations*, 3rd ed. Arlington, VA: Compressed Gas Association, 2005.

Handbook for Handling, Storing, and Dispensing E85. Washington, DC: U.S. Department of Energy, 2006.

Renkes, Robert N. *Fires at Refueling Sites that Appear to be Static Related*. Tulsa, OK: Petroleum Equipment Institute, 2006.

INTERNATIONAL CODE COUNCIL®
Copyright © 2015 ICC. ALL RIGHTS RESERVED. Accessed by David Dammon on Jun 21, 2017 12:30:52 PM pursuant to License Agreement with ICC. No further reproduction or distribution authorized. ANY UNAUTHORIZED REPRODUCTION OR DISTRIBUTION IS A VIOLATION OF THE FEDERAL COPYRIGHT ACT AND THE LICENSE AGREEMENT, AND SUBJECT TO CIVIL AND CRIMINAL PENALTIES THEREUNDER.

INTERNATIONAL CODE COUNCIL®
Copyright © 2015 ICC. ALL RIGHTS RESERVED. Accessed by David Dammon on Jun 21, 2017 12:30:52 PM pursuant to License Agreement with ICC. No further reproduction or distribution authorized. ANY UNAUTHORIZED REPRODUCTION OR DISTRIBUTION IS A VIOLATION OF THE FEDERAL COPYRIGHT ACT AND THE LICENSE AGREEMENT, AND SUBJECT TO CIVIL AND CRIMINAL PENALTIES THEREUNDER.

Chapter 24: Flammable Finishes

General Comments

Roughly one out of every six fires occurring in industrial occupancies involves the ignition of a flammable or combustible liquid. This extraordinary statistic underscores the importance of proper fire prevention and protection practices where flammable and combustible coatings are applied using spraying, dipping or flow-coating methods.

Chapter 24 requirements govern operations where flammable or combustible finishes are applied by spraying, dipping, powder coating or flow-coating processes. Like all operations involving flammable or combustible liquids and combustible dusts, controlling ignition sources and methods of reducing or controlling flammable vapors or combustible dusts at or near these operations is emphasized. Open flames and smoking are prohibited near spray areas and dip tanks. Electrical installations must comply with the requirements of NFPA 70, especially requirements for electrical equipment and wiring in areas classified as spraying spaces and flammable vapor areas, as defined in this chapter.

Good housekeeping and maintenance practices will significantly reduce fuel supply hazards. Additionally, care must be taken to control the accumulation and dissipation of static electricity. Managing the quantity of flammable and combustible liquids used and stored in and around spraying and dipping operations also discourages ignition. Because ample fuel and adequate oxygen are available in spraying and dipping operations, safeguards must be installed and maintained to manage the impact of a fire, should it occur. For example, if a match is dropped into a closed jar full of flammable liquids, the match is typically quenched because the fuel-to-air ratio does not allow flammable vapors to ignite; there is not enough oxygen. If the same liquid is poured onto a large surface, such as the floor, the vapors in the air are mixed in ratios that allow ignition to take place much more easily. The same phenomenon applies to atomization of flammable liquids where the liquid droplets have a greater surface area. Please note that, in addition to this chapter, other chapters such as Chapters 50 (Hazardous Materials—General Provisions), 57 (Flammable and Combustible Liquids) and 62 (Organic Peroxides) are applicable for additional requirements for storage and handling of hazardous materials.

Purpose

Compliance with the requirements of this chapter is intended to reduce the likelihood of fires involving the application of flammable or combustible liquids/powders through spraying, dipping or flow-coating operations. Additionally, compliance with the requirements of this chapter will reduce the impact of a fire, should one occur. Emphasis is placed on controlling ignition sources, managing the quantity and location of fuels/vapors/dust and maintaining fire protection features.

More information on the development of this chapter, as well as all other revised chapters in the code, can be found in the *Code Changes Resource Collection—2015 International Fire Code*.

SECTION 2401 GENERAL

2401.1 Scope. This chapter shall apply to locations or areas where any of the following activities are conducted:

1. The application of flammable finishes to articles or materials by means of spray apparatus.
2. The application of flammable finishes by dipping or immersing articles or materials into the contents of tanks, vats or containers of flammable or *combustible liquids* for coating, finishing, treatment or similar processes.
3. The application of flammable finishes by applying combustible powders to articles or materials utilizing powder spray guns, electrostatic powder spray guns, fluidized beds or electrostatic fluidized beds.
4. Floor surfacing or finishing operations using Class I or II liquids in areas exceeding 350 square feet (32.5 m^2).
5. The application of flammable finishes consisting of dual-component coatings or Class I or II liquids when applied by brush or roller in quantities exceeding 1 gallon (4 L).

❖ This section establishes the applicability of this chapter to a variety of locations, areas, operations and activities involving the hazards of atomizing flammable and combustible liquids and spraying of combustible powders. It is important to note that spray-finishing activities do not specifically relate to the maximum allowable quantity (MAQ) per control area as used in Chapters 50 and 57. However, storage related to spray-finishing supplies would be regulated by those chapters, which would require applying the MAQ.

INTERNATIONAL CODE COUNCIL®
Copyright © 2015 ICC. ALL RIGHTS RESERVED. Accessed by David Dammon on Jun 21, 2017 12:30:52 PM pursuant to License Agreement with ICC. No further reproduction or distribution authorized. ANY UNAUTHORIZED REPRODUCTION OR DISTRIBUTION IS A VIOLATION OF THE FEDERAL COPYRIGHT ACT AND THE LICENSE AGREEMENT, AND SUBJECT TO CIVIL AND CRIMINAL PENALTIES THEREUNDER.

2401.2 Nonapplicability. This chapter shall not apply to spray finishing utilizing flammable or *combustible liquids* that do not sustain combustion, including:

1. Liquids that have no fire point when tested in accordance with ASTM D 92.
2. Liquids with a flashpoint greater than 95°F (35°C) in a water-miscible solution or dispersion with a water and inert (noncombustible) solids content of more than 80 percent by weight.

❖ Chapter 24 regulates spray finishing with any material defined as a flammable or combustible liquid by requiring that the spraying operation be confined to either a spray booth or an approved spray room. There are a variety of water-based paint products available on the market today that have a flash point and meet the definition of a "Flammable or Combustible liquid" but cannot sustain combustion due to the sheer quantity of inert solids and water present in their composition. Many consumer latex paints fall into this category.

This section clarifies that liquids having no fire point, and water-miscible liquids with a flash point greater than 95ºF (35ºC) having an aggregate water and inert solid content by weight of at least 80 percent, are not regulated by Chapter 24. Materials meeting these same criteria have been exempted from the storage and use requirements in Chapter 57 (see Section 5701.2, Exceptions 6 and 7), but it has been unclear to code users whether the same two exemptions should apply when these products are used in spray-finishing operations.

2401.3 Permits. Permits shall be required as set forth in Sections 105.6 and 105.7.

❖ The process of issuing permits gives the fire code official an opportunity to carefully evaluate and regulate hazardous operations. Permit applicants should be required to demonstrate that their operations comply with the intent of the code before the permit is issued. See the commentary to Section 105.6 for a general discussion of operations requiring an operational permit and Section 105.7 for construction permits. The permit process also notifies the fire department of the need for prefire planning for the hazardous property. Because of the extremely hazardous processes described in this chapter, multiple operational permits are required by Sections 105.6.17, 105.6.18 and 105.6.43. A construction permit is required by Section 105.7.16.

SECTION 2402
DEFINITIONS

2402.1 Definitions. The following terms are defined in Chapter 2:

DETEARING.

DIP TANK.

ELECTROSTATIC FLUIDIZED BED.

FLAMMABLE FINISHES.

FLAMMABLE VAPOR AREA.

FLUIDIZED BED.

LIMITED SPRAYING SPACE.

RESIN APPLICATION AREA.

ROLL COATING.

SPRAY BOOTH.

SPRAY ROOM.

SPRAYING SPACE.

❖ Definitions of terms can help in the understanding and application of the code requirements. This section directs the code user to Chapter 2 for the proper application of the indicated terms used in this chapter. Terms may be defined in Chapter 2 or in another *International Code*® (I-Code®) as indicated in Section 201.3, or the dictionary meaning may be all that is needed (see also commentary, Sections 201 through 201.4).

SECTION 2403
PROTECTION OF OPERATIONS

2403.1 General. Operations covered by this chapter shall be protected as required by Sections 2403.2 through 2403.4.4.

❖ This section states that the general protection requirements that apply to all processes (spraying, dipping and powder coating) are contained in this section. The regulation and mitigation of hazards common to all processes described in Section 2401.1 are set forth here.

2403.2 Sources of ignition. Protection against sources of ignition shall be provided in accordance with Sections 2403.2.1 through 2403.2.8.

❖ Protection against sources of ignition is one of the most critical aspects of fire prevention in flammable finish operations. Flammable finish materials are finely divided or atomized during spraying operations, making them much more volatile and subject to ignition. Controlling sources of ignition is a preventive measure in a hazardous area where vapors can exist and potential ignition sources are readily available in the operations (ovens, electrical outlets, etc.).

2403.2.1 Electrical wiring and equipment. Electrical wiring and equipment shall comply with this chapter and NFPA 70.

❖ In order to control the ignition and personnel hazards of electrical wiring and equipment, they must meet the requirements of NFPA 70. Those requirements are found in Article 516 of NFPA 70 for areas in and around the spraying equipment, which places restrictions on the use of portable electric lamps. The classification of an area is based on the amount of flammable vapors, combustible mists, residues, dust or deposits present.

INTERNATIONAL CODE COUNCIL®
Copyright © 2015 ICC. ALL RIGHTS RESERVED. Accessed by David Dammon on Jun 21, 2017 12:30:52 PM pursuant to License Agreement with ICC. No further reproduction or distribution authorized. ANY UNAUTHORIZED REPRODUCTION OR DISTRIBUTION IS A VIOLATION OF THE FEDERAL COPYRIGHT ACT AND THE LICENSE AGREEMENT, AND SUBJECT TO CIVIL AND CRIMINAL PENALTIES THEREUNDER.

2403.2.1.1 Flammable vapor areas. Electrical wiring and equipment in flammable vapor areas shall be of an explosion-proof type *approved* for use in such hazardous locations. Such areas shall be considered to be Class I, Division 1 or Class II, Division 1 hazardous locations in accordance with NFPA 70.

❖ The areas where flammable vapors [defined as flammable constituents in air that exceed 25 percent of the lower flammable limit (LFL)] are present must meet the requirements for Class I, Division 1 hazardous locations. The areas where combustible residues (such as dusts or deposits) are present must meet the requirements for the Class II, Division 1 (for dusts and residue) electrical classification. This is a very critical aspect of prevention of sources of ignition. Based on the definition of "Flammable vapor area," the fire code official is authorized to define the extent of the flammable vapor area in any specific case. Otherwise, the areas described in that definition, such as the interior of spray booths, are used for electrical classification. See Commentary Figures 2403.2.1.1(1) and 2403.2.1.1(2) for examples of locations classified according to NFPA 70, Section 516.

2403.2.1.2 Areas subject to deposits of residues. Electrical equipment, flammable vapor areas or drying operations that are subject to splashing or dripping of liquids shall be specifically *approved* for locations containing deposits of readily ignitable residue and explosive vapors.

Exceptions:

1. This provision shall not apply to wiring in rigid conduit, threaded boxes or fittings not containing taps, splices or terminal connections.
2. This provision shall not apply to electrostatic equipment allowed by Section 2407.

In resin application areas, electrical wiring and equipment that is subject to deposits of combustible residues shall be *listed* for such exposure and shall be installed as required for hazardous (classified) locations. Electrical wiring and equipment not subject to deposits of combustible residues shall be installed as required for ordinary hazard locations.

❖ It is critical that only specifically approved electrical equipment be allowed in spraying spaces where deposits of combustible residues may readily accumulate. This section limits the use of electrical equipment in the above-mentioned area subject to deposit of residue for two primary reasons:

1. Sparks from such equipment could cause ignition of flammable vapors or overspray residue.
2. Buildup of combustible overspray or splashed residue accumulating on the surfaces of electrical equipment subject to heating may cause equipment to overheat and ignite. See Commentary Figures 2403.2.1.1(1) and 2403.2.1.1(2) for examples of electrically classified locations.

Taps, splices or terminal connections (similar to those of connections within flammable liquid transfer systems) are the areas where accidents are most likely to occur. By removing risks associated with such fittings and installing rigid conduit to protect against splashing or dripping of liquids, the hazards associated with such electrical equipment are

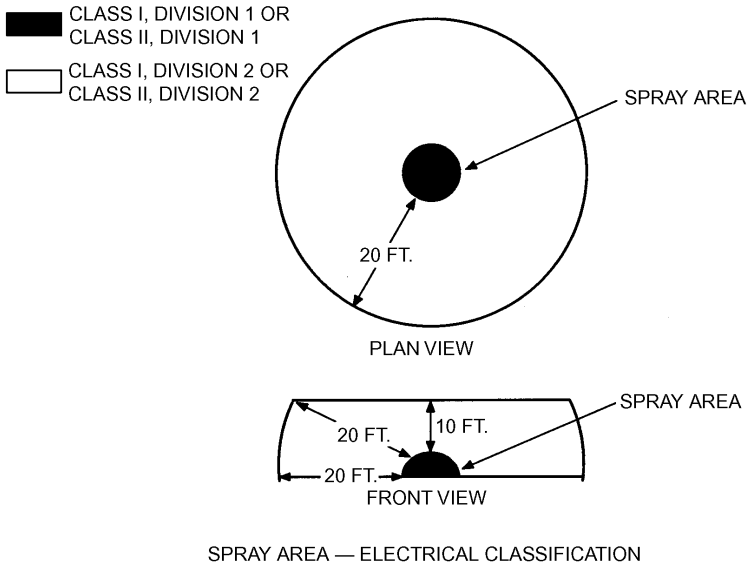

For SI: 1 foot = 304.8 mm.

Figure 2403.2.1.1(1)
FLAMMABLE VAPOR AREA—ELECTRICAL CLASSIFICATION

INTERNATIONAL CODE COUNCIL®
Copyright © 2015 ICC. ALL RIGHTS RESERVED. Accessed by David Dammon on Jun 21, 2017 12:30:52 PM pursuant to License Agreement with ICC. No further reproduction or distribution authorized. ANY UNAUTHORIZED REPRODUCTION OR DISTRIBUTION IS A VIOLATION OF THE FEDERAL COPYRIGHT ACT AND THE LICENSE AGREEMENT, AND SUBJECT TO CIVIL AND CRIMINAL PENALTIES THEREUNDER.

reduced substantially. Because the electrostatic equipment is part of many flammable-finish processes, Section 2407 requires that the equipment be approved. "Approved" is defined in Chapter 2 as "accepted by the fire code official" (see the commentary to this definition).

2403.2.1.3 Areas adjacent to spray booths. Electrical wiring and equipment located outside of, but within 5 feet (1524 mm) horizontally and 3 feet (914 mm) vertically of openings in a spray booth or a spray room, shall be *approved* for Class I, Division 2 or Class II, Division 2 hazardous locations, whichever is applicable.

❖ Class I, Division 2, and Class II, Division 2 typically apply to areas where accumulation of flammable vapors and combustible dust are prevented through ventilation and dust collection systems. However, flammable vapors and combustible dusts may be present in these areas if the ventilation system fails.

2403.2.1.4 Areas subject to overspray deposits. Electrical equipment in flammable vapor areas located such that deposits of combustible residues could readily accumulate thereon shall be specifically *approved* for locations containing deposits of readily ignitable residue and *explosive* vapors in accordance with NFPA 70.

Exceptions:

1. Wiring in rigid conduit.
2. Boxes or fittings not containing taps, splices or terminal connections.
3. Equipment allowed by Sections 2404 and 2407 and Chapter 30.

❖ Hazards associated with overspray deposit are similar to areas subject to deposits of residues specified in Section 2403.2.1.2 (see commentary, Section 2403.2.1.2). Exception 1 allows the use of rigid conduit to protect against splashing or dripping of liquids, which substantially reduces the hazards associated with electrical equipment.

Exception 2 acknowledges that where boxes do not contain taps, splices or terminal connections (similar to those of connections within flammable liquid transfer systems), the hazards associated with such electrical equipment are reduced substantially.

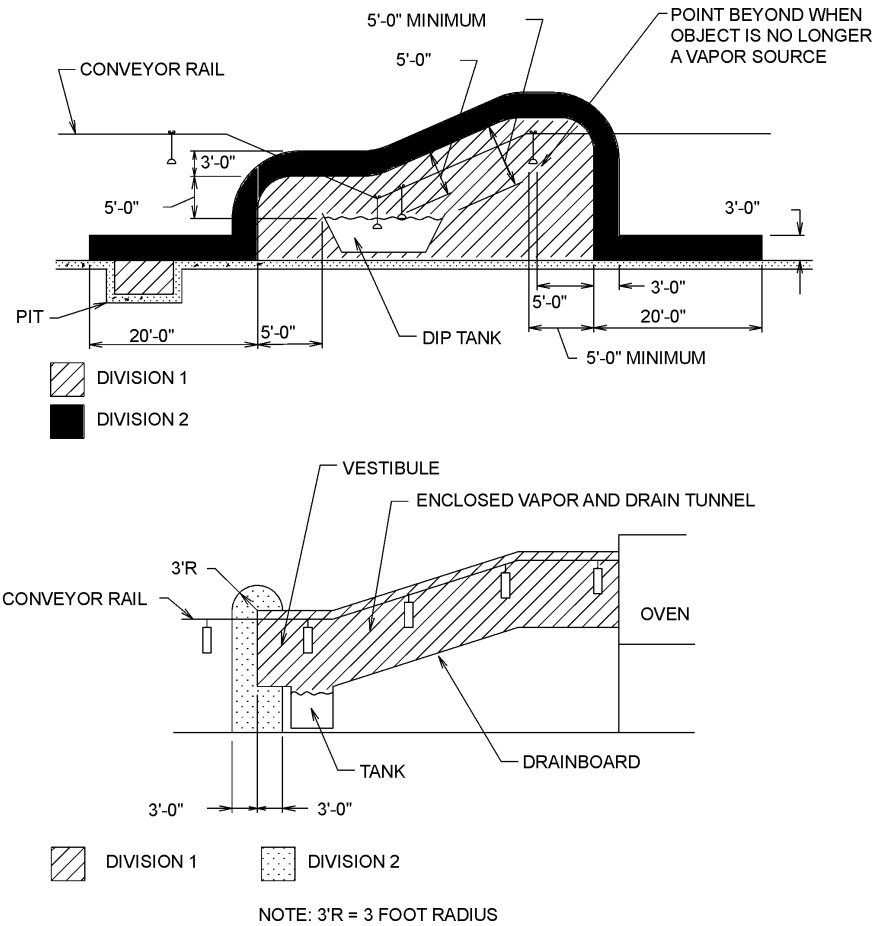

For SI: 1 foot = 304.8 mm.

Figure 2403.2.1.1(2)
EXTENT OF CLASS I, DIVISIONS I AND 2 LOCATIONS IN ENCLOSED COATING PROCESS

INTERNATIONAL CODE COUNCIL®
Copyright © 2015 ICC. ALL RIGHTS RESERVED. Accessed by David Dammon on Jun 21, 2017 12:30:52 PM pursuant to License Agreement with ICC. No further reproduction or distribution authorized. ANY UNAUTHORIZED REPRODUCTION OR DISTRIBUTION IS A VIOLATION OF THE FEDERAL COPYRIGHT ACT AND THE LICENSE AGREEMENT, AND SUBJECT TO CIVIL AND CRIMINAL PENALTIES THEREUNDER.

Exception 3 exempts equipment allowed by the code (approved or listed) for hazardous uses, such as equipment allowed by Sections 2404 and 2407 and Chapter 30 because those items are designed to protect against ignition or explosion hazards.

2403.2.2 Open flames and sparks. Open flames and spark-producing devices shall not be located in flammable vapor areas and shall not be located within 20 feet (6096 mm) of such areas unless separated by a permanent partition.

Exception: Drying and baking apparatus complying with Section 2404.6.1.2.

❖ For obvious prevention reasons, open flames and spark-producing devices are not allowed in areas considered as flammable vapor areas and areas that could contain flammable vapors should the ventilation system fail. Open flames are prohibited where flammable or combustible liquids are stored, dispensed or applied. Heaters and all types of open-flame appliances are prohibited in and within 20 feet (6096 mm) of spray spaces and vapor areas, such as dip tanks and spray-finishing areas.

The exception recognizes that there are additional safety requirements in Section 2404.6.1.2 and Chapter 30 that reduce the probability of an ignition associated with open flames and sparks from drying and baking apparatus.

2403.2.3 Hot surfaces. Heated surfaces having a temperature sufficient to ignite vapors shall not be located in flammable vapor areas. Space-heating appliances, steam pipes or hot surfaces in a flammable vapor area shall be located such that they are not subject to accumulation of deposits of combustible residues.

Exception: Drying apparatus complying with Section 2404.6.1.2.

❖ Where practical, auxiliary heating appliances (regardless of them being tested or listed) should not be installed inside a spray booth, room or area. Heating equipment and appliances approved for use only in Class I, Division 1 (flammable spray); or Class II, Division 1 (powder coating) hazardous locations are to be installed in spray booths, rooms or areas. Even the hot surfaces of indirect heating appliances can ignite combustible dusts or flammable or combustible vapors produced by spray or resin application operations.

The exception, as mentioned previously, notes that there are additional safety requirements in Section 2404.6.1.2 and Chapter 30 that prevent or reduce the probability of an ignition associated with open flames and sparks.

2403.2.4 Equipment enclosures. Equipment or apparatus that is capable of producing sparks or particles of hot metal that would fall into a flammable vapor area shall be totally enclosed.

❖ Equipment in areas considered as vapor areas and areas that could contain flammable vapors and combustible residue such as dusts or deposits is restricted. The same reasoning as for open flames required by Section 2403.2.2 applies. An example of this equipment is a metal grinding machine that produces sparks. Also see Section 2403.2.7 for welding requirements and signage.

2403.2.5 Grounding. Metal parts of spray booths, exhaust ducts and piping systems conveying Class I or II liquids shall be electrically grounded in accordance with NFPA 70. Metallic parts located in resin application areas, including but not limited to exhaust ducts, ventilation fans, spray application equipment, workpieces and piping, shall be electrically grounded.

❖ Static electricity is one of the most insidious and most common of all ignition sources. According to D.R. Scarborough in 2003, static sparks are the most common ignition sources involving spray-finishing operations. Additionally, humans are conductors of electricity, meaning that operators must also be considered when grounding systems are determined. NFPA 77 provides additional guidance on mitigating static electricity.

2403.2.6 Smoking prohibited. Smoking shall be prohibited in flammable vapor areas and hazardous materials storage rooms associated with flammable finish processes. "No Smoking" signs complying with Section 310 shall be conspicuously posted in such areas.

❖ Smoking is a significant ignition source and is therefore prohibited where flammable or combustible liquids or combustible dusts are stored, dispensed or applied. "No smoking" signs must be conspicuously located throughout the work area. Designated smoking areas should be located well outside the spray-finishing area and preferably in a separate room. The requirements of Sections 5003.7.1 and 5706.4.8 can also apply in facilities where flammable finish processes occur (see also commentary, Section 310).

2403.2.7 Welding warning signs. Welding, cutting and similar spark-producing operations shall not be conducted in or adjacent to flammable vapor areas or dipping or coating operations unless precautions have been taken to provide safety. Conspicuous signs with the following warning shall be posted in the vicinity of flammable vapor areas, dipping operations and paint storage rooms:

NO WELDING
THE USE OF WELDING OR CUTTING
EQUIPMENT IN OR NEAR THIS AREA
IS DANGEROUS BECAUSE OF FIRE
AND EXPLOSION HAZARDS. WELDING
AND CUTTING SHALL BE DONE ONLY
UNDER THE SUPERVISION OF THE
PERSON IN CHARGE.

❖ For obvious reasons, open flames and spark-producing devices are not allowed in areas considered as flammable vapor areas (and areas that could potentially contain flammable vapors should the prevention

INTERNATIONAL CODE COUNCIL®
Copyright © 2015 ICC. ALL RIGHTS RESERVED. Accessed by David Dammon on Jun 21, 2017 12:30:52 PM pursuant to License Agreement with ICC. No further reproduction or distribution authorized. ANY UNAUTHORIZED REPRODUCTION OR DISTRIBUTION IS A VIOLATION OF THE FEDERAL COPYRIGHT ACT AND THE LICENSE AGREEMENT, AND SUBJECT TO CIVIL AND CRIMINAL PENALTIES THEREUNDER.

system components, such as ventilation, fail). Open flames are prohibited where flammable or combustible liquids are stored, dispensed or applied. Although no specific separation distance between the welding area and spraying space is required, the 20 feet (6096 mm) beyond the spraying space or to a permanent partition as also mentioned in Section 2403.2.2 may be a good general separation guideline for these incompatible operations. Because welding and cutting processes can typically be found in buildings that house flammable-finish processes, they create a potentially hazardous environment, especially for personnel unaware of such hazards. As with other hazardous conditions, such as smoking, warning signs and placards must be posted to give appropriate notice to warn personnel of the hazards of welding near spraying spaces.

2403.2.8 Powered industrial trucks. Powered industrial trucks used in electrically classified areas shall be *listed* for such use.

❖ Similar language is used in Section 5003.7.3. Again, because these types of industrial trucks are powered by an electrical motor or internal combustion engine, the ignition of flammable vapors or combustible dusts is likely unless they are listed for such use (see also commentary, Sections 309 and 5003.7.3).

2403.3 Storage, use and handling of flammable and combustible liquids. The storage, use and handling of flammable and *combustible liquids* shall be in accordance with this section and Chapter 57.

❖ Provisions of Chapter 57 and this section govern the storage and handling of flammable and combustible liquids for flammable finishes. As mentioned previously, Section 2403 applies to all flammable-finishing operations within the scope of this chapter; therefore, Section 2403.3 applies to flammable-finish operations that use flammable and combustible liquids.

2403.3.1 Use. Containers supplying spray nozzles shall be of a closed type or provided with metal covers that are kept closed. Containers not resting on floors shall be on noncombustible supports or suspended by wire cables. Containers supplying spray nozzles by gravity flow shall not exceed 10 gallons (37.9 L) in capacity.

❖ Requirements in this section are intended to prevent spills or the release of flammable vapors from flammable liquid containers. Tight-fitting metal lids or covers must be installed on all containers during use. Only those containers used to supply spray apparatus should be in the spraying space or spray-finishing enclosure during spray-finishing operations. Containers supplying spray apparatus must rest on a floor or noncombustible stand when in use or be suspended from the ceiling by wire cables. Gravity dispensing of flammable liquids to spray nozzles is permitted for quantities not exceeding 10 gallons (38 L) to control the size of an uncontrolled gravity-fed leak.

2403.3.2 Valves. Containers and piping to which a hose or flexible connection is attached shall be provided with a shutoff valve at the connection. Such valves shall be kept shut when hoses are not in use.

❖ Shutoff valves must be installed at the juncture between flexible hoses or tubing and fixed piping used to dispense flammable liquids to spray-finishing apparatus to allow prompt stoppage of liquid flow if a hose or tubing failure occurs. Shutoff valves must be closed when spray apparatus is not in use.

2403.3.3 Pumped liquid supplies. Where flammable or *combustible liquids* are supplied to spray nozzles by positive displacement pumps, pump discharge lines shall be provided with an *approved* relief valve discharging to pump suction or a safe detached location.

❖ In order to prevent excess flows or line ruptures from positive-pressure pumps, pressure relief valves or other devices must be installed on the discharge side of positive-displacement pumps supplying flammable liquids to spray apparatus. These devices must operate before the discharge pressure exceeds the safe operating pressure of the connected valves, piping and equipment. Any discharge from the devices must be controlled to prevent ignition or environmental damage.

2403.3.4 Liquid transfer. Where a flammable mixture is transferred from one portable container to another, a bond shall be provided between the two containers. Not less than one container shall be grounded. Piping systems for Class I and II liquids shall be permanently grounded.

❖ The uncontrolled discharge of static electricity is a common ignition source during flammable liquid transfer. Proper bonding and grounding precautions must be followed for the safe discharge of static charges produced during flammable liquid transfer. See Section 5705.2 for general flammable and combustible liquid transfer requirements.

2403.3.5 Class I liquids as solvents. Class I liquids used as solvents shall be used in spray gun and equipment cleaning machines that have been *listed* and *approved* for such purpose or shall be used in spray booths or spray rooms in accordance with Sections 2403.3.5.1 and 2403.3.5.2.

❖ Another hazardous aspect of spray finishing is the use of solvents to clean spray guns and related equipment. When spray booths require cleaning, the use of solvents may often pose a greater hazard than the normally used spray-finishing material. Usually an integral part of the labeling process, manufacturer's installation, operation and maintenance instructions must be carefully followed. The type of solvent to be used in any given machine must be as recommended by the machine manufacturer.

2403.3.5.1 Listed devices. Cleaning machines for spray guns and equipment shall not be located in areas open to the public and shall be separated from ignition sources in accordance

INTERNATIONAL CODE COUNCIL®
Copyright © 2015 ICC. ALL RIGHTS RESERVED. Accessed by David Dammon on Jun 21, 2017 12:30:52 PM pursuant to License Agreement with ICC. No further reproduction or distribution authorized. ANY UNAUTHORIZED REPRODUCTION OR DISTRIBUTION IS A VIOLATION OF THE FEDERAL COPYRIGHT ACT AND THE LICENSE AGREEMENT, AND SUBJECT TO CIVIL AND CRIMINAL PENALTIES THEREUNDER.

with their listings or by a distance of 3 feet (914 mm), whichever is greater. The quantity of solvent used in a machine shall not exceed the design capacity of the machine.

❖ Cleaning machines for spray guns and equipment are commonly used in the industry. See Commentary Figure 2403.3.5.1 for an illustration of a spray gun cleaning machine. Such machines use solvents powerful enough to dissolve paint residues in the thin tubing and small orifices of the spray equipment. They are similar to the automotive parts cleaners that have been in widespread use since the early 1970s, and consist of a metal sink-like bowl set on a base unit that houses a storage container for retrieval of spent solvent after the cleaning process. The solvent is circulated in the machine by a pneumatic pump. Vapors are captured in the sink bowl and are vented to the outdoors, either directly or, where located inside a spray booth, by directing vapors to the spray booth operating exhaust system inlets (see Section 2403.3.5.2). A safety interlock prevents the solvent pump from operating if the exhaust system fails. Installation of such machines must be restricted to areas not accessible to the general public to avoid exposure to the potential hazards of the cleaning operations and prevent the inadvertent introduction of ignition sources to the cleaning area.

2403.3.5.2 Within spray booths and spray rooms. When solvents are used for cleaning spray nozzles and auxiliary equipment within spray booths and spray rooms, the ventilating equipment shall be operated during cleaning.

❖ The safety systems that are an integral part of operating spray booths and spray rooms can be used when solvents are used for equipment cleaning. These systems help, as they would during application of flammable finishes, in reducing the chances of ignition or the severity of a fire, should an ignition occur.

2403.3.6 Class II and III liquids. Solvents used outside of spray booths, spray rooms or *listed* and *approved* spray gun and equipment cleaning machines shall be restricted to Class II and III liquids.

❖ Cleaning spray equipment inside a spray booth or room designed to accommodate the hazards of spray painting and equipment maintenance should be the primary choice of operators. The code recognizes that this is not always a feasible option and thus allows for cleaning spray equipment outside an approved spray booth or room, or a labeled spray gun and equipment cleaning machine, provided that the cleaning solvents used are limited to combustible liquids having a flashpoint greater than 100°F (38°C).

2403.4 Operations and maintenance. Flammable vapor areas, exhaust fan blades and exhaust ducts shall be kept free from the accumulation of deposits of combustible residues. Where excessive residue accumulates in such areas, spraying

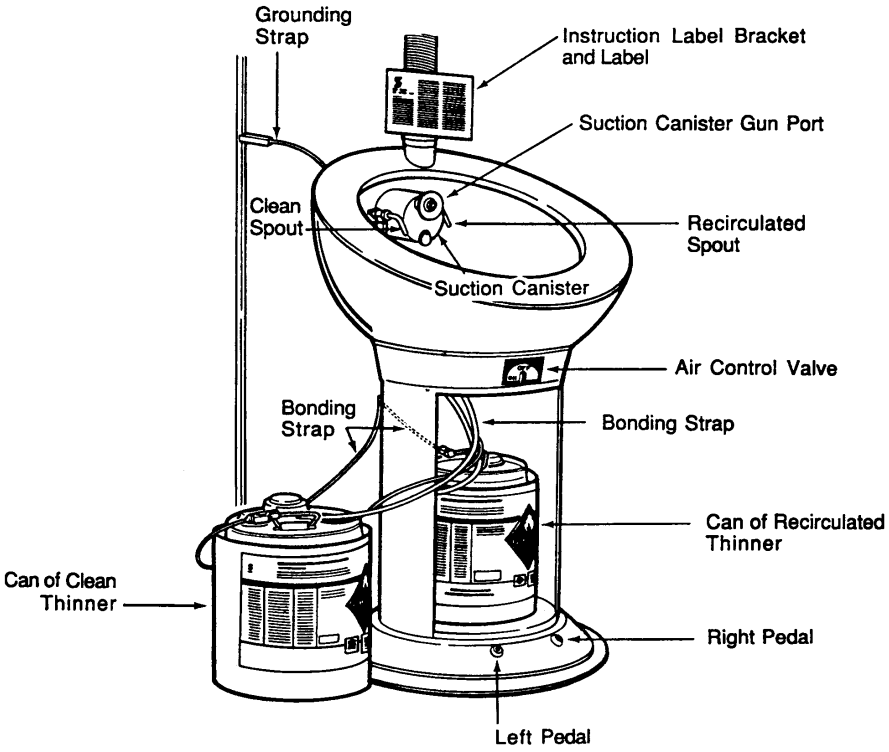

Figure 2403.3.5.1
SPRAY GUN CLEANING MACHINE

INTERNATIONAL CODE COUNCIL®
Copyright © 2015 ICC. ALL RIGHTS RESERVED. Accessed by David Dammon on Jun 21, 2017 12:30:52 PM pursuant to License Agreement with ICC. No further reproduction or distribution authorized. ANY UNAUTHORIZED REPRODUCTION OR DISTRIBUTION IS A VIOLATION OF THE FEDERAL COPYRIGHT ACT AND THE LICENSE AGREEMENT, AND SUBJECT TO CIVIL AND CRIMINAL PENALTIES THEREUNDER.

operations shall be discontinued until conditions are corrected.

❖ A regular cleaning schedule should be adopted for spraying spaces and spray-finishing enclosures. Accumulations of spray residue in interior spray booths or rooms or on exhaust duct surfaces should be removed at least daily or more frequently when accumulations become excessive. Any time overspray residue accumulations become excessive, the operator must suspend spray operations until the spray booth or area is thoroughly and properly cleaned. Water-wash nozzles, strainers and eliminator packs must be checked or cleaned daily or at the end of each shift, and tank sludge removed and discarded in a safe manner. Interior surfaces of ductwork and fan blades should be inspected regularly for accumulations of overspray residue caused by fouled nozzles, strainers or eliminator packs. The use of soap-based, water-soluble coatings makes it easier to strip surfaces using high-pressure water spray without greatly increasing the fire hazard. Determination of whether the accumulation of residue has become excessive in a particular location must be made by the fire code official on a case-by-case basis.

2403.4.1 Tools. Scrapers, spuds and other tools used for cleaning purposes shall be constructed of nonsparking materials.

❖ Because of the potential ignition problem that exists, the cleaning tools need to be of the nonsparking type. The term "nonsparking" is somewhat inaccurate. Tools made of brass and similar nonsparking materials do produce sparks but the sparks have ignition energies too low to ignite flammable vapors. Nonetheless, such tools should be used carefully to avoid producing sufficient frictional heat to cause an ignition.

2403.4.2 Residue. Residues removed during cleaning and debris contaminated with residue shall be immediately removed from the premises and properly disposed.

❖ Paint and solvent residue, cleaning rags and used protective coverings may be susceptible to spontaneous ignition. Residue and cleaning debris must be removed from the building and stored in approved containers located well away from the building. Removing residue and cleaning debris on a regular schedule, such as at the end of each work shift, are highly recommended.

2403.4.3 Waste cans. *Approved* metal waste cans equipped with self-closing lids shall be provided wherever rags or waste are impregnated with finishing material. Such rags and waste shall be deposited therein immediately after being utilized. The contents of waste cans shall be properly disposed of not less than once daily and at the end of each shift.

❖ Waste cans (sometimes called "oily rag cans") used for storing materials that might auto-ignite as a result of the spontaneous combustion process must be tested and listed for that use by a recognized testing laboratory or agency and must bear a label showing that they have been tested and including the name of the testing agency (see Section 304.3.1). Such containers are most commonly round and generally available in sizes ranging from 5 to 40 gallons (19 to 152 L). They are equipped with a manual or foot treadle-operated lid that opens to a maximum angle of 60 degrees (1 rad) and closes by gravity. These containers are designed to prevent continuing combustion of the contents if ignition occurs.

The container design includes features that keep the can body from coming into contact with combustible surfaces of walls or floors. Daily disposal of container contents reduces the amount of time that oily materials will lie dormant, generating internal heat that can lead to ignition. UL 32 provides further information on the construction, testing and listing of these containers (see the commentary to the Section 202 definition of "Listed"). Note that the general requirements of the daily removal and disposal of the contents of such waste cans found in Section 304.3.1 is superceded by the more specific disposal requirements of this section.

2403.4.4 Solvent recycling. Solvent distillation equipment used to recycle and clean dirty solvents shall comply with Section 5705.4.

❖ Section 5705.4 includes detailed requirements for solvent distillation processes and equipment, such as labeling, unit capacity, location and prohibited processes. Note that the terms "solvent distillation unit," "appliance" and "equipment" are used interchangeably in the code.

SECTION 2404
SPRAY FINISHING

2404.1 General. The application of flammable or *combustible liquids* by means of spray apparatus in continuous or intermittent processes shall be in accordance with the requirements of Sections 2403 and 2404.2 through 2404.9.4.

❖ This section establishes the applicability of the general requirements of Section 2403 to spraying operations, in addition to the provisions of Sections 2404.2 through 2404.9.4.

2404.2 Location of spray-finishing operations. Spray-finishing operations conducted in buildings used for Group A, E, I or R occupancies shall be located in a spray room protected with an *approved automatic sprinkler system* installed in accordance with Section 903.3.1.1 and separated vertically and horizontally from other areas in accordance with the *International Building Code*. In other occupancies, spray-finishing operations shall be conducted in a spray room, spray booth or spraying space *approved* for such use.

Exceptions:

1. Automobile undercoating spray operations and spray-on automotive lining operations conducted in areas with *approved* natural or mechanical ventilation shall be exempt from the provisions of Section

INTERNATIONAL CODE COUNCIL®
Copyright © 2015 ICC. ALL RIGHTS RESERVED. Accessed by David Dammon on Jun 21, 2017 12:30:52 PM pursuant to License Agreement with ICC. No further reproduction or distribution authorized. ANY UNAUTHORIZED REPRODUCTION OR DISTRIBUTION IS A VIOLATION OF THE FEDERAL COPYRIGHT ACT AND THE LICENSE AGREEMENT, AND SUBJECT TO CIVIL AND CRIMINAL PENALTIES THEREUNDER.

2404 when *approved* and where utilizing Class IIIA or IIIB *combustible liquids.*

2. In buildings other than Group A, E, I or R occupancies, *approved* limited spraying space in accordance with Section 2404.9.
3. Resin application areas used for manufacturing of reinforced plastics complying with Section 2409 shall not be required to be located in a spray room, spray booth or spraying space.

❖ In the listed occupancy groups, separating spray-finishing operations from other portions of the building and protecting those portions from spraying-associated hazards are critical for several reasons. Spray-finishing operations are generally too hazardous to be conducted in occupancies with a high life or property exposure. The number of occupants in such buildings and the physical conditions of those occupants vary. People exposed to the danger of a fire involving spray finishing must be able to evacuate or protect themselves promptly and effectively to avoid the risk of serious injury or death. Also, the psychology of people in a Group A, E, I or R occupancy is very different from those in a Group F manufacturing occupancy where spraying operations are usually found. A person walking in a manufacturing environment where flammable-finish processes take place in a large area where spray booths and signs are in plain view, for example, is more aware of the physical dangers associated with these processes than someone in a Group R occupancy who may be merely relaxing with a cigarette. Also note that the protection provided in these occupancies is, in many cases, less than would be found in manufacturing occupancies. Separation and protection in the form of fire-resistance-rated construction and automatic fire suppression must be provided where such operations are to be conducted in the same building.

Note that Section 307.1, Exception 1, of the *International Building Code*® (IBC®) excludes spraying operations from being classified in Group H as long as they comply with IBC Section 416 and the provisions of the fire code. Section 416.2 requires that spray rooms be separated from the rest of the building by 1-hour fire barriers and horizontal assemblies constructed in accordance with IBC Sections 707 and 711, respectively.

Exception 1 recognizes that most automobile undercoating and corrosion-inhibitor application operations use combustible liquids with flash points greater than 140°F (60°C). Precautions must be taken to prevent these materials from being heated above their flash points or ignited in finely divided or atomized form. Ventilation to reduce the accumulation of hazardous vapors and mists must comply with the requirements of Chapter 57 and the *International Mechanical Code*® (IMC®).

Exception 2 recognizes the reduced hazard of limited spray applications in compliance with the special requirements in Section 2404.9, including small job size, noncontinuous operation and substantial mechanical ventilation requirements.

Exception 3 defers to the specific safeguards applicable to resin application areas used in the manufacture of reinforced plastics in Section 2409.

2404.3 Design and construction. Design and construction of spray rooms, spray booths and spray spaces shall be in accordance with Sections 2404.3.1 through 2404.3.3.1.

❖ This section establishes the applicability of Sections 2404.3.1 through 2404.3.3.1 to the design and construction of spaces where spray-finishing operations may be carried out.

2404.3.1 Spray rooms. Spray rooms shall be constructed and designed in accordance with Section 2404.3.1.1 and the *International Building Code*, and shall comply with Sections 2404.4 through 2404.8.

❖ A spray room is a power-ventilated, fully enclosed room used exclusively for the open spraying of flammable and combustible materials. The entire spray room is considered a spraying space. The primary difference between a spray room and a spray booth is that spray booths are partially open.

Spray rooms, as with the other locations for spraying operations, are very highly regulated by the code and the IBC. As such, IBC Section 307.1, Exception 1 excludes spraying operations from being classified in Group H as long as they comply with IBC Section 416 and the provisions of the fire code. IBC Section 416.2 requires that spray rooms be separated from the rest of the building by 1-hour fire barriers and horizontal assemblies constructed in accordance with IBC Sections 707 and 711, respectively.

The occupancy of portions of buildings storing supplies of hazardous materials for these coating operations may be classified as Group H-2 or H-3 because of the presence of flammable or combustible liquids where the quantity of liquid stored exceeds the MAQ per control area listed in Table 5003.1.1(1). However, the occupancy is to be classified as Group F-1 for processes where the quantities do not exceed the MAQ. See also the commentary to the Section 202 definition of "Spray room."

2404.3.1.1 Floor. Combustible floor construction in spray rooms shall be covered by *approved*, noncombustible, nonsparking material, except where combustible coverings, including but not limited to thin paper or plastic and strippable coatings, are utilized over noncombustible materials to facilitate cleaning operations in spray rooms.

❖ In spray rooms, noncombustible floors would be the preferred type of floor construction so as not to contribute to the fuel load available to an unwanted fire. However, if the floor is not noncombustible, noncombustible and nonsparking material must be used to cover the floor. Kraft paper and similar coverings are commonly used in spraying spaces to protect against overspray. Such coverings must be removed and discarded when accumulation becomes excessive.

Note that IBC Section 416.2 further requires that

INTERNATIONAL CODE COUNCIL®
Copyright © 2015 ICC. ALL RIGHTS RESERVED. Accessed by David Dammon on Jun 21, 2017 12:30:52 PM pursuant to License Agreement with ICC. No further reproduction or distribution authorized. ANY UNAUTHORIZED REPRODUCTION OR DISTRIBUTION IS A VIOLATION OF THE FEDERAL COPYRIGHT ACT AND THE LICENSE AGREEMENT, AND SUBJECT TO CIVIL AND CRIMINAL PENALTIES THEREUNDER.

spray room floors be "...waterproofed and drained in an approved manner." Waterproof floors are to be arranged to drain either to the outside of the building, to internal drains or to other suitable places. Properly designed and guarded drains or scuppers of sufficient number and size to dispose of all surplus water likely to be discharged by automatic sprinklers must be provided.

2404.3.2 Spray booths. The design and construction of spray booths shall be in accordance with Sections 2404.3.2.1 through 2404.3.2.6, Sections 2404.4 through 2404.8 and NFPA 33.

❖ Sections 2404.3.2.1 through 2404.3.2.6 and 2404.4 through 2404.8 and NFPA 33 contain requirements for controlling hazards associated with spray booths. Much of the hazard prevention and mitigation of flammable-finish fires in a spray booth depend on the proper construction and design of the spray booth. See the commentary to the Section 202 definition of "Spray booth." Note that, by definition, a spray booth is considered to be an appliance.

2404.3.2.1 Construction. Spray booths shall be constructed of *approved* noncombustible materials. Aluminum shall not be used. Where walls or ceiling assemblies are constructed of sheet metal, single-skin assemblies shall be no thinner than 0.0478 inch (18 gage) (1.2 mm) and each sheet of double-skin assemblies shall be no thinner than 0.0359 inch (20 gage) (0.9 mm). Structural sections of spray booths are allowed to be sealed with latex-based or similar caulks and sealants.

❖ Even though spray booths are not required to meet the fire-resistance-rated construction requirements of the IBC, the requirements of this section recognize the need to minimize the spread of a fire and prevent a spray booth from contributing to a fire should one start within the booth. Aluminum is not suitable for structurally sound construction of enclosures because of its low melting point; it would be likely to melt in case of a substantial fire within the booth. For a spray booth to maintain its structural integrity in a fire, it should be constructed of steel, masonry or equivalent noncombustible materials. Section 5003.8 also requires hazardous materials storage cabinets to be constructed of 18-gage [0.0478 inch (1.2 mm)] steel. Both booths and cabinets are viewed as equipment used to control and contain spills or fires.

2404.3.2.2 Surfaces. The interior surfaces of spray booths shall be smooth; shall be constructed so as to permit the free passage of exhaust air from all parts of the interior, and to facilitate washing and cleaning; and shall be designed to confine residues within the booth. Aluminum shall not be used.

❖ Rough, corrugated or uneven surfaces are difficult to clean. Periodic cleaning of the interior surfaces reduces the fire hazard posed by the accumulation of flammable or combustible coatings. Because flammable or combustible vapors and dusts are typically heavier than air, design considerations should include the passage of exhaust air and proper air circulation to all parts of the spray booth, especially at or near the floor level. Due to the physical properties of aluminum, it is unsuitable for cleaning and scraping of overspray residue. See the commentary to Section 2404.3.2.1 for further discussion on the use of aluminum in spray-booth construction.

2404.3.2.3 Floor. Combustible floor construction in spray booths shall be covered by *approved*, noncombustible, nonsparking material, except where combustible coverings, including but not limited to thin paper or plastic and strippable coatings, are utilized over noncombustible materials to facilitate cleaning operations in spray booths.

❖ The spray-booth floor requirements in this section parallel those for spray rooms in Section 2404.3.1.1 (see commentary, Section 2404.3.1.1).

2404.3.2.4 Means of egress. *Means of egress* shall be provided in accordance with Chapter 10.

Exception: *Means of egress* doors from premanufactured spray booths shall be not less than 30 inches (762 mm) in width by 80 inches (2032 mm) in height.

❖ As with any room or space within a building from which occupants may need to egress, spray booths must comply with the exiting requirements of Chapter 10. See Section 1015, which establishes the minimum number of exits from rooms and spaces within a building, based on occupant load.

In typical spray booths, only a single egress door will be required. A premanufactured spray booth is considered to be an appliance or equipment and not a true separate room or space. Spray booths will also be occupied only by authorized personnel who are familiar with that environment. Accordingly, for booth design and listing purposes the exception specifically allows the egress door to be slightly smaller than the generally applicable minimum required width of 32 inches (813 mm) for means-of-egress doors specified in Section 1010.1.1. This is consistent with the door width exceptions for residential and Group I-3 occupancies in that section, which are based on familiarity with the occupancy in Group R and the controlled environment of Group I-3.

2404.3.2.5 Clear space. Spray booths shall be installed so that all parts of the booth are readily accessible for cleaning. A clear space of not less than 3 feet (914 mm) shall be maintained on all sides of the spray booth. This clear space shall be kept free of any storage or combustible construction.

Exceptions:

1. This requirement shall not prohibit locating a spray booth closer than 3 feet (914 mm) to or directly against an interior partition, wall or floor/ceiling assembly that has a *fire-resistance rating* of not less than 1 hour, provided the spray booth can be adequately maintained and cleaned.
2. This requirement shall not prohibit locating a spray booth closer than 3 feet (914 mm) to an exterior wall or a roof assembly, provided the wall or roof is con-

INTERNATIONAL CODE COUNCIL®
Copyright © 2015 ICC. ALL RIGHTS RESERVED. Accessed by David Dammon on Jun 21, 2017 12:30:52 PM pursuant to License Agreement with ICC. No further reproduction or distribution authorized. ANY UNAUTHORIZED REPRODUCTION OR DISTRIBUTION IS A VIOLATION OF THE FEDERAL COPYRIGHT ACT AND THE LICENSE AGREEMENT, AND SUBJECT TO CIVIL AND CRIMINAL PENALTIES THEREUNDER.

structed of noncombustible material and the spray booth can be adequately maintained and cleaned.

❖ Spray booths are viewed as equipment where accessibility is essential to cleaning and maintenance. This section is also included for housekeeping reasons, and to keep combustible debris and materials away from the spray booth to reduce the chances of an ignition on its exterior from a fire that might occur within the booth. This clearance also serves to prevent heat from a fire within a booth from being transferred to adjacent combustible material. It also will prevent a fire near a booth (from combustible storage, for example) from acting as an ignition source for the booth (see Commentary Figure 2404.3.2.5).

Under Exception 1, if the construction materials of an interior partition further inhibit the spread of a fire and if there are proper means of cleaning the spray booth, the intent of the section is considered met. This exception, however, still does not allow any storage within 3 feet (914 mm) of the spray booth. Note that the 1-hour partition, wall or floor/ceiling assembly is a generic description of an assembly and not a specific type of assembly (e.g., fire wall, fire barrier, fire partition, etc.) with a specific assigned purpose. As such, no continuity requirements apply for such assemblies as would be applicable to assemblies with a specific required fire protection function and their designation as a specific type of assembly.

Exception 2 recognizes that if an exterior wall or roof assembly is of noncombustible construction, it will not contribute to the fuel load or spread of the fire to other interior parts of the building. This meets the intent of this section as long as there are proper means of cleaning the spray booth. This exception still does not allow any storage within 3 feet (914 mm) of the spray booth.

2404.3.2.6 Size. The aggregate area of spray booths in a building shall not exceed the lesser of 10 percent of the area of any floor of a building or the basic area allowed for a Group H-2 occupancy without area increases, as set forth in the *International Building Code*. The area of an individual spray booth in a building shall not exceed the lesser of the aggregate size limit or 1,500 square feet (139 m^2).

Exception: One individual booth not exceeding 500 square feet (46 m^2).

❖ The intent of limiting the size of a spray booth is to compartmentalize or provide passive fire protection. This limits the size of a fire and the processes to a more manageable condition. Section 2404.2 requires spraying operations to be conducted in an approved spray booth, spraying space or spray room. As stated in this section, the size of an approved spray booth is limited to the lesser of 1,500 square feet (139 m^2) or 10 percent of the area of any floor of a building or the basic area allowed for a Group H-2 occupancy without area increases, as set forth in the IBC. If the area limits for an approved spray booth are exceeded, then the operation must be conducted in a spray room in accordance with Section 2404.3.1. The term "spray room" is defined in Section 202.

The exception references the first paragraph of the section. In businesses where the building is small [typically less than 5,000 square feet (465 m^2)], it may be impractical to design for a spray booth that is less than 10 percent of the overall building area. In case of a fire, smaller buildings are easier to control from a passive fire protection standpoint than larger operations.

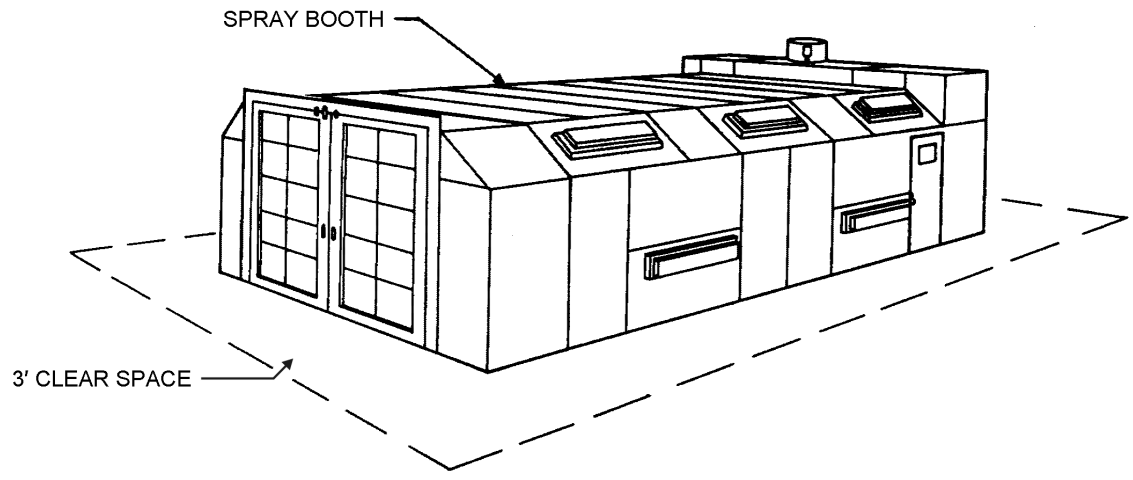

For SI: 1 foot = 304.8 mm.

Figure 2404.3.2.5
EXAMPLE OF SPRAY-BOOTH CLEAR SPACE

INTERNATIONAL CODE COUNCIL®
Copyright © 2015 ICC. ALL RIGHTS RESERVED. Accessed by David Dammon on Jun 21, 2017 12:30:52 PM pursuant to License Agreement with ICC. No further reproduction or distribution authorized. ANY UNAUTHORIZED REPRODUCTION OR DISTRIBUTION IS A VIOLATION OF THE FEDERAL COPYRIGHT ACT AND THE LICENSE AGREEMENT, AND SUBJECT TO CIVIL AND CRIMINAL PENALTIES THEREUNDER.

2404.3.3 Spraying spaces. Spraying spaces shall be designed and constructed in accordance with the *International Building Code*, and Section 2404.3.3.1 and Sections 2404.4 through 2404.8 of this code.

❖ Because spraying spaces are not enclosed, the occupancy classification of the room in which the spraying space is located depends on whether the MAQs of hazardous materials per control area are exceeded. The occupancy of buildings or portions of buildings housing these coating operations is typically classified as Group H-2 [because flammable liquids are typically in open system use or under pressure greater than 15 pounds per square inch (psi) (103 kPa)] where the aggregate quantity of flammable/combustible liquids or dusts stored or used in a single control area exceeds the MAQ per control area listed in Table 5003.1.1(1). However, the occupancy is to be classified as Group F-1 or as a mixed use (such as Group F-1/S-1) for processes where the quantities do not exceed the MAQ per control area.

2404.3.3.1 Floor. Combustible floor construction in spraying spaces shall be covered by *approved*, noncombustible, nonsparking material, except where combustible coverings, such as thin paper or plastic and strippable coatings, are utilized over noncombustible materials to facilitate cleaning operations in spraying spaces.

❖ The spray-booth floor requirements in this section parallel those for spray rooms in Section 2404.3.1.1 and spray booths in Section 2404.3.2.3 (see commentary, Section 2404.3.1.1).

2404.4 Fire protection. Spray booths and spray rooms shall be protected by an *approved* automatic fire-extinguishing system complying with Chapter 9. Protection shall also extend to exhaust plenums, exhaust ducts and both sides of dry filters when such filters are used.

❖ Automatic sprinkler protection is the preferred method of protection for spray booths and spray rooms where the building is otherwise sprinklered. In nonsprinklered buildings that contain spray booths and spray rooms, alternative automatic fire-extinguishing systems, such as clean agents, carbon dioxide, dry chemical, etc., are allowed to be installed when approved by the fire code official. See the commentary to Section 904 for further discussion of specific types of alternative fire-extinguishing systems. Fire protection systems, equipment and devices must be installed and maintained in accordance with Chapter 9. Because the flammable-finish operations are subject to accumulation of residue, failure of the system as a result of poor maintenance is more likely in these areas than in most other types of facilities.

2404.4.1 Fire extinguishers. Portable fire extinguishers complying with Section 906 shall be provided for spraying areas in accordance with the requirements for an extra (high) hazard occupancy.

❖ Portable fire extinguishers for fighting incipient fires must be installed for ready access by the spray-booth, spray-room or spraying-space operator. Additionally, they should be selected on the basis of extra-hazard criteria contained in NFPA 10 to provide sufficient extinguishing agents and discharge time for the hazard to be protected. Because a spraying-space fire would involve ordinary combustibles as well as flammable/combustible liquids and dusts, the selection of a fire extinguisher will include Class A and B ratings.

Section 906 and NFPA 10 require no less than a 4-A:40-B:C extinguisher when the maximum travel distance to the extinguisher does not exceed 30 feet (9144 mm). A 4-A:40-B:C extinguisher is also acceptable when the maximum travel distance does not exceed 50 feet (15 240 mm) (see Commentary Figure 2404.4.1). Employees who are expected to fight incipient fires should receive instruction in the operation of the installed fire protection equipment.

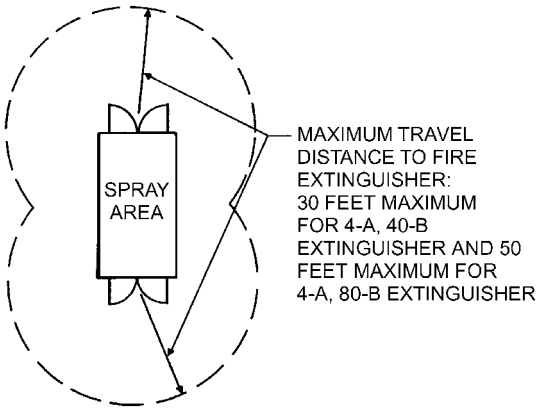

For SI: 1 foot = 304.8 mm.

Figure 2404.4.1
MAXIMUM TRAVEL TO EXTINGUISHERS

2404.5 Housekeeping, maintenance and storage of hazardous materials. Housekeeping, maintenance, storage and use of hazardous materials shall be in accordance with Sections 2403.3, 2403.4, 2404.5.1 and 2404.5.2.

❖ This section establishes the applicability of the requirements of Sections 2403.3, 2403.4, 2404.5.1 and 2404.5.2 for controlling hazards associated with housekeeping, maintenance and the storage of hazardous materials.

2404.5.1 Different coatings. Spray booths, spray rooms and spraying spaces shall not be alternately utilized for different types of coating materials where the combination of materials is conducive to spontaneous ignition, unless all deposits of one material are removed from the booth, room or space and exhaust ducts prior to spraying with a different material.

❖ Spray operations involving potentially reactive coating materials must be confined to separate spray booths or purged after use. Using the same spray booth for separate operations involving materials that react with each other may produce a reaction

INTERNATIONAL CODE COUNCIL®
Copyright © 2015 ICC. ALL RIGHTS RESERVED. Accessed by David Dammon on Jun 21, 2017 12:30:52 PM pursuant to License Agreement with ICC. No further reproduction or distribution authorized. ANY UNAUTHORIZED REPRODUCTION OR DISTRIBUTION IS A VIOLATION OF THE FEDERAL COPYRIGHT ACT AND THE LICENSE AGREEMENT, AND SUBJECT TO CIVIL AND CRIMINAL PENALTIES THEREUNDER.

between the overspray residues of such materials once they are captured by the filters. Therefore, the entire system, including the ducts/filters, must be purged.

Spontaneous ignition, also known as autoignition or self-ignition, is defined by Burklin and Purington as "ignition due to chemical reaction or bacterial action in which there is slow oxidation of organic compounds until the material ignites; usually there is sufficient air for oxidation but insufficient ventilation to carry heat away as it is generated." A detailed treatment of the subject appears in the NFPA *Fire Protection Handbook*.

The One Meridian Plaza office building fire in 1991 was allegedly started by the spontaneous ignition of oil-soaked rags that were improperly stored during a remodeling operation. This high-rise building in the heart of Philadelphia, Pennsylvania, was so seriously damaged in the fire that it was razed in 1999. A listed container for the storage of the oily rags as required by Section 2403.4.3 (see commentary, Section 2403.4.3) was not used. The fire code official should determine the kinds of oils or solvents used and research their potential for spontaneous ignition (see commentary, Section 304.3.2).

2404.5.2 Protection of sprinklers. Automatic sprinklers installed in flammable vapor areas shall be protected from the accumulation of residue from spraying operations in an *approved* manner. Bags used as a protective covering shall be 0.003-inch-thick (0.076 mm) polyethylene or cellophane or shall be thin paper. Automatic sprinklers contaminated by overspray particles shall be replaced with new automatic sprinklers.

❖ Automatic sprinkler heads must be protected from accumulations of spray residue to reduce the likelihood of residue build-up, which could insulate the fusible element and lead to failure of the head to respond in a timely manner in case of fire. Protective lightweight paper or plastic bags is allowed to be installed over sprinkler heads but must be replaced at regular intervals or when they become heavily coated. A regular inspection of the sprinkler heads in flammable-vapor areas should be undertaken by spray process operators to identify and replace any sprinklers that may have become coated with residue.

2404.6 Sources of ignition. Control of sources of ignition shall be in accordance with Section 2403.2 and Sections 2404.6.1 through 2404.6.2.4.

❖ This section establishes the applicability of the requirements of Sections 2403.2, 2404.6.1 and 2404.6.2.4 for controlling ignition hazards.

2404.6.1 Drying operations. Spray booths and spray rooms shall not be alternately used for the purpose of drying by arrangements or methods that could cause an increase in the surface temperature of the spray booth or spray room except in accordance with Sections 2404.6.1.1 and 2404.6.1.2. Except as specifically provided in this section, drying or baking units utilizing a heating system having open flames or that are capable of producing sparks shall not be installed in a flammable vapor areas.

❖ Drying apparatus that causes significant heating of the workpiece or spray-booth surface may ignite finishing vapors or overspray residue located inside the spray booth. Separate drying apparatus or enclosures free of overspray residue should be installed when a drying apparatus is used.

Introduction of additional sources of ignition, including drying and baking units that do not meet the requirements of Section 2404.6.1.2, is not permitted in spraying areas.

2404.6.1.1 Spraying procedure. The spraying procedure shall use low-volume spray application.

❖ This section would apply only to smaller applications/processes where smaller amounts of flammable finishes are used. This is intended for spray booths and spray rooms that are used only occasionally for spraying and drying operations.

2404.6.1.2 Drying apparatus. Fixed drying apparatus shall comply with this chapter and the applicable provisions of Chapter 30. When recirculation ventilation is provided in accordance with Section 2404.7.2, the heating system shall not be within the recirculation air path.

❖ The practice of drying finished work pieces in the same enclosure where spray finishing is in progress is common in the automobile refinishing industry. This practice must be confined to spray-finishing enclosures designed for this purpose in compliance with the requirements of this section. Although the recirculated air should not be flammable (less than 25-percent LFL or dust residue is removed) as required by Section 2404.7.2, the heating system should be positioned to avoid possible ignition as a result of any malfunctions or unforeseen incidents.

Although this section appears to require fixed drying apparatus, the section is intended to require both fixed and portable infrared apparatus. This is further evident in Section 2404.6.1.2.2, in which the additional requirements for portable infrared apparatus are given.

2404.6.1.2.1 Interlocks. The spraying apparatus, drying apparatus and ventilating system for the spray booth or spray room shall be equipped with interlocks arranged to accomplish all of the following:

1. Prevent operation of the spraying apparatus while drying operations are in progress.
2. Where the drying apparatus is located in the spray booth or spray room, prevent operation of the drying apparatus until a timed purge of spray vapors from the spray booth or spray room is complete. This purge time shall be based upon completing at least four air changes of spray booth or spray room volume or for a period of not less than 3 minutes, whichever is greater.
3. Have the ventilating system maintain a safe atmosphere within the spray booth or spray room during the drying

INTERNATIONAL CODE COUNCIL®
Copyright © 2015 ICC. ALL RIGHTS RESERVED. Accessed by David Dammon on Jun 21, 2017 12:30:52 PM pursuant to License Agreement with ICC. No further reproduction or distribution authorized. ANY UNAUTHORIZED REPRODUCTION OR DISTRIBUTION IS A VIOLATION OF THE FEDERAL COPYRIGHT ACT AND THE LICENSE AGREEMENT, AND SUBJECT TO CIVIL AND CRIMINAL PENALTIES THEREUNDER.

process and automatically shut off drying apparatus in the event of a failure of the ventilating system.

4. Shut off the drying apparatus automatically if the air temperature within the booth exceeds 200°F (93°C).

❖ This section prescribes requirements for the safe use of infrared drying units in spray-finishing enclosures used for automobile refinishing and other similar applications. The interlocks listed in this section are required to reduce the likelihood that a potential source of ignition (drying apparatus) and the fuel (flammable vapors) are not present in the spray booth or spray room simultaneously. Also, the hazard of the ease with which heated flammable vapors are ignited is further mitigated by controlling the temperature of the room. Without these features, and the greater of four air changes or a 3-minute purge for the spraying space, right conditions for ignition of vapors or residue could easily develop.

2404.6.1.2.2 Portable infrared apparatus. Where a portable infrared drying apparatus is used, electrical wiring and portable infrared drying equipment shall comply with NFPA 70. Electrical equipment located within 18 inches (457 mm) of floor level shall be *approved* for Class I, Division 2 hazardous locations. Metallic parts of drying apparatus shall be electrically bonded and grounded. During spraying operations, portable drying apparatus and electrical connections and wiring thereto shall not be located within spray booths, spray rooms or other areas where spray residue would be deposited thereon.

❖ In addition to the drying apparatus requirements stated throughout Section 2404.6.1, portable infrared apparatus is required to meet the provisions of this section. These requirements, such as bonding and grounding of apparatus, are intended to prevent the ignition of vapors in the transport of the apparatus.

2404.6.2 Illumination. Where spraying spaces, spray rooms or spray booths are illuminated through glass panels or other transparent materials, only fixed luminaires shall be utilized as a source of illumination.

❖ Fixed lighting units (luminaires) can be designed to minimize the possibility of ignition caused by the accidental heating of vapors above their autoignition temperature. Radiant heat from the source of illumination on the flammable finishes may cause ignition.

2404.6.2.1 Glass panels. Panels for luminaires or for observation shall be of heat-treated glass, wired glass or hammered wire glass and shall be sealed to confine vapors, mists, residues, dusts and deposits to the flammable vapor area. Panels for luminaires shall be separated from the luminaire to prevent the surface temperature of the panel from exceeding 200°F (93°C).

❖ The surface of incandescent bulbs, halogen lamps and other light fixtures (luminaires) often exceeds the ignition temperature of common flammable and combustible liquids. Separation of light fixtures (luminaires) from the glazing will help reduce the surface temperature on the unexposed side of the glass. Glass panels must be designed, arranged and protected to ease cleaning and prevent breakage.

2404.6.2.2 Exterior luminaires. Luminaires attached to the walls or ceilings of a flammable vapor area, but outside of any classified area and separated from the flammable vapor areas by vapor-tight glass panels, shall be suitable for use in ordinary hazard locations. Such luminaires shall be serviced from outside the flammable vapor areas.

❖ Safety features, such as ventilation and separation using vapor-tight glass panels, allow for the use of ordinary light fixtures (luminaires) that are not electrically classified for hazardous locations. To maintain the integrity of the separation (that is, vapor-tight glass panels and installation outside of the classified area), these light fixtures (luminaires) must be serviced from outside the spraying area.

2404.6.2.3 Integral luminaires. Luminaires that are an integral part of the walls or ceiling of a flammable vapor area are allowed to be separated from the flammable vapor area by glass panels that are an integral part of the luminaire. Such luminaires shall be *listed* for use in Class I, Division 2 or Class II, Division 2 locations, whichever is applicable, and also shall be suitable for accumulations of deposits of combustible residues. Such luminaires are allowed to be serviced from inside the flammable vapor area.

❖ Light fixtures (luminaires) with construction that includes a glass panel for separation and that are installed within the construction of the wall or ceiling flammable-vapor area must be Class I, Division 2 because flammable vapors are present. Class II, Division 2 light fixtures are required where combustible residue, such as dust, is present.

2404.6.2.4 Portable electric lamps. Portable electric lamps shall not be used in flammable vapor areas during spraying operations. Portable electric lamps used during cleaning or repairing operations shall be of a type *approved* for hazardous locations.

❖ Portable electric lamps are unsuitable for use in spraying spaces during spraying operations due to their increased exposure to dropping and other use-related damage. Portable electric lamps vary in type and electrical classification. It would be a difficult judgment call for an operator to determine the appropriate type and location of a portable lamp in spraying spaces. Although portable electric lamps, if approved for hazardous locations, are allowed to be utilized during cleaning or repairing operations, they should be avoided if possible.

2404.7 Ventilation. Mechanical ventilation of flammable vapor areas shall be provided in accordance with Section 502.7 of the *International Mechanical Code*.

❖ Flammable-vapor areas, as defined in Section 202, include, but are not limited to, the interior of spray booths and spray rooms. The proper design and installation of exhaust ventilation systems in spraying spaces is critical because of the potential production of large amounts of flammable vapors in the processes.

INTERNATIONAL CODE COUNCIL®
Copyright © 2015 ICC. ALL RIGHTS RESERVED. Accessed by David Dammon on Jun 21, 2017 12:30:52 PM pursuant to License Agreement with ICC. No further reproduction or distribution authorized. ANY UNAUTHORIZED REPRODUCTION OR DISTRIBUTION IS A VIOLATION OF THE FEDERAL COPYRIGHT ACT AND THE LICENSE AGREEMENT, AND SUBJECT TO CIVIL AND CRIMINAL PENALTIES THEREUNDER.

Exhaust systems in spray-finishing areas must also comply with IMC Section 502.7, which regulates hazardous exhaust systems. Additionally, because IMC Section 502.7.3 is identical to this section, compliance with the general section of IMC Section 502, especially Section 502.1.1 ("...the inlet to an exhaust system shall be located in the area of heaviest concentration of contaminants..."), is recommended. The location of heaviest concentration resulting from the physical characteristics of a material (for example, vapor density) or the process (such as atomization of the material) must be considered when inlets to exhaust systems are designed.

2404.7.1 Operation. Mechanical ventilation shall be kept in operation at all times while spraying operations are being conducted and for a sufficient time thereafter to allow vapors from drying coated articles and finishing material residue to be exhausted. Spraying equipment shall be interlocked with the ventilation of the flammable vapor areas such that spraying operations cannot be conducted unless the ventilation system is in operation.

❖ Ventilation must be functioning during the spraying operation phase and the drying phase of a process when vapors are generated. The interlock between the ventilation and spraying equipment will reduce the likelihood of human error, such as operator failure to activate the ventilation system prior to the use of the spray equipment. Operating spray equipment without having the exhaust system in operation could allow fugitive flammable vapors to migrate to areas that may contain unprotected ignition sources and ignite. Continuous operation of ventilation systems could also be an integral component of the design of certain alternative fire-extinguishing systems, such as dry chemical systems. Note that this section parallels Section 502.7.3.1 of the IMC.

2404.7.2 Recirculation. Air exhausted from spraying operations shall not be recirculated.

Exceptions:

1. Air exhausted from spraying operations is allowed to be recirculated as makeup air for unmanned spray operations, provided that all of the following conditions exist:
   - 1.1. The solid particulate has been removed.
   - 1.2. The vapor concentration is less than 25 percent of the LFL.
   - 1.3. *Approved* equipment is used to monitor the vapor concentration.
   - 1.4. When the vapor concentration exceeds 25 percent of the LFL, both of the following shall occur:
     a. An alarm shall sound.
     b. Spray operations shall automatically shut down.
   - 1.5. In the event of shutdown of the vapor concentration monitor, 100 percent of the air volume specified in Section 510 of the *International Mechanical Code* is automatically exhausted.
2. Air exhausted from spraying operations is allowed to be recirculated as makeup air to manned spraying operations where all of the conditions provided in Exception 1 are included in the installation and documents have been prepared to show that the installation does not pose a life safety hazard to personnel inside the spray booth, spraying space or spray room.

❖ The prohibition of recirculation in this section and in IMC Section 502.7.3.2 is specifically directed to the concern that exhaust system makeup air does not add to the fire hazard of the spraying space. The exceptions are fairly specific and focus on the LFL and the monitoring of that limit. The exceptions are based on the environmental community's concerns about the volume of emissions generated by spray finishing. The permissible exposure limit (PEL) is generally more restrictive than the LFL.

The recirculation of exhausted air containing flammable vapors could help spread the hazard of flash fires from the area of vapor generation to other parts of the building. At best, it would adversely affect only the area of vapor generation in that it could render the exhaust ventilation useless. It may also give the operators of the facility a false sense that the level of ventilation is safe for the system.

Exception 1 lists five conditions that must be met for the recirculation of exhausted air in unmanned spray operations. If solid particulates (dusts) are removed from the exhausted air, the exhausted air is no longer considered a fire hazard because the potential for a dust explosion is eliminated. Flammable vapors are defined in Section 202 as "flammable constituents in air that exceed 25 percent of the LFL." By reducing the flammable vapor concentrations to less than 25 percent of the LFL, the exhausted air is no longer considered a flammable vapor. To increase the likelihood that the concentrations remain at less than 25 percent of the LFL, flammable vapor detection systems must automatically shut down the operations, set off an alarm and exhaust 100 percent of the air. This would allow for energy conservation in unmanned operations, without compromising the safety features typically associated with such ventilation systems. Exception 2 is applicable to manned operations where additional documentation is needed to reduce the risk to personnel, such as people operating the spray equipment, from an injury or life safety standpoint. This documentation may include a risk analysis of fire and health hazards associated with the operation of this equipment when some portion of the exhausted air is recirculated.

In general, fire safety efforts have received some assistance from the environmental regulations that have placed restrictions on the amount of volatile organic compounds (VOCs) emitted to the atmo-

INTERNATIONAL CODE COUNCIL®
Copyright © 2015 ICC. ALL RIGHTS RESERVED. Accessed by David Dammon on Jun 21, 2017 12:30:52 PM pursuant to License Agreement with ICC. No further reproduction or distribution authorized. ANY UNAUTHORIZED REPRODUCTION OR DISTRIBUTION IS A VIOLATION OF THE FEDERAL COPYRIGHT ACT AND THE LICENSE AGREEMENT, AND SUBJECT TO CIVIL AND CRIMINAL PENALTIES THEREUNDER.

sphere. This in turn limits the types of materials used and lowers the flammability characteristics through the use of less volatile liquids.

2404.7.3 Air velocity. The ventilation system shall be designed, installed and maintained so that the flammable contaminants are diluted in noncontaminated air to maintain concentrations in the exhaust airflow below 25 percent of the contaminant's lower flammable limit (LFL). In addition, the spray booth shall be provided with mechanical ventilation so that the average air velocity through openings is in accordance with Sections 2404.7.3.1 and 2404.7.3.2.

❖ This section contains performance-based criteria to quantify the amount of exhaust in relation to the control of the contaminant source. In other words, a direct solution is to restrict the concentration of all known contaminants of concern to a specified and acceptable level. That "level" is below 25 percent of the LFL for a particular contaminant. Where the concentration of a flammable contaminant in air is maintained below 25 percent of the LFL for that contaminant, there is insufficient fuel vapor in the gas phase to sustain homogeneous ignition. Managing the contaminant(s) in a diluted state means there is less chance of catastrophic flame propagation, ignition or explosion. The quantity or volume of exhaust required is source specific.

2404.7.3.1 Open-face or open-front spray booth. For spray application operations conducted in an open-face or open-front spray booth, the ventilation system shall be designed, installed and maintained so that the average air velocity into the spray booth through all openings is not less than 100 feet per minute (0.51 m/s).

Exception: For fixed or automated electrostatic spray application equipment, the average air velocity into the spray booth through all openings shall be not less than 50 feet per minute (0.25 m/s).

❖ To help keep flammable vapors in a designated spraying space and limit the amount of overspray, the code requires that the exhaust system be adequately sized to maintain an average velocity over the open face of the booth or booth cross section of no less than 100 feet per minute (0.51 m/s), which is the minimum velocity to capture particulate spray material. To determine the minimum ventilation/exhaust capacity in cubic feet per minute [cfm (m^3/s)], multiply the booth width [feet (mm)] by booth height [feet (mm)] by 100 [linear feet per minute (m/s)].

In electrostatic spray application, paint, in the form of either powdered particles or atomized liquid, is initially projected toward a conductive workpiece using normal spraying methods, and is then accelerated toward the workpiece by a powerful electrostatic charge. This process is much more efficient than ordinary spray finishing, using 95 percent of sprayed paint, thus reducing overspray The exception recognizes this efficiency by allowing the air velocity across openings to be one-half of that required for ordinary spraying. See the commentary to Section 2407 for further discussion of electrostatic apparatus.

2404.7.3.2 Enclosed spray booth or spray room with openings for product conveyance. For spray application operations conducted in an enclosed spray booth or spray room with openings for product conveyance, the ventilation system shall be designed, installed and maintained so that the average air velocity into the spray booth through openings is not less than 100 feet per minute (0.51 m/s).

Exceptions:

1. For fixed or automated electrostatic spray application equipment, the average air velocity into the spray booth through all openings shall be not less than 50 feet per minute (0.25 m/s).
2. Where methods are used to reduce cross drafts that can draw vapors and overspray through openings from the spray booth or spray room, the average air velocity into the spray booth or spray room shall be that necessary to capture and confine vapors and overspray to the spray booth or spray room.

❖ To help keep flammable vapors in a designated spraying space and limit the amount of overspray, the code requires that the exhaust system be adequately sized to maintain an average velocity through the openings in the booth of no less than 100 feet per minute (0.51 m/s), which is the minimum velocity to capture particulate spray material.

In electrostatic spray application, paint, in the form of either powdered particles or atomized liquid, is initially projected toward a conductive workpiece using normal spraying methods and is then accelerated toward the workpiece by a powerful electrostatic charge. This process is much more efficient than ordinary spray finishing, using 95 percent of sprayed paint, thus reducing overspray. Exception 1 recognizes this efficiency by allowing the air velocity across openings to be one-half of that required for ordinary spraying.

Competing airflows (cross drafts) in a space in which a spraying operation is located can cause a "reverse air flow" that can draw vapors or overspray out of the spray booth or spray room. Exception 2 provides a performance-oriented exhaust air velocity option where the effect of such cross drafts is reduced or eliminated.

2404.7.4 Ventilation obstruction. Articles being sprayed shall be positioned in a manner that does not obstruct collection of overspray.

❖ When ventilation systems for spray operations are designed and installed, the configuration and position of the object being sprayed must be considered because it might disrupt the ventilation pattern in both cross-draft and down-draft ventilation spray booths, thereby compromising the effectiveness of the ventilation system.

INTERNATIONAL CODE COUNCIL®
Copyright © 2015 ICC. ALL RIGHTS RESERVED. Accessed by David Dammon on Jun 21, 2017 12:30:52 PM pursuant to License Agreement with ICC. No further reproduction or distribution authorized. ANY UNAUTHORIZED REPRODUCTION OR DISTRIBUTION IS A VIOLATION OF THE FEDERAL COPYRIGHT ACT AND THE LICENSE AGREEMENT, AND SUBJECT TO CIVIL AND CRIMINAL PENALTIES THEREUNDER.

2404.7.5 Independent ducts. Each spray booth and spray room shall have an independent exhaust duct system discharging to the outside.

Exceptions:

1. Multiple spray booths having a combined frontal area of 18 square feet (1.67 m^2) or less are allowed to have a common exhaust when identical spray finishing material is used in each booth. If more than one fan serves one booth, fans shall be interconnected such that all fans will operate simultaneously.
2. Where treatment of exhaust is necessary for air pollution control or for energy conservation, ducts shall be allowed to be manifolded if all of the following conditions are met:
   2.1. The sprayed materials used are compatible and will not react or cause ignition of the residue in the ducts.
   2.2. Nitrocellulose-based finishing material shall not be used.
   2.3. A filtering system shall be provided to reduce the amount of overspray carried into the duct manifold.
   2.4. Automatic sprinkler protection shall be provided at the junction of each booth exhaust with the manifold, in addition to the protection required by this chapter.

❖ This section requires independent duct exhaust of residue from spray-finishing operations. These ducts must be routed directly to the exterior of the building. Similar language is used in IMC Sections 502.7.3.5 and 510.4. Ducts may not penetrate fire-resistance-rated assemblies [see Commentary Figure 2404.7.5(1)].

Exception 1 applies to very small spray booths where the vapor area is very small compared to the area of standard spray booths. Because these individual smaller spray booths are considered as one fire area from a ventilation standpoint, all identical materials are to be used when this exception applies. This will ensure that incompatible materials are not used in booths with a common exhaust system [see Commentary Figure 2404.7.5(2)].

Exception 2 notes that because the exhausted air is at times treated, it can be manifolded. However, special hazards must be avoided to ensure fire protection safety. Incompatible materials must be separated in case of a reaction within the ducts. A similar requirement is found in IMC Section 510.4. Nitrocellulose and nitrocellulose-based products are unstable materials that can easily be ignited, and once ignited, need large quantities of water for suppression. Additionally, nitrocellulose is incompatible with many materials (alkalis, amines, etc.). The cleaning products used in other booths may even ignite the nitrocellulose-based products in a manifolded exhaust system. Therefore, the exhaust of nitrocellulose-based products is considered an exception to this section. See the commentary to Chapter 65 for further information on the hazards of cellulose nitrate (pyroxylin) plastics.

Additional protection, such as filtering and sprinklers at the junction of spray booth exhaust, is also required.

2404.7.6 Termination point. The termination point for exhaust ducts discharging to the atmosphere shall be not less than the following distances:

1. Ducts conveying explosive or flammable vapors, fumes or dusts: 30 feet (9144 mm) from the lot line; 10 feet

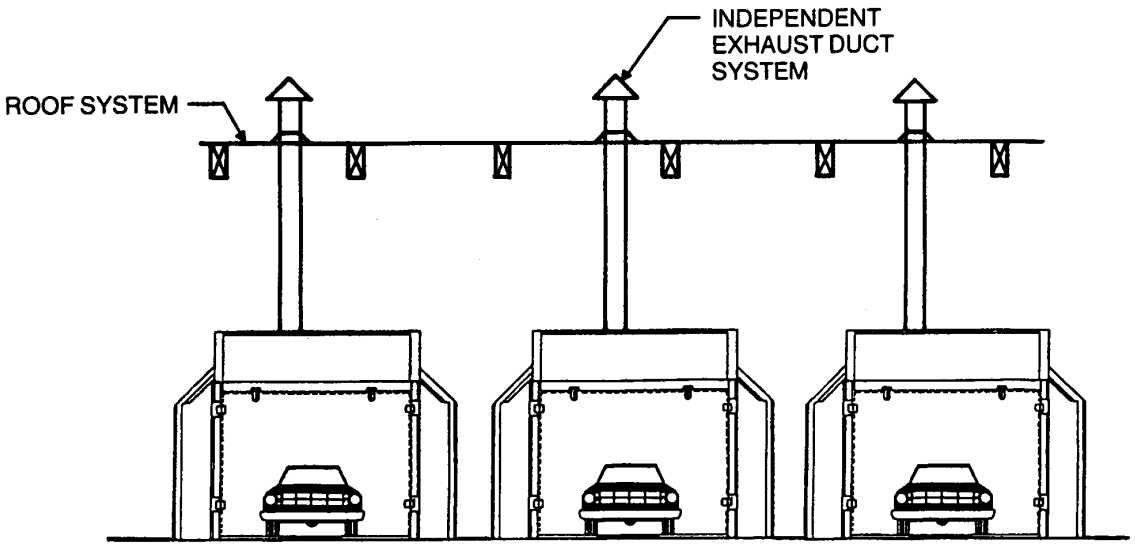

Figure 2404.7.5(1)
INDEPENDENT DUCTS FOR SPRAY BOOTHS

INTERNATIONAL CODE COUNCIL®
Copyright © 2015 ICC. ALL RIGHTS RESERVED. Accessed by David Dammon on Jun 21, 2017 12:30:52 PM pursuant to License Agreement with ICC. No further reproduction or distribution authorized. ANY UNAUTHORIZED REPRODUCTION OR DISTRIBUTION IS A VIOLATION OF THE FEDERAL COPYRIGHT ACT AND THE LICENSE AGREEMENT, AND SUBJECT TO CIVIL AND CRIMINAL PENALTIES THEREUNDER.

(3048 mm) from openings into the building; 6 feet (1829 mm) from exterior walls and roofs; 30 feet (9144 mm) from combustible walls or openings into the building that are in the direction of the exhaust discharge; 10 feet (3048 mm) above adjoining grade.

2. Other product-conveying outlets: 10 feet (3048 mm) from the lot line; 3 feet (914 mm) from exterior walls and roofs; 10 feet (3048 mm) from openings into the building; 10 feet (3048 mm) above adjoining grade.

❖ This section details the requirements for safe outlets/termination points of exhaust ducts conveying spray-finish operation effluent. This section gives distances that must be maintained, depending on the type of exhaust, and is consistent with the requirement in IMC Section 501.2.1.

Item 1 details the requirements of safe outlets/termination points for exhaust ducts that convey explosive or flammable vapors, fumes or dusts like those exhaust systems that serve operations involving the application of flammable finishes. This section is intended to reduce the exposure from the dangerous vapors in the exhaust. This is done to:

1. Protect other parts of the building.
2. Protect other buildings.
3. Reduce a potential reaction from materials that may be incompatible.
4. Reduce the severity of a fire, in case of an ignition.

Vapors that are considered flammable and flammable finishes, including dusts, have more restrictive outlet/termination requirements than other vapors due to the potential for ignition. To avoid recirculation of flammable vapors, fumes or dusts back into the building, the duct must be designed and located to reduce such exposures. This may be achieved by physically separating the exhaust outlet from openings in the building, walls and roof, where sources of ignition or incompatible materials may be present [see Commentary Figures 2404.7.6(1) and 2404.7.6(2)].

For health and safety reasons, hazardous exhaust cannot be directed onto adjacent property. Maintaining the required distance allows the hazardous contents of the exhaust to disperse into the atmosphere, thereby minimizing the exposure of an adjoining property to the potential ignition hazard of a burning ember or spark or the hazardous, noxious and objectionable odors emitted from such systems. Wind and wind-induced eddy currents can react with building structural surfaces to create air pressure zones that can diminish exhaust flow or redirect exhaust into nearby building openings, such as fresh air or combustion air intakes and operable windows.

Exhaust systems sometimes incorporate rotating hoods over the discharge opening to prevent high winds from restricting the flow of exhaust gases out of the system. The hoods align themselves with the direction of the wind to allow the unimpeded and sometimes induced discharge from the exhaust outlet. The termination height specified for combustible walls is more restrictive to allow the concentration of explosive or flammable constituents in the exhaust to diminish before landing or accumulating on a combustible wall. The fire code official must consider prevailing wind conditions in locating hazardous exhaust outlets with respect to other building openings.

Item 2 details provisions regarding safe outlets/termination points of other product-conveying ducts, such as those exhausting nonflammable and nonexplosive dusts and waste products. This item requires that the exhaust outlet be located well into the undisturbed wind stream and away from the cavity

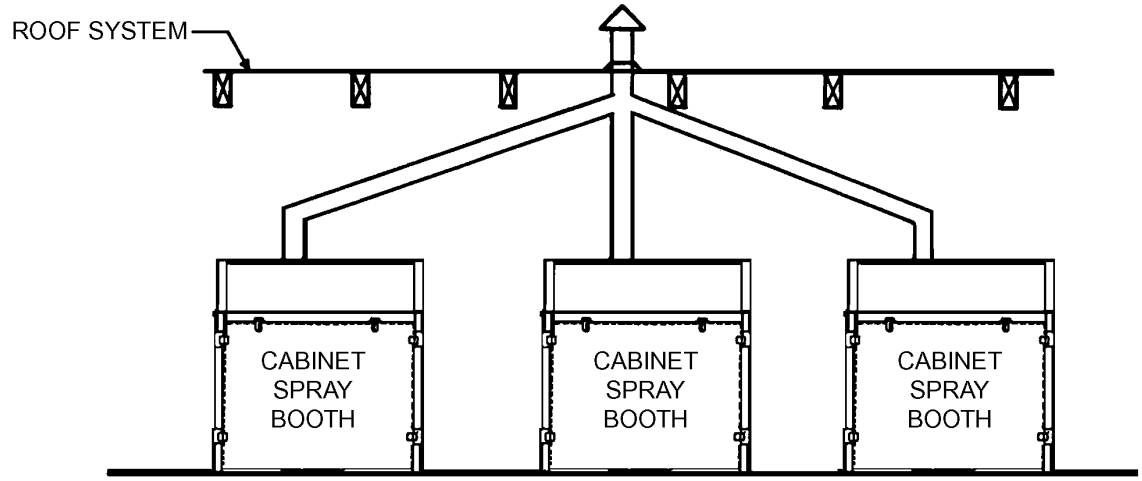

Figure 2404.7.5(2)
COMMON DUCTING FOR SPRAY BOOTHS

INTERNATIONAL CODE COUNCIL®
Copyright © 2015 ICC. ALL RIGHTS RESERVED. Accessed by David Dammon on Jun 21, 2017 12:30:52 PM pursuant to License Agreement with ICC. No further reproduction or distribution authorized. ANY UNAUTHORIZED REPRODUCTION OR DISTRIBUTION IS A VIOLATION OF THE FEDERAL COPYRIGHT ACT AND THE LICENSE AGREEMENT, AND SUBJECT TO CIVIL AND CRIMINAL PENALTIES THEREUNDER.

and wake (eddy) zones around the building. This counteracts the negative effects of wind-induced conditions and also prevents the reentry of exhaust products into the building through openings and fresh air intakes.

2404.7.7 Fan motors and belts. Electric motors driving exhaust fans shall not be placed inside booths or ducts. Fan rotating elements shall be nonferrous or nonsparking or the casing shall consist of, or be lined with, such material. Belts shall not enter the duct or booth unless the belt and pulley within the duct are tightly enclosed.

❖ This requirement in the ventilation section is intended to reduce sources of ignition from spark-producing elements. This would increase the likelihood that overspray in the booth or duct cannot accumulate on the motor housing, which could ultimately cause the motor to overheat. Products that are subject to sparking should be avoided within spraying spaces. Belts that drive exhaust fans are not permitted in the spraying area unless the belts and pulleys are tightly enclosed to prevent solvents in exhaust air from degrading the belt materials and causing a failure of the ventilation system.

As mentioned in the commentary to Section 2403.4.1, the term "nonsparking" is somewhat inaccurate. Parts made of brass and similar "nonsparking" materials do produce sparks but with ignition

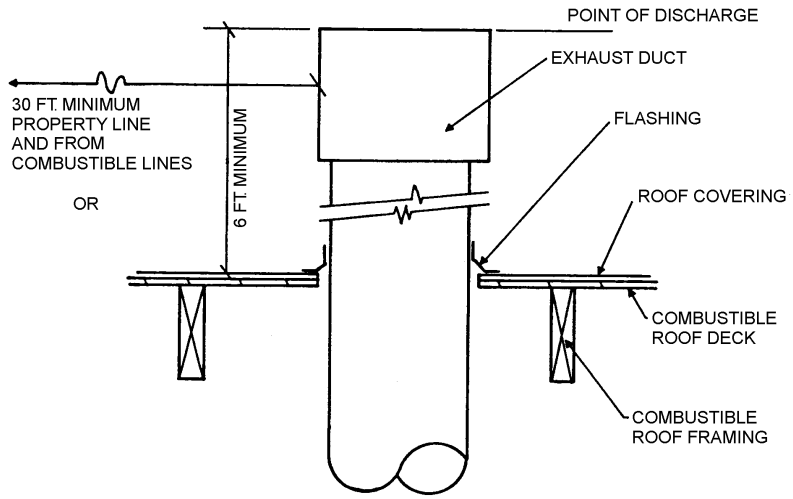

For SI: 1 foot = 304.8 mm.

Figure 2404.7.6(1)
SEPARATION REQUIREMENTS FOR ROOF EXHAUST DUCT PENETRATIONS

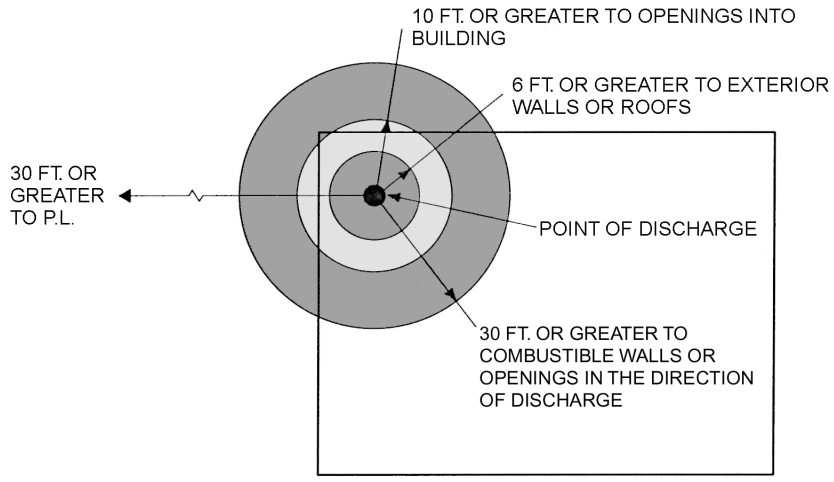

For SI: 1 foot = 304.8 mm.

Figure 2404.7.6(2)
SEPARATION REQUIREMENTS

INTERNATIONAL CODE COUNCIL®
Copyright © 2015 ICC. ALL RIGHTS RESERVED. Accessed by David Dammon on Jun 21, 2017 12:30:52 PM pursuant to License Agreement with ICC. No further reproduction or distribution authorized. ANY UNAUTHORIZED REPRODUCTION OR DISTRIBUTION IS A VIOLATION OF THE FEDERAL COPYRIGHT ACT AND THE LICENSE AGREEMENT, AND SUBJECT TO CIVIL AND CRIMINAL PENALTIES THEREUNDER.

energies too low to ignite flammable vapors. Nevertheless, such parts should be designed carefully to avoid producing sufficient frictional heat to cause an ignition.

2404.7.8 Filters. Air intake filters that are part of a wall or ceiling assembly shall be *listed* as Class I or II in accordance with UL 900. Exhaust filters shall be required.

❖ Spray-booth and ventilation system design should effectively enclose spray operations. To prevent exhausting contaminated vapors into the atmosphere and to prevent accumulation of overspray and residue on duct surfaces and at the duct discharge location, filters must be installed ahead of the exhaust ventilation systems from spraying spaces.

UL 900 requirements cover tests to determine combustibility and the amount of smoke generated for air filter units of both washable and throwaway types used for removal of dust and other air-borne particles from air circulated mechanically in equipment and systems. Because the combustibility and smoke generation of an air filter unit once used depends on the chemicals or materials it is impregnated with, the filter test requirements of UL 900 are for the clean condition only. See the commentary to IMC Section 605.2 for further discussion of UL 900 filters.

2404.7.8.1 Supports. Supports and holders for filters shall be constructed of noncombustible materials.

❖ This section is intended to minimize the combustible materials in a spray booth. The area near a filter that is used or partially used is very susceptible to ignition.

2404.7.8.2 Attachment. Overspray collection filters shall be readily removable and accessible for cleaning or replacement.

❖ Dry-type overspray collectors or filters of paper or fiberglass construction are more efficient than baffle plates. They are frequently used in spray booths containing moderate volumes of work. Replaceable flat or cartridge filters are intended to be discarded once they are significantly loaded with finish residue.

2404.7.8.3 Maintaining air velocity. Visible gauges, audible alarms or pressure-activated devices shall be installed to indicate or ensure that the required air velocity is maintained.

❖ Maintaining air velocities is critical in maintaining a safe environment outside the spraying space, as well as proper collection of flammable vapors and dusts within the spraying space. If air velocities that the exhaust system is designed for are not maintained, the spray booth operator must be made aware of this malfunction. To reduce the possibility of a fire or injury caused by human error, an automatic shutdown of the system is recommended when the designed air velocities are not maintained.

2404.7.8.4 Filter rolls. Spray booths equipped with a filter roll that is automatically advanced when the air velocity is reduced to less than 100 feet per minute (0.51 m/s) shall be arranged to shut down the spraying operation if the filter roll fails to advance automatically.

❖ In the case of roll-type filters, fresh filter material is advanced into the air stream when the air velocity is reduced to less than 100 feet per minute (0.51 m/s). The impregnated filter is wound on a take-up reel. When the entire filter roll is consumed, it is discarded and replaced with a fresh roll of filter material. Shutting down the spray booth when the filter cannot automatically advance (either because of system failure or the need for cartridge replacement) ensures that the operator of the spray booth does not fail in his or her task of replacing the filter.

2404.7.8.5 Filter disposal. Discarded filter pads shall be immediately removed to a safe, detached location or placed in a noncombustible container with a tight-fitting lid and disposed of properly.

❖ To reduce the possibility of ignition, filters should be disposed of in approved metal containers with tight-fitting, self-closing lids. Waste containers should be removed from the building when full and at the end of each work shift. See also the commentary to Section 2403.4.3 for further discussion of waste disposal.

2404.7.8.6 Spontaneous ignition. Spray booths using dry filters shall not be used for spraying materials that are highly susceptible to spontaneous heating and ignition. Filters shall be changed prior to spraying materials that could react with other materials previously collected. An example of a potentially reactive combination includes lacquer when combined with varnishes, stains or primers.

❖ Ventilation system filters must be noncombustible. Once fouled with paint or coating residue, the filters become highly combustible. Moreover, they are more susceptible to spontaneous heating. Dry-type overspray collectors or filters of paper or fiberglass construction are more efficient than baffle plates and are frequently used in spray booths containing moderate volumes of work. Replaceable flat or cartridge filters are intended to be discarded once they are significantly loaded with finish residue. See also the commentary to Section 2404.5.1 for further discussion of spontaneous ignition.

2404.7.8.7 Waterwash spray booths. Waterwash spray booths shall be of an *approved* design so as to prevent excessive accumulation of deposits in ducts and residue at duct outlets. Such booths shall be arranged so that air and overspray are drawn through a continuously flowing water curtain before entering an exhaust duct to the building exterior.

❖ Waterwash booths are typically used for high-volume paint and lacquer usage. Many paints and lacquers are susceptible to spontaneous heating and combustion when left in a poorly ventilated or enclosed area. Materials containing linseed oil are especially prone to this type of reaction. Spray-finishing operations involving these materials should be confined to waterwash booths when possible because water is used as the filtration medium instead of dry filters.

INTERNATIONAL CODE COUNCIL®
Copyright © 2015 ICC. ALL RIGHTS RESERVED. Accessed by David Dammon on Jun 21, 2017 12:30:52 PM pursuant to License Agreement with ICC. No further reproduction or distribution authorized. ANY UNAUTHORIZED REPRODUCTION OR DISTRIBUTION IS A VIOLATION OF THE FEDERAL COPYRIGHT ACT AND THE LICENSE AGREEMENT, AND SUBJECT TO CIVIL AND CRIMINAL PENALTIES THEREUNDER.

2404.8 Interlocks. Interlocks for spray application finishes shall be in accordance with Sections 2404.8.1 through 2404.8.2.

❖ This section establishes the applicability of the requirements of Sections 2404.8.1 and 2404.8.2 for controlling hazards of spraying operations through the installation of system interlocks.

2404.8.1 Automated spray application operations. Where protecting automated spray application operations, automatic fire-extinguishing systems shall be equipped with an *approved* interlock feature that will, upon discharge of the system, automatically stop the spraying operations and workpiece conveyors into and out of the flammable vapor areas. Where the building is equipped with a fire alarm system, discharge of the automatic fire-extinguishing system shall also activate the building alarm notification appliances.

❖ An interlock is a practical solution to avoid a fire situation in which the automated system would allow for a "moving fire" as the pieces within the automated assembly move through the spraying space. The interlock would stop the spray application, which would further contribute to the flammable fuel/vapors, and prevent a moving fire from spreading faster and farther than expected. This is especially significant in larger conveyor and multiple spraying-space/spray-booth systems, where fire could spread quickly beyond the designed sprinkler area. The interlock between the suppression system and the alarm system would notify the occupants of a building to evacuate.

2404.8.1.1 Alarm station. A manual fire alarm and emergency system shutdown station shall be installed to serve each flammable vapor area. When activated, the station shall accomplish the functions indicated in Section 2404.8.1.

❖ In case the operator of a spraying area becomes aware of a fire prior to the actuation of the extinguishing system, or in case there is an emergency not related to a fire where there is a risk to the occupants of the building, a manual fire alarm station is needed. The manual station is to provide the same functions as the automated interlock in Section 2404.8.1, such as stopping the spread of fire and activating occupant notification. Because areas near the spraying space are dangerous, to reduce the risk of injury to an operator who may be attempting to activate the manual alarm, an additional alarm is required adjacent to an exit for the operator to activate while exiting from a hazardous situation.

2404.8.1.2 Alarm station location. Not less than one manual fire alarm and emergency system shutdown station shall be readily accessible to operating personnel. Where access to this station is likely to involve exposure to danger, an additional station shall be located adjacent to an *exit* from the area.

❖ Manual fire alarm and emergency system shutdown stations, in order to be effective, must be located within easy reach of spray operation personnel who might be working in the area. The term "readily accessible" can be described as the capability of being quickly reached or approached for the purpose of operation. Ready access means that there are no physical obstructions and that there is no change in elevation to reach the required object or location.

When access to required manual fire alarm and emergency system shutdown stations could be compromised by a flash fire or equipment malfunction, an additional station must be installed near [within 5 feet (1524 mm)] an exit door from the area so that at least one station is available in the path of egress to transmit an alarm in a timely manner. This location also encourages the actuation of the manual fire alarm and emergency system on the fire floor prior to entering the stairway or exiting the building, resulting in the alarm being received from the actual fire floor and not another floor along the path of egress. The installation criteria contained in Section 907.4 for manual fire alarm boxes are applicable to such stations since part of their function is as a fire alarm pull station.

2404.8.2 Ventilation interlock prohibited. Air makeup and flammable vapor area exhaust systems shall not be interlocked with the fire alarm system and shall remain in operation during a fire alarm condition.

Exception: Where the type of fire-extinguishing system used requires such ventilation to be discontinued, air makeup and exhaust systems shall shut down and dampers shall close.

❖ Exhaust ventilation of flammable vapors and smoke during a fire may help reduce the fire severity and increase visibility. Therefore, an interlock system to shut down the spray operations during a fire should not include the safety systems, such as ventilation. In an emergency, the success of the fire-extinguishing system takes precedence over the function of the ventilation system. Therefore, if the ventilation system in any way compromises the fire-extinguishing system, the exception allows these systems to be interlocked to shut down in the event of a fire. Examples of systems that may be compromised if the ventilation system is on are many of the extinguishing systems that are not water based, such as carbon dioxide, halogenated agent, clean agent, etc.

2404.9 Limited spraying spaces. Limited spraying spaces shall comply with Sections 2404.9.1 through 2404.9.4.

❖ Limited spraying spaces are to accommodate uses that are limited in their frequency and amounts of hazardous materials used. As mentioned previously, this operation is intended more for small touch-up work found in a maintenance shop.

2404.9.1 Job size. The aggregate surface area to be sprayed shall not exceed 9 square feet (0.84 m^2).

❖ Limiting the workpiece size limits the amount of flammable vapors that are produced in such an area. This

INTERNATIONAL CODE COUNCIL®
Copyright © 2015 ICC. ALL RIGHTS RESERVED. Accessed by David Dammon on Jun 21, 2017 12:30:52 PM pursuant to License Agreement with ICC. No further reproduction or distribution authorized. ANY UNAUTHORIZED REPRODUCTION OR DISTRIBUTION IS A VIOLATION OF THE FEDERAL COPYRIGHT ACT AND THE LICENSE AGREEMENT, AND SUBJECT TO CIVIL AND CRIMINAL PENALTIES THEREUNDER.

is again to accommodate small incidental-type spraying processes found in typical manufacturing or mercantile occupancies.

2404.9.2 Frequency. Spraying operations shall not be of a continuous nature.

❖ As mentioned previously, the limited spraying setup is to accommodate small incidental-type processes. If the processes are continuous, a spray booth, spray room or spraying space must be used whose requirements are more stringent and are better regulated from a fire prevention and fire protection standpoint.

2404.9.3 Ventilation. Positive mechanical ventilation providing a minimum of six complete air changes per hour shall be installed. Such system shall meet the requirements of this code for handling flammable vapor areas. Explosion venting is not required.

❖ Six air changes per hour is the requirement for limited spraying areas; however, if the quantity of hazardous material in the room or control area in which the limited spraying space is located exceeds the MAQ for hazardous materials given in Chapter 50 or 57, both exhaust ventilation requirements in those chapters for flammable vapors and the requirement in this section have to be met. A typical example would be a plating shop where allowable quantities of corrosives and toxics are exceeded (Group H-4) and where the exhaust ventilation at a rate of 1 cfm per square foot [0.00508 $m^3/(s \bullet m^2)$] of floor area is required. If a limited spraying space is located in such a room, the most restrictive requirement has to be met; that is, the greater of 1 cfm per square foot [0.00508 $m^3/(s \bullet m^2)$] or six air changes per hour. The vapor density of the material should be taken into account (whether vapors are heavier or lighter than air) when considering the location of exhaust inlets. Additionally, because IMC Section 502.7.2 is identical to this section, conformance to the general requirements of IMC Section 502, especially Section 502.1.1 (the inlet to an exhaust system shall be located in the area of heaviest concentration of contaminants), is recommended.

2404.9.4 Electrical wiring. Electrical wiring within 10 feet (3048 mm) of the floor and 20 feet (6096 mm) horizontally of the limited spraying space shall be designed for Class I, Division 2 locations in accordance with NFPA 70.

❖ Processes in limited spraying spaces may still result in some vapor generation. Because they are generally heavier than air, vapors in spray processes typically accumulate near the floor. These vapors may travel long distances undetected before causing a flash fire. To limit the ignition sources, wiring must be installed to meet Class I, Division 2 requirements within 10 feet (3048 mm) of the floor and 20 feet (6096 mm) horizontally.

SECTION 2405
DIPPING OPERATIONS

2405.1 General. Dip-tank operations shall comply with the requirements of Section 2403 and Sections 2405.2 through 2405.11.

❖ This section establishes the applicability of the requirements of Sections 2403 and 2405 for controlling hazards associated with dip tanks and dipping operations.

2405.2 Location of dip-tank operations. Dip-tank operations conducted in buildings used for Group A, I or R occupancies shall be located in a room designed for that purpose, equipped with an *approved automatic sprinkler system* and separated vertically and horizontally from other areas in accordance with the *International Building Code*.

❖ Separation and protection from hazards of other portions of a building housing the occupancy groups listed in this section are critical for several reasons. Dipping and coating processes are too hazardous to be conducted in occupancies with a high life or property exposure. The number of occupants in such buildings and their physical conditions vary. People exposed to the danger of a fire involving dip-tank operations must be able to evacuate or protect themselves promptly and effectively to avoid the risk of serious injury or death. Also, the behavior psychology of people in a Group A, I or R occupancy is very different from those in a Group F manufacturing occupancy. A person walking in a manufacturing facility where dipping operations/processes take place in a large area where the dip tanks and signs are in plain view is more aware of the physical dangers associated with these processes than someone in a Group R occupancy, who would more likely be relaxing and thinking of things other than physical hazards.

The protection designed into these occupancies is, in many cases, less than would be found in manufacturing occupancies. Separation and protection in the form of fire-resistance-rated construction and automatic fire suppression must be provided where dipping operations must be conducted in the same building. Fire barriers, horizontal assemblies or both having a fire-resistance rating of 3 hours are required between Group F-1 and A, or I and R occupancies. Except for Group I-2, this requirement can be reduced in a sprinklered building by 1 hour. If the amounts of hazardous materials exceed the MAQ listed in Chapter 50, the occupancy separation between Group H and A, or I and R occupancies varies depending on what material(s) is involved (see IBC Section 508).

2405.3 Construction of dip tanks. Dip tanks shall be constructed in accordance with Sections 2405.3.1 through 2405.3.4.3 and NFPA 34. Dip tanks, including drain boards, shall be constructed of noncombustible material and their

INTERNATIONAL CODE COUNCIL®
Copyright © 2015 ICC. ALL RIGHTS RESERVED. Accessed by David Dammon on Jun 21, 2017 12:30:52 PM pursuant to License Agreement with ICC. No further reproduction or distribution authorized. ANY UNAUTHORIZED REPRODUCTION OR DISTRIBUTION IS A VIOLATION OF THE FEDERAL COPYRIGHT ACT AND THE LICENSE AGREEMENT, AND SUBJECT TO CIVIL AND CRIMINAL PENALTIES THEREUNDER.

supports shall be of heavy metal, reinforced concrete or masonry.

❖ The selection of materials and design of dipping and coating processes must consider the physical properties of the liquid and the processing environment. The corrosivity, density, viscosity, vapor pressure and flash point of the liquid influences the selection of materials and arrangement of processing equipment. Additionally, mechanical hazards, such as impacts and collisions involving conveyor equipment, should be considered. Protected steel or concrete tank supports reduce the likelihood of a collapse in the event of a fire caused by a spill or release. The figure accompanying the definition of "Dip tank" in Chapter 2 shows the arrangement of a typical dip tank, including overflow and emergency release drains.

2405.3.1 Overflow. Dip tanks greater than 150 gallons (568 L) in capacity or 10 square feet (0.93 m^2) in liquid surface area shall be equipped with a trapped overflow pipe leading to an *approved* location outside the building. The bottom of the overflow connection shall be not less than 6 inches (152 mm) below the top of the tank.

❖ An overflow drain is required for tanks with capacities greater than 150 gallons (568 L) or having a surface area greater than 10 square feet (0.93 m^2) to confine spills or uncontrolled releases caused by overfilling or overflowing when parts are immersed. The capacity of overflow drains should exceed the capacity of the tank and discharge through an approved trap and separator or to an approved salvage tank.

2405.3.2 Bottom drains. Dip tanks greater than 500 gallons (1893 L) in liquid capacity shall be equipped with bottom drains that are arranged to automatically and manually drain the tank quickly in the event of a fire unless the viscosity of the liquid at normal atmospheric temperature makes this impractical. Manual operation shall be from a safe, accessible location. Where gravity flow is not practicable, automatic pumps shall be provided. Such drains shall be trapped and discharged to a closed, vented salvage tank or to an *approved* outside location.

Exception: Dip tanks containing Class IIIB *combustible liquids* where the liquids are not heated above room temperature and the process area is protected by automatic sprinklers.

❖ Emergency release drains permit flammable liquids in dip tanks to be safely discharged if a fire occurs. A trap between the drain opening and the separator or salvage tank reduces the likelihood that the fire will flash back into the tank. The arrangement of emergency release drains must permit both automatic and manual operation. Moreover, viscous liquids are exempt from these requirements. These liquids, however, generally have higher flash points and are more difficult to ignite than other, less viscous materials. If a highly viscous combustible liquid is heated for use as a coating material, having a drain remains a good practice. If installed, the drain should be sized for the volume and viscosity of the liquid under normal usage conditions. When practical, tanks should be arranged to drain by gravity. Pumps must be used if gravity discharge is not practical. When a tank is equipped with a pump, the pump should be installed on the discharge side of the trap. When a pump is installed to aid in emergency release, flammable and combustible liquid piping must comply with Chapter 57. The exception covers Class IIIB combustible liquids, which have a flashpoint above 200°F (93°C). These liquids are not viewed by the code as extremely hazardous, especially when they are not heated above room temperature. For example, Table 5003.1.1(1), Note f allows for unlimited quantities of Class IIIB liquids in storage and use in a sprinklered building.

2405.3.3 Dipping liquid temperature control. Protection against the accumulation of vapors, self-ignition and excessively high temperatures shall be provided for dipping liquids that are heated directly or heated by the surfaces of the object being dipped.

❖ The evaporation rate of a liquid increases as the liquid temperature increases. By controlling the maximum liquid temperature, in case of a malfunction or unplanned event, the temperature of the liquid will not increase to a point where the exhaust ventilation cannot accommodate the exhaust of the vapors. Moreover, controlling the maximum liquid temperature would prevent the liquid from reaching its self-ignition (or auto-ignition) temperature. The temperature control for the liquid must be specifically designed for the liquid. Self-ignition temperatures of liquids can be found in many references. The *SFPE* (Society of Fire Protection Engineers) *Handbook of Fire Protection Engineering* includes tables listing auto-ignition temperatures for a variety of products. Although it is a more general application, similar temperature control requirements apply when exempt use and storage amounts of heated hazardous materials are exceeded (see Section 5004.8.1).

2405.3.4 Dip-tank covers. Dip-tank covers allowed by Section 2405.4.1 shall be capable of manual operation and shall be automatic closing by *approved* automatic-closing devices designed to operate in the event of a fire.

❖ Dip-tank covers installed as a method of automatic suppression conforming to Section 2405.4.1 must be capable of manual actuation. Automatic closure must be initiated by a fusible link or another approved heat-sensitive device. Covers that cannot close under the force of gravity must be assisted by hydraulic activators, springs, counterweights or other methods.

2405.3.4.1 Construction. Covers shall be constructed of noncombustible material or be of a tin-clad type with enclosing metal applied with locked joints.

❖ Dip-tank covers must be constructed of noncombustible material to avoid adding to the fire load, as well as to maintain the integrity of the system as a passive containment fire protection system. Tin-clad covers should be designed the same as metal-clad or tin-clad fire doors (see NFPA 80). Materials used for

INTERNATIONAL CODE COUNCIL®
Copyright © 2015 ICC. ALL RIGHTS RESERVED. Accessed by David Dammon on Jun 21, 2017 12:30:52 PM pursuant to License Agreement with ICC. No further reproduction or distribution authorized. ANY UNAUTHORIZED REPRODUCTION OR DISTRIBUTION IS A VIOLATION OF THE FEDERAL COPYRIGHT ACT AND THE LICENSE AGREEMENT, AND SUBJECT TO CIVIL AND CRIMINAL PENALTIES THEREUNDER.

automatic-closing mechanisms, such as hydraulic actuators, springs, etc., should also be constructed of noncombustible materials.

2405.3.4.2 Supports. Chain or wire rope shall be utilized for cover supports or operating mechanisms.

❖ Devices for holding the cover open must be designed to permit it to close freely and seal tightly. If noncombustible materials are used, a fusible link or another heat-sensitive device must be used to initiate closure.

2405.3.4.3 Closed covers. Covers shall be kept closed when tanks are not in use.

❖ Keeping the cover closed when the tank is not in use reduces the release of flammable vapors or the accidental introduction of an ignition source into the vapor area located below the rim of the dip tank.

2405.4 Fire protection. Dip-tank operations shall be protected in accordance with Sections 2405.4.1 through 2405.4.2.

❖ This section establishes the applicability of the requirements of Section 2405.4 for controlling and extinguishing fires in dipping operations.

2405.4.1 Fixed fire-extinguishing equipment. An *approved* automatic fire-extinguishing system or dip-tank cover in accordance with Section 2405.3.4 shall be provided for the following dip tanks:

1. Dip tanks less than 150 gallons (568 L) in capacity or 10 square feet (0.93 m^2) in liquid surface area.
2. Dip tanks containing a liquid with a *flash point* below 110°F (43°C) used in such manner that the liquid temperature could equal or be greater than its *flash point* from artificial or natural causes, and having both a capacity of more than 10 gallons (37.9 L) and a liquid surface area of more than 4 square feet (0.37 m^2).

❖ This section applies to fire-extinguishing equipment for certain smaller sizes of dip tanks. It offers the option of dip-tank covers instead of a fixed fire-extinguishing system. Tanks equipped with noncombustible automatic-closing covers conforming to Section 2405.3.4 need not be protected by a fire suppression system on the basis that the cover can be closed, thus containing a dip tank fire and further restricting oxygen supply to the fire. Additionally, the suppression system will not be effective in controlling a fire when the cover is in the sloped position because the sprinkler water would simply run off the cover and away from the fire. Automatic sprinkler protection is recommended for plant areas located around dip tanks and other similar equipment. However, the primary protection for the dip tank should be one of the following types of systems listed in order of desirability and effectiveness:

1. Water-spray fixed system (NFPA 15 or 16).
2. Foam-extinguishing system (NFPA 11, 11A or 16).
3. Carbon dioxide system (NFPA 12).
4. Halogenated system (NFPA 12A).
5. Dry-chemical system (NFPA 17).

Water-spray fixed systems are more effective at controlling flammable liquid pool fires, such as those involving dip tanks, because they produce finer water droplets that are more effective at absorbing heat from these rapidly burning, intense fires. Most water droplets are quickly vaporized by the fire and rarely pose a significant danger of boil-over, froth-over or slop-over from penetrating the surface of the flammable or combustible liquid (see NFPA 30 for further information on these phenomena unique to flammable and combustible liquids in tanks). Unless dip-tank covers are installed, fixed fire-extinguishing equipment is required for dip tanks less than 150 gallons (568 L) or 10 square feet (0.93 m^2). Unless dip-tank covers are installed, dip tanks containing Class I flammable liquids and Class II combustible liquids with flash points below 110°F (43°C) used at ambient temperatures above their flash points; and having capacities greater than 10 gallons (38 L) and exposed surface areas greater than 4 square feet (0.37 m^2) must be protected in accordance with Section 2405.4.1.1 because of their ease of ignition.

2405.4.1.1 Fire-extinguishing system. An *approved* automatic fire-extinguishing system shall be provided for dip tanks with a 150-gallon (568 L) or more capacity or 10 square feet (0.93 m^2) or larger in a liquid surface area. Fire-extinguishing system design shall be in accordance with NFPA 34.

❖ Automatic fire suppression must be installed at dip tanks with a capacity greater than 150 gallons (568 L) or larger than 10 square feet (0.93 m^2) in surface area. See the commentary to Section 2405.4.1 for the preferred type of extinguishing system.

2405.4.2 Portable fire extinguishers. Areas in the vicinity of dip tanks shall be provided with portable fire extinguishers complying with Section 906 and suitable for flammable and combustible liquid fires as specified for extra (high) hazard occupancies.

❖ Readily accessible portable fire extinguishers for incipient fire fighting must be installed for use by employees working around dipping and coating processing equipment. Both the size and distribution of portable fire extinguishers must conform to this section, Section 906.1 and the applicable sections of NFPA 10 for extra (high) hazards. Two units of Class B extinguishing capabilities are required for each square foot (m^2) of dip-tank area if either dry-chemical or carbon dioxide portable extinguishers are installed. Only one unit of Class B rating is required per square foot (m^2) if aqueous film-forming foam (AFFF) portable extinguishers are provided. For example, a 40-square-foot (4 m^2) dip tank would require an 80-B-rated dry-chemical or carbon dioxide extinguisher, or a 40-B AFFF extinguisher. The maximum travel distance to the nearest required portable fire extinguisher is 30 feet (9144 mm). Employees who are expected to fight incipient fires should

INTERNATIONAL CODE COUNCIL®
Copyright © 2015 ICC. ALL RIGHTS RESERVED. Accessed by David Dammon on Jun 21, 2017 12:30:52 PM pursuant to License Agreement with ICC. No further reproduction or distribution authorized. ANY UNAUTHORIZED REPRODUCTION OR DISTRIBUTION IS A VIOLATION OF THE FEDERAL COPYRIGHT ACT AND THE LICENSE AGREEMENT, AND SUBJECT TO CIVIL AND CRIMINAL PENALTIES THEREUNDER.

receive instructions in the operation of installed fire protection equipment. Fire protection systems, equipment and devices must be maintained in accordance with Section 901.6.

2405.5 Housekeeping, maintenance and storage of hazardous materials. Housekeeping, maintenance, storage and use of hazardous materials shall be in accordance with Sections 2403.3 and 2403.4.

❖ This section establishes the applicability of the requirements of Sections 2403.3 and 2403.4 for controlling hazards associated with housekeeping, maintenance and the storage of hazardous materials.

2405.6 Sources of ignition. Control of sources of ignition shall be in accordance with Section 2403.2.

❖ See the commentary to Section 2403.2.

2405.7 Ventilation of flammable vapor areas. Flammable vapor areas shall be provided with mechanical ventilation adequate to prevent the dangerous accumulation of vapors. Required ventilation systems shall be arranged such that the failure of any ventilating fan shall automatically stop the dipping conveyor system.

❖ This section includes performance-based language that requires ventilation to prevent the dangerous accumulation of vapors. Additionally, conveyor systems used with dipping operations need to be interlocked with the ventilation system to avoid continuation of operations in the event of a ventilation system failure. The IMC contains requirements for hazardous exhaust systems and requires independent duct exhaust of vapor releases from dipping and coating processing tanks, reservoirs, trench drains, drain boards, conveyor tunnels and any other space where flammable vapors may be liberated. Ducts are not to penetrate fire-resistance-rated assemblies. The plenum and ductwork must be protected by automatic sprinklers or other approved fire suppression systems installed in accordance with Chapter 9. Only fans and mechanical equipment approved for use in Class I, Division 1 hazardous locations are to be installed in the exhaust air stream, and ductwork must be of materials, thicknesses and construction methods specified in the IMC.

2405.8 Conveyor interlock. Dip tanks utilizing a conveyor system shall be arranged such that in the event of a fire, the conveyor system shall automatically cease motion and the required tank bottom drains shall open.

❖ Mechanical or electrical interlocks must interrupt conveyor motion and cause required emergency release drains to open in the event of a fire. Stopping the conveyor prevents newly coated parts from transporting a fire beyond the immediate vicinity of the dipping or coating processing area and its protection systems.

2405.9 Hardening and tempering tanks. Hardening and tempering tanks shall comply with Sections 2405.3 through 2405.3.3, 2405.4.2 and 2405.8, but shall be exempt from other provisions of Section 2405.

❖ Requirements of Sections 2405.9.1 through 2405.9.5 apply to oil-quenching tanks used in hardening and tempering processes. Individually, hardening and tempering are usually accomplished by immersing parts in tanks containing certain metal salts heated to temperatures between 1,400°F and 2,350°F (760°C and 1287°C). This process often requires several steps, with parts cooled by oil quenching between steps. Such oil-quenching baths are the subject of these requirements. Animal, vegetable and mineral oils, and various mixtures of each, are used for oil quenching, but mineral oils are most commonly used. Recently, polymers have replaced oils on a small scale in some oil-quenching processes. For most oil-quenching processes, oils have flash points above 300°F (149°C) (Class III-B) and many have flash points exceeding 500°F (260°C). Oil-quenching baths are usually maintained 100°F to 200°F (38°C to 93°C) below their flash points. The same design, construction, operation, maintenance and fire protection requirements applying to dip tanks pertain to hardening and tempering tanks, as do the requirements of Sections 2405.9.1 through 2405.9.5.

2405.9.1 Location. Tanks shall be located as far as practical from furnaces and shall not be located on or near combustible floors.

❖ High temperatures produced by hardening and tempering processes require the maintenance of separation between tanks, ignition sources and combustible materials (see Commentary Figure 2405.9.1).

2405.9.2 Hoods. Tanks shall be provided with a noncombustible hood and vent or other *approved* venting means, terminating outside of the structure to serve as a vent in case of a fire. Such vent ducts shall be treated as flues and proper clearances shall be maintained from combustible materials.

❖ Though the materials in hardening and tempering baths are usually not considered flammable, the elevated temperatures may represent an ignition source to other combustibles. The contents of oil-quenching tanks used for high flash-point liquids may be difficult to ignite, but once ignited, the rate of heat release is comparable to other flammable and combustible liquids. Hoods over hardening, tempering and oil-quenching tanks will help maintain tenable conditions near the tanks and help control a fire, should it occur, by providing a controlled avenue of vertical spread. Therefore, exhaust hood materials must be noncombustible and separated from combustible structural components.

INTERNATIONAL CODE COUNCIL®
Copyright © 2015 ICC. ALL RIGHTS RESERVED. Accessed by David Dammon on Jun 21, 2017 12:30:52 PM pursuant to License Agreement with ICC. No further reproduction or distribution authorized. ANY UNAUTHORIZED REPRODUCTION OR DISTRIBUTION IS A VIOLATION OF THE FEDERAL COPYRIGHT ACT AND THE LICENSE AGREEMENT, AND SUBJECT TO CIVIL AND CRIMINAL PENALTIES THEREUNDER.

2405.9.3 Alarms. Tanks shall be equipped with a high-temperature limit switch arranged to sound an alarm when the temperature of the quenching medium reaches 50°F (10°C) below the *flash point*.

❖ Thermostats may be used to limit the heat input to the oil bath for temperature maintenance. However, many systems require cooling systems to maintain oil baths within specified temperature limitations. Water leaking from these cooling systems can pose a special hazard from boil-over as the water is converted to steam (see Commentary Figure 2405.9.3).

2405.9.4 Fire protection. Hardening and tempering tanks greater than 500 gallons (1893 L) in capacity or 25 square feet (2.3 m^2) in liquid surface area shall be protected by an *approved* automatic fire-extinguishing system complying with Chapter 9.

❖ Tanks larger than 500 gallons (1893 L) in capacity or 25 square feet (2.3 m^2) in surface area present a significant enough hazard as to be required to be protected by an automatic fire-suppression system.

2405.9.5 Use of air pressure. Air under pressure shall not be used to fill or agitate oil in tanks.

❖ Heated oil can cause air injected below the oil surface to expand, allowing oil to spill from the tank. Air containing moisture can contaminate the oil bath, leading to boil-over.

2405.10 Flow-coating operations. Flow-coating operations shall comply with the requirements for dip tanks. The area of the sump and any areas on which paint flows shall be considered to be the area of a dip tank.

❖ In flow-coat operations, a liquid coating is applied to the workpiece in a nonatomized stream through fixed or oscillating nozzles. Excess liquid is collected in a trough or sump below the workpiece and recirculated through a reservoir. The principal hazard from flow

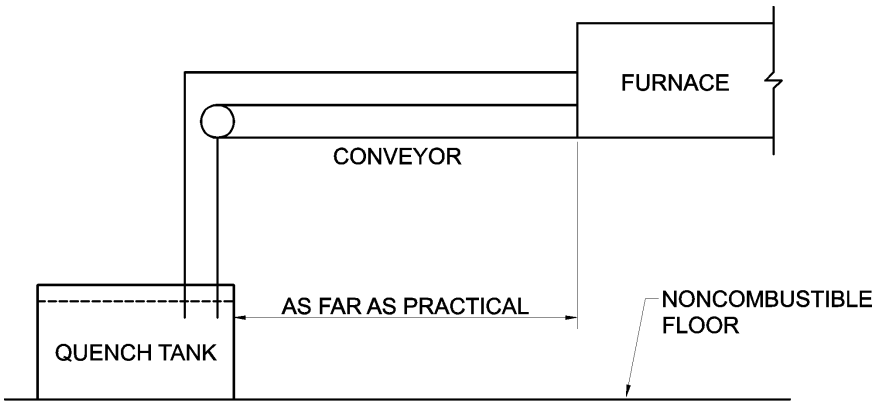

Figure 2405.9.1
SEPARATION REQUIREMENTS FOR QUENCHING TANKS

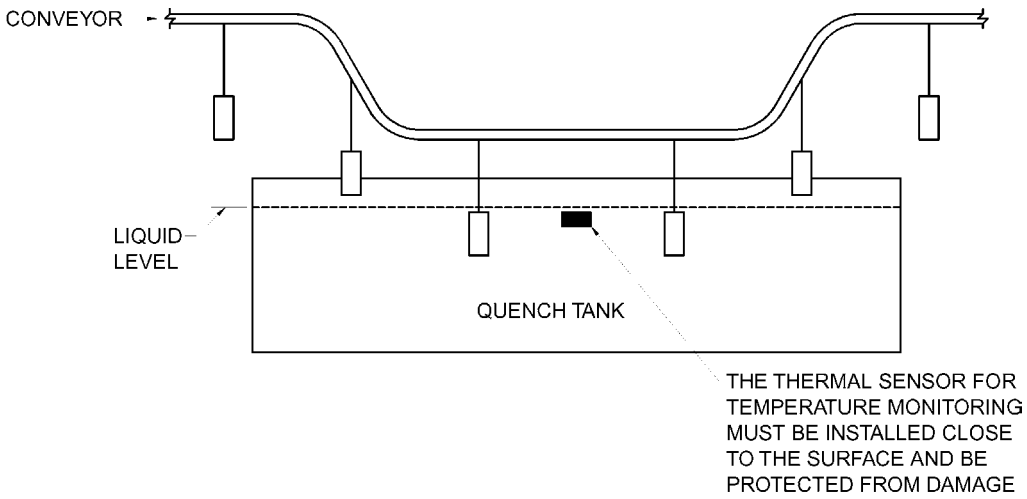

Figure 2405.9.3
TYPICAL QUENCH TANK ALARM LOCATION

INTERNATIONAL CODE COUNCIL®
Copyright © 2015 ICC. ALL RIGHTS RESERVED. Accessed by David Dammon on Jun 21, 2017 12:30:52 PM pursuant to License Agreement with ICC. No further reproduction or distribution authorized. ANY UNAUTHORIZED REPRODUCTION OR DISTRIBUTION IS A VIOLATION OF THE FEDERAL COPYRIGHT ACT AND THE LICENSE AGREEMENT, AND SUBJECT TO CIVIL AND CRIMINAL PENALTIES THEREUNDER.

coating is the liberation of flammable liquid vapor from the surface of excess liquid. The area of the trough or sump for collecting overspray defines the scope of the hazard. Protection of flow-coat operations must be based on the combined area of the trough or sump and any surfaces in which paint or coating material flows en route to the trough or sump (see Commentary Figure 2405.10). In large operations, drain tunnels extend outside the enclosure. Moving the object through the drain tunnels reduces solvent evaporation. Using the tunnels also improves the film coating on the object. Curtain coating operates on a similar principle, except a trough is filled above the workpiece and allowed to overflow in a thin flat stream. This process is often used to coat flat or slightly curved workpieces.

2405.10.1 Paint supply. Paint shall be supplied by a gravity tank not exceeding 10 gallons (38 L) in capacity or by direct low-pressure pumps arranged to shut down automatically in case of a fire by means of *approved* heat-actuated devices.

❖ Positive displacement pumps are most commonly used to recirculate paint and coating material from the reservoir to the nozzles. Gravity tanks not exceeding 10 gallons (38 L) in capacity are also permitted. When a pump is used, the pump power supply must be interlocked with heat detectors to shut down if a fire occurs.

2405.11 Roll-coating operations. Roll-coating operations shall comply with Section 2405.10. In roll-coating operations utilizing flammable or *combustible liquids*, sparks from static electricity shall be prevented by electrically bonding and grounding all metallic rotating and other parts of machinery and equipment and by the installation of static collectors, or by maintaining a conductive atmosphere such as a high relative humidity.

❖ Roll-coating methods apply material to flat work pieces, usually paper, cardboard, cloth or thin metals, using liquid-coated cylinders or rollers. Coating material may be applied to the rollers by rotating them in an open trough or pan or applying liquid to the space between two rollers (see Commentary Figure 2405.11).

SECTION 2406
POWDER COATING

2406.1 General. Operations using finely ground particles of protective finishing material applied in dry powder form by a fluidized bed, an electrostatic fluidized bed, powder spray guns or electrostatic powder spray guns shall comply with Sections 2406.2 through 2406.7. In addition, Section 2407 shall apply to fixed electrostatic equipment used in powder coating operations.

❖ This section applies to powder-coating operations, which involve the application of finely ground particles of protective finishing material. The finish from powder coating is very strong and more durable than conventional finishes. This is a benefit, from an environmental and fire protection standpoint, because there are no liquid finishes or solvents to produce flammable vapors or VOCs. Additionally, less solid waste is created with this method of finishing. The foremost hazard associated with such application(s) is fire or explosion as a result of the airborne dust. The hazard associated with powder-coating operations is considered less than that of a similar operation using flammable or combustible liquids. The energy required to ignite a cloud of air-suspended coating powder is from 100 to 1,000 times higher than that required to ignite flammable vapors associated with fluid-coating processes. Nevertheless, these operations pose a significant explosion hazard when organic powder is suspended in air, forming dust clouds.

2406.2 Location. Powder coating operations shall be conducted in enclosed powder coating rooms, enclosed powder

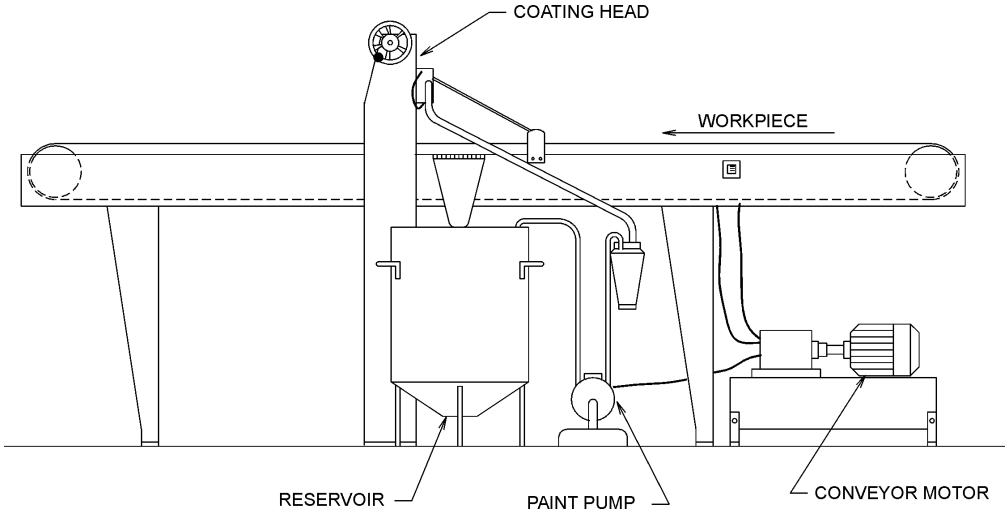

Figure 2405.10
TYPICAL FLOW-COAT SETUP

INTERNATIONAL CODE COUNCIL®
Copyright © 2015 ICC. ALL RIGHTS RESERVED. Accessed by David Dammon on Jun 21, 2017 12:30:52 PM pursuant to License Agreement with ICC. No further reproduction or distribution authorized. ANY UNAUTHORIZED REPRODUCTION OR DISTRIBUTION IS A VIOLATION OF THE FEDERAL COPYRIGHT ACT AND THE LICENSE AGREEMENT, AND SUBJECT TO CIVIL AND CRIMINAL PENALTIES THEREUNDER.

coating facilities that are ventilated or ventilated spray booths.

❖ This section simply states that powder coating must be conducted within enclosed rooms, spaces or apparatus that are designed for the purpose and constructed in accordance with the applicable provisions of Sections 2406.3 through 2406.7.

2406.3 Construction of powder coating rooms and booths. Powder coating rooms shall be constructed of noncombustible materials. Spray booths shall be constructed in accordance with Section 2404.3.2.

Exception: *Listed* spray-booth assemblies that are constructed of other materials shall be allowed.

❖ The majority of powder-coating operations are conducted in rooms or spray booths designed specifically to accommodate the air-borne dust. Listed spray-booth assemblies should be specifically listed for powder-coating operations to ensure that the differences in medium between flammable spray finish and powder coating are addressed in the protection systems. An example of such differences is the type of electrical classification between powder-coating operations and flammable-finish operations.

The exception allows powder-coating operations to be conducted in spray booths constructed of any material, provided that the spray booths are listed (see the commentary to Section 202 for the definition of "Listed").

2406.4 Fire protection. Areas used for powder coating shall be protected by an *approved* automatic fire-extinguishing system complying with Chapter 9.

❖ Although automatic sprinkler protection is the most common method of protection in facilities, other approved automatic fire suppression systems may be installed where approved by the fire code official. Fire protection systems, equipment and devices must be installed in accordance with Chapter 9 and maintained.

2406.4.1 Additional protection for fixed systems. Automated powder application equipment shall be protected by the installation of an *approved*, supervised flame detection apparatus that shall react to the presence of flame within 0.5 second and shall accomplish all of the following:

1. Shutting down of energy supplies (electrical and compressed air) to conveyor, ventilation, application, transfer and powder collection equipment.
2. Closing of segregation dampers in associated ductwork to interrupt airflow from application equipment to powder collectors.

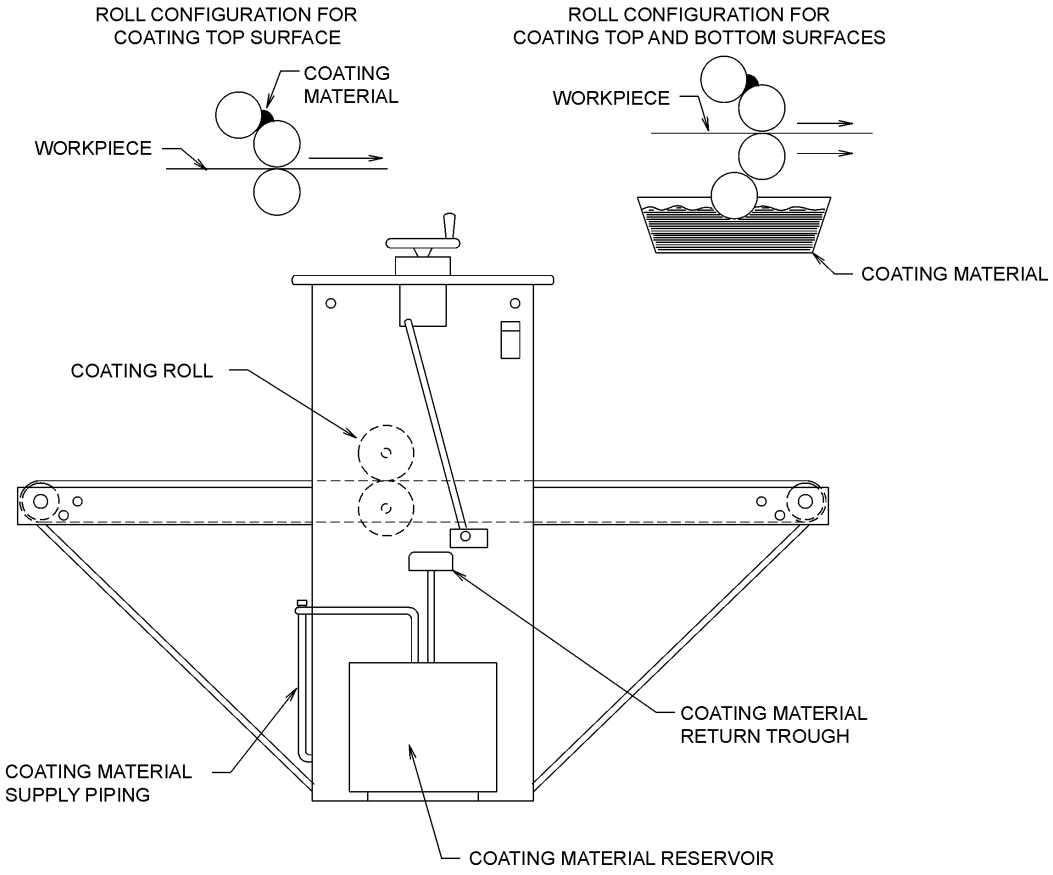

Figure 2405.11
TYPICAL ROLL-COATING SETUP

INTERNATIONAL CODE COUNCIL®
Copyright © 2015 ICC. ALL RIGHTS RESERVED. Accessed by David Dammon on Jun 21, 2017 12:30:52 PM pursuant to License Agreement with ICC. No further reproduction or distribution authorized. ANY UNAUTHORIZED REPRODUCTION OR DISTRIBUTION IS A VIOLATION OF THE FEDERAL COPYRIGHT ACT AND THE LICENSE AGREEMENT, AND SUBJECT TO CIVIL AND CRIMINAL PENALTIES THEREUNDER.

3. Activation of an alarm that is audible throughout the powder coating room or booth.

❖ Automated powder application may or may not have operators who would take steps to reduce the severity of the fire by shutting down the supply of powder, turning off energy supplies, warning occupants for evacuation, etc. The flame detection system and its associated interlocks are part of the protection system, in case ignition has already occurred. To reduce the severity of a fire or dust cloud explosion, the powder-coating application must be shut down immediately upon fire detection. Because automated powder application equipment may at times be unsupervised, flame detection that automatically can shut down the system is required. Shutting down systems such as conveyors, which can further spread the fire, or an application that further augments the existing fuel load/air-borne dust is critical to reducing the severity of a fire. Further, an audible alarm throughout the powder-coating room or area must notify the occupants to evacuate immediately to avoid injury. For example, injury to occupants of the booth may be avoided or reduced if they evacuate when a small incipient fire is detected before it reaches areas within the booth where dust-cloud explosions are sustainable.

2406.4.2 Fire extinguishers. Portable fire extinguishers complying with Section 906 shall be provided for areas used for powder coating in accordance with the requirements for an extra-hazard occupancy.

❖ Section 906 gives the requirements for portable fire extinguishers. Areas may be classified as an extra-hazard occupancy in accordance with NFPA 10 because of the higher hazard of powder-coating operations.

2406.5 Operation and maintenance. Powder coating areas shall be kept free from the accumulation of powder coating dusts, including horizontal surfaces such as ledges, beams, pipes, hoods, booths and floors.

❖ Regularly scheduled cleaning of accumulation of powder on surfaces is an important and often ignored good housekeeping practice. This is especially critical when pieces are bonded to the conveyor. If too much residue is accumulated on the conveyor, the pieces may no longer be bonded. When pieces are preheated, the additional dust accumulation may contribute to air-borne dust and escalate a small fire to a much larger and more severe fire.

2406.5.1 Cleaning. Surfaces shall be cleaned in such a manner so as to avoid scattering dusts to other places or creating dust clouds. Vacuum sweeping equipment shall be of a type *approved* for use in hazardous locations.

❖ Additional air-borne dust must be avoided during cleaning operations. Any type of dust-agitating process can create a potential for flash fires or dust explosions. Removal of dusts from any horizontal surfaces, such as ledges, beams, pipes, hoods, booths and floors, is important in reducing the excess dust concentrations within powder-coating areas.

Cleaning should minimize the scattering of dust or creation of a dust cloud that can easily cause a fire or explosion. Vacuum sweeping equipment must be approved for the type of use and be electrically classified in accordance with NFPA 70 (see commentary, Section 2403.2.1).

2406.6 Sources of ignition. Control of sources of ignition shall be in accordance with Section 2403.2 and Sections 2406.6.1 through 2406.6.4.

❖ This section establishes the applicability of the listed sections to the control of ignition sources in powder-coating operations.

2406.6.1 Drying, curing and fusion equipment. Drying, curing and fusion equipment shall comply with Chapter 30.

❖ Chapter 30 details the construction, operation, maintenance and fire protection of, as well as the equipment and piping associated with, industrial ovens (see commentary, Chapter 30).

2406.6.2 Spark-producing metals. Iron or spark-producing metals shall be prevented from being introduced into the powders being applied by magnetic separators, filter-type separators or by other *approved* means.

❖ Iron or spark-producing metals, such as small workpieces or tools, have caused ignitions or explosions of the air-borne combustible dusts in powder-coating operations. Although magnetic or filter-type separators are the simplest and most commonly used systems for reducing such a hazard, other approved means of removing metals are acceptable.

2406.6.3 Preheated parts. When parts are heated prior to coating, the temperature of the parts shall not exceed the ignition temperature of the powder to be used.

❖ During the heating process and prior to coating, safety controls must be implemented to prevent the ignition of the powder on an overheated piece as a result of a system malfunction (temperature control failures, when a piece is overheated on a conveyor that has stopped, etc.).

2406.6.4 Grounding and bonding. Precautions shall be taken to minimize the possibility of ignition by static electrical sparks through static bonding and grounding, where possible, of powder transport, application and recovery equipment.

❖ See the commentary to Section 2403.2.5.

2406.7 Ventilation. Exhaust ventilation shall be sufficient to maintain the atmosphere below one-half the minimum *explosive* concentration for the material being applied. Nondeposited, air-suspended powders shall be removed through exhaust ducts to the powder recovery system.

❖ Powder coating creates explosive atmospheres because of the large surface areas of the particles when dispersed in the air. The explosive limit or concentration, just as with flammable vapors, will depend on the type of material being used. For example, Factory Mutual tested several powder-coating materials and

INTERNATIONAL CODE COUNCIL®
Copyright © 2015 ICC. ALL RIGHTS RESERVED. Accessed by David Dammon on Jun 21, 2017 12:30:52 PM pursuant to License Agreement with ICC. No further reproduction or distribution authorized. ANY UNAUTHORIZED REPRODUCTION OR DISTRIBUTION IS A VIOLATION OF THE FEDERAL COPYRIGHT ACT AND THE LICENSE AGREEMENT, AND SUBJECT TO CIVIL AND CRIMINAL PENALTIES THEREUNDER.

found a range of lower explosive limit (LEL) of 0.026 to 0.097 ounces per square foot and auto-ignition temperatures between 790°F to 1,039°F (412°C to 559°C). Therefore, ventilation system requirements may vary from one type of coating to another. Also, a collection system is required to collect any unused powder. This requirement is similar to ventilation requirements for flammable vapors in its intent to limit the amount of vapors or dusts to a concentration that would not support ignition. Therefore "one-half the minimum explosive concentration" for powder coating is similar in intent to the "25 percent of the lower flammable limit (LFL)." The safety factor in the combustible dust is 2, while the safety factor for the LFL is 4. This is partly the result of the lower ignitibility of a dust compared to a vapor (see commentary, Section 2407.1).

SECTION 2407
ELECTROSTATIC APPARATUS

2407.1 General. Electrostatic apparatus and devices used in connection with paint-spraying and paint-detearing operations shall be of an *approved* type.

❖ Electrostatic spraying and paint detearing equipment, as well as electrostatic devices, such as generators, motors, transformers and electrodes, must be acceptable to the fire code official and should bear the label of an independent testing laboratory. Evidence of satisfactory performance is indicated by use or display of the appropriate label or seal of the laboratory. Testing laboratories generally publish directories or lists containing important information about labeled products.

2407.2 Location and clear space. A space of not less than twice the sparking distance shall be maintained between goods being painted or deteared and electrodes, electrostatic atomizing heads or conductors. A sign stating the sparking distance shall be conspicuously posted near the assembly.

Exception: Portable electrostatic paint-spraying apparatus *listed* for use in Class I, Division 1, locations.

❖ The equipment manufacturer's instructions must be consulted to determine the sparking distance of the equipment involved. Once the sparking distance is determined, it must be posted conspicuously in the work area. The sign must be clear, concise and of durable construction.

Maintaining the required separation distance prevents sparks generated by the properly maintained equipment from igniting vapors near the surface of the newly coated workpiece before it dries.

The exception recognizes that portable electrostatic spray guns have been listed by recognized testing laboratories for many years and are in use in commercial/industrial applications throughout the United States. These units are listed for use in Class I, Division I, Group D environments and they do not create an ignition source from potential sparking. Such units are designed to preclude sparking when the spray gun is moved directly against the object being sprayed. The requirements to install barriers, provide signs or require general isolation of equipment do not improve the safety of this category of equipment and hamper its use by industry.

2407.3 Construction of equipment. Electrodes and electrostatic atomizing heads shall be of *approved* construction, rigidly supported in permanent locations and effectively insulated from ground. Insulators shall be nonporous and noncombustible.

Exception: Portable electrostatic paint-spraying apparatus *listed* for use in Class I, Division 1, locations.

❖ Electrostatic atomizing heads are connected to both an air source and flammable coating products. Additionally, this particular piece of equipment is connected to high-voltage electricity. Oxygen, fuel and sources of ignition are readily available. Therefore, special care and consideration must be given in the construction and installation of such equipment. To avoid any sparking of the equipment, electrostatic atomizing heads must be insulated from grounded objects or parts.

The exception recognizes that portable electrostatic spray guns have been listed by recognized testing laboratories for many years and are in use in commercial/industrial applications throughout the United States. These units are listed for use in Class I, Division I, Group D environments and they do not create an ignition source from potential sparking. Such units are designed to preclude sparking when the spray gun is moved directly against the object being sprayed. The requirements to install barriers, provide signs or require general isolation of equipment do not improve the safety of this category of equipment and hamper its use by industry.

2407.3.1 Barriers. Booths, fencing, railings or guards shall be placed about the equipment such that either by their location or character, or both, isolation of the process is maintained from plant storage and personnel. Railings, fencing and guards shall be of conductive material, adequately grounded, and not less than 5 feet (1524 mm) from processing equipment.

Exception: Portable electrostatic paint-spraying apparatus *listed* for use in Class I, Division 1, locations.

❖ The required guards prevent materials with an opposite charge from being placed within the range of the electrostatic spraying apparatus. Guards or railings are grounded so that any charge accumulation or deficit on people or materials will be safely neutralized. The separation distance requirement allows the charge dissipation to occur at a safe distance from ignitable vapors.

The exception recognizes that portable, electrostatic spray guns have been listed by recognized testing laboratories for many years and are in use in commercial/industrial applications throughout the United States. These units are listed for use in Class I, Division I, Group D environments and they do not

INTERNATIONAL CODE COUNCIL®
Copyright © 2015 ICC. ALL RIGHTS RESERVED. Accessed by David Dammon on Jun 21, 2017 12:30:52 PM pursuant to License Agreement with ICC. No further reproduction or distribution authorized. ANY UNAUTHORIZED REPRODUCTION OR DISTRIBUTION IS A VIOLATION OF THE FEDERAL COPYRIGHT ACT AND THE LICENSE AGREEMENT, AND SUBJECT TO CIVIL AND CRIMINAL PENALTIES THEREUNDER.

create an ignition source from potential sparking. Such units are designed to preclude sparking when the spray gun is moved directly against the object being sprayed. The requirements to install barriers, provide signs or require general isolation of equipment do not improve the safety of this category of equipment and hamper its use by industry.

2407.4 Fire protection. Areas used for electrostatic spray finishing with fixed equipment shall be protected with an *approved* automatic fire-extinguishing system complying with Chapter 9 and Section 2407.4.1.

❖ Although automatic sprinkler protection is the most common method of protection in facilities, other approved automatic fire suppression systems may be installed if approved by the fire code official. Fire protection systems, equipment and devices must be installed in accordance with Chapter 9 and maintained.

2407.4.1 Protection for automated liquid electrostatic spray application equipment. Automated liquid electrostatic spray application equipment shall be protected by the installation of an *approved*, supervised flame detection apparatus that shall, in the event of ignition, react to the presence of flame within 0.5 second and shall accomplish all of the following:

1. Activation of a local alarm in the vicinity of the spraying operation and activation of the building alarm system, if such a system is provided.
2. Shutting down of the coating material delivery system.
3. Termination of all spray application operations.
4. Stopping of conveyors into and out of the flammable vapor areas.
5. Disconnection of power to the high-voltage elements in the flammable vapor areas and disconnection of power to the system.

❖ Automated liquid electrostatic spray application may or may not have operators who would take steps to reduce the severity of the fire, such as shutting down the supply of coating material, warning occupants for evacuation purposes, etc. The flame detection system and its associated interlocks are part of the protection system, in case ignition has already occurred. Systems that are designed to reduce the severity of the accident in the event of a fire need to be initiated automatically. Supervised flame detection systems are required by this section to stop the flow of additional fuel into the system, stop the spread of fire by shutting down the conveyor, activate an alarm for evacuation, terminate spray application operations that would further add to the fuel and disconnect power to the system. The power disconnection referred to in this section is for the spray booth equipment, but does not include power to emergency systems.

2407.5 Housekeeping, maintenance and storage of hazardous materials. Housekeeping, maintenance, storage and use of hazardous materials shall be in accordance with Sections 2403.3, 2403.4 and Sections 2407.5.1 and 2407.5.2.

❖ This section establishes the applicability of the listed sections to hazardous materials in and around electrostatic apparatus and its operations.

2407.5.1 Maintenance. Insulators shall be kept clean and dry. Drip plates and screens subject to paint deposits shall be removable and taken to a safe place for cleaning. Grounds and bonding means for the paint-spraying apparatus and all associated equipment shall be periodically cleaned and maintained free of overspray.

❖ Accumulation of dirt, oil, moisture or debris may compromise the effectiveness of insulators. Overspray accumulations are less severe with electrostatic processes but still require attention. Electrostatic spray equipment requires that grounding and bonding means be properly maintained free of overspray so as to preclude the potential injury to employees or the creation of potential fire hazards caused by the stored electric charge of objects.

2407.5.2 Signs. Signs shall be posted to provide the following information:

1. Designate the process zone as dangerous with respect to fire and accident.
2. Identify the grounding requirements for all electrically conductive objects in the flammable vapor area, including persons.
3. Restrict access to qualified personnel only.

❖ Signs should warn of the smoking, open-flame, grounding areas and high-voltage equipment hazards. Additionally, signs should warn against entrance of unqualified personnel into these areas to avoid accidents caused by people or employees who are not trained for the surrounding hazards.

2407.6 Sources of ignition. Transformers, power packs, control apparatus and all other electrical portions of the equipment, except high-voltage grids and electrostatic atomizing heads and connections, shall be located outside of the flammable vapor areas or shall comply with Section 2403.2.

❖ Devices that are not classified must be located outside the vapor area to prevent ignition of flammable vapors and overspray residue. The vapor area is defined as "that area where flammable vapors exceed 25 percent of the materials LFL." Equipment must be tested and labeled for use in Class I, Division 1, hazardous locations, as defined by Article 516 of NFPA 70, when locating equipment outside the spraying or vapor area is impractical.

2407.7 Ventilation. The flammable vapor area shall be ventilated in accordance with Section 2404.7.

❖ See the commentary to Section 2404.2.

2407.8 Emergency shutdown. Electrostatic apparatus shall be equipped with automatic controls operating without time delay to disconnect the power supply to the high-voltage

INTERNATIONAL CODE COUNCIL®
Copyright © 2015 ICC. ALL RIGHTS RESERVED. Accessed by David Dammon on Jun 21, 2017 12:30:52 PM pursuant to License Agreement with ICC. No further reproduction or distribution authorized. ANY UNAUTHORIZED REPRODUCTION OR DISTRIBUTION IS A VIOLATION OF THE FEDERAL COPYRIGHT ACT AND THE LICENSE AGREEMENT, AND SUBJECT TO CIVIL AND CRIMINAL PENALTIES THEREUNDER.

transformer and signal the operator under any of the following conditions:

1. Stoppage of ventilating fans or failure of ventilating equipment from any cause.
2. Stoppage of the conveyor carrying articles past the high-voltage grid.
3. Occurrence of a ground or an imminent ground at any point of the high-voltage system.
4. Reduction of clearance below that required in Section 2407.2.

❖ The required interlocks reduce the likelihood of the apparatus igniting flammable vapors in the event of any of the specified conditions. Conditions 1 and 2 may lead to an increase in the concentration of flammable vapors in the atmosphere. Condition 3 may lead to the release of a spark or arc capable of igniting flammable vapors. Additionally, occurrence of Condition 4 could bring those parts of the system capable of producing an ignition into an area containing an ignitable vapor concentration.

2407.9 Ventilation interlock. Hand electrostatic equipment shall be interlocked with the ventilation system for the spraying area so that the equipment cannot be operated unless the ventilating system is in operation.

❖ The required interlock is intended to prevent the use of hand sprayers without ventilation equipment in operation. Failure to operate exhaust ventilation may lead to the creation of ignitable vapor concentration in the spraying space.

SECTION 2408
ORGANIC PEROXIDES AND DUAL-COMPONENT COATINGS

2408.1 General. Spraying operations involving the use of organic peroxides and other dual-component coatings shall be in accordance with the requirements of Section 2403 and Sections 2408.2 through 2408.5.

❖ This section establishes the applicability of Sections 2408.2 through 2408.5, as well as Section 2403 for the regulation of organic peroxides and other dual-component coatings.

2408.2 Use of organic peroxide coatings. Spraying operations involving the use of organic peroxides and other dual-component coatings shall be conducted in *approved* sprinklered spray booths complying with Section 2404.3.2.

❖ Because of the reactivity of the material, the use of organic peroxide and other dual-component coating systems is limited to spray booths only. For example, organic peroxide coatings cannot be applied in the limited spraying spaces described in Section 2404.1.4. This section is more specific and, therefore, supersedes the more general requirements. Storage of organic peroxides shall comply with Chapter 62.

2408.3 Equipment. Spray guns and related handling equipment used with organic peroxides shall be of a type manufactured for such use.

❖ This process involves the discharging of two different components through the same spray gun. The sensitivity of the materials used results in a system that is extremely sensitive to shock, friction, temperature, contaminants, etc. The design and installation of the system cannot be taken lightly.

2408.3.1 Pressure tanks. Separate pressure vessels and inserts specifically for the application shall be used for the resin and for the organic peroxide, and shall not be interchanged. Organic peroxide pressure tank inserts shall be constructed of stainless steel or polyethylene.

❖ Special consideration must be given to the materials used in organic peroxide systems. Materials that do not react with organic peroxides, such as stainless steel or polyethylene, ensure system component integrity.

2408.4 Housekeeping, maintenance, storage and use of hazardous materials. Housekeeping, maintenance, storage and use of hazardous materials shall be in accordance with Sections 2403.3 and 2403.4 and Sections 2408.4.1 through 2408.4.7.

❖ This section establishes the applicability of the listed sections to hazardous materials in conjunction with organic peroxides and dual-component coatings.

2408.4.1 Contamination prevention. Organic peroxide initiators shall not be contaminated with foreign substances.

❖ See the commentary to Section 2409.4.3.

2408.4.2 Spilled material. Spilled organic peroxides shall be promptly removed so there are no residues. Spilled material absorbed by using a noncombustible absorbent shall be promptly disposed of in accordance with the manufacturer's recommendation.

❖ In order to avoid contact with materials and conditions that would cause a reaction, it is good housekeeping practice to promptly clean the spilled organic peroxide. Additionally, to reduce the possibility of a reaction, prompt disposal is recommended. Because the organic peroxides vary in nature and volatility, the manufacturer's recommendations or Material Safety Data Sheets (MSDS) must be followed for disposal.

2408.4.3 Residue control. Materials shall not be contaminated by dusts and overspray residues resulting from the sanding or spraying of finishing materials containing organic peroxides.

❖ Because of the hazards associated with organic peroxides and the chemical reactions within the system, issues such as contamination control are very important. To avoid a violent reaction with contaminants that may be introduced accidentally to the organic peroxide initiators, careful consideration must be given to the overall system design.

INTERNATIONAL CODE COUNCIL®
Copyright © 2015 ICC. ALL RIGHTS RESERVED. Accessed by David Dammon on Jun 21, 2017 12:30:52 PM pursuant to License Agreement with ICC. No further reproduction or distribution authorized. ANY UNAUTHORIZED REPRODUCTION OR DISTRIBUTION IS A VIOLATION OF THE FEDERAL COPYRIGHT ACT AND THE LICENSE AGREEMENT, AND SUBJECT TO CIVIL AND CRIMINAL PENALTIES THEREUNDER.

2408.4.4 Handling. Handling of organic peroxides shall be conducted in a manner that avoids shock and friction that produces decomposition and violent reaction hazards.

❖ Many organic peroxides are unstable reactive materials that are decomposed by heat, shock or friction. The rate of decomposition varies depending on the material and the condition it is exposed to. Organic peroxides vary in reactions from plain decomposition (without a fire or explosion hazard) to deflagration or detonation. Special handling care must be given to these materials. The manufacturer's information on handling and care (typically, the "Special Precautions" and "Reactivity" sections of the MSDS) should be referred to for proper storage of the product.

2408.4.5 Mixing. Organic peroxides shall not be mixed directly with accelerators or promoters.

❖ In order to avoid any unexpected reaction, organic peroxides should not be mixed directly. Dual-coating systems specifically designed and approved for such use must be used.

2408.4.6 Personnel qualifications. Personnel working with organic peroxides and dual-component coatings shall be specifically trained to work with these materials.

❖ Because of the sensitive nature of organic peroxides, only trained personnel should work with them. Qualified personnel should be trained in material handling to avoid accidents, as well as procedures (such as system shutdown, notification, evacuation, etc.) in case of an accident. Qualified personnel should also be familiar with the MSDS of the flammable finishes.

2408.4.7 Storage. The storage of organic peroxides shall comply with Chapter 62.

❖ Chapter 62 is specific to the storage and use of organic peroxides (see commentary, Chapter 62). The manufacturer's information on handling and care (typically "Special Precautions" and "Reactivity" sections of the MSDS) should be referred to for proper storage of the product.

2408.5 Sources of ignition. Only nonsparking tools shall be used in areas where organic peroxides are stored, mixed or applied.

❖ Many organic peroxides are sensitive to heat, shock and friction. Additionally, many of these materials are dissolved in flammable or combustible solvents. Because of the volatility of the material, sources of ignition must be avoided completely. As mentioned in other sections of this chapter, the term "nonsparking" is somewhat inaccurate. Tools made of brass and similar nonsparking materials produce sparks with ignition energies too low to ignite flammable vapors. Nonetheless, such tools should be used carefully to avoid producing sufficient frictional heat to cause an ignition. Smoking is prohibited in organic peroxide coating areas. "No Smoking" signs should be conspicuously located throughout the work area. Designated smoking areas should be located well outside the organic peroxide and dual-coating areas and storage rooms, preferably in a separate room (see also commentary, Section 310).

SECTION 2409
INDOOR MANUFACTURING OF REINFORCED PLASTICS

2409.1 General. Indoor manufacturing processes involving spray or hand application of reinforced plastics and using more than 5 gallons (19 L) of resin in a 24-hour period shall be in accordance with Sections 2409.2 through 2409.6.1.

❖ The applicability of this section is limited to operations involving the use of more than 5 gallons (19 L) of resin in a 24-hour period. It is intended to allow very limited amounts of resin to be removed from storage containers and applied in the manufacturing process during that period without further regulation other than those applicable to any hazardous material.

2409.2 Resin application equipment. Equipment used for spray application of resin shall be installed and used in accordance with Section 2408 and Sections 2409.3 through 2409.6.1.

❖ The equipment used for resin application should be manufactured for that use. Listed equipment is recommended.

2409.3 Fire protection. Resin application areas shall be protected by an *automatic sprinkler system.* The sprinkler system design shall be not less than that required for Ordinary Hazard, Group 2, with a minimum design area of 3,000 square feet (279 m^2). Where the materials or storage arrangements are required by other regulations to be provided with a higher level of sprinkler system protection, the higher level of sprinkler system protection shall be provided.

❖ Similar language and requirements can be found in Sections 5005.1.8 and 5004.5 when storage and use or dispensing of hazardous materials exceed the allowable quantities per control area given in Section 5003. If design density required by other sections results in a higher sprinkler demand, the more stringent requirement applies.

2409.4 Housekeeping, maintenance, storage and use of hazardous materials. Housekeeping, maintenance, storage and use of hazardous materials shall be in accordance with Sections 2403.3 and 2403.4 and Sections 2409.4.1 through 2409.4.3.

❖ This section establishes the applicability of the listed sections to hazardous materials in and around the indoor manufacturing of reinforced plastics.

2409.4.1 Handling of excess catalyzed resin. A noncombustible, open-top container shall be provided for disposal of excess catalyzed resin. Excess catalyzed resin shall be drained into the container while still in the liquid state. Enough water shall be provided in the container to maintain a

INTERNATIONAL CODE COUNCIL®
Copyright © 2015 ICC. ALL RIGHTS RESERVED. Accessed by David Dammon on Jun 21, 2017 12:30:52 PM pursuant to License Agreement with ICC. No further reproduction or distribution authorized. ANY UNAUTHORIZED REPRODUCTION OR DISTRIBUTION IS A VIOLATION OF THE FEDERAL COPYRIGHT ACT AND THE LICENSE AGREEMENT, AND SUBJECT TO CIVIL AND CRIMINAL PENALTIES THEREUNDER.

minimum 2-inch (51 mm) water layer over the contained resin.

❖ Some catalyzed resin products produce heat as they cure (exothermic reaction). This may be a fire hazard if the container is not open-top. In a confined container, enough heat may be generated to ignite the resin. Additionally, the required water in the container would help cool down the material and the container until the product is cured or safely disposed of.

2409.4.2 Control of overchop. In areas where chopper guns are used, exposed wall and floor surfaces shall be covered with paper, polyethylene film or other *approved* material to allow for removal of overchop. Overchop shall be allowed to cure for not less than 4 hours prior to removal.

❖ To ease removal of excess materials, coverings are required in the areas where chopper guns are used. Again, the materials are best left until they are cured to reduce the likelihood of any reactions or ignition from the heat produced during curing (exothermic reaction).

2409.4.2.1 Disposal. Following removal, used wall and floor covering materials required by Section 2409.4.2 shall be placed in a noncombustible container and removed from the facility.

❖ Once the material is cured for 4 hours, immediate disposal is important to reduce further chances of reaction. Additional heat may be produced if the materials are not fully cured. Regular disposal of hazardous materials is an important part of housekeeping in fire prevention.

2409.4.3 Storage and use of hazardous materials. Storage and use of organic peroxides shall be in accordance with Section 2408 and Chapter 62. Storage and use of flammable and *combustible liquids* shall be in accordance with Chapter 57. Storage and use of unstable (reactive) materials shall be in accordance with Chapter 66.

❖ Because a variety of materials are used in the GFRP process, chapters specific to the materials are referenced. In addition to the referenced chapters, the MSDS, as well as the manufacturer's recommendation for safe practices, should be considered. Although the codes contain information for the general hazardous materials category, the MSDS are specific to the material being used. For example, the reactivity section of an MSDS is specific in the types of materials that may be incompatible with the resin used.

2409.5 Sources of ignition in resin application areas. Sources of ignition in resin application areas shall comply with Section 2403.2.

❖ As with other flammable finishes, the sources of ignition must be controlled to a manageable level in hazardous environments.

2409.6 Ventilation. Mechanical ventilation shall be provided throughout resin application areas in accordance with Section 2404.7. The ventilation rate shall be adequate to maintain the concentration of flammable vapors in the resin application area at or below 25 percent of the LFL.

Exception: Mechanical ventilation is not required for buildings that have 75 percent of the perimeter unenclosed.

❖ In many cases, acetone is used for cleanup of resin accumulations. Therefore, the LFL for both resin and the cleaning solvent must be considered when designing the ventilation for the resin application areas. The exception recognizes that natural ventilation is considered adequate if the perimeter of the building is 75 percent open.

2409.6.1 Local ventilation. Local ventilation shall be provided inside of workpieces where personnel will be under or inside of the workpiece.

❖ Ventilation in areas where personnel are present is required for fire prevention as well as for reduction of health risks.

SECTION 2410
FLOOR SURFACING AND FINISHING OPERATIONS

2410.1 Scope. Floor surfacing and finishing operations exceeding 350 square feet (33 m^2) and using Class I or II liquids shall comply with Sections 2410.2 through 2410.5.

❖ Floor surfacing and finishing using Class I or II liquids in facilities such as bowling alleys or gymnasiums pose a high risk because of the spread of liquid over large surface areas. The intent of this section is to provide additional protection and hazard reduction for large surface fires resulting from floor surfacing and finishing.

2410.2 Mechanical system operation. Heating, ventilation and air-conditioning systems shall not be operated during resurfacing or refinishing operations or within 4 hours of the application of flammable or *combustible liquids*.

❖ In order to avoid circulation of potentially flammable vapors into other parts of the building, mechanical systems that are not part of the exhaust system required in Section 2410.3 must be shut down during the application of flammable or combustible liquids and for 4 hours after the last of the flammable or combustible liquids is applied. For example, if a flammable surface is applied and the entire area application takes 2 hours, the number of hours that the mechanical systems must be shut down is 6 (4 hours after the application).

2410.3 Business operation. Floor surfacing and finishing operations shall not be conducted while an establishment is open to the public.

❖ In case of a fire, the types and numbers of injuries are reduced by allowing surfacing and finishing operations only when the business is not open to the public. This would limit the exposure to fewer people (nighttime employees, etc.).

INTERNATIONAL CODE COUNCIL®
Copyright © 2015 ICC. ALL RIGHTS RESERVED. Accessed by David Dammon on Jun 21, 2017 12:30:52 PM pursuant to License Agreement with ICC. No further reproduction or distribution authorized. ANY UNAUTHORIZED REPRODUCTION OR DISTRIBUTION IS A VIOLATION OF THE FEDERAL COPYRIGHT ACT AND THE LICENSE AGREEMENT, AND SUBJECT TO CIVIL AND CRIMINAL PENALTIES THEREUNDER.

2410.4 Ignition sources. The power shall be shut down to all electrical sources of ignition within the flammable vapor area, unless those devices are classified for use in Class I, Division 1 hazardous locations.

❖ Because floor surfacing and finishing is a temporary process, the protection system is also temporary. Therefore, unlike processes such as spray booths, the building or area is not required to meet electrical requirements for hazardous areas. These systems that cannot meet the hazard conditions at the time of surfacing and finishing must be shut down to reduce the potential for unrated electrical sources to cause ignition of vapors.

2410.5 Ventilation. To prevent the accumulation of flammable vapors, mechanical ventilation at a minimum rate of 1 cubic foot per minute per square foot [0.00508 $m^3/(s \cdot m^2)$] of area being finished shall be provided. Such exhaust shall be by *approved* temporary or portable means. Vapors shall be exhausted to the exterior of the building.

❖ The air exhausted over the entire surface must be at minimum 1 cfm per square foot [0.00508 $m^3/(s \cdot m^2)$], even in the most remote areas or corners where finishing and surfacing take place. Please note that floor surfacing and finishing do not occur often in a building. Because outside companies are typically hired to do such surfacing, protection systems, such as exhaust, are temporary and can, therefore, be portable. To prevent recirculation of exhaust air that may contain flammable vapors, the exhausted air must be discharged to the exterior of the building.

Bibliography

The following resource materials were used in the preparation of the commentary for this chapter of the code:

Burklin, Ralph W. and Robert G. Purington. *Fire Terms: A Guide to Their Meaning and Use*. Quincy, MA: National Fire Protection Association, 1980.

Code Changes Resource Collection—2015 International Fire Code. Washington, DC: International Code Council, 2014.

Flammable Finishes Application Guide: 2009 International Fire Code. Washington, DC: International Code Council, 2009.

Scarborough, D.R. "Spray Finishing and Powder Coating," Section 6, Chapter 16, *Fire Protection Handbook*, 19th ed. Quincy, MA: National Fire Protection Association, 2003.

SFPE Handbook of Fire Protection Engineering, 3rd Edition. Quincy, MA: National Fire Protection Association, 2002.

INTERNATIONAL CODE COUNCIL®
Copyright © 2015 ICC. ALL RIGHTS RESERVED. Accessed by David Dammon on Jun 21, 2017 12:30:52 PM pursuant to License Agreement with ICC. No further reproduction or distribution authorized. ANY UNAUTHORIZED REPRODUCTION OR DISTRIBUTION IS A VIOLATION OF THE FEDERAL COPYRIGHT ACT AND THE LICENSE AGREEMENT, AND SUBJECT TO CIVIL AND CRIMINAL PENALTIES THEREUNDER.

INTERNATIONAL CODE COUNCIL®
Copyright © 2015 ICC. ALL RIGHTS RESERVED. Accessed by David Dammon on Jun 21, 2017 12:30:52 PM pursuant to License Agreement with ICC. No further reproduction or distribution authorized. ANY UNAUTHORIZED REPRODUCTION OR DISTRIBUTION IS A VIOLATION OF THE FEDERAL COPYRIGHT ACT AND THE LICENSE AGREEMENT, AND SUBJECT TO CIVIL AND CRIMINAL PENALTIES THEREUNDER.

Chapter 25:
Fruit and Crop Ripening

General Comments

American consumers have become accustomed to having a wide variety of the ripest and most attractive fruits and vegetables available all year. To supply this demand, horticulturists, growers and distributors have devised a means of growing and transporting these commodities to minimize damage and spoilage. Two fruits in greatest demand, tomatoes and bananas, are now shipped hard and green off the vine or tree, minimizing bruising but contributing to poor sales. To make the fruit attractive and edible, it must be ripened. Ethylene, a naturally occurring hormone in many fruit-bearing plants, is used to complete the ripening process after the fruit arrives at the distributor. This material has a wide explosive range and, when inhaled, is a medical anesthetic. Though only small concentrations of the gas are required in the ripening process, explosions have occurred. These incidents are usually attributed to the use of excessive concentrations of gas well above the lower flammable limit (LFL). Placed in a relatively vapor-tight room filled with ethylene gas at small concentrations—100 to 150 parts per million (ppm) (100 to 500 mg/L)—for varying durations, quantities of fruit are ripened slowly, bringing them to just the right point before transporting them to the local retail market.

Purpose

Chapter 25 provides guidance that is intended to reduce the likelihood of explosions resulting from improper use or handling of ethylene gas used for crop-ripening and coloring processes. This is accomplished by regulating ethylene gas generation; storage and distribution systems and controlling ignition sources. Design and construction of facilities for this use are regulated by the *International Building Code*® (IBC®) to reduce the impact of potential accidents on people and buildings.

SECTION 2501
GENERAL

2501.1 Scope. Ripening processes where ethylene gas is introduced into a room to promote the ripening of fruits, vegetables and other crops shall comply with this chapter.

Exception: Mixtures of ethylene and one or more inert gases in concentrations that prevent the gas from reaching greater than 25 percent of the lower explosive limit (LEL) when released to the atmosphere.

❖ This section establishes that this chapter is applicable to fruit- and crop-ripening processes that use ethylene gas as a ripening agent. While still green, many fruits and vegetables are picked and shipped to their point of distribution. Prior to shipping or upon arrival at the distribution warehouse near the retail market, fruits and vegetables are transferred to containers (trailers) or rooms filled with low concentrations of ethylene gas to facilitate ripening. As they ripen, some fruits and vegetables, including bananas, tomatoes, pears, apples and honeydew melons, produce ethylene gas. If kept in tightly enclosed rooms or containers, gas accumulates, expediting the ripening process as concentrations increase.

This process would be relatively safe, simple and effective except for one problem—ethylene is a highly flammable gas (see Commentary Figure 2501.1). A constituent of liquefied petroleum gas (LP-gas), ethylene is colorless with a sweet odor and taste. It is explosive in sunlight when mixed with chlorine. Moderate concentrations of ethylene in air are a medical anesthetic; thus, care must be taken to prevent inhalation. Atmospheres containing ethylene are classi-

Ignition Temperature[a]	842°F to 914°F
Vapor Density	1.0
Flammable Range Lower Upper	 2.7 percent 36 percent
NFPA 704 Hazard Classification Health Flammability Reactivity Other	 1 4 2 —

For SI: °C = (°F - 32)/1.8.

a. In the *NFPA Fire Protection Guide on Hazardous Materials*, 13th edition, NFPA 325 reports the lower value, while NFPA 49 reports the higher value.

Figure 2501.1
FLAMMABILITY CHARACTERISTICS AND ETHYLENE HAZARDS

INTERNATIONAL CODE COUNCIL®
Copyright © 2015 ICC. ALL RIGHTS RESERVED. Accessed by David Dammon on Jun 21, 2017 12:30:52 PM pursuant to License Agreement with ICC. No further reproduction or distribution authorized. ANY UNAUTHORIZED REPRODUCTION OR DISTRIBUTION IS A VIOLATION OF THE FEDERAL COPYRIGHT ACT AND THE LICENSE AGREEMENT, AND SUBJECT TO CIVIL AND CRIMINAL PENALTIES THEREUNDER.

fied as Class I, Division 1, Group C hazardous locations by NFPA 70. Additionally, ethylene (R-1150) is sometimes used as a refrigerant gas and classified among Group 3 (highly flammable) refrigerants. Explosions involving trucks and warehouses where ethylene gas is used as a fruit-ripening agent are usually attributed to the use of excessive concentrations of gas well above the lower explosive limit (LEL). The exception recognizes the reduced hazard of ethylene-inert gas mixtures when the mixtures keep the ethylene concentration at or below 25 percent of its LEL.

2501.2 Permits. Permits shall be required as set forth in Section 105.6.

❖ The process of issuing permits gives the fire code official an opportunity to carefully evaluate and regulate hazardous operations. Permit applicants should be required to demonstrate that their operations comply with the intent of the code before the permit is issued. Because of the extremely flammable nature of ethylene gas, an operational permit is required by Section 105.6.20 for ethylene-based ripening processes.

2501.3 Ethylene generators. *Approved* ethylene generators shall be operated and maintained in accordance with Section 2506.

❖ Chapter 25 recognizes the use of listed ethylene generators as a means of safely producing ethylene concentrations needed to ripen crops. This section requires that those devices be properly operated and maintained (see commentary, Section 2506.1).

SECTION 2502
DEFINITIONS

2502.1 Terms defined in Chapter 2. Words and terms used in this chapter and defined in Chapter 2 shall have the meanings ascribed to them as defined therein.

❖ Definitions of terms can help in the understanding and application of the code requirements. This section directs the code user to Chapter 2 for the proper application of the indicated terms used in this chapter. Terms may be defined in Chapter 2 or in another *International Code*® (I-Code®) as indicated in Section 201.3, or the dictionary meaning may be all that is needed (see also commentary, Sections 201 through 201.4).

SECTION 2503
ETHYLENE GAS

2503.1 Location. Ethylene gas shall be discharged only into *approved* rooms or enclosures designed and constructed for this purpose.

❖ Rooms or spaces occupied for the ripening of fruits and crops using ethylene gas must be constructed to accommodate the process without exposing the rest of the building to process hazards. The design and construction of facilities for this use are regulated by the applicable provisions of the IBC to reduce the impact of potential accidents on people and buildings. In particular, buildings and portions of buildings used for crop-ripening or coloring processes must conform to the requirements of IBC Section 414.

Because ethylene is a flammable gas, the occupancy group classification of the building depends on the quantities of gas present and the use of the control area concept (see IBC Section 414.2). If the amount of gas exceeds the maximum allowable quantity per control area (MAQ) [see IBC Table 307.1(1)], the applicable provisions of IBC Section 415 would also apply. Additionally, Chapter 53 regulates the physical hazards of compressed gases and Chapter 58 regulates the material hazards of flammable gases. Both would apply to ethylene used in fruit-ripening processes as would the general hazardous materials provisions of Chapter 50.

2503.2 Dispensing. Valves controlling discharge of ethylene shall provide positive and fail-closed control of flow and shall be set to limit the concentration of gas in air below 1,000 parts per million (ppm).

❖ Although the hazards of using ethylene should be of considerable concern, technological innovation has produced a safe alternative to the old method of distributing ethylene to the ripening rooms. In the past, compressed ethylene gas in cylinders was piped through regulating equipment into rooms. Regulating equipment was calibrated to restrict gas quantity to a volume that would produce concentrations below the lower explosive gas limit; however, excessive concentrations occasionally escaped and uncontrolled ignition sources produced serious explosions.

Ideally, gas sensors should be used to stop gas flow as it approaches the desired level. Manual overrides must be provided to interrupt the gas flow if a danger exists. A 1:1,000 concentration is only 0.1 percent in air. The LFL of ethylene is 2.6 percent. When used properly, this gas poses little hazard.

SECTION 2504
SOURCES OF IGNITION

2504.1 Ignition prevention. Sources of ignition shall be controlled or protected in accordance with this section and Chapter 3.

❖ Lighted smoking materials and other open-flame sources are prohibited in crop-ripening and color-processing rooms. This prohibition should also be extended to the immediate vicinity of the entrance to such rooms. “No Smoking” signs are to be conspicuously posted and stringently enforced (see also commentary, Sections 305, 308 and 310).

2504.2 Electrical wiring and equipment. Electrical wiring and equipment, including luminaires, shall be *approved* for

INTERNATIONAL CODE COUNCIL®
Copyright © 2015 ICC. ALL RIGHTS RESERVED. Accessed by David Dammon on Jun 21, 2017 12:30:52 PM pursuant to License Agreement with ICC. No further reproduction or distribution authorized. ANY UNAUTHORIZED REPRODUCTION OR DISTRIBUTION IS A VIOLATION OF THE FEDERAL COPYRIGHT ACT AND THE LICENSE AGREEMENT, AND SUBJECT TO CIVIL AND CRIMINAL PENALTIES THEREUNDER.

use in Class I, Division 2, Group C hazardous (classified) locations.

❖ Atmospheres containing ethylene are classified as Class 1, Division 1, Group C hazardous locations by NFPA 70. All electrical wiring and equipment must be suitably listed and labeled for use in such atmospheres.

2504.3 Static electricity. Containers, piping and equipment used to dispense ethylene shall be bonded and grounded to prevent the discharge of static sparks or arcs.

❖ Suitable grounds must be provided on all ethylene-handling systems and equipment to permit the dissipation of static electricity, thus preventing the generation of static sparks. Electrically isolated sections of systems and equipment must be independently grounded. NFPA 77 provides valuable guidance on this topic. Grounding and bonding should be in accordance with NFPA 70.

2504.4 Lighting. Lighting shall be by *approved* electric lamps or luminaires only.

❖ Open-flame lighting is prohibited in crop-ripening rooms and spaces because ethylene gas is flammable. Only approved electrical lighting equipment is allowed and it must comply with the provisions of Section 2504.2 of the code (see commentary, Section 2504.2).

2504.5 Heating. Heating shall be by indirect means utilizing low-pressure steam, hot water or warm air.

Exception: Electric or fuel-fired heaters *approved* for use in hazardous (classified) locations and that are installed and operated in accordance with the applicable provisions of NFPA 70, the *International Mechanical Code* or the *International Fuel Gas Code*.

❖ Wherever practical, heat for crop-ripening and coloring rooms should be indirect (steam, hot water or warm air) to eliminate sparks or open-flame ignition hazards. Piped steam and hot water-heating systems operate at temperatures of 250°F to 430°F (121°C to 221°C) and are considered the most appropriate method when providing indirect heat to ripening rooms.

The exception provides that electric heaters may be used where approved by the fire code official. The type of electric heaters required must be approved and listed for use in Class I, Division 1, Group C electrically classified locations because of the presence of ethylene gas. Such heaters must also be designed to keep all exposed surfaces at temperatures of 800°F (427°C) or below because ethylene gas has an ignition temperature of 842°F (450°C). Fuel-fired heaters using gas or liquid fuel may also be used, provided they are approved and comply with the *International Mechanical Code*® (IMC®) or the *International Fuel Gas Code*® (IFGC®), as applicable. These appliances must also have a sealed combustion chamber to prevent open-flame ignition of the ethylene gas and be installed in accordance with the manufacturer's instructions. All heaters must be protected from physical damage to prevent fuel spills or heater malfunctions.

SECTION 2505
COMBUSTIBLE WASTE

2505.1 Housekeeping. Empty boxes, cartons, pallets and other combustible waste shall be removed from ripening rooms or enclosures and disposed of at regular intervals in accordance with Chapter 3.

❖ Waste accumulation, especially packing materials and crop debris, is to be removed regularly from the premises and disposed of in an approved manner to reduce the volume of nonessential combustible materials susceptible to ignition and contributing to the fire load. Section 304 of the code provides specific regulations for waste disposal (see commentary, Section 304).

SECTION 2506
ETHYLENE GENERATORS

2506.1 Ethylene generators. Ethylene generators shall be *listed* and *labeled* by an *approved* testing laboratory, *approved* by the *fire code official* and used only in *approved* rooms in accordance with the ethylene generator manufacturer's instructions. The listing evaluation shall include documentation that the concentration of ethylene gas does not exceed 25 percent of the lower explosive limit (LEL).

❖ Several companies produce ethylene generators especially for fruit-ripening processes. These devices convert a liquid similar to ethanol into ethylene gas. This process produces ethylene in concentrations far below the LEL, even in very small compartments, which is an important feature since these generators are portable and could be operating in ripening rooms of different sizes. During a test conducted by an independent testing laboratory and witnessed by representatives of the Los Angeles City Fire Marshal's office, a small [4,000 cubic foot (113 m^3)] fruit-ripening room was filled with 400 cases of green bananas with the generator set at the maximum setting. During the 8-hour test, the device did not produce a concentration greater than 0.1 percent by volume; the LEL for ethylene is 2.6 percent by volume. While this may not be a worst-case scenario, it certainly suggests a significant safety margin—a factor of 26.This section mandates that ethylene generators be listed and labeled by a third-party testing laboratory. The basic standard used in the investigation and listing of these devices is UL 499, which, while it covers the most significant electrical hazards of ethylene generators, does not evaluate the flammable vapor-air mixtures produced when the devices are operated in closed rooms. This section is intended to fill that gap by requiring that the listing evaluation attests to the safety of the devices by documenting in the report results that the maximum ethylene concentration capable of being generated by the device does not

INTERNATIONAL CODE COUNCIL®
Copyright © 2015 ICC. ALL RIGHTS RESERVED. Accessed by David Dammon on Jun 21, 2017 12:30:52 PM pursuant to License Agreement with ICC. No further reproduction or distribution authorized. ANY UNAUTHORIZED REPRODUCTION OR DISTRIBUTION IS A VIOLATION OF THE FEDERAL COPYRIGHT ACT AND THE LICENSE AGREEMENT, AND SUBJECT TO CIVIL AND CRIMINAL PENALTIES THEREUNDER.

exceed 25 percent of the LEL. This section also requires adherence to the ethylene generator manufacturer's instructions, which are considered part of the listing.

2506.2 Ethylene generator rooms. Ethylene generators shall be used in rooms having a volume of not less than 1,000 cubic feet (28 m^3). Rooms shall have air circulation to ensure even distribution of ethylene gas and shall be free from sparks, open flames or other ignition sources.

❖ Because ethylene generators are portable, the level of hazard associated with their use in closed rooms can change each time one is moved to a new ripening room. The intent of this section is to reduce the hazard potential by requiring that ethylene generators be used only in ripening rooms having a minimum volume of 1,000 cubic feet (28 m^3) [10 feet by 10 feet by 10 feet (3048 mm by 3048 mm by 3048 mm)], that are free from ignition hazards and have air circulation to distribute the ethylene gas evenly throughout the space to avoid the potential for pockets of gas having concentrations approaching or exceeding 25 percent of the LEL.

SECTION 2507
WARNING SIGNS

2507.1 Where required. *Approved* warning signs indicating the danger involved and necessary precautions shall be posted on all doors and entrances to the premises.

❖ Given the flammability and the anesthetic quality of ethylene gas, it poses potential dangers to personnel who might accidentally enter a ripening room, building or area unaware of the hazards. As with other hazardous materials, warning signs and placards must be posted to give appropriate notice to warn personnel of the hazards of the ripening process and discourage entry by unauthorized and unprotected people. Warning signs must comply with Sections 5003.5 and 5003.5.1 and include NFPA 704 hazard warning system markings to warn of fire- and health-related hazards of these materials (see commentary, Sections 5003.5 and 5003.5.1).

Bibliography

The following resource material was used in the preparation of the commentary for this chapter of the code:

"Ethylene Gas Generator—Fruit Ripening." *Field Service Bulletin F-2-81*. Long Grove, IL: Kemper Group of Insurance Companies, 1981.

INTERNATIONAL CODE COUNCIL®
Copyright © 2015 ICC. ALL RIGHTS RESERVED. Accessed by David Dammon on Jun 21, 2017 12:30:52 PM pursuant to License Agreement with ICC. No further reproduction or distribution authorized. ANY UNAUTHORIZED REPRODUCTION OR DISTRIBUTION IS A VIOLATION OF THE FEDERAL COPYRIGHT ACT AND THE LICENSE AGREEMENT, AND SUBJECT TO CIVIL AND CRIMINAL PENALTIES THEREUNDER.

Chapter 26: Fumigation and Insecticidal Fogging

General Comments

Fumigation is the use of toxic pesticide chemicals to kill insects, rodents and other vermin. In addition, agricultural fumigation is used to kill plant and animal parasites, weed seeds and various types of fungi that adversely affect agricultural products.

Fumigants are available as liquids that will vaporize readily at ambient temperatures, solids that can release a toxic gas on reacting with water or acid or gases. Fumigants and insecticidal fogging agents pose little hazard if properly applied; however, the inherent toxicity of all these agents and the potential flammability of some makes special precautions necessary when they are used. Requirements of this chapter are intended to protect both the public and fire fighters from hazards associated with these products.

The use of fumigants poses the following two distinct hazards to both fire fighters and the general public: some fumigants are flammable or burn under certain circumstances and all fumigants are poisonous or toxic. Compounding these hazards, the fumigation fog may easily be confused with smoke from a fire if it is not properly contained within a building or compartment. Though these concerns seem quite serious, the proper use of fumigants poses little fire hazard. With the exception of allyl alcohol, aluminum phosphide, dichloropropane-dichloropropene mixtures and formaldehyde, most fumigants are relatively difficult to ignite. However, all fumigants are intended to kill something, whether involved in a fire or not. In fact, many of these agents are quite toxic if involved in a fire.

Special Fire Protection Problems

In particular, aluminum phosphide poses a special fire protection problem. This agent readily decomposes in water to form phosphine (PH_3), a pyrophoric toxic gas. In 1990, M.R. Spencer noted that although the lower flammable limit (LFL) of phosphine is only 1.79 percent, this is more than 10 times the effective concentration for fumigation. However, he also noted that poorly distributed agent and storage canisters can easily produce ignitable concentrations.

The other agents—allyl alcohol, dichloropropane-dichloropropene mixtures and formaldehyde—are either flammable or combustible liquids commonly used in diluted form. However, all flammable or combustible liquids are easier to ignite when finely dispersed in air; therefore, special precautions must be taken to eliminate ignition sources during fumigation and fogging operations. Commentary Figure 26-1 lists hazard classifications of various common fumigants.

Information Sources

Understanding and regulating fumigants and insecticidal fogging agents requires specialized knowledge of their hazards beyond the basic classifications of health, flammability and reactivity. Several references provide additional details necessary to apply code requirements. The most helpful of these references is the product's Material Safety Data Sheet (MSDS). A copy of this document is often shipped with a product in transit (see commentary, Section 407 and Chapter 50). Anyone handling or using these products should also have access to this information in compliance with the provisions of the hazard communication requirements of the Occupational Safety and Health Act (OSH Act).

Reference books, such as the *Farm Chemicals Handbook* and the *Crop Protection Chemicals Reference*, are also comprehensive sources for handling and storage information. The former contains a list of common agricultural chemicals based on their use, a list of suppliers or distributors and a chemical dictionary containing each product listed.

Every manufacturer of a pesticide or fumigant also produces a reference known as a label book containing facsimiles of the warning labels for each of its products. This reference is often helpful because U.S. Environmental Protection Agency (EPA) regulations require that labels contain breakdowns of the contents of environmentally hazardous substances and signal words providing clues about their toxicity.

Storage and Handling

Other code chapters should be consulted for specific storage and handling requirements for certain fumigants. Chapters 50, 57, 60 and 63 prescribe safeguards for the storage and handling of materials based on their specific hazardous properties. Requirements of this chapter apply only to the use of these products as fumigants or insecticidal fogging agents.

Purpose

Some of these products are also flammable and their involvement in fire may result in serious health or environmental hazards. The key to the safe use of these products is knowledge of the hazards, elimination of ignition sources and isolation of the premises during application.

INTERNATIONAL CODE COUNCIL®
Copyright © 2015 ICC. ALL RIGHTS RESERVED. Accessed by David Dammon on Jun 21, 2017 12:30:52 PM pursuant to License Agreement with ICC. No further reproduction or distribution authorized. ANY UNAUTHORIZED REPRODUCTION OR DISTRIBUTION IS A VIOLATION OF THE FEDERAL COPYRIGHT ACT AND THE LICENSE AGREEMENT, AND SUBJECT TO CIVIL AND CRIMINAL PENALTIES THEREUNDER.

PRODUCT	DOT CLASSIFICATION	NFPA 704 HAZARD CLASSIFICATION			
		Health	Flammability	Reactivity	Other
Allyl alcohol	Flammable liquid, Poisonous	3	3	0	
Aluminum phosphide	Flammable solid, Poisonous, Water reactive	4	4	2	₩
Calcium cyanide	Poison B	3	0	0	
Carbon tetrachloride	ORM-A	3	0	0	
Chloropicrin	Poison B	4	0	3	
Paradichlorobenzene	ORM-A	2	2	0	
Dichloropropane-dichloropropene mixtures	Flammable liquid	3	3	0	
Ethylene dibromide (EDB)	ORM-A	3	0	0	
EDB/chloropicrin mixtures		4	0	3	
Formaldehyde	Combustible liquid	2	4	0	
Furfural	Combustible liquid	2	2	0	
Methyl bromide	Poison B	3	1	0	
Methyl bromide/chloropicrin mixtures	Poison B	4	1	3	
Methyl bromide/EDB mixtures	Poison B	3	1	0	
Methylene chloride		2	1	0	
Napthalene	ORM-B	2	2	0	
Phosphine	Poison A, Flammable	4	4	4	

a. This list was compiled from chemicals listed under the heading "Fumigants" in the *Farm Chemicals Handbook*.

b. Other common fumigants include: streptomycin, dibromo-chloropropane, metam ammonium and metan sodium (consult MSDS or these products before issuing permits.)

Figure 26-1
HAZARDOUS PROPERTIES OF COMMON FUMIGANTS[a, b]

SECTION 2601
GENERAL

2601.1 Scope. Fumigation and insecticidal fogging operations within buildings, structures and spaces shall comply with this chapter.

❖ The requirements of this chapter govern fumigation operations using insecticidal fogging agents and other air-borne pesticides used to control insects, rodents, vermin and other similar pests inside buildings, structures and spaces.

2601.2 Permits. Permits shall be required as set forth in Section 105.6.

❖ Issuing an operational permit as prescribed in Section 105.6.19 gives the fire code official a method for identifying and controlling the hazards of fumigation and insecticidal fogging operations. The process of issuing permits also gives the fire code official a reason or method to advise fire fighters of the potential hazards at fumigation sites. This will allow fire fighters to take special note of the hazards present and will give them the information needed to determine whether the operation is mistaken for a fire.

This chapter states the requirements for approval and special warning signs because of the toxicity and flammability hazards of fumigants. Upon notification of the hazardous potential, the fire code official should notify the fire department responsible for protecting the work site.

A guard or fire watch must be posted at the work site and must have a means available to report a fire or other emergency. If possible, a means should also be provided for the fire department to contact the guards or fire watches to verify the occurrence of a fire and obtain additional information en route to the scene.

SECTION 2602
DEFINITIONS

2602.1 Definitions. The following terms are defined in Chapter 2:

FUMIGANT.

FUMIGATION.

INSECTICIDAL FOGGING.

❖ Definitions of terms can help in the understanding and application of the code requirements. This section directs the code user to Chapter 2 for the proper application of the indicated terms used in this chap-

INTERNATIONAL CODE COUNCIL®
Copyright © 2015 ICC. ALL RIGHTS RESERVED. Accessed by David Dammon on Jun 21, 2017 12:30:52 PM pursuant to License Agreement with ICC. No further reproduction or distribution authorized. ANY UNAUTHORIZED REPRODUCTION OR DISTRIBUTION IS A VIOLATION OF THE FEDERAL COPYRIGHT ACT AND THE LICENSE AGREEMENT, AND SUBJECT TO CIVIL AND CRIMINAL PENALTIES THEREUNDER.

ter. Terms may be defined in Chapter 2 or in another *International Code*® (I-Code®) as indicated in Section 201.3 or the dictionary meaning may be all that is needed (see also commentary, Sections 201 through 201.4).

SECTION 2603
FIRE SAFETY REQUIREMENTS

2603.1 General. Buildings, structures and spaces in which fumigation and insecticidal fogging operations are conducted shall comply with the fire protection and safety requirements of Sections 2603.2 through 2603.7.

❖ The provisions in Sections 2603.2 through 2603.7 apply to safe fumigation and insecticidal fogging in buildings, structures and spaces.

2603.2 Sources of ignition. Fires, open flames and similar sources of ignition shall be eliminated from the space under fumigation or insecticidal fogging. Heating, where needed, shall be of an *approved* type.

❖ Some insecticides and fumigants are flammable. Others that are considered nonflammable may ignite readily when suspended in air or dispersed as a vapor during fogging or fumigation operations. See the commentary to Chapters 22, 50, 57 and 60, and Section 307 of the *International Building Code*® (IBC®), for further information on the safe storage and handling of dusts and other materials used as pesticides or fogging agents.

2603.2.1 Electricity. Electricity in any part of the building, structure or space where operation of switches or electrical devices, equipment or systems could serve as a source of ignition shall be shut off.

Exception: Circulating fans that have been specifically designed for utilization in hazardous atmospheres and installed in accordance with NFPA 70.

❖ The structure's electrical service must be disconnected at the main service disconnect during fumigation or insecticidal fogging operations. While not specifically required, a physical means for preventing the inadvertent, premature restoration of power by anyone other than the fumigation supervisor should be provided, such as by locking the service disconnect switch, if possible, or by equivalent means.

The exception allows the use of fans to assist in the distribution of fumigant throughout the building undergoing fumigation. The power supply for circulating fans must be located outside the building undergoing fumigation or the fans may be self-powered, either by battery or an integral internal combustion engine. In any case, fans exposed to the hazardous atmosphere must be appropriately classified when an insecticide or fogging agent is susceptible to ignition during application or use, so as not to become an ignition source.

Equipment and devices used in the presence of flammable liquid vapors must be classified for use in Class I, Division 1, hazardous locations. When used where a dust explosion hazard exists, the fans must be classified for Class II hazardous locations.

2603.2.2 Electronic devices. Electronic devices, including portable equipment and cellular phones, shall be shut off. Telephone lines shall be disconnected from telephones.

❖ This section focuses on the ignition hazard posed to flammable vapor-rich atmospheres by popular personal electronic devices, such as cell phones, MP3 players, computers, etc., and requires that if present, they be shut off. Even though telephones are low-voltage devices, in certain atmospheres, the simple ringing of a telephone can be a source of ignition in a space undergoing fumigation. To avert potential ignition by a telephone, telephone lines must be unplugged from the phone sets.

2603.2.3 Duration. Sources of ignition shall be shut off during the fumigation activity and remain shut off until the ventilation required in Section 2603.6 is completed.

❖ This section provides the common-sense precaution regarding ignition sources that they must be secured as required by Sections 2603.2, 2603.2.1 and 2603.2.2 until the fumigation operation is finished and the fumigated space has been ventilated in accordance with Section 2603.6.

2603.3 Notification. The *fire code official* and fire chief shall be notified in writing not less than 48 hours before the building, structure or space is to be closed in connection with the utilization of any toxic or flammable fumigant. Notification shall give the location of the enclosed space to be fumigated or fogged, the occupancy, the fumigants or insecticides to be utilized, the person or persons responsible for the operation, and the date and time at which the operation will begin. Written notice of any fumigation or insecticidal fogging operation shall be given to all affected occupants of the building, structure or space in which such operations are to be conducted with sufficient advance notice to allow the occupants to evacuate the building, structure or space. Such notice shall inform the occupants as to the purposes, anticipated duration and hazards associated with the fumigation or insecticidal fogging operation.

❖ Written notice is required at least 48 hours before a structure is closed for fumigation or fogging with flammable or toxic agents. All pesticides must be considered toxic to some degree because they are intended to kill something at some concentration. Occupants of the structure must be given sufficient advance notice to permit evacuation and removal of any belongings or equipment that may be endangered by fumigation or fogging operations. The fire code official should relay the notification information and the nature of the fumigation or fogging operation to the responsible fire service personnel for this location.

Fire fighters must be aware of the nature of hazards to encourage the use of protective gear and precautions when investigating or operating at sites involving structures undergoing fumigation. Fire code

INTERNATIONAL CODE COUNCIL®
Copyright © 2015 ICC. ALL RIGHTS RESERVED. Accessed by David Dammon on Jun 21, 2017 12:30:52 PM pursuant to License Agreement with ICC. No further reproduction or distribution authorized. ANY UNAUTHORIZED REPRODUCTION OR DISTRIBUTION IS A VIOLATION OF THE FEDERAL COPYRIGHT ACT AND THE LICENSE AGREEMENT, AND SUBJECT TO CIVIL AND CRIMINAL PENALTIES THEREUNDER.

officials may consider the required written notification as a default for permit application under Section 2601.2; however, the fire code official must inspect the premises and equipment to verify compliance with the code before a permit is issued (see commentary, Sections 105.2.2 and 105.6.20).

2603.3.1 Warning signs. *Approved* warning signs indicating the danger, type of chemical involved and necessary precautions shall be posted on all doors and entrances to the affected building, structure or space and upon all gangplanks and ladders from the deck, pier or land to a ship. Such notices shall be printed in red ink on a white background. Letters in the headlines shall be not less than 2 inches (51 mm) in height and shall state the date and time of the operation, the name and address of the person, the name of the operator in charge, and a warning stating that the affected building, structure or space shall be vacated not less than 1 hour before the operation begins and shall not be reentered until the danger signs have been removed by the proper authorities.

❖ Warning signs and placards must be posted to give notice for evacuation, warn of the hazards of the fumigant or fogging agent and discourage entry by unauthorized and unprotected people. Warning signs must include the name and address of the party responsible for conducting fumigation operations. Both names and hazards associated with the chemical fumigant must appear on the warning signs.

The NFPA 704 hazard warning system is especially useful for warning of the fire-related hazards of these materials. Hazard warning signs also provide useful qualitative information about the relative toxicity of pesticides and fumigants in use at a particular site to warn and assist the fire department (see Commentary Figure 2603.3.1).



Figure 2603.3.1
FUMIGATION WARNING SIGN

2603.3.2 Breathing apparatus. Persons engaged in the business of fumigation or insecticidal fogging shall maintain and have available *approved* protective breathing apparatus.

❖ Respiratory protective equipment must be appropriate for the hazards of the material used. Stored-air self-contained breathing apparatus (SCBA) is not necessarily the only appropriate form of respiratory protection. Canister respirators with suitable filters may provide employees greater flexibility to perform required tasks without posing a danger of exposure or contamination to the employee. Employees required to wear respiratory protective equipment should be fitted for the correct size mask and enrolled in a medical surveillance program. The required protective equipment must be available at all times during the fumigation or fogging process.

2603.3.3 Watch personnel. During the period fumigation is in progress, except where fumigation is conducted in a gas-tight vault or tank, a responsible watchperson shall remain on duty at the entrance or entrances to the enclosed fumigated space until after the fumigation is completed and the building, structure or space is properly ventilated and safe for occupancy. Sufficient watchers shall be provided to prevent persons from entering the enclosed space under fumigation without being observed.

❖ A minimum of one watch must be posted at each entrance to the structure or space being fumigated. Watch personnel must discourage or prevent entry by unauthorized and unprotected individuals until fumigation is completed; the building, structure or premises has been ventilated; and the building, structure or premises is again ready for occupancy. Watch personnel must also have a means available to report emergencies without leaving their posts unattended. If practical, a means should be provided for the fire department to contact the watch while responding to determine whether a fire exists and, if so, obtain additional information before arrival.

2603.3.4 Evacuation during fumigation. Occupants of the building, structure or space to be fumigated, except the personnel conducting the fumigation, shall be evacuated from such building, structure or space prior to commencing fumigation operations.

❖ This section reinforces the life safety focus of this chapter by requiring that occupants of areas to be fumigated must leave the area of treatment prior to the commencing of fumigation operations to avoid contact with the toxic fumigant. Obviously, the fumigator's personnel are allowed to remain since they would be protected by appropriate protective clothing and a breathing apparatus. Although it is not explicitly stated, occupants should remain outside of the fumigated area until it has been properly ventilated and cleaned up in accordance with Section 2603.6.

2603.3.5 Evacuation during insecticidal fogging operations. Occupants in the building, structure or space to be

INTERNATIONAL CODE COUNCIL®
Copyright © 2015 ICC. ALL RIGHTS RESERVED. Accessed by David Dammon on Jun 21, 2017 12:30:52 PM pursuant to License Agreement with ICC. No further reproduction or distribution authorized. ANY UNAUTHORIZED REPRODUCTION OR DISTRIBUTION IS A VIOLATION OF THE FEDERAL COPYRIGHT ACT AND THE LICENSE AGREEMENT, AND SUBJECT TO CIVIL AND CRIMINAL PENALTIES THEREUNDER.

fogged, except the personnel conducting the insecticidal fogging operations, shall be evacuated from such building, structure or space prior to commencing fogging operations.

❖ This section reinforces the life safety focus of this chapter by requiring that the occupants of the areas to be fogged must leave the area of treatment prior to the commencing of insecticidal fogging operations to avoid contact with the toxic pesticide fog. Obviously, the insecticidal fogger's personnel are allowed to remain since they would be protected by appropriate protective clothing and a breathing apparatus. Although it is not explicitly stated, occupants should remain outside of the fogged area until it has been properly ventilated and cleaned up in accordance with Section 2603.6.

2603.4 Insecticidal fogging liquids. Insecticidal fogging liquids with a *flash point* below 100°F (38°C) shall not be utilized.

❖ The use of Class I flammable liquids as fumigants is prohibited. Many fumigants that are otherwise nonflammable or only combustible may be easily ignited when dispersed or suspended in air as a vapor or fine mist. This prohibition does not apply to flammable active ingredients in nonflammable concentrations when in a solution with other ingredients.

2603.5 Sealing of buildings, structures and spaces. Paper and other similar materials that do not meet the flame propagation performance criteria of Test Method 1 or Test Method 2, as appropriate, of NFPA 701 shall not be used to wrap or cover a building, structure or space in excess of that required for the sealing of cracks, casements and similar openings.

❖ Fundamental to a successful fumigation operation is achieving the proper concentration of fumigant for the proper length of time to allow the treatment to permeate all portions of the structure, including interstitial spaces and even some building materials to a cellular level. To achieve this level of permeation, the building, structure or space must be made as gas tight as possible. Small holes, cracks and openings can easily be sealed with tape; heavy-weight paper secured with tape or water-soluble or peelable paste; caulking compound; foam plastic sealant; or similar, readily available materials. Larger openings can be sealed using plastic sheets held in place with tacks or staples and sealed with tape; heavy-weight paper secured with tape or water-soluble or peelable paste; or a spray-on vinyl sealant. The use of these and similar readily combustible materials should be limited to small cracks, casements and similar openings.

This section is intended to ensure that more extensive sealing procedures than the simple crack and hole sealing described above, such as wrapping the building or tenting it, be done using materials that are, at a minimum, flame resistant in accordance with one of the test methods of NFPA 701. The use of such materials reduces the susceptibility of the enclosing membrane to easy ignition that could quickly engulf the entire structure in fire.

2603.5.1 Maintenance of openings. All openings to the building, structure or space to be fumigated or fogged shall be kept securely closed during such operation.

❖ Because of the "soak time" needed for fumigation operations to be successful, this section requires that the sealing of all openings to the fumigation area be maintained tightly sealed throughout the duration of the fumigation operation. This sealing of openings coupled with the watch person required by Section 2603.3.3 will also help prevent unauthorized personnel from inadvertently wandering into a toxic atmosphere or releasing fumigants to parts of the building not being fumigated. It will also prevent fumigant fog from escaping and being mistaken by a passerby for smoke from a fire which could result in an unwanted report of a fire.

2603.6 Venting and cleanup. At the end of the exposure period, fumigators shall safely and properly ventilate the premises and contents; properly dispose of fumigant containers, residues, debris and other materials used for such fumigation; and clear obstructions from gas-fired appliance vents.

❖ Following the desired fumigant exposure period, the structure must be completely aired by opening as many doors and windows as possible from the outside. Also at this time, any exterior wrapping and sealing materials should be removed. Complete removal of sealing materials from the gas-fired appliance vent and combustion air intake openings that were sealed during fumigation is especially important to avoid potential backups of products of combustion in the building. Approved ventilators and fans powered from a source, and with their switches accessible from outside the building, should be started as well (see commentary, Section 2603.2.1). Personnel should then withdraw from the immediate vicinity of the fumigated structure and wait a reasonable length of time before entering the building to open more doors and windows to complete the ventilation process.

Throughout the ventilation process, personnel should wear personal breathing protection equipment (respirators). Tests for the presence of gas may be conducted as soon as the fumigator determines that the structure is properly aired. Chemical tests for residual fumigant must be carried out to verify that both the structure and its contents are free of toxic concentrations of fumigant, at which time the building may be reoccupied for normal activities.

Consistent with Section 304, rubbish and debris generated by the fumigation project must be removed from the premises and properly discarded. Because fumigants are hazardous materials, fumigant containers and other materials that might contain flammable or toxic fumigant residues must be disposed of in accordance with the fumigant manufacturer's instructions.

INTERNATIONAL CODE COUNCIL®
Copyright © 2015 ICC. ALL RIGHTS RESERVED. Accessed by David Dammon on Jun 21, 2017 12:30:52 PM pursuant to License Agreement with ICC. No further reproduction or distribution authorized. ANY UNAUTHORIZED REPRODUCTION OR DISTRIBUTION IS A VIOLATION OF THE FEDERAL COPYRIGHT ACT AND THE LICENSE AGREEMENT, AND SUBJECT TO CIVIL AND CRIMINAL PENALTIES THEREUNDER.

2603.7 Flammable fumigants restricted. The use of carbon disulfide and hydrogen cyanide shall be restricted to agricultural fumigation.

❖ While they are very effective fumigants, carbon disulfide (Formula: CS2; CAS # 75-15-0) and hydrogen cyanide (Formula: HCN; CAS # 74-90-8) present such severe flammability and toxicity hazards that their use is restricted to agricultural fumigation applications only.

In addition to being toxic (see commentary, Chapter 60), carbon disulfide is a Class IB flammable liquid (see commentary, Chapter 57) having a flash point of -22°F (-30°C), a boiling point of 116°F (47°C) and a flammability range of 1 to 50 percent, thus making any release an extreme fire and deflagration hazard to the extent that its vapors can be ignited by contact with the heated surfaces of steam heating pipes or ordinary incandescent light bulbs. Given these dangers, carbon disulfide is typically used in mixtures with other materials, such as carbon tetrachloride as a fire suppressant, or stabilizing chemicals, such as sulfur dioxide, to mitigate the hazards of use.

The typical agricultural use of carbon disulfide is as a fumigant for treating raw cereal grains in grain bins and silos.

Hydrogen cyanide (also known as formonitrile, hydrocyanic acid or prussic acid) is colorless, possesses a characteristic almond-like aroma and is an insecticide principally used for fumigation of stored agricultural products, especially grains and flour in mills, warehouses and the holds of ships.

In fruit-growing regions of the United States, hydrogen cyanide has also been widely used for destroying scale insects on citrus trees by covering each tree with a gas tent. Hydrogen cyanide can be a Class IA flammable liquid (see commentary, Chapter 57) or a flammable gas (see commentary, Chapter 58). As a liquid, it may also be classified as a Class 2 unstable reactive material (see commentary, Chapter 66), a Class 1 water-reactive material (see commentary, Chapter 67) and a highly toxic material (see commentary, Chapter 60). Hydrogen cyanide may enter the body in toxic amounts by absorption through unbroken skin, inhalation and direct ingestion.

Bibliography

The following resource materials were used in the preparation of the commentary for this chapter of the code:

Code Changes Resource Collection—2015 International Fire Code. Washington, DC: International Code Council, 2014.

Crop Protection Chemical Reference. Etobicoke, ON, Canada: John Wiley & Sons Canada, Limited, 1986.

Farm Chemicals Handbook. Willoughby, OH: Meister Publishing Co., 1991.

Moerer, G., L. Thompson, and M. Wood. "Pesticides." Chapter 11, Section 8, In Cote, A.E. ed. *Fire Protection Handbook*, 19th ed. Quincy, MA: National Fire Protection Association, 2003.

Spencer, M.R. "Storage and Handling of Grain Mill Products." In Cote, A.E., ed. *Fire Protection Handbook*, 17th ed. Quincy, MA: National Fire Protection Association, 1991.

INTERNATIONAL CODE COUNCIL®

Copyright © 2015 ICC. ALL RIGHTS RESERVED. Accessed by David Dammon on Jun 21, 2017 12:30:52 PM pursuant to License Agreement with ICC. No further reproduction or distribution authorized. ANY UNAUTHORIZED REPRODUCTION OR DISTRIBUTION IS A VIOLATION OF THE FEDERAL COPYRIGHT ACT AND THE LICENSE AGREEMENT, AND SUBJECT TO CIVIL AND CRIMINAL PENALTIES THEREUNDER.

Chapter 27: Semiconductor Fabrication Facilities

General Comments

The invention, development and exploitation of semiconductor technology has changed the world. Without integrated circuits, and the microchips (or "chips") they are composed of, the world of high technology would not exist. With the benefits of living in a high-tech age come some unique and pressing challenges. The manufacture of microchips is a complex, hazardous and demanding operation involving state-of-the-art design and manufacturing techniques, specially designed processing centers and a highly trained work force. Despite these rigors, the dangers of the processes can neither be avoided nor ignored.

The manufacture of semiconductors and microprocessors has developed into its own industry within the last 25 years. The proliferation of computer technology has resulted in the incredible expansion of the semiconductor manufacturing industry. These sophisticated products require a special processing environment and new rules to match the new technology. Unlike many other hazardous operations, hazards of the production materials are not manifested in the finished product. Considering the unique and often acute hazards of many materials used in semiconductor processing, this contributes to the relatively good safety record of the industry.

Purpose

The requirements of this chapter are intended to control hazards associated with the manufacture of semiconductors. Though the finished product possesses no unusual hazards, materials commonly associated with semiconductor manufacturing are often quite hazardous and include flammable liquids; pyrophoric and flammable gases; toxic substances and corrosives. The requirements are concerned with both life safety and property protection. However, the fire code official should recognize that the risk of extraordinary property damage is far more common than the risk of personal injury from fire.

SECTION 2701 GENERAL

2701.1 Scope. Semiconductor fabrication facilities and comparable research and development areas classified as Group H-5 shall comply with this chapter and the *International Building Code*. The use, storage and handling of hazardous materials in Group H-5 shall comply with this chapter, other applicable provisions of this code and the *International Building Code*.

❖ Semiconductor facilities are unique facilities that, due to their size, complex layout and the logistics of their operations, have been provided with a unique package of requirements. In some cases these unique requirements will allow the maximum allowable quantities (MAQs) established in Tables 5003.1.1(1) and 5003.1.1(2) to be exceeded. The hazardous material MAQs are essentially replaced by more specific allowances and restrictions in this chapter. In cases where a material hazard is not addressed in this chapter, the applicable requirements found in Chapter 50 and associated material-specific chapters of the code and the *International Building Code*® (IBC®) would still apply regardless of whether the MAQs have been exceeded. Semiconductor fabrication facilities are classified in Occupancy Group H-5 and are to comply with the applicable provisions of IBC Section 415.11.

2701.2 Application. The requirements set forth in this chapter are requirements specific only to Group H-5 and shall be applied as exceptions or additions to applicable requirements set forth elsewhere in this code.

❖ Chapter 27 requirements are specific only to Group H-5 occupancies, with the requirements applied as exceptions or additions to requirements addressed elsewhere in the code. Where Chapter 27 contains a specific requirement for a certain condition and a general requirement for the same condition exists elsewhere in the code, the specific Chapter 27 requirements are to be applied. For example, general requirements for spill control and containment for use conditions involving hazardous materials in amounts exceeding MAQs are found in Section 5005.2, with conditions specific to Group H-5 occupancies addressed in Section 2705.2.2. For Group H-5 occupancy conditions, the specific Section 2705.2.2 requirements take precedence over the general requirements addressed in Section 5005.2.

2701.3 Multiple hazards. Where a material poses multiple hazards, all hazards shall be addressed in accordance with Section 5001.1.

❖ All hazard classifications of a material are to be considered. For example, glacial acetic acid is classified as both a Class II combustible liquid and a corrosive liquid. Thus, for glacial acetic acid, the requirements

INTERNATIONAL CODE COUNCIL®
Copyright © 2015 ICC. ALL RIGHTS RESERVED. Accessed by David Dammon on Jun 21, 2017 12:30:52 PM pursuant to License Agreement with ICC. No further reproduction or distribution authorized. ANY UNAUTHORIZED REPRODUCTION OR DISTRIBUTION IS A VIOLATION OF THE FEDERAL COPYRIGHT ACT AND THE LICENSE AGREEMENT, AND SUBJECT TO CIVIL AND CRIMINAL PENALTIES THEREUNDER.

for both Class II combustible liquids and corrosive liquids must be met. This section restates the conditions found in Section 5001.1.

2701.4 Existing buildings and existing fabrication areas. Existing buildings and existing *fabrication areas* shall comply with this chapter, except that transportation and handling of HPM in *corridors* and enclosures for stairways and ramps shall be allowed where in compliance with Section 2705.3.2 and the *International Building Code*.

❖ Although the adoption and enforcement of code requirements specifically addressing semiconductor manufacturing and similar research and development operations have been in place for over 20 years, there are still some facilities that predate the adoption of regulations specific to these operations. This section requires modifications to existing facilities to comply with certain provisions of IBC Section 415.11. Additionally, requirements found in Section 2705.3.2 of this code and Section 415.11.3 of the IBC must be met when existing conditions or modifications do not include service corridors and existing exit access corridors that are used to transport hazardous production materials (HPM) to fabrication areas.

2701.5 Permits. Permits shall be required as set forth in Section 105.6.

❖ The process of issuing permits gives the fire code official an opportunity to carefully evaluate and regulate hazardous operations. Permit applicants should be required to demonstrate that their operations comply with the intent of the code before the permit is issued. The process also notifies the fire department of the need for prefire planning for the hazardous property. See the commentary to Section 105.6 for a general discussion of operations requiring an operational permit; notably Section 105.6.21 for a discussion of specific quantity-based hazardous materials operational permits; and Section 105.6.22 for HPM operational permits.

SECTION 2702
DEFINITIONS

2702.1 Definitions. The following terms are defined in Chapter 2:

CONTINUOUS GAS DETECTION SYSTEM.

EMERGENCY CONTROL STATION.

FABRICATION AREA.

HAZARDOUS PRODUCTION MATERIAL (HPM).

HPM ROOM.

PASS-THROUGH.

SEMICONDUCTOR FABRICATION FACILITY.

SERVICE CORRIDOR.

TOOL.

WORKSTATION.

❖ Definitions of terms can help in the understanding and application of the code requirements. This section directs the code user to Chapter 2 for the proper application of the indicated terms used in this chapter. Terms may be defined in Chapter 2 or in another *International Code*® (I-Code®) as indicated in Section 201.3, or the dictionary meaning may be all that is needed (see also commentary, Sections 201 through 201.4).

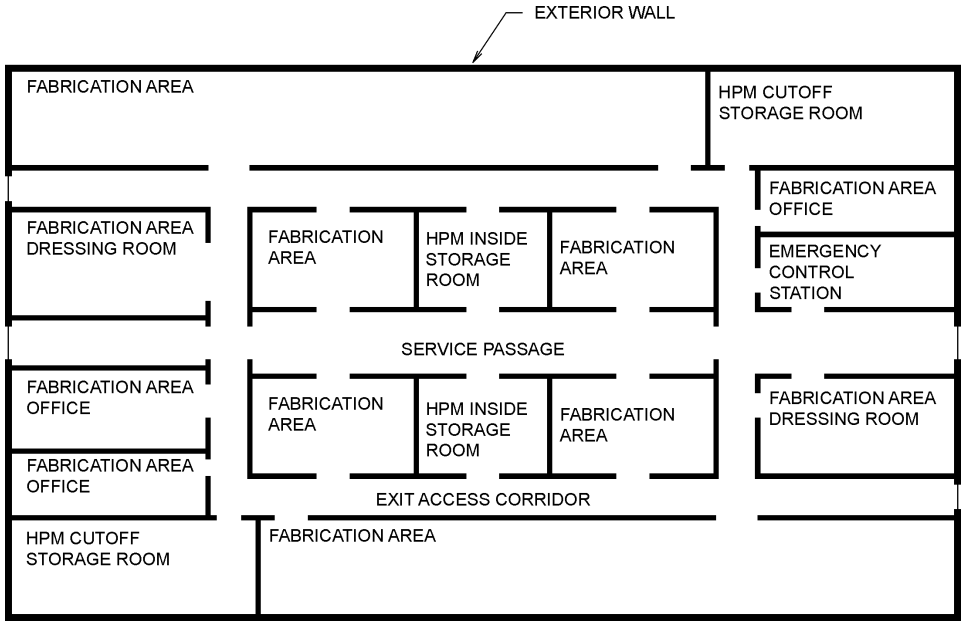

Figure 2701.1(1)
TYPICAL COMPONENTS OF AN HPM FACILITY

INTERNATIONAL CODE COUNCIL®
Copyright © 2015 ICC. ALL RIGHTS RESERVED. Accessed by David Dammon on Jun 21, 2017 12:30:52 PM pursuant to License Agreement with ICC. No further reproduction or distribution authorized. ANY UNAUTHORIZED REPRODUCTION OR DISTRIBUTION IS A VIOLATION OF THE FEDERAL COPYRIGHT ACT AND THE LICENSE AGREEMENT, AND SUBJECT TO CIVIL AND CRIMINAL PENALTIES THEREUNDER.

MATERIAL	DESCRIPTION OR USE	NFPA 704 HAZARD CLASSIFICATION			
		Health	Flammability	Reactivity	Other
Acetic acid	Corrosive liquid used for wet etching (metal)	2	2	1	
Acetone	Flammable liquid used for wafer cleaning	1	3	0	
Ammonium fluoride	Corrosive for wet etching (oxide)	3	0	0	
Arsenic trichloride	Diffusion	3	0	1	~~W~~
Arsenic trioxide	Diffusion	4	0	0	
Arsine	Poison flammable gas used for epitaxial growth, diffusion and ion implanation	4	4	3	
Boron tribromide	Corrosive liquid used for diffusion	4	0	3	~~WV~~
Boron trichloride	Nonflammable corrosive gas used for diffusion	4	0	1	~~W~~
Chlorine	Poison gas used for dry etching	3	0	0	OXY
Diborane	Highly reactive flammable gas used for diffusion	3	4	3	~~W~~
Dichlorosilane	Flammable liquefied gas used for epitaxial growth	4	4	4	
Gallium	Reactive metal used as a semiconductor crystal material	1	0	3	
Gallium arsenide	Reactive metal salt used as a semiconductor crystal material	3	0	0	
Gallium arsenide phosphide	Reactive metal salt used as a semiconductor crystal material	3	0	0	
Germanium	Reactive metal used as a semiconductor crystal material	0	0	3	
Hydrofluoric acid	Highly corrosive liquid or gas used for wet etching (oxide)	4	0	0	
Hydrogen peroxide[a]	Organic peroxide used for wafer cleaning	2	0	1	OXY
Isopropanol	Flammable liquid used for wafer cleaning	1	3	0	
Methanol	Flammable liquid used for wafer cleaning	1	3	0	
Nitric acid	Corrosive liquid used for wet etching (metal)	3	0	0	OXY
Oxygen (liquid)	Oxidizing gas used for oxidation	3	0	0	OXY
Phosphine	Flammable liquefied poison gas used for diffusion and ion implantation	4	4	4	
Phosphoric acid	Corrosive liquid used for wet etching (metal)	2	0	0	
Phosphorus oxychloride	Corrosive liquid used for diffusion	4	0	3	~~W~~
Phosphorus pentoxide	Corrosive solid sublimed for use in diffusion	4	0	3	~~W~~
Phosphorus tribromide	Corrosive liquid used for diffusion	4	0	3	~~W~~
Silane	Pyrophoric gas used for oxidation	2	4	4	
Silicon	Flammable solid (metal) used as a semiconductor crystal material	2	4	2	~~W~~
1, 1, 1-Trichloroethane	Mildly flammable solvent (difficult to ignite) used or wafer cleaning	2	1	0	
Tetrachlorosilane	Flammable liquid used for epitaxial growth	3	4	2	~~W~~

a. NFPA 704 values for 35 to 52 percent by weight (the most concentration) are listed. The reactivity hazard increases to 3 at concentrations above 52 percent.

Figure 2701.1(2)
HAZARDOUS PRODUCTION MATERIALS (HPM) USED IN THE MANUFACTURE OF SEMICONDUCTORS

INTERNATIONAL CODE COUNCIL®
Copyright © 2015 ICC. ALL RIGHTS RESERVED. Accessed by David Dammon on Jun 21, 2017 12:30:52 PM pursuant to License Agreement with ICC. No further reproduction or distribution authorized. ANY UNAUTHORIZED REPRODUCTION OR DISTRIBUTION IS A VIOLATION OF THE FEDERAL COPYRIGHT ACT AND THE LICENSE AGREEMENT, AND SUBJECT TO CIVIL AND CRIMINAL PENALTIES THEREUNDER.

SECTION 2703
GENERAL SAFETY PROVISIONS

2703.1 Emergency control station. An *emergency control station* shall be provided in accordance with Sections 2703.1.1 through 2703.1.3.

❖ This section introduces the requirements for emergency control stations in HPM facilities.

2703.1.1 Location. The *emergency control station* shall be located on the premises at an *approved* location outside the fabrication area.

❖ In order to enhance its operational integrity, the emergency control station must not be located in an area where hazardous materials are stored, used or transported, such as a fabrication area.

2703.1.2 Staffing. Trained personnel shall continuously staff the *emergency control station*.

❖ If an emergency control station is to be effective, continuous staffing must be provided. Those personnel must be conversant with the meaning of and proper response protocols for all system signals received in the station, and be able to implement prompt responsive actions.

2703.1.3 Signals. The *emergency control station* shall receive signals from emergency equipment and alarm and detection systems. Such emergency equipment and alarm and detection systems shall include, but not be limited to, the following where such equipment or systems are required to be provided either in this chapter or elsewhere in this code:

1. *Automatic sprinkler system* alarm and monitoring systems.
2. Manual fire alarm systems.
3. Emergency alarm systems.
4. Continuous gas detection systems.
5. Smoke detection systems.
6. Emergency power system.
7. Automatic detection and alarm systems for pyrophoric liquids and Class 3 water-reactive liquids required by Section 2705.2.3.4.
8. Exhaust ventilation flow alarm devices for pyrophoric liquids and Class 3 water-reactive liquids cabinet exhaust ventilation systems required by Section 2705.2.3.4.

❖ This section specifies the systems that are to be monitored by an emergency control station. The fire alarm system signals are received at the emergency control station, which must be located in an area approved by the fire code official. See also the commentary to the Section 202 definition of "Emergency control station."

2703.2 Systems, equipment and processes. Systems, equipment and processes shall be in accordance with Sections 2703.2.1 through 2703.2.3.2.

❖ This section introduces and establishes the applicability of the provisions of Section 2703.2.1 through 2703.2.3.2 to HPM systems, equipment and processes.

2703.2.1 Application. Systems, equipment and processes shall include, but not be limited to, containers, cylinders, tanks, piping, tubing, valves and fittings.

❖ This section clarifies the applicability of Section 2703.2 by defining what is included in the terms "systems," "equipment" and "processes" as they are used in this section.

2703.2.2 General requirements. In addition to the requirements in Section 2703.2, systems, equipment and processes shall also comply with Section 5003.2, other applicable provisions of this code, the *International Building Code* and the *International Mechanical Code*.

❖ This section contains a general reference to the IBC and the *International Mechanical Code*® (IMC®), as well as to Section 5003.2 and other sections of the code for regulations pertaining to hazardous materials-related systems, equipment and processes. Except as addressed in Section 2703.2.3, the requirements of the code for things such as containers, cylinders, tanks, piping, tubing, valves and fittings in Group H-5 occupancy facilities are basically the same as they are for other occupancies.

2703.2.3 Additional requirements for HPM supply piping. In addition to the requirements in Section 2703.2, HPM supply piping and tubing for HPM gases and liquids shall comply with this section.

❖ This section introduces the additional requirements of Sections 2703.2.3.1 and 2703.2.3.2, which are applicable to HPM supply piping due to the nature of the materials it transports.

2703.2.3.1 General requirements. The requirements set forth in Section 5003.2.2.2 shall apply to supply piping and tubing for HPM gases and liquids.

❖ The additional requirements for supply piping and tubing transferring HPM gases or liquids include the general requirements established in Section 5003.2.2.2, as well as more specific requirements for supply piping or tubing containing HPM gases or liquids having a health-hazard ranking of 3 or 4 found in Section 2703.2.3.2.

2703.2.3.2 Health-hazard ranking 3 or 4 HPM. Supply piping and tubing for HPM gases and liquids having a health-hazard ranking of 3 or 4 shall be welded throughout, except for connections located within a ventilation enclosure if the material is a gas, or an *approved* method of drainage or containment provided for connections if the material is a liquid.

❖ The primary purpose of the more specific requirements for supply piping or tubing containing a health-hazard ranking of 3 or 4 is to minimize the potential for HPM leakage. The use of mechanical compression-type fittings or other nonwelded joints for these materials is intended to be limited to areas where liquid leaks will be contained or drained, and gas leaks will be contained or exhausted.

INTERNATIONAL CODE COUNCIL®
Copyright © 2015 ICC. ALL RIGHTS RESERVED. Accessed by David Dammon on Jun 21, 2017 12:30:52 PM pursuant to License Agreement with ICC. No further reproduction or distribution authorized. ANY UNAUTHORIZED REPRODUCTION OR DISTRIBUTION IS A VIOLATION OF THE FEDERAL COPYRIGHT ACT AND THE LICENSE AGREEMENT, AND SUBJECT TO CIVIL AND CRIMINAL PENALTIES THEREUNDER.

2703.3 Construction requirements. Construction of semiconductor fabrication facilities shall be in accordance with Sections 2703.3.1 through 2703.3.9.

❖ This section contains references to the various construction requirements affecting the components of a semiconductor fabrication facility.

2703.3.1 Fabrication areas. Construction and location of *fabrication areas* shall comply with the *International Building Code*.

❖ Semiconductors are manufactured to specific standards. Current high-speed computers require highly sophisticated microprocessors, which rely on extremely fine electrical pathways to transmit the impulses forming the basis for their operation. A single particle of dust that is only a fraction of a micron in diameter may destroy a microprocessor by clogging one of these electronic arteries. Specially designed enclosures called "clean rooms" must be used for fabricating these products to protect the finished product during assembly. Commentary Figure 2703.3.1 illustrates various classifications used to describe the degree of cleanliness in a clean room. Environmental particulates inside the clean room are controlled by filtering all air entering the room through special high-efficiency particulate air (HEPA) filters and constantly replacing the air inside the room.

Fabrication areas are portions of an HPM area where semiconductors are actually produced. The circuit pattern is etched on the surface of the semiconductor crystal material during fabrication. Successive layers of etched semiconductor material are assembled to create integrated circuits or microchips. Fabrication is done in clean rooms, which derive their name from the ability of mechanical ventilation systems to maintain an environment nearly free of airborne particulate contamination. As a result, clean rooms are classified according to the number of particles in a cubic foot of air. For example, in a Class 10 clean room, mechanical ventilation is capable of removing all but 10 particles per cubic foot from the air in the room. The extraordinary precision required in the manufacture of semiconductors demands such cleanliness.

A fire in such an environment represents not only a life and property hazard, but also a serious contamination concern. The monetary value of semiconductors is of secondary concern when compared to the value of lost production time during recovery from a fire or other emergency. Such losses may extend into the millions of dollars from even very small fires. IBC Section 415.11 specifies requirements for the fabrication of areas to control these hazards. The requirements of this chapter are intended to complement and maintain compliance with the requirements of IBC Section 415.11.

2703.3.2 Pass-throughs in exit access corridors. Pass-throughs in *exit access corridors* shall be constructed in accordance with the *International Building Code*.

❖ Pass-throughs in exit access corridor walls must be constructed to maintain the integrity of any required fire-resistance rating of such walls in an HPM facility. Pass-through doors must also function to maintain that integrity. The IBC contains construction requirements for exit access corridor walls and their opening protectives in Chapter 10 (see also the commentary to the Section 202 definition of "Pass-through").

2703.3.3 Liquid storage rooms. Liquid storage rooms shall comply with Chapter 57 and the *International Building Code*.

❖ Liquid storage rooms are used to store closed containers of flammable or combustible liquids used in the HPM processes. Section 5704.3.7 contains detailed requirements for these rooms (see also the commentary to the Section 202 definition of "Liquid storage room").

2703.3.4 HPM rooms. HPM rooms shall comply with the *International Building Code*.

❖ Proper storage of hazardous materials can reduce the danger associated with those materials. Section 2704.3 establishes that adequate separation must be provided between materials and limits the quantity of materials stored in HPM rooms. This section requires that the separation of HPM storage rooms must comply with IBC Section 415.11 (see also the commentary to the Section 202 definition of "HPM room").

Measured Particle Size (Microns)					
Class	**0.1**	**0.2**	**0.3**	**0.5**	**0.5**
1	35	7.5	3	1	—
10	350	7.5	30	10	—
100	—	750	300	100	—
1,000	—	—	—	1,000	7
10,000	—	—	—	10,000	70
100,000	—	—	—	100,000	700

Source: Pearce, R.J. "Clean Rooms," in Cote, A.E., ed., *Industrial Fire Hazards Handbook*.

Figure 2703.3.1
CLEAN ROOM CLASSIFICATIONS

INTERNATIONAL CODE COUNCIL®
Copyright © 2015 ICC. ALL RIGHTS RESERVED. Accessed by David Dammon on Jun 21, 2017 12:30:52 PM pursuant to License Agreement with ICC. No further reproduction or distribution authorized. ANY UNAUTHORIZED REPRODUCTION OR DISTRIBUTION IS A VIOLATION OF THE FEDERAL COPYRIGHT ACT AND THE LICENSE AGREEMENT, AND SUBJECT TO CIVIL AND CRIMINAL PENALTIES THEREUNDER.

2703.3.5 Gas cabinets. Gas cabinets shall comply with Section 5003.8.6.

❖ To reduce the hazards presented by gases used in the fabrication of semiconductors, Section 5003.8.6 contains specific construction and ventilation requirements for enclosed gas cabinets used for the storage of HPM gases (see also the commentary to the Section 202 definition of "Gas cabinet").

2703.3.6 Exhausted enclosures. Exhausted enclosures shall comply with Section 5003.8.5.

❖ To reduce the hazards presented by hazardous materials used in the fabrication of semiconductors, Section 5003.8.5 contains specific construction and ventilation requirements for exhausted enclosures used for the storage of HPM. Whereas gas cabinets must be fully enclosed and equipped with self-closing doors, exhausted enclosures are typically open-fronted and lend themselves to small-scale operations, such as fume hoods found in chemical laboratories (see also the commentary to the Section 202 definition of "Exhausted enclosure").

2703.3.7 Gas rooms. Gas rooms shall comply with Section 5003.8.4.

❖ To reduce the hazards presented by hazardous gases used in the fabrication of semiconductors, Section 5003.8.4 contains specific construction and ventilation requirements for gas rooms used for the storage of HPM gases. These rooms are intended to be restricted to the storage of cylinders and tanks of highly toxic and toxic compressed gases. The storage of other hazardous materials, such as flammable and combustible liquids, is not permitted within a gas room. Similar to gas cabinets, the required exhaust ventilation for the gas room must be operated at negative pressures to prevent leakage of hazardous vapors to adjacent areas.

2703.3.8 Service corridors. Service corridors shall comply with Section 2705.3 and the *International Building Code*.

❖ The likelihood of accidental spillage or contact with HPM is increased during the transportation of such materials. Section 2705.3 regulates materials, handling and transportation in passageways used for purposes other than required means of egress.

2703.3.9 Cabinets containing pyrophoric liquids or water-reactive Class 3 liquids. Cabinets in *fabrication areas* containing pyrophoric liquids or Class 3 water-reactive liquids in containers or in amounts greater than $^1/_2$ gallon (2 L) shall comply with Section 2705.2.3.4.

❖ See the commentary to Section 2705.2.3.4.

2703.4 Emergency plan. An emergency plan shall be established as set forth in Section 403.7.1.

❖ Thorough planning is essential to evacuate personnel effectively and to combat a fire or other emergency. Risks associated with a structure containing HPM require extraordinary efforts regarding evacuation and fire control. Specific emergency planning procedures are outlined in Section 403.7.1.

2703.5 Maintenance of equipment, machinery and processes. Maintenance of equipment, machinery and processes shall comply with Section 5003.2.6.

❖ Fundamental to the safe operation of an HPM facility are the care and maintenance of the equipment used in the various fabrication processes. Section 5003.2.6 contains detailed maintenance requirements.

2703.6 Security of areas. Areas shall be secured in accordance with Section 5003.9.2.

❖ Public safety requires that HPM facilities be secure against unauthorized entry in accordance with Section 5003.9.2. Such security reduces the likelihood of hazardous material release or fire caused by a malicious act.

2703.7 Electrical wiring and equipment. Electrical wiring and equipment in HPM facilities shall comply with Sections 2703.7.1 through 2703.7.3.

❖ The safety and integrity of electrical wiring and equipment is a key factor in workplace safety. This section introduces the electrical safety requirements, by area, for HPM facility fabrication areas, workstations and storage rooms.

2703.7.1 Fabrication areas. Electrical wiring and equipment in *fabrication areas* shall comply with NFPA 70.

❖ NFPA 70 contains requirements for the electrical safety of HPM facilities, including fabrication areas.

2703.7.2 Workstations. Electrical equipment and devices within 5 feet (1524 mm) of workstations in which flammable or pyrophoric gases or flammable liquids are used shall comply with NFPA 70 for Class I, Division 2 hazardous locations. Workstations shall not be energized without adequate exhaust ventilation in accordance with Section 2703.14.

Exception: Class I, Division 2 hazardous electrical equipment is not required where the air removal from the workstation or dilution will prevent the accumulation of flammable vapors and fumes on a continuous basis.

❖ Areas located in and around workstations are considered Class I, Division 2, hazardous locations as defined by Article 500 of NFPA 70. Incidental exposures to flammable fumes or vapors must be considered horizontally possible within 5 feet (1524 mm) of each workstation where flammable liquids or gases are used. Either a mechanical or electrical interlock must be installed to engage the required exhaust ventilation system before HPM enters the workstation. This reduces the likelihood of gas or vapor exposure.

The exception in this section states that, in some cases, it is both possible and reasonable to assume that a hazardous concentration of flammable gas or vapor is unlikely to occur when ventilation is properly engaged. Class I, Division 2, electrical wiring and equipment is not required where automatic exhaust interlocks are installed.

INTERNATIONAL CODE COUNCIL®
Copyright © 2015 ICC. ALL RIGHTS RESERVED. Accessed by David Dammon on Jun 21, 2017 12:30:52 PM pursuant to License Agreement with ICC. No further reproduction or distribution authorized. ANY UNAUTHORIZED REPRODUCTION OR DISTRIBUTION IS A VIOLATION OF THE FEDERAL COPYRIGHT ACT AND THE LICENSE AGREEMENT, AND SUBJECT TO CIVIL AND CRIMINAL PENALTIES THEREUNDER.

2703.7.3 Hazardous production material (HPM) rooms, gas rooms and liquid storage rooms. Electrical wiring and equipment in HPM rooms, gas rooms and liquid storage rooms shall comply with NFPA 70.

❖ Electrical wiring, equipment and devices in HPM cut-off rooms used for the storage of flammable liquids or gases must be classified for hazardous locations, in accordance with NFPA 70. The hazardous location requirements in NFPA 70 contain special protection features to preclude ignition of flammable vapors, liquids, gases or dusts by sparks or electrical arcing.

2703.8 Corridors and enclosures for stairways and ramps. Hazardous materials shall not be used or stored in *corridors* or enclosures for stairways and ramps.

❖ Because corridors leading to enclosures for stairways and ramps are critical to the safe egress and life safety of personnel, this section prohibits the storage or use of HPM within them. This is consistent with Sections 1022.1 and 1023.1, which prohibit the use of an exit for any purpose other than the egress function.

2703.9 Service corridors. Hazardous materials shall not be used in an open-system use condition in service corridors.

❖ HPM dispensing, or the open use or open transfer of HPM from original shipping containers to secondary containers, must not be performed in service corridors in order to reduce the likelihood of liberating dangerous vapors or fumes that might be difficult to mitigate.

2703.10 Automatic sprinkler system. An *approved automatic sprinkler system* shall be provided in accordance with Sections 2703.10.1 through 2703.10.5 and Chapter 9.

❖ Sections 2703.10.1 through 2703.10.5 contain specific sprinkler protection design requirements for the various parts and components of an HPM facility. Section 903.2.5.2 requires automatic sprinkler protection throughout HPM facilities and states specific design criteria for various areas of the facility. Fabrication areas, service corridors and inside HPM storage rooms are considered Ordinary Hazard Group 2 and HPM storage rooms with dispensing are classified as Extra Hazard Group 2, in accordance with NFPA 13.

2703.10.1 Workstations and tools. The design of the sprinkler system in the area shall take into consideration the spray pattern and the effect on the equipment.

❖ The design of the sprinkler system must consider obstructions to water penetration of workstations and tools and the potential for collateral damage to equipment from sprinkler discharge that could delay a return to normal operations.

2703.10.1.1 Combustible workstations. A sprinkler head shall be installed within each branch exhaust connection or individual plenums of workstations of combustible construction. The sprinkler head in the exhaust connection or plenum shall be located not more than 2 feet (610 mm) from the point of the duct connection or the connection to the plenum. Where necessary to prevent corrosion, the sprinkler head and connecting piping in the duct shall be coated with *approved* or *listed* corrosion-resistant materials. The sprinkler head shall be accessible for periodic inspection.

Exceptions:

1. *Approved* alternative automatic fire-extinguishing systems are allowed. Activation of such systems shall deactivate the related processing equipment.
2. Process equipment that operates at temperatures exceeding 932°F (500°C) and is provided with automatic shutdown capabilities for hazardous materials.
3. Exhaust ducts 10 inches (254 mm) or less in diameter from flammable gas storage cabinets that are part of a workstation.
4. Ducts *listed* or *approved* for use without internal automatic sprinkler protection.

❖ Generally, workstations are constructed of noncombustible materials. Wet benches and machines handling certain corrosives may have substantial nonmetallic components or surfaces. Notwithstanding the requirements of Sections 2703.10.4.1 and 2703.10.4.2, an automatic sprinkler must be installed within 2 feet (610 mm) of where the exhaust duct connects to a workstation of combustible construction. It is reasonable to require the installation of a corrosion-resistant sprinkler, in accordance with NFPA 13, and the application of a corrosion-resistant pipe coating because combustible (nonmetallic) parts are commonly used as a result of corrosion concerns. The duct must be accessible to permit regular periodic inspection and maintenance. (Note: corrosion-resistant sprinklers require periodic replacement despite their ability to withstand severe exposures.)

Many fire protection engineers prefer the use of listed special flow control (also called “on-off”) sprinklers or cycling (on-off) sprinkler systems to minimize the effects of water damage from automatic sprinklers. Others prefer preaction systems as a backup to an alternative fire suppression system, including clean agent or carbon dioxide systems.

Exception 1 allows the installation of an alternative, automatic fire-extinguishing system, in accordance with Section 904, instead of automatic sprinklers. The activation of the alternative system must deactivate or deenergize processing equipment in the protected room or space. Deactivation of processing equipment should not affect the operation of required exhaust ventilation.

Exception 2 states that only the HPM flow must be interrupted in processing equipment operating at temperatures greater than 932°F (500°C).

Exception 3 allows gas cabinet exhaust systems associated with and part of workstations to continue to operate after shutdown.

Exception 4 states that automatic sprinklers are not required where the risk to people or property is lim-

INTERNATIONAL CODE COUNCIL®
Copyright © 2015 ICC. ALL RIGHTS RESERVED. Accessed by David Dammon on Jun 21, 2017 12:30:52 PM pursuant to License Agreement with ICC. No further reproduction or distribution authorized. ANY UNAUTHORIZED REPRODUCTION OR DISTRIBUTION IS A VIOLATION OF THE FEDERAL COPYRIGHT ACT AND THE LICENSE AGREEMENT, AND SUBJECT TO CIVIL AND CRIMINAL PENALTIES THEREUNDER.

ited, such as when nonmetallic ducts approved for installation without sprinklers are used.

2703.10.1.2 Combustible tools. Where the horizontal surface of a combustible tool is obstructed from ceiling sprinkler discharge, automatic sprinkler protection that covers the horizontal surface of the tool shall be provided.

Exceptions:

1. An automatic gaseous fire-extinguishing local surface application system shall be allowed as an alternative to sprinklers. Gaseous-extinguishing systems shall be actuated by infrared (IR) or ultraviolet/infrared (UV/IR) optical detectors.
2. Tools constructed of materials that are listed as Class 1 or Class 2 in accordance with UL 2360 or *approved* for use without internal fire-extinguishing system protection.

❖ Automatic sprinkler system discharge from ceiling sprinklers that cannot reach the fire because of obstructions below the sprinkler can allow the fire to grow beyond the capability of the system to extinguish or hold the fire's progress in check until help arrives. Where the surface of a combustible tool being used in an HPM process is thus obstructed, a fire could rapidly spread unimpeded in the workstation and overpower the ceiling sprinkler design capability. This section requires that sprinkler protection be installed to properly cover the entire surface of the tool.

Exception 1 allows surface protection to be by installation of a gaseous fire-extinguishing system, such as a clean agent system, if it is activated by the more sensitive infrared (IR) or ultraviolet/infrared (UV/IR) optical detectors (see also the commentary to the Section 202 definition of "Tool").

Exception 2 allows the use of plastics listed as being compliant with UL 2360 in the construction of combustible semiconductor tools in lieu of providing an automatic fire-extinguishing system. UL 2360 provisions are used to evaluate fire testing plastics utilized in the construction of semiconductor tools to determine their fire propagation and smoke development properties. The fire tests are implemented to evaluate two properties:

- The fire propagation index (FPI), which measures the ease of ignitibility of the plastic and its fire propagation characteristics. It is an index representing the propensity of the material to support fire propagation.
- The smoke-development index (SDI), which is a measurement of the amount of smoke generated. It is an indicator of the extent of smoke contamination of the environment during fire propagation.

In UL 2360, the FPI for a listed Class 1 plastic must not exceed 6 $(m/s^{0.5})/(kW/m)^{2/3}$ for fire propagation beyond the ignition zone. This maximum value is based on a 15-second average value of the fire test data. The SDI of a listed Class 1 plastic must not exceed 0.40 $(m/s^{0.5})/(kW/m)^{2/3}$ as the criterion for significantly limiting smoke concentration for nonpropagating fires beyond the ignition zone. For a Class 1 plastic to be listed, the material requires an FDI of 6 or less and a SDI of 0.4 or less. Listed Class 1 plastics are considered to be nonpropagating materials in UL 2360.

A listed Class 2 plastic means it has been formulated with a resin that limits the propagation of fire and the development of smoke. Class 2 materials are evaluated using a parallel panel fire test. In this test, an 8-foot-long by 2-foot-wide by $^1/_4$-inch (2438 mm by 610 mm by 6.4 mm) sample of the plastic is placed on a load cell and subjected to a 60 kW exposure fire. For a sample to successfully pass this test and obtain a Class 2 listing, it must not have a visual flame height of 6 feet (1829 mm) or more, a thermal flux less than 40 kW/m², a limited heat release rate calculated during the time the sample is tested with the flame source operating and 2 minutes after the flame source is discontinued, a smoke generation rate not to exceed 0.23 grams/second or less, and the total smoke generated is less than 60 grams.

Several polymers inherently resistant to fire that produce very little smoke are classified as Class 1 materials in accordance with Exception 2, including chlorinated polyvinyl chloride (CPVC), ethylene-chlorotrifluro-ethylene (ECTFE), polyvinylidene fluoride (PVDF) and fire-resistant polypropylene (FRPP). According to Factory Mutual (FM) Global, a major insurer of semiconductor fabrication facilities, 17 manufacturers are producing about 150 different polymers that comply with its *Clean Room Materials Flammability Test Protocol* published as FM 4910, which led to the development of UL 2360.

2703.10.2 Gas cabinets and exhausted enclosures. An *approved automatic sprinkler system* shall be provided in gas cabinets and exhausted enclosures containing HPM *compressed gases*.

Exception: Gas cabinets located in an HPM room other than those cabinets containing pyrophoric gases.

❖ Automatic sprinkler protection is required inside HPM storage cabinets, including workstation cabinets, except those storing gases other than pyrophoric gases (silane and dichlorosilane) located inside HPM rooms.

The exception recognizes the equivalency between automatic sprinkler protection and the fire-resistance-rated separation provided by an HPM room, except in cases of extremely hazardous pyrophoric gases.

2703.10.3 Pass-throughs in existing exit access corridors. Pass-throughs in existing *exit access corridors* shall be protected by an *approved automatic sprinkler system*.

❖ Exit access corridors in new buildings are not to be used for transporting HPM to the fabrication area. In accordance with IBC Section 415.11.1.7, HPM must be transported by service corridors or piping. This

INTERNATIONAL CODE COUNCIL®
Copyright © 2015 ICC. ALL RIGHTS RESERVED. Accessed by David Dammon on Jun 21, 2017 12:30:52 PM pursuant to License Agreement with ICC. No further reproduction or distribution authorized. ANY UNAUTHORIZED REPRODUCTION OR DISTRIBUTION IS A VIOLATION OF THE FEDERAL COPYRIGHT ACT AND THE LICENSE AGREEMENT, AND SUBJECT TO CIVIL AND CRIMINAL PENALTIES THEREUNDER.

section addresses HPM facilities that existed before the adoption and enforcement of those requirements. The intent of this section is to allow a pass-through in existing exit access corridor walls for transporting HPM to a fabrication area. A pass-through, such as a storage cabinet, is used to store and receive HPM for the fabrication area. The pass-through must be separated from the exit access corridor by fire-resistance-rated construction, including rated self-closing fire doors, and be protected by internal automatic sprinklers.

2703.10.4 Exhaust ducts for HPM. An *approved automatic sprinkler system* shall be provided in exhaust ducts conveying gases, vapors, fumes, mists or dusts generated from HPM in accordance with this section and the *International Mechanical Code*.

❖ Because of the hazardous nature of the materials exhausted in HPM facilities, exhaust systems must comply with the IMC requirements for hazardous exhaust systems, including automatic sprinklers installed within the ducts. Sections 2703.10.4.1 through 2703.10.4.4.5 contain specific requirements for sprinkler installation in these systems.

2703.10.4.1 Metallic and noncombustible nonmetallic exhaust ducts. An *approved automatic sprinkler system* shall be provided in metallic and noncombustible nonmetallic exhaust ducts where all of the following conditions apply:

1. Where the largest cross-sectional diameter is equal to or greater than 10 inches (254 mm).
2. The ducts are within the building.
3. The ducts are conveying flammable gases, vapors or fumes.

❖ Sprinklers are required in each individual duct where all three of the conditions listed in this section exist.

Commentary Figure 2703.10.4.1 illustrates how to measure the cross-sectional diameter of various duct shapes. This section requires the square and rounded ducts to be protected by automatic sprinklers. The round or elliptical ducts depicted on the right side of the diagram do not require protection.

2703.10.4.2 Combustible nonmetallic exhaust ducts. An *approved automatic sprinkler system* shall be provided in combustible nonmetallic exhaust ducts where the largest cross-sectional diameter of the duct is equal to or greater than 10 inches (254 mm).

Exceptions:

1. Ducts *listed* or *approved* for applications without *automatic sprinkler system* protection.
2. Ducts not more than 12 feet (3658 mm) in length installed below ceiling level.

❖ Automatic sprinkler protection is required for all combustible nonmetallic ducts with a cross-sectional diameter equal to or greater than 10 inches (254 mm) because of their ability to add a substantial amount of fuel in case of a fire within the duct system.

Exception 1 states that automatic sprinklers are not required where the risk to people or property is limited, such as when nonmetallic ducts approved for installation without sprinklers are used.

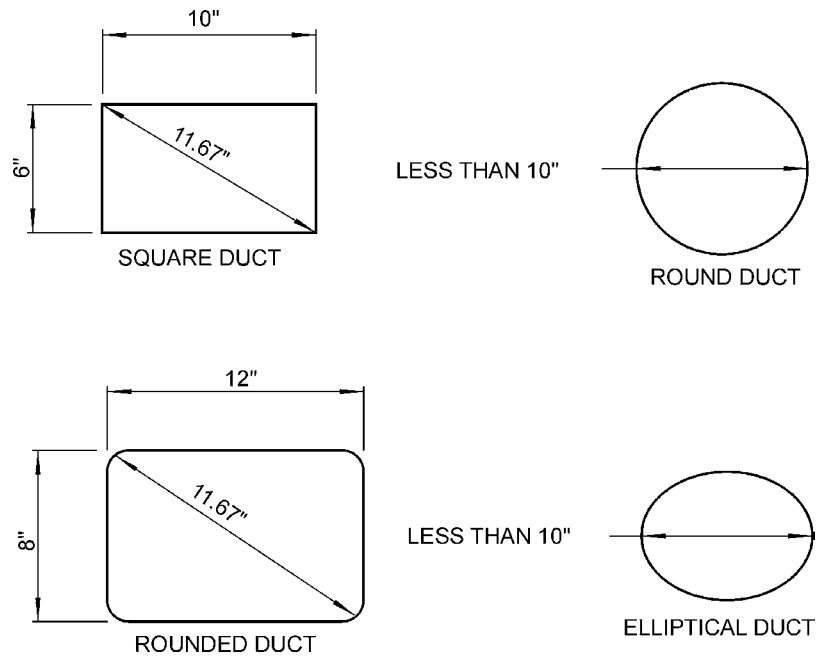

For SI: 1 inch = 25.4 mm.

Figure 2703.10.4.1
CROSS-SECTIONAL DIAMETERS OF VARIOUS-SHAPED DUCTS

INTERNATIONAL CODE COUNCIL®
Copyright © 2015 ICC. ALL RIGHTS RESERVED. Accessed by David Dammon on Jun 21, 2017 12:30:52 PM pursuant to License Agreement with ICC. No further reproduction or distribution authorized. ANY UNAUTHORIZED REPRODUCTION OR DISTRIBUTION IS A VIOLATION OF THE FEDERAL COPYRIGHT ACT AND THE LICENSE AGREEMENT, AND SUBJECT TO CIVIL AND CRIMINAL PENALTIES THEREUNDER.

Exception 2 states that when ducts do not exceed 12 feet (3658 mm) in length and are installed exposed below ceiling level, sprinklers may be omitted. A fire within such a system would be readily noticeable and readily accessible for fire attack because of the exposed ductwork.

2703.10.4.3 Exhaust connections and plenums of combustible workstations. Automatic fire-extinguishing system protection for exhaust connections and plenums of combustible workstations shall comply with Section 2703.10.1.1.

❖ Refer to Section 2703.10.1.1 for sprinkler protection for combustible workstation exhaust connections and plenums.

2703.10.4.4 Exhaust duct sprinkler system requirements. Automatic sprinklers installed in exhaust duct systems shall be hydraulically designed to provide 0.5 gallons per minute (gpm) (1.9 L/min) over an area derived by multiplying the distance between the sprinklers in a horizontal duct by the width of the duct. Minimum discharge shall be 20 gpm (76 L/min) per sprinkler from the five hydraulically most remote sprinklers.

❖ This section, including Sections 2703.10.4.4.1 through 2703.10.4.4.5, addresses the design, installation, maintenance and inspection requirements for sprinklers installed in exhaust duct systems. This section specifies the hydraulic design criteria and minimum flow discharged from sprinklers. Parallel provisions may also be found in Section 21.23.1.3 of NFPA 13.

2703.10.4.4.1 Sprinkler head locations. Automatic sprinklers shall be installed at 12-foot (3658 mm) intervals in horizontal ducts and at changes in direction. In vertical runs, automatic sprinklers shall be installed at the top and at alternate floor levels.

❖ This section specifies sprinkler spacing in both horizontal and vertical exhaust ducts. The provisions in Section 21.23.2.3 of NFPA 13 differ from these requirements in that the horizontal spacing is indicated as being 20 feet (6096 mm) and the vertical spacing as 12 feet (3658 mm). In accordance with Section 102.7, the provisions of this section would apply.

2703.10.4.4.2 Control valve. A separate indicating control valve shall be provided for sprinklers installed in exhaust ducts.

❖ To isolate the sprinklers installed within the exhaust ducts without depriving the building or other facility components of protection, a separate, approved indicating control valve must be installed to serve the duct system only. This valve should be supervised like any other sprinkler control valve.

2703.10.4.4.3 Drainage. Drainage shall be provided to remove sprinkler water discharged in exhaust ducts.

❖ To prevent contamination of process equipment by sprinkler discharge water that might flow back down the duct, this section requires that the ducts have approved drainage facilities. Prompt drainage of sprinkler discharge water also reduces the likelihood of the duct system collapsing from the weight of retained water. Because the water will likely contain residues of the chemicals being exhausted through the ductwork, it must be disposed of in accordance with applicable environmental laws.

2703.10.4.4.4 Corrosive atmospheres. Where corrosive atmospheres exist, exhaust duct sprinklers and pipe fittings shall be manufactured of corrosion-resistant materials or coated with *approved* materials.

❖ Corrosion-resistant sprinklers, piping and fittings must be installed in exhaust ducts conveying corrosive vapors, fumes, mists or dusts to increase the likelihood that the sprinklers will be operable when needed. This is also critical since such sprinklers are concealed and not readily operable by building occupants.

2703.10.4.4.5 Maintenance and inspection. Sprinklers in exhaust ducts shall be accessible for periodic inspection and maintenance.

❖ Access panels must be installed in exhaust ducts for inspection and maintenance of sprinklers.

2703.10.5 Sprinkler alarms and supervision. *Automatic sprinkler systems* shall be electrically supervised and provided with alarms in accordance with Chapter 9. *Automatic sprinkler system* alarm and supervisory signals shall be transmitted to the *emergency control station*.

❖ Automatic sprinkler systems must be electrically supervised and have alarms installed, in accordance with Section 903.4. The system alarm and supervisory signals should be transmitted to the on-site emergency control station. See Section 202 for the definition of, and Section 2703.1 for the conditions and requirements applicable to, "Emergency control stations."

2703.11 Manual fire alarm system. A manual fire alarm system shall be installed throughout buildings containing a Group H-5 occupancy. Activation of the alarm system shall initiate a local alarm and transmit a signal to the *emergency control station*. Manual fire alarm systems shall be designed and installed in accordance with Section 907.

❖ A manual fire alarm system, designed and installed as specified in Section 907.2, must be installed throughout buildings containing a Group H-5 occupancy. System activation is to set off a local alarm, with the alarm signal transmitted to the on-site emergency control station. Note that the local alarm signal is intended only for the area of alarm origin and is not intended to be a general alarm that sounds throughout the building. Refer to the commentary to Chapter 9 for manual fire alarm system requirements. Note that this section correlates with IBC Section 415.11.8.

2703.12 Emergency alarm system. Emergency alarm systems shall be provided in accordance with Sections 2703.12.1 through 2703.12.3, Section 5004.9 and Section 5005.4.4. The

INTERNATIONAL CODE COUNCIL®
Copyright © 2015 ICC. ALL RIGHTS RESERVED. Accessed by David Dammon on Jun 21, 2017 12:30:52 PM pursuant to License Agreement with ICC. No further reproduction or distribution authorized. ANY UNAUTHORIZED REPRODUCTION OR DISTRIBUTION IS A VIOLATION OF THE FEDERAL COPYRIGHT ACT AND THE LICENSE AGREEMENT, AND SUBJECT TO CIVIL AND CRIMINAL PENALTIES THEREUNDER.

maximum allowable quantity per control area provisions of Section 5004.1 shall not apply to emergency alarm systems required for HPM.

❖ This section requires an emergency alarm system in all areas where HPM is transported or stored. It also clarifies that the requirement for an emergency alarm system in a Group H-5 facility in the locations identified in Sections 2703.12.1 through 2703.12.1.3 is not dependent on whether the MAQs of Section 5004.1 are exceeded. Emergency alarm systems must comply with Section 908.

2703.12.1 Where required. Emergency alarm systems shall be provided in the areas indicated in Sections 2703.12.1.1 through 2703.12.1.3.

❖ This section states that emergency alarm systems must be installed in the locations defined in Sections 2703.12.1.1 through 2703.12.1.3.

2703.12.1.1 Service corridors. An *approved* emergency alarm system shall be provided in service corridors, with not less than one alarm device in the service corridor.

❖ An emergency telephone system or manual alarm pull station that is readily accessible to personnel is required in service corridors. These devices must set off an alarm at the emergency control station, as well as activate a local audible signal.

2703.12.1.2 Corridors and interior exit stairways and ramps. Emergency alarms for corridors, interior exit stairways and ramps and exit passageways shall comply with Section 5005.4.4.

❖ Because HPM materials would not be in corridors or interior exit stairways, ramps or passageways unless they were being transported to another approved area, the emergency alarm requirements of Section 5005.4.4 for dispensing, use and handling must be complied with.

2703.12.1.3 Liquid storage rooms, HPM rooms and gas rooms. Emergency alarms for liquid storage rooms, HPM rooms and gas rooms shall comply with Section 5004.9.

❖ This section mandates compliance with the emergency alarm requirements of Section 5004.9 for hazardous materials in a storage condition. This section addresses storage areas that, by their designation, contain HPM in quantities greater than those listed in Table 5003.1.1(1) or 5003.1.1(2).

2703.12.2 Alarm-initiating devices. An *approved* emergency telephone system, local alarm manual pull stations, or other *approved* alarm-initiating devices are allowed to be used as emergency alarm-initiating devices.

❖ This section classifies what constitutes an approved alarm-initiating device, affording maximum design flexibility.

2703.12.3 Alarm signals. Activation of the emergency alarm system shall sound a local alarm and transmit a signal to the *emergency control station.*

❖ The alarm signal must be transmitted to the emergency control station to notify trained personnel of an emergency condition. A local alarm is required to alert the occupants of a potential hazardous condition.

2703.13 Continuous gas detection systems. A continuous gas detection system shall be provided for HPM gases where the physiological warning threshold level of the gas is at a higher level than the accepted permissible exposure limit (PEL) for the gas and for flammable gases in accordance with Sections 2703.13.1 through 2703.13.2.2.

❖ A gas detection system in the room or area used for the storage or use of HPM gases provides early notification of a leak before the escaping gas reaches hazardous concentration levels.

2703.13.1 Where required. A continuous gas detection system shall be provided in the areas identified in Sections 2703.13.1.1 through 2703.13.1.4.

❖ Sections 2703.13.1.1 through 2703.13.1.4 prescribe the locations in a Group H-5 facility where a gas detection system is required.

2703.13.1.1 Fabrication areas. A continuous gas detection system shall be provided in *fabrication areas* where gas is used in the fabrication area.

❖ Fabrication areas that use HPM gases must have a gas detection system. It should be noted that gas detection is often installed in workstations as a means of early detection of leaks. Such detection is generally not acceptable as an alternative to gas detection for the fabrication area because a leak may occur at locations that are remote from the workstation.

2703.13.1.2 HPM rooms. A continuous gas detection system shall be provided in HPM rooms where gas is used in the room.

❖ HPM rooms where gas is used, which by definition contain more than the MAQs permitted by Tables 5003.1.1(1) and 5003.1.1(2), are required to have a gas detection system.

2703.13.1.3 Gas cabinets, exhausted enclosures and gas rooms. A continuous gas detection system shall be provided in gas cabinets and exhausted enclosures. A continuous gas detection system shall be provided in gas rooms where gases are not located in gas cabinets or exhausted enclosures.

❖ In the potential event of a leaking cylinder of a hazardous gas, gas cabinets, exhausted enclosures and gas rooms must have a gas detection system.

INTERNATIONAL CODE COUNCIL®
Copyright © 2015 ICC. ALL RIGHTS RESERVED. Accessed by David Dammon on Jun 21, 2017 12:30:52 PM pursuant to License Agreement with ICC. No further reproduction or distribution authorized. ANY UNAUTHORIZED REPRODUCTION OR DISTRIBUTION IS A VIOLATION OF THE FEDERAL COPYRIGHT ACT AND THE LICENSE AGREEMENT, AND SUBJECT TO CIVIL AND CRIMINAL PENALTIES THEREUNDER.

2703.13.1.4 Corridors. Where gases are transported in piping placed within the space defined by the walls of a *corridor* and the floor or roof above the *corridor*, a continuous gas detection system shall be provided where piping is located and in the *corridor*.

Exception: A continuous gas detection system is not required for occasional transverse crossings of the *corridors* by supply piping that is enclosed in a ferrous pipe or tube for the width of the *corridor*.

❖ The installation of HPM piping in the space above an exit access corridor, as well as the cavity of the egress corridor wall, presents a potential source of hazard to the building's occupants; therefore, a gas detection system is required for early notification of a potential leak of an HPM gas.

The exception recognizes that when the piping traverses a corridor, the use of an outer-jacket containment pipe around the HPM piping is considered acceptable for the required separation and containment of a potential leak. The assumption is that the open ends of that pipe are in an HPM facility and, therefore, a leak into the outer casing can be monitored. If the adjacent areas that contain the open ends are not in an HPM facility, the "outer-jacket" method cannot be used.

2703.13.2 Gas detection system operation. The continuous gas detection system shall be capable of monitoring the room, area or equipment in which the gas is located at or below all the following gas concentrations:

1. Immediately dangerous to life and health (IDLH) values where the monitoring point is within an exhausted enclosure, ventilated enclosure or gas cabinet.
2. Permissible exposure limit (PEL) levels where the monitoring point is in an area outside an exhausted enclosure, ventilated enclosure or gas cabinet.
3. For flammable gases, the monitoring detection threshold level shall be vapor concentrations in excess of 25 percent of the lower flammable limit (LFL) where the monitoring is within or outside an exhausted enclosure, ventilated enclosure or gas cabinet.
4. Except as noted in this section, monitoring for highly toxic and toxic gases shall also comply with Chapter 60.

❖ This section harmonizes the code with the widely used clean-room standard NFPA 318 provisions for gas detection, which are much more relevant to the type of monitoring performed in semiconductor manufacturing (inside exhausted enclosures, ventilated enclosures or gas cabinets). Monitoring in the semiconductor industry is designed to detect and alert employees of leaks inside exhausted enclosures, ventilated enclosures and gas cabinets, and is not intended to estimate potential employee breathing zone exposures.

This section requires gas detection based on the potential for health-threatening levels both inside enclosures and in the employee environment as established by nationally accepted health standards, such as those used by the Occupational Safety and Health Administration (OSHA). The permissible exposure limit (PEL) of a gas is the legal limitation for long-term exposure (8 to 10 hours, normally). The American Conference of Governmental Industrial Hygienists (ACGIH) publishes threshold limit values (TLVs) based on a time-weighted average. State and local laws may also contain limits.

Additionally, flammable gas detection must be installed where dispensing that may result in vapor concentrations in excess of 25 percent of the lower explosive limit (LEL) occurs, as is consistent with IMC Section 510.2 and NFPA 318. LELs can be obtained from suppliers or other printed sources, such as the NFPA *Fire Protection Guide to Hazardous Materials*. Chapter 60 contains additional requirements for monitoring highly toxic and toxic compressed gases.

2703.13.2.1 Alarms. The gas detection system shall initiate a local alarm and transmit a signal to the *emergency control station* when a short-term hazard condition is detected. The alarm shall be both visible and audible and shall provide warning both inside and outside the area where the gas is detected. The audible alarm shall be distinct from all other alarms.

❖ The required local alarm is intended to alert occupants to a hazardous condition in the vicinity of HPM gas storage or use. The alarm is not intended to be an evacuation alarm; however, it must be monitored to hasten emergency personnel response.

2703.13.2.2 Shut off of gas supply. The gas detection system shall automatically close the shutoff valve at the source on gas supply piping and tubing related to the system being monitored for which gas is detected when a short-term hazard condition is detected. Automatic closure of shutoff valves shall comply with the following:

1. Where the gas-detection sampling point initiating the gas detection system alarm is within a gas cabinet or exhausted enclosure, the shutoff valve in the gas cabinet or exhausted enclosure for the specific gas detected shall automatically close.
2. Where the gas-detection sampling point initiating the gas detection system alarm is within a room and *compressed gas* containers are not in gas cabinets or exhausted enclosure, the shutoff valves on all gas lines for the specific gas detected shall automatically close.
3. Where the gas-detection sampling point initiating the gas detection system alarm is within a piping distribution manifold enclosure, the shutoff valve supplying the manifold for the *compressed gas* container of the specific gas detected shall automatically close.

Exception: Where the gas-detection sampling point initiating the gas detection system alarm is at the use location or within a gas valve enclosure of a branch line downstream of a piping distribution manifold,

INTERNATIONAL CODE COUNCIL®
Copyright © 2015 ICC. ALL RIGHTS RESERVED. Accessed by David Dammon on Jun 21, 2017 12:30:52 PM pursuant to License Agreement with ICC. No further reproduction or distribution authorized. ANY UNAUTHORIZED REPRODUCTION OR DISTRIBUTION IS A VIOLATION OF THE FEDERAL COPYRIGHT ACT AND THE LICENSE AGREEMENT, AND SUBJECT TO CIVIL AND CRIMINAL PENALTIES THEREUNDER.

the shutoff valve for the branch line located in the piping distribution manifold enclosure shall automatically close.

❖ Where gas detection systems are required, automatic emergency shutoff valves are required to stop the flow of hazardous materials from possibly deteriorating further in an emergency.

There are essentially four different protocols for shutting off valves, depending on the source of the leak. Note that one of these methods is located within the exception. It should be emphasized that the requirements are to shut off the valves only when the type of gas is detected.

2703.14 Exhaust ventilation systems for HPM. Exhaust ventilation systems and materials for exhaust ducts utilized for the exhaust of HPM shall comply with Sections 2703.14.1 through 2703.14.3, other applicable provisions of this code, the *International Building Code* and the *International Mechanical Code*.

❖ This section is a summary of the ventilation requirements for semiconductor facilities, and references the IBC and IMC for further requirements. Parallel requirements may be found in IMC Section 502.10.

2703.14.1 Where required. Exhaust ventilation systems shall be provided in the following locations in accordance with the requirements of this section and the *International Building Code*:

1. *Fabrication areas*: Exhaust ventilation for *fabrication areas* shall comply with the *International Building Code*. The *fire code official* is authorized to require additional manual control switches.
2. Workstations: A ventilation system shall be provided to capture and exhaust gases, fumes and vapors at workstations.
3. Liquid storage rooms: Exhaust ventilation for liquid storage rooms shall comply with Section 5004.3.1 and the *International Building Code*.
4. HPM rooms: Exhaust ventilation for HPM rooms shall comply with Section 5004.3.1 and the *International Building Code.*
5. Gas cabinets: Exhaust ventilation for gas cabinets shall comply with Section 5003.8.6.2. The gas cabinet ventilation system is allowed to connect to a workstation ventilation system. Exhaust ventilation for gas cabinets containing highly toxic or toxic gases shall also comply with Chapter 60.
6. Exhausted enclosures: Exhaust ventilation for exhausted enclosures shall comply with Section 5003.8.5.2. Exhaust ventilation for exhausted enclosures containing highly toxic or toxic gases shall also comply with Chapter 60.
7. Gas rooms: Exhaust ventilation for gas rooms shall comply with Section 5003.8.4.2. Exhaust ventilation for gas rooms containing highly toxic or toxic gases shall also comply with Chapter 60.
8. Cabinets containing pyrophoric liquids or Class 3 water-reactive liquids: Exhaust ventilation for cabinets in *fabrication areas* containing pyrophoric liquids or Class 3 water-reactive liquids shall be as required in Section 2705.2.3.4.

❖ Items 1 through 8 list the specific ventilation requirements for semiconductor facilities based on the use of the particular area. Many of these requirements are references to other sections of the code. These are essentially the same requirements found in IMC Section 502.10 (see commentary, Section 2705.2.3.5).

Item 1 requires that fabrication areas must be ventilated as stated in the IBC. This item also gives the fire code official the authority to require additional manual control switches where facility arrangements make the additional switches necessary. Item 2 requires that workstations, typically found in each fabrication area, must have individual exhaust systems to collect any exhaust fumes and vapors. In Item 3, liquid storage rooms in semiconductor facilities are to be treated the same as other liquid storage rooms and ventilated according to the general requirements for hazardous materials found in Section 5004.3.1. Item 4 requires that HPM rooms, which are essentially a Group H-2, H-3 or H-4 occupancy, must be ventilated in the same way as any Group H-2, H-3 or H-4 occupancy would be ventilated, in accordance with Section 5004.3.1. Item 5 states that gas cabinets used in semiconductor facilities are to be treated the same as any other use of gas cabinets with hazardous materials. Gas cabinets can share the exhaust system of an individual workstation. Also, semiconductor facilities tend to make use of both toxic and highly toxic gases; therefore, additional requirements are specifically highlighted for these applications. Items 6 and 7 indicate that exhausted enclosures and gas rooms, respectively, are also regulated just as they are for other applications with hazardous materials. As with gas cabinets, semiconductor facilities tend to make use of both toxic and highly toxic gases; therefore, additional requirements are also specifically highlighted for those applications. Item 8 highlights the increased hazards of pyrophoric liquids and Class 3 water-reactive materials by requiring exhaust ventilation in fabrication area cabinets storing those materials to comply with the special requirements of Section 2705.2.3.4. See the commentary to Section 2705.2.3.4 for further discussion of pyrophoric and water-reactive materials.

2703.14.2 Penetrations. Exhaust ducts penetrating *fire barriers* constructed in accordance with Section 707 of the *International Building Code* or *horizontal assemblies* constructed

INTERNATIONAL CODE COUNCIL®
Copyright © 2015 ICC. ALL RIGHTS RESERVED. Accessed by David Dammon on Jun 21, 2017 12:30:52 PM pursuant to License Agreement with ICC. No further reproduction or distribution authorized. ANY UNAUTHORIZED REPRODUCTION OR DISTRIBUTION IS A VIOLATION OF THE FEDERAL COPYRIGHT ACT AND THE LICENSE AGREEMENT, AND SUBJECT TO CIVIL AND CRIMINAL PENALTIES THEREUNDER.

in accordance with Section 711 of the *International Building Code* shall be contained in a shaft of equivalent fire-resistance-rated construction. Exhaust ducts shall not penetrate *fire walls*. Fire dampers shall not be installed in exhaust ducts.

❖ Semiconductor facilities are essentially a combination of many activities involving the storage and use of hazardous materials. These facilities are large and generally complex, and exhaust systems may lead through several areas of a building before the exhaust is processed or released to the atmosphere. This section requires that the protection surrounding an exhaust system is at least equivalent to the fire-resistance rating of the surrounding fire barriers and horizontal assemblies. Ventilation should not be interrupted by a fire damper when a fire or other emergency occurs involving a workstation. This helps reduce the likelihood that hazardous combustion byproducts or hazardous concentrations of HPM will be forced back into the workstation or clean room. Continuous ventilation through a duct enclosed in a fire-resistance-rated shaft is required. Fire walls define separations between buildings. Ducts must never penetrate a barrier common to another building. This reduces the likelihood of tampering with or interrupting the duct integrity.

2703.14.3 Treatment systems. Treatment systems for highly toxic and toxic gases shall comply with Chapter 60.

❖ Because of their toxicity hazards, highly toxic and toxic gases should be protected by gas treatment systems. See the commentary to Section 3704 on highly toxic and toxic gases and, in particular, Section 3704.2.2.7 for further discussion of treatment systems.

2703.15 Emergency power system. An emergency power system shall be provided in Group H-5 occupancies in accordance with Section 604. The emergency power system shall supply power automatically to the electrical systems specified in Section 2703.15.1 when the normal supply system is interrupted.

❖ A backup emergency power source is considered essential for systems monitoring and protecting hazardous materials in a Group H-5 occupancy. Without an emergency power system, all required electrical controls or equipment monitoring hazardous materials would be rendered inoperative if a power failure or other electrical system failure were to occur. See also the commentary to Section 604.

2703.15.1 Required electrical systems. Emergency power shall be provided for electrically operated equipment and connected control circuits for the following systems:

1. HPM exhaust ventilation systems.
2. HPM gas cabinet ventilation systems.
3. HPM exhausted enclosure ventilation systems.
4. HPM gas room ventilation systems.
5. HPM gas detection systems.
6. Emergency alarm systems.
7. Manual fire alarm systems.
8. *Automatic sprinkler system* monitoring and alarm systems.
9. Automatic alarm and detection systems for pyrophoric liquids and Class 3 water-reactive liquids required in Section 2705.2.3.4.
10. Flow alarm switches for pyrophoric liquids and Class 3 water-reactive liquids cabinet exhaust ventilation systems required in Section 2705.2.3.4.
11. Electrically operated systems required elsewhere in this code or in the *International Building Code* applicable to the use, storage or handling of HPM.

❖ This section specifies the types of systems in a Group H-5 occupancy that must be connected to an approved emergency power system. As indicated in Section 604, emergency power systems must be installed, in accordance with the applicable requirements of NFPA 70, NFPA 110 and NFPA 111. Note that the systems included in the list are critical to personnel safety and must remain operable under all conditions of normal power system failure or impairment.

2703.15.2 Exhaust ventilation systems. Exhaust ventilation systems are allowed to be designed to operate at not less than one-half the normal fan speed on the emergency power system where it is demonstrated that the level of exhaust will maintain a safe atmosphere.

❖ Emergency power for exhaust ventilation is required to prevent hazardous concentrations of HPM fumes or vapors in areas such as workstations or fabrication areas. Fans for exhaust ventilation draw a considerable amount of current when operating. Running exhaust fans at a reduced speed may be desirable when it will not endanger the operator or result in a hazardous condition. However, exhaust fans must not be run at a speed less than 50 percent of their rating, even if a slower speed will not produce a serious hazard.

2703.16 Sub-atmospheric pressure gas systems. Sub-atmospheric pressure gas systems (SAGS) shall be in accordance with NFPA 318.

❖ This section allows the storage and use of HPM gases in subatmospheric pressure gas systems (SAGS) when the systems are installed in accordance with NFPA 318. It is the intent of this section to adopt only the provisions of NFPA 318 relating to SAGS even though the scope of the standard itself covers many more aspects of semiconductor fabrication safety. Those sections in the scope of the reference are Section 3.3.28.5 for the definition, and Section 8.6.2 addressing uses and controls (see the commentary to Section 102.7 regarding the proper application of referenced standards). Semiconductor manufacturing involves the storage, handling and use of a variety of hazardous production materials. Some

INTERNATIONAL CODE COUNCIL®
Copyright © 2015 ICC. ALL RIGHTS RESERVED. Accessed by David Dammon on Jun 21, 2017 12:30:52 PM pursuant to License Agreement with ICC. No further reproduction or distribution authorized. ANY UNAUTHORIZED REPRODUCTION OR DISTRIBUTION IS A VIOLATION OF THE FEDERAL COPYRIGHT ACT AND THE LICENSE AGREEMENT, AND SUBJECT TO CIVIL AND CRIMINAL PENALTIES THEREUNDER.

of the processes require the use of compressed gases that are classified by the code as being highly toxic, toxic, corrosive, flammable or pyrophoric. It is not uncommon for some of the gases to exhibit multiple hazard classifications. Because of the hazards associated with some of these materials, advancements to improve their safe storage and use have been developed. One improvement is SAGS for certain compressed gases, a primary goal of which is to improve safety by reducing the risk of a gas release. This is accomplished because SAGS only deliver gas when a vacuum is applied to the cylinder connection. In a SAGS, the cylinder valve can be opened, but no gas is released until the pressure downstream of the outlet connection is below atmospheric pressure. This is in contrast to a typical gas cylinder, which releases gas when the cylinder valve is opened. SAGS significantly reduce the risk associated with HPM because they mitigate the likelihood and magnitude of a gas release, and their use is becoming more common. The semiconductor industry has used SAGS successfully for a number of years.

In semiconductor manufacturing, SAGS are commonly used during ion implantation onto a silicon wafer. In ion implanting, charged metal electrons are chemically deposited or embedded onto the wafer to alter the electrical or optical properties of the substance. Known as "dopants," they are essential in the manufacturing of semiconductors used in integrated circuits and photovoltaics. In optics, dopants are necessary in the production of certain types of lasers. As integrated circuits become more powerful microprocessors, silicon wafers must undergo greater amounts of ion implanting. Some of the common dopant gases packaged and handled using SAGS are presented in Commentary Figure 2703.16.

SAGS are designed so that the gas must be removed from the cylinder using vacuum, which is less than 14.7 pounds per square inch absolute (psia) at normal temperature and pressure (NTP) [e.g., 70°F at 1 atmosphere (21°C at 101 kPa)]. In comparison to conventional compressed gas systems where gas is released because of its stored potential energy, SAGS either inherently remove this risk or mitigate it by using mechanical controls. In SAGS, the loss of vacuum pressure stops the gas flow.

NFPA 318 classifies SAGS into two categories: Types 1 and 2, based on the type of technology used in the gas storage and transfer system.

A Type 1 SAGS is made up of a gas cylinder filled with an adsorbent matter where the contents are stored at subatmospheric pressure at NTP. A Type 1 SAGS does not meet the code's definition of "Compressed gas"; it has the characteristics of a low vapor pressure solid. A Type 2 SAGS uses a conventional U.S. Department of Transporation (DOT)-approved compressed gas cylinder, and incorporates an internal pressure regulator or check valve and an excess flow control. These components allow gas to be released only under a vacuum condition. A Type 2 SAGS is designed so that component or process failures, such as the loss of vacuum pressure or the failure of the pressure regulator causes an internal valve to automatically close and prevent the release of the stored gas.

SECTION 2704
STORAGE

2704.1 General. Storage of hazardous materials shall comply with Section 2703 and this section and other applicable provisions of this code.

❖ This section establishes the proper storage conditions for hazardous materials in fabrication areas, storage areas and storage in equipment and cabinets.

2704.2 Fabrication areas. Hazardous materials storage and the maximum quantities of hazardous materials in use and storage allowed in *fabrication areas* shall be in accordance with Sections 2704.2.1 through 2704.2.2.1.

❖ This section establishes the applicability of Sections 2704.2.1 through 2704.2.2.1 to the proper storage conditions for hazardous materials in fabrication areas. This includes the location and amount of HPMs in fabrication areas.

Compressed Gas	Formula	IFC Hazard Classification
Arsenic Pentafluoride	AsF_5	Highly Toxic; Corrosive; Class 1 Water Reactive
Arsine	AsH_3	Flammable (Liquefied); Highly Toxic
Boron Trifluoride	BF_3	Toxic; Corrosive; Class 1 Water Reactive
Germanium Tetrafluoride	GeF_4	Toxic; Corrosive
Hydrogen Selenide	H_2Se	Flammable (Liquefied); Toxic
Phosphine	PH_3	Pyrophoric; Highly Toxic
Silicon Tetrafluoride	SiF_4	Toxic; Corrosive; Class 1 Water Reactive

Figure 2703.16
COMMON DOPANT GASES AND THEIR HAZARD CLASSIFICATION

INTERNATIONAL CODE COUNCIL®
Copyright © 2015 ICC. ALL RIGHTS RESERVED. Accessed by David Dammon on Jun 21, 2017 12:30:52 PM pursuant to License Agreement with ICC. No further reproduction or distribution authorized. ANY UNAUTHORIZED REPRODUCTION OR DISTRIBUTION IS A VIOLATION OF THE FEDERAL COPYRIGHT ACT AND THE LICENSE AGREEMENT, AND SUBJECT TO CIVIL AND CRIMINAL PENALTIES THEREUNDER.

2704.2.1 Location of HPM storage in fabrication areas. Storage of HPM in *fabrication areas* shall be within *approved* or *listed* storage cabinets, gas cabinets, exhausted enclosures or within a workstation as follows:

1. Flammable and *combustible liquid* storage cabinets shall comply with Section 5704.3.2.
2. Hazardous materials storage cabinets shall comply with Section 5003.8.7.
3. Gas cabinets shall comply with Section 5003.8.6. Gas cabinets for highly toxic or toxic gases shall also comply with Section 6004.1.2.
4. Exhausted enclosures shall comply with Section 5003.8.5. Exhausted enclosures for highly toxic or toxic gases shall also comply with Section 6004.1.3.
5. Workstations shall comply with Section 2705.2.3.

❖ Even though the amount of HPM in a fabrication area is controlled, it must be further controlled by storing it in approved cabinets, exhausted enclosures or a workstation. This requirement is intended to limit the exposure to occupants of the fabrication area to only the material in use in that area. Such separation also reduces the size of a possible hazardous material incident.

The larger amounts of HPM typically stored in separate areas present a hazard comparable to other Group H facilities. Therefore, storage rooms must meet similar code requirements. Storage rooms containing HPM in quantities greater than permitted by Tables 5003.1.1(1) and 5003.1.1(2) must comply with the applicable requirements of IBC Section 415.11.5, depending on the state of the material.

2704.2.2 Maximum aggregate quantities in fabrication areas. The aggregate quantities of hazardous materials stored or used in a single *fabrication area* shall be limited as specified in this section.

Exception: *Fabrication areas* containing quantities of hazardous materials not exceeding the maximum allowable quantities per *control area* established by Sections 5003.1.1, 5704.3.4 and 5704.3.5.

❖ This section regulates the total amount of hazardous materials, whether in use or in storage, in a single fabrication area based on the density/quantity of material specified in Table 2704.2.2.1. The exception permits a fabrication area to have a total quantity of HPM of either the quantity specified in Table 2704.2.2.1 or the MAQs specified in Sections 5003.1.1, 5704.3.4 and 5704.3.5, whichever is greater.

2704.2.2.1 Storage and use in fabrication areas. The maximum quantities of hazardous materials stored or used in a single *fabrication area* shall not exceed the quantities set forth in Table 2704.2.2.1.

❖ See the commentary to Table 2704.2.2.1.

TABLE 2704.2.2.1. See page 27-17.

❖ The quantity limitations identified in Table 2704.2.2.1 designate the aggregate amounts of hazardous materials allowed to be both stored and used in each fabrication area. The density basis for managing the maximum quantity of specified hazardous materials controls the hazard distribution in the occupancy. Generally, the lower the permitted density, the greater the required separation between containers.

2704.3 Indoor storage outside of fabrication areas. The indoor storage of hazardous materials outside of *fabrication areas* shall be in accordance with Sections 2704.3.1 through 2704.3.3.

❖ This section introduces the applicability of Sections 2704.3.1 through 2704.3.3 to HPM storage not contained within a fabrication area.

2704.3.1 HPM storage. The indoor storage of HPM in quantities greater than those *listed* in Sections 5003.1.1 and 3404.3.4 shall be in a room complying with the requirements of the *International Building Code* and this code for a liquid storage room, HPM room or gas room as appropriate for the materials stored.

❖ This section deals with the construction requirements for two types of storage rooms: those classified as HPM rooms or gas rooms, and those used as liquid storage rooms. The size and separation of these rooms are dependent on the type of materials stored.

2704.3.2 Other hazardous materials storage. The indoor storage of other hazardous materials shall comply with Sections 5001, 5003 and 5004 and other applicable provisions of this code.

❖ This section makes it clear that all hazardous materials, whether they are HPM or not, must comply with the basic applicable requirements of the code.

2704.3.3 Separation of incompatible hazardous materials. Incompatible hazardous materials in storage shall be separated from each other in accordance with Section 5003.9.8.

❖ This section is intended to prevent potentially incompatible materials from mixing or reacting with each other. In most instances, a noncombustible partition may suffice as the minimum required level of separation. Compliance with Section 5003.9.8 is required.

INTERNATIONAL CODE COUNCIL®
Copyright © 2015 ICC. ALL RIGHTS RESERVED. Accessed by David Dammon on Jun 21, 2017 12:30:52 PM pursuant to License Agreement with ICC. No further reproduction or distribution authorized. ANY UNAUTHORIZED REPRODUCTION OR DISTRIBUTION IS A VIOLATION OF THE FEDERAL COPYRIGHT ACT AND THE LICENSE AGREEMENT, AND SUBJECT TO CIVIL AND CRIMINAL PENALTIES THEREUNDER.

TABLE 2704.2.2.1
QUANTITY LIMITS FOR HAZARDOUS MATERIALS IN A SINGLE FABRICATION AREA IN GROUP H-5[a]

HAZARD CATEGORY	SOLIDS (pounds/square foot)	LIQUIDS (gallons/square foot)	GAS (cubic feet @ NTP/square foot)
PHYSICAL-HAZARD MATERIALS			
Combustible dust	Note b	Not Applicable	Not Applicable
Combustible fiber Loose Baled	 Note b Notes b and c	Not Applicable	Not Applicable
Combustible liquid Class II Class IIIA Class IIIB Combination Class I, II and IIIA	Not Applicable	 0.01 0.02 Not Limited 0.04	Not Applicable
Cryogenic gas Flammable Oxidizing	Not Applicable	Not Applicable	 Note d 1.25
Explosives	Note b	Note b	Note b
Flammable gas Gaseous Liquefied	Not Applicable	Not Applicable	 Note d Note d
Flammable liquid Class IA Class IB Class IC Combination Class IA, IB and IC Combination Class I, II and IIIA	Not Applicable	 0.0025 0.025 0.025 0.025 0.04	Not Applicable
Flammable solid	0.001	Not Applicable	Not Applicable
Organic peroxide Unclassified detonable Class I Class II Class III Class IV Class V	 Note b Note b 0.025 0.1 Not Limited Not Limited	Not Applicable	Not Applicable
Oxidizing gas Gaseous Liquefied Combination of Gaseous and Liquefied	Not Applicable	Not Applicable	 1.25 1.25 1.25
Oxidizer Class 4 Class 3 Class 2 Class 1 Combination oxidizer Class 1, 2, 3	 Note b 0.003 0.003 0.003 0.003	 Note b 0.03 0.03 0.03 0.03	 Not Applicable
Pyrophoric	0.01	0.00125	Notes d and e
Unstable reactive Class 4 Class 3 Class 2 Class 1	 Note b 0.025 0.1 Not Limited	 Note b 0.0025 0.01 Not Limited	 Note b Note b Note b Not Limited

(continued)

INTERNATIONAL CODE COUNCIL®
Copyright © 2015 ICC. ALL RIGHTS RESERVED. Accessed by David Dammon on Jun 21, 2017 12:30:52 PM pursuant to License Agreement with ICC. No further reproduction or distribution authorized. ANY UNAUTHORIZED REPRODUCTION OR DISTRIBUTION IS A VIOLATION OF THE FEDERAL COPYRIGHT ACT AND THE LICENSE AGREEMENT, AND SUBJECT TO CIVIL AND CRIMINAL PENALTIES THEREUNDER.

TABLE 2704.2.2.1—continued
QUANTITY LIMITS FOR HAZARDOUS MATERIALS IN A SINGLE FABRICATION AREA IN GROUP H-5

HAZARD CATEGORY	SOLIDS (pounds/square foot)	LIQUIDS (gallons/square foot)	GAS (cubic feet @ NTP/square foot)
PHYSICAL-HAZARD MATERIALS			
Water reactive Class 3 Class 2 Class 1	 Note b 0.25 Not Limited	 0.00125 0.025 Not Limited	 Not Applicable
HEALTH-HAZARD MATERIALS			
Corrosives	Not Limited	Not Limited	Not Limited
Highly toxics	Not Limited	Not Limited	Note d
Toxics	Not Limited	Not Limited	Note d

For SI: 1 pound per square foot = 4.882 kg/m^2, 1 gallon per square foot = 40.7 L/m^2, 1 cubic foot @ NTP/square foot = 0.305 m^3 @ NTP/m^2, 1 cubic foot = 0.02832 m^3.

a. Hazardous materials within piping shall not be included in the calculated quantities.

b. Quantity of hazardous materials in a single fabrication area shall not exceed the maximum allowable quantities per control area in Tables 5003.1.1(1) and 5003.1.1(2).

c. Densely packed baled cotton that complies with the packing requirements of ISO 8115 shall not be included in this material class.

d. The aggregate quantity of flammable, pyrophoric, toxic and highly toxic gases shall not exceed 9,000 cubic feet at NTP.

e. The aggregate quantity of pyrophoric gases in the building shall not exceed the amounts set forth in Table 5003.8.2.

SECTION 2705
USE AND HANDLING

2705.1 General. The use and handling of hazardous materials shall comply with this section, Section 2703 and other applicable provisions of this code.

❖ Section 2705 addresses the use of hazardous materials in fabrication areas, and transportation and handling of hazardous materials in buildings containing fabrication areas. Section 2703, Chapter 50 and the chapters of the code specific to hazardous materials are to be applied to the use and handling of other hazardous materials in the building.

2705.2 Fabrication areas. The use of hazardous materials in *fabrication areas* shall be in accordance with Sections 2705.2.1 through 2705.2.3.4.

❖ This section introduces the applicability of Sections 2705.2.1 through 2705.2.3.4 to HPM use in a fabrication area.

2705.2.1 Location of HPM in use in fabrication areas. Hazardous production materials in use in *fabrication areas* shall be within *approved* or *listed* gas cabinets, exhausted enclosures or a workstation.

❖ This section addresses four conditions for hazardous materials used in a fabrication area:

1. Hazardous materials in use and storage must be in approved or listed gas cabinets, in exhausted enclosures or within a workstation.
2. Section 2704 quantity limits for hazardous materials in use and storage apply.
3. The amount of HPM per individual workstation is limited.
4. Workstation construction, drainage, and containment and clearance requirements apply.

2705.2.2 Maximum aggregate quantities in fabrication areas. The aggregate quantities of hazardous materials in a single *fabrication area* shall comply with Section 2704.2.2, and Table 2704.2.2.1. The quantity of HPM in use at a workstation shall not exceed the quantities *listed* in Table 2705.2.2.

❖ This section establishes two quantity limitations for hazardous materials located in a fabrication area:

1. Reemphasizes the Section 2704 hazardous materials quantity limitations allowed in each fabrication area by specific reference to Section 2704.2.2 and Table 2704.2.2.1.
2. Limits the HPM quantity in use at each workstation. It is important to note that hazardous materials that have a hazard ranking of 1 or 2 (materials that are not HPM) are not subject to the same use limitations as HPM.

TABLE 2705.2.2. See page 27-19.

❖ As discussed at the beginning of this chapter, the unique engineering and operational controls inherent in semiconductor fabrication facilities justify what are, in effect, exceptions to an occupancy that would otherwise be classified as Group H-1, H-2, H-3 or H-4. Part of this justification includes limiting the maximum quantities of HPM at an individual workstation, thereby minimizing the hazard potential associated with an accident or equipment failure involving HPM. The table is intended to correlate with the HPM classifications, material conditions and quantity limitations addressed in Table 2704.2.2. It is important to understand that only HPMs are limited to the use quantities addressed in this table.

This table lists the MAQs of several types of hazardous materials that can be maintained at a workstation, either in storage or in use. It also reflects an

INTERNATIONAL CODE COUNCIL®
Copyright © 2015 ICC. ALL RIGHTS RESERVED. Accessed by David Dammon on Jun 21, 2017 12:30:52 PM pursuant to License Agreement with ICC. No further reproduction or distribution authorized. ANY UNAUTHORIZED REPRODUCTION OR DISTRIBUTION IS A VIOLATION OF THE FEDERAL COPYRIGHT ACT AND THE LICENSE AGREEMENT, AND SUBJECT TO CIVIL AND CRIMINAL PENALTIES THEREUNDER.

increase over the previous edition in the allowable gas quantities, which is intended to reduce the frequency of cylinder change-outs and, thus, the hazards associated with frequent handling of the material. The footnotes acknowledge the added safety of having approved fire-extinguishing and suppression systems in place, as well as the improved conditions with a closed system. See the commentary to Section 2705.2.3.4 for further discussion of pyrophoric and Class 3 water-reactive materials.

2705.2.3 Workstations. Workstations in *fabrication areas* shall be in accordance with Sections 2705.2.3.1 through 2705.2.3.4.

❖ This section introduces the applicability of Sections 2705.2.3.1 through 2705.2.3.4 to workstations located in a fabrication area.

2705.2.3.1 Construction. Workstations in *fabrication areas* shall be constructed of materials compatible with the materials used and stored at the workstation. The portion of the workstation that serves as a cabinet for HPM gases, Class I flammable liquids or Class II or Class IIIA combustible liquids shall be noncombustible and, if of metal, shall be not less than 0.0478-inch (18 gage) (1.2 mm) steel.

❖ This section addresses specific construction requirements for workstations and, to improve station longevity and avoid an undesirable reaction, requires that the materials of construction be compatible with the HPM used in the workstation. Likewise, HPM gases and flammable liquids must be kept in cabinets that are of substantial construction to prevent damage to HPM containers that could result in an HPM spill.

2705.2.3.2 Protection of vessels. Vessels containing hazardous materials located in or connected to a workstation shall be protected as follows:

1. HPM: Vessels containing HPM shall be protected from physical damage and shall not project from the workstation.
2. Hazardous *cryogenic fluids*, gases and liquids: Hazardous cryogenic fluid, gas and liquid vessels located within a workstation shall be protected from seismic forces in an *approved* manner in accordance with the *International Building Code*.
3. *Compressed gases*: Protection for *compressed gas* vessels shall also comply with Section 5303.5.
4. *Cryogenic fluids*: Protection for *cryogenic fluid* vessels shall also comply with Section 5503.5.

❖ HPM vessels located in or connected to a workstation are to be protected from physical damage and seismic forces (see Chapter 53 of the code and IBC Chapter 16). Additionally, Item 1 requires that these vessels be located in and not project from the workstation enclosure. Items 2 through 4 correlate with provisions of the code applicable to the hazards.

TABLE 2705.2.2
MAXIMUM QUANTITIES OF HPM AT A WORKSTATION[d]

HPM CLASSIFICATION	STATE	MAXIMUM QUANTITY
Flammable, highly toxic, pyrophoric and toxic combined	Gas	Combined aggregate volume of all cylinders at a workstation shall not exceed an internal cylinder volume of 39.6 gallons or 5.29 cubic feet
Flammable	Liquid Solid	15 gallons[a, b] 5 pounds[a, b]
Corrosive	Gas	Combined aggregate volume of all cylinders at a workstation shall not exceed an internal cylinder volume of 39.6 gallons or 5.29 cubic feet
	Liquid	Use-open system: 25 gallons[b] Use-closed system: 150 gallons[b, e]
	Solid	20 pounds[a, b]
Highly toxic	Liquid Solid	15 gallons[a] 5 pounds[a]
Oxidizer	Gas	Combined aggregate volume of all cylinders at a workstation shall not exceed an internal cylinder volume of 39.6 gallons or 5.29 cubic feet
	Liquid	Use-open system: 12 gallons[b] Use-closed system: 60 gallons[b]
	Solid	20 pounds[a, b]
Pyrophoric	Liquid Solid	0.5 gallon[c, f] 4.4 pounds[c, f]
Toxic	Liquid	Use-open system: 15 gallons[b] Use-closed system: 60 gallons[b]
	Solid	5 pounds[a, b]
Unstable reactive Class 3	Liquid Solid	0.5 gallon[a, b] 5 pounds[a, b]
Water-reactive Class 3	Liquid Solid	0.5 gallon[c, f] See Table 2704.2.2.1

For SI: 1 pound = 0.454 kg, 1 gallon = 3.785 L.

a. Maximum allowable quantities shall be increased 100 percent for closed system operations. Where Note b also applies, the increase for both notes shall be allowed.

b. Quantities shall be allowed to be increased 100 percent where workstations are internally protected with an approved automatic fire-extinguishing or suppression system complying with Chapter 9. Where Note b also applies, the increase for both notes shall be allowed. Where Note e also applies, the maximum increase allowed for both Notes b and e shall not exceed 100 percent.

c. Allowed only in workstations that are internally protected with an approved automatic fire-extinguishing or fire protection system complying with Chapter 9 and compatible with the reactivity of materials in use at the workstation.

d. The quantity limits apply only to materials classified as HPM.

e. Quantities shall be allowed to be increased 100 percent for nonflammable, noncombustible corrosive liquids where the materials of construction for workstations are listed or approved for use without internal fire-extinguishing or suppression system protection. Where Note b also applies, the maximum increase allowed for both Notes b and e shall not exceed 100 percent.

f. A maximum quantity of 5.3 gallons of liquids and 44 pounds of total liquids and solids shall be allowed at a workstation where conditions are in accordance with Section 2705.2.3.5.

INTERNATIONAL CODE COUNCIL®
Copyright © 2015 ICC. ALL RIGHTS RESERVED. Accessed by David Dammon on Jun 21, 2017 12:30:52 PM pursuant to License Agreement with ICC. No further reproduction or distribution authorized. ANY UNAUTHORIZED REPRODUCTION OR DISTRIBUTION IS A VIOLATION OF THE FEDERAL COPYRIGHT ACT AND THE LICENSE AGREEMENT, AND SUBJECT TO CIVIL AND CRIMINAL PENALTIES THEREUNDER.

2705.2.3.3 Drainage and containment for HPM liquids. Each workstation utilizing HPM liquids shall have all of the following:

1. Drainage piping systems connected to a compatible system for disposition of such liquids.
2. The work surface provided with a slope or other means for directing spilled materials to the containment or drainage system.
3. An *approved* means of containing or directing spilled or leaked liquids to the drainage system.

❖ Federal environmental requirements make it necessary to contain and recover HPM used in the manufacturing process. The design of the workstations must facilitate the recovery of spilled and spent HPM. The drainage system must be designed so that incompatible materials do not mix and the system is compatible with the materials handled.

2705.2.3.4 Pyrophoric solids, liquids and Class 3 water-reactive liquids. Pyrophoric liquids and Class 3 water-reactive liquids in containers greater than 0.5-gallon (2 L) but not exceeding 5.3-gallon (20 L) capacity and pyrophoric solids in containers greater than 4.4 pounds (2 kg) but not exceeding 44 pounds (20 kg) shall be allowed at workstations where located inside cabinets and the following conditions are met:

1. Maximum amount per cabinet: The maximum amount per cabinet shall be limited to 5.3 gallons (20 L) of liquids and 44 pounds (20 kg) of total liquids and solids.
2. Cabinet construction: Cabinets shall be constructed in accordance with the following:
   2.1. Cabinets shall be constructed of not less than 0.097-inch (2.5 mm) (12 gage) steel.
   2.2. Cabinets shall be permitted to have self-closing limited access ports or noncombustible windows that provide access to equipment controls.
   2.3. Cabinets shall be provided with self- or manual-closing doors. Manual-closing doors shall be equipped with a door switch that will initiate local audible and visual alarms when the door is in the open position.
3. Cabinet exhaust ventilation system: An exhaust ventilation system shall be provided for cabinets and shall comply with the following:
   3.1. The system shall be designed to operate at a negative pressure in relation to the surrounding area.
   3.2. The system shall be equipped with monitoring equipment to ensure that required exhaust flow or static pressure is provided.
   3.3. Low-flow or static pressure conditions shall send an alarm to the on-site emergency control station. The alarm shall be both visual and audible.
4. Cabinet spill containment: Spill containment shall be provided in each cabinet, with the spill containment capable of holding the contents of the aggregate amount of liquids in containers in each cabinet.
5. Valves: Valves in supply piping between the product containers in the cabinet and the workstation served by the containers shall fail in the closed position upon power failure, loss of exhaust ventilation and upon actuation of the fire control system.
6. Fire detection system: Each cabinet shall be equipped with an automatic fire detection system complying with the following conditions:
   6.1. Automatic detection system: UV/IR, high-sensitivity smoke detection (HSSD) or other *approved* detection systems shall be provided inside each cabinet.
   6.2. Automatic shutoff: Activation of the detection system shall automatically close the shutoff valves at the source on the liquid supply.
   6.3. Alarms and signals: Activation of the detection system shall initiate a local alarm within the *fabrication area* and transmit a signal to the *emergency control station.* The alarms and signals shall be both visual and audible.

❖ As semiconductor technology progresses to smaller line widths and increased device densities, newer materials are demanded. Conducting and nonconducting structures are fabricated at atomic levels using new metal-bearing agents. A class of materials known as metalorganics is used as precursor for the fabrication of these structures. These materials may possess both pyrophoric and water-reactive properties. Some common metalorganics used are trimethylaluminum (TMA), trimethyl gallium (TMG) and dimethylaluminum hydride (DMAH).

The strict safeguards for the increased workstation quantities allowed by this section should eliminate the need for bulk distribution systems, with larger quantities centralized in a Group H-2 occupancy, that would otherwise have to be installed to meet production requirements. These systems would have to be piped to individual workstations in the fabrication area from the bulk distribution supply location. Extensive runs of piping could result in significant risks, with the potential for leaks from piping or fitting leakage, which can cause accidental damage, installation errors and deinstallation errors. In this application, the piping from the bulk distribution source servicing the workstations becomes a greater risk than the alternative of having a greater quantity localized at the workstation with no exposed piping from a Group H-2 room both to and traversing the fabrication area.

FM has indicated that it has no loss history using these materials at any site, even at the compound semiconductor companies, which use large volumes of these materials. The semiconductor industry reports no loss history with the use of water-reactive or pyrophoric liquids. In addition, semiconductor industry health and safety professionals concur that it

INTERNATIONAL CODE COUNCIL®
Copyright © 2015 ICC. ALL RIGHTS RESERVED. Accessed by David Dammon on Jun 21, 2017 12:30:52 PM pursuant to License Agreement with ICC. No further reproduction or distribution authorized. ANY UNAUTHORIZED REPRODUCTION OR DISTRIBUTION IS A VIOLATION OF THE FEDERAL COPYRIGHT ACT AND THE LICENSE AGREEMENT, AND SUBJECT TO CIVIL AND CRIMINAL PENALTIES THEREUNDER.

is much safer to reduce the handling frequency of any chemical.

2705.3 Transportation and handling. The transportation and handling of hazardous materials shall comply with Sections 2705.3.1 through 2705.3.4.1 and other applicable provisions of this code.

❖ Transportation and handling in this section refers to the movement of hazardous materials through means of egress elements, such as exit access corridors and exit enclosures, and through service corridors.

2705.3.1 Corridors and enclosures for stairways and ramps. *Corridors* and enclosures for *exit stairways* and *ramps* in new buildings or serving new fabrication areas shall not contain HPM, except as permitted in corridors by Section 415.11.6.4 of the *International Building Code* and Section 2705.3.2 of this code.

❖ This section is specific to transportation and handling of HPM in both new buildings containing Group H-5 occupancy operations and existing buildings containing new Group H-5 occupancy operations. Transportation or handling of HPM in corridors or stairway and ramp enclosures is not allowed, except for existing buildings containing existing fabrication areas, and as specifically allowed in Section 415.11.6.4 of the IBC, and Section 2705.3.2. In older semiconductor fabrication facilities (a.k.a. "fabs"), hand transportation of HPMs is common practice. However, these older facilities are reaching the end of their service life and are being replaced. In new fabs, liquids and gases are supplied directly to tools via bulk distribution systems because it is safer and less expensive because the liquids and gases are purchased in bulk quantities. As a result, the transportation of HPMs in carts or by hand is fairly infrequent. When delivered by carts or by hand (e.g., exchanging compressed gas cylinders in ion implanters), the amount of HPM is fairly small. Because of the improvements in chemical distribution, very little benefit is gained from providing service corridors in Group H-5 occupancies. Note that this section is specific to HPMs only and neither prohibits nor restricts the transportation or handling of materials having a health-hazard ranking of 1 or 2 in exit access corridors or exit enclosures. The general handling and transportation requirements addressed in Section 5003.10 apply to materials having a health-hazard ranking of 1 or 2 and to conditions not specifically addressed in this section.

2705.3.2 Transport in corridors and enclosures for stairways and ramps. Transport in *corridors* and enclosures for *stairways* and *ramps* shall be in accordance with Sections 2705.3.2.1 through 2705.3.3.

❖ This section identifies the requirements for HPM transport in corridors, and stairway and ramp enclosures.

2705.3.2.1 Fabrication area alterations. Where existing fabrication areas are altered or modified in existing buildings, HPM is allowed to be transported in existing *corridors* where such *corridors* comply with Section 5003.10 of this code and Section 415.11.2 of the *International Building Code*.

❖ Corridors must comply with the requirements of Section 1018 and must be separated from fabrication areas in accordance with IBC Section 415.11.2. Additionally, corridors in new buildings are not to be used for transporting HPM to the fabrication area; HPM must be transported in service corridors or piping. This section addresses HPM facilities that existed before the adoption and enforcement of the IBC. It permits the transport of HPM in corridors in existing buildings under the conditions specified in IBC Section 415.11. When alterations are made to a fabrication area, those corridors must be upgraded.

2705.3.2.2 HPM transport in corridors and enclosures for stairways and ramps. Nonproduction HPM is allowed to be transported in *corridors* and enclosures for *stairways* and *ramps* where utilized for maintenance, lab work and testing when the transportation is in accordance with Section 5003.10.

❖ This section requires that the transportation of nonproduction HPMs comply with Section 5003.10, which establishes the design criteria and use parameters for carts and trucks and also includes the following requirements for on-site transportation of hazardous materials:

- Liquids packaged in containers of a volume of 5 gallons (19 L) or greater can only be transported on hand carts or hand trucks.
- Not more than four 55-gallon containers (833 L) can be handled utilizing acceptable drum trucks or on pallets.
- Compressed gas containers and cylinders require transportation using approved hand trucks.
- For HPMs transported by hand, the weight of the packaging is limited based on the contents being a solid, liquid or gas.

2705.3.3 Service corridors. Where a new *fabrication area* is constructed, a service corridor shall be provided where it is necessary to transport HPM from a liquid storage room, HPM room, gas room or from the outside of a building to the perimeter wall of a *fabrication area.* Service corridors shall be designed and constructed in accordance with the *International Building Code.*

❖ Under this section, in new buildings, or where a fabrication area is added in an existing building, service passageways are separate spaces dedicated to the transportation of HPM between cutoff rooms, the perimeter walls of fabrication areas and the building's exterior. Service passageways must not be used as elements of a means of egress. Requirements of Section 2705.3.4 must govern the number, capacity and type of HPM containers transported in service passageways.

INTERNATIONAL CODE COUNCIL®
Copyright © 2015 ICC. ALL RIGHTS RESERVED. Accessed by David Dammon on Jun 21, 2017 12:30:52 PM pursuant to License Agreement with ICC. No further reproduction or distribution authorized. ANY UNAUTHORIZED REPRODUCTION OR DISTRIBUTION IS A VIOLATION OF THE FEDERAL COPYRIGHT ACT AND THE LICENSE AGREEMENT, AND SUBJECT TO CIVIL AND CRIMINAL PENALTIES THEREUNDER.

2705.3.4 Carts and trucks. Carts and trucks used to transport HPM in *corridors* and enclosures for *stairways* and *ramps* shall comply with Section 5003.10.3.

❖ This section identifies the requirements for carts and trucks used to transport HPM in corridors and stairway and ramp enclosures in existing buildings containing existing fabrication areas. Both Section 2705.3.2 and this section are specific to HPM, and specific only to HPM in glass containers, HPM gas cylinders and the carts and trucks allowed for the transport of HPM through corridors and stairway and ramp enclosures. The general handling and transportation requirements addressed in Section 5003.10 apply to materials having a hazard ranking of 1 or 2 and to conditions not specifically addressed in Section 2705.3.2 and this section.

2705.3.4.1 Identification. Carts and trucks shall be marked to indicate the contents.

❖ Cart or truck enclosures must bear placards or signs indicating the contents transported. A combination of DOTn and NFPA 704 placards is ideal for this purpose. Materials possibly posing a danger of reaction if mixed should never be transported together.

Bibliography

The following resource materials were used in the preparation of the commentary for this chapter of the code:

ANSI/FM 4910—2013, *American National Standard for Clean Room Materials Flammability Test Protocol*. Norwood, MA: FM Global, 2013.

Code Changes Resource Collection—2015 International Fire Code. Washington, DC: International Code Council, 2014.

Fire Protection Guide to Hazardous Materials, 13th edition. Quincy, MA: National Fire Protection Association, 2001.

INTERNATIONAL CODE COUNCIL®

Copyright © 2015 ICC. ALL RIGHTS RESERVED. Accessed by David Dammon on Jun 21, 2017 12:30:52 PM pursuant to License Agreement with ICC. No further reproduction or distribution authorized. ANY UNAUTHORIZED REPRODUCTION OR DISTRIBUTION IS A VIOLATION OF THE FEDERAL COPYRIGHT ACT AND THE LICENSE AGREEMENT, AND SUBJECT TO CIVIL AND CRIMINAL PENALTIES THEREUNDER.

Chapter 28: Lumber Yards and Agro-industrial, Solid Biomass and Woodworking Facilities

General Comments

Woodworking, agro-industrial, solid biomass feedstock and forest product processing facilities tend to be located close to the source of the raw material, but facilities manufacturing finished products for the building trade industries may be found in or near most urban areas. Any facility using mechanical methods to work wood and solid biomass into a more finished form produces dust or debris. The smaller the fuel package, the more easily ignitable it will be. In fact, extremely fine wood dust or wood flour may even produce deflagrations (explosions) under the right conditions. Explosion prevention practices must be implemented to minimize the potential for such hazards. Accumulations of dust must be prevented, controlled mechanically or removed frequently. Automatic fire suppression systems are required by Section 903.2.4.1. Deflagration venting (see NFPA 69 and NFPA 495) is required where substantial amounts of dust are usually present. Areas where dust suspensions exist are considered Class II hazardous locations by NFPA 70. Manual fire-fighting equipment must be provided in the immediate vicinity of each machine because dust cannot be completely eliminated in any woodworking or wood-processing area.

Methods and procedures used to control hazards associated with wood, agro-industrial, solid biomass feedstock and forest product storage, sale and processing must recognize not only the fuel properties but the need to control and eliminate ignition sources, minimize the effect of fires and explosions, and facilitate fire control efforts by occupants at the incipient phase and fire fighters at more advanced stages. Adherence to these requirements will help secure these objectives.

Purpose

Most everyone is familiar with the hazards of wood as a fuel; however, the scale of wood, agro-industrial, solid biomass feedstock and forest product storage, manufacturing and processing operations stretches the limitations of their understanding. Wood has long been used as a reference fuel for understanding fire, but the sheer volume of materials present and the variety of fuel packages represented in these occupancies make this a hazard requiring special attention.

Sawdust, wood chips, shavings, bark mulch, shorts, finished planks, sheets, posts, poles, timber and raw logs represent a broad continuum of fuels. What they all bear in common is the hazard they represent once ignited; what is unique about each of these materials is the ease or difficulty with which any single fuel package may be ignited. The regulations recognize both of these concerns.

Provisions of this chapter are intended to prevent fires and explosions, facilitate fire control and reduce exposures to and from facilities storing, selling or processing wood and forest products.

This chapter requires active and passive fire protection features to reduce on- and off-site exposures, limit fire size and development, and facilitate fire fighting by employees and the fire service. Design and maintenance of these facilities must provide access to equipment and exposures to facilitate fire control.

SECTION 2801 GENERAL

2801.1 Scope. The storage, manufacturing and processing of solid biomass feedstock, timber, lumber, plywood, nonmetallic pallets, veneers and agro-industrial byproducts shall be in accordance with this chapter.

❖ These provisions are intended to prevent fires and explosions in lumber yards, woodworking plants and lumber drying and other similar operations. Further, provisions are intended to facilitate fire-fighting operations in these occupancies in the event of a fire.

2801.2 Permit. Permits shall be required as set forth in Section 105.6.

❖ Section 105.6.26 has a permit threshold amount for lumber storage of 100,000 board feet [8,333 cubic feet (236 m^3)] of lumber. The board foot is a measurement used in the lumber and building trades. One board foot (0.93 m^2) is the cubic volume of a piece of lumber 1 foot square (0.93 m^2) and 1 inch (25 mm) thick or approximately 0.083 cubic foot (0.002 m^3). Then, 100,000 board feet [8,333 cubic feet (236 m^3)] is a cubic volume of 8,333 cubic feet (236 m^3) or a

INTERNATIONAL CODE COUNCIL®
Copyright © 2015 ICC. ALL RIGHTS RESERVED. Accessed by David Dammon on Jun 21, 2017 12:30:52 PM pursuant to License Agreement with ICC. No further reproduction or distribution authorized. ANY UNAUTHORIZED REPRODUCTION OR DISTRIBUTION IS A VIOLATION OF THE FEDERAL COPYRIGHT ACT AND THE LICENSE AGREEMENT, AND SUBJECT TO CIVIL AND CRIMINAL PENALTIES THEREUNDER.

solid pile of lumber approximately 20 feet, 5 inches by 20 feet, 5 inches (6223 mm by 6223 mm) by the maximum allowable height of 20 feet (6096 mm). The permit requirement is intended to facilitate the regulation of hazards presented by quantities of lumber exceeding that amount.

SECTION 2802
DEFINITIONS

2802.1 Definitions. The following terms are defined in Chapter 2:

AGRO-INDUSTRIAL.

BIOMASS.

COLD DECK.

FINES.

HOGGED MATERIALS.

PLYWOOD AND VENEER MILLS.

RAW PRODUCT.

SOLID BIOFUEL.

SOLID BIOMASS FEEDSTOCK.

STATIC PILES.

TIMBER AND LUMBER PRODUCTION FACILITIES.

❖ Definitions of terms can help in the understanding and application of the code requirements. This section directs the code user to Chapter 2 for the proper application of the indicated terms used in this chapter. Terms may be defined in Chapter 2 or in another *International Code*® (I-Code®) as indicated in Section 201.3, or the dictionary meaning may be all that is needed (see also commentary, Sections 201 through 201.4).

SECTION 2803
GENERAL REQUIREMENTS

2803.1 Open yards. Open yards required by the *International Building Code* shall be maintained around structures.

❖ The *International Building Code*® (IBC®) requires that certain buildings face an open space on at least one side. The open spaces may be a yard required for the purpose of providing light and ventilation (see the commentary to the IBC Section 202 definition of "Yard" and IBC Section 1206) or they may be a public way provided in order to achieve an increase in building area called a "frontage increase" (see the commentary to IBC Section 202 definition of "Public way" and IBC Section 506.3), or to allow a building to be considered an "unlimited area building" (see the commentary to IBC Section 507). Regardless of the purpose of the open space, this section requires that the space be maintained and be free of obstructions associated with the outdoor storage of the materials regulated by Chapter 28, which could interfere with the function of the open space, especially that of providing fire department access to the building.

2803.2 Dust control. Equipment or machinery located inside buildings that generates or emits *combustible dust* shall be provided with an *approved* dust collection and exhaust system installed in accordance with Chapter 22 and the *International Mechanical Code*. Equipment or systems that are used to collect, process or convey *combustible dusts* shall be provided with an *approved* explosion control system.

❖ The basic wood-processing activities related to lumber yards and woodworking facilities generate large volumes of wood particles suspended in the air, creating a potentially explosive form of dust. Where such activities are located inside of buildings, this section requires that combustible dust be controlled by an approved dust-collection and exhaust system designed and installed in accordance with Chapter 22, and Sections 510 and 511 of the *International Mechanical Code*® (IMC®). There are two basic designs of dust collection systems. One is a single-stage system that consists of a single dust collector in the form of a cyclone separator or a combination cyclone/baghouse unit. The other is a two-stage system that consists of a cyclone separator followed by a bag-type filter house.

An approved explosion control system is also required for the equipment and systems that collect and convey the combustible dust. Such systems should be installed in accordance with Section 911.

2803.2.1 Explosion venting. Where a dust explosion hazard exists in equipment rooms, buildings or other enclosures, such areas shall be provided with explosion (*deflagration*) venting or an *approved* explosion suppression system complying with Section 911.

❖ When wood dust is ignited while suspended in air in concentrations above the minimum combustible concentration (MCC), it burns violently, producing a deflagration. This likelihood depends on the concentration of fuel per unit volume. Most of the time, dust-collection systems remove the larger dust particles, allowing the finer particles to pass through the system and reenter the production area. The finer dust can create an explosion and fire hazard unless an approved suppression system is used.

2803.3 Waste removal. Sawmills, planning mills and other woodworking plants shall be equipped with a waste removal system that will collect and remove sawdust and shavings. Such systems shall be installed in accordance with Chapter 22 and the *International Mechanical Code*.

Exception: Manual waste removal where *approved*.

❖ Like many other organic materials, sawdust, wood chips and other similar waste materials are susceptible to spontaneous heat. Pilings and debris must be turned over or consumed regularly to minimize the potential for spontaneous combustion. Some waste material is used as fuel and some might go to pulp or particleboard manufacturers. Finer material is

INTERNATIONAL CODE COUNCIL®
Copyright © 2015 ICC. ALL RIGHTS RESERVED. Accessed by David Dammon on Jun 21, 2017 12:30:52 PM pursuant to License Agreement with ICC. No further reproduction or distribution authorized. ANY UNAUTHORIZED REPRODUCTION OR DISTRIBUTION IS A VIOLATION OF THE FEDERAL COPYRIGHT ACT AND THE LICENSE AGREEMENT, AND SUBJECT TO CIVIL AND CRIMINAL PENALTIES THEREUNDER.

removed by air-moving equipment, cyclones or air bags. Chapter 22 and the IMC give the installation requirements for waste removal systems.

2803.3.1 Housekeeping. Provisions shall be made for a systematic and thorough cleaning of the entire plant at sufficient intervals to prevent the accumulations of *combustible dust* and spilled combustible or flammable liquids.

❖ Good housekeeping should be maintained at all times, including regular and frequent cleaning of material-handling equipment. Combustible waste materials, such as bark, chips and other debris, should not be allowed to accumulate in amounts that will constitute a fire hazard. Air-moving systems should be designed to remove or dilute transient flammable vapors.

2803.3.2 Metal scrap. Provision shall be made for separately collecting and disposing of any metal scrap so that such scrap will not enter the wood handling or processing equipment.

❖ Waste material from rough milling is carried by a belt conveyor to the wood hog, which cuts the waste into small pieces. The conveyor should have a magnetic separator to keep metal from causing fires in the hog, pneumatic conveyors and waste-storage silos. Waste material that is swept up and carried to the hog is hazardous because the trash often contains metal objects.

2803.4 Electrical equipment. Electrical wiring and equipment shall comply with NFPA 70.

❖ Arcs, sparks and loose connections often supply the ignition source that a vapor or combustible material needs for fire. Electrical equipment must be listed for the use it is installed for and comply with the requirements of NFPA 70.

2803.5 Control of ignition sources. Protection from ignition sources shall be provided in accordance with Sections 2803.5.1 through 2803.5.3.

❖ The two key points that will reduce fire losses in storage areas of forest products are reduction in the sources of ignition and a positive program for detecting incipient fires. The following subsections address sources of ignition. Section 2804 addresses programs and systems for early detection of fires.

2803.5.1 Cutting and welding. Cutting and welding shall comply with Chapter 35.

❖ No cutting, welding or other use of open flames and spark-producing equipment are allowed in the storage area without a permit.

2803.5.2 Static electricity. Static electricity shall be prevented from accumulating on machines and equipment subject to static electricity buildup by permanent grounding and bonding wires or other *approved* means.

❖ Static electricity builds up on operating machines because of the movement of product and machine. Proper grounding and bonding of equipment prevents static electricity from producing an ignition source and igniting a fire.

2803.5.3 Smoking. Where smoking constitutes a fire hazard, the *fire code official* is authorized to order the *owner* or occupant to post *approved* "No Smoking" signs complying with Section 310. The *fire code official* is authorized to designate specific locations where smoking is allowed.

❖ Smoking must not be allowed in a woodworking facility. Considering the abundance of existing fuel, with much of it in an easily ignitable form, smoking controls are an absolute necessity in lumber yards and forest products facilities. Smoking materials being discarded improperly are an ignition threat in woodworking facilities.

2803.6 Fire apparatus access roads. Fire apparatus access roads shall be provided for buildings and facilities in accordance with Section 503.

❖ Required driveways provide access for fire apparatus and create fire breaks between piles. Access roads must be sized to allow fire emergency equipment to enter and perform emergency operations. Section 503 gives required dimensions for access roads.

2803.7 Access plan. Where storage pile configurations could change because of changes in product operations and processing, the access plan shall be submitted for approval when required by the *fire code official*.

❖ A site plan showing access to the facilities with consideration given to pile location, access roads, hydrant locations and building locations must be presented to the fire code official for approval prior to construction.

SECTION 2804
FIRE PROTECTION

2804.1 General. Fire protection in timber and lumber production mills, plywood and veneer mills and agro-industrial facilities shall comply with Sections 2804.2 through 2804.4.

❖ This section introduces and establishes the applicability of Sections 2804.2 through 2804.4.

2804.2 Fire alarms. An *approved* means for transmitting alarms to the fire department shall be provided in timber and lumber production mills and plywood and veneer mills.

❖ The fire department must be notified if a fire occurs in the facility. How the fire department is notified must be approved by the local fire code official. This may be by a manual fire alarm system with pull stations, monitored phone lines or another approved system.

2804.2.1 Manual fire alarms. A manual fire alarm system complying with Section 907.2 shall be installed in areas of timber and lumber production mills and for plywood and veneer mills that contain product dryers.

Exception: Where dryers or other sources of ignition are protected by a supervised *automatic sprinkler system* complying with Section 903.

❖ Manual fire alarm systems usually have means for local notification, but according to Section 2804.2,

INTERNATIONAL CODE COUNCIL®
Copyright © 2015 ICC. ALL RIGHTS RESERVED. Accessed by David Dammon on Jun 21, 2017 12:30:52 PM pursuant to License Agreement with ICC. No further reproduction or distribution authorized. ANY UNAUTHORIZED REPRODUCTION OR DISTRIBUTION IS A VIOLATION OF THE FEDERAL COPYRIGHT ACT AND THE LICENSE AGREEMENT, AND SUBJECT TO CIVIL AND CRIMINAL PENALTIES THEREUNDER.

alarm systems must have the means to transmit the alarm to fire departments.

2804.3 Portable fire extinguishers or standpipes and hose. Portable fire extinguishers or standpipes and hose supplied from an *approved* water system shall be provided within a 50-foot (15 240 mm) distance of travel from any machine producing shavings or sawdust. Portable fire extinguishers shall be provided in accordance with Section 906 for extra-high hazards.

❖ The degree of protection will vary from facility to facility, but the basic recommendation is for a water system of mains and hydrants capable of supplying at least 1,000 gallons per minute (gpm) (60 L/s). Standpipes will provide a hose within 50 feet (15 240 mm) of shaving and sanding machines. Portable fire extinguishers are good initial fire knockdown equipment. Section 906 gives these requirements.

2804.4 Automatic sprinkler systems. *Automatic sprinkler systems* shall be installed in accordance with Section 903.3.1.1.

❖ This section does not require the installation of a sprinkler system. Rather, where a sprinkler system is provided as required by the occupancy group classification, this section mandates it be installed in accordance with Section 903.3.1.1, which references NFPA 13.

SECTION 2805
PLYWOOD, VENEER AND COMPOSITE BOARD MILLS

2805.1 General. Plant operations of plywood, veneer and composite board mills shall comply with Sections 2805.2 and 2805.3.

❖ This section addresses protection of dryers and installation requirements for thermal oil-heating systems.

2805.2 Dryer protection. Dryers shall be protected throughout by an *approved*, automatic deluge water-spray suppression system complying with Chapter 9. Deluge heads shall be inspected quarterly for pitch buildup. Deluge heads shall be flushed during regular maintenance for functional operation. Manual activation valves shall be located within 75 feet (22 860 mm) of the drying equipment.

❖ A deluge system is a good protective measure for the interior of dryers. This kind of protection is especially important in veneer mills where the temperature of the dryer may approach 392°F (200°C), which is the nominal ignition temperature of wood. Smoke sensors should activate the deluge system and automatically shut down fans, burners and drive machinery. Manual trips should also be installed at each end of the dryer.

2805.3 Thermal oil-heating systems. Facilities that use heat transfer fluids to provide process equipment heat through piped, indirect heating systems shall comply with this code and NFPA 664.

❖ The transfer of heated fluids for process equipment presents a fire hazard. A ruptured pipe line could expose fine particles of wood products to the heated fluid, thus creating the potential for a fire. The code and Chapter 9 of NFPA 664 address the requirements for installation of this equipment.

SECTION 2806
LOG STORAGE AREAS

2806.1 General. Log storage areas shall comply with Sections 2806.2 through 2806.3.

❖ The intent of this section is to provide fire protection advice for minimizing fire hazards in log-yard storage areas that contain saw, plywood or pulpwood logs stored in ranked piles, usually referred to as “cold decks”. Stacked piles of cordwood are not addressed unless they are stored in ranked piles.

2806.2 Cold decks. Cold decks shall not exceed 500 feet (152.4 m) in length, 300 feet (91 440 mm) in width and 20 feet (6096 mm) in height. Cold decks shall be separated from adjacent cold decks or other exposures by not less than 100 feet (30 480 mm).

Exception: The size of cold decks shall be determined by the *fire code official* where the decks are protected by special fire protection including, but not limited to, additional fire flow, portable turrets and deluge sets, and hydrant hose houses equipped with *approved* fire-fighting equipment capable of reaching the entire storage area in accordance with Chapter 9.

❖ Because of the fire load that they present, cold decks (see commentary to the Section 202 definition of “Cold deck”) must be limited in size and isolated from one another as prescribed in this section. All sides of the cold deck should be accessible to fire apparatus over hard-surface fire apparatus access roads. The suggested width of a cold deck fire apparatus access road is one and one-half times the height of the pile but a minimum of 20 feet (6096 mm) between alternate rows of two pile groups separated by a clear space of 100 feet (30 480 mm). See the commentary to Section 503 for further discussion of fire apparatus access roads.

2806.3 Pile stability. Log and pole piles shall be stabilized by *approved* means.

❖ Stabilizing the log and pole piles minimizes hazards in two ways. In a fire, the piles become weak and can fall on the fire fighters, but the stabilizing method will

INTERNATIONAL CODE COUNCIL®
Copyright © 2015 ICC. ALL RIGHTS RESERVED. Accessed by David Dammon on Jun 21, 2017 12:30:52 PM pursuant to License Agreement with ICC. No further reproduction or distribution authorized. ANY UNAUTHORIZED REPRODUCTION OR DISTRIBUTION IS A VIOLATION OF THE FEDERAL COPYRIGHT ACT AND THE LICENSE AGREEMENT, AND SUBJECT TO CIVIL AND CRIMINAL PENALTIES THEREUNDER.

assist in their protection. The method also minimizes the risk of logs falling on people and causing death or injury when no fire emergency exists.

SECTION 2807
STORAGE OF WOOD CHIPS AND HOGGED MATERIAL ASSOCIATED WITH TIMBER AND LUMBER PRODUCTION FACILITIES

2807.1 General. The storage of wood chips and hogged materials associated with timber and lumber production facilities shall comply with Sections 2807.2 through 2807.5.

❖ This section gives fire protection guidance for minimizing fire hazards in yard storage areas containing wood chips and hogged materials. Each individual facility will have its own special conditions for yard use, handling procedures and topography. Fire safety is also affected by climate conditions, wood species and the age of the piles.

2807.2 Size of piles. Piles shall not exceed 60 feet (18 288 mm) in height, 300 feet (91 440 mm) in width and 500 feet (152 m) in length. Piles shall be separated from adjacent piles or other exposures by *approved* fire apparatus access roads.

Exception: The *fire code official* is authorized to allow the pile size to be increased where additional fire protection is provided in accordance with Chapter 9. The increase shall be based on the capabilities of the system installed.

❖ Restrictions on pile size are established for practical reasons. When the piles are made low and narrow, fire extinguishment is enhanced. When the piles are extremely high and wide, fire extinguishment is hampered and arrangements must be made for fire-fighting service. Piles should also be constructed with an access roadway to the top of the pile to make all parts of the pile accessible to fire fighters.

2807.3 Pile fire protection. Automatic sprinkler protection shall be provided in conveyor tunnels and combustible enclosures that pass under a pile. Combustible or enclosed conveyor systems shall be equipped with an *approved automatic sprinkler system*.

❖ Automatic sprinklers are needed because of the difficulty of manual fire suppression operations in concealed, enclosed and elevated areas.

2807.4 Material-handling equipment. *Approved* material-handling equipment shall be readily available for moving wood chips and hogged material.

❖ Bulldozers and power-operated shovel and scoop vehicles are examples of the material-handling equipment needed to move stored material and, thus, make fire fighting easier.

2807.5 Emergency plan. The *owner* or operator shall develop a plan for monitoring, controlling and extinguishing spot fires. The plan shall be submitted to the *fire code official* for review and approval.

❖ As in all potential hazards, an emergency plan should be designed for monitoring and fighting spot fires. The plan must be submitted to the fire code official for review and approval.

SECTION 2808
STORAGE AND PROCESSING OF WOOD CHIPS, HOGGED MATERIAL, FINES, COMPOST, SOLID BIOMASS FEEDSTOCK AND RAW PRODUCT ASSOCIATED WITH YARD WASTE, AGRO-INDUSTRIAL AND RECYCLING FACILITIES

2808.1 General. The storage and processing of wood chips, hogged materials, fines, compost, solid biomass feedstock and raw product produced from yard waste, debris and agro-industrial and recycling facilities shall comply with Sections 2808.2 through 2808.10.

❖ This section contains fire protection guidance for minimizing fire hazards in yard storage areas containing wood chips and hogged materials, fines, compost, raw materials and solid biomass feedstock.

2808.2 Storage site. Storage sites shall be level and on solid ground, elevated soil lifts or other all-weather surface. Sites shall be thoroughly cleaned before transferring wood products to the site.

❖ The storage site should be reasonably level, solid ground or paved with blacktop, concrete or other hard surface material. The surface must be thoroughly cleaned of scrap and debris before beginning a new pile.

2808.3 Size of piles. Piles shall not exceed 25 feet (7620 mm) in height, 150 feet (45 720 mm) in width and 250 feet (76 200 mm) in length.

Exception: The *fire code official* is authorized to allow the pile size to be increased where a fire protection plan is provided for approval that includes, but is not limited to, the following:

1. Storage yard areas and materials-handling equipment selection, design and arrangement shall be based upon sound fire prevention and protection principles.
2. Factors that lead to spontaneous heating shall be identified in the plan, and control of the various factors shall be identified and implemented, including provisions for monitoring the internal condition of the pile.
3. The plan shall include means for early fire detection and reporting to the public fire department; and facilities needed by the fire department for fire extinguishment including a water supply and fire hydrants.

INTERNATIONAL CODE COUNCIL®
Copyright © 2015 ICC. ALL RIGHTS RESERVED. Accessed by David Dammon on Jun 21, 2017 12:30:52 PM pursuant to License Agreement with ICC. No further reproduction or distribution authorized. ANY UNAUTHORIZED REPRODUCTION OR DISTRIBUTION IS A VIOLATION OF THE FEDERAL COPYRIGHT ACT AND THE LICENSE AGREEMENT, AND SUBJECT TO CIVIL AND CRIMINAL PENALTIES THEREUNDER.

4. Fire apparatus access roads around the piles and access roads to the top of the piles shall be established, identified and maintained.
5. Regular yard inspections by trained personnel shall be included as part of an effective fire prevention maintenance program.

Additional fire protection called for in the plan shall be provided and shall be installed in accordance with this code. The increase of the pile size shall be based upon the capabilities of the installed fire protection systems and features.

❖ Restrictions on pile sizes are established for good and practical reasons. When the piles are made low and narrow, fire extinguishment is enhanced. When the piles are extremely high and wide, fire extinguishment is hampered and arrangements must be made for fire-fighting service. This section provides tools and guidance for fire code officials when proposals to increase pile size are submitted. The protection needed for increased pile size includes fire flows through a hydrant system, fire apparatus access roads, means for monitoring pile temperatures, a means of notifying the fire department and a sound fire prevention maintenance program. The exception provides for these features to be addressed in a fire protection plan submittal to the fire code official for approval. The systems installed are covered by various portions of the code, such as fire apparatus access roads covered in Chapter 5. The exception also replaces and codifies criteria that were formerly contained in referenced standards (NFPA 46 and NFPA 230) but have been withdrawn by NFPA.

2808.4 Pile separation. Piles shall be separated from adjacent piles by *approved* fire apparatus access roads.

❖ In order to slow the spread of fire from pile to pile, as well as to provide the fire department with tactical access to all parts of the pile storage area, piles must be subdivided by fire apparatus access roads at least 20 feet (6096 mm) in clear width at the base of the piles, in accordance with Section 503.2.1 (see also commentary, Section 2809.3).

2808.5 Combustible waste. The storage, accumulation and handling of combustible materials and control of vegetation shall comply with Chapter 3.

❖ Section 304 addresses vegetation and combustible waste requirements for minimizing hazards.

2808.6 Static pile protection. Static piles shall be monitored by an *approved* means to measure temperatures within the static piles. Internal pile temperatures shall be monitored and recorded weekly. Such records shall be maintained. An operational plan indicating procedures and schedules for the inspection, monitoring and restricting of excessive internal temperatures in static piles shall be submitted to the *fire code official* for review and approval.

❖ Inherent to long-term bulk storage of chips, fines, compost and hogged materials is internal heating, which can progress to spontaneous combustion under certain conditions. Unless procedures are established for measuring internal temperatures, fires could burn undetected for long periods before smoke is seen or produced at the surface. These piles must be monitored on a fixed schedule and records kept of the results of these inspections.

2808.7 Pile fire protection. Automatic sprinkler protection shall be provided in conveyor tunnels and combustible enclosures that pass under a pile. Combustible conveyor systems and enclosed conveyor systems shall be equipped with an *approved automatic sprinkler system*.

❖ Automatic sprinklers are needed because of the difficulty of manual fire suppression operations in concealed, enclosed and elevated areas (see commentary, Section 2807.3).

2808.8 Fire extinguishers. Portable fire extinguishers complying with Section 906 and with a minimum rating of 4-A:60-B:C shall be provided on all vehicles and equipment operating on piles and at all processing equipment.

❖ Each vehicle operating in the area must be equipped with a portable fire extinguisher that provides the fire extinguishing equivalent of 5 gallons (19 L) of water for use on a substantial Class A fire and is effective for flammable liquids and energized electrical components.

2808.9 Material-handling equipment. *Approved* material-handling equipment shall be available for moving wood chips, hogged material, wood fines and raw product during fire-fighting operations.

❖ Bulldozers and power-operated shovel and scoop vehicles are examples of the material-handling equipment needed to move stored material and, thus, make fire fighting easier. Pile surfaces can usually be removed with this type of equipment.

2808.10 Emergency plan. The *owner* or operator shall develop a plan for monitoring, controlling and extinguishing spot fires and submit the plan to the *fire code official* for review and approval.

❖ As in all potential hazards, an emergency plan should be designed for monitoring and fighting spot fires. The plan must be submitted to the fire code official for review and approval.

SECTION 2809
EXTERIOR STORAGE OF FINISHED LUMBER AND SOLID BIOFUEL PRODUCTS

2809.1 General. Exterior storage of finished lumber and solid biofuel products shall comply with Sections 2809.1 through 2809.5.

❖ The following sections address the size and height of piles, access roads and fire protection requirements for exterior lumber and solid biofuel storage.

2809.2 Size of piles. Exterior storage shall be arranged to form stable piles with a maximum height of 20 feet (6096

INTERNATIONAL CODE COUNCIL®
Copyright © 2015 ICC. ALL RIGHTS RESERVED. Accessed by David Dammon on Jun 21, 2017 12:30:52 PM pursuant to License Agreement with ICC. No further reproduction or distribution authorized. ANY UNAUTHORIZED REPRODUCTION OR DISTRIBUTION IS A VIOLATION OF THE FEDERAL COPYRIGHT ACT AND THE LICENSE AGREEMENT, AND SUBJECT TO CIVIL AND CRIMINAL PENALTIES THEREUNDER.

mm). Piles shall not exceed 150,000 cubic feet (4248 m^3) in volume.

❖ Bulk dimension lumber and solid biofuel represent fuel packages of considerable volume in occupancies such as wholesale and retail yards and distribution warehouses. Complicating matters, these facilities are often located in urban areas and close to the consumer. Forest products processing plants and sawmills, on the other hand, are usually closer to the raw material. Though dimension lumber may be harder to ignite than sawdust, scrap or waste, once ignited, it may expose more people and property to danger. To manage this hazard, the code places limitations on pile heights and sizes, requires fire apparatus access roadways (see Section 2809.3) and prescribes fire protection features (see Section 2809.5).

For example, pile limitations provide a means of controlling the size of potential fires and facilitate the fire-fighting process. Lumber in open piles is often stacked on dunnage to prevent damage. Spaces formed by this material create a flue space that may not only contribute to fire spread, but also may result in structural collapse of the pile.

2809.3 Fire apparatus access roads. Fire apparatus access roads in accordance with Section 503 shall be located so that a maximum grid system unit of 50 feet by 150 feet (15 240 mm by 45 720 mm) is established.

❖ Fire apparatus access roads must be spaced on a maximum grid system as required by this section to provide not only fire department access to all parts of the pile array, but also fire breaks between piles. This section correlates with Section 2809.2 by effectively limiting lumber piles to 150,000 cubic feet each (150 feet by 50 feet by 20 feet high or 1,800,000 board feet) (4248 m^2) between fire apparatus access roads. The fire apparatus access roads must be arranged to provide clear, unobstructed access to required yard hydrants (see Section 2809.5), be a minimum of 20 feet (6096 mm) wide in accordance with Section 503.2.1, have an all-weather driving surface in accordance with Section 503.2.3, and provide adequate turning radii in accordance with Section 503.2.4 (see Commentary Figure 2809.3). Where Appendix D is also adopted, approved turnarounds must be provided so that the fire apparatus can maneuver to protect exposures, as well as fire fighters.

2809.4 Security. Permanent storage areas shall be surrounded with an *approved* fence. Fences shall be not less than 6 feet (1829 mm) in height.

Exceptions:

1. Lumber piles inside of buildings and production mills for lumber, plywood and veneer.
2. Solid biofuel piles inside of buildings and agro-industrial processing facilities for solid biomass feedstock.

❖ Fences for site security must be installed around the perimeter of the storage yard to limit access to stored materials and deter theft, vandalism and arson. This

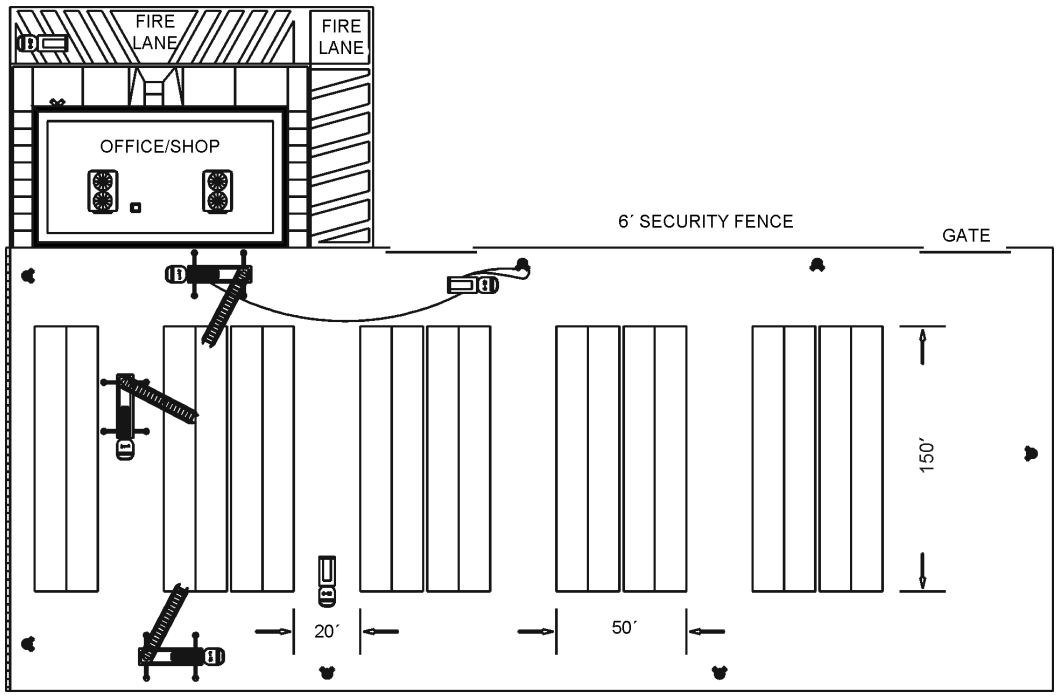

For SI: 1 foot = 304.8 mm.

Figure 2809.3
LUMBER YARD FIRE APPARATUS ACCESS ROADS

INTERNATIONAL CODE COUNCIL®
Copyright © 2015 ICC. ALL RIGHTS RESERVED. Accessed by David Dammon on Jun 21, 2017 12:30:52 PM pursuant to License Agreement with ICC. No further reproduction or distribution authorized. ANY UNAUTHORIZED REPRODUCTION OR DISTRIBUTION IS A VIOLATION OF THE FEDERAL COPYRIGHT ACT AND THE LICENSE AGREEMENT, AND SUBJECT TO CIVIL AND CRIMINAL PENALTIES THEREUNDER.

section assumes that equivalent security is provided where storage is confined to a building. Open structures or weather shelters over stored materials do not qualify for the exception.

2809.5 Fire protection. An *approved* hydrant and hose system or portable fire-extinguishing equipment suitable for the fire hazard involved shall be provided for open storage yards. Hydrant and hose systems shall be installed in accordance with NFPA 24. Portable fire extinguishers complying with Section 906 shall be located so that the distance of travel from the nearest unit does not exceed 75 feet (22 860 mm).

❖ Open storage yards can involve significant land areas and are often situated a substantial distance from public rights-of-way and public fire mains. Yard hydrant and private fire service main systems facilitate ready access to water for fire fighting by public or private fire-fighting forces. The yard hydrant system must be fed by a water supply of sufficient volume and duration to provide adequate protection where the public water supply provides inadequate volume or pressure to protect the facility. The fire flows required will, of necessity, be substantial because of the large land areas that can be included within the boundaries of a lumber yard. Water may need to be delivered to the scene by fire department tankers in rural areas where there is no public water supply. Further information and guidance on water supplies may be obtained from NFPA 1142 and the International Fire Service Training Association (IFSTA) *Pumping Apparatus Driver/Operator Handbook*. Installation of private fire protection systems must conform to the appropriate NFPA standards, including: yard hydrants and private fire mains (NFPA 24); water tanks for private fire protection (NFPA 22) and stationary fire pumps (NFPA 20).

Portable fire extinguishers must be provided for incipient fire fighting and be protected from freezing. Additionally, approved hose houses, properly equipped as described in NFPA 24, may be connected to the yard hydrant system. Travel distance to an extinguisher is limited to 75 feet (22 860 mm) so that manual efforts can be undertaken while the fire is still small enough to respond to first-aid fire-fighting efforts.

Bibliography

The following resource materials were used in the preparation of the commentary for this chapter of the code:

Code Changes Resource Collection—2015 International Fire Code. Washington, DC: International Code Council, 2014.

NFPA 1142—*Standard on Water Supplies for Suburban and Rural Fire Fighting 2012 Edition*. Quincy MA: National Fire Protection Association, 2012.

Pumping Apparatus Driver/Operator Handbook. Stillwater, OK: International Fire service Training Association, 2015.

INTERNATIONAL CODE COUNCIL®

Copyright © 2015 ICC. ALL RIGHTS RESERVED. Accessed by David Dammon on Jun 21, 2017 12:30:52 PM pursuant to License Agreement with ICC. No further reproduction or distribution authorized. ANY UNAUTHORIZED REPRODUCTION OR DISTRIBUTION IS A VIOLATION OF THE FEDERAL COPYRIGHT ACT AND THE LICENSE AGREEMENT, AND SUBJECT TO CIVIL AND CRIMINAL PENALTIES THEREUNDER.

Chapter 29: Manufacture of Organic Coatings

General Comments

The term “organic coatings” is used to describe diverse compounds formulated to protect buildings, machines and objects from the effects of weather, corrosion and hostile environmental exposures. Paint for architectural and industrial uses comprises the bulk of organic coating production. Most paints remain solvent-based, though the use of water-based products is becoming more widespread. The most common solvents include: mineral spirits, naphtha (VM&P), xylene, toluene, methyl ethyl ketone (MEK), methyl isobutyl ketone (MIBK), acetone, ethyl acetate, butyl acetate, butanol, isopropanol, ethylene glycol and propylene glycol, most of which are Class I flammable liquids with flash points less than 100°F (38°C). Other coatings are asphaltic and bituminous (for example, roofing tar). Most products in this category are Class II combustible liquids with flash points between 100°F and 140°F (38°C and 60°C).

The manufacture of organic coatings encompasses operations that produce decorative and protective coatings for architectural uses, industrial products and other specialized purposes. Requirements of this chapter address the hazards associated with the manufacture of solvent-based organic coatings. Water-based materials are exempt from these requirements.

In 1990, Harris and Swartz explained that the manufacture of organic coatings consists of the following six steps:

- Pigment dispersion.
- Mixing of raw materials and intermediates.
- Thinning and tinting.
- Quality-control testing and adjustment.
- Filtering.
- Filling into shipping containers.

Of these six steps, those involving mixing, thinning and container filling are of the most concern. Organic solvents are producers of static electricity, especially when agitated. If dissipation of static electricity is not controlled, agitation of these fluids can release enough energy to ignite flammable vapors. Static sparks are the most common source of ignition in organic coating fires.

By far, the most hazardous organic coating to manufacture is nitrocellulose lacquer because of the release of Class I flammable liquid vapors. Nitrocellulose is commonly shipped and stored alcohol-wet. This material becomes increasingly unstable as temperatures increase, thus making it capable of breaking down and burning in the absence of oxygen. Flammable vapors nearly always exist where organic coatings are manufactured. Consequently, the risk of ignition is usually present. Special precautions must be used to protect electrical and mechanical ignition sources.

Requirements of this chapter focus on the separation and control of ignition and fuel sources. Housekeeping is also emphasized to limit the quantity of ignitable material. Storage of flammable and combustible liquids must conform to Chapter 57. Application of organic coatings and other flammable finishes must conform to Chapter 24. Aerosol-charging operations and storage should conform to both Chapter 51 and NFPA 30B. Organic peroxide storage must conform to Chapter 62. Cellulose nitrate storage and handling are regulated by Chapter 65.

Hazards. In declining order, the most hazardous organic coating processes are nitrocellulose lacquer manufacturing and aerosol-charging operations, followed by those involving Class I flammable liquids, Class II combustible liquids and resin manufacturing. Manufacture of water-based products poses little hazard, although many water-based coatings exhibit a flash point when tested in a closed-cup apparatus. Research conducted by the National Paint and Coatings Association (NPCA) in 1977, however, indicates that these products pose little fire hazard. Ignition of solvent vapors released from products during the manufacturing process and flammable liquid spills are considered the most serious hazards encountered in daily operations. Concern about both of these scenarios is compounded by the fact that the mixing, pumping, agitation and filtering of organic chemicals generate large amounts of static electricity, which is the most common ignition source in paint and coating fires.

Nitrocellulose. Hazards associated with nitrocellulose deserve special attention. Nitrocellulose is a generic term used to describe a group of highly flammable organic fibers and other solid materials, usually cotton or wood, in fibrous or finely divided form with nitrogen contents between 10.5 and 12.6 percent. The most dangerous characteristic of these materials is their ability to support combustion in the absence of oxygen. This quality makes fire extinguishment extremely difficult. These materials are usually shipped and stored in 55-gallon (208 L) drums; however, dry product may be found in either fiber or cardboard drums.

Nitrocellulose is usually stored in one of four raw forms: solvent-wet, water-wet, plasticized or dry. Of these four forms, solvent-wet nitrocellulose (with alcohol as the usual solvent) is most common, while dry is most hazardous. Dry nitrocellulose must be avoided in all operations. Solvent-wet nitrocellulose possesses the same relative hazard as the solvent. Though relatively stable at room temperature, alcohol-wet nitrocellulose

INTERNATIONAL CODE COUNCIL®
Copyright © 2015 ICC. ALL RIGHTS RESERVED. Accessed by David Dammon on Jun 21, 2017 12:30:52 PM pursuant to License Agreement with ICC. No further reproduction or distribution authorized. ANY UNAUTHORIZED REPRODUCTION OR DISTRIBUTION IS A VIOLATION OF THE FEDERAL COPYRIGHT ACT AND THE LICENSE AGREEMENT, AND SUBJECT TO CIVIL AND CRIMINAL PENALTIES THEREUNDER.

decomposes rapidly as temperatures increase; therefore, maintaining room temperature and adequate ventilation is extremely important. Metal drums of the material must be carefully handled to prevent ignition. Drums should never be pushed across the floor or any other surface. Relatively small amounts of frictional heat may ignite the material inside the drum. Burning nitrocellulose produces harmful oxides of nitrogen and carbon monoxide (see commentary, Chapter 65).

Spills. Good housekeeping and prompt responses to spills are extremely important fire protection practices. Though not always successful in preventing a disaster, the prompt response of the occupants can often keep the hazard contained and under control until help arrives. Such was the case at a Sherwin-Williams paint warehouse in Dayton, Ohio, in May 1987, where the quick response of employees to a small spill [8 gallons to 10 gallons (30 L to 38 L)] saved a worker whose clothing caught on fire. It is very likely that the employees' training and experience prevented their coworker's death.

After their spill control efforts failed, the employees promptly evacuated the building and activated the fire alarm system, resulting in the notification of other employees working in different areas of the building, as well as the local fire department through the central station. Sherwin-Williams employees at the Dayton facility were well trained and well drilled in spill and emergency response procedures. After the incident, employee interviews conducted by the fire department, National Fire Protection Association (NFPA) and Building Officials and Code Administrators (BOCA) investigators suggested that this program had successfully averted disasters in the past.

Mechanical Ignition Sources. During the Sherwin-Williams warehouse incident, a Type E lift truck was operated in an area that should have been restricted to Type EE or EX lift trucks (see NFPA 505). Many fire investigators believe the Type E lift truck was the ignition source; however, other possible causes, including static electricity, could not be eliminated. The estimated total loss in damages resulting from this fire topped $49 million, thus requiring an extensive environmental cleanup effort.

Static Electricity. Arcs and sparks from static discharge are the most common ignition sources in organic coating manufacturing plants. As stated earlier, organic chemicals produce a great deal of static electricity. Special measures are required to successfully dissipate this energy without causing ignition. NFPA 77 describes recommended practices for controlling this ignition source.

Ignition Source Control. In this case, fire prevention means preventing ignition. Because the fuel sources (flammable liquids and vapors) usually exist, as do ignition sources (static electricity, electric motors and fixtures), keeping the two apart is nearly impossible. Safeguards must, therefore, be placed to minimize the likelihood that a flammable mixture will be ignited. Some of the most fundamental practices for controlling ignition sources are:

- Installing grounds.
- Observing bonding practices.
- Installing and maintaining electrical equipment classified for hazardous locations.
- Using nonsparking tools.

Purging and inerting systems are often employed where static electricity cannot be adequately dissipated (for example, pebble mixers).

Housekeeping. Good housekeeping practices, including the cleanup of spills and residues, are imperative. Cleanup programs should follow a regular schedule, and every effort should be made to keep the plant as clean and orderly as possible. Nitrocellulose residues should be swept up using a wet-chamber vacuum only. Loose material and scraps must be stored in metal containers with tight-fitting, self-closing or automatic-closing lids.

Installed fire protection systems must conform to the code and the requirements of the *International Building Code*® (IBC®) or another building code in effect at the time of construction, addition or alteration. Automatic sprinklers, foam-water sprinklers or deluge foam-water sprinklers must be installed and maintained, in accordance with the code and the appropriate referenced standard indicated in Chapter 9 of the code where required by the IBC or the code. Process hazards should be protected by special hazard systems designed, installed and maintained in accordance with the code and the appropriate NFPA standard (see Table 901.6.1) where flammable liquids exist. A method must be provided to notify employees and plant fire brigade personnel if a fire occurs. Portable fire extinguishers must be provided in the organic coating area and throughout the facility as provided in Section 2903.5 and Chapter 9.

Purpose

Chapter 29 regulates materials and processes associated with the manufacture of paints, as well as bituminous, asphaltic and other organic coatings used for protective or decorative purposes. Painting and processes related to the manufacture of nonflammable and noncombustible or water-based products are exempt from the provisions of this chapter. Application of organic coatings is covered by Chapter 24. Elimination of ignition sources, maintenance of fire protection equipment and isolation or segregation of hazardous operations are emphasized.

INTERNATIONAL CODE COUNCIL®
Copyright © 2015 ICC. ALL RIGHTS RESERVED. Accessed by David Dammon on Jun 21, 2017 12:30:52 PM pursuant to License Agreement with ICC. No further reproduction or distribution authorized. ANY UNAUTHORIZED REPRODUCTION OR DISTRIBUTION IS A VIOLATION OF THE FEDERAL COPYRIGHT ACT AND THE LICENSE AGREEMENT, AND SUBJECT TO CIVIL AND CRIMINAL PENALTIES THEREUNDER.

SECTION 2901
GENERAL

2901.1 Scope. Organic coating manufacturing processes shall comply with this chapter, except that this chapter shall not apply to processes manufacturing nonflammable or water-thinned coatings or to operations applying coating materials.

❖ Manufacture of flammable and combustible paints and other protective or decorative coatings is regulated by this chapter. Materials and processes associated with organic coatings manufacture may present explosion hazards from the ignition of vapors or dusts. Manufacture of nonflammable or water-based products and painting operations are not regulated by this chapter because hazards associated with those operations are insignificant.

2901.2 Permits. Permits shall be required as set forth in Section 105.6.

❖ Any manufacturing operation producing more than 1 gallon (4 L) of an organic coating per day must obtain approval from the fire code official. The process of issuing permits gives the fire code official an opportunity to carefully evaluate and regulate hazardous operations. Permit applicants should be required to demonstrate that their operations comply with the intent of the code before the permit is issued. See the commentary to Section 105.6 for a general discussion of activities requiring an operational permit and Section 105.6.35 for discussion of the specific operational permit for organic coating manufacturing operations. The process also notifies the fire department of the need for prefire planning for the hazardous property.

2901.3 Maintenance. Structures and their service equipment shall be maintained in accordance with this code and NFPA 35.

❖ NFPA 35 is referenced to cover maintenance requirements not specifically addressed by this chapter. Note that the prescribed extent of the reference to NFPA 35 is to only its maintenance provisions, not the entire standard. See commentary to Section 102.7.

SECTION 2902
DEFINITION

2902.1 Definition. The following term is defined in Chapter 2:

ORGANIC COATING.

❖ Definitions of terms can help in the understanding and application of the code requirements. This section directs the code user to Chapter 2 for the proper application of the indicated term used in this chapter. Terms may be defined in Chapter 2 or in another *International Code*® (I-Code®) as indicated in Section 201.3, or the dictionary meaning may be all that is needed (see also commentary, Sections 201 through 201.4).

SECTION 2903
GENERAL PRECAUTIONS

2903.1 Building features. Manufacturing of organic coatings shall be done only in buildings that do not have pits or *basements*.

❖ The IBC classifies organic coating processes in Group H-2 or H-3 occupancies, depending on the types and amounts of materials, when the maximum allowable quantity per control area (MAQ) of hazardous materials in Table 307.1(1) of that code is exceeded. Basements, pits or depressed first-floor construction are prohibited because of the tendency for hazardous materials vapors to accumulate in low areas and the difficulty in fighting fires in such areas and occupancies.

2903.2 Location. Organic coating manufacturing operations and operations incidental to or connected with organic coating manufacturing shall not be located in buildings having other occupancies.

❖ Incidental occupancies involve operations and activities closely related to the primary occupancy and are necessary for efficient, continuous and safe organic coatings manufacture. Administration, storage, shipping and receiving, as well as other related but not indispensable operations, should be located in separate buildings. Separations must have a fire-resistance rating, separation distance or a combination of the two as required by the IBC.

2903.3 Fire-fighting access. Organic coating manufacturing operations shall be accessible from not less than one side for the purpose of fire control. *Approved aisles* shall be maintained for the unobstructed movement of personnel and fire suppression equipment.

❖ Access from at least one side conforming to Sections 503 and 504 is required. Fire department connections, fire protection valves, yard hydrants and related fire-fighting equipment should be sited with respect to the provided access and hazards present (see commentary, Chapter 5). Fire department preincident plans should consider operational alternatives if the access is unusable when only one means of access is provided. Design and layout of equipment and processes must facilitate access for fire control. If provided, standpipes and hose reels should be located at intersections between aisles to facilitate movement of hose lines. Portable fire extinguishers must be located in the path of egress travel.

2903.4 Fire protection systems. *Fire protection systems* shall be installed, maintained, periodically inspected and tested in accordance with Chapter 9.

❖ Fire protection must be continuously maintained in order to remain effective. Prior permission of the fire code official is required for temporary outages for maintenance, repair, testing, alterations or additions. The fire code official may require special protection or precautions during any outage period. Every effort

INTERNATIONAL CODE COUNCIL®
Copyright © 2015 ICC. ALL RIGHTS RESERVED. Accessed by David Dammon on Jun 21, 2017 12:30:52 PM pursuant to License Agreement with ICC. No further reproduction or distribution authorized. ANY UNAUTHORIZED REPRODUCTION OR DISTRIBUTION IS A VIOLATION OF THE FEDERAL COPYRIGHT ACT AND THE LICENSE AGREEMENT, AND SUBJECT TO CIVIL AND CRIMINAL PENALTIES THEREUNDER.

must be made to restore service as quickly as possible (see commentary, Chapter 9).

2903.5 Portable fire extinguishers. Not less than one portable fire extinguisher complying with Section 906 for extra hazard shall be provided in organic coating areas.

❖ At least one fire extinguisher is required, sized and located for the extra hazardous nature of organic coatings operations. The addition of wheeled fire extinguishers could provide more extinguishing agent, longer discharge time and greater stream reach for the higher hazard in large area operations.

2903.6 Open flames. Open flames and direct-fired heating devices shall be prohibited in areas where flammable vapor-air mixtures exist.

❖ Only indirect heat equipment employing hot water, steam or warm air, or heat equipment approved for use in Class I, Division 2, Group D hazardous locations must be used where flammable vapor-air mixtures exist.

2903.7 Smoking. Smoking shall be prohibited in accordance with Section 310.

❖ Smoking is prohibited in and around organic coating manufacturing areas, in accordance with Section 310, to control this ignition source. Approved signs must be posted at entrances and throughout the manufacturing area. Locations approved for smoking should be separated from the manufacturing area by fire-resistance-rated construction and provided with separate ventilation.

2903.8 Power equipment. Power-operated equipment and industrial trucks shall be of a type *approved* for the location.

❖ Section 309 of the code, Section 7-6 of NFPA 35 and NFPA 505 provide guidance on use, classification of hazards and selection of industrial lift trucks.

2903.9 Tank maintenance. The cleaning of tanks and vessels that have contained flammable or *combustible liquids* shall be performed under the supervision of persons knowledgeable of the fire and explosion potential.

❖ Trained people well versed in the hazards of the tank cleaning process must supervise the cleaning of tanks containing flammable or combustible vapors. NFPA 326 provides useful guidance on tank-cleaning safety practices. Oxygen deficiency and explosion potential hazards are paramount concerns.

2903.9.1 Repairs. Where necessary to make repairs involving "hot work," the work shall be authorized by the responsible individual before the work begins.

❖ Extreme caution must be exercised when welding and cutting in or around flammable or combustible liquid tanks. Chapter 35 specifies safety requirements for welding and cutting operations and, in Section 3510, regulates hot work on tanks containing, or having contained, flammable or combustible liquids. Specific reference to NFPA 326 is also included in that section. See the commentary to Section 3510.

2903.9.2 Empty containers. Empty flammable or *combustible liquid* containers shall be removed to a detached, outside location and, if not cleaned on the premises, the empty containers shall be removed from the plant as soon as practical.

❖ Partially full and empty containers may pose an even greater hazard than full containers. Residual liquid must be completely removed and flammable vapors vented or purged from containers before they can be considered safe. Unused containers must be promptly removed from the premises. A special detached storage facility may be used for containers awaiting cleaning or disposal (see commentary, Section 5003.2.5).

2903.10 Drainage. Drainage facilities shall be provided to direct flammable and *combustible liquid* leakage and fire protection water to an *approved* location away from the building, any other structure, storage area or adjoining premises.

❖ Site drainage must be arranged to minimize hazards to adjacent properties and constructed to keep spills on site and away from significant buildings, means of egress and access routes. See Chapter 57 for further guidance on above-ground diking and drainage.

2903.11 Alarm system. An *approved* fire alarm system shall be provided in accordance with Section 907.

❖ A manual fire alarm system is required in areas where organic coatings are manufactured (see commentary, Section 907.2.5).

SECTION 2904
ELECTRICAL EQUIPMENT AND PROTECTION

2904.1 Wiring and equipment. Electrical wiring and equipment shall comply with this chapter and shall be installed in accordance with NFPA 70.

❖ NFPA 70 and the requirements of this section apply to electrical wiring and equipment to reduce the fire hazard associated with the presence of such equipment in areas where organic coatings are being manufactured.

2904.2 Hazardous locations. Where Class I liquids are exposed to the air, the design of equipment and ventilation of structures shall be such as to limit the Class I, Division 1, locations to the following:

1. Piping trenches.
2. The interior of equipment.
3. The immediate vicinity of pumps or equipment locations, such as dispensing stations, open centrifuges, plate and frame filters, opened vacuum filters, change cans and the surfaces of open equipment. The immediate vicinity shall include a zone extending from the vapor liberation point 5 feet (1524 mm) horizontally in all directions and vertically from the floor to a level 3 feet (914 mm) above the highest point of vapor liberation.

❖ Class I, Division 1, hazardous locations are areas where flammable or explosive vapors generally exist

INTERNATIONAL CODE COUNCIL®
Copyright © 2015 ICC. ALL RIGHTS RESERVED. Accessed by David Dammon on Jun 21, 2017 12:30:52 PM pursuant to License Agreement with ICC. No further reproduction or distribution authorized. ANY UNAUTHORIZED REPRODUCTION OR DISTRIBUTION IS A VIOLATION OF THE FEDERAL COPYRIGHT ACT AND THE LICENSE AGREEMENT, AND SUBJECT TO CIVIL AND CRIMINAL PENALTIES THEREUNDER.

in quantities sufficient to support an ignition (vapor-air concentrations within the flammable range). Piping trenches and other depressed areas will accumulate vapors because these vapors are usually heavier than air. Vapor production generally creates higher concentrations where flammable liquids are dispensed. Other areas must be adequately ventilated to disperse and dilute vapors to prevent flammable or explosive concentrations. The zone description in Item 3 should be used to define the limitations of the "immediate vicinity." Most flammable vapors are susceptible to ignition within relatively narrow concentrations in air so these boundaries provide a relatively good safety margin.

2904.2.1 Other locations. Locations within the confines of the manufacturing room where Class I liquids are handled shall be Class I, Division 2, except locations indicated in Section 2904.2.

❖ Class I, Division 2, locations include all areas where flammable vapors may be liberated in sufficient quantities to present a hazard should an accidental release or spill occur. Areas extending beyond the boundaries defined in Section 2904.2, such as processing areas for Class I liquids, should be considered as such locations. NFPA 497 provides useful guidance for determining the extent of electrically classified boundaries. When Class II liquids are handled and the ambient temperature is cooler than the liquid's flash point, ordinary electrical equipment may be used, provided precautions are taken to prevent hot metal or slag from falling into the liquid.

2904.2.2 Ordinary equipment. Ordinary electrical equipment, including switchgear, shall be prohibited, except where installed in a room maintained under positive pressure with respect to the hazardous area. The air or other media utilized for pressurization shall be obtained from a source that will not cause any amount or type of flammable vapor to be introduced into the room.

❖ Electrical equipment not classified for use in hazardous locations must be installed in separate rooms and provided with positive-pressure ventilation to prevent infiltration of flammable vapors. Care must be taken to avoid using air for ventilation that is contaminated with flammable vapors. Outside air taken from a source well above the adjacent grade is usually preferred. NFPA 496 provides useful guidance on the design of purged enclosures for electrical equipment.

2904.3 Bonding. Equipment including, but not limited to, tanks, machinery and piping shall be bonded and connected to a ground where an ignitable mixture is capable of being present.

❖ Both bonding and grounding prevent the accumulation of static charges and accidental release of electrical energy that could cause an ignition. The bond and ground may be physically applied or be a part of the design of the apparatus (see Commentary Figure 2904.3).

2904.3.1 Piping. Electrically isolated sections of metallic piping or equipment shall be grounded or bonded to the other grounded portions of the system.

❖ In order to maintain the continuity of the grounding path for all portions of a tank and piping system that

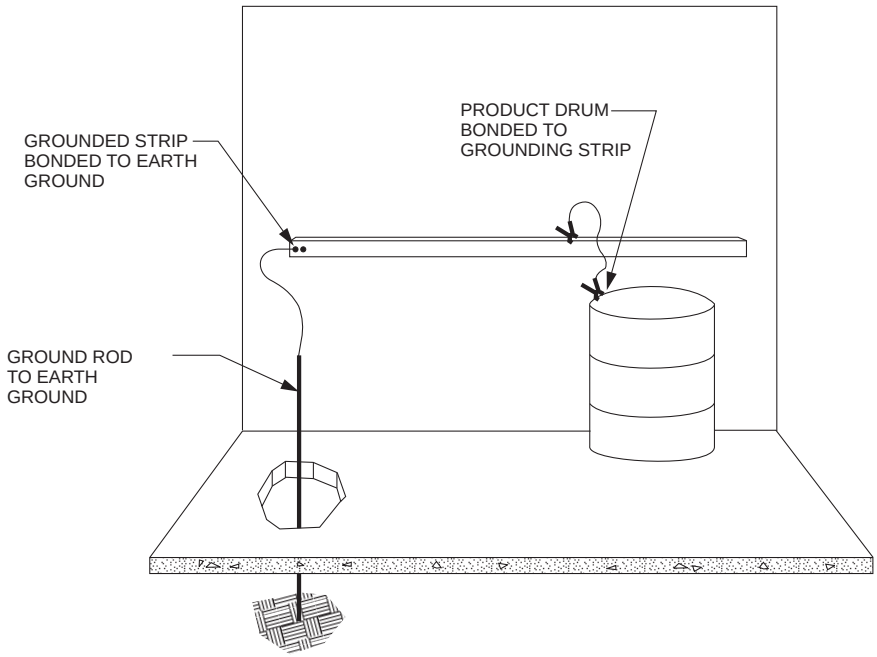

Figure 2904.3
FLAMMABLE LIQUID BONDING AND GROUNDING

INTERNATIONAL CODE COUNCIL®
Copyright © 2015 ICC. ALL RIGHTS RESERVED. Accessed by David Dammon on Jun 21, 2017 12:30:52 PM pursuant to License Agreement with ICC. No further reproduction or distribution authorized. ANY UNAUTHORIZED REPRODUCTION OR DISTRIBUTION IS A VIOLATION OF THE FEDERAL COPYRIGHT ACT AND THE LICENSE AGREEMENT, AND SUBJECT TO CIVIL AND CRIMINAL PENALTIES THEREUNDER.

do not form a continuous conductive path, each electrically isolated section of piping must be independently grounded or, alternatively, be bonded to another properly grounded portion of the system.

2904.3.2 Vehicles. Tank vehicles loaded or unloaded through open connections shall be grounded and bonded to the receiving system.

❖ The bond between the tank vehicle and the receiving system may be designed into the dispensing equipment or require physical attachment by the operator (a bond wire is often part of the dispensing hose). The system must also be grounded.

2904.3.3 Containers. Where a flammable mixture is transferred from one portable container to another, a bond shall be provided between the two containers, and one shall be grounded.

❖ Like tank vehicles, the dispensing hose may have the bond designed into the equipment or, if no such bond exists, a separate bond may need to be applied by the operator. A system ground must also be present.

2904.4 Ground. Metal framing of buildings shall be grounded with resistance of not more than 5 ohms.

❖ In order to reduce the likelihood of static electricity being generated involving any portion of the structure, the metal structural frame of Type II metal buildings or, for that matter, the metal frame of a building of any construction type, must be bonded together and grounded with a maximum resistance of 5 ohms.

SECTION 2905
PROCESS STRUCTURES

2905.1 Design. Process structures shall be designed and constructed in accordance with the *International Building Code*.

❖ The IBC classifies organic coating processes in occupancy Group H-2 or H-3, depending on the type and amounts of materials, when the MAQ of hazardous materials in Table 307.1(1) of that code is exceeded. IBC Section 418 further regulates these structures as to their physical configuration, location and finished product storage. See the commentary to IBC Sections 418.1 through 418.6 for further information.

2905.2 Fire apparatus access. Fire apparatus access complying with Section 503 shall be provided for the purpose of fire control to not less than one side of organic coating manufacturing operations.

❖ Access from at least one side that conforms to Section 503 is required. Fire department connections, fire protection valves, yard hydrants and related fire-fighting equipment should be located for ready access to hazards. Fire department preincident plans should consider operational alternatives if the access is unusable when only one means of access is provided.

2905.3 Drainage. Drainage facilities shall be provided in accordance with Section 2903.10 where topographical conditions are such that flammable and *combustible liquids* are capable of flowing from the organic coating manufacturing operation so as to constitute a fire hazard to other premises.

❖ Facility design should consider both spill containment and control provisions. Drains must discharge to approved containment basins. The location of containment facilities must not endanger adjacent facilities (see Sections 2903.10 and 5004.2).

2905.4 Explosion control. Explosion control shall be provided in areas subject to potential *deflagration* hazards as indicated in NFPA 35. Explosion control shall be provided in accordance with Section 911.

❖ Explosion control is required where Class I liquids or flammable dusts create a potential deflagration hazard; as defined by NFPA 35. Section 911 and IBC Section 414.5.1 prescribe requirements for explosion control. NFPA 68 also provides guidance on this subject.

2905.5 Ventilation. Enclosed structures in which Class I liquids are processed or handled shall be ventilated at a rate of not less than 1 cubic foot per minute per square foot [0.00508 $m^3/(s \cdot m^2)$] of solid floor area. Ventilation shall be accomplished by exhaust fans that take suction at floor levels and discharge to a safe location outside the structure. Noncontaminated intake air shall be introduced in such a manner that all portions of solid floor areas are provided with continuous uniformly distributed air movement.

❖ Ventilation systems must be designed to prevent the accumulation of vapors in the building where Class I flammable liquids are processed. Uncontaminated air, preferably from a source outside the building, should be distributed to dilute and disperse vapors over the entire solid floor area and then discharge them to a safe location outside the building. A ventilation rate of 1 cubic foot per minute per square foot ($0.00508\ m^3/s \bullet m^2$) is required.

2905.6 Heating. Heating provided in hazardous areas shall be by indirect means. Ignition sources such as open flames or electrical heating elements, except as provided for in Section 2904, shall not be permitted within the structure.

❖ Only indirect-heat appliances are permitted in hazardous areas. Steam or hot-water radiators and forced warm air may be used, provided the fans and heat sources are located outside the hazardous area. Appliances and devices using or producing open flames, electrical elements or electric arcs are prohibited.

SECTION 2906
PROCESS MILLS AND KETTLES

2906.1 Mills. Mills, operating with close clearances, which process flammable and heat-sensitive materials, such as nitro-

INTERNATIONAL CODE COUNCIL®
Copyright © 2015 ICC. ALL RIGHTS RESERVED. Accessed by David Dammon on Jun 21, 2017 12:30:52 PM pursuant to License Agreement with ICC. No further reproduction or distribution authorized. ANY UNAUTHORIZED REPRODUCTION OR DISTRIBUTION IS A VIOLATION OF THE FEDERAL COPYRIGHT ACT AND THE LICENSE AGREEMENT, AND SUBJECT TO CIVIL AND CRIMINAL PENALTIES THEREUNDER.

cellulose, shall be located in a detached building or in a noncombustible structure without other occupancies. The amount of nitrocellulose or other flammable material brought into the area shall not be more than the amount required for a batch.

❖ Milling of heat-sensitive materials, such as nitrocellulose, is an extraordinary hazard that must be located in single-purpose buildings, away from other uses and high-hazard operations. Pebble mills pose a special vapor ignition hazard caused by static electricity. Both the grinding material and inner lining of these mills are made of materials with good insulating characteristics. Because static electricity is produced during milling, it has nowhere to go. Generally, the atmosphere inside of this type of mill is made either partially or totally inert using nitrogen or carbon dioxide gas to prevent ignition.

2906.2 Mixers. Mixers shall be of the enclosed type or, where of the open type, shall be provided with properly fitted covers. Where flow is by gravity, a shutoff valve shall be installed as close as practical to the mixer, and a control valve shall be provided near the end of the fill pipe.

❖ Like any other part of the manufacturing process, mixing organic chemicals produces large quantities of static electricity. These requirements provide for controlling fires by smothering (closing the cover or lid) and interrupting fuel flow (closing the product valves).

2906.3 Open kettles. Open kettles shall be located in an outside area provided with a protective roof; in a separate structure of noncombustible construction; or separated from other areas by a noncombustible wall having a fire-resistance rating of not less than 2 hours.

❖ Kettles and reactors are large warming vessels used to cook various solid, liquid and gaseous materials, including monomers, which are usually solids or liquids, to initiate a controlled chemical reaction to produce resins. Most operations are exothermic and involve controlled polymerization. Finished resins are mixed with solvents, pigments and additives (for example, quality-control agents, texture materials, glass beads, etc.) to form the finished product in organic coating manufacturing. Principal dangers associated with open-fire kettles or reactors include the ignition of flammable vapors and uncontrolled polymerization. Vapors are released to the surrounding atmosphere, and uncontrolled reactions can lead to spills or discharges from the reactor vessel in open kettles. These operations must be conducted in an outside area under protective cover, if possible. Otherwise, open-fire kettles must be operated only in a separate building of noncombustible construction. An area separated from the main facility by a 2-hour fire wall or fire barrier would comply with this requirement. The area must be positively ventilated, with vapors discharged to a safe location away from the combustion air intake.

2906.4 Closed kettles. Contact-heated kettles containing solvents shall be equipped with safety devices that, in case of a fire, will turn off the process heat, turn on the cooling medium and inject inert gas into the kettle.

❖ Closed reactors confine reaction byproducts within the vessel in a closed loop system. Closed kettles or reactors may be either continuous or batch reactors. In the former, reactants are continuously fed into the system as reactant mass and byproducts are removed. Generally, continuous reactors are safer from a fire protection standpoint.

By comparison, reactants are fed into the batch reactor vessel, which is then sealed before the reaction is initiated by the application of heat. Reaction mass and byproducts are removed upon completion of the reaction and a new batch is processed with new raw materials. To interrupt the chemical process once the reaction begins, heat must be removed and the reaction mass cooled. This often requires the simultaneous venting of gaseous byproducts. Normal and emergency pressure relief vents must be arranged to discharge flammable vapors to a safe location when necessary. Automatic inerting of the atmosphere further disrupts the reaction process by displacing oxygen and oxidation byproducts. For further information, see NFPA 35.

2906.4.1 Vaporizer location. The vaporizer section of heat-transfer systems that heat closed kettles containing solvents shall be remotely located.

❖ The vaporizer must be located remotely from the process area.

2906.5 Kettle controls. The kettle and thin-down tank shall be instrumented, controlled and interlocked so that any failure of the controls will result in a safe condition. The kettle shall be provided with a pressure-rupture disc in addition to the primary vent. The vent piping from the rupture disc shall be of minimum length and shall discharge to an *approved* location. The thin-down tank shall be adequately vented. Thinning operations shall be provided with an adequate vapor removal system.

❖ Reactors must be provided with automatic high-temperature limit switches or other approved automatic temperature control methods. Manual and automatic methods must be provided to interrupt the flow of fuel if a flameout or other emergency occurs. The rupture disc is intended to vent excess pressure if the normal vent fails. Ventilation must be by a condenser of adequate size to prevent the accumulation of a vapor fog in the reactor area.

SECTION 2907
PROCESS PIPING

2907.1 Design. Piping, valves and fittings shall be designed for the working pressures and structural stresses to which the piping, valves and fittings will be subjected, and shall be of steel or other material *approved* for the service intended.

❖ Suitability of piping for the intended purpose is largely determined by compatibility with the material that it

INTERNATIONAL CODE COUNCIL®
Copyright © 2015 ICC. ALL RIGHTS RESERVED. Accessed by David Dammon on Jun 21, 2017 12:30:52 PM pursuant to License Agreement with ICC. No further reproduction or distribution authorized. ANY UNAUTHORIZED REPRODUCTION OR DISTRIBUTION IS A VIOLATION OF THE FEDERAL COPYRIGHT ACT AND THE LICENSE AGREEMENT, AND SUBJECT TO CIVIL AND CRIMINAL PENALTIES THEREUNDER.

will contain, adequate strength under normal working pressures and durability throughout the intended life of the system. Materials are permitted provided they are approved for the intended service. Piping systems for flammable and combustible liquids must comply with Section 5703.6. Good engineering judgment is needed in the design of these systems.

2907.2 Valves. Valves shall be of an indicating type. Terminal valves on remote pumping systems shall be of the deadman type, shutting off both the pump and the flow of solvent.

❖ Indicating valves permit the system operator to determine the position of critical valves at a glance. This aids in prompt control of the product flow if a piping or process failure occurs. Dead-man valves interlocked with product supply pumps cause the interruption of product flow if there is an operator error.

2907.3 Support. Piping systems shall be supported adequately and protected against physical damage. Piping shall be pitched to avoid unintentional trapping of liquids, or *approved* drains shall be provided.

❖ Ideally, product lines should be designed without trapped sections. Cleaning and purging of the system is made easier without releasing vapors when drains are opened and ignition sources are adequately controlled. Sufficient support and protection of piping prevent product releases if accidents occur in the processing area.

2907.4 Connectors. *Approved* flexible connectors shall be installed where vibration exists or frequent movement is necessary. Hose at dispensing stations shall be of an *approved* type.

❖ Rigid connectors either loosen from repeated vibration or fail from stresses created. Hose should be reinforced and designed with an integral ground wire to permit container bonding.

2907.5 Tests. Before being placed in service, all piping shall be free of leaks when tested for not less than 30 minutes at not less than 1.5 times the working pressure or a minimum of 5 pounds per square inch gauge (psig) (35 kPa) at the highest point in the system.

❖ Tests are intended to demonstrate system integrity under both normal and abnormal conditions. The 50-percent margin represents a reasonable safety range if a malfunction occurs. No test provides absolute certainty that a failure will not occur.

SECTION 2908
RAW MATERIALS IN PROCESS AREAS

2908.1 Nitrocellulose quantity. The amount of nitrocellulose brought into the operating area shall not exceed the amount required for a work shift. Nitrocellulose spillage shall be promptly swept up and disposed of properly.

❖ Nitrocellulose lacquer production is among the most hazardous organic coatings manufacturing processes. Nitrocellulose can support combustion in the absence of oxygen and is, therefore, considered very dangerous. As the temperature of alcohol-wet nitrocellulose increases, it becomes unstable. Relatively small amounts of energy are required to initiate combustion. Small amounts of finely divided nitrocellulose fiber should be cleaned up only with a wet-vacuum apparatus. Loose nitrocellulose material, scraps and waste should be stored underwater in a metal container with a tight-fitting, self-closing or automatic-closing lid. The waste container should be removed from the building daily and its contents burned at an approved site. See Chapter 65 for further regulation of pyroxilin plastics.

2908.2 Organic peroxides quantity. Organic peroxides brought into the operating area shall be in the original shipping container. When in the operating area, the organic peroxide shall not be placed in locations exposed to ignition sources, heat or mechanical shocks.

❖ Organic peroxides are both flammable materials and strong oxidizers. Many organic peroxides are principal components in more dangerous compounds such as blasting agents. Contamination may sensitize organic peroxides, making them especially sensitive to heat and shock. Organic peroxides should be kept in their original shipping containers to permit easy identification and prevent accidents while transferring contents to other containers.

SECTION 2909
RAW MATERIALS AND FINISHED PRODUCTS

2909.1 General. The storage, handling and use of flammable and *combustible liquids* in process areas shall be in accordance with Chapter 57.

❖ Chapter 57 details requirements for the storage and handling of flammable liquids. Moreover, it prescribes limitations on the size and location of containers, tanks and piles of flammable liquids in storage. The protection of flammable liquids in bulk storage has been the topic of considerable debate in the aftermath of the 1987 Sherwin-Williams warehouse fire. Fire code officials should carefully consider protection requirements. Annexes D and E of NFPA 30 contain extensive discussions of recommended protection for bulk flammable liquid storage. Also, investigations have been completed of flammable liquid storage in plastic containers. Reports from these tests conducted by the National Fire Protection Research Foundation (NFPRF) are available from NFPA.

2909.2 Tank storage. Tank storage for flammable and *combustible liquids* located inside of structures shall be limited to storage areas at or above grade which are separated from the processing area in accordance with the *International Building Code*. Processing equipment containing flammable and *combustible liquids* and storage in quantities essential to the continuity of the operations shall not be prohibited in the processing area.

❖ Tank storage located below grade is prohibited. Basements located under grade-level storage areas

INTERNATIONAL CODE COUNCIL®
Copyright © 2015 ICC. ALL RIGHTS RESERVED. Accessed by David Dammon on Jun 21, 2017 12:30:52 PM pursuant to License Agreement with ICC. No further reproduction or distribution authorized. ANY UNAUTHORIZED REPRODUCTION OR DISTRIBUTION IS A VIOLATION OF THE FEDERAL COPYRIGHT ACT AND THE LICENSE AGREEMENT, AND SUBJECT TO CIVIL AND CRIMINAL PENALTIES THEREUNDER.

should be discouraged. Below-grade flammable liquid fires are extremely difficult to fight. Similarly, above-grade spills will flow to lower floors, possibly resulting in spill fires on more than one building level. Tank storage of raw materials must be confined to locations at or above grade level. Tank storage must be separated from the processing area, in accordance with the IBC. If possible, these rooms should be accessible on at least one exterior side of the facility. IBC Section 418.4 contains requirements for the separation of these areas.

2909.3 Tank vehicle. Tank car and tank vehicle loading and unloading stations for Class I liquids shall be separated from the processing area, other plant structures, nearest lot line of property that can be built upon or public thoroughfare by a minimum clear distance of 25 feet (7620 mm).

❖ Like other separation requirements, the 25-foot (7620 mm) clearance is intended to limit accidental fire exposure to process, storage and adjacent buildings, as well as other areas. Additionally, clearance provides the same protection to the tanker or tank car if an incident involving an adjacent facility occurs. Finally, clearance provides access for establishing fire-fighting operations if an incident occurs.

2909.3.1 Loading. Loading and unloading structures and platforms for flammable and *combustible liquids* shall be designed and installed in accordance with Chapter 57.

❖ Chapter 57 specifies requirements for flammable liquid loading and unloading. Section 5706.5 and Chapter 28 of NFPA 30 specify requirements for tank vehicle and tank car loading and unloading operations, including separate piping and valves for Class I flammable liquids, and Class II and III combustible liquids; leak detection on the discharge side of dispensing pumps; provisions for bonding dispensing equipment to the tank vehicle; and flow control interlocks.

2909.3.2 Safety. Tank cars for flammable liquids shall be unloaded such that the safety to persons and property is ensured. Tank vehicles for flammable and *combustible liquids* shall be loaded and unloaded in accordance with Chapter 57.

❖ Section 5706.6 emphasizes the tank vehicle operator's responsibilities. Essentially, the operator must verify that all safety features are properly used and maintained. Before loading or unloading the product, the operator must verify that required bonding is in place, a liquid- and vapor-tight connection has been made and fill or discharge lines are protected from physical damage. The operator must remain with the vehicle during the loading or unloading operation, but not in the cab.

2909.4 Nitrocellulose storage. Nitrocellulose storage shall be located on a detached pad or in a separate structure or a room enclosed in accordance with the *International Building Code*. The nitrocellulose storage area shall not be utilized for any other purpose. Electrical wiring and equipment installed in storage areas adjacent to process areas shall comply with Section 2904.2.

❖ Solvent-wet nitrocellulose is the most common type associated with lacquer production. In this case, the solvent is usually an alcohol, which is a Class I flammable liquid. Solvent-wet nitrocellulose possesses the same fire-hazard characteristics as the solvent in which it is stored, with important differences noted. Solvent-wet nitrocellulose becomes increasingly unstable as the temperature rises. Once ignited, nitrocellulose will continue to burn even in the absence of oxygen. Therefore, extra diligence must be used to prevent ignition and fire spread. IBC Section 418.5 contains requirements for the separation of these areas.

2909.4.1 Containers. Nitrocellulose shall be stored in closed containers. Barrels shall be stored on end and not more than two tiers high. Barrels or other containers of nitrocellulose shall not be opened in the main storage structure but at the point of use or other location intended for that purpose.

❖ Like other materials possessing unusual fire-hazard characteristics that may be susceptible to ignition if improperly handled, nitrocellulose must be kept in its Department of Transportation (DOTn) shipping container until used. This reduces the likelihood of accidents associated with unnecessary transfer operations and allows the material to be readily identified by its shipping and DOTn hazard labels. In order to avoid solvent leakage, containers must not be stored on their sides because nitrocellulose is commonly shipped in a wet solvent. One-drum-high storage is preferred, but two-drum-high storage is allowed. Stacking containers poses the risk of toppling or other physical damage to the container with the potential for spillage or ignition.

2909.4.2 Spills. Spilled nitrocellulose shall be promptly wetted with water and disposed of by use or burning in the open at an *approved* detached location.

❖ Wetting spills with water will help prevent ignition by diluting the flammable solvent, especially in the case of alcohol-wet nitrocellulose. The spilled material must be swept up immediately and placed in a tightly closed metal container and covered with water. Waste must be disposed of in accordance with applicable federal, state and local environmental regulations, or denitrated.

2909.5 Organic peroxide storage. The storage of organic peroxides shall be in accordance with Chapter 62.

❖ Organic peroxides pose a dual hazard of being both flammable and oxidizing materials (see Section 5001.1). Additionally, these compounds are sensitive to friction, heat and shock. Detached storage buildings are required when storage exceeds the amounts indicated in Table 5003.8.2 to prevent reactions with other materials. These buildings must be constructed in accordance with requirements of the IBC for Group H occupancies, depending on the classification of the organic peroxide involved. Separation distances

INTERNATIONAL CODE COUNCIL®
Copyright © 2015 ICC. ALL RIGHTS RESERVED. Accessed by David Dammon on Jun 21, 2017 12:30:52 PM pursuant to License Agreement with ICC. No further reproduction or distribution authorized. ANY UNAUTHORIZED REPRODUCTION OR DISTRIBUTION IS A VIOLATION OF THE FEDERAL COPYRIGHT ACT AND THE LICENSE AGREEMENT, AND SUBJECT TO CIVIL AND CRIMINAL PENALTIES THEREUNDER.

specified in Table 6204.1.2 are intended to reduce the likelihood of an incident causing injury or property damage arising from materials stored adjacent to hazardous operations that may cause personal injury or property damage. Adequate access must be provided to facilitate defensive fire-fighting operations and support the installed protection. If possible, the fire department connection or connections should be of the free-standing type located far away from the building along the fire service access route. An organic peroxide may be stored inside a building of another occupancy group in control areas in accordance with Sections 5003.1.1 and 6203.1.1.

Signs are to be posted at the entrance and in all storage areas. NFPA 704 hazard warning signs and signs indicating: "ORGANIC PEROXIDE STORAGE—NO OPEN FLAMES" are recommended for this purpose.

Organic peroxides must be stored in original shipping containers. This practice serves the following three important purposes: reduces the likelihood of accidents caused by unnecessary handling; keeps the material in labeled containers that clearly identify the contents and the hazard; and reduces the likelihood of contamination, which may sensitize the material or cause it to decay.

2909.5.1 Size. The size of the package containing organic peroxide shall be selected so that, as nearly as practical, full packages are utilized at one time. Spilled peroxide shall be promptly cleaned up and disposed of as specified by the supplier.

❖ Any leftover organic peroxide poses a storage and handling problem. Most organic peroxides become increasingly unstable if contaminated with foreign materials. Organic peroxides may spontaneously ignite if exposed to sufficient heat or shock because they are both flammables and oxidizers. Extreme care must be taken when cleaning up organic peroxide spills. Hydrocarbons and other volatile organic chemicals may sensitize an organic peroxide. Excessive heat or friction during cleanup operations could result in a deflagration or explosion if the material is contaminated.

2909.6 Finished products. Finished products that are flammable or *combustible liquids* shall be stored outside of structures, in a separate structure, or in a room separated from the processing area in accordance with the *International Building Code*. The storage of finished products shall be in tanks or closed containers in accordance with Chapter 57.

❖ Flammable liquid warehouses must comply with both the IBC and Chapter 57 requirements. Though flammable liquid warehouses are exempt from storage quantity limitations, pile size and height restrictions still apply. Separation requirements are contained in IBC Section 418.6.

Bibliography

The following resource materials were used in the preparation of the commentary for this chapter of the code:

Bradford, W.J. "Chemical Processes." *Industrial Fire Hazards Handbook*, 3rd ed. Quincy, MA: National Fire Protection Association, 1990.

Harris, M.V. and A.B. Swartz. "Chapter 10: Paints and Coatings Manufacture." *Industrial Fire Hazards Handbook*, 3rd ed. Quincy, MA: National Fire Protection Association, 1990.

INTERNATIONAL CODE COUNCIL®

Copyright © 2015 ICC. ALL RIGHTS RESERVED. Accessed by David Dammon on Jun 21, 2017 12:30:52 PM pursuant to License Agreement with ICC. No further reproduction or distribution authorized. ANY UNAUTHORIZED REPRODUCTION OR DISTRIBUTION IS A VIOLATION OF THE FEDERAL COPYRIGHT ACT AND THE LICENSE AGREEMENT, AND SUBJECT TO CIVIL AND CRIMINAL PENALTIES THEREUNDER.

Chapter 30: Industrial Ovens

General Comments

The basic cause of industrial oven and furnace explosions is the ignition of an accumulated combustible mixture within the confined space of the furnace. A dangerous combustible mixture within a furnace consists of an excessive quantity of fuel mixed with air in proportions that will result in rapid or uncontrolled combustion when an ignition source is supplied. The magnitude and intensity of the explosion will depend on the relative quantity of the fuel that has accumulated, and the fuel-air ratio at the moment of ignition. Explosions, including "puffs," are often the result of improper design of the equipment or control systems, or a malfunction of one or the other.

The most common causes of oven fires and explosions are:

1. An interruption of the fuel supply, air supply or ignition source to the burners that results in a momentary loss of flame, which is subsequently followed by reignition of accumulated fuel-air mixtures.
2. Fuel leakage into an idle furnace resulting in a flammable fuel-air mixture, which causes an explosion upon start-up.
3. Repeated unsuccessful attempts to light the furnace without adequate purging of flammable fuel-air mixtures followed by ignition of the fuel-air mixture.
4. Ignition of flammable vapors emanating from a product or workpiece being dried where the volatiles enter the flammable range due to the materials being heated

This chapter addresses the fuel supply, ventilation, emergency shutdown equipment, fire protection, and the operation and maintenance of industrial ovens.

Purpose

Compliance with this chapter is intended to reduce the likelihood of fires involving industrial ovens or to manage the impact if a fire should occur. Industrial ovens are sometimes referred to as industrial heat enclosures or industrial furnaces. Heat may be furnished by gas burners, oil burners, electric heaters, infrared lamps, induction heaters or steam radiation systems.

SECTION 3001 GENERAL

3001.1 Scope. This chapter shall apply to the installation and operation of industrial ovens and furnaces. Industrial ovens and furnaces shall comply with the applicable provisions of NFPA 86, the *International Fuel Gas Code*, *International Mechanical Code* and this chapter. The terms "ovens" and "furnaces" are used interchangeably in this chapter.

❖ This chapter contains provisions for the installation and operation of industrial ovens and furnaces. If a certain provision is not found in this chapter, applicable provisions of NFPA 86, the *International Mechanical Code*® (IMC®) and the *International Fuel Gas Code*® (IFGC®) must be used.

3001.2 Permits. Permits shall be required as set forth in Sections 105.6 and 105.7.

❖ The process of issuing permits gives the fire code official an opportunity to carefully evaluate and regulate hazardous operations. Permit applicants should be required to demonstrate that their operations comply with the intent of the code before the permit is issued. See the commentary to Section 105.6 for a general discussion of operations requiring an operational permit. Because of the flammable nature of the contents and the operation of industrial ovens, an operational permit is required by Section 105.6.25. The process also notifies the fire department of the need for prefire planning for the hazardous property.

SECTION 3002 DEFINITIONS

3002.1 Definitions. The following terms are defined in Chapter 2:

FURNACE CLASS A.

FURNACE CLASS B.

FURNACE CLASS C.

FURNACE CLASS D.

❖ Definitions of terms can help in the understanding and application of the code requirements. This section directs the code user to Chapter 2 for the proper

INTERNATIONAL CODE COUNCIL®
Copyright © 2015 ICC. ALL RIGHTS RESERVED. Accessed by David Dammon on Jun 21, 2017 12:30:52 PM pursuant to License Agreement with ICC. No further reproduction or distribution authorized. ANY UNAUTHORIZED REPRODUCTION OR DISTRIBUTION IS A VIOLATION OF THE FEDERAL COPYRIGHT ACT AND THE LICENSE AGREEMENT, AND SUBJECT TO CIVIL AND CRIMINAL PENALTIES THEREUNDER.

application of the indicated terms used in this chapter. Terms may be defined in Chapter 2 or in another *International Code*® (I-Code®) as indicated in Section 201.3, or the dictionary meaning may be all that is needed (see also commentary, Sections 201 through 201.4).

SECTION 3003
LOCATION

3003.1 Ventilation. Enclosed rooms or *basements* containing industrial ovens or furnaces shall be provided with combustion air in accordance with the *International Mechanical Code* and the *International Fuel Gas Code*, and with ventilation air in accordance with the *International Mechanical Code.*

❖ Placing an oven or furnace below grade presents difficulty in ventilation and offers severe obstacles to proper explosion release. When gas or oil is used, the furnace or oven should be vented separately unless the products of discharge deposit directly into the oven.

3003.2 Exposure. When locating ovens, oven heaters and related equipment, the possibility of fire resulting from overheating or from the escape of fuel gas or fuel oil and the possibility of damage to the building and injury to persons resulting from explosion shall be considered.

❖ Ovens and furnaces should be located where they will present the least possible hazard to property and life. To present the least possible hazard, walls or partitions may be needed around the furnaces or ovens.

3003.3 Ignition source. Industrial ovens and furnaces shall be located so as not to pose an ignition hazard to flammable vapors or mists or *combustible dusts.*

❖ Industrial ovens should be considered an ignition source and should be separated from any materials that may be easily ignited.

3003.4 Temperatures. Roofs and floors of ovens shall be insulated and ventilated to prevent temperatures at combustible ceilings and floors from exceeding 160°F (71°C).

❖ Furnaces and ovens should be designed to minimize their fire hazard when operating at elevated temperatures. Insulation and ventilation are important in preventing heat transfer from the oven to surrounding combustible products.

SECTION 3004
FUEL PIPING

3004.1 Fuel-gas piping. Fuel-gas piping serving industrial ovens shall comply with the *International Fuel Gas Code*. Piping for other fuel sources shall comply with this section.

❖ Electrically wired, oil-fired and special-atmosphere furnaces are covered in this section. Fuel-gas piping is covered in the IFGC.

3004.2 Shutoff valves. Each industrial oven or furnace shall be provided with an *approved* manual fuel shutoff valve in accordance with the *International Mechanical Code* or the *International Fuel Gas Code*.

❖ Individual manual shutoff valves are used for equipment isolation. Requirements are found in either the IMC or IFGC.

3004.2.1 Fuel supply lines. Valves for fuel supply lines shall be located within 6 feet (1829 mm) of the appliance served.

Exception: When *approved* and the valve is located in the same general area as the appliance served.

❖ A fuel supply shutoff valve must be installed in the fuel supply line within 6 feet (1829 mm) of the appliance for easy shutoff of fuel in case of an emergency.

3004.3 Valve position. The design of manual fuel shutoff valves shall incorporate a permanent feature which visually indicates the open or closed position of the valve. Manual fuel shutoff valves shall not be equipped with removable handles or wrenches unless the handle or wrench can only be installed parallel with the fuel line when the valve is in the open position.

❖ Manual shutoff valves should have a permanently affixed visual indicator that is easily recognizable, and it should be in the open position. The removable handle requirement prevents fuel supply shutoff for any reason. Accidental shutoff could endanger property and people.

SECTION 3005
INTERLOCKS

3005.1 Shut down. Interlocks shall be provided for Class A ovens so that conveyors or sources of flammable or combustible materials shall shut down if either the exhaust or recirculation air supply fails.

❖ If ventilation or airflow were lost, a safety control circuit would immediately shut down the heating system of the effected section. When necessary, loss of ventilation must shut down the entire system, as well as the conveyor.

SECTION 3006
FIRE PROTECTION

3006.1 Required protection. Class A and B ovens that contain, or are utilized for the processing of, combustible materials shall be protected by an *approved* automatic fire-extinguishing system complying with Chapter 9.

❖ While this section requires that a fire protection system be installed in Class A and B ovens, it does not specify the type of fire-extinguishing system required—although automatic sprinklers would typically be considered the system of choice. As such, as an alternative to sprinklers, protection could be in the form of a water spray or mist system designed and installed in accordance with NFPA 13 or NFPA 750, respectively; or a dry chemical, carbon dioxide (CO_2),

INTERNATIONAL CODE COUNCIL®
Copyright © 2015 ICC. ALL RIGHTS RESERVED. Accessed by David Dammon on Jun 21, 2017 12:30:52 PM pursuant to License Agreement with ICC. No further reproduction or distribution authorized. ANY UNAUTHORIZED REPRODUCTION OR DISTRIBUTION IS A VIOLATION OF THE FEDERAL COPYRIGHT ACT AND THE LICENSE AGREEMENT, AND SUBJECT TO CIVIL AND CRIMINAL PENALTIES THEREUNDER.

inert gas or foam system designed and installed in accordance with the applicable standard indicated in Section 904. This type of system must be compatible with the design of the oven and the materials being processed. The extent of the required fire protection system is dictated by the design standard and depends on the construction and arrangement of the oven, as well as the materials handled, and should include oven exhaust ducts.

3006.2 Fixed fire-extinguishing systems. Fixed fire-extinguishing systems shall be provided for Class C or D ovens to protect against such hazards as overheating, spillage of molten salts or metals, quench tanks, ignition of hydraulic oil and escape of fuel. It shall be the user's responsibility to consult with the *fire code official* concerning the necessary requirements for such protection.

❖ Class C and D ovens can operate with special processing atmospheres at very high temperatures and can present fire hazards to the areas around them. While this section requires that a fire protection system be installed in Class C and D ovens, it does not specify the type of fire-extinguishing system required, although automatic sprinklers would typically be considered the system of choice. As such, as an alternative to sprinklers, protection could be in the form of a water mist, dry chemical, CO_2 or foam system. The extent of the required fire protection system depends on the construction and arrangement of the oven, as well as the materials handled, and should extend into oven exhaust ducts. Decisions regarding the fire protection system type and design must be made by the owner with the consultation and approval of the fire code official.

3006.3 Fire extinguishers. Portable fire extinguishers complying with Section 906 shall be provided not closer than 15 feet (4572 mm) or not more than 50 feet (15 240 mm) or in accordance with NFPA 10. This shall apply to the oven and related equipment.

❖ Portable fire extinguishers of the proper size and type and using an appropriate extinguishing agent must be installed near the oven and related equipment. The distances mentioned in this section should be used unless requirements in NFPA 10 are more stringent. See the commentary to Section 906 for additional discussion of portable fire extinguishers.

SECTION 3007
OPERATION AND MAINTENANCE

3007.1 Furnace system information. An *approved*, clearly worded, and prominently displayed safety design data form or manufacturer's nameplate shall be provided stating the safe operating condition for which the furnace system was designed, built, altered or extended.

❖ The equipment manufacturer establishes the need for adequate operational checks and maintenance. Specifications, data sheets and procedures provide clear and complete inspection, testing and maintenance instructions.

3007.2 Oven nameplate. Safety data for Class A solvent atmosphere ovens shall be furnished on the manufacturer's nameplate. The nameplate shall provide the following design data:

1. The solvent used.
2. The number of gallons (L) used per batch or per hour of solvent entering the oven.
3. The required purge time.
4. The oven operating temperature.
5. The exhaust blower rating for the number of gallons (L) of solvent per hour or batch at the maximum operating temperature.

Exception: For low-oxygen ovens, the maximum allowable oxygen concentration shall be included in place of the exhaust blower ratings.

❖ Safety data must be included on the manufacturer's nameplate for Class A solvent atmosphere ovens to ensure that safety personnel, operators and maintenance technicians have the information at hand. This same information should also be included in installation, operation and maintenance procedures. The exception in this case is actually an additional nameplate requirement for low-oxygen ovens.

3007.3 Training. Operating, maintenance and supervisory personnel shall be thoroughly instructed and trained in the operation of ovens or furnaces.

❖ Alert and competent operators are essential to safe operations. New operators should be thoroughly trained and tested in the use of the equipment. Regular operators should be reevaluated at regular intervals to make certain their skills and knowledge are current.

3007.4 Equipment maintenance. Equipment shall be maintained in accordance with the manufacturer's instructions.

❖ There should be a program for inspecting and maintaining oven safety controls. The operating and supervisory control equipment should be checked and tested regularly.

Bibliography

The following resource was used in the preparation of the commentary for this chapter of the code.

FM Global Property Loss Prevention Data Sheet 6-9, *Industrial Ovens and Dryers.* Johnson, RI: Factory Mutual Global Research, 2009.

INTERNATIONAL CODE COUNCIL®
Copyright © 2015 ICC. ALL RIGHTS RESERVED. Accessed by David Dammon on Jun 21, 2017 12:30:52 PM pursuant to License Agreement with ICC. No further reproduction or distribution authorized. ANY UNAUTHORIZED REPRODUCTION OR DISTRIBUTION IS A VIOLATION OF THE FEDERAL COPYRIGHT ACT AND THE LICENSE AGREEMENT, AND SUBJECT TO CIVIL AND CRIMINAL PENALTIES THEREUNDER.

INTERNATIONAL CODE COUNCIL®
Copyright © 2015 ICC. ALL RIGHTS RESERVED. Accessed by David Dammon on Jun 21, 2017 12:30:52 PM pursuant to License Agreement with ICC. No further reproduction or distribution authorized. ANY UNAUTHORIZED REPRODUCTION OR DISTRIBUTION IS A VIOLATION OF THE FEDERAL COPYRIGHT ACT AND THE LICENSE AGREEMENT, AND SUBJECT TO CIVIL AND CRIMINAL PENALTIES THEREUNDER.

Chapter 31:
Tents and Other Membrane Structures

General Comments

Though they do not happen often, fires occurring in tents and other membrane structures have historically caused significant loss of life. Perhaps the most notable of these tragedies occurred on July 6, 1944, in Hartford, Connecticut, where a Ringling Bros. and Barnum & Bailey Circus tent caught fire during a matinee performance, killing 167 people and injuring 487. Since then, protection of tents and other membrane structures has focused on construction methods and materials, as well as limiting use and occupancy.

Construction Methods and Materials

Tents and other membrane structures are constructed of diverse materials, usually fabrics, textiles and films. Section 3102 of the *International Building Code*® (IBC®) requires these membrane materials to be noncombustible as described in IBC Section 703.5 or meet the fire propagation criteria of NFPA 701. The use of lightweight high-tensile-strength membrane coverings is perhaps the most significant similarity between tents and air-supported structures. Beyond this similarity, an increasingly wide variety of structural configurations is becoming common. Tents include all structures using rigid structural frames or supports for lateral and compressive stability. In the case of air-supported structures, a positive pressure differential between the inside and the outside of the structure, coupled with the favorable tensile properties of the membrane, yields these structural properties.

In every case, anchors and cables are used for either additional structural stability or to act as fail-safe devices against extreme wind, rain or snow loading. The more commonplace membrane coverings include cotton and plastic-canvas fabrics. Exotic new materials, such as high-tensile-strength plastic films, have spawned a new generation of air-supported structures, including the spectacularly covered and domed stadiums built in recent years in many large metropolitan areas. Protecting the structure from collapse and fire remains the most significant fire and life safety concern.

Occupancy

Fire poses a dual threat to a tent or other membrane structures. First, the fire presents a danger to the occupants by exposing them to heat, smoke and toxic combustion products. Just as important, the fire represents an imminent threat to the structure. Even the best flame-resistant fabrics may ignite or fail under extreme conditions posed by a fire, and the fire's demand for air may compromise the structural support of the air inside of, if not the integrity of the membrane itself, an air-supported structure. Full or partial collapse of the membrane covering of a tent or air-supported structure may occur earlier and with less warning than in any other structural type.

Egress may become difficult, if not nearly impossible, if a collapse occurs; therefore, this chapter limits the storage or handling of combustible materials inside tents and other membrane structures because of their contribution to fuel loading. Similarly, heat energy sources that may ignite the membrane fabric or other combustibles are prohibited or restricted. Even spot lighting must be used with caution to prevent heat energy from igniting the covering. Portable fire extinguishers must be readily available for incipient fire fighting as an additional safeguard against fire.

Purpose

The requirements in this chapter are intended to protect tents and other membrane structures from fire by requiring regular inspections and continued compliance with fire safety regulations, as well as the applicable requirements of Chapter 31 of the IBC, regulating their use and occupancy.

SECTION 3101
GENERAL

3101.1 Scope. Tents, temporary stage canopies and membrane structures shall comply with this chapter. The provisions of Section 3103 are applicable only to temporary tents and membrane structures. The provisions of Section 3104 are applicable to temporary and permanent tents and membrane structures. Other temporary structures shall comply with the *International Building Code*.

❖ This section defines the kinds of structures covered by this chapter and designates which sections apply to temporary structures and which apply to permanent structures. Structures can range from 10-foot by 10-foot (3048 mm by 3048 mm) canvas shelters to

INTERNATIONAL CODE COUNCIL®
Copyright © 2015 ICC. ALL RIGHTS RESERVED. Accessed by David Dammon on Jun 21, 2017 12:30:52 PM pursuant to License Agreement with ICC. No further reproduction or distribution authorized. ANY UNAUTHORIZED REPRODUCTION OR DISTRIBUTION IS A VIOLATION OF THE FEDERAL COPYRIGHT ACT AND THE LICENSE AGREEMENT, AND SUBJECT TO CIVIL AND CRIMINAL PENALTIES THEREUNDER.

major indoor sports arenas. The common feature of all types of membrane structures, whether they are air-supported, air-inflated or tensioned membrane structures, is the nature of the structural skin. In all cases, a pliable material is used to create an indoor or protected space by separating the area under the covering from wind, precipitation and temperature extremes. Although most membrane structures are intended for temporary or seasonal use, elegant all-weather permanent membrane structures are becoming increasingly common.

There has been past confusion over the proper application of the requirements of Chapter 31 to temporary structures. Typically this occurs because the fire code official is already involved with the temporary event regarding other operational permits required by the code. For example, a weekend concert is planned at the fair. The fire code official is already involved with various IFC operational permits for Place of Assembly, Carnival/Fair, and Temporary Membrane Structures and Tents. However, when a stage, platform or other temporary structure is erected, the IBC regulates the construction.

This section now sends the code user to the IBC for temporary structures other than tents and membrane structures. IBC Sections 108.2 and 3103 clearly address the design requirements for such temporary structures. IBC Section 3103.1 similarly sends the IBC code user to the IFC for temporary membrane structures and temporary tents. Clearly, the IFC is designed to address "temporary tents" and "temporary membrane structures," while IBC Section 3103 is intended to address other "temporary structures."

SECTION 3102
DEFINITIONS

3102.1 Definitions. The following terms are defined in Chapter 2:

AIR-INFLATED STRUCTURE.

AIR-SUPPORTED STRUCTURE.

MEMBRANE STRUCTURE.

TEMPORARY STAGE CANOPY.

TENT.

❖ Definitions of terms can help in the understanding and application of the code requirements. This section directs the code user to Chapter 2 for the proper application of the indicated terms used in this chapter. Terms may be defined in Chapter 2 or in another *International Code*® (I-Code®) as indicated in Section 201.3, or the dictionary meaning may be all that is needed (see also commentary, Sections 201.1 through 201.4 and to the definitions in Section 202).

SECTION 3103
TEMPORARY TENTS AND MEMBRANE STRUCTURES

3103.1 General. Tents and membrane structures used for temporary periods shall comply with this section. Other temporary structures erected for a period of 180 days or less shall comply with the *International Building Code*.

❖ This section addresses tents and membrane structures that are considered temporary in terms of the duration of their erection and use (see Section 3103.5 for the definition of "Temporary" as it applies to membrane structures). This section is intended to ensure that if a membrane structure is used, it will be soundly designed so as not to present a hazard to its users, emergency responders or the public during the time it is in place. See also the commentary to Section 3101.1.

3103.2 Approval required. Tents and membrane structures having an area in excess of 400 square feet (37 m^2) shall not be erected, operated or maintained for any purpose without first obtaining a permit and approval from the *fire code official*.

Exceptions:

1. Tents used exclusively for recreational camping purposes.
2. Tents open on all sides that comply with all of the following:
   - 2.1. Individual tents having a maximum size of 700 square feet (65 m^2).
   - 2.2. The aggregate area of multiple tents placed side by side without a fire break clearance of 12 feet (3658 mm), not exceeding 700 square feet (65 m^2) total.
   - 2.3. A minimum clearance of 12 feet (3658 mm) to all structures and other tents.

❖ Use of membrane structures results in great flexibility and a large volume of weather-protected space; however, these benefits are balanced by the sensitivity of these structures to strict maintenance requirements. The approval process allows the fire code official to exercise strict control to achieve compliance with the requirements of this chapter.

This section sets the minimum size structure that requires approval. Exception 1 exempts from permit requirements tents that are normally used by families or very small groups for short periods under widely varying conditions that would be difficult or impossible for a fire code official to police. Exception 2 exempts from permit requirements, for example, a single tent approximately 25.5 square feet (2.4 m^2) without sides or multiple tents without sides aggregating an area of not more than 700 square feet (65 m^2) due to their limited size, limited fire load and limited

INTERNATIONAL CODE COUNCIL®
Copyright © 2015 ICC. ALL RIGHTS RESERVED. Accessed by David Dammon on Jun 21, 2017 12:30:52 PM pursuant to License Agreement with ICC. No further reproduction or distribution authorized. ANY UNAUTHORIZED REPRODUCTION OR DISTRIBUTION IS A VIOLATION OF THE FEDERAL COPYRIGHT ACT AND THE LICENSE AGREEMENT, AND SUBJECT TO CIVIL AND CRIMINAL PENALTIES THEREUNDER.

occupant load. The fact that these tents have no sides and are separated by a 12-foot (3658 mm) fire break also improves the occupants' situational awareness and provides the potential for occupant escape routes and fire department access all around the perimeter.

3103.3 Place of assembly. For the purposes of this chapter, a place of assembly shall include a circus, carnival, tent show, theater, skating rink, dance hall or other place of assembly in or under which persons gather for any purpose.

❖ This section gives examples of common types of assembly use for membrane structures, but leaves the issue open so that the fire code official has the discretion to determine whether some other intended use should be considered a place of assembly that would require permits and approvals.

3103.4 Permits. Permits shall be required as set forth in Sections 105.6 and 105.7.

❖ The process of issuing permits gives the fire code official an opportunity to carefully evaluate and regulate hazardous operations or special structures. Permit applicants should be required to demonstrate that their operation or construction complies with the intent of the code before the permit is issued. See the commentary to Section 105.7 for a general discussion of operations requiring a construction permit. The process also notifies the fire department of the need for prefire planning for the hazardous property.

3103.5 Use period. Temporary tents, air-supported, air-inflated or tensioned membrane structures shall not be erected for a period of more than 180 days within a 12-month period on a single premises.

❖ This section gives the fire code official control over the erection, maintenance and use of membrane structures by defining the term "Temporary" for the purpose of applying this chapter. Any membrane structure erected for more than 180 days in any 12-month period at a single location must be considered permanent and would be subject to all requirements for permanent structures as set forth in Section 3104 and the IBC. Note that the limiting factor is how long the structure is erected, not how many days it is in use, as was the case in older editions of the code. Without this level of specificity, a tent or membrane structure could literally remain erected indefinitely as long as it was not used for more than 180 days within any 12-month period, thus retaining its classification as a temporary structure while being, in effect, a permanent one.

3103.6 Construction documents. A detailed site and floor plan for tents or membrane structures with an *occupant load* of 50 or more shall be provided with each application for approval. The tent or membrane structure floor plan shall indicate details of the *means of egress* facilities, seating capacity, arrangement of the seating and location and type of heating and electrical equipment.

❖ The requirement for a floor plan showing means of egress facilities and seating locations eliminates possible conflicts at the time of field inspection. Evaluating means of egress for hastily arranged or movable seating is a challenge to the inspector. The detailed means-of-egress plan allows the inspector to verify that the actual configuration matches the approved plan. The applicant and designer also benefit by having the plans reviewed in detail before construction begins.

3103.7 Inspections. The entire tent, air-supported, air-inflated or tensioned membrane structure system shall be inspected at regular intervals, but not less than two times per permit use period, by the permittee, *owner* or agent to determine that the installation is maintained in accordance with this chapter.

Exception: Permit use periods of less than 30 days.

❖ The periodic inspections required here are conducted by the permit holder, the owner or his or her agent to make certain the structure continues to meet code requirements and is being properly maintained.

The exception states that structures used for less than 30 days do not need to be reinspected.

3103.7.1 Inspection report. Where required by the *fire code official*, an inspection report shall be provided and shall consist of maintenance, anchors and fabric inspections.

❖ This section allows the fire code official to require submittal of a complete inspection report, including completed maintenance work, for each finished inspection by the permit holder, owner or agent.

3103.8 Access, location and parking. Access, location and parking for temporary tents and membrane structures shall be in accordance with this section.

❖ This section addresses the issues of fire apparatus access, separation from vehicles and other structures and the need for fire breaks for tents and other membrane structures that are considered temporary in terms of the duration of their erection and use.

3103.8.1 Access. Fire apparatus access roads shall be provided in accordance with Section 503.

❖ The same access rules apply to membrane structures and structures erected using conventional construction materials. Because membrane structures can become serious fire hazards, depending on membrane material and structure contents, maintaining code-required fire access roads and lanes is especially important.

3103.8.2 Location. Tents or membrane structures shall not be located within 20 feet (6096 mm) of *lot lines*, buildings, other tents or membrane structures, parked vehicles or internal

INTERNATIONAL CODE COUNCIL®
Copyright © 2015 ICC. ALL RIGHTS RESERVED. Accessed by David Dammon on Jun 21, 2017 12:30:52 PM pursuant to License Agreement with ICC. No further reproduction or distribution authorized. ANY UNAUTHORIZED REPRODUCTION OR DISTRIBUTION IS A VIOLATION OF THE FEDERAL COPYRIGHT ACT AND THE LICENSE AGREEMENT, AND SUBJECT TO CIVIL AND CRIMINAL PENALTIES THEREUNDER.

combustion engines. For the purpose of determining required distances, support ropes and guy wires shall be considered as part of the temporary membrane structure or tent.

Exceptions:

1. Separation distance between membrane structures and tents not used for cooking is not required where the aggregate floor area does not exceed 15,000 square feet (1394 m^2).
2. Membrane structures or tents need not be separated from buildings when all of the following conditions are met:
   - 2.1. The aggregate floor area of the membrane structure or tent shall not exceed 10,000 square feet (929 m^2).
   - 2.2. The aggregate floor area of the building and membrane structure or tent shall not exceed the allowable floor area including increases as indicated in the *International Building Code*.
   - 2.3. Required *means of egress* are provided for both the building and the membrane structure or tent including travel distances.
   - 2.4. Fire apparatus access roads are provided in accordance with Section 503.

❖ The 20-foot (6096 mm) separation distance is consistent with requirements for conventional structures, especially those that could represent an above-average fire hazard. A fire of any size within a membrane structure would almost certainly involve the membrane itself. Because the support ropes and guy wires are under tension, particularly with large membrane structures, a membrane weakened by fire would fail, causing the ropes or wires to recoil and possibly pull portions of the burning membrane well clear of its original position. Requiring 20 feet (6096 mm) of clear ground around the structure helps reduce the likelihood that burning membrane sections and flying embers would endanger other structures or public trafficways.

Exception 1 acknowledges the reduced hazard of small membrane structures that do not house cooking appliances.

Exception 2 lists four criteria for determining whether a membrane structure must conform to the separation criteria of this section. To be exempt, the structure would have to meet all four criteria.

3103.8.3 Location of structures in excess of 15,000 square feet in area. Membrane structures having an area of 15,000 square feet (1394 m^2) or more shall be located not less than 50 feet (15 240 mm) from any other tent or structure as measured from the sidewall of the tent or membrane structure unless joined together by a corridor.

❖ The larger separation distance required by this section is consistent with the hazards presented by the larger structures. The exception for structures connected by corridors considers the smaller hazard posed by the covering of the corridor. Corridors are not likely to contain significant amounts of combustible materials other than the membrane itself.

3103.8.4 Membrane structures on buildings. Membrane structures that are erected on buildings, balconies, decks or other structures shall be regulated as permanent membrane structures in accordance with Section 3102 of the *International Building Code*.

❖ Temporary membrane structures that are placed in a field or parking lot are afforded several safety features, including fire separation distance from other hazards (buildings, vehicles) and separation from other tents, and provide an unobstructed means-of-egress path for the uniformly located exits. When a membrane structure is placed on a building or deck, Section 3103 does not regulate exiting from the temporary membrane structure to a set of stairs or door, nor does it regulate the hazards that could be below the temporary membrane structure. Section 3103 also does not contain requirements regulating the structural loads that the membrane structure would impose on the structure below. For these reasons, what would otherwise be considered as temporary membrane structures are regulated as permanent membrane structures and subject to the provisions of IBC Section 3102.

3103.8.5 Connecting corridors. Tents or membrane structures are allowed to be joined together by means of corridors. *Exit* doors shall be provided at each end of such corridor. On each side of such corridor and approximately opposite each other, there shall be provided openings not less than 12 feet (3658 mm) wide.

❖ Corridors connecting membrane structures to each other or to permanent structures must have openings in their side walls for convenient egress in case of an emergency. These openings could also be entry points for emergency response personnel.

3103.8.6 Fire break. An unobstructed fire break passageway or fire road not less than 12 feet (3658 mm) wide and free from guy ropes or other obstructions shall be maintained on all sides of all tents and membrane structures unless otherwise *approved* by the *fire code official*.

❖ This requirement for a clear path makes the membrane structures more accessible to emergency response personnel. It also results in an open space into which flaming embers or other debris can fall without endangering other structures or public trafficways. Measurement of the required width must be consistent with the provisions of Section 3103.8.2.

3103.9 Anchorage required. Tents or membrane structures and their appurtenances shall be adequately roped, braced and anchored to withstand the elements of weather and prevent against collapsing. Documentation of structural stability shall be furnished to the *fire code official* on request.

❖ Having secure anchorage to prevent damage or loss caused by wind or precipitation makes good economic sense. This section also gives the fire code

INTERNATIONAL CODE COUNCIL®
Copyright © 2015 ICC. ALL RIGHTS RESERVED. Accessed by David Dammon on Jun 21, 2017 12:30:52 PM pursuant to License Agreement with ICC. No further reproduction or distribution authorized. ANY UNAUTHORIZED REPRODUCTION OR DISTRIBUTION IS A VIOLATION OF THE FEDERAL COPYRIGHT ACT AND THE LICENSE AGREEMENT, AND SUBJECT TO CIVIL AND CRIMINAL PENALTIES THEREUNDER.

official the authority to review and approve both plans and actual installations to ensure that the structures have been designed and erected using good engineering practices.

3103.9.1 Tents and membrane structures exceeding one story. Tents and membrane structures exceeding one story shall be designed and constructed to comply with Chapter 16 of the *International Building Code*.

❖ In recent times, there has been an increasing number of multiple-story tents and membrane structures showing up in jurisdictions across the country. These structures can be seen at concerts, outdoor functions, fairs, etc. Many of these temporary tents and temporary membrane structures have multiple floors and are over 30 feet in height. As the height increases, the potential for collapse increases. Even though the provision of "temporary" limits the usability of these multistory structures to less than 180 days, improper structural design can pose a significant safety hazard to event patrons, performers and first responders.

Section 3103.9 requires that documentation of structural stability be furnished to the fire code official on request but provides no guidance on what an acceptable level of structural integrity is. Since these structures are temporary, they often do not go through a full building code structural analysis and review. This section closes that loophole by requiring that multistory tents and membrane structures be designed and constructed in accordance with IBC Chapter 16. This provides the fire code official with a solid tool to use to verify proper structural design. Most fire code officials, however, do not routinely review structural integrity. This is most commonly performed by the building code official. But the requirement for a construction permit is in Section 105.7.18 since this is a temporary structure. As such, enforcement of this requirement may take some coordination with the building official prior to the issuance of the IFC construction permit. Commentary Figures 3103.9.1(1) and 3103.9.1(2) illustrate a multistory membrane structure.

3103.10 Temporary air-supported and air-inflated membrane structures. Temporary air-supported and air-inflated membrane structures shall be in accordance with Sections 3103.10.1 through 3103.10.4.

❖ This section addresses air-supported and air-inflated membrane structures that are considered temporary in terms of the duration of their erection and use (see Section 3103.5 for the definition of "Temporary" as it applies to these structures). The intent of this section is that if air-supported or air-inflated membrane structures are used, they should be soundly designed so as not to present a hazard to their users, emergency responders or the public during the time they are in place.

3103.10.1 Door operation. During high winds exceeding 50 miles per hour (22 m/s) or in snow conditions, the use of doors in air-supported structures shall be controlled to avoid excessive air loss. Doors shall not be left open.

❖ Because the design pressure is critical in maintaining the structural integrity of an air-supported structure,



Figure 3103.9.1(1)
TWO-STORY MEMBRANE STRUCTURE AT THE AMERICA'S CUP RACE
(Photo courtesy of HTS-USA)

INTERNATIONAL CODE COUNCIL®
Copyright © 2015 ICC. ALL RIGHTS RESERVED. Accessed by David Dammon on Jun 21, 2017 12:30:52 PM pursuant to License Agreement with ICC. No further reproduction or distribution authorized. ANY UNAUTHORIZED REPRODUCTION OR DISTRIBUTION IS A VIOLATION OF THE FEDERAL COPYRIGHT ACT AND THE LICENSE AGREEMENT, AND SUBJECT TO CIVIL AND CRIMINAL PENALTIES THEREUNDER.

doors must not be kept open for extended periods. Controls on door usage help prevent excessive losses of internal pressure. When large openings are necessary, such as for vehicular traffic, vestibules help avoid excessive pressure loss.

3103.10.2 Fabric envelope design and construction. Air-supported and air-inflated structures shall have the design and construction of the fabric envelope and the method of anchoring in accordance with Architectural Fabric Structures Institute ASI 77.

❖ The referenced document is both a design manual that contains the engineering formulas needed to calculate stresses and other parameters associated with structural stability and a design standard for air-supported structures.

3103.10.3 Blowers. An air-supported structure used as a place of assembly shall be furnished with not less than two blowers, each of which has adequate capacity to maintain full inflation pressure with normal leakage. The design of the blower shall be so as to provide integral limiting pressure at the design pressure specified by the manufacturer.

❖ Requiring two blowers that have the capacity to keep the structure fully inflated builds redundancy into the system. Should one blower fail, the other would be capable of maintaining full inflation while the failed unit was repaired or replaced. The pressure-limiting device is required to prevent overpressurizing the structure and thus causing failure.

3103.10.4 Auxiliary inflation systems. Places of public assembly for more than 200 persons shall be furnished with an auxiliary inflation system capable of powering a blower with the capacity to maintain full inflation pressure with normal leakage in accordance with Section 3103.10.3 for a minimum duration of 4 hours. The auxiliary inflation system shall be either a fully automatic auxiliary engine-generator set or a supplementary blower powered by an internal combustion engine that shall be automatic in operation. The system shall be capable of automatically operating the required blowers at full power within 60 seconds of a commercial power failure.

❖ Because an air-supported structure must be maintained at full design pressure, a power failure that would disable all of the blowers used to maintain that pressure would result in a gradual collapse of the structure as pressure drops as a result of normal leakage. Having an auxiliary power source on site is intended to prevent this situation. This section allows either an auxiliary generator that will supply power to the blowers or a self-contained supplementary blower unit that has an internal combustion engine to drive it.

3103.11 Seating arrangements. Seating in tents or membrane structures shall be in accordance with Chapter 10.

❖ See the commentary to Section 3104.14.

3103.12 Means of egress. *Means of egress* for temporary tents and membrane structures shall be in accordance with Sections 3103.12.1 through 3103.12.8.

❖ Because of the unique nature of the structures regulated by this chapter, it is vital that their means of egress systems be carefully designed and constructed. This section regulates the access to, number, location, marking and illumination of the means of egress for temporary membrane structures.



Figure 3103.9.1(2)
INTERIOR OF TWO-STORY MEMBRANE STRUCTURE
(Photo courtesy of Losberger-USA)

INTERNATIONAL CODE COUNCIL®
Copyright © 2015 ICC. ALL RIGHTS RESERVED. Accessed by David Dammon on Jun 21, 2017 12:30:52 PM pursuant to License Agreement with ICC. No further reproduction or distribution authorized. ANY UNAUTHORIZED REPRODUCTION OR DISTRIBUTION IS A VIOLATION OF THE FEDERAL COPYRIGHT ACT AND THE LICENSE AGREEMENT, AND SUBJECT TO CIVIL AND CRIMINAL PENALTIES THEREUNDER.

3103.12.1 Distribution. *Exits* shall be spaced at approximately equal intervals around the perimeter of the tent or membrane structure, and shall be located such that all points are 100 feet (30 480 mm) or less from an *exit.*

❖ The requirement for exits to be equally spaced around the perimeter of the membrane structure considers the probability that any one structure could be used for several different purposes over its life and that each use could represent a different seating arrangement. Because travel distances to an exit must not exceed 100 feet (30 480 mm), exits must be located to minimize travel distances no matter how the seating is arranged.

3103.12.2 Number. Tents, or membrane structures or a usable portion thereof shall have not less than one *exit* and not less than the number of *exits* required by Table 3103.12.2. The total width of *means of egress* in inches (mm) shall be not less than the total *occupant load* served by a *means of egress* multiplied by 0.2 inches (5 mm) per person.

❖ This section specifies the use of the exit requirements contained in Table 3103.12.2 to determine the number and size of exits for all membrane structures. The formula given in the last sentence of the section allows for the calculation of total exit requirements for any given number of occupants.

TABLE 3103.12.2. See below.

❖ The minimum means of egress widths shown in this table were established on two very different bases. For tents, the widths are possibly conservative because so many in the fire service remember the Ringling Bros. and Barnum & Bailey Circus tent fire that happened in Hartford, Connecticut, in July 1944. In that fire, 167 people died and 487 were injured because they were unable to escape from the burning tent. Also, because the side panels of a tent can be constructed to varying widths without too much difficulty, the wider openings are practical.

On the other hand, means-of-egress widths required for air-supported structures seem to be much more optimistic. The narrower means-of-egress widths are necessary to prevent excess loss of internal air pressure in the air-supported structure and can be linked to the exit requirements in ASI 77. Excessive inflation pressure losses could lead to the collapse of the structure onto the very occupants the exits are serving.

3103.12.3 Exit openings from tents. *Exit* openings from tents shall remain open unless covered by a flame-resistant curtain. The curtain shall comply with the following requirements:

1. Curtains shall be free sliding on a metal support. The support shall be not less than 80 inches (2032 mm) above the floor level at the *exit*. The curtains shall be so arranged that, when open, no part of the curtain obstructs the *exit*.
2. Curtains shall be of a color, or colors, that contrasts with the color of the tent.

❖ The requirement for exit openings to remain free and clear is meant to ensure that the exit is not blocked or hidden from the view of the occupants attempting to exit. Allowing the opening to be covered by an easily moveable curtain is meant to add to the comfort of occupants by protecting them from wind, precipitation and temperature extremes. The requirement for the curtains to be of a contrasting color makes the exits readily identifiable even at a distance.

3103.12.4 Doors. *Exit* doors shall swing in the direction of *exit* travel. To avoid hazardous air and pressure loss in air-supported membrane structures, such doors shall be automatic closing against operating pressures. Opening force at the door edge shall not exceed 15 pounds (66 N).

❖ Pressure loss in an air-supported structure is always a concern. The requirement that the door be capable of closing automatically against the internal pressure supporting the membrane structure is intended to protect against this kind of loss. The 15-pound (66 N) force required for opening acknowledges that the door must be held closed against the interior air pressure. This level of opening force is, however, consistent with the requirements of the IBC for exterior doors in conventional buildings.

TABLE 3103.12.2
MINIMUM NUMBER OF MEANS OF EGRESS AND MEANS OF EGRESS WIDTHS FROM TEMPORARY MEMBRANE STRUCTURES AND TENTS

OCCUPANT LOAD	MINIMUM NUMBER OF MEANS OF EGRESS	MINIMUM WIDTH OF EACH MEANS OF EGRESS (inches)	MINIMUM WIDTH OF EACH MEANS OF EGRESS (inches)
		Tent	Membrane Structure
10 to 199	2	72	36
200 to 499	3	72	72
500 to 999	4	96	72
1,000 to 1,999	5	120	96
2,000 to 2,999	6	120	96
Over 3,000[a]	7	120	96

For SI: 1 inch = 25.4 mm.

a. When the occupant load exceeds 3,000, the total width of means of egress (in inches) shall be not less than the total occupant load multiplied by 0.2 inches per person.

INTERNATIONAL CODE COUNCIL®
Copyright © 2015 ICC. ALL RIGHTS RESERVED. Accessed by David Dammon on Jun 21, 2017 12:30:52 PM pursuant to License Agreement with ICC. No further reproduction or distribution authorized. ANY UNAUTHORIZED REPRODUCTION OR DISTRIBUTION IS A VIOLATION OF THE FEDERAL COPYRIGHT ACT AND THE LICENSE AGREEMENT, AND SUBJECT TO CIVIL AND CRIMINAL PENALTIES THEREUNDER.

3103.12.5 Aisle. The width of *aisles* without fixed seating shall be in accordance with the following:

1. In areas serving employees only, the minimum *aisle* width shall be 24 inches (610 mm) but not less than the width required by the number of employees served.
2. In public areas, smooth-surfaced, unobstructed *aisles* having a minimum width of not less than 44 inches (1118 mm) shall be provided from seating areas, and *aisles* shall be progressively increased in width to provide, at all points, not less than 1 foot (305 mm) of *aisle* width for each 50 persons served by such *aisle* at that point.

❖ The first requirement for areas serving only employees is indefinite because the configuration of the area could vary widely from one use to another. Required width beyond 24 inches (610 mm) would have to be determined based on seating arrangements, if any, and traffic patterns in the affected area. Guidance for assembly areas of fixed conventional structures is given in Chapter 10 of the code as well as in Chapter 10 of the IBC. The judgment of the fire code official would also have to be considered in the final decision.

The second requirement is quite specific for public-use areas. The wide aisles are intended to make egress quicker and easier because a fire in an air-supported structure could easily burn through the membrane covering and cause the structure to collapse on the occupants.

3103.12.5.1 Arrangement and maintenance. The arrangement of *aisles* shall be subject to approval by the *fire code official* and shall be maintained clear at all times during occupancy.

❖ This section gives the fire code official the authority to approve seating arrangements in air-supported structures and to inspect those arrangements periodically to verify that they have not been changed to an unacceptable configuration or that they have become obstructed or their use otherwise compromised. This is consistent with Section 1030.2.

3103.12.6 Exit signs. *Exits* shall be clearly marked. *Exit* signs shall be installed at required *exit* doorways and where otherwise necessary to indicate clearly the direction of egress where the *exit* serves an *occupant load* of 50 or more.

❖ This charging statement establishes the requirement for exit signs. See the commentary to Section 1011.2 for further discussion of exit sign requirements.

3103.12.6.1 Exit sign illumination. *Exit* signs shall be either *listed* and *labeled* in accordance with UL 924 as the internally illuminated type and used in accordance with the listing or shall be externally illuminated by luminaires supplied in either of the following manners:

1. Two separate circuits, one of which shall be separate from all other circuits, for *occupant loads* of 300 or less.
2. Two separate sources of power, one of which shall be an *approved* emergency system, shall be provided where the *occupant load* exceeds 300. Emergency systems shall be supplied from storage batteries or from the on-site generator set, and the system shall be installed in accordance with NFPA 70. The emergency system provided shall have a minimum duration of 90 minutes when operated at full design demand.

❖ Because there is always the possibility of power failure in a fire or other emergency, exit signs must have a power source—batteries, backup power or auxiliary power—that will keep them illuminated if the primary power source to the structure's lighting system fails. The requirement for this power source is established in Section 604.2.3 and is further defined in Section 1011.6.3. This section also provides correlation with Section 1011.4 since internally illuminated exit signs listed in accordance with UL 924, including electrically powered, self-luminous and photoluminescent types, all provide for a minimum of 90 minutes of luminosity upon loss of normal power.

3103.12.7 Means of egress illumination. *Means of egress* shall be illuminated with light having an intensity of not less than 1 footcandle (11 lux) at floor level while the structure is occupied. Fixtures required for *means of egress* illumination shall be supplied from a separate circuit or source of power.

❖ All means of egress must be continuously illuminated by artificial lighting during the entire time the air-supported structure is occupied so that the paths of exit travel are always visible and available for evacuation of the occupants during emergencies. The code makes a special point of noting that the exit discharge must also be provided with adequate illumination so that occupants can safely find the public way should the emergency occur at night.

The intensity of floor lighting illuminating the entire means of egress, including open-plan spaces, aisles, corridors, exit access passageways and exit doors, must not be less than 1 foot candle (11 lux). It has been found that this low level of lighting renders enough visibility for the occupants to evacuate the building safely. This lighting level is measured at the floor to make the floor surface visible. Levels of illumination above the floor may be higher or lower.

The means of egress must be illuminated, especially in times of emergency when the occupants must have a lighted path of exit travel to evacuate the building safely.

So that there will be a continuing source of electrical energy for lighting the means of egress when the main power supply is lost, the means-of-egress lighting system must be connected to an emergency electrical system that consists of storage batteries, unit equipment or an on-site generator. This emergency power-generating facility must be capable of supplying electricity for at least 90 minutes, thereby giving the occupants sufficient time to leave the premises. In most cases, where the loss of the main electrical supply is attributed to a malfunction in the distribution system of the electric power company, experience

INTERNATIONAL CODE COUNCIL®
Copyright © 2015 ICC. ALL RIGHTS RESERVED. Accessed by David Dammon on Jun 21, 2017 12:30:52 PM pursuant to License Agreement with ICC. No further reproduction or distribution authorized. ANY UNAUTHORIZED REPRODUCTION OR DISTRIBUTION IS A VIOLATION OF THE FEDERAL COPYRIGHT ACT AND THE LICENSE AGREEMENT, AND SUBJECT TO CIVIL AND CRIMINAL PENALTIES THEREUNDER.

has shown that such power outages do not usually last as long as 90 minutes.

3103.12.8 Maintenance of means of egress. The required width of *exits*, *aisles* and passageways shall be maintained at all times to a *public way*. Guy wires, guy ropes and other support members shall not cross a *means of egress* at a height of less than 8 feet (2438 mm). The surface of *means of egress* shall be maintained in an *approved* manner.

❖ It is important for occupant safety that the pathway from any point in the building to the exit discharge be kept clear so that occupants can exit the structure at any time without obstructions in the egress path. This requirement applies to all structures, but it is especially important for membrane structures and tents because of the added hazards that they present. The structural stability of tents relies on ropes or cables and stakes which, if not carefully arranged, can become an impediment to occupant egress flow. A clearly defined and well-lighted egress path without any rope or guy wire vertical or horizontal impingement is essential for these types of structures.

As the pace of exit travel becomes hurried during emergency situations, the probability of slipping on smooth or slick surfaces increases. To minimize the hazard in buildings, floor surfaces in the means of egress are required to be slip resistant by Section 1003.4. However, in tents and membrane structures, the structure "floor" may very well be dirt, gravel, grass or other nontraditional surfaces that defy traditional regulation. The fire code official must apply common sense in reviewing egress path surfaces, applying safety criteria for them and then requiring that the required conditions be maintained throughout the occupancy of the structure.

SECTION 3104
TEMPORARY AND PERMANENT TENTS AND MEMBRANE STRUCTURES

3104.1 General. Tents and membrane structures, both temporary and permanent, shall be in accordance with this section. Permanent tents and membrane structures shall also comply with the *International Building Code*.

❖ This section addresses tents and membrane structures that are considered either temporary or permanent in terms of the duration of their erection and use (see Section 3103.5 for the definition of "Temporary" and, by default, "Permanent" as they apply to membrane structures). This section is intended to ensure that if a tent or other membrane structure is used, it will be soundly designed so as not to present a hazard to its users, emergency personnel or the public during the time it is in place, whether that is more or less than 180 days per calendar year.

3104.2 Flame propagation performance treatment. Before a permit is granted, the *owner* or agent shall file with the *fire code official* a certificate executed by an *approved* testing laboratory certifying that the tents and membrane structures and their appurtenances; sidewalls, drops and tarpaulins; floor coverings, bunting and combustible decorative materials and effects, including sawdust where used on floors or passageways, are composed of material meeting the flame propagation performance criteria of Test Method 1 or Test Method 2, as appropriate, of NFPA 701 or shall be treated with a flame retardant in an *approved* manner and meet the flame propagation performance criteria of Test Method 1 or Test Method 2, as appropriate, of NFPA 701, and that such flame propagation performance criteria are effective for the period specified by the permit.

❖ The reference to NFPA 701 in this section is consistent with the requirements of IBC Section 3102 for structural materials, IBC Sections 802 and 806 and Section 807 of the code for decorative materials. Making certain the structure and as much of its contents as possible are either noncombustible or are treated to make them less prone to flame propagation is an important first step in fire safety. This section also gives the fire code official the authority to inspect the facility, its contents and documentation of applied flame-retardant treatment to ensure permit requirements have been met.

3104.3 Label. Membrane structures or tents shall have a permanently affixed label bearing the identification of size and fabric or material type.

❖ This required label gives the fire code official important information about the membrane and the designed size of the structure. This information will help him or her determine whether the structure and its covering meet code requirements.

3104.4 Certification. An affidavit or affirmation shall be submitted to the *fire code official* and a copy retained on the premises on which the tent or air-supported structure is located. The affidavit shall attest to all of the following information relative to the flame propagation performance criteria of the fabric:

1. Names and address of the *owners* of the tent or air-supported structure.
2. Date the fabric was last treated with flame-retardant solution.
3. Trade name or kind of chemical used in treatment.
4. Name of person or firm treating the material.
5. Name of testing agency and test standard by which the fabric was tested.

❖ The certificate is another piece of information the fire code official must have to make a decision on code compliance. The certificate will indicate whether the membrane fabric needs retreatment and at what frequency to maintain its low flame propagation properties.

3104.5 Combustible materials. Hay, straw, shavings or similar combustible materials shall not be located within any tent or membrane structure containing an assembly occupancy, except the materials necessary for the daily feeding and care of animals. Sawdust and shavings utilized for a public performance or exhibit shall not be prohibited provided the sawdust

INTERNATIONAL CODE COUNCIL®
Copyright © 2015 ICC. ALL RIGHTS RESERVED. Accessed by David Dammon on Jun 21, 2017 12:30:52 PM pursuant to License Agreement with ICC. No further reproduction or distribution authorized. ANY UNAUTHORIZED REPRODUCTION OR DISTRIBUTION IS A VIOLATION OF THE FEDERAL COPYRIGHT ACT AND THE LICENSE AGREEMENT, AND SUBJECT TO CIVIL AND CRIMINAL PENALTIES THEREUNDER.

and shavings are kept damp. Combustible materials shall not be permitted under stands or seats at any time.

❖ This section contains a "laundry list" of unacceptable practices. Hay, straw, shavings and sawdust are all readily ignitable materials. Minimizing their use is important to fire safety. A carelessly discarded match or other smoking material could easily cause any of these materials to catch fire.

Requiring finely divided combustible materials, such as sawdust and shavings, to be maintained damp significantly reduces their ignition potential.

Keeping areas under seating areas free of readily ignitable combustible materials removes a significant fire hazard from these areas of high-occupant density.

3104.6 Smoking. Smoking shall not be permitted in tents or membrane structures. *Approved* "No Smoking" signs shall be conspicuously posted in accordance with Section 310.

❖ Because smoking is prohibited in membrane structures, the requirement for posting signage is obvious. Because no specification exists for standard signs, each jurisdiction having authority is responsible for establishing its own criteria. To be approved, signs must be large enough to be read from a distance and be worded simply and clearly.

3104.7 Open or exposed flame. Open flame or other devices emitting flame, fire or heat or any flammable or *combustible liquids*, gas, charcoal or other cooking device or any other unapproved devices shall not be permitted inside or located within 20 feet (6096 mm) of the tent or membrane structures while open to the public unless *approved* by the *fire code official*.

❖ This section gives the fire code official the authority to approve an open-flame or exposed-flame appliance if it is determined that it poses a minimal fire hazard when properly used. These might include catalytic heaters that are located well away from the membrane walls, and any combustible materials or limited cooking facilities using charcoal or liquiefied petroleum gas (LP gas) for fuel and located under a tent or membrane structure. Such approvals, however, would be subject to the provisions of Section 308.

3104.8 Fireworks. Fireworks shall not be used within 100 feet (30 480 mm) of tents or membrane structures.

❖ Fireworks, whether designed to explode at ground level or as aerial displays, result in hot embers that could become a source of ignition if they contact the membrane of the structure. Establishing a 100-foot (30 480 mm) clear zone not only reduces the likelihood of hot embers contacting the membrane but also gives air-borne embers time to cool before they can reach membrane level.

3104.9 Spot lighting. Spot or effect lighting shall only be by electricity, and all combustible construction located within 6 feet (1829 mm) of such equipment shall be protected with *approved* noncombustible insulation not less than $9^1/_4$ inches (235 mm) thick.

❖ Spotlights can generate considerable heat. The metal housings of these lights generally become too hot to touch if they are on for more than a minute or two. Requiring that they be positioned well away from combustible materials and that the nearby combustibles be insulated helps ensure that the heat from the lights does not become an ignition source for either the membrane structure or combustibles inside the structure. Noncombustible insulation must conform to the requirements of IBC Section 720.

3104.10 Safety film. Motion pictures shall not be displayed in tents or membrane structures unless the motion picture film is safety film.

❖ The display of motion pictures on cellulose nitrate film is prohibited because of the extreme hazards associated with this type of material; however, such motion pictures are extremely rare because production of the raw film was suspended in 1951. Most known motion pictures printed on cellulose nitrate film are in the possession of special film repositories, such as the National Archives and the Smithsonian Institution, or are being restored by conservators.

3104.11 Clearance. There shall be a minimum clearance of at least 3 feet (914 mm) between the fabric envelope and all contents located inside membrane structures.

❖ The 3-foot (914 mm) clearance is intended not only to give fire fighters all-sides hose stream and overhaul access to burning materials, but also to reduce exposure of the membrane envelope if stored material becomes involved in a fire.

3104.12 Portable fire extinguishers. Portable fire extinguishers shall be provided as required by Section 906.

❖ Section 906 states that portable extinguishers are required in Group A occupancies and in special-hazards areas as designated by the fire code official. This section also refers to NFPA 10 for guidance on selection and placement of the extinguishers. Employees and staff who will be manning the membrane structure must be trained to use the extinguishers because they are likely to become the first line of emergency response in case of a fire.

3104.13 Fire protection equipment. Fire hose lines, water supplies and other auxiliary fire equipment shall be maintained at the site in such numbers and sizes as required by the *fire code official*.

❖ This section gives the fire code official the authority to establish reasonable equipment requirements for membrane structures. Because the size, construction and intended use of membrane structures vary so widely, each installation must be evaluated individually.

INTERNATIONAL CODE COUNCIL®
Copyright © 2015 ICC. ALL RIGHTS RESERVED. Accessed by David Dammon on Jun 21, 2017 12:30:52 PM pursuant to License Agreement with ICC. No further reproduction or distribution authorized. ANY UNAUTHORIZED REPRODUCTION OR DISTRIBUTION IS A VIOLATION OF THE FEDERAL COPYRIGHT ACT AND THE LICENSE AGREEMENT, AND SUBJECT TO CIVIL AND CRIMINAL PENALTIES THEREUNDER.

3104.14 Occupant load factors. The *occupant load* allowed in an assembly structure, or portion thereof, shall be determined in accordance with Chapter 10.

❖ This reference to Chapter 10 tells us that a membrane structure used as a place of assembly is treated in the same way that a permanent structure would be. The same means-of-egress requirements apply whether the structure is conventional construction or a membrane structure.

3104.15 Heating and cooking equipment. Heating and cooking equipment shall be in accordance with Sections 3104.15.1 through 3104.15.7.

❖ Because of the unique nature of the structures regulated by this chapter, it is vital that ignition sources be carefully regulated. This section regulates the dual hazards of heat-producing appliances and cooking equipment in membrane structures.

3104.15.1 Installation. Heating or cooking equipment, tanks, piping, hoses, fittings, valves, tubing and other related components shall be installed as specified in the *International Mechanical Code* and the *International Fuel Gas Code,* and shall be *approved* by the *fire code official*.

❖ This section refers to the cooking equipment installation requirements contained in the *International Fuel Gas Code*® (IFGC®) and *International Mechanical Code*® (IMC®), and gives the fire code official the authority to inspect and approve completed installations. Because of the special hazards that exist in membrane structures of all kinds, the importance of proper installation cannot be stressed enough.

Another issue with respect to this section is the question of whether cooking that produces grease-laden vapors is allowed inside of a tent or membrane structure without requiring the ventilation and fire suppression systems normally required for commercial cooking operations by Sections 609 and 904.2.1 and the referenced standards. Literally speaking, there is nothing in Chapter 31 that would specifically exempt cooking operations in any tent or membrane structure (whether or not it is open to the public) from the ventilation or fire suppression system requirements of the code or IMC for commercial cooking appliances that produce grease or smoke. The provisions of Section 3104.15 are equally applicable to all tents, canopies or membrane structures in which cooking is conducted.

It should be noted, however, that a key element in the use of a tent or membrane structure for commercial cooking and the application of ventilation and cooking fire suppression requirements is the evaluation and approval of the fire code official. Temporary facilities such as tents or membrane structures present a unique circumstance in which the strict application of code requirements to what is, in all likelihood, a temporary operation may not be practical or desirable. When applying the provisions of Section 104.8, the judicious review and application of the code to these circumstances should focus on the scope, nature and duration of the hazards created by the cooking operation and how best to mitigate them in a manner acceptable to all parties concerned while maintaining public safety. Consistent with Section 3104.7, in conducting such an evaluation, special attention should be paid to cooking operations using charcoal or other solid fuels due to the potential for sparks or flying embers coming into contact with membrane materials.

3104.15.2 Venting. Gas, liquid and solid fuel-burning equipment designed to be vented shall be vented to the outside air as specified in the *International Fuel Gas Code* and the *International Mechanical Code*. Such vents shall be equipped with *approved* spark arresters where required. Where vents or flues are used, all portions of the tent or membrane structure shall be not less than 12 inches (305 mm) from the flue or vent.

❖ As with the installation requirements in Section 3104.15.1, venting must comply with the applicable provisions of the IFGC and IMC, and be approved by the fire code official. The 12-inch (305 mm) separation between the vent or flue stack and the membrane fabric and support structures is intended to prevent heating of those elements to possible points of ignition.

3104.15.3 Location. Cooking and heating equipment shall not be located within 10 feet (3048 mm) of *exits* or combustible materials.

❖ This location requirement is intended to help make certain that equipment items would not be likely to block a means of egress during a fire or other emergency. Equipment locations would be subject to the approval of the fire code official in all cases.

3104.15.4 Operations. Operations such as warming of foods, cooking demonstrations and similar operations that use solid flammables, butane or other similar devices that do not pose an ignition hazard, shall be *approved*.

❖ This section authorizes the listed operations, but at the same time authorizes the fire code official to make certain the operations meet the requirements of the other subsections within this section.

3104.15.5 Cooking tents. Tents with sidewalls or drops where cooking is performed shall be separated from other tents or membrane structures by not less than 20 feet (6096 mm).

❖ This separation requirement is consistent with the overall requirement covering open or exposed flames that is contained in Section 3104.7. The 20-foot (6096 mm) separation provides protection from hot embers from a fire reaching the main membrane structure. The requirements for keeping the open area free of combustible materials or debris that could limit access to emergency response personnel also apply.

INTERNATIONAL CODE COUNCIL®
Copyright © 2015 ICC. ALL RIGHTS RESERVED. Accessed by David Dammon on Jun 21, 2017 12:30:52 PM pursuant to License Agreement with ICC. No further reproduction or distribution authorized. ANY UNAUTHORIZED REPRODUCTION OR DISTRIBUTION IS A VIOLATION OF THE FEDERAL COPYRIGHT ACT AND THE LICENSE AGREEMENT, AND SUBJECT TO CIVIL AND CRIMINAL PENALTIES THEREUNDER.

3104.15.6 Outdoor cooking. Outdoor cooking that produces sparks or grease-laden vapors shall not be performed within 20 feet (6096 mm) of a tent or membrane structure.

❖ As with cooking in tents, the 20-foot (6096 mm) separation is intended to separate this potential source of ignition from the membrane structure. Requirements for keeping the open area free of combustible materials or other debris that could hinder emergency response efforts also apply.

3104.15.7 Electrical heating and cooking equipment. Electrical cooking and heating equipment shall comply with NFPA 70.

❖ This reference to NFPA 70 establishes the requirements for the equipment and its installation.

3104.16 LP-gas. The storage, handling and use of LP-gas and LP-gas equipment shall be in accordance with Sections 3104.16.1 through 3104.16.3.

❖ Because of the unique nature of the structures regulated by this chapter, it is vital that the storage, handling and use of hazardous materials in or around such structures be carefully regulated. In general, Chapter 61 regulates LP-gas. This section specifically regulates its storage, handling and use in connection with membrane structures.

3104.16.1 General. LP-gas equipment such as tanks, piping, hoses, fittings, valves, tubing and other related components shall be *approved* and in accordance with Chapter 61 and with the *International Fuel Gas Code*.

❖ The requirements stated in this section mean that LP-gas containers and all associated equipment used in or around membrane structures of any kind will be inspected and must meet basically the same requirements as similar installations and equipment in conventional structures.

3104.16.2 Location of containers. LP-gas containers shall be located outside. Safety release valves shall be pointed away from the tent or membrane structure.

❖ Containers must be located outdoors to prevent vapors from safety-release valves, inadvertent spills during filling or from any other source from accumulating inside the membrane structure to flammable levels. Requiring the safety-release valves to be pointed away from the structure also helps to ensure that vapors do not infiltrate the structure.

3104.16.2.1 Containers 500 gallons or less. Portable LP-gas containers with a capacity of 500 gallons (1893 L) or less shall have a minimum separation between the container and structure not less than 10 feet (3048 mm).

❖ The 10-foot (3048 mm) separation distance is consistent with the requirements of Table 6104.3. See the commentary to Section 6104.3 and Table 6104.3 for further discussion.

3104.16.2.2 Containers more than 500 gallons. Portable LP-gas containers with a capacity of more than 500 gallons (1893 L) shall have a minimum separation between the container and structures not less than 25 feet (7620 mm).

❖ The 25-foot (7620 mm) separation distance is consistent with the requirements of Table 6104.3. See the commentary to Section 6104.3 and Table 6104.3 for further discussion.

3104.16.3 Protection and security. Portable LP-gas containers, piping, valves and fittings that are located outside and are being used to fuel equipment inside a tent or membrane structure shall be adequately protected to prevent tampering, damage by vehicles or other hazards and shall be located in an *approved* location. Portable LP-gas containers shall be securely fastened in place to prevent unauthorized movement.

❖ LP-gas containers and associated equipment must be protected from impact by vehicles or other objects that could cause damage and leakage. They must also be protected from tampering, vandalism and theft. See Sections 312 and 6107 for additional guidance on protection and security.

3104.17 Flammable and combustible liquids. The storage of flammable and *combustible liquids* and the use of flammable-liquid-fueled equipment shall be in accordance with Sections 3104.17.1 through 3104.17.3.

❖ Because of the unique nature of the structures regulated by this chapter, it is vital that the storage, handling and use of hazardous materials in or around such structures be carefully regulated. In general, Chapter 57 regulates flammable and combustible liquids. This section specifically regulates their storage, handling and use in connection with membrane structures.

3104.17.1 Use. Flammable-liquid-fueled equipment shall not be used in tents or membrane structures.

❖ Equipment of any kind that uses a flammable liquid for fuel must not be used inside a membrane structure because of the possibility of fuel leakage as well as the risk of accumulation of noxious exhaust fumes. Fluid leaks could vaporize and reach a flammable concentration. Exhaust fumes normally contain carbon monoxide and other gases that are harmful to occupants. Membrane structures, particularly air-supported and air-inflated structures, are not ventilated to the same extent that conventional structures are. Harmful vapors and fumes, therefore, are not diluted or dispersed as quickly or as efficiently as they are in those structures.

3104.17.2 Flammable and combustible liquid storage. Flammable and *combustible liquids* shall be stored outside in an *approved* manner not less than 50 feet (15 240 mm) from tents or membrane structures. Storage shall be in accordance with Chapter 57.

❖ This section provides a general separation requirement for containers used to store flammable or combustible liquids. The more detailed requirements are contained in Chapter 57 and depend, for the most

INTERNATIONAL CODE COUNCIL®
Copyright © 2015 ICC. ALL RIGHTS RESERVED. Accessed by David Dammon on Jun 21, 2017 12:30:52 PM pursuant to License Agreement with ICC. No further reproduction or distribution authorized. ANY UNAUTHORIZED REPRODUCTION OR DISTRIBUTION IS A VIOLATION OF THE FEDERAL COPYRIGHT ACT AND THE LICENSE AGREEMENT, AND SUBJECT TO CIVIL AND CRIMINAL PENALTIES THEREUNDER.

part, on whether the liquid is Class I, II or III and the quantity of the liquid being stored. Storage arrangements must comply with Chapter 57 requirements. They should, however, be discussed in advance with the fire code official to make certain all affected parties are in agreement.

3104.17.3 Refueling. Refueling shall be performed in an *approved* location not less than 20 feet (6096 mm) from tents or membrane structures.

❖ This section gives only a general guideline for location of a refueling station and gives the fire code official the authority to approve the selected location. When planning a station of this kind, the requirements of Chapter 57 must be considered. Some of the requirements of Sections 2304, 2305 and 2306 might also apply if vehicles are being refueled.

3104.18 Display of motor vehicles. Liquid- and gas-fueled vehicles and equipment used for display within tents or membrane structures shall be in accordance with Sections 3104.18.1 through 3104.18.5.3.

❖ This statement is an introduction to the subsections that follow. It contains only the kinds of structures, vehicles and equipment covered by the overall section. The provisions of these sections are similar to Section 314 on indoor displays.

3104.18.1 Batteries. Batteries shall be disconnected in an appropriate manner.

❖ Requiring that batteries be disconnected serves two purposes. First, it prevents unauthorized persons from starting and running engines that exhaust noxious fumes. Second, it removes a potential ignition source from the site by opening the battery-powered electrical circuit, thereby removing the possibility that the circuit could give off a stray spark. Equipment/vehicle manufacturers will, in all likelihood, have a recommended procedure in their owner's manuals for disconnecting batteries safely. The fire code official would also want to make sure the procedures used present no hazards.

3104.18.2 Fuel. Vehicles or equipment shall not be fueled or defueled within the tent or membrane structure.

❖ This section requires that all equipment and vehicle fueling must be conducted outdoors to avoid the accumulation of ignitable vapors within the membrane structure.

3104.18.2.1 Quantity limit. Fuel in the fuel tank shall not exceed one-quarter of the tank capacity or 5 gallons (19 L), whichever is less.

❖ Vehicles and equipment on display are allowed only a limited quantity of fuel in their tanks. Full fuel tanks could leak if temperatures reach a level that would cause the contained fuel to expand beyond the capacity of the tank. This kind of liquid spill would evaporate with the potential for enough flammable vapor to accumulate to reach a flammable level. Full tanks also leave very little room for vapors given off by the contained fuel. Practically all fuel tanks have some kind of pressure-release valve built in to prevent overpressurization of the tank. Leaving three quarters of the tank empty allows space for moderate quantities of vapor to accumulate without being released to the building atmosphere.

3104.18.2.2 Inspection. Fuel systems shall be inspected for leaks.

❖ This statement places an inspection requirement on the party displaying the vehicles or equipment. The requirement should be looked at as being a routine housekeeping chore. The statement also gives the fire code official the authority to inspect the facility to achieve compliance with code requirements.

3104.18.2.3 Closure. Fuel tank openings shall be locked and sealed to prevent the escape of vapors.

❖ Locking and sealing fuel tank openings not only prevents vapors from escaping from the tanks, but will also deter malicious mischief that could result in a fire by denying access to a fuel source. Locking and sealing the fill pipe also deters vandalism to the vehicle that could occur by placing foreign objects or substances into the fuel tank.

3104.18.3 Location. The location of vehicles or equipment shall not obstruct *means of egress*.

❖ If the structure is occupied, blocking a means of egress would interfere with orderly evacuation of the space. Whether the structure is occupied or not, blocking a means of egress could interfere with access for emergency response personnel.

3104.18.4 Places of assembly. When a compressed natural gas (CNG) or liquefied petroleum gas (LP-gas) powered vehicle is parked inside a place of assembly, all the following conditions shall be met:

1. The quarter-turn shutoff valve or other shutoff valve on the outlet of the CNG or LP-gas container shall be closed and the engine shall be operated until it stops. Valves shall remain closed while the vehicle is indoors.
2. The hot lead of the battery shall be disconnected.
3. Dual-fuel vehicles equipped to operate on gasoline and CNG or LP-gas shall comply with this section and Sections 3104.18.1 through 3104.18.5.3 for gasoline-powered vehicles.

❖ The three requirements given in this section are applicable to vehicles powered by compressed natural gas (CNG) or LP-gas, but they are consistent with the requirements for gasoline-fueled vehicles given elsewhere in the code.

The first requirement is intended to prevent vapor buildup in confined spaces, such as inside an engine compartment. Fuel left standing in a warm engine will "cook off" (vaporize) after the engine is turned off. Requiring the engine to be left running after the supply valve is closed means that all fuel left in the engine will be burned off through internal combustion, leaving the engine relatively free of fuel that could vaporize.

INTERNATIONAL CODE COUNCIL®
Copyright © 2015 ICC. ALL RIGHTS RESERVED. Accessed by David Dammon on Jun 21, 2017 12:30:52 PM pursuant to License Agreement with ICC. No further reproduction or distribution authorized. ANY UNAUTHORIZED REPRODUCTION OR DISTRIBUTION IS A VIOLATION OF THE FEDERAL COPYRIGHT ACT AND THE LICENSE AGREEMENT, AND SUBJECT TO CIVIL AND CRIMINAL PENALTIES THEREUNDER.

The second requirement is a restatement of Section 3104.18.1 (see the commentary to that section).

The third requirement states that specialty vehicles designed to run on either gasoline or CNG/LP-gas must comply with the same requirements as vehicles designed to run on gasoline alone.

3104.18.5 Competitions and demonstrations. Liquid and gas-fueled vehicles and equipment used for competition or demonstration within a tent or membrane structure shall comply with Sections 3104.18.5.1 through 3104.18.5.3.

❖ The provisions of this section introduce Sections 3104.18.5.1 through 3104.18.5.3, which contain requirements for controlling the hazards associated with the use of liquid-fueled vehicles, or the equipment inside of tents or other membrane structures.

3104.18.5.1 Fuel storage. Fuel for vehicles or equipment shall be stored in *approved* containers in an *approved* location outside of the structure in accordance with Section 3104.17.2.

❖ This section gives the fire code official the authority to approve both the storage containers used and the location of those containers. The site designer, competition manager or other responsible party must have the fire code official's approval before the storage scheme is put into use. See also Section 6104 for further discussion of LP-gas storage, and Sections 2303 and 2306 for additional information on the storage of CNG.

3104.18.5.2 Fueling. Refueling shall be performed outside of the structure in accordance with Section 3104.17.3.

❖ This section refers back to Section 3104.17.3, which states a requirement for a 20-foot (6096 mm) separation between the fueling station and the membrane structure. Further information on fueling with LP gas is contained in Section 6106. Similar information covering CNG is contained in Sections 2304, 2307 and 2308.

3104.18.5.3 Spills. Fuel spills shall be cleaned up immediately.

❖ Controlling spills is important to fire safety. Section 2305.3 gives requirements for spill containment. The requirements for immediate cleanup are intended to prevent the buildup of flammable vapors to hazardous levels. Provisions for fuel spill containment and cleanup would require approval from the fire code official.

3104.19 Separation of generators. Generators and other internal combustion power sources shall be separated from tents or membrane structures by not less than 20 feet (6096 mm) and shall be isolated from contact with the public by fencing, enclosure or other *approved* means.

❖ This section states two requirements. First, consistent with other separation requirements, generators and other equipment driven by internal combustion engines must be kept separated from the membrane structure to minimize fire hazards if the generator or other equipment should fail and catch on fire. Second, the isolation requirement is intended to both keep the public from coming into contact with hazardous equipment and protect the equipment from vandalism or accidental damage by the public.

3104.20 Standby personnel. Where, in the opinion of the *fire code official*, it is essential for public safety in a tent or membrane structure used as a place of assembly or any other use where people congregate, because of the number of persons, or the nature of the performance, exhibition, display, contest or activity, the *owner*, agent or lessee shall employ one or more qualified persons, as required and *approved*, to remain on duty during the times such places are open to the public, or when such activity is being conducted.

❖ This section authorizes the fire code official, at his or her discretion, to require the owner of a tent or membrane structure-based venue used for public assembly purposes to provide qualified supervisory personnel to enhance the safety profile of the event during its duration.

3104.20.1 Duties. Before each performance or the start of such activity, standby personnel shall keep diligent watch for fires during the time such place is open to the public or such activity is being conducted and take prompt measures for extinguishment of fires that occur and assist in the evacuation of the public from the structure.

❖ This section enumerates the duties and responsibilities of the individuals employed as standby personnel. These duties are that they: maintain a careful fire watch during whatever event is occurring, respond immediately to control fires and assist patrons in safely exiting the structure. They also could serve as ushers, tour guides or service supervisors for table seating; or in some other capacity related to making sure occupants are moved to or from assigned places in an orderly manner.

3104.20.2 Crowd managers. There shall be trained crowd managers or crowd manager/supervisors at a ratio of one crowd manager/supervisor for every 250 occupants, as *approved*.

❖ The key to this section is that the crowd managers must be trained in crowd management procedures appropriate to the activity being carried on in the membrane structure and they must be present in the required numbers. Training of personnel and the duties assigned to them would have to be approved by the fire code official. See also the commentary to Section 403.3 for further information on crowd managers.

3104.21 Combustible vegetation. Combustible vegetation that could create a fire hazard shall be removed from the area occupied by a tent or membrane structure, and from areas within 30 feet (9144 mm) of such structures.

❖ Because dry grass and weeds both within and outside of a membrane structure represent a significant fuel accumulation and fire hazard, this section requires that all combustible vegetation be removed from within the membrane structure and from the

INTERNATIONAL CODE COUNCIL®
Copyright © 2015 ICC. ALL RIGHTS RESERVED. Accessed by David Dammon on Jun 21, 2017 12:30:52 PM pursuant to License Agreement with ICC. No further reproduction or distribution authorized. ANY UNAUTHORIZED REPRODUCTION OR DISTRIBUTION IS A VIOLATION OF THE FEDERAL COPYRIGHT ACT AND THE LICENSE AGREEMENT, AND SUBJECT TO CIVIL AND CRIMINAL PENALTIES THEREUNDER.

area outside of and within a 30-foot (9144 mm) perimeter of the structure. Where the membrane structure is a tent that relies on ropes and stakes for its structural stability, the 30-foot (9144 mm) perimeter is to be measured outward from the furthest reach of the stake line, which is consistent with Section 3103.8.2. This will reduce the chances that a grass or brush fire originating outside the tent will damage the structural support system, which could lead to failure and collapse of the tent with potential injury to occupants. See the commentary to Section 304.1.2 for further information on combustible vegetation.

3104.22 Combustible waste material. The floor surface inside tents or membrane structures and the grounds outside and within a 30-foot (9144 mm) perimeter shall be kept free of combustible waste and other combustible materials that could create a fire hazard. Such waste shall be stored in *approved* containers and removed from the premises not less than once a day during the period the structure is occupied by the public.

❖ Accumulated waste, trash or debris and the fire load they represent can become a serious fire hazard if allowed to remain within a membrane structure or in close proximity outside of the structure. Accordingly, this section requires frequent collection and removal of trash and other combustibles from the area inside the structure and within a 30-foot (9144 mm) perimeter of the structure. Consistent with Section 3103.8.2, where the membrane structure is a tent that relies on ropes and stakes for its structural stability, the 30-foot (9144 mm) perimeter should be measured outward from the furthest reach of the stake line to reduce the chances that a trash fire originating outside the tent will damage the structural support system, which could lead to failure and collapse of the tent. Once collected and moved outside the structure, the trash and other combustible waste materials must be kept in an approved container, which should also be located outside of the 30-foot (9144 mm) perimeter. See Section 304.3 for requirements for approved trash containers. See also the commentary to Sections 304.1 and 304.1.1 for further information on waste accumulation.

SECTION 3105
TEMPORARY STAGE CANOPIES

3105.1 General. Temporary stage canopies shall comply with Section 3104, Sections 3105.2 through 3105.8 and ANSI E1.21.

❖ Temporary stage canopies are by their nature very specialized and complex structures. The nature of the structures must accommodate a wide variety of changing components such as audio equipment, video walls and scenery. The entertainment industry is continually evolving with new ways to improve shows creating larger and more complex spectacles.

There were four high-profile temporary stage canopy collapses during the 2011 summer concert season: August 7 at Brady District Block Party, Tulsa, Oklahoma; July 17 at the Cisco Ottawa Blues Festival in Ottawa, Canada; August 13 at the Indiana State Fairgrounds, which resulted in seven people killed and 50 injured; and August 18 at the Pukkelpop Festival in Kiewit, Belgium. In the summer of 2012, another life was lost at a Radiohead concert in Toronto, Canada. All resulted in tremendous property damage and two in multiple fatalities. The obvious concern is for the safety of the performers, audiences, stagehands, lighting technicians, security personnel and every other profession or individual in close proximity to a temporary stage.

Due to the unique design of temporary stage canopies, it is difficult for most fire inspectors to find adequate guidance in current code language to satisfactorily regulate these specialized structures. This section introduces new regulations for these unique structures that will improve the safety profile of their construction and use, and provides an appropriate referenced standard to guide the fire code official in enforcing the new section. ANSI E1.21 was produced by the Entertainment Services and Technology Association (ESTA). ESTA recently merged with an international organization, Professional Lighting and Sound Association (PLASA). Fire code officials may download the standard at no charge, provided they register at www.plasa.org. ANSI E1.21 includes requirements that the temporary stage canopy be designed not only to support the weight of the equipment, but also to withstand seismic loads, wind loads, rain and snow loading, and uplift. There is a necessity for a design professional to fully analyze and design the structure to comply with the structural loads. Section 3.4 of ANSI E1.21 requires: engineering drawings and calculations for the design; allowable payload; and maximum wind speed during the erection process and use of the structure. Commentary Figures 3105.1(1) and 3105.1(2) illustrate temporary stage structures.

3105.2 Approval. Temporary stage canopies in excess of 400 square feet (37 m^2) shall not be erected, operated or maintained for any purpose without first obtaining approval and a permit from the *fire code official* and the building official.

❖ This section requires that both the fire code official and the building official issue a permit to construct a temporary stage canopy where the structure exceeds 400 square feet in area. This provides coordination of the respective expertise of the fire code official and the building official. The size is consistent with the threshold provided in Section 3103.2.

3105.3 Permits. Permits shall be required as set forth in Sections 105.6 and 105.7.

❖ The process of issuing permits gives the fire code official an opportunity to carefully evaluate and regulate hazardous operations. Permit applicants should be required to demonstrate that their operations comply with the intent of the code before the permit is issued. See the commentary to Section 105.6 for a

INTERNATIONAL CODE COUNCIL®
Copyright © 2015 ICC. ALL RIGHTS RESERVED. Accessed by David Dammon on Jun 21, 2017 12:30:52 PM pursuant to License Agreement with ICC. No further reproduction or distribution authorized. ANY UNAUTHORIZED REPRODUCTION OR DISTRIBUTION IS A VIOLATION OF THE FEDERAL COPYRIGHT ACT AND THE LICENSE AGREEMENT, AND SUBJECT TO CIVIL AND CRIMINAL PENALTIES THEREUNDER.

general discussion of operations requiring an operational permit. Because of the hazards inherent in the construction and the operation of temporary stage canopies, an operational permit is required by Section 105.6.45 and a construction permit is required by Section 105.7.18. The process also notifies the fire department of the need for prefire planning for the operation.



Figure 3105.1(1)
TEMPORARY STAGE CANOPY IN AN OUTDOOR SETTING

3105.4 Use period. Temporary stage canopies shall not be erected for a period of more than 45 days.

❖ Temporary stage canopies are very complex and specialized for each individual event. The nature of these structures must accommodate a wide variety of changing components, such as audio and lighting equipment, video walls and scenery. As such, one difference when compared to other temporary structures regulated in Chapter 31 of the code is that the time period considered as "temporary" for temporary stage canopies in this section is a maximum of 45 days. For structures to be used longer than that period, they would be treated as permanent structures and be regulated by the IBC. This use period is based on the provisions of the referenced standard ANSI E1.21, which defines "temporary" as "A period of time that is less than 6 weeks in duration."

3105.5 Required documents. The following documents shall be submitted to the *fire code official* and the building official for review before a permit is *approved*:

1. Construction documents: *Construction documents* shall be prepared in accordance with the *International Building Code* by a registered design professional. *Construction* documents shall include:
   - 1.1. A summary sheet showing the building code used, design criteria, loads and support reactions.
   - 1.2. Detailed construction and installation drawings.
   - 1.3. Design calculations.
   - 1.4. Operating limits of the structure explicitly outlined by the registered design professional including environmental conditions and physical forces.
   - 1.5. Effects of additive elements such as video walls, supported scenery, audio equip-ment, vertical and horizontal coverings.
   - 1.6. Means for adequate stability including specific requirements for guying and cross-bracing, ground anchors or ballast for different ground conditions.
2. Designation of responsible party: The *owner* of the temporary stage canopy shall designate in writing a person to have responsibility for the temporary stage canopy on the site. The designated person shall have sufficient knowledge of the construction documents, manufacturer's recommendations and operations plan to make judgments regarding the structure's safety and to coordinate with the *fire code official.*
3. Operations plan: The operations plan shall reflect manufacturer's operational guidelines, procedures for environmental monitoring and actions to be taken under specified conditions consistent with the *construction documents.*

❖ This section is a summary of the relevant requirements of ANSI E1.21 necessary to provide guidance to the fire code official. Stage canopies are subject to more diverse loads than most permanent structures. Because of varying equipment weight, changing weather conditions and the need to raise and lower the roof to install equipment, a design professional must fully analyze the structure and a responsible person who understands this complexity of considerations must be on site. The operations plan must identify the responsible person, designate safe evacuation routes and locations, and evaluate the potential for canceling the show when the weather creates an unsafe condition.

INTERNATIONAL CODE COUNCIL®
Copyright © 2015 ICC. ALL RIGHTS RESERVED. Accessed by David Dammon on Jun 21, 2017 12:30:52 PM pursuant to License Agreement with ICC. No further reproduction or distribution authorized. ANY UNAUTHORIZED REPRODUCTION OR DISTRIBUTION IS A VIOLATION OF THE FEDERAL COPYRIGHT ACT AND THE LICENSE AGREEMENT, AND SUBJECT TO CIVIL AND CRIMINAL PENALTIES THEREUNDER.

3105.6 Inspections. Inspections shall comply with Section 106 and Sections 3105.6.1 and 3105.6.2.

❖ This section simply introduces the inspection requirements that follow.

3105.6.1 Independent inspector. The *owner* of a temporary stage canopy shall employ a qualified, independent approved agency or individual to inspect the installation of a temporary stage canopy.

❖ It is unlikely many fire inspectors will be familiar with the specialized nature of these structures. Accordingly, this section requires a qualified specialized inspector to be employed by the owner to inspect and report to the authority having jurisdiction and the designated responsible person. An Entertainment Technician Certification Program (ETCP) certification exists that would demonstrate competence to inspect the majority of temporary stage canopies. For large, unusually complex canopies there is latitude for the fire code official to require inspection by a structural engineer familiar with these types of temporary structures. Although it is not specified in the code, IBC Chapter 17, *Special Inspections and Tests,* could be used as a guide for this particular inspection requirement. The use of a special inspector could be a condition of approval from the building and fire code official.

3105.6.2 Inspection report. The inspecting agency or individual shall furnish an inspection report to the *fire code official*. The inspection report shall indicate that the temporary stage canopy was inspected and was or was not installed in accordance with the approved *construction documents*. Discrepancies shall be brought to the immediate attention of the installer for correction. Where any discrepancy is not corrected, it shall be brought to the attention of the *fire code official* and the designated responsible party.

❖ The specialized inspector must perform a construction inspection and issue a report, the primary objective of which is to verify that the temporary stage canopy was constructed in accordance with the approved construction documents and the conditions of the construction permit. Discrepancies must be identified and corrected before the structure can be utilized/occupied. Failure to correct any discrepancy must be reported to the fire code official and the responsible party that was designated in accordance with Section 3105.5(2).

3105.7 Means of egress. The *means of egress* for temporary stage canopies shall comply with Chapter 10.

❖ This section simply directs the code user to Chapter 10 for means of egress requirements.



Figure 3105.1(2)
TEMPORARY STAGE CANOPY AFTER STRUCTURAL COLLAPSE AT THE INDIANA STATE FAIR—AUGUST 13, 2011
(Photo courtesy of Anne vonWeller)

INTERNATIONAL CODE COUNCIL®
Copyright © 2015 ICC. ALL RIGHTS RESERVED. Accessed by David Dammon on Jun 21, 2017 12:30:52 PM pursuant to License Agreement with ICC. No further reproduction or distribution authorized. ANY UNAUTHORIZED REPRODUCTION OR DISTRIBUTION IS A VIOLATION OF THE FEDERAL COPYRIGHT ACT AND THE LICENSE AGREEMENT, AND SUBJECT TO CIVIL AND CRIMINAL PENALTIES THEREUNDER.

3105.8 Location. Temporary stage canopies shall be located a distance from property lines and buildings to accommodate distances indicated in the construction drawings for guy wires, cross-bracing, ground anchors or ballast. Location shall not interfere with egress from a building or encroach on fire apparatus access roads.

❖ Separation distance requirements of this section are consistent with requirements for conventional structures, especially those that could represent an above-average fire hazard. A fire of any size within a temporary stage structure would almost certainly involve any membrane coverings and structural support elements. Because the support ropes and ground anchors are under tension, particularly with large structures, a structure weakened by fire would likely fail, causing the ropes or wires to recoil and possibly pull portions of the burning temporary stage structure out of its original position. Requiring clear space around the structure helps reduce the likelihood that burning membrane sections and flying embers would endanger other structures or interfere with the functions of the open space, which include providing a clear egress path from the stage canopy or any structure adjacent to it and fire department access to the structure. Note that Section 3103.8.2 considers guy wires to be part of the structure when measuring open spaces around structures and it would seem prudent to apply that principle to this section as well.

Bibliography

The following resource materials were used in the preparation of the commentary for this chapter of the code:

Code Changes Resource Collection—2015 International Fire Code. Washington, DC: International Code Council, 2014.

Dent, R.N. *Principles of Pneumatic Architecture*. New York, NY: Halsted Press Division, John Wiley & Sons, 1971.

Frei, O. *Tensile Structures: Design, Structure, and Calculation of Buildings, Cables, Nets and Membranes*, Vol. 2. Cambridge, MA: MIT Press, 1969.

Herzog, T. *Pneumatic Structures: A Handbook of Inflatable Architecture*. Oxford, England: Oxford University Press, 1976.

Shaefer, R.E. *Tensioned Fabric Structures*. Reston, VA: American Society of Civil Engineers, 1996.

INTERNATIONAL CODE COUNCIL®

Copyright © 2015 ICC. ALL RIGHTS RESERVED. Accessed by David Dammon on Jun 21, 2017 12:30:52 PM pursuant to License Agreement with ICC. No further reproduction or distribution authorized. ANY UNAUTHORIZED REPRODUCTION OR DISTRIBUTION IS A VIOLATION OF THE FEDERAL COPYRIGHT ACT AND THE LICENSE AGREEMENT, AND SUBJECT TO CIVIL AND CRIMINAL PENALTIES THEREUNDER.

Chapter 32: High-Piled Combustible Storage

General Comments

High-piled combustible storage facilities present great challenges in fire incident management. The shear mass of commodities in concentrated form, along with a different configuration for access to those commodities, has led to the development of some unique fire protection and life safety measures. Experience with automatic sprinkler protection has demonstrated over the years that such systems are reliable and effective in suppressing fires and in supplementing manual fire suppression and extinguishing operations. However, the design and maintenance of any system or measure is essential to ensuring that, when needed, it will serve its function until such time as the fire service arrives to take command of the incident.

Chapter 32 presents fundamental concepts of fire and life safety protection within high-piled combustible storage areas and buildings. Fire tests and past fire experience have shown that the class and quantity of commodities, their relationship to one another and the maintenance and inspection of the systems and building are essential in preventing fires or limiting the spread of fire. This chapter has provisions aimed at verifying the proper design and installation of given fire and life safety protection systems. In some cases, the referenced standards will contain more specific design and installation criteria than are found in this chapter.

Other chapters of the code that contain provisions related to Chapter 32 are Chapters 3, 4, 5, 7, 9 and 10. The *International Building Code*® (IBC®) is mentioned within this chapter, which addresses construction classification, occupancy, fire protection features, means of egress and structural requirements.

This chapter does not specifically cover miscellaneous combustible materials storage (see Section 315) or storage facilities of unusual design. Under those circumstances, the provisions of Chapter 1, specifically Section 102.7, would apply. Unusual storage facilities may include, but are not limited to, storage warehouses located on piers, storage of vehicles, refrigerated storage, underground storage facilities and air-supported storage structures. Each type of specialty storage offers a challenge to the fire department that will require unconventional fire incident management planning and unusual fire-fighting techniques. Access by fire-fighting vehicles and personnel is the greatest of those challenges. As a result, preplanning of the design of the storage facility may require coordination with the fire code official and fire service to determine the means and methods of the fire service to handle an approach by water, addressing floating burning debris from a fire, hazards of other neighboring piers and vessels, etc.

Purpose

Chapter 32 provides guidance for reasonable protection of life from hazards associated with high-piled combustible storage. It contains requirements for identifying various classes of commodities; general fire and life protection safety features; and housekeeping and maintenance requirements. This chapter attempts to define potential fire severity and determine fire and life safety protection measures needed to control or suppress a potential fire. Design considerations for the construction, occupancy and fire protection features of the building or structure accommodating the high-piled combustible storage is the responsibility of the design professional and the building owner. Housekeeping, building maintenance and development and upkeep of an evacuation plan are the responsibility of the building owner, tenant or lessee.

SECTION 3201 GENERAL

3201.1 Scope. *High-piled combustible storage* shall be in accordance with this chapter. In addition to the requirements of this chapter, the following material-specific requirements shall apply:

1. Aerosols shall be in accordance with Chapter 51.
2. Flammable and *combustible liquids* shall be in accordance with Chapter 57.
3. Hazardous materials shall be in accordance with Chapter 50.
4. Storage of combustible paper records shall be in accordance with NFPA 13.
5. Storage of *combustible fibers* shall be in accordance with Chapter 37.
6. General storage of combustible material shall be in accordance with Chapter 3.

❖ This section is intended as an introduction and references those other chapters within the code that are to be used in conjunction with Chapter 32, when applicable. In many cases, the referenced chapter contains more stringent provisions regarding fire

INTERNATIONAL CODE COUNCIL®
Copyright © 2015 ICC. ALL RIGHTS RESERVED. Accessed by David Dammon on Jun 21, 2017 12:30:52 PM pursuant to License Agreement with ICC. No further reproduction or distribution authorized. ANY UNAUTHORIZED REPRODUCTION OR DISTRIBUTION IS A VIOLATION OF THE FEDERAL COPYRIGHT ACT AND THE LICENSE AGREEMENT, AND SUBJECT TO CIVIL AND CRIMINAL PENALTIES THEREUNDER.

protection and life safety measures, and may also cite other referenced standards. For example, Chapter 28 references NFPA 30B, Chapter 57 references NFPA 30 and Chapter 50 references NFPA 704.

3201.2 Permits. A permit shall be required as set forth in Section 105.6.

❖ The process of issuing permits gives the fire code official an opportunity to carefully evaluate and regulate hazardous operations. Permit applicants should be required to demonstrate that their operations comply with the intent of the code before the permit is issued. See the commentary to Section 105.6 for a general discussion of operations requiring an operational permit. The permit process also notifies the fire department of the need for prefire planning for the hazardous property.

3201.3 Construction documents. At the time of building permit application for new structures designed to accommodate high-piled storage or for requesting a change of occupancy/use, and at the time of application for a storage permit, plans and specifications shall be submitted for review and approval. In addition to the information required by the *International Building Code*, the storage permit submittal shall include the information specified in this section. Following approval of the plans, a copy of the *approved* plans shall be maintained on the premises in an *approved* location. The plans shall include all of the following:

1. Floor plan of the building showing locations and dimensions of *high-piled storage areas*.
2. Usable storage height for each storage area.
3. Number of tiers within each rack, if applicable.
4. Commodity clearance between top of storage and the sprinkler deflector for each storage arrangement.
5. Aisle dimensions between each storage array.
6. Maximum pile volume for each storage array.
7. Location and classification of commodities in accordance with Section 3203.
8. Location of commodities that are banded or encapsulated.
9. Location of required fire department access doors.
10. Type of fire suppression and fire detection systems.
11. Location of valves controlling the water supply of ceiling and in-rack sprinklers.
12. Type, location and specifications of smoke removal and curtain board systems.
13. Dimension and location of transverse and longitudinal flue spaces.
14. Additional information regarding required design features, commodities, storage arrangement and fire protection features within the high-piled storage area shall be provided at the time of permit, when required by the *fire code official*.

❖ Section 3201.3 contains provisions that are unique to the needs of the fire department. These construction document requirements are in addition to those encountered in the IBC and specifically require detailed information that is essential for the permit review process and for future use when conducting fire inspections, in the development of the fire department's prefire emergency plans and when conducting fire incident management during an emergency. Items 1, 2, 3 and 5 are general requirements that address the general description of work for which the application must be submitted. Item 4 is significant because the height of any storage in relation to the sprinkler heads will determine sprinkler effectiveness. Sprinklers should be designed for the maximum allowable heights of the stored commodities and the minimum amount of unobstructed space below the sprinkler heads. Items 6, 7 and 8 recognize that a storage building can contain multiple classes and groups of commodities. As a result, this section requires that the construction documents illustrate the location, size and classification of the various types of commodities. Items 9, 10, 11 and 12 are important for the development of a prefire emergency plan. Such a plan can be established by the building owner or the tenant in cooperation with the local fire department that will be called to the building during an emergency. Developing and maintaining a prefire emergency plan can help during the incipient stages of a fire by reducing the amount of damage from the fire and containing the fire within a short time. Item 13 requires a detailed description of the locations of transverse and longitudinal flue spaces. The provisions for minimum flue space dimensions are contained in Section 3208.3. Item 14 allows the fire code official to use the enforcement powers of that office to collect more detailed information to make a more educated decision. These provisions recognize that technology is evolving. As a result, the situation presented to the fire code official can require that additional fire protection and life safety measures be applied to address those new designs for storage or new class of commodity.

3201.4 Evacuation plan. Where required by the *fire code official*, an evacuation plan for public accessible areas and a separate set of plans indicating location and width of *aisles*, location of *exits*, *exit access* doors, *exit* signs, height of storage, and locations of hazardous materials shall be submitted at the time of permit application for review and approval. Following approval of the plans, a copy of the *approved* plans shall be maintained on the premises in an *approved* location.

❖ Section 3201.4 contains provisions that are designed to compel additional information about the facility in terms of the layout of the egress system. This feature serves both the occupants of the building or structure and the fire department by addressing unique conditions. The plans are to be accessible at the site and are for use by the fire code official or fire department during inspections of the building or structure. Maintenance of the plans is the responsibility of the building owner, tenant or lessee.

Note that Chapter 4 addresses fire safety and

INTERNATIONAL CODE COUNCIL®
Copyright © 2015 ICC. ALL RIGHTS RESERVED. Accessed by David Dammon on Jun 21, 2017 12:30:52 PM pursuant to License Agreement with ICC. No further reproduction or distribution authorized. ANY UNAUTHORIZED REPRODUCTION OR DISTRIBUTION IS A VIOLATION OF THE FEDERAL COPYRIGHT ACT AND THE LICENSE AGREEMENT, AND SUBJECT TO CIVIL AND CRIMINAL PENALTIES THEREUNDER.

evacuation plans for various occupancies. High-piled storage is not addressed directly, but larger Group M and F occupancies are required to provide these plans. Such occupancies have the possibility of containing high-piled storage.

SECTION 3202
DEFINITIONS

3202.1 Definitions. The following terms are defined in Chapter 2:

ARRAY.

ARRAY, CLOSED.

AUTOMATED RACK STORAGE.

BIN BOX.

COMMODITY.

EARLY SUPPRESSION FAST-RESPONSE (ESFR) SPRINKLER.

EXPANDED PLASTIC.

EXTRA-HIGH-RACK COMBUSTIBLE STORAGE.

HIGH-PILED COMBUSTIBLE STORAGE.

HIGH-PILED STORAGE AREA.

LONGITUDINAL FLUE SPACE.

MANUAL STOCKING METHODS.

MECHANICAL STOCKING METHODS.

SHELF STORAGE.

SOLID SHELVING.

TRANSVERSE FLUE SPACE.

❖ Definitions of terms can help in the understanding and application of the code requirements. This section directs the code user to Chapter 2 for the proper application of the indicated terms used in this chapter. Terms may be defined in Chapter 2 or in another *International Code*® (I-Code®) as indicated in Section 201.3, or the dictionary meaning may be all that is needed (see also commentary, Sections 201.1 through 201.4).

SECTION 3203
COMMODITY CLASSIFICATION

3203.1 Classification of commodities. Commodities shall be classified as Class I, II, III, IV or high hazard in accordance with this section. Materials listed within each commodity classification are assumed to be unmodified for improved combustibility characteristics. Use of flame-retarding modifiers or the physical form of the material could change the classification. See Section 3203.7 for classification of Group A, B and C plastics.

❖ The classification of commodities contains information addressing the materials that make up the commodity and its packaging (see Commentary Figure 3203.1). As an example, lubricating fluid in metal cans is designated as Class III, whereas lubricating fluid in plastic containers is designated as Class IV. Although this section addresses only the classification, such factors as the location of the commodity, location relative to other commodities of differing classes, flue spaces, fire protection, ventilation, access and egress will affect the storage layout. Among the most important considerations are the packaging of the commodity and the type of support the commodity is resting on (e.g., pallets). For rack storage, the distinction between the classes is made with respect to the arrangement of the products; for example, products encapsulated with plastic wrap and those products not encapsulated. The plastic wrap acts effectively as a container for the entire arrangement of products, and because it encapsulates five of the six sides of the arrangement, it can prevent sprinklers from having an effect on the products if they do ignite and makes it difficult for prewetting of the surrounding commodities. The encapsulated category can be considered nonencapsulated by removing, at a minimum, the plastic wrap from the top of the arranged products, thus allowing some penetration for the sprinklers.

	Low Fire Hazard
Class I	Essentially noncombustible products on noncombustible pallets
	High Fire Hazard
Class II	Essentially Class I products on wood pallets or crates
Class III	Essentially wood, paper and fiber products and Group C plastics (limited Class A and B plastics)
Class IV	Essentially Class I, II or III containing significant Group A plastics (unlimited Class B plastics and free-flowing Group A plastics)
	High Hazard
—	Essentially present fire hazard beyond Class I, II, III or IV

Figure 3203.1
CLASSIFICATION LEVELS

3203.2 Class I commodities. Class I commodities are essentially noncombustible products on wooden pallets, in ordinary corrugated cartons with or without single-thickness dividers, or in ordinary paper wrappings with or without pallets. Class I commodities are allowed to contain a limited amount of Group A plastics in accordance with Section 3203.7.4. Examples of Class I commodities include, but are not limited to, the following:

Alcoholic beverages not exceeding 20-percent alcohol
Appliances noncombustible, electrical
Cement in bags
Ceramics
Dairy products in nonwax-coated containers (excluding bottles)

INTERNATIONAL CODE COUNCIL®
Copyright © 2015 ICC. ALL RIGHTS RESERVED. Accessed by David Dammon on Jun 21, 2017 12:30:52 PM pursuant to License Agreement with ICC. No further reproduction or distribution authorized. ANY UNAUTHORIZED REPRODUCTION OR DISTRIBUTION IS A VIOLATION OF THE FEDERAL COPYRIGHT ACT AND THE LICENSE AGREEMENT, AND SUBJECT TO CIVIL AND CRIMINAL PENALTIES THEREUNDER.

Dry insecticides
Foods in noncombustible containers
Fresh fruits and vegetables in nonplastic trays or containers
Frozen foods
Glass
Glycol in metal cans
Gypsum board
Inert materials, bagged
Insulation, noncombustible
Noncombustible liquids in plastic containers having less than a 5-gallon (19 L) capacity
Noncombustible metal products

❖ Class I commodities are basically noncombustible products packaged in corrugated cardboard cartons. The products may be arranged on combustible pallets. Examples of products that create this hazard are listed in this section.

3203.3 Class II commodities. Class II commodities are Class I products in slatted wooden crates, solid wooden boxes, multiple-thickness paperboard cartons or equivalent combustible packaging material with or without pallets. Class II commodities are allowed to contain a limited amount of Group A plastics in accordance with Section 3203.7.4. Examples of Class II commodities include, but are not limited to, the following:

Alcoholic beverages not exceeding 20-percent alcohol, in combustible containers
Foods in combustible containers
Incandescent or fluorescent light bulbs in cartons
Thinly coated fine wire on reels or in cartons

❖ Class II commodities consist of noncombustible products packaged in slatted wooden crates, solid wooden boxes, multiple-thickness paperboard cartons or equivalent combustible packaging materials that may or may not be arranged on pallets. If the commodity is stored on a rack storage system, it will generally be placed on wooden pallets. Examples of products that create this hazard are listed in this section.

3203.4 Class III commodities. Class III commodities are commodities of wood, paper, natural fiber cloth, or Group C plastics or products thereof, with or without pallets. Products are allowed to contain limited amounts of Group A or B plastics, such as metal bicycles with plastic handles, pedals, seats and tires. Group A plastics shall be limited in accordance with Section 3203.7.4. Examples of Class III commodities include, but are not limited to, the following:

Aerosol, Level 1 (see Chapter 51)
Biomass briquettes, bagged, and static piles
Biomass pellets, bagged, and static piles
Charcoal
Combustible fiberboard
Cork, baled
Corn cobs, static piles
Corn stover, baled and chopped
Feed, bagged
Fertilizers, bagged
Firewood
Food in plastic containers
Forest residue, round wood or chipped (branches, bark, cross-cut ends, edgings and treetops)
Furniture: wood, natural fiber, upholstered, nonplastic, wood or metal with plastic-padded and covered armrests
Glycol in combustible containers not exceeding 25 percent
Lubricating or hydraulic fluid in metal cans
Lumber
Mattresses, excluding foam rubber and foam plastics
Noncombustible liquids in plastic containers having a capacity of more than 5 gallons (19 L)
Paints, oil base, in metal cans
Paper, waste, baled
Paper and pulp, horizontal storage, or vertical storage that is banded or protected with approved wrap
Paper in cardboard boxes
Peanut hulls, bagged, and static piles
Pillows, excluding foam rubber and foam plastics
Plastic-coated paper food containers
Plywood
Rags, baled
Recovered construction wood
Rice hulls, bagged, and static piles
Rugs, without foam backing
Seasonal grasses, baled and chopped
Straw, baled
Sugar, bagged
Wood, baled
Wood chips, bagged, and static piles
Woody biomass, round wood or chipped (vase-shaped stubby bushes, bamboo, willows; branches, bark and stem wood)
Wood doors, frames and cabinets
Wood pellets, bagged, and static piles
Yarns of natural fiber and viscose

❖ Class III commodities are products of wood, paper, natural fiber or Group C plastics that may be arranged with or without pallets. The limitations concerning Group A are determined by Section 3203.7.4 and Figure 3203.7.4. Limited Group B plastics are allowed. Examples of products that create this hazard are listed in this section.

3203.5 Class IV commodities. Class IV commodities are Class I, II or III products containing Group A plastics in ordinary corrugated cartons and Class I, II and III products with Group A plastic packaging, with or without pallets. Group B plastics and free-flowing Group A plastics are also included in this class. The total amount of nonfree-flowing Group A plastics shall be in accordance with Section 3203.7.4. Examples of Class IV commodities include, but are not limited to, the following:

Aerosol, Level 2 (see Chapter 51)
Alcoholic beverages, exceeding 20-percent but less than 80-percent alcohol, in cans or bottles in cartons
Clothing, synthetic or nonviscose
Combustible metal products (solid)
Furniture, plastic upholstered

INTERNATIONAL CODE COUNCIL®
Copyright © 2015 ICC. ALL RIGHTS RESERVED. Accessed by David Dammon on Jun 21, 2017 12:30:52 PM pursuant to License Agreement with ICC. No further reproduction or distribution authorized. ANY UNAUTHORIZED REPRODUCTION OR DISTRIBUTION IS A VIOLATION OF THE FEDERAL COPYRIGHT ACT AND THE LICENSE AGREEMENT, AND SUBJECT TO CIVIL AND CRIMINAL PENALTIES THEREUNDER.

Furniture, wood or metal with plastic covering and padding
Glycol in combustible containers (greater than 25 percent and less than 50 percent)
Linoleum products
Paints, oil base in combustible containers
Pharmaceutical, alcoholic elixirs, tonics, etc.
Rugs, foam back
Shingles, asphalt
Thread or yarn, synthetic or nonviscose

❖ Class IV commodities represent Class I, II or III products containing an appreciable amount of Group A plastics. These plastics can be a part of the actual product or may be part of the packaging. Packing is in ordinary corrugated cardboard cartons, and arrangement may or may not be on pallets. This class also allows unlimited Group B plastics and free-flowing Group A plastics. Examples of products that create this hazard are listed in this section.

3203.6 High-hazard commodities. High-hazard commodities are high-hazard products presenting special fire hazards beyond those of Class I, II, III or IV. Group A plastics not otherwise classified are included in this class. Examples of high-hazard commodities include, but are not limited to, the following:

Aerosol, Level 3 (see Chapter 51)
Alcoholic beverages, exceeding 80-percent alcohol, in bottles or cartons
Commodities of any class in plastic containers in carousel storage
Flammable solids (except solid combustible metals)
Glycol in combustible containers (50 percent or greater)
Lacquers that dry by solvent evaporation, in metal cans or cartons
Lubricating or hydraulic fluid in plastic containers
Mattresses, foam rubber or foam plastics
Pallets and flats that are idle combustible
Paper and pulp, rolled, in vertical storage that is unbanded or not protected with an *approved* wrap
Paper, asphalt, rolled, horizontal storage
Paper, asphalt, rolled, vertical storage
Pillows, foam rubber and foam plastics
Pyroxylin
Rubber tires
Vegetable oil and butter in plastic containers

❖ High-hazard commodities present a hazard inasmuch as they contain materials that readily support combustion or materials that can support a physical or health hazard. Those products that represent a physical hazard are those presenting a detonation hazard, deflagration hazard or that readily support combustion. The products representing a health hazard are those that present a risk to people from handling or exposure to the product. Examples of products that create this kind of hazard are listed in this section.

High-hazard commodities are not to be confused with high-hazard occupancy Group H. The term "high-hazard," in the context of this chapter, describes storage commodities that can present high-challenge fires. While some of the commodities listed may result in a Group H occupancy classification, others will not.

3203.7 Classification of plastics. Plastics shall be designated as Group A, B or C in accordance with Sections 3203.7.1 through 3203.7.4.

❖ The classification of plastics is contained in Sections 3203.7.1 through 3203.7.4. This section recognizes that plastics tend to have high heat content and burning rates (heat release rates). For example, a Class IV commodity could be evaluated as a high-hazard commodity because of the quantity of Group A plastic cushioning within the container used to sustain or hold the product.

3203.7.1 Group A plastics. Group A plastics are plastic materials having a heat of combustion that is much higher than that of ordinary combustibles, and a burning rate higher than that of Group B plastics. Examples of Group A plastics include, but are not limited to, the following:

ABS (acrylonitrile-butadiene-styrene copolymer)
Acetal (polyformaldehyde)
Acrylic (polymethyl methacrylate)
Butyl rubber
EPDM (ethylene propylene rubber)
FRP (fiberglass-reinforced polyester)
Natural rubber (expanded)
Nitrile rubber (acrylonitrile butadiene rubber)
PET or PETE (polyethylene terephthalate)
Polybutadiene
Polycarbonate
Polyester elastomer
Polyethylene
Polypropylene
Polystyrene (expanded and unexpanded)
Polyurethane (expanded and unexpanded)
PVC (polyvinyl chloride greater than 15-percent plasticized, e.g., coated fabric unsupported film)
SAN (styrene acrylonitrile)
SBR (styrene butadiene rubber)

❖ Group A plastics are generally considered a high-hazard commodity because they have the highest burning rate (heat release rates) of the materials in the classes and groups. Examples of products that create this hazard include:

- Polyurethane foams used in sofas and beds.
- Polypropylene plastic toys.
- Majority of stuffed animals and toys.
- Rubber tires.

3203.7.2 Group B plastics. Group B plastics are plastic materials having a heat of combustion and a burning rate higher than that of ordinary combustibles, but not as high as those of Group A plastics. Examples of Group B plastics include, but are not limited to, the following:

Cellulosics (cellulose acetate, cellulose acetate butyrate, ethyl cellulose)
Chloroprene rubber
Fluoroplastics (ECTFE, ethylene-chlorotrifluoroethylene copolymer; ETFE, ethylene-tetrafluoroethylene

INTERNATIONAL CODE COUNCIL®
Copyright © 2015 ICC. ALL RIGHTS RESERVED. Accessed by David Dammon on Jun 21, 2017 12:30:52 PM pursuant to License Agreement with ICC. No further reproduction or distribution authorized. ANY UNAUTHORIZED REPRODUCTION OR DISTRIBUTION IS A VIOLATION OF THE FEDERAL COPYRIGHT ACT AND THE LICENSE AGREEMENT, AND SUBJECT TO CIVIL AND CRIMINAL PENALTIES THEREUNDER.

copolymer; FEP, fluorinated ethylene-propylene copolymer)
Natural rubber (nonexpanded)
Nylon (Nylon 6, Nylon 6/6)
PVC (polyvinyl chloride greater than 5-percent, but not exceeding 15-percent plasticized)
Silicone rubber

❖ Group B plastics represent the next level of plastics that have a heat of combustion and burning rate higher than that of ordinary combustibles, but less than Group A plastics. Examples of products that create this hazard include nylon rugs and nylon ropes.

3203.7.3 Group C plastics. Group C plastics are plastic materials having a heat of combustion and a burning rate similar to those of ordinary combustibles. Examples of Group C plastics include, but are not limited to, the following:

Fluoroplastics (PCTFE, polychlorotrifluoroethylene; PTFE, polytetrafluoroethylene)
Melamine (melamine formaldehyde)
Phenol
PVC (polyvinyl chloride, rigid or plasticized less than 5 percent, e.g., pipe, pipe fittings)
PVDC (polyvinylidene chloride)
PVDF (polyvinylidene fluoride)
PVF (polyvinyl fluoride)
Urea (urea formaldehyde)

❖ Group C plastics are those products that can be similar to ordinary combustibles because of their heat of combustion and burning rates, which will be less than Group A and B plastics. Examples of products that create this hazard include hard, polyvinyl chloride (PVC) piping used in many swimming pools and irrigation products, and melamine dishware.

3203.7.4 Limited quantities of Group A plastics in mixed commodities. Figure 3203.7.4 shall be used to determine the quantity of Group A plastics allowed to be stored in a package or carton or on a pallet without increasing the commodity classification.

❖ Limited quantities of Group A plastics can be allowed within other classes of commodities. Figure 3203.7.4 shows the pertinent requirements, or limits, for determining to which class the limited amount of Group A plastic is assigned.

FIGURE 3203.7.4. See page 32-7.

❖ The figure represents an empirical judgment (as a result of fire testing experience) of the risks associated with assigning a limited amount of Group A plastics to another commodity class. The figure is intended to help determine the commodity classification of a mixed commodity in a package or carton or on a pallet when plastics are involved. Plastics can be involved (mixed) with products through the use of packaging or can be contained in or integrated into the actual product.

SECTION 3204
DESIGNATION OF HIGH-PILED STORAGE AREAS

3204.1 General. *High-piled storage areas*, and portions of *high-piled storage areas* intended for storage of a different commodity class than adjacent areas, shall be designed and specifically designated to contain Class I, Class II, Class III, Class IV or high-hazard commodities. The designation of a *high-piled combustible storage* area, or portion thereof intended for storage of a different commodity class, shall be based on the highest hazard commodity class stored except as provided in Section 3204.2.

❖ This section establishes designation requirements for different commodity classes, and designates areas within buildings for use in determining general fire protection and life safety features.

The highest hazard commodity will drive the classification of the storage area. Section 3204.2 offers an exception to this by taking advantage of the hydraulic design of sprinkler systems. Additionally, lower-hazard commodities can be separated from higher-hazard commodities in accordance with Sections 3206.3.2.1 and 3206.3.2.2.

3204.2 Designation based on engineering analysis. The designation of a *high-piled combustible storage* area, or portion thereof, is allowed to be based on a lower hazard class than that of the highest class of commodity stored when a limited quantity of the higher hazard commodity has been demonstrated by engineering analysis to be adequately protected by the *automatic sprinkler system* provided. The engineering analysis shall consider the ability of the sprinkler system to deliver the higher density required by the higher hazard commodity. The higher density shall be based on the actual storage height of the pile or rack and the minimum allowable design area for sprinkler operation as set forth in the density/area figures provided in NFPA 13. The contiguous area occupied by the higher hazard commodity shall not exceed 120 square feet (11 m^2) and additional areas of higher hazard commodity shall be separated from other such areas by 25 feet (7620 mm) or more. The sprinkler system shall be capable of delivering the higher density over a minimum area of 900 square feet (84 m^2) for wet pipe systems and 1,200 square feet (111 m^2) for dry pipe systems. The shape of the design area shall be in accordance with Section 903.

❖ This section allows the designer to make use of the benefits of hydraulic design. In other words, in an area rated for a low-hazard commodity it is likely that in some portions of that space the available water and pressure will be sufficient for a higher-hazard commodity. This is true since sprinklers are designed for the most hydraulically remote areas; therefore, areas closer to the riser will receive more water and higher pressure. There are certain criteria accompanying this allowance that limit the size of the higher-hazard storage areas to 120 square feet (11 m^2) each and require that they be separated from other similar

INTERNATIONAL CODE COUNCIL®
Copyright © 2015 ICC. ALL RIGHTS RESERVED. Accessed by David Dammon on Jun 21, 2017 12:30:52 PM pursuant to License Agreement with ICC. No further reproduction or distribution authorized. ANY UNAUTHORIZED REPRODUCTION OR DISTRIBUTION IS A VIOLATION OF THE FEDERAL COPYRIGHT ACT AND THE LICENSE AGREEMENT, AND SUBJECT TO CIVIL AND CRIMINAL PENALTIES THEREUNDER.

areas by 25 feet (7620 mm) (see Commentary Figure 3204.2). It also provides minimum areas in which this increased water supply needs to be available. It should be noted that there are some potential maintenance limitations. It may be difficult to keep track of these particular designated areas and the separation between the areas; therefore, it is suggested that the areas be delineated on the floor using durable traffic-type paint or tape. Recording the areas on a scaled floor plan available to inspectors could also be useful.

NFPA 13 also offers another alternative that allows higher-hazard commodities to be dispersed throughout a lower-hazard commodity storage area. There are limitations on how many commodities can be in each mixed commodity area. The commodities must be randomly dispersed (see NFPA 13).

SECTION 3205
HOUSEKEEPING AND MAINTENANCE

3205.1 Rack structures. The structural integrity of racks shall be maintained.

❖ This section's emphasis on "structural integrity" has its roots in the IBC, specifically Chapters 16 and 22, which govern the structural design of rack storage installations. The integrity of rack storage includes such items as the primary structural components, the connections, bracing members and relationship with

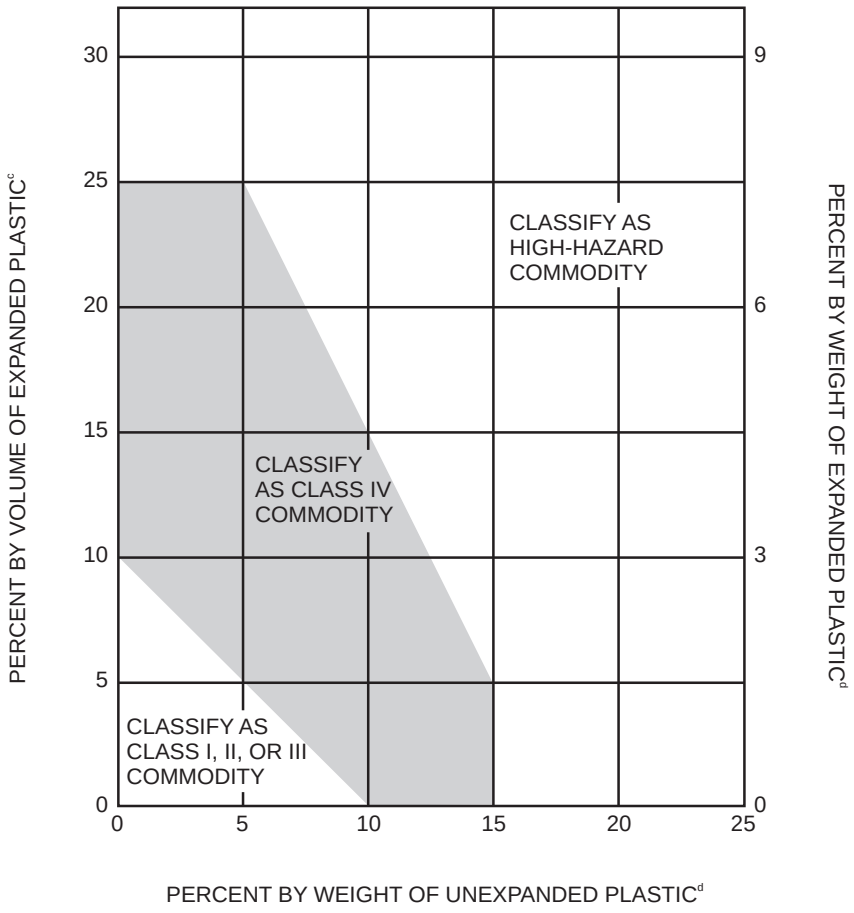

FIGURE 3203.7.4
MIXED COMMODITIES[a, b]

a. This figure is intended to determine the commodity classification of a mixed commodity in a package, carton or on a pallet where plastics are involved.

b. The following is an example of how to apply the figure: A package containing a Class III commodity has 12-percent Group A expanded plastic by volume. The weight of the unexpanded Group A plastic is 10 percent. This commodity is classified as a Class IV commodity. If the weight of the unexpanded plastic is increased to 14 percent, the classification changes to a high-hazard commodity.

c. $\text{Percent by volume} = \dfrac{\text{Volume of plastic in pallet load}}{\text{Total volume of pallet load, including pallet}}$

d. $\text{Percent by weight} = \dfrac{\text{Weight of plastic in pallet load}}{\text{Total weight of pallet load, including pallet}}$

INTERNATIONAL CODE COUNCIL®
Copyright © 2015 ICC. ALL RIGHTS RESERVED. Accessed by David Dammon on Jun 21, 2017 12:30:52 PM pursuant to License Agreement with ICC. No further reproduction or distribution authorized. ANY UNAUTHORIZED REPRODUCTION OR DISTRIBUTION IS A VIOLATION OF THE FEDERAL COPYRIGHT ACT AND THE LICENSE AGREEMENT, AND SUBJECT TO CIVIL AND CRIMINAL PENALTIES THEREUNDER.

the superstructure of the building. Racks can be a very significant part of the structure and pose structural failure concerns, especially for the fire suppression forces that may be operating in close proximity to the racks.

3205.2 Ignition sources. Clearance from ignition sources shall be provided in accordance with Section 305.

❖ Section 3205.2 directs the reader to Section 305, which addresses housekeeping provisions for such things as open flames, heaters, flame-producing devices, light fixtures and materials subject to spontaneous combustion. The responsibility for the care and maintenance of the building rests with the building owner or the tenant.

3205.3 Smoking. Smoking shall be prohibited. *Approved* "No Smoking" signs shall be conspicuously posted in accordance with Section 310.

❖ This section prohibits smoking within combustible storage areas to limit the chance for a fire to ignite. Section 310 is referenced for signage requirements.

3205.4 Aisle maintenance. When restocking is not being conducted, aisles shall be kept clear of storage, waste material and debris. Fire department access doors, aisles and *exit* doors shall not be obstructed. During restocking operations using manual stocking methods, a minimum unobstructed aisle width of 24 inches (610 mm) shall be maintained in 48-inch (1219 mm) or smaller aisles, and a minimum unobstructed aisle width of one-half of the required aisle width shall be maintained in aisles greater than 48 inches (1219 mm). During mechanical stocking operations, a minimum unobstructed aisle width of 44 inches (1118 mm) shall be maintained in accordance with Section 3206.9.

❖ This section emphasizes the importance of keeping aisles and access corridors open at all times for both occupant egress and fire-fighter access. Such aisles also serve as fire breaks. Miscellaneous storage, waste and other objects in the aisles negate or reduce these functions; therefore, the owner or tenant needs to have a rigorous maintenance program in place. This section is applicable to buildings that are accessible by the public, as well as those that are not. Restocking operations have the potential for being another impediment. Establishing minimum aisle widths coupled with strict enforcement increases the likelihood that clear aisle space will be available.

3205.5 Pile dimension and height limitations. Pile dimensions and height limitations shall comply with Section 3207.3.

❖ Pile dimensions and height limitations are directly regulated by the commodity class and the size of the storage area in accordance with Section 3207.3 and Table 3206.2. Section 3207.3 simply references

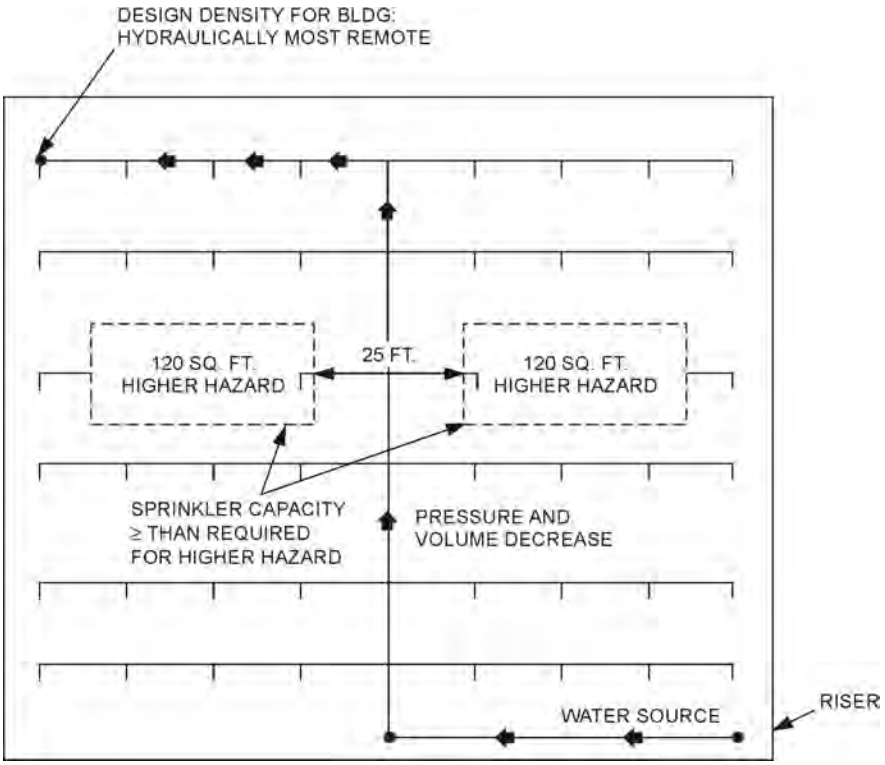

For SI: 1 foot = 304.8 mm, 1 square foot = 0.0929 m^2.

Figure 3204.2
HIGHER HAZARD STORAGE ALLOWANCE

INTERNATIONAL CODE COUNCIL®
Copyright © 2015 ICC. ALL RIGHTS RESERVED. Accessed by David Dammon on Jun 21, 2017 12:30:52 PM pursuant to License Agreement with ICC. No further reproduction or distribution authorized. ANY UNAUTHORIZED REPRODUCTION OR DISTRIBUTION IS A VIOLATION OF THE FEDERAL COPYRIGHT ACT AND THE LICENSE AGREEMENT, AND SUBJECT TO CIVIL AND CRIMINAL PENALTIES THEREUNDER.

Table 3206.2, which provides these limitations. The only real variation in pile sizes is when a designer chooses Option 2 in the table, which omits the use of sprinklers. Therefore, control of combustibles is more critical and the code has more restrictive height limitations.

3205.6 Designation of storage heights. Where required by the *fire code official*, a visual method of indicating the maximum allowable storage height shall be provided.

❖ The storage height of commodities is one of the most important variables when determining the adequacy of an automatic sprinkler system. A small increase in the height of storage can have major implications as to the minimum volume of water required to either control or suppress a fire involving high-piled combustible storage. This section was developed to provide code officials with a means of visually identifying the maximum allowable storage height in occupancies housing high-piled combustible storage. The requirement is not mandatory for all high-piled combustible storage, it is only required when specified by the fire code official. When applied, the requirement provides building owners and employees with a visual means of increasing the likelihood that the maximum allowable storage height will not be exceeded. This section does not specify the method required to satisfy its requirements. Compliance approaches could include the installation of barriers in rack sections; painting a line indicating the maximum storage height on the interior wall of the storage area or on the rack; posting signs; displaying a floor plan with storage heights indicated; or suspending objects from the roof structure. If the suspended objects method is selected, fire code officials should confirm that the design of the device does not create obstructions to the sprinkler discharge. A list of all possible methods to indicate maximum storage heights is not included in this section in order to avoid a "laundry list approach" that may limit creativity for a particular storage area.

3205.7 Arrays. Arrays shall comply with Section 3207.4.

❖ This section directs the reader to Section 3207.4, which in turn is governed by referenced standard NFPA 13. More specifically, it requires that any necessary spacings in accordance with the design be provided from the array to the ceiling to ensure sprinkler effectiveness.

3205.8 Flue spaces. Flue spaces shall comply with Section 3208.3.

❖ This section directs the reader to Section 3208.3, which in turn is governed by Table 3208.3 and provides criteria for flue spaces. Flue spaces are critical to sprinkler system effectiveness. See the definitions in Section 202 for "Flue spaces," "Longitudinal" and "Transverse" (see Commentary Figure 3205.8).

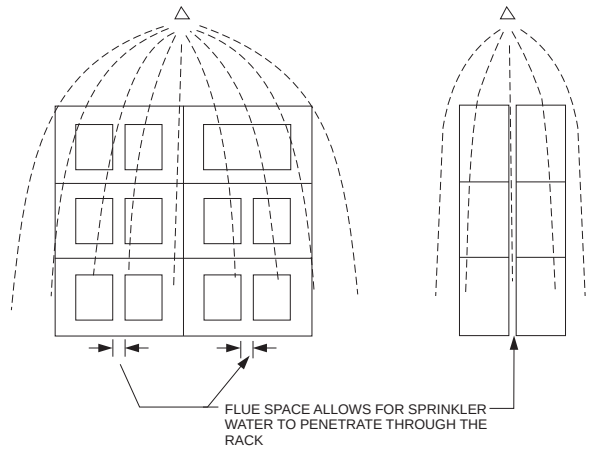

Figure 3205.8
SPRINKLER PENETRATION

SECTION 3206
GENERAL FIRE PROTECTION AND LIFE SAFETY FEATURES

3206.1 General. Fire protection and life safety features for *high-piled storage areas* shall be in accordance with Sections 3206.2 through 3206.10.

❖ This section establishes the minimum requirements for fire protection and life safety features. These provisions include separation requirements; automatic sprinklers; fire detection; access and egress; smoke and heat removal; hose connections; minimum dimensions for aisles; clear heights; dead ends; and fire extinguishers. In addition to the fire protection and life safety requirements, Table 3206.2 contains provisions concerning commodity class and size of storage area requirements that define which fire protection and life safety requirements are to be used in the building design. Although this section addresses minimum fire protection and life safety features, the provisions that require proper maintenance of those features are included in Section 3205 and Chapter 3.

The responsibility for the care and maintenance of the fire protection and life safety features rests with the building owner, tenant or lessee. The responsibility for notifying the fire service (local fire department) when fire protection systems are inoperable also rests with the building owner, tenant or lessee. This notification is necessary so that another means of protection is provided and that the fire department response and fireground management operations are based on system condition (see commentary, Section 901.7).

3206.2 Extent and type of protection. Where required by Table 3206.2, fire detection systems, smoke and heat removal and automatic sprinkler design densities shall extend the lesser of 15 feet (4572 mm) beyond the *high-piled storage area* or to a permanent partition. Where portions of *high-*

INTERNATIONAL CODE COUNCIL®
Copyright © 2015 ICC. ALL RIGHTS RESERVED. Accessed by David Dammon on Jun 21, 2017 12:30:52 PM pursuant to License Agreement with ICC. No further reproduction or distribution authorized. ANY UNAUTHORIZED REPRODUCTION OR DISTRIBUTION IS A VIOLATION OF THE FEDERAL COPYRIGHT ACT AND THE LICENSE AGREEMENT, AND SUBJECT TO CIVIL AND CRIMINAL PENALTIES THEREUNDER.

piled storage areas have different fire protection requirements because of commodity, method of storage or storage height, the fire protection features required by Table 3206.2 within this area shall be based on the most restrictive design requirements.

❖ The fire protection features noted in this section include a requirement for the extension of those features 15 feet (4572 mm) beyond the storage area if no partitions are present [see Commentary Figure 3206.2(1)]. For the fire protection systems to be effective, they must be designed with the knowledge that a fire within a storage area (high piled or rack) has the potential of jumping the aisle into another area of the same building. Note also that where mixed classes are stored in an area, the fire detection and protection system must be designed for the most hazardous commodity, except as allowed in Section 3204.2. The size of the high-piled storage area should include the aisles as required by NFPA 13 (only for rack storage). See the discussion in Section 3206.9 and the definition of "High-piled storage area." The 15-foot (4572 mm) extension of protection should include the aisle width when determining how far to extend the protection [see Commentary Figure 3206.2(2)].

TABLE 3206.2. See page 32-11.

❖ In addition to the provisions of Sections 3206 through 3210, this table defines, through a prescriptive approach, the fire protection requirements for high-piled storage. The table bases the requirements on the commodity class and size of the high-piled storage area to indicate the necessary automatic fire-extinguishing system, fire detection, building access, smoke and heat removal, and curtain boards. In addition, the type of commodity and size of the high-piled storage area govern the limitations for the size, height and volume of solid-piled storage, shelf storage and palletized storage. The table presents the requirements in two commodity groupings. These groupings are Class I through IV commodities and high-hazard commodities. Essentially, all the same requirements apply, but at lower thresholds for high-hazard commodities.

Some of the key footnotes to the table are as follows:

- Note a reminds the reader that sprinkler systems must comply with the high-piled storage protection strategies found in NFPA 13 to be considered protected in accordance with the table.
- Note g requires special fire protection features, such as fire protection of exposed steel in very large high-piled storage areas. This is likely due to the potential size of a fire event with such a large amount of storage.
- Note h limits high-hazard storage areas to 500,000 square feet (46 450 m^2). Each 500,000-square-foot (46 450 m^2) area would be required to be separated with a 2-hour fire wall (separate buildings).
- Note i indicates that a fire detection system is not required by the table if the high-piled storage area is sprinklered. Without this footnote it would be unclear whether smoke detection would be required where sprinklers are voluntarily provided.
- Note j makes an exception to the smoke and heat removal requirements where early suppression fast response (ESFR) sprinklers or control mode special application sprinklers with a response time index of 50 or less listed to control a fire with 12 or fewer sprinklers are used. Similar exceptions are found in Section 910.1.

Example: A storage area contains 200,000 square feet (18 580 m^2) of high-piled storage classified as commodity Class I. It is a single-story building with floor space only, no rack storage and is protected by standard automatic sprinklers. The subject building would be required to comply with the following:

- Automatic fire-extinguishing system throughout (see Section 3206.4).
- Building access (see Section 3206.6).
- Smoke and heat removal (see Section 3206.7).
- Maximum pile dimension of 100 feet (30 480 mm) (see Section 3206.9).
- Maximum permissible storage height of 40 feet (12 192 mm).
- Maximum pile volume of (100 feet by 100 feet by 40 feet tall) 400,000 cubic feet (11 328 m^3).

3206.3 Separation of high-piled storage areas. *High-piled storage areas* shall be separated from other portions of the building where required by Sections 3206.3.1 through 3206.3.2.2.

❖ This section sets forth the requirements for separating the storage area from other uses within the same building and for multiple classifications and heights of storage.

INTERNATIONAL CODE COUNCIL®
Copyright © 2015 ICC. ALL RIGHTS RESERVED. Accessed by David Dammon on Jun 21, 2017 12:30:52 PM pursuant to License Agreement with ICC. No further reproduction or distribution authorized. ANY UNAUTHORIZED REPRODUCTION OR DISTRIBUTION IS A VIOLATION OF THE FEDERAL COPYRIGHT ACT AND THE LICENSE AGREEMENT, AND SUBJECT TO CIVIL AND CRIMINAL PENALTIES THEREUNDER.

TABLE 3206.2
GENERAL FIRE PROTECTION AND LIFE SAFETY REQUIREMENTS

COMMODITY CLASS	SIZE OF HIGH-PILED STORAGE AREA[a] (square feet) (see Sections 3206.2 and 3206.4)	ALL STORAGE AREAS (See Sections 3206, 3207 and 3208)[b]				SOLID-PILED STORAGE, SHELF STORAGE AND PALLETIZED STORAGE (see Section 3207.3)		
		Automatic fire-extinguishing system (see Section 3206.4)	Fire detection system (see Section 3206.5)	Building access (see Section 3206.6)	Smoke and heat removal (see Section 3206.7)	Maximum pile dimension[c] (feet)	Maximum permissible storage height[d] (feet)	Maximum pile volume (cubic feet)
I-IV	0-500	Not Required[a]	Not Required	Not Required[e]	Not Required	Not Required	Not Required	Not Required
	501-2,500	Not Required[a]	Yes[i]	Not Required[e]	Not Required	100	40	100,000
	2,501-12,000 Public accessible	Yes	Not Required	Not Required[e]	Not Required	100	40	400,000
	2,501-12,000 Nonpublic accessible (Option 1)	Yes	Not Required	Not Required[e]	Not Required	100	40	400,000
	2,501-12,000 Nonpublic accessible (Option 2)	Not Required[a]	Yes	Yes	Yes[j]	100	30[f]	200,000
	12,001-20,000	Yes	Not Required	Yes	Yes[j]	100	40	400,000
	20,001-500,000	Yes	Not Required	Yes	Yes[j]	100	40	400,000
	Greater than 500,000[g]	Yes	Not Required	Yes	Yes[j]	100	40	400,000
High hazard	0-500	Not Required[a]	Not Required	Not Required[e]	Not Required	50	Not Required	Not Required
	501-2,500 Public accessible	Yes	Not Required	Not Required[e]	Not Required	50	30	75,000
	501-2,500 Nonpublic accessible (Option 1)	Yes	Not Required	Not Required[e]	Not Required	50	30	75,000
	501-2,500 Nonpublic accessible (Option 2)	Not Required[a]	Yes	Yes	Yes[j]	50	20	50,000
	2,501-300,000	Yes	Not Required	Yes	Yes[j]	50	30	75,000
	300,001-500,000[g, h]	Yes	Not Required	Yes	Yes[j]	50	30	75,000

For SI: 1 foot = 304.8 mm, 1 cubic foot = 0.02832 m^3, 1 square foot = 0.0929 m^2.

a. Where automatic sprinklers are required for reasons other than those in Chapter 32, the portion of the sprinkler system protecting the high-piled storage area shall be designed and installed in accordance with Sections 3207 and 3208.

b. For aisles, see Section 3206.9.

c. Piles shall be separated by aisles complying with Section 3206.9.

d. For storage in excess of the height indicated, special fire protection shall be provided in accordance with Note g where required by the fire code official. See Chapters 51 and 57 for special limitations for aerosols and flammable and combustible liquids, respectively.

e. Section 503 shall apply for fire apparatus access.

f. For storage exceeding 30 feet in height, Option 1 shall be used.

g. Special fire protection provisions including, but not limited to, fire protection of exposed steel columns; increased sprinkler density; additional in-rack sprinklers, without associated reductions in ceiling sprinkler density; or additional fire department hose connections shall be provided required by the fire code official.

h. High-piled storage areas shall not exceed 500,000 square feet. A 2-hour fire wall constructed in accordance with Section 706 the *International Building Code* shall be used to divide high-piled storage exceeding 500,000 square feet in area.

i. Not required where an automatic fire-extinguishing system is designed and installed to protect the high-piled storage area in accordance with Sections 3207 and 3208.

j. Not required where storage areas are protected by either early suppression fast response (ESFR) sprinkler systems or control mode special application sprinklers with a response time index of 50 $(m \cdot s)^{1/2}$ or less that are listed to control a fire in the stored commodities with 12 or fewer sprinklers, installed in accordance with NFPA 13.

INTERNATIONAL CODE COUNCIL®
Copyright © 2015 ICC. ALL RIGHTS RESERVED. Accessed by David Dammon on Jun 21, 2017 12:30:52 PM pursuant to License Agreement with ICC. No further reproduction or distribution authorized. ANY UNAUTHORIZED REPRODUCTION OR DISTRIBUTION IS A VIOLATION OF THE FEDERAL COPYRIGHT ACT AND THE LICENSE AGREEMENT, AND SUBJECT TO CIVIL AND CRIMINAL PENALTIES THEREUNDER.

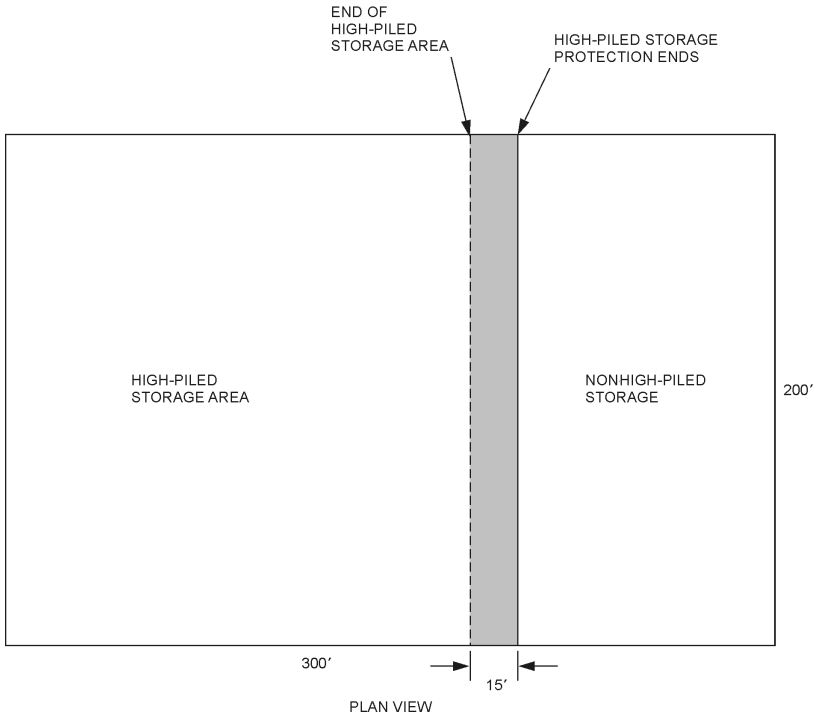

For SI: 1 foot = 304.8 mm.

Figure 3206.2(1)
EXTENT OF PROTECTION

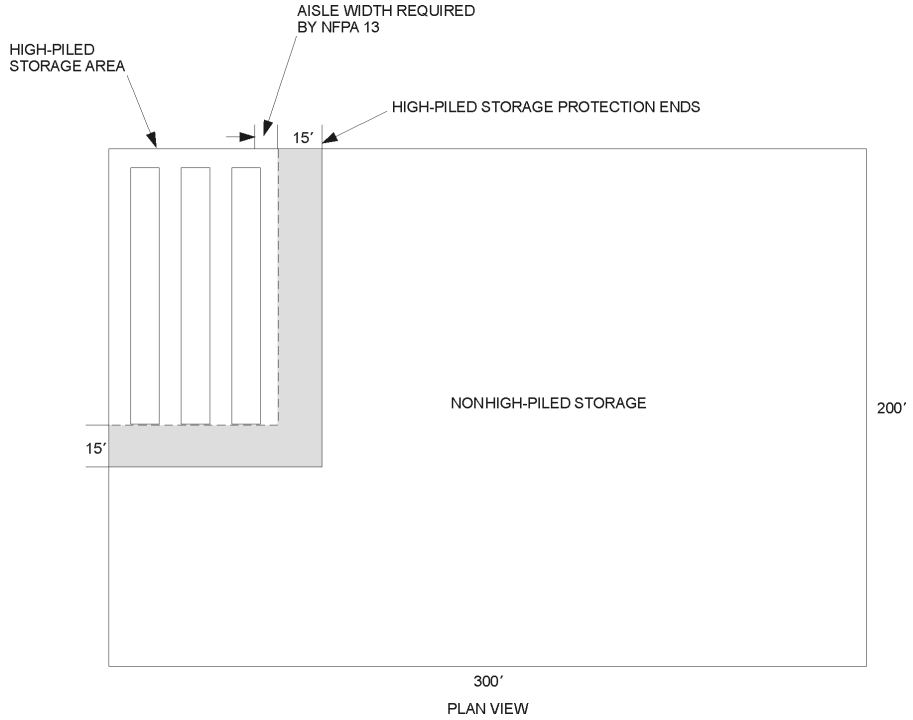

For SI: 1 foot = 304.8 mm.

Figure 3206.2(2)
EXTENT OF PROTECTION INCLUDING AISLES

INTERNATIONAL CODE COUNCIL®
Copyright © 2015 ICC. ALL RIGHTS RESERVED. Accessed by David Dammon on Jun 21, 2017 12:30:52 PM pursuant to License Agreement with ICC. No further reproduction or distribution authorized. ANY UNAUTHORIZED REPRODUCTION OR DISTRIBUTION IS A VIOLATION OF THE FEDERAL COPYRIGHT ACT AND THE LICENSE AGREEMENT, AND SUBJECT TO CIVIL AND CRIMINAL PENALTIES THEREUNDER.

3206.3.1 Separation from other uses. Mixed occupancies shall be separated in accordance with the *International Building Code.*

❖ IBC Section 508 describes the provisions governing the condition when a building contains more than one of the occupancy groups identified in IBC Sections 303 through 312 (see also the occupancy classification definitions in Section 202 of the code). Buildings very often will contain more than one occupancy group classification; for example, an office (Group B, business) connected to a storage area (Group S-1, moderate-hazard storage). Once a building is determined to house more than one occupancy group, the codes require that a combination of potential fire and life safety hazards be addressed. IBC Section 508.3 provides for several conditions under which certain dissimilar occupancies are treated: accessory occupancies, nonseparated occupancies and separated occupancies. It should be noted that when the mixed occupancy building is separated by a fire wall it technically becomes two buildings (see the definition of "Building area" in Section 202). As a result, the provisions of IBC Sections 503 through 507 will need to be reviewed for applicability and the evaluation and design adjusted for that difference.

3206.3.2 Multiple high-piled storage areas. Multiple *high-piled storage areas* shall be in accordance with Section 3206.3.2.1 or 3206.3.2.2.

❖ This section delineates how to determine fire and life safety requirements for a single building or area containing multiple classes of commodities.

3206.3.2.1 Aggregate area. The aggregate of all *high-piled storage areas* within a building shall be used for the application of Table 3206.2 unless such areas are separated from each other by 1-hour *fire barriers* constructed in accordance with Section 707 the *International Building Code*. Openings in such *fire barriers* shall be protected by opening protectives having a 1-hour *fire protection rating*.

❖ This section is intended to recognize that, in actual storage circumstances, storage arrays do not always correspond to any one commodity classification. It is not unusual for arrays to consist of thousands of products. As a result, this section recognizes that, in storage areas, multiple commodity classifications may be contained in one area and must be treated as an aggregate when applying Table 3206.2. As an alternative, this provision allows for each class of commodity to be separated within the same building by 1-hour fire barriers constructed in accordance with IBC Section 707, which applies to fire barriers used for separating fire areas. To maintain integrity of the separation of fire areas, fire barriers must be continuous from the top of the floor below to the underside of the roof slab or deck above and be securely attached thereto. As with any fire-resistance-rated assembly, consideration must be given to openings and penetrations. The number and size of openings in the fire barrier must comply with the provisions of IBC Section 707, and the opening protectives must have a minimum fire protection rating of 1 hour. Note that IBC Section 716.5 allows an opening protective fire protection rating of $^3/_4$ hour for nonexit-enclosure fire barriers; however, this section, with its specific requirement of a 1-hour opening protective assembly rating, would supersede that requirement. Penetrations of fire barriers must comply with IBC Section 714. Maintenance of the fire-resistance-rated construction rests with the building owner or the tenant as described in Section 703. The main purpose for this section is to determine what area is required to be used when addressing Table 3206.2. Section 3206.3.2.2 is focused on the need to separate different hazard levels of storage in order to increase or reduce the fire protection requirements (see also commentary, Section 3206.3.2.2).

3206.3.2.2 Multiclass high-piled storage areas. *High-piled storage areas* classified as Class I through IV not separated from *high-piled storage areas* classified as high hazard shall utilize the aggregate of all *high-piled storage areas* as high hazard for the purposes of the application of Table 3206.2. To be considered as separated, 1-hour *fire barriers* shall be constructed in accordance with Section 707 of the *International Building Code*. Openings in such *fire barriers* shall be protected by opening protectives having a 1-hour *fire protection rating*.

Exception: As provided for in Section 3204.2.

❖ This section is intended to recognize that, in actual circumstances, storage arrays may contain a combination of Class I through IV commodities alongside high-hazard commodities. It is not unusual for arrays to consist of thousands of products. As in Section 3206.3.2.1, this section recognizes that in storage areas multiples of commodity classifications may be contained in one area and must be treated as an aggregate under the highest hazard commodity class category found in that area when applying Table 3206.2. As with Section 3206.3.2.1, this provision allows for each class of commodity to be separated within the same building by 1-hour fire barriers constructed in accordance with IBC Section 707, which applies to fire barriers used for separating fire areas. To maintain integrity of the separation of fire areas, fire barriers must be continuous from the top of the floor below to the underside of the roof slab or deck above and be securely attached thereto. As with any fire-resistive barriers, consideration must be given to openings and penetrations. The number and size of openings in the fire barrier must comply with the provisions of IBC Section, and the opening protective assemblies must have a minimum fire-resistance rating of 1 hour. Note that IBC Section 716.5 allows an opening protection rating of $^3/_4$ hour for nonexit-enclosure fire barriers; however, this section, with its specific requirement of a 1-hour opening protective assembly rating, would supersede that requirement. Penetrations of fire barriers must comply with IBC Section 714. Maintenance of the fire-resistance-rated

INTERNATIONAL CODE COUNCIL®
Copyright © 2015 ICC. ALL RIGHTS RESERVED. Accessed by David Dammon on Jun 21, 2017 12:30:52 PM pursuant to License Agreement with ICC. No further reproduction or distribution authorized. ANY UNAUTHORIZED REPRODUCTION OR DISTRIBUTION IS A VIOLATION OF THE FEDERAL COPYRIGHT ACT AND THE LICENSE AGREEMENT, AND SUBJECT TO CIVIL AND CRIMINAL PENALTIES THEREUNDER.

construction rests with the building owner or the tenant as described in Section 703. The use of separation allows the application of less-restrictive, active fire protection requirements in some areas containing lower hazard commodities. It also creates smaller areas that need to be applied to Table 3206.2. The exception permits the use of an accepted engineering analysis in accordance with Section 3204.2, which allows one to take advantage of the benefits of hydraulic design (see Section 3204.2).

3206.4 Automatic sprinklers. *Automatic sprinkler systems* shall be provided in accordance with Sections 3207, 3208 and 3209.

❖ This section refers the reader to Sections 3207, 3208 and 3209 for the specific sprinkler requirements based upon the type of high-piled storage. Sprinkler systems are discussed in Sections 3207.2, 3208.2 and 3209.2 for the various ways in which high-piled storage is configured.

3206.4.1 Pallets. Automatic sprinkler system requirements based upon the presence of pallets shall be in accordance with NFPA 13.

❖ The types of pallets used will alter the sprinkler protection provided for storage. NFPA 13 has extensive requirements for pallet use and storage based on the type of pallet that must be designed for and maintained during occupancy. Plastic pallets, when used, increase the fuel load to the commodity that is being stored on top of the pallet. NFPA 13 requires the commodity classification to be altered to address the additional hazard. There are specific adjustments for commodity class for unreinforced or reinforced polypropylene or unreinforced or reinforced high-density polyethylene plastic pallets. If a different type of plastic is used, the commodity shall either be adjusted by two classes or be tested to determine the classification. NFPA 13 does not specify a test.

3206.4.1.1 Plastic pallets. Plastic pallets listed and labeled in accordance with UL 2335 or FM 4996 shall be treated as wood pallets for determining required sprinkler protection.

❖ This section allows for plastic pallets that have passed UL 2335 or FM 4996 to be treated as wood pallets. UL 2335 and FM 4996 are tests specific to storage pallets and their associated flammability; those tests do not address smoke generation. The tests examine the comparative performance of the plastic pallet to a wood pallet.

3206.5 Fire detection. Where fire detection is required by Table 3206.2, an *approved* automatic fire detection system shall be installed throughout the *high-piled storage area*. The system shall be monitored and be in accordance with Section 907.

❖ Automatic fire detection systems are designed to increase the likelihood that the fire will be detected and the occupants given sufficient warning to allow area or building exit. The detectors must be smoke detectors approved for the particular use, as required by Section 907.2. Table 3206.2 shows when a fire detection system is required to be installed in a storage area. Section 907 covers the application, installation, performance and maintenance of the fire alarm system and its components. Section 907.6.3 requires that the fire alarm system identify the specific initiation device address, location and device type. Several exceptions address issues such as small buildings where this is unnecessary, certain initiating devices and existing systems. Section 907.6.4 provides the minimum requirements for zoning the system, which limit the size of the zoned area to 22,500 square feet (2090 m^2). Such systems are only required in some cases in Table 3206.2, primarily when the building is not sprinklered.

3206.6 Building access. Where building access is required by Table 3206.2, fire apparatus access roads in accordance with Section 503 shall be provided within 150 feet (45 720 mm) of all portions of the *exterior walls* of buildings used for high-piled storage.

> **Exception:** Where fire apparatus access roads cannot be installed because of topography, railways, waterways, nonnegotiable grades or other similar conditions, the *fire code official* is authorized to require additional fire protection.

❖ This section contains the requirements for fire department access to a building. There are the same requirements found in Section 503.1.1. Section 503 discusses the minimum requirements for the location of such a roadway, additional access where required, minimum dimensions, minimum surface load tolerances, turning radii, grades, marking and overall access by the fire department. Additional measures are necessary when a road cannot be built on the property surrounding the building, including additional fire sprinkler protection, detection, building fire resistance, etc. This reliance on fire protection systems is necessary to compensate for the limited access available to fire department equipment.

3206.6.1 Access doors. Where building access is required by Table 3206.2, fire department access doors shall be provided in accordance with this section. Access doors shall be accessible without the use of a ladder.

❖ Building access requirements are summarized in Table 3206.2. The access requirements include the application of Sections 3206.6.1.1 through 3206.6.1.3. In addition, the provisions of Chapter 10, which address minimum clear width dimensions, allowable projections into the clear width, floor landings, door hardware, door identification, etc., must be considered. Section 504 states that an approved walkway must be provided from the fire apparatus access road, or from other approved fire apparatus access roadways, to an exterior door opening required for fire department access.

3206.6.1.1 Number of doors required. Not less than one access door shall be provided in each 100 linear feet (30 480 mm), or fraction thereof, of the exterior walls that face

INTERNATIONAL CODE COUNCIL®
Copyright © 2015 ICC. ALL RIGHTS RESERVED. Accessed by David Dammon on Jun 21, 2017 12:30:52 PM pursuant to License Agreement with ICC. No further reproduction or distribution authorized. ANY UNAUTHORIZED REPRODUCTION OR DISTRIBUTION IS A VIOLATION OF THE FEDERAL COPYRIGHT ACT AND THE LICENSE AGREEMENT, AND SUBJECT TO CIVIL AND CRIMINAL PENALTIES THEREUNDER.

required fire apparatus access roads. The required access doors shall be distributed such that the lineal distance between adjacent access doors does not exceed 100 feet (30 480 mm).

Exception: The linear distance between adjacent access doors is allowed to exceed 100 feet (30 480 mm) in existing buildings where no change in occupancy is proposed. The number and distribution of access doors in existing buildings shall be approved.

❖ In accordance with *International Fire Code*® (IFC®) Committee Interpretation No. 36-04, access door openings in exterior walls are to be located such that the distance between adjacent openings does not exceed 100 lineal feet (30 480 mm), providing the fire department short runs for quick access to assess, combat and control a fire in the high-piled storage areas of a building (see Commentary Figure 3206.6.1.1). The language is similar to that found in Section 903.2.11.1 for windowless stories or buildings. Table 3206.2 tends to require such doors for larger-sized, high-piled storage areas where fire fighting may be more difficult.

An exception is provided for existing buildings. This exception recognizes that there may be practical difficulties in adding doors to an existing building to meet the 100-foot limitations. The exception does not prescribe a specific number but instead requires the number and distribution to be approved. The current language limiting the distance to 100 feet first appeared in the 2009 edition of the code. Existing warehouses where one tenant moves out and a new tenant moves in will require a new high-piled storage permit. As part of the permit, the current/adopted edition of Chapter 32 is applied, often resulting in cutting holes in exterior walls, which are often concrete, and causing business restrictions as a result of adding doors where currently roll-up doors exist. This allows a small amount of flexibility for owners of existing buildings and the fire code official where adding doors appears costly or impractical.

3206.6.1.2 Door size and type. Access doors shall be not less than 3 feet (914 mm) in width and 6 feet 8 inches (2032 mm) in height. Roll-up doors shall not be used unless *approved*.

❖ Door sizes are the same as those in the means-of-egress door provisions of Chapter 10. The emphasis on the side-hinged type of door is to ensure that other door types, such as roll-up and sliding, are not used due to their historically poor reliability. The swing should be outward and no less than 90 degrees (1.75 rad). Section 1003.5, Exception 1, permits the door sill elevation to be above the outside grade if the door is not a required accessible route in accordance with the IBC. In some regions, the raised sill is preferred because of the potential buildup of snow and ice.

3206.6.1.3 Locking devices. Only *approved* locking devices shall be used.

❖ Locking mechanisms must be approved by the fire code official. The fire service must be able to open

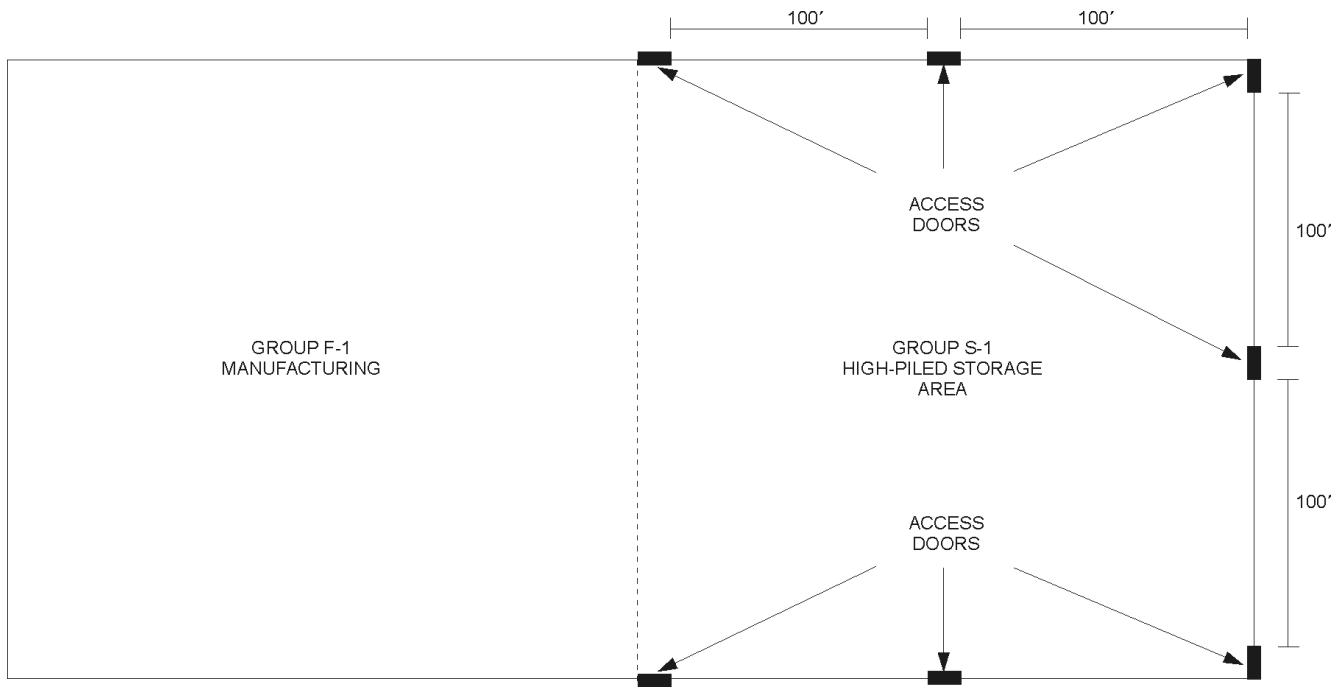

For SI: 1 foot = 304.8 mm.

Figure 3206.6.1.1
REQUIRED ACCESS DOORS

INTERNATIONAL CODE COUNCIL®
Copyright © 2015 ICC. ALL RIGHTS RESERVED. Accessed by David Dammon on Jun 21, 2017 12:30:52 PM pursuant to License Agreement with ICC. No further reproduction or distribution authorized. ANY UNAUTHORIZED REPRODUCTION OR DISTRIBUTION IS A VIOLATION OF THE FEDERAL COPYRIGHT ACT AND THE LICENSE AGREEMENT, AND SUBJECT TO CIVIL AND CRIMINAL PENALTIES THEREUNDER.

the doors from the exterior side during an emergency. The locking mechanism must be designed to maintain the security of the building, to be readily openable from the egress side and to be openable by fire department personnel from the exterior.

3206.7 Smoke and heat removal. Where smoke and heat removal is required by Table 3206.2 it shall be provided in accordance with Section 910.

❖ Table 3206.2 identifies the requirements for smoke and heat removal based on the size and public accessibility of the high-piled storage area. If required, smoke and heat removal is to be designed and installed in accordance with Section 910. Smoke and heat removal would not be required if ESFR sprinklers or control mode special application sprinklers are installed in accordance with Note j of Table 3206.2. The concern addressed by Note j is that smoke and heat vents may affect sprinkler reliability and the general need for such features in sprinklered buildings. Also, these types of sprinkler systems are extremely successful in suppressing and extinguishing fires. They are also designed such that disruption from smoke and heat vents or even a mechanical smoke removal system would be detrimental to their successful operation. Smoke and heat vents and draft curtains were originally developed as a way to manage smoke in nonsprinklered large spaces. Draft curtains are no longer addressed in Chapter 32 or Section 910.

In addition, vent locations must reflect consideration of the temperature requirements of both the fusible link of the vent and the temperature rating range of the sprinkler heads. A vent opening could keep the temperature around nearby sprinkler heads low enough to prevent them from activating because of the cooler air passing to the opened vent; therefore, smoke and heat vents should have a higher temperature rating than the sprinklers. These concerns are addressed in more detail in standards UL793 and FM 4430.

3206.8 Fire department hose connections. Where *exit* passageways are required by the *International Building Code* for egress, a Class I standpipe system shall be provided in accordance with Section 905.

❖ An exit passageway is a means of continuing the exit enclosure protection horizontally to the exit discharge. Accordingly, an exit passageway may be used to connect an interior exit stairway to the exit discharge. Another use of an exit passageway is to bring an exit entrance within the allowable limit of exit access travel distance. This section states that when the IBC requires the installation of an exit passageway, a Class I standpipe system must be provided in accordance with Section 905. The intent is to recognize that the standpipe will provide a quick and convenient water source for fire department use where fire hose lines would be in a protected area or would otherwise be impractical to use because of travel distance. The intent is to allow the fire department to initiate an attack on the fire more safely and quickly, thus reducing the possibility of loss of life or property.

3206.9 Aisles. Aisles providing access to *exits* and fire department access doors shall be provided in *high-piled storage areas* exceeding 500 square feet (46 m^2), in accordance with Sections 3206.9.1 through 3206.9.3. Aisles separating storage piles or racks shall comply with NFPA 13. Aisles shall also comply with Chapter 10.

Exception: Where aisles are precluded by rack storage systems, alternate methods of access and protection are allowed when *approved*.

❖ Aisles in high-piled storage areas have multiple functions, which include the following:

- Exit access.
- Fire department access.
- Fire breaks.
- Everyday access to storage.

Under normal conditions, the aisles primarily serve people working in the building, and the design for minimum aisle width is based on the maneuvering capabilities of the commodity-handling methods and equipment. Under emergency situations, the aisle automatically becomes an egress pathway that must provide the required minimum width to accommodate the number of occupants that must use the aisles, and also serves to allow the water discharge from the sprinklers to penetrate the high-piled storage. Aisles also provide access for fire department personnel and serve as fire breaks between piles and racks.

Chapter 2 of both the code and the IBC define “Aisle” as an exit access component that defines and provides a path of egress travel. This is generally true when it comes to high-piled storage, but the aisles have other important functions as noted above.

This section differentiates between aisle requirements for fire department access and exit access for occupants from those required by NFPA 13. The aisle requirements in NFPA 13 are specific to rack storage and are based on the testing of specific commodity configurations. During tests of high-piled rack storage configurations, one of the criteria for success/failure has been whether the target array (commodity across the aisle) has been ignited. Therefore, as discussed in the definition of “High-piled storage areas” these aisle widths would be included in the area actually classified as high-piled combustible storage [see Commentary Figure 3206.9(2)]. Any of the aisles related solely to exit and access would be above and beyond the requirements in NFPA 13 and would not need to be included in the aggregate area. NFPA 13 does not address aisle widths for solid-piled or palletized storage; therefore, the aisle widths would not

INTERNATIONAL CODE COUNCIL®
Copyright © 2015 ICC. ALL RIGHTS RESERVED. Accessed by David Dammon on Jun 21, 2017 12:30:52 PM pursuant to License Agreement with ICC. No further reproduction or distribution authorized. ANY UNAUTHORIZED REPRODUCTION OR DISTRIBUTION IS A VIOLATION OF THE FEDERAL COPYRIGHT ACT AND THE LICENSE AGREEMENT, AND SUBJECT TO CIVIL AND CRIMINAL PENALTIES THEREUNDER.

need to be included as part of the high-piled storage area when applying Table 3206.2, but would be required by this section for egress and access. NFPA 13 does have a section that discusses the need for aisle widths in all high-piled storage areas as it relates to slowing the spread of fire, fire-fighter access, salvage and removal of storage but does not provide specific aisle widths (see also IFC Committee Interpretation No. 13-05 and the definition of "High-piled combustible storage" in Section 202).

Another scenario encountered when determining the high-piled storage area is high-piled storage surrounding other uses or low-piled storage. The aisle width when addressing rack storage should be included in the high-piled storage area determination [see Commentary Figure 3206.9(3)].

The exception to this section provides the ability to address situations where the required aisle width affects the ability of a facility to operate. Essentially, other strategies must be proposed. This may include the use of additional sprinkler protection within racks. The key is that egress and access for occupants and fire fighters be addressed appropriately. It should be noted that multiple-row racks specifically lack aisles, unlike single- and double-row racks. However, the increased hazard from such storage is already specifically addressed by NPFA 13 in the fire protection requirements.

3206.9.1 Width. Aisle width shall be in accordance with Sections 3206.9.1.1 and 3206.9.1.2.

Exceptions:

1. Aisles crossing rack structures or storage piles, that are used only for employee access, shall be not less than 24 inches (610 mm) wide.
2. Aisles separating shelves classified as shelf storage shall be not less than 30 inches (762 mm) wide.

❖ This section alerts the code user to the various minimum aisle widths based on the commodity, commodity area and whether the building contains automatic sprinklers. It is important to note that for fire protection purposes, NFPA 13 defines "Aisle width" as "the horizontal dimension between the face of the loads in racks under consideration" (see Commentary Figure 3206.9.1).

There are two exceptions to the aisle requirements. Exception 1 allows aisles that cross rack structures to be 24 inches (610 mm), the logic being that those aisles are not required (above and beyond egress, access and need for fire breaks) and are simply a convenience for building owners and users (see Commentary Figure 3206.9.1).

Exception 2 is for shelving that allows a 30-inch (762 mm) aisle. This is related to the requirements found in NFPA 13 for shelf storage that allows 30-inch (762 mm) aisles. Solid shelving in rack storage would not be addressed by this exception.

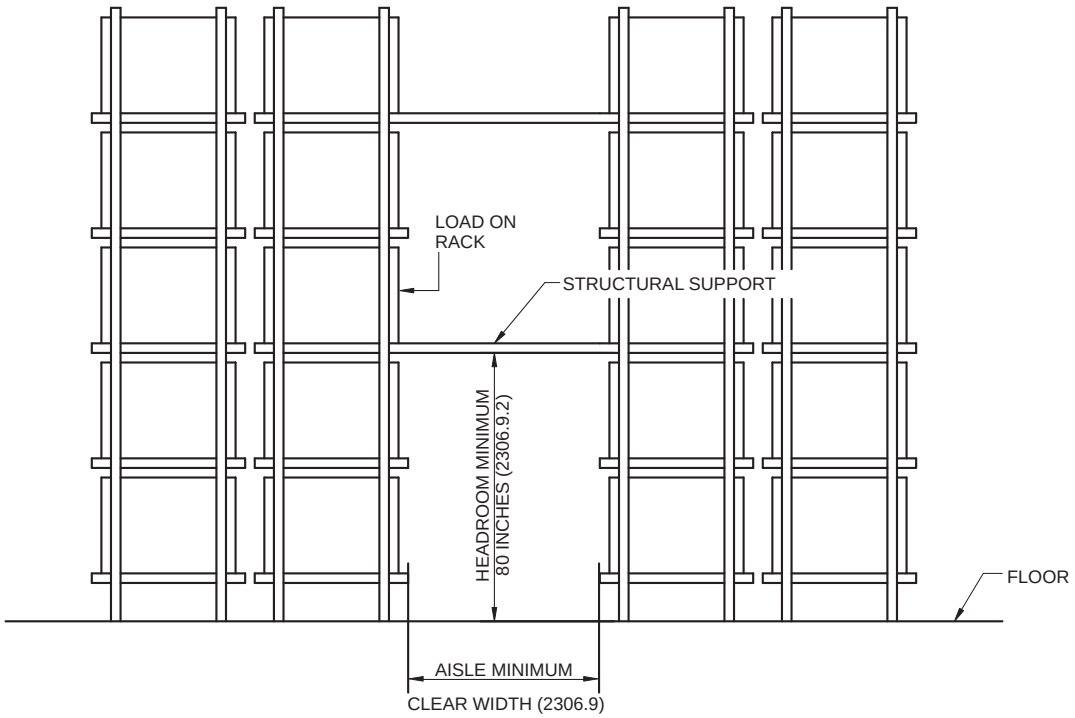

For SI: 1 inch = 25.4 mm.

Figure 3206.9(1)
RACK STORAGE (DOUBLE ROW)

INTERNATIONAL CODE COUNCIL®
Copyright © 2015 ICC. ALL RIGHTS RESERVED. Accessed by David Dammon on Jun 21, 2017 12:30:52 PM pursuant to License Agreement with ICC. No further reproduction or distribution authorized. ANY UNAUTHORIZED REPRODUCTION OR DISTRIBUTION IS A VIOLATION OF THE FEDERAL COPYRIGHT ACT AND THE LICENSE AGREEMENT, AND SUBJECT TO CIVIL AND CRIMINAL PENALTIES THEREUNDER.

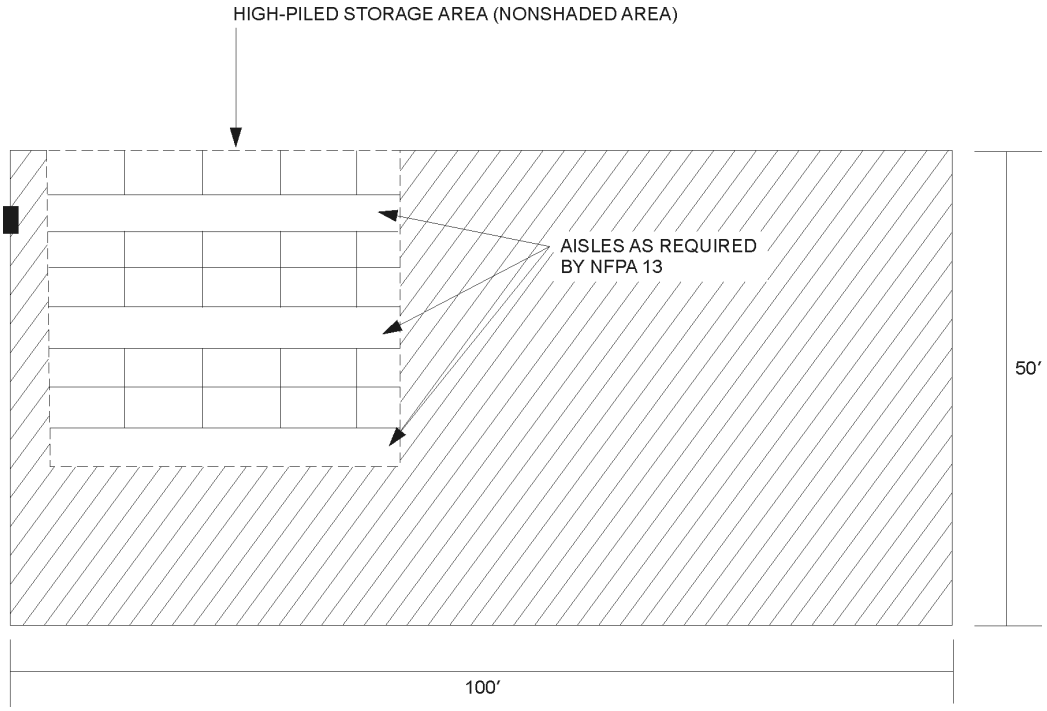

For SI: 1 foot = 304.8 mm.

Figure 3206.9(2)
HIGH-PILED STORAGE AREA

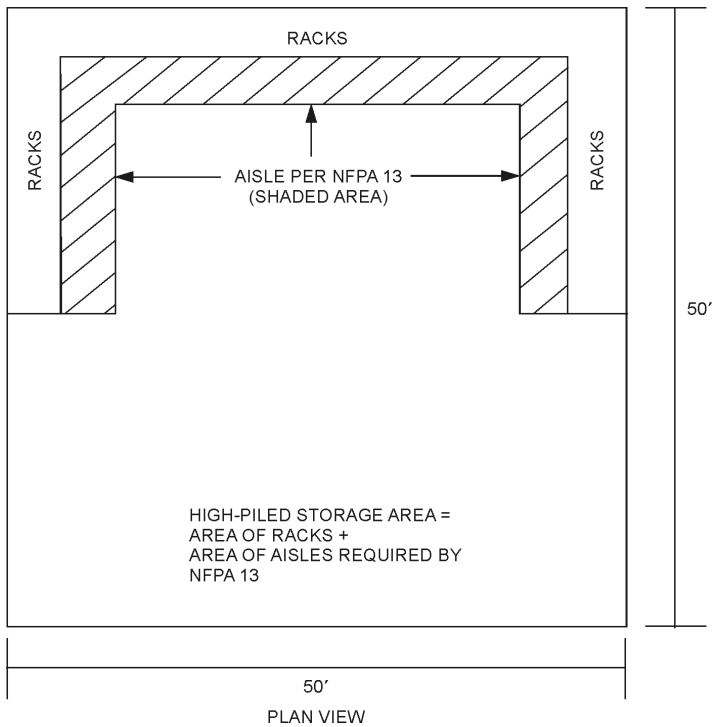

For SI: 1 foot = 304.8 mm.

Figure 3206.9(3)
HIGH-PILED STORAGE AREA (ALONG WALLS)

INTERNATIONAL CODE COUNCIL®
Copyright © 2015 ICC. ALL RIGHTS RESERVED. Accessed by David Dammon on Jun 21, 2017 12:30:52 PM pursuant to License Agreement with ICC. No further reproduction or distribution authorized. ANY UNAUTHORIZED REPRODUCTION OR DISTRIBUTION IS A VIOLATION OF THE FEDERAL COPYRIGHT ACT AND THE LICENSE AGREEMENT, AND SUBJECT TO CIVIL AND CRIMINAL PENALTIES THEREUNDER.

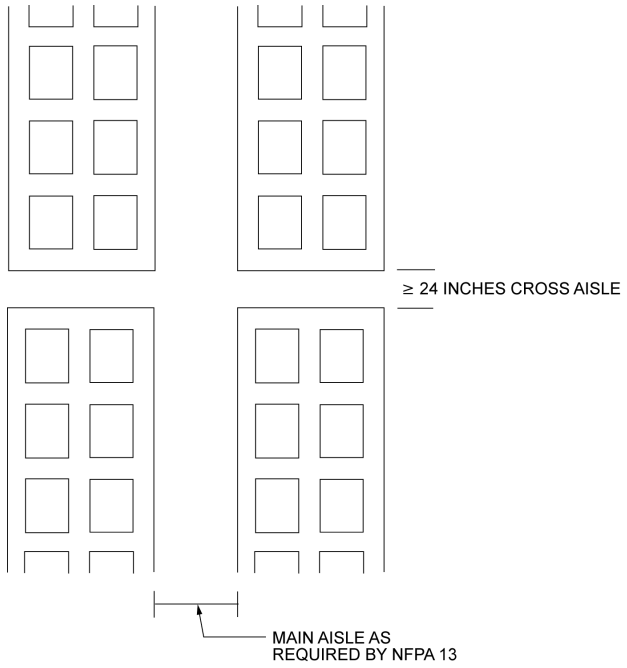

For SI: 1 inch = 25.4 mm.

Figure 3206.9.1
CROSS AISLES

3206.9.1.1 Sprinklered buildings. Aisles in sprinklered buildings shall be not less than 44 inches (1118 mm) wide. Aisles shall be not less than 96 inches (2438 mm) wide in *high-piled storage areas* exceeding 2,500 square feet (232 m^2) in area, that are accessible to the public and designated to contain high-hazard commodities.

Exception: Aisles in *high-piled storage areas* exceeding 2,500 square feet (232 m^2) in area, that are accessible to the public and designated to contain high-hazard commodities, are protected by a sprinkler system designed for multiple-row racks of high-hazard commodities shall be not less than 44 inches (1118 mm) wide.

Aisles shall be not less than 96 inches (2438 mm) wide in areas accessible to the public where mechanical stocking methods are used.

❖ The 44-inch-minimum (1118 mm) aisle width allows two unimpeded parallel columns of occupants to travel in opposite directions in addition to anticipating other obstructions occurring during an emergency situation. These obstructions could be in the form of a lift truck, idle pallets, mercantile displays and even the results of unstable commodities falling into the aisle. In addition, the 96-inch (2438 mm) width further reduces the hazard of aisle jumps (radiant heat from a burning pile/rack causing the pile/rack across the aisle to ignite) in case of a fire and provides the fire department with greater maneuvering capabilities during a fire, essentially providing an additional safety factor where more dangerous commodities are stored.

Aisles that provide access to exits and to the fire department access doors are required to comply with Section 3206.9.1. Therefore, where such exit access and fire department access doors are located, the aisles are required to be at least 44 inches. This would also require that single- or double-row racks have a minimum 44-inch aisle between racks when used as an aisle to provide access to exits and fire department access. This does not include cross aisles that are permitted to be 24 inches in width (Exception 1 to Section 3206.9.1). Note that NFPA 13 permits single- and double-row racks to have aisles as small as $3^1/_2$ feet. This is slightly smaller than the minimum aisle width required by the code. Careful exit planning is needed in rack storage for single- and double-row racks.

This section would not require that all aisles within multirow rack installation be 44 inches. Again, only aisles necessary for egress and fire department access would need to meet these requirements. This may affect the layout of multirow rack systems to provide such access paths for egress and fire department access in some cases. Travel distance, common path of travel and dead ends may be limiting factors. This is similar to solid-piled storage which can take up large areas within a building without providing aisles within the storage pile itself.

The exception recognizes the increased safety provided by a higher level of sprinkler protection, such as using a multirow rack protection scheme in a single- or double-row rack system, an ESFR system or additional levels of in-rack sprinklers, by allowing for smaller aisle widths for high-hazard commodity areas exceeding 2,500 square feet (232 m^2). If the sprinkler protection can protect multiple-row racks of high-hazard commodities, it should adequately protect small aisle displays between piles or racks.

It should be noted that NFPA 13 addresses two major configurations of rack storage. They include single- and double-row rack storage and multirow rack storage. The protection requirements are different and more stringent for multirow racks and are based specifically on test configurations with certain aisle spacings. NFPA considers any rack storage with less than $3^1/_2$ foot (42 inches) aisles as multirow rack storage. NFPA 13 does not require aisles within multirow racks. NFPA 13 compensates for the increased fire hazard with more restrictive fire protection requirements. Therefore, within the multirow racking itself, aisles as required by Section 3206.9.1.1 are not required and small convenience aisles are appropriate. This is also consistent with Exception 1 to Section 3206.9.1 allowing 24-inch cross aisles for employee access.

INTERNATIONAL CODE COUNCIL®
Copyright © 2015 ICC. ALL RIGHTS RESERVED. Accessed by David Dammon on Jun 21, 2017 12:30:52 PM pursuant to License Agreement with ICC. No further reproduction or distribution authorized. ANY UNAUTHORIZED REPRODUCTION OR DISTRIBUTION IS A VIOLATION OF THE FEDERAL COPYRIGHT ACT AND THE LICENSE AGREEMENT, AND SUBJECT TO CIVIL AND CRIMINAL PENALTIES THEREUNDER.

3206.9.1.2 Nonsprinklered buildings. Aisles in nonsprinklered buildings shall be not less than 96 inches (2438 mm) wide.

❖ The minimum 96-inch (2438 mm) aisle width for all aisles in nonsprinklered buildings recognizes the greater hazard caused by the lack of an automatic fire sprinkler system. This minimum width allows the building users a greater area for anticipating obstructions, as well as greater flexibility for the fire department personnel to assess, combat and control the fire.

3206.9.2 Clear height. The required aisle width shall extend from floor to ceiling. Rack structural supports and catwalks are allowed to cross aisles at a minimum height of 6 feet 8 inches (2032 mm) above the finished floor level, provided that such supports do not interfere with fire department hose stream trajectory.

❖ The clear ceiling height, or head room minimum [see Commentary Figure 3206.9(1)], is necessary for occupants to avoid an obstruction, to provide visibility to the occupants so that the path of travel can be planned and negotiated, and to allow sufficient area for effective use of the fire department's hose streams. The height is the vertical measurement above every point along the finished floor to a ceiling, to the underside of a rack storage catwalk or to the underside of a structural member. This requirement that aisles extend from floor to ceiling is for the primary aisles. Cross aisles are above and beyond that which is required for egress, access and the performance of fire protection systems. Though not specifically noted, it is within the intent of this code that cross aisles provide at least the minimum height of 6 feet 8 inches to be consistent with that required for structural supports and catwalks.

3206.9.3 Dead-end aisles. Dead-end aisles shall not exceed 20 feet (6096 mm) in length in Group M occupancies. Dead-end aisles shall not exceed 50 feet (15 240 mm) in length in all other occupancies.

Exception: Dead-end aisles are not limited where the length of the dead-end aisle is less than 2.5 times the least width of the dead-end aisle.

❖ Dead-end aisles can allow a single fire event to eliminate access to all the exits by trapping the occupants in the dead-end area. Dead ends, as they relate to high-piled storage, are similar to those formed by corridors. However, simply providing a reference back to Chapter 10 is somewhat confusing as to how the requirements would be intended to apply to warehouse configurations. This section provides two criteria specific to high-piled storage: one criterion for Group M occupancies of 20 feet; and, for all other occupancies, 50 feet. This is due to the fact that Group M occupancies are more likely to be open to the public where other occupancies, such as Group S, would not.

The exception recognizes aisles that are wide, which generally reduce the dangers of dead-end aisles. The fire is less likely to completely block access to an exit in a larger space.

3206.10 Portable fire extinguishers. Portable fire extinguishers shall be provided in accordance with Section 906.

❖ Portable fire extinguishers provide the building occupants with an opportunity to suppress a fire in its incipient stage. In storage facilities, the fire extinguisher can contribute to the protection of occupants when there are evacuation difficulties or a specific hazard within that occupancy. For portable extinguishers to be effective, personnel must be properly trained in their use and maintenance (see Sections 3201.3 and 3201.4). Section 906 provides criteria for the location, installation, inspection and testing and maintenance of portable fire extinguishers. Section 906 also contains criteria for cabinets in which portable fire extinguishers may be stored, as well as the designated locations for wheeled portable fire extinguishers.

SECTION 3207
SOLID-PILED AND SHELF STORAGE

3207.1 General. Shelf storage and storage in solid piles, solid piles on pallets and bin box storage in bin boxes not exceeding 5 feet (1524 mm) in any dimension, shall be in accordance with Sections 3206 and this section.

❖ Solid piling in piles or on pallets generally consists of commodities in cartons, boxes, bales or bags [see Commentary Figure 3207.1(1)] or which may be encapsulated in a plastic wrap for containment [see Commentary Figures 3207.1(2) and 3207.1(3)]. These commodities are usually stacked manually or with lift trucks. Palletized storage consists of commodities set onto pallets that are generally made of

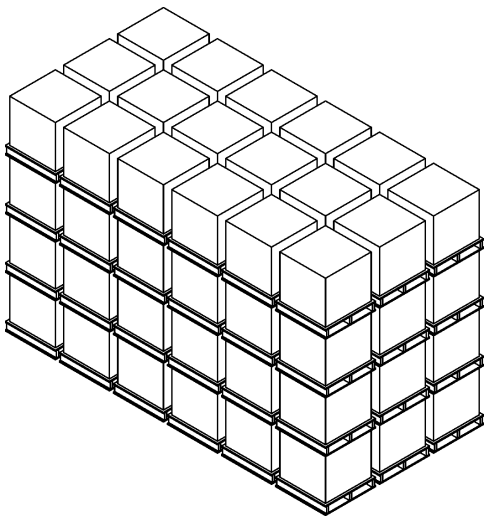

Figure 3207.1(1)
PALLETIZED STORAGE ARRAY
(COMMODITY CONFIGURED WITH FLUE SPACES)

INTERNATIONAL CODE COUNCIL®
Copyright © 2015 ICC. ALL RIGHTS RESERVED. Accessed by David Dammon on Jun 21, 2017 12:30:52 PM pursuant to License Agreement with ICC. No further reproduction or distribution authorized. ANY UNAUTHORIZED REPRODUCTION OR DISTRIBUTION IS A VIOLATION OF THE FEDERAL COPYRIGHT ACT AND THE LICENSE AGREEMENT, AND SUBJECT TO CIVIL AND CRIMINAL PENALTIES THEREUNDER.

wood or plastic, are square in shape and measure 3 to 4 feet (914 to 1219 mm) on each side. In this case, the cavity portion of the pallet is designed to accept the fork prongs of the lifting device for the commodity and pallet to be transported. The height limitations for stacking palletized storage are directly proportional to stackability of the commodity. Heights of palletized storage can reach 30 feet (9144 mm) in some cases.

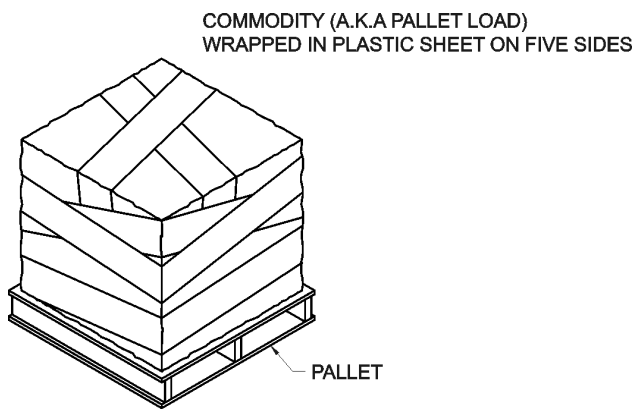

Figure 3207.1(2)
ENCAPSULATED COMMODITY

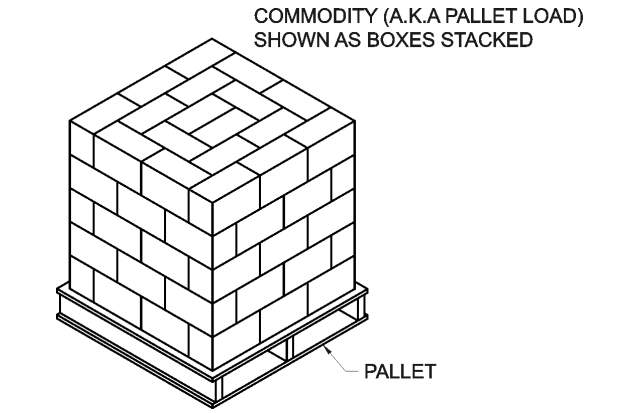

Figure 3207.1(3)
ENCAPSULATED COMMODITY

3207.2 Fire protection. Where automatic sprinklers are required by Table 3206.2, an *approved automatic sprinkler system* shall be installed throughout the building or to 1-hour *fire barriers* constructed in accordance with Section 707 of the *International Building Code*. Openings in such *fire barriers* shall be protected by opening protectives having a 1-hour *fire protection rating*. The design and installation of the *automatic sprinkler system* and other applicable fire protection shall be in accordance with the *International Building Code* and NFPA 13.

❖ The provision for approved automatic sprinklers is based on the commodity class and the size of the storage area. Automatic sprinkler protection, when required, is to be provided throughout the area containing the storage. For example, in a mixed-use occupancy, the area designated for storage would require an automatic sprinkler protection system throughout the storage area up to the fire barrier(s), whereas the other areas of the mixed-use occupancy may or may not require automatic sprinkler protection.

NFPA 13 is referenced for sprinkler protection and contains extensive requirements for high-piled storage, including the provisions that were originally found in NFPA 231 (NFPA 231C for rack storage). The development of these provisions was based on a number of large-scale fire tests conducted to determine the advantages and limitations of automatic sprinklers in various storage array configurations; however, test information was not available for all configurations. As a result, some of the protection criteria are based on extrapolation of the test information.

The automatic sprinkler system is expected to remain in operation as the fire fighters are attempting to control and extinguish the fire. As a result, design considerations for water supply must ensure that the water supply is not compromised by other operations. In no case should manual fire-fighting operations be substituted for automatic sprinklers. The sprinkler protection is to extend throughout the building containing the rack storage or to a fire barrier. The fire barrier is to comply with the provisions of IBC Section 707, which applies to fire barriers used for separating fire areas. To maintain integrity of fire area separations, fire barriers must be continuous from the top of the floor below to the underside of the roof slab or deck above and be securely attached thereto.

As with any fire-resistive barriers, consideration must be given to openings and penetrations. The number and size of openings in the fire barrier must comply with the provisions of IBC Section 707, and the opening protective assemblies must have a minimum fire-resistance rating of 1 hour. Note that IBC Section 716.5 allows an opening protection rating of $^3/_4$ hour for nonexit-enclosure fire barriers; however, this section, with its specific requirement of a 1-hour rating, would supersede that requirement. Penetrations of fire barriers must comply with IBC Section 714. Maintenance of the fire-resistance-rated construction rests with the building owner or the tenant as described in Section 703.

3207.2.1 Shelf storage. Shelf storage greater than 12 feet (3658 mm) but less than 15 feet (4572 mm) in height shall be in accordance with the fire protection requirements set forth in NFPA 13. Shelf storage 15 feet (4572 mm) or more in height shall be protected in an *approved* manner with special fire protection, such as in-rack sprinklers.

❖ Storage on shelving presents a unique problem because it shields the fire from the sprinklers. This shielding can both delay activation of the sprinklers and make it difficult for the water to reach the fire. This section recognizes the provisions of NFPA 13 that apply to the height range in question because

INTERNATIONAL CODE COUNCIL®
Copyright © 2015 ICC. ALL RIGHTS RESERVED. Accessed by David Dammon on Jun 21, 2017 12:30:52 PM pursuant to License Agreement with ICC. No further reproduction or distribution authorized. ANY UNAUTHORIZED REPRODUCTION OR DISTRIBUTION IS A VIOLATION OF THE FEDERAL COPYRIGHT ACT AND THE LICENSE AGREEMENT, AND SUBJECT TO CIVIL AND CRIMINAL PENALTIES THEREUNDER.

those provisions were developed based on full-scale tests of both unencapsulated and encapsulated products up to the 15-foot (4572 mm) height. Those provisions are found within NFPA 13 with the solid-piled and palletized storage requirements. As a result, the provisions related to solid shelving within the rack storage requirements of NFPA 13 should be used when addressing shelf storage of commodities above that height.

3207.3 Pile dimension and height limitations. Pile dimensions, the maximum permissible storage height and pile volume shall be in accordance with Table 3206.2.

❖ The commodity class and the size of the storage area directly regulate pile dimensions and height limitations. In Table 3206.2, these limitations include:

- Maximum pile dimension.
- Maximum permissible storage height.
- Maximum pile volume.

NFPA 13 only limits the pile height as it relates to the ceiling height and associated sprinkler requirements. The code takes it a step further and puts limits on the pile sizes. Specific aisle requirements are made in Section 3206.9, which the standard does not provide. The pile dimensions presented in Table 3206.2 are the same within each category of commodity class for the various high-piled storage area sizes except for height and volume limitations for the nonpublic accessible Option 2, which is not required to be sprinklered.

3207.4 Array. Where an *automatic sprinkler system* design utilizes protection based on a closed array, array clearances shall be provided and maintained as specified by the standard used.

❖ The closed array is defined in NFPA 13 as "a storage arrangement where air movement through a pile is restricted due to vertical flues 6 inches in width or narrower." Since most protection requirements are based on full-scale testing using a specific method of storage (closed versus open array) the specific configuration must be maintained for the sprinkler system to be effective in controlling and suppressing a fire. A closed array does not let the water penetrate, but also does not allow the fire to grow as rapidly.

SECTION 3208
RACK STORAGE

3208.1 General. Rack storage shall be in accordance with Section 3206 and this section. Bin boxes exceeding 5 feet (1524 mm) in any dimension shall be regulated as rack storage.

❖ Storage racks are commonly steel frames (see Commentary Figure 3208.1) able to store commodities in various configurations. There are numerous variations of rack storage, such as single-row, double-row and multiple-row racks. The rack structure may or may not be connected to the building superstructure, which is governed by Chapters 16 and 22 of the IBC. The commodity is generally set on pallets for easy and economical transport using lift trucks or automated materials handling systems (automatic/unmanned). Manual rack storage operations require reasonably wide aisles to accommodate the lift trucks, whereas automated systems can operate in much narrower aisles.

3208.2 Fire protection. Where automatic sprinklers are required by Table 3206.2, an *approved automatic sprinkler system* shall be installed throughout the building or to 1-hour *fire barriers* constructed in accordance with Section 707 of the *International Building Code*. Openings in such *fire barriers* shall be protected by opening protectives having a 1-hour *fire protection rating*. The design and installation of the *automatic sprinkler system* and other applicable fire protection shall be in accordance with Section 903.3.1.1 and the *International Building Code*.

❖ The provision for approved automatic sprinklers is based on the commodity class and the size of the storage area. The automatic sprinkler protection, when required, is to be installed throughout the area containing the storage. For example, in a mixed-use occupancy, the area designated for storage would require an automatic sprinkler protection system throughout up to the fire barrier(s), whereas the other areas may or may not require automatic sprinkler protection. It should be noted that 15 feet (4572 mm) beyond the high-piled storage area a different type of sprinkler system can be used. It may be necessary to provide draft curtains to divide the two types of sys-

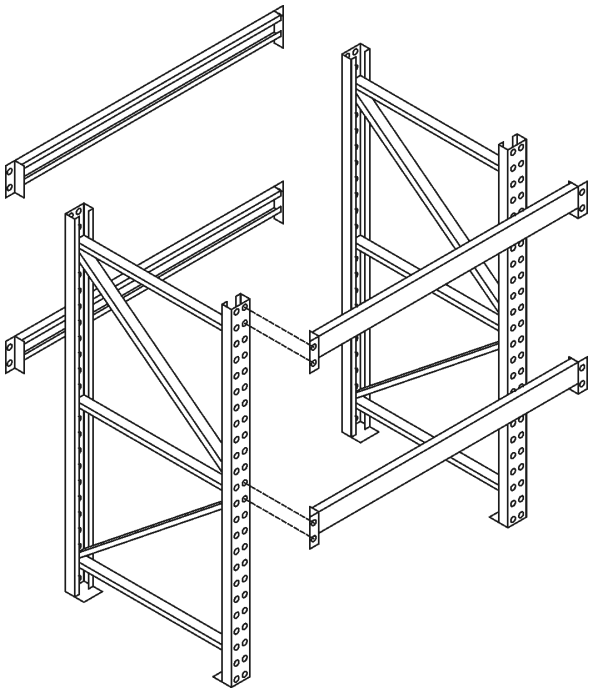

Figure 3208.1
TYPICAL RACK SYSTEM

INTERNATIONAL CODE COUNCIL®
Copyright © 2015 ICC. ALL RIGHTS RESERVED. Accessed by David Dammon on Jun 21, 2017 12:30:52 PM pursuant to License Agreement with ICC. No further reproduction or distribution authorized. ANY UNAUTHORIZED REPRODUCTION OR DISTRIBUTION IS A VIOLATION OF THE FEDERAL COPYRIGHT ACT AND THE LICENSE AGREEMENT, AND SUBJECT TO CIVIL AND CRIMINAL PENALTIES THEREUNDER.

tems. An example is dividing an ESFR sprinkler system from a standard sprinkler system.

When the rack storage generally exceeds 25 feet (7620 mm) in height, in-rack automatic sprinkler systems should be incorporated into the design because ceiling sprinklers alone may not be able to provide protection for those commodities in the lower levels of the rack storage. There are some configurations involving systems such as ESFR sprinklers that would not require in-rack sprinklers. It depends on many factors and must be determined when applying NFPA 13. Factors include such things as whether the storage is single-, double- or multiple-row, storage height, ceiling height, type of sprinkler, flue spaces and other factors. In addition, the protection of the columns of a building by that same sprinkler may be necessary to satisfy the provisions of Section 3208.4 (see NFPA 13). NFPA 13 contains the protection requirements for rack storage. The provisions were incorporated into NFPA 13 from NFPA 231C, which was originally developed based on a number of large-scale fire tests conducted to determine the advantages and limitations of automatic sprinklers in various storage array configurations. However, test information was not available for all configurations. As a result, some of the protection criteria are based on extrapolation of the test information.

The automatic sprinkler system is expected to remain in operation as the fire fighters attempt to control and extinguish the fire. As a result, design considerations for water supply must ensure that the water supply is not compromised by other operations. In no case should manual fire-fighting operations be substituted for automatic sprinklers. The sprinkler protection is to extend throughout the building containing the rack storage or to a fire barrier. The fire barrier is to comply with the provisions of IBC Section 707, which applies to fire barriers used for separating fire areas. To maintain integrity of the separation of fire areas, fire barriers must be continuous from the top of the floor below to the underside of the roof slab or deck above and be securely attached thereto. As with any fire-resistance-rated barriers, consideration must be given to openings and penetrations. The number and size of openings in the fire barrier must comply with the provisions of IBC Section 707, and the opening protective assemblies must have a minimum fire-resistance rating of 1 hour. Note that IBC Section 716.5 allows an opening protection rating of $^3/_4$ hour for nonexit-enclosure fire barriers; however, this section, with its specific requirement of a 1-hour rating, would supersede that requirement. Penetrations of fire barriers must comply with IBC Section 714. Maintenance of the fire-resistance-rated construction rests with the building owner or the tenant as described in Section 703.

3208.2.1 Plastic shelves. Storage on plastic shelves shall be protected by *approved* specially engineered *fire protection systems*.

❖ Plastic shelving, when used, increases the fuel load to the commodity that is being stored on top of the pallet or shelving. Specific requirements are not provided, but the code requires that special protection be provided as approved by the fire code official.

3208.2.2 Racks with solid shelving. Racks with solid shelving having an area greater than 20 square feet (1.9 m^2), measured between *approved* flue spaces at all four edges of the shelf, shall be in accordance with this section.

Exceptions:

1. Racks with mesh, grated, slatted or similar shelves having uniform openings not more than 6 inches (152 mm) apart, comprising not less than 50 percent of the overall shelf area, and with *approved* flue spaces are allowed to be treated as racks without solid shelves.
2. Racks used for the storage of combustible paper records, with solid shelving, shall be in accordance with NFPA 13.

❖ Racks with solid shelving provide a challenge to the fire protection system design (see Commentary Figure 3208.2.2). Ceiling-only automatic sprinkler protection will not provide sufficient suppression and protection of the neighboring commodities or the building. Additional sprinkler protection will be necessary to control and potentially suppress a fire. In this case, in-rack sprinklers have demonstrated that they can supplement the ceiling sprinklers for acceptable protection overall by reducing the fire's ability to develop a high rate of heat release. Designs for in-rack protection must consider necessary clearances, distance from structural components, flue space clearances and protection of the heads to allow the sprinklers to function properly.

In addition to Exception 1, NFPA 13 has provisions that allow slatted shelves to be considered equivalent to racks without solid shelves when certain criteria have been met. These criteria relate to restrictions on commodities (e.g., not allowing exposed expanded Group A plastics), certain types of sprinklers, minimum aisle widths, certain sprinkler configurations, flue spaces and other considerations (see NFPA 13).

3208.2.2.1 Fire protection. Fire protection for racks with solid shelving shall be in accordance with NFPA 13.

❖ The provisions of NFPA 13 stipulate the minimum requirements for the design and construction of an automatic fire suppression system within a building containing rack storage with solid shelving. Rack storage with solid shelving requires the installation of an in-rack automatic fire suppression system. Since

INTERNATIONAL CODE COUNCIL®
Copyright © 2015 ICC. ALL RIGHTS RESERVED. Accessed by David Dammon on Jun 21, 2017 12:30:52 PM pursuant to License Agreement with ICC. No further reproduction or distribution authorized. ANY UNAUTHORIZED REPRODUCTION OR DISTRIBUTION IS A VIOLATION OF THE FEDERAL COPYRIGHT ACT AND THE LICENSE AGREEMENT, AND SUBJECT TO CIVIL AND CRIMINAL PENALTIES THEREUNDER.

most rack storage systems are permanent, they can support the piping for the in-rack system. The in-rack fire suppression system provides an additional layer of protection that ceiling-only systems could not provide because the shelving prevents the water discharge from entering the individually shelved commodities. The in-rack sprinklers can contain the fire to a small area of the rack structure and wet the commodities adjacent to the fire, thus preventing the fire from spreading to other commodities located horizontally and vertically from the commodities involved in the fire. Important design considerations are the location and protection of supply lines from commodity storage and handling operations, protection of individual sprinkler heads and the separation of water supply to the in-rack fire suppression system from other systems, such as the ceiling-mounted fire suppression system.

3208.3 Flue spaces. Flue spaces shall be provided in accordance with Table 3208.3. Required flue spaces shall be maintained.

❖ This section refers to the requirements in Table 3208.3 for minimum longitudinal and transverse flue dimensions and design for the automatic fire suppression system, in association with Table 3206.2. In high-piled combustible storage racks, flue spaces are an important component of the fire protection design. NFPA 13 categorizes flue spaces as either being longitudinal or transverse. Longitudinal flue spaces extend the length of the storage rack while transverse flue spaces extend the depth of the rack. Flue spaces permit water discharged from a ceiling sprinkler to penetrate into the rack system so it can begin to either control or suppress the fire, depending on the automatic sprinkler system design. When the sprinkler system is designed to control the fire, flue spaces allow the additional sprinkler discharge to prewet the storage commodities, which slows vertical and horizontal fire spread within the rack, thus limiting the number of sprinklers that may operate. Note that when in-rack sprinklers are provided or if the building is not sprinklered, flue spaces are not required.

Flue spaces in storage racks containing Class I through IV commodities greater than 12 feet (3658 mm) in height, high-hazard commodities greater than 6 feet (1829 mm) in height or bin box storage greater

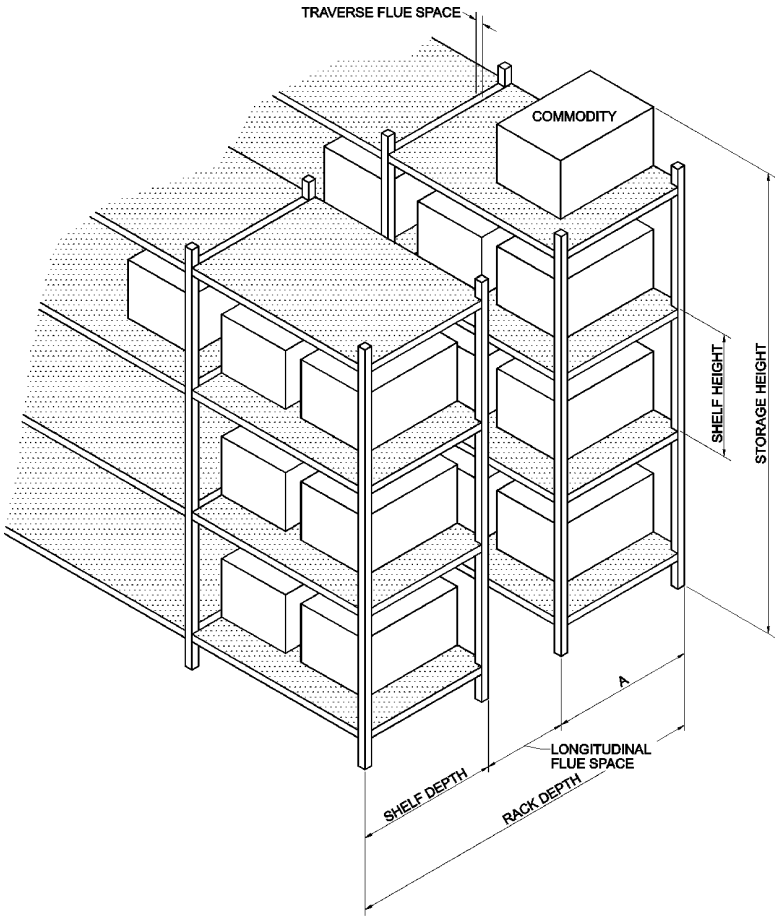

Figure 3208.2.2
DOUBLE-ROW RACKS WITH SOLID SHELVES

INTERNATIONAL CODE COUNCIL®
Copyright © 2015 ICC. ALL RIGHTS RESERVED. Accessed by David Dammon on Jun 21, 2017 12:30:52 PM pursuant to License Agreement with ICC. No further reproduction or distribution authorized. ANY UNAUTHORIZED REPRODUCTION OR DISTRIBUTION IS A VIOLATION OF THE FEDERAL COPYRIGHT ACT AND THE LICENSE AGREEMENT, AND SUBJECT TO CIVIL AND CRIMINAL PENALTIES THEREUNDER.

than 5 feet (1524 mm) in height must comply with all of the provisions in this section, which require longitudinal and transverse spaces to be maintained in accordance with Table 3208.3. Its requirements are dependent on the high-piled combustible storage area being unprotected or protected by an automatic sprinkler system, the height of rack storage, the type of storage rack system, and if partial or complete in-rack automatic sprinkler protection is provided. See Commentary Figures 3208.3(1-3) for the various flue space options based upon fire protection provided and storage height. Commentary Figure 3208.3(4) shows vertical alignment of flue spaces as required for storage over 25 feet in Table 3208.3.

Note that where proper maintenance of the flue spaces becomes a problem, Section 3208.3.1 may be applied by the fire code official. See also the commentary for the definitions of "Transverse" and "Longitudinal flue spaces" in Chapter 2.

3208.3.1 Flue space protection. Where required by the *fire code official*, flue spaces required by Table 3208.3, in single-, double- or multiple-row rack storage installations shall be equipped with *approved* devices to protect the required flue spaces. Such devices shall not be removed or modified.

❖ This section authorizes the fire code official to require installation of approved devices to maintain required flue spaces in storage rack systems. It is not the intent of this authority to require such devices in each instance, but rather when a business has an established history of poor flue space maintenance.

Available flue space protection devices that are designed to maintain transverse and longitudinal flue spaces include but are not limited to brackets, cables or other elements that are securely fastened to the load-bearing columns of the rack system. The devices control the depth or width to which a product, pallet or similar material can be stored in the rack system, thereby preventing obstruction of the required flue space. However, device selection should consider if the rack tiers are designed for mechanized material handling equipment, such as forklifts, versus racks where hand picking is the preferred method of material handling, such as archive storage. Devices available for hand-picking operations may lack the mechanical strength to withstand the impact loads that can arise during movements of palletized unit loads.

Once approved devices are installed, most business owner confusion regarding flue space requirements is removed. Other benefits include: property loss reduction through quick activation of the fire protection system; improved penetration of sprinkler discharge through the rack system to the seat of the fire; faster activation of smoke and heat vent systems; and improved employee, public and fire fighter safety. See Commentary Figure 3208.3.1 for an example of flue space protection device.

3208.4 Column protection. Steel building columns shall be protected in accordance with NFPA 13.

❖ NFPA 13 provides steel-column protection criteria in areas used for the rack storage of Class I through IV commodities in Section 16.1.4, for rack storage of plastic and rubber products in Section 17.1.4 and for rack storage of rubber tires in Section 18.2.

TABLE 3208.3
REQUIRED FLUE SPACES FOR RACK STORAGE

RACK CONFIGURATION	AUTOMATIC SPRINKLER PROTECTION		SPRINKLER AT THE CEILING WITH OR WITHOUT MINIMUM IN-RACK SPRINKLERS			IN-RACK SPRINKLERS AT EVERY TIER	NONSPRINKLERED
			≤ 25 feet		> 25 feet	Any height	Any height
	Storage height		Option 1	Option 2			
Single-row rack	Transverse flue space	Size[b]	3 inches	Not Applicable	3 inches	Not Required	Not Required
		Vertically aligned	Not Required	Not Applicable	Yes	Not Applicable	Not Required
	Longitudinal flue space		Not Required	Not Applicable	Not Required	Not Required	Not Required
Double-row rack	Transverse flue space	Size[b]	6 inches[a]	3 inches	3 inches	Not Required	Not Required
		Vertically aligned	Not Required	Not Required	Yes	Not Applicable	Not Required
	Longitudinal flue space		Not Required	6 inches	6 inches	Not Required	Not Required
Multirow rack	Transverse flue space	Size[b]	6 inches	Not Applicable	6 inches	Not Required	Not Required
		Vertically aligned	Not Required	Not Applicable	Yes	Not Applicable	Not Required
	Longitudinal flue space		Not Required	Not Applicable	Not Required	Not Required	Not Required

For SI: 1 inch = 25.4 mm, 1 foot = 304.8 mm.

a. Three-inch transverse flue spaces shall be provided not less than every 10 feet where ESFR sprinkler protection is provided.

b. Random variations are allowed, provided that the configuration does not obstruct water penetration.

INTERNATIONAL CODE COUNCIL®
Copyright © 2015 ICC. ALL RIGHTS RESERVED. Accessed by David Dammon on Jun 21, 2017 12:30:52 PM pursuant to License Agreement with ICC. No further reproduction or distribution authorized. ANY UNAUTHORIZED REPRODUCTION OR DISTRIBUTION IS A VIOLATION OF THE FEDERAL COPYRIGHT ACT AND THE LICENSE AGREEMENT, AND SUBJECT TO CIVIL AND CRIMINAL PENALTIES THEREUNDER.

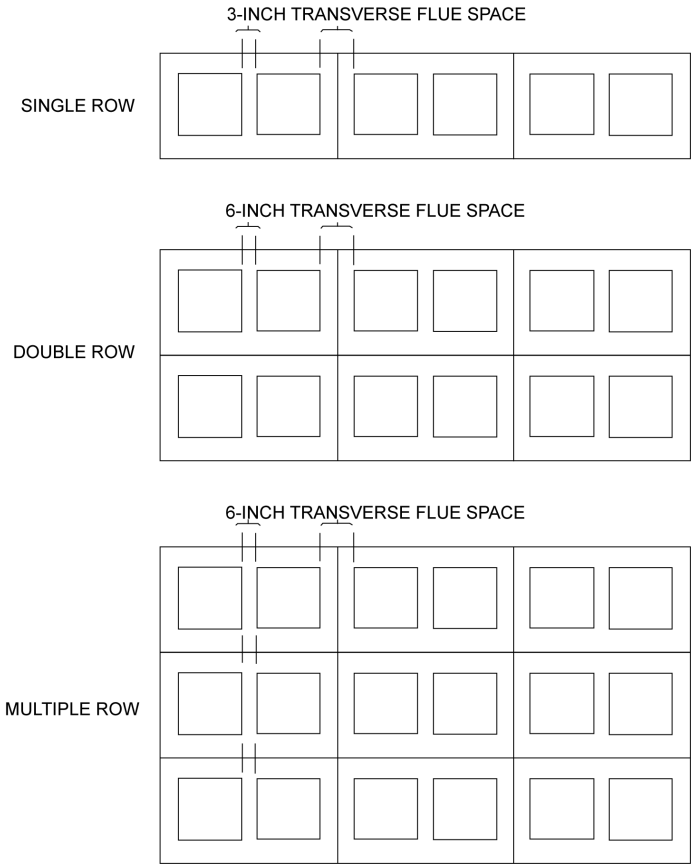

For SI: 1 inch = 25.4 mm.

Figure 3208.3(1)
FLUE SPACES (OPTION 1 OF TABLE 3208.3 25 FEET OR LESS IN STORAGE HEIGHT)

SINGLE ROW — NOT APPLICABLE

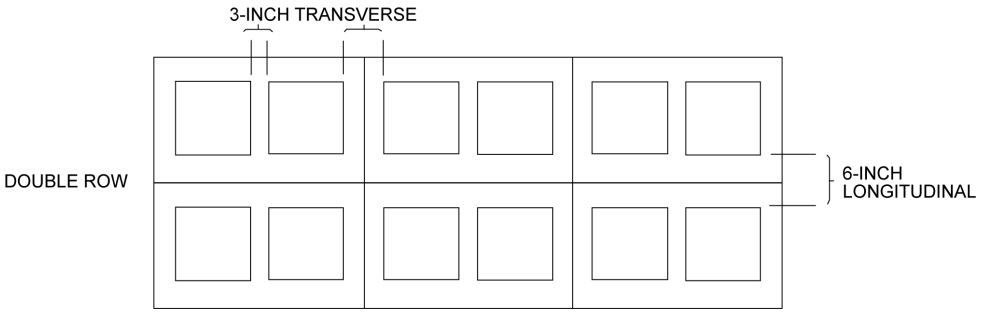

MULTIPLE ROW — NOT APPLICABLE

For SI: 1 inch = 25.4 mm.

Figure 3208.3(2)
FLUE SPACES (OPTION 2 OF TABLE 3208.3 25 FEET OR LESS IN STORAGE HEIGHT)

INTERNATIONAL CODE COUNCIL®
Copyright © 2015 ICC. ALL RIGHTS RESERVED. Accessed by David Dammon on Jun 21, 2017 12:30:52 PM pursuant to License Agreement with ICC. No further reproduction or distribution authorized. ANY UNAUTHORIZED REPRODUCTION OR DISTRIBUTION IS A VIOLATION OF THE FEDERAL COPYRIGHT ACT AND THE LICENSE AGREEMENT, AND SUBJECT TO CIVIL AND CRIMINAL PENALTIES THEREUNDER.

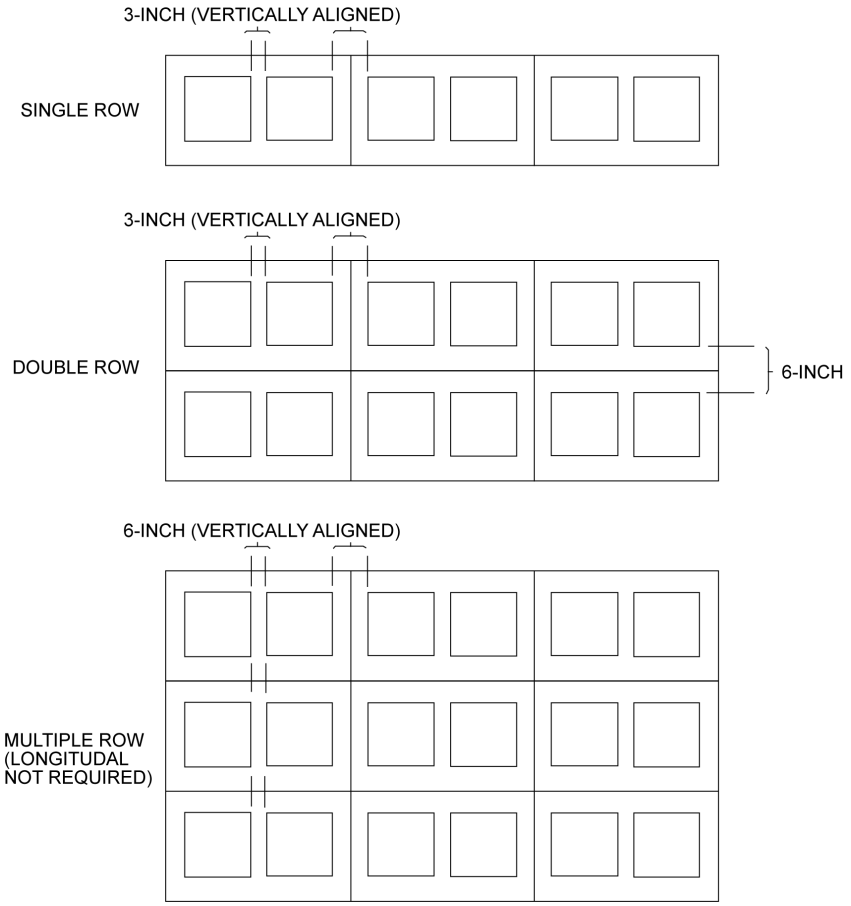

For SI: 1 inch = 25.4 mm, 1 foot = 304.8 mm.

Figure 3208.3(3)
FLUE SPACES GREATER THAN 25 FEET IN STORAGE HEIGHT

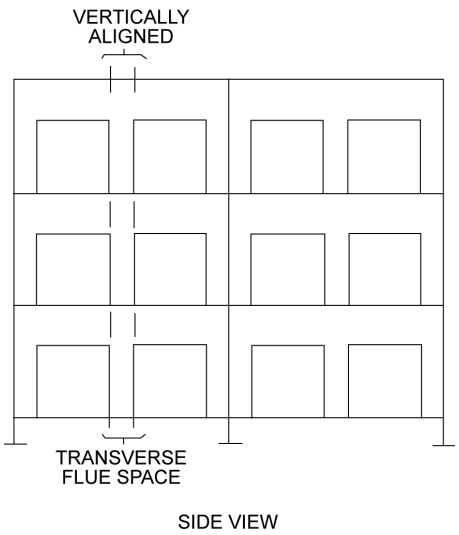

Figure 3208.3(4)
VERTICAL ALIGNMENT OF FLUE SPACES

INTERNATIONAL CODE COUNCIL®
Copyright © 2015 ICC. ALL RIGHTS RESERVED. Accessed by David Dammon on Jun 21, 2017 12:30:52 PM pursuant to License Agreement with ICC. No further reproduction or distribution authorized. ANY UNAUTHORIZED REPRODUCTION OR DISTRIBUTION IS A VIOLATION OF THE FEDERAL COPYRIGHT ACT AND THE LICENSE AGREEMENT, AND SUBJECT TO CIVIL AND CRIMINAL PENALTIES THEREUNDER.

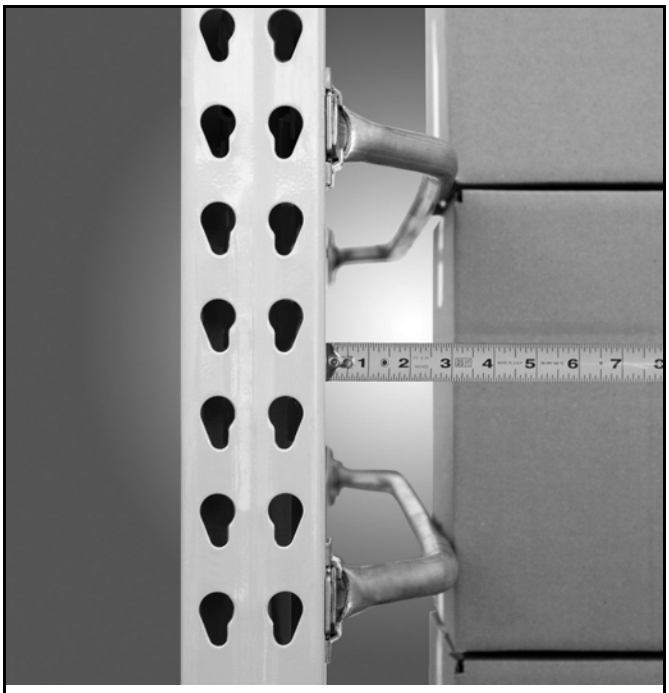

Figure 3208.3.1
FLUE SPACE PROTECTION EXAMPLE

3208.5 Extra-high-rack storage systems. Approval of the *fire code official* shall be obtained prior to installing extra-high-rack combustible storage.

❖ In addition to the permit requirements contained in Section 105, the building owner, tenant or lessee is required to seek permission from the fire code official to construct an extra-high-rack storage system because of the higher challenge fire that such storage presents (see the commentary to Section 202 for the definition of "Extra-high-rack combustible storage").

3208.5.1 Fire protection. Buildings with extra-high-rack combustible storage shall be protected with a specially engineered *automatic sprinkler system*. Extra-high-rack combustible storage shall be provided with additional special fire protection, such as separation from other buildings and additional built-in fire protection features and fire department access, where required by the *fire code official*.

❖ Extra-high-rack storage is considered to have additional risks that warrant the requirement for an automatic sprinkler system engineered with additional protection features. These features could include additional heads along the vertical axis, change in the type of sprinkler heads and the use of high-expansion foam systems. To further protect the building and neighboring buildings, the fire code official may require that additional fire protection measures be taken to increase the likelihood that, if a fire does occur, it will be contained to that building. These measures can include greater building separation requirements than required in Table 602 of the IBC, enhanced fire apparatus access, additional fire hydrants and building openings. All additional fire protection and life safety systems require the approval of the fire code official.

SECTION 3209
AUTOMATED STORAGE

3209.1 General. Automated storage shall be in accordance with this section.

❖ Automated storage is generally designed for operations in which the commodity storage necessary to serve the operation is large and where that facility may operate 24 hours a day, seven days a week. This type of storage is generally programmed for commodity stocking and retrieving, and contains a sufficient amount of commodity for the operation to continue working even if restocking may experience a slow period. Operations that commonly employ such facilities are automotive parts manufacturers, electronic parts manufacturers and even the food industry. One of the primary fire concerns with automated storage is the potential for the fire to be carried by the mechanism that transports the commodity. If such a fire were to occur while the commodity is in motion, it could reduce, if not overwhelm, the effectiveness of the automatic fire suppression system. As a result, additional measures are required in an attempt to compensate for that potential fire hazard.

3209.2 Automatic sprinklers. Where automatic sprinklers are required by Table 3206.2, the building shall be equipped throughout with an *approved automatic sprinkler system* in accordance with Section 903.3.1.1.

❖ The provisions requiring an automatic sprinkler system throughout the building housing the automatic storage system is an additional fire protection feature based on the concept that the area may be difficult for the fire service to suppress a fire manually. The reference to the provisions of Chapter 9 covers generally all types of sprinkler systems beyond those specific to high-piled storage. Not all areas would need a sprinkler system that is designed to protect high-piled storage commodities.

3209.3 Carousel storage. *High-piled storage areas* having greater than 500 square feet (46 m^2) of carousel storage shall be provided with automatic shutdown in accordance with one of the following:

1. An automatic smoke detection system installed in accordance with Section 907, with coverage extending 15 feet (4575 mm) in all directions beyond unenclosed carousel storage systems and that sounds a local alarm at the operator's station and stops the carousel storage system upon the activation of a single detector.
2. An automatic smoke detection system installed in accordance with Section 907 and within enclosed carousel storage systems, that sounds a local alarm at the operator's station and stops the carousel storage system upon the activation of a single detector.

INTERNATIONAL CODE COUNCIL®
Copyright © 2015 ICC. ALL RIGHTS RESERVED. Accessed by David Dammon on Jun 21, 2017 12:30:52 PM pursuant to License Agreement with ICC. No further reproduction or distribution authorized. ANY UNAUTHORIZED REPRODUCTION OR DISTRIBUTION IS A VIOLATION OF THE FEDERAL COPYRIGHT ACT AND THE LICENSE AGREEMENT, AND SUBJECT TO CIVIL AND CRIMINAL PENALTIES THEREUNDER.

3. A single dead-man-type control switch that allows the operation of the carousel storage system only when the operator is present. The switch shall be in the same room as the carousel storage system and located to provide for observation of the carousel system.

❖ Carousel storage is used in large storage operations when the commodity must be protected (security), when the commodity requires strict environmental control or both. In addition, carousel storage is selected because it may provide an economic advantage to an operation or business by having the commodity come directly to the employee rather than the employee stocking and retrieving the commodity. The carousel area is normally not occupied. An exception to this may be when the carousel system is undergoing maintenance or repair or during an annual inspection of the fire protection features. Examples of commodities within carousel storage may include distribution centers that distribute pharmaceutical or refrigerated/frozen foods and beverages. The additional fire safety requirements are precautionary, directly resulting from the limited access to these types of storage areas and addressing the potential of a moving fire via the carousel mechanism. Because the area of the carousel is controlled by a mechanized, generally computer-controlled system, immediate access to the actual storage area is normally limited. These limits serve to protect both personnel and the commodity. The additional fire safety measures include provisions for an elaborate automatic detection system, which upon activation stops the carousel from operating (moving). This precaution prevents the fire from spreading throughout the entire storage area.

3209.4 Automated rack storage. *High-piled storage areas* with automated rack storage shall be provided with a manually activated emergency shutdown switch for use by emergency personnel. The switch shall be clearly identified and shall be in a location *approved* by the fire chief.

❖ This section requires that if an emergency occurs in an automated rack storage facility, the remotely controlled pallet moving equipment be manually shut down. This shutdown accomplishes two objectives. First, the potential to either move additional product into the fire or move burning product through the storage area is removed. Second, it is not safe to place emergency personnel within the automated storage area when the system is still active. Many of these automated devices move much faster than personnel can get out of the way, and there is a physical danger to personnel. This shutdown will eliminate danger to personnel and reduce property damage. Since the shutdown of such systems is a tactical maneuver, the fire chief is required to approve the location for the switch and ensure that it is properly identified. The switch should be in a readily accessible location outside of the boundaries of the automated rack storage area. See also the commentary to Section 202 for the definition of "Automated rack storage."

SECTION 3210
SPECIALTY STORAGE

3210.1 General. Records storage facilities used for the rack or shelf storage of combustible paper records greater than 12 feet (3658 mm) in height shall be in accordance with Sections 3206 and 3208 and NFPA 13. Palletized storage of records shall be in accordance with Section 3207.

❖ The storage of various types of records can have a relatively high intrinsic value. This is where protection of the actual documents is essential to any business to retrieve information or to reconstruct records. The provisions of this section specifically identify the fire and life safety requirements for records stored on pallets and in-rack or shelf storage systems. Although the provisions of this section set the minimum safeguards from the hazards of fire and explosion, it is up to the owners of the records to determine the actual protection that must be provided. NFPA 13, as with other high-piled storage, is the minimum referenced standard. NFPA 13 specifically deals with carton record storage in Section 20.5 and high-bay record storage in Section 20.7.

Bibliography

The following resource materials were used in the preparation of the commentary for this chapter of the code:

2012 International Code Interpretations. Washington, DC: International Code Council, 2011.

High-piled Combustible Storage Application Guide, 2009 IFC. Washington, DC: International Code Council, 2011.

INTERNATIONAL CODE COUNCIL®
Copyright © 2015 ICC. ALL RIGHTS RESERVED. Accessed by David Dammon on Jun 21, 2017 12:30:52 PM pursuant to License Agreement with ICC. No further reproduction or distribution authorized. ANY UNAUTHORIZED REPRODUCTION OR DISTRIBUTION IS A VIOLATION OF THE FEDERAL COPYRIGHT ACT AND THE LICENSE AGREEMENT, AND SUBJECT TO CIVIL AND CRIMINAL PENALTIES THEREUNDER.

INTERNATIONAL CODE COUNCIL®
Copyright © 2015 ICC. ALL RIGHTS RESERVED. Accessed by David Dammon on Jun 21, 2017 12:30:52 PM pursuant to License Agreement with ICC. No further reproduction or distribution authorized. ANY UNAUTHORIZED REPRODUCTION OR DISTRIBUTION IS A VIOLATION OF THE FEDERAL COPYRIGHT ACT AND THE LICENSE AGREEMENT, AND SUBJECT TO CIVIL AND CRIMINAL PENALTIES THEREUNDER.

Chapter 33: Fire Safety During Construction and Demolition

General Comments

This chapter outlines general fire safety precautions for all structures and all occupancies during construction and demolition operations. In general, these requirements seek to maintain required fire protection, limit fire spread, establish the appropriate operation of equipment and promote prompt response to fire emergencies.

There are 17 sections in Chapter 33. Section 3301 gives the general scope of the chapter and provides the basis for enforcement of its provisions. Section 3302 defines terms specifically relevant to the chapter. The listing, arrangement, fueling and supervision of temporary heating equipment is described in Section 3303. Section 3304 deals with precautions against fire that involve the control of smoking, waste disposal, open burning, spontaneous ignition and temporary electrical wiring. The storage, handling and classification of flammable and combustible liquids, flammable gases and explosive materials are addressed in Sections 3305, 3306 and 3307, respectively.

Sections 3308 and 3309 regulate the need for prefire planning, training and maintenance of fire protection systems and emergency notification means. Access for fire fighting is discussed in Section 3310. Escape by on-site personnel is covered under means of egress in Section 3311. The provision and maintenance of specific fire protection devices such as standpipes, automatic sprinkler systems and portable fire extinguishers is explained in Sections 3313, 3314 and 3315, respectively. The need to regulate heat sources, such as internal combustion engines and fuel-fired asphalt and tar kettles, is addressed in Sections 3316 and 3317.

Purpose

This chapter contains requirements that are intended to safeguard people from injury or illness and protect property from damage during the construction or demolition processes.

SECTION 3301 GENERAL

3301.1 Scope. This chapter shall apply to structures in the course of construction, *alteration* or demolition, including those in underground locations. Compliance with NFPA 241 is required for items not specifically addressed herein.

❖ Buildings are most vulnerable to fire when undergoing construction, demolition or alteration. Special measures are required to either minimize the potential for a fire or aid in fire control and suppression. These requirements amplify those of other sections of the code and prescribe maintenance of adequate means of egress and on-site incipient fire-fighting equipment. Temporary heating appliances are regulated to prevent ignition of combustible debris and structural elements. Fire apparatus access and maintenance of standpipes are also addressed [see also Chapter 33 of the *International Building Code*® (IBC®), NFPA 241 and the *NFPA Fire Protection Handbook*]. Note that, in accordance with Section 102.7.2 of the code, where both Chapter 33 of the code and NFPA 241 regulate a topic, the provisions of the code take precedence.

3301.2 Purpose. This chapter prescribes minimum safeguards for construction, *alteration* and demolition operations to provide reasonable safety to life and property from fire during such operations.

❖ This chapter is intended to regulate access by the responding fire department, fire protection systems, operations and maintenance of structures for precautions against fire and spread of fire during construction and demolition.

SECTION 3302 DEFINITIONS

3302.1 Terms defined in Chapter 2. Words and terms used in this chapter and defined in Chapter 2 shall have the meanings ascribed to them as defined therein.

❖ This section directs the code user to Chapter 2 for the proper application of the terms used in this chapter. These terms may be defined in Chapter 2 or in another *International Code*® (I-Code®) as indicated in Section 201.3, or the dictionary meaning may be all that is needed (see also commentaries, Sections 201.1 through 201.4).

INTERNATIONAL CODE COUNCIL®
Copyright © 2015 ICC. ALL RIGHTS RESERVED. Accessed by David Dammon on Jun 21, 2017 12:30:52 PM pursuant to License Agreement with ICC. No further reproduction or distribution authorized. ANY UNAUTHORIZED REPRODUCTION OR DISTRIBUTION IS A VIOLATION OF THE FEDERAL COPYRIGHT ACT AND THE LICENSE AGREEMENT, AND SUBJECT TO CIVIL AND CRIMINAL PENALTIES THEREUNDER.

SECTION 3303
TEMPORARY HEATING EQUIPMENT

3303.1 Listed. Temporary heating devices shall be *listed* and *labeled* in accordance with the *International Mechanical Code* or the *International Fuel Gas Code*. Installation, maintenance and use of temporary heating devices shall be in accordance with the terms of the listing.

❖ Listing and labeling are used to identify materials, assemblies and devices that are required to bear the identification of the manufacturer, as well as a third-party quality-control agency. The quality-control agency allows the use of its listing or label based on periodic audits and inspections of the manufacturer's facility. Not all testing laboratories, inspection agencies and other organizations concerned with product or program evaluation use the same means for identifying listed equipment, materials or agencies. Some do not recognize equipment or materials as listed unless they are also labeled. The fire code official must use the same system as the listing organization to identify listed equipment, materials or agencies.

3303.2 Oil-fired heaters. Oil-fired heaters shall comply with Section 603.

❖ The regulations for the devices that are likely to be used for temporary heat are delineated in Section 603.

3303.3 LP-gas heaters. Fuel supplies for liquefied-petroleum gas-fired heaters shall comply with Chapter 61 and the *International Fuel Gas Code*.

❖ Because propane gas is heavier than air, special attention must be given to the way the fuel tank is arranged and connected to the heating device. Tank location and protection are just two of the concerns addressed in the *International Fuel Gas Code*® (IFGC®).

3303.4 Refueling. Refueling operations for liquid-fueled equipment or appliances shall be conducted in accordance with Section 5705. The equipment or appliance shall be allowed to cool prior to refueling.

❖ This section addresses the refueling of liquid-fueled equipment, but Section 5705 addresses proper liquid transfer, container filling operations, filling locations, quantity limits and more. Because hot surfaces can cause ignition of flammable vapors and spills, the appliance must be allowed to cool before refueling.

3303.5 Installation. Clearance to combustibles from temporary heating devices shall be maintained in accordance with the *labeled* equipment. When in operation, temporary heating devices shall be fixed in place and protected from damage, dislodgement or overturning in accordance with the manufacturer's instructions.

❖ Because conditions change during construction or demolition, temporary heating devices must be monitored and maintained. Materials are constantly being moved, which may reduce the clearances to the device. It may be advantageous for the owner to hire a fire watch to check operating conditions while work is in progress and at the end of work shifts. The fire code official may need to decide what is required.

3303.6 Supervision. The use of temporary heating devices shall be supervised and maintained only by competent personnel.

❖ Temporary installations must be as safe as permanent ones. Having qualified people do these installations is important.

SECTION 3304
PRECAUTIONS AGAINST FIRE

3304.1 Smoking. Smoking shall be prohibited except in *approved* areas. Signs shall be posted in accordance with Section 310. In *approved* areas where smoking is permitted, *approved* ashtrays shall be provided in accordance with Section 310.

❖ This smoking prohibition is out of concern for fire safety, not health or the environment. Every effort must be made to keep hot smoking materials from igniting building materials or debris. Smoking in occupancies subject to ignition hazards from smoking materials should be approved by the fire code official, confined to spaces without significant amounts of combustibles and where approved ash trays or receptacles are provided. Signage indicating "smoking permitted in this area" will encourage the use of the limited area. "No Smoking" signs similar to Commentary Figure 3304.1 may be used.



Figure 3304.1
NO SMOKING SIGN

INTERNATIONAL CODE COUNCIL®
Copyright © 2015 ICC. ALL RIGHTS RESERVED. Accessed by David Dammon on Jun 21, 2017 12:30:52 PM pursuant to License Agreement with ICC. No further reproduction or distribution authorized. ANY UNAUTHORIZED REPRODUCTION OR DISTRIBUTION IS A VIOLATION OF THE FEDERAL COPYRIGHT ACT AND THE LICENSE AGREEMENT, AND SUBJECT TO CIVIL AND CRIMINAL PENALTIES THEREUNDER.

3304.2 Combustible debris, rubbish and waste. Combustible debris, rubbish and waste material shall comply with the requirements of Sections 3304.2.1 through 3304.2.4.

❖ As a basic fire safety measure, work site housekeeping is often overlooked. This section introduces an orderly progression of procedures for managing the accumulation of combustible rubbish on construction and demolition sites. The subsections were formerly contained in a single paragraph but have been placed in separate sections to emphasize their importance in fire safety planning.

3304.2.1 Combustible waste material accumulation. Combustible debris, rubbish and waste material shall not be accumulated within buildings.

❖ Construction jobs must be kept reasonably free of accumulations of combustible waste inside of buildings undergoing construction or demolition where any number of ignition sources may exist.

3304.2.2 Combustible waste material removal. Combustible debris, rubbish and waste material shall be removed from buildings at the end of each shift of work.

❖ To help mitigate the hazards of accumulating combustible rubbish inside of buildings, this section requires that such materials be removed to outside of the building at the end of each work shift.

3304.2.3 Rubbish containers. Where rubbish containers with a capacity exceeding 5.33 cubic feet (40 gallons) (0.15 m^3) are used for temporary storage of combustible debris, rubbish and waste material, they shall have tight-fitting or self-closing lids. Such rubbish containers shall be constructed entirely of materials that comply with either of the following:

1. Noncombustible materials.
2. Materials that meet a peak rate of heat release not exceeding 300 kW/m^2 when tested in accordance with ASTM E1354 at an incident heat flux of 50 kW/m^2 in the horizontal orientation.

❖ Large rubbish containers must be provided for temporary storage of combustible construction or demolition rubbish. The specific container size is consistent with the size criteria in Section 304.3 and the fire safety requirements are consistent with those for large rubbish containers found throughout the code. The use of containers with tight-fitting or self- closing lids provides a method to reduce the possibility that a fire can be started in the container by accident and prevent continued burning if ignition does occur. Such containers need not be constructed of metal but can be constructed of other noncombustible materials, including materials that have been shown to be safe by meeting a very severe fire test, similar to those required by Section 808 for Group I-1, I-2 and I-3 occupancies and Section 304.3.4 for general rubbish control. A key requirement is that the lids must be tight-fitting or self-closing. Note that this does not address materials susceptible to spontaneous ignition, such as oily rags, that are covered by Section 3304.2.4. The use of the phrase "combustible debris, rubbish and waste" makes this section consistent with other sections of the code.

3304.2.4 Spontaneous ignition. Materials susceptible to spontaneous ignition, such as oily rags, shall be stored in a listed disposal container.

❖ Spontaneous ignition, also known as autoignition or self-ignition, is defined by Burklin and Purington as "ignition due to chemical reaction or bacterial action in which there is slow oxidation of organic compounds until the material ignites; usually there is sufficient air for oxidation but insufficient ventilation to carry heat away as it is generated." A detailed treatment of the subject appears in the *NFPA Fire Protection Handbook*. The One Meridian Plaza office building fire in 1991 was allegedly started by spontaneous ignition of oil-soaked rags that were improperly stored during a remodeling operation. This high-rise building in the heart of Philadelphia was so seriously damaged in the fire that it was razed in 1999. A listed container for the storage of the oily rags was not used. The fire code official should determine the kinds of oils or solvents used and research their potential for spontaneous ignition (see commentary, Section 304.3.1).

3304.3 Burning of combustible debris, rubbish and waste. Combustible debris, rubbish and waste material shall not be disposed of by burning on the site unless approved.

❖ Combustible rubbish and construction waste must not be burned, unless local environmental and fire authorities are consulted on local open burning regulations.

3304.4 Open burning. *Open burning* shall comply with Section 307.

❖ Section 307 requires that a permit be obtained for open burning. Other areas of concern are burning location and monitoring. The owner should make documentation of the event available to the fire code official.

3304.5 Fire watch. Where required by the *fire code official* for building demolition, or building construction during working hours that is hazardous in nature, qualified personnel shall be provided to serve as an on-site fire watch. Fire watch personnel shall be provided with not less than one approved means for notification of the fire department and their sole duty shall be to perform constant patrols and watch for the occurrence of fire.

❖ Hazardous demolition or construction operations may need the services of qualified emergency response personnel, such as hazmat technicians or fire fighters, to stand by or actually patrol the area, especially when hazardous construction operations are being conducted in an occupied building. When such persons are needed, it is essential that they focus on that task only and have no other assignments. A lay person should not be used; it is within the authority of the fire code official to require that professionals be on site. It is critical that such watch personnel be able to contact the fire department immediately in case of an

INTERNATIONAL CODE COUNCIL®
Copyright © 2015 ICC. ALL RIGHTS RESERVED. Accessed by David Dammon on Jun 21, 2017 12:30:52 PM pursuant to License Agreement with ICC. No further reproduction or distribution authorized. ANY UNAUTHORIZED REPRODUCTION OR DISTRIBUTION IS A VIOLATION OF THE FEDERAL COPYRIGHT ACT AND THE LICENSE AGREEMENT, AND SUBJECT TO CIVIL AND CRIMINAL PENALTIES THEREUNDER.

emergency through a reliable means of communication approved by the fire code official. See the commentary to Sections 403.12.1 through and 403.12.1.2 for additional information on fire watch personnel and their duties.

3304.6 Cutting and welding. Operations involving the use of cutting and welding shall be done in accordance with Chapter 35.

❖ Cutting and welding operations account for 9 percent of fires in industrial operations. With accumulations of combustible materials that are common during construction and demolition, additional precautions must be taken. One of the most effective ways to prevent or promptly respond to fires caused by cutting and welding is to have a vigorous "hot work" permit system. Chapter 35 presents these precautions.

3304.7 Electrical. Temporary wiring for electrical power and lighting installations used in connection with the construction, *alteration* or demolition of buildings, structures, equipment or similar activities shall comply with NFPA 70.

❖ Temporary wiring used during construction is, by its very nature, of a lesser class or quality than that which would be installed as permanent building wiring and must, therefore, be monitored for damage, unfinished work or exposed connections. Demolition operations may leave exposed live wiring, so coordination between the on-site electrician and the power company is important. Section 590 of NFPA 70 contains requirements for temporary wiring in buildings, including provisions for overcurrent protection, lamp protection, wiring quality and installation, disconnects and time limitations, to name but a few (see also commentary, Section 605).

SECTION 3305
FLAMMABLE AND COMBUSTIBLE LIQUIDS

3305.1 Storage of flammable and combustible liquids. Storage of flammable and *combustible liquids* shall be in accordance with Section 5704.

❖ Storage and use of flammable and combustible liquids require the approval of the fire code official for the control of hazards and to provide the fire department with vital hazard data for preplanning for incidents involving such materials. A permit is required for storage. See Section 105.6.17 and the accompanying commentary for more information on permit requirements.

3305.2 Class I and Class II liquids. The storage, use and handling of flammable and *combustible liquids* at construction sites shall be in accordance with Section 5706.2. Ventilation shall be provided for operations involving the application of materials containing flammable solvents.

❖ Sections 5706.2 through 5706.2.8.1 contain comprehensive regulations on the proper storage, use and handling of Class I and II liquids on construction sites. Areas of particular concern are: signage, storage location, ventilation, sources of ignition and dispensing. Class I liquids are more hazardous than Class II because of their lower flash points [less than 100°F (38°C)] (see commentaries, Sections 5706.2 through 5706.2.8.1).

3305.3 Housekeeping. Flammable and combustible liquid storage areas shall be maintained clear of combustible vegetation and waste materials. Such storage areas shall not be used for the storage of combustible materials.

❖ Housekeeping, in this case, concerns ignition sources and added fuel load in the liquid storage area. Easily ignited dry weeds, grass and paper are prohibited in the area. Access to the area by fire fighters can be hampered when combustibles in the storage area ignite.

3305.4 Precautions against fire. Sources of ignition and smoking shall be prohibited in flammable and *combustible liquid* storage areas. Signs shall be posted in accordance with Section 310.

❖ Sources of ignition, such as electric arcing, open-flame heating devices and static electricity, must be controlled. Smoking must also be controlled by posting "no smoking" signs, providing safe smoking areas and promoting on-the-job awareness of the smoking prohibition as stipulated in Section 310.

3305.5 Handling at point of final use. Class I and II liquids shall be kept in *approved* safety containers.

❖ This section mandates that only approved safety cans (as defined in Section 202) of not more than a 5-gallon (19 L) capacity with a spring-loaded, self-closing lid and spout covers, designed to safely relieve internal pressure under fire conditions, be used for the storage of Class I and II liquids at construction and demolition sites.

The key to the proper storage and handling of flammable and combustible liquids is to keep liquids and vapors away from ignition sources. Restrictions on flammable liquid container sizes, separation distances and active and passive fire protection are based on the extent of the hazard presented should an uncontrolled release occur.

3305.6 Leakage and spills. Leaking vessels shall be immediately repaired or taken out of service and spills shall be cleaned up and disposed of properly.

❖ Accidental liquid spills create a vapor release that can quickly travel from the spill point to an ignition source. Because spills need immediate attention to neutralize and remove the hazard, the local fire department should be notified; it is the agency best prepared to deal with the immediate hazards of a spill.

Leaks can indicate a developing problem with equipment or piping needing immediate repair. Until repairs are made, the equipment or piping must be

INTERNATIONAL CODE COUNCIL®
Copyright © 2015 ICC. ALL RIGHTS RESERVED. Accessed by David Dammon on Jun 21, 2017 12:30:52 PM pursuant to License Agreement with ICC. No further reproduction or distribution authorized. ANY UNAUTHORIZED REPRODUCTION OR DISTRIBUTION IS A VIOLATION OF THE FEDERAL COPYRIGHT ACT AND THE LICENSE AGREEMENT, AND SUBJECT TO CIVIL AND CRIMINAL PENALTIES THEREUNDER.

taken out of service. If the leak or spill is expected to spread beyond the property lines or contaminate water or air, environmental authorities should also be notified.

SECTION 3306
FLAMMABLE GASES

3306.1 Storage and handling. The storage, use and handling of flammable gases shall comply with Chapter 58.

❖ Chapter 58 deals with quantity limits for indoor storage, storage containers, ignition sources and limits for the outdoor storage of flammable gases. Also refer to Chapter 53 for general requirements for compressed gases.

3306.2 Cleaning with flammable gas. Flammable gases shall not be used to clean or remove debris from piping open to the atmosphere.

❖ In the past several years, two explosions that killed a combined 10 people were attributed to workers using natural gas flowing at high velocities to clean/clear fuel gas piping during the commissioning of fuel gas piping at industrial plants. The flammable gas and debris from the piping were vented to the atmosphere and ignited by sparks, one of which was suspected to be caused by static electricity. For details on the incidents see the U.S. Chemical Safety Board report at: http://www.csb.gov/assets/1/19/KleenUrgentRec.pdf.

The dangerous practice of using flammable gases to clean or remove debris from fuel piping that is open to the atmosphere is prohibited by this section.

3306.2.1 Pipe cleaning and purging. The cleaning and purging of flammable gas piping systems, including cleaning new or existing piping systems, purging piping systems into service and purging piping systems out of service, shall comply with NFPA 56.

Exceptions:

1. Compressed gas piping systems other than fuel gas piping systems where in accordance with Chapter 53.
2. Piping systems regulated by the *International Fuel Gas Code*.
3. Liquefied petroleum gas systems in accordance with Chapter 61.

❖ The intent of this section is to address the fire and explosion hazards associated with the purging of flammable gas piping typically found in electric generating plants and in industrial, institutional, and commercial applications. NFPA 56 provides minimum safety requirements for the cleaning and purging of flammable gas piping systems, including cleaning new or existing piping systems, purging piping systems into service, and purging piping systems out of service. It includes the appropriate managerial and operational requirements necessary to foster safe outcomes. NFPA 56 compliments this section and also does not allow flammable gases to be used for internal cleaning of piping open to the atmosphere.

As indicated by the exceptions, it is not the intent of this section to cover cleaning or purging of the three listed systems.

SECTION 3307
EXPLOSIVE MATERIALS

3307.1 Storage and handling. *Explosive* materials shall be stored, used and handled in accordance with Chapter 56.

❖ Chapter 56 prescribes minimum requirements for the safe storage, handling and use of explosives, ammunition and blasting agents for commercial and industrial occupancies. Its provisions are intended to protect the general public, emergency responders and individuals who handle explosives in connection with construction or demolition operations.

3307.2 Supervision. Blasting operations shall be conducted in accordance with Chapter 56.

❖ Specific requirements dealing with local physical and governmental controls, blasting area security and post-blast procedures are found in Section 5607.

Security precautions for explosive materials must conform to the requirements of this chapter and the referenced standards. Any discrepancy that suggests the loss or theft of explosives must be reported to local law enforcement authorities and the Bureau of Alcohol, Tobacco, Firearms and Explosives (ATF) within 24 hours of discovery (see DOTy 27 CFR, Part 55.30). The ATF hotline may be contacted 24 hours a day at (800) 800-3855. Abandoned explosives, including those not claimed by the consignee within 48 hours of their arrival at a terminal, should be returned to the control of the last licensee (manufacturer or distributor) to possess them before they were abandoned. Local law enforcement authorities and the ATF should be contacted if this is not possible.

3307.3 Demolition using explosives. *Approved* fire hoses for use by demolition personnel shall be maintained at the demolition site whenever *explosives* are used for demolition. Such fire hoses shall be connected to an *approved* water supply and shall be capable of being brought to bear on post-*detonation* fires anywhere on the site of the demolition operation.

❖ The code text does not stipulate the number, size or length of hoses needed; therefore, the involvement of the fire code official is essential to anticipate an incident. The competence of the demolition crew to properly use the hose for fire fighting is not addressed, which suggests that fire brigade training may be in order. Periodic inspections by the fire code official are imperative. As is the case throughout the code, fire protection methods and procedures must be acceptable to the fire code official.

INTERNATIONAL CODE COUNCIL®
Copyright © 2015 ICC. ALL RIGHTS RESERVED. Accessed by David Dammon on Jun 21, 2017 12:30:52 PM pursuant to License Agreement with ICC. No further reproduction or distribution authorized. ANY UNAUTHORIZED REPRODUCTION OR DISTRIBUTION IS A VIOLATION OF THE FEDERAL COPYRIGHT ACT AND THE LICENSE AGREEMENT, AND SUBJECT TO CIVIL AND CRIMINAL PENALTIES THEREUNDER.

SECTION 3308
OWNER'S RESPONSIBILITY FOR FIRE PROTECTION

3308.1 Program superintendent. The *owner* shall designate a person to be the fire prevention program superintendent who shall be responsible for the fire prevention program and ensure that it is carried out through completion of the project. The fire prevention program superintendent shall have the authority to enforce the provisions of this chapter and other provisions as necessary to secure the intent of this chapter. Where guard service is provided, the superintendent shall be responsible for the guard service.

❖ Each project must have a fire prevention program superintendent who is in charge of all fire safety efforts, such as prefire planning, on-the-job training of personnel, guard service and the other areas covered in Sections 3308.1 through 3308.7. This person acts on behalf of the fire code official and can enforce the provisions of Chapter 33.

3308.2 Prefire plans. The fire prevention program superintendent shall develop and maintain an *approved* prefire plan in cooperation with the fire chief. The fire chief and the *fire code official* shall be notified of changes affecting the utilization of information contained in such prefire plans.

❖ Prefire plans are developed by the fire prevention program superintendent to assist the site personnel responding to a fire. This plan must be coordinated with the local fire chief and the fire code official. Changes in building operations or equipment that could affect the fire department's ground attack of a fire must be reported to the fire department responder immediately. For example, if an additional 1,000-gallon (3785 L) propane tank is located alongside an existing tank, the responder needs to know about this situation.

3308.3 Training. Training of responsible personnel in the use of fire protection equipment shall be the responsibility of the fire prevention program superintendent.

❖ The fire responder is expected to know what firefighting and fire protection equipment is on the site and how to operate it. The fire prevention program superintendent is responsible for training the job-site personnel in the proper use of hand-held fire extinguishers, hose lines, fire alarms and sprinkler systems.

3308.4 Fire protection devices. The fire prevention program superintendent shall determine that all fire protection equipment is maintained and serviced in accordance with this code. The quantity and type of fire protection equipment shall be *approved*.

❖ Fire protection and detection equipment must be maintained during construction and demolition. The fire prevention program superintendent must decide what is necessary to enforce maintenance as required by the code. Approval of the equipment and its maintenance is not, however, transferred to the fire prevention program superintendent, but remains with the fire code official.

3308.5 Hot work operations. The fire prevention program superintendent shall be responsible for supervising the permit system for hot work operations in accordance with Chapter 35.

❖ This issue is also discussed in the commentary to Section 3304.6. Chapter 35 contains an in-depth treatment of hot work, especially Section 3503.3, which deals with hot work permits. The fire prevention program superintendent issues the permits to coordinate a response if a fire should occur in the known hot work permit area.

3308.6 Impairment of fire protection systems. Impairments to any *fire protection system* shall be in accordance with Section 901.

❖ Section 901.7 specifically deals with systems out of service because of planned, emergency or accidental impairment. During demolition, portions of the equipment must be kept in service as long as possible. Likewise, equipment on a construction site must keep pace with the new work and be kept in service as much as possible, especially at the end of the work day.

3308.7 Temporary covering of fire protection devices. Coverings placed on or over fire protection devices to protect them from damage during construction processes shall be immediately removed upon the completion of the construction processes in the room or area in which the devices are installed.

❖ Fire protection devices must be kept in service as much as possible during construction. An example would be that paper or plastic bags must be removed from the sprinkler heads as soon as the painting of the sprinkler piping or the adjacent ceiling is completed. Additional information can be obtained from standards, such as NFPA 13 and NFPA 72.

SECTION 3309
FIRE REPORTING

3309.1 Emergency telephone. Readily accessible emergency telephone facilities shall be provided in an *approved* location at the construction site. The street address of the construction site and the emergency telephone number of the fire department shall be posted adjacent to the telephone.

❖ The construction site must have an emergency phone located in an approved location. Workers on the site are not expected to know the street address of the site or the fire department emergency number if it is a number other than 9-1-1. Therefore, the site address and fire department emergency number must be prominently posted. Typical customized signs are available from safety equipment suppliers or sign companies.

INTERNATIONAL CODE COUNCIL®
Copyright © 2015 ICC. ALL RIGHTS RESERVED. Accessed by David Dammon on Jun 21, 2017 12:30:52 PM pursuant to License Agreement with ICC. No further reproduction or distribution authorized. ANY UNAUTHORIZED REPRODUCTION OR DISTRIBUTION IS A VIOLATION OF THE FEDERAL COPYRIGHT ACT AND THE LICENSE AGREEMENT, AND SUBJECT TO CIVIL AND CRIMINAL PENALTIES THEREUNDER.

SECTION 3310
ACCESS FOR FIRE FIGHTING

3310.1 Required access. *Approved* vehicle access for fire fighting shall be provided to all construction or demolition sites. Vehicle access shall be provided to within 100 feet (30 480 mm) of temporary or permanent fire department connections. Vehicle access shall be provided by either temporary or permanent roads, capable of supporting vehicle loading under all weather conditions. Vehicle access shall be maintained until permanent fire apparatus access roads are available.

❖ Fire-fighting vehicle access is the means by which fire fighters gain access to the construction or demolition site and building for fire suppression and rescue operations until the permanent fire apparatus access roads are constructed. Such access is an integral component of the fire prevention program. The site superintendent or other person responsible for construction and demolition operations is responsible for maintaining and policing fire-fighter access routes, as provided in Section 3308. Fire apparatus must be able to get within 100 feet (30 480 mm) of any installed fire department connection supplying water to temporary or permanent fire protection systems. Access roads must support the weight of the heaviest vehicle that might respond. The weight requirements are available from the local fire department. All-weather surfaces are required because the responding fire department should not waste time moving snow or trying to get out of mud (see also commentary, Section 503).

3310.2 Key boxes. Key boxes shall be provided as required by Chapter 5.

❖ As construction nears completion, some areas may not be accessible to the fire department without the use of a key. In those cases, the fire code official may require a key box as stipulated in Section 506.

SECTION 3311
MEANS OF EGRESS

[B] 3311.1 Stairways required. Where a building has been constructed to a *building height* of 50 feet (15 240 mm) or four stories, or where an existing building exceeding 50 feet (15 240 mm) in *building height* is altered, not less than one temporary lighted *stairway* shall be provided unless one or more of the permanent *stairways* are erected as the construction progresses.

❖ Work crews will necessarily be in, and the fire department will need access to, buildings under construction or demolition at the same time that the means-of-egress elements are being built or destroyed. This situation requires diligence on the part of the fire code official and the construction managers to make sure a means of escape for workers and access for emergency forces is available at all times, and that construction of occupiable areas does not unnecessarily extend beyond the construction of the means of egress. By the time the building is substantially enclosed, all required means of egress should be fully constructed and functional. For a building under construction, these precautions are triggered when the building exceeds 50 feet (15 240 mm) in height or four stories. Any temporary stairways must be lighted.

Similarly, the destruction of the means of egress should not precede the demolition of areas occupied by workers.

3311.2 Maintenance. Required *means of egress* shall be maintained during construction and demolition, remodeling or *alterations* and additions to any building.

Exception: *Approved* temporary *means of egress* systems and facilities.

❖ As in any building where people must egress, the required means of egress must be kept clear of construction materials and demolition debris so occupants can exit in an emergency.

Temporary means of egress may be provided when the permanent egress system cannot be maintained in accordance with this section.

SECTION 3312
WATER SUPPLY FOR FIRE PROTECTION

3312.1 When required. An *approved* water supply for fire protection, either temporary or permanent, shall be made available as soon as combustible material arrives on the site.

❖ A water supply must be connected to the wet standpipe, and underground water supply and hydrants must be available for the dry standpipes as soon as combustible materials are on the job site. As previously stated in this commentary, the unfinished building is most vulnerable to fire and must be protected as much as possible.

SECTION 3313
STANDPIPES

3313.1 Where required. In buildings required to have standpipes by Section 905.3.1, not less than one standpipe shall be provided for use during construction. Such standpipes shall be installed prior to construction exceeding 40 feet (12 192 mm) in height above the lowest level of fire department vehicle access. Such standpipe shall be provided with fire department hose connections at accessible locations adjacent to usable stairways. Such standpipes shall be extended as construction progresses to within one floor of the highest point of construction having secured decking or flooring.

❖ This section requires the installation of standpipes during construction for any building required by Chapter 9 and the IBC to be equipped with a standpipe system. The requirement for standpipe and hose connections is triggered when construction progresses to a height of not more than 40 feet (12 192 mm) above the lowest level of fire department access. While hoses need not be provided, the hose connection must be located adjacent to a stairway.

INTERNATIONAL CODE COUNCIL®
Copyright © 2015 ICC. ALL RIGHTS RESERVED. Accessed by David Dammon on Jun 21, 2017 12:30:52 PM pursuant to License Agreement with ICC. No further reproduction or distribution authorized. ANY UNAUTHORIZED REPRODUCTION OR DISTRIBUTION IS A VIOLATION OF THE FEDERAL COPYRIGHT ACT AND THE LICENSE AGREEMENT, AND SUBJECT TO CIVIL AND CRIMINAL PENALTIES THEREUNDER.

Although thread requirements are not stated here, the hose threads must be compatible with those of the responding fire department as required by Section 905.1. Standpipe hose connections must be ready for use on each floor before the installation of the floor deck on the story or level above in order to provide fire fighters with a means of bringing hose lines to bear on a fire on the highest floor level having access.

3313.2 Buildings being demolished. Where a building is being demolished and a standpipe is existing within such a building, such standpipe shall be maintained in an operable condition so as to be available for use by the fire department. Such standpipe shall be demolished with the building but shall not be demolished more than one floor below the floor being demolished.

❖ When a structure is being demolished and a standpipe system exists within that structure, the standpipe system must be operable and be available for use by the fire department. When a structure or a floor is to be demolished, its standpipe system must also be demolished with the structure; however, the system may not be demolished more than one floor below the floor being demolished.

The abundance of avenues for vertical fire spread make buildings undergoing partial or total demolition highly susceptible to damage from fire. Even more so than construction sites, demolition projects attract vandals and vagrants who may set fires on the property for warmth or criminal purposes. Further, cutting equipment and portable heating appliances may easily ignite combustible debris created during demolition. Once started, fire will spread rapidly through voids and vertical openings created to remove building service equipment. Standpipes provide fire fighters with a means of deploying hose lines quickly against these rapidly spreading fires.

3313.3 Detailed requirements. Standpipes shall be installed in accordance with the provisions of Section 905.

Exception: Standpipes shall be either temporary or permanent in nature, and with or without a water supply, provided that such standpipes comply with the requirements of Section 905 as to capacity, outlets and materials.

❖ Section 905 deals with installation; maintenance and supervision; building height and area; special occupancy application and type as related to standpipe systems in buildings under construction (see commentary, Section 905).

Temporary standpipes, whether dry or wet, are subject to the same requirements of Section 905 as permanent standpipes.

SECTION 3314
AUTOMATIC SPRINKLER SYSTEM

3314.1 Completion before occupancy. In buildings where an *automatic sprinkler system* is required by this code or the *International Building Code*, it shall be unlawful to occupy any portion of a building or structure until the *automatic sprinkler system* installation has been tested and *approved*, except as provided in Section 105.3.4.

❖ Section 105.3.4 is very clear in that when the sprinkler system is not tested and approved, the building cannot be occupied by the owner or tenants. In other words “no protection; no people” as one fire code official has put it. This is especially important in a building that has been given construction alternatives (i.e., increased travel distances, increased height and area, or reduced fire-resistance ratings) based on the installation of a sprinkler system, because the building is not safe for people when the system is not functional. Since the issuance of a Certificate of Occupancy is regulated by Section 111.1 of the IBC, the administration of this section should be coordinated with the building official.

3314.2 Operation of valves. Operation of sprinkler control valves shall be allowed only by properly authorized personnel and shall be accompanied by notification of duly designated parties. Where the sprinkler protection is being regularly turned off and on to facilitate connection of newly completed segments, the sprinkler control valves shall be checked at the end of each work period to ascertain that protection is in service.

❖ Closed control valves at the time of a fire are a major cause of sprinkler system failure. Only properly trained personnel should be operating these valves under the supervision of the fire prevention program superintendent, if available. The systems must be kept in service as much as possible and especially overnight or at the time of shift changes. If a fire watch is employed, duties should include monitoring these valves. The fire department must be notified when the system is out of service for an extended period of time because it responds to a sprinklered building differently than it does to an unsprinklered building.

SECTION 3315
PORTABLE FIRE EXTINGUISHERS

3315.1 Where required. Structures under construction, *alteration* or demolition shall be provided with not less than one *approved* portable fire extinguisher in accordance with Section 906 and sized for not less than ordinary hazard as follows:

1. At each *stairway* on all floor levels where combustible materials have accumulated.
2. In every storage and construction shed.
3. Additional portable fire extinguishers shall be provided where special hazards exist including, but not limited to, the storage and use of flammable and *combustible liquids*.

❖ Portable extinguishers must be rated for the hazards protected. Section 906 and NFPA 10, the applicable standard for portable fire extinguishers, contain infor-

INTERNATIONAL CODE COUNCIL®
Copyright © 2015 ICC. ALL RIGHTS RESERVED. Accessed by David Dammon on Jun 21, 2017 12:30:52 PM pursuant to License Agreement with ICC. No further reproduction or distribution authorized. ANY UNAUTHORIZED REPRODUCTION OR DISTRIBUTION IS A VIOLATION OF THE FEDERAL COPYRIGHT ACT AND THE LICENSE AGREEMENT, AND SUBJECT TO CIVIL AND CRIMINAL PENALTIES THEREUNDER.

mation on fire extinguisher ratings. Other circumstances under which the fire code official may require additional extinguishers include workers using: open-flame devices; flammable or combustible liquids; welding or cutting equipment; or painting equipment for applying flammable or combustible finishes during both construction and demolition.

SECTION 3316
MOTORIZED CONSTRUCTION EQUIPMENT

3316.1 Conditions of use. Internal-combustion-powered construction equipment shall be used in accordance with all of the following conditions:

1. Equipment shall be located so that exhausts do not discharge against combustible material.
2. Exhausts shall be piped to the outside of the building.
3. Equipment shall not be refueled while in operation.
4. Fuel for equipment shall be stored in an *approved* area outside of the building.

❖ Motorized equipment, particularly equipment powered by an internal combustion engine, must be kept clear of combustibles, must have exhaust arranged so as not to create an environmental hazard, must not be fueled while hot and have fuel stored properly. These issues are similarly addressed in Sections 3303, 3304 and 3305.

SECTION 3317
SAFEGUARDING ROOFING OPERATIONS

3317.1 General. Roofing operations utilizing heat-producing systems or other ignition sources shall be conducted in accordance with Sections 3317.2 and 3317.3 and Chapter 35.

❖ Although licensed and bonded contractors are often required for roofing operations by state or local laws or ordinances, the jurisdiction must establish who is authorized to conduct such activities. In addition to the requirements of Section 3317, the applicable hot work requirements of Chapter 35 also apply to certain roofing operations. Since the definition of "Hot work" in Section 202 specifically includes the installation of torch-applied roofing systems, permits for roofing operations utilizing such heat-producing systems that are ignition sources are required by Section 105.6.24. Additional permits for the use of combustible liquids and compressed gas may be also appropriate. Roofing permits are typically required by the IBC, as well.

3317.2 Asphalt and tar kettles. Asphalt and tar kettles shall be operated in accordance with Section 303.

❖ Section 303 regulates transportation, location, fueling, supervision, construction and fire protection of asphalt and tar kettles (see commentary, Section 303).

3317.3 Fire extinguishers for roofing operations. Fire extinguishers shall comply with Section 906. There shall be not less than one multipurpose portable fire extinguisher with a minimum 3-A 40-B:C rating on the roof being covered or repaired.

❖ Section 906 generally covers the location and requirements of portable fire extinguishers with a particular reference to asphalt kettles in Table 906.1. Section 303 also has requirements for extinguishers on the kettle, in the proximity of the kettle and on the roof. Fire extinguishers are to be fully charged and ready for service. Many construction sites are littered with building materials and debris. The kettle operator is responsible for maintaining an appropriate distance between the hot kettle and combustible materials.

Bibliography

The following resource materials were used in the preparation of the commentary for this chapter of the code:

Burklin, Ralph W. and Robert G. Purington. *Fire Terms: A Guide to Their Meaning and Use*. Quincy, MA: National Fire Protection Association, 1980.

Code Changes Resource Collection—2015 International Fire Code. Washington, DC: International Code Council, 2014.

NFPA Fire Protection Handbook. Quincy, MA: National Fire Protection Association, 2008.

US Chemical Safety Board Final Report, Kleen Energy Natural Gas Explosion. 6/28/2010.

INTERNATIONAL CODE COUNCIL®
Copyright © 2015 ICC. ALL RIGHTS RESERVED. Accessed by David Dammon on Jun 21, 2017 12:30:52 PM pursuant to License Agreement with ICC. No further reproduction or distribution authorized. ANY UNAUTHORIZED REPRODUCTION OR DISTRIBUTION IS A VIOLATION OF THE FEDERAL COPYRIGHT ACT AND THE LICENSE AGREEMENT, AND SUBJECT TO CIVIL AND CRIMINAL PENALTIES THEREUNDER.

INTERNATIONAL CODE COUNCIL®
Copyright © 2015 ICC. ALL RIGHTS RESERVED. Accessed by David Dammon on Jun 21, 2017 12:30:52 PM pursuant to License Agreement with ICC. No further reproduction or distribution authorized. ANY UNAUTHORIZED REPRODUCTION OR DISTRIBUTION IS A VIOLATION OF THE FEDERAL COPYRIGHT ACT AND THE LICENSE AGREEMENT, AND SUBJECT TO CIVIL AND CRIMINAL PENALTIES THEREUNDER.

Chapter 34:
Tire Rebuilding and Tire Storage

General Comments

Each year, over 270 million vehicle tires are disposed of in the United States. Recycling, reuse and energy recovery are having a major impact, but tire storage continues to present an environmental and fire safety hazard. The risk associated with tire fires demonstrates the need to address this problem. This chapter prescribes ways to prevent and control fires in tire rebuilding plants, tire storage and tire byproduct facilities.

Tire fires, although infrequent, are serious situations that are difficult to extinguish, expensive to clean up and often become major hazardous material incidents affecting entire communities, frequently requiring neighborhood evacuations and long, drawn-out fire-extinguishing operations. These fires threaten pollution of the air, soil and water. Federal and state agencies, municipalities and private companies have spent millions of dollars cleaning up tire fires across the country.

Scrap tires are not generally considered a hazardous waste; however, if a tire fire occurs, tires break down into hazardous compounds including gases, heavy metal and oil. The average passenger car tire is estimated to produce over 2 gallons (8 L) of oil when burned, according to the Rubber Manufacturers Association. Oil that exudes into ground and surface water as a result of tire fires is a significant environment pollutant. In some cases, this may trigger Environmental Protection Agency (EPA) Superfund cleanup status. For every million tires consumed by fire, about 55,000 gallons (208 175 L) of runoff oil can pollute the environment unless contained and collected. This oily material is also highly flammable.

Air pollution is also produced by tire fires. Air emissions may include polycyclic aromatic hydrocarbons (PAHs), benzene, styrene, phenols and butadiene. For more information on toxic air pollutants generated by tire fires, go to the U.S. EPA's Toxics Air Pollution website.

Notable tire fires include the following:

1. In 1983, 7 million tires burned in Rhinehart, Virginia, issuing a plume of smoke 3,000 feet (912 m) high and nearly 50 miles (80 km) long with air pollution emissions deposited in three states. The fire burned for nine months, polluting nearby water sources with lead and arsenic. The tire storage facility where the fire occurred is now being cleaned up as a Superfund site.
2. In 1999, a lightning strike ignited a tire fire in Westley, California. The tire dump contained millions of scrap tires located in a canyon in a coastal mountain range. The large smoke plume from the fire impacted nearby farming communities and caused widespread concern of potential health effects from exposure to the smoke emissions. The tire fire also produced large volumes of pyrolitic oil that flowed off the slope and into the drainage of an intermittent stream. This oil was ignited too, and the oil fire significantly increased the smoke emissions close to ground level. A response to the oil and tire fires was beyond the capabilities of local and state agencies. The EPA regional coordinator immediately responded using Oil Pollution Act of 1990 authority. It took 30 days to extinguish the fire. Total EPA response costs were $3.5 million.

   Waste tires are difficult to ignite, but once a tire fire starts, it is generally very hard to control and extinguish. Using water or foam to extinguish a tire fire is often futile. Water is best used to keep adjacent, unburned tires from igniting. Smothering a tire fire with dirt or sand is usually the best option for extinguishing fires. Typically, the sand or dirt is moved with heavy equipment to cover the burning tires. Putting out a tire fire can also be facilitated by removing unburned tires from the pile to lessen the fuel load.

Purpose

The requirements of Chapter 34 are intended to prevent or control fires and explosions associated with the remanufacture and storage of tires. Additionally, these requirements are intended to minimize the impact of tire storage fires by segregating the various operations and controlling ignition sources. Although the finished product, the tire, is not an unusual hazard, once ignition occurs the fire is extremely difficult to extinguish. Facilities designed and constructed for tire remanufacture are regulated by the *International Building Code*® (IBC®) to reduce the impact of potential fires on buildings and the environment.

INTERNATIONAL CODE COUNCIL®
Copyright © 2015 ICC. ALL RIGHTS RESERVED. Accessed by David Dammon on Jun 21, 2017 12:30:52 PM pursuant to License Agreement with ICC. No further reproduction or distribution authorized. ANY UNAUTHORIZED REPRODUCTION OR DISTRIBUTION IS A VIOLATION OF THE FEDERAL COPYRIGHT ACT AND THE LICENSE AGREEMENT, AND SUBJECT TO CIVIL AND CRIMINAL PENALTIES THEREUNDER.

SECTION 3401
GENERAL

3401.1 Scope. Tire rebuilding plants, tire storage and tire byproduct facilities shall comply with this chapter, other applicable requirements of this code and NFPA 13. Tire storage in buildings shall also comply with Chapter 32.

❖ In addition to the provisions of this chapter, NFPA 13 is referenced for sprinkler system design. Annex A of NFPA 13 also contains illustrations of various tire storage arrays. Spray operations using flammable or combustible solvents must also comply with Chapter 24. Sprinkler requirements for the bulk storage of rubber tires (defined in Section 202) may be found in Section 903.2.9.2. See the commentary to the above noted section for further discussion of fire protection for tire storage.

3401.2 Permit required. Permits shall be required as set forth in Section 105.6.

❖ The process of issuing permits gives the fire code official an opportunity to carefully evaluate and regulate hazardous operations. Permit applicants should be required to demonstrate that their operations comply with the intent of the code before the permit is issued. See the commentary to Section 105.6 for a general discussion of operations requiring an operational permit and Section 105.6.46 for discussion of specific operational permits for tire rebuilding facilities and their operation and maintenance. The process also notifies the fire department of the need for prefire planning for the hazardous property.

SECTION 3402
DEFINITIONS

3402.1 Terms defined in Chapter 2. Words and terms used in this chapter and defined in Chapter 2 shall have the meanings ascribed to them as defined therein.

❖ This section directs the code user to Chapter 2 for the proper application of the terms used in this chapter. Such terms may be defined in Chapter 2 or in another *International Code*® (I-Code®) as indicated in Section 201.3, or the dictionary meaning may be all that is needed (also see commentaries, Sections 201.1 through 201.4).

SECTION 3403
TIRE REBUILDING

3403.1 Construction. Tire rebuilding plants shall comply with the requirements of the *International Building Code*, as to construction, separation from other buildings or other portions of the same building, and protection.

❖ This section requires that construction must comply with the IBC. At a minimum, tire rebuilding plants are classified in Group F-1 (factory/industrial moderate hazard) in accordance with Section 306.2 of the IBC. Depending on an evaluation of the actual hazards presented by a given operation, which could include grinding, buffing or gluing of tires or tire components, the plant or portions of it might be classified in Group H.

3403.2 Location. Buffing operations shall be located in a room separated from the remainder of the building housing the tire rebuilding or tire recapping operations by a 1-hour *fire barrier*.

Exception: Buffing operations are not required to be separated where all of the following conditions are met:

1. Buffing operations are equipped with an *approved* continuous automatic water-spray system directed at the point of cutting action.
2. Buffing machines are connected to particle-collecting systems providing a minimum air movement of 1,500 cubic feet per minute (cfm) (0.71 m^3/s) in volume and 4,500 feet per minute (fpm) (23 m/s) in-line velocity.
3. The collecting system shall discharge the rubber particles to an *approved* outdoor noncombustible or fire-resistant container that is emptied at frequent intervals to prevent overflow.

❖ This section specifies that the buffing operations must be separated from the other operations by a 1-hour fire barrier. The intent is identical to the intent regarding construction: to keep the higher hazard operations separate, thereby reducing the potential for a rapidly spreading fire.

The exception recognizes that meeting the three outlined conditions will afford protection equivalent to the 1-hour fire barrier required by this section.

3403.3 Cleaning. The buffing area shall be cleaned at frequent intervals to prevent the accumulation of rubber particles.

❖ This section recognizes the importance of keeping the buffing area clean to reduce the possibility of igniting waste material. A maintenance schedule should be developed for particle removal. Cleaning frequency should be determined by the amount of equipment in operation.

3403.4 Spray rooms and booths. Each spray room or spray booth where flammable or combustible solvents are applied, shall comply with Chapter 24.

❖ When flammable or combustible solvents are used, the room or spray booth must comply with the requirements of Chapter 24. This provision is intended to reduce the likelihood of igniting solvents used in this process and to keep the incident within manageable proportions if ignition should occur.

INTERNATIONAL CODE COUNCIL®
Copyright © 2015 ICC. ALL RIGHTS RESERVED. Accessed by David Dammon on Jun 21, 2017 12:30:52 PM pursuant to License Agreement with ICC. No further reproduction or distribution authorized. ANY UNAUTHORIZED REPRODUCTION OR DISTRIBUTION IS A VIOLATION OF THE FEDERAL COPYRIGHT ACT AND THE LICENSE AGREEMENT, AND SUBJECT TO CIVIL AND CRIMINAL PENALTIES THEREUNDER.

SECTION 3404
PRECAUTIONS AGAINST FIRE

3404.1 Open burning. *Open burning* is prohibited in tire storage yards.

❖ Due to the stubborn nature of tire fires once they are ignited, this section prohibits open burning in tire storage areas where ignition of tires is a hazard.

3404.2 Sources of heat. Cutting, welding or heating devices shall not be operated in tire storage yards.

❖ Like the previous section, this section prohibits additional sources of ignition from welding or heating devices.

3404.3 Smoking prohibited. Smoking is prohibited in tire storage yards, except in designated areas.

❖ Except in smoking locations designated by the owner and approved by the fire code official, smoking is prohibited in tire storage yards. "No smoking" signs should be posted prominently in the yards and rigorously enforced. See the commentary to Section 310 for further information on smoking regulations.

3404.4 Power lines. Tire storage piles shall not be located beneath electrical power lines having a voltage in excess of 750 volts or that supply power to fire emergency systems.

❖ Should a fire occur in a tire storage yard, it could burn for some time before it is extinguished. Because these fires can be quite extensive and burn very hot, this precaution reduces the possibility that large electrical grids or emergency power supplies will be disabled for extended periods.

3404.5 Fire safety plan. The *owner* or individual in charge of the tire storage yard shall be required to prepare and submit to the *fire code official* a fire safety plan for review and approval. The fire safety plan shall include provisions for fire department vehicle access. Not less than one copy of the fire safety plan shall be prominently posted and maintained at the storage yard.

❖ This section requires that the owner develop a fire safety plan and submit it to the fire code official for approval. This plan should be as detailed as necessary, depending on the size and layout of the yard. This plan should also be coordinated with fire department pre-incident plans. The plan should include the size and composition of the storage material; layout of access and egress routes; the physical infrastructure of the roads and other possible access routes. Maps should include hydrant and water sources, interior access lanes, fuel load configurations and the location of utilities on the site. The composition of the storage pile should be indicated because shredded scrap or chip piles require a different fire-fighting approach than a pile of whole tires.

3404.6 Telephone number. The telephone number of the fire department and location of the nearest telephone shall be posted conspicuously in attended locations.

❖ This section requires posting of the fire department telephone number along with the location of the telephone in conspicuous locations.

SECTION 3405
OUTDOOR STORAGE

3405.1 Individual piles. Tire storage shall be restricted to individual piles not exceeding 5,000 square feet (464.5 m^2) of continuous area. Piles shall not exceed 50,000 cubic feet (1416 m^3) in volume or 10 feet (3048 mm) in height.

❖ Whole tires (new, used or awaiting recycling), shredded tires or tire chip piles represent a fuel package of considerable volume and heat potential. To manage this hazard, the code places limitations on pile heights and sizes as a means of controlling the size of potential fires and facilitating fire-fighting operations.

3405.2 Separation of piles. Individual tire storage piles shall be separated from other piles by a clear space of not less than 40 feet (12 192 mm).

❖ The intent of this section is to create 40-foot (12 192 mm) clear firebreaks between piles of tire storage in all directions.

3405.3 Distance between piles of other stored products. Tire storage piles shall be separated by a clear space of not less than 40 feet (12 192 mm) from piles of other stored product.

❖ This section also requires a 40-foot (12 192 mm) clear firebreak from piles of other materials, not just other tire storage piles.

3405.4 Distance from lot lines and buildings. Tire storage piles shall be located not less than 50 feet (15 240 mm) from *lot lines* and buildings.

❖ This section requires increasing the firebreak to 50 feet (15 240 mm) from lot lines and buildings due to the potential exposure to buildings on the same property or on adjacent property.

3405.5 Fire breaks. Storage yards shall be maintained free from combustible ground vegetation for a distance of 40 feet (12 192 mm) from the stored material to grass and weeds; and for a distance of 100 feet (30 480 mm) from the stored product to brush and forested areas.

❖ Because dry grass and weeds represent a significant fuel accumulation and fire hazard, this section requires that all combustible vegetation (grasses and weeds) be kept at least 40 feet (12 192 mm) from storage piles. The distance is increased to 100 feet (30 480 mm) when next to brush or forested areas,

INTERNATIONAL CODE COUNCIL®
Copyright © 2015 ICC. ALL RIGHTS RESERVED. Accessed by David Dammon on Jun 21, 2017 12:30:52 PM pursuant to License Agreement with ICC. No further reproduction or distribution authorized. ANY UNAUTHORIZED REPRODUCTION OR DISTRIBUTION IS A VIOLATION OF THE FEDERAL COPYRIGHT ACT AND THE LICENSE AGREEMENT, AND SUBJECT TO CIVIL AND CRIMINAL PENALTIES THEREUNDER.

not only to protect the brush and forested area from a fire in a storage yard but also to protect the storage yard from a brush or forest fire. For additional information on the protection of such areas, see the *International Wildland-Urban Interface Code*® (IWUIC®). The clearances required by this section require a vegetation control program to reduce the hazards.

3405.6 Volume more than 150,000 cubic feet. Where the bulk volume of stored product is more than 150,000 cubic feet (4248 m^3), storage arrangement shall be in accordance with the following:

1. Individual storage piles shall comply with size and separation requirements in Sections 3405.1 through 3405.5.
2. Adjacent storage piles shall be considered a group, and the aggregate volume of storage piles in a group shall not exceed 150,000 cubic feet (4248 m^3).

Separation between groups shall be not less than 75 feet (22 860 mm) wide.

❖ This section correlates with the requirements in Section 3405.1, which allow storage piles up to 50,000 cubic feet (1416 m^3) in volume. There is really no reason to limit the number of piles but rather to limit the volume of storage. This section limits the group volume to 150,000 cubic feet (4248 m^3) and clarifies that the piles must still comply with Sections 3405.1 through 3405.5 on pile size and separations. Basically, with the 75-foot (22 860 mm) separation requirement between groups, unlimited amounts of storage would be allowed.

3405.7 Location of storage. Outdoor waste tire storage shall not be located under bridges, elevated trestles, elevated roadways or elevated railroads.

❖ This section restricts where waste tire storage may be located. As a result of past fire experiences that created extended disruption in transportation, storage is prohibited under elevated roadways and bridges.

SECTION 3406
FIRE DEPARTMENT ACCESS

3406.1 Required access. New tire storage yards shall be provided with fire apparatus access roads in accordance with Section 503 and Section 3406.2. Existing tire storage yards shall be provided with fire apparatus access roads where required in Chapter 11.

❖ Fire apparatus access roads must be arranged to provide clear, unobstructed access to required yard hydrants, if provided, and all points of the yard storage area. Turn-arounds and turning radii must be sized so that the fire apparatus can maneuver to protect exposures as well as fire fighters. Access roads must also comply with Section 503. Fire department access for existing tire storage yards must comply with Sections 1106.1 through 1106.1.2. Appendix D, where adopted by the jurisdiction, covers design guidelines for access roads. Note that the appendices are not considered as part of the code unless specifically adopted. See Section 1 of the sample adopting ordinance on page xxi of the code book.

3406.2 Location. Fire apparatus access roads shall be located within all pile clearances identified in Section 3405.4 and within all fire breaks required in Section 3405.5. Access roadways shall be within 150 feet (45 720 mm) of any point in the storage yard where storage piles are located, not less than 20 feet (6096 mm) from any storage pile.

❖ In order to provide adequate access for fire suppression operations in tire storage yard fires, fire apparatus access roads must be located within all pile clearances and within all firebreaks. No portion of a pile is to be more than 150 feet (45 720 mm) from an access road and no less than 20 feet (6096 mm) from any storage pile. Maintaining a 20-foot (6096 mm) clearance between storage piles and the edge of the fire apparatus access road reduces the likelihood that the collapse of a pile [limited to 10 feet (3048 mm) in height by Section 3405.1] will totally obstruct access.

SECTION 3407
FENCING

3407.1 Where required. Where the bulk volume of stored material is more than 20,000 cubic feet (566 m^3), a firmly anchored fence or other *approved* method of security that controls unauthorized access to the storage yard shall surround the storage yard.

❖ Perimeter fences for site security are required to limit access to stored materials and deter theft, vandalism and arson in storage yards where the volume of tire material stored exceeds 20,000 cubic feet (566 m^3).

3407.2 Construction. The fence shall be constructed of *approved* materials and shall be not less than 6 feet (1829 mm) high and provided with gates at least 20 feet (6096 mm) wide.

❖ Owners should be encouraged to construct noncombustible fences. Chain-link fencing is an excellent choice because it can be firmly anchored and requires little maintenance. To accommodate fire apparatus, all gates must be at least 20 feet (6096 mm) wide. Depending on local security concerns, fences may be topped with barbed wire for intruder control to further enhance the level of security provided. Such an installation should be approved by the fire code official and the local administrative authority, since some communities have ordinances or a zoning code that prohibits the use of barbed wire on fences.

3407.3 Locking. Gates to the storage yard shall be locked when the storage yard is not staffed.

❖ This section states that access gates to the storage yard are to be locked when not staffed to deter unauthorized entry. Since the yard entrance is considered part of the fire apparatus road network required for

INTERNATIONAL CODE COUNCIL®
Copyright © 2015 ICC. ALL RIGHTS RESERVED. Accessed by David Dammon on Jun 21, 2017 12:30:52 PM pursuant to License Agreement with ICC. No further reproduction or distribution authorized. ANY UNAUTHORIZED REPRODUCTION OR DISTRIBUTION IS A VIOLATION OF THE FEDERAL COPYRIGHT ACT AND THE LICENSE AGREEMENT, AND SUBJECT TO CIVIL AND CRIMINAL PENALTIES THEREUNDER.

the yard, gates must also comply with the provisions of Section 503.6.

3407.4 Unobstructed. Gateways shall be kept clear of obstructions and be fully openable at all times.

❖ This section requires that gates be accessible and be fully openable at all times, which will allow full and quick access for fire apparatus.

SECTION 3408
FIRE PROTECTION

3408.1 Water supply. A public or private fire protection water supply shall be provided in accordance with Section 508. The water supply shall be arranged such that any part of the storage yard can be reached by using not more than 500 feet (152 m) of hose.

❖ This section requires that a fire protection water supply, in accordance with Section 508, be provided to the storage yard. Open storage yards are often located substantial distances from public fire mains, which may mean that water must be delivered to the scene by fire department tankers. This requirement should be included in both the prefire plan and the facility fire safety plan required by Section 3404.5. Alternative water supplies, such as a stream, lake or other body of water in the vicinity, should be explored.

3408.2 Fire extinguishers. Buildings or structures shall be provided with portable fire extinguishers in accordance with Section 906. Fuel-fired vehicles operating in the storage yard shall be equipped with a minimum 2-A:20-B:C-rated portable fire extinguisher.

❖ This section and Section 906 require that fire extinguishers be available. Portable fire extinguishers are provided for incipient fire control. These appliances should be located where they are readily available. They are also required on fuel-fired vehicles operating in the yard.

SECTION 3409
INDOOR STORAGE ARRANGEMENT

3409.1 Pile dimensions. Where tires are stored on-tread, the dimension of the pile in the direction of the wheel hole shall be not more than 50 feet (15 240 mm). Tires stored adjacent to or along one wall shall not extend more than 25 feet (7620 mm) from that wall. Other piles shall be not more than 50 feet (15 240 mm) in width.

❖ This section places further restrictions on tire storage to maintain fire-fighting access to the stored tires in case of a fire. When the tires are stored on their tread, storage piled against a wall (i.e., closed on one end) must not extend more than 25 feet (7620 mm) from the wall. Where the on-tread piles are open on both ends, the length of the pile must not exceed 50 feet (15 240 mm), measured in the direction of the wheel hole. These limitations enhance hose stream access to the interior of the pile. Piles of any other configuration cannot exceed 50 feet in any dimension. Annex A to Chapter 3 of NFPA 13 includes example illustrations of tire storage arrays.

Bibliography

The following resource materials were used in the preparation of the commentary for this chapter of the code:

FM Global Property Loss Prevention Data Sheet 8-7, *Rubber Tire Storage.* Johnson, RI: Factory Mutual Global Research, 2009.

Prevention and Management of Scrap Tire Fires. Washington, DC: Rubber Manufacturers Association.

INTERNATIONAL CODE COUNCIL®
Copyright © 2015 ICC. ALL RIGHTS RESERVED. Accessed by David Dammon on Jun 21, 2017 12:30:52 PM pursuant to License Agreement with ICC. No further reproduction or distribution authorized. ANY UNAUTHORIZED REPRODUCTION OR DISTRIBUTION IS A VIOLATION OF THE FEDERAL COPYRIGHT ACT AND THE LICENSE AGREEMENT, AND SUBJECT TO CIVIL AND CRIMINAL PENALTIES THEREUNDER.

INTERNATIONAL CODE COUNCIL®
Copyright © 2015 ICC. ALL RIGHTS RESERVED. Accessed by David Dammon on Jun 21, 2017 12:30:52 PM pursuant to License Agreement with ICC. No further reproduction or distribution authorized. ANY UNAUTHORIZED REPRODUCTION OR DISTRIBUTION IS A VIOLATION OF THE FEDERAL COPYRIGHT ACT AND THE LICENSE AGREEMENT, AND SUBJECT TO CIVIL AND CRIMINAL PENALTIES THEREUNDER.

Chapter 35: Welding and Other Hot Work

General Comments

Welding and other hot work are frequent ignition sources. Statistics from a major property insurance company for a recent 5-year period showed 290 hot-work-related ignitions that led to losses of $407 million, or an average of $1.4 million per incident. Of these 290 losses, 42 percent were caused by employees and 58 percent were caused by outside contractors. To compare the magnitude of these losses, this same insurance company saw 395 fires associated with housekeeping and 262 losses associated with smoking. The average poor housekeeping loss was $902,000; the average smoking loss was about $440,000.

Both hot work operations themselves and the equipment and materials associated with such work can create significant ignition and fire hazards. Hot work creates sparks and slag and gives off heat. Materials, such as acetylene and oxygen, are used in gas welding and an electrical current is used for arc welding. Additionally, these activities tend to occur in buildings that are not designed for these materials and hazards. Hot work often occurs within buildings undergoing renovations, which are even more susceptible to ignition. Hot work can be either temporary or ongoing. Permanent installations generally have the ability to address ignition hazards more consistently.

Several different types of hot work would fall under the requirements found in Chapter 35, including both gas and electric arc methods and any open-torch operations.

The important factor in avoiding ignition hazards is preparing for and monitoring hot-work activities. Primarily these precautions relate to basic fire prevention and fire control. Chapter 35 details a program that allows a facility to assign an employee to be the administrator of a hot-work program as defined in Section 202 of the code. This administrator would be allowed to issue permits for work on site, would be required to perform prework inspections and would be responsible for ensuring that the correct safety measures are taken. The fire code official has the authority to make periodic checks of these records, so they must be made available for at least 48 hours after the work ends. This chapter provides specific requirements for the protection of combustibles and for fire watches.

Personnel undertaking hot work will have varying levels of familiarity with the building or facility where the work is being done. Often, the person undertaking hot work is not an employee at the facility and may not be under the direct control of the hot work program manager. The qualifications of the hot work operator are discussed in Section 3503.4.

Purpose

This chapter covers requirements for safety in welding and other types of hot work by reducing the potential for fire ignitions. Many of the activities of this chapter focus on the actions of occupants. As noted, welding and other hot work are responsible for a large percentage of fire ignitions that usually result in large losses.

SECTION 3501 GENERAL

3501.1 Scope. Welding, cutting, open torches and other hot work operations and equipment shall comply with this chapter.

❖ Welding and cutting operations, whether electric or gas, are methods for joining or separating metals. In either case, a strong heat energy source is applied to the material, commonly known as the workpiece, to perform the required operation. Specific hazards associated with each type of welding or cutting apparatus and process may vary greatly, but, in each case, two elements are always present that may cause or contribute to the spread of fire—a heat energy source and air or oxygen. As a result, efforts to control fuels and reduce the impact of fires if they occur are the focuses of these requirements.

3501.2 Permits. Permits shall be required as set forth in Section 105.6.

❖ The process of issuing permits gives the fire code official an opportunity to carefully evaluate and regulate hazardous operations. Permit applicants must demonstrate that their operations comply with the intent of the code before the permit is issued. See the commentary to Section 105.6 for a general discussion of operations requiring an operational permit. The process also notifies the fire department of the need for prefire planning for the hazardous property and helps to verify that proper procedures will be followed.

INTERNATIONAL CODE COUNCIL®
Copyright © 2015 ICC. ALL RIGHTS RESERVED. Accessed by David Dammon on Jun 21, 2017 12:30:52 PM pursuant to License Agreement with ICC. No further reproduction or distribution authorized. ANY UNAUTHORIZED REPRODUCTION OR DISTRIBUTION IS A VIOLATION OF THE FEDERAL COPYRIGHT ACT AND THE LICENSE AGREEMENT, AND SUBJECT TO CIVIL AND CRIMINAL PENALTIES THEREUNDER.

The actual permit requirements for hot work are in Section 105.6.24. This section lists several specific instances where a permit would be required for hot work operations. One of the items would allow a single permit to be issued to allow a hot work program. This program will be explained in more detail in this chapter, but essentially it allows a person on site to manage the hot work activities. This program has a number of safety requirements, including fire department review of documentation at the facility for a minimum of 48 hours after the work is completed. Generally, this type of permit provides much needed flexibility for facilities where hot work is a common occurrence.

3501.3 Restricted areas. Hot work shall only be conducted in areas designed or authorized for that purpose by the personnel responsible for a Hot Work Program. Hot work shall not be conducted in the following areas unless approval has been obtained from the *fire code official*:

1. Areas where the sprinkler system is impaired.
2. Areas where there exists the potential of an explosive atmosphere, such as locations where flammable gases, liquids or vapors are present.
3. Areas with readily ignitable materials, such as storage of large quantities of bulk sulfur, baled paper, cotton, lint, dust or loose combustible materials.
4. On board ships at dock or ships under construction or repair.
5. At other locations as specified by the *fire code official*.

❖ This section describes restrictions on the areas where hot work can take place. Normally hot work activities are restricted to designated areas; however, there are times when hot work may be needed in specific locations, such as in a building undergoing renovation. This section presents this list as a way to verify that when hot work is needed, notification of the activity is made and special precautions are taken. In addition, this section also authorizes the fire code official to add other areas where special approval would be necessary. The code cannot anticipate all potentially hazardous situations. For this reason, this section does not explicitly prohibit hot work in these areas; it simply requires special approval.

3501.4 Cylinders and containers. *Compressed gas* cylinders and fuel containers shall comply with this chapter and Chapter 53.

❖ This section is focused on any cylinders or containers used to store gases used in hot work operations, primarily oxygen and acetylene. Oxygen is an oxidizing gas and acetylene is a highly flammable gas and an unstable reactive Class 2. This section requires that any specific requirements within Chapter 35 be addressed along with the general requirements found in Chapter 53 regarding compressed gases.

3501.5 Design and installation of oxygen-fuel gas systems. An oxygen-fuel gas system with two or more manifolded cylinders of oxygen shall be in accordance with NFPA 51.

❖ This section references NFPA 51 for any oxygen-fuel gas systems where any number of oxygen containers are manifolded. The scope of this standard specifically states that it addresses only situations where two or more cylinders are manifolded.

SECTION 3502
DEFINITIONS

3502.1 Definitions. The following terms are defined in Chapter 2:

HOT WORK.

HOT WORK AREA.

HOT WORK EQUIPMENT.

HOT WORK PERMITS.

HOT WORK PROGRAM.

RESPONSIBLE PERSON.

TORCH-APPLIED ROOF SYSTEM.

❖ Definitions of terms can help in the understanding and application of code requirements. This section directs the code user to Chapter 2 for the proper application of the indicated terms used in this chapter. Terms may be defined in Chapter 2 or in another *International Code*® (I-Code®) as indicated in Section 201.3, or the dictionary meaning may be all that is needed (see also commentary, Sections 201 through 201.4).

SECTION 3503
GENERAL REQUIREMENTS

3503.1 General. Hot work conditions and operations shall comply with this chapter.

❖ This section is generally applicable to all hot work activities, which would include welding and cutting, but also includes activities such as torch-applied roof systems. The requirements are primarily related to the hot work permit program, qualifications and general administrative provisions related to fire safety procedures.

3503.2 Temporary and fixed hot work areas. Temporary and fixed hot work areas shall comply with this section.

❖ These provisions are applicable to both temporary and permanent activities because the same fire hazard exists in both cases. Temporary situations generally pose a greater hazard, however, because they typically occur in areas not designed for such ignition hazards. For example, hot work is fairly common in buildings undergoing renovation.

INTERNATIONAL CODE COUNCIL®
Copyright © 2015 ICC. ALL RIGHTS RESERVED. Accessed by David Dammon on Jun 21, 2017 12:30:52 PM pursuant to License Agreement with ICC. No further reproduction or distribution authorized. ANY UNAUTHORIZED REPRODUCTION OR DISTRIBUTION IS A VIOLATION OF THE FEDERAL COPYRIGHT ACT AND THE LICENSE AGREEMENT, AND SUBJECT TO CIVIL AND CRIMINAL PENALTIES THEREUNDER.

3503.3 Hot work program permit. Hot work permits, issued by an *approved* responsible person under a hot work program, shall be available for review by the *fire code official* at the time the work is conducted and for 48 hours after work is complete.

❖ Because individual facilities are allowed to manage the process of issuing permits, permit information must be available to the fire code official for periodic review. As noted in the definition for "Hot work permits," the records must be available for at least 48 hours following completion of work. The 48-hour period gives the fire code official the time necessary to verify that permitting was done according to established procedures if a fire should occur.

This section does not require that the permits be submitted to the fire code official; it asks only that they be available for review. This section, along with Section 3503.5, is part of the package that allows a periodic random check of the permitting and hot work administrative procedures.

3503.4 Qualifications of operators. A permit for hot work operations shall not be issued unless the individuals in charge of performing such operations are capable of performing such operations safely. Demonstration of a working knowledge of the provisions of this chapter shall constitute acceptable evidence of compliance with this requirement.

❖ The definitions for "Hot work program" and "Responsible person" in Section 202 are specifically aimed at the individual who coordinates issuing and managing permits. The qualifications of the operator and administrative follow-through are critical aspects in preventing hot work fires and are the subjects of this section.

Operators of welding and cutting apparatus must demonstrate understanding of, competence in and responsibility for their activities. A thorough understanding of proper welding and cutting safety precautions as outlined in this chapter and NFPA 51 is a minimum requirement. Operators should also be familiar with general industry standards, as well as federal and state Occupational Safety and Health Administration (OSHA) regulations, manufacturers' recommendations regarding equipment being operated and standards of good practice as detailed by the American Welding Society (AWS), National Fire Protection Association (NFPA) or other professional safety organization. Operators must be capable of physically demonstrating their knowledge of proper safety practices when required by the fire code official. Written competency examinations are not required by this section.

3503.5 Records. The individual responsible for the hot work area shall maintain "prework check" reports in accordance with Section 3504.3.1. Such reports shall be maintained on the premises for not less than 48 hours after work is complete.

❖ This section is specific to the hot work program administrator and requires that the prework checks be available for review for at least 48 hours. This allows periodic checks by the fire code official and would allow reasonable time for review of documentation after a fire to determine if welding or cutting was implicated in any fire situation during the previous permit period.

3503.6 Signage. Visible hazard identification signs shall be provided where required by Chapter 50. Where the hot work area is accessible to persons other than the operator of the hot work equipment, conspicuous signs shall be posted to warn others before they enter the hot work area. Such signs shall display the following warning:

CAUTION

HOT WORK IN PROGRESS

STAY CLEAR

❖ Signage, as with many other code applications, is used as a method to warn of hazards. This is especially critical in areas where people unfamiliar with the hazards may be present. For example, this may be more important during renovations in an occupied office building. The signage requirements apply to both temporary and fixed situations, and the visibility of the signs must be consistent with the requirements of Chapter 50.

SECTION 3504
FIRE SAFETY REQUIREMENTS

3504.1 Protection of combustibles. Protection of combustibles shall be in accordance with Sections 3504.1.1 through 3504.1.9.

❖ This section deals with basic fire safety activities that should be addressed when undertaking hot work. Some of the requirements may be more applicable to certain types of hot work than others because of the specific hazards presented. The three specific issues addressed include the protection of the area and fire protection systems located in the vicinity of the hot work; requirements for fire watches during and after the hot work is undertaken; and the administrative procedures used to confirm that all the applicable safety steps have been taken. This section focuses primarily on the protection of combustibles through both passive and active means. More specifically, combustibles must either be removed or protected by fire protection systems that remain operational during hot work activities.

3504.1.1 Combustibles. Hot work areas shall not contain combustibles or shall be provided with appropriate shielding to prevent sparks, slag or heat from igniting exposed combustibles.

❖ This section requires that combustibles either be removed from the area or properly shielded from sparks or excessive heat that could ignite a fire. A shield may need to be both noncombustible and insulating. In the case of sparks that provide little heat, a metal shield may be allowable. If the hot work operation gives off large amounts of heat, such as the use

INTERNATIONAL CODE COUNCIL®
Copyright © 2015 ICC. ALL RIGHTS RESERVED. Accessed by David Dammon on Jun 21, 2017 12:30:52 PM pursuant to License Agreement with ICC. No further reproduction or distribution authorized. ANY UNAUTHORIZED REPRODUCTION OR DISTRIBUTION IS A VIOLATION OF THE FEDERAL COPYRIGHT ACT AND THE LICENSE AGREEMENT, AND SUBJECT TO CIVIL AND CRIMINAL PENALTIES THEREUNDER.

of a torch, the shield would also need to resist the transmission of heat.

3504.1.2 Openings. Openings or cracks in walls, floors, ducts or shafts within the hot work area shall be tightly covered to prevent the passage of sparks to adjacent combustible areas, or shielded by metal fire-resistant guards, or curtains shall be provided to prevent passage of sparks or slag.

❖ Openings or cracks in walls, floors, ducts or shafts within the hot work area shall be tightly covered to prevent the passage of sparks to adjacent combustible areas; shields constructed of metal fire-resistant guards or curtains shall be provided to prevent passage of sparks or slag.

Openings or cracks in walls are potential travel paths for sparks or slag from hot work operations. It is very common for a partition in an existing building to have penetrations for pipes or other utilities. Sparks that penetrate a partition or wall have the potential of starting a fire in adjoining rooms or areas.

3504.1.3 Housekeeping. Floors shall be kept clean within the hot work area.

❖ This section addresses a basic fire safety issue of keeping the floors in the hot work area clean. Accumulations of dust and other high-surface-area materials are highly susceptible to ignition, flash fires and explosions. This kind of housekeeping is doubly important for welding and similar hot work in a building under renovation because such buildings tend to have higher concentrations of dusts and other hazardous combustibles.

3504.1.4 Conveyor systems. Conveyor systems that are capable of carrying sparks to distant combustibles shall be shielded or shut down.

❖ Conveyor systems, particularly in industrial applications, constitute a hazard. More specifically, if a welding operation ignites a fire on a conveyor system, the fire can move throughout the parts of the building served by the conveyor and possibly ignite multiple fires. Generally, most fire protection features are not designed for multiple-fire ignitions, but instead are designed for a single event. For instance, a sprinkler system has a specific design density for a specified area of operation. If the fire demand is higher than what the sprinkler system was designed to handle, the water supply and pressure could be inadequate and the sprinkler system will likely be overcome. Also, because the fire is moving, it is more difficult for the sprinklers to activate because the sprinkler might not heat sufficiently. This results in the fire growing larger before intervention from the fire protection systems. Even if a sprinkler does activate, it may not be addressing the origin of the fire.

3504.1.5 Partitions. Partitions segregating hot work areas from other areas of the building shall be noncombustible. In fixed hot work areas, the partitions shall be securely connected to the floor such that no gap exists between the floor and the partition. Partitions shall prevent the passage of sparks, slag, and heat from the hot work area.

❖ The partitions discussed in this section act as shields, as described in Section 3504.1.1. The requirements state that partitions must be installed so that there is no room for sparks, slag or heat to pass beyond the hot work area. These requirements are primarily geared toward fixed hot work areas where the conditions can be more permanently controlled. Hot work operations in temporary locations will likely not have partitions installed solely for the purpose of protecting combustible materials. Section 3504.1.1 would be more applicable to temporary hot work.

3504.1.6 Floors. Fixed hot work areas shall have floors with noncombustible surfaces.

❖ The requirement for noncombustible floor surfaces is specific to fixed hot work operations because a fixed location situation can be more easily controlled than a temporary hot work operation. In many cases, program administrators will have little control over the type of floor and the location of combustibles in the areas where temporary hot work occurs.

3504.1.7 Precautions in hot work. Hot work shall not be performed on containers or equipment that contain or have contained flammable liquids, gases or solids until the containers and equipment have been thoroughly cleaned, inerted or purged; except that "hot tapping" shall be allowed on tanks and pipe lines where such work is to be conducted by *approved* personnel. Hot work on flammable and *combustible liquid* storage tanks shall be conducted in accordance with Section 3510.

❖ The title of this section is somewhat misleading because the section pertains specifically to hot work on containers or equipment that may contain flammable or combustible liquids. Simply because a container is empty does not mean that it is safe to conduct hot work. In fact, the vapors are usually much more susceptible to ignition than the liquid itself; therefore, before any hot work can occur, the vapors and liquids must be purged.

This section does allow hot work on containers or piping without the specific removal of liquids. This is termed "hot tapping" and must be done by an experienced individual. Hot tapping is extremely dangerous since the piping or tank still contains flammable or combustible liquids and, therefore, the personnel performing this work must be aware of the hazards and be able to safeguard the operation. This section also points the user to Section 3510, which contains specific safeguards for hot work on flammable and combustible liquid storage tanks and references NFPA 326 for these hot work operations. Note that NFPA 326 does not cover hot tapping, therefore other industry standards and safeguards must be used.

INTERNATIONAL CODE COUNCIL®
Copyright © 2015 ICC. ALL RIGHTS RESERVED. Accessed by David Dammon on Jun 21, 2017 12:30:52 PM pursuant to License Agreement with ICC. No further reproduction or distribution authorized. ANY UNAUTHORIZED REPRODUCTION OR DISTRIBUTION IS A VIOLATION OF THE FEDERAL COPYRIGHT ACT AND THE LICENSE AGREEMENT, AND SUBJECT TO CIVIL AND CRIMINAL PENALTIES THEREUNDER.

3504.1.8 Sprinkler protection. Automatic sprinkler protection shall not be shut off while hot work is performed. Where hot work is performed close to automatic sprinklers, noncombustible barriers or damp cloth guards shall shield the individual sprinkler heads and shall be removed when the work is completed. If the work extends over several days, the shields shall be removed at the end of each workday. The *fire code official* shall approve hot work where sprinkler protection is impaired.

❖ One of the major sources of losses related to hot work occurs either at buildings under construction or under renovation where an installed automatic sprinkler system has been shut off. In many cases, there is a concern that the automatic sprinkler system will be damaged or will accidentally activate during construction so the system is temporarily shut off. Unfortunately, this is the most likely time for an ignition to occur. Frequently, large manufacturing, storage and institutional occupancies intentionally perform much of their heavy maintenance work during slow periods to reduce service disruptions. Under such circumstances, care must be exercised so that sprinkler outages do not coincide with welding or cutting operations.

To reduce the likelihood of accidental operation of sprinklers if welding or cutting operations must be performed in close proximity to sprinklers or sprinkler piping, this section includes some methods of protecting the sprinkler without shutting the system down. It is important to note that any protection placed onto or near the sprinklers is to be removed at the end of each workday. Field welding or cutting operations performed on sprinkler piping is prohibited by NFPA 13.

3504.1.9 Fire detection systems. *Approved* special precautions shall be taken to avoid accidental operation of automatic fire detection systems.

❖ As with sprinkler systems, there is a concern for false alarms. This section does not give a methodology for protecting against false alarms but does state that precautions must be taken. There are many different technologies and approaches for fire detection systems in addition to the building-specific applications. Each situation should be looked at individually. One possible scenario would be to shut down smoke detectors in a hot work area and put a fire watch in place. As soon as the hot work is complete, those detectors are placed back on line.

3504.2 Fire watch. Fire watches shall be established and conducted in accordance with Sections 3504.2.1 through 3504.2.6.

❖ This section is critical to avoiding ignition as a result of hot work operations. The six subsections list criteria for establishing and conducting a fire watch.

3504.2.1 When required. A fire watch shall be provided during hot work activities and shall continue for not less than 30 minutes after the conclusion of the work. The *fire code official*, or the responsible manager under a hot work program, is authorized to extend the fire watch based on the hazards or work being performed.

Exception: Where the hot work area has no fire hazards or combustible exposures.

❖ Fire watches are required any time hot work is undertaken and are to extend a minimum of 30 minutes beyond completion of the work. The time may need to be extended, depending on the specific hazards present, such as a large amount of combustibles or the facility being open to the public. There is an exception for those situations when combustibles are simply not present. The combustibility of the floor should also be considered.

3504.2.2 Location. The fire watch shall include the entire hot work area. Hot work conducted in areas with vertical or horizontal fire exposures that are not observable by a single individual shall have additional personnel assigned to fire watches to ensure that exposed areas are monitored.

❖ This section states that a fire watch is required in all hot work areas. The term “hot work area” is defined but is necessarily a general definition because many things will affect the extent of the area. These factors include the type and application of hot work, the configuration and layout of the space and the types of materials in the area. Also, where, for example, many pieces of equipment act as obstructions or the shape of the room or placement of partitions blocks a line of sight, the fire watch may need to consist of more than one person.

3504.2.3 Duties. Individuals designated to fire watch duty shall have fire-extinguishing equipment readily available and shall be trained in the use of such equipment. Individuals assigned to fire watch duty shall be responsible for extinguishing spot fires and communicating an alarm.

❖ The individuals who undertake a fire watch have specific duties. They not only need to watch for and notify of an ignition of combustibles, they also need to be prepared to extinguish spot fires with portable extinguishers. Intervention when fires are small is the best line of defense in extinguishing and controlling fires. Waiting until the fire department or fire brigade arrives will allow a fire to increase dramatically in size and intensity.

3504.2.4 Fire training. The individuals responsible for performing the hot work and individuals responsible for providing the fire watch shall be trained in the use of portable fire extinguishers.

❖ A person conducting a fire watch must be trained to operate fire extinguishers located in the watch area. As noted previously, intervention in the incipient stages of a fire is extremely effective.

3504.2.5 Fire hoses. Where hoselines are required, they shall be connected, charged and ready for operation.

❖ This section states that when a hoseline is required, it should be properly charged and ready for use during a fire watch. Otherwise, the effectiveness is much lower. As already noted, fires are more likely to be

INTERNATIONAL CODE COUNCIL®
Copyright © 2015 ICC. ALL RIGHTS RESERVED. Accessed by David Dammon on Jun 21, 2017 12:30:52 PM pursuant to License Agreement with ICC. No further reproduction or distribution authorized. ANY UNAUTHORIZED REPRODUCTION OR DISTRIBUTION IS A VIOLATION OF THE FEDERAL COPYRIGHT ACT AND THE LICENSE AGREEMENT, AND SUBJECT TO CIVIL AND CRIMINAL PENALTIES THEREUNDER.

extinguished or controlled when intervention occurs early. An uncharged hoseline will defeat the purpose of the equipment.

3504.2.6 Fire extinguisher. Not less than one portable fire extinguisher complying with Section 906 and with a minimum 2-A:20-B:C rating shall be readily accessible within 30 feet (9144 mm) of the location where hot work is performed.

❖ This section specifies that the fire extinguishers required for a fire watch must be all-purpose extinguishers for all fire types; the potential fire type will vary with the type of hot work and the surrounding combustibles. The 30-foot (9144 mm) travel distance specified here is more restrictive than what is required for similar ratings of extinguishers in Section 906. Table 906.3(2) would allow a maximum travel distance of 50 feet (15 240 mm) for other applications with the same rating of extinguisher.

3504.3 Area reviews. Before hot work is permitted and not less than once per day while the permit is in effect, the area shall be inspected by the individual responsible for authorizing hot work operations to ensure that it is a fire safe area. Information shown on the permit shall be verified prior to signing the permit in accordance with Section 105.6.

❖ This section is part of the hot work program. It requires the person administering the program to check the area where hot work has been permitted. A specific checklist is contained within Section 3504.3.1 to provide guidance as to what is to be inspected. Because the authority is given to those other than the fire department to issue permits and manage the safety of hot work operations, documentation of the inspections is a mechanism for review by the fire department to verify that operations are proceeding safely.

3504.3.1 Pre-hot-work check. A pre-hot-work check shall be conducted prior to work to ensure that all equipment is safe and hazards are recognized and protected. A report of the check shall be kept at the work site during the work and available upon request. The pre-hot-work check shall determine all of the following:

1. Hot work equipment to be used shall be in satisfactory operating condition and in good repair.
2. Hot work site is clear of combustibles or combustibles are protected.
3. Exposed construction is of noncombustible materials or, if combustible, then protected.
4. Openings are protected.
5. Floors are kept clean.
6. No exposed combustibles are located on the opposite side of partitions, walls, ceilings or floors.
7. Fire watches, where required, are assigned.
8. *Approved* actions have been taken to prevent accidental activation of suppression and detection equipment in accordance with Sections 3504.1.8 and 3504.1.9.
9. Fire extinguishers and fire hoses (where provided) are operable and available.

❖ As noted in Section 3504.3, this section includes a list of items to be reviewed in hot work areas. These checks confirm that the requirements in Sections 3504.1 and 3504.2 are actually being met.

SECTION 3505
GAS WELDING AND CUTTING

3505.1 General. Devices or attachments mixing air or oxygen with combustible gases prior to consumption, except at the burner or in a standard torch or blow pipe, shall not be allowed unless *approved*.

❖ The materials used for gas cutting and welding are generally materials such as acetylene and oxygen. Acetylene is a flammable gas and oxygen is an oxidizer. Together, these gases produce an intense high-temperature flame. The high temperature of combustion is excellent for welding and cutting and, at the same time, is a significant ignition hazard. Acetylene is the preferred gas because it burns at high temperatures, but other flammable gases, such as methyl acetylene-propadiene and propylene, are also sometimes used. The other major type of welding is electric arc welding, which is discussed in Section 3506.

Because of the enriched combustion process created by pure oxygen, this section prohibits mixing oxygen and air prior to use with the flammable gas of choice for welding or cutting.

3505.2 Cylinder and container storage, handling and use. Storage, handling and use of *compressed gas* cylinders, containers and tanks shall be in accordance with this section and Chapter 53.

❖ A major hazard with gas welding and cutting is not necessarily the hot work operation itself, but instead the materials used in the operation. These gases are stored in cylinders and manifolded into systems for use. The storage, handling and use of such gases is specifically regulated by Chapter 53, which addresses issues such as security, valve protection, separation from hazardous materials and container and cylinder marking (see commentary, Chapter 53). Note that oxygen-fuel gas systems where two or more cylinders of oxygen are manifolded must meet the requirements of NFPA 51.

3505.2.1 Cylinders connected for use. The storage or use of a single cylinder of oxygen and a single cylinder of fuel gas located on a cart shall be allowed without requiring the cylinders to be separated in accordance with Section 5003.9.8 or 5003.10.3.6 when the cylinders are connected to regulators, ready for service, equipped with apparatus designed for cutting or welding and all of the following:

1. Carts shall be kept away from the cutting or welding operation in accordance with Section 3505.5 or fire-resistant shields shall be provided.

INTERNATIONAL CODE COUNCIL®
Copyright © 2015 ICC. ALL RIGHTS RESERVED. Accessed by David Dammon on Jun 21, 2017 12:30:52 PM pursuant to License Agreement with ICC. No further reproduction or distribution authorized. ANY UNAUTHORIZED REPRODUCTION OR DISTRIBUTION IS A VIOLATION OF THE FEDERAL COPYRIGHT ACT AND THE LICENSE AGREEMENT, AND SUBJECT TO CIVIL AND CRIMINAL PENALTIES THEREUNDER.

2. Cylinders shall be secured to the cart to resist movement.
3. Carts shall be in accordance with Section 5003.10.3.
4. Cylinder valves not having fixed hand wheels shall have keys, handles or nonadjustable wrenches on valve stems while the cylinders are in service.
5. Cylinder valve outlet connections shall conform to the requirements of CGA V-1.
6. Cylinder valves shall be closed when work is finished.
7. Cylinder valves shall be closed before moving the cart.

❖ The use of "welding carts" has been common practice as a means to secure cylinders of oxygen and fuel-gas used in cutting and welding operations. The carts serve as a means to safely secure cylinders, as well as a means to hold flexible hose, torches and, in some cases, safety equipment such as goggles or eye shields and welding rods (see Commentary Figure 3505.2.1).

This section was added to the code because a number of fire code officials were considering a compressed gas cylinder containing a fuel gas located adjacent to a cylinder of compressed or cryogenic oxygen on a cart to be incompatible hazardous materials based on the definition of "Incompatible materials" in Section 202.

The requirements for separation of incompatible materials under Sections 5003.9.8 and 5003.10.3.6 present a practical difficulty when the quantity of materials is limited. Allowing single cylinders of oxygen and fuel-gas, with additional controls to address the typical use condition, provides a more rational and comprehensive approach to safe use than outright prohibition that is out of convention with a common practice.

This section correctly treats a single cylinder of fuel gas adjacent to a cylinder of oxygen as being available for service as a closed use system rather than being considered storage. It requires that both the oxygen and fuel gas cylinder be equipped with a pressure regulator, which is a valve that reduces the pressure of a gas to safe levels for use and consumption. Section 3505.4 requires acetylene gas cylinders be equipped with a pressure regulator that limits the pressure to 15 pounds per square inch gauge (psig) (103 kPa) or less. For other fuel gases such as liquefied petroleum gas (LP-gas) and MAPP gas (an LP-gas mixed with methylacetylene-propadiene to yield a higher combustion temperature in oxygen), Section 3509.1 requires that fuel gas hose systems comply with NFPA 51, which has requirements for pressure regulators. Regulators for oxygen and fuel gas are required by NFPA 51 to be listed for use with the particular gases being used.

In addition to the requirements in NFPA 51, this section also specifies requirements for the protection of the cylinders and their contents. Cylinders must be adequately secured on the cart to limit their movement. Prior to moving the cart, the cylinder valves must be closed. Fuel gas cylinder valves that utilize square-head keys or similar valves that are not equipped with fixed hand wheels are required to be provided with their operating device on the cylinder to facilitate prompt and easy operation of the cylinder valve during use. Cylinders must also be protected from hot slag and sparks by being located away from the hot work activity or by protection using fire-resistant shields.

As an additional safety feature to prevent the connection of a fuel gas pressure regulator to an oxygen cylinder (or vice-versa), Item 5 requires that cylinder fittings comply with Compressed Gas Association (CGA) Standard V-1. Flammable gas cylinder valves are normally constructed using left-handed threaded connections and the outlet diameter is sized so a pressure regulator designed for oxygen cannot be accidentally connected to a cylinder containing a fuel gas.

In further substantiation of this new section, it should be pointed out that the CGA performed an extensive survey of its member companies who reported that in 75 years of experience, no regulator failures, hose fires or other incidents were attributable to single cylinders of oxygen and acetylene located next to each other and that most accidents associated with the use of oxygen regulators are failures and explosions caused by contamination.

It should also be noted that nothing in this section exempts or waives the requirements of Chapter 50 for maximum allowable quantities (MAQs), and the storage, handling and use of hazardous materials, or the requirements in Chapters 53, 58 and 63 for compressed gases, flammable gases and oxidizing



Figure 3505.2.1
TYPICAL WELDING CART

INTERNATIONAL CODE COUNCIL®
Copyright © 2015 ICC. ALL RIGHTS RESERVED. Accessed by David Dammon on Jun 21, 2017 12:30:52 PM pursuant to License Agreement with ICC. No further reproduction or distribution authorized. ANY UNAUTHORIZED REPRODUCTION OR DISTRIBUTION IS A VIOLATION OF THE FEDERAL COPYRIGHT ACT AND THE LICENSE AGREEMENT, AND SUBJECT TO CIVIL AND CRIMINAL PENALTIES THEREUNDER.

gases, respectively. A building in which oxygen and fuel gas supplies are stored and used must maintain quantities below the MAQs for indoor control areas. If the amount in storage and closed use exceeds the MAQ in one or more control areas the building must be constructed as a Group H-2 occupancy.

3505.2.1.1 Individual cart separation. Individual carts shall be separated from each other in accordance with Section 5003.9.8.

❖ In buildings housing more than one cart containing oxygen and fuel gas used for cutting and welding, this section requires that individual carts be separated from one another in accordance with Section 5003.9.8. For cutting and welding carts, this requires a minimum 20-foot (6096 mm) separation between each cart or the construction of noncombustible line-of-sight barriers that extend a minimum of 18 inches (457.2 mm) above and to the sides of each cart.

This section also recognizes the allowance created by Section 3505.2.1 to allow a single cylinder of oxidizing gas and a single cylinder of fuel gas to be located on an individual cart, and addresses the possible concern over multiple carts stored in close proximity to one another. If the number of carts were to grow, the quantity controls imposed by the MAQs per control area would trigger the use of a Group H occupancy when the MAQ of 1,000 cubic feet (23.32 m^3) of flammable gas was exceeded (three or four carts, depending on the fuel gas). However, using MAQ as a quantity control was not the intent of Section 3505.2.1.

3505.3 Precautions. Cylinders, valves, regulators, hose and other apparatus and fittings for oxygen shall be kept free from oil or grease. Oxygen cylinders, apparatus and fittings shall not be handled with oily hands, oily gloves, or greasy tools or equipment.

❖ Oxygen, which is an oxidizer, will increase the intensity of combustion; therefore, traces of combustibles, such as oils or greases, that normally pose a moderate hazard will be a higher hazard when found on cylinders of oxygen. Keeping gas cylinders free of grease and oil is especially important because gas-welding operations use flammable gases in combination with oxygen.

3505.4 Acetylene gas. Acetylene gas shall not be piped except in *approved* cylinder manifolds and cylinder manifold connections, or utilized at a pressure exceeding 15 pounds per square inch gauge (psig) (103 kPa) unless dissolved in a suitable solvent in cylinders manufactured in accordance with DOTn 49 CFR Part 178. Acetylene gas shall not be brought in contact with unalloyed copper, except in a blowpipe or torch.

❖ Acetylene is the preferred gas for welding because it burns at very high temperatures, which is more conducive to welding and cutting operations. This also creates a high fire hazard. Therefore, this section limits the piping of acetylene to approved cylinder manifolds and manifold connections, which can be accomplished in a variety of ways. The pressure of piped acetylene is limited to 15 pounds per square inch gauge (psig) (103 kPa) to avoid large releases of acetylene. There is an exception when acetylene is dissolved in a solvent, such as acetone, which reduces its volatility hazard.

Acetylene (CH = CH) is an extremely volatile compressed gas that is usually dissolved in a solvent, such as acetone or dimethylformamide, because of its volatility, and is normally stored and shipped in cylinders at a pressure of 250 pounds per square inch (psi) (1724 kPa). These solvents are Class IB flammable and Class II combustible liquids, respectively. However, in practice it is the flammable gas hazard that is regulated; the solvent into which the gas is absorbed has not been independently assessed. The established reason for doing this is that the control strategy for the compressed gas hazard is suitable for that of the solvent hazard. Acetone will dissolve approximately 425 times its volume of acetylene at 250 psi (1724 kPa).

Acetylene gas reacts vigorously with some metals, including copper and some copper alloys, to produce metallic acetylides that are shock-sensitive explosive compounds. Copper acetylide is an extremely shock-sensitive explosive and, if detonated, even in very small quantities, can initiate acetylene decomposition, cause hose or tank rupture and potentially cause catastrophic detonations or deflagrations, especially when tanks are manifolded.

3505.5 Remote locations. Oxygen and fuel-gas cylinders and acetylene generators shall be located away from the hot work area to prevent such cylinders or generators from being heated by radiation from heated materials, sparks or slag, or misdirection of the torch flame.

❖ Because of the hazards of using gases for welding and cutting, the cylinders and generators must be located away from the hot work operation itself. This means that the connection must be a sufficient length to allow locating the cylinders a safe distance from the hot work. Generally, only a short distance is required; a distance of only a few feet may be sufficient under ordinary conditions. A greater distance may be more prudent when welding or cutting operations involve a highly reflective surface or material. Where space is limited, a suitable barrier may be erected to protect cylinders from heat, provided such a barrier does not impair the operation of regulating equipment.

3505.6 Cylinders shutoff. The torch valve shall be closed and the gas supply to the torch completely shut off when gas welding or cutting operations are discontinued for a period of 1 hour or more.

❖ Good practice dictates shutting off gas cylinders when equipment is not in use; however, it is common practice for welding and cutting operators who must use a torch intermittently to shut off only the torch. Care must be taken in these instances to check the system to see that it has been properly shut down when work

INTERNATIONAL CODE COUNCIL®
Copyright © 2015 ICC. ALL RIGHTS RESERVED. Accessed by David Dammon on Jun 21, 2017 12:30:52 PM pursuant to License Agreement with ICC. No further reproduction or distribution authorized. ANY UNAUTHORIZED REPRODUCTION OR DISTRIBUTION IS A VIOLATION OF THE FEDERAL COPYRIGHT ACT AND THE LICENSE AGREEMENT, AND SUBJECT TO CIVIL AND CRIMINAL PENALTIES THEREUNDER.

is discontinued for a longer duration and at the end of the work period. This limits the amount of flammable or oxidizing gases that can be emitted to the atmosphere if the torch or hose is damaged in any way or if a valve at the torch head is not tightly closed.

3505.7 Prohibited operation. Welding or cutting work shall not be held or supported on *compressed gas* cylinders or containers.

❖ Section 3505.5 addresses physical separation of the welding and cutting gas cylinders from the hot work. This section goes a step further and prohibits welding operations on top of compressed gas containers or cylinders. This requirement would apply to any compressed gas cylinders or containers, whether they contain flammable gases or not. The concern is explosion caused by overpressure in the compressed gas cylinders when they are heated.

3505.8 Tests. Tests for leaks in piping systems and equipment shall be made with soapy water. The use of flames shall be prohibited for leak testing.

❖ This section requires that piping and equipment subjected to hot work be tested using soapy water rather than a flame to recognize any leaks. This is important because the piping may contain some residual flammable or oxidizing materials. Soapy water will produce harmless bubbles at the leak site even at very low pressures.

SECTION 3506
ELECTRIC ARC HOT WORK

3506.1 General. The frame or case of electric hot work machines, except internal-combustion-engine-driven machines, shall be grounded. Ground connections shall be mechanically strong and electrically adequate for the required current.

❖ The following sections are specific to welding and cutting using an electrical arc. This process produces enough heat to join metals together or cut metals. There are several variations of arc welding and cutting. More specifically, in some arc welding processes a shielding gas is used to protect the weld from contaminants and prevent metal oxidation. Also, the electrode is either nonconsumable or consumable, which dictates whether additional materials are needed in the process.

Electric arc hot work poses some potential hazards because the process is working with electric power and current. Therefore, unless the welder is powered using an internal combustion engine, the frame or case of the welding piece must be grounded.

3506.2 Return circuits. Welding current return circuits from the work to the machine shall have proper electrical contact at joints. The electrical contact shall be periodically inspected.

❖ The current for welding must be able to loop back to the power source from the item being welded or cut. Cable movement may loosen contacts, causing poor conduction and interruption of ground continuity. At the high voltages used in welding and cutting operations, high-resistance arcs may occur at loose contacts, resulting in a fire. Similarly, loose contacts may create a ground path, exposing the operator or others in the vicinity to the danger of electrocution.

3506.3 Disconnecting. Electrodes shall be removed from the holders when electric arc welding or cutting is discontinued for any period of 1 hour or more. The holders shall be located to prevent accidental contact and the machines shall be disconnected from the power source.

❖ The intent of this section is to prevent materials and machinery used as part of the electric arc-welding process from becoming a source of ignition after the hot work operations have been discontinued for 1 hour or more by requiring the disconnection of the electrodes and the power supply. Poorly supervised arc-welding machines may be subject to tampering or misuse even when properly maintained, and could become a fire hazard if left unattended and energized for long durations. Accidental contact with unsupervised welding electrodes or machine contacts may result in electrocution. This is similar to the intent of Section 3505.6 for gas hot work, which requires the supply gas valves to be shut off when an extended interruption occurs.

3506.4 Emergency disconnect. A switch or circuit breaker shall be provided so that fixed electric welders and control equipment can be disconnected from the supply circuit. The disconnect shall be installed in accordance with NFPA 70.

❖ When an electric arc-welding or cutting operation is in a permanent location, it is important that the particular operation be isolated onto a single disconnect switch. This makes it easier to verify that operations are in fact disconnected from the power supply during an emergency. NFPA 70 will have the specific requirements for this disconnect.

3506.5 Damaged cable. Damaged cable shall be removed from service until properly repaired or replaced.

❖ Damaged cable increases the likelihood of ignition hazards because wires may be exposed, resulting in resistance heating or potential electric shock hazards.

SECTION 3507
CALCIUM CARBIDE SYSTEMS

3507.1 Calcium carbide storage. Storage and handling of calcium carbide shall comply with Chapter 50 of this code and Chapter 9 of NFPA 51.

❖ Calcium carbide gas is used for the creation of acetylene gas used in gas welding and cutting. Acetylene gas, as discussed earlier in this commentary, is extremely flammable and burns at very high temperatures. Calcium carbide itself is considered water reactive and will form acetylene upon contact with moisture. This section increases the likelihood that the gas is handled to avoid a hazardous situation.

INTERNATIONAL CODE COUNCIL®
Copyright © 2015 ICC. ALL RIGHTS RESERVED. Accessed by David Dammon on Jun 21, 2017 12:30:52 PM pursuant to License Agreement with ICC. No further reproduction or distribution authorized. ANY UNAUTHORIZED REPRODUCTION OR DISTRIBUTION IS A VIOLATION OF THE FEDERAL COPYRIGHT ACT AND THE LICENSE AGREEMENT, AND SUBJECT TO CIVIL AND CRIMINAL PENALTIES THEREUNDER.

Compliance with Chapter 50 of the code and Chapter 9 of NFPA 51 is required. Chapter 9 of NFPA 51 specifically relates to storage requirements for calcium carbide gas. These requirements focus on keeping the calcium carbide dry and separated from other areas when it is stored in large quantities.

SECTION 3508
ACETYLENE GENERATORS

3508.1 Use of acetylene generators. The use of acetylene generators shall comply with this section and Chapter 6 of NFPA 51A.

❖ Acetylene generators essentially use calcium carbide gas and moisture to generate acetylene. Because acetylene is extremely flammable, the equipment must be handled with care.

Detailed requirements for acetylene generators are left to Chapter 4 of NFPA 51A, which is specific to such generators. These provisions deal with issues such as the construction requirements of generator rooms or houses and detailed installation requirements for the generators themselves.

There are several types of generators, including those with automatic water feed and manual water feed.

3508.2 Portable generators. The minimum volume of rooms containing portable generators shall be 35 times the total gas-generating capacity per charge of all generators in the room. The gas-generating capacity in cubic feet per charge shall be assumed to be 4.5 times the weight of carbide per charge in pounds. The minimum ceiling height of rooms containing generators shall be 10 feet (3048 mm). An acetylene generator shall not be moved by derrick, crane or hoist while charged.

❖ When generators are portable, they are generally at a greater risk for damage and are more likely to be in a location that may not have been specifically designed for this equipment. Therefore, this section provides some minimum volume requirements to make sure that a particular space can handle the volume of gases produced. The 35-to-1 volume requirement is intended to prevent formation of an explosive atmosphere in rooms or spaces where portable acetylene generators are employed. Assuming there is no leakage from the compartment, and that perfect efficiency in the generation of acetylene is achieved, this volume produces an atmosphere only slightly above the lower explosive limit (LEL). These provisions will reduce the likelihood of the formation of an explosive acetylene-air mixture if the required ventilation is maintained and acetylene production is not vented directly to the atmosphere in the room. To assist the code user in determining how much acetylene could be generated, this section includes a conservative approach to calculating the generation capacity.

Because acetylene is slightly lighter than air, the high ceiling is intended to provide space above the top of wall openings for containment of any combustible mixture that may form. The high ceiling is also important because acetylene is considered an asphyxiant, and having the high ceiling will allow the gas to rise, giving any occupants a longer escape time without being exposed to the gas.

Finally, this section prohibits the relocation of charged acetylene generators. Moving an acetylene generator while charged is likely to cause an uncontrolled gas release if it is dropped or damaged.

3508.3 Protection against freezing. Generators shall be located where water will not freeze. Common salt such as sodium chloride or other corrosive chemicals shall not be utilized for protection against freezing.

❖ Because acetylene generators use calcium carbide and moisture to create acetylene, freezing temperatures may cause water in the system to expand, thus damaging generator components. Additionally, corrosive materials, such as salt used to thaw ice on walkways, should not be used near the generators since they may have a damaging effect on generator components and potentially lead to failure.

SECTION 3509
PIPING MANIFOLDS AND HOSE SYSTEMS FOR FUEL GASES AND OXYGEN

3509.1 General. The use of piping manifolds and hose systems shall be in accordance with Section 3509.2 through 3509.7, Chapter 53 and Chapter 5 of NFPA 51.

❖ Quite often, manifolding of several cylinders is desirable to decrease the amount of time taken to disconnect spent cylinders and reconnect new ones. When cylinders are manifolded, the potential hazard increases because the amount of material that can be released in one event is much larger. Special care and specific requirements are necessary to address these hazards. Compliance with Chapter 5 of NFPA 51 and Chapter 53 of the code for compressed gases is referenced. Although manifolded cylinders may create a higher risk for a large release, numerous disconnections and connections using a single cylinder may increase the likelihood of a failure.

3509.2 Protection. Piping shall be protected against physical damage.

❖ When cylinders are manifolded, the potential size of a gas release increases. Manifold piping is more likely to be damaged than the cylinders themselves. This section requires that piping associated with manifolded cylinders be installed in a manner minimizing the likelihood of mechanical and physical damage from collision or abrasion. When piping must be run in an area where mechanical and physical hazards cannot be eliminated, barriers or other suitable protection must be provided to absorb or deflect the impact of such damage without affecting the compressed gas piping.

Though not specifically listed in this section, physical damage resulting from corrosion should be con-

INTERNATIONAL CODE COUNCIL®
Copyright © 2015 ICC. ALL RIGHTS RESERVED. Accessed by David Dammon on Jun 21, 2017 12:30:52 PM pursuant to License Agreement with ICC. No further reproduction or distribution authorized. ANY UNAUTHORIZED REPRODUCTION OR DISTRIBUTION IS A VIOLATION OF THE FEDERAL COPYRIGHT ACT AND THE LICENSE AGREEMENT, AND SUBJECT TO CIVIL AND CRIMINAL PENALTIES THEREUNDER.

sidered when providing piping protection. Corrosion is the enemy of any piping system and can be caused by weather exposure, burial in the soil or construction materials that are in contact with the pipe. Protection is usually provided by a factory-applied coating or by field-wrapping the pipe with a protective covering, such as a coal-tar-based or plastic wrapping. Where possible, a piping material should be chosen that is not subject to the type of corrosion of the application. Acceptable fuel gas piping materials are regulated by Chapter 4 of the *International Fuel Gas Code*® (IFGC®).

Corrosion can also be caused by galvanic action that takes place where dissimilar metals are joined together in a current-carrying medium, such as soil or water. For example, if steel and copper pipe are joined in a medium that conducts electrical current, the steel pipe will corrode at an accelerated rate because of the electrochemical process between the dissimilar metals. To protect against galvanic corrosion, dielectric fittings and couplings are used to join the piping.

3509.3 Signage. Signage shall be provided for piping and hose systems as follows:

1. Above-ground piping systems shall be marked in accordance with ASME A13.1.
2. Station outlets shall be marked to indicate their intended usage.
3. Signs shall be posted, indicating clearly the location and identity of section shutoff valves.

❖ Signage for piping and hosing associated with manifolded cylinders must indicate the content of the system, gas flow direction, intended use of the gas outlets and location of shutoff valves. This information helps to quickly assess emergencies and take corrective action.

3509.4 Manifolding of cylinders. Oxygen manifolds shall not be located in an acetylene generator room. Oxygen manifolds shall be located not less than 20 feet (6096 mm) away from combustible material such as oil or grease, and gas cylinders containing flammable gases, unless the gas cylinders are separated by a *fire partition*.

❖ Manifolds are groups of cylinders connected to one another in a series in a gas supply system. As a general rule throughout the code, oxidizing and flammable materials must be kept physically separated from each other, either by space or fire-resistance-rated construction. Acetylene is a flammable gas with an explosive range of 2.5 to 100 percent and needs very little oxygen to burn. Excess oxygen may only make an explosion worse; therefore, separation is required. Other materials found in shop areas, such as solvents, oils and lubricants, must be kept clear of oxygen cylinders for similar reasons and may either be separated by distance or fire-resistive shielding. The fire partitions required by this section must be constructed in accordance with Section 708 of the *International Building Code*® (IBC®).

3509.5 Identification of manifolds. Signs shall be posted for oxygen manifolds with service pressures not exceeding 200 psig (1379 kPa). Such signs shall include the words:

LOW-PRESSURE MANIFOLD

DO NOT CONNECT HIGH-PRESSURE CYLINDERS

MAXIMUM PRESSURE 250 PSIG

❖ The signage required by this section is intended to prevent high-pressure oxygen cylinders from being connected to a low-pressure manifold. A high-pressure cylinder may cause a rupture of the system, resulting in an instantaneous release of large volumes of oxygen. The maximum 250-psig (1723 kPa) working pressure is approximately one-half the customary minimum safety margin of $1^1/_2$ times the working pressure.

3509.6 Clamps. Hose connections shall be clamped or otherwise securely fastened.

❖ Hoses are potentially less reliable than a pipe if they do not receive proper care. This section requires clamps or other methods of securing to provide stability and prevent an inadvertent disconnection during use. Hose connections may fail because of an improper connection, damage or overpressurization. An unrestrained hose can become a deadly weapon if it becomes disconnected.

3509.7 Inspection. Hoses shall be inspected frequently for leaks, burns, wear, loose connections or other defects rendering the hose unfit for service.

❖ Many places where welding or cutting operations are performed pose distinct hazards to welding and cutting hoses. Excessive abrasions, cuts, dry rot, cracking or discoloration are all signs that a hose needs to be replaced. Any hose sustaining burn damage or having a damaged or deformed connection should be replaced immediately. When in doubt about the condition of a hose, it should be taken out of service and hydrostatically tested by qualified personnel in accordance with the manufacturer's recommendations before being returned to service or replaced. Discarding defective lengths of hose improves the likelihood that it will not be reused.

SECTION 3510
HOT WORK ON FLAMMABLE AND COMBUSTIBLE LIQUID STORAGE TANKS

3510.1 General. Hot work performed on the interior or exterior of tanks that hold or have held flammable or *combustible liquids* shall be in accordance with Section 3510.2 and Chapters 4, 5, 6, 7 and 10 of NFPA 326.

❖ Annually, there are numerous documented incidents involving loss of life, injury and property damage where hot work was conducted on tanks containing or that had contained flammable or combustible liquids and industry-specific precautions were not followed or personnel did not understand the hazard or risk.

INTERNATIONAL CODE COUNCIL®
Copyright © 2015 ICC. ALL RIGHTS RESERVED. Accessed by David Dammon on Jun 21, 2017 12:30:52 PM pursuant to License Agreement with ICC. No further reproduction or distribution authorized. ANY UNAUTHORIZED REPRODUCTION OR DISTRIBUTION IS A VIOLATION OF THE FEDERAL COPYRIGHT ACT AND THE LICENSE AGREEMENT, AND SUBJECT TO CIVIL AND CRIMINAL PENALTIES THEREUNDER.

This section improves the general guidelines in the code and references the appropriate standard to safely conduct hot work on tanks that contain or had contained flammable or combustible liquids. Other references to hot work on flammable and combustible tanks are in Section 3504.1.7 and in 5704.2.7.6 of the code, as well as Section 6.5.3 of NFPA 30.

3510.2 Prevention. The following steps shall be taken to minimize hazards where hot work must be performed on a flammable or *combustible liquid* storage container:

1. Use alternative methods to avoid hot work where possible.
2. Analyze the hazards prior to performing hot work, identify the potential hazards and the methods of hazard control.
3. Hot work shall conform to the requirements of the code or standard to which the container was originally fabricated.
4. Test the immediate and surrounding work area with a combustible gas detector and provide for a means of continuing monitoring while conducting the hot work.
5. Qualified employees and contractors performing hot work shall use an industry-approved hot work permit system to control the work.
6. Personnel shall be properly trained on hot work policies and procedures regarding equipment, safety, hazard controls and job-specific requirements.
7. On-site safety supervision shall be present where hot work is in progress to protect the personnel conducting the hot work and provide additional overview of site-specific hazards.

❖ The United States Chemical Safety Board (CSB) has published general guidelines applicable to almost every situation where welding or cutting on flammable, combustible or toxic chemical tanks occurs. Those general safety guidelines are listed in this section.

Bibliography

The following resource materials were used in the preparation of the commentary for this chapter of the code:

Complete Revision History to the 2015 I-Codes. Washington, DC: International Code Council, 2014.

Manz, A. "Welding, Cutting and Other Hotwork," Section 6, Chapter 14. *Fire Protection Handbook*, 19th ed. Quincy, MA: National Fire Protection Association, 2003.

INTERNATIONAL CODE COUNCIL®

Copyright © 2015 ICC. ALL RIGHTS RESERVED. Accessed by David Dammon on Jun 21, 2017 12:30:52 PM pursuant to License Agreement with ICC. No further reproduction or distribution authorized. ANY UNAUTHORIZED REPRODUCTION OR DISTRIBUTION IS A VIOLATION OF THE FEDERAL COPYRIGHT ACT AND THE LICENSE AGREEMENT, AND SUBJECT TO CIVIL AND CRIMINAL PENALTIES THEREUNDER.

Chapter 36: Marinas

General Comments

Chapter 36 addresses fire protection and prevention requirements for marinas. This chapter was developed in response to complications encountered by a number of fire departments responsible for protecting marinas, as well as fire loss history in marinas that lacked fire protection. Fire-fighting operations at marinas are more of a challenge from the perspectives of access, hose stream deployment and the proximity of exposures. These factors are compounded because personal marine craft are typically constructed of rigid thermoplastics or wood, do not burn as shielded fires when compared to fires involving passenger vehicles, and have flammable and combustible liquids on board in varying amounts.

Part of the basis for the approval of these requirements was the United States' fire loss history for marina fires from 2003 through 2006, wherein marina fires caused the complete loss of 272 boats and houseboats for a total loss of more than $67 million. Excluding the scoping section, Chapter 36 is divided into four sections:

Section 3602—Definitions

Section 3603—General Precautions

Section 3604—Fire Protection Equipment

Section 3605—Marine Motor Fuel-dispensing Stations

Purpose

Compliance with this chapter is to establish safe practices in marina areas, provide an identification method for mooring spaces in the marina, provide fire fighters with safe operational areas and provide fire protection methods to extend hose lines in a safe manner.

SECTION 3601 SCOPE

3601.1 Scope. Marina facilities shall be in accordance with this chapter.

❖ This section identifies that marina facilities are covered in this chapter. It is possible to find and utilize the provisions found in this chapter among other sections of the code. However, it was felt that, for ease of use, a chapter specific to this special use would be beneficial to those fire code officials with marinas in their jurisdictions.

3601.2 Plans and approvals. Plans for marina fire protection facilities shall be *approved* prior to installation. The work shall be subject to final inspection and approval after installation.

❖ Plan approval prior to installation enables the jurisdiction to review the marina layout, the required fire protection features and general safety precautions for the public, property and fire fighters. The inspection process verifies that the general safety precautions are met and that the required fire protection features are practiced.

SECTION 3602 DEFINITIONS

3602.1 Definitions. The following terms are defined in Chapter 2:

FLOAT.

MARINA.

PIER.

VESSEL.

WHARF.

❖ Definitions of terms can help in the understanding and application of code requirements. This section directs the code user to Chapter 2 for the proper application of the indicated terms used in this chapter. Terms may be defined in Chapter 2 or in another *International Code*® (I-Code®) as indicated in Section 201.3, or the dictionary meaning may be all that is needed (see also commentaries, Sections 201.1 through 201.4).

SECTION 3603 GENERAL PRECAUTIONS

3603.1 Combustible debris. Combustible debris and rubbish shall not be deposited or accumulated on land beneath marina structures, piers or wharves.

❖ Due to the combustible nature of most piers and wharves, the code requires that combustible debris not be deposited or allowed to accumulate under them. Consistent with the provisions found in Section 304.1.1, this section prohibits disorderly, unkempt storage or accumulation of trash, waste rags, wastepaper, litter and other combustible materials. Litter and trash represent serious fire hazards because of their ease of ignition and rapid heat release once

INTERNATIONAL CODE COUNCIL®
Copyright © 2015 ICC. ALL RIGHTS RESERVED. Accessed by David Dammon on Jun 21, 2017 12:30:52 PM pursuant to License Agreement with ICC. No further reproduction or distribution authorized. ANY UNAUTHORIZED REPRODUCTION OR DISTRIBUTION IS A VIOLATION OF THE FEDERAL COPYRIGHT ACT AND THE LICENSE AGREEMENT, AND SUBJECT TO CIVIL AND CRIMINAL PENALTIES THEREUNDER.

ignited. The importance of maintaining property and buildings in good order seems obvious, but sloppy housekeeping still occurs and can be the cause of serious fires.

3603.2 Sources of ignition. Open-flame devices used for lighting or decoration on the exterior of a vessel, float, pier or wharf shall be *approved*.

❖ Similar to Section 308.1.1, this section requires that open-flame devices used in marina areas—including the wharf, pier, float or aboard a vessel—be approved. Fire code official approval ensures the device is appropriate for the intended use and that any needed precautions will be followed.

3603.3 Flammable or combustible liquid spills. Spills of flammable or *combustible liquids* at or upon the water shall be reported immediately to the fire department or jurisdictional authorities.

❖ Spills of flammable and combustible liquids in a marina create significant hazards due to the fact that these materials have a specific gravity less than that of water and will float on the water, spreading the liquid quickly around the many combustible materials found in vessels, floats, piers and wharves. The vapors that are released from these materials may easily find an ignition source with the resulting fire covering a large area. In addition to the fire problem, rapid response can help mitigate issues that affect the environment, marine animals and birds.

3603.4 Rubbish containers. Containers with tight-fitting or self-closing lids shall be provided for temporary storage of combustible debris, rubbish and waste material. The rubbish containers shall be constructed entirely of materials that comply with any one of the following:

1. Noncombustible materials.
2. Materials that meet a peak rate of heat release not exceeding 300 kW/m^2 where tested in accordance with ASTM E 1354 at an incident heat flux of 50 kW/m^2 in the horizontal orientation.

❖ The use of containers with tight-fitting or self-closing lids reduces the possibility that an accidental container fire can be started and prevents continued burning if ignition does occur. Rubbish containers need not be constructed of metal or other noncombustible material. Other materials, including materials that have been shown to be safe by meeting a very severe fire test similar to those required by Section 808 for Group I-1, I-2 and I-3 occupancies and Section 304.3.4 for general rubbish control, may be used. Note that the requirement covers all types of rubbish and is not intended to address spills of combustible or flammable liquids. The use of the phrase "combustible debris, rubbish and waste material" makes this section consistent with other sections of the code. This section should be applied in conjunction with Section 304.3.

3603.5 Electrical equipment. Electrical equipment shall be installed and used in accordance with its listing, Section 605 of this code and Chapter 5 of NFPA 303 as required for wet, damp and hazardous locations.

❖ Section 605 provides the basic requirements for the use of electrical cords, appliances, motors and space heaters. Chapter 5 of NFPA 303 covers the same information and specifies requirements for new installations. It also requires an annual inspection of the marina's electrical wiring and equipment. The inspection must include all electrical grounds, verification of the polarity of circuits and an inspection of all flexible cords and cables, including shore power cable sets that supply electricity to docked marine craft. Other elements include requirements that address the introduction of hazards or uses that are greater than those for which the electrical system was originally designed.

3603.6 Berthing and storage. Berthing and storage shall be in accordance with Chapter 7 of NFPA 303.

❖ When vessels are either berthed or stored on land, this section requires these activities be performed in accordance with the requirements in NFPA 303. The requirements are based on whether the storage is wet or dry, indoor or outdoor and rack storage. Berthing involves locating a marine craft or vessel in a space between piers, wharves or docks. The berth is the area that is occupied by the water.

When wet berthed, the boat must be stored so that it can be removed in an emergency without moving other boats, and fire department access is required around piers, wharves and floats. When dry storage is used, the standard has extensive requirements for the use of heaters and open flame-producing devices, such as torches, on-board batteries, fuel tanks and types of equipment to access and remove the vessels, in an emergency.

3603.7 Slip identification. Slips and mooring spaces shall be individually identified by an *approved* numeric or alphabetic designator. Space designators shall be posted at the space. Signs indicating the space designators located on finger piers and floats shall be posted at the base of all piers, finger piers, floats and finger floats.

❖ A slip is a berthing space located between two adjacent piers. The term "mooring space" can also refer to a slip or an anchored space where the vessel is simply secured to a mooring buoy. Large marinas can have many hundreds of slips or mooring spaces on site.

Similar to the premises identification provisions in Section 505, this section provides for an approved system of signs indicating how the marina is laid out to enable emergency responders to quickly identify the location of a fire or other emergency. The provision not only provides for a marina layout, but also requires that individual float and slip identification be provided.

INTERNATIONAL CODE COUNCIL®
Copyright © 2015 ICC. ALL RIGHTS RESERVED. Accessed by David Dammon on Jun 21, 2017 12:30:52 PM pursuant to License Agreement with ICC. No further reproduction or distribution authorized. ANY UNAUTHORIZED REPRODUCTION OR DISTRIBUTION IS A VIOLATION OF THE FEDERAL COPYRIGHT ACT AND THE LICENSE AGREEMENT, AND SUBJECT TO CIVIL AND CRIMINAL PENALTIES THEREUNDER.

SECTION 3604
FIRE PROTECTION EQUIPMENT

3604.1 General. Piers, marinas and wharves with facilities for mooring or servicing five or more vessels, and marine motor fuel-dispensing facilities shall be equipped with fire protection equipment in accordance with Sections 3604.2 through 3604.6.

❖ Marinas have a significant potential for a fire emergency. Therefore, the fire protection to be provided must be properly established, installed and identified for use in an emergency.

3604.2 Standpipes. Marinas and boatyards shall be equipped throughout with standpipe systems in accordance with NFPA 303. Systems shall be provided with hose connections located such that no point on the marina pier or float system exceeds 150 feet (15 240 mm) from a standpipe hose connection.

❖ Standpipe systems in marinas are basically a horizontal standpipe to reach all parts of the float system, piers and buildings with no more than 150 feet (15 240 mm) of travel distance from a fire hose connection. This section requires a Class I standpipe system that provides $2^1/_2$-inch (64 mm) hose connections for fire department use. The system is allowed to be a manual dry system in accordance with Section 6.4 of NFPA 303, meaning that the only required water supply is a connection for fire apparatus and that piping is not required to contain water at all times. In addition, NFPA 303 permits the omission of hose racks, hoses and standpipe cabinets at marinas and boatyards, recognizing that these would be subject to misuse in such venues.

3604.2.1 Identification of standpipe outlets. Standpipe hose connection locations shall be clearly identified by a flag or other *approved* means designed to be readily visible from the pier accessing the float system.

❖ To provide emergency responders with a visual cue in locating standpipe hose connections, each connection must have an approved identification marker readily visible from the wharf or pier to which the floats are attached.

3604.3 Access and water supply. Piers and wharves shall be provided with fire apparatus access roads and water-supply systems with on-site fire hydrants where required by the *fire code official*. Such roads and water systems shall be provided and maintained in accordance with Sections 503 and 507.

❖ So that emergency responders can quickly access the floats, fire apparatus access roads are to be provided in close proximity to the gangways and standpipe inlets that serve the marina. The access roads may be part of the parking lot system for the marina; however, they must meet the minimum width, load-bearing capability and turning radius criteria for the responding apparatus set forth in Section 503. In addition to the access roads, a fire hydrant system complying with the requirements of Section 508 may be required. Note that such systems are to be provided when it is determined by the fire code official that they are needed to properly protect the marina.

3604.4 Portable fire extinguishers. One portable fire extinguisher of the ordinary (moderate) hazard type shall be provided at each required standpipe hose connection. Additional portable fire extinguishers, suitable for the hazards involved, shall be provided and maintained in accordance with Section 906.

❖ A 2-A:10-B-C-rated portable fire extinguisher placed adjacent to each standpipe hose connection would meet the general requirement for this section. In addition, to meet the requirements of Table 906.3(1), a sufficient number of extinguishers must be provided throughout the marina with a maximum travel distance of 75 feet (22 860 mm) from any point along the piers, wharves or floats to an extinguisher.

3604.5 Communications. A telephone not requiring a coin to operate or other *approved*, clearly identified means to notify the fire department shall be provided on the site in a location *approved* by the *fire code official*.

❖ This section requires a public telephone to be provided at locations approved by the fire code official. The phone is to have the capability of coinlessly dialing 911 or other means of notifying the fire department. A sign identifying the location of the emergency phone must be provided. When a telephone is provided, NFPA 303 requires a sign at the telephone indicating the address of the marina so that callers may clearly and promptly communicate the location of any emergency.

3604.6 Emergency operations staging areas. Space shall be provided on all float systems for the staging of emergency equipment. Emergency operation staging areas shall provide a minimum of 4 feet wide by 10 feet long (1219 mm by 3048 mm) clear area exclusive of walkways and shall be located at each standpipe hose connection. Emergency operation staging areas shall be provided with a curb or barrier having a minimum height of 4 inches (102 mm) and maximum space between the bottom edge and the surface of the staging area of 2 inches (51 mm) on the outboard sides of the staging area.

An *approved* sign reading FIRE EQUIPMENT STAGING AREA—KEEP CLEAR shall be provided at each staging area.

❖ Adjacent to each standpipe there is to be an open space at least 4 feet wide by 10 feet long (1219 mm by 3048 mm) in addition to the walkway width. This area is for the purpose of providing storage and working space around the standpipe for equipment that must be transported to the area for operational needs. To ensure the equipment does not slide, roll or otherwise fall into the water, a minimum 4-inch-high (102 mm) curb or barrier is to be provided. A maximum 2-inch (51 mm) space between the surface of the float deck and the bottom of the 4-inch-high (102 mm) barrier is permitted on the water side of the staging area to allow for drainage of the surface of

INTERNATIONAL CODE COUNCIL®
Copyright © 2015 ICC. ALL RIGHTS RESERVED. Accessed by David Dammon on Jun 21, 2017 12:30:52 PM pursuant to License Agreement with ICC. No further reproduction or distribution authorized. ANY UNAUTHORIZED REPRODUCTION OR DISTRIBUTION IS A VIOLATION OF THE FEDERAL COPYRIGHT ACT AND THE LICENSE AGREEMENT, AND SUBJECT TO CIVIL AND CRIMINAL PENALTIES THEREUNDER.

the pier, float or dock. A sign is required to identify the area as a dedicated fire department staging area and to keep it clear of other items that may be placed there by those who use the floats.

SECTION 3605
MARINE MOTOR FUEL-DISPENSING FACILITIES

3605.1 Fuel dispensing. Marine motor fuel-dispensing facilities shall be in accordance with Chapter 23.

❖ Fuel-dispensing facilities in marinas are required to be in accordance with Sections 2303 and 2310. Section 2303 provides general requirements for all fuel-dispensing facilities. Section 2310 contains the specific requirements for the marine fuel-dispensing facilities, which are similar to other fuel-dispensing facilities. Section 2310.1 also references the *International Building Code*® (IBC®) and NFPA 30A for construction requirements of these fueling facilities and Chapter 57 for fuel storage requirements.

Bibliography

The following resource materials were used in the preparation of the commentary for this chapter of the code:

Complete Revision History to the 2015 I-Codes. Washington, DC: International Code Council, 2014.

Fire Protection Handbook, 20th ed. Quincy, MA: National Fire Protection Association, 2008.

INTERNATIONAL CODE COUNCIL®

Copyright © 2015 ICC. ALL RIGHTS RESERVED. Accessed by David Dammon on Jun 21, 2017 12:30:52 PM pursuant to License Agreement with ICC. No further reproduction or distribution authorized. ANY UNAUTHORIZED REPRODUCTION OR DISTRIBUTION IS A VIOLATION OF THE FEDERAL COPYRIGHT ACT AND THE LICENSE AGREEMENT, AND SUBJECT TO CIVIL AND CRIMINAL PENALTIES THEREUNDER.

Chapter 37: Combustible Fibers

General Comments

Operations involving combustible fibers are typically associated with salvage, paper milling, recycling, cloth manufacturing, carpet and textile mills and agricultural operations, among others.

The primary hazard associated with these operations is the abundance of materials and their ready ignitability. These so-called "rag districts," where cloth scrap and clippings are collected and separated for reuse in paper manufacturing, have been associated with catastrophic conflagrations as recently as the 1970s.

Because of these hazards, occupancies storing or handling more than 100 cubic feet (3 m^3) of loose, or 1,000 cubic feet (28 m^3) of baled, combustible fibers are classified as Group H-3 (high hazard) by the *International Building Code*® (IBC®).

Purpose

Chapter 37 establishes the requirements for the storage and handling of combustible fibers, including animal, vegetable and synthetic fibers, whether woven into textiles, baled, packaged or loose.

SECTION 3701 GENERAL

3701.1 Scope. The equipment, processes and operations involving *combustible fibers* shall comply with this chapter.

❖ Fibers and textiles are an integral part of our daily lives. Almost all fibers are combustible. This characteristic is a problem when the fibers are manufactured, made into fabrics and collected as waste.

3701.2 Applicability. Storage of *combustible fibers* in any quantity shall comply with this section.

❖ Fibers stored as raw material or finished product must comply with this section.

3701.3 Permits. Permits shall be required as set forth in Section 105.6.

❖ The process of issuing permits gives the fire code official an opportunity to carefully evaluate and regulate hazardous operations. Permit applicants should be required to demonstrate that their operations comply with the intent of the code before the permit is issued. See the commentary to Section 105.6 for a general discussion of operations requiring an operational permit, Section 105.6.8 for a discussion of specific quantity-based operational permits for the materials regulated in this chapter and Section 105.7 for a general discussion of activities requiring a construction permit. The permit process also notifies the fire department of the need for prefire planning for hazardous properties.

SECTION 3702 DEFINITIONS

3702.1 Definitions. The following terms are defined in Chapter 2:

BALED COTTON.

BALED COTTON, DENSELY PACKED.

COMBUSTIBLE FIBERS.

SEED COTTON.

❖ Definitions of terms can help in the understanding and application of code requirements. This section directs the code user to Chapter 2 for the proper application of the indicated terms used in this chapter. Terms may be defined in Chapter 2 or in another *International Code*® (I-Code®) as indicated in Section 201.3, or the dictionary meaning may be all that is needed (see also commentary, Sections 201.1 through 201.4).

SECTION 3703 GENERAL PRECAUTIONS

3703.1 Use of combustible receptacles. Ashes, waste, rubbish or sweepings shall not be placed in wood or other combustible receptacles and shall be removed daily from the structure.

❖ The regular and proper disposal of ashes, waste, rubbish and sweepings is of the utmost importance. Not giving a fire a place of origin is the main objective.

INTERNATIONAL CODE COUNCIL®
Copyright © 2015 ICC. ALL RIGHTS RESERVED. Accessed by David Dammon on Jun 21, 2017 12:30:52 PM pursuant to License Agreement with ICC. No further reproduction or distribution authorized. ANY UNAUTHORIZED REPRODUCTION OR DISTRIBUTION IS A VIOLATION OF THE FEDERAL COPYRIGHT ACT AND THE LICENSE AGREEMENT, AND SUBJECT TO CIVIL AND CRIMINAL PENALTIES THEREUNDER.

The waste containers cannot be combustible. Routine and regular handling and disposal of waste products are integral parts of housekeeping.

3703.2 Vegetation. Grass or weeds shall not be allowed to accumulate at any point on the premises.

❖ Tall grass, dry weeds and bushes around buildings and on and alongside roadways, highways and streets present a definite fire hazard. Controlling or clearing grass, weeds and bushes reduces this hazard.

3703.3 Clearances. A minimum clearance of 3 feet (914 mm) shall be maintained between automatic sprinklers and the top of piles.

❖ Although a 3-foot (914 mm) clearance is required by this section, other sections of the code and NFPA 13 allow less clearance. Sprinkler clearances are intended to provide room for the fire plume to develop, thus ensuring sprinkler activation and preventing obstruction of the sprinkler spray pattern.

3703.4 Agricultural products. Hay, straw, seed cotton or similar agricultural products shall not be stored adjacent to structures or combustible materials unless a clear horizontal distance equal to the height of a pile is maintained between such storage and structures or combustible materials. Storage shall be limited to stacks of 100 tons (91 metric tons) each. Stacks shall be separated by not less than 20 feet (6096 mm) of clear space. Quantities of hay, straw, seed cotton and other agricultural products shall not be limited where stored in or near farm structures located outside closely built areas. A permit shall not be required for agricultural storage.

❖ Farm and other agricultural buildings are exempt from the requirements of this section. Agricultural outbuildings probably represent the single largest class of buildings used for combustible fiber storage; however, despite the hazards associated with the spontaneous combustion of green hay, these occupancies generally pose little threat to life or adjacent property.

3703.5 Dust collection. Where located within a building, equipment or machinery that generates or emits *combustible fibers* shall be provided with an *approved* dust-collecting and exhaust system. Such systems shall comply with Chapter 22 of this code and Section 511 of the *International Mechanical Code.*

❖ Dust may create a considerable explosion when displaced from a surface on which it rests, and it may also be ignited by static sparks. For this reason, a dust-collecting hood and exhaust system is required.

3703.6 Portable fire extinguishers. Portable fire extinguishers shall be provided in accordance with Section 906 as required for extra-hazard occupancy protection as indicated in Table 906.3(1).

❖ Section 906 gives the requirements for portable fire extinguishers. Such extinguishers must be selected and installed for an extra-hazard occupancy because of the high possibility of ignition of combustible fibers or dust.

3703.7 Sources of ignition. Sources of ignition shall comply with Sections 3703.7.1 and 3703.7.2.

❖ This section introduces the provisions for ignition control. A form of heat is required to ignite combustible fibers. By limiting the sources of ignition in the storage or use area, one can reduce the possibility of a fire.

3703.7.1 Smoking. Smoking shall be prohibited and "No Smoking" signs provided as follows:

1. In rooms or areas where materials are stored or dispensed or used in open systems.
2. Within 25 feet (7620 mm) of outdoor storage or open use areas.
3. Facilities or areas within facilities that have been designated as totally "no smoking" shall have "No Smoking" signs placed at all entrances to the facility or area. Designated areas within such facilities where smoking is permitted either permanently or temporarily shall be identified with signs designating that smoking is permitted in these areas only.

Signs required by this section shall be in English as a primary language or in symbols allowed by this code and shall comply with Section 310.

❖ The three areas listed in this section, because of their hazard characteristics, have been designated to receive "No Smoking" signs, in accordance with Section 310 of the code.

3703.7.2 Open flames. Open flames and high-temperature devices shall not be used in a manner that creates a hazardous condition and shall be listed for use with the materials stored or used. High-temperature devices and those devices utilizing an open flame shall be listed for use with the materials stored or used.

❖ Processes that use open flames must be installed and safeguarded in accordance with the manufacturer's specifications. Safety is further enhanced by the requirement for certain devices to be listed for use in proximity to hazardous materials.

SECTION 3704
LOOSE FIBER STORAGE

3704.1 General. Loose combustible fibers, not in suitable bales or packages and stored outdoors in the open, shall comply with Section 2808 of this code. Occupancies involving the indoor storage of loose combustible fibers in amounts exceeding the *maximum allowable quantity per control area* as set forth in Section 5003.1 shall comply with Sections 3704.2 through 3704.6.

❖ This section identifies Section 2808 of the code as the appropriate standard for the exterior storage of combustible fibers. The material hazards presented by combustible fibers are similar to the wood chips, hogged materials, fines, compost, raw materials and solid biomass feedstock regulated by Section 2808. This section further indicates that the more restrictive

INTERNATIONAL CODE COUNCIL®
Copyright © 2015 ICC. ALL RIGHTS RESERVED. Accessed by David Dammon on Jun 21, 2017 12:30:52 PM pursuant to License Agreement with ICC. No further reproduction or distribution authorized. ANY UNAUTHORIZED REPRODUCTION OR DISTRIBUTION IS A VIOLATION OF THE FEDERAL COPYRIGHT ACT AND THE LICENSE AGREEMENT, AND SUBJECT TO CIVIL AND CRIMINAL PENALTIES THEREUNDER.

indoor storage of combustible fibers regulated by Sections 3704.2 through 3704.6 is for those facilities that have amounts exceeding the maximum allowable quantity per control area (MAQ) as set forth in Section 5003.1. If the hazards are controlled so as to eliminate the application of Table 5003.1.1 of the code [IBC Table [F]307.1(1)] and IBC Section 307.5, the increased protection levels for a Group H-3 occupancy would not be necessary.

3704.2 Storage of 100 cubic feet or less. Loose *combustible fibers* in quantities of not more than 100 cubic feet (3 m^3) located in a structure shall be stored in a metal or metal-lined bin equipped with a self-closing cover.

❖ Small amounts of material may be stored inside a building in approved containers. Acceptable receptacles include metal or metal-lined containers with self-closing lids that help prevent the loose fibers from being ignited by outside sources such as cigarettes, candles, friction, sparks, etc. The term "self-closing" means that the lid is equipped with an approved device or is otherwise arranged to operate in a manner that will ensure its closing after having been opened. In many cases, these types of bins are top-opening and need nothing more than gravity to meet this requirement. See the commentary to the definition of "Self-closing" in Chapter 2.

3704.3 Storage of more than 100 cubic feet to 500 cubic feet. Loose *combustible fibers* in quantities exceeding 100 cubic feet (3 m^3) but not exceeding 500 cubic feet (14 m^3) shall be stored in rooms enclosed with 1-hour *fire barriers* constructed in accordance with Section 707 of the *International Building Code* or *horizontal assemblies* constructed in accordance with Section 711 of the *International Building Code*, or both, with openings protected by an *approved* opening protective assembly having a *fire protection rating* of $^3/_4$ hour in accordance with the *International Building Code*.

❖ Moderate quantities of material must be stored in 1-hour fire-resistance-rated rooms. Openings in floors, walls and ceilings must be protected with self-closing or automatic-closing $^3/_4$-hour fire doors or windows in approved frames. Section 707 of the IBC deals with the construction of and fire-resistance ratings for fire barriers and with fire barriers used for separation of incidental use areas.

3704.4 Storage of more than 500 cubic feet to 1,000 cubic feet. Loose *combustible fibers* in quantities exceeding 500 cubic feet (14 m^3) but not exceeding 1,000 cubic feet (28 m^3) shall be stored in rooms enclosed with 2-hour *fire barriers* constructed in accordance with Section 707 of the *International Building Code* or *horizontal assemblies* constructed in accordance with Section 711 of the *International Building Code*, or both, with openings protected by an *approved* opening protective assembly having a *fire protection rating* of $1^1/_2$ hours in accordance with the *International Building Code*.

❖ Large amounts of material require a 2-hour fire-resistance-rated enclosure. Openings in floors, walls and ceilings require self-closing or automatic-closing, $1^1/_2$-hour fire doors or windows in approved frames. Again, the IBC establishes the requirements for the construction of fire barriers and required opening protectives.

3704.5 Storage of more than 1,000 cubic feet. Loose *combustible fibers* in quantities exceeding 1,000 cubic feet (28 m^3) shall be stored in rooms enclosed with 2-hour *fire barriers* constructed in accordance with Section 707 of the *International Building Code* or *horizontal assemblies* constructed in accordance with Section 711 of the *International Building Code*, or both, with openings protected by an *approved* opening protective assembly having a *fire protection rating* of $1^1/_2$ hours in accordance with the *International Building Code*. The storage room shall be protected by an *automatic sprinkler system* installed in accordance with Section 903.3.1.1.

❖ The enclosure requirements in this section are the same as in Section 3704.4; however, if the storage quantity exceeds 1,000 cubic feet (28 m^3), the storage room must be sprinklered for extra protection.

3704.6 Detached storage structure. Not more than 2,500 cubic feet (70 m^3) of loose *combustible fibers* shall be stored in a detached structure suitably located, with openings protected against entrance of sparks. The structure shall not be occupied for any other purpose.

❖ Separate, special-purpose structures are required for the storage of extremely large volumes of loose material. Only loose fiber material may be stored in the structure, and openings must restrict the entrance of sparks. These occupancies must be classified in Group H-3, and must be constructed and protected in accordance with the IBC.

SECTION 3705
BALED STORAGE

3705.1 Bale size and separation. Baled *combustible fibers* shall be limited to single blocks or piles not more than 25,000 cubic feet (700 m^3) in volume, not including aisles or clearances. Blocks or piles of baled fiber shall be separated from adjacent storage by aisles not less than 5 feet (1524 mm) wide, or by flash-fire barriers constructed of continuous sheets of noncombustible material extending from the floor to a minimum height of 1 foot (305 mm) above the highest point of the piles and projecting not less than 1 foot (305 mm) beyond the sides of the piles.

❖ Bulk restrictions and aisle requirements for piles or blocks of combustible fibers are established in this section. These restrictions provide access for fire fighting and limit the fuel load of piles and blocks. Aisles or flash-fire barriers must be provided between piles and blocks. Aisles must be a minimum of 5 feet (1524 mm) wide to reduce the likelihood of horizontal fire spread between blocks or piles of stored material; and to provide fire fighters access to fires. In place of aisles, protection in the form of flash-fire barriers constructed of noncombustible materials is considered equivalent and may be used as specified in this sec-

INTERNATIONAL CODE COUNCIL®
Copyright © 2015 ICC. ALL RIGHTS RESERVED. Accessed by David Dammon on Jun 21, 2017 12:30:52 PM pursuant to License Agreement with ICC. No further reproduction or distribution authorized. ANY UNAUTHORIZED REPRODUCTION OR DISTRIBUTION IS A VIOLATION OF THE FEDERAL COPYRIGHT ACT AND THE LICENSE AGREEMENT, AND SUBJECT TO CIVIL AND CRIMINAL PENALTIES THEREUNDER.

tion. Depending upon the height and array of the baled storage, the provisions of Chapter 32 may also apply to these materials.

Note that these provisions do not apply to densely packed baled cotton based on its exclusion from the definition of "Combustible fibers" in Section 202. See the commentary to the various cotton definitions in Section 202 for a discussion of the hazards of various cotton processing and storage operations.

3705.2 Special baling conditions. Sisal and other fibers in bales bound with combustible tie ropes, jute and other fibers that swell when wet, shall be stored to allow for expansion in any direction without affecting building walls, ceilings or columns. A minimum clearance of 3 feet (914 mm) shall be required between walls and sides of piles, except that where the storage compartment is not more than 30 feet (9144 mm) wide, the minimum clearance at side walls shall be 1 foot (305 mm), provided that a center aisle not less than 5 feet (1524 mm) wide is maintained.

❖ Allowances or clearances must be provided for the expansion of combustible fibers susceptible to swelling when wet. In addition to the lateral forces that these piles may create if placed against structural elements, their contribution to the building live load should be considered. This section prescribes clearances from building elements. Structural loading concerns should be referred to the building official or to a qualified structural engineer. As an example of special baling conditions, rolled paper is commonly stored on its side rather than on its end to promote water runoff. Structural damage has resulted from the expansion of wet paper rolls or bales of rags when minimum clearances were not provided.

Bibliography

The following resource materials were used in the preparation of the commentary for this chapter of the code:

Complete Revision History to the 2015 I-Codes. Washington, DC: International Code Council, 2014.

Cotton Ginners Handbook. Washington, DC: U.S. Department of Agriculture, Agriculture Research Service, Agricultural Handbook Number 503, 1994.

Wakelyn, P.J., B.M. Norman and D.W. Thompson. "Why Cotton Ginning Is Considered Agriculture." *Cotton Gin and Oil Mill Press*, 2005.

Wakelyn, P.J. and P.J. Wan. "An Overview of Oil Extraction and Refining." *Oil Mill Gazette*, 2001.

Wakelyn, P.J. and S.E. Hughs. "Evaluation of the Flammability of Cotton Bales." *Fire and Materials*, 2002.

INTERNATIONAL CODE COUNCIL®

Copyright © 2015 ICC. ALL RIGHTS RESERVED. Accessed by David Dammon on Jun 21, 2017 12:30:52 PM pursuant to License Agreement with ICC. No further reproduction or distribution authorized. ANY UNAUTHORIZED REPRODUCTION OR DISTRIBUTION IS A VIOLATION OF THE FEDERAL COPYRIGHT ACT AND THE LICENSE AGREEMENT, AND SUBJECT TO CIVIL AND CRIMINAL PENALTIES THEREUNDER.

CHAPTERS 38 through 49

RESERVED

INTERNATIONAL CODE COUNCIL®
Copyright © 2015 ICC. ALL RIGHTS RESERVED. Accessed by David Dammon on Jun 21, 2017 12:30:52 PM pursuant to License Agreement with ICC. No further reproduction or distribution authorized. ANY UNAUTHORIZED REPRODUCTION OR DISTRIBUTION IS A VIOLATION OF THE FEDERAL COPYRIGHT ACT AND THE LICENSE AGREEMENT, AND SUBJECT TO CIVIL AND CRIMINAL PENALTIES THEREUNDER.

INTERNATIONAL CODE COUNCIL®
Copyright © 2015 ICC. ALL RIGHTS RESERVED. Accessed by David Dammon on Jun 21, 2017 12:30:52 PM pursuant to License Agreement with ICC. No further reproduction or distribution authorized. ANY UNAUTHORIZED REPRODUCTION OR DISTRIBUTION IS A VIOLATION OF THE FEDERAL COPYRIGHT ACT AND THE LICENSE AGREEMENT, AND SUBJECT TO CIVIL AND CRIMINAL PENALTIES THEREUNDER.

Part V—Hazardous Materials

Chapter 50: Hazardous Materials—General Provisions

General Comments

The requirements of this chapter apply to all hazardous chemicals. Hazardous chemicals are defined as those that pose an unreasonable risk to the health and safety of operating or emergency personnel, the public and the environment if not properly controlled during handling, storage, manufacture, processing, packaging, use, disposal or transportation. The requirements of this chapter and associated chapters are considered the minimum safety requirements for the use, production and storage of hazardous chemicals.

Purpose

This chapter contains the general requirements for hazardous chemicals in all occupancies. The general provisions of this chapter are intended to be companion provisions with the specific requirements of Chapters 51 and 53 through 67 regarding a given hazardous material.

SECTION 5001 GENERAL

5001.1 Scope. Prevention, control and mitigation of dangerous conditions related to storage, dispensing, use and handling of hazardous materials shall be in accordance with this chapter.

This chapter shall apply to all hazardous materials, including those materials regulated elsewhere in this code, except that where specific requirements are provided in other chapters, those specific requirements shall apply in accordance with the applicable chapter. Where a material has multiple hazards, all hazards shall be addressed.

Exceptions:

1. In retail or wholesale sales occupancies, the quantities of medicines, foodstuff or consumer products and cosmetics containing not more than 50 percent by volume of water-miscible liquids and with the remainder of the solutions not being flammable shall not be limited, provided such materials are packaged in individual containers not exceeding 1.3 gallons (5 L).
2. Quantities of alcoholic beverages in retail or wholesale sales occupancies shall not be limited providing the liquids are packaged in individual containers not exceeding 1.3 gallons (5 L).
3. Application and release of pesticide and agricultural products and materials intended for use in weed abatement, erosion control, soil amendment or similar applications where applied in accordance with the manufacturers' instructions and label directions.
4. The off-site transportation of hazardous materials where in accordance with Department of Transportation (DOTn) regulations.
5. Building materials not otherwise regulated by this code.
6. Refrigeration systems (see Section 606).
7. Stationary storage battery systems regulated by Section 608.
8. The display, storage, sale or use of fireworks and *explosives* in accordance with Chapter 56.
9. *Corrosives* utilized in personal and household products in the manufacturers' original consumer packaging in Group M occupancies.
10. The storage of distilled spirits and wines in wooden barrels and casks.
11. The use of wall-mounted dispensers containing alcohol-based hand rubs classified as Class I or II liquids where in accordance with Section 5705.5.

❖ The purpose of Exception 1 is to address consumer products, foodstuffs and cosmetics that are not formulated with flammable constituents and are stored and displayed in Group M occupancies, provided the individual package is limited to a volume of 1.3 gallons (5 L) or less. In the event of a leak or broken package, the amount of hazardous material lost would be small and present a smaller spill cleanup problem. This is limited to products containing no more than 50 percent by volume of water-miscible liquids and with the remaining content not being flammable, based on the code's definition of "Flammable liquid." This percentage limitation further reduces the

INTERNATIONAL CODE COUNCIL®
Copyright © 2015 ICC. ALL RIGHTS RESERVED. Accessed by David Dammon on Jun 21, 2017 12:30:52 PM pursuant to License Agreement with ICC. No further reproduction or distribution authorized. ANY UNAUTHORIZED REPRODUCTION OR DISTRIBUTION IS A VIOLATION OF THE FEDERAL COPYRIGHT ACT AND THE LICENSE AGREEMENT, AND SUBJECT TO CIVIL AND CRIMINAL PENALTIES THEREUNDER.

hazard of a material spill due to the difficult ignitability of such materials. This exception would not apply to any Level 2 or 3 aerosol as defined in Chapter 2, because these consumer products are formulated with either a flammable propellant or a flammable base product. It also would not apply to many paints, coatings, adhesives or lubricants formulated with flammable or combustible liquids. Consumer products, such as household bleach (which is typically a mixture of less than 12.5-percent sodium hypochlorite by volume and water) or window cleaners (typically formulated with 3 to 6 percent by volume of ammonium hydroxide) would be exempted by this exception, as would a 1-gallon (3.9 L) bottle containing a solution of 37-percent hydrochloric acid and water used for disinfecting swimming pool water or for cleaning concrete surfaces.

Similar to Exception 1, Exception 2 deals with the amount of storage allowed in Group M occupancies where individual containers of alcoholic beverages do not exceed 1.3 gallons (5 L) in wholesale and retail stores. In the event of a leak or broken consumer package, the amount of flammable or combustible beverage lost would be small and present a smaller spill cleanup problem. This exception parallels Section 5701.2, Exception 3.

Exception 3 states that the application of pesticides and agricultural products is not considered a hazardous process if done in accordance with the manufacturer's instructions and label directions, since those products and pesticides have been tested in these application methods.

Exception 4 states that any time hazardous materials are transported over public highways or by public transportation, U.S. Department of Transportation (DOTn) requirements must be enforced. The code intends that when a material, good or commodity is transported off site, it is within the domain of the DOTn while the material is in transit. In the case of hazardous materials, DOTn has ruled that the activities associated with preparing the material for shipment, such as selection of the type of shipping container, placarding the container to identify its hazards and the preparation of shipping papers, are within the domain of DOTn and that local codes [e.g., the *International Fire Code*® (IFC®)] are preempted by the Hazardous Materials Transportation Act. Commonly, this includes storing goods and materials at a railroad siding for several months before they are consigned for shipment. The code has no authority when the material is in transit, including while shipping papers are being prepared or are in effect. Note, however, that while the code exempts hazardous materials in transportation, it does not exempt the facility where these materials are packaged and prepared for shipment.

Once the material reaches the point where it has been delivered and the shipping papers have been received by the consignee (e.g., the party responsible for the material), the goods or commodity are no longer within the domain of DOTn and the applicable regulatory requirements are those adopted fire and building codes of the jurisdiction whose enforcement and interpretation is the responsibility of the fire code official.

Exception 5 exempts commonly used building materials that may exhibit some hazardous properties, but do not fall into the realm of a hazardous materials as defined in the code, from being regulated as hazardous material. Without this exception, the storage of certain building materials could result in a Group H occupancy classification.

Exception 6 states that refrigeration systems are governed by Section 606, which has specific requirements that would be enforced over any general requirements of the hazardous material chapters of the code.

Exception 7 notes that stationary storage battery systems are governed by Section 608, which has specific requirements that would be enforced over any general requirements of the hazardous material chapters of the code. Note that the *International Building Code*® (IBC®) considers this an incidental storage area. See Table 509 of the IBC for incidental use area requirements.

Exception 8 refers to Chapter 56 for specific requirements concerning fireworks and explosives. Those specific requirements would be enforced over any general requirements of the hazardous material chapters of the code.

Exception 9 states that corrosives used in personal and household products, such as certain cleaners or detergents, are not considered hazardous when maintained in their original packaging in Group M areas. Note that this is specific to Group M use areas only. However, this exception does not apply to small containers of flammable aerosols or liquids in retail display areas where they are regulated in Chapter 51 or 57, respectively. Without this exception, many common products in mercantile display areas could be classified as hazardous materials resulting in grocery stores and other mercantile occupancies being inappropriately classified in occupancy classification Group H.

Exception 10 covers the storage of distilled spirits and wines in wooden barrels and casks. This statement may appear to exempt all requirements for these products from being a Group H occupancy. However, the IBC will still classify the storage area as a Group H occupancy if the amounts exceed the maximum allowable quantities (MAQs) per control area listed in Table 307.1(1) of that code for flammable or combustible liquids. All requirements for a Group H occupancy in the IBC are still applicable; however, any requirements from the code are not.

Exception 11 provides a necessary cross reference to provisions in Section 5705.5 to prevent alcohol-based hand rub dispensers from being considered the same as other flammable liquids and exempting them from the limitations of Table 5003.1.1(1).

INTERNATIONAL CODE COUNCIL®
Copyright © 2015 ICC. ALL RIGHTS RESERVED. Accessed by David Dammon on Jun 21, 2017 12:30:52 PM pursuant to License Agreement with ICC. No further reproduction or distribution authorized. ANY UNAUTHORIZED REPRODUCTION OR DISTRIBUTION IS A VIOLATION OF THE FEDERAL COPYRIGHT ACT AND THE LICENSE AGREEMENT, AND SUBJECT TO CIVIL AND CRIMINAL PENALTIES THEREUNDER.

5001.1.1 Waiver. The provisions of this chapter are waived where the *fire code official* determines that such enforcement is preempted by other codes, statutes or ordinances. The details of any action granting such a waiver shall be recorded and entered in the files of the code enforcement agency.

❖ If the fire code official determines that the requirements of this chapter are preempted by other codes, statutes or ordinances, he or she has the authority to waive the requirements of this chapter. Documentation must be placed into the files of the code enforcement agency stating the reasons for the waiver.

5001.2 Material classification. Hazardous materials are those chemicals or substances defined as such in this code. Definitions of hazardous materials shall apply to all hazardous materials, including those materials regulated elsewhere in this code.

❖ Hazardous materials are chemicals or substances defined in the code as such. Be sure to view the Material Safety Data Sheets (MSDS) for information on the properties of the material.

5001.2.1 Mixtures. Mixtures shall be classified in accordance with hazards of the mixture as a whole. Mixtures of hazardous materials shall be classified in accordance with nationally recognized reference standards; by an *approved* qualified organization, individual, or Material Safety Data Sheet (MSDS); or by other *approved* methods.

❖ Mixtures are to be classified to their specific blend of chemicals, i.e., as a whole, not as to their component ingredients. The MSDS are required sources of information on the properties of the chemical mixtures.

5001.2.2 Hazard categories. Hazardous materials shall be classified according to hazard categories. The categories include materials regulated by this chapter and materials regulated elsewhere in this code.

❖ The properties of the chemical will mandate the hazard categories under which the chemical is listed. These properties are found in the MSDS.

5001.2.2.1 Physical hazards. The material categories listed in this section are classified as *physical hazards*. A material with a primary classification as a *physical hazard* can also pose a *health hazard*.

1. *Explosives* and blasting agents.
2. *Combustible liquids*.
3. Flammable solids, liquids and gases.
4. Organic peroxide solids or liquids.
5. Oxidizer, solids or liquids.
6. Oxidizing gases.
7. Pyrophoric solids, liquids or gases.
8. Unstable (reactive) solids, liquids or gases.
9. Water-reactive materials solids or liquids.
10. *Cryogenic fluids*.

❖ This section lists those hazardous materials regulated in Chapters 51 and 53 through 67 that are classified as a physical hazard. The definition for the term "physical hazard" is located in Section 202. Because of their potential detonation or fire hazard, buildings containing more than the MAQ of hazardous materials listed in this section are classified as Group H-1, H-2 or H-3. Materials posing multiple hazards must be classified as both a health hazard and physical hazard, and meet the requirements of both classifications.

5001.2.2.2 Health hazards. The material categories listed in this section are classified as *health hazards*. A material with a primary classification as a *health hazard* can also pose a *physical hazard*.

1. Highly toxic and toxic materials.
2. *Corrosive* materials.

❖ This section lists those hazardous materials regulated in Chapters 51 and 53 through 67 that are classified as a health hazard. When hazardous chemicals pose more of a health problem than a fire, explosion or reactivity hazard, buildings containing more than the MAQ of hazardous materials listed in this section are classified as Group H-4. This section also notes that a hazardous material may pose multiple hazards and thus be considered both a physical hazard and health hazard. For example, a material classified as toxic or corrosive may also be a Class 2 or 3 oxidizer. Requirements for each material classification are applicable where a multiple hazard exists.

5001.3 Performance-based design alternative. Where *approved* by the *fire code official*, buildings and facilities where hazardous materials are stored, used or handled shall be permitted to comply with this section as an alternative to compliance with the other requirements set forth in this chapter and Chapters 51 through 67.

❖ The purpose of performance-based design criteria is to promote innovative, flexible and responsive solutions that optimize the expenditure and consumption of resources while preserving social and economic value. The model codes, including the *International Codes*® (I-Codes®), have traditionally incorporated alternative materials, designs and methods of construction provisions, such as those found in Section 104.9. This section provides a framework and opportunity to use new materials and methods when design equivalence to the prescriptive requirements of the code is demonstrated to and approved by the fire code official.

Large chemical manufacturing and production facilities are typically required to comply with federal risk management plans (RMP) and process safety management (PSM) requirements, which require a level of safety that generally exceeds current hazardous materials regulations in the code. This section is intended to be compatible with federal RMP and PSM programs, so it would reduce the burden on businesses in having to comply with duplicative or conflicting local and federal regulations. Yet, compliance with these provisions will yield a level of safety that

INTERNATIONAL CODE COUNCIL®
Copyright © 2015 ICC. ALL RIGHTS RESERVED. Accessed by David Dammon on Jun 21, 2017 12:30:52 PM pursuant to License Agreement with ICC. No further reproduction or distribution authorized. ANY UNAUTHORIZED REPRODUCTION OR DISTRIBUTION IS A VIOLATION OF THE FEDERAL COPYRIGHT ACT AND THE LICENSE AGREEMENT, AND SUBJECT TO CIVIL AND CRIMINAL PENALTIES THEREUNDER.

should equal or exceed the prescriptive code requirements.

Based on the fact that performance-based approaches are already in widespread use in federal laws regulating chemical storage and handling facilities, the topic of hazardous materials regulation stands out as a good place to start phasing performance-based concepts into the code. While a casual glance through the text of Section 5001.3 might lead one to conclude that the proposed section represents a huge loophole for the industry to jump through to avoid compliance with the code's prescriptive requirements, a closer investigation will reveal that this is not the case. This text, duplicated from Chapter 22 of the *ICC Performance Code® for Buildings and Facilities* (ICCPC®), was developed by trying to incorporate federal RMP and PSM regulations and then looking through the code's prescriptive hazardous materials regulations to pick up any topics that appeared to have been overlooked.

The text of this section was developed through a cooperative effort of fire officials and industry representatives in the IFC Performance Code Development Forum. Those who worked on the text believed that compliance with the proposed provisions would yield a facility that would be at least as safe, if not safer, than a facility constructed in accordance with the code's prescriptive requirements.

It is absolutely true that use of this approach would require a tremendous amount of time, money and effort on the part of a permit applicant to demonstrate code compliance to local fire code officials, and clearly, the approach will not be for everyone; however, even for those who might not use the approach in its entirety, the performance objectives would greatly assist code users and enforcers when dealing with alternative methods by better defining the intent of the code.

See the ICCPC and its "User's Guide" for a more comprehensive discussion of performance-based design concepts and philosophy.

5001.3.1 Objective. The objective of Section 5001.3 is to protect people and property from the consequences of unauthorized discharge, fires or explosions involving hazardous materials.

❖ The intent and scope of this section is to protect the occupants of the building, people in the surrounding area, emergency response personnel and property from acute consequences associated with unintended or unauthorized releases of hazardous materials. These performance-based design requirements encourage the use of both accident prevention and control measures to reduce risk.

It is not the intent of this section or the prescriptive requirements of the code to regulate all hazardous materials. Within the scopes of building and fire codes, hazardous materials are generally defined as those materials that are acutely dangerous to people or property. Building and fire codes in the United States usually defer regulation of materials that present only a risk of chronic or environmental effects to other regulatory agencies, such as the Occupational Safety and Health Administration (OSHA) or the Environmental Protection Agency (EPA). Exposure of workers to hazardous materials in the normal course of their jobs is also beyond the scope of building and fire codes. Such workplace safety issues are instead regulated by occupational safety and health codes, which in the United States fall under the jurisdiction of OSHA.

When developing a performance-based design involving hazardous materials concerns, consideration should be given not only to the hazardous materials categories in Section 5001.2.2, but also to the quantity, state, situation (storage/use), arrangement and location of materials and processes.

5001.3.2 Functional statements. Performance-based design alternatives are based on the following functional statements:

1. Provide safeguards to minimize the risk of unwanted releases, fires or explosions involving hazardous materials.
2. Provide safeguards to minimize the consequences of an unsafe condition involving hazardous materials during normal operations and in the event of an abnormal condition.

❖ This section includes two functional statements that serve the overall objective of Section 5001.3. These two statements focus on reducing the probability of unsafe conditions involving hazardous materials and minimizing the consequences of an unsafe condition, if one occurs. The concepts can be summarized as prevention and control. Specific means by which these functional statements can be accommodated are listed in Section 5001.3.3.

5001.3.3 Performance requirements. Where safeguards, systems, documentation, written plans or procedures, audits, process hazards analysis, mitigation measures, engineering controls or construction features are required by Sections 5001.3.3.1 through 5001.3.3.18, the details of the design alternative shall be subject to approval by the *fire code official*. The details of actions granting the use of the design alternatives shall be recorded and entered in the files of the jurisdiction.

❖ Section 5001.3 allows the use of this section of the code based on the approval of the fire code official; however, the specifics of the design alternatives selected by designers, evaluators and operators should also be subject to review by a third party representing the public. The fire code official has the responsibility to verify that the performance alternatives provided by Section 5001.3 will protect from conditions hazardous to life, property or public welfare, as required by Section 101.2. When acceptance for the use of the design is granted, a record of the approval should be made in the public record to document acceptance of the design alternative.

INTERNATIONAL CODE COUNCIL®
Copyright © 2015 ICC. ALL RIGHTS RESERVED. Accessed by David Dammon on Jun 21, 2017 12:30:52 PM pursuant to License Agreement with ICC. No further reproduction or distribution authorized. ANY UNAUTHORIZED REPRODUCTION OR DISTRIBUTION IS A VIOLATION OF THE FEDERAL COPYRIGHT ACT AND THE LICENSE AGREEMENT, AND SUBJECT TO CIVIL AND CRIMINAL PENALTIES THEREUNDER.

5001.3.3.1 Properties of hazardous materials. The physical- and health-hazard properties of hazardous materials on site shall be known and shall be made readily available to employees, neighbors and the *fire code official*.

❖ This section correlates with the reporting requirements set forth in the Superfund Amendments and Reauthorization Act of 1986 (SARA Title III) and to some degree with the prescriptive reporting requirements set forth in the code. Compliance with these reporting requirements can be accomplished through the use of MSDS; inventory reports; SARA Title III reporting documents, which are typically mandatory under federal law; and Section 5001.5.2. This section ensures that interested parties will have access to information about the characteristics of hazardous materials that are located on site.

5001.3.3.2 Reliability of equipment and operations. Equipment and operations involving hazardous materials shall be designed, installed and maintained to ensure that they reliably operate as intended.

❖ Equipment and operations at facilities regulated by federal PSM rules should have little difficulty demonstrating compliance with the requirements of this section. The PSM rules generally address this topic area.

At facilities that are not required to comply with PSM rules, the selection of equipment and design of operations would have to go through a great deal of scrutiny by qualified individuals. In addition, equipment manuals and operational protocols would need to be developed and followed, as applicable.

5001.3.3.3 Prevention of unintentional reaction or release. Safeguards shall be provided to minimize the risk of an unintentional reaction or release that could endanger people or property.

❖ Facilities regulated by federal RMP rules are required to evaluate the potential consequences of various release scenarios on the surrounding area; therefore, many such facilities provide safety systems to reduce these potential consequences, recognizing that the consequence analysis information must be made available to the public.

Depending on the classification and state (solid, liquid or gas) of hazardous materials stored or used at a given site, a variety of mitigation measures may be provided to comply with this provision. Such measures might include process controls, spill control and containment systems, and ventilation controls.

5001.3.3.4 Spill mitigation. Spill containment systems or means to render a spill harmless to people or property shall be provided where a spill is determined to be a plausible event and where such an event would endanger people or property.

❖ This requirement is primarily derived from the prescriptive provisions in the code. As a general rule, storage facilities are regarded as less likely candidates for dangerous spills than facilities that involve dispensing or processing operations. In addition, dangerous spill conditions are probably more likely to occur in facilities with large quantity vessels or systems than those with only small containers. Information that may be useful in determining whether a spill is plausible and whether dangerous conditions would result includes the following:

- Specific material and process hazards involved.
- A block flow diagram for the facility.
- Piping and instrument drawings.
- A list of all safety devices showing their location, design basis and capacity, date of installation, etc.
- Equipment manufacturers' operational instructions, including safe operating limits for the equipment.
- Equipment drawings and specifications that reflect built and installed equipment.

5001.3.3.5 Ignition hazards. Safeguards shall be provided to minimize the risk of exposing combustible hazardous materials to unintended sources of ignition.

❖ The primary design and operating intent is to ensure that flammable and combustible materials are always completely controlled, in accordance with process design parameters; however, where flammable and combustible hazardous materials are present, a degree of redundancy is sometimes necessary to provide an additional level of safety. Where there is a plausible risk of spills or leaks, such as in loading and unloading or packaging operations, additional measures, such as ignition source controls, are prudent. To that end, process design and operation should ensure to the greatest degree possible that ignition sources are kept away from areas where flammable or combustible hazardous materials are present. Where separation is not feasible, ignition source controls may be warranted. Such controls may involve the following:

- Electrical classification of areas where flammable hazardous materials might be present.
- Classification of mobile equipment that might operate in areas where flammable hazardous materials might be present.
- The use of grounding systems and equipment to minimize the potential for sparking in areas where flammable hazardous materials might be present.

5001.3.3.6 Protection of hazardous materials. Safeguards shall be provided to minimize the risk of exposing hazardous materials to a fire or physical damage whereby such exposure could endanger or lead to the endangerment of people or property.

❖ This section directs the designer and operator to review and ensure that vessels or systems containing hazardous materials are not exposed to or are protected from damage by external fire. The design should focus, first, on reducing the possibility for fire or other hazards, such as vehicular impact, and, sec-

INTERNATIONAL CODE COUNCIL®
Copyright © 2015 ICC. ALL RIGHTS RESERVED. Accessed by David Dammon on Jun 21, 2017 12:30:52 PM pursuant to License Agreement with ICC. No further reproduction or distribution authorized. ANY UNAUTHORIZED REPRODUCTION OR DISTRIBUTION IS A VIOLATION OF THE FEDERAL COPYRIGHT ACT AND THE LICENSE AGREEMENT, AND SUBJECT TO CIVIL AND CRIMINAL PENALTIES THEREUNDER.

ond, on isolating hazardous materials from exposure to unsafe conditions, such as a fire.

All storage areas and systems should be formally reviewed to find and correct any sources of exposure to fire, including the following:

- Nearby storage of combustibles.
- Nearby hot work operation.
- Nearby vehicular operation.

All systems subject to fire exposure should be formally reviewed to ensure adequate protection, including the following:

- Sprinkler installation.
- Insulation of equipment.
- Fire-resistance-rated barriers.

5001.3.3.7 Exposure hazards. Safeguards shall be provided to minimize the risk of and limit damage from a fire or explosion involving explosive hazardous materials whereby such fire or explosion could endanger or lead to the endangerment of people or property.

❖ This section directs the designer and operator to review and ensure that vessels or systems containing hazardous materials are not subject to damage from internal fire, chemical reaction or explosion. The design criteria should be, first, to reduce the risk of an internal fire or explosion and, second, where the first is not feasible, to design vessels and systems in such a manner that loss of integrity will not occur in an overpressure situation.

All systems should be formally reviewed to identify and correct any sources of internal fire, explosion or overpressure. The review should include the following:

- The potential for inadvertent or improper mixing of reactive components.
- The potential for overheating of unstable materials.
- The potential for inadequate venting of unstable reaction byproducts.
- The potential for inadequate dilutent material supply.

Where overpressure or explosion conditions cannot be reasonably ruled out, the design should consider overpressure protection, containment and explosion control systems.

5001.3.3.8 Detection of gas or vapor release. Where a release of hazardous materials gas or vapor would cause immediate harm to persons or property, means of mitigating the dangerous effects of a release shall be provided.

❖ This section increases the likelihood that hazardous vapor releases are detected and mitigated before they can harm individuals or property. In occupied areas, detection of a vapor release may be by sight, smell or an automatic detection system. For many hazardous materials, such as chlorine or ammonia, vapor releases are readily evident before concentrations are truly hazardous based on the presence of vapor fog or a noxious odor. Where this is not the case, automatic detection systems and alarms may be warranted. Sensors can take the form of ambient sampling devices at strategic area locations, sampling devices in key vent streams or specially designed leak-detection systems, such as acoustic emission systems. The performance measurement is based on the ability of the sensing equipment or operators to provide adequate warning so that safety precautions can be taken before unsafe conditions are present.

Mitigation-based solutions can range from special process equipment designs to elaborate ventilation and air-scrubbing systems. Where practical, the simplest mitigation consists of overdesign of the process system so that the likelihood of release is extremely low. The performance measurement of a ventilation or treatment system is based on the reduction of the concentration of the hazardous materials in the workplace and nearby environment to levels that are not acutely hazardous.

5001.3.3.9 Reliable power source. Where a power supply is relied upon to prevent or control an emergency condition that could endanger people or property, the power supply shall be from a reliable source.

❖ This section is derived from the prescriptive requirements of the code. It is essential to ensure that a reliable power supply is provided for systems that are critical to safety. Some examples of systems that may require a reliable power supply include mechanical ventilation systems; treatment systems; gas detection and alarm systems; and emergency shutdown systems. The reliability needs of the system are related to the potential risks associated with system failure.

A reliable power source does not necessarily equate to a generator or battery system. The type of system to be used depends on the relative level of hazard that might result in the event of a power failure. In some cases, such as those where hazardous processes shut down upon loss of power, a connection ahead of the building's main disconnect switch may be adequate to qualify as a reliable source. Guidance on the selection and performance requirements for power supply systems providing an alternative source of electrical power can be found in NFPA 110.

5001.3.3.10 Ventilation. Where ventilation is necessary to limit the risk of creating an emergency condition resulting from normal or abnormal operations, means of ventilation shall be provided.

❖ In many cases involving hazardous materials, ventilation must be provided to limit the risk of creating an emergency condition. Ventilation might be necessary during both normal and abnormal operating conditions. Some examples of operations that may require ventilation are storage or processing of flammable and combustible liquids or gases inside buildings;

INTERNATIONAL CODE COUNCIL®
Copyright © 2015 ICC. ALL RIGHTS RESERVED. Accessed by David Dammon on Jun 21, 2017 12:30:52 PM pursuant to License Agreement with ICC. No further reproduction or distribution authorized. ANY UNAUTHORIZED REPRODUCTION OR DISTRIBUTION IS A VIOLATION OF THE FEDERAL COPYRIGHT ACT AND THE LICENSE AGREEMENT, AND SUBJECT TO CIVIL AND CRIMINAL PENALTIES THEREUNDER.

drum-filling operations inside buildings; laboratory use of chemicals and dust-handling systems. Ventilation may also be used as a means for reducing vapor concentrations below lower flammable limits (LFL) in areas where ignition sources are present or for pressurization of areas to isolate hazardous vapors.

Guidance on the performance requirements for ventilation systems can be found in a number of sources, including the OSHA Process Safety Management (PSM) regulations, DOL 29 CFR Part 1910.119; NFPA 30; NFPA 45; NFPA 69; and NFPA 497.

5001.3.3.11 Process hazard analyses. Process hazard analyses shall be conducted to ensure reasonably the protection of people and property from dangerous conditions involving hazardous materials.

❖ This section establishes an administrative safety control plan addressing process hazard analysis. Guidance on process hazard analysis techniques can be found in the OSHA PSM regulation, DOL 29 CFR, Part 1910.119. The process hazard analysis must be appropriate to the complexity of the process and must identify, evaluate and control the hazards involved in the process. The analysis can be accomplished through various methods. Some of these are "what-if" scenarios, process hazard analysis, fault tree, etc. A person trained in these and other hazard evaluation techniques should be employed to complete this analysis.

5001.3.3.12 Pre-startup safety review. Written documentation of pre-startup safety review procedures shall be developed and enforced to ensure that operations are initiated in a safe manner. The process of developing and updating such procedures shall involve the participation of affected employees.

❖ This section establishes an administrative safety control plan addressing prestartup safety review procedures. Guidance on techniques for written documentation of prestartup safety review procedures can be found in the OSHA PSM regulation, DOL 29 CFR, Part 1910.119. Prestartup safety reviews are typically necessary when new facilities are prepared for operation and where existing facilities are modified to a degree that is significant enough to require a change in the process safety information.

A prestartup safety review should confirm that, prior to the introduction of highly hazardous chemicals to a process, the following verifications have been accomplished at a minimum:

- Construction and equipment is in accordance with design specifications.
- Safety, operating, maintenance and emergency procedures are in place and are adequate.
- For new facilities, a process hazard analysis has been performed and recommendations have been resolved or implemented before startup; for modified facilities, requirements contained in management of change documents have been met.
- Training of each employee involved in operating a process has been completed.

5001.3.3.13 Operating and emergency procedures. Written documentation of operating procedures and procedures for emergency shut down shall be developed and enforced to ensure that operations are conducted in a safe manner. The process of developing and updating such procedures shall involve the participation of affected employees.

❖ This section establishes an administrative safety control plan addressing written documentation of operating and emergency shutdown procedures. Guidance on developing written documentation for operating procedures and emergency shutdown techniques can be found in the OSHA PSM regulation, DOL 29 CFR, Part 1910.119. Overall, there are 14 elements that employers covered by PSM are required to complete to meet the federal PSM regulations. Two elements that relate to this section are as follows:

- DOL 29 CFR Part 1910.119(c): This element requires that employees and their representatives be consulted on the development and conduct of hazard assessments and the development of chemical accident prevention plans, and provide access to these and other records required under the federal law.
- DOL 29 CFR Part 1910.119(f): This element requires that written operating procedures for the chemical process, including procedures for each operating phase, operating limitations, and safety and health considerations, must be developed and implemented.

5001.3.3.14 Management of change. A written plan for management of change shall be developed and enforced. The process of developing and updating the plan shall involve the participation of affected employees.

❖ This section establishes an administrative safety control plan addressing management of change. Guidance on developing written documentation for management of change can be found in the OSHA PSM regulation, DOL 29 CFR, Part 1910.119. The PSM element that relates to this section is DOL 29 CFR, Part 1910.119 (l), which states that this element requires a review of the technical basis for the proposed change; the impact of change on safety and health; possible modifications to operating procedures and process safety information; the necessary time period for the change; and authorization requirements for the proposed change.

Employees involved in operating a process, and maintenance and contract employees whose job tasks will be affected by a change in the process, should be informed of and trained in the change prior to startup of the process or the affected part of the process.

INTERNATIONAL CODE COUNCIL®
Copyright © 2015 ICC. ALL RIGHTS RESERVED. Accessed by David Dammon on Jun 21, 2017 12:30:52 PM pursuant to License Agreement with ICC. No further reproduction or distribution authorized. ANY UNAUTHORIZED REPRODUCTION OR DISTRIBUTION IS A VIOLATION OF THE FEDERAL COPYRIGHT ACT AND THE LICENSE AGREEMENT, AND SUBJECT TO CIVIL AND CRIMINAL PENALTIES THEREUNDER.

5001.3.3.15 Emergency plan. A written emergency plan shall be developed to ensure that proper actions are taken in the event of an emergency, and the plan shall be followed if an emergency condition occurs. The process of developing and updating the plan shall involve the participation of affected employees.

❖ This section establishes an administrative safety control plan addressing emergency response planning. Guidance on developing written documentation for an emergency response plan can be found in the OSHA PSM regulation, DOL 29 CFR, Part 1910.119. The PSM element that relates to this section is 29 CFR, Part 1910.119(n), which references other portions of the federal regulations. Such plans may include identification of actions to be taken by employees in the event of an emergency and the assignment of a staff liaison who can assist emergency response personnel.

5001.3.3.16 Accident procedures. Written procedures for investigation and documentation of accidents shall be developed, and accidents shall be investigated and documented in accordance with these procedures.

❖ This section establishes an administrative safety control plan addressing accident investigation and reporting. Guidance on accident investigation and reporting can be found in the OSHA PSM regulation, DOL 29 CFR, Part 1910.119. The PSM element that relates to this section is DOL 29 CFR, Part 1910.119(m).

Some of the guidelines specified in the federal regulations include the following:

- The need for an incident investigation team to be established, consisting of at least one person knowledgeable in the process involved, a contract employee if the incident involved contractor work and other persons with appropriate knowledge and experience to thoroughly investigate and analyze the incident.
- The need for a report to be prepared at the conclusion of each investigation, including, at a minimum, the date of the incident and when the investigation began; description of the incident; factors that contributed to the incident and recommendations resulting from the investigation.
- The need for the establishment of a system to promptly address and resolve the incident report findings and recommendations, and to document resolutions and corrective actions.
- The need for accident investigation reports to be reviewed by all affected persons whose job tasks are relevant to the incident findings, including contract employees, where applicable.

5001.3.3.17 Consequence analysis. Where an accidental release of hazardous materials could endanger people or property, either on or off-site, an analysis of the expected consequences of a plausible release shall be performed and utilized in the analysis and selection of active and passive hazard mitigation controls.

❖ This section establishes an administrative safety control plan addressing an analysis of off-site consequences. Guidance on accident investigation and reporting can be found in the EPA RMP regulation, 40 CFR, Part 68. These regulations amend the accident release prevention requirements under Section 112(r) of the Clean Air Act.

EPA's RMP rules are a good source of examples for alternative release scenarios for a particular site, and, through the identification and analysis of plausible release scenarios, changes can be implemented to minimize the probability and consequences of a release. A plausible release is one that has occurred in the past or could occur under reasonable single-system failures.

Devices that normally use some kind of motion or energy to prevent or minimize the release represent active mitigation controls. Active mitigation controls might include valves, switches, pumps and blowers. Passive mitigation controls include devices that are permanently in place and have an inherently safe design that allows them to be used at all times. Passive mitigation controls might include dikes, walls, ponds and sumps.

The off-site consequence analysis can be accomplished through various methods. Those methods include "what-if" scenarios, process hazard analysis, Hazard and Operability Analysis (HAZOP) and fault tree. A person trained in these and other hazard evaluation techniques should be used to complete this analysis.

5001.3.3.18 Safety audits. Safety audits shall be conducted on a periodic basis to verify compliance with the requirements of this section.

❖ This section establishes an administrative safety control plan addressing safety compliance audits. Guidance on safety audits can be found in the OSHA PSM regulation, DOL 29 CFR, Part 1910.119. The PSM element that relates to this section is DOL 29 CFR, Part 1910.119(o). On a routine basis, each facility must review its continuing compliance with each of the subsections in Section 5001.3 and other related provisions of the code. The word "periodic" reflects a need for adequate frequency to check that safety programs, features and systems will perform as intended. Recognizing that many code sections contain issues that change very little over time, compliance audit frequencies will not be the same for all programs, features and systems. Depending on the particular safety element, the audit frequency may range to as much as 5-year intervals under the PSM regulations.

5001.4 Retail and wholesale storage and display. For retail and wholesale storage and display of nonflammable solid and nonflammable or noncombustible liquid hazardous materials

INTERNATIONAL CODE COUNCIL®
Copyright © 2015 ICC. ALL RIGHTS RESERVED. Accessed by David Dammon on Jun 21, 2017 12:30:52 PM pursuant to License Agreement with ICC. No further reproduction or distribution authorized. ANY UNAUTHORIZED REPRODUCTION OR DISTRIBUTION IS A VIOLATION OF THE FEDERAL COPYRIGHT ACT AND THE LICENSE AGREEMENT, AND SUBJECT TO CIVIL AND CRIMINAL PENALTIES THEREUNDER.

in Group M occupancies and storage in Group S occupancies, see Section 5003.11.

❖ This section deals only with nonflammable solid and nonflammable or noncombustible liquid hazardous materials in Group M and S occupancies. For flammable or combustible liquids, see Section 5704.3.4 of the code.

5001.5 Permits. Permits shall be required as set forth in Sections 105.6 and 105.7.

When required by the *fire code official*, permittees shall apply for approval to permanently close a storage, use or handling facility. Such application shall be submitted not less than 30 days prior to the termination of the storage, use or handling of hazardous materials. The *fire code official* is authorized to require that the application be accompanied by an *approved* facility closure plan in accordance with Section 5001.6.3.

❖ The process of issuing permits gives the fire code official an opportunity to carefully evaluate and regulate hazardous operations. Permit applicants should be required to demonstrate that their operations comply with the intent of the code before the permit is issued. See the commentary to Section 105.6 for a general discussion of operations requiring an operational permit and Section 105.7 for a general discussion of activities requiring a construction permit. The permit process also notifies the fire department of the need for prefire planning for the hazardous property.

5001.5.1 Hazardous Materials Management Plan. Where required by the *fire code official*, an application for a permit shall include a Hazardous Materials Management Plan (HMMP). The HMMP shall include a facility site plan designating the following:

1. Access to each storage and use area.
2. Location of emergency equipment.
3. Location where liaison will meet emergency responders.
4. Facility evacuation meeting point locations.
5. The general purpose of other areas within the building.
6. Location of all above-ground and underground tanks and their appurtenances including, but not limited to, sumps, vaults, below-grade treatment systems and piping.
7. The hazard classes in each area.
8. Locations of all control areas and Group H occupancies.
9. Emergency *exits*.

❖ This section requires information that allows emergency responders to understand the basic construction and access features of a building or premises to be presented. Such features include emergency exits that can be used for access; the physical and health hazards of hazardous materials stored and used within particular areas; where emergency responders will meet the fire department liaison; and the location of all above-ground and underground tanks, sumps, vaults or any other below-grade processes. This information is extremely beneficial to emergency responders because it identifies locations where confined space entries may need to be performed. A Hazardous Materials Management Plan (HMMP) must also identify which areas are constructed as control areas and Group H occupancies.

HMMPs have commonly been used as tools to help facilitate tactical preplanning of Group H occupancies or facilities storing and handling large amounts of hazardous materials, such as petroleum storage terminals. HMMPs can be beneficial when preparing tactical preplans, but can be cumbersome if actually used as a tactical preplan. For example, consider a water treatment plant. Such a plant could have large amounts of anhydrous chlorine, sulfur dioxide, sodium hydroxide and hydroflurosilic acid. To comply with all of the requirements of an HMMP for the various storage and process piping drawings, plant layout and process details could easily result in over 100 pages of information that would need to be read and understood. This level of information has not always been beneficial to emergency responders, especially given that Section 5003.9.1.1 requires the permit holder to designate responsible persons to serve as fire department liaisons in the event of an incident. It is expected that these responsible persons have a good understanding of the hazardous materials and the processes involving their storage and use.

All plans must be legible and should be drawn to scale or dimensioned and be kept updated. The fire code official may waive the requirement for an HMMP. By themselves, approvals of the building or site may suffice for the HMMP when dealing with small quantities of hazardous materials not posing a complex storage, use or maintenance problem.

Appendix H [Hazardous Materials Management Plan (HMMP) and Hazardous Materials Inventory Statement (HMIS) Instructions] was developed to provide a standard reporting format for businesses submitting an HMMP to the fire or building code official. Appendix H is not a mandatory appendix unless it is adopted by the jurisdiction. Some jurisdictions have already developed standard formats for submittal of HMMPs, and Appendix H can be amended to provide this information to the regulated community.

5001.5.2 Hazardous Materials Inventory Statement (HMIS). Where required by the *fire code official*, an application for a permit shall include an HMIS, such as Superfund Amendments and Reauthorization Act of 1986 (SARA) Title III, Tier II Report or other *approved* statement. The HMIS shall include the following information:

1. Product name.
2. Component.
3. Chemical Abstract Service (CAS) number.

INTERNATIONAL CODE COUNCIL®
Copyright © 2015 ICC. ALL RIGHTS RESERVED. Accessed by David Dammon on Jun 21, 2017 12:30:52 PM pursuant to License Agreement with ICC. No further reproduction or distribution authorized. ANY UNAUTHORIZED REPRODUCTION OR DISTRIBUTION IS A VIOLATION OF THE FEDERAL COPYRIGHT ACT AND THE LICENSE AGREEMENT, AND SUBJECT TO CIVIL AND CRIMINAL PENALTIES THEREUNDER.

4. Location where stored or used.
5. Container size.
6. Hazard classification.
7. Amount in storage.
8. Amount in use-*closed systems*.
9. Amount in use-*open systems*.

❖ HMIS requirements provide information that will prove beneficial to building and fire code officials, plans examiners and fire code inspectors who are attempting to determine that the amount of hazardous materials in storage and use complies with the applicable requirements of the code and the IBC. An HMIS must document the product's name, its chemical constituents along with its respective Chemical Abstract Service (CAS) numbers, the volume of containers or tanks, the product's hazard classification and the amount in storage, use-open systems and use-closed systems. This type of information is beneficial for plans examiners to confirm the correct occupancy classification, if the mechanical ventilation system should comply with Section 510 of the *International Mechanical Code*®, (IMC®), as well as to verify that the design of the process(es) complies with the applicable requirements of the code.

To provide the necessary information for proper occupancy classification, IBC Section 414.1.3 requires that information similar to the requirements for an HMIS be provided to the building code official. This section now requires that plans reflect where hazardous materials will be stored and used in multiple-story buildings, which is necessary to verify compliance with Table 5003.8.3.2 and IBC Table 414.2.2.

SARA Title III, known as the Emergency Planning and Right to Know Act, established requirements for emergency planning and reporting on hazardous materials. SARA Title III, Tier II reports are representative of a typical HMIS as required by this section. The exception, which is listed in SARA and is similar to Section 5001.4.1, leaves the requirement for submission of the HMIS up to the discretion of the fire code official for circumstances in which hazards can be managed without the need for HMIS.

A new Appendix H [Hazardous Materials Management Plan (HMMP) and Hazardous Materials Inventory Statement (HMIS) Instructions] was developed to provide a standard reporting format for businesses submitting an HMIS to the fire or building code official. Appendix H is not a mandatory appendix unless it is adopted by the jurisdiction. Some jurisdictions have already developed standard formats for submittal of HMISs, and Appendix H can be amended to provide this information to the regulated community.

5001.6 Facility closure. Facilities shall be placed out of service in accordance with Sections 5001.6.1 through 5001.6.3.

❖ This section contains requirements for handling and disposing of hazardous materials prior to a facility's closure. The 30-day notice prior to the facility's closure is intended to enable proper measures to be taken for disposing of or eliminating all hazardous materials before the building owner vacates the premises.

5001.6.1 Temporarily out-of-service facilities. Facilities that are temporarily out of service shall continue to maintain a permit and be monitored and inspected.

❖ Facilities warranting a closure plan are considered to be either temporarily or permanently out of service. Although a facility may not be closed permanently, this section recognizes the need to regulate hazardous materials in buildings that may be temporarily out of service. Because the out-of-service condition may be temporary, the storage or presence of any hazardous materials in a facility must be monitored and inspected, as required by the fire code official.

5001.6.2 Permanently out-of-service facilities. Facilities for which a permit is not kept current or is not monitored and inspected on a regular basis shall be deemed to be permanently out of service and shall be closed in an *approved* manner. Where required by the *fire code official*, permittees shall apply for approval to close permanently storage, use or handling facilities. The *fire code official* is authorized to require that such application be accompanied by an *approved* facility closure plan in accordance with Section 5001.6.3.

❖ Facilities warranting a closure plan are considered to be either temporarily or permanently out of service. A facility is to be classified as permanently out of service if approval is not kept current as required for a temporarily out-of-service facility or it is not properly monitored or inspected, as required by the fire code official.

5001.6.3 Facility closure plan. Where a facility closure plan is required in accordance with Section 5001.5 to terminate storage, dispensing, handling or use of hazardous materials, it shall be submitted to the *fire code official* not less than 30 days prior to facility closure. The plan shall demonstrate that hazardous materials that are stored, dispensed, handled or used in the facility will be transported, disposed of or reused in a manner that eliminates the need for further maintenance and any threat to public health and safety.

❖ This plan is used to document the timetable for the proper transportation, disposal or approved reuse of all chemicals that are on site. It is important to note that this could include any contaminated soils or dike facilities in the area.

SECTION 5002
DEFINITIONS

5002.1 Definitions. The following terms are defined in Chapter 2:

BOILING POINT.

CEILING LIMIT.

CHEMICAL.

CHEMICAL NAME.

INTERNATIONAL CODE COUNCIL®
Copyright © 2015 ICC. ALL RIGHTS RESERVED. Accessed by David Dammon on Jun 21, 2017 12:30:52 PM pursuant to License Agreement with ICC. No further reproduction or distribution authorized. ANY UNAUTHORIZED REPRODUCTION OR DISTRIBUTION IS A VIOLATION OF THE FEDERAL COPYRIGHT ACT AND THE LICENSE AGREEMENT, AND SUBJECT TO CIVIL AND CRIMINAL PENALTIES THEREUNDER.

CLOSED CONTAINER.

CONTAINER.

CONTROL AREA.

CYLINDER.

DAY BOX.

DEFLAGRATION.

DESIGN PRESSURE.

DETACHED BUILDING.

DISPENSING.

EXCESS FLOW CONTROL.

EXHAUSTED ENCLOSURE.

EXPLOSION.

FLAMMABLE VAPORS OR FUMES.

GAS CABINET.

GAS ROOM.

HANDLING.

HAZARDOUS MATERIALS.

HEALTH HAZARD.

IMMEDIATELY DANGEROUS TO LIFE AND HEALTH (IDLH).

INCOMPATIBLE MATERIALS.

LIQUID.

LOWER EXPLOSIVE LIMIT (LEL).

LOWER FLAMMABLE LIMIT (LFL).

MATERIAL SAFETY DATA SHEET (MSDS).

MAXIMUM ALLOWABLE QUANTITY PER CONTROL AREA.

NORMAL TEMPERATURE AND PRESSURE (NTP).

OUTDOOR CONTROL AREA.

PERMISSIBLE EXPOSURE LIMIT (PEL).

PESTICIDE.

PHYSICAL HAZARD.

PRESSURE VESSEL.

SAFETY CAN.

SECONDARY CONTAINMENT.

SEGREGATED.

SOLID.

STORAGE, HAZARDOUS MATERIALS.

SYSTEM.

TANK, ATMOSPHERIC.

TANK, PORTABLE.

TANK, STATIONARY.

TANK VEHICLE.

UNAUTHORIZED DISCHARGE.

USE (MATERIAL).

VAPOR PRESSURE.

❖ Definitions of terms can help in the understanding and application of the code requirements. This section directs the code user to Chapter 2 for the proper application of the indicated terms used in this chapter. Terms may be defined in Chapter 2 or in another *International Code*® (I-Code®) as indicated in Section 201.3, or the dictionary meaning may be all that is needed (see also commentary, Sections 201 through 201.4).

SECTION 5003
GENERAL REQUIREMENTS

5003.1 Scope. The storage, use and handling of all hazardous materials shall be in accordance with this section.

❖ Once a chemical is considered a hazardous chemical that is not exempt under the exceptions of Section 5001.1, it is expected to meet the general requirements listed in Section 5003 and any of the referenced codes or standards.

5003.1.1 Maximum allowable quantity per control area. The *maximum allowable quantity per control area* shall be as specified in Tables 5003.1.1(1) through 5003.1.1(4).

For retail and wholesale storage and display in Group M occupancies and Group S storage, see Section 5003.11.

❖ This section references Tables 5003.1.1(1) through 5003.1.1(4) for the maximum quantities allowed in a control area (see Section 5003.8.2 for design and protection requirements). If the quantity of chemicals used in a building does not exceed the maximum allowed per control area and the number of control areas does not exceed the number and percentage of chemicals allowed by Table 5003.8.3.2, those areas are considered part of the main use and do not have to meet all of the requirements for a hazardous occupancy.

TABLE 5003.1.1(1). See page 50-17.

❖ Table 5003.1.1(1) is subdivided based on whether the material is in storage or in use in a closed or open system. Definitions of both “Closed” and “Open” systems are found in Section 202. Within these subdivisions, the appropriate MAQ is listed in accordance with the physical state (solid, liquid or gas) of the material. A column for gas in open systems is not indicated because gaseous hazardous materials should not be allowed in a system that is continuously open to the atmosphere. Note that the third column of the table, “Group When the Maximum Allowable Quantity Is Exceeded,” is informational only, since occupancy group determination is within the scope of the IBC, not the code.

Note also that the MAQ values for gases are indicated (at the head of each gas column) as being “at NTP,” i.e., at a “normal” temperature of 70°F (21°C) and a pressure of one atmosphere, or 14.7 pounds per square inch absolute (psia) (101 kPa). In other

INTERNATIONAL CODE COUNCIL®
Copyright © 2015 ICC. ALL RIGHTS RESERVED. Accessed by David Dammon on Jun 21, 2017 12:30:52 PM pursuant to License Agreement with ICC. No further reproduction or distribution authorized. ANY UNAUTHORIZED REPRODUCTION OR DISTRIBUTION IS A VIOLATION OF THE FEDERAL COPYRIGHT ACT AND THE LICENSE AGREEMENT, AND SUBJECT TO CIVIL AND CRIMINAL PENALTIES THEREUNDER.

words, the MAQs for gases are based on a certain volume of free gas, not gas under pressure in its cylinder.

This table and Table 5003.1.1(3) for outdoor storage include a row for inert gases and inert cryogenics, thus clarifying that the amount of inert gases and inert cryogenics in storage or use is unlimited. There is also a definition in Section 202 for "Inert gas" that provides a means of classifying gases considered inert under conditions most commonly encountered by fire code officials. This definition ensures that inert compressed gases, inert cryogenic fluids or gas mixtures containing cryogenic fluid are properly classified. See the commentary to that definition in Section 202.

Even though the quantity of inert gases and cryogenics is not limited inside of a building, they are still subject to regulation. For example, storage of inert gases and cryogenic fluids requires an operational permit in accordance with Sections 105.6.9 and 105.6.11, respectively. In addition, Section 5307 has requirements for a mechanical ventilation system designed and operated in accordance with Section 5004.3 for storage and Section 5005.1.9 for use when a room or building contains inert compressed gases. Rooms containing inert cryogenic compressed gases are required to comply with the construction and mechanical ventilation requirements in Section 5504.2.

The unit of measure for liquefied gases has historically been incorporated into the MAQ tables in terms of gallons (L) because that has been the conventional thinking. From a practical standpoint, the use of gallons (L) as a unit of measure for liquefied gases introduces an inconsistency into the concept due to the fact that, unlike most liquids, the density of liquefied gases varies widely.

In commerce, liquefied gases are packaged and distributed based on weight as the unit of measure. The table has been revised to reflect threshold quantities in terms of the units of measure that are readily available from the commercial market and greatly simplifies the use of the code, thereby making it more user friendly. The revision required that a model be used as the basis for comparison. This approach was taken when thresholds were revised to base certain health-hazard threshold levels using a "chlorine index" as the model. A similar approach was used as a means to simplify the use of the table.

In the case of liquefied flammable gases, probably the most commonly encountered liquefied gas is LP-gas (LPG). LPG as defined can consist of propane, butane, propylene or others either in a mixed or pure form. NFPA 58, Table B.1.2(a), lists the approximate densities of commercial propane and butane at 60°F (16°C) as 4.20 and 4.81 pounds per gallon, respectively. Converting the 30-gallon (114 L) quantity to pounds and rounding up to the closest 5 pounds (2.3 kg) yields a quantity of 150 pounds (68 kg) on a weight basis. The density of butane is greater than that of propane, therefore representing the worst case where mixtures of propane and butane are involved. The result of converting the 30-gallon (114 L) threshold to a 150-pound (68 kg) threshold is in keeping with the philosophical approach used with gases, such as ammonia and chlorine, as they appear in Table 5003.1.1(2).

The threshold level of 15 gallons (57 L) for oxidizing gases is now expressed in terms of weight based on using any of a number of oxidizing gases as the baseline. However, given the fact that a single cylinder of chlorine (an oxidizing, corrosive and toxic gas) has been used as the baseline in Table 5003.1.1(2), it is reasonable to use a single cylinder of chlorine as the baseline for the establishment of quantity in Table 5003.1.1(1), as well. To test the assumption, a comparison was made to the 1,500-cubic-foot (42 m^3) baseline maximum quantity for a nonliquefied gas using oxygen as the model. Using a specific volume for oxygen of 12.1 cubic feet per pound translates the 1,500 cubic feet (42 m^3) allowed for the baseline MAQ to 125 pounds (57 kg) if this gas was considered on a weight basis. The use of 150 pounds (68 kg) as a baseline quantity for liquefied oxidizing gases resolves the problem where a single cylinder of chlorine would not trip the Group H-4 occupancy threshold, but would trip the Group H-3 occupancy threshold where arguably the inherent health hazards of the gas may represent a greater concern for public safety than do the physical hazards of the same gas.

It is recognized that this approach may appear to represent a major increase in the threshold for liquefied oxidizing gases; however, it brings the threshold levels into parity with those of liquefied flammable gases, which may represent the greater hazard given the potential for fire and/or explosion. The example using oxygen as the baseline shows that an increase is justified and establishes a clear rationale that is based on practical examples of materials commonly found in commerce, which have generally been accepted for use as the threshold for an increased level of control. In addition, the use of weight as a unit of measure brings the code into correlation with units typically used by the suppliers of these products, thereby mitigating the need for elaborate conversions into units of measure not found in common use.

Note a refers the user to Section 5003.8.3 to determine if a design strategy using the control area concept is needed for a building to avoid being classified in Group H.

Note b clearly indicates that the aggregate quantity of hazardous materials in use and storage, within a given control area, cannot exceed the quantity listed in the table for storage.

Without Note c, many common alcoholic beverages and household products containing a negligible amount of a hazardous material could result in a Group M occupancy being classified as a high hazard. Note c also recognizes the reduced hazard of the materials based on their water miscibility and limited

INTERNATIONAL CODE COUNCIL®
Copyright © 2015 ICC. ALL RIGHTS RESERVED. Accessed by David Dammon on Jun 21, 2017 12:30:52 PM pursuant to License Agreement with ICC. No further reproduction or distribution authorized. ANY UNAUTHORIZED REPRODUCTION OR DISTRIBUTION IS A VIOLATION OF THE FEDERAL COPYRIGHT ACT AND THE LICENSE AGREEMENT, AND SUBJECT TO CIVIL AND CRIMINAL PENALTIES THEREUNDER.

container size. A similar exception is indicated in Table 5003.1.1(2), and in IBC Tables 307.1(1) and 307.1(2).

Notes d and e of the table are significant in that, for certain materials, the MAQ may be increased due to the use of approved special hazardous material storage methods as listed in the note, an approved automatic sprinkler system, or both. The notes are intended to be cumulative in that up to four times the base MAQ may be allowed per control area, if the building is sprinklered and approved special storage methods are used, without classifying the building as Group H. While the use of approved special storage methods is not always a feasible or practical method of storage, they do provide sufficient additional protection to warrant an increase if utilized to contain the entire MAQ (not just the increase amount). For example, the tabular MAQ for the storage of Class IA flammable liquid is 30 gallons (114 L) and both Notes d and e apply. Applying the notes accumulatively, the increased MAQ becomes $30 \times 2 = 60 \times 2 = 120$ gallons (454 L). Note e also requires that a safety can, when used for increasing the MAQ of flammable and combustible liquids stored or used indoors, be a listed metal safety can meeting the requirements of UL 30, as required by Section 5003.9.10 (also see the commentary to that section).

The code recognizes the relative lower hazard of Class IIIB liquids as compared to that of other flammable and combustible liquids by classifying them as Group H-3 and by establishing a base MAQ of 13,200 gallons (49 962 L). As indicated in Note f, the quantity of Class I oxidizers and Class IIIB liquids, without classifying the occupancy as Group H-3, would not be limited, provided the building is fully sprinklered in accordance with NFPA 13. The hazard presented by Class I oxidizers is that they slightly increase the burning rate of combustible materials that they may come into contact with during a fire. Class IIIB combustible liquids have flash points at or above 200°F (93°C). Motor oil is a typical example of a Class IIIB combustible liquid.

Note g recognizes that the hazard presented by certain materials is such that they may be stored or used only inside buildings that are fully sprinklered.

Note h clarifies for the user that while there is a combination MAQ for flammable liquids, no individual class of liquid (Class IA, IB or IC) may exceed its own individual MAQ.

Note i allows for a special quantity of inside combustible liquid storage in tanks that are connected to a fuel-oil piping system in accordance with Section 603.3.2. This would apply to most oil-fired stationary equipment, whether in industrial, commercial or residential occupancies. Oil-fired heating equipment and diesel engine-driven generator sets and their fuel supplies are indicative of the types of fuel-oil piping systems to which this note would apply.

Note k permits a larger amount of Class III oxidizers in a building when used for maintenance and health purposes. The quantities proposed are reasonable for occupancies such as the health care industry where Class III oxidizers are used for maintenance purposes, sterilization and sanitation of equipment and operation sanitation. The method used to store the oxidizers is subject to the evaluation and approval of the fire code official.

Note l clarifies that the 125 pounds (57 kg) of storage permitted for consumer fireworks represents the net weight of the pyrotechnic composition of the fireworks in a nonsprinklered building. This amount represents approximately $12^1/_2$ shipping cases (less than one and one-half pallet loads) of fireworks in a nonsprinklered storage condition. In cases where the net weight of the pyrotechnic composition of the fireworks is unknown, 25 percent of the gross weight of the fireworks is to be used. The gross weight is to include the weight of the packaging.

Note n provides an exception when the amount of hazardous material in storage and display in Group M and S occupancies meets the requirements of Section 5003.11.

While cotton is included in the definition of combustible fibers, Note o recognizes the lesser hazard of cotton when it is stored in densely packed bales. See the commentary to the Section 202 definitions of “Baled cotton, densely packed” and “Combustible fibers” for further information.

Note p clarifies that vehicles and appliances with closed fuel systems should be treated no differently than machinery or equipment when applying the provisions of the table. The fuel contained within the fuel tanks of vehicles or motorized equipment is not to be considered when calculating the aggregate quantity of hazardous materials within a control area of a building. For example, when evaluating a parking garage with several hundred cars parked inside, the capacity of their fuel tanks is not counted. Also, when motorized equipment, such as a floor buffer or forklift, is stored or used, those fuels are not included as long as the other code requirements are followed. This note also allows a reasonable amount of alcohol-based hand rub for infection control and patient safety located in Group I-2 occupancies in appropriately sized dispensers to be located in control areas and permits the amounts not to be included in determining the MAQ. Section 5705.5 addresses the specifics regarding these amounts and locations.

Note q draws attention to the particularly challenging hazards of combustible dusts. This note specifies that where combustible dusts are manufactured, generated or used, and the concentration of dust or operating conditions creates a fire or explosion hazard, the building or space must be classified as a Group H-2 occupancy. To avoid this occupancy classification, the analysis needs to demonstrate why such a classification is not warranted. It should include an analysis of the material’s characteristics, and the type of engineering and administrative controls that will be employed in the process to quantitatively mitigate the

INTERNATIONAL CODE COUNCIL®
Copyright © 2015 ICC. ALL RIGHTS RESERVED. Accessed by David Dammon on Jun 21, 2017 12:30:52 PM pursuant to License Agreement with ICC. No further reproduction or distribution authorized. ANY UNAUTHORIZED REPRODUCTION OR DISTRIBUTION IS A VIOLATION OF THE FEDERAL COPYRIGHT ACT AND THE LICENSE AGREEMENT, AND SUBJECT TO CIVIL AND CRIMINAL PENALTIES THEREUNDER.

risk of a dust deflagration. The basis for this determination must be documented in a technical report and opinion in accordance with Section 104.7.2 (or IBC Section 414.1.3). See also the commentary to the definition of "Combustible dust" in Chapter 2 and the commentary to Chapter 22.

TABLE 5003.1.1(2). See page 50-20.

❖ Table 5003.1.1(2), similar to Table 5003.1.1(1), specifies the MAQs of hazardous materials, liquids or chemicals allowed per control area before having to classify a part of the building (or the entire building) as a Group H occupancy and is subdivided based on whether the material is in storage or in use in a closed or open system. Definitions of both "Closed system" and "Open system" are found in Section 202. Within these subdivisions, the appropriate MAQ is listed in accordance with the physical state (solid, liquid or gas) of the material. A column for gas in open systems is not indicated because hazardous gaseous materials should not be allowed in a system that is continuously open to the atmosphere. This table contains health-hazard materials classified as Group H-4, in accordance with IBC Section 307.6.

While the materials listed in this table are considered health hazards, some of the materials may also possess physical hazard characteristics more indicative of materials classified as Group H-1, H-2 or H-3 (see IBC Section 5001.1). The MAQs listed in the table are indicative of industry practice and assume the materials are properly stored and handled, in accordance with the code. Group H-4 materials, while indeed hazardous, are primarily considered a handling problem and do not possess the same fire, explosion or reactivity potential associated with other hazardous materials.

Note that the MAQ values for gases are indicated (at the head of each gas column) as being "at NTP," i.e., at a "normal" temperature of 70°F (21°C) and pressure of one atmosphere, or 14.7 psia (101 kPa). In other words, the MAQs for gases are based on a certain volume of free gas, not gas under pressure in its cylinder.

The MAQ of 810 cubic feet (23 m^3) for corrosive and toxic gases established in the table was based on a single cylinder of chlorine. Historically, Note g to the table that existed in previous editions of the code (but which was deleted in 2009) recognized that a single cylinder of ammonia should be allowed; however, the use of 810 cubic feet (23 m^3) did not allow for this given the fact that, by comparison, a 150-pound (68 kg) cylinder of ammonia contains over 3,300 cubic feet (93 m^3) of gas. The preferred solution in lieu of trying to justify or create a series of footnotes to address individual gases was to use an index system that created a standardized approach to establish the unit of measure by using a widely distributed gas, such as chlorine, as an index. However, the unit of measure in terms of weight was not carried into the table when it was formulated, thereby creating the need for the use of footnotes to address ammonia. Compressed gases may be in liquid form or they may be gaseous. Maintaining the use of chlorine as the index to the table for toxic and corrosive properties and listing the threshold for liquefied gases (as well as those that are nonliquefied) eliminates the need for elaborate conversions in units of measure using data that in many cases is not readily available. The index used to establish the weight threshold is based on the use of arsine, a highly toxic gas with a specific volume of 5.0 cubic feet per pound.

It may be argued that recognizing the common forms of gases, e.g., liquefied and nonliquefied, allows a de facto increase in the threshold levels applied. It is possible that one could have a toxic gas that is liquefied and also one that is nonliquefied in the same area, therefore doubling the aggregate quantity of gas if all was considered. While this is theoretically possible, it is not considered to be the norm. In addition, there is precedent in using the approach as established in Table 5003.1.1(1) for flammable and oxidizing gases. Also see the commentary to Table 5003.1.1(1) for further discussion of liquefied gas MAQ units of measure.

Note b clearly indicates that the aggregate quantity of hazardous materials in use and storage, within a given control area, cannot exceed the quantity listed in the table for storage.

Without Note c, many common household products containing a negligible amount of a hazardous material could result in a Group M occupancy being classified as a high hazard. Note c recognizes the reduced hazard of the materials based on their water miscibility and limited container size. A similar exception is indicated in Table 5003.1.1(1), and IBC Tables 307.1(1) and 307.1(2).

Where applicable, Notes d and e provide an increase in the base maximum allowable amount similar to that in Table 5003.1.1(1) [see commentary, Table 5003.1.1(1)].

Note f provides an exception when the amount of hazardous material in storage and display in Group M and S occupancies meets the requirements of Section 5003.11.

Note g of the table is significant in that, for certain materials, their hazard is so great that their MAQ may be stored in the building only when approved exhausted enclosures or gas cabinets complying with Sections 5003.8.5 and 5003.8.6, respectively, are utilized.

TABLE 5003.1.1(3). See page 50-21.

❖ Table 5003.1.1(3) specifies the MAQs of hazardous materials, liquids or chemicals allowed per outdoor control area before being subject to additional regulations contained in Chapters 51 and 53 through 67, and is subdivided based on whether the material is in storage or in use in a closed or open system. Definitions of both "Closed system" and "Open system" are found in Section 202. Within these subdivisions, the

INTERNATIONAL CODE COUNCIL®
Copyright © 2015 ICC. ALL RIGHTS RESERVED. Accessed by David Dammon on Jun 21, 2017 12:30:52 PM pursuant to License Agreement with ICC. No further reproduction or distribution authorized. ANY UNAUTHORIZED REPRODUCTION OR DISTRIBUTION IS A VIOLATION OF THE FEDERAL COPYRIGHT ACT AND THE LICENSE AGREEMENT, AND SUBJECT TO CIVIL AND CRIMINAL PENALTIES THEREUNDER.

appropriate MAQ is listed in accordance with the physical state (solid, liquid or gas) of the material. A column for gas in open systems is not indicated because hazardous gaseous materials should not be allowed in a system that is continuously open to the atmosphere. This table contains physical-hazard materials, as defined in Section 202. While the materials listed in this table are considered physical hazards, some of the materials may also possess health-hazard characteristics, as defined in Section 202. The MAQs per outdoor control area listed in the table are indicative of industry practice and assume the materials are properly stored and handled in accordance with the code. The base MAQ per outdoor control area of 810 cubic feet (23 m^3) for gases that are either corrosive or toxic is based on a standard-size chlorine cylinder. Note that the MAQ values for gases are indicated (at the head of each gas column) as being "at NTP," i.e., at a "normal" temperature of 70°F (21°C) and pressure of one atmosphere, or 14.7 psia (101 kPa). In other words, the MAQs for gases are based on a certain volume of free gas, not gas under pressure in its cylinder.

Historically, the concept of "outdoor control areas" was introduced into the code as a means to establish a threshold where the general provisions of Chapter 50 would apply. When this table was created, the logic for assignment of threshold values was primarily based on the use of multipliers representing a multiple increase of the basic tabular values shown in Table 5003.1.1(1). In the first draft of the code, this table limited the MAQ of gaseous and liquefied flammable gases to 1,500 cubic feet (42 m^3) and 15 gallons (57 L), respectively. The result was that the threshold level for liquefied flammable gases in interior areas was greater than that allowed for the same commodity when stored in outdoor areas. Assuming that the threshold level of 30 gallons (114 L) for indoor areas was correct, the value of 15 gallons (57 L) shown for outdoor areas is believed to have been in error. Code change F1324-98 increased the threshold quantities for flammable and oxidizing gases, as well as a number of other commodities, in storage in outdoor areas by a factor of 2 resulting in the increase for liquefied flammable gases from 15 to 30 gallons (57 to 114 L), furthering the inconsistency.

The table corrects the MAQ inconsistency for liquefied flammable gases and, as in Table 5003.1.1(1), changes the MAQ unit of measure to units of weight rather than those of volume. This eliminates confusing and elaborate calculations, thereby bringing the code closer into harmony with the commercial environment. The index system used to obtain a unit of measure for weight is based on multiples for a single 150-pound (68 kg) cylinder of butane for flammable gases and a single 150-pound (68 kg) cylinder for chlorine. The row for oxidizing gases provides consistency and correlates in concept with conversion to a weight basis [also see commentary, Table 5003.1.1(1)].

While hazardous materials within a closed or open system are considered to be "in use," Note b clearly indicates that the aggregate quantity of hazardous materials in use and storage within a given outdoor control area cannot exceed the quantity listed in the table for storage.

Note c provides an exception when the amount of hazardous materials in outdoor storage in conjunction with a retail or wholesale Group M occupancy meets the requirements of Section 5003.11. The outside storage area must be under the same ownership as the Group M occupancy.

TABLE 5003.1.1(4). See page 50-22.

❖ Table 5003.1.1(4), similar to Table 5003.1.1(3), specifies the MAQs of hazardous materials, liquids or chemicals allowed per outdoor control area before being subject to additional regulations contained in Chapters 51 and 53 through 67. It is also subdivided based on whether the material is in storage or in use in a closed or open system. Definitions of both "Closed system" and "Open system" are found in Section 202. Within these subdivisions, the appropriate MAQ is listed in accordance with the physical state (solid, liquid or gas) of the material. A column for gas in open systems is not indicated because hazardous gaseous materials should not be allowed in a system that is continuously open to the atmosphere. This table contains health-hazard materials, as defined in Section 202.

While the materials listed in this table are considered health hazards, some of the materials may also possess physical-hazard characteristics, as defined in Section 202. The MAQs per outdoor control area listed in the table are indicative of industry practice and assume the materials are properly stored and handled in accordance with the code. These materials, while indeed hazardous, are primarily considered a handling problem and do not possess the same fire, explosion or reactivity hazard associated with other hazardous materials.

As in Tables 5003.1.1(1) through 5003.1.1(3), a weight unit of measure has been established for liquefied gas MAQs and the table has been revised to recognize that these materials may exist in liquid, as well as gaseous form. The index system used to establish the quantity for toxics and corrosives is based on multiples of a single 150-pound (68 kg) cylinder of chlorine. The index system used to establish the threshold quantity for highly toxic liquefied gases is based on arsine, a highly toxic gas with a specific volume of 5.0 cubic feet per pound [also see commentary, Table 5003.1.1(1)].

Note b clearly indicates that the aggregate quantity of hazardous materials in use and storage within a given outdoor control area cannot exceed the quantity listed in the table for storage.

Note c provides an exception when the amount of hazardous material in outdoor storage in conjunction with a retail or wholesale Group M occupancy meets the requirements of Section 5003.11. The outside

INTERNATIONAL CODE COUNCIL®
Copyright © 2015 ICC. ALL RIGHTS RESERVED. Accessed by David Dammon on Jun 21, 2017 12:30:52 PM pursuant to License Agreement with ICC. No further reproduction or distribution authorized. ANY UNAUTHORIZED REPRODUCTION OR DISTRIBUTION IS A VIOLATION OF THE FEDERAL COPYRIGHT ACT AND THE LICENSE AGREEMENT, AND SUBJECT TO CIVIL AND CRIMINAL PENALTIES THEREUNDER.

storage area must be under the same ownership as the Group M occupancy.

Note d of the table is significant in that, for certain materials, the hazard is so great that their MAQ may be stored only when approved exhausted enclosures or gas cabinets complying with Sections 5003.8.5 and 5003.8.6, respectively, or laboratory fume hoods are utilized.

Note e states that when toxic liquids with a vapor pressure in excess of 1 psia (7 kPa) at 77°F (25°C) are stored, the MAQ is limited to the amount listed for highly toxic materials.

5003.1.2 Conversion. Where quantities are indicated in pounds and where the weight per gallon of the liquid is not provided to the *fire code official*, a conversion factor of 10 pounds per gallon (1.2 kg/L) shall be used.

❖ If the weight of a liquid is not given either in the MSDS or in other documentation on the material, the fire code official is allowed to use a conversion rate of 10 pounds of liquid to 1 gallon of material (Note: 1 U.S. gallon = 0.1336805 cubic foot).

5003.1.3 Quantities not exceeding the maximum allowable quantity per control area. The storage, use and handling of hazardous materials in quantities not exceeding the *maximum allowable quantity per control area* indicated in Tables 5003.1.1(1) through 5003.1.1(4) shall be in accordance with Sections 5001 and 5003.

❖ See the commentary to Section 5003.1.1.

5003.1.4 Quantities exceeding the maximum allowable quantity per control area. The storage and use of hazardous materials in quantities exceeding the *maximum allowable quantity per control area* indicated in Tables 5003.1.1(1) through 5003.1.1(4) shall be in accordance with this chapter.

❖ Once the amounts of chemicals exceed the maximum allowed in Tables 5003.1.1(1) through 5003.1.1(4) per control area, the area or building is considered a hazardous occupancy and must meet the general requirements and specific requirements in both the code and the IBC, based on the chemicals being used.

5003.2 Systems, equipment and processes. Systems, equipment and processes utilized for storage, dispensing, use or handling of hazardous materials shall be in accordance with Sections 5003.2.1 through 5003.2.8.

❖ Devices used in the process and storage or dispensing of hazardous materials are to meet the requirements of Sections 5003.1 through 5003.2.8.

5003.2.1 Design and construction of containers, cylinders and tanks. Containers, cylinders and tanks shall be designed and constructed in accordance with *approved* standards. Containers, cylinders, tanks and other means used for containment of hazardous materials shall be of an *approved* type. Pressure vessels not meeting DOTn requirements for transportation shall comply with the ASME *Boiler and Pressure Vessel Code*.

❖ This section sets forth requirements for the construction of containers, cylinders and tanks used for the storage of hazardous materials. It requires that pressure vessels be constructed in accordance with the ASME *Boiler and Pressure Vessel Code* (BPVC) where hazardous materials are stored, used or handled inside of vessels designed to be operated at pressures greater than 15 pounds per square inch gauge (psig) (103.4 kPa). This is consistent with the requirements for pressure vessels used for other than hazardous materials purposes, as set forth in Section 1003.1 of the IMC.

The reference to the BPVC is in response to an incident investigated by the United States Chemical Safety Board (USCSB) involving an improperly modified pressure vessel at the Marcus Oil Company in Houston, Texas. The 12-foot-diameter (305 mm), 50-foot-long (15 240 mm) pressure vessel, which had an empty weight of approximately 50,000 pounds (22 680 kg), lacked any evidence of being constructed in accordance with the BPVC. The pressure vessel was not equipped with a pressure relief device. The pressure vessel was modified by the company by using an oxygen-acetylene torch to add a steam line that was used to melt polyethylene wax. The cut section of the head was reinstalled and welded into place by welders who were not qualified to perform work on pressure vessels. After the vessel was modified, it was not subjected to a hydrostatic pressure test to determine if it would remain closed when subjected to its operating pressure.

The vessel was returned to service and was pressurized by a nitrogen/air mixture while heating the polyethylene wax at a temperature of 300°F (149°C). On the day of the incident, the vessel catastrophically failed and was propelled more than 150 feet (45 720 mm) into an adjacent business. A 900-pound (408 kg) section of the vessel was propelled 900 feet (274 m) away and a 2-pound (0.9 kg) steel plate was found in the front yard of a residence one-quarter mile from the explosion. Shattered glass and building structural damage occurred one-quarter mile away from the explosion.

INTERNATIONAL CODE COUNCIL®
Copyright © 2015 ICC. ALL RIGHTS RESERVED. Accessed by David Dammon on Jun 21, 2017 12:30:52 PM pursuant to License Agreement with ICC. No further reproduction or distribution authorized. ANY UNAUTHORIZED REPRODUCTION OR DISTRIBUTION IS A VIOLATION OF THE FEDERAL COPYRIGHT ACT AND THE LICENSE AGREEMENT, AND SUBJECT TO CIVIL AND CRIMINAL PENALTIES THEREUNDER.

TABLE 5003.1.1(1)
MAXIMUM ALLOWABLE QUANTITY PER CONTROL AREA OF HAZARDOUS MATERIALS POSING A PHYSICAL HAZARD[a, j, m, n, p]

MATERIAL	CLASS	GROUP WHEN THE MAXIMUM ALLOWABLE QUANTITY IS EXCEEDED	STORAGE[b]			USE-CLOSED SYSTEMS[b]			USE-OPEN SYSTEMS[b]	
			Solid pounds (cubic feet)	Liquid gallons (pounds)	Gas (cubic feet at NTP)	Solid pounds (cubic feet)	Liquid gallons (pounds)	Gas (cubic feet at NTP)	Solid pounds (cubic feet)	Liquid gallons (pounds)
Combustible dust	NA	H-2	See Note q	NA	NA	See Note q	NA	NA	See Note q	NA
Combustible fibers[g]	Loose Baled[o]	H-3	(100) (1,000)	NA	NA	(100) (1,000)	NA	NA	(20) (200)	NA
Combustible liquid[c, i]	II IIIA IIIB	H-2 or H-3 H-2 or H-3 NA	NA	120[d,e] 330[d, e] 13,200[e, f]	NA	NA	120[d] 330[d] 13,200[f]	NA	NA	30[d] 80[d] 3,300[f]
Consumer fireworks	1.4G	H-3	125 [e, l]	NA	NA	NA	NA	NA	NA	NA
Cryogenic Flammable	NA	H-2	NA	45[d]	NA	NA	45[d]	NA	NA	10[d]
Cryogenic Inert	NA	NA	NA	NA	NL	NA	NA	NL	NA	NA
Cryogenic Oxidizing	NA	H-3	NA	45[d]	NA	NA	45[d]	NA	NA	10[d]
Explosives	Division 1.1 Division 1.2 Division 1.3 Division 1.4 Division 1.4G Division 1.5 Division 1.6	H-1 H-1 H-1 or H-2 H-3 H-3 H-1 H-1	1[e, g] 1[e, g] 5[e, g] 50[e, g] 125[d, e, l] 1[e, g] 1[e, g]	(1)[e, g] (1)[e, g] (5)[e, g] (50)[e, g] NA (1)[e,g] NA	NA	0.25[g] 0.25[g] 1[g] 50[g] NA 0.25[g] NA	(0.25)[g] (0.25)[g] (1)[g] (50)[g] NA (0.25)[g] NA	NA	0.25[g] 0.25[g] 1[g] NA NA 0.25[g] NA	(0.25)[g] (0.25)[g] (1)[g] NA NA (0.25)[g] NA
Flammable gas	Gaseous Liquefied	H-2	NA	NA (150)[d, e]	1,000[d, e] NA	NA	NA (150)[d, e]	1,000[d, e] NA	NA	NA
Flammable liquid[c]	IA IB and IC	H-2 or H-3	NA	30[d, e] 120[d, e]	NA	NA	30[d] 120[d]	NA	NA	10[d] 30[d]
Flammable liquid, combination (IA, IB, IC)	NA	H-2 or H-3	NA	120[d, e, h]	NA	NA	120[d, h]	NA	NA	30[d, h]
Flammable solid	NA	H-3	125[d, e]	NA	NA	125[d]	NA	NA	25[d]	NA

(continued)

Copyright © 2015 ICC. ALL RIGHTS RESERVED. Accessed by David Dammon on Jun 21, 2017 12:30:52 PM pursuant to License Agreement with ICC. No further reproduction or distribution authorized. ANY UNAUTHORIZED REPRODUCTION OR DISTRIBUTION IS A VIOLATION OF THE FEDERAL COPYRIGHT ACT AND THE LICENSE AGREEMENT, AND SUBJECT TO CIVIL AND CRIMINAL PENALTIES THEREUNDER.

TABLE 5003.1.1(1)—continued
MAXIMUM ALLOWABLE QUANTITY PER CONTROL AREA OF HAZARDOUS MATERIALS POSING A PHYSICAL HAZARD[a, j, m, n, p]

MATERIAL	CLASS	GROUP WHEN THE MAXIMUM ALLOWABLE QUANTITY IS EXCEEDED	STORAGE[b]			USE-CLOSED SYSTEMS[b]			USE-OPEN SYSTEMS[b]	
			Solid pounds (cubic feet)	Liquid gallons (pounds)	Gas (cubic feet at NTP)	Solid pounds (cubic feet)	Liquid gallons (pounds)	Gas (cubic feet at NTP)	Solid pounds (cubic feet)	Liquid gallons (pounds)
Inert Gas	Gaseous Liquefied	NA NA	NA NA	NA NA	NL NL	NA NA	NA NA	NL NL	NA NA	NA NA
Organic peroxide	UD I II III IV V	H-1 H-2 H-3 H-3 NA NA	1[e, g] 5[d, e] 50[d, e] 125[d, e] NL NL	(1)[e, g] (5)[d, e] (50)[d, e] (125)[d, e] NL NL	NA	0.25[g] 1[d] 50[d] 125[d] NL NL	(0.25)[g] (1)[d] (50)[d] (125)[d] NL NL	NA	0.25[g] 1[d] 10[d] 25[d] NL NL	(0.25[g] (1)[d] (10)[d] (25)[d] NL NL
Oxidizer	4 3[k] 2 1	H-1 H-2 or H-3 H-3 NA	1[g] 10[d, e] 250[d, e] 4,000[e,f]	(1)[e, g] (10)[d, e] (250)[d, e] (4,000)[e,f]	NA	0.25[g] 2[d] 250[d] 4,000[f]	(0.25)[g] (2)[d] (250)[d] (4,000)[f]	NA	0.25[g] 2[d] 50[d] 1,000[f]	(0.25)[g] (2)[d] (50)[d] (1,000)[f]
Oxidizing gas	Gaseous Liquefied	H-3	NA	NA (150)[d, e]	1,500[d, e] NA	NA	NA (150)[d, e]	1,500[d, e] NA	NA	NA
Pyrophoric	NA	H-2	4[e, g]	(4)[e, g]	50[e, g]	1[g]	(1)[g]	10[e, g]	0	0
Unstable (reactive)	4 3 2 1	H-1 H-1 or H-2 H-3 NA	1[e, g] 5[d, e] 50[d, e] NL	(1)[e, g] (5)[d, e] (50)[d, e] NL	10[e, g] 50[d, e] 750[d, e] NL	0.25[g] 1[d] 50[d] NL	(0.25)[g] (1)[d] (50)[d] NL	2[e, g] 10[d, e] 750[d, e] NL	0.25[g] 1[d] 10[d] NL	(0.25)[g] (1)[d] (10)[d] NL
Water reactive	3 2 1	H-2 H-3 NA	5[d,e] 50[d, e] NL	(5)[d, e] (50)[d, e] NL	NA	5[d] 50[d] NL	(5)[d] (50)[d] NL	NA	1[d] 10[d] NL	(1)[d] (10)[d] NL

For SI: 1 cubic foot = 0.02832 m^3, 1 pound = 0.454 kg, 1 gallon = 3.785 L.

NA = Not Applicable, NL = Not Limited, UD = Unclassified Detonable.

a. For use of control areas, see Section 5003.8.3.

b. The aggregate quantity in use and storage shall not exceed the quantity listed for storage.

c. The quantities of alcoholic beverages in retail and wholesale sales occupancies shall not be limited providing the liquids are packaged in individual containers not exceeding 1.3 gallons. In retail and wholesale sales occupancies, the quantities of medicines, foodstuff or consumer products and cosmetics containing not more than 50 percent by volume of water-miscible liquids with the remainder of the solutions not being flammable shall not be limited, provided that such materials are packaged in individual containers not exceeding 1.3 gallons.

d. Maximum allowable quantities shall be increased 100 percent in buildings equipped throughout with an approved automatic sprinkler system in accordance with Section 903.3.1.1. Where Note e also applies, the increase for both notes shall be applied accumulatively.

(continued)

INTERNATIONAL CODE COUNCIL®

Copyright © 2015 ICC. ALL RIGHTS RESERVED. Accessed by David Dammon on Jun 21, 2017 12:30:52 PM pursuant to License Agreement with ICC. No further reproduction or distribution authorized. ANY UNAUTHORIZED REPRODUCTION OR DISTRIBUTION IS A VIOLATION OF THE FEDERAL COPYRIGHT ACT AND THE LICENSE AGREEMENT, AND SUBJECT TO CIVIL AND CRIMINAL PENALTIES THEREUNDER.

TABLE 5003.1.1(1)—continued
MAXIMUM ALLOWABLE QUANTITY PER CONTROL AREA OF HAZARDOUS MATERIALS POSING A PHYSICAL HAZARD[a, j, m, n, p]

e. Maximum allowable quantities shall be increased 100 percent where stored in approved storage cabinets, day boxes, gas cabinets, gas rooms, exhausted enclosures or in listed safety cans in accordance with Section 5003.9.10. Where Note d also applies, the increase for both notes shall be applied accumulatively.
f. Quantities shall not be limited in a building equipped throughout with an approved automatic sprinkler system in accordance with Section 903.3.1.1.
g. Allowed only in buildings equipped throughout with an approved automatic sprinkler system.
h. Containing not more than the maximum allowable quantity per control area of Class IA, Class IB or Class IC flammable liquids.
i. The maximum allowable quantity shall not apply to fuel oil storage complying with Section 603.3.2.
j. Quantities in parenthesis indicate quantity units in parenthesis at the head of each column.
k. A maximum quantity of 200 pounds of solid or 20 gallons of liquid Class 3 oxidizers is allowed where such materials are necessary for maintenance purposes, operation or sanitation of equipment where the storage containers and the manner of storage are approved.
l. Net weight of pyrotechnic composition of the fireworks. Where the net weight of the pyrotechnic composition of the fireworks is not known, 25 percent of the gross weight of the fireworks including packaging shall be used.
m. For gallons of liquids, divide the amount in pounds by 10 in accordance with Section 5003.1.2.
n. For storage and display quantities in Group M and storage quantities in Group S occupancies complying with Section 5003.11, see Table 5003.11.1.
o. Densely-packed baled cotton that complies with the packing requirements of ISO 8115 shall not be included in this material class.
p. The following shall not be included in determining the maximum allowable quantities:
    1. Liquid or gaseous fuel in fuel tanks on vehicles.
    2. Liquid or gaseous fuel in fuel tanks on motorized equipment operated in accordance with this code.
    3. Gaseous fuels in piping systems and fixed appliances regulated by the *International Fuel Gas Code*.
    4. Liquid fuels in piping systems and fixed appliances, regulated by the *International Mechanical Code*.
    5. Alcohol-based hand rubs classified as Class I or II liquids in dispensers that are installed in accordance with Sections 5705.5 and 5705.5.1. The location of the alcohol-based hand rub (ABHR) dispensers shall be provided in the construction documents.
q. Where manufactured, generated or used in such a manner that the concentration and conditions create a fire or explosion hazard based on information prepared in accordance with Section 104.7.2.

INTERNATIONAL CODE COUNCIL®
Copyright © 2015 ICC. ALL RIGHTS RESERVED. Accessed by David Dammon on Jun 21, 2017 12:30:52 PM pursuant to License Agreement with ICC. No further reproduction or distribution authorized. ANY UNAUTHORIZED REPRODUCTION OR DISTRIBUTION IS A VIOLATION OF THE FEDERAL COPYRIGHT ACT AND THE LICENSE AGREEMENT, AND SUBJECT TO CIVIL AND CRIMINAL PENALTIES THEREUNDER.

TABLE 5003.1.1(2)
MAXIMUM ALLOWABLE QUANTITY PER CONTROL AREA OF HAZARDOUS MATERIAL POSING A HEALTH HAZARD[a, c, f, h, i]

MATERIAL	STORAGE[b]			USE-CLOSED SYSTEMS[b]			USE-OPEN SYSTEMS[b]	
	Solid pounds[d, e]	Liquid gallons (pounds)[d, e]	Gas cubic feet at NTP (pounds)[d]	Solid pounds[d]	Liquid gallons (pounds)[d]	Gas cubic feet at NTP (pounds)[d]	Solid pounds[d]	Liquid gallons (pounds)[d]
Corrosives	5,000	500	Gaseous 810[e] Liquefied (150)	5,000	500	Gaseous 810[e] Liquefied (150)	1,000	100
Highly Toxics	10	(10)	Gaseous 20[g] Liquefied (4)[g]	10	(10)	Gaseous 20[g] Liquified (4)[g]	3	(3)
Toxics	500	(500)	Gaseous 810[e] Liquefied (150)[e]	500	(500)	Gaseous 810[e] Liquefied (150)[e]	125	(125)

For SI: 1 cubic foot = 0.02832 m^3, 1 pound = 0.454 kg, 1 gallon = 3.785 L.

a. For use of control areas, see Section 5003.8.3.
b. The aggregate quantity in use and storage shall not exceed the quantity listed for storage.
c. In retail and wholesale sales occupancies, the quantities of medicines, foodstuff or consumer products and cosmetics, containing not more than 50 percent by volume of water-miscible liquids and with the remainder of the solutions not being flammable, shall not be limited, provided that such materials are packaged in individual containers not exceeding 1.3 gallons.
d. Maximum allowable quantities shall be increased 100 percent in buildings equipped throughout with an approved automatic sprinkler system in accordance with Section 903.3.1.1. Where Note e also applies, the increase for both notes shall be applied accumulatively.
e. Maximum allowable quantities shall be increased 100 percent where stored in approved storage cabinets, gas cabinets or exhausted enclosures. Where Note d also applies, the increase for both notes shall be applied accumulatively.
f. For storage and display quantities in Group M and storage quantities in Group S occupancies complying with Section 5003.11, see Table 5003.11.1.
g. Allowed only where stored in approved exhausted gas cabinets or exhausted enclosures.
h. Quantities in parentheses indicate quantity units in parentheses at the head of each column.
i. For gallons of liquids, divide the amount in pounds by 10 in accordance with Section 5003.1.2.

Copyright © 2015 ICC. ALL RIGHTS RESERVED. Accessed by David Dammon on Jun 21, 2017 12:30:52 PM pursuant to License Agreement with ICC. No further reproduction or distribution authorized. ANY UNAUTHORIZED REPRODUCTION OR DISTRIBUTION IS A VIOLATION OF THE FEDERAL COPYRIGHT ACT AND THE LICENSE AGREEMENT, AND SUBJECT TO CIVIL AND CRIMINAL PENALTIES THEREUNDER.

TABLE 5003.1.1(3)
MAXIMUM ALLOWABLE QUANTITY PER CONTROL AREA OF HAZARDOUS MATERIALS POSING A PHYSICAL HAZARD IN AN OUTDOOR CONTROL AREA[a, b, c, d]

MATERIAL	CLASS	STORAGE[b]			USE-CLOSED SYSTEMS[b]			USE-OPEN SYSTEMS[b]	
		Solid pounds (cubic feet)	Liquid gallons (pounds)[d]	Gas cubic feet at NTP	Solid pounds (cubic feet)	Liquid gallons (pounds)[d]	Gas cubic feet at NTP	Solid pounds (cubic feet)	Liquid gallons (pounds)[d]
Flammable gas	Gaseous Liquefied	Not Applicable	Not Applicable (300)	3,000 Not Applicable	Not Applicable	Not Applicable (150)	1,500 Not Applicable	Not Applicable	Not Applicable
Flammable solid	Not Applicable	500	Not Applicable	Not Applicable	250	Not Applicable	Not Applicable	50	Not Applicable
Inert Gas Cryogenic inert	Gaseous Liquefied Not Applicable	Not Applicable Not Applicable Not Applicable	Not Applicable Not Applicable Not Applicable	Not Limited Not Limited Not Limited	Not Applicable Not Applicable Not Applicable	Not Applicable Not Applicable Not Applicable	Not Limited Not Limited Not Limited	Not Applicable Not Applicable Not Applicable	Not Applicable Not Applicable Not Applicable
Organic peroxide	Unclassified Detonable	1	(1)	Not Applicable	0.25	(0.25)	Not Applicable	0.25	(0.25)
Organic peroxide	I II III IV V	20 200 500 1,000 Not Limited	(20) (200) (500) (1,000) Not Limited	Not Applicable	10 100 250 500 Not Limited	(10) (100) (250) (500) Not Limited	Not Applicable	2 20 50 100 Not Limited	(2) (20) (50) (100) Not Limited
Oxidizer	4 3 2 1	2 40 1,000 Not Limited	(2) (40) (1,000) Not Limited	Not Applicable	1 20 500 Not Limited	(1) (20) (500) Not Limited	Not Applicable	0.25 4 100 Not Limited	(0.25) (4) (100) Not Limited
Oxidizing gas	Gaseous Liquefied	Not Applicable	Not Applicable (600)	6,000 Not Applicable	Not Applicable	Not Applicable (300)	1,500 Not Applicable	Not Applicable	Not Applicable
Pyrophoric materials	Not Applicable	8	(8)	100	4	(4)	10	0	0
Unstable (reactive)	4 3 2 1	2 20 200 Not Limited	(2) (20) (200) Not Limited	20 200 1,000 1,500	1 10 100 Not Limited	(1) (10) (100) Not Limited	2 10 250 Not Limited	0.25 1 10 Not Limited	(0.25) (1) (10) Not Limited
Water reactive	3 2 1	20 200 Not Limited	(20) (200) Not Limited	Not Applicable	10 100 Not Limited	(10) (100) Not Limited	Not Applicable	1 10 Not Limited	(1) (10) Not Limited

For SI: 1 pound = 0.454 kg, 1 gallon = 3.785 L, 1 cubic foot = 0.02832 m^3.

a. For gallons of liquids, divide the amount in pounds by 10 in accordance with Section 5003.1.2.

b. The aggregate quantities in storage and use shall not exceed the quantity listed for storage.

c. The aggregate quantity of nonflammable solid and nonflammable or noncombustible liquid hazardous materials allowed in outdoor storage per single property under the same ownership or control used for retail or wholesale sales is allowed to exceed the maximum allowable quantity per control area where such storage is in accordance with Section 5003.11.

d. Quantities in parentheses indicate quantity units in parentheses at the head of each column.

INTERNATIONAL CODE COUNCIL®
Copyright © 2015 ICC. ALL RIGHTS RESERVED. Accessed by David Dammon on Jun 21, 2017 12:30:52 PM pursuant to License Agreement with ICC. No further reproduction or distribution authorized. ANY UNAUTHORIZED REPRODUCTION OR DISTRIBUTION IS A VIOLATION OF THE FEDERAL COPYRIGHT ACT AND THE LICENSE AGREEMENT, AND SUBJECT TO CIVIL AND CRIMINAL PENALTIES THEREUNDER.

TABLE 5003.1.1(4)
MAXIMUM ALLOWABLE QUANTITY PER CONTROL AREA OF HAZARDOUS MATERIALS POSING A HEALTH HAZARD IN AN OUTDOOR CONTROL AREA[a, b, c, f]

MATERIAL	STORAGE			USE-CLOSED SYSTEMS			USE-OPEN SYSTEMS	
	Solid pounds	Liquid gallons (pounds)	Gas cubic feet at NTP (pounds)	Solid pounds	Liquid gallons (pounds)	Gas cubic feet at NTP (pounds)	Solid pounds	Liquid gallons (pounds)
Corrosives	20,000	2,000	Gaseous 1,620 Liquefied (300)	10,000	1,000	Gaseous 810 Liquefied (150)	1,000	100
Highly toxics	20	(20)	Gaseous 40[d] Liquefied (8)[d]	10	(10)	Gaseous 20[d] Liquefied (4)[d]	3	(3)
Toxics	1,000	(l,000)[e]	Gaseous 1,620 Liquefied (300)	500	50[e]	Gaseous 810 Liquefied (150)	125	(125)[e]

For SI: 1 cubic foot = 0.02832 m^3, 1 pound = 0.454 kg, 1 gallon = 3.785 L, 1 pound per square inch absolute = 6.895 kPa, °C = [(°F)-32/1.8].

a. For gallons of liquids, divide the amount in pounds by 10 in accordance with Section 5003.1.2.
b. The aggregate quantities in storage and use shall not exceed the quantity listed for storage.
c. The aggregate quantity of nonflammable solid and nonflammable or noncombustible liquid hazardous materials allowed in outdoor storage per single property under the same ownership or control used for retail or wholesale sales is allowed to exceed the maximum allowable quantity per control area where such storage is in accordance with Section 5003.11.
d. Allowed only where used in approved exhausted gas cabinets, exhausted enclosures or under fume hoods.
e. The maximum allowable quantity per control area for toxic liquids with vapor pressures in excess of 1 psia at 77°F shall be the maximum allowable quantity per control area listed for highly toxic liquids.
f. Quantities in parentheses indicate quantity units in parentheses at the head of each column.

Copyright © 2015 ICC. ALL RIGHTS RESERVED. Accessed by David Dammon on Jun 21, 2017 12:30:52 PM pursuant to License Agreement with ICC. No further reproduction or distribution authorized. ANY UNAUTHORIZED REPRODUCTION OR DISTRIBUTION IS A VIOLATION OF THE FEDERAL COPYRIGHT ACT AND THE LICENSE AGREEMENT, AND SUBJECT TO CIVIL AND CRIMINAL PENALTIES THEREUNDER.

5003.2.2 Piping, tubing, valves and fittings. Piping, tubing, valves, and fittings conveying hazardous materials shall be designed and installed in accordance with ASME B31 or other approved standards, and shall be in accordance with Sections 5003.2.2.1 and 5003.2.2.2.

❖ The design and construction of piping, tubing, valves and fittings must meet the requirements listed in Chapters 50 through 67, and the referenced standard or other approved standards acceptable to the fire code official. ASME B31 is the primary code for pressure piping. It is divided into nine sections, each regulating a different type of piping, and it has detailed requirements for installation, inspection and testing. Including ASME B31 in this general section on hazardous material piping will assist designers in referencing the correct standard in project specifications.

5003.2.2.1 Design and construction. Piping, tubing, valves, fittings and related components used for hazardous materials shall be in accordance with the following:

1. Piping, tubing, valves, fittings and related components shall be designed and fabricated from materials that are compatible with the material to be contained and shall be of adequate strength and durability to withstand the pressure, structural and seismic stress and exposure to which they are subject.
2. Piping and tubing shall be identified in accordance with ASME A13.1 to indicate the material conveyed.
3. Readily accessible manual valves or automatic remotely activated fail-safe emergency shutoff valves shall be installed on supply piping and tubing at the following locations:
   3.1. The point of use.
   3.2. The tank, cylinder or bulk source.
4. Manual emergency shutoff valves and controls for remotely activated emergency shutoff valves shall be identified and the location shall be clearly visible, accessible and indicated by means of a sign.
5. Backflow prevention or check valves shall be provided where the backflow of hazardous materials could create a hazardous condition or cause the unauthorized discharge of hazardous materials.
6. Where gases or liquids having a hazard ranking of:

   Health Class 3 or 4
   Flammability Class 4
   Instability Class 3 or 4

in accordance with NFPA 704 are carried in pressurized piping above 15 pounds per square inch gauge (psig) (103 kPa), an *approved* means of leak detection and emergency shutoff or excess flow control shall be provided. Where the piping originates from within a hazardous material storage room or area, the excess flow control shall be located within the storage room or area. Where the piping originates from a bulk source, the excess flow control shall be located as close to the bulk source as practical.

Exceptions:

1. Piping for inlet connections designed to prevent backflow.
2. Piping for pressure relief devices.

❖ This section specifies minimum design requirements for any piping system handling hazardous materials. All associated piping, valves and fittings should also be compatible with the material to be used. As may be required by industry standards and OSHA regulations, piping and tubing conveying hazardous materials must be properly identified. Identification could include color-coded piping and permanent labeling on the piping and tubing. The method of operation of accessible manual shutoff valves must be identified as to what they control, as well. Backflow protection must be provided as necessary to protect potable water supplies and the environment, as required by local health departments, environmental agencies and fire code officials. This section mandates that a means of leak detection and either an emergency shutoff valve or excess flow control are to be provided.

5003.2.2.2 Additional regulations for supply piping for health-hazard materials. Supply piping and tubing for gases and liquids having a health-hazard ranking of 3 or 4 in accordance with NFPA 704 shall be in accordance with ASME B31.3 and the following:

1. Piping and tubing utilized for the transmission of highly toxic, toxic or highly volatile *corrosive* liquids and gases shall have welded, threaded or flanged connections throughout except for connections located within a ventilated enclosure if the material is a gas, or an *approved* method of drainage or containment is provided for connections if the material is a liquid.
2. Piping and tubing shall not be located within *corridors*, within any portion of a *means of egress* required to be enclosed in fire-resistance-rated construction or in concealed spaces in areas not classified as Group H occupancies.

Exception: Piping and tubing within the space defined by the walls of *corridors* and the floor or roof above or in concealed spaces above other occupancies where installed in accordance with Section 415.11.6.4 of the *International Building Code* for Group H-5 occupancies.

❖ Requirements of this section are dependent on whether the hazardous material involved has a health-hazard ranking of 3 or 4 based on the hazard classification system in NFPA 704. This section is not applicable to materials with a flammability or reactivity rating of 3 or 4; rather, it addresses piping systems handling highly toxic or toxic liquids and gases.

INTERNATIONAL CODE COUNCIL®
Copyright © 2015 ICC. ALL RIGHTS RESERVED. Accessed by David Dammon on Jun 21, 2017 12:30:52 PM pursuant to License Agreement with ICC. No further reproduction or distribution authorized. ANY UNAUTHORIZED REPRODUCTION OR DISTRIBUTION IS A VIOLATION OF THE FEDERAL COPYRIGHT ACT AND THE LICENSE AGREEMENT, AND SUBJECT TO CIVIL AND CRIMINAL PENALTIES THEREUNDER.

Leaks or piping failures are most common around threaded connections in the piping or tubing. Therefore, a means of containment is required around connections unless metallic piping or tubing with welded connections is used.

Hazardous material piping may not be located in an exit access corridor, exit or areas not classified as high hazard so that the required means of egress are available. The exception in this section recognizes specific design provisions for existing hazardous production materials facilities, which commonly transport hazardous materials through service passages or corridors. Also required are excess-flow control valves (to regulate the rate of flow of hazardous materials within the piping system) and emergency shutoff valves (to stop the flow of hazardous materials from possibly deteriorating further in an emergency scenario).

5003.2.3 Equipment, machinery and alarms. Equipment, machinery and required detection and alarm systems associated with the use, storage or handling of hazardous materials shall be listed or *approved*.

❖ Equipment associated with the use or storage of hazardous materials must be listed or approved by a third-party testing agency.

5003.2.4 Installation of tanks. Installation of tanks shall be in accordance with Sections 5003.2.4.1 through 5003.2.4.2.1.

❖ The installation of tanks shall be in accordance with Chapter 57, the referenced standards in Chapter 80 and Sections 5003.2.4.1 through 5003.2.4.2.1.

5003.2.4.1 Underground tanks. Underground tanks used for the storage of liquid hazardous materials shall be provided with secondary containment. In lieu of providing secondary containment for an underground tank, an above-ground tank in an underground vault complying with Section 5704.2.8 shall be permitted.

❖ This section requires that all new underground tanks for the storage of hazardous materials comply with applicable code requirements regarding the hazardous material in the tank. Secondary containment provides an additional measure of confining hazardous materials at their point of generation in case of a tank failure. As an alternative to providing secondary containment, an above-ground tank installed in an underground vault for flammable or combustible liquids in accordance with Section 5704.2.8 is allowed as being equivalent. Note that the requirement for secondary containment is a general requirement subject to the limitations and exclusions of Section 5001.1.

5003.2.4.2 Above-ground tanks. Above-ground stationary tanks used for the storage of hazardous materials shall be located and protected in accordance with the requirements for outdoor storage of the particular material involved.

Exception: Above-ground tanks that are installed in vaults complying with Section 5303.16 or 5704.2.8 shall not be required to comply with location and protection requirements for outdoor storage.

❖ Requirements for above-ground tanks depend on the hazards associated with the material being stored. Tank requirements can be found in Sections 2306, 5404 and 5704.2. The exception allows the use of an above-ground tank in a below-grade tank vault in lieu of an underground tank. Installation of a tank in a vault is regarded as equivalent in safety to an underground tank by Chapter 57, and it is a superior method with regard to environmental safety. When such an installation is provided, requirements for location on site and similar provisions should be regarded as an underground installation.

5003.2.4.2.1 Marking. Above-ground stationary tanks shall be marked as required by Section 5003.5.

❖ This section requires that NFPA 704 hazard identification signs in accordance with Section 5003.5 be provided for above-ground tanks to assist emergency responders in identifying the hazards of the tanks' contents in case of a spill or fire incident.

5003.2.5 Empty containers and tanks. Empty containers and tanks previously used for the storage of hazardous materials shall be free from residual material and vapor as defined by DOTn, the Resource Conservation and Recovery Act (RCRA) or other regulating authority or maintained as specified for the storage of hazardous material.

❖ Tanks must be purged and cleaned of all residual hazardous chemicals before reuse for storage. Containers and tanks that have not been cleaned must be stored in areas meeting the requirements for a hazardous use area. Under the Resource Conservation and Recovery Act (RCRA), the EPA issues "cradle-to-grave" regulations for storing, using and disposing of hazardous waste. The act, enacted by Congress in 1976, established a uniform national policy for hazardous and solid waste disposal. This section requires that containers, cylinders and tanks, if still in use, either be properly maintained as required or comply with the EPA or other state and local environmental regulations.

5003.2.6 Maintenance. In addition to the requirements of Section 5003.2.3, equipment, machinery and required detection and alarm systems associated with hazardous materials shall be maintained in an operable condition. Defective containers, cylinders and tanks shall be removed from service, repaired or disposed of in an *approved* manner. Defective equipment or machinery shall be removed from service and repaired or replaced. Required detection and alarm systems shall be replaced or repaired where defective.

❖ Equipment, machinery and required detection and alarm equipment must be maintained in an operable condition at all times.

5003.2.6.1 Tanks out of service for 90 days. Stationary tanks not used for a period of 90 days shall be properly safe-

INTERNATIONAL CODE COUNCIL®
Copyright © 2015 ICC. ALL RIGHTS RESERVED. Accessed by David Dammon on Jun 21, 2017 12:30:52 PM pursuant to License Agreement with ICC. No further reproduction or distribution authorized. ANY UNAUTHORIZED REPRODUCTION OR DISTRIBUTION IS A VIOLATION OF THE FEDERAL COPYRIGHT ACT AND THE LICENSE AGREEMENT, AND SUBJECT TO CIVIL AND CRIMINAL PENALTIES THEREUNDER.

guarded or removed in an *approved* manner. Such tanks shall have the fill line, gauge opening and pump connection secured against tampering. Vent lines shall be properly maintained.

❖ This section places a time limitation on out-of-service storage tanks of hazardous materials. Within 90 days, proper steps should be taken to address any potential hazard with the storage tank. Without a time limitation for safeguarding the out-of-service storage tank, it is likely that the tank will not be properly monitored or inspected as necessary and, consequently, the risk of the tank becoming defective increases. Care shall be taken to prevent tampering with all associated equipment. Vent lines must be kept clear and be properly maintained during this time.

5003.2.6.1.1 Return to service. Tanks that are to be placed back in service shall be tested in an *approved* manner.

❖ Tanks must be tested as a new installation before being placed back in service.

5003.2.6.2 Defective containers and tanks. Defective containers and tanks shall be removed from service, repaired in accordance with approved standards or disposed of in an *approved* manner.

❖ Damaged containers, cylinders and tanks pose the potential hazard of content release. Care must be taken to determine that disposal does not present a greater hazard than the damaged container, cylinder or tank.

Small containers usually cannot be repaired easily. Large containers and fixed tank installations often cannot be easily replaced and must be repaired. Temporary storage of hazardous materials during container repair must comply with code requirements.

5003.2.7 Liquid-level limit control. Atmospheric tanks having a capacity greater than 500 gallons (1893 L) and that contain hazardous material liquids shall be equipped with a liquid-level limit control or other *approved* means to prevent overfilling of the tank.

❖ Overfilling of tanks has been a problem over the years. This section requires atmospheric tanks with a capacity greater than 500 gallons (1893 L) containing hazardous materials to be equipped with an approved method of fill control.

5003.2.8 Seismic protection. Machinery and equipment utilizing hazardous materials shall be braced and anchored in accordance with the seismic design requirements of the *International Building Code* for the seismic design category in which the machinery or equipment is classified.

❖ In areas listed in IBC Chapter 16 as requiring seismic protection, machinery and equipment containing hazardous materials must be protected against seismic activity. The IBC assigns importance factors in classifying buildings. Buildings containing sufficient quantities of toxic or explosive substances that are considered to be dangerous to the public if release occurs carry an importance factor of 1.25 and structures containing highly toxic materials where the storage or use exceeds the MAQ have an importance factor of 1.50.

5003.2.9 Testing. The equipment, devices and systems listed in Section 5003.2.9.1 shall be tested at the time of installation and at one of the intervals listed in Section 5003.2.9.2. Records of the tests conducted or maintenance performed shall be maintained in accordance with the provisions of Section 107.2.1.

Exceptions:

1. Periodic testing shall not be required where *approved* written documentation is provided stating that testing will damage the equipment, device or system and the equipment, device or system is maintained as specified by the manufacturer.
2. Periodic testing shall not be required for equipment, devices and systems that fail in a fail-safe manner.
3. Periodic testing shall not be required for equipment, devices and systems that self-diagnose and report trouble. Records of the self-diagnosis and trouble reporting shall be made available to the *fire code official.*
4. Periodic testing shall not be required if system activation occurs during the required test cycle for the components activated during the test cycle.
5. *Approved* maintenance in accordance with Section 5003.2.6 that is performed not less than annually or in accordance with an *approved* schedule shall be allowed to meet the testing requirements set forth in Sections 5003.2.9.1 and 5003.2.9.2.

❖ This section establishes that the critical life safety and property protection systems and equipment listed in Section 5003.2.9.1 associated with the storage, handling and use of hazardous materials must undergo regular, documented maintenance to verify that they will perform as designed when needed. The section also requires that, as with any other safeguard required by the code, maintenance records must be maintained and be available to the fire code official (see commentary, Section 107.2).

Exception 1 recognizes that certain equipment, devices or systems are designed to function when needed but could be damaged by periodic testing. This fact must be documented in writing by an authority on the equipment, device or system that is acceptable to the fire code official. This would most likely be the equipment, device or system manufacturer since it is most familiar with its product. In addition to the written documentation, the manufacturer's maintenance specifications must be followed in order to take this exception.

Exception 2 recognizes that some equipment, devices or systems are designed with a feature for automatically counteracting the effect of an anticipated failure and eliminating or mitigating a hazardous condition caused by that failure by compensating for it. The term "fail-safe" is defined in Chapter 2.

INTERNATIONAL CODE COUNCIL®
Copyright © 2015 ICC. ALL RIGHTS RESERVED. Accessed by David Dammon on Jun 21, 2017 12:30:52 PM pursuant to License Agreement with ICC. No further reproduction or distribution authorized. ANY UNAUTHORIZED REPRODUCTION OR DISTRIBUTION IS A VIOLATION OF THE FEDERAL COPYRIGHT ACT AND THE LICENSE AGREEMENT, AND SUBJECT TO CIVIL AND CRIMINAL PENALTIES THEREUNDER.

Exception 3 recognizes the reliability of technology that allows equipment, devices or systems to self-monitor, diagnose and report any problems that could lead to a failure. Many fire alarm systems have this capability. In order to take the exception, records of the self-diagnosis and reporting must be kept and be available to the fire code official in accordance with Section 107.2.1.

Exception 4 states that, in the unlikely (but possible) event that an actual activation of the equipment, device or system occurs during a scheduled test of the equipment, device or system, the actual activation can be accepted in lieu of the scheduled test of the affected components.

Exception 5 states that the maintenance required by Section 5003.2.6 of equipment, devices or systems can be conducted in accordance with Section 5003.2.9.2, Item 1 or 4.

5003.2.9.1 Equipment, devices and systems requiring testing. The following equipment, systems and devices shall be tested in accordance with Sections 5003.2.9 and 5003.2.9.2.

1. Gas detection systems, alarms and automatic emergency shutoff valves required by Section 6004.2.2.10 for highly toxic and toxic gases.
2. Limit control systems for liquid level, temperature and pressure required by Sections 5003.2.7, 5004.8 and 5005.1.4.
3. Emergency alarm systems and supervision required by Sections 5004.9 and 5005.4.4.
4. Monitoring and supervisory systems required by Sections 5004.10 and 5005.1.6.
5. Manually activated shutdown controls required by Section 6403.1.1.1 for *compressed gas* systems conveying pyrophoric gases.

❖ This section lists the equipment, devices and systems that are subject to the provisions of Sections 5003.2.9 and 5003.2.9.2.

5003.2.9.2 Testing frequency. The equipment, systems and devices listed in Section 5003.2.9.1 shall be tested at one of the frequencies listed below:

1. Not less than annually.
2. In accordance with the *approved* manufacturer's requirements.
3. In accordance with *approved* recognized industry standards.
4. In accordance with an *approved* schedule.

❖ This section provides a list of suggested testing frequencies for equipment, devices and systems required by Section 5003.2.9.1 to be tested. The party responsible for compliance with the testing requirements can choose one of the four testing frequencies that meets its needs. Note that Section 5003.2.3 requires that equipment, devices or systems associated with the storage, handling and use of hazardous materials be listed or approved. When the fire code official determines that listing is required, the choice of testing frequency must be correlated with the manufacturer's testing requirements, which are often included as an integral part of the listing of the product.

5003.3 Release of hazardous materials. Hazardous materials in any quantity shall not be released into a sewer, storm drain, ditch, drainage canal, creek, stream, river, lake or tidal waterway or on the ground, sidewalk, street, highway or into the atmosphere.

Exceptions:

1. The release or emission of hazardous materials is allowed where in compliance with federal, state or local governmental agencies, regulations or permits.
2. The release of pesticides is allowed where used in accordance with registered label directions.
3. The release of fertilizer and soil amendments is allowed where used in accordance with manufacturer's specifications.

❖ Because of the toxic and hazardous nature of chemicals governed by this section, no amount of release is allowed, unless it is in compliance with federal, state or local regulations. The release of pesticides is allowed when they are used in compliance with the manufacturer's instructions. Fertilizer and soil amendments are also allowed when they are used as the manufacturer specifies.

5003.3.1 Unauthorized discharges. Where hazardous materials are released in quantities reportable under state, federal or local regulations, the *fire code official* shall be notified and the following procedures required in accordance with Sections 5003.3.1.1 through 5003.3.1.4.

❖ As stated above, release of hazardous chemicals is prohibited; however, when a release does occur in quantities that exceed the requirements of federal, state and local regulations, the fire code official must be notified.

5003.3.1.1 Records. Records of the unauthorized discharge of hazardous materials by the permittee shall be maintained.

❖ The amounts released, the cause of the release, containment efforts, cleanup efforts and environmental impact are items that should be included in the records submitted and kept on the incident.

5003.3.1.2 Preparation. Provisions shall be made for controlling and mitigating unauthorized discharges.

❖ A facility preplan for controlling and mitigating a release is recommended. After a release, this plan should be immediately implemented.

5003.3.1.3 Control. Where an unauthorized discharge caused by primary container failure is discovered, the involved primary container shall be repaired or removed from service.

❖ Once the cause of the release has been determined, repair of defective equipment or changes in operating procedures must begin immediately.

INTERNATIONAL CODE COUNCIL®
Copyright © 2015 ICC. ALL RIGHTS RESERVED. Accessed by David Dammon on Jun 21, 2017 12:30:52 PM pursuant to License Agreement with ICC. No further reproduction or distribution authorized. ANY UNAUTHORIZED REPRODUCTION OR DISTRIBUTION IS A VIOLATION OF THE FEDERAL COPYRIGHT ACT AND THE LICENSE AGREEMENT, AND SUBJECT TO CIVIL AND CRIMINAL PENALTIES THEREUNDER.

5003.3.1.4 Responsibility for cleanup. The person, firm or corporation responsible for an unauthorized discharge shall institute and complete all actions necessary to remedy the effects of such unauthorized discharge, whether sudden or gradual, without cost to the jurisdiction. Where deemed necessary by the *fire code official*, cleanup can be initiated by the fire department or by an authorized individual or firm. Costs associated with such cleanup shall be borne by the *owner*, operator or other person responsible for the unauthorized discharge.

❖ Cleanup is the responsibility of the person, firm or corporation responsible for an unauthorized release. Cleanup must begin immediately once the incident is stable.

5003.4 Material Safety Data Sheets. Material Safety Data Sheets (MSDS) shall be readily available on the premises for hazardous materials regulated by this chapter. Where a hazardous substance is developed in a laboratory, available information shall be documented.

Exception: Designated hazardous waste.

❖ Both the number and the diversity of industrial chemicals are constantly increasing. The inventory of chemicals at modern industrial operations is sometimes quite variable. These factors make accurate and timely information more important to emergency responders. This section specifies requirements for submitting MSDS and other emergency response information. Regardless of quantity, MSDS are required for all hazardous materials regulated by the code, even if the intended quantities do not require a permit or exceed the maximum quantities allowed per control area relative to a high-hazard occupancy classification. Preincident planning is essential for buildings containing hazardous materials, regardless of quantity. See the commentary to the definition of "Material safety data sheet" in Section 202.

The exception recognizes that the information contained in the Uniform Hazardous Waste Manifest (EPA Form 870022A) required by DOTn 49 CFR regulations contains sufficient information on the hazards of the waste material. Because EPA shipping rules for hazardous waste require that the manifest be with the waste material at all times, the manifest serves the same purpose as an MSDS.

The following is the minimum information needed from the MSDS to assist in determining the hazardous occupancy. The special consideration area will tell when items such as emergency showers, eye wash centers, acid piping and special ventilation are required. The MSDS will have the following information:

- The chemical name.
- The boiling point.
- The flash point.
- The UFL.
- The LFL.
- The solubility of the chemical.
- The IDLH.
- The LD50.
- The NFPA 704 classification.
- Any special consideration with the chemical.

Note that as part of OSHA's planned conversion to the Globally Harmonized System of Classification and Labeling of Chemicals (GHS/HC) by 2016, the MSDS will be reformatted to 16 sections and renamed as "Safety Data Sheets" (SDS). The format of the new SDS is expected to include the following information:

Section 1. Identification
Section 2. Hazard(s) identification
Section 3. Composition/information on ingredients
Section 4. First-aid measures
Section 5. Fire-fighting measures
Section 6. Accidental release measures
Section 7. Handling and storage
Section 8. Exposure controls/personal protection
Section 9. Physical and chemical properties
Section 10. Stability and reactivity
Section 11. Toxicological information
Section 12. Ecological information
Section 13. Disposal considerations
Section 14. Transport information
Section 15. Regulatory information
Section 16. Other information, including date of preparation or last revision

The purpose of the GHS/HC system is rooted in the agencies that will administer the regulations, i.e., OSHA and the United Nations. Neither agency is exclusively focused on emergency responder notifications but, rather, they focus on worker/workplace regulations and global transportation and shipping of hazardous materials.

5003.5 Hazard identification signs. Unless otherwise exempted by the *fire code official*, visible hazard identification signs as specified in NFPA 704 for the specific material contained shall be placed on stationary containers and aboveground tanks and at entrances to locations where hazardous materials are stored, dispensed, used or handled in quantities requiring a permit and at specific entrances and locations designated by the *fire code official*.

❖ This section contains requirements for identification signage and labeling of containers with hazardous materials. Signs are required to alert occupants who may unknowingly enter an area containing hazardous materials.

The hazard identification symbol (see Commentary Figure 5003.5) is a color-coded array of four numbers or letters arranged in a diamond shape. This symbol appears on the label of many chemicals acquired from commercial vendors.

The **blue diamond**, appearing on the left side of

INTERNATIONAL CODE COUNCIL®
Copyright © 2015 ICC. ALL RIGHTS RESERVED. Accessed by David Dammon on Jun 21, 2017 12:30:52 PM pursuant to License Agreement with ICC. No further reproduction or distribution authorized. ANY UNAUTHORIZED REPRODUCTION OR DISTRIBUTION IS A VIOLATION OF THE FEDERAL COPYRIGHT ACT AND THE LICENSE AGREEMENT, AND SUBJECT TO CIVIL AND CRIMINAL PENALTIES THEREUNDER.

the label, conveys **health hazard** information. A number from 0 to 4 appears in the blue diamond indicating the degree of the hazard. The higher the number, the higher the hazard, as follows:

0—No hazard.

1—Can cause irritation if not treated.

2—Can cause injury. Requires prompt treatment.

3—Can cause serious injury despite medical treatment.

4—Can cause death or major injury despite medical treatment.

The **red diamond**, appearing at the top of the label, conveys **flammability hazard** information. Again, the numbers 0 to 4 are used to rate the flammability hazard as follows:

0—No hazard.

1—Ignites after considerable heating.

2—Ignites if moderately heated.

3—Can be ignited at all normal temperatures.

4—Very flammable gases or very volatile flammable liquid.

The **yellow diamond**, appearing on the right side of the label, conveys **reactivity hazard** information. The numbers 0 to 4 are used to rank reactivity hazards as follows:

0—Normally stable. Not reactive with water.

1—Normally stable. Unstable at high temperatures and pressure. Reacts with water.

2—Normally unstable but will not detonate.

3—Can detonate or explode but requires strong initiating force or heating under confinement.

4—Readily detonates or explodes.

The **white diamond**, appearing at the bottom of the label, conveys **special hazard** information. This information is conveyed by the use of symbols that represent the special hazard. Two of the common symbols are:

W —The material is water reactive.

OX—An oxidizing agent.

Some labels use the white diamond to convey personal protective equipment or engineering controls required to work with the material safely. You may see a picture of gloves, safety glasses or a fume hood in the white diamond.

NFPA hazard ratings can be found on the MSDS for a given chemical. Also, this symbol, or a form of this symbol, often appears on the label of commercial chemical products.

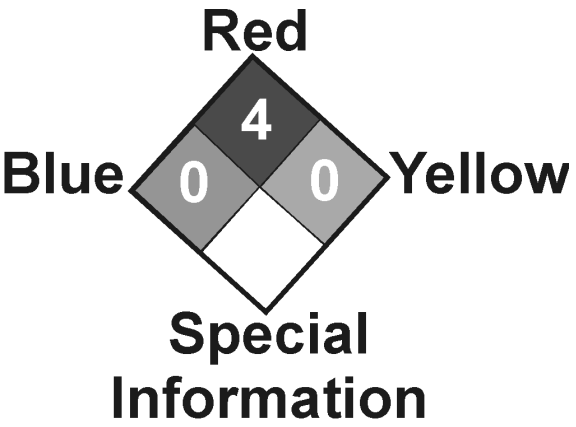

Figure 5003.5
HAZARD IDENTIFICATION SYMBOLS

5003.5.1 Markings. Individual containers, cartons or packages shall be conspicuously marked or labeled in an approved manner. Rooms or cabinets containing *compressed gases* shall be conspicuously labeled: COMPRESSED GAS.

❖ DOTn 49 CFR requires labels on all containers, cartons and packages of hazardous materials during transportation. Many manufacturers also post comprehensive labels on all containers and packages. These labels often include hazard information beyond that required by DOTn 49 CFR. The international pictorial symbols likely to be found on these labels are shown in Commentary Figure 5003.5.1.



Figure 5003.5.1
HAZARD SYMBOLS

5003.6 Signs. Signs and markings required by Sections 5003.5 and 5003.5.1 shall not be obscured or removed, shall be in English as a primary language or in symbols allowed by this code, shall be durable, and the size, color and lettering shall be *approved*.

❖ Signs must be in English as the primary language, or in symbols allowed by the code, and be made of a durable material with the size, color and lettering approved by the fire code official or other sections of the I-Codes.

5003.7 Sources of ignition. Sources of ignition shall comply with Sections 5003.7.1 through 5003.7.3.

❖ This section introduces the provisions for ignition control. A form of heat is required to ignite the vapors of flammable and combustible liquids. By limiting the sources of ignition in the storage or use area, one can reduce the possibility of a fire.

5003.7.1 Smoking. Smoking shall be prohibited and "No Smoking" signs provided as follows:

1. In rooms or areas where hazardous materials are stored or dispensed or used in *open systems* in amounts requiring a permit in accordance with Section 5001.5.

INTERNATIONAL CODE COUNCIL®
Copyright © 2015 ICC. ALL RIGHTS RESERVED. Accessed by David Dammon on Jun 21, 2017 12:30:52 PM pursuant to License Agreement with ICC. No further reproduction or distribution authorized. ANY UNAUTHORIZED REPRODUCTION OR DISTRIBUTION IS A VIOLATION OF THE FEDERAL COPYRIGHT ACT AND THE LICENSE AGREEMENT, AND SUBJECT TO CIVIL AND CRIMINAL PENALTIES THEREUNDER.

2. Within 25 feet (7620 mm) of outdoor storage, dispensing or open use areas.
3. Facilities or areas within facilities that have been designated as totally "no smoking" shall have "No Smoking" signs placed at all entrances to the facility or area. Designated areas within such facilities where smoking is permitted either permanently or temporarily, shall be identified with signs designating that smoking is permitted in these areas only.
4. In rooms or areas where flammable or combustible hazardous materials are stored, dispensed or used.

Signs required by this section shall be in English as a primary language or in symbols allowed by this code and shall comply with Section 310.

❖ The four areas listed in this section, because of their hazard characteristics, have been designated to receive "No Smoking" signs, in accordance with Section 310.

5003.7.2 Open flames. Open flames and high-temperature devices shall not be used in a manner that creates a hazardous condition and shall be *listed* for use with the hazardous materials stored or used.

❖ Processes that use open flames must be installed and safeguarded in accordance with the manufacturer's specifications. It should be noted that a chemical that is preheated can change from a nonhazardous classification to a hazardous classification or move from a lower hazard to a higher hazard. Safety is further enhanced by the requirement for devices to be listed for use in proximity to hazardous materials.

5003.7.3 Industrial trucks. Powered industrial trucks used in areas designated as hazardous (classified) locations in accordance with NFPA 70 shall be *listed* and *labeled* for use in the environment intended in accordance with NFPA 505.

❖ Powered industrial trucks used in hazardous locations defined in accordance with NFPA 70 must meet the requirements of NFPA 505 (see also Section 309).

5003.8 Construction requirements. Buildings, *control areas*, enclosures and cabinets for hazardous materials shall be in accordance with Sections 5003.8.1 through 5003.8.6.3.

❖ Both the code and the IBC have requirements for construction of hazardous use areas. Each of these codes must be consulted for the specific and general requirements based on the chemicals being protected.

5003.8.1 Buildings. Buildings, or portions thereof, in which hazardous materials are stored, handled or used shall be constructed in accordance with the *International Building Code*.

❖ Buildings must meet the construction requirements of the IBC. Note that IBC Section 414 is a good starting point for this review.

5003.8.2 Required detached buildings. Group H occupancies containing quantities of hazardous materials in excess of those set forth in Table 5003.8.2 shall be in detached buildings.

❖ The definition of a "Detached building" is found in Section 202. As defined, a detached storage building is a separate single-story building, without a basement or crawl space, that is used for the storage of hazardous materials and located an approved distance from all other structures.

The manufacture and storage of hazardous materials are frequently integrated into a single building. Additionally, it is not unusual for certain manufacturing buildings to contain multiple Group H uses where the threshold quantities are exceeded. Limiting the uses of identified hazardous materials to separate buildings containing only Group H uses maintains the intent of the code, which is to isolate large quantities of certain physical hazardous materials from uses other than those in Group H.

TABLE 5003.8.2. See page 50-30.

❖ Table 5003.8.2 gives the MAQs of materials that can be stored in Group H occupancies without detached storage.

5003.8.3 Control areas. *Control areas* shall comply with Sections 5003.8.3.1 through 5003.8.3.5.

❖ As defined in Section 202, a "Control area" is a space within a building where quantities of hazardous materials not exceeding the MAQs per control area are stored, dispensed, used or handled.

This section, in conjunction with the MAQ tables in Section 5003.1, utilizes a density concept for hazardous materials through the use of control areas. The intent of the control area concept is to provide an alternative method for the handling of hazardous materials without classifying the occupancy as Group H. In order to not be considered Group H, the amount of hazardous materials within any single control area bounded by fire barriers, horizontal assemblies, fire walls or exterior walls cannot exceed the MAQ for a specific material listed in Table 5003.1.1(1) or 5003.1.1(2) [see Commentary Figure 5003.8.3(1)]. A control area may be an entire building or a portion thereof. Where a building is not compartmented as required by the code for control areas, the entire building would be considered a single control area, in which case the entire MAQ of material from Table 5003.1.1(1) or 5003.1.1(2) located on any story would be subject to the limitations of Table 5003.8.3.2 based on IFC Committee Interpretations 51-07 and 52-07 of the table. Note that MAQs are based on the physical state, situation and hazard classification of materials and that up to the MAQ of each state of each class of material is permitted in each control area, subject to material incompatibility issues (see Section 5003.9.8).

As noted above, application of the control area provisions is intended only as a means for a building to avoid classification as Group H. It is not intended in

INTERNATIONAL CODE COUNCIL®
Copyright © 2015 ICC. ALL RIGHTS RESERVED. Accessed by David Dammon on Jun 21, 2017 12:30:52 PM pursuant to License Agreement with ICC. No further reproduction or distribution authorized. ANY UNAUTHORIZED REPRODUCTION OR DISTRIBUTION IS A VIOLATION OF THE FEDERAL COPYRIGHT ACT AND THE LICENSE AGREEMENT, AND SUBJECT TO CIVIL AND CRIMINAL PENALTIES THEREUNDER.

all cases to result in adequate separation of certain hazardous materials storage. For example, a control area for the storage of flammable liquids not exceeding the MAQ indicated in Table 5003.1.1(1) and constructed in accordance with these sections may require a fire-resistance rating of 1 hour for a building to avoid classification in Group H. However, the provisions of Chapter 57 or the referenced standard on flammable liquids, NFPA 30, may require a higher fire-resistance rating to provide proper separation based on the hazards of the flammable liquid being stored. In such a case, the provisions requiring the higher rating would apply.

5003.8.3.1 Construction requirements. *Control areas* shall be separated from each other by *fire barriers* constructed in accordance with Section 707 of the *International Building Code* or *horizontal assemblies* constructed in accordance with Section 711 of the *International Building Code*, or both.

❖ This section requires that control areas be separated both vertically and horizontally, from one another as well as the rest of the building in which they are located, by the same type of construction as is used for occupancy separations. The fire barriers and horizontal assemblies thus required must be constructed in accordance with IBC Sections 707 and 711, respectively. Requiring fire-resistance-rated compartmentation of control areas minimizes the possibility of simultaneous involvement of multiple control areas in a single fire incident. A fire in a single control area would involve only the amount of hazardous materials in that control area, which would not exceed the MAQ.

5003.8.3.2 Percentage of maximum allowable quantities. The percentage of maximum allowable quantities of hazardous materials per *control area* allowed at each floor level within a building shall be in accordance with Table 5003.8.3.2.

❖ See the commentary to Table 5003.8.3.2.

TABLE 5003.8.3.2. See page 50-31.

❖ Table 5003.8.3.2 establishes the maximum quantity of hazardous materials permitted in a building and the required fire-resistance-rated separation for control areas. The overall maximum quantity of hazardous materials that can be present in the entire building is established based on the number of permitted control areas in Table 5003.8.3.2 and the maximum quantity of materials allowed in each control area per floor.

Based on the table, the first floor level could contain four control areas with up to 100 percent of the MAQ of each hazardous material per control area. For example, a single control area in a one-story, nonsprinklered building could contain up to 30 gallons (114 L) of Class 1A flammable liquids [see Table 5003.1.1(1)], 125 pounds (57 kg) of Class III organic peroxides [see Table 5003.1.1(1)], 250 pounds (114

TABLE 5003.8.2
DETACHED BUILDING REQUIRED

A DETACHED BUILDING IS REQUIRED WHERE THE QUANTITY OF MATERIAL EXCEEDS THAT LISTED HEREIN			
Material	**Class**	**Solids and liquids (tons)[a, b]**	**Gases (cubic feet)[a, b]**
Explosives	Division 1.1 Division 1.2 Division 1.3 Division 1.4 Division 1.4[c] Division 1.5 Division 1.6	Maximum Allowable Quantity Maximum Allowable Quantity Maximum Allowable Quantity Maximum Allowable Quantity 1 Maximum Allowable Quantity Maximum Allowable Quantity	Not Applicable
Oxidizers	Class 4	Maximum Allowable Quantity	Maximum Allowable Quantity
Unstable (reactives) detonable	Class 3 or 4	Maximum Allowable Quantity	Maximum Allowable Quantity
Oxidizer, liquids and solids	Class 3 Class 2	1,200 2,000	Not Applicable
Organic peroxides	Detonable Class I Class II Class III	Maximum Allowable Quantity Maximum Allowable Quantity 25 50	Not Applicable
Unstable (reactives) nondetonable	Class 3 Class 2	1 25	2,000 10,000
Water reactives	Class 3 Class 2	1 25	Not Applicable
Pyrophoric gases	Not Applicable	Not Applicable	2,000

For SI: 1 pound = 0.454 kg, 1 cubic foot = 0.02832 m^3, 1 ton = 2000 lbs. = 907.2 kg.

a. For materials that are detonable, the distance to other buildings or lot lines shall be as specified in the *International Building Code*. For materials classified as explosives, the required separation distances shall be as specified in Chapter 56.

b. "Maximum Allowable Quantity" means the maximum allowable quantity per control area set forth in Table 5003.1.1(1).

c. Limited to Division 1.4 materials and articles, including articles packaged for shipment, that are not regulated as an explosive under Bureau of Alcohol, Tobacco, Firearms and Explosives regulations, or unpackaged articles used in process operations that do not propagate a detonation or deflagration between articles, providing the net explosive weight of individual articles does not exceed 1 pound.

INTERNATIONAL CODE COUNCIL®
Copyright © 2015 ICC. ALL RIGHTS RESERVED. Accessed by David Dammon on Jun 21, 2017 12:30:52 PM pursuant to License Agreement with ICC. No further reproduction or distribution authorized. ANY UNAUTHORIZED REPRODUCTION OR DISTRIBUTION IS A VIOLATION OF THE FEDERAL COPYRIGHT ACT AND THE LICENSE AGREEMENT, AND SUBJECT TO CIVIL AND CRIMINAL PENALTIES THEREUNDER.

kg) of Class 2 oxidizers [see Table 5003.1.1(1)] and 500 gallons (1892 L) of corrosive liquids [see Table 5003.1.1(2)]. These quantities could be contained in four different control areas if they are separated from one another by a minimum 1-hour fire-resistance-rated fire barrier.

The amount of hazardous materials per control area and the number of control areas per floor are reduced if hazardous materials are stored or used above the first floor. Difficulty in gaining access for fire fighting or other emergency response purposes and potential hazard to building occupants who must egress that area are increased above the first floor. The use of control areas on upper floors can be advantageous for multistory research and laboratory-type facilities that often have a functional need to use limited amounts of hazardous materials throughout various portions of the building. Without control areas, the MAQ for a hazardous material would be limited to an entire building area regardless of the overall size or height of the building. For example, if control areas are not used, a 50,000-square-foot (4645 m^2) multistory building would be limited to the same MAQ of hazardous materials as a single-story building of 5,000 square feet (465 m^2), subject to the per-floor limitations of the table based on IFC Committee Interpretations of Chapter 50.

Note a clarifies that the MAQ is based on Table 5003.1.1(1) or 5003.1.1(2) including the increases allowed by an automatic sprinkler system in accordance with NFPA 13, approved hazardous material storage cabinets or both where applicable.

Note b clarifies the fire barrier separation needed to establish the boundaries of the control, area that

TABLE 5003.8.3.2
DESIGN AND NUMBER OF CONTROL AREAS

FLOOR LEVEL		PERCENTAGE OF THE MAXIMUM ALLOWABLE QUANTITY PER CONTROL AREA[a]	NUMBER OF CONTROL AREAS PER FLOOR	FIRE-RESISTANCE RATING FOR FIRE BARRIERS IN HOURS[b]
Above grade plane	Higher than 9	5	1	2
	7-9	5	2	2
	6	12.5	2	2
	5	12.5	2	2
	4	12.5	2	2
	3	50	2	1
	2	75	3	1
	1	100	4	1
Below grade plane	1	75	3	1
	2	50	2	1
	Lower than 2	Not Allowed	Not Allowed	Not Allowed

a. Percentages shall be of the maximum allowable quantity per control area shown in Tables 5003.1.1(1) and 5003.1.1(2), with all increases allowed in the footnotes to those tables.
b. Separation shall include fire barriers and horizontal assemblies as necessary to provide separation from other portions of the building.

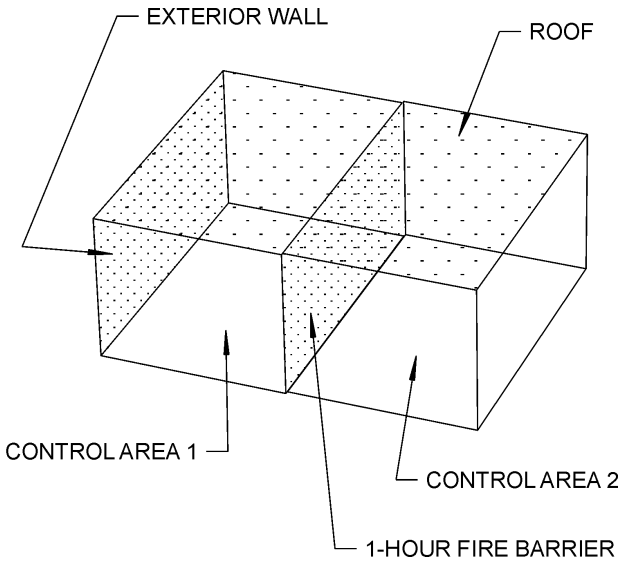

Figure 5003.8.3(1)
CONTROL AREAS

INTERNATIONAL CODE COUNCIL®
Copyright © 2015 ICC. ALL RIGHTS RESERVED. Accessed by David Dammon on Jun 21, 2017 12:30:52 PM pursuant to License Agreement with ICC. No further reproduction or distribution authorized. ANY UNAUTHORIZED REPRODUCTION OR DISTRIBUTION IS A VIOLATION OF THE FEDERAL COPYRIGHT ACT AND THE LICENSE AGREEMENT, AND SUBJECT TO CIVIL AND CRIMINAL PENALTIES THEREUNDER.

include not only the vertical wall assemblies but also the floor/ceiling assemblies in order to be adequately separated from all adjacent interior spaces.

Example: Determine the maximum amount of Class IB flammable liquids that can be stored within a single-story, 10,000-square-foot (929 m^2) nonsprinklered Group F-1 occupancy [see Commentary Figure 5003.8.3(2)] of Type IIB construction without classifying the storage area Group H-2.

Based on a MAQ of 120 gallons (454 L) for Class IB flammable liquids from Table 5003.1.1(1), a maximum of 120 gallons (454 L) can be stored in each of the four control areas; therefore, while the building may actually contain a total of 480 gallons (1817 L), a maximum of 120 gallons (454 L) is permitted in each control area that is separated from all adjacent control areas by minimum 1-hour fire barriers constructed in accordance with IBC Section 707.

The building, in this case, could still be classified as Group F-1. An automatic fire suppression system would not be required, since the 12,000-square-foot (1115 m^2) threshold for suppression of Group F-1 fire areas is not exceeded (see Section 903.2.3) and there are no control areas containing hazardous materials that exceed the MAQ. Notes d and e of Table 5003.1.1(1) would allow the base quantity of Class IB flammable liquids to be increased 100 percent in buildings protected with an automatic sprinkler system or when the material is stored in approved hazardous material storage cabinets. In this example, this would result in increasing the MAQ of Class IB flammable liquids by a factor of two; therefore, the building could now contain a total of 960 gallons (3634 L) with a maximum of 240 gallons (908 L) in each of the four control areas, separated as required by the code, and still maintain a Group F-1 classification.

If both an automatic sprinkler system and hazardous material storage cabinets are used to protect the Class IB flammable liquids, then the base quantity of Table 5003.1.1(1) could be increased by a factor of four. The building in this example, therefore, with both sprinkler protection and approved cabinets, could contain a total of 1,920 gallons (7267 L) with a maximum of 480 gallons (1817 L) in each of the four control areas, separated as required by the code, and still maintain a Group F-1 classification.

The allowable increase in the MAQ is offset by the additional level or levels of protection. The use of control areas provides a tradeoff based on building compartmentation. Fire protection (automatic sprinkler systems) and controlled storage through the use of approved hazardous material storage cabinets also adds a degree of protection, justifying the increased allowable quantities. See IFC Committee Interpretations 51-07 and 52-07 in Commentary Figure 5003.8.3.2.

5003.8.3.3 Number. The maximum number of *control areas* per floor within a building shall be in accordance with Table 5003.8.3.2.

❖ It is not the code's intent to require multiple control areas. As previously indicated, in a building that is entirely one control area, if the total quantity of hazardous materials does not exceed the MAQ, the building would not be classified as Group H. Similarly, if the owner is satisfied with an occupancy classification of Group H, multiple control areas would not be required. Therefore, control areas are characterized

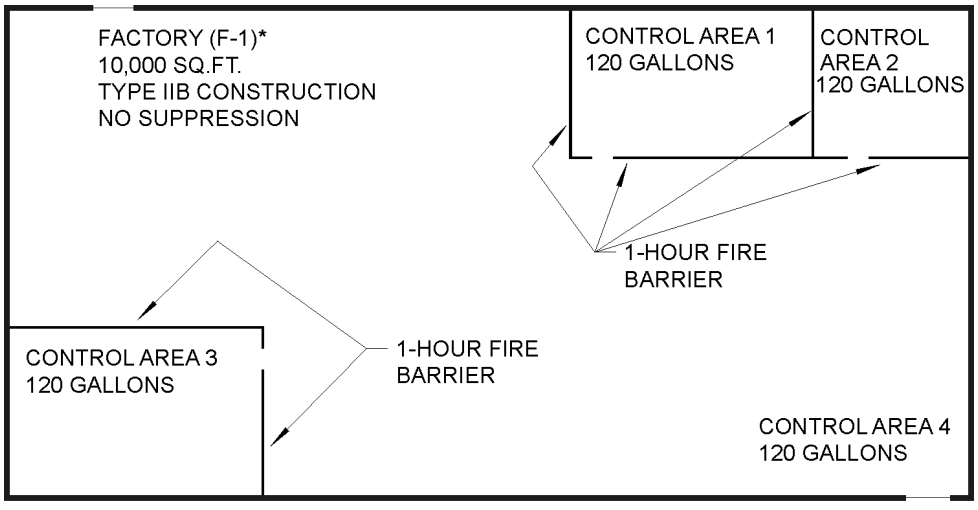

For SI: 1 square foot = 0.0929 m^2, 1 gallon = 3.785 L.

Figure 5003.8.3(2)
CONTROL AREA EXAMPLE

INTERNATIONAL CODE COUNCIL®
Copyright © 2015 ICC. ALL RIGHTS RESERVED. Accessed by David Dammon on Jun 21, 2017 12:30:52 PM pursuant to License Agreement with ICC. No further reproduction or distribution authorized. ANY UNAUTHORIZED REPRODUCTION OR DISTRIBUTION IS A VIOLATION OF THE FEDERAL COPYRIGHT ACT AND THE LICENSE AGREEMENT, AND SUBJECT TO CIVIL AND CRIMINAL PENALTIES THEREUNDER.

COMMITTEE INTERPRETATION NO. 51-07

Section 5003.8.3.2
Issued on 2006 edition – Issued 04-29-08

Q: Given a nonsprinklered, multistory building of Type IIB construction. The building is used for the storage of hazardous materials that do not exceed the maximum allowable quantity per control area in accordance with Tables 5003.1.1(1) and 5003.1.1(2) of the *International Fire Code*. The building contains no fire walls, interior fire barriers or fire-resistance-rated horizontal assemblies. The entire building is defined as a single control area.

Are the provisions of Section 5003.8.3.2 of the *International Fire Code*, which limit the percentage of the maximum allowable quantity of hazardous materials for any floor, applicable to a multistory building consisting of a single control area?

A: Yes. When the quantity of hazardous material stored in the building is equal to or less than the maximum allowable quantity per control area in Tables 5003.1.1(1) and 5003.1.1(2), the entire building would be considered the control area. When the entire building is the control area, the maximum allowable quantity of material may be located anywhere in the building subject to the per-floor limitations of Table 5003.8.3.2.

COMMITTEE INTERPRETATION NO. 52-07

Section 5003.8.3.2
Issued on 2006 edition – Issued 04-29-08

Q: Given a nonsprinklered multistory building of Type IIB construction. The building is used for the storage of hazardous materials that exceeds the maximum allowable quantity permitted for a single control area in accordance with Tables 5003.1.1(1) and 5003.1.1(2) of the *International Fire Code*. An interior fire barrier is constructed that spans from the foundation to the roof for the entire height of the building. There are no fire-resistance-rated horizontal assemblies provided between floors. Therefore, the entire building is defined as having two independent multistory control areas.

Are the provisions of Section 5003.8.3.2 of the *International Fire Code*, which limit the percentage of the maximum allowable quantity of hazardous materials for any floor, applicable to a multistory building consisting of multiple control areas?

A: Yes. When the quantity of hazardous material being stored in each control area is equal to or less than the maximum allowable quantity per control area in Tables 5003.1.1(1) and 5003.1.1(2), the maximum allowable quantity of material per control area may be located anywhere within a multistory control area, subject to the per-floor limitations of Table 5003.8.3.2.

Figure 5003.8.3.2
COMMITTEE INTERPRETATIONS

as an alternative means by which a building can be classified as other than Group H. Again, the provisions are applicable only when control areas are chosen as a design alternative to classification of the occupancy as Group H (see commentary, Table 5003.8.3.2).

5003.8.3.4 Fire-resistance-rating requirements. The required *fire-resistance rating* for *fire barriers* shall be in accordance with Table 5003.8.3.2. The floor assembly of the *control area* and the construction supporting the floor of the *control area* shall have a *fire-resistance rating* of not less than 2 hours.

Exception: The floor assembly of the *control area* and the construction supporting the floor of the *control area* is allowed to be 1-hour *fire-resistance* rated in buildings of Type IIA, IIIA and VA construction, provided that both of the following conditions exist:

1. The building is equipped throughout with an *automatic sprinkler system* in accordance with Section 903.3.1.1.

INTERNATIONAL CODE COUNCIL®
Copyright © 2015 ICC. ALL RIGHTS RESERVED. Accessed by David Dammon on Jun 21, 2017 12:30:52 PM pursuant to License Agreement with ICC. No further reproduction or distribution authorized. ANY UNAUTHORIZED REPRODUCTION OR DISTRIBUTION IS A VIOLATION OF THE FEDERAL COPYRIGHT ACT AND THE LICENSE AGREEMENT, AND SUBJECT TO CIVIL AND CRIMINAL PENALTIES THEREUNDER.

2. The building is three stories or less above grade plane.

❖ The fire separation requirements for control areas, both horizontal and vertical, are dependent on their location in a building in accordance with Table 5003.8.3.2. The amount of hazardous materials per control area, as well as the number of control areas per floor, are reduced if stored or used above the first floor.

Where the control area is located above the first floor, the floor assembly and all supporting construction for the control area would require a minimum 2-hour fire-resistance rating. The required 2-hour fire-resistance rating of the floor construction only refers to the floor of the control area. The increased fire-resistance rating and reduced quantities are intended to aid the fire department and other emergency response personnel in overcoming the difficulties associated with dealing with hazardous materials incidents above the level of fire department access (see commentary, Table 5003.8.3.2). The use of control areas on upper floors provides an alternative method for multistory research and laboratory-type facilities that may need to use a limited amount of hazardous materials throughout various portions of the building. Without control areas, the MAQ for a hazardous material would be limited to a single building area regardless of the overall size or height of the building. For example, if control areas are not utilized, a 50,000-square-foot (4645 m^2) single-story building would be limited to the same quantity of hazardous materials as a two-story building with 5,000 square feet (464 m^2) per floor.

Buildings of Type IIA, IIIA and VA construction are required to have floor construction with a minimum fire-resistance rating of 1 hour as indicated in IBC Table 601. The exception recognizes the combination of a 1-hour horizontal assembly in conjunction with sprinkler protection as a reasonable alternative for the noted construction types. The three-story limitation is consistent with the fire-resistant-rating requirements for fire barriers in Table 5003.8.3.2.

5003.8.3.5 Hazardous material in Group M display and storage areas and in Group S storage areas. The aggregate quantity of nonflammable solid and nonflammable or noncombustible liquid hazardous materials allowed within a single *control area* of a Group M display and storage area or a Group S storage area is allowed to exceed the *maximum allowable quantities per control area* specified in Tables 5003.1.1(1) and 5003.1.1(2) without classifying the building or use as a Group H occupancy, provided that the materials are displayed and stored in accordance with Section 5003.11.

❖ This section addresses an option for control areas containing certain nonflammable or noncombustible hazardous materials that are stored in mercantile and storage occupancies, including outdoor control areas. This option would allow Group H-4 materials, which present a health hazard rather than a physical hazard, as well as limited Group H-2 and H-3 materials such as oxidizers, to be stored in both retail display and stock areas of regulated mercantile occupancies and in storage-related occupancies in excess of the MAQs of Tables 5003.1.1(1) and 5003.1.1(2) without classifying the building as Group H. Without this option, many mercantile and storage occupancies could be classified technically as Group H. The increased quantities of certain hazardous materials are based on the recognition that while there is limited risk in these occupancies, the packaging and storage arrangements can be controlled. For further information on the storage limitations required for these types of materials, see Section 5003.11.3.

This section, in conjunction with Table 5003.11.1, establishes the maximum quantity of the indicated hazardous materials permitted within a single control area of a mercantile occupancy. As indicated in Table 5003.11.1, this section only applies to certain nonflammable solids and nonflammable or noncombustible liquids. Note that this option is not applicable to mercantile and storage occupancies containing hazardous materials other than those indicated in Table 5003.11.1.

5003.8.4 Gas rooms. Where a gas room is used to increase the *maximum allowable quantity per control area* or provided to comply with the provisions of Chapter 60, the gas room shall be in accordance with Sections 5003.8.4.1 and 5003.8.4.2.

❖ Where gas rooms are provided as required by Chapter 60 or where they are used in accordance with Table 5003.1.1(1), Note e to increase the maximum allowable quantity per control area (MAQ) of hazardous materials, they must meet the requirements stated in the subsections that follow. Gas rooms are required to be protected by automatic sprinklers, separated based on the occupancy, and have ventilation designed to operate at a negative pressure. These requirements are similar to those that apply to exhausted enclosures that allow the quantity increase. This section will bring consistency between the requirements for gas cabinets, exhausted enclosures and gas rooms with respect to application and MAQ.

5003.8.4.1 Construction. Gas rooms shall be protected with an *automatic sprinkler system.* Gas rooms shall be separated from the remainder of the building in accordance with the requirements of the *International Building Code* based on the occupancy group into which it has been classified.

❖ Construction shall be based on the occupancy separation requirements of IBC Table 302.3.3. A gas room would typically be a Group H-4 occupancy; therefore, the separation requirements would be from a Group H-4 occupancy to the other occupancy (i.e., business, institutional, storage, etc.).

5003.8.4.2 Ventilation system. The ventilation system for gas rooms shall be designed to operate at a negative pressure in relation to the surrounding area. Highly toxic and toxic gases shall also comply with Section 6004.2.2.6. The ventila-

INTERNATIONAL CODE COUNCIL®
Copyright © 2015 ICC. ALL RIGHTS RESERVED. Accessed by David Dammon on Jun 21, 2017 12:30:52 PM pursuant to License Agreement with ICC. No further reproduction or distribution authorized. ANY UNAUTHORIZED REPRODUCTION OR DISTRIBUTION IS A VIOLATION OF THE FEDERAL COPYRIGHT ACT AND THE LICENSE AGREEMENT, AND SUBJECT TO CIVIL AND CRIMINAL PENALTIES THEREUNDER.

tion system shall be installed in accordance with the *International Mechanical Code.*

❖ The gas room exhaust ventilation system must be designed to operate at a negative pressure to the area in which it is located in order to maintain a safe atmosphere outside the gas room in the event of a leak. Section 6004.2.2.6 also has specific ventilation requirements for highly toxic and toxic gases. Ventilation systems must comply with the IMC.

5003.8.5 Exhausted enclosures. Where an exhausted enclosure is used to increase *maximum allowable quantity per control area* or where the location of hazardous materials in exhausted enclosures is provided to comply with the provisions of Chapter 60, the exhausted enclosure shall be in accordance with Sections 5003.8.5.1 through 5003.8.5.3.

❖ When exhausted enclosures are provided as required by Chapter 60, they must meet the requirements of the following subsections.

5003.8.5.1 Construction. Exhausted enclosures shall be of noncombustible construction.

❖ See IBC Section 202 for the definition of "Noncombustible construction."

5003.8.5.2 Ventilation. Exhausted enclosures shall be provided with an exhaust ventilation system. The ventilation system for exhausted enclosures shall be designed to operate at a negative pressure in relation to the surrounding area. Ventilation systems used for highly toxic and toxic gases shall also comply with Items 1, 2 and 3 of Section 6004.1.2. The ventilation system shall be installed in accordance with the *International Mechanical Code*.

❖ The exhausted enclosure exhaust ventilation system must be designed to operate at a negative pressure to the area in which it is located in order to maintain a safe atmosphere in the area in the event of a leak. Section 6004.2.2.6 also has specific ventilation requirements for highly toxic and toxic gases. Ventilation systems must comply with the IMC.

5003.8.5.3 Fire-extinguishing system. Exhausted enclosures where flammable materials are used shall be protected by an approved automatic fire-extinguishing system in accordance with Chapter 9.

❖ Special care is required in selecting the correct type of automatic fire suppression system. The MSDS should be consulted for compatibility of the suppression system and the chemicals being used.

5003.8.6 Gas cabinets. Where a gas cabinet is used to increase the *maximum allowable quantity per control area* or where the location of *compressed gases* in gas cabinets is provided to comply with the provisions of Chapter 60, the gas cabinet shall be in accordance with Sections 5003.8.6.1 through 5003.8.6.3.

❖ When gas cabinets are provided as required by Chapter 60, they must meet the requirements of the following subsections.

5003.8.6.1 Construction. Gas cabinets shall be constructed in accordance with the following:

1. Constructed of not less than 0.097-inch (2.5 mm) (No. 12 gage) steel.
2. Be provided with self-closing limited access ports or noncombustible windows to give access to equipment controls.
3. Be provided with self-closing doors.
4. Gas cabinet interiors shall be treated, coated or constructed of materials that are compatible with the hazardous materials stored. Such treatment, coating or construction shall include the entire interior of the cabinet.

❖ This section itemizes four requirements for the construction of gas cabinets. Listed and labeled gas cabinets can be assumed to meet these minimum requirements when they have been tested by an approved third-party testing agency.

5003.8.6.2 Ventilation. Gas cabinets shall be provided with an exhaust ventilation system. The ventilation system for gas cabinets shall be designed to operate at a negative pressure in relation to the surrounding area. Ventilation systems used for highly toxic and toxic gases shall also comply with Items 1, 2 and 3 of Section 6004.1.2. The ventilation system shall be installed in accordance with the *International Mechanical Code*.

❖ The gas cabinet exhaust ventilation system must be designed to operate at a negative pressure to the area in which it is located in order to maintain a safe atmosphere in the area in the event of a leak. Section 6004.2.2.6 also has specific ventilation requirements for highly toxic and toxic gases. Ventilation systems must comply with the IMC.

5003.8.6.3 Maximum number of cylinders per gas cabinet. The number of cylinders contained in a single gas cabinet shall not exceed three.

❖ This section limits the number of cylinders of compressed gases within a gas cabinet for quantity control purposes in an effort to reduce the potential involvement of other gas cylinders in a fire.

5003.8.7 Hazardous materials storage cabinets. Where storage cabinets are used to increase *maximum allowable quantity per control area* or to comply with this chapter, such cabinets shall be in accordance with Sections 5003.8.7.1 and 5003.8.7.2.

❖ This section recognizes that the use of approved storage cabinets is an acceptable alternative to increase the MAQ of certain hazardous materials. For example, the base MAQ in each control area for storage of Class IB flammable liquids is 120 gallons (454 L) as indicated in Table 5003.1.1(1). However, if Class IB flammable liquids are stored in an approved storage cabinet, the base MAQ could be increased to 240 gallons (908 L). Therefore, a building could contain 240 gallons (908 L) of Class IB liquids in each control

INTERNATIONAL CODE COUNCIL®
Copyright © 2015 ICC. ALL RIGHTS RESERVED. Accessed by David Dammon on Jun 21, 2017 12:30:52 PM pursuant to License Agreement with ICC. No further reproduction or distribution authorized. ANY UNAUTHORIZED REPRODUCTION OR DISTRIBUTION IS A VIOLATION OF THE FEDERAL COPYRIGHT ACT AND THE LICENSE AGREEMENT, AND SUBJECT TO CIVIL AND CRIMINAL PENALTIES THEREUNDER.

area without classifying the building as a high-hazard occupancy if all flammable liquids are stored in an approved storage cabinet. These types of storage cabinets are sometimes known as flammable liquid cabinets or acid storage cabinets.

5003.8.7.1 Construction. The interior of cabinets shall be treated, coated or constructed of materials that are nonreactive with the hazardous material stored. Such treatment, coating or construction shall include the entire interior of the cabinet. Cabinets shall either be *listed* in accordance with UL 1275 as suitable for the intended storage or constructed in accordance with the following:

1. Cabinets shall be of steel having a thickness of not less than 0.0478 inch (1.2 mm) (No. 18 gage). The cabinet, including the door, shall be double walled with a $1^1/_2$-inch (38 mm) airspace between the walls. Joints shall be riveted or welded and shall be tight fitting. Doors shall be well fitted, self-closing and equipped with a self-latching device.
2. The bottoms of cabinets utilized for the storage of liquids shall be liquid tight to a minimum height of 2 inches (51 mm).

Electrical equipment and devices within cabinets used for the storage of hazardous gases or liquids shall be in accordance with NFPA 70.

❖ This section gives two methods of acceptance. Either the cabinet is listed in accordance with UL 1275 or construction meets the requirements of this section.

This section specifies minimum construction requirements for hazardous material storage cabinets similar to those cabinets required for flammable and combustible liquids in NFPA 30. While both this section and NFPA 30 require the door of the cabinet to be equipped with a latching device, this section does not specifically require a three-point latch arrangement on all cabinet doors. The three-point latch arrangement is recommended to enhance the integrity of the cabinet in a fire. The door sill of hazardous material storage cabinets used for storing liquids must be raised 2 inches (51 mm) above the bottom of the cabinet. The 2-inch (51 mm) raised sill is intended to retain any spilled liquid within the cabinet. The surface of the cabinets must be compatible with the material stored in the cabinets. Any electrical equipment must comply with NFPA 70.

5003.8.7.2 Warning markings. Cabinets shall be clearly identified in an approved manner with red letters on a contrasting background to read:

HAZARDOUS—KEEP FIRE AWAY.

❖ To warn the general public and employees of potential exposure to hazardous materials within storage cabinets, appropriate warning labels are required. Cabinets shall be clearly identified with the wording given in this section.

5003.9 General safety precautions. General precautions for the safe storage, handling or care of hazardous materials shall be in accordance with Sections 5003.9.1 through 5003.9.10.

❖ The following subsections deal with the safe handling and storage of hazardous materials.

5003.9.1 Personnel training and written procedures. Persons responsible for the operation of areas in which hazardous materials are stored, dispensed, handled or used shall be familiar with the chemical nature of the materials and the appropriate mitigating actions necessary in the event of fire, leak or spill.

❖ Each tenant or owner should develop a mitigation plan. This plan should be posted and be familiar to all workers. In the event of a release, this plan should be immediately placed into effect.

5003.9.1.1 Fire department liaison. Responsible persons shall be designated and trained to be liaison personnel to the fire department. These persons shall aid the fire department in preplanning emergency responses and identifying the locations where hazardous materials are located, and shall have access to Material Safety Data Sheets and be knowledgeable in the site's emergency response procedures.

❖ It goes without saying that an emergency is not the time to wonder who, what, when or where. The code section recommends that a working relationship be established with the emergency services prior to the emergency. A plant engineer or chemist who knows the type of materials, methods of storage, location of storage in the structure and chemical makeup would typically be the best person for this liaison work.

5003.9.2 Security. Storage, dispensing, use and handling areas shall be secured against unauthorized entry and safeguarded in a manner *approved* by the *fire code official*.

❖ Safeguards must be in place to assist in the prevention of unauthorized entry into the building or the removal of hazardous chemicals.

5003.9.3 Protection from vehicles. Guard posts or other *approved* means shall be provided to protect storage tanks and connected piping, valves and fittings; dispensing areas; and use areas subject to vehicular damage in accordance with Section 312.

❖ Storage, piping or other process equipment that could be damaged by vehicular traffic must be protected with barriers designed to meet the requirements of Section 312.

5003.9.4 Electrical wiring and equipment. Electrical wiring and equipment shall be installed and maintained in accordance with NFPA 70.

❖ Article 500 of NFPA 70 is the applicable article for classified locations.

5003.9.5 Static accumulation. Where processes or conditions exist where a flammable mixture could be ignited by

INTERNATIONAL CODE COUNCIL®
Copyright © 2015 ICC. ALL RIGHTS RESERVED. Accessed by David Dammon on Jun 21, 2017 12:30:52 PM pursuant to License Agreement with ICC. No further reproduction or distribution authorized. ANY UNAUTHORIZED REPRODUCTION OR DISTRIBUTION IS A VIOLATION OF THE FEDERAL COPYRIGHT ACT AND THE LICENSE AGREEMENT, AND SUBJECT TO CIVIL AND CRIMINAL PENALTIES THEREUNDER.

static electricity, means shall be provided to prevent the accumulation of a static charge.

❖ NFPA 77 gives some guidance into the methods of protection against static electricity. NFPA 70 also provides guidance on the requirements.

5003.9.6 Protection from light. Materials that are sensitive to light shall be stored in containers designed to protect them from such exposure.

❖ Light-sensitive chemicals must be protected from UV lights or other spectrum patterns that may be damaging. See the MSDS for additional information and requirements for chemicals.

5003.9.7 Shock padding. Materials that are shock sensitive shall be padded, suspended or otherwise protected against accidental dislodgement and dislodgement during seismic activity.

❖ Several explosive chemicals are shock sensitive and must be protected against accidents that could knock them from their shelves. If the building in which they are stored or used is in a seismic zone, they must also be protected.

5003.9.8 Separation of incompatible materials. *Incompatible materials* in storage and storage of materials that are incompatible with materials in use shall be separated where the stored materials are in containers having a capacity of more than 5 pounds (2 kg) or 0.5 gallon (2 L). Separation shall be accomplished by:

1. Segregating *incompatible materials* in storage by a distance of not less than 20 feet (6096 mm).
2. Isolating *incompatible materials* in storage by a noncombustible partition extending not less than 18 inches (457 mm) above and to the sides of the stored material.
3. Storing liquid and solid materials in hazardous material storage cabinets.
4. Storing *compressed gases* in gas cabinets or exhausted enclosures in accordance with Sections 5003.8.5 and 5003.8.6. Materials that are incompatible shall not be stored within the same cabinet or exhausted enclosure.

❖ Materials that are incompatible with each other must be separated. This section gives four methods of separation. If cabinets or exhausted enclosures are used, only compatible chemicals can be stored in any one cabinet or enclosure.

5003.9.9 Shelf storage. Shelving shall be of substantial construction, and shall be braced and anchored in accordance with the seismic design requirements of the *International Building Code* for the seismic zone in which the material is located. Shelving shall be treated, coated or constructed of materials that are compatible with the hazardous materials stored. Shelves shall be provided with a lip or guard where used for the storage of individual containers.

Exceptions:

1. Storage in hazardous material storage cabinets or laboratory furniture specifically designed for such use.
2. Storage of hazardous materials in amounts not requiring a permit in accordance with Section 5001.5.

Shelf storage of hazardous materials shall be maintained in an orderly manner.

❖ Where hazardous chemicals are stored on shelves, the shelves must have a lip or guard at the edges. The shelving must be treated or otherwise protected to be compatible with the chemicals stored.

5003.9.10 Safety cans. Safety cans shall be *listed* in accordance with UL 30 where used to increase the *maximum allowable quantities per control area* of flammable or *combustible liquids* in accordance with Table 5003.1.1(1). Safety cans *listed* in accordance with UL 1313 are allowed for flammable and *combustible liquids* where not used to increase the *maximum allowable quantities per control area* and for other hazardous material liquids in accordance with the listing.

❖ This section specifically prescribes the use of metallic safety cans listed in accordance with UL 30 when increasing the MAQ of flammable and combustible liquids in Table 5003.1.1(1). For all other physical hazard classes of hazardous material, a listed safety can constructed of either metal or nonmetallic material can be used to increase the MAQ provided that the safety can is suitable and listed for the particular hazardous material.

It should be noted that metal safety cans listed under UL 30 are "...primarily intended to store and handle flammable and combustible liquids, such as gasoline, naphtha, kerosene, acetone, MEK and similar liquids...," according to the scope statement of that standard. As such, a listed safety can constructed of metal may not always be the appropriate container for hazardous materials presenting multiple hazards. Consider acetic acid, which is not only a Class II combustible liquid, but also a corrosive liquid. Galvanized steel is an inappropriate construction material because the acid will corrode the steel. However, a material like polyethylene, which is used in the manufacturing of nonmetallic safety cans, is chemically compatible with acetic acid. Once again, however, the caution is raised that the scope statement of UL 1313 states that nonmetallic safety cans "...are primarily intended to store and handle fuel oil, gasoline, kerosene. Nonmetallic safety cans that are intended to store and handle liquid fuels other than those specified...may be subjected to additional

INTERNATIONAL CODE COUNCIL®
Copyright © 2015 ICC. ALL RIGHTS RESERVED. Accessed by David Dammon on Jun 21, 2017 12:30:52 PM pursuant to License Agreement with ICC. No further reproduction or distribution authorized. ANY UNAUTHORIZED REPRODUCTION OR DISTRIBUTION IS A VIOLATION OF THE FEDERAL COPYRIGHT ACT AND THE LICENSE AGREEMENT, AND SUBJECT TO CIVIL AND CRIMINAL PENALTIES THEREUNDER.

requirements not covered in the Standard." Also see the commentary to Section 5002.1 for the definition of "Safety can" and Table 5003.1.1(1), Note e.

5003.10 Handling and transportation. In addition to the requirements of Section 5003.2, the handling and transportation of hazardous materials in *corridors* or enclosures for stairways and ramps shall be in accordance with Sections 5003.10.1 through 5003.10.3.6.

❖ This section deals with the handling and transportation of hazardous chemicals in corridors or exit enclosures.

5003.10.1 Valve protection. Hazardous material gas containers, cylinders and tanks in transit shall have their protective caps in place. Containers, cylinders and tanks of highly toxic or toxic *compressed gases* shall have their valve outlets capped or plugged with an *approved* closure device in accordance with Chapter 53.

❖ Whenever a cylinder or tank of hazardous gases is transported, it can have a protective cover on the outlet valves or be plugged with an approved closure valve as stated in Section 5303.4.

5003.10.2 Carts and trucks required. Liquids in containers exceeding 5 gallons (19 L) in a *corridor* or enclosure for a stairway or ramp shall be transported on a cart or truck. Containers of hazardous materials having a hazard ranking of 3 or 4 in accordance with NFPA 704 and transported within *corridors* or interior exit stairways and ramps, shall be on a cart or truck. Where carts and trucks are required for transporting hazardous materials, they shall be in accordance with Section 5003.10.3.

Exceptions:

1. Two hazardous material liquid containers that are hand carried in acceptable safety carriers.
2. Not more than four drums not exceeding 55 gallons (208 L) each that are transported by suitable drum trucks.
3. Containers and cylinders of *compressed gases* that are transported by *approved* hand trucks, and containers and cylinders not exceeding 25 pounds (11 kg) that are hand carried.
4. Solid hazardous materials not exceeding 100 pounds (45 kg) that are transported by *approved* hand trucks, and a single container not exceeding 50 pounds (23 kg) that is hand carried.

❖ This section limits the amount of hazardous liquid that can be transported by hand in approved containers to 5 gallons (19 L) or less. Containers with hazardous liquids exceeding 5 gallons (19 L) must be transported using approved carts or trucks that meet the construction requirements of Section 5003.10.3. This section addresses not only hand push-type carts and trucks, but also gas carts, motorized hand trucks and specialized industrial trucks. Additional guidance on the approved use and construction of motorized hand trucks and electrical industrial trucks can be found in NFPA 505. This section prohibits the transportation of more than the MAQ of any material within an exit. The movement of hazardous materials through exit enclosures within a building is undesirable. However, it may also be unavoidable in multistory buildings. This section is intended to limit the amount of hazardous materials within an exit at any time.

Exception 1 recognizes that two safety carriers can be hand carried.

Exception 2 recognizes that a maximum of four drums with a capacity of 55 gallons (208 L) or less can be transported using an approved drum truck.

Exception 3 recognizes that some containers and cylinders of compressed gases can be transported if they are secured on approved hand trucks. Also, the hand carrying of containers and cylinders is approved when they weigh no more than 25 pounds (11 kg).

Exception 4 recognizes that solid hazardous materials not exceeding 100 pounds (45 kg) can be transported using approved hand trucks. Single containers weighing no more than 50 pounds (23 kg) may be hand carried.

5003.10.3 Carts and trucks. Carts and trucks required by Section 5003.10.2 to be used to transport hazardous materials shall be in accordance with Sections 5003.10.3.1 through 5003.10.3.6.

❖ Where carts and trucks are required, they must be designed in accordance with Sections 5003.10.3.1 through 5003.10.3.6.

5003.10.3.1 Design. Carts and trucks used to transport hazardous materials shall be designed to provide a stable base for the commodities to be transported and shall have a means of restraining containers to prevent accidental dislodgement. *Compressed gas* cylinders placed on carts and trucks shall be individually restrained.

❖ Carts and trucks must be of an inherently stable design to minimize tipping, rolling or other uncontrolled movement. They must also be equipped with a means to restrain cylinders or other containers from falling, tipping or rolling.

5003.10.3.2 Speed-control devices. Carts and trucks shall be provided with a device that will enable the operator to control safely movement by providing stops or speed-reduction devices.

❖ Carts and trucks must be equipped with speed control devices, brakes, steering stops or other controls for use when uncontrolled movements occur.

5003.10.3.3 Construction. Construction materials for hazardous material carts or trucks shall be compatible with the material transported. The cart or truck shall be of substantial construction.

❖ The surface of the cart or truck must be compatible with the material transported. Although this section only clarifies that the cart or truck be made of substantial construction, trucks are built of noncombustible materials. The cart or truck should not be a contributing factor in a fire.

INTERNATIONAL CODE COUNCIL®
Copyright © 2015 ICC. ALL RIGHTS RESERVED. Accessed by David Dammon on Jun 21, 2017 12:30:52 PM pursuant to License Agreement with ICC. No further reproduction or distribution authorized. ANY UNAUTHORIZED REPRODUCTION OR DISTRIBUTION IS A VIOLATION OF THE FEDERAL COPYRIGHT ACT AND THE LICENSE AGREEMENT, AND SUBJECT TO CIVIL AND CRIMINAL PENALTIES THEREUNDER.

5003.10.3.4 Spill control. Carts and trucks transporting liquids shall be capable of containing a spill from the largest single container transported.

❖ Each cart or hand truck used must be able to control the spill of the largest container it transports.

5003.10.3.5 Attendance. Carts and trucks used to transport materials shall not obstruct or be left unattended within any part of a *means of egress*.

❖ When transporting material through a corridor or exit enclosure, the material must not be left unattended.

5003.10.3.6 Incompatible materials. *Incompatible materials* shall not be transported on the same cart or truck.

❖ As has been stated throughout the code, incompatible materials must not be mixed during transport.

5003.11 Group M storage and display and Group S storage. The aggregate quantity of nonflammable solid and nonflammable or noncombustible liquid hazardous materials stored and displayed within a single *control area* of a Group M occupancy, or an outdoor *control area*, or stored in a single *control area* of a Group S occupancy, is allowed to exceed the *maximum allowable quantity per control area* indicated in Section 5003.1 where in accordance with Sections 5003.11.1 through 5003.11.3.11.

❖ This section names three specific use or storage areas in which limits on nonflammable solid and nonflammable or noncombustible liquid chemicals may be exceeded:

1. When they are being stored or displayed in a Group M occupancy.
2. When they are being stored in a single control area of a Group S occupancy.
3. When they are in an outdoor control area.

MAQs can be exceeded when the area is protected as required by Sections 5003.11.1 through 5003.11.3.10.

5003.11.1 Maximum allowable quantity per control area in Group M or S occupancies. The aggregate amount of nonflammable solid and nonflammable or noncombustible liquid hazardous materials stored and displayed within a single *control area* of a Group M occupancy or stored in a single *control area* of a Group S occupancy shall not exceed the amounts set forth in Table 5003.11.1.

❖ The amounts of nonflammable solid and nonflammable or noncombustible liquid hazardous material stored and displayed in inside areas may not exceed the MAQs shown in Table 5003.11.1 unless a footnote allows an increase.

TABLE 5003.11.1. See page 50-40.

❖ Table 5003.11.1 lists the hazardous materials eligible for the mercantile and storage occupancy option and the corresponding MAQs depending on the extent of protection provided. The permitted quantities of each listed material are independent of each other, as well as the various classes or physical state of a specific material. For example, a given control area could contain up to the permitted maximum quantity of Class 2 solid oxidixers, Class 3 solid oxidizers and Class 2 liquid oxidizers, in addition to the permitted quantities of corrosive materials.

Notes b and c would allow the listed maximum quantity in Table 5003.11.1 to be increased due to the use of sprinklers or approved hazardous materials storage cabinets, or both. The notes are intended to be cumulative in that up to four times the listed amount may be allowed per control area, if the building is fully sprinklered and approved cabinets are utilized, without classifying the building as Group H.

Note d simply refers to Table 5003.8.3.2 for the design and permitted number of control areas. Note b of Table 5003.8.3.2 limits mercantile and storage occupancies utilizing this option to two control areas.

The 100-percent increase in MAQs for outdoor control areas permitted by Note f is based on the reduced exposure hazard to the building and its occupants. The increase encourages exterior storage applications without mandating sprinkler protection or approved hazardous material storage cabinets.

Notes g and h recognize that Class 2 and 3 solid oxidizers include several disinfectants that are commonly used in recreational, potable and waste water treatment. Without these exceptions, the tabular MAQs allowed in Group M and S occupancies would not be sufficient to sustain trade demand during times of peak usage. Because small containers of these materials have not been involved in losses, the exceptions permit additional containers of 10 pounds (5 kg) or less. Note that Section 5003.11.3.6 limits the tabular quantities to individual containers of 100 pounds (45 kg) or less, whereas these exceptions give the retailer/wholesaler the option of increasing quantities on the shelves when the packaging sizes are limited to 10 pounds (5 kg) or less.

Note i recognizes the inherently higher level of protection and safety afforded by a sprinkler system and that, by definition, the only hazard presented by Class 1 oxidizers is they slightly increase the burning rate of combustible materials they may contact with during a fire. Materials with such properties present nowhere near the level of hazard of many ordinary commodities that might be found in a Group M or S occupancy, such as foam plastics. To put this matter into perspective, Class 1 oxidizers are materials with a degree of hazard similar to that of toilet bowl cleaner crystals. Note i also provides correlation with Note f of Table 5003.1.1(1).

Note j further recognizes the lesser hazard of Class 1 oxidizers and the inherent safety of storing hazardous materials outdoors by allowing quantities to be unlimited in outdoor control areas. Note j also provides correlation with Table 5003.1.1(3).

5003.11.2 Maximum allowable quantity per outdoor control area in Group M or S occupancies. The aggregate

INTERNATIONAL CODE COUNCIL®
Copyright © 2015 ICC. ALL RIGHTS RESERVED. Accessed by David Dammon on Jun 21, 2017 12:30:52 PM pursuant to License Agreement with ICC. No further reproduction or distribution authorized. ANY UNAUTHORIZED REPRODUCTION OR DISTRIBUTION IS A VIOLATION OF THE FEDERAL COPYRIGHT ACT AND THE LICENSE AGREEMENT, AND SUBJECT TO CIVIL AND CRIMINAL PENALTIES THEREUNDER.

amount of nonflammable solid and nonflammable or noncombustible liquid hazardous materials stored and displayed within a single outdoor *control area* of a Group M occupancy shall not exceed the amounts set forth in Table 5003.11.1.

❖ The amounts of storage of nonflammable solid and nonflammable or noncombustible liquid hazardous material stored and displayed in outside areas may not exceed the MAQs given in Table 5003.11.1.

5003.11.3 Storage and display. Storage and display shall be in accordance with Sections 5003.11.3.1 through 5003.11.3.11.

❖ Storage and display of nonflammable solid and nonflammable or noncombustible liquid chemicals must comply with Sections 5003.11.3.1 through 5003.11.3.10.

5003.11.3.1 Density. Storage and display of solids shall not exceed 200 pounds per square foot (976 kg/m^2) of floor area actually occupied by solid merchandise. Storage and display of liquids shall not exceed 20 gallons per square foot (0.50 L/m^2) of floor area actually occupied by liquid merchandise.

❖ The key element to this section is the phrase "floor area actually occupied by solid or liquid merchandise." As an example, if 10 square feet (0.9 m^2) of floor area is to be used for storage or display, the limit allowed would be 2,000 pounds (908 kg) (200 pounds × 10 square feet) of solid material or 200 gallons (757 L) (20 gallons × 10 square feet) of liquid material.

5003.11.3.2 Storage and display height. Display height shall not exceed 6 feet (1829 mm) above the finished floor in display areas of Group M occupancies. Storage height shall not exceed 8 feet (2438 mm) above the finished floor in storage areas of Group M and Group S occupancies.

❖ This section limits Group M display height to 6 feet (1829 mm). In storage areas of Group M occupancies and Group S occupancies, the storage height is increased to 8 feet (2438 mm) in recognition of the fact that these areas are not normally open to the

TABLE 5003.11.1
MAXIMUM ALLOWABLE QUANTITY PER INDOOR AND OUTDOOR CONTROL AREA IN GROUP M AND S OCCUPANCIES—NONFLAMMABLE SOLIDS, NONFLAMMABLE AND NONCOMBUSTIBLE LIQUIDS[d, e, f]

CONDITION		MAXIMUM ALLOWABLE QUANTITY PER CONTROL AREA	
Material[a]	Class	Solids pounds	Liquids gallons
A. HEALTH-HAZARD MATERIALS—NONFLAMMABLE AND NONCOMBUSTIBLE SOLIDS AND LIQUIDS			
1. Corrosives[b, c]	Not Applicable	9,750	975
2. Highly Toxics	Not Applicable	20[b, c]	2[b, c]
3. Toxics[b, c]	Not Applicable	1,000	100
B. PHYSICAL-HAZARD MATERIALS—NONFLAMMABLE AND NONCOMBUSTIBLE SOLIDS AND LIQUIDS			
1. Oxidizers[b, c]	4	Not Allowed	Not Allowed
	3	1,150[g]	115
	2	2,250[h]	225
	1	18,000[i, j]	1,800[i, j]
2. Unstable (Reactives)[b, c]	4	Not Allowed	Not Allowed
	3	550	55
	2	1,150	115
	1	Not Limited	Not Limited
3. Water Reactives	3[b, c]	550	55
	2[b, c]	1,150	115
	1	Not Limited	Not Limited

For SI: 1 pound = 0.454 kg, 1 gallon = 3.785 L, 1 cubic foot = 0.02832 m^3.

a. Hazard categories are as specified in Section 5001.2.2.

b. Maximum allowable quantities shall be increased 100 percent in buildings equipped throughout with an approved automatic sprinkler system in accordance with Section 903.3.1.1. Where Note c also applies, the increase for both notes shall be applied accumulatively.

c. Maximum allowable quantities shall be increased 100 percent where stored in approved storage cabinets in accordance with Section 5003.8. Where Note b also applies, the increase for both notes shall be applied accumulatively.

d. See Table 5003.8.3.2 for design and number of control areas.

e. Maximum allowable quantities for other hazardous material categories shall be in accordance with Section 5003.1.

f. Maximum allowable quantities shall be increased 100 percent in outdoor control areas.

g. Maximum allowable quantities shall be increased to 2,250 pounds where individual packages are in the original sealed containers from the manufacturer or packager and do not exceed 10 pounds each.

h. Maximum allowable quantities shall be increased to 4,500 pounds where individual packages are in the original sealed containers from the manufacturer or packager and do not exceed 10 pounds each.

i. Quantities are unlimited where protected by an automatic sprinkler system.

j. Quantities are unlimited in an outdoor control area.

INTERNATIONAL CODE COUNCIL®
Copyright © 2015 ICC. ALL RIGHTS RESERVED. Accessed by David Dammon on Jun 21, 2017 12:30:52 PM pursuant to License Agreement with ICC. No further reproduction or distribution authorized. ANY UNAUTHORIZED REPRODUCTION OR DISTRIBUTION IS A VIOLATION OF THE FEDERAL COPYRIGHT ACT AND THE LICENSE AGREEMENT, AND SUBJECT TO CIVIL AND CRIMINAL PENALTIES THEREUNDER.

public. These areas are also subject to the density requirements of Section 5003.11.3.1.

5003.11.3.3 Container location. Individual containers less than 5 gallons (19 L) or less than 25 pounds (11 kg) shall be stored or displayed on pallets, racks or shelves.

❖ When the capacity of individual containers is less than either 5 gallons (19 L) or 25 pounds (11 kg), they must be displayed on pallets, racks or shelves.

5003.11.3.4 Racks and shelves. Racks and shelves used for storage or display shall be in accordance with Section 5003.9.9.

❖ The design of racks and shelves must meet the requirements of Section 5003.9.9. See also Chapter 32 for high-piled combustible storage and rack storage over 12 feet in height.

5003.11.3.5 Container type. Containers shall be *approved* for the intended use and identified as to their content.

❖ Containers must be approved for the storage or display conditions.

5003.11.3.6 Container size. Individual containers shall not exceed 100 pounds (45 kg) for solids or 10 gallons (38 L) for liquids in storage and display areas.

❖ The individual containers may not exceed 10 gallons (38 L) for liquids or 100 pounds (45 kg) for solids.

5003.11.3.7 Incompatible materials. *Incompatible materials* shall be separated in accordance with Section 5003.9.8.

❖ Incompatible materials may not be stored together unless separated in accordance with Section 5003.9.8.

5003.11.3.8 Floors. Floors shall be in accordance with Section 5004.12.

❖ Floors in storage and display areas must meet the requirements of Section 5004.12. See the commentary for that section.

5003.11.3.9 Aisles. Aisles 4 feet (1219 mm) in width shall be maintained on three sides of the storage or display area.

❖ The storage or display area must be surrounded on at least three sides with an aisle that is at least 4 feet (1219 mm) wide.

5003.11.3.10 Signs. Hazard identification signs shall be provided in accordance with Section 5003.5.

❖ Signs meeting the requirements of NFPA 704 and Section 5003.5 must be installed.

5003.11.3.11 Storage plan. A storage plan illustrating the intended storage arrangement, including the location and dimensions of aisles, and storage racks shall be provided.

❖ This section makes it clear that all racks and other arrays for merchandise and storage must be shown in order to do a complete and accurate plan review, especially with respect to verifying the adequacy of the means of egress and arrangement of aisles for fire protection of rack systems. These types of plans are often part of the fixture plan prepared after the construction documents have been submitted but are no less important in the plan review process.

5003.12 Outdoor control areas. Outdoor *control areas* for hazardous materials in amounts not exceeding the maximum allowable quantity per outdoor *control area* shall be in accordance with the following:

1. Outdoor *control areas* shall be kept free from weeds, debris and common combustible materials not necessary to the storage. The area surrounding an outdoor *control area* shall be kept clear of such materials for not less than 15 feet (4572 mm).
2. Outdoor control areas shall be located not closer than 20 feet (6096 mm) from a lot line that can be built upon, public street, public alley or public way.

   Exceptions:

   1. For solid and liquid hazardous materials, a 2-hour fire-resistance-rated wall without openings extending not less than 30 inches (762 mm) above and to the sides of the storage area shall be allowed in lieu of such distance.
   2. For compressed gas hazardous materials, unless otherwise specified, the minimum required distances shall not apply where *fire barriers* without openings or penetrations having a minimum *fire-resistance rating* of 2 hours interrupt the line of sight between the storage and the exposure. The configuration of the *fire barrier* shall be designed to allow natural ventilation to prevent the accumulation of hazardous gas concentrations.
3. Where a property exceeds 10,000 square feet (929 m^2), a group of two outdoor *control areas* is allowed where *approved* and where each *control area* is separated by a minimum distance of 50 feet (15 240 mm).
4. Where a property exceeds 35,000 square feet (3252 m^2), additional groups of outdoor *control areas* are allowed where approved and where each group is separated by a minimum distance of 300 feet (91 440 mm).

❖ This section lists four requirements for an outdoor control area:

Item 1 requires that outdoor control areas be kept clear of combustible materials for a minimum of 15 feet (4572 mm) around the control area.

Item 2 requires the control area to either be 20 feet (6096 mm) from the lot lines, street, alley or public way or have a 2-hour blank wall extending a minimum of 30 inches (762 mm) above and to either side of the storage area, if the distance requirement cannot be met. Exception 1 allows encroachment on lot lines, public streets, public alleys or public ways through the use of a protective 2-hour fire-resistance-rated wall, which acts as a shield between the storage and the exposure. Recognition of the protection thus provided can also be found in Section 5904.2.1, which contains comparable provisions for flammable solids identifying the use of a protective structure as a

INTERNATIONAL CODE COUNCIL®
Copyright © 2015 ICC. ALL RIGHTS RESERVED. Accessed by David Dammon on Jun 21, 2017 12:30:52 PM pursuant to License Agreement with ICC. No further reproduction or distribution authorized. ANY UNAUTHORIZED REPRODUCTION OR DISTRIBUTION IS A VIOLATION OF THE FEDERAL COPYRIGHT ACT AND THE LICENSE AGREEMENT, AND SUBJECT TO CIVIL AND CRIMINAL PENALTIES THEREUNDER.

means to allow encroachment on lot lines, public streets, public alleys or public ways. For gases, Exception 2 allows encroachment on property lines, public streets, public ways, etc., through the use of an unpenetrated protective 2-hour fire barrier (constructed as required by IBC Section 707), which acts as a shield between the storage and the exposure. This recognizes that a 2-hour fire-barrier provides an equivalent means of achieving the objective of spatial separation. Where a separation assembly is used instead of a physical separation distance, the wall must interrupt the line of sight between storage and exposure and be configured so as to prevent a hazardous accumulation of gas.

Item 3 allows two control areas on properties larger than 10,000 square feet (929 m^2) when they are separated by at least 50 feet (15 240 mm). The 20-foot (6096 mm) distance from the lot lines, street, alley or public way is still in effect.

Item 4 allows for more than two control areas when the property exceeds 35,000 square feet (3252 m^2). Each group must be separated by a minimum distance of 300 feet (91 440 mm) to reduce the likelihood of simultaneous involvement of multiple outdoor control areas in a single incident.

SECTION 5004
STORAGE

5004.1 Scope. Storage of hazardous materials in amounts exceeding the *maximum allowable quantity per control area* as set forth in Section 5003.1 shall be in accordance with Sections 5001, 5003 and 5004. Storage of hazardous materials in amounts not exceeding the *maximum allowable quantity per control area* as set forth in Section 5003.1 shall be in accordance with Sections 5001 and 5003. Retail and wholesale storage and display of nonflammable solid and nonflammable and noncombustible liquid hazardous materials in Group M occupancies and Group S storage shall be in accordance with Section 5003.11.

❖ This scope paragraph considers four storage situations: storage of quantities exceeding the maximum, storage of quantities within the allowable limits, retail and wholesale storage and display in Group M occupancies and storage areas in Group S occupancies. Section references are given for each of the four storage and use situations.

5004.2 Spill control and secondary containment for liquid and solid hazardous materials. Rooms, buildings or areas used for the storage of liquid or solid hazardous materials shall be provided with spill control and secondary containment in accordance with Sections 5004.2.1 through 5004.2.3.

Exception: Outdoor storage of containers on approved containment pallets in accordance with Section 5004.2.3.

❖ This section introduces the specific requirements for spill control and secondary containment for solid and liquid hazardous materials. The exception recognizes the innovation of containment pallets and their suitability for preventing the spread of hazardous materials spills in outdoor control areas (see commentary, Section 5004.2.3).

5004.2.1 Spill control for hazardous material liquids. Rooms, buildings or areas used for the storage of hazardous material liquids in individual vessels having a capacity of more than 55 gallons (208 L), or in which the aggregate capacity of multiple vessels exceeds 1,000 gallons (3785 L), shall be provided with spill control to prevent the flow of liquids to adjoining areas. Floors in indoor locations and similar surfaces in outdoor locations shall be constructed to contain a spill from the largest single vessel by one of the following methods:

1. Liquid-tight sloped or recessed floors in indoor locations or similar areas in outdoor locations.
2. Liquid-tight floors in indoor locations or similar areas in outdoor locations provided with liquid-tight raised or recessed sills or dikes.
3. Sumps and collection systems.
4. Other *approved* engineered systems.

Except for surfacing, the floors, sills, dikes, sumps and collection systems shall be constructed of noncombustible material, and the liquid-tight seal shall be compatible with the material stored. Where liquid-tight sills or dikes are provided, they are not required at perimeter openings having an open-grate trench across the opening that connects to an approved collection system.

❖ The requirement for spill control in a room or area is based on two items. The first is that the storage container(s) have a capacity of more than 55 gallons (208 L). The second is that the aggregate capacity of multiple vessels be more than 1,000 gallons (3785 L). The area, once determined to require spill control, must be protected so that the containment area will handle the release from the largest container in the area. This section recommends four methods of containment:

1. Liquid-tight sloped or recessed floors. The chemicals being stored or used in the area must be evaluated to ensure that the method of making the floor liquid tight will not cause a reaction with the chemicals.
2. Liquid-tight floors with a containment sill or trench around the area. To determine the volume of the containment sill or dike, the following procedure is recommended:
   - Determine the greatest amount of liquid that can be released from the largest tank or container within the containment area.
   - If more than one tank or group of containers are in the containment area, the volume of the tank or group of containers below the height of the containment sill or dike can be subtracted from the volume of the containment sill or dike.

INTERNATIONAL CODE COUNCIL®
Copyright © 2015 ICC. ALL RIGHTS RESERVED. Accessed by David Dammon on Jun 21, 2017 12:30:52 PM pursuant to License Agreement with ICC. No further reproduction or distribution authorized. ANY UNAUTHORIZED REPRODUCTION OR DISTRIBUTION IS A VIOLATION OF THE FEDERAL COPYRIGHT ACT AND THE LICENSE AGREEMENT, AND SUBJECT TO CIVIL AND CRIMINAL PENALTIES THEREUNDER.

- The following is the equation for determining the volumetric capacity of a tank:

$$V = \frac{3.1416(d)^2 h}{4}$$

where:

V = Tank capacity, in gallons.

d = Diameter of tank, in feet.

h = Height of tank, in feet.

- Determine whether the containment sill or dike is of sufficient size to control the spill.
- The following is the equation for determining the volumetric capacity of the containment sill or dike:

$$V = a^*h$$

where:

V = Volumetric capacity of dike, in gallons.

a^* = Area of storage floor, in square feet.

h = Height of sill, in feet.

Example:

There is a sprinklered first-floor inside storage room that is 20 feet by 15 feet (6096 mm by 4572 mm). Storage consists of 32 drums [55 gallon (208 L)] of a Class II combustible liquid stacked two pallets high. The containment sill is 4 inches (102 mm) high. Is this height adequate for spill containment?

The largest tank is 55 gallons (208 L). It is 36 inches (914 mm) tall and 22 inches (559 mm) wide, and has a volumetric capacity of:

$$V = \frac{3.1416(22/12)^2(36/12)}{4}$$

(Convert inches to feet)

V = 7.91 cubic feet (0.22 m^3) of spill from a 55-gallon (208 L) drum.

There are four pallets that are 54 inches by 54 inches square (1372 mm by 1372 mm) and 4 inches (102 mm) tall.

V = (54/12) × (54/12) × 4/12 inches

V = 6.68 cubic feet (0.2 m^3) per pallet.

6.68 × 4 (pallets) = 26.73 cubic feet (0.76 m^3) of space taken up in the containment area.

The room has a containment area of 20 feet by 15 feet by 4/12 or 99 cubic feet (3 m^3).

When the volume of the pallets is subtracted, there is 72.27 cubic feet (0.2 m^3) of containment. The largest container [55-gallon (208 L) drum] would produce a spill volume of 7.91 cubic feet (0.2 m^3). Thus, the secondary containment of a 20-foot by 15-foot (6096 mm by 4572 mm) room with a 4-inch (102 mm) curb would contain the spill from the largest container.

3. Sumps and collection systems that can consist of floor drains to a remote collection tank. Oil/water separators would also be required by Section 1003.4 of the *International Plumbing Code*® (IPC®) for floor drains that discharge into the building drainage system or other point of disposal.
4. Any other approved engineered systems. Any system that has been engineered and evaluated for the hazards present can be accepted by the fire code official.

5004.2.2 Secondary containment for hazardous material liquids and solids. Where required by Table 5004.2.2 buildings, rooms or areas used for the storage of hazardous materials liquids or solids shall be provided with secondary containment in accordance with this section where the capacity of an individual vessel or the aggregate capacity of multiple vessels exceeds both of the following:

1. Liquids: Capacity of an individual vessel exceeds 55 gallons (208 L) or the aggregate capacity of multiple vessels exceeds 1,000 gallons (3785 L).
2. Solids: Capacity of an individual vessel exceeds 550 pounds (250 kg) or the aggregate capacity of multiple vessels exceeds 10,000 pounds (4540 kg).

❖ Table 5004.2.2 specifies requirements for secondary containment according to the type of material and method of storage. In addition, the capacity of an individual container must exceed 55 gallons (208 L) of liquid or the aggregate capacity of multiple containers must exceed 1,000 gallons (3785 L). If the chemical is in solid form and the capacity of an individual container exceeds 550 pounds (250 kg) or the cumulative capacity of multiple containers exceeds 10,000 pounds (4540 kg), secondary containment is required when called for in Table 5004.2.2.

TABLE 5004.2.2. See page 50-44.

❖ This table is divided into three main columns: material, indoor storage and outdoor storage. Indoor and outdoor storage is further divided into two subcolumns: solids and liquids. This table indicates when secondary containment is required.

5004.2.2.1 Containment and drainage methods. The building, room or area shall contain or drain the hazardous materials and fire protection water through the use of one of the following methods:

1. Liquid-tight sloped or recessed floors in indoor locations or similar areas in outdoor locations.

INTERNATIONAL CODE COUNCIL®
Copyright © 2015 ICC. ALL RIGHTS RESERVED. Accessed by David Dammon on Jun 21, 2017 12:30:52 PM pursuant to License Agreement with ICC. No further reproduction or distribution authorized. ANY UNAUTHORIZED REPRODUCTION OR DISTRIBUTION IS A VIOLATION OF THE FEDERAL COPYRIGHT ACT AND THE LICENSE AGREEMENT, AND SUBJECT TO CIVIL AND CRIMINAL PENALTIES THEREUNDER.

2. Liquid-tight floors in indoor locations or similar areas in outdoor locations provided with liquid-tight raised or recessed sills or dikes.
3. Sumps and collection systems.
4. Drainage systems leading to an *approved* location.
5. Other *approved* engineered systems.

❖ The five methods of containment and drainage for secondary containment in this section are similar to those of spill control.

Method 1 consists of liquid-tight sloped or recessed floors. The chemicals being stored or used in the area must be evaluated to ensure that the method of making the floor liquid tight will not cause a reaction with the chemicals.

Method 2 consists of liquid-tight floors with a containment sill or trench around the area.

To determine the height of the containment sill or dike, the following procedure is recommended:

- Determine the greatest amount of liquid that can be released from the largest tank or container within the containment area.
- If more than one tank or group of containers are in the containment area, the volume of the tank or group of containers below the height of the containment sill or dike must be subtracted from the volume of the containment sill or dike.

TABLE 5004.2.2
REQUIRED SECONDARY CONTAINMENT—HAZARDOUS MATERIAL SOLIDS AND LIQUIDS STORAGE

MATERIAL		INDOOR STORAGE		OUTDOOR STORAGE	
		Solids	Liquids	Solids	Liquids
1. Physical-hazard materials					
Combustible liquids	Class II	Not Applicable	See Chapter 57	Not Applicable	See Chapter 57
	Class IIIA		See Chapter 57		See Chapter 57
	Class IIIB		See Chapter 57		See Chapter 57
Cryogenic fluids			See Chapter 55		See Chapter 55
Explosives		See Chapter 56		See Chapter 56	
Flammable liquids	Class IA	Not Applicable	See Chapter 57	Not Applicable	See Chapter 57
	Class IB		See Chapter 57		See Chapter 57
	Class IC		See Chapter 57		See Chapter 57
Flammable solids		Not Required	Not Applicable	Not Required	Not Applicable
Organic peroxides	Unclassified Detonable	Required	Required	Not Required	Not Required
	Class I				
	Class II				
	Class III				
	Class IV				
	Class V	Not Required	Not Required	Not Required	Not Required
Oxidizers	Class 4	Required	Required	Not Required	Not Required
	Class 3				
	Class 2				
	Class 1	Not Required	Not Required	Not Required	Not Required
Pyrophorics		Not Required	Required	Not Required	Required
Unstable (reactives)	Class 4	Required	Required	Required	Required
	Class 3				
	Class 2				
	Class 1	Not Required	Not Required	Not Required	Not Required
Water reactives	Class 3	Required	Required	Required	Required
	Class 2				
	Class 1	Not Required	Not Required	Not Required	Not Required
2. Health-hazard materials					
Corrosives		Not Required	Required	Not Required	Required
Highly toxics		Required	Required	Required	Required
Toxics					

INTERNATIONAL CODE COUNCIL®
Copyright © 2015 ICC. ALL RIGHTS RESERVED. Accessed by David Dammon on Jun 21, 2017 12:30:52 PM pursuant to License Agreement with ICC. No further reproduction or distribution authorized. ANY UNAUTHORIZED REPRODUCTION OR DISTRIBUTION IS A VIOLATION OF THE FEDERAL COPYRIGHT ACT AND THE LICENSE AGREEMENT, AND SUBJECT TO CIVIL AND CRIMINAL PENALTIES THEREUNDER.

- The following is the equation for determining the volumetric capacity of a tank:

$$V = \frac{3.1416(d)^2 h}{4}$$

- Determine whether the containment sill or dike is of sufficient size to control a spill and the fire-fighting water, as required.

  The following is the equation for determining the volumetric capacity of a containment sill or dike:

$$V = (a)\,(h)$$

where:

V = Volume of the containment, in cubic feet.

a = Area of the containment, in square feet.

h = Height of the sill or dike, in feet.

Example:

There is a sprinklered first floor inside storage room that is 20 feet by 15 feet (6096 mm by 4572 mm). Stored in this area are 32 drums [55 gallons (208 L)] of a Class II combustible liquid stacked two pallets high. The containment sill is 4 inches (102 mm) high. Will this provide secondary containment?

The largest tank is 55 gallons (208 L). It has dimensions of 36 inches (914 mm) tall and 22 inches (539 mm) wide, and has a volumetric capacity of:

$$V = \frac{3.1416(22/12)^2(36/12)}{4}$$

(Convert inches to feet)

V = 7.91 cubic feet (0.2 m^3) of spill from a 55-gallon (208 L) drum.

There are four pallets with a size of 54 inches by 54 inches (1372 mm by 1372 mm) and 4 inches (102 mm) tall.

V = (54/12)(54/12) (4/12)

V = 6.68 cubic feet (0.2 m^3) per pallet

6.68 × 4 (pallets) = 26.73 cubic feet (0.76 m^3) of space taken up in the containment area.

The room has a containment area of 20 feet by 15 feet by 4 inches (6096 mm by 4572 mm by 102 mm) or 99 cubic feet (3 m^3).

When the volume of the pallets is subtracted, there is 72.27 cubic feet (2 m^3) of containment. The largest container [55-gallon (208 L) drum] would produce a spill of 7.91 cubic feet (0.2 m^3). Thus, the secondary containment of a 20-foot by 15-foot (6096 mm by 4572 mm) room with a 4-inch (102 mm) curb would contain the spill from the largest container. Now the requirements of the fire-fighting water from the sprinkler system as required by Section 5004.2.2.3 must be factored in. From NFPA 13 Chapter 11, the design density is 0.2. This design density of 0.2 times the fire area of 300 square feet (28 m^2) equals 60 gallons (227 L) per minute discharge. The sprinkler discharge will be 60 gallons (227 L) × 20 minutes (as required by Section 5004.2.2.3) or 1,200 gallons (4542 L) of fire-fighting water.

The conversion factor from gallon to cubic foot is 0.1335805. Therefore, 1,200 gallons (4542 L) of fire-fighting water × 0.1335805 = 167.79 cubic feet (5 m^3) of containment area required.

The largest tank volume is 7.91 cubic feet (0.2 m^3).

The volume of the pallets is 26.73 cubic feet (0.8 m^3).

The volume for fire-fighting water is 167.79 cubic feet (5 m^3).

Total cubic feet required for secondary containment is 202.43 cubic feet (6 m^3).

In this case, the secondary containment does not have enough capacity. Although the 4-inch (102 mm) sill does give enough capacity for spill containment, with the requirement of fire-fighting water there is now no proper secondary containment.

Method 3 recommends sumps and collection systems, which can consist of floor drains to remote collection tanks. It is important to remember that oil/water separators are required by IPC Section 1003.4 for floor drains that discharge into the building drainage system or other point of disposal.

Method 4 is a drainage system leading to an approved location. If water is being used as the automatic extinguishing agent for the area, a large containment area will be required to hold the runoff of the sprinkler water and the spill.

Method 5 is any other approved engineered system. Any system that has been engineered and evaluated for the hazards present can be accepted by the fire code official.

5004.2.2.2 Incompatible materials. *Incompatible materials* used in *open systems* shall be separated from each other in the secondary containment system.

❖ Different containment areas cannot be manifolded if the products in the different areas are incompatible. Even in containment of a spill in a single area, incompatible materials must be kept separated.

5004.2.2.3 Indoor design. Secondary containment for indoor storage areas shall be designed to contain a spill from the largest vessel plus the design flow volume of fire protection water calculated to discharge from the fire-extinguishing system over the minimum required system design area or area of the room or area in which the storage is located, whichever is

INTERNATIONAL CODE COUNCIL®
Copyright © 2015 ICC. ALL RIGHTS RESERVED. Accessed by David Dammon on Jun 21, 2017 12:30:52 PM pursuant to License Agreement with ICC. No further reproduction or distribution authorized. ANY UNAUTHORIZED REPRODUCTION OR DISTRIBUTION IS A VIOLATION OF THE FEDERAL COPYRIGHT ACT AND THE LICENSE AGREEMENT, AND SUBJECT TO CIVIL AND CRIMINAL PENALTIES THEREUNDER.

smaller. The containment capacity shall be designed to contain the flow for a period of 20 minutes.

❖ Secondary containment must be sized to hold the release of the largest container in the area plus the design flow volume of the fire protection for a 20-minute period.

For example, there is a 500-square-foot (46 m^2) flammable liquid storage area that is sprinklered. Section 5004.5 states that the minimum design of the sprinkler system is an ordinary hazard Group 2 with the minimum design area of 3,000 square feet (279 m^2). From NFPA 13 Chapter 11, the design density is 0.2. This design density of 0.2 times the fire area of 500 square feet (46 m^2) equals 100-gallon-per-minute (6 L/s) discharge.

The largest tank in the fire area is 100 gallons (379 L). The secondary containment must be sized to hold the 100 gallons (379 L) plus the sprinkler discharge of 100 gallons (379 L) for 20 minutes, or 2,100 gallons (7949 L). This must be the minimum capacity of the secondary containment.

5004.2.2.4 Outdoor design. Secondary containment for outdoor storage areas shall be designed to contain a spill from the largest individual vessel. If the area is open to rainfall, secondary containment shall be designed to include the volume of a 24-hour rainfall as determined by a 25-year storm and provisions shall be made to drain accumulations of groundwater and rainwater.

❖ In addition to holding the volume of the largest container, if the area is open to rainfall, the secondary containment must include the volume of a 24-hour rainfall, as determined by a 25-year storm. Drains must be sized to carry off accumulations of ground water and rainwater. See IPC Section 1106.1 for information on rainfall maps.

5004.2.2.5 Monitoring. An *approved* monitoring method shall be provided to detect hazardous materials in the secondary containment system. The monitoring method is allowed to be visual inspection of the primary or secondary containment, or other *approved* means. Where secondary containment is subject to the intrusion of water, a monitoring method for detecting water shall be provided. Where monitoring devices are provided, they shall be connected to *approved* visual or audible alarms.

❖ Visual inspection of the primary or secondary containment system is permitted; otherwise, an electronic monitoring system must be installed. These electronic systems must be connected to both audible and visual alarms.

5004.2.2.6 Drainage system design. Drainage systems shall be in accordance with the *International Plumbing Code* and all of the following:

1. The slope of floors to drains in indoor locations, or similar areas in outdoor locations shall be not less than 1 percent.
2. Drains from indoor storage areas shall be sized to carry the volume of the fire protection water as determined by the design density discharged from the automatic fire-extinguishing system over the minimum required system design area or area of the room or area in which the storage is located, whichever is smaller.
3. Drains from outdoor storage areas shall be sized to carry the volume of the fire flow and the volume of a 24-hour rainfall as determined by a 25-year storm.
4. Materials of construction for drainage systems shall be compatible with the materials stored.
5. *Incompatible materials* used in *open systems* shall be separated from each other in the drainage system.
6. Drains shall terminate in an *approved* location away from buildings, valves, *means of egress*, fire access roadways, adjoining property and storm drains.

❖ Drainage systems for hazardous materials must meet the requirements of IPC Section 1003, in addition to the six elements listed in this section:

1. The slope of the floor may not be more than 1 percent.
2. The drains for an indoor storage area must be sized to carry the automatic fire-extinguishing agent from the room. If an agent other than a liquid is used, no additional volume will be needed for calculations.
3. The drains for outdoor storage must be sized to carry the volume of fire flow and the volume of a 24-hour rainfall.
4. The piping and other elements of the system must be chosen to be compatible with the chemicals and extinguishing agents that will be flowing through the drainage system.
5. Incompatible materials pose a great hazard both in use and when an emergency occurs. This section requires that incompatible materials, when used in open systems, be separated into different drainage systems.
6. Drains must terminate in safe locations so that they do not pose additional threats to lives and property.

5004.2.3 Containment pallets. Where used as an alternative to spill control and secondary containment for outdoor storage in accordance with the exception in Section 5004.2, containment pallets shall comply with all of the following:

1. A liquid-tight sump accessible for visual inspection shall be provided.
2. The sump shall be designed to contain not less than 66 gallons (250 L).
3. Exposed surfaces shall be compatible with material stored.

INTERNATIONAL CODE COUNCIL®
Copyright © 2015 ICC. ALL RIGHTS RESERVED. Accessed by David Dammon on Jun 21, 2017 12:30:52 PM pursuant to License Agreement with ICC. No further reproduction or distribution authorized. ANY UNAUTHORIZED REPRODUCTION OR DISTRIBUTION IS A VIOLATION OF THE FEDERAL COPYRIGHT ACT AND THE LICENSE AGREEMENT, AND SUBJECT TO CIVIL AND CRIMINAL PENALTIES THEREUNDER.

4. Containment pallets shall be protected to prevent collection of rainwater within the sump.

❖ Another option now available is the use of containment pallets. This type of pallet is designed to contain a leak should one occur. This section specifies the minimum design for the pallet.

5004.3 Ventilation. Indoor storage areas and storage buildings shall be provided with mechanical exhaust ventilation or natural ventilation where natural ventilation can be shown to be acceptable for the materials as stored.

Exception: Storage areas for flammable solids complying with Chapter 59.

❖ Indoor storage areas and buildings must be ventilated either mechanically or naturally so that the level of vapors is maintained below the LFL or PEL. Keeping the area/building at these levels maintains a level of safety for the area. Storage areas for flammable solids that meet the requirements of Chapter 59 are exempted from this requirement.

5004.3.1 System requirements. Exhaust ventilation systems shall comply with all of the following:

1. Installation shall be in accordance with the *International Mechanical Code*.
2. Mechanical ventilation shall be at a rate of not less than 1 cubic foot per minute per square foot [0.00508 $m^3/(s \cdot m^2)$] of floor area over the storage area.
3. Systems shall operate continuously unless alternative designs are *approved*.
4. A manual shutoff control shall be provided outside of the room in a position adjacent to the access door to the room or in an *approved* location. The switch shall be a break-glass or other *approved* type and shall be *labeled*: VENTILATION SYSTEM EMERGENCY SHUTOFF.
5. Exhaust ventilation shall be designed to consider the density of the potential fumes or vapors released. For fumes or vapors that are heavier than air, exhaust shall be taken from a point within 12 inches (305 mm) of the floor. For fumes or vapors that are lighter than air, exhaust shall be taken from a point within 12 inches (305 mm) of the highest point of the room.
6. The location of both the exhaust and inlet air openings shall be designed to provide air movement across all portions of the floor or room to prevent the accumulation of vapors.
7. Exhaust air shall not be recirculated to occupied areas if the materials stored are capable of emitting hazardous vapors and contaminants have not been removed. Air contaminated with explosive or flammable vapors, fumes or dusts; flammable, highly toxic or toxic gases; or radioactive materials shall not be recirculated.

❖ The exhaust ventilation system must comply with all of the seven requirements of this section:

1. Systems must be installed as required by IMC Chapter 5.
2. The minimum rate for mechanical ventilation is listed here; however, the MSDS must also be reviewed. The ventilation needed to maintain a safe environment could require a much higher flow rate.
3. The exhaust system must provide continuous ventilation in the area.
4. The entry door into the area must be equipped with an emergency shutoff that can be used to disable the ventilation system in case of a fire.
5. The system design must consider the vapor density of the chemicals being stored. The vapor density for the chemicals can be found in the MSDS.
6. The system must provide air movement across the entire area being protected.
7. Item 7 recognizes the possibility for contaminant control and energy conservation for hazardous exhaust systems through air-recovery systems. Some energy conservation opportunities use the exhausted air for heat recovery, makeup air, or recirculation to occupied areas. Those systems incorporate a variety of contaminant control strategies, including water mist sprays, activated carbon filters and oxidizing pellet filters.

   Air contaminated with explosive or flammable vapors, fumes or dusts; flammable or toxic gases; or radioactive material must be exhausted to the outdoors and, therefore, cannot be recirculated or transferred to any other space. Note that the recirculation of exhaust in any form is in direct conflict with IMC Section 510.1, which requires hazardous exhaust to discharge to the outdoors.

5004.4 Separation of incompatible hazardous materials. *Incompatible materials* shall be separated in accordance with Section 5003.9.8.

❖ Incompatible materials must be kept separated so that accidental mixing of chemicals in an emergency does not create a more dangerous incident.

5004.5 Automatic sprinkler systems. Indoor storage areas and storage buildings shall be equipped throughout with an *approved automatic sprinkler system* in accordance with Section 903.3.1.1. The design of the sprinkler system shall be not less than that required for Ordinary Hazard Group 2 with a minimum design area of 3,000 square feet (279 m^2). Where the materials or storage arrangement are required by other regulations to be provided with a higher level of sprinkler system protection, the higher level of sprinkler system protection shall be provided.

❖ This section requires a sprinkler system for indoor storage areas and buildings. The system must comply with NFPA 13 and provide a minimum density as required for an Ordinary Hazard Group 2. The MSDS should be consulted for compatibility with water. If the

INTERNATIONAL CODE COUNCIL®
Copyright © 2015 ICC. ALL RIGHTS RESERVED. Accessed by David Dammon on Jun 21, 2017 12:30:52 PM pursuant to License Agreement with ICC. No further reproduction or distribution authorized. ANY UNAUTHORIZED REPRODUCTION OR DISTRIBUTION IS A VIOLATION OF THE FEDERAL COPYRIGHT ACT AND THE LICENSE AGREEMENT, AND SUBJECT TO CIVIL AND CRIMINAL PENALTIES THEREUNDER.

materials are incompatible, other methods of automatic extinguishing should be used.

5004.6 Explosion control. Indoor storage rooms, areas and buildings shall be provided with explosion control in accordance with Section 911.

❖ Storage rooms and use areas must be provided with explosion control in accordance with Table 911.1. The design of the explosion control must meet the requirements of Section 911.

5004.7 Standby or emergency power. Where mechanical ventilation, treatment systems, temperature control, alarm, detection or other electrically operated systems are required, such systems shall be provided with an emergency or standby power in accordance with Section 604.

For storage areas for highly toxic or toxic materials, see Sections 6004.2.2.8 and 6004.3.4.2.

❖ A backup emergency power source is considered essential for required systems monitoring and serving hazardous materials; therefore, when limit controls, detection systems or mechanical ventilation is required for a specific hazardous material, an emergency electrical system or standby power system is required.

5004.7.1 Exempt applications. Standby or emergency power is not required for mechanical ventilation systems for any of the following:

1. Storage of Class IB and Class IC flammable and *combustible liquids* in closed containers not exceeding $6^1/_2$ gallons (25 L) capacity.
2. Storage of Class 1 and 2 oxidizers.
3. Storage of Class II, III, IV and V organic peroxides.
4. Storage of asphyxiant, irritant and radioactive gases.

❖ Exempt application 1 correlates with industry treatment of portable container storage. Notably, storage of small, closed containers does not pose a risk that warrants ventilation for these materials. FM Data Sheet 7-29, *Ignitable Liquid Storage in Portable Containers*, does not require mechanical ventilation for flammable liquids in closed containers of not greater than $6^1/_2$-gallon (25 L) individual capacity, with a flash point of not greater than 100ºF (38°C) and a boiling point equal to or greater than 100ºF (38°C). NFPA 30 also recognizes that closed container storage does not pose a risk that warrants ventilation (ventilation is required if there is open dispensing). These materials are in sealed containers in storage. Any loss of power would require an immediate cessation of operations, which would eliminate spill risk. By limiting the container size, the potential for accidental spills is significantly reduced.

Exempt applications 2 and 3 address low-hazard oxidizers and organic peroxides that do not present a severe fire or reactivity hazard. Highly toxic and toxic materials (see Exception 5) must conform to applicable requirements of Chapter 37. For example, emergency power may be required for treatment systems utilized to process the accidental release of highly toxic or toxic compressed gases caused by a leak or rupture in storage cylinders or tanks. Without emergency power, all required monitoring systems, including the treatment system for neutralizing potential leaking gas, would be rendered inoperative if a power failure or other electrical system failure occurred.

Exempt application 4 exempts storage areas for asphyxiant, irritant or radioactive gases because, unlike the requirements for other hazard categories, which use the MAQ as a trigger threshold, the requirement for ventilation in storage areas containing these gases is not quantity based. The construction of compressed gas containers is robust compared to the containers used for other materials that may be of glass, plastic or paper. The integrity of the containers alone represents a major safeguard against likely failure. While leakage from containers is a consideration, the concern over reestablishing power to the ventilation system within 60 seconds is not warranted given the facts that the requirement could be imposed for insignificant quantities of the gas, and that occupancy of a storage area during power outage is not the norm.

5004.7.2 Fail-safe engineered systems. Standby power for mechanical ventilation, treatment systems and temperature control systems shall not be required where an *approved* fail-safe engineered system is installed..

❖ This section recognizes the use of an engineered system designed to always fail in the appropriate design mode without human intervention in lieu of the emergency power system. The intent of the exception is to permit alternative systems that are not subject to power interruptions. Note that this exception does not apply to detection and alarm systems, but addresses those systems essential to the removal of hazardous fumes and vapors from potentially occupied areas.

5004.8 Limit controls. Limit controls shall be provided in accordance with Sections 5004.8.1 and 5004.8.2.

❖ Based on the MSDS, limit controls may be required to protect the chemicals.

5004.8.1 Temperature control. Materials that must be kept at temperatures other than normal ambient temperatures to prevent a hazardous reaction shall be provided with an approved means to maintain the temperature within a safe range. Redundant temperature control equipment that will operate on failure of the primary temperature control system shall be provided. Where *approved*, alternative means that prevent a hazardous reaction are allowed.

❖ When a chemical is temperature sensitive, a temperature control system with a redundant backup is required.

5004.8.2 Pressure control. Stationary tanks and equipment containing hazardous material liquids that can generate pressures exceeding design limits because of exposure fires or internal reaction shall have some form of construction or other *approved* means that will relieve excessive internal

INTERNATIONAL CODE COUNCIL®
Copyright © 2015 ICC. ALL RIGHTS RESERVED. Accessed by David Dammon on Jun 21, 2017 12:30:52 PM pursuant to License Agreement with ICC. No further reproduction or distribution authorized. ANY UNAUTHORIZED REPRODUCTION OR DISTRIBUTION IS A VIOLATION OF THE FEDERAL COPYRIGHT ACT AND THE LICENSE AGREEMENT, AND SUBJECT TO CIVIL AND CRIMINAL PENALTIES THEREUNDER.

pressure. The means of pressure relief shall vent to an *approved* location or to an exhaust scrubber or treatment system where required by Chapter 60.

❖ Emergency vents must be installed when the vapor density of a chemical could cause a boiling liquid expanding vapor explosion (BLEVE) during a fire.

5004.9 Emergency alarm. An *approved* manual emergency alarm system shall be provided in buildings, rooms or areas used for storage of hazardous materials. Emergency alarm-initiating devices shall be installed outside of each interior *exit* or *exit access* door of storage buildings, rooms or areas. Activation of an emergency alarm-initiating device shall sound a local alarm to alert occupants of an emergency situation involving hazardous materials.

❖ A manual emergency alarm system that meets the requirements of Section 908 must be installed (see commentary, Sections 908.1 through 908.6).

5004.10 Supervision and monitoring. Emergency alarm, detection and automatic fire-extinguishing systems required by Section 5004 shall be electrically supervised and monitored by an *approved* supervising station or, where approved, shall initiate an audible and visual signal at a constantly attended on-site location.

❖ Emergency alarm systems, detection systems and automatic extinguishing systems must be supervised by an approved central, proprietary or remote station system. Where a facility has an on-site, "constantly attended location" (as defined in Chapter 2) staffed by qualified personnel who can respond to signals in a timely fashion, the fire code official may approve the monitoring of audible and visual signals by such an attended location in lieu of off-site transmission to an approved supervising station.

5004.11 Clearance from combustibles. The area surrounding an outdoor storage area or tank shall be kept clear of combustible materials and vegetation for a minimum distance of 25 feet (7620 mm).

❖ Vegetation and other combustible materials must be cut back for a distance of at least 25 feet (7620 mm) from outdoor storage to minimize the exposure to the storage area in the event of a fire in the combustible materials. Note that Section 5005.3.8 requires an additional 5 feet (1524 mm) of clearance due to the fact that in use, dispensing and handling scenarios, vapors may be present, whereas in storage, containers or tanks are closed and vapors are contained.

5004.12 Noncombustible floor. Except for surfacing, floors of storage areas shall be of noncombustible construction.

❖ The floor of hazardous occupancies must be of noncombustible construction.

5004.13 Weather protection. Where overhead noncombustible construction is provided for sheltering outdoor hazardous material storage areas, such storage shall not be considered indoor storage where the area is constructed in accordance with the requirements for weather protection as required by the *International Building Code.*

Exception: Storage of *explosive* materials shall be considered as indoor storage.

❖ This section allows for the construction of noncombustible covers over outdoor storage areas for weather protection. This area is not considered inside storage, except when explosive materials are stored under the noncombustible roof. IBC Section 414.6.1 contains the specific requirements for weather-protection construction.

SECTION 5005
USE, DISPENSING AND HANDLING

5005.1 General. Use, dispensing and handling of hazardous materials in amounts exceeding the *maximum allowable quantity per control area* set forth in Section 5003.1 shall be in accordance with Sections 5001, 5003 and 5005. Use, dispensing and handling of hazardous materials in amounts not exceeding the *maximum allowable quantity per control area* set forth in Section 5003.1 shall be in accordance with Sections 5001 and 5003.

❖ The section references two conditions: when the amount of chemicals exceeds the MAQ; and when the amount of chemicals is within the MAQ.

5005.1.1 Separation of incompatible materials. Separation of *incompatible materials* shall be in accordance with Section 5003.9.8.

❖ When using, dispensing or handling incompatible materials, care must be taken to ensure that the chemicals do not mix.

5005.1.2 Noncombustible floor. Except for surfacing, floors of areas where liquid or solid hazardous materials are dispensed or used in *open systems* shall be of noncombustible, liquid-tight construction.

❖ When chemicals are used in an open system, the floors must be both liquid tight and of noncombustible construction.

5005.1.3 Spill control and secondary containment for hazardous material liquids. Where required by other provisions of Section 5005, spill control and secondary containment shall be provided for hazardous material liquids in accordance with Section 5004.2.

❖ If required by Section 5005, the spill control and secondary containment must meet the requirements of Section 5004.2.

5005.1.4 Limit controls. Limit controls shall be provided in accordance with Sections 5005.1.4.1 through 5005.1.4.4.

❖ Limit controls required in use, dispensing and handling areas are described in the four subsections to this section.

5005.1.4.1 High-liquid-level control. Open tanks in which liquid hazardous materials are used shall be equipped with a

INTERNATIONAL CODE COUNCIL®
Copyright © 2015 ICC. ALL RIGHTS RESERVED. Accessed by David Dammon on Jun 21, 2017 12:30:52 PM pursuant to License Agreement with ICC. No further reproduction or distribution authorized. ANY UNAUTHORIZED REPRODUCTION OR DISTRIBUTION IS A VIOLATION OF THE FEDERAL COPYRIGHT ACT AND THE LICENSE AGREEMENT, AND SUBJECT TO CIVIL AND CRIMINAL PENALTIES THEREUNDER.

liquid-level limit control or other means to prevent overfilling of the tank.

❖ When there is a danger of overfilling a tank, especially in open systems, liquid-level controls are required.

5005.1.4.2 Low-liquid-level control. *Approved* safeguards shall be provided to prevent a low-liquid level in a tank from creating a hazardous condition, including but not limited to, overheating of a tank or its contents.

❖ If the method of storage can allow for the collapse of the tank or other types of failure as a result of a low level of chemicals, low-liquid-level controls are required.

5005.1.4.3 Temperature control. Temperature control shall be provided in accordance with Section 5004.8.1.

❖ See Section 5004.8.1 for requirements for temperature controls.

5005.1.4.4 Pressure control. Pressure control shall be provided in accordance with Section 5004.8.2.

❖ See Section 5004.8.2 for requirements for pressure control systems.

5005.1.5 Standby or emergency power. Where mechanical ventilation, treatment systems, temperature control, manual alarm, detection or other electrically operated systems are required by this code, such systems shall be provided with emergency or standby power in accordance with Section 604.

❖ Mechanical ventilation, treatment systems, temperature controls or other important safety controls must be connected to an emergency electrical system or standby power as required by Section 604 to enhance their reliability in emergency situations.

5005.1.5.1 Exempt applications. Standby power for mechanical ventilation, treatment systems and temperature control systems shall not be required where an *approved* fail-safe engineered system is installed.

❖ This section recognizes the use of an engineered system that is designed to always fail in the appropriate design mode without human intervention in lieu of the emergency power system. The exception is intended to permit alternative systems that are not subject to power interruptions. Note that this exception does not apply to detection and alarm systems, but addresses those systems essential to the removal of hazardous fumes and vapors from potentially occupied areas.

5005.1.6 Supervision and monitoring. Manual alarm, detection and automatic fire-extinguishing systems required by other provisions of Section 5005 shall be electrically supervised and monitored by an *approved* supervisory service or, where *approved*, shall initiate an audible and visual signal at a constantly attended on-site location.

❖ Manual fire alarm systems, detection systems and automatic extinguishing systems must be supervised by an approved central, proprietary or remote station system. Where a facility has an on-site, "constantly attended location" (as defined in Chapter 2) staffed by qualified personnel who can respond to signals in a timely fashion, the fire code official may approve the monitoring of audible and visual signals by such a location in lieu of off-site transmission to an approved supervising station.

5005.1.7 Lighting. Adequate lighting by natural or artificial means shall be provided.

❖ All areas must be adequately lighted.

5005.1.8 Fire-extinguishing systems. Indoor rooms or areas in which hazardous materials are dispensed or used shall be protected by an automatic fire-extinguishing system in accordance with Chapter 9. Sprinkler system design shall be not less than that required for Ordinary Hazard, Group 2, with a minimum design area of 3,000 square feet (279 m^2). Where the materials or storage arrangement are required by other regulations to be provided with a higher level of sprinkler system protection, the higher level of sprinkler system protection shall be provided.

❖ An automatic sprinkler system is required in use, dispensing and handling areas. Special attention must be paid to chemical/water compatibility.

5005.1.9 Ventilation. Indoor dispensing and use areas shall be provided with exhaust ventilation in accordance with Section 5004.3.

Exception: Ventilation is not required for dispensing and use of flammable solids other than finely divided particles.

❖ Exhaust ventilation meeting the requirements of Section 5004.3 must be installed in indoor use and dispensing areas so that the level of vapors is maintained below the LFL or the PEL. Keeping the area/building at these levels provides a level of safety for the area.

5005.1.10 Liquid transfer. Liquids having a hazard ranking of 3 or 4 in accordance with NFPA 704 shall be transferred by one of the following methods:

1. From safety cans complying with UL 30.
2. Through an *approved* closed piping system.
3. From containers or tanks by an approved pump taking suction through an opening in the top of the container or tank.
4. From containers or tanks by gravity through an approved self-closing or automatic-closing valve where the container or tank and dispensing operations are provided with spill control and secondary containment in accordance with Section 5004.2. Highly toxic liquids shall not be dispensed by gravity from tanks.
5. *Approved* engineered liquid transfer systems.

Exceptions:

1. Liquids having a hazard ranking of 4 where dispensed from approved containers not exceeding 1.3 gallons (5 L).

INTERNATIONAL CODE COUNCIL®
Copyright © 2015 ICC. ALL RIGHTS RESERVED. Accessed by David Dammon on Jun 21, 2017 12:30:52 PM pursuant to License Agreement with ICC. No further reproduction or distribution authorized. ANY UNAUTHORIZED REPRODUCTION OR DISTRIBUTION IS A VIOLATION OF THE FEDERAL COPYRIGHT ACT AND THE LICENSE AGREEMENT, AND SUBJECT TO CIVIL AND CRIMINAL PENALTIES THEREUNDER.

2. Liquids having a hazard ranking of 3 8 dispensed from approved containers not exceeding 5.3 gallons (20 L).

❖ Liquids having a hazard rating of 3 or 4 in NFPA 704 must be transferred using one of the five methods listed in this section. Exceptions include liquids having a hazard ranking of 4 being dispensed from approved containers not exceeding 1.3 gallons (5 L) and liquids having a hazard ranking of 3 when dispensed from approved containers not exceeding 5.3 gallons (20 L).

5005.1.11 Design. Systems shall be suitable for the use intended and shall be designed by persons competent in such design. Controls shall be designed to prevent materials from entering or leaving the process or reaction system at other than the intended time, rate or path. Where failure of an automatic control could result in a dangerous condition or reaction, the automatic control shall be fail-safe.

❖ This section provides requirements that govern the use and dispensing of hazardous materials in quantities that exceed the MAQ by relocating a provision that previously only applied to indoor dispensing and use activities to the general provisions. This is a significant improvement because it now requires process design and safety controls to be considered for outdoor processes using quantities of hazardous materials that exceed the outdoor control area MAQs. A variety of hazardous processes are performed outside of buildings because of the physical size of the process or to avoid constructing a building to the IBC and code requirements for a Group H occupancy. By locating this provision as a general requirement, outdoor hazardous materials processes are now subject to design requirements that ensure process variables, such as time, rate, pressure, temperature, flow rate or sequencing the order of chemicals being blended, are considered.

This section requires that automatic process controls be "fail-safe," as defined in Section 202. A fail-safe design can include an automatic emergency shutoff valve that is designed to close upon loss of power or a process upset condition. It may include an excess flow control valve or feature, which is designed to stop the flow of a gas or liquid when a preset flow rate is exceeded. In most cases, the fail-safe condition would stop the movement or processing of hazardous materials. However, some processes require staged shutdown to be safely stopped, and in these cases, a process hazard analysis is necessary to determine the true fail-safe mode.

5005.2 Indoor dispensing and use. Indoor dispensing and use of hazardous materials shall be in buildings complying with the *International Building Code* and in accordance with Section 5005.1 and Sections 5005.2.1 through 5005.2.2.4.

❖ Indoor dispensing and use areas must be constructed to meet the requirements of the IBC along with Section 5005.1 and Sections 5005.2.1 through 5005.2.2.4 of the code.

5005.2.1 Open systems. Dispensing and use of hazardous materials in open containers or systems shall be in accordance with Sections 5005.2.1.1 through 5005.2.1.4.

❖ See the commentary to the definition of "Open systems" in Chapter 2.

5005.2.1.1 Ventilation. Where gases, liquids or solids having a hazard ranking of 3 or 4 in accordance with NFPA 704 are dispensed or used, mechanical exhaust ventilation shall be provided to capture gases, fumes, mists or vapors at the point of generation.

Exception: Gases, liquids or solids that can be demonstrated not to create harmful gases, fumes, mists or vapors.

❖ Areas where gases, liquids or solids having a ranking of 3 or 4 in accordance with NFPA 704 are used or dispensed must have a mechanical exhaust system to capture vapors at the point of generation unless the chemicals do not produce harmful fumes, mists or vapors.

5005.2.1.2 Explosion control. Explosion control shall be provided in accordance with Section 5004.6 where an explosive environment can occur because of the characteristics or nature of the hazardous materials dispensed or used, or as a result of the dispensing or use process.

❖ Based on the requirements of Section 5004.6, explosion control must be provided when the dispensing or use of a chemical could cause an explosion.

5005.2.1.3 Spill control for hazardous material liquids. Buildings, rooms or areas where hazardous material liquids are dispensed into vessels exceeding a 1.3-gallon (5 L) capacity or used in *open systems* exceeding a 5.3-gallon (20 L) capacity shall be provided with spill control in accordance with Section 5004.2.1.

❖ When dispensing hazardous materials into containers larger than 1.3 gallons (5 L) or in an open system with a capacity of 5.3 gallons (20 L), spill control must be provided.

5005.2.1.4 Secondary containment for hazardous material liquids. Where required by Table 5005.2.1.4, buildings, rooms or areas where hazardous material liquids are dispensed or used in *open systems* shall be provided with secondary containment in accordance with Section 5004.2.2 where the capacity of an individual vessel or system or the capacity of multiple vessels or systems exceeds the following:

1. Individual vessel or system: greater than 1.3 gallons (5 L).
2. Multiple vessels or systems: greater than 5.3 gallons (20 L).

❖ Table 5005.2.1.4 lists conditions where secondary spill containment is required. The containment must meet the requirements of Section 5004.2.2 where the capacity of a single vessel exceeds 1.3 gallons (5 L) or multiple vessels exceed 5.3 gallons (20 L).

INTERNATIONAL CODE COUNCIL®
Copyright © 2015 ICC. ALL RIGHTS RESERVED. Accessed by David Dammon on Jun 21, 2017 12:30:52 PM pursuant to License Agreement with ICC. No further reproduction or distribution authorized. ANY UNAUTHORIZED REPRODUCTION OR DISTRIBUTION IS A VIOLATION OF THE FEDERAL COPYRIGHT ACT AND THE LICENSE AGREEMENT, AND SUBJECT TO CIVIL AND CRIMINAL PENALTIES THEREUNDER.

TABLE 5005.2.1.4. See below.

❖ This table specifies when secondary containment is required. The table is divided into three columns: material, indoor use and outdoor use. Subcolumns of solids and liquids further divide the table. By finding the type of material in question, the physical state and the method of use, one can determine whether secondary containment is required.

5005.2.2 Closed systems. Use of hazardous materials in closed containers or systems shall be in accordance with Sections 5005.2.2.1 through 5005.2.2.4.

❖ See the definition of "Closed systems" in Chapter 2.

5005.2.2.1 Ventilation. Where *closed systems* are designed to be opened as part of normal operations, ventilation shall be provided in accordance with Section 5005.2.1.1.

❖ See Section 5005.2.1.1 for requirements on ventilation of areas with closed systems.

5005.2.2.2 Explosion control. Explosion control shall be provided in accordance with Section 5004.6 where an explosive environment exists because of the hazardous materials dispensed or used, or as a result of the dispensing or use process.

Exception: Where process vessels are designed to contain fully the worst-case explosion anticipated within the ves-

TABLE 5005.2.1.4
REQUIRED SECONDARY CONTAINMENT—HAZARDOUS MATERIAL LIQUIDS USE

MATERIAL	INDOOR LIQUIDS USE	OUTDOOR LIQUIDS USE	
1. Physical-hazard materials			
Combustible liquids	Class II	See Chapter 57	See Chapter 57
	Class IIIA	See Chapter 57	See Chapter 57
	Class IIIB	See Chapter 57	See Chapter 57
Cryogenic fluids		See Chapter 55	See Chapter 55
Explosives		See Chapter 56	See Chapter 56
Flammable liquids	Class IA	See Chapter 57	See Chapter 57
	Class IB	See Chapter 57	See Chapter 57
	Class IC	See Chapter 57	See Chapter 57
Flammable solids		Not Applicable	Not Applicable
Organic peroxides	Unclassified Detonable	Required	Required
	Class I	Required	Required
	Class II		
	Class III		
	Class IV		
	Class V	Not Required	Not Required
Oxidizers	Class 4	Required	Required
	Class 3		
	Class 2		
	Class 1		
Pyrophorics		Required	Required
Unstable (reactives)	Class 4	Required	Required
	Class 3		
	Class 2		
	Class 1	Not Required	Required
Water reactives	Class 3	Required	Required
	Class 2		
	Class 1	Not Required	Required
2. Health-hazard materials			
Corrosives		Required	Required
Highly toxics			
Toxics			

INTERNATIONAL CODE COUNCIL®
Copyright © 2015 ICC. ALL RIGHTS RESERVED. Accessed by David Dammon on Jun 21, 2017 12:30:52 PM pursuant to License Agreement with ICC. No further reproduction or distribution authorized. ANY UNAUTHORIZED REPRODUCTION OR DISTRIBUTION IS A VIOLATION OF THE FEDERAL COPYRIGHT ACT AND THE LICENSE AGREEMENT, AND SUBJECT TO CIVIL AND CRIMINAL PENALTIES THEREUNDER.

sel under process conditions based on the most likely failure.

❖ If the use or process could produce an explosion and the vessels are not rated as explosionproof, explosion control must meet the requirements of Section 5004.6. The exception covers process vessels designed to contain potential explosions.

5005.2.2.3 Spill control for hazardous material liquids. Buildings, rooms or areas where hazardous material liquids are used in individual vessels exceeding a 55-gallon (208 L) capacity shall be provided with spill control in accordance with Section 5004.2.1.

❖ In addition to the other requirements that have been covered, if an individual vessel exceeds 55 gallons (208 L), spill control is required.

5005.2.2.4 Secondary containment for hazardous material liquids. Where required by Table 5005.2.1.4, buildings, rooms or areas where hazardous material liquids are used in vessels or systems shall be provided with secondary containment in accordance with Section 5004.2.2 where the capacity of an individual vessel or system or the capacity of multiple vessels or systems exceeds the following:

1. Individual vessel or system: greater than 55 gallons (208 L).
2. Multiple vessels or systems: greater than 1,000 gallons (3785 L).

❖ Secondary containment must be installed where required by Table 5005.2.1.4, where the capacity of an individual vessel is over 55 gallons (208 L) or where multiple vessels have a combined capacity greater than 1,000 gallons (3785 L).

5005.3 Outdoor dispensing and use. Dispensing and use of hazardous materials outdoors shall be in accordance with Sections 5005.3.1 through 5005.3.9.

❖ The following sections refer to outdoor storage. It is important to note that a noncombustible shed without sides is also considered outdoor storage.

5005.3.1 Quantities exceeding the maximum allowable quantity per control area. Outdoor dispensing or use of hazardous materials, in either closed or open containers or systems, in amounts exceeding the *maximum allowable quantity per control area* indicated in Tables 5003.1.1(3) and 5003.1.1(4) shall be in accordance with Sections 5001, 5003, 5005.1 and 5005.3.

❖ Once the quantities in storage exceed the MAQs of Table 5003.1.1(3) and Section 5003.11(4), the storage must meet the requirements of Sections 5001, 5003, 5005.1 and 5005.3.

5005.3.2 Quantities not exceeding the maximum allowable quantity per control area. Outdoor dispensing or use of hazardous materials, in either closed or open containers or systems, in amounts not exceeding the *maximum allowable quantity per control area* indicated in Tables 5003.1.1(3) and 5003.1.1(4) shall be in accordance with Sections 5001 and 5003.

❖ Where quantities in storage do not exceed the MAQs of Tables 5003.1.1(3) and 5003.1.1(4), the storage must meet the requirements of Sections 5001 and 5003.

5005.3.3 Location. Outdoor dispensing and use areas for hazardous materials shall be located as required for outdoor storage in accordance with Section 5004.

❖ See the commentary to Section 5004 for the location of storage.

5005.3.4 Spill control for hazardous material liquids in open systems. Outdoor areas where hazardous material liquids are dispensed in vessels exceeding a 1.3-gallon (5 L) capacity or used in *open systems* exceeding a 5.3-gallon (20 L) capacity shall be provided with spill control in accordance with Section 5004.2.1.

❖ The dispensing and use areas of open systems located outdoors also require spill controls when the individual containers being filled exceed 1.3 gallons (5 L) or the combined vessels or systems exceed 5.3 gallons (20 L).

5005.3.5 Secondary containment for hazardous material liquids in open systems. Where required by Table 5005.2.1.4, outdoor areas where hazardous material liquids are dispensed or used in *open systems* shall be provided with secondary containment in accordance with Section 5004.2.2 where the capacity of an individual vessel or system or the capacity of multiple vessels or systems exceeds the following:

1. Individual vessel or system: greater than 1.3 gallons (5 L).
2. Multiple vessels or systems: greater than 5.3 gallons (20 L).

❖ Dispensing and use areas of open systems located outdoors also require secondary spill controls when the requirements of Table 5005.2.1.4 are met and the individual containers being filled exceed 1.3 gallons (5 L) or the combined vessels or systems exceed 5.3 gallons (208 L).

5005.3.6 Spill control for hazardous material liquids in closed systems. Outdoor areas where hazardous material liquids are used in *closed systems* exceeding 55 gallons (208 L) shall be provided with spill control in accordance with Section 5004.2.1.

❖ Outdoor closed systems with a liquid capacity of over 55 gallons (208 L) must have spill control.

5005.3.7 Secondary containment for hazardous material liquids in closed systems. Where required by Table 5005.2.1.4, outdoor areas where hazardous material liquids are dispensed or used in *closed systems* shall be provided

INTERNATIONAL CODE COUNCIL®
Copyright © 2015 ICC. ALL RIGHTS RESERVED. Accessed by David Dammon on Jun 21, 2017 12:30:52 PM pursuant to License Agreement with ICC. No further reproduction or distribution authorized. ANY UNAUTHORIZED REPRODUCTION OR DISTRIBUTION IS A VIOLATION OF THE FEDERAL COPYRIGHT ACT AND THE LICENSE AGREEMENT, AND SUBJECT TO CIVIL AND CRIMINAL PENALTIES THEREUNDER.

with secondary containment in accordance with Section 5004.2.2 where the capacity of an individual vessel or system or the capacity of multiple vessels or systems exceeds the following:

1. Individual vessel or system: greater than 55 gallons (208 L).
2. Multiple vessels or systems: greater than 1,000 gallons (3785 L).

❖ Dispensing and use areas of closed systems located outdoors also require secondary spill controls when the individual containers being filled exceed 55 gallons (208 L) or the combined vessels or systems exceed 1,000 gallons (3785 L).

5005.3.8 Clearance from combustibles. The area surrounding an outdoor dispensing or use area shall be kept clear of combustible materials and vegetation for a minimum distance of 30 feet (9144 mm).

❖ Vegetation and other combustible materials must be cut back for a distance of at least 30 feet (9144 mm) from outdoor storage to minimize the exposure to the dispensing or use area in the event of a fire in the combustible materials. Note that this section requires an additional 5 feet (1524 mm) of clearance beyond that required by Section 5004.11 due to the fact that in use, dispensing and handling scenarios, vapors may be present, whereas in storage, containers are closed and vapors are contained.

5005.3.9 Weather protection. Where overhead noncombustible construction is provided for sheltering outdoor hazardous material use areas, such use shall not be considered indoor use where the area is constructed in accordance with the requirements for weather protection as required in the *International Building Code.*

Exception: Use of *explosive* materials shall be considered as indoor use.

❖ This section allows for the construction of noncombustible covers over outdoor dispensing and use areas for weather protection. This area is not considered inside dispensing or use, except when explosive materials are dispensed or used under the noncombustible roof. IBC Section 414.6.1 contains the specific requirements for weather-protection construction.

5005.4 Handling. Handling of hazardous materials shall be in accordance with Sections 5005.4.1 through 5005.4.4.

❖ The handling of hazardous materials must meet the requirements of the following sections.

5005.4.1 Quantities exceeding the maximum allowable quantity per control area. Handling of hazardous materials in indoor and outdoor locations in amounts exceeding the *maximum allowable quantity per control area* indicated in Tables 5003.1.1(1) through 5003.1.1(4) shall be in accordance with Sections 5001, 5003, 5005.1 and 5005.4.

❖ When the indoor and outdoor storage amounts of chemicals are below the MAQs per control area, the area must meet the requirements of Sections 5001, 5003, 5005.1 and 5005.4.

5005.4.2 Quantities not exceeding the maximum allowable quantity per control area. Handling of hazardous materials in indoor locations in amounts not exceeding the *maximum allowable quantity per control area* indicated in Tables 5003.1.1(1) and 5003.1.1(2) shall be in accordance with Sections 5001, 5003 and 5005.1. Handling of hazardous materials in outdoor locations in amounts not exceeding the *maximum allowable quantity per control area* indicated in Tables 5003.1.1(3) and 5003.1.1(4) shall be in accordance with Sections 5001 and 5003.

❖ When the indoor storage amounts of chemicals exceed the MAQ, the area must meet the requirements of Sections 5001, 5003 and 5005.1. When outdoor storage exceeds the MAQs listed in Tables 5003.1.1(3) and 5003.1.1(4), the area must meet the requirements of Sections 5001 and 5003.

5005.4.3 Location. Outdoor handling areas for hazardous materials shall be located as required for outdoor storage in accordance with Section 5004.

❖ Outdoor handling areas must meet the requirements of Section 5004.

5005.4.4 Dispensing, use and handling. Where hazardous materials having a hazard ranking of 3 or 4 in accordance with NFPA 704 are transported through *corridors*, interior *exit stairways* or *ramps* or *exit passageways,* there shall be an emergency telephone system, a local manual alarm station or an approved alarm-initiating device at not more than 150-foot (45 720 mm) intervals and at each *exit* and *exit access* doorway throughout the transport route. The signal shall be relayed to an approved central, proprietary or remote station service or constantly attended on-site location and shall also initiate a local audible alarm.

❖ When exit access corridors or exit enclosures are used to transport hazardous materials with a ranking of 3 or 4, a supervised emergency telephone system, local manual alarm or approved alarm-initiating device must be installed at intervals of no more than 150 feet (45 720 mm). In addition, these devices must be located at each exit and exit access doorway throughout the transport route.

Bibliography

The following resource materials were used in the preparation of the commentary for this chapter of the code:

2012 International Code Interpretations. Washington, DC: International Code Council, 2011.

Code Changes Resource Collection—2015 International Fire Code. Washington, DC: International Code Council, 2014.

FM Global Property Loss Prevention Data Sheet 7-29, *Ignitable Liquid Storage in Portable Containers*. Johnston, RI: FM Global Research, April 2012.

INTERNATIONAL CODE COUNCIL®

Copyright © 2015 ICC. ALL RIGHTS RESERVED. Accessed by David Dammon on Jun 21, 2017 12:30:52 PM pursuant to License Agreement with ICC. No further reproduction or distribution authorized. ANY UNAUTHORIZED REPRODUCTION OR DISTRIBUTION IS A VIOLATION OF THE FEDERAL COPYRIGHT ACT AND THE LICENSE AGREEMENT, AND SUBJECT TO CIVIL AND CRIMINAL PENALTIES THEREUNDER.

Chapter 51: Aerosols

General Comments

The adequacy of aerosol storage protection became a major concern in the late 1970s and early 1980s because of a few major warehouse fires in which the involvement of aerosol products was a primary factor. These fire-loss incidents showed that, although these buildings were fully sprinklered, the level of sprinkler protection was inadequate and strict storage limitations for aerosol products were necessary.

The fire losses prompted extensive large-scale fire tests to develop protection requirements for aerosol product storage. The results of these tests led to the development, in 1990, of NFPA 30B, which is the basis for the provisions of this chapter. NFPA 30B recognizes that aerosol products represent a wide range of flammability and that classification criteria are necessary for all aerosol products to determine the desired level of protection. Prior to the development of NFPA 30B, flammable aerosols were classified as Class IA flammable liquids in accordance with NFPA 30; however, this classification was based primarily on a flame extension test designed to assess the in-use aerosol flammability hazard, but had little relevance to warehouse storage conditions.

Increased sprinkler water density and sprinkler head sensitivity, along with adequate separation and quantity control, are the most important factors in controlling aerosol product fires. Increased water density requirements improve the capability of the system to suppress the fire, as opposed to just controlling its spread, by applying more water to the base of the fire. Increased sprinkler activation speed also provides additional benefits. Early suppression fast-response (ESFR) sprinklers are specifically listed for high-challenge fire hazards. Increased sensitivity of ESFR sprinklers allows them to activate in response to a cardboard-carton packaging fire before aerosol cans rupture.

Purpose

These requirements address the prevention, control and extinguishment of fires and explosions in facilities where retail aerosol products are displayed or stored. They impact both life safety and property protection from a fire; however, historically, aerosol product fires have caused property loss more frequently than loss of life.

SECTION 5101 GENERAL

5101.1 Scope. The provisions of this chapter, the *International Building Code* and NFPA 30B shall apply to the manufacturing, storage and display of aerosol products. Manufacturing of aerosol products using hazardous materials shall also comply with Chapter 50.

❖ In addition to the provisions of this chapter, NFPA 30B is referenced for storing and displaying aerosol products because it was the original source document for this chapter. The requirements in Chapter 50 must also be complied with where applicable.

Although this chapter deals primarily with the storage and retail display of aerosol products, Chapter 50, the *International Building Code*® (IBC®) and NFPA 30B must be consulted for guidance on facilities involved in the manufacture of aerosol-containing products. For example, aerosol-charging operations that use flammable aerosols require special design considerations and operating procedures. An aerosol-charging room is where the aerosol containers are filled with the propellant. These rooms are either located in a separate building or are separated within a building and in spaces that have explosion venting because of the deflagration potential of the products being handled. See the commentary to Section 5107.1 for further information.

5101.2 Permit required. Permits shall be required as set forth in Section 105.6.

❖ The process of issuing permits gives the fire code official an opportunity to carefully evaluate and regulate hazardous operations. Permit applicants should be required to demonstrate that their operations comply with the intent of the code before a permit is issued. See the commentary to Section 105.6 for a general discussion of operations requiring an operational permit, Section 105.6.1 for a discussion of specific quantity-based operational permits for the materials regulated in this chapter and Section 105.7 for a general discussion of activities requiring a construction permit. The permit process also notifies the fire department of the need for prefire planning for hazardous properties.

INTERNATIONAL CODE COUNCIL®
Copyright © 2015 ICC. ALL RIGHTS RESERVED. Accessed by David Dammon on Jun 21, 2017 12:30:52 PM pursuant to License Agreement with ICC. No further reproduction or distribution authorized. ANY UNAUTHORIZED REPRODUCTION OR DISTRIBUTION IS A VIOLATION OF THE FEDERAL COPYRIGHT ACT AND THE LICENSE AGREEMENT, AND SUBJECT TO CIVIL AND CRIMINAL PENALTIES THEREUNDER.

5101.3 Material Safety Data Sheets. Material Safety Data Sheet (MSDS) information for aerosol products displayed shall be kept on the premises at an *approved* location.

❖ This section gives the fire code official the authority to designate or approve the location where the Material Safety Data Sheets (MSDS) covering aerosol materials are kept for use by authorized personnel and first responders in case of an emergency.

5101.4 Containers. Metal aerosol containers shall be limited to a maximum size of 33.8 fluid ounces (1000 ml). Plastic aerosol containers shall be limited to a maximum 4 fluid ounces (118 ml) except as provided in Section 5104.1.1. Glass aerosol containers shall be limited to a maximum 4 fluid ounces (118 ml).

❖ Design criteria for aerosol containers, including the maximum size and minimum strength, are set by the U.S. Department of Transportation (DOTn 49 CFR). These container regulations are necessary for the safe transportation of aerosol products. These container design criteria were formerly contained in the definition of "aerosol container" in Chapter 2 but were moved since they are technical requirements that belong with the subject matter they regulate.

SECTION 5102
DEFINITIONS

5102.1 Definitions. The following terms are defined in Chapter 2:

AEROSOL.

Level 1 aerosol products.

Level 2 aerosol products.

Level 3 aerosol products.

AEROSOL CONTAINER.

AEROSOL WAREHOUSE.

PROPELLANT.

RETAIL DISPLAY AREA.

❖ Definitions of terms can help in the understanding and application of the code requirements. This section directs the code user to Chapter 2 for the proper application of the indicated terms used in this chapter. Terms may be defined in Chapter 2 or in another *International Code*® (I-Code®) as indicated in Section 201.3, or the dictionary meaning may be all that is needed (see also commentary, Sections 201 through 201.4).

SECTION 5103
CLASSIFICATION OF AEROSOL PRODUCTS

5103.1 Classification levels. Aerosol products shall be classified as Level 1, 2 or 3 in accordance with Table 5103.1 and NFPA 30B. Aerosol products in cartons that are not identified in accordance with this section shall be classified as Level 3.

❖ Because of the wide range of flammability of aerosol products, a classification system was established to determine the required level of fire protection. Categories are defined according to the aerosol's chemical heat of combustion expressed in British thermal units per pound (Btu/lb) [kilojoules/gram (kJ/g)] (see the commentary to Table 5103.1 for additional discussion of factors affecting classification).

Three categories determine the level of fire protection required (see Chapter 4 of NFPA 30B for fire protection requirements). Aerosol product classification Levels 1, 2 and 3 are used to avoid confusion with flammable and combustible liquid classifications (Classes I, II and III). Table 5103.1 shows the three aerosol classifications. Appendices A and C of NFPA 30B also contain additional background information on the development of the classification system.

This section also recognizes the importance of identifying the level of aerosols in storage cartons. Unless cartons are marked to identify their contents, it is difficult to determine the allowable quantity and fire protection requirements. Where cartons are not marked, there is no alternative but to consider the aerosol storage as Level 3 and apply the code requirements for that level (see commentary, Section 5106.1).

TABLE 5103.1
CLASSIFICATION OF AEROSOL PRODUCTS

CHEMICAL HEAT OF COMBUSTION		AEROSOL CLASSIFICATION
Greater than (Btu/lb)	Less than or equal to (Btu/lb)	
0	8,600	1
8,600	13,000	2
13,000	—	3

For SI: 1 British thermal unit per pound = 0.002326 kJ/g.

❖ Table 5103.1 shows how to classify aerosol products based on their "chemical heat of combustion," a term defined in Section 3.3.16.1 of NFPA 30B. NFPA 30B contains tables giving the heat of combustion (expressed in kJ/g) for representative materials and gives examples for calculating the chemical heat of combustion for aerosol products. Heat of combustion is determined using the method in ASTM D240. Factory Mutual Research Corporation (FMRC) correlated the chemical heat of combustion with the results of full-scale pallet tests to provide a classification method based on chemical heat of combustion that is more consistent than the original classification based on weight percentages. Examples are given in NFPA 30B for calculating the heat of combustion for aerosol products that contain a number of components so that they can be classified using Table 5103.1.

Examples of Level 1 aerosol products include air

INTERNATIONAL CODE COUNCIL®
Copyright © 2015 ICC. ALL RIGHTS RESERVED. Accessed by David Dammon on Jun 21, 2017 12:30:52 PM pursuant to License Agreement with ICC. No further reproduction or distribution authorized. ANY UNAUTHORIZED REPRODUCTION OR DISTRIBUTION IS A VIOLATION OF THE FEDERAL COPYRIGHT ACT AND THE LICENSE AGREEMENT, AND SUBJECT TO CIVIL AND CRIMINAL PENALTIES THEREUNDER.

fresheners, shaving gels and whipped cream. Fire tests involving Level 1 aerosols have demonstrated that they pose a fire hazard no greater than that of Class III commodities as defined in NFPA 13. Consequently, Level 1 aerosols are not regulated as a hazardous material and are essentially exempt from the requirements of this chapter.

Examples of Level 2 aerosol products include some hair sprays and insect repellents, based on the values in Table 5103.1.

Level 3 aerosol products, such as carburetor cleaner and other petroleum-based aerosols, require the highest level of fire protection.

5103.2 Identification. Cartons shall be identified on not less than one side with the classification level of the aerosol products contained within the carton as follows:

LEVEL _____ AEROSOLS

❖ Aerosol products are generally stored and transported in cardboard cartons that must be clearly marked with the level of aerosol products they contain so that the proper storage arrangements and fire protection are provided. The product label on the aerosol container may define whether the product is flammable or extremely flammable, but does not need to explain the actual classification level. If cartons are discarded or not marked, classification may be obtained from the submitted MSDS (see Section 5101.3). Fire protection requirements for the highest level of aerosols must be used where storage is mixed or unknown (see Section 5103.1).

SECTION 5104
INSIDE STORAGE OF AEROSOL PRODUCTS

5104.1 General. The inside storage of Level 2 and 3 aerosol products shall comply with Sections 5104.2 through 5104.7 and NFPA 30B. Level 1 aerosol products and those aerosol products covered by Section 5104.1.1 shall be considered equivalent to a Class III commodity and shall comply with the requirements for palletized or rack storage in NFPA 13.

❖ Sections 5104.1.1 through 5104.7, the applicable requirements in NFPA 30B and the applicable provisions of Chapter 32 regulate the inside storage of aerosol products. Permissible quantities, separation and fire protection depend on the occupancy type (see Sections 5104.2 and 5104.7) and storage condition, such as a general purpose warehouse (see Section 5104.3), aerosol warehouse (see Section 5104.4), inside flammable-liquid storage room (see Section 5104.5) or liquid warehouse (see Section 5104.6).

This section also specifies the level of protection required for Level 1 aerosols. The fire hazard associated with Level 1 aerosols has been demonstrated to be equivalent to Class III commodities as defined in Section 202 and NFPA 13. Therefore, Sections 5104.2 through 5104.7, and the applicable provisions of Chapter 32, apply only to Level 2 and 3 aerosol products. Level 2 aerosol products are classified as a Group IV commodity in Section 3203.5; while aerosols, including Level 3 aerosols, are not regulated as hazardous materials, for the purpose of occupancy classification, Level 3 aerosols would still be considered a high-hazard commodity in accordance with Section 3203.6.

5104.1.1 Plastic containers. Aerosol products in plastic containers larger than 4 fluid ounces (118 ml), but not to exceed 33.8 fluid ounces (1000 ml), shall be allowed only where in accordance with this section. The commodity classification shall be Class III commodities, as defined in NFPA 13 where any of the following conditions are met:

1. Base product has no fire point where tested in accordance with ASTM D92, and nonflammable propellant.
2. Base product has no sustained combustion as tested in accordance with Appendix H, "Method of Testing for Sustained Combustibility," in DOTn 49 CFR Part 173, and nonflammable propellant.
3. Base product contains up to 20 percent by volume (15.8 percent by weight) of ethanol and/or isopropyl alcohol in an aqueous mix, and nonflammable propellant.
4. Base product contains 4 percent by weight or less of an emulsified flammable liquefied gas propellant within an aqueous base. The propellant shall remain emulsified for the life of the product. Where such propellant is not permanently emulsified, the propellant shall be nonflammable.

❖ This section provides criteria for accepting certain aerosol product compositions in previously prohibited plastic containers. It also provides correlation with the referenced standard, NFPA 30B.

A significant amount of new research has been completed on aerosol products in plastic containers, clearly defining a "low hazard" version of the product that can be stored in general purpose warehouses without significantly increasing the fire hazard. The following discussions, excerpted from NFPA 308, provide an overview of the work done and the conclusions drawn that resulted in the criteria in this section:

1. Aerosol Products in Plastic Containers – Propellant: Nonflammable; Base: Liquid Content that Does not Support Combustion: The fire hazard created by aerosol products in metal containers is driven by their propellant and the liquid content. An aerosol product that contains a nonflammable propellant and a liquid content that does not support combustion would have a chemical heat of combustion of 0 kJ/g and be classified as a Level 1 aerosol product. Level 1 aerosols are protected using the same protection criteria needed for Class III commodities provided by NFPA 13.

The fire hazard of an aerosol product in plastic containers cannot be directly compared to aerosol products in metal containers. However, using commodity classification information for plastic containers filled with liquids that do not burn supports proposing a protection level for equivalent

INTERNATIONAL CODE COUNCIL®
Copyright © 2015 ICC. ALL RIGHTS RESERVED. Accessed by David Dammon on Jun 21, 2017 12:30:52 PM pursuant to License Agreement with ICC. No further reproduction or distribution authorized. ANY UNAUTHORIZED REPRODUCTION OR DISTRIBUTION IS A VIOLATION OF THE FEDERAL COPYRIGHT ACT AND THE LICENSE AGREEMENT, AND SUBJECT TO CIVIL AND CRIMINAL PENALTIES THEREUNDER.

aerosol products. In this case, the content of the aerosol would not contribute to a fire. Only the primary (plastic container) and secondary (carton) packaging would contribute. If the aerosol was not pressurized, it would directly compare to products listed in NFPA 13 Annex A, Table A.5.6.3 and FM Global Property Loss Prevention Data Sheet 8-1, Section 2.2.2.2. Both standards treat a plastic container filled with a liquid that does not burn as a Class I commodity. The addition of a nonflammable propellant to a plastic container will not change the burning properties of the commodity (it may result in a violent rupture with no change in burning rates or severity). The above discussion would point to classifying the aerosol products in plastic containers charged with a nonflammable propellant and liquid that does not burn as a Class I commodity. However, in an effort to provide consistency in the protection of aerosols, the protection proposal targets using the same protection currently recommended for Level 1 aerosols.

2. Aerosol Products in Plastic Containers – Propellant: Nonflammable; Base: Liquid Content Consists of up to 20 percent Ethanol or Isopropyl Alcohol in Aqueous Solution: An aerosol product in a plastic container that contains a liquid that burns will create a fire hazard at least as severe as the same liquid in an unpressurized plastic container. The fire hazard may increase because the container is pressurized and will definitely increase if it is pressurized with a flammable propellant. As the fire hazard of the aerosol's content increases, the fire hazard of the actual aerosol will increase as well. If, on the other hand, the aerosol product in a plastic container was charged with liquid components that can easily be protected in an unpressurized plastic container, similar to the discussion under Item 1, there is a good chance that the aerosol products in plastic containers can be similarly protected.

FM Global has developed protection criteria for several alcohol water mixtures in plastic bottles. The alcohols used in the testing were ethanol and isopropyl alcohol. The mixtures ranged from 100-percent alcohol (approximate) down to 20-percent alcohol/80-percent water by volume. Cartons of the 20-percent alcohol/80-percent water mixture in a plastic bottle were tested in a full-scale array. This alcohol/water mixture does have a definable fire point; however, it produces unstable burning.

Based on the results of this test, FM Global has recommended protecting 20-percent alcohol/80-percent water mixtures by volume in plastic bottles with the same protection recommended for liquids that do not burn in plastic containers, i.e., Class I commodities. A final question is whether pressurizing a plastic container filled with a 20-percent alcohol/80-percent water mixture by volume with nonflammable propellant will change the burning properties of the product.

Since the propellant will not burn, the only real opportunity to change the burning behavior would be to cause the alcohol/water mixture to burn more severely (e.g., possibly produce fireballs when the mixture is ejected from the container under pressure). To evaluate this potential, a small-scale test series was contracted with Underwriters Laboratories (UL) to investigate the impact of pressurizing aerosol products in plastic containers, filled with a 20-percent alcohol/80-percent water mixture by volume with nonflammable propellants. In the five tests that were run, two filling methods were investigated: direct fill (liquid and propellant in same space) and bag-on-valve (liquid in one compartment, propellant in outer compartment). UL reported the number of container failures. The overall fire behavior was provided through direct observation. The tests looked at two cases of six containers arranged with a 6-inch (15 cm) flue between them and a point igniter in the flue space. The cases were in a small pan.

None of the tests produced a pool fire or fireball. In all five tests, portions of the aerosol products in plastic containers and cardboard cases remained unburned. Based on these tests, it appears that the fire properties of the alcohol/water mixture remained unchanged when pressurized and that using Class III commodity protection will provide fully adequate protection for the aerosol products in plastic containers.

3. Aerosol Products in Plastic Containers – Propellant: 4 percent by Weight Nonflammable Propellant or Flammable Propellant that is Emulsified in Liquid Base; Base: Aqueous Base with no Fire Point: An emulsion, in an aerosol product, would be a mixture of two or more liquids in which one is present as droplets, of microscopic or ultramicroscopic size, distributed throughout the other. Emulsions are formed from the component liquids either spontaneously or, more often, by mechanical means, such as agitation, provided that the liquids that are mixed have no (or a very limited) mutual solubility. Emulsions are stabilized by agents that form films at the surface of the droplets (e.g., soap molecules) or that impart to them a mechanical stability (e.g., colloidal carbon or bentonite). Colloidal distributions or suspension of one or more liquid(s) with another will have a shelf life that varies with the efficiency of the recipe used.

A Level 1 aerosol (metal can) was defined by the fire performance of shave cream. This product had limited amounts of flammable liquefied gas propellant to eject the mixture and to cause foaming of the mixture. In a fire, the hydrocarbon propellant would be ejected and burn, but the large quantities of foam mix and water tended to produce a very limited fire severity. A similar product was evaluated when placed in a plastic aerosol container.

INTERNATIONAL CODE COUNCIL®
Copyright © 2015 ICC. ALL RIGHTS RESERVED. Accessed by David Dammon on Jun 21, 2017 12:30:52 PM pursuant to License Agreement with ICC. No further reproduction or distribution authorized. ANY UNAUTHORIZED REPRODUCTION OR DISTRIBUTION IS A VIOLATION OF THE FEDERAL COPYRIGHT ACT AND THE LICENSE AGREEMENT, AND SUBJECT TO CIVIL AND CRIMINAL PENALTIES THEREUNDER.

The product consisted of several liquid components that do not support combustion mixed with water and a maximum of 4 percent by weight flammable liquefied gas propellant. The liquefied gas was held within the liquid mixture as an emulsion. The gas would eject the liquid product and cause the liquid mixture to foam. Since the liquid components do not burn, the main concern centers around the flammable liquefied gas propellant. The evaluation used small, intermediate, and full-scale fire testing to evaluate the fire hazard created by this product. All of the testing was completed at UL.

The large-scale test used the 12-pallet aerosol classification test protocol. This methodology only applies to metal aerosol products but, lacking any test data, it was considered a good starting point. The 12 pallet load palletized array operated four sprinklers in 10 seconds at around a minute and a half after ignition. The fire was quickly knocked down. The test was run for 32 minutes. The liquid product was released during the test and did not contribute to the fire. The flammable liquefied gas did create brief flare-ups of the fire when released and continued to create small fireballs throughout the test. The high sprinkler discharge density [0.79 gpm/ft^2 (32 mm/min)] easily extinguished the majority of the array and limited the fire spread to the ignition flue located in the center of the array. The fire test seemed to demonstrate that the limited amount of flammable liquefied gas in the product would not produce a severe fire; however, the high water density does not permit easy comparison to a Class III commodity fire.

An intermediate-scale test was run under the calorimeter at UL to evaluate the effect of a significantly lower water density [0.25 gpm/ft^2 (10 mm/min)] on this product. The product was placed in a double-row rack with a storage height of 15 feet (4.6 m). Four open sprinklers were located 10 feet (3 m) above the top of the array and arranged to deliver a water density of 0.25 gallon per minute per square foot (10 mm/min). The sprinklers were activated at approximately 1 minute after ignition. The test was terminated at 4 minutes since the fire was extinguished. The percent damage was not provided in the UL report; however the pictures indicate that the fire was again confined to the ignition flue.

NFPA 13 requires a water density of 0.25 gallon per minute per square foot (10 mm/min) to protect a 15-foot-high (4.6 m) double-row rack storage of Class III commodity in a 25-foot (7.6 m) high building using low temperature ceiling sprinklers [NFPA 13, Table 16.2.1.3.2, Figure 16.2.1.3.2(c) curves E & F, Figure 16.2.1.3.4.1]. The intermediate-scale test indicates that this same protection level easily controlled/extinguished a fire involving the foam shave cream in a plastic aerosol container.

In addition to the intermediate and large-scale fire test, a number of small-scale tests were also done to provide a visual documentation on how a plastic aerosol container with a shave foam-type product behaves when exposed to fire without sprinkler protection. These tests consisted of placing two cases of six containers on each side of a standard igniter. The containers were packed in a cardboard box. A shave cream and a hair mousse were tested.

Test 9 used a product that was very similar to what was tested in the intermediate and large-scale testing. It was a shave cream product that had a small percentage of a flammable liquefied gas that was in a stable emulsion with a multi-component liquid mixture. The liquid mixture did not support combustion. The product in Test 10 had a higher weight percent flammable liquefied gas that did not form a stable emulsion in the bottle. A liquefied gas layer formed in the container. It was not clear what the liquid mixture was made up of. In both products, the flammable liquefied gas was used to eject the liquid mixture out of the container and cause the liquid product to create foam.

In Test 9, all but two of the containers failed. The shave foam covered the cases, containers and pan after the test. The product burned weakly and extinguished the igniter used in the test. The product used in Test 10 did appear to burn more vigorously. Container failure produced momentary fireballs. While this limited-scale test cannot predict the behavior of a product in a full-scale arrangement, it did demonstrate that there were differences between the shave cream and the hair mousse, and that the hair mousse produced a more vigorous fire.

The results of the intermediate-scale testing, the full-scale testing and the small-scale testing indicate that an aerosol product in a plastic container filled with a liquid mixture that does not support combustion and no more than 4 percent by weight flammable liquefied gas in a stable emulsion with the liquid mixture can be protected using criteria recommended for a Class III commodity.

5104.2 Storage in Groups A, B, E, F, I and R. Storage of Level 2 and 3 aerosol products in occupancies in Groups A, B, E, F, I and R shall be limited to the following maximum quantities:

1. A net weight of 1,000 pounds (454 kg) of Level 2 aerosol products.
2. A net weight of 500 pounds (227 kg) of Level 3 aerosol products.
3. A combined net weight of 1,000 pounds (454 kg) of Level 2 and 3 aerosol products.

The maximum quantity shall be increased 100 percent where the excess quantity is stored in storage cabinets in accordance with Section 5704.3.2.

❖ This section strictly limits quantities of aerosols in buildings of Groups A, B, E, F, I and R because these

INTERNATIONAL CODE COUNCIL®
Copyright © 2015 ICC. ALL RIGHTS RESERVED. Accessed by David Dammon on Jun 21, 2017 12:30:52 PM pursuant to License Agreement with ICC. No further reproduction or distribution authorized. ANY UNAUTHORIZED REPRODUCTION OR DISTRIBUTION IS A VIOLATION OF THE FEDERAL COPYRIGHT ACT AND THE LICENSE AGREEMENT, AND SUBJECT TO CIVIL AND CRIMINAL PENALTIES THEREUNDER.

occupancy types will have higher occupant loads and host many activities not related to the storage of aerosol products. Storage exceeding the maximum permitted quantities would result in the building being classified as a high-hazard, Group H occupancy in accordance with the IBC. The indicated maximum quantities are applicable per building area and not per control area (see commentary, Section 5003).

This section would also allow the maximum quantities to be increased by 100 percent, if the quantities exceeding those indicated for Level 2 and 3 aerosol products are stored in approved storage cabinets in accordance with Section 5704.3.2, which contains specific requirements for the design, construction and capacity of storage cabinets.

5104.2.1 Excess storage. Storage of quantities exceeding the maximum quantities indicated in Section 5104.2 shall be stored in separate inside flammable liquid storage rooms in accordance with Section 5104.5.

❖ This section recognizes that in certain occupancies, the maximum quantities listed in Section 5104.2 may be exceeded. Any Level 2 or 3 aerosol product exceeding the maximum quantities specified in Section 5104.2, including the exception for approved storage cabinets, must be stored in a separate, inside, flammable liquid storage room to maintain a Group A, B, E, F, I or R occupancy classification for the building.

For example, 1,000 pounds (454 kg) of Level 2 aerosols are allowed in a building classified in occupancy Group B. An additional 1,000 pounds (454 kg) of Level 2 aerosols are also allowed, if the product is stored in approved storage cabinets (see Section 5104.2). If additional storage is desired, 1,000 pounds (454 kg) of Level 2 aerosols would be allowed in an inside, flammable liquid storage room having a floor area of 500 square feet (46 m^2) or less, in accordance with Section 5104.5.1. Therefore, as much as 3,000 pounds (1362 kg) of Level 2 aerosols could be stored in a building of Group B occupancy, if all excess storage is in approved storage cabinets and in an inside, flammable liquid storage room having a floor area of no more than 500 square feet (46 m^2). If an inside, flammable liquid storage room exceeding 500 square feet (46 m^2) were used for the excess storage, the allowable quantity of Level 2 aerosols in the room could be increased to 2,500 pounds (1135 kg). The increased allowed quantities in the larger storage room results from the presence of an automatic sprinkler system. Compliance with these requirements would maintain the Group B occupancy classification for the building (see commentary, Section 5104.5).

5104.3 Storage in general purpose warehouses. Aerosol storage in general purpose warehouses utilized only for warehousing-type operations involving mixed commodities shall comply with Section 5104.3.1 or 5104.3.2.

❖ General purpose warehouses are used for storing general commodities and aerosol products (i.e., "mixed commodities"). Aerosol product storage located in general purpose warehouses is classified as either nonsegregated storage (see Section 5104.3.1) or segregated storage (see Section 5104.3.2).

Distribution warehouses for major department store chains containing large amounts of aerosols and various common mercantile commodities are typical of buildings classified as general purpose warehouses. Proper protection and separation of aerosol product storage areas are essential to protect ordinary storage commodities from the hazards of aerosol products in these types of buildings.

5104.3.1 Nonsegregated storage. Storage consisting of solid pile, palletized or rack storage of Level 2 and 3 aerosol products not segregated into areas utilized exclusively for the storage of aerosols shall comply with Table 5104.3.1.

❖ Nonsegregated storage is located in a general purpose warehouse in which Level 2 and 3 aerosol products are not physically or spatially separated from other commodities. The maximum quantity of Level 2 and 3 aerosol products that can be located in nonsegregated storage areas is specified in Table 5104.3.1.

TABLE 5104.3.1
NONSEGREGATED STORAGE OF LEVEL 2 AND 3 AEROSOL PRODUCTS IN GENERAL PURPOSE WAREHOUSES[b]

AEROSOL LEVEL	MAXIMUM NET WEIGHT PER FLOOR (pounds)[b]			
	Palletized or solid-pile storage		Rack storage	
	Unprotected	Protected[a]	Unprotected	Protected[a]
2	2,500	12,000	2,500	24,000
3	1,000	12,000	1,000	24,000
Combination 2 and 3	2,500	12,000	2,500	24,000

For SI: 1 foot = 304.8 mm, 1 pound = 0.454 kg, 1 square foot = 0.0929 m^2.

a. Approved automatic sprinkler system protection and storage arrangements shall comply with NFPA 30B. Sprinkler system protection shall extend 20 feet beyond the storage area containing the aerosol products.

b. Storage quantities indicated are the maximum permitted in any 50,000-square-foot area.

❖ Table 5104.3.1 lists the maximum quantities of Level 2 and 3 aerosols permitted in general purpose warehouses with nonsegregated storage. Maximum quantities of aerosol products depend on the type of storage condition and the level of sprinkler protection.

Unprotected storage refers to areas that have no sprinkler protection or in which the sprinkler system does not meet specific NFPA 30B design requirements; therefore, protected storage refers only to areas in which sprinkler protection meets NFPA 30B design parameters for solid pile, palletized and rack structure storage conditions.

The "Maximum Net Weight" referred to in the table consists of the base aerosol product plus the propellant, as defined in NFPA 30B.

5104.3.2 Segregated storage. Storage of Level 2 and 3 aerosol products segregated into areas utilized exclusively for the

INTERNATIONAL CODE COUNCIL®
Copyright © 2015 ICC. ALL RIGHTS RESERVED. Accessed by David Dammon on Jun 21, 2017 12:30:52 PM pursuant to License Agreement with ICC. No further reproduction or distribution authorized. ANY UNAUTHORIZED REPRODUCTION OR DISTRIBUTION IS A VIOLATION OF THE FEDERAL COPYRIGHT ACT AND THE LICENSE AGREEMENT, AND SUBJECT TO CIVIL AND CRIMINAL PENALTIES THEREUNDER.

storage of aerosols shall comply with Table 5104.3.2 and Sections 5104.3.2.1 and 5104.3.2.2.

❖ Special requirements for storing aerosol products to prevent mixing with other commodities recognize that, without proper sprinkler protection and separation, fires involving Level 2 and 3 aerosols are difficult to control. Storage areas can be segregated by fire-resistance-rated interior walls, a chain-link fence enclosure or the establishment of a separation area. All aerosol product storage areas in segregated storage must have sprinkler protection in accordance with NFPA 30B. The maximum quantity of Level 2 and 3 aerosol products that can be placed in segregated storage is specified in Table 5104.3.2.

TABLE 5104.3.2
SEGREGATED STORAGE OF LEVEL 2 AND 3 AEROSOL PRODUCTS IN GENERAL PURPOSE WAREHOUSES

STORAGE SEPARATION	MAXIMUM SEGREGATED STORAGE AREA[a]		SPRINKLER REQUIREMENTS
	Percentage of building area (percent)	Area limitation (square feet)	
Separation area[e, f]	15	20,000	Notes b, c
Chain-link fence enclosure[d]	20	20,000	Notes b, c
1-hour fire-resistance-rated interior walls	20	30,000	Note b
2-hour fire-resistance-rated interior walls	25	40,000	Note b
3-hour fire-resistance-rated interior walls	30	50,000	Note b

For SI: 1 foot = 304.8 mm, 1 square foot = 0.0929 m^2.

a. The maximum segregated storage area shall be limited to the smaller of the two areas resulting from the percentage of building area limitation and the area limitation.

b. Automatic sprinkler system protection in aerosol product storage areas shall comply with NFPA 30B and be approved. Building areas not containing aerosol product storage shall be equipped throughout with an approved automatic sprinkler system in accordance with Section 903.3.1.1.

c. Automatic sprinkler system protection in aerosol product storage areas shall comply with NFPA 30B and be approved. Sprinkler system protection shall extend a minimum 20 feet beyond the aerosol storage area.

d. Chain-link fence enclosures shall comply with Section 5104.3.2.1.

e. A separation area shall be defined as an area extending outward from the periphery of the segregated aerosol product storage area as follows.

1. The limits of the aerosol product storage shall be clearly marked on the floor.
2. The separation distance shall be not less than 25 feet and maintained clear of all materials with a commodity classification greater than Class III in accordance with Section 903.3.1.1.

f. Separation areas shall only be permitted where approved.

❖ Table 5104.3.2 lists maximum quantities of Level 2 and 3 aerosols allowed in general purpose warehouses with segregated storage. Storage areas can be segregated using either fire-resistance-rated interior walls, a chain-link fence enclosure (see Section 5104.3.2.1) or a separation area.

As indicated in Note e, a minimum separation distance of 25 feet (7620 mm) from commodity classifications greater than Class III must be maintained when using the separation area option (for additional guidance on commodity classifications, see NFPA 13).

Depending on the separation type provided, the segregated storage area is limited by both a percentage of the building area and a maximum area limitation, as indicated in Note a. The allowable area of segregated storage increases with the increased degree of separation. Segregated storage areas of Level 2 and 3 aerosols must have sprinkler protection in accordance with NFPA 30B.

5104.3.2.1 Chain-link fence enclosures. Chain-link fence enclosures required by Table 5104.3.2 shall comply with the following:

1. The fence shall not be less than No. 9 gage steel wire, woven into a maximum 2-inch (51 mm) diamond mesh.
2. The fence shall be installed from the floor to the underside of the roof or ceiling above.
3. Class IV and high-hazard commodities shall be stored outside of the aerosol storage area and not less than 8 feet (2438 mm) from the fence.
4. Access openings in the fence shall be provided with either self- or automatic-closing devices or a labyrinth opening arrangement preventing aerosol containers from rocketing through the access openings.
5. Not less than two *means of egress* shall be provided from the fenced enclosure.

❖ Table 5104.3.2 establishes limits on the use of a chain-link fence as a means of segregated storage of Level 2 and 3 aerosol products. A chain-link fence enclosure is intended to reduce the potential hazard of "rocketing" aerosol cans in a fire. Both fire tests and loss history have shown that ruptured aerosol cans in fires will "rocket" through the warehouse storage area, resulting in multiple ignition locations and overtaxing of the fire protection systems. Chain-link fence construction details as indicated in this section, in combination with proper sprinkler protection as specified in Notes b and c of Table 5104.3.2, provide a measure of additional safety, allowing increased storage quantities over that permitted where no physical barrier exists.

The No. 9 gage steel requirement for the chain-link fence is similar to a standard, industrial-grade chain-link gage that is commonly used for fencing property. This chain-link gage is considered the lightest acceptable fencing and is capable of restraining flying aerosol containers. A labyrinth opening arrangement in the fencing essentially works as an entryway maze. In place of a door, the access area to the chain-link fence enclosure would be constructed of other fencing, which is usually located at right angles, and through its arrangement, would obstruct the opening to prevent the aerosol containers from rocketing through the access opening.

INTERNATIONAL CODE COUNCIL®
Copyright © 2015 ICC. ALL RIGHTS RESERVED. Accessed by David Dammon on Jun 21, 2017 12:30:52 PM pursuant to License Agreement with ICC. No further reproduction or distribution authorized. ANY UNAUTHORIZED REPRODUCTION OR DISTRIBUTION IS A VIOLATION OF THE FEDERAL COPYRIGHT ACT AND THE LICENSE AGREEMENT, AND SUBJECT TO CIVIL AND CRIMINAL PENALTIES THEREUNDER.

5104.3.2.2 Aisles. The minimum aisle requirements for segregated storage in general purpose warehouses shall comply with Table 5104.3.2.2.

❖ Fires involving aerosol products can spread across aisles located between two rows of racks or palletized and solid pile storage. If the fire is severe enough, the radiant energy may ignite combustible cartons across an aisle, or a fireball from a rupturing container may be large enough to engulf adjacent storage. Table 5104.3.2.2 gives aisle requirements for segregated storage of Level 2 and 3 aerosol products located in general purpose warehouses.

TABLE 5104.3.2.2
SEGREGATED STORAGE AISLE WIDTHS AND DISTANCE TO AISLES IN GENERAL PURPOSE WAREHOUSES

STORAGE CONDITION	MINIMUM AISLE WIDTH (feet)	MAXIMUM DISTANCE FROM STORAGE TO AISLE (feet)
Solid pile or palletized[a]	4 feet between piles	25
Racks with ESFR sprinklers[a]	4 feet between racks and adjacent Level 2 and 3 aerosol product storage	25
Racks without ESFR sprinklers[a]	8 feet between racks and adjacent Level 2 and 3 aerosol product storage	25

For SI: 1 foot = 304.8 mm.
a. Sprinklers shall comply with NFPA 30B.

❖ Table 5104.3.2.2 shows a minimum aisle width and a 25-foot-maximum (7620 mm) separation distance from aerosol storage to aisles where aerosols cannot be stored for segregated storage of Level 2 and 3 aerosol products located in general purpose warehouses. The minimum aisle width depends on the storage condition and the level of sprinkler protection. The 25-foot (7620 mm) distance between the storage and aisle not only isolates aerosols but also limits travel distances within the storage area.

Note a is intended to require the design of the automatic sprinkler system to meet the requirements of NFPA 30B. If the automatic sprinkler system is not designed in accordance with the conditions for ESFR sprinklers in NFPA 30B, then aisles must be 8 feet (2438 mm) wide when storing Level 2 or 3 aerosol products in rack structures. The storage area must be configured so that storage is no more than 25 feet (7620 mm) from the aisle, thus providing a storage footprint of 50 feet (15 240 mm) on a side.

5104.4 Storage in aerosol warehouses. The total quantity of Level 2 and 3 aerosol products in a warehouse utilized for the storage, shipping and receiving of aerosol products shall not be restricted in structures complying with Sections 5104.4.1 through 5104.4.4.

❖ Buildings classified as aerosol warehouses are detached buildings or a separate portion of a building used exclusively for storing and handling aerosol products. This section does not limit the quantity of Level 2 and 3 aerosol products in a building classified as an aerosol warehouse complying with the provisions of Sections 5104.4.1 through 5104.4.4.

5104.4.1 Automatic sprinkler system. Aerosol warehouses shall be protected by an *approved* wet-pipe *automatic sprinkler system* in accordance with NFPA 30B. Sprinkler protection shall be designed based on the highest classification level of aerosol product present.

❖ The automatic sprinkler system for aerosol warehouses must be designed in accordance with NFPA 30B. The sprinkler protection must be designed for Level 3 aerosol products if both Level 2 and 3 aerosols are stored in the aerosol warehouse. With the approval of the fire code official, sprinkler protection can be omitted from an aerosol warehouse where a minimum separation distance of 100 feet (30 480 mm) from a lot line or structure is maintained and exposure protection is provided. Exposure protection would include either a public fire department or plant fire brigade that could apply cooling water streams on adjacent properties or structures. Exposure protection is not required where the distance is 200 feet (60 960 mm) or more to other buildings or lot lines.

5104.4.2 Pile and palletized storage aisles. Solid pile and palletized storage shall be arranged so the maximum travel distance to an aisle is 25 feet (7620 mm). Aisles shall have a minimum width of 4 feet (1219 mm).

❖ The maximum travel distance of 25 feet (7620 mm) to an aisle provides an adequate means of egress if an emergency occurs. This results in an allowable storage area of 50 feet by 50 feet (15 240 mm by 15 240 mm) surrounded by 4-foot (1219 mm) aisles for palletized and pile storage. The 4-foot (1219 mm) aisle width, in conjunction with a sprinkler system and in accordance with NFPA 30B, reduces the chance of fire spread across aisles involving pile and palletized storage.

5104.4.3 Rack storage aisles. Rack storage shall be arranged with a minimum aisle width of 8 feet (2438 mm) between rows of racks and 8 feet (2438 mm) between racks and adjacent solid pile or palletized storage. Where early suppression fast-response (ESFR) sprinklers provide automatic sprinkler protection, the minimum aisle width shall be 4 feet (1219 mm).

❖ The requirements in this section are similar to those in Table 5104.3.2.2 for segregated storage in general purpose warehouses. This section requires 8-foot (2438 mm) aisles between rows of racks or between racks and adjacent piles or palletized storage when the area is protected with sprinkler systems designed in accordance with NFPA 30B.

The 8-foot (2438 mm) minimum aisle width allows two unimpeded parallel columns of egressing occupants to travel in opposite directions, in addition to anticipating other obstructions occurring during an emergency situation. These obstructions could be in the form of a lift truck, or idle pallets or even the result of unstable commodities falling into the aisle. In addi-

INTERNATIONAL CODE COUNCIL®
Copyright © 2015 ICC. ALL RIGHTS RESERVED. Accessed by David Dammon on Jun 21, 2017 12:30:52 PM pursuant to License Agreement with ICC. No further reproduction or distribution authorized. ANY UNAUTHORIZED REPRODUCTION OR DISTRIBUTION IS A VIOLATION OF THE FEDERAL COPYRIGHT ACT AND THE LICENSE AGREEMENT, AND SUBJECT TO CIVIL AND CRIMINAL PENALTIES THEREUNDER.

tion, the 96-inch (2438 mm) width further reduces the hazard of aisle jumps (radiant heat from a burning rack or pile causing the rack or pile across the aisle to ignite) in case of a fire and provides the fire department with greater maneuvering capabilities during a fire, essentially providing an additional safety factor where aerosols are stored.

The second sentence of this section is an exception that recognizes the increased safety of the higher level of sprinkler protection provided by an ESFR system designed in accordance with NFPA 30B by allowing for a 50-percent reduction in aisle width. The maximum travel distance to an aisle is intended to be 25 feet (7620 mm), as indicated in Table 5104.3.2.2.

5104.4.4 Combustible commodities. Combustible commodities other than flammable and *combustible liquids* shall be permitted to be stored in an aerosol warehouse.

Exception: Flammable and *combustible liquids* in 1-quart (946 mL) metal containers and smaller shall be permitted to be stored in an aerosol warehouse.

❖ Based on the full-scale aerosol product fire tests discussed in earlier sections of the commentary, this section allows ordinary combustible commodities to be stored in aerosol warehouses, provided that the fire protection system for the entire facility is based on the appropriate fire protection design table from NFPA 30B and Section 5104.4.1. This is consistent with and correlates with Section 6.3.6.7 of NFPA 30B. See the commentary to Section 3203 for information on the classification of combustible commodities.

The exception allows small, 1 quart [32 ounce (0.95 L)] metal containers of flammable and combustible liquids to be stored in aerosol warehouses, along with the ordinary combustible commodities discussed in the previous paragraph, provided that the fire protection system for the entire facility is based on the appropriate fire protection design table from NFPA 30B. This is consistent with and correlates with Section 6.3.6.8 of NFPA 30B.

5104.5 Storage in inside flammable liquid storage rooms. Inside flammable liquid storage rooms shall comply with Section 5704.3.7. The maximum quantities of aerosol products shall comply with Section 5104.5.1 or 5104.5.2.

❖ This section recognizes another option for storing Level 2 and 3 aerosols. Depending on the anticipated quantities, storage in a Group H-3 inside flammable liquid storage room meeting the requirements of Section 5704.3.7 may be more economical.

Sections 5104.5.1 and 5104.5.2 limit maximum quantities of Level 2 and 3 aerosols that can be stored in an inside flammable liquid storage room depending on the size of the room and the degree of fire-resistance-rated separation and automatic sprinkler protection installed. Indicated maximum quantities of aerosol products are the same quantities listed in Section 5104.2. See the commentary to Section 202 for the definition of "Liquid storage room."

Storage of aerosols exceeding the quantities indicated in Sections 5104.5.1 and 5104.5.2, and the storage of flammable and combustible liquids exceeding maximum allowable quantities (MAQs), must be classified as high-hazard Group H occupancies.

5104.5.1 Storage rooms of 500 square feet or less. The storage of aerosol products in flammable liquid storage rooms less than or equal to 500 square feet (46 m^2) in area shall not exceed the following quantities:

1. A net weight of 1,000 pounds (454 kg) of Level 2 aerosol products.
2. A net weight of 500 pounds (227 kg) of Level 3 aerosol products.
3. A combined net weight of 1,000 pounds (454 kg) of Level 2 and 3 aerosol products.

❖ This section limits the amount of Level 2 and 3 aerosols that can be stored in an inside flammable liquid storage room 500 square feet (46 m^2) or less in area that complies with NFPA 30. The degree of fire-resistance-rated construction depends on room size. Sprinkler protection may or may not be required depending on the quantity of other flammable and combustible liquids in the inside storage room (see commentary, Section 5104.2.1).

5104.5.2 Storage rooms greater than 500 square feet. The storage of aerosol products in flammable liquid storage rooms greater than 500 square feet (46 m^2) in area shall not exceed the following quantities:

1. A net weight of 2,500 pounds (1135 kg) of Level 2 aerosol products.
2. A net weight of 1,000 pounds (454 kg) of Level 3 aerosol products.
3. A combined net weight of 2,500 pounds (1135 kg) of Level 2 and 3 aerosol products.

The maximum aggregate storage quantity of Level 2 and 3 aerosol products permitted in separate inside storage rooms protected by an *approved automatic sprinkler system* in accordance with NFPA 30B shall be 5,000 pounds (2270 kg).

❖ This section allows an increase in the quantity of Level 2 and 3 aerosols for inside, flammable, liquid storage rooms exceeding 500 square feet (46 m^2) in area. These provisions assume that the storage room complies with fire-resistance-rated construction and the fire protection requirements of NFPA 30. Increased quantities compared to Section 5104.5.1 for rooms less than 500 square feet (46 m^2) in area are based on having an automatic sprinkler system throughout the building in accordance with NFPA 13. The additional quantities allowed by the last paragraph of this section require the sprinkler system to comply with NFPA 30B (see commentary, Section 5104.2.1).

5104.6 Storage in liquid warehouses. The storage of Level 2 and 3 aerosol products in liquid warehouses shall comply with NFPA 30B. The storage shall be located within segre-

INTERNATIONAL CODE COUNCIL®
Copyright © 2015 ICC. ALL RIGHTS RESERVED. Accessed by David Dammon on Jun 21, 2017 12:30:52 PM pursuant to License Agreement with ICC. No further reproduction or distribution authorized. ANY UNAUTHORIZED REPRODUCTION OR DISTRIBUTION IS A VIOLATION OF THE FEDERAL COPYRIGHT ACT AND THE LICENSE AGREEMENT, AND SUBJECT TO CIVIL AND CRIMINAL PENALTIES THEREUNDER.

gated storage areas in accordance with Section 5104.3.2 and Sections 5104.6.1 through 5104.6.3.

❖ This section contains requirements for storing Level 2 and 3 aerosol products in warehouses used primarily for storing flammable and combustible liquids. The aerosol product storage area is required to meet the segregated storage requirements of Section 5104.3.2, Sections 5104.6.1 through 5104.6.3 and NFPA 30B. This section is intended to address only protection for the segregated aerosol product storage area. NFPA 30 addresses protection for the flammable and combustible liquids in the liquid warehouse.

5104.6.1 Containment. Spill control or drainage shall be provided to prevent the flow of liquid to within 8 feet (2438 mm) of the segregated storage area.

❖ To reduce the potential for the segregated aerosol storage area to become involved in an emergency created by the flammable and combustible liquids stored elsewhere in the building, an approved means of spill control and drainage must be provided. The spill-control and drainage system is intended to keep the liquids away from the aerosols. Section 5004.2 contains additional guidance on the means of spill control and drainage for flammable and combustible liquids.

5104.6.2 Sprinkler design. Sprinkler protection shall be designed based on the highest level of aerosol product present.

❖ Design requirements for the sprinkler system are based on the highest level of aerosol products stored and the anticipated storage condition. The sprinkler system must be designed for Level 3 aerosol products where both Level 2 and 3 aerosol products are stored.

5104.6.3 Opening protection into segregated storage areas. Fire doors or gates opening into the segregated storage area shall either be self-closing or provided with automatic-closing devices activated by sprinkler water flow or an *approved* fire detection system.

❖ Openings for access to and from segregated storage areas must provide the intended degree of protection. Chain-link fence enclosures can have either self-closing or automatic-closing gates. If the segregated storage opening is protected with automatic-closing fire doors or gates, the closing device must be activated by water flow from the sprinkler system or by an approved fire detection system.

5104.7 Storage in Group M occupancies. Storage of Level 2 and 3 aerosol products in occupancies in Group M shall comply with Table 5104.7. Retail display shall comply with Section 5106.

❖ Both this section and Table 5104.7 contain storage limitations for Level 2 and 3 aerosol products in the storage area of a mercantile occupancy that is physically separated from the sales area and not accessible to the public. These areas are generally referred to as "back-stock" storage areas. The storage limitation for aerosol products located in the retail sales area of mercantile occupancies is specified in Section 5106.

TABLE 5104.7
MAXIMUM QUANTITIES OF LEVEL 2 AND 3 AEROSOL PRODUCTS IN RETAIL STORAGE AREAS

MAXIMUM NET WEIGHT PER FLOOR (pounds)			
Floor	Nonsegregated storage[a, b]	Segregated storage	
		Storage cabinets[b]	Separated from retail area[c]
Basement	Not Permitted	Not Permitted	Not Permitted
Ground floor	2,500	5,000	Note d
Upper floors	500	1,000	Note d

For SI: 1 pound = 0.454 kg, 1 square foot = 0.0929 m^2.

a. The total aggregate quantity on display and in storage shall not exceed the maximum retail display quantity indicated in Section 5106.3.

b. Storage quantities indicated are the maximum permitted in any 50,000-square-foot area.

c. The storage area shall be separated from the retail area with a 1-hour fire-resistance-rated assembly.

d. See Table 5104.3.2.

❖ Table 5104.7 shows the maximum quantity limitations for Level 2 and 3 aerosol products in the back-stock storage areas of mercantile occupancies in both nonsegregated and segregated conditions. In nonsegregated storage, the aerosol product storage is neither separated from the retail display by a fire-resistance-rated barrier nor stored in approved flammable liquid storage cabinets. When the storage is nonsegregated, the quantity of Level 2 and 3 aerosols is the total quantity in the back-stock storage and display areas combined. Level 2 and 3 aerosol products would be limited to 2,500 pounds (1135 kg) and 500 pounds (227 kg) on the ground and upper floors, respectively, in any 50,000-square-foot (4645 m^2) area. In the case of segregated back-stock storage using approved, flammable-liquid storage cabinets, the total aerosol product storage is independent of the displayed quantities. The back-stock storage area quantities can be increased to those specified in Table 5104.3.2.2 for segregated storage in general purpose warehouses where the storage has been separated from the retail sales area by no less than 1-hour fire-resistance-rated construction.

SECTION 5105
OUTSIDE STORAGE

5105.1 General. The outside storage of Level 2 and 3 aerosol products, including storage in temporary storage trailers, shall be separated from exposures in accordance with Table 5105.1.

❖ Outside storage of Level 2 and 3 aerosol products must be separated from buildings, lot lines, public ways and other outside combustible storage as shown in Table 5105.1 to minimize potential exposure hazards to the aerosols. Temporary storage trailers must also be located a minimum of 50 feet (15 240 mm)

INTERNATIONAL CODE COUNCIL®
Copyright © 2015 ICC. ALL RIGHTS RESERVED. Accessed by David Dammon on Jun 21, 2017 12:30:52 PM pursuant to License Agreement with ICC. No further reproduction or distribution authorized. ANY UNAUTHORIZED REPRODUCTION OR DISTRIBUTION IS A VIOLATION OF THE FEDERAL COPYRIGHT ACT AND THE LICENSE AGREEMENT, AND SUBJECT TO CIVIL AND CRIMINAL PENALTIES THEREUNDER.

from buildings and other outside storage. Minimum separation distances are consistent with NFPA 30B and NFPA 80A. Areas surrounding outdoor aerosol storage areas also should be maintained free of miscellaneous combustible materials and vegetation for a distance of at least 20 feet (6096 mm) to avoid exposing the aerosols being stored to ignition or damage from unwanted fire involving rubbish, wind-borne debris and dry vegetation.

TABLE 5105.1
DISTANCE TO EXPOSURES FOR OUTSIDE STORAGE OF LEVEL 2 AND 3 AEROSOL PRODUCTS

EXPOSURE	MINIMUM DISTANCE FROM AEROSOL STORAGE (feet)[a]
Public alleys, public ways, public streets	20
Buildings	50
Exit discharge to a public way	50
Lot lines	20
Other outside storage	50

For SI: 1 inch = 25.4 mm, 1 foot = 304.8 mm.

a. The minimum separation distance indicated is not required where exterior walls having a 2-hour fire-resistance rating without penetrations separate the storage from the exposure. The walls shall extend not less than 30 inches above and to the sides of Level 2 and 3 aerosol products.

❖ Table 5105.1 specifies minimum separation requirements for the outside storage of Level 2 and 3 aerosol products for various exposure conditions.

In place of the minimum separation distance requirement, Note a allows the use of a minimum 2-hour fire-resistance-rated wall without openings or penetrations as the means of exposure protection. The wall with the required extensions beyond the aerosol product storage area is intended to act as an effective shield to protect the exposed area from the Level 2 and 3 aerosol products, equivalent to the spatial separations shown in the table.

SECTION 5106
RETAIL DISPLAY

5106.1 General. This section shall apply to the retail display of 500 pounds (227 kg) or more of Level 2 and 3 aerosol products.

❖ This section establishes the applicability of Section 5106 to the retail display of Level 2 and 3 aerosol products with a net weight exceeding 500 pounds (227 kg) in retail and wholesale stores classified in Group M in accordance with IBC Section 309.1.

Quantities of Level 1 aerosol products are not limited in Group M mercantile display areas because of their low content of flammable product or propellant.

5106.2 Aerosol display and normal merchandising not exceeding 8 feet (2438 mm) high. Aerosol display and normal merchandising not exceeding 8 feet (2438 mm) in height shall be in accordance with Sections 5106.2.1 through 5106.2.4.

❖ Prior to about 1990, the typical mercantile store displayed merchandise to heights of about 8 feet (2438 mm). In the years since, merchandising techniques have changed substantially so that item displays now exceed 8 feet (2438 mm) in what are called “big box” stores. Section 5106.2 and its subsections regulate the more traditional type of stores where display and merchandising of Level 2 and 3 aerosol products do not exceed 8 feet (2438 mm) in height. See the commentary to Section 5106.3 for information on displays greater than 8 feet (2438 mm) in height.

5106.2.1 Maximum quantities in retail display areas. Aerosol products in retail display areas shall not exceed quantities needed for display and normal merchandising and shall not exceed the quantities in Table 5106.2.1.

❖ This section is intended to restrict the quantities of aerosol products in display areas where the public would be exposed to them and where they might not be protected by fire barriers or sprinkler systems, as they would be in approved storage areas.

TABLE 5106.2.1
MAXIMUM QUANTITIES OF LEVEL 2 AND 3 AEROSOL PRODUCTS IN RETAIL DISPLAY AREAS

MAXIMUM NET WEIGHT PER FLOOR (pounds)[b]			
Floor	Unprotected[a]	Protected in accordance with Section 5106.2[a, c]	Protected in accordance with Section 5106.3[c]
Basement	Not allowed	500	500
Ground	2,500	10,000	10,000
Upper	500	2,000	Not allowed

For SI: 1 pound = 0.454 kg, 1 square foot = 0.0929 m^2.

a. The total quantity shall not exceed 1,000 pounds net weight in any one 100-square-foot retail display area.

b. Per 25,000-square-foot retail display area.

c. Minimum Ordinary Hazard Group 2 wet-pipe automatic sprinkler system throughout the retail sales occupancy.

❖ This table establishes quantity limits for display areas that are protected by sprinklers as well as those that are not. Note a deals only with product display in accordance with Section 5106.2. Note b deals with the entire table and does allow these quantities for each 25,000 square feet (2323 m^2) of retail display area. This provides adequate separation of the quantities while allowing the display of various product types, such as paint, insect control and personal care products. Note c deals with Sections 5106.2 and 5106.3, and does require, at a minimum, an Ordinary Hazard Group 2 wet pipe sprinkler system throughout the retail sales occupancy, except where higher levels of protection are required, such as in Level 2 and 3 aerosol display areas.

INTERNATIONAL CODE COUNCIL®
Copyright © 2015 ICC. ALL RIGHTS RESERVED. Accessed by David Dammon on Jun 21, 2017 12:30:52 PM pursuant to License Agreement with ICC. No further reproduction or distribution authorized. ANY UNAUTHORIZED REPRODUCTION OR DISTRIBUTION IS A VIOLATION OF THE FEDERAL COPYRIGHT ACT AND THE LICENSE AGREEMENT, AND SUBJECT TO CIVIL AND CRIMINAL PENALTIES THEREUNDER.

5106.2.2 Display of containers. Level 2 and 3 aerosol containers shall not be stacked more than 6 feet (1829 mm) high from the base of the aerosol array to the top of the aerosol array unless the containers are placed on fixed shelving or otherwise secured in an *approved* manner. Where storage or retail display is on shelves, the height of such storage or retail display to the top of aerosol containers shall not exceed 8 feet (2438 mm).

❖ Restricting display heights of Level 2 and 3 aerosol containers where NFPA 30B protection tables are not followed serves three purposes. The first is, obviously, to limit the quantity of aerosols that can be housed in a given area; the second is to make certain the displays are stable and not likely to topple; and the third is to make certain the piles are not so high that they would be likely to interfere with the efficient operation of area sprinklers.

5106.2.3 Combustible cartons. Aerosol products located in retail display areas shall be removed from combustible cartons.

Exceptions:

1. Display areas that use a portion of combustible cartons that consist of only the bottom panel and not more than 2 inches (51 mm) of the side panel are allowed.
2. When the display area is protected in accordance with Tables 6.3.2.7(a) through 6.3.2.7(l) of NFPA 30B, storage of aerosol products in combustible cartons is allowed.

❖ Removing combustible cartons from display areas reduces the potential fuel supply in case of a fire and also removes the combustible material that would surround the aerosol containers and heat them to the point that they could ignite, "rocket" or explode. It also keeps the display more open so that sprinklers can reach the individual containers more easily to help keep them below dangerous temperatures, as well as control or extinguish fire in other surrounding combustibles.

Exception 1 allows cut-down cartons in displays because they represent a somewhat reduced fuel load for a fire and also leave the sides of the aerosol containers exposed so that sprinkler water can reach them. The carton bottoms also help stabilize stacks in displays to keep them from toppling.

Exception 2 allows use of cartons in aerosol display and merchandising areas, which are protected in accordance with Tables 6.3.2.7(a) through 6.3.2.7(l) of NFPA 30B in accordance with Section 5106.3.

5106.2.4 Retail display automatic sprinkler system. Where an *automatic sprinkler system* is required for the protected retail display of aerosol products, the wet-pipe *automatic sprinkler system* shall be in accordance with Section 903.3.1.1. The minimum system design shall be for an Ordinary Hazard Group 2 occupancy. The system shall be provided throughout the retail display area.

❖ The reference to Section 903.3.1.1 indicates that the sprinkler system must meet the requirements of NFPA 13, which classifies mercantile groups used for retail display as an Ordinary Hazard Group 2 occupancy. This would require a minimum sprinkler design density of 0.20 gallon per minute (gpm) per square foot (8.14 L/min/m^2) applied over the hydraulically most remote 1,500 square feet (139 m^2) of system coverage, which is common for most mercantile occupancies. In areas that are equipped with a sprinkler system conforming to NFPA 13, this section limits the quantity of aerosols on display to 2 pounds per square foot (psf) (10 kg/m^2) of the gross sales floor area with a maximum weight of 1,000 pounds (454 kg) of aerosols in any 10-foot by 10-foot (3048 mm by 3048 mm) area of the sales floor.

If more aerosol product storage is desired or anticipated, Section 5106.3 must be followed.

5106.3 Aerosol display and normal merchandising exceeding 8 feet (2438 mm) high. Aerosol display and merchandising exceeding 8 feet in height shall be in accordance with Sections 5106.3.1 through 5106.3.3.

❖ Many modern stores classified in Group M are included in the family of stores commonly know as "big box" or "warehouse"-type stores (Section 309.1 of the IBC calls them "wholesale stores"), so called because of their high-density, high-piled display and storage of products at heights greater than 8 feet (2438 mm) in areas accessible to the public. This section describes the requirements for displaying and merchandising Level 2 and 3 aerosol products where they exceed 8 feet (2438 mm) in height.

5106.3.1 Maximum quantities in retail display areas. Aerosol products in retail display areas shall not exceed quantities needed for display and normal merchandising and shall not exceed the quantities in Table 5106.2.1, with fire protection in accordance with Section 5106.3.2.

❖ This section is intended, as is Section 5106.2.1, to restrict the quantities of hazardous materials in display areas where the public would be exposed to them.

5106.3.2 Automatic sprinkler protection. Aerosol display and merchandising areas shall be protected by an *automatic sprinkler system* based on the requirements set forth in Tables 6.3.2.7(a) through 6.3.2.7(l) of NFPA 30B and the following:

1. Protection shall be based on the highest level of aerosol product in the array and the packaging method of the storage located more than 6 feet (1829 mm) above the finished floor.
2. Where using the cartoned aerosol tables of NFPA 30B, uncartoned or display-cut Level 2 and 3 aerosols shall be permitted not more than 6 feet (1829 mm) above the finished floor.

INTERNATIONAL CODE COUNCIL®
Copyright © 2015 ICC. ALL RIGHTS RESERVED. Accessed by David Dammon on Jun 21, 2017 12:30:52 PM pursuant to License Agreement with ICC. No further reproduction or distribution authorized. ANY UNAUTHORIZED REPRODUCTION OR DISTRIBUTION IS A VIOLATION OF THE FEDERAL COPYRIGHT ACT AND THE LICENSE AGREEMENT, AND SUBJECT TO CIVIL AND CRIMINAL PENALTIES THEREUNDER.

3. The design area for Level 2 and 3 aerosols shall extend not less than 20 feet (6096 mm) beyond the Level 2 and 3 aerosol display and merchandising areas.
4. Where ordinary and high-temperature ceiling sprinkler systems are adjacent to each other, noncombustible draft curtains shall be installed at the interface.

❖ This section describes the automatic sprinkler protection requirements for Level 2 and 3 aerosol products where pile heights exceed 8 feet (2438 mm) in height. The sprinkler protection is the same as that required in a warehouse and must follow the appropriate requirements in Tables 6.3.2.7(a) through 6.3.2.7(l) of NFPA 30B. See Commentary Figure 5106.3.2. The protection table to be used is based on:

- The highest level of aerosol product found in the array.
- The packaging method of product located more than 6 feet (1829 mm) above the floor; that is, whether the product is in cartons or is uncartoned.
- The display/storage method: bulk, palletized or rack.

When using the tables for cartoned product, all product above the 6-foot (1829 mm) level must be cartoned. This is to increase the likelihood that the sprinkler protection will properly protect the storage array.

The design area for the ceiling sprinklers for the Level 2 or 3 aerosols must extend at least 20 feet (6096 mm) beyond the display and merchandising area. This is to provide the outer part of the aerosol area with adequate ceiling sprinkler water distribution regardless of whether the fire is internal or external to the aerosols.

Noncombustible draft curtains are to be installed at interfaces between ordinary- and high-temperature ceiling sprinkler systems in order to prevent a fire beneath high-temperature sprinklers from activating ordinary-temperature sprinklers located away from the fire. This could put a strain on water availability in the fire area.

5106.3.3 Separation of Level 2 and 3 aerosol areas. Separation of Level 2 and 3 aerosol areas shall comply with the following:

1. Level 2 and 3 aerosol display and merchandising areas shall be separated from each other by not less than 25 feet (7620 mm). See Table 5106.2.1.
2. Level 2 and 3 aerosol display and merchandising areas shall be separated from flammable and *combustible liquids* storage and display areas by one or a combination of the following:
   2.1. Segregating areas from each other by horizontal distance of not less than 25 feet (7620 mm).
   2.2. Isolating areas from each other by a noncombustible partition extending not less than 18 inches (457 mm) above the merchandise.
   2.3. In accordance with Section 5106.5.
3. Where Item 2.2 is used to separate Level 2 or 3 aerosols from flammable or *combustible liquids*, and the aerosol products are located within 25 feet (7620 mm) of flammable or *combustible liquids*, the area below the noncombustible partition shall be liquid tight at the floor to prevent spilled liquids from flowing beneath the aerosol products.

❖ As indicated in Table 5106.2.1, Note b, the maximum net weight shown is for each 25,000 square feet (2323 m^2) of sales display area. This section provides for the separation of aerosols in any one of these areas from those in any other area. This 25-foot (7620 mm) separation prevents back-to-back, 10,000-pound (4540 kg) arrays of product, which would defeat the purpose of the MAQs.

Separation of Level 2 and 3 aerosol products from

TABLE 6.3.2.7 SUFFIX	STORAGE METHOD		PACKAGING TYPE		AEROSOL LEVEL	
	Pallet or Solid Pile	Rack Storage	Cartoned	Uncartoned	Level 2	Level 3
(a) Metric (b) English	X		X		X	X
(c) Metric (d) English	X			X	X	
(e) Metric (f) English		X	X		X	
(g) Metric (h) English		X	X			X
(i) Metric (j) English		X		X	X	
(k) Metric (l) English		X		X		X

a. There Are Two Versions Of Each Table, One That Uses Si Units (Metric) And One That Uses English Units.

Figure 5106.3.2
GUIDE TO CONTENTS OF NFPA 30B TABLES 6.3.2.7(a) through (l)

INTERNATIONAL CODE COUNCIL®
Copyright © 2015 ICC. ALL RIGHTS RESERVED. Accessed by David Dammon on Jun 21, 2017 12:30:52 PM pursuant to License Agreement with ICC. No further reproduction or distribution authorized. ANY UNAUTHORIZED REPRODUCTION OR DISTRIBUTION IS A VIOLATION OF THE FEDERAL COPYRIGHT ACT AND THE LICENSE AGREEMENT, AND SUBJECT TO CIVIL AND CRIMINAL PENALTIES THEREUNDER.

flammable and combustible liquids is required in order to prevent a liquid spill fire from immediately involving the aerosol products. The burning liquid could easily overwhelm the automatic sprinkler protection provided for the aerosol products, thus increasing the size of the loss.

The separation can be accomplished in any one or a combination of three ways:

1. Separation by a horizontal distance of at least 25 feet (7620 mm). This will prevent immediate involvement of the aerosols; and, if the burning liquid does eventually flow toward the aerosols, the in-rack sprinklers or fast-response sprinklers should activate so as to provide prewetting of the area.
2. A noncombustible partition between the products to prevent liquid flow into the aerosol area. When the partition is used and the aerosols and liquids are within 25 feet (7620 mm) of one another, this partition is to be liquid tight at the floor to prevent spilled liquids from flowing under the aerosol products.
3. A special protection design in accordance with Section 5106.5.

5106.4 Maximum quantities in storage areas. Aerosol products in storage areas adjacent to retail display areas shall not exceed the quantities in Table 5106.4.

❖ This section establishes quantity limits on aerosol products held in storage areas adjacent to retail sales floors. The limits are given in Table 5106.4, except for those in the right-hand column. Table 5104.7 designates this column as applying to areas that are separated from the retail sales area. The requirement for a barrier having a 1-hour fire-resistance rating is given in the notes to Table 5104.7. Applicable quantities for that storage condition are given in Table 5104.3.2. In the case of Table 5106.4, the separation is called a "1-hour occupancy separation," which, within the IBC, would be considered a fire barrier constructed in accordance with Section 707. The quantity limits are as found in NFPA 30B.

TABLE 5106.4. See below.

❖ The quantities stated in this table are the same as those in Table 5104.7 (see commentary, Table 5104.7).

5106.5 Special protection design for Level 2 and 3 aerosols adjacent to flammable and combustible liquids in double-row racks. The display and merchandising of Level 2 and 3 aerosols adjacent to flammable and *combustible liquids* in double-row racks shall be in accordance with Sections 5106.5.1 through 5106.5.8 or Section 5106.3.3.

❖ This is the third method referred to in Section 5106.3.3, Item 2.3, for the separation of Level 2 and 3 aerosol display and merchandising areas from flammable and combustible liquid storage and display areas.

This special protection design is based on large-scale fire testing, with the storage arrays and sprinkler protection based on that testing. Rather than requiring the separation of aerosols and liquids in retail display and merchandising, it is a specific method to allow some of these products to be adjacent to one another.

5106.5.1 Fire protection. Fire protection for the display and merchandising of Level 2 and 3 aerosols in double-row racks shall be in accordance with Table 7.4.1 and Figure 7.4.1 of NFPA 30B.

❖ This specific method requires that the aerosols be in double-row racks, and that the fire protection be in accordance with Table 7.4.1 and Figure 7.4.1 of NFPA 30B. This fire protection scheme is based on a successful large-scale fire test.

5106.5.2 Cartoned products. Level 2 and 3 aerosols displayed or merchandised more than 8 feet (2438 mm) above the finished floor shall be in cartons.

❖ The Level 2 and 3 aerosols displayed or merchandised up to 8 feet (2438 mm) in height are allowed to be uncartoned or in display-cut cartons. All aerosols stored or displayed higher than 8 feet (2438 mm) must be in cartons to satisfy this special method.

5106.5.3 Shelving. Shelving in racks shall be limited to wire mesh shelving having uniform openings not more than 6 inches (152 mm) apart, with the openings comprising not less than 50 percent of the overall shelf area.

❖ All shelving in the racks for this special protection design must be wire mesh, with openings as prescribed in this section. This open wire mesh will allow sprinkler water flow between shelves and will not allow early collapse of the shelves.

TABLE 5106.4
MAXIMUM STORAGE QUANTITIES FOR STORAGE AREAS ADJACENT TO RETAIL DISPLAY OF LEVEL 2 AND 3 AEROSOLS

MAXIMUM NET WEIGHT PER FLOOR (pounds)			
Floor	Unseparated[a,b]	Separated	
		Storage Cabinets[b]	1-hour Occupancy Separation
Basement	Not Allowed	Not Allowed	Not Allowed
Ground	2,500	5,000	In accordance with Sections 6.3.4.3 and 6.3.4.4 of NFPA 30B
Upper	500	1,000	In accordance with Sections 6.3.4.3 and 6.3.4.4 of NFPA 30B

For SI: 1 pound = 0.454 kg, 1 square foot = 0.0929 m^2.

a. The aggregate quantity in storage and retail display shall not exceed the quantity limits for retail display.

b. In any 50,000-square-foot area.

INTERNATIONAL CODE COUNCIL®
Copyright © 2015 ICC. ALL RIGHTS RESERVED. Accessed by David Dammon on Jun 21, 2017 12:30:52 PM pursuant to License Agreement with ICC. No further reproduction or distribution authorized. ANY UNAUTHORIZED REPRODUCTION OR DISTRIBUTION IS A VIOLATION OF THE FEDERAL COPYRIGHT ACT AND THE LICENSE AGREEMENT, AND SUBJECT TO CIVIL AND CRIMINAL PENALTIES THEREUNDER.

5106.5.4 Aisles. Racks shall be arranged so that aisles not less than $7^1/_2$ feet (2286 mm) wide are maintained between rows of racks and adjacent solid-piled or palletized merchandise.

❖ Aisles of at least $7^1/_2$ feet (2286 mm) in width must be maintained. This is based on the successful large-scale fire test and is to help prevent fire spread.

5106.5.5 Flue spaces. Flue spaces in racks shall comply with the following:

1. Transverse flue spaces—Nominal 3-inch (76 mm) transverse flue spaces shall be maintained between merchandise and rack uprights.
2. Longitudinal flue spaces—Nominal 6-inch (152 mm) longitudinal flue spaces shall be maintained.

❖ This section requires nominal 3-inch (76 mm) transverse flue spaces and nominal 6-inch (152 mm) longitudinal flue spaces. These flue spaces are provided to allow sprinkler discharge water to freely flow between rack levels. As in Section 5106.5.3, the flue spaces are necessary so that lower levels of the array have adequate protection.

5106.5.6 Horizontal barriers. Horizontal barriers constructed of minimum $^3/_8$-inch-thick (10 mm) plywood or minimum 0.034-inch (0.086 mm) (No. 22 gage) sheet metal shall be provided and located in accordance with Table 7.4.1 and Figure 7.4.1 of NFPA 30B where in-rack sprinklers are installed.

❖ Whenever in-rack sprinklers are used, horizontal barriers of the thickness and materials indicated in this section are to be provided directly above the in-rack sprinklers. Their location shall be in accordance with Table 7.4.1 and Figure 7.4.1 of NFPA 30B. Their presence above the in-rack sprinkler will trap heat and ensure that these sprinklers, closest to any fire, will properly activate in a timely manner.

5106.5.7 Class I, II, III, IV and plastic commodities. Class I, II, III, IV and plastic commodities located adjacent to Level 2 and 3 aerosols shall be protected in accordance with NFPA 13.

❖ Class I through IV and plastic commodities located adjacent to the aerosols in this array must be protected in accordance with NFPA 13.

5106.5.8 Flammable and combustible liquids. Class I, II, III A and III B Liquids shall be allowed to be located adjacent to Level 2 and 3 aerosol products where both of the following conditions are met:

1. Class I, II, IIIA and IIIB liquid containers: Containers for Class I, II, IIIA and IIIB liquids shall be limited to 1.06-gallon (4 L) metal-relieving and nonrelieving style containers and 5.3-gallon (20 L) metal-relieving style containers.
2. Fire protection for Class I, II, IIIA and IIIB Liquids: Automatic sprinkler protection for Class I, II, IIIA and IIIB liquids shall be in accordance with Chapter 57.

❖ This section identifies the maximum size and style of metal containers that must be used for flammable and combustible liquids stored adjacent to the aerosols. Section 6.8.1.3 and Appendix A-6.8.1.3 of NFPA 30 provide information on relieving- and nonrelieving-type metal containers.

No plastic containers of flammable or combustible liquids are allowed for this special protection design. Fire protection for the flammable and combustible liquids must be in accordance with Chapter 57.

SECTION 5107
MANUFACTURING FACILITIES

5107.1 General. Manufacturing facilities shall be in accordance with NFPA 30B.

❖ The hazards of aerosol manufacturing are significantly different from those of a storage facility where aerosols are stored in cartons in their individual steel or aluminum containers. The manufacturing process involves the hazards of handling flammable and combustible liquids under pressure and potentially in aerosol form, which is an even greater fire hazard. Since the manufacturing of aerosol products is not included in the list of exceptions to a Group H occupancy classification found in IBC Section 307.1, Exception 11, such facilities could warrant a Group H classification. See the commentary to Section 5101.1 for further information.

The code relies upon the referenced standard, NFPA 30B, for the regulation of aerosol manufacturing facilities. Chapter 5 of that standard includes basic requirements for manufacturing facilities, including, among others, requirements for the protection and separation of propellant-charging areas and pump rooms, explosion and deflagration venting, special ventilation requirements, electrical requirements, control of static electricity and fire protection systems.

Bibliography

The following resource materials were used in the preparation of the commentary for this chapter of the code:

ASTM D240—07, *Standard Test Method for Heat of Combustion of Liquid Hydrocarbon Fuels by Bomb Calorimete*r. West Conshohocken, PA: ASTM International, 2007.

INTERNATIONAL CODE COUNCIL®
Copyright © 2015 ICC. ALL RIGHTS RESERVED. Accessed by David Dammon on Jun 21, 2017 12:30:52 PM pursuant to License Agreement with ICC. No further reproduction or distribution authorized. ANY UNAUTHORIZED REPRODUCTION OR DISTRIBUTION IS A VIOLATION OF THE FEDERAL COPYRIGHT ACT AND THE LICENSE AGREEMENT, AND SUBJECT TO CIVIL AND CRIMINAL PENALTIES THEREUNDER.

Code Changes Resource Collection—2015 International Fire Code. Washington, DC: International Code Council, 2014.

Fredrickson, David L. "Manufacture and Storage of Aerosol Products." Section 6, Chapter 20, *Fire Protection Handbook*, 19th ed. Quincy, MA: National Fire Protection Association, 2003.

INTERNATIONAL CODE COUNCIL®

Copyright © 2015 ICC. ALL RIGHTS RESERVED. Accessed by David Dammon on Jun 21, 2017 12:30:52 PM pursuant to License Agreement with ICC. No further reproduction or distribution authorized. ANY UNAUTHORIZED REPRODUCTION OR DISTRIBUTION IS A VIOLATION OF THE FEDERAL COPYRIGHT ACT AND THE LICENSE AGREEMENT, AND SUBJECT TO CIVIL AND CRIMINAL PENALTIES THEREUNDER.

CHAPTER 52

RESERVED

INTERNATIONAL CODE COUNCIL®
Copyright © 2015 ICC. ALL RIGHTS RESERVED. Accessed by David Dammon on Jun 21, 2017 12:30:52 PM pursuant to License Agreement with ICC. No further reproduction or distribution authorized. ANY UNAUTHORIZED REPRODUCTION OR DISTRIBUTION IS A VIOLATION OF THE FEDERAL COPYRIGHT ACT AND THE LICENSE AGREEMENT, AND SUBJECT TO CIVIL AND CRIMINAL PENALTIES THEREUNDER.

INTERNATIONAL CODE COUNCIL®
Copyright © 2015 ICC. ALL RIGHTS RESERVED. Accessed by David Dammon on Jun 21, 2017 12:30:52 PM pursuant to License Agreement with ICC. No further reproduction or distribution authorized. ANY UNAUTHORIZED REPRODUCTION OR DISTRIBUTION IS A VIOLATION OF THE FEDERAL COPYRIGHT ACT AND THE LICENSE AGREEMENT, AND SUBJECT TO CIVIL AND CRIMINAL PENALTIES THEREUNDER.

Chapter 53: Compressed Gases

General Comments

This chapter regulates the storage, use and handling of all flammable and nonflammable compressed gases, such as those that are used in medical facilities, air separation plants, industrial plants, agricultural equipment and similar occupancies. Standards for the design, construction and marking of compressed gas cylinders and pressure vessels are referenced. Compressed gases used in welding and cutting, cryogenic liquids and liquefied petroleum gases (LP-gases) are also regulated under Chapters 35, 55 and 61, respectively. Compressed gases that are classified as hazardous materials are also regulated in Chapter 50, which includes general requirements.

Purpose

Chapter 53 sets requirements for the storage, handling and use of all compressed gases, whether flammable or nonflammable.

Flammable compressed gases

The principal hazard posed by flammable compressed gas is its ready ignitability, or even explosivity, when mixed with air in the proper proportions. The question in a flammable gas release usually is not if the mixture will ignite, but rather when or how it will ignite if not controlled. Consequently, occupancies storing or handling more than 1,000 cubic feet (28 m^3) of flammable compressed gases or 30 gallons (114 L) of liquefied flammable gases per control area are classified as Group H-2 (high hazard) by the *International Building Code*® (IBC®).

Nonflammable compressed gases

The principal danger in the case of nonflammable compressed gas is its toxicity, reactivity or the ability to support combustion. Many gases do not fall into any of these categories; however, oxygen, perhaps the most abundant compressed gas, obviously does. Gaseous commodities containing oxygen, such as oxygen-helium and oxygen-nitrogen mixtures, oxides (e.g., nitrous oxide) and peroxides, all support the combustion. Fluorine (F_2) and chlorine (Cl_2) may also support the combustion of certain materials. Saacke and Associates (1990) discussed some of the properties of these two gases. Since these commodities are stored under pressure, their release from a cylinder causes them to expand to many times their initial volume. In confined and poorly ventilated spaces, this will cause certain gases to create an oxygen-enriched atmosphere that will accelerate burning. The release of other gases displaces atmospheric oxygen, thereby creating a dangerous, oxygen-deficient atmosphere. Many materials that do not burn in atmospheric concentrations of oxygen (19 to 21 percent) will support combustion at elevated levels. Chapter 60 contains specific provisions for highly toxic and toxic compressed gases.

Container supports

The one common danger presented by all compressed gases is the enormous amount of energy released by container or fitting failures. For this reason, Sections 5303.5 and 5303.5.2 require all compressed gas cylinders to be properly secured as a means of protection against physical or mechanical damage. Containers should always be checked for obvious physical damage. Dented, bulging, gouged or corroded cylinders should be returned to the gas supplier for inspection and, if necessary, retesting.

Overpressure protection

All compressed gas storage vessels, except those containing highly toxic materials, are equipped with pressure relief devices as a measure of protection against catastrophic container failure. These devices operate when compressed gas pressure, temperature or both exceed safe limits. Fusible discs and plugs, bimetallic "snap" discs, spring-operated valves or a combination of these methods are used to vent excess gas to the atmosphere. Some of these devices self-restore and stop the release of container contents; others do not. The fire code official should check pressure relief devices to see that they have not been painted, removed, damaged, contaminated, obstructed or otherwise impaired. Additionally, temperature extremes in the operating area [greater than 120°F (49°C) and less than 20°F (-7°C)] should be avoided.

Housekeeping

Check valves, filters, flash arrestors and other gas system apparatus must be maintained in good operating condition. Dirt is the primary enemy of any gas system: debris can clog filters and block valves; damaged valves may permit the gradual release of tank contents and accumulations of grease and other organic materials become a fire hazard in the presence of oxidizing gases. Combustibles should be kept clear of all compressed gas installations, especially oxidizing gases. External fires involving accumulated combustibles can cause containers to fail.

INTERNATIONAL CODE COUNCIL®
Copyright © 2015 ICC. ALL RIGHTS RESERVED. Accessed by David Dammon on Jun 21, 2017 12:30:52 PM pursuant to License Agreement with ICC. No further reproduction or distribution authorized. ANY UNAUTHORIZED REPRODUCTION OR DISTRIBUTION IS A VIOLATION OF THE FEDERAL COPYRIGHT ACT AND THE LICENSE AGREEMENT, AND SUBJECT TO CIVIL AND CRIMINAL PENALTIES THEREUNDER.

Separation

Separating gas system installations and incompatible gases (flammables and oxidizers) to minimize exposures is one of the simplest safeguards to implement. If possible, a suitable fire barrier should be constructed around container installations. The best location for compressed gas container installations is outside of buildings. In such cases, adequate access and weather protection should be provided to facilitate maintenance and emergency response.

Ignition sources

Controlling ignition sources around both flammable compressed gas and oxidizing gas installations is the most important and most difficult safeguard to implement. Sparks, frictional heat, electrical arcs, static electricity, smoking materials and hot surfaces are only a few of the potential ignition sources. Every reasonable effort must be made to eliminate these sources or limit the adverse impact of an unintentional ignition. Smoking, welding, cutting and other obvious sources of ignition must be prohibited in the vicinity of compressed gases, and steps must be taken to prevent the accumulation of static electricity. Compressed gas cylinders should never be permitted to come into contact with energized electrical equipment.

SECTION 5301
GENERAL

5301.1 Scope. Storage, use and handling of *compressed gases* in *compressed gas* containers, cylinders, tanks and systems shall comply with this chapter and NFPA 55, including those gases regulated elsewhere in this code. Partially full *compressed gas* containers, cylinders or tanks containing residual gases shall be considered as full for the purposes of the controls required.

Liquefied natural gas for use as a vehicular fuel shall also comply with NFPA 52 and NFPA 59A.

Compressed gases classified as hazardous materials shall also comply with Chapter 50 for general requirements and chapters addressing specific hazards, including Chapters 58 (Flammable Gases), 60 (Highly Toxic and Toxic Materials), 63 (Oxidizers, Oxidizing Gases and Oxidizing Cryogenic Fluids) and 64 (Pyrophoric Materials).

Compressed hydrogen (CH2) for use as a vehicular fuel shall also comply with Chapters 23 and 58 of this code, the *International Fuel Gas Code* and NFPA 2.

Cutting and welding gases shall also comply with Chapter 35.

LP-gas shall also comply with Chapter 61 and the *International Fuel Gas Code.*

Exceptions:

1. Gases used as refrigerants in refrigeration systems (see Section 606).
2. Compressed natural gas (CNG) for use as a vehicular fuel shall comply with Chapter 23, NFPA 52 and the *International Fuel Gas Code*.
3. *Cryogenic fluids* shall comply with Chapter 55.

❖ This section establishes the scope of Chapter 53 with respect to the storage, use and handling of compressed gases, containers, cylinders, tanks and systems. The requirements of this chapter and the referenced standards are applicable, in addition to the general storage requirements of Chapter 50 for hazardous materials.

5301.2 Permits. Permits shall be required as set forth in Section 105.6.

❖ The process of issuing permits gives the fire code official an opportunity to carefully evaluate and regulate hazardous operations. Permit applicants should be required to demonstrate that their operations comply with the intent of the code before the permit is issued. See the commentary to Section 105.6 for a general discussion of operations requiring an operational permit; Section 105.6.9 for a discussion of specific quantity-based operational permits for the materials regulated in this chapter; and Section 105.7 for a general discussion of activities requiring a construction permit. The permit process also notifies the fire department of the need for prefire planning for hazardous properties.

SECTION 5302
DEFINITIONS

5302.1 Definitions. The following terms are defined in Chapter 2:

COMPRESSED GAS.

COMPRESSED GAS CONTAINER.

COMPRESSED GAS SYSTEM.

NESTING.

TUBE TRAILER.

❖ Definitions of terms can help in the understanding and application of the code requirements. This section directs the code user to Chapter 2 for the proper application of the indicated terms used in this chap-

INTERNATIONAL CODE COUNCIL®
Copyright © 2015 ICC. ALL RIGHTS RESERVED. Accessed by David Dammon on Jun 21, 2017 12:30:52 PM pursuant to License Agreement with ICC. No further reproduction or distribution authorized. ANY UNAUTHORIZED REPRODUCTION OR DISTRIBUTION IS A VIOLATION OF THE FEDERAL COPYRIGHT ACT AND THE LICENSE AGREEMENT, AND SUBJECT TO CIVIL AND CRIMINAL PENALTIES THEREUNDER.

ter. Terms may be defined in Chapter 2 or in another *International Code*® (I-Code®) as indicated in Section 201.3, or the dictionary meaning may be all that is needed (see also commentary, Sections 201 through 201.4).

SECTION 5303
GENERAL REQUIREMENTS

5303.1 Containers, cylinders and tanks. *Compressed gas* containers, cylinders and tanks shall comply with this section. *Compressed gas* containers, cylinders or tanks that are not designed for refillable use shall not be refilled after use of the original contents.

❖ This section addresses protection from physical damage and prevents the gas containers, cylinders and tanks from being tampered with and otherwise damaged. It also requires marking for identification of the contents and the hazard degree. Only compressed gas containers, cylinders and tanks designed to be refillable may be done so after the original contents have been used.

5303.2 Design and construction. *Compressed gas* containers, cylinders and tanks shall be designed, fabricated, tested, marked with the specifications of manufacture and maintained in accordance with the regulations of DOTn 49 CFR Parts 100-185 or the ASME *Boiler and Pressure Vessel Code*, Section VIII.

❖ This section establishes basic requirements for the construction of pressure vessels. These requirements are in harmony with standards used by the suppliers of compressed gases and also correlate the code with standards promulgated by the Compressed Gas Association (CGA) as adopted by the Occupational Safety and Health Administration (OSHA). Manufacturing pressure vessels to standards is an essential element of safety that is warranted for materials of the type to be contained. Department of Transportation (DOTn) specification containers are used for pressure vessels in transport; while American Society of Mechanical Engineers (ASME) design specifications are typically used for stationary installations or where the pressure vessel is not designed as a transport vessel. By providing these requirements in the code, users who otherwise might devise a noncompliant system will be guided to appropriate standards of design.

5303.3 Pressure relief devices. Pressure relief devices shall be in accordance with Sections 5303.3.1 through 5303.3.5.

❖ Pressure relief devices are essential for compressed gases because of the high pressures at which they are maintained. Pressure relief devices provide a method of relieving overpressures and avoiding a hazardous situation. Sections 5303.3.1 through 5303.3.5 contain requirements related to accessibility for maintenance, general sizing, installation requirements and freeze protection for pressure relief devices.

5303.3.1 Where required. Pressure relief devices shall be provided to protect containers, cylinders and tanks containing *compressed gases* from rupture in the event of overpressure.

Exception: Cylinders, containers and tanks where exempt from the requirements for pressure relief devices specified by the standards of design *listed* in Section 5303.3.2.

❖ All compressed gas containers, cylinders and tanks must be equipped with pressure relief protection to reduce the likelihood of catastrophic vessel failure because of an overpressure condition. The exception recognizes that under certain conditions, the referenced design standards may not require pressure relief devices for certain vessels.

5303.3.2 Design. Pressure relief devices to protect containers shall be designed and provided in accordance with CGA S-1.1, CGA S-1.2, CGA S-1.3 or the ASME *Boiler and Pressure Vessel Code*, Section VIII, as applicable.

❖ There are two forms of pressure relief devices (PRDs): reusable devices or sacrificial devices. The type of PRD selected is based on the size of the gas container and the characteristics and hazards of the stored gas. The reusable form of a PRD is a spring-loaded safety relief valve that has the ability to open and close as excess pressures are relieved. Sacrificial PRDs are either a rupture disk or a fusible plug. When a sacrificial PRD operates, it cannot reclose; thus, its operation expels the entire contents of the gas container. Sacrificial PRDs operate when the device's pressure or temperature limits are exceeded.

Heat-activated PRDs are manufactured using fusible relief valves, known as fusible plugs. Frangible plugs operate when they are subjected to direct heating or heat from an exposure fire. Fusible plugs are normally set to operate at 212-350°F and are manufactured with metals with extremely reliable and predictable melting temperatures. Heat-activated PRDs operate when they are heated by direct fire contact or radiant and convective energies of an exposure fire.

Pressure-activated PRDs are known as burst discs or rupture discs. A burst disc is an engineered device that uses a metal or graphite disc weakened by scoring. Scoring is a mechanical process where the metal is partially cut to cause a predictable failure at the opening pressure of the burst disc. The disc's size, geometry and material of construction governs its opening or "burst" pressure. When a burst disc operates, it opens like a flower, and the gas is released into the atmosphere.

Pressure relief devices are to be designed in accordance with established engineering principles. Three CGA standards that cover the full range of container types, from portable to stationary, are referenced in this section, along with the ASME code, which is also referenced in Section 5303.2 for compressed gas container, cylinder and tank design.

INTERNATIONAL CODE COUNCIL®
Copyright © 2015 ICC. ALL RIGHTS RESERVED. Accessed by David Dammon on Jun 21, 2017 12:30:52 PM pursuant to License Agreement with ICC. No further reproduction or distribution authorized. ANY UNAUTHORIZED REPRODUCTION OR DISTRIBUTION IS A VIOLATION OF THE FEDERAL COPYRIGHT ACT AND THE LICENSE AGREEMENT, AND SUBJECT TO CIVIL AND CRIMINAL PENALTIES THEREUNDER.

5303.3.3 Sizing. Pressure relief devices shall be sized in accordance with the specifications to which the container was fabricated and to material-specific requirements as applicable.

❖ This section contains only general language requiring that the pressure relief device be properly designed to fit the needs of the particular container, cylinder or tank. In most cases, the manufacturer will already have the devices installed on the vessel at the factory. There are cases, however, when a compressed gas system or vessel may be constructed for a specific purpose and user. In those cases, the relief valves must be sized and installed by the user.

5303.3.4 Arrangement. Pressure relief devices shall be arranged to discharge upward and unobstructed to the open air in such a manner as to prevent any impingement of escaping gas upon the container, adjacent structures or personnel.

Exception: DOTn specification containers having an internal volume of 30 cubic feet (0.855 m^3) or less.

❖ Pressure relief devices must be located so as to direct vented vapors away from personnel, containers and structures, as well as enclosed spaces to prevent personal injury and property damage. The arrangement will vary from one installation to another based on the use and location of the container and the system. The exception for DOTn containers with an internal volume less than or equal to 30 cubic feet (0.855 m^3) recognizes that the amount of gas released from these containers is small enough to make this section unnecessary.

5303.3.5 Freeze protection. Pressure relief devices or vent piping shall be designed or located so that moisture cannot collect and freeze in a manner that would interfere with the operation of the device.

❖ A concern related to the integrity of pressure relief valves is their exposure to below-freezing temperatures that, in addition to having the tendency to make materials brittle and more susceptible to failure, cause accumulated moisture to freeze and possibly obstruct the relief valve opening, increasing the potential for a catastrophic container overpressure failure. This section requires that pressure relief devices be either not subject to extreme temperatures at all or provided with an approved freeze-protection technology as an integral part of the design.

5303.4 Marking. Stationary and portable *compressed gas* containers, cylinders, tanks and systems shall be marked in accordance with Sections 5303.4.1 through 5303.4.3.

❖ This section introduces the marking requirements for specific systems or gas containers, cylinders and tanks, including color and labeling of the name of the gas it contains.

5303.4.1 Stationary compressed gas containers, cylinders and tanks. Stationary *compressed gas* containers, cylinders and tanks shall be marked with the name of the gas and in accordance with Sections 5003.5 and 5003.6. Markings shall be visible from any direction of approach.

❖ In order to provide emergency personnel with critical information regarding potential hazard exposure, gas storage vessels are to be marked in accordance with Sections 5003.5 (that references NFPA 704) and 5003.6 (see commentary, Sections 5003.5 and 5003.6). The markings need to be readily visible from any direction of approach (see Commentary Figure 5303.4.1).

5303.4.2 Portable containers, cylinders and tanks. Portable *compressed gas* containers, cylinders and tanks shall be marked in accordance with CGA C-7.

❖ Portable units are to be marked in accordance with Compressed Gas Association (CGA) standard C-7. The scope of that standard is to provide guidance on the appropriate labeling of containers of compressed gases for the purpose of identifying their contents; warning personnel of the physical and health hazards of the container contents, such as flammability, corrosivity, pyrophoricity and poison, among others; and providing information regarding precautions to be taken relative to the container contents. Such labels and markings must be prominently displayed and durable, identifying the standard that governed its construction, the material of construction, its design pressure, and an indication that it is qualified for the compressed gas it contains. These requirements are based on the hazardous material regulations promulgated by the U.S. Department of Transportation (DOTn) in 49 CFR Parts 100 through 185. DOTn markings indicate the specification to which the cylinder was constructed, its type and material of construction, its service pressure measured in pounds per square inch gage (PSIG), the manufacturer's mark and the cylinder's serial number. Additional markings are required to indicate the month and year the cylinder was manufactured and the cylinder testing requirements.

A common misconception is that the color of a cylinder indicates its contents. The only means of identifying the contents of a cylinder is by labeling or marking the cylinder. Cylinders require markings in accordance with CGA C-7. These labels are located on the shoulder or wall of the cylinder. CGA C-7 requires that markings contain the name of the hazardous material and its DOTn and UN hazardous-material identification label and hazard-division identification number, which is used in the DOTn *Hazardous Materials Emergency Response Guidebook*. If the compressed gas is an inhalation hazard, warning statements about this hazard are required, as is a statement about its reportable quantity (RQ), if such a value is assigned by the DOTn.

5303.4.3 Piping systems. Piping systems shall be marked in accordance with ASME A13.1. Markings used for piping systems shall consist of the content's name and include a direc-

INTERNATIONAL CODE COUNCIL®
Copyright © 2015 ICC. ALL RIGHTS RESERVED. Accessed by David Dammon on Jun 21, 2017 12:30:52 PM pursuant to License Agreement with ICC. No further reproduction or distribution authorized. ANY UNAUTHORIZED REPRODUCTION OR DISTRIBUTION IS A VIOLATION OF THE FEDERAL COPYRIGHT ACT AND THE LICENSE AGREEMENT, AND SUBJECT TO CIVIL AND CRIMINAL PENALTIES THEREUNDER.

tion-of-flow arrow. Markings shall be provided at each valve; at wall, floor or ceiling penetrations; at each change of direction; and at not less than every 20 feet (6096 mm) or fraction thereof throughout the piping run.

Exceptions:

1. Piping that is designed or intended to carry more than one gas at various times shall have appropriate signs or markings posted at the manifold, along the piping and at each point of use to provide clear identification and warning.
2. Piping within gas manufacturing plants, gas processing plants, refineries and similar occupancies shall be marked in an *approved* manner.

❖ Piping systems are to be marked in accordance with ASME A13.1 to provide information to personnel, including emergency responders, as to the piping content and flow. The marking locations indicated are intended to provide continuity of identification of the piping at valves, certain fittings and structure penetrations. Exception 1 addresses piping systems that carry more than one gas. In these cases, signs are posted at the manifold and at each point of use. This will provide a clear identification and warning. Exception 2 recognizes that gas manufacturing plants need to be evaluated individually to provide clear and adequate piping identification.

5303.5 Security. *Compressed gas* containers, cylinders, tanks and systems shall be secured against accidental dislodgement and against access by unauthorized personnel in accordance with Sections 5303.5.1 through 5303.5.3.

❖ Compressed gas containers, cylinders and tanks must be adequately safeguarded. A fence or other approved protection should be provided around the storage area to minimize the likelihood of someone unknowingly entering the area, as well as to deter vandalism or theft.

5303.5.1 Security of areas. Areas used for the storage, use and handling of *compressed gas* containers, cylinders, tanks and systems shall be secured against unauthorized entry and safeguarded in an *approved* manner.

❖ Areas such as yards, loading platforms and any area where gas containers, cylinders and tanks are used, handled or stored are to be secured and safeguarded against unauthorized access.

5303.5.2 Physical protection. *Compressed gas* containers, cylinders, tanks and systems that could be exposed to physical damage shall be protected. Guard posts or other *approved* means shall be provided to protect *compressed gas* containers, cylinders, tanks and systems indoors and outdoors from vehicular damage and shall comply with Section 312.

❖ Compressed gas containers, cylinders and tanks must be adequately protected against physical or mechanical damage to the container and any valves or fittings. Where damage from vehicles may occur, guard posts or other kinds of guards are required to afford protection that complies with Section 312.

5303.5.3 Securing compressed gas containers, cylinders and tanks. *Compressed gas* containers, cylinders and tanks shall be secured to prevent falling caused by contact, vibration or seismic activity. Securing of *compressed gas* containers, cylinders and tanks shall be by one of the following methods:

1. Securing containers, cylinders and tanks to a fixed object with one or more restraints.
2. Securing containers, cylinders and tanks on a cart or other mobile device designed for the movement of *compressed gas* containers, cylinders or tanks.
3. Nesting of *compressed gas* containers, cylinders and tanks at container filling or servicing facilities or in sellers' warehouses not accessible to the public. Nesting shall be allowed provided the nested containers, cylinders or tanks, if dislodged, do not obstruct the required *means of egress*.
4. Securing of *compressed gas* containers, cylinders and tanks to or within a rack, framework, cabinet or similar assembly designed for such use.

   Exception: *Compressed gas* containers, cylinders and tanks in the process of examination, filling, transport or servicing.

❖ A primary safety objective in the storage of compressed gas cylinders is the prevention of accidents from cylinders being knocked over. The best method to reliably achieve this objective is somewhat dependent on the frequency of cylinders being moved in and out of storage. For operations involving the infrequent movement of cylinders, the safest operation, obviously, would include chains or other means to completely secure all cylinders in place.

Securing all cylinders in place is not necessarily efficient for high-volume operations that are not open to the public, denoted in Method 3 of this section, such as container filling or servicing facilities, or seller's warehouses. When containers, cylinders and tanks are frequently moved, a chain or other restraining device can become a safety impediment to the efficiency of the operation. The tendency in a high-volume operation might be to drop a chain to the floor and roll cylinders over it, which would increase the likelihood of tripping a cylinder. Ideally, a chain should be moved out of the way, but in high-volume operations this can become impractical. Hence, the permissibility of nesting for these cases. See the commentary to the Section 202 definition of "Nesting."

In summary, the fire code official must determine whether the frequency of cylinder movement would qualify an operation as a "seller's warehouse" and allow the nesting exception as a safe alternative to securing cylinders with chains or similar devices. This decision should be based on criteria that is uniformly applied throughout the jurisdiction but that considers the unique characteristics of each operation. For an example of restrained cylinders in a compressed gas

INTERNATIONAL CODE COUNCIL®
Copyright © 2015 ICC. ALL RIGHTS RESERVED. Accessed by David Dammon on Jun 21, 2017 12:30:52 PM pursuant to License Agreement with ICC. No further reproduction or distribution authorized. ANY UNAUTHORIZED REPRODUCTION OR DISTRIBUTION IS A VIOLATION OF THE FEDERAL COPYRIGHT ACT AND THE LICENSE AGREEMENT, AND SUBJECT TO CIVIL AND CRIMINAL PENALTIES THEREUNDER.

system, see Commentary Figure 5303.4.1.

The exception recognizes that the container will not be secure when it is being filled, examined, transported or serviced. The container should be attended and monitored by adequately trained personnel during these operations.

5303.6 Valve protection. *Compressed gas* container, cylinder and tank valves shall be protected from physical damage by means of protective caps, collars or similar devices in accordance with Sections 5303.6.1 and 5303.6.2.

❖ This section states that all compressed gas container, cylinder and tank valves must be protected from physical damage in accordance with Sections 5303.6.1 and 5303.6.2. Avoiding damage to the cylinder valves is extremely important because such damage could result in the cylinder being propelled by the sudden release of its contents, which are under high pressure.

5303.6.1 Compressed gas container, cylinder or tank protective caps or collars. *Compressed gas* containers, cylinders and tanks designed for protective caps, collars or other protective devices shall have the caps or devices in place except when the containers, cylinders or tanks are in use or are being serviced or filled.

❖ Valve protection designed into the container, cylinder or tank by the manufacturer is the best means to prevent damage that could result in a "rocketing cylinder" scenario. When the design of gas containers, cylinders or tanks includes protective caps, collars or other protective devices, it only makes sense that these devices must be in place, except when servicing or filling the container, cylinder or tank makes it impractical.

5303.6.2 Caps and plugs. Compressed gas containers, cylinders and tanks designed for valve protection caps or other protective devices shall have the caps or devices in place. When outlet caps or plugs are installed, they shall be in place.

Exception: *Compressed gas* containers, cylinders or tanks in use, being serviced or being filled.

❖ As stated in the commentary to Section 5303.6.1, in gas containers, cylinders and tanks that are designed to include valve protection caps or other protective devices, these devices must be tightly in place except when the container, cylinder or tank is in use or connected for use.

5303.7 Separation from hazardous conditions. *Compressed gas* containers, cylinders and tanks and systems in storage or use shall be separated from materials and conditions that pose exposure hazards to or from each other. *Compressed gas* containers, cylinders, tanks and systems in storage or use shall be separated in accordance with Sections 5303.7.1 through 5303.7.11.2.

❖ This section recognizes the danger of improperly storing materials, which can pose an exposure hazard to surrounding materials. Compressed gas containers, cylinders and tanks must, therefore, be separated in accordance with Sections 5303.7.1 through 5303.7.11.2.

5303.7.1 Incompatible materials. *Compressed gas* containers, cylinders and tanks shall be separated from each other based on the hazard class of their contents. *Compressed gas* containers, cylinders and tanks shall be separated from *incompatible materials* in accordance with Section 5003.9.8.

❖ Separating gas systems to minimize exposures is one of the simplest safeguards to implement. Section 5003.9.8 provides the minimum separation requirements for incompatible materials (see commentary, Section 5003.9.8).

5303.7.2 Combustible waste, vegetation and similar materials. Combustible waste, vegetation and similar materials

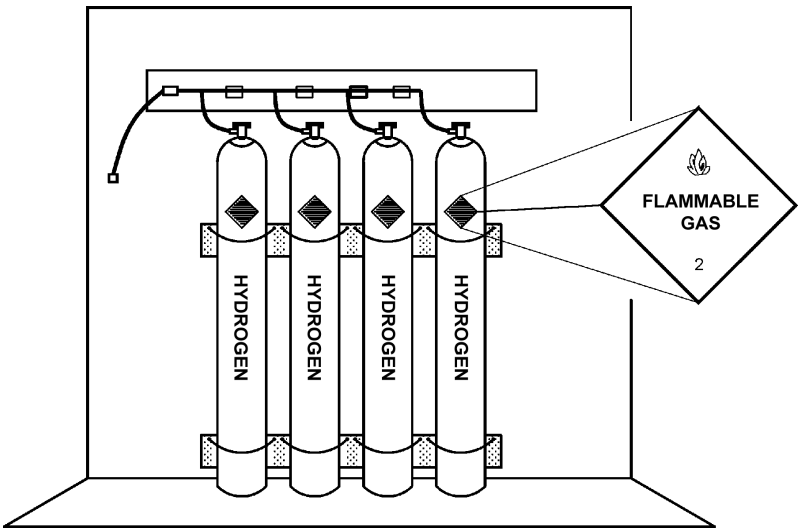

Figure 5303.4.1
STORAGE AND LABELING OF CYLINDERS

INTERNATIONAL CODE COUNCIL®
Copyright © 2015 ICC. ALL RIGHTS RESERVED. Accessed by David Dammon on Jun 21, 2017 12:30:52 PM pursuant to License Agreement with ICC. No further reproduction or distribution authorized. ANY UNAUTHORIZED REPRODUCTION OR DISTRIBUTION IS A VIOLATION OF THE FEDERAL COPYRIGHT ACT AND THE LICENSE AGREEMENT, AND SUBJECT TO CIVIL AND CRIMINAL PENALTIES THEREUNDER.

shall be kept not less than 10 feet (3048 mm) from *compressed gas* containers, cylinders, tanks and systems. A noncombustible partition, without openings or penetrations and extending not less than 18 inches (457 mm) above and to the sides of the storage area is allowed in lieu of such distance. The wall shall either be an independent structure, or the exterior wall of the building adjacent to the storage area.

❖ This section indicates that combustible waste, vegetation and similar materials must be kept at least 10 feet (3048 mm) from compressed gas containers, cylinders and tanks because external fires involving accumulated combustibles can cause such vessels to fail. This section does permit a noncombustible partition instead of the 10-foot (3048 mm) requirement, provided the partition has no openings or penetrations and extends at least 18 inches (457 mm) above and 18 inches (457 mm) beyond the sides of the storage area. The partition must be an independent structure or may be an exterior wall of a building adjacent to the storage area. Note that no fire-resistance rating for this partition is required, only a stipulation that it be constructed of noncombustible materials.

5303.7.3 Ledges, platforms and elevators. *Compressed gas* containers, cylinders and tanks shall not be placed near elevators, unprotected platform ledges or other areas where falling would result in *compressed gas* containers, cylinders or tanks being allowed to drop distances exceeding one-half the height of the container, cylinder or tank.

❖ This section addresses concerns about gas containers, cylinders and tanks being damaged by a fall. Gas containers, cylinders and tanks cannot be placed on platform ledges, elevators and other areas where the container, if dropped, would fall more than one-half the height of the container.

5303.7.4 Temperature extremes. *Compressed gas* containers, cylinders and tanks, whether full or partially full, shall not be exposed to artificially created high temperatures exceeding 125°F (52°C) or subambient (low) temperatures unless designed for use under the exposed conditions.

❖ This section identifies the limits of the temperature extremes to which gas containers, cylinders and tanks can be exposed without creating a danger of the possibility of catastrophic failure. The section also recognizes the added safety of gas containers, cylinders and tanks that are designed to be used beyond the indicated limitations.

5303.7.5 Falling objects. *Compressed gas* containers, cylinders, tanks and systems shall not be placed in areas where they are capable of being damaged by falling objects.

❖ This section is similar in intent to Section 5303.5.2 for the physical protection of gas containers, cylinders and tanks, except this section addresses falling objects, which could cause physical damage.

5303.7.6 Heating. *Compressed gas* containers, cylinders and tanks, whether full or partially full, shall not be heated by devices that could raise the surface temperature of the container, cylinder or tank to above 125°F (52°C). Heating devices shall comply with the *International Mechanical Code* and NFPA 70. *Approved* heating methods involving temperatures of less than 125°F (52°C) are allowed to be used by trained personnel. Devices designed to maintain individual *compressed gas* containers, cylinders or tanks at constant temperature shall be *approved* and shall be designed to be fail-safe.

❖ This section requires that any heating devices comply with the *International Mechanical Code*® (IMC®) and NFPA 70. It also requires that heating devices be used only by trained personnel and be designed to be fail-safe.

5303.7.7 Sources of ignition. Open flames and high-temperature devices shall not be used in a manner that creates a hazardous condition.

❖ Controlling ignition sources around compressed gas is both very important and somewhat difficult. This section addresses open flames and high-temperature devices. These ignition sources should be used only when necessary and by trained personnel, provided adequate safeguards are in place.

5303.7.8 Exposure to chemicals. *Compressed gas* containers, cylinders, tanks and systems shall not be exposed to *corrosive* chemicals or fumes that could damage containers, cylinders, tanks, valves or valve-protective caps.

❖ This section requires protection against corrosive chemicals or fumes that could cause damage to the container or valves and valve caps.

5303.7.9 Exhausted enclosures. Where exhausted enclosures are provided as a means to segregate *compressed gas* containers, cylinders and tanks from exposure hazards, such enclosures shall comply with the requirements of Section 5003.8.5.

❖ Exhausted enclosures, as defined in Section 5002.1, are one means of isolating compressed gas containers from hazardous conditions. When such equipment is utilized, performance requirements are needed and may be found in Section 5003.8.5.

5303.7.10 Gas cabinets. Where gas cabinets are provided as a means to separate *compressed gas* containers, cylinders and tanks from exposure hazards, such gas cabinets shall comply with the requirements of Section 5003.8.6.

❖ Gas cabinets, as defined in Section 202, are one means of isolating compressed gas containers from hazardous conditions. When such equipment is utilized, performance requirements are needed and may be found in Section 5003.8.6.

5303.7.11 Tube trailers. Tube trailers, including those containing compatible *compressed gases*, shall be surrounded by a clear space of not less than 3 feet (914 mm) to allow for maintenance, access and inspection.

❖ This section presents minimum requirements for siting one or more tube trailers (see Commentary Figure 5303.7.11) in an industrial plant or another setting

INTERNATIONAL CODE COUNCIL®
Copyright © 2015 ICC. ALL RIGHTS RESERVED. Accessed by David Dammon on Jun 21, 2017 12:30:52 PM pursuant to License Agreement with ICC. No further reproduction or distribution authorized. ANY UNAUTHORIZED REPRODUCTION OR DISTRIBUTION IS A VIOLATION OF THE FEDERAL COPYRIGHT ACT AND THE LICENSE AGREEMENT, AND SUBJECT TO CIVIL AND CRIMINAL PENALTIES THEREUNDER.

for the supply of compressed gases. It also provides requirements for installations at a single location delivering several compressed gases using multiple tube trailers.

A minimum clear space must be provided between tube trailers, and between tube trailers and other objects, including buildings, to allow for the access and passage of personnel involved in activities associated with the servicing and use of the trailer. At filling plants, operators must access the vehicles for maintenance and service-related work, and at user locations, access is needed to allow users unimpeded movement, including access and egress. A clear space of 36 inches (914 mm) has been selected to accommodate a "person width" of 22 inches (559 mm) while addressing the fact that there could be service-related connections or fittings that require the trailer to be attended. This is similar to Section 2306.2.6, which requires a 3-foot (914 mm) clearance around flammable liquid tanks when installed in a special enclosure inside of buildings to allow for access and maintenance.

It should also be noted that these minimum clearance requirements do not supercede or replace distances from storage to exposures contained in other chapters of the code. Siting of tube trailers will be based on the hazard classification of the compressed gas. For example, consider a six-pack tube trailer of compressed methane, a flammable gas regulated by Chapter 58, with each tube having a rated volume of 10,000 standard cubic feet (scf) (283 m^3) at a design pressure of 3,000 pounds per square inch gauge (psig) (20 613 kPa) for a total volume of 60,000 scf (1699 m^3). In this example, the application of Table 5804.2.1 would result in the following minimum distances from the tube trailer to exposures:

MINIMUM DISTANCE:

Between storage areas: 10 feet (3048 mm).
To lot lines of property that can be built upon: 20 feet (6096 mm).
To public streets, public alleys or public ways: 20 feet (6096 mm).



Figure 5303.7.11
TUBE TRAILER

MINIMUM DISTANCE TO BUILDINGS ON THE SAME PROPERTY:

To nonrated construction or opening within 25 feet (7620 mm):
20 feet (6096 mm).
To 2-hour construction and no openings within 25 feet (7620 mm):
5 feet (1524 mm).
To 4-hour construction and no openings within 25 feet (7620 mm):
0 feet (0 mm).

5303.7.11.1 Individual tube trailers containing incompatible materials. Increased separation distances between individual tube trailers containing incompatible gases shall be provided where required by Section 5303.7.1.

❖ See the commentary to the Section 202 definition of "Tube trailer," and the commentary to Sections 5003.9.8 and 5303.7.1.

5303.7.11.2 Connections. Piping systems used to connect tube trailers to a user piping system shall not be viewed as an encroachment into the 3-foot (914 mm) clear space.

❖ This section clarifies that the 3-foot (914 mm) clearance in Section 5303.7.11 is to be measured from a building or object to the tube trailer itself. The extension of any piping system to the tube trailer is not viewed as an encroachment on the clearance otherwise required.

5303.8 Wiring and equipment. Electrical wiring and equipment shall comply with NFPA 70. *Compressed gas* containers, cylinders, tanks and systems shall not be located where they could become part of an electrical circuit. *Compressed gas* containers, cylinders, tanks and systems shall not be used for electrical grounding.

❖ This section requires that any electrical wiring and equipment comply with NFPA 70. It further requires that no compressed gas containers, cylinders or tanks be placed where they could become part of an electrical circuit. Cylinders and systems cannot be part of any electrical grounding system.

5303.9 Service and repair. Service, repair, modification or removal of valves, pressure-relief devices or other *compressed gas* container, cylinder or tank appurtenances shall be performed by trained personnel.

❖ This section requires individuals who service, repair or modify gas containers, cylinders and tanks, or tank appurtenances to be fully trained in the particular function they are performing.

5303.10 Unauthorized use. *Compressed gas* containers, cylinders, tanks and systems shall not be used for any purpose other than to serve as a vessel for containing the product that it is designed to contain.

❖ This section requires that gas containers, cylinders and tanks hold only the product they were designed to contain. These containers, cylinders and tanks may not be used for any other purpose. This section

INTERNATIONAL CODE COUNCIL®
Copyright © 2015 ICC. ALL RIGHTS RESERVED. Accessed by David Dammon on Jun 21, 2017 12:30:52 PM pursuant to License Agreement with ICC. No further reproduction or distribution authorized. ANY UNAUTHORIZED REPRODUCTION OR DISTRIBUTION IS A VIOLATION OF THE FEDERAL COPYRIGHT ACT AND THE LICENSE AGREEMENT, AND SUBJECT TO CIVIL AND CRIMINAL PENALTIES THEREUNDER.

prohibits the filling of a gas container, cylinder or tank with a gas for which it was not designed.

5303.11 Exposure to fire. *Compressed gas* containers, cylinders and tanks that have been exposed to fire shall be removed from service. Containers, cylinders and tanks so removed shall be handled by *approved*, qualified persons.

❖ This section requires any gas containers, cylinders and tanks that have been exposed to fire to be removed from service and be handled only by qualified persons. This is especially important because the container may still be under pressure.

5303.12 Leaks, damage or corrosion. Leaking, damaged or corroded *compressed gas* containers, cylinders and tanks shall be removed from service. Leaking, damaged or corroded *compressed gas* systems shall be replaced or repaired in accordance with the following:

1. *Compressed gas* containers, cylinders and tanks that have been removed from service shall be handled in an *approved* manner.
2. *Compressed gas* systems that are determined to be leaking, damaged or corroded shall be repaired to a serviceable condition or removed from service.

❖ Leaking, damaged or corroded gas containers, cylinders and tanks must be removed from service and be replaced or repaired in accordance with Items 1 and 2 of this section. Damaged gas containers, cylinders and tanks pose a potential content-release hazard. Care must be taken to determine that disposal does not present a greater hazard than the damaged container. Small gas containers, cylinders and tanks usually cannot be repaired easily. Large gas containers, cylinders and tanks, and fixed tank installations, often cannot be easily replaced and must be repaired. Temporary storage of materials during the repair of these gas containers, cylinders and tanks must comply with code requirements.

5303.13 Surface of unprotected storage or use areas. Unless otherwise specified in Section 5303.14, *compressed gas* containers, cylinders and tanks are allowed to be stored or used without being placed under overhead cover. To prevent bottom corrosion, containers, cylinders and tanks shall be protected from direct contact with soil or unimproved surfaces. The surface of the area on which the containers are placed shall be graded to prevent accumulation of water.

❖ This section requires that adequate protection be provided to prevent bottom corrosion of the container from direct contact with soil or unimproved surfaces. Grading is also required to eliminate the accumulation of water in the container storage area to prevent the container bottoms from being immersed. Overhead cover is not required unless extreme temperatures are present. Section 5303.14 addresses overhead protection.

5303.14 Overhead cover. *Compressed gas* containers, cylinders and tanks are allowed to be stored or used in the sun except in locations where extreme temperatures prevail. Where extreme temperatures prevail, overhead covers shall be provided.

❖ This section requires that overhead cover be provided when extreme temperatures exist. Many of these structures are constructed as an attached canopy to provide ready access to materials. IBC Section 414.6 prescribes construction requirements applicable to weather protection for hazardous materials.

5303.15 Lighting. *Approved* lighting by natural or artificial means shall be provided.

❖ Lighting sufficient for good visibility must be maintained at all times in both inside and outside areas. Natural light for outdoor areas may be sufficient where operations are limited to daylight hours.

5303.16 Vaults. Generation, compression, storage and dispensing equipment for *compressed gases* shall be allowed to be located in either above- or below-grade vaults complying with Sections 5303.16.1 through 5303.16.14.

❖ This section extends the permissible use of vaults to include gaseous materials. The code previously allowed vaults to be used for the protection of all hazardous material liquids, but the protection features have been modified for inclusion in Chapter 53 to accommodate the protection of compressed gases. The provisions of the section are derived from Section 5704.2.8, which regulates vaults used for flammable and combustible liquids. The code has previously allowed gases to be stored and handled inside of buildings, and it is also appropriate to allow gas storage and handling equipment to be in vaults, given that a vault environment is unoccupied and offers fewer possible accident scenarios.

5303.16.1 Listing required. Vaults shall be *listed* by a nationally recognized testing laboratory.

Exception: Where *approved* by the *fire code official*, below-grade vaults are allowed to be constructed on site, provided that the design is in accordance with the *International Building Code* and that special inspections are conducted to verify structural strength and compliance of the installation with the *approved* design in accordance with Section 1707 of the *International Building Code*. Installation plans for below-grade vaults that are constructed on site shall be prepared by, and the design shall bear the stamp of, a professional engineer. Consideration shall be given to soil and hydrostatic loading on the floors, walls and lid; anticipated seismic forces; uplifting by ground water or flooding; and to loads imposed from above, such as traffic and equipment loading on the vault lid.

❖ Where prefabricated vaults are used, they must be listed by a testing laboratory experienced in evaluating such design and construction. While this section does not reference any particular standard to which a vault is to be listed, UL 2245 is the referenced standard in Section 5704.2.8.1 for vaults containing flammable or combustible liquid tanks and could be used to provide guidance to the fire code official.

INTERNATIONAL CODE COUNCIL®
Copyright © 2015 ICC. ALL RIGHTS RESERVED. Accessed by David Dammon on Jun 21, 2017 12:30:52 PM pursuant to License Agreement with ICC. No further reproduction or distribution authorized. ANY UNAUTHORIZED REPRODUCTION OR DISTRIBUTION IS A VIOLATION OF THE FEDERAL COPYRIGHT ACT AND THE LICENSE AGREEMENT, AND SUBJECT TO CIVIL AND CRIMINAL PENALTIES THEREUNDER.

The exception recognizes that vaults may also be site-built, provided that they are approved by the fire code official. Site-built vaults must be designed by a qualified design professional to comply with IBC Chapter 16, and the construction is to be overseen with special inspections conducted in accordance with IBC Chapter 17. Flood hazard areas are defined in IBC Section 202.

5303.16.2 Design and construction. The vault shall completely enclose generation, compression, storage or dispensing equipment located in the vault. There shall not be openings in the vault enclosure except those necessary for vault ventilation and access, inspection, filling, emptying or venting of equipment in the vault. The walls and floor of the vault shall be constructed of reinforced concrete not less than 6 inches (152 mm) thick. The top of an above-grade vault shall be constructed of noncombustible material and shall be designed to be weaker than the walls of the vault to ensure that the thrust of any explosion occurring inside the vault is directed upward.

The top of an at- or below-grade vault shall be designed to relieve safely or contain the force of an explosion occurring inside the vault. The top and floor of the vault and the tank foundation shall be designed to withstand the anticipated loading, including loading from vehicular traffic, where applicable. The walls and floor of a vault installed below grade shall be designed to withstand anticipated soil and hydrostatic loading. Vaults shall be designed to be wind and earthquake resistant, in accordance with the *International Building Code*.

❖ The vault is to be of noncombustible materials with openings required only for the operation and maintenance of the equipment it contains. In order to provide structural integrity, thermal exposure protection and equipment physical protection, reinforced concrete is to be used for the walls and floor. The vault top for above-grade vaults is required only to be constructed of noncombustible materials and must be designed to vent the forces of an explosion. If the vault is constructed such that the top is located below grade, or is subject to vehicular traffic, then the top must be designed to withstand vehicle loads and also contain the forces of an explosion. The structural design of the vault must also comply with IBC Chapter 16 for wind and earthquake loads, as applicable.

5303.16.3 Secondary containment. Vaults shall be substantially liquid-tight and there shall not be backfill within the vault. The vault floor shall drain to a sump. For premanufactured vaults, liquid tightness shall be certified as part of the listing provided by a nationally recognized testing laboratory. For field-erected vaults, liquid tightness shall be certified in an *approved* manner.

❖ The vault is to function as secondary containment for the tank in the event of a leak or spillage. Any leakage or spillage must be removed by draining to a sump in the vault floor. Premanufactured vaults are required to be listed; during this listing process, an analysis program is performed that includes an evaluation of the effectiveness of secondary containment provided by a vault. It is much more difficult to accomplish a liquid-tight installation on a field-erected vault, as evidenced by the proliferation of leaky basements found throughout the country; therefore, to enhance the quality of field-erected vaults, such units must be certified for liquid tightness to the satisfaction of the fire code official. Methods that might be used include third-party inspection/evaluation and full-scale liquid retention testing.

5303.16.4 Internal clearance. There shall be sufficient clearance within the vault to allow for visual inspection and maintenance of equipment in the vault.

❖ Maintenance and inspection of the tank requires that the clearance between the tank and the vault be sufficient for personnel to perform these functions.

5303.16.5 Anchoring. Vaults and equipment contained therein shall be suitably anchored to withstand uplifting by groundwater or flooding. The design shall verify that uplifting is prevented even where equipment within the vault is empty.

❖ The tank and the vault may float if the water table is high or flooding occurs. The tank is to be anchored to the vault to prevent the tank from floating while the vault is also to be anchored to prevent it, in turn, from floating. Flood hazard areas are defined in IBC Section 202.

5303.16.6 Vehicle impact protection. Vaults shall be resistant to damage from the impact of a motor vehicle, or vehicle impact protection shall be provided in accordance with Section 312.

❖ Protection from the impact of vehicles is provided by guard posts or other approved barriers. Section 312 contains the specifications for guard posts or the design forces required for an approved barrier to comply with the code. Protection from vehicle impact is also required under Section 5303.5.2.

5303.16.7 Arrangement. Equipment in vaults shall be *listed* or *approved* for above-ground use. Where multiple vaults are provided, adjacent vaults shall be allowed to share a common wall. The common wall shall be liquid and vapor tight and shall be designed to withstand the load imposed when the vault on either side of the wall is filled with water.

❖ Tanks and equipment designed for underground use typically rely upon proper backfilling and burial in soil for their structural support and stability; therefore, tanks and equipment installed in the vault must be appropriate for above-ground use since there will be no backfill to provide support. Equipment and tanks installed in vaults are to be independent of each other and a separate vault is to be constructed for each. The individual vaults are allowed to use a common separation wall if it does not allow the gases from one vault to enter an adjacent vault. This common wall must be able to structurally resist the hydrostatic loads if the adjacent vault is flooded.

INTERNATIONAL CODE COUNCIL®
Copyright © 2015 ICC. ALL RIGHTS RESERVED. Accessed by David Dammon on Jun 21, 2017 12:30:52 PM pursuant to License Agreement with ICC. No further reproduction or distribution authorized. ANY UNAUTHORIZED REPRODUCTION OR DISTRIBUTION IS A VIOLATION OF THE FEDERAL COPYRIGHT ACT AND THE LICENSE AGREEMENT, AND SUBJECT TO CIVIL AND CRIMINAL PENALTIES THEREUNDER.

5303.16.8 Connections. Connections shall be provided to permit the venting of each vault to dilute, disperse and remove vapors prior to personnel entering the vault.

❖ In order to provide a safe environment for inspection or repair personnel to operate inside the vault, openings must be provided to facilitate the purging of harmful or oxygen-depleting inert gases from the vault prior to entry.

5303.16.9 Ventilation. Vaults shall be provided with an exhaust ventilation system installed in accordance with Section 5004.3. The ventilation system shall operate continuously or be designed to operate upon activation of the vapor or liquid detection system. The system shall provide ventilation at a rate of not less than 1 cubic foot per minute (cfm) per square foot [0.00508 $m^3/(s \cdot m^2)$] of floor area, but not less than 150 cfm (4 m^3/min). The exhaust system shall be designed to provide air movement across all parts of the vault floor for gases having a density greater than air and across all parts of the vault ceiling for gases having a density less than air. Supply ducts shall extend to within 3 inches (76 mm), but not more than 12 inches (305 mm), of the floor. Exhaust ducts shall extend to within 3 inches (76 mm), but not more than 12 inches (305 mm) of the floor or ceiling, for heavier-than-air or lighter-than-air gases, respectively. The exhaust system shall be installed in accordance with the *International Mechanical Code*.

❖ The removal of hazardous gases from a vault requires that a ventilation system be installed in accordance with Section 5004.3 and the IMC. The ventilation system must have supply and exhaust ducts 3 to 12 inches (76 to 305 mm) from the vault floor. These ducts are to provide ventilation across the entire vault floor to allow air movement across the lowest part of the vault where heavier-than-air gases could settle, remove them and provide breathable air.

5303.16.10 Monitoring and detection. Vaults shall be provided with *approved* vapor and liquid detection systems and equipped with on-site audible and visual warning devices with battery backup. Vapor detection systems shall sound an alarm when the system detects vapors that reach or exceed 25 percent of the lower explosive limit (LEL) or one-half the immediately dangerous to life and health (IDLH) concentration for the gas in the vault. Vapor detectors shall be located not higher than 12 inches (305 mm) above the lowest point in the vault for heavier-than-air gases and not lower than 12 inches (305 mm) below the highest point in the vault for lighter-than-air gases. Liquid detection systems shall sound an alarm upon detection of any liquid, including water. Liquid detectors shall be located in accordance with the manufacturers' instructions. Activation of either vapor or liquid detection systems shall cause a signal to be sounded at an *approved*, constantly attended location within the facility served by the tanks or at an *approved* location. Activation of vapor detection systems shall also shut off gas-handling equipment in the vault and dispensers.

❖ The vault is to have liquid and vapor detection systems that sound an alarm when either is present in the quantities specified. The systems should have battery backup in the event of a power failure, and are to sound an alarm on the premises at a constantly attended location that is approved by the fire code official (see commentary to the Section 202 definition of "Constantly attended location").

5303.16.11 Liquid removal. Means shall be provided to recover liquid from the vault. Where a pump is used to meet this requirement, it shall not be permanently installed in the vault. Electric-powered portable pumps shall be suitable for use in Class I, Division 1 locations, as defined in NFPA 70.

❖ A method for removing liquid from the vault must be provided. This can be a gravity drain, if the site is appropriate, or manual or portable electric pumps suitable for use in hazardous locations.

5303.16.12 Relief vents. Vent pipes for equipment in the vault shall terminate not less than 12 feet (3658 mm) above ground level.

❖ Vent pipes must be terminated so as to direct gases and vapors into the airstream and away from the vault and any nearby buildings. Some compressed gases are normally heavier than air so they will settle to lower levels. The termination of a vent pipe, a minimum of 12 feet (3658 mm) above grade, will provide space for the gases to disperse to below the lower flammable limit (LFL). This high termination elevation also reduces the potential for the termination being close to grade-level ignition sources. The design features of nearby buildings that may allow hazardous gases to reenter the building or to collect on the building are to be avoided.

5303.16.13 Accessway. Vaults shall be provided with an *approved* personnel accessway with a minimum dimension of 30 inches (762 mm) and with a permanently affixed, nonferrous ladder. Accessways shall be designed to be nonsparking. Travel distance from any point inside a vault to an accessway shall not exceed 20 feet (6096 mm). At each entry point, a warning sign indicating the need for procedures for safe entry into confined spaces shall be posted. Entry points shall be secured against unauthorized entry and vandalism.

❖ Access to the vault must have a minimum dimension of 30 inches (762 mm) for ease of personnel passage. Because there is the possibility of hazardous and potentially flammable gases in the vault, the accessway and ladder are to be constructed of approved, nonsparking material. Since gases can replace the air in a vault, for personnel safety, the travel distance is limited and warning signs must be posted to remind personnel of the potential hazards.

5303.16.14 Classified area. The interior of a vault containing a flammable gas shall be designated a Class I, Division 1 location, as defined in NFPA 70.

❖ The interior of a vault storing flammable gas is classified as a Class 1, Division I hazardous electrical location, in accordance with NFPA 70 for determining the type of electrical system to be installed.

INTERNATIONAL CODE COUNCIL®
Copyright © 2015 ICC. ALL RIGHTS RESERVED. Accessed by David Dammon on Jun 21, 2017 12:30:52 PM pursuant to License Agreement with ICC. No further reproduction or distribution authorized. ANY UNAUTHORIZED REPRODUCTION OR DISTRIBUTION IS A VIOLATION OF THE FEDERAL COPYRIGHT ACT AND THE LICENSE AGREEMENT, AND SUBJECT TO CIVIL AND CRIMINAL PENALTIES THEREUNDER.

SECTION 5304
STORAGE OF COMPRESSED GASES

5304.1 Upright storage. *Compressed gas* containers, cylinders and tanks, except those designed for use in a horizontal position, and all *compressed gas* containers, cylinders and tanks containing nonliquefied gases, shall be stored in an upright position with the valve end up. An upright position shall include conditions where the container, cylinder or tank axis is inclined as much as 45 degrees (0.80 rad) from the vertical.

Exceptions:

1. *Compressed gas* containers with a water volume less than 1.3 gallons (5 L) are allowed to be stored in a horizontal position.
2. Cylinders, containers and tanks containing nonflammable gases, or cylinders, containers and tanks containing nonliquefied flammable gases that have been secured to a pallet for transportation purposes.

❖ Containers, cylinders or tanks designed to be used in the horizontal position with the valve end up and accessible are to be stored in an upright position, unless the conditions of one of the two listed exceptions are met. Exception 1 allows gas containers, cylinders and tanks with a water volume of less than 1.3 gallons (5 L) to be stored in the horizontal position. Exception 2 permits gas containers, cylinders and tanks containing nonflammable gases to be in the horizontal position when secured to a pallet for transportation.

5304.2 Material-specific regulations. In addition to the requirements of this section, indoor and outdoor storage of *compressed gases* shall comply with the material-specific provisions of Chapters 54, 58 and 60 through 67.

❖ In addition to meeting the requirements of this section, storage of compressed gases needs to comply with the material-specific provisions of Chapters 54, 58 and 60 through 67. For example, the storage and use of flammable gases must be in accordance with Chapter 58 in addition to the requirements of this section.

SECTION 5305
USE AND HANDLING OF COMPRESSED GASES

5305.1 Compressed gas systems. *Compressed gas* systems shall be suitable for the use intended and shall be designed by persons competent in such design. *Compressed gas* equipment, machinery and processes shall be *listed* or *approved*.

❖ This section contains requirements for gas systems. A system includes stationary or movable gas containers, cylinders and tanks; pressure regulators; safety relief devices; manifolds; interconnecting piping; and controls. It is important that persons designing these systems be competent in this area. All equipment, machinery and processes need to be listed or approved for that particular use.

5305.2 Controls. *Compressed gas* system controls shall be designed to prevent materials from entering or leaving process or reaction systems at other than the intended time, rate or path. Automatic controls shall be designed to be fail safe.

❖ In designing the system controls, provisions must be made to prevent materials from escaping the system other than at the intended time. Automatic controls must be designed so that they are fail safe to provide safe conditions when personnel are not present.

5305.3 Piping systems. Piping, including tubing, valves, fittings and pressure regulators, shall comply with this section and Chapter 50. Piping, tubing, pressure regulators, valves and other apparatus shall be kept gas tight to prevent leakage.

❖ All apparatus, connected and part of the system, shall comply with this section and Chapter 50. Proper maintenance of all the components ensures that gas leaks are prevented.

5305.4 Valves. Valves utilized on *compressed gas* systems shall be suitable for the use intended and shall be accessible. Valve handles or operators for required shutoff valves shall not be removed or otherwise altered to prevent access.

❖ This section is intended to provide adequate safeguards for valves. Valves are to be employed solely for the use for which they were designed. They must be accessible and must not be removed or altered to prevent access.

5305.5 Venting. Venting of gases shall be directed to an *approved* location. Venting shall comply with the *International Mechanical Code*.

❖ This section indicates that gases must be vented to an approved location. It refers the user to the IMC to ensure compliance with venting requirements.

5305.6 Upright use. *Compressed gas* containers, cylinders and tanks, except those designed for use in a horizontal position, and all *compressed gas* containers, cylinders and tanks containing nonliquefied gases, shall be used in an upright position with the valve end up. An upright position shall include conditions where the container, cylinder or tank axis is inclined as much as 45 degrees (0.80 rad) from the vertical. Use of nonflammable liquefied gases in the inverted position where the liquid phase is used shall not be prohibited provided that the container, cylinder or tank is properly secured and the dispensing apparatus is designed for liquefied gas use.

Exception: *Compressed gas* containers, cylinders and tanks with a water volume less than 1.3 gallons (5 L) are allowed to be used in a horizontal position.

❖ This section has some of the general requirements found in Section 5304.1. Unless the container is designed to be used in the horizontal position, it must be in the upright position with the valve end up and accessible. In a gas system, the container may be in the inverted position when using nonflammable liquefied gases, provided that the container is secured and the dispensing apparatus is designed for liquefied gas use. Exception 1 to Section 5304.1 also applies

INTERNATIONAL CODE COUNCIL®
Copyright © 2015 ICC. ALL RIGHTS RESERVED. Accessed by David Dammon on Jun 21, 2017 12:30:52 PM pursuant to License Agreement with ICC. No further reproduction or distribution authorized. ANY UNAUTHORIZED REPRODUCTION OR DISTRIBUTION IS A VIOLATION OF THE FEDERAL COPYRIGHT ACT AND THE LICENSE AGREEMENT, AND SUBJECT TO CIVIL AND CRIMINAL PENALTIES THEREUNDER.

here: if the container has a water volume less than 1.3 gallons (5 L), it may be used in the horizontal position.

5305.7 Transfer. Transfer of gases between containers, cylinders and tanks shall be performed by qualified personnel using equipment and operating procedures in accordance with CGA P-1.

Exception: The fueling of vehicles with CNG or CH2, conducted in accordance with Chapter 23.

❖ In order to increase the likelihood that the inherent hazards involved in the transfer of compressed gases between gas containers, cylinders and tanks are mitigated, this section requires that only qualified personnel, using equipment and procedures in accordance with CGA P-1, execute the transfer. The exception to this occurs when fueling vehicles with compressed natural gas (CNG) or compressed hydrogen gas, provided that the fueling is conducted in accordance with the applicable provisions of Chapter 23 of the code.

5305.8 Use of compressed gas for inflation. Inflatable equipment, devices or balloons shall only be pressurized or filled with compressed air or inert gases.

❖ This section permits inflatable items, such as balloons, to be pressurized with compressed air or an inert gas only.

5305.9 Material-specific regulations. In addition to the requirements of this section, indoor and outdoor use of *compressed gases* shall comply with the material-specific provisions of Chapters 54, 58 and 60 through 67.

❖ In addition to the requirements of this section, storage of compressed gases must comply with the material-specific provisions of Chapters 54, 58 and 60 through 67. For example, the storage and use of a flammable gas system must comply with Chapter 58 in addition to the requirements of this section.

5305.10 Handling. The handling of *compressed gas* containers, cylinders and tanks shall comply with Sections 5305.10.1 and 5305.10.2.

❖ The requirements of Sections 5303.10.1 and 5305.10.2 are specific for handling gas containers, cylinders and tanks.

5305.10.1 Carts and trucks. Containers, cylinders and tanks shall be moved using an *approved* method. Where containers, cylinders or tanks are moved by hand cart, hand truck or other mobile device, such carts, trucks or devices shall be designed for the secure movement of containers, cylinders or tanks. Carts and trucks utilized for transport of *compressed gas* containers, cylinders and tanks within buildings shall comply with Section 5003.10. Carts and trucks utilized for transport of *compressed gas* containers, cylinders and tanks exterior to buildings shall be designed so that the containers, cylinders and tanks will be secured against dropping or otherwise striking against each other or other surfaces.

❖ This section contains regulations for moving gas containers, cylinders and tanks with carts and trucks. When carts or trucks are used inside buildings, they must also comply with Section 5003.10. The potential release of gas is greatly increased during the handling process. A leak caused by improper handling, such as dropping a container, striking containers against each other or striking a container on another surface, poses a potential hazard to persons and property. Proper handling of the containers greatly reduces this risk.

5305.10.2 Lifting devices. Ropes, chains or slings shall not be used to suspend *compressed gas* containers, cylinders and tanks unless provisions at time of manufacture have been made on the container, cylinder or tank for appropriate lifting attachments, such as lugs.

❖ This section states that, in order to be suspended by ropes, chains or slings, compressed gas containers, cylinders and tanks must be fitted with lifting attachments at the time of manufacture.

SECTION 5306
MEDICAL GASES

5306.1 General. Medical gases at health care-related facilities intended for patient care, inhalation or sedation including, but not limited to, analgesia systems for dentistry, podiatry, veterinary and similar uses shall comply with Sections 5306.2 through 5306.4 in addition to other requirements of this chapter.

❖ Compressed gases used in healthcare-related facilities include oxygen, nitrogen and nitrogen oxides, carbon dioxide and other gases that pose a variety of hazards if not handled and stored properly. Oxygen, for example, represents both a fire and an explosion hazard. Nitrogen oxides are useful for sedation, but in uncontrolled amounts in a confined space can asphyxiate an unknowing occupant. The remainder of these sections are intended to minimize hazards by setting the requirements for storage and supply locations. Note that the use of the phrase "healthcare-related facilities" indicates the intent that these provisions apply to not only hospitals but also to nursing homes and ambulatory care facilities.

5306.2 Interior supply location. Medical gases shall be stored in areas dedicated to the storage of such gases without other storage or uses. Where containers of medical gases in quantities greater than the permit amount are located inside buildings, they shall be in a 1-hour exterior room, a 1-hour interior room or a gas cabinet in accordance with Section 5306.2.1, 5306.2.2 or 5306.2.3, respectively. Rooms or areas where medical gases are stored or used in quantities exceeding the *maximum allowable quantity per control area* as set forth in Section 5003.1 shall be in accordance with the *International Building Code* for high-hazard Group H occupancies.

❖ This section states that medical gases must be stored in dedicated areas not used for other storage or any other purpose. Where medical gases are stored

INTERNATIONAL CODE COUNCIL®
Copyright © 2015 ICC. ALL RIGHTS RESERVED. Accessed by David Dammon on Jun 21, 2017 12:30:52 PM pursuant to License Agreement with ICC. No further reproduction or distribution authorized. ANY UNAUTHORIZED REPRODUCTION OR DISTRIBUTION IS A VIOLATION OF THE FEDERAL COPYRIGHT ACT AND THE LICENSE AGREEMENT, AND SUBJECT TO CIVIL AND CRIMINAL PENALTIES THEREUNDER.

inside buildings in quantities greater than the permit amount indicated in Table 105.6.9, they are required to be in a 1-hour exterior room, in a 1-hour interior room or a gas cabinet in accordance with Section 5306.2.1, 5306.2.2 or 5306.2.3.

The section also makes it clear that where hazardous gases are stored or used in quantities in excess of the maximum allowable quantity per control area (MAQ), the storage room must be constructed as an appropriate Group H area in accordance with the IBC.

5306.2.1 One-hour exterior rooms. A 1-hour exterior room shall be a room or enclosure separated from the remainder of the building by *fire barriers* constructed in accordance with Section 707 of the *International Building Code* or horizontal assemblies constructed in accordance with Section 711 of the *International Building Code*, or both, with a *fire-resistance rating* of not less than 1 hour. Openings between the room or enclosure and interior spaces shall be self-closing smoke- and draft-control assemblies having a *fire protection rating* of not less than 1 hour. Rooms shall have not less than one exterior wall that is provided with not less than two nonclosable louvered vents. Each vent shall have a minimum free opening area of 24 square inches (155 cm^2) for each 1,000 cubic feet (28 m^3) at normal temperature and pressure (NTP) of gas stored in the room and shall be not less than 72 square inches (465 cm^2) in aggregate free opening area. One vent shall be within 6 inches (152 mm) of the floor and one shall be within 6 inches (152 mm) of the ceiling. Rooms shall be provided with not less than one automatic sprinkler to provide container cooling in case of fire.

❖ This section contains specific construction, ventilation and suppression requirements for exterior rooms that contain medical gases in quantities greater than the permit amount indicated in Table 105.6.9. All openings between medical gas storage rooms and building interior spaces are required to be protected by self-closing smoke- and fire-rated assemblies to maintain separate airspaces. Even automatic-closing assemblies, which close on detection of fire or smoke, are not allowed since they cause the airspaces to be normally connected. The purpose of keeping airspaces separate is to prevent gas that may escape from a leak in the medical gas room from migrating into other areas of the building. These requirements are consistent with those of NFPA 99 and NFPA 101 used by the federal Centers for Medicare Services (CMS) for healthcare facility licensure.

5306.2.2 One-hour interior room. Where an exterior wall cannot be provided for the room, automatic sprinklers shall be installed within the room. The room shall be exhausted through a duct to the exterior. Supply and exhaust ducts shall be enclosed in a 1-hour-rated shaft enclosure from the room to the exterior. *Approved* mechanical ventilation shall comply with the *International Mechanical Code* and be provided at a minimum rate of 1 cubic foot per minute per square foot [0.00508 $m^3/(s \cdot m^2)$] of the area of the room.

❖ This section contains specific construction, ventilation and suppression requirements for interior rooms that contain medical gases in quantities greater than the permit amount indicated in Table 105.6.9.

5306.2.3 Gas cabinets. Gas cabinets shall be constructed in accordance with Section 5003.8.6 and the following:

1. The average velocity of ventilation at the face of access ports or windows shall be not less than 200 feet per minute (1.02 m/s) with not less than 150 feet per minute (0.76 m/s) at any point of the access port or window.
2. They shall be connected to an exhaust system.
3. They shall be internally sprinklered.

❖ This section contains specific requirements for the construction of gas cabinets that contain medical gases in quantities greater than the permit amount indicated in Table 105.6.8. These requirements are in addition to those contained in Section 5003.8.6. The cabinet ventilation system must be designed to operate at a negative pressure and be connected to an exhaust system to maintain a safe atmosphere inside the room in the event of a leak, especially during the normal opening and closing of the cabinet. Additionally, the section requires that gas cabinets be protected with an internal automatic sprinkler system to provide cooling of the gas cylinders housed in the cabinet in the event of a fire that is outside of the cabinet. Other types of extinguishing systems are prohibited.

5306.3 Exterior supply locations. Oxidizer medical gas systems located on the exterior of a building with quantities greater than the permit amount shall be located in accordance with Section 6304.2.1.

❖ This section requires compliance with Section 6304.2.1 for oxidizer medical gas systems located on the exterior of the building in amounts greater than permitted in Table 105.6.9 (see commentary, Section 6304.2.1).

5306.4 Transfilling. Transfilling areas and operations including, but not limited to, ventilation and separation, shall comply with NFPA 99.

❖ Transfilling is the transfer of oxygen to smaller portable containers from larger storage containers. This can occur in the liquid or gaseous state. The reference to NFPA 99 will provide restrictions on the construction of floors used in transfilling areas, limiting them to concrete or ceramic tile due to their noncombustible nature.

5306.5 Medical gas systems. Medical gas systems including, but not limited to, distribution piping, supply manifolds, connections, pressure regulators and relief devices and valves,

INTERNATIONAL CODE COUNCIL®
Copyright © 2015 ICC. ALL RIGHTS RESERVED. Accessed by David Dammon on Jun 21, 2017 12:30:52 PM pursuant to License Agreement with ICC. No further reproduction or distribution authorized. ANY UNAUTHORIZED REPRODUCTION OR DISTRIBUTION IS A VIOLATION OF THE FEDERAL COPYRIGHT ACT AND THE LICENSE AGREEMENT, AND SUBJECT TO CIVIL AND CRIMINAL PENALTIES THEREUNDER.

shall be installed in accordance with NFPA 99 and the general provisions of this chapter. Existing medical gas systems shall be maintained in accordance with the maintenance, inspection and testing provisions of NFPA 99 for medical gas systems.

❖ Compressed medical gas piping systems in hospitals and similar institutions may not be used to distribute flammable gases. Nonflammable compressed gas piping systems installed and used as detailed in NFPA 99 are permitted. Systems are to comply with the general, maintenance, inspection and testing provisions of this chapter and NFPA 99.

SECTION 5307
CARBON DIOXIDE (CO2) SYSTEMS USED IN BEVERAGE DISPENSING APPLICATIONS

5307.1 General. Carbon dioxide systems with more than 100 pounds (45.4 kg) of carbon dioxide used in beverage dispensing applications shall comply with Sections 5307.2 through 5307.5.2.

❖ Several fatal carbon dioxide (CO_2) poisoning (asphyxiation) incidents have occurred in restaurants where CO_2 leaked from large storage tanks and displaced oxygen in the area. CO_2 is an odorless and colorless gas with a vapor density of 1.53, making it 50 percent heavier than air. As such, the CO_2 will fill a room from the floor up and displace the oxygen in the room. Just a short exposure to a 10-percent concentration of CO_2 can be fatal. A 2-percent CO_2 concentration in air can increase the breathing rate by 50 percent and a 3-percent concentration can increase it by 100 percent. As the breathing rate increases, so does the amount of CO_2 being drawn into the person's system with the eventual results being headache, nausea, dizziness, disorientation, unconsciousness and death. The displacement of oxygen is more severe in smaller rooms or enclosures.

The intent of Section 5307 is to address locations, typically restaurants or other food service facilities, where liquefied CO_2 is used in conjunction with carbonators to produce carbonated beverages. CO_2 is stored as a compressed gas or a liquefied compressed gas but many larger restaurants are converting from gaseous CO_2 and taking advantage of liquefied CO_2 because the reduced container size and the reduced number of cylinders frees up valuable floor space. Note that CO_2 is not classified as a cryogenic fluid because its boiling point is -109°F.

A minimum trigger of more than 100 pounds was selected for these requirements because it was felt that systems with lesser amounts of CO_2 do not pose as great a risk of asphyxiation as large quantities of the gas.

5307.2 Permits. Permits shall be required as set forth in Section 105.6.

❖ Operational permits in accordance with Section 105.6.4 are required for CO_2 systems used in the beverage dispensing applications. See the commentary to Section 5301.2.

5307.3 Equipment. The storage, use, and handling of liquid carbon dioxide shall be in accordance with Chapter 53 and the applicable requirements of NFPA 55, Chapter 13. Insulated liquid carbon dioxide systems shall have pressure relief devices vented in accordance with NFPA 55.

❖ Components in compressed gas systems, including CO_2 systems, are required to comply with Chapter 53, which covers items such as pressure vessel and piping requirements, among others. An additional reference to NFPA 55, Chapter 13 addresses insulated liquid CO_2 systems in indoor and outdoor locations consisting of containers with a capacity of 1,000 pounds or less. The requirements address:

- Pressure relief devices.
- Pressure and level indicators.
- Piping systems including materials of construction.
- Operating instructions.

Some typical equipment are pictured in Commentary Figures 5307.3(1) and (2).



Figure 5307.3(1)
EXTERIOR FITTING TO FILL THE BULK CO_2 CYLINDER INSIDE THE BUILDING

INTERNATIONAL CODE COUNCIL®
Copyright © 2015 ICC. ALL RIGHTS RESERVED. Accessed by David Dammon on Jun 21, 2017 12:30:52 PM pursuant to License Agreement with ICC. No further reproduction or distribution authorized. ANY UNAUTHORIZED REPRODUCTION OR DISTRIBUTION IS A VIOLATION OF THE FEDERAL COPYRIGHT ACT AND THE LICENSE AGREEMENT, AND SUBJECT TO CIVIL AND CRIMINAL PENALTIES THEREUNDER.



Figure 5307.3(2)
BULK CO_2 CYLINDER IN A CARBONATED BEVERAGE DISPENSING SYSTEM

5307.4 Protection from damage. Carbon dioxide systems shall be installed so the storage tanks, cylinders, piping and fittings are protected from damage by occupants or equipment during normal facility operations.

❖ A CO_2 release can accumulate and displace oxygen, creating an asphyxiation hazard. To prevent a potential mishap, the CO_2 storage tanks, cylinders, piping, and fittings must be protected from physical damage. This section includes basic requirements intended to protect CO_2 storage tanks, cylinders, piping and fittings from damage by occupants or equipment during normal facility operations. This will decrease the chance of damage that may cause leaks, especially important in facilities where gas detection systems are not provided in accordance with Section 5307.5.2.

5307.5 Required protection. Where carbon dioxide storage tanks, cylinders, piping and equipment are located indoors, rooms or areas containing carbon dioxide storage tanks, cylinders, piping and fittings and other areas where a leak of carbon dioxide can collect shall be provided with either ventilation in accordance with Section 5307.5.1 or an emergency alarm system in accordance with Section 5307.5.2.

❖ This section requires buildings in which the CO_2 systems are installed to be provided with either ventilation that complies with Section 5307.5.1 or an emergency alarm system that complies with Section 5307.5.2. It does not require that both ventilation and gas detection be provided. The hazard associated with these systems is that the heavier-than-air CO_2 may accumulate and displace oxygen, creating an asphyxiation hazard. Leaks are most likely to occur from fittings and connections, but could also be from plastic or other runs of piping.

5307.5.1 Ventilation. Mechanical ventilation shall be in accordance with the *International Mechanical Code* and shall comply with all of the following:

1. Mechanical ventilation in the room or area shall be at a rate of not less than 1 cubic foot per minute per square foot [0.00508 $m^3/(s \cdot m^2)$].
2. Exhaust shall be taken from a point within 12 inches (305 mm) of the floor.
3. The ventilation system shall be designed to operate at a negative pressure in relation to the surrounding area.

❖ This section provides the requirements for mechanical ventilation when such is the chosen means of protection for CO_2 storage areas. The minimum ventilation rate of not less than 1 cubic foot per minute per square foot [0.00508 $m^3/(s \cdot m^2)$] is a "standard" rate used for many applications throughout the code and the IMC. Since the room or area must be at a negative pressure to the surrounding areas to prevent any fugitive CO_2 from escaping the room, that "standard" rate may need to be adjusted upward to gain compliance. Though the exhaust system is not specifically required to be constantly in operation, such a precaution would be advisable due to the asphyxiation hazard that could arise in the event of an undetected CO_2 leak. The exhaust ventilation intakes must be located within 12 inches of the floor to allow the airflow to "sweep" the entire lowest part of the room, since CO_2 is heavier than air.

5307.5.2 Emergency alarm system. An emergency alarm system shall comply with all of the following:

1. Continuous gas detection shall be provided to monitor areas where carbon dioxide can accumulate.
2. The threshold for activation of an alarm shall not exceed 5,000 parts per million (9,000 mg/m^3).
3. Activation of the emergency alarm system shall initiate a local alarm within the room or area in which the system is installed.

❖ As the second alternative provided by Section 5307.5, this section contains the requirements for an emergency alarm system consisting of continuous gas detection with CO_2 detectors of adequate number

INTERNATIONAL CODE COUNCIL®
Copyright © 2015 ICC. ALL RIGHTS RESERVED. Accessed by David Dammon on Jun 21, 2017 12:30:52 PM pursuant to License Agreement with ICC. No further reproduction or distribution authorized. ANY UNAUTHORIZED REPRODUCTION OR DISTRIBUTION IS A VIOLATION OF THE FEDERAL COPYRIGHT ACT AND THE LICENSE AGREEMENT, AND SUBJECT TO CIVIL AND CRIMINAL PENALTIES THEREUNDER.

and spacing to cover the protected area and a local alarm within the room where the CO_2 is stored. The emergency alarm trigger level of 5,000 parts per million (ppm) is the 8-hour time-weighted average (TWA) exposure limit for CO_2 established by the United States Department of Labor, Occupational Safety and Health Administration (OSHA) for CO_2. This section also provides correlation with CGA-6.5 which, although not referenced in the code, is a national standard on the subject.

SECTION 5308
COMPRESSED GASES NOT OTHERWISE REGULATED

5308.1 General. *Compressed gases* in storage or use not regulated by the material-specific provisions of Chapters 6, 54, 55 and 60 through 67, including asphyxiant, irritant and radioactive gases, shall comply with this section in addition to other requirements of this chapter.

❖ Statistics show that there are more deaths every year from the use of inert and asphyxiant gases than from toxic gases. The indoor storage or use of compressed gases falling into categories such as inerts, asphyxiants, irritants and radioactive can be hazardous regardless of the type of gas involved simply due to the hazards related to asphyxiation. Sections 5301 through 5305 have been designed as generic provisions that apply to all compressed gases. Sections 5306 and 5307 are unique in that they establish additional requirements for specific uses. This section is intended to fill a void in the regulations of compressed gases by addressing compressed gases posing material hazards not otherwise regulated while not creating unnecessary additional material-specific chapters in the code. Note that this section requires that the storage and handling of cylinders containing the gases must comply with the remaining requirements of Chapter 53 because their contents are under positive pressure.

The question is often asked as to why the code does not include more comprehensive regulation of these "compressed gases not otherwise regulated." Historically, the U.S. did not develop comprehensive hazardous materials regulations in the model building and fire codes until the mid-1980s. Prior to that time there were various regulations but they were not correlated, and more importantly, were not tied to a building's occupancy classification, a material's hazard classification or how the building was used. As a result, a task group was formed that worked on completely revising the legacy building and fire codes by creating comprehensive hazardous materials regulations.

Part of these early requirements included requirements for radioactive, asphyxiant and irritant gases. In recognition that some of these gases presented minimal risks, the codes reduced the requirements for irritant and asphyxiant gases. Later changes essentially exempted radioactive gases since they are highly regulated in the U.S. at the state and federal level, and their requirements are driven by the isotope and its respective hazards.

At the time that the hazardous material regulations were being formulated, a number of fire code officials were concerned about a release of simple asphyxiant gases within a room in which they were being stored. Because simple asphyxiant gases are colorless and odorless, some fire code officials were concerned about the potential for a person walking into a room where a simple asphyxiant gas leak had occurred and becoming incapacitated due to an oxygen deficient atmosphere. To minimize this risk, Section 5308 was developed. And more recently, Section 5307 was created in response to several life-loss incidents involving asphyxiation by CO_2 in public assembly occupancies.

5308.2 Ventilation. Indoor storage and use areas and storage buildings shall be provided with mechanical exhaust ventilation or natural ventilation in accordance with the requirements of Section 5004.3 or 5005.1.9. Where mechanical ventilation is provided, the systems shall be operational during such time as the building or space is occupied

❖ The provisions of this section are limited to basic ventilation requirements when these materials are stored or used indoors. Section 5004.3 of the code provides the fundamental requirements for ventilation systems. The basic provisions allow natural ventilation to be used as a means to address the concern, and mechanical ventilation is not required when it can be shown that natural ventilation is adequate. By including basic provisions for ventilation for the specified material hazards, a reasonable level of safety for building occupants is maintained.

Bibliography

The following resource was used in the preparation of the commentary for this chapter of the code:

Code Changes Resource Collection—2015 International Fire Code. Washington, DC: International Code Council, 2014.

INTERNATIONAL CODE COUNCIL®
Copyright © 2015 ICC. ALL RIGHTS RESERVED. Accessed by David Dammon on Jun 21, 2017 12:30:52 PM pursuant to License Agreement with ICC. No further reproduction or distribution authorized. ANY UNAUTHORIZED REPRODUCTION OR DISTRIBUTION IS A VIOLATION OF THE FEDERAL COPYRIGHT ACT AND THE LICENSE AGREEMENT, AND SUBJECT TO CIVIL AND CRIMINAL PENALTIES THEREUNDER.

INTERNATIONAL CODE COUNCIL®
Copyright © 2015 ICC. ALL RIGHTS RESERVED. Accessed by David Dammon on Jun 21, 2017 12:30:52 PM pursuant to License Agreement with ICC. No further reproduction or distribution authorized. ANY UNAUTHORIZED REPRODUCTION OR DISTRIBUTION IS A VIOLATION OF THE FEDERAL COPYRIGHT ACT AND THE LICENSE AGREEMENT, AND SUBJECT TO CIVIL AND CRIMINAL PENALTIES THEREUNDER.

Chapter 54: Corrosive Materials

General Comments

This chapter regulates the storage of corrosive materials, which pose unusual risks to fire fighters, emergency personnel and the general public when they are involved in a spill, fire or explosion.

Section 5401 establishes the scope of Chapter 54 and the quantities requiring a permit. This section also lists the exempt amounts per control area for corrosive materials to aid in establishing the appropriate occupancy group classification for the building.

Section 5402 provides the definition of "Corrosive," which is derived from DOT 49 CFR, Part 173.

Section 5403 provides the requirements for structures used for the storage of corrosive materials. These requirements are applicable to storage in excess of the exempt amounts per control area.

Section 5404 provides the maintenance provisions for both indoor and outdoor storage conditions, regardless of quantities.

Section 5405 provides the requirements for both the indoor and outdoor use of corrosives, regardless of the quantities.

Corrosive materials may be found in solid, liquid or gaseous states, although the most frequently encountered corrosive materials are liquids and solids. They may be found in all types of occupancies, including research laboratories, hospitals, industrial facilities, warehouses and retail stores.

Corrosive materials may pose multiple hazards, such as radioactivity, toxicity, flammability or detonability. The focus of this chapter is on materials whose primary hazard is corrosivity; that is, the ability to destroy or irreparably damage living tissue on contact.

These regulations are intended to minimize the exposure of the public, fire fighters and other emergency responders to the harmful vapors, liquid matter or splashes resulting from fire or accidental releases. Advance knowledge of the materials in structures through the permit process and the submittal of Material Safety Data Sheets (MSDS) are essential for effective prefire planning by the fire department. NFPA 471 provides useful guidance for managing hazardous material incidents.

Purpose

Chapter 54 addresses the hazards of corrosive materials that have a destructive effect on living tissues. Though corrosive gases exist, most corrosive materials are solid and classified as either acids or bases (alkalis). These materials may pose a wide range of hazards other than corrosivity, such as combustibility, reactivity or oxidizing hazards. This chapter, however, addresses the hazards associated with the storage of materials based on their corrosivity only. Materials posing multiple hazards must conform to the requirements of the code with respect to all their known hazards.

SECTION 5401 GENERAL

5401.1 Scope. The storage and use of *corrosive* materials shall be in accordance with this chapter. *Compressed gases* shall also comply with Chapter 53.

Exceptions:

1. Display and storage in Group M and storage in Group S occupancies complying with Section 5003.11.
2. Stationary storage battery systems in accordance with Section 608.
3. This chapter shall not apply to R-717 (ammonia) where used as a refrigerant in a refrigeration system (see Section 606).

❖ Chapter 54 details specific requirements for the storage and use of corrosive materials. The requirements of this chapter are intended to complement the hazardous materials general storage requirements of Chapter 50.

Exception 1 addresses mercantile displays to which this chapter is not applicable. Section 5003.11 addresses requirements for the storage of hazardous material in mercantile occupancies. Exceptions 2 and 3 state that stationary lead-acid battery systems and R-717 refrigerants are not addressed in this chapter.

5401.2 Permits. Permits shall be required as set forth in Section 105.6.

❖ The process of issuing permits gives the fire code official an opportunity to carefully evaluate and regulate hazardous operations. Permit applicants should be required to demonstrate that their operations comply with the intent of the code before the permit is issued. See the commentary to Section 105.6 for a general discussion of operations requiring an operational permit, Section 105.6.21 for discussion of specific operational permits for hazardous materials,

INTERNATIONAL CODE COUNCIL®
Copyright © 2015 ICC. ALL RIGHTS RESERVED. Accessed by David Dammon on Jun 21, 2017 12:30:52 PM pursuant to License Agreement with ICC. No further reproduction or distribution authorized. ANY UNAUTHORIZED REPRODUCTION OR DISTRIBUTION IS A VIOLATION OF THE FEDERAL COPYRIGHT ACT AND THE LICENSE AGREEMENT, AND SUBJECT TO CIVIL AND CRIMINAL PENALTIES THEREUNDER.

Section 105.7 for a general discussion of activities requiring a construction permit and Section 105.7.10 for discussion of specific construction permits for hazardous materials. The permit process also notifies the fire department of the need for prefire planning for hazardous properties.

SECTION 5402
DEFINITION

5402.1 Definition. The following term is defined in Chapter 2:

CORROSIVE.

❖ Definitions of terms can help in the understanding and application of the code requirements. This section directs the code user to Chapter 2 for the proper application of the indicated term used in this chapter. Terms may be defined in Chapter 2 or in another *International Code*® (I-Code®) as indicated in Section 201.3, or the dictionary meaning may be all that is needed (see also commentary, Sections 201.1 through 201.4).

SECTION 5403
GENERAL REQUIREMENTS

5403.1 Quantities not exceeding the maximum allowable quantity per control area. The storage and use of *corrosive* materials in amounts not exceeding the *maximum allowable quantity per control area* indicated in Section 5003.1 shall be in accordance with Sections 5001, 5003 and 5401.

❖ The stored quantities per control area are addressed in Section 5001 if the quantities do not exceed the amounts in Table 5003.1.1(2) or 5003.1.1(4). The tables address quantities posing a health hazard for control areas located indoors and outdoors.

5403.2 Quantities exceeding the maximum allowable quantity per control area. The storage and use of *corrosive* materials in amounts exceeding the *maximum allowable quantity per control area* indicated in Section 5003.1 shall be in accordance with this chapter and Chapter 50.

❖ Tables 5003.1.1(2) and 5003.1.1(4) give the maximum allowable quantity per control area (MAQ). If the amounts exceed the allowable quantities, the occupancy classifications in Chapter 2 and this chapter must be used for requirements. Section 5003.1.4 states that compliance with Chapter 50 is also required.

SECTION 5404
STORAGE

5404.1 Indoor storage. Indoor storage of *corrosive* materials in amounts exceeding the *maximum allowable quantity per control area* indicated in Table 5003.1.1(2), shall be in accordance with Sections 5001, 5003 and 5004 and this chapter.

❖ Table 5003.1.1(2) gives the maximum quantities for an indoor storage control area. Section 5004 addresses the storage requirements of hazardous materials in the amounts that exceed the MAQ.

5404.1.1 Liquid-tight floor. In addition to the provisions of Section 5004.12, floors in storage areas for *corrosive* liquids shall be of liquid-tight construction.

❖ Section 5004.12 requires that floors of storage areas must be of noncombustible construction, except for surfacing. This section requires them to be liquid tight, as well.

5404.2 Outdoor storage. Outdoor storage of *corrosive* materials in amounts exceeding the *maximum allowable quantity per control area* indicated in Table 5003.1.1(4) shall be in accordance with Sections 5001, 5003 and 5004 and this chapter.

❖ Table 5003.1.1(4) gives the maximum quantities for an outdoor storage control area. Section 5004 addresses storage of hazardous materials in amounts that exceed the MAQ.

5404.2.1 Above-ground outside storage tanks. Above-ground outside storage tanks exceeding an aggregate quantity of 1,000 gallons (3785 L) of *corrosive* liquids shall be provided with secondary containment in accordance with Section 5004.2.2.

❖ In order to help confine a leak or spill from an outside above-ground storage tank containing corrosive liquids, secondary containment in accordance with Section 5004.2 must be provided. This section applies to all outside storage areas with an aggregate tank capacity in excess of 1,000 gallons (3785 L).

5404.2.2 Distance from storage to exposures. Outdoor storage of *corrosive* materials shall not be within 20 feet (6096 mm) of buildings not associated with the manufacturing or distribution of such materials, *lot lines*, public streets, public alleys, *public ways* or *means of egress*. A 2-hour *fire barrier* without openings or penetrations, and extending not less than 30 inches (762 mm) above and to the sides of the storage area, is allowed in lieu of such distance. The wall shall either be an independent structure, or the *exterior wall* of the building adjacent to the storage area.

❖ The required separation distances for corrosive materials are intended to reduce the hazard of radiant heat transfer from nearby exposures on or off the property. This section also recognizes that a 2-hour fire barrier constructed in accordance with Section 706 of the *International Building Code*® (IBC®) will provide physical barrier protection as an alternative to the required separation distance. Note that the wall must be positioned to restrict the spread of fire around or over it.

INTERNATIONAL CODE COUNCIL®
Copyright © 2015 ICC. ALL RIGHTS RESERVED. Accessed by David Dammon on Jun 21, 2017 12:30:52 PM pursuant to License Agreement with ICC. No further reproduction or distribution authorized. ANY UNAUTHORIZED REPRODUCTION OR DISTRIBUTION IS A VIOLATION OF THE FEDERAL COPYRIGHT ACT AND THE LICENSE AGREEMENT, AND SUBJECT TO CIVIL AND CRIMINAL PENALTIES THEREUNDER.

SECTION 5405
USE

5405.1 Indoor use. The indoor use of *corrosive* materials in amounts exceeding the *maximum allowable quantity per control area* indicated in Table 5003.1.1(2) shall be in accordance with Sections 5001, 5003 and 5005 and this chapter.

❖ Table 5003.1.1(2) gives the MAQ for use in either a closed system or an open system. Section 5005 addresses the use, dispensing and handling of hazardous materials in amounts that exceed the MAQ.

5405.1.1 Liquid transfer. *Corrosive* liquids shall be transferred in accordance with Section 5005.1.10.

❖ Section 5005.1.10 lists five methods that can be used for the transfer of corrosive liquids. These methods are for liquids having a hazard ranking of 3 or 4 in accordance with NFPA 704.

5405.1.2 Ventilation. Where *corrosive* materials are dispensed or used, mechanical exhaust ventilation in accordance with Section 5005.2.1.1 shall be provided.

❖ This section requires mechanical exhaust ventilation for all storage areas containing corrosive liquids with positive vapor pressures, which, if exposed under standard room temperature and atmospheric pressure, give off hazardous fumes and vapors. Adequate mechanical ventilation will reduce the chance for the accumulation of hazardous concentration levels of toxic fumes and vapors. Corrosive liquids without a positive vapor pressure do not readily give off vapors at hazardous concentration levels under normal conditions and, therefore, do not require mechanical exhaust ventilation.

5405.2 Outdoor use. The outdoor use of *corrosive* materials in amounts exceeding the *maximum allowable quantity per control area* indicated in Table 5003.1.1(4) shall be in accordance with Sections 5001, 5003 and 5005 and this chapter.

❖ Table 5003.1.1(4) gives the MAQ for an outdoor control area. Section 5005 addresses the use, dispensing and handling of hazardous materials in the amounts that exceed the MAQ.

5405.2.1 Distance from use to exposures. Outdoor use of *corrosive* materials shall be located in accordance with Section 5404.2.2.

❖ The required separation distances for corrosive materials are intended to reduce the hazard of radiant heat transfer to nearby structures or public areas. The distances also help protect the property in question from heat exposure from incidents on or off the property. The exception recognizes that a 2-hour fire separation wall will provide physical barrier protection as an alternative to the required separation distance.

INTERNATIONAL CODE COUNCIL®
Copyright © 2015 ICC. ALL RIGHTS RESERVED. Accessed by David Dammon on Jun 21, 2017 12:30:52 PM pursuant to License Agreement with ICC. No further reproduction or distribution authorized. ANY UNAUTHORIZED REPRODUCTION OR DISTRIBUTION IS A VIOLATION OF THE FEDERAL COPYRIGHT ACT AND THE LICENSE AGREEMENT, AND SUBJECT TO CIVIL AND CRIMINAL PENALTIES THEREUNDER.

INTERNATIONAL CODE COUNCIL®
Copyright © 2015 ICC. ALL RIGHTS RESERVED. Accessed by David Dammon on Jun 21, 2017 12:30:52 PM pursuant to License Agreement with ICC. No further reproduction or distribution authorized. ANY UNAUTHORIZED REPRODUCTION OR DISTRIBUTION IS A VIOLATION OF THE FEDERAL COPYRIGHT ACT AND THE LICENSE AGREEMENT, AND SUBJECT TO CIVIL AND CRIMINAL PENALTIES THEREUNDER.

Chapter 55: Cryogenic Fluids

General Comments

The code regulates the hazards associated with materials that are considered to be cryogenic fluids. These requirements are in addition to the other code requirements that address hazards such as flammability and toxicity. Cryogenics are hazardous because they are held at extremely low temperatures and high pressures. Many cryogenic fluids, however, are actually inert gases and would not be regulated elsewhere in the code.

Cryogenics pose several hazards to humans who come in close contact with them. The first is the potential for severe freeze burns and tissue damage that can result from direct contact with cryogenic liquids, uninsulated cryogenic pipes or uninsulated cryogenic equipment. Also, a jet of cryogen can freeze the skin or the eyes faster than liquid contact. Eyes are especially susceptible to cryogen exposure.

In addition to freeze hazards, cryogens pose an asphyxiation hazard because they rapidly boil and convert from a liquid to a gas. As will be discussed in the definitions, cryogens have extremely low boiling points. When converting from a liquid to a gas, there is a great deal of expansion that displaces breathable air. This hazard is compounded when the gases are also toxic or flammable.

There is also the potential for air surrounding a cryogen containment system to condense. This is especially the case when transferring liquid nitrogen through uninsulated metal pipes. Because nitrogen has a lower boiling point than oxygen, it will evaporate first and leave an oxygen-enriched atmosphere, which has the potential of improving the conditions for combustion.

Finally, a release of cryogens at extremely low temperatures has the effect of making some materials such as rubber, carbon steel and plastic so brittle that failure of those materials can occur very easily. Materials like stainless steel, copper, brass and most alloys of aluminum must be used when handling cryogenic fluids.

The extreme low temperatures also have the tendency to create thermal stresses in badly designed cryogen containment systems. Uneven temperature distributions can create stress in some piping or related equipment.

The more common cryogens include helium, hydrogen, nitrogen, argon, oxygen and methane. Note that some of these gases are inert but, based on the specific concerns related to cryogens, are still a potential hazard. Cryogens are used for many applications but specifically have had widespread use in the biomedical field and in space programs.

Purpose

Hazards created by cryogenic materials are sometimes compounded by additional hazard characteristics, such as flammability or toxicity. These other characteristics are dealt with in Chapter 50 and other chapters, such as Chapter 58 dealing with flammable gases. This chapter covers the storage, use and handling of cryogenic fluids through regulation of such things as pressure relief mechanisms and proper container storage.

SECTION 5501 GENERAL

5501.1 Scope. Storage, use and handling of *cryogenic fluids* shall comply with this chapter and NFPA 55. *Cryogenic fluids* classified as hazardous materials shall also comply with the general requirements of Chapter 50. Partially full containers containing residual *cryogenic fluids* shall be considered as full for the purposes of the controls required.

Exceptions:

1. Fluids used as refrigerants in refrigeration systems (see Section 606).
2. Liquefied natural gas (LNG), which shall comply with NFPA 59A.

Oxidizing *cryogenic fluids*, including oxygen, shall comply with Chapter 63, as applicable.

Flammable *cryogenic fluids*, including hydrogen, methane and carbon monoxide, shall comply with Chapters 23 and 58, as applicable.

Inert *cryogenic fluids*, including argon, helium and nitrogen, shall comply with ANSI/CGA P-18.

❖ This section states that the chapter focuses on the hazards related to cryogenic fluids. If the materials are also classified as a hazardous material, additional requirements, as found in Chapter 50, must be reviewed as well.

Exception 1 is for cryogens used in refrigeration systems, which are specifically regulated in Section 606 of the code.

Exception 2 is for liquefied natural gas (LNG) since there are more specific and appropriate sections or standards that address those hazards, most notably NFPA 59A.

INTERNATIONAL CODE COUNCIL®
Copyright © 2015 ICC. ALL RIGHTS RESERVED. Accessed by David Dammon on Jun 21, 2017 12:30:52 PM pursuant to License Agreement with ICC. No further reproduction or distribution authorized. ANY UNAUTHORIZED REPRODUCTION OR DISTRIBUTION IS A VIOLATION OF THE FEDERAL COPYRIGHT ACT AND THE LICENSE AGREEMENT, AND SUBJECT TO CIVIL AND CRIMINAL PENALTIES THEREUNDER.

Following the exceptions are three requirements that reference three additional chapters of the code and an associated standard dealing with inert cryogenic fluids that must be adhered to in addition to complying with Chapter 55.

See also Appendix G for weight and volume equivalents of cryogenic fluids. It is important to note that the appendices are not considered part of the code unless specifically adopted (see Section 1 of the sample adopting ordinance on page xxi of the code book).

5501.2 Permits. Permits shall be required as set forth in Section 105.6.

❖ The process of issuing permits gives the fire code official an opportunity to carefully evaluate and regulate hazardous operations. Permit applicants should be required to demonstrate that their operations comply with the code before the permit is issued. See the commentary to Section 105.6 for a general discussion of operations requiring an operational permit, Section 105.6.11 for discussion of specific quantity-based operational permits for the materials regulated in this chapter and Section 105.7.4 for a discussion of activities involving cryogenic fluids requiring a construction permit. The permit process also notifies the fire department of the need for prefire planning for hazardous property.

SECTION 5502
DEFINITIONS

5502.1 Definitions. The following terms are defined in Chapter 2.

CRYOGENIC CONTAINER.

CRYOGENIC FLUID.

CRYOGENIC VESSEL.

FLAMMABLE CRYOGENIC FLUID.

LOW-PRESSURE TANK.

❖ Definitions of terms can help in the understanding and application of the code requirements. This section directs the code user to Chapter 2 for the proper application of the indicated terms used in this chapter. Terms may be defined in Chapter 2 or in another *International Code*® as indicated in Section 201.3, or the dictionary meaning may be all that is needed (see also commentary, Sections 201.1 through 201.4).

SECTION 5503
GENERAL REQUIREMENTS

5503.1 Containers. Containers employed for storage or use of *cryogenic fluids* shall comply with Sections 5503.1.1 through 5503.1.3.2 and Chapter 50.

❖ The focus of this section is the proper use of containers when storing, using or handling cryogenic fluids so that they can handle concerns such as pressures, thermal stresses and embrittlement. Chapter 50 would also apply in cases where issues are not specifically dealt with in Chapter 55.

5503.1.1 Nonstandard containers. Containers, equipment and devices that are not in compliance with recognized standards for design and construction shall be *approved* upon presentation of satisfactory evidence that they are designed and constructed for safe operation.

❖ Various standards are available for the construction of containers for use with cryogenic materials. In some cases, applications using cryogenics can facilitate the use of a uniquely designed container that does not meet the specifics of the available standards. This section allows such containers with proper technical justification; criteria are listed. Material properties of cryogenic fluids vary based on differences in the boiling point and critical point. For instance, a material with a lower boiling point would require colder temperatures and perhaps higher pressures; therefore, design calculations or test results must show that container designs can meet the specific pressure and temperature criteria for the cryogenic fluid to be stored.

5503.1.1.1 Data submitted for approval. The following data shall be submitted to the *fire code official* with reference to the deviation from the recognized standard with the application for approval.

1. Type and use of container, equipment or device.
2. Material to be stored, used or transported.
3. Description showing dimensions and materials used in construction.
4. Design pressure, maximum operating pressure and test pressure.
5. Type, size and setting of pressure relief devices.
6. Other data requested by the *fire code official*.

❖ This section lists approval criteria for nonstandard containers that are to be used with cryogenic fluids. Material properties of cryogenic fluids vary based on differences in the boiling point and critical point. For

INTERNATIONAL CODE COUNCIL®
Copyright © 2015 ICC. ALL RIGHTS RESERVED. Accessed by David Dammon on Jun 21, 2017 12:30:52 PM pursuant to License Agreement with ICC. No further reproduction or distribution authorized. ANY UNAUTHORIZED REPRODUCTION OR DISTRIBUTION IS A VIOLATION OF THE FEDERAL COPYRIGHT ACT AND THE LICENSE AGREEMENT, AND SUBJECT TO CIVIL AND CRIMINAL PENALTIES THEREUNDER.

instance, a material with a lower boiling point would require colder temperatures and perhaps higher pressures; therefore, design calculations or test results must show that container designs can meet the specific pressure and temperature criteria for the cryogenic fluid to be stored. Approval applications must include specific references to the portions of recognized standards from which they deviate.

5503.1.2 Concrete containers. Concrete containers shall be built in accordance with the *International Building Code*. Barrier materials and membranes used in connection with concrete, but not functioning structurally, shall be compatible with the materials contained.

❖ Because concrete containers are often built on site, this section requires that they be built in accordance with the *International Building Code*® (IBC®) and its requirements in Chapter 16 for structural strength and other related issues. Additionally, this section acknowledges the fact that any material in contact with cryogens must be compatible. This will vary based on what cryogenic fluids are stored and the type of barrier materials chosen.

5503.1.3 Foundations and supports. Containers shall be provided with substantial concrete or masonry foundations, or structural steel supports on firm concrete or masonry foundations. Containers shall be supported to prevent the concentration of excessive loads on the supporting portion of the shell. Foundations for horizontal containers shall be constructed to accommodate expansion and contraction of the container. Foundations shall be provided to support the weight of vaporizers or heat exchangers.

❖ Critical to avoiding catastrophic failure of a container is the proper construction of the elements that support the container. The design must anticipate the equipment loads that may be used in conjunction with the container, such as vaporizers or heat exchangers. The foundations and supports need to be strong and firmly set in place by either placing the containers directly on a concrete or masonry foundation or on steel supports that are set into a concrete or masonry foundation.

5503.1.3.1 Temperature effects. Where container foundations or supports are subject to exposure to temperatures below -130°F (-90°C), the foundations or supports shall be constructed of materials to withstand the low-temperature effects of *cryogenic fluid* spillage.

❖ As was mentioned in the general comments at the beginning of this chapter, exposure to extremely low temperatures will cause some materials, such as carbon steel, to become brittle and lose structural strength. For this reason, any portion of a foundation or structural support for cryogenic fluid tanks that might be exposed to the fluid in case of a spill must be constructed of materials that will not be affected by the exposure. A cryogenic fluid is defined in Chapter 2 as having a boiling point lower than -130°F. The requirements of this section should apply at that temperature, otherwise the foundations or supports of those cryogenic fluid containers within the range not covered are at risk. This section also correlates with the provisions of NFPA 55.

5503.1.3.2 Corrosion protection. Portions of containers in contact with foundations or saddles shall be painted to protect against corrosion.

❖ Corrosion can occur for a number of reasons. Because tanks and their supports will probably be constructed of dissimilar materials, this can cause galvanic corrosion. Exposure to moisture can cause oxidation of metals, otherwise known as rust.

If the corrosion occurs in the metal skin of the tank, leakage of the cryogenic fluid could occur. If the corrosion is extensive, tank failure and spillage of pressurized tank contents could occur.

If the corrosion occurs in the saddle or other part of the supporting foundation structure, collapse of the structure could cause the tank to fall and rupture, resulting in spillage of the cryogenic fluid. If the cryogenic fluid is flammable, tank failure could lead to a fire or explosion.

Prevention of corrosion, therefore, is important. The most common way of protecting metal structures from corrosion is to paint them. This painting becomes even more important where dissimilar metals contact each other. This section specifies that the containers must be painted where they are in contact with foundation structures. Good maintenance practice suggests that both tanks and their supporting structures might benefit from painting.

5503.2 Pressure relief devices. Pressure relief devices shall be provided in accordance with Sections 5503.2.1 through 5503.2.7 to protect containers and systems containing *cryogenic fluids* from rupture in the event of overpressure. Pressure relief devices shall be designed in accordance with CGA S-1.1, CGA S-1.2 and CGA S-1.3.

❖ Pressure relief devices are essential for cryogenics because of the high pressures and low temperatures at which cryogenics are maintained. Although storage tanks, other containers and transfer piping are normally well insulated, some heating of the contents will occur over time, causing internal pressures to increase. Pressure relief mechanisms provide a method of relieving these overpressures and avoiding a hazardous situation. Three Compressed Gas Association (CGA) standards that cover the full range of container types, from portable to stationary, are referenced at the end of this section.

Sections 5503.2.1 through 5503.2.7 contain requirements related to accessibility for maintenance, general sizing, installation requirements and device integrity.

5503.2.1 Containers. Containers shall be provided with pressure relief devices.

❖ This section states very clearly that pressure relief devices are required for cryogenic containers. Section 5503.2.2 addresses associated equipment. Generally, the container is the main area of concern

INTERNATIONAL CODE COUNCIL®
Copyright © 2015 ICC. ALL RIGHTS RESERVED. Accessed by David Dammon on Jun 21, 2017 12:30:52 PM pursuant to License Agreement with ICC. No further reproduction or distribution authorized. ANY UNAUTHORIZED REPRODUCTION OR DISTRIBUTION IS A VIOLATION OF THE FEDERAL COPYRIGHT ACT AND THE LICENSE AGREEMENT, AND SUBJECT TO CIVIL AND CRIMINAL PENALTIES THEREUNDER.

because it is the primary storage vessel for cryogenics and has the largest potential for overpressurization.

5503.2.2 Vessels or equipment other than containers. Heat exchangers, vaporizers, insulation casings surrounding containers, vessels and coaxial piping systems in which liquefied *cryogenic fluids* could be trapped because of leakage from the primary container shall be provided with a pressure relief device.

❖ Just as Section 5503.2.1 requires pressure relief devices on the container itself, this section mentions other areas where overpressures occur if there is a leak in the primary container. This is a smaller hazard potential, but requirements make it more likely that all potential overpressures are addressed.

5503.2.3 Sizing. Pressure relief devices shall be sized in accordance with the specifications to which the container was fabricated. The relief device shall have sufficient capacity to prevent the maximum design pressure of the container or system from being exceeded.

❖ This section contains only general language that makes it likely that the pressure relief device is properly designed to fit the needs of the particular container. In most cases, the manufacturer will already have the devices installed on the container. There are cases, however, when a cryogenic system or container may be constructed for a specific purpose and user. In those cases, the relief valves must be sized and installed by the user.

5503.2.4 Accessibility. Pressure relief devices shall be located such that they are provided with ready access for inspection and repair.

❖ This section addresses the long-term reliability of pressure relief devices by making maintenance and repair more convenient through accessibility.

5503.2.5 Arrangement. Pressure relief devices shall be arranged to discharge unobstructed to the open air in such a manner as to prevent impingement of escaping gas on personnel, containers, equipment and adjacent structures or to enter enclosed spaces.

Exception: DOTn-specified containers with an internal volume of 2 cubic feet (0.057 m^3) or less.

❖ Pressure relief devices must be located to direct vented vapors away from personnel, containers and structures as well as enclosed spaces to prevent personal injury and property damage. The arrangement will vary from one installation to another based on the use and location of the container and the system.

The exception for Department of Transportation (DOT) containers with an internal volume less than or equal to 2 cubic feet (0.057 m^3) recognizes that the amount of vapor released from these containers is small enough to make this section impractical and unnecessary.

5503.2.6 Shutoffs between pressure relief devices and containers. Shutoff valves shall not be installed between pressure relief devices and containers.

Exceptions:

1. A shutoff valve is allowed on containers equipped with multiple pressure relief device installations where the arrangement of the valves provides the full required flow through the minimum number of required relief devices at all times.
2. A locking-type shutoff valve is allowed to be used upstream of the pressure relief device for service-related work performed by the supplier when in accordance with the requirements of the ASME *Boiler and Pressure Vessel Code*.

❖ This section prohibits shutoff valves from being installed between the pressure relief device and the container because the closing of a valve in that position would allow pressure in the tank to build without relief. Exception 1 covers containers designed with multiple pressure relief devices that can still handle the pressure relief even when a valve is shut off. Exception 2 is consistent with NFPA 55. The ASME *Boiler and Pressure Vessel Code* (BPVC) allows the use of a locking valve on the upstream side of a pressure relief device in instances where it is impractical to install multiple pressure relief devices and valves, or where having the multiple valves creates more potential safety hazards during maintenance work on the devices. The BPVC has detailed requirements for working on relief devices with the use of upstream valves, including the requirement to lock the valve open when not working on the valve and the requirement to lower pressure in the pressure vessel before maintenance. The BPVC also requires that personnel monitor vessel pressure during maintenance and have access to an alternate valve other than a pressure relief valve to relieve unexpected pressure rises during maintenance activities. Petrochemical plants and industrial gas plant personnel have used the procedures successfully for many years, as evidenced by the continued endorsement of the procedure in the BPVC.

5503.2.7 Temperature limits. Pressure relief devices shall not be subjected to *cryogenic fluid* temperatures except when operating.

❖ One concern related to the integrity of the relief valves is deterioration of the valves as a result of extended exposure to extremely low temperatures, which often have the tendency to make materials brittle and more susceptible to failure. This requirement ensures that pressure relief devices are not subject to these extreme temperatures. Instead, the materials can directly interact with the pressure relief valve only when the valve is operating.

5503.3 Pressure relief vent piping. Pressure relief vent-piping systems shall be constructed and arranged so as to remain

INTERNATIONAL CODE COUNCIL®
Copyright © 2015 ICC. ALL RIGHTS RESERVED. Accessed by David Dammon on Jun 21, 2017 12:30:52 PM pursuant to License Agreement with ICC. No further reproduction or distribution authorized. ANY UNAUTHORIZED REPRODUCTION OR DISTRIBUTION IS A VIOLATION OF THE FEDERAL COPYRIGHT ACT AND THE LICENSE AGREEMENT, AND SUBJECT TO CIVIL AND CRIMINAL PENALTIES THEREUNDER.

functional and direct the flow of gas to a safe location in accordance with Sections 5503.3.1 and 5503.3.2.

❖ Because of tank locations, piping must sometimes be used to extend the discharge location of the pressure relief vent. This section generally states that piping can be used along with the pressure relief device when needed for safety. The requirements that follow are similar to those found in the section on pressure relief devices.

5503.3.1 Sizing. Pressure relief device vent piping shall have a cross-sectional area not less than that of the pressure relief device vent opening and shall be arranged so as not to restrict the flow of escaping gas.

❖ Though somewhat obvious, this section points out in the most generic way the need for piping to have at least the same diameter as the pressure relief device itself, if not larger. This section also states that piping must be free of any bends or other features that could potentially restrict the flow of gases.

5503.3.2 Arrangement. Pressure relief device vent piping and drains in vent lines shall be arranged so that escaping gas will discharge unobstructed to the open air and not impinge on personnel, containers, equipment and adjacent structures or enter enclosed spaces. Pressure relief device vent lines shall be installed in such a manner to exclude or remove moisture and condensation and prevent malfunction of the pressure relief device because of freezing or ice accumulation.

❖ This section is similar to Section 5503.2.5 in that it requires the vent piping to be arranged so that the discharge itself does not cause additional damage simply because of its location. As discussed in Section 5503.2.5, cryogenic liquids can damage materials and pose asphyxiation and burn hazards to people in the surrounding areas.

This section also addresses the fact that moisture accumulated in piping has the potential to freeze and cause an obstruction that could interfere with the proper operation of the pressure relief device.

5503.4 Marking. Cryogenic containers and systems shall be marked in accordance with Sections 5503.4.1 through 5503.4.6.

❖ This section is important for the safe and effective use of cryogenics and is also a necessary tool for emergency response teams. The marking requirements apply to a variety of locations, from the area in which these materials are stored, to the marking of the piping and emergency shutoff valves.

5503.4.1 Identification signs. Visible hazard identification signs in accordance with NFPA 704 shall be provided at entrances to buildings or areas in which *cryogenic fluids* are stored, handled or used.

❖ This section refers to the placarding requirements in NFPA 704, which are an important tool for emergency response teams when entering a building or room containing hazardous materials. This section requires all rooms and buildings containing cryogenic fluids, regardless of the amount, to be properly marked.

5503.4.2 Identification of contents. Stationary and portable containers shall be marked with the name of the gas contained. Stationary above-ground containers shall be placarded in accordance with Sections 5003.5 and 5003.6. Portable containers shall be identified in accordance with CGA C-7.

❖ Because different cryogens present different hazards, the contents of the container must be specifically identified. This section refers to other sections or standards that contain more detailed identification requirements.

5503.4.3 Identification of containers. Stationary containers shall be identified with the manufacturing specification and maximum allowable working pressure with a permanent nameplate. The nameplate shall be installed on the container in an accessible location. The nameplate shall be marked in accordance with the ASME *Boiler and Pressure Vessel Code* or DOTn 49 CFR Parts 100-185.

❖ This section establishes a requirement for the manufacturer of permanently installed tanks to label the tanks with a nameplate meeting the requirements of the ASME *Boiler and Pressure Vessel Code* (BPVC) or DOTn 49 CFR, Parts 100-185. The nameplate must be clearly visible to anyone entering the tank location. The manufacturer's specifications and maximum allowable tank working pressure must be included on the nameplate.

5503.4.4 Identification of container connections. Container inlet and outlet connections, liquid-level limit controls, valves and pressure gauges shall be identified in accordance with one of the following:

1. Marked with a permanent tag or label identifying the function.
2. Identified by a schematic drawing that portrays the function and designates whether connected to the vapor or liquid space of the container.

Where a schematic drawing is provided, it shall be attached to the container and maintained in a legible condition.

❖ Cryogens are often used as part of a system or process. Failure of parts of the system or process can be as hazardous as failure of the main container. Also, the better the components of a process or system are understood, the less likely a hazardous situation will be. This section requires that all components, including shutoff valves, gauges, inlet and outlet connections and others, be labeled or that a schematic drawing of the process or system be attached to the container. The labeling and drawings will help personnel responding to an emergency understand both what has gone wrong and how to most effectively handle the situation.

INTERNATIONAL CODE COUNCIL®
Copyright © 2015 ICC. ALL RIGHTS RESERVED. Accessed by David Dammon on Jun 21, 2017 12:30:52 PM pursuant to License Agreement with ICC. No further reproduction or distribution authorized. ANY UNAUTHORIZED REPRODUCTION OR DISTRIBUTION IS A VIOLATION OF THE FEDERAL COPYRIGHT ACT AND THE LICENSE AGREEMENT, AND SUBJECT TO CIVIL AND CRIMINAL PENALTIES THEREUNDER.

5503.4.5 Identification of piping systems. Piping systems shall be identified in accordance with ASME A13.1.

❖ Piping systems are to be labeled using the industry standard requirements found in ASME A13.1. This standard is specific to the identification of piping systems for all types of materials. Use of this standard results in consistency from one type of industrial process to another and again decreases the likelihood of large-scale failures.

5503.4.6 Identification of emergency shutoff valves. Emergency shutoff valves shall be identified and the location shall be clearly visible and indicated by means of a sign.

❖ Emergency valves can play the most important role during an emergency. For this reason, they must be clearly visible and identified using signs. This is particularly important because the emergency responders may not be as familiar with the facility as are the daily occupants.

5503.5 Security. Cryogenic containers and systems shall be secured against accidental dislodgement and against access by unauthorized personnel in accordance with Sections 5503.5.1 through 5503.5.4.

❖ The security measures stated in the four subsections that follow this general statement are intended to safeguard cryogenic containers and systems from both accidental and intentional damage. Entry of unauthorized personnel into a cryogenic storage or use area can result in personal injury as well as physical damage.

5503.5.1 Security of areas. Containers and systems shall be secured against unauthorized entry and safeguarded in an *approved* manner.

❖ This section addresses the restriction of access to the cryogenic containers and associated equipment. The requirements are generic because each facility has unique characteristics. The fire code official is responsible for reviewing and approving security plans.

5503.5.2 Securing of containers. Stationary containers shall be secured to foundations in accordance with the *International Building Code*. Portable containers subject to shifting or upset shall be secured. Nesting shall be an acceptable means of securing containers.

❖ This section focuses on the protection of containers from unintentional physical damage by increasing the integrity of the storage arrangement. Stationary containers are addressed through a reference to the IBC or requirements on foundations and similar support systems because they are permanent structures.

Portable containers are addressed only generally because container sizes and locations vary so widely; however, they must be secured to prevent falling due to contact, vibration or seismic activity. See the commentary to the definition of "Nesting" in Section 5502.1 and the commentary to Section 5503.5.3. Those discussions can be just as useful for guidance in the safeguarding of cryogen containers as they are for compressed gases since the containers and hazards are similar. Fire code official approval is required for proposed security plans.

5503.5.3 Securing of vaporizers. Vaporizers, heat exchangers and similar equipment shall be anchored to a suitable foundation and its connecting piping shall be sufficiently flexible to provide for the effects of expansion and contraction due to temperature changes.

❖ The stability of vaporizers and other equipment can be as important as the containers themselves because they regulate the conditions of the fluids. Equipment must be anchored securely and protected from damage. Piping must be able to expand and contract with temperature changes either from the process itself or climatic conditions.

5503.5.4 Physical protection. Containers, piping, valves, pressure relief devices, regulating equipment and other appurtenances shall be protected against physical damage and tampering.

❖ The wording of this section is broad and general because the equipment involved can vary so widely. The intent of the section is to ensure that all associated equipment, components and piping are protected from impacts that are fairly likely to occur within a facility and also to reduce the chances for someone to tamper with the components. This could mean restricting access to certain critical areas of the system.

5503.6 Electrical wiring and equipment. Electrical wiring and equipment shall comply with NFPA 70 and Sections 5503.6.1 and 5503.6.2.

❖ This section addresses compliance with NFPA 70 requirements.

5503.6.1 Location. Containers and systems shall not be located where they could become part of an electrical circuit.

❖ Containers and systems accidentally becoming part of an electrical circuit simply because of where they are placed could overheat, which could lead to expansion of the fluids and overpressure situations.

5503.6.2 Electrical grounding and bonding. Containers and systems shall not be used for electrical grounding. Where electrical grounding and bonding is required, the system shall comply with NFPA 70. The grounding system shall be protected against corrosion, including corrosion caused by stray electric currents.

❖ Containers and systems should not be used to ground or bond because this may cause a rise in temperature, which, similar to being part of a circuit, may cause heating (see also Section 5503.6.1).

5503.7 Service and repair. Service, repair, modification or removal of valves, pressure relief devices or other container appurtenances shall comply with Sections 5503.7.1 and

INTERNATIONAL CODE COUNCIL®
Copyright © 2015 ICC. ALL RIGHTS RESERVED. Accessed by David Dammon on Jun 21, 2017 12:30:52 PM pursuant to License Agreement with ICC. No further reproduction or distribution authorized. ANY UNAUTHORIZED REPRODUCTION OR DISTRIBUTION IS A VIOLATION OF THE FEDERAL COPYRIGHT ACT AND THE LICENSE AGREEMENT, AND SUBJECT TO CIVIL AND CRIMINAL PENALTIES THEREUNDER.

5503.7.2 and the ASME *Boiler and Pressure Vessel Code*, Section VIII or DOTn 49 CFR Parts 100-185.

❖ To ensure that the initial reliability of the containers and systems is maintained, minimum requirements for the qualifications and procedures for repair are mandated. The general requirements in Sections 5503.7.1 and 5503.7.2 are supplemented by a reference to the ASME BPVC and DOT requirements.

5503.7.1 Containers. Containers that have been removed from service shall be handled in an *approved* manner.

❖ This section requires that containers out of service must be handled according to procedures previously approved by the authority having jurisdiction. These procedures have to be written to accommodate all types and uses of containers, including stationary and portable containers.

5503.7.2 Systems. Service and repair of systems shall be performed by trained personnel.

❖ This section gives the jurisdiction having authority the right to enforce training requirements that are consistent with the fluids being handled and the physical plant being operated.

5503.8 Unauthorized use. Containers shall not be used for any purpose other than to serve as a vessel for containing the product that it is designed to contain.

❖ To ensure that the container can actually handle the pressures and temperatures for which it was designed, containers are limited to the materials they were specifically designed to contain. This can be a material compatibility concern as well. A container designed to be compatible with one cryogenic fluid may not be compatible with other fluids.

5503.9 Leaks, damage and corrosion. Leaking, damaged or corroded containers shall be removed from service. Leaking, damaged or corroded systems shall be replaced, repaired or removed in accordance with Section 5503.7.

❖ This requirement states that faulty containers must be removed from service before a failure can occur. The section allows repair of the faulty container either before or after it is removed from service as well as the option for replacement.

5503.10 Lighting. Where required, lighting, including emergency lighting, shall be provided for fire appliances and operating facilities such as walkways, control valves and gates ancillary to stationary containers.

❖ This section gives the fire code official the authority to require lighting around essential features of the facility both for routine use and during emergency operations. This might include paths to such features. This requirement also allows the fire code official to ask for additional lighting that can be used as emergency lighting when it is appropriate. Typically, the phrase "where required" in other places within the code means that another section would enact the requirement. In this case, however, it appears that the intent is to provide authority to the fire code official to ask for specific lighting to address emergency response in individual situations.

SECTION 5504
STORAGE

5504.1 General. Storage of containers shall comply with this section.

❖ As with all the chapters associated with hazardous materials, there is a section specific to storage and one specific to use. This section covers storage aspects, which tend to be less hazardous than use. The requirements are split into indoor and outdoor storage locations. Whether cryogens are indoors or outdoors will affect the number and type of safeguards required.

5504.2 Indoor storage. Indoor storage of containers shall be in accordance with Sections 5504.2.1 through 5504.2.2.3.

❖ The indoor storage requirements are divided into stationary and portable containers.

5504.2.1 Stationary containers. Stationary containers shall be installed in accordance with the provisions applicable to the type of fluid stored and this section.

❖ This section acknowledges that requirements will vary depending on the type of fluid being stored.

5504.2.1.1 Containers. Stationary containers shall comply with Section 5503.1.

❖ See the commentary to Section 5503.1.

5504.2.1.2 Construction of indoor areas. *Cryogenic fluids* in stationary containers stored indoors shall be located in buildings, rooms or areas constructed in accordance with the *International Building Code*.

❖ This section requires that indoor storage areas be constructed in accordance with the IBC. This addresses occupancy requirements in terms of maximum allowable quantities (MAQs) and other relevant issues. Again, note that all cryogens do not necessarily have a characteristic that would classify them as hazardous in the context of MAQs.

5504.2.1.3 Ventilation. Storage areas for stationary containers shall be ventilated in accordance with the *International Mechanical Code*.

❖ Ventilation is more critical for indoor areas than for outdoor areas because the fluids cannot disperse and be removed as easily. This section refers to the *International Mechanical Code*® (IMC®) for the ventilation requirements. The IMC ventilation requirements in Section 502 are based on the use of the space. Chapter 50 also addresses ventilation requirements in Sections 5003.8 and 5005.2. These particular requirements apply only when the maximum allowable quantities have been exceeded. Further requirements for ventilation and treatment systems, in some cases, are found in the hazard-specific chapters of the code, such as Chapter 60, which addresses highly toxic and toxic materials.

INTERNATIONAL CODE COUNCIL®
Copyright © 2015 ICC. ALL RIGHTS RESERVED. Accessed by David Dammon on Jun 21, 2017 12:30:52 PM pursuant to License Agreement with ICC. No further reproduction or distribution authorized. ANY UNAUTHORIZED REPRODUCTION OR DISTRIBUTION IS A VIOLATION OF THE FEDERAL COPYRIGHT ACT AND THE LICENSE AGREEMENT, AND SUBJECT TO CIVIL AND CRIMINAL PENALTIES THEREUNDER.

5504.2.2 Portable containers. Indoor storage of portable containers shall comply with the provisions applicable to the type of fluid stored and Sections 5504.2.2.1 through 5504.2.2.3.

❖ This section is a reminder that storage requirements will vary with the fluid being stored.

5504.2.2.1 Containers. Portable containers shall comply with Section 5503.1.

❖ See the commentary to Section 5503.1.

5504.2.2.2 Construction of indoor areas. *Cryogenic fluids* in portable containers stored indoors shall be stored in buildings, rooms or areas constructed in accordance with the *International Building Code*.

❖ This section is the same as Section 5504.2.1.2 for stationary containers and requires compliance with the IBC for the construction of the building, which means the occupancy classification and related construction requirements must be considered. The use of cryogenics alone may not drive the need for a Group H occupancy. The additional hazard characteristics and amounts of fluids will drive those requirements.

5504.2.2.3 Ventilation. Storage areas shall be ventilated in accordance with the *International Mechanical Code*.

❖ These requirements are the same as those for stationary containers (see commentary, Section 5504.2.1.3).

5504.3 Outdoor storage. Outdoor storage of containers shall be in accordance with Sections 5504.3.1 through 5504.3.1.2.3.

❖ This section is specific to outdoor areas, which are generally less hazardous because the fluids can more easily disperse if released, thereby reducing the potential for harm to both people in the surrounding area and property. Outdoor storage areas are, however, more susceptible to damage from both weather and people. As with the indoor area section, the requirements are divided into portable and stationary containers.

5504.3.1 Separation from hazardous conditions. Cryogenic containers and systems in outdoor storage shall be separated from materials and conditions that pose exposure hazards to or from each other in accordance with Sections 5504.3.1.1 through 5504.3.1.1.5.

❖ This introductory statement emphasizes that cryogenic containers and systems, whether for storage or for use, must be separated from other materials and conditions that could pose a hazard to them or when they could be hazardous to other materials. The two subsections that follow address stationary containers and portable containers.

5504.3.1.1 Stationary containers. Stationary containers shall be separated from exposure hazards in accordance with the provisions applicable to the type of fluid contained and the minimum separation distances indicated in Table 5504.3.1.1.

❖ This section refers to Table 5504.3.1.1 and also notes that there may be other separation requirements associated with the fluids that may increase this distance. For example, Table 5804.2.1 for flammable gases has more restrictive distance requirements in certain cases. This table states that the minimum distance to buildings for 0 to 4,225 cubic feet (0 to 120 m^3) of flammable gases is 5 feet (1524 mm), whereas Table 5504.3.1.1 requires only a 1-foot (305 mm) separation.

TABLE 5504.3.1.1
SEPARATION OF STATIONARY CONTAINERS FROM EXPOSURE HAZARDS

EXPOSURE	MINIMUM DISTANCE (feet)
Buildings, regardless of construction type	1
Building exits	10
Wall openings	1
Air intakes	10
Lot lines	5
Places of public assembly	50
Nonambulatory patient areas	50
Combustible materials such as paper, leaves, weeds, dry grass or debris	15
Other hazardous materials	In accordance with Chapter 50

For SI: 1 foot = 304.8 mm.

❖ This table has several different separation distance criteria for stationary containers. Generally, the distances are larger when exposure to people is involved, such as places of public assembly and areas where nonambulatory patients are housed. These restrictions are related more to the hazards associated with their low temperatures, high pressures and asphyxiation hazards than they are to flammability or toxicity, which are dealt with in other chapters. Depending on these additional characteristics, larger distances to buildings and lot lines are sometimes required. Also, the restrictions in Table 5504.3.1.1 of the code are for any amounts of cryogens where the requirements for other hazards typically vary based on the volume of gas.

5504.3.1.1.1 Point-of-fill connections. Remote transfer points and fill connection points shall not be positioned closer to exposures than the minimum distances required for stationary containers.

❖ Because there is a potential for a large release of cryogens from faulty connections, the same separation requirements found in Table 5504.3.1.1 would apply to the point-of-fill connection.

INTERNATIONAL CODE COUNCIL®
Copyright © 2015 ICC. ALL RIGHTS RESERVED. Accessed by David Dammon on Jun 21, 2017 12:30:52 PM pursuant to License Agreement with ICC. No further reproduction or distribution authorized. ANY UNAUTHORIZED REPRODUCTION OR DISTRIBUTION IS A VIOLATION OF THE FEDERAL COPYRIGHT ACT AND THE LICENSE AGREEMENT, AND SUBJECT TO CIVIL AND CRIMINAL PENALTIES THEREUNDER.

5504.3.1.1.2 Surfaces beneath containers. Containers shall be placed on surfaces that are compatible with the fluid in the container.

❖ To ensure that a reaction does not occur with the surface below the container in the event of a cryogen spill, the surface beneath the container and its point of fill must be compatible with the fluid stored. The surface below the container must never be made of materials that may become brittle when exposed to extremely low temperatures or be corroded by the stored fluid. Either embrittlement or corrosion could weaken the supporting structure and affect the stability of the container.

5504.3.1.1.3 Location. Containers of *cryogenic fluids* shall not be located within diked areas containing other hazardous materials.

❖ Cryogenic fluids cannot share diked areas with other hazardous materials because of the risk that one type of hazardous material could create an exposure hazard for the other. Cryogens, if released, will be at very low temperatures and high pressures that could potentially compromise the integrity of the other containers and tanks.

5504.3.1.1.4 Areas subject to flooding. Stationary containers located in areas subject to flooding shall be securely anchored or elevated to prevent the containers from separating from foundations or supports.

❖ Because stationary containers are considered permanent, issues such as flooding and the effect that flooding will have on the stability of the container are important. Flooding has the tendency to cause containers to pull away from their foundations because of their potential buoyancy. This section requires that the container either be anchored or elevated; if elevated, containers must be elevated to or above the elevation requirements of the IBC. Flood hazard areas are defined in IBC Section 202.

5504.3.1.1.5 Drainage. The area surrounding stationary containers shall be provided with a means to prevent accidental discharge of fluids from endangering personnel, containers, equipment and adjacent structures or to enter enclosed spaces. The stationary container shall not be placed where spilled or discharged fluids will be retained around the container.

Exception: These provisions shall not apply where it is determined by the *fire code official* that the container does not constitute a hazard, after consideration of special features such as crushed rock utilized as a heat sink, topographical conditions, nature of occupancy, proximity to structures on the same or adjacent property, and the capacity and construction of containers and character of fluids to be stored.

❖ This section deals with both exposure hazards and the need to avoid a buildup of spilled fluids. People and property must be protected from the exposure hazards of the initial spill. How this is to be done is not specified because the needs for installation vary considerably.

In terms of the drainage, if the fluids are released, they cannot be held in the immediate vicinity of the container; therefore, diking may be a practical method of containment, but the impounded spill would have to be diverted away from the container once it has been released.

There is an exception for areas where the exposure hazards are very low, such as a container in a very remote location. Several factors need to be addressed before such allowances can be given. In some cases, a smaller container may be able to take advantage of this exception whereas a larger container may not, based on the potential size of the discharge.

5504.3.1.2 Outdoor storage of portable containers. Outdoor storage of portable containers shall comply with Section 5503 and Sections 5504.3.1.2.1 through 5504.3.1.2.3.

❖ Portable containers are typically smaller than stationary containers; therefore, the requirements are less detailed and are generally less substantial.

5504.3.1.2.1 Exposure hazard separation. Portable containers in outdoor storage shall be separated from exposure hazards in accordance with Table 5504.3.1.2.1.

❖ Concerns with portable containers are similar to those with stationary containers because of low temperatures and high pressures. This section refers to Table 5504.3.1.2.1 for the required separation distances.

TABLE 5504.3.1.2.1
SEPARATION OF PORTABLE CONTAINERS FROM EXPOSURE HAZARDS

EXPOSURE	MINIMUM DISTANCE (feet)
Building exits	10
Wall openings	1
Air intakes	10
Lot lines	5
Combustible materials such as paper, leaves, weeds, dry grass or debris	15
Other hazardous materials	In accordance with Chapter 50

For SI: 1 foot = 304.8 mm.

❖ Because portable tanks are generally much smaller than stationary containers and are more easily moved, the separation distances do not address areas of assembly or buildings housing nonambulatory patients. Instead, the focus is on exits and areas where portable tanks are more likely to cause an immediate threat. For those locations that correlate with Table 5504.3.1.1 of the code, the distances are the same. For instance, the distance to wall openings must be at least 1 foot (305 mm) for both stationary and portable containers. Again, these separation

INTERNATIONAL CODE COUNCIL®
Copyright © 2015 ICC. ALL RIGHTS RESERVED. Accessed by David Dammon on Jun 21, 2017 12:30:52 PM pursuant to License Agreement with ICC. No further reproduction or distribution authorized. ANY UNAUTHORIZED REPRODUCTION OR DISTRIBUTION IS A VIOLATION OF THE FEDERAL COPYRIGHT ACT AND THE LICENSE AGREEMENT, AND SUBJECT TO CIVIL AND CRIMINAL PENALTIES THEREUNDER.

requirements are for all amounts of cryogens stored in portable containers. Concerns over flammability or toxicity are covered in other chapters.

5504.3.1.2.2 Surfaces beneath containers. The surface of the area on which stationary containers are placed, including the surface of the area located below the point where connections are made for the purpose of filling such containers, shall be compatible with the fluid in the container.

❖ This section is identical in intent to Section 5504.3.1.1.2; however, because portable containers are not permanently attached to foundations or similar supports, they can be moved to various locations with different surfaces. Personnel responsible for handling and placing the portable containers must be educated and trained on the interaction of cryogenics with certain materials.

5504.3.1.2.3 Drainage. The area surrounding portable containers shall be provided with a means to prevent accidental discharge of fluids from endangering adjacent containers, buildings, equipment or adjoining property.

Exception: These provisions shall not apply where it is determined by the *fire code official* that the container does not constitute a hazard.

❖ This section requires placement of the containers where they will not further endanger buildings and other exposures if a spill occurs. If impounding is used to contain a spill, the spilled fluid must be diverted to a location where it would not cause personal injury or property damage. This requirement is in addition to the distances specified in Section 5504.3.1. As in Section 5504.3.1.1.5, there is an exception that allows the fire code official to review container locations and evaluate the potential hazard of a spill. If the arrangement of the container does not create a hazard, compliance with this section is not necessary. A good example is a well-isolated storage area.

SECTION 5505
USE AND HANDLING

5505.1 General. Use and handling of *cryogenic fluid* containers and systems shall comply with Sections 5505.1.1 through 5505.5.2.

❖ These provisions are not quantity-specific but apply generally any time cryogens are being used or handled. This section addresses system components and the integrity of the components. The container itself is addressed primarily in Section 5504.

5505.1.1 Cryogenic fluid systems. *Cryogenic fluid* systems shall be suitable for the use intended and designed by persons competent in such design. Equipment, machinery and processes shall be *listed* or *approved*.

❖ This section contains general requirements for the design of systems, including the requirement for the competency of the designer. Because the use of cryogens is varied, a single listed system is not available. There is, however, a requirement that all components of the system either be listed or specifically approved.

The nature of the listing should be understood because it may be unrelated to the performance of the system. Use of listed parts and components alone does not guarantee that a system as a whole operates as intended.

5505.1.2 Piping systems. Piping, tubing, valves and joints and fittings conveying *cryogenic fluids* shall be installed in accordance with the material-specific provisions of Section 5501.1 and Sections 5505.1.2.1 through 5505.1.2.6.

❖ See the commentary to Section 5501.1 and for the subsections that follow.

5505.1.2.1 Design and construction. Piping systems shall be suitable for the use intended through the full range of pressure and temperature to which they will be subjected. Piping systems shall be designed and constructed to provide adequate allowance for expansion, contraction, vibration, settlement and fire exposure.

❖ This section sets out the basic elements that need to be addressed in an acceptable design, including temperature and pressures and the type of events or climatic exposures that the system must withstand. A competent designer must show that all of these elements have been satisfied.

5505.1.2.2 Joints. Joints on container piping and tubing shall be threaded, welded, silver brazed or flanged.

❖ This section lists the acceptable types of joints allowed with cryogenic fluids. Joints represent potential weak points in a system if they are not properly designed and constructed. Friction joints would not be allowed. A high level of reliability is needed from joints to decrease the likelihood of joint failure.

5505.1.2.3 Valves and accessory equipment. Valves and accessory equipment shall be suitable for the intended use at the temperatures of the application and shall be designed and constructed to withstand the maximum pressure at the minimum temperature to which they will be subjected.

❖ This section sets the basic criterion for approval, which requires valves and any accessory equipment to be able to withstand the minimum temperature at the highest operating pressure. This will ensure that the valves can withstand the most critical forces to which they may be subject during normal operation.

5505.1.2.3.1 Shutoff valves on containers. Shutoff valves shall be provided on all container connections except for pressure relief devices. Shutoff valves shall be provided with access thereto and located as close as practical to the container.

❖ This section requires shutoff valves on all container connections. This allows isolation of the container to prevent a large release. It is critical that shutoff valves not be placed on pressure relief devices.

INTERNATIONAL CODE COUNCIL®
Copyright © 2015 ICC. ALL RIGHTS RESERVED. Accessed by David Dammon on Jun 21, 2017 12:30:52 PM pursuant to License Agreement with ICC. No further reproduction or distribution authorized. ANY UNAUTHORIZED REPRODUCTION OR DISTRIBUTION IS A VIOLATION OF THE FEDERAL COPYRIGHT ACT AND THE LICENSE AGREEMENT, AND SUBJECT TO CIVIL AND CRIMINAL PENALTIES THEREUNDER.

5505.1.2.3.2 Shutoff valves on piping. Shutoff valves shall be installed in piping containing *cryogenic fluids* where needed to limit the volume of liquid discharged in the event of piping or equipment failure. Pressure relief valves shall be installed where liquid is capable of being trapped between shutoff-valves in the piping system (see Section 5503.2).

❖ Further shutoff valves are required at strategic locations within the piping systems where a large release may be possible. The containers themselves must have shutoff valves in accordance with Section 5505.1.2.3.1. This section is quite general. Because piping systems vary so much, there is no single solution based on either use or process layouts. There is an additional requirement for pressure relief devices to be installed where shutoff of the flow could potentially cause a buildup of pressure between the source and the shutoff valve.

5505.1.2.4 Physical protection and support. Piping systems shall be supported and protected from physical damage. Piping passing through walls shall be protected from mechanical damage.

❖ This is a general section that requires a level of protection from physical and other damage when piping is either exposed or passes through elements, such as walls and floors, that are subject to movement. These requirements, along with the others, are intended to increase the reliability of the piping and associated processes.

5505.1.2.5 Corrosion protection. Above-ground piping that is subject to corrosion because of exposure to corrosive atmospheres, shall be constructed of materials to resist the corrosive environment or otherwise protected against corrosion. Below-ground piping shall be protected against corrosion.

❖ Another possible mode of failure is the weakening of the piping system caused by corrosion. The extent of corrosion protection required will depend on the piping material used, the particular climate or, in the case of the underground installations, the soil condition and content of the soil. In some areas, this may be a significant problem whereas in others it may not. Corrosion-resistant construction materials are the preferred means of compliance with this section.

5505.1.2.6 Testing. Piping systems shall be tested and proven free of leaks after installation as required by the standards to which they were designed and constructed. Test pressures shall be not less than 150 percent of the maximum allowable working pressure where hydraulic testing is conducted or 110 percent where testing is conducted pneumatically.

❖ To increase the reliability of the system to work as designed without the occurrence of leaks or other more substantial failures, proof testing of the piping is required. This section sets the testing criteria for either a hydraulic test or a pneumatic test.

5505.2 Indoor use. Indoor use of *cryogenic fluids* shall comply with the material-specific provisions of Section 5501.1.

❖ The code does not provide detail on the specifics of indoor use. That is contained in the standards listed in Section 5501.1, principally NFPA 55.

5505.3 Outdoor use. Outdoor use of *cryogenic fluids* shall comply with the material specific provisions of Sections 5501.1, 5505.3.1 and 5505.3.2.

❖ This section refers back to the standards, principally NFPA 55, in Section 5501.1 for specific details on the use of cryogens, and emphasizes the separation requirements and placement of necessary shutoff valves.

5505.3.1 Separation. Distances from lot lines, buildings and exposure hazards shall comply with Section 5504.3 and the material-specific provisions of Section 5501.1.

❖ Because use is more hazardous than storage, the basic separation requirements found in Tables 5504.3.1.1 and 5504.3.1.2.1 would apply in addition to any of the restrictions found in the referenced standards in Section 5501.1.

5505.3.2 Emergency shutoff valves. Manual or automatic emergency shutoff valves shall be provided to shut off the *cryogenic fluid* supply in case of emergency. An emergency shutoff valve shall be located at the source of supply and at the point where the system enters the building.

❖ This section establishes the requirement for emergency shutoff valves to be provided and be readily available during an emergency to either on-site personnel or the local emergency response personnel. Essentially, the ability must exist to both shut down the supply of cryogens and also to shut off the supply at the location where it enters the building. Pressure relief devices may be necessary where liquid could be trapped between the source and the emergency shutoff valve at the entrance to the building (see also the commentary to the definitions of "Emergency shutoff valve," "Emergency shutoff valve, manual" and "Emergency shutoff valve, automatic" in Section 202 and to Section 5505.1.2.3.2 for further information).

5505.4 Filling and dispensing. Filling and dispensing of *cryogenic fluids* shall comply with Sections 5505.4.1 through 5505.4.3.

❖ Filling and dispensing is an activity that could result in fluid release because of the connections and disconnections involved with such processes. This section addresses the location and construction of dispensing areas, the approval of loading and unloading activities and controls on the amount of fluids dispensed into stationary tanks. All of these requirements focus on preventing an unwanted fluid release and possible physical damage or personal injury.

INTERNATIONAL CODE COUNCIL®
Copyright © 2015 ICC. ALL RIGHTS RESERVED. Accessed by David Dammon on Jun 21, 2017 12:30:52 PM pursuant to License Agreement with ICC. No further reproduction or distribution authorized. ANY UNAUTHORIZED REPRODUCTION OR DISTRIBUTION IS A VIOLATION OF THE FEDERAL COPYRIGHT ACT AND THE LICENSE AGREEMENT, AND SUBJECT TO CIVIL AND CRIMINAL PENALTIES THEREUNDER.

5505.4.1 Dispensing areas. Dispensing of *cryogenic fluids* with physical or *health hazards* shall be conducted in *approved* locations. Dispensing indoors shall be conducted in areas constructed in accordance with the *International Building Code*.

❖ This section focuses on dispensing of fluids with a physical or health hazard rating, such as flammability or toxicity. This section also refers back to the IBC for construction requirements, primarily for the determination of whether a Group H occupancy would be required. This specifically relates to whether the MAQs of hazardous materials have been exceeded.

5505.4.1.1 Ventilation. Indoor areas where *cryogenic fluids* are dispensed shall be ventilated in accordance with the requirements of the *International Mechanical Code* in a manner that captures any vapor at the point of generation.

Exception: *Cryogenic fluids* that can be demonstrated not to create harmful vapors.

❖ In addition to the basic ventilation requirements for the indoor storage of cryogens, this section requires that vapors be captured at the source; therefore, special ventilation would be required at the point of fill for the dispensing operation. These ventilation requirements appear to be for normal operation rather than emergency operation.

There is an exception if the amount and type of gas would not be sufficient enough to create a hazardous situation.

5505.4.1.2 Piping systems. Piping systems utilized for filling or dispensing of *cryogenic fluids* shall be designed and constructed in accordance with Section 5505.1.2.

❖ This is simply a reference back to Section 5505.1.2 for the general piping requirements to ensure correct design and construction (see commentary, Section 5505.1.2).

5505.4.2 Vehicle loading and unloading areas. Loading or unloading areas shall be conducted in an *approved* manner in accordance with the standards referenced in Section 5501.1.

❖ Generally, loading, unloading, dispensing and filling operations have a high potential for creating a hazardous situation if not properly conducted. This section ensures that the areas are constructed and operated as required by approved standards.

5505.4.3 Limit controls. Limit controls shall be provided to prevent overfilling of stationary containers during filling operations.

❖ This is a mechanism to prevent a release of fluids caused by an overflow.

5505.5 Handling. Handling of cryogenic containers shall comply with Sections 5505.5.1 and 5505.5.2.

❖ This section is focused on portable containers and the prevention of a fluid release.

5505.5.1 Carts and trucks. Cryogenic containers shall be moved using an *approved* method. Where cryogenic containers are moved by hand cart, hand truck or other mobile device, such carts, trucks or devices shall be designed for the secure movement of the container.

Carts and trucks used to transport cryogenic containers shall be designed to provide a stable base for the commodities to be transported and shall have a means of restraining containers to prevent accidental dislodgement.

❖ This section does not specify a particular handling method, but gives the fire code official the authority to determine whether the method chosen by the facility is acceptable. If carts, hand trucks or other similar methods are chosen, they must be able to transport the containers safely and securely. This includes restraining containers while they are being moved.

5505.5.2 Closed containers. Pressurized containers shall be transported in a closed condition. Containers designed for use at atmospheric conditions shall be transported with appropriate loose-fitting covers in place to prevent spillage.

❖ This section recognizes that containers designed to hold pressure can be moved safely if they are properly closed. Containers designed for use at normal atmospheric pressure need only have an appropriate cover to ensure that fluid does not escape.

Bibliography

The following resource materials were used in the preparation of the commentary for this chapter of the code:

Code Changes Resource Collection—2015 International Fire Code. Washington, DC: International Code Council, 2014.

Fire Protection Handbook, 20th ed. Quincy, MA: National Fire Protection Association, 2008.

INTERNATIONAL CODE COUNCIL®

Copyright © 2015 ICC. ALL RIGHTS RESERVED. Accessed by David Dammon on Jun 21, 2017 12:30:52 PM pursuant to License Agreement with ICC. No further reproduction or distribution authorized. ANY UNAUTHORIZED REPRODUCTION OR DISTRIBUTION IS A VIOLATION OF THE FEDERAL COPYRIGHT ACT AND THE LICENSE AGREEMENT, AND SUBJECT TO CIVIL AND CRIMINAL PENALTIES THEREUNDER.

Chapter 56: Explosives and Fireworks

General Comments

The safe handling of explosives in transportation, storage and use requires preventing ignitions and reducing the hazard to exposures. These exposures include people who may be harmed and property that may be damaged by an accidental detonation and other circumstances involving accidental or malicious detonation of the explosive materials. All requirements applicable to explosives are based on these principles. To apply the requirements of this chapter, the fire code official must recognize conditions that are liable to cause ignition or create exposures.

To varying degrees, all explosives, ammunition and blasting agents are susceptible to ignition from heat, sparks and, in certain cases, shock or pressure. Explosives are considered the most susceptible to ignition from these stimuli and may detonate when exposed to any of them, even under controlled conditions. Blasting agents are generally more stable and less susceptible to detonation, but such agents may become sensitized or unstable when exposed to heat or contaminated by certain organic materials. Sources of ignition include: sparks from tools, friction, static electricity, electrical devices, hot surfaces, open flames and open-flame devices, smoking materials, chemical reactions, electric currents, pressure and shock from explosions or impact.

Exposure protection involves protecting people, buildings and public rights-of-way from detonations, and protecting explosives, ammunition and blasting agents from fires or explosions occurring outside the magazine or blasting area. Such protection also includes security—protecting the magazine or blasting area from entry by unauthorized personnel. Two techniques—separation distance requirements and security precautions—are used to reduce exposure hazards.

An excellent discussion of the origin and rationale behind the separation distances specified in Table 5604.5.2(1) is presented in Appendix C of NFPA 495. Required magazine construction features include: weather resistance, bullet resistance, spark resistance, fire resistance, theft resistance and ventilation to prevent excessive heating or dampening of explosives.

Regulation of explosives is a complex enforcement issue. Local fire code officials must understand that many state and federal agencies have concurrent jurisdiction over the manufacture, transportation, storage, sale, handling and use of explosive materials. The U.S. Department of Justice, which oversees the Bureau of Alcohol, Tobacco, Firearms and Explosives (ATF) division, is the federal agency responsible (see 18 USC, Chapter 40) for regulating the manufacture, sale, distribution and storage of explosives. In addition to enforcing explosives laws and regulations, ATF investigates incidents of theft or misuse of explosives and has extensive resources for investigating bombings and incendiary acts. Recently, ATF's inspection of explosives manufacturing plants has been credited with improving industry safety.

Many states, especially where mining is an important industry, also regulate explosives. States often pick up where federal authority ends, especially in the areas of blasting and siting of explosive material facilities.

Fireworks regulation is one of the most controversial and hotly debated topics in American fire protection. The National Fire Protection Association (NFPA) and U.S. Consumer Product Safety Commission (CPSC) have called for stricter rules to govern the sale and use of common fireworks and trick and novelty items. To understand the tenor of the debate, it is helpful to appreciate the scope of the problem and look back at the origins of this chapter and other standards that were drafted in response to fireworks misuse and injuries.

According to statistics quoted by NFPA and gathered by the CPSC, more than 10,000 citizens are injured each year by the misuse of common and illegally manufactured fireworks. These injuries result in millions of dollars in medical and legal expenses, and untold suffering. The injuries include burns and the loss of fingers, limbs, vision or hearing; most injuries leave permanent scarring. The overwhelming majority of persons injured are younger than 20 years old. Public displays of fireworks have also resulted in several serious accidents. Many of these accidents have involved local fire departments and untrained operators performing public fireworks displays.

Parts of Chapter 56 had their origin in former NFPA 1121L, Model Fireworks Law, which was first published in 1938. According to NFPA, this is the most widely adopted fireworks regulation in the United States. Many states have enacted this model as part of state law and prohibit all fireworks except toy paper or plastic caps and authorized public displays. Other states have adopted modified versions that prohibit all but trick and novelty items, toy paper or plastic caps and permitted public displays. The NFPA Standards Council withdrew NFPA 1121L as an NFPA standard and in 1988 transferred control of the document to the Fire Marshal's Association of North America (FMANA) [now the International Fire Marshals Association (IFMA)], a membership section of NFPA. Copies of the document may be obtained from IFMA or from various internet sources.

This chapter requires the display of fireworks to comply with NFPA 1123. The standard includes criteria for the firing and on-site storage of fireworks, display site location, fallout area and operator qualifications. This

INTERNATIONAL CODE COUNCIL®
Copyright © 2015 ICC. ALL RIGHTS RESERVED. Accessed by David Dammon on Jun 21, 2017 12:30:52 PM pursuant to License Agreement with ICC. No further reproduction or distribution authorized. ANY UNAUTHORIZED REPRODUCTION OR DISTRIBUTION IS A VIOLATION OF THE FEDERAL COPYRIGHT ACT AND THE LICENSE AGREEMENT, AND SUBJECT TO CIVIL AND CRIMINAL PENALTIES THEREUNDER.

chapter also references NFPA 1124 for the regulation of fireworks manufacture and storage of fireworks at manufacturing plants. Federal regulations also provide useful guidance.

Purpose

Chapter 56 prescribes minimum requirements for the safe manufacture, storage, handling and use of explosives, ammunition and blasting agents for commercial and industrial occupancies. These provisions are intended to protect the general public, emergency responders and individuals who handle explosives.

This chapter regulates the manufacturing, retail sale, display and wholesale distribution of fireworks, establishing the requirements for obtaining approval to manufacture, store, sell, discharge or conduct a public display, and references national standards for regulations governing manufacture, storage and public displays.

SECTION 5601
GENERAL

5601.1 Scope. The provisions of this chapter shall govern the possession, manufacture, storage, handling, sale and use of *explosives*, *explosive materials*, fireworks and small arms ammunition.

Exceptions:

1. The Armed Forces of the United States, Coast Guard or National Guard.
2. *Explosives* in forms prescribed by the official United States Pharmacopoeia.
3. The possession, storage and use of small arms ammunition where packaged in accordance with DOTn packaging requirements.
4. The possession, storage and use of not more than 1 pound (0.454 kg) of commercially manufactured sporting black powder, 20 pounds (9 kg) of smokeless powder and 10,000 small arms primers for hand loading of small arms ammunition for personal consumption.
5. The use of *explosive materials* by federal, state and local regulatory, law enforcement and fire agencies acting in their official capacities.
6. Special industrial *explosive* devices that in the aggregate contain less than 50 pounds (23 kg) of *explosive materials*.
7. The possession, storage and use of blank industrial-power load cartridges where packaged in accordance with DOTn packaging regulations.
8. Transportation in accordance with DOTn 49 CFR Parts 100–185.
9. Items preempted by federal regulations.

❖ This chapter contains specific requirements for the manufacture, transportation, handling, storage and use of explosives, ammunition and blasting agents by nonmilitary and nongovernmental agencies and individuals.

Exceptions in this section detail situations in which compliance with the requirements of this chapter is not required. Generally, these situations are governed by more stringent federal requirements or another chapter of the code or they may represent a low hazard.

Exception 1 recognizes that the U.S. military promulgates its own regulations governing the manufacture and storage of explosives, ammunition and blasting agents. These regulations are similar to those that apply to civilian explosives with a few exceptions for identifying and marking them in transportation and storage.

An example of Exception 2 is nitroglycerin in tablet and transdermal patch form used for the treatment of angina pectoris and other pharmaceuticals containing explosive materials which are not dangerous in the form dispensed and thus are exempt from these requirements.

Exception 4 exempts small amounts of materials for making small arms ammunition for personal use based on the limited potential hazard due to the quantity.

Exception 5 is a limited exception that exempts certain federal, state and local agencies from the application of Article 56 when using explosive materials while acting in the course of their official capacities. All other applicable provisions contained in the chapter would apply, i.e., possession, storage and handling regulations.

Exception 6 exempts from the provisions of this chapter special industrial explosive devices in an aggregate quantity of 50 pounds of explosive materials. See the commentary to Chapter 2 definitions of “Special industrial explosive device” and “Explosive material.”

Exception 7 exempts from the provisions of this chapter the possession, storage, and use of blank industrial power load cartridges. Sometimes called propellant-actuated power devices, these articles include devices such as rivets, nail guns, bolt or stud drivers, punches and cutting tools which use explosive cartridges to perform their function. Devices employing explosive mixtures to produce a flame or jet for cutting, propelling or directing work would not be included.

Exceptions 8 and 9 recognize that adequate regulations may already exist at the federal level for certain materials.

INTERNATIONAL CODE COUNCIL®
Copyright © 2015 ICC. ALL RIGHTS RESERVED. Accessed by David Dammon on Jun 21, 2017 12:30:52 PM pursuant to License Agreement with ICC. No further reproduction or distribution authorized. ANY UNAUTHORIZED REPRODUCTION OR DISTRIBUTION IS A VIOLATION OF THE FEDERAL COPYRIGHT ACT AND THE LICENSE AGREEMENT, AND SUBJECT TO CIVIL AND CRIMINAL PENALTIES THEREUNDER.

5601.1.1 Explosive material standard. In addition to the requirements of this chapter, NFPA 495 shall govern the manufacture, transportation, storage, sale, handling and use of *explosive* materials.

❖ The requirements in NFPA 495 apply to situations not specifically addressed by this chapter.

5601.1.2 Explosive material terminals. In addition to the requirements of this chapter, the operation of *explosive material* terminals shall conform to the provisions of NFPA 498.

❖ The requirements of NFPA 498 apply to situations not specifically addressed by this chapter.

5601.1.3 Fireworks. The possession, manufacture, storage, sale, handling and use of fireworks are prohibited.

Exceptions:

1. Storage and handling of fireworks as allowed in Section 5604.
2. Manufacture, assembly and testing of fireworks as allowed in Section 5605.
3. The use of fireworks for fireworks displays as allowed in Section 5608.
4. The possession, storage, sale, handling and use of specific types of Division 1.4G fireworks where allowed by applicable laws, ordinances and regulations, provided such fireworks and facilities comply with NFPA 1124, CPSC 16 CFR Parts 1500 and 1507, and DOTn 49 CFR Parts 100–185, for consumer fireworks.

❖ The possession, manufacture, storage, sale and unauthorized use of fireworks are prohibited by this section. The prohibition of retail sales allows communities to have direct control over the hazards associated with small amounts of storage typical of retail sales. Exception 1 allows storage and handling of fireworks within the limitations of Section 5604. Exception 2 allows the manufacture, assembly and testing of fireworks within the limitations of Section 5605. Exception 3 allows those displays to be specifically approved by the fire code official in accordance with Section 5608.

Exception 4 recognizes that, in some instances, the possession, storage, sale, handling and use of certain types of fireworks may be allowed by provisions of the preemptive laws of superior jurisdictions, most typically the state. Even if such laws preempt the local jurisdiction, the exception stipulates that the fireworks and the facilities allowed by such laws must still meet the minimum requirements of the referenced standards. The scope of NFPA 1124 includes important criteria related to construction, allowable area, egress and protection which is not identified in CPSC 16 CFR, Parts 1500 and 1507, or DOTn 49 CFR, Parts 100–185 for facilities for the storage, handling and sale of consumer fireworks. See also Section 5609.1.

5601.1.4 Rocketry. The storage, handling and use of model and high-power rockets shall comply with the requirements of NFPA 1122, NFPA 1125 and NFPA 1127.

❖ NFPA 1122 contains instructional guidelines and specific standards for the design, construction, limitation of charge and power, and reliability of rocket motors manufactured for sale to the general public; for the design and construction of rockets propelled by these motors; and for tests, launchings and other operations involving such rockets in order to minimize hazards. NFPA 1125 applies to the manufacture of model rocket motors designed, sold and used for the purpose of propelling recoverable aero models. NFPA 1127 contains instructional guidelines and specific standards for the design, construction, limitation of charge and power and reliability of high-power rocket motors manufactured for sale to users; for the qualification and certification of users; for the design and construction of high-power rockets propelled by these motors; and for tests, launchings and other operations involving rockets so that hazards are minimized.

5601.1.5 Ammonium nitrate. The storage and handling of ammonium nitrate shall comply with the requirements of NFPA 400 and Chapter 63.

Exception: Storage of ammonium nitrate in magazines with blasting agents shall comply with the requirements of NFPA 495.

❖ NFPA 400 addresses storage and Chapter 63 addresses oxidizers and separation distances for ammonium nitrate. Ammonium nitrate can be sensitized by both heat and contaminants, causing it to become a greater explosive danger (commercial blasting agents are made from a mixture of diesel oil and ammonium nitrate).

It cannot be determined when or if contamination will occur. No matter how many times it has failed to explode in fires, the important point is that ammonium nitrate might explode and has the potential to explode in any fire.

5601.2 Permit required. Permits shall be required as set forth in Section 105.6 and regulated in accordance with this section.

❖ The process of issuing permits gives the fire code official an opportunity to carefully evaluate and regulate hazardous operations. Permit applicants should be required to demonstrate that their operations comply with the intent of the code before the permit is issued. See the commentary to Section 105.6 for a general discussion of operations requiring an operational permit and Section 105.6.14 for a discussion of specific quantity-based operational permits for the materials regulated in this chapter. The permit process also notifies the fire department of the need for prefire planning for the hazardous property.

INTERNATIONAL CODE COUNCIL®
Copyright © 2015 ICC. ALL RIGHTS RESERVED. Accessed by David Dammon on Jun 21, 2017 12:30:52 PM pursuant to License Agreement with ICC. No further reproduction or distribution authorized. ANY UNAUTHORIZED REPRODUCTION OR DISTRIBUTION IS A VIOLATION OF THE FEDERAL COPYRIGHT ACT AND THE LICENSE AGREEMENT, AND SUBJECT TO CIVIL AND CRIMINAL PENALTIES THEREUNDER.

5601.2.1 Residential uses. Persons shall not keep or store, nor shall any permit be issued to keep or store, any *explosives* at any place of habitation, or within 100 feet (30 480 mm) thereof.

Exception: Storage of smokeless propellant, black powder and small arms primers for personal use and not for resale in accordance with Section 5606.

❖ Small amounts of materials for making small arms ammunition for personal use are exempt based on the limited potential hazard of the small quantities.

5601.2.2 Sale and retail display. Persons shall not construct a retail display nor offer for sale *explosives*, *explosive materials* or fireworks upon highways, sidewalks, public property or in Group A or E occupancies.

❖ Where retail sales are allowed by Section 5601.1.3, Exception 4, the intent of this section is to prohibit the retail display and sale of explosives, including fireworks 1.3G and 1.4G, in public rights-of-way, on public property and in assembly (Group A) and educational (Group E) buildings. This reduces the likelihood of theft and personal injury if a fire or explosion occurs. See also the commentary to Section 5601.1.3 for further discussion of retail sales of fireworks.

5601.2.3 Permit restrictions. The *fire code official* is authorized to limit the quantity of *explosives*, *explosive materials* or fireworks permitted at a given location. Persons possessing a permit for storage of *explosives* at any place, shall not keep or store an amount greater than authorized in such permit. Only the kind of *explosive* specified in such a permit shall be kept or stored.

❖ The fire code official may set limits on the quantity of explosive materials or blasting agents stored at any site as a means of maintaining control over the degree of hazard posed by explosive storage. Limits should be based on the severity of the exposure if an explosion or fire occurs in the magazine. This section is not intended to give the fire code official authority to prohibit the storage of explosives or blasting agents on any site.

5601.2.4 Financial responsibility. Before a permit is issued, as required by Section 5601.2, the applicant shall file with the jurisdiction a corporate surety bond in the principal sum of $100,000 or a public liability insurance policy for the same amount, for the purpose of the payment of all damages to persons or property that arise from, or are caused by, the conduct of any act authorized by the permit upon which any judicial judgment results. The *fire code official* is authorized to specify a greater or lesser amount when, in his or her opinion, conditions at the location of use indicate a greater or lesser amount is required. Government entities shall be exempt from this bond requirement.

❖ The fire code official should understand that some insurance coverages are invalidated by violations of federal, state and local regulations. Insurance coverages obtained by an owner or operator provide no protection from liability for the fire code official who is responsible for issuing approvals or conducting inspections. Moreover, third-party insurance may conflict with other coverages obtained by the jurisdiction, as well as governmental immunity or tort claims protections under state or local statutes.

5601.2.4.1 Blasting. Before approval to do blasting is issued, the applicant for approval shall file a bond or submit a certificate of insurance in such form, amount and coverage as determined by the legal department of the jurisdiction to be adequate in each case to indemnify the jurisdiction against any and all damages arising from permitted blasting.

❖ Insurance coverage is required in an amount specified by a jurisdiction's legal department. This coverage is intended to indemnify the operator or responsible individual from damages arising from accidents involving blasting operations.

5601.2.4.2 Fireworks display. The permit holder shall furnish a bond or certificate of insurance in an amount deemed adequate by the *fire code official* for the payment of all potential damages to a person or persons or to property by reason of the permitted display, and arising from any acts of the permit holder, the agent, employees or subcontractors.

❖ The bonding requirement is intended to indemnify the display operator and, if required by the fire code official, the jurisdiction in the event of an accident. Jurisdictions desiring coverage under the display operator's policy should require that the jurisdiction be named on the policy as an additional insured or a named insured. (Before making this requirement, check with legal counsel to determine the fire code official's and the jurisdiction's liability. Many tort claims acts exempt the government from certain claims, while others limit the amount of liability. The standard of care that must be exercised by the fire code official when reviewing conditions for a permit varies widely.)

The fire code official must exercise great care when establishing bonding requirements. Insurance companies underwriting fireworks displays often issue a large number of policies at the same time of year. Often the face value of these policies far exceeds the total of the companies' assets and reserves. Insurance evaluation services should be consulted to evaluate the companies' ratings. (Like credit bureaus, these evaluation services rate the companies' financial health on a letter scale—AAA being the highest rating, B and C the lowest.) Most policies include some coverage restrictions. Losses within 150 feet (45 720 mm) of the discharge site are often excluded from coverage, and claims within 600 feet (182 m) of the discharge site are frequently severely limited. When included in the policy, these separation distances usually conform to the separation requirements of NFPA 1123. This is done purposely to encourage display operators to follow nationally recognized standards.

The fire code official may require the approval holder to submit an original copy of the certificate of insurance verifying indemnification of the display.

INTERNATIONAL CODE COUNCIL®
Copyright © 2015 ICC. ALL RIGHTS RESERVED. Accessed by David Dammon on Jun 21, 2017 12:30:52 PM pursuant to License Agreement with ICC. No further reproduction or distribution authorized. ANY UNAUTHORIZED REPRODUCTION OR DISTRIBUTION IS A VIOLATION OF THE FEDERAL COPYRIGHT ACT AND THE LICENSE AGREEMENT, AND SUBJECT TO CIVIL AND CRIMINAL PENALTIES THEREUNDER.

When an original copy cannot be obtained, a facsimile of the original from the issuing broker is a good alternative. Most insurance companies authorize only highly trusted, specially trained, bonded employees to issue these certificates. The fire code official should examine the certificate carefully and never accept a photocopy of this document unless it can be thoroughly authenticated. Unscrupulous operators have been known to alter old certificates or produce and submit counterfeit certificates. The fire code official may contact the broker, underwriter or other insurance company representative to verify coverage, although these agents may be reluctant to confirm coverage if the jurisdiction is not named as an additional insured on the policy.

5601.3 Prohibited explosives. Permits shall not be issued or renewed for possession, manufacture, storage, handling, sale or use of the following materials and such materials currently in storage or use shall be disposed of in an *approved* manner.

1. Liquid nitroglycerin.
2. Dynamite containing more than 60-percent liquid *explosive* ingredient.
3. Dynamite having an unsatisfactory absorbent or one that permits leakage of a liquid *explosive* ingredient under any conditions liable to exist during storage.
4. Nitrocellulose in a dry and uncompressed condition in a quantity greater than 10 pounds (4.54 kg) of net weight in one package.
5. Fulminate of mercury in a dry condition and fulminate of all other metals in any condition except as a component of manufactured articles not hereinafter forbidden.
6. *Explosive* compositions that ignite spontaneously or undergo marked decomposition, rendering the products of their use more hazardous, when subjected for 48 consecutive hours or less to a temperature of 167°F (75°C).
7. New *explosive materials* until *approved* by DOTn, except that permits are allowed to be issued to educational, governmental or industrial laboratories for instructional or research purposes.
8. *Explosive materials* forbidden for transport by DOTn.
9. *Explosive materials* containing an ammonium salt and a chlorate.
10. *Explosives* not packed or marked as required by DOTn 49 CFR Parts 100–185.

Exception: Gelatin dynamite.

❖ The fire code official is not authorized to issue approval for manufacture, transportation, storage, sale or use because of extreme or unusual hazards presented by the listed materials.

5601.4 Qualifications. Persons in charge of magazines, blasting, fireworks display or pyrotechnic special effect operations shall not be under the influence of alcohol or drugs that impair sensory or motor skills, shall be not less than 21 years of age and shall demonstrate knowledge of all safety precautions related to the storage, handling or use of *explosives*, *explosive materials* or fireworks.

❖ The only discharge of fireworks permissible under the code is a public display conducted by competent pyrotechnicians in accordance with the requirements of NFPA 1123 and authorized by the fire code official.

The competence of the display operator is first among the important safeguards that must be observed for a safe and enjoyable public display. Chapter 6 of NFPA 1123 details the qualifications of competent fireworks display operators. Many jurisdictions also require display operators to possess a license or certificate of fitness. To obtain such a certificate, the operator must be bonded or indemnified, pass a written examination and serve an apprenticeship under another licensed or certified pyrotechnician.

The best sites are free of overhead obstructions and are well isolated, with clear viewing paths and landing areas. Fallout areas should be large, open areas, clear of spectators, vehicles and combustible materials. Generally, the discharge site must have a minimum radius of 70 feet (21 336 mm) for each inch of aerial shell diameter. Table 31.3 of NFPA 1123 specifies the separation distances.

Fireworks discharge sites must be separated from institutional and high-hazard occupancies by at least twice the distance specified in the table [140 feet (42 672 mm) per inch of shell diameter]. When mortars are positioned vertically (zero degrees), they must be located at the center of the display area. When mortars or shells stored at the discharge site are angled, they must be aimed away from principal spectator viewing and shell storage areas. When angled, mortars may be placed up to one-third the distance from the center of the display area to the principal spectator viewing area. Aerial shell trajectories must not come within 25 feet (7620 mm) of overhead obstructions, such as power lines and trees. Tents and canvas structures must be at least 100 feet (30 480 mm) from the discharge site.

High winds, precipitation or extremely hot, dry conditions should be avoided. Moisture-damaged shells must not be fired. If, in the opinion of the fire code official or the display operator, weather conditions present a danger, the display must be postponed or canceled.

5601.5 Supervision. The *fire code official* is authorized to require operations permitted under the provisions of Section 5601.2 to be supervised at any time by the *fire code official* in order to determine compliance with all safety and fire regulations.

❖ Only supervised public displays of fireworks, approved in advance by the fire code official, and wholesale sales in accordance with Section 5601.1.3, Exception 4, are permitted under the requirements of this chapter. Written application for approval of public displays must be made at least 15 days prior to the

INTERNATIONAL CODE COUNCIL®
Copyright © 2015 ICC. ALL RIGHTS RESERVED. Accessed by David Dammon on Jun 21, 2017 12:30:52 PM pursuant to License Agreement with ICC. No further reproduction or distribution authorized. ANY UNAUTHORIZED REPRODUCTION OR DISTRIBUTION IS A VIOLATION OF THE FEDERAL COPYRIGHT ACT AND THE LICENSE AGREEMENT, AND SUBJECT TO CIVIL AND CRIMINAL PENALTIES THEREUNDER.

display. Before approval can be issued, the fire code official must review the qualifications and determine the competence of the display operator, verify the operator's proof of insurance or indemnification, inspect the proposed discharge site and viewing area and review the operator's fire protection and crowd control plans.

5601.6 Notification. Whenever a new *explosive material* storage or manufacturing site is established, including a temporary job site, the local law enforcement agency, fire department and local emergency planning committee shall be notified 48 hours in advance, not including Saturdays, Sundays and holidays, of the type, quantity and location of *explosive materials* at the site.

❖ Local law enforcement, fire department and emergency planning officials must be notified of all new explosive materials storage and handling sites at least 48 hours, excluding weekends and holidays, prior to operations beginning. This period is intended to give officials time to prepare response plans for the new site, communicate the operation's potential hazards to first responders and train site personnel and emergency responders on the management of emergencies at the new site.

In practice, this notice should be submitted well in advance of the required 48 hours. Approval should not be granted or should be suspended if local law enforcement, fire department or emergency planning officials believe that adequate and proper preparations cannot be made to safeguard the public and emergency responders prior to the planned start of such operations.

5601.7 Seizure. The *fire code official* is authorized to remove or cause to be removed or disposed of in an *approved* manner, at the expense of the *owner*, *explosives*, *explosive materials* or fireworks offered or exposed for sale, stored, possessed or used in violation of this chapter.

❖ The seizure and disposal of controlled articles, in this case fireworks, at the owner's expense is usually considered a lawful taking of private property under the U.S. Constitution. However, before taking such measures, fire code officials should consult with legal counsel regarding due process requirements.

Seizure requires probable cause that the article or device being seized is unlawful itself, is being used in an unlawful manner, has been used in conjunction with an unlawful activity or poses an imminent danger to life and property. Recovery of expenses may require the filing of civil or criminal charges against the owner or his or her agents.

Before taking possession of fireworks, it is also prudent for the jurisdiction to verify that it has adequate facilities for safely handling, transporting, storing and disposing of the articles. The jurisdiction may require assistance to dispose of large quantities of special fireworks. Transportation of special fireworks is governed by DOTn 49 CFR. A commercial driver's license with a hazardous materials endorsement is required, as well as a vehicle with special equipment and inspections.

5601.8 Establishment of quantity of explosives and distances. The quantity of *explosives* and distances shall be in accordance with Sections 5601.8.1 and 5601.8.1.1.

❖ This section provides a methodology for establishing the explosive quantities and distances based on the class of explosives.

5601.8.1 Quantity of explosives. The quantity-distance (Q-D) tables in Sections 5604.5 and 5605.3 shall be used to provide the minimum separation distances from potential explosion sites as set forth in Tables 5601.8.1(1) through 5601.8.1(3). The classification and the weight of the *explosives* are primary characteristics governing the use of these tables. The net *explosive* weight shall be determined in accordance with Sections 5601.8.1.1 through 5601.8.1.4.

❖ The hazards presented by explosive materials range across a spectrum identified by hazard Divisions 1.1 through 1.6. When all of the explosive materials are in a single hazard division, the quantity is easily determined; however, when the materials are mixed among multiple hazard divisions, a method is needed to determine the level of hazard in order to apply the quantity-distance (Q-D) tables contained in Sections 5604 and 5605. The concepts in this and the following sections have been drawn from applicable federal regulations governing the use of these materials [i.e., the Department of Defense (DOD) *Contractor's Safety Manual for Ammunition and Explosives*].

This section requires the quantity of explosives and the distances used to be in accordance with the limits expressed in the Q-D Tables 5604.5.2(2), 5604.5.2(3) and 5605.3, as appropriate, based on application of Tables 5601.8.1(1) through 5601.8.1(3).

The intent of the tables is not unlike the intent behind Table 5604.5.2(1). They serve as guides to assist the user in answering the question as to what is the appropriate table to use when Q-D is to be determined. The relationship between intraplant distance (IPD), intraline distance (ILD), intermagazine distance (IMD), public traffic route (PTR), etc., is cross referenced in each of the tables.

Guidance is provided as to the interpolation of distances when using the tables. In general, linear interpolation is not appropriate for high explosives as the effects of an explosion vary with the cube root of the distance [Table 5601.8.1(1)]. Nonlinear interpolation may be performed with the provision that the interpolation be documented in an approved technical opinion and report as required by Section 104.7.2. For materials with mass fire hazards shown in Table 5601.8.1(2), linear interpolation is allowed as noted in Note b to the table.

5601.8.1.1 Mass-detonating explosives (Division 1.1, 1.2 or 1.5). The total net *explosive* weight of mass-detonating explo-

INTERNATIONAL CODE COUNCIL®
Copyright © 2015 ICC. ALL RIGHTS RESERVED. Accessed by David Dammon on Jun 21, 2017 12:30:52 PM pursuant to License Agreement with ICC. No further reproduction or distribution authorized. ANY UNAUTHORIZED REPRODUCTION OR DISTRIBUTION IS A VIOLATION OF THE FEDERAL COPYRIGHT ACT AND THE LICENSE AGREEMENT, AND SUBJECT TO CIVIL AND CRIMINAL PENALTIES THEREUNDER.

sives (Division 1.1, 1.2 or 1.5) shall be used. See Table 5604.5.2(1) or Table 5605.3 as appropriate.

Exception: Where the TNT equivalence of the *explosive material* has been determined, the equivalence is allowed to be used to establish the net *explosive* weight.

❖ Mass-detonating explosives are typically classified as Group H-1 by the *International Building Code*® (IBC®), and present a detonation hazard and a greater threat to adjacent objects and structures. The code, therefore, contains provisions in Table 5605.3 to deal with the separation distances for mass explosion hazards. This section establishes the weights to be used when applying that table as the total net weight of all mass-detonating explosive hazard divisions.

TABLE 5601.8.1(1). See below.

❖ See the commentary to Section 5601.8.1.

TABLE 5601.8.1(2). See below.

❖ See the commentary to Section 5601.8.1.

TABLE 5601.8.1(3). See page 56-8.

❖ See the commentary to Section 5601.8.1.

5601.8.1.2 Nonmass-detonating explosives (excluding Division 1.4). Nonmass-detonating *explosives* (excluding Division 1.4) shall be as follows:

1. Division 1.3 propellants. The total weight of the propellants alone shall be the net *explosive* weight. The net weight of propellant shall be used. See Table 5604.5.2(2).
2. Combinations of bulk metal powder and pyrotechnic compositions. The sum of the net weights of metal powders and pyrotechnic compositions in the containers shall be the net *explosive* weight. See Table 5604.5.2(2).

❖ This section establishes the explosive material weight for entering in Table 5604.5.2(3) for explosives classified as nonmass detonating.

5601.8.1.3 Combinations of mass-detonating and nonmass-detonating explosives (excluding Division 1.4). Combination of mass-detonating and nonmass-detonating *explosives* (excluding Division 1.4) shall be as follows:

1. Where Division 1.1 and 1.2 *explosives* are located in the same site, determine the distance for the total quan-

TABLE 5601.8.1(1)
APPLICATION OF SEPARATION DISTANCE (Q-D) TABLES—DIVISION 1.1, 1.2 AND 1.5 EXPLOSIVES[a, b, c]

ITEM	MAGAZINE	Q-D	OPERATING BUILDING	Q-D	INHABITED BUILDING	Q-D	PUBLIC TRAFFIC ROUTE	Q-D
Magazine	Table 5604.5.2(1)	IMD	Table 5605.3	ILD or IPD	Table 5604.5.2(1)	IBD	Table 5604.5.2(1)	PTR
Operating building	Table 5604.5.2(1)	ILD or IPD	Table 5605.3	ILD or IPD	Table 5604.5.2(1)	IBD	Table 5604.5.2(1)	PTR
Inhabited building	Table 5604.5.2(1)	IBD	Table 5604.5.2(1)	IBD	Not Applicable	Not Applicable	Not Applicable	Not Applicable
Public traffic route	Table 5604.5.2(1)	PTR	Table 5604.5.2(1)	PTR	Not Applicable	Not Applicable	Not Applicable	Not Applicable

For SI: 1 foot = 304.8 mm.

a. The minimum separation distance (D_o) shall be 60 feet. Where a building or magazine containing explosives is barricaded, the minimum distance shall be 30 feet.

b. Linear interpolation between tabular values in the referenced Q-D tables shall not be allowed. Nonlinear interpolation of the values shall be allowed subject to an approved technical opinion and report prepared in accordance with Section 104.7.2.

c. For definitions of Quantity-Distance abbreviations IBD, ILD, IMD, IPD and PTR, see Chapter 2.

TABLE 5601.8.1(2)
APPLICATION OF SEPARATION DISTANCE (Q-D) TABLES—DIVISION 1.3 EXPLOSIVES[a, b, c]

ITEM	MAGAZINE	Q-D	OPERATING BUILDING	Q-D	INHABITED BUILDING	Q-D	PUBLIC TRAFFIC ROUTE	Q-D
Magazine	Table 5604.5.2(2)	IMD	Table 5604.5.2(2)	ILD or IPD	Table 5604.5.2(2)	IBD	Table 5604.5.2(2)	PTR
Operating building	Table 5604.5.2(2)	ILD or IPD	Table 5604.5.2(2)	ILD or IPD	Table 5604.5.2(2)	IBD	Table 5604.5.2(2)	PTR
Inhabited building	Table 5604.5.2(2)	IBD	Table 5604.5.2(2)	IBD	Not Applicable	Not Applicable	Not Applicable	Not Applicable
Public traffic route	Table 5604.5.2(2)	PTR	Table 5604.5.2(2)	PTR	Not Applicable	Not Applicable	Not Applicable	Not Applicable

For SI: 1 foot = 304.8 mm.

a. The minimum separation distance (D_o) shall be not less than 50 feet.

b. Linear interpolation between tabular values in the referenced Q-D table shall be allowed.

c. For definitions of Quantity-Distance abbreviations IBD, ILD, IMD, IPD and PTR, see Chapter 2.

INTERNATIONAL CODE COUNCIL®
Copyright © 2015 ICC. ALL RIGHTS RESERVED. Accessed by David Dammon on Jun 21, 2017 12:30:52 PM pursuant to License Agreement with ICC. No further reproduction or distribution authorized. ANY UNAUTHORIZED REPRODUCTION OR DISTRIBUTION IS A VIOLATION OF THE FEDERAL COPYRIGHT ACT AND THE LICENSE AGREEMENT, AND SUBJECT TO CIVIL AND CRIMINAL PENALTIES THEREUNDER.

tity considered first as 1.1 and then as 1.2. The required distance is the greater of the two. Where the Division 1.1 requirements are controlling and the TNT equivalence of the 1.2 is known, the TNT equivalent weight of the 1.2 items shall be allowed to be added to the total *explosive* weight of Division 1.1 items to determine the net *explosive* weight for Division 1.1 distance determination. See Table 5604.5.2(2) or Table 5605.3 as appropriate.

2. Where Division 1.1 and 1.3 *explosives* are located in the same site, determine the distances for the total quantity considered first as 1.1 and then as 1.3. The required distance is the greater of the two. Where the Division 1.1 requirements are controlling and the TNT equivalence of the 1.3 is known, the TNT equivalent weight of the 1.3 items shall be allowed to be added to the total *explosive* weight of Division 1.1 items to determine the net *explosive* weight for Division 1.1 distance determination. See Table 5604.5.2(1), 5604.5.2(2) or 5605.3, as appropriate.
3. Where Division 1.1, 1.2 and 1.3 *explosives* are located in the same site, determine the distances for the total quantity considered first as 1.1, next as 1.2 and finally as 1.3. The required distance is the greatest of the three. As allowed by paragraphs 1 and 2 above, TNT equivalent weights for 1.2 and 1.3 items are allowed to be used to determine the net weight of *explosives* for Division 1.1 distance determination. Table 5604.5.2(1) or 5605.3 shall be used where TNT equivalency is used to establish the net *explosive* weight.
4. For composite pyrotechnic items Division 1.1 and Division 1.3, the sum of the net weights of the pyrotechnic composition and the *explosives* involved shall be used. See Tables 5604.5.2(1) and 5604.5.2(2).

❖ This section establishes the explosive material weights to be used when applying the various distance tables in Sections 5604 and 5605 for mixed storage combinations of explosives classified as both mass detonating and nonmass detonating. The most hazardous explosives will likely drive the distance requirements.

5601.8.1.4 Moderate fire—no blast hazards (Division 1.4). For Division 1.4 explosives, the total weight of the explosive material alone is the net weight. The net weight of the explosive material shall be used.

❖ This section establishes the explosive material weight to be used when applying Table 5604.5.2(3) for explosives classified as a moderate fire hazard without a blast hazard.

SECTION 5602
DEFINITIONS

5602.1 Definitions. The following terms are defined in Chapter 2:

AMMONIUM NITRATE.

BARRICADE.

Artificial barricade.

Natural barricade.

BARRICADED.

BLAST AREA.

BLAST SITE.

BLASTER.

BLASTING AGENT.

BULLET RESISTANT.

DETONATING CORD.

DETONATION.

DETONATOR.

DISCHARGE SITE.

DISPLAY SITE.

EXPLOSIVE.
High explosive.
Low explosive.
Mass-detonating explosives.
UN/DOTn Class 1 explosives.
Division 1.1.
Division 1.2.

TABLE 5601.8.1(3)
APPLICATION OF SEPARATION DISTANCE (Q-D) TABLES—DIVISION 1.4 EXPLOSIVES[a, b, c, d]

ITEM	MAGAZINE	Q-D	OPERATING BUILDING	Q-D	INHABITED BUILDING	Q-D	PUBLIC TRAFFIC ROUTE	Q-D
Magazine	Table 5604.5.2(3)	IMD	Table 5604.5.2(3)	ILD or IPD	Table 5604.5.2(3)	IBD	Table 5604.5.2(3)	PTR
Operating building	Table 5604.5.2(3)	ILD or IPD	Table 5604.5.2(3)	ILD or IPD	Table 5604.5.2(3)	IBD	Table 5604.5.2(3)	PTR
Inhabited building	Table 5604.5.2(3)	IBD	Table 5604.5.2(3)	IBD	Not Applicable	Not Applicable	Not Applicable	Not Applicable
Public traffic route	Table 5604.5.2(3)	PTR	Table 5604.5.2(3)	PTR	Not Applicable	Not Applicable	Not Applicable	Not Applicable

For SI: 1 foot = 304.8 mm.

a. The minimum separation distance (D_o) shall be not less than 50 feet.

b. Linear interpolation between tabular values in the referenced Q-D table shall not be allowed.

c. For definitions of Quantity-Distance abbreviations IBD, ILD, IMD, IPD and PTR, see Chapter 2.

d. This table shall not apply to consumer fireworks, 1.4G.

INTERNATIONAL CODE COUNCIL®
Copyright © 2015 ICC. ALL RIGHTS RESERVED. Accessed by David Dammon on Jun 21, 2017 12:30:52 PM pursuant to License Agreement with ICC. No further reproduction or distribution authorized. ANY UNAUTHORIZED REPRODUCTION OR DISTRIBUTION IS A VIOLATION OF THE FEDERAL COPYRIGHT ACT AND THE LICENSE AGREEMENT, AND SUBJECT TO CIVIL AND CRIMINAL PENALTIES THEREUNDER.

Division 1.3.
Division 1.4.
Division 1.5.
Division 1.6.

EXPLOSIVE MATERIAL.

FALLOUT AREA.

FIREWORKS.
Fireworks, 1.4G.
Fireworks, 1.3G.

FIREWORKS DISPLAY.

HIGHWAY.

INHABITED BUILDING.

MAGAZINE.
Indoor.
Type 1.
Type 2.
Type 3.
Type 4.
Type 5.

MORTAR.

NET EXPLOSIVE WEIGHT (net weight).

OPERATING BUILDING.

OPERATING LINE.

PLOSOPHORIC MATERIAL.

PROXIMATE AUDIENCE.

PUBLIC TRAFFIC ROUTE (PTR).

PYROTECHNIC ARTICLE.

PYROTECHNIC COMPOSITION.

PYROTECHNIC SPECIAL EFFECT.

PYROTECHNIC SPECIAL-EFFECT MATERIAL.

PYROTECHNICS.

QUANTITY-DISTANCE (Q-D).
Inhabited building distance (IBD).
Intermagazine distance (IMD).
Intraline distance (ILD) or Intraplant distance (IPD).
Minimum separation distance (D_o).

RAILWAY.

READY BOX.

SMALL ARMS AMMUNITION.

SMALL ARMS PRIMERS.

SMOKELESS PROPELLANTS.

SPECIAL INDUSTRIAL EXPLOSIVE DEVICE.

THEFT RESISTANT.

❖ Definitions of terms can help in the understanding and application of the code requirements. This section directs the code user to Chapter 2 for the proper application of the indicated terms used in this chapter. Terms may be defined in Chapter 2 or in another *International Code*® as indicated in Section 201.3, or the dictionary meaning may be all that is needed (see also commentary, Sections 201.1 through 201.4).

SECTION 5603
RECORD KEEPING AND REPORTING

5603.1 General. Records of the receipt, handling, use or disposal of *explosive materials*, and reports of any accidents, thefts or unauthorized activities involving *explosive materials* shall conform to the requirements of this section.

❖ An accumulation of invoices, sales slips, delivery tickets, receipts or similar records representing individual transactions will satisfy the requirements for record keeping if they include the signature of the receiver of the explosive materials.

5603.2 Transaction record. The permittee shall maintain a record of all transactions involving receipt, removal, use or disposal of *explosive materials*. Such records shall be maintained for a period of 5 years.

Exception: Where only Division 1.4G (consumer fireworks) are handled, records need only be maintained for a period of 3 years.

❖ A permit holder must keep a record of all transactions or operations involving explosive materials for 5 years and that record should be made available to the issuing authority upon request.

5603.3 Loss, theft or unauthorized removal. The loss, theft or unauthorized removal of *explosive materials* from a magazine or permitted facility shall be reported to the *fire code official*, local law enforcement authorities and the U.S. Department of Treasury, Bureau of Alcohol, Tobacco, Firearms and Explosives within 24 hours.

Exception: Loss of Division 1.4G (consumer fireworks) need not be reported to the Bureau of Alcohol, Tobacco, Firearms and Explosives.

❖ The loss, theft or unlawful removal of explosive materials must be reported within 24 hours to the ATF, to the permit-issuing authority and to the local law enforcement agency.

5603.4 Accidents. Accidents involving the use of *explosives*, *explosive materials* and fireworks that result in injuries or property damage shall be reported to the *fire code official* immediately.

❖ Accidents involving explosive material that cause a lost-time injury or property damage must be reported immediately to the authority having jurisdiction for its records.

5603.5 Misfires. The pyrotechnic display operator or blaster in charge shall keep a record of all aerial shells that fail to fire or charges that fail to detonate.

❖ A record of all misfires must be kept, eliminating the possibility of using the misfires in other displays and shows.

5603.6 Hazard communication. Manufacturers of *explosive materials* and fireworks shall maintain records of chemicals,

INTERNATIONAL CODE COUNCIL®
Copyright © 2015 ICC. ALL RIGHTS RESERVED. Accessed by David Dammon on Jun 21, 2017 12:30:52 PM pursuant to License Agreement with ICC. No further reproduction or distribution authorized. ANY UNAUTHORIZED REPRODUCTION OR DISTRIBUTION IS A VIOLATION OF THE FEDERAL COPYRIGHT ACT AND THE LICENSE AGREEMENT, AND SUBJECT TO CIVIL AND CRIMINAL PENALTIES THEREUNDER.

chemical compounds and mixtures required by DOL 29 CFR Part 1910.1200, and Section 407.

❖ Manufacturers of explosive materials and fireworks are required to assess the hazards of chemicals that they produce or import. Employers must inform their employees of the hazardous chemicals to which they are exposed, using a hazard communication program, labels and other forms of warning, Material Safety Data Sheets (MSDS) and information and training. In addition, this section requires distributors to transmit the required information to employers.

5603.7 Safety rules. Current safety rules covering the operation of magazines, as described in Section 5604.7, shall be posted on the interior of the magazine in a visible location.

❖ Magazine safety rules must be posted conspicuously on the interior of the magazine as a reminder to employees of the requirements for the safe operation of the magazine. These safety rules must cover security; open flames and lights; area around the magazine; separation distance of combustibles; instructions for packing and unpacking; acceptable tools and equipment.

SECTION 5604
EXPLOSIVE MATERIALS STORAGE AND HANDLING

5604.1 General. Storage of *explosives* and *explosive materials*, small arms ammunition, small arms primers, propellant-actuated cartridges and smokeless propellants in magazines shall comply with the provisions of this section.

❖ This section establishes requirements for various magazines associated with explosive materials storage.

5604.2 Magazine required. *Explosives* and *explosive materials*, and Division 1.3G fireworks shall be stored in magazines constructed, located, operated and maintained in accordance with the provisions of Section 5604 and NFPA 495 or NFPA 1124.

Exceptions:

1. Storage of fireworks at display sites in accordance with Section 5608.5 and NFPA 1123 or NFPA 1126.
2. Portable or mobile magazines not exceeding 120 square feet (11 m^2) in area shall not be required to comply with the requirements of the *International Building Code.*

❖ Explosives and blasting agents must be kept in magazines when not in use to reduce the exposure hazard.

5604.3 Magazines. The storage of *explosives* and *explosive materials* in magazines shall comply with Table 5604.3.

❖ This section gives the requirements for magazine storage of explosives and explosive materials. The section covers high explosives, low explosives and detonating cord.

TABLE 5604.3. See below.

❖ This table gives both the new and the old classification of explosives. It also states whether the explosive is a low or high type of explosive. The table specifies the maximum amounts allowed in the control areas, whether indoors or outdoors. The last columns specify the type of magazine required for storage of various explosives. Then Table 5604.5.2(1) refers to the proper table for separation distances.

5604.3.1 High explosives. *Explosive materials* classified as Division 1.1 or 1.2 or formerly classified as Class A by the

TABLE 5604.3
STORAGE AMOUNTS AND MAGAZINE REQUIREMENTS FOR EXPLOSIVES, EXPLOSIVE MATERIALS AND FIREWORKS, 1.3G MAXIMUM ALLOWABLE QUANTITY PER CONTROL AREA

NEW UN/ DOTn DIVISION	OLD DOTn CLASS	ATF/OSHA CLASS	INDOOR[a] (pounds)				OUTDOOR (pounds)	MAGAZINE TYPE REQUIRED				
			Unprotected	Cabinet	Sprinklers	Sprinklers & cabinet		1	2	3	4	5
1.1[b]	A	High	0	0	1	2	1	X	X	X	—	—
1.2	A	High	0	0	1	2	1	X	X	X	—	—
1.2	B	Low	0	0	1	1	1	X	X	X	X	—
1.3	B	Low	0	0	5	10	1	X	X	X	X	—
1.4[c]	B	Low	0	0	50	100	1	X	X	X	X	—
1.5	C	Low	0	0	1	2	1	X	X	X	X	—
1.5	Blasting Agent	Blasting Agent	0	0	1	2	1	X	X	X	X	X
1.6	Not Applicable	Not Applicable	0	0	1	2	1	X	X	X	X	X

For SI: 1 pound = 0.454 kg, 1 pound per gallon = 0.12 kg per liter, 1 ounce = 28.35 g.

a. A factor of 10 pounds per gallon shall be used for converting pounds (solid) to gallons (liquid) in accordance with Section 5003.1.2.

b. Black powder shall be stored in a Type 1, 2, 3 or 4 magazine as provided for in Section 5604.3.1.

c. This table shall not apply to consumer fireworks, 1.4G.

INTERNATIONAL CODE COUNCIL®
Copyright © 2015 ICC. ALL RIGHTS RESERVED. Accessed by David Dammon on Jun 21, 2017 12:30:52 PM pursuant to License Agreement with ICC. No further reproduction or distribution authorized. ANY UNAUTHORIZED REPRODUCTION OR DISTRIBUTION IS A VIOLATION OF THE FEDERAL COPYRIGHT ACT AND THE LICENSE AGREEMENT, AND SUBJECT TO CIVIL AND CRIMINAL PENALTIES THEREUNDER.

U.S. Department of Transportation shall be stored in Type 1, 2 or 3 magazines.

Exceptions:

1. Black powder shall be stored in a Type 1, 2, 3 or 4 magazine.
2. Cap-sensitive *explosive material* that is demonstrated not to be bullet sensitive shall be stored in a Type 1, 2, 3, 4 or 5 magazine.

❖ Type 1, 2 and 3 magazines are constructed with stricter requirements for the prevention of possible fire, water damage or bullet hazards.

5604.3.2 Low explosives. *Explosive materials* that are not cap sensitive shall be stored in a Type 1, 2, 3, 4 or 5 magazine.

❖ There are fewer restrictions on the storage of low explosives that are not cap sensitive. Protection against theft is a primary concern.

5604.3.3 Detonating cord. For quantity and distance purposes, detonating cord of 50 grains per foot shall be calculated as equivalent to 8 pounds (4 kg) of high *explosives* per 1,000 feet (305 m). Heavier or lighter core loads shall be rated proportionally.

❖ Standard detonating cord averaging about 50 grains per foot, which is considered the equivalent of 8 pounds (4 kg) of high explosives per 1,000 feet (305 m), is a benchmark for detonating cord. Heavier cord would be 60 grains per foot equaling 9 pounds (4 kg) of high explosive per 1,000 feet (305 m).

5604.4 Prohibited storage. Detonators shall be stored in a separate magazine for blasting supplies and shall not be stored in a magazine with other *explosive materials*.

❖ Storage of detonators with explosives may result in an accidental mass detonation. Detonators may be stored with other explosives only if that storage is approved by the fire code official and is under the following conditions [see DOTy 27 CFR, Part 55.213(b)]:

1. Nonmass-detonating detonators may be stored with electric squibs, safety fuses, ignitors and ignitor cord in a Type 4 magazine.
2. Detonators may be stored with delay devices, electric squibs, safety fuses, ignitors and ignitor cord in Type 1 and 2 magazines.

5604.5 Location. The use of magazines for storage of *explosives* and *explosive materials* shall comply with Sections 5604.5.1 through 5604.5.3.3.

❖ Explosives and blasting agents must be kept in magazines when not in use to reduce the exposure hazard.

5604.5.1 Indoor magazines. The use of indoor magazines for storage of *explosives* and *explosive materials* shall comply with the requirements of Sections 5604.5.1.1 through 5604.5.1.7.

❖ The following sections address the requirements for indoor magazines. These sections cover the use, construction, quantity limit, prohibited use, number and separation distance of indoor magazines.

5604.5.1.1 Use. The use of indoor magazines for storage of *explosives* and *explosive materials* shall be limited to occupancies of Group F, H, M or S, and research and development laboratories.

❖ Section 5604.2 requires all explosives in storage to be located in magazines. This section, however, recognizes that certain operations engaged in manufacturing or research processes require the use of magazines (commonly referred to as “day boxes”) inside the building for the purposes of storing small quantities of material awaiting use.

5604.5.1.2 Construction. Indoor magazines shall comply with the following construction requirements:

1. Construction shall be fire resistant and theft resistant.
2. Exterior shall be painted red.
3. Base shall be fitted with wheels, casters or rollers to facilitate removal from the building in an emergency.
4. Lid or door shall be marked with conspicuous white lettering not less than 3 inches (76 mm) high and minimum $^{1}/_{2}$ inch (12.7 mm) stroke, reading EXPLOSIVES—KEEP FIRE AWAY.
5. The least horizontal dimension shall not exceed the clear width of the entrance door.

❖ Indoor magazines need not be bullet resistant if the building in which they are located gives protection from bullet penetration. Not more than 50 pounds (23 kg) of high explosives may be stored in an indoor magazine, and not more than one indoor magazine may be stored inside a single building if the 50-pound (23 kg) limit has not been exceeded. The following comments clarify the intent of special requirements applying to magazines used indoors:

1. Construction specifications in this section state the minimum acceptable degree of protection from physical hazards and an exterior fire exposure when wood is used as a construction material for the magazine. Interior nails and screws must be countersunk to prevent damage to explosives and friction or sparks when the magazine is in transit or explosives are moved within the magazine.
2. The required color serves as a reminder of flammable, explosive and detonation hazards.
3. If a fire or an emergency occurs in the building, wheels or casters will permit the magazine to

INTERNATIONAL CODE COUNCIL®
Copyright © 2015 ICC. ALL RIGHTS RESERVED. Accessed by David Dammon on Jun 21, 2017 12:30:52 PM pursuant to License Agreement with ICC. No further reproduction or distribution authorized. ANY UNAUTHORIZED REPRODUCTION OR DISTRIBUTION IS A VIOLATION OF THE FEDERAL COPYRIGHT ACT AND THE LICENSE AGREEMENT, AND SUBJECT TO CIVIL AND CRIMINAL PENALTIES THEREUNDER.

be removed from the building or relocated to a safer area.

4. The required sign serves as a reminder to keep open flames and ignition sources away from the magazine.
5. In case of emergency, the magazine should clear the opening of the door for transfer of the magazine to the outdoors.

5604.5.1.3 Quantity limit. Not more than 50 pounds (23 kg) of *explosives* or *explosive materials* shall be stored within an indoor magazine.

Exception: Day boxes used for the storage of in-process material in accordance with Section 5605.6.4.1.

❖ Section 5605.6.4.1 establishes the requirements for magazines used for in-process materials that are consumed over the course of the workday. Magazines used in daily operations are generally referred to as "day boxes" by the industry. The ATF uses the term "day box" in its description of a Type 3 magazine. Magazines may either be used as storage magazines or as designated holding containers or structures within an operating building. The primary differences between a storage magazine and the magazines that are used as day boxes are limited to operational controls and the duration that the materials are allowed to be present in the work area.

A storage magazine is regulated by ATF, which requires materials present in the magazine to be identified on written logs and the inventory closely maintained during the time when it is present in the magazine. On the other hand, ATF does not regulate in-process materials that may be located in holding containers or structures, including day boxes located within an operating building.

Magazines (day boxes) that are used for the interim storage or staging of in-process materials are required to be emptied at the end of the work day. As containers for in-process material, they are not "storage" magazines, and as such are not further regulated by ATF. They are, however, regulated by Sections 5605.6.4 and 5605.6.4.1. The magazines (day boxes) used for in-process materials are protective enclosures that serve to isolate the materials from the work area and to minimize the exposure risk to personnel when materials are located outside of areas that may otherwise be provided with workstation protection. They serve to protect the material contained from potential fire exposure as well as to serve as a means to separate various in-process materials in order to avoid propagation hazards.

On the other hand, explosives stored in manufacturing buildings where the materials are not staged for in-process use are limited to quantities not exceeding 50 pounds (23 kg) net explosive weight. This storage can remain in the building without regard to a time limit, and all such storage may be further regulated by the operational controls required by ATF.

Day boxes or magazines used for process operations are used as a means to isolate in-process material from a workstation and to minimize the potential for involvement should an event occur within the immediate area of the workstation. This same material could be located in the same work space without the benefit of a day box.

Quantity control for these in-process magazines is limited to aggregating the quantity contained within the Q-D relationships of the building as specified by Section 5605.4. The 50-pound (23 kg) limit specified by this section applies to the storage of material where the storage can remain in an unattended mode and left in place during times when the building is unoccupied.

5604.5.1.4 Prohibited use. Indoor magazines shall not be used within buildings containing Group R occupancies.

❖ Indoor magazines are not permitted inside residences or dwellings because of the life hazard present and the difficulty of maintaining control over their use through routine inspections.

5604.5.1.5 Location. Indoor magazines shall be located within 10 feet (3048 mm) of an entrance and only on floors at or having ramp access to the exterior grade level.

❖ The location of these magazines must be chosen to minimize exposure of means of egress but maintain ready access from the exterior to facilitate fire fighting.

5604.5.1.6 Number. Not more than two indoor magazines shall be located in the same building. Where two such magazines are located in the same building, one magazine shall be used solely for the storage of not more than 5,000 detonators.

❖ The location of magazines in wholesale and retail establishments should be coordinated with and approved by the fire department's prefire plans. Any changes in magazine locations require prior approval of the fire code official and should be noted on the permit.

5604.5.1.7 Separation distance. Where two magazines are located in the same building, they shall be separated by a distance of not less than 10 feet (3048 mm).

❖ Explosives and blasting agents that are offered for sale must be stored in separate magazines to prevent an explosion in one magazine from triggering an explosion in another magazine or mass detonation.

5604.5.2 Outdoor magazines. Outdoor magazines other than Type 3 shall be located so as to comply with Table 5604.5.2(2) or 5604.5.2(3) as set forth in Tables 5601.8.1(1) through 5601.8.1(3). Where a magazine or group of magazines, as described in Section 5604.5.2.2, contains different classes of *explosive materials*, and Division 1.1 materials are present, the required separations for the magazine or magazine group as a whole shall comply with Table 5604.5.2(2).

❖ Specified separation distances in the tables are intended to minimize the potential damage to life and property that may result from a blast inside a maga-

INTERNATIONAL CODE COUNCIL®
Copyright © 2015 ICC. ALL RIGHTS RESERVED. Accessed by David Dammon on Jun 21, 2017 12:30:52 PM pursuant to License Agreement with ICC. No further reproduction or distribution authorized. ANY UNAUTHORIZED REPRODUCTION OR DISTRIBUTION IS A VIOLATION OF THE FEDERAL COPYRIGHT ACT AND THE LICENSE AGREEMENT, AND SUBJECT TO CIVIL AND CRIMINAL PENALTIES THEREUNDER.

zine. Additionally, the separation distances help control the hazard to a given magazine from exposure fires involving ground cover or a fire occurring in another magazine and thus provide clear access for emergency response personnel. Separation and the rules governing blasting for those magazines are addressed by Section 5607.

Tables 5601.8.1(1) through (3) enhance the code and provide guidance in application for operating buildings as well as magazines.

Sections 5604.5.2.1 and 5604.5.2.2 recognize the circumstance surrounding the use of multiple magazines and magazines that are arranged in groups where the separation between magazines is less than the tabular distance established by the intermagazine (inter = between or among) distances. The basis for these provisions is Note d to the American Table of Distances [Table 5604.5.2(1)], except that the permissive language has been removed and the note divided into two distinct provisions. The provisions of Sections 5604.5.2.1 and 5604.5.2.2 are consistent with the footnote, and applicable to Division 1.3 and 1.4 materials as well as to the materials addressed by Table 5604.5.2(1). It is common to group a number of magazines, each containing different materials, on manufacturing sites for the purposes of operational control and dedication to specific manufacturing lines.

5604.5.2.1 Separation. Where two or more storage magazines are located on the same property, each magazine shall comply with the minimum distances specified from inhabited buildings, public transportation routes and operating buildings. Magazines shall be separated from each other by not less than the intermagazine distances (IMD) shown for the separation of magazines.

❖ See the commentary to Section 5604.5.2.

TABLE 5604.5.2(1). See page 56-14.

❖ Table 5604.5.2(1) establishes minimum separation distances for the permanent storage of explosives from selected property classes. The intent of the table is to place explosive storage far enough away from occupied buildings, highways, railways and other magazines to reduce exposure of those properties to damage if a detonation of a magazine occurs. Storage exceeding tabular amounts in a single magazine is rare and thus requires special approval by the fire code official.

5604.5.2.2 Grouped magazines. Where two or more magazines are separated from each other by less than the intermagazine distances (IMD), such magazines as a group shall be considered as one magazine and the total quantity of *explosive materials* stored in the group shall be treated as if stored in a single magazine. The location of the group of magazines shall comply with the intermagazine distances (IMD) specified from other magazines or magazine groups, inhabited buildings (IBD), public transportation routes (PTR) and operating buildings (ILD or IPD) as required.

❖ See the commentary to Section 5604.5.2.

TABLE 5604.5.2(2). See page 56-16.

❖ Magazines containing special fireworks, other than special salutes, and black powder or other low explosives must be separated from each other and from inhabited buildings, public highways and passenger railways. Amounts of low explosives are located in the left two columns. The separation distances are located on the row of the amount of low explosives in reference to inhabited buildings, railways or other magazines.

TABLE 5604.5.2(3). See page 56-16.

❖ Items in Division 1.4 present a fire hazard with no blast hazard and virtually no fragmentation hazard beyond the fire-hazard clearance ordinarily specified for high-risk materials. Separate facilities for storage and handling of this division should not be less than 100 feet (30 480 mm) from other facilities, except those of noncombustible construction, which can be 50 feet (15 240 mm) from each other, provided both are noncombustible.

Division 1.4 materials are finished goods or devices that contain energetic materials. A fire or explosive event with Division 1.4 materials is limited to the individual devices involved and, unlike the materials in the other divisions, there is no mass reaction. The table of distances has been based on federal regulations as published by the DOD.

5604.5.3 Special requirements for Type 3 magazines. Type 3 magazines shall comply with Sections 5604.5.3.1 through 5604.5.3.3.

❖ These requirements are intended to provide a reasonable degree of safety for Type 3 magazines at blasting sites.

5604.5.3.1 Location. Wherever practicable, Type 3 magazines shall be located away from neighboring inhabited buildings, railways, highways and other magazines in accordance with Table 5604.5.2(2) or 5604.5.2(3) as applicable.

❖ Type 3 magazines must be located as remotely as practical from public rights-of-way, buildings and other magazines to reduce exposures between them.

5604.5.3.2 Supervision. Type 3 magazines shall be attended when *explosive materials* are stored within. *Explosive materials* shall be removed to appropriate storage magazines for unattended storage at the end of the work day.

❖ The magazine must be constantly supervised by a trained attendant when explosives are being stored to prevent unauthorized removal of the contents and to enforce safety rules.

INTERNATIONAL CODE COUNCIL®
Copyright © 2015 ICC. ALL RIGHTS RESERVED. Accessed by David Dammon on Jun 21, 2017 12:30:52 PM pursuant to License Agreement with ICC. No further reproduction or distribution authorized. ANY UNAUTHORIZED REPRODUCTION OR DISTRIBUTION IS A VIOLATION OF THE FEDERAL COPYRIGHT ACT AND THE LICENSE AGREEMENT, AND SUBJECT TO CIVIL AND CRIMINAL PENALTIES THEREUNDER.

TABLE 5604.5.2(1)
AMERICAN TABLE OF DISTANCES FOR STORAGE OF EXPLOSIVES AS APPROVED BY THE INSTITUTE OF MAKERS OF EXPLOSIVES AND REVISED JUNE 1991[a]

QUANTITY OF EXPLOSIVE MATERIALS[c]		DISTANCES IN FEET							
		Inhabited buildings		Public highways with traffic volume less than 3,000 vehicles per day		Public highways with traffic volume greater than 3,000 vehicles per day and passenger railways		Separation of magazines[d]	
Pounds over	Pounds not over	Barricaded	Unbarricaded	Barricaded	Unbarricaded	Barricaded	Unbarricaded	Barricaded	Unbarricaded
0	5	70	140	30	60	51	102	6	12
5	10	90	180	35	70	64	128	8	16
10	20	110	220	45	90	81	162	10	20
20	30	125	250	50	100	93	186	11	22
30	40	140	280	55	110	103	206	12	24
40	50	150	300	60	120	110	220	14	28
50	75	170	340	70	140	127	254	15	30
75	100	190	380	75	150	139	278	16	32
100	125	200	400	80	160	150	300	18	36
125	150	215	430	85	170	159	318	19	38
150	200	235	470	95	190	175	350	21	42
200	250	255	510	105	210	189	378	23	46
250	300	270	540	110	220	201	402	24	48
300	400	295	590	120	240	221	442	27	54
400	500	320	640	130	260	238	476	29	58
500	600	340	680	135	270	253	506	31	62
600	700	355	710	145	290	266	532	32	64
700	800	375	750	150	300	278	556	33	66
800	900	390	780	155	310	289	578	35	70
900	1,000	400	800	160	320	300	600	36	72
1,000	1,200	425	850	165	330	318	636	39	78
1,200	1,400	450	900	170	340	336	672	41	82
1,400	1,600	470	940	175	350	351	702	43	86
1,600	1,800	490	980	180	360	366	732	44	88
1,800	2,000	505	1,010	185	370	378	756	45	90
2,000	2,500	545	1,090	190	380	408	816	49	98
2,500	3,000	580	1,160	195	390	432	864	52	104
3,000	4,000	635	1,270	210	420	474	948	58	116
4,000	5,000	685	1,370	225	450	513	1,026	61	122
5,000	6,000	730	1,460	235	470	546	1,092	65	130
6,000	7,000	770	1,540	245	490	573	1,146	68	136
7,000	8,000	800	1,600	250	500	600	1,200	72	144
8,000	9,000	835	1,670	255	510	624	1,248	75	150
9,000	10,000	865	1,730	260	520	645	1,290	78	156
10,000	12,000	875	1,750	270	540	687	1,374	82	164
12,000	14,000	885	1,770	275	550	723	1,446	87	174
14,000	16,000	900	1,800	280	560	756	1,512	90	180
16,000	18,000	940	1,880	285	570	786	1,572	94	188
18,000	20,000	975	1,950	290	580	813	1,626	98	196
20,000	25,000	1,055	2,000	315	630	876	1,752	105	210

(continued)

INTERNATIONAL CODE COUNCIL®
Copyright © 2015 ICC. ALL RIGHTS RESERVED. Accessed by David Dammon on Jun 21, 2017 12:30:52 PM pursuant to License Agreement with ICC. No further reproduction or distribution authorized. ANY UNAUTHORIZED REPRODUCTION OR DISTRIBUTION IS A VIOLATION OF THE FEDERAL COPYRIGHT ACT AND THE LICENSE AGREEMENT, AND SUBJECT TO CIVIL AND CRIMINAL PENALTIES THEREUNDER.

TABLE 5604.5.2(1)-continued
AMERICAN TABLE OF DISTANCES FOR STORAGE OF EXPLOSIVES AS APPROVED BY THE INSTITUTE OF MAKERS OF EXPLOSIVES AND REVISED JUNE 1991[a]

QUANTITY OF EXPLOSIVE MATERIALS[c]		DISTANCES IN FEET							
		Inhabited buildings		Public highways with traffic volume less than 3,000 vehicles per day		Public highways with traffic volume greater than 3,000 vehicles per day and passenger railways		Separation of magazines[d]	
Pounds over	Pounds not over	Barricaded	Unbarricaded	Barricaded	Unbarricaded	Barricaded	Unbarricaded	Barricaded	Unbarricaded
25,000	30,000	1,130	2,000	340	680	933	1,866	112	224
30,000	35,000	1,205	2,000	360	720	981	1,962	119	238
35,000	40,000	1,275	2,000	380	760	1,026	2,000	124	248
40,000	45,000	1,340	2,000	400	800	1,068	2,000	129	258
45,000	50,000	1,400	2,000	420	840	1,104	2,000	135	270
50,000	55,000	1,460	2,000	440	880	1,140	2,000	140	280
55,000	60,000	1,515	2,000	455	910	1,173	2,000	145	290
60,000	65,000	1,565	2,000	470	940	1,206	2,000	150	300
65,000	70,000	1,610	2,000	485	970	1,236	2,000	155	310
70,000	75,000	1,655	2,000	500	1,000	1,263	2,000	160	320
75,000	80,000	1,695	2,000	510	1,020	1,293	2,000	165	330
80,000	85,000	1,730	2,000	520	1,040	1,317	2,000	170	340
85,000	90,000	1,760	2,000	530	1,060	1,344	2,000	175	350
90,000	95,000	1,790	2,000	540	1,080	1,368	2,000	180	360
95,000	100,000	1,815	2,000	545	1,090	1,392	2,000	185	370
100,000	110,000	1,835	2,000	550	1,100	1,437	2,000	195	390
110,000	120,000	1,855	2,000	555	1,110	1,479	2,000	205	410
120,000	130,000	1,875	2,000	560	1,120	1,521	2,000	215	430
130,000	140,000	1,890	2,000	565	1,130	1,557	2,000	225	450
140,000	150,000	1,900	2,000	570	1,140	1,593	2,000	235	470
150,000	160,000	1,935	2,000	580	1,160	1,629	2,000	245	490
160,000	170,000	1,965	2,000	590	1,180	1,662	2,000	255	510
170,000	180,000	1,990	2,000	600	1,200	1,695	2,000	265	530
180,000	190,000	2,010	2,010	605	1,210	1,725	2,000	275	550
190,000	200,000	2,030	2,030	610	1,220	1,755	2,000	285	570
200,000	210,000	2,055	2,055	620	1,240	1,782	2,000	295	590
210,000	230,000	2,100	2,100	635	1,270	1,836	2,000	315	630
230,000	250,000	2,155	2,155	650	1,300	1,890	2,000	335	670
250,000	275,000	2,215	2,215	670	1,340	1,950	2,000	360	720
275,000	300,000[b]	2,275	2,275	690	1,380	2,000	2,000	385	770

For SI: 1 foot = 304.8 mm, 1 pound = 0.454 kg.

a. This table applies only to the manufacture and permanent storage of commercial explosive materials. It is not applicable to transportation of explosives or any handling or temporary storage necessary or incident thereto. It is not intended to apply to bombs, projectiles or other heavily encased explosives.

b. Storage in excess of 300,000 pounds of explosive materials in one magazine is not allowed.

c. Where a manufacturing building on an explosive materials plant site is designed to contain explosive materials, such building shall be located with respect to its proximity to inhabited buildings, public highways and passenger railways based on the maximum quantity of explosive materials permitted to be in the building at one time.

d. Where two or more storage magazines are located on the same property, each magazine shall comply with the minimum distances specified from inhabited buildings, railways and highways, and, in addition, they should be separated from each other by not less than the distances shown for separation of magazines, except that the quantity of explosives in detonator magazines shall govern in regard to the spacing of said detonator magazines from magazines containing other explosive materials. Where any two or more magazines are separated from each other by less than the specified separation of magazines distances, then two or more such magazines, as a group, shall be considered as one magazine, and the total quantity of explosive materials stored in such group shall be treated as if stored in a single magazine located on the site of any magazine in the group and shall comply with the minimum distances specified from other magazines, inhabited buildings, railways and highways.

INTERNATIONAL CODE COUNCIL®
Copyright © 2015 ICC. ALL RIGHTS RESERVED. Accessed by David Dammon on Jun 21, 2017 12:30:52 PM pursuant to License Agreement with ICC. No further reproduction or distribution authorized. ANY UNAUTHORIZED REPRODUCTION OR DISTRIBUTION IS A VIOLATION OF THE FEDERAL COPYRIGHT ACT AND THE LICENSE AGREEMENT, AND SUBJECT TO CIVIL AND CRIMINAL PENALTIES THEREUNDER.

TABLE 5604.5.2(2)
TABLE OF DISTANCES (Q-D) FOR BUILDINGS AND MAGAZINES CONTAINING EXPLOSIVES—DIVISION 1.3 MASS-FIRE HAZARD[a, b, c]

QUANTITY OF DIVISION 1.3 EXPLOSIVES (NET EXPLOSIVES WEIGHT)		DISTANCES IN FEET			
Pounds over	Pounds not over	Inhabited Building Distance (IBD)	Distance to Public Traffic Route (PTR)	Intermagazine Distance (IMD)	Intraline Distance (ILD) or Intraplant Distance (IPD)
0	1,000	75	75	50	50
1,000	5,000	115	115	75	75
5,000	10,000	150	150	100	100
10,000	20,000	190	190	125	125
20,000	30,000	215	215	145	145
30,000	40,000	235	235	155	155
40,000	50,000	250	250	165	165
50,000	60,000	260	260	175	175
60,000	70,000	270	270	185	185
70,000	80,000	280	280	190	190
80,000	90,000	295	295	195	195
90,000	100,000	300	300	200	200
100,000	200,000	375	375	250	250
200,000	300,000	450	450	300	300

For SI: 1 foot = 304.8 mm, 1 pound = 0.454 kg

a. Black powder, where stored in magazines, is defined as low explosive by the Bureau of Alcohol, Tobacco, Firearms and Explosives (BATF).

b. For quantities less than 1,000 pounds, the required distances are those specified for 1,000 pounds. The use of lesser distances is allowed where supported by approved test data and/or analysis.

c. Linear interpolation of explosive quantities between table entries is allowed.

TABLE 5604.5.2(3)
TABLE OF DISTANCES (Q-D) FOR BUILDINGS AND MAGAZINES CONTAINING EXPLOSIVES—DIVISION 1.4[c]

QUANTITY OF DIVISION 1.4 EXPLOSIVES (NET EXPLOSIVES WEIGHT)		DISTANCES IN FEET			
Pounds over	Pounds not over	Inhabited Building Distance (IBD)	Distance to Public Traffic Route (PTR)	Intermagazine Distance[a, b] (IMD)	Intraline Distance (ILD) or Intraplant Distance[a] (IPD)
50	Not Limited	100	100	50	50

For SI: 1 foot = 304.8 mm, 1 pound = 0.454 kg.

a. A separation distance of 100 feet is required for buildings of other than Type I or Type II construction as defined in the *International Building Code.*

b. For earth-covered magazines, specific separation is not required.

1. Earth cover material used for magazines shall be relatively cohesive. Solid or wet clay and similar types of soil are too cohesive and shall not be used. Soil shall be free from unsanitary organic matter, trash, debris and stones heavier than 10 pounds or larger than 6 inches in diameter. Compaction and surface preparation shall be provided, as necessary, to maintain structural integrity and avoid erosion. Where cohesive material cannot be used, as in sandy soil, the earth cover over magazines shall be finished with a suitable material to ensure structural integrity.
2. The earth fill or earth cover between earth-covered magazines shall be either solid or sloped, in accordance with the requirements of other construction features, but not less than 2 feet of earth cover shall be maintained over the top of each magazines. To reduce erosion and facilitate maintenance operations, the cover shall have a slope of 2 horizontal to 1 vertical.

c. Restricted to articles, including articles packaged for shipment, that are not regulated as an explosive under Bureau of Alcohol, Tobacco, Firearms and Explosives regulations, or unpacked articles used in process operations that do not propagate a detonation or deflagration between articles. This table shall not apply to consumer fireworks, 1.4G.

INTERNATIONAL CODE COUNCIL®
Copyright © 2015 ICC. ALL RIGHTS RESERVED. Accessed by David Dammon on Jun 21, 2017 12:30:52 PM pursuant to License Agreement with ICC. No further reproduction or distribution authorized. ANY UNAUTHORIZED REPRODUCTION OR DISTRIBUTION IS A VIOLATION OF THE FEDERAL COPYRIGHT ACT AND THE LICENSE AGREEMENT, AND SUBJECT TO CIVIL AND CRIMINAL PENALTIES THEREUNDER.

5604.5.3.3 Use. Not more than two Type 3 magazines shall be located at the same blasting site. Where two Type 3 magazines are located at the same blasting site, one magazine shall used solely for the storage of detonators.

❖ Detonators must be stored in separate magazines from explosives to prevent an accidental mass detonation.

5604.6 Construction. Magazines shall be constructed in accordance with Sections 5604.6.1 through 5604.6.5.2.

❖ Magazine construction requirements are based on requirements in DOTy 27 CFR, Part 55 and NFPA 495. Magazines are identified by designation as one of five types: Types 1 through 5.

5604.6.1 Drainage. The ground around a magazine shall be graded so that water drains away from the magazine.

❖ Grading land away from the magazine allows storm water to run off and not accumulate in, under or around a magazine. Water may damage explosives. Contaminated water may conduct an electric current, possibly resulting in the detonation of explosives.

5604.6.2 Heating. Magazines requiring heat shall be heated as prescribed in NFPA 495 by either hot water radiant heating within the magazine or by indirect warm air heating.

❖ Indirect heating systems can prevent freezing and avoid excessive heating of magazine contents. These systems also do not constitute an ignition hazard.

5604.6.3 Lighting. Where lighting is necessary within a magazine, electric safety flashlights or electric safety lanterns shall be used, except as provided in NFPA 495.

❖ Safety flashlights and safety lanterns used inside magazines must be designed for use in hazardous locations. Fixed electric lighting installed as specified in Section 65.5.1 of NFPA 495 is acceptable. All electrical work must conform to NFPA 70 requirements. DOTy 27 CFR, Part 55.217(c), requires that copies of documents indicating that the electrical installation conforms to NFPA 70 to be maintained on site and always available for inspections. Requirements of NFPA 70 and NFPA 495 are intended to minimize the possibility that sparks generated by electrical arcing during normal operations or through equipment failures will ignite explosives within the magazine.

5604.6.4 Nonsparking materials. In other than Type 5 magazines, there shall not be exposed ferrous metal on the interior of a magazine containing packages of *explosives*.

❖ Ferrous metal must not be exposed in the interior of a Type 1, 2, 3 or 4 magazine where the metal could come in contact with packages of explosives.

5604.6.5 Signs and placards. Property upon which Type 1 magazines and outdoor magazines of Types 2, 4 and 5 are located shall be posted with signs stating: EXPLOSIVES—KEEP OFF. These signs shall be of contrasting colors with a minimum letter height of 3 inches (76 mm) with a minimum brush stroke of $^1/_2$ inch (12.7 mm). The signs shall be located to minimize the possibility of a bullet shot at the sign hitting the magazine.

❖ Signs are intended to identify the public hazard and provide warning to fire fighters. Signs should also be prominently displayed at the entrance to the property and at regular intervals around the perimeter of the property. Contrasting letters and backgrounds on the signs (red on white preferred) should be used with letters that are legible from a distance. A minimum 3-inch (76 mm) height is recommended for the letters. The Institute of Makers of Explosives (IME) recommends the following wording in addition to that required by this section:

DANGER!
NEVER FIGHT EXPLOSIVE FIRES.
EXPLOSIVES ARE STORED AT THIS SITE.
CALL: _____.

Military and DOT explosives warning signs use black letters, numerals and symbols on orange backgrounds. Nonreflective sign materials make these types of signs difficult to identify and read. Signs must always be conspicuously posted and maintained in a clear, clean and legible condition.

Signs are attractive targets for irresponsible firearms bearers. Therefore, signs must be located, in anticipation of an individual shooting a rifle or handgun at the sign, so the bullet will not hit the magazine.

The absence of clear warning signs was cited as a contributing factor in the November 1988 deaths of six Kansas City, Missouri, fire fighters who were approaching a Type 4 magazine at a remote highway construction site when it exploded. A similar incident in March 1989 in Peterborough, England, killed one fire fighter and injured 76 other persons, including six fire fighters. The Peterborough, England, incident occurred while fire fighters were trying to control a fire in a motor carrier hauling explosives.

5604.6.5.1 Access road signs. At the entrance to *explosive* material manufacturing and storage sites, all access roads shall be posted with the following warning sign or other *approved* sign:

DANGER!
NEVER FIGHT EXPLOSIVE FIRES.
EXPLOSIVES ARE STORED ON THIS SITE
CALL _____.

The sign shall be weather-resistant with a reflective surface and have lettering not less than 2 inches (51 mm) high.

❖ Signs are intended to identify the public hazard and warn fire fighters. Signs should also be prominently displayed at the entrance to the property and at regular intervals around the perimeter of the property. Contrasting letters and backgrounds on the signs (red on white preferred) should be used with letters that are legible from a distance. A minimum 2-inch (51 mm) height is recommended for the letters.

INTERNATIONAL CODE COUNCIL®
Copyright © 2015 ICC. ALL RIGHTS RESERVED. Accessed by David Dammon on Jun 21, 2017 12:30:52 PM pursuant to License Agreement with ICC. No further reproduction or distribution authorized. ANY UNAUTHORIZED REPRODUCTION OR DISTRIBUTION IS A VIOLATION OF THE FEDERAL COPYRIGHT ACT AND THE LICENSE AGREEMENT, AND SUBJECT TO CIVIL AND CRIMINAL PENALTIES THEREUNDER.

5604.6.5.2 Placards. Type 5 magazines containing Division 1.5 blasting agents shall be prominently placarded as required during transportation by DOTn 49 CFR Part 172 and DOTy 27 CFR Part 55.

❖ Requirements for placarding explosives shipments are found in DOTn 49 CFR; Part 172, Subpart F. Commentary Figure 5604.6.5.2 depicts the format of a typical explosives placard (black graphics on an orange background). Placards allow emergency response personnel to readily identify the explosive materials being transported if a fire or accident involving the transport vehicle occurs.



Figure 5604.6.5.2
AN EXAMPLE OF AN EXPLOSIVES PLACARD

5604.7 Operation. Magazines shall be operated in accordance with Sections 5604.7.1 through 5604.7.9.

❖ The following sections address the operations of magazines. Items covered include security; open flames; brush; combustible storage; unpacking and packing; tools and equipment.

5604.7.1 Security. Magazines shall be kept locked in the manner prescribed in NFPA 495 at all times except during placement or removal of *explosives* or inspection.

❖ Security precautions must be taken to minimize the possibility of theft, tampering or misuse of explosives.

5604.7.2 Open flames and lights. Smoking, matches, flame-producing devices, open flames, firearms and firearms cartridges shall not be allowed inside of or within 50 feet (15 240 mm) of magazines.

❖ The carrying or use of open flames, spark-producing devices, matches and firearms is prohibited to prevent accidental ignition of explosives within the magazine.

5604.7.3 Brush. The area located around a magazine shall be kept clear of brush, dried grass, leaves, trash, debris and similar combustible materials for a distance of 25 feet (7620 mm).

❖ Brush and dry grass, leaves, trash and other easily ignitable debris must be kept clear for a distance of 25 feet (7620 mm) around magazines containing explosives to minimize the threat to magazine contents from fire exposure.

5604.7.4 Combustible storage. Combustible materials shall not be stored within 50 feet (15 240 mm) of magazines.

❖ Elimination of combustible materials within 50 feet (15 240 mm) of magazines eliminates both a fuel source and a possible source of ignition for stored explosives.

5604.7.5 Unpacking and repacking explosive materials. Containers of *explosive materials*, except fiberboard containers, and packages of damaged or deteriorated *explosive materials* or fireworks shall not be unpacked or repacked inside or within 50 feet (15 240 mm) of a magazine or in close proximity to other *explosive materials*.

❖ The packing or unpacking of boxes, crates, drums or other containers with metal staples, bands, nails or other ferrous parts may generate sparks, which could possibly ignite explosives stored within a magazine. The separation distance is intended to reduce the possibility of secondary explosions if an accident involving the explosives being handled occurs.

5604.7.5.1 Storage of opened packages. Packages of *explosive materials* that have been opened shall be closed before being placed in a magazine.

❖ The closing of the opened packages eliminates the hazard of mixing with other explosives, being available in case of an ignition source and causing an explosion or fire.

5604.7.5.2 Nonsparking tools. Tools used for the opening and closing of packages of *explosive materials*, other than metal slitters for opening paper, plastic or fiberboard containers, shall be made of nonsparking materials.

❖ Nonsparking tools are used to avoid producing sparks and igniting explosives. These tools must either be made from nonsparking materials or be painted to prevent them from producing sparks.

5604.7.5.3 Disposal of packaging. Empty containers and paper and fiber packaging materials that previously contained *explosive materials* shall be disposed of or reused in a *approved* manner.

❖ Debris from explosives shipments or use, including discarded packages, bags and cartons, must be disposed in accordance with the explosive manufacturer's instructions.

5604.7.6 Tools and equipment. Metal tools, other than nonferrous transfer conveyors and ferrous metal conveyor stands

INTERNATIONAL CODE COUNCIL®
Copyright © 2015 ICC. ALL RIGHTS RESERVED. Accessed by David Dammon on Jun 21, 2017 12:30:52 PM pursuant to License Agreement with ICC. No further reproduction or distribution authorized. ANY UNAUTHORIZED REPRODUCTION OR DISTRIBUTION IS A VIOLATION OF THE FEDERAL COPYRIGHT ACT AND THE LICENSE AGREEMENT, AND SUBJECT TO CIVIL AND CRIMINAL PENALTIES THEREUNDER.

protected by a coat of paint, shall not be stored in a magazine containing *explosive materials* or detonators.

❖ Tools that can be stored in a magazine are limited to those needed to maintain the magazine and facilitate the transfer of explosives. These tools must be nonsparking or painted to prevent them from producing sparks. Ferrous tools with chipped or worn protective coatings must be removed from service and repainted before being placed back in use.

5604.7.7 Contents. Magazines shall be used exclusively for the storage of *explosive materials*, blasting materials and blasting accessories.

❖ Additional materials likely to pose a fire hazard or produce sparks when used cannot be stored inside magazines.

5604.7.8 Compatibility. Corresponding grades and brands of *explosive materials* shall be stored together and in such a manner that the grade and brand marks are visible. Stocks shall be stored so as to be easily counted and checked. Packages of *explosive materials* shall be stacked in a stable manner not exceeding 8 feet (2438 mm) in height.

❖ Identical grades and brands of explosives must be stored together, with the brands and grade marks showing. Explosive materials must be stored so they can be easily checked and counted.

5604.7.9 Stock rotation. When *explosive material* is removed from a magazine for use, the oldest usable stocks shall be removed first.

❖ Use of the oldest usable stock first assists in elimination of explosive material before it can deteriorate and become hazardous.

5604.8 Maintenance. Maintenance of magazines shall comply with Sections 5604.8.1 through 5604.8.3.

❖ This section addresses housekeeping, repairs and the floors on which the magazines are maintained.

5604.8.1 Housekeeping. Magazine floors shall be regularly swept and be kept clean, dry and free of grit, paper, empty packages and rubbish. Brooms and other cleaning utensils shall not have any spark-producing metal parts. Sweepings from magazine floors shall be disposed of in accordance with the manufacturers' *approved* instructions.

❖ Dirt and debris may contain materials that produce sparks or friction when explosives are moved within the magazine. Some blasting agents become sensitized or unstable when contaminated; therefore, regular cleaning and a maintenance schedule should be established and followed.

Cleaning implements with ferrous parts may produce sparks when used improperly. Only nonsparking tools may be used inside the magazine.

Finely divided residue on packages may pose an extreme fire hazard when improperly discarded. Most manufacturers recommend burning packages and debris from explosives at an approved remote location. The IME Safety Library Publication No. 21 contains general guidance on the subject of disposing packages of explosives. Poor housekeeping often indicates other safety hazards.

5604.8.2 Repairs. *Explosive materials* shall be removed from the magazine before making repairs to the interior of a magazine. *Explosive materials* shall be removed from the magazine before making repairs to the exterior of the magazine where there is a possibility of causing a fire. *Explosive materials* removed from a magazine under repair shall either be placed in another magazine or placed a safe distance from the magazine, where they shall be properly guarded and protected until repairs have been completed. Upon completion of repairs, the *explosive materials* shall be promptly returned to the magazine. Floors shall be cleaned before and after repairs.

❖ Explosives must be removed from the magazine under repair and placed in another magazine or a safe distance away before beginning repair activities that could cause sparks or fire, and the floor must be cleaned before beginning repairs inside a magazine. Explosives must be properly guarded until they are returned to the magazine.

5604.8.3 Floors. Magazine floors stained with liquid shall be dealt with in accordance with instructions obtained from the manufacturer of the *explosive material* stored in the magazine.

❖ Floors stained with nitroglycerin must be cleaned according to the manufacturer's instructions. If the manufacturer cannot be identified or reached, another manufacturer, the nearest U.S. military installation, the ATF regional office or a local law enforcement agency must be contacted to request an explosive ordnance disposal (EOD) team.

5604.9 Inspection. Magazines containing *explosive materials* shall be opened and inspected at maximum seven-day intervals. The inspection shall determine whether there has been an unauthorized or attempted entry into a magazine or an unauthorized removal of a magazine or its contents.

❖ The importance of magazine security and explosives accountability cannot be overestimated, especially in light of the upsurge in incidents of international terrorists using bombs. In most cases of illicit use of explosives, the source of the explosive materials has been legitimate operating explosive material users. Magazines must be inspected at least weekly to determine that no theft or attempted theft has occurred. Thefts or tampering should be reported immediately to the fire code official and local and federal law enforcement officials.

5604.10 Disposal of explosive materials. *Explosive materials* shall be disposed of in accordance with Sections 5604.10.1 through 5604.10.7.

❖ Sections 5604.10.1 through 5604.10.7 cover the procedures for proper disposal of explosive materials. Areas covered are notification, deteriorated materials, qualified persons, storage of misfires, disposal sites, reuse of sites and personnel safeguards.

INTERNATIONAL CODE COUNCIL®
Copyright © 2015 ICC. ALL RIGHTS RESERVED. Accessed by David Dammon on Jun 21, 2017 12:30:52 PM pursuant to License Agreement with ICC. No further reproduction or distribution authorized. ANY UNAUTHORIZED REPRODUCTION OR DISTRIBUTION IS A VIOLATION OF THE FEDERAL COPYRIGHT ACT AND THE LICENSE AGREEMENT, AND SUBJECT TO CIVIL AND CRIMINAL PENALTIES THEREUNDER.

5604.10.1 Notification. The *fire code official* shall be notified immediately where deteriorated or leaking *explosive materials* are determined to be dangerous or unstable and in need of disposal.

❖ The notification must include the following for each site where explosive material is stored: type of explosives, magazine capacity and location.

5604.10.2 Deteriorated materials. Where an *explosive material* has deteriorated to an extent that it is in an unstable or dangerous condition, or when a liquid has leaked from an *explosive material*, the person in possession of such material shall immediately contact the material's manufacturer to obtain disposal and handling instructions.

❖ Damaged or deteriorated explosives may become sensitized and unpredictable. Extreme caution must be used in handling such materials. Some explosives, such as nitroglycerin, become shock sensitive when contaminated or deteriorated because of age, exposure to ultraviolet light or excessive heating. Emergency forces should be summoned for standby while cleanup procedures are underway in situations involving sensitized or unstable explosives. If an accident occurs, fire fighters should attempt to protect exposures only from a distance and rescue individuals who are in immediate danger and safely reachable. Explosives manufacturers do not recommend fighting fires involving explosives because of the extreme danger associated with such operations. Manufacturers can provide advice and assistance in identifying a safe means of disposing of damaged explosives.

5604.10.3 Qualified person. The work of destroying *explosive materials* shall be directed by persons experienced in the destruction of *explosive* materials.

❖ Only an approved and experienced explosives technician is permitted to dispose of damaged, dangerous or unstable explosives. IME Safety Library Publication No. 21 contains general guidance on the safe destruction of damaged explosives and explosive waste. However, the manufacturer's specific guidance should always be followed first.

A military or law enforcement EOD team should be contacted if the licensee or permittee cannot provide a suitable explosives technician. Member companies of the IME have entered into a cooperative agreement to give advice and consultation to law enforcement agencies, fire departments and regulatory officials regarding the destruction or disposal of dangerous, damaged or unstable commercial explosives. Another manufacturer can lend assistance if the manufacturer of the damaged or dangerous goods cannot be identified or located.

5604.10.4 Storage of misfires. *Explosive materials* and fireworks recovered from blasting or display misfires shall be placed in a magazine until an experienced person has determined the proper method for disposal.

❖ Explosives recovered from misfires must be placed in a separate licensed magazine until they can be disposed of according to the manufacturer's recommendations.

5604.10.5 Disposal sites. Sites for the destruction of *explosive materials* and fireworks shall be *approved* and located at the maximum practicable safe distance from inhabited buildings, public highways, operating buildings and all other exposures to ensure keeping air blast and ground vibration to a minimum. The location of disposal sites shall not be closer to magazines, inhabited buildings, railways, highways and other rights-of-way than is allowed by Tables 5604.5.2(1), 5604.5.2(2) and 5604.5.2(3). Where possible, *barricades* shall be utilized between the destruction site and inhabited buildings. Areas where *explosives* are detonated or burned shall be posted with adequate warning signs.

❖ A blasting shelter should be located near the burn area for protection from the blast and for emergency use of personnel.

5604.10.6 Reuse of site. Unless an *approved* burning site has been thoroughly saturated with water and has passed a safety inspection, 48 hours shall elapse between the completion of a burn and the placement of scrap explosive materials for a subsequent burn.

❖ Procedures and safeguards must be in place to prevent scrap explosive material from being placed in any burn location until at least 48 hours has passed since the last fires have gone out.

5604.10.7 Personnel safeguards. Once an *explosive* burn operation has been started, personnel shall relocate to a safe location where adequate protection from air blast and flying debris is provided. Personnel shall not return to the burn area until the person in charge has inspected the burn site and determined that it is safe for personnel to return.

❖ A warning device must be used when explosives and fireworks materials are being destroyed. This warning device may also be used to advise personnel when the area is safe for reentry.

SECTION 5605
MANUFACTURE, ASSEMBLY AND TESTING OF EXPLOSIVES, EXPLOSIVE MATERIALS AND FIREWORKS

5605.1 General. The manufacture, assembly and testing of *explosives*, ammunition, blasting agents and fireworks shall comply with the requirements of this section and NFPA 495 or NFPA 1124.

Exceptions:

1. The hand loading of small arms ammunition prepared for personal use and not offered for resale.
2. The mixing and loading of blasting agents at blasting sites in accordance with NFPA 495.
3. The use of binary *explosives* or plosophoric materials in blasting or pyrotechnic special effects applications in accordance with NFPA 495 or NFPA 1126.

❖ This section covers emergency planning; separation of operating and manufacturing buildings; control

INTERNATIONAL CODE COUNCIL®
Copyright © 2015 ICC. ALL RIGHTS RESERVED. Accessed by David Dammon on Jun 21, 2017 12:30:52 PM pursuant to License Agreement with ICC. No further reproduction or distribution authorized. ANY UNAUTHORIZED REPRODUCTION OR DISTRIBUTION IS A VIOLATION OF THE FEDERAL COPYRIGHT ACT AND THE LICENSE AGREEMENT, AND SUBJECT TO CIVIL AND CRIMINAL PENALTIES THEREUNDER.

areas; operations and maintenance for the manufacturing, assembling and testing of explosives, blasting agents and fireworks. Section 5606 covers small arms ammunition. Exceptions 2 and 3 are addressed in NFPA standards.

Fireworks manufacturing is a relatively localized or concentrated industry. Most fireworks plants have settled and remain in predominantly rural locations for several reasons. Substantial sites are required to allow for isolation of manufacturing and storage buildings from one another to limit hazard exposures. These sites permit insulation from regulatory supervision. Skilled workers are required to assemble the fireworks; as a result, a loyal workforce usually develops in the regions where plants are located. Consequently, the local economy usually becomes heavily dependent on the industry's presence. Further, public concern and outcry is minimized by these factors, since occasional accidents are more or less expected. Increased regulatory attention and the prohibition of common fireworks in many states has, however, led to increased foreign competition that has further impacted the industry. Today, fewer than 100 American firms are engaged in this activity and they employ less than 3,000 persons. The U.S. Department of Treasury (DOTy) enforces regulations (DOTy 27 CFR; 55 and 181) restricting the import, manufacture, storage and use of fireworks and explosives.

5605.2 Emergency planning and preparedness. Emergency plans, emergency drills, employee training and hazard communication shall conform to the provisions of this section and Sections 404, 405, 406 and 407.

❖ Reference to Sections 404, 405 and 407 are also included for assistance with this section. See the commentary to those sections.

5605.2.1 Hazardous Materials Management Plans and Inventory Statements required. Detailed Hazardous Materials Management Plans (HMMP) and Hazardous Materials Inventory Statements (HMIS) complying with the requirements of Section 407 shall be prepared and submitted to the local emergency planning committee, the *fire code official* and the local fire department.

❖ Section 407.6 requires that Hazardous Materials Management Plans (HMMP) be in accordance with Section 2701.4.1, which gives the requirements for a facility site plan. Section 407.5 requires that the Hazardous Materials Inventory Statements (HMIS) be in accordance with Section 2701.4.2, which gives the items required in an HMIS.

5605.2.2 Maintenance of plans. A copy of the required HMMP and HMIS shall be maintained on site and furnished to the *fire code official* on request.

❖ A copy of the plant's plans must be kept in the office on the premises of each explosives, ammunition, blasting agent or fireworks manufacturing plant and must be made available to the fire code official or an authorized representative upon request.

5605.2.3 Employee training. Workers who handle *explosives* or *explosive* charges or dispose of *explosives* shall be trained in the hazards of the materials and processes in which they are to be engaged and with the safety rules governing such materials and processes.

❖ Employees who are required to handle the explosive materials need instructions concerning the hazards of the products. MSDS are a great source for the hazards of the materials. The employees must go through an orientation on the rules and regulations concerning the processes.

5605.2.4 Emergency procedures. *Approved* emergency procedures shall be formulated for each plant and shall include personal instruction in any anticipated emergency. Personnel shall be made aware of an emergency warning signal.

❖ Emergency procedures must be developed for each plant and building. Fire and disaster drills must be conducted and records of those drills must be kept at the plant office.

5605.3 Intraplant separation of operating buildings. *Explosives* manufacturing buildings and fireworks manufacturing buildings, including those where *explosive* charges are assembled, manufactured, prepared or loaded utilizing Division 1.1, 1.2, 1.3, 1.4 or 1.5 *explosives*, shall be separated from all other buildings, including magazines, within the confines of the manufacturing plant, at a distance not less than those shown in Table 5605.3 or 5604.5.2(3), as appropriate.

Exception: Fireworks manufacturing buildings separated in accordance with NFPA 1124.

The quantity of *explosives* in an operating building shall be the net weight of all *explosives* contained therein. Distances shall be based on the hazard division requiring the greatest separation, unless the aggregate *explosive* weight is divided by *approved* walls or shields designed for that purpose. Where dividing a quantity of *explosives* into smaller stacks, a suitable barrier or adequate separation distance shall be provided to prevent propagation from one stack to another.

Where distance is used as the sole means of separation within a building, such distance shall be established by testing. Testing shall demonstrate that propagation between stacks will not result. Barriers provided to protect against *explosive* effects shall be designed and installed in accordance with *approved* standards.

❖ Manufacturing operations frequently contain explosive materials that may fall into more than one division. When such is the case, Q-D relationships are established on the most severe case. The separation of explosives into piles by distance or the construction of substantial dividing walls (barrier wall) is a recognized means of mitigating the effects of conflagration by propagation. Propagation distances are established by testing. The construction of barriers can be accomplished by various means; however, the design of such structures must be specific to address the nature (impulse pressures) and time factors involved with the energy produced by explosive materials. The primary reference is U.S. Army

INTERNATIONAL CODE COUNCIL®
Copyright © 2015 ICC. ALL RIGHTS RESERVED. Accessed by David Dammon on Jun 21, 2017 12:30:52 PM pursuant to License Agreement with ICC. No further reproduction or distribution authorized. ANY UNAUTHORIZED REPRODUCTION OR DISTRIBUTION IS A VIOLATION OF THE FEDERAL COPYRIGHT ACT AND THE LICENSE AGREEMENT, AND SUBJECT TO CIVIL AND CRIMINAL PENALTIES THEREUNDER.

Technical Manual TM 51300, Air Force Manual (AFM) 8822 and Navy NAVFAC P397, *Structures to Resist the Effects of Accidental Explosions*.

The exception recognizes that NFPA 1124 requirements cover site security; separation distances for manufacturing facilities; storage of salute and black powder; building construction and transportation of fireworks.

TABLE 5605.3. See below.

❖ Table 5605.3 has been designed to recognize explosives that either detonate or present a mass-explosion hazard (Divisions 1.1, 1.2 and 1.5). Under the classification system used by the code there is a need to recognize the various hazards of explosive materials when classified in other divisions, specifically Division 1.3 and 1.4 materials. The hazards of Division 1.3 materials are mass fire hazards where fire can involve the aggregate amount of undivided material. As finished goods, the hazards of Division 1.4 materials are limited to events with the individual articles. Division 1.5 materials are capable of detonation, and including them in Table 5605.3 represents the most conservative case. This table applies to the separation distances of buildings within an explosive manufacturing plant. Of course, the distance is related to the amount of explosives in storage. Distance and barricades are means of reducing damage to property and injury to personnel. With a barricade, the distance is sufficient, but without a barricade, the distance must be doubled to be the equivalent of a barricade. The quantity is calculated in pounds in each structure or building.

5605.4 Separation of manufacturing operating buildings from inhabited buildings, public traffic routes and magazines. Where an operating building on an *explosive* materials plant site is designed to contain *explosive* materials, such a building shall be located away from inhabited buildings, public traffic routes and magazines in accordance with Table 5604.5.2(2) or 5604.5.2(3) as appropriate, based on the maxi-

TABLE 5605.3
MINIMUM INTRALINE (INTRAPLANT) SEPARATION DISTANCES (ILD OR IPD) BETWEEN BARRICADED OPERATING BUILDINGS CONTAINING EXPLOSIVES—DIVISION 1.1, 1.2 OR 1.5 MASS-EXPLOSION HAZARD[a]

NET EXPLOSIVE WEIGHT			NET EXPLOSIVE WEIGHT		
Pounds over	Pounds not over	Intraline Distance (ILD) or Intraplant Distance (IPD) (feet)	Pounds over	Pounds not over	Intraline Distance (ILD) or Intraplant Distance (IPD) (feet)
0	50	30	20,000	25,000	265
50	100	40	25,000	30,000	280
100	200	50	30,000	35,000	295
200	300	60	35,000	40,000	310
300	400	65	40,000	45,000	320
400	500	70	45,000	50,000	330
500	600	75	50,000	55,000	340
600	700	80	55,000	60,000	350
700	800	85	60,000	65,000	360
800	900	90	65,000	70,000	370
900	1,000	95	70,000	75,000	385
1,000	1,500	105	75,000	80,000	390
1,500	2,000	115	80,000	85,000	395
2,000	3,000	130	85,000	90,000	400
3,000	4,000	140	90,000	95,000	410
4,000	5,000	150	95,000	100,000	415
5,000	6,000	160	100,000	125,000	450
6,000	7,000	170	125,000	150,000	475
7,000	8,000	180	150,000	175,000	500
8,000	9,000	190	175,000	200,000	525
9,000	10,000	200	200,000	225,000	550
10,000	15,000	225	225,000	250,000	575
15,000	20,000	245	250,000	275,000	600
—	—	—	275,000	300,000	635

For SI: 1 foot = 304.8 mm, 1 pound = 0.454 kg.

a. Where a building or magazine containing explosives is not barricaded, the intraline distances shown in this table shall be doubled.

INTERNATIONAL CODE COUNCIL®
Copyright © 2015 ICC. ALL RIGHTS RESERVED. Accessed by David Dammon on Jun 21, 2017 12:30:52 PM pursuant to License Agreement with ICC. No further reproduction or distribution authorized. ANY UNAUTHORIZED REPRODUCTION OR DISTRIBUTION IS A VIOLATION OF THE FEDERAL COPYRIGHT ACT AND THE LICENSE AGREEMENT, AND SUBJECT TO CIVIL AND CRIMINAL PENALTIES THEREUNDER.

mum quantity of *explosive* materials permitted to be in the building at one time (see Section 5601.8).

Exception: Fireworks manufacturing buildings constructed and operated in accordance with NFPA 1124.

❖ Buildings and other facilities used for mixing of blasting agents at a fixed location must comply with the separation requirements of Table 5604.5.2(1). The buildings must be isolated for the protection of life and nearby property. Suitable exterior barricades, natural or artificial, are to be provided on pressure-relief sides of buildings. The exception recognizes that NFPA 1124 requirements cover site security; separation distances for manufacturing facilities; storage of salute and black powder; building construction and transportation of fireworks.

5605.4.1 Determination of net explosive weight for operating buildings. In addition to the requirements of Section 5601.8 to determine the net *explosive* weight for materials stored or used in operating buildings, quantities of *explosive materials* stored in magazines located at distances less than intraline distances from the operating building shall be added to the contents of the operating building to determine the net *explosive* weight for the operating building.

❖ Manufacturing buildings are operating buildings within the context of the code. Explosive materials located in manufacturing buildings or process areas are classified as in-process materials and considered to be in use within the context of the code. The in-process materials are either located at workstations or are being staged as they enter or exit the manufacturing process.

It is common practice to utilize day boxes constructed to meet the requirements of a Type 3 magazine as a means to store explosives that are consumed over the course of a single workday or work shift so the magazine may be located either inside or immediately outside of the building in which the explosive materials are used. The use of pass-through type magazines that allow for delivery of explosive materials from the outside, and extraction of the explosive material from inside the building is commonplace. When pass-throughs are used, the magazine is located to abut the exterior building wall, with access to the inside limited to one or more access doors. In the most conservative sense, such magazines are considered to be outdoors and the exception granted by Section 5606.6.4.1 applicable to in-process material does not apply.

When the storage is located outside the building, there is a literal encroachment on the distances imposed by the code that require the magazines to be separated from the building in which the material is used. The net explosive weight (or contents) of the operating building or magazine is used to determine the separation distances required. Section 5604.5.1.3 allows the storage of up to 50 pounds (23 kg) of explosive material to be located in an indoor magazine when such magazines are not regulated by Section 5605.6.4.1. Quantities in excess of 50 pounds (23 kg) in a storage magazine are required to be stored in outdoor magazines. For the storage of finished goods or raw materials there is seldom a problem because the outdoor magazines are normally located well away from the manufacturing area.

The problem arises with storage of explosives, other than those designated for in-process use, when small quantities of up to 50 pounds (23 kg) are to be located outdoors in a magazine that could otherwise be located indoors. Literally interpreted, the code requires a separation between any magazine and an operating building regardless of the contents of the magazine. Whether an indoor magazine limited to 50 pounds (23 kg) net explosive weight is located either immediately inside an access door to the work area or immediately outside the same door does not change the hazard of its contents. It is reasonable to restrict the quantities of explosive materials located outside the door to an amount not to exceed that which would otherwise be allowed to be located inside the door, i.e., 50 pounds (23 kg). Quantities that exceed the amount allowed indoors must be in magazines located at not less than the tabular distances specified by the IPD tables.

Explosives stored or used within the ILD assigned to an operating building must be accounted for in determining the location of the building with its proximity to others. This section requires that the aggregate quantity of explosives stored or used in an operating building be derived by adding the totals of all material stored in magazines inside or outside the building to the total of material in process.

Sections 5605.4.1.1 through 5605.4.1.4 limit the quantity of explosives allowed to be stored in magazines within the ILD whether located inside or outside of the building, or both, to not more than 50 pounds (23 kg), thereby maintaining the intent of the code, which is to move larger quantities of material away from the building to storage arrangements of a more permanent nature.

By establishing clear rules that recognize the need for operating buildings to have limited quantities of explosive materials other than in-process materials in storage proximate to the point of use, operational safety is enhanced and the concept of quantity control remains intact.

5605.4.1.1 Indoor magazines. The storage of *explosive* materials located in indoor magazines in operating buildings shall be limited to a net *explosive* weight not to exceed 50 pounds (23 kg).

❖ See the commentary to Section 5605.4.1.

5605.4.1.2 Outdoor magazines with a net explosive weight less than 50 pounds. The storage of *explosive materials* in outdoor magazines located at less than intraline distances from operating buildings shall be limited to a net *explosive* weight not to exceed 50 pounds (23 kg).

❖ See the commentary to Section 5605.4.1.

5605.4.1.3 Outdoor magazines with a net explosive weight greater than 50 pounds. The storage of *explosive materials*

INTERNATIONAL CODE COUNCIL®
Copyright © 2015 ICC. ALL RIGHTS RESERVED. Accessed by David Dammon on Jun 21, 2017 12:30:52 PM pursuant to License Agreement with ICC. No further reproduction or distribution authorized. ANY UNAUTHORIZED REPRODUCTION OR DISTRIBUTION IS A VIOLATION OF THE FEDERAL COPYRIGHT ACT AND THE LICENSE AGREEMENT, AND SUBJECT TO CIVIL AND CRIMINAL PENALTIES THEREUNDER.

in outdoor magazines in quantities exceeding 50 pounds (23 kg) net *explosive* weight shall be limited to storage in outdoor magazines located not less than intraline distances from the operating building in accordance with Section 5604.5.2.

❖ See the commentary to Section 5605.4.1.

5605.4.1.4 Net explosive weight of materials stored in combination indoor and outdoor magazines. The aggregate quantity of *explosive materials* stored in any combination of indoor magazines or outdoor magazines located at less than the intraline distances from an operating building shall not exceed 50 pounds (23 kg).

❖ See the commentary to Section 5605.4.1.

5605.5 Buildings and equipment. Buildings or rooms that exceed the *maximum allowable quantity per control area* of *explosive materials* shall be operated in accordance with this section and constructed in accordance with the requirements of the *International Building Code* for Group H occupancies.

Exception: Fireworks manufacturing buildings constructed and operated in accordance with NFPA 1124.

❖ The IBC addresses the issue of buildings that exceed the maximum allowable quantities per control area (MAQ) found in Table 307.7(1) of the IBC as well as in Chapter 50 of the code. The exception recognizes that NFPA 1124 requirements cover site security, separation distances for manufacturing facilities, storage of salute and black powder, building construction and transportation of fireworks.

5605.5.1 Explosives dust. *Explosives* dust shall not be exhausted to the atmosphere.

❖ Exhausting explosive dust into the atmosphere creates an explosive hazard. When the concentration of air and dust reaches the ignition stage, explosions can occur and cause both physical and structural damage.

5605.5.1.1 Wet collector. When collecting *explosives* dust, a wet collector system shall be used. Wetting agents shall be compatible with the *explosives*. Collector systems shall be interlocked with process power supplies so that the process cannot continue without the collector systems also operating.

❖ Wet processes will be used wherever practicable in mixing explosive materials. Wet processing eliminates the probability of dust being an explosive hazard.

5605.5.1.2 Waste disposal and maintenance. *Explosives* dust shall be removed from the collection chamber as often as necessary to prevent overloading. The entire system shall be cleaned at a frequency that will eliminate hazardous concentrations of *explosives* dust in pipes, tubing and ducts.

❖ Ducts are to be grounded and be as short and straight as possible with no caps, outlets, pockets or other dead-end spaces where explosives might accumulate.

5605.5.2 Exhaust fans. Squirrel cage blowers shall not be used for exhausting hazardous fumes, vapors or gases. Only nonferrous fan blades shall be used for fans located within the ductwork and through which hazardous materials are exhausted. Motors shall be located outside the duct.

❖ Ventilation and dust control equipment must be of such a type and installed and operated to not endanger employees by possible ignition of explosives.

5605.5.3 Work stations. Work stations shall be separated by distance, barrier or other *approved* alternatives so that fire in one station will not ignite material in another work station. Where necessary, the operator shall be protected by a personnel shield located between the operator and the *explosive* device or *explosive material* being processed. This shield and its support shall be capable of withstanding a blast from the maximum amount of *explosives* allowed behind it.

❖ Using safety precautions should eliminate most problems in a work station; however, sometimes accidents happen beyond our control. The separation requirements in this section are intended to protect workstations from accidents in another station and their operators from all accidental blasts. Protection of the worker must always be of high priority.

5605.6 Operations. Operations involving *explosives* shall comply with Sections 5605.6.1 through 5605.6.10.

❖ The following sections address the operations that involve explosives. These sections apply to isolating the operations; controlling static electricity; using approved containers for bulk materials; having quantity limits; properly disposing of waste; abiding by safety rules, posting limits and not storing explosive materials near a heat source.

5605.6.1 Isolation of operations. Where the type of material and processing warrants, mechanical operations involving *explosives* in excess of 1 pound (0.454 kg) shall be carried on at isolated stations or at intraplant distances, and machinery shall be controlled from remote locations behind *barricades* or at separations so that workers will be at a safe distance while machinery is operating.

❖ The machinery used in processing operations on explosive items weighing more than 1 pound (0.454 kg) must be controlled from remote locations and behind barricades for the safety of personnel. These extra safety controls are not required when no unit or separate article of any manufactured or assembled explosive device contains more than 1 pound (0.454 kg) of explosive material.

5605.6.2 Static controls. The work area where the screening, grinding, blending and other processing of static-sensitive *explosives* or pyrotechnic materials is done shall be provided with *approved* static controls.

❖ The working area must be maintained above 20-percent relative humidity. If the relative humidity drops below 20 percent, the above operations must be stopped and secured until the relative humidity can be raised above 20 percent. It is desirable to keep the relative humidity above 20 to 30 percent, except where metal powders are involved. In that case, the relative humidity should be between 50 and 60 per-

INTERNATIONAL CODE COUNCIL®
Copyright © 2015 ICC. ALL RIGHTS RESERVED. Accessed by David Dammon on Jun 21, 2017 12:30:52 PM pursuant to License Agreement with ICC. No further reproduction or distribution authorized. ANY UNAUTHORIZED REPRODUCTION OR DISTRIBUTION IS A VIOLATION OF THE FEDERAL COPYRIGHT ACT AND THE LICENSE AGREEMENT, AND SUBJECT TO CIVIL AND CRIMINAL PENALTIES THEREUNDER.

cent. Means must be provided and used to discharge static electricity from hand trucks, buggies and similar equipment before they enter buildings containing static-sensitive explosives. Conductive wheels, including metal wheels that could not cause sparks, are recommended for this equipment.

5605.6.3 Approved containers. Bulk *explosives* shall be kept in *approved*, nonsparking containers when not being used or processed. *Explosives* shall not be stored or transported in open containers.

❖ Explosive materials must be kept in covered containers except when being used or processed. The closed containers eliminate the possibility of an ignition source falling into the containers and causing an explosion.

5605.6.4 Quantity limits. The quantity of *explosives* at any particular work station shall be limited to that posted on the load limit signs for the individual work station. The total quantity of *explosives* for multiple workstations shall not exceed that established by the intraplant distances in Table 5605.3 or 5604.5.2(3), as appropriate.

❖ The maximum permissible quantities of explosive materials allowed by Table 5605.3 must be clearly indicated with suitable signs, usually with letters not less than 3 inches (76 mm) high.

5605.6.4.1 Magazines. Magazines used for storage in processing areas shall be in accordance with the requirements of Section 5604.5.1. *Explosive materials* shall be removed to appropriate storage magazines for unattended storage at the end of the work day. The contents of indoor magazines shall be added to the quantity of *explosives* contained at individual workstations and the total quantity of material stored, processed or used shall be utilized to establish the intraplant separation distances indicated by Table 5605.3 or 5604.5.2(3), as appropriate.

❖ This section makes it clear that indoor magazines can be used in manufacturing areas when in accordance with the requirements of the code, including quantity limits, separation distances and limitations on the number of magazines. Materials contained in magazines add to the net explosive weight (NEW) for the building, and intraplant separations are based on NEW.

This section also recognizes that there may be more than one workstation in a process area with the control on the location of process areas established by IPD. Removal of any residual stored contents at the end of the day is consistent with requirements of NFPA 495 and military standards governing process operations.

5605.6.5 Waste disposal. *Approved* receptacles with covers shall be provided for each location for disposing of waste material and debris. These waste receptacles shall be emptied and cleaned as often as necessary but not less than once each day or at the end of each shift.

❖ Waste receptacles with tight-fitting covers must be supplied at or just outside of each working area for the disposal of waste material, cleaning rags and other combustible waste and debris. The containers must be emptied daily or at the end of each shift.

5605.6.6 Safety rules. General safety rules and operating instructions governing the particular operation or process conducted at that location shall be available at each location.

❖ Operating instructions must be posted at or near each working area. These instructions must include the technical steps for the process and the safety precautions the operators must follow for their personal safety.

5605.6.7 Personnel limits. The number of occupants in each process building and in each magazine shall not exceed the number necessary for proper conduct of production operations.

❖ The number of persons involved in performing the process must be held to a minimum to make sure there is enough room for those performing the operation. Too many occupants reduces operating space, increasing the potential for an accident that could result in injury or building damage.

5605.6.8 Pyrotechnic and explosive composition quantity limits. Not more than 500 pounds (227 kg) of pyrotechnic or *explosive* composition, including not more than 10 pounds (5 kg) of salute powder shall be allowed at one time in any process building or area. Compositions not in current use shall be kept in covered nonferrous containers.

Exception: Composition that has been loaded or pressed into tubes or other containers as consumer fireworks.

❖ The maximum amount of pyrotechnic or explosive materials contained at any one time in any building used for the manufacture or assembly of products using or containing explosive materials must not exceed the amounts listed above. This action will assist in eliminating the possibility of a catastrophic explosion.

5605.6.9 Posting limits. The maximum number of occupants and maximum weight of pyrotechnic and *explosive* composition permitted in each process building shall be posted in a conspicuous location in each process building or magazine.

❖ Only persons essential to the operation can be allowed in the mixing and packaging area. Usually, no more than one day's production of explosive material should be allowed in the mixing and packaging area. These limitations must be posted in an obvious location.

5605.6.10 Heat sources. Fireworks, *explosives* or *explosive* charges in *explosive materials* manufacturing, assembly or testing shall not be stored near any source of heat.

Exception: *Approved* drying or curing operations.

❖ Storing the explosive materials near heat sources obviously will be an explosion hazard. Stored explosive products must be separated an adequate distance from any heat source. The building heat source should be located outside the building.

INTERNATIONAL CODE COUNCIL®
Copyright © 2015 ICC. ALL RIGHTS RESERVED. Accessed by David Dammon on Jun 21, 2017 12:30:52 PM pursuant to License Agreement with ICC. No further reproduction or distribution authorized. ANY UNAUTHORIZED REPRODUCTION OR DISTRIBUTION IS A VIOLATION OF THE FEDERAL COPYRIGHT ACT AND THE LICENSE AGREEMENT, AND SUBJECT TO CIVIL AND CRIMINAL PENALTIES THEREUNDER.

5605.7 Maintenance. Maintenance and repair of *explosives*-manufacturing facilities and areas shall comply with Section 5604.8.

❖ Section 5604.8 covers the subjects of housekeeping, repairs and floors of buildings and facilities. Having a periodic maintenance program in place will keep hazards to a minimum.

5605.8 Explosive materials testing sites. *Detonation* of *explosive* materials or ignition of fireworks for testing purposes shall be done only in isolated areas at sites where distance, protection from missiles, shrapnel or flyrock, and other safeguards provides protection against injury to personnel or damage to property.

❖ Operations or activities on a site where explosive materials are used, stored or handled could be subject to additional or more restrictive requirements or conditions at the discretion of the local fire code official.

5605.8.1 Protective clothing and equipment. Protective clothing and equipment shall be provided to protect persons engaged in the testing, ignition or *detonation* of *explosive materials.*

❖ Personnel must be dressed in proper personal protective equipment to eliminate the hazard of physical injury.

5605.8.2 Site security. Where tests are being conducted or *explosives* are being detonated, only authorized persons shall be present. Areas where *explosives* are regularly or frequently detonated or burned shall be *approved* and posted with adequate warning signs. Warning devices shall be activated before burning or detonating *explosives* to alert persons approaching from any direction that they are approaching a danger zone.

❖ Only authorized personnel can be allowed in test area enclosures. Audible and visible warning devices must be used to warn nearby personnel before detonating or burning any explosive material.

5605.9 Waste disposal. Disposal of *explosive materials* waste from manufacturing, assembly or testing operations shall be in accordance with Section 5604.10.

❖ Section 5604.10 addresses the issues of notification, deteriorated materials, qualified people, storage of misfires, sites for disposal and reuse and safety for personnel.

SECTION 5606
SMALL ARMS AMMUNITION AND SMALL ARMS AMMUNITION COMPONENTS

5606.1 General. Indoor storage and display of black powder, smokeless propellants, small arms primers and small arms ammunition shall comply with this section and NFPA 495.

❖ This section addresses the storage of small arms ammunition and its components, including proper packaging, in residential and commercial occupancies. NFPA 495 also contains requirements for these materials.

5606.2 Prohibited storage. Small arms ammunition shall not be stored together with Division 1.1, Division 1.2 or Division 1.3 *explosives* unless the storage facility is suitable for the storage of *explosive materials.*

❖ Small arms ammunition must not be stored with explosives that have mass explosion, projection or fire hazards. If the storage facility meets the requirements of the local fire code official, however, this storage is allowed. Separation and explosive wave prevention are two requirements that should be met.

5606.3 Packages. Smokeless propellants shall be stored in *approved* shipping containers conforming to DOTn 49 CFR Part 173.

❖ Smokeless propellants must not be stored in their original factory containers. DOTn 49 CFR, Part 173 addresses precautions such as not allowing metal (nails, staples, etc.) to penetrate the interior of a container, interior packaging not allowing contents to shift and become loose and packaging being made compatible with the explosives kept in the container.

5606.3.1 Repackaging. The bulk repackaging of smokeless propellants, black powder and small arms primers shall not be performed in retail establishments.

❖ Bulk repackaging must be performed by qualified personnel. The product should be handled by trained explosives personnel and in the proper location for human and property safety.

5606.3.2 Damaged packages. Damaged containers shall not be repackaged.

Exception: *Approved* repackaging of damaged containers of smokeless propellant into containers of the same type and size as the original container.

❖ Damaged containers must not be repackaged. Smokeless propellants must not be transferred from the approved container into one that is not approved.

5606.4 Storage in Group R occupancies. The storage of small arms ammunition components in Group R occupancies shall comply with Sections 5606.4.1 through 5606.4.3.

❖ The following sections cover storage requirements for black powder, smokeless propellants and small arms primers in Group R occupancies [which do not include detached one- and two-family dwellings or townhouses constructed under the *International Residential Code*® (IRC®)].

5606.4.1 Black powder. Black powder for personal use in quantities not exceeding 20 pounds (9 kg) shall be stored in original containers in occupancies limited to Group R-3. Quantities exceeding 20 pounds (9 kg) shall not be stored in any Group R occupancy.

❖ Black powder used in muzzle-loading firearms intended for personal use in quantities not exceeding 20 pounds (9 kg) in original containers may be stored without restriction in Group R-3 occupancies. Quanti-

INTERNATIONAL CODE COUNCIL®
Copyright © 2015 ICC. ALL RIGHTS RESERVED. Accessed by David Dammon on Jun 21, 2017 12:30:52 PM pursuant to License Agreement with ICC. No further reproduction or distribution authorized. ANY UNAUTHORIZED REPRODUCTION OR DISTRIBUTION IS A VIOLATION OF THE FEDERAL COPYRIGHT ACT AND THE LICENSE AGREEMENT, AND SUBJECT TO CIVIL AND CRIMINAL PENALTIES THEREUNDER.

ties exceeding 20 pounds (9 kg) are not allowed, regardless of the type of container.

5606.4.2 Smokeless propellants. Smokeless propellants for personal use in quantities not exceeding 20 pounds (9 kg) shall be stored in original containers in occupancies limited to Group R-3. Smokeless propellants in quantities exceeding 20 pounds (9 kg) but not exceeding 50 pounds (23 kg) and kept in a wooden box or cabinet having walls of not less than 1 inch (25 mm) nominal thickness shall be allowed to be stored in occupancies limited to Group R-3. Quantities exceeding these amounts shall not be stored in any Group R occupancy.

❖ Small arms smokeless propellant intended for personal use in quantities not exceeding 20 pounds (9 kg) in original containers may be stored without restriction in Group R-3 occupancies; quantities exceeding 20 pounds (9 kg) but not exceeding 50 pounds (23 kg) must be stored in a strong box or cabinet constructed with 1-inch (25 mm) wood (minimum) or equivalent on all sides, top and bottom.

5606.4.3 Small arms primers. Not more than 10,000 small arms primers shall be stored in occupancies limited to Group R-3.

❖ This section mirrors the provisions of NFPA 495, which allows storage of no more than 10,000 primers in a private residence. Even the most avid small arms ammunition reloader should have no reason to store in excess of 1,000 each of large rifle, large rifle magnum, small rifle, large pistol, large pistol magnum, small pistol, small pistol magnum and shotgun primers, (a total of 8,000 primers). See the description of Group R-3 occupancies in Chapter 2.

5606.5 Display and storage in Group M occupancies. The display and storage of small arms ammunition components in Group M occupancies shall comply with Sections 5606.5.1 through 5606.5.2.3.

❖ Ignited stored powder can raise pressure within the storage area; therefore, there are specific requirements for keeping powder on hand. The first of these is never to transfer any propellant from its original container, which is designed to burst or partially open at very low pressures. Some container caps will simply just push off if the contents are ignited.

5606.5.1 Display. Display of small arms ammunition components in Group M occupancies shall comply with Sections 5606.5.1.1 through 5606.5.1.3.

❖ The display quantities of smokeless propellants, black powder and small arms primers are given in the following sections.

5606.5.1.1 Smokeless propellant. Not more than 20 pounds (9 kg) of smokeless propellants, in containers of 1 pound (0.454 kg) or less capacity each, shall be displayed in Group M occupancies.

❖ Displayed containers of smokeless propellant must be limited to 1 pound (0.454 kg) each. The total quantity of smokeless propellant not in an approved magazine is limited to 20 pounds (9 kg).

The 20-pound (9 kg) limit can be traced back to the original edition of the legacy *Uniform Fire Code* in 1971. This quantity was considered by the International Conference of Building Officials (ICBO) membership to be the maximum allowable quantity in retail sales occupancies based on the potential risk posed to the public. There was no "magic reason" for establishing the 20-pound (9 kg) limit other than agreement by the various ICBO code development committees that it would be unreasonable to expose the public to potential accidents involving greater quantities. According to records, the 20-pound (9 kg) limitation originated from the Explosives Committee of the California Fire Chiefs Association/Southern Division, Fire Prevention Officers Section. Quoting from this committee, its reason for the limit was as follows:

> "The quantities were arrived at over a protracted period of time by a mutual exchange of information between representatives of public and private sectors of the economy, who possessed experience in dealing with these materials. Specific regulations represented a compromise between the various points of view expressed during several meetings. In general, the public safety was the key issue in the final proposed regulations. The committee would like to point out that at some point the line must be drawn. A recent series of tests conducted by this committee on both smokeless and black powder indicated that there is an appreciable hazard involved when even small amounts of these materials are exposed to fire. Black powder is much more sensitive than smokeless and should be kept in a magazine at all times to reduce the chance of ignition and propagation. Smokeless powder, which is less sensitive than black powder, can be openly displayed, but the amount should be limited due to its capacity for increasing a fire hazard. It is our feeling that the current 20 pound limit on display should be the maximum."

5606.5.1.2 Black powder. Not more than 1 pound (0.454 kg) of black powder shall be displayed in Group M occupancies.

❖ Safety must be the first priority when black powder is accessible to the public. The 1-pound (0.454 kg) limitation holds to the objective of keeping the public from having access to enough black powder to cause serious damage if mishandled.

5606.5.1.3 Small arms primers. Not more than 10,000 small arms primers shall be displayed in Group M occupancies.

❖ Because of their explosive nature, only the absolute minimum should be kept on display. With care in replacing exhausted supplies, it is not difficult to adhere to the 10,000-primer limit.

5606.5.2 Storage. Storage of small arms ammunition components shall comply with Sections 5606.5.2.1 through 5606.5.2.3.

❖ Generally, propellants used in sporting arms cartridges will not explode or detonate when ignited. Burning smokeless propellants do not generate the

INTERNATIONAL CODE COUNCIL®
Copyright © 2015 ICC. ALL RIGHTS RESERVED. Accessed by David Dammon on Jun 21, 2017 12:30:52 PM pursuant to License Agreement with ICC. No further reproduction or distribution authorized. ANY UNAUTHORIZED REPRODUCTION OR DISTRIBUTION IS A VIOLATION OF THE FEDERAL COPYRIGHT ACT AND THE LICENSE AGREEMENT, AND SUBJECT TO CIVIL AND CRIMINAL PENALTIES THEREUNDER.

shock wave produced by an explosive. Unlike smokeless propellants, shock waves produced by ignition of an explosive cannot be adequately vented, even when ignition occurs in the open.

5606.5.2.1 Smokeless propellant. Commercial stocks of smokeless propellants shall be stored as follows:

1. Quantities exceeding 20 pounds (9 kg), but not exceeding 100 pounds (45 kg) shall be stored in portable wooden boxes having walls of not less than 1 inch (25 mm) nominal thickness.
2. Quantities exceeding 100 pounds (45 kg), but not exceeding 800 pounds (363 kg), shall be stored in nonportable storage cabinets having walls not less than 1 inch (25 mm) nominal thickness. Not more than 400 pounds (182 kg) shall be stored in any one cabinet, and cabinets shall be separated by a distance of not less than 25 feet (7620 mm) or by a *fire partition* having a *fire-resistance rating* of not less than 1 hour.
3. Storage of quantities exceeding 800 pounds (363 kg), but not exceeding 5,000 pounds (2270 kg) in a building shall comply with all of the following:
    3.1. The warehouse or storage room is unaccessible to unauthorized personnel.
    3.2. Smokeless propellant shall be stored in nonportable storage cabinets having wood walls not less than 1 inch (25 mm) nominal thickness and having shelves with not more than 3 feet (914 mm) of separation between shelves.
    3.3. Not more than 400 pounds (182 kg) is stored in any one cabinet.
    3.4. Cabinets shall be located against walls of the storage room or warehouse with not less than 40 feet (12 192 mm) between cabinets.
    3.5. The minimum required separation between cabinets shall be 20 feet (6096 mm) provided that *barricades* twice the height of the cabinets are attached to the wall, midway between each cabinet. The *barricades* must extend not less than 10 feet (3048 mm) outward, be firmly attached to the wall and be constructed of steel not less than $^1/_4$ inch thick (6.4 mm), 2-inch (51 mm) nominal thickness wood, brick or concrete block.
    3.6. Smokeless propellant shall be separated from materials classified as *combustible liquids*, flammable liquids, flammable solids or oxidizing materials by a distance of 25 feet (7620 mm) or by a *fire partition* having a *fire-resistance rating* of 1 hour.
    3.7. The building shall be equipped throughout with an *automatic sprinkler system* installed in accordance with Section 903.3.1.1.
4. Smokeless propellants not stored in accordance with Item 1, 2, or 3 above shall be stored in a Type 2 or 4 magazine in accordance with Section 5604 and NFPA 495.

❖ Storage cabinets are often made of 1-inch-thick (25 mm) wood with one or more walls designed to open outward or blow free at very low pressures. They should be many times larger than necessary to store the minimum quantities of powder. Propellants must not be stored in the same area with solvents, flammable gases, primers or highly combustible materials. Smoking should never be allowed in the storage areas or while handling or using powder.

5606.5.2.2 Black powder. Commercial stocks of black powder in quantities less than 50 pounds (23 kg) shall be allowed to be stored in Type 2 or 4 indoor or outdoor magazines. Quantities greater than 50 pounds (23 kg) shall be stored in outdoor Type 2 or 4 magazines. Where black powder and smokeless propellants are stored together in the same magazine, the total quantity shall not exceed that permitted for black powder.

❖ Black powder must be stored in a magazine no matter the quantity. The guideline quantity of 50 pounds (23 kg) is the dividing line between storage in an indoor or outdoor magazine. The code does allow storage of smokeless propellants along with black powder as long as the total quantity given in this section for black powder is not exceeded. The maximum quantity is given to limit the explosive potential in considering life safety and property damage.

5606.5.2.3 Small arms primers. Commercial stocks of small arms primers shall be stored as follows:

1. Quantities not to exceed 750,000 small arms primers stored in a building shall be arranged such that not more than 100,000 small arms primers are stored in any one pile and piles are not less than 15 feet (4572 mm) apart.
2. Quantities exceeding 750,000 small arms primers stored in a building shall comply with all of the following:
    2.1. The warehouse or storage building shall not be accessible to unauthorized personnel.
    2.2. Small arms primers shall be stored in cabinets. Not more than 200,000 small arms primers shall be stored in any one cabinet.
    2.3. Shelves in cabinets shall have vertical separation of not less than 2 feet (610 mm).
    2.4. Cabinets shall be located against walls of the warehouse or storage room with not less than 40 feet (12 192 mm) between cabinets. The minimum required separation between cabinets shall be allowed to be reduced to 20 feet (6096 mm) provided that *barricades* twice the height of the cabinets are attached to the wall, midway between each cabinet. The *barricades* shall be firmly attached to the wall and shall be constructed of steel not less than $^1/_4$ inch thick (6.4

INTERNATIONAL CODE COUNCIL®
Copyright © 2015 ICC. ALL RIGHTS RESERVED. Accessed by David Dammon on Jun 21, 2017 12:30:52 PM pursuant to License Agreement with ICC. No further reproduction or distribution authorized. ANY UNAUTHORIZED REPRODUCTION OR DISTRIBUTION IS A VIOLATION OF THE FEDERAL COPYRIGHT ACT AND THE LICENSE AGREEMENT, AND SUBJECT TO CIVIL AND CRIMINAL PENALTIES THEREUNDER.

mm), 2-inch (51 mm) nominal thickness wood, brick or concrete block.

2.5. Small arms primers shall be separated from materials classified as *combustible liquids*, flammable liquids, flammable solids or oxidizing materials by a distance of 25 feet (7620 mm) by a *fire partition* having a *fire-resistance rating* of 1 hour.

2.6. The building shall be protected throughout with an *automatic sprinkler system* installed in accordance with Section 903.3.1.1.

3. Small arms primers not stored in accordance with Item 1 or 2 of this section shall be stored in a magazine meeting the requirements of Section 5604 and NFPA 495.

❖ Primers must be stored in a remote area away from any possible source of ignition, including bullet impact. Primers are by nature explosive. As a result, they may explode if subjected to friction, percussion, crushing or excessive heat from any cause, whether open flame or not. Static electricity and many other abuses can cause primers to explode; therefore, public access to storage containers must not be allowed.

Primers must be stored away from oxidizing agents and flammable liquids and solids. Naturally, smoking should be prohibited around primers. The storage cabinet is strongly recommended. The cabinet should be constructed of 1-inch-thick (25 mm) lumber to delay the transfer of heat to contents in the event of a fire or other mishap.

SECTION 5607
BLASTING

5607.1 General. Blasting operations shall be conducted only by *approved*, competent operators familiar with the required safety precautions and the hazards involved and in accordance with the provisions of NFPA 495.

❖ Personnel using explosives must be at least 21 years old and possess all required federal [see Title 18 U.S. Code (USC), Chapter 40], state and local approvals or permits. Employees under 21 years old but at least 18 years old may serve as apprentices or assistants under direct supervision of a permittee. In addition to these requirements, individuals who handle explosives must not:

1. Be under the influence of alcohol or drugs.
2. Smoke or carry matches or firearms.
3. Use or carry an open flame or open flame-producing device.

Many states require individuals who handle explosives to obtain a certificate of fitness, which is dubbed a "blaster's permit," before being authorized to handle or use explosives. The individual must be bonded or show acceptable proof of insurance, pass a written examination demonstrating an adequate understanding of the applicable codes and ordinances and demonstrate adequate experience (usually a minimum of three years) in handling explosives safely in an approved apprenticeship program to obtain a fitness certificate.

5607.2 Manufacturer's instructions. Blasting operations shall be performed in accordance with the instructions of the manufacturer of the *explosive materials* being used.

❖ No blasting operation will be performed in a manner contrary to the instructions of the manufacturer of the explosive materials being used. Each manufacturer has its own instructions for discharging its explosives.

5607.3 Blasting in congested areas. Where blasting is done in a congested area or in close proximity to a structure, railway or highway, or any other installation, precautions shall be taken to minimize earth vibrations and air blast effects. Blasting mats or other protective means shall be used to prevent fragments from being thrown.

❖ Precautions must be taken to minimize damage from blasting operations where those operations are likely to generate projectiles, scatter debris or produce significant blast-wave effects.

5607.4 Restricted hours. Surface-blasting operations shall only be conducted during daylight hours between sunrise and sunset. Other blasting shall be performed during daylight hours unless otherwise *approved* by the *fire code official*.

❖ Darkness impairs the effectiveness of the most important sense involved in setting surface explosive charges—sight. This section improves the safety of surface blasting by allowing it only between sunrise and sunset when ample natural light is available. Care must be taken throughout blasting operations to inspect all elements of the explosive setup.

Nighttime nonsurface blasting operations require approved artificial illumination. The lighting could pose a hazard if improper equipment or procedures are used. Only the fire code official may authorize nighttime blasting operations.

5607.5 Utility notification. Where blasting is being conducted in the vicinity of utility lines or rights-of-way, the blaster shall notify the appropriate representatives of the utilities not less than 24 hours in advance of blasting, specifying the location and intended time of such blasting. Verbal notices shall be confirmed with written notice.

Exception: In an emergency situation, the time limit shall not apply where *approved*.

❖ Steps must be taken to prevent disruption of public utility services. Location of underground utilities in many areas must be designated by a utility locator service before blasting or construction begins. Notification may not relieve the blaster of liability if operations disrupt utility service. Therefore, great care must be exercised when blasting in the vicinity of utilities. Blasting must not proceed without the approval of utility officials and the fire code official.

The exception recognizes that there may be emergency conditions under which it is not possible to

INTERNATIONAL CODE COUNCIL®
Copyright © 2015 ICC. ALL RIGHTS RESERVED. Accessed by David Dammon on Jun 21, 2017 12:30:52 PM pursuant to License Agreement with ICC. No further reproduction or distribution authorized. ANY UNAUTHORIZED REPRODUCTION OR DISTRIBUTION IS A VIOLATION OF THE FEDERAL COPYRIGHT ACT AND THE LICENSE AGREEMENT, AND SUBJECT TO CIVIL AND CRIMINAL PENALTIES THEREUNDER.

strictly comply with the full 24-hour advance notice requirement. Conditions represented as an emergency must be approved as such by the fire code official. (Note: Both verbal and written notification must still be made in as timely a manner as the emergency will permit prior to blasting operations.)

5607.6 Electric detonator precautions. Precautions shall be taken to prevent accidental discharge of electric detonators from currents induced by radar and radio transmitters, lightning, adjacent power lines, dust and snow storms, or other sources of extraneous electricity.

❖ Wires connecting elements of the explosive train may act as an antenna or conduct electricity from sources outside of those controlled by the blaster. Therefore, special precautions are required to prevent inadvertent detonation of explosive materials:

1. The 350-foot (106 m) separation distance provides a significant safety margin. Recommended minimum clearances for citizens band, VHF, UHF and cellular telephone transmitters with up to 50 watts vary from 5 to 180 feet (1524 to 54 864 mm). Nearly all mobile transmitters operate between 3 and 30 watts.
2. Power lines may also emit radio frequency energy (see IME Safety Library Publication No. 20 for guidance on separation from other radio frequency sources).
3. Lightning produces more than sufficient energy to detonate explosive materials. Charges should not be placed when there has been adequate warning of an approaching storm. If charges have been set before warning of an approaching storm is received, blast site workers should abandon their operations and take cover until the storm passes.

5607.7 Nonelectric detonator precautions. Precautions shall be taken to prevent accidental initiation of nonelectric detonators from stray currents induced by lightning or static electricity.

❖ All elements of pneumatic loading devices must be electrically bonded and a positive grounding device for the equipment must be used to prevent the accumulation of static electricity. Water lines, air lines, rails or permanent electric grounding systems for other equipment must not be used to ground pneumatic loading equipment.

5607.8 Blasting area security. During the time that holes are being loaded or are loaded with *explosive materials*, blasting agents or detonators, only authorized persons engaged in drilling and loading operations or otherwise authorized to enter the site shall be allowed at the blast site. The blast site shall be guarded or barricaded and posted. Blast site security shall be maintained until after the post-blast inspection has been completed.

❖ Loading and firing operations are the most hazardous steps in the blasting process. To prevent inadvertent detonation while electrically fired charges are being set, only the individual making lead wire connections must fire the shot [see DOL 29 CFR, Parts 1910.109 (e)(4)(viii) and 1926.906(s)]. Similar precautions must be taken when firing explosives using other methods. Individuals performing or supervising loading and firing operations must hold all required federal (see 18 USC Chapter 40 and DOTy 27 CFR 55, Subpart D), state and local approvals or permits.

5607.9 Drill holes. Holes drilled for the loading of *explosive* charges shall be made and loaded in accordance with NFPA 495.

❖ Drill holes must be large enough to allow free insertion of cartridges of explosive materials and cannot be collared in bootlegs or in holes that previously contained explosive materials. Holes must not be drilled where there is a danger of intersecting another hole containing explosive material. Of utmost importance, all drill holes must be inspected and cleared of any obstruction before loading. NFPA 495 gives other requirements for drilling the holes.

5607.10 Removal of excess explosive materials. After loading for a blast is completed and before firing, excess *explosive materials* shall be removed from the area and returned to the proper storage facilities.

❖ After loading is completed, surplus explosive materials must be returned to an approved magazine before firing.

5607.11 Initiation means. The initiation of blasts shall be by means conforming to the provisions of NFPA 495.

❖ Cap and fuse cannot be used to initiate blasts on or adjacent to highways open to traffic or in congested areas. NFPA 495 gives the burning rate and safety fuse length in units of time.

5607.12 Connections. The blaster shall supervise the connecting of the blastholes and the connection of the loadline to the power source or initiation point. Connections shall be made progressively from the blasthole back to the initiation point.

Blasting lead lines shall remain shunted (shorted) and shall not be connected to the blasting machine or other source of current until the blast is to be fired.

❖ Connections must be made progressively from the blast holes to the source of firing current. The shorted lead wire must remain unconnected until the blast is ready for firing. Only insulated leading wire of adequate current-carrying capacity can be used.

5607.13 Firing control. A blast shall not be fired until the blaster has made certain that all surplus *explosive materials* are in a safe place in accordance with Section 5607.10, all persons and equipment are at a safe distance or under sufficient cover and that an adequate warning signal has been given.

❖ The blaster must conduct a complete survey of the blast site before blasting begins. Surplus charges must be placed in a magazine or day box and individuals and vehicles must be cleared from the blast site.

INTERNATIONAL CODE COUNCIL®
Copyright © 2015 ICC. ALL RIGHTS RESERVED. Accessed by David Dammon on Jun 21, 2017 12:30:52 PM pursuant to License Agreement with ICC. No further reproduction or distribution authorized. ANY UNAUTHORIZED REPRODUCTION OR DISTRIBUTION IS A VIOLATION OF THE FEDERAL COPYRIGHT ACT AND THE LICENSE AGREEMENT, AND SUBJECT TO CIVIL AND CRIMINAL PENALTIES THEREUNDER.

A loud warning signal (claxon horn or whistle) must be sounded before charges are fired to alert workers that blasting is about to begin (see also IME Safety Library Publication Nos. 3, 4 and 17).

5607.14 Post-blast procedures. After the blast, the following procedures shall be observed.

1. No person shall return to the blast area until allowed to do so by the blaster in charge.
2. The blaster shall allow sufficient time for smoke and fumes to dissipate and for dust to settle before returning to or approaching the blast area.
3. The blaster shall inspect the entire blast site for misfires before allowing other personnel to return to the blast area.

❖ Blast areas must not be reentered after firing until concentrations of smoke, dust and fumes have been reduced to safe limits as determined by the blaster in charge. The blaster must determine the length of time before any person is permitted in the blast area. When a misfire is known or suspected, no person should enter the area for at least 1 hour.

5607.15 Misfires. Where a misfire is suspected, all initiating circuits shall be traced and a search made for unexploded charges. Where a misfire is found, the blaster shall provide proper safeguards for excluding all personnel from the blast area. Misfires shall be reported to the blasting supervisor immediately. Misfires shall be handled under the direction of the person in charge of the blasting operation in accordance with NFPA 495.

❖ All misfires are potential accidents. A misfire may be caused by many different factors. Only qualified and experienced personnel should attempt to handle disposal of a misfire. DOL 29 CFR, Parts 1910.109(e)(4)(v) and 1926.911(c) prohibit the extraction of explosives from a blasthole unless it is impossible to detonate the unexploded charge by insertion of a fresh primer.

No one should enter the blasting area to handle a misfire or investigate the cause until it is safe to do so. Recommended waiting periods for investigating misfires are listed in Commentary Figure 5607.15. The IME waiting periods correspond with the recommendation in IME Safety Library Publication No. 17. Occupational Safety and Health Administration (OSHA) waiting periods are those specified in DOL 29 CFR, Parts 1910.109 and 1926.911(d).

The safest way to dispose of most misfires is by detonation; however, even this method has distinct hazards. Misfired explosives may be unstable or sensitive, so any procedure to dispose of a misfire must be carried out with extreme caution. Removing a misfired explosive charge should be attempted only if all other alternatives are unsuccessful or unadvisable. After a misfired charge has been removed, it must be transported immediately to a storage magazine and disposed of as soon as possible.

Description	IME	OSHA
Blasting cap and fuse	30 minutes	1 hour
Electric blasting cap, shock tube, gas tube or detonating cord	15 minutes	30 minutes
Refiring of a misfired charge	1 hour	1 hour

Source: DOL 29 CFR 1910 and IME Safety Library Publication No. 17.

Figure 5607.15
RECOMMENDED WAITING PERIODS FOR INVESTIGATING MISFIRES

SECTION 5608
FIREWORKS DISPLAY

5608.1 General. Outdoor fireworks displays, use of pyrotechnics before a *proximate audience* and pyrotechnic special effects in motion picture, television, theatrical and group entertainment productions shall comply with Sections 5608.2 through 5608.10 and NFPA 1123 or NFPA 1126.

❖ The only discharge of fireworks permissible under the code is a public display conducted by competent pyrotechnicians in accordance with the requirements of NFPA 1123 and NFPA 1126 and authorized by the fire code official.

The use of pyrotechnic special effects in theatrical performances has become a topic of some concern. In December 1990, a pyrotechnic effect exploded during a band concert in a Florida hotel lounge, injuring seven people, one critically. NFPA 1126 was published in response to this event.

5608.2 Permit application. Prior to issuing permits for a fireworks display, plans for the fireworks display, inspections of the display site and demonstrations of the display operations shall be *approved*. A plan establishing procedures to follow and actions to be taken in the event that a shell fails to ignite in, or discharge from, a mortar or fails to function over the fallout area or other malfunctions shall be provided to the *fire code official*.

❖ This section addresses approval and permit issuance for fireworks displays. A 15-day time limitation is suggested to give the fire code official reasonable time to verify the completeness and accuracy of the information in the application and to allow a thorough inspection of the display site. Customarily, only the display operator or pyrotechnician may apply for approval and a permit. Issuing approvals and permits to corporations, associations, boards or other corporate entities may hamper accountability. Because only a single individual can be assigned overall control of the discharge of fireworks, only the individual responsible for operating the display should be issued an approval, and ultimately a permit. However, all other organizations, institutions or individuals acting together or alone to contract the display should also be named in the permit application and, if considered appropriate by the fire code official, named as addi-

INTERNATIONAL CODE COUNCIL®
Copyright © 2015 ICC. ALL RIGHTS RESERVED. Accessed by David Dammon on Jun 21, 2017 12:30:52 PM pursuant to License Agreement with ICC. No further reproduction or distribution authorized. ANY UNAUTHORIZED REPRODUCTION OR DISTRIBUTION IS A VIOLATION OF THE FEDERAL COPYRIGHT ACT AND THE LICENSE AGREEMENT, AND SUBJECT TO CIVIL AND CRIMINAL PENALTIES THEREUNDER.

tional insureds in the bond indemnifying the jurisdiction for the display. Strict prohibitions against transfers and extensions are needed for the continuing supervision of fireworks operations.

This section also requires the applicant for approval and permit to provide an action plan for those occasions during the conduct of a fireworks display when a shell fails in some manner (often referred to as a "misfire," a term which is often misinterpreted since it is not defined in either the code or NFPA 1123). The terminology used in this section makes it clear that the concerns are specifically with malfunctions of shells that either fail to discharge from a mortar or fail to function properly within the fallout area of the display venue, which could jeopardize safety of the audience or display operators. The fireworks display industry has established procedures for responding to various types and degrees of incidents that may occur as a result of a malfunction. This section enables the fire code official to be aware of the proposed procedures in order to evaluate their appropriateness to the particular event. The terminology used is consistent with that found in NFPA 1123.

5608.2.1 Outdoor fireworks displays. In addition to the requirements of Section 403, permit applications for outdoor fireworks displays using Division 1.3G fireworks shall include a diagram of the location at which the fireworks display will be conducted, including the site from which fireworks will be discharged; the location of buildings, highways, overhead obstructions and utilities; and the lines behind which the audience will be restrained.

❖ The best sites are free of overhead obstructions and are well isolated, with clear viewing paths and landing areas. Fallout areas should be large, open areas, clear of spectators, vehicles and combustible materials. Generally, the discharge site must have a minimum radius of 70 feet (21 336 mm) for each inch of aerial shell diameter.

5608.2.2 Use of pyrotechnics before a proximate audience. Where the separation distances required in Section 5608.4 and NFPA 1123 are unavailable or cannot be secured, fireworks displays shall be conducted in accordance with NFPA 1126 for *proximate audiences*. Applications for use of pyrotechnics before a *proximate audience* shall include plans indicating the required clearances for spectators and combustibles, crowd control measures, smoke control measures and requirements for standby personnel and equipment where provision of such personnel or equipment is required by the *fire code official*.

❖ This section applies to any outdoor use of pyrotechnics at distances less than those required by NFPA 1123. The use of pyrotechnics before a proximate audience is not a display of fireworks as regulated by NFPA 1123 but is regulated by NFPA 1126.

The separation distance between the audience and where the pyrotechnic device is fired during a performance must be at least 15 feet (4572 mm) but not less than twice the fallout radius of the device. The audience must be separated from concussion mortars by a minimum of 25 feet (7620 mm) and there must be no glowing or flaming particles within 10 feet (3048 mm) of the audience.

5608.3 Approved fireworks displays. *Approved* fireworks displays shall include only the *approved* fireworks 1.3G, fireworks 1.4G, fireworks 1.4S and pyrotechnic articles, 1.4G, which shall be handled by an *approved*, competent operator. The *approved* fireworks shall be arranged, located, discharged and fired in a manner that will not pose a hazard to property or endanger any person.

❖ The competence of the display operator is foremost among the important safeguards that must be observed for a safe and enjoyable public display. NFPA 1123 details the qualifications of competent fireworks display operators. Many jurisdictions require display operators to possess a license or certificate of fitness. To obtain such a certificate, the operator must be bonded or indemnified, pass a written examination and serve an apprenticeship under another licensed or certified pyrotechnician.

5608.4 Clearance. Spectators, spectator parking areas, and *dwellings*, buildings or structures shall not be located within the display site.

Exceptions:

1. This provision shall not apply to pyrotechnic special effects and fireworks displays using Division 1.4G materials before a *proximate audience* in accordance with NFPA 1126.
2. This provision shall not apply to unoccupied *dwellings*, buildings and structures with the approval of the building *owner* and the *fire code official*.

❖ Aerial displays must meet the requirements of NFPA 1123. The site for the outdoor display should have at least a 70-foot (21 336 mm) radius per inch of the internal mortar diameter of the largest aerial shell being fired, except as noted in NFPA 1123. Some jurisdictions require 100 feet (30 480 mm) of radius per inch of diameter of aerial shell. No spectators, dwellings or spectator parking areas can be located within the display site.

5608.5 Storage of fireworks at display site. The storage of fireworks at the display site shall comply with the requirements of this section and NFPA 1123 or NFPA 1126.

❖ NFPA 1123 addresses weather protection, inspection, sorting and ready boxes for fireworks. The standard also addresses construction of display fireworks aerial shells.

5608.5.1 Supervision and weather protection. Beginning as soon as fireworks have been delivered to the display site, they shall not be left unattended.

❖ Never leave fireworks unattended. Too many events can cause serious problems during the show. For example, someone could replace good fireworks with faulty ones. Constant supervision is necessary both after and before inspection of the fireworks.

INTERNATIONAL CODE COUNCIL®
Copyright © 2015 ICC. ALL RIGHTS RESERVED. Accessed by David Dammon on Jun 21, 2017 12:30:52 PM pursuant to License Agreement with ICC. No further reproduction or distribution authorized. ANY UNAUTHORIZED REPRODUCTION OR DISTRIBUTION IS A VIOLATION OF THE FEDERAL COPYRIGHT ACT AND THE LICENSE AGREEMENT, AND SUBJECT TO CIVIL AND CRIMINAL PENALTIES THEREUNDER.

5608.5.2 Weather protection. Fireworks shall be kept dry after delivery to the display site.

❖ Protecting the fireworks from inclement weather is the responsibility of everyone involved in the display. If the fireworks get wet from rain, they will not fire properly, thus possibly causing harm to personnel and spectators. A tarpaulin will serve nicely for protection from rain.

5608.5.3 Inspection. Shells shall be inspected by the operator or assistants after delivery to the display site. Shells having tears, leaks, broken fuses or signs of having been wet shall be set aside and shall not be fired. Aerial shells shall be checked for proper fit in mortars prior to discharge. Aerial shells that do not fit properly shall not be fired. After the fireworks display, damaged, deteriorated or dud shells shall either be returned to the supplier or destroyed in accordance with the supplier's instructions and Section 5604.10.

Exception: Minor repairs to fuses shall be allowed. For electrically ignited displays, attachment of electric matches and similar tasks shall be allowed.

❖ Prior to acceptance of display fireworks from a wholesaler, the permit holder or designated agent must confirm that the outside of all cartons, containers or cases is in good condition and all documentation is in order. Shells can be damaged during transport from the factory. It is good safety practice to examine all shells before placing them into the mortars for firing. If there is any sign of damage, the shells should be set aside and not fired, reducing the risk of injury to personnel. The exception does allow minor repairs that are safe in the judgement of the pyrotechnician.

5608.5.4 Sorting and separation. After delivery to the display site and prior to the fireworks display, all shells shall be separated according to their size and their designation as salutes.

Exception: For electrically fired displays, or displays where all shells are loaded into mortars prior to the show, there is no requirement for separation of shells according to their size or their designation as salutes.

❖ Where aerial shells are to be stored at the discharge site for subsequent loading into mortars during the display, the mortars must be placed usually at one-sixteenth, but not more than one-third, the distance from the center of the display site toward the main spectator area.

5608.5.5 Ready boxes. Display fireworks, 1.3G, that will be temporarily stored at the site during the fireworks display shall be stored in ready boxes located upwind and not less than 25 feet (7620 mm) from the mortar placement and separated according to their size and their designation as salutes.

Exception: For electrically fired fireworks displays, or fireworks displays where all shells are loaded into mortars prior to the show, there is no requirement for separation of shells according to their size, their designation as salutes or for the use of ready boxes.

❖ A ready box should be a weather-resistant container that protects contents from burning debris with a self-closing cover or equivalent means of closure required. If the wind shifts during a display, the ready boxes must be relocated to again be upwind from the discharge site. Tarpaulins can be used as weather protection for ready boxes but not considered as ready boxes.

5608.6 Installation of mortars. Mortars for firing fireworks shells shall be installed in accordance with NFPA 1123 and shall be positioned so that shells are propelled away from spectators and over the fallout area. Under no circumstances shall mortars be angled toward the spectator viewing area. Prior to placement, mortars shall be inspected for defects, such as dents, bent ends, damaged interiors and damaged plugs. Defective mortars shall not be used.

❖ Mortars can be buried to a depth of at least two-thirds to three-quarters of their length in the ground, in above-ground troughs or drums or however the local fire code official considers necessary. Eliminating as much of a risk as possible from spectator injury is a good reason for angling away from the viewing area. See also the commentary to the definition of "Fallout area" for further information.

5608.7 Handling. Aerial shells shall be carried to mortars by the shell body. For the purpose of loading mortars, aerial shells shall be held by the thick portion of the fuse and carefully loaded into mortars.

❖ During the firing of the display, personnel in the discharge site should wear head, eye, hearing and foot protection, and cotton, wool or similarly flame-resistant, long-sleeved, long-legged clothing. Personal protective equipment, as necessary, should be worn by the operator and assistants during the setup and cleanup of the display. Shells must be carried from the storage area to the discharge site only by their bodies and shall never be carried by their fuses.

5608.8 Fireworks display supervision. Whenever in the opinion of the *fire code official* or the operator a hazardous condition exists, the fireworks display shall be discontinued immediately until such time as the dangerous situation is corrected.

❖ All displays must be set up using methods that allow an interruption in firing in case an unforseen danger becomes evident. The judgement of the display operator and the fire code official will determine whether an ongoing display or one that has been set up and is ready to begin must be stopped or delayed because of hazardous conditions.

5608.9 Post-fireworks display inspection. After the fireworks display, the firing crew shall conduct an inspection of the fallout area for the purpose of locating unexploded aerial

INTERNATIONAL CODE COUNCIL®
Copyright © 2015 ICC. ALL RIGHTS RESERVED. Accessed by David Dammon on Jun 21, 2017 12:30:52 PM pursuant to License Agreement with ICC. No further reproduction or distribution authorized. ANY UNAUTHORIZED REPRODUCTION OR DISTRIBUTION IS A VIOLATION OF THE FEDERAL COPYRIGHT ACT AND THE LICENSE AGREEMENT, AND SUBJECT TO CIVIL AND CRIMINAL PENALTIES THEREUNDER.

shells or live components. This inspection shall be conducted before public access to the site shall be allowed. Where fireworks are displayed at night and it is not possible to inspect the site thoroughly, the operator or designated assistant shall inspect the entire site at first light.

A report identifying any shells that fail to ignite in, or discharge from, a mortar or fail to function over the fallout area or otherwise malfunction, shall be filed with the *fire code official*.

❖ This section is intended to identify those display fireworks shells that fail to discharge or function properly over the fallout area of the fireworks display site, and provide a means of notification to the fire code official of the disposition of malfunctioning or misfired fireworks within the jurisdiction.

The firing crew will consist of the operator and assistants. For the public's own safety, no one should be allowed entry into the fallout area of the display site until inspection is completed. Mortar inspection and removal should be conducted within 10 minutes after show completion. When fireworks are displayed at night and it is impossible to thoroughly inspect the site, the crew must reinspect the entire site early the following morning. Preparation of an inspection report will enhance the level of safety provided for displays and is consistent with the requirements of Section 5608.2. See the commentary to that section for a further discussion of fireworks malfunctions.

5608.10 Disposal. Any shells found during the inspection required in Section 5608.9 shall not be handled until not less than 15 minutes have elapsed from the time the shells were fired. The fireworks shall then be doused with water and allowed to remain for not less than 5 additional minutes before being placed in a plastic bucket or fiberboard box. The disposal instructions of the manufacturer as provided by the fireworks supplier shall then be followed in disposing of the fireworks in accordance with Section 5604.10.

❖ In addition to the above requirements, any aerial shell that misfires in a mortar should be left alone for a minimum of 30 minutes, carefully loaded into a bucket of water and left for a minimum of 15 minutes and then properly disposed of.

SECTION 5609
TEMPORARY STORAGE OF CONSUMER FIREWORKS

5609.1 General. Where the temporary storage of consumer fireworks, 1.4G is allowed by Section 5601.1.3, Exception 4, such storage shall comply with the applicable requirements of NFPA 1124.

❖ Where approved by the fire code official, this section allows for the temporary storage of consumer fireworks in accordance with Chapter 6 of NFPA 1124. NFPA 1124 defines "permanent" as any building or structure constructed on a foundation that has fixed utility connections for more than 180 consecutive calendar days—if the utilities remain in use for 90 consecutive days or less and the building is not permanent as defined by NFPA 1124, it is defined as temporary. See also Section 5601.1.3, Exception 4.

Bibliography

The following resource materials were used in the preparation of the commentary for this chapter of the code:

1997 Uniform Fire Code Applications Manual. Whittier, CA: International Fire Code Institute, 1998.

Structures to Resist the Effects of Accidental Explosions. U.S. Army Technical Manual TM 51300. Air Force Manual (AFM) 8822 and Navy NAVFAC P397. Washington, DC: U.S. Government Printing Office.

INTERNATIONAL CODE COUNCIL®

Copyright © 2015 ICC. ALL RIGHTS RESERVED. Accessed by David Dammon on Jun 21, 2017 12:30:52 PM pursuant to License Agreement with ICC. No further reproduction or distribution authorized. ANY UNAUTHORIZED REPRODUCTION OR DISTRIBUTION IS A VIOLATION OF THE FEDERAL COPYRIGHT ACT AND THE LICENSE AGREEMENT, AND SUBJECT TO CIVIL AND CRIMINAL PENALTIES THEREUNDER.

Chapter 57: Flammable and Combustible Liquids

General Comments

Flammable and combustible liquids are essential in our modern lifestyles. These liquids are used for fuel, lubricants, cleaners, solvents, medicine and even drinking. The danger associated with flammable and combustible liquids is that the vapors from these liquids, when combined with air in their flammable range, will burn or explode at temperatures near our normal living and working environment.

The use of these liquids is accepted in all occupancies if the liquids are in appropriate containers and the quantity is very limited. When the quantities exceed these limited amounts or the use of the flammable or combustible liquids increases the potential danger, the code requires that measures be taken to control the potential danger. These measures are to prevent the possibility of flammable and combustible liquids igniting.

Although the dangers of flammable liquids are well known, accidents involving flammable liquids remain one of the most common fire scenarios in the United States. Statistically, the more common flammable or combustible liquids (gasoline) rather than the most dangerous flammable or combustible liquids account for the most fires. There are five factors that account for the involvement of flammable liquids in these fires: 1. Personnel inadequately trained in safe operating procedures; 2. Hazardous operations not isolated from other operations; 3. Equipment and flammable or combustible liquids improperly used; 4. Poor property maintenance and supervision and 5. Inadequate control systems.

These five factors suggest that a holistic approach to flammable and combustible liquid fire safety is required. By beginning with people, a safety system has a better chance of working successfully and consistently. Trained personnel recognize the importance of safe practices to their personal safety, and are more likely to demand that necessary safeguards be installed in their homes and workplaces. Because all of us tend to become complacent as time passes, inspectors, owners, operators, managers and employees must work together to maintain vigilance over the system's continued operation.

Hazardous characteristics

Although the classification boundaries are somewhat arbitrary, flammable and combustible liquids are distinguished by their flash points. The flash point is that temperature at which the liquid produces sufficient vapor to form an ignitable vapor-air mixture above its surface. Because Class I flammable liquids all have flash points below 100°F (38°C), it is prudent to assume that they may be capable of igniting when unconfined under normal environmental conditions. On the other hand, combustible liquids [those materials with flash points above 100°F (38°C)] must usually be heated above their flash points, or in the case of extremely high flash point liquids, above their boiling points, before they will ignite.

Physical characteristics

Flammable liquids possess other characteristics besides their low flash points. Significant characteristics when evaluating relative fire hazards include ignition temperature, autoignition temperature, flammable (explosive) range, viscosity, vapor density, vapor pressure, boiling point, evaporation rate, specific gravity and water solubility. Once the liquid is ignited, these variables have little influence over the material's heat release rate; however, factors such as evaporation rate, viscosity and water solubility may profoundly affect how these fires are extinguished.

Hazards

In general, flammable and combustible liquids have low specific gravities, high vapor densities and narrow flammable (explosive) ranges. These characteristics mean that the liquids will usually float on water, the vapors will usually hug the ground and ignitable vapor-air mixtures will be confined to a range between 6 and 15 percent in air. Thus, smothering is difficult and ignition sources near the ground are more likely to pose a hazard. Low and high concentrations within the flammable range are likely to produce deflagrations, while concentrations near the middle of the flammable (explosive) range are more likely to produce detonations.

Protection

The protection provided by the code is to prevent the flammable and combustible liquids from becoming ignited. This is accomplished by one or more of the following procedures:

1. Preventing the flammable and combustible liquids from vaporizing. Equipment and devices are used to safely store, transport, dispense, mix or use the flammable and combustible liquids so that the liquid does not have the opportunity to evaporate except where intended.
2. Preventing the concentration of vapors of flammable and combustible liquids from reaching the vapor-air mixture between the lower flammable limit (LFL) and the upper flammable limit (UFL). Ventilation of the area is used to dilute and

INTERNATIONAL CODE COUNCIL®
Copyright © 2015 ICC. ALL RIGHTS RESERVED. Accessed by David Dammon on Jun 21, 2017 12:30:52 PM pursuant to License Agreement with ICC. No further reproduction or distribution authorized. ANY UNAUTHORIZED REPRODUCTION OR DISTRIBUTION IS A VIOLATION OF THE FEDERAL COPYRIGHT ACT AND THE LICENSE AGREEMENT, AND SUBJECT TO CIVIL AND CRIMINAL PENALTIES THEREUNDER.

disperse the vapors before the vapor-air mixture reaches the LFL.

3. Preventing an accumulation of the vapor-air mixture of flammable and combustible liquids. The ventilation of the area as well as the design of the area is used to prevent the vapors from collecting.
4. Removing ignition sources from the area. These ignition sources are from people, equipment or static electricity sources.
5. Precautions against spontaneous ignition.
6. Removing other combustibles from the area. Other combustibles may become involved in a fire, creating the ignition source for the flammable and combustible liquid.
7. Designing the equipment (piping, vessels, containers, etc.) and facilities to prevent the loss of flammable and combustible liquids and to protect the flammable and combustible liquids from exterior fire exposure. This protection is also used to protect other property and flammable and combustible liquids from fire exposure.
8. Controlling the volume of flammable and combustible liquids to reduce the size of a potential fire.
9. Providing fire-fighting equipment to control fire from combustibles other than flammable and combustible liquids as well as fire from flammable and combustible liquids.
10. Security to ensure that only trained personnel have access to flammable and combustible liquids.
11. Training of personnel to ensure they are aware of the potential dangers and know the operating procedures and safety procedures.

Purpose

The requirements of this chapter are intended to reduce the likelihood of fires involving the storage, handling, use or transportation of flammable and combustible liquids. Adherence to these practices may also limit damage in the event of an accidental fire involving these materials.

SECTION 5701
GENERAL

5701.1 Scope and application. Prevention, control and mitigation of dangerous conditions related to storage, use, dispensing, mixing and handling of flammable and *combustible liquids* shall be in accordance with Chapter 50 and this chapter.

❖ This chapter regulates the storage, handling and use of flammable and combustible liquids. Although U.S. Department of Transportation (DOT) regulations govern the construction of tank vehicles and the interstate transportation of flammable and combustible liquids, this chapter regulates the parking, garaging, filling and discharging of tank vehicles. This chapter is used in conjunction with Chapter 50 to regulate flammable and combustible liquids. Related operations, materials and processes are regulated elsewhere in the code.

5701.2 Nonapplicability. This chapter shall not apply to liquids as otherwise provided in other laws or regulations or chapters of this code, including:

1. Specific provisions for flammable liquids in motor fuel-dispensing facilities, repair garages, airports and marinas in Chapter 23.
2. Medicines, foodstuffs, cosmetics and commercial or institutional products containing not more than 50 percent by volume of water-miscible liquids and with the remainder of the solution not being flammable, provided that such materials are packaged in individual containers not exceeding 1.3 gallons (5 L).
3. Quantities of alcoholic beverages in retail or wholesale sales or storage occupancies, providied that the liquids are packaged in individual containers not exceeding 1.3 gallons (5 L).
4. Storage and use of fuel oil in tanks and containers connected to oil-burning equipment. Such storage and use shall be in accordance with Section 603. For abandonment of fuel oil tanks, this chapter applies.
5. Refrigerant liquids and oils in refrigeration systems (see Section 606).
6. Storage and display of aerosol products complying with Chapter 51.
7. Storage and use of liquids that do not have a fire point when tested in accordance with ASTM D92.
8. Liquids with a *flash point* greater than 95°F (35°C) in a water-miscible solution or dispersion with a water and inert (noncombustible) solids content of more than 80 percent by weight, which do not sustain combustion.
9. Liquids without *flash points* that can be flammable under some conditions, such as certain halogenated hydrocarbons and mixtures containing halogenated hydrocarbons.
10. The storage of distilled spirits and wines in wooden barrels and casks.

INTERNATIONAL CODE COUNCIL®
Copyright © 2015 ICC. ALL RIGHTS RESERVED. Accessed by David Dammon on Jun 21, 2017 12:30:52 PM pursuant to License Agreement with ICC. No further reproduction or distribution authorized. ANY UNAUTHORIZED REPRODUCTION OR DISTRIBUTION IS A VIOLATION OF THE FEDERAL COPYRIGHT ACT AND THE LICENSE AGREEMENT, AND SUBJECT TO CIVIL AND CRIMINAL PENALTIES THEREUNDER.

11. Commercial cooking oil storage tank systems located within a building and designed and installed in accordance with Section 610 and NFPA 30.

❖ This section is an acknowledgment that some flammable and combustible liquids are regulated by other laws or by other chapters of the code. The application of these other laws or code chapters takes precedence over the requirements in this chapter. Note that most of the items listed in this section correlate to Section 9.1.4 of NFPA 30 (see also commentary, Section 5001.1).

Item 1 covers the unique use of flammable liquids at motor fuel-dispensing facilities, airports and marinas, which require specific regulations that are addressed in Chapter 23.

Item 2 indicates that individually packaged consumer products consisting of medicines, foodstuffs, cosmetics and commercial and institutional products with a limited quantity of flammable liquid used in the product are exempt from the requirements of this chapter. Such products present a reduced hazard due to their limited ignitability and because the packaging limitation helps in keeping spills, due to a leaking package or broken container, to a manageable size. A similar exception appears in Section 5001.1.

Item 3 indicates that alcoholic beverages in retail or wholesale Group M occupancies or in storage occupancies are not regulated by this chapter where the individual containers do not exceed 1.3 gallons (4.92 L). The packaging limitation helps in keeping spills, due to a leaking package or broken container, to a manageable size. A similar exception appears in Section 5001.1.

Item 4 states that fuel oil tanks and containers connected to oil-burning equipment are regulated by Chapter 6. See the commentary to Sections 603.3 through 603.3.3. This chapter regulates abandoned fuel tanks.

Item 5 notes that refrigerant liquids and oils in refrigeration systems are also regulated by Chapter 6.

Item 6 refers the reader to Chapter 51 for requirements covering the storage and display of aerosol products. Where the storage or display of aerosols does not comply with Chapter 51, this chapter will regulate the storage and display of aerosols in those specific circumstances.

Item 7 notes that the storage and use of a liquid whose vapor cannot be ignited and sustain burning for a minimum of 5 seconds (fire point) is not regulated by this chapter. The test procedure for determining the fire point of a petroleum product is ASTM D92. The fire point is based on a specific barometric pressure established by ASTM International (ASTM). An example of such a liquid would be water-based paints.

Item 8 exempts certain liquids that, although they have a flash point, will not sustain combustion.

Item 9 notes that some liquids do not have a flash point except in specific circumstances; for example, halogenated hydrocarbons that may become explosive when exposed to aluminum. These liquids are not regulated by the code.

Item 10 makes the storage of distilled spirits and wines in wooden barrels and casks exempt from this chapter. Although their contents are classified as flammable liquids, the containers do not pose the rupture hazard that other containers do. Barrels and casks will leak their contents and contribute to the fire as the metal bands that secure the staves expand and loosen. Even this hazard feature is generally mitigated by the operation of automatic sprinklers that prevent the fire from progressing to the point where the metal bands get hot enough to expand. A similar exception also appears in Section 5001.1.

Item 11 exempts high flash point cooking oil (Class IIIB liquid) storage in a restaurant back-of-house setting because it presents a different, and generally lower, hazard than commonly anticipated by Chapter 57, which is more relevant to industrial flammable and combustible liquid tank requirements. This exemption to Section 5701.2 unifies all pertinent fire safety requirements into Section 610 and the standards referenced therein and establishes the level of safety commensurate with this hazard. This approach is consistent with other exceptions in this section, in particular the exception for fuel oil tanks connected with oil burning equipment.

5701.3 Referenced documents. The applicable requirements of Chapter 50, other chapters of this code, the *International Building Code* and the *International Mechanical Code* pertaining to flammable liquids shall apply.

❖ The requirements to regulate the design, construction and maintenance of facilities using flammable and combustible liquids are contained in more than one document. The code contains several chapters that address requirements for the storage, handling, dispensing, processing, transportation and use of flammable and combustible liquids. The *International Building Code*® (IBC®) covers the construction requirements for the structure, while the *International Mechanical Code*® (IMC®) covers the construction requirements for mechanical systems.

5701.4 Permits. Permits shall be required as set forth in Sections 105.6 and 105.7.

❖ The process of issuing permits gives the fire code official an opportunity to carefully evaluate and regulate hazardous operations. Permit applicants should be required to demonstrate that their operations comply with the intent of the code before the permit is issued. See the commentary to Section 105.6 for a general discussion of operations requiring an operational permit, Section 105.6.17 for discussion of specific quantity-based operational permits for the materials regulated in this chapter and Section 105.7.8 for a discussion of activities requiring a construction permit. The permit process also notifies the fire department of the need for prefire planning for the hazardous property.

INTERNATIONAL CODE COUNCIL®
Copyright © 2015 ICC. ALL RIGHTS RESERVED. Accessed by David Dammon on Jun 21, 2017 12:30:52 PM pursuant to License Agreement with ICC. No further reproduction or distribution authorized. ANY UNAUTHORIZED REPRODUCTION OR DISTRIBUTION IS A VIOLATION OF THE FEDERAL COPYRIGHT ACT AND THE LICENSE AGREEMENT, AND SUBJECT TO CIVIL AND CRIMINAL PENALTIES THEREUNDER.

5701.5 Material classification. Flammable and *combustible liquids* shall be classified in accordance with the definitions in Chapter 2.

When mixed with lower flash-point liquids, Class II or III liquids are capable of assuming the characteristics of the lower flash-point liquids. Under such conditions, the appropriate provisions of this chapter for the actual *flash point* of the mixed liquid shall apply.

When heated above their *flash points*, Class II and III liquids assume the characteristics of Class I liquids. Under such conditions, the appropriate provisions of this chapter for flammable liquids shall apply.

❖ Flammable and combustible liquids are defined in Chapter 2. Mixing or heating the liquid may modify flammable and combustible liquids. This process will change the flash point of the liquid. The mixed liquid is to be classified and handled based on the flash point determined by the appropriate test procedure and apparatus as specified in ASTM D56, ASTM D93 or ASTM D3278. A Class II or III liquid that is heated above its flash point during handling or processing must be treated as a Class I liquid.

SECTION 5702
DEFINITIONS

5702.1 Definitions. The following terms are defined in Chapter 2:

ALCOHOL-BASED HAND RUB.

BULK PLANT OR TERMINAL.

BULK TRANSFER.

COMBUSTIBLE LIQUID.
Class II.
Class IIIA.
Class IIIB.

FIRE POINT.

FLAMMABLE LIQUID.
Class IA.
Class IB.
Class IC.

FLASH POINT.

FUEL LIMIT SWITCH.

LIQUID STORAGE ROOM.

LIQUID STORAGE WAREHOUSE.

MOBILE FUELING.

PROCESS TRANSFER.

REFINERY.

REMOTE EMERGENCY SHUTOFF DEVICE.

REMOTE SOLVENT RESERVOIR.

SOLVENT DISTILLATION UNIT.

TANK, PRIMARY.

❖ Definitions of terms can help in the understanding and application of the code requirements. This section directs the code user to Chapter 2 for the proper application of the indicated terms used in this chapter. Terms may be defined in Chapter 2 or in another *International Code*® as indicated in Section 201.3, or the dictionary meaning may be all that is needed (see also commentary, Sections 201.1 through 201.4).

SECTION 5703
GENERAL REQUIREMENTS

5703.1 Electrical. Electrical wiring and equipment shall be installed and maintained in accordance with Section 605 and NFPA 70.

❖ The installation of electrical wiring and equipment is regulated by NFPA 70.

5703.1.1 Classified locations for flammable liquids. Areas where flammable liquids are stored, handled, dispensed or mixed shall be in accordance with Table 5703.1.1. A classified area shall not extend beyond an unpierced floor, roof or other solid partition.

The extent of the classified area is allowed to be reduced, or eliminated, where sufficient technical justification is provided to the *fire code official* that a concentration in the area in excess of 25 percent of the lower flammable limit (LFL) cannot be generated.

❖ Electrical systems can create sparks that can be a source of ignition. Areas of a building where flammable liquids are present are to have the electrical wiring and equipment installed to prevent the electrical system from becoming an ignition source. This type of electrical installation is not required in other areas of the building where the construction prevents the spread of flammable liquids and their vapors. This construction can be accomplished only by eliminating penetrations. Class I equipment locations, which require special installation of wiring and equipment, are listed in Table 5703.1.1.

TABLE 5703.1.1. See page 57-5.

❖ The table lists the Class I, Group D locations that require installation of the electrical system or its components to prevent them from becoming an ignition source. Class I is defined as a location where flammable liquids or gases may be present in sufficient quantities to produce an explosive or ignitable mixture. Group D is defined as an atmosphere containing flammable or combustible liquids or gases. Group D is divided into two divisions: Division 1 is for locations where flammable or combustible vapors are present; Division 2 is for locations where flammable or combustible vapors may be present.

INTERNATIONAL CODE COUNCIL®
Copyright © 2015 ICC. ALL RIGHTS RESERVED. Accessed by David Dammon on Jun 21, 2017 12:30:52 PM pursuant to License Agreement with ICC. No further reproduction or distribution authorized. ANY UNAUTHORIZED REPRODUCTION OR DISTRIBUTION IS A VIOLATION OF THE FEDERAL COPYRIGHT ACT AND THE LICENSE AGREEMENT, AND SUBJECT TO CIVIL AND CRIMINAL PENALTIES THEREUNDER.

TABLE 5703.1.1
CLASS I ELECTRICAL EQUIPMENT LOCATIONS[a]

LOCATION	GROUP D DIVISION	EXTENT OF CLASSIFIED AREA
Underground tank fill opening	1	Pits, boxes or spaces below grade level, any part of which is within the Division 1 or 2 classified area.
	2	Up to 18 inches above grade level within a horizontal radius of 10 feet from a loose-fill connection and within a horizontal radius of 5 feet from a tight-fill connection.
Vent—Discharging upward	1	Within 3 feet of open end of vent, extending in all directions.
	2	Area between 3 feet and 5 feet of open end of vent, extending in all directions.
Drum and container filling		
Outdoor or indoor with adequate ventilation	1	Within 3 feet of vent and fill opening, extending in all directions.
	2	Area between 3 feet and 5 feet from vent of fill opening, extending in all directions. Also up to 18 inches above floor or grade level within a horizontal radius of 10 feet from vent or fill opening.
Pumps, bleeders, withdrawal fittings, meters and similar devices		
Indoor	2	Within 5 feet of any edge of such devices, extending in all directions, and up to 3 feet above floor or grade level within 25 feet horizontally from any edge of such devices.
Outdoor	2	Within 3 feet of any edge of such devices, extending in all directions, and up to 18 inches above floor or grade level within 10 feet horizontally from an edge of such devices.
Pits		
Without mechanical ventilation	1	Entire area within pit if any part is within a Division 1 or 2 classified area.
With mechanical ventilation	2	Entire area within pit if any part is within a Division 1 or 2 classified area.
Containing valves, fittings or piping, and not within a Division 1 or 2 classified area	2	Entire pit.
Drainage ditches, separators, impounding basins	1 or 2	Same as pits.
Indoor		
Outdoor	2	Area up to 18 inches above ditch, separator or basin, and up to 18 inches above grade within 15 feet horizontal from any edge.
Tank vehicle and tank car[b]		
Loading through open dome	1	Within 3 feet of edge of dome, extending in all directions.
	2	Area between 3 feet and 15 feet from edge of dome, extending in all directions.
Loading through bottom connections with atmospheric venting	1	Within 3 feet of point of venting to atmosphere, extending in all directions.
	2	Area between 3 feet and 15 feet from point of venting to atmosphere, extending in all directions. Also up to 18 inches above grade within a horizontal radius of 10 feet from point of loading connection.

(continued)

Copyright © 2015 ICC. ALL RIGHTS RESERVED. Accessed by David Dammon on Jun 21, 2017 12:30:52 PM pursuant to License Agreement with ICC. No further reproduction or distribution authorized. ANY UNAUTHORIZED REPRODUCTION OR DISTRIBUTION IS A VIOLATION OF THE FEDERAL COPYRIGHT ACT AND THE LICENSE AGREEMENT, AND SUBJECT TO CIVIL AND CRIMINAL PENALTIES THEREUNDER.

TABLE 5703.1.1—continued
CLASS I ELECTRICAL EQUIPMENT LOCATIONS[a]

LOCATION	GROUP D DIVISION	EXTENT OF CLASSIFIED AREA
Tank vehicle and tank car[b]—continued		
Loading through closed dome with atmospheric venting	1	Within 3 feet of open end of vent, extending in all directions.
	2	Area between 3 feet and 15 feet from open end of vent, extending in all directions, and within 3 feet of edge of dome, extending in all directions.
Loading through closed dome with vapor control	2	Within 3 feet of point of connection of both fill and vapor lines, extending in all directions.
Bottom loading with vapor control or any bottom unloading	2	Within 3 feet of point of connection, extending in all directions, and up to 18 inches above grade within a horizontal radius of 10 feet from point of connection.
Storage and repair garage for tank vehicles	1	Pits or spaces below floor level.
	2	Area up to 18 inches above floor or grade level for entire storage or repair garage.
Garages for other than tank vehicles	Ordinary	Where there is an opening to these rooms within the extent of an outdoor classified area, the entire room shall be classified the same as the area classification at the point of the opening.
Outdoor drum storage	Ordinary	—
Indoor warehousing where there is no flammable liquid transfer	Ordinary	Where there is an opening to these rooms within the extent of an indoor classified area, the room shall be classified the same as if the wall, curb or partition did not exist.
Indoor equipment where flammable vapor/air mixtures could exist under normal operations	1	Area within 5 feet of any edge of such equipment, extending in all directions.
	2	Area between 5 feet and 8 feet of any edge of such equipment, extending in all directions, and the area up to 3 feet above floor or grade level within 5 feet to 25 feet horizontally from any edge of such equipment.[c]
Outdoor equipment where flammable vapor/air mixtures could exist under normal operations	1	Area within 3 feet of any edge of such equipment, extending in all directions.
	2	Area between 3 feet and 8 feet of any edge of such equipment extending in all directions, and the area up to 3 feet above floor or grade level within 3 feet to 10 feet horizontally from any edge of such equipment.
Tank—Above ground		
Shell, ends or roof and dike area	1	Area inside dike where dike height is greater than the distance from the tank to the dike for more than 50 percent of the tank circumference.
	2	Area within 10 feet from shell, ends or roof of tank. Area inside dikes to level of top of dike.
Vent	1	Area within 5 feet of open end of vent, extending in all directions.
	2	Area between 5 feet and 10 feet from open end of vent, extending in all directions.
Floating roof	1	Area above the roof and within the shell.
Office and restrooms	Ordinary	Where there is an opening to these rooms within the extent of an indoor classified location, the room shall be classified the same as if the wall, curb or partition did not exist.

For SI: 1 inch = 25.4 mm, 1 foot = 304.8 mm.

a. Locations as classified in NFPA 70.

b. When classifying extent of area, consideration shall be given to the fact that tank cars or tank vehicles can be spotted at varying points. Therefore, the extremities of the loading or unloading positions shall be used.

c. The release of Class I liquids can generate vapors to the extent that the entire building, and possibly a zone surrounding it, are considered a Class I, Division 2 location.

INTERNATIONAL CODE COUNCIL®

Copyright © 2015 ICC. ALL RIGHTS RESERVED. Accessed by David Dammon on Jun 21, 2017 12:30:52 PM pursuant to License Agreement with ICC. No further reproduction or distribution authorized. ANY UNAUTHORIZED REPRODUCTION OR DISTRIBUTION IS A VIOLATION OF THE FEDERAL COPYRIGHT ACT AND THE LICENSE AGREEMENT, AND SUBJECT TO CIVIL AND CRIMINAL PENALTIES THEREUNDER.

5703.1.2 Classified locations for combustible liquids. Areas where Class II or III liquids are heated above their *flash points* shall have electrical installations in accordance with Section 5703.1.1.

Exception: Solvent distillation units in accordance with Section 5705.4.

❖ Electrical systems can create sparks that can be a source of ignition. The sparks may be caused by electrical current or static electricity. Areas of a building where combustible liquids are heated to or above their flash points are treated the same as areas containing flammable liquids. Class I equipment locations, which require special installation of the wiring and equipment, are listed in Table 5703.1.1.

The exception indicates that use of a solvent distillation unit for the recovery of combustible liquids is not considered a Class I, Group D location. See the commentary to Section 2705.4 for information on solvent distillation units.

5703.1.3 Other applications. The *fire code official* is authorized to determine the extent of the Class I electrical equipment and wiring location where a condition is not specifically covered by these requirements or NFPA 70.

❖ There may be situations when the code does not specifically cover the hazardous location that should have Class I electrical equipment and wiring. The fire code official has the authority to require Class I electrical equipment and wiring in a location not specifically identified by the code for Division 1 or 2 locations.

5703.2 Fire protection. Fire protection for the storage, use, dispensing, mixing, handling and on-site transportation of flammable and *combustible liquids* shall be in accordance with this chapter and applicable sections of Chapter 9.

❖ The requirements of Chapter 9 apply to flammable and combustible liquids. Fire protection is a principal means of preventing and controlling the spread of fire.

5703.2.1 Portable fire extinguishers and hose lines. Portable fire extinguishers shall be provided in accordance with Section 906. Hose lines shall be provided in accordance with Section 905.

❖ Portable fire extinguishers and hose lines are to be installed where flammable and combustible liquids are stored, used or dispensed. These fire protection devices, operated by trained personnel, are to handle small emergencies. They are not an alternative to fire protection systems mandated by this section, Chapter 9 of the code or the IBC.

5703.3 Site assessment. In the event of a spill, leak or discharge from a tank system, a site assessment shall be completed by the *owner* or operator of such tank system if the *fire code official* determines that a potential fire or explosion hazard exists. Such site assessments shall be conducted to ascertain potential fire hazards and shall be completed and submitted to the fire department within a time period established by the *fire code official*, not to exceed 60 days.

❖ Site assessment is to ensure that a spill, leak or discharge of flammable or combustible liquid is investigated and corrective action is taken. The corrective action may involve only cleaning the area and covering the cause of the problem during personnel safety meetings or it may require a revision to the equipment or operation procedures. The fire code official is to establish the deadline for completion of the site assessment. The maximum time for completing a site assessment is 60 days. The corrective actions may take longer than the time to complete the site assessment.

5703.4 Spill control and secondary containment. Where the *maximum allowable quantity per control area* is exceeded, and where required by Section 5004.2, rooms, buildings or areas used for storage, dispensing, use, mixing or handling of Class I, II and IIIA liquids shall be provided with spill control and secondary containment in accordance with Section 5004.2.

❖ Where the maximum allowable quantity per control area (MAQ) of flammable or Class II or IIIA combustible liquids is exceeded, spills must be controlled to prevent the spread of liquid and vapors. Section 5004.2 discusses the use of liquid-tight floors, curbs, dikes and drainage systems to divert the liquid to a location where it can be contained and safely handled. Section 5004.3 discusses mechanical and natural exhaust systems. The exhaust system is to remove the vapors to prevent them from accumulating in concentrations in the flammable range of the vapor. See also Section 5704.3.7.3.

5703.5 Labeling and signage. The *fire code official* is authorized to require warning signs for the purpose of identifying the hazards of storing or using flammable liquids. Signage for identification and warning such as for the inherent hazard of flammable liquids or smoking shall be provided in accordance with this chapter and Sections 5003.5 and 5003.6.

❖ Signs are used to identify the flammable or combustible liquid being stored or used and to provide any warning or information necessary for its storage or use. Sections 5003.5 and 5003.6 include a reference to NFPA 704, which details the locations and construction of the signs. NFPA 704 uses a diamond with each of its four points colored either red, blue, yellow or white. Each diamond point represents a different hazard. For flammable and combustible liquids, the red diamond point (uppermost point) represents flammability. The number in this diamond point will vary from 0 (will not burn) to 4 (rapidly burn). For flammable and combustible reference, numbers 2 to 4 usually represent flammable and combustible liquids. These signs are permanent, durable signs that are to be readily visible and are not to be covered or removed.

INTERNATIONAL CODE COUNCIL®
Copyright © 2015 ICC. ALL RIGHTS RESERVED. Accessed by David Dammon on Jun 21, 2017 12:30:52 PM pursuant to License Agreement with ICC. No further reproduction or distribution authorized. ANY UNAUTHORIZED REPRODUCTION OR DISTRIBUTION IS A VIOLATION OF THE FEDERAL COPYRIGHT ACT AND THE LICENSE AGREEMENT, AND SUBJECT TO CIVIL AND CRIMINAL PENALTIES THEREUNDER.

5703.5.1 Style. Warning signs shall be of a durable material. Signs warning of the hazard of flammable liquids shall have white lettering on a red background and shall read: DANGER—FLAMMABLE LIQUIDS. Letters shall be not less than 3 inches (76 mm) in height and $^1/_2$ inch (12.7 mm) in stroke.

❖ The signs used with flammable liquids are to read "DANGER–FLAMMABLE LIQUIDS." The code defines color and size of lettering to ensure uniformity.

5703.5.2 Location. Signs shall be posted in locations as required by the *fire code official*. Piping containing flammable liquids shall be identified in accordance with ASME A13.1.

❖ The location of signs is discussed in Section 5003.5 for containers, tanks, entrances, etc., by reference to NFPA 704. Signage for piping containing flammable liquids is covered under ASME A13.1. The signage is in English text and requires arrows to indicate flow direction.

5703.5.3 Warning labels. Individual containers, packages and cartons shall be identified, marked, labeled and placarded in accordance with federal regulations and applicable state laws.

❖ The warning labels on individual containers, packages and cartons may be different than what is required under NFPA 704. Other federal and state laws may address the warning label for these individual containers, packages and cartons.

5703.5.4 Identification. Color coding or other *approved* identification means shall be provided on each loading and unloading riser for flammable or *combustible liquids* to identify the contents of the tank served by the riser.

❖ More than one flammable or combustible liquid may be present at a facility in addition to other liquids. The loading and unloading risers are to be color coded or identified by other approved identification means to ensure that operators know which material is being used. If color coding is not used, the fire code official is to approve any other identification means.

5703.6 Piping systems. Piping systems, and their component parts, for flammable and *combustible liquids* shall be in accordance with Sections 5703.6.1 through 5703.6.11.

❖ Piping must be designed to provide protection against overpressure or other conditions that could create leaks at joints or rupture the pipes.

5703.6.1 Nonapplicability. The provisions of Section 5703.6 shall not apply to gas or oil well installations; piping that is integral to stationary or portable engines, including aircraft, watercraft and motor vehicles; and piping in connection with boilers and pressure vessels regulated by the *International Mechanical Code*.

❖ Piping of some applications of flammable and combustible liquids is addressed under other code documents or other laws. Other state and federal agencies have laws and authority to regulate the piping for oil and gas wells. Stationary and portable engines are manufactured under other standards that are enforced by other state and federal agencies. Because the piping associated with heating equipment (fuel oil and pressure systems) is addressed by the IMC, those requirements are not repeated.

5703.6.2 Design and fabrication of piping systems and components. Piping system components shall be designed and fabricated in accordance with the applicable standard listed in Table 5703.6.2 and Chapter 27 of NFPA 30, except as modified by Section 5703.6.2.1.

❖ Rather than include lengthy requirements for piping systems in the body of the code, this section provides correlation with Chapter 27 of NFPA 30, which references the ASME B31 series of piping standards, not all of which are suitable or necessary for flammable or combustible liquid piping. By including a table listing the four specific standards within ASME B31 that are applicable for flammable liquid piping, the code is made more user friendly. It is left to the code user to select the correct standard to apply.

TABLE 5703.6.2
PIPING STANDARDS

PIPING USE	STANDARD
Power Piping	ASME B31.1
Process Piping	ASME B31.3
Pipeline Transportation Systems for Liquid Hydrocarbons and Other Liquids	ASME B31.4
Building Services Piping	ASME B31.9

❖ See the commentary to Section 5703.6.2.

5703.6.2.1 Special materials. Low-melting-point materials (such as aluminum, copper or brass), materials that soften on fire exposure (such as nonmetallic materials) and nonductile material (such as cast iron) shall be acceptable for use underground in accordance with the applicable standard listed in Table 5703.6.2. Where such materials are used outdoors in above-ground piping systems or within buildings, they shall be in accordance with the applicable standard listed in Table 5703.6.2 and one of the following:

1. Suitably protected against fire exposure.
2. Located where leakage from failure would not unduly expose people or structures.
3. Located where leakage can be readily controlled by operation of accessible remotely located valves.

In all cases, nonmetallic piping shall be used in accordance with Section 27.4.6 of NFPA 30.

❖ Piping that may fail under fire exposure as a result of heat reducing its material strength is limited to specific installations and locations. Pipes that have "low melting points" can fail by sagging when exposed to fire. Sagging can cause a joint to separate or the pipes to burst if piping is under pressure. These failures would result in the flammable and combustible liquids being exposed to the fire and air. The limitations on the use of these piping materials reduces their exposure to a fire, or where a failure occurs,

INTERNATIONAL CODE COUNCIL®
Copyright © 2015 ICC. ALL RIGHTS RESERVED. Accessed by David Dammon on Jun 21, 2017 12:30:52 PM pursuant to License Agreement with ICC. No further reproduction or distribution authorized. ANY UNAUTHORIZED REPRODUCTION OR DISTRIBUTION IS A VIOLATION OF THE FEDERAL COPYRIGHT ACT AND THE LICENSE AGREEMENT, AND SUBJECT TO CIVIL AND CRIMINAL PENALTIES THEREUNDER.

does not increase the potential danger. This kind of piping can also be used where the piping system can be isolated in an emergency.

5703.6.3 Testing. Unless tested in accordance with the applicable section of ASME B31.9, piping, before being covered, enclosed or placed in use, shall be hydrostatically tested to 150 percent of the maximum anticipated pressure of the system, or pneumatically tested to 110 percent of the maximum anticipated pressure of the system, but not less than 5 pounds per square inch gauge (psig) (34.47 kPa) at the highest point of the system. This test shall be maintained for a sufficient time period to complete visual inspection of joints and connections. For not less than 10 minutes, there shall be no leakage or permanent distortion. Care shall be exercised to ensure that these pressures are not applied to vented storage tanks. Such storage tanks shall be tested independently from the piping.

❖ Piping must be tested to a minimum pressure of 5 pounds per square inch gauge (psig) (34.47 kPa) or to a pressure greater than the anticipated pressure of the system. The pipe joints and connections are to be visually inspected. The test pressure is to be maintained for a minimum of 10 minutes, but not less than the time required for a visual inspection.

5703.6.3.1 Existing piping. Existing piping shall be tested in accordance with this section where the *fire code official* has reasonable cause to believe that a leak exists. Piping that could contain flammable or *combustible liquids* shall not be tested pneumatically. Such tests shall be at the expense of the *owner* or operator.

Exception: Vapor-recovery piping is allowed to be tested using an inert gas.

❖ The fire code official may require testing of existing piping. Existing piping is to be tested to the same criteria as new piping, except that piping containing flammable or combustible liquids is not to be pneumatically tested. The introduction of air into these pipes can create a vapor and air mixture that reaches the flammable range.

The exception allows pneumatic testing of a vapor-recovery system with an inert gas (such as nitrogen, carbon dioxide, etc.). Because vapor-recovery systems are designed to remove the flammable or combustible vapors and recycle the liquid, these vapors could be removed from the piping during the recovery process; however, the inert gas is still required to prevent the vapor and air mixture from reaching the flammable range before or during the recovery process.

5703.6.4 Protection from vehicles. Guard posts or other *approved* means shall be provided to protect piping, valves or fittings subject to vehicular damage in accordance with Section 312.

❖ Protection from vehicle impact is provided by guard posts or other approved barriers. Section 312 states that the specifications for guard posts or the design forces required for an approved barrier should comply with the code.

5703.6.5 Protection from external corrosion and galvanic action. Where subject to external corrosion, piping, related fluid-handling components and supports for both underground and above-ground applications shall be fabricated from noncorrosive materials, and coated or provided with corrosion protection. Dissimilar metallic parts that promote galvanic action shall not be joined.

❖ Deterioration of piping and components can cause leaks and spillage of flammable and combustible liquids. Using uncorrodible materials, protective coatings, galvanic protection or a combination of these methods can protect the piping and components. Dissimilar metals are prohibited because of the localized galvanic action that could occur between them. This localized galvanic action could cause one of the metals to corrode so that the other metal is protected from corrosion. See Section 5704.2.7.9 for corrosion protection for tanks.

5703.6.6 Valves. Piping systems shall contain a sufficient number of manual control valves and check valves to operate the system properly and to protect the plant under both normal and emergency conditions. Piping systems in connection with pumps shall contain a sufficient number of such valves to control properly the flow of liquids in normal operation and in the event of physical damage or fire exposure.

❖ Valves are essential to proper operation. Check valves prevent the backflow or siphonage of flammable and combustible liquids. Other valves are used to isolate piping sections and equipment for maintenance. Valves are also used to stop the flow of flammable and combustible liquids.

5703.6.6.1 Backflow protections. Connections to pipelines or piping by which equipment (such as tank cars, tank vehicles or marine vessels) discharges liquids into storage tanks shall be provided with check valves or block valves for automatic protection against backflow where the piping arrangement is such that backflow from the system is possible. Where loading and unloading is done through a common pipe system, a check valve is not required. However, a block valve, located so as to be readily accessible or remotely operable, shall be provided.

❖ Check valves prevent the backflow or siphonage of flammable and combustible liquids. A check valve cannot be used for a common pipe used to both load and unload flammable and combustible liquids because check valves are designed to allow flow in only one direction. This type of valve would prohibit a common pipe for both loading and unloading. A block valve is to be used for this common pipe. The block valve control mechanism must be readily accessible or remotely operable in the event that the valve is needed to stop a spill or accidental discharge.

INTERNATIONAL CODE COUNCIL®
Copyright © 2015 ICC. ALL RIGHTS RESERVED. Accessed by David Dammon on Jun 21, 2017 12:30:52 PM pursuant to License Agreement with ICC. No further reproduction or distribution authorized. ANY UNAUTHORIZED REPRODUCTION OR DISTRIBUTION IS A VIOLATION OF THE FEDERAL COPYRIGHT ACT AND THE LICENSE AGREEMENT, AND SUBJECT TO CIVIL AND CRIMINAL PENALTIES THEREUNDER.

5703.6.6.2 Manual drainage. Manual drainage-control valves shall be located at *approved* locations remote from the tanks, diked area, drainage system and impounding basin to ensure their operation in a fire condition.

❖ In case of a fire, it may be necessary to drain the piping system. This is to be accomplished by a manual drainage-control valve. The number of manual drainage-control valves will depend on the facility. The manual drainage-control valves are to be located to isolate sections of the piping and equipment for maintenance, repair, replacement and control of flammable and combustible liquids during an emergency.

5703.6.7 Connections. Above-ground tanks with connections located below normal liquid level shall be provided with internal or external isolation valves located as close as practical to the shell of the tank. Except for liquids whose chemical characteristics are incompatible with steel, such valves, where external, and their connections to the tank shall be of steel.

❖ The isolation valve is located as near as practical to above-ground tanks to control the flow of flammable and combustible liquids. This location is to reduce the quantity of flammable and combustible liquids that may be discharged during an emergency. The loss of a portion of the piping system between an above-ground tank and the isolation valve may allow the discharge of the flammable and combustible liquids under gravity flow.

The isolation valve is to be of steel unless the flammable and combustible liquids are not compatible with steel. Other valve materials may be damaged and fail under the heat from a fire. If the isolation valve fails, the flammable and combustible liquids may be discharged under gravity flow and increase the fire potential.

5703.6.8 Piping supports. Piping systems shall be substantially supported and protected against physical damage and excessive stresses arising from settlement, vibration, expansion, contraction or exposure to fire. The supports shall be protected against exposure to fire by one of the following:

1. Draining liquid away from the piping system at a minimum slope of not less than 1 percent.
2. Providing protection with a *fire-resistance rating* of not less than 2 hours.
3. Other *approved* methods.

❖ Pipe supports are necessary to reduce stress on the pipe from both external and internal sources. Personnel are an external source of potential damage to piping, as is unattached equipment hitting the piping system. The pipe supports are to absorb these impact loads to protect the pipe from excess deflection.

Internal forces are caused by the positive and negative pressures created by the operation of pumps and valves. Pumping of flammable and combustible liquids will generate positive pressure in the pipe. This pressure, combined with any pressure required to support the dead weight of the piping system and flammable and combustible liquids in the piping system, can cause the pipe wall to rupture.

The pumping action and the operation of the valve can cause shock waves to travel through the flammable and combustible liquids in a pipe, which can create internal pressures several times larger than normal operating pressures. One type of shock wave is caused by the fast opening and closing of a valve. This pressure wave can place high internal pressures on the piping system.

This section lists three methods of protecting pipe supports from a fire:

1. The piping is required to have a minimum slope of 1 percent to allow for drainage. The viscosity of the flammable and combustible liquids may mandate a greater drainage slope.
2. The pipe supports must support the piping in a fire for a minimum of 2 hours based on ASTM E119 test criteria. This fire protection of the supports is to keep any flammable and combustible liquids in the pipe from adding to an existing fire.
3. The code always recognizes that there may be other methods available for accomplishing the intent. The fire code official has the responsibility to review these alternative methods and the authority to approve an alternative method, but only if it has been demonstrated or documented to comply with the intent of the code requirement.

5703.6.9 Flexible joints. Flexible joints shall be *listed* and *approved* and shall be installed on underground liquid, vapor and vent piping at all of the following locations:

1. Where piping connects to underground tanks.
2. Where piping ends at pump islands and vent risers.
3. At points where differential movement in the piping can occur.

❖ Flexible joints are necessary to handle expansion and contraction of the piping system and control vibration. Expansion and contraction of the piping system will create stresses in the pipe and pipe joints because of the increase or decrease in pipe length. These changes in pipe length may cause the pipe to buckle, or pull or push a joint apart. The vibration of a pipe may cause a fatigue failure. Fatigue failures result from the reversal of stresses in a material. The flexing of the pipe wall or pipe joint from a positive pressure to a negative pressure over time will create a fatigue failure in the pipe wall. This fatigue can cause the pipe or pipe joint to finally break open because of internal operating pressures or external loading, such as dead weight or an impact load.

INTERNATIONAL CODE COUNCIL®
Copyright © 2015 ICC. ALL RIGHTS RESERVED. Accessed by David Dammon on Jun 21, 2017 12:30:52 PM pursuant to License Agreement with ICC. No further reproduction or distribution authorized. ANY UNAUTHORIZED REPRODUCTION OR DISTRIBUTION IS A VIOLATION OF THE FEDERAL COPYRIGHT ACT AND THE LICENSE AGREEMENT, AND SUBJECT TO CIVIL AND CRIMINAL PENALTIES THEREUNDER.

This section lists three locations where flexible joints must be used:

1. *Piping connected to an underground tank.* An underground tank is unmovable; therefore, the flexible joint connecting the piping to the tank must handle the expansion and contraction of the pipe system.
2. *Piping ending at pump islands and vent risers.* The mechanical equipment vibrations make it necessary to isolate the piping with flexible joints at a pumping island. Equipment vibrations can cause failure of vent risers or joints in vent risers. Vent risers may vibrate more than other piping because there is no liquid in the pipe to help dampen the vibrations.
3. *Points of differential movement.* Any location where differential settlement may occur will need to be isolated by a flexible joint. Differential settlement can cause the piping to become the support or to have inadequate support. Either case can cause the pipe to buckle or fail.

5703.6.9.1 Fiberglass-reinforced plastic piping. Fiberglass-reinforced plastic (FRP) piping is not required to be provided with flexible joints in locations where both of the following conditions are present:

1. Piping does not exceed 4 inches (102 mm) in diameter.
2. Piping has a straight run of not less than 4 feet (1219 mm) on one side of the connection where such connections result in a change of direction.

In lieu of the minimum 4-foot (1219 mm) straight run length, *approved* and *listed* flexible joints are allowed to be used under dispensers and suction pumps, at submerged pumps and tanks, and where vents extend above ground.

❖ Fiberglass-reinforced plastic piping is more flexible than metal piping. This flexibility of fiberglass-reinforced plastic piping can be used to handle expansion and contraction of piping, or vibrations that would be handled by a flexible joint under a set of conditions of pipe diameter and minimum straight section of fiberglass-reinforced plastic piping. This section lists two conditions that must be met:

1. *Maximum 4 inches (102 mm) in diameter.* Fiberglass-reinforced plastic piping greater than 4 inches (102 mm) in diameter can be too stiff to have the flexibility necessary to be an alternative to a flexible joint. The greater the diameter of the pipe, the greater the stiffness of the pipe.
2. *Minimum 4-foot (1219 mm) straight run.* Straight runs of less than 4 feet (1219 mm) are too stiff to have the flexibility necessary to be an alternative to a flexible joint. The longer a pipe run is, the more the pipe can flex without causing stresses that will damage the pipe.

These two conditions are required before fiberglass-reinforced plastic piping can be used as the flexible joint. Flexible joints can be used with fiberglass-reinforced plastic piping. There are locations where there is not sufficient space to meet the two requirements for fiberglass-reinforced plastic piping as a flexible joint or where the use of fiberglass-reinforced plastic piping is not desired. These locations can use a flexible joint.

5703.6.10 Pipe joints. Joints shall be liquid tight and shall be welded, flanged or threaded except that *listed* flexible connectors are allowed in accordance with Section 5703.6.9. Threaded or flanged joints shall fit tightly by using *approved* methods and materials for the type of joint. Joints in piping systems used for Class I liquids shall be welded where located in concealed spaces within buildings.

Nonmetallic joints shall be *approved* and shall be installed in accordance with the manufacturer's instructions.

Pipe joints that are dependent on the friction characteristics or resiliency of combustible materials for liquid tightness of piping shall not be used in buildings. Piping shall be secured to prevent disengagement at the fitting.

❖ Pipe joints are to be liquid tight. The code recognizes only three types of generic mechanical joints as being adequate for pipes carrying flammable and combustible liquids. Welded joints, flanged joints and threaded joints provide a liquid-tight joint. ANSI B31.3 contains criteria for the welding of piping. This reference is not in this chapter, but is cited in Chapter 50.

Flanged joints are to be made with materials that are compatible with the piping system and the flammable and combustible liquids in the pipe.

Threaded joints are to be fabricated by methods that ensure a liquid-tight joint by the selection of thread pitch and length of the threaded connection. Listed flexible joints are to be approved by the fire code official.

Pipe joints in a building's concealed space that carry Class I flammable liquids are limited to welded joints. Because Class I flammable liquids can become vapor at ambient temperature, a joint leak in a concealed space could go unnoticed. There could be no liquid escaping the concealed space for personnel to notice. A welded joint that has passed the test requirements of Section 5703.6.3 would be a liquid-tight joint that meets code requirements.

5703.6.11 Bends. Pipe and tubing shall be bent in accordance with ASME B31.9.

❖ Pipe direction can be changed using either fittings or bends. Bends are to be done according to ANSI B31.9. Bending a pipe can damage the pipe. An improper bend may kink the interior portion of the pipe wall and that could cause increased pipe stresses resulting from the kink restricting flow. An improper bend could stretch the outer portion of the pipe wall. The stretched portion of pipe would have a thinner wall thickness. This thinner wall could develop pinhole leaks or even cause the pipe to rupture.

INTERNATIONAL CODE COUNCIL®
Copyright © 2015 ICC. ALL RIGHTS RESERVED. Accessed by David Dammon on Jun 21, 2017 12:30:52 PM pursuant to License Agreement with ICC. No further reproduction or distribution authorized. ANY UNAUTHORIZED REPRODUCTION OR DISTRIBUTION IS A VIOLATION OF THE FEDERAL COPYRIGHT ACT AND THE LICENSE AGREEMENT, AND SUBJECT TO CIVIL AND CRIMINAL PENALTIES THEREUNDER.

SECTION 5704
STORAGE

5704.1 General. The storage of flammable and *combustible liquids* in containers and tanks shall be in accordance with this section and the applicable sections of Chapter 50.

❖ This section and Chapter 50 cover the storage of flammable and combustible liquids in containers and tanks.

5704.2 Tank storage. The provisions of this section shall apply to:

1. The storage of flammable and *combustible liquids* in fixed above-ground and underground tanks.
2. The storage of flammable and *combustible liquids* in fixed above-ground tanks inside of buildings.
3. The storage of flammable and *combustible liquids* in portable tanks whose capacity exceeds 660 gallons (2498 L).
4. The installation of such tanks and portable tanks.

❖ The scope of this section is limited to the storage of flammable and combustible liquids in above-ground tanks, underground tanks, above-ground tanks in buildings, portable tanks exceeding 660 gallons (2498 L) and the installation of these tanks.

5704.2.1 Change of tank contents. Tanks subject to change in contents shall be in accordance with Section 5704.2.7. Prior to a change in contents, the *fire code official* is authorized to require testing of a tank.

Tanks that have previously contained Class I liquids shall not be loaded with Class II or Class III liquids until such tanks and all piping, pumps, hoses and meters connected thereto have been completely drained and flushed.

❖ The type of flammable or combustible liquid stored in a tank can change. When the type of flammable or combustible liquid is changed, the design and construction of the tank is to comply with NFPA 30 for the type of flammable or combustible liquid to be stored. A change in the tank contents can effect safety by altering the flashpoint of the contents through contamination. Accordingly, the fire code official has the authority to require the tank to be tested before placing the tank in operation with the new type of flammable and combustible liquid.

If the change of flammable and combustible liquid is from a Class I to a Class II or III liquid, the tank and accessory piping and equipment are to be drained and cleaned of the Class I liquid. The Class I liquid left in the tank and accessory piping and equipment can generate vapors that could create a hazard not associated with the Class II or III liquid that has replaced the Class I liquid.

5704.2.2 Use of tank vehicles and tank cars as storage tanks. Tank cars and tank vehicles shall not be used as storage tanks.

❖ Even if the wheels were removed and the tank supported on adequate foundations, the use of tank cars or tank vehicles for permanent storage of flammable or combustible liquids is prohibited by this section because, in many cases, these "tanks" do not comply with the requirements of the referenced standard, NFPA 30. The U.S. Department of Transportation (DOTn) allows motor carriers to transport flammable and combustible liquids in tank vehicles constructed of aluminum. Section 5704.2.7 requires that tanks be constructed in accordance with Section 21.4 of NFPA 30, which, in turn, requires that they be constructed in accordance with good engineering practices. All of the standards adopted in NFPA 30 for shop-fabricated and field-erected above-ground storage tanks prohibit the use of aluminum as a material of construction for storage tanks because of its low melting point. In addition, it is quite possible, for example, that someone could attempt to convert a milk tanker into an above-ground storage tank for flammable or combustible liquids. Such a tank would not, for one thing, have an emergency vent, which is required by Section 5704.2.7.4 of the code. Note that this section does not include the demountable intermediate bulk containers (IBCs) frequently seen in transport secured on flatbed trucks. These portable tanks are regulated by Section 5704.3.

5704.2.3 Labeling and signs. Labeling and signs for storage tanks and storage tank areas shall comply with Sections 5704.2.3.1 and 5704.2.3.2.

❖ Above-ground tanks, underground tanks, above-ground tanks in buildings and portable tanks exceeding 660 gallons (2498 L) are to be provided with warning and identification signs.

5704.2.3.1 Smoking and open flame. Signs shall be posted in storage areas prohibiting open flames and smoking. Signs shall comply with Section 5703.5.

❖ Warning signs prohibiting smoking and open flames are to comply with NFPA 704.

5704.2.3.2 Label or placard. Tanks more than 100 gallons (379 L) in capacity, which are permanently installed or mounted and used for the storage of Class I, II or III liquids, shall bear a label and placard identifying the material therein. Placards shall be in accordance with NFPA 704.

Exceptions:

1. Tanks of 300-gallon (1136 L) capacity or less located on private property and used for heating and cooking fuels in single-family *dwellings*.
2. Tanks located underground.

❖ In order to provide warning and information on the hazards of their contents, permanently installed tanks in excess of 100-gallon (379 L) capacity used to store Class I, II or III liquids are to be labeled to identify the flammable or combustible liquid.

There are two exceptions to this labeling of storage tanks based on the use of the storage tank and its location. First, a 300-gallon (1136 L) storage tank for use by a single-family dwelling does not need to be

INTERNATIONAL CODE COUNCIL®
Copyright © 2015 ICC. ALL RIGHTS RESERVED. Accessed by David Dammon on Jun 21, 2017 12:30:52 PM pursuant to License Agreement with ICC. No further reproduction or distribution authorized. ANY UNAUTHORIZED REPRODUCTION OR DISTRIBUTION IS A VIOLATION OF THE FEDERAL COPYRIGHT ACT AND THE LICENSE AGREEMENT, AND SUBJECT TO CIVIL AND CRIMINAL PENALTIES THEREUNDER.

labeled. This exception is based on the tank's sole use for the storage of heating or cooking fuel used by the occupants of the single-family dwelling. Second, underground tanks do not need to be labeled since their location precludes it.

5704.2.4 Sources of ignition. Smoking and open flames are prohibited in storage areas in accordance with Section 5003.7.

Exception: Areas designated as smoking and hot work areas, and areas where hot work permits have been issued in accordance with this code.

❖ Smoking and open flames are strictly limited around above-ground tanks, underground tanks, above-ground tanks in buildings and portable tanks exceeding 660 gallons (2498 L). Section 5003.7 prohibits smoking or open flames within 25 feet (7620 mm) of outdoor storage of flammable and combustible liquids and indoors where there are flammable and combustible liquids or where vapors from flammable and combustible liquids may occur.

The exception allows establishment of designated smoking areas and hot work areas. Hot work may be done in areas not designated as a hot work area when a hot work permit is obtained.

5704.2.5 Explosion control. Explosion control shall be provided in accordance with Section 911 for indoor tanks.

❖ The vapor from flammable and combustible liquids can cause an explosion when the vapor-air mixture is in an explosive ratio. Explosion control is required for a facility storing or using Class IA liquids or for a facility that has open use or dispensing of Class IIB liquids. Section 911 requires deflagration venting to direct the force of an explosion out of the structure and into an unoccupied area. This section also references NFPA 69, which may require monitoring of gases and other methods to suppress factors affecting an explosion.

5704.2.6 Separation from incompatible materials. Storage of flammable and *combustible liquids* shall be separated from *incompatible materials* in accordance with Section 5003.9.8.

Grass, weeds, combustible materials and waste Class I, II or IIIA liquids shall not be accumulated in an unsafe manner at a storage site.

❖ Materials that could create a fire or explosive hazard when in contact with flammable or combustible liquids are to be separated from flammable or combustible liquids by either distance or physical barriers.

Materials that may not be incompatible with flammable or combustible liquids but may be an ignition source or a fuel source are to be removed.

5704.2.7 Design, fabrication and construction requirements for tanks. The design, fabrication and construction of tanks shall comply with NFPA 30. Each tank shall bear a permanent nameplate or marking indicating the standard used as the basis of design.

❖ Tanks are to be designed according to NFPA 30 and labeled to indicate the design standard.

5704.2.7.1 Materials used in tank construction. The materials used in tank construction shall be in accordance with NFPA 30. The materials of construction for tanks and their appurtenances shall be compatible with the liquids to be stored.

❖ The preferred material for tank construction is steel or concrete, materials that have high levels of resistance to heat. Because combustible and flammable liquid tanks are being used to store an ever increasing number of liquids, including gasoline/ethanol blends and diesel/biodiesels blends, this section requires that tank construction materials be compatible with the stored liquids. This is consistent with NFPA 30, Section 21.4.1.1. Petroleum products containing mixtures that are not petroleum based may be incompatible with components in the underground tank. The nonpetroleum products could attack liners, gaskets, etc., and the loss of or damage to these components may cause the underground tank or piping system to develop leaks.

5704.2.7.2 Pressure limitations for tanks. Tanks shall be designed for the pressures to which they will be subjected in accordance with NFPA 30.

❖ Tanks may be designed for operation under atmospheric pressure, low pressure or high pressure. The design criteria for pressure are in NFPA 30.

5704.2.7.3 Tank vents for normal venting. Tank vents for normal venting shall be installed and maintained in accordance with Sections 5704.2.7.3.1 through 5704.2.7.3.5.3.

❖ Tanks are vented to maintain the internal tank pressure within the design operating range. A low pressure can increase the generation of vapors while a high pressure can damage the tank or piping system. Any pressure outside of the design pressure range can have an adverse affect on the operation of the system as well as the piping and equipment.

5704.2.7.3.1 Vent lines. Vent lines from tanks shall not be used for purposes other than venting unless *approved*.

❖ Vent lines are to be used only as vents unless an additional use is approved by the fire code official.

5704.2.7.3.2 Vent-line flame arresters and pressure-vacuum vents. *Listed* or *approved* flame arresters or pressure-vacuum (PV) vents that remain closed unless venting under pressure or vacuum conditions shall be installed in normal vents of tanks containing Class IB and IC liquids.

Exception: Where determined by the *fire code official* that the use of such devices can result in damage to the tank.

Vent-line flame arresters shall be installed in accordance with their listing or API 2000 and maintained in accordance

INTERNATIONAL CODE COUNCIL®
Copyright © 2015 ICC. ALL RIGHTS RESERVED. Accessed by David Dammon on Jun 21, 2017 12:30:52 PM pursuant to License Agreement with ICC. No further reproduction or distribution authorized. ANY UNAUTHORIZED REPRODUCTION OR DISTRIBUTION IS A VIOLATION OF THE FEDERAL COPYRIGHT ACT AND THE LICENSE AGREEMENT, AND SUBJECT TO CIVIL AND CRIMINAL PENALTIES THEREUNDER.

with Section 21.8.6 of NFPA 30 or API 2000. In-line flame arresters in piping systems shall be installed and maintained in accordance with their listing or API 2028. Pressure-vacuum vents shall be installed in accordance with Section 21.4.3 of NFPA 30 or API 2000 and maintained in accordance with Section 21.8.6 of NFPA 30 or API 2000.

❖ The vapors from a vent will mix with air and become an ignitable mixture. This condition requires that measures be taken to either suppress an ignition source or to disperse the ignitable mixture with additional air to drop the vapor-air mixture below the LFL. Previously, the code required that a flame arrester or pressure-vacuum (PV) vent be installed in the normal vent of only protected above-ground tanks containing flammable or combustible liquids, but did not have a similar requirement for other above-ground tanks with a design and construction that provides significantly less protection than a protected above-ground tank. This section has been revised to be consistent with NFPA 30 in that, regardless of tank type, a listed flame arrester or PV vent is only required for tanks containing Class IB and IC liquids, which are less prone to vaporization than Class IA liquids.

Because the primary function of a flame arrester is to prevent the unrestricted propagation of flame through flammable gas or vapor mixtures, it is not necessary to install a flame arrester on tanks containing combustible liquids. Additionally, because flame arresters cannot prevent detonation or control flame propagation speeds associated with a detonation (flame speeds greater than the speed of sound), flame arresters are not effective when installed on tanks containing Class IA liquids. This revision establishes a requirement for a tank-vent flame arrester only when there is a sound technical reason to provide one. The exception allows omitting the use of a PV vent or flame arrester in situations where the properties of the liquid can cause the tank to be damaged by their use. Properties of some Class IB and IC liquids (e.g., crystallization, polymerization, corrosion) can present obstructions in flame arresters that may justify omitting the device.

This section clarifies that API 2028 addresses in-line flame arresters for piping systems. An end-of-line flame arrester is a flame arrester that is mounted at the end of a pipe (flanged or threaded inlet connection) and vents directly to the atmosphere, whereas an in-line flame arrester may be mounted upstream of a PV relief vent or may be located upstream of a specified maximum length of vent piping to the atmosphere. Both in-line and end-of-line flame arresters are acceptable devices. Not only is proper installation of these devices important, but their maintenance is critical. A blocked or corroded flame arrester can render the device ineffective and lead to catastrophic results. As such, this section also addresses maintenance of flame arresters and PV vents in accordance with NFPA 30 or API 2000.

5704.2.7.3.3 Vent pipe outlets. Vent pipe outlets for tanks storing Class I, II or IIIA liquids shall be located such that the vapors are released at a safe point outside of buildings and not less than 12 feet (3658 mm) above the finished ground level. Vapors shall be discharged upward or horizontally away from adjacent walls to assist in vapor dispersion. Vent outlets shall be located such that flammable vapors will not be trapped by eaves or other obstructions and shall be not less than 5 feet (1524 mm) from building openings or *lot lines* of properties that can be built upon. Vent outlets on atmospheric tanks storing Class IIIB liquids are allowed to discharge inside a building where the vent is a normally closed vent.

Exception: Vent pipe outlets on tanks storing Class IIIB liquid inside buildings and connected to fuel-burning equipment shall be located such that the vapors are released to a safe location outside of buildings.

❖ Vent pipes must be terminated to direct vapors away from the building. Vapors from flammable liquids are normally heavier than air so that the vapor will settle to lower levels. The termination of a vent pipe a minimum of 12 feet (3658 mm) above grade will provide space for the vapors to disperse to below the LFL. This high termination elevation also reduces the potential for the termination being close to grade-level ignition sources. Because flammable liquid vapors are heavier than air, attention needs to be placed on the building design near the termination. Building design and features that may allow the flammable liquid vapors to reenter the building or to collect on the building are to be eliminated. Because Class IIIB liquids have a relatively high boiling point, the vent termination for atmospheric tanks containing these combustible liquids may terminate inside the building, if the vent is normally closed.

Because of the increasing use of alternative fuels derived from biological mass, the requirements for above-ground storage tanks located inside of buildings and that are connected to fuel-burning equipment have been modified to address the use of biodiesel blends. Even though this section allows tanks storing Class IIIB liquids to discharge their vents inside the building, the exception applies to tanks providing fuel to fuel-burning equipment and recognizes that a facility could discover after installation that the fuel-burning equipment either isn't working as efficiently as desired with the Class IIIB liquid biofuel, or the biofuel becomes unavailable or more costly than traditional diesel fuel. Under such circumstances, the facility may elect to switch to a higher-hazard fuel such as Class II diesel fuel without a permit as required by Section 105.6.16(8) or other notification to the jurisdiction. The result of such a switch could be a significantly noncompliant tank system where the quantity of Class II liquid fuel could far exceed the code-allowed quantity of Class II liquid fuel. Such quantities of Class II diesel fuel in excess of that allowed inside of buildings in steel above-

INTERNATIONAL CODE COUNCIL®
Copyright © 2015 ICC. ALL RIGHTS RESERVED. Accessed by David Dammon on Jun 21, 2017 12:30:52 PM pursuant to License Agreement with ICC. No further reproduction or distribution authorized. ANY UNAUTHORIZED REPRODUCTION OR DISTRIBUTION IS A VIOLATION OF THE FEDERAL COPYRIGHT ACT AND THE LICENSE AGREEMENT, AND SUBJECT TO CIVIL AND CRIMINAL PENALTIES THEREUNDER.

ground tanks would otherwise require providing a Group H occupancy or a protected above-ground tank. Accordingly, tanks connected to and supplying fuel to fuel-burning equipment must be vented to an approved location outside the building.

The exception does not specify a minimum termination height for the vent opening nor a minimum separation distance from property lines or building eaves. Instead, the terminus of the normal vent is required to be at a safe location outside of buildings. Given that biodiesel and many biodiesel blends are classified as Class IIIA or IIIB liquids, it will be difficult to ignite the vapors exhausted through the normal vent opening from a storage tank inside of a building. The exception will provide flexibility to the design professional and fire code official in the placement of the termination point for a normal vent discharging Class IIIB liquid vapors.

5704.2.7.3.4 Installation of vent piping. Vent piping shall be designed, sized, constructed and installed in accordance with Section 5703.6. Vent pipes shall be installed such that they will drain toward the tank without sags or traps in which liquid can collect. Vent pipes shall be installed in such a manner so as not to be subject to physical damage or vibration.

❖ Section 5703.6 covers the design, installation, testing and protection of vent pipes. Vent pipes are to drain to the tank and not accumulate condensation in the vent pipe.

5704.2.7.3.5 Manifolding. Tank vent piping shall not be manifolded unless required for special purposes such as vapor recovery, vapor conservation or air pollution control.

❖ The combining of vent pipes into a manifold is not permitted as a function for venting unless it is required for the purposes stated in this section. Manifolding of several vents can cause pressure problems during tank-filling operations or in case of a fire in or near the tanks. When vapor recovery, vapor conservation or pollution control is necessary, the vents can be manifolded so that the same equipment can be used for multiple vents.

5704.2.7.3.5.1 Above-ground tanks. For above-ground tanks, manifolded vent pipes shall be adequately sized to prevent system pressure limits from being exceeded where manifolded tanks are subject to the same fire exposure.

❖ Manifolding of above-ground tanks requires the manifold to be designed to handle the additional pressure generated by the heating of the flammable or combustible liquid. This additional pressure could cause pressure to build up in other tanks or in the piping system. This additional pressure could create leaks or failure of other tanks or piping.

5704.2.7.3.5.2 Underground tanks. For underground tanks, manifolded vent pipes shall be sized to prevent system pressure limits from being exceeded when manifolded tanks are filled simultaneously.

❖ Manifolding of underground tanks must consider the buildup of pressure when the underground tanks are filled simultaneously. The introduction of flammable or combustible liquids into several tanks at the same time will require the vent system to release the vapor in the tank being displaced by the flammable or combustible liquids. This displaced vapor could exceed the capacity of the vent, causing a buildup of pressure.

5704.2.7.3.5.3 Tanks storing Class I liquids. Vent piping for tanks storing Class I liquids shall not be manifolded with vent piping for tanks storing Class II and III liquids unless positive means are provided to prevent the vapors from Class I liquids from entering tanks storing Class II and III liquids, to prevent contamination and possible change in classification of less volatile liquid.

❖ Vapor from a Class I liquid is not to be vented with Class II or III liquid vapors unless a positive means is provided to prevent the Class I vapors from entering tanks storing Class II or III liquids. The flash point of the Class I liquid vapor may affect the flash point of the vapors in the tanks storing the Class II or III liquids.

5704.2.7.4 Emergency venting. Stationary, above-ground tanks shall be equipped with additional venting that will relieve excessive internal pressure caused by exposure to fires. Emergency vents for Class I, II and IIIA liquids shall not discharge inside buildings. The venting shall be installed and maintained in accordance with Section 22.7 of NFPA 30.

Exceptions:

1. Tanks larger than 12,000 gallons (45 420 L) in capacity storing Class IIIB liquids that are not within the diked area or the drainage path of Class I or II liquids do not require emergency relief venting.
2. Emergency vents on protected above-ground tanks complying with UL 2085 containing Class II or IIIA liquids are allowed to discharge inside the building.

❖ Stationary above-ground tanks can be exposed to an external fire that will heat the tank, generating a greater volume of flammable or combustible liquid vapors in the tank. These vapors can create pressures that could damage the tank or piping system, so these tanks are vented to relieve this additional pressure. If the tank is installed inside of a building and exposed to a fire, the tank is required to vent itself, releasing flammable or combustible liquid vapors into the building, which is already involved in a fire. Since the tank will be venting flammable vapors into a fire scenario, vapor ignition would be immediate and the reaction would be continuous and uncontrolled. This hazard is mitigated by requiring that the emergency vents for Class I, II and IIIA liquid tanks discharge outside the building.

Recognizing the reduced hazard of Class IIIB liquids, Exception 1 provides that stationary above-ground tanks storing more than 12,000 gallons (45 420 L) of Class IIIB liquids do not need emergency venting if the tank is not in the same containment area or drainage path as tanks with Class I or II liq-

INTERNATIONAL CODE COUNCIL®
Copyright © 2015 ICC. ALL RIGHTS RESERVED. Accessed by David Dammon on Jun 21, 2017 12:30:52 PM pursuant to License Agreement with ICC. No further reproduction or distribution authorized. ANY UNAUTHORIZED REPRODUCTION OR DISTRIBUTION IS A VIOLATION OF THE FEDERAL COPYRIGHT ACT AND THE LICENSE AGREEMENT, AND SUBJECT TO CIVIL AND CRIMINAL PENALTIES THEREUNDER.

uids. The high boiling point of Class IIIB liquids and the high volume provide a degree of safety before the buildup of internal pressure. With the tank safety features, the volume of Class IIIB liquid and having the tank located so that it does not affect tanks storing Class I or II liquids, emergency venting is not required.

Exception 2 recognizes the higher level of protection afforded by a UL 2085-protected above-ground tank storing Class II or IIIA liquid by allowing the emergency vent to discharge inside the building. This is made possible by the fact that UL 2085 tanks are designed and constructed to withstand a 2-hour pool fire test of 2,000°F (1111°C) during which no single point temperature may exceed 400°F (204°C) and the average temperature rise throughout the internal tank can be no greater than 260°F (126.67°C). Given the stringent UL 2085 testing requirements, activation of the emergency vent is likely only under extreme fire conditions over an extended period of time. Further, NFPA 30 requires that emergency vents placed on vent pipes that extend beyond 12 inches (305 mm) from the tank be reengineered to account for the potential back pressure and ensure activation at the appropriate pressure. It is not unusual to see vent lines extending 30 or 40 feet (9.14 or 12.19 m) or more through a building in order to achieve the exterior discharge. Allowing the emergency vent to discharge inside eliminates the need to reengineer the venting and ensures proper sizing and activation of the emergency vent.

5704.2.7.5 Tank openings other than vents. Tank openings for other than vents shall comply with Sections 5704.2.7.5.1 through 5704.2.7.5.8.

❖ Tanks will have openings other than a vent opening. It will be necessary to have openings for the transfer of flammable and combustible liquids to monitor the contents, sampling, etc. These openings will need to be controlled to avoid the escape of vapors of flammable and combustible liquids or the entrance of air.

5704.2.7.5.1 Connections below liquid level. Connections for tank openings below the liquid level shall be liquid tight.

❖ Connections below the liquid level for flammable and combustible liquids are to be liquid tight. A connection that is not liquid tight may allow the flammable or combustible liquid to leak from the connection. The leakage could cause a vapor-air mixture that is between the lower flammable limit and the upper flammable limit.

5704.2.7.5.2 Filling, emptying and vapor recovery connections. Filling, emptying and vapor recovery connections to tanks containing Class I, II or IIIA liquids shall be located outside of buildings in accordance with Section 5704.2.7.5.6 at a location free from sources of ignition and not less than 5 feet (1524 mm) away from building openings or *lot lines* of property that can be built upon. Such openings shall be properly identified and provided with a liquid-tight cap that shall be closed when not in use.

Filling and emptying connections to indoor tanks containing Class IIIB liquids and connected to fuel-burning equipment shall be located at a finished ground level location outside of buildings. Such openings shall be provided with a liquid-tight cap that shall be closed when not in use. A sign in accordance with Section 5003.6 that displays the following warning shall be permanently attached at the filling location:

TRANSFERRING FUEL OTHER THAN
CLASS IIIB COMBUSTIBLE LIQUID TO
THIS TANK CONNECTION IS A VIOLATION
OF THE FIRE CODE AND IS STRICTLY
PROHIBITED

❖ In order to eliminate the hazards associated with inside connections, tanks for Class I, II and IIIA liquids are to have openings for filling, emptying and vapor recovery connections outside of the building and away from property lines and ignition sources in accordance with Section 5704.2.7.5.6. The flash point of the liquids creates a hazard that is not acceptable inside a building where vapors could accumulate and find their way to an ignition source.

The English-language sign complying with Section 5003.6 required by this section is to warn delivery drivers that liquids other than Class IIIB liquids are not to be delivered to the subject fill pipe. Since some tanks storing Class IIIB liquid biodiesel fuels are allowed to vent inside the building in accordance with Section 5704.2.7.3.3, this is intended to prevent the inadvertent delivery of higher hazard (i.e., lower flash point) liquids to the tank with the corresponding discharge of vapors inside the building (see commentary, Section 5704.2.7.3.3).

5704.2.7.5.3 Piping, connections and fittings. Piping, connections, fittings and other appurtenances shall be installed in accordance with Section 5703.6.

❖ Section 5703.6 covers the design, installation, testing and protection of vent pipes.

5704.2.7.5.4 Manual gauging. Openings for manual gauging, if independent of the fill pipe, shall be provided with a liquid-tight cap or cover. Covers shall be kept closed when not gauging. If inside a building, such openings shall be protected against liquid overflow and possible vapor release by means of a spring-loaded check valve or other *approved* device.

❖ A manual gauge opening that has a liquid-tight cap and protection against overfill and vapor release is acceptable in tanks located inside a building. The manual gauge opening is permitted if it meets the safety requirements to prevent spillage, leakage and vapor release and has the operation feature that the opening has to be closed except when used to check the contents of the tank.

INTERNATIONAL CODE COUNCIL®
Copyright © 2015 ICC. ALL RIGHTS RESERVED. Accessed by David Dammon on Jun 21, 2017 12:30:52 PM pursuant to License Agreement with ICC. No further reproduction or distribution authorized. ANY UNAUTHORIZED REPRODUCTION OR DISTRIBUTION IS A VIOLATION OF THE FEDERAL COPYRIGHT ACT AND THE LICENSE AGREEMENT, AND SUBJECT TO CIVIL AND CRIMINAL PENALTIES THEREUNDER.

5704.2.7.5.5 Fill pipes and discharge lines. For top-loaded tanks, a metallic fill pipe shall be designed and installed to minimize the generation of static electricity by terminating the pipe within 6 inches (152 mm) of the bottom of the tank, and it shall be installed in a manner that avoids excessive vibration.

❖ The filling of a tank with flammable or combustible liquids can generate static electricity. To reduce the generation of static electricity for a top-loaded tank, the fill pipe is to be metallic and extend to within 6 inches (152 mm) of the tank bottom.

5704.2.7.5.5.1 Class I liquids. For Class I liquids other than crude oil, gasoline and asphalt, the fill pipe shall be designed and installed in a manner that will minimize the possibility of generating static electricity by terminating within 6 inches (152 mm) of the bottom of the tank.

❖ Class I liquids other than crude oil, gasoline and asphalt are to comply with Section 5704.2.7.5.5.

5704.2.7.5.5.2 Underground tanks. For underground tanks, fill pipe and discharge lines shall enter only through the top. Fill lines shall be sloped toward the tank. Underground tanks for Class I liquids having a capacity greater than 1,000 gallons (3785 L) shall be equipped with a tight fill device for connecting the fill hose to the tank.

❖ Underground tanks are to have the fill pipe and discharge pipe through the top. These fill and discharge pipes are to slope to the top to prevent the accumulation of flammable and combustible liquid. The tight fill device for tanks having a capacity of 1,000 gallons (3785 L) of Class I liquid is to ensure a liquid-tight mechanical connection of the fill hose to the tank. This connection will reduce the potential for spills or leakage and the mixing of Class I vapors with air.

5704.2.7.5.6 Location of connections that are made or broken. Filling, withdrawal and vapor-recovery connections for Class I, II and IIIA liquids that are made and broken shall be located outside of buildings, not more than 5 feet (1524 mm) above the finished ground level, in an *approved* location in close proximity to the parked delivery vehicle. Such location shall be away from sources of ignition and not less than 5 feet (1524 mm) away from building openings. Such connections shall be closed and liquid tight when not in use and shall be properly identified.

❖ The low flash point of liquids creates a hazard that is not acceptable inside of a building where vapors could accumulate. In order to eliminate the hazards associated with inside connections that are made or broken, tanks for Class I, II and IIIA liquids are to have their filling, emptying and vapor-recovery connections outside of the building and away from property lines and ignition sources in accordance with this section. The flash point of the liquids creates a hazard that is not acceptable inside a building where vapors could accumulate and find their way to an ignition source.

This section also requires that the tank-fill connection location is required to be at ground level where the fuel delivery truck driver has direct access to it. This is to prevent designs that propose to hoist fuel delivery truck hose lines up the exterior of the building to rooftops and other building levels above the finished ground level (see also commentary, Section 5704.2.7.5.2).

5704.2.7.5.7 Protection against vapor release. Tank openings provided for purposes of vapor recovery shall be protected against possible vapor release by means of a spring-loaded check valve or dry-break connections, or other *approved* device, unless the opening is a pipe connected to a vapor processing system. Openings designed for combined fill and vapor recovery shall also be protected against vapor release unless connection of the liquid delivery line to the fill pipe simultaneously connects the vapor recovery line. Connections shall be vapor tight.

❖ Connections are to be vapor tight to prevent the release of vapor from flammable or combustible liquids into the area surrounding the tank. The release of vapor from flammable or combustible liquids could create a vapor-air mixture that exceeds the LFL. The code does permit connections that are not vapor tight if the connection is part of the vapor-recovery system. This exception is permitted because the vapor-recovery system should be operating at a pressure lower than atmospheric pressure. This lower pressure should prevent vapor from escaping the vapor-recovery system.

5704.2.7.5.8 Overfill prevention. An *approved* means or method in accordance with Section 5704.2.9.7.6 shall be provided to prevent the overfill of all Class I, II and IIIA liquid storage tanks. Storage tanks in refineries, bulk plants or terminals regulated by Section 5706.4 or 5706.7 shall have overfill protection in accordance with API 2350.

An *approved* means or method in accordance with Section 5704.2.9.7.6 shall be provided to prevent the overfilling of Class IIIB liquid storage tanks connected to fuel-burning equipment inside buildings.

Exception: Outside above-ground tanks with a capacity of 1,320 gallons (5000 L) or less.

❖ In the 2003 and earlier editions and drafts of the code, this section required that all above-ground storage tanks, regardless of capacity, be provided with an approved means or method of overfill prevention. For smaller tanks [less than 200- to 300-gallon (757 to 1136 L) capacity], technology exists to provide such protection. However, it must be an engineered design using a liquid-level limit switch and shutoff valve in the tank fill opening, which can cost thousands of dollars. Off-the-shelf overfill prevention devices are generally not available in the marketplace because most tank manufacturers provide fill openings that are less than 2 inches (51 mm) in diameter on smaller tanks and the off-the-shelf overfill prevention devices currently available are designed for use with tank openings 2 inches (51 mm) or larger in diameter.

A second issue relates to the frequency and size of spills. The United States Coast Guard maintains data

INTERNATIONAL CODE COUNCIL®
Copyright © 2015 ICC. ALL RIGHTS RESERVED. Accessed by David Dammon on Jun 21, 2017 12:30:52 PM pursuant to License Agreement with ICC. No further reproduction or distribution authorized. ANY UNAUTHORIZED REPRODUCTION OR DISTRIBUTION IS A VIOLATION OF THE FEDERAL COPYRIGHT ACT AND THE LICENSE AGREEMENT, AND SUBJECT TO CIVIL AND CRIMINAL PENALTIES THEREUNDER.

on spill amounts and locations in accordance with the Federal Water Pollution Control Act. A review of that data disclosed that the volume of spills has been on a downward trend since 1974. For spills of 101 to 1,000 gallons (382 to 3785 L), 1,457 events occurred in 1974, but in 2001, only 216 such spill events occurred. Also, 87.6 percent of all the spills reported to the Coast Guard are less than 100 gallons (379 L). Certainly, while no spill is acceptable, the data clearly shows that when spills do occur, they are typically less than 100 gallons (379 L).

Overfill protection is important for flammable and combustible liquids but not necessary on small tanks. Those code requirements for overfill prevention for above-ground petroleum storage tanks align with the federal requirements for Spill Prevention Control and Countermeasures (SPCC) Plans. An SPCC plan is required in accordance with the U.S. Oil Pollution Act for most sites with an aggregate tank volume of over 1,320 gallons (4996 L). Additionally, tanks over 660 gallons (2498 L) typically have 2-inch (51 mm) or larger openings that can accommodate off-the-shelf overfill prevention devices discussed above.

API 2350 includes recommended practices on prevention of overfills of above-ground tanks of greater than 1,320 gallons (4996 L) storing Class I and II liquids associated with marketing, refining, pipeline and similar facilities (see commentary, Section 5704.2.9.7.5).

Even though this section does not otherwise require overfill protection on tanks storing Class IIIB liquids, it recognizes one of the major concerns about Class IIIB liquid biodiesel tanks connected to fuel-burning equipment. That concern is that a facility could discover after installation that the fuel-burning equipment either isn't working as efficiently as desired with the Class IIIB liquid biofuel, or the biofuel becomes unavailable or more costly than traditional diesel fuel. Under such circumstances, the facility may elect to switch to a higher hazard fuel such as Class II diesel fuel without a permit as required by Section 105.6.16(8) or other notification to the jurisdiction. The result of such a switch could be a significantly noncompliant tank system where now a Class II liquid fuel storage tank exists where none did before and is without the safeguard of overfill protection. The lower flash point of the Class II liquid creates an overfill hazard potential that is not acceptable inside a building where vapors could accumulate and find their way to an ignition source.

5704.2.7.6 Repair, alteration or reconstruction of tanks and piping. The repair, *alteration* or reconstruction, including welding, cutting and hot tapping of storage tanks and piping that have been placed in service, shall be in accordance with NFPA 30. Hot work, as defined in Section 202, on such tanks shall be conducted in accordance with Section 3510.

❖ Tanks and piping for flammable and combustible liquids can be repaired, altered or reconstructed under the criteria of NFPA 30 and in accordance with Section 3510.

5704.2.7.7 Design of supports. The design of the supporting structure for tanks shall be in accordance with the *International Building Code* and NFPA 30.

❖ Footings, foundations and structural supports for tanks must comply with the IBC and NFPA 30.

5704.2.7.8 Locations subject to flooding. Where a tank is located in an area where it is subject to buoyancy because of a rise in the water table, flooding or accumulation of water from fire suppression operations, uplift protection shall be provided in accordance with Sections 22.14 and 23.14 of NFPA 30.

❖ The tank, with its content of flammable or combustible liquid, may weigh less than an equivalent volume of water. If this occurs and the tank is subjected to flooding, the tank will float. This will place stresses on piping systems that could fail, causing the flammable or combustible liquid to spill. The flooding may be from natural causes or from fire suppression operations. The application of water by a fire department could cause flooding in the area of the tank. Section 26.6 of NFPA 30 contains the criteria for designing anchorage for both above-ground and underground tanks. Flood hazard areas are defined in IBC Section 202.

5704.2.7.9 Corrosion protection. Where subject to external corrosion, tanks shall be fabricated from corrosion-resistant materials, coated or provided with corrosion protection in accordance with Section 23.3.5 of NFPA 30.

❖ Soil conditions and environmental conditions can cause tanks to deteriorate. Corrosion can weaken the tank, creating a potential for leakage. The tank is to be protected from corrosion by use of corrosion-resistant material, coatings, cathodic protection or methods described in Section 23.3.4 of NFPA 30. See Section 5703.6.5 for requirements for corrosion protection for piping.

5704.2.7.10 Leak reporting. A consistent or accidental loss of liquid, or other indication of a leak from a tank system, shall be reported immediately to the fire department, the *fire code official* and other authorities having jurisdiction.

❖ The leakage of flammable or combustible liquids is a serious fire hazard. This hazard is to be immediately reported to the fire department, the fire code official and other authorities having jurisdiction.

The leaking tank will have to be repaired or taken out of service. The fire code official will have to review plans and issue a permit for the repair.

5704.2.7.10.1 Leaking tank disposition. Leaking tanks shall be promptly emptied, repaired and returned to service, abandoned or removed in accordance with Section 5704.2.13 or 5704.2.14.

❖ Leaking tanks must be repaired, taken out of service or removed. The fire code official must review plans and issue a permit for these activities.

5704.2.7.11 Tank lining. Steel tanks are allowed to be lined only for the purpose of protecting the interior from corrosion or providing compatibility with a material to be stored. Only

INTERNATIONAL CODE COUNCIL®
Copyright © 2015 ICC. ALL RIGHTS RESERVED. Accessed by David Dammon on Jun 21, 2017 12:30:52 PM pursuant to License Agreement with ICC. No further reproduction or distribution authorized. ANY UNAUTHORIZED REPRODUCTION OR DISTRIBUTION IS A VIOLATION OF THE FEDERAL COPYRIGHT ACT AND THE LICENSE AGREEMENT, AND SUBJECT TO CIVIL AND CRIMINAL PENALTIES THEREUNDER.

those liquids tested for compatibility with the lining material are allowed to be stored in lined tanks.

❖ Tanks are lined to prevent corrosion from attacking the interior surface. Water vapor can condense inside a tank or the flammable or combustible liquid stored can be corrosive. The type of lining will limit the use of the tank to flammable and combustible liquids that are compatible with the lining.

5704.2.8 Vaults. Vaults shall be allowed to be either above or below grade and shall comply with Sections 5704.2.8.1 through 5704.2.8.18.

❖ Vaults are designed and constructed for the protection of tanks and as a secondary containment for flammable and combustible liquids. Above-ground tanks may be installed in vaults.

5704.2.8.1 Listing required. Vaults shall be *listed* in accordance with UL 2245.

Exception: Where *approved* by the *fire code official*, below-grade vaults are allowed to be constructed on site, provided that the design is in accordance with the *International Building Code* and that special inspections are conducted to verify structural strength and compliance of the installation with the *approved* design in accordance with Section 1707 of the *International Building Code*. Installation plans for below-grade vaults that are constructed on site shall be prepared by, and the design shall bear the stamp of, a professional engineer. Consideration shall be given to soil and hydrostatic loading on the floors, walls and lid; anticipated seismic forces; uplifting by groundwater or flooding; and to loads imposed from above such as traffic and equipment loading on the vault lid.

❖ Vaults must be listed to UL 2245. The fire code official can approve below-grade vaults that are constructed on site. These below-grade vaults must be designed by a professional engineer to comply with the IBC. The construction is to be inspected by a design professional. Flood hazard areas are defined in IBC Section 202.

5704.2.8.2 Design and construction. The vault shall completely enclose each tank. There shall not be openings in the vault enclosure except those necessary for access to, inspection of, and filling, emptying and venting of the tank. The walls and floor of the vault shall be constructed of reinforced concrete not less than 6 inches (152 mm) thick. The top of an above-grade vault shall be constructed of noncombustible material and shall be designed to be weaker than the walls of the vault, to ensure that the thrust of an explosion occurring inside the vault is directed upward before significantly high pressure can develop within the vault.

The top of an at-grade or below-grade vault shall be designed to relieve safely or contain the force of an explosion occurring inside the vault. The top and floor of the vault and the tank foundation shall be designed to withstand the anticipated loading, including loading from vehicular traffic, where applicable. The walls and floor of a vault installed below grade shall be designed to withstand anticipated soil and hydrostatic loading.

Vaults shall be designed to be wind and earthquake resistant, in accordance with the *International Building Code*.

❖ The vault is to be of noncombustible materials with openings required only for the operation and maintenance of the enclosed tank. Reinforced concrete is to be used for the walls and floor and the top is designed to vent an explosion.

5704.2.8.3 Secondary containment. Vaults shall be substantially liquid tight and there shall not be backfill around the tank or within the vault. The vault floor shall drain to a sump. For premanufactured vaults, liquid tightness shall be certified as part of the listing provided by a nationally recognized testing laboratory. For field-erected vaults, liquid tightness shall be certified in an *approved* manner.

❖ The vault is to function as a secondary containment for the tank in the event of a leak or spillage. Any leakage or spillage must be removed by draining to a sump in the vault floor. Premanufactured vaults are required to be listed in accordance with UL 2245 by Section 5704.2.8.1, and part of the analysis program performed is an evaluation during the listing process of the effectiveness of secondary containment provided by a vault. It is much more difficult to accomplish a liquid-tight installation on a field-erected vault, as evidenced by the proliferation of leaky basements found throughout the country; therefore, to enhance the quality of field-erected vaults, such units must be certified for liquid tightness to the satisfaction of the fire code official. Methods that might be used include third-party inspection/evaluation and full-scale liquid retention testing.

5704.2.8.4 Internal clearance. There shall be sufficient clearance between the tank and the vault to allow for visual inspection and maintenance of the tank and its appurtenances. Dispensing devices are allowed to be installed on tops of vaults.

❖ Maintenance and inspection of the tank requires that the clearance between the tank and the vault be sufficient for personnel to perform these functions.

5704.2.8.5 Anchoring. Vaults and their tanks shall be suitably anchored to withstand uplifting by ground water or flooding, including when the tank is empty.

❖ The tank and the vault may float if the water table is high or flooding occurs. The tank is to be anchored to the vault to prevent the tank from floating, while the vault is also to be anchored to prevent it from floating. Anchoring is also required under Section 5704.2.7.8. Flood hazard areas are defined in IBC Section 202.

5704.2.8.6 Vehicle impact protection. Vaults shall be resistant to damage from the impact of a motor vehicle, or vehicle impact protection shall be provided in accordance with Section 312.

❖ Protection from impact by vehicles is provided by guard posts or other approved barriers. Section 312 contains the specifications for guard posts or the design forces required for an approved barrier to

INTERNATIONAL CODE COUNCIL®
Copyright © 2015 ICC. ALL RIGHTS RESERVED. Accessed by David Dammon on Jun 21, 2017 12:30:52 PM pursuant to License Agreement with ICC. No further reproduction or distribution authorized. ANY UNAUTHORIZED REPRODUCTION OR DISTRIBUTION IS A VIOLATION OF THE FEDERAL COPYRIGHT ACT AND THE LICENSE AGREEMENT, AND SUBJECT TO CIVIL AND CRIMINAL PENALTIES THEREUNDER.

comply with the code. Protection from vehicle impact is also required under Section 5703.6.4.

5704.2.8.7 Arrangement. Tanks shall be *listed* for above-ground use, and each tank shall be in its own vault. Compartmentalized tanks shall be allowed and shall be considered as a single tank. Adjacent vaults shall be allowed to share a common wall. The common wall shall be liquid and vapor tight and shall be designed to withstand the load imposed when the vault on either side of the wall is filled with water.

❖ Above-ground tanks installed in vaults are to be independent of each other; a separate vault is to be constructed for each tank. The individual vaults can use a common separation wall if it does not allow the flammable and combustible liquids or their vapors from one vault to enter another vault. This common wall must be able to resist the hydrostatic loads if the adjacent vault is flooded.

5704.2.8.8 Connections. Connections shall be provided to permit venting of each vault to dilute, disperse and remove vapors prior to personnel entering the vault.

❖ Because flammable and combustible vapors are normally heavier than air, the vault must have connections for venting these vapors.

5704.2.8.9 Ventilation. Vaults that contain tanks of Class I liquids shall be provided with an exhaust ventilation system installed in accordance with Section 5004.3. The ventilation system shall operate continuously or be designed to operate upon activation of the vapor or liquid detection system. The system shall provide ventilation at a rate of not less than 1 cubic foot per minute (cfm) per square foot of floor area [0.00508 $m^3/(s \cdot m^2)$], but not less than 150 cfm (4 m^3/min). The exhaust system shall be designed to provide air movement across all parts of the vault floor. Supply and exhaust ducts shall extend to within 3 inches (76 mm), but not more than 12 inches (305 mm), of the floor. The exhaust system shall be installed in accordance with the *International Mechanical Code*.

❖ The removal of Class I vapors from a vault requires that a ventilation system be installed according to Section 5004.3 and the IMC. The ventilation system must have supply and exhaust ducts within 3 inches (76 mm) to 12 inches (305 mm) of the vault floor. These ducts are to provide ventilation across the entire vault floor to remove the vapors and provide breathable air.

5704.2.8.10 Liquid detection. Vaults shall be equipped with a detection system capable of detecting liquids, including water, and activating an alarm.

❖ The liquid detection system is to identify any leakage or spillage of flammable or combustible liquids. There are two concerns for liquid detection: flammable or combustible liquids and water leaking into the vault.

5704.2.8.11 Monitoring and detection. Vaults shall be provided with *approved* vapor and liquid detection systems and equipped with on-site audible and visual warning devices with battery backup. Vapor detection systems shall sound an alarm when the system detects vapors that reach or exceed 25 percent of the lower explosive limit (LEL) of the liquid stored. Vapor detectors shall be located not higher than 12 inches (305 mm) above the lowest point in the vault. Liquid detection systems shall sound an alarm upon detection of any liquid, including water. Liquid detectors shall be located in accordance with the manufacturer's instructions. Activation of either vapor or liquid detection systems shall cause a signal to be sounded at an *approved*, constantly attended location within the facility serving the tanks or at an *approved* location. Activation of vapor detection systems shall also shut off dispenser pumps.

❖ The vault is to have liquid and vapor detection systems that sound an alarm when either is present. The systems are to have battery backup in the event of a power failure.

The liquid and vapor detection systems are to sound an alarm at a constantly attended location that is approved by the fire code official.

The vapor detection system is to sound an alarm and shut off dispensing pumps when the detection system senses a vapor concentration of 25 percent or greater of the flammable or combustible LFL.

5704.2.8.12 Liquid removal. Means shall be provided to recover liquid from the vault. Where a pump is used to meet this requirement, the pump shall not be permanently installed in the vault. Electric-powered portable pumps shall be suitable for use in Class I, Division 1, or Zone 0 locations, as defined in NFPA 70.

❖ A method for removing liquid from the vault must be provided. This can be through a gravity drain, if the site is appropriate, or by manual or portable electric pumps.

5704.2.8.13 Normal vents. Vent pipes that are provided for normal tank venting shall terminate not less than 12 feet (3658 mm) above ground level.

❖ Vault vent pipe termination must comply with Section 5704.2.7.3.3.

5704.2.8.14 Emergency vents. Emergency vents shall be vapor tight and shall be allowed to discharge inside the vault. Long-bolt manhole covers shall not be allowed for this purpose.

❖ An emergency vent is necessary to release any pressure that develops in a tank when it is exposed to fire. The fire will cause a release of vapor from the flammable or combustible liquid, greatly exceeding pressures expected during normal operation. The emergency vent on a tank is to prevent the tank from rupturing, which would expose a greater volume of flammable or combustible liquids to the fire.

5704.2.8.15 Accessway. Vaults shall be provided with an *approved* personnel accessway with a minimum dimension of 30 inches (762 mm) and with a permanently affixed, nonferrous ladder. Accessways shall be designed to be nonsparking. Travel distance from any point inside a vault to an accessway shall not exceed 20 feet (6096 mm). At each entry point, a warning sign indicating the need for procedures for safe entry

INTERNATIONAL CODE COUNCIL®
Copyright © 2015 ICC. ALL RIGHTS RESERVED. Accessed by David Dammon on Jun 21, 2017 12:30:52 PM pursuant to License Agreement with ICC. No further reproduction or distribution authorized. ANY UNAUTHORIZED REPRODUCTION OR DISTRIBUTION IS A VIOLATION OF THE FEDERAL COPYRIGHT ACT AND THE LICENSE AGREEMENT, AND SUBJECT TO CIVIL AND CRIMINAL PENALTIES THEREUNDER.

into confined spaces shall be posted. Entry points shall be secured against unauthorized entry and vandalism.

❖ Access to the vault must have a minimum dimension of 30 inches (762 mm) for ease of personnel passage. Because there is the possibility of vapors from flammable and combustible liquids in the vault, the accessway and ladder are to be nonsparking. Vapor from flammable and combustible liquids can replace the air in a vault. For personnel safety, the travel distance is limited and warning signs must be posted to remind personnel of potential hazards.

5704.2.8.16 Fire protection. Vaults shall be provided with a suitable means to admit a fire suppression agent.

❖ The fire suppression agent used to control a flammable or combustible liquid fire in a vault may be water, foam or some combination. The vault must be equipped with a suitable means for applying the fire suppression agent.

5704.2.8.17 Classified area. The interior of a vault containing a tank that stores a Class I liquid shall be designated a Class I, Division 1, or Zone 0 location, as defined in NFPA 70.

❖ The interior of a vault storing Class I liquid is a Class I, Division 1, location for determining the type of electrical system and components to be installed.

5704.2.8.18 Overfill protection. Overfill protection shall be provided in accordance with Section 5704.2.9.7.6. The use of a float vent valve shall be prohibited.

❖ Overfill protection is covered in Section 5704.2.9.7.6 and applies to all flammable and combustible liquids.

5704.2.9 Above-ground tanks. Above-ground storage of flammable and *combustible liquids* in tanks shall comply with Section 5704.2 and Sections 5704.2.9.1 through 5704.2.9.7.9.

❖ The storage of flammable and combustible liquids is permitted in above-ground tanks if the tanks are equipped to prevent the flammable and combustible liquid from escaping and becoming a vapor-air mixture in the flammable range. Operation of these above-ground tanks, sources of ignition, locations, security, etc., are covered to ensure a safe facility and operation.

5704.2.9.1 Existing noncompliant installations. Existing above-ground tanks shall be maintained in accordance with the code requirements that were applicable at the time of installation. Above-ground tanks that were installed in violation of code requirements applicable at the time of installation shall be made code compliant or shall be removed in accordance with Section 5704.2.14, regardless of whether such tank has been previously inspected (see Section 106.4).

❖ For existing, noncompliant above-ground storage tanks that constitute a hazard, such as an underground tank being used above ground, straightforward guidance and a clear-cut authorization, as provided by this section, to remove the tank is needed. These situations are different from an abandoned or out-of-service tank, yet require similar mitigation, such that the removal of such an unsafe tank needs to be in accordance with the safeguards otherwise required.

The reference to Section 106.4 addresses the issue of previous approvals that were mistakenly given by an inspector when a violation may have gone unnoticed.

5704.2.9.2 Fire protection. Fire protection for above-ground tanks shall comply with Sections 5704.2.9.2.1 through 5704.2.9.2.4.

❖ Above-ground tanks are equipped with fire protection to control exterior fire exposure, control fire from flammable and combustible liquid, protect the tank structure and protect the facility.

5704.2.9.2.1 Required foam fire protection systems. Where required by the *fire code official*, foam fire protection shall be provided for above-ground tanks, other than pressure tanks operating at or above 1 pound per square inch gauge (psig) (6.89 kPa) where such tank, or group of tanks spaced less than 50 feet (15 240 mm) apart measured shell to shell, has a liquid surface area in excess of 1,500 square feet (139 m^2), and is in accordance with one of the following:

1. Used for the storage of Class I or II liquids.
2. Used for the storage of crude oil.
3. Used for in-process products and is located within 100 feet (30 480 mm) of a fired still, heater, related fractioning or processing apparatus or similar device at a processing plant or petroleum refinery as herein defined.
4. Considered by the *fire code official* as posing an unusual exposure hazard because of topographical conditions; nature of occupancy, proximity on the same or adjoining property, and height and character of liquids to be stored; degree of private fire protection to be provided; and facilities of the fire department to cope with flammable liquid fires.

❖ The fire code official has the authority to require a foam fire protection system for above-ground tanks when the tanks satisfy the criteria in this section. These limits are based on the capacity of the foam fire protection system.

5704.2.9.2.2 Foam fire protection system installation. Where foam fire protection is required, it shall be installed in accordance with NFPA 11.

❖ Foam fire protection systems are to comply with NFPA 11. Such systems are for use on flammable and combustible liquid hazards in local areas of a building, for storage tanks and for indoor or outdoor processing areas. NFPA 11 also covers systems for use on liquid fuel fires in small enclosed or partially enclosed spaces.

Foam can provide quick and effective coverage for flammable liquid spill fires where rapid vapor suppression is essential. High-expansion foams are for use on liquid fuel fires where depth of coverage is

INTERNATIONAL CODE COUNCIL®
Copyright © 2015 ICC. ALL RIGHTS RESERVED. Accessed by David Dammon on Jun 21, 2017 12:30:52 PM pursuant to License Agreement with ICC. No further reproduction or distribution authorized. ANY UNAUTHORIZED REPRODUCTION OR DISTRIBUTION IS A VIOLATION OF THE FEDERAL COPYRIGHT ACT AND THE LICENSE AGREEMENT, AND SUBJECT TO CIVIL AND CRIMINAL PENALTIES THEREUNDER.

important to fill volumes where fire exists at various levels. High-expansion foams are more effective indoors than outdoors.

5704.2.9.2.2.1 Foam storage. Where foam fire protection is required, foam-producing materials shall be stored on the premises.

Exception: Storage of foam-producing materials off the premises is allowed as follows:

1. Such materials stored off the premises shall be of the proper type suitable for use with the equipment at the installation where required.
2. Such materials shall be readily available at the storage location at all times.
3. Adequate loading and transportation facilities shall be provided.
4. The time required to deliver such materials to the required location in the event of fire shall be consistent with the hazards and fire scenarios for which the foam supply is intended.
5. At the time of a fire, these off-premises supplies shall be accumulated in sufficient quantities before placing the equipment in operation to ensure foam production at an adequate rate without interruption until extinguishment is accomplished.

❖ When the fire code official requires a foam fire protection system, the foam must be stored on site.

The exception allows the fire code official to authorize off-site foam storage if the off-site storage does not hamper the foam fire protection. Consideration must be given to type of foam, availability, time needed to get the foam material to the site and the quantity of foam material required before authorization for off-site foam storage is approved.

5704.2.9.2.3 Fire protection of supports. Supports or pilings for above-ground tanks storing Class I, II or IIIA liquids elevated more than 12 inches (305 mm) above grade shall have a *fire-resistance rating* of not less than 2 hours in accordance with the fire exposure criteria specified in ASTM E1529.

Exceptions:

1. Structural supports tested as part of a protected above-ground tank in accordance with UL 2085.
2. Stationary tanks located outside of buildings where protected by an *approved* water-spray system designed in accordance with Chapter 9 and NFPA 15.
3. Stationary tanks located inside of buildings equipped throughout with an *approved* automatic sprinkler system designed in accordance with Section 903.3.1.1.

❖ Above-ground tank supports extending more than 12 inches (305 mm) above grade must have no less than 2-hour fire protection. This fire rating is based on ASTM E1529, which is based on a hydrocarbon pool fire instead of the ASTM E119 estimate of fuel content in a building.

The exceptions to this fire rating for the structural support are based on the fire protection provided by other means listed under UL 2085, protection provided by a waterspray system under NFPA 15 or for a tank inside a sprinklered building.

5704.2.9.2.4 Inerting of tanks storing boilover liquids. Liquids with boilover characteristics shall not be stored in fixed roof tanks larger than 150 feet (45 720 mm) in diameter unless an *approved* gas enrichment or inerting system is provided on the tank.

Exception: Crude oil storage tanks in production fields with no other exposures adjacent to the storage tank.

❖ The application of water to a liquid with boilover characteristics can cause a rapid increase in the fire. The boilover liquid may be hot enough to vaporize water that has been added to the fire or water that may be under the boilover liquid. The sudden release of steam can cause the fire to greatly increase in intensity or cause an explosion. Using an inert system to suppress a fire in a large diameter tank will reduce the potential danger from boilover.

The exception notes that where the hazard is limited to an isolated crude oil tank in a production field, the inert system is not required.

5704.2.9.3 Supports, foundations and anchorage. Supports, foundations and anchorages for above-ground tanks shall be designed and constructed in accordance with NFPA 30 and the *International Building Code*.

❖ Footings, foundations and structural supports for above-ground tanks must comply with the IBC and NFPA 30.

5704.2.9.4 Stairways, platforms and walkways. *Stairways*, platforms and walkways shall be of noncombustible construction and shall be designed and constructed in accordance with NFPA 30 and the *International Building Code*.

❖ Stairways, platforms and walkways for above-ground tanks must be of noncombustible construction and comply with the IBC and NFPA 30.

5704.2.9.5 Above-ground tanks inside of buildings. Above-ground tanks inside of buildings shall comply with Sections 5704.2.9.5.1 and 5704.2.9.5.2.

❖ This section introduces the requirements for above-ground storage tanks inside buildings.

5704.2.9.5.1 Overfill prevention. Above-ground tanks storing Class I, II and IIIA liquids inside buildings shall be equipped with a device or other means to prevent overflow into the building including, but not limited to: a float valve; a preset meter on the fill line; a valve actuated by the weight of the tank's contents; a low-head pump that is incapable of producing overflow; or a liquid-tight overflow pipe not less than one pipe size larger than the fill pipe and discharging by gravity back to the outside source of liquid or to an *approved* location. Tanks containing Class IIIB liquids and connected

INTERNATIONAL CODE COUNCIL®
Copyright © 2015 ICC. ALL RIGHTS RESERVED. Accessed by David Dammon on Jun 21, 2017 12:30:52 PM pursuant to License Agreement with ICC. No further reproduction or distribution authorized. ANY UNAUTHORIZED REPRODUCTION OR DISTRIBUTION IS A VIOLATION OF THE FEDERAL COPYRIGHT ACT AND THE LICENSE AGREEMENT, AND SUBJECT TO CIVIL AND CRIMINAL PENALTIES THEREUNDER.

to fuel-burning equipment shall be provided with a means to prevent overflow into buildings in accordance with Section 5704.2.7.5.8.

❖ Overfilling of tanks containing Class I, II and IIIA liquids inside a building can release vapors that could reach concentrations at or above the LFL. Devices and equipment for filling of these tanks must be designed to prevent spillage and damage to the storage tank.

Note that tanks storing Class IIIB liquids and not connected to fuel-burning equipment, such as waste motor oil, are not subject to these requirements due to the higher flash point (lower volatility) and thus the lower relative hazard of the liquid.

Tanks storing Class IIIB liquids and connected to fuel burning equipment, however, are subject to overfill protection requirements in accordance with Section 5704.2.7.5.8 due to the potential for the creation of hazardous conditions as discussed in the commentary to that section.

5704.2.9.5.2 Fill pipe connections. Fill pipe connections for tanks storing Class I, II and IIIA liquids and Class IIIB liquids connected to fuel-burning equipment shall be in accordance with Section 5704.2.9.7.7.

❖ This section requires fill pipes on above-ground tanks located inside buildings to be equipped with a means to make a direct connection with the tank vehicle's fuel-delivery hose. Essentially, it requires a "camlock" or other similar device and prohibits filling a tank located inside a building through the use of a hand-held nozzle. This requirement exists already for protected above-ground tanks in Section 5704.2.9.7.6, so a reference in this section establishes parity between protected tanks and other types of tanks.

5704.2.9.6 Above-ground tanks outside of buildings. Above-ground tanks outside of buildings shall comply with Sections 5704.2.9.6.1 through 5704.2.9.6.3.

❖ Above-ground tanks outside of a building are separated from other tanks and facilities to minimize the exposure to fire and transfer of fire from tank to tank or to another facility.

5704.2.9.6.1 Locations where above-ground tanks are prohibited. Storage of Class I and II liquids in above-ground tanks outside of buildings is prohibited within the limits established by law as the limits of districts in which such storage is prohibited (see Section 3 of the Sample Legislation for Adoption of the *International Fire Code* on page xxi).

❖ This section enables the adopting jurisdiction to prohibit the installation of above-ground tanks in certain geographic areas of the jurisdiction by enumerating them in the adopting legislation. The code book includes a sample adopting ordinance that contains a blank space for the jurisdiction to fill in describing the particular areas where above-ground tank installations are to be prohibited.

5704.2.9.6.1.1 Location of tanks with pressures 2.5 psig or less. Above-ground tanks operating at pressures not exceeding 2.5 psig (17.2 kPa) for storage of Class I, II or IIIA liquids, which are designed with a floating roof, a weak roof-to-shell seam or equipped with emergency venting devices limiting pressure to 2.5 psig (17.2 kPa), shall be located in accordance with Table 22.4.1.1(a) of NFPA 30.

Exceptions:

1. Vertical tanks having a weak roof-to-shell seam and storing Class IIIA liquids are allowed to be located at one-half the distances specified in Table 22.4.1.1(a) of NFPA 30, provided the tanks are not within a diked area or drainage path for a tank storing Class I or II liquids.
2. Liquids with boilover characteristics and unstable liquids in accordance with Sections 5704.2.9.6.1.3 and 5704.2.9.6.1.4.
3. For protected above-ground tanks in accordance with Section 5704.2.9.7 and tanks in at-grade or above-grade vaults in accordance with Section 5704.2.8, the distances in Table 22.4.1.1(b) of NFPA 30 shall apply and shall be reduced by one-half, but not to less than 5 feet (1524 mm).

❖ Above-ground tanks for Class I, II and IIIA liquids are to be located at clearances specified by Table 22.4.1.1(a) of NFPA 30.

Exception 1 permits locating above-ground tanks for Class IIIA liquids at half the clearances of Table 22.4.1.1(a) of NFPA 30 if the tanks are isolated from tanks containing Class I and II liquids.

Exception 2 recognizes the special hazards of boilover and unstable liquids by deferring to Section 5704.2.9.6.1.3 or 5704.2.9.6.1.4, respectively.

Exception 3 recognizes the additional fire protection provided by protected above-ground tanks and tanks in vaults by allowing reduced separation distances.

5704.2.9.6.1.2 Location of tanks with pressures exceeding 2.5 psig. Above-ground tanks for the storage of Class I, II or IIIA liquids operating at pressures exceeding 2.5 psig (17.2 kPa) or equipped with emergency venting allowing pressures to exceed 2.5 psig (17.2 kPa) shall be located in accordance with Table 22.4.1.3 of NFPA 30.

Exception: Liquids with boilover characteristics and unstable liquids in accordance with Sections 5704.2.9.6.1.4 and 5704.2.9.6.1.5.

❖ Above-ground tanks for Class I, II and IIIA liquids are to be located at clearances specified by Table 22.4.1.3 of NFPA 30.

The exception prohibits this tank spacing if the tanks contain liquids with boilover characteristics and unstable liquids (see commentary, Sections 5704.2.9.6.1.4 and 5704.2.9.6.1.5).

5704.2.9.6.1.3 Location of tanks storing boilover liquids. Above-ground tanks for storage of liquids with boilover char-

INTERNATIONAL CODE COUNCIL®
Copyright © 2015 ICC. ALL RIGHTS RESERVED. Accessed by David Dammon on Jun 21, 2017 12:30:52 PM pursuant to License Agreement with ICC. No further reproduction or distribution authorized. ANY UNAUTHORIZED REPRODUCTION OR DISTRIBUTION IS A VIOLATION OF THE FEDERAL COPYRIGHT ACT AND THE LICENSE AGREEMENT, AND SUBJECT TO CIVIL AND CRIMINAL PENALTIES THEREUNDER.

acteristics shall be located in accordance with Table 22.4.1.4 of NFPA 30.

❖ Above-ground tanks containing boilover liquids are to be located at clearances specified by Table 22.4.1.4 of NFPA 30.

5704.2.9.6.1.4 Location of tanks storing unstable liquids. Above-ground tanks for the storage of unstable liquids shall be located in accordance with Table 22.4.1.5 of NFPA 30.

❖ Above-ground tanks for unstable liquids are to be located at clearances specified by Table 22.4.1.5 of NFPA 30.

5704.2.9.6.1.5 Location of tanks storing Class IIIB liquids. Above-ground tanks for the storage of Class IIIB liquids, excluding unstable liquids, shall be located in accordance with Table 22.4.1.6 of NFPA 30, except where located within a diked area or drainage path for a tank or tanks storing Class I or II liquids. Where a Class IIIB liquid storage tank is within the diked area or drainage path for a Class I or II liquid, distances required by Section 5704.2.9.6.1.1 shall apply.

❖ Above-ground tanks for Class IIIB liquids, excluding unstable liquids,are to be located at clearances specified by Table 22.4.1.6 of NFPA 30. Because of the hazards of Class I and II liquids, when an above-ground tank for Class IIIB liquids is not isolated from these liquids, the clearances specified by NFPA 30 are to apply.

5704.2.9.6.1.6 Reduction of separation distances to adjacent property. Where two tank properties of diverse ownership have a common boundary, the *fire code official* is authorized to, with the written consent of the *owners* of the two properties, apply the distances in Sections 5704.2.9.6.1.2 through 5704.2.9.6.1.5 assuming a single property.

❖ The fire code official has the authority to consider two independent properties as a single property for tank farms for determining the clearances. This authority is limited to having the written consent from both property owners. This does not reduce the clearances between above-ground tanks.

5704.2.9.6.2 Separation between adjacent stable or unstable liquid tanks. The separation between tanks containing stable liquids shall be in accordance with Table 22.4.2.1 of NFPA 30. Where tanks are in a diked area containing Class I or II liquids, or in the drainage path of Class I or II liquids, and are compacted in three or more rows or in an irregular pattern, the *fire code official* is authorized to require greater separation than specified in Table 22.4.2.1 of NFPA 30 or other means to make tanks in the interior of the pattern accessible for fire-fighting purposes.

Exception: Tanks used for storing Class IIIB liquids are allowed to be spaced 3 feet (914 mm) apart unless within a diked area or drainage path for a tank storing Class I or II liquids.

The separation between tanks containing unstable liquids shall be not less than one-half the sum of their diameters.

❖ NFPA 30 specifies clearances between above-ground tanks containing stable and unstable liquids. Because the placement of tanks can create an access problem for fire department equipment, the fire code official has the authority to require a greater separation than required by Table 22.4.2.1 of NFPA 30 to ensure fire equipment access.

The exception allows a 3-foot (914 mm) clearance between above-ground tanks containing Class IIIB liquid if they meet the requirements stated.

The minimum clearance for above-ground tanks containing unstable liquids must be greater because of the greater hazard they pose.

5704.2.9.6.3 Separation between adjacent tanks containing flammable or combustible liquids and LP-gas. The minimum horizontal separation between an LP-gas container and a Class I, II or IIIA liquid storage tank shall be 20 feet (6096 mm) except in the case of Class I, II or IIIA liquid tanks operating at pressures exceeding 2.5 psig (17.2 kPa) or equipped with emergency venting allowing pressures to exceed 2.5 psig (17.2 kPa), in which case the provisions of Section 5704.2.9.6.2 shall apply.

An *approved* means shall be provided to prevent the accumulation of Class I, II or IIIA liquids under adjacent LP-gas containers such as by dikes, diversion curbs or grading. Where flammable or *combustible liquid* storage tanks are within a diked area, the LP-gas containers shall be outside the diked area and not less than 10 feet (3048 mm) away from the centerline of the wall of the diked area.

Exceptions:

1. Liquefied petroleum gas containers of 125 gallons (473 L) or less in capacity installed adjacent to fuel-oil supply tanks of 660 gallons (2498 L) or less in capacity.
2. Horizontal separation is not required between above-ground LP-gas containers and underground flammable and *combustible liquid* tanks.

❖ Liquefied petroleum gas (LP-gas) above-ground tanks need a minimum clearance of 20 feet (6069 mm) from above-ground tanks containing Class I, II or IIIA liquids. When the above-ground tanks containing Class I, II and IIIA liquids are under pressure exceeding 2.5 psig (17.2 kPa), the minimum clearance is according to Section 5704.2.9.6.3.

LP-gas tanks require additional protection from Class I, II and IIIA liquids. Spills and leakage of the flammable and combustible liquids are to be kept away from the LP-gas tank by not placing the tanks in a common diked area. Drainage from the above-ground tanks containing Class I, II and IIIA liquids is to be directed away from the LP-gas tank.

The exception states that small tanks of LP-gas and small fuel oil tanks need not be separated. There is no separation required between LP-gas tanks and underground tanks of flammable and combustible liquids.

5704.2.9.7 Additional requirements for protected above-ground tanks. In addition to the requirements of this chapter for above-ground tanks, the installation of protected above-

INTERNATIONAL CODE COUNCIL®
Copyright © 2015 ICC. ALL RIGHTS RESERVED. Accessed by David Dammon on Jun 21, 2017 12:30:52 PM pursuant to License Agreement with ICC. No further reproduction or distribution authorized. ANY UNAUTHORIZED REPRODUCTION OR DISTRIBUTION IS A VIOLATION OF THE FEDERAL COPYRIGHT ACT AND THE LICENSE AGREEMENT, AND SUBJECT TO CIVIL AND CRIMINAL PENALTIES THEREUNDER.

ground tanks shall be in accordance with Sections 5704.2.9.7.1 through 5704.2.9.7.9.

❖ Besides being located to have the required clearance between above-ground tanks and between above-ground tanks and property lines or other structures, the above-ground tanks are to be designed and constructed with safety features to protect and control flammable and combustible liquids. These features include venting, flame arresters, secondary containment, impact protection, overfill protection and antisiphon devices.

5704.2.9.7.1 Tank construction. The construction of a protected above-ground tank and its primary tank shall be in accordance with Section 5704.2.7.

❖ Tanks are to be designed according to NFPA 30 and labeled to indicate the design standard according to Section 5704.2.7.

5704.2.9.7.2 Normal and emergency venting. Normal and emergency venting for protected above-ground tanks shall be provided in accordance with Sections 5704.2.7.3 and 5704.2.7.4. The vent capacity reduction factor shall not be allowed.

❖ Tanks must be vented to maintain the internal tank pressure within the design operating range. A low pressure can increase the generation of vapors. A high pressure can damage the tank or piping system. Any pressure outside of the design pressure range can have an adverse effect on the operation of the system as well as on the piping and equipment. Vent lines are to be used solely as vents unless other uses are approved by the fire code official. The termination of a vent pipe is to direct the vapors away from the building. Vapors from flammable liquids are normally heavier than air so that the vapor will settle to lower levels. The termination of a vent pipe a minimum of 12 feet (3658 mm) above grade will provide space for the vapors to disperse to concentrations below the LFL. This high termination elevation also reduces the potential for the termination to be close to grade-level ignition sources. Because flammable liquid vapors are heavier than air, attention needs to be given to the building design near the termination. Building design and features that may allow the flammable liquid vapors to reenter the building or to collect on the building must be eliminated. Because Class IIIB has a relatively high boiling point, the vent termination for this combustible liquid may terminate inside the building if the vent is normally closed. Section 5703.6 covers the design, installation, testing and protection of vent pipes. Vent pipes must drain to the tank and not accumulate condensation in the vent pipe.

5704.2.9.7.3 Secondary containment. Protected above-ground tanks shall be provided with secondary containment, drainage control or diking in accordance with Section 5004.2. A means shall be provided to establish the integrity of the secondary containment in accordance with NFPA 30.

❖ Protected above-ground tanks are to be located within secondary containment according to Section 5004.2 and NFPA 30. Section 5004.2 discusses the use of liquid-tight curbs, dikes and drainage systems to divert the liquid to a location where it can be contained and safely handled (see commentary, Section 5004.2).

5704.2.9.7.4 Vehicle impact protection. Where protected above-ground tanks, piping, electrical conduit or dispensers are subject to vehicular impact, they shall be protected therefrom, either by having the impact protection incorporated into the system design in compliance with the impact test protocol of UL 2085, or by meeting the provisions of Section 312, or where necessary, a combination of both. Where guard posts or other *approved* barriers are provided, they shall be independent of each above-ground tank.

❖ Above-ground tanks can be protected from vehicle impact in one of two ways. Either the above-ground tank system can be designed to satisfy the impact criteria of UL 2085 or guard posts or other approved barriers complying with Section 312 can be used for protection from vehicle impact. Section 312 contains the specifications for guard posts or the design forces required for an approved barrier to comply with the code.

5704.2.9.7.5 Overfill prevention. Protected above-ground tanks shall not be filled in excess of 95 percent of their capacity. An overfill prevention system shall be provided for each tank. During tank-filling operations, the system shall comply with one of the following:

1. The system shall:
   1.1. Provide an independent means of notifying the person filling the tank that the fluid level has reached 90 percent of tank capacity by providing an audible or visual alarm signal, providing a tank level gauge marked at 90 percent of tank capacity, or other *approved* means; and
   1.2. Automatically shut off the flow of fuel to the tank when the quantity of liquid in the tank reaches 95 percent of tank capacity. For rigid hose fuel-delivery systems, an *approved* means shall be provided to empty the fill hose into the tank after the automatic shutoff device is activated.
2. The system shall reduce the flow rate to not more than 15 gallons per minute (0.95 L/s) so that at the reduced flow rate, the tank will not overfill for 30 minutes, and automatically shut off flow into the tank so that none of the fittings on the top of the tank are exposed to product because of overfilling.

❖ To prevent spillage during filling, above-ground tanks must be limited to 95 percent of their capacity by an overfill protection system. Several methods are acceptable that provide design flexibility utilizing either an audible or visible alarm when the tank becomes 90-percent full, including draining the fill hose into the above-ground tank without exceeding the 95-percent capacity; an automatic shutoff at 95-percent full or by a means of reducing the fill rate to not more than 15

INTERNATIONAL CODE COUNCIL®
Copyright © 2015 ICC. ALL RIGHTS RESERVED. Accessed by David Dammon on Jun 21, 2017 12:30:52 PM pursuant to License Agreement with ICC. No further reproduction or distribution authorized. ANY UNAUTHORIZED REPRODUCTION OR DISTRIBUTION IS A VIOLATION OF THE FEDERAL COPYRIGHT ACT AND THE LICENSE AGREEMENT, AND SUBJECT TO CIVIL AND CRIMINAL PENALTIES THEREUNDER.

gallons per minute (gpm) (0.95 L/sec) so that, at that reduced flow rate, the tank will not overfill for 30 minutes, after which the fill flow will stop automatically.

5704.2.9.7.5.1 Information signs. A permanent sign shall be provided at the fill point for the tank, documenting the filling procedure and the tank calibration chart.

Exception: Where climatic conditions are such that the sign may be obscured by ice or snow, or weathered beyond readability or otherwise impaired, said procedures and chart shall be located in the office window, lock box or other area accessible to the person filling the tank.

❖ A permanent sign displaying filling instructions and a tank calibration chart must be located at the fill point.

If weather conditions exist that make an outdoor permanent sign impractical, the exception allows storing the instructions and calibration charts at another location that is accessible to the individual filling the tank.

5704.2.9.7.5.2 Determination of available tank capacity. The filling procedure shall require the person filling the tank to determine the gallonage (literage) required to fill it to 90 percent of capacity before commencing the fill operation.

❖ As an additional safety measure, the filling procedure is to include a requirement that the operator determine the gallonage (literage) required to fill the tank to 90-percent capacity before commencing the operation.

5704.2.9.7.6 Fill pipe connections. The fill pipe shall be provided with a means for making a direct connection to the tank vehicle's fuel delivery hose so that the delivery of fuel is not exposed to the open air during the filling operation. Where any portion of the fill pipe exterior to the tank extends below the level of the top of the tank, a check valve shall be installed in the fill pipe not more than 12 inches (305 mm) from the fill hose connection.

❖ The filling operation could create a vapor-air mixture above the LFL. The fill hose is to be tight fitting to reduce the potential for the flammable or combustible liquid to be exposed to air.

5704.2.9.7.7 Spill containers. A spill container having a capacity of not less than 5 gallons (19 L) shall be provided for each fill connection. For tanks with a top fill connection, spill containers shall be noncombustible and shall be fixed to the tank and equipped with a manual drain valve that drains into the primary tank. For tanks with a remote fill connection, a portable spill container shall be allowed.

❖ To control spillage during filling, a spill container is to be provided for each above-ground tank. The spill container must have a top fill connection, be noncombustible and be permanently fixed to the tank. This spill container is to drain directly into the above-ground tank. A remote fill connection can use a portable spill container.

5704.2.9.7.8 Tank openings. Tank openings in protected above-ground tanks shall be through the top only.

❖ Above-ground tanks can have an opening only through the tank top.

5704.2.9.7.9 Antisiphon devices. *Approved* antisiphon devices shall be installed in each external pipe connected to the protected above-ground tank where the pipe extends below the level of the top of the tank.

❖ To prevent spillage by siphoning through the fill connection, an approved antisiphon device must be installed on the fill connection. An antisiphon valve is a normally closed valve used on above-ground storage tanks to help prevent a drain off of tank contents if a rupture in a line occurs below the liquid level in the tank.

5704.2.10 Drainage and diking. The area surrounding a tank or group of tanks shall be provided with drainage control or shall be diked to prevent accidental discharge of liquid from endangering adjacent tanks, adjoining property or reaching waterways.

Exceptions:

1. The *fire code official* is authorized to alter or waive these requirements based on a technical report that demonstrates that such tank or group of tanks does not constitute a hazard to other tanks, waterways or adjoining property, after consideration of special features such as topographical conditions, nature of occupancy and proximity to buildings on the same or adjacent property, capacity, and construction of proposed tanks and character of liquids to be stored, and nature and quantity of private and public fire protection provided.
2. Drainage control and diking is not required for *listed* secondary containment tanks.

❖ Leaks and spills of flammable and combustible liquids must be controlled by dikes and drainage. The flammable and combustible liquids are to be collected in a manner that will not endanger other tanks, properties or waterways.

Exception 1 gives the fire code official the authority to consider installations where the use of drainage and dikes may not be necessary if technical documentation exists to show that this is practical.

Exception 2 states that listed secondary containment tanks do not require drainage control or dikes in the surrounding area. The secondary containment system in these tanks is considered equivalent to drainage and diking.

5704.2.10.1 Volumetric capacity. The volumetric capacity of the diked area shall be not less than the greatest amount of liquid that can be released from the largest tank within the diked area. The capacity of the diked area enclosing more than one tank shall be calculated by deducting the volume of

INTERNATIONAL CODE COUNCIL®
Copyright © 2015 ICC. ALL RIGHTS RESERVED. Accessed by David Dammon on Jun 21, 2017 12:30:52 PM pursuant to License Agreement with ICC. No further reproduction or distribution authorized. ANY UNAUTHORIZED REPRODUCTION OR DISTRIBUTION IS A VIOLATION OF THE FEDERAL COPYRIGHT ACT AND THE LICENSE AGREEMENT, AND SUBJECT TO CIVIL AND CRIMINAL PENALTIES THEREUNDER.

the tanks other than the largest tank below the height of the dike.

❖ The diked area must have sufficient capacity to contain the spillage of flammable and combustible liquids. The volume of flammable and combustible liquid to be held in the diked area is the greatest amount that can be released from the largest tank. This is the volume of the largest tank that is above the lowest elevation of the dike. For diked areas containing more than one tank, the volume is determined using the volume of the largest tank. This determination is based on the assumption that major leakage from more than one tank at any given time is very unlikely.

Because dike storage capacity is critical to spill control, designers must make certain they design their impoundment based on tank capacity. The fire code official, the plan reviewers and the inspectors responsible for approving the design must also be able to determine whether the design is adequate. Below are two examples to aid in understanding the calculations.

Example 1:

Determine the dike storage volume for a single tank.

Tank:

Diameter = 100 feet (30 480 mm)

Height = 30 feet (9144 mm)

Dike:

Length = 140 feet (42 672 mm)

Width = 140 feet (42 672 mm)

Height = 5 feet (1524 mm)

Maximum dike storage volume:
(140 feet) (140 feet) (5 feet) = 98,000 ft^3 (2775 m^3)

Maximum potential volume of spill:
(100 feet/2)^2 (π) (30 feet – 5 feet) = 196,350 ft^3 (5560 m^3)

Tank volume below dike height:
(100 feet/2)^2 (π) (5 feet) = 39,270 ft^3 (1112 m^3)

Available dike storage volume for spill containment:
98,000 ft^3 – 39,270 ft^3 = 58,730 ft^3 (1663 m^3)

Available dike storage volume for spill containment is not sufficient to contain for the maximum potential spill.
58,730 ft^3 (1663 m^3) < 196,350 ft^3 (5560 m^3)

Determine the minimum size dike based on a square dike area.

$$L = \sqrt{\frac{100(\text{ feet}/2)^2(30\text{ feet})}{5}} = 218\text{ feet}\,(66\,446\text{ mm})$$

Maximum dike storage volume:
(218 feet) (218 feet) (5 feet) = 237,620 ft^3 (6729 m^3)

Available dike storage volume for spill containment:
237,620 ft^3 – 39,270 ft^3 = 198,350 ft^3 (5617 m^3)

Available dike storage volume for spill containment is sufficient to contain for the maximum potential spill.
198,350 ft^3 (5617 m^3) > 196,350 ft^3 (5560 m^3)

Example 2:

Determine the dike storage volume for a dike with three tanks.

Tank 1:

Diameter = 100 feet (30 480 mm)

Height = 30 feet (9144 mm)

Tank 2:

Diameter = 50 feet (15 240 mm)

Height = 20 feet (6096 mm)

Tank 3:

Diameter = 50 feet (15 240 mm)

Height = 20 feet (6096 mm)

Dike:

Length = 300 feet (91 440 mm)

Width = 150 feet (45 720 mm)

Height = 5 feet (1524 mm)

Maximum dike storage volume:
300 feet (150 feet) (5 feet) = 225,000 ft^3 (6371 m^3)

Maximum potential volume of spill:

Tank 1:
(100 feet/2)^2 (π) (30 feet – 5 feet) = 196,350 ft^3 (5560 m^3)

Tank 1 volume below dike height:
(100 feet/2)^2 (π) (5 feet) = 39,270 ft^3 (1112 m^3)

Tank 2 volume below dike height:
(50 feet/2)^2 (π) (5 feet) = 9,817 ft^3 (278 m^3)

Tank 3 volume below dike height:
(50 feet/2)^2 (π) (5 feet) = 9,817 ft^3 (278 m^3)

Available dike storage volume for spill containment:
225,000 ft^3 – 39,270 ft^3 – 9,817 ft^3 – 9,817 ft^3 = 166,095 ft^3 (4703 m^3)

Available dike storage volume for spill containment is not sufficient to contain for the maximum potential spill. 166,095 ft^3 (4703 m^3) < 196,350 ft^3 (5560 m^3)

Revise the dike design by increasing the dike height to 6 feet (1829 mm).

Maximum dike storage volume:
300 feet (150 feet) (6 feet) = 270,000 ft^3 (7646 m^3)

Maximum potential volume of spill:

Tank 1:
(100 feet/2)^2 (π) (30 feet – 6 feet) = 188,496 ft^3 (5338 m^3)

INTERNATIONAL CODE COUNCIL®
Copyright © 2015 ICC. ALL RIGHTS RESERVED. Accessed by David Dammon on Jun 21, 2017 12:30:52 PM pursuant to License Agreement with ICC. No further reproduction or distribution authorized. ANY UNAUTHORIZED REPRODUCTION OR DISTRIBUTION IS A VIOLATION OF THE FEDERAL COPYRIGHT ACT AND THE LICENSE AGREEMENT, AND SUBJECT TO CIVIL AND CRIMINAL PENALTIES THEREUNDER.

Tank 1 volume below dike height:
(100 feet/2)^2 (π) (6 feet) = 47,124 ft^3 (1334 m^3)

Tank 2 volume below dike height:
(50 feet/2)^2 (π) (6 feet) = 11,781 ft^3 (334 m^3)

Tank 3 volume below dike height:
(50 feet/2)^2 (π) (6 feet) = 11,781 ft^3 (334 m^3)

Available dike storage volume for spill containment:
270,000 ft^3 – 47,124 ft^3 – 11,781 ft^3 – 11,781 ft^3 = 199,314 ft^3 (5644 m^3)

Available dike storage volume for spill containment is sufficient to contain for the maximum potential spill.
199,314 ft^3 (5644 m^3) > 188,496 ft^3 (5338 m^3)

5704.2.10.2 Diked areas containing two or more tanks. Diked areas containing two or more tanks shall be subdivided in accordance with NFPA 30.

❖ Diked areas are to be subdivided according to NFPA 30 to control the flow of flammable and combustible liquids.

5704.2.10.3 Protection of piping from exposure fires. Piping shall not pass through adjacent diked areas or impounding basins, unless provided with a sealed sleeve or otherwise protected from exposure to fire.

❖ Piping can be damaged and fail as a result of fire exposure. A failed pipe could add fuel to a fire. To prevent a pipe from an adjacent diked area or impoundment basin from providing additional fuel, the pipe is to be protected with a sealed sleeve or otherwise protected from exposure to fire. The best method is to install piping so that it does not enter an adjacent diked area or impoundment basin whenever possible. The sealed pipe sleeve provides some protection from direct fire exposure and is also a secondary containment system.

5704.2.10.4 Combustible materials in diked areas. Diked areas shall be kept free from combustible materials, drums and barrels.

❖ Good housekeeping must be practiced around flammable and combustible materials, whether they are solid or liquid. Combustible materials that accumulate in diked areas are a source of ignition and fuel. These materials must be removed.

5704.2.10.5 Equipment, controls and piping in diked areas. Pumps, manifolds and fire protection equipment or controls shall not be located within diked areas or drainage basins or in a location where such equipment and controls would be endangered by fire in the diked area or drainage basin. Piping above ground shall be minimized and located as close as practical to the shell of the tank in diked areas or drainage basins.

Exceptions:

1. Pumps, manifolds and piping integral to the tanks or equipment being served, which is protected by intermediate diking, berms, drainage or fire protection such as water spray, monitors or resistive coating.
2. Fire protection equipment or controls that are appurtenances to the tanks or equipment being protected, such as foam chambers or foam piping and water or foam monitors and hydrants, or hand and wheeled extinguishers.

❖ Equipment and controls must be located outside of the diked areas for fire protection. Piping must be in the diked areas to operate the facility, but the piping must be underground except at the tank. This provides as much fire protection for the piping as is practical while still allowing the facility to function.

Exception 1 allows locating equipment that is integral to the tank inside the diked area. Other service equipment that is provided with fire protection may also be in diked areas. Separation (immediate diking), water spray or coatings can accomplish this fire protection.

Exception 2 allows fire protection equipment that is part of the tank system to be in the diked area.

5704.2.11 Underground tanks. Underground storage of flammable and *combustible liquids* in tanks shall comply with Section 5704.2 and Sections 5704.2.11.1 through 5704.2.11.4.2.

❖ Underground tanks are exposed to conditions not associated with above-ground tanks. Leakage of flammable and combustible liquids is harder to detect. Protection from loads being placed on top of or adjacent to the underground tank is needed to prevent damage to the underground tank. The underground tank must be protected from flooding and from floating in areas having a groundwater table that may be above the bottom of the underground tank.

5704.2.11.1 Location. Flammable and *combustible liquid* storage tanks located underground, either outside or under buildings, shall be in accordance with all of the following:

1. Tanks shall be located with respect to existing foundations and supports such that the loads carried by the latter cannot be transmitted to the tank.
2. The distance from any part of a tank storing liquids to the nearest wall of a *basement*, pit, cellar or *lot line* shall be not less than 3 feet (914 mm).
3. A minimum distance of 1 foot (305 mm), shell to shell, shall be maintained between underground tanks.

❖ Underground tanks must be located away from a building or structure so that the tank does not support the building or structure. The loads from a building or structure can cause the underground tank to rupture.

Underground tanks are to be a minimum of 3 feet (914 mm) from the nearest below-grade wall or property line. Any leakage from an underground tank may migrate through the soil and enter a basement, cellar or pit. The accumulation of flammable and combustible liquids in this location could develop into a hazard-

INTERNATIONAL CODE COUNCIL®
Copyright © 2015 ICC. ALL RIGHTS RESERVED. Accessed by David Dammon on Jun 21, 2017 12:30:52 PM pursuant to License Agreement with ICC. No further reproduction or distribution authorized. ANY UNAUTHORIZED REPRODUCTION OR DISTRIBUTION IS A VIOLATION OF THE FEDERAL COPYRIGHT ACT AND THE LICENSE AGREEMENT, AND SUBJECT TO CIVIL AND CRIMINAL PENALTIES THEREUNDER.

ous condition. Because the owner of the underground tank does not own the adjacent property, the location of the underground tank should not affect the adjacent property or the use of this property.

To ensure that underground tanks are independent of each other, a minimum clearance of 1 foot (305 mm) is required between the shells of adjacent underground tanks.

5704.2.11.2 Depth and cover. Excavation for underground storage tanks shall be made with due care to avoid undermining of foundations of existing structures. Underground tanks shall be set on firm foundations and surrounded with not less than 6 inches (152 mm) of noncorrosive inert material, such as clean sand.

❖ Excavation for underground tanks must not damage existing structures and must provide a sound foundation for the underground tank. The use of 6 inches (152 mm) of a noncorrosive material (sand) around an underground tank prevents concentrated loads from being applied to the tank. These concentrated loads can be caused during backfilling when a hard solid object, such as a rock, comes in contact with the underground tank. Soil pressures on the rock can be concentrated into a small contact area with the underground tank.

5704.2.11.3 Overfill protection and prevention systems. Fill pipes shall be equipped with a spill container and an overfill prevention system in accordance with NFPA 30.

❖ To control spillage during filling of underground tanks, each tank must have a spill container that is noncombustible and permanently fixed to the tank. This spill container is to drain directly into the underground tank.

5704.2.11.4 Leak prevention. Leak prevention for underground tanks shall comply with Sections 5704.2.11.4.1 and 5704.2.11.4.2.

❖ Leakage from underground tanks is to be detected by either monitoring or an approved leak detection system.

5704.2.11.4.1 Inventory control. Daily inventory records for underground storage tank systems shall be maintained.

❖ Leakage detection by inventory control requires accurate records of the volume of flammable and combustible liquid dispensed into and removed from the underground tank. A discrepancy between these two volumes is used to identify a leak.

5704.2.11.4.2 Leak detection. Underground storage tank systems shall be provided with an *approved* method of leak detection from any component of the system that is designed and installed in accordance with NFPA 30.

❖ Leakage detection systems must comply with NFPA 30.

5704.2.12 Testing. Tank testing shall comply with Sections 5704.2.12.1 and 5704.2.12.2.

❖ Tanks must be tested before being placed in service.

5704.2.12.1 Acceptance testing. Prior to being placed into service, tanks shall be tested in accordance with Section 21.5 of NFPA 30.

❖ The acceptance test for tanks is described in Section 21.5 of NFPA 30.

5704.2.12.2 Testing of underground tanks. Before being covered or placed in use, tanks and piping connected to underground tanks shall be tested for tightness in the presence of the *fire code official*. Piping shall be tested in accordance with Section 5703.6.3. The system shall not be covered until it has been *approved*.

❖ The fire code official is to be present for testing of underground tanks. The tank, connections and piping are to be tested for tightness. Piping is to be tested under Section 5703.6.3.

5704.2.13 Abandonment and status of tanks. Tanks taken out of service shall be removed in accordance with Section 5704.2.14, or safeguarded in accordance with Sections 5704.2.13.1 through 5704.2.13.2.3 and API 1604.

❖ Tanks that are no longer in service are to be removed or secured. Abandoned tanks can develop leaks or be damaged when new construction occurs near the tank. In addition to the referenced standard, API 1604, further guidance on this subject is available in NFPA 30, Annex C.

5704.2.13.1 Underground tanks. Underground tanks taken out of service shall comply with Sections 5704.2.13.1.1 through 5704.2.13.1.5.

❖ The procedure for safeguarding an underground tank will depend on the period that the tank is to be out of service.

5704.2.13.1.1 Temporarily out of service. Underground tanks temporarily out of service shall have the fill line, gauge opening, vapor return and pump connection secure against tampering. Vent lines shall remain open and be maintained in accordance with Sections 5704.2.7.3 and 5704.2.7.4.

❖ An underground tank that will be temporarily out of service for a period of less than 90 days is to be secured from tampering. The vents are to remain in operation and are to be maintained to allow for continuous venting of the tank. The flammable or combustible liquids may remain in the underground tank.

5704.2.13.1.2 Out of service for 90 days. Underground tanks not used for a period of 90 days shall be safeguarded in accordance with all the following or be removed in accordance with Section 5704.2.14:

1. Flammable or *combustible liquids* shall be removed from the tank.
2. All piping, including fill line, gauge opening, vapor return and pump connection, shall be capped or plugged and secured from tampering.
3. Vent lines shall remain open and be maintained in accordance with Sections 5704.2.7.3 and 5704.2.7.4.

❖ Flammable or combustible liquid must be removed from underground tanks that are out of service for 90

INTERNATIONAL CODE COUNCIL®
Copyright © 2015 ICC. ALL RIGHTS RESERVED. Accessed by David Dammon on Jun 21, 2017 12:30:52 PM pursuant to License Agreement with ICC. No further reproduction or distribution authorized. ANY UNAUTHORIZED REPRODUCTION OR DISTRIBUTION IS A VIOLATION OF THE FEDERAL COPYRIGHT ACT AND THE LICENSE AGREEMENT, AND SUBJECT TO CIVIL AND CRIMINAL PENALTIES THEREUNDER.

days but less than a year. The tank is to be secured and vents are to be opened and maintained as required by Section 5704.2.13.1.1.

The owner also has the option to remove the underground tank according to Section 5704.2.14. The code does not provide the option for abandoning the underground tank in place because the tank could not be returned to service.

5704.2.13.1.3 Out of service for one year. Underground tanks that have been out of service for a period of one year shall be removed from the ground in accordance with Section 5704.2.14 or abandoned in place in accordance with Section 5704.2.13.1.4.

❖ An underground tank that is out of service for one year is to be removed or abandoned in place.

5704.2.13.1.4 Tanks abandoned in place. Tanks abandoned in place shall be as follows:

1. Flammable and *combustible liquids* shall be removed from the tank and connected piping.
2. The suction, inlet, gauge, vapor return and vapor lines shall be disconnected.
3. The tank shall be filled completely with an *approved* inert solid material.
4. Remaining underground piping shall be capped or plugged.
5. A record of tank size, location and date of abandonment shall be retained.
6. All exterior above-grade fill piping shall be permanently removed when tanks are abandoned or removed.

❖ An underground tank that is abandoned in place is to have the flammable or combustible liquid removed. The tank is to be stripped of any appurtenances and filled with an inert material. Piping from the underground tank is to be capped or plugged and the owner is to retain a record of the tank. This action should remove the flammable or combustible liquid from the underground tank and prevent any residue from readily mixing with air. Annex C of NFPA 30 provides additional guidance on this topic.

Note that these provisions apply to all tanks without exception, such as the one that existed in previous editions of the code for 1,100-gallon (4163 L) capacity residential heating oil tanks. The majority of those tanks were installed in the 1950s and 1960s and the estimated useful life of such unprotected, single wall, steel underground fuel oil tanks is 35 to 40 years. This raises the question of who becomes responsible when someone drives or falls into one of the empty voids left by these tanks when the steel finally corrodes away. In order to improve the safeguarding of the public's health and safety, the exception has been removed and all underground tanks abandoned in place must be filled with an approved, inert solid material.

5704.2.13.1.5 Reinstallation of underground tanks. Tanks that are to be reinstalled for flammable or *combustible liquid* service shall be in accordance with this chapter, ASME *Boiler and Pressure Vessel Code* (Section VIII), API 12-P, API 1615, UL 58 and UL 1316.

❖ An underground tank that is reinstalled for flammable or combustible liquids has to comply as a new installation.

5704.2.13.2 Above-ground tanks. Above-ground tanks taken out of service shall comply with Sections 5704.2.13.2.1 through 5704.2.13.2.3.

❖ The procedure for safeguarding an above-ground tank will depend on the period that the tank is to be out of service.

5704.2.13.2.1 Temporarily out of service. Above-ground tanks temporarily out of service shall have all connecting lines isolated from the tank and be secured against tampering.

Exception: In-place fire protection (foam) system lines.

❖ An above-ground tank that is temporarily out of service for a period of less than 90 days is to be secured from tampering, and all lines to the tank are to be disconnected. The flammable or combustible liquids may remain in the above-ground tank.

The exception requires keeping fire protection lines intact. Disconnecting the fire protection lines would reduce the fire safety of the above-ground tank.

5704.2.13.2.2 Out of service for 90 days. Above-ground tanks not used for a period of 90 days shall be safeguarded in accordance with Section 5704.2.13.1.2 or removed in accordance with Section 5704.2.14.

Exceptions:

1. Tanks and containers connected to oil burners that are not in use during the warm season of the year or are used as a backup heating system to gas.
2. In-place, active fire protection (foam) system lines.

❖ Flammable or combustible liquid must be removed from an above-ground tank that is out of service for at least 90 days but less than one year. The tank is to be secured and vents are to be opened and maintained as required by Section 5704.2.13.1.1.

The owner has the option to remove the above-ground tank according to Section 5704.2.14.

Exception 1 exempts an above-ground tank used for seasonal heating or as a backup for a gas heater from being considered out of service.

Exception 2 requires fire protection lines to remain intact. To disconnect the fire protection lines would reduce the fire safety of the above-ground tank.

5704.2.13.2.3 Out of service for one year. Above-ground tanks that have been out of service for a period of one year shall be removed in accordance with Section 5704.2.14.

Exception: Tanks within operating facilities.

❖ Tanks that have held hazardous materials must be properly decommissioned in order to abate the residual hazards that they can present. An above-ground tank that is out of service for one year is assumed by the code to be at the end of its useful life and must be

INTERNATIONAL CODE COUNCIL®
Copyright © 2015 ICC. ALL RIGHTS RESERVED. Accessed by David Dammon on Jun 21, 2017 12:30:52 PM pursuant to License Agreement with ICC. No further reproduction or distribution authorized. ANY UNAUTHORIZED REPRODUCTION OR DISTRIBUTION IS A VIOLATION OF THE FEDERAL COPYRIGHT ACT AND THE LICENSE AGREEMENT, AND SUBJECT TO CIVIL AND CRIMINAL PENALTIES THEREUNDER.

properly removed and disposed. The exception recognizes that operating facilities such as refineries, tank farms, etc. may hold a tank in reserve out of service for more than one year. The status of tanks should be monitored through the operating permit required by Section 105.6.17(7).

5704.2.14 Removal and disposal of tanks. Removal and disposal of tanks shall comply with Sections 5704.2.14.1 and 5704.2.14.2.

❖ Removal and disposal of above-ground and underground tanks requires care because the vapors in the tank may be above the LFL for the flammable or combustible liquid. Operations to remove equipment or piping may involve heat that could ignite the vapor-air mixture or force the vapor-air mixture out of the tank where it may be ignited.

5704.2.14.1 Removal. Removal of above-ground and underground tanks shall be in accordance with all of the following:

1. Flammable and *combustible liquids* shall be removed from the tank and connected piping.
2. Piping at tank openings that is not to be used further shall be disconnected.
3. Piping shall be removed from the ground.

   Exception: Piping is allowed to be abandoned in place where the *fire code official* determines that removal is not practical. Abandoned piping shall be capped and safeguarded as required by the *fire code official*.
4. Tank openings shall be capped or plugged, leaving a $^1/_8$-inch to $^1/_4$-inch-diameter (3.2 mm to 6.4 mm) opening for pressure equalization.
5. Tanks shall be purged of vapor and inerted prior to removal.
6. All exterior above-grade fill and vent piping shall be permanently removed.

   Exception: Piping associated with bulk plants, terminal facilities and refineries.

❖ For tanks that will be removed and disposed, the flammable or combustible liquid is to be removed from the tank and piping and the tank must be purged. An inert gas, such as nitrogen or carbon dioxide, should be used to purge the tank, not air. Tank openings are to be capped or plugged. Vent openings are to be provided in capped tank openings as a vent for equalization of internal and atmospheric pressure. Abandoned piping above ground or in the ground is to be removed to the maximum practical extent to avoid being mistaken for active piping. Any piping approved by the fire code official to remain in the ground is to be capped.

5704.2.14.2 Disposal. Tanks shall be disposed of in accordance with federal, state and local regulations.

❖ Other federal, state and local regulations address the disposal of above-ground and underground tanks.

5704.2.15 Maintenance. Above-ground tanks, connected piping and ancillary equipment shall be maintained in a safe operating condition. Tanks shall be maintained in accordance with their listings. Damage to above-ground tanks, connected piping or ancillary equipment shall be repaired using materials having equal or greater strength and *fire resistance* or the equipment shall be replaced or taken out of service.

❖ This section addresses the general maintenance of above-ground flammable and combustible liquid tanks and associated equipment. Similar text appears in Section 5003.2.6 for general maintenance of equipment associated with hazardous materials. However, it is useful and appropriate to also have specific text to address the maintenance of above-ground flammable and combustible liquid tank systems available in Chapter 57 (see also commentary, Section 5003.2.6).

5704.3 Container and portable tank storage. Storage of flammable and *combustible liquids* in closed containers that do not exceed 60 gallons (227 L) in individual capacity and portable tanks that do not exceed 660 gallons (2498 L) in individual capacity, and limited transfers incidental thereto, shall comply with Sections 5704.3.1 through 5704.3.8.5.

❖ Storage containers not exceeding 60 gallons (227 L) and portable tanks not exceeding 660 gallons (2798 L) are regulated by this section. The use of these containers and portable tanks is limited to incidental transfers of flammable or combustible liquids.

5704.3.1 Design, construction and capacity of containers and portable tanks. The design, construction and capacity of containers for the storage of Class I, II and IIIA liquids shall be in accordance with this section and Section 9.4 of NFPA 30.

❖ Design, construction and capacity of containers and portable tanks are addressed in Section 9.4 of NFPA 30.

5704.3.1.1 Approved containers. Only *approved* containers and portable tanks shall be used.

❖ It is difficult at best to determine by examination that a container or portable tank complies with Section 9.4 of NFPA 30. One practical approval method is to require listed containers or portable tanks.

5704.3.2 Liquid storage cabinets. Where other sections of this code require that liquid containers be stored in storage cabinets, such cabinets and storage shall be in accordance with Sections 5704.3.2.1 through 5704.3.2.2.

❖ Containers and portable storage tanks are to be stored in liquid storage cabinets.

5704.3.2.1 Design and construction of storage cabinets. Design and construction of liquid storage cabinets shall be in accordance with Sections 5704.3.2.1.1 through 5704.3.2.1.4.

❖ Liquid storage cabinets are designed to protect containers and portable storage tanks and their contents from damage and ignition sources.

Liquid storage cabinets can be constructed of

INTERNATIONAL CODE COUNCIL®
Copyright © 2015 ICC. ALL RIGHTS RESERVED. Accessed by David Dammon on Jun 21, 2017 12:30:52 PM pursuant to License Agreement with ICC. No further reproduction or distribution authorized. ANY UNAUTHORIZED REPRODUCTION OR DISTRIBUTION IS A VIOLATION OF THE FEDERAL COPYRIGHT ACT AND THE LICENSE AGREEMENT, AND SUBJECT TO CIVIL AND CRIMINAL PENALTIES THEREUNDER.

metal or wood. Cabinets listed under UL 1275 and cabinets constructed according to this section are approved.

5704.3.2.1.1 Materials. Cabinets shall be *listed* in accordance with UL 1275, or constructed of *approved* wood or metal in accordance with the following:

1. Unlisted metal cabinets shall be constructed of steel having a thickness of not less than 0.044 inch (1.12 mm) (18 gage). The cabinet, including the door, shall be double walled with $1^1/_2$-inch (38 mm) airspace between the walls. Joints shall be riveted or welded and shall be tight fitting.
2. Unlisted wooden cabinets, including doors, shall be constructed of not less than 1-inch (25 mm) exterior grade plywood. Joints shall be rabbeted and shall be fastened in two directions with wood screws. Door hinges shall be of steel or brass. Cabinets shall be painted with an intumescent-type paint.

❖ Unlisted liquid storage cabinets and cabinet doors made of steel are to be double-wall cabinets with tight-fitting joints. Minimum steel thickness is 18 gage [0.044 inch (1.12 mm)].

Unlisted liquid storage cabinets and cabinet doors made of wood are to use rabbet joints fastened with wood screws in two directions to develop a tight joint. The minimum wood is to be 1-inch (25 mm) exterior-grade plywood. The cabinet is to be painted with an intumescent-type paint. The plywood grade will increase the cabinet's durability and the intumescent-type paint will reduce the ignition properties of the plywood.

5704.3.2.1.2 Labeling. Cabinets shall be provided with a conspicuous label in red letters on contrasting background that reads: FLAMMABLE—KEEP FIRE AWAY.

❖ Label the liquid storage cabinet to restrict ignition sources from the immediate area.

5704.3.2.1.3 Doors. Doors shall be well fitted, self-closing and equipped with a three-point latch.

❖ The door is to be self-closing and tight fitting. This prevents flammable or combustible liquid that has leaked or spilled in the storage cabinet from easily escaping the storage cabinet.

5704.3.2.1.4 Bottom. The bottom of the cabinet shall be liquid tight to a height of not less than 2 inches (51 mm).

❖ To control the flow of any spills, the cabinet is to be liquid tight for at least 2 inches (51 mm) from the bottom. This prevents flammable or combustible liquid that has leaked or spilled in the storage cabinet from easily escaping the storage cabinet.

5704.3.2.2 Capacity. The combined total quantity of liquids in a cabinet shall not exceed 120 gallons (454 L).

❖ The quantity of flammable and combustible liquids in a cabinet is not to exceed 120 gallons (454 L). Controlling the quantity of flammable and combustible liquids in a liquid storage cabinet controls the fire hazard by limiting the amount of liquid that can be involved in a single incident.

5704.3.3 Indoor storage. Storage of flammable and *combustible liquids* inside buildings in containers and portable tanks shall be in accordance with Sections 5704.3.3.1 through 5704.3.3.10.

Exceptions:

1. Liquids in the fuel tanks of motor vehicles, aircraft, boats or portable or stationary engines.
2. The storage of distilled spirits and wines in wooden barrels or casks.

❖ Indoor storage in containers or portable tanks is governed by this section with two exceptions.

The requirements of this section are not applicable to fuel in vehicles and portable engines. The small quantity of fuel and the protection provided by the fuel containers provide sufficient safety for these uses to be indoors.

Distilled spirits and wines in wooden barrels or casks are allowed indoors. This exception is covered in Section 5701.1.

5704.3.3.1 Portable fire extinguishers. *Approved* portable fire extinguishers shall be provided in accordance with specific sections of this chapter and Section 906.

❖ Portable fire extinguishers are useful for controlling small fires. Section 906 contains the size and spacing for portable fire extinguishers to be used on a fire involving flammable or combustible liquids that have a liquid depth of 0.25 inch (6.4 mm) or less.

5704.3.3.2 Incompatible materials. Materials that will react with water or other liquids to produce a hazard shall not be stored in the same room with flammable and combustible liquids except where stored in accordance with Section 5003.9.8.

❖ Materials that generate heat or become combustible when exposed to water or other liquids are not to be in the same room as flammable or combustible liquids. The exception is when one of the four methods of material separation from Section 5003.9.8 of the code is used. This is to remove a potential ignition reaction.

5704.3.3.3 Clear means of egress. Storage of any liquids, including stock for sale, shall not be stored near or be allowed to obstruct physically the route of egress.

❖ The means of egress must be usable to be effective. The placement of flammable or combustible liquids near or in the route used to exit the room or building produces a risk that is not acceptable.

5704.3.3.4 Empty containers or portable tank storage. The storage of empty tanks and containers previously used for the storage of flammable or *combustible liquids*, unless free from explosive vapors, shall be stored as required for filled containers and portable tanks. Portable tanks and containers,

INTERNATIONAL CODE COUNCIL®
Copyright © 2015 ICC. ALL RIGHTS RESERVED. Accessed by David Dammon on Jun 21, 2017 12:30:52 PM pursuant to License Agreement with ICC. No further reproduction or distribution authorized. ANY UNAUTHORIZED REPRODUCTION OR DISTRIBUTION IS A VIOLATION OF THE FEDERAL COPYRIGHT ACT AND THE LICENSE AGREEMENT, AND SUBJECT TO CIVIL AND CRIMINAL PENALTIES THEREUNDER.

when emptied, shall have the covers or plugs immediately replaced in openings.

❖ An empty container or portable tank is as dangerous and possibly more dangerous than a full container or portable storage tank. There is a possibility that the vapor-air mixture in the container or portable storage tank could reach the LFL. This potential danger requires that empty containers and portable tanks be handled and stored as if full of flammable or combustible liquid.

5704.3.3.5 Shelf storage. Shelving shall be of *approved* construction, adequately braced and anchored. Seismic requirements shall be in accordance with the *International Building Code*.

❖ Shelving for containers and portable tanks is to be adequate to support the container and portable tank under normal loads and seismic loads. Failure of shelving could cause damage to containers and portable tanks or leakage.

5704.3.3.5.1 Use of wood. Wood of not less than 1 inch (25 mm) nominal thickness is allowed to be used as shelving, racks, dunnage, scuffboards, floor overlay and similar installations.

❖ The minimum thickness of wood is to be 1 inch (25 mm).

5704.3.3.5.2 Displacement protection. Shelves shall be of sufficient depth and provided with a lip or guard to prevent individual containers from being displaced.

Exception: Shelves in storage cabinets or on laboratory furniture specifically designed for such use.

❖ Shelving must be designed and constructed to prevent containers or portable tanks from sliding off the shelving. A container or portable tank that falls from a shelf is subject to damage or leakage.

The exception covers shelving in storage cabinets, which may have locked doors or doors fitting snugly against the front of shelves to prevent containers from falling. Shelving that is part of laboratory furniture is not required to have a lip or guard because typically this kind of shelving would hold only small containers. Large containers or tanks would be floor mounted in nearly all laboratory settings. These kinds of shelves may also have other features to prevent containers or portable tanks from sliding or being knocked off the shelf.

5704.3.3.5.3 Orderly storage. Shelf storage of flammable and *combustible liquids* shall be maintained in an orderly manner.

❖ The handling of containers and portable tanks increases the possibility that an accident can occur. Containers and portable tanks arranged on shelves in an orderly manner make moving one container or portable tank to get to another unnecessary.

5704.3.3.6 Rack storage. Where storage on racks is allowed elsewhere in this code, a minimum 4-foot-wide (1219 mm) aisle shall be provided between adjacent rack sections and any adjacent storage of liquids. Main aisles shall be not less than 8 feet (2438 mm) wide.

❖ Rack storage indicates that a larger quantity of flammable and combustible liquids is available for use. Requiring a minimum aisle width of 4 feet (1219 mm) between racks and a minimum main aisle width of 8 feet (2438 mm) provides room to access the flammable and combustible liquids while reducing interference with other racks or other containers and portable tanks. In case of a fire, these aisles are wide enough to give emergency response personnel ready access to the fire and also serve as fire breaks that help prevent fire spread from rack to rack.

5704.3.3.7 Pile or palletized storage. Solid pile and palletized storage in liquid warehouses shall be arranged so that piles are separated from each other by not less than 4 feet (1219 mm). Aisles shall be provided and arranged so that no container or portable tank is more than 20 feet (6096 mm) from an aisle. Main *aisles* shall be not less than 8 feet (2438 mm) wide.

❖ The rationale for aisle widths is similar to that for rack storage. The 20-foot (6069 mm) restriction is intended to place containers and portable tanks within easy range of on-site fire-fighting equipment as well as minimize the number of items that must be moved to get to the desired container or portable tank.

5704.3.3.8 Limited combustible storage. Limited quantities of combustible commodities are allowed to be stored in liquid storage areas where the ordinary combustibles, other than those used for packaging the liquids, are separated from the liquids in storage by not less than 8 feet (2438 mm) horizontally, either by open aisles or by open racks, and where protection is provided in accordance with Chapter 9.

❖ Combustible products may be stored in a storage facility with flammable or combustible liquids because having a separate storage facility for these combustible materials may be impractical. The storage of these combustible materials with flammable and combustible liquids results in a source of ignition that must be regulated. The code recognizes a clearance of 8 feet (2438 mm) between the combustible materials and the flammable and combustible liquids, with the building fire protection systems required by Chapter 9, as being acceptable.

5704.3.3.9 Idle combustible pallets. Storage of empty or idle combustible pallets inside an unprotected liquid storage area shall be limited to a maximum pile size of 2,500 square feet (232 m^2) and to a maximum storage height of 6 feet (1829 mm). Storage of empty or idle combustible pallets inside a protected liquid storage area shall comply with NFPA 13. Pallet storage shall be separated from liquid storage by aisles that are not less than 8 feet (2438 mm) wide.

❖ The construction of combustible pallets with their large air spaces and volume of wood or plastic boards is a recipe for rapid consumption by fire. Though they present a substantial fuel load, combus-

INTERNATIONAL CODE COUNCIL®
Copyright © 2015 ICC. ALL RIGHTS RESERVED. Accessed by David Dammon on Jun 21, 2017 12:30:52 PM pursuant to License Agreement with ICC. No further reproduction or distribution authorized. ANY UNAUTHORIZED REPRODUCTION OR DISTRIBUTION IS A VIOLATION OF THE FEDERAL COPYRIGHT ACT AND THE LICENSE AGREEMENT, AND SUBJECT TO CIVIL AND CRIMINAL PENALTIES THEREUNDER.

tible pallets are often necessary for the stable storage of flammable and combustible liquids in containers. Ideally, idle combustible pallets should be stored outdoors; however, that is not always feasible and they may accumulate inside the building.

When stored indoors in unprotected (nonsprinklered) liquid storage areas, the volume of idle combustible pallets stored is regulated to limit the fire load. Note that the maximum volume of combustible pallets that are allowed to be stored is 15,000 cubic feet [2,500 square feet (232 m^2) in area by 6 feet (1829 mm) (425 m^3) high].

Conversely, in protected (sprinklered) liquid storage areas, when combustible pallets are no longer in use, the quantity is not controlled in light of the enhanced fire protection provided in accordance with Section 12.12 of NFPA 13.

The required separation aisles are intended to reduce the likelihood of fire spread from the pallet storage pile to rack- or pallet-stored flammable or combustible liquid containers.

5704.3.3.10 Containers in piles. Containers in piles shall be stacked in such a manner as to provide stability and to prevent excessive stress on container walls. Portable tanks stored more than one tier high shall be designed to nest securely, without dunnage. Material-handling equipment shall be suitable to handle containers and tanks safely at the upper tier level.

❖ The requirements in this section for stacking containers reduce the possibility of damaging the containers. Piling containers can damage them by placing loading on sides that were not intended to be loaded. Piles are subject to collapse if stress loads on containers become excessive. Collapse could cause the containers to rupture or rub against one another and bump one another, resulting in liquid spills and possibly sparking that could cause ignition. By controlling container stacks, this potential for damage is reduced.

Unless tanks are specifically designed to allow stacking, they must all be stored at ground level.

Requiring material-handling equipment to be designed specifically to handle the stored items is intended to increase safety and reduce the potential for serious accidents.

5704.3.4 Quantity limits for storage. Liquid storage quantity limitations shall comply with Sections 5704.3.4.1 through 5704.3.4.4.

❖ The quantity of flammable and combustible liquids in an area is limited to reduce the potential fire hazard.

5704.3.4.1 Maximum allowable quantity per control area. For occupancies other than Group M wholesale and retail sales uses, indoor storage of flammable and *combustible liquids* shall not exceed the *maximum allowable quantities per control area* indicated in Table 5003.1.1(1) and shall not exceed the additional limitations set forth in this section.

For Group M occupancy wholesale and retail sales uses, indoor storage of flammable and *combustible liquids* shall not exceed the *maximum allowable quantities per control area* indicated in Table 5704.3.4.1.

Storage of hazardous production material flammable and *combustible liquids* in Group H-5 occupancies shall be in accordance with Chapter 27.

❖ Whereas Table 5003.1.1(1) lists the MAQs for occupancies other than Group M, Table 5704.3.4.1 lists the flammable and combustible liquid MAQ for Group M occupancies. The term "wholesale" is intended to eliminate the question as to whether Group M provisions apply to stores where goods are displayed and sold in bulk packaging or where bulk-packaged merchandise is kept above customer displays, such as in the popular "big box" home-improvement centers and "club" stores. Conversely, these provisions would not apply to a storage warehouse with a customer service counter or similar arrangement. Such facilities should be regulated using standard MAQs for occupancies other than Group M and would not qualify for the special MAQs of this section. It is very important to note that any time the special MAQs for Group M wholesale and retail-sale uses are applied, the limitations on container types, capacities, fire protection and storage arrangements in Section 5704.3.6 must be applied.

TABLE 5704.3.4.1. See page 57-35.

❖ Group M (mercantile) occupancies used for wholesale and retail sales of flammable and combustible liquids are not designed and constructed for flammable and combustible liquids. Business establishments classified in Group M must be able to display flammable and combustible liquids for sale to the public. To control the potential hazard, the quantities of flammable and combustible liquids are limited in a control area. The limitations are based on the type of flammable and combustible liquid in the control area, the type of storage of the flammable and combustible liquids and the automatic sprinkler system installed in the mercantile occupancy.

The easier the flammable or combustible liquid is to ignite, the smaller the quantity of the liquid allowed. This table shows that the quantity of Class IA liquids is smaller than any of the flammable and combustible liquids, and Class III liquids are unlimited in a building with an automatic sprinkler system.

The automatic sprinkler system must be one complying with NFPA 13. Flammable and combustible liquids displayed on shelves of 6 feet (1829 mm) or less are treated as Ordinary Hazard Group 2, which would require a minimum sprinkler density of 0.19 gpm per square foot (7.7 L/min/m^2) over the most remote 1,500-square-foot (139 m^2) area.

Because the flammable and combustible liquid is more exposed in individual packaging, the sprinkler system can provide better fire control. If the flammable and combustible liquids are displayed or stored in cartons, pallets or racks, the minimum sprinkler density is 0.21 gpm per square foot (8.6 L/min/m^2) over

INTERNATIONAL CODE COUNCIL®
Copyright © 2015 ICC. ALL RIGHTS RESERVED. Accessed by David Dammon on Jun 21, 2017 12:30:52 PM pursuant to License Agreement with ICC. No further reproduction or distribution authorized. ANY UNAUTHORIZED REPRODUCTION OR DISTRIBUTION IS A VIOLATION OF THE FEDERAL COPYRIGHT ACT AND THE LICENSE AGREEMENT, AND SUBJECT TO CIVIL AND CRIMINAL PENALTIES THEREUNDER.

the most remote 1,500-square-foot (139 m^2) area. This type of display or storage is limited to a maximum height of 4 feet, 6 inches (1372 mm). This type of packaging is more difficult for the automatic sprinkler system to handle so a greater density is required. To allow a larger quantity of flammable and combustible liquids, the mercantile occupancy can use an automatic sprinkler system that complies with Table 5704.3.6.3(4), 5704.3.6.3(5) or 5704.3.7.5.1. These tables require the automatic sprinkler system to have a greater capacity for fire fighting.

5704.3.4.2 Occupancy quantity limits. The following limits for quantities of stored flammable or *combustible liquids* shall not be exceeded:

1. Group A occupancies: Quantities in Group A occupancies shall not exceed that necessary for demonstration, treatment, laboratory work, maintenance purposes and operation of equipment, and shall not exceed quantities set forth in Table 5003.1.1(1).
2. Group B occupancies: Quantities in drinking, dining, office and school uses within Group B occupancies shall not exceed that necessary for demonstration, treatment, laboratory work, maintenance purposes and operation of equipment, and shall not exceed quantities set forth in Table 5003.1.1(1).
3. Group E occupancies: Quantities in Group E occupancies shall not exceed that necessary for demonstration, treatment, laboratory work, maintenance purposes and operation of equipment, and shall not exceed quantities set forth in Table 5003.1.1(1).
4. Group F occupancies: Quantities in dining, office, and school uses within Group F occupancies shall not exceed that necessary for demonstration, laboratory work, maintenance purposes and operation of equipment, and shall not exceed quantities set forth in Table 5003.1.1(1).
5. Group I occupancies: Quantities in Group I occupancies shall not exceed that necessary for demonstration, laboratory work, maintenance purposes and operation of equipment, and shall not exceed quantities set forth in Table 5003.1.1(1).
6. Group M occupancies: Quantities in dining, office, and school uses within Group M occupancies shall not exceed that necessary for demonstration, laboratory work, maintenance purposes and operation of equipment, and shall not exceed quantities set forth in Table 5003.1.1(1). The maximum allowable quantities for storage in wholesale and retail sales areas shall be in accordance with Section 5704.3.4.1.
7. Group R occupancies: Quantities in Group R occupancies shall not exceed that necessary for maintenance purposes and operation of equipment, and shall not exceed quantities set forth in Table 5003.1.1(1).
8. Group S occupancies: Quantities in dining and office uses within Group S occupancies shall not exceed that necessary for demonstration, laboratory work, maintenance purposes and operation of equipment, and shall not exceed quantities set forth in Table 5003.1.1(1).

❖ Flammable and combustible liquids may be used in occupancies other than Group H. These other occupancies are not designed specifically for flammable and combustible liquids, so there are limitations on the quantities that can be in use or stored in these occupancies. The use of flammable and combustible liquids must be consistent with the function of the occupancy. This prevents these other occupancies from becoming Group H occupancies. The quantities of flammable and combustible liquid are listed in Table 5003.1.1(1). The occupancies covered by these limitations are Groups A, B, E, F, I, M, R and S.

5704.3.4.3 Quantities exceeding limits for control areas. Quantities exceeding those allowed in *control areas* set forth

TABLE 5704.3.4.1
MAXIMUM ALLOWABLE QUANTITY PER CONTROL AREA OF FLAMMABLE AND COMBUSTIBLE LIQUIDS IN WHOLESALE AND RETAIL SALES OCCUPANCIES[a]

TYPE OF LIQUID	MAXIMUM ALLOWABLE QUANTITY PER CONTROL AREA (gallons)		
	Sprinklered[b] in accordance with footnote densities and arrangements	Sprinklered in accordance with Tables 5704.3.6.3(4) through 5704.3.6.3(8) and Table 5704.3.7.5.1	Nonsprinklered
Class IA	60	60	30
Class IB, IC, II and IIIA	7,500[c]	15,000[c]	1,600
Class IIIB	Unlimited	Unlimited	13,200

For SI: 1 foot = 304.8 mm, 1 square foot = 0.0929 m^2, 1 gallon = 3.785 L, 1 gallon per minute per square foot = 40.75 L/min/m^2.

a. Control areas shall be separated from each other by not less than a 1-hour *fire barrier*.

b. To be considered as sprinklered, a building shall be equipped throughout with an approved automatic sprinkler system with a design providing minimum densities as follows:
   1. For uncartoned commodities on shelves 6 feet or less in height where the ceiling height does not exceed 18 feet, quantities are those allowed with a minimum sprinkler design density of Ordinary Hazard Group 2.
   2. For cartoned, palletized or racked commodities where storage is 4 feet 6 inches or less in height and where the ceiling height does not exceed 18 feet, quantities are those allowed with a minimum sprinkler design density of 0.21 gallon per minute per square foot over the most remote 1,500-square-foot area.

c. Where wholesale and retail sales or storage areas exceed 50,000 square feet in area, the maximum allowable quantities are allowed to be increased by 2 percent for each 1,000 square feet of area in excess of 50,000 square feet, up to not more than 100 percent of the table amounts. A control area separation is not required. The cumulative amounts, including amounts attained by having an additional control area, shall not exceed 30,000 gallons.

INTERNATIONAL CODE COUNCIL®
Copyright © 2015 ICC. ALL RIGHTS RESERVED. Accessed by David Dammon on Jun 21, 2017 12:30:52 PM pursuant to License Agreement with ICC. No further reproduction or distribution authorized. ANY UNAUTHORIZED REPRODUCTION OR DISTRIBUTION IS A VIOLATION OF THE FEDERAL COPYRIGHT ACT AND THE LICENSE AGREEMENT, AND SUBJECT TO CIVIL AND CRIMINAL PENALTIES THEREUNDER.

in Section 5704.3.4.1 shall be in liquid storage rooms or liquid storage warehouses in accordance with Sections 5704.3.7 and 5704.3.8.

❖ It is possible to have a quantity of flammable and combustible liquids greater than allowed in Section 5704.3.4.1. To control the potential hazard, these quantities must be given additional protection by being in specifically designed liquid storage rooms.

5704.3.4.4 Liquids for maintenance and operation of equipment. In all occupancies, quantities of flammable and *combustible liquids* in excess of 10 gallons (38 L) used for maintenance purposes and the operation of equipment shall be stored in liquid storage cabinets in accordance with Section 5704.3.2. Quantities not exceeding 10 gallons (38 L) are allowed to be stored outside of a cabinet where in *approved* containers located in private garages or other *approved* locations.

❖ The operation of a building will require the use of flammable and combustible liquids for maintenance. A quantity of 10 gallons (38 L) or less of flammable and combustible liquids is recognized as practical to allow the use of such liquids for maintenance without requiring fire protection. See also Section 313.1 and its commentary for additional regulations on this topic.

5704.3.5 Storage in control areas. Storage of flammable and *combustible liquids* in *control areas* shall be in accordance with Sections 5704.3.5.1 through 5704.3.5.4.

❖ The location of flammable and combustible liquids in a control area can increase the fire hazard.

5704.3.5.1 Basement storage. Class I liquids shall be allowed to be stored in *basements* in amounts not exceeding the *maximum allowable quantity per control area* for use-*open systems* in Table 5003.1.1(1), provided that automatic suppression and other fire protection are provided in accordance with Chapter 9. Class II and IIIA liquids shall also be allowed to be stored in *basements*, provided that automatic suppression and other fire protection are provided in accordance with Chapter 9.

❖ The storage of Class I liquids in basements in amounts not exceeding the MAQ in Table 5003.1.1(1) (including the increases allowed by the table notes) is allowed by this section. Since storage is typically thought to be a safer condition than any use condition (no transport, no transfer, etc.), storage in a basement of amounts at least equal to what is allowed for use-open system MAQs in a basement (Section 5705.3.7.2) is allowed. This reflects actual practice in the field with no known loss experience indicating that it has been a problem. Compliance with control area requirements must still be achieved, the MAQ limitations must still apply and the basement must be provided with a fire suppression system and other required protection called for in Chapter 9. It also enhances the level of safety by eliminating the need to transport Class I liquids vertically in buildings (out of the basement) after use is complete.

Class II and IIIA liquids are also permitted in a basement provided with a fire suppression system and other required protection called for in Chapter 9.

5704.3.5.2 Storage pile heights. Containers having less than a 30-gallon (114 L) capacity that contain Class I or II liquids shall not be stacked more than 3 feet (914.4 mm) or two containers high, whichever is greater, unless stacked on fixed shelving or otherwise satisfactorily secured. Containers of Class I or II liquids having a capacity of 30 gallons (114 L) or more shall not be stored more than one container high. Containers shall be stored in an upright position.

❖ The storage height of containers of flammable and combustible liquids increases the risk by having a larger quantity per floor area and possible damage to the container. The stacking operation and the weight of containers can damage the containers, creating leaks.

5704.3.5.3 Storage distance from ceilings and roofs. Piles of containers or portable tanks shall not be stored closer than 3 feet (914 mm) to the nearest beam, chord, girder or other obstruction, and shall be 3 feet (914 mm) below sprinkler deflectors or discharge orifices of water spray or other overhead *fire protection system*.

❖ The storage of containers or portable tanks near a ceiling or roof can create several problems. The high fire load that close to a structural member could overpower the fire protection of the structure or membrane, allowing the fire to spread to another level or cause a collapse. The height could reduce the effectiveness of the automatic sprinkler system. If the flammable and combustible liquid containers and portable tanks are stacked too high, the sprinkler heads may not be able to effectively apply water to the fire. The containers and portable tanks may be above the sprinkler spray or the containers and portable tanks may shield areas from the spray. Note that the general storage clearances contained in Section 315.3.1 are superceded by these specific requirements as provided in Section 102.9.

5704.3.5.4 Combustible materials. In areas that are inaccessible to the public, Class I, II and IIIA liquids shall not be stored in the same pile or rack section as ordinary combustible commodities unless such materials are packaged together as kits.

❖ The mixing of flammable and combustible liquid containers and portable tanks with other combustibles can place the flammable and combustible liquid in the vicinity of a possible ignition source and a fuel source.

5704.3.6 Wholesale and retail sales uses. Flammable and combustible liquids in Group M occupancy wholesale and retail sales uses shall be in accordance with Sections 5704.3.6.1 through 5704.3.6.5, or Sections 10.10.2, 12.3.8,

INTERNATIONAL CODE COUNCIL®
Copyright © 2015 ICC. ALL RIGHTS RESERVED. Accessed by David Dammon on Jun 21, 2017 12:30:52 PM pursuant to License Agreement with ICC. No further reproduction or distribution authorized. ANY UNAUTHORIZED REPRODUCTION OR DISTRIBUTION IS A VIOLATION OF THE FEDERAL COPYRIGHT ACT AND THE LICENSE AGREEMENT, AND SUBJECT TO CIVIL AND CRIMINAL PENALTIES THEREUNDER.

16.4.1 through 16.4.3, 16.5.1 through 16.5.2.12, Tables 16.5.2.1 through 16.5.2.12, and Figures 16.4.1(a) through 16.14.1(c) of NFPA 30.

❖ A mercantile (Group M) occupancy is not designed to address the fire hazards associated with flammable and combustible liquids, so the limited quantities, specific packing requirements and handling are used to control the fire hazard.

5704.3.6.1 Container type. Containers for Class I liquids shall be metal.

Exception: In sprinklered buildings, an aggregate quantity of 120 gallons (454 L) of water-miscible Class IB and Class IC liquids is allowed in nonmetallic containers, each having a capacity of 16 ounces (0.473 L) or less.

❖ Metal containers are required for Class I liquids. Class II and III liquids may be stored in any container designed for that specific liquid.

The exception recognizes that the additional fire protection provided by an automatic sprinkler system will allow an aggregate quantity of 120 gallons (454 L) of Class IB and IC liquids to be in individual noncombustible containers of 16 ounces (0.473 L) or less. The lower flash point of these Class I liquids, combined with the individual packaging in an automatic sprinkler building, is the rationale for this exception.

5704.3.6.2 Container capacity. Containers for Class I liquids shall not exceed a capacity of 5 gallons (19 L).

Exception: Metal containers not exceeding 55 gallons (208 L) are allowed to store up to 240 gallons (908 L) of the *maximum allowable quantity per control area* of Class IB and IC liquids in a control area. The building shall be equipped throughout with an *approved* automatic sprinkler system in accordance with Table 5704.3.4.1. The containers shall be provided with plastic caps without cap seals and shall be stored upright. Containers shall not be stacked or stored in racks and shall not be located in areas accessible to the public.

❖ Limiting the capacity of containers in a wholesale or retail establishment reduces the size of a potential spill or fire.

The lengthy and detailed exception recognizes that sprinklers provide additional protection so that a greater quantity of flammable and combustible liquids can be placed in the wholesale or retail establishment. Even with this greater fire protection, the flammable and combustible liquids must have the physical property that would allow them to be mixed with water. This ability will allow the sprinkler system to dilute the flammable and combustible liquid. Restrictions on the size of individual containers control the volume of Class IB and IC liquids that can be exposed at one time.

5704.3.6.3 Fire protection and storage arrangements. Fire protection and container storage arrangements shall be in accordance with Table 5704.3.6.3(1) or the following:

1. Storage on shelves shall not exceed 6 feet (1829 mm) in height, and shelving shall be metal.
2. Storage on pallets or in piles greater than 4 feet 6 inches (1372 mm) in height, or where the ceiling exceeds 18 feet (5486 mm) in height, shall be protected in accordance with Table 5704.3.6.3(4), and the storage heights and arrangements shall be limited to those specified in Table 5704.3.6.3(2).
3. Storage on racks greater than 4 feet 6 inches (1372 mm) in height, or where the ceiling exceeds 18 feet (5486 mm) in height shall be protected in accordance with Tables 5704.3.6.3(5), 5704.3.6.3(6), and 5704.3.6.3(7) as appropriate, and the storage heights and arrangements shall be limited to those specified in Table 5704.3.6.3(3).

Combustible commodities shall not be stored above flammable and *combustible liquids.*

❖ The methods and the maximum height of storage are intended to control the flammable and combustible liquids so that damage to containers is limited and fire protection equipment adequately protects flammable and combustible liquids and controls fire.

TABLE 5704.3.6.3(1). See page 57-41.

❖ The storage height of flammable and combustible liquids has an effect on the ability of the automatic sprinkler system to control a fire. The first to be considered is storage: the higher the storage, the greater the quantity. By limiting the height of storage, the code limits the volume of flammable and combustible liquids under a sprinkler head. Because the automatic sprinkler system is designed to deliver a minimum density of water per square foot of area, the less flammable and combustible the liquid is, the easier it will be for the automatic sprinkler system to control the fire.

The second function of limiting the height of storage is to make certain the automatic sprinkler system will cover the flammable and combustible liquids. The upper containers of flammable and combustible liquids could act as a shield for lower containers. This shielding could divert the water spray from the sprinkler head away from the fire. With the automatic sprinkler system shielded during early development of the fire, the fire could develop to a stage that the automatic sprinkler system would not be effective.

Note a helps to ensure that storage heights will not exceed the capabilities of the level of sprinkler protection provided. It also clarifies that protection schemes demonstrated with metallic containers and portable tanks are not suitable for nonmetallic containers and

INTERNATIONAL CODE COUNCIL®
Copyright © 2015 ICC. ALL RIGHTS RESERVED. Accessed by David Dammon on Jun 21, 2017 12:30:52 PM pursuant to License Agreement with ICC. No further reproduction or distribution authorized. ANY UNAUTHORIZED REPRODUCTION OR DISTRIBUTION IS A VIOLATION OF THE FEDERAL COPYRIGHT ACT AND THE LICENSE AGREEMENT, AND SUBJECT TO CIVIL AND CRIMINAL PENALTIES THEREUNDER.

portable tanks, which present a much more significant fire challenge. Without this clarification, which correlates with NFPA 30, the height limits established by the tables place sprinklered buildings at risk of having the sprinkler system fail to control a fire because the protection scheme might not be properly matched with stored commodities.

TABLE 5704.3.6.3(2). See page 57-42.

❖ The palletized or solid-pile storage of flammable and combustible liquids in liquid storage rooms and warehouses is regulated by floor, type of container, maximum storage height, maximum quantity per pile and maximum quantity per room. The table restricts the storage by floor to require that the basement not be used for the storage of Class I liquids. The accumulation of vapors from Class I liquids in a basement with a low ignition point for these vapors is not an acceptable situation.

The type of container is regulated to control the problem of leakage and damage to the container caused by handling.

The storage height is used to control the quantity of flammable and combustible liquids and to provide access to the flammable and combustible liquids for water spray from the automatic sprinkler system.

The maximum quantity per pile is to limit the volume of flammable and combustible liquids so that the automatic sprinkler system can control a fire based on the design density of the automatic sprinkler system.

The maximum quantity per room of flammable and combustible liquids is to control the volume of flammable and combustible liquids with the automatic sprinkler system.

The sprinkler system is designed for a minimum flow rate. If the volume of flammable and combustible liquids in a room is not regulated, the room could contain more flammable and combustible liquids than the design flow rate of the automatic sprinkler system could handle.

Note a recognizes that since liquid storage warehouses are dedicated to storage of those materials only, unlimited quantities are acceptable based on Section 5704.3.8.1. See the commentary to Section 5704.3.8.1 for further discussion. This is consistent with Table 5704.3.6.3(3), Note a.

Note b helps to ensure that storage heights will not exceed the capabilities of the level of sprinkler protection provided. It also clarifies that protection schemes demonstrated with metallic containers and portable tanks are not suitable for nonmetallic containers and portable tanks, which present a much more significant fire challenge. Without this clarification, which correlates with NFPA 30, the height limits established by the tables place sprinklered buildings at risk of having the sprinkler system fail to control a fire because the protection scheme might not be properly matched with stored commodities.

Note c recognizes the enhanced level of safety provided by smaller containers.

Note d recognizes that low-flash point, unsaturated polyester resins (UPRs) have a fire behavior more closely resembling that of Class IIIB liquids than Class I liquids, and that sprinkler protection schemes more closely associated with protection of Class III liquids can satisfactorily protect UPRs packaged in relieving-style metal drums. The American Composites Manufacturing Association recently completed a full-scale, two-phase fire test series to demonstrate the safety of UPR storage when protected in that manner.

Phase I of the test program, which included three tests, was conducted at Omega Point Laboratories in San Antonio, Texas. These tests involved totally engulfing single 55-gallon (208 L) relieving-style drums containing a representative UPR in a UPR liquid pool fire to determine the behavior of the commodity in extreme fire conditions. The results of the Phase I tests were considered successful in demonstrating that UPRs are a unique commodity that do not behave like “typical” flammable or combustible liquids in a fire condition because of their high viscosity and density. During the Phase I tests, no significant increases in internal drum pressure were observed in any case even though drum contents completely polymerized during the tests, changing from a liquid to a dense jelly-like consistency.

Phase II tests were conducted at Southwest Research Institute in San Antonio, Texas, in a simulated warehouse environment, and included arrangements ranging in size from a single pallet load to a three-high pallet array. These tests successfully demonstrated that UPRs respond better to the application of sprinkler water than “typical” low-flash point flammable liquids. The unique fire behavior, which resembled that of a Class IIIB liquid as opposed to a Class IC liquid (which is the true classification based on the flash point), can be attributed to at least two factors. First, UPRs are more viscous than typical fluids, which tends to limit the size of associated pool fires, and second, UPRs are heavier than water, which allows sprinkler discharge to cool the surface of a burning pool fire more efficiently than with typical liquids.

Given that the testing conducted clearly demonstrated that a 10-foot-high (3048 mm) array of UPR can be satisfactorily protected with a water-only sprinkler system discharging at a rate of 0.45 gpm per square foot (18 L/min/m^2); and the testing clearly demonstrated that pile length and width and the associated liquid volume were not factors in determining the effectiveness of sprinkler protection, it is appropriate to allow limits on storage arrays of UPRs to parallel the code requirements for Class III liquids, rather than Class I liquids. Accordingly, the pile quantity limits for UPRs in containers are those currently listed in this table for Class III liquids. However, the recom-

INTERNATIONAL CODE COUNCIL®
Copyright © 2015 ICC. ALL RIGHTS RESERVED. Accessed by David Dammon on Jun 21, 2017 12:30:52 PM pursuant to License Agreement with ICC. No further reproduction or distribution authorized. ANY UNAUTHORIZED REPRODUCTION OR DISTRIBUTION IS A VIOLATION OF THE FEDERAL COPYRIGHT ACT AND THE LICENSE AGREEMENT, AND SUBJECT TO CIVIL AND CRIMINAL PENALTIES THEREUNDER.

mended height limit is restricted to 10 feet (3048 mm) because that was the height limit utilized in the referenced fire tests.

It is also important to note that there is a code-based precedence for UPRs to be uniquely regulated as a Class IIIB liquid, even though the actual flash point-based classification is ordinarily Class IC. Under NFPA 30, UPRs were generally regarded as "viscous" liquids, which allowed them to be protected as Class IIIB liquids even though the actual designation was Class IC.

TABLE 5704.3.6.3(3). See page 57-42.

❖ The storage of flammable and combustible liquids in liquid storage rooms and warehouses is regulated by floor, type of rack, maximum storage height and maximum quantity per room. The table restricts the storage by floor to ensure that the basement is not used for the storage of Class I liquids. The accumulation of vapors from Class I liquids in a basement with a low ignition point for these vapors is not an acceptable situation.

The storage height is used to control the quantity of flammable and combustible liquids and to provide access to the flammable and combustible liquids for water spray from the automatic sprinkler system.

The maximum quantity per room of flammable and combustible liquids is to control the volume of flammable and combustible liquids with the automatic sprinkler system.

The automatic sprinkler system is designed for a minimum flow rate. If the volume of flammable and combustible liquids in a room is not regulated, the room could contain more flammable and combustible liquids than the design flow rate of the automatic sprinkler system could handle.

Note a recognizes that since liquid storage warehouses are dedicated to storage of those materials only, unlimited quantities are acceptable based on Section 5704.3.8.1. See the commentary to Section 5704.3.8.1 for further discussion. This is consistent with Table 5704.3.6.3(2), Note a.

Note b helps to ensure that storage heights will not exceed the capabilities of the level of sprinkler protection provided. It also clarifies that protection schemes demonstrated with metallic containers and portable tanks are not suitable for nonmetallic containers and portable tanks, which present a much more significant fire challenge. Without this clarification, which correlates with NFPA 30, the height limits established by the tables place sprinklered buildings at risk of having the sprinkler system fail to control a fire because the protection scheme might not be properly matched with stored commodities.

TABLE 5704.3.6.3(4). See page 57-43.

❖ The quantity of flammable and combustible liquids can be increased if they are in containers and arranged as described in this table and the sprinkler system criteria are increased to comply with this table. The containers and arrangements control the quantity of flammable and combustible liquid that is exposed. The sprinkler system criteria have been increased to provide a higher density, larger water demand and longer duration than normally required under NFPA 13. These additional sprinkler requirements permit an increase in quantity of flammable and combustible liquids that are permitted per control area in wholesale and retail uses.

Note that the provisions in this table are based on fire tests or historic protection schemes that were based on protection of metal containers and portable tanks. The schemes are inadequate for protection of liquids in containers and portable tanks constructed of other materials, such as plastic. NFPA 30 includes a limited number of protection schemes for nonmetal containers, and those schemes, which require far more protection than the code prescribes in Tables 5704.3.6.3(4) through (8), can still be recognized through the application of Section 5704.3.7.5.1 or 5704.3.8.4. Storage configurations that do not have demonstrated or code-recognized protection schemes, such as putting plastic containers into an area protected for metallic containers, should not be permitted.

TABLE 5704.3.6.3(5). See page 57-44.

❖ Rack storage is designed for easy access by personnel and to contain huge quantities of goods that are stored to great heights. The rack storage arrangement maximizes the fuel surface area accessible to flames. Fire can rapidly spread up between containers. Heat from flames burning on one surface augments the heat transfer from the flames burning on the opposing surface. Rack storage geometry can be the most hazardous of all fire geometries. High-rack storage is often protected with in-rack sprinklers inside or on the face of the high-rack storage. The storage of flammable and combustible liquids can be as high as 25 feet (7620 mm) because the containers have been limited in size to control volume in individual containers, and the sprinkler system requirements have been increased to provide more fire protection.

Note that the provisions in this table are based on fire tests or historic protection schemes that were based on protection of metal containers and portable tanks. The schemes are inadequate for protection of liquids in containers and portable tanks constructed of other materials, such as plastic. NFPA 30 includes a limited number of protection schemes for nonmetal containers, and those schemes, which require far more protection than the code prescribes in Tables 5704.3.6.3(4) through (8), can still be recognized through the application of Section 5704.3.7.5.1 or 5704.3.8.4. Storage configurations that do not have demonstrated or code-recognized protection schemes, such as putting plastic containers into an area protected for metallic containers, should not be permitted.

INTERNATIONAL CODE COUNCIL®
Copyright © 2015 ICC. ALL RIGHTS RESERVED. Accessed by David Dammon on Jun 21, 2017 12:30:52 PM pursuant to License Agreement with ICC. No further reproduction or distribution authorized. ANY UNAUTHORIZED REPRODUCTION OR DISTRIBUTION IS A VIOLATION OF THE FEDERAL COPYRIGHT ACT AND THE LICENSE AGREEMENT, AND SUBJECT TO CIVIL AND CRIMINAL PENALTIES THEREUNDER.

TABLE 5704.3.6.3(6). See page 57-45.

❖ Rack storage is designed for easy access by personnel and to contain huge quantities of goods that are stored to great heights. The rack storage arrangement maximizes the fuel surface area accessible to flames. Fire can rapidly spread up between containers. Heat from flames burning on one surface augments the heat transfer from the flames burning on the opposing surface. Rack storage geometry can be the most hazardous of all fire geometries. High-rack storage is often protected with in-rack sprinklers inside or on the face of the high-rack storage. The storage of Class I and II liquids up to 25 feet (7620 mm) and for Class III liquids up to 40 feet (12 192 mm) in containers larger than 5-gallon (19 L) capacity is similar to Table 5704.3.6.3(5), except the sprinkler system requirements have been increased to provide more fire protection.

Note that the provisions in this table are based on fire tests or historic protection schemes that were based on protection of metal containers and portable tanks. The schemes are inadequate for protection of liquids in containers and portable tanks constructed of other materials, such as plastic. NFPA 30 includes a limited number of protection schemes for nonmetal containers, and those schemes, which require far more protection than the code prescribes in Tables 5704.3.6.3(4) through (8), can still be recognized through the application of Section 5704.3.7.5.1 or 5704.3.8.4. Storage configurations that do not have demonstrated or code-recognized protection schemes, such as putting plastic containers into an area protected for metallic containers, should not be permitted.

TABLE 5704.3.6.3(7). See page 57-46.

❖ Rack storage is designed for easy access by personnel and to contain huge quantities of goods that are stored to great heights. The rack storage arrangement maximizes the fuel surface area accessible to flames. Fire can rapidly spread up between containers. Heat from flames burning on one surface augments the heat transfer from the flames burning on the opposing surface. Rack storage geometry can be the most hazardous of all fire geometries. High-rack storage (see also Chapter 23) is often protected with in-rack sprinklers inside or on the face of the high-rack storage. Aqueous film-forming foam (AFFF) is effective because the film forms a barrier that starves the fire for oxygen, cools the hydrocarbon and suppresses the release of flammable vapors. The increased fire protection provided by the additional requirements on the AFFF above that required under NFPA 13 allows the storage of flammable and combustible liquids with in-rack storage.

Note that the provisions in this table are based on fire tests or historic protection schemes that were based on protection of metal containers and portable tanks. The schemes are inadequate for protection of liquids in containers and portable tanks constructed of other materials, such as plastic. NFPA 30 includes a limited number of protection schemes for nonmetal containers, and those schemes, which require far more protection than the code prescribes in Tables 5704.3.6.3(4) through (8), can still be recognized through the application of Section 5704.3.7.5.1 or 5704.3.8.4. Storage configurations that do not have demonstrated or code-recognized protection schemes, such as putting plastic containers into an area protected for metallic containers, should not be permitted.

TABLE 5704.3.6.3(8). See page 57-46.

❖ Group M (mercantile) occupancies used for wholesale and retail sales of flammable and combustible liquids are not designed and constructed for flammable and combustible liquids. Table 5704.3.4.1 permits the display and storage of Class I liquid if the automatic fire protection system complies with this table. The limited container size, the limited volume under Table 5704.3.4.1 and the sprinkler protection provided under this table permit display and storage in racks up to 6 feet, 6 inches (1981 mm) high.

Rack storage is designed for easy access by personnel and to contain huge quantities of goods that are stored to great heights. The rack storage arrangement maximizes the fuel surface area accessible to flames. Fire can rapidly spread up between containers. Heat from flames burning on one surface augments the heat transfer from the flames burning on the opposing surface. Rack storage geometry can be the most hazardous of all fire geometries. High-rack storage is often protected with in-rack sprinklers inside or on the face of the high-rack storage. Double-row racks are rack storage that has two racks placed back to back. The double-row rack storage requires additional sprinkler heads to control fire between containers within the rack storage. This table provides the requirements for the additional sprinkler heads and increases the sprinkler density.

Note that the provisions in this table are based on fire tests or historic protection schemes that were based on protection of metal containers and portable tanks. The schemes are inadequate for protection of liquids in containers and portable tanks constructed of other materials, such as plastic. NFPA 30 includes a limited number of protection schemes for nonmetal containers, and those schemes, which require far more protection than the code prescribes in Tables 5704.3.6.3(4) through (8), can still be recognized through the application of Sections 5704.3.7.5.1 or 5704.3.8.4. Storage configurations that do not have demonstrated or code-recognized protection schemes, such as putting plastic containers into an area protected for metallic containers, should not be permitted.

5704.3.6.4 Warning for containers. Cans, containers and vessels containing flammable liquids or flammable liquid

INTERNATIONAL CODE COUNCIL®
Copyright © 2015 ICC. ALL RIGHTS RESERVED. Accessed by David Dammon on Jun 21, 2017 12:30:52 PM pursuant to License Agreement with ICC. No further reproduction or distribution authorized. ANY UNAUTHORIZED REPRODUCTION OR DISTRIBUTION IS A VIOLATION OF THE FEDERAL COPYRIGHT ACT AND THE LICENSE AGREEMENT, AND SUBJECT TO CIVIL AND CRIMINAL PENALTIES THEREUNDER.

compounds or mixtures offered for sale shall be provided with a warning indicator, painted or printed on the container and stating that the liquid is flammable, and shall be kept away from heat and an open flame.

❖ Individual containers and their packaging must bear labels warning handling personnel and the public of flammable and combustible liquids. This warning is to prevent the containers from being accidently or deliberately exposed to heat or open flame.

5704.3.6.5 Storage plan. Where required by fire the code official, *aisle* and storage plans shall be submitted in accordance with Chapter 50.

❖ The storage plan would be needed if there are conditions that the fire code official believes would lead to the mishandling of flammable and combustible liquids. Such conditions include, but are not limited to, quantity of flammable and combustible liquids, the turnover rate of flammable and combustible liquids and the turnover rate of personnel.

5704.3.7 Liquid storage rooms. Liquid storage rooms shall comply with Sections 5704.3.7.1 through 5704.3.7.5.2.

❖ Liquid storage rooms are protected locations for the storage of flammable and combustible liquids in occupancies normally not associated with the use and storage of flammable and combustible liquids. Liquid storage rooms are intended to store flammable and combustible liquids that exceed the quantities permitted in a control area.

5704.3.7.1 General. Quantities of liquids exceeding those set forth in Section 5704.3.4.1 for storage in *control areas* shall be stored in a liquid storage room complying with this section and constructed and separated as required by the *International Building Code*.

❖ Liquid storage rooms are intended to store flammable and combustible liquids that exceed the quantities permitted in a control area.

5704.3.7.2 Quantities and arrangement of storage. The quantity limits and storage arrangements in liquid storage rooms shall be in accordance with Tables 5704.3.6.3(2) and 5704.3.6.3(3) and Sections 5704.3.7.2.1 through 5704.3.7.2.3.

❖ Liquid storage rooms are limited in the quantity of flammable and combustible liquids and the method of storage of flammable and combustible liquids. The maximum height and maximum volume per pile are limited by Tables 5704.3.6.3(2) and 5704.3.6.3(3).

5704.3.7.2.1 Mixed storage. Where two or more classes of liquids are stored in a pile or rack section, both of the following shall apply:

1. The quantity in that pile or rack shall not exceed the smallest of the maximum quantities for the classes of liquids stored in accordance with Table 5704.3.6.3(2) or 5704.3.6.3(3).
2. The height of storage in that pile or rack shall not exceed the smallest of the maximum heights for the classes of liquids stored in accordance with Table 5704.3.6.3(2) or 5704.3.6.3(3).

❖ A liquid storage room is intended for the storage of a maximum quantity of flammable and combustible liquid. When more than one class of flammable and combustible liquid is stored in the same room, the aggregate quantity of flammable and combustible liquids cannot exceed the smallest quantity allowed in Table 5704.3.6.3(2) or 5704.3.6.3(3) for the flammable and combustible liquids being stored:

1. Because the liquid storage room is adequate for a maximum volume of a flammable or combustible liquid, the liquid storage room will be adequate for the aggregate quantity based on the allowable volume of the most hazardous flammable and combustible liquid being stored.
2. Because the liquid storage room is adequate for a maximum height of a flammable or combustible liquid, the liquid storage room will be adequate for the height based on the allowable height of the most hazardous flammable and combustible liquid being stored.

TABLE 5704.3.6.3(1)
MAXIMUM STORAGE HEIGHT IN CONTROL AREA

TYPE OF LIQUID	NONSPRINKLERED AREA (feet)	SPRINKLERED AREA[a] (feet)	SPRINKLERED WITH IN-RACK PROTECTION[a, b] (feet)
Flammable liquids:			
Class IA	4	4	4
Class IB	4	8	12
Class IC	4	8	12
Combustible liquids:			
Class II	6	8	12
Class IIIA	8	12	16
Class IIIB	8	12	20

For SI: 1 foot = 304.8 mm.

a In buildings protected by an automatic sprinkler system, the storage height for containers and portable tanks shall not exceed the maximum storage height permitted for the fire protection scheme set forth in NFPA 30 or the maximum storage height demonstrated in a full-scale fire test, whichever is greater. NFPA 30 criteria and fire test results for metallic containers and portable tanks shall not be applied to nonmetallic containers and portable tanks.

b. In-rack protection shall be in accordance with Table 5704.3.6.3(5), 5704.3.6.3(6) or 5704.3.6.3(7).

INTERNATIONAL CODE COUNCIL®
Copyright © 2015 ICC. ALL RIGHTS RESERVED. Accessed by David Dammon on Jun 21, 2017 12:30:52 PM pursuant to License Agreement with ICC. No further reproduction or distribution authorized. ANY UNAUTHORIZED REPRODUCTION OR DISTRIBUTION IS A VIOLATION OF THE FEDERAL COPYRIGHT ACT AND THE LICENSE AGREEMENT, AND SUBJECT TO CIVIL AND CRIMINAL PENALTIES THEREUNDER.

TABLE 5704.3.6.3(2)
STORAGE ARRANGEMENTS FOR PALLETIZED OR SOLID-PILE STORAGE IN LIQUID STORAGE ROOMS AND WAREHOUSES

CLASS	STORAGE LEVEL	MAXIMUM STORAGE HEIGHT			MAXIMUM QUANTITY PER PILE (gallons)		MAXIMUM QUANTITY PER ROOM[a] (gallons)	
		Drums	Containers[b] (feet)	Portable tanks[b] (feet)	Containers	Portable tanks	Containers	Portable tanks
IA	Ground floor Upper floors Basements	1 1 0	5 5 Not Allowed	Not Allowed Not Allowed Not Allowed	3,000 2,000 Not Allowed	Not Allowed Not Allowed Not Allowed	12,000 8,000 Not Allowed	Not Allowed Not Allowed Not Allowed
IB	Ground floor Upper floors Basements	1 1 0	6.5 6.5 Not Allowed	7 7 Not Allowed	5,000 3,000 Not Allowed	20,000 10,000 Not Allowed	15,000 12,000 Not Allowed	40,000 20,000 Not Allowed
IC	Ground floor[d] Upper floors Basements	1 1 0	6.5[c] 6.5[c] Not Allowed	7 7 Not Allowed	5,000 3,000 Not Allowed	20,000 10,000 Not Allowed	15,000 12,000 Not Allowed	40,000 20,000 Not Allowed
II	Ground floor[d] Upper floors Basements	3 3 1	10 10 5	14 14 7	10,000 10,000 7,500	40,000 40,000 20,000	25,000 25,000 7,500	80,000 80,000 20,000
III	Ground floor Upper floors Basements	5 5 3	20 20 10	14 14 7	15,000 15,000 10,000	60,000 60,000 20,000	50,000 50,000 25,000	100,000 100,000 40,000

For SI: 1 foot = 304.8 mm, 1 gallon = 3.785 L.

a. See Section 5704.3.8.1 for unlimited quantities in liquid storage warehouses.

b. In buildings protected by an automatic sprinkler system, the storage height for containers and portable tanks shall not exceed the maximum storage height permitted for the fire protection scheme set forth in NFPA 30 or the maximum storage height demonstrated in a full-scale fire test, whichever is greater. NFPA 30 criteria and fire test results for metallic containers and portable tanks shall not be applied to nonmetallic containers and portable tanks.

c. These height limitations are allowed to be increased to 10 feet for containers having a capacity of 5 gallons or less.

d. For palletized storage of unsaturated polyester resins (UPR) in relieving-style metal containers with 50 percent or less by weight Class IC or II liquid and no Class IA or IB liquid, height and pile quantity limits shall be permitted to be 10 feet and 15,000 gallons, respectively, provided that such storage is protected by sprinklers in accordance with NFPA 30 and that the UPR storage area is not located in the same containment area or drainage path for other Class I or II liquids.

TABLE 5704.3.6.3(3)
STORAGE ARRANGEMENTS FOR RACK STORAGE IN LIQUID STORAGE ROOMS AND WAREHOUSES

CLASS	TYPE RACK	STORAGE LEVEL	MAXIMUM STORAGE HEIGHT[b] (feet)	MAXIMUM QUANTITY PER ROOM[a] (gallons)
			Containers	Containers
IA	Double row or Single row	Ground floor Upper floors Basements	25 15 Not Allowed	7,500 4,500 Not Allowed
IB IC	Double row or Single row	Ground floor Upper floors Basements	25 15 Not Allowed	15,000 9,000 Not Allowed
II	Double row or Single row	Ground floor Upper floors Basements	25 25 15	24,000 24,000 9,000
III	Multirow Double row Single row	Ground floor Upper floors Basements	40 20 20	48,000 48,000 24,000

For SI: 1 foot = 304.8 mm, 1 gallon = 3.785 L.

a. See Section 5704.3.8.1 for unlimited quantities in liquid storage warehouses.

b. In buildings protected by an automatic sprinkler system, the storage height for containers and portable tanks shall not exceed the maximum storage height permitted for the fire protection scheme set forth in NFPA 30 or the maximum storage height demonstrated in a full-scale fire test, whichever is greater. NFPA 30 criteria and fire test results for metallic containers and portable tanks shall not be applied to nonmetallic containers and portable tanks.

INTERNATIONAL CODE COUNCIL®
Copyright © 2015 ICC. ALL RIGHTS RESERVED. Accessed by David Dammon on Jun 21, 2017 12:30:52 PM pursuant to License Agreement with ICC. No further reproduction or distribution authorized. ANY UNAUTHORIZED REPRODUCTION OR DISTRIBUTION IS A VIOLATION OF THE FEDERAL COPYRIGHT ACT AND THE LICENSE AGREEMENT, AND SUBJECT TO CIVIL AND CRIMINAL PENALTIES THEREUNDER.

TABLE 5704.3.6.3(4)
AUTOMATIC SPRINKLER PROTECTION FOR SOLID-PILE AND PALLETIZED STORAGE OF LIQUIDS IN METAL CONTAINERS AND PORTABLE TANKS[a]

STORAGE CONDITIONS		CEILING SPRINKLER DESIGN AND DEMAND				MINIMUM HOSE STREAM DEMAND (gpm)	MINIMUM DURATION SPRINKLERS AND HOSE STREAMS (hours)
Class liquid	Container size and arrangement	Density (gpm/ft^2)	Area (square feet)		Maximum spacing (square feet)		
			High temperature sprinklers	Ordinary temperature sprinklers			
IA	5 gallons or less, with or without cartons, palletized or solid pile[b]	0.30	3,000	5,000	100	750	2
	Containers greater than 5 gallons, on end or side, palletized or solid pile	0.60	5,000	8,000	80	750	
IB, IC and II	5 gallons or less, with or without cartons, palletized or solid pile[b]	0.30	3,000	5,000	100	500	2
	Containers greater than 5 gallons on pallets or solid pile, one high	0.25	5,000	8,000	100		
II	Containers greater than 5 gallons on pallets or solid pile, more than one high, on end or side	0.60	5,000	8,000	80	750	2
IB, IC and II	Portable tanks, one high	0.30	3,000	5,000	100	500	2
II	Portable tanks, two high	0.60	5,000	8,000	80	750	2
III	5 gallons or less, with or without cartons, palletized or solid pile	0.25	3,000	5,000	120	500	1
	Containers greater than 5 gallons on pallets or solid pile, on end or sides, up to three high	0.25	3,000	5,000	120	500	1
	Containers greater than 5 gallons, on pallets or solid pile, on end or sides, up to 18 feet high	0.35	3,000	5,000	100	750	2
	Portable tanks, one high	0.25	3,000	5,000	120	500	1
	Portable tanks, two high	0.50	3,000	5,000	80	750	2

For SI: 1 foot = 304.8 mm, 1 gallon = 3.785 L, 1 square foot = 0.0929 m^2, 1 gallon per minute = 3.785 L/m, 1 gallon per minute per square foot = 40.75 L/min/m^2.

a. The design area contemplates the use of Class II standpipe systems. Where Class I standpipe systems are used, the area of application shall be increased by 30 percent without revising density.

b. For storage heights above 4 feet or ceiling heights greater than 18 feet, an approved engineering design shall be provided in accordance with Section 104.7.2.

Copyright © 2015 ICC. ALL RIGHTS RESERVED. Accessed by David Dammon on Jun 21, 2017 12:30:52 PM pursuant to License Agreement with ICC. No further reproduction or distribution authorized. ANY UNAUTHORIZED REPRODUCTION OR DISTRIBUTION IS A VIOLATION OF THE FEDERAL COPYRIGHT ACT AND THE LICENSE AGREEMENT, AND SUBJECT TO CIVIL AND CRIMINAL PENALTIES THEREUNDER.

TABLE 5704.3.6.3(5)
AUTOMATIC SPRINKLER PROTECTION REQUIREMENTS FOR RACK STORAGE OF LIQUIDS IN METAL CONTAINERS OF 5-GALLON CAPACITY OR LESS WITH OR WITHOUT CARTONS ON CONVENTIONAL WOOD PALLETS[a]

CLASS LIQUID	CEILING SPRINKLER DESIGN AND DEMAND			IN-RACK SPRINKLER ARRANGEMENT AND DEMAND					MINIMUM HOSE STREAM DEMAND (gpm)	MINIMUM DURATION SPRINKLER AND HOSE STREAM (hours)
	Density (gpm/ft^2)	Area (square feet)		Maximum spacing	Racks up to 9 feet deep	Racks more than 9 feet to 12 feet deep	30 psi (standard orifice) 14 psi (large orifice)	Number of sprinklers operating		
		High-temperature sprinklers	Ordinary temperature sprinklers							
I (maximum 25-foot height) Option 1	0.40	3,000	5,000	80 ft^2/head	1. Ordinary temperature, quick-response sprinklers, maximum 8 feet 3 inches horizontal spacing 2. One line sprinklers above each level of storage 3. Locate in longitudinal flue space, staggered vertical 4. Shields required where multilevel	1. Ordinary temperature, quick-response sprinklers, maximum 8 feet 3 inches horizontal spacing 2. One line sprinklers above each level of storage 3. Locate in transverse flue spaces, staggered vertical and within 20 inches of aisle 4. Shields required where multilevel	30 psi (0.5- inch orifice)	1. Eight sprinklers if only one level 2. Six sprinklers each on two levels if only two levels 3. Six sprinklers each on top three levels, if three or more levels 4. Hydraulically most remote	750	2
I (maximum 25-foot height) Option 2	0.55	2,000[b]	Not Applicable	100 ft^2/ head	1. Ordinary temperature, quick-response sprinklers, maximum 8 feet 3 inches horizontal spacing 2. See 2 above 3. See 3 above 4. See 4 above	1. Ordinary temperature, quick-response sprinklers, maximum 8 feet 3 inches horizontal spacing 2. See 2 above 3. See 3 above 4. See 4 above	14 psi (0.53-inch orifice)	See 1 through 4 above	500	2
I and II (maximum 14-foot storage height) (maximum three tiers)	0.55[c]	2,000[d]	Not Applicable	100 ft^2/ head	Not Applicable None for maximum 6-foot-deep racks	Not Applicable	Not Applicable	Not Applicable	500	2
II (maximum 25-foot height)	0.30	3,000	5,000	100 ft^2/ head	1. Ordinary temperature sprinklers 8 feet apart horizontally 2. One line sprinklers between levels at nearest 10-foot vertical intervals 3. Locate in longitudinal flue space, staggered vertical 4. Shields required where multilevel	1. Ordinary temperature sprinklers 8 feet apart horizontally 2. Two lines between levels at nearest 10-foot vertical intervals 3. Locate in transverse flue spaces, staggered vertical and within 20 inches of aisle 4. Shields required where multilevel	30 psi	Hydraulically most remote—six sprinklers at each level, up to a maximum of three levels	750	2
III (40-foot height)	0.25	3,000	5,000	120 ft^2/ head	Same as for Class II liquids	Same as for Class II liquids	30 psi	Same as for Class II liquids	500	2

For SI: 1 inch = 25.4 mm, 1 foot = 304.8 mm, 1 square foot = 0.0929 m^2, 1 pound per square inch = 6.895 kPa, 1 gallon = 3.785 L, 1 gallon per minute = 3.785 L/m, 1 gallon per minute per square foot = 40.75 L/min/m^2.

a. The design area contemplates the use of Class II standpipe systems. Where Class I standpipe systems are used, the area of application shall be increased by 30 percent without revising density.

b. Using listed or approved extra-large orifices, high-temperature quick-response or standard element sprinklers under a maximum 30-foot ceiling with minimum 7.5-foot aisles.

c. For friction lid cans and other metal containers equipped with plastic nozzles or caps, the density shall be increased to 0.65 gpm per square foot using listed or approved extra-large orifice, high-temperature quick-response sprinklers.

d. Using listed or approved extra-large orifice, high-temperature quick-response or standard element sprinklers under a maximum 18-foot ceiling with minimum 7.5-foot aisles and metal containers.

INTERNATIONAL CODE COUNCIL®

Copyright © 2015 ICC. ALL RIGHTS RESERVED. Accessed by David Dammon on Jun 21, 2017 12:30:52 PM pursuant to License Agreement with ICC. No further reproduction or distribution authorized. ANY UNAUTHORIZED REPRODUCTION OR DISTRIBUTION IS A VIOLATION OF THE FEDERAL COPYRIGHT ACT AND THE LICENSE AGREEMENT, AND SUBJECT TO CIVIL AND CRIMINAL PENALTIES THEREUNDER.

INTERNATIONAL CODE COUNCIL®

TABLE 5704.3.6.3(6)
AUTOMATIC SPRINKLER PROTECTION REQUIREMENTS OR RACK STORAGE OF LIQUIDS IN METAL CONTAINERS GREATER THAN 5-GALLON CAPACITY[a]

CLASS LIQUID	CEILING SPRINKLER DESIGN AND DEMAND			IN-RACK SPRINKLER ARRANGEMENT AND DEMAND					MINIMUM HOSE STREAM DEMAND (gpm)	MINIMUM DURATION SPRINKLER AND HOSE STREAM (hours)
	Density (gpm/ ft^2)	Area (square feet)		Maximum spacing	On-side storage racks up to 9-foot-deep racks	On-end storage (on pallets) up to 9-foot-deep racks	Minimum nozzle pressure	Number of sprinklers operating		
		High-temperature sprinklers	Ordinary temperature sprinklers							
IA (maximum 25-foot height)	0.60	3,000	5,000	80 ft^2/head	1. Ordinary temperature sprinklers 8 feet apart horizontally 2. One line sprinklers above each tier of storage 3. Locate in longitudinal flue space, staggered vertical 4. Shields required where multilevel	1. Ordinary temperature sprinklers 8 feet apart horizontally 2. One line sprinklers above each tier of storage 3. Locate in longitudinal flue space, staggered vertical 4. Shields required where multilevel	30 psi	Hydraulically most remote—six sprinklers at each level	1,000	2
IB, IC and II (maximum 25-foot height)	0.60	3,000	5,000	100 ft^2/head	1. See 1 above 2. One line sprinklers every three tiers of storage 3. See 3 above 4. See 4 above	1. See 1 above 2. See 2 above 3. See 3 above 4. See 4 above	30 psi	Hydraulically most remote—six sprinklers at each level	750	2
III (maximum 40-foot height)	0.25	3,000	5,000	120 ft^2/head	1. See 1 above 2. One line sprinklers every sixth level (maximum) 3. See 3 above 4. See 4 above	1. See 1 above 2. One line sprinklers every third level (maximum) 3. See 3 above 4. See 4 above	15 psi	Hydraulically most remote—six sprinklers at each level	500	1

For SI: 1 foot = 304.8 mm, 1 square foot = 0.0929 m^2, 1 pound per square inch = 6.895 kPa, 1 gallon = 3.785 L, 1 gallon per minute = 3.785 L/m, 1 gallon per minute per square foot = 40.75 L/min/m^2.
a. The design assumes the use of Class II standpipe systems. Where a Class I standpipe system is used, the area of application shall be increased by 30 percent without revising density.

Copyright © 2015 ICC. ALL RIGHTS RESERVED. Accessed by David Dammon on Jun 21, 2017 12:30:52 PM pursuant to License Agreement with ICC. No further reproduction or distribution authorized. ANY UNAUTHORIZED REPRODUCTION OR DISTRIBUTION IS A VIOLATION OF THE FEDERAL COPYRIGHT ACT AND THE LICENSE AGREEMENT, AND SUBJECT TO CIVIL AND CRIMINAL PENALTIES THEREUNDER.

TABLE 5704.3.6.3(7)
AUTOMATIC AFFF WATER PROTECTION REQUIREMENTS FOR RACK STORAGE OF LIQUIDS IN METAL CONTAINERS GREATER THAN 5-GALLON CAPACITY[a,b]

CLASS LIQUID	CEILING SPRINKLER DESIGN AND DEMAND			IN-RACK SPRINKLER ARRANGEMENT AND DEMAND[c]				DURATION AFFF SUPPLY (minimum)	DURATION WATER SUPPLY (hours)
	Density (gpm/ft^2)	Area (square feet)		On-end storage of drums on pallets, up to 25 feet	Minimum nozzle pressure (psi)	Number of sprinklers operating	Hose stream demand[d] (gpm)		
		High-temperature sprinklers	Ordinary temperature sprinklers						
IA, IB, IC and II	0.30	1,500	2,500	1. Ordinary temperature sprinkler up to 10 feet apart horizontally 2. One line sprinklers above each level of storage 3. Locate in longitudinal flue space, staggered vertically 4. Shields required for multilevel	30	Three sprinklers per level	500	15	2

For SI: 1 inch = 25.4 mm, 1 foot = 304.8 mm, 1 square foot = 0.0929 m^2, 1 pound per square inch = 6.895 kPa, 1 gallon = 3.785 L, 1 gallon per minute = 3.785 L/m, 1 gallon per minute per square foot = 40.75 L/min/m^2.

a. System shall be a closed-head wet system with *approved* devices for proportioning aqueous film-forming foam.

b. Except as modified herein, in-rack sprinklers shall be installed in accordance with NFPA 13.

c. The height of storage shall not exceed 25 feet.

d. Hose stream demand includes $1^1/_2$-inch inside hose connections, where required.

TABLE 5704.3.6.3(8)
AUTOMATIC SPRINKLER PROTECTION REQUIREMENTS FOR CLASS I LIQUID STORAGE IN METAL CONTAINERS OF 1-GALLON CAPACITY OR LESS WITH UNCARTONED OR CASE-CUT SHELF DISPLAY UP TO 6.5 FEET, AND PALLETIZED STORAGE ABOVE IN A DOUBLE-ROW RACK ARRAY[a]

STORAGE HEIGHT	CEILING SPRINKLER DESIGN AND DEMAND				IN-RACK SPRINKLER ARRANGEMENT AND DEMAND				MINIMUM HOSE STREAM DEMAND (gpm)	MINIMUM DURATION SPRINKLERS AND HOSE STREAM (hours)
	Density (gpm/ft^2)	Area (square feet)		Maximum spacing	Racks up to 9 feet deep	Racks 9 to 12 feet	Minimum nozzle pressure	Number of sprinklers operating		
		High temperature	Ordinary temperature							
Maximum 20-foot storage height	0.60	2,000[b]	Not Applicable	100 ft^2/head	1. Ordinary temperature, quick-response sprinklers, maximum 8 feet 3 inches horizontal spacing 2. One line of sprinklers at the 6-foot level and the 11.5-foot level of storage 3. Locate in longitudinal flue space, staggered vertical 4. Shields required where multilevel	Not Applicable	30 psi (standard orifice) or 14 psi (large orifice)	1. Six sprinklers each on two levels 2. Hydraulically most remote 12 sprinklers	500	2

For SI: 1 inch = 25.4 mm, 1 foot = 304.8 mm, 1 square foot = 0.0929 m^2, 1 pound per square inch = 6.895 kPa, 1 gallon = 3.785 L, 1 gallon per minute = 3.785 L/m, 1 gallon per minute per square foot = 40.75 L/min/m^2.

a. This table shall not apply to racks with solid shelves.

b. Using extra-large orifice sprinklers under a ceiling 30 feet or less in height. Minimum aisle width is 7.5 feet.

INTERNATIONAL CODE COUNCIL®
Copyright © 2015 ICC. ALL RIGHTS RESERVED. Accessed by David Dammon on Jun 21, 2017 12:30:52 PM pursuant to License Agreement with ICC. No further reproduction or distribution authorized. ANY UNAUTHORIZED REPRODUCTION OR DISTRIBUTION IS A VIOLATION OF THE FEDERAL COPYRIGHT ACT AND THE LICENSE AGREEMENT, AND SUBJECT TO CIVIL AND CRIMINAL PENALTIES THEREUNDER.

5704.3.7.2.2 Separation and aisles. Piles shall be separated from each other by not less than 4-foot (1219 mm) aisles. Aisles shall be provided so that all containers are 20 feet (6096 mm) or less from an aisle. Where the storage of liquids is on racks, a minimum 4-foot-wide (1219 mm) aisle shall be provided between adjacent rows of racks and adjacent storage of liquids. Main aisles shall be not less than 8 feet (2438 mm) wide.

Additional aisles shall be provided for access to doors, required windows and ventilation openings, standpipe connections, mechanical equipment and switches. Such aisles shall be not less than 3 feet (914 mm) in width, unless greater widths are required for separation of piles or racks, in which case the greater width shall be provided.

❖ Aisles in a liquid storage room are designed to the same aisle criteria as for rack storage. A minimum aisle width of 4 feet (1219 mm) between piles and a minimum main aisle of 8 feet (2438 mm) is to provide clearance for personnel to access the flammable and combustible liquids without interference with other piles.

Egress from the room for evacuation and access to fire protection and other facilities within the room must be maintained.

5704.3.7.2.3 Stabilizing and supports. Containers and piles shall be separated by pallets or dunnage to provide stability and to prevent excessive stress to container walls. Portable tanks stored over one tier shall be designed to nest securely without dunnage.

Requirements for portable tank design shall be in accordance with Chapters 9 and 12 of NFPA 30. Shelving, racks, dunnage, scuffboards, floor overlay and similar installations shall be of noncombustible construction or of wood not less than a 1-inch (25 mm) nominal thickness. Adequate material-handling equipment shall be available to handle tanks safely at upper tier levels.

❖ The requirements of this section are intended to prevent piles from collapsing and causing container damage or liquid spills. Requiring pallets or dunnage spreads stress loads over broad surfaces, reducing stresses in container walls that could lead to damage or leakage.

Requirements for portable tank design are intended to result in stability that will prevent tanks from toppling. Having materials-handling equipment that is designed to handle the tanks also helps to ensure safe storage and handling.

5704.3.7.3 Spill control and secondary containment. Liquid storage rooms shall be provided with spill control and secondary containment in accordance with Section 5004.2.

❖ Spills must be contained and controlled to prevent the spread of the liquid and the vapors. Section 5004.2 discusses the use of liquid-tight floors, curbs, dikes and drainage systems to divert the liquid to a location where it can be contained and safely handled. Storage rooms shall be ventilated in accordance with Section 5004.3, which discusses mechanical and natural exhaust systems. The exhaust system is to remove the vapors to prevent them from accumulating in concentrations in the flammable range of the vapor.

5704.3.7.4 Ventilation. Liquid storage rooms shall be ventilated in accordance with Section 5004.3.

❖ See the commentary to Section 5004.3 for discussions of ventilation requirements.

5704.3.7.5 Fire protection. Fire protection for liquid storage rooms shall comply with Sections 5704.3.7.5.1 and 5704.3.7.5.2.

❖ This section introduces the fire protection requirements for liquid storage rooms.

5704.3.7.5.1 Fire-extinguishing systems. Liquid storage rooms shall be protected by *automatic sprinkler systems* installed in accordance with Chapter 9 and Tables 5704.3.6.3(4) through 5704.3.6.3(7) and Table 5704.3.7.5.1. In-rack sprinklers shall also comply with NFPA 13.

Automatic foam-water systems and automatic aqueous film-forming foam (AFFF) water sprinkler systems shall not be used except where *approved*.

Protection criteria developed from fire modeling or full-scale fire testing conducted at an *approved* testing laboratory are allowed in lieu of the protection as shown in Tables 5704.3.6.3(2) through 5704.3.6.3(7) and Table 5704.3.7.5.1 where *approved*.

❖ The fire protection system must be designed to handle anticipated fires. For a liquid storage room that contains a variety of flammable and combustible liquids, the fire protection needs to be selected from Tables 5704.3.6.3(4) through 5704.3.6.3(7) and Table 5704.3.7.5.1. These tables address the classification of flammable and combustible liquids, container size and the method of storing the liquids. The installation of this fire protection is to comply with Chapter 9. For liquid storage rooms that use rack storage not covered in the tables, use NFPA 13 for the fire protection requirements.

Automatic foam-water systems and AFFF are to be used if approved by the fire code official. These fire protection systems starve the fire for oxygen by forming a barrier between the hydrocarbon and the air, by cooling the hydrocarbon and by suppressing the release of flammable vapors.

These fire protection systems, however, can be harmful to the environment. Containment of the foam solution should be considered when using these systems.

The code is designed to reflect that there may be other methods available for meeting code requirements. The fire code official is responsible for reviewing proposed alternative methods and has the authority to approve them when they have been demonstrated or documented to comply with the code.

INTERNATIONAL CODE COUNCIL®
Copyright © 2015 ICC. ALL RIGHTS RESERVED. Accessed by David Dammon on Jun 21, 2017 12:30:52 PM pursuant to License Agreement with ICC. No further reproduction or distribution authorized. ANY UNAUTHORIZED REPRODUCTION OR DISTRIBUTION IS A VIOLATION OF THE FEDERAL COPYRIGHT ACT AND THE LICENSE AGREEMENT, AND SUBJECT TO CIVIL AND CRIMINAL PENALTIES THEREUNDER.

TABLE 5704.3.7.5.1. See below.

❖ Solid-pile or palletized storage of flammable and combustible liquids, except for Class IA liquids, in metal containers is allowed when AFFF is installed. The storage system permits these flammable and combustible liquids to either be in cartons or uncartoned. Flammable and combustible liquids in carton packaging can be piled 11 feet (3353 mm) high while uncartoned containers can be piled 12 feet (3658 mm) high. The higher storage is allowed for containers out of cartons because the combustible cartons have been removed, reducing the fire load.

AFFF is effective fire protection for this storage because it forms a barrier that starves the fire for oxygen, cools the hydrocarbon and suppresses the release of flammable vapors. The 5-gallon (19 L) metal containers provide some protection from ignition as well as limit the quantity of flammable and combustible liquids that can be exposed. The cartons and pallets are a source of combustibles.

The AFFF provides fire prevention and fire protection in case of a liquid spill or pool fire. The AFFF will also provide protection for the metal containers if the cartons or pallets become involved in a fire. The increased fire protection provided by using 5-gallon (19 L) containers or less with the additional requirements on the AFFF above that required under NFPA 13 permit the storage of flammable and combustible liquids in solid-piled and palletized storage.

5704.3.7.5.2 Portable fire extinguishers. Not less than one *approved* portable fire extinguisher complying with Section 906 and having a rating of not less than 20-B shall be located not less than 10 feet (3048 mm) or more than 50 feet (15 240 mm) from any Class I or II liquid storage area located outside of a liquid storage room.

Not less than one portable fire extinguisher having a rating of not less than 20-B shall be located outside of, but not more than 10 feet (3048 mm) from, the door opening into a liquid storage room.

❖ Portable fire extinguishers are to be available outside of the liquid storage room because a fire in the liquid storage room could prevent personnel from getting to portable fire extinguishers in the room. The 20-B portable fire extinguisher is for the control of small flammable liquid fires.

5704.3.8 Liquid storage warehouses. Buildings used for storage of flammable or *combustible liquids* in quantities exceeding those set forth in Section 5704.3.4 for *control areas* and Section 5704.3.7 for liquid storage rooms shall comply with Sections 5704.3.8.1 through 5704.3.8.5 and shall be constructed and separated as required by the *International Building Code*.

❖ Liquid storage warehouses, as defined in Section 5702.1, are buildings that are designed to store flammable and combustible liquids in quantities that exceed the quantities allowed in a control area or a liquid storage room. A liquid storage warehouse is classified in Group H-2 or H-3 depending on whether the liquid is (H-2) or is not (H-3) under pressure. It can be a separate, detached building or it can be an attached building separated from other parts of the structure by a fire wall complying with IBC Section 706. This section establishes the applicability of Sections 5704.3.8.1 through 5704.3.8.5 to these unique buildings. See the commentary to Section 5702.1 and definition of "Liquid storage warehouse" for further information.

5704.3.8.1 Quantities and storage arrangement. The total quantities of liquids in a liquid storage warehouse shall not be limited. The arrangement of storage shall be in accordance with Table 5704.3.6.3(2) or 5704.3.6.3(3).

❖ Liquid storage warehouses are not restricted in the quantity of flammable and combustible liquids that may be stored; however, the maximum height and maximum volume per pile is limited by Tables 5704.3.6.3(2) and 5704.3.6.3(3), which effectively limit the quantity of flammable or combustible liquids that can be stored in a given space. Aisle width requirements further restrict quantities.

5704.3.8.1.1 Mixed storage. Mixed storage shall be in accordance with Section 5704.3.7.2.1.

❖ Liquid storage warehouses have to meet the same criteria as a liquid storage room. Liquid storage warehouses are intended for the storage of a maximum quantity of flammable and combustible liquid. When

TABLE 5704.3.7.5.1
AUTOMATIC AFFF-WATER PROTECTION REQUIREMENTS FOR SOLID-PILE AND PALLETIZED STORAGE OF LIQUIDS IN METAL CONTAINERS OF 5-GALLON CAPACITY OR LESS[a, b]

PACKAGE TYPE	CLASS LIQUID	CEILING SPRINKLER DESIGN AND DEMAND					STORAGE HEIGHT (feet)	HOSE DEMAND (gpm)[c]	DURATION AFFF SUPPLY (minimum)	DURATION WATER SUPPLY (hours)
		Density (gpm/ft^2)	Area (square feet)	Temperature rating	Maximum spacing	Orifice size (inch)				
Cartoned	IB, IC, II and III	0.40	2,000	286°F	100 ft^2/ head	0.531	11	500	15	2
Uncartoned	IB, IC, II and III	0.30	2,000	286°F	100 ft^2/ head	0.5 or 0.531	12	500	15	2

For SI: 1 inch = 25.4 mm, 1 foot = 304.8 mm, 1 square foot = 0.0929 m^2, 1 gallon per minute = 3.785 L/m, 1 gallon per minute per square foot = 40.75 L/min/m^2, °C = [(°F)-32]/1.8.

a. System shall be a closed-head wet system with approved devices for proportioning aqueous film-forming foam.

b. Maximum ceiling height of 30 feet.

c. Hose stream demand includes $1^1/_2$-inch inside hose connections, where required.

INTERNATIONAL CODE COUNCIL®
Copyright © 2015 ICC. ALL RIGHTS RESERVED. Accessed by David Dammon on Jun 21, 2017 12:30:52 PM pursuant to License Agreement with ICC. No further reproduction or distribution authorized. ANY UNAUTHORIZED REPRODUCTION OR DISTRIBUTION IS A VIOLATION OF THE FEDERAL COPYRIGHT ACT AND THE LICENSE AGREEMENT, AND SUBJECT TO CIVIL AND CRIMINAL PENALTIES THEREUNDER.

more than one class of flammable and combustible liquid is stored in the same liquid storage warehouse, the aggregate quantity of flammable and combustible liquids cannot exceed the smallest quantity allowed in Table 5704.3.6.3(2) or 5704.3.6.3(3) for the flammable and combustible liquids being stored.

Because the liquid storage warehouse is adequate for a maximum volume of a flammable or combustible liquid, the liquid storage warehouse will be adequate for the aggregate quantity based on the allowable volume of the most hazardous flammable and combustible liquid being stored.

Because the liquid storage warehouse is adequate for a maximum height of a flammable or combustible liquid, the liquid storage warehouse will be adequate for the height based on the allowable height of the most hazardous flammable and combustible liquid being stored.

5704.3.8.1.2 Separation and aisles. Separation and *aisles* shall be in accordance with Section 5704.3.7.2.2.

❖ Liquid storage warehouses must meet the same criteria as a liquid storage room. A liquid storage warehouse is designed to the same aisle criteria as rack storage. A minimum aisle width of 4 feet (1219 mm) between piles and a minimum main aisle of 8 feet (2438 mm) provide clearance for personnel and materials-handling equipment to access the flammable and combustible liquids without interference with other piles. The aisles are also intended for ready access by emergency responders.

Egress from the warehouse for evacuation and access to fire protection and other facilities within the warehouse need to be maintained.

5704.3.8.2 Spill control and secondary containment. Liquid storage warehouses shall be provided with spill control and secondary containment as set forth in Section 5004.2.

❖ The spill must be controlled to prevent the spread of liquid. Section 5004.2 discusses the use of liquid-tight floors, curbs, dikes and drainage systems to divert the liquid to a location where it can be contained and safely handled.

5704.3.8.3 Ventilation. Liquid storage warehouses storing containers greater than 5 gallons (19 L) in capacity shall be ventilated at a rate of not less than 0.25 cfm per square foot ($0.075\ m^3/s \cdot m^2$) of floor area over the storage area.

❖ This section specifies the ventilation rate for liquid warehouses storing containers whose capacity exceeds 5 gallons (19 L). Note that the provisions of Section 5004.3 do not apply. The exhaust system is to remove the vapors to prevent them from accumulating in concentrations in the flammable range of the vapor.

5704.3.8.4 Automatic sprinkler systems. Liquid storage warehouses shall be protected by *automatic sprinkler systems* installed in accordance with Chapter 9 and Tables 5704.3.6.3(4) through 5704.3.6.3(7) and Table 5704.3.7.5.1, or Sections 16.4.1 through 16.4.3, 16.5.1 through 16.5.2.12, and Tables 16.5.2.1 through 16.5.2.12 and Figures 16.4.1(a) through 16.4.1(c) of NFPA 30. In-rack sprinklers shall also comply with NFPA 13.

Automatic foam-water systems and automatic AFFF water sprinkler systems shall not be used except where *approved*.

Protection criteria developed from fire modeling or full-scale fire testing conducted at an *approved* testing laboratory are allowed in lieu of the protection as shown in Tables 5704.3.6.3(2) through 5704.3.6.3(7) and Table 5704.3.7.5.1 where *approved*.

❖ The fire protection system must be designed to cope with anticipated fires. For a liquid storage warehouse that contains a variety of flammable and combustible liquids, the fire protection needs to be selected from Tables 5704.3.6.3(4) through 5704.3.6.3(7) and Table 5704.3.7.5.1. These tables address the classification of flammable and combustible liquids, container size and the method of storing the liquids. The installation of this fire protection is to comply with Chapter 9. For liquid storage warehouses that use rack storage not covered in the tables, use NFPA 13 for the fire protection requirements.

Automatic foam-water systems and AFFF are to be used if approved by the fire code official. These fire protection systems starve the fire for oxygen by forming a barrier between the hydrocarbon and the air, by cooling the hydrocarbon and by suppressing the release of flammable vapors.

These fire protection systems, however, can be harmful to the environment. Containment of the foam solution should be considered when using these systems.

The code always recognizes that there may be other methods available for accomplishing its intent. The fire code official is responsible for reviewing these alternative methods and has the authority to approve them if they have been demonstrated or documented to comply with the intent of the code requirement.

5704.3.8.5 Warehouse hose lines. In liquid storage warehouses, either $1^1/_2$-inch (38 mm) lined or 1-inch (25 mm) hard rubber hose lines shall be provided in sufficient number to reach all liquid storage areas and shall be in accordance with Section 903 or 905.

❖ The requirements for hose lines stated in this section are consistent with the requirements of Chapter 9. They may be supplied by either the automatic sprinkler system in accordance with Section 903 or a standpipe system in accordance with Section 905.

5704.4 Outdoor storage of containers and portable tanks. Storage of flammable and *combustible liquids* in closed containers and portable tanks outside of buildings shall be in accordance with Section 5703 and Sections 5704.4.1 through 5704.4.8. Capacity limits for containers and portable tanks shall be in accordance with Section 5704.3.

❖ Outdoor storage in containers and portable tanks is regulated to prevent ignition sources from coming in

INTERNATIONAL CODE COUNCIL®
Copyright © 2015 ICC. ALL RIGHTS RESERVED. Accessed by David Dammon on Jun 21, 2017 12:30:52 PM pursuant to License Agreement with ICC. No further reproduction or distribution authorized. ANY UNAUTHORIZED REPRODUCTION OR DISTRIBUTION IS A VIOLATION OF THE FEDERAL COPYRIGHT ACT AND THE LICENSE AGREEMENT, AND SUBJECT TO CIVIL AND CRIMINAL PENALTIES THEREUNDER.

contact with containers and portable tanks, to prevent damage to containers and portable tanks and to protect property and buildings.

5704.4.1 Plans. Storage shall be in accordance with *approved* plans.

❖ The fire code official must approve the layout of the outdoor storage. The clearances between tanks, buildings and property lines are to ensure that ignition sources are not in the immediate vicinity of the outdoor storage area.

5704.4.2 Location on property. Outdoor storage of liquids in containers and portable tanks shall be in accordance with Table 5704.4.2. Storage of liquids near buildings located on the same lot shall be in accordance with this section.

❖ Restrictions on pile size, required pile separation distances and required distances from lot lines, structures and public throughways are intended to result in improved fire safety. Limiting quantities that can be stored in a single pile limits the potential fuel load in any fire. Keeping piles away from structures, lot lines and public ways protects the piles from stray ignition sources as well as keeping buildings, personnel and the general public safe from the hazards of a possible fire.

TABLE 5704.4.2. See below.

❖ The outdoor storage of flammable and combustible liquids in containers and portable tanks is limited to control the size and location of a fire. The volume of flammable and combustible liquids is limited based on the type of liquid. The lower the ignition point of the liquid, the smaller the volume of the liquid permitted in a pile. The same approach is taken in determining the maximum height of a pile. These two features control the size of a fire.

Separation is used to control the spread of fire from pile to pile and from a pile to a structure or other property. The distance between piles is the same for all classes of flammable and combustible liquids. The distance between a pile and a structure or property line serves several functions. The clearance is greater for flammable or combustible liquids with a lower ignition point to protect the flammable and combustible liquid from an ignition source as well as protecting the surrounding area from a pool fire of flammable or combustible liquid.

5704.4.2.1 Mixed liquid piles. Where two or more classes of liquids are stored in a single pile, the quantity in the pile shall not exceed the smallest of maximum quantities for the classes of material stored.

❖ When more than one class of flammable and combustible liquid is stored in the same pile, the aggregate quantity of flammable and combustible liquids cannot exceed the smallest quantity allowed in Table 5704.4.2.

Because the pile is adequate for a maximum volume of a flammable or combustible liquid, the pile will be adequate for the aggregate quantity based on the allowable volume of the most hazardous flammable and combustible liquid being stored.

Because the pile is adequate for a maximum height of a flammable or combustible liquid, the pile will be adequate for the height based on the allowable height of the most hazardous flammable and combustible liquid being stored.

5704.4.2.2 Access. Storage of containers or portable tanks shall be provided with fire apparatus access roads in accordance with Chapter 5.

❖ Access roads for fire department apparatus must be maintained in the outdoor storage so that fire department apparatus can gain access to any pile storage. Access may involve more than one access point. Consideration must be given to the turning radius of fire apparatus, dead-end lanes and entrance through security gates or locked gates.

5704.4.2.3 Security. The storage area shall be protected against tampering or trespassers where necessary and shall be

TABLE 5704.4.2
OUTDOOR LIQUID STORAGE IN CONTAINERS AND PORTABLE TANKS

CLASS OF LIQUID	CONTAINER STORAGE—MAXIMUM PER PILE		PORTABLE TANK STORAGE—MAXIMUM PER PILE		MINIMUM DISTANCE BETWEEN PILES OR RACKS (feet)	MINIMUM DISTANCE TO LOT LINE OF PROPERTY THAT CAN BE BUILT UPON[c, d] (feet)	MINIMUM DISTANCE TO PUBLIC STREET, PUBLIC ALLEY OR PUBLIC WAY[d] (feet)
	Quantity[a, b] (gallons)	Height (feet)	Quantity[a, b] (gallons)	Height (feet)			
IA	1,100	10	2,200	7	5	50	10
IB	2,200	12	4,400	14	5	50	10
IC	4,400	12	8,800	14	5	50	10
II	8,800	12	17,600	14	5	25	5
III	22,000	18	44,000	14	5	10	5

For SI: 1 foot = 304.8 mm, 1 gallon 3.785 L.

a. For mixed class storage, see Section 5704.4.2.

b. For storage in racks, the quantity limits per pile do not apply, but the rack arrangement shall be limited to not more than 50 feet in length and two rows or 9 feet in depth.

c. If protection by a public fire department or private fire brigade capable of providing cooling water streams is not available, the distance shall be doubled.

d. When the total quantity stored does not exceed 50 percent of the maximum allowed per pile, the distances are allowed to be reduced 50 percent, but not less than 3 feet.

INTERNATIONAL CODE COUNCIL®
Copyright © 2015 ICC. ALL RIGHTS RESERVED. Accessed by David Dammon on Jun 21, 2017 12:30:52 PM pursuant to License Agreement with ICC. No further reproduction or distribution authorized. ANY UNAUTHORIZED REPRODUCTION OR DISTRIBUTION IS A VIOLATION OF THE FEDERAL COPYRIGHT ACT AND THE LICENSE AGREEMENT, AND SUBJECT TO CIVIL AND CRIMINAL PENALTIES THEREUNDER.

kept free from weeds, debris and other combustible materials not necessary to the storage.

❖ Unauthorized personnel may not know the potential dangers associated with flammable and combustible liquids. By controlling access to the outdoor storage facility, the owner will be able to monitor sources of heat and open flame. Security will be able to monitor the accumulation of combustibles and take appropriate action to remove these fuel sources.

5704.4.2.4 Storage adjacent to buildings. Not more than 1,100 gallons (4163 L) of liquids stored in closed containers and portable tanks is allowed adjacent to a building located on the same premises and under the same management, provided that:

1. The building does not exceed one story in height.Such building shall be of fire-resistance-rated construction with noncombustible exterior surfaces or noncombustible construction and shall be used principally for the storage of liquids; or
2. The exterior building wall adjacent to the storage area shall have a *fire-resistance rating* of not less than 2 hours, having no openings to above-grade areas within 10 feet (3048 mm) horizontally of such storage and no openings to below-grade areas within 50 feet (15 240 mm) horizontally of such storage.

The quantity of liquids stored adjacent to a building protected in accordance with Item 2 is allowed to exceed 1,100 gallons (4163 L), provided that the maximum quantity per pile does not exceed 1,100 gallons (4163 L) and each pile is separated by a 10-foot-minimum (3048 mm) clear space along the common wall.

Where the quantity stored exceeds 1,100 gallons (4163 L) adjacent to a building complying with Item 1, or the provisions of Item 1 cannot be met, a minimum distance in accordance with Table 5704.4.2, column 7 ("Minimum Distance to Lot Line of Property That Can Be Built Upon") shall be maintained between buildings and the nearest container or portable tank.

❖ Storage of flammable and combustible liquid next to a building can expose the flammable and combustible liquid or the building to a fire; however, placing flammable and combustible liquids next to a building may be necessary for the operation of the facility. To control the fire exposure, both the flammable and combustible liquid next to the building and the building itself must be on the same property and under the same management. Two types of buildings may have flammable and combustible liquid stored adjacent to them.

A building of noncombustible construction not more than one story in height used for the storage of flammable and combustible liquid that is of noncombustible construction and not more than one story in height can have outdoor storage next to it. This building has fire protection features installed to protect the building and its contents from an interior fire, but is not designed for the exterior fire exposure. Limiting the quantity of flammable and combustible liquid to 1,100 gallons (4136 L) in closed containers reduces the exterior fire exposure. If the exterior quantity of flammable and combustible liquid exceeds 1,100 gallons (4136 L) in closed containers, or this building does not meet the criteria for construction, height or use as storage for flammable and combustible liquids, the fire protection must be increased by using the distance between the building and the pile. The clearance required between the class of flammable and combustible liquid and the property line is to be used.

A building can have outdoor storage next to it when the building exterior wall adjacent to the storage of flammable and combustible liquid has a minimum 2-hour fire-resistance rating and protected openings. The restriction on openings above grade is to prevent an interior or exterior fire from bypassing the 2-hour fire-resistance-rated wall construction. The restriction on an opening below grade is to prevent flammable or combustible liquid or vapors from entering the building. The maximum quantity of flammable and combustible liquid is limited to 1,100 gallons (4136 L) in closed containers per pile. More than one pile can be located adjacent to this fire-resistant construction if the piles are located a minimum of 10 feet (3480 mm) from the building.

5704.4.3 Spill control and secondary containment. Storage areas shall be provided with spill control and secondary containment in accordance with Section 5703.4.

Exception: Containers stored on *approved* containment pallets in accordance with Section 5004.2.3 and containers stored in cabinets and lockers with integral spill containment.

❖ Outdoor storage of flammable or Class II combustible liquids must be controlled to prevent the spread of liquid. Section 5004.2 discusses the use of liquid-tight floors, curbs, dikes and drainage systems to divert the liquid to a location where it can be contained and safely handled.

The exception allows use of approved containment pallets as an acceptable alternative to an integral spill containment for containers. Section 5004.2.3 requires containment pallets to have a liquid-tight sump that is accessible for visible inspection with a minimum capacity of 66 gallons (250 L). The containment pallet must be designed to prevent the collection of rainwater in the sump.

5704.4.4 Security. Storage areas shall be protected against tampering or trespassers by fencing or other *approved* control measures.

❖ Unauthorized personnel may not know the potential dangers associated with flammable and combustible liquids. By controlling access to the outdoor storage facility, the owner will be able to monitor sources of heat and open flame.

INTERNATIONAL CODE COUNCIL®
Copyright © 2015 ICC. ALL RIGHTS RESERVED. Accessed by David Dammon on Jun 21, 2017 12:30:52 PM pursuant to License Agreement with ICC. No further reproduction or distribution authorized. ANY UNAUTHORIZED REPRODUCTION OR DISTRIBUTION IS A VIOLATION OF THE FEDERAL COPYRIGHT ACT AND THE LICENSE AGREEMENT, AND SUBJECT TO CIVIL AND CRIMINAL PENALTIES THEREUNDER.

5704.4.5 Protection from vehicles. Guard posts or other means shall be provided to protect exterior storage tanks from vehicular damage. Where guard posts are installed, the posts shall be installed in accordance with Section 312.

❖ Protection from vehicle impact is provided by guard posts or other approved barriers. Section 312 contains the specifications for guard posts or the design forces required for an approved barrier to comply with the code.

5704.4.6 Clearance from combustibles. The storage area shall be kept free from weeds, debris and combustible materials not necessary to the storage. The area surrounding an exterior storage area shall be kept clear of such materials for a minimum distance of 15 feet (4572 mm).

❖ This is the same requirement as in Section 5704.4.2.3, with the additional focus that combustible materials be cleared for a minimum of 15 feet (4572 mm) around the storage area. Keeping combustibles a minimum of 15 feet (4572 mm) from each pile removes a fuel source from the immediate area.

5704.4.7 Weather protection. Weather protection for outdoor storage shall be in accordance with Section 5004.13.

❖ Weather protection is not required for outdoor storage; however, where an overhead structure is erected, it must conform to the requirements of Section 5004.13, which refers to the requirements of the IBC. The code reference notes that an open structure consisting of only a noncombustible roof structure does not change the storage facility to indoor storage. Natural airflow through a structure with no walls and only a noncombustible roof has sufficient ventilation for the storage area to be treated as outdoor storage for flammable and combustible liquids.

5704.4.8 Empty containers and tank storage. The storage of empty tanks and containers previously used for the storage of flammable or *combustible liquids*, unless free from explosive vapors, shall be stored as required for filled containers and tanks. Tanks and containers when emptied shall have the covers or plugs immediately replaced in openings.

❖ An empty container or portable tank is at least as dangerous as and possibly more dangerous than a full container or portable storage tank. There is a possibility that a vapor-air mixture in the container or portable storage tank could reach the LFL. This potential danger requires that empty containers and portable tanks be handled and stored as if full of flammable or combustible liquid.

SECTION 5705
DISPENSING, USE, MIXING AND HANDLING

5705.1 Scope. Dispensing, use, mixing and handling of flammable liquids shall be in accordance with Section 5703 and this section. Tank vehicle and tank car loading and unloading and other special operations shall be in accordance with Section 5706.

Exception: Containers of organic coatings having no fire point and which are opened for pigmentation are not required to comply with this section.

❖ The dispensing, use, mixing and handling of flammable and combustible liquids provide opportunities for flammable and combustible liquids to become mixed with air. These operations can create a vapor-air mixture between the LFL and the UFL.

This section does not cover organic coating with no fire point used for pigmentation. This exception is also covered in Section 5701.1.

5705.2 Liquid transfer. Liquid transfer equipment and methods for transfer of Class I, II and IIIA liquids shall be *approved* and be in accordance with Sections 5705.2.1 through 5705.2.6.

❖ The low flash points for Class I, II and IIIA liquids require restrictions on transferring flammable and combustible liquids.

5705.2.1 Pumps. Positive-displacement pumps shall be provided with pressure relief discharging back to the tank, pump suction or other *approved* location, or shall be provided with interlocks to prevent over-pressure.

❖ Positive-displacement pumps are used because the pumping action is forward only and is a good pump for viscous fluids. The positive-displacement pump will create pressure waves in the fluid. A buildup of pressure can damage the pump and the piping system. This pressure buildup must be relieved by discharging the excess pressure into the tank or the pump suction (intake) or other approved location.

5705.2.2 Pressured systems. Where gases are introduced to provide for transfer of Class I liquids, or Class II and III liquids transferred at temperatures at or above their *flash points* by pressure, only inert gases shall be used. Controls, including pressure relief devices, shall be provided to limit the pressure so that the maximum working pressure of tanks, containers and piping systems cannot be exceeded. Where devices operating through pressure within a tank or container are used, the tank or container shall be a pressure vessel *approved* for the intended use. Air or oxygen shall not be used for pressurization.

Exception: Air transfer of Class II and III liquids at temperatures below their *flash points*.

❖ Compressed inert gas can be used to transfer flammable and combustible liquids. The inert gas prevents a vapor-air mixture from entering the LFL. The pressure system must be designed to prevent overloading any component of the system. An overload could create a leak or failure in the system.

The use of air as the compressed gas is permitted for Class II and III liquids under limited conditions. If the Class II and III liquids are to be dispensed at a

INTERNATIONAL CODE COUNCIL®
Copyright © 2015 ICC. ALL RIGHTS RESERVED. Accessed by David Dammon on Jun 21, 2017 12:30:52 PM pursuant to License Agreement with ICC. No further reproduction or distribution authorized. ANY UNAUTHORIZED REPRODUCTION OR DISTRIBUTION IS A VIOLATION OF THE FEDERAL COPYRIGHT ACT AND THE LICENSE AGREEMENT, AND SUBJECT TO CIVIL AND CRIMINAL PENALTIES THEREUNDER.

temperature below their flash points, there is no ignition source.

5705.2.3 Piping, hoses and valves. Piping, hoses and valves used in liquid transfer operations shall be *approved* or *listed* for the intended use.

❖ Piping, hoses and valves must be designed to function with the flammable or combustible liquid being transferred and at the temperatures and pressures of the dispensing system.

5705.2.4 Class I, II and III liquids. Class I liquids or, when heated to or above their flash points, Class II and Class III liquids, shall be transferred by one of the following methods:

1. From safety cans complying with UL 30.
2. Through an *approved* closed piping system.
3. From containers or tanks by an *approved* pump taking suction through an opening in the top of the container or tank.
4. For Class IB, IC, II and III liquids, from containers or tanks by gravity through an *approved* self-closing or automatic-closing valve where the container or tank and dispensing operations are provided with spill control and secondary containment in accordance with Section 5703.4. Class IA liquids shall not be dispensed by gravity from tanks.
5. *Approved* engineered liquid transfer systems.

Exception: Liquids in original shipping containers not exceeding a 5.3-gallon (20 L) capacity.

❖ This section correlates with Section 5701.5 and similar provisions in Section 18.4.2 of NFPA 30. The lower flash points for Class I liquids require that dispensing be done by an approved procedure to avoid the development of a vapor-air mixture above the LFL. Class II and III liquids, when they are heated up to or above their flash point, become as readily ignitable as Class I liquids.

The exception exempts original shipping containers no larger than 5.3 gallons (20 L) from the limitations of this section with the intent of preventing the use of temporary, single-use containers.

5705.2.5 Manual container filling operations. Class I liquids or Class II and Class III liquids that are heated up to or above their *flash points* shall not be transferred into containers unless the nozzle and containers are electrically interconnected. Acceptable methods of electrical interconnection include either of the following:

1. Metallic floor plates on which containers stand while filling, where such floor plates are electrically connected to the fill stem.
2. Where the fill stem is bonded to the container during filling by means of a bond wire.

❖ Flammable and combustible liquids being transferred near or above their flash points will generate vapors and are near the point of ignition. Transferring these liquids to a container must be done in a manner to prevent a static spark. Grounding the container and the nozzle will remove the potential for an electrical hazard and the possibility for a spark to jump.

5705.2.6 Automatic container-filling operations for Class I liquids. Container-filling operations for Class I liquids involving conveyor belts or other automatic-feeding operations shall be designed to prevent static accumulations.

❖ The conveyor belts and other automatic-feeding equipment can develop a static charge. This static charge must be discharged by grounding the equipment so that no electrical potential can develop.

5705.3 Use, dispensing and mixing inside of buildings. Indoor use, dispensing and mixing of flammable and *combustible liquids* shall be in accordance with Section 5705.2 and Sections 5705.3.1 through 5705.3.5.3.

❖ The use, dispensing and mixing of flammable and combustible liquids creates an environment where vapor may accumulate. Theses vapors must be controlled to keep the vapor-air mixture from reaching the LFL.

5705.3.1 Closure of mixing or blending vessels. Vessels used for mixing or blending of Class I liquids and Class II or III liquids heated up to or above their *flash points* shall be provided with self-closing, tight-fitting, noncombustible lids that will control a fire within such vessel.

Exception: Where such devices are impractical, *approved* automatic or manually controlled fire-extinguishing devices shall be provided.

❖ Flammable and combustible liquids being mixed or blended near or above their flash points will generate vapors and are near the point of ignition. Using a vessel with a self-closing, tight-fitting, noncombustible lid will allow a fire to be contained within the vessel and for the fire to be cut off from any source of additional air.

The exception covers situations in which the use of a vessel to contain and extinguish the fire may be impractical. These processes can use a fire-extinguishing device that operates automatically or manually.

5705.3.2 Bonding of vessels. Where differences of potential could be created, vessels containing Class I liquids or liquids handled at or above their *flash points* shall be electrically connected by bond wires, ground cables, piping or similar means to a static grounding system to maintain equipment at the same electrical potential to prevent sparking.

❖ Static electricity will spark between surfaces with different electrical potential. This spark is an ignition source for Class I liquids. Vessels used to contain Class I liquids near or above their flash points are to be bonded using wires, ground cables, metal piping or other similar means that will carry current.

INTERNATIONAL CODE COUNCIL®
Copyright © 2015 ICC. ALL RIGHTS RESERVED. Accessed by David Dammon on Jun 21, 2017 12:30:52 PM pursuant to License Agreement with ICC. No further reproduction or distribution authorized. ANY UNAUTHORIZED REPRODUCTION OR DISTRIBUTION IS A VIOLATION OF THE FEDERAL COPYRIGHT ACT AND THE LICENSE AGREEMENT, AND SUBJECT TO CIVIL AND CRIMINAL PENALTIES THEREUNDER.

5705.3.3 Heating, lighting and cooking appliances. Heating, lighting and cooking appliances that utilize Class I liquids shall not be operated within a building or structure.

Exception: Operation in single-family *dwellings*.

❖ The use of Class I liquids for the operation of heating, lighting and cooking appliances is not permitted inside of a building or structure except for a single-family dwelling.

5705.3.4 Location of processing vessels. Processing vessels shall be located with respect to distances to *lot lines* of adjoining property that can be built on, in accordance with Tables 5705.3.4(1) and 5705.3.4(2).

Exception: Where the exterior wall facing the adjoining *lot line* is a blank wall having a *fire-resistance rating* of not less than 4 hours, the *fire code official* is authorized to modify the distances. The distance shall be not less than that set forth in the *International Building Code*, and where Class IA or unstable liquids are involved, explosion control shall be provided in accordance with Section 911.

❖ Adjacent property is protected from processing vessels by separation. The three factors to be considered in determining the minimum clearance to protect property are the processing vessel operating pressure, the processing vessel capacity and the stability of the flammable or combustible liquid. The larger these factors become, the greater the clearance needed for safety. Processing an unstable flammable or combustible liquid will require a greater clearance than a similar operation using a stable flammable or combustible liquid. Tables 5705.3.4(1) and 5705.3.4(2) are used together to determine the minimum clearance required to protect adjacent property or important buildings on the same property.

The exception allows fire-resistant construction to be substituted for clearance to a property. A 4-hour fire-resistant exterior wall without any openings may be used to reduce the clearance to as little as 30 feet (9144 mm). The fire code official can use the requirements in IBC Section 415.6.1, along with a 4-hour fire-resistance-rated exterior wall without any openings, to approve smaller clearance to a property line. The clearances in IBC Section 415.6.1 establish the minimum clearance.

For process vessels using Class I liquids, this exception requires that the building be designed for explosion control as well as having a 4-hour fire-resistant exterior wall without any openings to take advantage of the smaller clearance.

Here are some sample problems to determine the separation for processing vessels:

Example 1:

Processing vessel:
Tank capacity = 800 gallons (3028 L)
Emergency relief venting = 2 psig (14 kPa)

Flammable liquid is stable.

Factors from Table 5705.3.4(1):
Emergency relief venting under 2.5 psig (17 kPa) with stable liquid = 1

Minimum distance from Table 5705.3.4(2):
Distance from lot line or opposite side of public way = 15 feet (4572 mm)
Distance to nearest side of public way or important building = 5 feet (1524 mm)

Adjustment to the minimum distance resulting from emergency relief venting and stability of flammable liquid:
Distance from lot line or opposite side of public way:
1 (15 feet) = 15 feet (4572 mm)
Distance to nearest side of public way or important building:
1 (5 feet) = 5 feet (1524 mm)

Example 2:

Processing vessel:
Tank capacity = 800 gallons (3028 L)
Emergency relief venting = 3 psig (21 kPa)

Flammable liquid is stable.

Factors from Table 5705.3.4(1):
Emergency relief venting over 2.5 psig (17 kPa) with stable liquid = 2.5

Minimum distance from Table 5705.3.4(2):
Distance from lot line or opposite side of public way = 15 feet (4572 mm)
Distance to nearest side of public way or important building = 5 feet (1524 mm)

Adjustment to the minimum distance resulting from emergency relief venting and stability of flammable liquid:
Distance from lot line or opposite side of public way:
2.5 (15 feet) = 37.5 feet (11 430 mm)
Distance to nearest side of public way or important building: 2.5 (5 feet) = 12.5 feet (3810 mm)

Example 3:

Processing vessel:
Tank capacity = 800 gallons (3028 L)
Emergency relief venting = 2 psig (14 kPa)

Flammable liquid is stable.

Factors from Table 5705.3.4(1):
Emergency relief venting under 2.5 psig (17 kPa) with stable liquid = 1.5

Minimum distance from Table 5705.3.4(2):
Distance from lot line or opposite side of public way = 15 feet (4572 mm)
Distance to nearest side of public way or important building = 5 feet (1524 mm)

INTERNATIONAL CODE COUNCIL®
Copyright © 2015 ICC. ALL RIGHTS RESERVED. Accessed by David Dammon on Jun 21, 2017 12:30:52 PM pursuant to License Agreement with ICC. No further reproduction or distribution authorized. ANY UNAUTHORIZED REPRODUCTION OR DISTRIBUTION IS A VIOLATION OF THE FEDERAL COPYRIGHT ACT AND THE LICENSE AGREEMENT, AND SUBJECT TO CIVIL AND CRIMINAL PENALTIES THEREUNDER.

Adjustment to the minimum distance resulting from emergency relief venting and stability of flammable liquid:
Distance from lot line or opposite side of public way:
1.5 (15 feet) = 22.5 feet (6858 mm)
Distance to nearest side of public way or important building: 1.5 (5 feet) = 7.5 feet (2286 mm)

Example 4:

Processing vessel:
Tank capacity = 800 gallons (3028 L)
Emergency relief venting = 3 psig (17 kPa)

Flammable liquid is unstable.

Factors from Table 5705.3.4(1):
Emergency relief venting over 2.5 psig (17 kPa) with unstable liquid = 4

Minimum distance from Table 5705.3.4(2):
Distance from lot line or opposite side of public way = 15 feet (4572 mm)
Distance to nearest side of public way or important building = 5 feet (1524 mm)

Adjustment to the minimum distance resulting from emergency relief venting and stability of flammable liquid:
Distance from lot line or opposite side of public way:
4 (15 feet) = 60 feet (18 288 mm)
Distance to nearest side of public way or important building: 4 (5 feet) = 20 feet (6096 mm)

TABLE 5705.3.4(1). See below.

❖ Processing vessels containing flammable and combustible liquids must be located a minimum distance from property lines. The clearance is to protect flammable and combustible liquids from ignition sources that are not under the control of facility operators. This clearance also protects the property adjacent to the facility.

The separation varies depending on the type of flammable and combustible liquid and operating pressure of the processing vessel. The table divides flammable and combustible liquids into two categories: stable and unstable. An unstable liquid can self-react when exposed to heat. This autoignition property requires that the separation distance for an unstable flammable or combustible liquid be several times greater than for a stable flammable or combustible liquid.

The operating pressure of the processing vessel is divided into two categories: 2.5 psig (17 kPa) or less and over 2.5 psig (17 kPa). Pressure can be the cause of damage to the processing system, and this damage could result in a vapor or liquid leak of flammable or combustible liquid. A higher pressure would also force more vapor or liquid out of the system during a leak. To provide protection from a processing vessel with an operating pressure greater than 2.5 psig (17 kPa), the separation distance is several times greater than for a processing vessel with an operating pressure 2.5 psig (17 kPa) or less. These two factors are cumulative. One or both of these factors may increase the separation distance. This table provides the factor to be used to calculate the separation distance listed in Table 5705.3.4(2).

TABLE 5705.3.4(2). See page 57-56.

❖ The separation distance from the processing vessel is affected by the tank capacity of the processing vessel and the object. The larger the tank capacity, the greater the separation distance. This greater separation distance is to handle the potential pool fire with the tank capacity. The separation distance is greater to a property line to protect the processing vessel from ignition sources that are not under control of the facility operators, as well as to protect the adjacent property from a potential fire. The separation distance to an important building on the property or to a public way is the same or less than for a property line. Because buildings on the property are under the control and operation of the facility operators, these buildings should be maintained and operated to prevent an ignition source. The separation from a public way is handled the same as from an important building on the property. The public way does not have buildings that have ignition sources, so the potential is not as great as from an adjacent property.

5705.3.5 Quantity limits for use. Liquid use quantity limitations shall comply with Sections 5705.3.5.1 through 5705.3.5.3.

❖ The volume of flammable and combustible liquid is controlled to limit the potential fire. The smaller the quantity, the smaller the potential fire. The dispensing and mixing of flammable and combustible liquids indoors can generate a vapor-air mixture. If this vapor-air mixture is ignited, the size of the fire could increase because of the availability of flammable and combustible liquid in the area. Limiting the volume will help control the overall size of any fire.

TABLE 5705.3.4(1)
SEPARATION OF PROCESSING VESSELS FROM LOT LINES

PROCESSING VESSELS WITH EMERGENCY RELIEF VENTING	LOCATION[a]	
	Stable liquids	Unstable liquids
Not in excess of 2.5 psig	Table 5705.3.4(2)	2.5 times Table 5705.3.4(2)
Over 2.5 psig	1.5 times Table 5705.3.4(2)	4 times Table 5705.3.4(2)

For SI: 1 pound per square inch gauge = 6.895 kPa.

a. Where protection of exposures by a public fire department or private fire brigade capable of providing cooling water streams on structures is not provided, distances shall be doubled.

INTERNATIONAL CODE COUNCIL®
Copyright © 2015 ICC. ALL RIGHTS RESERVED. Accessed by David Dammon on Jun 21, 2017 12:30:52 PM pursuant to License Agreement with ICC. No further reproduction or distribution authorized. ANY UNAUTHORIZED REPRODUCTION OR DISTRIBUTION IS A VIOLATION OF THE FEDERAL COPYRIGHT ACT AND THE LICENSE AGREEMENT, AND SUBJECT TO CIVIL AND CRIMINAL PENALTIES THEREUNDER.

5705.3.5.1 Maximum allowable quantity per control area. Indoor use, dispensing and mixing of flammable and *combustible liquids* shall not exceed the *maximum allowable quantity per control area* indicated in Table 5003.1.1(1) and shall not exceed the additional limitations set forth in Section 5705.3.5.

Exception: Cleaning with Class I, II and IIIA liquids shall be in accordance with Section 5705.3.6.

Use of hazardous production material flammable and *combustible liquids* in Group H-5 occupancies shall be in accordance with Chapter 27.

❖ The maximum quantity per control area for use, dispensing and mixing of flammable and combustible liquids indoors is identical to that for indoor storage (see Section 5704.3.3) with some additional limits caused by the processing operation. Table 5003.1.1(1) contains the quantity permitted per control area. By limiting the quantity per control area, the flammable and combustible liquid hazard is reduced to a level that the fire protection can handle and that will not interfere with egress requirements, which results in a building that can function and provide a reasonable degree of safety.

Cleaning with Class I, II, and IIIA liquids is covered in Section 5705.3.6.

The use of flammable and combustible liquids in a semiconductor fabrication facility is covered by Chapter 27.

5705.3.5.2 Occupancy quantity limits. The following limits for quantities of flammable and *combustible liquids* used, dispensed or mixed based on occupancy classification shall not be exceeded:

Exception: Cleaning with Class I, II, or IIIA liquids shall be in accordance with Section 5705.3.6.

1. Group A occupancies: Quantities in Group A occupancies shall not exceed that necessary for demonstration, treatment, laboratory work, maintenance purposes and operation of equipment, and shall not exceed quantities set forth in Table 5003.1.1(1).
2. Group B occupancies: Quantities in drinking, dining, office and school uses within Group B occupancies shall not exceed that necessary for demonstration, treatment, laboratory work, maintenance purposes and operation of equipment, and shall not exceed quantities set forth in Table 5003.1.1(1).
3. Group E occupancies: Quantities in Group E occupancies shall not exceed that necessary for demonstration, treatment, laboratory work, maintenance purposes and operation of equipment and shall not exceed quantities set forth in Table 5003.1.1(1).
4. Group F occupancies: Quantities in dining, office and school uses within Group F occupancies shall not exceed that necessary for demonstration, laboratory work, maintenance purposes and operation of equipment, and shall not exceed quantities set forth in Table 5003.1.1(1).
5. Group I occupancies: Quantities in Group I occupancies shall not exceed that necessary for demonstration, laboratory work, maintenance purposes and operation of equipment, and shall not exceed quantities set forth in Table 5003.1.1(1).
6. Group M occupancies: Quantities in dining, office and school uses within Group M occupancies shall not exceed that necessary for demonstration, laboratory work, maintenance purposes and operation of equipment, and shall not exceed quantities set forth in Table 5003.1.1(1).
7. Group R occupancies: Quantities in Group R occupancies shall not exceed that necessary for maintenance purposes and operation of equipment, and shall not exceed quantities set forth in Table 5003.1.1(1).

TABLE 5705.3.4(2)
REFERENCE TABLE FOR USE WITH TABLE 5705.3.4(1)

TANK CAPACITY (gallons)	MINIMUM DISTANCE FROM LOT LINE OF A LOT WHICH IS OR CAN BE BUILT UPON, INCLUDING THE OPPOSITE SIDE OF A PUBLIC WAY (feet)	MINIMUM DISTANCE FROM NEAREST SIDE OF ANY PUBLIC WAY OR FROM NEAREST IMPORTANT BUILDING ON THE SAME PROPERTY (feet)
275 or less	5	5
276 to 750	10	5
751 to 12,000	15	5
12,001 to 30,000	20	5
30,001 to 50,000	30	10
50,001 to 100,000	50	15
100,001 to 500,000	80	25
500,001 to 1,000,000	100	35
1,000,001 to 2,000,000	135	45
2,000,001 to 3,000,000	165	55
3,000,001 or more	175	60

For SI: 1 foot = 304.8 mm, 1 gallon = 3.785 L.

INTERNATIONAL CODE COUNCIL®
Copyright © 2015 ICC. ALL RIGHTS RESERVED. Accessed by David Dammon on Jun 21, 2017 12:30:52 PM pursuant to License Agreement with ICC. No further reproduction or distribution authorized. ANY UNAUTHORIZED REPRODUCTION OR DISTRIBUTION IS A VIOLATION OF THE FEDERAL COPYRIGHT ACT AND THE LICENSE AGREEMENT, AND SUBJECT TO CIVIL AND CRIMINAL PENALTIES THEREUNDER.

8. Group S occupancies: Quantities in dining and office uses within Group S occupancies shall not exceed that necessary for demonstration, laboratory work, maintenance purposes and operation of equipment and shall not exceed quantities set forth in Table 5003.1.1(1).

❖ Flammable and combustible liquids may be used in occupancies other than Group H. The control of these liquids is based on the quantity in that occupancy.

The limitations for occupancies are based on the quantity limits for the storage of flammable and combustible liquids in containers and portable tanks in other occupancies. These other occupancies are not designed for flammable and combustible liquids so there are limitations on the quantity of flammable and combustible liquids that can be stored or used in these occupancies.

The use of flammable and combustible liquids must be consistent with the function of the occupancy. This prevents these other occupancies from being converted into Group H. The MAQs of flammable and combustible liquids are listed in Table 5003.1.1(1). The occupancies covered by these limitations are Groups A, B, E, F, I, M, R and S.

5705.3.5.3 Quantities exceeding limits for control areas. Quantities exceeding the *maximum allowable quantity per control area* indicated in Sections 5705.3.5.1 and 5705.3.5.2 shall be in accordance with the following:

1. For *open systems,* indoor use, dispensing and mixing of flammable and *combustible liquids* shall be within a room or building complying with the *International Building Code* and Sections 5705.3.7.1 through 5705.3.7.5.
2. For *closed systems,* indoor use, dispensing and mixing of flammable and *combustible liquids* shall be within a room or building complying with the *International Building Code* and Sections 5705.3.7 through 5705.3.7.4 and Section 5705.3.7.6.

❖ It is possible to have a quantity of flammable and combustible liquids greater than allowed in Sections 5704.3.5 and 5705.3.5.2. To use, dispense and mix flammable and combustible liquids indoors in quantities larger than approved in this section, the building or room must be designed and constructed to provide additional protection. The design and construction requirements are based on the potential for the use, dispensing and mixing to generate vapors.

5705.3.6 Cleaning with flammable and combustible liquids. Cleaning with Class I, II and IIIA liquids shall be in accordance with Sections 5705.3.6.1 through 5705.3.6.2.7.

Exceptions:

1. Dry cleaning shall be in accordance with Chapter 21.
2. Spray-nozzle cleaning shall be in accordance with Section 2403.3.5.

❖ Cleaning machines using flammable or combustible liquids may generate a vapor-air mixture in the flammable range. The use of cleaning machines using flammable or combustible liquids is regulated to control the vapor-air mixture, ignition sources and quantity of flammable or combustible liquids in the machines and the work area.

The exception directs the reader to other chapters for a detailed discussion of dry cleaning operations and spray nozzle cleaning.

5705.3.6.1 Cleaning operations. Class IA liquids shall not be used for cleaning. Cleaning with Class IB, IC or II liquids shall be conducted as follows:

1. In a room or building in accordance with Section 5705.3.7; or
2. In a parts cleaner *listed*, *labeled* and approved for the purpose in accordance with Section 5705.3.6.2.

Exception: Materials used in commercial and industrial process-related cleaning operations in accordance with other provisions of this code and not involving facilities maintenance cleaning operations.

❖ The lower flash point for a Class IA liquid is the reason for prohibiting its use as a cleaning solution. Class IB, IC and II liquids can be used in rooms designed and constructed with adequate fire protection, spillage control and ventilation, or in a machine that is designed to protect and control the liquid. The exception is provided to make it clear that process-related cleaning operations not considered part of facility maintenance cleaning and having a good safety history are not included in the operations regulated by this section.

5705.3.6.2 Listed and approved machines. Parts cleaning and degreasing conducted in *listed* and *approved* machines in accordance with Section 5705.3.6.1 shall be in accordance with Sections 5705.3.6.2.1 through 5705.3.6.2.7.

❖ Prior to the development of parts-washing machines, the typical method of washing automotive or other machinery parts was primitive and dangerous and typically consisted of allowing parts to soak in an open bucket of gasoline or low-flash-point solvent. Labeled machines used for the washing of parts are similar to the spray equipment cleaning machines discussed in the commentary to Section 2403.3.5.1. Such machines consist of a sink-like open container set upon a solvent reservoir or connected to it by approved hoses. A noncombustible lid on the sink is typically held in the open position by a fusible element that will melt and allow the lid to close in the event of a fire in the sink [see Commentary Figure 5705.3.6.2(1)].

Some labeled parts washing machines do not include a solvent reservoir but are simply a solvent-filled, sink-like rinsing tank in which parts may be soaked, manually agitated or scrubbed with a brush, but in which circulation of the solvent does not occur [see Commentary Figure 5705.3.6.2(2)]. The manufacturers' installation instructions are evaluated as part of the labeling process and, thus, must be care-

INTERNATIONAL CODE COUNCIL®
Copyright © 2015 ICC. ALL RIGHTS RESERVED. Accessed by David Dammon on Jun 21, 2017 12:30:52 PM pursuant to License Agreement with ICC. No further reproduction or distribution authorized. ANY UNAUTHORIZED REPRODUCTION OR DISTRIBUTION IS A VIOLATION OF THE FEDERAL COPYRIGHT ACT AND THE LICENSE AGREEMENT, AND SUBJECT TO CIVIL AND CRIMINAL PENALTIES THEREUNDER.

fully followed when setting up and using these machines.

5705.3.6.2.1 Solvents. Solvents shall be classified and shall be compatible with the machines within which they are used.

❖ Manufacturers of labeled parts-washing machines either manufacture and market or recommend specific solvents that may be used in their machines in order to maintain the level of safety contemplated in the design of the machine. The testing and labeling process is based on only the manufacturer-recommended solvents being used in the machines. Typically, these are Class II or III solvents.

5705.3.6.2.2 Machine capacities. The quantity of solvent shall not exceed the *listed* design capacity of the machine for the solvent being used with the machine.

❖ The machine listing states the quantity of solvent permitted. The listing agency tests the machine to determine the maximum capacity of flammable or combustible liquid. The listing indicates that the machine is safe for use based on the quantities permitted.

5705.3.6.2.3 Solvent quantity limits. Solvent quantities shall be limited as follows:

1. Machines without remote solvent reservoirs shall be limited to quantities set forth in Section 5705.3.5.
2. Machines with remote solvent reservoirs using Class I liquids shall be limited to quantities set forth in Section 5705.3.5.
3. Machines with remote solvent reservoirs using Class II liquids shall be limited to 35 gallons (132 L) per machine. The total quantities shall not exceed an aggregate of 240 gallons (908 L) per *control area* in buildings not equipped throughout with an *approved* automatic sprinkler system and an aggregate of 480 gallons (1817 L) per *control area* in buildings equipped throughout with an *approved* automatic sprinkler system in accordance with Section 903.3.1.1.
4. Machines with remote solvent reservoirs using Class IIIA liquids shall be limited to 80 gallons (303 L) per machine.

❖ This section lists four restrictions on solvent quantities in machines:

1. A machine without a remote solvent reservoir is under the quantity limitations for a control area. The quantity of solvent in the machine and any other flammable and combustible liquids in the control area cannot exceed the maximum quantity permitted under Table 5003.1.1(1). These quantities can be increased by the application of Section 5705.3.5.3.
2. A machine with a remote solvent reservoir using Class IB or IC liquids is treated the same as a machine without a remote solvent reservoir.
3. A machine with a remote solvent reservoir using Class II liquid is permitted to have larger quantities than Table 5003.1.1(1) allows. The allowable quantity is increased even more if the control area has an automatic sprinkler system. The safety features built into the machine permit the increase in Class II solvent quantities for each machine and for the control area.

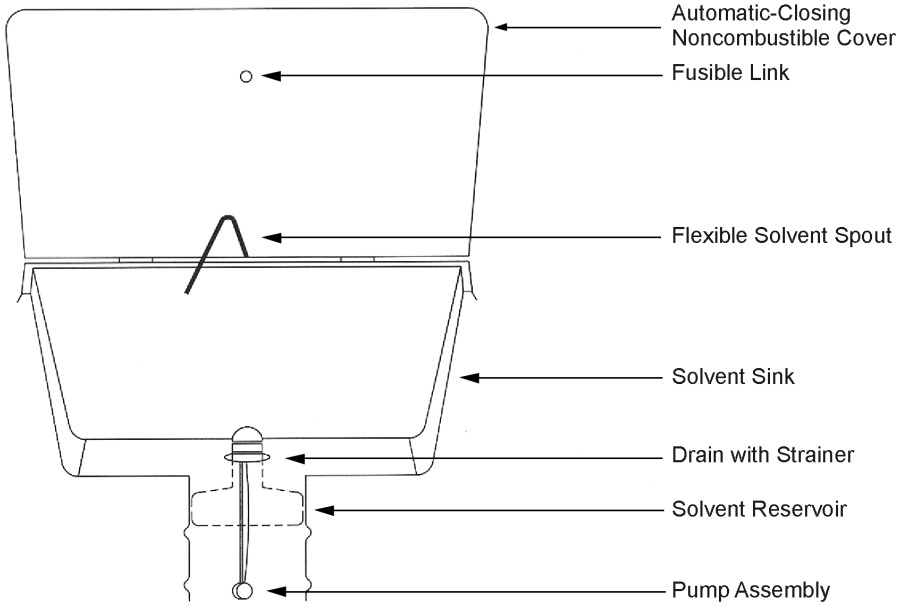

Figure 5705.3.6.2(1)
PARTS CLEANING MACHINE WITH SOLVENT RESERVOIR

INTERNATIONAL CODE COUNCIL®
Copyright © 2015 ICC. ALL RIGHTS RESERVED. Accessed by David Dammon on Jun 21, 2017 12:30:52 PM pursuant to License Agreement with ICC. No further reproduction or distribution authorized. ANY UNAUTHORIZED REPRODUCTION OR DISTRIBUTION IS A VIOLATION OF THE FEDERAL COPYRIGHT ACT AND THE LICENSE AGREEMENT, AND SUBJECT TO CIVIL AND CRIMINAL PENALTIES THEREUNDER.

4. A machine with a remote solvent reservoir using Class IIIA liquid is permitted to have 80 gallons (303 L) per machine.

5705.3.6.2.4 Immersion soaking of parts. Work areas of machines with remote solvent reservoirs shall not be used for immersion soaking of parts.

❖ The action of immersion soaking of parts for a machine with a remote reservoir would have the effect of changing the machine from having a remote reservoir to a machine without a remote reservoir. This function of immersion soaking of parts changes the justification for permitting machines with a remote reservoir to have greater quantities of solvent than machines without a remote reservoir.

5705.3.6.2.5 Separation. Multiple machines shall be separated from each other by a distance of not less than 30 feet (9144 mm) or by a *fire barrier* with a minimum 1-hour *fire-resistance rating*.

❖ Machines are isolated from one another to reduce the potential of a fire from one machine affecting an adjacent machine. The isolation can be by a clearance of 30 feet (9144 mm) or by a 1-hour fire-resistant barrier.

5705.3.6.2.6 Ventilation. Machines shall be located in areas adequately ventilated to prevent accumulation of vapors.

❖ The machines are to be located in areas having mechanical or natural ventilation complying with Section 5004.3 to remove the vapors in order to prevent the vapor-air mixture from accumulating in concentrations above the LFL.

5705.3.6.2.7 Installation. Machines shall be installed in accordance with their listings.

❖ Listed machines normally have written installation instructions that must be followed to make certain the machine is installed correctly. A machine installed incorrectly could generate vapors, leaks or sparks.

5705.3.7 Rooms or buildings for quantities exceeding the maximum allowable quantity per control area. Where required by Section 5705.3.5.3 or 5705.3.6.1, rooms or buildings used for the use, dispensing or mixing of flammable and *combustible liquids* in quantities exceeding the maximum allowable quantity per control area shall be in accordance with Sections 5705.3.7.1 through 5705.3.7.6.3.

❖ Some uses of flammable and combustible liquids may require a quantity that is greater than the MAQ. These sections state requirements for a room or building so that a greater quantity of flammable and combustible liquid may be used.

5705.3.7.1 Construction, location and fire protection. Rooms or buildings classified in accordance with the *International Building Code* as Group H-2 or H-3 occupancies based on use, dispensing or mixing of flammable or *combustible liquids* shall be constructed in accordance with the *International Building Code*.

❖ Group H-2 occupancy is the classification for a facility that uses or stores Class I, II or III liquids in open con-

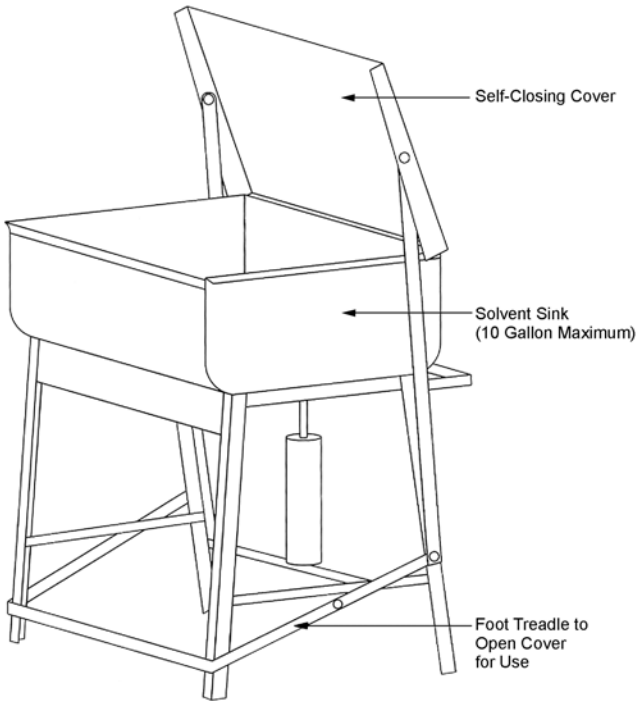

For SI: 1 gallon = 3.785 L.

Figure 5705.3.6.2(2)
PARTS CLEANING MACHINE WITHOUT SOLVENT RESERVOIR

INTERNATIONAL CODE COUNCIL®
Copyright © 2015 ICC. ALL RIGHTS RESERVED. Accessed by David Dammon on Jun 21, 2017 12:30:52 PM pursuant to License Agreement with ICC. No further reproduction or distribution authorized. ANY UNAUTHORIZED REPRODUCTION OR DISTRIBUTION IS A VIOLATION OF THE FEDERAL COPYRIGHT ACT AND THE LICENSE AGREEMENT, AND SUBJECT TO CIVIL AND CRIMINAL PENALTIES THEREUNDER.

tainers and systems, or in closed containers or systems under a pressure greater than 15 psig (103 kPa). Group H-3 occupancy is the classification for a facility that uses or stores Class I, II or III liquids in closed containers or systems under a pressure of 15 psig (103 kPa) or less. IBC Sections 414 and 415 give guidance for determining the construction requirements for these two occupancies.

5705.3.7.2 Basements. In rooms or buildings classified in accordance with the *International Building Code* as Group H-2 or H-3, dispensing or mixing of flammable or *combustible liquids* shall not be conducted in *basements*.

❖ The mixing and dispensing of flammable and combustible liquids may generate vapors. The accumulation of flammable and combustible liquids or vapors in a basement could develop into a hazardous condition. These operations are prohibited in a basement of a Group H-2 or H-3 occupancy.

5705.3.7.3 Fire protection. Rooms or buildings classified in accordance with the *International Building Code* as Group H-2 or H-3 occupancies shall be equipped with an *approved* automatic fire-extinguishing system in accordance with Chapter 9.

❖ Group H-2 and H-3 occupancies must have an automatic sprinkler system according to Section 903.2.5.1 of the code. Any building that can be classified as a Group H-2 or H-3 occupancy that is not equipped with an automatic sprinkler system is in violation of the code.

5705.3.7.4 Doors. Interior doors to rooms or portions of such buildings shall be self-closing fire doors in accordance with the *International Building Code*.

❖ Interior fire-resistance-rated wall construction used to separate or isolate portions of a building must have fire-resistance-rated doors in the openings in the wall. A fire-resistance-rated interior door consists of the door, door frame, latches, locks, hinges, closers and any other hardware that is necessary for the door to function. The door is to be self-closing to ensure that the door is not open during a fire. IBC Section 716 contains the criteria for the fire-resistance-rated door. Any obstruction to the operation of or damage to this door that prevents the door from forming a barrier with the fire-resistance-rated wall must be removed or repaired.

5705.3.7.5 Open systems. Use, dispensing and mixing of flammable and *combustible liquids* in *open systems* shall be in accordance with Sections 5705.3.7.5.1 through 5705.3.7.5.3.

❖ Rooms and buildings where flammable and combustible liquids are dispensed, mixed or used in open containers or open systems must be designed and constructed to control the potential fire hazard created by the liquid and its vapor.

5705.3.7.5.1 Ventilation. Continuous mechanical ventilation shall be provided at a rate of not less than 1 cfm per square foot [0.00508 $m^3/(s \cdot m^2)$] of floor area over the design area. Provisions shall be made for introduction of makeup air in such a manner to include all floor areas or pits where vapors can collect. Local or spot ventilation shall be provided where needed to prevent the accumulation of hazardous vapors. Ventilation system design shall comply with the *International Building Code* and *International Mechanical Code*.

Exception: Where natural ventilation can be shown to be effective for the materials used, dispensed or mixed.

❖ The requirements of this section for a mechanical ventilation system are identical to those in Section 5004.3. The mechanical ventilation system must remove the vapors to prevent accumulation in concentrations in the flammable range for the flammable and combustible liquids being used.

The exception allows use of natural ventilation complying with Section 5004.3 that can be demonstrated to be effective for the flammable and combustible liquids being used.

5705.3.7.5.2 Explosion control. Explosion control shall be provided in accordance with Section 911.

❖ Refer to Section 911 for deflagration venting to direct the force of an explosion out of the structure into an unoccupied area. That section also references NFPA 69, which may require monitoring of gases and other methods to suppress factors affecting an explosion.

5705.3.7.5.3 Spill control and secondary containment. Spill control shall be provided in accordance with Section 5703.4 where Class I, II or IIIA liquids are dispensed into containers exceeding a 1.3-gallon (5 L) capacity or mixed or used in open containers or systems exceeding a 5.3-gallon (20 L) capacity. Spill control and secondary containment shall be provided in accordance with Section 5703.4 where the capacity of an individual container exceeds 55 gallons (208 L) or the aggregate capacity of multiple containers or tanks exceeds 100 gallons (378.5 L).

❖ Spill control complying with Section 5703.4 must be built into a room or a building where Class I, II or IIIA liquids are used in open containers or open systems that dispense the liquid into containers greater than 1.3 gallons (5 L), or mixed or used in quantities greater than 5.3 gallons (20 L). In addition, secondary containment must be provided for individual containers greater than 55 gallons or multiple containers with an aggregate capacity greater than 100 gallons. This section references Section 5004.2, which discusses the use of liquid-tight floors, curbs, dikes and drainage systems to divert the liquid to a location where it can be contained and safely handled.

5705.3.7.6 Closed systems. Use or mixing of flammable or *combustible liquids* in *closed systems* shall be in accordance with Sections 5705.3.7.6.1 through 5705.3.7.6.3.

❖ Rooms and buildings where flammable and combustible liquids are dispensed, mixed or used in closed systems must be designed and constructed to control the potential fire hazard created by the liquid and its vapor.

INTERNATIONAL CODE COUNCIL®
Copyright © 2015 ICC. ALL RIGHTS RESERVED. Accessed by David Dammon on Jun 21, 2017 12:30:52 PM pursuant to License Agreement with ICC. No further reproduction or distribution authorized. ANY UNAUTHORIZED REPRODUCTION OR DISTRIBUTION IS A VIOLATION OF THE FEDERAL COPYRIGHT ACT AND THE LICENSE AGREEMENT, AND SUBJECT TO CIVIL AND CRIMINAL PENALTIES THEREUNDER.

5705.3.7.6.1 Ventilation. *Closed systems* designed to be opened as part of normal operations shall be provided with ventilation in accordance with Section 5705.3.7.5.1.

❖ The requirements of this section for a mechanical ventilation system are identical to those in Section 5004.3. The mechanical ventilation system must remove the vapors to prevent accumulation in concentrations in the flammable range for the flammable and combustible liquids being used. Natural ventilation complying with Section 5004.3 that can be demonstrated to be effective for the flammable and combustible liquids being used is an acceptable alternative.

5705.3.7.6.2 Explosion control. Explosion control shall be provided where an explosive environment can occur as a result of the mixing or use process. Explosion control shall be designed in accordance with Section 911.

Exception: Where process vessels are designed to contain fully the worst-case explosion anticipated within the vessel under process conditions considering the most likely failure.

❖ Refer to Section 911 for deflagration venting to direct the force of an explosion out of the structure into an unoccupied area. This section also references NFPA 69, which may require monitoring of gases and other methods to suppress factors affecting an explosion.

The exception recognizes that a closed system can be designed to absorb the forces from an internal explosion. If the closed system is designed to resist the worst-case explosion, the room or building does not have to be designed to comply with Section 911.

5705.3.7.6.3 Spill control and secondary containment. Spill control shall be provided in accordance with Section 5703.4 where flammable or *combustible liquids* are dispensed into containers exceeding a 1.3-gallon (5 L) capacity or mixed or used in open containers or systems exceeding a 5.3-gallon (20 L) capacity. Spill control and secondary containment shall be provided in accordance with Section 5703.4 where the capacity of an individual container exceeds 55 gallons (208 L) or the aggregate capacity of multiple containers or tanks exceeds 1,000 gallons (3785 L).

❖ Spill control complying with Section 5703.4 must be designed into a room or a building where flammable or combustible liquids are used in closed systems that dispense the liquid into containers greater than 1.3 gallons (5 L), or mixed or used in quantities greater than 5.3 gallons (20 L). In addition, secondary containment must be provided for individual containers greater than 55 gallons or multiple containers with an aggregate capacity greater than 1,000 gallons. This section references Section 5004.2, which discusses the use of liquid-tight floors, curbs, dikes and drainage systems to divert the liquid to a location where it can be contained and safely handled. This is identical to the requirement for an open system except that the aggregate quantity for a closed system is 1,000 gallons (3785 L) and only 100 gallons (379 L) for an open system.

5705.3.8 Use, dispensing and handling outside of buildings. Outside use, dispensing and handling shall be in accordance with Sections 5705.3.8.1 through 5705.3.8.4.

Dispensing of liquids into motor vehicle fuel tanks at motor fuel-dispensing facilities shall be in accordance with Chapter 23.

❖ Dispensing and handling of flammable and combustible liquids outside of a building requires that the location be protected from ignition sources by separating it from structures, property lines, streets, etc. Spill control and drainage control must be designed into the outside location to prevent flammable and combustible liquids from affecting other areas. Dispensing into motor vehicle fuel tanks is covered in Chapter 23.

5705.3.8.1 Spill control. Outside use, dispensing and handling areas shall be provided with spill control as set forth in Section 5703.4.

❖ Outside use, dispensing and handling areas must have spill control according to Section 5703.4. Section 5004.2 discusses the use of liquid-tight floors, curbs, dikes and drainage systems to divert the liquid to a location where it can be contained and safely handled.

5705.3.8.2 Location on property. Dispensing activities that exceed the quantities set forth in Table 5705.3.8.2 shall not be conducted within 15 feet (4572 mm) of buildings or combustible materials or within 25 feet (7620 mm) of building openings, *lot lines*, public streets, public alleys or *public ways*. Dispensing activities that exceed the quantities set forth in Table 5705.3.8.2 shall not be conducted within 15 feet (4572 mm) of storage of Class I, II or III liquids unless such liquids are stored in tanks that are *listed* and *labeled* as 2-hour protected tank assemblies in accordance with UL 2085.

Exceptions:

1. The requirements shall not apply to areas where only the following are dispensed: Class III liquids; liquids that are heavier than water; water-miscible liquids; and liquids with viscosities greater than 10,000 centipoise (cp) (10 Pa • s).
2. Flammable and *combustible liquid* dispensing in refineries, chemical plants, process facilities, gas and crude oil production facilities and oil-blending and packaging facilities, terminals and bulk plants.

❖ The dispensing of flammable and combustible liquids can generate vapors. Flammable and combustible liquid exceeding the quantities in Table 5705.3.8.2 must be separated from combustibles, buildings, other property, public property, etc. The separation allows the vapor to disperse to a vapor-air mixture below its LFL. The clearance isolates the dispensing area from ignition sources and other fuel sources. When the quantity of flammable and combustible liquid exceeds the quantity in Table 5705.3.8.2, the

INTERNATIONAL CODE COUNCIL®
Copyright © 2015 ICC. ALL RIGHTS RESERVED. Accessed by David Dammon on Jun 21, 2017 12:30:52 PM pursuant to License Agreement with ICC. No further reproduction or distribution authorized. ANY UNAUTHORIZED REPRODUCTION OR DISTRIBUTION IS A VIOLATION OF THE FEDERAL COPYRIGHT ACT AND THE LICENSE AGREEMENT, AND SUBJECT TO CIVIL AND CRIMINAL PENALTIES THEREUNDER.

storage tank for the flammable or combustible liquid must be protected by separation from the dispensing area. The clearance between the storage tank and the dispensing area can be reduced if the storage tank is a 2-hour protected tank in accordance with UL 2085.

Exception 1 is based on the viscosity of the hazardous liquid. Class III liquids, liquids heavier than water, water-miscible liquids and liquids with a viscosity greater than 10,000 cp need not be isolated. The isolation is not necessary for liquids with higher flash points, liquids that can be mixed with water, liquids that can be covered by a barrier of water or liquids that are slow moving. These liquids can be controlled by other procedures rather than mandate a clearance.

Exception 2 exempts facilities that are designed specifically for processing, manufacturing, storage or transfer of large quantities of flammable and combustible liquids.

Table 5705.3.8.2. See below.

❖ The quantities of flammable and combustible liquids dispensed outdoors are limited when the dispensing is near a building. This table contains the maximum volume of flammable and combustible liquids that can be dispensed in an outdoor control area. An outdoor control area is defined as the area within 15 feet (4572 mm) of a building, combustible materials or a Class I, II or III liquid storage tank unless the storage tanks have 2-hour fire protection, or within 25 feet (7620 mm) of a building opening, a property line, a street, an alley or a public way. This quantity limit protects the vapor of flammable or combustible liquids from ignition sources. It also protects the building and adjacent property from a fire involving flammable or combustible liquids.

TABLE 5705.3.8.2
MAXIMUM ALLOWABLE QUANTITIES FOR DISPENSING OF FLAMMABLE AND COMBUSTIBLE LIQUIDS IN OUTDOOR CONTROL AREAS[a, b]

CLASS OF LIQUID	QUANTITY (gallons)
Flammable	
Class IA	10
Class IB	15
Class IC	20
Combination Class IA, IB and IC	30[c]
Combustible	
Class II	30
Class IIIA	80
Class IIIB	3,300

For SI: 1 gallon = 3.785 L.

a. For definition of "Outdoor Control Area," see Section 5002.1.

b. The fire code official is authorized to impose special conditions regarding locations, types of containers, dispensing units, fire control measures and other factors involving fire safety.

c. Containing not more than the maximum allowable quantity per control area of each individual class.

5705.3.8.3 Location of processing vessels. Processing vessels shall be located with respect to distances to *lot lines* that can be built on in accordance with Table 5705.3.4(1).

Exception: In refineries and distilleries.

❖ Processing vessels outside of a building must be treated the same as a processing vessel inside a building. The exception covers refineries and distilleries, which are designed specifically for the processing of large quantities of hazardous liquids.

5705.3.8.4 Weather protection. Weather protection for outdoor use shall be in accordance with Section 5005.3.9.

❖ Weather protection is not required for outdoor use; however, where an overhead protective structure is erected, it must conform to the requirements of Section 5004.13. That section also notes that an open structure consisting of only a noncombustible roof structure does not change the storage facility to being considered as indoor storage, provided that the roof structure is constructed in accordance with the construction requirements of IBC Section 414.6.1. Natural airflow through a structure with no walls and only a noncombustible roof is considered sufficient ventilation for the storage area to be treated as outdoor storage for flammable and combustible liquids.

5705.4 Solvent distillation units. Solvent distillation units shall comply with Sections 5705.4.1 through 5705.4.9.

❖ Distillation units generate vapors by heating the flammable and combustible liquids. This process must be controlled to prevent the vapor-air mixture from reaching the LFL or an ignition source from coming into contact with the mixture.

5705.4.1 Unit with a capacity of 60 gallons or less. Solvent distillation units used to recycle Class I, II or IIIA liquids having a distillation chamber capacity of 60 gallons (227 L) or less shall be *listed*, *labeled* and installed in accordance with Section 5705.4 and UL 2208.

Exceptions:

1. Solvent distillation units used in continuous through-put industrial processes where the source of heat is remotely supplied using steam, hot water, oil or other heat transfer fluids, the temperature of which is below the auto-ignition point of the solvent.
2. *Approved* research, testing and experimental processes.

❖ Distillation equipment with a distillation chamber (sometimes called a "still pot") of the stated size can be manufactured so that the design, construction and operation can be tested for safety. These units are tested, listed and labeled according to this section and UL 2208. There are two exceptions to these requirements: Exception 1 exempts solvent distillation units that are in continuous operation, do not use heat from fluid transfer and the heat transfer fluid

INTERNATIONAL CODE COUNCIL®
Copyright © 2015 ICC. ALL RIGHTS RESERVED. Accessed by David Dammon on Jun 21, 2017 12:30:52 PM pursuant to License Agreement with ICC. No further reproduction or distribution authorized. ANY UNAUTHORIZED REPRODUCTION OR DISTRIBUTION IS A VIOLATION OF THE FEDERAL COPYRIGHT ACT AND THE LICENSE AGREEMENT, AND SUBJECT TO CIVIL AND CRIMINAL PENALTIES THEREUNDER.

temperature is below the autoignition point. Exception 2 exempts solvent distillation units that are approved for research or experimental processes from complying with this section or UL 2208.

5705.4.2 Units with a capacity exceeding 60 gallons. Solvent distillation units used to recycle Class I, II or IIIA liquids, having a distillation chamber capacity exceeding 60 gallons (227 L) shall be used in locations that comply with the use and mixing requirements of Section 5705 and other applicable provisions in this chapter.

❖ Distillation units with a distillation chamber (sometimes called a "still pot") of the stated size must be treated as if the unit was for mixing and blending. The operation involves vapor concentrations from flammable or combustible liquid that may be in the flammable range.

5705.4.3 Prohibited processing. Class I, II and IIIA liquids that are also classified as unstable (reactive) shall not be processed in solvent distillation units.

Exception: Appliances *listed* for the distillation of unstable (reactive) solvents.

❖ Flammable and combustible liquids that are also unstable are prohibited from being processed by a solvent distillation unit. An unstable liquid can self-react when exposed to heat. By removing the heat source, the code is reducing the potential danger.

The exception recognizes that some equipment is designed for the safe distillation of unstable flammable and combustible liquids and is listed for that function.

5705.4.4 Labeling. A permanent label shall be affixed to the unit by the manufacturer. The label shall indicate the capacity of the distillation chamber, and the distance the unit shall be placed away from sources of ignition. The label shall indicate the products for which the unit has been *listed* for use or refer to the instruction manual for a list of the products.

❖ The distillation unit is to be permanently labeled to provide information for its safe operation. At minimum, the label must indicate capacity, clearance from ignition sources and information on products the unit is designed to process.

5705.4.5 Manufacturer's instruction manual. An instruction manual shall be provided. The manual shall be readily available for the user and the *fire code official*. The manual shall include installation, use and servicing instructions. It shall identify the liquids for which the unit has been *listed* for distillation purposes along with each liquid's *flash point* and auto-ignition temperature. For units with adjustable controls, the manual shall include directions for setting the heater temperature for each liquid to be instilled.

❖ Manufacturers of listed and labeled equipment normally prepare an instruction manual for their equipment. The instruction manual is to be available for use by installation personnel and the fire code official. The instruction manual should include not only installation instructions, but also operating procedures and the products the unit can distill.

5705.4.6 Location. Solvent distillation units shall be used in locations in accordance with the listing. Solvent distillation units shall not be used in *basements*.

❖ The label and instruction manual will include information on acceptable locations, separation from ignition sources, light sources, ventilation, etc. Regardless of the instruction manual, the distillation unit cannot be located in a basement. Vapors that may escape during distillation will normally be heavier than air and settle to the lower levels, making their removal from a basement location difficult.

5705.4.7 Storage of liquids. Distilled liquids and liquids awaiting distillation shall be stored in accordance with Section 5704.

❖ Distilled liquids governed by this section will always present storage hazards. It is therefore important that all the liquids, both before and after distillation, be handled as prescribed in Section 5704.

5705.4.8 Storage of residues. Hazardous residue from the distillation process shall be stored in accordance with Section 5704 and Chapter 50.

❖ The residue from the distillation process may be a flammable or combustible material, or some other hazardous material. The instruction manual must include information on the products that the distillation unit is designed to process and identify the residue. If the residue is hazardous, it must be handled according to Section 5704 and Chapter 50.

5705.4.9 Portable fire extinguishers. *Approved* portable fire extinguishers shall be provided in accordance with Section 906. Not less than one portable fire extinguisher having a rating of not less than 40-B shall be located not less than 10 feet (3048 mm) or more than 30 feet (9144 mm) from any solvent distillation unit.

❖ Portable fire extinguishers must be located in clear view and within 30 feet (9144 mm) of the distillation unit. The 40-B portable fire extinguisher is for the control of small flammable liquid fires.

5705.5 Alcohol-based hand rubs classified as Class I or II liquids. The use of wall-mounted dispensers containing alcohol-based hand rubs classified as Class I or II liquids shall be in accordance with all of the following:

1. The maximum capacity of each dispenser shall be 68 ounces (2 L).
2. The minimum separation between dispensers shall be 48 inches (1219 mm).
3. The dispensers shall not be installed above, below, or closer than 1 inch (25 mm) to an electrical receptacle, switch, appliance, device or other ignition source. The wall space between the dispenser and the floor or intervening counter top shall be free of electrical receptacles, switches, appliances, devices or other ignition sources.
4. Dispensers shall be mounted so that the bottom of the dispenser is not less than 42 inches (1067 mm) and not

INTERNATIONAL CODE COUNCIL®
Copyright © 2015 ICC. ALL RIGHTS RESERVED. Accessed by David Dammon on Jun 21, 2017 12:30:52 PM pursuant to License Agreement with ICC. No further reproduction or distribution authorized. ANY UNAUTHORIZED REPRODUCTION OR DISTRIBUTION IS A VIOLATION OF THE FEDERAL COPYRIGHT ACT AND THE LICENSE AGREEMENT, AND SUBJECT TO CIVIL AND CRIMINAL PENALTIES THEREUNDER.

more than 48 inches (1219 mm) above the finished floor.

5. Dispensers shall not release their contents except when the dispenser is manually activated. Facilities shall be permitted to install and use automatically activated "touch free" alcohol-based hand-rub dispensing devices with the following requirements:
   5.1. The facility or persons responsible for the dispensers shall test the dispensers each time a new refill is installed in accordance with the manufacturer's care and use instructions.
   5.2. Dispensers shall be designed and must operate in a manner that ensures accidental or malicious activations of the dispensing device are minimized. At a minimum, all devices subject to or used in accordance with this section shall have the following safety features:
      5.2.1. Any activations of the dispenser shall only occur when an object is placed within 4 inches (98 mm) of the sensing device.
      5.2.2. The dispenser shall not dispense more than the amount required for hand hygiene consistent with label instructions as regulated by the United States Food and Drug Administration (USFDA).
      5.2.3. An object placed within the activation zone and left in place will cause only one activation.
6. Storage and use of alcohol-based hand rubs shall be in accordance with the applicable provisions of Sections 5704 and 5705.
7. Dispensers installed in occupancies with carpeted floors shall only be allowed in smoke compartments or *fire areas* equipped throughout with an *approved* automatic sprinkler system in accordance with Section 903.3.1.1 or 903.3.1.2.

❖ Alcohol-based hand rubs are essential in health care occupancies for controlling the spread of unwanted infectious microorganisms. Numerous studies conducted on their use have found that they provide a vastly improved efficacy against numerous pathogens and are more effective for a longer time period when compared to simple hand-washing with soap and water.

In 2003, the American Hospital Association (AHA) approached the International Code Council® (ICC®) regarding the safety issues related to the use of alcohol-based hand rub products in health care occupancies. Specifically, they were concerned that some code officials had prohibited the installation of alcohol-based hand rub dispensers in corridors. The ICC Board of Directors appointed an ad hoc committee with broad representation to address the issue and develop appropriate code change proposals.

Alcohol-based hand rub solution is typically packaged in pump bottles or soft bladders for insertion into a pump dispenser. They are closed to the atmosphere with no mixing or refilling of containers. The likelihood of ignition is extremely remote. But if, somehow, a dispenser were to ignite, the burn characteristics must be understood to better determine the risks. The American Society of Healthcare Engineering (ASHE) commissioned a fire modeling analysis to study the overall effects of placing dispensers in corridors and suites of rooms. The Fire Dynamics Simulator (FDS) Version 3.1, published by the National Institute of Standards and Technology (NIST), was used for the modeling. The results of the FDS model were used to evaluate the potential hazards and characteristics including:

- Tenability of the space.
- Ignition of adjacent fuel loads/combustibles.
- Sprinkler activation.

Because the modeling was for sick patients incapable of self-preservation, the tenability value (temperature, visibility, and carbon monoxide) was chosen to be conservative (factor of safety of 10).

Several fire scenarios were modeled with variables of dispenser volume, spacing and space configuration. In each scenario, a "worst case" was simulated that consisted of a complete rupture of the dispenser and simultaneous ignition resulting in a pool fire. The results indicated that both ethyl and isopropyl alcohol-based products met the tenability criteria when controlled in volume (1.2-L container in a corridor and 2 L in a room) and in dispenser placement [6-foot wide (1829 mm) corridor]. The results showed that with adequate horizontal spacing [48 inches (1219 mm)], none of the fuel targets put into the models would ignite, indicating that the proposed spacing was reasonable to prevent additional ignition. Sprinkler activation was not predicted for most of the scenarios modeled (activation only occurred with the larger 2-L spills). Additionally, the results indicate the scenario with a carpeted floor is a concern because of visibility problems.

This section and Section 5705.5.1 are the result of the ICC ad hoc committee's consensus proposals and also reflect the opinion of the *International Fire Code*® (IFC®) Code Development Committee and the ICC membership as to the appropriate level of regulation necessary in allowing the use of alcohol-based hand rubs in buildings. The intent of this section is to provide a means to avoid the code being utilized as a barrier to infection control while maintaining an appropriate level of safety in health care and other environments where alcohol-based hand rubs are an important public health tool. It should be noted that, while the AHA approached the ICC specifically regarding health care occupancies, these provisions are not occupancy-specific because the ad hoc committee recognized that the use of alcohol-based

INTERNATIONAL CODE COUNCIL®
Copyright © 2015 ICC. ALL RIGHTS RESERVED. Accessed by David Dammon on Jun 21, 2017 12:30:52 PM pursuant to License Agreement with ICC. No further reproduction or distribution authorized. ANY UNAUTHORIZED REPRODUCTION OR DISTRIBUTION IS A VIOLATION OF THE FEDERAL COPYRIGHT ACT AND THE LICENSE AGREEMENT, AND SUBJECT TO CIVIL AND CRIMINAL PENALTIES THEREUNDER.

hand rubs affects more than a single occupancy group. Section 5001.1 also provides the necessary cross reference to these new provisions to prevent the alcohol-based hand rub dispensers from being considered the same as other flammable liquids, thereby exempting them from the MAQs in Table 5003.1.1(1).

This section outlines seven criteria that are necessary, based in large part on fire modeling tests, to safely utilize alcohol-based hand rubs in buildings of any occupancy. These include regulating fuel load by controlling dispenser volume based on established industry practices (Criterion 1), minimizing the potential for ignition of other dispensers by establishing horizontal spacing requirements (Criterion 2), minimizing the potential for ignition of dispensers by establishing clearance requirements to ignition sources (Criterion 3), access to dispensers consistent with accessibility requirements (Criterion 4), control of dripping (Criterion 5), regulation of alcohol-based hand rub storage and use (Criterion 6) and mitigation of concerns over the visibility of leakage on carpeting by requiring sprinkler protection (Criterion 7). When combined, these controls effectively manage and minimize fire risk while allowing personnel ready access to these hand hygiene products.

It should be noted that, originally, Criterion 5 of this section allowed only manual activation of hand-rub dispensers by actual physical contact with the unit, which did not include operation by means of an infrared sensor. Infrared sensor operation has gained in popularity as use of hand rubs has grown, resulting in a revised Criterion 5 that allows "touch-free" operation. Touch-free dispensers have been developed to eliminate the need for persons to touch the dispenser, which creates a potential path for passing of microorganisms. (See Commentary Figure 5705.5) The devices are generally activated by passing hands in front of or under an optical scanner, which dispenses a specified dose of ethanol or isopropanol. In addition to compliance with all seven of the requirements of this section, these particular dispensers are required by Item 5.1 to be tested each time the dispenser is refilled in accordance the manufacturer's care and use instructions. Item 5.2 requires that dispenser design be such that accidental or malicious activations are minimized. To prevent accidental activation of the device, such as when a cart or gurney is pushed near a touch-free dispenser, Item 5.2.1 only allows dispenser activation to occur when an object is placed within 4 inches (102 mm) of the device. Item 5.2.2 requires the discharged dose to be limited to the amount necessary for hand hygiene. Finally, if a cart or other object is "parked" close enough to activate the dispenser, Item 5.2.3 only allows the device to dispense a single dose, i.e., the dispenser must be designed so that it does not continue to cycle and dispense additional doses of alcohol.

5705.5.1 Corridor installations. In addition to the provisions of Section 5705.5, where wall-mounted dispensers containing alcohol-based hand rubs are installed in *corridors* or rooms and areas open to the corridor, they shall be in accordance with all of the following:

1. Level 2 and 3 aerosol containers shall not be allowed in *corridors*.
2. The maximum capacity of each Class I or II liquid dispenser shall be 41 ounces (1.21 L) and the maximum capacity of each Level 1 aerosol dispenser shall be 18 ounces (0.51 kg).
3. The maximum quantity allowed in a *corridor* within a *control area* shall be 10 gallons (37.85 L) of Class I or II liquids or 1135 ounces (32.2 kg) of Level 1 aerosols, or a combination of Class I or II liquids and Level 1 aerosols not to exceed, in total, the equivalent of 10 gallons (37.85 L) or 1,135 ounces (32.2 kg) such that the sum of the ratios of the liquid and aerosol quantities divided by the allowable quantity of liquids and aerosols, respectively, shall not exceed one.
4. The minimum *corridor* width shall be 72 inches (1829 mm).
5. Projections into a *corridor* shall be in accordance with Section 1003.3.3.

❖ Though these provisions are not occupancy specific, in health care occupancies, hand rub dispensers are often located in the patient room. But due to a variety of clinical issues, including patient population (psychiatric and pediatric patients), care delivery models (teaching hospitals with multiple residents in contact with patients) and patient room space constraints



Figure 5705.5
TOUCH-FREE ALCOHOL-BASED HAND RUB DISPENSER
(Credit: Gojo Industries, Akron, OH)

INTERNATIONAL CODE COUNCIL®
Copyright © 2015 ICC. ALL RIGHTS RESERVED. Accessed by David Dammon on Jun 21, 2017 12:30:52 PM pursuant to License Agreement with ICC. No further reproduction or distribution authorized. ANY UNAUTHORIZED REPRODUCTION OR DISTRIBUTION IS A VIOLATION OF THE FEDERAL COPYRIGHT ACT AND THE LICENSE AGREEMENT, AND SUBJECT TO CIVIL AND CRIMINAL PENALTIES THEREUNDER.

(lack of available space for mounting a dispenser away from constricted traffic flow, electric outlets and electric switches), mounting the dispenser in the patient room may not be possible or may compromise effective patient care. In these instances, dispensers mounted in the corridor best meet the clinical needs.

Because of life safety hazards in health care occupancies, various medical professional associations approached the ASHE to address the challenge of understanding, and if possible, allowing the installation of a number of dispensers containing a small quantity of alcohol-based hand rubs (Class 1B flammable liquid) in egress corridors of health care facilities. Concerned that the introduction of alcohol-based hand rubs may simply be reducing one risk while creating another (fire safety), ASHE responded by investigating the current use of alcohol-based hand rub solutions and analyzing the risks presented by them. The ad hoc committee reviewed the results of the fire modeling in corridors and recommended the five safeguards contained in this section.

Item 1 prohibits the use of Level 2 and 3 aerosol alcohol-based hand rub dispensers in exit access corridors because aerosol containers were not considered in the fire modeling for the original project. This exclusion is appropriate for Level 2 and 3 aerosols but not for Level 1 aerosols, because they are treated as ordinary combustibles by the code. Their alcohol content is equal to that currently permitted in Class I and II liquid or gel hand sanitizers. The aerosol industry was asked to conduct its own study and testing to show that aerosols could also be allowed in the same application. The study determined that the hazard of level 1 aerosols was less than that of the allowed Class I and II liquid or gel hand sanitizers and that the aerosol can would not release its contents before the temperatures in the corridor became untenable.

Item 2 is based on the fact that the fire modeling and aerosol industry test results indicated that both ethyl and isopropyl alcohol-based products and aerosols met the tenability criteria when controlled in volume to 41-ounce (1158 g) liquid and 18-ounce (509 g) aerosol dispenser containers in corridors. For aerosols, the capacity is based on typical industry containers.

In arriving at Item 3, based on usage patterns, primarily in health care occupancies, it was felt that establishing a 10-gallon (38 L) allowable amount or combined liquid and aerosol equivalent allowable amount, which is well below the MAQs for Class I or II liquids in Table 5003.1.1(1), is reasonable and safe for any occupancy. A simple method of calculating the maximum allowable quantity of combined liquids and aerosols is provided and is based on IBC Section 508.4.2. For example, if 4 gallons (15 L) of liquids and 500 ounces (14 175 g) of aerosols were present, 4/10 plus 500/1135 is less than one and, therefore, below the maximum combined allowable quantity.

Item 4 is based on the performance of the dispenser containers in the fire modeling scenarios.

Item 5 is intended to prevent dispensers from projecting into areas over walking surfaces as regulated in Section 1003.3.3. See the commentary for Section 1003.3.3 for further discussion of projections into the required width of corridors.

SECTION 5706
SPECIAL OPERATIONS

5706.1 General. This section shall cover the provisions for special operations that include, but are not limited to, storage, use, dispensing, mixing or handling of flammable and *combustible liquids*. The following special operations shall be in accordance with Sections 5701, 5703, 5704 and 5705, except as provided in Section 5706.

1. Storage and dispensing of flammable and *combustible liquids* on farms and construction sites.
2. Well drilling and operating.
3. Bulk plants or terminals.
4. Bulk transfer and process transfer operations utilizing tank vehicles and tank cars.
5. Tank vehicles and tank vehicle operation.
6. Refineries.
7. Vapor recovery and vapor-processing systems.

❖ This section covers uses of flammable and combustible liquids for specific occupancies. The requirements of Sections 5701, 5703, 5704 and 5705 apply to these occupancies except as specifically directed by Section 5706.

5706.2 Storage and dispensing of flammable and combustible liquids on farms and construction sites. Permanent and temporary storage and dispensing of Class I and II liquids for private use on farms and rural areas and at construction sites, earth-moving projects, gravel pits or borrow pits shall be in accordance with Sections 5706.2.1 through 5706.2.8.1.

Exception: Storage and use of fuel oil and containers connected with oil-burning equipment regulated by Section 603 and the *International Mechanical Code*.

❖ These provisions cover both temporary and permanent storage and dispensing of Class I and II liquids, primarily in outdoor locations.

The exception covers storage and use of fuel oil for building service equipment, which is governed by other sections of the code as well as other codes.

5706.2.1 Combustibles and open flames near tanks. Storage areas shall be kept free from weeds and extraneous combustible material. Open flames and smoking are prohibited in flammable or *combustible liquid* storage areas.

❖ The area around storage tanks is to be free of combustibles and ignition sources.

5706.2.2 Marking of tanks and containers. Tanks and containers for the storage of liquids above ground shall be conspicuously marked with the name of the product that they

INTERNATIONAL CODE COUNCIL®
Copyright © 2015 ICC. ALL RIGHTS RESERVED. Accessed by David Dammon on Jun 21, 2017 12:30:52 PM pursuant to License Agreement with ICC. No further reproduction or distribution authorized. ANY UNAUTHORIZED REPRODUCTION OR DISTRIBUTION IS A VIOLATION OF THE FEDERAL COPYRIGHT ACT AND THE LICENSE AGREEMENT, AND SUBJECT TO CIVIL AND CRIMINAL PENALTIES THEREUNDER.

contain and the words: FLAMMABLE—KEEP FIRE AND FLAME AWAY. Tanks shall bear the additional marking: KEEP 50 FEET FROM BUILDINGS.

❖ When hazardous liquids are stored in above-ground storage tanks, signs containing safety information and warnings to keep ignition sources from the tanks are to be placed on the tanks.

5706.2.3 Containers for storage and use. Metal containers used for storage of Class I or II liquids shall be in accordance with DOTn requirements or shall be of an *approved* design.

Discharge devices shall be of a type that do not develop an internal pressure on the container. Pumping devices or *approved* self-closing faucets used for dispensing liquids shall not leak and shall be well-maintained. Individual containers shall not be interconnected and shall be kept closed when not in use.

Containers stored outside of buildings shall be in accordance with Section 5704 and the *International Building Code*.

❖ Individual containers for the storage of Class I and II liquids are to be DOT approved or approved for use with these liquids. To prevent leaks and spills, the discharge devices must be designed for use with Class I and II liquids. The storage of individual containers outside of a building is to be treated as outside storage under Section 5704.

5706.2.4 Permanent and temporary tanks. The capacity of permanent above-ground tanks containing Class I or II liquids shall not exceed 1,100 gallons (4164 L). The capacity of temporary above-ground tanks containing Class I or II liquids shall not exceed 10,000 gallons (37 854 L). Tanks shall be of the single-compartment design.

Exception: Permanent above-ground tanks of greater capacity that meet the requirements of Section 5704.2.

❖ Above-ground, single-compartment storage tanks must be used for permanent or temporary storage of Class I and II liquids. Permanent storage is limited to 1,100 gallons (3785 L) where temporary storage is limited to 10,000 gallons (37 854 L).

The exception covers permanent storage of quantities larger than 1,100 gallons (3785 L). Requirements for permanent storage of larger quantities are contained in Section 5704.2.

5706.2.4.1 Fill-opening security. Fill openings shall be equipped with a locking closure device. Fill openings shall be separate from vent openings.

❖ Security to prevent the dispensing of flammable and combustible liquids is provided by a locking device on the fill opening. Fill openings are separated from vent openings so that locking does not affect the operation of the vent openings.

5706.2.4.2 Vents. Tanks shall be provided with a method of normal and emergency venting. Normal vents shall be in accordance with Section 5704.2.7.3.

Emergency vents shall be in accordance with Section 5704.2.7.4. Emergency vents shall be arranged to discharge in a manner that prevents localized overheating or flame impingement on any part of the tank in the event that vapors from such vents are ignited.

❖ The need for normal venting and emergency venting is no different than required on other storage tanks. The requirements of Sections 5702.7.3 and 5702.7.4 apply to venting the storage tanks.

5706.2.4.3 Location. Tanks containing Class I or II liquids shall be kept outside and not less than 50 feet (15 240 mm) from buildings and combustible storage. Additional distance shall be provided where necessary to ensure that vehicles, equipment and containers being filled directly from such tanks will not be less than 50 feet (15 240 mm) from structures, haystacks or other combustible storage.

❖ The clearance required between above-ground storage tanks containing Class I and II liquids, combustible storage and other structures is 50 feet (15 240 mm). Vehicles, equipment or containers using the storage tank are to have a clearance of 50 feet (15 240 mm) from these same ignition sources and fuel sources.

5706.2.4.4 Locations where above-ground tanks are prohibited. The storage of Class I and II liquids in above-ground tanks is prohibited within the limits established by law as the limits of districts in which such storage is prohibited (see Section 3 of the Sample Legislation for Adoption of the *International Fire Code* on page xxi).

❖ This section enables the adopting jurisdiction to prohibit the installation of above-ground tanks in certain geographic areas by enumerating them in the adopting legislation. Page xxi of the code (ix in this volume) shows a sample ordinance containing blank space for the jurisdiction to fill in describing the particular areas where above-ground tank installations are to be prohibited.

5706.2.5 Type of tank. Tanks shall be provided with top openings only or shall be elevated for gravity discharge.

❖ Above-ground storage tanks are to be top-opening or gravity discharge tanks.

5706.2.5.1 Tanks with top openings only. Tanks with top openings shall be mounted in accordance with either of the following:

1. On well-constructed metal legs connected to shoes or runners designed so that the tank is stabilized and the entire tank and its supports can be moved as a unit.
2. For stationary tanks, on a stable base of timbers or blocks approximately 6 inches (152 mm) in height that prevents the tank from contacting the ground.

❖ Above-ground storage tanks with top openings must be on stable supports of metal or wood. The above-ground storage tank shell is not to be in contact with the ground. Stability is extremely important because movement of the tank could damage the tank shell or connected piping, creating a leak.

5706.2.5.1.1 Pumps and fittings. Tanks with top openings only shall be equipped with a tightly and permanently

INTERNATIONAL CODE COUNCIL®
Copyright © 2015 ICC. ALL RIGHTS RESERVED. Accessed by David Dammon on Jun 21, 2017 12:30:52 PM pursuant to License Agreement with ICC. No further reproduction or distribution authorized. ANY UNAUTHORIZED REPRODUCTION OR DISTRIBUTION IS A VIOLATION OF THE FEDERAL COPYRIGHT ACT AND THE LICENSE AGREEMENT, AND SUBJECT TO CIVIL AND CRIMINAL PENALTIES THEREUNDER.

attached, *approved* pumping device having an *approved* hose of sufficient length for filling vehicles, equipment or containers to be served from the tank. Either the pump or the hose shall be equipped with a padlock to its hanger to prevent tampering. An effective antisiphoning device shall be included in the pump discharge unless a self-closing nozzle is provided. Siphons or internal pressure discharge devices shall not be used.

❖ Above-ground storage tanks with top openings must be equipped with an approved, permanently attached tight-fitting pump and hose. Pumps must be secured against unauthorized use and designed to prevent siphoning through the pump.

5706.2.5.2 Tanks for gravity discharge. Tanks with a connection in the bottom or the end for gravity-dispensing liquids shall be mounted and equipped as follows:

1. Supports to elevate the tank for gravity discharge shall be designed to carry all required loads and provide stability.
2. Bottom or end openings for gravity discharge shall be equipped with a valve located adjacent to the tank shell that will close automatically in the event of fire through the operation of an effective heat-activated releasing device. Where this valve cannot be operated manually, it shall be supplemented by a second, manually operated valve.

The gravity discharge outlet shall be provided with an *approved* hose equipped with a self-closing valve at the discharge end of a type that can be padlocked to its hanger.

❖ Above-ground storage tanks for gravity discharge must be elevated on stable supports capable of supporting all required loads. Valves for bottom and end openings must be located adjacent to the tank shell. These valves are to be heat-activated valves that must close in case of a fire. The valve is to prevent the tank from dispensing its content through one of the tank openings. If the heat-activated valve cannot be manually operated, a second manually operable valve must be installed. The hose must be secured to prevent unauthorized operation.

5706.2.6 Spill control drainage control and diking. Indoor storage and dispensing areas shall be provided with spill control and drainage control as set forth in Section 5703.4. Outdoor storage areas shall be provided with drainage control or diking as set forth in Section 5704.2.10.

❖ Indoor above-ground storage tanks must be equipped to control leaks and spills to prevent the spread of liquid and vapors. Section 5004.2 discusses the use of liquid-tight floors, curbs, dikes and drainage systems to divert the liquid to a location where it can be contained and safely handled. Section 5004.3 discusses mechanical and natural exhaust systems. The exhaust system is to remove the vapors to prevent them from accumulating in concentrations in the flammable range of the vapor.

Outdoor above-ground storage tanks must use dikes and drainage to control leaks or spills from a tank. The flammable and combustible liquids must be collected in a manner that will not endanger other tanks, properties or waterways.

The fire code official has the authority to consider installations where the use of drainage and dikes may not be necessary, such as listed secondary containment tanks in lieu of drainage control or dikes. The secondary containment system in these tanks is considered equivalent to drainage and diking.

5706.2.7 Portable fire extinguishers. Portable fire extinguishers with a minimum rating of 20-B:C and complying with Section 906 shall be provided where required by the *fire code official*.

❖ Portable fire extinguishers must be in clear view and within 50 feet (15 240 mm) of the storage tank. The 20-B:C portable fire extinguisher is for the control of small flammable liquid fires and electrical fires.

5706.2.8 Dispensing from tank vehicles. Where *approved*, liquids used as fuels are allowed to be transferred from tank vehicles into the tanks of motor vehicles or special equipment, provided:

1. The tank vehicle's specific function is that of supplying fuel to motor vehicle fuel tanks.
2. The dispensing hose does not exceed 100 feet (30 480 mm) in length.
3. The dispensing nozzle is an *approved* type.
4. The dispensing hose is properly placed on an *approved* reel or in a compartment provided before the tank vehicle is moved.
5. Signs prohibiting smoking or open flames within 25 feet (7620 mm) of the vehicle or the point of refueling are prominently posted on the tank vehicle.
6. Electrical devices and wiring in areas where fuel dispensing is conducted are in accordance with NFPA 70.
7. Tank vehicle-dispensing equipment is operated only by designated personnel who are trained to handle and dispense motor fuels.
8. Provisions are made for controlling and mitigating unauthorized discharges.

❖ The dispensing of fuel at a farm or construction site may be from a tanker to a vehicle or equipment. Dispensing fuel using a tanker requires the tanker to be designed and equipped specifically for fueling other vehicles and equipment. The dispensing line cannot exceed 100 feet (30 480 mm). The tanker operator is responsible for the dispensing line and the tanker, so these two items need to be in the same area. The dispensing cannot be done around an ignition source, such as smoking, or electrical equipment that is not classified for use in hazardous locations. Note that these provisions apply to all classes of liquid fuel, not Class II and III only, as in Section 5706.5.4.5.

INTERNATIONAL CODE COUNCIL®
Copyright © 2015 ICC. ALL RIGHTS RESERVED. Accessed by David Dammon on Jun 21, 2017 12:30:52 PM pursuant to License Agreement with ICC. No further reproduction or distribution authorized. ANY UNAUTHORIZED REPRODUCTION OR DISTRIBUTION IS A VIOLATION OF THE FEDERAL COPYRIGHT ACT AND THE LICENSE AGREEMENT, AND SUBJECT TO CIVIL AND CRIMINAL PENALTIES THEREUNDER.

5706.2.8.1 Location. Dispensing from tank vehicles shall be conducted not less than 50 feet (15 240 mm) from structures or combustible storage.

❖ Fuel must be dispensed at least 50 feet (15 240 mm) from a structure or combustible storage to prevent the accumulation of vapor-air mixtures, control ignition sources and to minimize the potential loss of property.

5706.3 Well drilling and operating. Wells for oil and natural gas shall be drilled and operated in accordance with Sections 5706.3.1 through 5706.3.8.

❖ The drilling and operation of a well may allow the escape of vapors from petroleum products. Well drilling and operation are essential for the extraction of petroleum products. The requirements are to prevent the vapor-air mixture from reaching the LFL, to prevent ignition sources from being in the immediate vicinity and other functions to control the hazard.

5706.3.1 Location. The location of wells shall comply with Sections 5706.3.1.1 through 5706.3.1.3.2.

❖ The location of wells is regulated to permit the dilution of any vapor-air mixtures that may escape the well head or facilities, prevent ignition sources from being in close proximity and other safety and security to control the hazards created by the well drilling and production operation.

5706.3.1.1 Storage tanks and sources of ignition. Storage tanks or boilers, fired heaters, open-flame devices or other sources of ignition shall not be located within 25 feet (7620 mm) of well heads. Smoking is prohibited at wells or tank locations except as designated and in *approved* posted areas.

Exception: Engines used in the drilling, production and serving of wells.

❖ Sources of ignition from equipment and open flame must be kept a minimum of 25 feet (7620 mm) from a well head. The distance provides an area for any vapors leaking from the well head to dilute to a vapor-air mixture below the LFL.

Only equipment necessary for the drilling, installation and production of the well is permitted. These engines are designed for this use.

5706.3.1.2 Streets and railways. Wells shall not be drilled within 75 feet (22 860 mm) of any dedicated public street, highway or nearest rail of an operating railway.

❖ Sources of ignition from vehicle and rail traffic are to be kept a minimum of 75 feet (22 860 mm) from a well head. Vehicle traffic can produce sources of ignition from either the vehicle or the passengers. The rail traffic can produce sources of ignition by engine, brakes or personnel. The distance provides an area for any vapors leaking from the well head to dilute to a vapor-air mixture below the LFL.

5706.3.1.3 Buildings. Wells shall not be drilled within 100 feet (30 480 mm) of buildings not necessary to the operation of the well.

❖ Sources of ignition from buildings are to be kept a minimum of 100 feet (30 480 mm) from a well head. Building equipment and occupancy can become sources of ignition. The building also represents a potential for loss of life and property. The distance provides an area for any vapors leaking from the well head to dilute to a vapor-air mixture below the LFL.

The separation distance also protects buildings and their occupants from hazards associated with the well and its operation.

A building necessary for operation of a well need not be remote from the well head, but it should be constructed and maintained to prevent it from becoming an ignition source.

5706.3.1.3.1 Group A, E or I buildings. Wells shall not be drilled within 300 feet (91 440 mm) of buildings with an occupancy in Group A, E or I.

❖ Sources of ignition from a Group A, E, or I occupancy must be kept a minimum of 300 feet (91 440 mm) from a well head. Building equipment and occupancy can become sources of ignition. Because these occupancies also represent a potential for loss of life and property, the clearance has been increased over that required for other occupancies. The distance provides an area for any vapors leaking from the well head to dilute to a vapor-air mixture below the LFL.

5706.3.1.3.2 Existing wells. Where wells are existing, buildings shall not be constructed within the distances set forth in Section 5706.3.1 for separation of wells or buildings.

❖ The same problems exist regardless of whether the well head is installed first or the building is constructed first. The code regulates whichever is built second. The well head clearance to the building is to be maintained.

5706.3.2 Waste control. Control of waste materials associated with wells shall comply with Sections 5706.3.2.1 and 5706.3.2.2.

❖ Liquids containing petroleum or its products are to be disposed of according to federal and state laws and any local ordinances.

5706.3.2.1 Discharge on a street or water channel. Liquids containing crude petroleum or its products shall not be discharged into or on streets, highways, drainage canals or ditches, storm drains or flood control channels.

❖ The discharge of liquids containing petroleum or its products is prohibited. The unregulated discharge of liquids containing petroleum or its products can place flammable or combustible liquids and gases into contact with ignition sources. The liquids and their vapors also can become environmental problems and can cause health concerns.

INTERNATIONAL CODE COUNCIL®
Copyright © 2015 ICC. ALL RIGHTS RESERVED. Accessed by David Dammon on Jun 21, 2017 12:30:52 PM pursuant to License Agreement with ICC. No further reproduction or distribution authorized. ANY UNAUTHORIZED REPRODUCTION OR DISTRIBUTION IS A VIOLATION OF THE FEDERAL COPYRIGHT ACT AND THE LICENSE AGREEMENT, AND SUBJECT TO CIVIL AND CRIMINAL PENALTIES THEREUNDER.

5706.3.2.2 Discharge and combustible materials on ground. The surface of the ground under, around or near wells, pumps, boilers, oil storage tanks or buildings shall be kept free from oil, waste oil, refuse or waste material.

❖ The discharge of liquids containing petroleum or its products is prohibited. The unregulated discharge of liquids containing petroleum or its products can place flammable or combustible liquids and gases into contact with ignition sources and become a source of environmental contamination and health hazards.

5706.3.3 Sumps. Sumps associated with wells shall comply with Sections 5706.3.3.1 through 5706.3.3.3.

❖ Sumps and basins may be necessary to temporarily store drilling materials that may contain petroleum products. The use of sumps and basins is regulated to control their size, service life and security.

5706.3.3.1 Maximum width. Sumps or other basins for the retention of oil or petroleum products shall not exceed 12 feet (3658 mm) in width.

❖ The maximum width of 12 feet (3658 mm) for a sump or basin keeps the surface area of the sump or basin at a size that will help in diluting the vapor-air mixture to below the LFL and that is readily accessible to fire-fighting equipment. The narrow width allows the vapors of the petroleum products to diffuse with a greater volume of air than if the sump or basin were allowed to be larger.

5706.3.3.2 Backfilling. Sumps or other basins for the retention of oil or petroleum products larger than 6 feet by 6 feet by 6 feet (1829 mm by 1829 mm by 1829 mm) shall not be maintained longer than 60 days after the cessation of drilling operations.

❖ The temporary storage of oil or petroleum products in sumps or basins larger than 6 feet by 6 feet by 6 feet (1829 mm by 1829 mm by 1829 mm) is restricted to no more than 60 days. Drilling operations may require that materials containing petroleum products be stored in a sump or basin. This open storage may allow the vapors from the petroleum products to mix with air, creating a hazard. To control the hazard, the use of a sump or basin is restricted to a maximum of 60 days. The storage of oil or petroleum products in volumes greater than the capacity of these sumps or basins needs to be equipped with safety features to control the hazard.

5706.3.3.3 Security. Sumps, diversion ditches and depressions used as sumps shall be securely fenced or covered.

❖ Security for the open storage of oil or petroleum products in sumps, basins and ditches is needed to prevent unauthorized access. Individuals may not realize the hazard presented by this open storage and accidentally introduce ignition sources.

5706.3.4 Prevention of blowouts. Protection shall be provided to control and prevent the blowout of a well. Protection equipment shall meet federal, state and other applicable jurisdiction requirements.

❖ A blowout is the uncontrolled release of oil, gas or water from a well. Pressure relief equipment must be installed and maintained on a drilling apparatus to reduce the likelihood of an uncontrolled release of oil, gas or water. Oil vapor or gas escaping in an uncontrolled manner poses an extreme hazard and can generate enough energy to ignite during its release, which can lead to the destruction of the drilling apparatus or the site itself with a corresponding potential for loss of life. Federal and state regulations govern the protective equipment required to prevent blowouts.

5706.3.5 Storage tanks. Storage of flammable or *combustible liquids* in tanks shall be in accordance with Section 5704. Oil storage tanks or groups of tanks shall have posted in a conspicuous place, on or near such tank or tanks, an *approved* sign with the name of the *owner* or operator, or the lease number and the telephone number where a responsible person can be reached at any time.

❖ The storage requirements for flammable and combustible liquids at a well head are identical to those for any other storage of flammable and combustible liquids. Clearances, security, corrosion protection, drainage, diking, signing, etc., are to control ignition sources, combustibles, leaks, spills, etc.

5706.3.6 Soundproofing. Where soundproofing material is required during oil field operations, such material shall be noncombustible.

❖ The operation of drilling, pumping and dispensing equipment may create noise that needs to be reduced. Soundproofing material must not add a fuel source around the flammable or combustible liquids. Combustible soundproofing is to be used only at locations that are beyond the distances for the clearance between flammable and combustible liquids and combustibles.

5706.3.7 Signs. Well locations shall have posted in a conspicuous place on or near such tank or tanks an *approved* sign with the name of the *owner* or operator, name of the leasee or the lease number, the well number and the telephone number where a responsible person can be reached at any time. Such signs shall be maintained on the premises from the time materials are delivered for drilling purposes until the well is abandoned.

❖ Well heads may or may not have personnel on site, so it may be necessary to contact the operator/owner. The signs need to provide sufficient information so the operator/owner can be notified of any problems with the site.

5706.3.8 Field-loading racks. Field-loading racks shall be in accordance with Section 5706.5.

❖ See the commentary to Section 5706.5.

INTERNATIONAL CODE COUNCIL®
Copyright © 2015 ICC. ALL RIGHTS RESERVED. Accessed by David Dammon on Jun 21, 2017 12:30:52 PM pursuant to License Agreement with ICC. No further reproduction or distribution authorized. ANY UNAUTHORIZED REPRODUCTION OR DISTRIBUTION IS A VIOLATION OF THE FEDERAL COPYRIGHT ACT AND THE LICENSE AGREEMENT, AND SUBJECT TO CIVIL AND CRIMINAL PENALTIES THEREUNDER.

5706.4 Bulk plants or terminals. Portions of properties where flammable and *combustible liquids* are received by tank vessels, pipelines, tank cars or tank vehicles and stored or blended in bulk for the purpose of distribution by tank vessels, pipelines, tanks cars, tank vehicles or containers shall be in accordance with Sections 5706.4.1 through 5706.4.10.4.

❖ Bulk plants and terminals are used for the blending or transferring of large volumes of flammable and combustible liquids. Besides normally involving large quantities of flammable and combustible liquids, these facilities can create numerous opportunities for leaks, spills and the escape of vapors.

5706.4.1 Building construction. Buildings shall be constructed in accordance with the *International Building Code*.

❖ These facilities are hazardous occupancies divided into Group H-2 or H-3. Sections 414 and 415 of the IBC contain guidance for determining the construction requirements for these two occupancies.

5706.4.2 Means of egress. Rooms in which liquids are stored, used or transferred by pumps shall have *means of egress* arranged to prevent occupants from being trapped in the event of fire.

❖ The means of egress from rooms where flammable or combustible liquids are present must be an escape route for personnel that cannot be blocked in case of a fire. This may require having more than one independent escape route or having a short travel distance to a door exiting the room. Doors exiting rooms should swing in the direction of exit travel.

5706.4.3 Heating. Rooms in which Class I liquids are stored or used shall be heated only by means not constituting a source of ignition, such as steam or hot water. Rooms containing heating appliances involving sources of ignition shall be located and arranged to prevent entry of flammable vapors.

❖ Heating units that use open flames and other ignition sources must be separated from areas where flammable or combustible liquids are present or where vapors from these liquids can migrate. The low flash point for Class I liquids requires that where Class I liquid is present, either steam or hot water must be used as the heat source.

5706.4.4 Ventilation. Ventilation shall be provided for rooms, buildings and enclosures in which Class I liquids are pumped, used or transferred. Design of ventilation systems shall consider the relatively high specific gravity of the vapors. Where natural ventilation is used, adequate openings in outside walls at floor level, unobstructed except by louvers or coarse screens, shall be provided. Where natural ventilation is inadequate, mechanical ventilation shall be provided in accordance with the *International Mechanical Code*.

❖ The low flash point for Class I liquids requires that where Class I liquid is present the area be ventilated to prevent the accumulation of a vapor-air mixture above the LFL. Ventilation can be either mechanical or natural. Because the vapors from Class I liquids are heavier than air, the ventilation must remove the air at the floor level. Natural ventilation must be to the outdoors.

5706.4.4.1 Basements and pits. Class I liquids shall not be stored or used within a building having a *basement* or pit into which flammable vapors can travel, unless such area is provided with ventilation designed to prevent the accumulation of flammable vapors therein.

❖ The vapors from Class I liquids are heavier than air, so these vapors can settle from the upper floors and accumulate in a basement or pit. In a building with a basement or pit that has any connection between the basement or pit and upper floors, the basement or pit is not to be used for the storage or mixing of Class I liquids. The vapors from Class I liquids may settle in the basement or pit through openings for mechanical systems or that are part of an egress path, creating a hazard. Unless there is a mechanical or natural ventilation system that is adequate for removing accumulated vapors from the basement or pit, the building cannot be used for the storage or mixing of Class I liquids.

5706.4.4.2 Dispensing of Class I liquids. Containers of Class I liquids shall not be drawn from or filled within buildings unless a provision is made to prevent the accumulation of flammable vapors in hazardous concentrations. Where mechanical ventilation is required, it shall be kept in operation while flammable vapors could be present.

❖ Containers of Class I liquids cannot be dispensed or filled in a building unless ventilation is installed to remove accumulated vapors. To make certain that vapors do not accumulate, any mechanical ventilation system must operate continuously or whenever containers of Class I liquids are open.

5706.4.5 Storage. Storage of Class I, II and IIIA liquids in bulk plants shall be in accordance with the applicable provisions of Section 5704.

❖ The potential hazards of storing Class I, II and IIIA liquids are the same for bulk plants and terminals as for any other facility. The requirements for storage are covered in Section 5704.

5706.4.6 Overfill protection of Class I and II liquids. Manual and automatic systems shall be provided to prevent overfill during the transfer of Class I and II liquids from mainline pipelines and marine vessels in accordance with API 2350.

❖ Overfill protection must comply with API 2350. This standard is limited to above-ground tanks that receive liquids from main pipelines or marine vessels. The standard accomplishes overfill protection by awareness of available tank capacity and inventory and careful monitoring and control of product movement.

5706.4.7 Wharves. This section shall apply to all wharves, piers, bulkheads and other structures over or contiguous to navigable water having a primary function of transferring liq-

INTERNATIONAL CODE COUNCIL®
Copyright © 2015 ICC. ALL RIGHTS RESERVED. Accessed by David Dammon on Jun 21, 2017 12:30:52 PM pursuant to License Agreement with ICC. No further reproduction or distribution authorized. ANY UNAUTHORIZED REPRODUCTION OR DISTRIBUTION IS A VIOLATION OF THE FEDERAL COPYRIGHT ACT AND THE LICENSE AGREEMENT, AND SUBJECT TO CIVIL AND CRIMINAL PENALTIES THEREUNDER.

uid cargo in bulk between shore installations and tank vessels, ships, barges, lighter boats or other mobile floating craft.

Exception: Marine motor fuel-dispensing facilities in accordance with Chapter 23.

❖ This section regulates the transfer of flammable and combustible liquids in bulk quantities between a shore installation and any marine vessel or other floating craft, except for marine motor fuel-dispensing facilities, which are covered in Chapter 23.

5706.4.7.1 Transferring approvals. Handling packaged cargo of liquids, including full and empty drums, bulk fuel and stores, over a wharf during cargo transfer shall be subject to the approval of the wharf supervisor and the senior deck officer on duty.

❖ The handling and transferring of flammable and combustible liquids, including any container that contains or has contained these liquids, must be approved by the personnel responsible for the wharf. This will usually be the wharf supervisor or senior deck officer. Because these materials represent a potential hazard if mishandled, the person in authority must be aware of the potential hazard and approve the process being used.

5706.4.7.2 Transferring location. Wharves at which liquid cargoes are to be transferred in bulk quantities to or from tank vessels shall be not less than 100 feet (30 480 mm) from any bridge over a navigable waterway; or from an entrance to, or superstructure of, any vehicular or railroad tunnel under a waterway. The termination of the fixed piping used for loading or unloading at a wharf shall be not less than 200 feet (60 960 mm) from a bridge or from an entrance to, or superstructures of, a tunnel.

❖ Transportation facilities on a wharf must be protected by separation from public throughways. The separation distance required for vessel loading or unloading is 100 feet (30 480 mm). Fixed piping must terminate 200 feet (60 960 mm) from the same throughways.

5706.4.7.3 Superstructure and decking material. Superstructure and decking shall be designed for the intended use. Decking shall be constructed of materials that will afford the desired combination of flexibility, resistance to shock, durability, strength and *fire resistance*.

❖ The wharf superstructure and decking materials have to be selected to withstand normal loads, impact loads, fire exposure, environmental factors, etc.

5706.4.7.4 Tanks allowed. Tanks used exclusively for ballast water or Class II or III liquids are allowed to be installed on suitably designed wharves.

❖ Tanks other than tanks used for Class I liquids can be installed on a wharf if the wharf is designed for this purpose.

5706.4.7.5 Transferring equipment. Loading pumps capable of building up pressures in excess of the safe working pressure of cargo hose or loading arms shall be provided with bypasses, relief valves or other arrangements to protect the loading facilities against excessive pressure. Relief devices shall be tested not less than annually to determine that they function satisfactorily at their set pressure.

❖ Pump systems must be designed so that excess pressure cannot be created in the piping and storage system. If excess pressure develops and is not relieved, the equipment or piping and storage system can be damaged. A damaged system could develop a leak.

5706.4.7.6 Piping, valves and fittings. Piping valves and fittings shall be in accordance with Section 5703.6 except as modified by the following:

1. Flexibility of piping shall be ensured by appropriate layout and arrangement of piping supports so that motion of the wharf structure resulting from wave action, currents, tides or the mooring of vessels will not subject the pipe to repeated excessive strain.
2. Pipe joints that depend on the friction characteristics of combustible materials or on the grooving of pipe ends for mechanical continuity of piping shall not be used.
3. Swivel joints are allowed in piping to which hoses are connected and for articulated, swivel-joint transfer systems, provided the design is such that the mechanical strength of the joint will not be impaired if the packing materials fail such as by exposure to fire.
4. Each line conveying Class I or II liquids leading to a wharf shall be provided with a readily accessible block valve located on shore near the approach to the wharf and outside of any diked area. Where more than one line is involved, the valves shall be grouped in one location.
5. Means shall be provided for easy access to cargo line valves located below the wharf deck.
6. Piping systems shall contain a sufficient number of valves to operate the system properly and to control the flow of liquid in normal operation and in the event of physical damage.
7. Piping on wharves shall be bonded and grounded where Class I and II liquids are transported. Where excessive stray currents are encountered, insulating joints shall be installed. Bonding and grounding connections on piping shall be located on the wharf side of hose riser insulating flanges, where used, and shall be accessible for inspection.
8. Hose or articulated swivel-joint pipe connections used for cargo transfer shall be capable of accommodating the combined effects of change in draft and maximum tidal range, and mooring lines shall be kept adjusted to prevent surge of the vessel from placing stress on the cargo transfer system.
9. Hoses shall be supported to avoid kinking and damage from chafing.

❖ The general requirements of Section 5703.6 apply to the piping on a wharf, with the exception of specific

INTERNATIONAL CODE COUNCIL®
Copyright © 2015 ICC. ALL RIGHTS RESERVED. Accessed by David Dammon on Jun 21, 2017 12:30:52 PM pursuant to License Agreement with ICC. No further reproduction or distribution authorized. ANY UNAUTHORIZED REPRODUCTION OR DISTRIBUTION IS A VIOLATION OF THE FEDERAL COPYRIGHT ACT AND THE LICENSE AGREEMENT, AND SUBJECT TO CIVIL AND CRIMINAL PENALTIES THEREUNDER.

requirements that are unique to the design and operation of a wharf, as indicated in this section:

1. Wharves, especially floating wharves, need flexible piping that can withstand wharf movement.
2. Slip-joint pipe connections and threaded connections are prohibited. The flexible piping required to handle the wharf's movement may move enough to cause these types of joints to loosen. A loose joint can create a leak or a spill.
3. Swivel joints are necessary for connections between wharves, between the wharf and land, and between the wharf and marine vessels. These joints are to be designed to withstand loads placed on them even if the packing material used to seal the joint fails.
4. Lines carrying Class I and II liquids require a block valve on each line feeding the wharf. The block valve is to be near the wharf and outside of the dike area. A block valve is used to isolate the line from the wharf.
5. Piping under a wharf used to transfer flammable and combustible liquids must be accessible. If these lines are not accessible, it may be difficult or impossible to inspect, maintain or provide fire protection to these lines.
6. Valves must be installed in the piping system so that sections of the system can be isolated for maintenance or repairs or to stop the transfer of flammable and combustible liquids in case of leaks, spills or fire.
7. Piping must be bonded to prevent static sparks or sparks from the electrical equipment.
8. Swivel joints must be protected from loads caused by movement of the wharf relative to movement of the marine vessel.
9. Hoses must be maintained to prevent damage.

5706.4.7.7 Loading and unloading. Loading or discharging shall not commence until the wharf superintendent and officer in charge of the tank vessel agree that the tank vessel is properly moored and connections are properly made.

❖ Section 5706.4.7.1 requires approval from the individual responsible for the wharf for transferring flammable and combustible liquids over the wharf. This section requires that this same individual approve the mooring of the marine vessel before transfer begins. Failure of the moorings or excessive movement of the marine vessel can damage the piping.

5706.4.7.8 Mechanical work. Mechanical work shall not be performed on the wharf during cargo transfer, except under special authorization by the *fire code official* based on a review of the area involved, methods to be employed and precautions necessary.

❖ Work on the wharf or transfer equipment and piping are prohibited during the transfer of flammable or combustible liquids. Work can introduce an ignition source or possible damage to the equipment or piping system.

5706.4.8 Sources of ignition. Class I, II or IIIA liquids shall not be used, drawn or dispensed where flammable vapors can reach a source of ignition. Smoking shall be prohibited except in designated locations. "No Smoking" signs complying with Section 310 shall be conspicuously posted where a hazard from flammable vapors is normally present.

❖ One of the principal safety measures for using flammable and combustible liquids is to keep sources of ignition away from the liquids.

5706.4.9 Drainage control. Loading and unloading areas shall be provided with drainage control in accordance with Section 5704.2.10.

❖ Flammable and combustible liquids that leak or spill from a tank must be controlled by dikes and drainage. The flammable and combustible liquids are to be collected in a manner that will not endanger other tanks, properties or waterways. The fire code official has the authority to consider installations where the use of drainage and dikes may not be necessary. Listed secondary containment tanks need not be surrounded by drainage control or dikes. The secondary containment system in these tanks is considered equivalent to drainage and diking.

5706.4.10 Fire protection. Fire protection shall be in accordance with Chapter 9 and Sections 5706.4.10.1 through 5706.4.10.4.

❖ Fire protection complying with Chapter 9 is required for wharves.

5706.4.10.1 Portable fire extinguishers. Portable fire extinguishers with a rating of not less than 20-B and complying with Section 906 shall be located within 75 feet (22 860 mm) of hose connections, pumps and separator tanks.

❖ Portable fire extinguishers must be located within 75 feet (22 860 mm) of hose connections, pumps and separator tanks. These locations are where a possible leak can occur and a portable fire extinguisher may be adequate in preventing a fire or controlling a small, flammable-liquid fire. The 20-B portable fire extinguisher is for the control of a small, flammable-liquid fire.

5706.4.10.2 Fire hoses. Where piped water is available, ready-connected fire hose in a size appropriate for the water supply shall be provided in accordance with Section 905 so that manifolds where connections are made and broken can be reached by not less than one hose stream.

❖ If the fire control system uses piped water, a fire hose of adequate size for the piped water and complying

INTERNATIONAL CODE COUNCIL®
Copyright © 2015 ICC. ALL RIGHTS RESERVED. Accessed by David Dammon on Jun 21, 2017 12:30:52 PM pursuant to License Agreement with ICC. No further reproduction or distribution authorized. ANY UNAUTHORIZED REPRODUCTION OR DISTRIBUTION IS A VIOLATION OF THE FEDERAL COPYRIGHT ACT AND THE LICENSE AGREEMENT, AND SUBJECT TO CIVIL AND CRIMINAL PENALTIES THEREUNDER.

with Section 905 must be available. The fire hose must be capable of washing down manifolds in case of a leak or spill or for fighting a fire at the manifold.

5706.4.10.3 Obstruction of equipment. Material shall not be placed on wharves in such a manner that would obstruct access to fire-fighting equipment or important pipeline control valves.

❖ Access for fire equipment and to valves for isolating and controlling flammable and combustible liquids must be kept clear. Obstruction would prevent or slow any response to a leak, spill or fire.

5706.4.10.4 Fire apparatus access. Where the wharf is accessible to vehicular traffic, an unobstructed fire apparatus access road to the shore end of the wharf shall be maintained in accordance with Chapter 5.

❖ Wharves that are accessible to vehicle traffic are to be made accessible for fire department equipment. The access requirements are in Chapter 5. Where vehicle access to the wharf does not exist, fire department equipment access is not required.

5706.5 Bulk transfer and process transfer operations. Bulk transfer and process transfer operations shall be *approved* and be in accordance with Sections 5706.5.1 through 5706.5.4.5. Motor fuel-dispensing facilities shall comply with Chapter 23.

❖ This section gives the fire code official the authority to require approval of bulk transfer and process transfer operations.

5706.5.1 General. The provisions of Sections 5706.5.1.1 through 5706.5.1.18 shall apply to bulk transfer and process transfer operations; Sections 5706.5.2 and 5706.5.2.1 shall apply to bulk transfer operations; Sections 5706.5.3 through 5706.5.3.3 shall apply to process transfer operations and Sections 5706.5.4 through 5706.5.4.5 shall apply to dispensing from tank vehicles and tank cars.

❖ Facilities that are used for bulk transferring, bulk processing and bulk dispensing to tank vehicles and tank cars are covered by these sections.

5706.5.1.1 Location. Bulk transfer and process transfer operations shall be conducted in *approved* locations. Tank cars shall be unloaded only on private sidings or railroad-siding facilities equipped for transferring flammable or *combustible liquids*. Tank vehicle and tank car transfer facilities shall be separated from buildings, above-ground tanks, combustible materials, *lot lines*, public streets, public alleys or *public ways* by a distance of 25 feet (7620 mm) for Class I liquids and 15 feet (4572 mm) for Class II and III liquids measured from the nearest position of any loading or unloading valve. Buildings for pumps or shelters for personnel shall be considered part of the transfer facility.

❖ The volume of flammable and combustible liquids being transferred and processed requires that the location be protected from ignition sources. This is accomplished by maintaining minimum clearance between the transfer and process operation and buildings, property lines, streets, etc.

5706.5.1.2 Weather protection canopies. Where weather protection canopies are provided, they shall be constructed in accordance with Section 5004.13. Weather protection canopies shall not be located within 15 feet (4572 mm) of a building or combustible material or within 25 feet (7620 mm) of building openings, *lot lines*, public streets, public alleys or *public ways*.

❖ This section makes clear that an open structure consisting of only a noncombustible roof structure is considered outdoor storage. A structure with no walls and only a noncombustible roof provides sufficient ventilation for the storage area to be treated as outdoor storage. Separation from buildings and openings is needed to prevent the vapors from flammable and combustible liquids from being exposed to an ignition source. These separation requirements also limit potential property and life losses.

5706.5.1.3 Ventilation. Ventilation shall be provided to prevent accumulation of vapors in accordance with Section 5705.3.7.5.1.

❖ The requirements of this section for a mechanical ventilation system are identical to those in Section 5004.3. The mechanical ventilation system must remove vapors to prevent accumulation in concentrations in the flammable range for the flammable and combustible liquids being used. Natural ventilation complying with Section 5004.3 that can be demonstrated to be effective for the flammable and combustible liquids being used is an acceptable alternative.

5706.5.1.4 Sources of ignition. Sources of ignition shall be controlled or eliminated in accordance with Section 5003.7.

❖ Smoking and open flames are strictly limited around flammable and combustible liquids. Section 5003.7 prohibits smoking or open flames within 25 feet (7620 mm) of outdoor storage of flammable and combustible liquids and anywhere indoors where there are flammable and combustible liquids or where vapors from flammable and combustible liquids may occur.

5706.5.1.5 Spill control and secondary containment. Areas where transfer operations are located shall be provided with spill control and secondary containment in accordance with Section 5703.4. The spill control and secondary containment system shall have a design capacity capable of containing the capacity of the largest tank compartment located in the area where transfer operations are conducted. Containment of the rainfall volume specified in Section 5004.2.2.6 is not required.

❖ Where flammable or combustible liquids are present, spills must be controlled to prevent the spread of liquid and vapors. Section 5004.2 discusses the use of liquid-tight floors, curbs, dikes and drainage systems to divert the liquid to a location where it can be contained and safely handled. Section 5004.3 discusses

INTERNATIONAL CODE COUNCIL®
Copyright © 2015 ICC. ALL RIGHTS RESERVED. Accessed by David Dammon on Jun 21, 2017 12:30:52 PM pursuant to License Agreement with ICC. No further reproduction or distribution authorized. ANY UNAUTHORIZED REPRODUCTION OR DISTRIBUTION IS A VIOLATION OF THE FEDERAL COPYRIGHT ACT AND THE LICENSE AGREEMENT, AND SUBJECT TO CIVIL AND CRIMINAL PENALTIES THEREUNDER.

mechanical and natural exhaust systems for indoor facilities. The exhaust system must remove the vapors to prevent them from accumulating in concentrations in the flammable range. The diked area must have sufficient capacity to contain the largest spillage of flammable and combustible liquids that can be released from the largest tank. This would be the volume of the largest tank that extends above the top of the dike.

5706.5.1.6 Fire protection. Fire protection shall be in accordance with Section 5703.2.

❖ The requirements of Chapter 9 apply to flammable and combustible liquids. Fire protection is a principal means of preventing and controlling the spread of a fire.

5706.5.1.7 Static protection. Static protection shall be provided to prevent the accumulation of static charges during transfer operations. Bonding facilities shall be provided during the transfer through open domes where Class I liquids are transferred, or where Class II and III liquids are transferred into tank vehicles or tank cars that could contain vapors from previous cargoes of Class I liquids.

Protection shall consist of a metallic bond wire permanently electrically connected to the fill stem. The fill pipe assembly shall form a continuous electrically conductive path downstream from the point of bonding. The free end of such bond wire shall be provided with a clamp or equivalent device for convenient attachment to a metallic part in electrical contact with the cargo tank of the tank vehicle or tank car. For tank vehicles, protection shall consist of a flexible bond wire of adequate strength for the intended service and the electrical resistance shall not exceed 1 megohm. For tank cars, bonding shall be provided where the resistance of a tank car to ground through the rails is 25 ohms or greater.

Such bonding connection shall be fastened to the vehicle, car or tank before dome covers are raised and shall remain in place until filling is complete and all dome covers have been closed and secured.

Exceptions:

1. Where vehicles and cars are loaded exclusively with products not having a static-accumulating tendency, such as asphalt, cutback asphalt, most crude oils, residual oils and water-miscible liquids.
2. Where Class I liquids are not handled at the transfer facility and the tank vehicles are used exclusively for Class II and III liquids.
3. Where vehicles and cars are loaded or unloaded through closed top or bottom connections whether the hose is conductive or nonconductive.

Filling through open domes into the tanks of tank vehicles or tank cars that contain vapor-air mixtures within the flammable range, or where the liquid being filled can form such a mixture, shall be by means of a downspout which extends to near the bottom of the tank.

❖ Static electricity will spark between surfaces with different electrical potential. Vehicles that are or may have been used to carry Class I liquids are to be bonded. Vehicles with open domes are to be bonded before the dome is opened. Bonding to control static electricity can be done using wires, ground cables, metal piping or other similar means that will carry current. Open dome tanks must use a downspout that extends to near the bottom of the tank. This downspout will reduce the mixing of the flammable or combustible liquid with air.

Bonding to control static electricity is not necessary where static electricity is not an issue or a static spark would not act as an ignition source. Three exceptions are given to this section:

1. Combustible liquids whose viscosity prevents the accumulation of static electricity.
2. Facilities and vehicles that do not handle Class I liquids.
3. Vehicles that use a closed system for loading and unloading flammable and combustible liquids. These closed systems prevent the vapors of flammable and combustible liquids from mixing with air to form a vapor-air mixture that can reach the LFL.

5706.5.1.8 Stray current protection. Tank car loading facilities where Class I, II or IIIA liquids are transferred through open domes shall be protected against stray currents by permanently bonding the pipe to not less than one rail and to the transfer apparatus. Multiple pipes entering the transfer areas shall be permanently electrically bonded together. In areas where excessive stray currents are known to exist, all pipes entering the transfer area shall be provided with insulating sections to isolate electrically the transfer apparatus from the pipelines.

❖ Bonding of piping to the transfer apparatus and to a rail prevents any stray current from arcing. Any electrical equipment can develop stray current. Grounding of electrical equipment, dispensing piping and vehicles will prevent the accumulation of electrical potential, which will prevent the stray current from arcing and forming an ignition source.

5706.5.1.9 Top loading. When top loading a tank vehicle with Class I and II liquids without vapor control, valves used for the final control of flow shall be of the self-closing type and shall be manually held open except where automatic means are provided for shutting off the flow when the tank is full. Where used, automatic shutoff systems shall be provided with a manual shutoff valve located at a safe distance from the loading nozzle to stop the flow if the automatic system fails.

When top loading a tank vehicle with vapor control, flow control shall be in accordance with Section 5706.5.1.10. Self-closing valves shall not be tied or locked in the open position.

❖ A top-loading tank vehicle for use with Class I and II flammable and combustible liquids must have either a self-closing valve, a control valve that is manually held open or an automatic shutoff control valve to prevent overfilling and spillage. The automatic shutoff

INTERNATIONAL CODE COUNCIL®
Copyright © 2015 ICC. ALL RIGHTS RESERVED. Accessed by David Dammon on Jun 21, 2017 12:30:52 PM pursuant to License Agreement with ICC. No further reproduction or distribution authorized. ANY UNAUTHORIZED REPRODUCTION OR DISTRIBUTION IS A VIOLATION OF THE FEDERAL COPYRIGHT ACT AND THE LICENSE AGREEMENT, AND SUBJECT TO CIVIL AND CRIMINAL PENALTIES THEREUNDER.

control valve is to have a manual backup control valve located a safe distance from the loading nozzle.

If the dispensing system includes vapor control, the top loading is to comply with Section 5706.5.1.10.

5706.5.1.10 Bottom loading. When bottom loading a tank vehicle or tank car with or without vapor control, a positive means shall be provided for loading a predetermined quantity of liquid, together with an automatic secondary shutoff control to prevent overfill. The connecting components between the transfer equipment and the tank vehicle or tank car required to operate the secondary control shall be functionally compatible.

❖ Spillage is prevented when filling a bottom-loading tank vehicle by using a loading system that loads a predetermined quantity of flammable or combustible liquid. An automatic secondary shutoff control valve is required for a bottom-loading tank vehicle.

5706.5.1.10.1 Dry disconnect coupling. When bottom loading a tank vehicle, the coupling between the liquid loading hose or pipe and the truck piping shall be a dry disconnect coupling.

❖ To prevent spillage when disconnecting the dispensing system from the bottom-loading vehicle, the system is to use a dry connection.

5706.5.1.10.2 Venting. When bottom loading a tank vehicle or tank car that is equipped for vapor control and vapor control is not used, the tank shall be vented to the atmosphere to prevent pressurization of the tank. Such venting shall be at a height equal to or greater than the top of the cargo tank.

❖ Pressure is relieved in a bottom-loading tank during the loading process by venting the tank to the atmosphere. The tank vent is to be above the top of the upper limit to which flammable and combustible liquid can be loaded. This prevents the vent from spilling flammable or combustible liquid.

5706.5.1.10.3 Vapor-tight connection. Connections to the plant vapor control system shall be designed to prevent the escape of vapor to the atmosphere when not connected to a tank vehicle or tank car.

❖ Vapor recovery systems must be designed so that when they are not in use, vapors cannot escape the connection to the tank vehicle.

5706.5.1.10.4 Vapor-processing equipment. Vapor-processing equipment shall be separated from above-ground tanks, warehouses, other plant buildings, transfer facilities or nearest *lot line* of adjoining property that can be built on by a distance of not less than 25 feet (7620 mm). Vapor-processing equipment shall be protected from physical damage by remote location, guard rails, curbs or fencing.

❖ Vapor recovery is the most dangerous component of flammable or combustible liquid transfer. To protect property and life, the vapor recovery equipment is to be separated from other buildings, equipment, property lines, etc. The vapor recovery equipment must be protected from physical damage either by separation or by physical barriers. Any damage to the vapor recovery equipment could create a vapor-air mixture that is flammable. The same damage could generate an ignition source.

5706.5.1.11 Switch loading. Tank vehicles or tank cars that have previously contained Class I liquids shall not be loaded with Class II or III liquids until such vehicles and all piping, pumps, hoses and meters connected thereto have been completely drained and flushed.

❖ Class I liquids and their vapors must be cleaned from a tank vehicle before loading it with Class II or III combustible liquids. The vapors from Class I liquids can affect the response to Class II or III liquids by being the source of ignition and the initial fuel source to start a Class II or III liquid fire.

5706.5.1.12 Loading racks. Where provided, loading racks, *stairways* or platforms shall be constructed of noncombustible materials. Buildings for pumps or for shelter of loading personnel are allowed to be part of the loading rack. Wiring and electrical equipment located within 25 feet (7620 mm) of any portion of the loading rack shall be in accordance with Section 5703.1.1.

❖ Loading racks and buildings that are part of the loading rack and used to shelter pumps and loading personnel are to be noncombustible. This reduces the fuel sources in the vicinity of the flammable and combustible liquids. Electrical equipment within 25 feet (7620 mm) of the loading racks is to be classified as a hazardous location. This removes an ignition source from the immediate vicinity.

5706.5.1.13 Transfer apparatus. Bulk and process transfer apparatus shall be of an *approved* type.

❖ This section gives the fire code official the authority to approve any transfer apparatus.

5706.5.1.14 Inside buildings. Tank vehicles and tank cars shall not be located inside a building while transferring Class I, II or IIIA liquids, unless *approved* by the *fire code official*.

Exception: Tank vehicles are allowed under weather protection canopies and canopies of automobile motor vehicle fuel-dispensing stations.

❖ Tank vehicles are to be loaded outside of a building unless approved by the fire code official. The potential for the accumulation of vapors in a building where the bulk loading of tank vehicles takes place produces an unacceptable hazard.

The exception allows loading tank vehicles under a canopy because a canopy structure is considered to be outdoor usage.

5706.5.1.15 Tank vehicle and tank car certification. Certification shall be maintained for tank vehicles and tank cars in accordance with DOTn 49 CFR Parts 100-185.

❖ Tank vehicles for use with flammable and combustible liquids are regulated under DOTn 49 CFR, Parts 100-185. Tank vehicles and tank cars not having a current certification are not to be used.

INTERNATIONAL CODE COUNCIL®
Copyright © 2015 ICC. ALL RIGHTS RESERVED. Accessed by David Dammon on Jun 21, 2017 12:30:52 PM pursuant to License Agreement with ICC. No further reproduction or distribution authorized. ANY UNAUTHORIZED REPRODUCTION OR DISTRIBUTION IS A VIOLATION OF THE FEDERAL COPYRIGHT ACT AND THE LICENSE AGREEMENT, AND SUBJECT TO CIVIL AND CRIMINAL PENALTIES THEREUNDER.

5706.5.1.16 Tank vehicle and tank car stability. Tank vehicles and tank cars shall be stabilized against movement during loading and unloading in accordance with Sections 5706.5.1.16.1 through 5706.5.1.16.3.

❖ The stability of tank vehicles and tank cars is to be maintained during loading and unloading. The movement of a tank vehicle or tank car during loading or unloading could cause a spill.

5706.5.1.16.1 Tank vehicles. When the vehicle is parked for loading or unloading, the cargo trailer portion of the tank vehicle shall be secured in a manner that will prevent unintentional movement.

❖ Cargo trailers must be secured to prevent movement during loading and unloading.

5706.5.1.16.2 Chock blocks. Not less than two chock blocks not less than 5 inches by 5 inches by 12 inches (127 mm by 127 mm by 305 mm) in size and dished to fit the contour of the tires shall be used during transfer operations of tank vehicles.

❖ Tank vehicles are to use chock blocks that conform to the wheels to prevent movement. Movement of the tank vehicle could cause a spill.

5706.5.1.16.3 Tank cars. Brakes shall be set and the wheels shall be blocked to prevent rolling.

❖ Tank cars are to use both the tank car brakes and blocks to prevent movement. Movement of the tank car could cause a spill.

5706.5.1.17 Monitoring. Transfer operations shall be monitored by an *approved* monitoring system or by an attendant. Where monitoring is by an attendant, the operator or other competent person shall be present at all times.

❖ To prevent spillage, the transfer operations are to be continually monitored by an individual at the site.

5706.5.1.18 Security. Transfer operations shall be surrounded by a noncombustible fence not less than 5 feet (1524 mm) in height. Tank vehicles and tank cars shall not be loaded or unloaded unless such vehicles are entirely within the fenced area.

Exceptions:

1. Motor fuel-dispensing facilities complying with Chapter 23.
2. Installations where adequate public safety exists because of isolation, natural barriers or other factors as determined appropriate by the *fire code official*.
3. Facilities or properties that are entirely enclosed or protected from entry.

❖ Transfer operations must take place in a fenced-in area to prevent access by unauthorized personnel and the possibility of introduction of ignition sources around the transfer operation.

The three exceptions cover special sets of circumstances:

1. Motor fuel-dispensing facilities that comply with Chapter 23.
2. Installation approved by the fire code official that provides security complying with the intent of the code.
3. Facilities or properties that are completely enclosed or protected from entry by unauthorized persons.

5706.5.2 Bulk transfer. Bulk transfer shall be in accordance with Sections 5706.5.1 and 5706.5.2.1.

❖ The operation of a motor vehicle is prohibited during bulk transfer to prevent the presence of an ignition source.

5706.5.2.1 Vehicle motor. Motors of tank vehicles or tank cars shall be shut off during the making and breaking of hose connections and during the unloading operation.

Exception: Where unloading is performed with a pump deriving its power from the tank vehicle motor.

❖ The engine of a motor vehicle is a source of ignition. This source of ignition is to be turned off during transfer of flammable or combustible liquids.

The exception allows the engine of a motor vehicle to operate during transfer of flammable or combustible liquids only if the pump to move the flammable or combustible liquids is powered by the vehicle engine.

5706.5.3 Process transfer. Process transfer shall be in accordance with Section 5706.5.1 and Sections 5706.5.3.1 through 5706.5.3.3.

❖ Safety features are installed in the processing system to protect the system from failure. The failure may be caused by operational procedures or equipment. The process transfer is to be designed and operated to prevent leaks, spills, overpressure buildup, siphonage, accumulation of vapors, exposure to ignition sources, etc.

5706.5.3.1 Piping, valves, hoses and fittings. Piping, valves, hoses and fittings that are not a part of the tank vehicle or tank car shall be in accordance with Section 5703.6. Caps or plugs that prevent leakage or spillage shall be provided at all points of connection to transfer piping.

❖ Piping complying with Section 5703.6 provides protection against leaks and overpressures that may create leaks at joints or rupture of the pipes. To prevent any residue from leaking or spilling from the piping system, caps or plugs are to be available for all openings.

5706.5.3.1.1 Shutoff valves. *Approved* automatically or manually activated shutoff valves shall be provided where the transfer hose connects to the process piping, and on both sides of any exterior fire-resistance-rated wall through which the piping passes. Manual shutoff valves shall be arranged so that they are accessible from grade. Valves shall not be locked in the open position.

❖ Shutoff valves must be installed to isolate portions of the piping system. The valves must be located where the flammable or combustible liquids connect to the process equipment. Valves are to be located on both

INTERNATIONAL CODE COUNCIL®
Copyright © 2015 ICC. ALL RIGHTS RESERVED. Accessed by David Dammon on Jun 21, 2017 12:30:52 PM pursuant to License Agreement with ICC. No further reproduction or distribution authorized. ANY UNAUTHORIZED REPRODUCTION OR DISTRIBUTION IS A VIOLATION OF THE FEDERAL COPYRIGHT ACT AND THE LICENSE AGREEMENT, AND SUBJECT TO CIVIL AND CRIMINAL PENALTIES THEREUNDER.

sides of exterior fire-resistance-rated walls. Valves are not to be locked in the open position.

5706.5.3.1.2 Hydrostatic relief. Hydrostatic pressure-limiting or relief devices shall be provided where pressure buildup in trapped sections of the system could exceed the design pressure of the components of the system.

Devices shall relieve to other portions of the system or to another *approved* location.

❖ Pressure relief valves must be installed to prevent damage to the system by releasing the pressure either into another portion of the system or to an approved location. This prevents any vapors from the flammable and combustible liquids from being released into the atmosphere of the building or facility.

5706.5.3.1.3 Antisiphon valves. Antisiphon valves shall be provided where the system design would allow siphonage.

❖ To prevent leakage or spillage by siphoning flammable or combustible liquids from one portion of the process system to another, an approved antisiphon device must be installed.

5706.5.3.2 Vents. Normal and emergency vents shall be maintained operable at all times.

❖ Vents are installed to help prevent overpressurization of tanks and transfer piping. If these vents fail to operate as designed, serious damage to the system could result.

5706.5.3.3 Motive power. Motors of tank vehicles or tank cars shall be shut off during the making and breaking of hose connections and during the unloading operation.

Exception: When unloading is performed with a pump deriving its power from the tank vehicle motor.

❖ Because there is always a possibility that vapors or minor liquid spillage could present a fire hazard, it is important to remove all possible sources of ignition from the vicinity. Requiring internal combustion engines to be shut off before connections are made or broken removes an ignition source from the vicinity.

The exception acknowledges that some pumps are powered by the engine of the tank vehicle involved in the liquid transfer operation.

5706.5.4 Dispensing from tank vehicles and tank cars. Dispensing from tank vehicles and tank cars into the fuel tanks of motor vehicles shall be prohibited unless allowed by and conducted in accordance with Sections 5706.5.4.1 through 5706.5.4.5.

❖ The dispensing of flammable or combustible liquids from a tank vehicle or tank car into the fuel tank of a motor vehicle is covered by this section.

5706.5.4.1 Marine craft and special equipment. Liquids intended for use as motor fuels are allowed to be transferred from tank vehicles into the fuel tanks of marine craft and special equipment where *approved* by the *fire code official*, and where:

1. The tank vehicle's specific function is that of supplying fuel to fuel tanks.
2. The operation is not performed where the public has access or where there is unusual exposure to life and property.
3. The dispensing line does not exceed 50 feet (15 240 mm) in length.
4. The dispensing nozzle is *approved*.

❖ Transfer of motor fuel into marine craft and special equipment is covered by this section.

The tank vehicle or tank car must be designed and equipped specifically for fueling other vehicles and equipment and the dispensing equipment must be approved for this use. The dispensing line cannot be more than 50 feet (15 240 mm) long. The dispensing must be done in a controlled area where there is minimal exposure to life or property.

5706.5.4.2 Emergency refueling. Where *approved* by the *fire code official*, dispensing of motor vehicle fuel from tank vehicles into the fuel tanks of motor vehicles is allowed during emergencies. Dispensing from tank vehicles shall be in accordance with Sections 5706.2.8 and 5706.6.

❖ Emergency refueling of vehicles is permitted only when approved by the fire code official.

5706.5.4.3 Aircraft fueling. Transfer of liquids from tank vehicles to the fuel tanks of aircraft shall be in accordance with Chapter 20.

❖ Chapter 20 covers the requirements for aircraft fueling.

5706.5.4.4 Fueling of vehicles at farms, construction sites and similar areas. Transfer of liquid from tank vehicles to motor vehicles for private use on farms and rural areas and at construction sites, earth-moving projects, gravel pits and borrow pits is allowed in accordance with Section 5706.2.8.

❖ Fueling of vehicles at farms, construction sites and similar areas is covered by Section 5706.2.8. The dispensing of fuel at a farm or construction site may be from a tanker to a vehicle or equipment. Dispensing using a tanker requires that the tanker be designed and equipped specifically for fueling other vehicles and equipment. The dispensing equipment must be approved for this use. The dispensing line cannot be more than 100 feet (30 480 mm) long.

The tanker operator is responsible for the dispensing line and the tanker, so these two items need to be in the same area. The dispensing cannot be done around an ignition source, such as smoking, or electrical equipment that is not classified for use in hazardous locations.

5706.5.4.5 Commercial, industrial, governmental or manufacturing. Dispensing of Class II and III motor vehicle fuel

INTERNATIONAL CODE COUNCIL®
Copyright © 2015 ICC. ALL RIGHTS RESERVED. Accessed by David Dammon on Jun 21, 2017 12:30:52 PM pursuant to License Agreement with ICC. No further reproduction or distribution authorized. ANY UNAUTHORIZED REPRODUCTION OR DISTRIBUTION IS A VIOLATION OF THE FEDERAL COPYRIGHT ACT AND THE LICENSE AGREEMENT, AND SUBJECT TO CIVIL AND CRIMINAL PENALTIES THEREUNDER.

from tank vehicles into the fuel tanks of motor vehicles located at commercial, industrial, governmental or manufacturing establishments is allowed where permitted, provided such dispensing operations are conducted in accordance with the following:

1. Dispensing shall occur only at sites that have been issued a permit to conduct mobile fueling.
2. The *owner* of a mobile fueling operation shall provide to the jurisdiction a written response plan which demonstrates readiness to respond to a fuel spill and carry out appropriate mitigation measures, and describes the process to dispose properly of contaminated materials.
3. A detailed site plan shall be submitted with each application for a permit. The site plan shall indicate: all buildings, structures and appurtenances on site and their use or function; all uses adjacent to the lot lines of the site; the locations of all storm drain openings, adjacent waterways or wetlands; information regarding slope, natural drainage, curbing, impounding and how a spill will be retained upon the site property; and the scale of the site plan.

   Provisions shall be made to prevent liquids spilled during dispensing operations from flowing into buildings or off-site. Acceptable methods include, but shall not be limited to, grading driveways, raising doorsills or other *approved* means.
4. The *fire code official* is allowed to impose limits on the times and days during which mobile fueling operations is allowed to take place, and specific locations on a site where fueling is permitted.
5. Mobile fueling operations shall be conducted in areas not accessible to the public or shall be limited to times when the public is not present.
6. Mobile fueling shall not take place within 15 feet (4572 mm) of buildings, property lines, combustible storage or storm drains.

   Exceptions:

   1. The distance to storm drains shall not apply where an *approved* storm drain cover or an *approved* equivalent that will prevent any fuel from reaching the drain is in place prior to fueling or a fueling hose being placed within 15 feet (4572 mm) of the drain. Where placement of a storm drain cover will cause the accumulation of excessive water or difficulty in conducting the fueling, such cover shall not be used and the fueling shall not take place within 15 feet (4572 mm) of a drain.
   2. The distance to storm drains shall not apply for drains that direct influent to *approved* oil interceptors.
7. The tank vehicle shall comply with the requirements of NFPA 385 and local, state and federal requirements. The tank vehicle's specific functions shall include that of supplying fuel to motor vehicle fuel tanks. The vehicle and all its equipment shall be maintained in good repair.
8. Signs prohibiting smoking or open flames within 25 feet (7620 mm) of the tank vehicle or the point of fueling shall be prominently posted on three sides of the vehicle including the back and both sides.
9. A portable fire extinguisher with a minimum rating of 40:BC shall be provided on the vehicle with signage clearly indicating its location.
10. The dispensing nozzles and hoses shall be of an *approved* and *listed* type.
11. The dispensing hose shall not be extended from the reel more than 100 feet (30 480 mm) in length.
12. Absorbent materials, nonwater-absorbent pads, a 10-foot-long (3048 mm) containment boom, an *approved* container with lid and a nonmetallic shovel shall be provided to mitigate a minimum 5-gallon (19 L) fuel spill.
13. Tank vehicles shall be equipped with a "fuel limit" switch such as a count-back switch, to limit the amount of a single fueling operation to not more than 500 gallons (1893 L) before resetting the limit switch.

    Exception: Tank vehicles where the operator carries and can utilize a remote emergency shut-off device which, when activated, immediately causes flow of fuel from the tank vehicle to cease.
14. Persons responsible for dispensing operations shall be trained in the appropriate mitigating actions in the event of a fire, leak or spill. Training records shall be maintained by the dispensing company.
15. Operators of tank vehicles used for mobile fueling operations shall have in their possession at all times an emergency communications device to notify the proper authorities in the event of an emergency.
16. The tank vehicle dispensing equipment shall be constantly attended and operated only by designated personnel who are trained to handle and dispense motor fuels.
17. Fuel dispensing shall be prohibited within 25 feet (7620 mm) of any source of ignition.
18. The engines of vehicles being fueled shall be shut off during dispensing operations.
19. Nighttime fueling operations shall only take place in adequately lighted areas.
20. The tank vehicle shall be positioned with respect to vehicles being fueled to prevent traffic from driving over the delivery hose.
21. During fueling operations, tank vehicle brakes shall be set, chock blocks shall be in place and warning lights shall be in operation.
22. Motor vehicle fuel tanks shall not be topped off.

INTERNATIONAL CODE COUNCIL®
Copyright © 2015 ICC. ALL RIGHTS RESERVED. Accessed by David Dammon on Jun 21, 2017 12:30:52 PM pursuant to License Agreement with ICC. No further reproduction or distribution authorized. ANY UNAUTHORIZED REPRODUCTION OR DISTRIBUTION IS A VIOLATION OF THE FEDERAL COPYRIGHT ACT AND THE LICENSE AGREEMENT, AND SUBJECT TO CIVIL AND CRIMINAL PENALTIES THEREUNDER.

23. The dispensing hose shall be properly placed on an *approved* reel or in an *approved* compartment prior to moving the tank vehicle.
24. The *fire code official* and other appropriate authorities shall be notified when a reportable spill or unauthorized discharge occurs.
25. Operators shall place a drip pan or an absorbent pillow under each fuel fill opening prior to and during dispensing operations. Drip pans shall be liquid-tight. The pan or absorbent pillow shall have a capacity of not less than 3 gallons (11.36 L). Spills retained in the drip pan or absorbent pillow need not be reported. Operators, when fueling, shall have on their person an absorbent pad capable of capturing diesel fuel overfills. Except during fueling, the nozzle shall face upward and an absorbent pad shall be kept under the nozzle to catch drips. Contaminated absorbent pads or pillows shall be disposed of regularly in accordance with local, state and federal requirements.

❖ This section codifies minimum safety requirements for the regulation of certain mobile fueling operations, provides administrative controls over fueling sites, specifies the types of tank vehicles required in such operations and specifies training and licensing requirements for persons engaged in mobile fueling operations.

Regardless of previous allowances or restrictions by the legacy model fire codes (i.e., national, standard and uniform), mobile fueling is flourishing nationally and is welcomed in many jurisdictions. In fact, a number of local jurisdictions have developed regulations specifically allowing for expanded mobile fueling operations. The regulations in this section are consistent with those local regulations as well as those contained in NFPA 30A and provide an international model for jurisdictions to follow.

The greatest operational uses of mobile fueling are in conjunction with fueling of fleets, such as trucking companies, bus companies, delivery companies, municipal fleets, the U.S. Postal Service fleets and similar operations. Nationwide, the annual mobile fueling volume is conservatively estimated to exceed 500,000,000 gallons (18,992,500,000 L) and it is increasing at a rate exceeding 30 percent per year. It is a business carried out by both public and private entities. One private company alone delivers over 120,000,000 gallons (454,200,000 L) per year. There are several other companies that deliver from 500,000 to 3,000,000 gallons (1,892,500 to 11,355,000 L) per month. These operations are occurring in all regions of the United States since the early 1990s and in some areas, even longer.

Mobile fueling thrives because it meets several needs:

1. It is more cost efficient to bring delivery of fuel to high-volume consuming vehicles versus having each of those vehicles go to the fuel source.
2. Fueling is a safer operation when carried out by a trained, focused specialist who is familiar with the dispensing equipment and safety regulations, is trained in spill control and mitigation and knows what steps to take should an incident occur.
3. Fuel-consuming fleet operators recognize both safety and cost benefits by not involving a multitude of employees in a fueling operation for which they are not trained and are not likely to develop an overriding concern for safety.
4. Additional safety controls are evolving through the use of technology systems. Some systems are not economically feasible unless they include additional services. For example, some mobile fueling operations bring cost-saving advantages to their clients through the provision of a data-capturing system. In addition to having instant remote fuel-flow stopping capabilities, the system frees the operator to concentrate solely on the task of safe dispensing.
5. On-site mobile fueling eliminates the traffic hazards and air pollution problems associated with driving fleets of vehicles to a fixed fueling facility.

There is no known adverse fire incident history associated with mobile fueling. Given the length of time that mobile fueling has been occurring, the data points to an outstanding safety record. There is no safety-related reason that mobile fueling operations should not be allowed, provided such operations are carried out in keeping with reasonable safety requirements, including those designed to protect water supply and environment, as provided in this section.

5706.6 Tank vehicles and vehicle operation. Tank vehicles shall be designed, constructed, equipped and maintained in accordance with NFPA 385 and Sections 5706.6.1 through 5706.6.4.

❖ This section sets forth rules for the operation of tank vehicles used for the transportation of flammable and combustible liquids. Included are parking and garaging regulations, fire extinguisher requirements and regulations for the discharge of flammable and combustible liquids into underground storage tanks. These requirements are intended to apply to the extent that they do not conflict with federal requirements detailed in DOTn 49 CFR and other federal transportation regulations.

NFPA 385 details requirements for materials and methods of construction for flammable and combustible liquid tank vehicles to provide protection for their cargo under highway conditions. Design and construction of these vehicles must also conform to the requirements set forth in DOTn 49 CFR.

INTERNATIONAL CODE COUNCIL®
Copyright © 2015 ICC. ALL RIGHTS RESERVED. Accessed by David Dammon on Jun 21, 2017 12:30:52 PM pursuant to License Agreement with ICC. No further reproduction or distribution authorized. ANY UNAUTHORIZED REPRODUCTION OR DISTRIBUTION IS A VIOLATION OF THE FEDERAL COPYRIGHT ACT AND THE LICENSE AGREEMENT, AND SUBJECT TO CIVIL AND CRIMINAL PENALTIES THEREUNDER.

5706.6.1 Operation of tank vehicles. Tank vehicles shall be utilized and operated in accordance with NFPA 385 and Sections 5706.6.1.1 through 5706.6.1.11.

❖ NFPA 385 outlines the requirements for the operation of tank vehicles. These requirements detail required practices during transit, parking, loading and unloading, maintenance and repair designed to reduce the potential for accidental release of the vehicle cargo.

5706.6.1.1 Vehicle maintenance. Tank vehicles shall not be operated unless they are in proper state of repair and free from accumulation of grease, oil or other flammable substance, and leaks.

❖ Good housekeeping practices extend to tank vehicles just as much as they do to permanent facilities. Keeping vehicles clean and in good repair reduces the possibility for accumulations of flammable materials to become a fuel source for a fire.

5706.6.1.2 Leaving vehicle unattended. The driver, operator or attendant of a tank vehicle shall not remain in the vehicle cab and shall not leave the vehicle while it is being filled or discharged. The delivery hose, when attached to a tank vehicle, shall be considered to be a part of the tank vehicle.

❖ The tank vehicle driver, operator or attendant must be prepared to immediately suspend dispensing, loading or unloading operations; control a spill; or extinguish a fire should an incident occur. This section and NFPA 385 emphasize that the driver, operator or attendant must be outside the cab of the vehicle in order to be in compliance. It further clarifies that the driver, operator or attendant may be no further away from the vehicle than the length of the delivery hose connected to the vehicle. These restrictions are especially important in climates subject to extreme weather, where drivers are often tempted to sit in the truck cab or go into a building to keep cool or warm. Keeping the person most qualified to take prompt emergency action in the best possible location to do so reduces the likelihood of a major spill in the event of an equipment failure or accident.

5706.6.1.3 Vehicle motor shutdown. Motors of tank vehicles or tractors shall be shut down during the making or breaking of hose connections. If loading or unloading is performed without the use of a power pump, the tank vehicle or tractor motor shall be shut down throughout such operations.

❖ Motors must be shut down when not required to operate unloading equipment. When the vehicle motor is required to operate transfer pumps, it must be shut off when loading or unloading is commencing or is completed and before hose connections are made or broken in order to control it as a source of ignition.

5706.6.1.4 Outage. A cargo tank or compartment thereof used for the transportation of flammable or *combustible liquids* shall not be loaded to absolute capacity. The vacant space in a cargo tank or compartment thereof used in the transportation of flammable or *combustible liquids* shall be not less than 1 percent. Sufficient space shall be left vacant to prevent leakage from or distortion of such tank or compartment by expansion of the contents caused by rise in temperature in transit.

❖ To allow for the thermal expansion of flammable or combustible liquids, the maximum allowable capacity of a cargo tank or compartment is 99 percent of the actual capacity. The expansion of flammable or combustible liquids in a confined space will create internal pressures, which may damage the cargo tank or compartment, possibly creating a leak.

5706.6.1.5 Overfill protection. The driver, operator or attendant of a tank vehicle shall, before making delivery to a tank, determine the unfilled capacity of such tank by a suitable gauging device. To prevent overfilling, the driver, operator or attendant shall not deliver in excess of that amount.

❖ The individual responsible for the operation of the tank vehicle is also responsible for overfill protection. This individual is to calculate the fill quantity. This is the maximum quantity that the individual responsible for the operation of the tank vehicle is to deliver.

5706.6.1.6 Securing hatches. During loading, hatch covers shall be secured on all but the receiving compartment.

❖ To ensure that the minimum amount of flammable and combustible liquids is exposed to air or to an ignition source, only hatches in actual use during dispensing are to be opened.

5706.6.1.7 Liquid temperature. Materials shall not be loaded into or transported in a tank vehicle at a temperature above the material's ignition temperature unless safeguarded in an *approved* manner.

❖ Loading and transporting of flammable and combustible liquids above their ignition temperature are prohibited unless the loading operation and the transporting process are protected from the hazards involved in this process. Risks are increased significantly when the liquid is at an elevated temperature.

5706.6.1.8 Bonding to underground tanks. An external bond-wire connection or bond-wire integral with a hose shall be provided for the transferring of flammable liquids through open connections into underground tanks.

❖ Static electricity will spark between surfaces with different electrical potential. This spark is an ignition source for flammable and combustible liquids. Bonding of the dispensing hose to the underground tank is required, if the transfer is through an open connection. Bonding can be done using wires, ground cables, metal piping or other similar means that will carry current.

5706.6.1.9 Smoking. Smoking by tank vehicle drivers, helpers or other personnel is prohibited while they are driving, making deliveries, filling or making repairs to tank vehicles.

❖ Smoking is prohibited in the vicinity of the tank vehicle. This eliminates a source of ignition.

5706.6.1.10 Hose connections. Delivery of flammable liquids to underground tanks with a capacity of more than 1,000 gallons (3785 L) shall be made by means of *approved* liquid

INTERNATIONAL CODE COUNCIL®
Copyright © 2015 ICC. ALL RIGHTS RESERVED. Accessed by David Dammon on Jun 21, 2017 12:30:52 PM pursuant to License Agreement with ICC. No further reproduction or distribution authorized. ANY UNAUTHORIZED REPRODUCTION OR DISTRIBUTION IS A VIOLATION OF THE FEDERAL COPYRIGHT ACT AND THE LICENSE AGREEMENT, AND SUBJECT TO CIVIL AND CRIMINAL PENALTIES THEREUNDER.

and vapor-tight connections between the delivery hose and tank fill pipe. Where underground tanks are equipped with any type of vapor recovery system, all connections required to be made for the safe and proper functioning of the particular vapor recovery process shall be made. Such connections shall be made liquid and vapor tight and remain connected throughout the unloading process. Vapors shall not be discharged at grade level during delivery.

❖ The delivery of Class I liquids to either an above-ground or underground storage tank that exceeds 1,000 gallons (3785 L) in capacity must be through a liquid- and vapor-tight fitting to reduce the potential for the escape of flammable liquid or vapors at the point of connection. These fittings include liquid transfer lines and vapor recovery lines, which are designed to prevent the release of polluting, flammable vapors during transfer. These requirements prohibit the extremely dangerous, but not uncommon, practice of delivery tanker operators not connecting vapor return hoses, thus allowing the vapors displaced during delivery to escape at grade level from the unmade connections. Incidents have been reported where the vapors have traveled to nearby buildings, found an ignition source and exploded (see also commentary, Section 2305.1.3).

5706.6.1.10.1 Simultaneous delivery. Simultaneous delivery to underground tanks of any capacity from two or more discharge hoses shall be made by means of mechanically tight connections between the hose and fill pipe.

❖ The simultaneous delivery of flammable and combustible liquids to an underground tank using two or more hoses requires a mechanically tight connection for each delivery hose to the tank fill pipe. The pressure generated by the delivery could cause one or more of the delivery hoses to leak or to disconnect if the connections are not tight.

5706.6.1.11 Hose protection. Upon arrival at a point of delivery and prior to discharging any flammable or *combustible liquids* into underground tanks, the driver, operator or attendant of the tank vehicle shall ensure that all hoses utilized for liquid delivery and vapor recovery, where required, will be protected from physical damage by motor vehicles. Such protection shall be provided by positioning the tank vehicle to prevent motor vehicles from passing through the area or areas occupied by hoses, or by other *approved* equivalent means.

❖ Whenever possible, fill connections for new underground storage tanks should be located where tank vehicle hose lines will be out of the way of traffic during liquid transfer operations. Otherwise, the tank vehicle should be positioned to minimize the likelihood of damage to the discharge line (which could result in a large spill and potentially a large fire), or traffic cones or pylons should be placed to warn approaching vehicles (see Commentary Figure 5706.6.1.11).

5706.6.2 Parking. Parking of tank vehicles shall be in accordance with Sections 5706.6.2.1 through 5706.6.2.3.

Exception: In cases of accident, breakdown or other emergencies, tank vehicles are allowed to be parked and left unattended at any location while the operator is obtaining assistance.

❖ The parking of tank vehicles is as important as above-ground tank storage. The quantity of flamma-

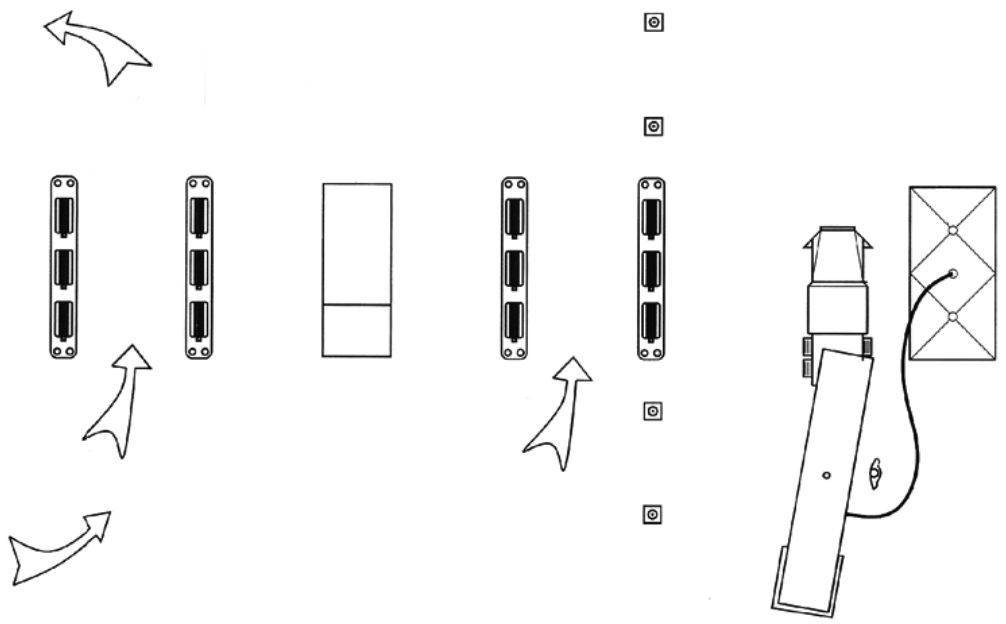

Figure 5706.6.1.11
TANK VEHICLE POSITIONING DURING UNLOADING

INTERNATIONAL CODE COUNCIL®
Copyright © 2015 ICC. ALL RIGHTS RESERVED. Accessed by David Dammon on Jun 21, 2017 12:30:52 PM pursuant to License Agreement with ICC. No further reproduction or distribution authorized. ANY UNAUTHORIZED REPRODUCTION OR DISTRIBUTION IS A VIOLATION OF THE FEDERAL COPYRIGHT ACT AND THE LICENSE AGREEMENT, AND SUBJECT TO CIVIL AND CRIMINAL PENALTIES THEREUNDER.

ble and combustible liquids can be substantial in a tank vehicle and exposure to ignition sources is more problematic than in a secured area. The facilities adjacent to the tank vehicle may represent a potential for large loss of life or large property damage. The spread of fire from a tank vehicle is not contained by dikes or a similar containment and drainage system. The fire can spread to areas outside of the tank vehicle location and fire-fighting operations may not be effective if the fire goes into an underground drainage system.

The restrictions on parking do not apply in case of a vehicle breakdown. Because it is impossible to predict or prevent all vehicle failures, the code does not make temporary parking resulting from mechanical failure of the tank vehicle a violation.

5706.6.2.1 Parking near residential, educational and institutional occupancies and other high-risk areas. Tank vehicles shall not be left unattended at any time on residential streets, or within 500 feet (152 m) of a residential area, apartment or hotel complex, educational facility, hospital or care facility. Tank vehicles shall not be left unattended at any other place that would, in the opinion of the fire chief, pose an extreme life hazard.

❖ Tank vehicles must not be parked or left unattended in residential districts or near schools, nursing homes, hospitals or similar buildings where the hazards to life may be high and the occupants are more vulnerable.

Maintaining a distance of 500 feet (152 400 mm) to the listed premises provides a spatial buffer between the tank vehicle and the high life-risk property in case of a spill, accident or ignition. This section also allows the fire chief to declare certain other areas of the jurisdiction as being off limits to parking, based on the hazard exposures present. Some jurisdictions have, by local ordinance, specified certain road routes to be used by hazardous cargo vehicles, further reducing the likelihood of a major hazardous materials incident or fire.

5706.6.2.2 Parking on thoroughfares. Tank vehicles shall not be left unattended on a public street, highway, public avenue or public alley.

Exceptions:

1. The necessary absence in connection with loading or unloading the vehicle. During actual fuel transfer, Section 5706.6.1.2 shall apply. The vehicle location shall be in accordance with Section 5706.6.2.1.
2. Stops for meals during the day or night, where the street is well lighted at the point of parking. The vehicle location shall be in accordance with Section 5706.6.2.1.

❖ Leaving a tank vehicle parked or unattended in a public way invites malicious vandalism to the vehicle or an accidental collision by another vehicle, either of which could cause a release of the cargo, creating a large-scale spill or possible large-area fire if ignition were to occur. The exceptions in this section are very specific in describing the limited conditions under which the vehicle operator may be absent from the vehicle. The locations where such absence is permitted may be expected to be generally off limits to the public (i.e., unauthorized personnel) or, in the case of meal breaks, sufficiently lighted so as to discourage vandalism and reduce the likelihood of accidental collision.

5706.6.2.3 Duration exceeding 1 hour. Tank vehicles parked at one point for longer than 1 hour shall be located off of public streets, highways, public avenues or alleys, and in accordance with either of the following:

1. Inside of a bulk plant and either 25 feet (7620 mm) or more from the nearest *lot line* or within a building *approved* for such use.
2. At other *approved* locations not less than 50 feet (15 240 mm) from the buildings other than those *approved* for the storage or servicing of such vehicles.

❖ In order to prevent the tank vehicle from being subject to accidents or vandalism, this section requires tank vehicles that are parked for durations exceeding 1 hour to be located off streets, highways, avenues or alleys, and either inside of a bulk plant or at other approved locations as specified in the code.

Security should be a major consideration in approving an off-street location for overnight parking. If a satisfactory location cannot be found, as an alternative method based on Section 104.9, the fire code official could consider designating areas in a parking lot for tank vehicles that provide the maximum available separation from buildings and are well-lighted, away from traffic areas, drained away from buildings, etc.

5706.6.3 Garaging. Tank vehicles shall not be parked or garaged in buildings other than those specifically *approved* for such use by the *fire code official*.

❖ This section prohibits the parking or garaging of tank vehicles inside of buildings. There is an exception, although it is not shown in the code style, that allows the fire code official to specifically approve a building for the parking or garaging of tank vehicles. Criteria for such specific approval could include a requirement that all liquid cargo be off-loaded (outside the building), and the tank vehicle's cargo tank, piping and hoses cleaned and purged of vapors or made inert in an approved manner before moving into any building or structure.

An alternative criterion for specific approval could be that the building or structure be specifically designed for that purpose and classified in Group H-3 (assuming that the cargo tank is at atmospheric pressure). Group H buildings used for the garaging of tank vehicles would include all code-required safety features for the indoor storage of flammable or combustible liquids, including safety features for control of leaks, spills and ignition sources; fire and fire containment and higher levels of ventilation that are not found in other buildings.

INTERNATIONAL CODE COUNCIL®
Copyright © 2015 ICC. ALL RIGHTS RESERVED. Accessed by David Dammon on Jun 21, 2017 12:30:52 PM pursuant to License Agreement with ICC. No further reproduction or distribution authorized. ANY UNAUTHORIZED REPRODUCTION OR DISTRIBUTION IS A VIOLATION OF THE FEDERAL COPYRIGHT ACT AND THE LICENSE AGREEMENT, AND SUBJECT TO CIVIL AND CRIMINAL PENALTIES THEREUNDER.

In a Group H-3 scenario, the cargo would not need to be off-loaded and the tank and appurtenances purged or inerted; however, the length of time that a tank vehicle is allowed to be kept inside of a building must be included in the approval and permit process since Section 5704.2.2 very specifically prohibits the use of tank vehicles as storage tanks, whether inside or outside of a building.

5706.6.4 Portable fire extinguisher. Tank vehicles shall be equipped with a portable fire extinguisher complying with Section 906 and having a minimum rating of 2-A:20-B:C.

During unloading of the tank vehicle, the portable fire extinguisher shall be out of the carrying device on the vehicle and shall be 15 feet (4572 mm) or more from the unloading valves.

❖ A fire extinguisher (2-A:20-B:C) must be available to control a small fire. The fire extinguisher is designed for use on ordinary combustible fires, flammable liquid fires and electrical fires. The extinguisher is to be at least 15 feet (4572 mm) from the unloading valve. This location is convenient for the attendant to close the valve, control the flow of the flammable or combustible liquid and have access to the fire extinguisher to control a fire.

5706.7 Refineries. Plants and portions of plants in which flammable liquids are produced on a scale from crude petroleum, natural gasoline or other hydrocarbon sources shall be in accordance with Sections 5706.7.1 through 5706.7.3. Petroleum-processing plants and facilities or portions of plants or facilities in which flammable or *combustible liquids* are handled, treated or produced on a commercial scale from crude petroleum, natural gasoline, or other hydrocarbon sources shall also be in accordance with API 651, API 653, API 752, API 1615, API 2001, API 2003, API 2009, API 2015, API 2023, API 2201 and API 2350.

❖ Refineries process crude petroleum or other hydrocarbon sources into flammable or combustible liquids on a commercial scale. These facilities are covered by American Petroleum Institute (API) standards:

API RP 651: The standard describes corrosion problems characteristic to above-ground storage tanks and associated piping systems. The standard covers the two current methods used to provide cathodic protection against corrosion.

API STD 653: The standard covers the inspection, repair, alteration and reconstruction of steel above-ground storage tanks and includes the minimum requirements for maintaining the integrity of welded or riveted, nonrefrigerated, atmospheric pressure, above-ground storage tanks that have been placed in service.

API RP 752: The guide describes a methodology for assessing and evaluating the hazards associated with the location of process plant buildings.

API RP 1615: The guide contains the procedures and lists equipment needed for the proper installation of underground petroleum storage systems. The guide applies to underground storage tank systems that store petroleum products for retail and commercial facilities.

API RP 2001: The publication provides an understanding of the fire protection problems and the steps needed to ensure the safe storage, handling and processing of petroleum products in refineries and the safe shipment of petroleum products.

API RP 2003: The publication describes some of the conditions that have resulted in fires caused by electrical sparks and arcs from natural causes. The publication describes methods currently used to prevent ignition from these sources.

API Publ. 2009: The publication contains suggested precautions for the protection of personnel from injury and property from damage by fire that may arise during the operation of gas and electric cutting and welding equipment in and around petroleum operations.

API STD 2015: The standard contains safety procedures for preparing, emptying, isolating, ventilating, atmospheric testing, cleaning, entry, hot work and recommissioning activities in, on and around atmospheric and low pressure [15 psig (103 kPa) or less] above-ground storage tanks. The standard applies to stationary tanks used in petroleum and petrochemical plants and terminals.

API RP 2023: The publication is a recommended practice that describes the phenomena that can occur and precautions to be taken in the storage of asphalt products and residue derived from crude oil petroleum. The recommendations apply when these materials are stored in heated tanks at refineries and bulk storage facilities and transported in tank vehicles.

API RP 2201: The publication covers the safety aspects to be considered when hot tapping or welding without hot tapping on in-service piping or equipment.

API RP 2350: The publication is a recommended practice to prevent petroleum storage tanks from being overfilled. Tank overfill can be effectively reduced by developing and implementing practical and safe operating procedures for storage facilities and by providing for careful selection and application of equipment, scheduled maintenance programs and personnel training. The publication covers overfill protection for above-ground storage tanks in petroleum facilities, including refineries, terminals, bulk plants and pipeline terminals for Class I liquids from mainline pipelines or marine vessels.

5706.7.1 Corrosion protection. Above-ground tanks and piping systems shall be protected against corrosion in accordance with API 651.

❖ Above-ground tanks must have corrosion protection complying with API 651. Soil and environmental con-

INTERNATIONAL CODE COUNCIL®
Copyright © 2015 ICC. ALL RIGHTS RESERVED. Accessed by David Dammon on Jun 21, 2017 12:30:52 PM pursuant to License Agreement with ICC. No further reproduction or distribution authorized. ANY UNAUTHORIZED REPRODUCTION OR DISTRIBUTION IS A VIOLATION OF THE FEDERAL COPYRIGHT ACT AND THE LICENSE AGREEMENT, AND SUBJECT TO CIVIL AND CRIMINAL PENALTIES THEREUNDER.

ditions can cause the deterioration of tanks. Corrosion can weaken the tank, creating a potential for leakage.

Cathodic protection uses a sacrificial metal to prevent the corrosion of the metal storage tank. The sacrificial metal is bonded to the tank so the electrochemical reaction of the sacrificial metal prevents the corrosion of the steel storage tank. The sacrificial metal is the anode, the steel storage tank is the cathode and a power supply connects the two. Replacement of the anode will depend on the rate of corrosion.

5706.7.2 Cleaning of tanks. The safe entry and cleaning of petroleum storage tanks shall be conducted in accordance with API 2015.

❖ The safe entry and cleaning of tanks must comply with API 2015. The environment in a storage tank can be hostile for personnel because the air may not be breathable or may contain a vapor-air mixture within the flammable range. The standard provides mitigation protocols for personnel hazards. See the commentary to Section 5706.7 for a more detailed description of the standard.

5706.7.3 Storage of heated petroleum products. Where petroleum-derived asphalts and residues are stored in heated tanks at refineries and bulk storage facilities or in tank vehicles, such products shall be in accordance with API 2023.

❖ The storage of heated petroleum products must comply with API 2023. The guide describes the phenomena that can occur and the precautions to be taken in the storage and handling of asphalt products and residue derived from crude-oil petroleum. The heating of these flammable and combustible liquids can result in the release of vapors as well as increase the potential for ignition.

5706.8 Vapor recovery and vapor-processing systems. Vapor-processing systems in which the vapor source operates at pressures from vacuum, up to and including 1 psig (6.9 kPa) or in which a potential exists for vapor mixtures in the flammable range, shall comply with Sections 5706.8.1 through 5706.8.5.

Exceptions:

1. Marine systems complying with federal transportation waterway regulations such as DOTn 33 CFR Parts 154 through 156, and CGR 46 CFR Parts 30, 32, 35 and 39.
2. Motor fuel-dispensing facility systems complying with Chapter 23.

❖ Vapor-recovery systems must function to prevent the release of vapors and protect the vapor-recovery system during operation in the flammable range.

Exception 1 covers marine systems complying with federal regulations. A marine system not complying with federal regulations is in violation of the code and should be reported to the appropriate federal authority for enforcement of federal regulations. Exception 2 addresses service station systems complying with Chapter 23. A service station system not complying with Chapter 23 is in violation of the code. The motor fuel-dispensing facility system is to be brought into compliance with Chapter 23.

5706.8.1 Over-pressure/vacuum protection. Tanks and equipment shall have independent venting for over-pressure or vacuum conditions that might occur from malfunction of the vapor recovery or processing system.

Exception: For tanks, venting shall comply with Section 5704.2.7.3.

❖ A vapor-recovery system must be equipped with an independent system for venting overpressure or a vacuum. An overpressure condition can damage the vapor-recovery system, creating leaks or other damage. The leak or damage could allow the vapor from a flammable or combustible liquid to escape and generate a vapor-air mixture in the flammable range.

A vacuum condition can result in the introduction of air into the vapor-recovery system. The introduction of air could generate a vapor-air mixture in the flammable range within the vapor-recovery system.

The exception recognizes that tank venting complying with Section 5704.2.7.3 is exempt from this requirement. Tanks are vented to maintain the internal tank pressure within the design operating range. A low pressure can increase the generation of vapors. A high pressure can damage the tank or piping system. Any pressure outside of the design pressure range can have an adverse affect on the operation of the system as well as the piping and equipment.

5706.8.2 Vent location. Vents on vapor-processing equipment shall be not less than 12 feet (3658 mm) from adjacent ground level, with outlets located and directed so that flammable vapors will disperse to below the lower flammable limit (LFL) before reaching locations containing potential ignition sources.

❖ The termination of a vent pipe must direct vapors away from the building. Vapors from flammable liquids are normally heavier than air so that the vapor will settle to lower levels. The termination of a vent pipe a minimum of 12 feet (3658 mm) above grade will provide space for the vapors to disperse to below the LFL. This high termination elevation also reduces the potential for the termination being in close proximity to grade-level ignition sources. Because flammable liquid vapor is heavier than air, attention must be given to the building design near the termination.

5706.8.3 Vapor collection systems and overfill protection. The design and operation of the vapor collection system and overfill protection shall be in accordance with this section and Section 19.5 of NFPA 30.

❖ The vapor collection system and overfill protection are to comply with Section 7.10 of NFPA 30. This section addresses the same topics as Section 5706.8. Section 7.10 of NFPA 30 contains additional requirements not specifically listed in Section 5706.8. These requirements are in other sections of this

INTERNATIONAL CODE COUNCIL®
Copyright © 2015 ICC. ALL RIGHTS RESERVED. Accessed by David Dammon on Jun 21, 2017 12:30:52 PM pursuant to License Agreement with ICC. No further reproduction or distribution authorized. ANY UNAUTHORIZED REPRODUCTION OR DISTRIBUTION IS A VIOLATION OF THE FEDERAL COPYRIGHT ACT AND THE LICENSE AGREEMENT, AND SUBJECT TO CIVIL AND CRIMINAL PENALTIES THEREUNDER.

chapter, but not specifically contained in this section.

These additional requirements are: 1. The vapor collection system is to be designed not to trap liquid in the vapor collection piping; 2. Unless the vapor-recovery system is designed to handle flammable or combustible liquid, the system is to be designed to eliminate any liquid from the vapor-recovery system; 3. Provide protection from ignition sources; 4. Classification of locations for electrical system; 5. Protection from static electricity; 6. Precautions against spontaneous ignition; 7. Prevent friction heat or sparks from mechanical equipment; 8. Prevent the propagation of flame through the vapor-recovery system; 9. When necessary, provisions for explosion prevention; and 10. Requirements for an emergency shutdown system.

5706.8.4 Liquid-level monitoring. A liquid knock-out vessel used in the vapor collection system shall have means to verify the liquid level and a high-liquid-level sensor that activates an alarm. For unpopulated facilities, the high-liquid-level sensor shall initiate the shutdown of liquid transfer into the vessel and shutdown of vapor recovery or vapor-processing systems.

❖ Liquid monitoring is necessary to prevent the liquid knockout vessel from overfilling. The liquid-level monitor must sound an alarm or shut down the vapor-recovery process before the liquid knockout vessel is overfilled. Overfill of the liquid knockout vessel could cause a spill of the flammable or combustible liquid.

5706.8.5 Overfill protection. Storage tanks served by vapor recovery or processing systems shall be equipped with overfill protection in accordance with Section 5704.2.7.5.8.

❖ Section 5704.2.7.5.8 requires compliance with Sections 5704.2.9.6.6 through 5704.2.9.6.6.2 for tanks storing Class I, II and IIIA liquids. To prevent spillage of liquid from storage tanks served by a vapor-recovery or processing system, the tanks are limited to 95 percent of their capacity by an overfill protection system. Several methods are acceptable. The protection system must include provisions for draining the vapor-recovery or processing system into the storage tank without exceeding the 95-percent capacity.

Bibliography

The following resource materials were used in the preparation of the commentary for this chapter of the code:

Code Changes Resource Collection—2015 International Fire Code. Washington, DC: International Code Council, 2014.

NFPA 30-12, *Flammable and Combustible Liquids Code*. Quincy, MA: National Fire Protection Association, 2011.

INTERNATIONAL CODE COUNCIL®

Copyright © 2015 ICC. ALL RIGHTS RESERVED. Accessed by David Dammon on Jun 21, 2017 12:30:52 PM pursuant to License Agreement with ICC. No further reproduction or distribution authorized. ANY UNAUTHORIZED REPRODUCTION OR DISTRIBUTION IS A VIOLATION OF THE FEDERAL COPYRIGHT ACT AND THE LICENSE AGREEMENT, AND SUBJECT TO CIVIL AND CRIMINAL PENALTIES THEREUNDER.

Chapter 58: Flammable Gases and Flammable Cryogenic Fluids

General Comments

The requirements of Chapter 58 address flammable gases and flammable cryogenic fluids, principally bulk hydrogen gas stored as either a compressed gas or as a cryogenic fluid. Note that, while Chapter 55 is intended to apply to all cryogenic fluids regardless of classification, the flammable characteristics will now be regulated by Chapter 58.

Excluding liquefied petroleum gases whose requirements are contained in Chapter 61, this chapter aggregates all of the requirements for flammable gases that are compressed, liquefied compressed or stored as a cryogenic fluid. Section 5806 is divided into two major subsections: Section 5806.3 addresses requirements for above-ground liquid hydrogen vessels and Section 5806.4 addresses the requirements for underground liquid hydrogen vessels. Sections 5806.3.1 and 5806.4.1 require above-ground liquid hydrogen tanks that are not U.S. Department of Transportation (DOT) cylinders and underground liquid hydrogen tanks to be constructed to the requirements of the American Society of Mechanical Engineers (ASME) *Boiler and Pressure Vessel Code* (BPVC), Section VIII, Division 1 for unfired pressure vessels. Section 5807 provides regulation of metal hydride storage systems.

Of the three physical states of matter, only gas will ignite without preheating. In order to burn, all other materials must be transformed into a vaporous or gaseous state, regardless of their initial phase. The principal hazard posed by flammable gas and flammable cryogenic fluids is ready ignitability, or even explosivity, when mixed with air in the proper proportions. The question in a release usually is not whether the mixture will ignite, but rather when or how it will ignite if not controlled. Consequently, occupancies storing or handling more than 1,000 cubic feet (28 m^3) of flammable gas or 30 gallons (114 L) of liquefied flammable gas per control area or 45 gallons (170 L) of flammable cryogenic fluid are classified as Group H-2 (high hazard) by the *International Building Code*® (IBC®).

Purpose

Chapter 58 sets requirements for the storage and use of flammable gases and flammable cryogenic fluids. For safety purposes, there is a limit on the quantities allowed per control area. Exceeding these limitations increases the possibility of damage to both property and individuals.

SECTION 5801 GENERAL

5801.1 Scope. The storage and use of flammable gases and flammable cryogenic fluids shall be in accordance with this chapter and NFPA 55. Compressed gases shall also comply with Chapter 53 and cryogenic fluids shall also comply with Chapter 55. Flammable cryogenic fluids shall comply with Section 5806. Hydrogen motor fuel-dispensing stations and repair garages and their associated above-ground hydrogen storage systems shall also be designed, constructed and maintained in accordance with Chapter 23 and NFPA 2.

Exceptions:

1. Gases used as refrigerants in refrigeration systems (see Section 606).
2. Liquefied petroleum gases and natural gases regulated by Chapter 61.
3. Fuel-gas systems and appliances regulated under the *International Fuel Gas Code* other than gaseous hydrogen systems and appliances.
4. Pyrophoric gases in accordance with Chapter 64.

❖ This section establishes the scope of Chapter 58 with respect to the storage and use of flammable and nonflammable gases, cryogenic fluids and flammable cryogenic fluids. The requirements of this chapter and the referenced standards are applicable in addition to the general storage requirements of Chapter 23 for flammable gas motor fuel dispensing facilities and Chapter 50 for hazardous materials.

5801.2 Permits. Permits shall be required as set forth in Section 105.6.

❖ The process of issuing permits gives the fire code official an opportunity to carefully evaluate and regu-

INTERNATIONAL CODE COUNCIL®
Copyright © 2015 ICC. ALL RIGHTS RESERVED. Accessed by David Dammon on Jun 21, 2017 12:30:52 PM pursuant to License Agreement with ICC. No further reproduction or distribution authorized. ANY UNAUTHORIZED REPRODUCTION OR DISTRIBUTION IS A VIOLATION OF THE FEDERAL COPYRIGHT ACT AND THE LICENSE AGREEMENT, AND SUBJECT TO CIVIL AND CRIMINAL PENALTIES THEREUNDER.

late hazardous operations. Permit applicants should be required to demonstrate that their operations comply with the intent of the code before the permit is issued. See the commentary to Section 105.6 for a general discussion of operations requiring an operational permit, Sections 105.6.9 and 105.6.11 for discussion of specific quantity-based operational permits for the materials regulated in this chapter and Section 105.7 for a general discussion of activities requiring a construction permit. The permit process also notifies the fire department of the need for prefire planning for hazardous property.

SECTION 5802
DEFINITIONS

5802.1 Definitions. The following terms are defined in Chapter 2:

FLAMMABLE GAS.

FLAMMABLE LIQUEFIED GAS.

GASEOUS HYDROGEN SYSTEM.

HYDROGEN FUEL GAS ROOM.

METAL HYDRIDE.

METAL HYDRIDE STORAGE SYSTEM.

❖ Definitions of terms can help in the understanding and application of the code requirements. This section directs the code user to Chapter 2 for the proper application of the indicated terms used in this chapter. Terms may be defined in Chapter 2 or in another *International Code*® as indicated in Section 201.3, or the dictionary meaning may be all that is needed (see also commentary, Sections 201.1 through 201.4).

SECTION 5803
GENERAL REQUIREMENTS

5803.1 Quantities not exceeding the maximum allowable quantity per control area. The storage and use of flammable gases in amounts not exceeding the *maximum allowable quantity per control area* indicated in Section 5003.1 shall be in accordance with Sections 5001, 5003, 5801 and 5803.

❖ When the amounts stored or used do not exceed the maximum allowable quantities per control area (MAQs), certain factors that must be adhered to include systems and processes, release of hazardous materials into the air, Material Safety Data Sheets (MSDS), hazard identification signs, sources of ignition and construction requirements.

5803.1.1 Special limitations for indoor storage and use. Flammable gases shall not be stored or used in Group A, E, I or R occupancies or in offices in Group B occupancies.

Exceptions:

1. Cylinders of nonliquefied *compressed gases* not exceeding a capacity of 250 cubic feet (7.08 m^3) or liquefied gases not exceeding a capacity of 40 pounds (18 kg) each at *normal temperature and pressure (NTP)* used for maintenance purposes, patient care or operation of equipment.
2. Food service operations in accordance with Section 6103.2.1.7.
3. Hydrogen gas systems located in a hydrogen fuel gas room constructed in accordance with Section 421 of the *International Building Code*.

❖ Flammable gases must not be stored or used where an accident could cause a large loss of life. They must be stored and used in accordance with preventive guidelines for safety purposes. The limitation to office spaces in Group B occupancies allows small laboratories, doctor or dental spaces or other nonoffice uses classified as Group B to store and use quantities up to the MAQs of flammable or oxidizing gases.

Exception 1 provides that small quantities of liquefied or nonliquefied gases are allowed for maintenance of buildings, taking care of patients and equipment operation. Flammable gas systems are not allowed for these purposes because the large volume would create the potential for a catastrophic event with large loss of life and property.

Exception 2 refers the code user to the code provisions for use of liquefied petroleum gas (LP-gas) in cooking operations in buildings.

Starting with the 2003 editions of the code and the IBC, there existed provisions for the use of a "hydrogen cutoff room" as an incidental use for the storage and use of hydrogen. The purpose was to provide rules for the indoor application of the then-new hydrogen fuel technology. Though language was added to Chapter 23 pointing to the “hydrogen cutoff room” provisions for indoor motor fuel dispensing operations, no pointer was provided for other uses of the new technology, such as the use of hydrogen fuel cells with hydrogen gas cylinders as a fuel supply for clean energy backup power systems. The use of the hydrogen fuel cell for backup power supplies is not occupancy group specific and, though Exception 1 permits the use of hydrogen for operation of equipment, the allowed hydrogen capacity is insufficient for the backup power application. Exception 3 provides a needed pointer to the use of the “hydrogen cutoff room” (renamed “hydrogen fuel gas room”) and allows use of this technology in the occupancy groups otherwise restricted by this section. The limiting factor would be the MAQ for flammable gas currently specified by the code. See the commentary to Section 5808.

5803.1.1.1 Medical gases. Medical gas system supply cylinders shall be located in medical gas storage rooms or gas cabinets as set forth in Section 5306.

❖ Section 5306 gives requirements for storage rooms and gas cabinets. Storage rooms are to be of 1-hour-

INTERNATIONAL CODE COUNCIL®
Copyright © 2015 ICC. ALL RIGHTS RESERVED. Accessed by David Dammon on Jun 21, 2017 12:30:52 PM pursuant to License Agreement with ICC. No further reproduction or distribution authorized. ANY UNAUTHORIZED REPRODUCTION OR DISTRIBUTION IS A VIOLATION OF THE FEDERAL COPYRIGHT ACT AND THE LICENSE AGREEMENT, AND SUBJECT TO CIVIL AND CRIMINAL PENALTIES THEREUNDER.

rated construction and be either interior or exterior rooms. Gas cabinets must be connected to an exhaust system, sprinklered internally and meet certain air velocity ventilation requirements.

5803.1.1.2 Aggregate quantity. The aggregate quantities of flammable gases used for maintenance purposes and operation of equipment shall not exceed the *maximum allowable quantity per control area* indicated in Table 5003.1.1(1).

❖ Table 5003.1.1(1) contains categories of storage, use-closed systems and use-open systems. Flammable gas is categorized only in the storage and use-closed systems. Because gas is in closed containers and systems, use-open systems do not apply. The base MAQ for either storage or use-closed systems is 1,000 cubic feet (28 m^3); however, increases for sprinklers and using approved storage cabinets may be applied.

5803.1.2 Storage containers. Cylinders and pressure vessels for flammable gases shall be designed, constructed, installed, tested and maintained in accordance with Chapter 53.

❖ Sections 5303 and 5304 give requirements for storage containers, such as markings on tanks, securing the tanks to prevent dislodging, protection of the valves, separation from hazards, electrical wiring, exposure to fire, unauthorized use, leak prevention, overhead protection and grounding to properly prevent a lightning hazard.

5803.1.3 Emergency shutoff. *Compressed gas* systems conveying flammable gases shall be provided with *approved* manual or automatic emergency shutoff valves that can be activated at each point of use and at each source.

❖ In order to maintain control over the flow of flammable gases under emergency conditions, each supply source, as well as each point of use of flammable compressed gas, must have an approved emergency shutoff valve. These valves must be excess flow control valves to regulate the rate of flow of hazardous materials within the piping system, fail-safe valves or other approved types that will operate automatically, or there must be a manual means of operation to give the fire department or other responsible persons the ability to stop the flow of hazardous materials in an emergency. The valves must be readily accessible and comply with Section 5003.2.2.1. See also the commentary to the definitions of "Emergency shutoff valve," "Emergency shutoff valve, manual" and "Emergency shutoff valve, automatic" in Section 202.

5803.1.3.1 Shutoff at source. A manual or automatic fail-safe emergency shutoff valve shall be installed on supply piping at the cylinder or bulk source. Manual or automatic cylinder valves are allowed to be used as the required emergency shutoff valve where the source of supply is limited to unmanifolded cylinder sources.

❖ Where the source of the gas is limited to cylinder sources that are not manifolded, the shutoff valve can be the cylinder valve itself. If cylinders are manifolded or if the source is other than cylinders, an independent shutoff valve is required to be installed in the piping system.

5803.1.3.2 Shutoff at point of use. A manual or automatic emergency shutoff valve shall be installed on the supply piping at the point of use or at a point where the equipment using the gas is connected to the supply system.

❖ Emergency shutoff valves are to be installed on the supply piping either at the use point or where equipment is connected. Either manual or automatic valves are allowed to be used. For example, it is common in some installations to have gas piped to a room for use with portable or fixed equipment. Emergency shutoff valves are typically provided at the point where the piping first enters the room. Equipment may not be connected to the valve; however, the valve represents the point of connection for use. When equipment is connected to the supply system, a valve that isolates the equipment is required. It may or may not be the same valve at that used at the point of penetration. Either valve is allowed to be manual or automatic, and either valve serves as an emergency shutoff valve.

5803.1.4 Ignition source control. Ignition sources in areas containing flammable gases in storage or in use shall be controlled in accordance with Section 5003.7.

Exception: Fuel gas systems connected to building service utilities in accordance with the *International Fuel Gas Code*.

❖ As discussed in the commentary to Chapter 3, an ignition source is needed to ignite a fuel load and cause a fire. Making sure electrical equipment located in gas storage areas is properly grounded is one of the primary ways to control ignition sources. The exception exempts flammable gas systems that are used primarily as a source of fuel furnished by a public utility service. The term "service utilities" is used in IBC Section 112 to describe those utilities that are used to provide building service. Without this exception, any area in which a fuel gas is used would be required to be posted.

The exception is focused on building services and as such is not intended to address the use of flammable gases such as hydrogen that may be generated on site, or otherwise supplied to an area of dispensing or use.

5803.1.4.1 Static-producing equipment. Static-producing equipment located in flammable gas storage areas shall be grounded.

❖ This requirement is intended to reduce the likelihood of a buildup of static electricity that could produce a spark that may become an ignition source for flammable gas. This requirement is similar to grounding requirements for electrical equipment in other hazardous material storage and handling areas, such as flammable liquids or LP-gas, and in combustible dust-producing environments. Although the text of this

INTERNATIONAL CODE COUNCIL®
Copyright © 2015 ICC. ALL RIGHTS RESERVED. Accessed by David Dammon on Jun 21, 2017 12:30:52 PM pursuant to License Agreement with ICC. No further reproduction or distribution authorized. ANY UNAUTHORIZED REPRODUCTION OR DISTRIBUTION IS A VIOLATION OF THE FEDERAL COPYRIGHT ACT AND THE LICENSE AGREEMENT, AND SUBJECT TO CIVIL AND CRIMINAL PENALTIES THEREUNDER.

section is the same as that of Section 5803.1.5.2, the applicability here is to equipment other than electrical wiring and equipment.

5803.1.4.2 Signs. "No Smoking" signs shall be posted at entrances to rooms and in areas containing flammable gases in accordance with Section 5003.7.1.

❖ Establishing no-smoking zones in, around and at the entrance to flammable gas storage and use areas is another means of controlling a common ignition source. Section 5003.7.1, Item 4 requires signage in the room or area where flammable materials are stored, dispensed or used. Even if the entire facility is designated as a "No Smoking" facility, entrance doors to flammable gas areas are required to be posted (see Section 5003.7.1, Item 3). With the development of provisions for the use of hydrogen as an alternative fuel, hydrogen cutoff rooms have been created. These rooms are to be used for compression, generation, storage and dispensing of hydrogen. See IBC Section 421 for further information on hydrogen cutoff rooms.

There are a multitude of other instances where posting should be provided to warn users of the potential presence of flammable gases prior to entering a room or area. Posting at the entrance to the room or area in which flammable gases are compressed or generated provides early warning of the hazard prior to entering the space. Signage on the outside entrances to such areas, as well as inside the area, is warranted. Signs should be in accordance with Section 310.

5803.1.5 Electrical. Electrical wiring and equipment shall be installed and maintained in accordance with Section 605 and NFPA 70.

❖ This section establishes the applicability of NFPA 70 to all electrical wiring and equipment in flammable gas occupancies. In order to control the ignition and personnel hazards of electrical wiring located where flammable gas might be released by malfunctioning equipment, rupture or breakage, they are typically classified as Class I, Division 2 wiring methods and equipment under the provisions of NFPA 70.

5803.1.5.1 Bonding of electrically conductive materials and equipment. Exposed noncurrent-carrying metal parts, including metal gas piping systems, that are part of flammable gas supply systems located in a hazardous (electrically classified) location shall be bonded to a grounded conductor in accordance with the provisions of NFPA 70.

❖ NFPA 70 requires bonding and grounding of metal gas piping systems and other noncurrent-carrying metal parts that are likely to become energized. Flammable gas piping and supply and transfer systems are subject to differences in electrical potential as gas is transferred from one portion of the system to another. By bonding the system and connecting the bond to ground, the system will be brought to a common potential. The limitation is placed on systems located in hazardous or electrically classified areas, because in these areas ignition is likely and differences in electrical potential represent the greatest hazard.

5803.1.5.2 Static-producing equipment. Static-producing equipment located in flammable gas storage or use areas shall be grounded.

❖ This requirement is intended to reduce the likelihood of a buildup of static electricity that could produce a spark that may become an ignition source for flammable gas. This requirement is similar to grounding requirements for electrical equipment in other hazardous material storage and handling areas, such as flammable liquids or LP-gas, and in combustible dust-producing environments. Although the text of this section is the same as that of Section 5803.1.4.1, the applicability here is to electrical wiring and equipment as sources of static electricity.

5803.1.6 Liquefied flammable gases and flammable gases in solution. Containers of liquefied flammable gases and flammable gases in solution shall be positioned in the upright position or positioned so that the pressure relief valve is in direct contact with the vapor space of the container.

Exceptions:

1. Containers of flammable gases in solution with a capacity of 1.3 gallons (5 L) or less.
2. Containers of flammable liquefied gases, with a capacity not exceeding 1.3 gallons (5 L), designed to preclude the discharge of liquid from safety relief devices.

❖ This section requires that pressure relief valves communicate with the container vapor space where there is a liquid component to the flammable gas storage method. Pressure relief valves are designed on the basis of gas flow, not liquid flow. As such, in the event of an abnormal increase in container pressure that could cause the pressure relief valve to operate, a pressure relief valve that is in contact with and attempts to pass liquid will operate much more slowly to reduce container pressure, thus increasing the potential for container failure. Passing liquid through a pressure relief valve to the atmosphere can also lead to a sudden vaporization of the liquid into a much larger quantity of flammable gas than would be released had the valve communicated with the vapor space. The magnitude of the vaporization depends upon the expansion ratio [from liquid to gas at 14.7 psia (101 kPa)] of the liquefied gas being stored. Propane, for example, has an expansion ratio of 1 to 270.

The exceptions recognize the lesser hazard of small containers used in everyday commerce, such as torch cylinders, table-top grill cylinders, etc. Exception 1 focuses on small containers containing gases that are dissolved in solution (such as acetylene dissolved in acetone). Exception 2 focuses on similar small containers that are designed specifically

INTERNATIONAL CODE COUNCIL®
Copyright © 2015 ICC. ALL RIGHTS RESERVED. Accessed by David Dammon on Jun 21, 2017 12:30:52 PM pursuant to License Agreement with ICC. No further reproduction or distribution authorized. ANY UNAUTHORIZED REPRODUCTION OR DISTRIBUTION IS A VIOLATION OF THE FEDERAL COPYRIGHT ACT AND THE LICENSE AGREEMENT, AND SUBJECT TO CIVIL AND CRIMINAL PENALTIES THEREUNDER.

to prevent liquid discharge through the pressure relief valve.

5803.2 Quantities exceeding the maximum allowable quantity per control area. The storage and use of flammable gases in amounts exceeding the *maximum allowable quantity per control area* indicated in Section 5003.1 shall be in accordance with Chapter 50 and this chapter.

❖ Section 5003.1.4 addresses quantities that exceed the MAQ. The MAQs are located in Tables 5003.1.1(1) through 5003.1.1(4).

SECTION 5804
STORAGE

5804.1 Indoor storage. Indoor storage of flammable gases in amounts exceeding the *maximum allowable quantity per control area* indicated in Table 5003.1.1(1), shall be in accordance with Sections 5001, 5003 and 5004, and this chapter.

❖ Sections 5003.1 through 5003.11 give the requirements for the indoor storage of flammable gases, including design and construction; equipment; maintenance; markings and signs.

5804.1.1 Explosion control. Buildings or portions thereof containing flammable gases shall be provided with explosion control in accordance with Section 911.

❖ Table 911.1 gives the barricade and explosion control requirements for flammable gases. Section 911 gives deflagration, explosion venting and barricade requirements.

5804.2 Outdoor storage. Outdoor storage of flammable gases in amounts exceeding the *maximum allowable quantity per control area* indicated in Table 5003.1.1(3) shall be in accordance with Sections 5001, 5003 and 5004, and this chapter.

❖ Section 5001 covers the classification of the hazard of flammable gases. The MAQs of the gases are given in Table 5003.1.1(3). Section 5004 deals with the storage of flammable gases. The section covers ventilation, separation, fire-extinguishing systems, emergency power, limit controls, supervision and weather protection.

SECTION 5805
USE

5805.1 General. The use of flammable gases in amounts exceeding the *maximum allowable quantity per control area* indicated in Table 5003.1.1(1) or 5003.1.1(3) shall be in accordance with Sections 5001, 5003 and 5005, and this chapter.

❖ Section 5005 addresses separation, spill control, limit controls, lighting, fire-extinguishing systems, open systems, ventilation, outdoor dispensing and handling of flammable gases.

SECTION 5806
FLAMMABLE CRYOGENIC FLUIDS

5806.1 General. The storage and use of flammable *cryogenic fluids* shall be in accordance with Sections 5806.2 through 5806.4.8.3 and Chapter 55.

❖ This section introduces the following sections that address the requirements for the storage and use of flammable cryogenic fluids. In addition to these hazard-specific requirements, the general provisions applicable to cryogenic fluids in Chapter 55 also apply. Note that Sections 5806.4 through 5806.4.8.3 were formerly contained in Chapter 55.

5806.2 Limitations. Storage of flammable *cryogenic fluids* in stationary containers outside of buildings is prohibited within the limits established by law as the limits of districts in which such storage is prohibited (see Section 3 of the Sample Legislation for Adoption of the *International Fire Code* on page xxi).

❖ This section reminds users that there may be an ordinance in the jurisdiction that would limit the location or amount of cryogenic fluid that could be stored outside of buildings. Generally, such restrictions will be based on locations in densely populated areas or similar factors. This section does not limit the amount that can be stored; it is simply a note to the code user to review any local rules or ordinances for restrictions before investing time and money in designing a facility that may not be usable. If such areas do exist in the adopting community, they must be enumerated in the adopting ordinance.

5806.3 Above-ground tanks for liquid hydrogen. Above-ground tanks for the storage of liquid hydrogen shall be in accordance with Sections 5806.3 through 5806.3.2.1.

❖ This section introduces the following sections that address the requirements for above-ground tank construction in a more specific manner than that described in Section 5003.2.1. The requirements for construction for above-ground tanks parallel those found for underground tanks with the exception that the vacuum jacket (outer tank) is not required to be constructed to meet requirements of the ASME BPVC. The vacuum jacket is designed to provide an insulated layer around the inner vessel through the use of vacuum and an insulating layer. It is also designed to contain and relieve a release of hydrogen should a leak occur in the annular space. The jacket is designed to a safety factor of two. For underground tanks, the safety factor is increased due to potential loading by the use of ASME requirements where the safety factor of three and a half is used.

The design criteria are found in CGA H-3 which, while not referenced in the code, is available for use by those that seek to establish more detailed design requirements than would otherwise be available through the use of Section 5003.2.1. The minimum design requirements established by Section 5806.3

INTERNATIONAL CODE COUNCIL®
Copyright © 2015 ICC. ALL RIGHTS RESERVED. Accessed by David Dammon on Jun 21, 2017 12:30:52 PM pursuant to License Agreement with ICC. No further reproduction or distribution authorized. ANY UNAUTHORIZED REPRODUCTION OR DISTRIBUTION IS A VIOLATION OF THE FEDERAL COPYRIGHT ACT AND THE LICENSE AGREEMENT, AND SUBJECT TO CIVIL AND CRIMINAL PENALTIES THEREUNDER.

coupled with the general requirements of Chapter 55 applicable to all cryogens result in greater consistency and an increase in public safety.

5806.3.1 Construction of the inner vessel. The inner vessel of storage tanks in liquid hydrogen service shall be designed and constructed in accordance with Section VIII, Division 1, of the ASME *Boiler and Pressure Vessel Code* and shall be vacuum jacketed in accordance with Section 5806.3.2.

❖ Hydrogen in a liquid state must be stored at very low temperatures in tanks insulated to maintain that temperature. The inner vessel of the assemby must be constructed as a pressure vessel in accordance with the ASME BPVC, Section VIII, Division 1 to withstand the liquid hydrogen pressures.

Liquid hydrogen storage tanks are designed and manufactured as double-walled tanks equipped with a layer of insulation between the inner tank and the outer jacket. Additionally, the annular space between the inner tank and outer jacket is held under a vacuum for further insulation. Leakage of either the outer jacket through external corrosion or the inner tank through an internal crack will result in a loss of vacuum and early detection of the leak.

5806.3.2 Construction of the vacuum jacket (outer vessel). The vacuum jacket used as an outer vessel for storage tanks in liquid hydrogen service shall be of welded steel construction designed to withstand the maximum internal and external pressure to which it will be subjected under operating conditions to include conditions of emergency pressure relief of the annular space between the inner and outer vessel. The jacket shall be designed to withstand a minimum collapsing pressure differential of 30 psi (207 kPa).

❖ The construction requirements for the vacuum jacket will be different depending on whether the vessel will be installed above ground or underground. For aboveground liquid hydrogen vessels, the requirements in this section are applicable and for underground vessels, Section 5806.4.8.

Above-ground vacuum-jacketed vessels must be designed to withstand the maximum internal and external pressure to which they may be subjected. Because the primary inner vessel is designed as a pressure vessel, the vacuum jacket must be designed to withstand a collapse due to the loss of vacuum and be capable of withstanding the pressure that can result in the event the liquid hydrogen vessel becomes involved in a fire or is subjected to the radiation energy of an exposure fire. While the probability of such an event is low, it is possible that hydrogen could leak from the primary pressure vessel into the annular space created by the vacuum jacket. This section requires that the outer vessel be designed for a minimum collapse pressure differential of 30 psig (207 kPa) and with a means of pressure relief to ensure that the inner primary vessel and the outer jacket safely relieve any pressure in the event the vessel is subjected to fire exposure.

5806.3.2.1 Vacuum-level monitoring. A connection shall be provided on the exterior of the vacuum jacket to allow measurement of the pressure within the annular space between the inner and outer vessel. The connection shall be fitted with a bellows-sealed or diaphragm-type valve equipped with a vacuum gauge tube that is shielded to protect against damage from impact.

❖ This section and Section 5806.4.8.3 require a means of monitoring the underground and above-ground liquid hydrogen tanks to ensure that vacuum pressure is maintained. Loss of vacuum pressure will result in the increased heating of the primary vessel, which will increase the pressure inside of the container. Eventually the pressure will reach and exceed the vessel's maximum allowable working pressure, which will result in the operation of the pressure relief device. For above-ground liquid hydrogen tanks, a connection with a tube or pipe terminated into the vacuum space is required by this section to terminate at a valve equipped with a vacuum pressure gauge so the pressure can be monitored. This section specifies the use of a bellows-sealed or diaphragm valve. A bellows valve is constructed with a steel bellows that is welded to the valve stem and the valve bonnet. This bellows creates a multiple layer barrier that prevents the release of any product around the valve packing or the valve gasket. Bellows valves are generally specified based on the number of cycles the valve can anticipate over its service life, which can vary from 2,000 to 10,000 cycles. A diaphragm valve is constructed in a similar manner in that the internal diaphragm isolates the working parts of the valve from the cryogenic hydrogen and isolates the valve inlet from the valve outlet. Regarding underground liquid hydrogen containers, Section 5806.4.8.3 requires that the method of monitoring the vacuum pressure be approved.

5806.4 Underground tanks for liquid hydrogen. Underground tanks for the storage of liquid hydrogen shall be in accordance with Sections 5806.4.1 through 5806.4.8.3.

❖ Underground storage of fuel is a common practice at consumer sites such as motor fuel-dispensing facilities. The benefits of underground storage include reduced risk of fire and hazards resulting from damage caused by vehicles or vandals. Also, unlike underground fuel storage tanks containing petroleum products, liquid hydrogen tanks present no known risk to groundwater should a leak, spill or overfill occur. Released hydrogen will evaporate to the atmosphere and will not contaminate groundwater.

Cryogenic liquid storage tanks traditionally have been installed above ground. This practice is documented in CGA P-12, which states, "Bulk storage tanks and vessels should be installed above ground and out-of-doors so that they are readily accessible to mobile supply equipment at ground level and to authorized personnel." Further, CGA G-5.4 states, "Liquid hydrogen piping shall not be installed underground."

INTERNATIONAL CODE COUNCIL®
Copyright © 2015 ICC. ALL RIGHTS RESERVED. Accessed by David Dammon on Jun 21, 2017 12:30:52 PM pursuant to License Agreement with ICC. No further reproduction or distribution authorized. ANY UNAUTHORIZED REPRODUCTION OR DISTRIBUTION IS A VIOLATION OF THE FEDERAL COPYRIGHT ACT AND THE LICENSE AGREEMENT, AND SUBJECT TO CIVIL AND CRIMINAL PENALTIES THEREUNDER.

The current interest in hydrogen vehicle fueling stations in locations similar to present gasoline-fueling stations demonstrates an increased need to place liquid hydrogen tanks at sites with limited space for a typical above-ground installation. Based on the compressed gas industry's extensive experience with cryogenic liquid storage tanks and their associated piping systems, installing cryogenic liquid storage tanks underground with proper engineering and controls is thought to be a safe alternative to the traditional practice of limiting installations to above ground only.

Underground tanks require special care and attention in design and installation because they are exposed to conditions not associated with above-ground tanks. Leakage is harder to detect and protection from loads being placed on top of or adjacent to the underground tank is needed to prevent damage to it. Additionally, the underground tank must be protected from flooding and from floating in areas having a groundwater table that may be above the bottom of the underground tank. Safeguards to mitigate these effects are contained in Sections 5806.4.1 through 5806.4.8.3.

5806.4.1 Construction. Storage tanks for liquid hydrogen shall be designed and constructed in accordance with ASME *Boiler and Pressure Vessel Code* (Section VIII, Division 1) and shall be vacuum jacketed in accordance with Section 5806.4.8.

❖ Hydrogen in a liquid state must be stored at very low temperatures, usually at or below -423°F (-253°C), in tanks insulated to maintain that temperature and constructed to withstand the liquid hydrogen pressures.

Liquid hydrogen storage tanks, designed, built and stamped in accordance with ASME BPVC, Section VIII, Division 1, can be installed underground as long as certain minimum criteria are met. Liquid hydrogen tanks are designed and manufactured as double-walled tanks equipped with a layer of insulation between the inner tank and the outer jacket. Additionally, the annular space between the tanks is held under a vacuum for further insulation. Leakage of either the outer jacket through external corrosion or the inner tank through an internal crack will result in a loss of vacuum and early detection of the leak.

5806.4.2 Location. Storage tanks shall be located outside in accordance with the following:

1. Tanks and associated equipment shall be located with respect to foundations and supports of other structures such that the loads carried by the latter cannot be transmitted to the tank.
2. The distance from any part of the tank to the nearest wall of a *basement*, pit, cellar or *lot line* shall be not less than 3 feet (914 mm).
3. A minimum distance of 1 foot (305 mm), shell to shell, shall be maintained between underground tanks.

❖ Underground tanks must be located away from a building or structure so that the tank does not support the building or structure since such loads can cause the underground tank to rupture.

Underground tanks are to be a minimum of 3 feet (914 mm) from the nearest below-grade wall or property line because any leakage from an underground tank may migrate through the soil and enter an adjacent basement, cellar or pit. The accumulation of hydrogen gas in such locations could develop into a hazardous condition. Because the owner of the underground tank does not own the adjacent property, the location of the underground tank should not have the potential to affect the adjacent property or the use of this property.

To provide physical independence between underground tanks so that they share no common or projected loads, a minimum shell-to-shell clearance of 1 foot (305 mm) is required between adjacent underground tanks.

5806.4.3 Depth, cover and fill. The tank shall be buried such that the top of the vacuum jacket is covered with not less than 1 foot (305 mm) of earth and with concrete not less than 4 inches (102 mm) thick placed over the earthen cover. The concrete shall extend not less than 1 foot (305 mm) horizontally beyond the footprint of the tank in all directions. Underground tanks shall be set on firm foundations constructed in accordance with the *International Building Code* and surrounded with not less than 6 inches (152 mm) of noncorrosive inert material, such as sand.

Exception: The vertical extension of the vacuum jacket as required for service connections.

❖ Excavation for underground tanks must not damage existing adjacent structures and must provide a sound foundation for the underground tank. The use of 6 inches (152 mm) of well-tamped, noncorrosive material (e.g., sand or clean pea gravel) around an underground tank prevents concentrated loads from being applied to the tank. These concentrated loads can be caused during backfilling when a hard solid object, such as a rock, comes in contact with the underground tank. Soil pressures on the rock can be concentrated into a small contact area with the underground tank and lead to a leak in the vacuum jacket.

While the 1 foot (305 mm) of earth cover plus a 4-inch (102 mm) concrete slab will provide physical protection for the tank from most predictable load scenarios, it would not alone provide adequate protection from the imposition of vehicular loads upon the tank. However, the provisions of this section and those for vacuum jacket construction in Section 5806.4.8 of the code are intended to work together to provide adequate protection from all anticipated loads, including vehicle loads.

INTERNATIONAL CODE COUNCIL®
Copyright © 2015 ICC. ALL RIGHTS RESERVED. Accessed by David Dammon on Jun 21, 2017 12:30:52 PM pursuant to License Agreement with ICC. No further reproduction or distribution authorized. ANY UNAUTHORIZED REPRODUCTION OR DISTRIBUTION IS A VIOLATION OF THE FEDERAL COPYRIGHT ACT AND THE LICENSE AGREEMENT, AND SUBJECT TO CIVIL AND CRIMINAL PENALTIES THEREUNDER.

The exception recognizes the practical limitations of maintaining the required burial depth and cover on vertical vacuum jacket extensions used to provide above-ground control and monitoring points, such as for vacuum and liquid level gauges, manually operated valves, controls, pressure relief devices and instrumentation, which need to be readily accessible to mobile supply equipment at ground level and to authorized personnel.

5806.4.4 Anchorage and security. Tanks and systems shall be secured against accidental dislodgement in accordance with this chapter.

❖ Sections 5503.5.2 and 5504.3.1.1.4 of the code detail the provisions for security of cryogenic fluid containers. See the commentary to those sections for further information.

5806.4.5 Venting of underground tanks. Vent pipes for underground storage tanks shall be in accordance with Section 5503.3.

❖ Section 5503.3 regulates pressure relief vent piping. Additional venting requirements were formerly contained in Section 2309.5.4 but were removed in the 2012 edition. For additional pressure relief device venting, the provisions of Chapter 8 of NFPA 2 apply in accordance with Section 5801.1. See the commentary to Sections 5503.3 through 5503.3.2.

5806.4.6 Underground liquid hydrogen piping. Underground liquid hydrogen piping shall be vacuum jacketed or protected by *approved* means and designed in accordance with Chapter 55.

❖ Piping associated with underground liquid hydrogen storage tanks must be provided with the same level of design integrity as the tank that it serves. If the piping is not designed with a vacuum jacket, an engineered design complying with the performance requirements of Chapter 55 and approved by the fire code official must be provided.

5806.4.7 Overfill protection and prevention systems. An *approved* means or method shall be provided to prevent the overfill of all storage tanks.

❖ The purpose of spill and overfill protection equipment is to reduce the potential for a hydrogen release during deliveries by stopping product flow, reducing product flow or alerting the delivery person during delivery before the tank becomes full and begins releasing hydrogen into the environment. The equipment must be maintained in proper working order and used properly to provide adequate protection from overfills.

5806.4.8 Vacuum jacket construction. The vacuum jacket shall be designed and constructed in accordance with Section VIII of ASME *Boiler and Pressure Vessel Code* and shall be designed to withstand the anticipated loading, including loading from vehicular traffic, where applicable. Portions of the vacuum jacket installed below grade shall be designed to withstand anticipated soil, seismic and hydrostatic loading.

❖ This section, along with Section 5806.4.3, requires that the design of the tank's vacuum jacket and the tank's burial depth and cover work together to provide a tank installation unlikely to be affected by any anticipated loading conditions, including the possibility of vehicles being driven over the installation site.

5806.4.8.1 Material. The vacuum jacket shall be constructed of stainless steel or other *approved* corrosion-resistant material.

❖ Soil conditions and environmental conditions can cause tanks to deteriorate. Corrosion can weaken the tank, creating a potential for leakage. The tank must be protected from corrosion by use of corrosion-resistant material, coatings, cathodic protection or alternative methods approved by the fire code official.

5806.4.8.2 Corrosion protection. The vacuum jacket shall be protected by *approved* or *listed* corrosion-resistant materials or an engineered cathodic protection system. Where cathodic protection is utilized, an *approved* maintenance schedule shall be established. Exposed components shall be inspected not less than twice a year. Records of maintenance and inspection events shall be maintained.

❖ Deterioration of tanks, piping and components caused by corrosion can allow leaks and spillage of liquid hydrogen. Using noncorrodible materials of construction or cathodic (galvanic) protection can protect the tank, piping and components from deterioration and failure from corrosive effects.

Cathodic protection uses a sacrificial anode to prevent the corrosion of the metal vacuum jacket of the storage tank. The sacrificial anode is electrically bonded to the tank, so the electrochemical reaction of the sacrificial anode reduces or prevents the corrosion of the steel vacuum jacket of the storage tank. The sacrificial anode and the steel vacuum jacket of the storage tank, acting as a cathode, are interconnected with a power supply. The need to replace the anode will depend on the rate of corrosion.

While not specifically prohibited by this section, the joining of dissimilar metals in system construction should be avoided because of the localized galvanic action that could occur between them. This localized galvanic action could cause one of the metals to corrode to failure so that the other metal is protected from corrosion.

Because cathodic protection systems are more complex than other corrosion protection methodologies and in order to verify that the system is functioning properly, a fire code official's approved maintenance and inspection schedule must be established with all activities recorded. Records must be retained and should be made available for examination by the fire code official or a duly authorized representative of the fire code official when requested.

INTERNATIONAL CODE COUNCIL®
Copyright © 2015 ICC. ALL RIGHTS RESERVED. Accessed by David Dammon on Jun 21, 2017 12:30:52 PM pursuant to License Agreement with ICC. No further reproduction or distribution authorized. ANY UNAUTHORIZED REPRODUCTION OR DISTRIBUTION IS A VIOLATION OF THE FEDERAL COPYRIGHT ACT AND THE LICENSE AGREEMENT, AND SUBJECT TO CIVIL AND CRIMINAL PENALTIES THEREUNDER.

5806.4.8.3 Vacuum-level monitoring. An *approved* method shall be provided to indicate loss of vacuum within the vacuum jacket(s).

❖ In order for vacuum-jacketed tanks to be effective in maintaining liquid hydrogen at the required subzero temperature, the vacuum must be maintained at the manufacturer's design level. This section requires that an approved method of monitoring the integrity of the vacuum jacket be provided. Though no alarm system is required to be activated upon loss of the interstitial vacuum, it is important that administrative procedures require regular checking of the monitoring method to reduce the likelihood of loss of the liquid hydrogen (see also commentary, Section 5806.3.2.1).

SECTION 5807
METAL HYDRIDE STORAGE SYSTEMS

5807.1 General requirements. The storage and use of metal hydride storage systems shall be in accordance with Sections 5801, 5803, 5804, 5805 and 5807. Those portions of the system that are used as a means to store or supply hydrogen shall also comply with Chapters 50 and 53 as applicable.

❖ Metal hydride storage systems (MHSS) are subject to the requirements in Section 5003.1.1 and IBC Sections 414 and 415 for hazardous materials, in addition to the indicated provisions of this chapter. The requirements include that the total volume of hydrogen in the fuel cells cannot exceed the compressed flammable gas MAQ of 1,000 cubic feet (28 m^3) at NTP in a single control area located at the grade plane of a building.

5807.1.1 Classification. The hazard classification of the metal hydride storage system, as required by Section 5001.2.2, shall be based on the hydrogen stored without regard to the metal hydride content.

❖ When classifying the metals and hydrogen contained in an MHSS, this section prescribes that only the compressed hydrogen be considered in the classification and determination of the amount of compressed gas. The type and amount of metal used to adsorb the hydrogen is not considered when classifying hazardous materials contained in a MHSS. For the purpose of determining the MAQ, Section 5807.1.1 specifies all MHSSs should only be evaluated based on the amount of compressed flammable gas.

5807.1.2 Listed or approved systems. Metal hydride storage systems shall be *listed* or *approved* for the application and designed in a manner that prevents the addition or removal of the metal hydride by other than the original equipment manufacturer.

❖ The design of an MHSS must prevent the addition or removal of the metal hydride by unauthorized individuals. Some metal hydrides can present other physical and health hazards. This section requires that MHSS be either listed or approved by the code official and any addition or removal of metal hydrides is to be performed by the original equipment manufacturer. When being filled, Section 5807.1.9.2 requires that the hydrogen be of a purity specified by the manufacturer.

5807.1.3 Containers, design and construction. *Compressed gas* containers, cylinders and tanks shall be designed and constructed in accordance with Section 5303.2.

❖ Containers, tanks and cylinders used in MHSS are to be constructed in accordance with U.S. DOT and Compressed Gas Association (CGA) requirements for cylinders or in accordance with Section VIII, Division 1 of the ASME BPVC. This section requires all cylinders, containers or tanks used for the primary containment of metal hydrides and hydrogen to meet the requirements of Section 5303.2. See the commentary to that section for further information.

5807.1.4 Service life and inspection of containers. Metal hydride storage system cylinders, containers or tanks shall be inspected, tested and requalified for service at not less than 5-year intervals.

❖ To ensure that hydrogen and metal hydrides are safely contained, the cylinders, tanks and containers are also subject to periodic inspection and requalification in accordance with U.S. DOT requirements and this section. This section establishes a maximum requalification frequency of 5 years.

5807.1.5 Marking and labeling. Marking and labeling of cylinders, containers, tanks and systems shall be in accordance with Section 5303.4 and Sections 5807.1.5.1 through 5807.1.5.4.

❖ The requirements for MHSS include marking and labeling of important system components to confirm that the design complies with the requirements of Chapters 50 and 53, as well as those in Section 5807.

5807.1.5.1 System marking. Metal hydride storage systems shall be marked with all of the following:

1. Manufacturer's name.
2. Service life indicating the last date the system can be used.
3. A unique code or serial number specific to the unit.
4. System name or product code that identifies the system by the type of chemistry used in the system.
5. Emergency contact name, telephone number or other contact information.
6. Limitations on refilling of containers to include rated charging pressure and capacity.

❖ The marking requirements in this section for various components of the assembled MHSS are intended to ensure that the MHSS is properly filled and the design pressure and temperature of the system is not exceeded. The markings must also identify the basic chemistry of the MHSS in the unlikely event a metal

INTERNATIONAL CODE COUNCIL®
Copyright © 2015 ICC. ALL RIGHTS RESERVED. Accessed by David Dammon on Jun 21, 2017 12:30:52 PM pursuant to License Agreement with ICC. No further reproduction or distribution authorized. ANY UNAUTHORIZED REPRODUCTION OR DISTRIBUTION IS A VIOLATION OF THE FEDERAL COPYRIGHT ACT AND THE LICENSE AGREEMENT, AND SUBJECT TO CIVIL AND CRIMINAL PENALTIES THEREUNDER.

hydride is released from a container. Markings are required for the cylinder valve in accordance with Section 5807.1.5.2, the pressure relief device in accordance with the requirements in Section 5807.1.5.3 and the cylinder or pressure vessel containing the metal hydride and hydrogen in accordance with Section 5807.1.5.4.

5807.1.5.2 Valve marking. Metal hydride storage system valves shall be marked with all of the following:

1. Manufacturer's name.
2. Service life indicating the last date the valve can be used.
3. Metal hydride service in which the valve can be used, or a product code that is traceable to this information.

❖ See the commentary to Section 5807.1.5.1.

5807.1.5.3 Pressure relief device marking. Metal hydride storage system pressure relief devices shall be marked with all of the following:

1. Manufacturer's name.
2. Metal hydride service in which the device can be used, or a product code that is traceable to this information.
3. Activation parameters to include temperature, pressure or both.

❖ See the commentary to Section 5807.1.5.1.

5807.1.5.3.1 Pressure relief devices integral to container valves. The required markings for pressure relief devices that are integral components of valves used on cylinders, containers and tanks shall be allowed to be placed on the valve.

❖ See the commentary to Section 5807.1.5.1.

5807.1.5.4 Pressure vessel markings. Cylinders, containers and tanks used in metal hydride storage systems shall be marked with all of the following:

1. Manufacturer's name.
2. Design specification to which the vessel was manufactured.
3. Authorized body approving the design and initial inspection and test of the vessel.
4. Manufacturer's original test date.
5. Unique serial number for the vessel.
6. Service life identifying the last date the vessel can be used.
7. System name or product code that identifies the system by the type of chemistry used in the system.

❖ See the commentary to Section 5807.1.5.1.

5807.1.6 Temperature extremes. Metal hydride storage systems, whether full or partially full, shall not be exposed to artificially created high temperatures exceeding 125°F (52°C) or subambient (low) temperatures unless designed for use under the exposed conditions.

❖ The intent of this section is to prevent damage to the MHSS or the accidental release of hydrogen due to the cylinder exceeding its design pressure. As such, this section requires that MHSS be located in an area where they are not subject to artificially high or low temperatures. It prohibits any MHSS from exposure to temperatures in excess of 125°F (52°C) or excessively low temperatures unless it is designed for use in such environments.

5807.1.7 Falling objects. Metal hydride storage systems shall not be placed in areas where they are capable of being damaged by falling objects.

❖ The intent of this section is to prevent damage to the MHSS from falling objects. As such, this section requires that MHSS be located in an area where they are not subject to being struck by falling objects. In climates subject to freezing, this could include keeping the MHSS well clear of buildings or other structures where accumulated ice could fall from the structure and strike the MHSS.

5807.1.8 Piping systems. Piping, including tubing, valves, fittings and pressure regulators, serving metal hydride storage systems, shall be maintained gas tight to prevent leakage.

❖ All apparatus, connected and part of the MHSS, shall comply with this section and Chapter 50. Proper maintenance of all the components ensures that gas leaks with possible ignition are prevented.

5807.1.8.1 Leaking systems. Leaking systems shall be removed from service.

❖ Accidental spills create a vapor release that can quickly travel from the spill point to an ignition source. Because spills need immediate attention to neutralize and remove the hazard, the local fire department should be notified; it is the agency best prepared to deal with the immediate hazards of a spill.

Leaks can indicate a developing problem with equipment or piping needing immediate repair. Until repairs are made, the equipment or piping must be taken out of service.

5807.1.9 Refilling of containers. The refilling of *listed* or *approved* metal hydride storage systems shall be in accordance with the listing requirements and manufacturer's instructions.

❖ MHSS that are listed or approved in accordance with Section 5807.1.2 must be refilled strictly in accordance with their manufacturer's instructions which are considered part of the listing of a system. MHSS that are approved but not listed must also be refilled in accordance with their manufacturer's instructions, which were included in the fire code official's approval. Approval records should also be reviewed for any additional conditions for refilling of the system.

5807.1.9.1 Industrial trucks. The refilling of metal hydride storage systems serving powered industrial trucks shall be in accordance with Section 309.

❖ One MHSS application is fuel cells powering material-handling equipment such as forklifts or motorized pallet jacks. At locations where industrial trucks are fueled, this section requires that the fueling area comply with the requirements of Section 309, which, in

INTERNATIONAL CODE COUNCIL®
Copyright © 2015 ICC. ALL RIGHTS RESERVED. Accessed by David Dammon on Jun 21, 2017 12:30:52 PM pursuant to License Agreement with ICC. No further reproduction or distribution authorized. ANY UNAUTHORIZED REPRODUCTION OR DISTRIBUTION IS A VIOLATION OF THE FEDERAL COPYRIGHT ACT AND THE LICENSE AGREEMENT, AND SUBJECT TO CIVIL AND CRIMINAL PENALTIES THEREUNDER.

turn, includes requirements for proper refilling of equipment.

5807.1.9.2 Hydrogen purity. The purity of hydrogen used for the purpose of refilling containers shall be in accordance with the listing and the manufacturer's instructions.

❖ Keeping the hydrogen as pure as possible in keeping with the MHSS's listing is critical for the efficient operation of a turbine. Every 2-percent reduction in the purity of the hydrogen coolant increases windage losses in the turbine and the cost of running an 800-megawatt generator is increased significantly. Contaminants in the hydrogen can also be very dangerous and air is the most common impurity due to leaks. When the oxygen in the air is mixed with hydrogen, a potentially explosive condition can be created. However, hydrogen does not support combustion in a nearly pure state (greater than 90 percent) with the balance being air. By using a continuous gas analyzer transmitter to constantly monitor the hydrogen purity, any potentially hazardous condition can be avoided, enhancing safety and maximizing efficiency and profitability (see also commentary to Section 5807.1.9).

5807.1.10 Electrical. Electrical components for metal hydride storage systems shall be designed, constructed and installed in accordance with NFPA 70.

❖ NFPA 70 regulates the design and installation of electrical systems, components and equipment. All electrical work must also be in compliance with any specific electrical classifications and conditions contained in the listing or approval for each MHSS.

5807.2 Portable containers or systems. Portable containers or systems shall comply with Sections 5807.2.1 through 5807.2.2.

❖ This section introduces the provisions for portable metal hydride containers or MHSS.

5807.2.1 Securing containers. Containers, cylinders and tanks shall be secured in accordance with Section 5303.5.3.

❖ See the commentary to Section 5303.5.3.

5807.2.1.1 Use on mobile equipment. Where a metal hydride storage system is used on mobile equipment, the equipment shall be designed to restrain containers, cylinders or tanks from dislodgement, slipping or rotating when the equipment is in motion.

❖ This section requires MHSS installed on mobile equipment to be designed for such an application and be capable of restraining cylinders from movement while in motion so as to avoid damage to the equipment.

5807.2.1.2 Motorized equipment. Metal hydride storage systems used on motorized equipment, shall be installed in a manner that protects valves, pressure regulators, fittings and controls against accidental impact.

❖ This section requires MHSS installed on motorized equipment to be designed to be capable of restraining cylinders from movement, dislodgement or impact with other objects while the equipment is in operation so as to avoid damage to the equipment.

5807.2.1.2.1 Protection from damage. Metal hydride storage systems, including cylinders, containers, tanks and fittings, shall not extend beyond the platform of the mobile equipment.

❖ To protect MHSS components such as cylinders, regulators, pipe, valves and fittings from impact, the MHSS and its components must be installed so they do not extend beyond the platform of the mobile equipment.

5807.2.2 Valves. Valves on containers, cylinders and tanks shall remain closed except when containers are connected to *closed systems* and ready for use.

❖ In order to reduce the likelihood of hydrogen leakage from containers, cylinders and tanks when they are not connected to or in use in a closed system, their valves must be kept closed.

SECTION 5808
HYDROGEN FUEL GAS ROOMS

5808.1 General. Where required by this code, hydrogen fuel gas rooms shall be designed and constructed in accordance with Sections 5808.1 through 5808.7 and the *International Building Code.*

❖ This section is simply stating that all hydrogen fuel gas rooms are to be constructed in accordance with the provisions contained in this section and IBC Section 421. Hydrogen fuel gas rooms were created to address the increasing and emerging concepts of fuel cells that use hydrogen and actually generate hydrogen on site to run the fuel cells. The provisions of this section and IBC Section 421 address construction-related issues for hydrogen cutoff rooms such as location, fire-resistance-rated separation, ventilation and safety features such as gas detection and explosion control. The provisions of Section 5808 are intended to be consistent with those of the referenced standard, NFPA 2.

5808.2 Location. Hydrogen fuel gas rooms shall not be located below grade.

❖ Restrictions against installation of hydrogen fuel gas rooms below grade are similar to those restricting the location of flammable and combustible liquids in basements. Explosion hazards are the primary concern, and placement of materials that have an ability to cause an explosion in below-grade spaces is not appropriate. Such spaces are more difficult to evacuate, create a fire and explosion hazard to the structure above and are very difficult for the fire department to access.

5808.3 Design and construction. Hydrogen fuel gas rooms not exceeding the *maximum allowable quantity per control area* in Table 5003.1.1(1) shall be separated from other areas

INTERNATIONAL CODE COUNCIL®
Copyright © 2015 ICC. ALL RIGHTS RESERVED. Accessed by David Dammon on Jun 21, 2017 12:30:52 PM pursuant to License Agreement with ICC. No further reproduction or distribution authorized. ANY UNAUTHORIZED REPRODUCTION OR DISTRIBUTION IS A VIOLATION OF THE FEDERAL COPYRIGHT ACT AND THE LICENSE AGREEMENT, AND SUBJECT TO CIVIL AND CRIMINAL PENALTIES THEREUNDER.

of the building in accordance with Section 509.1 of the *International Building Code*.

❖ Hydrogen fuel gas rooms are required to be separated by not less than 1-hour fire-resistance-rated fire barriers or horizontal assemblies, or both, which is consistent with the requirements in IBC Table 509 for incidental uses. In addition, the classification of the space will affect the separation requirements. Hydrogen fuel gas rooms can contain any amount of hydrogen up to the maximum allowable quantities per control area (MAQ). However, if the MAQs are exceeded, the room can no longer be considered an incidental use and instead must be classified as a separated Group H-2 occupancy. In all cases, separation in accordance with IBC Table 508.4 would apply in addition to the applicable occupancy-specific requirements.

5808.3.1 Pressure control. Hydrogen fuel gas rooms shall be provided with a ventilation system designed to maintain the room at a negative pressure in relation to surrounding rooms and spaces.

❖ This section requires hydrogen fuel gas rooms to be maintained at a negative pressure with regard to surrounding spaces to provide some level of protection against a flammable mixture being attained in other parts of the building.

5808.3.2 Windows. Operable windows in interior walls shall not be permitted. Fixed windows shall be permitted where in accordance with Section 716 of the *International Building Code*.

❖ Operable windows are prohibited in order to further reduce the likelihood of allowing hydrogen to escape from the room into other portions of the building that may not be properly ventilated. An operable window could inadvertently be left in the open or partially open position and go unnoticed. Fixed window openings must meet the requirements of IBC Section 716 to ensure that the requirements for opening protectives are met. More specifically, the proper fire protection ratings for openings in fire barriers are required.

5808.4 Exhaust ventilation. Hydrogen fuel gas rooms shall be provided with mechanical exhaust ventilation in accordance with the applicable provisions of Section 2311.7.1.1.

❖ The purpose of this section is to prevent a dangerous accumulation of flammable gas in the room through the use of an exhaust ventilation system. The ventilation must be at the rate of 1 cfm per 12 cubic feet of room volume, which is as required for ventilation of motor vehicle repair shops that repair hydrogen-fueled vehicles and is consistent with the requirements in Chapter 5 of the *International Mechanical Code*® (IMC®). See the commentary to Section 2311.7.1.1.

5808.5 Gas detection system. Hydrogen fuel gas rooms shall be provided with an approved flammable gas detection system in accordance with Sections 5808.5.1 through 5808.5.4.

❖ Some gases contain additives that produce pungent odors for easy recognition. Systems using nonodorized gases, such as hydrogen and liquefied natural gas (LNG), must utilize gas detection systems to detect leaks. This section specifically requires such detection due to the hazards associated with a build-up of hydrogen at hazardous levels within a building.

5808.5.1 System design. The flammable gas detection system shall be *listed* for use with hydrogen and any other flammable gases used in the hydrogen fuel gas room. The gas detection system shall be designed to activate when the level of flammable gas exceeds 25 percent of the lower flammable limit (LFL) for the gas or mixtures present at their anticipated temperature and pressure.

❖ The detection system must initiate the operations specified in Section 5808.5.3 at any time that the flammable gas concentration exceeds one-fourth of the concentration necessary to support combustion. Early detection of the presence of a flammable gas will allow adequate mitigation procedures to be taken. Hydrogen fires are not normally extinguished until the supply of hydrogen has been shut off because of the danger of reignition or explosion. A gas detection system in the room or space housing a gaseous hydrogen system results in early notification of a leak that is occurring before the escaping gas reaches a hazardous concentration.

5808.5.2 Gas detection system components. Gas detection system control units shall be *listed* and *labeled* in accordance with UL 864 or UL 2017. Gas detectors shall be *listed* and *labeled* in accordance with UL 2075 for use with the gases and vapors being detected.

❖ This section requires gas detection equipment to be listed in accordance with UL 2075 for use with the different gases it will detect. Under UL 2075, a set of flammable gases and concentrations, measured in parts per million (ppm), is developed for each detector or sensor, and the manufacturer is required to provide information as to what gases and the concentrations the device is designed to detect. Tests under the standard then verify the performance of each detector or sensor for each gas it is designed to detect. The gases that the equipment will detect may be shown in the manufacturer's instructions rather than on the product. This section also is intended to ensure that gas detection system control components are listed in accordance with nationally recognized safety standards. These standards include a comprehensive set of construction and performance requirements that are used to evaluate and list gas detection system control units and gas detectors.

INTERNATIONAL CODE COUNCIL®
Copyright © 2015 ICC. ALL RIGHTS RESERVED. Accessed by David Dammon on Jun 21, 2017 12:30:52 PM pursuant to License Agreement with ICC. No further reproduction or distribution authorized. ANY UNAUTHORIZED REPRODUCTION OR DISTRIBUTION IS A VIOLATION OF THE FEDERAL COPYRIGHT ACT AND THE LICENSE AGREEMENT, AND SUBJECT TO CIVIL AND CRIMINAL PENALTIES THEREUNDER.

5808.5.3 Operation. Activation of the gas detection system shall result in both of the following:

1. Initiation of distinct audible and visual alarm signals both inside and outside of the hydrogen fuel gas room.
2. Activation of the mechanical exhaust ventilation system.

❖ The required local alarm is intended to alert the occupants to an emerging hazardous condition in the vicinity. The monitor control equipment must also initiate operation of the mechanical ventilation system in the event of a leak or rupture in the gaseous hydrogen system to prevent an accumulation of flammable gas.

In addition to causing alarms to activate the detection system must also activate the mechanical ventilation system required by Section 5808.4.

5808.5.4 Failure of the gas detection system. Failure of the gas detection system shall result in activation of the mechanical exhaust ventilation system, cessation of hydrogen generation and the sounding of a trouble signal in an approved location.

❖ Gas detection systems must be designed to be self-monitoring and fail-safe in that all safety systems are activated to alert any occupants that a problem exists and to prevent more hydrogen from being generated by any appliances in the room when hazardous conditions cannot be monitored.

5808.6 Explosion control. Explosion control shall be provided where required by Section 911.

❖ The requirements of this section are intended to address the circumstance resulting from a catastrophic failure of the hydrogen fuel gas room. These requirements are the final safeguard in case safety features such as interlocked doors, ventilation and gas detection systems should fail. An ignited hydrogen mixture produces large quantities of heat, causing a rapid expansion of the surrounding air. This can cause a pressure increase in a confined space and a catastrophic failure. Explosion control methods are identified in Section 911 to prevent such a catastrophic failure. The explosion control requirements for gaseous and liquefied hydrogen are consistent with the requirements in Section 6.9 of NFPA 2.

5808.7 Standby power. Mechanical ventilation and gas detection systems shall be connected to a standby power system in accordance with Section 604.

❖ The ventilation system and gas detection system are life safety systems and, therefore, must be dependable. Both safety systems must remain active in the event of a failure of the primary power supply. Hydrogen is a colorless, odorless gas; a release might go undetected if detection systems are not functioning. The accumulation of hydrogen in an unventilated area can lead to mixtures in the flammable range if safety systems and mechanical ventilation systems are not in operation. Section 604 and Chapter 50 address standby power requirements for essential systems. Chapter 50 also allows for systems that are fail-safe in Sections 5004.7.2 and 5005.1.5.1 in hydrogen fuel gas rooms where hydrogen is either generated or stored.

Bibliography

The following resource materials were used in the preparation of the commentary for this chapter of the code:

ASME *Boiler and Pressure Vessel Code*. New York: The American Society of Mechanical Engineers, 2007.

Barlen W., F.C. Saacke and G.R. Spies. *Industrial Fire Hazards Handbook,* 3rd ed. Quincy, MA: National Fire Protection Association, 1990.

CGA G-5 (2006), *Cryogenic Hydrogen Storage*. Arlington, VA: Compressed Gas Association, 2006.

CGA H-3 (2006), *Cryogenic Hydrogen Storage*. Arlington, VA: Compressed Gas Association, 2006.

CGA P-12 (2006), *Cryogenic Hydrogen Storage*. Arlington, VA: Compressed Gas Association, 2006.

Code Changes Resource Collection—2015 International Fire Code. Washington, DC: International Code Council, 2014.

Fire Protection Guide to Hazardous Materials, 13th ed. Quincy MA: National Fire Protection Association, 2001.

Fire Protection Handbook, 20th ed. Quincy MA: National Fire Protection Association, 2008.

Handbook of Compressed Gases, 3rd ed. Arlington, VA: Compressed Gas Association, 1999.

INTERNATIONAL CODE COUNCIL®
Copyright © 2015 ICC. ALL RIGHTS RESERVED. Accessed by David Dammon on Jun 21, 2017 12:30:52 PM pursuant to License Agreement with ICC. No further reproduction or distribution authorized. ANY UNAUTHORIZED REPRODUCTION OR DISTRIBUTION IS A VIOLATION OF THE FEDERAL COPYRIGHT ACT AND THE LICENSE AGREEMENT, AND SUBJECT TO CIVIL AND CRIMINAL PENALTIES THEREUNDER.

INTERNATIONAL CODE COUNCIL®
Copyright © 2015 ICC. ALL RIGHTS RESERVED. Accessed by David Dammon on Jun 21, 2017 12:30:52 PM pursuant to License Agreement with ICC. No further reproduction or distribution authorized. ANY UNAUTHORIZED REPRODUCTION OR DISTRIBUTION IS A VIOLATION OF THE FEDERAL COPYRIGHT ACT AND THE LICENSE AGREEMENT, AND SUBJECT TO CIVIL AND CRIMINAL PENALTIES THEREUNDER.

Chapter 59: Flammable Solids

General Comments

This chapter addresses magnesium almost to the exclusion of all other flammable solids; however, it is important to know that several other solid materials, primarily metals, are also flammable and under the right conditions can be explosion hazards. It should also be noted that, although the definition of "Flammable solid" could be literally interpreted as being applicable to a much wider variety of common materials having an ignition temperature below 212°F (100°C), it is not the intent of this chapter to regulate such materials. See the commentary for "Flammable solid" in Chapter 2.

The list of other metals that can become fire hazards consists of titanium, zirconium, hafnium, calcium, zinc, sodium, lithium, potassium, sodium/potassium alloys, aluminum, iron and steel, uranium, thorium and plutonium. Some of these metals have a few highly specialized commercial uses; they are almost exclusively laboratory materials. But because of where they are used, both plant and fire service personnel must be trained to handle emergency situations. Because uranium, thorium and plutonium are also radioactive materials, they present still more specialized problems for plant fire brigades and local fire service personnel.

The form of the material being used (powder, sheets, castings or billets) also is critical to the way fire services respond to an incident. Fine powders of any of the materials listed can ignite or even explode under various atmospheres, including nitrogen. Some molten metals can ignite or explode under certain conditions. Castings of some of these metals can ignite or detonate if they are not handled properly. Even bulky billets can be ignited if there is sufficient heat to bring the metal to its ignition temperature, resulting in self-sustained burning.

Conventional fire-extinguishing agents may only increase the intensity of the fire being fought. Magnesium, for example, burns fiercely in a steam atmosphere. Likewise, carbon dioxide, foam and dry chemical extinguishers are not effective on titanium fires. Additionally, water, foam and vaporizing liquids should never be used on lithium, sodium and potassium fires. Each material is different and requires different extinguishing treatment.

The National Fire Protection Association (NFPA) has developed standards for handling several of the listed materials, which are included in the bibliography at the end of this chapter. Most industry associations and companies manufacturing primary metals and alloys also have available recommended practices for storage, handling, use and scrap disposal that are based on extensive testing and usage history. The fire code official should require any person or business storing, handling or processing any of these materials to demonstrate a thorough knowledge of safe practices in both facility design and operating procedures.

Purpose

This chapter sets general requirements for storage and handling of flammable solids in the first five sections before addressing the subject of magnesium in Section 5906.

A word of caution is necessary when applying the general requirements stated in Sections 5901 through 5905. Each of the flammable metals mentioned in the "General Comments" section requires special precautions. What works with one material may cause a major disaster with another. It is always best to make certain the building, facility and operating conditions proposed by the owner, architect or builder are based on the latest safety information available from the suppliers of the materials to be used or stored. The fire code official should verify that the emergency plan prepared for use by the owner or tenant is workable and compatible with the emergency response personnel and equipment available to the jurisdiction.

SECTION 5901 GENERAL

5901.1 Scope. The storage and use of flammable solids shall be in accordance with this chapter.

❖ This section establishes the applicability of this chapter to all materials meeting the definition of and classified as flammable solids.

5901.2 Permits. Permits shall be required as set forth in Section 105.6.

❖ The process of issuing permits gives the fire code official an opportunity to carefully evaluate and regulate hazardous operations. Permit applicants should be required to demonstrate that their operations comply with the intent of the code before the permit is

INTERNATIONAL CODE COUNCIL®
Copyright © 2015 ICC. ALL RIGHTS RESERVED. Accessed by David Dammon on Jun 21, 2017 12:30:52 PM pursuant to License Agreement with ICC. No further reproduction or distribution authorized. ANY UNAUTHORIZED REPRODUCTION OR DISTRIBUTION IS A VIOLATION OF THE FEDERAL COPYRIGHT ACT AND THE LICENSE AGREEMENT, AND SUBJECT TO CIVIL AND CRIMINAL PENALTIES THEREUNDER.

issued. See the commentary to Section 105.6 for a general discussion of operations requiring an operational permit and Section 105.6.21 for discussion of specific operational permits for hazardous materials, Section 105.7 for a general discussion of activities requiring a construction permit and Section 105.7.10 for discussion of specific construction permits for hazardous materials. The permit process also notifies the fire department of the need for pre-fire planning for hazardous properties.

SECTION 5902
DEFINITIONS

5902.1 Definitions. The following terms are defined in Chapter 2:

FLAMMABLE SOLID.

MAGNESIUM.

❖ Definitions of terms can help in the understanding and application of the code requirements. This section directs the code user to Chapter 2 for the proper application of the indicated terms used in this chapter. Terms may be defined in Chapter 2 or in another *International Code*® as indicated in Section 201.3, or the dictionary meaning may be all that is needed (see also commentary, Sections 201.1 through 201.4).

SECTION 5903
GENERAL REQUIREMENTS

5903.1 Quantities not exceeding the maximum allowable quantity per control area. The storage and use of flammable solids in amounts not exceeding the *maximum allowable quantity per control area* as indicated in Section 5003.1 shall be in accordance with Sections 5001, 5003 and 5901.

❖ This section complements the requirements of Chapter 50 in structures occupied for the storage, handling or use of flammable solids. The regulations assume that the quantity of flammable solids in a given building is limited to the maximum allowable quantity per control area (MAQ) as established in Section 5003.1; thus, the building is not classified in Occupancy Group H. The general requirements of Sections 5001 and 5003 are fully applicable to the storage and use of flammable solids, in addition to the requirements of this chapter.

5903.2 Quantities exceeding the maximum allowable quantity per control area. The storage and use of flammable solids exceeding the *maximum allowable quantity per control area* as indicated in Section 5003.1 shall be in accordance with Chapter 50 and this chapter.

❖ This section complements the requirements of Chapter 50 for structures occupied for the storage, handling or use of flammable solids. The regulations contained in this section assume that the quantity of flammable solids in a given building is in excess of the MAQ as established in Section 5003.1; thus, the building is classified in Occupancy Group H. The requirements of Chapter 50 apply to the storage and use of flammable solids, in addition to the requirements of this chapter.

SECTION 5904
STORAGE

5904.1 Indoor storage. Indoor storage of flammable solids in amounts exceeding the *maximum allowable quantity per control area* indicated in Table 5003.1.1(1) shall be in accordance with Sections 5001, 5003, 5004 and this chapter.

❖ This section regulates the indoor storage of flammable solids when in excess of the MAQ in buildings or portions of buildings classified in Occupancy Group H. The general and storage requirements of Chapter 50 are applicable in addition to the requirements of this section. Storage of flammable solids inside of structures must comply with Sections 5904.1.1 through 5904.1.3 to prevent exposure to conditions that may result in a fire or explosion.

5904.1.1 Pile size limits and location. Flammable solids stored in quantities greater than 1,000 cubic feet (28 m^3) shall be separated into piles each not larger than 1,000 cubic feet (28 m^3).

❖ Storage piles are restricted to 1,000 cubic feet (28 m^3) in size to limit the quantity of flammable solids exposed to a single fire and to facilitate fire-fighting operations. Aisles must be provided on all sides to permit access for fire fighting and reduce the likelihood of the spread of fire to adjacent piles if a pile collapse occurs.

5904.1.2 Aisles. Aisle widths between piles shall not be less than the height of the piles or 4 feet (1219 mm), whichever is greater.

❖ As with all other storage, aisles allow fire response personnel ready access to the immediate area of the fire. The requirement that aisle width depends on pile height acknowledges the effectiveness of physical separation in preventing fire spread as well as making room for more or larger fire-fighting equipment that may be needed to fight fires in large storage piles of flammable solids. Additionally, keeping aisle widths the same as the pile heights reduces the likelihood of the spread of fire to adjacent piles or creating a "domino effect" in the event of a pile collapse, since a pile will generally not tip over intact.

5904.1.3 Basement storage. Flammable solids shall not be stored in *basements.*

❖ Basement storage is prohibited because of the limited access for fire suppression and ventilation operations in most basements and the hazards associated with the vigorous and persistent fires that can occur in flammable solids.

5904.2 Outdoor storage. Outdoor storage of flammable solids in amounts exceeding the *maximum allowable quantities per control area* indicated in Table 5003.1.1(1) shall be in

INTERNATIONAL CODE COUNCIL®
Copyright © 2015 ICC. ALL RIGHTS RESERVED. Accessed by David Dammon on Jun 21, 2017 12:30:52 PM pursuant to License Agreement with ICC. No further reproduction or distribution authorized. ANY UNAUTHORIZED REPRODUCTION OR DISTRIBUTION IS A VIOLATION OF THE FEDERAL COPYRIGHT ACT AND THE LICENSE AGREEMENT, AND SUBJECT TO CIVIL AND CRIMINAL PENALTIES THEREUNDER.

accordance with Sections 5001, 5003, 5004 and this chapter. Outdoor storage of magnesium shall be in accordance with Section 5906.

❖ This section regulates the outdoor storage of flammable solids when in excess of the MAQ established by Table 5003.1.1(3). The general and storage requirements of Chapter 50 are applicable, in addition to the requirements of this section. Storage of flammable solids in outdoor control areas must comply with Sections 5904.2.1 and 5904.2.2 to reduce the likelihood of uncontrolled release or exposure to conditions that may result in a fire or explosion.

5904.2.1 Distance from storage to exposures. Outdoor storage of flammable solids shall not be located within 20 feet (6096 mm) of a building, *lot line*, public street, public alley, *public way* or *means of egress*. A 2-hour *fire barrier* without openings or penetrations and extending 30 inches (762 mm) above and to the sides of the storage area is allowed in lieu of such distance. The wall shall either be an independent structure, or the *exterior wall* of the building adjacent to the storage area.

❖ The required separation distance is intended to minimize radiant heat transfer between exposures. Separation distances provide a measure of protection against the possibility of fire spread if a fire occurs involving either the stored material or another exposure, such as a building located on the same or an adjacent lot or a vehicle in the public right-of-way.

An alternative to the 20-foot (6069 mm) distance is offered in this section. Essentially, it would allow the use of a 2-hour fire barrier, constructed in accordance with Section 707 of the *International Building Code*® (IBC®) and without openings, that extends 30 inches (763 mm) above and to the sides of the storage.

5904.2.2 Pile size limits. Outdoor storage of flammable solids shall be separated into piles not larger than 5,000 cubic feet (141 m^3) each. Piles shall be separated by aisles with a minimum width of not less than one-half the pile height or 10 feet (3048 mm), whichever is greater.

❖ Outside storage piles may be increased in size (over inside storage) to 5,000 cubic feet (141 m^3) based on the reduced danger to people and property associated with outdoor storage. Required aisles are intended to facilitate fire-fighting access and prevent the spread of fire to adjacent piles if a pile collapse occurs. Aisles should permit unobstructed access to the pile on all sides, as well as permit approach from more than one direction.

SECTION 5905
USE

5905.1 General. The use of flammable solids in amounts exceeding the *maximum allowable quantity per control area* indicated in Table 5003.1.1(1) or 5003.1.1(3) shall be in accordance with Sections 5001, 5003, 5005 and this chapter. The use of magnesium shall be in accordance with Section 5906.

❖ This section applies to all indoor and outdoor use and handling operations involving flammable solids, except magnesium, when the amounts being used or handled are in excess of the MAQ [buildings or portions of buildings classified in Occupancy Group H and outdoor control area indicated in Tables 5003.1.1(1) and 5003.1.1(3), respectively]. The administrative, general use and handling provisions of Chapter 50 are applicable, in addition to the requirements of this chapter.

SECTION 5906
MAGNESIUM

5906.1 General. Storage, use, handling and processing of magnesium, including the pure metal and alloys of which the major part is magnesium, shall be in accordance with Chapter 50 and Sections 5906.2 through 5906.5.8.

❖ This section establishes the applicability of Section 5906 and Chapter 50 to the production, storage, processing and disposal of magnesium products. These requirements are applicable not only to pure magnesium but also to alloys having a magnesium content in excess of 50 percent.

5906.2 Storage of magnesium articles. The storage of magnesium shall comply with Sections 5906.2.1 through 5906.4.3.

❖ The requirements of Sections 5906.2.1 through 5906.4.3 apply to the storage of any quantity of magnesium based on the various physical forms of the material and the fire hazard and extinguishing problems it poses.

5906.2.1 Storage of greater than 50 cubic feet. Magnesium storage in quantities greater than 50 cubic feet (1.4 m^3) shall be separated from storage of other materials that are either combustible or in combustible containers by aisles. Piles shall be separated by aisles with a minimum width of not less than the pile height.

❖ This is a general criterion applicable to all forms of magnesium. As is noted in the following sections, storage requirements and allowable quantities vary with the form of the product being stored.

Isolation of magnesium from other combustible materials of any kind helps reduce the amount of magnesium exposed to a single fire originating outside of the magnesium pile and protects materials outside the magnesium pile from exposure to it. Properly established and maintained aisles provide fire suppression personnel ready access to the immediate area of the fire as well as proper egress circulation in the storage area. The requirement that aisle width depends on pile height acknowledges the effectiveness of physical separation in preventing fire spread.

INTERNATIONAL CODE COUNCIL®
Copyright © 2015 ICC. ALL RIGHTS RESERVED. Accessed by David Dammon on Jun 21, 2017 12:30:52 PM pursuant to License Agreement with ICC. No further reproduction or distribution authorized. ANY UNAUTHORIZED REPRODUCTION OR DISTRIBUTION IS A VIOLATION OF THE FEDERAL COPYRIGHT ACT AND THE LICENSE AGREEMENT, AND SUBJECT TO CIVIL AND CRIMINAL PENALTIES THEREUNDER.

5906.2.2 Storage of greater than 1,000 cubic feet. Magnesium storage in quantities greater than 1,000 cubic feet (28 m^3) shall be separated into piles not larger than 1,000 cubic feet (28 m^3) each. Piles shall be separated by aisles with a minimum width of not less than the pile height. Such storage shall not be located in nonsprinklered buildings of Type III, IV or V construction, as defined in the *International Building Code*.

❖ Again, this is a general criterion applicable to all forms of magnesium and establishes the maximum pile size at 1,000 cubic feet (28 m^3) of material (see also the discussion in the commentary to Section 5906.2.1). In this scenario, a pile could be approximately 10 feet long by 10 feet wide by 10 feet high (3048 mm by 3048 mm by 3048 mm) with an established aisle width between piles of 10 feet (3048 mm). Note that when the quantity of stored magnesium exceeds 1,000 cubic feet (28 m^3), this section requires that the storage building be of Type I or II construction, or when equipped throughout with an automatic sprinkler system, of Type III, IV or V construction.

5906.2.3 Storage in combustible containers or within 30 feet of other combustibles. Where in nonsprinklered buildings of Type III, IV or V construction, as defined in the *International Building Code*, magnesium shall not be stored in combustible containers or within 30 feet (9144 mm) of other combustibles.

❖ This section recognizes the increased hazard of storing magnesium in nonsprinklered buildings of Type III, IV and V construction by requiring that any containers used for the storage of magnesium be constructed of noncombustible material to provide a layer of shielding to the magnesium in the event of a fire. To further isolate magnesium piles, reduce the likelihood of fire spread among adjacent piles and enhance the effectiveness of the shielding provided by noncombustible storage containers where used, this section requires a substantial increase in the spatial separation between the magnesium and any other combustible materials. Note that this increased separation is not related to pile height.

5906.2.4 Storage in foundries and processing plants. The size of storage piles of magnesium articles in foundries and processing plants shall not exceed 1,250 cubic feet (25 m^3). Piles shall be separated by aisles with a minimum width of not less than one-half the pile height.

❖ Allowing storage of an increased quantity of flammable solids in foundries and processing plants acknowledges that ignition of pigs, ingots and billets is unlikely under conditions normally found in foundries and other processing buildings where ordinary combustible materials are rarely found in any significant quantity.

5906.3 Storage of pigs, ingots and billets. The storage of magnesium pigs, ingots and billets shall comply with Sections 5906.3.1 and 5906.3.2.

❖ The requirements of Sections 5906.3.1 and 5906.3.2 apply to the storage of any quantity of magnesium in the forms of pigs (a mass of magnesium that has been run into a mold while molten), ingots (a mass of magnesium cast in a convenient form for further processing) and billets (a bar of magnesium forged from an ingot) and the hazards they pose. The quantities allowed again indicate that ignition of these large shapes is unlikely under the conditions required.

5906.3.1 Indoor storage. Indoor storage of pigs, ingots and billets shall only be on floors of noncombustible construction. Piles shall not be larger than 500,000 pounds (226.8 metric tons) each. Piles shall be separated by aisles with a minimum width of not less than one-half the pile height.

❖ This section establishes maximum quantity for single piles, but does not restrict the number of piles that can be located in one building or structure. The requirement for aisles that are at least half the pile height allows adequate clearance for both materials-handling equipment and emergency response equipment and personnel. Where pile heights are kept low, the aisles must still be maintained at a width that will allow for equipment travel between piles. Requiring storage on a noncombustible surface reduces the likelihood that the floor would contribute any fuel or contribute to the spread of a fire involving magnesium.

5906.3.2 Outdoor storage. Outdoor storage of magnesium pigs, ingots and billets shall be in piles not exceeding 1,000,000 pounds (453.6 metric tons) each. Piles shall be separated by aisles with a minimum width of not less than one-half the pile height. Piles shall be separated from combustible materials or buildings on the same or adjoining property by a distance of not less than the height of the nearest pile.

❖ This section recognizes the inherently higher level of safety provided by the storage of materials outdoors by doubling the amount of magnesium per pile that can be stored. The required separation distance is intended to minimize radiant heat transfer between exposures. Separation distances provide a measure of protection against the possibility of fire spread if a fire occurs either in the stored material or in another exposure, such as a building located on the same or an adjacent lot. Separation also serves the purpose of allowing passage of materials-handling equipment and emergency response equipment.

5906.4 Storage of fine magnesium scrap. The storage of scrap magnesium shall comply with Sections 5906.4.1 through 5906.4.3.

❖ The requirements of Sections 5906.4.1 through 5906.4.3 apply to the storage of any quantity of mag-

INTERNATIONAL CODE COUNCIL®
Copyright © 2015 ICC. ALL RIGHTS RESERVED. Accessed by David Dammon on Jun 21, 2017 12:30:52 PM pursuant to License Agreement with ICC. No further reproduction or distribution authorized. ANY UNAUTHORIZED REPRODUCTION OR DISTRIBUTION IS A VIOLATION OF THE FEDERAL COPYRIGHT ACT AND THE LICENSE AGREEMENT, AND SUBJECT TO CIVIL AND CRIMINAL PENALTIES THEREUNDER.

nesium in the form of scrap chips, fines and dust and the hazards they pose. These less-dense forms of magnesium, typically produced in machine processing and recovered for subsequent reuse, present a substantial fire and explosion risk, which is addressed in the following sections.

5906.4.1 Separation. Magnesium fines shall be kept separate from other combustible materials.

❖ Separation of stored magnesium fines from ordinary combustible materials is required because fines are extremely combustible and easily ignitable. A small pile of fines can be ignited by a common match flame. Section 5906.2.1 contains minimum separation criteria for all types of magnesium storage.

5906.4.2 Storage of 50 to 1,000 cubic feet. Storage of fine magnesium scrap in quantities greater than 50 cubic feet (1.4 m^3) [six 55-gallon (208 L) steel drums] shall be separated from other occupancies by an open space of not less than 50 feet (15 240 mm) or by a *fire barrier* constructed in accordance with Section 707 of the *International Building Code*.

❖ Because fines are usually wet with coolant from the processing operation, there is a possibility of hydrogen generation. For this reason, fines must be stored in approved steel containers with vented lids to prevent hydrogen buildup. Because there is also a possibility of spontaneous heating of fines, they must be stored separately from combustible materials, including other storage piles of magnesium. The required separation distance is intended to minimize radiant heat transfer between the stored magnesium and other materials and provide a measure of protection against the possibility of spread if a fire occurs.

An alternative to the 20-foot (6069 mm) distance is offered in this section. Essentially, it would allow the use of a 2-hour fire barrier, constructed in accordance with IBC Section 707 and without openings, that extends 30 inches (763 mm) above and to the sides of the storage.

5906.4.3 Storage of greater than 1,000 cubic feet. Storage of fine magnesium scrap in quantities greater than 1,000 cubic feet (28 m^3) shall be separated from all buildings other than those used for magnesium scrap recovery operations by a distance of not less than 100 feet (30 480 mm).

❖ This section recognizes the increased risk associated with the storage of significant quantities of magnesium fines by establishing a blanket 100-foot (30 480 mm) separation distance to any building that is not specifically part of a magnesium recovery operation.

5906.5 Use of magnesium. The use of magnesium shall comply with Sections 5906.5.1 through 5906.5.8.

❖ The requirements of Sections 5906.5.1 through 5906.5.8 apply to the use, handling and processing of any quantity of magnesium and the processing hazards it poses.

5906.5.1 Melting pots. Floors under and around melting pots shall be of noncombustible construction.

❖ This requirement should seem obvious for any operation that involves melting any quantity of any metal. It is particularly important with flammable metals, however, because of the possibility of fire from an overheated melting pot or an explosion caused by the addition of alloying metal to the molten magnesium that has not been thoroughly dried before being added to the pot. Any quantity of absorbed moisture on the added metal will turn instantly to steam and cause a violent eruption of molten metal from the pot.

Eruptions of molten metal present a serious burn hazard to personnel as well as the potential for the hot metal to ignite combustible construction under or near the pot.

When molten magnesium is handled according to standard industry safety practices, it is not a serious hazard. Magnesium has been used for well over 50 years in both military and commercial applications with very few serious fires. This long history of safe operations suggests that safety rules and precautions developed by both suppliers and users are effective. The fire code official must require that a user of molten magnesium have safe operating procedures in place as well as an emergency response plan that includes both plant fire brigades and jurisdiction emergency response units.

5906.5.2 Heat-treating ovens. *Approved* means shall be provided for control of magnesium fires in heat-treating ovens.

❖ Heat-treating ovens present a significant potential for fires. Some of the heat treatments required to obtain the physical properties necessary for certain applications are done at temperatures very close to the ignition temperature of magnesium. Accordingly, this section requires that fire control means approved by the fire code official be readily available to the heat-treating process. Large castings that have thick sections are not as likely to ignite, but fine fins or very thin sections can ignite if overheated, as can dust or fine chips. For this reason, oven controls are critical to safe operation. Making sure items to be heat treated are free of dust and chips is also essential. Fire control can also be achieved in higher temperature ovens by operating them with an inert gas atmosphere to reduce the risk of magnesium ignition.

Although not stated specifically in this section, the requirement for keeping the heat-treating area clear of scrap and other combustibles should be obvious.

5906.5.3 Dust collection. Magnesium grinding, buffing and wire-brushing operations, other than rough finishing of cast-

INTERNATIONAL CODE COUNCIL®
Copyright © 2015 ICC. ALL RIGHTS RESERVED. Accessed by David Dammon on Jun 21, 2017 12:30:52 PM pursuant to License Agreement with ICC. No further reproduction or distribution authorized. ANY UNAUTHORIZED REPRODUCTION OR DISTRIBUTION IS A VIOLATION OF THE FEDERAL COPYRIGHT ACT AND THE LICENSE AGREEMENT, AND SUBJECT TO CIVIL AND CRIMINAL PENALTIES THEREUNDER.

ings, shall be provided with *approved* hoods or enclosures for dust collection that are connected to a liquid-precipitation type of separator that converts dust to sludge without contact (in a dry state) with any high-speed moving parts.

❖ The potential for fires and explosions involving magnesium dust and other fines has already been stated. The dust from grinding, buffing and wire brushing operations must be collected and contained in a closed system that is equipped with a water spray dust precipitator and an exhaust blower. The exhaust system is required because wet magnesium fines will generate hydrogen gas that must be diluted below its lower flammable limit (LFL).

Equipment used for grinding, buffing and wire-brushing must be dedicated for use on magnesium only. Commentary Figure 5906.5.3 shows a typical grinding machine setup.

5906.5.3.1 Duct construction. Connecting ducts or suction tubes shall be completely grounded, as short as possible, and without bends. Ducts shall be fabricated and assembled with a smooth interior, with internal lap joints pointing in the direction of airflow and without unused capped side outlets, pockets or other dead-end spaces that allow an accumulation of dust.

❖ Although the requirements stated in this section are applicable to magnesium manufacturing operations, they are virtually the same as the requirements for handling any other kind of flammable or detonable dust and fine particles. The construction specifications are intended to prevent fines from accumulating in sufficient quantities to become a hazard. Grounding is required to prevent sparking that could become a source of ignition. See the commentary to Sections 510 and 511 of the *International Mechanical Code*® (IMC®) for a discussion of hazardous exhaust systems and dust conveying systems.

5906.5.3.2 Independent dust separators. Each machine shall be equipped with an individual dust-separating unit.

Exceptions:

1. One separator is allowed to serve two dust-producing units on multiunit machines.
2. One separator is allowed to serve not more than four portable dust-producing units in a single enclosure or stand.

❖ This requirement complements Section 5906.5.3.1, which mandates that ducts be straight and of minimum length in order to reduce the likelihood of static buildup and dust buildup in the duct.

Exception 1 does allow two units working in tandem to be served by one collector; however, the ducts must still meet the specifications in Section 5906.5.3.1.

Exception 2 allows one collector to serve up to four small units if they are operated in an enclosure that would prevent dust from escaping into the general work area. The collector would function in approximately the same way as a vacuum system in a paint booth. The requirements for exhausting, water spray and ductwork would still apply.

Chapter 22 regulates combustible dusts and includes a reference to NFPA 484, *Standard for Combustible Metals.* See the commentary to that chapter for further information.

5906.5.4 Power supply interlock. Power supply to machines shall be interlocked with exhaust airflow, and liquid pressure level or flow. The interlock shall be designed to shut down the machine it serves when the dust removal or separator system is not operating properly.

❖ Allowing magnesium dust-producing operations to continue when the dust collection system required by Section 5906.5.3 is malfunctioning could allow the

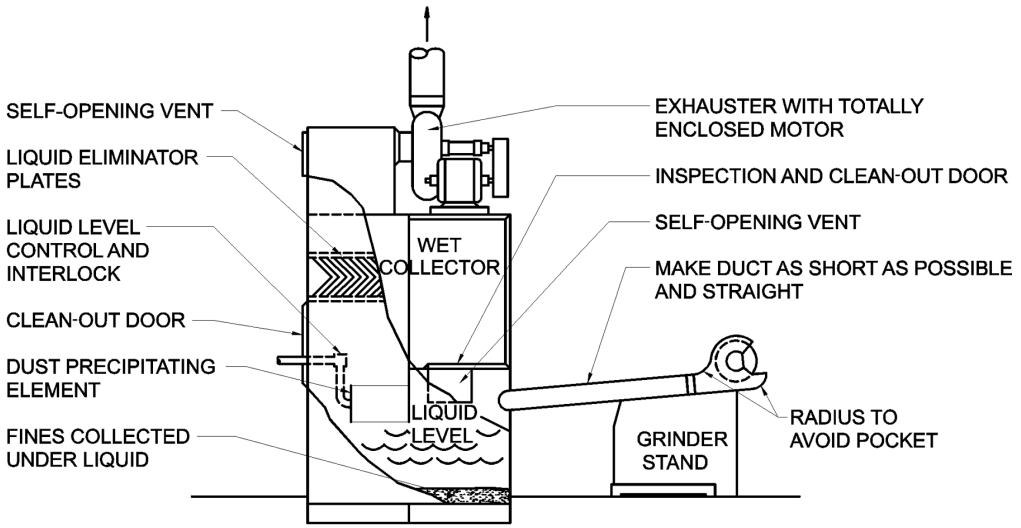

Figure 5906.5.3
A SCHEMATIC DIAGRAM OF WATER PRECIPITATION-TYPE COLLECTOR

INTERNATIONAL CODE COUNCIL®
Copyright © 2015 ICC. ALL RIGHTS RESERVED. Accessed by David Dammon on Jun 21, 2017 12:30:52 PM pursuant to License Agreement with ICC. No further reproduction or distribution authorized. ANY UNAUTHORIZED REPRODUCTION OR DISTRIBUTION IS A VIOLATION OF THE FEDERAL COPYRIGHT ACT AND THE LICENSE AGREEMENT, AND SUBJECT TO CIVIL AND CRIMINAL PENALTIES THEREUNDER.

dangerous buildup of extremely flammable magnesium fines at the machines. The ready ignitability of this collected material creates a hazard that this section is intended to mitigate by interlocking the dust-producing machines with the exhaust system so that the production of dust and flyings will halt if the exhaust is not performing as designed.

5906.5.5 Electrical equipment. Electric wiring, fixtures and equipment in the immediate vicinity of and attached to dust-producing machines, including those used in connection with separator equipment, shall be of *approved* types and shall be *approved* for use in Class II, Division 1 hazardous locations in accordance with NFPA 70.

❖ This requirement for classified electrical equipment is intended to reduce the likelihood that any fixed or portable electrical wiring and electrical equipment attached to or located or used near dust-producing and dust-collecting machines will become an ignition source.

5906.5.6 Grounding. Equipment shall be securely grounded by permanent ground wires in accordance with NFPA 70.

❖ As with Section 5906.5.5, this requirement is intended to reduce the likelihood of a buildup of static electricity that could produce a spark that would be an ignition source for flammable solids dust. This requirement is similar to grounding requirements for electrical equipment in other dust-producing environments.

5906.5.7 Fire-extinguishing materials. Fire-extinguishing materials shall be provided for every operator performing machining, grinding or other processing operation on magnesium in accordance with either of the following:

1. Within 30 feet (9144 mm), a supply of extinguishing materials in an *approved* container with a hand scoop or shovel for applying the material.
2. Within 75 feet (22 860 mm), a portable fire extinguisher complying with Section 906.

All extinguishing materials shall be *approved* for use on magnesium fires. Where extinguishing materials are stored in cabinets or other enclosed areas, the enclosures shall be openable without the use of a key or special knowledge.

❖ Magnesium fires present unusual fire suppression challenges because none of the common extinguishing materials can be used safely. The problem of using water has already been mentioned, but it must be emphasized again. Water sprayed on a magnesium fire will do two things. First, if the fire involves small pieces such as chips, fines or dust, the reaction of the burning metal with water can be explosive, causing burning brands to fly onto surrounding materials and equipment. Second, the extraordinary heat generated by burning magnesium can break the chemical bonds between hydrogen and oxygen atoms in the water molecule. Once this occurs, the hydrogen will be burned and the oxygen will support continued combustion, making the fire that much more intense; however, the danger of a hydrogen explosion under fire conditions is generally slight. If magnesium burns in the open, an excess of oxygen will be available to burn any hydrogen as rapidly as it is generated, thus preventing formation of an explosive accumulation of gas. Despite the noted dangers, however, magnesium fires can be extinguished by cooling the metal below its melting point using relatively large amounts of water carefully applied from a safe distance.

The use of sand can produce a similar reaction to the use of water. Sand is composed of silicon dioxide (SiO_2) molecules that will break down, allowing the oxygen to support the combustion of the magnesium.

Carbon dioxide cannot be used on magnesium fires for the same reason. Magnesium reacts so strongly with oxygen that the carbon dioxide will decompose, giving the fire additional oxygen and making it burn more intensely.

In extreme cases, magnesium will even burn in a nitrogen atmosphere, forming magnesium nitride.

Halon cannot be used because magnesium reacts violently with the chlorine molecules in the gas to form magnesium chloride.

Consequently, special fire-fighting agents are required for fighting magnesium and other flammable metal fires. Because flammable metal fires are considered Class D fires, it is important to verify that portable fire extinguishers provided in accordance with this section are labeled as being effective on such fires. Similarly, any installed fire-extinguishing system must be chosen carefully with the focus on extinguishing agent compatibility with the protected content.

The form of the material involved in the fire will dictate what can be used to extinguish it. The most difficult fire is one involving fines. Normally, a dry extinguishing agent is manually spread over the fire to smother the burning material. Care must be taken, however, to make sure the application does not raise a dust cloud that could cause an explosion.

The long history of magnesium use has resulted in a well-documented fire-fighting strategy for each form of magnesium that could be involved in a fire. The fire code official must verify that the user facility is equipped to fight potential fires and that emergency response personnel are trained in the hazards they may face as well as in the use of the available extinguishers.

Prompt control of magnesium fires requires ready access to fire-extinguishing materials and equipment by every operator at every workstation processing the metal. The fire extinguisher access travel distance of 75 feet (22 860 mm) correlates with Section 906. The 30-foot (9144 mm) travel distance to a stockpiled supply of dry extinguishing agent correlates with the travel distance for an extra-hazard occupancy and recognizes the potential need to make repeated trips to the stockpile to bring a sufficient amount of agent to accomplish extinguishment.

5906.5.8 Collection of chips, turnings and fines. Chips, turnings and other fine magnesium scrap shall be collected

INTERNATIONAL CODE COUNCIL®
Copyright © 2015 ICC. ALL RIGHTS RESERVED. Accessed by David Dammon on Jun 21, 2017 12:30:52 PM pursuant to License Agreement with ICC. No further reproduction or distribution authorized. ANY UNAUTHORIZED REPRODUCTION OR DISTRIBUTION IS A VIOLATION OF THE FEDERAL COPYRIGHT ACT AND THE LICENSE AGREEMENT, AND SUBJECT TO CIVIL AND CRIMINAL PENALTIES THEREUNDER.

from the pans or spaces under machines and from other places where they collect not less than once each working day. Such material shall be placed in a covered, vented steel container and removed to an *approved* location.

❖ This requirement for collection of highly flammable material is really nothing more than good housekeeping. Keeping the working area free of accumulations of fire fuel means that the fuel load for any potential fire is minimized. As indicated in the commentary to Section 5906.4.2, because magnesium chips, turnings and fines are usually wet with coolant from the processing operation, there is a possibility of hydrogen generation. For this reason, fines must be stored in accordance with Section 5906.4 and in approved steel containers with vented lids to prevent hydrogen buildup.

As was discussed in Chapter 3, the three required elements for a fire are fuel, oxygen and an ignition source. If any one of these three is absent, there will be no fire. Depriving a potential fire of its fuel source is one of the primary ways to prevent fires. Following the other requirements in this chapter will also minimize the oxygen supply and prevent fuel from coming in contact with ignition sources.

Bibliography

The following resource materials were used in the preparation of the commentary for this chapter of the code:

CPSC 16 CFR, 1500 44, *Method for Testing Extremely Flammable and Flammable Solids*. Bethesda, MD: Consumer Product Safety Commission, 2001.

Fire Protection Handbook, 20th Ed. Quincy, MA: National Fire Protection Association, 2008.

INTERNATIONAL CODE COUNCIL®

Copyright © 2015 ICC. ALL RIGHTS RESERVED. Accessed by David Dammon on Jun 21, 2017 12:30:52 PM pursuant to License Agreement with ICC. No further reproduction or distribution authorized. ANY UNAUTHORIZED REPRODUCTION OR DISTRIBUTION IS A VIOLATION OF THE FEDERAL COPYRIGHT ACT AND THE LICENSE AGREEMENT, AND SUBJECT TO CIVIL AND CRIMINAL PENALTIES THEREUNDER.

Chapter 60: Highly Toxic and Toxic Materials

General Comments

Toxic and highly toxic materials are addressed in the code because of the immediate threat they pose to occupants, others in the vicinity of a building and facility and emergency responders. As with other health hazard materials, the solid state is usually the least hazardous, while the gaseous form is the most hazardous.

Materials are often listed as being toxic or highly toxic on Material Safety Data Sheets (MSDS). These descriptors do not necessarily mean that the materials would be considered toxic or highly toxic according to the specific definitions found in Chapter 2. Those definitions provide specific criteria that will be discussed in more detail. Generally, the requirements for toxic and highly toxic materials are the most regulated health hazards in the code.

This chapter deals with all three states of toxic and highly toxic materials: solids, liquids and gases. As will be discussed, gases will generally require treatment systems and related ventilation systems.

Purpose

The main purpose of this chapter is, as noted, to protect occupants, emergency responders and those in the immediate area of the building and facility from short-term, acute hazards associated with a release of or general exposure to toxic and highly toxic materials. The code does not address long-term exposure effects. Such issues are addressed by agencies such as the Environmental Protection Agency (EPA) and Occupational Safety and Health Administration (OSHA).

SECTION 6001 GENERAL

6001.1 Scope. The storage and use of highly toxic and toxic materials shall comply with this chapter. *Compressed gases* shall also comply with Chapter 53.

Exceptions:

1. Display and storage in Group M and storage in Group S occupancies complying with Section 5003.11.
2. Conditions involving pesticides or agricultural products as follows:
   - 2.1. Application and release of pesticide, agricultural products and materials intended for use in weed abatement, erosion control, soil amendment or similar applications when applied in accordance with the manufacturer's instruction and label directions.
   - 2.2. Transportation of pesticides in compliance with the Federal Hazardous Materials Transportation Act and regulations thereunder.
   - 2.3. Storage in *dwellings* or private garages of pesticides registered by the U.S. Environmental Protection Agency to be utilized in and around the home, garden, pool, spa and patio.

❖ This section states that highly toxic materials must be stored and used in accordance with this chapter. Additionally, it notes that gases are subject to the requirements in Chapter 53, which focuses on the hazards associated with the fact that the material is a compressed gas.

There are various exceptions to this chapter. Exception 1 is related to the increased amounts allowed for storage and display in Group M and S occupancies. These increased amounts apply only to solids and liquids. For this exception to apply, all requirements found in Section 5003.11 are applicable.

Exception 2 is specific to pesticides or other agriculture-related products. Essentially, only storage in a building or facility would be regulated. The application, release or transportation of such materials would be exempt because federal standards would preempt a local jurisdiction from enforcement. In terms of application and release, regulations are specific to activities such as weed control, erosion control and soil amendment. Additionally, pesticides approved for use around homes, gardens, pools, spas and patios can be stored without regulation in private garages and within dwellings.

6001.2 Permits. Permits shall be required as set forth in Section 105.6.

❖ The process of issuing permits gives the fire code official an opportunity to carefully evaluate and regulate hazardous operations. Permit applicants should be required to demonstrate that their operations comply with the intent of the code before the permit is issued. See the commentary to Section 105.6 for a general discussion of operations requiring an opera-

INTERNATIONAL CODE COUNCIL®
Copyright © 2015 ICC. ALL RIGHTS RESERVED. Accessed by David Dammon on Jun 21, 2017 12:30:52 PM pursuant to License Agreement with ICC. No further reproduction or distribution authorized. ANY UNAUTHORIZED REPRODUCTION OR DISTRIBUTION IS A VIOLATION OF THE FEDERAL COPYRIGHT ACT AND THE LICENSE AGREEMENT, AND SUBJECT TO CIVIL AND CRIMINAL PENALTIES THEREUNDER.

tional permit, Section 105.6.21 for a discussion of specific quantity-based operational permits for the materials regulated in this chapter and Section 105.7 for a general discussion of activities requiring a construction permit. The permit process also notifies the fire department of the need for prefire planning for hazardous property.

SECTION 6002
DEFINITIONS

6002.1 Definitions. The following terms are defined in Chapter 2:

CONTAINMENT SYSTEM.

CONTAINMENT VESSEL.

EXCESS FLOW VALVE.

HIGHLY TOXIC.

OZONE-GAS GENERATOR.

PHYSIOLOGICAL WARNING THRESHOLD LEVEL.

REDUCED FLOW VALVE.

TOXIC.

❖ Definitions of terms can help in the understanding and application of the code requirements. This section directs the code user to Chapter 2 for the proper application of the indicated terms used in this chapter. Terms may be defined in Chapter 2 or in another *International Code*® as indicated in Section 201.3, or the dictionary meaning may be all that is needed (see also commentary, Sections 201.1 through 201.4).

SECTION 6003
HIGHLY TOXIC AND TOXIC SOLIDS AND LIQUIDS

6003.1 Indoor storage and use. The indoor storage and use of highly toxic and toxic materials shall comply with Sections 6003.1.1 through 6003.1.5.3.

❖ As noted in the "General Comments" section, liquids and solids are dealt with in one section and gases are dealt with in another. Generally, gases pose a greater hazard because they are more difficult to contain and can have a much more immediate effect. This section contains requirements for indoor storage and use. Outdoor storage and use are discussed in Section 6003.2.

6003.1.1 Quantities not exceeding the maximum allowable quantity per control area. The indoor storage or use of highly toxic and toxic solids or liquids in amounts not exceeding the *maximum allowable quantity per control area* indicated in Table 5003.1.1(2) shall be in accordance with Sections 5001, 5003 and 6001.

❖ This section sends the code user to the appropriate sections when the maximum allowable quantities per control area (MAQs) have not been exceeded. As with other materials, when the MAQs have not been exceeded, the requirements are less restrictive. The code user must comply with Section 6001 as well as Sections 5001 and 5003, which are the general requirements for hazardous materials related to permits, material classification and management plans, hazard identification and other basic requirements. Section 6003 would not apply.

6003.1.2 Quantities exceeding the maximum allowable quantity per control area. The indoor storage or use of highly toxic and toxic solids or liquids in amounts exceeding the *maximum allowable quantity per control area* set forth in Table 5003.1.1(2) shall be in accordance with Section 6001, Sections 6003.1.3 through 6003.1.5.3 and Chapter 50.

❖ When the MAQs have been exceeded, the requirements in Sections 6001 and 6003 and all of Chapter 50 are applicable.

6003.1.3 Treatment system—highly toxic liquids. Exhaust scrubbers or other systems for processing vapors of highly toxic liquids shall be provided where a spill or accidental release of such liquids can be expected to release highly toxic vapors at *normal temperature and pressure*. Treatment systems and other processing systems shall be installed in accordance with the *International Mechanical Code*.

❖ This requirement is specific to highly toxic liquids and would require a treatment system to collect and process any vapors that might escape if a spill should occur at "normal temperature and pressure." In other words, if at normal temperature and pressure conditions vapors would not be highly toxic, a treatment system would not be required. The focus of this section is on the inhalation hazards associated with highly toxic materials. A material may be considered highly toxic by skin contact or ingestion, but not create an inhalation hazard because of the low volatility of the liquid.

6003.1.4 Indoor storage. Indoor storage of highly toxic and toxic solids and liquids shall comply with Sections 6003.1.4.1 and 6003.1.4.2.

❖ This section is specific to indoor storage and focuses on floor surfaces and separation requirements.

6003.1.4.1 Floors. In addition to the requirements set forth in Section 5004.12, floors of storage areas where highly toxic and toxic liquids are stored shall be of liquid-tight construction.

❖ This requirement increases the likelihood that if a highly toxic or toxic liquid comes in contact with the floor of the storage area, it will not soak in and be difficult to remove. If concrete is not properly treated, spills could seep into the floor and give off vapors over time. The use of liquid-tight floors is one of the methods mentioned in Section 5004 for drainage control and secondary containment. The requirements of this section would apply in any case.

The reference to Section 5004.12 requires the floor to be noncombustible except for the surfacing; therefore, the method used to make the floor liquid tight does not need to be noncombustible. The same requirement is stated in Section 5004.2.1.

INTERNATIONAL CODE COUNCIL®
Copyright © 2015 ICC. ALL RIGHTS RESERVED. Accessed by David Dammon on Jun 21, 2017 12:30:52 PM pursuant to License Agreement with ICC. No further reproduction or distribution authorized. ANY UNAUTHORIZED REPRODUCTION OR DISTRIBUTION IS A VIOLATION OF THE FEDERAL COPYRIGHT ACT AND THE LICENSE AGREEMENT, AND SUBJECT TO CIVIL AND CRIMINAL PENALTIES THEREUNDER.

6003.1.4.2 Separation—highly toxic solids and liquids. In addition to the requirements set forth in Section 5003.9.8, highly toxic solids and liquids in storage shall be located in *approved* hazardous material storage cabinets or isolated from other hazardous material storage by construction in accordance with the *International Building Code*.

❖ In order to reduce the possibility of releasing hazardous fumes and vapors due to a fire involving highly toxic liquids and solids, adequate separation from other hazardous materials is required. The intent of this section is to separate flammable, explosive or other highly reactive materials from all highly toxic solids and liquids. A 1-hour fire barrier, constructed in accordance with Section 707 of the *International Building Code*® (IBC®), a 1-hour horizontal assembly constructed in accordance with IBC Section 711 or both, or an approved hazardous material storage cabinet reduces the potential for involvement of highly toxic materials in a fire involving other hazardous materials. This section would not allow a physical separation or a fire barrier that extended above and to the sides of the material, as would be possible with other hazardous materials. Note that these requirements are in addition to the code's requirements for separation of incompatible materials. See the commentary to Section 5003.9.8 for further information on that topic.

6003.1.5 Indoor use. Indoor use of highly toxic and toxic solids and liquids shall comply with Sections 6003.1.5.1 through 6003.1.5.3.

❖ Use is more hazardous than storage because the materials are more susceptible to release. The focus of this particular section is on the transfer of highly toxic liquids and requirements for exhaust ventilation systems where highly toxic and toxic materials are being used.

6003.1.5.1 Liquid transfer. Highly toxic and toxic liquids shall be transferred in accordance with Section 5005.1.10.

❖ This section refers the code user back to Section 5005.1.10 for requirements on the transfer of liquids with a hazard ranking of 3 or 4. These liquids can be transferred using several different methods, including safety cans, closed piping, approved pump arrangements, an approved engineered liquid transfer system or, under certain conditions, by gravity. It should be noted that Section 5005.1.10 prohibits highly toxic liquids from being transferred where gravity feed is involved regardless of the safeguards. There are exceptions for small amounts of liquids [1.3 gallons (5 L) for a hazard ranking of 4 and 5.3 gallons (20 L) for a hazard ranking of 3]. Section 5005.1.10 is also referenced in Section 6003.2.6 for outdoor liquid transfer.

6003.1.5.2 Exhaust ventilation for open systems. Mechanical exhaust ventilation shall be provided for highly toxic and toxic liquids used in *open systems* in accordance with Section 5005.2.1.1.

Exception: Liquids that do not generate highly toxic or toxic fumes, mists or vapors.

❖ This section requires any open use of highly toxic or toxic liquids to be properly ventilated and refers to Section 5005.2.1.1. That section contains the general ventilation requirements for open systems using gases, liquids or solids with a hazard ranking of 3 or 4. Essentially, it requires that vapors be captured at the point of generation.

The exceptions to both Sections 5005.2.1.1 and 6003.1.5.2 state that liquids that do not produce hazardous vapors, mists or fumes need not comply with these ventilation requirements. Much of this will depend on the volatility of the liquid, the degree of hazard of the liquid and how it is used.

6003.1.5.3 Exhaust ventilation for closed systems. Mechanical exhaust ventilation shall be provided for highly toxic and toxic liquids used in *closed systems* in accordance with Section 5005.2.2.1.

Exception: Liquids that do not generate highly toxic or toxic fumes, mists or vapors.

❖ Section 5005.2.2.2 requires ventilation in accordance with Section 5005.1.1 if the closed system is designed to be opened during normal operations. Section 5005.1.1 is for open systems using materials with a hazard ranking of 3 or 4. The same exception is stated in Section 6003.1.5.2, which exempts liquids that do not produce highly toxic or toxic fumes, vapors or mists (see commentary, Section 6003.1.5.2).

6003.2 Outdoor storage and use. Outdoor storage and use of highly toxic and toxic materials shall comply with Sections 6003.2.1 through 6003.2.6.

❖ Outdoor storage and use is generally less hazardous than indoor storage and use because the vapors can disperse more easily to the atmosphere, posing less of a hazard to occupants and those in the vicinity of the building. Because the materials are located outside, however, there are other exposure concerns, such as weather and location of storage and use.

6003.2.1 Quantities not exceeding the maximum allowable quantity per control area. The outdoor storage or use of highly toxic and toxic solids or liquids in amounts not exceeding the *maximum allowable quantity per control area* indicated in Table 5003.1.1(4) shall be in accordance with Sections 5001, 5003 and 6001.

❖ As with indoor storage and use, when the MAQs have not been exceeded, the only requirements are those found in Section 6001 and the general requirements of Chapter 50. These requirements address issues such as permits, hazardous materials plans, pipe connections (especially with health-hazard rank-

INTERNATIONAL CODE COUNCIL®
Copyright © 2015 ICC. ALL RIGHTS RESERVED. Accessed by David Dammon on Jun 21, 2017 12:30:52 PM pursuant to License Agreement with ICC. No further reproduction or distribution authorized. ANY UNAUTHORIZED REPRODUCTION OR DISTRIBUTION IS A VIOLATION OF THE FEDERAL COPYRIGHT ACT AND THE LICENSE AGREEMENT, AND SUBJECT TO CIVIL AND CRIMINAL PENALTIES THEREUNDER.

ing materials of 3 or 4), facility closures and hazard identification and signage.

6003.2.2 Quantities exceeding the maximum allowable quantity per control area. The outdoor storage or use of highly toxic and toxic solids or liquids in amounts exceeding the *maximum allowable quantity per control area* set forth in Table 5003.1.1(4) shall be in accordance with Sections 6001 and 6003.2 and Chapter 50.

❖ When the MAQs have been exceeded for the outdoor control areas, the requirements become more extensive. More specifically, compliance with Section 6003.2 is required in addition to Section 6001 and Chapter 50, as applicable.

6003.2.3 General outdoor requirements. The general requirements applicable to the outdoor storage of highly toxic or toxic solids and liquids shall be in accordance with Sections 6003.2.3.1 and 6003.2.3.2.

❖ This section sets general requirements for the location and the need for treatment systems to collect vapors from highly toxic liquids.

6003.2.3.1 Location. Outdoor storage or use of highly toxic or toxic solids and liquids shall not be located within 20 feet (6096 mm) of *lot lines*, public streets, public alleys, *public ways*, *exit discharges* or *exterior wall* openings. A 2-hour *fire barrier* without openings or penetrations extending not less than 30 inches (762 mm) above and to the sides of the storage is allowed in lieu of such distance. The wall shall either be an independent structure, or the exterior wall of the building adjacent to the storage area.

❖ This section requires that toxic and highly toxic solids and liquids be at least 20 feet (6096 mm) from possible exposure hazards, such as an exit discharge. The concern with highly toxic and toxic materials is the health hazards for building occupants, emergency responders and others in the immediate area.

An alternative to the 20-foot (6096 mm) distance is offered in this section. Essentially, it would allow the use of a 2-hour fire barrier constructed in accordance with IBC Section 707 and without openings, that extends 30 inches (763 mm) above and to the sides of the storage. The wall can be either freestanding or a wall of the building that fits the requirements as a 2-hour fire barrier without openings. Generally, this wall and the distance requirements are for the protection of the toxic and highly toxic liquids and solids from fire exposures that could lead to the release of materials. Additionally, both methods allowed in this section result in a separation (by either distance or construction) from people to reduce the likelihood of contact with hazards.

6003.2.3.2 Treatment system—highly toxic liquids. Exhaust scrubbers or other systems for processing vapors of highly toxic liquid shall be provided where a spill or accidental release of such liquids can be expected to release highly toxic vapors at *normal temperature and pressure (NTP)*. Treatment systems and other processing systems shall be installed in accordance with the *International Mechanical Code*.

❖ This section is the same as Section 6003.1.3 for indoor storage and the use of highly toxic liquids (see commentary, Section 6003.1.3).

6003.2.4 Outdoor storage piles. Outdoor storage piles of highly toxic and toxic solids and liquids shall be separated into piles not larger than 2,500 cubic feet (71 m^3). Aisle widths between piles shall be not less than one-half the height of the pile or 10 feet (3048 mm), whichever is greater.

❖ The requirement in this section seeks to reduce the hazard level of a release of highly toxic and toxic liquids and solids by reducing the amount allowed in a single pile. Additionally, minimum separations between piles are required. These separations serve both as a fire barrier and as access for emergency responders. If the piles become too large, they become difficult to manage if a release should happen or a fire should occur.

6003.2.5 Weather protection for highly toxic liquids and solids—outdoor storage or use. Where overhead weather protection is provided for outdoor storage or use of highly toxic liquids or solids, and the weather protection is attached to a building, the storage or use area shall either be equipped throughout with an *approved automatic sprinkler system* in accordance with Section 903.3.1.1, or storage or use vessels shall be fire resistive. Weather protection shall be provided in accordance with Section 5004.13 for storage and Section 5005.3.9 for use.

❖ This section is specific to outdoor storage or use of highly toxic liquids and solids when they are located in an area with weather protection attached to a building. The storage or use must be either sprinklered or placed within fire-resistive containers. Because the storage or use area is next to the building, the concern for a fire and the potential release of liquids and solids is greater. This poses a hazard to both building occupants and emergency responders. Section 5004.13 contains the general requirements for weather-protected storage and references the weather protection provisions of IBC Section 414.6.1.

6003.2.6 Outdoor liquid transfer. Highly toxic and toxic liquids shall be transferred in accordance with Section 5005.1.10.

❖ This section refers to Section 5005.1.10 for the general requirements for liquid transfer. This is the same reference used in Section 6003.1.5.1 for indoor liquid transfer (see commentary, Section 6003.1.5.1).

INTERNATIONAL CODE COUNCIL®
Copyright © 2015 ICC. ALL RIGHTS RESERVED. Accessed by David Dammon on Jun 21, 2017 12:30:52 PM pursuant to License Agreement with ICC. No further reproduction or distribution authorized. ANY UNAUTHORIZED REPRODUCTION OR DISTRIBUTION IS A VIOLATION OF THE FEDERAL COPYRIGHT ACT AND THE LICENSE AGREEMENT, AND SUBJECT TO CIVIL AND CRIMINAL PENALTIES THEREUNDER.

SECTION 6004
HIGHLY TOXIC AND TOXIC COMPRESSED GASES

6004.1 General. The storage and use of highly toxic and toxic *compressed gases* shall comply with this section.

❖ This section requires all highly toxic and toxic gases to comply with the following subsections.

6004.1.1 Special limitations for indoor storage and use by occupancy. The indoor storage and use of highly toxic and toxic *compressed gases* in certain occupancies shall be subject to the limitations contained in Sections 6004.1.1.1 through 6004.1.1.3.

❖ This section places additional limitations on the storage and use of toxic and highly toxic gases in several occupancy types and uses. These are further restrictions on the MAQs given in Chapter 50.

6004.1.1.1 Group A, E, I or U occupancies. Toxic and highly toxic *compressed gases* shall not be stored or used within Group A, E, I or U occupancies.

Exception: Cylinders not exceeding 20 cubic feet (0.566 m^3) at *normal temperature and pressure (NTP)* are allowed within gas cabinets or fume hoods.

❖ This section prohibits having any large quantities of highly toxic and toxic gases in these occupancies. With the exception of Group U, these are occupancies that have typically high occupant densities or a vulnerable population. The prohibition for Group U occupancies is likely related to the potential lack of supervision and the types of materials that are likely to be stored along with such gases.

The exception to this section allows small amounts of gases if they are stored or used within gas cabinets or fume hoods. The allowance for small cylinders results from the small potential for release when they are stored in a cabinet or used within a fume hood and the probability that the volume of the release would be low.

6004.1.1.2 Group R occupancies. Toxic and highly toxic *compressed gases* shall not be stored or used in Group R occupancies.

❖ This section prohibits the storage and use of highly toxic and toxic gases in all Group R occupancies without exception. Group R occupancies cover a wide variety of dwelling-type occupancies, such as one- and two-family dwellings, apartment buildings, hotels, motels, etc. The hazards posed by the storage and use of toxic or highly toxic gases would be much higher than would reasonably be anticipated by the occupants.

6004.1.1.3 Offices, retail sales and classrooms. Toxic and highly toxic *compressed gases* shall not be stored or used in offices, retail sales or classroom portions of Group B, F, M or S occupancies.

Exception: In classrooms of Group B occupancies, cylinders with a capacity not exceeding 20 cubic feet (0.566 m^3) at *NTP* are allowed in gas cabinets or fume hoods.

❖ This section does not completely prohibit the storage and use of highly toxic liquids in these particular occupancies, but instead focuses on certain portions of occupancies. In particular, this section addresses the offices, retail sales areas and classrooms of Group B, F, M or S occupancies. A normal storage area with no public access, therefore, could be used to store highly toxic or toxic gases, but the office incidental to that storage facility could not.

The exception allows small cylinders in classrooms in Group B occupancies when they are used within gas cabinets or fume hoods. This acknowledges special needs at university laboratories and similar facilities.

6004.1.2 Gas cabinets. Gas cabinets containing highly toxic or toxic *compressed gases* shall comply with Section 5003.8.6 and the following requirements:

1. The average ventilation velocity at the face of gas cabinet access ports or windows shall be not less than 200 feet per minute (1.02 m/s) with not less than 150 feet per minute (0.76 m/s) at any point of the access port or window.
2. Gas cabinets shall be connected to an exhaust system.
3. Gas cabinets shall not be used as the sole means of exhaust for any room or area.
4. The maximum number of cylinders located in a single gas cabinet shall not exceed three, except that cabinets containing cylinders not exceeding 1 pound (0.454 kg) net contents are allowed to contain up to 100 cylinders.
5. Gas cabinets required by Section 6004.2 or 6004.3 shall be equipped with an *approved automatic sprinkler system* in accordance with Section 903.3.1.1. Alternative fire-extinguishing systems shall not be used.

❖ This section sets additional requirements for gas cabinets used specifically for highly toxic and toxic gases. Section 5003.8.6 contains the general requirements for all gas cabinets. More specifically, that section sets out construction specifications, requires negative pressure for ventilation and restricts the number of cylinders to three. Section 6004.1.2 is more restrictive, requiring an air velocity of at least 200 feet per minute (1.02 m/s) at the face of the cabinet as well as a connection to an exhaust system and an area ventilation system in addition to the ventilation system in the gas cabinet. A sprinkler system is also required.

INTERNATIONAL CODE COUNCIL®
Copyright © 2015 ICC. ALL RIGHTS RESERVED. Accessed by David Dammon on Jun 21, 2017 12:30:52 PM pursuant to License Agreement with ICC. No further reproduction or distribution authorized. ANY UNAUTHORIZED REPRODUCTION OR DISTRIBUTION IS A VIOLATION OF THE FEDERAL COPYRIGHT ACT AND THE LICENSE AGREEMENT, AND SUBJECT TO CIVIL AND CRIMINAL PENALTIES THEREUNDER.

Section 6004.2.2.7 would require the exhaust to be connected to a treatment system. Item 4 in Section 6004.1.2 does allow up to 100 small cylinders [under 1 pound (0.454 kg) each] instead of the restriction of three larger cylinders. This allowance recognizes the reduced potential for a large release and increases flexibility to meet the needs of the facilities such as laboratories.

6004.1.3 Exhausted enclosures. Exhausted enclosures containing highly toxic or toxic *compressed gases* shall comply with Section 5003.8.5 and the following requirements:

1. The average ventilation velocity at the face of the enclosure shall be not less than 200 feet per minute (1.02 m/s) with not less than 150 feet per minute (0.76 m/s).
2. Exhausted enclosures shall be connected to an exhaust system.
3. Exhausted enclosures shall not be used as the sole means of exhaust for any room or area.
4. Exhausted enclosures required by Section 6004.2 or 6004.3 shall be equipped with an *approved automatic sprinkler system* in accordance with Section 903.3.1.1. Alternative fire-extinguishing systems shall not be used.

❖ This section, like Section 6004.1.2, requires compliance with the general exhausted enclosure requirements in Section 5003.8.5. Section 5003.8.5, like Section 5003.8.6 for gas cabinets, contains basic construction specifications and requires that the enclosure be at a negative pressure. Additionally, there is a requirement in Section 5003.8.5.3 that a fire-extinguishing system be installed when the materials stored or used in the enclosure are flammable.

Section 6004.1.3 additionally requires an air velocity of at least 200 feet per minute (1.02 m/s) at the face of the enclosure and that the enclosure be connected to an exhaust system that is not the sole source of ventilation for that area. In addition, this section requires a sprinkler system in the enclosure. This is independent of whether the material is considered flammable.

6004.2 Indoor storage and use. The indoor storage and use of highly toxic or toxic *compressed gases* shall be in accordance with Sections 6004.2.1 through 6004.2.2.10.4.

❖ This section is specific to the indoor storage and use of toxic and highly toxic gases. When Section 6004.2 applies, it focuses on the location of cylinders and the removal of unwanted releases of gases. Treatment systems are required to process any gases collected when ventilating results in the release of toxic and highly toxic gases.

6004.2.1 Applicability. The applicability of regulations governing the indoor storage and use of highly toxic and toxic *compressed gases* shall be as set forth in Sections 6004.2.1.1 through 6004.2.1.3.

❖ This section clarifies which requirements apply based on the amount of material in storage or in use.

6004.2.1.1 Quantities not exceeding the maximum allowable quantity per control area. The indoor storage or use of highly toxic and toxic gases in amounts not exceeding the *maximum allowable quantity per control area* set forth in Table 5003.1.1(2) shall be in accordance with Sections 5001, 5003, 6001 and 6004.1.

❖ When the MAQs have not been exceeded, only the more general requirements would apply. These include restrictions on the storage and use in certain occupancies, piping connection requirements based on the level of health hazards, permits and other similar requirements. Tables 5003.1.1(2) and 5003.1.1(4) would require putting highly toxic gases in a gas cabinet or exhausted enclosure regardless of the amount of gases stored or used. These gas cabinets and exhausted enclosures need to be in accordance only with the basic requirements of Chapter 50 and do not need to be connected to a treatment system.

6004.2.1.2 Quantities exceeding the maximum allowable quantity per control area. The indoor storage or use of highly toxic and toxic gases in amounts exceeding the *maximum allowable quantity per control area* set forth in Table 5003.1.1(2) shall be in accordance with Sections 6001, 6004.1, 6004.2 and Chapter 50.

❖ If the MAQs have been exceeded, the requirements become much more extensive. This requires compliance with all applicable sections of Chapter 50 and also Section 6004.2, which has requirements for treatment systems and gas detection systems.

6004.2.1.3 Ozone gas generators. The indoor use of ozone gas-generating equipment shall be in accordance with Section 6005.

❖ This section is a specific reference to Section 6005, which deals with the process of ozone generation. The operation is unique and, therefore, has unique requirements. The requirements in Section 6005 apply when the ozone-generating capacity exceeds 0.5 pound (0.227 kg) in a 24-hour period.

6004.2.2 General indoor requirements. The general requirements applicable to the indoor storage and use of highly toxic and toxic *compressed gases* shall be in accordance with Sections 6004.2.2.1 through 6004.2.2.10.4.

❖ The requirements in this section are for both storage and use of toxic and highly toxic gases when the MAQs have been exceeded.

6004.2.2.1 Cylinder and tank location. Cylinders shall be located within gas cabinets, exhausted enclosures or gas

INTERNATIONAL CODE COUNCIL®
Copyright © 2015 ICC. ALL RIGHTS RESERVED. Accessed by David Dammon on Jun 21, 2017 12:30:52 PM pursuant to License Agreement with ICC. No further reproduction or distribution authorized. ANY UNAUTHORIZED REPRODUCTION OR DISTRIBUTION IS A VIOLATION OF THE FEDERAL COPYRIGHT ACT AND THE LICENSE AGREEMENT, AND SUBJECT TO CIVIL AND CRIMINAL PENALTIES THEREUNDER.

rooms. Portable and stationary tanks shall be located within gas rooms or exhausted enclosures.

❖ Toxic and highly toxic gases pose a high threat to occupants and emergency responders if released to the atmosphere; therefore, this section places restrictions on where cylinders and tanks can be located. More specifically, cylinders must be in a gas cabinet or within gas rooms or exhausted enclosures. Tanks, both portable and stationary, must be either in a gas room or an exhausted enclosure. Gas cabinets are not an option because of the size of portable and stationary tanks. Gas cabinets, exhausted enclosures and gas rooms have specific requirements in Sections 6004.1.2, 6004.1.3 and 6004.2.2.6, respectively, in addition to the general requirements in Chapter 50.

6004.2.2.2 Ventilated areas. The room or area in which gas cabinets or exhausted enclosures are located shall be provided with exhaust ventilation. Gas cabinets or exhausted enclosures shall not be used as the sole means of exhaust for any room or area.

❖ This section requires that gas cabinets and exhausted enclosures not be the only ventilation provided when toxic or highly toxic gases are stored or used. The room or area must have additional ventilation. The exhaust ventilation for the room need not be processed through a treatment system.

6004.2.2.3 Leaking cylinders and tanks. One or more gas cabinets or exhausted enclosures shall be provided to handle leaking cylinders, containers or tanks.

Exceptions:

1. Where cylinders, containers or tanks are located within gas cabinets or exhausted enclosures.
2. Where *approved* containment vessels or containment systems are provided in accordance with all of the following:
   2.1. Containment vessels or containment systems shall be capable of fully containing or terminating a release.
   2.2. Trained personnel shall be available at an *approved* location.
   2.3. Containment vessels or containment systems shall be capable of being transported to the leaking cylinder, container or tank.

❖ Section 6004.2.2.1 requires the use of gas cabinets, exhausted enclosures or gas rooms for the storage of cylinders and tanks. This section takes the requirements one step further and requires that one or more additional gas cabinets or exhausted enclosures be provided and ready to receive leaking cylinders or tanks. Exception 1 is for cylinders and tanks that are already contained within gas cabinets or exhausted enclosures.

Exception 2 allows the use of containment vessels and containment systems in place of a gas cabinet or exhausted enclosure to address the release of gases based on three conditions: the vessel or system must be sufficiently sized to contain the potential release; a trained person must be available; and the containment vessel or system must be transportable to the leaking cylinder or tank.

6004.2.2.3.1 Location. Gas cabinets and exhausted enclosures shall be located in gas rooms and connected to an exhaust system.

❖ When gas cabinets and exhausted enclosures are used with leaking tanks, they must be contained in gas rooms. Containment vessels and systems would not have to be located in a gas room.

6004.2.2.4 Local exhaust for portable tanks. A means of local exhaust shall be provided to capture leaks from portable tanks. The local exhaust shall consist of portable ducts or collection systems designed to be applied to the site of a leak in a valve or fitting on the tank. The local exhaust system shall be located in a gas room. Exhaust shall be directed to a treatment system in accordance with Section 6004.2.2.7.

❖ This section requires portable tanks located in gas rooms to have an additional local exhaust mechanism. More specifically, Section 6004.2.2.1 requires locating portable tanks in a gas room or exhausted enclosure as a minimum. Since exhausted enclosures would be considered local, an additional local exhaust system would not be required. Only when the sole exhaust mechanism is a gas room would a local exhaust be required. The exhaust from the gas room and the local exhaust system must be processed through a treatment system in accordance with Section 6004.2.2.7. The focus of a local exhaust system should be on the valves or valve fittings where a leak is more likely.

6004.2.2.5 Piping and controls—stationary tanks. In addition to the requirements of Section 5003.2.2, piping and controls on stationary tanks shall comply with the following requirements:

1. Pressure relief devices shall be vented to a treatment system designed in accordance with Section 6004.2.2.7.

   Exception: Pressure relief devices on outdoor tanks provided exclusively for relieving pressure due to fire exposure are not required to be vented to a treatment system provided that:

   1. The material in the tank is not flammable.
   2. The tank is not located in a diked area with other tanks containing combustible materials.
   3. The tank is located not less than 30 feet (9144 mm) from combustible materials or structures or is shielded by a *fire barrier* complying with Section 6004.3.2.1.1.

2. Filling or dispensing connections shall be provided with a means of local exhaust. Such exhaust shall be designed to capture fumes and vapors. The exhaust shall be directed to a treatment system in accordance with Section 6004.2.2.7.

INTERNATIONAL CODE COUNCIL®
Copyright © 2015 ICC. ALL RIGHTS RESERVED. Accessed by David Dammon on Jun 21, 2017 12:30:52 PM pursuant to License Agreement with ICC. No further reproduction or distribution authorized. ANY UNAUTHORIZED REPRODUCTION OR DISTRIBUTION IS A VIOLATION OF THE FEDERAL COPYRIGHT ACT AND THE LICENSE AGREEMENT, AND SUBJECT TO CIVIL AND CRIMINAL PENALTIES THEREUNDER.

3. Stationary tanks shall be provided with a means of excess flow control on all tank inlet or outlet connections.

Exceptions:

1. Inlet connections designed to prevent backflow.
2. Pressure relief devices.

❖ This section is in addition to Section 5003.2.2, which addresses piping, tubing, valves and fittings in general for all hazardous materials. This section focuses on exhaust ventilation for potential leaks and releases associated with piping, filling and dispensing connections on stationary tanks. Section 5003.2.2 contains general requirements covering issues such as compatibility, shutoff valves, backflow prevention and leak detection. This section is specific to stationary tanks because they are more permanent and piping and other controls are more likely on stationary tanks versus portable tanks and cylinders.

The specific requirements found in this section are as follows:

1. If a pressure relief valve is used, the release must be vented directly to a treatment system. There is an exception that pertains to outdoor tanks with pressure valves specifically for pressure relief in a fire. There are several conditions for the exception that address exposure hazards, such as neighboring tanks or combustible hazards. Also, the material in the tank itself cannot be flammable. Although this exception for outdoor tanks is found in the indoor storage and use requirements, Section 6004.3 for outdoor storage and use has a specific requirement in Section 6004.3.2.3 that refers back to this section for piping and controls for outdoor stationary tanks.
2. This item requires a local exhaust system connected to a treatment system for filling and dispensing connections.
3. Excess flow control is required at every tank inlet and outlet to reduce the size of the release and to avoid dangerous reactions and overpressures in other areas of a process designed for a particular flow rate and pressure. There are two exceptions that relate to devices serving a specific purpose, which include an inlet connection designed to address backflow or a pressure relief valve. A pressure relief valve is specifically designed to allow excessive flow beyond the design pressures of the tank to avoid overpressures in the tank.

6004.2.2.6 Gas rooms. Gas rooms shall comply with Section 5003.8.4 and both of the following requirements:

1. The exhaust ventilation from gas rooms shall be directed to an exhaust system.
2. Gas rooms shall be equipped with an *approved automatic sprinkler system*. Alternative fire-extinguishing systems shall not be used.

❖ The requirements in Chapter 50 address construction and basic ventilation. General gas room requirements are found in Section 5003.8.3. More specifically, Section 5003.8.3 requires an automatic sprinkler system, separation as required in the IBC and maintaining negative pressure in the room. This section takes the requirements one step further and requires that exhaust ventilation be directed to an exhaust system. Section 6004.2.2.7 also requires directing this exhaust system to a treatment system. The second criterion is a restriction that does not allow any alternative fire-extinguishing systems in place of an automatic sprinkler system.

6004.2.2.7 Treatment systems. The exhaust ventilation from gas cabinets, exhausted enclosures and gas rooms, and local exhaust systems required in Sections 6004.2.2.4 and 6004.2.2.5 shall be directed to a treatment system. The treatment system shall be utilized to handle the accidental release of gas and to process exhaust ventilation. The treatment system shall be designed in accordance with Sections 6004.2.2.7.1 through 6004.2.2.7.5 and Section 510 of the *International Mechanical Code*.

Exceptions:

1. Highly toxic and toxic gases—storage. A treatment system is not required for cylinders, containers and tanks in storage where all of the following controls are provided:
   1.1. Valve outlets are equipped with gas-tight outlet plugs or caps.
   1.2. Handwheel-operated valves have handles secured to prevent movement.
   1.3. *Approved* containment vessels or containment systems are provided in accordance with Section 6004.2.2.3.
2. Toxic gases—use. Treatment systems are not required for toxic gases supplied by cylinders or portable tanks not exceeding 1,700 pounds (772 kg) water capacity where the following are provided:
   2.1. A *listed* or *approved* gas detection system with a sensing interval not exceeding 5 minutes.
   2.2. A *listed* or *approved* automatic-closing fail-safe valve located immediately adjacent to cylinder valves. The fail-safe valve shall close when gas is detected at the permissible exposure limit (PEL) by a gas detection system monitoring the exhaust system at the point of discharge from the gas cabinet, exhausted enclosure, vent-ilated enclosure or gas room. The gas detection system shall comply with Section 6004.2.2.10.

❖ Treatment systems are required for all exhaust ventilation and accidental releases of toxic and highly toxic

INTERNATIONAL CODE COUNCIL®
Copyright © 2015 ICC. ALL RIGHTS RESERVED. Accessed by David Dammon on Jun 21, 2017 12:30:52 PM pursuant to License Agreement with ICC. No further reproduction or distribution authorized. ANY UNAUTHORIZED REPRODUCTION OR DISTRIBUTION IS A VIOLATION OF THE FEDERAL COPYRIGHT ACT AND THE LICENSE AGREEMENT, AND SUBJECT TO CIVIL AND CRIMINAL PENALTIES THEREUNDER.

gases. A treatment system essentially treats the exhaust through methods such as diluting, absorbing, burning and other various methods, which are discussed in Section 6004.2.2.7.1. Generally, Section 6004.2.2.7 and related subsections contain the design criteria for such systems.

There are two overall exceptions where treatment systems would not be required. They are broken into storage and use, respectively. Treatment systems can be very costly and the exceptions give credit to situations where the hazard is low and the benefit of a costly treatment system cannot be justified.

Exception 1 deals with cylinders, containers and tanks in storage. A treatment system would not be required if all three criteria are met. The criteria include caps or plugs on any valves to provide a level of redundancy in case of an accidental release; handwheel-operated valves that are secured in place; and the installation of containment vessels or containment systems.

Exception 2 is for toxic gases supplied by cylinders limited to a size of 1,700 pounds (772 kg) water capacity. The 1,700-pound (772 kg) limit was derived as follows: A ton container typically holds about 1,600 pounds (726 kg) of water, and a filling density of approximately 125 percent of the water capacity is allowed for chlorine [1,600 x 1.25 = 2,000 pounds (908 kg)]. The resulting weight of product in a filled container is one ton for chlorine. The maximum capacity of 1,700 pounds versus 1,600 pounds (772 kg versus 726 kg) is intended to accommodate manufacturing variations that occur from one container to the next, but this does not affect the ultimate gas capacity of a filled container, which is limited to 2,000 pounds (908 kg) regardless of the variation in water capacity. To avoid the use of a treatment system, a gas detection system must also be accompanied by a fail-safe valve adjacent to the cylinder valve. The fail-safe valve must operate when gas is detected at the point of discharge of the location of the cylinder (see commentary to the Section 202 definition of "Fail-safe"). Section 6004.2.2.1 requires cylinders to be located in a gas cabinet, an exhausted enclosure or a gas room.

6004.2.2.7.1 Design. Treatment systems shall be capable of diluting, adsorbing, absorbing, containing, neutralizing, burning or otherwise processing the contents of the largest single vessel of compressed gas. Where a total containment system is used, the system shall be designed to handle the maximum anticipated pressure of release to the system when it reaches equilibrium.

❖ This section states that a treatment system must process the exhaust ventilation or an accidental release. Various methods are listed but the section is written to allow exploration of other methods. Additionally, this section sets important capacity criteria for the treatment system, which would require it to either be capable of processing the largest vessel or handle the maximum pressure of release at equilibrium when a total containment system is used.

6004.2.2.7.2 Performance. Treatment systems shall be designed to reduce the maximum allowable discharge concentrations of the gas to one-half immediate by dangerous to life and health (IDLH) at the point of discharge to the atmosphere. Where more than one gas is emitted to the treatment system, the treatment system shall be designed to handle the worst-case release based on the release rate, the quantity and the IDLH for all *compressed gases* stored or used.

❖ Now that the method and the capacity have been established in Section 6004.2.2.7.1, the actual treatment capabilities are described in this section. More specifically, this section describes how well the gases need to be treated. Once treated, the output from the treatment system must not exceed one-half of the immediately dangerous to life and health (IDLH) concentration. If the treatment system is used for a variety of different stored gases that have various levels of toxicity, the treatment system must be able to accommodate the worst-case situation. As an example, the least-toxic gas may have the largest release potential, but the treatment system does not have to work as hard to reduce the IDLH; therefore, both the level of hazard and the amount of the gas must be addressed.

6004.2.2.7.3 Sizing. Treatment systems shall be sized to process the maximum worst-case release of gas based on the maximum flow rate of release from the largest vessel utilized. The entire contents of the largest *compressed gas* vessel shall be considered.

❖ This section re-emphasizes that the treatment system must be capable of treating the largest single vessel. In addition, this section requires that the maximum flow rates be considered; therefore, it is not simply the capacity of the largest single vessel but also how fast that gas is released. Treatment systems need to account for only a single failure of a vessel, but at the highest flow rate.

6004.2.2.7.4 Stationary tanks. Stationary tanks shall be labeled with the maximum rate of release for the *compressed gas* contained based on valves or fittings that are inserted directly into the tank. Where multiple valves or fittings are provided, the maximum flow rate of release for valves or fittings with the highest flow rate shall be indicated. Where liquefied *compressed gases* are in contact with valves or fittings, the liquid flow rate shall be utilized for computation purposes. Flow rates indicated on the label shall be converted to cubic feet per minute (cfm/min) (m^3/s) of gas at *normal temperature and pressure (NTP).*

❖ The potential release rates of all valves directly connected to the tank that have the potential for a release of gases must be properly labeled. In addition, the valves that have the highest potential release rates need to be specifically identified. This is especially important when there are multiple valves.

Another requirement of this section is for situations in which the valve is located where it is interacting with the liquid form of the compressed gas. Such interaction will alter the release rate; therefore, the

INTERNATIONAL CODE COUNCIL®
Copyright © 2015 ICC. ALL RIGHTS RESERVED. Accessed by David Dammon on Jun 21, 2017 12:30:52 PM pursuant to License Agreement with ICC. No further reproduction or distribution authorized. ANY UNAUTHORIZED REPRODUCTION OR DISTRIBUTION IS A VIOLATION OF THE FEDERAL COPYRIGHT ACT AND THE LICENSE AGREEMENT, AND SUBJECT TO CIVIL AND CRIMINAL PENALTIES THEREUNDER.

liquid rate of release must be used. When a gas is in liquid form it is denser than the gas form. If released, the liquid vaporizes, expanding into a much larger volume of gas. Finally, to more readily assess the amount of gas that can be released into the room or area, the tank liquid flow rate must be shown on the label as the equivalent gas volume in cubic feet per minute at normal temperature and pressure (NTP). In other words, the flow rate is not as important as the gas volume it will produce when released into the room or area. NTP provides a comparable base value.

6004.2.2.7.5 Portable tanks and cylinders. The maximum flow rate of release for portable tanks and cylinders shall be calculated based on the total release from the cylinder or tank within the time specified in Table 6004.2.2.7.5. Where portable tanks or cylinders are equipped with *approved* excess flow or reduced flow valves, the worst-case release shall be determined by the maximum achievable flow from the valve as determined by the valve manufacturer or *compressed gas* supplier. Reduced flow and excess flow valves shall be permanently marked by the valve manufacturer to indicate the maximum design flow rate. Such markings shall indicate the flow rate for air under *normal temperature and pressure*.

❖ Given that flow rates of different portable tanks and cylinders tend to vary because of their portability, this information would be difficult to track; therefore, this section simply requires that the maximum flow rate be determined based on the capacity of the tank and the time prescribed in Table 6004.2.2.7.5. For example, say a portable tank had a capacity (at NTP) of 1,000 cubic feet (28 m^3) and was not under liquefied conditions. The maximum rate of release based on the criteria given in Table 6004.2.2.7.5 would be as follows:

1,000 cubic feet/40 minutes =
25 cubic feet per minute at NTP

In some cases, portable tanks and cylinders may be equipped with valves that either alter the rate of flow or will stop in the case of flow over the designed rate. In those cases, credit is given to the actual amount of gas released at NTP in determining the maximum flow rate. Valves that are used in this manner must be properly labeled to note the specific flow rate at NTP or function.

TABLE 6004.2.2.7.5
RATE OF RELEASE FOR CYLINDERS AND PORTABLE TANKS

VESSEL TYPE	NONLIQUEFIED (minutes)	LIQUEFIED (minutes)
Containers	5	30
Portable tanks	40	240

6004.2.2.8 Emergency power. Emergency power shall be provided for the following systems in accordance with Section 604:

1. Exhaust ventilation system.
2. Treatment system.
3. Gas detection system.
4. Smoke detection system.
5. Temperature control system.
6. Fire alarm system.
7. Emergency alarm system.

❖ Because of the immediate health hazard posed by the release of toxic or highly toxic gases, emergency, rather than standby, power is required. The major difference between them is that standby power activates within 60 seconds whereas emergency power activates within 10 seconds. This section provides a specific list of systems that would require emergency power. The most critical is likely the treatment system.

6004.2.2.8.1 Fail-safe engineered systems. Emergency power shall not be required for mechanical exhaust ventilation, treatment systems and temperature control systems where *approved* fail-safe engineered systems are installed.

❖ This section permits the use of an engineered system designed to fail in the appropriate design mode without human intervention in place of an emergency power system. The exception is intended to permit alternative systems that are not subject to power interruptions.

6004.2.2.9 Automatic fire detection system—highly toxic compressed gases. An *approved* automatic fire detection system shall be installed in rooms or areas where highly toxic *compressed gases* are stored or used. Activation of the detection system shall sound a local alarm. The fire detection system shall comply with Section 907.

❖ This section requires a fire detection system in rooms or areas where highly toxic gases are stored or used. The intent is that a fire in the area could lead to the release of the highly toxic gases. Fires can heat gases stored and cause expansion, leading to overpressures and releases; therefore, warning of a fire is critical to avoiding such releases. The alarm system needs to provide a local alarm at the building, but the detection is required only in the room or area where the highly toxic gas is stored.

6004.2.2.10 Gas detection system. A gas detection system shall be provided to detect the presence of gas at or below the PEL or ceiling limit of the gas for which detection is provided. The system shall be capable of monitoring the discharge from the treatment system at or below one-half the IDLH limit.

Exception: A gas detection system is not required for toxic gases when the physiological warning threshold level for the gas is at a level below the accepted PEL for the gas.

❖ This section requires a system to detect the presence of gas in a large enough concentration to exceed the permissible exposure limit (PEL). The system must also be designed to be capable of detecting whether one-half the IDLH has been exceeded at the discharge from the treatment system. This is to ensure that the treatment system is working to capacity or to

INTERNATIONAL CODE COUNCIL®
Copyright © 2015 ICC. ALL RIGHTS RESERVED. Accessed by David Dammon on Jun 21, 2017 12:30:52 PM pursuant to License Agreement with ICC. No further reproduction or distribution authorized. ANY UNAUTHORIZED REPRODUCTION OR DISTRIBUTION IS A VIOLATION OF THE FEDERAL COPYRIGHT ACT AND THE LICENSE AGREEMENT, AND SUBJECT TO CIVIL AND CRIMINAL PENALTIES THEREUNDER.

indicate that there may be other problems, such as a release larger than the treatment system has been designed to handle. It is important to stress the terminology of "capable," which would not require monitoring but would require an installation that would enable such monitoring if desired. In many cases, monitoring is done intermittently with portable monitors. Such monitoring may become necessary as a result of environmental restrictions, which are beyond the scope of the code.

There is an exception to the requirement of a gas detection system where the odor of the gas or its physical effects are noticeable far before the PEL is reached. Those indicators should be sufficient to notify people to leave the area.

6004.2.2.10.1 Gas detection system components. Gas detection system control units shall be *listed* and *labeled* in accordance with UL 864 or UL 2017, or approved. Gas detectors shall be *listed* and *labeled* in accordance with UL 2075 for use with the gases and vapors being detected, or *approved*.

❖ This section requires gas detection equipment to be listed in accordance with UL 2075 for use with the different gases it will detect. Under UL 2075, a set of flammable gases and concentrations in parts per million (PPM) is developed for each detector or sensor and the manufacturer is required to provide information as to what gases and concentrations the device is designed to detect. Tests under the standard then verify the performance of each detector or sensor for each gas it is designed to detect. The gases that the equipment will detect may be shown in the manufacturer's instructions rather than on the product. This section is intended to ensure that gas detection system control components are listed in accordance with nationally recognized safety standards. These standards include a comprehensive set of construction and performance requirements that are used to evaluate and list gas detection system control units and gas detectors. This section also provides the fire code official with the ability to approve gas detection system components that may not be listed and labeled.

6004.2.2.10.2 Alarms. The gas detection system shall initiate a local alarm and transmit a signal to a constantly attended control station when a short-term hazard condition is detected. The alarm shall be both visual and audible and shall provide warning both inside and outside the area where gas is detected. The audible alarm shall be distinct from all other alarms.

Exception: Signal transmission to a constantly attended control station is not required where not more than one cylinder of highly toxic or toxic gas is stored.

❖ Once the gas is detected at the levels noted in Section 6004.2.2.10, a local alarm must be initiated and a signal at a constantly attended control station (such as a security room or fire command center) must be transmitted. The alarm is intended to alert those both inside the particular area of detection and in the immediate vicinity. This is to prevent any gases that escape from causing harm to those outside the area of release.

The notification to the control station provides information to those who must take a role in emergency response, whereas the local alarm is a warning for those in the vicinity of the release.

A signal need not be sent to the control station if the amount of gas stored or used is a maximum of one cylinder. In that case, a local alarm is sufficient to notify people of the immediate hazard.

6004.2.2.10.3 Shut off of gas supply. The gas-detection system shall automatically close the shutoff valve at the source on gas supply piping and tubing related to the system being monitored for whichever gas is detected.

Exception: Automatic shutdown is not required for reactors utilized for the production of highly toxic or toxic *compressed gases* where such reactors are:

1. Operated at pressures less than 15 pounds per square inch gauge (psig) (103.4 kPa).
2. Constantly attended.
3. Provided with readily accessible emergency shutoff valves.

❖ The gas detection system also initiates the shutdown of gases at the source for gas supply piping and tubing, making this requirement more applicable to the use of the gas than to storage. The exception applies only to equipment used to make toxic or highly toxic gases, and only when all three of the stated conditions are met. This exception recognizes that pressure is a critical element in how much and how fast a gas is released. A low operating pressure normally means a smaller, more easily controlled release. Having an operator monitoring the equipment at all times is considered an adequate safeguard when shutoff valves are easy to reach in case of an emergency. Under these circumstances, notification by an alarm system and a signal to a constantly attended control station is sufficient to deal with the particular hazard. Automatic shutoff would probably be overly restrictive.

6004.2.2.10.4 Valve closure. Automatic closure of shutoff valves shall be in accordance with the following:

1. Where the gas-detection sampling point initiating the gas detection system alarm is within a gas cabinet or exhausted enclosure, the shutoff valve in the gas cabinet or exhausted enclosure for the specific gas detected shall automatically close.
2. Where the gas-detection sampling point initiating the gas detection system alarm is within a gas room and *compressed gas* containers are not in gas cabinets or exhausted enclosures, the shutoff valves on all gas lines for the specific gas detected shall automatically close.

INTERNATIONAL CODE COUNCIL®
Copyright © 2015 ICC. ALL RIGHTS RESERVED. Accessed by David Dammon on Jun 21, 2017 12:30:52 PM pursuant to License Agreement with ICC. No further reproduction or distribution authorized. ANY UNAUTHORIZED REPRODUCTION OR DISTRIBUTION IS A VIOLATION OF THE FEDERAL COPYRIGHT ACT AND THE LICENSE AGREEMENT, AND SUBJECT TO CIVIL AND CRIMINAL PENALTIES THEREUNDER.

3. Where the gas-detection sampling point initiating the gas detection system alarm is within a piping distribution manifold enclosure, the shutoff valve for the compressed container of specific gas detected supplying the manifold shall automatically close.

Exception: Where the gas-detection sampling point initiating the gas-detection system alarm is at a use location or within a gas valve enclosure of a branch line downstream of a piping distribution manifold, the shutoff valve in the gas valve enclosure for the branch line located in the piping distribution manifold enclosure shall automatically close.

❖ This section describes three common situations in which gas lines need to automatically close when gas is detected. If the gas is detected within a gas cabinet or exhausted enclosure, only the gas line related to the gas cylinder or container within the cabinet or enclosure must be shut down. If the gas is detected within a gas room, all gas lines containing that particular gas must be shut down because it is difficult to determine where the leak originates when the storage and use are in a larger area. The next criterion is related to situations where the gas sampling occurs within a piping manifold enclosure. Gas sampling in such locations is much more localized and the code requires shutting down only the cylinder supplying the manifold.

The exception is for situations where the gas is clearly being released downstream from the piping distribution manifold enclosure. The problem is with the piping or perhaps at a point of use and can be isolated by simply shutting off that particular branch line from the piping distribution manifold enclosure. This would be allowed only if the gas detection system was sampling at the location of use or within a gas valve enclosure downstream from the distribution piping. Otherwise, it would be difficult to determine where the leak originated and the supply at the cylinder or tank would have to be shut down.

6004.3 Outdoor storage and use. The outdoor storage and use of highly toxic and toxic *compressed gases* shall be in accordance with Sections 6004.3.1 through 6004.3.4.

❖ Outdoor storage and use is generally less hazardous than indoor storage and use because the toxic and highly toxic gases, if released, are more easily diluted and, thus, the hazard to the people in the surrounding area is reduced. When gases are released outdoors, however, it is more difficult to control where the released gases will go and what or who is being exposed to the hazards; therefore, this section contains restrictions on locations and distance to exposures. This section refers back to many of the requirements found in Section 6004.2, such as for piping and controls for stationary tanks and gas detection.

6004.3.1 Applicability. The applicability of regulations governing the outdoor storage and use of highly toxic and toxic *compressed gases* shall be as set forth in Sections 6004.3.1.1 through 6004.3.1.3.

❖ This section defines which requirements of the code apply based on the amount of gases stored and used.

6004.3.1.1 Quantities not exceeding the maximum allowable quantity per control area. The outdoor storage or use of highly toxic and toxic gases in amounts not exceeding the *maximum allowable quantity per control area* set forth in Table 5003.1.1(4) shall be in accordance with Sections 5001, 5003 and 6001.

❖ This section states that when the MAQs have not been exceeded, the general requirements found in Sections 5001 and 5003 would apply, as appropriate. Section 6001, primarily Section 6001.2, would also apply; therefore, the requirements would be fairly limited for amounts under the MAQs.

6004.3.1.2 Quantities exceeding the maximum allowable quantity per control area. The outdoor storage or use of highly toxic and toxic gases in amounts exceeding the *maximum allowable quantity per control area* set forth in Table 5003.1.1(4) shall be in accordance with Sections 6001 and 6004.3 and Chapter 50.

❖ When the MAQs have been exceeded, the requirements become more restrictive. All of Chapter 50 would apply, as appropriate to the outdoor storage and use of gases, and Section 6004.3 would apply in its entirety.

6004.3.1.3 Ozone gas generators. The outdoor use of ozone gas-generating equipment shall be in accordance with Section 6005.

❖ Section 6605 contains the bulk of the requirements for outdoor use of ozone gas-generating equipment (see commentary, Section 6605).

6004.3.2 General outdoor requirements. The general requirements applicable to the outdoor storage and use of highly toxic and toxic *compressed gases* shall be in accordance with Sections 6004.3.2.1 through 6004.3.2.4.

❖ This section contains the bulk of the requirements for outdoor storage and the use of highly toxic and toxic gases. In several places, the text refers back to various sections in Section 6004.2 to avoid repetitive wording when the same requirements apply to both indoor and outdoor storage and use. The sections that are unique to outdoor storage and use concern location and exposures.

6004.3.2.1 Location. Outdoor storage or use of highly toxic or toxic *compressed gases* shall be located in accordance with Sections 6004.3.2.1.1 through 6004.3.2.1.3.

Exception: *Compressed gases* located in gas cabinets complying with Sections 5003.8.6 and 6004.1.2 and located 5 feet (1524 mm) or more from buildings and 25 feet (7620 mm) or more from an *exit discharge*.

❖ As noted, highly toxic and toxic gases used and stored outdoors are more difficult to contain because

INTERNATIONAL CODE COUNCIL®
Copyright © 2015 ICC. ALL RIGHTS RESERVED. Accessed by David Dammon on Jun 21, 2017 12:30:52 PM pursuant to License Agreement with ICC. No further reproduction or distribution authorized. ANY UNAUTHORIZED REPRODUCTION OR DISTRIBUTION IS A VIOLATION OF THE FEDERAL COPYRIGHT ACT AND THE LICENSE AGREEMENT, AND SUBJECT TO CIVIL AND CRIMINAL PENALTIES THEREUNDER.

an accidental release could disperse in various directions based on the configuration of the storage, the properties of the gases stored and used and climatic conditions. Additionally, there is less control of exposure hazards, which may affect the storage and use of such gases. The following subsections address distance to exposures, openings in exposed buildings and hazards associated with air intakes into buildings.

There is an exception when cylinders are contained in a gas cabinet that complies with both the general requirements of Chapter 50 and the specific requirements of Section 6004.1.2 for use of highly toxic and toxic gases. In addition, the cabinet must be sufficiently separated from buildings and the exit discharge.

6004.3.2.1.1 Distance limitation to exposures. Outdoor storage or use of highly toxic or toxic *compressed gases* shall not be located within 75 feet (22 860 mm) of a *lot line*, public street, public alley, *public way*, *exit discharge* or building not associated with the manufacture or distribution of such gases, unless all of the following conditions are met:

1. Storage is shielded by a 2-hour *fire barrier* that interrupts the line of sight between the storage and the exposure.
2. The 2-hour *fire barrier* shall be located not less than 5 feet (1524 mm) from any exposure.
3. The 2-hour *fire barrier* shall not have more than two sides at approximately 90-degree (1.57 rad) directions, or three sides with connecting angles of approximately 135 degrees (2.36 rad).

❖ A minimum distance of 75 feet (22 860 mm) is required to exposures such as an exit discharge, lot line or public way. The distance to exposures is in terms of buildings not associated with the manufacture or distribution of highly toxic and toxic gases because buildings associated with those activities would not have separation requirements. It would be impractical for such facilities to be laid out with this kind of separation, and the level of hazard is known and accepted at these facilities. An alternative to the 75-foot (22 860 mm) separation is allowed when certain conditions are met. A 2-hour fire barrier constructed in accordance with IBC Section 707 can be substituted when the conditions stated in this section are met [see Commentary Figure 6004.3.2.1.1(1)]. The code criteria do not set a limit on the height or width of the barrier as long as it interrupts the line of sight between the storage and the exposure, although areas located above and to the sides of the barrier will likely have more restrictive limitations on openings (see commentary, Section 6004.3.2.1.2). Limitations are placed on barriers in terms of the number of walls creating the separation based on the angle of the walls to one another. These are shown in Commentary Figure 6004.3.2.1.1(2). Generally, the limitations are related to the fact that when more than one wall is used there is the potential that some of the natural ventilation of the outdoor storage location would be lost. For instance, allowing three walls at 90 degrees (1.57 rad) versus two walls practically encloses the storage. The allowance of three walls at 135-degree (2.36 rad) angles still results in a level of openness that allows the benefits of natural ventilation.

6004.3.2.1.2 Openings in exposed buildings. Where the storage or use area is located closer than 75 feet (22 860 mm) to a building not associated with the manufacture or distribution of highly toxic or toxic *compressed gases*, openings into a building other than for piping are not allowed above the

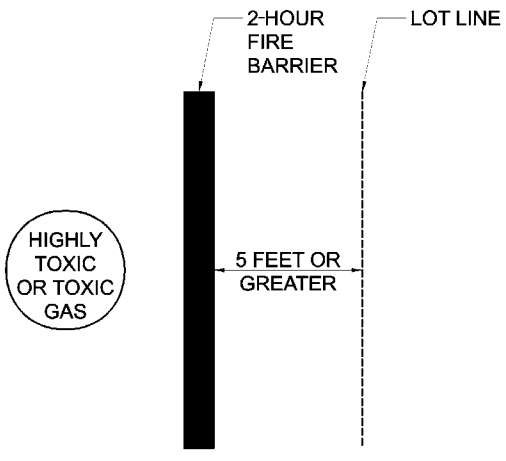

PLAN VIEW
(NOTE: NO SPECIFIC REQUIREMENT FOR HEIGHT OR WIDTH)

For SI: 1 foot = 304.8 mm.

Figure 6004.3.2.1.1(1)
FIRE BARRIER

INTERNATIONAL CODE COUNCIL®
Copyright © 2015 ICC. ALL RIGHTS RESERVED. Accessed by David Dammon on Jun 21, 2017 12:30:52 PM pursuant to License Agreement with ICC. No further reproduction or distribution authorized. ANY UNAUTHORIZED REPRODUCTION OR DISTRIBUTION IS A VIOLATION OF THE FEDERAL COPYRIGHT ACT AND THE LICENSE AGREEMENT, AND SUBJECT TO CIVIL AND CRIMINAL PENALTIES THEREUNDER.

height of the top of the 2-hour *fire barrier* or within 50 feet (15 240 mm) horizontally from the storage area whether or not shielded by a *fire barrier*.

❖ When a fire barrier is used in place of the 75-foot (22 860 mm) separation, there are further limitations on openings. Openings other than pipe penetrations are allowed only when the exposure is 50 feet (15 240 mm) or more from the barrier, and then only below the height of the barrier. Piping penetrations are allowed because they are small enough to be considered an insignificant hazard (see Commentary Figure 6004.3.2.1.2).

The primary intent of this section is to protect the highly toxic and toxic gases from a release caused by a fire in the building. Openings such as windows increase the likelihood of a fire heating up a cylinder or tank and causing overpressures that could result in a release. A solid wall decreases the possibility of a fire penetrating or the radiation from the fire from contacting the storage area. Also, openings are a potential method for highly toxic and toxic gases to enter a building. A fire barrier will not stop gases from traveling upward if they are lighter than air.

6004.3.2.1.3 Air intakes. The storage or use area shall not be located within 75 feet (22 860 mm) of air intakes.

❖ This section addresses the threat of a release of toxic or highly toxic gases getting into a building's heating, ventilating and air-conditioning (HVAC) system. The 75-foot (22 860 mm) separation is consistent with the distances previously laid out. The important distinction with this section is that exposure of the building's exterior is not a concern. Instead, the concern is for the health risks of a gas released into the building's HVAC system.

This section does not differentiate between a building associated with the storage and manufacture of highly toxic and toxic gases and one that is not. The risk to building occupants and emergency responders and the potential hazards of such gases entering a facility's main air source would be the same in either case. Also, gases entering other openings do not have the same potential for circulation around the building as those entering an air intake with the specific purpose of circulation.

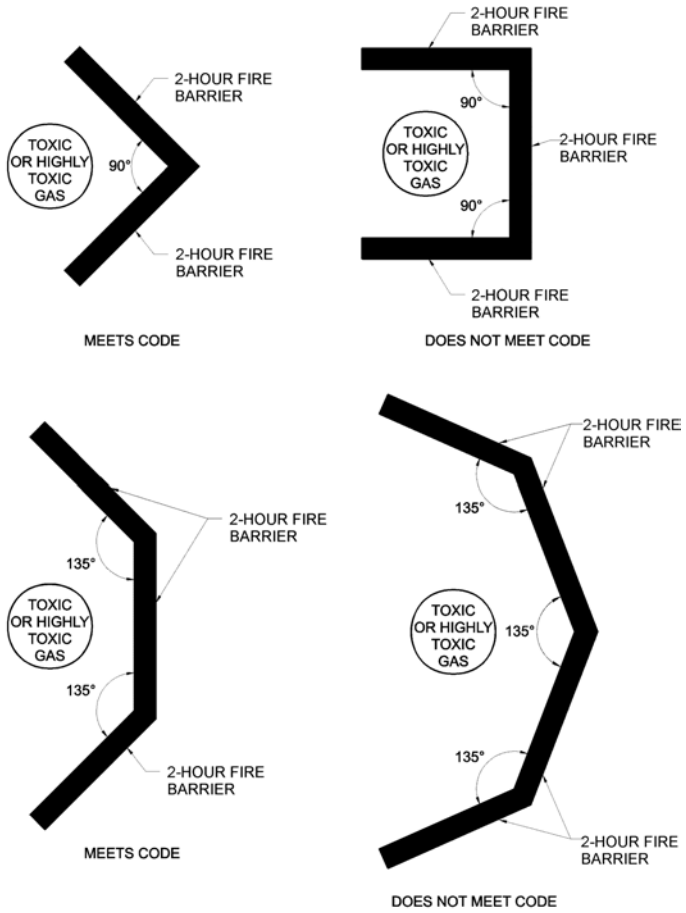

For SI: 1 degree = 0.01745 rad.

Figure 6004.3.2.1.1(2)
FIRE BARRIER LIMITATIONS

INTERNATIONAL CODE COUNCIL®
Copyright © 2015 ICC. ALL RIGHTS RESERVED. Accessed by David Dammon on Jun 21, 2017 12:30:52 PM pursuant to License Agreement with ICC. No further reproduction or distribution authorized. ANY UNAUTHORIZED REPRODUCTION OR DISTRIBUTION IS A VIOLATION OF THE FEDERAL COPYRIGHT ACT AND THE LICENSE AGREEMENT, AND SUBJECT TO CIVIL AND CRIMINAL PENALTIES THEREUNDER.

6004.3.2.2 Leaking cylinders and tanks. The requirements of Section 6004.2.2.3 shall apply to outdoor cylinders and tanks. Gas cabinets and exhausted enclosures shall be located within or immediately adjacent to outdoor storage or use areas.

❖ This section refers back to Section 6004.2.2.3 for requirements for handling leaking cylinders and tanks. Essentially, a gas cabinet or exhausted enclosure is required to contain leaking cylinders and tanks. Section 6004.2.2.3.1 requires that gas cabinets and exhausted enclosures used with leaking cylinders and tanks be located in a gas room. Although this section refers back to these requirements, the code was not intended to require a gas room in outdoor storage and use areas. If a gas room with either a gas cabinet or exhausted enclosure is available nearby, it can be used, but to require an outdoor storage and use area to go indoors would be impractical. Regardless, gas rooms, gas cabinets and exhausted enclosures would have to be connected to an exhaust system that would then be connected to a treatment system. The major difference between the indoor requirements and the outdoor requirements is that cylinders, portable tanks and stationary tanks stored outside of buildings need not be placed in gas cabinets, exhausted enclosures or gas rooms except when they are leaking.

A containment vessel or containment system could also be used as long as several criteria are met (see definitions for "Containment vessel" and "Containment system" in Section 202 and the commentary to Section 6004.2.2.3).

6004.3.2.3 Local exhaust for portable tanks. Local exhaust for outdoor portable tanks shall be provided in accordance with the requirements set forth in Section 6004.2.2.4.

❖ This section refers to Section 6004.2.2.4, which would require local exhaust systems for portable tanks to address areas on a tank where leaks are likely to occur. These systems need to be flexible to address the types of tanks likely to be stored or used. Although Section 6004.2.2.4 would require the exhaust system to be located in a gas room, the intent of this section would warrant the elimination of a gas room where the exhaust system is in or immediately adjacent to the outdoor storage area. Again, the intent is not to require outdoor storage to be placed indoors in a gas room. Outdoor storage has slightly different concerns, such as exposure hazards (see commentary, Section 6004.2.2.4).

6004.3.2.4 Piping and controls-stationary tanks. Piping and controls for outdoor stationary tanks shall be in accordance with the requirements set forth in Section 6004.2.2.5.

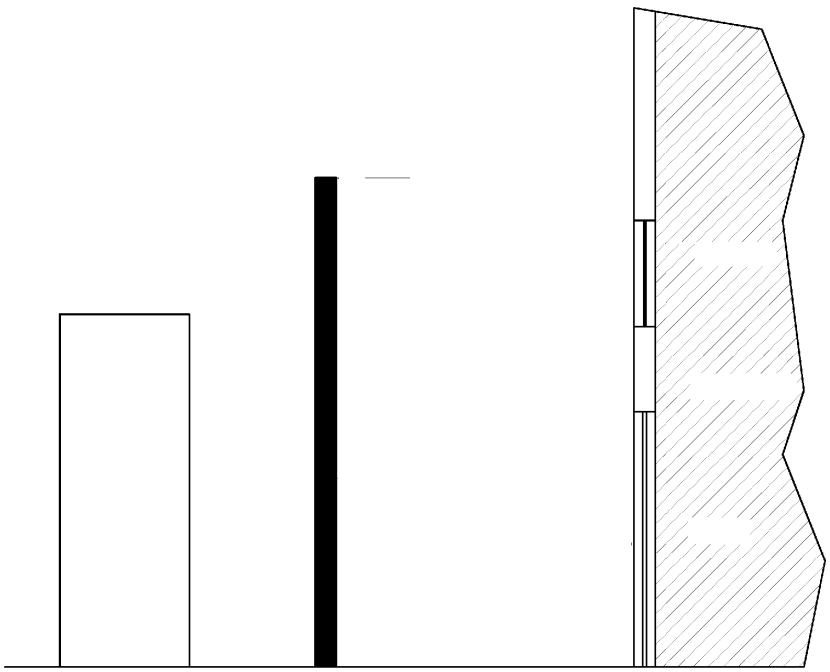

For SI: 1 foot = 304.8 mm.

Figure 6004.3.2.1.2
OPENINGS

INTERNATIONAL CODE COUNCIL®
Copyright © 2015 ICC. ALL RIGHTS RESERVED. Accessed by David Dammon on Jun 21, 2017 12:30:52 PM pursuant to License Agreement with ICC. No further reproduction or distribution authorized. ANY UNAUTHORIZED REPRODUCTION OR DISTRIBUTION IS A VIOLATION OF THE FEDERAL COPYRIGHT ACT AND THE LICENSE AGREEMENT, AND SUBJECT TO CIVIL AND CRIMINAL PENALTIES THEREUNDER.

❖ This section refers to Section 6004.2.2.5 for requirements. The exception to Section 6004.2.2.5, Item 1 is specific to outdoor tanks. This exception allows for the elimination of a treatment system to collect a release from a pressure relief device that is specifically installed for overpressure caused by fire. To take advantage of this exception, several criteria must be met. These criteria address the reduction of possible fire hazards by ensuring both that the gas stored is not flammable and the exposures to other fire hazards are reduced. This exception recognizes that gases are more readily dispersed outside, which reduces the need for a treatment system to process a release (see commentary, Section 6004.2.2.5).

6004.3.3 Outdoor storage weather protection for portable tanks and cylinders. Weather protection in accordance with Section 5004.13 shall be provided for portable tanks and cylinders located outdoors and not within gas cabinets or exhausted enclosures. The storage area shall be equipped with an *approved automatic sprinkler system* in accordance with Section 903.3.1.1.

Exception: An *automatic sprinkler system* is not required when:

1. All materials under the weather protection structure, including hazardous materials and the containers in which they are stored, are non-combustible.
2. The weather protection structure is located not less than 30 feet (9144 mm) from combustible materials or structures or is separated from such materials or structures using a *fire barrier* complying with Section 6004.3.2.1.1.

❖ Cylinders and portable tanks that are used strictly for the outdoor storage of highly toxic and toxic gases must be placed in gas cabinets and exhausted enclosures only if they are leaking. Otherwise, outdoor storage simply requires protection from the elements.

Sprinklers are required unless every material under the weather protection is noncombustible and the weather protection structure is properly separated either by distance or by construction from combustible exposures such as other storage or buildings. The exception refers back to the exposure requirements in Section 6004.3.2.1.1 for construction requirements. Protecting materials from the elements reduces the likelihood of the tanks and cylinders being damaged and potential release through corrosion. Additionally, the sprinklers protect the storage from a large release if a fire were to occur, causing overpressures in tanks and cylinders and ultimately releases of gases. This protection is especially important because these particular gases are not being processed through a treatment system should a release occur.

6004.3.4 Outdoor use of cylinders, containers and portable tanks. Cylinders, containers and portable tanks in outdoor use shall be located in gas cabinets or exhausted enclosures and shall comply with Sections 6004.3.4.1 through 6004.3.4.3.

❖ Because use is more likely than storage to lead to a release of gas, the cylinders, containers or portable tanks that supply the gases need to be located in a gas cabinet or exhausted enclosure and be equipped with a treatment system, emergency power and a gas detection system in accordance with Sections 6004.3.4.1 through 6004.3.4.3.

6004.3.4.1 Treatment systems. The treatment system requirements set forth in Section 6004.2.2.7 shall apply to highly toxic or toxic gases located outdoors.

❖ This section refers to the design criteria for treatment systems in Section 6004.2. As noted in Section 6004.2.2.7, a treatment system is required for exhaust ventilation coming from gas cabinets, exhausted enclosures, gas rooms and local exhaust systems. There are exceptions in Section 6004.2.2.7 for both storage and use. The storage exception focuses on securing valve outlets and using containment vessels and systems.

The use exception requires gas detection and fail-safe valve operation. Note that the exception for use is specific only to toxic gases.

For outdoor areas there are only a few occasions where a gas cabinet, exhausted enclosure, gas room or local exhaust would be required. Again, this is related to the fact that gases stored and used outdoors can be more easily dispersed if a release should occur, generally posing a lower hazard to those in the area. The requirements generally are based on the location of the gases. Treatment systems would come into play only for gas cabinets, exhausted enclosures and gas rooms associated with leaking cylinders or tanks and local exhaust for portable containers.

6004.3.4.2 Emergency power. The requirements for emergency power set forth in Section 6004.2.2.8 shall apply to highly toxic or toxic gases located outdoors.

❖ See the commentary to Section 6004.2.2.8.

6004.3.4.3 Gas detection system. The gas detection system requirements set forth in Section 6004.2.2.10 shall apply to highly toxic or toxic gases located outdoors.

❖ Because this section pertains to outdoor storage and use of highly toxic and toxic gases, the requirement for gas detection systems is less restrictive than it is for indoor storage and use. Essentially, detection systems would be required for small enclosures, such as gas cabinets and exhausted enclosures, and for local enclosures, such as piping manifold enclosures. Otherwise, gas detection is fairly ineffective in the outdoors. The detailed requirements for gas detection are found in Section 6004.2.2.10.

INTERNATIONAL CODE COUNCIL®
Copyright © 2015 ICC. ALL RIGHTS RESERVED. Accessed by David Dammon on Jun 21, 2017 12:30:52 PM pursuant to License Agreement with ICC. No further reproduction or distribution authorized. ANY UNAUTHORIZED REPRODUCTION OR DISTRIBUTION IS A VIOLATION OF THE FEDERAL COPYRIGHT ACT AND THE LICENSE AGREEMENT, AND SUBJECT TO CIVIL AND CRIMINAL PENALTIES THEREUNDER.

SECTION 6005
OZONE GAS GENERATORS

6005.1 Scope. Ozone gas generators having a maximum ozone-generating capacity of 0.5 pound (0.23 kg) or more over a 24-hour period shall be in accordance with Sections 6005.2 through 6005.6.

Exceptions:

1. Ozone-generating equipment used in Group R-3 occupancies.
2. Ozone-generating equipment where used in Group H-5 occupancies where in compliance with Chapters 27 and 50 and the other provisions in this chapter for highly toxic gases.

❖ This section differs from most of the rest of this chapter because it deals with the generation (i.e., creation) of a highly toxic gas and not simply its storage or use. The requirements center on the design, location, piping integrity and methods of ozone generator shutdown.

Ozone is a molecule composed of three atoms of oxygen. Two atoms of oxygen form the basic oxygen molecule, which is the oxygen we breathe. The third oxygen atom can detach from the ozone molecule and reattach to molecules of other substances, thereby altering their chemical composition. Generally, this ability to reattach is the reason ozone is generated and used as a method of purification. The primary uses are for the purification of water and air. The two uses are very different in their applications and the success of the air purification is a controversial one because it appears to be ineffective unless the ozone is present in the atmosphere at concentrations that would be harmful to people. Ozone is actually considered a pollutant when in the atmosphere we breathe.

The ability of ozone to react with organic materials is why it is used in purification. It is this same ability that causes harm to humans. The following table is taken from documentation from the EPA regarding the health effects, risk factors and health standards of various federal agencies.

Because of the nature of fire codes, the main goal of the requirements in this section is to avoid a situation where building occupants and emergency responders are exposed to unsafe levels of ozone on a more immediate basis, which is slightly different than the objectives of the federal agencies listed in Commentary Figure 6005.1.

These requirements apply only to generators that produce 0.5 pound (0.23 kg) or more over a 24-hour period. These tend to be the larger commercial and industrial application generators.

Exception 1 for ozone generators that are found in one- and two-family dwellings (Group R-3) is based on the assumption that these generators would not produce the quantity noted in this section. This exception avoids impractical enforcement.

Exception 2 clarifies that the general conditions in Section 6005.1 do not apply to ozone-generating equipment used in Group H-5 occupancies. Ozone in a Group H-5 occupancy is a hazardous production material (HPM) gas specifically regulated as a highly toxic, oxidizing HPM gas in Chapters 27, 50 and 60.

HEALTH EFFECTS	RISK FACTORS	HEALTH STANDARDS*
Potential risk of experiencing: Decreases in lung function Aggravation of asthma Throat irritation and cough Chest pain and shortness of breath Inflammation of lung tissue Higher susceptibility to respiratory infection	**Factors expected to increase risk and severity of health effects are:** Increase in ozone concentration in air Greater duration of exposure for some health effects Activities that raise the breathing rate (e.g., exercise) Certain pre-existing lung diseases (e.g., asthma)	**Food and Drug Administration (FDA)** requires ozone output of indoor medical devices to be no more than 0.05 ppm. **Occupational Safety and Health Administration (OSHA)** requires that worker exposure be limited to an average concentration of no more than 0.10 ppm for a maximum of 8 hours. **National Institute of Occupational Safety and Health (NIOSH)** recommends an upper limit of 0.10 ppm, not to be exceeded at any time. **Environmental Protection Agency (EPA)'s** National Ambient Air Quality Standard for Ozone is a maximum of 8-hour average outdoor concentration of 0.08 ppm.

(*ppm = parts per million)

Figure 6005.1
FEDERAL AGENCY OZONE STANDARDS

INTERNATIONAL CODE COUNCIL®
Copyright © 2015 ICC. ALL RIGHTS RESERVED. Accessed by David Dammon on Jun 21, 2017 12:30:52 PM pursuant to License Agreement with ICC. No further reproduction or distribution authorized. ANY UNAUTHORIZED REPRODUCTION OR DISTRIBUTION IS A VIOLATION OF THE FEDERAL COPYRIGHT ACT AND THE LICENSE AGREEMENT, AND SUBJECT TO CIVIL AND CRIMINAL PENALTIES THEREUNDER.

6005.2 Design. Ozone gas generators shall be designed, fabricated and tested in accordance with NEMA 250.

❖ Ozone is generated by applying an electrical current to at least one ozone-generating plate that then charges oxygen in the incoming air and produces ozone; therefore, the generator must comply with NEMA 250 for design, fabrication and testing.

6005.3 Location. Ozone generators shall be located in *approved* cabinets or ozone generator rooms in accordance with Section 6005.3.1 or 6005.3.2.

Exception: An ozone gas generator within an *approved* pressure vessel where located outside of buildings.

❖ Because of the potential health hazards related to the generation of ozone, this section states limitations on the location of generating equipment. Ozone generators must be either in an approved cabinet or in an ozone gas generator room. Details of each are discussed in the subsections that follow.

The exception for ozone gas generators located outside of buildings is applicable only if the generators are contained in an approved pressure vessel. Generally, as with storage and use of gases outdoors, the gas is more likely to be dispersed to the atmosphere without harming people in the surrounding area.

6005.3.1 Cabinets. Ozone cabinets shall be constructed of *approved* materials and compatible with ozone. Cabinets shall display an *approved* sign stating: OZONE GAS GENERATOR—HIGHLY TOXIC—OXIDIZER.

Cabinets shall be braced for seismic activity in accordance with the *International Building Code*.

Cabinets shall be mechanically ventilated in accordance with the *International Mechanical Code* with not less than six air changes per hour.

The average velocity of ventilation at makeup air openings with cabinet doors closed shall be not less than 200 feet per minute (1.02 m/s).

❖ This section lists criteria for the design and construction of cabinets intended for the ozone gas generators. This includes labeling, ventilation and seismic bracing requirements. For ventilation, it both refers to the *International Mechanical Code*® (IMC®) for requirements and states the following criteria:

- Six air changes per hour.
- Average velocity of 200 feet per minute (1.02 m/s) across the opening of the cabinet.

These criteria result in a negative pressure cabinet with appropriate intake air sizing.

6005.3.2 Ozone gas generator rooms. Ozone gas generator rooms shall be mechanically ventilated in accordance with the *International Mechanical Code* with not less than six air changes per hour. Ozone gas generator rooms shall be equipped with a continuous gas detection system that will shut off the generator and sound a local alarm when concentrations above the permissible exposure limit occur.

Ozone gas generator rooms shall not be normally occupied, and such rooms shall be kept free of combustible and hazardous material storage. Room access doors shall display an *approved* sign stating: OZONE GAS GENERATOR—HIGHLY TOXIC—OXIDIZER.

❖ For larger generators and particular processes, an ozone gas generator room may be more practical than cabinets. This section gives the criteria for design and construction for these rooms. The key construction element is the ventilation requirement of six air changes per hour, which is the same requirement as for cabinets. A gas detection system is also required that will activate a local alarm when the permissible exposure limit has been reached. This limit appears to be 10 parts per million (ppm) in accordance with the information provided by the EPA.

Because ozone is also an oxidizer, combustibles would not be allowed within the room to reduce the potential for an intense fire. In addition, because of the health effects, the rooms are not intended to be normally occupied. These two limitations essentially necessitate a mechanical room-type arrangement. The labeling of the generator room is essential to emergency responders and also to those unfamiliar with the facility.

6005.4 Piping, valves and fittings. Piping, valves, fittings and related components used to convey ozone shall be in accordance with Sections 6005.4.1 through 6005.4.3.

❖ The requirements found in this section are intended to reduce the weak links in the system that can be found with improper piping connections or fittings.

6005.4.1 Piping. Piping shall be welded stainless steel piping or tubing.

Exceptions:

1. Double-walled piping.
2. Piping, valves, fittings and related components located in exhausted enclosures.

❖ A welded connection is required for piping because it is more reliable than a friction connection or a threaded connection. Additionally, this section requires the piping to be stainless steel to reduce the likelihood of corrosion to which other piping may be susceptible.

There are two exceptions to the welded connection and stainless steel requirement: double wall piping or where all portions of the piping, valves and fittings are located in an exhausted enclosure. Both of these methods reduce the likelihood that a failure in the piping, valves or fittings would result in a release of highly toxic ozone to the atmosphere.

INTERNATIONAL CODE COUNCIL®
Copyright © 2015 ICC. ALL RIGHTS RESERVED. Accessed by David Dammon on Jun 21, 2017 12:30:52 PM pursuant to License Agreement with ICC. No further reproduction or distribution authorized. ANY UNAUTHORIZED REPRODUCTION OR DISTRIBUTION IS A VIOLATION OF THE FEDERAL COPYRIGHT ACT AND THE LICENSE AGREEMENT, AND SUBJECT TO CIVIL AND CRIMINAL PENALTIES THEREUNDER.

6005.4.2 Materials. Materials shall be compatible with ozone and shall be rated for the design operating pressures.

❖ It is important that valves or fittings used are compatible with ozone. Section 6005.4.1 requires the piping to be stainless steel unless one of the two exceptions applies. Regardless, the materials used need to be compatible. Essentially, the intent is to avoid leaks or major failures resulting from corrosion.

Also, this section discusses the need for piping to withstand the pressures that are expected, because that could be another potential mode of failure.

6005.4.3 Identification. Piping shall be identified with the following: OZONE GAS—HIGHLY TOXIC—OXIDIZER.

❖ To alert occupants and emergency responders to the potential dangers of ozone, the piping carrying the ozone must be labeled to list the hazards of this highly toxic and oxidizing gas.

6005.5 Automatic shutdown. Ozone gas generators shall be designed to shut down automatically under the following conditions:

1. When the dissolved ozone concentration in the water being treated is above saturation when measured at the point where the water is exposed to the atmosphere.
2. When the process using generated ozone is shut down.
3. When the gas detection system detects ozone.
4. Failure of the ventilation system for the cabinet or ozone-generator room.
5. Failure of the gas detection system.

❖ There are several conditions where the ozone generator needs to shut down automatically. These include when dissolved ozone in water being treated in a water purification system is above saturation, when the ozone being generated is not placed directly into use, as in the case of water purification, when ozone is detected or the ventilation and gas detection systems fail. This adds to the levels of redundancies available to enhance personnel safety.

6005.6 Manual shutdown. Manual shutdown controls shall be provided at the generator and, where in a room, within 10 feet (3048 mm) of the main *exit* or *exit access* door.

❖ A manual shutdown control on the ozone generator is a backup to the automated shutdown system that uses sensors to detect leaks, sound alarms and shut down the system. Because an ozone generator located in a room would almost always be a large-capacity machine, the manual shutdown controls are needed near the main access door to minimize the possibility that any significant quantity of escaping ozone would reach building occupants. Having the controls near the door also minimizes the chance that the person who shuts down the generator in an emergency would be exposed to harmful amounts of ozone. With smaller generators that would more likely be located in a ventilated cabinet or exhausted enclosure, there is no requirement for manual shutdown controls other than those on the generator itself.

Bibliography

The following resource materials were used in the preparation of the commentary for this chapter of the code:

Code Changes Resource Collection—2015 International Fire Code. Washington, DC: International Code Council, 2014.

EPA-452/R-96-007, *Review of National Ambient Air Quality Standards for Ozone: Assessment of Scientific and Technical Information*. OAQPS Staff Paper. Research Triangle Park, NC: Office of Air Quality Planning and Standards, U.S. Environmental Protection Agency (U.S. EPA), 1996.

EPA-600/R-95-154, *Ozone Generators in Indoor Air Settings*. Report prepared for the Office of Research and Development by Raymond Steiber. Research Triangle Park, NC: National Risk Management Research Laboratory, U.S. Environmental Protection Agency (U.S. EPA), 1995.

INTERNATIONAL CODE COUNCIL®
Copyright © 2015 ICC. ALL RIGHTS RESERVED. Accessed by David Dammon on Jun 21, 2017 12:30:52 PM pursuant to License Agreement with ICC. No further reproduction or distribution authorized. ANY UNAUTHORIZED REPRODUCTION OR DISTRIBUTION IS A VIOLATION OF THE FEDERAL COPYRIGHT ACT AND THE LICENSE AGREEMENT, AND SUBJECT TO CIVIL AND CRIMINAL PENALTIES THEREUNDER.

INTERNATIONAL CODE COUNCIL®
Copyright © 2015 ICC. ALL RIGHTS RESERVED. Accessed by David Dammon on Jun 21, 2017 12:30:52 PM pursuant to License Agreement with ICC. No further reproduction or distribution authorized. ANY UNAUTHORIZED REPRODUCTION OR DISTRIBUTION IS A VIOLATION OF THE FEDERAL COPYRIGHT ACT AND THE LICENSE AGREEMENT, AND SUBJECT TO CIVIL AND CRIMINAL PENALTIES THEREUNDER.

Chapter 61: Liquefied Petroleum Gases

General Comments

The use and popularity of liquefied petroleum gas (LP-gas) for domestic purposes varies depending on location. In the United States, propane is the most widely used LP-gas, with butane a distant runner-up. Rural communities, especially those located in cooler climates, tend to use propane as a principal fuel source for domestic cooking, clothes drying, water heating and space heating. This practice tends to be less common in urban and suburban communities served by public utility companies supplying piped natural gas. On the other hand, LP-gas is widely used by industries as a motor fuel for industrial lift trucks; aerosol charging; welding and cutting; auxiliary heating and lighting and, in the agricultural community, as a fuel for drying crops, operating pumps and heating livestock shelters.

Propane is well known as a camping fuel for cooking, lighting, heating and refrigerating. LP-gas also remains a popular standby fuel supply for auxiliary generators. Additionally, utility companies use propane as a substitute for natural gas as a "peak shaving" alternative when supplies run low or prices are high; in this application, propane is usually mixed with air to achieve the same energy content per cubic foot as natural gas.

Propane is widely used as an alternative motor vehicle fuel, and its characteristic as a clean-burning fuel has resulted in the addition of propane dispensers to service stations throughout the country.

Another use for propane, although less popular because it is flammable, is as the working fluid in a refrigeration cycle. In some applications, it is a suitable alternative to R-22 and other chlorofluorocarbon (CFC)-rich refrigerants.

Future uses for LP-gas, and propane in particular, may arise out of an intense interest in independent electrical power generation units, such as fuel cell and microturbine generators. Propane is a leading candidate for these units because of its portability and moderate storage pressures. Additionally, ongoing research on absorption refrigeration cycles may lead to greater interest in propane-powered air conditioners.

Purpose

Chapter 61 includes requirements for handling, storing and using LP-gas, principally propane, to reduce the possibility of damage to containers, accidental releases of LP-gas and exposure of flammable concentrations of LP-gas to ignition sources.

SECTION 6101 GENERAL

6101.1 Scope. Storage, handling and transportation of liquefied petroleum gas (LP-gas) and the installation of LP-gas equipment pertinent to systems for such uses shall comply with this chapter and NFPA 58. Properties of LP-gases shall be determined in accordance with Appendix B of NFPA 58.

❖ Some of the principal characteristics of LP-gases are shown in Commentary Figure 6101.1(1). They include the limits of flammability, the specific gravity of the gas vapor at 60°F (16°C) and the ignition temperatures of the flammable mixtures.

It is important to recognize that LP-gases exist in both liquid and vapor states at ambient temperatures. When stored in a pressure vessel, the liquid and vapor states of LP-gases will be in equilibrium until the system is called upon to deliver vapor to the appliance it is serving. When this happens, the pressure in the container drops and the liquid begins to boil to produce more vapor and once again reach equilibrium. As vapor is produced through the boiling process, the liquid in the container begins to refrigerate itself and the entire system cools down. Commentary Figure 6101.1(2) shows the vapor pressure of propane at various temperatures.

LP-gases are heavier than air, and although public perception holds that they will sink to the lowest level of a space, these gases disperse according to the laws of physics just as other gases do. It is not safe to assume that all LP-gases, such as propane, immediately sink to the floor and "pool" there. LP-gases can and will, under ambient conditions, disperse to all parts of a room or space.

LP-gases, such as propane, must be odorized with a warning agent that is detectable at a minimum concentration of one-fifth the lower limit of flammability. The most frequently used odorant for propane is ethyl mercaptan, which is usually added at a pipeline terminal or other supply point before the gas is shipped to a retail bulk storage facility.

LP-gas containers pose the danger of a boiling-liquid expanding-vapor explosion (BLEVE) if they are exposed to a fire. Prolonged flame impingement above the liquid-gas interface, where the heat-absorbing properties of the liquid cannot protect the

INTERNATIONAL CODE COUNCIL®
Copyright © 2015 ICC. ALL RIGHTS RESERVED. Accessed by David Dammon on Jun 21, 2017 12:30:52 PM pursuant to License Agreement with ICC. No further reproduction or distribution authorized. ANY UNAUTHORIZED REPRODUCTION OR DISTRIBUTION IS A VIOLATION OF THE FEDERAL COPYRIGHT ACT AND THE LICENSE AGREEMENT, AND SUBJECT TO CIVIL AND CRIMINAL PENALTIES THEREUNDER.

container shell from thermal stress, may generate catastrophic failures, expelling tank contents in a fireball and propelling container fragments from the site of the accident.

Such violent container failures are extremely dangerous and were much more common in the past, before safety improvements in railcars and cargo transport trucks were introduced. Recently, the propane industry, through the National Propane Gas Association and the Propane Education and Research Council, has developed a program for training emergency response personnel to respond effectively and knowledgeably to threatening incidents involving the transportation, storage or use of propane. The curriculum was made available free of charge to every fire department in the United States.

The requirements of this chapter are intended to address hazards associated with the storage, handling and use of LP-gas. NFPA 58 is supplemented by NFPA 59, which specifically addresses the use of LP-gas at utility gas plants.

The U.S. Department of Transportation (DOT) classifies LP-gas as a hazardous material, and the transportation of LP-gases "in commerce" is regulated by Title 49 of the Code of Federal Regulations. The term "in commerce" is defined to be transportation by a commercial entity. In other words, transportation of a propane grill cylinder in the passenger compartment of a car is not regulated by the DOT but is by NFPA 58.

6101.2 Permits. Permits shall be required as set forth in Sections 105.6 and 105.7.

Distributors shall not fill an LP-gas container for which a permit is required unless a permit for installation has been issued for that location by the *fire code official*.

❖ The process of issuing permits gives the fire code official an opportunity to carefully evaluate and regulate hazardous operations. Permit applicants should be required to demonstrate that their operations comply with the intent of the code before the permit is issued. See the commentary to Section 105.6 for a general discussion of operations requiring an operational permit, Section 105.6.28 for a discussion of specific quantity-based operational permits for the materials regulated in this chapter and Section 105.7 for a general discussion of activities requiring a construction permit. The permit process also notifies the fire department of the need for prefire planning for hazardous property.

GAS	IGNITION TEMPERATURE (°F)	LOWER FLAMMABLE LIMITATIONS[a]	UPPER FLAMMABLE LIMITATIONS[a]	SPECIFIC GRAVITY OF VAPOR @ 60°F
Butane	550	1.9	8.5	2.0
1-Butene	725	1.6	10.0	1.9
2-Butene (cis)	617	1.7	9.0	1.9
2-Butene (trans)	615	1.8	9.7	1.9
Propane	920	2.1	9.5	1.5
Propylene	851	2.0	11.1	1.5

For SI: °C = [(°F) - 32]/1.8.

a. Lower and upper flammable limitations are percentages of gas in gas-air mixtures. Specific gravity describes the relative weight of a unit of gas compared to air (air = 1.0).

Source: NFPA 325M, *Properties of Flammable Solids, Liquids and Gases* (1991).

Figure 6101.1(1)
PROPERTIES OF COMMON LP-GASES

TEMP (°F)	PRESS. (psig)	TEMP (°F)	PRESS. (psig)	TEMP (°F)	PRESS. (psig)	TEMP (°F)	PRESS. (psig)
130	257	70	109	20	40	-20	10
120	225	65	100	10	31	-25	8
110	197	60	92	0	23	-30	5
100	172	50	77	-5	20	-35	3
90	149	40	63	-10	16	-40	1
80	128	30	51	-15	13	-44	0

For SI: °C = [(°F) - 32]/1.8.

Figure 6101.1(2)
VAPOR PRESSURES OF PROPANE

INTERNATIONAL CODE COUNCIL®
Copyright © 2015 ICC. ALL RIGHTS RESERVED. Accessed by David Dammon on Jun 21, 2017 12:30:52 PM pursuant to License Agreement with ICC. No further reproduction or distribution authorized. ANY UNAUTHORIZED REPRODUCTION OR DISTRIBUTION IS A VIOLATION OF THE FEDERAL COPYRIGHT ACT AND THE LICENSE AGREEMENT, AND SUBJECT TO CIVIL AND CRIMINAL PENALTIES THEREUNDER.

An operational permit for installations using or storing LP-gas is required except when the installation is a container of 500-gallon (1893 L) water capacity or less and serving a Group R-3 occupancy. In addition, Section 105.7.8 requires that a construction permit be obtained for any installation of or modification to an LP-gas system.

The last sentence of this section is addressing stationary installations of LP-gas and states that for those installations requiring a permit, the container must not be filled unless that permit has been issued.

6101.3 Construction documents. Where a single LP-gas container is more than 2,000 gallons (7570 L) in water capacity or the aggregate water capacity of LP-gas containers is more than 4,000 gallons (15 140 L), the installer shall submit *construction documents* for such installation.

❖ This section applies to those installations for which a construction permit is required, namely when a new system is being installed or an existing system is being modified. When container size exceeds the thresholds specified, applicants must submit plans indicating compliance with requirements before approval can be authorized. Plans should be clear concise, legible, prepared on standard-sized paper and include the following:

- Location and legal identification (address and lot or parcel number) of the lot or site.
- Legal boundaries of the site, including reference to source or survey.
- Location of significant buildings on the lot or site and adjacent lots or sites.
- Location of nearest public roadways and site access.
- Location of all underground and overhead utilities.
- North arrow.
- Topographical features.
- Proposed container location with respect to buildings, building openings, lot lines, public roadways and underground or overhead utilities.
- Container dimensions and capacity.
- Container compliance markings (e.g., ASME, DOT, API).
- Details of container foundation and supports.
- Section through container showing supports and anchors and, if an underground tank, backfill and corrosion protection.
- Arrangement of valves and piping.
- Specifications for containers, valves, piping, tank mounts and pads and other related equipment and appliances.
- Means for protecting valves from tampering.
- Name, address and telephone number of property owner.
- Name, address and telephone number of installer and servicing contractor.

SECTION 6102
DEFINITIONS

6102.1 Definitions. The following terms are defined in Chapter 2:

LIQUEFIED PETROLEUM GAS (LP-gas).

LP-GAS CONTAINER.

❖ Definitions of terms can help in the understanding and application of the code requirements. This section directs the code user to Chapter 2 for the proper application of the indicated terms used in this chapter. Terms may be defined in Chapter 2 or in another *International Code*® as indicated in Section 201.3, or the dictionary meaning may be all that is needed (see also commentary, Sections 201.1 through 201.4).

SECTION 6103
INSTALLATION OF EQUIPMENT

6103.1 General. LP-gas equipment shall be installed in accordance with the *International Fuel Gas Code* and NFPA 58, except as otherwise provided in this chapter.

❖ The *International Fuel Gas Code*® (IFGC®) addresses the installation of equipment downstream from the final pressure regulator in the system, which typically is the second-stage regulator. The IFGC would, therefore, regulate LP-gas piping typically installed indoors, as well as appliance installations.

The remainder of Chapter 61 is devoted primarily to energy-consuming installations at which fuel-burning appliances are installed. NFPA 58 should be referred to for propane bulk plant installations; refrigerated storage installations; marine shipping and receiving installations and equipment-specific requirements such as for installing vaporizers and dispensers. The more detailed provisions in NFPA 58 should be reviewed by the fire code official before approving any LP-gas installation.

6103.2 Use of LP-gas containers in buildings. The use of LP-gas containers in buildings shall be in accordance with Sections 6103.2.1 and 6103.2.2.

❖ In general, storing and using LP-gas inside buildings is limited to relatively small quantities. There are some exceptions, such as the use of LP-gas for temporary heating in buildings under construction.

LP-gas containers are either fabricated to the requirements of the American Society of Mechanical Engineers (ASME) *Boiler and Pressure Vessel Code* (BPVC) or the DOT rules contained in Title 49 of the Code of Federal Regulations.

6103.2.1 Portable containers. Portable LP-gas containers, as defined in NFPA 58, shall not be used in buildings except as

INTERNATIONAL CODE COUNCIL®
Copyright © 2015 ICC. ALL RIGHTS RESERVED. Accessed by David Dammon on Jun 21, 2017 12:30:52 PM pursuant to License Agreement with ICC. No further reproduction or distribution authorized. ANY UNAUTHORIZED REPRODUCTION OR DISTRIBUTION IS A VIOLATION OF THE FEDERAL COPYRIGHT ACT AND THE LICENSE AGREEMENT, AND SUBJECT TO CIVIL AND CRIMINAL PENALTIES THEREUNDER.

specified in NFPA 58 and Sections 6103.2.1.1 through 6103.2.1.7.

❖ Portable containers are typically DOT cylinders, which are used in the vertical position. This is not always the case though; some recreational vehicles use DOT cylinders in a horizontal position (see Commentary Figure 6103.2.1).

One of the most common violations involving LP-gas is the storage or use of it inside buildings, particularly residential structures. This is a long-standing requirement that relates to the potential for releasing propane within a building.

In the past, any propane cylinder would release propane simply by opening the service valve; however, advances have been made in the technologies used in the propane industry. Since 1995, propane cylinders shipped with new outdoor cooking equipment (grills, smokers, etc.) must be fitted with valves that will not release propane even if the valve handle is opened, unless a positive, leak-tight connection is made between the cylinder and the cooking equipment. This technology, as well as two others that would stop the flow of gas under fire conditions or if there were a hose line break, are required by ANSI Z21.58.

6103.2.1.1 Use in basement, pit or similar location. LP-gas containers shall not be used in a basement, pit or similar location where heavier-than-air gas might collect. LP-gas containers shall not be used in an above-grade underfloor space or basement unless such location is provided with an *approved* means of ventilation.

Exception: Use with self-contained torch assemblies in accordance with Section 6103.2.1.6.

❖ Because propane has a specific gravity of 1.52 at 60°F (16°C) (which means it is 1.52 times heavier than air at that temperature), it has been assumed to automatically sink to the ground when it is released to the atmosphere. Even though the laws of physics have proven this concept to be untrue, concerns persist about the ability for propane to disperse in locations where air circulation is restricted. Any ventilation system design should take into account the expected temperatures at the location and an expected leak rate from the piping system.

Only LP-gas containers are prohibited from being used in basements, pits and similar locations. Hard-piped systems in which the container remains outside the building can serve systems installed in basements, pits and similar locations. The hazard associated with containers in buildings relates to the fact that the pressure in the container is dependent on the temperature of the propane within it and can exceed 100 pounds per square inch gauge (psig) at 70°F (21°C), whereas the pressure in the building piping of a propane service is usually 0.5 psig (3 kPa).

In the past, the model codes prohibited the use of any propane system in spaces below grade. The U.S. Consumer Product Safety Commission (CPSC) staff concluded, however, that the rate of incidents occurring in propane systems used in basements and underground locations is no different than that occurring in above-ground locations.

The exception to this requirement acknowledges the use of self-contained torch assemblies, which are limited to about 1 pound (0.454 kg) (2.5 pounds water) of propane per container.

6103.2.1.2 Construction and temporary heating. Portable LP-gas containers are allowed to be used in buildings or areas of buildings undergoing construction or for temporary heating as set forth in Sections 6.19.4, 6.19.5 and 6.19.8 of NFPA 58.

❖ The referenced sections in NFPA 58 address the use of temporary heating in buildings undergoing construction or renovations, or industrial buildings under certain conditions.

6103.2.1.3 Group F occupancies. In Group F occupancies, portable LP-gas containers are allowed to be used to supply quantities necessary for processing, research or experimentation. Where manifolded, the aggregate water capacity of such containers shall not exceed 735 pounds (334 kg) per manifold. Where multiple manifolds of such containers are present in the same room, each manifold shall be separated from

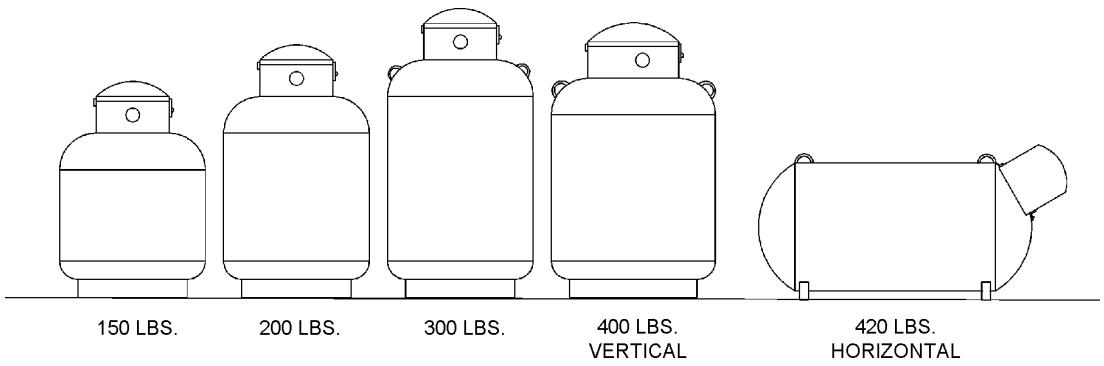

For SI: 1 pound = 0.454 kg.

Figure 6103.2.1
TYPICAL DOT CYLINDERS

INTERNATIONAL CODE COUNCIL®
Copyright © 2015 ICC. ALL RIGHTS RESERVED. Accessed by David Dammon on Jun 21, 2017 12:30:52 PM pursuant to License Agreement with ICC. No further reproduction or distribution authorized. ANY UNAUTHORIZED REPRODUCTION OR DISTRIBUTION IS A VIOLATION OF THE FEDERAL COPYRIGHT ACT AND THE LICENSE AGREEMENT, AND SUBJECT TO CIVIL AND CRIMINAL PENALTIES THEREUNDER.

other manifolds by a distance of not less than 20 feet (6096 mm).

❖ The use of manifolds to connect containers increases the overall capacity of the system by increasing its vaporization capacity. The vaporization rate is directly related to the total surface area of the containers. Using manifolds, however, also increases the number of connections made on a system, and, because the connections in a piping system under pressure are where leaks are likely to originate, the total volume of propane in manifolded systems is limited to that shown. The amount of propane in pounds can be calculated from the water capacity in pounds by multiplying by 0.42. In this instance, the amount of propane permitted is about 310 pounds (141 kg).

6103.2.1.4 Group E and I occupancies. In Group E and I occupancies, portable LP-gas containers are allowed to be used for research and experimentation. Such containers shall not be used in classrooms. Such containers shall not exceed a 50-pound (23 kg) water capacity in occupancies used for educational purposes and shall not exceed a 12-pound (5 kg) water capacity in occupancies used for institutional purposes. Where more than one such container is present in the same room, each container shall be separated from other containers by a distance of not less than 20 feet (6096 mm).

❖ Further restrictions on the use of propane in educational (schools) and institutional occupancies reflect the likelihood that the occupants of those spaces will be limited in their ability to respond to an emergency.

The minimum distance of 20 feet (6096 mm) is intended to provide a factor of safety so that if one installation becomes a source of an ignited jet plume, any other similar installations would not be directly exposed to the plume.

6103.2.1.5 Demonstration uses. Portable LP-gas containers are allowed to be used temporarily for demonstrations and public exhibitions. Such containers shall not exceed a water capacity of 12 pounds (5 kg). Where more than one such container is present in the same room, each container shall be separated from other containers by a distance of not less than 20 feet (6096 mm).

❖ This section restricts the size of LP-gas containers used for demonstrations to roughly 5 pounds (2.3 kg) of propane capacity. There is no restriction on the number of containers, however; only a limitation that they be separated by at least 20 feet (6096 mm) for the same reason as specified in the previous section.

6103.2.1.6 Use with self-contained torch assemblies. Portable LP-gas containers are allowed to be used to supply *approved* self-contained torch assemblies or similar appliances. Such containers shall not exceed a water capacity of $2^1/_2$ pounds (1 kg).

❖ A common example of the use described in this section is jewelry making using portable LP-gas containers to supply approved self-contained torch assemblies when such containers do not exceed a $2^1/_2$-pound (1.13 kg) water capacity. This section, which correlates with Section 6.20.9.3 of NFPA 58, is not contingent on the type of operation or whether it is permanent or temporary. Thus, this section allows jewelry manufacturers to use portable LP-gas containers in accordance with the requirements set forth in NFPA 58. NFPA 58 also requires that these LP-gas containers comply with UL 147A, *Nonrefillable (Disposable Type Fuel Gas Cylinder Assemblies*.

6103.2.1.7 Use for food preparation. Where *approved*, *listed* LP-gas commercial food service appliances are allowed to be used for food-preparation within restaurants and in attended commercial food-catering operations in accordance with the *International Fuel Gas Code*, the *International Mechanical Code* and NFPA 58.

❖ Although not stated explicitly, this section intends to permit the use of LP-gas containers in buildings with commercial food service cooking appliances. The code requires that those appliances be approved. Typically, this type of appliance will be labeled in accordance with one of the ANSI Z83 series standards for commercial gas cooking equipment.

6103.2.2 Industrial vehicles and floor maintenance machines. LP-gas containers on industrial vehicles and floor maintenance machines shall comply with Sections 11.13 and 11.14 of NFPA 58.

❖ This section simply refers to the correct section reference in NFPA 58 for containers serving engines mounted on industrial vehicles and floor maintenance machines.

6103.3 Location of equipment and piping. Equipment and piping shall not be installed in locations where such equipment and piping is prohibited by the *International Fuel Gas Code*.

❖ With respect to LP-gas systems, the IFGC addresses equipment and piping downstream of the second-stage regulator, which would typically include all piping and appliances within the building.

SECTION 6104
LOCATION OF LP-GAS CONTAINERS

6104.1 General. The storage and handling of LP-gas and the installation and maintenance of related equipment shall comply with NFPA 58 and be subject to the approval of the *fire code official*, except as provided in this chapter.

❖ This section reinforces the need to review NFPA 58 for detailed provisions before any installation of LP-gas is approved.

6104.2 Maximum capacity within established limits. Within the limits established by law restricting the storage of liquefied petroleum gas for the protection of heavily populated or congested areas, the aggregate capacity of any one installation shall not exceed a water capacity of 2,000 gallons

INTERNATIONAL CODE COUNCIL®
Copyright © 2015 ICC. ALL RIGHTS RESERVED. Accessed by David Dammon on Jun 21, 2017 12:30:52 PM pursuant to License Agreement with ICC. No further reproduction or distribution authorized. ANY UNAUTHORIZED REPRODUCTION OR DISTRIBUTION IS A VIOLATION OF THE FEDERAL COPYRIGHT ACT AND THE LICENSE AGREEMENT, AND SUBJECT TO CIVIL AND CRIMINAL PENALTIES THEREUNDER.

(7570 L) (see Section 3 of the Sample Legislation for Adoption of the *International Fire Code* on page xxi).

Exception: In particular installations, this capacity limit shall be determined by the *fire code official*, after consideration of special features such as topographical conditions, nature of occupancy, and proximity to buildings, capacity of proposed LP-gas containers, degree of fire protection to be provided and capabilities of the local fire department.

❖ This section originated in NFPA 58 and is intended to establish a limit on ordinary above-ground containers in densely populated areas. The requirement establishes a level of acceptable risk to the general public; however, the scientific basis for the 2,000-gallon (908 kg) limitation is not clear.

The question is often asked, "What is the definition of heavily populated or congested areas?" Heavily populated and congested areas are those areas that are determined by the fire code official to pose a risk of substantial loss from a fire involving large containers of LP-gas and are designated in the jurisdiction's adopting ordinance. Such areas could be likened to the areas designated as "fire districts" in Appendix D of the IBC. This section refers to "the limits established by law" to cross reference those provisions in the ordinance adopting the code. The model adopting ordinance on page xxi of the *International Fire Code*® (IFC®) includes Section 3 to correlate with this section in defining these limits.

The exception recognizes that consideration of the specific features of the installation, such as fire protection systems, mounding or burying of containers or the capabilities of the local fire-fighting service, should be taken into account before establishing any limit on the system's capacity.

6104.3 Container location. LP-gas containers shall be located with respect to buildings, *public ways* and *lot lines* of adjoining property that can be built upon, in accordance with Table 6104.3.

❖ This paragraph references Table 6104.3, which contains the requirements for siting LP-gas containers on a piece of property.

Separating and protecting containers from each other and from buildings and heat-producing appliances are the principal means for preventing container failures and accidental ignitions. Separation serves at least two purposes. Outside a building, separating tanks from structures allows escaping gas to disperse or dilute before it can enter a building or come in contact with an ignition source. Similarly, the container is protected to an extent from a hazardous exposure if escaping gas is ignited, and the tank is protected if the building becomes involved in a fire.

Separating containers from each other or from other groups of containers minimizes the scale of an accident if a tank or group of containers becomes involved in a fire. Though the separation distances do not result in absolute protection from fire exposures and leaks, they do provide a measure of access for establishing fire-fighting positions to protect tanks and exposures.

TABLE 6104.3. See page 61-7.

❖ This table has its origins in NFPA 58 and has existed for many years. This establishes reasonable distances that can be used to determine separation requirements between an LP-gas container installation and buildings, lot lines and public ways, as well as between multiple containers installed at the same site. The important factors to consider when establishing suitable distances include the container capacity and whether it is installed above ground, mounded or below ground. See Commentary Figure 6104.3(1) for a graphic depiction of the requirements.

As one would expect, the required distances are reduced for containers that are mounded or installed underground because of the reduced exposure of the container to external sources of heat. Although not defined in the code, the difference between a mounded container and one installed underground is that a mounded container is an ASME container labeled for underground installation but installed above the minimum depth required for underground service. NFPA 58 contains specific provisions for mounding tanks.

Note a to Table 6104.3 defines the endpoint for measuring the separation distance for underground containers as being the relief device, which will release propane to the atmosphere only under abnormal conditions, and the filling connection and liquid-level gauge, both of which release propane during a normal filling operation.

Note b contains a requirement for building overhangs in which the overhang is less than 50 feet (15 240 mm) above the relief device discharge outlet. This dimension represents what is considered a safe distance to prevent the accumulation of LP-gas should the relief device discharge [see Commentary Figure 6104.3(2)].

Note c requires that clearances be provided to allow installation and maintenance, if necessary, for underground tanks, which must be done using a backhoe or some other large piece of equipment.

Note d anticipates an increase in the hazard of those installations made up of at least four containers because of the greater number of joints and connections needed as well as perhaps a greater risk of involvement of the storage system in a building fire.

Note e addresses installing smaller containers and focuses on requirements for locating relief devices and other appurtenances an acceptable distance from potential sources of ignition.

Note f permits a reduction in the required distances for a 1,200-gallon (4,542 L) water capacity container, which is typically the maximum size for a container that would be used for any residential service.

INTERNATIONAL CODE COUNCIL®
Copyright © 2015 ICC. ALL RIGHTS RESERVED. Accessed by David Dammon on Jun 21, 2017 12:30:52 PM pursuant to License Agreement with ICC. No further reproduction or distribution authorized. ANY UNAUTHORIZED REPRODUCTION OR DISTRIBUTION IS A VIOLATION OF THE FEDERAL COPYRIGHT ACT AND THE LICENSE AGREEMENT, AND SUBJECT TO CIVIL AND CRIMINAL PENALTIES THEREUNDER.

TABLE 6104.3
LOCATION OF LP-GAS CONTAINERS

LP-GAS CONTAINER CAPACITY (water gallons)	MINIMUM SEPARATION BETWEEN LP-GAS CONTAINERS AND BUILDINGS, PUBLIC WAYS OR LOT LINES OF ADJOINING PROPERTY THAT CAN BE BUILT UPON		MINIMUM SEPARATION BETWEEN LP-GAS CONTAINERS[b, c] (feet)
	Mounded or underground LP-gas containers[a] (feet)	Above-ground LP-gas containers[b] (feet)	
Less than 125[c, d]	10	5[e]	None
125 to 250	10	10	None
251 to 500	10	10	3
501 to 2,000	10	25[e, f]	3
2,001 to 30,000	50	50	5
30,001 to 70,000	50	75	(0.25 of sum of diameters of adjacent LP-gas containers)
70,001 to 90,000	50	100	
90,001 to 120,000	50	125	

For SI: 1 foot = 304.8 mm, 1 gallon = 3.785 L.

a. Minimum distance for underground LP-gas containers shall be measured from the pressure relief device and the filling or liquid-level gauge vent connection at the container, except that all parts of an underground LP-gas container shall be not less than 10 feet from a building or lot line of adjoining property that can be built upon.

b. For other than installations in which the overhanging structure is 50 feet or more above the relief-valve discharge outlet. In applying the distance between buildings and ASME LP-gas containers with a water capacity of 125 gallons or more, not less than 50 percent of this horizontal distance shall also apply to all portions of the building that project more than 5 feet from the building wall and that are higher than the relief valve discharge outlet. This horizontal distance shall be measured from a point determined by projecting the outside edge of such overhanging structure vertically downward to grade or other level upon which the LP-gas container is installed. Distances to the building wall shall be not less than those prescribed in this table.

c. Where underground multicontainer installations are composed of individual LP-gas containers having a water capacity of 125 gallons or more, such containers shall be installed so as to provide access at their ends or sides to facilitate working with cranes or hoists.

d. At a consumer site, if the aggregate water capacity of a multicontainer installation, comprised of individual LP-gas containers having a water capacity of less than 125 gallons, is 500 gallons or more, the minimum distance shall comply with the appropriate portion of Table 6104.3, applying the aggregate capacity rather than the capacity per LP-gas container. If more than one such installation is made, each installation shall be separated from other installations by not less than 25 feet. Minimum distances between LP-gas containers need not be applied.

e. The following shall apply to above-ground containers installed alongside buildings:
   1. LP-gas containers of less than a 125-gallon water capacity are allowed next to the building they serve where in compliance with Items 2, 3 and 4.
   2. Department of Transportation (DOTn) specification LP-gas containers shall be located and installed so that the discharge from the container pressure relief device is not less than 3 feet horizontally from building openings below the level of such discharge and shall not be beneath buildings unless the space is well ventilated to the outside and is not enclosed for more than 50 percent of its perimeter. The discharge from LP-gas container pressure relief devices shall be located not less than 5 feet from exterior sources of ignition, openings into direct-vent (sealed combustion system) appliances or mechanical ventilation air intakes.
   3. ASME LP-gas containers of less than a 125-gallon water capacity shall be located and installed such that the discharge from pressure relief devices shall not terminate in or beneath buildings and shall be located not less than 5 feet horizontally from building openings below the level of such discharge and not less than 5 feet from exterior sources of ignition, openings into direct vent (sealed combustion system) appliances, or mechanical ventilation air intakes.
   4. The filling connection and the vent from liquid-level gauges on either DOTn or ASME LP-gas containers filled at the point of installation shall be not less than 10 feet from exterior sources of ignition, openings into direct vent (sealed combustion system) appliances or mechanical ventilation air intakes.

f. This distance is allowed to be reduced to not less than 10 feet for a single LP-gas container of 1,200-gallon water capacity or less, provided such container is not less than 25 feet from other LP-gas containers of more than 125-gallon water capacity.

INTERNATIONAL CODE COUNCIL®
Copyright © 2015 ICC. ALL RIGHTS RESERVED. Accessed by David Dammon on Jun 21, 2017 12:30:52 PM pursuant to License Agreement with ICC. No further reproduction or distribution authorized. ANY UNAUTHORIZED REPRODUCTION OR DISTRIBUTION IS A VIOLATION OF THE FEDERAL COPYRIGHT ACT AND THE LICENSE AGREEMENT, AND SUBJECT TO CIVIL AND CRIMINAL PENALTIES THEREUNDER.

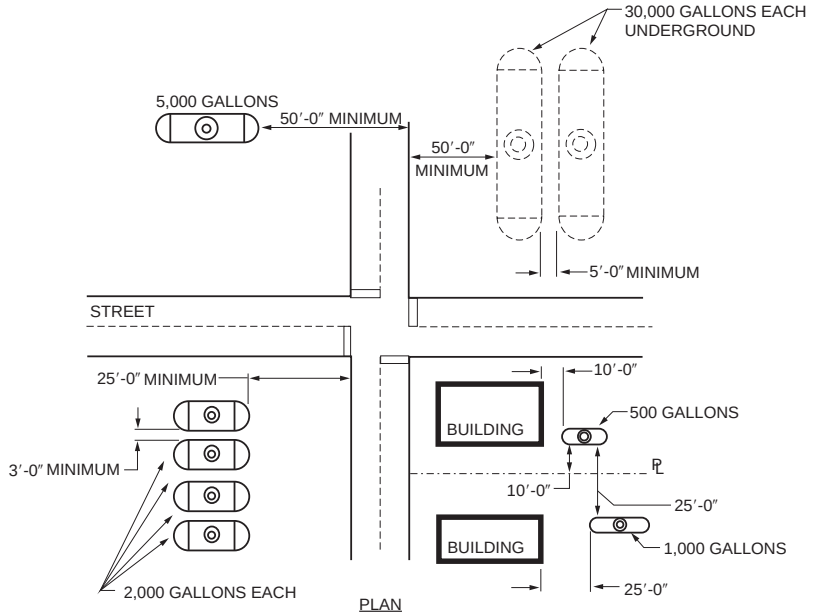

NOTE: ALL LPG CYLINDERS, ALL ABOVE GROUND EXCEPT WHERE NOTED.

For SI: 1 foot = 304.8 mm, 1 gallon = 3.785 L.

Figure 6104.3(1)
LOCATION OF LPG CYLINDER/CONTAINER PER TABLE 6104.3

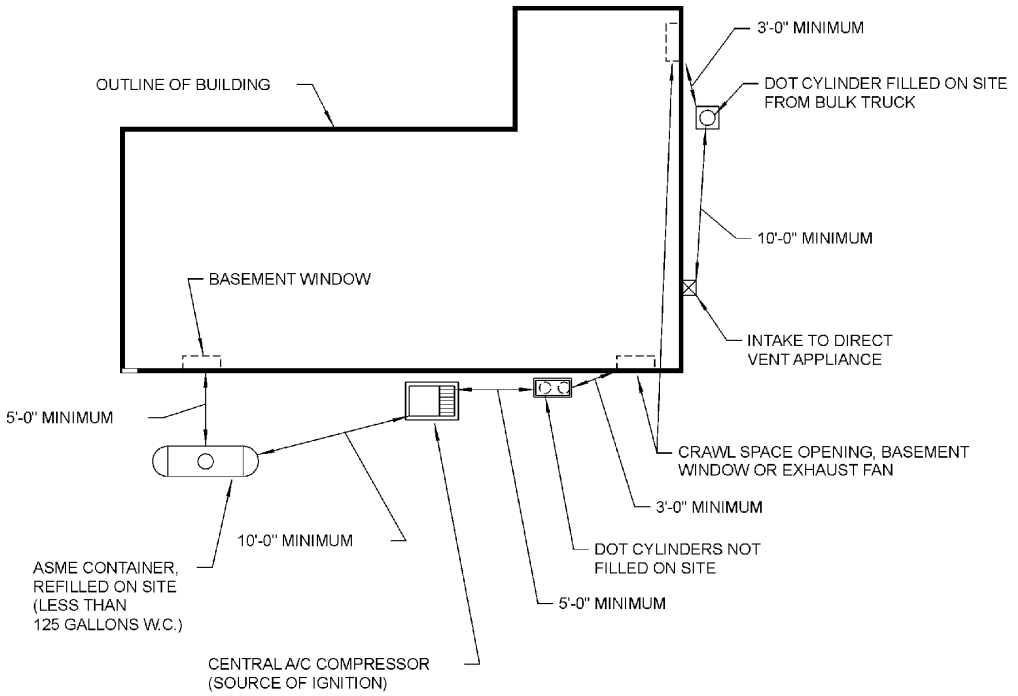

For SI: 1 foot = 304.8 mm, 1 gallon = 3.785 L.

Figure 6104.3(2)
LOCATION OF DOT AND ASME CONTAINERS

INTERNATIONAL CODE COUNCIL®
Copyright © 2015 ICC. ALL RIGHTS RESERVED. Accessed by David Dammon on Jun 21, 2017 12:30:52 PM pursuant to License Agreement with ICC. No further reproduction or distribution authorized. ANY UNAUTHORIZED REPRODUCTION OR DISTRIBUTION IS A VIOLATION OF THE FEDERAL COPYRIGHT ACT AND THE LICENSE AGREEMENT, AND SUBJECT TO CIVIL AND CRIMINAL PENALTIES THEREUNDER.

6104.3.1 Installation on roof prohibited. LP-gas containers used in stationary installations shall not be located on the roofs of buildings.

❖ Installation of stationary containers on the roof of buildings is permitted by NFPA 58; however, based on this section, stationary LP-gas containers are not allowed on the roof of any building. This prohibition takes precedence over the NFPA 58 requirements because of Section 102.7 of the code. Note that the use of the word "stationary" is intended to make it clear that this section should not be misinterpreted to include containers used for temporary applications such as applying roofing materials or brazing operations. A stationary LP-gas installation is defined in Chapter 3 of NFPA 58 as "An installation of LP-gas containers, piping and equipment for indefinite use at a particular location; an installation is not normally expected to change in status, condition, or location." A stationary installation is assembled from approved DOT cylinders or ASME-compliant containers, piping and equipment such as pressure regulators that remain on the site for an indefinite time period. Section 105.7.12 requires a construction permit for any LP-gas system. Temporary operations require an operational permit in accordance with Section 105.6.28 and possibly other operational permits, depending on the specific operation being conducted. For example, LP-gas is commonly used by contractors for soldering water or refrigerant piping systems. Many roof covering systems are applied using LP-gas-fueled torch systems, which constitute hot work and must comply with the requirements in Chapter 35 (see Commentary Figure 6104.3.1). Torch-applied roofing systems also need to comply with the requirements of Section 3317 for hot work. When LP-gas cylinders are required on a building roof or inside a building for temporary maintenance or construction reasons, their on-site transportation and use should comply with the requirements of Section 6.20 of NFPA 58 for cylinders, equipment, piping and appliances in buildings, building roofs and exterior balconies.



Figure 6104.3.1
TORCH-APPLIED ROOFING APPARATUS

6104.3.2 Special hazards. LP-gas containers shall be located with respect to special hazards including, but not limited to, above-ground flammable or *combustible liquid* tanks, oxygen or gaseous hydrogen containers, flooding or electric power lines as specified in Section 6.4.5 of NFPA 58.

❖ Additional requirements may apply when siting an LP-gas container. Other products stored in the vicinity may present specific hazards that must be addressed. Flood hazard areas are defined in Section 202 of the *International Building Code*® (IBC®).

6104.4 Multiple LP-gas container installations. Multiple LP-gas container installations with a total water storage capacity of more than 180,000 gallons (681 300 L) [150,000-gallon (567 750 L) LP-gas capacity] shall be subdivided into groups containing not more than 180,000 gallons (681 300 L) in each group. Such groups shall be separated by a distance of not less than 50 feet (15 240 mm), unless the containers are protected in accordance with one of the following:

1. Mounded in an *approved* manner.
2. Protected with *approved* insulation on areas that are subject to impingement of ignited gas from pipelines or other leakage.
3. Protected by fire walls of *approved* construction.
4. Protected by an *approved* system for application of water as specified in Table 6.4.2 of NFPA 58.
5. Protected by other *approved* means.

Where one of these forms of protection is provided, the separation shall be not less than 25 feet (7620 mm) between LP-gas container groups.

❖ These separation requirements are intended to minimize the exposure of adjacent containers following ignition of a release and to establish access for fire fighting. When used, insulation must be capable of preventing container temperatures from exceeding 800°F (427°C) for at least 50 minutes. Annex H of NFPA 58 details the performance test for LP-gas tank insulation systems.

SECTION 6105
PROHIBITED USE OF LP-GAS

6105.1 Nonapproved equipment. LP-gas shall not be used for the purpose of operating devices or equipment unless such device or equipment is *approved* for use with LP-gas.

❖ Appliances and equipment must be approved for use with LP-gas. For example, appliances should be listed for use with LP-gas; hoses used to serve LP-gas installations should be listed and labeled for that use.

INTERNATIONAL CODE COUNCIL®
Copyright © 2015 ICC. ALL RIGHTS RESERVED. Accessed by David Dammon on Jun 21, 2017 12:30:52 PM pursuant to License Agreement with ICC. No further reproduction or distribution authorized. ANY UNAUTHORIZED REPRODUCTION OR DISTRIBUTION IS A VIOLATION OF THE FEDERAL COPYRIGHT ACT AND THE LICENSE AGREEMENT, AND SUBJECT TO CIVIL AND CRIMINAL PENALTIES THEREUNDER.

6105.2 Release to the atmosphere. LP-gas shall not be released to the atmosphere, except in accordance with Section 7.3 of NFPA 58.

❖ The release of LP-gas to the atmosphere is not recommended, but sometimes cannot be avoided. Prior to the 2015 edition, the code permitted LP-gas to be released to the atmosphere only while the container is being filled, through the fixed maximum liquid level gauge. One such common instance is when filling a container at a residence. The delivery person must rely on the fixed liquid-level gauge to determine when the maximum amount of LP-gas has been reached. This gauge has a very small circular orifice that is connected to a tube that extends into the container to a level consistent with the height of the liquid when the container would be 80-percent full. When the liquid level in the container being filled reaches the bottom of the tube opening, a small amount of liquid escapes from the gauge to the atmosphere, causing it to vaporize. The vaporizing gas cools the surrounding air to the point that the moisture in the air condenses and forms a white cloud. When the delivery person observes this cloud, the filling operation is stopped.

Another instance in which the release of gas to the atmosphere is unavoidable is when the filling hose is disconnected from the container fill valve. The liquid remaining in the hose is released to the atmosphere and vaporizes.

There are many other situations that require the release of LP-gas under controlled conditions. Section 7.3 of NFPA 58 recognizes additional circumstances that necessitate the release of gas to the atmosphere, including the release of gas when the filling hose is disconnected from the filler valve on the container; the release of gas necessary to make cylinders and other containers safe prior to being serviced; and the release of gas that may be necessary in order to properly purge a container of air to make it safe for filling. These are a few of the common occurrences in the propane industry that necessitate the release of LP-gas to the atmosphere.

SECTION 6106
DISPENSING AND OVERFILLING

6106.1 Attendants. Dispensing of LP-gas shall be performed by a qualified attendant.

❖ This section requires that any person transferring LP-gas must be qualified, which means that person must be trained. A number of training materials are available, most notably the *Certified Employees Training Program* published by the National Propane Gas Association (NPGA).

6106.2 Overfilling. LP-gas containers shall not be filled or maintained with LP-gas in excess of either the volume determined using the fixed liquid-level gauge installed in accordance with the manufacturer's specifications and in accordance with Section 5.7.5 of NFPA 58 or the weight determined by the required percentage of the water capacity marked on the container. Portable LP-gas containers shall not be refilled unless equipped with an overfilling prevention device (OPD) where required by Section 5.7.3 of NFPA 58.

❖ Overfilling a container can result in a catastrophic release of LP-gas because of the relatively high coefficient of expansion of liquid LP-gas. Depending on how much a container has been overfilled, a temperature difference of just a few degrees can result in the container becoming "liquid full," which increases the pressure in the container dramatically and leads to the pressure relief device opening, releasing LP-gas to the atmosphere.

Detailed requirements for filling containers are given in NFPA 58. As stated there, the maximum amount of LP-gas permitted in a container may vary between containers filled by weight or by volume because the density of liquid LP-gas varies greatly with different temperatures.

Since 2002, NFPA 58 has not permitted the filling of cylinders for vapor service in the 4- to 40-pound (1.8 kg and 18 kg) range unless the cylinder is equipped with an overfill prevention device (OPD). An OPD is a float-operated mechanism that is designed to act as a backup to the normal filling procedures (using either a scale or the fixed liquid-level gauge) and will automatically close the filler valve when the liquid in the container reaches 80 percent of the container volume. The OPD cannot be seen, but new containers having this safety device are identifiable by the three lobes on the handwheel on the valve (see Commentary Figure 6106.2). Accordingly, all cylinders in a cylinder exchange program must be

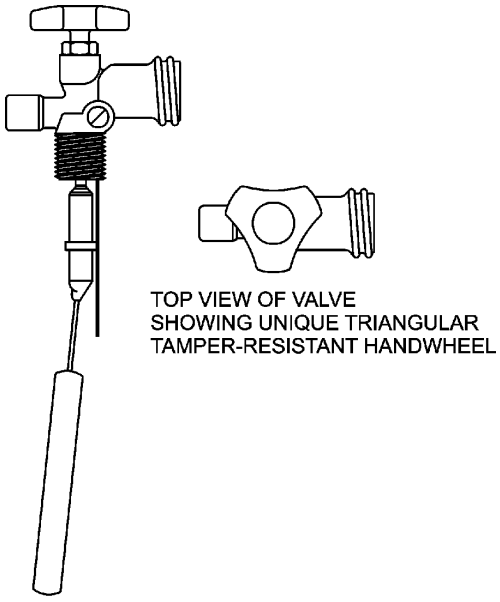

Figure 6106.2
CYLINDER VALVE WITH
OVERFILL PREVENTION DEVICE

INTERNATIONAL CODE COUNCIL®
Copyright © 2015 ICC. ALL RIGHTS RESERVED. Accessed by David Dammon on Jun 21, 2017 12:30:52 PM pursuant to License Agreement with ICC. No further reproduction or distribution authorized. ANY UNAUTHORIZED REPRODUCTION OR DISTRIBUTION IS A VIOLATION OF THE FEDERAL COPYRIGHT ACT AND THE LICENSE AGREEMENT, AND SUBJECT TO CIVIL AND CRIMINAL PENALTIES THEREUNDER.

equipped with or retrofitted with an OPD. Prior to the introduction of OPDs, overfilled cylinders may have initially held their charge, but later leaked when cylinder pressure increased due to high ambient temperature exposures. This safeguard against overfilling portable containers is found in referenced Section 5.7.3 of NFPA 58.

This section requires the use of a manufacturer-installed liquid level gauge to fill a container. The liquid level gauge is generally an integral part of the service valve which is used to turn the tank on and off. Service valves have rubber or plastic o-rings that can start to leak over time. It is common practice in the industry to field repair and replace valves and gauges on both ASME tanks and DOTn cylinders, as needed. When a service valve becomes faulty, a new valve is installed with a liquid level gauge tube of exactly the same length. In addition, OPD systems on DOT cylinders may also require periodic replacement. The propane industry has procedures and training to successfully perform these replacements and repair.

This section also acknowledges that the service and repair of propane containers in the field does take place and NFPA 58 Section 5.7.5 covers the requirements for proper installation and the use of liquid level gauges.

6106.3 Dispensing locations. The point of transfer of LP-gas from one LP-gas container to another shall be separated from exposures as specified in NFPA 58.

❖ Because the release of LP-gas to the atmosphere in small quantities may be unavoidable when filling a container, all possible sources of ignition in the vicinity of the point of transfer must be accounted for. NFPA 58 includes detailed requirements for establishing clearances from those sources of ignition.

SECTION 6107
SAFETY PRECAUTIONS AND DEVICES

6107.1 Safety devices. Safety devices on LP-gas containers, equipment and systems shall not be tampered with or made ineffective.

❖ The safety devices found on all propane containers include the service valve, the filler valve (part of the service valve on some containers) and the pressure relief device. In addition, small cylinders with a propane capacity between 4 and 40 pounds (1.8 and 18 kg) now may have a separate device called an OPD attached to the service valve inside the container. See the commentary to Section 6106.2 for further discussion of OPDs.

6107.2 Smoking and other sources of ignition. "No Smoking" signs complying with Section 310 shall be posted where required by the *fire code official*. Smoking within 25 feet (7620 mm) of a point of transfer, while filling operations are in progress at LP-gas containers or vehicles, shall be prohibited.

Control of other sources of ignition shall comply with Chapter 3 of this code and Section 6.22 of NFPA 58.

❖ Because of the nature of the filling operation, it may be inevitable that some quantity of gas will be released to the atmosphere; therefore, strict observance of the requirement for prohibiting sources of ignition within the limits prescribed here is essential.

6107.3 Clearance to combustibles. Weeds, grass, brush, trash and other combustible materials shall be kept not less than 10 feet (3048 mm) from LP-gas tanks or containers.

❖ The concern addressed here is the potential threat to a container of LP-gas from the ignition of nearby combustible material. It has been common practice to exempt from this requirement landscaping materials, such as grass and shrubs, that are regularly maintained.

6107.4 Protecting containers from vehicles. Where exposed to vehicular damage due to proximity to alleys, driveways or parking areas, LP-gas containers, regulators and piping shall be protected in accordance with NFPA 58.

❖ Because NFPA 58 is specific to LP-gas and contains requirements for vehicle impact protection as well as annex guidance on how to accomplish such protection, it makes sense for this section to reference NFPA 58 for this topic to avoid conflicts between the code and the referenced standard.

SECTION 6108
FIRE PROTECTION

6108.1 General. Fire protection shall be provided for installations having LP-gas storage containers with a water capacity of more than 4,000 gallons (15 140 L), as required by Section 6.25 of NFPA 58.

❖ This section refers to NFPA 58 for the criteria to establish where fire protection should be installed at any location where the aggregate water capacity of LP-gas containers exceeds 4,000 gallons (15 140 L). The objective is to provide protection to those containers that are exposed to the threat of fire. NFPA 58 should be referred to for exceptions to this requirement.

6108.2 Portable fire extinguishers. Portable fire extinguishers complying with Section 906 shall be provided as specified in NFPA 58.

❖ Refer to NFPA 58 to determine where fire extinguishers must be provided.

INTERNATIONAL CODE COUNCIL®
Copyright © 2015 ICC. ALL RIGHTS RESERVED. Accessed by David Dammon on Jun 21, 2017 12:30:52 PM pursuant to License Agreement with ICC. No further reproduction or distribution authorized. ANY UNAUTHORIZED REPRODUCTION OR DISTRIBUTION IS A VIOLATION OF THE FEDERAL COPYRIGHT ACT AND THE LICENSE AGREEMENT, AND SUBJECT TO CIVIL AND CRIMINAL PENALTIES THEREUNDER.

SECTION 6109
STORAGE OF PORTABLE LP-GAS CONTAINERS AWAITING USE OR RESALE

6109.1 General. Storage of portable LP-gas containers of 1,000 pounds (454 kg) or less, whether filled, partially filled or empty, at consumer sites or distribution points, and for resale by dealers or resellers shall comply with Sections 6109.2 through 6109.15.1.

Exceptions:

1. LP-gas containers that have not previously been in LP-gas service.
2. LP-gas containers at distribution plants.
3. LP-gas containers at consumer sites or distribution points, which are connected for use.

❖ This section is intended to apply to DOT cylinders, which are distinguishable from ASME containers by their vertical orientation (ASME containers are usually horizontally oriented) and markings on the collar (see Commentary Figure 6103.2.1).

The container size threshold of 1,000 pounds (454 kg) is the water capacity of the container; therefore, the maximum propane capacity would be 420 pounds (191 kg).

Exception 1 applies to containers that are brand new and have never contained LP-gas. Such containers would not be subject to this chapter but, rather, would be treated as any other mercantile product. Exceptions 2 and 3 include those containers already in use and those at LP-gas distribution plants, at which employees are trained in the hazards of LP-gas and whose everyday job functions include the handling of the containers.

6109.2 Exposure hazards. LP-gas containers in storage shall be located in a manner that minimizes exposure to excessive temperature rise, physical damage or tampering.

❖ Because of the relatively high coefficient of expansion for liquid LP-gas, precautions must be taken to prevent overheating of containers that could lead to releases of LP-gas to the atmosphere.

6109.3 Position. LP-gas containers in storage having individual water capacity greater than $2^1/_2$ pounds (1 kg) [nominal 1-pound (0.454 kg) LP-gas capacity] shall be positioned with the pressure relief valve in direct communication with the vapor space of the container.

❖ Liquid propane released to the atmosphere through the relief valve will expand to 270 times its original volume after it vaporizes, whereas propane vapor will expand much less. To avoid the release of liquid propane, it is important to keep the pressure relief device in contact with the vapor space. Most cylinders are designed to be oriented vertically, so the relief device is at the top of the cylinder; however, some cylinders used in the recreational vehicle industry are designed for horizontal orientation only, and must be kept in that position for the relief valve to be in contact with the vapor space. Some cylinders are designed for use in either the horizontal or vertical orientation.

6109.4 Separation from means of egress. LP-gas containers stored in buildings in accordance with Sections 6109.9 and 6109.11 shall not be located near *exit access* doors, *exits*, *stairways* or in areas normally used, or intended to be used, as a *means of egress.*

❖ This section states that LP-gas containers may not be stored where they would block a means of egress in a building. The required means of egress widths and capacities must not be infringed upon by either LP-gas containers or the cabinets in which they may be stored.

6109.5 Quantity. Empty LP-gas containers that have been in LP-gas service shall be considered as full containers for the purpose of determining the maximum quantities of LP-gas allowed in Sections 6109.9 and 6109.11.

❖ Because the actual quantity of LP-gas in a container cannot always be determined, every container stored at a location must be treated as a full container.

6109.6 Storage on roofs. LP-gas containers that are not connected for use shall not be stored on roofs.

❖ The roof is a location that is likely to become warmer than atmospheric conditions on a sunny day; therefore, LP-gas containers must not be stored on roofs when they are not connected for use.

6109.7 Storage in basement, pit or similar location. LP-gas containers shall not be stored in a basement, pit or similar location where heavier-than-air gas might collect. LP-gas containers shall not be stored in above-grade underfloor spaces or basements unless such location is provided with an *approved* means of ventilation.

Exception: Department of Transportation (DOTn) specification cylinders with a maximum water capacity of $2^1/_2$ pounds (1 kg) for use in completely self-contained hand torches and similar applications. The quantity of LP-gas shall not exceed 20 pounds (9 kg).

❖ Because propane has a specific gravity of 1.52 at 60°F (16°C) (which means it is 1.52 times heavier than air at that temperature), it has been assumed to automatically sink to the ground when it is released to the atmosphere. Even though the laws of physics have proven this concept to be untrue, concerns persist about propane dispersing in locations where air circulation is restricted. Any proposed ventilation system should take into account the expected temperatures at the location.

The exception to this section would permit very small, disposable cylinders to be stored in these locations.

6109.8 Protection of valves on LP-gas containers in storage. LP-gas container valves shall be protected by screw-on-type caps or collars that shall be securely in place on all containers stored regardless of whether they are full, partially full or empty. Container outlet valves shall be closed or plugged.

❖ Valve assemblies must be protected from physical impact. Cylinders having propane capacities up to 60 pounds (27 kg) will usually have collars that extend above the height of the valves. Larger cylinders will

INTERNATIONAL CODE COUNCIL®
Copyright © 2015 ICC. ALL RIGHTS RESERVED. Accessed by David Dammon on Jun 21, 2017 12:30:52 PM pursuant to License Agreement with ICC. No further reproduction or distribution authorized. ANY UNAUTHORIZED REPRODUCTION OR DISTRIBUTION IS A VIOLATION OF THE FEDERAL COPYRIGHT ACT AND THE LICENSE AGREEMENT, AND SUBJECT TO CIVIL AND CRIMINAL PENALTIES THEREUNDER.

have screw-on caps or domes that serve the same function.

6109.9 Storage within buildings accessible to the public. Department of Transportation (DOTn) specification cylinders with maximum water capacity of $2^1/_2$ pounds (1 kg) used in completely self-contained hand torches and similar applications are allowed to be stored or displayed in a building accessible to the public. The quantity of LP-gas shall not exceed 200 pounds (91 kg) except as provided in Section 6109.11.

❖ This section recognizes that retail stores require inventory that is accessible to the public where hand-held torch assemblies are sold. The smaller cylinders in this section are also used as "starters" for charcoal grills and as fuel for insecticidal foggers and camp lanterns. The phrase "accessible to the public" describes circumstances where public exposure to a fire or explosion would be a concern. Where public access to a building is available, such as in Group M occupancies, a fire or explosion involving LP-gas could place nonemployees at risk. By limiting quantities and container sizes in such publicly accessible facilities, the code minimizes this risk.

6109.10 Storage within buildings not accessible to the public. The maximum quantity allowed in one storage location in buildings not accessible to the public, such as industrial buildings, shall not exceed a water capacity of 735 pounds (334 kg) [nominal 300 pounds (136 kg) of LP-gas]. Where additional storage locations are required on the same floor within the same building, they shall be separated by not less than 300 feet (91 440 mm). Storage beyond these limitations shall comply with Section 6109.11.

❖ This section is applicable to industrial or storage facilities where LP-gas-powered forklift trucks are frequently operated and maintained by trained personnel. The requirement permits up to 300 pounds (136 kg) of propane to be stored at a single location. Forklift cylinders, which typically have a 33-pound (15 kg) propane capacity, can be stored in small quantities for convenient exchange during a working shift. Where larger quantities of cylinders are needed by the building operations, to reduce the excess storage exposure to a single-fire incident, the excess quantity must be physically separated by space. Where such spatial separation cannot be achieved, the more restrictive provisions of Section 6109.11 must be applied to provide the needed level of safety.

The reference to Section 6109.11 applies where more than 300 pounds (136 kg) must be stored at a location without the required 300-foot (91 440 mm) separation distance.

The phrase "not accessible to the public" describes circumstances where public exposure to a fire or explosion would be a relatively minor concern. Where public access to a building is not available, such as in Group F or S occupancies, a fire or explosion involving LP-gas would not place nonemployees at risk.

6109.10.1 Quantities on equipment and vehicles. LP-gas containers carried as part of service equipment on highway mobile vehicles need not be considered in the total storage capacity in Section 6109.10, provided such vehicles are stored in private garages and do not carry more than three LP-gas containers with a total aggregate LP-gas capacity not exceeding 100 pounds (45.4 kg) per vehicle. LP-gas container valves shall be closed.

❖ This section addresses vehicles carrying LP-gas that is ancillary to service equipment on the vehicle. Typically, LP-gas may be found on fabrication trucks and mechanics' trucks for use with welding equipment, roofing tar trucks for torches used on roofs and plumbers' trucks for use with lead melting pots.

6109.11 Storage within rooms used for gas manufacturing. Storage within buildings or rooms used for gas manufacturing, gas storage, gas-air mixing and vaporization, and compressors not associated with liquid transfer shall comply with Sections 6109.11.1 and 6109.11.2.

❖ The requirements of this section might typically apply to the storage of LP-gas containers used for standby gas systems in which LP-gas is mixed with air to achieve an energy content similar to that of natural gas, thereby permitting gas appliances and equipment to continue operating without a change in burner controls. These systems are commonly found in larger industrial applications.

6109.11.1 Quantity limits. The maximum quantity of LP-gas shall be 10,000 pounds (4540 kg).

❖ Limiting LP-gas to 10,000 pounds (4,540 kg) [roughly 3,000-gallon (11 355 L) water capacity container] is considered to be an acceptable threshold for the safe and efficient operation of standby gas systems.

6109.11.2 Construction. The construction of such buildings and rooms shall comply with requirements for Group H occupancies in the *International Building Code*, Chapter 10 of NFPA 58 and both of the following:

1. Adequate vents shall be provided to the outside at both top and bottom, located not less than 5 feet (1524 mm) from building openings.
2. The entire area shall be classified for the purposes of ignition source control in accordance with Section 6.22 of NFPA 58.

❖ Section 508 of the *International Building Code*® (IBC®) contains specific requirements to address the separation of mixed occupancies to isolate the hazard of storing up to 10,000 pounds (4540 kg) of LP-gas in a room or a building. In addition to those requirements, Item 1 of this section requires adequate ventilation openings to assist in the dilution of gas should a leak occur. Chapter 10 of NFPA 58 contains information on venting as well as other aspects of the design of rooms of this nature. Item 2 refers to NFPA 58, which contains extensive information on establishing the proper hazard classification that

INTERNATIONAL CODE COUNCIL®
Copyright © 2015 ICC. ALL RIGHTS RESERVED. Accessed by David Dammon on Jun 21, 2017 12:30:52 PM pursuant to License Agreement with ICC. No further reproduction or distribution authorized. ANY UNAUTHORIZED REPRODUCTION OR DISTRIBUTION IS A VIOLATION OF THE FEDERAL COPYRIGHT ACT AND THE LICENSE AGREEMENT, AND SUBJECT TO CIVIL AND CRIMINAL PENALTIES THEREUNDER.

would govern the requirements for electrical wiring systems and limit ignition sources.

6109.12 Location of storage outside of buildings. Storage outside of buildings of LP-gas containers awaiting use, resale or part of a cylinder exchange program shall be located in accordance with Table 6109.12.

❖ This section regulates, by reference to Table 6109.12, the placement of cylinders awaiting use or resale and cylinder exchange cabinets, which are increasingly being used to distribute the 20-pound (9 kg) gas grill cylinders to the public. Exchange cabinets are typically constructed of steel and are ventilated to permit the dispersal of gas should a leak occur.

TABLE 6109.12. See below.

❖ This table provides correlation with NFPA 58 and allows all code users to quickly identify minimum required separation distances to all regulated exposures. As in Section 6104, this table is based on the quantity of LP-gas stored (not the size of the container) and is intended to limit the two-way exposure between containers and the built environment.

Regarding Column 5 of the table, prior to the introduction of OPDs, overfilled cylinders may have initially held their charge, but later leaked when cylinder pressure increased due to high ambient temperature exposures, a significant source of concern. Today, cylinder exchange operators report that cylinder leaks due to overfill have declined to almost zero based on the use of OPDs and by the widespread use of new grill cylinder valves that will only allow gas to flow if a cylinder valve is mated to an appliance connection device. These measures prevent fugitive releases due to exposure of overfilled cylinders to high ambient temperatures and due to cylinder valves that have not been completely closed. By using cylinders that mitigate the risk of vapor releases based on improved equipment technologies, cylinder exchange stations are now much safer than they were in the early- to mid-1990s when it was necessary to rely on minimum separation distances to prevent fugitive vapors from entering nearby buildings.

Column 6 of the table considers separation from the doorway or openings in a single-exit building (see Section 1006.2) based on quantity of gas stored. If a fire occurs inside of a building, the presence of a propane exchange station outside is not an egress or life safety concern. Individuals leaving the building could simply exit past the station. If a fire occurs outside, the fire will have to achieve a size that is adequate to raise the temperature of stored propane to the 150°F (66°C) range before a standard cylinder relief vent would be expected to operate. Given the minimum required 10-foot (3048 mm) separation to combustibles in Column 7, it is reasonable to assume that building occupants would have time to evacuate a single-exit building before an exposure fire caused cylinder venting. Scenarios involving a release of gas from an overfilled cylinder and subsequent migration to an ignition source are no longer regarded as plausible based on the mandatory use of OPDs and the likely use of leak-resistant cylinder valves. With regard to Column 7, it should be noted that this prescriptive separation from combustible materials is not consistent with NFPA 58, which uses a more performance-oriented approach. However, the fire service's desire for a specific minimum distance has been clearly expressed in the past; therefore, the distance was retained in the table.

Column 8 contains a required 20-foot (6096 mm) separation to motor fuel dispensers which completes the reference to Chapter 61 made in Section 2307.4. Motor fuel-dispensing facilities are considered Group M occupancies and frequently include convenience stores in addition to motor fuel-dispensing operations. Column 8 specifies a minimum separation distance between the LP-gas container area and any flammable or combustible liquid-dispensing operation or the outdoor storage of combustible materials to reduce the potential fire hazard exposure.

6109.13 Protection of containers. LP-gas containers shall be stored within a suitable enclosure or otherwise protected against tampering. Vehicle impact protection shall be provided as required by Section 6107.4.

Exception: Vehicle impact protection shall not be required for protection of LP-gas containers where the

TABLE 6109.12
SEPARATION FROM EXPOSURES OF LP-GAS CONTAINERS AWAITING USE, RESALE OR EXCHANGE STORED OUTSIDE OF BUILDINGS

QUANTITY OF LP-GAS STORED (pounds)	MINIMUM SEPARATION DISTANCE FROM STORED LP-GAS CYLINDERS TO (feet):						
	Nearest important building or group of buildings or line of adjoining property that may be built upon	Line of adjoining property occupied by schools, places of religious worship, hospitals, athletic fields or other points of public gathering; busy thoroughfares; or sidewalks	LP-gas dispensing station	Doorway or opening to a building with two or more means of egress	Doorway or opening to a building with one means of egress	Combustible materials	Motor vehicle fuel dispenser
720 or less	0	0	5	5	10	10	20
721 – 2,500	0	10	10	5	10	10	20
2,501 – 6,000	10	10	10	10	10	10	20
6,001 – 10,000	20	20	20	20	20	10	20
Over 10,000	25	25	25	25	25	10	20

For SI: 1 foot = 304.8 mm, 1 pound = 0.454 kg.

INTERNATIONAL CODE COUNCIL®
Copyright © 2015 ICC. ALL RIGHTS RESERVED. Accessed by David Dammon on Jun 21, 2017 12:30:52 PM pursuant to License Agreement with ICC. No further reproduction or distribution authorized. ANY UNAUTHORIZED REPRODUCTION OR DISTRIBUTION IS A VIOLATION OF THE FEDERAL COPYRIGHT ACT AND THE LICENSE AGREEMENT, AND SUBJECT TO CIVIL AND CRIMINAL PENALTIES THEREUNDER.

containers are kept in lockable, ventilated cabinets of metal construction.

❖ At public facilities, tampering with LP-gas containers may be a problem. For that reason, locked metal cabinets are used to provide not only tamper protection but also substantial protection from vehicular impact (see Commentary Figure 6109.13). See the commentary to Section 6107.4. The exception reflects the results of impact testing done on a variety of cabinet designs, which found that lockable metal cabinet construction provided equivalent protection.

6109.14 Alternative location and protection of storage. Where the provisions of Sections 6109.12 and 6109.13 are impractical at construction sites, or at buildings or structures undergoing major renovation or repairs, the storage of containers shall be as required by the *fire code official*.

❖ These requirements permit the fire code official to approve storage sites for LP-gas even if compliance with Sections 6109.12 and 6109.13 is not practical. This would especially be the case at construction sites and other transient installations in which LP-gas containers may be moved frequently.

6109.15 LP-gas cylinder exchange for resale. In addition to other applicable requirements of this chapter, facilities operating LP-gas cylinder exchange stations that are accessible to the public shall comply with the following requirements.

1. Cylinders shall be secured in a lockable, ventilated metal cabinet or other *approved* enclosure.
2. Cylinders shall be accessible only by authorized personnel or by use of an automated exchange system in accordance with Section 6109.15.1.
3. A sign shall be posted on the entry door of the business operating the cylinder exchange stating "DO NOT BRING LP-GAS CYLINDERS INTO THE BUILDING" or similar *approved* wording.
4. An emergency contact information sign shall be posted within 10 feet (3048 mm) of the cylinder storage cabinet. The content, lettering, size, color and location of the required sign shall be as required by the *fire code official*.

❖ Cylinder exchange cabinets, such as the one shown in Commentary Figure 6109.13, for 20-pound (9 kg) LP-gas cylinders have been available to consumers for over 15 years and have a very respectable safety record. Cabinets for exchange of industrial cylinders, such as those found on forklift trucks, are also in use. While a limited number of incidents resulting from impact from vehicles have been reported, none of these events has resulted in loss of life or severe injuries. It is estimated that several million sales transactions occur annually at cylinder exchange stations.

This section addresses all LP-gas cylinder exchange stations, whether they are manual or automatic. Item 1 requires that all cylinder exchange cabinets be designed so the cabinet provides ventilation for the stored cylinders and is equipped with a means of securing cylinders against tampering.

Item 2 limits access to cylinders to authorized personnel or to users of automated cylinder exchange stations. At an automated cylinder exchange station, Item 5 of Section 6109.1.5.1 requires that when a manual override occurs, it must be performed by an authorized person before returning the station to automatic operation. In the absence of a definition for



Figure 6109.13
INSTALLATION OF LP-GAS CONTAINERS FOR RETAIL SALE OR EXCHANGE

INTERNATIONAL CODE COUNCIL®
Copyright © 2015 ICC. ALL RIGHTS RESERVED. Accessed by David Dammon on Jun 21, 2017 12:30:52 PM pursuant to License Agreement with ICC. No further reproduction or distribution authorized. ANY UNAUTHORIZED REPRODUCTION OR DISTRIBUTION IS A VIOLATION OF THE FEDERAL COPYRIGHT ACT AND THE LICENSE AGREEMENT, AND SUBJECT TO CIVIL AND CRIMINAL PENALTIES THEREUNDER.

the term "authorized personnel," fire code officials could apply the requirements in Section 4.4 of NFPA 58 for qualification of personnel who are involved in the operation of cylinder exchange stations. NFPA 58 requires that they receive documented training in proper cylinder-handling procedures with refresher training at least every 3 years. Training can often be provided by the LP-gas supplier and many suppliers offer programs prepared by the Propane Education and Research Council, which offers a Certified Employee Training Program to its members. In Item 3, an approved sign is required to inform consumers that bringing cylinders inside of a building is prohibited, based on the requirement in Section 6109.9, and Item 4 requires a sign that provides emergency contact information in the event of a leaking cylinder or other emergency involving the exchange station.

6109.15.1 Automated cylinder exchange stations. Cylinder exchange stations that include an automated vending system for exchanging cylinders shall comply with the following additional requirements:

1. The vending system shall only permit access to a single cylinder per individual transaction.
2. Cabinets storing cylinders shall be designed such that cylinders can only be placed inside when they are oriented in the upright position.
3. Devices operating door releases for access to stored cylinders shall be permitted to be pneumatic, mechanical or electrically powered.
4. Electrical equipment inside of or within 5 feet (1524 mm) of a cabinet storing cylinders, including but not limited to electronics associated with vending operations, shall comply with the requirements for Class I, Division 2 equipment in accordance with NFPA 70.
5. A manual override control shall be permitted for use by authorized personnel. On newly installed cylinder exchange stations, the vending system shall not be capable of returning to automatic operation after a manual override until the system has been inspected and reset by authorized personnel.
6. Inspections shall be conducted by authorized personnel to verify that all cylinders are secured, access doors are closed and the station has no visible damage or obvious defects that necessitate placing the station out of service. The frequency of inspections shall be as specified by the *fire code official*.

❖ One of the bigger advancements in LP-gas cylinder exchange programs is the use of automation at the point-of-sale (POS). These improvements have allowed exchange stations to become self-service, meaning that retailers can allow their employees to focus on other interests in the store rather than managing the exchange of LP-gas cylinders. Consumers can now use an electronic banking card at automated exchange stations where they receive a properly filled and code-compliant cylinder of LP-gas while the supplier receives an empty cylinder in return (see Commentary Figure 6109.13).

This section contains provisions for regulating these automated LP-gas cylinder exchange stations. These requirements increase the likelihood that consumers will properly remove filled cylinders and return empty cylinders. Item 1 requires that the vending system be designed to limit the consumer to one cylinder per transaction. Item 2 requires that the system accommodate cylinders placed only in the upright position. As indicated in Item 3, door-release components inside the exchange cabinet can be powered by pneumatic, mechanical or electrical energy. Where door release components or other equipment in the cabinet are electrically operated, Item 4 requires hazardous location electrical equipment in accordance with Article 500 of NFPA 70 and specifies the boundary [within 5 feet (1524 mm)] of the hazardous location to mitigate the risk of igniting fugitive gas. Normally, flammable gases in storage do not require classified hazardous location electrical equipment, but in the case of these automated LP-gas cylinder exchange stations, the possibility exists for a cylinder valve to not be completely closed on a cylinder that has been returned by a consumer. Some cabinet manufacturers provide a remote POS kiosk that is located more than 5 feet (1524 mm) from the exchange station to accommodate this requirement with ordinary electrical equipment. As with any mechanical or electro-mechanical vending device, failures can and do occur and Item 5 provides a means for authorized personnel to deal with such failures by using a manual override control. Item 6 requires that automated cylinder exchange stations be inspected by authorized personnel (see commentary, Section 6109.15, Item 5) at a frequency specified by the fire code official. Factors to consider in establishing a required inspection frequency could include the servicing/refilling interval for the cabinet.

SECTION 6110
LP-GAS CONTAINERS NOT IN SERVICE

6110.1 Temporarily out of service. LP-gas containers whose use has been temporarily discontinued shall comply with all of the following:

1. Be disconnected from appliance piping.
2. Have LP-gas container outlets, except relief valves, closed or plugged.
3. Be positioned with the relief valve in direct communication with the LP-gas container vapor space.

❖ When a new LP-gas supplier installs a tank at a customer's facility, he or she is responsible for ensuring that the previous supplier's tank is removed from service and safely stored until it can be retrieved.

INTERNATIONAL CODE COUNCIL®
Copyright © 2015 ICC. ALL RIGHTS RESERVED. Accessed by David Dammon on Jun 21, 2017 12:30:52 PM pursuant to License Agreement with ICC. No further reproduction or distribution authorized. ANY UNAUTHORIZED REPRODUCTION OR DISTRIBUTION IS A VIOLATION OF THE FEDERAL COPYRIGHT ACT AND THE LICENSE AGREEMENT, AND SUBJECT TO CIVIL AND CRIMINAL PENALTIES THEREUNDER.

6110.2 Permanently out of service. LP-gas containers to be placed permanently out of service shall be removed from the site.

❖ This provision is an extension of Section 6110.1 and requires that any container placed out of service must be retrieved by its owner.

SECTION 6111
PARKING AND GARAGING OF LP-GAS TANK VEHICLES

6111.1 General. Parking of LP-gas tank vehicles shall comply with Sections 6111.2 and 6111.3.

Exception: In cases of accident, breakdown or other emergencies, LP-gas tank vehicles are allowed to be parked and left unattended at any location while the operator is obtaining assistance.

❖ In this context, LP-gas tank vehicles include bulk cargo tank vehicles, either transports (semitruck trailers) or bobtails [usually up to 5,000-gallon (18 925 L) water capacity]. The exception to this section recognizes the possibility of a mechanical breakdown of a vehicle while in service.

6111.2 Unattended parking. The unattended parking of LP-gas tank vehicle shall be in accordance with Sections 6111.2.1 and 6111.2.2.

❖ Unattended parking may be defined as the parking of a cargo tank vehicle used to transport LP-gas where either the driver or other responsible person is not able to respond to situations involving the vehicle that may occur.

6111.2.1 Near residential, educational and institutional occupancies and other high-risk areas. LP-gas tank vehicles shall not be left unattended at any time on residential streets or within 500 feet (152 m) of a residential area, apartment or hotel complex, educational facility, hospital or care facility. Tank vehicles shall not be left unattended at any other place that would, in the opinion of the *fire code official*, pose an extreme life hazard.

❖ Because of the hazardous cargo involved, operator control must be maintained over cargo tank vehicles used to transport LP-gas. In other words, LP-gas transports must not be left unattended. This is especially true in areas where high occupancy levels exist and the possibility of tampering with the vehicle increases.

6111.2.2 Durations exceeding 1 hour. LP-gas tank vehicles parked at any one point for longer than 1 hour shall be located as follows:

1. Off public streets, highways, public avenues or public alleys.
2. Inside of a bulk plant.
3. At other *approved* locations not less than 50 feet (15 240 mm) from buildings other than those *approved* for the storage or servicing of such vehicles.

❖ When a vehicle will be parked for more than 1 hour, it will probably be unattended and, therefore, special conditions are imposed.

The first condition specifies that the vehicle must not be parked on a public way. The second condition permits the vehicle to be parked in an LP-gas bulk plant, which is a plant with containers used for storing LP-gas, until the gas is delivered to the end user. The third condition permits the fire code official to approve alternative locations for parking LP-gas cargo tank vehicles. The fire code official might base approval on the proximity to occupied buildings and spaces as well as the potential for tampering with the vehicle.

6111.3 Garaging. Garaging of LP-gas tank vehicles shall be as specified in NFPA 58. Vehicles with LP-gas fuel systems are allowed to be stored or serviced in garages as specified in Section 11.16 of NFPA 58.

❖ This section applies not only to cargo tank vehicles used to transport and deliver LP-gas, but also to motor vehicles fueled by LP-gas. NFPA 58 contains extensive provisions for garaging these vehicles. Section 6.24.9 of NFPA 58 contains parking, service and repair requirements for vehicles equipped with an LP-gas system not used for propulsion, such as a recreational vehicle with an on-board LP-gas cooking system.

Bibliography

The following resource materials were used in the preparation of the commentary for this chapter.

ANSI Z21.58-2007/CSA 1.6-2007, *Outdoor Cooking Appliances*. New York: American National Standards Institute, 2007.

Code Changes Resource Collection—2015 International Fire Code. Washington, DC: International Code Council, 2014.

NFPA 59-08, *Utility LP-gas Plant Code*. Quincy, MA: National Fire Protection Association, 2008.

UL 147A-05, *Standard for Nonrefillable (Disposable) Type Fuel Gas Cylinder Assemblies*. Northbrook, IL: Underwriters Laboratories, Inc., 2005.

INTERNATIONAL CODE COUNCIL®
Copyright © 2015 ICC. ALL RIGHTS RESERVED. Accessed by David Dammon on Jun 21, 2017 12:30:52 PM pursuant to License Agreement with ICC. No further reproduction or distribution authorized. ANY UNAUTHORIZED REPRODUCTION OR DISTRIBUTION IS A VIOLATION OF THE FEDERAL COPYRIGHT ACT AND THE LICENSE AGREEMENT, AND SUBJECT TO CIVIL AND CRIMINAL PENALTIES THEREUNDER.

INTERNATIONAL CODE COUNCIL®
Copyright © 2015 ICC. ALL RIGHTS RESERVED. Accessed by David Dammon on Jun 21, 2017 12:30:52 PM pursuant to License Agreement with ICC. No further reproduction or distribution authorized. ANY UNAUTHORIZED REPRODUCTION OR DISTRIBUTION IS A VIOLATION OF THE FEDERAL COPYRIGHT ACT AND THE LICENSE AGREEMENT, AND SUBJECT TO CIVIL AND CRIMINAL PENALTIES THEREUNDER.

Chapter 62: Organic Peroxides

General Comments

This chapter addresses the hazards associated with the storage, handling and use of organic peroxides. These chemicals possess the characteristics of flammable or combustible liquids and are also strong oxidizers. Class V organic peroxides pose little fire hazard; therefore, these materials are not regulated by specific storage or use requirements. Some organic peroxides are unstable and become increasingly reactive with age or heating.

Organic peroxides pose the dual hazard of being both oxidizers and flammable or explosive compounds. This unusual combination of properties requires special storage and handling precautions to prevent uncontrolled release, contamination, hazardous chemical reactions, fires or explosions. In addition to these properties, organic peroxides are unusually sensitive to temperature. Heat, whether by fire exposure or environmental, is a major factor in the decomposition of peroxide compounds. Some organic peroxides will decompose uneventfully when subject to a gradual temperature increase but may explode if they undergo the thermal shock of a rapid, uncontrolled temperature rise.

J.S. Townsend (1993) notes that some organic peroxides are just as dangerous when they become too cold as when they are too hot. For example, acetyl peroxide becomes unstable above 122°F (50°C)—its self-accelerating decomposition temperature (SADT). When cooled below 17°F (-8.3°F), acetyl peroxide forms crystals that are shock sensitive. Consequently, special precautions must be taken to transport and store acetyl peroxide between 32°F (0°C) and 90°F (32°C).

Organic peroxides are commonly used in the plastics industry to initiate polymerization. Although the requirements of this chapter pertain to industrial applications in which significant quantities of organic peroxides are stored or used, smaller quantities of organic peroxides still pose a significant hazard. These materials, therefore, must be stored and used in accordance with the applicable provisions of this chapter and Chapter 50.

Purpose

The provisions of this chapter are intended to manage the fire and oxidation hazards of organic peroxides by preventing their uncontrolled release.

SECTION 6201 GENERAL

6201.1 Scope. The storage and use of organic peroxides shall be in accordance with this chapter and Chapter 50.

Unclassified detonable organic peroxides that are capable of *detonation* in their normal shipping containers under conditions of fire exposure shall be stored in accordance with Chapter 56.

❖ The specific requirements for the storage, handling and use of organic peroxides in this chapter are intended to complement the general hazardous materials requirements of Chapter 50. Because of the hazards to people and property, organic peroxides capable of being detonated in their usual shipping containers or packages under fire conditions must be stored in accordance with the provisions of Chapter 56 for explosives. Examples of unclassified detonable (UD) materials are organic peroxides classified as Type A by DOTn 49 CFR; 173.128(b)(1) and materials classified as explosives by DOTn 49 CFR; 173, Subpart C. DOTn Type A organic peroxides have an SADT of 122°F (50°C) or less.

6201.2 Permits. Permits shall be required for organic peroxides as set forth in Section 105.6.

❖ The process of issuing permits gives the fire code official an opportunity to carefully evaluate and regulate hazardous operations. Permit applicants should be required to demonstrate that their operations comply with the intent of the code before the permit is issued. See the commentary to Section 105.6 for a general discussion of operations requiring an operational permit and Section 105.7 for a general discussion of activities requiring a construction permit. The permit process also notifies the fire department of the need for prefire planning for hazardous property.

SECTION 6202 DEFINITION

6202.1 Definition. The following term is defined in Chapter 2:

ORGANIC PEROXIDE.
Class I.
Class II.

INTERNATIONAL CODE COUNCIL®
Copyright © 2015 ICC. ALL RIGHTS RESERVED. Accessed by David Dammon on Jun 21, 2017 12:30:52 PM pursuant to License Agreement with ICC. No further reproduction or distribution authorized. ANY UNAUTHORIZED REPRODUCTION OR DISTRIBUTION IS A VIOLATION OF THE FEDERAL COPYRIGHT ACT AND THE LICENSE AGREEMENT, AND SUBJECT TO CIVIL AND CRIMINAL PENALTIES THEREUNDER.

Class III.
Class IV.
Class V.
Unclassified detonable.

❖ Definitions of terms can help in the understanding and application of the code requirements. This section directs the code user to Chapter 2 for the proper application of the indicated term used in this chapter. Terms may be defined in Chapter 2 or in another *International Code*® as indicated in Section 201.3, or the dictionary meaning may be all that is needed (see also commentary, Sections 201.1 through 201.4).

SECTION 6203
GENERAL REQUIREMENTS

6203.1 Quantities not exceeding the maximum allowable quantity per control area. The storage and use of organic peroxides in amounts not exceeding the *maximum allowable quantity per control area* indicated in Section 5003.1 shall be in accordance with Sections 5001, 5003, 6201 and 6203.

❖ The provisions of this section complement the requirements of Chapter 50 in structures occupied for the storage, handling or use of organic peroxides. The regulations contained in Sections 6203.1.1 through 6203.1.1.4 assume that the quantity of organic peroxides in a given building is limited to the maximum allowable quantities (MAQs) per control area as established in Section 5003.1; thus, the building is not classified in Occupancy Group H. The general requirements of Sections 5001 and 5003 are fully applicable to the storage and use of organic peroxides, in addition to the provisions of this chapter.

6203.1.1 Special limitations for indoor storage and use by occupancy. The indoor storage and use of organic peroxides shall be in accordance with Sections 6203.1.1.1 through 6203.1.1.4.

❖ Because certain occupancies may need to have organic peroxides on hand, Sections 6203.1.1.1 through 6203.1.1.4 provide regulations specific to occupancy group classifications and that recognize the relative hazards of both the occupancy and the organic peroxide.

6203.1.1.1 Group A, E, I or U occupancies. In Group A, E, I or U occupancies, any amount of unclassified detonable and Class I organic peroxides shall be stored in accordance with the following:

1. Unclassified detonable and Class I organic peroxides shall be stored in hazardous materials storage cabinets complying with Section 5003.8.7.
2. The hazardous materials storage cabinets shall not contain other storage.

❖ Because of their respective explosive or higher deflagration hazard characteristics, even the smallest quantity of UD or Class I organic peroxides present in Group A, E, I or U occupancies must be stored in an approved hazardous materials storage cabinet constructed and placarded in accordance with Section 5003.8.7 to reduce the exposure of the materials to hazards from the surrounding environment.

In accordance with Note g in Table 5003.1.1(1), storage of UD organic peroxide in any amount is allowed only in buildings equipped throughout with an approved automatic sprinkler system, in accordance with Section 903.3.1. Also, based on Note e in Table 5003.1.1(1), where an approved storage cabinet is used, the MAQ that can be kept in the occupancies can be doubled.

To reduce the likelihood of contamination of the organic peroxide materials or damage to their packaging, Item 2 prohibits the storage of other materials in the approved organic peroxide storage cabinet.

In accordance with Section 6201.1, storage of UD organic peroxides must also comply with the applicable provisions of Chapter 56 for explosives.

6203.1.1.2 Group R occupancies. Unclassified detonable and Class I organic peroxides shall not be stored or used within Group R occupancies.

❖ Because of their explosive or higher deflagration hazard characteristics, UD and Class I organic peroxide cannot be stored in any residential occupancy within the scope of the code's regulations. Storage would result in an increased danger to the occupants, as well as exposure of the peroxides to the otherwise unregulated environment.

6203.1.1.3 Group B, F, M or S occupancies. Unclassified detonable and Class I organic peroxides shall not be stored or used in offices, or retail sales areas of Group B, F, M or S occupancies.

❖ Because of their explosive or higher deflagration hazard characteristics, UD and Class I organic peroxide cannot be stored in occupancies in Group B, F, M or S. Storage would result in an increased danger to the occupants, as well as exposure of the peroxides to the higher relative fire loads typically encountered in these occupancies.

6203.1.1.4 Classrooms. In classrooms in Group B, F or M occupancies, any amount of unclassified detonable and Class 1 organic peroxides shall be stored in accordance with the following.

1. Unclassified detonable and Class 1 organic peroxides shall be stored in hazardous materials storage cabinets complying with Section 5003.8.7.
2. The hazardous materials storage cabinets shall not contain other storage.

❖ It is the intent of this section to allow for the occasional use of limited amounts of organic peroxides in certain scientific, experimental or demonstration settings; however, this section does not allow storage of any quantity of these materials for any length of time.

INTERNATIONAL CODE COUNCIL®
Copyright © 2015 ICC. ALL RIGHTS RESERVED. Accessed by David Dammon on Jun 21, 2017 12:30:52 PM pursuant to License Agreement with ICC. No further reproduction or distribution authorized. ANY UNAUTHORIZED REPRODUCTION OR DISTRIBUTION IS A VIOLATION OF THE FEDERAL COPYRIGHT ACT AND THE LICENSE AGREEMENT, AND SUBJECT TO CIVIL AND CRIMINAL PENALTIES THEREUNDER.

The fire code official may limit the amount of organic peroxides brought into a structure for these uses. The quantity actually needed for the experiment should determine the amount allowed into a structure.

Because of their explosive or higher deflagration hazard characteristics, even the smallest quantity of UD or Class I organic peroxides must be stored in an approved hazardous materials storage cabinet constructed and placarded in accordance with Section 5003.8.7 to reduce the exposure of the materials to hazards from the surrounding environment.

In accordance with Note g in Table 5003.1.1(1), storage of UD organic peroxide in any amount is allowed only in buildings equipped throughout with an approved automatic sprinkler system, in accordance with Section 903.3.1. Also, based on Note g in Table 5003.1.1(1), where an approved storage cabinet is used, the MAQ that could be kept in these occupancies can be doubled.

To reduce the likelihood of contaminating organic peroxide materials or damaging their packaging, Item 2 prohibits the storage of other materials in the approved organic peroxide storage cabinet.

Note that in accordance with Section 6201.1, storage of UD organic peroxides must also comply with the applicable provisions of Chapter 56 for explosives.

6203.2 Quantities exceeding the maximum allowable quantity per control area. The storage and use of organic peroxides in amounts exceeding the *maximum allowable quantity per control area* indicated in Section 5003.1 shall be in accordance with Chapter 50 and this chapter.

❖ The provisions of this section complement the requirements of Chapter 50 in structures occupied for the storage, handling or use of organic peroxides. The regulations in this section assume that the quantity of organic peroxides in a given building is in excess of the MAQ as established in Section 5003.1 and, therefore, that the building is classified in Occupancy Group H. The requirements of Chapter 50 apply to the storage and use of organic peroxides in addition to the provisions of this chapter.

SECTION 6204
STORAGE

6204.1 Indoor storage. Indoor storage of organic peroxides in amounts exceeding the *maximum allowable quantity per control area* indicated in Table 5003.1.1(1) shall be in accordance with Sections 5001, 5003, 5004 and this chapter.

Indoor storage of unclassified detonable organic peroxides that are capable of *detonation* in their normal shipping containers under conditions of fire exposure shall be stored in accordance with Chapter 56.

❖ This section regulates the indoor storage of organic peroxides when in excess of the MAQ in buildings or portions of buildings classified in Occupancy Group H. The general and storage provisions of Chapter 50 are applicable in addition to the requirements of this section. Storage of organic peroxides inside of structures must comply with Sections 6204.1.1 through 6204.1.11 to prevent uncontrolled release or exposure to conditions that may result in a fire or explosion.

Because of the explosion hazard, UD organic peroxides must be stored in accordance with the provisions of this section and Chapter 56 for explosives.

6204.1.1 Detached storage. Storage of organic peroxides shall be in detached buildings where required by Section 5003.8.2.

❖ Detached structures designed and constructed for the sole purpose of organic peroxide storage provide the best protection for people and property from fire and explosions. Detached storage structures should be constructed of noncombustible materials to prevent them from becoming involved in an outside fire that may endanger their contents or a fire stemming from ignited contents in storage.

Section 5003.8.2 and Table 5003.8.2 require detached storage when the indoor storage quantities are more than 2 tons (4 metric tons) of Class I, more than 25 tons (50 metric tons) of Class II and more than 50 tons (100 metric tons) of Class III organic peroxides. See the commentary to Section 5003.8.2 and Table 5003.8.2 for further discussion of detached storage requirements. Commentary Figure 6204.1.1 shows a cross-sectional diagram of a typical detached storage building.

6204.1.2 Distance from detached buildings to exposures. In addition to the requirements of the *International Building Code*, detached storage buildings for Class I, II, III, IV and V organic peroxides shall be located in accordance with Table 6204.1.2. Detached buildings containing quantities of unclassified detonable organic peroxides in excess of those set forth in Table 5003.8.2 shall be located in accordance with Table 5604.5.2(1).

❖ The *International Building Code*® (IBC®) prescribes minimum fire-resistance ratings for exterior walls of buildings based on clearances from adjacent structures and lot lines. The separation distances prescribed by this section are minimums notwithstanding the inherent fire-resistance ratings of the exterior wall assemblies. These clearances are intended to reduce the hazard to nearby structures and people in the event of a fire or explosion in a detached storage structure used for the storage of organic peroxides.

TABLE 6204.1.2. See page 62-4.

❖ The separation distances specified in the table are intended to reduce the effects of radiant heat exposure in the event of a fire in an adjacent storage structure. Separation distances for UD organic peroxides must conform to the requirements of Table 5604.5.2(2).

INTERNATIONAL CODE COUNCIL®
Copyright © 2015 ICC. ALL RIGHTS RESERVED. Accessed by David Dammon on Jun 21, 2017 12:30:52 PM pursuant to License Agreement with ICC. No further reproduction or distribution authorized. ANY UNAUTHORIZED REPRODUCTION OR DISTRIBUTION IS A VIOLATION OF THE FEDERAL COPYRIGHT ACT AND THE LICENSE AGREEMENT, AND SUBJECT TO CIVIL AND CRIMINAL PENALTIES THEREUNDER.

6204.1.3 Liquid-tight floor. In addition to the requirements of Section 5004.12, floors of storage areas shall be of liquid-tight construction.

❖ In addition to the requirement of Section 5004.12 that floors be constructed of noncombustible materials, liquid-tight floors are required so as to prevent the passage of liquids to adjacent spaces.

6204.1.4 Electrical wiring and equipment. In addition to the requirements of Section 5003.9.4, electrical wiring and equipment in storage areas for Class I or II organic peroxides shall comply with the requirements for electrical Class I, Division 2 locations.

❖ Because of the danger of ignition by arcs or sparks in the event of an accidental spill or leak, electrical equipment and devices in storage areas for organic peroxides must be classified for use in Class I, Division 2 hazardous locations as described in NFPA 70.

6204.1.5 Smoke detection. An *approved* supervised smoke detection system in accordance with Section 907 shall be provided in rooms or areas where Class I, II or III organic perox-

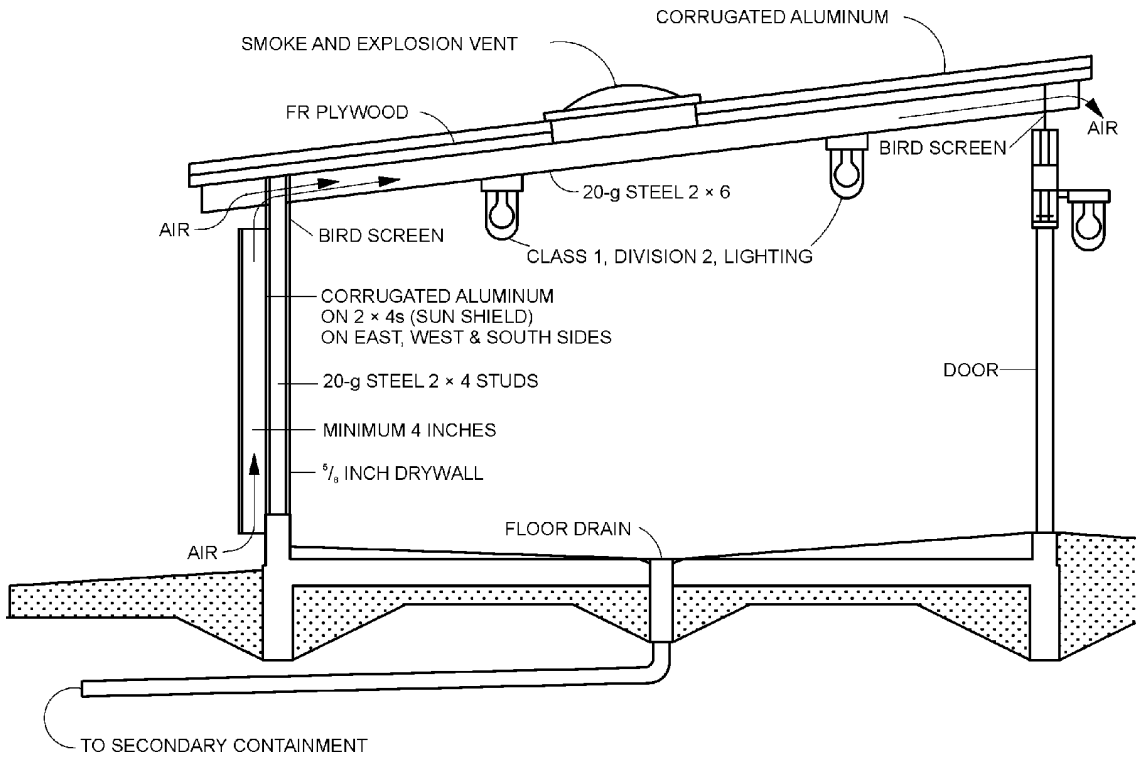

For SI: 1 inch = 25.4 mm.

Figure 6204.1.1
TYPICAL DETACHED STORAGE STRUCTURE

TABLE 6204.1.2
ORGANIC PEROXIDES—DISTANCE TO EXPOSURES FROM DETACHED STORAGE BUILDINGS OR OUTDOOR STORAGE AREAS

ORGANIC PEROXIDE CLASS	MAXIMUM STORAGE QUANTITY (POUNDS) AT MINIMUM SEPARATION DISTANCE					
	Distance to buildings, lot lines, public streets, public alleys, public ways or means of egress			Distance between individual detached storage buildings or individual outdoor storage areas		
	50 feet	100 feet	150 feet	20 feet	75 feet	100 feet
I	2,000	20,000	175,000	2,000	20,000	175,000
II	100,000	200,000	No Limit	100,000[a]	No Limit	No Limit
III	200,000	No Limit	No Limit	200,000[a]	No Limit	No Limit
IV	No Limit	No Limit	No Limit	No Limit	No Limit	No Limit
V	No Limit	No Limit	No Limit	No Limit	No Limit	No Limit

For SI: 1 foot = 304.8 mm, 1 pound = 0.454 kg.
a. Where the amount of organic peroxide stored exceeds this amount, the minimum separation shall be 50 feet.

INTERNATIONAL CODE COUNCIL®
Copyright © 2015 ICC. ALL RIGHTS RESERVED. Accessed by David Dammon on Jun 21, 2017 12:30:52 PM pursuant to License Agreement with ICC. No further reproduction or distribution authorized. ANY UNAUTHORIZED REPRODUCTION OR DISTRIBUTION IS A VIOLATION OF THE FEDERAL COPYRIGHT ACT AND THE LICENSE AGREEMENT, AND SUBJECT TO CIVIL AND CRIMINAL PENALTIES THEREUNDER.

ides are stored. Activation of the smoke detection system shall sound a local alarm.

Exception: A smoke detection system shall not be required in detached storage buildings equipped throughout with an *approved* automatic fire-extinguishing system complying with Chapter 9.

❖ An automatic fire detection system with central, remote or proprietary station supervision and a local alarm signal is required to provide early warning of fire to building occupants and fire suppression personnel. Detectors and installation methods in organic peroxide storage areas should be selected for compatibility with the materials stored. Fire alarm equipment and installation methods must comply with Section 907. Materials that give off strong vapors may interfere with fire detection system components or trigger nuisance alarm signals. The required local alarm is intended to alert the occupants in the immediate vicinity of the storage area to a potential hazardous condition. The local alarm is not intended to be part of an evacuation alarm system for the entire structure.

The exception indicates that automatic fire detection is not required in detached storage buildings when an automatic fire suppression system is provided. Automatic sprinklers or other approved fire suppression systems reduce the danger to people and property from fire by detecting the fire, sounding an alarm, transmitting the alarm to the fire department and containing or suppressing the fire. Sprinkler systems in detached storage buildings must be supervised by a connection to a central station, a remote supervising station or a proprietary supervising station, or, when approved by the fire code official, connected to a system that produces an audible and visual signal monitored at a constantly attended on-site location. See the commentary to Section 903.4 for further discussion of sprinkler system supervision and Section 904.3.5 for further discussion of alternative automatic fire-extinguishing system supervision.

6204.1.6 Maximum quantities. Maximum allowable quantities per building in a mixed occupancy building shall not exceed the amounts set forth in Table 5003.8.2. Maximum allowable quantities per building in a detached storage building shall not exceed the amounts specified in Table 6204.1.2.

❖ This section establishes the maximum allowable indoor storage quantities of organic peroxide on a per-building basis, as opposed to a per-control area basis, and regulates both mixed occupancy buildings and detached organic peroxide storage buildings.

6204.1.7 Storage arrangement. Storage arrangements for organic peroxides shall be in accordance with Table 6204.1.7 and shall comply with all of the following:

1. Containers and packages in storage areas shall be closed.
2. Bulk storage shall not be in piles or bins.
3. A minimum 2-foot (610 mm) clear space shall be maintained between storage and uninsulated metal walls.
4. Fifty-five-gallon (208 L) drums shall not be stored more than one drum high.

❖ These provisions detail storage requirements related to the hazards of release or ignition of liquids and vapors of organic peroxide stored in structures. Some of the factors that are considered are as follows:

1. Open containers or packages may permit the release of flammable or oxidizing materials or vapors.
2. Containers in bulk piles or bins may be susceptible to physical damage from stacking or product movement, which could damage the container and lead to an uncontrolled release of product.
3. The required separation distance is intended to minimize the effects of radiant heat exposures to stored materials in the event of a fire outside the structure.
4. The stacking of drums may result in a container being damaged during product movement if a drum is dropped or tipped over.

TABLE 6204.1.7. See below.

❖ See the commentary to Section 6204.2.4.

TABLE 6204.1.7
STORAGE OF ORGANIC PEROXIDES

ORGANIC PEROXIDE CLASS	PILE CONFIGURATION				MAXIMUM QUANTITY PER BUILDING
	Maximum width (feet)	Maximum height (feet)	Minimum distance to next pile (feet)	Minimum distance to walls (feet)	
I	6	8	4[a]	4[b]	Note c
II	10	8	4[a]	4[b]	Note c
III	10	8	4[a]	4[b]	Note c
IV	16	10	3[a, d]	4[b]	No Requirement
V	No Requirement	No Requirement	No Requirement	No Requirement	No Requirement

For SI: 1 foot = 304.8 mm.

a. Not less than one main aisle with a minimum width of 8 feet shall divide the storage area.

b. Distance to noncombustible walls is allowed to be reduced to 2 feet.

c. See Table 6204.1.2 for maximum quantities.

d. The distance shall be not less than one-half the pile height.

INTERNATIONAL CODE COUNCIL®
Copyright © 2015 ICC. ALL RIGHTS RESERVED. Accessed by David Dammon on Jun 21, 2017 12:30:52 PM pursuant to License Agreement with ICC. No further reproduction or distribution authorized. ANY UNAUTHORIZED REPRODUCTION OR DISTRIBUTION IS A VIOLATION OF THE FEDERAL COPYRIGHT ACT AND THE LICENSE AGREEMENT, AND SUBJECT TO CIVIL AND CRIMINAL PENALTIES THEREUNDER.

6204.1.8 Location in building. The storage of Class I or II organic peroxides shall be on the ground floor. Class III organic peroxides shall not be stored in basements.

❖ Class I and II organic peroxides may not be stored above or below the ground floor because of concerns for fire-fighter access. Because of their lower relative hazard, Class III organic peroxides may be stored on floors above grade; however, they may not be stored on floors below grade because of the difficulty of manual fire suppression operations in below-grade areas.

6204.1.9 Contamination. Organic peroxides shall be stored in their original DOTn shipping containers. Organic peroxides shall be stored in a manner to prevent contamination.

❖ Organic peroxides must be kept in original U.S. Department of Transportation (DOT)-approved shipping containers to facilitate identification and to minimize the possibility of accidental spills or ignition. The stability of organic peroxides can be markedly reduced through contamination by various materials, such as strong acids or alkalis, sulfur-based compounds or reducing agents of any type. Storage practices must prevent contamination and the hazards associated with it.

6204.1.10 Explosion control. Indoor storage rooms, areas and buildings containing unclassified detonable and Class I organic peroxides shall be provided with explosion control in accordance with Section 911.

❖ Because of the possibility of a deflagration or detonation in the event of ignition of Class I organic peroxides, explosion relief venting must be provided to protect the storage building or structure from collapse. Explosion venting must conform to the requirements in Section 911.

6204.1.11 Standby power. Standby power shall be provided in accordance with Section 604 for the following systems used to protect Class I and unclassified detonable organic peroxide:

1. Exhaust ventilation system.
2. Treatment system.
3. Gas detection system.
4. Smoke detection system.
5. Temperature control system.
6. Fire alarm system.
7. Emergency alarm system.

❖ A standby power system complying with Section 604 is required as a backup power supply for the systems listed in this section. These systems may also be connected to an approved emergency power system instead of a separate standby power system (see commentary, Section 604).

6204.1.11.1 Fail-safe engineered systems. Standby power shall not be required for mechanical exhaust ventilation, treatment systems and temperature control systems where *approved* fail-safe engineered systems are installed.

❖ This section recognizes the use of an engineered system designed to always fail in the appropriate design mode without human intervention rather than an emergency power system. The exception is intended to permit alternative systems that are not subject to power interruptions.

6204.2 Outdoor storage. Outdoor storage of organic peroxides in amounts exceeding the *maximum allowable quantities per control area* indicated in Table 5003.1.1(3) shall be in accordance with Sections 5001, 5003, 5004 and this chapter.

❖ This section regulates the outdoor storage of organic peroxides when in excess of the MAQ per outdoor control area established by Table 5003.1.1(3). The general and storage provisions of Chapter 50 are applicable in addition to the requirements of this section. Storage of organic peroxides in outdoor control areas must comply with Sections 6204.2.1 through 6204.2.5 to prevent uncontrolled release or exposure to conditions that may result in a fire or explosion.

6204.2.1 Distance from storage to exposures. Outdoor storage areas for organic peroxides shall be located in accordance with Table 6204.1.2.

❖ The IBC prescribes minimum fire-resistance ratings for exterior walls of buildings based on clearances from adjacent structures and lot lines. The separation distances prescribed by this section are minimums notwithstanding the inherent fire-resistance ratings of the exterior wall assemblies. These clearances are intended to reduce the hazard to nearby structures and people in the event of a fire or explosion in a detached storage structure or outdoor area used for the storage of organic peroxides.

6204.2.2 Electrical wiring and equipment. In addition to the requirements of Section 5003.9.4, electrical wiring and equipment in outdoor storage areas containing unclassified detonable, Class I or II organic peroxides shall comply with the requirements for electrical Class I, Division 2 locations.

❖ Because of the danger of ignition by arcs or sparks in the event of an accidental spill or leak, electrical equipment and devices in outdoor organic peroxide storage areas must be classified for use in Class I, Division 2 hazardous locations as described in NFPA 70.

6204.2.3 Maximum quantities. Maximum quantities of organic peroxides in outdoor storage shall be in accordance with Table 6204.1.2.

❖ Outdoor storage of organic peroxides must comply with the requirements specified in Table 6204.1.2, which establishes the minimum separation distances required between the outdoor storage area and exposures, including other outdoor storage areas, and the MAQ of organic peroxides being stored.

INTERNATIONAL CODE COUNCIL®
Copyright © 2015 ICC. ALL RIGHTS RESERVED. Accessed by David Dammon on Jun 21, 2017 12:30:52 PM pursuant to License Agreement with ICC. No further reproduction or distribution authorized. ANY UNAUTHORIZED REPRODUCTION OR DISTRIBUTION IS A VIOLATION OF THE FEDERAL COPYRIGHT ACT AND THE LICENSE AGREEMENT, AND SUBJECT TO CIVIL AND CRIMINAL PENALTIES THEREUNDER.

6204.2.4 Storage arrangement. Storage arrangements shall be in accordance with Table 6204.1.7.

❖ Similar to Section 6204.1.7 for indoor storage, this section references the provisions of Table 6204.1.7 for organic peroxide storage arrangements. Pile limitations specified in the table are based on the relative hazard of the material when involved in fire. These limits apply to Class I, II, III and IV organic peroxides in combustible and noncombustible containers and packages.

6204.2.5 Separation. In addition to the requirements of Section 5003.9.8, outdoor storage areas for organic peroxides in amounts exceeding those specified in Table 5003.8.2 shall be located a minimum distance of 50 feet (15 240 mm) from other hazardous material storage.

❖ The required minimum 50-foot (15 240 mm) separation distance from other hazardous materials storage is intended to reduce the hazard of dangerous chemical reactions with other incompatible materials in the event of a spill, fire or explosion.

SECTION 6205
USE

6205.1 General. The use of organic peroxides in amounts exceeding the *maximum allowable quantity per control area* indicated in Table 5003.1.1(1) or 5003.1.1(3) shall be in accordance with Sections 5001, 5003, 5005 and this chapter.

❖ This section applies to indoor and outdoor dispensing, use and handling of organic peroxides when the amounts being dispensed, used or handled are in excess of the MAQ per indoor or outdoor control area indicated in Table 5003.1.1(1) or 5003.1.1(3), respectively. The administrative, general, use, dispensing and handling provisions of Chapter 50 are applicable, in addition to the requirements of this chapter.

Once the MAQ of organic peroxide per control area has been exceeded, indoor areas where materials are being dispensed, used or handled must be located in a building or portion of a building complying with the IBC for a Group H occupancy because of the increased hazards associated with quantity.

Although no occupancy group is assigned to them, outside organic peroxide use areas require an increased level of regulation when quantities exceed the MAQs per outdoor control area. The MAQs per control area listed in Tables 5003.1.1(1) and 5003.1.1(3) have been divided into closed-use and open-use systems. Corresponding MAQs recognize that an open-use condition is generally more hazardous than a closed-use condition because the organic peroxide is more directly exposed to the surrounding environment and can become more readily involved in an incident than if it is totally confined. The MAQs for use are based on the aggregate quantity in both use and storage, not exceeding the exempt amount listed for storage.

Bibliography

The following resource materials were used in the preparation of the commentary for this chapter of the code:

Bulletin 19A, *Suggested Relative Hazard Classification of Organic Peroxides*. Washington, DC: Society of the Plastics Industry, 1975.

Code Changes Resource Collection—2015 International Fire Code. Washington, DC: International Code Council, 2014.

DOTn 49 CFR; 100-178-05, *Specification for Transportation of Explosive and Other Dangerous Articles, Shipping Containers*. Washington, DC: U.S. Department of Transportation, 2005.

Publication AS109, *Safety and Handling of Organic Peroxides: A Guide*. Washington, DC: Society of the Plastics Industry, 1999.

Recommendations on the Transport of Dangerous Goods, Test and Criteria, Parts I, II and III, 10th rev. ed. New York: United Nations, 1997.

Townsend, J.S. “Heat: The Forgotten Reactant.” *Industrial Fire World*, p. 1416 May/June 1993.

INTERNATIONAL CODE COUNCIL®
Copyright © 2015 ICC. ALL RIGHTS RESERVED. Accessed by David Dammon on Jun 21, 2017 12:30:52 PM pursuant to License Agreement with ICC. No further reproduction or distribution authorized. ANY UNAUTHORIZED REPRODUCTION OR DISTRIBUTION IS A VIOLATION OF THE FEDERAL COPYRIGHT ACT AND THE LICENSE AGREEMENT, AND SUBJECT TO CIVIL AND CRIMINAL PENALTIES THEREUNDER.

INTERNATIONAL CODE COUNCIL®
Copyright © 2015 ICC. ALL RIGHTS RESERVED. Accessed by David Dammon on Jun 21, 2017 12:30:52 PM pursuant to License Agreement with ICC. No further reproduction or distribution authorized. ANY UNAUTHORIZED REPRODUCTION OR DISTRIBUTION IS A VIOLATION OF THE FEDERAL COPYRIGHT ACT AND THE LICENSE AGREEMENT, AND SUBJECT TO CIVIL AND CRIMINAL PENALTIES THEREUNDER.

Chapter 63: Oxidizers, Oxidizing Gases and Oxidizing Cryogenic Fluids

General Comments

Solid, liquid and gaseous oxidizers and oxidizing cryogenic fluids are common industrial chemicals. These compounds are often used because of their reactive properties. Common oxidizers include bromates, chlorates, chlorites, dichromates, hypochlorites, nitrates, nitrites, permanganates, inorganic peroxides and inorganic superoxides. Oxidizing cryogenic fluids include liquid oxygen, which is regulated by this chapter in addition to Chapter 55.

Requirements for the storage and use of liquid oxygen for respiratory care in Group I-1, I-4 and R occupancies are now specified in Chapter 63. Section 6306 was developed in response to changes in technology that improve in-home care of patients with respiratory ailments. This section now allows patients to utilize a liquid oxygen ambulatory care container and to be able to refill the container from a liquid oxygen home care container in a home setting.

Although oxidizers themselves do not burn, they pose unique fire hazards because of their ability to support combustion by breaking down and giving off oxygen. The hazard classification system for these materials described in the definition of "Oxidizer" in Section 6302.1 reflects the varying reactivity of oxidizers when they come in contact with combustible materials. The classification system originated in NFPA 430, upon which the provisions of this chapter are based but that is not referenced by the code except for sprinkler design criteria in Section 6304.1.4.

Cryogenic oxygen regulated by this chapter is also known as liquid oxygen (LOX). Oxygen is converted to LOX because it is less bulky and costly to handle when compared to an equivalent volume of compressed oxygen stored in high-pressure cylinders. LOX is defined in Section 6302.1 as an oxidizing gas in the cryogenic state and has a boiling point temperature of -297.3°F (-165°C). LOX, as with other cryogenic fluids, presents a number of hazards.

Because of the extremely low boiling points of cryogenic fluids, containers for cryogenic fluids, piping and pressure relief and control devices must be constructed of materials that are resistant to these temperatures. Materials like carbon steel and all plastics are not acceptable for cryogenic fluid service.

Cryogenic fluids are gases that have been condensed into a fluid and have extremely large expansion ratios. LOX has a liquid-to-gas expansion ratio [measured from its boiling point temperature to normal temperature and pressure (NTP)] of one to 960. Because of the large expansion ratio, the design of the containers must include a means of pressure relief anywhere in the piping system where LOX can be trapped, such as a pipe located between two valves that are closed.

The physical hazard as an oxidizer remains when oxygen is converted to LOX. As a result, a small release of liquid may produce a sufficient volume of oxygen to create an oxygen-enriched atmosphere. An atmosphere containing 23 percent or more by volume of oxygen is considered to be oxygen enriched. LOX and its cold vapors are capable of causing severe burns to human tissues.

The oxidizer hazard classifications defined in this chapter do not correspond to those given in NFPA 704. The NFPA 704 system indicates whether a given material will support combustion by using the "OXY" symbol in the lower quadrant of the placard. No numerical hazard value is assigned to a material's oxidizing ability in the NFPA 704 system.

When the specific hazard classification of a material is not known, the fire code official must use judgment in approving the assignment of materials to specific hazard classes. The best source of guidance is the information supplied by the Material Safety Data Sheets (MSDS) (see commentary, Section 407).

Purpose

Chapter 63 addresses the hazards associated with oxidizing materials and establishes criteria for their safe storage and protection in indoor and outdoor storage facilities, minimizing the potential for uncontrolled releases and contact with fuel sources. The chapter also provides reasonable safeguards for the storage and use of medical oxygen in home health care settings.

INTERNATIONAL CODE COUNCIL®
Copyright © 2015 ICC. ALL RIGHTS RESERVED. Accessed by David Dammon on Jun 21, 2017 12:30:52 PM pursuant to License Agreement with ICC. No further reproduction or distribution authorized. ANY UNAUTHORIZED REPRODUCTION OR DISTRIBUTION IS A VIOLATION OF THE FEDERAL COPYRIGHT ACT AND THE LICENSE AGREEMENT, AND SUBJECT TO CIVIL AND CRIMINAL PENALTIES THEREUNDER.

SECTION 6301
GENERAL

6301.1 Scope. The storage and use of oxidizing materials shall be in accordance with this chapter and Chapter 50. Oxidizing gases shall also comply with Chapter 53. Oxidizing *cryogenic fluids* shall also comply with Chapter 55.

Exceptions:

1. Display and storage in Group M and storage in Group S occupancies complying with Section 5003.11.
2. Bulk oxygen systems at industrial and institutional consumer sites shall be in accordance with NFPA 55.
3. Liquid oxygen stored or used in home health care in Group I-1, I-4 and R occupancies in accordance with Section 6306.

❖ This chapter is based in part on former NFPA 430 (now Chapter 15 of NFPA 400), addressing the hazards presented by the storage and use of oxidizers. In addition to the requirements of this chapter, oxidizing compressed gases are subject to Chapter 53 and oxidizing cryogenic fluids to Chapter 55.

Exception 1 states that this chapter does not apply to oxidizers where stored and displayed in Group M occupancies or where stored in Group S occupancies. Instead, they are governed by Section 5003.11 for those occupancy groups. In that section, Class 4 oxidizers are prohibited in Group M mercantile occupancies because of their detonable hazard potential. Quantities of all other oxidizer classes are limited on a per-control-area basis to limit exposure to people and property (see commentary, Section 5003.11). This exception would permit an increase above the maximum allowable quantities per control area (MAQs) indicated in Table 5003.1.1(1) for oxidizers while still maintaining a mercantile or storage occupancy group classification.

Exception 2 makes it clear that bulk oxygen systems, as defined in Section 6302.1, are not within the scope of this chapter but are required to comply with the provisions of NFPA 55.

It is not realistic to apply the MAQ/control area concept set forth in Chapter 50 to the widespread use and distribution of liquid oxygen in home health care settings. Exception 3 clarifies that LOX stored and used for home health care in the indicated occupancies in accordance with Section 6306 is not required to also comply with Chapter 50 or 55 provisions. The concept in Section 6306 is to limit not only the individual container size but also the total number of containers allowed in an individual dwelling unit. Trying to further regulate the quantity in a building is not considered by either industry or the fire service to be a reasonable or enforceable regulatory approach. A similar statement in Section 5301.1 sends the user to this chapter for regulation of oxidizing gases (including oxygen), which will get the user to Section 6306, as well.

6301.2 Permits. Permits shall be required as set forth in Section 105.6.

❖ The process of issuing permits gives the fire code official an opportunity to carefully evaluate and regulate hazardous operations. Permit applicants should be required to demonstrate that their operations comply with the intent of the code before the permit is issued. See the commentary to Section 105.6 for a general discussion of operations requiring an operational permit, Section 105.6.21 for a discussion of specific quantity-based operational permits for the materials regulated in this chapter and Section 105.7 for a general discussion of activities requiring a construction permit. The permit process also notifies the fire department of the need for prefire planning for hazardous property.

SECTION 6302
DEFINITIONS

6302.1 Definitions. The following terms are defined in Chapter 2:

BULK OXYGEN SYSTEM.

LIQUID OXYGEN AMBULATORY CONTAINER.

LIQUID OXYGEN HOME CARE CONTAINER.

OXIDIZER.
Class 4.
Class 3.
Class 2.
Class 1.

OXIDIZING CRYOGENIC FLUID.

OXIDIZING GAS.

❖ Definitions of terms can help in the understanding and application of the code requirements. This section directs the code user to Chapter 2 for the proper application of the indicated terms used in this chapter. Terms may be defined in Chapter 2 or in another *International Code*® as indicated in Section 201.3, or the dictionary meaning may be all that is needed (see also commentary, Sections 201.1 through 201.4).

SECTION 6303
GENERAL REQUIREMENTS

6303.1 Quantities not exceeding the maximum allowable quantity per control area. The storage and use of oxidizing materials in amounts not exceeding the *maximum allowable quantity per control area* indicated in Section 5003.1 shall be

INTERNATIONAL CODE COUNCIL®
Copyright © 2015 ICC. ALL RIGHTS RESERVED. Accessed by David Dammon on Jun 21, 2017 12:30:52 PM pursuant to License Agreement with ICC. No further reproduction or distribution authorized. ANY UNAUTHORIZED REPRODUCTION OR DISTRIBUTION IS A VIOLATION OF THE FEDERAL COPYRIGHT ACT AND THE LICENSE AGREEMENT, AND SUBJECT TO CIVIL AND CRIMINAL PENALTIES THEREUNDER.

in accordance with Sections 5001, 5003, 6301 and 6303. Oxidizing gases shall also comply with Chapter 53.

❖ The provisions of this section complement the requirements of Chapter 50 in structures used for the storage, handling or use of oxidizing materials. Unless otherwise indicated in a particular section, the regulations contained in Sections 6303.1.1 through 6303.1.3 assume that the quantity of oxidizers in a given building is limited to the MAQs established in Section 5003.1; thus, the building is not classified in Occupancy Group H. The general requirements of Sections 5001 and 5003 are fully applicable to the storage and use of organic peroxides in addition to the provisions of this chapter. In the event that the oxidizer being stored is a gas, it will also be subject to Chapter 53.

6303.1.1 Special limitations for indoor storage and use by occupancy. The indoor storage and use of oxidizing materials shall be in accordance with Sections 6303.1.1.1 through 6303.1.1.3.

❖ Because certain occupancies may need to have oxidizing materials on hand, Sections 6303.1.1.1 through 6303.1.1.3 provide regulations that are specific to occupancy group classifications and recognize the relative hazards of both the occupancy and the oxidizing material.

6303.1.1.1 Class 4 liquid and solid oxidizers. The storage and use of Class 4 liquid and solid oxidizers shall comply with Sections 6303.1.1.1.1 through 6303.1.1.1.4.

❖ Because of their explosive or higher deflagration hazard characteristics, Class 4 liquid and solid oxidizers warrant special consideration and limitations when stored or used in certain occupancies, as indicated in Sections 6303.1.1.1.1 through 6303.1.1.1.4.

6303.1.1.1.1 Group A, E, I or U occupancies. In Group A, E, I or U occupancies, any amount of Class 4 liquid and solid oxidizers shall be stored in accordance with the following:

1. Class 4 liquid and solid oxidizers shall be stored in hazardous materials storage cabinets complying with Section 5003.8.7.
2. The hazardous materials storage cabinets shall not contain other storage.

❖ Because of their explosive or higher deflagration hazard characteristics, even the smallest quantity of Class 4 liquid and solid oxidizers present in Group A, E, I or U occupancies must be stored in an approved hazardous materials storage cabinet constructed and placarded in accordance with Section 5003.8.6 to reduce the exposure of the materials to hazards from the surrounding environment.

It should also be noted that Note g to Table 5003.1.1(1) limits storage of Class 4 liquid and solid oxidizers in any amount to buildings equipped throughout with an approved automatic sprinkler system in accordance with Section 903.3.1.1. Also, based on Note e to Table 5003.1.1(1), if an approved storage cabinet is used, the MAQ that could be kept in occupancies equipped with sprinklers can be doubled.

6303.1.1.1.2 Group R occupancies. Class 4 liquid and solid oxidizers shall not be stored or used within Group R occupancies.

❖ Because Class 4 liquid and solid oxidizers are a great explosive hazard, they cannot be stored in any residential occupancy within the scope of the code's regulations because of the increased danger to the occupants and the otherwise unregulated environment to which the materials could be exposed.

6303.1.1.1.3 Offices and retail sales areas. Class 4 liquid and solid oxidizers shall not be stored or used in offices or retail sales areas of Group B, F, M or S occupancies.

❖ Because Class 4 liquid and solid oxidizers are a great explosive hazard, they cannot be stored in offices or retail sales areas of occupancies in Group B, F, M or S because of the increased danger to the occupants and the higher relative fire loads typically encountered in these occupancies.

6303.1.1.1.4 Classrooms. In classrooms of Group B, F or M occupancies, any amount of Class 4 liquid and solid oxidizers shall be stored in accordance with the following:

1. Class 4 liquid and solid oxidizers shall be stored in hazardous materials storage cabinets complying with Section 5003.8.7.
2. Hazardous materials storage cabinets shall not contain other storage.

❖ This section allows the occasional use of limited amounts of Class 4 liquid and solid oxidizers in certain scientific, experimental or demonstration settings; however, storage of any quantity of these materials for any length of time is not allowed. The fire code official may limit the amount of Class 4 liquid and solid oxidizers brought into a structure for these uses. The quantity actually needed for the experiment should determine the amount allowed into a structure.

Because of their explosive hazard characteristics, even the smallest quantity of Class 4 liquid and solid oxidizers must be stored in an approved hazardous materials storage cabinet, constructed and placarded in accordance with Section 5003.8.6, to reduce the exposure of the materials to hazards from the surrounding environment. Based on Note e to Table 5003.1.1(1), where an approved storage cabinet is used, the MAQ that could be kept in such occupancies can be doubled.

Note g to Table 5003.1.1(1) allows storage of Class 4 liquid and solid oxidizers in any amount only in buildings equipped throughout with an approved automatic sprinkler system in accordance with Section 903.3.1.1.

To reduce the likelihood of contamination of the Class 4 oxidizer materials or damage to their packaging, Item 2 prohibits the storage of other materials in the approved storage cabinet.

INTERNATIONAL CODE COUNCIL®
Copyright © 2015 ICC. ALL RIGHTS RESERVED. Accessed by David Dammon on Jun 21, 2017 12:30:52 PM pursuant to License Agreement with ICC. No further reproduction or distribution authorized. ANY UNAUTHORIZED REPRODUCTION OR DISTRIBUTION IS A VIOLATION OF THE FEDERAL COPYRIGHT ACT AND THE LICENSE AGREEMENT, AND SUBJECT TO CIVIL AND CRIMINAL PENALTIES THEREUNDER.

6303.1.1.2 Class 3 liquid and solid oxidizers. Not more than 200 pounds (91 kg) of solid or 20 gallons (76 L) of liquid Class 3 oxidizer is allowed in storage and use where such materials are necessary for maintenance purposes or operation of equipment. The oxidizers shall be stored in *approved* containers and in an *approved* manner.

❖ The higher amounts of Class 3 liquid and solid oxidizers permitted by this section in storage and use are in recognition of their common use for building maintenance purposes or equipment operation. Proper storage practices and safeguards must still be observed.

6303.1.1.3 Oxidizing gases. Except for cylinders of nonliquefied *compressed gases* not exceeding a capacity of 250 cubic feet (7 m^3) or liquefied *compressed gases* not exceeding a capacity of 46 pounds (21 kg) each used for maintenance purposes, patient care or operation of equipment, oxidizing gases shall not be stored or used in Group A, E, I or R occupancies or in offices in Group B occupancies.

The aggregate quantities of gases used for maintenance purposes and operation of equipment shall not exceed the *maximum allowable quantity per control area* listed in Table 5003.1.1(1).

Medical gas systems and medical gas supply cylinders shall also be in accordance with Section 5306.

❖ In Occupancy Groups A, E, I or R, or offices in Group B occupancies, up to the MAQ of oxidizing gases per control area established in Table 5003.1.1(1) are allowed for maintenance and critical functions, such as patient care and maintenance of equipment.

To limit the amount of gas that could be released in any given incident, no individual cylinder may exceed a capacity of 250 cubic feet (7 m^3) for nonliquefied compressed gases or 46 pounds (21 kg) for liquefied compressed gases. Consistent with Section 6301.1, the provisions of Chapter 53 are also applicable to oxidizer gases, in addition to the provisions of this section.

The quantity limitation to office spaces in Group B occupancies allows small laboratories, doctor or dental spaces, or other nonoffice uses classified as Group B to store and use quantities up to the MAQs of flammable or oxidizing gases.

6303.1.2 Emergency shutoff. *Compressed gas* systems conveying oxidizing gases shall be provided with *approved* manual or automatic emergency shutoff valves that can be activated at each point of use and at each source.

❖ In order to maintain control over the flow of oxidizer gases under emergency conditions, each supply source and point of use of oxidizer compressed gas must have an approved emergency shutoff valve. These valves must be excess flow control valves to regulate the rate of flow of hazardous materials in the piping system, fail-safe valves or other approved types that will operate automatically, or there must be a manual means of operation to give the fire department or other responsible persons the ability to stop the flow of hazardous materials in an emergency. The valves must be readily accessible and comply with Section 5003.2.2.1. Also see the commentary to the definitions of "Emergency shutoff valve," "Emergency shutoff valve, manual" and "Emergency shutoff valve, automatic" in Section 202.

6303.1.2.1 Shutoff at source. A manual or automatic fail-safe emergency shutoff valve shall be installed on supply piping at the cylinder or bulk source. Manual or automatic cylinder valves are allowed to be used as the required emergency shutoff valve where the source of supply is limited to unmanifolded cylinder sources.

❖ Where the source of the gas is limited to "cylinder sources" that are not manifolded, the shutoff valve can be the cylinder valve itself. If cylinders are manifolded or if the source is other than cylinders, an independent shutoff valve is required to be installed on the piping system.

6303.1.2.2 Shutoff at point of use. A manual or automatic emergency shutoff valve shall be installed on the supply piping at the point of use or at a point where the equipment using the gas is connected to the supply system.

❖ Emergency shutoff valves at the point of use are to be installed on the supply piping either at the use point or where equipment is connected. Either manual or automatic valves are allowed to be used. For example, it is common in some installations to have gas piped to a room for use with portable or fixed equipment. Emergency shutoff valves are typically provided at the point where the piping first enters the room. Equipment may not be connected to the valve; however, the valve represents the point of connection for use. When equipment is connected to the supply system, a valve that isolates the equipment is required. It may or may not be the same valve as that used at the point of penetration. Either valve is allowed to be manual or automatic, and either valve serves as an emergency shutoff valve.

6303.1.3 Ignition source control. Ignition sources in areas containing oxidizing gases shall be controlled in accordance with Section 5003.7.

❖ Given the fact that oxidizers enhance or accelerate the combustion process, ignition sources, such as smoking and open flames, must be strictly controlled in oxidizer storage or use areas in accordance with the provisions of Section 5003.7 to reduce the likelihood of a fire involving the stored material.

INTERNATIONAL CODE COUNCIL®
Copyright © 2015 ICC. ALL RIGHTS RESERVED. Accessed by David Dammon on Jun 21, 2017 12:30:52 PM pursuant to License Agreement with ICC. No further reproduction or distribution authorized. ANY UNAUTHORIZED REPRODUCTION OR DISTRIBUTION IS A VIOLATION OF THE FEDERAL COPYRIGHT ACT AND THE LICENSE AGREEMENT, AND SUBJECT TO CIVIL AND CRIMINAL PENALTIES THEREUNDER.

6303.2 Class 1 oxidizer storage configuration. The storage configuration of Class I liquid and solid oxidizers shall be as set forth in Table 6303.2.

❖ See the commentary to Table 6303.2.

TABLE 6303.2
STORAGE OF CLASS 1 OXIDIZER LIQUIDS AND SOLIDS

STORAGE CONFIGURATION	LIMITS (feet)
Piles	
Maximum width	24
Maximum height	20
Maximum distance to aisle	12
Minimum distance to next pile[a]	4
Minimum distance to walls[b]	2
Maximum quantity per pile	200 tons
Maximum quantity per building	No Limit

For SI: 1 foot = 304.8 mm, 1 pound = 0.454 kg, 1 ton = 0.907185 metric ton.

a. The minimum aisle width shall be equal to the pile height, but not less than 4 feet and not greater than 8 feet.

b. There shall be no minimum distance from the pile to a wall for amounts less than 9,000 pounds.

❖ Class 1 oxidizers are the least susceptible to spontaneous reactions at elevated temperatures (such as from exposure fires). The limitations of Table 6303.2 apply to Class 1 oxidizers in containers and packages. Combustible containers such as fiber drums, cardboard or plastic boxes, paper or plastic bags and plastic bottles or jugs are common packaging materials for oxidizers. Expanded polystyrene foam and other plastic and cellulosic combustible materials are also commonly used as packing materials. Noncombustible containers, such as glass jugs and bottles, are common containers but are usually shipped in combustible packing materials and boxes to prevent damage. Occasionally, some materials may be shipped or stored in metal drums. Whenever possible, materials should be kept in original shipping containers to prevent spillage or contamination.

SECTION 6304
STORAGE

6304.1 Indoor storage. Indoor storage of oxidizing materials in amounts exceeding the *maximum allowable quantity per control area* indicated in Table 5003.1.1(1) shall be in accordance with Sections 5001, 5003 and 5004 and this chapter.

❖ This section regulates the indoor storage of oxidizing materials when quantities are in excess of the MAQ and classified in Occupancy Group H. The general and storage provisions of Chapter 50 are applicable in addition to the requirements of this section. Storage of oxidizing materials inside structures must comply with Sections 6304.1.1 through 6304.2.4 to prevent uncontrolled release or exposure to conditions that may result in a fire or explosion.

6304.1.1 Explosion control. Indoor storage rooms, areas and buildings containing Class 4 liquid or solid oxidizers shall be provided with explosion control in accordance with Section 911.

❖ Because of the possibility of a deflagration or detonation in the event of ignition of oxidizers, explosion relief venting meeting the requirements of Section 911 must be installed to protect the storage building or structure from collapse.

6304.1.2 Automatic sprinkler system. The *automatic sprinkler system* for oxidizer storage shall be designed in accordance with NFPA 400.

❖ This section, as with all of Section 6304.1, is applicable to oxidizer storage buildings or portions of buildings classified in Occupancy Group H. Section 903.2.5.1 generally requires that sprinklers be installed throughout the Group H occupancy in accordance with Section 903.3.1.1. Because of the unique fire protection challenges presented by the storage of liquid and solid oxidizers, this section mandates that the sprinkler design for oxidizer storage be in accordance with NFPA 400, which includes special sprinkler design densities based on the class of oxidizer being protected and the manner of storage. These requirements are also duplicated in NFPA 13.

Note that only the sprinkler design criteria contained in NFPA 400 may be used because the rest of the standard is not included in the reference and, therefore, would not be applicable. See the commentary to Section 102.7 for further discussion of the limitations on the use of referenced standards.

6304.1.3 Liquid-tight floor. In addition to Section 5004.12, floors of storage areas for liquid and solid oxidizers shall be of liquid-tight construction.

❖ Floors and sills of rooms or areas used to contain hazardous material spills must be liquid tight to prevent the flow of liquids to adjoining areas (see commentary, Section 5004.2). The floor surface should be compatible with the oxidizer materials to be retained and must be noncombustible, as required by Section 5004.12.

6304.1.4 Smoke detection. An *approved* supervised smoke detection system in accordance with Section 907 shall be installed in liquid and solid oxidizer storage areas. Activation of the smoke detection system shall sound a local alarm.

Exception: Detached storage buildings protected by an *approved* automatic fire-extinguishing system.

❖ An automatic fire detection system with central, remote or proprietary station supervision and a local alarm signal is required for early warning of fire to building occupants and fire suppression personnel.

INTERNATIONAL CODE COUNCIL®
Copyright © 2015 ICC. ALL RIGHTS RESERVED. Accessed by David Dammon on Jun 21, 2017 12:30:52 PM pursuant to License Agreement with ICC. No further reproduction or distribution authorized. ANY UNAUTHORIZED REPRODUCTION OR DISTRIBUTION IS A VIOLATION OF THE FEDERAL COPYRIGHT ACT AND THE LICENSE AGREEMENT, AND SUBJECT TO CIVIL AND CRIMINAL PENALTIES THEREUNDER.

Detectors and installation methods in oxidizer storage areas must be selected for compatibility with the materials stored. Fire alarm equipment and installation methods must comply with Section 907. Materials that emit strong vapors may interfere with fire detection system components or trigger nuisance alarm signals. The required local alarm is intended to alert the occupants in the immediate vicinity of the storage area to a potentially hazardous condition. The alarm is not intended to be part of an evacuation alarm system for the entire structure.

The exception indicates that automatic fire detection is not required in detached storage buildings where there is an automatic fire suppression system. Automatic sprinklers or approved alternative fire-extinguishing systems reduce the danger to people and property from fire by detecting the fire, sounding an alarm, transmitting the alarm to the fire department and suppressing the fire.

Fire-extinguishing systems in detached storage buildings must be supervised by connection to a central station, a remote supervising station or a proprietary supervising station or, when approved by the fire code official, connected to a system that produces an audible and visual signal monitored at a constantly attended on-site location. See the commentary to Section 903.4 for further discussion of sprinkler system supervision, and Section 904.3.5 for further discussion of alternative automatic fire-extinguishing system supervision.

6304.1.5 Storage conditions. The maximum quantity of oxidizers per building in storage buildings shall not exceed those quantities set forth in Tables 6304.1.5(1) through 6304.1.5(3).

The storage configuration for liquid and solid oxidizers shall be as set forth in Table 6303.2 and Tables 6304.1.5(1) through 6304.1.5(3).

Class 2 oxidizers shall not be stored in *basements* except where such storage is in stationary tanks.

Class 3 and 4 oxidizers in amounts exceeding the *maximum allowable quantity per control area* set forth in Section 5003.1 shall be stored on the ground floor only.

❖ This section covers storage requirements related to the hazards of oxidizers stored in storage structures. MAQs of oxidizers and their arrangement in the building must comply with Tables 6304.1.5(1) through (3).

Because of the moderate hazard of Class 2 oxidizers, they can be stored in basements, but only when contained in approved stationary tanks that comply with the applicable provisions of Section 5003.2.

Because of their greater relative hazard, storage of Class 3 and 4 oxidizers in excess of the MAQs above or below the ground floor is prohibited. The greater hazard results in more problems associated with manual fire suppression operations in below-grade areas. Ground-floor storage also facilitates fire-fighter access to the storage area.

TABLE 6304.1.5(1)
STORAGE OF CLASS 2 OXIDIZER LIQUIDS AND SOLIDS

STORAGE CONFIGURATION	LIMITS		
	Control area storage	Group H occupancy storage	Detached storage
Piles			
Maximum width	16 feet	25 feet	25 feet
Maximum height	Note a	Note a	Note a
Maximum distance to aisle	8 feet	12 feet	12 feet
Minimum distance to next pile	Note b	Note b	Note b
Minimum distance to walls	2 feet	2 feet[c]	2 feet[c]
Maximum quantity per pile	MAQ	100 tons	100 tons
Maximum quantity per building	MAQ	2000 tons	No Limit

For SI: 1 foot = 304.8 mm, 1 pound = 0.454 kg, 1 ton = 0.907185 metric ton.

a. Maximum storage height in nonsprinklered buidlings is limited to 6 feet. In sprinklered buildings see NFPA 400 for storage heights based on ceiling sprinkler protection.

b. The minimum aisle width shall be equal to the pile height, but not less than 4 feet and not greater than 8 feet.

c. For protection level and detached storage under 4,500 pounds, there shall be no minimum separation distance between the pile and any wall.

❖ Table 6304.1.5(1) applies equally to Class 3 oxidizers in combustible and noncombustible containers and packages in control areas, Group H storage rooms and detached storage structures. Aisle widths that are equal to the pile height, as stated in Note b, reduce the fire exposure hazard between piles and, in the event of a fire-related collapse of a pile, reduce the likelihood of a "domino" effect that could not only increase fire intensity but also completely block access to pile areas by fire suppression personnel.

TABLE 6304.1.5(2)
STORAGE OF CLASS 3 OXIDIZER LIQUIDS AND SOLIDS

STORAGE CONFIGURATION	LIMITS		
	Control area storage	Group H occupancy storage	Detached storage
Piles			
Maximum width	12 feet	16 feet	20 feet
Maximum height	Note a	Note a	Note a
Maximum distance to aisle	8 feet	10 feet	10 feet
Minimum distance to next pile	Note b	Note b	Note b
Minimum distance to walls	4 feet	4 feet[c]	4 feet[c]
Maximum quantity per pile	NA	30 tons	100 tons
Maximum quantity per building	MAQ	1200 tons	No Limit

For SI: 1 foot = 304.8 mm, 1 pound = 0.454 kg, 1 ton = 0.907185 metric ton.

a. Maximum storage height in nonsprinklered buildings is limited to 6 feet. In sprinklered buildings see NFPA 400 for storage heights based on ceiling sprinkler protection.

b. The minimum aisle width shall be equal to the pile height, but not less than 4 feet and not greater than 8 feet.

c. For protection level and detached storage under 2,300 pounds, there shall be no minimum separation distance between the pile and any wall.

❖ Table 6304.1.5(2) applies equally to Class 3 oxidizers in combustible and noncombustible containers and

INTERNATIONAL CODE COUNCIL®
Copyright © 2015 ICC. ALL RIGHTS RESERVED. Accessed by David Dammon on Jun 21, 2017 12:30:52 PM pursuant to License Agreement with ICC. No further reproduction or distribution authorized. ANY UNAUTHORIZED REPRODUCTION OR DISTRIBUTION IS A VIOLATION OF THE FEDERAL COPYRIGHT ACT AND THE LICENSE AGREEMENT, AND SUBJECT TO CIVIL AND CRIMINAL PENALTIES THEREUNDER.

packages in control areas, Group H storage rooms and detached storage structures. Aisle widths that are equal to the pile height, as stated in Note b, reduce the fire exposure hazard between piles and, in the event of a fire-related collapse of a pile, reduce the likelihood of a "domino" effect that could not only increase fire intensity but also completely block access to pile areas by fire suppression personnel.

TABLE 6304.1.5(3)
STORAGE OF CLASS 4 OXIDIZER LIQUIDS AND SOLIDS

STORAGE CONFIGURATION	LIMITS (feet)
Piles	
Maximum length	10
Maximum width	4
Maximum height	8
Minimum distance to next pile	8
Maximum quantity per building	No Limit

For SI: 1 foot = 304.8 mm.

❖ Table 6304.1.5(3) applies to the storage of Class 4 oxidizers in quantities greater than the exempt amounts specified in Table 5003.1.1(1). Aisle widths that are equal to the pile height, as required in the table, reduce the fire exposure hazard between piles and, in the event of a fire-related collapse of a pile, reduce the likelihood of a "domino" effect that could not only increase fire intensity but also completely block access to pile areas by fire suppression personnel.

6304.1.6 Separation of Class 4 oxidizers from other materials. In addition to the requirements in Section 5003.9.8, Class 4 oxidizer liquids and solids shall be separated from other hazardous materials by not less than a 1-hour *fire barrier* or stored in hazardous materials storage cabinets.

❖ Above all else, oxidizers must be kept away from flammable and combustible liquids and explosive materials. Other chemicals may also react violently with some oxidizers and some oxidizers will react with other oxidizers. For example, triazinetriones (chlorinated isocyanurates) are incompatible with hypochlorites. Materials should be checked for compatibility before storage arrangements are approved. See the MSDS for each product for guidance on compatibility.

Class 4 oxidizers must be stored in separate hazardous materials storage cabinets or in rooms separated from other storage areas by 1-hour fire-resistance-rated construction.

6304.1.7 Contamination. Liquid and solid oxidizers shall not be stored on or against combustible surfaces. Liquid and solid oxidizers shall be stored in a manner to prevent contamination.

❖ Combustible surfaces may be ignited in the event of a spill or uncontrolled release of oxidizing material, including its vapors. Protective floor and wall coverings should be checked for compatibility with the oxidizing materials even if the underlying material is compatible. Noncombustible materials, such as unprotected ferrous metals, may corrode or react violently in the presence of certain oxidizing materials. For example, concentrated hydrogen peroxide (greater than 52-percent solution) may produce a violent decomposition reaction in contact with iron, copper, chromium, brass, bronze, lead, silver and manganese. The corrosive effects of many oxidizers may also damage concrete surfaces.

6304.1.8 Detached storage. Storage of liquid and solid oxidizers shall be in detached buildings where required by Section 5003.8.2.

❖ Section 5003.8.2 and Table 5003.8.2 require detached storage for Class 4 oxidizer solids and liquids when the MAQ is exceeded. See the commentary to Section 5003.8.2 and Table 5003.8.2.

6304.1.8.1 Separation distance. Detached storage buildings for Class 4 oxidizer liquids and solids shall be located not less than 50 feet (15 240 mm) from other hazardous materials storage.

❖ When the MAQ is exceeded for Class 4 oxidizer liquids and solids, the occupancy group is Group H-1, the same as for explosives. The minimum separation distance specified is intended to reduce the effects of radiant heat or physical damage exposure in the event of a fire or explosion in a detached storage building.

6304.2 Outdoor storage. Outdoor storage of oxidizing materials in amounts exceeding the *maximum allowable quantities per control area* set forth in Table 5003.1.1(3) shall be in accordance with Sections 5001, 5003, 5004 and this chapter. Oxidizing gases shall also comply with Chapter 53.

❖ This section regulates the outdoor storage of oxidizing materials when in excess of the MAQ established by Table 5003.1.1(3). The general and storage provisions of Chapter 50 are applicable in addition to the requirements of this section. Storage of oxidizing materials in outdoor control areas must comply with Sections 6304.2.1 through 6304.2.4 to prevent uncontrolled release or exposure to conditions that may result in a fire or explosion. In addition to the requirements of this chapter, oxidizing compressed gases are subject to the requirements of Chapter 53.

6304.2.1 Distance from storage to exposures for oxidizing gases. Outdoor storage areas for oxidizing gases shall be located in accordance with Table 6304.2.2.

❖ Table 6304.2.1 contains separation distances for outdoor storage of oxidizing gases that are intended to minimize radiant heat transfer and fire spread between exposures.

TABLE 6304.2.1. See page 63-8.

❖ Table 6304.2.1 establishes spatial separation (or alternative) safeguards required for the outside storage of oxidizing compressed gases when in excess of the outside storage MAQ shown in Table 5003.1.1(3).

INTERNATIONAL CODE COUNCIL®
Copyright © 2015 ICC. ALL RIGHTS RESERVED. Accessed by David Dammon on Jun 21, 2017 12:30:52 PM pursuant to License Agreement with ICC. No further reproduction or distribution authorized. ANY UNAUTHORIZED REPRODUCTION OR DISTRIBUTION IS A VIOLATION OF THE FEDERAL COPYRIGHT ACT AND THE LICENSE AGREEMENT, AND SUBJECT TO CIVIL AND CRIMINAL PENALTIES THEREUNDER.

The required separation distance is intended to minimize radiant heat transfer between exposures. Separation distances provide a measure of protection against the possibility of fire spread in the event of a fire involving the stored material or an incident involving another exposure, such as a building on the same or an adjacent lot, or a vehicle in the public right-of-way. IBC Section 414.6 contains additional protection requirements for outside storage conditions in areas that are provided with an overhead roof structure or canopy to protect the materials from the weather.

Note a allows encroachment on property lines, public streets, public ways, etc., through the use of a protective 2-hour fire barrier (constructed as required by IBC Section 707, which acts as a shield between the storage and the exposure. The note recognizes that a 2-hour fire-barrier wall provides an equivalent means of achieving the objective of spatial separation. Where a separation assembly is used instead of a physical separation distance, the wall must extend vertically beyond the roof or wall opening of the larger structure on each side (top and sides) to prevent a fire from lapping over or extending around the wall and must be arranged to prevent hazardous accumulation of gas.

6304.2.1.1 Oxidizing cryogenic fluids. Outdoor storage areas for oxidizing *cryogenic fluids* shall be located in accordance with Chapter 55.

❖ This section indicates that outdoor storage areas for oxidizing cryogenic fluids are subject to the outdoor storage requirements found in Section 5504.3.

6304.2.2 Storage configuration for liquid and solid oxidizers. Storage configuration for liquid and solid oxidizers shall be in accordance with Table 6303.2 and Tables 6304.1.5(1) through 6304.1.5(3).

❖ The outside storage arrangements for liquid and solid oxidizers are the same as for inside storage arrangements contained in Section 6304.1.8 and its referenced tables (see commentary, Section 6304.1.8).

6304.2.3 Storage configuration for oxidizing gases. Storage configuration for oxidizing gases shall be in accordance with Table 6304.2.2.

❖ To minimize radiant heat transfer and fire spread between exposures, Table 6304.2.2 contains separation distances for the outdoor storage of oxidizer gases when in excess of the outside storage MAQ shown in Table 5001.1.1(3).

SECTION 6305
USE

6305.1 Scope. The use of oxidizers in amounts exceeding the *maximum allowable quantity per control area* indicated in Table 5003.1.1(1) or 5003.1.1(3) shall be in accordance with Sections 5001, 5003, 5005 and this chapter. Oxidizing gases shall also comply with Chapter 53.

❖ This section applies to all indoor and outdoor dispensing, use and handling of oxidizers when these amounts are in excess of the MAQ per indoor or outdoor control area indicated in Table 5003.1.1(1) or 5003.1.1(3), respectively. The administrative, general use, handling and dispensing provisions of Chapter 50 are applicable in addition to the requirements of this chapter.

Once the MAQs of oxidizers per control area have been exceeded, indoor areas where materials are being dispensed, used or handled must be located in a building or portion of a building complying with the IBC for a Group H occupancy as a result of the increased hazards associated with quantity.

Although no occupancy group is assigned to them, outside oxidizer use areas must have an increased level of regulation when quantities exceed the MAQs per outdoor control area listed in Table 5003.1.1(3). Corresponding MAQs recognize that an open-use condition is generally more hazardous than a closed-use condition because the oxidizer is more directly exposed to the surrounding environment and can become more readily involved in an incident than if totally confined. The MAQs for use are based on the aggregate quantity in both use and storage being within the MAQs listed for storage.

SECTION 6306
LIQUID OXYGEN IN HOME HEALTH CARE

6306.1 General. The storage and use of liquid oxygen (LOX) in home health care in Group I-1, I-4 and R occupancies shall

TABLE 6304.2.1
OXIDIZER GASES—DISTANCE FROM STORAGE TO EXPOSURES[a]

QUANTITY OF GAS STORED (cubic feet at NTP)	DISTANCE TO A BUILDING NOT ASSOCIATED WITH THE MANUFACTURE OR DISTRIBUTION OF OXIDIZING GASES OR PUBLIC WAY OR LOT LINE THAT CAN BE BUILT UPON (feet)	DISTANCE BETWEEN STORAGE AREAS (feet)
0 – 50,000	5	5
50,001 – 100,000	10	10
100,001 or greater	15	10

For SI: 1 foot = 304.8 mm, 1 cubic foot = 0.02832 m^3.

a. The minimum required distances shall not apply where fire barriers without openings or penetrations having a minimum fire-resistance rating of 2 hours interrupt the line of sight between the storage and the exposure. The configuration of the fire barrier shall be designed to allow natural ventilation to prevent the accumulation of hazardous gas concentrations.

INTERNATIONAL CODE COUNCIL®
Copyright © 2015 ICC. ALL RIGHTS RESERVED. Accessed by David Dammon on Jun 21, 2017 12:30:52 PM pursuant to License Agreement with ICC. No further reproduction or distribution authorized. ANY UNAUTHORIZED REPRODUCTION OR DISTRIBUTION IS A VIOLATION OF THE FEDERAL COPYRIGHT ACT AND THE LICENSE AGREEMENT, AND SUBJECT TO CIVIL AND CRIMINAL PENALTIES THEREUNDER.

comply with Sections 6306.2 through 6306.6, or shall be stored and used accordance with Chapter 50.

❖ As the population ages, the use of LOX in home health care settings is expected to increase. Section 6306 was developed in response to changes in technology that improve the care of patients with respiratory ailments in their own homes allowing them to utilize a LOX ambulatory care container and to be able to refill it from a LOX home care container. Section 6306 will enhance public safety by establishing minimum requirements for LOX storage and use in the occupancies where the material is most frequently encountered. In addition, Section 6306 requires that the suppliers provide a reasonable level of information regarding safeguards to be supplied by the users, and fills a void in the code that has been characterized by a growing concern and "need to know" expressed by the code enforcement community. There may be certain circumstances that make compliance with the provisions of Section 6306 impractical or impossible, in which case, the provisions of Chapters 50 and 55 of the code would be applicable.

6306.2 Information and instructions to be provided. The seller of liquid oxygen shall provide the user with information in written form that includes, but is not limited to, the following:

1. Manufacturer's instructions and labeling for safe storage and use of the containers.
2. Locating containers away from ignition sources, *exits*, electrical hazards and high-temperature devices in accordance with Section 6306.3.3.
3. Restraint of containers to prevent falling in accordance with Section 6306.3.4.
4. Requirements for handling containers in accordance with Section 6306.3.5.
5. Safeguards for refilling containers in accordance with Section 6306.3.6.
6. Signage requirements in accordance with Section 6306.6.

❖ This section requires that the LOX purveyor provide the customer with written, basic instructions on the safe storage, use, handling and refilling of LOX containers.

6306.3 Liquid oxygen home care containers. Containers of liquid oxygen in home health care shall be in accordance with Sections 6306.3.1 through 6306.3.6.

❖ This section introduces the requirements applicable to home health care LOX containers. See the commentary to the Chapter 2 definitions of "Liquid oxygen home care container" and "Liquid oxygen ambulatory container."

6306.3.1 Maximum individual container capacity. Liquid oxygen home care containers shall not exceed an individual capacity of 15.8 gallons (60 L) in Group I-1, I-4 and R occupancies. Liquid oxygen ambulatory containers are allowed in Group I-1, I-4 and R occupancies. Containers of liquid oxygen in home health care shall also be stored, used and filled in accordance with Section 6306 and Sections 5503.1 and 5503.2.

❖ The sizes of LOX ambulatory and health care containers in Group I-1, I-4 and R occupancies are limited to 0.396 gallons (0.75 L) and 15.8 gallons (60 L), respectively, as established in the definitions in Section 6302.1 and by this section. It is necessary to establish container size limits because there has been a trend to increase the size of the containers delivered to the user, in some cases, simply in order to avoid more frequent deliveries. If it is necessary to have individual containers larger than the limits established here, then the MAQ and control area concept set forth in Chapter 50 will apply. The general requirements of Chapter 55 for containers and their pressure relief devices are also applicable to these containers.

6306.3.2 Manufacturer's instructions and labeling. Containers shall be stored, used and operated in accordance with the manufacturer's instructions and labeling.

❖ Compliance with the LOX container manufacturer's storage, use and operating instructions is a fundamental requirement consistent with all *International Codes*® and those instructions are considered an enforceable extension of the code. Federal, state, county or municipal laws might supercede part of or be applied in addition to the requirements in the instructions.

6306.3.3 Locating containers. Containers shall not be located in areas where any of the following conditions exist:

1. They can be overturned due to operation of a door.
2. They are in the direct path of egress.
3. They are subject to falling objects.
4. They can become part of an electrical circuit.
5. Open flames and high-temperature devices can cause a hazard.

❖ The requirements in this section ensure that LOX home care and ambulatory containers are not located in areas where they can be damaged, near sources of ignition or in the direct path of egress. Home care and ambulatory containers must be located so that they are protected from being overturned resulting from the impact of a door or from falling objects, such as a bookshelf. Containers are not allowed to be located in the direct path of a means of egress to avoid damage to containers or injury to occupants egressing the area. Containers also must be located so they cannot become part of an electrical circuit or near open flames or high-temperature devices.

INTERNATIONAL CODE COUNCIL®
Copyright © 2015 ICC. ALL RIGHTS RESERVED. Accessed by David Dammon on Jun 21, 2017 12:30:52 PM pursuant to License Agreement with ICC. No further reproduction or distribution authorized. ANY UNAUTHORIZED REPRODUCTION OR DISTRIBUTION IS A VIOLATION OF THE FEDERAL COPYRIGHT ACT AND THE LICENSE AGREEMENT, AND SUBJECT TO CIVIL AND CRIMINAL PENALTIES THEREUNDER.

6306.3.4 Restraining containers. Liquid oxygen home care containers shall be restrained while in storage or use to prevent falling caused by contact, vibration or seismic activity. Containers shall be restrained by one of the following methods:

1. Restraining containers to a fixed object with one or more restraints.
2. Restraining containers within a framework, stand or assembly designed to secure the container.
3. Restraining containers by locating a container against two points of contact such as the walls of a corner of a room or a wall and a secure furnishing or object such as a desk.

❖ To avoid physical damage to the containers and to protect the user from injury due to falling containers, LOX home care containers are required to be restrained. This section specifies three approved methods of restraint to prevent a home care container from being overturned due to mechanical impact or a seismic event.

6306.3.5 Container handling. Containers shall be handled by use of a cart or hand truck designed for such use.

Exceptions:

1. Liquid oxygen home care containers equipped with a roller base.
2. Liquid oxygen ambulatory containers are allowed to be hand carried.

❖ This section requires that if containers are moved, to avoid damage due to dropping or upset, they must be transported using a cart or hand truck suitable for the purpose. Because the level of stability and efficiency in container moving is provided by roller bases that are made for the container, Exception 1 exempts LOX home care containers equipped with rollers or caster wheels in their bases. Exception 2 recognizes that some ambulatory containers are made for portability and are hand carried.

6306.3.6 Filling of containers. The filling of containers shall be in accordance with Sections 6306.3.6.1 through 6306.3.6.3.

❖ This section introduces the following requirements applicable to the filling of home health care LOX containers.

6306.3.6.1 Filling location. Liquid oxygen home care containers and ambulatory containers shall be filled outdoors.

Exception: Liquid oxygen ambulatory containers are allowed to be filled indoors where the supply container is specifically designed for filling such containers and written instructions are provided by the container manufacturer.

❖ A requirement for filling LOX home care and ambulatory containers outdoors is specified in this section. The exception allows ambulatory LOX containers to be filled indoors, provided the supply container is designed for the filling of such containers by the patient or other individuals and written instructions for the proper filling of these containers are provided by the home care container manufacturer.

6306.3.6.2 Incompatible surfaces. A drip pan compatible with liquid oxygen shall be provided under home care container fill and vent connections during the filling process in order to protect against liquid oxygen spillage from coming into contact with combustible surfaces, including asphalt.

❖ This section requires the use of a LOX-compatible drip pan located beneath the container to prevent any spilled LOX from contacting surfaces whose combustibility would be greatly enhanced by contact with the LOX. Asphalt surfaces are especially problematic because LOX that contacts asphalt can act as a contact explosive, resulting in a low-pressure explosion.

6306.3.6.3 Open flames and high-temperature devices. The use of open flames and high-temperature devices shall be in accordance with Section 5003.7.2.

❖ During LOX container filling operations, open flame sources and high-temperature devices must be separated from home care and ambulatory containers in accordance with Section 5003.7.2 (see commentary, Section 5003.7.2).

6306.4 Maximum aggregate quantity. The maximum aggregate quantity of liquid oxygen allowed in storage and in use in each *dwelling unit* shall be 31.6 gallons (120 L).

Exceptions:

1. The maximum aggregate quantity of liquid oxygen allowed in Group I-4 occupancies shall be limited by the maximum allowable quantity set forth in Table 5003.1.1(1).
2. Where individual sleeping rooms are separated from the remainder of the *dwelling unit* by *fire barriers* constructed in accordance with Section 707 of the *International Building Code*, and *horizontal assemblies* constructed in accordance with Section 711 of the *International Building Code*, or both, having a minimum *fire-resistance rating* of 1 hour, the maximum aggregate quantity per *dwelling unit* shall be increased to allow not more than 31.6 gallons (120 L) of liquid oxygen per sleeping room.

❖ This section establishes a maximum aggregate amount of 31.6 gallons (120 L) inside of each dwelling unit. This allows for one container to be in use and an additional cylinder in storage.

Exception 1 further requires that the total amount of LOX stored indoors in Group I-4 occupancies not exceed the MAQ for cryogenic oxidizing liquids specified in Table 5003.1.1(1). That table establishes an MAQ for LOX of 45 gallons (170.3 L) in a one-story, Group I-4 occupancy constructed as a single control area and allows the quantity to be increased by 100 percent if the building is protected throughout by an approved automatic sprinkler system complying with NFPA 13. Additional amounts of LOX are permitted if it is stored in approved hazardous materials storage cabinets or if a Group I-4 occupancy is constructed

INTERNATIONAL CODE COUNCIL®
Copyright © 2015 ICC. ALL RIGHTS RESERVED. Accessed by David Dammon on Jun 21, 2017 12:30:52 PM pursuant to License Agreement with ICC. No further reproduction or distribution authorized. ANY UNAUTHORIZED REPRODUCTION OR DISTRIBUTION IS A VIOLATION OF THE FEDERAL COPYRIGHT ACT AND THE LICENSE AGREEMENT, AND SUBJECT TO CIVIL AND CRIMINAL PENALTIES THEREUNDER.

with additional control areas. Keep in mind that even though these occupancies may be equipped with automatic sprinklers, the ability to increase the MAQ by 100 percent in Table 5003.1.1(1) is only applicable when the sprinkler system is designed in accordance with NFPA 13. Designs in accordance with NFPA 13D or 13R would not qualify for an increase.

Exception 2 permits a maximum of 31.6 gallons (120 L) of LOX in an individual sleeping room when the room is separated from the remainder of the dwelling unit by 1-hour fire-resistance-rated fire barriers and horizontal assemblies constructed in accordance with the requirements in IBC Chapter 7.

6306.5 Smoking prohibited. Smoking shall be prohibited in rooms or areas where liquid oxygen is in use.

❖ Smoking is a significant ignition source and LOX is a hazardous material that can enhance the burning rate of combustible materials. Smoking is therefore prohibited in all areas where LOX is in use (also see commentary, Sections 310 and 6306.6.1).

6306.6 Signs. Warning signs for occupancies using home health care liquid oxygen shall be in accordance with Sections 6306.6.1 and 6306.6.2.

❖ This section introduces the requirements for warning signs applicable to home health care LOX storage, use or transfer.

6306.6.1 No smoking sign. A sign stating "OXYGEN—NO SMOKING" shall be posted in each room or area where liquid oxygen containers are stored, used or filled.

❖ Since smoking is prohibited by Section 6306.5, it is reasonable to provide appropriate warning signs in each room where LOX is stored, used or transferred stating that smoking is banned (see Section 310 for additional requirements for these signs).

6306.6.2 Premises signage. Where required by the *fire code official*, each *dwelling unit* or *sleeping unit* shall have an *approved* sign indicating that the unit contains liquid oxygen home care containers.

❖ When the fire code official deems it necessary, this section authorizes him or her to require a sign for each sleeping or dwelling unit to identify the presence of LOX to fire fighters. During the development of Section 6306, concern was expressed that there could be privacy and personal safety issues in placing such signage in public spaces. Accordingly, this section should be applied judiciously and sparingly, and only when absolutely essential to fire-fighter safety.

6306.7 Fire department notification. Where required by the *fire code official*, the liquid oxygen seller shall notify the fire department of the locations of liquid oxygen home care containers.

❖ This section requires the seller of the LOX to notify the fire code official of the locations where LOX is being used for home health care. Note that this section is only applicable when it is required by the fire code official. Some jurisdictions may not want this information due to the potentially large volume of information involved or the lack of resources to process it.

Bibliography

The following resource materials were used in the preparation of the commentary for this chapter of the code:

21 USC Chapter 9, *Federal Food, Drug and Cosmetic Act*. Washington, DC: U.S. Government Printing Office, 2007.

Code Changes Resource Collection—2015 International Fire Code. Washington, DC: International Code Council, 2014.

DOTn 49 CFR; 100-178-94, *Hazardous Materials Regulations*. Washington, DC: U.S. Department of Transportation, 1994.

Holtzclaw, H.F and W.R. Robinson. *General Chemistry*, 8th ed. Lexington, MA: DC Heath and Co., 1988.

INTERNATIONAL CODE COUNCIL®
Copyright © 2015 ICC. ALL RIGHTS RESERVED. Accessed by David Dammon on Jun 21, 2017 12:30:52 PM pursuant to License Agreement with ICC. No further reproduction or distribution authorized. ANY UNAUTHORIZED REPRODUCTION OR DISTRIBUTION IS A VIOLATION OF THE FEDERAL COPYRIGHT ACT AND THE LICENSE AGREEMENT, AND SUBJECT TO CIVIL AND CRIMINAL PENALTIES THEREUNDER.

INTERNATIONAL CODE COUNCIL®
Copyright © 2015 ICC. ALL RIGHTS RESERVED. Accessed by David Dammon on Jun 21, 2017 12:30:52 PM pursuant to License Agreement with ICC. No further reproduction or distribution authorized. ANY UNAUTHORIZED REPRODUCTION OR DISTRIBUTION IS A VIOLATION OF THE FEDERAL COPYRIGHT ACT AND THE LICENSE AGREEMENT, AND SUBJECT TO CIVIL AND CRIMINAL PENALTIES THEREUNDER.

Chapter 64: Pyrophoric Materials

General Comments

Because of their capacity to ignite spontaneously at low temperatures, pyrophoric materials pose unusual deflagration and detonation hazards to building occupants and fire-fighting personnel. Advance knowledge of the materials present in the building through the issuance of permits and the submittal of Material Safety Data Sheets (MSDS), as noted in Section 407, are essential for effective preplanning by the fire department. The ability to fight fires involving pyrophoric materials may be somewhat limited since many pyrophoric materials are also highly reactive with water. Interior fire fighting may not be an option unless adequate alternative extinguishing agents are available.

Some flammable liquids may also be considered pyrophoric liquids. Diethylzine, for example, is considered a pyrophoric liquid in accordance with NFPA 49 (found in the NFPA *Fire Protection Guide to Hazardous Materials*), but has a U.S. Department of Transportation (DOT) classification as a flammable liquid. Since this material is known to ignite spontaneously when exposed to air, the multiple hazards of being both pyrophoric and flammable must be addressed.

Alkali metals, such as sodium, potassium and lithium, are examples of pyrophoric solids. Most of these reactive metals are not found free in nature, but are combined with other elements. Sodium, for example, burns violently and ignites spontaneously when exposed to moist air. Sodium that comes in contact with water may be accompanied by hydrogen explosions.

Diborane and phosphine are pyrophoric gases that must comply with the provisions of this chapter as well as those of Chapter 53.

The proper classification of materials as pyrophoric is essential to providing adequate means of hazard mitigation. Pyrophoric materials, as indicated earlier, may also pose multiple hazards similar to flammable liquids, flammable solids and water-reactive materials.

In previous editions of the code, there were extensive regulations in Section 6406 for silane gas tetrahydride (SiH^4); CAS No. 7803-62-5], a common but dangerous pyrophoric gas that is also classified as unstable (reactive)(see commentary, Chapter 66). Due to the development of a standard for its storage and handling, this chapter now regulates silane by reference to the applicable Compressed Gas Association (CGA) standard, G-13. Silane gas or mixtures of silane gas are commonly found in the semiconductor and photovoltaic cell manufacturing processes and allied industries. Silane gas is distributed at 100-percent concentration or it can be distributed as a mixture with other gases, such as various concentrations of silane mixed with nitrogen or hydrogen. This chapter only addresses silane gas or mixtures of silane gas that behave as a pyrophoric and flammable gas.

Silane is classified as a pyrophoric material and a Class 1 Unstable (reactive) compressed gas. It can autoignite or spontaneously ignite when it is exposed to air without any source of ignition. Silane has a lower flammable limit of 1.37 percent by volume in air. It begins to exhibit pyrophoric characteristics at about 4.5 percent volume in air. Silane is a unique hazardous material in that it is also metastable, meaning that it can have delayed ignition. This metastable characteristic is dangerous because it allows a volume of gas to accumulate inside of a building. In such cases, a deflagration can occur, which can cause structural damage to buildings, injure or kill individuals located close to the release, and complicate the emergency response due to its potential energy. It is for this reason that Section 911.1 and Table 911.1 require deflagration venting when the amount of silane stored inside of buildings exceeds its maximum allowable quantity.

Because of silane's importance in the manufacturing of semiconductors and photovoltaic products and its increased use, manufacturers of silane in conjunction with its users have performed extensive testing of this hazardous material. These tests, along with incident experiences and peer-reviewed scientific data, resulted in the development of the 2006 edition of ANSI/CGA Standard G-13, *Storage and Handling of Silane and Silane Mixtures*.

Excluding the introduction, scope, definitions and references, CGA G-13 is divided into 14 sections. These sections address the following:

- Physical and chemical properties of silane.
- Requirements for its proper indoor and outdoor storage.
- Configuration of the piping, valves and fitting.
- Packaging of silane, gas and flame detection systems.
- Fire protection.
- Ventilation.
    - Purge gas systems.
    - Electrical installation requirements.
    - Supervisory controls of mechanical ventilation, gas monitoring and flame detection systems.

The standard also contains four informational appendices that address protective equipment required for personnel working on silane systems, the compressibility of silane, minimum separation distances from silane

INTERNATIONAL CODE COUNCIL®
Copyright © 2015 ICC. ALL RIGHTS RESERVED. Accessed by David Dammon on Jun 21, 2017 12:30:52 PM pursuant to License Agreement with ICC. No further reproduction or distribution authorized. ANY UNAUTHORIZED REPRODUCTION OR DISTRIBUTION IS A VIOLATION OF THE FEDERAL COPYRIGHT ACT AND THE LICENSE AGREEMENT, AND SUBJECT TO CIVIL AND CRIMINAL PENALTIES THEREUNDER.

storage to certain thermal flux (e.g., radiant energy) exposures and blast overpressure.

The requirements for outdoor storage are based on a series of silane release tests and the development of a mathematic model that were sponsored by the CGA. During these tests silane was released from DOT tube trailers, International Standards Organization (ISO) module packs (which are another form of bulk compressed packaging), and containers with a volume of more than 16 cubic feet (450 L). The testing results were used in the development of requirements for separation distances of cylinders and large bulk sources of silane.

For cylinders with a volume of less than 16 cubic feet (450 L), CGA G-13 requires the outdoor separation distance to be established based on the volume of silane gas in each nest of compressed gas cylinders (see Chapter 2 for the definition of "Nesting"). The separation distances are intended to limit the thermal flux of the radiation produced by a silane jet fire and are limited based on the volume of each cylinder in each nest and if the cylinder is constructed of steel, fiber overwrapped aluminum or aluminum.

For bulk storage containers including silane tube trailers, ISO modules and containers greater than 450 liters (16 cubic feet) in volume, the CGA standard establishes minimum separation distances to protect exposures from the energy of a 0.5 psig (3.44 kPa) blast overpressure. Blast overpressure is the pressure above the ambient pressure that is manifested in the shock wave of a deflagration or a detonation. The threshold of 0.5 psig (3.44 kPa) value was chosen as the acceptable level of blast overpressure for both buildings and occupants because a frame structure can normally withstand that level of external force with no serious structural damage, and it is unlikely that human beings inside the building would normally suffer any serious injury.

The separation distances from the exposures are based on the stored pressure within the bulk containers or cylinders and the diameter of the pressure relief device. CGA G-13 limits the maximum pressure in the bulk containers or cylinders to 1,600 psig (11 032 kPa) and requires minimum separation distances from a bulk silane source and exposures.

CGA G-13 also contains extensive requirements for the indoor storage and use of silane. It is important to note that some of the requirements of CGA G-13 exceed the requirements of former Section 4106, which was deleted in the 2012 edition of the code.

Purpose

This chapter regulates the hazards associated with pyrophoric materials, which are capable of spontaneously igniting in the air at or below a temperature of 130°F (54°C). Many pyrophoric materials also pose severe flammability or reactivity hazards. This chapter addresses only the hazards associated with pyrophoric materials. Other materials that pose multiple hazards must conform to the requirements of the code with respect to all hazards (see Section 5001.1). Strict compliance with the provisions of this chapter, along with proper housekeeping and storage arrangements, can reduce the exposure hazards associated with the involvement of pyrophoric materials in a fire or other emergency.

SECTION 6401
GENERAL

6401.1 Scope. The storage and use of pyrophoric materials shall be in accordance with this chapter. *Compressed gases* shall also comply with Chapter 53.

❖ This chapter details specific requirements for the storage of pyrophoric materials. The requirements of this chapter are intended to complement the general requirements for hazardous materials in Chapter 50. Pyrophoric gases are also regulated by Chapter 53. The classification of pyrophoric materials is based on the definition indicated in Section 202, which is derived from DOL 29 CFR; Part 1910.1200.

6401.2 Permits. Permits shall be required as set forth in Section 105.6.

❖ The process of issuing permits gives the fire code official an opportunity to carefully evaluate and regulate hazardous operations. Permit applicants should be required to demonstrate that their operations comply with the intent of the code before the permit is issued. See the commentary to Section 105.6 for a general discussion of operations requiring an operational permit, Section 105.6.21 for discussion of specific quantity-based operational permits for the materials regulated in this chapter and Section 105.7 for a general discussion of activities requiring a construction permit.

The permit process also notifies the fire department of the need for prefire planning for hazardous property.

SECTION 6402
DEFINITION

6402.1 Definition. The following term is defined in Chapter 2:

PYROPHORIC.

❖ Definitions of terms can help in the understanding and application of the code requirements. This section directs the code user to Chapter 2 for the proper

INTERNATIONAL CODE COUNCIL®
Copyright © 2015 ICC. ALL RIGHTS RESERVED. Accessed by David Dammon on Jun 21, 2017 12:30:52 PM pursuant to License Agreement with ICC. No further reproduction or distribution authorized. ANY UNAUTHORIZED REPRODUCTION OR DISTRIBUTION IS A VIOLATION OF THE FEDERAL COPYRIGHT ACT AND THE LICENSE AGREEMENT, AND SUBJECT TO CIVIL AND CRIMINAL PENALTIES THEREUNDER.

application of the indicated terms used in this chapter. Terms may be defined in Chapter 2 or in another *International Code*® as indicated in Section 201.3, or the dictionary meaning may be all that is needed (see also commentary, Sections 201.1 through 201.4).

SECTION 6403
GENERAL REQUIREMENTS

6403.1 Quantities not exceeding the maximum allowable quantity per control area. The storage and use of pyrophoric materials in amounts not exceeding the *maximum allowable quantity per control area* indicated in Section 5003.1 shall be in accordance with Sections 5001, 5003, 6401 and 6403.

❖ The provisions of this section complement the requirements of Chapter 50 for structures occupied for the storage, handling or use of pyrophoric materials. The general requirements of Sections 5001 and 5003, in addition to the provisions of this chapter, are fully applicable to the storage and use of organic peroxides.

6403.1.1 Emergency shutoff. *Compressed gas* systems conveying pyrophoric gases shall be provided with *approved* manual or automatic emergency shutoff valves that can be activated at each point of use and at each source.

❖ To provide control over the flow of pyrophoric gases under emergency conditions, each supply source as well as each point of use of pyrophoric compressed gas must be equipped with an approved emergency shutoff valve. These are excess flow control valves that regulate the rate of flow of hazardous materials in the piping system, fail-safe valves or other approved types that will operate automatically or manually to give the fire department or other responsible persons the ability to stop the flow of hazardous material in an emergency. The valves must be readily accessible and comply with Section 5003.2.2.1. See also the commentary to the definitions of "Emergency shutoff valve," "Emergency shutoff valve, manual" and "Emergency shutoff valve, automatic" in Section 202.

6403.1.1.1 Shutoff at source. An automatic emergency shutoff valve shall be installed on supply piping at the cylinder or bulk source. The shutoff valve shall be operated by a remotely located manually activated shutdown control located not less than 15 feet (4572 mm) from the source of supply. Manual or automatic cylinder valves are allowed to be used as the required emergency shutoff valve where the source of supply is limited to unmanifolded cylinder sources.

❖ This section requires that an automatic emergency shutoff valve be provided on pyrophoric compressed gas systems activated by a remotely located, manually activated control. A minimum distance of 15 feet (4572 mm) has been specified to provide reasonable separation distance between the control and the source as a means to protect persons using the control from radiant heat in a fire event. When the source of supply is limited to unmanifolded cylinders, the cylinder valve is allowed to be either manual or automatic.

6403.1.1.2 Shutoff at point of use. A manual or automatic emergency shutoff valve shall be installed on the supply piping at the point of use or at a point where the equipment using the gas is connected to the supply system.

❖ Emergency shutoff valves at the point of use are to be installed on the supply piping either at the use point or where equipment is connected. Either manual or automatic valves are allowed to be used. For example, it is common in some installations to have gas piped to a room for use with portable or fixed equipment. Emergency shutoff valves are typically provided at the point where the piping first enters the room. Equipment may not be connected to the valve; however, the valve represents the point of connection for use. When equipment is connected to the supply system, a valve that isolates the equipment is required. It may or may not be the same valve as that used at the point of penetration. Either valve is allowed to be manual or automatic, and either valve serves as an emergency shutoff valve.

6403.2 Quantities exceeding the maximum allowable quantity per control area. The storage and use of pyrophoric materials in amounts exceeding the *maximum allowable quantity per control area* indicated in Section 5003.1 shall be in accordance with Chapter 50 and this chapter.

❖ This section complements the requirements of Chapter 50 for structures used for the storage, handling or use of pyrophoric materials. The regulations contained in this section assume that the quantity of pyrophoric materials in a given building is in excess of the maximum allowable quantities per control area (MAQ) as established in Section 5003.1, thus classifying the building as a Group H occupancy. The requirements of Chapter 50 apply to the storage and use of pyrophoric materials, in addition to the provisions of this chapter.

SECTION 6404
STORAGE

6404.1 Indoor storage. Indoor storage of pyrophoric materials in amounts exceeding the *maximum allowable quantity per control area* indicated in Table 5003.1.1(1), shall be in accordance with Sections 5001, 5003 and 5004 and this chapter.

The storage of silane gas, and gas mixtures with a silane concentration of 1.37 percent or more by volume, shall be in accordance with CGA G-13.

❖ This section regulates the indoor storage of pyrophoric materials when they exceed the MAQ in buildings or portions of buildings classified as a Group H occupancy. The general and storage provisions of Chapter 50 are applicable, in addition to the require-

INTERNATIONAL CODE COUNCIL®
Copyright © 2015 ICC. ALL RIGHTS RESERVED. Accessed by David Dammon on Jun 21, 2017 12:30:52 PM pursuant to License Agreement with ICC. No further reproduction or distribution authorized. ANY UNAUTHORIZED REPRODUCTION OR DISTRIBUTION IS A VIOLATION OF THE FEDERAL COPYRIGHT ACT AND THE LICENSE AGREEMENT, AND SUBJECT TO CIVIL AND CRIMINAL PENALTIES THEREUNDER.

ments of this section. Storage of pyrophoric materials inside of structures must comply with Sections 6404.1.1 through 6404.1.4 to prevent uncontrolled release or exposure to conditions that may result in a fire or explosion. Section 6405.3 covers silane gas use. See the commentary introduction to this chapter for a detailed discussion of silane.

6404.1.1 Liquid-tight floor. In addition to the requirements of Section 5004.12, floors of storage areas containing pyrophoric liquids shall be of liquid-tight construction.

❖ Floors and sills of rooms or areas used to contain hazardous material spills must be liquid tight to prevent the flow of liquids to adjoining areas (see commentary, Section 5004.2). The floor surface should be compatible with the pyrophoric materials to be retained and must be noncombustible, as required by Section 5004.12.

6404.1.2 Pyrophoric solids and liquids. Storage of pyrophoric solids and liquids shall be limited to a maximum area of 100 square feet (9.3 m^2) per pile. Storage shall not exceed 5 feet (1524 mm) in height. Individual containers shall not be stacked.

Aisles between storage piles shall be not less than 10 feet (3048 mm) in width.

Individual tanks or containers shall not exceed 500 gallons (1893 L) in capacity.

❖ Inside storage restrictions, including pile height, container arrangement and aisle width, are intended to reduce the potential involvement of multiple piles, reduce the exposure hazard to occupants and facilitate fire department access to the storage areas. Inside storage of pyrophoric liquids in tanks or containers is limited to an individual capacity of 500 gallons (1893 L) to reduce the exposure hazard in the event of a single container failure. Prohibiting the stacking of individual containers reduces the likelihood of container failure from stacking stresses. Wide aisles reduce the fire exposure hazard between piles and, in the event of a fire-related collapse of a pile, reduce the likelihood of a "domino" effect that could not only increase fire intensity but also completely block access to pile areas by fire suppression personnel. While not specifically mentioned in this section, inside storage must also be protected as required by Chapter 50, which includes provisions for incompatible material storage, security, signage, control of ignition sources and submittal of a storage plan.

6404.1.3 Pyrophoric gases. Storage of pyrophoric gases shall be in detached buildings where required by Section 5003.8.2.

❖ This section is an important cross reference to Section 5004.14 and Table 5004.14. The table requires that storage of more than 2,000 cubic feet (57 m^3) of pyrophoric gas must be in a detached building complying with Section 5004.14.

Detached structures designed and constructed for the sole purpose of pyrophoric material storage provide the best protection for people and property from fire and explosion. Detached storage structures should be constructed of noncombustible materials to prevent them from becoming involved in an outside fire that may endanger their contents or a fire stemming from ignited contents in storage (see the commentary to Section 5004.14 and Table 5004.14 for further discussion of detached storage requirements).

6404.1.4 Separation from incompatible materials. In addition to the requirements of Section 5003.9.8, indoor storage of pyrophoric materials shall be isolated from incompatible hazardous materials by 1-hour *fire barriers* with openings protected in accordance with the *International Building Code*.

Exception: Storage in *approved* hazardous materials storage cabinets constructed in accordance with Section 5003.8.7.

❖ This section is intended to separate all incompatible, flammable, explosive or other highly reactive materials from the inside storage areas of pyrophoric materials. A 1-hour fire barrier assembly or, as allowed by the exception, an approved hazardous materials storage cabinet can reduce the potential involvement of pyrophoric materials in a fire involving other incompatible hazardous materials. Note that the provisions of Section 6404.1.4 are to be applied in addition to the requirements of Section 5003.9.8.

6404.2 Outdoor storage. Outdoor storage of pyrophoric materials in amounts exceeding the *maximum allowable quantity per control area* indicated in Table 5003.1.1(3) shall be in accordance with Sections 5001, 5003 and 5004, and this chapter.

The storage of silane gas, and gas mixtures with a silane concentration of 1.37 percent or more by volume, shall be in accordance with CGA G-13.

❖ Sections 6404.2.1 and 6404.2.2 are applicable for the outdoor storage of pyrophoric materials in excess of the MAQ listed in Table 5003.1.1(3). The provisions of this section, in addition to the provisions of Sections 5001, 5003 and 5004, are applicable to outdoor areas used for the storage of pyrophoric materials because of the severity of the hazards posed by these materials. Regardless of quantity, silane gas and certain silane gas mixtures must also comply with the provisions of CGA G-13. See the commentary introduction to this chapter for a detailed discussion of silane.

6404.2.1 Distance from storage to exposures. The separation of pyrophoric solids, liquids and gases from buildings, *lot lines*, public streets, public alleys, *public ways* or *means of egress* shall be in accordance with the following:

1. Solids and liquids. Two times the separation required by Chapter 57 for Class IB flammable liquids.

INTERNATIONAL CODE COUNCIL®
Copyright © 2015 ICC. ALL RIGHTS RESERVED. Accessed by David Dammon on Jun 21, 2017 12:30:52 PM pursuant to License Agreement with ICC. No further reproduction or distribution authorized. ANY UNAUTHORIZED REPRODUCTION OR DISTRIBUTION IS A VIOLATION OF THE FEDERAL COPYRIGHT ACT AND THE LICENSE AGREEMENT, AND SUBJECT TO CIVIL AND CRIMINAL PENALTIES THEREUNDER.

2. Gases. The location and maximum amount of pyrophoric gas per storage area shall be in accordance with Table 6404.2.1.

❖ To minimize radiant heat transfer and fire spread between stored pyrophoric solid and liquid materials and the listed exposures, the values shown for Class IB flammable liquids in Table 5704.4.2 are applied and then doubled. Similarly, Table 6404.2.1 is referenced for the outdoor storage of pyrophoric gases.

TABLE 6404.2.1. See below.

❖ Table 6404.2.1 establishes the spatial separation distance (or alternative safeguards) required for the outside storage of pyrophoric compressed gases when in excess of the outside storage MAQ shown in Table 5003.1.1(3).

The required separation distance is intended to minimize radiant heat transfer between storage and exposures. Separation distances provide a measure of protection against the possibility of fire spread in the event of a fire involving either the stored material or another exposure, such as a building on the same or an adjacent lot or a vehicle in the public right-of-way. Section 414.6 of the *International Building Code*® (IBC®) contains additional protection requirements for outside storage in areas that have an overhead roof structure or canopy to protect the materials from the weather.

Note a recognizes that a 2-hour fire barrier wall (constructed in accordance with IBC Section 707), provides an equivalent means of achieving the objectives of spatial separation. Where a separation assembly is used instead of the tabular separation distance, the wall must be arranged to prevent a hazardous accumulation of gas.

6404.2.2 Weather protection. Where overhead construction is provided for sheltering outdoor storage areas of pyrophoric materials, the storage areas shall be provided with *approved* automatic fire-extinguishing system protection.

❖ The general requirements for construction of weather protection roofs over outdoor storage areas are contained in Section 5004.13 of the code and IBC Section 414.6; however, due to the hazards of pyrophoric materials, this section is a specific provision applicable to pyrophoric materials that requires roofed-over outdoor storage areas to be sprinklered.

SECTION 6405
USE

6405.1 General. The use of pyrophoric materials in amounts exceeding the *maximum allowable quantity per control area* indicated in Table 5003.1.1(1) or 5003.1.1(3) shall be in accordance with Sections 5001, 5003, 5005 and this chapter.

❖ This section applies to all indoor and outdoor dispensing, use and handling of pyrophoric material when the amounts being dispensed, used or handled are in excess of the MAQs per indoor or outdoor control area as indicated in Table 5003.1.1(1) or 5003.1.1(3), respectively. The administrative, general use, handling and dispensing provisions of Chapter 50 are applicable, in addition to the requirements of this chapter.

Once the MAQ of pyrophoric material has been exceeded, indoor areas where materials are being dispensed, used or handled must be located in a building or portion of a building complying with the IBC for a Group H occupancy because of the increased hazards associated with quantity.

Although no occupancy group is assigned to them, outside pyrophoric material use areas require an increased level of regulation when quantities exceed the MAQs per outdoor control area listed in Table 5003.1.1(3). Corresponding MAQs recognize that an open-use condition is generally more hazardous than a closed-use condition because the pyrophoric material is more directly exposed to the surrounding environment and can become more readily involved in an incident than if it is totally confined. The maximum allowable quantities per control area for use are based on the aggregate quantity in both use and storage not exceeding the maximum allowable quantities per control area listed for storage.

6405.2 Weather protection. Where overhead construction is provided for sheltering of outdoor use areas of pyrophoric

TABLE 6404.2.1
PYROPHORIC GASES—DISTANCE FROM STORAGE TO EXPOSURES[a]

MAXIMUM AMOUNT PER STORAGE AREA (cubic feet)	MINIMUM DISTANCE BETWEEN STORAGE AREAS (feet)	MINIMUM DISTANCE TO LOT LINES OF PROPERTY THAT CAN BE BUILT UPON (feet)	MINIMUM DISTANCE TO PUBLIC STREETS, PUBLIC ALLEYS OR PUBLIC WAYS (feet)	MINIMUM DISTANCE TO BUILDINGS ON THE SAME PROPERTY		
				Nonrated construction or openings within 25 feet	Two-hour construction and no openings within 25 feet	Four-hour construction and no openings within 25 feet
250	5	25	5	5	0	0
2,500	10	50	10	10	5	0
7,500	20	100	20	20	10	0

For SI: 1 foot = 304.8 mm, 1 cubic foot = 0.02832 m^3.

a. The minimum required distances shall be reduced to 5 feet when protective structures having a minimum fire resistance of 2 hours interrupt the line of sight between the container and the exposure. The protective structure shall be at least 5 feet from the exposure. The configuration of the protective structure shall allow natural ventilation to prevent the accumulation of hazardous gas concentrations.

INTERNATIONAL CODE COUNCIL®
Copyright © 2015 ICC. ALL RIGHTS RESERVED. Accessed by David Dammon on Jun 21, 2017 12:30:52 PM pursuant to License Agreement with ICC. No further reproduction or distribution authorized. ANY UNAUTHORIZED REPRODUCTION OR DISTRIBUTION IS A VIOLATION OF THE FEDERAL COPYRIGHT ACT AND THE LICENSE AGREEMENT, AND SUBJECT TO CIVIL AND CRIMINAL PENALTIES THEREUNDER.

materials, the use areas shall be provided with *approved* automatic fire-extinguishing system protection.

❖ The general requirements for the construction of weather protection roofs over outdoor use areas are contained in Section 5005.3.9 of the code and IBC Section 414.6; however, due to the hazards of pyrophoric materials, this section is a specific provision applicable to pyrophoric materials that requires roofed-over outdoor use areas to be sprinklered.

6405.3 Silane gas. The use of silane gas, and gas mixtures with a silane concentration of 1.37 percent or more by volume, shall be in accordance with CGA G-13.

❖ Regardless of quantity, the use of silane gas and certain silane gas mixtures must comply with the provisions of CGA G-13. See the commentary introduction to this chapter for a discussion of silane.

Bibliography

The following resource material was used in the preparation of the commentary for this chapter of the code:

Fire Protection Guide to Hazardous Materials, 13th ed. Quincy, MA: National Fire Protection Association, 2001.

INTERNATIONAL CODE COUNCIL®

Copyright © 2015 ICC. ALL RIGHTS RESERVED. Accessed by David Dammon on Jun 21, 2017 12:30:52 PM pursuant to License Agreement with ICC. No further reproduction or distribution authorized. ANY UNAUTHORIZED REPRODUCTION OR DISTRIBUTION IS A VIOLATION OF THE FEDERAL COPYRIGHT ACT AND THE LICENSE AGREEMENT, AND SUBJECT TO CIVIL AND CRIMINAL PENALTIES THEREUNDER.

Chapter 65:
Pyroxylin (Cellulose Nitrate) Plastics

General Comments

Pyroxylin (cellulose nitrate) plastic is formulated from a combination of cellulose, nitric acid and sulfuric acid. The resulting compound, also known as pyroxylin or nitrocellulose, is an unstable and extremely combustible plastic. Once exposed to elevated temperatures, pyroxylin (cellulose nitrate) plastic is subject to spontaneous ignition. The products of combustion of pyroxylin (cellulose nitrate) plastic are extremely toxic because nitrogen oxides are produced at the elevated temperatures reached when this material burns rapidly.

Pyroxylin (cellulose nitrate) plastic, also called "gun cotton," was discovered to be a powerful explosive and replaced common gunpowder as the explosive charge in the ammunition for rifles and artillery in World War I. Other early uses included being a replacement material for elephant tusk ivory in billiard balls (which had a tendency to explode on a hard break), as casino dice and as the laminating adhesive in early forms of automotive safety glass. It has also been used as a film base for photographic film, as well as to encase documents, book leaves, etc.; however, its flammability and the fact that it causes severe deterioration of the materials it supposedly protects has prevented its widespread use in preservation work.

Many of these products are no longer manufactured from pyroxylin (cellulose nitrate) plastic. Although it has been replaced in many applications by safer plastics, it is still used in many industrial applications such as shoe heels, housewares and lacquers.

Raw pyroxylin (cellulose nitrate) plastic is usually shipped in drums and covered with water or another solvent, usually alcohol.

Water-wet pyroxylin plastic presents the least hazard, while alcohol-wet and other types of solvent-wet pyroxylin plastic possess hazards similar to those of the solvent involved. Because nitrocellulose becomes increasingly unstable as temperatures increase and may ignite easily from frictional heat, drums must never be pushed, rolled or dragged across the floor. Pyroxylin (cellulose nitrate) plastic is especially susceptible to ignition, burns vigorously once ignited (at a rate approximately 15 times that of a comparable mass of paper), produces toxic nitrogen oxides and will burn in the absence of oxygen.

Purpose

This chapter addresses the significant hazards associated with pyroxylin (cellulose nitrate) plastics, which are the most dangerous and unstable of all plastic compounds. The chemically bound oxygen in their structure permits them to burn vigorously in the absence of atmospheric oxygen. Although these compounds produce approximately the same amount of energy when they burn as paper, pyroxylin (cellulose nitrate) plastics burn at a rate 15 times greater than comparable common combustibles. When burning, these materials release highly flammable and toxic combustion byproducts. Consequently, pyroxylin (cellulose nitrate) plastic fires are very difficult to control and must be virtually flooded to extinguish them. Even storage cabinets, which may be used only for temporary (e.g., overnight) storage of pyroxylin (cellulose nitrate) plastic films, must be sprinklered. Strict compliance with the provisions of this chapter, along with proper housekeeping and storage arrangements, help to reduce the hazards associated with pyroxylin (cellulose nitrate) plastics in a fire or other emergencies.

SECTION 6501
GENERAL

6501.1 Scope. This chapter shall apply to the storage and handling of plastic substances, materials or compounds with cellulose nitrate as a base, by whatever name known, in the form of blocks, sheets, tubes or fabricated shapes.

Cellulose nitrate motion picture film shall comply with the requirements of Section 306.

❖ This section establishes that any raw materials or finished products containing any amount of pyroxylin (cellulose nitrate) plastic are subject to the regulations of this chapter. This is true even if the materials are called something other than pyroxylin (cellulose nitrate) plastic, such as xyloidin, collodion, photocotton, pyrocollodion, guncotton or smokeless powder. Compliance with the applicable provisions of Section 407 and Chapter 50, which include, but are not limited to, Material Safety Data Sheets (MSDS) submittal, hazard identification signs and labeling provisions, is also required. Pyroxylin (cellulose nitrate) plastic in the form of motion picture film is regulated by Section 306, as noted in this section.

INTERNATIONAL CODE COUNCIL®
Copyright © 2015 ICC. ALL RIGHTS RESERVED. Accessed by David Dammon on Jun 21, 2017 12:30:52 PM pursuant to License Agreement with ICC. No further reproduction or distribution authorized. ANY UNAUTHORIZED REPRODUCTION OR DISTRIBUTION IS A VIOLATION OF THE FEDERAL COPYRIGHT ACT AND THE LICENSE AGREEMENT, AND SUBJECT TO CIVIL AND CRIMINAL PENALTIES THEREUNDER.

6501.2 Permits. Permits shall be required as set forth in Section 105.6.

❖ The process of issuing permits gives the fire code official an opportunity to carefully evaluate and regulate hazardous operations. Permit applicants should be required to demonstrate that their operations comply with the intent of the code before the permit is issued. See the commentary to Section 105.6 for a general discussion of operations requiring an operational permit; Section 105.6.39 for discussion of specific operational permits for the storage, handling or use of pyroxylin plastics; and Section 105.7 for a general discussion of activities requiring a construction permit. The permit process also notifies the fire department of the need for prefire planning for hazardous property.

SECTION 6502
DEFINITIONS

6502.1 Terms defined in Chapter 2. Words and terms used in this chapter and defined in Chapter 2 shall have the meanings ascribed to them as defined therein.

❖ This section directs the code user to Chapter 2 of the code for the proper application of the terms used in this chapter. These terms may be defined in Chapter 2 of the code or in another *International Code*® as indicated in Section 201.3, or may retain their ordinary (dictionary) meaning (see also commentary, Sections 201.1 through 201.4).

SECTION 6503
GENERAL REQUIREMENTS

6503.1 Displays. Cellulose nitrate (pyroxylin) plastic articles are allowed to be placed on tables not more than 3 feet (914 mm) wide and 10 feet (3048 mm) long. Tables shall be spaced at least 3 feet (914 mm) apart. Where articles are displayed on counters, they shall be arranged in a like manner.

❖ Because of pyroxylin (cellulose nitrate) plastic's hazardous instability and easily ignitable composition, its exposure to the ambient environment in public venues must be strictly controlled to minimize the amount of material exposed to potential ignition sources and the number of persons exposed to its hazards, should it be ignited. This section places strict limits on the size of an individual display surface and requires that multiple display surfaces be separated from one another by minimum 3-foot (914 mm) aisles to not only limit the number of tables involved in a single incident but also to provide free egress circulation in the event of an emergency.

6503.2 Space under tables. Spaces underneath tables shall be kept free from storage of any kind and accumulation of paper, refuse and other combustible material.

❖ The importance of good housekeeping in reducing the exposure of pyroxylin (cellulose nitrate) plastic display objects to fire exposure cannot be overstated. Prohibiting the storage or accumulation of any combustible material beneath tables on which pyroxylin (cellulose nitrate) plastic display objects are arrayed will reduce the display's exposure to fire in the event such stored materials were to be ignited.

6503.3 Location. Sales or display tables shall be so located that in the event of a fire at the table, the table will not interfere with free *means of egress* from the room in not less than one direction.

❖ Display tables placed in corridors or aisles may unduly expose egressing persons to rapidly burning pyroxylin (cellulose nitrate) plastic objects, reduce required egress capacity or require substantial effort to remove the tables or negotiate the reduced egress path quickly. Anything that slows egress may also impede access, particularly to fire fighters who may be called to rescue occupants or fight the fire.

6503.4 Lighting. Lighting shall not be located directly above cellulose nitrate (pyroxylin) plastic material, unless provided with a suitable guard to prevent heated particles from falling.

❖ Because it is pyroxylin (cellulose nitrate) plastic's nature to rapidly deteriorate and ignite when exposed to heat, the hazard posed by light fixtures located over display tables must be reduced in an approved manner. Ideally, the display tables should be located where hot particles from a broken light bulb cannot fall on the pyroxylin (cellulose nitrate) plastic materials. When that is not possible, fixtures must be enclosed to prevent debris from a broken bulb from falling out of the fixture.

SECTION 6504
STORAGE AND HANDLING

6504.1 Raw material. Raw cellulose nitrate (pyroxylin) plastic material in a Group F building shall be stored and handled in accordance with Sections 6504.1.1 through 6504.1.7.

❖ Raw pyroxylin (cellulose nitrate) plastic materials present increased hazards when they are involved in manufacturing processes. To reduce those increased hazards, the provisions of Sections 6504.1.1 through 6504.1.7 are applicable to buildings used for the fabrication of items containing pyroxylin (cellulose nitrate) plastic.

6504.1.1 Storage of incoming material. Where raw material in excess of 25 pounds (11 kg) is received in a building or *fire area*, an *approved* vented cabinet or *approved* vented vault equipped with an *approved automatic sprinkler system* shall be provided for the storage of material.

❖ The amount of heat liberated by pyroxylin (cellulose nitrate) plastic when burning and the speed with which it burns make conventional extinguishment virtually impossible. This, coupled with the poisonous combustion gases, produce conditions that require material confinement and rapid fire suppression. This section requires that quantities of pyroxylin (cellulose nitrate) plastic in excess of 25 pounds (11 kg) be con-

INTERNATIONAL CODE COUNCIL®
Copyright © 2015 ICC. ALL RIGHTS RESERVED. Accessed by David Dammon on Jun 21, 2017 12:30:52 PM pursuant to License Agreement with ICC. No further reproduction or distribution authorized. ANY UNAUTHORIZED REPRODUCTION OR DISTRIBUTION IS A VIOLATION OF THE FEDERAL COPYRIGHT ACT AND THE LICENSE AGREEMENT, AND SUBJECT TO CIVIL AND CRIMINAL PENALTIES THEREUNDER.

fined to an approved storage cabinet complying with Section 5003.8.7 or an approved vault constructed in accordance with the *International Building Code*® (IBC®). While typical pyroxylin (cellulose nitrate) plastic storage cabinets are limited to a 30-cubic-foot (0.8 m^3) volume, typical pyroxylin (cellulose nitrate) plastic vault construction has a fire-resistance rating of 4 hours because of the violent nature of the stored material. Cabinets and vaults must be vented to the outdoors to relieve the pressure buildup resulting from the rapid decomposition of the stored material and equipped with automatic sprinklers designed in accordance with Section 903.3.1.1.

6504.1.2 Capacity limitations. Cabinets in any one workroom shall not contain more than 1,000 pounds (454 kg) of raw material. Each cabinet shall not contain more than 500 pounds (227 kg). Each compartment shall not contain more than 250 pounds (114 kg).

❖ To provide a reasonable quantity of material to work with in the manufacturing process while minimizing the quantity of pyroxylin (cellulose nitrate) plastic exposed to a single fire, this section limits the aggregate and per-cabinet and cabinet compartment quantities.

6504.1.3 Storage of additional material. Raw material in excess of that allowed by Section 6504.1.2 shall be kept in vented vaults not exceeding 1,500-cubic-foot capacity (43 m^3) of total vault space, and with *approved* construction, venting and sprinkler protection.

❖ Quantities of pyroxylin (cellulose nitrate) plastic in excess of the 1,000 pounds (454 kg) allowed by Section 6504.1.2 to be readily accessible in cabinets in work spaces must be stored in approved sprinklered and vented vaults no larger than 1,500 cubic feet each in volume [approximately 10 feet by 15 feet by 10 feet (3048 mm by 4572 mm by 3048 mm) high] to limit the amount of material involved in a fire.

6504.1.4 Heat sources. Cellulose nitrate (pyroxylin) plastic shall not be stored within 2 feet (610 mm) of heat-producing appliances, steam pipes, radiators or chimneys.

❖ Because pyroxylin (cellulose nitrate) plastic rapidly decomposes and will spontaneously burst into flame when in contact with heated objects in the presence of sufficient oxygen, it is extremely important to reduce the hazard by keeping stored materials well away from the common sources of heat noted in this section. Storing pyroxylin (cellulose nitrate) plastic in an unheated room would be an ideal strategy for this hazard.

6504.1.5 Accumulation of material. In factories manufacturing articles of cellulose nitrate (pyroxylin) plastics, *approved* sprinklered and vented cabinets, vaults or storage rooms shall be provided to prevent the accumulation in workrooms of raw stock in process or finished articles.

❖ This section reinforces the provisions of Sections 6504.1.1, 6504.1.2 and 6504.1.3 and intends to limit the amount of raw pyroxylin (cellulose nitrate) plastic stock or finished product exposed to the hazards of manufacturing operations by mandating that all pyroxylin (cellulose nitrate) plastic materials, whether raw stock or finished product, be stored in sprinklered, vented vaults or cabinets.

6504.1.6 Operators. In workrooms of cellulose nitrate (pyroxylin) plastic factories, operators shall not be stationed closer together than 3 feet (914 mm), and the amount of material per operator shall not exceed one shift's supply and shall be limited to the capacity of three tote boxes, including material awaiting removal or use.

❖ To isolate the manufacturing hazard of labor (i.e., the hazards involved in the manipulation of materials in the manufacturing, packing or shipping of finished products), as well as the in-process quantity of pyroxylin (cellulose nitrate) plastic (either raw or finished product), this section requires that workstations in the factory have a clearance from one another of no less than 3 feet (914 mm). Depending on the specific articles being manufactured, the quantity of pyroxylin raw material or finished product allowed at any workstation may vary but cannot exceed the amount needed for a single work shift or three tote boxes, whichever is the greater amount. The term "tote box," although not defined in the code, describes portable containers used to transport raw pyroxylin (cellulose nitrate) plastic or finished pyroxylin (cellulose nitrate) plastic products between a central storage vault and a workstation.

6504.1.7 Waste material. Waste cellulose nitrate (pyroxylin) plastic materials such as shavings, chips, turnings, sawdust, edgings and trimmings shall be kept under water in metal receptacles until removed from the premises.

❖ The manufacturing process may involve shaving, scraping, sanding or cutting of pyroxylin (cellulose nitrate) plastic, all of which produce finely divided scrap material that presents much more surface area susceptible to the hazards of ignition than the larger, more dense work pieces from which they came. To reduce the measurable increase in the hazard, this section requires extraordinary collection and storage safeguards for such scrap material in water-filled metal containers. These containers should be removed from the work area at the end of each shift for disposal.

6504.2 Fire protection. The manufacture or storage of articles of cellulose nitrate (pyroxylin) plastic in quantities exceeding 100 pounds (45 kg) shall be located in a building or portion thereof equipped throughout with an *approved automatic sprinkler system* in accordance with Section 903.3.1.1.

❖ Because pyroxylin (cellulose nitrate) plastics pose unusual and substantial fire risks, burn at a rate 15 times greater than comparable common combustibles and, when burning, release highly flammable and toxic combustion byproducts, fires involving these materials are very difficult to control. This section mirrors the provisions of Section 1103.5.1 and

INTERNATIONAL CODE COUNCIL®
Copyright © 2015 ICC. ALL RIGHTS RESERVED. Accessed by David Dammon on Jun 21, 2017 12:30:52 PM pursuant to License Agreement with ICC. No further reproduction or distribution authorized. ANY UNAUTHORIZED REPRODUCTION OR DISTRIBUTION IS A VIOLATION OF THE FEDERAL COPYRIGHT ACT AND THE LICENSE AGREEMENT, AND SUBJECT TO CIVIL AND CRIMINAL PENALTIES THEREUNDER.

specifies a sprinkler threshold quantity of 100 pounds (45 kg); however, the need for additional fire protection should be considered for pyroxylin (cellulose nitrate) plastics in any amount.

6504.3 Sources of ignition. Sources of ignition shall not be located in rooms in which cellulose nitrate (pyroxylin) plastic in excess of 25 pounds (11 kg) is handled or stored.

❖ Consistent with the hazards presented by pyroxylin (cellulose nitrate) plastic, this section prohibits the presence of recognized ignition sources in storage and manufacturing areas where more than 25 pounds (11 kg) of material are present to minimize the amount of material exposed.

6504.4 Heating. Rooms in which cellulose nitrate (pyroxylin) plastic is handled or stored shall be heated by low-pressure steam or hot water radiators.

❖ This section reinforces the provisions of Sections 6504.1.4 and 6504.3 by mandating indirect heat only by either low-pressure steam or hot water in rooms where pyroxylin (cellulose nitrate) plastic is stored or processed. In this way, the hazards of open-flame, fuel-fired heat sources do not exist and cannot expose the pyroxylin (cellulose nitrate) plastic to ignition.

Bibliography

The following resource materials were used in the preparation of the commentary for this chapter of the code:

Barrow, William J. *Manuscripts and Documents: Their Deterioration and Restoratio*n, 2nd ed. Charlottesville, VA: University of Virginia Press, 1972.

Cellulose Nitrate, FM Global Property Loss Prevention Data Sheet 7-86*;* Johnson, RI: Factory Mutual Global Research, 2000.

"Pyroxylin (cellulose nitrate) Plastic." *Special Interest Bulletin No. 49*. New York: American Insurance Association, 1971.

INTERNATIONAL CODE COUNCIL®

Copyright © 2015 ICC. ALL RIGHTS RESERVED. Accessed by David Dammon on Jun 21, 2017 12:30:52 PM pursuant to License Agreement with ICC. No further reproduction or distribution authorized. ANY UNAUTHORIZED REPRODUCTION OR DISTRIBUTION IS A VIOLATION OF THE FEDERAL COPYRIGHT ACT AND THE LICENSE AGREEMENT, AND SUBJECT TO CIVIL AND CRIMINAL PENALTIES THEREUNDER.

Chapter 66:
Unstable (Reactive) Materials

General Comments

This chapter regulates the storage of unstable (reactive) materials. Unstable (reactive) materials may react spontaneously with themselves, other chemicals or when exposed to light, heat, cold, moisture, air or physical shock. These materials may burn, explode, polymerize or decompose to form toxic materials. Unstable (reactive) materials are used in a variety of industrial applications, including food processing and the manufacture of plastics, textiles, fireworks, explosives, rocket propellants, special fuel systems and dyes. These hazardous materials may also be found in the preparation of certain medicines or fumigants. They pose unusual and substantial risks to the general public, fire fighters and emergency response personnel under a variety of conditions.

Advance knowledge of the materials being stored in structures through the permit process and the submittal of Material Safety Data Sheets (MSDS), in accordance with Section 407, is essential for adequate control of the hazard and for prefire planning by the fire department. This is especially important for unstable (reactive) liquid and solid materials because of their unpredictable and violent nature.

During a mishap, a variety of hazards can be created by these materials, including explosions, violent decomposition, toxic products of combustion, toxic vapors, corrosion injuries, poisoning or violent polymerization.

Spills or leaks of unstable materials may be handled by absorbing them with inert materials and then removal or, in cases of larger spills, flushing with large volumes of water if no additional hazard will be created.

Fires in structures or vehicles storing or carrying unstable chemicals should be approached with extreme caution to avoid injury from an explosion, such as a tank boiling liquid expending vapor explosion (BLEVE). Unless and until specific and reliable information on the stored materials is available to fire command personnel, the scene should be treated as though the incident involves explosives, and personnel and apparatus should be kept well away.

Purpose

This chapter addresses the hazards of unstable (reactive) liquid and solid materials, as well as unstable (reactive) compressed gas materials. In addition to their unstable reactivity, these materials may pose other hazards, such as toxicity, corrosivity, explosivity, flammability or oxidizing potential. This chapter, however, is intended to address those materials whose primary hazard is unstable reactivity. Materials that pose multiple hazards must conform to the requirements of the code with respect to all hazards (see commentary, Section 5001.1). Strict compliance with the provisions of this chapter, along with proper housekeeping and storage arrangements, help to reduce the exposure hazards associated with unstable (reactive) materials in a fire or other emergency.

SECTION 6601
GENERAL

6601.1 Scope. The storage and use of unstable (reactive) materials shall be in accordance with this chapter. *Compressed gases* shall also comply with Chapter 53.

Exceptions:

1. Display and storage in Group M and storage in Group S occupancies complying with Section 5003.11.
2. Detonable unstable (reactive) materials shall be stored in accordance with Chapter 56.

❖ This chapter details specific requirements for the storage of unstable (reactive) materials. The requirements of this chapter are intended to complement the hazardous materials general storage requirements of Chapter 50. Hazardous gases are also regulated by Chapter 53. The chemicals classified as unstable (reactive) are based on the definition in Section 6602.1, which is derived from NFPA 704.

Exception 1 makes it clear that this chapter does not apply to unstable (reactive) materials stored and displayed in Group M occupancies or stored in Group S occupancies; Section 5003.11 covers those occupancy groups. Also in that section, Class 4 unstable (reactive) materials are prohibited in Group M (mercantile) occupancies because of their detonable hazard potential. Quantities of all other classes are limited on a per-control area basis to limit exposure to people and property (see commentary, Section 5003.11). This exception would permit an increase above the maximum allowable quantity per control area (MAQ) indicated in Table 5003.1.1(1) for unsta-

INTERNATIONAL CODE COUNCIL®
Copyright © 2015 ICC. ALL RIGHTS RESERVED. Accessed by David Dammon on Jun 21, 2017 12:30:52 PM pursuant to License Agreement with ICC. No further reproduction or distribution authorized. ANY UNAUTHORIZED REPRODUCTION OR DISTRIBUTION IS A VIOLATION OF THE FEDERAL COPYRIGHT ACT AND THE LICENSE AGREEMENT, AND SUBJECT TO CIVIL AND CRIMINAL PENALTIES THEREUNDER.

ble (reactive) materials while still maintaining a mercantile or storage occupancy group classification.

Exception 2 recognizes the violent, explosive nature of detonable unstable (reactive) materials and directs that they be stored in accordance with the requirements for explosives and blasting agents in Chapter 56 to provide the safeguards commensurate with their hazards.

6601.2 Permits. Permits shall be required as set forth in Section 105.6.

❖ The process of issuing permits gives the fire code official an opportunity to carefully evaluate and regulate hazardous operations. Permit applicants should be required to demonstrate that their operations comply with the intent of the code before the permit is issued. See the commentary to Section 105.6 for a general discussion of operations requiring an operational permit; Section 105.6.21 for discussion of specific quantity-based operational permits for the materials regulated in this chapter; and Section 105.7 for a general discussion of activities requiring a construction permit. The permit process also notifies the fire department of the need for prefire planning for hazardous property.

SECTION 6602
DEFINITION

6602.1 Definition. The following term is defined in Chapter 2:

UNSTABLE (REACTIVE) MATERIAL.
Class 4.
Class 3.
Class 2.
Class 1.

❖ Definitions of terms can help in the understanding and application of the code requirements. This section directs the code user to Chapter 2 for the proper application of the indicated term used in this chapter. Terms may be defined in Chapter 2 or in another *International Code*® as indicated in Section 201.3, or the dictionary meaning may be all that is needed (see also commentary, Sections 201.1 through 201.4).

SECTION 6603
GENERAL REQUIREMENTS

6603.1 Quantities not exceeding the maximum allowable quantity per control area. Quantities of unstable (reactive) materials not exceeding the *maximum allowable quantity per control area* shall be in accordance with Sections 6603.1.1 through 6603.1.2.5.

❖ The regulations contained in Sections 6603.1.1 through 6603.1.2.5 assume that the quantity of unstable (reactive) materials in a given building is limited to the MAQs as established in Section 5003.1; thus, the building is not classified in Occupancy Group H.

6603.1.1 General. The storage and use of unstable (reactive) materials in amounts not exceeding the *maximum allowable quantity per control area* indicated in Section 5003.1 shall be in accordance with Sections 5001, 5003, 6601 and 6603.

❖ This section complements the requirements of Chapter 50 in structures occupied for the storage, handling or use of unstable (reactive) materials. Unless otherwise indicated in a particular section, the regulations contained in Sections 6603.1.2 through 6603.1.2.5 assume that the quantity of unstable (reactive) materials in a given building is limited to the MAQs as established in Section 5003.1. The general requirements of Sections 5001 and 5003 are fully applicable to the storage and use of unstable (reactive) materials, in addition to the provisions of this chapter.

6603.1.2 Limitations for indoor storage and use by occupancy. The indoor storage of unstable (reactive) materials shall be in accordance with Sections 6603.1.2.1 through 6603.1.2.5.

❖ Because unstable (reactive) materials may be needed in certain occupancies, Sections 6603.1.2.1 through 6603.1.2.5 provide regulations that are specific to occupancy group classifications and that recognize the relative hazards of both the occupancy and the unstable (reactive) materials.

6603.1.2.1 Group A, E, I or U occupancies. In Group A, E, I or U occupancies, any amount of Class 3 and 4 unstable (reactive) materials shall be stored in accordance with the following:

1. Class 3 and 4 unstable (reactive) materials shall be stored in hazardous material storage cabinets complying with Section 5003.8.7.
2. The hazardous material storage cabinets shall not contain other storage.

❖ Because of their explosive or higher deflagration hazard characteristics, even the smallest quantity of Class 3 and 4 unstable (reactive) materials present in Group A, E, I or U occupancies must be stored in an approved hazardous material storage cabinet constructed and placarded in accordance with Section 5003.8.6 to reduce the exposure of the materials to hazards from the surrounding environment.

In accordance with Table 5003.1.1(1), Note g, storage of Class 4 unstable (reactive) materials in any amount is allowed only in buildings equipped throughout with an approved automatic sprinkler system in accordance with Section 903.3.1.1. Also, based on Table 5003.1.1(1), Note e, where an approved storage cabinet is used, the MAQ of unstable (reactive) materials that could be kept in those occupancies can be doubled.

To reduce the likelihood of contamination of the organic peroxide materials or damage to their packaging, Item 2 prohibits the storage of other materials in the approved unstable (reactive) materials storage cabinet.

INTERNATIONAL CODE COUNCIL®
Copyright © 2015 ICC. ALL RIGHTS RESERVED. Accessed by David Dammon on Jun 21, 2017 12:30:52 PM pursuant to License Agreement with ICC. No further reproduction or distribution authorized. ANY UNAUTHORIZED REPRODUCTION OR DISTRIBUTION IS A VIOLATION OF THE FEDERAL COPYRIGHT ACT AND THE LICENSE AGREEMENT, AND SUBJECT TO CIVIL AND CRIMINAL PENALTIES THEREUNDER.

6603.1.2.2 Group R occupancies. Class 3 and 4 unstable (reactive) materials shall not be stored or used within Group R occupancies.

❖ Because of their respective explosive or higher deflagration hazard characteristics, Class 3 and 4 unstable (reactive) materials storage in any residential occupancy within the scope of the code's regulations is prohibited because of the increased danger to the occupants and the otherwise unregulated environment to which those materials could be exposed.

6603.1.2.3 Group M occupancies. Class 4 unstable (reactive) materials shall not be stored or used in retail sales portions of Group M occupancies.

❖ Because of their explosive hazard characteristics, Class 4 unstable (reactive) materials storage in occupancies in Group M is prohibited because of the increased danger to the occupants and the higher relative fire loads typically encountered in these occupancies to which the materials could be exposed.

6603.1.2.4 Offices. Class 3 and 4 unstable (reactive) materials shall not be stored or used in offices of Group B, F, M or S occupancies.

❖ Because of their explosive hazard characteristics, Class 3 and 4 unstable (reactive) materials storage in office areas of occupancies in Group B, F, M or S is prohibited because of the increased danger to the occupants and the higher relative fire loads typically encountered in these occupancies.

6603.1.2.5 Classrooms. In classrooms in Group B, F or M occupancies, any amount of Class 3 and 4 unstable (reactive) materials shall be stored in accordance with the following:

1. Class 3 and 4 unstable (reactive) materials shall be stored in hazardous material storage cabinets complying with Section 5003.8.7.
2. The hazardous material storage cabinets shall not contain other storage.

❖ This section is intended to allow for the occasional use of limited amounts of Class 3 and 4 unstable (reactive) materials in certain scientific, experimental or demonstration settings; however, it is not the intent to allow storage of any quantity of these materials for any length of time. The fire code official may limit the amount of unstable (reactive) materials brought into a structure for these uses. The quantity actually needed for the experiment or demonstration should determine the amount allowed into a structure.

Because of its respective explosive or higher deflagration hazard characteristics, even the smallest quantity of Class 3 or 4 unstable (reactive) materials must be stored in an approved hazardous material storage cabinet constructed and placarded in accordance with Section 5003.8.6 to reduce the exposure of the materials to hazards from the surrounding environment.

In accordance with Table 5003.1.1(1), Note g, storage of Class 4 unstable (reactive) materials in any amount is allowed only in buildings equipped throughout with an approved automatic sprinkler system in accordance with Section 903.3.1.1. Also, based on Table 5003.1.1(1), Note e, where an approved storage cabinet is used, the MAQ that could be kept in such occupancies can be doubled. To reduce the likelihood of contamination of the unstable (reactive) materials or damage to their packaging, Item 2 prohibits the storage of other materials in the approved unstable (reactive) material storage cabinet.

6603.2 Quantities exceeding the maximum allowable quantity per control area. The storage and use of unstable (reactive) materials in amounts exceeding the *maximum allowable quantity per control area* indicated in Section 5003.1 shall be in accordance with Chapter 50 and this chapter.

❖ This section complements the requirements of Chapter 50 in structures occupied for the storage, handling or use of unstable (reactive) materials. The regulations contained in this section assume that the quantity of unstable (reactive) material in a given building or portion of a building is in excess of the MAQs as established in Section 5003.1; thus, the building or portion of the building is classified in Occupancy Group H. The requirements of Chapter 50 apply to the storage and use of unstable (reactive) material, in addition to the provisions of this chapter.

SECTION 6604
STORAGE

6604.1 Indoor storage. Indoor storage of unstable (reactive) materials in amounts exceeding the *maximum allowable quantity per control area* indicated in Table 5003.1.1(1) shall be in accordance with Sections 5001, 5003, 5004 and this chapter.

In addition, Class 3 and 4 unstable (reactive) detonable materials shall be stored in accordance with the *International Building Code* requirements for *explosives*.

❖ This section regulates the indoor storage of unstable (reactive) materials when in excess of the MAQ in buildings or portions of buildings classified in Occupancy Group H. The general and storage provisions of Chapter 50 are applicable in addition to the requirements of this section. Storage of unstable (reactive) materials inside structures must comply with Sections 6604.1.1 through 6604.1.5 to prevent uncontrolled release or exposure to conditions that may result in a fire or explosion.

Because of the explosion hazard, Class 3 and 4 detonable unstable (reactive) materials must be stored as required by this section, Chapter 56 and the *International Building Code*® (IBC®) requirements for explosives.

INTERNATIONAL CODE COUNCIL®
Copyright © 2015 ICC. ALL RIGHTS RESERVED. Accessed by David Dammon on Jun 21, 2017 12:30:52 PM pursuant to License Agreement with ICC. No further reproduction or distribution authorized. ANY UNAUTHORIZED REPRODUCTION OR DISTRIBUTION IS A VIOLATION OF THE FEDERAL COPYRIGHT ACT AND THE LICENSE AGREEMENT, AND SUBJECT TO CIVIL AND CRIMINAL PENALTIES THEREUNDER.

6604.1.1 Detached storage. Storage of unstable (reactive) materials shall be in detached buildings when required in Section 5003.8.2.

❖ Detached structures designed and constructed for the sole purpose of unstable (reactive) materials storage are the best protection for people and property from fire and explosion. Detached storage structures should be constructed of noncombustible materials to prevent them from becoming involved in either an outside fire that may endanger their contents or an indoor fire due to the structure's contents igniting.

Section 5003.8.2 and Table 5003.8.2 require detached storage when the indoor storage quantities are more than 1 ton (908 kg) of Class 3 unstable (reactive) solid or liquid materials, more than 25 tons (22 700 kg) of Class 2 unstable (reactive) solid or liquid material, more than 2,000 cubic feet (57 m^3) of Class 3 gaseous unstable (reactive) material or more than 10,000 cubic feet (283 m^3) of Class 2 unstable (reactive) gaseous material. See the commentaries to Section 5003.8.2 and Table 5003.8.2 for further discussion of detached storage requirements.

6604.1.2 Explosion control. Indoor storage rooms, areas and buildings containing Class 3 or 4 unstable (reactive) materials shall be provided with explosion control in accordance with Section 911.

❖ Because of the possibility of a deflagration or detonation in the event of ignition of Class 3 or 4 unstable (reactive) materials, explosion relief venting must be installed to protect the storage building or structure from collapse. Explosion venting must conform to the requirements of Section 911.

6604.1.3 Liquid-tight floor. In addition to Section 5004.12, floors of storage areas for liquids and solids shall be of liquid-tight construction.

❖ Floors and sills of rooms or areas used to contain hazardous material spills must be liquid tight to prevent the flow of liquids to adjoining areas (see commentary, Section 5004.2). The floor surface should be compatible with the unstable (reactive) materials to be retained and must be noncombustible, as required by Section 5004.12.

6604.1.4 Storage configuration. Unstable (reactive) materials stored in quantities greater than 500 cubic feet (14 m^3) shall be separated into piles, each not larger than 500 cubic feet (14 m^3). Aisle width shall not be less than the height of the piles or 4 feet (1219 mm), whichever is greater.

Exception: Materials stored in tanks.

❖ These provisions detail storage requirements related to the hazards of release or ignition of unstable (reactive) materials stored in structures and are intended to reduce the amount of material exposed in a single incident by managing pile sizes and their separation. Aisle widths that are equal to the pile height or are 4 feet (3048 mm), whichever is greater, reduce the fire exposure hazard between piles and, in the event of a fire-related collapse of a pile, reduce the likelihood of a "domino" effect that could not only increase fire intensity but also completely block access to pile areas by fire suppression personnel.

Although not specifically mentioned in this section, inside storage must also be protected in accordance with Chapter 50, which includes provisions for incompatible material storage, security, signage, control of ignition sources and submittal of a storage plan.

6604.1.5 Location in building. Unstable (reactive) materials shall not be stored in *basements*.

❖ Storage of unstable (reactive) material below the ground floor is prohibited to facilitate fire-fighter access and also because of the inherent difficulty associated with manual fire suppression operations in below-grade areas.

6604.2 Outdoor storage. Outdoor storage of unstable (reactive) materials in amounts exceeding the *maximum allowable quantities per control area* indicated in Table 5003.1.1(3) shall be in accordance with Sections 5001, 5003, 5004 and this chapter.

❖ This section regulates the outdoor storage of unstable (reactive) materials when in excess of the MAQ established by Table 5003.1.1(3). The general and storage provisions of Chapter 50 are applicable in addition to the requirements of this section. Storage of unstable (reactive) materials in outdoor control areas must comply with Sections 6604.2.1 and 6604.2.2 to prevent uncontrolled release or exposure to conditions that could result in a fire or explosion.

6604.2.1 Distance from storage to exposures Class 4 and 3 (detonable) materials. Outdoor storage of Class 4 or 3 (detonable) unstable (reactive) material shall be in accordance with Table 5604.5.2(2). The number of pounds of material listed in the table shall be the net weight of the material present. Alternatively, the number of pounds of material shall be based on a trinitrotoluene (TNT) equivalent weight.

❖ The distance requirements are divided into three subsections to address the different natures of unstable (reactive) materials. As previously drafted, suitable locations for Class 4 and 3 (detonable) unstable reactive materials had not been addressed. The tabular distances listed in Table 5604.5.2(2) provided by the Institute of Makers of Explosives have been developed based on pounds of trinitrotoluene (TNT) or a TNT weight. A TNT equivalent weight is comparable to the net explosive weight as used by the table (also see the commentary to the definition of "Net explosive weight" in Section 202).

6604.2.2 Distance from storage to exposures Class 3 (deflagratable) materials. Outdoor storage of deflagratable Class 3 unstable (reactive) materials shall be in accordance with Table 5604.5.2(3). The number of pounds of material listed shall be the net weight of the material present.

❖ This section addresses Class 3 (deflagrating) unstable (reactive) materials and relies on Table 5604.5.2(3) for the quantity-distance regulations. Note that the use of TNT equivalent weights are not

INTERNATIONAL CODE COUNCIL®
Copyright © 2015 ICC. ALL RIGHTS RESERVED. Accessed by David Dammon on Jun 21, 2017 12:30:52 PM pursuant to License Agreement with ICC. No further reproduction or distribution authorized. ANY UNAUTHORIZED REPRODUCTION OR DISTRIBUTION IS A VIOLATION OF THE FEDERAL COPYRIGHT ACT AND THE LICENSE AGREEMENT, AND SUBJECT TO CIVIL AND CRIMINAL PENALTIES THEREUNDER.

applied but, rather, the net weight of stored material is used.

6604.2.3 Distance from storage to exposures Class 2 and 1 materials. Outdoor storage of Class 2 or 1 unstable (reactive) materials shall not be located within 20 feet (6096 mm) of buildings not associated with the manufacture or distribution of such materials, *lot lines*, public streets, public alleys, *public ways* or *means of egress*. The minimum required distance shall not apply when *fire barriers* without openings or penetrations having a minimum fire-resistance rating of 2 hours interrupt the line of sight between the storage and the exposure. The *fire barrier* shall either be an independent structure or the exterior wall of the building adjacent to the storage area.

❖ This section addresses Class 2 unstable (reactive) materials. The provisions of this section from the previous edition have been retained with a modification that exempts buildings associated with the manufacture or distribution of Class 2 and 1 materials. The exemption is similar to that provided for the manufacture and distribution of toxic or highly toxic compressed gases found in Section 6004.3.2.1.2 or for oxidizing gases found in Table 6304.2.2. The exemption has been broadened to include solids, liquids and gases based on the fact that manufacturing buildings processing these materials typically stage or store materials inside and immediately outside of the building where processing is conducted, while materials that have explosive effects are (or should be) located at distances comparable to those used for explosive materials. Line of sight protection is used in lieu of a 30-inch (762 mm) requirement for the protection from radiant flux.

6604.2.4 Storage configuration. Piles of unstable (reactive) materials shall not exceed 1,000 cubic feet (28 m^3).

❖ The size of storage piles of unstable (reactive) materials is regulated by this section based on the hazards of the unstable (reactive) materials being stored. To limit the amount of material involved in a single fire, unstable (reactive) materials are limited to piles no larger than 10 feet by 10 feet by 10 feet (3048 mm by 3048 mm by 3048 mm) high.

6604.2.5 Aisle widths. Aisle widths between piles shall not be less than one-half the height of the pile or 10 feet (3048 mm), whichever is greater.

❖ Minimum 10-foot-wide (3048 mm) aisles provide access to the storage area for emergency personnel and reduce the likelihood of a "domino" effect that could not only increase fire intensity but also completely block access to pile areas by fire suppression personnel should a pile topple over.

SECTION 6605
USE

6605.1 General. The use of unstable (reactive) materials in amounts exceeding the *maximum allowable quantity per control area* indicated in Table 5003.1.1(1) or 5003.1.1(3) shall be in accordance with Sections 5001, 5003, 5005 and this chapter.

❖ This section applies to all indoor and outdoor dispensing, use and handling of unstable (reactive) materials when the amounts being dispensed, used or handled are in excess of the MAQs per indoor or outdoor control area indicated in Table 5003.1.1(1) or 5003.1.1(3), respectively. The administrative general, use, handling and dispensing provisions of Chapter 50 are applicable, in addition to the requirements of this chapter.

Once the MAQ of unstable (reactive) materials has been exceeded, indoor areas where materials are being dispensed, used or handled must be located in a building or portion of a building complying with the IBC for a Group H occupancy because of the increased hazards associated with quantity. Although no occupancy group is assigned to them, outside unstable (reactive) materials use areas must be regulated more closely when quantities exceed the MAQs per outdoor control area.

The MAQs listed in Table 5003.1.1(1) or 5003.1.1(3) have been divided into closed-use and open-use systems. Corresponding MAQs recognize that an open-use system is generally more hazardous than a closed-use system because the unstable (reactive) materials are more directly exposed to the surrounding environment and can become more readily involved in an incident than if they are totally confined. The MAQs for use are based on the aggregate quantity in both use and storage not exceeding the MAQ listed for storage.

Bibliography

The following resource materials were used in the preparation of the commentary for this chapter of the code:

Fire Protection Guide on Hazardous Materials, 13th ed. Quincy, MA: National Fire Protection Association, 2001.

Isman, W.E. and G.P. Carlson. *Hazardous Materials*. Encino, CA: Glencoe Publishing Co., Inc., 1980.

NFPA 704-12, *Identification of the Fire Hazards of Materials for Emergency Response.* Quincy, MA: National Fire Protection Association, 2011.

Police and Fire Interest Bulletin No 7, Unstable (Reactive) Chemicals. New York: American Insurance Association, 1973.

INTERNATIONAL CODE COUNCIL®
Copyright © 2015 ICC. ALL RIGHTS RESERVED. Accessed by David Dammon on Jun 21, 2017 12:30:52 PM pursuant to License Agreement with ICC. No further reproduction or distribution authorized. ANY UNAUTHORIZED REPRODUCTION OR DISTRIBUTION IS A VIOLATION OF THE FEDERAL COPYRIGHT ACT AND THE LICENSE AGREEMENT, AND SUBJECT TO CIVIL AND CRIMINAL PENALTIES THEREUNDER.

INTERNATIONAL CODE COUNCIL®
Copyright © 2015 ICC. ALL RIGHTS RESERVED. Accessed by David Dammon on Jun 21, 2017 12:30:52 PM pursuant to License Agreement with ICC. No further reproduction or distribution authorized. ANY UNAUTHORIZED REPRODUCTION OR DISTRIBUTION IS A VIOLATION OF THE FEDERAL COPYRIGHT ACT AND THE LICENSE AGREEMENT, AND SUBJECT TO CIVIL AND CRIMINAL PENALTIES THEREUNDER.

Chapter 67:
Water-Reactive Solids and Liquids

General Comments

Water-reactive materials are used in a variety of industrial applications for the processing of other materials, such as descaling (salt) baths in the metal processing industry, dehydrating agents in sulfonation processes (the addition of fuming sulfuric acid to a product being treated) and a variety of other complex chemical industrial processes. They also may be found in the manufacture of a variety of consumer products, such as soaps and detergents, rodenticides, fertilizers, silicone rubber and pharmaceutical products.

Advance knowledge of the materials stored in structures through permits and the submittal of Material Safety Data Sheets (MSDS) are essential for effective prefire planning by the fire department. This is especially important in prefire planning for water-reactive materials, because the presence of these materials severely limits the fire department's ability to use water as the primary fire suppression tool.

Water-reactive materials may react to water in a variety of ways, including explosion, violent splattering, production of toxic gases, rapid decomposition with the evolution of large volumes of heat that may ignite nearby combustibles or any combination of these reactions. Alternative fire suppression protocols must be developed well in advance of an incident and the requisite alternative suppression medium obtained, rather than having to go searching for it at the time of an emergency. Depending on the specific water-reactive material involved in an incident, the alternative extinguishing media could include dry graphite, soda ash, sodium chloride, dry sand or specialized dry powder agents, such as Lith-X or Met-L-X, both manufactured by the Ansul Fire Protection Company.

If a manageable spill occurs without a fire, the material can be confined by a dam of dry sand and then covered with an absorbent material, such as vermiculite, dolomite or more dry sand. Once absorbed, the material must be moved outside with care for disposal. Water-reactive materials that are spilled outdoors are sometimes best handled by allowing them to react and hastening that process by applying water. Large volumes of water are required for this procedure and they must be applied from a safe distance by personnel wearing full protective clothing and breathing apparatus. This method will not only accelerate the reaction, but also disperse and dilute the fumes generated.

Purpose

This chapter addresses the hazards associated with water-reactive materials that are solid or liquid at normal temperatures and pressures. In addition to their water reactivity, these materials may pose a wide range of other hazards, such as toxicity, flammability, corrosiveness or oxidizing potential. This chapter addresses only those materials whose primary hazard is water reactivity. Materials that pose multiple hazards must conform to the requirements of the code with respect to all hazards (see commentary, Section 5001.1). Strict compliance with the requirements of this chapter, along with proper housekeeping and storage arrangements, helps to reduce the exposure hazards associated with water-reactive materials in a fire or other emergency.

SECTION 6701
GENERAL

6701.1 Scope. The storage and use of water-reactive solids and liquids shall be in accordance with this chapter.

Exceptions:

1. Display and storage in Group M and storage in Group S occupancies complying with Section 5003.11.
2. Detonable water-reactive solids and liquids shall be stored in accordance with Chapter 56.

❖ This chapter contains specific requirements for the storage of water-reactive materials. The requirements of this chapter are intended to complement the hazardous materials general storage requirements of Chapter 50. Classification of solids and liquids as being water reactive is based on their relative degree of hazard as described in the definition in Section 6502.

Exception 1 makes it clear that this chapter does not apply to water-reactive materials stored and displayed in Group M occupancies or stored in Group S occupancies, and defers to the requirements of Section 5003.11 for those occupancy groups. In that section, quantities are limited on a per-control-area basis to limit exposure to people and property (see commentary, Section 5003.11). This exception would permit an increase above the maximum allowable quantities per control area (MAQ) indicated in Table

INTERNATIONAL CODE COUNCIL®
Copyright © 2015 ICC. ALL RIGHTS RESERVED. Accessed by David Dammon on Jun 21, 2017 12:30:52 PM pursuant to License Agreement with ICC. No further reproduction or distribution authorized. ANY UNAUTHORIZED REPRODUCTION OR DISTRIBUTION IS A VIOLATION OF THE FEDERAL COPYRIGHT ACT AND THE LICENSE AGREEMENT, AND SUBJECT TO CIVIL AND CRIMINAL PENALTIES THEREUNDER.

5003.1.1(1) for water-reactive materials while still maintaining a mercantile or storage occupancy group classification.

Exception 2 recognizes the violent, explosive nature of detonable water-reactive materials and directs that they be stored in accordance with the requirements for explosives and blasting agents (see Chapter 56) to provide the safeguards commensurate with their hazards.

6701.2 Permits. Permits shall be required as set forth in Section 105.6.

❖ The process of issuing permits gives the fire code official an opportunity to carefully evaluate and regulate hazardous operations. Permit applicants should be required to demonstrate that their operations comply with the intent of the code before the permit is issued. See the commentary to Section 105.6 for a general discussion of operations requiring an operational permit; Section 105.6.21 for a discussion of specific quantity-based operational permits for the materials regulated in this chapter; and Section 105.7 for a general discussion of activities requiring a construction permit. The permit process also notifies the fire department of the need for prefire planning for hazardous property.

SECTION 6702
DEFINITION

6702.1 Definition. The following term is defined in Chapter 2:

WATER-REACTIVE MATERIAL.
Class 3.
Class 2.
Class 1.

❖ Definitions of terms can help in the understanding and application of the code requirements. This section directs the code user to Chapter 2 for the proper application of the indicated terms used in this chapter. Terms may be defined in Chapter 2 or in another *International Code*® as indicated in Section 201.3, or the dictionary meaning may be all that is needed (see also commentary, Sections 201.1 through 201.4).

SECTION 6703
GENERAL REQUIREMENTS

6703.1 Quantities not exceeding the maximum allowable quantity per control area. The storage and use of water-reactive solids and liquids in amounts not exceeding the *maximum allowable quantity per control area* indicated in Section 5003.1 shall be in accordance with Sections 5001, 5003, 6701 and 6703.

❖ This section complements the requirements of Chapter 50 in structures occupied for the storage, handling or use of water-reactive materials limited to the MAQs as established in Section 5003.1. The general requirements of Sections 5001 and 5003 are fully applicable to the storage and use of water-reactive materials, in addition to the requirements of this chapter.

6703.2 Quantities exceeding the maximum allowable quantity per control area. The storage and use of water-reactive solids and liquids in amounts exceeding the *maximum allowable quantity per control area* indicated in Section 5003.1 shall be in accordance with Chapter 50 and this chapter.

❖ This section complements the requirements of Chapter 50 in structures occupied for the storage, handling or use of water-reactive materials. The regulations contained in this section assume that the quantity of water-reactive materials in a given building is in excess of the MAQs as established in Section 5003.1; thus, the building is classified in Occupancy Group H. The requirements of Chapter 50 apply to the storage and use of water-reactive material, in addition to the requirements of this chapter.

SECTION 6704
STORAGE

6704.1 Indoor storage. Indoor storage of water-reactive solids and liquids in amounts exceeding the *maximum allowable quantity per control area* indicated in Table 5003.1.1(1), shall be in accordance with Sections 5001, 5003, 5004 and this chapter.

❖ This section regulates the indoor storage of water-reactive materials when in excess of the MAQ in buildings or portions of buildings classified in Occupancy Group H. The general and storage requirements of Chapter 50 are applicable in addition to the requirements of this section. Storage of water-reactive materials inside structures must comply with Sections 6701.1 through 6704.1.7 to prevent uncontrolled release or exposure to conditions that may result in a fire or explosion.

6704.1.1 Detached storage. Storage of water-reactive solids and liquids shall be in detached buildings where required by Section 5003.8.2.

❖ This section regulates the indoor storage of water-reactive materials when in excess of the MAQ in buildings or portions of buildings classified in Occupancy Group H. The general and storage requirements of Chapter 50 are applicable in addition to the requirements of this section. Storage of water-reactive materials inside structures must comply with Sections 6701.1 through 6704.1.7 to prevent uncontrolled release or exposure to conditions that may result in a fire or explosion.

6704.1.2 Liquid-tight floor. In addition to the provisions of Section 5004.12, floors in storage areas for water-reactive solids and liquids shall be of liquid-tight construction.

❖ Floors and sills of rooms or areas used to contain hazardous material spills must be liquid tight to pre-

INTERNATIONAL CODE COUNCIL®
Copyright © 2015 ICC. ALL RIGHTS RESERVED. Accessed by David Dammon on Jun 21, 2017 12:30:52 PM pursuant to License Agreement with ICC. No further reproduction or distribution authorized. ANY UNAUTHORIZED REPRODUCTION OR DISTRIBUTION IS A VIOLATION OF THE FEDERAL COPYRIGHT ACT AND THE LICENSE AGREEMENT, AND SUBJECT TO CIVIL AND CRIMINAL PENALTIES THEREUNDER.

vent the flow of liquids to adjoining areas (see commentary, Section 5004.2). The floor surface should be compatible with the water-reactive materials to be retained and must be noncombustible, as required by Section 5004.12.

6704.1.3 Waterproof room. Rooms or areas used for the storage of water-reactive solids and liquids shall be constructed in a manner which resists the penetration of water through the use of waterproof materials. Piping carrying water for other than *approved automatic sprinkler systems* shall not be within such rooms or areas.

❖ The design and construction of rooms used for storing water-reactive materials must prevent water from coming into contact with the stored materials. The building materials should be noncombustible so they do not contribute fuel to a fire or reaction and should be designed to resist the passage of flowing water.

A major safeguard is planning the design of the room and locating it to minimize water hazards. For example, in a two-story building it would not be appropriate to put a water-reactive materials storage room directly below a locker room with showers or a bathroom located on the second floor.

Similarly, the enclosure walls of a storage room should not contain plumbing piping. Though water piping may not be run into or through storage rooms, the code recognizes that automatic sprinkler systems are a more regulated type of water piping system and have a low leakage and failure rate when properly installed and maintained.

6704.1.4 Water-tight containers. Where Class 3 water-reactive solids and liquids are stored in areas equipped with an *automatic sprinkler system*, the materials shall be stored in closed water-tight containers.

❖ In the event of a sprinkler discharge in response to a fire, the application of water should not aggravate the fire by causing a violent exothermic reaction with the water-reactive materials in storage that might not otherwise become involved. To reduce this hazard and to complement the provisions of Section 6704.1.4, water-reactive materials must be stored in water-tight containers of 60 gallons (227 L) or less than capacity that comply with Section 5003.2 (see the commentary to the Section 202 definition of "Container").

6704.1.5 Storage configuration. Water-reactive solids and liquids stored in quantities greater than 500 cubic feet (14 m^3) shall be separated into piles, each not larger than 500 cubic feet (14 m^3). Aisle widths between piles shall not be less than the height of the pile or 4 feet (1219 mm), whichever is greater.

Exception: Water-reactive solids and liquids stored in tanks.

Class 2 water-reactive solids and liquids shall not be stored in *basements* unless such materials are stored in closed water-tight containers or tanks.

Class 3 water-reactive solids and liquids shall not be stored in *basements*.

Class 2 or 3 water-reactive solids and liquids shall not be stored with flammable liquids.

❖ This section details storage requirements related to the hazards of release or ignition of water-reactive materials stored in structures and is intended to reduce the amount of material exposed in a single incident by managing pile sizes and their separation. Water-reactive materials are limited to piles no larger than 500 cubic feet (14 m^3) in volume [approximately 8 feet by 8 feet by 8 feet high (2438 mm by 2438 mm by 2438 mm)]. Aisle widths that are equal to the pile height or 4 feet (1219 mm), whichever is greater, reduce the fire exposure hazard between piles and, in the event of a fire-related collapse of a pile, reduce the likelihood of a "domino" effect that could not only increase fire intensity but also completely block access to pile areas by fire suppression personnel. Although not specifically mentioned in this section, inside storage must also comply with Chapter 50, which includes provisions for incompatible material storage, security, signage, control of ignition sources and submittal of a storage plan.

The exception exempts tank storage from the requirements of this section; however, the tanks must conform to the requirements of Section 5003.2.

Because Class 2 oxidizers are potentially explosive, they may be stored in basements only when contained in approved stationary tanks or containers that comply with the applicable requirements of Section 5003.2 and this section.

Because Class 3 water-reactive materials are violently reactive, they may not be stored in a basement because of the limited access for fire suppression operations, the potential for increased damage to the structure and exposure of the occupants to danger.

Class 2 and 3 water-reactive materials may not be stored in the same room or area as flammable liquids because of their violent reactivity and their incompatibility. See the commentary to Section 5003.9.8 for a discussion of precautions to be taken with incompatible materials.

6704.1.6 Explosion control. Indoor storage rooms, areas and buildings containing Class 2 or 3 water-reactive solids and liquids shall be provided with explosion control in accordance with Section 911.

❖ The violently reactive nature of Class 2 and 3 water-reactive materials can seriously damage or destroy a storage room or structure. To prevent damage or destruction in storage rooms or structures where Class 2 or 3 water-reactive materials are stored, an explosion control system must be installed as required in Section 911.

6704.2 Outdoor storage. Outdoor storage of water-reactive solids and liquids in quantities exceeding the *maximum*

INTERNATIONAL CODE COUNCIL®
Copyright © 2015 ICC. ALL RIGHTS RESERVED. Accessed by David Dammon on Jun 21, 2017 12:30:52 PM pursuant to License Agreement with ICC. No further reproduction or distribution authorized. ANY UNAUTHORIZED REPRODUCTION OR DISTRIBUTION IS A VIOLATION OF THE FEDERAL COPYRIGHT ACT AND THE LICENSE AGREEMENT, AND SUBJECT TO CIVIL AND CRIMINAL PENALTIES THEREUNDER.

allowable quantity per control area indicated in Table 5003.1.1(3) shall be in accordance with Sections 5001, 5003, 5004 and this chapter.

❖ This section regulates the outdoor storage of water-reactive material when in excess of the MAQ established by Table 5003.1.1(3). The general and storage provisions of Chapter 50 are applicable, in addition to the requirements of this section.

6704.2.1 General. Outdoor storage of water-reactive solids and liquids shall be within tanks or closed water-tight containers and shall be in accordance with Sections 6704.2.2 through 6704.2.5.

❖ Similar to Sections 6704.1.3 and 6704.1.5, which require waterproof rooms and water-tight containers for the storage of water-reactive materials, this section carries the protection of the material one step further by requiring that water-reactive materials stored outdoors be in closed, water-tight containers or tanks to reduce the likelihood that rain or snow will come into contact with them. Storage of water-reactive material in outdoor control areas must comply with Sections 6704.2.1 through 6704.2.5 to prevent uncontrolled release or exposure to conditions that could result in a fire or explosion.

6704.2.2 Class 3 distance to exposures. Outdoor storage of Class 3 water-reactive solids and liquids shall not be within 75 feet (22 860 mm) of buildings, *lot lines*, public streets, public alleys, *public ways* or *means of egress*.

❖ The required separation distances are based on the class of water-reactive material and are intended to reduce the hazard of radiant heat transfer to nearby structures, public streets or alleys or egress elements from buildings. The distances also protect the property in question from heat exposure from incidents on or off the property.

6704.2.3 Class 2 distance to exposures. Outdoor storage of Class 2 water-reactive solids and liquids shall not be within 20 feet (6096 mm) of buildings, *lot lines*, public streets, public alleys, *public ways* or *means of egress*. A 2-hour *fire barrier* without openings or penetrations, and extending not less than 30 inches (762 mm) above and to the sides of the storage area, is allowed in lieu of such distance. The wall shall either be an independent structure, or the exterior wall of the building adjacent to the storage area.

❖ The required separation distances in this section are based on the less violently reactive Class 1 and 2 water-reactive materials and are intended to reduce the hazard of radiant heat transfer to nearby structures, public streets or alleys or egress elements from buildings. The distances also protect the property in question from heat exposure from incidents on or off the property.

This section also recognizes that, for these less violently reactive water-reactive materials, a minimum separation distance of 20 feet (6096 mm) provides adequate protection and that a solid, 2-hour fire barrier, constructed in accordance with Section 707 of the *International Building Code*® (IBC®), is an equivalent way to meet the objectives of spatial separation. Where a separation assembly is installed instead of having the separation distance, the wall must extend vertically beyond the roof or wall of the larger structure on each side (top and sides) to prevent a fire from lapping over or extending around the wall.

6704.2.4 Storage conditions. Class 3 water-reactive solids and liquids shall be limited to piles not greater than 500 cubic feet (14 m^3).

Class 2 water-reactive solids and liquids shall be limited to piles not greater than 1,000 cubic feet (28 m^3).

Aisle widths between piles shall not be less than one-half the height of the pile or 10 feet (3048 mm), whichever is greater.

❖ The size of storage piles of water-reactive materials is regulated by this section based on the hazards of the water-reactive materials being stored. To limit the amount of material involved in a single fire, water-reactive materials are limited to piles no larger than approximately 8 feet by 8 feet by 8 feet high (2438 mm by 2438 mm by 2438 mm) for Class 3 or 10 feet by 10 feet by 10 feet high (3048 mm by 3048 mm by 3048 mm) for Class 2 materials. The required aisle width ensures access to the storage area for emergency personnel and reduces the likelihood of a "domino" effect that could not only increase fire intensity, but also completely block access to pile areas by fire suppression personnel should a pile topple over.

6704.2.5 Containment. Secondary containment shall be provided in accordance with the provisions of Section 5004.2.2.

❖ To prevent the flow of water-reactive liquids to adjoining rooms or spaces, secondary containment complying with Section 5004.2.2 is required by this section. The design of drainage and secondary containment systems must take into consideration automatic sprinkler design discharge flow rates and fire suppression hand line [typically $1^1/_2$- or $1^3/_4$-inch (38 or 44 mm) hose] flows.

Note that secondary containment requirements do not provide for control of the flammable, irritating or toxic vapors given off by reacted materials, and care must be taken to minimize exposure to hazardous vapors.

Runoff from spills or manual fire suppression activities may result in environmental contamination if not properly controlled (see commentary, Section 5004.2).

SECTION 6705
USE

6705.1 General. The use of water-reactive solids and liquids in amounts exceeding the *maximum allowable quantity per control area* indicated in Table 5003.1.1(1) or 5003.1.1(3)

INTERNATIONAL CODE COUNCIL®
Copyright © 2015 ICC. ALL RIGHTS RESERVED. Accessed by David Dammon on Jun 21, 2017 12:30:52 PM pursuant to License Agreement with ICC. No further reproduction or distribution authorized. ANY UNAUTHORIZED REPRODUCTION OR DISTRIBUTION IS A VIOLATION OF THE FEDERAL COPYRIGHT ACT AND THE LICENSE AGREEMENT, AND SUBJECT TO CIVIL AND CRIMINAL PENALTIES THEREUNDER.

shall be in accordance with Sections 5001, 5003, 5005 and this chapter.

❖ This section applies to all indoor and outdoor dispensing, use and handling operations of water-reactive materials when the amounts being dispensed, used or handled are in excess of the MAQs in accordance with indoor or outdoor areas indicated in Table 5003.1.1(1) or 5003.1.1(3), respectively. The administrative, general use, handling and dispensing provisions of Chapter 50 are applicable, in addition to the requirements of this chapter.

Once the MAQ per control area of water-reactive materials has been exceeded, indoor areas where materials are being dispensed, used or handled must be located in a building or portion of a building complying with the IBC for a Group H occupancy because of the increased hazards associated with quantity. Although no occupancy group is assigned to them, outside water-reactive materials use areas must be regulated more heavily when quantities exceed the MAQs.

The MAQs listed in Table 5003.1.1(1) or 5003.1.1(3) have been divided into closed-use and open-use systems. Corresponding MAQs recognize that an open-use system is generally more hazardous than a closed-use system because the water-reactive materials are more directly exposed to the surrounding environment and can become more readily involved in an incident than if they are totally confined. The MAQs for use are based on the aggregate quantity in both use and storage not exceeding the MAQ listed for storage.

Bibliography

The following resource materials were used in the preparation of the commentary for this chapter of the code:

"Cellar Fires." *Special Interest Bulletin No. 67*. New York: National Board of Fire Underwriters, 1953.

Davenport, John A. Section 6.23, "Storage and Handling of Chemicals." *Fire Protection Handbook*. Quincy, MA: National Fire Protection Association, 2003.

Fire Protection Guide on Hazardous Materials, 13th ed. Quincy, MA: National Fire Protection Association, 2001.

Isman, W.E. and G.P. Carlson. *Hazardous Materials*. Encino, CA: Glencoe Publishing Co., Inc., 1980.

"Sodium." *Special Interest Bulletin No. 208*. New York: National Board of Fire Underwriters, 1956.

"Sodium Hydride Descaling." *Special Interest Bulletin No. 209*. New York: National Board of Fire Underwriters, 1956.

INTERNATIONAL CODE COUNCIL®
Copyright © 2015 ICC. ALL RIGHTS RESERVED. Accessed by David Dammon on Jun 21, 2017 12:30:52 PM pursuant to License Agreement with ICC. No further reproduction or distribution authorized. ANY UNAUTHORIZED REPRODUCTION OR DISTRIBUTION IS A VIOLATION OF THE FEDERAL COPYRIGHT ACT AND THE LICENSE AGREEMENT, AND SUBJECT TO CIVIL AND CRIMINAL PENALTIES THEREUNDER.

INTERNATIONAL CODE COUNCIL®
Copyright © 2015 ICC. ALL RIGHTS RESERVED. Accessed by David Dammon on Jun 21, 2017 12:30:52 PM pursuant to License Agreement with ICC. No further reproduction or distribution authorized. ANY UNAUTHORIZED REPRODUCTION OR DISTRIBUTION IS A VIOLATION OF THE FEDERAL COPYRIGHT ACT AND THE LICENSE AGREEMENT, AND SUBJECT TO CIVIL AND CRIMINAL PENALTIES THEREUNDER.

CHAPTERS 68 through 79

RESERVED

INTERNATIONAL CODE COUNCIL®
Copyright © 2015 ICC. ALL RIGHTS RESERVED. Accessed by David Dammon on Jun 21, 2017 12:30:52 PM pursuant to License Agreement with ICC. No further reproduction or distribution authorized. ANY UNAUTHORIZED REPRODUCTION OR DISTRIBUTION IS A VIOLATION OF THE FEDERAL COPYRIGHT ACT AND THE LICENSE AGREEMENT, AND SUBJECT TO CIVIL AND CRIMINAL PENALTIES THEREUNDER.

INTERNATIONAL CODE COUNCIL®
Copyright © 2015 ICC. ALL RIGHTS RESERVED. Accessed by David Dammon on Jun 21, 2017 12:30:52 PM pursuant to License Agreement with ICC. No further reproduction or distribution authorized. ANY UNAUTHORIZED REPRODUCTION OR DISTRIBUTION IS A VIOLATION OF THE FEDERAL COPYRIGHT ACT AND THE LICENSE AGREEMENT, AND SUBJECT TO CIVIL AND CRIMINAL PENALTIES THEREUNDER.

Part VI—Referenced Standards

Chapter 80: Referenced Standards

General Comments

Not every document related to fire safety system design, installation and construction is qualified to be a referenced standard. The International Code Council® (ICC®) has adopted a criterion that referenced standards in the *International Codes*® and standards intended for adoption into the *International Codes* must meet to qualify as a referenced standard. The policy is as follows:

Referenced Standards: In order for a standard to be considered for reference or to continue to be referenced by the codes, a standard shall meet the following criteria:

Code References:

1. The standard and the manner in which it is to be utilized shall be specifically referenced in the code text.
2. The need for the standard to be referenced shall be established.

Standard Content:

1. A standard or portions of a standard intended to be enforced shall be written in mandatory language.
2. The standard shall be appropriate for the subject covered.
3. All terms shall be defined when they deviate from an ordinarily accepted meaning or a dictionary definition.
4. The scope or application of a standard shall be clearly described.
5. The standard shall not have the effect of requiring proprietary materials.
6. The standard shall not prescribe a proprietary agency for quality control or testing.
7. The test standard shall describe, in detail, preparation of the test sample, sample selection or both.
8. The test standard shall prescribe the reporting format for the test results. The format shall identify the key performance criteria of the element(s) tested.
9. The measure of performance for which the test is conducted shall be clearly defined in either the test standard or in code text.
10. The standard shall not state that its provisions shall govern whenever the referenced standard is in conflict with the requirements of the referencing code.
11. The preface to the standard shall announce that the standard is promulgated according to a consensus procedure.

Standard Promulgation:

1. The standard shall be completed and readily available prior to final action consideration. In order for a new standard to be considered for reference by the code, two copies of such a standard shall be submitted in at least a consensus draft form.
2. The standard shall be developed and maintained through a consensus process, such as ASTM or ANSI.

Once a standard is incorporated into the code through the code development process, it becomes an enforceable part of the code, subject to the limitations of the text reference in accordance with Section 102.7. When the code is adopted by a jurisdiction, the referenced portion (only the referenced portion) of the standard is also part of that jurisdiction's adopted code. It is for this reason that the criteria were developed.

Compliance with this policy means that documents or portions of documents incorporated into the code by reference are, among others, developed through the use of a consensus process, written in mandatory language and do not mandate the use of proprietary materials or agencies. The requirement that a standard be developed through a consensus process is vital, because it means that the standard will be representative of the most current body of available knowledge on the subject as determined by a broad range of interested or affected parties without dominance by any single interest group. A true consensus process has many attributes, including, but not limited to:

- An open process that has formal (published) procedures allowing for the consideration of all viewpoints.
- A definitive review period that allows for the standard to be updated or revised.
- A process of notification to all interested parties.
- An appeals process.

INTERNATIONAL CODE COUNCIL®
Copyright © 2015 ICC. ALL RIGHTS RESERVED. Accessed by David Dammon on Jun 21, 2017 12:30:52 PM pursuant to License Agreement with ICC. No further reproduction or distribution authorized. ANY UNAUTHORIZED REPRODUCTION OR DISTRIBUTION IS A VIOLATION OF THE FEDERAL COPYRIGHT ACT AND THE LICENSE AGREEMENT, AND SUBJECT TO CIVIL AND CRIMINAL PENALTIES THEREUNDER.

Many available documents related to fire safety system design, installation and construction, though useful, are not "standards" and are not appropriate for reference in the code. Often, these documents are developed or written with the intention of being used for regulatory purposes and are unsuitable for use as a regulation because of extensive use of recommendations, advisory comments and nonmandatory terms. Typical examples of such documents include installation instructions, guidelines and practices.

The ICC standards policy results in regulations that are clear, concise and enforceable; thus the requirement that standards be written in mandatory language. This requirement is not intended to mean that a standard cannot contain informational or explanatory material that will aid the user of the standard in its application. When it is the desire of the standard's promulgating agency for such material to be included, however, the information must appear in a nonmandatory location, such as an annex or appendix, and be clearly identified as not being part of the standard.

Overall, standards referenced by the code must be authoritative, relevant, up to date and, most important, reasonable and enforceable. Standards that comply with ICC's standards policy fulfill these expectations.

Purpose

As a performance-based code, the *International Fire Code*® (IFC®) contains numerous references to documents that are used to regulate materials and methods of construction. The references to these documents within the code text consist of the promulgating agency's acronym and its publication designation (for example, ASME A17.1), as well as a further indication that the document being referenced is the one that is listed in Chapter 80. Chapter 80 contains all of the information that is necessary to identify the specific referenced document. Included is the following information on a document's promulgating agency (see Commentary Figure 80):

- The promulgating agency (the agency's title).
- The promulgating agency's acronym.
- The promulgating agency's address.

For example, a reference to an ASME standard within the code indicates that the document is promulgated by the American Society of Mechanical Engineers (ASME), which is located in New York City. Chapter 80 lists the standards' agencies alphabetically for ease of identification.

Chapter 80 also includes the following information on the referenced document itself (see Commentary Figure 80):

- The document's publication designation.
- The document's edition year.
- The document's title.
- Any addenda or revisions to the document known at the time of the code's publication.
- Every section of the code in which the document is referenced.

For example, a reference to ASME B16.18 indicates that this document can be found in Chapter 80 under the heading ASME. The specific standards designation is B16.18. For convenience, these designations are listed in alphanumeric order. Chapter 80 identifies that: ASME 16.18 is titled *Cast Copper-Alloy Solder Joint Pressure Fittings*, the applicable edition (its year of publication) is 2001, and it is referenced in one specifically identified section of the code.

Using the system established for the family of *International Codes*, the specific edition of a specific standard is clearly identified and the requirements necessary for compliance can be readily determined. The basis for code compliance is, therefore, established and available on an equal basis to the fire code official, builder, designer and owner.

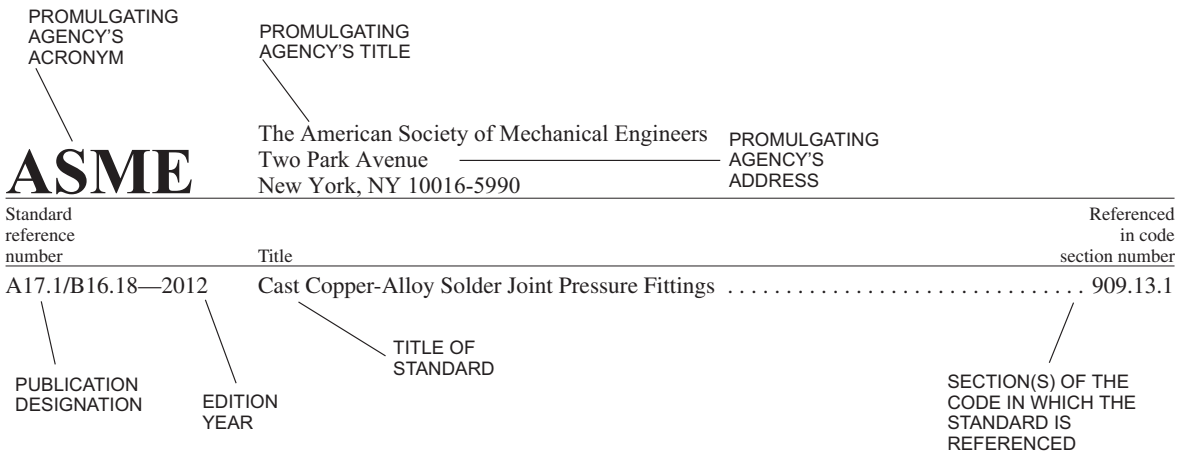

Figure 80
REFERENCED STANDARDS

INTERNATIONAL CODE COUNCIL®
Copyright © 2015 ICC. ALL RIGHTS RESERVED. Accessed by David Dammon on Jun 21, 2017 12:30:52 PM pursuant to License Agreement with ICC. No further reproduction or distribution authorized. ANY UNAUTHORIZED REPRODUCTION OR DISTRIBUTION IS A VIOLATION OF THE FEDERAL COPYRIGHT ACT AND THE LICENSE AGREEMENT, AND SUBJECT TO CIVIL AND CRIMINAL PENALTIES THEREUNDER.

This chapter lists the standards that are referenced in various sections of this document. The standards are listed herein by the promulgating agency of the standard, the standard identification, the effective date and title, and the section or sections of this document that reference the standard. The application of the referenced standards shall be as specified in Section 102.7.

AASHTO

American Association of State Highway and Transportation Officials
444 North Capitol Street, Northwest, #249
Washington, DC 20001

Standard reference number	Title	Referenced in code section number
HB-17—2002	Specification for Highway Bridges, 17th Edition 2002	503.2.6

AFSI

Architectural Fabric Structures Institute
c/o Industrial Fabric Association International
1801 County Road B West
Roseville, MN 55113

Standard reference number	Title	Referenced in code section number
ASI—77	Design and Standard Manual	3103.10.2

ANSI

American National Standards Institute
25 West 43rd Street, Fourth Floor
New York, NY 10036

Standard reference number	Title	Referenced in code section number
ANSI E1.21—2006	Entertainment Technology: Temporary Ground Supported Overhead Structures Used to Cover the Stage Areas and Support Equipment in the Production of Outdoor Entertainment Events	3105.1
ANSI Z21.69/ CSA 6.16—09	Connectors for Movable Gas Appliances	609.4

API

American Petroleum Institute
1220 L Street, Northwest
Washington, DC 20005

Standard reference number	Title	Referenced in code section number
Spec 12P—3rd Edition (Reaffirmed 2008)	Specification for Fiberglass Reinforced Plastic Tanks	5704.2.13.1.5
RP 651 3rd Edition (2007)	Cathodic Protection of Aboveground Petroleum Storage Tanks	5706.7, 5706.7.1
Std 653—4th Edition (2009)	Tank Inspection, Repair, Alteration and Reconstruction	5706.7
RP 752— 3rd Edition (2009)	Management of Hazards Associated with Location of Process Plant Buildings, CMA Managers Guide	5706.7
RP 1604—3rd Edition (1996 R2010)	Closure of Underground Petroleum Storage Tanks	5704.2.13
RP 1615—(1996) 6th Edition (2011)	Installation of Underground-petroleum Storage Systems	5704.2.13.1.5, 5706.7
Std 2000—6th Edition (2009)	Venting Atmosphere and Low-pressure Storage Tanks: Nonrefrigerated and Refrigerated	5704.2.7.3.2

INTERNATIONAL CODE COUNCIL®
Copyright © 2015 ICC. ALL RIGHTS RESERVED. Accessed by David Dammon on Jun 21, 2017 12:30:52 PM pursuant to License Agreement with ICC. No further reproduction or distribution authorized. ANY UNAUTHORIZED REPRODUCTION OR DISTRIBUTION IS A VIOLATION OF THE FEDERAL COPYRIGHT ACT AND THE LICENSE AGREEMENT, AND SUBJECT TO CIVIL AND CRIMINAL PENALTIES THEREUNDER.

API—continued

RP 2001—9th Edition (2012)	Fire Protection in Refineries, 8th Edition	5706.7
RP 2003—7th Edition (2008)	Protection Against Ignitions Arising out of Static, Lightning and Stray Currents	5706.7
Publ 2009 7th Edition—(2002, R2012)	Safe Welding and Cutting Practices in Refineries, Gas Plants and Petrochemical Plants	5706.7
Std 2015—6th Edition 2001 (R2006)	Safe Entry and Clearing of Petroleum Storage Tanks	5706.7, 5706.7.2
RP 2023 3rd Edition—(2001, R2006)	Guide for Safe Storage and Handling of Heated Petroleum-derived Asphalt Products and Crude-oil Residue	5706.7, 5706.7.3
Publ 2028 3rd Edition—(2002, R2012)	Flame Arrestors in Piping Systems	5704.2.7.3.2
Publ 2201 5th Edition—(2003, R2010)	Procedures for Welding or Hot Tapping on Equipment in Service	5706.7
RP 2350— 4th Edition (2012)	Overfill Protection for Storage Tanks in Petroleum Facilities, 3rd Edition	5704.2.7.5.8, 5706.4.6, 5706.7

ASCE/SEI

American Society of Civil Engineers
Structural Engineering Institute
1801 Alexander Bell Drive
Reston, VA 20191

Standard reference number	Title	Referenced in code section number
ASCE/SEI 24—13	Flood Resistant Design and Construction	604.1.7

ASHRAE

American Society of Heating, Refrigerating and Air-Conditioning Engineers, Inc.
1791 Tullie Circle, NE
Atlanta, GA 30329

Standard reference number	Title	Referenced in code section number
15—2013	Safety Standard for Refrigeration Systems	606.12.1

ASME

The American Society of Mechanical Engineers
Two Park Avenue
New York, NY 10016-5990

Standard reference number	Title	Referenced in code section number
A13.1—2007	Scheme for the Identification of Piping Systems	3509.3, 5003.2.2.1, 5303.4.3, 5503.4.5, 5703.5.2
ASME A17.1/CSA B44—2013	Safety Code for Elevators and Escalators	508.1.6, 607.1, 907.3.3, 1009.4
A17.3—2008	Safety Code for Existing Elevators and Escalators	1103.3.1, 1103.3.2
B16.18—2012	Cast Copper-Alloy Solder Joint Pressure Fittings	909.13.1
B16.22—2001 (R2010)	Wrought Copper and Copper-Alloy Solder-joint Pressure Fittings	909.13.1
B31.1—2012	Power Piping	5003.2.2, Table 5703.6.2
B31.3—2012	Process Piping	5003.2.2.2, Table 5703.6.2
B31.4—2012	Pipeline Transportation Systems for Liquid Hydrocarbons and Other Liquids	Table 5703.6.2
B31.9—2011	Building Services Piping	Table 5703.6.2, 5703.6.3, 5703.6.11
BPVC—2010/2011 addenda	ASME Boiler and Pressure Vessel Code (Sections I, II, IV, V & VI, VIII)	5003.2.1, 5303.2, 5303.3.2, 5503.2.6, 5503.4.3, 5503.7, 5704.2.13.1.5, 5806.3.1, 5806.4.1, 5806.4.8

INTERNATIONAL CODE COUNCIL®
Copyright © 2015 ICC. ALL RIGHTS RESERVED. Accessed by David Dammon on Jun 21, 2017 12:30:52 PM pursuant to License Agreement with ICC. No further reproduction or distribution authorized. ANY UNAUTHORIZED REPRODUCTION OR DISTRIBUTION IS A VIOLATION OF THE FEDERAL COPYRIGHT ACT AND THE LICENSE AGREEMENT, AND SUBJECT TO CIVIL AND CRIMINAL PENALTIES THEREUNDER.

ASSE

American Society of Safety Engineers
1800 East Oakton Street
Des Plaines, IL 60018

Standard reference number	Title	Referenced in code section number
ANSI/ASSE Z359.1-2007	Safety Requirements for Personal Fall Arrest Systems, Subsystems and Components, Part of the Fall Protection Code	1015.6, 1015.7

ASTM

ASTM International
100 Barr Harbor Drive
West Conshohocken, PA 19428-2959

Standard reference number	Title	Referenced in code section number
B42—10	Specification for Seamless Copper Pipe, Standard Sizes.	909.13.1
B43—09	Specification for Seamless Red Brass Pipe, Standard Sizes	909.13.1
B68—11	Specification for Seamless Copper Tube, Bright Annealed.	909.13.1
B88—09	Specification for Seamless Copper Water Tube	909.13.1
B251—10	Specification for General Requirements for Wrought Seamless Copper and Copper-alloy Tube	909.13.1
B280—08	Specification for Seamless Copper Tube for Air Conditioning and Refrigeration Field Service	909.13.1
D56—05(2010)	Test Method for Flash Point by Tag Closed Tester	202
D86—2012	Test Method for Distillation of Petroleum Products at Atmospheric Pressure	202
D92—12b	Test Method for Flash and Fire Points by Cleveland Open Cup	202, 2401.2, 5104.1.1, 5701.2
D93—12	Test Method for Flash Point by Pensky-Martens Closed Up Tester	202
D323—08	Test Method for Vapor Pressure of Petroleum Products (Reid Method).	202
D2859—06(2011)	Standard Test Method for Ignition Characteristics of Finished Textile Floor Covering Materials	804.3.3.1, 804.3.3.2
D3278—96(2011)	Test Methods for Flash Point of Liquids by Small Scale Closed-cup Apparatus	202
E84—2013A	Test Method for Surface Burning Characteristics of Building Materials	202, 803.1, 803.1.1, 803.1.2, 803.5.1, 803.5.2, 803.6, 803.7, 803.10, 804.1, 804.1.1, 804.2.4
E108—2011	Test Methods for Fire Tests of Roof Coverings.	317.3
E681—2009	Test Method for Concentration Limits of Flammability of Chemicals (Vapors and Gases).	202
E1354—2013	Standard Test Method for Heat and Visible Smoke Release Rates for Materials and Products Using an Oxygen Consumption Calorimeter	304.3.2, 304.3.4, 318.1, 808.1, 808.2, 2310.5.3, 3304.2.3, 3603.4
E1529—13	Test Method for Determining Effects of Large Hydrocarbon Pool Fires on Structural Members and Assemblies	5704.2.9.2.3
E1537—13	Test Method for Fire Testing of Upholstered Furniture.	805.1.1.2, 805.2.1.2, 805.3.1.2, 805.4.1.2
E1590—13	Test Method for Fire Testing of Mattresses	805.1.2.2, 805.2.2.2, 805.3.2.2.1, 805.4.2.2
E1966—2012A	Test Method for Fire-resistant Joint Systems.	202
E2072—10	Standard Specification for Pholuminescent (Phosphorescent) Safety Markings	1025.4
E2404—2013E1	Standard Practice for Specimen Preparation and Mounting of Textile, Paper or Vinyl Wall or Ceiling Coverings to Assess Surface Burning Characteristics.	803.5.2, 803.6, 803.7
E2573—12	Standard Practice for Specimen Preparation and Mounting of Site-fabricated Stretch Systems to Assess Surface Burning Characteristics	803.10
F1085—10	Standard Specification for Mattress and Box Springs for Use in Berths in Marine Vessels	805.3.2.2.2
F2006—10	Standard/Safety Specification for Window Fall Prevention Devices for Non-Emergency Escape (Egress) and Rescue (Ingress) Windows	1015.8
F2090—10	Specification for Window Fall Prevention Devices with Emergency Escape (Egress) Release Mechanisms	1015.8, 1015.8.1
F2200—13	Standard Specification for Automated Vehicular Gate Construction	503.5, 503.6

INTERNATIONAL CODE COUNCIL®
Copyright © 2015 ICC. ALL RIGHTS RESERVED. Accessed by David Dammon on Jun 21, 2017 12:30:52 PM pursuant to License Agreement with ICC. No further reproduction or distribution authorized. ANY UNAUTHORIZED REPRODUCTION OR DISTRIBUTION IS A VIOLATION OF THE FEDERAL COPYRIGHT ACT AND THE LICENSE AGREEMENT, AND SUBJECT TO CIVIL AND CRIMINAL PENALTIES THEREUNDER.

BHMA

Builders Hardware Manufacturers' Association
355 Lexington Avenue, 15th Floor
New York, NY 10017

Standard reference number	Title	Referenced in code section number
A156.10—2011	American National Standard for Power-operated Pedestrian Doors	1010.1.4.2
A156.19—2013	American National Standard for Power Assist and Low-energy Power-operated Doors	1010.1.4.2
A156.27—2011	Power and Manual Operated Revolving Pedestrian Doors	1010.1.4.1, 1010.1.4.3.1

CA

State of California Department of Consumer Affairs
Bureau of Electronics and Appliance Repair, Home Furnishings and Thermal Insulation
4244 South Market Court, Suite D
Sacramento, CA 95834-1243

Standard reference number	Title	Referenced in code section number
California Technical Bulletin 129—1992	Flammability Test Procedure for Mattresses for Use in Public Buildings	805.1.1.2, 805.2.2.2, 805.3.2.2.1, 805.4.2.2
California Technical Bulletin 133—1991	Flammability Test Procedure for Seating Furniture for Use in Public Occupancies	805.1.1.2, 805.2.1.2, 805.4.1.2

CGA

Compressed Gas Association
14501 George Carter Way, Suite 103
Chantilly, VA 20151

Standard reference number	Title	Referenced in code section number
C-7—(2011)	Guide to the Preparation of Precautionary Labeling and Marking of Compressed Gas Containers	5303.4.2, 5503.4.2
G-13—(2006)	Storage and Handling of Silane and Silane Mixtures (an American National Standard)	6404.1, 6404.2, 6405.3
P-1—(2000)	Safe Handling of Compressed Gases in Containers	5305.7
ANSI/P-18—(2006)	Standard for Bulk Inert Gas Systems	5501.1
S-1.1—(2011)	Relief Device Standards—Part 1—Cylinders for Compressed Gases	5303.3.2, 5503.2
S-1.2—(2005)	Pressure Relief Device Standards—Part 2—Cargo and Portable Tanks for Compressed Gases	5303.3.2, 5503.2
S-1.3—(2008)	Pressure Relief Device Standards—Part 3—Stationary Storage Containers for Compressed Gases	5303.3.2, 5503.2
V-1—(2005)	Standard for Gas Cylinder Valve Outlet and Inlet Connections	3505.2.1

CGR

Coast Guard Regulations
c/o Superintendent of Documents
U.S. Government Printing Office
Washington, DC 20402-9325

Standard reference number	Title	Referenced in code section number
46 CFR Parts 30, 32, 35 & 39—1999	Shipping	5706.8

INTERNATIONAL CODE COUNCIL®
Copyright © 2015 ICC. ALL RIGHTS RESERVED. Accessed by David Dammon on Jun 21, 2017 12:30:52 PM pursuant to License Agreement with ICC. No further reproduction or distribution authorized. ANY UNAUTHORIZED REPRODUCTION OR DISTRIBUTION IS A VIOLATION OF THE FEDERAL COPYRIGHT ACT AND THE LICENSE AGREEMENT, AND SUBJECT TO CIVIL AND CRIMINAL PENALTIES THEREUNDER.

CPSC

Consumer Product Safety Commission
4330 East West Highway
Bethesda, MD 20814

Standard reference number	Title	Referenced in code section number
16 CFR Part 1500.41—2009	Method for Testing Primary Irritant Substances	202
16 CFR Part 1500.42—2009	Test for Eye Irritants	202
16 CFR Part 1500.44—2009	Method for Testing Extremely Flammable and Flammable Solids	202
16 CFR Part 1500—2009	Hazardous Substances and Articles; Administration and Enforcement Regulations	202, 5601.1.3
16 CFR Part 1507—2002	Fireworks Devices	5601.1.3
16 CFR Part 1630—2007	Standard for the Surface Flammability of Carpets and Rugs	804.3.3.1, 804.3.3.2

DOC

U.S. Department of Commerce
1401 Constitution Avenue, NW
Washington, DC 20230

Standard reference number	Title	Referenced in code section number
16 CFR Part 1632—2009	Standard for the Flammability of Mattress and Mattress Pads (FF 4-72, Amended)	805.1.2.1, 805.2.2.1, 805.3.2.1, 805.4.2.1

DOL

U.S. Department of Labor
c/o Superintendent of Documents
U.S. Government Printing Office
Washington, DC 20402-9325

Standard reference number	Title	Referenced in code section number
29 CFR Part 1910.1000—2009	Air Contaminants	202, 2104.2.1
29 CFR Part 1910.1200—2009	Hazard Communication	202, 5603.6

DOTn

U.S. Department of Transportation
Office of Hazardous Material Safety
1200 New Jersey Avenue, SE
East Building, 2nd Floor
Washington, DC 20590

Standard reference number	Title	Referenced in code section number
33 CFR Part 154—1998	Facilities Transferring Oil or Hazardous Material in Bulk	5706.8
33 CFR Part 155—1998	Oil or Hazardous Material Pollution Prevention Regulations for Vessels	5706.8
33 CFR Part 156 —1998	Oil and Hazardous Material Transfer Operations	5706.8
49 CFR Parts 100-185—2005	Hazardous Materials Regulations	202, 3505.4, 5303.2, 5503.4.3, 5503.7, 5601.1, 5601.1.3, 5601.3, 5706.5.1.15
49 CFR Part 172—2009	Hazardous Materials Tables, Special Provisions, Hazardous Materials Communications, Emergency Response Information and Training Requirements	5604.6.5.2

INTERNATIONAL CODE COUNCIL®
Copyright © 2015 ICC. ALL RIGHTS RESERVED. Accessed by David Dammon on Jun 21, 2017 12:30:52 PM pursuant to License Agreement with ICC. No further reproduction or distribution authorized. ANY UNAUTHORIZED REPRODUCTION OR DISTRIBUTION IS A VIOLATION OF THE FEDERAL COPYRIGHT ACT AND THE LICENSE AGREEMENT, AND SUBJECT TO CIVIL AND CRIMINAL PENALTIES THEREUNDER.

DOTn—continued

49 CFR Part 173—2009	Shippers—General Requirements for Shipments and Packagings	5104.1.1, 5606.3
49 CFR Part 173.137—2009	Shippers—General Requirements for Shipments and Packagings: Class 8—Assignment of Packing Group	202

DOTy

U.S. Department of Treasury
c/o Superintendent of Documents
U.S. Government Printing Office
Washington, DC 20402-9325

Standard reference number	Title	Referenced in code section number
27 CFR Part 55—1998	Commerce in Explosives, as amended through April 1, 1998	202, 5604.6.5.2

EN

European Committee for Standardization (EN)
Central Secretariat
Rue de Stassart 36
B-10 50 Brussels

Standard reference number	Title	Referenced in code section number
European Standard EN 1081	1998 Resilient Floor Coverings—Determination of the Electrical Resistance.	2309.5.1.1

FCC

Federal Communications Commission
Wireless Telecommunications Bureau (WTB)
445 12th Street, SW
Washington, DC 20554

Standard reference number	Title	Referenced in code section number
47 CFR Part 90.219—2007	Private Land Mobile Radio Services—Use of Signal Boosters	510.5.4

FM

Factory Mutual Global Research
Standards Laboratories Department
1301 Atwood Avenue, P.O. Box 7500
Johnston, RI 02919

Standard reference number	Title	Referenced in code section number
4430—12	Approval Standard for Heat and Smoke Vents	910.3.1
ANSI/FM 4996—13	Approval Standard for Classification of Pallets and Other Material Handling Products as Equivalent to Wood Pallets	3206.4.1.1

INTERNATIONAL CODE COUNCIL®
Copyright © 2015 ICC. ALL RIGHTS RESERVED. Accessed by David Dammon on Jun 21, 2017 12:30:52 PM pursuant to License Agreement with ICC. No further reproduction or distribution authorized. ANY UNAUTHORIZED REPRODUCTION OR DISTRIBUTION IS A VIOLATION OF THE FEDERAL COPYRIGHT ACT AND THE LICENSE AGREEMENT, AND SUBJECT TO CIVIL AND CRIMINAL PENALTIES THEREUNDER.

ICC

International Code Council, Inc.
500 New Jersey Avenue, NW
6th Floor
Washington, DC 20001

Standard reference number	Title	Referenced in code section number
ICC A117.1—09	Accessible and Usable Buildings and Facilities	907.5.2.3.3, 1009.9, 1009.11, 1010.14.9.7, 1012.1, 1012.6.5, 1012.10, 1013.4, 1023.9
ICC 300—12	Standard on Bleachers, Folding and Telescopic Seating and Grandstands	1029.1.1, 1029.16
IBC—15	International Building Code®	102.3, 102.4, 201.3, 202, 304.1.3, 306.1, 311.1.1, 311.3, 313.1, 317.1, 403.8.2, 403.11.4, 404.2.1, 504.1, 508.1, 508.1.2, 603.2, 603.5.2, 603.6.1, 603.8, 604.1.2, 604.1.7, 604.2.2, 604.2.6, 604.2.7, 604.2.9, 604.2.13, 604.2.16, 605.11, 607.3, 607.4, 607.5, 607.6, 608.4, 608.8, 701.1, 704.1, 801.1, 803.1, Table 803.3, 803.7.2, 803.8.1, 803.8.2, 807.3, 807.5.1.2, 808.1, 808.2, 901.4.1, 901.4.2, 901.4.3, 901.8.2, 903.2, 903.2.5.2, 903.2.8.3.2, 903.2.9.1, 903.2.10, 903.3.1.1.1, 903.3.1.2, 903.3.2, 904.13, 907.1.1, 907.2.1, 907.2.1.9, 907.2.6.2, 907.2.6.3.3, 907.2.7, 907.2.13, 907.2.18, 907.2.21, 907.5.2.1, 907.5.2.2.4, 907.6.6, 909.1, 909.2, 909.3, 909.4.3, 909.5, 909.5.3, 909.5.3.1, 909.5.3.2, 909.6.3, 909.10.5, 909.11.1, 909.18.8, 909.21.1, 910.4.5, Table 911.1, 911.2, 914.1, 914.2.1, 914.3.1, 914.3.2, 914.4.1, 914.5.3, Table 914.8.3, 914.8.3.2, 914.10, 915.1.6, 1003.2, 1003.5, Table 1004.1.2, 1004.4, 1005.7.2, 1006.2.1, 1009.2, 1009.4, 1009.5, 1009.6.4, 1010.1.4.1, 1010.1.4.3, 1010.1.5, 1010.1.7, 1010.1.9.1, 1010.1.9.11, 1011.10, 1011.11, 1011.12.2, 1012.6.3, 1012.6.4, 1014.1, 1015.2, 1015.2.1, 1016.2, 1018.3, 1018.5, 1019.3, 1019.4,1020.1, Table 1020.1, 1021.4, 1023.2, 1023.3.1, 1023.4, 1023.5, 1023.6, 1023.7, 1023.11.1, 1023.11.2, 1024.3, 1024.4, 1024.5, 1024.6, 1024.7, 1026.2, 1026.3, 1027.5, 1028.1.6, 1029.1.1.1, 1101.2, 1101.3, 1103.1, 1103.3.2, 1103.4.1, 1103.4.8, 1103.4.9.1, 1103.4.9.2.1, 1103.4.9.2.2, 1103.4.9.4, 1103.4.9.5, 1103.4.10, 1104.5, 1104.17, 1104.17.1, Table 1104.17.2, 1105.3.1, 1105.3.3.1, 1105.3.3.2, 1105.4.7, 1105.6.2, 1105.6.3, 1105.6.4, 1105.6.5, 1105.6.6, 1105.6.7, 1105.7, 2004.6, 2006.17, 2007.1, 2007.4, 2103.3, 2107.1, 2301.1, 2301.4, 2303.1, 2307.4, 2308.3, 2308.3.1, 2308.3.1.2, 2309.3.1.5.1, 2309.3.2, 2309.6.1.2.3, 2310.1, 2311.1, 2311.3.1, 2311.4.1, 2404.2, 2404.3.1, 2404.3.2.6, 2404.3.3, 2405.2, 2701.1, 2701.4, 2703.2.2, 2703.3.1, 2703.3.2, 2703.3.3, 2703.3.4, 2703.3.8, 2703.14, 2703.14.1, 2703.14.2, 2703.15.1, 2704.3.1, 2705.2.3.2, 2705.3.1, 2705.3.2.1, 2705.3.3, 2803.1, 2905.1, 2909.2, 2909.4, 2909.6, 3101.1, 3103.1, 3103.8.2, 3103.8.4, 3103.9.1, 3104.1, 3105.5, 3314.1, 3403.1, 3704.3, 3704.4, 3704.5, 5003.2.2.2, 5003.2.8, 5003.8.1, Table 5003.8.2, 5003.8.3.1, 5003.8.4.1, 5003.9.9, 5004.13, 5005.2, 5005.3.9, 5101.1, 5303.16.1, 5303.16.2, 5306.2, 5306.2.1, 5503.1.2, 5503.5.2, 5504.2.1.2, 5504.2.2.2, 5505.4.1, 5604.2, Table 5604.5.2(3), 5605.5, 5701.3, 5704.2.7.7, 5704.2.8.1, 5704.2.8.2, 5704.2.9.3, 5704.2.9.4, 5704.3.3.5, 5704.3.7.1, 5704.3.8, 5705.3.4, 5705.3.5.3, 5705.3.7.1, 5705.3.7.2, 5705.3.7.3, 5705.3.7.4, 5705.3.7.5.1, 5706.2.3, 5706.4.1, 5803.1.1, 5806.4.3, 5808.1, 5808.3, 5808.3.2, 5906.2.2, 5906.2.3, 5906.4.2, 6003.1.4.2, 6005.3.1, 6109.11.2, 6204.1.2, 6306.4, 6404.1.4, 6604.1
IEBC—15	International Existing Building Code®	1011.5.2, 1103.1
IFGC—15	International Fuel Gas Code®	201.3, 603.1, 603.1.2, 603.5.2, 603.8, 2301.1, 2301.6, 2309.3.1.2, 2309.3.1.5, 2504.5, 3001.1, 3003.1, 3004.1, 3004.2, 3104.15.1, 3104.15.2, 3104.16.1, 3303.1, 3303.3, 3306.2.1, Table 5003.1.1(1), 5301.1, 5801.1, 5803.1.4, 6103.1, 6103.2.1.7, 6103.3
IMC—15	International Mechanical Code®	201.3, 202, 308.3, 603.1, 603.1.2, 603.2, 603.3, 603.3.2.4, 603.5.2, 603.8, 606.1, 606.2, 606.3, 606.4, 606.7, 606.8, 606.9, 606.16, 608.6.1, 609.1, 903.2.11.4, 904.12, 907.3.1, 909.1, 909.10.2, 909.13.1, 910.4.7, 1006.2.2.3, 1011.16, 1020.5.1, 2104.2.1, 2105.3, 2301.1, 2301.6, 2309.3.1.2, 2309.3.2.3, 2311.3.1, 2311.4.3, 2311.7.1, 2404.7, 2404.7.2, 2504.5, 2703.2.2, 2703.10.4, 2703.14, 2803.2, 2803.3, 3001.1, 3003.1, 3004.2, 3104.15.1, 3104.15.2, 3303.1, 3703.5, Table 5003.1.1(1), 5003.8.4.2, 5003.8.5.2, 5003.8.6.2, 5004.3.1, 5303.7.6, 5303.16.9, 5305.5, 5306.2.2, 5307.5.1, 5504.2.1.3, 5504.2.2.3, 5505.4.1.1, 5701.3, 5703.6.1, 5704.2.8.9, 5705.3.7.5.1, 5706.2, 5706.4.4, 6003.1.3, 6003.2.3.2, 6004.2.2.7, 6005.3.1, 6005.3.2, 6103.2.1.7
IPC—15	International Plumbing Code®	201.3, 903.3.5, 904.11.1.3, 912.6, 2311.2.3, 5004.2.2.6
IPMC—15	International Property Maintenance Code®	311.1.1
IRC—15	International Residential Code®	102.5, 202, 605.11, 605.11.1.2, 1001.1
IWUIC—15	International Wildland-Urban Interface Code®	304.1.2

INTERNATIONAL CODE COUNCIL®
Copyright © 2015 ICC. ALL RIGHTS RESERVED. Accessed by David Dammon on Jun 21, 2017 12:30:52 PM pursuant to License Agreement with ICC. No further reproduction or distribution authorized. ANY UNAUTHORIZED REPRODUCTION OR DISTRIBUTION IS A VIOLATION OF THE FEDERAL COPYRIGHT ACT AND THE LICENSE AGREEMENT, AND SUBJECT TO CIVIL AND CRIMINAL PENALTIES THEREUNDER.

IIAR

International Institute of Ammonia Refrigeration
1001 N. Fairfax Street, Suite 503
Alexandria, VA 22314

Standard reference number	Title	Referenced in code section number
IIAR-2—2014	Equipment, Design and Installation of Closed-Circuit Ammonia Mechanical Refrigerating Systems	606.12.1.1
IIAR-7—2013	Developing Operating Procedures for Closed-Circuit Ammonia Mechanical Refrigerating Systems	606.12.1.1

IKECA

International Kitchen Exhaust Cleaning Association
100 North 20th Street, Suite 400
Philadelphia, PA 19103

Standard reference number	Title	Referenced in code section number
C10—2011 ANSI/IKECA	Standard for Cleaning of Commercial Kitchen Exhaust Systems	609.3.3.2

ISO

International Organization for Standardization (ISO)
ISO Central Secretariat
1 ch, de la Voie-Creuse, Case postale 56
CH-1211 Geneva 20, Switzerland

Standard reference number	Title	Referenced in code section number
ISO 8115—86	Cotton Bales—Dimensions and Density	Table 2704.2.2.1, Table 5003.1.1(1)

NEMA

National Electrical Manufacturer's Association
1300 N. 17th Street, Suite 1752
Rosslyn, VA 22209

Standard reference number	Title	Referenced in code section number
250—2003	Enclosures for Electrical Equipment (1,000 Volt Maximum)	6005.2

NFPA

National Fire Protection Association
1 Batterymarch Park
Quincy, MA 02169-7471

Standard reference number	Title	Referenced in code section number
02—11	Hydrogen Technologies Code	2309.3.1.1, 2309.3.1.2, 5301.1, 5307.3, 5801.1
10—13	Standard for Portable Fire Extinguishers	Table 901.6.1, 906.2, 906.3, Table 906.3(1), Table 906.3(2), 906.3.2, 906.3.4, 3006.3, I101.1
11—10	Standard for Low-, Medium- and High-expansion Foam	904.7, 5704.2.9.2.2
12—11	Standard on Carbon Dioxide Extinguishing Systems	Table 901.6.1, 904.8, 904.12
12A—09	Standard on Halon 1301 Fire Extinguishing Systems	Table 901.6.1, 904.9
13—13	Standard for the Installation of Sprinkler Systems	903.3.1.1, 903.3.2, 903.3.8.2 903.3.8.5, 904.12, 905.3.4, 907.6.4, 914.3.2, 1019.3, 1103.4.8, 3201.1, 3204.2, Table 3206.2, 3206.4.1, 3206.9, 3207.2, 3207.2.1, 3208.2.2, 3208.2.2.1, 3208.4, 3210.1, 3401.1, 5104.1, 5104.1.1, 5106.5.7, 5704.3.3.9, Table 5704.3.6.3(7), 5704.3.7.5.1, 5704.3.8.4

INTERNATIONAL CODE COUNCIL®
Copyright © 2015 ICC. ALL RIGHTS RESERVED. Accessed by David Dammon on Jun 21, 2017 12:30:52 PM pursuant to License Agreement with ICC. No further reproduction or distribution authorized. ANY UNAUTHORIZED REPRODUCTION OR DISTRIBUTION IS A VIOLATION OF THE FEDERAL COPYRIGHT ACT AND THE LICENSE AGREEMENT, AND SUBJECT TO CIVIL AND CRIMINAL PENALTIES THEREUNDER.

NFPA—continued

13D—13	Standard for the Installation of Sprinkler Systems in One- and Two-family Dwellings and Manufactured Homes	903.3.1.3
13R—13	Standard for the Installation of Sprinkler Systems in Low Rise Residential Occupancies	903.3.1.2, 903.3.5.2, 903.4
14—13	Standard for the Installation of Standpipe and Hose Systems	905.2, 905.3.4, 905.4.2, 905.6.2, 905.8
15—12	Standard for Water Spray Fixed Systems for Fire Protection	5704.2.9.2.3
16—15	Standard for the Installation of Foam-water Sprinkler and Foam-water Spray Systems	904.7, 904.12
17—13	Standard for Dry Chemical Extinguishing Systems	Table 901.6.1, 904.6, 904.12
17A—13	Standard for Wet Chemical Extinguishing Systems	Table 901.6.1, 904.5, 904.12
20—13	Standard for the Installation of Stationary Pumps for Fire Protection	913.1, 913.2, 913.5.1
22—13	Standard for Water Tanks for Private Fire Protection	507.2.2
24—13	Standard for Installation of Private Fire Service Mains and Their Appurtenances	507.2.1, 2809.5
25—14	Standard for the Inspection, Testing and Maintenance of Water-based Fire Protection Systems	507.5.3, Table 901.6.1, 904.7.1, 912.7, 913.5
30—12	Flammable and Combustible Liquids Code	610.1, 5701.2, 5703.6.2, 5703.6.2.1, 5704.2.7, 5704.2.7.1, 5704.2.7.2, 5704.2.7.3.2, 5704.2.7.4, 5704.2.7.6, 5704.2.7.7, 5704.2.7.8, 5704.2.7.9, 5704.2.9.3, 5704.2.9.4, 5704.2.9.6.1.1, 5704.2.9.6.1.2, 5704.2.9.6.1.3, 5704.2.9.6.1.4, 5704.2.9.6.1.5, 5704.2.9.6.2, 5704.2.9.7.3, 5704.2.10.2, 5704.2.11.3, 5704.2.11.4.2, 5704.2.12.1, 5704.3.1, 5704.3.6, Table 5704.3.6.3(1), Table 5704.3.6.3(2), Table 5704.3.6.3(3), 5704.3.7.2.3, 5704.3.8.4, 5706.8.3
30A—15	Code for Motor Fuel-dispensing Facilities and Repair Garages	2301.4, 2301.5, 2301.6, 2306.6.3, 2310.1
30B—15	Code for the Manufacture and Storage of Aerosol Products	5101.1, 5103.1, 5104.1, Table 5104.3.1, Table 5104.3.2, Table 5104.3.2.2, 5104.4.1, 5104.5.2, 5104.6, 5106.2.3 5106.3.2, Table 5106.4,5106.5.1, 5106.5.6, 5107.1
31—11	Standard for the Installation of Oil-burning Equipment	603.1.7, 603.3.1, 603.3.3
32—11	Standard for Dry Cleaning Plants	2107.1, 2107.3
33—15	Standard for Spray Application Using Flammable or Combustible Materials	2404.3.2
34—15	Standard for Dipping, Coating and Printing Processes Using Flammable or Combustible Liquids	2405.3, 2405.4.1.1
35—11	Standard for the Manufacture of Organic Coatings	2901.3, 2905.4
40—11	Standard for the Storage and Handling of Cellulose Nitrate Film	306.2
51—13	Standard for the Design and Installation of Oxygen-fuel Gas Systems for Welding, Cutting and Allied Processes	3501.5, 3507.1, 3509.1
51A—12	Standard for Acetylene Cylinder Charging Plants	3508.1
52—13	Vehicular Gaseous Fuel System Code	5301.1
55—13	Compressed Gases and Cryogenic Fluids Code	2309.2.1, 5301.1, 5307.3, 5501.1, 5801.1, 6301.1
56—12	Standard for Fire and Explosion Prevention during Cleaning and Purging of Flammable Gas Piping Systems	3306.2.1
58—14	Liquefied Petroleum Gas Code	603.4.2.1.1, 6101.1, 6103.1, 6103.2.1, 6103.2.1.2, 6103.2.1.7, 6103.2.2, 6104.1, 6104.3.2, 6104.4, 6105.2, 6106.2, 6106.3, 6107.2, 6107.4, 6108.1, 6108.2, 6109.11.2, 6111.3
59A—13	Standard for the Production, Storage and Handling of Liquefied Natural Gas (LNG)	5301.1, 5501.1
61—13	Standard for the Prevention of Fires and Dust Explosions in Agricultural and Food Processing Facilities	Table 2204.1
69—14	Standard on Explosion Prevention Systems	911.1, 911.3, Table 2204.1
70—14	National Electrical Code	603.1.3, 603.1.7, 603.5.2, 604.1.2, 605.3, 605.4, 605.9, 605.11, 606.16, 610.6, 610.7, 904.3.1, 907.6.1, 909.12.2, 909.16.3, 910.4.6, 2006.3.4, 2104.2.3, 2108.2, Table 2204.1, 2301.5, 2305.4, 2308.8.1.2.4, 2309.2.3, 2309.6.1.2.4, 2311.3.1, 2403.2.1, 2403.2.1.1, 2403.2.1.4, 2403.2.5, 2404.6.1.2.2, 2404.9.4, 2504.5, 2603.2.1, 2606.4, 2703.7.1, 2703.7.2, 2703.7.3, 2803.4, 2904.1, 3103.12.6.1, 3104.15.7, 3304.7, 3506.4, 5003.7.3, 5003.8.7.1, 5003.9.4, 5303.7.6, 5303.8, 5303.16.11, 5303.16.14, 5503.6, 5503.6.2, 5703.1, Table 5703.1.1, 5703.1.3, 5704.2.8.12, 5704.2.8.17, 5706.2.8, 5803.1.5, 5803.1.5.1, 5807.1.10, 5906.5.5, 5906.5.6, 6109.15.1
72—13	National Fire Alarm and Signaling Code	508.1.6, 604.2.4, Table 901.6.1, 903.4.1, 904.3.5, 907.2, 907.2.6, 907.2.9.3, 907.2.11, 907.2.13.2, 907.3, 907.3.3, 907.3.4, 907.5.2.1.2, 907.5.2.2, 907.5.2.2.5, 907.6, 907.6.1, 907.6.2, 907.6.6, 907.7, 907.7.1, 907.7.2, 907.8, 907.8.2, 907.8.5, 1103.3.2

INTERNATIONAL CODE COUNCIL®
Copyright © 2015 ICC. ALL RIGHTS RESERVED. Accessed by David Dammon on Jun 21, 2017 12:30:52 PM pursuant to License Agreement with ICC. No further reproduction or distribution authorized. ANY UNAUTHORIZED REPRODUCTION OR DISTRIBUTION IS A VIOLATION OF THE FEDERAL COPYRIGHT ACT AND THE LICENSE AGREEMENT, AND SUBJECT TO CIVIL AND CRIMINAL PENALTIES THEREUNDER.

NFPA—continued

80—13	Standard for Fire Doors and Other Opening Protectives	703.1.3, 1010.1.4.3
85—15	Boiler and Combustion System Hazards Code	Table 2204.1
86—15	Standard for Ovens and Furnaces	3001.1
92—15	Standard for Smoke Control Systems	909.7, 909.8
99—15	Health Care Facilities Code	611.1, 1105.5.2, 1105.10.1, 1105.10.2, 5306.4, 5306.5
101—15	Life Safety Code	1029.6.2
105—13	Standard for Smoke Door Assemblies and Other Opening Protectives	703.1.2
110—13	Standard for Emergency and Standby Power Systems	604.1.2, 604.4, 604.5, 913.5.2, 913.5.3
111—13	Standard on Stored Electrical Energy Emergency and Standby Power Systems	604.1.2, 604.4, 604.5
120—15	Standard for Fire Prevention and Control in Coal Mines	Table 2204.1
160—11	Standard for the Use of Flame Effects Before an Audience	308.3.2
170—15	Standard for Fire Safety and Emergency Symbols	1025.2.6.1
204—15	Standard for Smoke and Heat Venting	Table 901.6.1, 910.5.1
211—13	Standard for Chimneys, Fireplaces, Vents and Solid Fuel-burning Appliances	603.2
241—13	Standard for Safeguarding Construction, Alteration and Demolition Operations	3301.1
253—15	Standard Method of Test for Critical Radiant Flux of Floor Covering Systems Using a Radiant Heat Energy Source	804.3.1, 804.3.2, 804.4
260—13	Methods of Tests and Classification System for Cigarette Ignition Resistance of Components of Upholstered Furniture	805.1.1.1, 805.2.1.1, 805.3.1.1, 805.4.1.1
261—13	Standard Method of Test for Determining Resistance of Mock-up Upholstered Furniture Material Assemblies to Ignition by Smoldering Cigarettes	805.2.1.1, 805.3.1.1, 805.4.1.1
265—11	Standard Methods of Fire Tests for Evaluating Room Fire Growth Contribution of Textile Wall Coverings in Full Height Panels and Walls	803.5.1, 803.5.1.1, 803.5.1.2, 803.5.2, 803.6
286—15	Standard Methods of Fire Tests for Evaluating Contribution of Wall and Ceiling Interior Finish to Room Fire Growth	803.1, 803.1.2, 803.1.2.1, 803.5.1, 803.5.2, 803.6, 803.7
289—13	Standard Method of Fire Test for Individual Fuel Packages	806.2, 807.4, 807.5.1.1, 808.3
303—11	Fire Protection Standard for Marinas and Boatyards	905.3.7, 3603.5, 3603.6, 3604.2
318—15	Standard for the Protection of Semiconductor Fabrication Facilities	2703.16
326—10	Standard for the Safeguarding of Tanks and Containers for Entry, Cleaning, or Repair	3510.1
385—12	Standard for Tank Vehicles for Flammable and Combustible Liquids	5706.5.4.5, 5706.6, 5706.6.1
400—13	Hazardous Materials Code	5601.1.5, 6304.1.2, Table 6304.1.5(1), Table 6304.1.5(2)
407—12	Standard for Aircraft Fuel Servicing	2006.2, 2006.3
409—11	Standard for Aircraft Hangars	914.8.3, Table 914.8.3, 914.8.3.1, 914.8.6
410—10	Standard on Aircraft Maintenance	2004.7
484—15	Standard for Combustible Metals	Table 2204.1
495—13	Explosive Materials Code	202, 911.1, 911.4, 5601.1.1, 5601.1.5, 5604.2, 5604.6.2, 5604.6.3, 5604.7.1, 5605.1, 5606.1, 5606.5.2.1, 5606.5.2.3, 5607.1, 5607.9, 5607.11, 5607.15
498—13	Standard for Safe Havens and Interchange Lots for Vehicles Transporting Explosives	5601.1.2
505—13	Fire Safety Standard for Powered Industrial Trucks, Including Type Designations, Areas of Use, Maintenance and Operation	5003.7.3
654—13	Standard for Prevention of Fire and Dust Explosions from the Manufacturing, Processing and Handling of Combustible Particulate Solids	Table 2204.1
655—12	Standard for the Prevention of Sulfur Fires and Explosions	Table 2204.1
664—12	Standard for the Prevention of Fires and Explosions in Wood Processing and Woodworking Facilities	Table 2204.1, 2805.3
701—10	Standard Methods of Fire Tests for Flame-propagation of Textiles and Films	806.2, 807.4, 807.5.1.2, 2603.5, 3104.2
703—15	Standard for Fire Retardant-Wood and Fire-Retardant Coatings for Building Materials	803.4
704—12	Standard System for Identification of the Hazards of Materials for Emergency Response	606.7, 202, 3104.2, 5003.2.2.1, 5003.2.2.2, 5003.5, 5003.10.2, 5005.1.10, 5005.2.1.1, 5005.4.4, 5503.4.1, 5704.2.3.2,
720—15	Standard for the Installation of Carbon Monoxide (CO) Detection and Warning Equipment	915.5.1, 915.5.2, 915.6
750—14	Standard on Water Mist Fire Protection Systems	202, Table 901.6.1, 904.11.1.1
914—10	Code for Fire Protection of Historic Structures	1103.1.1
1122—13	Code for Model Rocketry	5601.1.4
1123—14	Code for Fireworks Display	202, 5604.2, 5608.1, 5608.2.2, 5608.5, 5608.6
1124—06	Code for the Manufacture, Transportation, Storage and Retail Sales of Fireworks and Pyrotechnic Articles	202, 5601.1.3, 5604.2, 5605.1, 5605.3, 5605.4, 5605.5, 5609.1

INTERNATIONAL CODE COUNCIL®

Copyright © 2015 ICC. ALL RIGHTS RESERVED. Accessed by David Dammon on Jun 21, 2017 12:30:52 PM pursuant to License Agreement with ICC. No further reproduction or distribution authorized. ANY UNAUTHORIZED REPRODUCTION OR DISTRIBUTION IS A VIOLATION OF THE FEDERAL COPYRIGHT ACT AND THE LICENSE AGREEMENT, AND SUBJECT TO CIVIL AND CRIMINAL PENALTIES THEREUNDER.

NFPA—continued

1125—12	Code for the Manufacture of Model Rocket and High Power Rocket Motors	5601.1.4
1126—11	Standard for the Use of Pyrotechnics Before a Proximate Audience	5604.2, 5605.1, 5608.1, 5608.2.2, 5608.4, 5608.5
1127—13	Code for High Power Rocketry	5601.1.4
2001—15	Standard on Clean Agent Fire Extinguishing Systems	Table 901.6.1, 904.10

UL

Underwriters Laboratories LLC
333 Pfingsten Road
Northbrook, IL 60062

Standard reference number	Title	Referenced in code section number
10C—09	Positive Pressure Fire Tests of Door Assemblies	1010.1.10.1
30—95	Metal Safety Cans—with revisions through July 2009	5003.9.10, 5005.1.10, 5705.2.4
58—96	Steel Underground Tanks for Flammable and Combustible Liquids—with revisions through July 1998	5704.2.13.1.5
80—07	Steel Tanks for Oil-Burner Fuels and Other Combustible Liquids—with revisions Through August 2009	610.2
87A—12	Outline of Investigation for Power-Operated Dispensing Devices for Gasoline and Gasoline/Ethanol Blends with Nominal Ethanol Concentrations up to 85 Percent	2306.8.1
142—06	Steel Aboveground Tanks for Flammable and Combustible Liquids—with revisions through February 12, 2010	610.2, 2306.2.3
199E—04	Outline of Investigation for Fire Testing of Sprinklers and Water Spray Nozzles for Protection of Deep Fat Fryers	904.12.4.1
217—06	Single and Multiple Station Smoke Alarms—with revisions through April 2012	907.2.11, 915.4.3
268—09	Smoke Detectors for Fire Alarm Systems	907.2.6.2, 907.2.11.7, 915.5.3
294—1999	Access Control System Units—with revisions through September 2010	1010.1.9.6, 1010.1.9.8, 1010.1.9.9
300—05(R2010)	Fire Testing of Fire Extinguishing Systems for Protection of Commercial Cooking Equipment—with revisions through July 16, 2010	904.12
300A—06	Outline of Investigation for Extinguishing System Units for Residential Range Top Cooking Surfaces	904.13
305—2012	Panic Hardware	1010.1.10.1
325—02	Door, Drapery, Gate, Louver and Window Operators and Systems—with revisions through June 2013	503.5, 503.6
499—05	Standard for Electrical Heating Appliances—with revisions through February 2013	610.6
710B—2011	Recirculating Systems	609.2, 904.12
723—08	Standard for Test for Surface Burning Characteristics of Building Materials—with revisions through September 2010	202, 803.5.1, 803.5.2, 803.6, 803.7, 803.10, 804.1, 804.2.4
790—04	Standard Test Methods for Fire Tests of Roof Coverings—with revisions through October 2008	317.2, 317.3
793—08	Automatically Operated Roof Vents for Smoke and Heat—with revisions through September 2011	910.3.1
864—03	Control Units and Accessories for Fire Alarm Systems—with revisions through August 2012	909.12, 2311.7.2.1.1, 5808.5.2, 6004.2.2.10.1
900—04	Air Filter Units—with revisions through February 2012	2404.7.8
924—06	Standard for Safety Emergency Lighting and Power Equipment—with revisions through February 2011	1013.5, 3103.12.6.1
1037—99	Antitheft Alarms and Devices—with revisions through December 2009	506.1
1275—05	Flammable Liquid Storage Cabinets—with revisions through February 2010	5003.8.7.1, 5704.3.2.1.1
1313—93	Standard for Nonmetallic Safety Cans for Petroleum Products—with revisions through November 2012	5003.9.10
1315—95	Standard for Safety for Metal Waste Paper Containers—with revisions through September 2012	808.1, 808.2
1316—94	Glass Fiber Reinforced Plastic Underground Storage Tanks for Petroleum Products, Alcohols, and Alcohol-gasoline Mixtures—with revisions through May 2006	5704.2.13.1.5
1363—07	Relocatable Power Taps—with revisions through September 2012	605.4.1
1975—06	Fire Tests for Foamed Plastics Used for Decorative Purpose	807.4.2.1, 808.3
1994—04	Standard for Luminous Egress Path Marking Systems—with revisions through November 2010	1008.2.1, 1025.2.1, 1025.2.3, 1025.2.4, 1025.4
2017—08	General-Purpose Signaling Devices and Systems—with revisions through May 2011	2311.7.2.1.1, 5808.5.2, 6004.2.2.10.1

INTERNATIONAL CODE COUNCIL®
Copyright © 2015 ICC. ALL RIGHTS RESERVED. Accessed by David Dammon on Jun 21, 2017 12:30:52 PM pursuant to License Agreement with ICC. No further reproduction or distribution authorized. ANY UNAUTHORIZED REPRODUCTION OR DISTRIBUTION IS A VIOLATION OF THE FEDERAL COPYRIGHT ACT AND THE LICENSE AGREEMENT, AND SUBJECT TO CIVIL AND CRIMINAL PENALTIES THEREUNDER.

UL—continued

2034—08	Single and Multiple Station Carbon Monoxide Alarms—with revisions through February 2009 . . . . . 915.4.2, 915.4.3, 1103.9
2075—2013	Standard for Gas and Vapor Detectors and Sensors 915.5.1, 915.5.3, 2311.7.2.1.1, 5808.5.2, 6004.2.2.10.1
2079—04	Tests for Fire Resistance of Building Joint Systems—with revisions through December 2012 202
2085—97	Protected Above-ground Tanks for Flammable and Combustible Liquids—with revisions through September 2010 . . . . . 202, 2306.2.2, 2306.2.3, 5704.2.7.4, 5704.2.9.2.3, 5704.2.9.7.4, 5705.3.8.2
2196—2001	Tests for Fire Resistive Cables—with revisions through March 2012 . . . . . 604.3, 913.2.2
2200—2012	Stationary Engine Generator Assemblies—with revisions through June 2013 . . . . . 604.1.1
2208—2010	Solvent Distillation Units—with revisions through March 2011 . . . . . 5705.4.1
2245—06	Below-grade Vaults for Flammable Liquid Storage Tanks 5704.2.8.1
2335—10	Fire Tests of Storage Pallets—with revisions through September 2012 . . . . . 3206.4.1.1, 3208.2.1
2360—00	Test Methods for Determining the Combustibility Characteristics of Plastics Used in Semi-Conductor Tool Construction—with revisions through May 2013 . . . . . 2703.10.1.2

USC

United States Code
c/o Superintendent of Documents
U.S. Government Printing Office
Washington, DC 20402-9325

Standard reference number	Title	Referenced in code section number
18 USC Part 1, Chapter 40	Importation, Manufacture, Distribution and Storage of Explosive Materials.	202
21 USC Chapter 9	United States Food, Drug and Cosmetic Act	4002.1

INTERNATIONAL CODE COUNCIL®
Copyright © 2015 ICC. ALL RIGHTS RESERVED. Accessed by David Dammon on Jun 21, 2017 12:30:52 PM pursuant to License Agreement with ICC. No further reproduction or distribution authorized. ANY UNAUTHORIZED REPRODUCTION OR DISTRIBUTION IS A VIOLATION OF THE FEDERAL COPYRIGHT ACT AND THE LICENSE AGREEMENT, AND SUBJECT TO CIVIL AND CRIMINAL PENALTIES THEREUNDER.

Appendix A: Board of Appeals

The provisions contained in this appendix are not mandatory unless specifically referenced in the adopting ordinance.

General Comments

When adopted, this appendix provides jurisdictions with detailed appeals board member qualifications and administrative procedures to supplement the basic requirements found in Section 108 of the code.

Purpose

This appendix contains optional criteria for administrative procedures of the board of appeals and board member qualifications. A jurisdiction that wants to make this appendix a mandatory part of the code needs to specifically list this appendix in its adoption ordinance (see page xxi of the code for a sample ordinance for adoption).

SECTION A101 GENERAL

A101.1 Scope. A board of appeals shall be established within the jurisdiction for the purpose of hearing applications for modification of the requirements of the *International Fire Code* pursuant to the provisions of Section 108 of the *International Fire Code*. The board shall be established and operated in accordance with this section, and shall be authorized to hear evidence from appellants and the *fire code official* pertaining to the application and intent of this code for the purpose of issuing orders pursuant to these provisions.

❖ Section 108 establishes a board of appeals, provides a framework for the composition of the board, defines the limits of the board's authority and requires that the board adopt a set of rules of procedure for its operation. This appendix describes a model board of appeals that the jurisdiction may adopt and gives both a recommended board membership and a recommended operating procedure for the conduct of the board. The jurisdiction must adopt this appendix as part of its fire code before the board and its operations, as described in the appendix, can be authorized.

A101.2 Membership. The membership of the board shall consist of five voting members having the qualifications established by this section. Members shall be nominated by the *fire code official* or the chief administrative officer of the jurisdiction, subject to confirmation by a majority vote of the governing body. Members shall serve without remuneration or compensation, and shall be removed from office prior to the end of their appointed terms only for cause.

❖ This section details the method of appointment and the general administrative policy pertaining to the board. The five subsections, Sections A101.2.1 through A101.2.5, list the recommended makeup of the board and the qualifications each member should have to serve on the board.

It is important that the decisions of the appeals board be based purely on the technical merits involved in an appeal and that only technical people rule on technical matters, with due regard for state-of-the-art fire protection and construction technology. The board should not be expected to engage in policy or political deliberations. Members of the appeals board are expected to have experience in matters of fire safety and building construction technology as prescribed in Sections A101.2.1 through A101.2.5.

The board of appeals is to consist of five members recommended by the fire code official and appointed by the chief administrative officer of the jurisdiction—typically, the mayor or city manager. To enhance the integrity of the board and its deliberations and preclude any accusations of partiality on the part of a board member, the members are to serve strictly as volunteers in the community interest, without salary, stipend or any other form of compensation.

A101.2.1 Design professional. One member shall be a practicing design professional registered in the practice of engineering or architecture in the state in which the board is established.

❖ The architectural or engineering design professional serves on the board to give a balanced perspective to board deliberations. His or her role should be to evaluate the general design features of the appeal to determine whether they satisfy the intent of the code.

INTERNATIONAL CODE COUNCIL®
Copyright © 2015 ICC. ALL RIGHTS RESERVED. Accessed by David Dammon on Jun 21, 2017 12:30:52 PM pursuant to License Agreement with ICC. No further reproduction or distribution authorized. ANY UNAUTHORIZED REPRODUCTION OR DISTRIBUTION IS A VIOLATION OF THE FEDERAL COPYRIGHT ACT AND THE LICENSE AGREEMENT, AND SUBJECT TO CIVIL AND CRIMINAL PENALTIES THEREUNDER.

A101.2.2 Fire protection engineering professional. One member shall be a qualified engineer, technologist, technician or safety professional trained in fire protection engineering, fire science or fire technology. Qualified representatives in this category shall include fire protection contractors and certified technicians engaged in *fire protection system* design.

❖ This board member is expected to evaluate appeals to determine whether they represent good, logical solutions to fire safety questions that satisfy code requirements and are consistent with current fire protection engineering principles. Note that this position does not specifically require professional registration in the state but may be filled by any technical person qualified in fire protection technology, including experienced fire protection system installation contractors and system designers.

A101.2.3 Industrial safety professional. One member shall be a registered industrial or chemical engineer, certified hygienist, certified safety professional, certified hazardous materials manager or comparably qualified specialist experienced in chemical process safety or industrial safety.

❖ The key words in this section are "chemical process safety" or "industrial safety." This board member should contribute specialized knowledge of this field to board deliberations. His or her concerns should be more with industrial processes and inventories than with design or safety features, although his or her knowledge of the processes and the materials involved in them should bear on both. Note that this position also does not necessarily require professional registration in the state but may be filled by any technical person qualified in matters of chemical or industrial safety. This member's input would be especially valuable in appeals involving the application and enforcement of the hazardous material provisions of the code.

A101.2.4 General contractor. One member shall be a contractor regularly engaged in the construction, *alteration*, maintenance, repair or remodeling of buildings or building services and systems regulated by the code.

❖ The experienced general contractor adds to the board's expertise in determining the practicality of an appeal. This member many times may be a counterbalance to the opinion of the design professional. That is, the design may satisfy the definition of good engineering practice but not be practical or economical to construct or be compatible with an existing structure in the case of building modifications or additions.

A101.2.5 General industry or business representative. One member shall be a representative of business or industry not represented by a member from one of the other categories of board members described above.

❖ This board member, as stated in the code text, is expected to represent a point of view not represented by the other four board members. This member could, for example, be nominated by the jurisdiction's Chamber of Commerce or Industrial Development Board.

A101.3 Terms of office. Members shall be appointed for terms of 4 years. No member shall be reappointed to serve more than two consecutive full terms.

❖ Limiting terms of service serves two purposes. First, it ensures a turnover of membership so that professionals not currently on the board will have an opportunity to serve. Second, it tells the prospective board nominee that there is a definite term of service being committed to. In larger jurisdictions where the board may be very busy, these principles can also help reduce the potential for the so-called "burnout" syndrome among board members.

A101.3.1 Initial appointments. Of the members first appointed, two shall be appointed for a term of 1 year, two for a term of 2 years, one for a term of 3 years.

❖ The staggered terms for initial appointees ensures that no more than two board members will come up for reappointment or replacement in any one year unless one or more members resigns for personal reasons or is replaced for cause. This method of staggered appointment also allows for a smooth transition of board of appeals members, providing continuity of board action over the years.

A101.3.2 Vacancies. Vacancies shall be filled for an unexpired term in the manner in which original appointments are required to be made. Members appointed to fill a vacancy in an unexpired term shall be eligible for reappointment to two full terms.

❖ This section authorizes filling vacancies on the board outside of regular term expirations and sets the limits on terms of service for the new appointee. Vacancies are filled in the same manner as outlined in Section A101.2, with persons possessing qualifications equivalent to those of the board member being replaced.

A101.3.3 Removal from office. Members shall be removed from office prior to the end of their terms only for cause. Continued absence of any member from regular meetings of the board shall, at the discretion of the applicable governing body, render any such member liable to immediate removal from office.

❖ No board member can be removed from office without cause. Although there may be many reasons for removing a serving board member, the only one identified here is chronic failure to perform board duties by attending scheduled regular meetings. This does not mean absence is the only reason for removal.

A101.4 Quorum. Three members of the board shall constitute a quorum. In varying the application of any provisions of this code or in modifying an order of the *fire code official*, affirmative votes of the majority present, but not less than three, shall be required.

❖ This section clearly defines a quorum and also states that no matter how many members are present at the meeting, at least three affirmative votes are required

INTERNATIONAL CODE COUNCIL®
Copyright © 2015 ICC. ALL RIGHTS RESERVED. Accessed by David Dammon on Jun 21, 2017 12:30:52 PM pursuant to License Agreement with ICC. No further reproduction or distribution authorized. ANY UNAUTHORIZED REPRODUCTION OR DISTRIBUTION IS A VIOLATION OF THE FEDERAL COPYRIGHT ACT AND THE LICENSE AGREEMENT, AND SUBJECT TO CIVIL AND CRIMINAL PENALTIES THEREUNDER.

for passage of a proposal for code variance or modification.

A101.5 Secretary of board. The *fire code official* shall act as secretary of the board and shall keep a detailed record of all its proceedings, which shall set forth the reasons for its decisions, the vote of each member, the absence of a member and any failure of a member to vote.

❖ This section establishes the fire code official as the board secretary and defines the secretary's duties. Because the deliberations and actions of a board of appeals are considered legal proceedings, the secretary is required to record the proceedings in substantial detail. These details may be needed for any future review of the board's decision or for documentation in executing the procedures established by this appendix.

A101.6 Legal counsel. The jurisdiction shall furnish legal counsel to the board to provide members with general legal advice concerning matters before them for consideration. Members shall be represented by legal counsel at the jurisdiction's expense in all matters arising from service within the scope of their duties.

❖ This section requires the jurisdiction to appoint legal counsel to give the board opinions on the legality of proposed variances and also to represent board members at the jurisdiction's expense should a legal action result from their decisions within the scope of their duties. This legal representation for board members would not be considered remuneration or compensation to the board member, which is prohibited by Section A101.2.

A101.7 Meetings. The board shall meet at regular intervals, to be determined by the chairman. In any event, the board shall meet within 10 days after notice of appeal has been received.

❖ This section establishes ground rules for when meetings are to be held and gives the chairperson of the board the responsibility for making sure meetings are held to give timely response to appellants. In order that an appellant's request be heard in a timely manner, the board must meet within 10 days of the filing of an appeal. In large jurisdictions, where there are likely to be more appeals, the board will often set a regular schedule of meeting dates, such as monthly, and the 10-day rule would not apply.

A101.8 Conflict of interest. Members with a material or financial interest in a matter before the board shall declare such interest and refrain from participating in discussions, deliberations and voting on such matters.

❖ This section defines conflict of interest for board members and states their expected behavior. All members must recuse themselves from any appeal proceeding in which they have a personal, professional or financial interest.

A101.9 Decisions. Every decision shall be promptly filed in writing in the office of the *fire code official* and shall be open to public inspection. A certified copy shall be sent by mail or otherwise to the appellant, and a copy shall be kept publicly posted in the office of the *fire code official* for 2 weeks after filing.

❖ This section establishes guidelines for posting decisions and notifying appellants. Once an appeal is concluded and a board has taken action, the board secretary must prepare one or more certified copies of the written report for record and distribution. The report copies must be certified as required by applicable state laws pertaining to such matters, which can often be accomplished by a commissioned notary public. The office of the municipal clerk or the board's legal counsel should be able to provide guidance on the subject. To ensure that the decisions and actions of the board are publicly broadcast, a copy of all decisions must be posted in a publicly accessible location in the office of the fire code official for at least two weeks from the date of the action. The appellant must also be given a certified copy of the decision by personal service or ordinary mail service, although certified mail with a requested return receipt would be advisable.

A101.10 Procedures. The board shall be operated in accordance with the Administrative Procedures Act of the state in which it is established or shall establish rules and regulations for its own procedure not inconsistent with the provisions of this code and applicable state law.

❖ This section establishes the responsibility of the board to operate using procedures established by the state or jurisdiction having authority. If those administrative procedures do not exist in a given jurisdiction, the board is to write its own procedures consistent with both the code and existing state law.

Hearings before the board must be open to the public as required by state law. The appellant, the appellant's representative, the building official and any person whose interests are affected must be heard.

INTERNATIONAL CODE COUNCIL®
Copyright © 2015 ICC. ALL RIGHTS RESERVED. Accessed by David Dammon on Jun 21, 2017 12:30:52 PM pursuant to License Agreement with ICC. No further reproduction or distribution authorized. ANY UNAUTHORIZED REPRODUCTION OR DISTRIBUTION IS A VIOLATION OF THE FEDERAL COPYRIGHT ACT AND THE LICENSE AGREEMENT, AND SUBJECT TO CIVIL AND CRIMINAL PENALTIES THEREUNDER.

INTERNATIONAL CODE COUNCIL®

Copyright © 2015 ICC. ALL RIGHTS RESERVED. Accessed by David Dammon on Jun 21, 2017 12:30:52 PM pursuant to License Agreement with ICC. No further reproduction or distribution authorized. ANY UNAUTHORIZED REPRODUCTION OR DISTRIBUTION IS A VIOLATION OF THE FEDERAL COPYRIGHT ACT AND THE LICENSE AGREEMENT, AND SUBJECT TO CIVIL AND CRIMINAL PENALTIES THEREUNDER.

Appendix B:
Fire-Flow Requirements for Buildings

The provisions contained in this appendix are not mandatory unless specifically referenced in the adopting ordinance.

General Comments

The availability of water is essential for fire-fighting operations. The amount of water required to fight a fire depends on many things, including the type of construction, the location of the fire, the contents of the building, response time and the capabilities of the fire department. Fires will increase in size very quickly from the time of ignition to the arrival of the fire department. Couple these unknowns with the fact that the actual water available varies significantly from one jurisdiction to another and, in many cases, from one location to another in the same jurisdiction, and it is easy to see that determining the necessary water supply is not an exact science. The fire-flow rates given in this appendix are a simplified version of the method previously published by the Insurance Services Office (ISO), *Guide for Determination of Required Fire Flow* (ISO 1972). This particular method took several factors into account that included construction type, size and location of the building. The actual equation used with the ISO guide was as follows:

$$F = 18\,C(A)^{0.5}$$

where:

F = Required fire flow (gpm).

C = Coefficient related to the type of construction.

A = Total floor area (including all stories but excluding the basement).

Type of Construction	Coefficient
Wood-frame construction	1.5
For ordinary construction	1.0
Noncombustible construction	0.8
Fire-resistive construction	0.6

This equation came with various increases and decreases that will be discussed throughout this commentary. The simplified version of this method is included here for two reasons. First, the guidelines were difficult to obtain; and second, the methodology was considered overly complex for the degree of accuracy it gave.

Fire-flow determination is not an exact science. Several methods beyond the one presented by ISO have been available over the years and none is able to provide a correct answer for all situations. Fires grow quickly during their initial stages and the amount of water necessary increases as the fire grows. The larger the fire, the larger the water supply necessary. This is why sprinklers require, comparably, much less water as they can attack the fire at a very early stage. For these reasons, this appendix does not provide a single answer to solve the problem of determining the amount of fire flow required. It is a decision that must involve many factors.

This appendix was developed independent of the sprinkler standards NFPA 13, 13R and 13D. These standards sometimes have requirements for inside and outside hose streams that are independent of the fire-flow requirements.

Purpose

This appendix provides a tool for jurisdictions to establish a policy for fire-flow requirements. The determination of required fire flow is not an exact science, but having some level of information provides a consistent way of choosing the appropriate fire flow for buildings throughout a jurisdiction.

The primary tool used in this appendix is Table B105.1, which presents fire flows based on construction type and building area. This table is based on the correlation of the ISO method and the construction types used in the *International Building Code*® (IBC®). Because of the wide variations in water availability and the application of fire flow in different communities, these provisions are presented in this appendix.

The important message sent by this appendix is that some sort of policy should be in place to provide requirements that are consistent within a jurisdiction. Fire-flow requirements have the tendency to be somewhat controversial for the simple reasons that the facilities needed to provide them can be very costly to construct and install and appear to the building owners, in many cases, to yield little benefit.

INTERNATIONAL CODE COUNCIL®
Copyright © 2015 ICC. ALL RIGHTS RESERVED. Accessed by David Dammon on Jun 21, 2017 12:30:52 PM pursuant to License Agreement with ICC. No further reproduction or distribution authorized. ANY UNAUTHORIZED REPRODUCTION OR DISTRIBUTION IS A VIOLATION OF THE FEDERAL COPYRIGHT ACT AND THE LICENSE AGREEMENT, AND SUBJECT TO CIVIL AND CRIMINAL PENALTIES THEREUNDER.

SECTION B101
GENERAL

B101.1 Scope. The procedure for determining fire-flow requirements for buildings or portions of buildings hereafter constructed shall be in accordance with this appendix. This appendix does not apply to structures other than buildings.

❖ This appendix is clearly intended for buildings only and would not be applicable to outside storage areas or similar hazards. Target hazards such as petroleum bulk plants, refineries, lumberyards, junk yards, etc., which present high-challenge fire suppression scenarios, must be specifically evaluated and protected commensurate with the hazards and operational challenges that they present.

The provisions of this appendix were originally drafted based on the ISO *Guide for Determination of Required Fire Flow* (now called the *Guide for Determination of Needed Fire Flow*), which focuses on buildings only and takes into account the construction type and building size as well as exposures from other buildings nearby. This method may not translate very well to other hazards but could be used as a starting point for other types of facilities. Also, the scope of this appendix is intended for new construction rather than existing buildings. Providing fire flow is generally costly, and requiring it for existing buildings would likely be unreasonable.

Note that the appendix applies only if specifically adopted by ordinance by a jurisdiction. See the commentary to Sections 102.5 and 507.1 for a discussion of this appendix's application (if adopted) to buildings constructed under the *International Residential Code*® (IRC®).

SECTION B102
DEFINITIONS

B102.1 Definitions. For the purpose of this appendix, certain terms are defined as follows:

❖ Definitions can help in the understanding and application of the code requirements. Having the definitions here puts them close to the subject matter to which they pertain.

FIRE-FLOW. The flow rate of a water supply, measured at 20 pounds per square inch (psi) (138 kPa) residual pressure, that is available for fire fighting.

❖ A consistent criterion is used to measure the water available for fire fighting. The criterion is that the fire flow available be measured at a residual pressure of 20 pounds per square inch (psi) (138 kPa). Residual pressure is the pressure in the water main measured when the water is flowing, as opposed to static pressure, which is measured when the water is not flowing.

The residual pressure criterion of 20 psi (138 kPa) is used because it is the minimum pressure recommended for fire engine use by water authorities in order to minimize the possibility of creating a negative pressure in the water main and damaging the water supply system. It also provides a consistent point from which to measure the available flow. Flow will vary based on the pressure for each system. NFPA 291 provides information on fire-flow testing and formulae for calculating test results, including how to calculate the flow available at the 20 psi (138 KPa) residual pressure.

FIRE-FLOW CALCULATION AREA. The floor area, in square feet (m^2), used to determine the required fire flow.

❖ This term defines what portion of the building is to be accounted for when applying Table B105.1. This term differs from the IBC definition of "Fire area" in that this definition allows a fire-flow calculation area, for the purposes of defining fire flow, to be divided only by a fire wall with no openings or penetrations. Fire barriers and fire partitions could not be used to create separate fire-flow calculation areas (see commentary, Section B104.2).

SECTION B103
MODIFICATIONS

B103.1 Decreases. The fire chief is authorized to reduce the fire-flow requirements for isolated buildings or a group of buildings in rural areas or small communities where the development of full fire-flow requirements is impractical.

❖ The purpose of this section is to recognize that many factors may require adjustments to the numbers in Table B105.1. This particular section generally addresses issues such as proximity to exposures, general location, configuration and practicality.

This section gives the fire code official the authority to make adjustments based on the impracticality of fire-flow requirements in rural areas. The text conveys the message that the requirements found here will not be appropriate for all situations. For example, requiring that a fire main be extended to a house located by itself in the middle of a large open field is impractical. This is especially the case if the fire department has a considerable response time. When a considerable response time exists for buildings, such as one- and two-family dwellings in isolated locations, the effectiveness of fire flow is likely to be low because intervention may not be necessary once the fire department arrives. Although, if this same house is located in an wildland-urban interface area, this may be a different issue. The house may be a complete loss, but the protection of the wildland from the exposure of this fire may be necessary.

This section is intended to provide flexibility to better fit the needs of a specific community. In addition to the example above, the following examples describe instances where requiring the full fire flow given in Table B105.1(2) would be unreasonable:

- A rural area dependent on tanker supplies and on-site water sources.

INTERNATIONAL CODE COUNCIL®
Copyright © 2015 ICC. ALL RIGHTS RESERVED. Accessed by David Dammon on Jun 21, 2017 12:30:52 PM pursuant to License Agreement with ICC. No further reproduction or distribution authorized. ANY UNAUTHORIZED REPRODUCTION OR DISTRIBUTION IS A VIOLATION OF THE FEDERAL COPYRIGHT ACT AND THE LICENSE AGREEMENT, AND SUBJECT TO CIVIL AND CRIMINAL PENALTIES THEREUNDER.

- A water system for a small town or community provided for domestic consumption with some incidental fire hydrants, but with no serious intent to provide fire protection water.
- A fire department that does not have the equipment to pump the required fire flow.

Section B103.3 discusses alternative approaches for water supplies.

B103.2 Increases. The fire chief is authorized to increase the fire-flow requirements where conditions indicate an unusual susceptibility to group fires or conflagrations. An increase shall not be more than twice that required for the building under consideration.

❖ As discussed in Section B103.1, the fire flows provided in this appendix are not appropriate for all situations. This section gives jurisdictions the authority to increase fire flow when necessary. The focus of this section is on densely populated occupancies and on buildings arranged in a way that makes conflagration more likely. These provisions were based on the ISO guide, and this particular section is primarily focusing on proximity to exposures. The ISO guide included specific increases for close proximity buildings and other exposures. This appendix does not include specific increases but does give jurisdictions the authority to make adjustments based on these concerns. Adjustments, however, are not to exceed twice the required fire flow. This section and Section B103.1 together suggest that each jurisdiction have a specific policy that can anticipate various scenarios to enable a consistent approach to those undertaking construction in the jurisdiction.

B103.3 Areas without water supply systems. For information regarding water supplies for fire-fighting purposes in rural and suburban areas in which adequate and reliable water supply systems do not exist, the *fire code official* is authorized to utilize NFPA 1142 or the *International Wildland-Urban Interface Code.*

❖ In many cases the infrastructure simply does not exist to provide the large amounts of water required by Table B105.1, but the hazards require that some level of water be available for fire-fighting activities. This section provides an outside resource in the use of either NFPA 1142 or the *International Wildland-Urban Interface Code*® (IWUIC®). NFPA 1142 gives options for areas where adequate and reliable water supplies are not available. It provides minimum requirements for situations where the water is to come from drafting sources, such as a river, canal, stream or pond.

The IWUIC, in Chapter 4, includes alternative approaches to address the lack of water supplies in areas where providing necessary fire flow is typically difficult. Such alternatives include more restrictive construction types and providing defensible spaces to compensate for a reduced water supply. Also, water supply methodologies are presented for both natural and man-made sources.

SECTION B104
FIRE-FLOW CALCULATION AREA

B104.1 General. The fire-flow calculation area shall be the total floor area of all floor levels within the *exterior walls*, and under the horizontal projections of the roof of a building, except as modified in Section B104.3.

❖ This section establishes the area that is to be taken to Tables B105.1(1) and B105.1(2) to determine the minimum fire flow, including how to separate a building into multiple fire-flow calculation areas in order to have lower fire-flow requirements. Fire-flow calculation areas are defined differently here than is the term "Fire area" in the IBC. This difference is described in the commentary for the definition of "Fire-flow calculation area" in Section B102 of this appendix.

The fire-flow calculation area includes all floors and horizontal projections of a building (see Figure B104.1). The area under horizontal projections is important because either combustibles may be located below those areas or the construction itself is combustible. Both situations add to the fire loading of the building. In some cases, horizontal projections can cover a significant area. There are some exceptions for Type IA and IB construction because they are inherently less combustible structures (see commentary, Section B104.3).

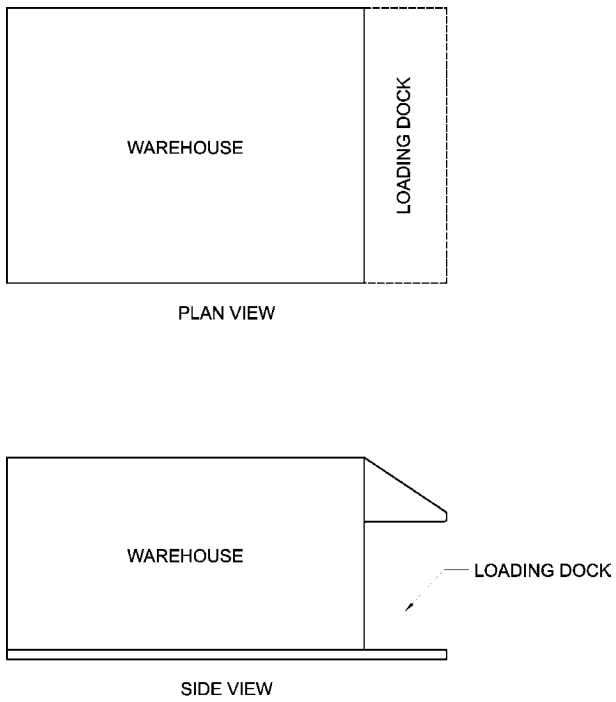

Figure B104.1
FIRE-FLOW CALCULATION AREA =
A WAREHOUSE + A LOADING DOCK

INTERNATIONAL CODE COUNCIL®
Copyright © 2015 ICC. ALL RIGHTS RESERVED. Accessed by David Dammon on Jun 21, 2017 12:30:52 PM pursuant to License Agreement with ICC. No further reproduction or distribution authorized. ANY UNAUTHORIZED REPRODUCTION OR DISTRIBUTION IS A VIOLATION OF THE FEDERAL COPYRIGHT ACT AND THE LICENSE AGREEMENT, AND SUBJECT TO CIVIL AND CRIMINAL PENALTIES THEREUNDER.

B104.2 Area separation. Portions of buildings which are separated by *fire walls* without openings, constructed in accordance with the *International Building Code,* are allowed to be considered as separate fire-flow calculation areas.

❖ To reduce the amount of fire flow required, fire walls without openings can be constructed to create separate fire-flow calculation areas. Fire barriers or fire partitions cannot be used to create separate fire-flow calculation areas. It should be noted that IBC Section 706 regulates the construction of fire walls and would generally allow properly protected openings in them (see IBC Section 706.8). However, consistent with Section 102.10 of the code, this section would supercede the IBC fire wall opening provisions since this section is a specific prohibition on any openings in fire walls that are used to reduce the fire-flow calculation area.

B104.3 Type IA and Type IB construction. The fire-flow calculation area of buildings constructed of Type IA and Type IB construction shall be the area of the three largest successive floors.

Exception: Fire-flow calculation area for open parking garages shall be determined by the area of the largest floor.

❖ Type IA and IB construction are essentially noncombustible and have the tendency to limit fire spread within the buildings more so than other construction types. Therefore, the fire-flow calculation area needs to include only the three largest successive floors. Successive floors are specified because of the logical progression of a fire. The concept of three largest successive floors appears to come from the ISO guide. These guidelines allowed the fire-flow calculation area for fire-resistive construction to only include six successive floors if vertical openings were not protected, and three successive floors if the vertical openings were protected. Taking the three largest floors when they are separated from one another may be overly conservative.

The exception to this section allows open parking garages to count only the largest floor for the fire-flow calculation area. This is probably related to the facts that fires in such facilities tend to be limited to one or two cars and that such facilities have large openings through which the hot gases and smoke from a fire can dissipate quickly, limiting the intensity of the fire.

SECTION B105
FIRE-FLOW REQUIREMENTS FOR BUILDINGS

B105.1 One- and two-family dwellings, Group R-3 and R-4 buildings and townhouses. The minimum fire-flow and flow duration requirements for one- and two-family *dwellings,* Group R-3 and R-4 buildings and townhouses shall be as specified in Tables B105.1(1) and B105.1(2).

❖ This section establishes fire-flow requirements for one- and two-family dwellings, in two distinct categories. The first category is one- and two-family dwellings, Group R3 and R4 buildings and townhouses through reference to Tables B105.1(1) and B105.1(2). Table B105.1(1) essentially addresses two different area ranges and whether automatic sprinkler systems are installed. Where the area is 3,600 square feet or greater, reference is made to Table B105.1(2). It should be noted that automatic sprinkler systems shall comply with either NFPA 13D or IRC Section 2904. Buildings addressed by Section B105.2 allow a larger decrease in fire flow but require an NFPA 13 or NFPA 13R system.

TABLE B105.1(1). See below.

❖ This table sets out the requirements for one- and two-family dwellings, Group R3 and R4 buildings and townhouses. The criteria for fire flow is based on two major factors. The first is the area of the building. The table addresses buildings up to 3,600 square feet and greater than 3,600 square feet. The second is whether a sprinkler system is provided. The type of sprinkler system is either that required by NFPA 13D or IRC P2904. The assumption would be that more restrictive systems, such as those required by NFPA13R or 13, would also be permitted.

Essentially, for less than 3,600 square feet, the fire flow is reduced by 50 percent. This is consistent with exceptions present in past editions of the code. Once 3,600 square feet has been reached, compliance with Table B105.1(2) is required. Note that a 50-percent reduction is allowed by Table B105.1(2) for these buildings.

The original ISO guide provided a simplified approach for one- and two-family dwellings. That approach stated that fire flows should be based on a limitation of two stories and a relationship to proximity of exposures. The fire-flow requirements based on

TABLE B105.1(1)
REQUIRED FIRE-FLOW FOR ONE- AND TWO-FAMILY DWELLINGS, GROUP R-3 AND R-4 BUILDINGS AND TOWNHOUSES

FIRE-FLOW CALCULATION AREA (square feet)	AUTOMATIC SPRINKLER SYSTEM (Design Standard)	MINIMUM FIRE-FLOW (gallons per minute)	FLOW DURATION (hours)
0-3,600	No automatic sprinkler system	1,000	1
3,601 and greater	No automatic sprinkler system	Value in Table B105.1(2)	Duration in Table B105.1(2) at the required fire-flow rate
0-3,600	Section 903.3.1.3 of the *International Fire Code* or Section P2904 of the *International Residential Code*	500	$^1/_2$
3,601 and greater	Section 903.3.1.3 of the *International Fire Code* or Section P2904 of the *International Residential Code*	$^1/_2$ value in Table B105.1(2)	1

For SI: 1 square foot = 0.0929 m^2, 1 gallon per minute = 3.785 L/m.

INTERNATIONAL CODE COUNCIL®
Copyright © 2015 ICC. ALL RIGHTS RESERVED. Accessed by David Dammon on Jun 21, 2017 12:30:52 PM pursuant to License Agreement with ICC. No further reproduction or distribution authorized. ANY UNAUTHORIZED REPRODUCTION OR DISTRIBUTION IS A VIOLATION OF THE FEDERAL COPYRIGHT ACT AND THE LICENSE AGREEMENT, AND SUBJECT TO CIVIL AND CRIMINAL PENALTIES THEREUNDER.

proximity to exposures in the ISO guide were as follows:

EXPOSURE DISTANCE (ft)	FIRE-FLOW REQUIREMENT (gpm)
Over 100	500
31-100	750-1000
11-30	1000-1500
10 or less	1500-2000

For SI: 1 foot = 304.8 mm, 1 gallon per minute = 3.785 L/m.

This appendix uses 1,000 gpm (3785 L/min), which would be equivalent to a 30-foot (9144 mm) distance from exposures. This was taken as an average to provide a reasonable number for a majority of one- and two-family dwellings. Also, as discussed in the beginning of this appendix, based on the amount of variability involved with fighting fires, taking an average and applying it to all one- and two-family dwellings may be the most reasonable approach.

This appendix also does not use the two-story limitation but, rather, uses an area limitation of 3,600 square feet (345 m^2) for the 1,000-gpm (3785 L/min) requirement. This is a more realistic approach because the ISO guide probably did not anticipate the larger floor area of today's houses and the large number of townhouses.

The table recognizes the efficacy of automatic sprinkler systems in reducing the amount of water needed to suppress fires and allows a reduction in fire flow of 50 percent where sprinklers are installed. This allowance for sprinklers does not amount to a requirement that a sprinkler system be installed. Rather, it allows a design alternative to be utilized in the event that there is insufficient water available to meet the required fire flow for a building established by this appendix. Table B105.2 allows a similar reduction for all other types of buildings.

A review of the original ISO guide reveals that there was no reduction for sprinklers in one- and two-family dwellings. However, in 1972 sprinklers were extremely uncommon within homes, and since that time sprinkler technology has changed dramatically. Section B105.2 contains more discussion on the application of this concept of reductions for sprinklers. Generally, the reduction is intended to encourage installation of an automatic sprinkler system because it is easier to control a fire that is attacked during the incipient stages.

TABLE B105.1(2). See page B-6.

❖ Table B105.1(2) establishes the fire-flow and duration requirements based on the fire-flow calculation area, as defined by the definition in this appendix and Section B103, and the construction types defined in the IBC. As the construction type becomes more combustible, the fire-flow requirements increase. Likewise, as the area of the building increases, the fire-flow requirements increase. The last column also specifies a minimum duration of fire flow. The duration of fire flow varies from a minimum of 2 hours to 4 hours. Flow duration may be an issue that each jurisdiction may need to consider when assessing the capabilities of the department, the hazards presented and the availability of water supply (see commentary, Section B105.1).

Applying this table, for example, a 50,000-square-foot (4546 m^2) Type IV construction building would require a fire flow of 4,000 gpm (15 140 L/min) with a duration of 4 hours. If the building was sprinklered in accordance with NFPA 13, the required fire flow would only be 25 percent or 1,000 gpm (5678 L/min).

This table does not address use and occupancy classifications. A Type IA construction building housing a Group A occupancy would be treated the same as a Type IA construction building housing a Group H or F occupancy. Again, this table was formed based on the approaches presented by the ISO guide, which focus on construction types.

A common question when applying this table is how to deal with a building that incorporates multiple construction types. Such scenarios would be better addressed through a percentage approach. For example, in a building that has two construction types, Types IA and VA, having areas of 25,000 square feet (2323 m^2) and 10,000 square feet (929 m^2), respectively, the fire flow would be calculated as follows:

Total building area

25,000 square feet (Type IA) + 10,000 square feet

(Type VA) = 35,000 square feet (3252 m^2)

Fire flow per construction type

Type IA at 35,000 square feet = 2,000 gpm (7370 L/min)

Type VA at 35,000 square feet = 3,250 gpm (12 112 L/min)

Percentage of building

IA = 25,000/35,000 × 100 = 71.4 percent

VA = 10,000/35,000 × 100 = 28.6 percent

Therefore

0.714 (2,000 gpm) + 0.286 (3,250 gpm) = 2,357.5 = Approximately 2,350 gpm (8894 L/min)

B105.2 Buildings other than one- and two-family dwellings, Group R-3 and R-4 buildings and townhouses. The minimum fire-flow and flow duration for buildings other than one- and two-family *dwellings*, Group R-3 and R-4 buildings and townhouses shall be as specified in Tables B105.2 and B105.1(2).

❖ This section refers all buildings that are not one- and two-family dwellings to Tables B105.1(2) and B105.2 for the minimum fire-flow and duration requirements. Table B105.1(2) provides the fire flow and Table B105.2 provides the reductions allowed for having either an NFPA 13 or NFPA 13R automatic sprinkler system. In such buildings, the reduction is 75 percent versus the 50-percent reduction allowed for one- and two-family dwellings in Table B105.1(1).

The tabular fire flows, based on the 1972 ISO

INTERNATIONAL CODE COUNCIL®
Copyright © 2015 ICC. ALL RIGHTS RESERVED. Accessed by David Dammon on Jun 21, 2017 12:30:52 PM pursuant to License Agreement with ICC. No further reproduction or distribution authorized. ANY UNAUTHORIZED REPRODUCTION OR DISTRIBUTION IS A VIOLATION OF THE FEDERAL COPYRIGHT ACT AND THE LICENSE AGREEMENT, AND SUBJECT TO CIVIL AND CRIMINAL PENALTIES THEREUNDER.

guide, are extremely high and it is doubtful that many water supply systems and fire departments can develop them. Also, it should be noted that the current ISO guide on this topic for sprinklered buildings requires providing only the calculated sprinkler demand plus hose stream allowances, calling the continued validity of this appendix into question. The updated ISO publication, *Guide for the Determination of Needed Fire Flows*, as with its predecessor, is a tool for the development of fire insurance ratings and is not intended to be used for legislating an individual sprinklered building's fire flow. That document states, "ISO does not determine a needed fire flow for buildings rated and coded by ISO as protected by an automatic sprinkler system meeting applicable National Fire Protection Association standards."

The allowance for buildings equipped with an automatic sprinkler system is intended to encourage the use of sprinklers. It does not link to any other portions of the code or the IBC in terms of height and area requirements and limitations. Therefore, it can be used in addition to any trade-offs for sprinklers. Keep in mind that as the area of the building increases so do the fire-flow requirements. Therefore, even though a reduction may be given to a building that has already increased its area based on sprinklers, the overall fire flow will be larger because of this area increase.

The original ISO guide allowed only a 25-percent reduction for sprinklers. As mentioned in Section B105.1, sprinkler technology has changed dramatically since the guidelines were developed in the early 1970s. Also, the ISO guide allowed reduction in fire flow for buildings with light fire loads that this appendix does not.

TABLE B105.1(2)
REFERENCE TABLE FOR TABLES B105.1(1) AND B105.2

FIRE-FLOW CALCULATION AREA (square feet)					FIRE-FLOW (gallons per minute)[b]	FLOW DURATION (hours)
Type IA and IB[a]	Type IIA and IIIA[a]	Type IV and V-A[a]	Type IIB and IIIB[a]	Type V-B[a]		
0-22,700	0-12,700	0-8,200	0-5,900	0-3,600	1,500	2
22,701-30,200	12,701-17,000	8,201-10,900	5,901-7,900	3,601-4,800	1,750	
30,201-38,700	17,001-21,800	10,901-12,900	7,901-9,800	4,801-6,200	2,000	
38,701-48,300	21,801-24,200	12,901-17,400	9,801-12,600	6,201-7,700	2,250	
48,301-59,000	24,201-33,200	17,401-21,300	12,601-15,400	7,701-9,400	2,500	
59,001-70,900	33,201-39,700	21,301-25,500	15,401-18,400	9,401-11,300	2,750	
70,901-83,700	39,701-47,100	25,501-30,100	18,401-21,800	11,301-13,400	3,000	3
83,701-97,700	47,101-54,900	30,101-35,200	21,801-25,900	13,401-15,600	3,250	
97,701-112,700	54,901-63,400	35,201-40,600	25,901-29,300	15,601-18,000	3,500	
112,701-128,700	63,401-72,400	40,601-46,400	29,301-33,500	18,001-20,600	3,750	
128,701-145,900	72,401-82,100	46,401-52,500	33,501-37,900	20,601-23,300	4,000	4
145,901-164,200	82,101-92,400	52,501-59,100	37,901-42,700	23,301-26,300	4,250	
164,201-183,400	92,401-103,100	59,101-66,000	42,701-47,700	26,301-29,300	4,500	
183,401-203,700	103,101-114,600	66,001-73,300	47,701-53,000	29,301-32,600	4,750	
203,701-225,200	114,601-126,700	73,301-81,100	53,001-58,600	32,601-36,000	5,000	
225,201-247,700	126,701-139,400	81,101-89,200	58,601-65,400	36,001-39,600	5,250	
247,701-271,200	139,401-152,600	89,201-97,700	65,401-70,600	39,601-43,400	5,500	
271,201-295,900	152,601-166,500	97,701-106,500	70,601-77,000	43,401-47,400	5,750	
295,901-Greater	166,501-Greater	106,501-115,800	77,001-83,700	47,401-51,500	6,000	
—	—	115,801-125,500	83,701-90,600	51,501-55,700	6,250	
—	—	125,501-135,500	90,601-97,900	55,701-60,200	6,500	
—	—	135,501-145,800	97,901-106,800	60,201-64,800	6,750	
—	—	145,801-156,700	106,801-113,200	64,801-69,600	7,000	
—	—	156,701-167,900	113,201-121,300	69,601-74,600	7,250	
—	—	167,901-179,400	121,301-129,600	74,601-79,800	7,500	
—	—	179,401-191,400	129,601-138,300	79,801-85,100	7,750	
—	—	191,401-Greater	138,301-Greater	85,101-Greater	8,000	

For SI: 1 square foot = 0.0929 m^2, 1 gallon per minute = 3.785 L/m, 1 pound per square inch = 6.895 kPa.

a. Types of construction are based on the *International Building Code*.

b. Measured at 20 psi residual pressure.

INTERNATIONAL CODE COUNCIL®
Copyright © 2015 ICC. ALL RIGHTS RESERVED. Accessed by David Dammon on Jun 21, 2017 12:30:52 PM pursuant to License Agreement with ICC. No further reproduction or distribution authorized. ANY UNAUTHORIZED REPRODUCTION OR DISTRIBUTION IS A VIOLATION OF THE FEDERAL COPYRIGHT ACT AND THE LICENSE AGREEMENT, AND SUBJECT TO CIVIL AND CRIMINAL PENALTIES THEREUNDER.

TABLE 105.2. See below.

❖ This table provides allowances for reduced fire flow based on the installation of an automatic sprinkler system. More specifically, the fire flow obtained from Table B105.1(2) can be reduced to 25 percent where an NFPA 13 or NFPA 13R system is installed. The only major difference in the allowance given for both sprinkler systems is the minimum flow permitted. NFPA 13 systems can have a fire flow as low as 1,000 gpm, whereas an NFPA 13R system will allow a reduction to a minimum of 1,500 gpm. This is related to the relative performance of the type of sprinkler system. More credit was deemed necessary for NFPA 13 systems. Note with the reductions in this table and also Table B105.1(1) for one- and two-family dwellings, Group R3 and R4 Buildings and townhouses that there is no specific approval required by the fire official to apply these reductions. In the past, this approach has led to confusion as to how to differentiate situations where such an allowance was appropriate and where a lesser reduction was necessary.

B105.3 Water supply for buildings equipped with an automatic sprinkler system. For buildings equipped with an approved *automatic sprinkler system*, the water supply shall be capable of providing the greater of:

1. The *automatic sprinkler system* demand, including hose stream allowance.
2. The required fire-flow.

❖ This section clarifies that the fire-flow requirements are not in addition to the sprinkler demand. What is required is determining which needs a larger water supply. The greater of the sprinkler demand or the demand developed in accordance with Appendix B will be the required fire flow.

SECTION B106
REFERENCED STANDARDS

ICC	IBC—15	International Building Code	B104.2,
ICC	IFC—15	International Fire Code	Tables B105.1(1) and B105.2
ICC	IWUIC—15	International Wildland-Urban Interface Code	B103.3
ICC	IRC—15	International Residential Code	Table B105.1(1)
NFPA	1142—12	Standard on Water Supplies for Suburban and Rural Fire Fighting	B103.3

Bibliography

The following resource materials were used in the preparation of the commentary for this appendix of the code.

Davis, L. "Rural Fire Fighting Operations." *Fire Service Information*. Iowa State University, February 1984.

Fire Service Hydraulics and Water Supply, 1st ed. Stillwater, OK: International Fire Service Training Association Fire Protection Publications, 2005.

Guide for Determination of Needed Fire Flow. Jersey City, NJ: Insurance Services Office, 2005.

Guide for Determination of Required Fire Flow. New York: Insurance Services Office, 1972.

IFCI, *UFC Code Applications Manual*. Whittier, CA: International Fire Code Institute, 1998.

NFPA 291-10, *Fire Flow Testing and Marking of Hydrants*. Quincy, MA: National Fire Protection Association, 2010.

NFPA 1141-08, *Fire Protection Infrastructure for Land Development in Suburban and Rural Areas*. Quincy, MA: National Fire Protection Association, 2008.

NFPA 1142-12, *Water Supplies for Suburban and Rural Fire Fighting*. Quincy, MA: National Fire Protection Association, 2011.

Smith, P.D. "What Are the Real Fire Flow Requirements?" *Fire Journal*, 1975.

Wenzel, L.J. "Water Supply Requirements for Public Supply Systems," Section 10, Chapter 4. *NFPA Fire Protection Handbook, 19th ed*. Quincy, MA: National Fire Protection Association, 2003.

TABLE B105.2
REQUIRED FIRE-FLOW FOR BUILDINGS OTHER THAN ONE- AND TWO-FAMILY DWELLINGS, GROUP R-3 AND R-4 BUILDINGS AND TOWNHOUSES

AUTOMATIC SPRINKLER SYSTEM (Design Standard)	MINIMUM FIRE-FLOW (gallons per minute)	FLOW DURATION (hours)
No automatic sprinkler system	Value in Table B105.1(2)	Duration in Table B105.1(2)
Section 903.3.1.1 of the *International Fire Code*	25% of the value in Table B105.1(2)[a]	Duration in Table B105.1(2) at the reduced flow rate
Section 903.3.1.2 of the *International Fire Code*	25% of the value in Table B105.1(2)[b]	Duration in Table B105.1(2) at the reduced flow rate

For SI: 1 gallon per minute = 3.785 L/m.

a. The reduced fire-flow shall be not less than 1,000 gallons per minute.

b. The reduced fire-flow shall be not less than 1,500 gallons per minute.

INTERNATIONAL CODE COUNCIL®
Copyright © 2015 ICC. ALL RIGHTS RESERVED. Accessed by David Dammon on Jun 21, 2017 12:30:52 PM pursuant to License Agreement with ICC. No further reproduction or distribution authorized. ANY UNAUTHORIZED REPRODUCTION OR DISTRIBUTION IS A VIOLATION OF THE FEDERAL COPYRIGHT ACT AND THE LICENSE AGREEMENT, AND SUBJECT TO CIVIL AND CRIMINAL PENALTIES THEREUNDER.

INTERNATIONAL CODE COUNCIL®

Copyright © 2015 ICC. ALL RIGHTS RESERVED. Accessed by David Dammon on Jun 21, 2017 12:30:52 PM pursuant to License Agreement with ICC. No further reproduction or distribution authorized. ANY UNAUTHORIZED REPRODUCTION OR DISTRIBUTION IS A VIOLATION OF THE FEDERAL COPYRIGHT ACT AND THE LICENSE AGREEMENT, AND SUBJECT TO CIVIL AND CRIMINAL PENALTIES THEREUNDER.

Appendix C:
Fire Hydrant Locations and Distribution

The provisions contained in this appendix are not mandatory unless specifically referenced in the adopting ordinance.

General Comments

Fire hydrants are among the primary ways to access water for fighting fires. The location and spacing of hydrants are important to the success of fire-fighting operations. The difficulty with determining the spacing of fire hydrants is that every situation is unique and has unique challenges. Finding one methodology for determining hydrant spacing is difficult. This particular appendix gives one methodology fire departments can work with to set a policy for new buildings and facilities.

This methodology is located in an appendix because, as with fire-flow requirements (Appendix B), many factors affect the need for and location of hydrants. Also, in many jurisdictions, hydrant spacing is prescribed by zoning regulations or by the water authority. This appendix is simply one approach for spacing hydrants that can be used when no other guidelines are given.

Purpose

Section 507.5.1 requires hydrants to be within 400 feet (122 m) of all portions of new buildings and facilities. If a building or facility cannot meet that criterion, on-site fire hydrants and mains are required. This appendix provides some guidance on the spacing of the on-site hydrants based on the required fire flow. These guidelines could also be used to require hydrants on public streets and roads where no other entity regulates such hydrants.

The general approach is to use fire-flow requirements to determine the number and spacing of hydrants—the higher the fire-flow requirements, the larger the number of hydrants required and the smaller the spacing between hydrants. The spacings given in this appendix are independent of the distance to a building and are simply focused on having the correct number and spacing of hydrants on a fire apparatus access road.

SECTION C101
GENERAL

C101.1 Scope. In addition to the requirements of Section 507.5.1 of the *International Fire Code*, fire hydrants shall be provided in accordance with this appendix for the protection of buildings, or portions of buildings, hereafter constructed or moved into the jurisdiction.

❖ This section establishes the applicability of this appendix, where specifically adopted, to only new buildings and portions of buildings constructed or moved into a jurisdiction. Another important aspect of this section is that these requirements are in addition to what is already required in Section 507.5.1. This is similar to the scope of Appendix B. Generally, both fire flow and fire hydrants are fairly expensive and requiring them for an existing building would likely be cost prohibitive. Note also that the provisions in this appendix may not be adequate for structures other than buildings or for outside storage or processing operations. Target hazards such as petroleum bulk plants, refineries, lumberyards, junk yards, etc., which present high-challenge fire suppression scenarios, must be specifically evaluated and protected commensurate with the hazards and operation challenges they present.

A question that often arises is whether the code is intended to regulated fire hydrant systems in residential developments where buildings are constructed under the provisions of the *International Residential Code*® (IRC®). That question is specifically addressed in Section 102.5. See the commentary to that section for further discussion of this topic.

SECTION C102
NUMBER OF FIRE HYDRANTS

C102.1 Minimum number of fire hydrants for a building. The number of fire hydrants available to a building shall be not less than the minimum specified in Table C102.1.

❖ This section is focused only on the number of hydrants required. Table C102.1 shows a minimum number of hydrants based on the required fire flow. In many cases, a particular fire flow may require only one or two hydrants.

TABLE C102.1. See page Appendix C-2.

❖ This table is referenced throughout this appendix for the minimum number of hydrants and spacing limits. These limits are based on the fire flow required for a particular building. In terms of the spacing limitations,

INTERNATIONAL CODE COUNCIL®
Copyright © 2015 ICC. ALL RIGHTS RESERVED. Accessed by David Dammon on Jun 21, 2017 12:30:52 PM pursuant to License Agreement with ICC. No further reproduction or distribution authorized. ANY UNAUTHORIZED REPRODUCTION OR DISTRIBUTION IS A VIOLATION OF THE FEDERAL COPYRIGHT ACT AND THE LICENSE AGREEMENT, AND SUBJECT TO CIVIL AND CRIMINAL PENALTIES THEREUNDER.

there are two criteria. First is the average distance between hydrants. Second is a maximum distance limitation from any point on a street or accessway to a hydrant. When the number of required fire hydrants increases, the maximum distance does not always correspond to half of the average distance between hydrants. Instead, this distance is larger than half the distance to compensate for the fact that the average spacing between hydrants as the number of hydrants increases may result in spacings larger than those shown in column three. Otherwise, the maximum distance listed in column four would limit the spacing [see Commentary Figure C102.1(1)].

One question that is often asked with these requirements is whether the table—or the entire appendix, for that matter—requires minimum flows per hydrant. This particular appendix does not address minimum flow per hydrant or how the flow is to be subdivided. Fire-flow requirements are addressed in Appendix B.

Note a

This note is referenced in the third column for the average spacing between hydrants and restricts the spacing between hydrants on dead-end streets or roads to 100 feet less than the required spacing. This avoids a hydrant being located an impractical distance from hazards. Otherwise, a hydrant could literally be placed at the end of street and provide little benefit to buildings on that street.

Note b

The intent of this note is to provide guidance for placing hydrants along boulevards with uncrossable medians and multilane roads that carry a heavy traffic load each day. Such roadways present the fire department with several challenges to rapidly accessing installed fire hydrants. Boulevards with built-up or walled medians can prevent ready access to hydrants if they are on the opposite side of the street from a fire incident. Accordingly, fire hydrants are required to be installed on both sides of the boulevard right-of-way. Arterial streets with high traffic flows are also problematic as accessing hydrants on the opposite side of the street presents risk to fire fighters and apparatus when leading out or manually dragging supply hoses across such busy thoroughfares.

In addition to those dangers, police agencies already faced with the traffic control needs of the fire scene are often opposed to shutting down major streets for prolonged periods of time since doing so can have an adverse “domino effect” on traffic management in other areas of the community. These hydrants are typically intended for use only with highway hazards and may be spaced every 500 feet (152 m) on each side in alternating positions [resulting in a hydrant every 250 feet (76 200 mm)] [see Commentary Figure C102.1(2)]

TABLE C102.1
REQUIRED NUMBER AND SPACING OF FIRE HYDRANTS

FIRE-FLOW REQUIREMENT (gpm)	MINIMUM NUMBER OF HYDRANTS	AVERAGE SPACING BETWEEN HYDRANTS[a, b, c, f, g] (feet)	MAXIMUM DISTANCE FROM ANY POINT ON STREET OR ROAD FRONTAGE TO A HYDRANT[d, f, g]
1,750 or less	1	500	250
2,000-2,250	2	450	225
2,500	3	450	225
3,000	3	400	225
3,500-4,000	4	350	210
4,500-5,000	5	300	180
5,500	6	300	180
6,000	6	250	150
6,500-7,000	7	250	150
7,500 or more	8 or more[e]	200	120

For SI: 1 foot = 304.8 mm, 1 gallon per minute = 3.785 L/m.

a. Reduce by 100 feet for dead-end streets or roads.

b. Where streets are provided with median dividers that cannot be crossed by fire fighters pulling hose lines, or where arterial streets are provided with four or more traffic lanes and have a traffic count of more than 30,000 vehicles per day, hydrant spacing shall average 500 feet on each side of the street and be arranged on an alternating basis.

c. Where new water mains are extended along streets where hydrants are not needed for protection of structures or similar fire problems, fire hydrants shall be provided at spacing not to exceed 1,000 feet to provide for transportation hazards.

d. Reduce by 50 feet for dead-end streets or roads.

e. One hydrant for each 1,000 gallons per minute or fraction thereof.

f. A 50-percent spacing increase shall be permitted where the building is equipped throughout with an approved automatic sprinkler system in accordance with Section 903.3.1.1 of the *International Fire Code*.

g. A 25-percent spacing increase shall be permitted where the building is equipped throughout with an approved automatic sprinkler system in accordance with Section 903.3.1.2 or 903.3.1.3 of the *International Fire Code* or Section P2904 of the *International Residential Code*.

INTERNATIONAL CODE COUNCIL®
Copyright © 2015 ICC. ALL RIGHTS RESERVED. Accessed by David Dammon on Jun 21, 2017 12:30:52 PM pursuant to License Agreement with ICC. No further reproduction or distribution authorized. ANY UNAUTHORIZED REPRODUCTION OR DISTRIBUTION IS A VIOLATION OF THE FEDERAL COPYRIGHT ACT AND THE LICENSE AGREEMENT, AND SUBJECT TO CIVIL AND CRIMINAL PENALTIES THEREUNDER.

Note c
This note requires that new fire mains installed along fire apparatus access roads or streets without structures have hydrants at least every 1,000 feet (305 m) for the protection of hazards such as car fires or other traffic- or transportation-related hazards. This note does not require that water mains specifically be placed along roadways for this purpose; only that when such mains are installed or extended, hydrants must be provided.

Note d
This note requires, as does Note a, that the distance to a hydrant be reduced by 50 feet (13 240 mm) on dead-end streets and roads. Again, this avoids a hydrant being unnecessarily far from buildings.

Note e
This note applies only to situations where the table requires eight or more hydrants and that hydrants be added for every 1,000 gpm (3785 L/min) or fraction thereof of fire flow required beyond 7,500 gpm (28 387 L/min). This means that one additional hydrant would be required for fire flows up to 8,500 gpm (2028 L/min). No minimum fire flow per hydrant is specified.

Note f
This note is consistent with the decreases in fire flow allowed in Appendix b. This note allows a 50-percent increase in spacing between hydrants where buildings are equipped throughout with an NFPA 13 automatic sprinkler system.

Note g
Similar to Note f, this note is consistent with the decreases in fire flow allowed in Appendix B. This note allows a 25-percent increase in spacing between hydrants where buildings are equipped throughout with an NFPA 13R or 13D automatic sprinkler system.

SECTION C103
FIRE HYDRANT SPACING

C103.1 Hydrant spacing. Fire apparatus access roads and public streets providing required access to buildings in accordance with Section 503 of the *International Fire Code* shall be provided with one or more fire hydrants, as determined by Section C102.1. Where more than one fire hydrant is required, the distance between required fire hydrants shall be in accordance with Sections C103.2 and C103.3.

❖ This section specifies that when fire apparatus access roads are required by Section 503 such roads be provided with hydrants as set forth in Section C102.1. Where more than one hydrant is required, the distance between hydrants is more specifically dealt with in Sections C103.2 and C103.3. If there is a complex of buildings, each with a low required fire flow, the spacing requirements would dictate additional hydrants. A fire flow of 2,000 gpm (7570 L/min) would require only two hydrants with a maximum average spacing of 450 feet (137 160 mm), but because of the size of the complex additional

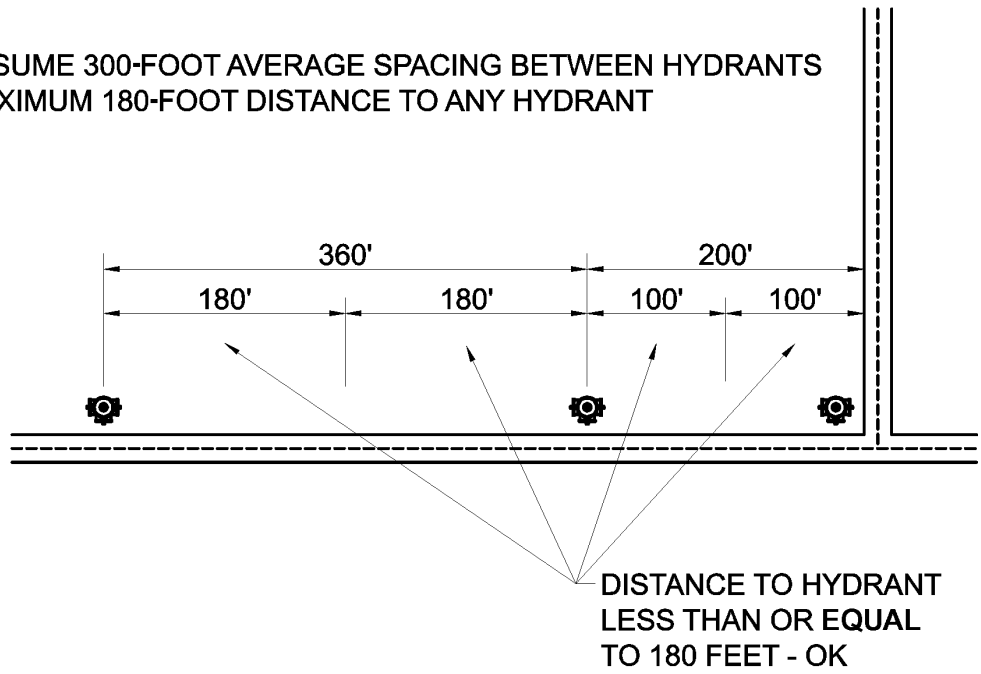

For SI: 1 foot = 304.8 mm.

Figure C102.1(1)
TRAVEL DISTANCE TO HYDRANTS

INTERNATIONAL CODE COUNCIL®
Copyright © 2015 ICC. ALL RIGHTS RESERVED. Accessed by David Dammon on Jun 21, 2017 12:30:52 PM pursuant to License Agreement with ICC. No further reproduction or distribution authorized. ANY UNAUTHORIZED REPRODUCTION OR DISTRIBUTION IS A VIOLATION OF THE FEDERAL COPYRIGHT ACT AND THE LICENSE AGREEMENT, AND SUBJECT TO CIVIL AND CRIMINAL PENALTIES THEREUNDER.

hydrants may be necessary to achieve proper spacing along the access road (see Commentary Figure C103.1). In this particular case, the number of hydrants, not the spacing, drives the layout.

C103.2 Average spacing. The average spacing between fire hydrants shall be in accordance with Table C102.1.

Exception: The average spacing shall be permitted to be increased by 10 percent where existing fire hydrants provide all or a portion of the required number of fire hydrants.

❖ This section states that the spacing designated in Table C102.1 is an average. Real-life conditions, however, often result in the need for approximate spacing of hydrants. In some cases, good judgment would dictate deviation from rigid exact spacing so that hydrants could be located where more than one building could access them [see Commentary Figure C103.2].

The exception allows a 10-percent deficiency in average hydrant spacing when using existing hydrants. For example, if the average spacing allowed is 350 feet (106 m), the largest average spacing allowed by this exception would be 350 × 1.10 = 385 feet (117 m). The allowance of longer average spacing for existing hydrants is important in enabling their use with new buildings.

C103.3 Maximum spacing. The maximum spacing between fire hydrants shall be in accordance with Table C102.1.

❖ This section requires that no point on a street or access road be beyond the distance to a hydrant shown in the last column of Table C102.1. This distance is not an average but a maximum distance (see Commentary Figure C103.3).

SECTION C104
CONSIDERATION OF EXISTING FIRE HYDRANTS

C104.1 Existing fire hydrants. Existing fire hydrants on public streets are allowed to be considered as available to meet the requirements of Sections C102 and C103. Existing fire hydrants on adjacent properties are allowed to be considered as available to meet the requirements of Sections C102 and C103 provided that a fire apparatus access road extends between properties and that an easement is established to prevent obstruction of such roads.

❖ To meet the number and spacing requirements of this appendix, existing hydrants may be counted as available. In smaller buildings, this could mean that the fire hydrants available may be sufficient to meet the hydrant spacing needs. Hydrants on adjacent property should not be used unless access is always available to the fire department. This may require an easement on the adjacent property.

SECTION C105
REFERENCED STANDARDS

ICC	IFC—15	International Fire Code	C101.1, C103.1, Table C102.1
ICC	IRC—15	International Residential Code	Table C102.1

Bibliography

The following resource material was used in the preparation of the commentary for this appendix of the code.

IRC-15, *International Residential Code*. Washington, DC: International Code Council, 2014.

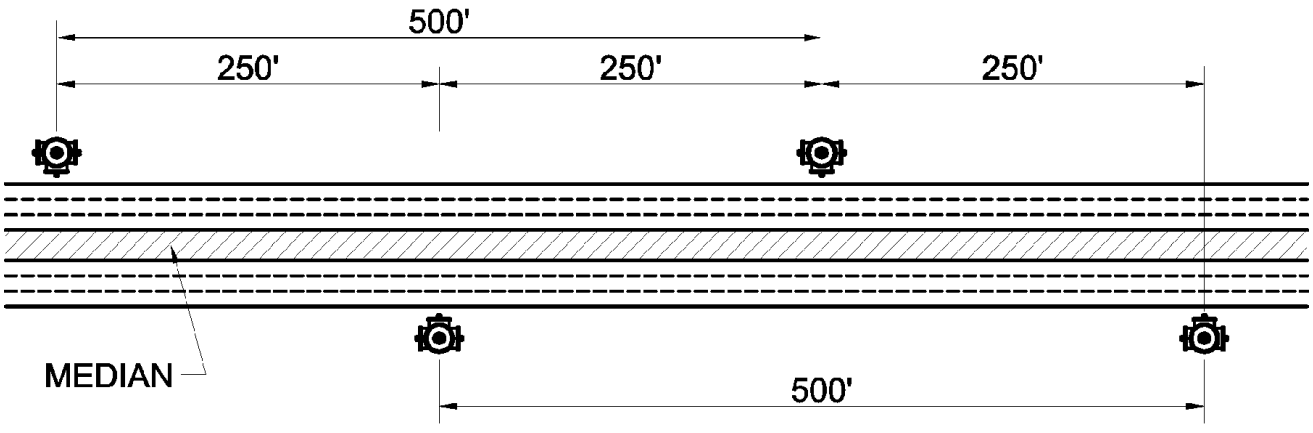

For SI: 1 foot = 304.8 mm.

Figure C102.1(2)
HYDRANT SPACING ALONG BOULEVARDS AND HIGH-VOLUME ARTERIAL STREETS

INTERNATIONAL CODE COUNCIL®
Copyright © 2015 ICC. ALL RIGHTS RESERVED. Accessed by David Dammon on Jun 21, 2017 12:30:52 PM pursuant to License Agreement with ICC. No further reproduction or distribution authorized. ANY UNAUTHORIZED REPRODUCTION OR DISTRIBUTION IS A VIOLATION OF THE FEDERAL COPYRIGHT ACT AND THE LICENSE AGREEMENT, AND SUBJECT TO CIVIL AND CRIMINAL PENALTIES THEREUNDER.

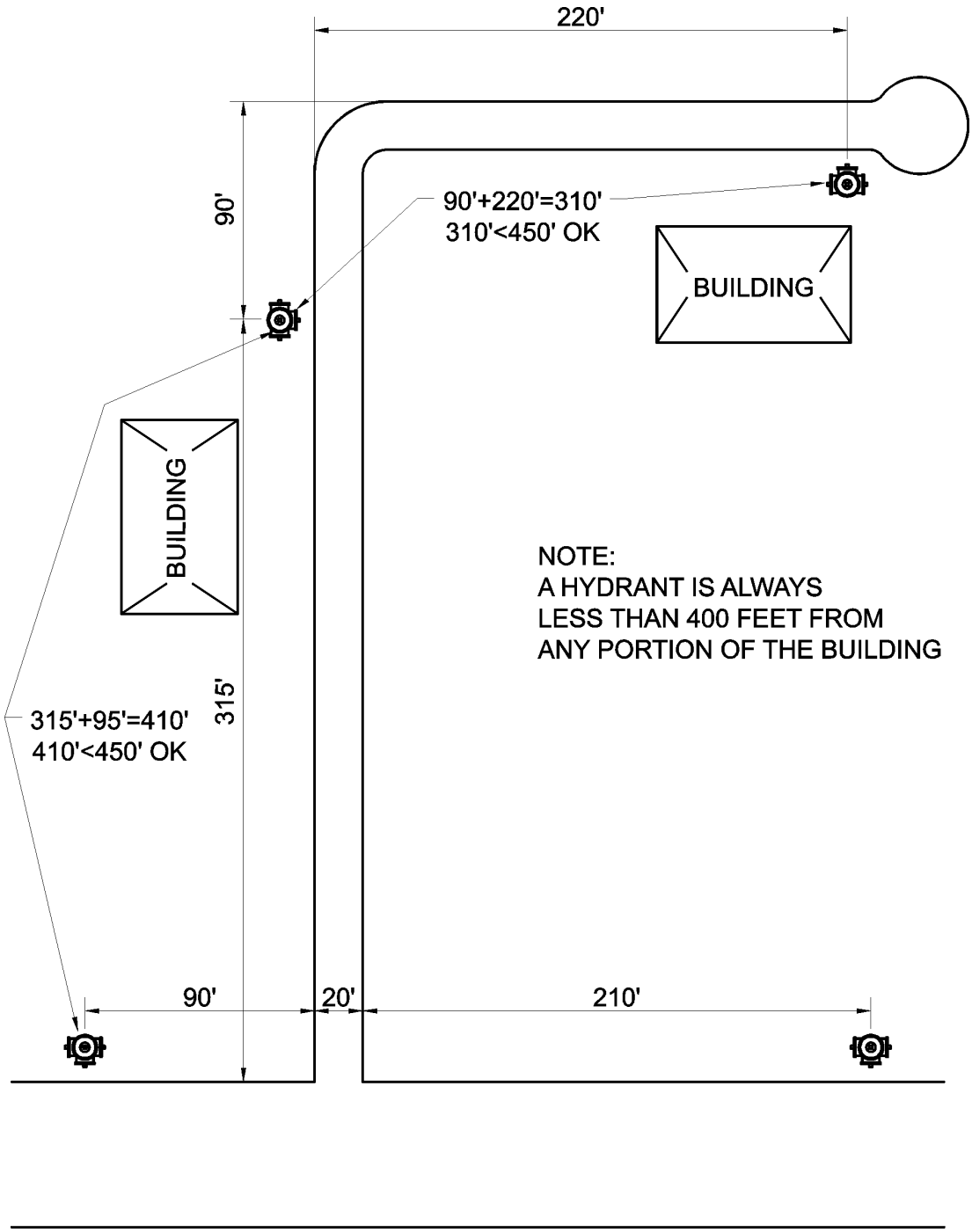

For SI: 1 foot = 304.8 mm.

Figure C103.1
HYDRANT SPACING

INTERNATIONAL CODE COUNCIL®
Copyright © 2015 ICC. ALL RIGHTS RESERVED. Accessed by David Dammon on Jun 21, 2017 12:30:52 PM pursuant to License Agreement with ICC. No further reproduction or distribution authorized. ANY UNAUTHORIZED REPRODUCTION OR DISTRIBUTION IS A VIOLATION OF THE FEDERAL COPYRIGHT ACT AND THE LICENSE AGREEMENT, AND SUBJECT TO CIVIL AND CRIMINAL PENALTIES THEREUNDER.

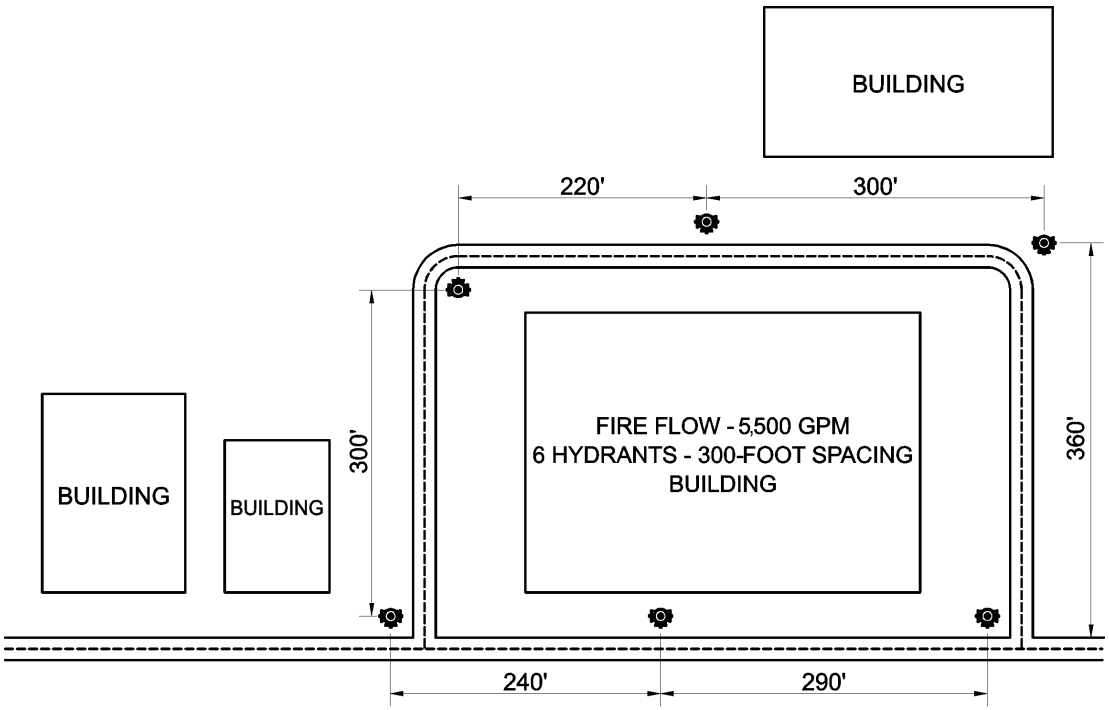

220 + 300 + 360 + 290 + 240 + 300 = 1710/6 = 285' < 300' OK

For SI: 1 foot = 304.8 mm, 1 gallon per minute = 3.785 L/min.

Figure C103.2
AVERAGE HYDRANT SPACING

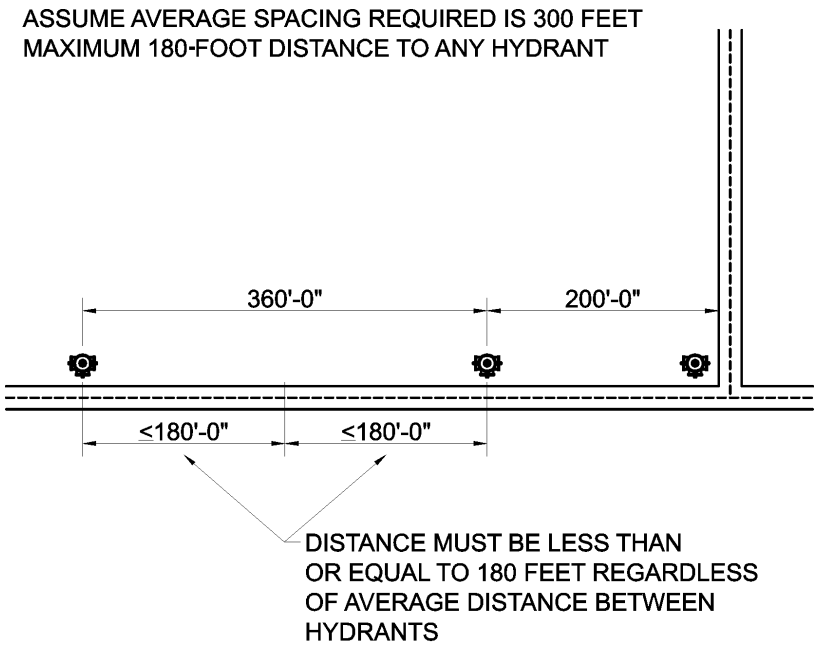

For SI: 1 foot = 304.8 mm.

Figure C103.3
TRAVEL DISTANCE TO HYDRANTS

INTERNATIONAL CODE COUNCIL®
Copyright © 2015 ICC. ALL RIGHTS RESERVED. Accessed by David Dammon on Jun 21, 2017 12:30:52 PM pursuant to License Agreement with ICC. No further reproduction or distribution authorized. ANY UNAUTHORIZED REPRODUCTION OR DISTRIBUTION IS A VIOLATION OF THE FEDERAL COPYRIGHT ACT AND THE LICENSE AGREEMENT, AND SUBJECT TO CIVIL AND CRIMINAL PENALTIES THEREUNDER.

Appendix D:
Fire Apparatus Access Roads

The provisions contained in this appendix are not mandatory unless specifically referenced in the adopting ordinance.

General Comments

Fire apparatus access is essential to successful fire-fighting and rescue operations. Fire department vehicles vary widely in size and operational needs and must be able to maneuver into position to properly undertake their fire-fighting activities. The needs of each jurisdiction will therefore vary with the equipment used. Needs assessment should also include consideration of mutual-aid companies that may respond from outside the jurisdiction. Access roads must be designed to provide the fire department with the required access to all structures on a site.

Purpose

This appendix contains more detailed elements for use with the basic access requirements found in Section 503. Section 503 gives some minimum criteria, such as a maximum distance of 150 feet (45 720 mm) and a minimum width of 20 feet (6090 mm), but in many cases Section 503 does not state specific criteria. For example, what specific load should a fire apparatus access road be able to carry and what specific grade is allowed? Section 503 cannot go to this level of detail because needs vary widely from one jurisdiction to another. This appendix, like Appendices B and C, is a tool for jurisdictions seeking guidance in establishing access requirements.

Some of the other requirements found in this appendix address access layouts for multiple-family residential developments and large one- and two-family subdivisions. Also, specific examples for various types of turnarounds for fire department apparatus and parking regulation signage are included.

SECTION D101
GENERAL

D101.1 Scope. Fire apparatus access roads shall be in accordance with this appendix and all other applicable requirements of the *International Fire Code*.

❖ If this appendix has been adopted by a jurisdiction, this particular section simply states that all fire apparatus access roads must meet the requirements of this appendix and other applicable requirements. More specifically, Section 503 would also apply.

Be aware that essentially all roads leading to a particular building or facility, whether public or private, are fire apparatus access roads. Generally, the requirements of this appendix and Section 503 would be required only for new buildings and facilities. However, in some cases, improvements to existing roads and access ways may be necessary to meet the needs of the fire department.

Note that the appendix applies only if specifically adopted by ordinance by a jurisdiction. See the commentary to Sections 102.5 and 507.1 for a discussion of this appendix's application (if adopted) to buildings constructed under the *International Residential Code*® (IRC®).

SECTION D102
REQUIRED ACCESS

D102.1 Access and loading. Facilities, buildings or portions of buildings hereafter constructed shall be accessible to fire department apparatus by way of an *approved* fire apparatus access road with an asphalt, concrete or other *approved* driving surface capable of supporting the imposed load of fire apparatus weighing at least 75,000 pounds (34 050 kg).

❖ This section contains more detailed specifications for the road surface and applied loads. In Section 503, it simply states that the road must be able to withstand the loads and be of "all-weather driving capability." This section states that the surface be of asphalt, concrete or other approved material and be able to withstand a load of 75,000 pounds (34 050 kg).

SECTION D103
MINIMUM SPECIFICATIONS

D103.1 Access road width with a hydrant. Where a fire hydrant is located on a fire apparatus access road, the minimum road width shall be 26 feet (7925 mm), exclusive of shoulders (see Figure D103.1).

❖ The access road width of 20 feet (6096 mm) stated in Section 503 does not specifically account for the

INTERNATIONAL CODE COUNCIL®
Copyright © 2015 ICC. ALL RIGHTS RESERVED. Accessed by David Dammon on Jun 21, 2017 12:30:52 PM pursuant to License Agreement with ICC. No further reproduction or distribution authorized. ANY UNAUTHORIZED REPRODUCTION OR DISTRIBUTION IS A VIOLATION OF THE FEDERAL COPYRIGHT ACT AND THE LICENSE AGREEMENT, AND SUBJECT TO CIVIL AND CRIMINAL PENALTIES THEREUNDER.

presence of the hydrant. This section specifically requires a minimum width of 26 feet (7925 mm) when a hydrant is located along that access roadway (see Figure D103.1). This provides more room for the fire department vehicle to maneuver and connect to the hydrant. In many cases, a full 26-foot (7925 mm) width may not be possible for a majority of the access road and a possible solution is to simply widen the access road for a short distance to accommodate hydrant use. Including adjacent road shoulders in the width measurement could yield substandard and inadequate driving surfaces for apparatus. Accordingly, this section makes it clear that any road shoulders are not to be included in the minimum fire apparatus access road width. Section 503 is generic because available water supplies are not always accessed using hydrants. In some cases, the water comes from a tanker or from an on-site water supply.

D103.2 Grade. Fire apparatus access roads shall not exceed 10 percent in grade.

Exception: Grades steeper than 10 percent as *approved* by the fire chief.

❖ Section 503 discusses grade in generalities and states that the grade be within the limits established by the fire code official. The criteria are generic because the conditions in different jurisdictions will vary. For example, some fire department apparatus is able to handle steeper grades than others, and the likelihood of inclement weather, such as snow, will affect the ability of the vehicles to handle the terrain.

This appendix states a numerical criterion of not more than 10 percent, which is fairly conservative for most situations. This number gives something specific for a jurisdiction to cite without having to determine the actual grade. There is an exception to this section that would allow the fire chief to approve a grade greater than 10 percent. This gives the jurisdiction flexibility for specific situations where terrain might call for a steeper grade.

D103.3 Turning radius. The minimum turning radius shall be determined by the *fire code official*.

❖ The turning radius is left generic within both Section 503 and this section because of the large variation in the equipment used by fire departments. Each fire department must assess the specific abilities of its vehicles to set a minimum turning radius. The diagrams in Figure D103.1 set the turning radius at 28 feet (8534 mm), which may not be satisfactory for all jurisdictions.

D103.4 Dead ends. Dead-end fire apparatus access roads in excess of 150 feet (45 720 mm) shall be provided with width and turnaround provisions in accordance with Table D103.4.

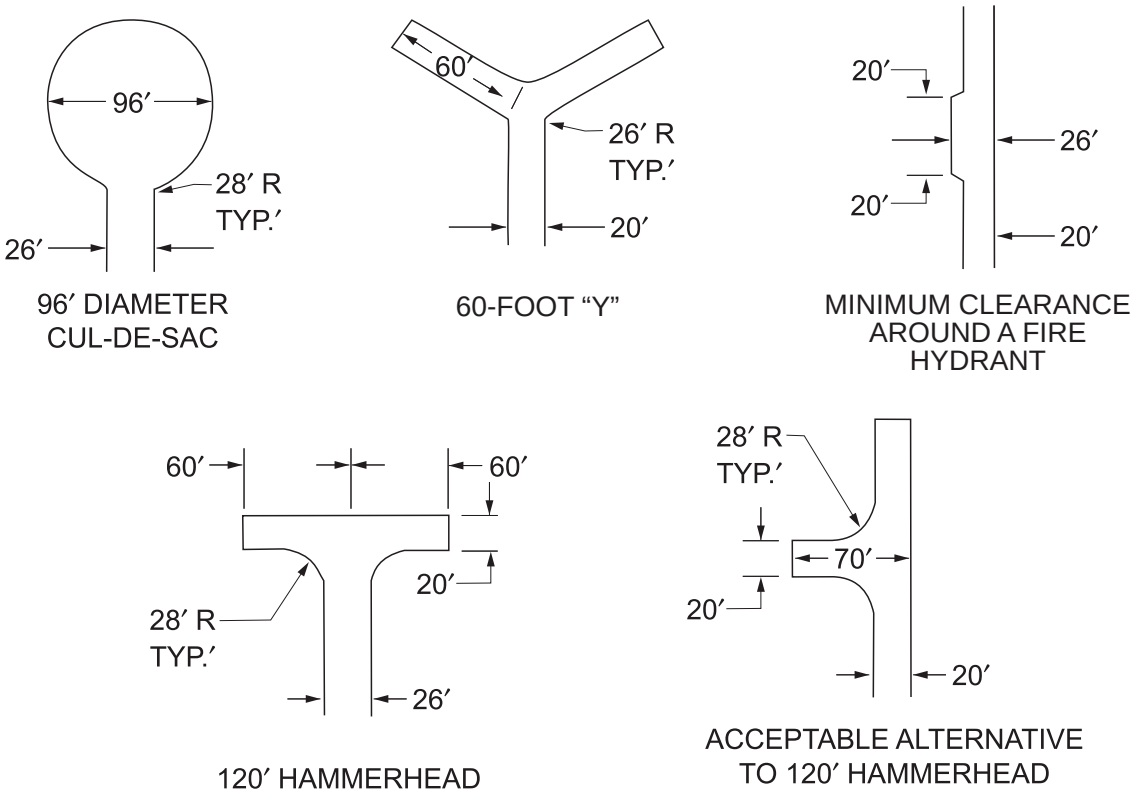

For SI: 1 foot = 304.8 mm.

FIGURE D103.1
DEAD-END FIRE APPARATUS ACCESS ROAD TURNAROUND

INTERNATIONAL CODE COUNCIL®
Copyright © 2015 ICC. ALL RIGHTS RESERVED. Accessed by David Dammon on Jun 21, 2017 12:30:52 PM pursuant to License Agreement with ICC. No further reproduction or distribution authorized. ANY UNAUTHORIZED REPRODUCTION OR DISTRIBUTION IS A VIOLATION OF THE FEDERAL COPYRIGHT ACT AND THE LICENSE AGREEMENT, AND SUBJECT TO CIVIL AND CRIMINAL PENALTIES THEREUNDER.

TABLE D103.4
REQUIREMENTS FOR DEAD-END
FIRE APPARATUS ACCESS ROADS

LENGTH (feet)	WIDTH (feet)	TURNAROUNDS REQUIRED
0-150	20	None required
151-500	20	120-foot Hammerhead, 60-foot "Y" or 96-foot diameter cul-de-sac in accordance with Figure D103.1
501-750	26	120-foot Hammerhead, 60-foot "Y" or 96-foot diameter cul-de-sac in accordance with Figure D103.1
Over 750	Special approval required	

For SI: 1 foot = 304.8 mm.

❖ Though the widths of the access roadways may be sufficient to move and operate the necessary equipment at a fire scene, they may not be wide enough for the vehicles to turn around. On through streets this is not an issue, but when the road is a dead end and is sufficiently long, some means are necessary to enable fire department vehicles to turn around rather than having to back up over excessive distances. The three major methods used to provide a turn-around area are a cul-de-sac, hammerhead and "Y." Figure D103.1 shows examples of all three types. Section 503 does not give any specific guidance. Each jurisdiction can choose from a variety of ways to accomplish this.

Dead ends require a fire vehicle turnaround when they exceed 150 feet (45 720 mm). The turnaround is to be located at the end of the roadway or within 150 feet (45 720 mm) of the end of the roadway to limit the backing distance to a maximum of 150 feet (45 720 mm). Backing a large vehicle, such as a tower ladder, over 150 feet (45 720 mm) can be especially challenging, especially in cases where the engineer may have to use a video camera-equipped back-up system due to the vehicle's length. Refer to the table for more guidance in determining the kind of turning radius required. In any event, the configuration of the roadway and turnaround must be approved by the fire code official.

This table, which is based on the length of a dead end, sets minimum widths and recommends which types of turnarounds should be used. The diagrams in Figure D103.1 show the configurations of these turnarounds.

D103.5 Fire apparatus access road gates. Gates securing the fire apparatus access roads shall comply with all of the following criteria:

1. Where a single gate is provided, the gate width shall be not less than 20 feet (6096 mm). Where a fire apparatus road consists of a divided roadway, the gate width shall be not less than 12 feet (3658 mm).
2. Gates shall be of the swinging or sliding type.
3. Construction of gates shall be of materials that allow manual operation by one person.
4. Gate components shall be maintained in an operative condition at all times and replaced or repaired when defective.
5. Electric gates shall be equipped with a means of opening the gate by fire department personnel for emergency access. Emergency opening devices shall be *approved* by the *fire code official*.
6. Methods of locking shall be submitted for approval by the *fire code official*.
7. Electric gate operators, where provided, shall be *listed* in accordance with UL 325.
8. Gates intended for automatic operation shall be designed, constructed and installed to comply with the requirements of ASTM F 2200.

❖ Gates are sometimes required by the fire code official to limit access to certain hazardous fire areas. They are also often used as a security mechanism for gated communities and complexes. Section 503 discusses the use of gates in more general terms whereas this section provides more specific guidelines. The nine requirements stated here all must be complied with where applicable. They focus on maintaining the required width, ease of use and ability to open in an emergency. The construction and installation of gates and methods for opening the gates, whether by manual means or by a listed electrical mechanism, must comply with the referenced standards and be approved by the fire code official. This ensures that the operating procedures of the fire department are taken into account. See the commentary to Sections 503.5 and 503.6 for further information on gates.

D103.6 Signs. Where required by the *fire code official*, fire apparatus access roads shall be marked with permanent NO PARKING—FIRE LANE signs complying with Figure D103.6. Signs shall have a minimum dimension of 12 inches (305 mm) wide by 18 inches (457 mm) high and have red letters on a white reflective background. Signs shall be posted on one or both sides of the fire apparatus road as required by Section D103.6.1 or D103.6.2.

❖ One of the more challenging aspects of access roads is maintaining the necessary width. Parked cars can reduce this width if parking is not prohibited and the prohibition is posted. Section 503.3 addresses this need by giving the fire code official the authority to require marking of fire access roads. This section and Figure D103.6 add wording and dimension specifications for the signs needed to mark areas where parking is prohibited.

D103.6.1 Roads 20 to 26 feet in width. Fire lane signs as specified in Section D103.6 shall be posted on both sides of fire apparatus access roads that are 20 to 26 feet wide (6096 to 7925 mm).

❖ This section requires that parking be prohibited on both sides of narrower fire apparatus access roads. Twenty feet (6096 mm) is the appropriate width

INTERNATIONAL CODE COUNCIL®
Copyright © 2015 ICC. ALL RIGHTS RESERVED. Accessed by David Dammon on Jun 21, 2017 12:30:52 PM pursuant to License Agreement with ICC. No further reproduction or distribution authorized. ANY UNAUTHORIZED REPRODUCTION OR DISTRIBUTION IS A VIOLATION OF THE FEDERAL COPYRIGHT ACT AND THE LICENSE AGREEMENT, AND SUBJECT TO CIVIL AND CRIMINAL PENALTIES THEREUNDER.

needed for two average-size fire trucks to pass one another. If that width is reduced by parking even on one side, it will be potentially difficult for a fire department to undertake emergency operations in that area.

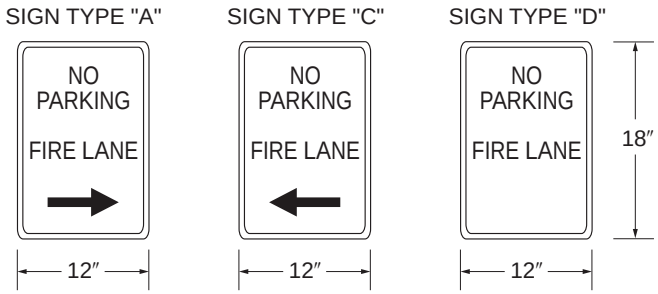

FIGURE D103.6
FIRE LANE SIGNS

D103.6.2 Roads more than 26 feet in width. Fire lane signs as specified in Section D103.6 shall be posted on one side of fire apparatus access roads more than 26 feet wide (7925 mm) and less than 32 feet wide (9754 mm).

❖ Because this width is more than sufficient for maneuvering at least two fire department vehicles by one another, parking would be allowed on one side.

SECTION D104
COMMERCIAL AND INDUSTRIAL DEVELOPMENTS

D104.1 Buildings exceeding three stories or 30 feet in height. Buildings or facilities exceeding 30 feet (9144 mm) or three stories in height shall have at least two means of fire apparatus access for each structure.

❖ This section addresses commercial and industrial buildings that, because of their height, can create a large challenge to a fire department. This section, along with Sections D105, D106 and D107, contains requirements for fire apparatus access roads for specific kinds of buildings or developments. Section 503 gives the fire code official the authority to require more access roads but does not specify when the additional roads are required. The need for additional access roads will depend on so many factors that each situation must be judged individually.

Because of the height of these buildings, various types of vehicles may be needed, and having two or more means of approaching the site may be necessary to manage and manipulate the vehicles.

D104.2 Buildings exceeding 62,000 square feet in area. Buildings or facilities having a gross *building area* of more than 62,000 square feet (5760 m^2) shall be provided with two separate and *approved* fire apparatus access roads.

Exception: Projects having a gross *building area* of up to 124,000 square feet (11 520 m^2) that have a single *approved* fire apparatus access road when all buildings are equipped throughout with *approved automatic sprinkler systems.*

❖ Where buildings are very large in area, two separate fire apparatus access roads are required because a large building may be difficult to access rapidly and, if one of the access roads is blocked, there is a potential for a large fire loss. The exception acknowledges the ability of automatic sprinklers to prevent most fires from growing out of control quickly even when the building area is doubled and there is only a single, approved fire apparatus access road.

D104.3 Remoteness. Where two fire apparatus access roads are required, they shall be placed a distance apart equal to not less than one half of the length of the maximum overall diagonal dimension of the lot or area to be served, measured in a straight line between accesses.

❖ This concept is similar to the one dealing with the remoteness of exits in Section 1007.1.1. One of the primary reasons for multiple access roads is to ensure that if one access road is blocked or otherwise unavailable, another will allow access to the fire department. Therefore, when more than one access road is required, they need to be separated by enough distance to avoid a situation where both would be blocked or unavailable simply because they are too close to one another.

SECTION D105
AERIAL FIRE APPARATUS ACCESS ROADS

D105.1 Where required. Where the vertical distance between the grade plane and the highest roof surface exceeds 30 feet (9144 mm), approved aerial fire apparatus access roads shall be provided. For purposes of this section, the highest roof surface shall be determined by measurement to the eave of a pitched roof, the intersection of the roof to the exterior wall, or the top of parapet walls, whichever is greater.

❖ Aerial apparatus access roads are required when the fire department cannot reach the roof or upper stories with ground ladders. The Insurance Services Office (ISO) Fire Suppression Rating Schedule suggests that fire departments carry a 35-foot ground ladder. When setting up a 35-foot ground ladder appropriately, the effective vertical reach of the ladder is approximately 30 feet; hence the 30-foot requirement within this section. Note that the measurement in this section is from grade plane to the edge of the roof where the ladder would be placed. If this measurement is greater than 30 feet, then an aerial apparatus access road would be required. The term eave is the most common term used in the *International Building Code*® (IBC®) when describing the edge of a peaked roof and is thus used herein. See also the commentary to the definition of "Grade plane" in Chapter 2.

D105.2 Width. Aerial fire apparatus access roads shall have a minimum unobstructed width of 26 feet (7925 mm), exclu-

INTERNATIONAL CODE COUNCIL®
Copyright © 2015 ICC. ALL RIGHTS RESERVED. Accessed by David Dammon on Jun 21, 2017 12:30:52 PM pursuant to License Agreement with ICC. No further reproduction or distribution authorized. ANY UNAUTHORIZED REPRODUCTION OR DISTRIBUTION IS A VIOLATION OF THE FEDERAL COPYRIGHT ACT AND THE LICENSE AGREEMENT, AND SUBJECT TO CIVIL AND CRIMINAL PENALTIES THEREUNDER.

sive of shoulders, in the immediate vicinity of the building or portion thereof.

❖ This section specifies the minimum road width needed for aerial apparatus. This width allows the aerial apparatus outriggers to be set solidly on the road surface for safe operation of the aerial equipment. Including adjacent road shoulders in the width measurement could yield substandard and inadequate driving or set-up surfaces for aerial apparatus. Accordingly, this section makes it clear that any road shoulders are not to be included in the minimum fire apparatus access road width.

D105.3 Proximity to building. At least one of the required access routes meeting this condition shall be located within a minimum of 15 feet (4572 mm) and a maximum of 30 feet (9144 mm) from the building, and shall be positioned parallel to one entire side of the building. The side of the building on which the aerial fire apparatus access road is positioned shall be approved by the *fire code official*.

❖ This section requires that the access road be specifically located where aerial equipment will have maximum access to the building. The fire code official, in consultation with the fire chief, must approve the final location of the aerial fire apparatus access road required by this section. Although not stated in this section, fireground operation protocols often place an aerial apparatus/truck company on the front side of the building so that the entire front, which could include emergency escape and rescue openings, can be reached by the ladder or the tower basket. The road that will meet the requirements of this section will often be the public street upon which the building fronts. The distance from the building to the road must be reviewed and approved to match the capabilities of the fire department aerial equipment versus the building's height.

D105.4 Obstructions. Overhead utility and power lines shall not be located over the aerial fire apparatus access road or between the aerial fire apparatus road and the building. Other obstructions shall be permitted to be placed with the approval of the *fire code official*.

❖ This section establishes requirements for controlling overhead obstructions to aerial fire apparatus positioned on aerial fire apparatus access roads to avoid the possibility of personnel injury and equipment damage, especially from electrical shock. The requirements prohibit overhead obstructions between the aerial fire apparatus access road and the building, but permit the fire code official to allow limited obstructions that do not affect the placement or use of aerial fire apparatus, such as site vegetation or a porte-cochere at the entrance to a building.

SECTION D106
MULTIPLE-FAMILY RESIDENTIAL DEVELOPMENTS

D106.1 Projects having more than 100 dwelling units. Multiple-family residential projects having more than 100 *dwelling units* shall be equipped throughout with two separate and *approved* fire apparatus access roads.

Exception: Projects having up to 200 *dwelling units* may have a single *approved* fire apparatus access road when all buildings, including nonresidential occupancies, are equipped throughout with *approved automatic sprinkler systems* installed in accordance with Section 903.3.1.1 or 903.3.1.2.

❖ This section is intended to provide some specific guidance to jurisdictions for dealing with larger apartment complexes. Again, Section 503 suggests that more than one access road is needed when there is a potential for an access road to be unavailable. In a large complex there is a large potential for loss. Lack of access should not become a factor in such a loss.

This section requires at least two separate access roads any time the number of dwelling units exceeds 100. The term "approved" is used because the layout of the complex may require some specific considerations when providing the access roads. For example, having two access roads leading onto a facility that come together before reaching the actual buildings may not satisfy the criterion of remoteness to be effective in an emergency.

The exception would allow a single access road for up to 200 dwelling units if all buildings on the site are fully sprinklered to meet code requirements. This exception acknowledges the effectiveness of sprinklers in slowing the growth of fires; therefore, the risk of having the access road blocked or unusable is more acceptable.

D106.2 Projects having more than 200 dwelling units. Multiple-family residential projects having more than 200 *dwelling units* shall be provided with two separate and *approved* fire apparatus access roads regardless of whether they are equipped with an *approved automatic sprinkler system*.

❖ Because of the large size of such complexes and the potential for large losses, even where sprinklers are installed as required by Section 903.2.8, two approved access roads must be provided. This section emphasizes that the exception in Section D106.1 is for up to 200 units only.

D106.3 Remoteness. Where two fire apparatus access roads are required, they shall be placed a distance apart equal to not less than one-half of the length of the maximum overall diagonal dimension of the property or area to be served, measured in a straight line between accesses.

❖ This concept is similar to the one dealing with the remoteness of exits in Section 1007.1.1. One of the primary reasons for multiple access roads is to ensure that if one access road is blocked or otherwise unavailable, another will allow access by the fire department. Therefore, when more than one access road is required, those roads must be separated by enough distance to avoid a situation where both would be blocked or unavailable simply because they are too close to one another.

INTERNATIONAL CODE COUNCIL®
Copyright © 2015 ICC. ALL RIGHTS RESERVED. Accessed by David Dammon on Jun 21, 2017 12:30:52 PM pursuant to License Agreement with ICC. No further reproduction or distribution authorized. ANY UNAUTHORIZED REPRODUCTION OR DISTRIBUTION IS A VIOLATION OF THE FEDERAL COPYRIGHT ACT AND THE LICENSE AGREEMENT, AND SUBJECT TO CIVIL AND CRIMINAL PENALTIES THEREUNDER.

SECTION D107
ONE- OR TWO-FAMILY RESIDENTIAL DEVELOPMENTS

D107.1 One- or two-family dwelling residential developments. Developments of one- or two-family dwellings where the number of *dwelling units* exceeds 30 shall be provided with two separate and *approved* fire apparatus access roads.

Exceptions:

1. Where there are more than 30 *dwelling units* on a single public or private fire apparatus access road and all *dwelling units* are equipped throughout with an *approved automatic sprinkler system* in accordance with Section 903.3.1.1, 903.3.1.2 or 903.3.1.3 of the *International Fire Code*, access from two directions shall not be required.
2. The number of *dwelling units* on a single fire apparatus access road shall not be increased unless fire apparatus access roads will connect with future development, as determined by the *fire code official*.

❖ This section requires that one- and two-family dwelling subdivisions with more than 30 dwellings have more than one fire apparatus access road into the development. The second access road is needed in case one access road for any reason becomes unusable

Exception 1 states that when there are more than 30 dwelling units equipped throughout with an approved sprinkler system in accordance with NFPA 13, 13R or 13D, as applicable or approved, a second access road is not required. This recognizes the effectiveness and reliability of properly designed and installed automatic sprinkler systems in mitigating the need to have two access points.

Exception 2 requires approval by the fire code official any time a new house is constructed on an existing access road. Once the maximum number of dwelling units allowed by this section has been reached, no further development may occur unless the fire code official determines that there will be a future road connection that will prevent creation of an excessive dead-end situation with no means for apparatus turn-around. Such determination by the fire code official should consider the phased development of an individual project or adjacent projects. Requiring evidence of legal agreements for specific future development would be prudent, especially in times of economic uncertainty. This gives the fire code official an opportunity to assess whether additional access is required in the interim.

D107.2 Remoteness. Where two fire apparatus access roads are required, they shall be placed a distance apart equal to not less than one-half of the length of the maximum overall diagonal dimension of the property or area to be served, measured in a straight line between accesses.

❖ This concept is similar to the one dealing with the remoteness of exits in Section 1007.1.1. One of the primary reasons for multiple access roads is to ensure that if one access road is blocked or otherwise unavailable, another will allow access by the fire department. Therefore, when more than one access road is required, those roads must be separated by enough distance to avoid a situation where both would be blocked or unavailable simply because they are too close to one another.

SECTION D108
REFERENCED STANDARDS

ASTM	F2200—13	Standard Specification for Automated Vehicular Gate Construction	D103.5
ICC	IFC—15	International Fire Code	D101.1, D107.1
UL	325—02	Door, Drapery, Gate, Louver, and Window Operators and Systems, with Revisions through June 2013	D103.5

Bibliography

The following resource material was used in the preparation of the commentary for this appendix of the code.

2015 International Code Interpretations. Washington, DC: International Code Council, 2015.

INTERNATIONAL CODE COUNCIL®
Copyright © 2015 ICC. ALL RIGHTS RESERVED. Accessed by David Dammon on Jun 21, 2017 12:30:52 PM pursuant to License Agreement with ICC. No further reproduction or distribution authorized. ANY UNAUTHORIZED REPRODUCTION OR DISTRIBUTION IS A VIOLATION OF THE FEDERAL COPYRIGHT ACT AND THE LICENSE AGREEMENT, AND SUBJECT TO CIVIL AND CRIMINAL PENALTIES THEREUNDER.

Appendix E: Hazard Categories

This appendix is for information purposes and is not intended for adoption.

General Comments

This appendix contains guidance for designers, engineers, architects, building officials, plans reviewers and inspectors in the classifying of hazardous materials so that proposed designs can be evaluated intelligently and accurately and can be an extremely useful tool for all concerned. A thorough understanding of how Material Safety Data Sheets (MSDS) are created and how to read them makes these hazard evaluations much easier.

Purpose

The descriptive materials and explanations of hazardous materials and how to report and evaluate them on the MSDS that are contained in this appendix are intended to be instructional as well as informative. A thorough understanding of how to prepare and interpret the MSDS makes the code user's job easier.

SECTION E101 GENERAL

E101.1 Scope. This appendix provides information, explanations and examples to illustrate and clarify the hazard categories contained in Chapter 50 of the *International Fire Code*. The hazard categories are based upon the DOL 29 CFR. Where numerical classifications are included, they are in accordance with nationally recognized standards.

This appendix should not be used as the sole means of hazardous materials classification.

❖ Although this appendix contains guidance in classifying hazardous materials, there are several other sources available to the fire code official or building official. The actual MSDS should be the only method used in the final classification of products because of the different characteristics that a blend of products produces. General classification information can come from NFPA 704, Chemical Hazards Response Information System (CHRIS) manuals, MSDS online and other methods.

It is important to remember that many chemicals have multiple hazards associated with them. A chemical may be a toxic poison (Group H-4) and also have a flammable or combustible base (Group H-2 or H-3), which creates additional problems. Section 5001 states, "Where a material has multiple hazards, all hazards shall be addressed." This means that the building must be protected in the above example as a Group H-4 use, as well as a Group H-3 use when the products are in sealed containers and a Group H-2 use if they are open to the air.

SECTION E102 HAZARD CATEGORIES

E102.1 Physical hazards. Materials classified in this section pose a *physical hazard*.

❖ A chemical presents a physical hazard when there is evidence that it is a combustible liquid, compressed gas, cryogenic, explosive, a flammable gas, a flammable liquid, a flammable solid, an organic peroxide, an oxidizer, or a pyrophoric or unstable (reactive) or water-reactive material (see commentary, Section 5001.2.2.1).

E102.1.1 Explosives and blasting agents. The current UN/DOT classification system recognized by international authorities, the Department of Defense and others classifies all *explosives* as Class 1 materials. They are then divided into six separate divisions to indicate their relative hazard. There is not a direct correlation between the designations used by the old DOT system and those used by the current system nor is there correlation with the system (high and low) established by the Bureau of Alcohol, Tobacco, Firearms and Explosives (BATF). Table 5604.3 of the *International Fire Code* provides some guidance with regard to the current categories and their relationship to the old categories. Some items may appear in more than one division, depending on factors such as the degree of confinement or separation, by type of packaging, storage configuration or state of assembly.

In order to determine the level of hazard presented by *explosive materials*, testing to establish quantitatively their *explosive* nature is required. There are numerous test methods that have been used to establish the character of an *explosive material*. Standardized tests, required for finished goods con-

INTERNATIONAL CODE COUNCIL®
Copyright © 2015 ICC. ALL RIGHTS RESERVED. Accessed by David Dammon on Jun 21, 2017 12:30:52 PM pursuant to License Agreement with ICC. No further reproduction or distribution authorized. ANY UNAUTHORIZED REPRODUCTION OR DISTRIBUTION IS A VIOLATION OF THE FEDERAL COPYRIGHT ACT AND THE LICENSE AGREEMENT, AND SUBJECT TO CIVIL AND CRIMINAL PENALTIES THEREUNDER.

taining *explosives* or *explosive materials* in a packaged form suitable for shipment or storage, have been established by UN/DOT and BATF. However, these tests do not consider key elements that should be examined in a manufacturing situation. In manufacturing operations, the condition and/or the state of a material may vary within the process. The in-process material classification and classification requirements for materials used in the manufacturing process may be different from the classification of the same material where found in finished goods depending on the stage of the process in which the material is found. A classification methodology must be used that recognizes the hazards commensurate with the application to the variable physical conditions as well as potential variations of physical character and type of *explosive* under consideration.

Test methods or guidelines for hazard classification of energetic materials used for in-process operations shall be *approved* by the *fire code official*. Test methods used shall be DOD, BATF, UN/DOT or other *approved* criteria. The results of such testing shall become a portion of the files of the jurisdiction and be included as an independent section of any Hazardous Materials Management Plan (HMMP) required by Section 5605.2.1 of the *International Fire Code*. Also see Section 104.7.2 of the *International Fire Code*.

Examples of materials in various Divisions are as follows:

1. Division 1.1 (High *Explosives*). Consists of *explosives* that have a mass explosion hazard. A mass explosion is one that affects almost the entire pile of material instantaneously. Includes substances that, where tested in accordance with *approved* methods, can be caused to detonate by means of a blasting cap where unconfined or will transition from *deflagration* to a *detonation* where confined or unconfined. Examples: dynamite, TNT, nitroglycerine, C-3, HMX, RDX, encased *explosives*, military ammunition.
2. Division 1.2 (Low *Explosives*). Consists of *explosives* that have a projection hazard, but not a mass explosion hazard. Examples: nondetonating encased *explosives*, military ammunition and the like.
3. Division 1.3 (Low *Explosives*). Consists of *explosives* that have a fire hazard and either a minor blast hazard or a minor projection hazard or both, but not a mass explosion hazard. The major hazard is radiant heat or violent burning, or both. Can be deflagrated where confined. Examples: smokeless powder, propellant *explosives*, display fireworks.
4. Division 1.4. Consists of *explosives* that pose a minor explosion hazard. The *explosive* effects are largely confined to the package and no projection of fragments of appreciable size or range is expected. An internal fire must not cause virtually instantaneous explosion of almost the entire contents of the package. Examples: squibs (nondetonating igniters), *explosive* actuators, *explosive* trains (low-level detonating cord).
5. Division 1.5 (Blasting Agents). Consists of very insensitive *explosives*. This division comprises substances that have a mass explosion hazard, but are so insensitive that there is very little probability of initiation or of transition from burning to *detonation* under normal conditions of transport. Materials are not cap sensitive; however, they are mass detonating where provided with sufficient input. Examples: oxidizer and liquid fuel slurry mixtures and gels, ammonium nitrate combined with fuel oil.
6. Division 1.6. Consists of extremely insensitive articles that do not have a mass *explosive* hazard. This division comprises articles that contain only extremely insensitive detonating substances and that demonstrate a negligible probability of accidental initiation or propagation. Although this category of materials has been defined, the primary application is currently limited to military uses. Examples: Low vulnerability military weapons.

Explosives in each division are assigned a compatibility group letter by the Associate Administrator for Hazardous Materials Safety (DOT) based on criteria specified by DOTn 49 CFR. Compatibility group letters are used to specify the controls for the transportation and storage related to various materials to prevent an increase in hazard that might result if certain types of *explosives* were stored or transported together. Altogether, there are 35 possible classification codes for *explosives*, e.g., 1.1A, 1.3C, 1.4S, etc.

❖ It is recognized that the hazard classification of goods packaged for release to the Department of Transportation (DOT) system is likely to be different from that of the same material when found in an unpackaged or bulk form. For example, a finished article as manufactured or packaged and classified as Division 1.4 may contain Division 1.1 or 1.3 material. Although the ingredients may in fact be classified differently when removed from the package or article, the hazard level of the finished device may be classified with a different level of hazard from the ingredients alone. Classification, in part, is based on the protection offered by the final package, the article itself, as well as the configuration or nature of the energetic materials as they exist within the article. Recognizing the fact that the hazard level of an energetic material can vary based on the physical character (size and shape) or configuration (physical arrangement) in which the material is found is key to understanding the nature of explosives and proper application of the code.

Scientific methods are needed to appraise the hazards of materials as they appear in the manufacturing process. By granting the fire code official authority to approve test methods, flexibility is provided while at the same time maintaining a reasonable level of control. By recording the technical basis of decision within the Hazardous Materials Management Plan (HMMP), a record of the criteria used to establish the

INTERNATIONAL CODE COUNCIL®
Copyright © 2015 ICC. ALL RIGHTS RESERVED. Accessed by David Dammon on Jun 21, 2017 12:30:52 PM pursuant to License Agreement with ICC. No further reproduction or distribution authorized. ANY UNAUTHORIZED REPRODUCTION OR DISTRIBUTION IS A VIOLATION OF THE FEDERAL COPYRIGHT ACT AND THE LICENSE AGREEMENT, AND SUBJECT TO CIVIL AND CRIMINAL PENALTIES THEREUNDER.

hazard level is maintained by the applicant. The reference to Section 104.7.2 refers the fire code official back to the administrative section of the code to exercise authority for outside technical assistance in those cases where such assistance is warranted. The terminology used in the examples reflects the current terminology, and examples accurately portray materials that may be encountered. The explanatory language has been drawn in pertinent part from 49 CFR Sections 173.50 and 173.58. Although the DOT has eliminated the Class A, B and C nomenclature, the Bureau of Alcohol, Tobacco, Firearms and Explosives (ATF) has retained the use of the terms "high explosives" and "low explosives." These terms are included in parenthesis where appropriate.

By definition, an "Explosive" is a chemical compound, mixture or device, the primary or common purpose of which is to function by explosion. The term includes, but is not limited to, dynamite, black powder, pellet powder, initiating explosives, detonators, safety fuses, squibs, detonating cord, igniter cord, igniters and display fireworks, 1.3G.

The term "explosive" includes any material determined to be within the scope of USC Title 18: Chapter 63 and also includes any material classified as an explosive other than consumer fireworks, 1.4G, by the hazardous materials regulations of DOTn 49 CFR. See the commentary to the definition of "Explosive" in Section 202.

The former classification system used by DOTn (UN/DOTn Class 1 explosives) included the terms "high explosives" and "low explosives." The following terms further define explosives under the current system used by DOTn for all explosive materials defined as hazard Class 1 materials. Compatibility group letters are used together with the division to specify further limitations on each division noted; for example, the letter "G" identifies the material as a pyrotechnic substance or article containing a pyrotechnic substance and similar materials.

Division 1.1. Explosives that are a mass explosion hazard. A mass explosion is one that affects almost the entire load instantaneously.

Division 1.2. Explosives that have a projection hazard but not a mass explosion hazard.

Division 1.3. Explosives that have a fire hazard and either a minor blast hazard or a minor projection hazard or both, but not a mass explosion hazard.

Division 1.4. Explosives that pose a minor explosion hazard. The explosive effects are largely confined to the package and no projection of fragments of appreciable size or range is to be expected. An external fire must not cause virtually instantaneous explosion of almost the entire contents of the package.

Division 1.5. Very insensitive explosives. This division comprises substances that have a mass explosion hazard but are so insensitive that there is very little probability of initiation or of transition from burning to detonation under normal conditions of transport.

Division 1.6. Extremely insensitive articles that do not have a mass explosion hazard. This division comprises articles that contain only extremely insensitive detonating substances and which demonstrate a negligible probability of accidental initiation or propagation.

The term "explosive material" means explosives, blasting agents and detonators.

Chemicals in this classification must meet the minimum requirements of Sections 5001, 5003, 5004 and 5005, and Chapter 56.

E102.1.2 Compressed gases. Examples include:

1. Flammable: acetylene, carbon monoxide, ethane, ethylene, hydrogen, methane. Ammonia will ignite and burn although its flammable range is too narrow for it to fit the definition of "Flammable gas."

   For binary mixtures where the hazardous component is diluted with a nonflammable gas, the mixture shall be categorized in accordance with CGA P-23.
2. Oxidizing: oxygen, ozone, oxides of nitrogen, chlorine and fluorine. Chlorine and fluorine do not contain oxygen but reaction with flammables is similar to that of oxygen.
3. *Corrosive*: ammonia, hydrogen chloride, fluorine.
4. Highly toxic: arsine, cyanogen, fluorine, germane, hydrogen cyanide, nitric oxide, phosphine, hydrogen selenide, stibine.
5. Toxic: chlorine, hydrogen fluoride, hydrogen sulfide, phosgene, silicon tetrafluoride.
6. Inert (chemically unreactive): argon, helium, krypton, neon, nitrogen, xenon.
7. Pyrophoric: diborane, dichloroborane, phosphine, silane.
8. Unstable (reactive): butadiene (unstabilized), ethylene oxide, vinyl chloride.

❖ Compressed gases by definition are a material, or mixture of materials, that:

1. Is a gas at 68°F (20°C) or less at 14.7 pounds per square inch atmosphere (psia) (101 kPa) of pressure; and
2. Has a boiling point of 68°F (20°C) or less at 14.7 psia (101 kPa), which is either liquefied, nonliquefied or in solution, except those gases that have no other health or physical hazard properties and are not considered to be compressed until the pressure in the packaging exceeds 41 psia (282 kPa) at 68°F (20°C).

INTERNATIONAL CODE COUNCIL®
Copyright © 2015 ICC. ALL RIGHTS RESERVED. Accessed by David Dammon on Jun 21, 2017 12:30:52 PM pursuant to License Agreement with ICC. No further reproduction or distribution authorized. ANY UNAUTHORIZED REPRODUCTION OR DISTRIBUTION IS A VIOLATION OF THE FEDERAL COPYRIGHT ACT AND THE LICENSE AGREEMENT, AND SUBJECT TO CIVIL AND CRIMINAL PENALTIES THEREUNDER.

The states of a compressed gas are categorized as follows:

1. Nonliquefied compressed gases are gases, other than those in solution, that are in a packaging under the charged pressure and are entirely gaseous at a temperature of 68°F (20°C).
2. Liquefied compressed gases are gases that, in a packaging under the charged pressure, are partially liquid at a temperature of 68°F (20°C).
3. Compressed gases in solution are nonliquefied gases that are dissolved in a solvent.
4. Compressed gas mixtures consist of a mixture of two or more compressed gases contained in a packaging, the hazard properties of which are represented by the properties of the mixture as a whole.

Chemicals in this classification must meet the minimum requirements of Sections 5001, 5003, 5004, 5005 and 6004 and Chapters 53, 54, 55 and 58. In addition, flammable gases that are binary mixtures (i.e., compounded or consisting of two things or parts) diluted with a nonflammable gas present special categorization challenges, and therefore must be evaluated in accordance with CGA P-23. This standard provides consistency with industry standards for categorization.

E102.1.3 Flammable and combustible liquids. Examples include:

1. Flammable liquids.

   Class IA liquids shall include those having *flash points* below 73°F (23°C) and having a *boiling point* at or below 100°F (38°C).

   Class IB liquids shall include those having *flash points* below 73°F (23°C) and having a *boiling point* at or above 100°F (38°C).

   Class IC liquids shall include those having *flash points* at or above 73°F (23°C) and below 100°F (38°C).

2. *Combustible liquids.*

   Class II liquids shall include those having *flash points* at or above 100°F (38°C) and below 140°F (60°C).

   Class IIIA liquids shall include those having *flash points* at or above 140°F (60°C) and below 200°F (93°C).

   Class IIIB liquids shall include those liquids having *flash points* at or above 200°F (93°C).

❖ Chemicals in this classification must meet the minimum requirements of Sections 5001, 5003, 5004 and 5005, and Chapter 57.

E102.1.4 Flammable solids. Examples include:

1. Organic solids: camphor, cellulose nitrate, naphthalene.
2. Inorganic solids: decaborane, lithium amide, phosphorous heptasulfide, phosphorous sesquisulfide, potassium sulfide, anhydrous sodium sulfide, sulfur.
3. Combustible metals (except dusts and powders): cesium, magnesium, zirconium.

❖ A flammable solid is a solid, other than a blasting agent or explosive, that is capable of causing fire through friction, absorption of moisture, spontaneous chemical change or retained heat from manufacturing or processing; has an ignition temperature below 212°F (100°C); or that burns so vigorously and persistently when ignited as to create a serious hazard. A chemical shall be considered a flammable solid as determined in accordance with the test method of CPSC 16 CFR; Part 1500.44 if it ignites and burns with a self-sustained flame at a rate greater than 0.1 inch (2.5 mm) per second along its major axis.

Chemicals in this classification must meet the minimum requirements of Sections 5001, 5003, 5004 and 5005, and Chapter 59.

E102.1.5 Combustible dusts and powders. Finely divided solids that could be dispersed in air as a dust cloud: wood sawdust, plastics, coal, flour, powdered metals (few exceptions).

❖ Combustible dusts and combustible fibers are listed separately because they are not subcategories of flammable solids in either the maximum allowable quantity tables in Chapter 50 or in their respective material-specific hazard chapters.

E102.1.6 Combustible fibers. See Section 5202.1.

❖ See the commentary to Section E102.1.5.

E102.1.7 Oxidizers. Examples include:

1. Gases: oxygen, ozone, oxides of nitrogen, fluorine and chlorine (reaction with flammables is similar to that of oxygen).
2. Liquids: bromine, hydrogen peroxide, nitric acid, perchloric acid, sulfuric acid.
3. Solids: chlorates, chromates, chromic acid, iodine, nitrates, nitrites, perchlorates, peroxides.

❖ An oxidizer is material that readily yields oxygen or other oxidizing gas, or that readily reacts to promote or initiate combustion of combustible materials. An oxidizing gas is a gas that can support and accelerate combustion of other materials. Examples of other oxidizing gases include bromine, chlorine and fluorine.

E102.1.7.1 Examples of liquid and solid oxidizers according to hazard.

Class 4: ammonium perchlorate (particle size greater than 15 microns), ammonium permanganate, guanidine nitrate, hydrogen peroxide solutions more than 91 percent by weight, perchloric acid solutions more than 72.5 percent by weight, potassium superoxide, tetranitromethane.

INTERNATIONAL CODE COUNCIL®
Copyright © 2015 ICC. ALL RIGHTS RESERVED. Accessed by David Dammon on Jun 21, 2017 12:30:52 PM pursuant to License Agreement with ICC. No further reproduction or distribution authorized. ANY UNAUTHORIZED REPRODUCTION OR DISTRIBUTION IS A VIOLATION OF THE FEDERAL COPYRIGHT ACT AND THE LICENSE AGREEMENT, AND SUBJECT TO CIVIL AND CRIMINAL PENALTIES THEREUNDER.

Class 3: ammonium dichromate, calcium hypochlorite (over 50 percent by weight), chloric acid (10 percent maximum concentration), hydrogen peroxide solutions (greater than 52 percent up to 91 percent), mono-(trichloro)-tetra-(monopotassium di-chloro)-penta-s-triazinetrione, nitric acid, (fuming -more than 86 percent concentration), perchloric acid solutions (60 percent to 72 percent by weight), potassium bromate, potassium chlorate, potassium dichloro-s-triazinetrione (potassium dichloro-isocyanurate), potassium perchlorate (99 percent), potassium permanganate (greater than 97.5 percent), sodium bromate, sodium chlorate, sodium chlorite (over 40 percent by weight) and sodium dichloro-s-triazinetrione anhydrous (sodium dichloro-isocyanurate anhydrous).

Class 2: barium bromate, barium chlorate, barium hypochlorite, barium perchlorate, barium permanganate, 1-bromo-3-chloro-5, 5-dimethylhydantoin, calcium chlorate, calcium chlorite, calcium hypochlorite (50 percent or less by weight), calcium perchlorate, calcium permanganate, calcium peroxide (75 percent), chromium trioxide (chromic acid), copper chlorate, halane (1, 3-di-chloro-5, 5-dimethylhydantoin), hydrogen peroxide (greater than 27.5 percent up to 52 percent), lead perchlorate, lithium chlorate, lithium hypochlorite (more than 39 percent available chlorine), lithium perchlorate, magnesium bromate, magnesium chlorate, magnesium perchlorate, mercurous chlorate, nitric acid (more than 40 percent but less than 86 percent), perchloric acid solutions (more than 50 percent but less than 60 percent), potassium peroxide, potassium superoxide, silver peroxide, sodium chlorite (40 percent or less by weight), sodium perchlorate, sodium perchlorate monohydrate, sodium permanganate, sodium peroxide, sodium persulfate (99 percent), strontium chlorate, strontium perchlorate, thallium chlorate, urea hydrogen peroxide, zinc bromate, zinc chlorate and zinc permanganate.

Class 1: all inorganic nitrates (unless otherwise classified), all inorganic nitrites (unless otherwise classified), ammonium persulfate, barium peroxide, hydrogen peroxide solutions (greater than 8 percent up to 27.5 percent), lead dioxide, lithium hypochlorite (39 percent or less available chlorine), lithium peroxide, magnesium peroxide, manganese dioxide, nitric acid (40 percent concentration or less), perchloric acid solutions (less than 50 percent by weight), potassium dichromate, potassium monopersulfate (45 percent KHSO5 or 90 percent triple salt), potassium percarbonate, potassium persulfate, sodium carbonate peroxide, sodium dichloro-s-triazinetrione dihydrate, sodium dichromate, sodium perborate (anhydrous), sodium perborate monohydrate, sodium perborate tetra-hydrate, sodium percarbonate, strontium peroxide, trichloro-s-triazinetrione (trichloroisocyanuric acid) and zinc peroxide.

❖ Class 4. An oxidizer that can undergo an explosive reaction as a result of contamination or exposure to thermal or physical shock. In addition, the oxidizer will enhance the burning rate and can cause spontaneous ignition of combustibles.

Class 3. An oxidizer that will cause a severe increase in the burning rate of combustible materials with which it comes in contact or that will undergo vigorous self-sustained decomposition as a result of contamination or exposure to heat.

Class 2. An oxidizer that will cause a moderate increase in the burning rate or that causes spontaneous ignition of combustible materials with which it comes in contact.

Class 1. An oxidizer whose primary hazard is that it slightly increases the burning rate but that does not cause spontaneous ignition when it comes in contact with combustible materials.

Chemicals in this classification must meet the minimum requirements of Sections 5001, 5003, 5004 and 5005, and Chapter 63.

E102.1.8 Organic peroxides. Organic peroxides contain the double oxygen or peroxy (-o-o) group. Some are flammable compounds and subject to explosive decomposition. They are available as:

1. Liquids.
2. Pastes.
3. Solids (usually finely divided powders).

❖ Organic peroxides can pose an explosion hazard (detonation or deflagration) or they can be shock sensitive. They can also decompose into various unstable compounds over an extended period of time.

E102.1.8.1 Classification of organic peroxides according to hazard.

Unclassified: Unclassified organic peroxides are capable of *detonation* and are regulated in accordance with Chapter 56 of the *International Fire Code*.

Class I: acetyl cyclohexane sulfonyl 60-65 percent concentration by weight, fulfonyl peroxide, benzoyl peroxide over 98 percent concentration, t-butyl hydroperoxide 90 percent, t-butyl peroxyacetate 75 percent, t-butyl peroxy-isopropylcarbonate 92 percent, diisopropyl peroxydicarbonate 100 percent, di-n-propyl peroxydicarbonate 98 percent, and di-n-propyl peroxydicarbonate 85 percent.

Class II: acetyl peroxide 25 percent, t-butyl hydroperoxide 70 percent (with DTBP and t-BuOH diluents), t-butyl peroxybenzoate 98 percent, t-butyl peroxy-2-ethylhexanoate 97 percent, t-butyl peroxyisobutyrate 75 percent, t-butyl peroxyisopropyl-carbonate 75 percent, t-butyl peroxypivalate 75 percent, dybenzoyl peroxydicarbonate 85 percent, di-sec-butyl peroxydicarbonate 98 percent, di-sec-butyl peroxydicarbonate 75 percent, 1,1-di-(t-butylperoxy)-3,5,5-trimethyecyclohexane 95 percent, di-(2-ethythexyl) peroxydicarbonate 97 percent, 2,5-dymethyl-2-5 di (benzoylperoxy) hexane 92 percent, and peroxyacetic acid 43 percent.

INTERNATIONAL CODE COUNCIL®
Copyright © 2015 ICC. ALL RIGHTS RESERVED. Accessed by David Dammon on Jun 21, 2017 12:30:52 PM pursuant to License Agreement with ICC. No further reproduction or distribution authorized. ANY UNAUTHORIZED REPRODUCTION OR DISTRIBUTION IS A VIOLATION OF THE FEDERAL COPYRIGHT ACT AND THE LICENSE AGREEMENT, AND SUBJECT TO CIVIL AND CRIMINAL PENALTIES THEREUNDER.

Class III: acetyl cyclohexane sulfonal peroxide 29 percent, benzoyl peroxide 78 percent, benzoyl peroxide paste 55 percent, benzoyl peroxide paste 50 percent peroxide/50 percent butylbenzylphthalate diluent, cumene hydroperoxide 86 percent, di-(4-butylcyclohexyl) peroxydicarbonate 98 percent, t-butyl peroxy-2-ethylhexanoate 97 percent, t-butyl peroxyneodecanoate 75 percent, decanoyl peroxide 98.5 percent, di-t-butyl peroxide 99 percent, 1,1-di-(t-butylperoxy)3,5,5-trimethylcyclohexane 75 percent, 2,4-dichlorobenzoyl peroxide 50 percent, di-isopropyl peroxydicarbonate 30 percent, 2,-5-di-methyl-2,5-di-(2-ethylhexanolyperoxy)-hexane 90 percent, 2,5-dimethyl-2,5-di-(t-butylperoxy) hexane 90 percent and methyl ethyl ketone peroxide 9 percent active oxygen diluted in dimethyl phthalate.

Class IV: benzoyl peroxide 70 percent, benzoyl peroxide paste 50 percent peroxide/15 percent water/35 percent butylphthalate diluent, benzoyl peroxide slurry 40 percent, benzoyl peroxide powder 35 percent, t-butyl hydroperoxide 70 percent, (with water diluent), t-butyl peroxy-2-ethylhexanoate 50 percent, decumyl peroxide 98 percent, di-(2-ethylhexal) peroxydicarbonate 40 percent, laurel peroxide 98 percent, p-methane hydroperoxide 52.5 percent, methyl ethyl ketone peroxide 5.5 percent active oxygen and methyl ethyl ketone peroxide 9 percent active oxygen diluted in water and glycols.

Class V: benzoyl peroxide 35 percent, 1,1-di-t-butyl peroxy 3,5,5-trimethylcyclohexane 40 percent, 2,5-di-(t-butyl peroxy) hexane 47 percent and 2,4-pentanedione peroxide 4 percent active oxygen.

❖ Unclassified detonable. Organic peroxides that are capable of detonation. These peroxides pose an extremely high explosion hazard through rapid explosive decomposition.

Class I. Those formulations that are capable of deflagration but not detonation.

Class II. Those formulations that burn very rapidly and that pose a moderate reactivity hazard.

Class III. Those formulations that burn rapidly and that pose a moderate reactivity hazard.

Class IV. Those formulations that burn in the same manner as ordinary combustibles and that pose a minimal reactivity hazard.

Class V. Those formulations that burn with less intensity than ordinary combustibles or do not sustain combustion and that pose no reactivity hazard.

Chemicals in this classification must meet the minimum requirements of Sections 5001, 5003, 5004 and 5005, and Chapter 62.

E102.1.9 Pyrophoric materials. Examples include:

1. Gases: diborane, phosphine, silane.
2. Liquids: diethylaluminum chloride, di-ethylberylli-um, diethylphosphine, diethylzinc, dimethylarsine, triethylaluminum etherate, tri-ethylbismuthine, triethylboron, trimethylaluminum, trimethylgallium.
3. Solids: cesium, hafnium, lithium, white or yellow phosphorous, plutonium, potassium, rubidium, sodium, thorium.

❖ Pyrophoric materials are two or more unmixed, commercially manufactured, prepackaged chemical substances, including oxidizers, flammable liquids or solids or similar substances that are not independently classified as explosives but that, when mixed or combined, form an explosive that is intended for blasting.

Chemicals in this classification must meet the minimum requirements of Sections 5001, 5003, 5004 and 5005, and Chapter 64.

E102.1.10 Unstable (reactive) materials. Examples include:

Class 4: acetyl peroxide, dibutyl peroxide, dinitrobenzene, ethyl nitrate, peroxyacetic acid and picric acid (dry) trinitrobenzene.

Class 3: hydrogen peroxide (greater than 52 percent), hydroxylamine, nitromethane, paranitroaniline, perchloric acid and tetrafluoroethylene monomer.

Class 2: acrolein, acrylic acid, hydrazine, methacrylic acid, sodium perchlorate, styrene and vinyl acetate.

Class 1: acetic acid, hydrogen peroxide 35 percent to 52 percent, paraldehyde and tetrahydrofuran.

❖ An unstable (reactive) material is a material, other than an explosive, that in its pure state or as commercially produced, will vigorously polymerize, decompose, condense or become self-reactive and undergo other violent chemical changes, including explosion, when:

1. Exposed to heat, friction, or shock;
2. In the absence of an inhibitor;
3. In the presence of contaminants; or
4. In contact with incompatible materials.

Unstable (reactive) materials are subdivided as follows:

Class 4. Materials that in themselves are readily capable of detonation, explosive decomposition or reaction at normal temperatures and pressures. This class includes materials that are sensitive to mechanical or localized thermal shock at normal temperatures and pressures.

Class 3. Materials that in themselves are capable of detonation, explosive decomposition or reaction but that require a strong initiating source or must be heated under confinement before initiation. This class includes materials that are sensitive to thermal or mechanical shock at elevated temperatures and pressures.

Class 2. Materials that in themselves are normally unstable and readily undergo violent chemical change but do not detonate. This class includes materials that can undergo chemical change with rapid release of energy at normal temperatures

INTERNATIONAL CODE COUNCIL®
Copyright © 2015 ICC. ALL RIGHTS RESERVED. Accessed by David Dammon on Jun 21, 2017 12:30:52 PM pursuant to License Agreement with ICC. No further reproduction or distribution authorized. ANY UNAUTHORIZED REPRODUCTION OR DISTRIBUTION IS A VIOLATION OF THE FEDERAL COPYRIGHT ACT AND THE LICENSE AGREEMENT, AND SUBJECT TO CIVIL AND CRIMINAL PENALTIES THEREUNDER.

and pressures, and that can undergo violent chemical change at elevated temperatures and pressures.

Class 1. Materials that in themselves are normally stable but that can become unstable at elevated temperatures and pressures.

Chemicals in this classification must meet the minimum requirements of Sections 5001, 5003, 5004 and 5005, and Chapter 66.

E102.1.11 Water-reactive materials. Examples include:

Class 3: aluminum alkyls such as triethylaluminum, isobutylaluminum and trimethylaluminum; bromine pentafluoride, bromine trifluoride, chlorodiethylaluminium and diethylzinc.

Class 2: calcium carbide, calcium metal, cyanogen bromide, lithium hydride, methyldichlorosilane, potassium metal, potassium peroxide, sodium metal, sodium peroxide, sulfuric acid and trichlorosilane.

Class 1: acetic anhydride, sodium hydroxide, sulfur monochloride and titanium tetrachloride.

❖ A water-reactive material explodes; violently reacts; produces flammable, toxic or other hazardous gases; or evolves enough heat to cause self-ignition or ignition of nearby combustibles upon exposure to water or moisture. Water-reactive materials are subdivided as follows:

Class 3. Materials that react explosively with water without requiring heat or confinement.

Class 2. Materials that may form potentially explosive mixtures with water.

Class 1. Materials that may react with water with some release of energy, but not violently.

Chemicals in this classification must meet the minimum requirements of Sections 5001, 5003, 5004 and 5005, and Chapter 67.

E102.1.12 Cryogenic fluids. The cryogenics listed will exist as *compressed gases* where they are stored at ambient temperatures.

1. Flammable: carbon monoxide, deuterium (heavy hydrogen), ethylene, hydrogen, methane.
2. Oxidizing: fluorine, nitric oxide, oxygen.
3. *Corrosive*: fluorine, nitric oxide.
4. Inert (chemically unreactive): argon, helium, krypton, neon, nitrogen, xenon.
5. Highly toxic: fluorine, nitric oxide.

❖ A cryogenic fluid is liquid having a boiling point lower than 150°F (101°C) at 14.7 pounds per square inch atmosphere (psia) (101 kPa).

A flammable cryogenic fluid is cryogenic fluid that is flammable in its vapor state.

Chemicals in this classification must meet the minimum requirements of Sections 5001, 5003, 5004 and 5005, and Chapter 55.

E102.2 Health hazards. Materials classified in this section pose a *health hazard*.

❖ If a chemical is classified as a health hazard, there is statistically significant evidence that it can cause acute or chronic health effects in exposed persons. The term "health hazard" includes chemicals that are toxic, highly toxic and corrosive.

E102.2.1 Highly toxic materials. Examples include:

1. Gases: arsine, cyanogen, diborane, fluorine, germane, hydrogen cyanide, nitric oxide, nitrogen dioxide, ozone, phosphine, hydrogen selenide, stibine.
2. Liquids: acrolein, acrylic acid, 2-chloroethanol (ethylene chlorohydrin), hydrazine, hydrocyanic acid, 2-methylaziridine (propylenimine), 2-methyl-acetonitrile (acetone cyanohydrin), methyl ester isocyanic acid (methyl isocyanate), nicotine, tetranitromethane and tetraethylstannane (tetraethyltin).
3. Solids: (aceto) phenylmercury (phenyl mercuric acetate), 4-aminopyridine, arsenic pentoxide, arsenic trioxide, calcium cyanide, 2-chloroacetophenone, aflatoxin B, decaborane(14), mercury (II) bromide (mercuric bromide), mercury (II) chloride (*corrosive* mercury chloride), pentachlorophenol, methyl parathion, phosphorus (white) and sodium azide.

❖ A highly toxic material produces a lethal dose or lethal concentration that falls within any of the following categories:

1. A chemical that has a median lethal dose (LD_{50}) of 50 milligrams or less per kilogram of body weight when administered orally to albino rats weighing between 200 and 300 grams each.
2. A chemical that has a median lethal dose (LD_{50}) of 200 milligrams or less per kilogram of body weight when administered by continuous contact for 24 hours (or less if death occurs within 24 hours) with the bare skin of albino rabbits weighing between 2 and 3 kilograms each.
3. A chemical that has a median lethal concentration (LC_{50}) in air of 200 parts per million by volume or less of gas or vapor, or 2 milligrams per liter or less of mist, fume or dust, when administered by continuous inhalation for 1 hour (or less if death occurs within 1 hour) to albino rats weighing between 200 and 300 grams each.

Mixtures of these materials with ordinary materials, such as water, might not warrant classification as highly toxic. Although this system is basically simple in application, any hazard evaluation that is required for the precise categorization of this type of material must be performed by experienced, technically competent persons.

INTERNATIONAL CODE COUNCIL®
Copyright © 2015 ICC. ALL RIGHTS RESERVED. Accessed by David Dammon on Jun 21, 2017 12:30:52 PM pursuant to License Agreement with ICC. No further reproduction or distribution authorized. ANY UNAUTHORIZED REPRODUCTION OR DISTRIBUTION IS A VIOLATION OF THE FEDERAL COPYRIGHT ACT AND THE LICENSE AGREEMENT, AND SUBJECT TO CIVIL AND CRIMINAL PENALTIES THEREUNDER.

Chemicals in this classification must meet the minimum requirements of Sections 5001, 5003, 5004 and 5005, and Chapter 60.

E102.2.2 Toxic materials. Examples include:

1. Gases: boron trichloride, boron trifluoride, chlorine, chlorine trifluoride, hydrogen fluoride, hydrogen sulfide, phosgene, silicon tetrafluoride.
2. Liquids: acrylonitrile, allyl alcohol, alpha-chlorotoluene, aniline, 1-chloro-2,3-epoxypropane, chloroformic acid (allyl ester), 3-chloropropene (allyl chloride), o-cresol, crotonaldehyde, dibromomethane, diisopropylamine, diethyl ester sulfuric acid, dimethyl ester sulfuric acid, 2-furaldehyde (furfural), furfural alcohol, phosphorus chloride, phosphoryl chloride (phosphorus oxychloride) and thionyl chloride.
3. Solids: acrylamide, barium chloride, barium (II) nitrate, benzidine, p-benzoquinone, beryllium chloride, cadmium chloride, cadmium oxide, chloroacetic acid, chlorophenylmercury (phenyl mercuric chloride), chromium (VI) oxide (chromic acid, solid), 2,4-dinitrotoluene, hydroquinone, mercury chloride (calomel), mercury (II) sulfate (mercuric sulfate), osmium tetroxide, oxalic acid, phenol, P-phenylenediamine, phenylhydrazine, 4-phenylmorpholine, phosphorus sulfide, potassium fluoride, potassium hydroxide, selenium (IV) disulfide and sodium fluoride.

❖ A toxic chemical falls within any of the following categories:

1. A chemical that has a median lethal dose (LD_{50}) of more than 50 milligrams per kilogram, but not more than 500 milligrams per kilogram of body weight when administered orally to albino rats weighing between 200 and 300 grams each.
2. A chemical that has a median lethal dose (LD_{50}) of more than 200 milligrams per kilogram but not more than 1,000 milligrams per kilogram of body weight when administered by continuous contact for 24 hours (or less if death occurs within 24 hours) with the bare skin of albino rabbits weighing between 2 and 3 kilograms each.
3. In air of more than 200 parts per million but not more than 2,000 parts per million by volume of gas or vapor, or more than 2 milligrams per liter but not more than 20 milligrams per liter of mist, fume or dust, when administered by continuous inhalation for 1 hour (or less if death occurs within 1 hour) to albino rats weighing between 200 and 300 grams each.

Chemicals in this classification must meet the minimum requirements of Sections 5001, 5003, 5004 and 5005, and Chapter 60.

E102.2.3 Corrosives. Examples include:

1. Acids: Examples: chromic, formic, hydrochloric (muriatic) greater than 15 percent, hydrofluoric, nitric (greater than 6 percent, perchloric, sulfuric (4 percent or more).
2. Bases (alkalis): hydroxides-ammonium (greater than 10 percent), calcium, potassium (greater than 1 percent), sodium (greater than 1 percent); certain carbonates-potassium.
3. Other *corrosives*: bromine, chlorine, fluorine, iodine, ammonia.

Note: *Corrosives* that are oxidizers, e.g., nitric acid, chlorine, fluorine; or are *compressed gases*, e.g., ammonia, chlorine, fluorine; or are water-reactive, e.g., concentrated sulfuric acid, sodium hydroxide, are *physical hazards* in addition to being *health hazards*.

❖ Corrosive chemicals cause visible destruction of, or irreversible alterations in, living tissue by chemical action at the point of contact. A chemical shall be considered corrosive if, when tested on the intact skin of albino rabbits by the method described in DOTn 49 CFR, Part 173, it destroys or changes irreversibly the structure of the tissue at the point of contact following an exposure period of 4 hours. This term does not refer to action on inanimate surfaces.

Chemicals in this classification must meet the minimum requirements of Sections 5001, 5003, 5004 and 5005, and Chapter 54.

SECTION E103
EVALUATION OF HAZARDS

E103.1 Degree of hazard. The degree of hazard present depends on many variables that should be considered individually and in combination. Some of these variables are as shown in Sections E103.1.1 through E103.1.5.

❖ How can the degree of hazard presented by the various chemicals that may be in the structure under design or review be determined? The only way to ensure that the structure is constructed or reviewed to the correct standards is to obtain and review the MSDS on the specific chemicals proposed. Owners can expect their structures to be required to meet a number of federal laws that regulate hazardous materials, including: the Superfund Amendments and Reauthorization Act of 1986 (SARA), the Resource Conservation and Recovery Act of 1976 (RCRA), the Hazardous Materials Transportation Act (HMTA), the Occupational Safety and Health Act (OSHA), the Toxic Substances Control Act (TSCA) and the Clean Air Act and Title III of SARA.

Community building/fire departments must make certain that the properties in their areas meet Title III of SARA, which regulates the packaging, labeling, handling, storage and transportation of hazardous materials. The law requires facilities to furnish information about the quantities and health effects of materials used at the facility and to promptly notify local and state officials whenever a significant release of hazardous materials occurs. Title 42, Chapter 116, Subchapter II, Section 11021 of the

INTERNATIONAL CODE COUNCIL®
Copyright © 2015 ICC. ALL RIGHTS RESERVED. Accessed by David Dammon on Jun 21, 2017 12:30:52 PM pursuant to License Agreement with ICC. No further reproduction or distribution authorized. ANY UNAUTHORIZED REPRODUCTION OR DISTRIBUTION IS A VIOLATION OF THE FEDERAL COPYRIGHT ACT AND THE LICENSE AGREEMENT, AND SUBJECT TO CIVIL AND CRIMINAL PENALTIES THEREUNDER.

Emergency Planning and Community Right-to-Know Act contains the following requirements for the submittal of MSDS:

Basic requirement

1. Submission of MSDS or list

The owner or operator of any facility which is required to prepare or have available a material safety data sheet for a hazardous chemical under the Occupational Safety and Health Act of 1970 (29 U.S. C. 651 et seq.) and regulations promulgated under that Act shall submit a material safety data sheet for each chemical.

These MSDS are a guide to determining the specific hazards presented to a community. The sections that follow, along with their commentary, should help determine whether the MSDS is complete and correct in identifying the properties and characteristics of the hazardous materials expected in the subject occupancy.

E103.1.1 Chemical properties of the material. Chemical properties of the material determine self reactions and reactions that could occur with other materials. Generally, materials within subdivisions of hazard categories will exhibit similar chemical properties. However, materials with similar chemical properties could pose very different hazards. Each individual material should be researched to determine its hazardous properties and then considered in relation to other materials that it might contact and the surrounding environment.

❖ When we think of chemical properties, what should we be looking for in the MSDS in terms of reactivity hazards?

Hypergolic materials are those chemicals that will ignite when they come in contact with each other. Rocket propellants and military munitions are the most common uses of this type of material.

Pyrophoric materials react and ignite on contact with air. Common storage practices have this type of material stored in inert substances or under pressure in sealed containers to prevent the introduction of air.

Water-reactive materials will react on contact with water. It is very important to the emergency personnel that these chemicals be identified and labeled properly. The use of fire hoses and sprinklers with this type of material can be very dangerous for the responding personnel.

Unstable materials can violently decompose with little or no outside stimulus. Several of the materials used in the development of plastics can exhibit these traits.

E103.1.2 Physical properties of the material. Physical properties, such as whether a material is a solid, liquid or gas at ordinary temperatures and pressures, considered along with chemical properties will determine requirements for containment of the material. Specific gravity (weight of a liquid compared to water) and vapor density (weight of a gas compared to air) are both physical properties that are important in evaluating the hazards of a material.

❖ When we think of physical properties, what should we be looking for in the MSDS?

Flammable and combustible liquids classifications are determined by their chemical flash points and boiling points. The only difference between the various classifications of flammable and combustible liquids is the degree difference in these two chemical properties.

Ignition temperature is the temperature that the fuel in air must be heated for self-sustained combustion without help from a heat source. This gives the MSDS user a point to determine how the method of storage can change the properties of the chemical.

Flammability range is a very important property to understand because it will relate to the amount of ventilation that may be required to satisfy the *International Mechanical Code*® (IMC®). If a storage atmosphere is within the flammability range, a dangerous situation exists. In this condition the only element missing to start a fire is an ignition source; thus, an incident could happen at any time. In the reverse, when the storage arrangement is outside the flammability range, a much safer condition exists because the air-to-chemical ratio must be within the range prior to a dangerous incident.

Specific gravity is the weight of the item compared to the weight of an equal volume of water. Water is given a specific gravity of 1.00. If the chemical has a specific gravity less than 1.00, the chemical will float on water. For that reason, water would not be an effective extinguishing tool. Also, the chemical will flow with any runoff of fire-fighting water. Diking or another containment method is needed to contain the fire-fighting water and chemicals. If the chemical has a specific gravity greater than 1.00, the chemical will sink in water. It is important to note that most flammable liquids have a specific gravity less than 1.00. Review the MSDS for the specific requirements for the chemicals.

Vapor density is similar to specific gravity; however, it is a comparison between the densities of a gas/vapor and air. Again, air is given a density of 1.00. If the chemical has a vapor density less than 1.00, it will rise. In many cases the vapor density being less than 1.00 is a good property because there are far fewer high ignition sources; however, remember that in an incident, the gas/vapor can be spread over a larger area. The spreading can reduce the flammability range enough to greatly lessen the possibility of a fire. If the vapor density is greater than 1.00, the gas/vapor will sink to the lowest point in the storage area. An example of a protection method in the codes for this property is the requirement that gas-fired appliances in garages must be 18 inches (457 mm) above the floor surface. This allows a chemical with a high vapor density to spread across

INTERNATIONAL CODE COUNCIL®
Copyright © 2015 ICC. ALL RIGHTS RESERVED. Accessed by David Dammon on Jun 21, 2017 12:30:52 PM pursuant to License Agreement with ICC. No further reproduction or distribution authorized. ANY UNAUTHORIZED REPRODUCTION OR DISTRIBUTION IS A VIOLATION OF THE FEDERAL COPYRIGHT ACT AND THE LICENSE AGREEMENT, AND SUBJECT TO CIVIL AND CRIMINAL PENALTIES THEREUNDER.

the floor surface without encountering an ignition source.

Water solubility refers to the chemical's ability to mix with water. This information can be used in creating a proper response to an emergency incident.

E103.1.3 Amount and concentration of the material. The amount of material present and its concentration must be considered along with physical and chemical properties to determine the magnitude of the hazard. Hydrogen peroxide, for example, is used as an antiseptic and a hair bleach in low concentrations (approximately 8 percent in water solution). Over 8 percent, hydrogen peroxide is classed as an oxidizer and is toxic. Above 90 percent, it is a Class 4 oxidizer "that can undergo an explosive reaction when catalyzed or exposed to heat, shock or friction," a definition that incidentally also places hydrogen peroxide over 90-percent concentration in the unstable (reactive) category. Small amounts at high concentrations could present a greater hazard than large amounts at low concentrations.

❖ Many chemicals exhibit combined chemical traits, one of which is toxicity. The amount of damage that can be inflicted on the environment is based on the toxicity and the threshold limit values, lethal dosage, lethal concentration or emergency exposure limits.

Review the chemicals that will be housed in the structure or used in the process. Look at their chemical, physical and toxicity properties. The method of storage and the amounts of chemical will also play a major role in determining hazards. Chemical and physical characteristics were covered in Sections E103.1.1 and E103.1.2. This section covers the properties of toxicity.

Threshold limit value, also known as "time weighted average" (TLV/TWA), is the maximum amount of chemical that the human body can be exposed to for 8 hours a day or 40 hours a week without dangerous effects. This number is important when checking or reviewing the ventilation for a structure. TLV/TWA is normally expressed in parts per million, while others are sometimes expressed as a percentage per billion. This is the number of molecules of chemical per molecules of air. It is important to note that the smaller the ratio, the more toxic the material.

Lethal dosage (LD) is the minimum amount of solid or liquid that, when ingested or absorbed through the skin, may be fatal. MSDS provide this information typically as LD_{50}. This notation represents the amount of chemical that will kill at least 50 percent of the test subjects when exposed. The amount is expressed in milligrams per kilogram of body weight.

Lethal concentration (LC) is the minimum concentration in the gaseous state that, when inhaled, may be fatal. MSDS provide this information typically as LC_{50}. This notation is expressed in milligrams per liter.

Emergency exposure limit or TLV short-term exposure limit (EEL or TLVSTEL) is the maximum amount of chemical that can be tolerated with no permanent toxic effects.

Ceiling limit (TLVC) is the amount of chemical that normally will not cause immediate irritation. This limit should never be reached in normal operation, even for an instant.

E103.1.3.1 Mixtures. Gases—toxic and highly toxic gases include those gases that have an LC_{50} of 2,000 parts per million (ppm) or less when rats are exposed for a period of 1 hour or less. To maintain consistency with the definitions for these materials, exposure data for periods other than 1 hour must be normalized to 1 hour. To classify mixtures of *compressed gases* that contain one or more toxic or highly toxic components, the LC_{50} of the mixture must be determined. Mixtures that contain only two components are binary mixtures. Those that contain more than two components are multicomponent mixtures. Where two or more hazardous substances (components) having an LC_{50} below 2,000 ppm are present in a mixture, their combined effect, rather than that of the individual substance components, must be considered. In the absence of information to the contrary, the effects of the hazards present must be considered as additive. Exceptions to the above rule could be made when there is a good reason to believe that the principal effects of the different harmful substances (components) are not additive.

For binary mixtures where the hazardous component is diluted with a nontoxic gas such as an inert gas, the LC_{50} of the mixture is estimated by use of the methodology contained in CGA P-20. The hazard zones specified in CGA P-20 are applicable for DOTn purposes and shall not be used for hazard classification.

❖ This information allows evaluation of the methods of calculation submitted by the chemical engineer. It is not designed for the inspector/plans examiner to perform the calculations during inspection or plan review. Mixtures and chemicals should be evaluated by a qualified person such as a chemical engineer, with the information submitted to the inspector/plans examiner. MSDS for the specific mixtures can be submitted in place of separate chemical engineering evaluations. Calculations for toxic gas mixtures are included in the referenced standard CGA P-20 and will bring consistency to the definition of "Toxic gas mixtures." It is easy to determine the proper hazard classification of toxic gas mixtures by using CGA P-20.

E103.1.4 Actual use, activity or process involving the material. The definition of handling, storage and use in *closed systems* refers to materials in packages or containers. Dispensing and use in open containers or systems describes situations where a material is exposed to ambient conditions or vapors are liberated to the atmosphere. Dispensing and use in *open systems*, then, are generally more hazardous situations than handling, storage or use in *closed systems*. The actual use or process could include heating, electric or other sparks, catalytic or reactive materials and many other factors that could affect the hazard and must therefore be thoroughly analyzed.

❖ The owner must be asked how the products will be used in the facility. Tables 5003.1.1(1) and (2) are

INTERNATIONAL CODE COUNCIL®
Copyright © 2015 ICC. ALL RIGHTS RESERVED. Accessed by David Dammon on Jun 21, 2017 12:30:52 PM pursuant to License Agreement with ICC. No further reproduction or distribution authorized. ANY UNAUTHORIZED REPRODUCTION OR DISTRIBUTION IS A VIOLATION OF THE FEDERAL COPYRIGHT ACT AND THE LICENSE AGREEMENT, AND SUBJECT TO CIVIL AND CRIMINAL PENALTIES THEREUNDER.

based on normal storage arrangements, open systems and closed systems. The amount of chemical allowed per control area is based on how the chemical is being used or stored. Correct interpretation of the tables depends on knowing how the chemicals will be used. Remember that any process that changes the chemical traits must be accounted for. These would include preheating and pressurizing the chemicals.

E103.1.5 Surrounding conditions. Conditions such as other materials or processes in the area, type of construction of the structure, fire protection features (e.g., *fire walls*, sprinkler systems, alarms, etc.), occupancy (use) of adjoining areas, normal temperatures, exposure to weather, etc., must be taken into account in evaluating the hazard.

❖ Final elements in determining hazards are the conditions of storage and use. Will the chemical be in outdoor storage, indoor storage or in a detached building? What types of protection for the chemicals are proposed? What types of protection are required for the type of hazard? What are the requirements for temperature control for the chemicals? What types of processes will the chemicals be used in? The answers to these questions will determine whether the proposed structure meets the minimum requirements of the code.

E103.2 Evaluation questions. The following are sample evaluation questions:

❖ Evaluating each chemical proposed to be in a structure and determining whether the structure will be a hazardous use group is very important. In today's society, even those occupancies that would normally not be thought of as having hazardous materials can have enough involved in production to change the use group. For example, during review of a dentist's office (normally considered a business use group) MSDS were requested for all chemicals, along with the amounts and storage methods. When the MSDS were received, the chemicals reported included one that was listed as explosive when at room temperature. The occupancy was to have 3 pounds (1.4 kg) of the product.

The introduction of this one chemical made the structure move from a Group B use to a Group H-1 use, and the product had to be stored in a detached storage building.These questions must be asked and evaluated to determine whether a building is a Group H use.

1. What is the material? Correct identification is important; exact spelling is vital. Check labels, MSDS, ask responsible persons, etc.

❖ The properties of chemicals change with the mixture, manufacturer and blends. Generic information cannot be used; information recorded on the MSDS must match the exact chemical that will be used. Currently, there are at least six different blends of diesel fuel that, based on the flash point and boiling point, can range from a Class IC to a Class III flammable liquid; thus, different protection and exempt amounts are allowed and required for the chemical. It is important to note that the changing of one letter in the chemical name can change a chemical that is not considered hazardous to one that is extremely hazardous. Precise information is required to determine whether a hazardous use group designation is needed.

2. What are the concentration and strength?

❖ Based on the blend, concentration and strength of solution, each chemical takes on different traits. One MSDS does not cover all concentrations and blends; a separate MSDS must be submitted for each specific chemical.

3. What is the physical form of the material? Liquids, gases and finely divided solids have differing requirements for spill and leak control and containment.

❖ The physical form of the material is important from the standpoint of hazards and the concept of fire. Gases are more dangerous than liquids and liquids are more dangerous than solids. Understanding the form and makeup of the chemical will assist in determining the danger to the structure and the community. Each physical form will have its own problems with protection and containment that must be considered in the review.

4. How much material is present? Consider in relation to permit amounts, *maximum allowable quantity per control area* (from Group H occupancy requirements), amounts that require detached storage and overall magnitude of the hazard.

❖ A review of the chemicals and amounts of product that will be present will raise some questions: Will the chemicals be in an open or closed container? What type of protection will be provided? Will the chemical be placed in control areas in accordance with Section 5003.8.*2*? Will the amounts be more than the exempt amounts allowed by Tables 5003.1.1 and 5003.1.1(2) or be one of the exceptions listed in Section 5001.1? The answers to these questions will govern the types of requirements that must be addressed.

5. What other materials (including furniture, equipment and building components) are close enough to interact with the material?

❖ Will other items be stored close to the chemical storage? Will the storage of other chemicals that are normally not hazardous cause a more hazardous condition when mixed with the hazardous chemicals in an emergency? Is the fire load of the area increased by the presence of the chemicals and general storage? If so, additional protection may be required based on the additional fire loading and hazards created.

6. What are the likely reactions?

❖ Will the mixing of chemical or fire protection features create a dangerous or hazardous condition if the chemicals are not separated into different contain-

INTERNATIONAL CODE COUNCIL®
Copyright © 2015 ICC. ALL RIGHTS RESERVED. Accessed by David Dammon on Jun 21, 2017 12:30:52 PM pursuant to License Agreement with ICC. No further reproduction or distribution authorized. ANY UNAUTHORIZED REPRODUCTION OR DISTRIBUTION IS A VIOLATION OF THE FEDERAL COPYRIGHT ACT AND THE LICENSE AGREEMENT, AND SUBJECT TO CIVIL AND CRIMINAL PENALTIES THEREUNDER.

ment areas? Checking the MSDS for adverse reactions to other products in the storage area is extremely important.

7. What is the activity involving the material?

❖ What process will the chemical be used in? Will the physical conditions of the chemical be changed by heating, pressurizing or other methods during the use, process or manufacturing of the final product? It is important to note that some nonhazardous chemicals, through the processing phases, can create a hazardous atmosphere. As much information and knowledge as possible of the processing system and use of the chemical must be gained for a good review/inspection process.

8. How does the activity impact the hazardous characteristics of the material? Consider vapors released or hazards otherwise exposed.

❖ Is the chemical being used in an open atmosphere? Chemicals in an open system are normally much more dangerous than they would be in a closed system. When dealing with a toxic chemical, what types of filters are required to protect personnel and the environment?

9. What must the material be protected from? Consider other materials, temperature, shock, pressure, etc.

❖ High explosives can be detonated by light to moderate shock. Some chemicals can react to changes in temperatures. Containers under pressure can react violently. The MSDS must be checked for these types of hazards to make certain protective storage and use arrangements fit requirements.

10. What effects of the material must people and the environment be protected from?

❖ What are the dangers to the environment or to personnel if there is an emergency release? Dikes, special filters, distance from other structures and other methods of protection may be required to reduce the impact from an emergency release.

11. How can protection be accomplished? Consider:

11.1. Proper containers and equipment.

❖ Plastic pint bottles, glass bottles, safety cans, drums, barrels, above-ground tanks and underground tanks are just a few of the types of containers that may be used for storage. Each type of container has special requirements for size and methods of storage. These requirements can be found in Chapter 50 and other related references.

11.2. Separation by distance or construction.

❖ Group H-1 use areas must be located in a detached building. Outdoor storage must be separated from other buildings and property lines by distances as outlined in Section 5003.12 and other related sections.

11.3. Enclosure in cabinets or rooms.

❖ Third-party tested hazardous materials storage cabinets can be used to increase the exempt amounts allowed by Tables 5003.1.1(1) and (2). These cabinets must meet the minimum requirements of Sections 5003.8.4, 6004.1.2 and other related sections. Gas rooms must meet the requirements of Sections 5003.8.3, 6004.1.2 and other related sections. Flammable liquid storage rooms must meet the requirements of Section 5704.3.7.3 and related codes.

11.4. Spill control, drainage and containment.

❖ If one can minimize the spill area and contain any accidental release, the amount of potential damage will be greatly reduced. Cleanup will be easier and the hazard reduced for fire service and emergency workers. Spill control, drainage and containment must meet the minimum requirements of Section 5004.2 and related sections. Remember that the containment area is, in a lot of cases, more hazardous than the initial storage area.

11.5. Control systems-ventilation, special electrical, detection and alarm, extinguishment, explosion venting, limit controls, exhaust scrubbers and excess flow control.

❖ The methods of control, how much ventilation, special detection and alarms will be obtained from the MSDS. Section 5003 contains guidance into requirements for additional protection.

11.6. Administrative (operational) controls-signs, ignition source control, security, personnel training, established procedures, storage plans and emergency plans.

Evaluation of the hazard is a strongly subjective process; therefore, the person charged with this responsibility must gather as much relevant data as possible so that the decision will be objective and within the limits prescribed in laws, policies and standards.

It could be necessary to cause the responsible persons in charge to have tests made by qualified persons or testing laboratories to support contentions that a particular material or process is or is not hazardous. See Section 104.7.2 of the *International Fire Code*.

❖ Posting signs, as required by Section 5003.5, is an important component to alert emergency response personnel to possible dangers to them and the community. Section 5003.7 contains guidance on the requirements for ignition source controls. Section 5003.9.1 contains information on personnel training. Section 5003.9.2 contains information on security. Storage plans and emergency plans requirements can be found in Sections 407, 408 and 5001.4.1 and other related sections. Having an up-to-date emergency plan is very important to both the community and emergency services; however, it is often overlooked.

INTERNATIONAL CODE COUNCIL®
Copyright © 2015 ICC. ALL RIGHTS RESERVED. Accessed by David Dammon on Jun 21, 2017 12:30:52 PM pursuant to License Agreement with ICC. No further reproduction or distribution authorized. ANY UNAUTHORIZED REPRODUCTION OR DISTRIBUTION IS A VIOLATION OF THE FEDERAL COPYRIGHT ACT AND THE LICENSE AGREEMENT, AND SUBJECT TO CIVIL AND CRIMINAL PENALTIES THEREUNDER.

SECTION E104
REFERENCED STANDARDS

CGA (2009)	P-20—	Standard for Classification of Toxic Mixtures	E103.1.3.1
CGA (2008)	P-23—	Standard for Categorizing Gas Mixtures Containing Flammable and Nonflammable Components	E102.1.2
ICC	IFC—15	International Fire Code	E101.1, E102.1.1, E102.1.8.1, E103.2

INTERNATIONAL CODE COUNCIL®
Copyright © 2015 ICC. ALL RIGHTS RESERVED. Accessed by David Dammon on Jun 21, 2017 12:30:52 PM pursuant to License Agreement with ICC. No further reproduction or distribution authorized. ANY UNAUTHORIZED REPRODUCTION OR DISTRIBUTION IS A VIOLATION OF THE FEDERAL COPYRIGHT ACT AND THE LICENSE AGREEMENT, AND SUBJECT TO CIVIL AND CRIMINAL PENALTIES THEREUNDER.

INTERNATIONAL CODE COUNCIL®

Copyright © 2015 ICC. ALL RIGHTS RESERVED. Accessed by David Dammon on Jun 21, 2017 12:30:52 PM pursuant to License Agreement with ICC. No further reproduction or distribution authorized. ANY UNAUTHORIZED REPRODUCTION OR DISTRIBUTION IS A VIOLATION OF THE FEDERAL COPYRIGHT ACT AND THE LICENSE AGREEMENT, AND SUBJECT TO CIVIL AND CRIMINAL PENALTIES THEREUNDER.

Appendix F: Hazard Ranking

The provisions contained in this appendix are not mandatory unless specifically referenced in the adopting ordinance.

General Comments

The presence of hazardous materials in all types of occupancies is becoming more common. While industrial facilities are constantly developing and expanding their use of hazardous materials, significant quantities of an ever-increasing variety of materials can also be found in other occupancies, such as hospitals, research laboratories and even mercantile uses. Knowledge of hazardous materials within a given occupancy is essential not only for proper code enforcement but also for prefire planning purposes. Although submittal of Material Safety Data Sheets (MSDS) and compliance with right-to-know legislation are necessary to determine the proper mitigation means for all hazardous materials, it is also true that in an emergency response situation, responders must have a clear and readily available warning of the material hazards that confront them. The NFPA 704 hazard classification system was developed for that express purpose and it is the intent of this appendix to provide the fire code official with a ready reference tool for approval of the hazard warnings required by Chapter 50, among others.

Purpose

The code regulates the storage, dispensing and use of all hazardous materials classified as either physical or health hazards. These materials pose diverse hazards, including instability, reactivity, flammability, oxidizing potential or toxicity; therefore, identifying them by hazard ranking is essential. The information in this appendix is intended to be a companion to the specific requirements of Chapters 51 through 67.

The table included in this appendix lists the various hazardous materials categories that are defined in Chapter 2 of the code, along with the NFPA 704 hazard ranking for each. Once a specific material is properly identified and categorized as meeting a given hazardous material definition, the appropriate flammability, health, reactivity, oxidizing and special hazard designations of the NFPA 704 system can be readily found in the table.

SECTION F101 GENERAL

F101.1 Scope. Assignment of levels of hazards to be applied to specific hazard classes as required by NFPA 704 shall be in accordance with this appendix. The appendix is based on application of the degrees of hazard as defined in NFPA 704 arranged by hazard class as for specific categories defined in Chapter 2 of the *International Fire Code* and used throughout.

❖This paragraph establishes the relationship between the hazardous materials definitions found in Chapter 2 and the methods used in NFPA 704 to establish the degree of hazard for a wide variety of hazardous materials.

F101.2 General. The hazard rankings shown in Table F101.2 have been established by using guidelines found within NFPA 704. As noted in Section 4.2 of NFPA 704, there could be specific reasons to alter the degree of hazard assigned to a specific material; for example, ignition temperature, flammable range or susceptibility of a container to rupture by an internal combustion explosion or to metal failure while under pressure or because of heat from external fire. As a result, the degree of hazard assigned for the same material can vary when assessed by different people of equal competence.

The hazard rankings assigned to each class represent reasonable minimum hazard levels for a given class based on the use of criteria established by NFPA 704. Specific cases of use or storage may dictate the use of higher degrees of hazard in certain cases.

❖These two paragraphs explain the rationale for the hazard rankings shown in Table F101.2. The word of caution sounded here is that rankings will vary depending on the circumstances of each individual application. In addition, because fire code officials are required to use personal judgement to determine rankings, those rankings may vary from one official to another because of their differing personal backgrounds and experience.

The message given in the last sentence of the first paragraph is very significant. The fire code official will be called upon to use every bit of knowledge gained through years of experience to make judgments of hazards on a case-by-case basis. The rankings shown in Table F101.2 are minimums. The fire code official

INTERNATIONAL CODE COUNCIL®
Copyright © 2015 ICC. ALL RIGHTS RESERVED. Accessed by David Dammon on Jun 21, 2017 12:30:52 PM pursuant to License Agreement with ICC. No further reproduction or distribution authorized. ANY UNAUTHORIZED REPRODUCTION OR DISTRIBUTION IS A VIOLATION OF THE FEDERAL COPYRIGHT ACT AND THE LICENSE AGREEMENT, AND SUBJECT TO CIVIL AND CRIMINAL PENALTIES THEREUNDER.

may decide that circumstances in individual cases require higher rankings than are shown in the table.

As an example of how conditions can cause a change in ranking, consider this. The method of storage and processing of a chemical can greatly change the ranking. If a Class IIIB combustible liquid is preheated to its flashpoint, or pressurized to greater than 15 psi (103 kPa), it will exhibit the same traits as a Class IA flammable liquid. Thus, the ranking would change from a 1 (F1) in the flammable diamond to a 4 (F4). This increase in ranking is a result of the change of storage method and process, not any change in the chemical makeup of the combustible liquid.

TABLE F101.2. See below.

❖The alpha-numeric designations indicated in this table represent the primary hazard information that is to appear in the various quadrants of the "NFPA 704 Diamond" sign depicted in Chapter 9 of NFPA 704 and required by Sections 407.3 and 5003.5. Consistent with Section 5001.2.2, the materials listed in this table may posses multiple hazard characteristics that must be displayed in additional quadrants of the "NFPA 704 Diamond." The construction and content of the signs must be approved by the fire code official as required by Section 5003.6. Note that the designations in this table are not to be confused with occupancy group designations established by Chapter 3 of the *International Building Code*® (IBC®).

TABLE F101.2
FIRE FIGHTER WARNING PLACARD DESIGNATIONS BASED ON HAZARD CLASSIFICATION CATEGORIES

HAZARD CATEGORY	DESIGNATION
	F2
	F2
Combustible liquid II	F1
Combustible liquid IIIA	F4
Combustible liquid IIIB	F3
Combustible dust	F4, H3
Combustible fiber	OX, H3
Cryogenic flammable	R4
Cryogenic oxidizing	F2
Explosive	F4
Flammable solid	F4
Flammable gas (gaseous)	F4
Flammable gas (liquefied)	F3
Flammable liquid IA	F3
Flammable liquid IB	R4
Flammable liquid IC	F4, R3
Organic peroxide, UD	F3, R3
Organic peroxide I	F2, R2
Organic peroxide II	F1, R1
Organic peroxide III	None
Organic peroxide IV	OX
Organic peroxide V	OX
Oxidizing gas (gaseous)	OX4
Oxidizing gas (liquefied)	OX3
Oxidizer 4	OX2
Oxidizer 3	OX1
Oxidizer 2	F4
Oxidizer 1	F3
Pyrophoric gases	R4
Pyrophoric solids, liquids	R4
Unstable reactive 4D	R2
Unstable reactive 3D	R2
Unstable reactive 3N	None
Unstable reactive 2	W3
Unstable reactive 1	W2
Water reactive 3	H3, COR
Water reactive 2	H3
Corrosive	H4
Toxic	
Highly toxic	

F—Flammable category.
R—Reactive category.
H—Health category.
W—Special hazard: water reactive.
OX—Special hazard: oxidizing properties.
COR—Corrosive.
UD—Unclassified detonable material.
4D—Class 4 detonable material.
3D—Class 3 detonable material.
3N—Class 3 nondetonable material.

INTERNATIONAL CODE COUNCIL®
Copyright © 2015 ICC. ALL RIGHTS RESERVED. Accessed by David Dammon on Jun 21, 2017 12:30:52 PM pursuant to License Agreement with ICC. No further reproduction or distribution authorized. ANY UNAUTHORIZED REPRODUCTION OR DISTRIBUTION IS A VIOLATION OF THE FEDERAL COPYRIGHT ACT AND THE LICENSE AGREEMENT, AND SUBJECT TO CIVIL AND CRIMINAL PENALTIES THEREUNDER.

SECTION F102
REFERENCED STANDARDS

ICC	IFC—15	International Fire Code	F101.1
NFPA	704—12	Standard System for Identification of the Hazards of Materials for Emergency Response	F101.1 F101.2

INTERNATIONAL CODE COUNCIL®
Copyright © 2015 ICC. ALL RIGHTS RESERVED. Accessed by David Dammon on Jun 21, 2017 12:30:52 PM pursuant to License Agreement with ICC. No further reproduction or distribution authorized. ANY UNAUTHORIZED REPRODUCTION OR DISTRIBUTION IS A VIOLATION OF THE FEDERAL COPYRIGHT ACT AND THE LICENSE AGREEMENT, AND SUBJECT TO CIVIL AND CRIMINAL PENALTIES THEREUNDER.

INTERNATIONAL CODE COUNCIL®

Copyright © 2015 ICC. ALL RIGHTS RESERVED. Accessed by David Dammon on Jun 21, 2017 12:30:52 PM pursuant to License Agreement with ICC. No further reproduction or distribution authorized. ANY UNAUTHORIZED REPRODUCTION OR DISTRIBUTION IS A VIOLATION OF THE FEDERAL COPYRIGHT ACT AND THE LICENSE AGREEMENT, AND SUBJECT TO CIVIL AND CRIMINAL PENALTIES THEREUNDER.

Appendix G: Cryogenic Fluids—Weight and Volume Equivalents

This appendix is for information purposes and is not intended for adoption.

General Comments

Chapter 55 of the code regulates cryogenic fluids (liquefied gases) that are used to provide very low temperatures in a variety of scientific and industrial processes. Low temperatures in cryogenic processes are achieved primarily by the liquefaction of gases, resulting in the family of hazardous materials known as cryogenic fluids (see the commentary to the definition of "Cryogenic fluid" in Section 202). More than 25 such cryogens are currently in use in the cryogenic industry; however, this appendix focuses on the six that account for the greatest volume of use and application in research and industry: helium, hydrogen, nitrogen, argon, oxygen and liquefied natural gas (LNG; methane).

Although cryogenic fluids are characterized by extreme low temperatures, ranging from a boiling point of 258.5°F (161.4°C) for LNG to 453.1°F (269.5°C) for helium, they also posses another hazard characteristic: a high volume expansion ratio from liquid to gas, from approximately 696 to 1 for nitrogen, to 860 to 1 for oxygen. And while argon, helium, oxygen and nitrogen in the cryogenic range are not toxic or flammable, they can cause asphyxiation by displacing the air necessary for the support of life when released. Even pure oxygen, an oxidizer, may have harmful physiological effects if it is breathed over an extended period.

There is also the flammable gas hazard when cryogenic fluids, such as hydrogen and LNG, are stored or used. However, the fire hazard may also be greatly increased when cryogenic fluids normally thought to be nonflammable are used. The presence of oxygen, for example, will greatly increase the combustibility of ordinary combustible materials, and may even cause some noncombustible materials like carbon steel to burn readily under the right conditions. Liquefied inert gases, such as liquid nitrogen or liquid helium, are also capable, under the right conditions, of condensing oxygen from the atmosphere and causing unsuspected oxygen enrichment or entrapment in areas where there may be ignition sources. Reduction of such conditions, and the potential asphyxiation hazard of cryogenic fluids (liquefied gases) discussed above, may be accomplished, in part, by a properly designed ventilation system.

To properly apply the requirements of Chapter 55 to reduce the hazards discussed here, the volume of gas capable of being generated by a cryogenic fluid installation must be determined. Rather than leaving such determination to case-by-case mathematical calculation, this appendix gives the fire code official and design professional a convenient tool for determining the correct gas volumes for selected cryogenic fluids. For further discussion of cryogenic fluids, see the commentary to Chapter 55.

Purpose

This appendix gives the fire code official a ready reference tool for the conversion of the liquid weight and volume of cryogenic fluid to their corresponding volume of gas and vice versa.

SECTION G101 GENERAL

G101.1 Scope. This appendix is used to convert from liquid to gas for *cryogenic fluids*.

❖This appendix gives the liquid volume for the most frequently used cryogenic fluids for a given weight at the normal boiling point of the liquid, and then shows the volume of gas that will expand from that volume of liquid at normal temperature and pressure (NTP). An example showing how to use the table is given in the paragraphs that follow.

Anyone who has followed a truck containing liquid nitrogen down a highway has seen the vapor plume venting from the tank. Anyone who has watched the launch of a liquid-fueled rocket, such as the space shuttle booster or the Saturn V used to put Apollo capsules in moon orbit, has seen a vapor plume coming from the liquid oxygen tanks. In both cases the plume is water vapor that has been condensed from the air by the cold gas escaping from the tanks through overpressure valves.

All of these common cryogenics represent hazards of one kind or another. LNG and hydrogen are both

INTERNATIONAL CODE COUNCIL®
Copyright © 2015 ICC. ALL RIGHTS RESERVED. Accessed by David Dammon on Jun 21, 2017 12:30:52 PM pursuant to License Agreement with ICC. No further reproduction or distribution authorized. ANY UNAUTHORIZED REPRODUCTION OR DISTRIBUTION IS A VIOLATION OF THE FEDERAL COPYRIGHT ACT AND THE LICENSE AGREEMENT, AND SUBJECT TO CIVIL AND CRIMINAL PENALTIES THEREUNDER.

flammable and present combustion and explosion hazards at concentrations that are addressed in Chapter 55. Oxygen can also contribute tremendously to the intensity of a fire, its size and its spread. On the other hand, helium, argon and nitrogen are nonflammable, but are not breathable. Helium, being lighter than air, would rise to the highest levels of the storage space, presenting a minimal hazard unless the concentration became so large that it displaced breathable air at lower levels. Nitrogen and argon are heavier and would concentrate at lower levels, displacing breathable air.

G101.2 Conversion. Table G101.2 shall be used to determine the equivalent amounts of *cryogenic fluids* in either the liquid or gas phase.

❖Table G101.2 is a convenient reference to determine the volume of gas that will expand from a given volume of cryogenic fluid. This kind of information is important to the decision of what quantities can be safely stored or used under any set of conditions and also to the determination of what ventilation capacity would be required for those storage or use conditions.

G101.2.1 Use of the table. To use Table G101.2, read horizontally across the line of interest. For example, to determine the number of cubic feet of gas contained in 1.0 gallon (3.785 L) of liquid argon, find 1.000 in the column entitled "Volume of Liquid at Normal *Boiling Point.*" Reading across the line under the column entitled "Volume of Gas at NTP" (70°F and 1 atmosphere/14.7 psia), the value of 112.45 cubic feet (3.184 m^3) is found.

❖This example emphasizes the importance of expansion volume of these cryogenic liquids to determining safe storage and use conditions. Leakage of as little as 10 gallons (38 L) of liquid argon would displace all air in a space measuring 10 feet by 10 feet by 10 feet (3048 mm by 3048 mm by 3048 mm), unless the ventilation system for this space is sized to remove the expanding gas as it escapes from its container or transport system.

G101.2.2 Other quantities. If other quantities are of interest, the numbers obtained can be multiplied or divided to obtain the quantity of interest. For example, to determine the number of cubic feet of argon gas contained in a volume of 1,000 gallons (3785 L) of liquid argon at its normal *boiling point*, multiply 112.45 by 1,000 to obtain 112,450 cubic feet (3184 m^3).

❖This example shows that the basic numbers in the table can be used to calculate the effect of any quantity of cryogenic liquid on any given storage or work space.

The table can also be used to calculate needed information about design requirements. Consider this simplified example:

Assume a cryogenic tank that holds 75 gallons (284 L) of liquid oxygen (LOX) and weighs 200 pounds (91 kg) empty. The tank is to be located in a room in an existing retirement home building to fill portable oxygen bottles for individuals needing breathing assistance. An exhaust hood will be installed over the tank to assist in carrying off any oxygen vapors. To be determined is whether the floor structure of the existing room will carry the added load of the filled tank and also what volume of oxygen gas would have to be exhausted in case of a valve failure.

Table G101.2 shows that 1 gallon (3.785 L) of LOX weighs 9.527 pounds (4.3 kg). The weight of the tank and its contents may then be calculated as follows:

75 gal.× 9.527 lb/gal = 714.525 lb (324.4 kg)
714.525 lb + 200 lb = 915 lb (415 kg)
Add safety factor of 2 = 1,830 lb (831 kg)

The floor structure would have to support the added load of the LOX tank and its contents having a weight of approximately 2,000 pounds (1080 kg) [see the commentary to Chapter 16 of the *International Building Code*® (IBC®) for discussion of structural loads].

Table G101.2 also shows that 1 gallon (3.785 L) of LOX will expand to 115.05 cubic feet (3.26 m^3) of gas. Assuming the tank is full and a valve failure would result in the tank emptying completely in 2 hours, the exhaust hood would have to be able to remove the following volume of gas:

75 gal. × 115.05 cu. ft./gal. = 8628.75 cu. ft. (244.4 m^3) total
8628.75 cu. ft. ÷ 120 min. = 71.9 cfm (2 m^3/min)

The exhaust hood fan would have to be able to remove 72 cubic feet per minute (cfm) (0.03 m^3/s) of gas from the room.

This example is obviously a simplified version of a real problem. In real-world terms, more information would be needed about the volume of the room the tank is in, and additional safety features to make sure no spark sources or flammable materials are added where concentrations of oxygen could intensify a fire would need to be considered. But it does serve to show how Table G101.2 can be used to help designers, contractors, inspectors, plans examiners and building owners and tenants determine whether planned installations meet minimum safety requirements.

INTERNATIONAL CODE COUNCIL®
Copyright © 2015 ICC. ALL RIGHTS RESERVED. Accessed by David Dammon on Jun 21, 2017 12:30:52 PM pursuant to License Agreement with ICC. No further reproduction or distribution authorized. ANY UNAUTHORIZED REPRODUCTION OR DISTRIBUTION IS A VIOLATION OF THE FEDERAL COPYRIGHT ACT AND THE LICENSE AGREEMENT, AND SUBJECT TO CIVIL AND CRIMINAL PENALTIES THEREUNDER.

TABLE G101.2
WEIGHT AND VOLUME EQUIVALENTS FOR COMMON CRYOGENIC FLUIDS

CRYOGENIC FLUID	WEIGHT OF LIQUID OR GAS		VOLUME OF LIQUID AT NORMAL BOILING POINT		VOLUME OF GAS AT NTP	
	Pounds	Kilograms	Liters	Gallons	Cubic feet	Cubic meters
Argon	1.000	0.454	0.326	0.086	9.67	0.274
	2.205	1.000	0.718	0.190	21.32	0.604
	3.072	1.393	1.000	0.264	29.71	0.841
	11.628	5.274	3.785	1.000	112.45	3.184
	10.340	4.690	3.366	0.889	100.00	2.832
	3.652	1.656	1.189	0.314	35.31	1.000
Helium	1.000	0.454	3.631	0.959	96.72	2.739
	2.205	1.000	8.006	2.115	213.23	6.038
	0.275	0.125	1.000	0.264	26.63	0.754
	1.042	0.473	3.785	1.000	100.82	2.855
	1.034	0.469	3.754	0.992	100.00	2.832
	0.365	0.166	1.326	0.350	35.31	1.000
Hydrogen	1.000	0.454	6.409	1.693	191.96	5.436
	2.205	1.000	14.130	3.733	423.20	11.984
	0.156	0.071	1.000	0.264	29.95	0.848
	0.591	0.268	3.785	1.000	113.37	3.210
	0.521	0.236	3.339	0.882	100.00	2.832
	0.184	0.083	1.179	0.311	35.31	1.000
Oxygen	1.000	0.454	0.397	0.105	12.00	0.342
	2.205	1.000	0.876	0.231	26.62	0.754
	2.517	1.142	1.000	0.264	30.39	0.861
	9.527	4.321	3.785	1.000	115.05	3.250
	8.281	3.756	3.290	0.869	100.00	2.832
	2.924	1.327	1.162	0.307	35.31	1.000
Nitrogen	1.000	0.454	0.561	0.148	13.80	0.391
	2.205	1.000	1.237	0.327	30.43	0.862
	1.782	0.808	1.000	0.264	24.60	0.697
	6.746	3.060	3.785	1.000	93.11	2.637
	7.245	3.286	4.065	1.074	100.00	2.832
	2.558	1.160	1.436	0.379	35.31	1.000
LNG[a]	1.000	0.454	1.052	0.278	22.968	0.650
	2.205	1.000	2.320	0.613	50.646	1.434
	0.951	0.431	1.000	0.264	21.812	0.618
	3.600	1.633	3.785	1.000	82.62	2.340
	4.356	1.976	4.580	1.210	100.00	2.832
	11.501	5.217	1.616	0.427	35.31	1.000

For SI: 1 pound = 0.454 kg, 1 gallon = 3.785 L, 1 cubic foot = 0.02832 m^3, °C = [(°F)-32]/1.8, 1 pound per square inch atmosphere = 6.895 kPa.

a. The values listed for liquefied natural gas (LNG) are "typical" values. LNG is a mixture of hydrocarbon gases, and no two LNG streams have exactly the same composition.

INTERNATIONAL CODE COUNCIL®
Copyright © 2015 ICC. ALL RIGHTS RESERVED. Accessed by David Dammon on Jun 21, 2017 12:30:52 PM pursuant to License Agreement with ICC. No further reproduction or distribution authorized. ANY UNAUTHORIZED REPRODUCTION OR DISTRIBUTION IS A VIOLATION OF THE FEDERAL COPYRIGHT ACT AND THE LICENSE AGREEMENT, AND SUBJECT TO CIVIL AND CRIMINAL PENALTIES THEREUNDER.

INTERNATIONAL CODE COUNCIL®

Copyright © 2015 ICC. ALL RIGHTS RESERVED. Accessed by David Dammon on Jun 21, 2017 12:30:52 PM pursuant to License Agreement with ICC. No further reproduction or distribution authorized. ANY UNAUTHORIZED REPRODUCTION OR DISTRIBUTION IS A VIOLATION OF THE FEDERAL COPYRIGHT ACT AND THE LICENSE AGREEMENT, AND SUBJECT TO CIVIL AND CRIMINAL PENALTIES THEREUNDER.

Appendix H: Hazardous Materials Management Plan (HMMP) and Hazardous Materials Inventory Statement (HMIS) Instructions

The provisions contained in this appendix are not mandatory unless specifically referenced in the adopting ordinance.

General Comments

The requirements for a Hazardous Materials Management Plan (HMMP) or Hazardous Materials Inventory Statement (HMIS) have existed in some form since the 1988 edition of the legacy *Uniform Fire Code*. HMMP and HMIS must be submitted with permit applications when required by the fire code official. Appendix H provides an example format for these documents and clarifies the information to be submitted to the building code official for review of plans to determine compliance with the hazardous material requirements in *International Building Code*® (IBC®) Sections 414 and 415.

Appendix H was developed to provide a standard reporting format for businesses submitting an HMMP or HMIS to the fire or building code official based on the classification and quantities of materials that would be found on site for storage or use. Appendix H is not mandatory unless it is adopted by the jurisdiction. Some jurisdictions have already developed standard formats for submittal of HMMP and HMIS. Appendix H can be amended to provide this information to the regulated community.

Appendix H is divided into four distinct sections:

1. H101: Hazardous Materials Management Plan
2. H102: Hazardous Materials Inventory Statement
3. H103: Emergency Plan
4. H104: Referenced Standards

The sample forms in this appendix and available Material Safety Data Sheets (MSDS) provide the basis for the evaluations. The use of the forms should promote uniformity in the manner that hazardous materials information is provided, stored and used.

Purpose

Sections 407.5 and 407.6 of the *International Fire Code*® (IFC®) require that HMIS and HMMP be provided. Sections 5001.5.1 and 5001.5.2 specify their contents when these documents are required to be submitted with a permit application by the fire code official. They focus on three important goals. First, the HMIS is formatted so that plan reviewers can determine the correct occupancy classification of the building based on material hazards. Second, the HMMP and HMIS provide hazardous materials storage and use information necessary for inspectors. Third, the HMMP includes information that fire department operations personnel need before and during an emergency response.

The amounts of each hazard class in storage and use and the applicable maximum allowable quantities are provided in the HMIS.

SECTION H101 HMMP

❖HMMP have commonly been used as a tool to help facilitate tactical preplanning of Group H occupancies or facilities storing and handling large amounts of hazardous materials, such as petroleum storage terminals. They can be beneficial when preparing tactical preplans, but can be cumbersome if actually used as such. For example, consider a typical water treatment plant that could have large amounts of anhydrous chlorine, sulfur dioxide, sodium hydroxide and hydroflurosilic acid. To comply with all of the requirements of an HMMP for the various storage and process piping drawings, plant layout and process details could easily result in over 100 pages of information that would need to be read and understood. This level of information has not always been beneficial to emergency responders, especially given that Section 5003.9.1.1 requires that the permit holder designate responsible persons to serve as fire department liaisons in the event of an incident. It is expected that these responsible persons have a good understanding of the hazardous materials and the processes involving their storage and use.

INTERNATIONAL CODE COUNCIL®
Copyright © 2015 ICC. ALL RIGHTS RESERVED. Accessed by David Dammon on Jun 21, 2017 12:30:52 PM pursuant to License Agreement with ICC. No further reproduction or distribution authorized. ANY UNAUTHORIZED REPRODUCTION OR DISTRIBUTION IS A VIOLATION OF THE FEDERAL COPYRIGHT ACT AND THE LICENSE AGREEMENT, AND SUBJECT TO CIVIL AND CRIMINAL PENALTIES THEREUNDER.

H101.1 Part A (See Example Format in Figure 1).

1. Fill out items and sign the declaration.
2. Part A of this section is required to be updated and submitted annually, or within 30 days of a process or management change.

❖The business information portion of the plan is to identify the business, location and responsible people who will interact with the fire department, both during normal review periods and during an emergency incident. Also included is general information regarding the type of process, procedures and storage; and the number of people normally in the facility during each shift and time period the business is open to assist in accounting for them during an emergency. This plan assists not only the fire department, but also the business to establish a listing of employees to be accounted for during an emergency. The plan must be continually reviewed by the company to ensure the information is current and reviewed by the fire department during inspections.

H101.2 Part B–General Facility Description/Site Plan (See Example Format in Figure 2).

1. Provide a site plan on $8^1/_2$ by 11 inch (215 mm by 279 mm) paper, showing the locations of all buildings, structures, outdoor chemical control or storage and use areas, parking lots, internal roads, storm and sanitary sewers, wells and adjacent property uses. Indicate the approximate scale, northern direction and date the drawing was completed.

❖The facility description and site plan is a description of what occurs at the facility and where. This form must correlate the processes and procedures with locations on the building and site plans to be provided on Figure 3 (see commentary, Section H101.3).

H101.3 Part C–Facility Storage Map–Confidential Information (See Example Format in Figure 3).

1. Provide a floor plan of each building identified on the site plan as containing hazardous materials on $8^1/_2$-inch by 11-inch (215 mm by 279 mm) paper, identifying the northern direction, and showing the location of each storage and use area.
2. Identify storage and use areas, including hazard waste storage areas.
3. Show the following:
   - 3.1. Accesses to each storage and use area.
   - 3.2. Location of emergency equipment.
   - 3.3. Location where liaison will meet emergency responders.
   - 3.4. Facility evacuation meeting point locations.
   - 3.5. The general purpose of other areas within the building.
   - 3.6. Location of all aboveground and underground tanks to include sumps, vaults, below-grade treatment systems, piping, etc.
   - 3.7. Show hazard classes in each area.
   - 3.8. Show locations of all Group H occupancies, control areas, and exterior storage and use areas.
   - 3.9. Show emergency exits.

❖In creating the facility map, it is usually best to follow the map maker's guide of orientating the site so that North is at the top of the page, identified by the use of a compass arrow pointing toward the top of the page. Wherever possible, standard map symbols should be used. In any event, clear identification of required features is essential to the effectiveness of the map. NFPA 170, *Fire Safety and Emergency Symbols*, may be useful in map preparation.

Identify the use, storage and waste storage using different symbols. With the areas identified, it is important to identify the access to each area and emergency exits, and the location of emergency equipment that is available for the hazard. The designated location for the facility liaison to meet the fire department is important for the prompt exchange of information regarding the facility and as a location where employees are to go to be safe and out of the way of emergency responders.

The location of tanks at the facility, especially the underground tanks, piping and valves, and the material classes are needed in addition to the control areas or Group H occupancies within the buildings. Exterior storage and use areas also need to be clearly identified.

SECTION H102
HMIS

❖HMIS are commonly used for determining a building's occupancy classification and to satisfy the requirements in Section 105 for operational permits to store, handle, dispense and use hazardous materials. Section 5001.5.2 previously required that product information, the MSDS for each product, the hazard classification of the material using the criteria in Section 5001.2.2 and the maximum quantity stored on site be reported. While this information is helpful in understanding the hazards that may be associated with a particular occupancy or premises, it does not require reporting amounts in open or closed systems or the identification of the control areas locations.

H102.1 Inventory statement contents.

1. HMIS Summary Report (see Example Format in Figure 4).
   - 1.1. Complete a summary report for each control area and Group H occupancy.
   - 1.2. The storage summary report includes the HMIS Inventory Report amounts in storage, use-closed and use-open conditions.
   - 1.3. Provide separate summary reports for storage, use-closed and use-open conditions.

INTERNATIONAL CODE COUNCIL®
Copyright © 2015 ICC. ALL RIGHTS RESERVED. Accessed by David Dammon on Jun 21, 2017 12:30:52 PM pursuant to License Agreement with ICC. No further reproduction or distribution authorized. ANY UNAUTHORIZED REPRODUCTION OR DISTRIBUTION IS A VIOLATION OF THE FEDERAL COPYRIGHT ACT AND THE LICENSE AGREEMENT, AND SUBJECT TO CIVIL AND CRIMINAL PENALTIES THEREUNDER.

1.4. IBC/IFC Hazard Class.

1.5. Inventory Amount. [Solid (lb), Liquid (gal), Gas (cu ft, gal or lbs)].

1.6. IBC/IFC Maximum Allowable Quantity per control area (MAQ). (If applicable, double MAQ for sprinkler protection and/or storage in cabinets. For wholesale and retail sales occupancies, go to Tables 5003.11.1 and 5704.3.4.1 of the *International Fire Code* for MAQs.).

2. HMIS Inventory Report (see Example Format in Figure 5).

2.1. Complete an inventory report by listing products by location.

2.2. Product Name.

2.3. Components. (For mixtures specify percentages of major components if available.)

2.4. Chemical Abstract Service (CAS) Number. (For mixtures list CAS Numbers of major components if available.)

2.5. Location. (Identify the control area or, if it is a Group H occupancy, provide the classification, such as H-2, H-3, etc.)

2.6. Container with a capacity of greater than 55 gallons (208 L). (If product container, vessel or tank could exceed 55 gallons, indicate yes in column.)

2.7. Hazard Classification. (List applicable classifications for each product.)

2.8. Stored. (Amount of product in storage conditions.)

2.9. Closed. (Amount of product in use-closed systems.)

2.10. Open. (Amount of product in use-open systems.)

Facilities that have prepared, filed and submitted a Tier II Inventory Report required by the U.S. Environmental Protection Agency (USEPA) or required by a state that has secured USEPA approval for a similar form shall be deemed to have complied with this section.

❖Facilities that have prepared, filed and submitted a Tier II Inventory Report required by the U.S. Environmental Protection Agency (U.S. EPA) or required by a state which has secured U.S. EPA approval for a similar form shall be deemed to have complied with this section.

The HMIS Report is a comprehensive summary of the hazardous materials to be found at the facility for each control area or Group H occupancy area, and is to contain all of the information listed in Items 1 and 2 of this section (see also Section 5001.5.2). Note that this section of the HMIS is only needed if a SARA Tier II Report has not been filed.

SECTION H103
EMERGENCY PLAN

1. Emergency Notification. (See Example Format in Figure 6.)

2. Where OSHA or state regulations require a facility to have either an Emergency Action Plan (EAP) or an Emergency Response Plan (ERP), the EAP or ERP shall be included as part of the HMMP.

❖When state or Occupational Safety and Health Administration (OSHA) regulations require an Emergency Action Plan or Emergency Response Plan, the plan must provide contact information for liaisons of the business to the appropriate response agencies.

SECTION H104
REFERENCED STANDARDS

ICC	IBC—15 International Building Code	H102.1
ICC	IFC—15 International Fire Code	H102.1

INTERNATIONAL CODE COUNCIL®
Copyright © 2015 ICC. ALL RIGHTS RESERVED. Accessed by David Dammon on Jun 21, 2017 12:30:52 PM pursuant to License Agreement with ICC. No further reproduction or distribution authorized. ANY UNAUTHORIZED REPRODUCTION OR DISTRIBUTION IS A VIOLATION OF THE FEDERAL COPYRIGHT ACT AND THE LICENSE AGREEMENT, AND SUBJECT TO CIVIL AND CRIMINAL PENALTIES THEREUNDER.

FIGURE 1
HAZARDOUS MATERIALS MANAGEMENT PLAN
SECTION I: FACILITY DESCRIPTION

1. Business Name:_____ Phone:_____
   Address:_____

2. Person Responsible for the Business

Name:	Title:	Phone:
_____	_____	_____

3. Emergency Contacts:

Name:	Title:_____	Home Number:	Work Number:
_____	_____	_____	_____
_____	_____	_____	_____
_____	_____	_____	_____
_____	_____	_____	_____
_____	_____	_____	_____

4. Person Responsible for the Application/Principal Contact:

Name:	Title:	Phone:
_____	_____	_____

5. Principal Business Activity:

_____
_____
_____

6. Number of Employees:_____

7. Number of Shifts: _____
   a. Number of Employees per Shift:

_____
_____
_____

8. Hours of Operation: _____

INTERNATIONAL CODE COUNCIL®
Copyright © 2015 ICC. ALL RIGHTS RESERVED. Accessed by David Dammon on Jun 21, 2017 12:30:52 PM pursuant to License Agreement with ICC. No further reproduction or distribution authorized. ANY UNAUTHORIZED REPRODUCTION OR DISTRIBUTION IS A VIOLATION OF THE FEDERAL COPYRIGHT ACT AND THE LICENSE AGREEMENT, AND SUBJECT TO CIVIL AND CRIMINAL PENALTIES THEREUNDER.

FIGURE 2
HAZARDOUS MATERIALS MANAGEMENT PLAN SECTION I: FACILITY DESCRIPTION

INTERNATIONAL CODE COUNCIL®
Copyright © 2015 ICC. ALL RIGHTS RESERVED. Accessed by David Dammon on Jun 21, 2017 12:30:52 PM pursuant to License Agreement with ICC. No further reproduction or distribution authorized. ANY UNAUTHORIZED REPRODUCTION OR DISTRIBUTION IS A VIOLATION OF THE FEDERAL COPYRIGHT ACT AND THE LICENSE AGREEMENT, AND SUBJECT TO CIVIL AND CRIMINAL PENALTIES THEREUNDER.

FIGURE 3
HAZARDOUS MATERIALS MANAGEMENT PLAN SECTION I: FACILITY DESCRIPTION PART C—FACILITY MAP

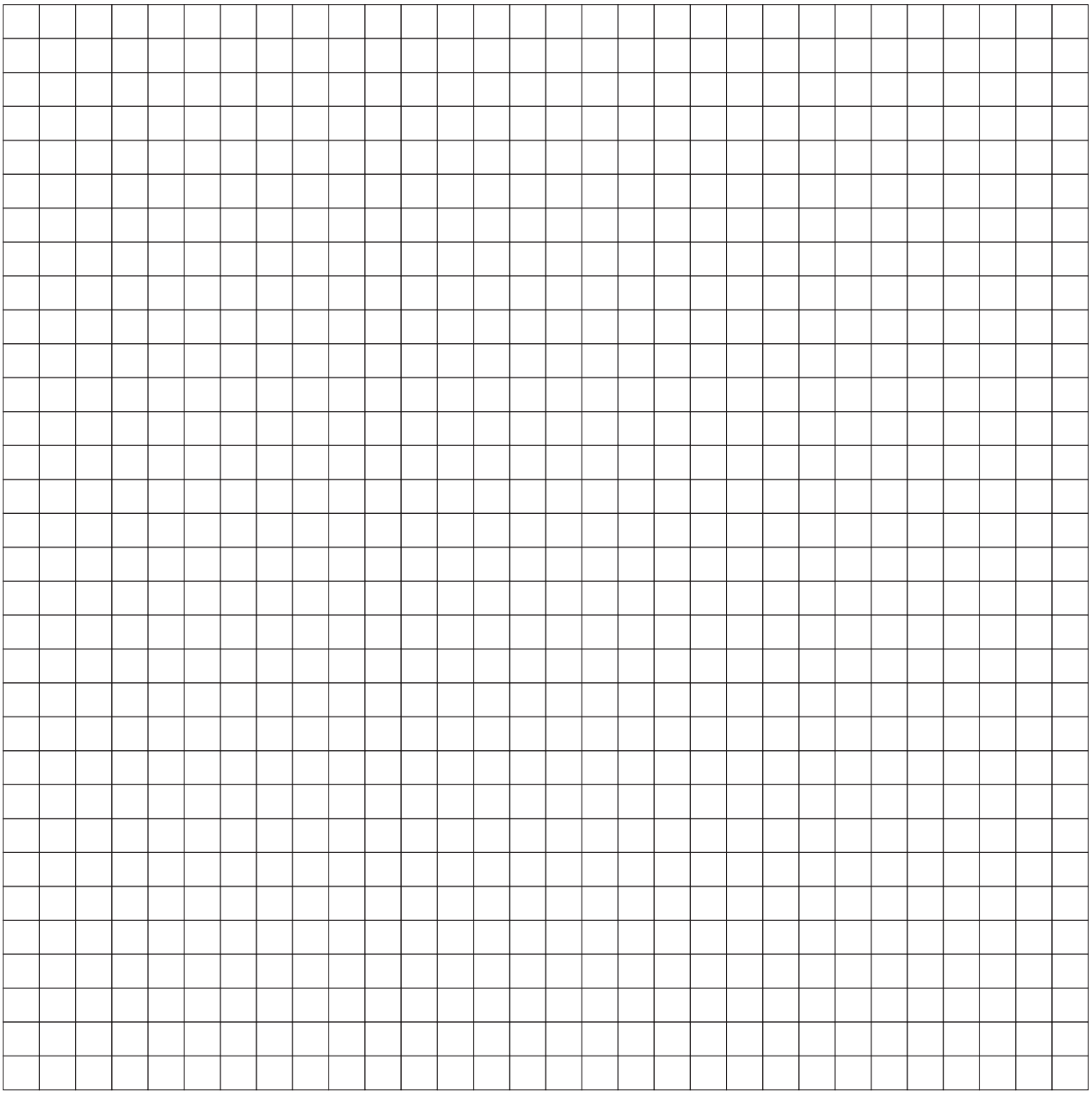

Business Name	Date
Address	Page of

INTERNATIONAL CODE COUNCIL®
Copyright © 2015 ICC. ALL RIGHTS RESERVED. Accessed by David Dammon on Jun 21, 2017 12:30:52 PM pursuant to License Agreement with ICC. No further reproduction or distribution authorized. ANY UNAUTHORIZED REPRODUCTION OR DISTRIBUTION IS A VIOLATION OF THE FEDERAL COPYRIGHT ACT AND THE LICENSE AGREEMENT, AND SUBJECT TO CIVIL AND CRIMINAL PENALTIES THEREUNDER.

FIGURE 4
SECTION II—HAZARDOUS MATERIALS INVENTORY STATEMENT (HMIS) HMIS SUMMARY REPORT[a] (Storage[b] Conditions)[c]

IBC/IFC HAZARD CLASS	HAZARD CLASS	INVENTORY AMOUNT			IBC/IFC MAXIMUM ALLOWABLE QUANTITY[d]		
	(Abbrev)	Solid (lb)	Liquid (gal)	Gas (cu ft, gal, lb)	Solid (lb)	Liquid (gal)	Gas (cu ft, gal, lb)
Combustible Liquid	C2		5			120	
	C3A					330	
	C3B		6			13,200	
Combustible Fiber	Loose/Baled						
Cryogenics, Flammable	Cryo-Flam					45	
Cryogenic, Oxidizing	Cryo-OX					45	
Flammable Gas	FLG						
(Gaseous)				150			1,000
(Liquefied)						30	
Flammable Liquid	F1A					30	
	F1B & F1C		5			120	
Combination (1A, 1B, 1C)			5			120	
Flammable Solid	FLS				125		
Organic Peroxide	OPU				0		
	OP1				5		
	OP2				50		
	OP3				125		
	OP4				NL		
	OP5				NL		
Oxidizer	OX4				0		
	OX3				10		
	OX2				250		
	OX1				4,000		

a. Complete a summary report for each control area and Group H occupancy.
b. Storage = storage + use-closed + use-open systems.
c. Separate reports are required for use-closed and use-open systems.
d. Include increases for sprinklefrs or storage in cabinets, if applicable.
(This is an example; add additional hazard classes as needed.)

INTERNATIONAL CODE COUNCIL®
Copyright © 2015 ICC. ALL RIGHTS RESERVED. Accessed by David Dammon on Jun 21, 2017 12:30:52 PM pursuant to License Agreement with ICC. No further reproduction or distribution authorized. ANY UNAUTHORIZED REPRODUCTION OR DISTRIBUTION IS A VIOLATION OF THE FEDERAL COPYRIGHT ACT AND THE LICENSE AGREEMENT, AND SUBJECT TO CIVIL AND CRIMINAL PENALTIES THEREUNDER.

FIGURE 5
SECTION II — HAZARDOUS MATERIALS INVENTORY STATEMENT (HMIS) HMIS INVENTORY REPORT
(Sort Products Alphabetically by Location of Product and then Alphabetically by Product Name)

Product Name (Components)[c]	CAS Number	Location[a]	Container > 55 gal[b]	Haz Class 1	Haz Class 2	Haz Class 3	Stored (lbs)	Stored (gal)	Stored (gas)[d]	Closed (lbs)	Closed (gal)	Closed gas[d]	Open (lbs)	Open (gal)
ACETYLENE (Acetylene gas)	74-86-2	Control Area 1		FLG	UR2				150					
BLACK AEROSOL SPRAY PAINT (Mixture)	Mixture	Control Area 1		A-L3			24							
GASOLINE, UNLEADED (Gasoline-Mixture) Methyl-t-Butyl-Ether-15% Diisopropyl Ether-7% Ethanol-11% Toluene-12% Xylene-11%	8006-61-9 1634-04-4 108-20-3 64-17-5 108-88-3 1330-20-7	Control Area 1		F1B				5						
MOTOR OIL-10W40 (Hydrotreated Heavy Paraffinic Distillate-85%; Additives-20%)	64742-54-7 Mixture	Control Area 1		C3B				3						
DIESEL (Diesel-99-100%; Additives)	68476-34-6 Proprietary	Control Area 2	Yes	C2				225						
TRANSMISSION FLUID (Oil-Solvent-Neutral; Performance Additives)	64742-65-0	Control Area 2		C3B				3						
OXYGEN, GAS (Oxygen)	7782-44-7	H-3		OXG					5,000					

a. Identify the control area or, if it is a Group H occupancy, provide the classification, such as H-2, H-3, etc.
b. If the product container, vessel or tank could exceed 55 gallons, indicate yes in the column.
c. Specify percentages of main components if available.
d. In cubic feet, gallons or pounds.
(This is an example; add additional hazard classes as needed.)

INTERNATIONAL CODE COUNCIL®
Copyright © 2015 ICC. ALL RIGHTS RESERVED. Accessed by David Dammon on Jun 21, 2017 12:30:52 PM pursuant to License Agreement with ICC. No further reproduction or distribution authorized. ANY UNAUTHORIZED REPRODUCTION OR DISTRIBUTION IS A VIOLATION OF THE FEDERAL COPYRIGHT ACT AND THE LICENSE AGREEMENT, AND SUBJECT TO CIVIL AND CRIMINAL PENALTIES THEREUNDER.

FIGURE 6
HAZARDOUS MATERIALS MANAGEMENT PLAN
SECTION III: EMERGENCY PLAN

1. In the event of an emergency, the following shall be notified:
   a. Facility Liaison

Name	Title	Home Number	Work Number
_____	_____	_____	_____
_____	_____	_____	_____
_____	_____	_____	_____
_____	_____	_____	_____
_____	_____	_____	_____

   b. Agency

Agency		Contact	Phone Number
Fire Department	_____	_____	_____
LEPC	_____	_____	_____
Other	_____	_____	_____

INTERNATIONAL CODE COUNCIL®
Copyright © 2015 ICC. ALL RIGHTS RESERVED. Accessed by David Dammon on Jun 21, 2017 12:30:52 PM pursuant to License Agreement with ICC. No further reproduction or distribution authorized. ANY UNAUTHORIZED REPRODUCTION OR DISTRIBUTION IS A VIOLATION OF THE FEDERAL COPYRIGHT ACT AND THE LICENSE AGREEMENT, AND SUBJECT TO CIVIL AND CRIMINAL PENALTIES THEREUNDER.

INTERNATIONAL CODE COUNCIL®

Copyright © 2015 ICC. ALL RIGHTS RESERVED. Accessed by David Dammon on Jun 21, 2017 12:30:52 PM pursuant to License Agreement with ICC. No further reproduction or distribution authorized. ANY UNAUTHORIZED REPRODUCTION OR DISTRIBUTION IS A VIOLATION OF THE FEDERAL COPYRIGHT ACT AND THE LICENSE AGREEMENT, AND SUBJECT TO CIVIL AND CRIMINAL PENALTIES THEREUNDER.

Appendix I: Fire Protection Systems—Noncompliant Conditions

The provisions contained in this appendix are not mandatory unless specifically referenced in the adopting ordinance.

General Comments

Appendix I addresses unsafe conditions for fire protection systems. This particular appendix was developed by the ICC Hazard Abatement in Existing Buildings Committee to help building owners and fire code officials improve their awareness of fire protection system deficiencies that have a high probability of causing a system to be inoperative.

Appendix I does not contain any requirements for identifying unsafe conditions in alternative fire-extinguishing systems such as dry chemical, carbon dioxide or clean agent systems or wet chemical alternative fire extinguishing systems designed to protect commercial kitchen cooking activities.

While it is not a comprehensive list of inspection and maintenance requirements for fire protection systems, Appendix I is intended to identify problems that are readily observable during fire inspections and can be used in conjunction with Chapter 9 of the and the applicable NFPA standards for the indicated fire protection equipment and systems and their maintenance. For example, water supply reliability data for water-based fire protection systems show that the major causes for failure of automatic sprinkler systems include shutting off the source of the water supply, not extending sprinkler protection into rooms or areas that are not protected, or the introducting goods or commodities that cannot be controlled based on the sprinkler system's discharge density.

Excluding the general provision in Section I101.1, the appendix is divided into two sections. Section I101.2 addresses noncompliant conditions that require the replacement of sprinklers and system gauges, including sprinklers that are damaged, painted or improperly oriented. It also requires sprinklers manufactured in 1919 or earlier to be replaced. Section I101.3 addresses noncompliant conditions for automatic sprinkler systems, standpipes, their fire department connections, fire pumps, fire alarm and detections systems and portable fire extinguishers.

Purpose

The requirements in Appendix I focus on the identification of unsafe conditions for water-based fire protection systems including automatic sprinkler systems, standpipes, fire pumps and automatic fire detection and signaling systems. It also identifies unsafe conditions for portable fire extinguishers.

SECTION I101
NONCOMPLIANT CONDITIONS

I101.1 General. This appendix is intended to identify conditions that can occur where fire protection systems are not properly maintained or components have been damaged. This appendix is not intended to provide comprehensive inspection, testing and maintenance requirements, which are found in NFPA 10, 25 and 72. Rather, its intent is to identify problems that are readily observable during fire inspections.

❖During inspections, it is important to observe and report conditions that may lead to failure of fire protection systems. Section 901.6 references the system installation standards that refer to maintenance of the equipment and or system(s) being reviewed. This section lists items to be included. Note the list includes some, but not all, of the items that might need review. The ICC has published a document, *Fire Plan Review and Inspection Guidelines,* that provides a more comprehensive look at this issue.

I101.2 Noncompliant conditions requiring component replacement. The following conditions shall be deemed noncompliant and shall cause the related component(s) to be replaced to comply with the provisions of this code:

1. Sprinkler heads having any of the following conditions:
   - 1.1. Signs of leakage.
   - 1.2. Paint or other ornamentation that is not factory applied.
   - 1.3. Evidence of corrosion including, but not limited to, discoloration or rust.
   - 1.4. Deformation or damage of any part.
   - 1.5. Improper orientation of sprinkler head.
   - 1.6. Empty glass bulb.
   - 1.7. Sprinkler heads manufactured prior to 1920.
   - 1.8. Replacement sprinkler heads that do not match existing sprinkler heads in orifice size, K-factor temperature rating, coating or deflector type.

INTERNATIONAL CODE COUNCIL®
Copyright © 2015 ICC. ALL RIGHTS RESERVED. Accessed by David Dammon on Jun 21, 2017 12:30:52 PM pursuant to License Agreement with ICC. No further reproduction or distribution authorized. ANY UNAUTHORIZED REPRODUCTION OR DISTRIBUTION IS A VIOLATION OF THE FEDERAL COPYRIGHT ACT AND THE LICENSE AGREEMENT, AND SUBJECT TO CIVIL AND CRIMINAL PENALTIES THEREUNDER.

1.9. Sprinkler heads for the protection of cooking equipment that have not been replaced within one year.

2. Water pressure and air pressure gauges that have been installed for more than 5 years and have not been tested to within 3 percent accuracy.

❖Item 1 addresses sprinkler heads only, as they are the component that is replaced in the system after activation and where an error may be made in the process replacing of a sprinkler head. Note that some of the items are easily found by a visual inspection, while others will require a review of the inspection file (1.7, 1.8, and 1.9) to determine if the sprinkler heads are in compliance. Item 2 also belongs to the group that will need to be validated from information in the inspection file.

I101.3 Noncompliant conditions requiring component repair or replacement. The following shall be deemed noncompliant conditions and shall cause the related component(s) to be repaired or replaced to comply with the provisions of this code:

1. Sprinkler and standpipe system piping and fittings having any of the following conditions:
   1.1. Signs of leakage.
   1.2. Evidence of corrosion.
   1.3. Misalignment.
   1.4. Mechanical damage.
2. Sprinkler piping support having any of the following conditions:
   2.1. Materials resting on or hung from sprinkler piping.
   2.2. Damaged or loose hangers or braces.
3. Class II and Class III standpipe systems having any of the following conditions:
   3.1. No hose or nozzle, where required.
   3.2. Hose threads incompatible with fire department hose threads.
   3.3. Hose connection cap missing.
   3.4. Mildew, cuts, abrasions and deterioration evident.
   3.5. Coupling damaged.
   3.6. Gaskets missing or deteriorated.
   3.7. Nozzle missing or obstructed.
4. Hose racks and cabinets having any of the following conditions:
   4.1. Difficult to operate or damaged.
   4.2. Hose improperly racked or rolled.
   4.3. Inability of rack to swing 90 degrees (1.57 rad) out of the cabinet.
   4.4. Cabinet locked, except as permitted by this code.
   4.5. Cabinet door will not fully open.
   4.6. Door glazing cracked or broken.
5. Portable fire extinguishers having any of the following conditions:
   5.1. Broken seal or tamper indicator.
   5.2. Expired maintenance tag.
   5.3. Pressure gauge indicator in “red.”
   5.4. Signs of leakage or corrosion.
   5.5. Mechanical damage, denting or abrasion of tank.
   5.6. Presence of repairs such as welding, soldering or brazing.
   5.7. Damaged threads.
   5.8. Damaged hose assembly, couplings or swivel joints.
6. Fire alarm and detection control equipment, initiating devices and notification appliances having any of the following conditions:
   6.1. Corroded or leaking batteries or terminals.
   6.2. Smoke detectors having paint or other ornamentation that is not factory-applied.
   6.3. Mechanical damage to heat or smoke detectors.
   6.4. Tripped fuses.
7. Fire department connections having any of the following conditions:
   7.1. Fire department connections are not visible or accessible from the fire apparatus access road.
   7.2. Couplings or swivels are damaged.
   7.3. Plugs and caps are missing or damaged.
   7.4. Gaskets are deteriorated.
   7.5. Check valve is leaking.
   7.6. Identification signs are missing.
8. Fire pumps having any of the following conditions:
   8.1. Pump room temperature is less than 40°F (4.4°C).
   8.2. Ventilating louvers are not freely operable.
   8.3. Corroded or leaking system piping.
   8.4. Diesel fuel tank is less than two-thirds full.
   8.5. Battery readings, lubrication oil or cooling water levels are abnormal.

❖This section lists inspection items for components in various types of fire protection systems. All of these are visual or manipulative items that can be easily verified during an inspection.

INTERNATIONAL CODE COUNCIL®
Copyright © 2015 ICC. ALL RIGHTS RESERVED. Accessed by David Dammon on Jun 21, 2017 12:30:52 PM pursuant to License Agreement with ICC. No further reproduction or distribution authorized. ANY UNAUTHORIZED REPRODUCTION OR DISTRIBUTION IS A VIOLATION OF THE FEDERAL COPYRIGHT ACT AND THE LICENSE AGREEMENT, AND SUBJECT TO CIVIL AND CRIMINAL PENALTIES THEREUNDER.

SECTION I102
REFERENCED STANDARDS

NFPA 10—13	Standard for Portable Fire Extinguishers	I101.1
NFPA 25—13	Standard for the Inspection, Testing and Maintenance of Water-based Fire Protection Systems	I101.1
NFPA 72—13	National Fire Alarm and Signaling Code	I101.1

INTERNATIONAL CODE COUNCIL®
Copyright © 2015 ICC. ALL RIGHTS RESERVED. Accessed by David Dammon on Jun 21, 2017 12:30:52 PM pursuant to License Agreement with ICC. No further reproduction or distribution authorized. ANY UNAUTHORIZED REPRODUCTION OR DISTRIBUTION IS A VIOLATION OF THE FEDERAL COPYRIGHT ACT AND THE LICENSE AGREEMENT, AND SUBJECT TO CIVIL AND CRIMINAL PENALTIES THEREUNDER.

INTERNATIONAL CODE COUNCIL®
Copyright © 2015 ICC. ALL RIGHTS RESERVED. Accessed by David Dammon on Jun 21, 2017 12:30:52 PM pursuant to License Agreement with ICC. No further reproduction or distribution authorized. ANY UNAUTHORIZED REPRODUCTION OR DISTRIBUTION IS A VIOLATION OF THE FEDERAL COPYRIGHT ACT AND THE LICENSE AGREEMENT, AND SUBJECT TO CIVIL AND CRIMINAL PENALTIES THEREUNDER.

Appendix J: Building Information Signs

The provisions contained in this appendix are not mandatory unless specifically referenced in the adopting ordinance.

General Comments

Prefire or preincident planning is a long-standing operational tool wherein information is collected by fire code officials and fire department personnel to assist in identifying hazards and the equipment, supplies, personnel, skills and procedures needed to deal with a potential incident in a building.

Purpose

The purpose of Appendix J is to establish standard guidelines for prefire plans. It sets forth requirements for a building information sign (BIS) that may be useful to fire fighters in understanding basic information about the building where the sign is posted. The provisions provide a uniform format so that the type of information provided to emergency responders is consistent across the jurisdiction's territory.

SECTION J101 GENERAL

J101.1 Scope. New buildings shall have a building information sign(s) that shall comply with Sections J101.1.1 through J101.7. Existing buildings shall be brought into conformance with Sections J101.1 through J101.9 when one of the following occurs:

1. The fire department conducts an annual inspection intended to verify compliance with this section, or any required inspection.
2. When a change in use or occupancy has occurred.

   Exceptions:

   1. Group U occupancies.
   2. One- and two-family dwellings.

❖Because building information is critical to executing an effective fire attack, with the exception of one- and two-family dwellings and Group U occupancies, the provisions in Section J101.1 are applicable to all new buildings and are retroactive to any building that undergoes a fire inspection or change of occupancy.

J101.1.1 Sign location. The building information sign shall be placed at one of the following locations:

1. Upon the entry door or sidelight at a minimum height of 42 inches (1067 mm) above the walking surface on the address side of the building or structure.
2. Upon the exterior surface of the building or structure on either side of the entry door, not more than 3 feet (76 mm) from the entrance door, at a minimum height of 42 inches (1067 mm) above the walking surface on the address side of the building or structure.
3. Conspicuously placed inside an enclosed entrance lobby, on any vertical surface within 10 feet (254 mm) of the entrance door at a minimum height of 42 inches (1067 mm) above the walking surface.
4. Inside the building's fire command center.
5. On the exterior of the fire alarm control unit or on the wall immediately adjacent to the fire alarm control unit door where the alarm panel is located in the enclosed main lobby.

❖Acceptable sign locations are specified in Section J101.1.1 and include the entrance to a building on the side that has the posted address, the interior of a building's enclosed entrance lobby, the fire command center or at a building's fire alarm control unit. The chosen location should be approved by both the fire code official and the fire chief so that it is consistent with the tactical approaches to the building.

J101.1.2 Sign features. The building information sign shall consist of all of the following:

1. White reflective background with red letters.
2. Durable material.
3. Numerals shall be Roman or Latin numerals, as required, or alphabet letters.
4. Permanently affixed to the building or structure in an approved manner.

❖Section J101.1.2 specifies the materials of construction of the BIS and requires that it be permanently attached to the building in a manner acceptable to the fire code official based on the materials of construction of the building.

INTERNATIONAL CODE COUNCIL®
Copyright © 2015 ICC. ALL RIGHTS RESERVED. Accessed by David Dammon on Jun 21, 2017 12:30:52 PM pursuant to License Agreement with ICC. No further reproduction or distribution authorized. ANY UNAUTHORIZED REPRODUCTION OR DISTRIBUTION IS A VIOLATION OF THE FEDERAL COPYRIGHT ACT AND THE LICENSE AGREEMENT, AND SUBJECT TO CIVIL AND CRIMINAL PENALTIES THEREUNDER.

J101.1.3 Sign shape. The building information sign shall be a Maltese cross as shown in Figure J101.1.3.

❖The BIS is configured as a Maltese cross which is a traditional symbol universally recognized by the U.S. fire service.

J101.1.4 Sign size and lettering. The minimum size of the building information sign and lettering shall be in accordance with the following:

1. The width and height shall be 6 inches by 6 inches (152 mm by 152 mm).
2. The height or width of each Maltese cross wing area shall be $1^1/_8$ inches (29 mm) and have a stroke width of $^1/_2$ inch (13 mm).
3. The center of the Maltese cross, a circle or oval, shall be 3 inches (76 mm) in diameter and have a stroke width of $^1/_2$ inch (6 mm).
4. All Roman numerals and alphabetic designations, shall be $1^1/_4$ inch (32 mm) height and have a stroke width of $^1/_4$ inch (6 mm).

❖The BIS must meet the dimensional requirements in Section J101.1.4 and be assembled using reflective materials that are visible in the dark (see Section J101.1.2).

J101.2 Sign designations. Designations shall be made based upon the construction type, content, hazard, *fire protection systems*, life safety and occupancy. Where multiple designations occur within a classification category, the designation used shall be based on the greatest potential risk.

❖Section J101.2 requires the sign to convey pertinent information about the building to assist the incident commander in sizing up the incident and deploying resources safely and effectively.

J101.3 Construction type (top wing). The construction types shall be designated by assigning the appropriate Roman numeral, and letter, placed inside the top wing of the Maltese cross. The hourly rating provided is for the structural framing in accordance with Table 601 of the *International Building Code*.

CONSTRUCTION TYPE	FIRE-RESISTANCE RATING
IA—Noncombustible	3 Hours
IB—Noncombustible	2 Hours
IIA—Noncombustible	1 Hour
IIB—Noncombustible	0 Hours
IIIA—Noncombustible/combustible	1 Hour
IIIB—Noncombustible/combustible	0 Hours
IV—Heavy timber (HT)	HT
VA—Combustible	1 Hour
VB—Combustible	0 Hours

❖Section J101.3 requires the sign to convey the building's construction type based on its *International Building Code*® (IBC®) construction classification. See Chapter 6 of the IBC for detailed descriptions of the construction types.

J101.4 Fire protection systems (right wing). The *fire protection system* shall be designated by determining its level of protection and assigning the appropriate designation to the right wing of the Maltese cross. Where multiple systems are provided, all shall be listed:

AS *Automatic sprinkler system* installed throughout
DS Dry sprinkler system and designated areas
FA Fire alarm system

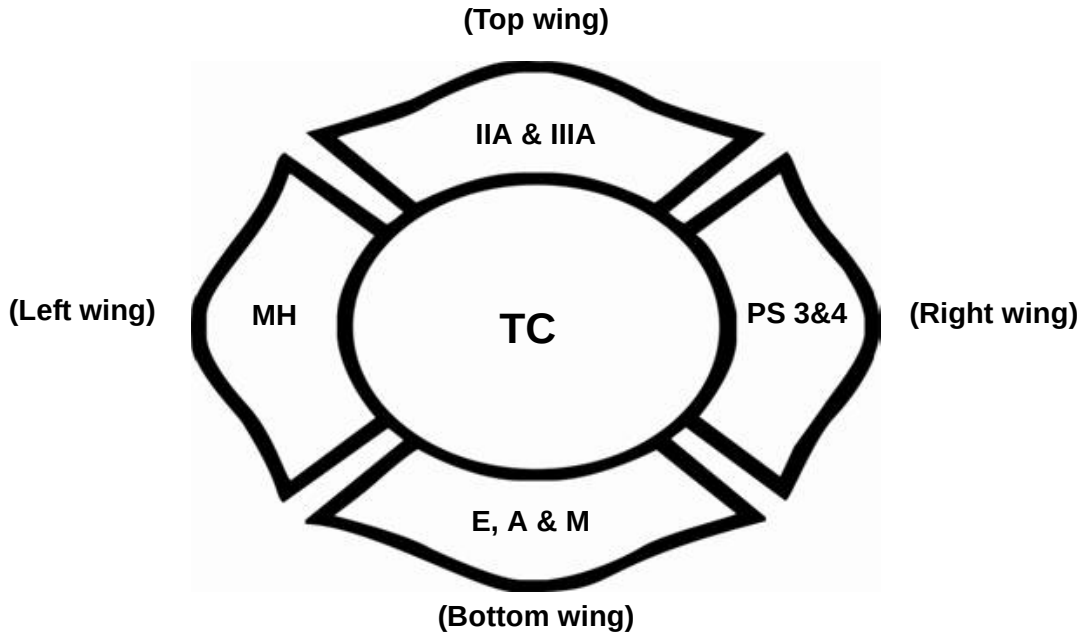

FIGURE J101.3.1
EXAMPLE OF COMPLETED BUILDING INFORMATION SIGN

INTERNATIONAL CODE COUNCIL®
Copyright © 2015 ICC. ALL RIGHTS RESERVED. Accessed by David Dammon on Jun 21, 2017 12:30:52 PM pursuant to License Agreement with ICC. No further reproduction or distribution authorized. ANY UNAUTHORIZED REPRODUCTION OR DISTRIBUTION IS A VIOLATION OF THE FEDERAL COPYRIGHT ACT AND THE LICENSE AGREEMENT, AND SUBJECT TO CIVIL AND CRIMINAL PENALTIES THEREUNDER.

FP Fire pump

FW *Fire wall* and designated areas

PAS Pre-action sprinkler system and designated floor

PS Partial *automatic sprinkler system*, and designate floor

CES Chemical extinguishing system and designated area

CS Combination sprinkler and standpipe system

S Standpipe system

NS No system installed

❖Section J101.4 requires the sign to convey the type of fire protection systems in the building. If a building, even a nonsprinklered building, is partially protected by an automatic sprinkler system, the areas or floors of the building that are protected must be identified.

J101.5 Occupancy type (bottom wing). The occupancy of a building or structure shall be designated in accordance with the occupancy classification found in Section 302.1 of the *International Building Code* and the corresponding designation shall be placed in the bottom wing of the Maltese cross. Where a building or structure contains a mixture of uses and occupancies; all uses and occupancies shall be identified.

A Assembly

B Business

E Educational

F Factory or Industrial

H High Hazard

I Institutional

M Mercantile

R Residential

❖Section J101.5 requires the sign to convey the occupancy classification. In mixed-occupancy buildings all occupancy groups are required to be identified on the sign. See the definitions of "Occupancy classification" in Chapter 2 of the code or Chapter 3 of the IBC.

J101.6 Hazards of content (left wing). The hazards of building contents shall be designated by one of the following classifications as defined in NFPA 13 and the appropriate designation shall be placed inside the left wing of the Maltese cross:

LH Light hazard

MH Moderate hazard

HH High hazard

❖Section J101.6 requires the sign to convey an estimation of the building's fuel load using the hazard classification criteria of NFPA 13 for light, ordinary and extra-hazard occupancies. The section does not align the classifications with the NFPA 13 definitions for occupancy hazard classifications; however, the intent is to provide a standard method for estimating a building's fuel load. Fire code officials should ensure that the selected fuel load classification system is consistent so its application in applying a designation to the information sign is uniform to avoid confusion among emergency responders.

J101.7 Tactical considerations (center circle). The center circle shall include the name of the local fire service and when required the letters TC for tactical considerations. Where fire fighters conduct preplan operations, a unique situation(s) for tactical considerations shall be identified and the information provided to the fire dispatch communications center to further assist fire fighters in identifying that there is special consideration(s) for this occupancy. Special consideration designations include, but are not limited to:

1. Impact-resistant drywall.
2. Impact-resistant glazing, such as blast or hurricane-type glass.
3. All types of roof and floor structural members including but not limited to post-tension concrete, bar joists, solid wood joists, rafters, trusses, cold-formed galvanized steel, I-joists and I-beams; green roof with vegetation, soil and plants.
4. Hazardous materials (explosives, chemicals, plastics, etc.).
5. Solar panels and DC electrical energy.
6. HVAC system; and smoke management system for pressurization and exhaust methods.
7. Other unique characteristic(s) within the building that are ranked according to a potential risk to occupants and fire fighters.

❖Section J101.7 requires the sign to convey relevant tactical information that can be used by fire fighters prior to commencing an interior fire attack. This could include the use of terrorism-resistant building materials; impact-resistant glazing or construction; the storage or use of hazardous materials; certain types of structural components that may have a propensity for rapid failure under fire exposure or any other potential hazards that could impact the health and safety of emergency responders.

J101.8 Sign classification maintenance, building information. Sign maintenance shall comply with each of the following:

1. Fire departments in the jurisdiction shall define the designations to be placed within the sign.
2. Fire departments in the jurisdiction shall conduct annual inspections to verify compliance with this section of the code and shall notify the *owner*, or the *owner's* agent, of any required updates to the sign in accordance with fire department designations and the *owner*, or the *owner's* agent, shall comply within 30 days.

INTERNATIONAL CODE COUNCIL®
Copyright © 2015 ICC. ALL RIGHTS RESERVED. Accessed by David Dammon on Jun 21, 2017 12:30:52 PM pursuant to License Agreement with ICC. No further reproduction or distribution authorized. ANY UNAUTHORIZED REPRODUCTION OR DISTRIBUTION IS A VIOLATION OF THE FEDERAL COPYRIGHT ACT AND THE LICENSE AGREEMENT, AND SUBJECT TO CIVIL AND CRIMINAL PENALTIES THEREUNDER.

3. The owner of a building shall be responsible for the maintenance and updates to the sign in accordance with fire department designations.

❖Prior to implementing the requirements for building information signs, Section J101.8 requires that the fire department define unique or special designations required on signs. If a building warrants this particular sign, the owner has 30 days to provide and install it. As with other warning signage and markings required throughout the code, this section also requires that the BIS be maintained so that it continues to be effective in providing important tactical information to first responders.

J101.9 Training. Jurisdictions shall train fire department personnel on Sections J101.1 through J101.9.

❖Section J101.9 requires the jurisdiction to train all fire department personnel on the provisions in Appendix J to maximize the effectiveness of the BIS. Jurisdictions should also consider cross-training with neighboring fire departments that are part of the area's mutual-aid network.

SECTION J102
REFERENCED STANDARDS

ICC	IBC—15	International Building Code	J101.3, J101.5
NFPA	13—13	Standard for the Installation of Sprinkler Systems	J101.6

INTERNATIONAL CODE COUNCIL®
Copyright © 2015 ICC. ALL RIGHTS RESERVED. Accessed by David Dammon on Jun 21, 2017 12:30:52 PM pursuant to License Agreement with ICC. No further reproduction or distribution authorized. ANY UNAUTHORIZED REPRODUCTION OR DISTRIBUTION IS A VIOLATION OF THE FEDERAL COPYRIGHT ACT AND THE LICENSE AGREEMENT, AND SUBJECT TO CIVIL AND CRIMINAL PENALTIES THEREUNDER.

Appendix K: Construction Requirements for Existing Ambulatory Care Facilities

The provisions contained in this appendix are not mandatory unless specifically referenced in the adopting ordinance.

General Comments

This is an especially important option for federal authorities having jurisdiction (AHJ), which have long-standing minimum fire and life safety standards for ambulatory care facilities. Those federal standards were applied to new and existing construction long before the creation of the ambulatory care facility use that currently exists in the *International Building Code*® (IBC®). Therefore, we have a situation where some (but not all) ambulatory care facilities were built with very specific defend-in-place features. This subset of facilities were certified by the federal government as "ambulatory surgical facilities." Many other medical facilities that would be classified today as ambulatory care were not required to have defend-in-place features, such as smoke compartmentation. The federal AHJ highly value these defend-in-place concepts and need retroactive requirements.

This appendix would also be useful for those local and state jurisdictions that are specifically focused on ensuring safety for existing ambulatory care facilities. Surgery centers constructed as recently as 2009 would not have defend-in-place features required by the ICC family of codes. This appendix could be used to assess post-2009 surgery centers and freestanding emergency departments. It could also be used to bring those earlier facilities into compliance with current standards at the discretion of the adopting jurisdiction.

The technical requirements are based on current IBC language. The significant difference from the IBC is a relaxation of the sprinkler requirement for existing facilities. This appendix would only require retroactive sprinklering of unprotected construction, which is consistent with the overall concept of current federal requirements.

Purpose

This section is intended to provide jurisdictions an option for assessing minimum fire and life safety requirements for buildings containing ambulatory care facilities. While this appendix is written with the intent to apply retroactive minimum standards, it is recognized that ambulatory care requirements are relatively recent additions to the code. For that reason, these requirements are presented as an appendix, so that the adopting authority can exercise judgment in the adoption and application of this section.

SECTION K101 GENERAL

K101.1 Scope. The provisions of this chapter shall apply to existing buildings containing ambulatory care facilities in addition to the requirements of Chapter 11 of the *International Fire Code*. Where the provisions of this chapter conflict with either the construction requirements in Chapter 11 of the *International Fire Code* or the construction requirements that applied at the time of construction, the most restrictive provision shall apply.

❖ These provisions are similar in application to those found in Chapter 11 for Group I-2 occupancies. In other words, they are construction requirements for existing buildings. Chapter 11 provides various requirements that apply to a number of different occupancy classifications for existing buildings. Section 1105 is unique to Group I-2 occupancies. This appendix is focused on ambulatory care facilities and helps those jurisdictions that want such facilities to be consistent with federal requirements. This section basically states that compliance with Chapter 11 and this appendix is necessary to fully address existing ambulatory care facilities. If there is a conflict, the most restrictive provison would apply.

It should be noted that the *International Existing Building Code*® (IEBC®) work-area method would specifically require compliance with IBC Section 422 where the change of occupancy (whether use or occupancy classification) is to an ambulatory care facility. In other words, if an office building was changed to an ambulatory care facility, IBC Section 422, which is more restrictive than this appendix, would apply.

K101.2 Intent. The intent of this appendix is to provide a minimum degree of fire and life safety to persons occupying

INTERNATIONAL CODE COUNCIL®
Copyright © 2015 ICC. ALL RIGHTS RESERVED. Accessed by David Dammon on Jun 21, 2017 12:30:52 PM pursuant to License Agreement with ICC. No further reproduction or distribution authorized. ANY UNAUTHORIZED REPRODUCTION OR DISTRIBUTION IS A VIOLATION OF THE FEDERAL COPYRIGHT ACT AND THE LICENSE AGREEMENT, AND SUBJECT TO CIVIL AND CRIMINAL PENALTIES THEREUNDER.

and existing buildings containing ambulatory care facilities where such buildings do not comply with the minimum requirements of the *International Building Code*.

❖ This appendix is primarily applicable to ambulatory care facilities that were not regulated by the federal requirements for healthcare and built prior to publication of the 2009 IBC. Most ambulatory care facilities will already meet these minimum requirements and no changes will be necessary.

SECTION K102
FIRE SAFETY REQUIREMENTS FOR EXISTING AMBULATORY CARE FACILITIES

K102.1 Separation. Ambulatory care facilities where the potential exists for four or more care recipients to be incapable of self-preservation at any time, whether rendered incapable by staff or staff has accepted responsibility for a care recipient already incapable, shall be separated from adjacent spaces, corridors or tenants with a fire partition installed in accordance with Section 708 of the *International Building Code*.

❖ This section is consistent with IBC Section 422.2. Many existing facilities may already meet this requirement. This applies only to those that were not addressed by the CMS program standards.

K102.2 Smoke compartments. Where the aggregate area of one or more ambulatory care facilities is greater than 10,000 square feet (929 m^2) on one story, the story shall be provided with a *smoke barrier* to subdivide the *story* into no fewer than two *smoke compartments*. The area of any one such *smoke compartment* shall be not greater than 22,500 square feet (2092 m^2). The travel distance from any point in a *smoke compartment* to a *smoke barrier* door shall be not greater than 200 feet (60 960 mm). The *smoke barrier* shall be installed in accordance with Section 709 of the *International Building Code* with the exception that *smoke barriers* shall be continuous from an outside wall to an outside wall, a floor to a floor, or from a *smoke barrier* to a *smoke barrier* or a combination thereof.

❖ This section is the same as that required for new ambulatory care facilities in IBC Section 422.3.

K102.2.1 Refuge area. Not less than 30 net square feet (2.8 m^2) for each nonambulatory care recipient shall be provided within the aggregate area of *corridors*, care recipient rooms, treatment rooms, lounge or dining areas and other low-hazard areas within each *smoke compartment*. Each occupant of an ambulatory care facility shall be provided with access to a refuge area without passing through or utilizing adjacent tenant spaces.

❖ As with smoke compartments and separation, this requirement is the same as that for a new building. The requirements are the same as IBC Section 422.3.2.

K102.2.2 Independent egress. A *means of egress* shall be provided from each *smoke compartment* created by smoke barriers without having to return through the *smoke compartment* from which *means of egress* originated.

❖ This section is the same as that required for new buildings. It would not be appropriate to have to egress back through the smoke compartment of egress origin. IBC Section 422.3.3 provides the same limitation.

K102.3 Automatic sprinkler systems. An *automatic sprinkler system* shall be provided throughout the entire floor containing an ambulatory care facility in Type IIB, IIIB and VB construction where either of the following conditions exist at any time:

1. Four or more care recipients are incapable of self-preservation, whether rendered incapable by staff or staff has accepted responsibility for care recipients already incapable.
2. One or more care recipients that are incapable of self-preservation are located at other than the *level of exit discharge* serving such a facility.

In buildings where ambulatory care is provided on levels other than the *level of exit discharge*, an *automatic sprinkler system* shall be installed throughout the entire floor where such care is provided and all floors below, and all floors between the level of ambulatory care and the nearest *level of exit discharge*, including the *level of exit discharge*.

❖ This section is less restrictive than Section 903.2.2. It focuses on combustible construction and whether the ambulatory care facility is located on a level other than the level of exit discharge. Unlike Group I-2 occupancies, ambulatory care facilities can often be located in buildings housing other types of occupancies. Therefore, compliance with retroactive sprinkler requirements becomes more difficult. If, at a minimum, combustible construction and ambulatory care facilities located on other than the level of exit discharge are addressed, compliance with federal requirements is addressed.

K102.4 Automatic fire alarm system. *Fire areas* containing ambulatory care facilities shall be provided with an electronically supervised automatic smoke detection system installed within the ambulatory care facility and in public use areas outside of tenant spaces, including *public corridors* and elevator lobbies.

Exception: Buildings equipped throughout with an *automatic sprinkler system* in accordance with Section 903.3.1.1 of the *International Fire Code*, provided the occupant notification appliances will activate throughout the notification zones upon sprinkler waterflow.

❖ These requirements for smoke detection systems are the same as those in Section 907.2.2.1. The retroactive installation of a fire alarm system is more feasible than an automatic sprinkler system.

INTERNATIONAL CODE COUNCIL®
Copyright © 2015 ICC. ALL RIGHTS RESERVED. Accessed by David Dammon on Jun 21, 2017 12:30:52 PM pursuant to License Agreement with ICC. No further reproduction or distribution authorized. ANY UNAUTHORIZED REPRODUCTION OR DISTRIBUTION IS A VIOLATION OF THE FEDERAL COPYRIGHT ACT AND THE LICENSE AGREEMENT, AND SUBJECT TO CIVIL AND CRIMINAL PENALTIES THEREUNDER.

SECTION K103
INCIDENTAL USES IN EXISTING AMBULATORY CARE FACILITIES

K103.1 General. Incidental uses associated with and located within existing ambulatory care facilities required to be separated by Section 422 in the *International Building Code*, and that generally pose a greater level of risk to such occupancies, shall comply with the provisions of Sections K103.2 through K103.4.2.1. Incidental uses in ambulatory care facilities required to be separated by Section 422 of the *International Building Code* are limited to those listed in Table K103.1.

❖ Incidental use area provisions are applicable to new construction in IBC Section 509; however, similar provisions are needed for existing ambulatory care facilities since the hazards posed by such rooms or spaces are no different than in new buildings. Section and Table K103.1 are very similar to and based upon IBC Section and Table 509, except that references to occupancies other than ambulatory care are not included. The basic requirements proposed for incidental uses in existing healthcare occupancies rely upon the provisions of the IBC for the specifics of construction and protection. Sections K103.2 through K103.4.2.1 are based on IBC Sections 509.2 through 509.4.2.1. These provisions will provide correlation with not only the IBC but also with the operational and CMS program standards for existing ambulatory care facilities.

This section establishes the scope of Section K103 and its applicability to ambulatory care facilities. Incidental uses are rooms or areas that constitute special hazards or risks to life safety not typically addressed by the provisions for the occupancy group in which they occur, even though such rooms or areas may functionally be an extension of the primary use. Only those rooms or areas indicated in Table K103.1 are to be regulated as incidental uses. Incidental uses can be located in both single- and mixed-occupancy buildings. The concern is that those areas designated as incidental uses pose a risk to the remainder of the building and, as such, some degree of protection is required. The nature of these incidental uses is such that they are small areas not frequented by building occupants in which a fire could start and go unnoticed for a longer time than in a part of the building that is constantly occupied.

K103.2 Occupancy classification. Incidental uses shall not be individually classified in accordance with Section 302.1 of the *International Building Code*. Incidental uses shall be included in the building occupancies in which they are located.

❖ Consistent with the IBC, this section expressly states that incidental uses are not considered as separate and distinct occupancy classifications but, rather, are classified the same as the occupancies in which they are located. For example, a waste and linen collection room in a ambulatory care facility would be classified as a portion of the ambulatory care facility even though it may present a level of hazard more akin to a Group S-1 occupancy if it were to be classified separately.

K103.3 Area limitations. Incidental uses shall not occupy more than 10 percent of the building area of the story in which they are located.

❖ The proposed floor-area limitation of 10 percent for incidental uses emphasizes the ancillary nature of such rooms and areas and correlates with the IBC. Each incidental use would be limited to a maximum of 10 percent of the floor area of the story in which it is located. Where there are two or more tenants located on the same story, the 10-percent limitation is based upon the floor area of each individual tenant space rather than that of the entire story. The application of the limit on a tenant-by-tenant basis is consistent with the concept of incidental uses typically being ancillary

TABLE K103.1
INCIDENTAL USES IN EXISTING AMBULATORY CARE FACILITIES

ROOM OR AREA	SEPARATION AND/OR PROTECTION
Furnace room where any piece of equipment is over 400,000 Btu per hour input	1 hour or provide automatic sprinkler system
Rooms with boilers where the largest piece of equipment is over 15 psi and 10 horsepower	1 hour or provide automatic sprinkler system
Refrigerant machinery room	1 hour or provide automatic sprinkler system
Hydrogen fuel gas rooms, not classified as Group H	1 hour in ambulatory care facilities
Incinerator rooms	2 hours and provide automatic sprinkler system
Laboratories not classified as Group H	1 hour or provide automatic sprinkler system
Laundry rooms over 100 square feet	1 hour or provide automatic sprinkler system
Waste and linen collection rooms with containers with total volume of 10 cubic feet or greater	1 hour or provide automatic sprinkler system
Storage rooms greater than 100 square feet	1 hour or provide automatic sprinkler system
Stationary storage battery systems having a liquid electrolyte capacity of more than 50 gallons for flooded lead-acid, nickel cadmium or VRLA, or more than 1,000 pounds for lithium-ion and lithium metal polymer used for facility standby power, emergency power or uninterruptible power supplies	1 hour in ambulatory care facilities

For SI: 1 square foot = 0.0929 m^2, 1 pound per square inch (psi) = 6.9 kPa, 1 British thermal unit (Btu) per hour = 0.293 watts, 1 horsepower = 746 watts, 1 gallon = 3.785 L.

INTERNATIONAL CODE COUNCIL®
Copyright © 2015 ICC. ALL RIGHTS RESERVED. Accessed by David Dammon on Jun 21, 2017 12:30:52 PM pursuant to License Agreement with ICC. No further reproduction or distribution authorized. ANY UNAUTHORIZED REPRODUCTION OR DISTRIBUTION IS A VIOLATION OF THE FEDERAL COPYRIGHT ACT AND THE LICENSE AGREEMENT, AND SUBJECT TO CIVIL AND CRIMINAL PENALTIES THEREUNDER.

only to a portion of the building, i.e., the specific tenant occupancy.

K103.4 Separation and protection. The incidental uses listed in Table K103.1 shall be separated from the remainder of the building or equipped with an *automatic sprinkler system*, or both, in accordance with the provisions of that table.

❖ In addition to identifying those rooms or areas that warrant regulation as incidental uses, Table K103.1 also indicates the required degree of protection or separation. The requirements identified in Table K103.1 vary depending on the incidental use. In some cases, a specific type of separation and/or protection is required, while in others there is an option.

K103.4.1 Separation. Where Table K103.1 specifies a fire-resistance-rated separation, the incidental uses shall be separated from the remainder of the building in accordance with Section 509.4.1 of the *International Building Code*.

❖ Where a fire-resistance rated separation would be required, the incidental use would need to be separated from other portions of the building in accordance with assemblies complying with the IBC.

K103.4.2 Protection. Where Table K103.1 permits an *automatic sprinkler system* without a fire-resistance-rated separation, the incidental uses shall be separated from the remainder of the building by construction capable of resisting the passage of smoke in accordance with Section 509.4.2 of the *International Building Code*.

❖ In this section, where Table K103.1 would allow protection by an automatic sprinkler system without a fire-resistance-rated separation, the construction enclosing the incidental use would still need to resist the passage of smoke. Construction details for resisting the passage of smoke are provided in the IBC. Note that this requirement is not specifying a smoke partition. IBC Section 710 provides specific smoke partition requirements that must be directly referenced.

K103.4.2.1 Protection limitation. Except as otherwise specified in Table K103.1 for certain incidental uses, where an *automatic sprinkler system* is provided in accordance with Table K103.1, only the space occupied by the incidental use need be equipped with such a system.

❖ This section makes it clear that the sprinkler systems stipulated in Table K103.1 are required for the incidental use area only.

SECTION K104
MEANS OF EGRESS REQUIREMENTS FOR EXISTING AMBULATORY CARE FACILITIES

K104.1 Size of doors. The minimum width of each door opening shall be sufficient for the *occupant load* thereof and shall provide a clear width of not less than 28 inches (711 mm). Where this section requires a minimum clear width of 28 inches (711 mm) and a door opening includes two door leaves without a mullion, one leaf shall provide a clear opening width of 28 inches (711 mm). In ambulatory care facilities, doors serving as *means of egress* from patient treatment rooms shall provide a clear width of not less than 32 inches (813 mm). The maximum width of a swinging door leaf shall be 48 inches (1219 mm) nominal. The height of doors openings shall be not less than 80 inches (2032 mm).

Exceptions:

1. Door openings to storage closets less than 10 square feet (0.93 m^2) in area shall not be limited by the minimum width.
2. Width of door leafs in revolving doors that comply with Section 1008.1.4.1 shall not be limited.
3. *Exit access* doors serving a room not larger than 70 square feet (6.5 m^2) shall be not less than 24 inches (610 mm) in door width.
4. Door closers and door stops shall be permitted to be 78 inches (1980 mm) minimum above the door.

❖ This section is quite similar to Section 1104.7 and generally these requirements would therefore already be applicable without this appendix. However, the exceptions are specific to ambulatory care facilities. The height is also consistent with Section 1010.1.1 for new buildings.

K104.2 Corridor and aisle width. *Corridor* width shall be as determined in Section 1005.1 of the *International Fire Code* and this section. The minimum width of *corridors* and aisles that serve gurney traffic in areas where patients receive care that causes them to be incapable of self-preservation shall be not less than 72 inches (1829 mm).

❖ This section is consistent with new building requirements. Reference is made to Section 1005.1 and a corridor width of 72 inches is prescribed. Table 1020.2 requires a 72-inch width for corridors and areas serving stretcher traffic in ambulatory care facilities.

K104.3 Existing elevators. Existing elevators, escalators, dumbwaiters and moving walks shall comply with the requirements of Sections K104. 3.1 and K104.3.2.

❖ Sections K104.3.1 and K104.3.2 set forth some minimum requirements for existing elevators. Of primary importance are the emergency operation features.

K104.3.1 Elevators, escalators, dumbwaiters and moving walks. Existing elevators, escalators, dumbwaiters and moving walks in ambulatory care facilities required to be separated by Section 422 of the *International Building Code* shall comply with ASME A17.3.

❖ Not only are existing elevators required to comply with ASME A17.3, but escalators and moving walks must also comply. Note that IBC Section 3001.2 requires ongoing maintenance of all elevators and conveying systems. This section specifically calls out ASME A17.3 for such maintenance.

The healthcare industry has historically been required to comply with regulations set forth by accreditation and certification agencies, such as The Joint Commission. ASME A17.3 has been referenced by guidelines adopted by The Joint Commission for

INTERNATIONAL CODE COUNCIL®
Copyright © 2015 ICC. ALL RIGHTS RESERVED. Accessed by David Dammon on Jun 21, 2017 12:30:52 PM pursuant to License Agreement with ICC. No further reproduction or distribution authorized. ANY UNAUTHORIZED REPRODUCTION OR DISTRIBUTION IS A VIOLATION OF THE FEDERAL COPYRIGHT ACT AND THE LICENSE AGREEMENT, AND SUBJECT TO CIVIL AND CRIMINAL PENALTIES THEREUNDER.

more than a decade and this code change will correlate the IFC with the mandated healthcare industry standard.

Adding a reference to ASME A17.3 will require that existing elevators, escalators and moving walks and their related operating equipment in ambulatory care facilities comply with a minimum level of safety. Because the occupants of these types of facilities are often incapable of self-preservation, this reference provides important features essential for occupant safety, including escalator and moving walk emergency stop buttons and automatic skirt obstruction stop features.

K104.3.2 Elevator emergency operation. Existing elevators with a travel distance of 25 feet (7620 mm) or more above or below the main floor or other level of a building and intended to serve the needs of emergency personnel for fire-fighting or rescue purposes shall be provided with emergency operation in accordance with ASME A17.3.

❖ This section is consistent with Section 1103.3.2, which applies to any elevator that travels 25 feet or more above or below the main floor or other level of a building. It should be noted, however, that the exceptions found in Section 1103.3.2 are not located in this appendix. Therefore, there are no specific exceptions to this requirement.

SECTION K105
REFERENCED STANDARDS

ICC	IBC—15	International Building Code	K101.2, K102.1, K102.2, K103.1, K103.2, K103.4.1, K103.4.2, K104.3.1,
ICC	IFC—15	International Fire Code	K101.1, K102.4, K104.2
ASME A17.3-08			K104.3.1, K104.3.2

INTERNATIONAL CODE COUNCIL®
Copyright © 2015 ICC. ALL RIGHTS RESERVED. Accessed by David Dammon on Jun 21, 2017 12:30:52 PM pursuant to License Agreement with ICC. No further reproduction or distribution authorized. ANY UNAUTHORIZED REPRODUCTION OR DISTRIBUTION IS A VIOLATION OF THE FEDERAL COPYRIGHT ACT AND THE LICENSE AGREEMENT, AND SUBJECT TO CIVIL AND CRIMINAL PENALTIES THEREUNDER.

INTERNATIONAL CODE COUNCIL®

Copyright © 2015 ICC. ALL RIGHTS RESERVED. Accessed by David Dammon on Jun 21, 2017 12:30:52 PM pursuant to License Agreement with ICC. No further reproduction or distribution authorized. ANY UNAUTHORIZED REPRODUCTION OR DISTRIBUTION IS A VIOLATION OF THE FEDERAL COPYRIGHT ACT AND THE LICENSE AGREEMENT, AND SUBJECT TO CIVIL AND CRIMINAL PENALTIES THEREUNDER.

Appendix L: Requirements for Fire Fighter Air Replenishment Systems

The provisions contained in this appendix are not mandatory unless specifically referenced in the adopting ordinance.

General Comments

Breathing air is critical for fire-fighting operations. Historically, fire departments have supplied air bottles by means of a "bottle brigade," whereby fire fighters manually transport air bottles up stairways. This is usually accomplished by stationing a fire fighter on alternating floors, and each fire fighter carries two to four bottles at a time up two floors, passes them to the next fire fighter, then goes down two flights of stairs and receives more air bottles from the fire fighter stationed below. This process is extraordinarily fire-fighter intensive, and takes fire fighters away from their primary mission of rescue and fire fighting. Even when fires are insignificant or controlled by sprinklers, copious amounts of smoke and other combustion byproducts require the use of self-contained breathing apparatus (SCBA) for extended periods of time to conduct search, rescue, suppression and overhaul. These extended missions require a large number of air bottles to be transported to support the operation. Transporting bottles is not the highest and best use of highly trained fire fighters. It is a costly solution to a serious problem that can be addressed by installing fire fighter air replenishment systems.

Technology exists at this point in time to address the issue using in-building air supply systems. Fire fighter Breathing Air Systems were introduced in the late 1980's. These systems are now required in a number of communities throughout the United States, and several hundred systems have been installed and are now operational. The system has been called a "standpipe for air," which is an accurate description. The system consists of stainless steel, high-pressure piping that is supplied by on-site air storage, fire department air supply units, or both; a few systems have breathing air compressors installed. Air filling stations are then strategically located throughout the building, using either quick fill connections or rupture containment fill stations complying with NFPA 1901. These systems allow fire fighters to refill breathing air cylinders inside the fire building, negating the required "bottle brigade", and making more fire fighters available for search, rescue, and fire suppression operations.

Purpose

While not every jurisdiction will necessarily embrace this technology, there is a need to standardize the installation criteria in jurisdictions that determine the systems are needed. It is now being recognized as a basic principle of fire protection that, once a community has identified an unacceptable risk, risk mitigation must occur to reduce that risk to a level that allows the fire department to be both efficient and effective in coping with it. Therefore, this appendix provides model requirements to jurisdictions considering fire fighter air replenishment systems.

SECTION L101 GENERAL

L101.1 Scope. Fire fighter air replenishment systems (FARS) shall be provided in accordance with this appendix. The adopting ordinance shall specify building characteristics or special hazards that establish thresholds triggering a requirement for the installation of a FARS. The requirement shall be based upon the fire department's capability of replenishing fire fighter breathing air during sustained emergency operations. Considerations shall include:

1. Building characteristics, such as number of stories above or below grade plane, floor area, type of construction and fire-resistance of the primary structural *frame* to allow sustained fire-fighting operations based on a rating of not less than 2 hours.
2. Special hazards, other than buildings, that require unique accommodations to allow the fire department to replenish fire fighter breathing air.
3. Fire department staffing level.
4. Availability of a fire department breathing air replenishment vehicle.

❖ This section clarifies that such systems are required when the appendix is adopted. The adopting ordinance must specify when such systems are required. Many buildings (e.g., a two-story Group B occupancy) would not need such systems. Therefore, the applicability must clearly be provided. Suggestions are provided as to what types of buildings and facilities may need such systems.

INTERNATIONAL CODE COUNCIL®
Copyright © 2015 ICC. ALL RIGHTS RESERVED. Accessed by David Dammon on Jun 21, 2017 12:30:52 PM pursuant to License Agreement with ICC. No further reproduction or distribution authorized. ANY UNAUTHORIZED REPRODUCTION OR DISTRIBUTION IS A VIOLATION OF THE FEDERAL COPYRIGHT ACT AND THE LICENSE AGREEMENT, AND SUBJECT TO CIVIL AND CRIMINAL PENALTIES THEREUNDER.

SECTION L102
DEFINITIONS

L102.1 Definitions. For the purpose of this appendix, certain terms are defined as follows:

FIRE FIGHTER AIR REPLENISHMENT SYSTEM (FARS). A permanently installed arrangement of piping, valves, fittings and equipment to facilitate the replenishment of breathing air in self contained breathing apparatus (SCBA) for fire fighters engaged in emergency operations.

❖ This definition describes what is considered part of the fire fighter air replenishment systems (FARS) as far as the code is concerned. It also explains that the purpose of such systems is to provide breathing air to fire fighters.

SECTION L103
PERMITS

L103.1 Permits. Permits shall be required to install and maintain a FARS. Permits shall be in accordance with Sections L103.2 and L103.3.

❖ These systems need to be installed and modified appropriately and be maintained for the successful long term use of such systems. Permits facilitate these activities occurring.

L103.2 Construction permit. A construction permit is required for installation of or modification to a FARS. The construction permit application shall include documentation of an acceptance and testing plan as specified in Section L105.

❖ This permit is for the initial installation and for modifications to such systems. This will include documentation to demonstrate that they have been appropriately tested and installed as designed.

L103.3 Operational permit. An operational permit is required to maintain a FARS.

❖ Quality installation and modifications to the system are important but just as important is the long term maintenance of such systems to make sure they remain in operating condition. This also reminds the fire department that such systems are provided at those locations.

SECTION L104
DESIGN AND INSTALLATION

L104.1 Design and installation. A FARS shall be designed and installed in accordance with Sections L104.2 through L104.15.

❖ These sections contain the various design criteria, standards and other considerations such as location, security measures and compatibility with the fire departments equipment.

L104.2 Standards. Fire fighter air replenishment systems shall be in accordance with Sections L104.2.1 and L104.2.2.

❖ Sections L104.2.1 and L104.2.2 set out the basic design standards for such systems within the building. Later sections will prescribe standard for onsite stored pressure air supply.

L104.2.1 Pressurized system components. Pressurized system components shall be designed and installed in accordance with ASME B31.3.

❖ This standard reference addresses the quality of the piping and connections used.

L104.2.2 Air quality. The system shall be designed to convey breathing air complying with NFPA 1989.

❖ Such systems in order to be of assistance to the fire service must meet minimum air quality standards. NFPA 1989 provides these minimum requirements. This standard prescribes the type of pipes such air can be conveyed through.

L104.3 Design and operating pressure. The minimum design pressure shall be 110 percent of the fire department's normal SCBA fill pressure. The system design pressure shall be marked in an approved manner at the supply connections, and adjacent to pressure gauges on any fixed air supply components. Pressure shall be maintained in the system within 5 percent of the design pressure.

❖ This section sets the minimum design pressure for the system to ensure that the appropriate pressurized air can be provided during refills. There is a 10-percent level of flexibility provided at any time in the system.

L104.4 Cylinder refill rate. The FARS shall be capable of refilling breathing air cylinders of a size and pressure used by the fire department at a rate of not less than two empty cylinders in 2 minutes.

❖ For practical use of such systems, the FARS must be able to fill two empty cylinders in a defined amount of time. This must be tested once the installation is complete (see Section L105.1).

L104.5 Breathing air supply. Where a fire department mobile air unit is available, the FARS shall be supplied by an external mobile air connection in accordance with Section L104.14. Where a fire department mobile air unit is not available, a stored pressure air supply shall be provided in accordance with Section L104.5.1. A stored pressure air supply shall be permitted to be added to a system supplied by an external mobile air connection provided that a means to bypass the stored pressure air supply is located at the external mobile air connection.

❖ There are two sources from which breathing air can originate: a mobile air unit or an on-site stored pressure air supply.

L104.5.1. Stored pressure air supply. A stored pressure air supply shall be designed based on Chapter 24 of NFPA 1901

INTERNATIONAL CODE COUNCIL®
Copyright © 2015 ICC. ALL RIGHTS RESERVED. Accessed by David Dammon on Jun 21, 2017 12:30:52 PM pursuant to License Agreement with ICC. No further reproduction or distribution authorized. ANY UNAUTHORIZED REPRODUCTION OR DISTRIBUTION IS A VIOLATION OF THE FEDERAL COPYRIGHT ACT AND THE LICENSE AGREEMENT, AND SUBJECT TO CIVIL AND CRIMINAL PENALTIES THEREUNDER.

except that provisions applicable only to mobile apparatus or not applicable to system design shall not apply. A stored pressure air supply shall be capable of refilling not less than 50 empty breathing air cylinders of a size and pressure used by the fire department.

❖ The design standard for on-site pressure air supply along with the capacity of storage is specified in this section. The stored supply must fill a minimum of 50 cylinders based upon the type the fire department uses.

L104.5.2. Retrofit of external mobile air connection. A FARS not initially provided with an external mobile air connection due to the lack of a mobile air unit shall be retrofitted with an external mobile air connection where a mobile air unit becomes available. Where an external mobile air connection is provided, a means to bypass the stored pressure air supply shall be located at the external mobile air connection. The retrofit shall be completed not more than 12 months after notification by the *fire code official*.

❖ This section mandates a mobile air connection to be provided to a system that was initially only designed for on-site pressure air when such units become available. This also involves some reworking of the system to provide a bypass of the on-site air. Flexibility is provided to building owners to comply with this based upon notice from the fire code official.

L104.6 Isolation valves. System isolation valves that are accessible to the fire department shall be installed on the system riser to allow piping beyond any air cylinder refill panel to be blocked.

❖ This section requires that isolation of the system in terms of valving is provided.

L104.7 Pressure relief valve. Pressure relief valves shall be installed at each point of supply and at the top or end of every riser. The relief valve shall meet the requirements of CGA S-1.3 and shall not be field adjustable. Pressure relief valves shall discharge in a manner that does not endanger personnel who are in the area. Valves, plugs or caps shall not be installed in the discharge of a pressure relief valve. Where discharge piping is used the end shall not be threaded.

❖ It is necessary for such systems to provide pressure relief valves. This specifies where they are to be located and that they cannot be adjusted in the field.

L104.8 Materials and equipment. Pressurized system components shall be *listed* or *approved* for their intended use and rated for the maximum allowable design pressure in the system. Piping and fittings shall be stainless steel.

❖ This section prevents system failure based on inappropriately rated piping and fittings. Stainless steel is necessary for air quality purposes.

L104.9 Welded connections. Piping connections that are concealed shall be welded.

❖ Welded connections are less likely to fail than threaded connections. When located within a wall, where failures can go undetected, this is critical.

L104.10 Protection of piping. System piping shall be protected from physical damage in an *approved* manner.

❖ This section provides protection from physical damage that can occur to elements of a building and it systems due to human error.

L104.11 Compatibility. Fittings and connections intended to be used by the fire department shall be compatible with the fire department's equipment.

❖ This section ensures that the wide variety of fire-fighting components associated with buildings will be compatible with the building's fittings and connections. Section 912 addresses similar concerns.

L104.12 Security. Connections to a FARS shall be safeguarded from unauthorized access in an *approved* manner.

❖ This section addresses intentional damage inflicted on or general unauthorized use of such systems. Some type of safeguard is necessary to protect such systems. However, such protection must take into account how the fire department can access such systems. A specific method is not prescribed. The term "approved manner" acknowledges that safeguarding methods will vary based on each situation.

L104.13 Fill stations. Fire fighter air replenishment fill stations shall comply with Section L104.13.1 through L104.13.3.

❖ The next several sections address the location and features of the fire fighter interface with such systems.

L104.13.1 Location. Fill stations for refilling breathing air cylinders shall be located as follows:

1. Fill stations shall be provided at the fifth floor above and below the ground level floor and every third floor level thereafter.
2. On floor levels requiring fill stations, one fill station shall be provided adjacent to a required exit stair at a location designated by the *fire code official*. In buildings required to have three or more exit stairs, additional fill stations shall be provided at a ratio of one fill station for every three stairways.

❖ This section details where filling stations must be located both vertically (see Commentary Figure L104.13) and on any floor in a building. In most buildings where the floor must be provided with a filling station only one will be required. The filling station must be located next to a required interior exit stairway. In buildings with many stairways, one filling station is required for each three interior exit stairways.

L104.13.2 Design. Fill stations for breathing air cylinders shall be designed to meet the following requirements:

1. A pressure gauge and pressure-regulating devices and controls shall be provided to allow the operator to control the fill pressure and fill rate on each cylinder fill hose.
2. Valves controlling cylinder fill hoses shall be slow-operating valves.

INTERNATIONAL CODE COUNCIL®
Copyright © 2015 ICC. ALL RIGHTS RESERVED. Accessed by David Dammon on Jun 21, 2017 12:30:52 PM pursuant to License Agreement with ICC. No further reproduction or distribution authorized. ANY UNAUTHORIZED REPRODUCTION OR DISTRIBUTION IS A VIOLATION OF THE FEDERAL COPYRIGHT ACT AND THE LICENSE AGREEMENT, AND SUBJECT TO CIVIL AND CRIMINAL PENALTIES THEREUNDER.

3. A separate flow restriction device shall be provided on each fill hose.
4. A method shall be provided to bleed each cylinder fill hose.
5. The fill station shall be designed to provide a containment area that fully encloses any cylinder being filled and flexible cylinder fill hoses, and directs the energy from a failure away from personnel. Fill stations shall be designed to prohibit filling of cylinders that are not enclosed within the containment area.

Exception: Where required or *approved* by the fire chief, fill stations providing for the direct refilling of the fire fighters' breathing air cylinders using Rapid Intervention Crew/Company Universal Air Connection (RIC/UAC) fittings shall be used in lieu of cylinder fill stations that utilize containment areas.

❖ This section provides specific design specifications for fill stations. This addresses the various features needed, such as slow-operating valves and the ability to bleed each cylinder fill hose. All of these features must be verified during the design and installation process.

L104.13.3 Cylinder refill rate. Fill stations shall be capable of simultaneously filling two or more empty breathing air cylinders equivalent to those used by the fire department to the cylinders' design pressure within 2 minutes.

❖ This section echoes the design criteria in Section L104.4, which mandates the ability to fill two cylinders within 2 minutes. Speed is essential fire fighting and filling the cylinders should be a quick process. The overall intent of such systems is to make obtaining breathing air faster and less labor intensive.

L104.14 External mobile air connection. An external mobile air connection shall be provided for fire department mobile air apparatus where required by Section L104.5 to supply the system with breathing air.

❖ This section requires that the mobile air apparatus can be connected to the system. This is similar to the concept of a standpipe connection for a standpipe

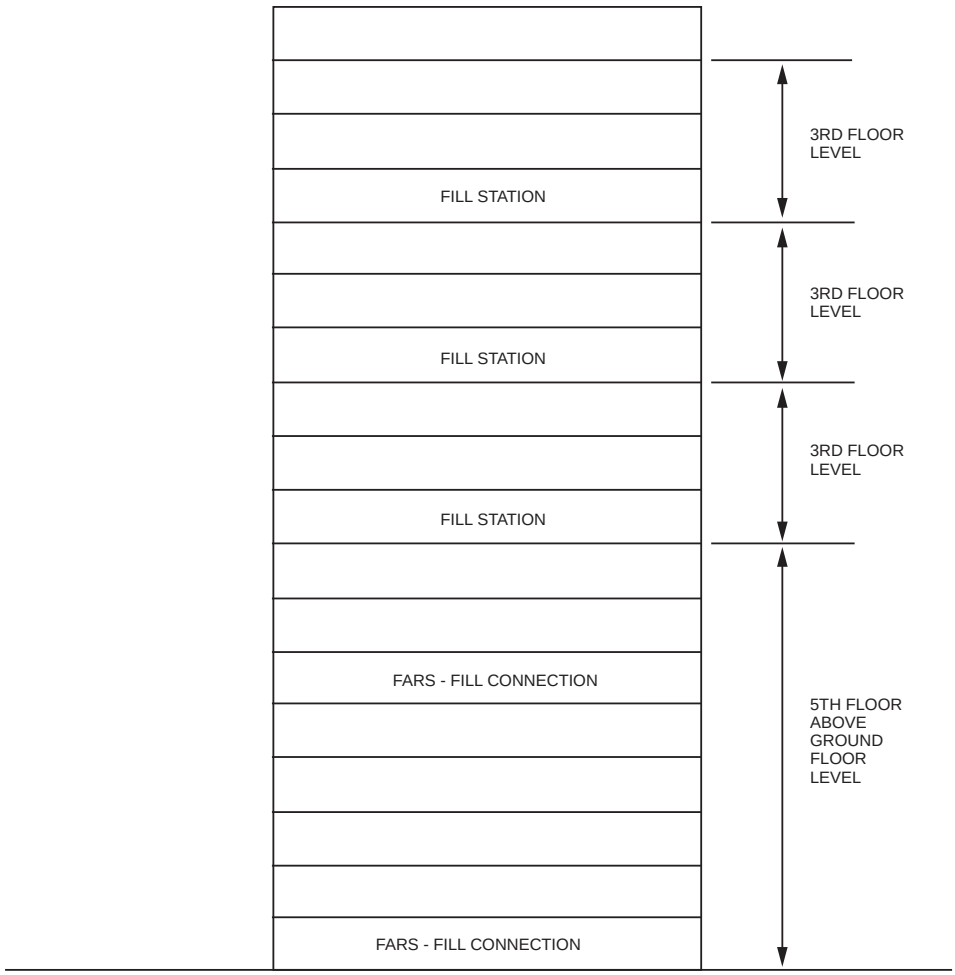

Figure L104.13
FILL STATION LOCATIONS

INTERNATIONAL CODE COUNCIL®
Copyright © 2015 ICC. ALL RIGHTS RESERVED. Accessed by David Dammon on Jun 21, 2017 12:30:52 PM pursuant to License Agreement with ICC. No further reproduction or distribution authorized. ANY UNAUTHORIZED REPRODUCTION OR DISTRIBUTION IS A VIOLATION OF THE FEDERAL COPYRIGHT ACT AND THE LICENSE AGREEMENT, AND SUBJECT TO CIVIL AND CRIMINAL PENALTIES THEREUNDER.

system except that this system supplies critical breathing air rather than fire-fighting water.

L104.14.1 Location. The location of the external mobile air connection shall be accessible to mobile air apparatus and *approved* by the fire chief.

❖ The FARS is critical to fire-fighting operations. The connection must be located where it is feasible for the mobile air apparatus to make a connection. Approval from the fire chief is specifically called out as this is a fire-fighter operations issue.

L104.14.2 Protection from vehicles. A means of vehicle impact protection in accordance with Section 312 shall be provided to protect mobile air connections that are subject to vehicular impact.

❖ Similar requirements are found for other building connections related to fire department connections. Impact protection helps to ensure that connections will be in usable condition to make a proper connection to the mobile air apparatus.

L104.14.3 Clear space around connections. A working space of not less than 36 inches (914 mm) in width, 36 inches (914 mm) in depth and 78 inches (1981 mm) in height shall be provided and maintained in front of and to the sides of external mobile air connections.

❖ This section is very similar to Section 912.4 for access to fire department connections. Space must be provided to manipulate equipment and make proper connections.

L104.15 Air monitoring system. An *approved* air monitoring system shall be provided. The system shall automatically monitor air quality, moisture and pressure on a continual basis. The air monitoring system shall be equipped with not less than two content analyzers capable of detecting carbon monoxide, carbon dioxide, nitrogen, oxygen, moisture and hydrocarbons.

❖ In addition to the testing and maintenance required by Section L106.1, this section requires monitoring of the air at all times. The focus is on making sure that the air is of the correct quality, moisture content and pressure. Sections L105.15.1 through L105.15.3 focus on the actual alarm system requirements. The requirements address what creates an alarm condition (L104.15.1), where notification of a problem is communicated (L104.15.2) and that air quality status shall be visually communicated at the mobile air connection to let fire fighters know of any problem (L105.15.3).

L104.15.1 Alarm conditions. The air monitoring system shall transmit a supervisory signal when any of the following levels are detected:

1. Carbon monoxide exceeds 5 ppm.
2. Carbon dioxide exceeds 1,000 ppm.
3. An oxygen level below 19.5 percent or above 23.5 percent.
4. A nitrogen level below 75 percent or above 81 percent.
5. Hydrocarbon (condensed) content exceeds 5 milligrams per cubic meter of air.
6. The moisture concentration exceeds 24 ppm by volume.
7. The pressure falls below 90 percent of the maintenance pressure specified in Section L104.3.

❖ This section simply provides the criteria as to what constitutes a hazard and should initiate an alarm.

L104.15.2 Alarm supervision, monitoring and notification. The air monitoring system shall be electrically supervised and monitored by an *approved* supervising station, or where *approved*, shall initiate audible and visual supervisory signals at a constantly attended location.

❖ This section requires supervision and monitoring but does not mandate an audible or visual alarm. If approved, in place of a supervising station a local audible and visual signal may be provided at a constantly attended location. This could be in a security office within a building that is staffed 24 hours.

L104.15.3 Air quality status display. Air quality status shall be visually displayed at the external mobile air connection required by Section L104.14.

❖ In addition to monitoring and supervision at the connection for the mobile air apparatus, a visual display of current air quality is required. This is a location easily identified by the fire department.

SECTION L105
ACCEPTANCE TESTS

L105.1 Acceptance tests. Upon completion of the installation, a FARS shall be acceptance tested to verify compliance with equipment manufacturers' instructions and design documents. Oversight of the acceptance tests shall be provided by a registered design professional. Acceptance testing shall include all of the following:

1. A pneumatic test in accordance with ASME B31.3 of the complete system at a minimum test pressure of 110 percent of the system design pressure using oil free dry air, nitrogen or argon shall be conducted. Test pressure shall be maintained for not less than 24 hours. During this test, all fittings, joints and system components shall be inspected for leaks. Defects in the system or leaks detected shall be documented and repaired.
2. A cylinder-filling performance test shall be conducted to verify compliance with the required breathing air cylinder refill rate from the exterior mobile air connection and, where provided, a stored air pressure supply system.
3. The air quality monitoring system shall be tested to verify both of the following conditions:
   3.1. Visual indicators required by Section L104.15.1 function properly.

INTERNATIONAL CODE COUNCIL®
Copyright © 2015 ICC. ALL RIGHTS RESERVED. Accessed by David Dammon on Jun 21, 2017 12:30:52 PM pursuant to License Agreement with ICC. No further reproduction or distribution authorized. ANY UNAUTHORIZED REPRODUCTION OR DISTRIBUTION IS A VIOLATION OF THE FEDERAL COPYRIGHT ACT AND THE LICENSE AGREEMENT, AND SUBJECT TO CIVIL AND CRIMINAL PENALTIES THEREUNDER.

3.2. Supervisory signals are transmitted as required by Section L104.15.2 for each sensor based on a sensor function test.

4. Connections intended for fire department use shall be confirmed as compatible with the fire department's mobile air unit, SCBA cylinders and, where provided, RIC/UAC connections.

5. Air samples shall be taken from not less than two fill stations and submitted to an *approved* gas analysis laboratory to verify compliance with NFPA 1989. The FARS shall not be placed into service until a written report verifying compliance with NFPA 1989 has been provided to the *fire code official*.

❖ This section provides specific testing requirements regarding the installation and modification of such systems. Section L103.2 requires a construction permit along with documentation to show compliance with this section.

SECTION L106
INSPECTION, TESTING AND MAINTENANCE

L106.1 Periodic inspection, testing and maintenance. A FARS shall be continuously maintained in an operative condition and shall be inspected not less than annually. Not less than quarterly, an air sample shall be taken from the system and tested to verify compliance with NFPA 1989. The laboratory test results shall be maintained on site and readily available for review by the *fire code official*.

❖ Ongoing maintenance is critical to the success of the air replenishment systems, which rely on consistent air quality and pressure. Operational permits help ensure that quarterly air samples are taken and annual inspections made.

SECTION L107
REFERENCED STANDARDS

ASME B31.3—2012	Process Piping	L104.2.1, L105.1
CGA S-1.3—2008	Pressure Relief Device Standards – Part 3 Stationary Storage Containers for Compressed Gases	L104.7
NFPA 1901—09	Standard for Automotive Fire Apparatus	L104.5.1,
NFPA 1989—13	Breathing Air Quality for Fire Emergency Services Respiratory Protection	L104.2.2, L105.1, L106.1

INTERNATIONAL CODE COUNCIL®
Copyright © 2015 ICC. ALL RIGHTS RESERVED. Accessed by David Dammon on Jun 21, 2017 12:30:52 PM pursuant to License Agreement with ICC. No further reproduction or distribution authorized. ANY UNAUTHORIZED REPRODUCTION OR DISTRIBUTION IS A VIOLATION OF THE FEDERAL COPYRIGHT ACT AND THE LICENSE AGREEMENT, AND SUBJECT TO CIVIL AND CRIMINAL PENALTIES THEREUNDER.

Appendix M: High-rise Buildings—Retroactive Automatic Sprinkler Requirement

The provisions contained in this appendix are not mandatory unless specifically referenced in the adopting ordinance.

General Comments

Modern fire and building codes require complete automatic fire sprinkler protection and a variety of other safety features in new high-rise construction. Many older high-rise buildings lack automatic fire sprinkler protection and other basic fire protection features necessary to protect occupants, emergency responders, and the structure itself. Without complete automatic fire sprinkler protection, fire departments cannot provide the level of protection that high-rise buildings demand.

Existing high-rise buildings that are not protected with fire sprinklers represent a significant hazard to occupants and fire fighters. Additionally, high-rise fires can significantly impact a community's infrastructure and economic viability.

Between 2003 and 2006, there was an average of 13,400 reported structure fires in high-rise buildings annually. These incidents resulted in 62 civilian deaths, 490 civilian injuries, and $179 million in direct property damage per year. Furthermore, from 1977 to 2009, 25 fire fighters died from nonstress-related cardiac death during fire suppression operations in high-rise buildings.

By their very nature, high-rise fires present unique fire-fighting challenges that are extremely difficult for fire fighters to mitigate without the presence of automatic sprinkler systems. Some of these challenges include:

- High-rise structure fires require significantly more resources, such as personnel and equipment, to extinguish than do fires in other types of occupancies. This further strains the responding fire department and fire fighters.
- Due to their height, smoke movement in high-rise structures is very different from that of other structures. Temperature gradients result in varying pressures throughout the structure, which can allow for the rapid, uncontrolled movement of smoke and flame (known as the "stack effect"). By design, exits from high-rise structures are limited. In an emergency, the movement of people out of a building is particularly difficult. A prime example of this hazard is the One Meridian Plaza fire. This fire occurred on the 22nd floor of the 38-story Meridian Bank Building and was reported to the Philadelphia Fire Department on February 23, 1991 and burned for more than 19 hours. The fire caused three fire-fighter fatalities and injuries to 24 fire fighters. The 12 alarms brought 51 engine companies, 15 ladder companies, 11 specialized units, and more than 300 fire fighters to the scene. It was the largest high-rise office building fire in modern American history, completely consuming eight floors of the building, and was only controlled only when it reached a floor that was protected by automatic sprinklers. In 1999, the building was torn down amidst a storm of litigation.
- The HVAC and other utilities in some high-rises service multiple levels and can facilitate the spread of smoke and flame through a building.
- Due to the height of the building, response times for the fire department to reach the actual fire itself are extended, contributing to larger fire growth and more extensive smoke spread.

Purpose

This appendix provides model code text for adoption by jurisdictions that choose to require existing high-rise buildings to be retrofitted with fire sprinklers. It is recognized that not all jurisdictions may choose to or have legal authority to enact a retroactive construction requirement of this nature, so an adoptable appendix has been provided. This appendix will provide the basic tools to those jurisdictions that have the ability to adopt such requirements. The appendix contains the basic automatic sprinkler system requirements and provides reasonable timeframes for building owners to meet such requirements.

INTERNATIONAL CODE COUNCIL®
Copyright © 2015 ICC. ALL RIGHTS RESERVED. Accessed by David Dammon on Jun 21, 2017 12:30:52 PM pursuant to License Agreement with ICC. No further reproduction or distribution authorized. ANY UNAUTHORIZED REPRODUCTION OR DISTRIBUTION IS A VIOLATION OF THE FEDERAL COPYRIGHT ACT AND THE LICENSE AGREEMENT, AND SUBJECT TO CIVIL AND CRIMINAL PENALTIES THEREUNDER.

SECTION M101
SCOPE

M101.1 Scope. An *automatic sprinkler system* shall be installed in all existing high-rise buildings in accordance with the requirements and compliance schedule of this appendix.

❖ This section provides a tool for jurisdictions to implement a retroactive requirement for the installation of an automatic sprinkler system in high-rise buildings. This appendix also provides a method for building owners to file a compliance schedule for their building.

SECTION M102
WHERE REQUIRED

M102.1 High-rise buildings. An *automatic sprinkler system* installed in accordance with Section 903.3.1.1 of the *International Fire Code* shall be provided throughout existing high-rise buildings.

Exceptions:

1. Airport traffic control towers.
2. Open parking structures.
3. Group U occupancies.
4. Occupancies in Group F-2.

❖ This section contains the focus of the appendix, which is the enabling language for a jurisdiction to require an NFPA 13 automatic sprinkler system to be installed in existing high-rise buildings. In jurisdictions that use this appendix, the enabling language will be consistent. Several exceptions are similar to the exceptions in Section 403.1 addressing the applicability of the high-rise special use requirements.

SECTION M103
COMPLIANCE

M103.1 Compliance schedule. Building owners shall file a compliance schedule with the *fire code official* not later than 365 days after the first effective date of this code. The compliance schedule shall not exceed 12 years for an *automatic sprinkler system* retrofit.

❖ The requirement for the retroactive installation of a sprinkler system in a high-rise building is one that is costly and often a disruption to the use of the building. This is understood and flexibility is built into the appendix to ease the burden and recognize such installations cannot occur overnight. Instead, it provides some reasonable limits as to when a compliance schedule is to be provided to a jurisdiction (1 year after effective date). Additionally, this section allows up to 12 years for the installation process to be completed. The owners may prioritize based, for example, on changing tenants or planned renovations as to which portion of the building will be retrofitted first.

SECTION M104
REFERENCED STANDARD

ICC	IFC—15	International Fire Code	M102.1

INTERNATIONAL CODE COUNCIL®
Copyright © 2015 ICC. ALL RIGHTS RESERVED. Accessed by David Dammon on Jun 21, 2017 12:30:52 PM pursuant to License Agreement with ICC. No further reproduction or distribution authorized. ANY UNAUTHORIZED REPRODUCTION OR DISTRIBUTION IS A VIOLATION OF THE FEDERAL COPYRIGHT ACT AND THE LICENSE AGREEMENT, AND SUBJECT TO CIVIL AND CRIMINAL PENALTIES THEREUNDER.

INDEX

A

24-HOUR BASIS
Defined 202
ABANDONED PREMISES (see VACANT PREMISES)
ABANDONMENT
Flammable and combustible liquid tanks 5704.2.13
ACCEPTANCE TESTING
Fire protection system installations 901.5, 904.4, 907.8
Fire pumps 913.5.1
Flammable and combustible liquid tanks 5704.2.12.1
Single- and multiple-station smoke alarms 907.8.1
Smoke control systems 909.18
ACCESS, FIRE DEPARTMENT
Aviation facilities 2003.4
Construction and demolition sites 3310.1
Doors for 504.2, 3205.4, 3206.6.1
Equipment to 509
High-piled storage buildings 3206.6
Tire storage 3406
ACCESS ROADS, FIRE APPARATUS 503
Aviation facilities 2003.4
Bridges 503.2.6
Building openings and roofs 504
Defined 202
High-piled storage 3206.6
Lumber yards 2803.6, 2809.3
Obstructions 503.4
Tents and membrane structures 3103.8.1
ACCESSIBLE MEANS OF EGRESS 1009
Defined 202
Standby power 604.2.1
ACCESSIBLE ROUTE
Defined 202
ACETYLENE (see WELDING AND OTHER HOT WORK)
Gas 3505.4
Generators 3508
ADDRESS NUMBER (see PREMISES IDENTIFICATION)
ADMINISTRATION
Alternative methods and materials 104.9, 501.4
Applicability 102
Approval 104.6.1, 401.2, 603.1.2, 2307.2, 2308.2, 3101.2, 5706.4.7.1
Approved materials and equipment 104.7
Board of appeal 108.1
Emergencies 104.11
General 101
Inspections 104.6.2, 106
Maintenance 107
Permits 104.2, 105
Right of entry 104.3
Unsafe buildings 110
Violations 109
AEROSOL CONTAINER
Defined 202
Glass 5101.4
Plastic 5101.4, 5104.1.1
AEROSOL WAREHOUSE 5104.4
Defined 202
AEROSOLS . . . . . Chapter 51
Classification levels 5103.1
Classification of products . . . . . Table 5103.1
Defined 202
Inside storage 5104
Manufacturing facilities 5107
Nonsegregated storage . . . . . 5104.3.1, Table 5104.3.1
Outside storage 5105
Permit required 105.6.1
Retail display 5106
Segregated storage . . . . . 5104.3.2, Table 5104.3.2
AGENCY
Defined 202
AGENT
Defined 202
AGRICULTURAL BUILDING (Occupancy Group U)
Defined 202
Occupant load . . . . . Table 1004.1.2
AGRICULTURAL PRODUCTS 5203.4, 6001.1
AGRO-INDUSTRIAL
Byproducts 2801.1
Defined 202
Facilities 2804.1, 2808.1
AIR-INFLATED STRUCTURES (see TENTS AND OTHER MEMBRANE STRUCTURES)
Defined 202
Permit 105.6.4.5

INTERNATIONAL CODE COUNCIL®
Copyright © 2015 ICC. ALL RIGHTS RESERVED. Accessed by David Dammon on Jun 21, 2017 12:30:52 PM pursuant to License Agreement with ICC. No further reproduction or distribution authorized. ANY UNAUTHORIZED REPRODUCTION OR DISTRIBUTION IS A VIOLATION OF THE FEDERAL COPYRIGHT ACT AND THE LICENSE AGREEMENT, AND SUBJECT TO CIVIL AND CRIMINAL PENALTIES THEREUNDER.

AIR-SUPPORTED STRUCTURES (see TENTS AND OTHER MEMBRANE STRUCTURES) . . . . . Chapter 31
Defined 202
Permit 105.6.4.5
AIRCRAFT
Defueling 2006.5, 2006.18
Fueling 2006
Hangars 914.8.3
Maintenance 2004
AIRCRAFT MOTOR-VEHICLE FUEL-DISPENSING FACILITY 2006.1, 2301.1
Defined 202
AIRCRAFT OPERATION AREA (AOA)
Defined 202
Housekeeping in 2003.3
Smoking prohibited 2003.2
AIRCRAFT-RELATED OCCUPANCIES, FIRE PROTECTION FOR 914.8
AIRPORT
Defined 202
AIRPORT TRAFFIC CONTROL TOWERS 604.2.18, 907.2.13, 907.2.22, 914.8.1, 914.8.2
AISLE ACCESSWAY 1018.4
Defined 202
AISLE(S) 308.1.7.1, 1018
Assembly 1029
Cross 1029.16.2
Defined 202
Fixed seating 1004.4
Hazardous materials 5003.11.3.9
High-piled combustible storage 3205.4, 3206.9
Obstruction of 1031.3, 1031.5
Tents 3103.12.5
Travel distance 1029.7
Walking surface 1003.4
Width 1018.3, 1029.9.1, 1104.22, 3206.9.1, 5904.1.2
ALARM 903.4.2, 2405.9.3, 2703.13.2.1, 6004.2.2.10.1
Activations 401.3.2
Audible 907.5.2.1
Coded signals 408.8.3
Signals 903.4.1, 2703.12.3
Testing 901.5, 901.6, 904.4.2
Visible 907.5.2.3
Warning signs 904.3.4
ALARM NOTIFICATION APPLIANCE 907.5.2
Defined 202
ALARM, NUISANCE
Defined 202
ALARM SIGNAL
Defined 202
ALARM, SMOKE
Defined 202
ALARM VERIFICATION FEATURE
Defined 202
ALCOHOL-BASED HAND RUB 5001.1, 5705.5
Defined 202
ALCOHOL-BLENDED FUELS
Compatibility of components 2306.8.2
Defined 202
Dispensing 2306.8
Listed equipment 2306.8.1
ALTERATION
Defined 202
ALTERNATING TREAD DEVICE 1011.14
Defined 202
ALTERNATIVE AUTOMATIC FIRE-EXTINGUISHING SYSTEMS 904
ALTERNATIVE MATERIALS AND METHODS 104.9
AMBULATORY CARE FACILITY (Occupancy Group B)
Automatic sprinklers 903.2.2
Defined 202
Fire alarm systems 907.2.2.1
AMMONIA
Diffusion systems 606.12.6
Refrigerant 606.12.3
AMMONIUM NITRATE 5601.1.5
Defined 202
AMMUNITION, SMALL ARMS 5606
Defined 202
Storage and handling 105.6.14, 5601.2.1, 5604
AMUSEMENT BUILDING, SPECIAL (see SPECIAL AMUSEMENT BUILDING)
AMUSEMENT PARK STRUCTURES (Assembly, Group A-5)
Defined 202
ANNUNCIATOR
Defined 202
APPEALS, BOARD OF 108
APPENDICES 101.2.1
APPLIANCES 605.7
Chimneys 603.6
Commercial kitchen hoods 609
Cooking 5705.3.3
Fuel-fired 603
Gas piping connection 609.4

INTERNATIONAL CODE COUNCIL®
Copyright © 2015 ICC. ALL RIGHTS RESERVED. Accessed by David Dammon on Jun 21, 2017 12:30:52 PM pursuant to License Agreement with ICC. No further reproduction or distribution authorized. ANY UNAUTHORIZED REPRODUCTION OR DISTRIBUTION IS A VIOLATION OF THE FEDERAL COPYRIGHT ACT AND THE LICENSE AGREEMENT, AND SUBJECT TO CIVIL AND CRIMINAL PENALTIES THEREUNDER.

Heat-producing 2301.6
Heating 603.5, 605.10, 5705.3.3
Lighting 5705.3.3
Unsafe 603.7
APPLICABILITY (of the code) 102
APPROVED
Defined 202
ARC WELDING
(see WELDING AND OTHER HOT WORK)
AREA, BUILDING
Defined 202
AREA OF REFUGE 1009.6
Defined 202
ARRAY (storage) 3205.7, 3207.4
Defined 202
ARRAY, CLOSED (storage) 3205.7, 3207.4
Defined 202
ARTIFICIAL BARRICADE (see BARRICADE)
ASH TRAYS 310.6
ASHES, HOT 305.2
ASPHALT (TAR) KETTLES 303, 3317.2
ASPHYXIANT GASES 5004.7, 5307.1
ASSEMBLY OCCUPANCIES (Group A)
Aisles 1029
Announcements 403.2.2
Automatic sprinklers 903.2
Candles 308
Cellulose nitrate film 105.6.6, 306
Decorative materials 806, 807
Defined (Occupancy classification) 202
Doors 1010
Egress . . . . . Chapter 10
Emergency evacuation drill 4051
Employee training 406
Evacuation plans 404
Fire alarm systems 907.2.1
Fire safety plans 404
Furnishings 807.5.1
Interior finish 803
LP-gas installations . . . . . Chapter 61
Motion picture projection rooms 306.1
Multiple fire areas 903.2.1.7
Obstruction of exits 1031.3
Occupant load calculation 1004
On roofs 903.2.1.6
Open-flame devices 308.3
Panic hardware 1008.1.10
Permits required 105.6.36
Portable fire extinguishers 906
Posting maximum occupant load 1004.3
Prohibit smoking 310
Pyroxylin-coated fabric 807.5.1.4
Pyroxylin plastic motion picture film storage . . . 306.1
Seating 1029
Seating plan 403.2.1
Standpipe systems 905
Storage, flammable liquids 5704.3.4.2
Tents . . . . . Chapter 31
Vehicles in 3104.18.4
ASSISTED RESCUE AREAS, EXTERIOR 1009.7
ATRIUM
Defined 202
Sprinklers 903.2.8.3.1, 903.2.8.3.2
ATRIUM FIRE PROTECTION 907.2.14, 914.4
ATTIC
Defined 202
ATTIC STORAGE 315.2.4, 903.2.8.3.1
AUDIBLE ALARM NOTIFICATION APPLIANCE 907.5.2.1
Defined 202
AUTOMATED RACK STORAGE
Defined 202
Emergency shutdown 3209.4
AUTOMATIC
Defined 202
AUTOMATIC FIRE-EXTINGUISHING SYSTEM
(see FIRE-EXTINGUISHING SYSTEMS, ALTERNATIVE)
AUTOMATIC SMOKE DETECTION SYSTEM
Defined 202
AUTOMATIC SPRINKLER SYSTEM 2108.2, 2703.10, 2804.3, 3206.4, 3209.2, 3314, 6304.1.4
Aerosol warehouses 5104.4.1
Alarms 903.4.2, 2703.10.5
Basements 903.2.11.1.3
Chutes 1103.4.9.3
Defined 202
Dip-tank operations 2405.4
Gas rooms 5003.8.4.1
Group A 903.2.1, 1103.5.1
Group B 903.2.2
Group E 903.2.3
Group F-1 . . . . . 903.2.4
Group H 903.2.5
Group I 903.2.6, 1103.5.2, 1103.5.3
Group M 903.2.7
Group R 903.2.8
Group S-1 . . . . . 903.2.9
Group S-2 . . . . . 903.2.10
Hazardous exhaust ducts 903.2.11.4
High-piled storage 903.2.7.1

INTERNATIONAL CODE COUNCIL®
Copyright © 2015 ICC. ALL RIGHTS RESERVED. Accessed by David Dammon on Jun 21, 2017 12:30:52 PM pursuant to License Agreement with ICC. No further reproduction or distribution authorized. ANY UNAUTHORIZED REPRODUCTION OR DISTRIBUTION IS A VIOLATION OF THE FEDERAL COPYRIGHT ACT AND THE LICENSE AGREEMENT, AND SUBJECT TO CIVIL AND CRIMINAL PENALTIES THEREUNDER.

Hose threads 903.3.6
Installation requirements 903.3
Kitchen exhaust hood and ducts systems 903.2.11.5
Limited area 903.3.8
Monitoring 903.4
NFPA 13 sprinkler systems 903.3.1.1
NFPA 13D sprinkler systems 903.3.1.3
NFPA 13R sprinkler systems 903.3.1.2
Open-ended corridors 903.3.1.2.2
Pyroxylin plastics 903.2.4.3, 903.6.1, 1103.5.4
Repair garages 903.2.9.1
Riser rooms 901.4.6
Rubbish and linen chutes 903.2.11.2
Secondary water supply 914.3.2
Spray rooms 2404.4
Water supplies 903.3.5
Windowless stories 903.2.11.1
Woodworking operations 903.2.4.1
Zones 907.6.3

AUTOMATIC SPRINKLERS
Defined 202
Early Suppression Fast Response (ESFR) . . . . . 910.2, Table 3206.2, Table 3208.3, Table 5104.3.2.2, 5104.4.3
Obstructions to discharge 315.3.1, 903.3.3
Quick response (QR) . . . . . 903.3.2, Table 5704.3.6.3(5)
Residential 903.3.2

AUTOMATIC WATER MIST SYSTEM 904.11
Defined 202

AUTOMOBILE UNDERCOATING (see SPRAY FINISHING)

AUTOMOTIVE MOTOR FUEL-DISPENSING FACILITY . . . . . Chapter 23
Defined 202

AVERAGE AMBIENT SOUND LEVEL . . . 907.5.2.1.1
Defined 202

AVIATION FACILITIES . . . . . Chapter 20
(see also AIRCRAFT-RELATED OCCUPANCIES, FIRE PROTECTION FOR)
Cleaning parts 2004.3
Combustible storage 2003.6
Dispensing hoses and nozzles 2006.3.3
Dispensing of flammable and combustible liquids 2003.5
Fire protection 914.8
Fueling and defueling 2006
Portable fire extinguishers 2005
Radar equipment 2006.21

AWNING
Defined 202

B

BACKFLOW PREVENTION 903.3.5, 912.6
BALCONIES 308.3.1, 903.3.1.2.1, 1021

BALCONY, EXTERIOR
Defined 202

BARRICADE
Artificial defined (for explosives) 202
Defined (for explosives) 202
Fire apparatus access road 503.5, 503.5.1
Natural defined (for explosives) 202
Placement at fire scene 104.11.1

BARRICADED (explosives)
Defined 202

BASEMENT 603.3.2.5, 903.2.11.1.3, 905.3.1, 1006.3.2.2, 1030.1, 2311.4.3, 2903.1, 3003.1, 5704.3.5.1, 5705.3.7.2, 5704.6, 5706.4, 5904.1.3, 6103.2.1.1, 6109.7, 6204.1.8, 6304.1.7, 6604.1.5, 6704.1.5
Defined 202

BATTERY CHARGING (see POWERED INDUSTRIAL TRUCKS)

BATTERY SYSTEM, STATIONARY LEAD-ACID
Defined 202

BATTERY SYSTEM, STATIONARY STORAGE 608
Defined 202
Permit 105.7.2
Room design 608.4
Signs 608.7
Ventilation 608.6

BATTERY TYPES—Defined
Lithium-ion 202
Lithium metal polymer 202
Nickel cadmium 202
Nonrecombinant 202
Recombinant 202
Stationary storage 202
Valve-regulated lead acid 202
Vented (flooded) lead acid 202

BIN BOX 3208.1
Defined 202

BIOFUEL, SOLID (see SOLID BIOFUEL)

BIOMASS
Defined 202

BIOMASS FEEDSTOCK, SOLID (see SOLID BIOMASS FEEDSTOCK)

INTERNATIONAL CODE COUNCIL®
Copyright © 2015 ICC. ALL RIGHTS RESERVED. Accessed by David Dammon on Jun 21, 2017 12:30:52 PM pursuant to License Agreement with ICC. No further reproduction or distribution authorized. ANY UNAUTHORIZED REPRODUCTION OR DISTRIBUTION IS A VIOLATION OF THE FEDERAL COPYRIGHT ACT AND THE LICENSE AGREEMENT, AND SUBJECT TO CIVIL AND CRIMINAL PENALTIES THEREUNDER.

BLAST AREA
Defined 202
BLAST SITE
Defined 202
BLASTER
Defined 202
BLASTING AGENT (see also EXPLOSIVES AND FIREWORKS)
Defined 202
BLEACHERS 1029.1.1
Defined 202
Occupant load 1004.4
BOARDING HOUSE (Occupancy Group R)
Defined 202
BOILING POINT
Defined 202
BOND
For explosives 5601.2.4.1
For fireworks display 5601.2.4.2
BONDING AND GROUNDING 2104.2.4, 2106.3.4
Aircraft fueling 2006.3.7.1, 2006.5.2
CNG motor fuel-dispensing facilities 2308.8.1.2.4
Cryogenic fluids 5503.7.2
Organic coating 2904.3
Piping, valves and fittings 5706.4.7.6
Powdered coating 2406.6.4
Roll-coating operations 2405.11
Underground tanks 5706.6.1.8
Vessels 5705.3.2
BONFIRES 307.4.1
Defined 202
Permit 105.6.30, 307.2
BREAKAWAY PROTECTION (see EMERGENCY BREAKAWAY DEVICES)
BREAKOUT 1010.1.4
Defined 202
BREATHING APPARATUS 2603.3.2
BRIDGES (see ACCESS ROADS, FIRE APPARATUS)
BRITISH THERMAL UNIT (BTU)
Defined 202
BUILDING
Defined 202
Unsafe 110
Vacant (see **VACANT PREMISES**)
BUILDING INFORMATION CARD . . . . . 508.1.5(13)
BUILDING OFFICIAL 403.11.1.4, 510.1, 3105.2, 3105.5
Defined 202
BUILDING SERVICES AND SYSTEMS . . . . Chapter 6
BULK OXYGEN SYSTEM . . . . . Chapter 63
Defined 202
BULK PLANT OR TERMINAL 5706.4
Defined 202
BULK TRANSFER 5706.5
Defined 202
BULLET RESISTANT
Defined 202
BURNING (see OPEN BURNING)
BUTANE (see LIQUEFIED PETROLEUM GAS)
BUTYLENE (see LIQUEFIED PETROLEUM GAS)

C

CABINETS
Fire equipment 905.7, 906.8, 2005.7.1
Flammable liquid 5704.3.2
Hazardous material 5003.8.7
Ozone 6005.3.1
CABINETS, GAS 2703.3.5, 2703.10.2, 2703.13.1.3, 5003.8.6, 5306.2.3, 6004.1.2, 6406.2.2, 6406.4.1
CANDLES 105.6.34, 308, 806.4
CANOPY
Defined 202
CANOPY, TEMPORARY STAGE (see TEMPORARY STAGE CANOPY)
CAPTIONS, EMERGENCY VOICE/ALARM COMMUNICATION SYSTEM 907.5.2.2.4
CARBON DIOXIDE EXTINGUISHING SYSTEM
Commercial cooking systems 904.11
Defined 202
Emergency alarms for 908.7
Permit required 105.6.4
CARBON DIOXIDE SYSTEMS USED IN BEVERAGE DISPENSING 5307
CARBON MONOXIDE ALARMS AND DETECTION SYSTEMS 915, 1103.9
CARE, 24-HOUR (Occupancy Group I)
Defined 202
CARE FACILITY 903.2.8.4
CARE SUITE
Defined 202
CARNIVALS AND FAIRS
Permit required 105.6.5
Place of assembly tent 3103.3
CARTON
Combustible 5106.5
Defined 202
CEILING LIMIT
Defined 202

INTERNATIONAL CODE COUNCIL®
Copyright © 2015 ICC. ALL RIGHTS RESERVED. Accessed by David Dammon on Jun 21, 2017 12:30:52 PM pursuant to License Agreement with ICC. No further reproduction or distribution authorized. ANY UNAUTHORIZED REPRODUCTION OR DISTRIBUTION IS A VIOLATION OF THE FEDERAL COPYRIGHT ACT AND THE LICENSE AGREEMENT, AND SUBJECT TO CIVIL AND CRIMINAL PENALTIES THEREUNDER.

CELLULOSE NITRATE MOTION PICTURE FILM 105.6.6, 306
CELLULOSE NITRATE PLASTICS [see PYROXYLIN (CELLULOSE NITRATE) PLASTICS]
CERTIFICATION OF SERVICE PERSONNEL
Automatic fire-extinguishing systems 904.1.1
Portable fire extinguishers 906.2.1
CHANGE OF OCCUPANCY 102.3
Defined 202
CHANGE OF USE 102.3
CHEMICAL
Defined 202
CHEMICAL NAME
Defined 202
CHIMNEY 603.2, 603.6
Defined 202
Factory-built 603.6.4
Masonry 603.6.1
Metal 603.6.2
CHRISTMAS TREE (see DECORATIVE VEGETATION)
CHUTES, RUBBISH AND LINEN 903.2.11.2
CLASSIFICATION
Aerosols 5103
Commodity 3203
Dry cleaning plants and systems 2103.2
Dry cleaning solvent or liquid 202, 2103.1
Flammable and combustible liquids 202
Floor finish materials 804.3.1
Hazardous materials 5001.2
Occupancy 202
Refrigerant 606.3
CLEAN AGENT
Defined 202
CLEANING
Cooking equipment 609.3.3
Flammable liquids used for 2004.3
Powder coating 2406.5.1
Piping 3306.2
Repair garages 2311.2.1
Tanks 5706.7.2
Tire rebuilding buffing areas 3403.3
CLEARANCE
Storage to ceiling or sprinklers 315.2.1, 903.3.3, 5704.3.5.3
CLINIC, OUTPATIENT (Occupancy Group B)
Defined 202
CLOSED CONTAINER 5505.5.2
Defined 202
CLOSED SYSTEM 5705.3.7.6
Defined 202
CNG MOTOR FUEL-DISPENSING FACILITIES 2308
COLD DECK 2806.2
Defined 202
COLLEGE AND UNIVERSITY BUILDINGS, GROUP R-2 . . . . . 403.10.2.1, Table 405.2, 907.2.9.3
COMBUSTIBLE DUST
Defined 202
COMBUSTIBLE DUST-PRODUCING OPERATIONS . . . . . Chapter 22
Permit 105.6.7
COMBUSTIBLE FIBERS . . . . . Chapter 37
Defined 202
General precautions 3703
Permit 105.6.8
Portable fire extinguishers 3703.6
COMBUSTIBLE GAS DETECTOR 3510.2
Defined 202
COMBUSTIBLE LIQUID . . . . . 2306, 3104.17, Chapter 57
Classified locations 5703.1.2
Defined 202
Dispensing, use, mixing and handling 5705.3, 5705.3.8
Heated 5701.5
Indoor storage 5704.3.3
Mixtures 5701.5
Outdoor storage 5704.4
Permit 105.6.17, 105.7.8
Portable fire extinguisher 5706.2.7
Special operations 5706
Tank storage 5704.2
Waste control 5706.3.3
Wholesale and resale use 5704.3.6
COMBUSTIBLE MATERIAL STORAGE 105.6.30, 315, 2003.6
COMBUSTIBLE WASTE MATERIAL 304, 2505
At construction sites 3304.2
Containers 304.3
Storage 304.2
COMMERCIAL COOKING APPLIANCES
Defined 202
COMMERCIAL KITCHEN COOKING OIL STORAGE TANK SYSTEMS 610
COMMERCIAL KITCHEN HOODS 609
COMMERCIAL MOTOR VEHICLE 903.2.9
Defined 202
COMMODITY
Classifications 3203
Defined 202

INTERNATIONAL CODE COUNCIL®
Copyright © 2015 ICC. ALL RIGHTS RESERVED. Accessed by David Dammon on Jun 21, 2017 12:30:52 PM pursuant to License Agreement with ICC. No further reproduction or distribution authorized. ANY UNAUTHORIZED REPRODUCTION OR DISTRIBUTION IS A VIOLATION OF THE FEDERAL COPYRIGHT ACT AND THE LICENSE AGREEMENT, AND SUBJECT TO CIVIL AND CRIMINAL PENALTIES THEREUNDER.

COMMON PATH OF EGRESS TRAVEL . . . . . 1006.2.1, 1018.4, 1029.8, Table 1104.18.2
Defined 202
COMMON USE AREAS 907.5.2.3.1
Defined 202
COMPATIBILITY (Hazardous materials) (see INCOMPATIBLE MATERIALS)
COMPRESSED GAS . . . . . Chapter 53
Containers, cylinders, tanks 5303.1
Defined 202
Medical gas 5306
Not otherwise regulated 5308
Permit required 105.6.9
Requirements 5303
Storage 5304
Use and handling 5305
Wiring 5303.6
COMPRESSED GAS CONTAINER
Defined 202
COMPRESSED GAS SYSTEM
Defined 202
Motor fuel-dispensing facilities 2308
COMPRESSED NATURAL GAS (CNG) 5301.1
CONFLICTING PROVISIONS 102.9
CONGREGATE CARE FACILITY (Occupancy Group I)
Defined 202
CONGREGATE LIVING FACILITY (Occupancy Group R)
Defined 202
CONSTANTLY ATTENDED LOCATION 903.4.1, 907.2.1.1, 907.2.6, 907.2.7.1, 907.2.10.1, 907.2.12.1, 907.2.13, 907.2.18.2, 907.3, 907.3.1, 907.5, 907.5.1, 913.4, 5704.2.8.11
Defined 202
CONSTRUCTION AND DEMOLITION FIRE SAFETY . . . . . Chapter 33
CONSTRUCTION DOCUMENTS 105.4
Defined 202
CONSTRUCTION EQUIPMENT, MOTORIZED (see MOTORIZED CONSTRUCTION EQUIPMENT)
CONTAINER
Defined 202
CONTAINER AND PORTABLE TANK STORAGE . . . . . 5704.3, Table 5704.3.6.3(4), 5704.4, Table 5704.4.2
CONTAINMENT PALLETS
Flammable and combustible liquids 5704.4.3
Hazardous materials 5004.2.3
CONTAINMENT SYSTEM
Defined 202
CONTAINMENT VESSEL
Defined 202
CONTINUOUS GAS DETECTION SYSTEM (see GAS DETECTION SYSTEM, CONTINUOUS)
CONTROL AREAS 5003.8.3
Defined 202
COOKING
Appliances, commercial, defined 202
Commercial, automatic sprinkler systems 903.2.11.5
Commercial, fire-extinguishing systems 904.11
Commercial, hoods 609
Commercial, oil storage tank systems 610
Commercial, portable fire extinguishers 904.11.5
Devices, open-flame 308.1.4
Group I-2 . . . . . 904.13
On balconies 308.1.4
CORRIDOR 1020, 1104.17
Defined 202
Open-ended **(see OPEN-ENDED CORRIDOR)**
CORROSION PROTECTION
Cryogenic fluid containers 5503.1.3.2
Cryogenic fluid piping 5505.1.2.5
General 5703.6.5
Tanks and piping 5704.2.7.9, 5706.7.1
CORROSIVE
Defined 202
CORROSIVE MATERIALS . . . . . Chapter 54
Indoor storage 5404.1
Indoor use 5405.1
Outdoor storage 5404.2
Outdoor use 5405.2
Requirements 5403
COTTON, BALED . . . . . Table 5003.1.1(1), 3705
Defined 202
COTTON, DENSELY PACKED BALED . . . . . Table 5003.1.1(1)
Defined 202
COTTON, SEED 3703.4
Defined 202
COURT
Defined 202
COURT, EGRESS 1028.4
Defined 202
COVERED AND OPEN MALL BUILDINGS
Automatic sprinkler system 914.2.1
Defined 202
Emergency planning 403.11.1
Emergency voice/alarm communication system 907.2.20, 914.2.3

INTERNATIONAL CODE COUNCIL®
Copyright © 2015 ICC. ALL RIGHTS RESERVED. Accessed by David Dammon on Jun 21, 2017 12:30:52 PM pursuant to License Agreement with ICC. No further reproduction or distribution authorized. ANY UNAUTHORIZED REPRODUCTION OR DISTRIBUTION IS A VIOLATION OF THE FEDERAL COPYRIGHT ACT AND THE LICENSE AGREEMENT, AND SUBJECT TO CIVIL AND CRIMINAL PENALTIES THEREUNDER.

Permit 105.6.10
Standpipe system 905.3.3, 914.2.2
Tenant identification. 403.11.1.5
Unoccupied tenant spaces 311.6, 403.11.1.6
CRANKCASE OIL (see WASTE OIL)
CRITICAL CIRCUIT 604.3
Defined 202
CROP-RIPENING AND COLORING PROCESSES (see FRUIT AND CROP RIPENING)
CROWD MANAGERS 403.12.3, 3104.20.2
CRYOGENIC CONTAINER
Defined 202
Handling. 5505.5
Marking 5503.4
Security 5503.5
CRYOGENIC FLUIDS . . . . . Chapter 55
Containers 5503.1
Defined 202
Filling 5505.4
Flammable 5806
Indoor storage 5504.2
Indoor use 5505.2
Outdoor storage. 5504.3
Outdoor use 5505.3
Permit 105.6.11
Requirements 5503
Underground storage tanks 5504.4, 5504.5
CRYOGENIC VESSEL
Defined 202
CUSTODIAL CARE (Occupancy Group I)
Defined 202
CUTTING AND WELDING (see WELDING AND OTHER HOT WORK)
CYLINDER
Defined 202

D

DAMPER
Defined 202
DANGER, IMMINENT. 110.2
DAY BOX (Magazine, Type 3). 202
Defined 202
DEAD END 1020.4
DECK
Defined 202
DECORATIONS 805
Exit obstruction 1031.5
DECORATIVE MATERIALS. 807
Defined 202
DECORATIVE VEGETATION 806
DEFLAGRATION
Defined. 202
DEFUELING
Aircraft 2006.5
Hydrogen fuel tanks 2309.6
DELAYED EGRESS LOCKS 907.4.2, 1010.1.9.7
DELUGE SYSTEM 903.4, 2805.2
Defined. 202
DEMOLITION OF BUILDINGS FIRE SAFETY . . . . . Chapter 33
DESIGN PRESSURE
Defined. 202
DETACHED BUILDING
Defined. 202
Group H occupancies. 5003.8.2
Storage. . . . . 6204.1.1, 6304.1.1, Table 6304.1.2
DETEARING
Defined. 202
DETECTOR, HEAT
Defined. 202
DETONATING CORD
Defined. 202
DETONATION
Defined. 202
DETONATOR
Defined. 202
DETOXIFICATION FACILITY (Group I-2)
Defined. 202
DIP TANK 2405
Defined. 202
DIPPING OPERATIONS. 2405
DISCHARGE, EXIT (see EXIT DISCHARGE)
DISCHARGE OF HAZARDOUS MATERIAL (see RELEASE OF HAZARDOUS MATERIAL)
DISCHARGE SITE
Defined. 202
DISPENSING
Aircraft fueling 2006
Defined. 202
Fire extinguishers. 2305.5
Location 2303.1
Motor fuel-dispensing operations 2304
Requirements. 2305, 5005
DISPENSING DEVICE, OVERHEAD-TYPE
Defined. 202
DISPLAY SITE (Fireworks)
Defined. 202
DISPLAYS
Aerosol products 5106
Cellulose nitrate (pyroxylin) plastic 314.3, 6503.1

INTERNATIONAL CODE COUNCIL®
Copyright © 2015 ICC. ALL RIGHTS RESERVED. Accessed by David Dammon on Jun 21, 2017 12:30:52 PM pursuant to License Agreement with ICC. No further reproduction or distribution authorized. ANY UNAUTHORIZED REPRODUCTION OR DISTRIBUTION IS A VIOLATION OF THE FEDERAL COPYRIGHT ACT AND THE LICENSE AGREEMENT, AND SUBJECT TO CIVIL AND CRIMINAL PENALTIES THEREUNDER.

Fireworks 5608
Group M 5003.11
Indoor 314
Motor vehicles 314.4, 3104.18
Retail 5001.4, 5106, 5601.2.2
Storage 5003.11.3
DOOR, BALANCED 1010.1.10.2
Defined 202
DOOR, DUTCH 1105.4.4.2.3
Defined 202
DOOR, LOW ENGERY POWER-OPERATED 1010.1.4.2
Defined 202
DOOR, POWER-ASSISTED 1010.1.4.2
Defined 202
DOOR, POWER-OPERATED 1010.1.4.2, 1010.1.4.3
Defined 202
DOORWAY, EXIT ACCESS 1006
Defined 202
DORMITORIES (see OCCUPANCY CLASSIFICATION, Residential Group R and COLLEGE AND UNIVERSITY BUILDINGS, Group R-2)
DRAFT CURTAIN
Defined 202
Installation 1019.3, 1103.4.5, 1103.4.6, 1103.4.8, 5106.3.2
DRAFTSTOP
Defined 202
Maintenance 703.1.1
DRAINAGE CONTROL 2903.10, 2905.3, 5004.2.2.6, 5705.3.8.1, 5706.2.6, 5706.4.9
DRAINS
Dip-tank bottom 2405.3.2
Exhaust duct sprinkler system 2703.10.4.4.3
HPM liquids 2705.2.2.2
Magazines 5604.6.1
Outdoor cryogenic fluid storage containers 5504.3.1.3
Portable containers 5204.3.2.2
DRAPERIES 807.1, 1031.5
DRILLING, WELL 5706.3
DRY-CHEMICAL EXTINGUISHING AGENT
Defined 202
DRY CLEANING . . . . . Chapter 21
Classifications 2103.1
Defined 202
Fire protection 2108
Permit 105.6.13
Requirements, general 2104
Requirements, operating 2105
Solvent or liquid classifications 202
Spotting and pretreating 2106
Systems 2107
DRY CLEANING PLANT
Defined 202
DRY CLEANING ROOM
Defined 202
DRY CLEANING SYSTEM
Defined 202
DRYING APPARATUS 2404.6.1.2
DRYING OVENS (see INDUSTRIAL OVENS)
DRYING ROOMS 914.10
DUCT SMOKE DETECTORS 907.3.1
DUMPSTERS 304.3
DUST COLLECTION 5203.5, 5906.5.3
DUST EXPLOSION HAZARDS . . . . . Chapter 22, 2803
Explosion venting 2803.2.1
DWELLING
Defined 202
DWELLING UNIT
Defined 202

E

EARLY SUPPRESSION FAST-RESPONSE SPRINKLER (ESFR) (see AUTOMATIC SPRINKLERS)
EGRESS (see MEANS OF EGRESS)
ELECTRICAL EQUIPMENT 605
Aviation facilities 2006.14
Dust-producing machines 5906.5.5
Signs 605.3.1, 608.7.1
Workstations in HPM facilities 2703.7.2
ELECTROSTATIC APPARATUS 2407
ELECTROSTATIC FLUIDIZED BED
Defined 202
ELEVATOR GROUP
Defined 202
Emergency voice/alarm communication system in 907.5.2.2
ELEVATOR HOISTWAYS 704.1, 1103.4
Pressurization 909.21
Water protection 607.6
ELEVATOR KEYS, FIRE SERVICE (see KEYS, FIRE SERVICE ELEVATOR)
ELEVATOR KEYS, NONSTANDARDIZED FIRE SERVICE
Key boxes for 506.1.2

INTERNATIONAL CODE COUNCIL®
Copyright © 2015 ICC. ALL RIGHTS RESERVED. Accessed by David Dammon on Jun 21, 2017 12:30:52 PM pursuant to License Agreement with ICC. No further reproduction or distribution authorized. ANY UNAUTHORIZED REPRODUCTION OR DISTRIBUTION IS A VIOLATION OF THE FEDERAL COPYRIGHT ACT AND THE LICENSE AGREEMENT, AND SUBJECT TO CIVIL AND CRIMINAL PENALTIES THEREUNDER.

ELEVATOR RECALL/ EMERGENCY OPERATION 607
EMERGENCY ALARM SYSTEM 908, 5004.9, 5005.4.4
Defined 202
EMERGENCY BREAKAWAY DEVICES 2306.7.5.1, 2307.6.3
EMERGENCY CONTROL STATION 2703.1
Defined 202
EMERGENCY ESCAPE AND RESCUE OPENING 1030
Defined 202
EMERGENCY EVACUATION DRILL 405
Defined 202
Frequency . . . . . 405.2, Table 405.2
EMERGENCY LIGHTING EQUIPMENT
Inspection and testing 604.6
EMERGENCY PLANNING AND PREPAREDNESS . . . . . Chapter 4
EMERGENCY POWER SYSTEMS 604
Defined 202
EMERGENCY RELIEF VENTING 2306.6.2.5, 5704.2.7.4
EMERGENCY REPAIRS 105.1.4
EMERGENCY RESPONDER RADIO COVERAGE 510
In existing buildings 1103.2
Permit 105.7.5
EMERGENCY SHUTOFF VALVE 5003.2.2.1, 5503.4.6, 5505.3.2, 5803.1.3, 6303.1.2, 6403.1.1
Defined 202
EMERGENCY SHUTOFF VALVE, AUTOMATIC 2305.2.4, 2306.7.4, 5003.2.9.1, 5505.3.2, 5803.1.3, 5803.1.3.2, 6303.1.2, 6303.1.2.2, 6403.1.1, 6403.1.1.1, 6403.1.1.2
Defined 202
EMERGENCY SHUTOFF VALVE, MANUAL 2309.5.2, 2309.5.2.1, 5505.3.2, 5803.1.3, 5803.1.3.2, 6303.1.2, 6303.1.2.2, 6403.1.1, 6403.1.1.2
Defined 202
EMERGENCY VENTING FOR TANKS 610.5, 2306.5, 5704.2.7.4, 5704.2.9.6.1.1, 5704.2.9.6.1.2, 5704.2.9.6.3, 5704.2.9.7.2, 5706.2.4.2
EMERGENCY VOICE/ALARM COMMUNICATIONS 907.5.2.2
Atriums 907.2.14
Captions 907.5.2.2.4
Covered mall buildings 907.2.20
Deep underground buildings 907.2.19
Defined 202
Group A 907.2.1.1
High-rise building 907.2.13
Special amusement buildings 907.2.12.3
EMPLOYEE TRAINING 406
EMPLOYEE WORK AREA
Defined 202
ENTRY, RIGHT OF 104.3
EQUIPMENT, FUELED 312
EQUIPMENT PLATFORM
Defined 202
Guards required 1015.2
ESCALATOR OPENINGS (see FLOOR OPENINGS AND SHAFTS)
ESCAPE OPENINGS 1030
ESFR SPRINKLERS (see AUTOMATIC SPRINKLERS)
ETHYLENE
Gas 2503
Generators 2506
EVACUATION 110.2, 1703.3.4, 1704.3.5
EVACUATION DIAGRAMS 403.10.1.1, 403.10.2.3
EVACUATION DRILLS 405
Frequency . . . . . 405.2, Table 405.2
Notification 405.6
Recall and reentry 405.9
EVACUATION PLANS 404
EXCESS FLOW CONTROL
Defined 202
EXCESS FLOW VALVE
Defined 202
EXHAUSTED ENCLOSURE 5003.8.5
Defined 202
EXHIBIT GALLERY
Occupancy load . . . . . Table 1004.1.2
EXHIBITION HALLS (Occupancy Group A-3) . . . 202
EXHIBITS AND TRADE SHOWS 105.6.14
EXISTING
Defined 202
EXISTING BUILDINGS . . . . . Chapter 11
EXIT 1022
Defined 202
Enclosure 1023

INTERNATIONAL CODE COUNCIL®
Copyright © 2015 ICC. ALL RIGHTS RESERVED. Accessed by David Dammon on Jun 21, 2017 12:30:52 PM pursuant to License Agreement with ICC. No further reproduction or distribution authorized. ANY UNAUTHORIZED REPRODUCTION OR DISTRIBUTION IS A VIOLATION OF THE FEDERAL COPYRIGHT ACT AND THE LICENSE AGREEMENT, AND SUBJECT TO CIVIL AND CRIMINAL PENALTIES THEREUNDER.

Horizontal 1026
Number required 1006
Passageways 1024
EXIT ACCESS 1016
Defined 202
Doorway 202
Ramp 202
Stairway 202
EXIT DOORS, EXTERIOR 1022
EXIT RAMP, EXTERIOR 1006.3, 1008.3.2, 1027
Defined 202
EXIT STAIRWAY, EXTERIOR 1027
Defined 202
EXIT DISCHARGE 1028
Defined 202
EXIT DISCHARGE, LEVEL OF
Defined 202
EXIT ENCLOSURE 1022
Defined 202
EXIT, HORIZONTAL 1026
Defined 202
EXIT PASSAGEWAY 1024
Defined 202
EXPANDED PLASTIC . . . . . Figure 3203.7.4
Defined 202
EXPANDED VINYL WALL OR CEILING COVERINGS 803.6
EXPLOSION
Defined 202
EXPLOSION CONTROL 911, 2803.1, 2803.2.1, 2905.4, 5004.6, 5005.2.1.2, 5005.2.2.2, 5704.2.5, 5705.3.4, 5705.3.7.5.2, 5705.3.7.6.2, 5804.1.1, 5808.6, 6204.1.10, 6304.1.1, 6604.1.2, 6704.1.6
EXPLOSIVE MATERIAL . . . . . Chapter 56
Defined 202
EXPLOSIVES AND FIREWORKS . . . . . Chapter 56
Defined 202
Permits 105.6.15
EXTENSION CORDS 605.5
EXTERIOR ASSISTED RESCUE AREAS 1009.7
EXTERIOR WALL
Defined 202
EXTINGUISHERS (see FIRE EXTINGUISHERS, PORTABLE)
EXTRA-HIGH-RACK COMBUSTIBLE STORAGE
Approval 3208.5
Defined 202
Fire protection 3208.5.1

F

FABRICATION AREA 2705.2
Construction 2703.3.1
Defined 202
Electrical wiring and equipment 2703.7.1
Existing 2701.4
Gas detection 2703.13.1.1
Storage 2704.2
FACILITY
Defined 202
FAIL-SAFE 5003.2.2.1, 5004.7.2, 5005.1.5.1, 5005.1.11, 6004.2.2.7, 6004.2.2.8.1, 6204.1.11.1
Defined 202
FAIRS 105.6.5
FALLOUT AREA
Defined 202
FALSE ALARM
Defined 202
FEES 113
FILL PIPE CONNECTIONS 5704.2.9.5.2
FILM, CELLULOSE NITRATE MOTION PICTURE 306
Projection rooms 306.1
Storage 306.2
FINES (in woodworking operations) (see also VIOLATION PENALTIES)
Defined (in woodworking operations) 202
Storage and processing (in woodworking operations) 2808
FINISHED PRODUCTS 2909.6
FIRE ALARM
Defined 202
Reporting 401.3.2, 3309
FIRE ALARM BOX (see MANUAL FIRE ALARM BOX)
FIRE ALARM CONTROL UNIT
Defined 202
FIRE ALARM SIGNAL
Defined 202
FIRE ALARM SYSTEM
Annunciation 907.6.3.1, 907.6.4.1
Defined 202
Existing buildings 907.9, 1103.7
Maintenance 907.8
Monitoring 907.6.6
Notification appliances 907.5
Out of service 901.7
Permit 105.7.6
Power supply 907.6.2
Presignal feature 907.5.1
Telephone dialing devices 907.6.6.1

INTERNATIONAL CODE COUNCIL®
Copyright © 2015 ICC. ALL RIGHTS RESERVED. Accessed by David Dammon on Jun 21, 2017 12:30:52 PM pursuant to License Agreement with ICC. No further reproduction or distribution authorized. ANY UNAUTHORIZED REPRODUCTION OR DISTRIBUTION IS A VIOLATION OF THE FEDERAL COPYRIGHT ACT AND THE LICENSE AGREEMENT, AND SUBJECT TO CIVIL AND CRIMINAL PENALTIES THEREUNDER.

Testing 907.8
Where required, existing buildings 1103.7
Where required, new buildings 907.2
Zones 907.6.4
FIRE AND SMOKE PROTECTION FEATURES . . . . . Chapter 7
FIRE APPARATUS ACCESS ROAD 503
Defined 202
Gates and barricades 503.5, 503.6
Obstructions 503.4
FIRE AREA 901.4.3
Defined 202
FIRE BARRIER
Defined 202
Maintenance 703.1.3
FIRE CHIEF 104.11, 311.2.2, 503.6, 508.1.1, 605.11.1, 907.6.5.1, 909.15, 912.2, 912.3, 2603.3, 3209.4, 3308.2, 5706.2.1
Defined 202
FIRE CODE OFFICIAL
Defined 202
FIRE COMMAND CENTER 508
Defined 202
Storage prohibited 315.3.3, 508.1.5
FIRE DAMPER
Defined 202
FIRE DEPARTMENT COMMUNICATION SYSTEM 907.2.13.2
FIRE DEPARTMENT CONNECTIONS 903.3.7, 905.2, 912
FIRE DEPARTMENT MASTER KEY
Defined 202
FIRE DEPARTMENT NOTIFICATION [see NOTIFICATION (of fire department)]
FIRE DEPARTMENT OPERATIONS . . . 104.11, 401.4
FIRE DETECTOR, AUTOMATIC
Defined 202
FIRE DOOR
Defined 202
FIRE DOOR ASSEMBLY
Defined 202
FIRE DRILL (see EMERGENCY EVACUATION DRILL)
FIRE EQUIPMENT, TAMPERING WITH 901.8
FIRE ESCAPE STAIRWAYS 1104.16
FIRE EXIT HARDWARE 1010.1.10
Defined 202
FIRE EXTINGUISHERS, PORTABLE 906
Asphalt kettles 303.5
Aviation facilities 2005
Buildings under construction or demolition 3315
Commercial cooking equipment 904.11.5
Dry cleaning plants 2108.4
Flammable finishes 2404.4.1, 2405.4.2, 2406.4.2
Lumber yards 2804.2, 2808.8
FIRE-EXTINGUISHING SYSTEMS, ALTERNATIVE 904
Commercial cooking 904.12
Fire alarm system interconnection 904.3.5, 907.6
Flammable and combustible liquids 5704.3.7.5.1, 5704.3.8.4
Flammable finishing 2404.4, 2405.4.1, 2406.4, 2407.4
Hazardous materials 5005.1.8
Monitoring 904.3.5
Permit 105.7.1
Required 904.2
FIRE FIGHTERS
Hazards to 316
Pitfalls 316.3
Safety 101.3
FIRE FLOW REQUIREMENTS 507.3
FIRE HYDRANT
Obstruction 507.5.4
Permit 105.6.16, 105.6.37, 105.7.13
Standpipe system 507.5.1.1
Tampering 901.8
Testing 507.5.2, 901.5
FIRE INVESTIGATIONS 104.10
FIRE LANE
Defined 202
FIRE PARTITION
Defined 202
Maintenance 703.1.3
FIRE POINT
Defined 202
FIRE PROTECTION EQUIPMENT 509
FIRE PROTECTION RATING
Defined 202
FIRE PROTECTION SYSTEM . . . . . Chapter 9
Defined 202
Nonrequired 901.4.2
Out of service 901.7
Owner's responsibility during construction or demolition 3308
Permit 105.7.1, 105.7.5, 105.7.6, 105.7.14, 105.7.17
FIRE PUMP ROOMS 901.4.6, 913.2.1, 1008.3.3
FIRE PUMPS 105.7.7, 913

INTERNATIONAL CODE COUNCIL®
Copyright © 2015 ICC. ALL RIGHTS RESERVED. Accessed by David Dammon on Jun 21, 2017 12:30:52 PM pursuant to License Agreement with ICC. No further reproduction or distribution authorized. ANY UNAUTHORIZED REPRODUCTION OR DISTRIBUTION IS A VIOLATION OF THE FEDERAL COPYRIGHT ACT AND THE LICENSE AGREEMENT, AND SUBJECT TO CIVIL AND CRIMINAL PENALTIES THEREUNDER.

FIRE RECORDS 104.6.3
FIRE, RECREATIONAL (see RECREATIONAL FIRE)
FIRE, REPORTING OF UNWANTED 401.3, 3309
FIRE RESISTANCE
Defined 202
FIRE-RESISTANCE-RATED CONSTRUCTION . . . 703
FIRE-RESISTANCE RATING
Defined 202
FIRE-RESISTANT JOINT SYSTEM
Defined 202
FIRE-RETARDANT COATINGS 803.4
FIRE SAFETY DURING CONSTRUCTION AND DEMOLITION . . . . . Chapter 33
FIRE SAFETY FUNCTIONS 907.3
Defined 202
FIRE SAFTEY PLANS 404, 3404.5
FIRE SEPARATION DISTANCE
Defined 202
FIRE SERVICE ELEVATOR KEYS (see KEYS, FIRE SERVICE ELEVATOR)
FIRE SERVICE FEATURES . . . . . Chapter 5
FIRE, UNWANTED (see UNWANTED FIRE)
FIRE WALL
Defined 202
Maintenance 703.1.3
FIRE WATCH (see also STANDBY PERSONNEL)
Construction/demolition sites 3304.5
Defined 202
Fire protection impairments 901.7
Hot work 3504.2
Places of assembly 403.12.1
FIREBLOCKING
Defined 202
Maintenance 703.1.3
FIREPLACES, PORTABLE OUTDOOR (see PORTABLE OUTDOOR FIREPLACES)
FIREWORKS (see EXPLOSIVES AND FIREWORKS)
Defined 202
Prohibited 5601.1.3
Retail display and sale 5609.1
FIREWORKS DISPLAY
Damage from 5601.2.4.2
Defined 202
FIXED BASE OPERATOR
Defined 202
FIXED SEATING 1004.4
Defined 202
Occupant load factor 1004.1.2
FLAME ARRESTORS 5704.2.7.3.2
FLAME RETARDANT (see also FIRE-RETARDANT COATINGS)
Tents, air-supported, air-inflated and tensioned membrane structures 3104.2
FLAME SPREAD
Defined 202
FLAME SPREAD INDEX
Defined 202
FLAMING FOODS AND BEVERAGES 308.6
FLAMMABLE CRYOGENIC FLUID
Defined 202
FLAMMABLE FINISHES . . . . . Chapter 24
Defined 202
Dipping operations 2405
Electrostatic apparatus 2407
Floor surfacing 2410
Powder coating 2406
Protection of operations 2403
Spray finishing 2404
Ventilation 2404.7, 2405.7, 2406.7, 2407.7, 2409.6, 2410.5
FLAMMABLE GAS . . . . . Chapter 58
Defined 202
Nonodorized 2311.7.2
Prohibited for pipe cleaning 3306.2
Requirements 5803
Storage 3306.1, 5804
Use 3306.1, 5805
FLAMMABLE LIQUEFIED GAS
Defined 202
FLAMMABLE LIQUIDS . . . . . Chapter 57
Buildings under construction or demolition 3305
Classified locations 5703.1.1
Defined 202
Dispensing, use, mixing and handling 5705.3, 5705.3.8
In construction and demolition operations 3305
Indoor storage 5704.3.3
Labeling and signage 5703.5
Motor fuel 2306
Outdoor storage 5704.4
Permit 105.6.17, 105.7.8
Portable fire extinguisher 5706.2.7
Special operations 5706
Tank storage 5704.2
Tents, air-supported, air-inflated and tensioned membrane structures 3104.17
Waste control 5706.3.3
Wholesale and resale use 5704.3.6

INTERNATIONAL CODE COUNCIL®
Copyright © 2015 ICC. ALL RIGHTS RESERVED. Accessed by David Dammon on Jun 21, 2017 12:30:52 PM pursuant to License Agreement with ICC. No further reproduction or distribution authorized. ANY UNAUTHORIZED REPRODUCTION OR DISTRIBUTION IS A VIOLATION OF THE FEDERAL COPYRIGHT ACT AND THE LICENSE AGREEMENT, AND SUBJECT TO CIVIL AND CRIMINAL PENALTIES THEREUNDER.

FLAMMABLE MATERIAL
Defined 202
FLAMMABLE SOLID . . . . . Chapter 59
Defined 202
Indoor storage 5904.1
Magnesium 5906
Outdoor storage 5906
Requirements 5903
Use 5905
FLAMMABLE VAPOR AREA
Alarms 2404.8.1.1
Defined 202
Electrical equipment 2403.2.1
Ignition sources 2403.2
Ventilation 2404.7, 2405.7
Warning signs 2403.2.7
FLAMMABLE VAPORS OR FUMES
Defined 202
FLASH POINT
Defined 202
FLEET VEHICLE MOTOR FUEL-DISPENSING FACILITY
Defined 202
Tanks 2306.2.4.2
FLEXIBLE JOINTS 2306.7.9.1.4, 5703.6.9
FLIGHT (stairs)
Defined 202
FLOOR AREA, GROSS
Defined 202
FLOOR AREA, NET
Defined 202
FLOOR CONSTRUCTION 2309.5.1.1, 5004.2.1, 5004.12, 6003.1.4.1, 6304.1.3
FLOOR COVERING (interior finish) 804.3
FLOOR FINISHING 2410
Permit 105.6.18
FLOOR IDENTIFICATION SIGNS 1023.9, 1031.9, 1104.24
FLOOR OPENINGS AND SHAFTS 704, 1103.4
FLUE SPACES 3208.3
Defined 202
FLUIDIZED BED
Defined 202
FOAM-EXTINGUISHING SYSTEMS 904.7
Defined 202
FOAM PLASTICS 803.7, 804.2, 807.4.2.1, 808.3
FOGGING, INSECTICIDAL (see FUMIGATION AND INSECTICIDAL FOGGING)
FOLDING AND TELESCOPIC SEATING
Defined 202
FOSTER CARE FACILITIES (Occupancy Group I)
Defined 202
FRUIT AND CROP RIPENING . . . . . Chapter 25
Ethylene gas 2503
Heating 2504.5
Permit 105.6.19
Sources of ignition 2504
Warning signs 2507
FUEL-FIRED APPLIANCES 603
Chimneys 603.2, 603.6
Heating 603.5
Installation 603.1
FUEL LIMIT SWITCH
Defined 202
FUEL OIL
Grade 603.1.4
Storage 603.3
FUMIGANT
Defined 202
FUMIGATION AND INSECTICIDAL FOGGING . . . . . Chapter 26
Breathing apparatus 2603.3.2
Clean up 2603.6
Defined 202
Fire safety requirements 2603
Notification 2603.3
Permit 105.6.20
Sealing of buildings 2603.5
Warning signs 2603.3.1
Watch personnel 2603.3.3
FURNACE CLASS A, B, C, D
Defined 202
FURNISHINGS 808, 1031.6
FURNITURE, UPHOLSTERED 805, 903.2.4, 903.2.7, 903.2.9
FUSIBLE LINKS 703.2, 704.2, 904.5.2, 904.6.2, 904.12.6.3, 910.5.1.1

G

GARAGE (see REPAIR GARAGE)
GARAGING (see PARKING AND GARAGING)
GAS CABINET 2703.10.2, 2703.13.1.3, 5003.8.6, 5303.7.10, 5306.2.3, 6004.1.1,
Defined 202
GAS DETECTION SYSTEM, CONTINUOUS
Defined 202
Emergency alarm system 908
HPM gases 2703.13

INTERNATIONAL CODE COUNCIL®
Copyright © 2015 ICC. ALL RIGHTS RESERVED. Accessed by David Dammon on Jun 21, 2017 12:30:52 PM pursuant to License Agreement with ICC. No further reproduction or distribution authorized. ANY UNAUTHORIZED REPRODUCTION OR DISTRIBUTION IS A VIOLATION OF THE FEDERAL COPYRIGHT ACT AND THE LICENSE AGREEMENT, AND SUBJECT TO CIVIL AND CRIMINAL PENALTIES THEREUNDER.

Hydrogen motor fuel 2307.2
Ozone gas 6005.3.2
GAS DETECTOR (see COMBUSTIBLE GAS DETECTOR)
GAS METERS 603.9
GAS- OR LIQUID-FUELED VEHICLES 314.4, 3104.18
Permit 105.6.27
GAS ROOM 5003.8.4, 6004.2.2.6
Defined 202
GASEOUS HYDROGEN SYSTEM 5801.1
Defined 202
GATES
Means of egress 1010.2
GATES, FIRE APPARATUS ROAD 503.5, 503.6
Permit 105.7.9
GENERAL REQUIREMENTS . . . . . Chapter 3
GENERATORS
Acetylene 3508
Ethylene 2506
Ozone Gas 6005
Stationary 604.1.1
GLASS-FIBER-REINFORCED PLASTICS
Manufacturing 2409
Storage 2409.4
Ventilation 2409.6
GRADE FLOOR OPENING
Defined 202
GRADE PLANE
Defined 202
GRANDSTAND 1029.1.1, 1029.1.1.1
Defined 202
GROUP HOME (Occupancy Group R-4)
Defined 202
GUARD 1015, 1029.16, 1104.6
Defined 202
GUEST ROOM
Defined 202
GYPSUM BOARD
Defined 202

H

HABITABLE SPACE
Defined 202
HALOGENATED EXTINGUISHING SYSTEM
Defined 202
HAND RUB, ALCOHOL-BASED (see ALCOHOL-BASED HAND RUB)
HANDLING
Defined 202
HANDRAIL 1014
Defined 202
HANGARS, AIRCRAFT (see AIRCRAFT-RELATED OCCUPANCIES, FIRE PROTECTION FOR)
HANGERS, FIRE EXTINGUISHER 906.7
HARDENING TANKS 2405.9
HARDWARE, EXIT DOOR 1010.1.9
HARDWARE, PANIC 1010.1.10
HAY
Combustible fiber 5203.4
Combustible waste 304.1.1
Storage 3104.5, 5203.4
HAZARD COMMUNICATION 407
Hazardous Materials Inventory Statement 407.5, 5001.5.2
Hazardous Materials Management Plan 407.6 5001.5.1
Training 407.4
HAZARDOUS MATERIALS
Defined 202
Fire-extinguishing systems 5004.5, 5005.1.8
General . . . . . Chapter 50
Groups M and S 5003.11
Identification signs 5003.5
Mixtures 5001.2.1
Outdoor control areas 5003.12
Permit 105.6.21, 105.7.10
Personnel training 407.4
Power systems 604.2.8
Requirements 5003
Storage 5004
Use, dispensing and handling 5005
HAZARDOUS MATERIALS INVENTORY STATEMENT 407.5, 5001.5.2
HAZARDOUS MATERIALS MANAGEMENT PLAN 407.6, 5001.5.1
HAZARDOUS PRODUCTION MATERIAL (HPM)
Defined 202
Permit 105.6.22
HAZARDS TO FIRE FIGHTERS 316
HEALTH HAZARD . . . . . 5001.2.2.2, Table 5003.1.1(2), Table 5003.1.1(4)
Defined 202
HEAT VENTS (see SMOKE AND HEAT VENTS)
HEATERS, PATIO (see PORTABLE OUTDOOR GAS-FIRED HEATING APPLIANCES)
HEATERS, PORTABLE ELECTRIC SPACE . . 605.10
HEATERS, PORTABLE UNVENTED 603.4
HEATING APPLIANCES 603.5

INTERNATIONAL CODE COUNCIL®
Copyright © 2015 ICC. ALL RIGHTS RESERVED. Accessed by David Dammon on Jun 21, 2017 12:30:52 PM pursuant to License Agreement with ICC. No further reproduction or distribution authorized. ANY UNAUTHORIZED REPRODUCTION OR DISTRIBUTION IS A VIOLATION OF THE FEDERAL COPYRIGHT ACT AND THE LICENSE AGREEMENT, AND SUBJECT TO CIVIL AND CRIMINAL PENALTIES THEREUNDER.

HEATING EQUIPMENT, TEMPORARY, DURING CONSTRUCTION 3303
HEIGHT, BUILDING
Defined 202
HELIPORT 2007
Defined 202
Permit for rooftop heliport 105.6.42
HELISTOP 2007
Defined 202
HI-BOY
Construction 303.7
Defined 202
HIGH-PILED COMBUSTIBLE STORAGE . . . . . Chapter 32
Aisles 3206.9
Automated storage 3209
Automatic sprinklers 3206.4, 3209.2
Classifications, commodities 3203
Defined 202
Fire protection . . . . . 3206, Table 3206.2
Housekeeping 3205
Pallets 3206.4.1
Plastic pallets 3206.4.1.1
HIGH-PILED STORAGE AREA
Defined 202
Designations 3204
Permit 105.6.23
HIGH-RISE BUILDING
Automatic sprinkler system 903.2.11.3, 914.3.1
Automatic sprinkler system, floor control valves required 903.4.3
Automatic sprinkler system, secondary water supply required 914.3.2
Defined 202
Emergency responder radio coverage 914.3.5
Emergency voice/alarm communications system 907.2.13, 914.3.4
Fire alarm system 907.2.13, 914.3.2
Fire alarm system zoning 907.6.3.2
Fire command center 508.1, 914.3.6
Fire department communications system 907.2.13.2
Fire safety and evacuation plans 403.11.2
Smokeproof exit stairway enclosures 1023.11
Standby power system 604.2.10
Standpipe system 905.3.1
HIGH-VOLTAGE TRANSMISSION LINE
Defined 202
Storage under 315.5, 316.6
HIGHLY TOXIC AND TOXIC MATERIALS . . . . . Chapter 60
Compressed gases 6004
Defined 202
Indoor storage and use 6003.1
Outdoor storage and use 6003.2
Solids and liquids 6003
HIGHWAY
Defined 202
HISTORIC BUILDINGS 102.6
Defined 202
HOGGED MATERIALS 2807, 2808
Defined 202
HOOD 609
Defined 202
HORIZONTAL ASSEMBLY
Defined 202
HORIZONTAL PROJECTIONS 1003.3.3
HOSE 2307.5.2, 2310.3.3
Aircraft fueling 2006
Conductive 2006.5.2.1
Connections for standpipes 905.3.4.1, 905.4, 905.5, 905.6
Dispensing 2006.3.3, 2306.7.5
Protection 2006.7, 5706.6.1.11
Removal of occupant hose lines 901.8.2
System 904.8.4, 904.9.3, 904.10.3
Threads 903.3.6, 912.3
HOSPITALS AND PSYCHIATRIC HOSPITALS (Group I-2)
Defined 202
HOT WORK (see WELDING AND OTHER HOT WORK)
Defined 202
Permit 105.6.24
HOT WORK AREA
Defined 202
HOT WORK EQUIPMENT
Defined 202
HOT WORK PERMITS
Defined 202
HOT WORK PROGRAM
Defined 202
HPM FACILITY (see SEMICONDUCTOR FABRICATION FACILITY)
HPM ROOM
Defined 202
HYDRANTS (see FIRE HYDRANT)
HYDROGEN 5501.1, 5801.1
HYDROGEN FUEL GAS ROMS 5808
Defined 202
HYDROGEN MOTOR FUEL-DISPENSING FACILITIES 2309
HYPERBARIC FACILITIES 611

INTERNATIONAL CODE COUNCIL®
Copyright © 2015 ICC. ALL RIGHTS RESERVED. Accessed by David Dammon on Jun 21, 2017 12:30:52 PM pursuant to License Agreement with ICC. No further reproduction or distribution authorized. ANY UNAUTHORIZED REPRODUCTION OR DISTRIBUTION IS A VIOLATION OF THE FEDERAL COPYRIGHT ACT AND THE LICENSE AGREEMENT, AND SUBJECT TO CIVIL AND CRIMINAL PENALTIES THEREUNDER.

I

IDENTIFICATION
Alcohol-blended fuel-dispensing facilities . . . 2306.8.3
Building (address) . . . 505.1
Elevator lobby . . . 1023.10
Exit discharge . . . 1023.8, 1104.21
Floor level . . . 1023.9, 1031.9
Fire protection equipment . . . 509.1, 905.7.1
Hazardous materials . . . 5003.5, 5503.4, 5703.5.4, 6005.4.3
Hot work hazards . . . 3503.6
Streets and roads . . . 505.2
Tenant spaces in covered malls . . . 403.11.1.5
Utilities . . . 509.1.1
Vacant premises . . . 311.5.4
IGNITION SOURCES . . . 305, 3703.7
IMMEDIATELY DANGEROUS TO LIFE AND HEALTH (IDLH)
Defined . . . 202
IMPACT PROTECTION, VEHICLE . . . 312, 6107.4, 6109.13
IMPAIRMENT COORDINATOR . . . 901.7.1
Defined . . . 202
INCAPABLE OF SELF-PRESERVATION (Occupancy Group I)
Defined . . . 202
INCINERATORS . . . 603.8, 1103.4.10
Room egress . . . 1006.2.2.1
INCOMPATIBLE MATERIALS . . . 2704.3.3, 5003.9.8, 5003.10.3.6, 5003.11.3.7, 5004.2.2.2, 5004.2.2.6, 5004.4, 5005.1.1, 5303.7.1, 5303.7.11.1, 5704.2.6, 5704.3.3.2, 6404.1.4
Defined . . . 202
INCOMPATIBLE SURFACES . . . 6306.3.6.2
INDUSTRIAL OVENS . . . Chapter 30
Defined . . . 202
Fire protection . . . 3006
Fuel piping . . . 3004
Interlocks . . . 3005
Location . . . 3003
Operation and maintenance . . . 3007
Permit . . . 105.6.25, 105.7.11
INERT GAS . . . 2309.6.2, 2501.1, 2906.4, Table 5003.1.1(1), Table 5003.1.1(3), 5305.8, 5703.6.3.1, 5705.2.2
Defined . . . 202
INHABITED BUILDING
Defined . . . 202
INITIATING DEVICE
Defined . . . 202
Identification . . . 907.6.3
INSECTICIDAL FOGGING (see FUMIGATION AND INSECTICIDAL FOGGING)
INSPECTION . . . 104.6.2, 105.2.2, 106, 107.2.1, 901.6
Emergency and standby power system . . . 604.4
Fire department connections . . . 912.6
Fire hydrant . . . 507.5.2
Fireworks display . . . 5608.5.3, 5608.9
Hose . . . 3509.7
Magazines . . . 5604.9
Masonry chimneys . . . 603.6.1
Tents . . . 3103.7
INSTITUTIONAL OCCUPANCIES
Defined . . . 202
INTERCONNECTION
Fire-extinguishing systems with cooking appliances . . . 904.11.2
Smoke alarms . . . 907.2.11.3, 1103.7.2
Standpipe risers . . . 905.4.2
INTERIOR EXIT RAMP
Defined . . . 202
INTERIOR EXIT STAIRWAY
Defined . . . 202
INTERIOR FINISH . . . Chapter 8
Defined . . . 202
INTERIOR FLOOR-WALL BASE . . . 804.4
Defined . . . 202
INTERIOR WALL AND CEILING FINISH . . . 803, 804
Defined . . . 202
INTERIOR WALL AND CEILING FINISH AND TRIM . . . 803, 804
INVESTIGATIONS, FIRE . . . 104.10
IRRITANT
Defined . . . 202
Gases . . . 5004.7.1, 5308.1
ISO-BUTANE (see LIQUEFIED PETROLEUM GAS)

J

JURISDICTION
Defined . . . 202

INTERNATIONAL CODE COUNCIL®
Copyright © 2015 ICC. ALL RIGHTS RESERVED. Accessed by David Dammon on Jun 21, 2017 12:30:52 PM pursuant to License Agreement with ICC. No further reproduction or distribution authorized. ANY UNAUTHORIZED REPRODUCTION OR DISTRIBUTION IS A VIOLATION OF THE FEDERAL COPYRIGHT ACT AND THE LICENSE AGREEMENT, AND SUBJECT TO CIVIL AND CRIMINAL PENALTIES THEREUNDER.

K

KETTLES
[see ORGANIC COATING or ASPHALT (TAR) KETTLES]
KEY BOXES 506
Defined 202
Maintenance 506.2
Nonstandard fire service elevator keys 506.1.2
Required 506.1
KEYS, FIRE SERVICE ELEVATOR 607.8

L

LABELED
Defined 202
LADDERS 1006.2.2.1, 1006.2.2.2, 1011.15, 1030.5.2, 1104.16.6, 5704.1.8.15
LANDING
Defined 202
Ramps 1012.6, 1012.10
Stairs and stairways 1010.1.5, 1010.1.6, 1011.6, 1025.2.2, 1025.2.4
LANDSCAPED ROOFS
(see also ROOFTOP GARDENS 317
LAUNDRY CARTS 318.1
LEAD-ACID BATTERY SYSTEM, STATIONARY
(see BATTERY SYSTEMS, STATIONARY STORAGE)
LEAD-ACID BATTERY SYSTEM, VALVE-REGULATED (see BATTERY SYSTEMS, STATIONARY STORAGE)
LEAKS
Compressed gases 5303.12
Cryogenic fluids 5503.10
Explosive materials 5604.10
Flammable and combustible liquids 2006.11, 2305.2.3, 2306.7.7.1, 3305.6, 5703.3, 5703.6.3.1, 5704.2.7.10, 5704.2.11.5, 5706.6.1.1
Highly toxic and toxic materials 6004.2.2.3, 6004.2.2.4, 6004.3.2.2
LEVEL OF EXIT DISCHARGE
(see EXIT DISCHARGE, LEVEL OF)
LIABILITY 103.4
LIMITED SPRAYING SPACE
Defined 202
LINEN CHUTES 903.2.11.2
LINEN CONTAINERS 808.1
LIQUEFIED NATURAL GAS (LNG) 2311.7, 5301.1, 5501.1
Defined 202
LIQUEFIED PETROLEUM GAS (LP-gas) . . . . . Chapter 61
Container defined 202
Containers not in service 6110
Cooking devices 308.3.1.1
Cylinder exchange 6109
Defined 202
Dispensing and overfilling 6106
Fire protection 6108
Installation of equipment 6103
Location of containers . . . . . 6104, Table 6104.3
Motor fuel-dispensing facilities 2307
Parking and garaging of LPG-fueled vehicles 6111
Parking and garaging of tank vehicles 6111
Permit 105.6.28, 105.7.12
Prohibited use 6105
Storage 6109
LIQUID
Defined 202
LIQUID- OR GAS-FUELED VEHICLES 314.4, 2404.18
Permit 105.6.27
LIQUID LEVEL LIMIT CONTROL 5003.2.7, 5005.1.4.1, 5005.1.4.2
LIQUID OXYGEN AMBULATORY CONTAINER 6306.3.1, 6306.3.5, 6306.3.6.1
Defined 202
LIQUID OXYGEN HOME CARE CONTAINER 6306.3
Defined 202
LIQUID OXYGEN IN HOME HEALTH CARE 6306
LIQUID STORAGE ROOM 5704.3.7
Defined 202
LIQUID STORAGE WAREHOUSE 5704.3.8
Defined 202
LISTED
Defined 202
LOADING RACKS 5706.3.8, 5706.5.1.12
LOCKDOWN
Defined 202
Plans 404.2.3
LOCKERS, COMBUSTIBLE 808.4
LODGING HOUSE
Defined 202
Occupancy group 202
LONGITUDINAL FLUE SPACE (see FLUE SPACES)
LOT
Defined 202

INTERNATIONAL CODE COUNCIL®
Copyright © 2015 ICC. ALL RIGHTS RESERVED. Accessed by David Dammon on Jun 21, 2017 12:30:52 PM pursuant to License Agreement with ICC. No further reproduction or distribution authorized. ANY UNAUTHORIZED REPRODUCTION OR DISTRIBUTION IS A VIOLATION OF THE FEDERAL COPYRIGHT ACT AND THE LICENSE AGREEMENT, AND SUBJECT TO CIVIL AND CRIMINAL PENALTIES THEREUNDER.

LOT LINE
Defined 202
LOW-PRESSURE TANK
Defined 202
LOWER EXPLOSIVE LIMIT (LEL)
Defined 202
LOWER FLAMMABLE LIMIT (LFL)
Defined 202
LP-GAS (see LIQUEFIED PETROLEUM GAS)
LUMBER YARDS, AGRO-INDUSTRIAL, SOLID BIOMASS AND WOODWORKING FACILITIES . . . . . Chapter 28
Access plan 2803.7
Emergency plan 2808.10
Fire alarms 2804.1
Fire protection 2804
General 2803
Log storage areas 2806
Open yards 2803.1
Permit 105.6.26
Size of piles 2807.2, 2808.3
Waste removal 2803.3
LUMINOUS EGRESS PATH MARKINGS 1025, 1104.25

M

MAGAZINE
Defined 202
MAGNESIUM
Defined 202
Permit 105.6.29
Storage 5906.2, 5906.3, 5906.4
Use 5906.5
MAINTENANCE 107
MALL (see COVERED MALL BUILDING)
MANIFOLDS
Cylinders 3509.4
Identification 3509.5
Piping 3509
MANUAL FIRE ALARM BOX 907.4.2
Defined 202
MANUAL STOCKING METHODS
Defined 202
MANUFACTURE OF ORGANIC COATINGS . . . . . Chapter 29
MARINAS . . . . . Chapter 36
MARINE MOTOR FUEL-DISPENSING FACILITY 2310
Defined 202
Fire protection 2310.6
Fueling 2310.4
General 2310.1
Nozzles 2310.3.3
MARKING (see also PLACARDS; PLACARDING) 503.3, 909.14, 5003.5.1
Compressed gas 5303.2
Cryogenic containers 5503.4
Shaftway 507.2
Tank 5706.2.2
Warnings 5003.8.7.2
MATERIAL SAFETY DATA SHEET (MSDS) . . 5003.4
Aerosols 5101.3
Defined 202
Hazard communication 407.2
MATTRESSES (in Groups I and R) 805
MAXIMUM ALLOWABLE QUANTITY PER CONTROL AREA . . . . . Tables 5003.1.1(1) through 5003.1.1(4), 5003.11
Defined 202
MEANS OF EGRESS . . . . . Chapter 10, 1104, 3311
Accessible means of egress 1009
Assembly 1029
Bleachers 1029.1.1
Buildings under construction or demolition 3311
Corridors 1020, 1104.17
Defined 202
Egress court 202, 1028.4
Elevators, escalators and moving walks 1003.7, 1104.2
Emergency escape and rescue 1030
Existing buildings 1104
Exit access 1016
Exit discharge 1028
Exits 1005
Guards 1015, 1104.6
Handrails 1014
Illumination 1008, 1104.3
Locks, latches 1010.1.9.3
Maintenance of 1031
Membrane structures 3103.12
Obscuration of 316.4, 1031.4, 1031.6
Obstructions 1031.3, 1031.3.1
Ramps 1012
Signs 1013
Sizing 1005
Stairways 1001
Tents 3103.12
MECHANICAL REFRIGERATION (see REFRIGERATION SYSTEM)
MECHANICAL STOCKING METHODS 3206.9.1.1
Defined 202

INTERNATIONAL CODE COUNCIL®
Copyright © 2015 ICC. ALL RIGHTS RESERVED. Accessed by David Dammon on Jun 21, 2017 12:30:52 PM pursuant to License Agreement with ICC. No further reproduction or distribution authorized. ANY UNAUTHORIZED REPRODUCTION OR DISTRIBUTION IS A VIOLATION OF THE FEDERAL COPYRIGHT ACT AND THE LICENSE AGREEMENT, AND SUBJECT TO CIVIL AND CRIMINAL PENALTIES THEREUNDER.

MEDICAL CARE (Occupancy Group I)
Defined 202
MEDICAL GASES 5306
MEDICAL GAS SYSTEMS 5306.5
MEMBRANE STRUCTURE . . . . . Chapter 31
Defined 202
MERCHANDISE PAD 1018.4
Defined 202
METAL HYDRIDE AND METAL HYDRIDE STORAGE SYSTEMS 5807
Defined 202
METERS, GAS 603.9
MEZZANINE 1004.1.1.2
Ceiling height 1003.2
Defined 202
MILLS
Composite board 2805
Plywood 2805
Process 2806
Veneer 2805
MIRRORS 1010.1, 1031.6
MIXTURES (Hazardous materials) 5001.2.1
MOBILE FUELING 5706.5.4.5
Defined 202
MODIFICATIONS (of code requirements) 104.8
MONITORING (sprinkler and fire alarm systems) 903.4.1, 907.6.5
Hazardous materials 5004.2.2.5
Termination of 907.6.5.2
MORTAR
Defined 202
MOTION PICTURE PROJECTION ROOMS AND FILM 306
Film storage 306.2
MOTOR FUEL-DISPENSING FACILITIES (see also by type of fuel) . . . . 105.6.31, Chapter 23
MOTORIZED CONSTRUCTION EQUIPMENT 3316
MOVING WALKS 1103.3
MSDS (see MATERIAL SAFETY DATA SHEET)
MULTIPLE-STATION ALARM DEVICE
Defined 202
MULTIPLE-STATION SMOKE ALARM 907.2.11, 1103.8
Defined 202
MUSEUMS (Occupancy Group A-3)
Occupant load . . . . . Table 1004.1.2

N

NATURAL BARRICADE (see BARRICADE)
NATURAL CUT TREES . . . . . 806.1 through 806.1.3, 806.3
NESTING
Defined 202
NET EXPLOSIVE WEIGHT
Defined 202
NITROCELLULOSE 2908.1, 2909.4
NORMAL TEMPERATURE AND PRESSURE (NTP)
Defined 202
NOSING
Defined 202
NOTICE OF VIOLATION 109.2
NOTIFICATION (of Fire department/Fire code official) 401.3, 2006.11.5, 2304.3.6, 5003.3.1
NOTIFICATION (of Fumigation) 2603.3
NOTIFICATION APPLIANCE (see ALARM NOTIFICATION APPLIANCE)
NOTIFICATION ZONE (see ZONE, NOTIFICATION)
NOZZLES
Fuel delivery 2306.7.6
Fuel transfer 2006.3.3
Marine craft 2310.3.3
NUISANCE ALARM
Defined 202
NURSING HOME (Occupancy Group I-2)
Defined 202

O

OBSTRUCTIONS
Fire apparatus access roads 503.4
Fire department connections 912.3
Fire hydrants 507.5.4
Fire protection equipment 509.2, 2310.6.2
Fuel-dispensing view 2304.2.4
Manual fire alarm boxes 904.2.6
Means of egress 806.3, 1003.6, 1020.3, 1029.9.6, 1031.2, 1031.3, 1031.3.1, 1031.6
Portable fire extinguishers 906.6
On rooftops 316.4
Spraying operation ventilation 2404.7.4
Sprinkler discharge 315.2.1, 903.3.3

INTERNATIONAL CODE COUNCIL®
Copyright © 2015 ICC. ALL RIGHTS RESERVED. Accessed by David Dammon on Jun 21, 2017 12:30:52 PM pursuant to License Agreement with ICC. No further reproduction or distribution authorized. ANY UNAUTHORIZED REPRODUCTION OR DISTRIBUTION IS A VIOLATION OF THE FEDERAL COPYRIGHT ACT AND THE LICENSE AGREEMENT, AND SUBJECT TO CIVIL AND CRIMINAL PENALTIES THEREUNDER.

OCCUPANCY, CHANGE OF
(see CHANGE OF OCCUPANCY)
OCCUPANCY CLASSIFICATION
Defined 202
Assembly Group A
Defined 202
Business Group B
Defined 202
Educational Group E
Defined 202
Factory Industrial Group F
Defined 202
High-hazard Group H
Defined 202
Institutional Group I
Defined 202
Mercantile Group M
Defined 202
Miscellaneous Group U
Defined 202
Residential Group R
Defined 202
Storage Group S
Defined 202
OCCUPANT LOAD
Defined 202
Posting 1004.3
OIL-BURNING EQUIPMENT
(see FUEL-FIRED APPLIANCES)
OIL, COOKING 610
OIL, FUEL
(see FUEL OIL and COMBUSTIBLE LIQUID)
OIL, MOTOR (see COMBUSTIBLE LIQUID)
OIL, WASTE (see WASTE OIL)
OPEN BURNING 307
Defined 202
Permit 105.6.32, 307.2
Precautions in tire storage areas 3404.1
OPEN-ENDED CORRIDOR 903.3.1.2.2, 1027.6, 1104.22
Defined 202
OPEN FLAMES 308, 806.4, 2004.6, 2903.6, 5003.7.2, 5604.7.2, 5706.2.1
Devices 308.1.6
Group A occupancies 308.3
Permit 105.6.33, 105.6.34, 308.2
OPEN MALL AND OPEN MALL BUILDING
(see COVERED MALL BUILDING)
Defined 202
OPEN PARKING GARAGE
Defined 202
OPEN SYSTEM (hazardous materials)
Defined 202
OPERATING BUILDING
Defined 202
Separation distances 5605.3
OPERATING PRESSURE
Defined 202
ORDERS AND NOTICES 109.2.2
ORGANIC COATINGS . . . . . Chapter 29
Defined 202
Electrical equipment and protection 2904
General 2903
Kettles 2906
Manufacture . . . . . Chapter 29
Permit 105.6.35
Process structures 2905
ORGANIC PEROXIDE . . . . . 2408, Chapter 62
Defined 202
Indoor storage 6204.1
Outdoor storage . . . . . 6204.2, Table 6204.1.2, Table 6204.2.4
Requirements 6203
Use 6205
OUTDOOR CONTROL AREA
Defined 202
Hazardous materials 5003.12
OUTDOOR FIREPLACE, PORTABLE
(see PORTABLE OUTDOOR FIREPLACES)
OUTPATIENT CLINIC (Occupancy Group B)
Defined 202
OVENS (see INDUSTRIAL OVENS)
OVERCROWDING
Defined 202
Prohibited 107.6
OVERFILL PREVENTION AND PROTECTION 2006.18, 2306.6.2.3, 5704.2.7.5.8, 5704.2.8.18, 5704.2.9.7.5, 5704.2.11.4, 5706.4.6, 5706.6.1.5, 5706.8.3, 5706.8.5, 6106.2
OWNER
Defined 202
OXIDIZERS, OXIDIZING GASES AND OXIDIZING CRYOGENIC FLUIDS . . . . . Chapter 63
Defined 202
Indoor storage 6304.1
Outdoor storage 6304.2
Requirements 6303
Use 6305

INTERNATIONAL CODE COUNCIL®
Copyright © 2015 ICC. ALL RIGHTS RESERVED. Accessed by David Dammon on Jun 21, 2017 12:30:52 PM pursuant to License Agreement with ICC. No further reproduction or distribution authorized. ANY UNAUTHORIZED REPRODUCTION OR DISTRIBUTION IS A VIOLATION OF THE FEDERAL COPYRIGHT ACT AND THE LICENSE AGREEMENT, AND SUBJECT TO CIVIL AND CRIMINAL PENALTIES THEREUNDER.

OXIDIZING CRYOGENIC FLUID
Defined 202
OXIDIZING GAS
Defined 202
OXYGEN IN HOME HEALTH CARE 6306
OZONE-GAS GENERATOR 6005
Automatic shutdown 6005.5
Defined 202
Location 6005.3
Manual shutdown. 6005.6

P

PALLETS 3206.4.1
PALLETS, IDLE COMBUSTIBLE 2505, 3203.6, 5704.3.3.9
PALLETS, PLASTIC 3206.4.1.1
PANIC HARDWARE. 1008.1.10, 1008.2.1
Defined 202
PARKING AND GARAGING
Aircraft-fueling vehicles 2006.5.1.3, 2006.20
Flammable- and combustible-liquid tank vehicles 5706.6.2, 5706.6.3
LP-gas tank vehicles 6111
LP-gas-fueled vehicles 6111.3
PASS-THROUGH. 2703.3.2, 2703.10.3
Defined 202
PATIO HEATERS (see PORTABLE OUTDOOR GAS-FIRED HEATING APPLIANCES)
PENTHOUSE
Defined 202
PERMISSIBLE EXPOSURE LIMIT (PEL)
Defined 202
PERMITS 105
Annual 105.1.6
Defined 202
Hot work program 3503.3
PERSON
Defined 202
PERSONAL CARE SERVICE
Defined 202
PESTICIDE
Defined 202
PHOTOLUMINESCENT 1013.5, 1025, 1025.4, 1104.25
Defined 202
PHYSICAL HAZARD . . . . . 5007.2.2.1, Table 5003.1.1(1), Table 5003.1.1(3)
Defined 202
PIPELINES 5706.1
PIPING, VALVES AND FITTINGS
Flammable and combustible liquids 2306.6, 2306.7.9.1.3, 5706.4.7.6
Hazardous materials 5003.2.2
Highly toxic and toxic gases. 6004.2.2.5
Organic coating manufacturing 2907
Ozone-gas 6005
LP-gas in membrane structures. 3104.16.3
Protection from vehicles. 5003.9.3
PLACARDS; PLACARDING (see also SIGNS)
Cryogenic fluid containers 5503.4.2
Explosives 5604.6.5, 5604.6.5.2
Flammable and combustible liquid tanks 5703.5.3, 5704.2.3.2
Vacant buildings. 311.5
PLANS (see also CONSTRUCTION DOCUMENTS)
Diagrams 403.7.1.1
Evacuation 404.2.1
Facility closure 407.7
Fire safety 404.2.2
Hazardous materials management 5605.2.1
Lockdown. 404.2.3
Maintenance of. 5605.2.2
Prefire. 5608.2
Storage. 5704.4.1
PLASTICS
Cellulose nitrate . . . . . Chapter 65
Classifications of 3203.7
Foam 803.8, 804.2, 808.3
Manufacturing of glass-fiber-reinforced 2411
Pyroxylin. . . . . 105.6.39, 903.2.5.3, Chapter 65, 1103.5.4
PLENUM 315.6, 605.12
Defined. 202
PLOSOPHORIC MATERIAL 5605.1
Defined. 202
PLYWOOD AND VENEER MILLS
Defined. 202
Fire alarm system. 907.2.17, 2804.2
PORTABLE FIRE EXTINGUISHERS (see FIRE EXTINGUISHERS, PORTABLE)
PORTABLE OUTDOOR FIREPLACES 307.4.3, 307.5
Defined. 202
PORTABLE OUTDOOR GAS-FIRED HEATING APPLIANCES. 603.4.2
PORTABLE TANKS
Defined. 202
Design, construction and capacity 5704.3.1
Empty 5704.3.3.4

INTERNATIONAL CODE COUNCIL®
Copyright © 2015 ICC. ALL RIGHTS RESERVED. Accessed by David Dammon on Jun 21, 2017 12:30:52 PM pursuant to License Agreement with ICC. No further reproduction or distribution authorized. ANY UNAUTHORIZED REPRODUCTION OR DISTRIBUTION IS A VIOLATION OF THE FEDERAL COPYRIGHT ACT AND THE LICENSE AGREEMENT, AND SUBJECT TO CIVIL AND CRIMINAL PENALTIES THEREUNDER.

Flammable liquids 2306.2.5
Flow rate . . . . . 6004.2.2.7.5, Table 6004.2.2.7.5
Indoor storage 5704.3.3
Local exhaust 6004.2.2.4, 6004.3.2.3
Outdoor storage . . . . . 5704.4, Table 5704.4, 6004.3.4
Piles 5704.3.3.10, 5704.3.7.2.3
POSTING
Evacuation diagrams (Group R-1) 403.10.1.1, 403.10.23
Explosives and pyrotechnic amounts 5605.6.9
No smoking signs 310.3
Occupant load 1004.3, 5605.6.9
Permits 105.3.5
Tenant identification 403.11.1.5
POWDER COATING 2406
POWERED INDUSTRIAL TRUCKS 309
Battery charging 309.2
Defined 202
Fire extinguishers 309.4
Refueling 309.5
Repairs 309.6
Ventilation 309.3
PRECAUTIONS AGAINST FIRE 301.1, 3304, 3305.4, 3404
PREMISES IDENTIFICATION 505
PRESSURE VESSEL
Defined 202
PRESPOTTING (see DRY CLEANING)
PRIMARY CONTAINMENT
Defined 202
PRIMARY TANK
Defined 202
PRIVATE GARAGE 915.1.5
Defined 202
PROCESS
Piping 2907
Raw materials 2908, 2909
PROCESS TRANSFER
Defined 202
Operations 5706.5
PROPANE (see LIQUEFIED PETROLEUM GAS)
PROPELLANT (Aerosol)
Defined 202
PROPELLANT, SMOKELESS (see SMOKELESS PROPELLANT)
PROPYLENE (see LIQUEFIED PETROLEUM GAS)
PROTRUDING OBJECTS 1003.3
PROXIMATE AUDIENCE
Defined 202
Displays 5608.2.2
PSYCHIATRIC HOSPITAL (see HOSPITALS AND PSYCHIATRIC HOSPITALS)
PUBLIC ASSEMBLAGES AND EVENTS 403
PUBLIC USE AREAS 907.5.2.3.1
Defined 202
PUBLIC WAY 1027.5
Defined 202
PYROPHORIC
Defined 202
Indoor storage 6404.1
Materials . . . . . Chapter 64
Outdoor storage 6404.2
Requirements 6403
Use 6405
PYROTECHNIC ARTICLE
Defined 202
PYROTECHNIC COMPOSITION
Defined 202
PYROTECHNIC SPECIAL EFFECT
Defined 202
PYROTECHNIC SPECIAL EFFECTS MATERIAL
Defined 202
Permit 105.6.38
PYROTECHNICS
Defined 202
PYROXYLIN (CELLULOSE NITRATE) PLASTICS
Decorative materials 807.5.1.4
Fire protection system 903.2.5.3, 1103.5.4, 6504.2
Permit 105.6.39
Raw material 6504.1
Requirements 6503
Storage and handling 6504

Q

QUICK-RESPONSE (QR) SPRINKLERS (see AUTOMATIC SPRINKLERS)

R

RACK STORAGE 3108, 5104.4.3, 5704.3.3.6
RADIOACTIVE
Gases 5004.7, 5307.1
Materials 5004.3.1
RAILWAY
Defined 202
RAMPS 1012, 1023, 1027
Defined 202
RAW PRODUCT (Wood products)
Defined 202

INTERNATIONAL CODE COUNCIL®
Copyright © 2015 ICC. ALL RIGHTS RESERVED. Accessed by David Dammon on Jun 21, 2017 12:30:52 PM pursuant to License Agreement with ICC. No further reproduction or distribution authorized. ANY UNAUTHORIZED REPRODUCTION OR DISTRIBUTION IS A VIOLATION OF THE FEDERAL COPYRIGHT ACT AND THE LICENSE AGREEMENT, AND SUBJECT TO CIVIL AND CRIMINAL PENALTIES THEREUNDER.

Storage and processing 2808
REACTIVE MATERIALS [see UNSTABLE (REACTIVE) MATERIALS or WATER REACTIVE MATERIALS]
READY BOX 5608.5.5
Defined 202
RECALL, FIRE PROTECTION SYSTEM COMPONENT 901.9
RECORD DRAWINGS (fire alarm system) . . . 907.8.3
Defined 202
RECORDS/RECORD KEEPING 104.6, 104.6.3, 107.2.1, 107.3, 405.5, 604.3.2, 606.15, 901.6.2, 2006.5.3.2.2, 3210.1, 3503.5, 5003.3.1.1, 5603
RECREATIONAL FIRE 307.4.2
Defined 202
RECYCLING FACILITIES 2808
REDUCED FLOW VALVE 6004.2.2.7.5
Defined 202
REFERENCED STANDARDS . . . . . 102.7, Chapter 80
REFINERY
Defined 202
Petroleum 5706.7
REFRIGERANT 606.2
Classification 606.3
Defined 202
Detector 606.8
Discharge 606.12
Storage 606.11
Type 606.4
REFRIGERATION MACHINERY ROOMS 1006.2.2.2
REFRIGERATION SYSTEM 606.9.1
Defined 202
Permit 105.6.40
REFUGE AREA ASSOCIATED WITH SMOKE BARRIERS AND HORIZONTAL EXITS 404.2.2
REFUGE, AREA OF (see AREA OF REFUGE)
REGISTERED DESIGN PROFESSIONAL 104.7.2, 105.4.1, 909.9, 909.18.8.3
Defined 202
RELEASE OF HAZARDOUS MATERIAL 5003.3
REMOTE EMERGENCY SHUTOFF DEVICE
Defined 202
Use of 5706.5.4.5
REMOTE SOLVENT RESERVOIR 5705.3.6.2.3
Defined 202
REPAIRS 105.1.5
REPAIRS, EMERGENCY (see EMERGENCY REPAIRS)
REPAIR GARAGES 2311
Defined 202
Gas detection system 2311.7.2
LP-gas-fueled vehicles 6111.3
Permit 105.6.41
Sources of ignition 2311.3
Sprinklers required 903.2.9.1
Ventilation 2311.4.3
REPORTING
Aviation facilities fire extinguisher use 2005.8
Emergencies 401.1
Fire 3309
Fire alarm 3309
Leak 5704.2.7.10
Record keeping 5603
Research reports 104.9.1
RESIN APPLICATION AREA 2403.2.5, 2409.3, 2409.5, 2409.6
Defined 202
RESPONSE PROCEDURES 406
RESPONSIBLE PERSON
Defined 202
RETAIL DISPLAY AREA (for aerosols)
Defined 202
Manufacturing facilities 5107.1
Maximum quantities . . . . . 5106.2, Table 5106.2, Table 5106.3
REVOCATION OF PERMITS 105.5
RIGHT OF ENTRY 104.3
ROADWAYS, ACCESS FOR FIRE APPARATUS (see FIRE APPARATUS ACCESS ROAD)
ROCKETS AND ROCKETRY 5601.1.4
ROLL COATING
Defined 202
ROOF, LANDSCAPED (see ROOFTOP GARDENS)
ROOF VENTS 910
ROOFING OPERATIONS SAFEGUARDS 3317
ROOFS
Safeguarding operations 3317
Stairway access 504.3, 1009.14, 1009.16
ROOFTOP GARDENS AND LANDSCAPED ROOFS 317, 905.3.8
ROOFTOP HELIPORT (see HELIPORT)
RUBBISH (TRASH) 3304.2
Chutes, automatic sprinkler protection 903.2.11.2
Containers 304.3
Defined 202

INTERNATIONAL CODE COUNCIL®
Copyright © 2015 ICC. ALL RIGHTS RESERVED. Accessed by David Dammon on Jun 21, 2017 12:30:52 PM pursuant to License Agreement with ICC. No further reproduction or distribution authorized. ANY UNAUTHORIZED REPRODUCTION OR DISTRIBUTION IS A VIOLATION OF THE FEDERAL COPYRIGHT ACT AND THE LICENSE AGREEMENT, AND SUBJECT TO CIVIL AND CRIMINAL PENALTIES THEREUNDER.

S

SAFETY CAN 5003.9.10
Defined 202
SAFETY RULES (Explosives) 5603.7, 5605.6.6
SCISSOR STAIRWAY
Defined 202
Use of 1007.1.1
SCREEN PORCHES AND DECKS 1015.5
SEAT STABILITY 1029.14
SEATING, FOLDING AND TELESCOPIC . . . 1029.1.1
Defined 202
SECONDARY CONTAINMENT
Above-ground tanks 2306.5
Defined 202
Hazardous materials 5004.2, 5004.2.2, 5005.1.3, 5005.2.1.4, 5005.2.2.5, 5005.3.5, 5005.3.7
Indoor storage 5004.2.2.3
Outdoor storage 5004.2.2.4
Type II dry cleaning systems 2107.2.3
Underground tanks 5003.2.4.1
SECONDARY WATER SUPPLY (see WATER SUPPLY)
SECURITY DEVICES 316.4, 1031.2.1
SEGREGATED
Defined 202
SELF-CLOSING
Defined 202
SELF-LUMINOUS 1013.4, 1025.4
Defined 202
SELF-SERVICE MOTOR FUEL-DISPENSING FACILITY 2304
Defined 202
SEMICONDUCTOR FABRICATION FACILITY . . . . . Chapter 27
Automatic sprinkler system 2703.10
Defined 202
Emergency alarm system 2703.12
Emergency power 604.2.8, 2703.15
Manual fire alarm system 2703.11
Permit 105.6.22
Quantity limits . . . . . Table 2704.2.1
Storage 2704
Transportation and handling 2705.3
Use and handling 2705
SERVICE CORRIDOR 2703.3.8, 2703.9, 2703.12.1.1, 2705.3.3
Defined 202
SERVICE PERSONNEL, CERTIFICATION OF (see CERTIFICATION OF SERVICE PERSONNEL)
SERVICE UTILITIES 112
SHAFTS 704, 1103.4
SHAFTWAY MARKINGS 316.2
SHELF STORAGE 3207
Defined 202
Specialty storage 3210
SHOCK PADDING 5003.9.7
SHROUDS, DECORATIVE (on chimneys) . . . 603.6.3
SIGNS (see also PLACARDS; PLACARDING)
Access roads 5604.6.5.1
Alarms and warning 904.3.4, 2507, 2305.6, 2310.5.5.1, 2603.3.1, 5703.5.1
Electrical rooms 605.3.1
Electrostatic apparatus 2407.5.2
Emergency 606.7, 607.2
Exit 604.2.3, 1011, 2403.12.6
Fire alarm boxes 907.5.2.4
Fire department connection 912.4
Fire protection equipment rooms 509.1
Fire-resistance-rated construction 703.2.1
Foam plastic 808.2
Hazardous identification 5003.5, 5003.6, 5003.11.3.10, 5503.4.1
Illumination 1013.5
Marking 503.3
No smoking 310.3, 2305.3, 2308.8.1.2.6, 5003.7.1, 5704.2.3.1
Placards 311.5, 5604.6.5
Removal 310.4
Stairway exit 1013.5, 1013.6.2
Stationary storage battery systems 608.7
Storage tanks 5704.2.3, 5706.3.7
Street or road 505.2
Tampering with 109.2.4
Vacant buildings 311.5
Welding 2403.2.7
SILANE GAS 6401.1, 6404.2, 6405.3
SINGLE-STATION SMOKE ALARM . . 907.2.11, 1103.8
Defined 202
SITE
Defined 202
SITE-FABRICATED STRETCH SYSTEMS 803.9
Defined 202
SKY LANTERNS 308.1.6.3
Defined 202
SLEEPING UNIT
Defined 202
SMALL ARMS AMMUNITION AND SMALL ARMS AMMUNITION COMPONENTS 5606
Defined 202

INTERNATIONAL CODE COUNCIL®
Copyright © 2015 ICC. ALL RIGHTS RESERVED. Accessed by David Dammon on Jun 21, 2017 12:30:52 PM pursuant to License Agreement with ICC. No further reproduction or distribution authorized. ANY UNAUTHORIZED REPRODUCTION OR DISTRIBUTION IS A VIOLATION OF THE FEDERAL COPYRIGHT ACT AND THE LICENSE AGREEMENT, AND SUBJECT TO CIVIL AND CRIMINAL PENALTIES THEREUNDER.

SMALL ARMS PRIMERS
Defined 202
Group M 5606.5.1.3
Group R-3 . . . . . 5606.4.3
Storage 5606.5.2.3
SMOKE ALARM 907.2.11, 1030.4, 1103.8
Defined 202
Smoke detection system as alternative to 907.2.11.7
SMOKE AND HEAT VENTS 910, 3206.7
SMOKE BARRIERS
Construction 909.5
Defined 202
Maintenance 703.1.2
Opening protectives in 703.2, 909.5.2
Pressure differential 909.18.6
SMOKE COMPARTMENT
Defined 202
SMOKE CONTROL SYSTEMS 909
Permit 105.7.14
SMOKE DAMPER
Defined 202
SMOKE DETECTOR 907.2.13.1, 907.2.18.1, 907.4.1
Defined 202
SMOKE-DEVELOPED INDEX
Defined 202
SMOKE PARTITIONS 703.1.2
SMOKE-PROTECTED ASSEMBLY SEATING 1029.6.2
Defined 202
SMOKE REMOVAL 910.4
SMOKELESS PROPELLANTS
Defined 202
General 5606
Storage and handling 5604
SMOKEPROOF ENCLOSURE
Defined 202
SMOKING 310, 2003.2, 2006.3.8, 2310.5.5.1, 2403.2.6, 2803.5.3, 2903.7, 3304.1, 3404.3, 5003.7.1, 5704.2.3.1, 5706.6.1.9
Signs 310.3
SOLAR PHOTOVOLTAIC POWER SYSTEMS 605.11
Permit 105.7.15
SOLID (material state)
Defined 202
SOLID BIOFUEL 2809.4
Defined 202
SOLID BIOMASS FEEDSTOCK 2809.4
Defined 202
SOLID SHELVING
Defined 202
Fire protection 3208.2.2.1
Racks 3208.2.2
SOLVENT DISTILLATION UNIT 5705.4
Defined 202
SOLVENT OR LIQUID CLASSIFICATIONS, DRY CLEANING 2103
Defined 202
SPACE HEATERS 605.10, 3303
SPECIAL AMUSEMENT BUILDING
Defined 202
Exit access travel distance . . . . . Table 1017.2
Fire alarm system 907.2.12, 914.7.2
Permit 105.6.2
Sprinklers . . . . . Table 903.2.11.6, 914.7.1
SPECIAL INDUSTRIAL EXPLOSIVE DEVICE 5601.1
Defined 202
SPILL CONTROL
Carts and trucks 5003.10.3.4
Dry cleaning 2107.2.3
Flammable and combustible liquids 5703.4, 5704.3.7.3, 5704.3.8.2, 5704.4.3, 5705.3.7.5.3, 5705.3.7.6.3, 5705.3.8.1, 5706.2.6, 5706.5.1.5
Hazardous materials 5004.2, 5005.1.3, 5005.2.1.3, 5005.2.2.4, 5005.3.4, 5005.3.6
Lead-acid battery systems 608.5
Service stations and repair garages 2305.3
SPILLS 2004.4, 2009.4.2, 2310.5.2, 2404.18.5.3, 3305.6
SPONTANEOUS IGNITION HAZARDS 304.3.1, 305.2, 3304.2.4
SPOTTING (see DRY CLEANING)
SPRAY BOOTH
Areas adjacent to 2403.2.1.3
Construction 2404.3.2.1
Defined 202
Permit 105.6.43, 105.7.16
Ventilation 2403.3.5.2
SPRAY FINISHING 105.6.43, 105.7.16, 2404
SPRAY ROOM
Construction 2404.3.1
Defined 202
Permit 105.6.43, 105.7.16
Ventilation 2403.3.5.2
SPRAYING SPACE
Defined 202

INTERNATIONAL CODE COUNCIL®
Copyright © 2015 ICC. ALL RIGHTS RESERVED. Accessed by David Dammon on Jun 21, 2017 12:30:52 PM pursuant to License Agreement with ICC. No further reproduction or distribution authorized. ANY UNAUTHORIZED REPRODUCTION OR DISTRIBUTION IS A VIOLATION OF THE FEDERAL COPYRIGHT ACT AND THE LICENSE AGREEMENT, AND SUBJECT TO CIVIL AND CRIMINAL PENALTIES THEREUNDER.

SPRINKLER SYSTEM (see AUTOMATIC SPRINKLER SYSTEM)
STAGE CANOPY, TEMPORARY (see TEMPORARY STAGE CANOPY)
STAGES, FIRE PROTECTION FOR . . . 905.3.4, 914.6
STAIR
Defined . . . 202
STAIRWAY . . . 1011
Defined . . . 202
Identification . . . 1023.8, 1023.9, 1104.21, 1104.24
On flammable and combustible liquid loading racks . . . 5706.5.1.1.2
On flammable and combustible liquid storage tanks . . . 5704.2.9.4
STAIRWAY, EXTERIOR EXIT . . . 1027
Defined . . . 202
STAIRWAY, SPIRAL . . . 1011.10
Defined . . . 202
STANDBY PERSONNEL (see also FIRE WATCH) . . . 3104.20
STANDBY POWER SYSTEM . . . 604, 5005.1.5
Defined . . . 202
STANDPIPE SYSTEM, CLASSES OF
Defined . . . 202
STANDPIPE, TYPES OF
Defined . . . 202
STANDPIPES . . . 905
Buildings under construction/demolition . . . 3313
Dry . . . 905.8
Existing buildings . . . 1103.6, 1103.6.1
Heliports and helistops . . . 905.3.6, 1103.6.2, 2007.5
Landscaped roofs . . . 905.3.8
Permit . . . 105.7.17
Rooftop gardens . . . 905.3.8
STATIC PILES (wood products)
Defined . . . 202
Protection . . . 2808.6
STATIC PROTECTION . . . 5706.5.1.7
STATIONARY STORAGE BATTERY SYSTEMS (see BATTERY SYSTEM, STATIONARY STORAGE)
STEEL
Defined . . . 202
STILLS, DRY CLEANING . . . 2104.2.4, 2107.1
STORAGE
Aerosol, inside . . . 5104
Ammunition . . . 5606
Attics . . . 315.2.4
Automated . . . 3209
Boiler rooms . . . 315.2.3
Calcium carbide . . . 3507.1
Carousel . . . 3209.3
Combustible fibers, baled . . . 3705
Combustible fibers, detached structure . . . 3704.6
Combustible fibers, loose . . . 3704
Combustible liquids . . . 5704
Combustible materials . . . 105.6.30, 315, 2003.6
Compressed gas . . . 5304
Concealed spaces . . . 315.2.4
Corridors and lobbies in Group E . . . 807.5.2.1
Corrosive materials . . . 5404
Cryogenic fluids . . . 5504
Cylinder and container, welding . . . 3505.2
Electrical rooms . . . 315.2.3
Elevator (occupant evacuation) lobbies . . . 607.5
Explosives . . . 5604
Exterior, finished lumber . . . 2809
Fire command centers . . . 315.3.3, 508.1.6
Flammable gases . . . 5804
Flammable liquids . . . 5704
Flammable solids . . . 5904
Foam . . . 5704.2.9.2.2.1
Fuel oil . . . 603.3
Hazardous materials . . . 5004
Hazardous materials storage defined . . . 202
High-piled combustible . . . Chapter 32
Hogged material . . . 2807, 2808
Indoor . . . 315
Log areas . . . 2806
Loose combustible fibers . . . 5204
LP-gas . . . 6109
Means of egress . . . 315.2.2, 807.4.3.1, 1031.3
Mechanical refrigeration rooms . . . 606.10
Mechanical rooms . . . 315.2.3
Nitrocellulose . . . 2909.4
Organic peroxide . . . 2909.5, 6204
Outside . . . 315.3
Oxidizers . . . 6304
Plan . . . 5004.11.3.11
Plenums . . . 315.6
Pyrophoric materials . . . 6404
Pyroxylin (cellulose nitrate) plastics . . . 6504
Rack . . . 3208
Semiconductor fabrication facilities . . . 2704
Solid-piled and shelf . . . 3207
Specialty . . . 3210
Tank . . . 2909.2, 5704.2
Tire . . . 3405, 3409
Under floors . . . 315.2.4
Under high-voltage transmission lines . . . 315.4
Unstable (reactive) materials . . . 6604
Water-reactive solids and liquids . . . 6704

INTERNATIONAL CODE COUNCIL®
Copyright © 2015 ICC. ALL RIGHTS RESERVED. Accessed by David Dammon on Jun 21, 2017 12:30:52 PM pursuant to License Agreement with ICC. No further reproduction or distribution authorized. ANY UNAUTHORIZED REPRODUCTION OR DISTRIBUTION IS A VIOLATION OF THE FEDERAL COPYRIGHT ACT AND THE LICENSE AGREEMENT, AND SUBJECT TO CIVIL AND CRIMINAL PENALTIES THEREUNDER.

Wood chips 2807, 2808
STORAGE BATTERY SYSTEMS, STATIONARY 608
Permit 105.7.2
Room design 608.3
Signs 608.6
Ventilation 608.5
STORY
Defined 202
STORY ABOVE-GRADE PLANE
Defined 202
STRAW 2404.5, 2903.4
Waste material 304.1.1
SUB-ATMOSPHERIC PRESSURE GAS SYSTEMS (SAGS) 1803.16
SUMPS 5706.3.3
SUPERVISING STATION 903.4.1, 905.9
Defined 202
SUPERVISION 903.4, 905.9, 913.4
SUPERVISORY SERVICE
Defined 202
SUPERVISORY SIGNAL 903.4.1, 905.9
Defined 202
SUPERVISORY SIGNAL-INITIATING DEVICE
Defined 202
SYSTEM (hazardous materials)
Defined 202

T

TAGS 901.7.2, 901.7.3, 901.8.1, 904.9.2
TANK
Abandonment of 5704.2.13, 5704.2.13.1.4
Above-ground 2306.2.2, 2306.2.3, 2306.2.4, 3104.2.1, 5003.2.4.2, 5704.2.7.3.5.1, 5704.2.9, 5704.2.13.2
Anchoring 5704.2.8.5
Capacity 2305.1.2
Capacity, available 5704.2.9.7.5.2
Compressed gas 5303.1, 5303.4.2
Construction 5704.2.9.6.1
Cooking oil storage 610
Defective 5003.2.6.2
Defined 202
Design and construction 5003.2.1, 5704.2.7, 5704.2.9.6.1
Diking 5704.2.10.2
Discharge 5704.2.7.5.5.2
Dispensing 5706.2.8, 5706.5.4
Drainage control 2306.5
Empty 5003.2.5, 5704.3.3.4, 5704.4.8
Filling operations 2305.1, 5706.6.1.10
Fill pipe connections 5704.2.9.7.6
Hot work on 3510, 5704.2.7.6
Inside buildings 2306.2.2, 5704.2.9.5
Installation 5003.2.4, 5704.2.7
Lining 5704.2.7.11
Low-pressure 3202.1
Maintenance 2003.9
Manifolding 5704.2.7.3.5
Marking 5706.2.2
Openings 2306.6.2.1, 5704.2.7.5, 5704.2.9.10
Out of service 5003.2.6.1, 5704.2.13.1.1
Outside buildings 5704.2.9.5
Overfill protection 5704.2.7.5.8, 5704.2.9.7.6, 5704.2.11.4, 5706.6.1.5, 5706.8.3, 5706.8.5
Permanent and temporary 5706.2.4
Piping 2306.6.3
Piping, valves and fittings 2306.6.2
Portable 2306.2.5, 5704.3
Preparation for fueling 2310.5.6
Pressure 2409.3, 5704.2.7.2
Primary 202
Protected above-ground (see Above-ground)
Removal 5704.2.14
Repair, alteration or reconstruction 5704.2.7.6
Secondary containment 5704.2.9.7.3
Security 2306.3
Solvent storage 2107.3
Stationary 6004.2.2.7.4
Storage 2009.2, 5704, 5706.3.2.1, 5706.3.5
Testing 5704.2.12
Underground 2306.2.1, 5003.2.4.1, 5704.2.7.3.5.2, 5704.2.11, 5704.2.13.1
Vaults 2306.2.4, 5704.2.8
Vehicle 2009.3, 5706.5.1.15, 5706.5.1.16, 5706.6
Venting 5704.2.7.3, 5706.2.4.2
Water 507.2.2, 507.5.3
TANK, ATMOSPHERIC
Defined 202
TANK CARS (see also BULK TRANSFER) 5706.5.1
Loading racks or stations 2909.3, 5706.5.1.12
Use as storage tank 5704.2.2
TANK, PORTABLE
Defined 202
TANK, PRIMARY
Defined 202

INTERNATIONAL CODE COUNCIL®
Copyright © 2015 ICC. ALL RIGHTS RESERVED. Accessed by David Dammon on Jun 21, 2017 12:30:52 PM pursuant to License Agreement with ICC. No further reproduction or distribution authorized. ANY UNAUTHORIZED REPRODUCTION OR DISTRIBUTION IS A VIOLATION OF THE FEDERAL COPYRIGHT ACT AND THE LICENSE AGREEMENT, AND SUBJECT TO CIVIL AND CRIMINAL PENALTIES THEREUNDER.

TANK, PROTECTED ABOVE-GROUND
Defined 202
TANK, STATIONARY
Defined 202
TANK VEHICLE 2904.3.2, 5706.5.1.16.1, 5706.6
Aircraft fuel-servicing 2005.4
Certification. 5706.5.1.15
Construction 5003.2.1
Defined 202
Dispensing from 5706.2.8, 5706.5.4
Fire protection. 5706.6.4
Garaging. 5706.6.1, 6111.3
Loading racks or stations 2909.3
Operation 5706.6.1
Parking 5706.6.3, 6111
Smoking 5706.6.1.9
Stability. 5706.5.1.16
Use as storage tank 5704.2.2
TAR KETTLE [see ASPHALT (TAR) KETTLES]
TELEPHONE DIALING-DEVICES, AUTOMATIC 907.6.6.1
TEMPORARY HEATING EQUIPMENT 605.10, 3303
TEMPORARY STAGE CANOPY 3805
Defined 202
Permit 105.7.18
TEMPORARY WIRING 605.9, 3304.7
TENANT IDENTIFICATION (see COVERED AND OPEN MALL BUILDINGS)
TENANT SPACES, VACANT (see VACANT PREMISES)
TENTS AND OTHER MEMBRANE STRUCTURES. . . . . Chapter 31
Access 3103.8.1
Air-inflated structure 3102.1
Air-supported structure 3102.1, 3103.10
Approval 3103.2
Crowd managers 3104.20.2
Defined 202
Fire safety requirements. 3104.2
Generators 3104.19
Heating and cooking equipment. 3104.15
Location 3103.8.3
LP-gas 3104.16
Means of egress. 3103.12
Occupant load 3104.14
On buildings 3103.8.4
Permit 105.6.45, 105.7.18
Portable fire extinguisher 3104.8.12
Seating 3103.11
Structural stability 3103.9
Waste 3104.22
TESTING, ACCEPTANCE (see ACCEPTANCE TESTING)
THEFT RESISTANT 5604.5.1.2
Defined 202
TIMBER AND LUMBER PRODUCTION FACILITIES 2807
Defined 202
TIRE REBUILDING 3403
Permit 105.6.46
Precautions against fire 3404
TIRE STORAGE . . . . . Chapter 34
Access 3406
Fencing 3407
Indoor 3409
Outdoor. 3405
Permit 105.6.44
Precautions against fire 3404
TIRES, BULK STORAGE OF
Defined 202
TOOL (semiconductor fabrication)
Defined 202
TORCH-APPLIED ROOF SYSTEM
Defined 202
TORCHES 308.4
Permit 105.6.33
TOWNHOUSE
Defined 202
TOXIC
Defined 202
Materials
(see **HIGHLY TOXIC AND TOXIC MATERIALS**)
TRADE-OFFS FOR SPRINKLERS 904.2.1
TRAFFIC CALMING DEVICES 503.4.1
Defined 202
TRAINING, EMPLOYEE EMERGENCY 406
TRANSIENT
Defined 202
TRANSIENT AIRCRAFT 914.8.2
Defined 202
TRANSPORTATION
Hazardous materials 2705.3, 5003.10
LP-gas. 6101.1
TRANSVERSE FLUE SPACE (see FLUE SPACES)
TRASH (see RUBBISH)
TRAVEL DISTANCE, EXIT ACCESS 1016
TREATMENT SYSTEMS. 606.12.4, 2703.14.3, 6003.1.3, 6003.2.3.2, 6004.2.2.7, 6004.3.2.5
TREES (see NATURAL CUT TREES)

INTERNATIONAL CODE COUNCIL®
Copyright © 2015 ICC. ALL RIGHTS RESERVED. Accessed by David Dammon on Jun 21, 2017 12:30:52 PM pursuant to License Agreement with ICC. No further reproduction or distribution authorized. ANY UNAUTHORIZED REPRODUCTION OR DISTRIBUTION IS A VIOLATION OF THE FEDERAL COPYRIGHT ACT AND THE LICENSE AGREEMENT, AND SUBJECT TO CIVIL AND CRIMINAL PENALTIES THEREUNDER.

TROUBLE SIGNAL 903.4.1, 2311.7.2.3
Defined 202
TUBE TRAILERS 5303.7.11
Defined 202
TURNSTILES 1010
TWENTY-FOUR HOUR BASIS
Defined 202

U

UNAUTHORIZED DISCHARGE. . . 5003.3.1, 5706.2.6
Defined 202
UNDERGROUND BUILDINGS. . . . . 403.11.3, 604.2.16, 905.3.5, 907.2.18, 907.2.19, 914.5, Table 1103.1
UNLAWFUL ACTS 109.1
UNOCCUPIED TENANT SPACE 311.6
UNSAFE BUILDINGS (see BUILDING)
UNSAFE HEATING APPLIANCES 603.7
UNSTABLE (REACTIVE) MATERIAL . . . . Chapter 66
Defined 202
Indoor storage 6604.1
Outdoor storage 6604.2
Requirements 6603
Use 6605.1
UNVENTED HEATERS 603.4
UNWANTED FIRE
Defined 202
Ignitions 305.5
Reporting 401.3, 3309
UPHOLSTERED FURNITURE (see FURNITURE, UPHOLSTERED)
USE, CHANGE OF (see CHANGE OF USE)
USE (MATERIAL)
Defined 202
UTILITY IDENTIFICATION. 509.1.1

V

VACANT PREMISES 311
Abandoned 311.1.1
Fire protection systems 311.2.2
Placarding 311.5
Removal of hazardous materials 311.4
Safeguarding 311.2
Tenant spaces 311.1.2, 311.6, 403.11.1.6
Waste removal 311.3
VAPOR AREA, FLAMMABLE
Defined 202
VAPOR BALANCE SYSTEM. 2306.7.9.1
VAPOR PRESSURE
Defined 202
VAPOR-PROCESSING SYSTEM 2306.7.9.2, 5706.8
VAPOR-RECOVERY SYSTEM 2306.7.9, 5706.8
VEHICLE IMPACT PROTECTION (see IMPACT PROTECTION, VEHICLE)
VEHICLES 314.4
Compressed natural gas powered 2308
Gas-fueled 2404.18
Industrial 6103.2.2
Liquid-fueled 3104.18
LP-gas-powered 2307
Overfilling 2307.7
Storage of, in buildings 313.1
Tank 2909.3, 5704.2.2, 5706.5.1.15, 5706.5.1.16, 5706.6
VENTILATION
Battery systems 608.6
Defined 202
Dry cleaning 2104.2.1, 2105.2.3, 2106.3.3
Electrostatic equipment 2406.7
Exhaust 2703.14, 2703.15.2
Floor surfacing 2410.5
Hazardous materials 5003.8.4.2, 5003.8.5.2, 5003.8.6.2, 5005.2.1.1, 5005.2.2.2
Indoor dispensing 5005.1.9
Indoor storage areas 5004.3
Industrial ovens 3003.1
Powered industrial trucks 309.3
Process structures 2905.5
Refrigeration machinery room 606.13
Reinforced plastics manufacturing 2411.5
Repair garages 2311.4.3, 2311.7.1
Spray finishing 2404.1.4.3, 2404.2, 2404.2.4, 2404.6.3, 2406.10
VENTS, SMOKE AND HEAT (see SMOKE AND HEAT VENTS)
VIOLATION PENALTIES 109.3
VISIBLE ALARM NOTIFICATION APPLIANCE 907.5.2.3
Defined 202

W

WAREHOUSE
Aerosol . . . . . 5102.1, 5104.3.2, Table 5104.3.2, 5104.4
Liquid . . . . . 5104.6, Table 5704.3.6(2), Table 5704.3.6(3), 5704.3.8, 5704.3.8.5

INTERNATIONAL CODE COUNCIL®
Copyright © 2015 ICC. ALL RIGHTS RESERVED. Accessed by David Dammon on Jun 21, 2017 12:30:52 PM pursuant to License Agreement with ICC. No further reproduction or distribution authorized. ANY UNAUTHORIZED REPRODUCTION OR DISTRIBUTION IS A VIOLATION OF THE FEDERAL COPYRIGHT ACT AND THE LICENSE AGREEMENT, AND SUBJECT TO CIVIL AND CRIMINAL PENALTIES THEREUNDER.

WARNING SIGNS
Compressed gas vaults 5303.16.3
Explosives 5604.10.5, 5605.8.2
Fire-extinguishing systems 904.3.4
Flammable and combustible liquid vaults 5704.2.8.15
Flammable finish operations 2403.2.7
Flammable liquids storage 5703.5
Fruit and crop ripening 2507
Fuel dispensing 2305.6
Fumigation and insecticidal fogging 2603.3.1
Hazard communication (haz-mat) 407.3, 5003.5
Oxygen in home health care 6306.6
Shaftways 316.2.1, 316.2.2,
WARRANTS 104.3.1
WASTE MATERIALS, COMBUSTIBLE 105.6.47, 304, 3304.2
WASTE OIL 603.1.4, 2311.2.2
WASTEBASKETS AND WASTE CONTAINERS 304.3, 808.1, 3304.2.3
WATCH, FIRE (see FIRE WATCH)
WATER MIST SYSTEM (see AUTOMATIC WATER MIST SYSTEM)
WATER-REACTIVE MATERIAL . . . . . Chapter 67
Defined 202
Indoor storage 6704.1
Outdoor storage 6704.2
Requirements 6703
Use 6705
WATER SUPPLY
Buildings under construction or demolition, standpipes 3313
Fire protection 507, 3312
Required 507.1
Secondary for high-rise 914.3.2
Sprinklers 903.3.5
Standpipes 3313
Test 507.4
WEATHER PROTECTION 5004.13, 5005.3.9, 5608.5.2, 5704.4.7, 5705.3.8.4, 5706.5.1.2, 6003.2.5, 6004.3.3, 4104.2.2, 4105.2
WELDING AND OTHER HOT WORK . . . . . Chapter 35
Cutting 3505
Defined 202
Electric arc 3506
Flammable and combustible liquid tanks 3504.1.7, 3510, 5704.2.7.6
Gas 3505
Permit 105.6.12, 105.6.24
Requirements 3503, 3504
Tire storage yards 3404.2
Warning signs in flammable finish operations 2403.2.7
WELL DRILLING 5706.3
WET-CHEMICAL EXTINGUISHING AGENT . . . 904.5
Defined 202
WET FUELING (see MOBILE FUELING)
WET HOSING (see MOBILE FUELING)
WHARVES 2310.3.1, 2310.5.5, 5706.4.7
WILDFIRE RISK AREA 308.1.6, 308.2
Defined 202
WINDER 1011.5.3, 1011.9
Defined 202
WINDOW WELLS 1030.5
WINDOWLESS STORIES OR AREAS 903.2.11.1
WIRELESS PROTECTION SYSTEM 907.6.1
Defined 202
WIRING, ELECTRICAL
Abandoned in plenums 605.12
Hazards 605
WOOD PRODUCTS 105.4.48, 2807, 2808
WOOD VENEERS 803.7
WOODWORKING FACILITIES (see LUMBER YARDS AND WOODWORKING FACILITIES) 903.2.4.1
WORKSTATION (semiconductor manufacturing)
Defined 202

Y

YARD
Defined 202

Z

ZONE, FIRE ALARM 907.6.3
Defined 202
ZONE, NOTIFICATION
Defined 202
ZONING INDICATOR PANEL 907.6.3.1

INTERNATIONAL CODE COUNCIL®
Copyright © 2015 ICC. ALL RIGHTS RESERVED. Accessed by David Dammon on Jun 21, 2017 12:30:52 PM pursuant to License Agreement with ICC. No further reproduction or distribution authorized. ANY UNAUTHORIZED REPRODUCTION OR DISTRIBUTION IS A VIOLATION OF THE FEDERAL COPYRIGHT ACT AND THE LICENSE AGREEMENT, AND SUBJECT TO CIVIL AND CRIMINAL PENALTIES THEREUNDER.

INTERNATIONAL CODE COUNCIL®

Copyright © 2015 ICC. ALL RIGHTS RESERVED. Accessed by David Dammon on Jun 21, 2017 12:30:52 PM pursuant to License Agreement with ICC. No further reproduction or distribution authorized. ANY UNAUTHORIZED REPRODUCTION OR DISTRIBUTION IS A VIOLATION OF THE FEDERAL COPYRIGHT ACT AND THE LICENSE AGREEMENT, AND SUBJECT TO CIVIL AND CRIMINAL PENALTIES THEREUNDER.

ICC INTERNATIONAL CODE COUNCIL®

People Helping People Build a Safer World®

Valuable Guides to Changes in the 2015 I-Codes®

NEW!

FULL COLOR! HUNDREDS OF PHOTOS AND ILLUSTRATIONS!

SIGNIFICANT CHANGES TO THE 2015 INTERNATIONAL CODES®

Practical resources that offer a comprehensive analysis of the critical changes made between the 2012 and 2015 editions of the codes. Authored by ICC code experts, these useful tools are "must-have" guides to the many important changes in the 2015 International Codes.



SIGNIFICANT CHANGES TO THE IBC, 2015 EDITION
#7024S15

SIGNIFICANT CHANGES TO THE IRC, 2015 EDITION
#7101S15

SIGNIFICANT CHANGES TO THE IFC, 2015 EDITION
#7404S15

SIGNIFICANT CHANGES TO THE IPC/IMC/IFGC, 2015 EDITION
#7202S15

Changes are identified then followed by in-depth discussion of how the change affects real world application. Photos, tables and illustrations further clarify application.

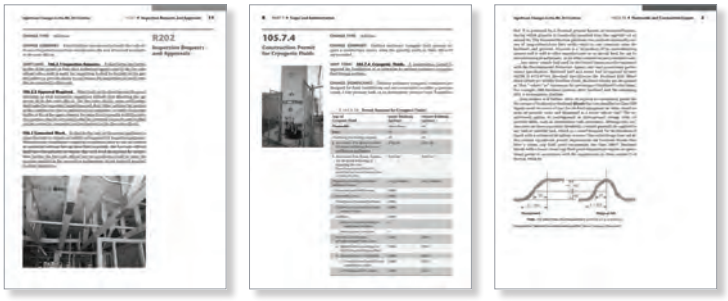

ORDER YOUR HELPFUL GUIDES TODAY!
1-800-786-4452 | www.iccsafe.org/books

HIRE ICC TO TEACH

Want your group to learn the Significant Changes to the I-Codes from an ICC expert instructor? Schedule a seminar today!

email: **ICCTraining@iccsafe.org** | phone: **1-888-422-7233 ext. 33818**

14-09379

INTERNATIONAL CODE COUNCIL®

Copyright © 2015 ICC. ALL RIGHTS RESERVED. Accessed by David Dammon on Jun 21, 2017 12:30:52 PM pursuant to License Agreement with ICC. No further reproduction or distribution authorized. ANY UNAUTHORIZED REPRODUCTION OR DISTRIBUTION IS A VIOLATION OF THE FEDERAL COPYRIGHT ACT AND THE LICENSE AGREEMENT, AND SUBJECT TO CIVIL AND CRIMINAL PENALTIES THEREUNDER.

ICC INTERNATIONAL CODE COUNCIL®

People Helping People Build a Safer World®

The International Code Council's Training and Education Department

Industry professionals look to ICC to provide the critical knowledge and experiences necessary to excel in today's challenging world. ICC's educational programs cover a broad spectrum of code and construction related topics, offering some of the highest quality instruction direct from the source.

INSTITUTES

Acquire Skills, Share Experiences, Earn CEUs

ICC's training institutes offer a comprehensive education experience and a great way to earn much needed CEUs. Learn best practices from the leading experts in the field, build your network of professional contacts and share experiences. Institutes are held across the country throughout the year. To see the full schedule go to www.iccsafe.org/training.

HIRE ICC TO TEACH

Bring ICC On-Site and Earn CEUs

Give your group the confidence they need to meet tough challenges head-on so they can reach their full potential. ICC's course catalog contains a wide variety of educational topics that are available for contract at a location of your choice. Customized training is also available to fit your needs. For our full course catalogue go to www.iccsafe.org/hireicc.

ICC ONLINE CAMPUS

Earn CEUs at Your Own Pace

Online courses offer access to a comprehensive training and education portal, providing you with an effective and convenient tool to enhance your professional skills. Courses are available anytime for 99 days following registration. Go to www.iccsafe.org/onlinecampus for our full offerings.

For more information about ICC's Training please contact us at **888-ICC-SAFE (422-7233) ext. 33818** or email us at **icctraining@iccsafe.org**.

15-10915

INTERNATIONAL CODE COUNCIL®

Copyright © 2015 ICC. ALL RIGHTS RESERVED. Accessed by David Dammon on Jun 21, 2017 12:30:52 PM pursuant to License Agreement with ICC. No further reproduction or distribution authorized. ANY UNAUTHORIZED REPRODUCTION OR DISTRIBUTION IS A VIOLATION OF THE FEDERAL COPYRIGHT ACT AND THE LICENSE AGREEMENT, AND SUBJECT TO CIVIL AND CRIMINAL PENALTIES THEREUNDER.

ICC INTERNATIONAL CODE COUNCIL®

People Helping People Build a Safer World®

Get Connected with the Best Code Resources and Member Benefits in the Industry

As a building professional, being connected to a Member-driven association that offers exclusive I-Code resources and training can play a vital role in building your career. No other building code association offers you more I-Code resources to help enhance your code knowledge and your career than the International Code Council® (ICC®).

Become an ICC Member now to take advantage of:

- Free code opinions from I-Codes experts
- Free I-Code book(s) or download to new Members*
- Discounts on I-Code resources, training and certification renewal
- Free access to employment opportunities in the ICC Career Center, including posting jobs
- Free benefits - Governmental Members: Your staff can receive free ICC benefits too*
- Great opportunities to network at ICC events
- ***Savings of up to 25% on code books & Training materials***

Get connected now! Visit our Member page at **www.iccsafe.org/membership** or call 1-888-ICC-SAFE (422-7233), ext. 33804 to join or learn more today!

*Some restrictions apply. Speak with an ICC Member Services Representative for details.



15-11222

INTERNATIONAL CODE COUNCIL®

Copyright © 2015 ICC. ALL RIGHTS RESERVED. Accessed by David Dammon on Jun 21, 2017 12:30:52 PM pursuant to License Agreement with ICC. No further reproduction or distribution authorized. ANY UNAUTHORIZED REPRODUCTION OR DISTRIBUTION IS A VIOLATION OF THE FEDERAL COPYRIGHT ACT AND THE LICENSE AGREEMENT, AND SUBJECT TO CIVIL AND CRIMINAL PENALTIES THEREUNDER.

ICC INTERNATIONAL CODE COUNCIL®

People Helping People Build a Safer World®

2015 I-Code Essentials

This helpful series uses a straightforward, focused approach to explore code requirements with non-code language, allowing readers to gain confidence in their understanding of the material. Each book is an invaluable companion guide to the 2015 IBC, IRC, IFC or IECC for both new and experienced code users.

- **Detailed full-color illustrations enhance comprehension of code provisions**
- **A focused, concise approach facilitates understanding of the essential code provisions**
- **References to corresponding code sections provide added value as companion guides to the 2015 I-Codes**
- **Glossary of code and construction terms clarifies their meaning in the context of the code**



A

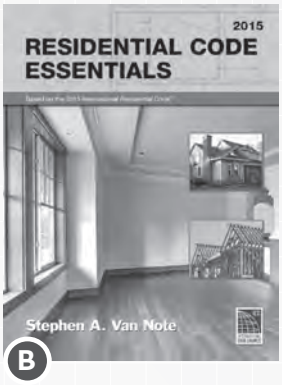

B

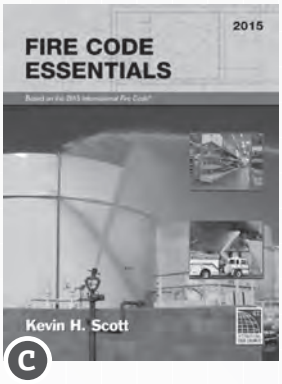

C

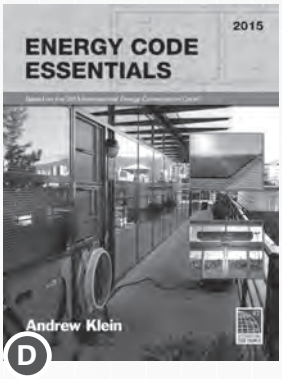

D

A. BUILDING CODE ESSENTIALS: BASED ON THE 2015 INTERNATIONAL BUILDING CODE

Explores those code provisions essential to understanding the application of the IBC in an easy-to-read format. The user-friendly approach of the text simplifies critical concepts so users can achieve a more complete understanding of the code's intent. Full-color illustrations, examples and simplified tables assist the reader in visualizing the code requirements. This up-to-date, step-by-step guide's topic organization reflects the intent of the IBC and facilitates understanding and application of the code provisions.

SOFT COVER #4031S15
PDF DOWNLOAD #8950P596

B. RESIDENTIAL CODE ESSENTIALS: BASED ON THE 2015 INTERNATIONAL RESIDENTIAL CODE

Explains those code provisions essential to understanding the application of the IRC to the most commonly encountered building practices. The information is presented in a user-friendly manner with an emphasis on technical accuracy and clear non-code language. Full-color illustrations, examples and simplified tables assist the reader in visualizing the code requirements.

SOFT COVER #4131S15
PDF DOWNLOAD #8950P59

C. FIRE CODE ESSENTIALS: BASED ON THE 2015 INTERNATIONAL FIRE CODE

Focuses on the essential provisions of the IFC for controlling ignition sources and fire hazards, fire department access to buildings, building uses and processes, fire protection and life safety systems, special processes and uses and hazardous materials.

SOFT COVER #4431S15
PDF DOWNLOAD #8950P59

D. ENERGY CODE ESSENTIALS: BASED ON THE 2015 INTERNATIONAL ENERGY CONSERVATION CODE®

Designed to provide a straightforward, easy-to-read companion guide to the IECC for both beginning and experienced code users. The text provides accurate information on critical energy code applications in the office and in the field for residential and commercial construction. The focused coverage examines those code provisions essential to understanding the application of the IECC to the most commonly encountered building practices and discusses the reasons behind the requirements.

SOFT COVER #4831S15
PDF DOWNLOAD #8950P651

ORDER YOUR I-CODE ESSENTIALS TODAY! 1-800-786-4452 | www.iccsafe.org/books

14-10387

INTERNATIONAL CODE COUNCIL®

Copyright © 2015 ICC. ALL RIGHTS RESERVED. Accessed by David Dammon on Jun 21, 2017 12:30:52 PM pursuant to License Agreement with ICC. No further reproduction or distribution authorized. ANY UNAUTHORIZED REPRODUCTION OR DISTRIBUTION IS A VIOLATION OF THE FEDERAL COPYRIGHT ACT AND THE LICENSE AGREEMENT, AND SUBJECT TO CIVIL AND CRIMINAL PENALTIES THEREUNDER.

2015 IPC®

CODE AND COMMENTARY

The complete IPC with commentary after each section



INTERNATIONAL CODE COUNCIL®

Copyright © 2015 ICC. ALL RIGHTS RESERVED. Accessed by David Dammon on Jun 21, 2017 12:30:52 PM pursuant to License Agreement with ICC. No further reproduction or distribution authorized. ANY UNAUTHORIZED REPRODUCTION OR DISTRIBUTION IS A VIOLATION OF THE FEDERAL COPYRIGHT ACT AND THE LICENSE AGREEMENT, AND SUBJECT TO CIVIL AND CRIMINAL PENALTIES THEREUNDER.

2015 IPC®

CODE AND COMMENTARY

The complete IPC with commentary after each section

INTERNATIONAL CODE COUNCIL®

Copyright © 2015 ICC. ALL RIGHTS RESERVED. Accessed by David Dammon on Jun 21, 2017 12:30:52 PM pursuant to License Agreement with ICC. No further reproduction or distribution authorized. ANY UNAUTHORIZED REPRODUCTION OR DISTRIBUTION IS A VIOLATION OF THE FEDERAL COPYRIGHT ACT AND THE LICENSE AGREEMENT, AND SUBJECT TO CIVIL AND CRIMINAL PENALTIES THEREUNDER.

2015 International Plumbing Code® Commentary

First Printing: October 2014

ISBN: 978-1-60983-290-2

COPYRIGHT © 2014
by
INTERNATIONAL CODE COUNCIL, INC.

ALL RIGHTS RESERVED. This 2015 *International Plumbing Code® Commentary* is a copyrighted work owned by the International Code Council, Inc. Without advance written permission from the copyright owner, no part of this book may be reproduced, distributed or transmitted in any form or by any means, including, without limitation, electronic, optical or mechanical means (by way of example, and not limitation, photocopying, or recording by or in an information storage retrieval system). For information on permission to copy material exceeding fair use, please contact: Publications, 4051 Flossmoor Road, Country Club Hills, IL 60478. Phone 1-888-ICC-SAFE (422-7233).

Trademarks: "International Code Council," the "International Code Council" logo and the "International Plumbing Code" are trademarks of the International Code Council, Inc.

PRINTED IN THE U.S.A.

INTERNATIONAL CODE COUNCIL®

Copyright © 2015 ICC. ALL RIGHTS RESERVED. Accessed by David Dammon on Jun 21, 2017 12:30:52 PM pursuant to License Agreement with ICC. No further reproduction or distribution authorized. ANY UNAUTHORIZED REPRODUCTION OR DISTRIBUTION IS A VIOLATION OF THE FEDERAL COPYRIGHT ACT AND THE LICENSE AGREEMENT, AND SUBJECT TO CIVIL AND CRIMINAL PENALTIES THEREUNDER.

PREFACE

Significant changes in the plumbing industry, as well as in manufacturing technology, had become so commanding that a radically new approach to the design and installation of plumbing systems seemed an imperative. The reply to that imperative was the *International Plumbing Code*, a document emphasizing prescriptive and performance-related provisions.

As a follow-up to the *International Plumbing Code*, we offer a companion document, the *International Plumbing Code Commentary*. The basic appeal of the Commentary is thus: it provides in a small package and at reasonable cost thorough coverage of many issues likely to be dealt with when using the *International Plumbing Code* — and then supplements that coverage with historical and technical background. Reference lists, information sources and bibliographies are also included.

Throughout all of this, strenuous effort has been made to keep the vast quantity of material accessible and its method of presentation useful. With a comprehensive yet concise summary of each section, the Commentary provides a convenient reference for plumbing regulations. In the chapters that follow, discussions focus on the full meaning and implications of the code text. Guidelines suggest the most effective method of application, and the consequences of not adhering to the code text. Illustrations are provided to aid understanding; they do not necessarily illustrate the only methods of achieving code compliance.

The format of the Commentary includes the full text of each section, table and figure in the code, followed immediately by the commentary applicable to that text. Each section's narrative includes a statement of its objective and intent, and usually includes a discussion about why the requirement commands the conditions set forth. Code text and commentary text are easily distinguished from each other. All code text is shown as it appears in the *International Plumbing Code*, and all commentary is indented below the code text and begins with the symbol ❖.

Readers should note that the Commentary is to be used in conjunction with the *International Plumbing Code* and not as a substitute for the code. **The Commentary is advisory only;** the code official alone possesses the authority and responsibility for interpreting the code.

Comments and recommendations are encouraged, for through your input, we can improve future editions. Please direct your comments to the Codes and Standards Development Department at the Chicago District Office.

INTERNATIONAL CODE COUNCIL®
Copyright © 2015 ICC. ALL RIGHTS RESERVED. Accessed by David Dammon on Jun 21, 2017 12:30:52 PM pursuant to License Agreement with ICC. No further reproduction or distribution authorized. ANY UNAUTHORIZED REPRODUCTION OR DISTRIBUTION IS A VIOLATION OF THE FEDERAL COPYRIGHT ACT AND THE LICENSE AGREEMENT, AND SUBJECT TO CIVIL AND CRIMINAL PENALTIES THEREUNDER.

INTERNATIONAL CODE COUNCIL®
Copyright © 2015 ICC. ALL RIGHTS RESERVED. Accessed by David Dammon on Jun 21, 2017 12:30:52 PM pursuant to License Agreement with ICC. No further reproduction or distribution authorized. ANY UNAUTHORIZED REPRODUCTION OR DISTRIBUTION IS A VIOLATION OF THE FEDERAL COPYRIGHT ACT AND THE LICENSE AGREEMENT, AND SUBJECT TO CIVIL AND CRIMINAL PENALTIES THEREUNDER.

TABLE OF CONTENTS

CHAPTER 1 SCOPE AND ADMINISTRATION . . . . . 1-1 – 1-20

CHAPTER 2 DEFINITIONS . . . . . 2-1 – 2-32

CHAPTER 3 GENERAL REGULATIONS . . . . . 3-1 – 3-48

CHAPTER 4 FIXTURES, FAUCETS AND FIXTURE FITTINGS . . . . . 4-1 – 4-76

CHAPTER 5 WATER HEATERS . . . . . 5-1 – 5-20

CHAPTER 6 WATER SUPPLY AND DISTRIBUTION . . . . . 6-1 – 6-112

CHAPTER 7 SANITARY DRAINAGE . . . . . 7-1 – 7-66

CHAPTER 8 INDIRECT/SPECIAL WASTE . . . . . 8-1 – 8-14

CHAPTER 9 VENTS . . . . . 9-1 – 9-72

CHAPTER 10 TRAPS, INTERCEPTORS AND SEPARATORS . . . . . 10-1 – 10-26

CHAPTER 11 STORM DRAINAGE . . . . . 11-1 – 11-24

CHAPTER 12 SPECIAL PIPING AND STORAGE SYSTEMS . . . . . 12-1 – 12-4

CHAPTER 13 NONPOTABLE WATER SYSTEMS . . . . . 13-1 – 13-18

CHAPTER 14 SUBSURFACE LANDSCAPE IRRIGATION SYSTEMS . . . . . 14-1 – 14-6

CHAPTER 15 REFERENCED STANDARDS . . . . . 15-1 – 15-14

APPENDIX A PLUMBING PERMIT FEE SCHEDULE . . . . . A-1 – A-2

APPENDIX B RATES OF RAINFALL FOR VARIOUS CITIES . . . . . B-1 – B-2

APPENDIX C STRUCTURAL SAFETY . . . . . C-1 – C-2

APPENDIX D DEGREE DAY AND DESIGN TEMPERATURES . . . . . D-1 – D-8

APPENDIX E SIZING OF WATER PIPING SYSTEM . . . . . E-1 – E-24

INDEX . . . . . INDEX-1 – INDEX-10

INTERNATIONAL CODE COUNCIL®

Copyright © 2015 ICC. ALL RIGHTS RESERVED. Accessed by David Dammon on Jun 21, 2017 12:30:52 PM pursuant to License Agreement with ICC. No further reproduction or distribution authorized. ANY UNAUTHORIZED REPRODUCTION OR DISTRIBUTION IS A VIOLATION OF THE FEDERAL COPYRIGHT ACT AND THE LICENSE AGREEMENT, AND SUBJECT TO CIVIL AND CRIMINAL PENALTIES THEREUNDER.

INTERNATIONAL CODE COUNCIL®
Copyright © 2015 ICC. ALL RIGHTS RESERVED. Accessed by David Dammon on Jun 21, 2017 12:30:52 PM pursuant to License Agreement with ICC. No further reproduction or distribution authorized. ANY UNAUTHORIZED REPRODUCTION OR DISTRIBUTION IS A VIOLATION OF THE FEDERAL COPYRIGHT ACT AND THE LICENSE AGREEMENT, AND SUBJECT TO CIVIL AND CRIMINAL PENALTIES THEREUNDER.

Chapter 1:
Scope and Administration

General Comments

The law of building regulation is grounded on the police power of the state. In terms of how it is used, this is the power of the state to legislate for the general welfare of its citizens. This power enables passage of such laws as a plumbing code. It is from the police power delegated by the state legislature that local governments are able to enact building regulations. If the state legislature has limited this power in any way, the municipality may not exceed these limitations. Although the municipality may not further delegate its police power (e.g., by delegating the burden of determining code compliance to the building owner, contractor or architect), it may turn over the administration of building regulations to a municipal official, such as a code official, provided that he or she is given sufficient criteria to clearly establish the basis for decisions as to whether or not a proposed building, including its plumbing systems, conforms to the code.

Chapter 1 is largely concerned with maintaining "due process of law" in enforcing the performance criteria contained in the code. Only through careful observation of the administrative provisions can the code official reasonably hope to demonstrate that "equal protection under the law" has been provided. Although it is generally assumed that the administrative and enforcement sections of a code are geared toward the code official, this is not entirely true. The provisions also establish the rights and privileges of the design professional, contractor and building owner. The position of the code official is merely to review the proposed and completed work and determine whether a plumbing installation conforms to the code requirements. The design professional is responsible for the design of a safe, sanitary plumbing system.

The contractor is responsible for installing the system in strict accordance with the plans.

During the course of the construction of a plumbing system, the code official reviews the activity to make sure that the spirit and intent of the law are being met and that the plumbing system provides adequate protection of public health. As a public servant, the code official enforces the code in an unbiased, proper manner. Every individual is guaranteed equal enforcement of the code. Furthermore, design professionals, contractors and building owners have the right of due process for any requirement in the code.

Purpose

A plumbing code, as with any other code, is intended for adoption as a legally enforceable document to safeguard health, safety, property and public welfare. A plumbing code cannot be effective without adequate provisions for its administration and enforcement. The official charged with the administration and enforcement of plumbing regulations has a great responsibility, and with this responsibility goes authority. No matter how detailed the plumbing code may be, the code official must, to some extent, exercise judgment in determining compliance. The code official has the responsibility for establishing that the homes in which the citizens of the community reside and the buildings in which they work are designed and constructed to be reasonably free from hazards associated with the presence and use of plumbing appliances, appurtenances, fixtures and systems. The code is intended to establish a minimum acceptable level of safety.

PART 1—SCOPE AND APPLICATION

SECTION 101
GENERAL

[A] 101.1 Title. These regulations shall be known as the *International Plumbing Code* of **[NAME OF JURISDICTION]** hereinafter referred to as "this code."

❖ This section sets forth the scope and intent of the code as it applies to new and existing structures. The adopted regulations are identified by inserting the name of the adopting jurisdiction into the code.

[A] 101.2 Scope. The provisions of this code shall apply to the erection, installation, alteration, repairs, relocation, replacement, addition to, use or maintenance of plumbing systems within this jurisdiction. This code shall regulate nonflammable medical gas, inhalation anesthetic, vacuum piping, nonmedical oxygen systems and sanitary and condensate vacuum collection systems. The installation of fuel gas distribution piping and equipment, fuel-gas-fired water heaters and water heater venting systems shall be regulated by the *International Fuel Gas Code*. Provisions in the appendices shall not apply unless specifically adopted.

Exception: Detached one- and two-family dwellings and multiple single-family dwellings (townhouses) not more than three stories high with separate means of egress and their accessory structures shall comply with the *International Residential Code.*

❖ This section describes the types of plumbing system construction-related activities to which the code is intended to apply. The applicability of the code encompasses the initial design of plumbing systems, the installation and construction phases and the mainte-

INTERNATIONAL CODE COUNCIL®
Copyright © 2015 ICC. ALL RIGHTS RESERVED. Accessed by David Dammon on Jun 21, 2017 12:30:52 PM pursuant to License Agreement with ICC. No further reproduction or distribution authorized. ANY UNAUTHORIZED REPRODUCTION OR DISTRIBUTION IS A VIOLATION OF THE FEDERAL COPYRIGHT ACT AND THE LICENSE AGREEMENT, AND SUBJECT TO CIVIL AND CRIMINAL PENALTIES THEREUNDER.

nance of operating systems. Section 101.2 excludes nothing plumbing related and does not limit applicability of the code to any device, fixture, system and associated equipment that could fall under, or is construed to fall under, the definition of "Plumbing" (see the definition of "Plumbing" in Chapter 2). The code is intended to govern plumbing systems provided for use by and for the general safety and well being of occupants of a building. The code intends to regulate any and all plumbing-related appliances, systems and associated equipment that can affect the health, safety and welfare of building occupants insofar as they are affected by the installation, operation and maintenance of such appliances and systems. Plumbing systems include the associated equipment by definition of "Plumbing system" in Chapter 2.

In addition, nonflammable medical gas, inhalation anesthetic, vacuum piping, nonmedical oxygen systems and sanitary and condensate vacuum collection systems are regulated by the code. Other than the actual connections to the potable water system, the code does not regulate hydronic piping for space heating or cooling, lawn sprinkler (irrigation) systems or automatic fire sprinkler and standpipe systems. These are not considered to be plumbing systems because they have nothing to do with supplying potable water or the transport of liquid wastes and water-borne solid wastes. Flammable/combustible liquid piping, hydronic piping, fire suppression system piping and nonplumbing-related systems are typically addressed in the *International Building Code*® (IBC®), the *International Fire Code*® (IFC®) and the *International Mechanical Code*® (IMC®). Most hydronic heating and cooling systems and fire suppression systems have one or more connections to the plumbing system. Such connections involve direct connections to the water supply system and indirect connections to the drainage system. For example, an automatic fire sprinkler system may be supplied by the public potable water supply and may have one or more drains and test apparatus that discharge water to the building drainage system. In the case of irrigation systems, for example, the plumbing system terminates at the backflow prevention device that joins the potable water supply to the irrigation piping system. All interfaces between plumbing systems and nonplumbing systems are subject to the requirements of the code.

This section references the *International Fuel Gas Code*® (IFGC®) for all fuel-gas-related regulations. This is the result of an agreement between the International Code Council® (ICC®) and the American Gas Association (AGA) to develop the IFGC.

The exception is actually a distinct requirement that sends the user to the *International Residential Code*® (IRC®) for one- and two-family dwellings that are less than four stories in height and townhouses that are less than four stories in height as these structures are within the scope of the IRC. It is the intent of the *International Codes*® that the *International Plumbing Code*® (IPC®) regulate plumbing in all structures that do not fall within the scope of the IRC. Structures falling within the scope of the IRC are to be regulated by the IRC.

[A] 101.3 Intent. The purpose of this code is to establish minimum standards to provide a reasonable level of safety, health, property protection and public welfare by regulating and controlling the design, construction, installation, quality of materials, location, operation and maintenance or use of plumbing equipment and systems.

❖ The intent of the code is to set forth regulations that establish minimum standards to provide a reasonable level of safety and to protect public health and general welfare of building occupants. The intent becomes important in the application of such sections as Sections 102, 104.2, 105.2 and 108, as well as any enforcement-oriented interpretive action or judgment. Like any code, the written text is subject to interpretation. Interpretations should not be affected by economics or the potential impact on any party. The only considerations should be occupants' safety, protection of occupants' health and welfare and emergency responder safety.

[A] 101.4 Severability. If any section, subsection, sentence, clause or phrase of this code is for any reason held to be unconstitutional, such decision shall not affect the validity of the remaining portions of this code.

❖ Only invalid sections of the code (as established by the court of jurisdiction) can be set aside. This is essential to safeguard the application of the code text to situations in which a provision of the code is declared illegal or unconstitutional. This section preserves the legislative action that put the legal provisions in place.

SECTION 102
APPLICABILITY

[A] 102.1 General. Where there is a conflict between a general requirement and a specific requirement, the specific requirement shall govern. Where, in any specific case, different sections of this code specify different materials, methods of construction or other requirements, the most restrictive shall govern.

❖ Specific requirements of the code override or take precedence over general requirements. For example, while the code specifies the types of piping materials that can be used for vent systems, the specific requirements for chemical waste systems require the vent piping be suitable for the service intended and be approved by the code official.

[A] 102.2 Existing installations. Plumbing systems lawfully in existence at the time of the adoption of this code shall be

INTERNATIONAL CODE COUNCIL®
Copyright © 2015 ICC. ALL RIGHTS RESERVED. Accessed by David Dammon on Jun 21, 2017 12:30:52 PM pursuant to License Agreement with ICC. No further reproduction or distribution authorized. ANY UNAUTHORIZED REPRODUCTION OR DISTRIBUTION IS A VIOLATION OF THE FEDERAL COPYRIGHT ACT AND THE LICENSE AGREEMENT, AND SUBJECT TO CIVIL AND CRIMINAL PENALTIES THEREUNDER.

permitted to have their use and maintenance continued if the use, maintenance or repair is in accordance with the original design and hazard to life, health or property is not created by such plumbing system.

❖ An existing plumbing system is generally considered to be "grandfathered" with code adoption if the system meets a minimum level of safety. Frequently the criteria for this level are the regulations (or code) under which the existing building was originally constructed. If there are no previous code criteria to apply, the code official is to apply those provisions that are reasonably applicable to existing buildings. A specific level of safety is dictated by provisions dealing with hazard abatement in existing buildings and maintenance provisions, as contained in the code and the *International Property Maintenance Code*® (IPMC®), *the International Existing Building Code*® (IEBC®) and the IFC.

[A] 102.3 Maintenance. Plumbing systems, materials and appurtenances, both existing and new, and parts thereof, shall be maintained in proper operating condition in accordance with the original design in a safe and sanitary condition. Devices or safeguards required by this code shall be maintained in compliance with the edition of the code under which they were installed.

The owner or the owner's authorized agent shall be responsible for maintenance of plumbing systems. To determine compliance with this provision, the code official shall have the authority to require any plumbing system to be reinspected.

❖ All plumbing systems and equipment are subject to deterioration resulting from aging, wear, accumulation of dirt and debris, corrosion and other factors. Maintenance is necessary to keep plumbing systems and equipment in proper operating condition. Required safety devices and controls must be maintained to continue providing the protection that they afford. Existing equipment and systems could have safety devices or other measures that were necessary because of the nature of the equipment, and such safeguards may have been required by a code that predates the current code. Safeguards required by previous or present codes must be maintained for the life of the equipment or system.

The maintenance of plumbing systems as prescribed in this section is the responsibility of the owner of the property. The owner may authorize another party to be responsible for the property, in which case that party is responsible for the maintenance of the plumbing systems involved.

The reinspection authority of the code official is needed to assure compliance with the maintenance requirements in this section.

[A] 102.4 Additions, alterations or repairs. Additions, alterations, renovations or repairs to any plumbing system shall conform to that required for a new plumbing system without requiring the existing plumbing system to comply with all the requirements of this code. Additions, alterations or repairs shall not cause an existing system to become unsafe, insanitary or overloaded.

Minor additions, alterations, renovations and repairs to existing plumbing systems shall meet the provisions for new construction, unless such work is done in the same manner and arrangement as was in the existing system, is not hazardous and is *approved*.

❖ Simply stated, new work must comply with current code requirements. Any alteration or addition to an existing system involves some new work, and therefore is subject to the requirements of the code. Additions or alterations to an existing system can place additional loads or different demands on the system, which could necessitate changing all or part of the existing system. For example, the addition of plumbing fixtures to an existing system may necessitate an increase in drain piping size and water distribution piping size. Additions and alterations must not cause an existing system to be any less in compliance with the code than it was before the changes.

Repair of an existing nonconforming plumbing system is permitted without having to completely replace the nonconforming portion. This typically occurs when repairing a fixture or piping. Although some types of fixtures or piping arrangements are no longer permitted, existing fixtures or piping can be repaired and remain in service if a health hazard or insanitary condition is not maintained or created. This section distinguishes between alterations (subject to applicable provisions of the code) and ordinary repairs (maintenance activities not requiring a permit). The intent of this section is to allow the continued use of existing plumbing systems and equipment that may or may not be designed and constructed as required for new installations.

Existing plumbing systems and equipment will normally require repair and component replacement to remain operational. This section permits repair and component replacements without requiring the redesign, alteration or replacement of the entire system. In other words, the plumbing system is allowed to stay as it was if it is not hazardous. It is important to note that the word "minor" in this section is intended to modify "additions," "alterations," "renovations" and "repairs." It is not the intent of this section to waive code requirements for the replacement of all or major portions of systems under the guise of repair. Any work other than minor repairs or replacement of minor portions of a system must be considered as new work subject to all applicable provisions of the code. Repairs and minor component replacements are permitted in a manner that is consistent with the existing system if those repairs or replacements are approved by the code official; are not hazardous; do not cause the system or equipment to be any less in compliance with the code than before; and are, to the extent practicable, in compliance with the provisions of the code applicable to new work.

INTERNATIONAL CODE COUNCIL®
Copyright © 2015 ICC. ALL RIGHTS RESERVED. Accessed by David Dammon on Jun 21, 2017 12:30:52 PM pursuant to License Agreement with ICC. No further reproduction or distribution authorized. ANY UNAUTHORIZED REPRODUCTION OR DISTRIBUTION IS A VIOLATION OF THE FEDERAL COPYRIGHT ACT AND THE LICENSE AGREEMENT, AND SUBJECT TO CIVIL AND CRIMINAL PENALTIES THEREUNDER.

[A] 102.5 Change in occupancy. It shall be unlawful to make any change in the *occupancy* of any structure that will subject the structure to any special provision of this code applicable to the new *occupancy* without approval of the code official. The code official shall certify that such structure meets the intent of the provisions of law governing building construction for the proposed new *occupancy* and that such change of *occupancy* does not result in any hazard to the public health, safety or welfare.

❖ When a building undergoes a change of occupancy, the plumbing system must be evaluated to determine what effect the change has on the plumbing system. For example, if a mercantile building was converted to a restaurant, additional plumbing fixtures would be required for the public based on the increased occupant load. If an existing system serves an occupancy that is different from the one it served when the code went into effect, the plumbing system must comply with the applicable code requirements for the newer occupancy. Depending on the nature of the previous occupancy, changing a building's occupancy classification could result in the requirement for additional or different types of plumbing fixtures.

[A] 102.6 Historic buildings. The provisions of this code relating to the construction, alteration, repair, enlargement, restoration, relocation or moving of buildings or structures shall not be mandatory for existing buildings or structures identified and classified by the state or local jurisdiction as historic buildings where such buildings or structures are judged by the code official to be safe and in the public interest of health, safety and welfare regarding any proposed construction, alteration, repair, enlargement, restoration, relocation or moving of buildings.

❖ This section gives the code official the widest possible flexibility in enforcing the code when the building in question has historic value. This flexibility, however, does not come without conditions. The most important criterion for application of this section is that the building must be specifically classified as being of historic significance by a qualified party or agency. Usually this is done by a state or local authority after considerable scrutiny. Most, if not all, states have such authorities, as do many local jurisdictions. Agencies with such authority typically exist at the state or local government level.

[A] 102.7 Moved buildings. Except as determined by Section 102.2, plumbing systems that are a part of buildings or structures moved into or within the jurisdiction shall comply with the provisions of this code for new installations.

❖ Buildings that have been relocated are subject to the requirements of the code as if they were new construction. Placing a building where one did not previously exist is analogous to constructing a new building. It is the intent of this section to require alteration of the existing plumbing systems to the extent necessary to bring them into compliance with the provisions of the code applicable to new construction or make the existing plumbing system comply with Section 102.2.

[A] 102.8 Referenced codes and standards. The codes and standards referenced in this code shall be those that are listed in Chapter 15 and such codes and standards shall be considered as part of the requirements of this code to the prescribed extent of each such reference and as further regulated in Sections 102.8.1 and 102.8.2.

❖ The code references many standards and codes promulgated and published by other organizations. A complete list of referenced standards appears in Chapter 15. The wording in this provision, "shall be those that are listed in Chapter 15," was carefully chosen to establish the edition of the standard or code that is enforceable under the code.

[A] 102.8.1 Conflicts. Where conflicts occur between provisions of this code and the referenced standards, the provisions of this code shall apply.

❖ The code takes precedence when the requirements of the standard conflict with the requirements of the code. For example, Section 412.1 requires all floor drains to conform to ASME A112.3.1, ASME A112.6.3 or CSA B79. These standards regulate the design and construction of a floor drain and permit both fixed and removable strainers; however, Section 412.2 requires all floor drains to have removable strainers. Although a floor drain without a removable cover may conform to ASME A112.3.1, ASME A112.6.3 or CSA B79, removable strainers would be required because the code takes precedence over the standard. Although it is the intent of the code to be in harmony with referenced standards, the code text governs if conflicts occur.

[A] 102.8.2 Provisions in referenced codes and standards. Where the extent of the reference to a referenced code or standard includes subject matter that is within the scope of this code, the provisions of this code, as applicable, shall take precedence over the provisions in the referenced code or standard.

❖ Although a standard or code is referenced, its full scope and content is not necessarily applicable. The standard (or code) is applicable only to the extent indicated in the text in which the standard is specifically referenced. A referenced standard or a portion thereof is an enforceable extension of the code as if the content of the standard were included in the body of the code. The use and application of referenced standards are limited to those portions of the standards that are specifically identified.

[A] 102.9 Requirements not covered by code. Any requirements necessary for the strength, stability or proper operation of an existing or proposed plumbing system, or for the public safety, health and general welfare, not specifically covered by this code shall be determined by the code official.

❖ Evolving technology in our society will inevitably result in a situation in which the code is comparatively silent on an identified hazard. The reasonable application of the code to such hazardous, unforeseen conditions is addressed in this section. Clearly this section and the code official's judicious and reasonable application of it is necessary. The purpose of this section, however, is

INTERNATIONAL CODE COUNCIL®
Copyright © 2015 ICC. ALL RIGHTS RESERVED. Accessed by David Dammon on Jun 21, 2017 12:30:52 PM pursuant to License Agreement with ICC. No further reproduction or distribution authorized. ANY UNAUTHORIZED REPRODUCTION OR DISTRIBUTION IS A VIOLATION OF THE FEDERAL COPYRIGHT ACT AND THE LICENSE AGREEMENT, AND SUBJECT TO CIVIL AND CRIMINAL PENALTIES THEREUNDER.

not to impose requirements that may be preferred when the code provides alternative methods or is not silent on the circumstances. Additionally, this section can be used to implement the general performance-oriented language of the code to specific enforcement situations.

[A] 102.10 Other laws. The provisions of this code shall not be deemed to nullify any provisions of local, state or federal law.

❖ Other laws enacted by the local, state or federal government may be applicable to a condition that is also governed by a requirement in the code. In such circumstances, the requirements of the code are in addition to those other laws, even though the code official may not be responsible for the enforcement of those laws. For example, the health department might require the handsinks in a restaurant to be indirectly connected whereas the code requires these sinks to be directly connected.

[A] 102.11 Application of references. Reference to chapter section numbers, or to provisions not specifically identified by number, shall be construed to refer to such chapter, section or provision of this code.

❖ In a situation where the code may make reference to a chapter or section number or to another code provision without specifically identifying its location in the code, assume that the referenced section, chapter or provision is in the code and not in a referenced code or standard.

PART 2—ADMINISTRATION AND ENFORCEMENT

SECTION 103
DEPARTMENT OF PLUMBING INSPECTION

[A] 103.1 General. The department of plumbing inspection is hereby created and the executive official in charge thereof shall be known as the code official.

❖ This section describes the plumbing inspection department and the duties of its employees. The executive official in charge of the plumbing department is named the "code official" by this section. In actuality, the person who is in charge of the department may hold a different title such as building commissioner, plumbing inspector, construction official, etc. For the purpose of the code, the person is referred to as the "code official" on being appointed.

[A] 103.2 Appointment. The code official shall be appointed by the chief appointing authority of the jurisdiction.

❖ This section establishes the code official as an appointed position from which he or she cannot be removed, except for cause subject to a due process review.

[A] 103.3 Deputies. In accordance with the prescribed procedures of this jurisdiction and with the concurrence of the appointing authority, the code official shall have the authority to appoint a deputy code official, other related technical officers, inspectors and other employees. Such employees shall have powers as delegated by the code official.

❖ This section gives the code official the authority to appoint other individuals to assist with the administration and enforcement of the code. These individuals have authority and responsibility as designated by the code official.

[A] 103.4 Liability. The code official, member of the board of appeals or employee charged with the enforcement of this code, while acting for the jurisdiction in good faith and without malice in the discharge of the duties required by this code or other pertinent law or ordinance, shall not thereby be rendered civilly or criminally liable personally, and is hereby relieved from all personal liability for any damage accruing to persons or property as a result of any act or by reason of an act or omission in the discharge of official duties.

❖ The code official, other department employees and members of the appeals board are not intended to be held liable, either civilly or criminally, for those actions performed in accordance with the code in a reasonable and lawful manner. The responsibility of the building official in this regard is subject to local, state and federal laws that may supersede this provision.

[A] 103.4.1 Legal defense. Any suit or criminal complaint instituted against any officer or employee because of an act performed by that officer or employee in the lawful discharge of duties and under the provisions of this code shall be defended by the legal representative of the jurisdiction until the final termination of the proceedings. The code official or any subordinate shall not be liable for costs in any action, suit or proceeding that is instituted in pursuance of the provisions of this code.

❖ This section establishes that code officials (or subordinates) must not be liable for costs in any legal action instituted in response to the performance of lawful duties. These costs are to be borne by the state, county or municipality. The best way to be certain that the code official's action is a "lawful duty" is always to cite the applicable code section on which the enforcement action is based.

SECTION 104
DUTIES AND POWERS OF THE CODE OFFICIAL

[A] 104.1 General. The code official is hereby authorized and directed to enforce the provisions of this code. The code official shall have the authority to render interpretations of this code and to adopt policies and procedures in order to clarify the application of its provisions. Such interpretations, policies and procedures shall be in compliance with the intent and purpose of this code. Such policies and procedures shall not have the effect of waiving requirements specifically provided for in this code.

❖ The duty of the code official is to enforce the code, and he or she is the "authority having jurisdiction" for all matters relating to the code and its enforcement. It is the duty of the code official to interpret the code and to

INTERNATIONAL CODE COUNCIL®
Copyright © 2015 ICC. ALL RIGHTS RESERVED. Accessed by David Dammon on Jun 21, 2017 12:30:52 PM pursuant to License Agreement with ICC. No further reproduction or distribution authorized. ANY UNAUTHORIZED REPRODUCTION OR DISTRIBUTION IS A VIOLATION OF THE FEDERAL COPYRIGHT ACT AND THE LICENSE AGREEMENT, AND SUBJECT TO CIVIL AND CRIMINAL PENALTIES THEREUNDER.

determine compliance. Code compliance will not always be easy to determine and will require judgment and expertise. In exercising this authority, however, the code official cannot set aside or ignore any provision of the code.

[A] 104.2 Applications and permits. The code official shall receive applications, review construction documents and issue permits for the installation and alteration of plumbing systems, inspect the premises for which such permits have been issued, and enforce compliance with the provisions of this code.

❖ The code enforcement process is normally initiated with an application for a permit. The code official is responsible for processing the applications and issuing permits for the installation, replacement, addition to or modification of plumbing systems in accordance with the code.

[A] 104.3 Inspections. The code official shall make all the required inspections, or shall accept reports of inspection by *approved* agencies or individuals. Reports of such inspections shall be in writing and be certified by a responsible officer of such *approved agency* or by the responsible individual. The code official is authorized to engage such expert opinion as deemed necessary to report on unusual technical issues that arise, subject to the approval of the appointing authority.

❖ The code official is required to make inspections as necessary to determine compliance with the code or to accept written reports of inspections by an approved agency. The inspection of the work in progress or accomplished is another significant element in determining code compliance. Even though a department may not have the resources to inspect every aspect of all work, the required inspections are those that are dictated by administrative rules and procedures based on many parameters, including available inspection resources. To expand the available inspection resources, the code official may approve an inspection agency that, in his or her opinion, possesses the proper qualifications. When unusual, extraordinary or complex technical issues arise relative to plumbing installations or the safety of an existing plumbing system, the code official has the authority to seek the opinion and advice of experts. A technical report from an expert can be used to assist the code official in the approval process.

[A] 104.4 Right of entry. Where it is necessary to make an inspection to enforce the provisions of this code, or where the code official has reasonable cause to believe that there exists in any building or upon any premises any conditions or violations of this code that make the building or premises unsafe, insanitary, dangerous or hazardous, the code official shall have the authority to enter the building or premises at all reasonable times to inspect or to perform the duties imposed upon the code official by this code. If such building or premises is occupied, the code official shall present credentials to the occupant and request entry. If such building or premises is unoccupied, the code official shall first make a reasonable effort to locate the owner, the owner's authorized agent or other person having charge or control of the building or premises and request entry. If entry is refused, the code official shall have recourse to every remedy provided by law to secure entry.

Where the code official shall have first obtained a proper inspection warrant or other remedy provided by law to secure entry, no owner, owner's authorized agent, occupant or person having charge, care or control of any building or premises shall fail or neglect, after proper request is made as herein provided, to promptly permit entry therein by the code official for the purpose of inspection and examination pursuant to this code.

❖ The first part of this section establishes the right of the code official to enter the premises to make the permit inspections required by Section 107. Permit application forms typically include a statement signed by the applicant (who is the owner or owner's agent) granting the code official the authority to enter specific areas to enforce code provisions related to the permit. The right to enter other structures or premises is more limited. First, to protect the right of privacy, the owner or occupant must grant the code official permission before the interior of the property can be inspected. Permission is not required for inspections that can be accomplished from within the public right-of-way. Second, access may be denied by the owner or occupant. Unless the inspector has reasonable cause to believe that a violation exists, access may be unattainable. Third, code officials must present proper identification (see commentary, Section 104.5) and request admittance during reasonable hours—usually the normal business hours of the establishment. Fourth, inspections must be aimed at securing or determining compliance with the provisions and intent of the regulations that are specifically within the established scope of the code official's authority.

Searches to gather information for the purpose of enforcing the other codes, ordinances or regulations are considered unreasonable and are prohibited by the Fourth Amendment to the U.S. Constitution. "Reasonable cause" in the context of this section must be distinguished from "probable cause," which is required to gain access to property in criminal cases. The burden of proof establishing reasonable cause may vary among jurisdictions. Usually, an inspector must show that the property is subject to inspection under the provisions of the code; that the interests of the public health, safety and welfare outweigh the individual's right to maintain privacy; and that such an inspection is required solely to determine compliance with the provisions of the code.

Many jurisdictions do not recognize the concept of an administrative warrant and may require the code official to prove probable cause in order to gain access upon refusal. This burden of proof is usually more substantial, often requiring the code official to stipulate in advance why access is needed (usually access is restricted to gathering evidence for seeking an indictment or making an arrest); what specific items or information is sought; its relevance to the case against the

INTERNATIONAL CODE COUNCIL®
Copyright © 2015 ICC. ALL RIGHTS RESERVED. Accessed by David Dammon on Jun 21, 2017 12:30:52 PM pursuant to License Agreement with ICC. No further reproduction or distribution authorized. ANY UNAUTHORIZED REPRODUCTION OR DISTRIBUTION IS A VIOLATION OF THE FEDERAL COPYRIGHT ACT AND THE LICENSE AGREEMENT, AND SUBJECT TO CIVIL AND CRIMINAL PENALTIES THEREUNDER.

individual subject; how knowledge of the relevance of the information or items sought was obtained; and how the evidence sought will be used. In all such cases, the right to privacy must always be weighed against the right of the code official to conduct an inspection to establish public health, safety and welfare. Such important and complex constitutional issues should be discussed with the jurisdiction's legal counsel. Jurisdictions should establish procedures for securing the necessary court orders when an inspection is deemed necessary following a refusal.

The last paragraph in this section requires the owner or occupant to permit entry for inspection if a proper warrant or other documentation required by law has been obtained.

[A] 104.5 Identification. The code official shall carry proper identification when inspecting structures or premises in the performance of duties under this code.

❖ This section requires the code official (including by definition all authorized designees) to carry identification in the course of conducting the duties of the position. This identification removes any question concerning the purpose and authority of the inspector.

[A] 104.6 Notices and orders. The code official shall issue all necessary notices or orders to ensure compliance with this code.

❖ An important element of code enforcement is the necessary advisement of deficiencies and correction, which is accomplished through notices and orders. The code official is required to issue orders to abate illegal or unsafe conditions. Sections 108.7, 108.7.1, 108.7.2 and 108.7.3 contain additional information for these notices.

[A] 104.7 Department records. The code official shall keep official records of applications received, permits and certificates issued, fees collected, reports of inspections, and notices and orders issued. Such records shall be retained in the official records for the period required for the retention of public records.

❖ In keeping with the need for an efficiently conducted business practice, the code official must keep records pertaining to permit applications, permits, fees collected, inspections, notices and orders issued. Such documentation provides a valuable resource if questions arise regarding the department's actions with respect to a building. It requires that other documents be kept for the length of time mandated by a jurisdiction's, or its state's, laws or administrative rules for retaining public records.

SECTION 105
APPROVAL

[A] 105.1 Modifications. Where there are practical difficulties involved in carrying out the provisions of this code, the code official shall have the authority to grant modifications for individual cases, upon application of the owner or owner's authorized agent, provided the code official shall first find that special individual reason makes the strict letter of this code impractical and the modification conforms to the intent and purpose of this code and that such modification does not lessen health, life and fire safety requirements. The details of action granting modifications shall be recorded and entered in the files of the plumbing inspection department.

❖ The code official may amend or make exceptions to the code as needed where strict compliance is impractical. Only the code official has authority to grant modifications. Consideration of a particular difficulty is to be based on the application of the owner and a demonstration that the intent of the code is accomplished. This section is not intended to permit setting aside or ignoring a code provision; rather, it is intended to provide acceptance of equivalent protection. Such modifications do not, however, extend to actions that are necessary to correct violations of the code. In other words, a code violation or the expense of correcting one cannot constitute a practical difficulty.

[A] 105.2 Alternative materials, methods and equipment. The provisions of this code are not intended to prevent the installation of any material or to prohibit any method of construction not specifically prescribed by this code, provided that any such alternative has been *approved.* An alternative material or method of construction shall be *approved* where the code official finds that the proposed alternative material, method or equipment complies with the intent of the provisions of this code and is not less than the equivalent of that prescribed in this code. Where the alternative material, design or method of construction is not *approved*, the code official shall respond in writing, stating the reasons why the alternative was not *approved*.

❖ The code is not intended to inhibit innovative ideas or technological advances. A comprehensive regulatory document such as a plumbing code cannot envision and then address all future innovations in the industry. As a result, a performance code must be applicable to and provide a basis for the approval of an increasing number of newly developed, innovative materials, systems and methods for which no code text or referenced standards yet exist. The fact that a material, product or method of construction is not addressed in the code is not an indication that the material, product or method is prohibited. The code official is expected to apply sound technical judgment in accepting materials, systems or methods that, although not anticipated by the drafters of the current code text, can be demonstrated to offer equivalent performance. By virtue of its text, the code regulates new and innovative construction practices while addressing the relative safety of building occupants. The code official is responsible for determining whether a requested alternative provides an equivalent level of protection of the public health, safety and welfare as required by the code. In order to ensure effective communication and due process of law, if an alternative is not approved, the code official must state, in writing, the reasons for the disapproval.

The most common application of an alternative approval occurs with the proposed use of new mate-

INTERNATIONAL CODE COUNCIL®
Copyright © 2015 ICC. ALL RIGHTS RESERVED. Accessed by David Dammon on Jun 21, 2017 12:30:52 PM pursuant to License Agreement with ICC. No further reproduction or distribution authorized. ANY UNAUTHORIZED REPRODUCTION OR DISTRIBUTION IS A VIOLATION OF THE FEDERAL COPYRIGHT ACT AND THE LICENSE AGREEMENT, AND SUBJECT TO CIVIL AND CRIMINAL PENALTIES THEREUNDER.

rial. For example, if a new piping material is produced, the manufacturer may gain approval for use by submitting adequate technical data indicating it is equivalent in quality, strength, effectiveness, fire resistance, durability and safety to the piping material listed as acceptable in the code. At the same time, the manufacturer may submit a proposed code change to recognize the new piping material. If the code official rejects the request for an alternative approval, the applicant may appeal the decision, as regulated by Section 109.

[A] 105.2.1 Research reports. Supporting data, where necessary to assist in the approval of materials or assemblies not specifically provided for in this code, shall consist of valid research reports from *approved* sources.

❖ When an alternative material or method is proposed for construction, it is incumbent upon the code official to determine whether this alternative is, in fact, an equivalent to the methods prescribed by the code. Reports providing evidence of this equivalency are required to be supplied by an approved source, meaning a source that the code official finds to be reliable and accurate. The ICC Evaluation Service is one example of an agency that provides research reports for alternative materials and methods.

[A] 105.3 Required testing. Where there is insufficient evidence of compliance with the provisions of this code, or evidence that a material or method does not conform to the requirements of this code, or in order to substantiate claims for alternate materials or methods, the code official shall have the authority to require tests as evidence of compliance to be made at no expense to the jurisdiction.

❖ To provide the basis on which the code official can make a decision regarding an alternative material or type of equipment, sufficient technical data, test reports and documentation must be provided for evaluation. If evidence satisfactory to the code official proves that the alternative equipment, material or construction method is equivalent to that required by the code, the code official is obligated to approve it for use. Any such approval cannot have the effect of waiving any requirements of the code. The burden of proof of equivalence lies with the applicant who proposes the use of alternative equipment, materials or methods.

[A] 105.3.1 Test methods. Test methods shall be as specified in this code or by other recognized test standards. In the absence of recognized and accepted test methods, the code official shall approve the testing procedures.

❖ The code official must require the submission of any appropriate information and data to assist in the determination of equivalency before a permit can be issued. The type of information required includes test data in accordance with the referenced standards, evidence of compliance with the referenced standard specifications, and design calculations. An evaluation report issued by an authoritative agency, such as ICC Evaluation Service is particularly useful in providing the code official with the technical basis for evaluation and approval of new and innovative plumbing materials and components. The use of authoritative research reports can greatly assist the code official by reducing the time-consuming engineering analysis necessary to review materials and products. Failure to adequately substantiate a request for the use of an alternative is a valid reason for the code official to deny a request.

[A] 105.3.2 Testing agency. Tests shall be performed by an *approved agency*.

❖ The testing agency must be approved by the code official. The testing agency should have technical expertise, test equipment and quality assurance to properly conduct and report the necessary testing.

[A] 105.3.3 Test reports. Reports of tests shall be retained by the code official for the period required for retention of public records.

❖ Test reports substantiating the modification must be retained in accordance with public record laws. The attorney of the jurisdiction could be asked to verify the specific time period in applicable laws of the jurisdiction.

[A] 105.4 Approved materials and equipment. Materials, equipment and devices *approved* by the code official shall be constructed and installed in accordance with such approval.

❖ The code is a compilation of criteria with which materials, equipment, devices and systems must comply to be suitable for a particular application. The code official has a duty to evaluate such materials, equipment, devices and systems for code compliance and when compliance is determined, approve the same for use. The materials, equipment, devices and systems must be constructed and installed in compliance with, and all conditions and limitations considered as a basis for, that approval. For example, the manufacturer's instructions and recommendations are to be followed if the approval of the material was based, even in part, on those instructions and recommendations. The approval authority given to the code official is a significant responsibility and is a key to code compliance. The approval process is first technical and then administrative and must be approached as such. For example, if data to determine code compliance is required, such data should be in the form of test reports or engineering analysis and not simply taken from a sales brochure.

[A] 105.4.1 Material and equipment reuse. Materials, equipment and devices shall not be reused unless such elements have been reconditioned, tested, placed in good and proper working condition and *approved*.

❖ The code criteria for materials and equipment have changed over the years. Evaluation of testing and materials technology has permitted the development of new criteria, which the old materials may not satisfy. As a result, used materials must be evaluated in the same manner as new materials. Used (previously installed) equipment must be equivalent to that required by the code if it is to be used in a new installation.

INTERNATIONAL CODE COUNCIL®
Copyright © 2015 ICC. ALL RIGHTS RESERVED. Accessed by David Dammon on Jun 21, 2017 12:30:52 PM pursuant to License Agreement with ICC. No further reproduction or distribution authorized. ANY UNAUTHORIZED REPRODUCTION OR DISTRIBUTION IS A VIOLATION OF THE FEDERAL COPYRIGHT ACT AND THE LICENSE AGREEMENT, AND SUBJECT TO CIVIL AND CRIMINAL PENALTIES THEREUNDER.

SECTION 106
PERMITS

[A] 106.1 When required. Any owner, owner's authorized agent or contractor who desires to construct, enlarge, alter, repair, move, demolish or change the *occupancy* of a building or structure, or to erect, install, enlarge, alter, repair, remove, convert or replace any plumbing system, the installation of which is regulated by this code, or to cause any such work to be performed, shall first make application to the code official and obtain the required permit for the work.

❖ This section contains the administrative rules governing the issuance, suspension, revocation or modification of plumbing permits. It also establishes how and by whom the application for a plumbing permit is to be made, how it is to be processed and what information it must contain or have attached to it. In general, a permit is required for all activities that are regulated by the code, and these activities cannot begin until the permit is issued.

A plumbing permit is required for the installation, replacement, alteration or modification of all plumbing systems and components that are in the scope of applicability of the code. Replacement of an existing fixture, piece of equipment or related piping is treated no differently than a new installation in new building construction. The purpose of a permit is to cause the work to be inspected to determine compliance with the intent of the code.

[A] 106.1.1 Annual permit. Instead of an individual construction permit for each alteration to an already *approved* system or equipment or appliance installation, the code official is authorized to issue an annual permit upon application therefor to any person, firm or corporation regularly employing one or more qualified tradespersons in the building, structure or on the premises owned or operated by the applicant for the permit.

❖ Many large facilities need plumbing alteration work performed often and on short notice. (Note that there is not a definition in the code for what constitutes an "alteration.") The obtaining of permits could occur nearly every day and might take more time than performing the work. If a qualified individual will be performing work on an already approved plumbing system, the code official can issue an annual permit to cover all the alteration work that occurs. This is sometimes referred to as a "blanket" permit. The person in charge of getting the work accomplished needs to be a qualified tradesperson. The code is not specific as to what is meant by qualified. Often this is someone who has worked in the plumbing trades for several years and has attained a level of understanding that is commensurate of the knowledge possessed by a journeyman plumbing tradesperson. However, the code official will have to decide the level of qualifications needed before issuing an annual permit.

Note that the person in charge of performing the work needs to be someone who is regularly employed by the person, firm or organization that owns or operates the facility. The term "employed" usually means that the person is on the payroll of the facility's owner (or operator) and is not a contractor. The intent is that the annual permit not be used to cover the work performed at the facility by outside contractors. This employer/employee arrangement provides some assurance that the employee (the tradesperson) will "do the right thing" when performing the work in order to maintain future employment. This also makes the owner or operator of the facility directly responsible for the work performed. Where the work is performed by contractors, incorrect work is sometimes more difficult to get corrected as the owner/operator originally paid for correct work and might be reluctant to "pay again" to resolve violations found months later. Thus, contractors would be required to obtain a permit for each "job" except for the exempt work indicated in Section 106.2. The term "regularly" is somewhat ambiguous but generally, a facility's owner or operator will usually employ at least one tradesperson on a full-time basis because of the frequency of (unknown) events that occur in the facility.

[A] 106.1.2 Annual permit records. The person to whom an annual permit is issued shall keep a detailed record of alterations made under such annual permit. The code official shall have access to such records at all times or such records shall be filed with the code official as designated.

❖ The issuance of an annual permit makes the owner or operator responsible for detailed logging of all the work performed during that year. Ideally, when the code official has slack time periods in performing regular inspections, he or she can call on facilities with annual permits and inspect some of the work performed since the last visit. Where the code official cannot make periodic visits to the facility, he or she should periodically request a copy of the records to identify items that fall outside the scope of "alterations" (as defined by the code official) such that an inspection can be scheduled.

[A] 106.2 Exempt work. The following work shall be exempt from the requirement for a permit:

1. The stopping of leaks in drains, water, soil, waste or vent pipe provided, however, that if any concealed trap, drainpipe, water, soil, waste or vent pipe becomes defective and it becomes necessary to remove and replace the same with new material, such work shall be considered as new work and a permit shall be obtained and inspection made as provided in this code.
2. The clearing of stoppages or the repairing of leaks in pipes, valves or fixtures, and the removal and reinstallation of water closets, provided such repairs do not involve or require the replacement or rearrangement of valves, pipes or fixtures.

Exemption from the permit requirements of this code shall not be deemed to grant authorization for any work to be done in violation of the provisions of this code or any other laws or ordinances of this jurisdiction.

❖ Repair work, maintenance procedures and similar work are exempt from the permit requirement, pro-

INTERNATIONAL CODE COUNCIL®
Copyright © 2015 ICC. ALL RIGHTS RESERVED. Accessed by David Dammon on Jun 21, 2017 12:30:52 PM pursuant to License Agreement with ICC. No further reproduction or distribution authorized. ANY UNAUTHORIZED REPRODUCTION OR DISTRIBUTION IS A VIOLATION OF THE FEDERAL COPYRIGHT ACT AND THE LICENSE AGREEMENT, AND SUBJECT TO CIVIL AND CRIMINAL PENALTIES THEREUNDER.

vided that such work does not involve the replacement of any system components other than minor parts.

Literally, the only plumbing activities that are exempt from the requirement for a permit are drain cleaning and rodding and the repair of faucets, fill valves, flushometers and similar fixture trim and fittings. Any plumbing work that results in the alteration or disassembly of existing drain, waste, vent and water distribution piping would require a permit. Additionally, any plumbing work that involves the alteration of a plumbing fixture would require a permit.

[A] 106.3 Application for permit. Each application for a permit, with the required fee, shall be filed with the code official on a form furnished for that purpose and shall contain a general description of the proposed work and its location. The application shall be signed by the owner or owner's authorized agent. The permit application shall indicate the proposed *occupancy* of all parts of the building and of that portion of the site or lot, if any, not covered by the building or structure and shall contain such other information required by the code official.

❖ This section limits persons who may apply for a permit to the building owner or an authorized agent. An owner's authorized agent could be anyone who is given written permission to act in the owner's interest for the purpose of obtaining a permit, such as an architect, an engineer, a contractor, a tenant or other. Permit forms generally have sufficient space to write a very brief description of the work to be accomplished, which is acceptable for small jobs. For larger projects, the description will be augmented by construction documents.

[A] 106.3.1 Construction documents. Construction documents, engineering calculations, diagrams and other such data shall be submitted in two or more sets with each application for a permit. The code official shall require construction documents, computations and specifications to be prepared and designed by a registered design professional where required by state law. Construction documents shall be drawn to scale and shall be of sufficient clarity to indicate the location, nature and extent of the work proposed and show in detail that the work conforms to the provisions of this code. Construction documents for buildings more than two stories in height shall indicate where penetrations will be made for pipes, fittings and components and shall indicate the materials and methods for maintaining required structural safety, fire-resistance rating and fireblocking.

Exception: The code official shall have the authority to waive the submission of construction documents, calculations or other data if the nature of the work applied for is such that reviewing of construction documents is not necessary to determine compliance with this code.

❖ A detailed description of the work for which application is made must be submitted. When the work is of a "minor nature," either in scope or needed description, the code official may use judgement in determining the need for a detailed description of the work. An example of minor work that may not involve a detailed description is the replacement of an existing fixture in a plumbing system or the replacement or repair of a defective portion of a piping system.

These provisions are intended to reflect the minimum scope of information needed to determine code compliance. A statement on the construction documents such as, "All plumbing work must comply with the 2015 IPC," is not an acceptable substitute for showing the required information.

This section also requires the code official to determine compliance with any state professional registration laws as they apply to the preparation of construction documents.

[A] 106.3.2 Preliminary inspection. Before a permit is issued, the code official shall be authorized to inspect and evaluate the systems, equipment, buildings, devices, premises and spaces or areas to be used.

❖ Some projects might require a preliminary inspection by the code official prior to a permit being issued. This is especially useful for remodel and addition projects where the conditions of the existing building plumbing systems are unknown or are of questionable condition. This section authorizes the code official to make such inspections.

[A] 106.3.3 Time limitation of application. An application for a permit for any proposed work shall be deemed to have been abandoned 180 days after the date of filing, unless such application has been pursued in good faith or a permit has been issued; except that the code official shall have the authority to grant one or more extensions of time for additional periods not exceeding 180 days each. The extension shall be requested in writing and justifiable cause demonstrated.

❖ Once an application for a permit has been submitted for proposed work, a time limit of 180 days is established for issuance of the permit. This prevents the code official from having to hold onto incomplete or delayed applications for an indefinite amount of time. The code official can grant extensions for this time period if provided with a written request with justifiable reasons for the extension request.

[A] 106.4 By whom application is made. Application for a permit shall be made by the person or agent to install all or part of any plumbing system. The applicant shall meet all qualifications established by statute, or by rules promulgated by this code, or by ordinance or by resolution. The full name and address of the applicant shall be stated in the application.

❖ This section specifies that the permit applicant is to meet all of the qualifications that may be established by the governmental enforcing agency. For example, some governmental enforcing agencies may require the permit applicant to be a registered design professional or licensee.

[A] 106.5 Permit issuance. The application, construction documents and other data filed by an applicant for permit shall be reviewed by the code official. If the code official finds that the proposed work conforms to the requirements of

INTERNATIONAL CODE COUNCIL®
Copyright © 2015 ICC. ALL RIGHTS RESERVED. Accessed by David Dammon on Jun 21, 2017 12:30:52 PM pursuant to License Agreement with ICC. No further reproduction or distribution authorized. ANY UNAUTHORIZED REPRODUCTION OR DISTRIBUTION IS A VIOLATION OF THE FEDERAL COPYRIGHT ACT AND THE LICENSE AGREEMENT, AND SUBJECT TO CIVIL AND CRIMINAL PENALTIES THEREUNDER.

this code and all laws and ordinances applicable thereto, and that the fees specified in Section 106.6 have been paid, a permit shall be issued to the applicant.

❖ This section requires the code official to review all submittals for a permit for compliance with the code and to verify that the project will be carried out in accordance with any other applicable laws. This may involve interagency communication and cooperation so that all laws are being obeyed. Once the code official verifies this, a permit may be issued upon payment of the required fees.

[A] 106.5.1 Approved construction documents. When the code official issues the permit where construction documents are required, the construction documents shall be endorsed in writing and stamped "APPROVED." Such *approved* construction documents shall not be changed, modified or altered without authorization from the code official. Work shall be done in accordance with the *approved* construction documents.

The code official shall have the authority to issue a permit for the construction of a part of a plumbing system before the entire construction documents for the whole system have been submitted or *approved*, provided adequate information and detailed statements have been filed complying with all pertinent requirements of this code. The holders of such permit shall proceed at their own risk without assurance that the permit for the entire plumbing system will be granted.

❖ Construction documents that reflect compliance with code requirements form an integral part of the permit process. Successful execution of the work depends on these documents. This section requires the code official to stamp the complying construction documents as being "approved." Once approved, no further revisions to the documents may be made without the express authorization of the code official in order to maintain code compliance.

In the interest of saving time and coordinating construction phases, it is common practice for contractors to seek permits solely applicable to the installation of site work, such as water services and sewers. This practice allows the project to proceed before the final construction documents are completed, thus minimizing delays in the construction process. This also allows the builder to perform site work while the weather permits.

The holder of a partial permit must realize that a permit for the remainder of the plumbing system or structure may not be granted for various reasons. Issuance of a partial permit in no way guarantees issuance of a permit for the entire scope of the project.

[A] 106.5.2 Validity. The issuance of a permit or approval of construction documents shall not be construed to be a permit for, or an approval of, any violation of any of the provisions of this code or any other ordinance of the jurisdiction. A permit presuming to give authority to violate or cancel the provisions of this code shall not be valid.

The issuance of a permit based upon construction documents and other data shall not prevent the code official from thereafter requiring the correction of errors in said construction documents and other data or from preventing building operations being carried on thereunder where in violation of this code or of other ordinances of this jurisdiction.

❖ An important code section, this section states the fundamental premise that the permit is only "a license to proceed with the work." It is not a license to "violate, cancel or set aside any provisions of the code." This is important because it means that, despite any errors in the approval process, the permit applicant is responsible for code compliance.

[A] 106.5.3 Expiration. Every permit issued by the code official under the provisions of this code shall expire by limitation and become null and void if the work authorized by such permit is not commenced within 180 days from the date of such permit, or if the work authorized by such permit is suspended or abandoned at any time after the work is commenced for a period of 180 days. Before such work can be recommenced, a new permit shall be first obtained and the fee therefor shall be one-half the amount required for a new permit for such work, provided changes have not been made and will not be made in the original construction documents for such work, and provided further that such suspension or abandonment has not exceeded 1 year.

❖ The permit becomes invalid under two distinct situations, both based on a six-month period. The first situation is when no work has started six months from issuance of the permit. The second situation is when there is no continuation of authorized work for six months. The person who was issued the permit should be notified in writing that it is invalid and what steps must be taken to restart the work.

This section also provides the administrative authority with a means of offsetting the costs associated with expired permits by charging a nominal fee for permit reissuance. If, however, the nature or scope of the work to be resumed is different from that covered by the original permit, the permit process essentially starts from "scratch" and full fees are charged. The same procedure would also apply if the work has not commenced within one year of the date of permit issuance or if work has to be suspended for a year or more.

[A] 106.5.4 Extensions. Any permittee holding an unexpired permit shall have the right to apply for an extension of the time within which the permittee will commence work under that permit when work is unable to be commenced within the time required by this section for good and satisfactory reasons. The code official shall extend the time for action by the permittee for a period not exceeding 180 days if there is reasonable cause. A permit shall not be extended more than once. The fee for an extension shall be one-half the amount required for a new permit for such work.

❖ Although it is typical for a project to begin immediately following issuance of a permit, there are occasions when an unforeseen delay may occur. This section intends to afford the permit holder the opportunity to apply for and receive a single, 180-day extension within which to begin a project under a still-valid permit

INTERNATIONAL CODE COUNCIL®
Copyright © 2015 ICC. ALL RIGHTS RESERVED. Accessed by David Dammon on Jun 21, 2017 12:30:52 PM pursuant to License Agreement with ICC. No further reproduction or distribution authorized. ANY UNAUTHORIZED REPRODUCTION OR DISTRIBUTION IS A VIOLATION OF THE FEDERAL COPYRIGHT ACT AND THE LICENSE AGREEMENT, AND SUBJECT TO CIVIL AND CRIMINAL PENALTIES THEREUNDER.

(i.e., less than 180 days old). The applicant must, however, provide the code official with an adequate explanation for the delay in starting a project, which could include such things as the need to obtain approvals or permits from other agencies having jurisdiction. This section requires the code official to determine what constitutes "good and satisfactory" reasons for any delay and further allows the jurisdiction to offset its administrative costs for extending the permit by charging one-half the fee for a new permit for the extension.

[A] 106.5.5 Suspension or revocation of permit. The code official shall have the authority to suspend or revoke a permit issued under the provisions of this code wherever the permit is issued in error or on the basis of incorrect, inaccurate or incomplete information, or in violation of any ordinance or regulation or any of the provisions of this code.

❖ A permit is in reality a license to proceed with the work. The code official, however, must revoke all permits shown to be based, all or in part, on any false statement or misrepresentation of fact. An applicant may subsequently reapply for a permit with the appropriate corrections or modifications made to the application and construction documents.

[A] 106.5.6 Retention of construction documents. One set of *approved* construction documents shall be retained by the code official for a period of not less than 180 days from date of completion of the permitted work, or as required by state or local laws.

One set of *approved* construction documents shall be returned to the applicant, and said set shall be kept on the site of the building or work at all times during which the work authorized thereby is in progress.

❖ Once the code official has stamped or endorsed as approved the construction documents on which the permit is based (see commentary, Section 106.3.1), one set of approved construction documents must be kept on the construction site to serve as the basis for all subsequent inspections. To avoid confusion, the construction documents on the site must be precisely the documents that were approved and stamped.This is because inspections are based on the approved documents. Additionally, the contractor cannot determine compliance with the approved construction documents unless those documents are readily available. Unless the approved construction documents are available, the inspection should be postponed and work on the project halted.

[A] 106.5.7 Previous approvals. This code shall not require changes in the construction documents, construction or designated *occupancy* of a structure for which a lawful permit has been heretofore issued or otherwise lawfully authorized, and the construction of which has been pursued in good faith within 180 days after the effective date of this code and has not been abandoned.

❖ This section provides the code official with a useful tool to protect the continuity of permits issued under previous codes or code editions, as long as such permits are being actively executed subsequent to the effective date of the ordinance adopting the newer code.

[A] 106.5.8 Posting of permit. The permit or a copy shall be kept on the site of the work until the completion of the project.

❖ This section requires the permit (or a copy of the permit) to be on the work site until the project is completed. Having the permit at the jobsite provides project information and evidence to anyone needing to know if the project has been duly authorized.

[A] 106.6 Fees. A permit shall not be issued until the fees prescribed in Section 106.6.2 have been paid, and an amendment to a permit shall not be released until the additional fee, if any, due to an increase of the plumbing systems, has been paid.

❖ All fees are to be paid prior to permit issuance. This requirement establishes that the permit applicant intends to proceed with the work, as well as facilitates payment.

[A] 106.6.1 Work commencing before permit issuance. Any person who commences any work on a plumbing system before obtaining the necessary permits shall be subject to 100 percent of the usual permit fee in addition to the required permit fees.

❖ This section is intended to serve as a deterrent to proceeding with work on a plumbing system without a permit (except as provided in Section 106.2). As a punitive measure, it doubles the cost of the permit fee. This section does not, however, intend to penalize a contractor called upon to do emergency work after hours, provided that he or she makes prompt notification to the code official the next business day and obtains the requisite permit for the work done and has the required inspections performed.

[A] 106.6.2 Fee schedule. The fees for all plumbing work shall be as indicated in the following schedule:

[JURISDICTION TO INSERT APPROPRIATE SCHEDULE]

❖ A published fee schedule must be established for plans examination, permits and inspections. Ideally, the department should generate revenues that cover operating costs and expenses. The permit fee schedule is an integral part of this process.

[A] 106.6.3 Fee refunds. The code official shall authorize the refunding of fees as follows:

1. The full amount of any fee paid hereunder that was erroneously paid or collected.
2. Not more than **[SPECIFY PERCENTAGE]** percent of the permit fee paid where work has been done under a permit issued in accordance with this code.

INTERNATIONAL CODE COUNCIL®
Copyright © 2015 ICC. ALL RIGHTS RESERVED. Accessed by David Dammon on Jun 21, 2017 12:30:52 PM pursuant to License Agreement with ICC. No further reproduction or distribution authorized. ANY UNAUTHORIZED REPRODUCTION OR DISTRIBUTION IS A VIOLATION OF THE FEDERAL COPYRIGHT ACT AND THE LICENSE AGREEMENT, AND SUBJECT TO CIVIL AND CRIMINAL PENALTIES THEREUNDER.

3. Not more than **[SPECIFY PERCENTAGE]** percent of the plan review fee paid where an application for a permit for which a plan review fee has been paid is withdrawn or canceled before any plan review effort has been expended.

The code official shall not authorize the refunding of any fee paid except upon written application filed by the original permittee not later than 180 days after the date of fee payment.

❖ This section allows for a partial refund of fees resulting from the revocation, abandonment or discontinuance of a plumbing project for which a permit has been issued and fees have been collected. The incomplete work for which the excess fees are to be refunded refers to the work that would have been required by the department had the permit not been terminated. The refund of fees should be related to the cost of enforcement services not provided because of termination of the project.

SECTION 107
INSPECTIONS AND TESTING

[A] 107.1 General. The code official is authorized to conduct such inspections as are deemed necessary to determine compliance with the provisions of this code. Construction or work for which a permit is required shall be subject to inspection by the code official, and such construction or work shall remain accessible and exposed for inspection purposes until *approved*. Approval as a result of an inspection shall not be construed to be an approval of a violation of the provisions of this code or of other ordinances of the jurisdiction. Inspections presuming to give authority to violate or cancel the provisions of this code or of other ordinances of the jurisdiction shall not be valid. It shall be the duty of the permit applicant to cause the work to remain accessible and exposed for inspection purposes. Neither the code official nor the jurisdiction shall be liable for expense entailed in the removal or replacement of any material required to allow inspection.

❖ The inspection function is one of the more important aspects of building department operations. This section authorizes the code official to inspect the work for which a permit has been issued and requires that the work to be inspected remain accessible to the code official until inspected and approved. Any expense incurred in removing or replacing material that conceals an item to be inspected is not the responsibility of the code official or the jurisdiction. As with the issuance of permits (see Section 106.5.2), an approval as a result of an inspection is not a license to violate the code. Any work approved that might contain a violation of the code does not relieve the applicant from complying with the code.

[A] 107.2 Required inspections and testing. The code official, upon notification from the permit holder or the permit holder's agent, shall make the following inspections and such other inspections as necessary, and shall either release that portion of the construction or shall notify the permit holder or an agent of any violations that must be corrected. The holder of the permit shall be responsible for the scheduling of such inspections.

1. Underground inspection shall be made after trenches or ditches are excavated and bedded, piping installed, and before any backfill is put in place.
2. Rough-in inspection shall be made after the roof, framing, fireblocking, firestopping, draftstopping and bracing is in place and all sanitary, storm and water distribution piping is roughed-in, and prior to the installation of wall or ceiling membranes.
3. Final inspection shall be made after the building is complete, all plumbing fixtures are in place and properly connected, and the structure is ready for occupancy.

❖ This section requires that all portions of the plumbing system be inspected before and after fixtures are installed. The code official has the authority to require noncomplying plumbing to be brought into compliance and reinspected.

Inspections are necessary to determine that an installation conforms to all code requirements. Because the majority of a plumbing system is hidden within the building enclosure or is underground, periodic inspections are necessary before the systems are concealed. The code official is required to determine that plumbing systems and equipment are installed in accordance with the applicable code requirements and any special arrangements that fall outside of the code requirements, but have been approved during the jurisdiction's plan review (see Section 106.3). All inspections that are necessary to provide such verifications must be conducted. The code official is not required to inspect the work against the construction drawings (except the drawing for any special arrangements that were approved during plan review). The inspecting code official is not a quality control inspector insofar as making sure that the plumbing system is installed exactly like the construction drawings that the jurisdiction approved during plan review. As long as the installed work complies with the code, the work should be acceptable to the inspecting code official. Note that some jurisdictions could have different policies regarding site inspections. Contractors should always check with the local code official to determine how inspections are handled for projects.

Generally, the administrative rules of a department indicate the required interim inspections. Construction projects that occur in steps or phases may necessitate multiple inspections; therefore, an exact number of required inspections cannot be specified. Where violations are noted and corrections are required, reinspections may be necessary. As time permits, frequent inspections of some job sites, especially where the work is complex, can be beneficial in detecting code violations or other potential problems before they develop or become more difficult to resolve.

It is the responsibility of the contractor, the builder, the owner or other authorized party to arrange for the

INTERNATIONAL CODE COUNCIL®
Copyright © 2015 ICC. ALL RIGHTS RESERVED. Accessed by David Dammon on Jun 21, 2017 12:30:52 PM pursuant to License Agreement with ICC. No further reproduction or distribution authorized. ANY UNAUTHORIZED REPRODUCTION OR DISTRIBUTION IS A VIOLATION OF THE FEDERAL COPYRIGHT ACT AND THE LICENSE AGREEMENT, AND SUBJECT TO CIVIL AND CRIMINAL PENALTIES THEREUNDER.

required inspections and to coordinate them to prevent work from being concealed before it is inspected.

1. Inspection of underground plumbing is especially important because once it is covered, it is the most challenging part of a plumbing system in which to detect a leak. If repairs are necessary, underground repairs are proportionately more expensive because of the need for heavy equipment and the more labor-intensive nature of working below grade level (see Section 306 for trenching, excavation and backfill requirements).
2. A rough-in inspection is a visual observation of all parts of the plumbing system that will eventually be concealed in the building structure. Rough-in inspections also include verification that the applicable test pressures are applied to the system and that leaks do not exist. The inspection must be made before any of the system is covered by building finish materials or hidden by future work.

   A rough-in inspection may be completed in one visit or as a series of inspections. This is administratively determined by the local inspections department and is typically dependent on the size of the job.
3. A final inspection may be done as a series of inspections or in one visit, similar to a rough-in inspection. A final inspection is required prior to the approval of plumbing work and installations. For the construction of a new building, final approval is required prior to the issuance of the certificate of occupancy as specified in the IBC. To verify that all previously issued correction orders have been complied with and to determine whether subsequent violations exist, a final inspection must be made. All violations observed during the final inspection must be noted and the permit holder must be advised.

   The final inspection follows the completion of the work or installation. Typically, the final inspection is an inspection of all that was installed after the rough-in inspection and not concealed in the building construction. Subsequent reinspections are necessary if the final inspection generates a notice of violation.

[A] 107.2.1 Other inspections. In addition to the inspections specified above, the code official shall be authorized to make or require other inspections of any construction work to ascertain compliance with the provisions of this code and other laws that are enforced.

❖ Any item regulated by the code is subject to inspection by the code official to determine compliance with the applicable code provision, and no list can include all types of work in a given building. Also, other inspections before, during or after the rough-in could be necessary. This section gives the code official the authority to inspect any regulated work.

[A] 107.2.2 Inspection requests. It shall be the duty of the holder of the permit or their duly authorized agent to notify the code official when work is ready for inspection. It shall be the duty of the permit holder to provide *access* to and means for inspections of such work that are required by this code.

❖ This section clarifies that it is the responsibility of the permit holder to arrange for the required inspections when the completed work is ready. It also establishes his or her responsibility for keeping the work open for inspection and providing all means needed to accomplish the inspections.

[A] 107.2.3 Approval required. Work shall not be done beyond the point indicated in each successive inspection without first obtaining the approval of the code official. The code official, upon notification, shall make the requested inspections and shall either indicate the portion of the construction that is satisfactory as completed, or notify the permit holder or his or her agent wherein the same fails to comply with this code. Any portions that do not comply shall be corrected and such portion shall not be covered or concealed until authorized by the code official.

❖ This section establishes that work cannot progress beyond the point of a required inspection without the code official's approval. Upon making the inspection, the code official must either approve the completed work or notify the permit holder or other responsible party of that which does not comply with the code. Approvals and notices of noncompliance must be in writing, as required by Section 104.3, to avoid any misunderstanding as to what is required. Any work not approved cannot be concealed until it has been corrected and approved by the code official.

[A] 107.2.4 Approved agencies. The code official is authorized to accept reports of *approved* inspection agencies, provided that such agencies satisfy the requirements as to qualifications and reliability.

❖ The determination as to whether to accept an agency test report rests with the code official and the reporting agency must be acceptable to the code official.

[A] 107.2.5 Evaluation and follow-up inspection services. Prior to the approval of a closed, prefabricated plumbing system and the issuance of a plumbing permit, the code official shall require the submittal of an evaluation report on each prefabricated plumbing system indicating the complete details of the plumbing system, including a description of the system and its components, the basis upon which the plumbing system is being evaluated, test results and similar information, and other data as necessary for the code official to determine conformance to this code.

❖ As an alternative to a physical inspection in the plant or location where prefabricated components are fabricated (such as modular homes, prefabricated structures, etc.), the code official has the option of accepting an evaluation report from an approved agency detailing such inspections. These evaluation reports can serve as the basis for code compliance.

INTERNATIONAL CODE COUNCIL®
Copyright © 2015 ICC. ALL RIGHTS RESERVED. Accessed by David Dammon on Jun 21, 2017 12:30:52 PM pursuant to License Agreement with ICC. No further reproduction or distribution authorized. ANY UNAUTHORIZED REPRODUCTION OR DISTRIBUTION IS A VIOLATION OF THE FEDERAL COPYRIGHT ACT AND THE LICENSE AGREEMENT, AND SUBJECT TO CIVIL AND CRIMINAL PENALTIES THEREUNDER.

[A] 107.2.5.1 Evaluation service. The code official shall designate the evaluation service of an *approved agency* as the evaluation agency, and review such agency's evaluation report for adequacy and conformance to this code.

❖ The code official is required to review all submitted reports for conformity to the applicable code requirements. If, in the judgment of the code official, the submitted reports are acceptable, he or she should document the basis for the approval.

[A] 107.2.5.2 Follow-up inspection. Except where *ready access* is provided to all plumbing systems, service equipment and accessories for complete inspection at the site without disassembly or dismantling, the code official shall conduct the frequency of in-plant inspections necessary to ensure conformance to the *approved* evaluation report or shall designate an independent, *approved* inspection agency to conduct such inspections. The inspection agency shall furnish the code official with the follow-up inspection manual and a report of inspections upon request, and the plumbing system shall have an identifying label permanently affixed to the system indicating that factory inspections have been performed.

❖ The owner is required to provide special inspections of fabricated assemblies at the fabrication plant. The code official or an approved inspection agency must conduct periodic in-plant inspections to ensure conformance to the approved evaluation report described in Section 107.2.5.1. Such inspections would not be required where the plumbing systems can be inspected completely at the job site.

[A] 107.2.5.3 Test and inspection records. Required test and inspection records shall be available to the code official at all times during the fabrication of the plumbing system and the erection of the building, or such records as the code official designates shall be filed.

❖ All testing and inspection records related to a fabricated assembly must be filed with the code official so he or she can maintain a complete and legal record of the assembly and erection of the building.

[A] 107.3 Special inspections. Special inspections of *alternative engineered design* plumbing systems shall be conducted in accordance with Sections 107.3.1 and 107.3.2.

❖ This section establishes that the design professional has to periodically inspect the alternative engineered design, keep records of such inspections and submit a final report to the code official certifying that all work conforms to the construction documents. Because of the unusual nature and possible complexity of alternative engineered plumbing systems, it is necessary for the system designer to be involved in the inspection process.

[A] 107.3.1 Periodic inspection. The registered design professional or designated inspector shall periodically inspect and observe the *alternative engineered design* to determine that the installation is in accordance with the *approved* construction documents. Discrepancies shall be brought to the immediate attention of the plumbing contractor for correction. Records shall be kept of all inspections.

❖ The registered design professional must periodically inspect the engineered plumbing system during installation to determine that the system conforms to the approved construction documents. This is an important step because the design professional can identify any deviations from the approved plans in the early stages of the plumbing work. The design professional must then advise the plumbing contractor of any problems so that corrective measures can be taken before needless costs are incurred, and labor and materials are wasted.

The design professional must compile a complete legal record of the project, which must include all inspections made, discrepancies found and resolutions of discrepancies. It is the responsibility of the design professional to document and submit inspection records and written certification in accordance with Section 107.3.2.

[A] 107.3.2 Written report. The registered design professional shall submit a final report in writing to the code official upon completion of the installation, certifying that the *alternative engineered design* conforms to the *approved* construction documents. A notice of approval for the plumbing system shall not be issued until a written certification has been submitted.

❖ After all work is completed, the design professional is required to inspect the entire alternative engineered plumbing system. The details of that inspection, including verification of compliance with the approved construction documents, must be submitted in writing to the code official before final approval can be granted.

[A] 107.4 Testing. Plumbing work and systems shall be tested as required in Section 312 and in accordance with Sections 107.4.1 through 107.4.3. Tests shall be made by the permit holder and observed by the code official.

❖ Visual inspection is not all that is required in the determination of a plumbing system's compliance with the code. This section establishes where and how testing is to be performed to disclose leaks and defects.

[A] 107.4.1 New, altered, extended or repaired systems. New plumbing systems and parts of existing systems that have been altered, extended or repaired shall be tested as prescribed herein to disclose leaks and defects, except that testing is not required in the following cases:

1. In any case that does not include addition to, replacement, alteration or relocation of any water supply, drainage or vent piping.
2. In any case where plumbing equipment is set up temporarily for exhibition purposes.

❖ Every plumbing system must be tested before it is placed into service. Testing is necessary to make sure that the system is free from leaks or other defects. Testing is also required, to the extent practicable, for portions of existing systems that have been repaired, altered or extended.

INTERNATIONAL CODE COUNCIL®
Copyright © 2015 ICC. ALL RIGHTS RESERVED. Accessed by David Dammon on Jun 21, 2017 12:30:52 PM pursuant to License Agreement with ICC. No further reproduction or distribution authorized. ANY UNAUTHORIZED REPRODUCTION OR DISTRIBUTION IS A VIOLATION OF THE FEDERAL COPYRIGHT ACT AND THE LICENSE AGREEMENT, AND SUBJECT TO CIVIL AND CRIMINAL PENALTIES THEREUNDER.

[A] 107.4.2 Equipment, material and labor for tests. Equipment, material and labor required for testing a plumbing system or part thereof shall be furnished by the permit holder.

❖ The permit holder is responsible for performing tests, as well as for supplying all of the labor, equipment and apparatus necessary to conduct such tests. The code official observes but never performs the test.

[A] 107.4.3 Reinspection and testing. Where any work or installation does not pass any initial test or inspection, the necessary corrections shall be made to comply with this code. The work or installation shall then be resubmitted to the code official for inspection and testing.

❖ If a system or portion thereof does not pass the initial test or inspection, all violations must be corrected and the system must be reinspected.

To encourage code compliance and cover the expense of the code official's time, many jurisdictions charge fees for inspections that are required subsequent to the first reinspection.

[A] 107.5 Approval. After the prescribed tests and inspections indicate that the work complies in all respects with this code, a notice of approval shall be issued by the code official.

❖ After the code official has performed the required inspections and observed the required equipment and system tests (or has received written reports of the results of such tests), he or she must determine whether the installation or work is in compliance with all applicable sections of the code. The code official must issue a written notice of approval if it has been determined that the subject plumbing work or installation is in apparent compliance with the code. The notice of approval is given to the permit holder, and a copy of the notice is retained on file by the code official.

[A] 107.5.1 Revocation. The code official is authorized to, in writing, suspend or revoke a notice of approval issued under the provisions of this code wherever the notice is issued in error, or on the basis of incorrect information supplied, or where it is determined that the building or structure, premise or portion thereof is in violation of any ordinance or regulation or any of the provisions of this code.

❖ This section is needed to give the code official the authority to revoke a notice of approval for the reasons indicated in the code text. The code official can suspend the notice until all of the code violations are corrected.

[A] 107.6 Temporary connection. The code official shall have the authority to authorize the temporary connection of the building or system to the utility source for the purpose of testing plumbing systems or for use under a temporary certificate of occupancy.

❖ The typical procedure for a local jurisdiction is to withhold the issuance of the certificate of occupancy until approvals have been received from each code official responsible for inspection of the structure. The code official is permitted to issue a temporary authorization to make connections to the public utility system prior to the completion of all work. The certification is intended to acknowledge that, because of seasonal limitations, time constraints, the need for testing or partial operation of equipment, some building systems may be connected even though the building is not suitable for final occupancy. The intent of this section is that a request for temporary occupancy or the connection and use of plumbing equipment or systems should not be denied when the requesting permit holder has demonstrated to the code official's satisfaction that the public health, safety and welfare will not be endangered.

The code official should view the issuance of a "temporary authorization or certificate of occupancy" as substantial an act as the issuance of the final certificate. Indeed, the issuance of a temporary certificate of occupancy offers a greater potential for conflict because once the building or structure is occupied, it is very difficult to remove the occupants through legal means.

[A] 107.7 Connection of service utilities. A person shall not make connections from a utility, source of energy, fuel, power, water system or *sewer* system to any building or system that is regulated by this code for which a permit is required until authorized by the code official.

❖ This section establishes the authority of the code official to approve utility connections to a building, such as water, sewer, electricity, gas and steam, and to require their disconnection when such approval has not been granted. For the protection of building occupants, including workers, such systems must have had final inspection approvals, except as allowed by Section 110.3 for temporary connections.

SECTION 108
VIOLATIONS

[A] 108.1 Unlawful acts. It shall be unlawful for any person, firm or corporation to erect, construct, alter, repair, remove, demolish or utilize any plumbing system, or cause same to be done, in conflict with or in violation of any of the provisions of this code.

❖ This section describes the citing, recording and subsequent actions pursuant to observed code violations. Violations of the code are prohibited; this is the basis for all citations and correction notices.

[A] 108.2 Notice of violation. The code official shall serve a notice of violation or order to the person responsible for the erection, installation, alteration, extension, repair, removal or demolition of plumbing work in violation of the provisions of this code, or in violation of a detail statement or the *approved* construction documents thereunder, or in violation of a permit or certificate issued under the provisions of this code. Such order shall direct the discontinuance of the illegal action or condition and the abatement of the violation.

❖ The code official is required to notify the person responsible for the erection or use of a building found

INTERNATIONAL CODE COUNCIL®
Copyright © 2015 ICC. ALL RIGHTS RESERVED. Accessed by David Dammon on Jun 21, 2017 12:30:52 PM pursuant to License Agreement with ICC. No further reproduction or distribution authorized. ANY UNAUTHORIZED REPRODUCTION OR DISTRIBUTION IS A VIOLATION OF THE FEDERAL COPYRIGHT ACT AND THE LICENSE AGREEMENT, AND SUBJECT TO CIVIL AND CRIMINAL PENALTIES THEREUNDER.

to be in violation of the code. The section that is allegedly being violated must be cited so that the responsible party can respond to the notice.

[A] 108.3 Prosecution of violation. If the notice of violation is not complied with promptly, the code official shall request the legal counsel of the jurisdiction to institute the appropriate proceeding at law or in equity to restrain, correct or abate such violation, or to require the removal or termination of the unlawful occupancy of the structure in violation of the provisions of this code or of the order or direction made pursuant thereto.

❖ The code official must pursue, through the use of legal counsel of the jurisdiction, legal means to correct the violation. This is not optional.

Any extensions of time for voluntary correction of the violations must be for a reasonable, bona fide cause, or the code official may be subject to criticism for "arbitrary and capricious" actions. In general, it is better to have a standard time limitation for correction of violations. Departures from this standard must be for a clear and reasonable purpose, usually stated in writing by the violator.

[A] 108.4 Violation penalties. Any person who shall violate a provision of this code or shall fail to comply with any of the requirements thereof or who shall erect, install, alter or repair plumbing work in violation of the *approved* construction documents or directive of the code official, or of a permit or certificate issued under the provisions of this code, shall be guilty of a **[SPECIFY OFFENSE]**, punishable by a fine of not more than **[AMOUNT]** dollars or by imprisonment not exceeding **[NUMBER OF DAYS]**, or both such fine and imprisonment. Each day that a violation continues after due notice has been served shall be deemed a separate offense.

❖ A standard fine or other penalty as deemed appropriate by the jurisdiction is prescribed in this section. Additionally, this section identifies a principle that "each day that a violation continues shall be deemed a separate offense" for the purpose of applying the prescribed penalty in order to facilitate prompt resolution.

[A] 108.5 Stop work orders. Upon notice from the code official, work on any plumbing system that is being performed contrary to the provisions of this code or in a dangerous or unsafe manner shall immediately cease. Such notice shall be in writing and shall be given to the owner of the property, or to the owner's authorized agent, or to the person performing the work. The notice shall state the conditions under which work is authorized to resume. Where an emergency exists, the code official shall not be required to give a written notice prior to stopping the work. Any person who shall continue any work in or about the structure after having been served with a stop work order, except such work as that person is directed to perform to remove a violation or unsafe condition, shall be liable to a fine of not less than **[AMOUNT]** dollars or more than **[AMOUNT]** dollars.

❖ Upon receipt of a violation notice from the code official, the owner of the property, the owner's agent or the person doing the work must immediately cease all construction activities identified in the notice, except as expressly permitted to correct the violation. A stop work order can prevent a violation from becoming worse and more difficult or expensive to correct. However, it can result in inconvenience and monetary loss to the affected parties; therefore, justification must be evident and judgment must be exercised before such an order is issued.

A stop work order may be issued where work is proceeding without a permit. Hazardous conditions could develop where the code official is unaware of the nature of the work and a permit has not been issued. The issuance of a stop work order on a plumbing system often results from work done by the plumbing contractor that affects a nonplumbing component. For example, if a plumbing contractor cuts a structural element to install piping or fixtures, the structure may be weakened enough to cause a partial or complete structural failure. As determined by the adopting jurisdiction, a penalty may be assessed for failure to comply with this section, and it is to be inserted in the blanks provided.

[A] 108.6 Abatement of violation. The imposition of the penalties herein prescribed shall not preclude the legal officer of the jurisdiction from instituting appropriate action to prevent unlawful construction or to restrain, correct or abate a violation, or to prevent illegal occupancy of a building, structure or premises, or to stop an illegal act, conduct, business or utilization of the plumbing on or about any premises.

❖ Despite the assessment of a penalty in the form of a fine or imprisonment against a violator, the violation itself must still be corrected. Failure to make the necessary corrections will result in the violator being subject to additional penalties as described in the preceding section.

[A] 108.7 Unsafe plumbing. Any plumbing regulated by this code that is unsafe or that constitutes a fire or health hazard, insanitary condition, or is otherwise dangerous to human life is hereby declared unsafe. Any use of plumbing regulated by this code constituting a hazard to safety, health or public welfare by reason of inadequate maintenance, dilapidation, obsolescence, fire hazard, disaster, damage or abandonment is hereby declared an unsafe use. Any such unsafe equipment is hereby declared to be a public nuisance and shall be abated by repair, rehabilitation, demolition or removal.

❖ Unsafe conditions include those that constitute a health hazard, fire hazard, explosion hazard, shock hazard, asphyxiation hazard, physical injury hazard or are otherwise dangerous to human life and property.

In the course of performing duties, the code official may identify a hazardous condition. Such condition must be declared in violation of the code and, therefore, must be abated. For example, while inspecting a plumbing installation, the code official may notice a leaking soil pipe that is causing structural decay, a missing cleanout plug or a defective water-heater relief valve. Even though the defective plumbing may be

INTERNATIONAL CODE COUNCIL®
Copyright © 2015 ICC. ALL RIGHTS RESERVED. Accessed by David Dammon on Jun 21, 2017 12:30:52 PM pursuant to License Agreement with ICC. No further reproduction or distribution authorized. ANY UNAUTHORIZED REPRODUCTION OR DISTRIBUTION IS A VIOLATION OF THE FEDERAL COPYRIGHT ACT AND THE LICENSE AGREEMENT, AND SUBJECT TO CIVIL AND CRIMINAL PENALTIES THEREUNDER.

unrelated to the installation that the code official was called to inspect, he or she is obligated to address the hazard and have it corrected.

[A] 108.7.1 Authority to condemn equipment. Whenever the code official determines that any plumbing, or portion thereof, regulated by this code has become hazardous to life, health or property or has become insanitary, the code official shall order in writing that such plumbing either be removed or restored to a safe or sanitary condition. A time limit for compliance with such order shall be specified in the written notice. A person shall not use or maintain defective plumbing after receiving such notice.

Where such plumbing is to be disconnected, written notice as prescribed in Section 108.2 shall be given. In cases of immediate danger to life or property, such disconnection shall be made immediately without such notice.

❖ When a plumbing system or plumbing equipment is determined to be unsafe, the code official is required to notify the owner or agent of the building as the first step in correcting the difficulty. Such notice is to describe the repairs and improvements necessary to correct the deficiency or require removal or replacement of the unsafe equipment or system. All such notices must specify a time frame in which the corrective actions must occur. Additionally, such notice should require the immediate response of the owner or agent. If he or she is not available, public notice of such declaration should suffice for the purposes of complying with this section. The code official may also determine that disconnection of the system is necessary to correct an unsafe condition and must give written notice to that effect (see commentary, Section 108.2) unless immediate disconnection is essential for public health and safety reasons (see commentary, Section 108.7.2).

[A] 108.7.2 Authority to disconnect service utilities. The code official shall have the authority to authorize disconnection of utility service to the building, structure or system regulated by the technical codes in case of an emergency, where necessary, to eliminate an immediate danger to life or property. Where possible, the owner or the owner's authorized agent and occupant of the building, structure or service system shall be notified of the decision to disconnect utility service prior to taking such action. If not notified prior to disconnecting, the owner, the owner's authorized agent or occupant of the building, structure or service systems shall be notified in writing, as soon as practical thereafter.

❖ The code official should have the authority to order disconnection of any plumbing supplied to a building, structure or equipment regulated by the code when it is determined that the equipment or any portion thereof has become an immediate danger. Written notice of an order to disconnect service and the causes therefore, should be given to the owner and the occupant of the building, structure or premises. However, disconnection should be done without such notice in cases of immediate danger to life or property.

[A] 108.7.3 Connection after order to disconnect. A person shall not make connections from any energy, fuel, power supply or water distribution system or supply energy, fuel or water to any equipment regulated by this code that has been disconnected or ordered to be disconnected by the code official or the use of which has been ordered to be discontinued by the code official until the code official authorizes the reconnection and use of such equipment.

Where any plumbing is maintained in violation of this code, and in violation of any notice issued pursuant to the provisions of this section, the code official shall institute any appropriate action to prevent, restrain, correct or abate the violation.

❖ Once the reason for discontinuation of use or disconnection of the plumbing system no longer exists, only the code official can authorize resumption of use or reconnection of the system after it is demonstrated to his or her satisfaction that all repairs or other work are in compliance with applicable sections of the code. This section also requires him or her to take action to abate code violations (see commentary, Section 108.2).

SECTION 109
MEANS OF APPEAL

[A] 109.1 Application for appeal. Any person shall have the right to appeal a decision of the code official to the board of appeals. An application for appeal shall be based on a claim that the true intent of this code or the rules legally adopted thereunder have been incorrectly interpreted, the provisions of this code do not fully apply, or an equally good or better form of construction is proposed. The application shall be filed on a form obtained from the code official within 20 days after the notice was served.

❖ This section holds that any aggrieved party with a material interest in the decision of the code official may challenge such a decision before a board of appeals. This provides a forum, other than the court of jurisdiction, in which to review the code official's actions.

This section literally allows any person to appeal a decision of the code official. In practice, this section has been interpreted to permit appeals only by aggrieved parties with a material or definitive interest in the decision of the code official. An aggrieved party may not appeal a code requirement per se. The intent of the appeal process is not to waive or set aside a code requirement; rather, it is to provide a means of reviewing a code official's decision on an interpretation or application of the code or to review the equivalency of protection to the code requirements.

[A] 109.2 Membership of board. The board of appeals shall consist of five members appointed by the chief appointing authority as follows: one for 5 years, one for 4 years, one for 3 years, one for 2 years and one for 1 year. Thereafter, each new member shall serve for 5 years or until a successor has been appointed.

❖ The board of appeals is to consist of five members appointed by the "chief appointing authority"—typically, the mayor or city manager. One member is to be

INTERNATIONAL CODE COUNCIL®
Copyright © 2015 ICC. ALL RIGHTS RESERVED. Accessed by David Dammon on Jun 21, 2017 12:30:52 PM pursuant to License Agreement with ICC. No further reproduction or distribution authorized. ANY UNAUTHORIZED REPRODUCTION OR DISTRIBUTION IS A VIOLATION OF THE FEDERAL COPYRIGHT ACT AND THE LICENSE AGREEMENT, AND SUBJECT TO CIVIL AND CRIMINAL PENALTIES THEREUNDER.

appointed for five years, one for four, one for three, one for two and one for one year. This method of appointment allows for a smooth transition of board of appeals members, allowing continuity of action over the years.

[A] 109.2.1 Qualifications. The board of appeals shall consist of five individuals, one from each of the following professions or disciplines:

1. Registered design professional who is a registered architect; or a builder or superintendent of building construction with not less than 10 years' experience, 5 years of which shall have been in responsible charge of work.
2. Registered design professional with structural engineering or architectural experience.
3. Registered design professional with mechanical and plumbing engineering experience; or a mechanical and plumbing contractor with not less than 10 years' experience, 5 years of which shall have been in responsible charge of work.
4. Registered design professional with electrical engineering experience; or an electrical contractor with not less than 10 years' experience, 5 years of which shall have been in responsible charge of work.
5. Registered design professional with fire protection engineering experience; or a fire protection contractor with not less than 10 years' experience, 5 years of which shall have been in responsible charge of work.

❖ The board of appeals consists of five persons with the qualifications and experience indicated in this section. One must be a registered design professional (see Item 2) with structural or architectural experience. The others must be registered design professionals, construction superintendents or contractors with experience in various areas of building construction. These requirements are important in that technical people rule on technical matters. The board of appeals is not the place for policy or political deliberations. It is intended that these matters be decided purely on their technical merits, with due regard for state-of-the-art construction technology.

[A] 109.2.2 Alternate members. The chief appointing authority shall appoint two alternate members who shall be called by the board chairman to hear appeals during the absence or disqualification of a member. Alternate members shall possess the qualifications required for board membership, and shall be appointed for 5 years or until a successor has been appointed.

❖ This section authorizes the chief appointing authority to appoint two alternate members who are to be available if the principal members of the board are absent or disqualified. Alternate members must possess the same qualifications as the principal members and are appointed for a term of five years or until such time that a successor is appointed.

[A] 109.2.3 Chairman. The board shall annually select one of its members to serve as chairman.

❖ It is customary to determine chairmanship annually so that a regular opportunity is available to evaluate and either reappoint the current chairman or appoint a new one.

[A] 109.2.4 Disqualification of member. A member shall not hear an appeal in which that member has any personal, professional or financial interest.

❖ All members must disqualify themselves regarding any appeal in which they have a personal, professional or financial interest.

[A] 109.2.5 Secretary. The chief administrative officer shall designate a qualified clerk to serve as secretary to the board. The secretary shall file a detailed record of all proceedings in the office of the chief administrative officer.

❖ The chief administrative officer is to designate a qualified clerk to serve as secretary to the board. The secretary is required to record the proceedings using detailed records.

[A] 109.2.6 Compensation of members. Compensation of members shall be determined by law.

❖ Members of the board of appeals need not be compensated unless required by the local municipality or jurisdiction.

[A] 109.3 Notice of meeting. The board shall meet upon notice from the chairman, within 10 days of the filing of an appeal or at stated periodic meetings.

❖ The board must meet within 10 days of the filing of an appeal or at regularly scheduled meetings.

[A] 109.4 Open hearing. Hearings before the board shall be open to the public. The appellant, the appellant's representative, the code official and any person whose interests are affected shall be given an opportunity to be heard.

❖ All hearings before the board must be open to the public. The appellant, the appellant's representative, the code official and any person whose interests are affected must be heard.

[A] 109.4.1 Procedure. The board shall adopt and make available to the public through the secretary procedures under which a hearing will be conducted. The procedures shall not require compliance with strict rules of evidence, but shall mandate that only relevant information be received.

❖ The board is required to establish and make available to the public written procedures detailing how hearings are to be conducted. Additionally, this section provides that although strict rules of evidence are not applicable, the information presented must be deemed relevant.

[A] 109.5 Postponed hearing. When five members are not present to hear an appeal, either the appellant or the appellant's representative shall have the right to request a postponement of the hearing.

❖ When all five members of the board are not present, either the appellant or the appellant's representative may request a postponement of the hearing.

INTERNATIONAL CODE COUNCIL®
Copyright © 2015 ICC. ALL RIGHTS RESERVED. Accessed by David Dammon on Jun 21, 2017 12:30:52 PM pursuant to License Agreement with ICC. No further reproduction or distribution authorized. ANY UNAUTHORIZED REPRODUCTION OR DISTRIBUTION IS A VIOLATION OF THE FEDERAL COPYRIGHT ACT AND THE LICENSE AGREEMENT, AND SUBJECT TO CIVIL AND CRIMINAL PENALTIES THEREUNDER.

[A] 109.6 Board decision. The board shall modify or reverse the decision of the code official by a concurring vote of three members.

❖ A concurring vote of three members of the board is needed to modify or reverse the decision of the code official.

[A] 109.6.1 Resolution. The decision of the board shall be by resolution. Certified copies shall be furnished to the appellant and to the code official.

❖ A formal decision in the form of a resolution is required to provide an official record. Copies of this resolution are to be furnished to both the appellant and the code official. The code official is bound by the action of the board of appeals unless he or she thinks that the board of appeals has acted improperly. In such cases, relief through the court having jurisdiction may be sought by corporate council.

[A] 109.6.2 Administration. The code official shall take immediate action in accordance with the decision of the board.

❖ To avoid any undue hindrance in the progress of construction, the code official is required to act without delay based on the board's decision. This action may be to enforce the decision or to seek legislative relief if the board's action can be demonstrated to be inappropriate.

[A] 109.7 Court review. Any person, whether or not a previous party of the appeal, shall have the right to apply to the appropriate court for a writ of certiorari to correct errors of law. Application for review shall be made in the manner and time required by law following the filing of the decision in the office of the chief administrative officer.

❖ This section allows any person to request a review by the court of jurisdiction of perceived errors of law. Application for such review must be made after the decision of the board is filed with the chief administrative officer. This helps to establish the observance of due process for all concerned.

SECTION 110
TEMPORARY EQUIPMENT, SYSTEMS AND USES

[A] 110.1 General. The code official is authorized to issue a permit for temporary equipment, systems and uses. Such permits shall be limited as to time of service, but shall not be permitted for more than 180 days. The code official is authorized to grant extensions for demonstrated cause.

❖ The code official is permitted to issue temporary authorization to make connections to a public utility system prior to completion of all work. This acknowledges that, because of seasonal limitations, time constraints or the need for testing or partial operations of equipment, some building systems may be safely connected even though the building is not suitable for final occupancy. The temporary connection and utilization of connected equipment should be approved when the requesting permit holder has demonstrated to the code official's satisfaction that public health, safety and welfare will not be endangered.

[A] 110.2 Conformance. Temporary equipment, systems and uses shall conform to the structural strength, fire safety, means of egress, accessibility, light, ventilation and sanitary requirements of this code as necessary to ensure the public health, safety and general welfare.

❖ Even though a utility connection may be temporary, the only way to make sure that the public health, safety and general welfare are protected is for those temporary connections to comply with the code.

[A] 110.3 Temporary utilities. The code official is authorized to give permission to temporarily supply utilities before an installation has been fully completed and the final certificate of completion has been issued. The part covered by the temporary certificate shall comply with the requirements specified for temporary lighting, heat or power in the code.

❖ Commonly, the utilities on many construction sites are installed and energized long before all aspects of the system are completed. This section would allow such temporary systems to continue provided that they comply with the applicable safety provisions of the code.

[A] 110.4 Termination of approval. The code official is authorized to terminate such permit for temporary equipment, systems or uses and to order the temporary equipment, systems or uses to be discontinued.

❖ This section provides the code official with the necessary authority to terminate the permit for temporary equipment, systems and uses if conditions of the permit have been violated or if temporary equipment or systems pose an imminent hazard to the public. This enables the code official to act quickly when time is of the essence in order to protect public health, safety and welfare.

Bibliography

The following resource materials are referenced in this chapter or are relevant to the subject matter addressed in this chapter.

ASME A112.6.3-01, *Floor and Trench Drains.* New York: American Society of Mechanical Engineers, 2001.

CSA B79-94(2000), *Floor, Area and Shower Drains, and Cleanouts for Residential Construction. Canadian Standards Association, 2000.*

INTERNATIONAL CODE COUNCIL®
Copyright © 2015 ICC. ALL RIGHTS RESERVED. Accessed by David Dammon on Jun 21, 2017 12:30:52 PM pursuant to License Agreement with ICC. No further reproduction or distribution authorized. ANY UNAUTHORIZED REPRODUCTION OR DISTRIBUTION IS A VIOLATION OF THE FEDERAL COPYRIGHT ACT AND THE LICENSE AGREEMENT, AND SUBJECT TO CIVIL AND CRIMINAL PENALTIES THEREUNDER.

Chapter 2: Definitions

General Comments

The words or terms defined in this chapter are deemed to be of prime importance in both specifying the subject matter of code provisions and giving meaning to certain terms used throughout the code for administrative or enforcement purposes.

Purpose

Codes, by their very nature, are technical documents. As such, literally every word, term and punctuation mark can add to or change the meaning of the intended result.

This is even more so with a performance code where the desired result often takes on more importance than the specific words.

Furthermore, the code, with its broad scope of applicability, includes terms inherent in a variety of construction disciplines. These terms can often have multiple meanings depending on the context or discipline being used at the time.

For these reasons, it is necessary to maintain a consensus on the specific meaning of terms contained in the code. Chapter 2 performs this function by stating clearly what specific terms mean for the purpose of the code.

SECTION 201 GENERAL

201.1 Scope. Unless otherwise expressly stated, the following words and terms shall, for the purposes of this code, have the meanings shown in this chapter.

❖ This section contains language and provisions that are supplemental regarding the use of Chapter 2. The subsections give guidance to the use of the defined words relevant to tense, gender, etc. Finally, this chapter provides the means to resolve those terms not defined.

201.2 Interchangeability. Words stated in the present tense include the future; words stated in the masculine gender include the feminine and neuter; the singular number includes the plural and the plural the singular.

❖ Although the definitions contained in Chapter 2 are to be taken literally, gender and tense are considered to be interchangeable. This is so that any grammatical inconsistencies within the code do not hinder the understanding or enforcement of the requirements.

201.3 Terms defined in other codes. Where terms are not defined in this code and are defined in the *International Building Code*, *International Fire Code*, *International Fuel Gas Code* or the *International Mechanical Code*, such terms shall have the meanings ascribed to them as in those codes.

❖ When a word or term appears in the code that is not defined in this chapter, other references may be used to find its definition, such as the other *International Codes*® in the International Code Council® (ICC®) family of codes, which are coordinated to prevent conflict among documents.

201.4 Terms not defined. Where terms are not defined through the methods authorized by this section, such terms shall have ordinarily accepted meanings such as the context implies.

❖ Another resource for defining words or terms not defined herein or in other codes is their "ordinarily accepted meanings." The intent of this statement is that a dictionary definition could suffice, provided that such definition refers to the context.

Some of the construction terms used throughout the code may not be defined in Chapter 2 or in a dictionary. In such a case, one would first turn to the definitions contained in the referenced standards (see Chapter 15) and then to published textbooks on the subject in question.

SECTION 202 GENERAL DEFINITIONS

ACCEPTED ENGINEERING PRACTICE. That which conforms to accepted principles, tests or standards of nationally recognized technical or scientific authorities.

❖ The code makes frequent reference to a variety of consensus standards. Where a requirement is not based on a specific standard but on a body of knowledge of a particular engineering or construction discipline, this term is used.

It is also understood that where the code is silent on a subject, any rules that could be applicable in the interest of public safety must be in accordance with that body of knowledge called "accepted engineering practice." The code official can enforce this concept through the use of Section 102.9, titled "Requirements not covered by code." Care and caution need to be used by the code official when enforcing the "accepted engineering practice" concept to be sure that the concept is sound and safe.

[M] ACCESS (TO). That which enables a fixture, appliance or equipment to be reached by ready *access* or by a means that first requires the removal or movement of a panel, door or similar obstruction (see "Ready *access*").

❖ Access to plumbing fixtures, appliances and appurtenances is necessary to facilitate inspection, observation, maintenance, adjustment, repair or replacement. Access to something means that it can be easily physically reached without having to remove a permanent

INTERNATIONAL CODE COUNCIL®
Copyright © 2015 ICC. ALL RIGHTS RESERVED. Accessed by David Dammon on Jun 21, 2017 12:30:52 PM pursuant to License Agreement with ICC. No further reproduction or distribution authorized. ANY UNAUTHORIZED REPRODUCTION OR DISTRIBUTION IS A VIOLATION OF THE FEDERAL COPYRIGHT ACT AND THE LICENSE AGREEMENT, AND SUBJECT TO CIVIL AND CRIMINAL PENALTIES THEREUNDER.

portion of the structure. It is acceptable, for example, to install a device in a space that would require removal of lay-in suspended ceiling panels to gain access. A fixture, appliance or device would not be considered accessible if it were necessary to remove or open any portion of a structure other than panels, doors, covers or similar obstructions intended to be removed or opened normally, without special tools or knowledge. See the definition of "Ready access."

Access can be described as the capability of being reached or approached for inspection, observation, maintenance, adjustment, repair or replacement. Achieving access could require the removal or opening of a panel, door or similar obstruction and might require overcoming an obstacle such as elevation. When access is being provided to an emergency shutoff valve, the designer should be aware that more damage can occur during the time it takes to actually "access" the valve.

ACCESS COVER. A removable plate, usually secured by bolts or screws, to permit *access* to a pipe or pipe fitting for the purposes of inspection, repair or cleaning.

❖ A removable access cover is normally installed to conceal a plumbing fitting that must be inspected, serviced, repaired or cleaned through a finished material or surface. Where the floor or paved surface is subject to pedestrian or vehicular traffic, the access cover must be structurally capable of supporting the load applied to it. Most access covers are secured with either fasteners, such as bolts or screws, or a simple latching mechanism. In special installations where security or safety is a concern, the method for securing the access cover could become more extensive and complicated. These special installations should be limited in number wherever possible because of the concern over the time it takes to access the fitting behind the cover.

Access covers placed in finished walls are often set flush with the face of the wall. Some access covers have provisions that allow for insertion of a portion of the actual wall finish material to help conceal the access cover. Where the access cover is in a floor surface, it should be installed flush so that it does not create a tripping hazard.

ADAPTER FITTING. An *approved* connecting device that suitably and properly joins or adjusts pipes and fittings that do not otherwise fit together.

❖ Where approved by the code official, these fittings are used to join pipes that are of different diameters, different materials or both. Adapter fittings are used to convert from one joining method to another. Refer to Sections 605 and 705 for specific information related to joints.

AIR ADMITTANCE VALVE. One-way valve designed to allow air to enter the plumbing drainage system when negative pressures develop in the piping system. The device shall close by gravity and seal the vent terminal at zero differential pressure (no flow conditions) and under positive internal pressures. The purpose of an air admittance valve is to provide a method of allowing air to enter the plumbing drainage system without the use of a vent extended to open air and to prevent *sewer* gases from escaping into a building.

❖ An air admittance valve (AAV) is a device used as an alternative method for the venting of traps for fixtures and waste receptors. AAVs reduce the amount of vent piping required to terminate outdoors. An AAV is designed to open and admit air into the drainage system when negative drain system pressures occur. An AAV closes by gravity and seals the vent terminal when the drain system pressure is equal to or exceeds atmospheric pressure. The seal prevents sewer gas from entering the building [see Commentary Figures 202(1) and 202(2)].

It is important to note that a mechanical vent is not considered an air admittance valve [see Commentary Figure 202(3)]. A mechanical vent is a device that operates in a manner similar to that of an air admittance valve. The mechanical vent opens to admit air under negative pressure conditions and closes under zero and positive pressure conditions. It cannot, however, be classified as an air admittance valve because it closes against the force of gravity by a lightweight wire spring. The use of a spring to overcome the forces of gravity to return the seal to the closed position introduces a higher probability of device failure than that of an air admittance valve.

AIR BREAK (Drainage System). A piping arrangement in which a drain from a fixture, appliance or device discharges indirectly into another fixture, receptacle or interceptor at a point below the *flood level rim* and above the trap seal.

❖ An air break is an indirect drainage method in which waste discharges to the drainage system through piping that terminates below the flood level rim and above the trap seal of an approved receptor. An air break is commonly used to protect mechanical equipment from sewage backup in the event that stoppage occurs. It also protects the drainage system from adverse pressure conditions caused by pumped discharge [see Commentary Figure 202(4)].

AIR GAP (Drainage System). The unobstructed vertical distance through the free atmosphere between the outlet of the waste pipe and the *flood level rim* of the receptacle into which the waste pipe is discharging.

❖ An air gap (drainage system) is a type of indirect waste arrangement where the waste is discharged to the drainage system through piping that terminates at a specified distance above the flood level rim of an approved receptor.

An air gap is commonly installed in drain lines serving equipment that is used in the preparation, storage and service of food; the conveyance of potable water; and the sterilization of medical equipment. The air gap serves as an impossible barrier for sewage to overcome in the event that stoppage occurs in the receptor drain, because sewage backup would overflow the receptor drain flood level before it came in contact with the drain line above [see Commentary Figure 202(4)].

INTERNATIONAL CODE COUNCIL®
Copyright © 2015 ICC. ALL RIGHTS RESERVED. Accessed by David Dammon on Jun 21, 2017 12:30:52 PM pursuant to License Agreement with ICC. No further reproduction or distribution authorized. ANY UNAUTHORIZED REPRODUCTION OR DISTRIBUTION IS A VIOLATION OF THE FEDERAL COPYRIGHT ACT AND THE LICENSE AGREEMENT, AND SUBJECT TO CIVIL AND CRIMINAL PENALTIES THEREUNDER.

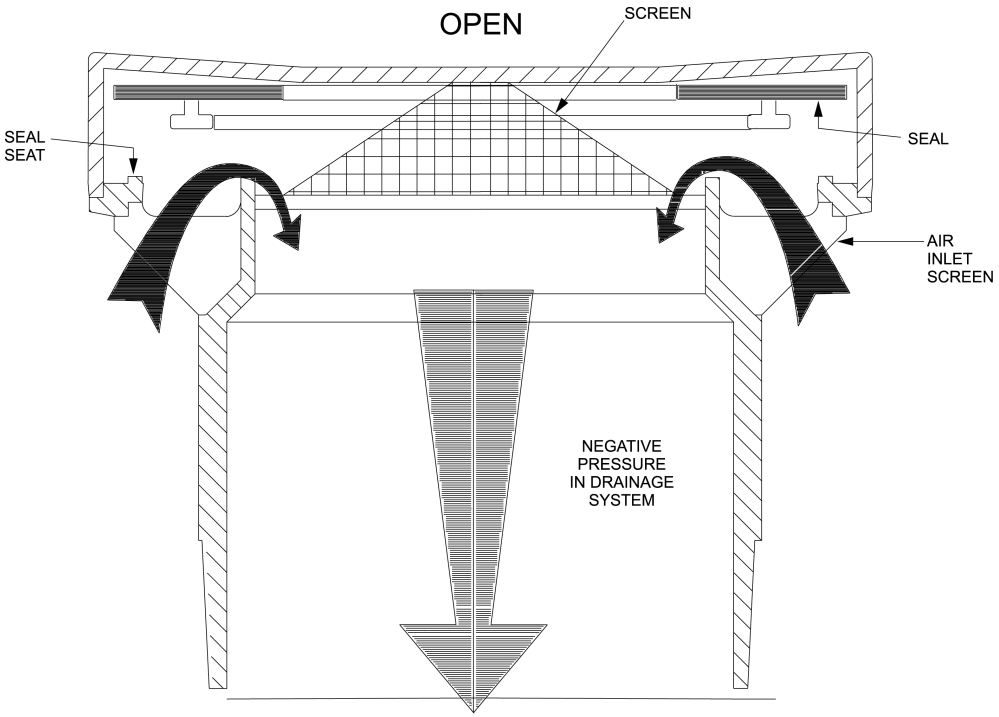

Figure 202(1)
AIR ADMITTANCE VALVE OPENS

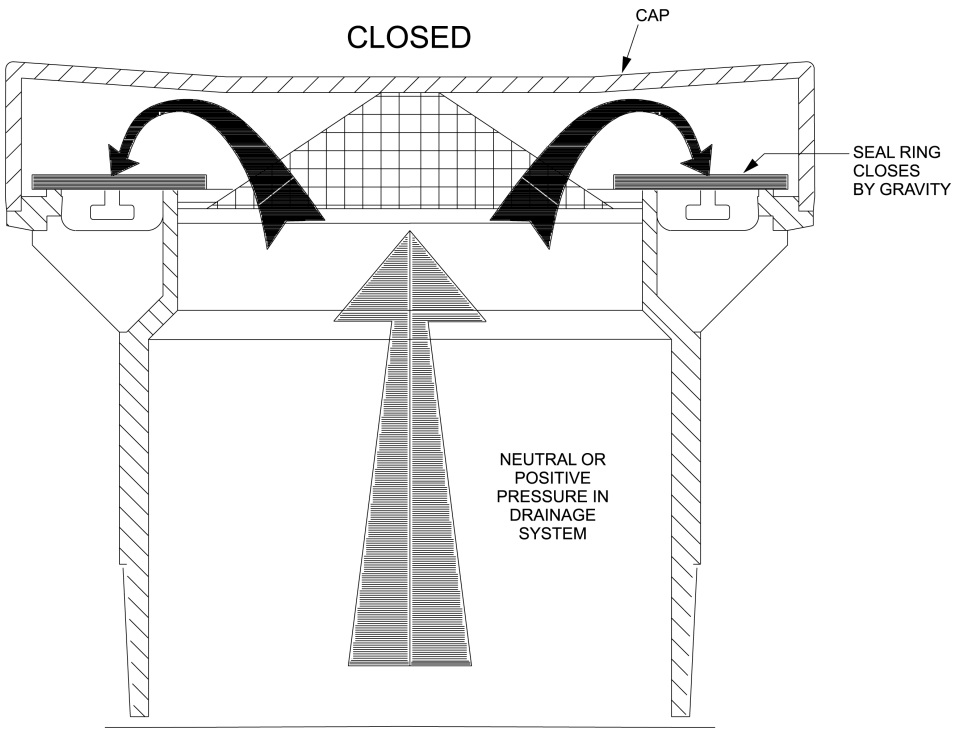

Figure 202(2)
AIR ADMITTANCE VALVE CLOSES

INTERNATIONAL CODE COUNCIL®
Copyright © 2015 ICC. ALL RIGHTS RESERVED. Accessed by David Dammon on Jun 21, 2017 12:30:52 PM pursuant to License Agreement with ICC. No further reproduction or distribution authorized. ANY UNAUTHORIZED REPRODUCTION OR DISTRIBUTION IS A VIOLATION OF THE FEDERAL COPYRIGHT ACT AND THE LICENSE AGREEMENT, AND SUBJECT TO CIVIL AND CRIMINAL PENALTIES THEREUNDER.

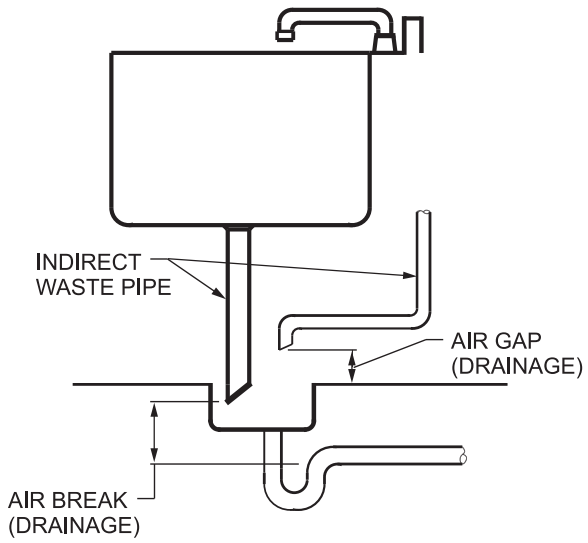

Figure 202(4)
AIR GAP, AIR BREAK

AIR GAP (Water Distribution System). The unobstructed vertical distance through the free atmosphere between the lowest opening from any pipe or faucet supplying water to a tank, plumbing fixture or other device and the *flood level rim* of the receptacle.

❖ An air gap is the most reliable and effective means of backflow protection. It is simply the vertical airspace between the potable water supply outlet and the possible source of contamination. This air gap prevents possible contamination of the potable water supply by preventing the supply outlet, such as a faucet, from backsiphoning waste water, such as from a basin. Many manufacturers have developed air gap fittings that provide a rigid connection to the drainage system while maintaining the minimum level of protection from contamination.

ALTERNATE ON-SITE NONPOTABLE WATER. Nonpotable water from other than public utilities, on-site surface sources and subsurface natural freshwater sources. Examples of such water are gray water, on-site reclaimed water, col-

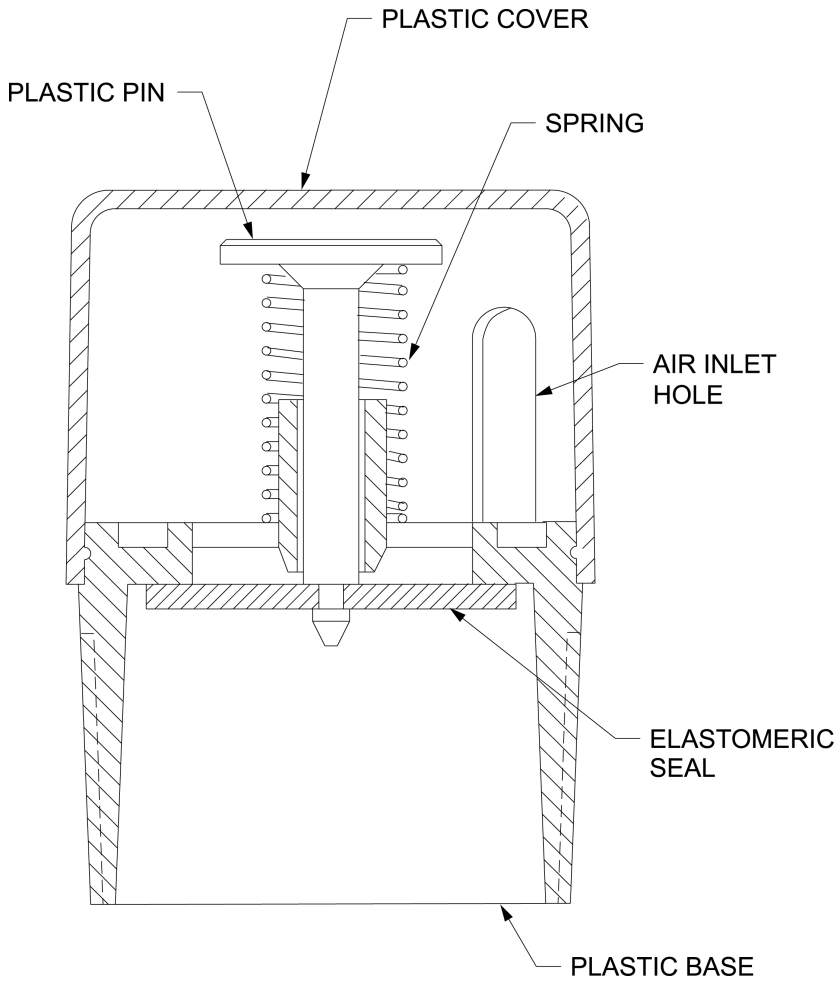

Figure 202(3)
MECHANICAL VENT
NOT CODE COMPLIANT

INTERNATIONAL CODE COUNCIL®
Copyright © 2015 ICC. ALL RIGHTS RESERVED. Accessed by David Dammon on Jun 21, 2017 12:30:52 PM pursuant to License Agreement with ICC. No further reproduction or distribution authorized. ANY UNAUTHORIZED REPRODUCTION OR DISTRIBUTION IS A VIOLATION OF THE FEDERAL COPYRIGHT ACT AND THE LICENSE AGREEMENT, AND SUBJECT TO CIVIL AND CRIMINAL PENALTIES THEREUNDER.

lected rainwater, captured condensate and rejected water from reverse osmosis systems.

❖ A common problem in potable water-saving designs that use nonpotable water in buildings and on building sites is the understanding and naming of the different classes of nonpotable water. The term "reclaimed water" (also known as "recycled water") has been reserved for nonpotable water that is delivered to the building site by municipal water delivery systems (see the definition of "Reclaimed water"). The term "on-site nonpotable water" is too encompassing, as this means well water that has not been treated to be potable, and gray water from showers and lavatories. The handling and treatment protocols and concerns for these two sources are quite different. Thus, municipally reclaimed water, on-site surface sources and subsurface natural freshwater sources are excluded from this definition. All other on-site nonpotable water is considered to be alternate on-site nonpotable water.

ALTERNATIVE ENGINEERED DESIGN. A plumbing system that performs in accordance with the intent of Chapters 3 through 12 and provides an equivalent level of performance for the protection of public health, safety and welfare. The system design is not specifically regulated by Chapters 3 through 12.

❖ Plumbing systems designed by accepted engineering practice (as previously defined in this section) to provide the same performance as achieved by conventional plumbing design methods are considered as alternative engineered designs. An alternative engineered design could include water supply and distribution, sanitary and storm drainage, venting, traps, fixtures and connections, devices and appurtenances. Alternative engineered designs must be at least equivalent to that prescribed by Chapters 3 through 14 (see commentary, Section 105.2).

ANCHORS. See "Supports."

❖ Anchors are the principal components of a support device or system that affix the support device or system to the building structure. Perhaps the most common use of the term "anchor" in the building industry is for indicating a "concrete anchor," which is an imbedded (either integrally cast-in-place or drilled-and-inserted) fastener. However, the term can also include nails, screws, bolts or adhesives used in conjunction with fastening the support device or system to the structure.

ANTISIPHON. A term applied to valves or mechanical devices that eliminate siphonage.

❖ This term refers to the function of certain valves and devices used to break or prevent the siphon effect that can be created in plumbing systems.

[A] APPROVED. Acceptable to the code official.

❖ As related to the process of acceptance of building installations, including materials, equipment and construction systems, this definition identifies where the ultimate authority rests. Wherever this term is used, it intends that only the enforcing authority can accept a specific installation or component as complying with the code.

[A] APPROVED AGENCY. An established and recognized agency that is regularly engaged in conducting tests or furnishing inspection services, where such agency has been *approved* by the code official.

❖ Third-party testing or inspections may be needed for elements within the built environment. The basis for the code official's approval of any agency for a particular activity may include, but is not necessarily limited to, the capacity and capability of the agency to perform the work in accordance with Section 303 and other applicable sections. This is typically accomplished through a review of the résumés and references of the agency and its personnel.

AREA DRAIN. A receptacle designed to collect surface or storm water from an open area.

❖ An area drain is a storm water and surface drainage collection point installed in outdoor open areas and paved areas, such as driveways, patios, outside stairwells, window wells and parking lots. These devices are placed at points of lower elevation to allow water to flow toward them. Additionally, this location causes debris, ice, etc., to flow toward them. Therefore, attention must be given to their design and installation to prevent them from becoming inoperative, often at the time when they are most needed.

ASPIRATOR. A fitting or device supplied with water or other fluid under positive pressure that passes through an integral orifice or constriction, causing a vacuum. Aspirators are also referred to as suction apparatus, and are similar in operation to an ejector.

❖ Within the context of this code, an aspirator is a device that uses a flowing liquid to create a reduced pressure condition. A simple example of an aspirator is a laboratory filter pump. Where water is forced through a smooth tube having a zone with an abrupt restricted area, the flow velocity will necessarily increase in the restricted area, thereby creating a reduced pressure condition at the restriction. Highly effective aspirators can produce vacuums approaching zero atmospheres (perfect vacuum).

Since an aspirator has no moving parts and only requires a flow of liquid to function, they are an economic method for drawing liquids (or gases) into the flow stream. Common examples of aspirators can be found in many food service facilities to "inject" cleaning chemicals for the dishwasher or for mop bucket filling. The flow of water through the aspirator draws the chemical into the flow stream without the need for pumps. Where an aspirator device is connected to a potable water supply, a backflow protection device must be installed between the water supply and the aspirator due to the connection of a contaminant to the aspirator. Most manufacturers of chemical dispensing equipment that are designed to use internal aspirators

INTERNATIONAL CODE COUNCIL®
Copyright © 2015 ICC. ALL RIGHTS RESERVED. Accessed by David Dammon on Jun 21, 2017 12:30:52 PM pursuant to License Agreement with ICC. No further reproduction or distribution authorized. ANY UNAUTHORIZED REPRODUCTION OR DISTRIBUTION IS A VIOLATION OF THE FEDERAL COPYRIGHT ACT AND THE LICENSE AGREEMENT, AND SUBJECT TO CIVIL AND CRIMINAL PENALTIES THEREUNDER.

will also provide integral backflow protection within the equipment.

BACKFLOW. Pressure created by any means in the water distribution system, which by being in excess of the pressure in the water supply mains causes a potential backflow condition.

❖ Backflow is the reversal of flow from its intended direction. In the context of this code, backflow refers to a reversed flow condition that occurs in a closed water piping system caused by an event or device within the system. Since movement of liquids in a pipe is caused by a difference in pressure, in order for flow to reverse, the event or device must cause a change in pressure that is either greater than or less than the differential pressure conditions that cause flow in a normal direction (see "Backflow preventer").

Backpressure, low-head. A pressure less than or equal to 4.33 psi (29.88 kPa) or the pressure exerted by a 10-foot (3048 mm) column of water.

❖ Low-head backpressure is created where the source of backpressure comes from a hose elevated to a level that produces 10 feet (3048 mm) or less of water column at the outlet. A hose connection, such as a wall hydrant or faucet, is where "low-head backpressure" is typically experienced (also see the commentary to Section 608).

Backsiphonage. The backflow of potentially contaminated water into the potable water system as a result of the pressure in the potable water system falling below atmospheric pressure of the plumbing fixtures, pools, tanks or vats connected to the potable water distribution piping.

❖ Backsiphonage occurs where the pressure within the potable water distribution system drops below atmospheric (subatmospheric) pressure or negative gauge pressure. It, like backpressure, allows the normal direction of flow to be reversed. A siphon can result in an unprotected cross connection, causing contamination or pollution of the potable water supply.The main difference between backsiphonage and backpressure is the pressure in the system. Water distribution systems having a pressure less than zero gauge have the potential to create a siphon, resulting in backsiphonage. Where backpressure typically occurs in a closed system, backsiphonage can occur in an open system or a system that is open to the atmosphere.

Drainage. A reversal of flow in the drainage system.

❖ Backflow drainage is the flow of waste in the drainage system opposite the direction intended, regardless of the cause. Backflow is generally the result of drainage system stoppages, overloads or a higher pressure on the drainage pipe side of the trap. Drainage backflow can result in interior flooding, contamination of fixtures and contamination of the potable water system.

Water supply system. The flow of water or other liquids, mixtures or substances into the distribution pipes of a potable water supply from any source except the intended source.

❖ The flow of water or other liquids, mixtures or substances into the distribution pipes of a potable water supply from any source except the intended source.

BACKFLOW CONNECTION. Any arrangement whereby backflow is possible.

❖ Backflow is a possibility in most, if not all, piping systems. The theory of backflow prevention is based on the possibility, not on the probability or likelihood, of an event.

BACKFLOW PREVENTER. A backflow prevention assembly, a backflow prevention device or other means or method to prevent backflow into the potable water supply.

❖ There are three distinct classes of backflow equipment: assemblies, devices and other means or methods. This class distinction clarifies that an assembly is field testable, a device is not testable in the field and a mean or method is observable for their adequacy to protect the potable water supply from backflow. Table 608.1 was reorganized for the 2015 edition to group backflow preventers into these three classes. This change (along with changes to Table 608.1) should make the code user more aware of the suitability of particular backflow equipment after the initial installation. In other words, if a verification of the backflow protection is needed year after year, either an assembly would be chosen for its field testability or other means or methods would be chosen so that installation conditions can be observed.

BACKWATER VALVE. A device or valve installed in the *building drain* or *sewer* pipe where a *sewer* is subject to backflow, and that prevents drainage or waste from backing up into a lower level or fixtures and causing a flooding condition.

❖ Backwater valves are a type of check valve designed for installation in drainage piping. The valves have a lower invert downstream of the flapper to help prevent solids from interfering with valve closure.

[BS] BASE FLOOD ELEVATION. A reference point, determined in accordance with the building code, based on the depth or peak elevation of flooding, including wave height, which has a 1 percent (100-year flood) or greater chance of occurring in any given year.

❖ The base flood elevation is the height to which floodwaters are predicted to rise during passage or occurrence of a base flood. The Federal Emergency Management Agency (FEMA) uses commonly accepted computer models that estimate hydrologic and hydraulic conditions to determine the 1-percent annual chance (base) flood. Along rivers and streams, statistical methods and computer models may have been used to estimate runoff and develop flood elevations. The models take into consideration watershed characteristics and the shape and nature of the flood plain, including natural ground contours and the pres-

INTERNATIONAL CODE COUNCIL®
Copyright © 2015 ICC. ALL RIGHTS RESERVED. Accessed by David Dammon on Jun 21, 2017 12:30:52 PM pursuant to License Agreement with ICC. No further reproduction or distribution authorized. ANY UNAUTHORIZED REPRODUCTION OR DISTRIBUTION IS A VIOLATION OF THE FEDERAL COPYRIGHT ACT AND THE LICENSE AGREEMENT, AND SUBJECT TO CIVIL AND CRIMINAL PENALTIES THEREUNDER.

ence of buildings, bridges and culverts. Along coastal areas, base flood elevations can be developed using models that take into account offshore bathymetry, historical storms and typical wind patterns. In many coastal areas, the base flood elevation includes wave heights.

BATHROOM GROUP. A group of fixtures consisting of a water closet, lavatory, bathtub or shower, including or excluding a bidet, an *emergency floor drain* or both. Such fixtures are located together on the same floor level.

❖ This term is used in Table 709.1 and Section 912.1. Special consideration is given to a bathroom group when sizing drain, waste and vent piping because of the probability of fixture usage. A bathroom group has historically referred to a single water closet, a lavatory and a bathtub or shower that are all located within a single room. Such an arrangement would normally allow only one occupant in the room; therefore, the likelihood of simultaneous fixture discharge is remote. For the fixture usage theory of the bathroom group to be valid, the fixtures in the group must be located within the same bathroom. A bidet has been added to the group of fixtures considered as a bathroom group. A bathroom group may or may not contain a bidet, an emergency floor drain or both, and in any case, the drainage fixture unit (dfu) value is the same (see commentary, Table 709.1).

BEDPAN STEAMER OR BOILER. A fixture utilized for scalding bedpans or urinals by direct application of steam or boiling water.

❖ A bedpan steamer or boiler is a special health care fixture designed to sterilize bedpans by the direct application of steam or boiling water. Bedpan washers and sterilizers combine the functions of a human waste elimination fixture and a sterilizing fixture.

As with all hose connections to the potable water supply, the potential for backflow is present, and the flushing devices and hand-held hose apparatus must be protected against backflow in accordance with Section 608.

BEDPAN WASHER AND STERILIZER. A fixture designed to wash bedpans and to flush the contents into the sanitary drainage system. Included are fixtures of this type that provide for disinfecting utensils by scalding with steam or *hot water*.

❖ See the definition of "Bedpan steamer or boiler."

BEDPAN WASHER HOSE. A device supplied with hot and cold water and located adjacent to a water closet or clinical sink to be utilized for cleansing bedpans.

❖ A bedpan washer hose consists of a flexible hose connected on one end to a source of water and having a spray head with a shutoff valve on the other end. The flexibility of the hose allows the user to flush all inside areas of a bedpan without having to change the position of the bedpan being held above a water closet or clinical sink.

BRANCH. Any part of the piping system except a riser, main or *stack*.

❖ Risers, stacks and mains (including a building drain) are the principal arteries of water and waste plumbing systems. Pipes connecting to these arteries are called branches. Pipes connecting to those branches are also called branches except a fixture drain pipe does not become a fixture branch until it merges with other fixture drain piping (see commentary to "Fixture drain"). A branch could be the same size or smaller than the pipe to which it connects. Branches in plumbing systems are analogous to branches of trees.

BRANCH INTERVAL. A vertical measurement of distance, 8 feet (2438 mm) or more in *developed length*, between the connections of horizontal *branches* to a drainage *stack*. Measurements are taken down the *stack* from the highest horizontal *branch* connection.

❖ One branch interval corresponds to a length of a drainage stack that has two horizontal branch connections at least 8 feet (2438 mm) apart. In typical multistory construction practice with 8-foot (2438 mm) ceilings, horizontal branch drains connect just below each floor level to a vertical stack; therefore, a branch interval will typically correspond to each floor in the building, below the top floor. If the lowest floor fixtures drain into a horizontal branch drain (and not the building drain), the number of branch intervals is the number of floors minus one, assuming that each floor has fixtures that discharge to the stack. The numbering of branch intervals starts at the uppermost horizontal branch connection to the stack and proceeds down the stack.

Note that the number of branch intervals does not correspond to the number of stories in a building. Because stories are not limited in height, multiple horizontal branches could enter the stack within a story and some floors might not have any horizontal branch connections. See Commentary Figures 202(5) and 202(6) illustrating where branch intervals do and do not exist.

Branch intervals are a design factor for drainage pipe sizing and venting design. Drain, waste and vent (DWV) system design must consider the nature of waste and airflow in a stack and the effects that branch connections have on such flow. [see Commentary Table 710.1(2) and Sections 904.2 and 908].

BRANCH VENT. A vent connecting one or more individual vents with a vent *stack* or *stack* vent.

❖ Commentary Figure 202(7) illustrates a branch vent.

[A] BUILDING. Any structure occupied or intended for supporting or sheltering any *occupancy*.

❖ Where this term is used in the code, it means a structure used to provide shelter or support for some activity or occupancy.

INTERNATIONAL CODE COUNCIL®
Copyright © 2015 ICC. ALL RIGHTS RESERVED. Accessed by David Dammon on Jun 21, 2017 12:30:52 PM pursuant to License Agreement with ICC. No further reproduction or distribution authorized. ANY UNAUTHORIZED REPRODUCTION OR DISTRIBUTION IS A VIOLATION OF THE FEDERAL COPYRIGHT ACT AND THE LICENSE AGREEMENT, AND SUBJECT TO CIVIL AND CRIMINAL PENALTIES THEREUNDER.

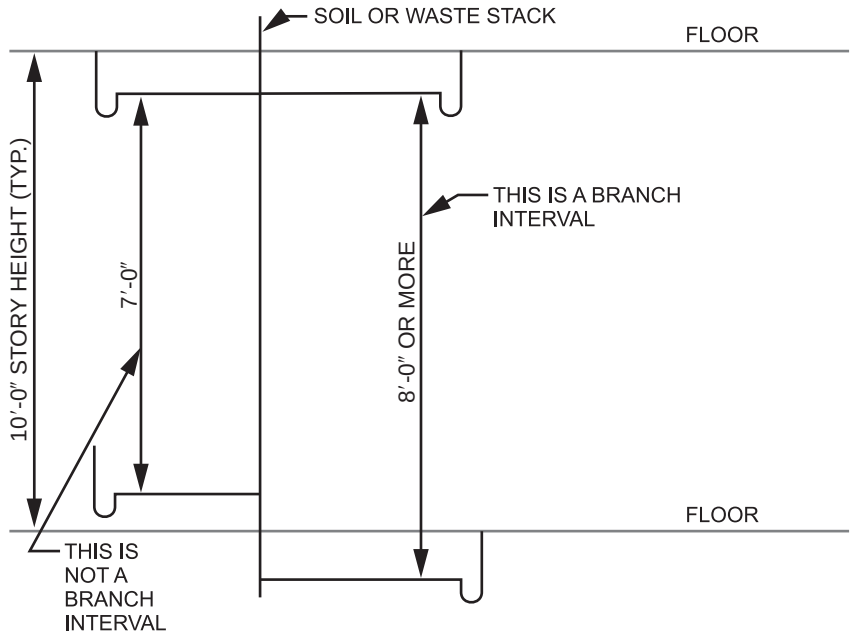

For SI: 1 inch = 25.4 mm, 1 foot = 304.8 mm.

Figure 202(5)
DEFINITION OF A BRANCH INTERVAL

BUILDING DRAIN. That part of the lowest piping of a drainage system that receives the discharge from soil, waste and other drainage pipes inside and that extends 30 inches (762 mm) in *developed length* of pipe beyond the exterior walls of the building and conveys the drainage to the *building sewer*.

❖ Building drains are usually considered to be the main drain of a drainage system within a structure. Building drains are horizontal (including vertical offsets) and are the portion of the drainage system that is at the lowest elevation in the structure. All horizontal drains above the elevation of the building drain are horizontal branches. The building drain terminates at the point where it exits the building [see commentary, Table 710.1(1)].

Combined. A *building drain* that conveys both sewage and storm water or other drainage.

❖ See the definitions of "Building drain" and "Building sewer, combined."

Sanitary. A *building drain* that conveys sewage only.

❖ The sanitary building drain is the main drain of the sanitary drainage system and does not conduct storm drainage [see Commentary Figure 202(8)].

Storm. A *building drain* that conveys storm water or other drainage, but not sewage.

❖ The storm building drain is the main drain of the storm drainage system and does not conduct sewage (see the definition of "Building drain").

BUILDING SEWER. That part of the drainage system that extends from the end of the *building drain* and conveys the discharge to a *public sewer*, *private sewer*, individual sewage disposal system or other point of disposal.

❖ The building sewer is the extension of the building drain and is located entirely outside of the building exterior walls [see commentary, Table 710.1(1) and Commentary Figure 202(8)].

Combined. A *building sewer* that conveys both sewage and storm water or other drainage.

❖ Combination storm and sanitary sewers are no longer constructed because of the burden placed on sewage treatment plants. More than 1,100 cities housing 42 million people nationwide, however, are served by existing combination storm and sanitary sewers. Storm water does not require treatment; therefore, combining it with sanitary drainage unnecessarily increases the volume of influent to treatment facilities (see commentary, Section 1101.3). Controlled-flow storm drainage systems should be considered in all combined systems to minimize the impact on municipal sewage disposal plants.

Sanitary. A *building sewer* that conveys sewage only.

❖ The sanitary sewer extends from the point of connection to the sanitary building drain to the point of connection to the public sewer system or the private sewage disposal system. Most jurisdictions arbitrarily set a distance such as 3 or 5 feet (914 or 1524 mm) outside of the building foundation as the point at which the building drain becomes the building sewer [see Commentary Figure 202(8)].

INTERNATIONAL CODE COUNCIL®
Copyright © 2015 ICC. ALL RIGHTS RESERVED. Accessed by David Dammon on Jun 21, 2017 12:30:52 PM pursuant to License Agreement with ICC. No further reproduction or distribution authorized. ANY UNAUTHORIZED REPRODUCTION OR DISTRIBUTION IS A VIOLATION OF THE FEDERAL COPYRIGHT ACT AND THE LICENSE AGREEMENT, AND SUBJECT TO CIVIL AND CRIMINAL PENALTIES THEREUNDER.

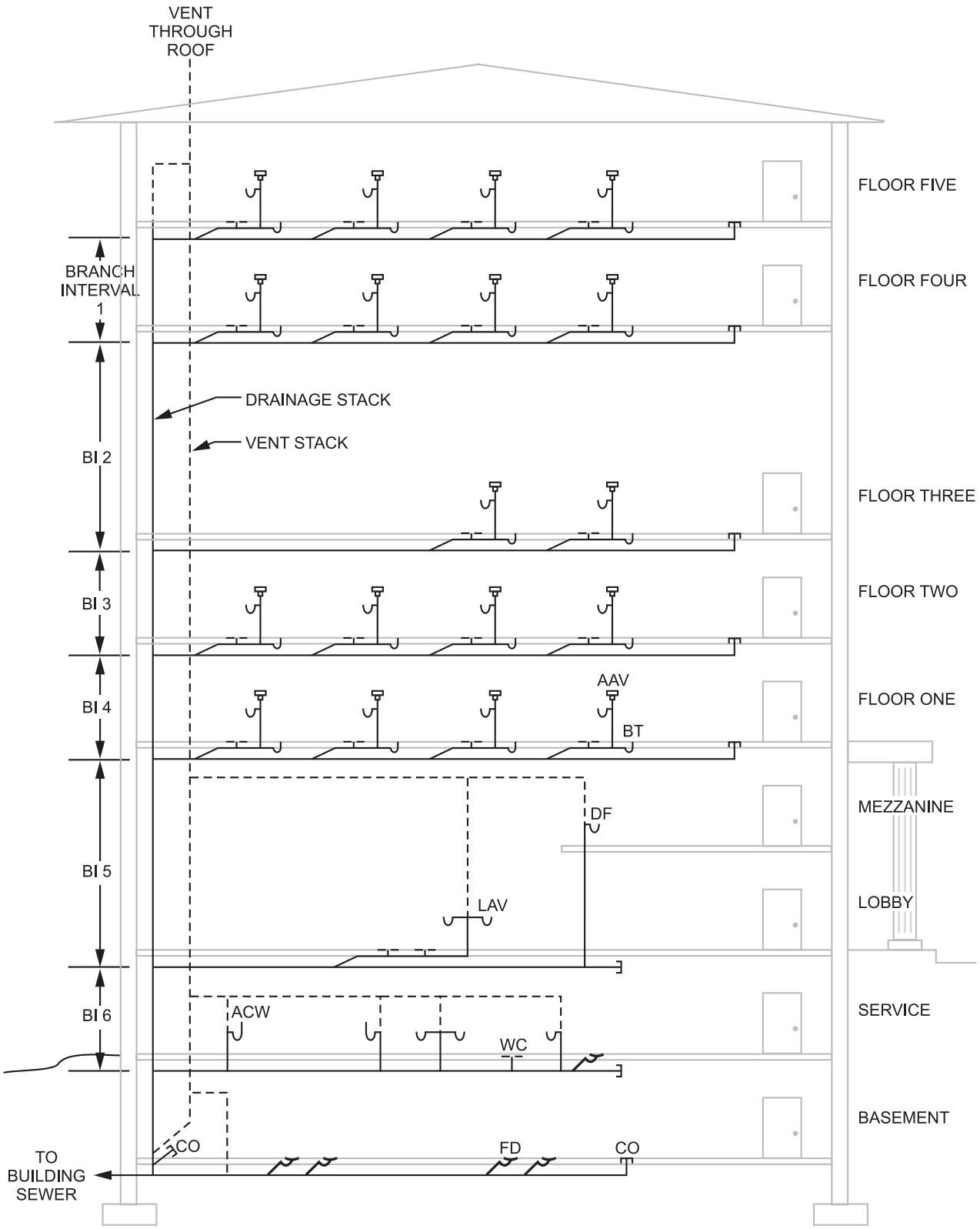

Figure 202(6)
BRANCH INTERVALS

INTERNATIONAL CODE COUNCIL®
Copyright © 2015 ICC. ALL RIGHTS RESERVED. Accessed by David Dammon on Jun 21, 2017 12:30:52 PM pursuant to License Agreement with ICC. No further reproduction or distribution authorized. ANY UNAUTHORIZED REPRODUCTION OR DISTRIBUTION IS A VIOLATION OF THE FEDERAL COPYRIGHT ACT AND THE LICENSE AGREEMENT, AND SUBJECT TO CIVIL AND CRIMINAL PENALTIES THEREUNDER.

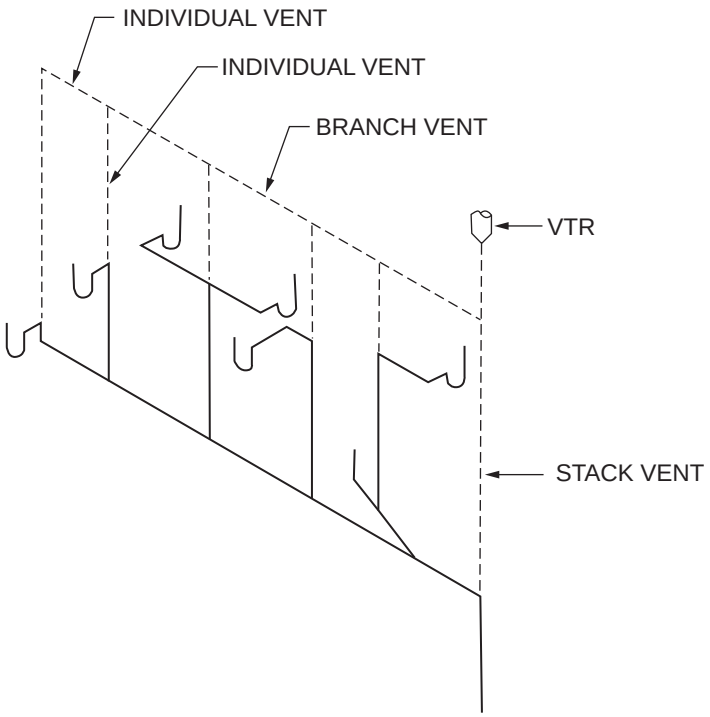

Figure 202(7)
BRANCH VENT

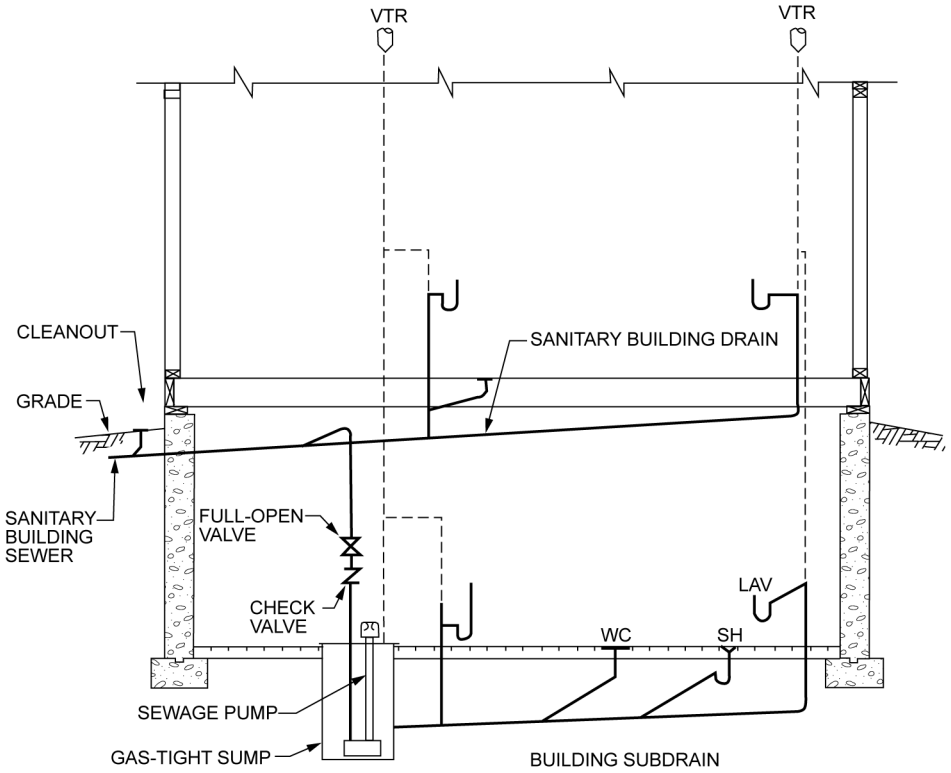

Figure 202(8)
DRAINAGE SYSTEM COMPONENTS

INTERNATIONAL CODE COUNCIL®
Copyright © 2015 ICC. ALL RIGHTS RESERVED. Accessed by David Dammon on Jun 21, 2017 12:30:52 PM pursuant to License Agreement with ICC. No further reproduction or distribution authorized. ANY UNAUTHORIZED REPRODUCTION OR DISTRIBUTION IS A VIOLATION OF THE FEDERAL COPYRIGHT ACT AND THE LICENSE AGREEMENT, AND SUBJECT TO CIVIL AND CRIMINAL PENALTIES THEREUNDER.

Storm. A *building sewer* that conveys storm water or other drainage, but not sewage.

❖ The storm sewer extends from the point of connection to the storm building drain to the point of connection to the public storm sewer or other point of disposal (see the definition of "Sewer, sanitary"). Storm sewers are prohibited from being combined with a sanitary sewer.

BUILDING SUBDRAIN. That portion of a drainage system that does not drain by gravity into the *building sewer*.

❖ Building subdrains must discharge to sumps or receivers equipped with pumps or ejectors to lift the influent to the elevation of the gravity sewer.

BUILDING TRAP. A device, fitting or assembly of fittings installed in the *building drain* to prevent circulation of air between the drainage system of the building and the *building sewer*.

❖ A building trap (house trap) is a "running" trap that prevents the circulation of sewer gases between the building drain and the building sewer. The installation of building traps is prohibited in Chapter 10 as they could be a source of drainage blockages.

CIRCUIT VENT. A vent that connects to a horizontal drainage *branch* and vents two traps to a maximum of eight traps or trapped fixtures connected into a battery.

❖ A circuit vent is a means of venting multiple fixtures using only one or two vents. The horizontal drainage branch actually serves as a wet vent for the fixtures located downstream of the circuit vent connection (see Commentary Figure 914.1.1).

CIRCULATING HOT WATER SYSTEM. A specifically designed water distribution system where one or more pumps are operated in the service hot water piping to circulate heated water from the water-heating equipment to fixture supply and back to the water-heating equipment.

❖ This is a piping arrangement to provide hot (or tempered) water at plumbing fixtures in a manner that does not require the user to wait any appreciable amount of time for the heated water to begin discharging from the water outlet. The hot (or tempered) water is circulated (by a pump) in a "loop" of piping that is routed in close proximity to each fixture and then back to the heated water source. Ideally, the fixture supply piping from this "loop" piping to the fixture is relatively short such that it only takes a few seconds for the heated water to arrive at the outlet when the faucet or mixing valve is opened. Large buildings such as hotels with centralized water heaters and hot water storage tanks are often piped in this manner so that the occupants don't have to wait for hot (or tempered) water. Wasting cool potable water down the drain (to get hot water to arrive) is costly for the building owner and time consuming for the occupants. Generally, the hot (or tempered) water is circulated in the piping "loop" for 24 hours a day for buildings that are occupied on a 24-hour basis. For buildings that are only occupied during "work hours," the circulation pumps can be shut off when building occupancy is at a minimum. Time switches typically control these type of intermittently operated pumps (see the definition of "Demand recirculation water system").

CISTERN. A small covered tank for storing water for a home or farm. Generally, this tank stores rainwater to be utilized for purposes other than in the potable water supply, and such tank is placed underground in most cases.

❖ A cistern is a reservoir, usually placed underground, used for the storage of rainwater. Once common, cisterns are rarely used today because of the availability of potable water supplies from wells and public water distribution systems. Cisterns were used as the primary or supplemental source of water for drinking, cooking, bathing and washing. When cisterns are used, care needs to be taken to prevent contamination during construction, maintenance and use.

CLEANOUT. An access opening in the drainage system utilized for the removal of obstructions. Types of cleanouts include a removable plug or cap, and a removable fixture or fixture trap.

❖ Cleanouts are broadly defined as any access opening point into the drainage system for the purpose of removing a clog or other obstruction in the drain line. A cleanout is intended to provide convenient access to the piping interior without significant disassembly of the plumbing installation. A "P" trap with a removable U-bend is typically acceptable as a cleanout for the fixture drain or branch to which the trap discharges. Although a water closet connection (flange) is permitted to serve as a cleanout, such use will require removal and reinstallation of the water closet. The installation of a water closet is an activity that requires a permit, whereas the clearance of drain stoppages does not (see commentary, Sections 106.1 and 106.2 and Commentary Figure 708.1). Removal of "fixed" objects should occur only as a last resort when no other cleanouts are available.

[A] CODE. These regulations, subsequent amendments thereto, or any emergency rule or regulation that the administrative authority having jurisdiction has lawfully adopted.

❖ The adopted regulations are generally referred to as "the code" and include not only the *International Plumbing Code*® (IPC®), but any adopted modifications to the code and all other associated building codes, related rules and regulations promulgated and enacted by the jurisdiction.

[A] CODE OFFICIAL. The officer or other designated authority charged with the administration and enforcement of this code, or a duly authorized representative.

❖ The statutory power to enforce the code is normally vested in a building department (or the like) of a state, county or municipality whose designated enforcement officer is termed the "code official" (see commentary, Section 103).

INTERNATIONAL CODE COUNCIL®
Copyright © 2015 ICC. ALL RIGHTS RESERVED. Accessed by David Dammon on Jun 21, 2017 12:30:52 PM pursuant to License Agreement with ICC. No further reproduction or distribution authorized. ANY UNAUTHORIZED REPRODUCTION OR DISTRIBUTION IS A VIOLATION OF THE FEDERAL COPYRIGHT ACT AND THE LICENSE AGREEMENT, AND SUBJECT TO CIVIL AND CRIMINAL PENALTIES THEREUNDER.

COLLECTION PIPE. Unpressurized pipe used within the collection system that drains on-site nonpotable water or rainwater to a storage tank by gravity.

❖ A different term, other than drainage pipe, is used to describe piping that conveys, by gravity, on-site nonpotable water and rainwater to a storage tank to distinguish such piping from drainage piping that carries waste water.

COMBINATION FIXTURE. A fixture combining one sink and laundry tray or a two- or three-compartment sink or laundry tray in one unit.

❖ These fixtures have more than one waste outlet and, depending on their design, are allowed to be served by a single trap (see commentary, Section 1002.1, Exceptions 2 and 3). Combination fixtures include two- and three-well sinks, such as pots-and-pans sinks, laundry sinks, bar sinks and culinary sinks.

COMBINATION WASTE AND VENT SYSTEM. A specially designed system of waste piping embodying the horizontal wet venting of one or more sinks, lavatories, drinking fountains or floor drains by means of a common waste and vent pipe adequately sized to provide free movement of air above the flow line of the drain.

❖ This term refers to a system of waste piping in which the horizontal wet venting of floor drains, drinking fountains, sinks and lavatories is accomplished by means of a common waste and vent pipe that is oversized to provide free movement of air above the waste flow line of the drain.

COMBINED BUILDING DRAIN. See "*Building drain*, combined."

COMBINED BUILDING SEWER. See "*Building sewer*, combined."

COMMON VENT. A vent connecting at the junction of two *fixture drains* or to a fixture *branch* and serving as a vent for both fixtures.

❖ Where two fixtures are connected to the same drainage pipe, a common vent could be used. This common vent is sized and classified as an individual vent. Any two fixtures may be common vented to either a vertical or horizontal drainage pipe.

The most typical form of common venting is where two fixtures are connected at the same level. Two fixtures connecting at different levels but within the same story are still considered to be common vented. When one of the fixtures connected is at a different level, the vertical drain between the fixtures is oversized because it functions as both a drain for the upper fixture and a vent for the lower fixture.

Additional information on common venting is found in the commentary to Section 911 and Commentary Figure 911.1.

CONCEALED FOULING SURFACE. Any surface of a plumbing fixture that is not readily visible and is not scoured or cleansed with each fixture operation.

❖ The concealed fouling surface is any part of the plumbing fixture that is not readily visible and cleanable by the occupants. This is of concern because of the possible contamination of these surfaces by waste and the resulting growth of bacteria. The amount of concealed fouling surface is to be kept to a minimum. This is controlled in the standards for each type of fixture. As the amount of water used with each operation of the fixture is reduced for conservation purposes, the possibility for contamination of these concealed fouling surfaces increases. This concern needs to be addressed in the related fixture standards.

CONDUCTOR. A pipe inside the building that conveys storm water from the roof to a storm or combined *building drain*.

❖ A conductor is an interior vertical drain pipe (including horizontal offsets) that generally serves roof drains (also see the definition of "Leader").

[A] CONSTRUCTION DOCUMENT. All of the written, graphic and pictorial documents prepared or assembled for describing the design, location and physical characteristics of the elements of the project necessary for obtaining a building permit. The construction drawings shall be drawn to an appropriate scale.

❖ For the code official to determine that proposed construction is in compliance with code requirements, sufficient information must be submitted for review. This typically consists of the drawings (floor plans, elevations, sections, details, etc.), specifications and product information describing the proposed work. This term replaces the less descriptive "plans and specifications" used in earlier editions of the codes.

CONTAMINATION. An impairment of the quality of the potable water that creates an actual hazard to the public health through poisoning or the spread of disease by sewage, industrial fluids or waste.

❖ The Environmental Protection Agency (EPA) sets maximum levels for various chemicals and bacteria in drinking water. When an unacceptable level of one or more contaminants is present, the water is considered to be nonpotable. One of the primary purposes of the code is to protect potable water supplies from contamination. Contamination consists of either hazardous chemicals or raw sewage and is considered by the code to represent a high hazard when present in the water supply. Refer to Table 608.1 for the required potable protection requirements related to high-hazard situations.

The purpose of the code and other related regulations, such as those from the EPA, is to reduce, if not totally eliminate, the risk to the general public of poisoning or health impairment through sewage, industrial fluids or waste entering the potable water supply. It should be noted that these contaminants would have a harmful effect on the occupants of a building should such water be consumed. Contamination is quite different from pollution in that polluted water is still con-

INTERNATIONAL CODE COUNCIL®
Copyright © 2015 ICC. ALL RIGHTS RESERVED. Accessed by David Dammon on Jun 21, 2017 12:30:52 PM pursuant to License Agreement with ICC. No further reproduction or distribution authorized. ANY UNAUTHORIZED REPRODUCTION OR DISTRIBUTION IS A VIOLATION OF THE FEDERAL COPYRIGHT ACT AND THE LICENSE AGREEMENT, AND SUBJECT TO CIVIL AND CRIMINAL PENALTIES THEREUNDER.

sidered to be nonpotable, but would not kill or harm if ingested. Refer to the definition of "Pollution."

CRITICAL LEVEL (C-L). An elevation (height) reference point that determines the minimum height at which a backflow preventer or vacuum breaker is installed above the *flood level rim* of the fixture or receptor served by the device. The critical level is the elevation level below which there is a potential for backflow to occur. If the critical level marking is not indicated on the device, the bottom of the device shall constitute the critical level.

❖ The critical level determines the installation height of vacuum breaker backflow-preventer devices. This is referred to as critical because whether or not the vacuum breaker will function as intended is dependent on that level (see commentary, Section 608.13.6). The critical level (C-L) will be either marked on the device or stated in the manufacturer's installation instructions.

CROSS CONNECTION. Any physical connection or arrangement between two otherwise separate piping systems, one of which contains potable water and the other either water of unknown or questionable safety or steam, gas or chemical, whereby there exists the possibility for flow from one system to the other, with the direction of flow depending on the pressure differential between the two systems (see "Backflow").

❖ Cross connections are the links through which it is possible for contaminating materials to enter a potable water supply. The contaminant enters the potable water supply when the pressure of the polluted source exceeds the pressure of the potable source. The action may be called "backsiphonage" or "backpressure." Many serious outbreaks of illness and disease have been traced to cross connections. The intent of the code is to eliminate cross connections or prevent backflow where cross connections cannot be eliminated. Also refer to the definitions and commentary for the terms "Backflow," "Backsiphonage" and "Backpressure."

DEMAND RECIRCULATION WATER SYSTEM. A water distribution system where one or more pumps prime the service hot water piping with heated water upon a demand for hot water.

❖ This definition mirrors the same definition in the *International Energy Conservation Code*® (IECC®). This type of circulating hot (or tempered) water system has substantially less energy consumption than a circulating hot (or tempered) water system that has a constant (pumped) flow of water whenever the building is occupied. The demand type of system operates the circulation pump only when the presence of a user is detected. The detection could be a motion sensor, a door switch or a button that the user presses when entering the room where the fixture, requiring hot (or tempered) water, is located. A pump is activated to cause the hot (or tempered) water to flow towards the fixture until a temperature sensor in (or on) the piping detects a small increase in the temperature of the water. The pump then shuts off and the pump control locks out pump operation for a certain amount of time. After the "lockout" period, the pump can again be activated by the detection method to increase the water temperature by a small amount and so forth. If the hot (or tempered) water is actually used at the fixture, the temperature of the water for the very first user might not be very warm at first, but warmer water is fairly close to the fixture(s). With additional activations, or with multiple fixture uses, hot (or tempered) water is readily available at the fixtures.

A significant amount of energy is consumed by running pumps constantly and there is a large amount of heat loss from piping (even though the piping is insulated). By keeping the pump run time low and only bringing the hot (or tempered) water just a little closer to the fixture upon each "user detection," energy is conserved. Demand recirculation water systems can utilize cold water supply pipe or a dedicated pipe for water return back to the hot (or tempered) water source. See the definition of "Circulating hot water system."

DEPTH OF TRAP SEAL. The depth of liquid that would have to be removed from a full trap before air could pass through the trap.

❖ This is the distance measured from the bottom of the "dip" to the top of the "crown of the trap" (crown weir) [see Commentary Figure 202(9)]. The definition prior to this edition of the code referred to water. But with the advent of liquid seal traps for nonwater urinal designs, this definition changed "water" to "liquid."

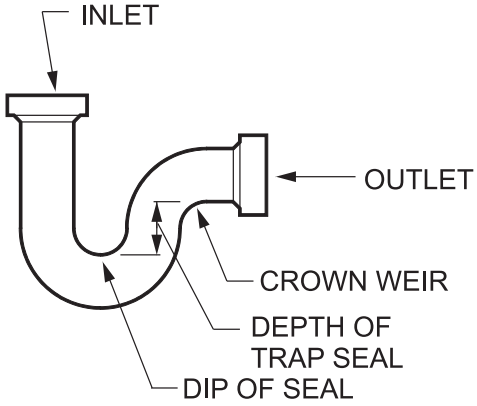

Figure 202(9)
DEPTH OF TRAP SEAL

[BS] DESIGN FLOOD ELEVATION. The elevation of the "design flood," including wave height, relative to the datum specified on the community's legally designated flood hazard map. In areas designated as Zone AO, the *design flood elevation* shall be the elevation of the highest existing grade of the building's perimeter plus the depth number (in feet) specified on the flood hazard map. In areas designated as Zone AO

INTERNATIONAL CODE COUNCIL®
Copyright © 2015 ICC. ALL RIGHTS RESERVED. Accessed by David Dammon on Jun 21, 2017 12:30:52 PM pursuant to License Agreement with ICC. No further reproduction or distribution authorized. ANY UNAUTHORIZED REPRODUCTION OR DISTRIBUTION IS A VIOLATION OF THE FEDERAL COPYRIGHT ACT AND THE LICENSE AGREEMENT, AND SUBJECT TO CIVIL AND CRIMINAL PENALTIES THEREUNDER.

where a depth number is not specified on the map, the depth number shall be taken as being equal to 2 feet (610 mm).

❖ The design flood elevation is the height to which floodwaters are predicted to rise during passage or occurrence of the design flood. Unless a community has adopted another flood hazard map or otherwise designated the design flood, the design flood elevation is the base flood elevation shown on the Flood Insurance Rate Maps (FIRM). The datum specified on the flood hazard map is important because it may differ from the datum used locally for other purposes. Also, the datum shown on the FIRM may change over time, as FEMA updates and revises the maps.

Some flood hazard maps have areas denoted as AO Zones, identifying areas subject to sheet flow flooding, shallow flooding or ponding. Specific instruction for these zones is provided in the code because the maps specify a flood depth above grade rather than a height above datum.

FEMA refers to some areas subject to shallow flooding and/or unpredictable flow paths as AH Zones. AH Zones have specified base flood elevations and they are treated the same as the other A Zones with base flood elevations.

DEVELOPED LENGTH. The length of a pipeline measured along the centerline of the pipe and fittings.

❖ This term identifies a concept necessary for computing the actual length of piping in a plumbing system. The developed length is measured along the actual flow path of piping and includes the piping lengths in all offsets and changes in direction. Several code requirements are dependent on the actual length of plumbing piping (see commentary, Sections 708, 802.2, 906 and 917).

DISCHARGE PIPE. A pipe that conveys the discharge from plumbing fixtures or appliances.

❖ This type of pipe typically refers to waste piping that either empties into a sump or conveys the discharge of a pump (see commentary, Sections 712 and 1111).

DRAIN. Any pipe that carries waste water or water-borne wastes in a building drainage system.

❖ A drain is any pipe in a plumbing system that carries sanitary waste, clear-water waste or storm water. In the case of wet vents, common vents, waste stack vents, circuit vents and combination drain and vents, the drain may also be conducting airflow.

DRAINAGE FITTING. The type of fitting or fittings utilized in the drainage system. Drainage fittings are similar to cast-iron fittings, except that instead of having a bell and spigot, drainage fittings are recessed and tapped to eliminate ridges on the inside of the installed pipe.

❖ The second sentence of the definition above is outdated. Fittings for galvanized steel drain piping were called drainage fittings. Drainage fittings were made substantially different from standard cast pipe fittings so that restrictions to drainage flow were minimized. These special fittings were made of cast iron with recessed internal threads to enable connection with Schedule 40 galvanized pipe. The threads on the fittings were cut in a manner that a horizontal pipe would be sloped $^1/_4$ inch per foot (20.8 mm/m) to cause gravity flow. A drain piping system using galvanized pipe and these special threaded cast fittings was called a Durham system, named after prominent manufacturer's product line of threaded drainage fittings. Thus, all threaded drainage pattern fittings were coined "Durham" fittings. These special drainage fittings are no longer used in modern construction. Today, the term "drainage fitting" applies to any fitting that has been made to a recognized (ASTM) drainage pattern for use in a gravity flow drain system.

DRAINAGE FIXTURE UNIT.

Drainage (dfu). A measure of the probable discharge into the drainage system by various types of plumbing fixtures. The drainage fixture-unit value for a particular fixture depends on its volume rate of drainage discharge, on the time duration of a single drainage operation and on the average time between successive operations.

❖ The conventional method of designing a sanitary drainage system is based on drainage fixture unit (dfu) load values. The fixture unit approach takes into consideration the probability of load on a drainage system. The dfu is an arbitrary loading factor assigned to each fixture relative to its impact on the drainage system. The dfu values are determined based on:

- Average rate of water discharge by a fixture;
- Duration of a single operation; and
- Frequency of use or interval between each operation.

Because dfu values have a built-in probability factor, they cannot be directly translated into flow rates or discharge rates.

A dfu is not the same as a water supply fixture unit (wsfu) in Table E103.3(2), Appendix E.

DRAINAGE SYSTEM. Piping within a *public* or *private* premise that conveys sewage, rainwater or other liquid waste to a point of disposal. A drainage system does not include the mains of a *public sewer* system or a private or public sewage treatment or disposal plant.

❖ The drainage system is the network of piping starting from the waste outlets of fixtures or receptors and ending at the public sewer system or other point of disposal [see Commentary Figure 202(8)].

Building gravity. A drainage system that drains by gravity into the *building sewer*.

❖ Plumbing systems are designed to drain by gravity wherever possible. Where gravity drainage is not possible, pumps or ejectors must be used to lift the waste to higher elevations.

Sanitary. A drainage system that carries sewage and excludes storm, surface and ground water.

❖ See the commentary to Section 701.

INTERNATIONAL CODE COUNCIL®
Copyright © 2015 ICC. ALL RIGHTS RESERVED. Accessed by David Dammon on Jun 21, 2017 12:30:52 PM pursuant to License Agreement with ICC. No further reproduction or distribution authorized. ANY UNAUTHORIZED REPRODUCTION OR DISTRIBUTION IS A VIOLATION OF THE FEDERAL COPYRIGHT ACT AND THE LICENSE AGREEMENT, AND SUBJECT TO CIVIL AND CRIMINAL PENALTIES THEREUNDER.

Storm. A drainage system that carries rainwater, surface water, subsurface water and similar liquid waste.

❖ The storm drainage system conducts water from roof drains, area drains, subsurface drains and clear-water waste sources to an approved location or to the public storm sewer (see Section 1101). The storm drainage system is independent of the sanitary drainage system.

DRINKING FOUNTAIN. A plumbing fixture that is connected to the potable water distribution system and the drainage system. The fixture allows the user to obtain a drink directly from a stream of flowing water without the use of any accessories.

❖ Although such a definition might seem unnecessary to veterans in the plumbing industry, there are so many different types of water dispensers on the market today that the distinction between those dispensers and what the code intended as a drinking fountain becomes blurred. Simply, a drinking fountain provides a stream of drinking water quality (potable) water from which to consume water. Excess water is captured and directed to the drainage system.

EFFECTIVE OPENING. The minimum cross-sectional area at the point of water supply discharge, measured or expressed in terms of the diameter of a circle or, if the opening is not circular, the diameter of a circle of equivalent cross-sectional area. For faucets and similar fittings, the *effective opening* shall be measured at the smallest orifice in the fitting body or in the supply piping to the fitting.

❖ The effective opening is used to determine the minimum air gap required between a potable water supply outlet or opening and the flood level rim of a receptacle, fixture or other potential source of contamination (see Table 608.15.1).

EMERGENCY FLOOR DRAIN. A floor drain that does not receive the discharge of any drain or indirect waste pipe, and that protects against damage from accidental spills, fixture overflows and leakage.

❖ A floor drain installed in a toilet facility is an example of an emergency drain.

ESSENTIALLY NONTOXIC TRANSFER FLUID. Fluids having a Gosselin rating of 1, including propylene glycol; mineral oil; polydimethylsiloxane; hydrochlorofluorocarbon, chlorofluorocarbon and carbon refrigerants; and FDA-approved boiler water additives for steam boilers.

❖ See the commentary to Section 608.16.3.

ESSENTIALLY TOXIC TRANSFER FLUID. Soil, waste or gray water and fluids having a Gosselin rating of 2 or more, including ethylene glycol, hydrocarbon oils, ammonia refrigerants and hydrazine.

❖ Transfer fluids are liquids or gases that transfer heat to or remove heat from another fluid, such as water. The exchange of heat energy takes place through a heat exchanger material that separates the transfer fluid from the fluid being heated or cooled (see commentary, Section 608.16.3).

EXISTING INSTALLATION. Any plumbing system regulated by this code that was legally installed prior to the effective date of this code, or for which a permit to install has been issued.

❖ Existing installations is a term that applies to all plumbing work that has been legally installed, and for which a permit to install has been issued prior to the effective date of the code. Plumbing that has been illegally installed prior to the effective date of the code is not considered existing and is subject to all code requirements for new installations. Sections that address existing plumbing systems and installations include Sections 102 and 108.

FAUCET. A valve end of a water pipe through which water is drawn from or held within the pipe.

❖ A faucet is a type of valve or terminal fitting that controls the volume and directional flow of water. In the context of the code, faucets are installed in the potable water distribution system. Faucets terminate to the atmosphere by means of a spout or similar opening and are considered as outlets for the potable water distribution system.

FILL VALVE. A water supply valve, opened or closed by means of a float or similar device, utilized to supply water to a tank. An antisiphon fill valve contains an antisiphon device in the form of an *approved air gap* or vacuum breaker that is an integral part of the fill valve unit and that is positioned on the discharge side of the water supply control valve.

❖ A fill valve is a float-actuated valve used in flush tanks. The fill valve serves to control the water supply for refilling the flush tank and restoring the trap seal in the water closet bowl. All flush tanks must be equipped with an antisiphon fill valve installed with the critical level 1 inch (25 mm) above the overflow pipe.

FIXTURE. See "Plumbing fixture."

❖ See the commentary to "Plumbing fixture."

FIXTURE BRANCH. A drain serving two or more fixtures that discharges to another drain or to a *stack*.

❖ See Commentary Figure 202(10).

FIXTURE DRAIN. The drain from the trap of a fixture to a junction with any other drain pipe.

❖ A fixture drain is the section of pipe that connects the outlet weir of a trap to a stack, fixture branch or any other drain [see Commentary Figures 202(10) and 202(11)]. A fixture drain conveys the discharge of only a single trap and can consist of both horizontal and vertical sections of pipe. A fixture drain ends at the point where the discharge from any other fixture is introduced. Although commonly referred to as a "trap arm," a fixture drain can extend beyond the connection of the vent for the fixture drain.

INTERNATIONAL CODE COUNCIL®
Copyright © 2015 ICC. ALL RIGHTS RESERVED. Accessed by David Dammon on Jun 21, 2017 12:30:52 PM pursuant to License Agreement with ICC. No further reproduction or distribution authorized. ANY UNAUTHORIZED REPRODUCTION OR DISTRIBUTION IS A VIOLATION OF THE FEDERAL COPYRIGHT ACT AND THE LICENSE AGREEMENT, AND SUBJECT TO CIVIL AND CRIMINAL PENALTIES THEREUNDER.

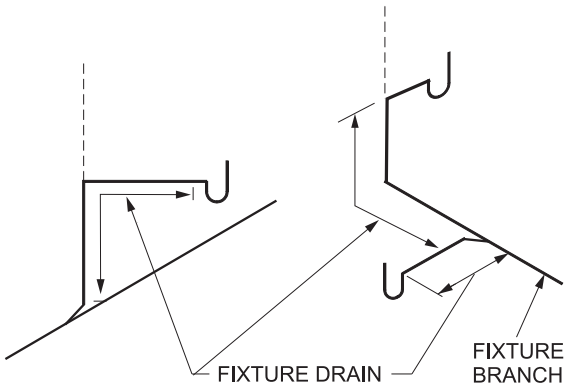

Figure 202(11)
FIXTURE DRAIN

FIXTURE FITTING.

❖ Fixture fittings include faucets, spouts, terminal fittings, diverters, supply stops, wastes, traps and other "trim" items that attach to, or in the case of supply fittings are accessible from, a plumbing fixture. These items are necessary to allow the fixture to function as intended.

Supply fitting. A fitting that controls the volume, direction of flow or both, of water and is either attached to or accessible from a fixture, or is used with an open or atmospheric discharge.

❖ These fittings are associated with the supply and control of flow of water to a fixture. Supply fittings can also include fittings that serve the same purpose but are not mounted directly to the fixture.

Waste fitting. A combination of components that conveys the sanitary waste from the outlet of a fixture to the connection to the sanitary drainage system.

❖ These fittings include the fixture traps that are not an integral part of the fixture (see commentary, Section 1002) and the parts used to connect piping to the sanitary drainage system (see Section 424.1.2).

FIXTURE SUPPLY. The water supply pipe connecting a fixture to a *branch* water supply pipe or directly to a main water supply pipe.

❖ A fixture supply is a water supply pipe that serves a single fixture (see commentary, Section 604.5).

[BS] FLOOD HAZARD AREA. The greater of the following two areas:

1. The area within a flood plain subject to a 1-percent or greater chance of flooding in any given year.
2. The area designated as a *flood hazard area* on a community's flood hazard map or as otherwise legally designated.

❖ The FIRMs that are prepared by FEMA show areas that are predicted to be flooded under conditions of the 1-percent annual chance (base) flood. Some states

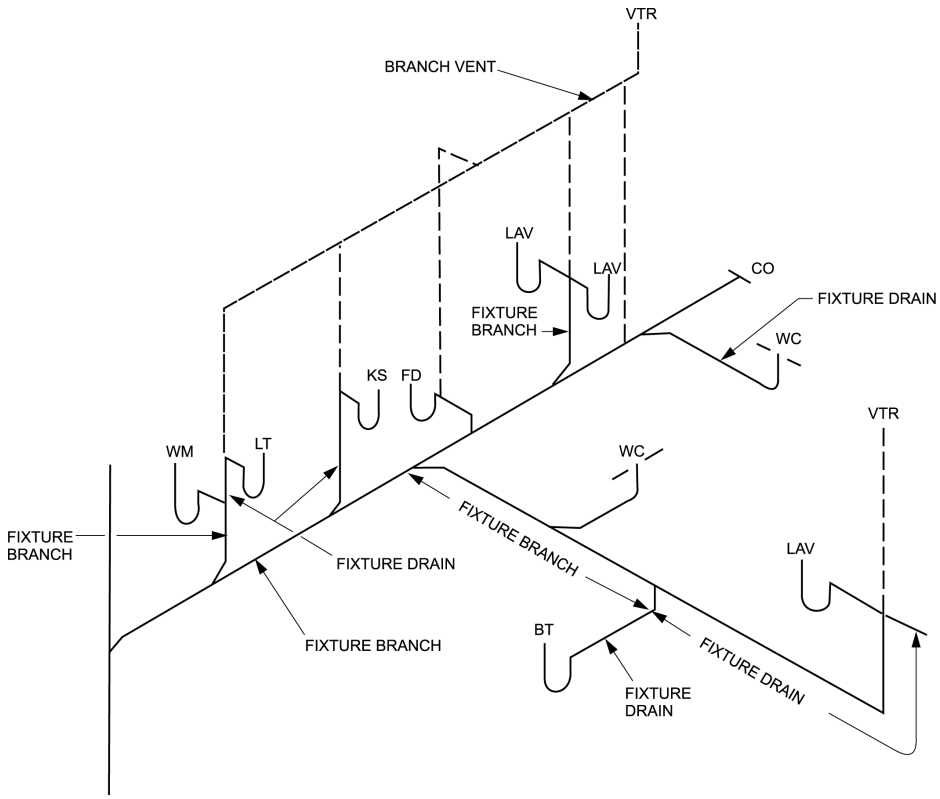

Figure 202(10)
FIXTURE DRAINS AND FIXTURE BRANCHES

INTERNATIONAL CODE COUNCIL®
Copyright © 2015 ICC. ALL RIGHTS RESERVED. Accessed by David Dammon on Jun 21, 2017 12:30:52 PM pursuant to License Agreement with ICC. No further reproduction or distribution authorized. ANY UNAUTHORIZED REPRODUCTION OR DISTRIBUTION IS A VIOLATION OF THE FEDERAL COPYRIGHT ACT AND THE LICENSE AGREEMENT, AND SUBJECT TO CIVIL AND CRIMINAL PENALTIES THEREUNDER.

and local jurisdictions develop and adopt maps of flood hazard areas that are more extensive than the areas shown on FEMA's maps. For the purposes of the code, the flood hazard area within which the requirements are to be applied is the greater of the two delineated areas.

FLOOD LEVEL RIM. The edge of the receptacle from which water overflows.

❖ The flood level rim corresponds to the highest elevation that liquid can be contained in a receptacle without spilling over the side. The flood level rim is the point above which liquid will flow over and out of a fixture or receptor. For example, the flood level rim of a sink is the top edge of the basin, and the flood level rim of a floor drain is the floor surface at the floor drain [see Commentary Figure 608.15.1(1)].

FLOW CONTROL (Vented). A device installed upstream from the interceptor having an orifice that controls the rate of flow through the interceptor and an air intake (vent) downstream from the orifice that allows air to be drawn into the flow stream.

❖ Referenced standard ASME A112.14.3 and Section 1003.4.2 use this term in connection with grease interceptors. This device is necessary to control the flow rate of waste through the interceptor and to entrain air to assist in separation of grease and oily waste from the water. Grease interceptors depend on having the necessary waste retention time to allow the fats, oils and grease to separate. If the influent flow rate is too high, the waste will pass through the interceptor too quickly, not allowing sufficient time for separation to occur. Entraining air in the waste influent will cause air bubbles to attach to grease globules, making them more buoyant and thereby enhancing the separation process (see Commentary Figure 1003.3.4.2).

FLOW PRESSURE. The pressure in the water supply pipe near the faucet or water outlet while the faucet or water outlet is wide open and flowing.

❖ Each fixture requiring water has a minimum flow pressure that is necessary for the fixture to operate properly and to help protect the potable water supply from contamination. Flow pressure is a factor used in the sizing of the water supply system. The flow pressure of a plumbing system is less than the static pressure because energy is lost in putting the fluid in motion (see Table 604.3).

FLUSH TANK. A tank designed with a fill valve and flush valve to flush the contents of the bowl or usable portion of the fixture.

❖ The flush tank for a water closet or urinal must be able to supply water in sufficient quantity to flush the contents of the fixture, cleanse the fixture bowl and refill the fixture trap. The definition states clearly that the flush valve is considered to be part of the flush tank.

FLUSHOMETER TANK. A device integrated within an air accumulator vessel that is designed to discharge a predetermined quantity of water to fixtures for flushing purposes.

❖ These devices are a hybrid between flushometer valves and gravity flush tanks. A flushometer tank uses a compression tank that holds water under a pressure equivalent to the water supply pressure. The flushing action created by the flushometer tank is similar to that of the flushometer valve. The amount of water used is limited, as it is with a gravity flush tank.

FLUSHOMETER VALVE. A valve attached to a pressurized water supply pipe and so designed that when activated it opens the line for direct flow into the fixture at a rate and quantity to operate the fixture properly, and then gradually closes to reseal fixture traps and avoid water hammer.

❖ These flushing devices are a type of metering valve and are used primarily in public occupancy applications because of the more powerful flushing action.

GRAY WATER. Waste discharged from lavatories, bathtubs, showers, clothes washers and laundry trays.

❖ The collection of water only from the fixtures indicated deserves a special and distinct name so designers and installers know to keep this water separate from blackwater (waste water from water closets, urinals and kitchen sinks), where necessary to do so. In fact, graywater usually does have a grayish color. Although the code does not require the marking of gray water collection piping, it may be prudent to mark such piping systems to avoid future connection of blackwater (containing fecal matter) piping to gray water piping.

GREASE INTERCEPTOR.

Fats, oils and greases (FOG) disposal system. A plumbing appurtenance that reduces nonpetroleum fats, oils and greases in effluent by separation or mass and volume reduction.

Gravity. Plumbing appurtenances of not less than 500 gallons (1893 L) capacity that are installed in the sanitary drainage system to intercept free-floating fats, oils and grease from waste water discharge. Separation is accomplished by gravity during a retention time of not less than 30 minutes.

Hydromechanical. Plumbing appurtenances that are installed in the sanitary drainage system to intercept free-floating fats, oils and grease from waste water discharge. Continuous separation is accomplished by air entrainment, buoyancy and interior baffling.

❖ Prior to the 2012 edition, the code did not distinguish between the two of these types of grease interceptors, gravity and hydromechanical. Many in the plumbing industry still use the old term "grease trap" without giving a preference to meaning either type. Now more than ever, correct terminology for these appurtenances must be used because with the 2015 edition, a new type of grease interceptor, the FOG disposal system, is introduced.

Gravity grease interceptors are typically large tanks, usually buried below a parking lot or driveway, that provide for quiescent flow of grease-laden waste through the tank. Internal baffles and changes in flow direction cause solids to settle out and grease to float.

INTERNATIONAL CODE COUNCIL®
Copyright © 2015 ICC. ALL RIGHTS RESERVED. Accessed by David Dammon on Jun 21, 2017 12:30:52 PM pursuant to License Agreement with ICC. No further reproduction or distribution authorized. ANY UNAUTHORIZED REPRODUCTION OR DISTRIBUTION IS A VIOLATION OF THE FEDERAL COPYRIGHT ACT AND THE LICENSE AGREEMENT, AND SUBJECT TO CIVIL AND CRIMINAL PENALTIES THEREUNDER.

All are retained in the tank until pumped out on a periodic basis by a grease waste removal/disposal contractor.

Hydromechanical grease interceptors are much smaller in size than the typical gravity grease interceptor. These units are more often located indoors and can be somewhat automated to draw off grease, making maintenance easier.

FOG disposal systems are relatively new and are converters of fats, oils and greases. Rather than simply capturing FOG like the other type of grease interceptors, this type of system converts a majority of the FOG into grey water through a bioremediation process. In other words, these systems are an on-site, in-line treatment process specifically designed for grease-laden waste. FOG disposal systems can attain lower FOG concentrations in the effluent than the other types of grease interceptors.

These definitions, along with their proper application in the code text of Chapter 10, helps to clarify which type of grease interceptor the code is regulating.

GREASE-LADEN WASTE. Effluent discharge that is produced from food processing, food preparation or other sources where grease, fats and oils enter automatic dishwater prerinse stations, sinks or other appurtenances.

❖ The effluent discharge from food preparation and processing of animal products will usually produce grease-laden waste. Additionally, many industrial processes that use animal fats or petroleum products will produce grease-laden waste. This waste has two main deleterious effects on sewer systems: frequent stoppages resulting from congealed grease and overloading of the sewage treatment system.

GREASE REMOVAL DEVICE, AUTOMATIC (GRD). A plumbing appurtenance that is installed in the sanitary drainage system to intercept free-floating fats, oils and grease from waste water discharge. Such a device operates on a time- or event-controlled basis and has the ability to remove free-floating fats, oils and grease automatically without intervention from the user except for maintenance.

❖ Referenced standard ASME A112.14.4 and Section 1003.3.4 use this term in connection with grease interceptors. An automatic grease removal device serves the same function as a grease interceptor with the distinction that the unpleasant aspect of grease removal is performed automatically. There are two main types of automatic GRD: pump-out and skimmer type. The pump-out type has an internal sensor that senses a buildup of collected grease, liquefies it and pumps it out to an external container for proper environmental disposal.The skimmer type has a timer-activated skimmer mechanism to mechanically collect and transport the collected grease to an external container. Both types usually have internal heaters to keep the grease in liquid form for easy pumping or skimming.

Although the solids interceptor section of the GRD still requires manual maintenance to remove waste stream particulates such as food scraps, broken glass and plastics, the task is relatively easy, thus having the likelihood of being performed regularly [see Commentary Figures 202(12) through 202(14)].

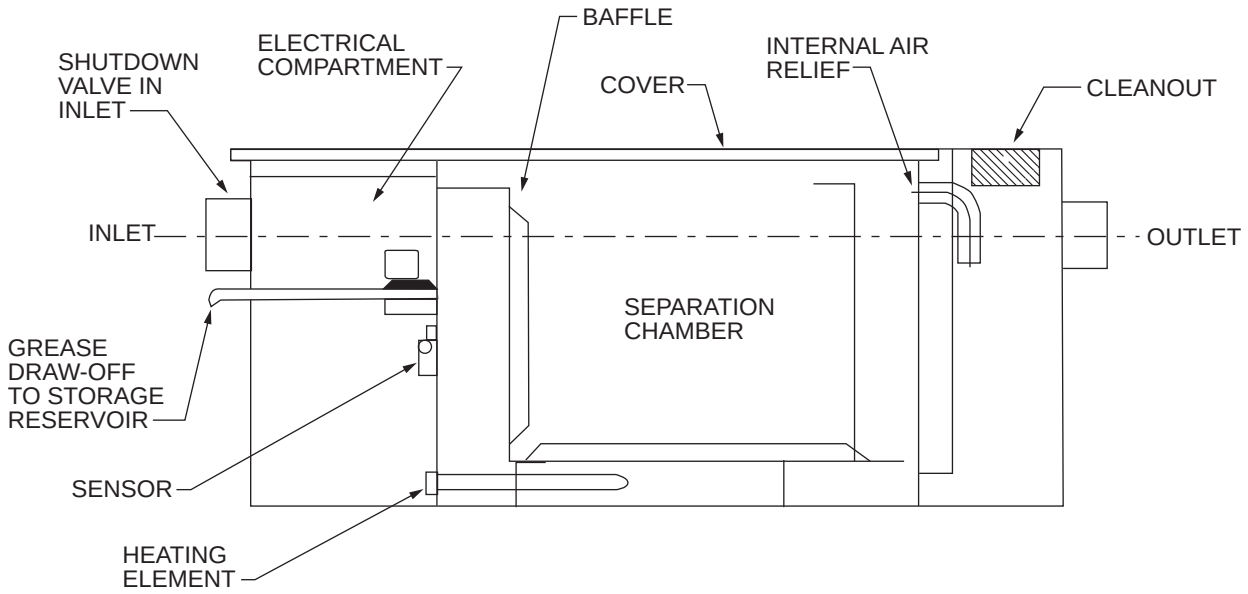

Figure 202(12)
SENSOR-CONTROLLED GREASE RECOVERY DEVICE

INTERNATIONAL CODE COUNCIL®
Copyright © 2015 ICC. ALL RIGHTS RESERVED. Accessed by David Dammon on Jun 21, 2017 12:30:52 PM pursuant to License Agreement with ICC. No further reproduction or distribution authorized. ANY UNAUTHORIZED REPRODUCTION OR DISTRIBUTION IS A VIOLATION OF THE FEDERAL COPYRIGHT ACT AND THE LICENSE AGREEMENT, AND SUBJECT TO CIVIL AND CRIMINAL PENALTIES THEREUNDER.

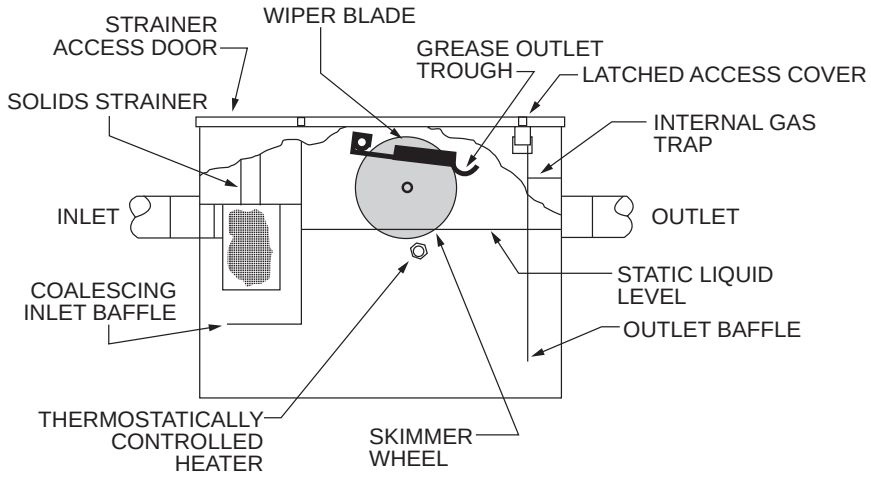

Figure 202(13)
TIMER-CONTROLLED GREASE RECOVERY DEVICE

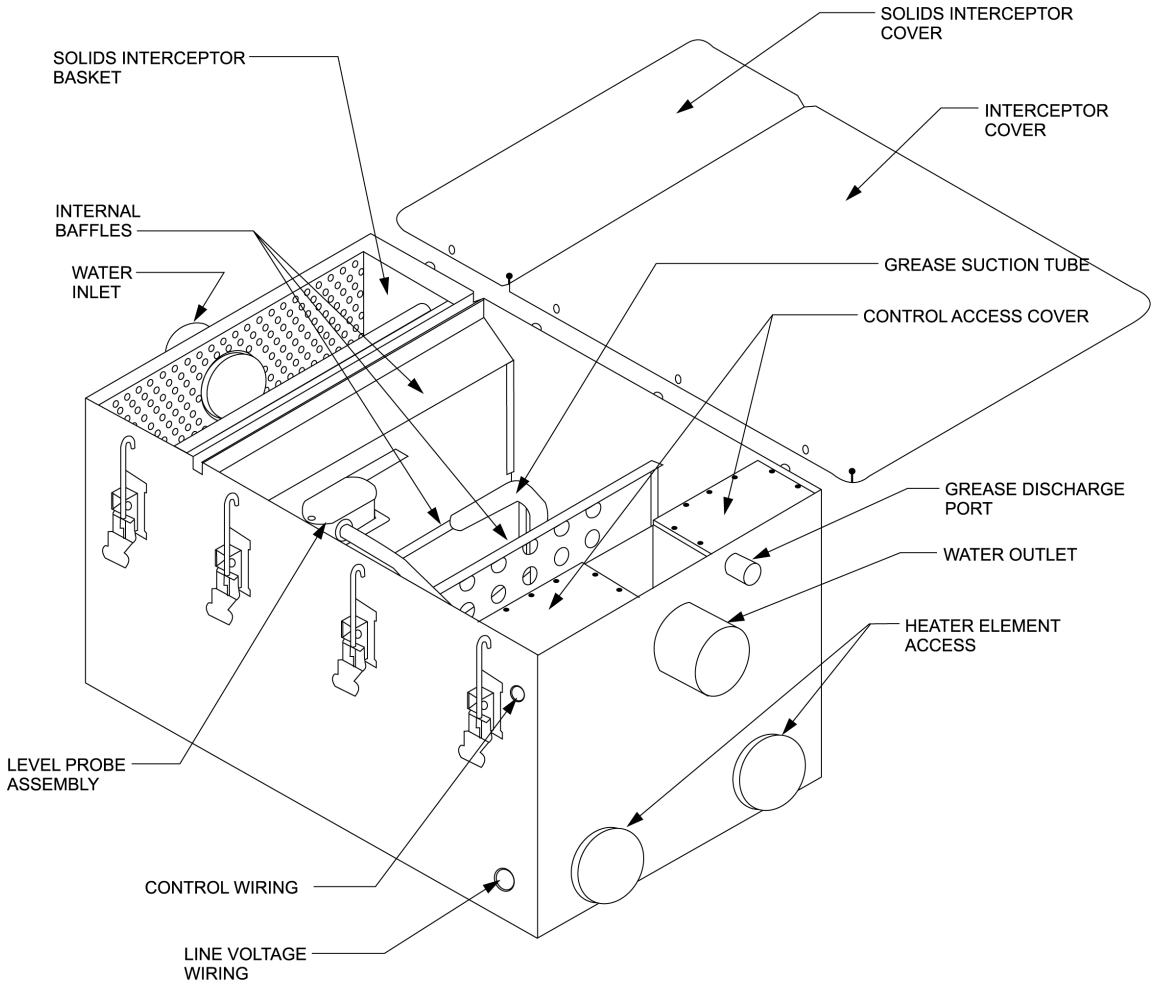

Figure 202(14)
GREASE-REMOVAL DEVICE, AUTOMATIC

INTERNATIONAL CODE COUNCIL®
Copyright © 2015 ICC. ALL RIGHTS RESERVED. Accessed by David Dammon on Jun 21, 2017 12:30:52 PM pursuant to License Agreement with ICC. No further reproduction or distribution authorized. ANY UNAUTHORIZED REPRODUCTION OR DISTRIBUTION IS A VIOLATION OF THE FEDERAL COPYRIGHT ACT AND THE LICENSE AGREEMENT, AND SUBJECT TO CIVIL AND CRIMINAL PENALTIES THEREUNDER.

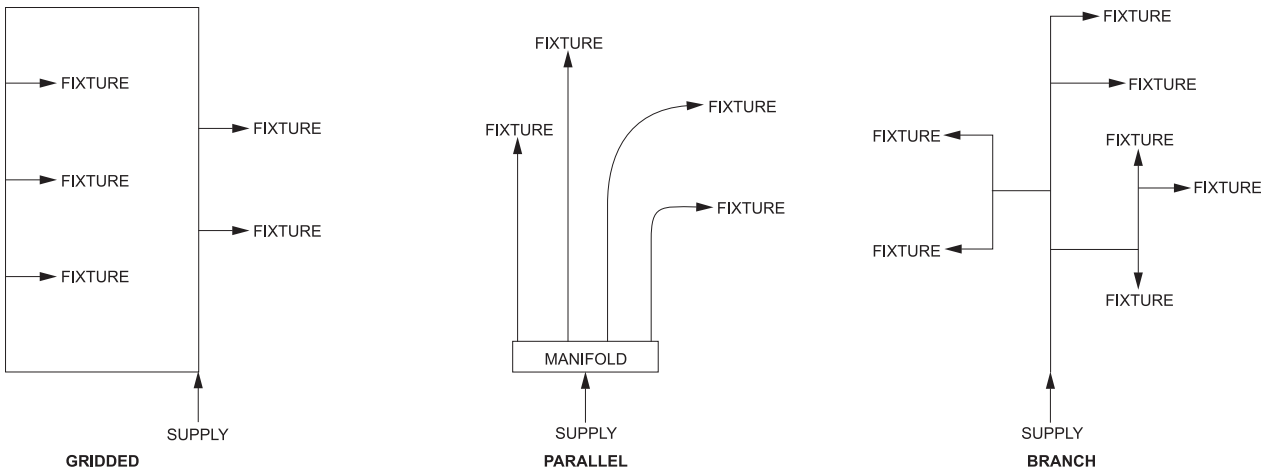

Figure 202.(15)
TYPES OF WATER DISTRIBUTION SYSTEMS

GRIDDED WATER DISTRIBUTION SYSTEM. A water distribution system where every water distribution pipe is interconnected so as to provide two or more paths to each fixture supply pipe.

❖ A gridded water distribution system is more hydraulically efficient than a parallel or branch line layout but not necessarily more cost efficient. The design balances pressure and equalizes flow so that fixtures farthest from the water service entry point will operate under the same pressure and flow conditions as those closest to the water service entry point. Commentary Figure 202(15) illustrates various distribution layouts.

HANGERS. See "Supports."

HORIZONTAL BRANCH DRAIN. A drainage *branch* pipe extending laterally from a soil or waste *stack* or *building drain*, with or without vertical sections or *branches*, that receives the discharge from two or more *fixture drains* or *branches* and conducts the discharge to the soil or waste *stack* or to the *building drain*.

❖ See Commentary Figure 202(10) and Sections 912 and 914.

HORIZONTAL PIPE. Any pipe or fitting that makes an angle of less than 45 degrees (0.79 rad) with a horizontal plane.

❖ This definition is needed for the application of many code provisions that apply only to horizontal piping, such as those contained in Chapters 3, 7, 9 and 11.

HOT WATER. Water at a temperature greater than or equal to 110°F (43°C).

❖ The code does not specify a maximum temperature for hot water; however, it should be limited to minimize the risk of burn injury and thermal stress to plumbing system components. The designer, the installer or the owner has the choice of determining the temperature. Underwriters Laboratories (UL) standard UL 174 for electric water heaters requires that the temperature-regulating thermostat or control be set at the factory at not greater than 125°F (51.7°C).

Water temperature below the minimum temperature of 110°F (43°C) is considered to be either tempered or cold. Care must be used when installing a system that has temperature capability of scalding.

HOUSE TRAP. See "Building trap."

INDIRECT WASTE PIPE. A waste pipe that does not connect directly with the drainage system, but that discharges into the drainage system through an *air break* or *air gap* into a trap, fixture, receptor or interceptor.

❖ Often referred to as "open site" or "safe waste," indirect waste pipe installations are intended to protect fixtures, equipment and systems from the backflow or backsiphonage of waste (see commentary, Sections 801.1 and 802.1).

INDIVIDUAL SEWAGE DISPOSAL SYSTEM. A system for disposal of domestic sewage by means of a septic tank, cesspool or mechanical treatment, designed for utilization apart from a public *sewer* to serve a single establishment or building.

❖ When installed in accordance with the *International Private Sewage Disposal Code*® (IPSDC®) and approved by the administrative authority, these systems are acceptable as a point of disposal for sewage when a public sewer system is not available.

INDIVIDUAL VENT. A pipe installed to vent a fixture trap and that connects with the vent system above the fixture served or terminates in the open air.

❖ An individual vent is the simplest and most common method of venting a single plumbing fixture (see commentary, Section 907.1).

INTERNATIONAL CODE COUNCIL®
Copyright © 2015 ICC. ALL RIGHTS RESERVED. Accessed by David Dammon on Jun 21, 2017 12:30:52 PM pursuant to License Agreement with ICC. No further reproduction or distribution authorized. ANY UNAUTHORIZED REPRODUCTION OR DISTRIBUTION IS A VIOLATION OF THE FEDERAL COPYRIGHT ACT AND THE LICENSE AGREEMENT, AND SUBJECT TO CIVIL AND CRIMINAL PENALTIES THEREUNDER.

INDIVIDUAL WATER SUPPLY. A water supply that serves one or more families, and that is not an *approved* public water supply.

❖ This type of water supply includes wells, springs, streams and cisterns. Surface bodies of water and land cisterns can be used when properly treated and approved (see commentary, Sections 602.3 and 608.17).

INTERCEPTOR. A device designed and installed to separate and retain for removal, by automatic or manual means, deleterious, hazardous or undesirable matter from normal wastes, while permitting normal sewage or wastes to discharge into the drainage system by gravity.

❖ These devices are often necessary for the initial treatment of sewage before it is discharged to an approved point of disposal. Interceptors are intended to eliminate or reduce the amounts of substances in sewage that can be detrimental to drainage and sewage treatment systems. When the interceptor is designed for a specific use, it often bears that name, such as a grease interceptor.

JOINT.

❖ For a piping system, either supply or drainage, to be installed in a structure, there must be a series of pipe sections and pipe fittings. The connection of these two types of components is a joint in its most general definition.The four types of joints listed below are special types used for a particular installation. These joints are very specific and should be made using the proper components and procedures.

Expansion. A loop, return bend or return offset that provides for the expansion and contraction in a piping system and is utilized in tall buildings or where there is a rapid change of temperature, as in power plants, steam rooms and similar occupancies.

❖ See the commentary to Sections 305.2 and 308.8.

Flexible. Any joint between two pipes that permits one pipe to be deflected or moved without movement or deflection of the other pipe.

❖ See the commentary to Section 305.2.

Mechanical. See "Mechanical joint."

Slip. A type of joint made by means of a washer or a special type of packing compound in which one pipe is slipped into the end of an adjacent pipe.

❖ A slip joint is a joint commonly found in tubular-type fixture tailpieces and "P" traps. Even though the term "slip" is used, there is not the intent that such joints be suitable for accommodating expansion and contraction of piping or differential movement. In the early use of slip joints, sealing rings were made of various fibrous materials and then later, rubber. Joints using these materials would "slip" if the tubes were pushed around. The rings adequately "sealed" the connections when new but when aged, they would leak if the tubes were bumped. Newer designs of tubular-type tailpieces and "P" traps allow for cone-shaped plastic sealing rings to be used for the connections. When the joint is assembled and the connection nut is still loose, the tubes can be "slipped" for final adjustment into position. However, once the nut is tightened, the "wedge action" of the sealing ring into the tube opening offers a tight, superior, long-lasting seal for the connection. Even though the joint does not "slip," these joints are still called slip joints (see commentary, Section 405.8 and Figure 1002.2).

LEAD-FREE SOLDER AND FLUX. Containing not more than 0.2-percent lead.

❖ A soldered joint is one method of joining copper pipe and tubing. ASTM B32 covers many grades of solder, including tin-silver solders. Many decades ago the grades used in the plumbing industry were typically 40-60 (40-percent tin and 60-percent lead) and 50-50 (50-percent tin and 50-percent lead). However, solders for joining copper tubing used for the distribution of potable water and having more than 0.2 percent have not been allowed for several decades. Most solders for potable water service are 95-5 (95-percent tin and 5-percent antimony). There are other "lead-free" solders available that sometimes offer better characteristics for certain installer's techniques.

Soldering requires a flux be applied to the joint surfaces prior to heating and applying the solder. The term "flux" in Latin is *fluxus,* meaning "flow." The flux removes oxidation on the surfaces to be joined even though the procedure for preparing a joint requires brush cleaning of the surfaces to a bright finish. The flux encourages capillary action of the melted solder throughout the joint.

Lead-bearing solders are still acceptable for joining copper and copper alloy drain, waste and vent piping.

Installers using both "lead free" and "leaded" solder and flux in their work need to carefully control truck and shop stock of the leaded products so they are not inadvertently used for a potable water piping application (see commentary, Section 705.7.3).

LEADER. An exterior drainage pipe for conveying storm water from roof or gutter drains to an *approved* means of disposal.

❖ Otherwise known as a downspout, this type of drain serves the storm drainage system and typically connects to hanging or built-in gutters and scuppers (see the definition of "Conductor").

LOCAL VENT STACK. A vertical pipe to which connections are made from the fixture side of traps and through which vapor or foul air is removed from the fixture or device utilized on bedpan washers.

❖ Local vents are designed to conduct moisture vapor and foul air to the exterior of the building. Local vents connect to a fixture on the house side (fixture side) of the fixture trap; therefore, such vents must be entirely independent of the sanitary drainage system vents.

INTERNATIONAL CODE COUNCIL®
Copyright © 2015 ICC. ALL RIGHTS RESERVED. Accessed by David Dammon on Jun 21, 2017 12:30:52 PM pursuant to License Agreement with ICC. No further reproduction or distribution authorized. ANY UNAUTHORIZED REPRODUCTION OR DISTRIBUTION IS A VIOLATION OF THE FEDERAL COPYRIGHT ACT AND THE LICENSE AGREEMENT, AND SUBJECT TO CIVIL AND CRIMINAL PENALTIES THEREUNDER.

MACERATING TOILET SYSTEM. An assembly consisting of a water closet and sump with a macerating pump that is designed to collect, grind and pump wastes from the water closet and up to two other fixtures connected to the sump.

❖ This assembly includes a water closet and a sump facilitating the connection of two other fixtures and is normally used where fixtures are required below the building sewer invert. Section 712.4.1 specifically requires these assemblies to be installed according to the manufacturers' instructions and ASME A112.3.4 or CSA B45.9. The assembly includes a grinder pump that reduces the size of solids, allowing the use of discharge piping that is smaller than conventional size.

MAIN. The principal pipe artery to which branches are connected.

❖ This is a generic item that applies to the primary (and typically the largest) water supply system piping or drainage system piping to which all other piping is connected. The main is the trunk line of branch system piping designs.

MANIFOLD. See "Plumbing appurtenance."

❖ A manifold is a multiple-opening header to which one or more branch lines connect (see the definition of "Plumbing appurtenance" and Section 604.10).

[M] MECHANICAL JOINT. A connection between pipes, fittings, or pipes and fittings that is not screwed, caulked, threaded, soldered, solvent cemented, brazed, welded or heat fused. A joint in which compression is applied along the centerline of the pieces being joined. In some applications, the joint is part of a coupling, fitting or adapter.

❖ Mechanical joints form a seal by compressing a ferrule or seal around the outside circumference of the pipe or tube or by compressing the tubing around a fitting inserted into the tubing. Mechanical joints are often proprietary and must be installed in accordance with the manufacturers' instructions. Heat fused joints are not considered to be a mechanical joint.

MEDICAL GAS SYSTEM. The complete system to convey medical gases for direct patient application from central supply systems (bulk tanks, manifolds and medical air compressors), with pressure and operating controls, alarm warning systems, related components and piping networks extending to station outlet valves at patient use points.

❖ Nonflammable medical gases are distributed through piping systems from central supply systems, such as cylinders or medical air compressors, to station outlets throughout the medical facility (i.e., patient rooms, operating/delivery rooms or emergency treatment facilities). Medical gases include, but are not limited to, oxygen, nitrogen, nitrous oxide, carbon dioxide and compressed air.

Because more than one medical gas is usually delivered to an outlet station, care must be exercised so that the correct gas is being used for a given procedure. Accidental cross connection can result in injury or death of a patient. All piping, supply systems and outlet stations must be clearly labeled with the name of the gas being supplied. In addition, color-coded or noninterchangeable fittings, keyed to the specific gas, are usually incorporated to further safeguard against cross connections.

The delivery of medical gases is critical to the operation of a health care facility, and provisions must be made to ensure continuous operation of the system. Secondary (backup) cylinders and air compressors are required, and the compressors should be connected to the emergency electrical power grid.

Detailed guidance for the design, installation and maintenance of a medical gas system is provided in NFPA 99.

MEDICAL VACUUM SYSTEM. A system consisting of central-vacuum-producing equipment with pressure and operating controls, shutoff valves, alarm-warning systems, gauges and a network of piping extending to and terminating with suitable station inlets at locations where patient suction may be required.

❖ Central medical vacuum systems, including surgical and bedside vacuum systems and waste gas scavenging systems, have become a standard feature in most health care facilities. Inlet stations are typically installed in patient rooms, operating/delivery rooms, nurseries, emergency rooms and other patient care facilities. A vacuum system may also be provided in the laboratory, but is not usually connected to the medical vacuum system.

Each vacuum inlet station requires a collection bottle for collecting fluids and a trap bottle to prevent any overflow fluids from entering and clogging the suction line.This dual bottle system helps prevent the spread of contaminants within the medical facility.

Because the medical vacuum system has become so critical to patient care, continuous service from the system must be assured. At least two vacuum pumps should be installed, each sized to meet all of the facility's needs if the other fails. The pumps should also be connected to the facility's emergency electrical power grid.

Detailed guidance for the design, installation and maintenance of a medical vacuum system is contained in NFPA 99.

METER. A measuring device used to collect data and indicate water usage.

❖ Just about everyone understands what a water (utility) meter is—it is the device that a public water purveyor installs on the water service line to measure water use for a building in order to charge the user for the water. Most meters are a totalizer type, that is, they simply indicate the number of gallons that have passed through the device. Periodic readings (such as once per month) allow the water supplier to subtract the lower reading from the higher reading to know how much water was used in a month. Over the years,

INTERNATIONAL CODE COUNCIL®
Copyright © 2015 ICC. ALL RIGHTS RESERVED. Accessed by David Dammon on Jun 21, 2017 12:30:52 PM pursuant to License Agreement with ICC. No further reproduction or distribution authorized. ANY UNAUTHORIZED REPRODUCTION OR DISTRIBUTION IS A VIOLATION OF THE FEDERAL COPYRIGHT ACT AND THE LICENSE AGREEMENT, AND SUBJECT TO CIVIL AND CRIMINAL PENALTIES THEREUNDER.

totalizer-type meters have been fitted with electronic readout devices to make the reading process quicker and sometimes by remote means.

Newer meters are now available that can store data on water usage patterns for reporting to a remote location when activated to do so. Such data has been found to be very useful for alerting users of wasteful water usage, helping them curtail their use of water. The data is also useful to building owners for spotting patterns indicating leaks, malfunctioning fixtures and defective equipment. Measuring is the first step in the process of water conservation.

NONPOTABLE WATER. Water not safe for drinking, personal or culinary utilization.

❖ Myriad substances can make water unfit for consumption, washing or bathing. Water not meeting the parameters for quality as defined in the EPA Clean Drinking Water Act is considered to be nonpotable. The code has numerous requirements for preventing the cross connection of nonpotable water to the potable water supply (see commentary, Section 608).

NUISANCE. Public nuisance as known in common law or in equity jurisprudence; whatever is dangerous to human life or detrimental to health; whatever structure or premises is not sufficiently ventilated, sewered, drained, cleaned or lighted, with respect to its intended *occupancy*; and whatever renders the air, or human food, drink or water supply unwholesome.

❖ The meaning of the term "nuisance" can be interpretive. Although there are certainly situations wherein a health hazard is clearly present, other conditions that represent an unreasonable interference with "the enjoyment of life and property" require a subjective decision on the part of the administrative authority. An indirect waste discharge onto a floor adjacent to a floor receptor could be a slipping hazard and therefore judged to be a nuisance. Additionally, any insanitary condition caused by a plumbing installation or lack of a plumbing installation could be considered a nuisance.

[A] OCCUPANCY. The purpose for which a building or portion thereof is utilized or occupied.

❖ The occupancy classification of a building is an indication of the level of hazard to which occupants are exposed as a function of the building's use. Occupancy in terms of an occupancy group classification is one of the primary considerations in the development and application of many code requirements that are designed to offset the hazards specific to each occupancy group designation.

OFFSET. A combination of *approved* bends that makes two changes in direction bringing one section of the pipe out of line but into a line parallel with the other section.

❖ Offsets are necessary to route piping around or through structural elements such as beams, joists, trusses and columns. An offset always involves at least two changes in direction to keep the piping heading in the same direction. Any other arrangement would be considered a bend or a simple change in direction.

ON-SITE NONPOTABLE WATER REUSE SYSTEM. A water system for the collection, treatment, storage, distribution and reuse of nonpotable water generated on site, including but not limited to a gray water system. This definition does not include a rainwater harvesting system.

❖ There are a number of water sources that can be generated by the operation or occupancy of a building. The first source that comes to mind is usually gray water (see the definition for "Gray water"). But there could be many other sources such as heat exchanger cooling water, air-conditioning condensate, cooling tower discharge water, steam condensate and other sources that are specific to unique processes. In other words, if it is water-based liquid and is not blackwater (that which contains fecal matter or urine), it could possibly be used for another purpose. Whether or not all sources can be used depends on how much the water needs to be treated to make it suitable for an end use, the feasibility of collecting the water and the jurisdiction's allowances for using such water for end uses.

OPEN AIR. Outside the structure.

❖ This term clarifies the intent of the code with regard to the location of vent terminals. "Open air" refers to the atmosphere that is exterior to the envelope or outside of a building.

PLUMBING. The practice, materials and fixtures utilized in the installation, maintenance, extension and alteration of all piping, fixtures, plumbing appliances and plumbing appurtenances, within or adjacent to any structure, in connection with sanitary drainage or storm drainage facilities; venting systems; and public or private water supply systems.

❖ The term refers to the collective system of piping, fixtures, fittings, components or devices and appurtenances that transport potable water and liquid and solid wastes associated with cleaning, washing, bathing, food preparation, drinking and the elimination of bodily wastes.

The word "plumbing" comes from the Latin word for the element lead (plumbum), because lead was used extensively in the construction of piping systems. The practice of installing piping systems and the materials used in such systems became known as plumbing.

Piping, fittings, devices, faucets, vessels, containers and receptacles that are used to supply, distribute, receive or transport potable water, liquid wastes or solid wastes suspended in water are considered as plumbing. Plumbing also includes appliances, equipment and systems such as water conditioners, water heaters, storm drainage systems, water coolers, water filters and waste treatment systems.

PLUMBING APPLIANCE. Water or drain-connected devices intended to perform a special function. These devices have their operation or control dependent on one or

INTERNATIONAL CODE COUNCIL®
Copyright © 2015 ICC. ALL RIGHTS RESERVED. Accessed by David Dammon on Jun 21, 2017 12:30:52 PM pursuant to License Agreement with ICC. No further reproduction or distribution authorized. ANY UNAUTHORIZED REPRODUCTION OR DISTRIBUTION IS A VIOLATION OF THE FEDERAL COPYRIGHT ACT AND THE LICENSE AGREEMENT, AND SUBJECT TO CIVIL AND CRIMINAL PENALTIES THEREUNDER.

more energized components, such as motors, controls or heating elements. Such devices are manually adjusted or controlled by the owner or operator, or are operated automatically through one or more of the following actions: a time cycle, a temperature range, a pressure range, a measured volume or weight.

❖ Examples of plumbing appliances include water heaters, hot water dispensers, garbage disposals, dishwashers, clothes washers, water purifiers and water softeners.

PLUMBING APPURTENANCE. A manufactured device, prefabricated assembly or on-the-job assembly of component parts that is an adjunct to the basic piping system and plumbing fixtures. An appurtenance demands no additional water supply and does not add any discharge load to a fixture or to the drainage system.

❖ Examples of plumbing appurtenances include water closet seats, hand-held showers, manifolds, backflow preventers, water-hammer arrestors, strainers and filters.

PLUMBING FIXTURE. A receptacle or device that is connected to a water supply system or discharges to a drainage system or both. Such receptacles or devices require a supply of water; or discharge liquid waste or liquid-borne solid waste; or require a supply of water and discharge waste to a drainage system.

❖ This definition was changed for the 2012 edition of the code in order to fully encompass the variety of plumbing fixtures that could be installed in a building. The most common type of plumbing fixture has a supply of water connected to it and is connected to the drain system. Examples are water closets, lavatories and bath-

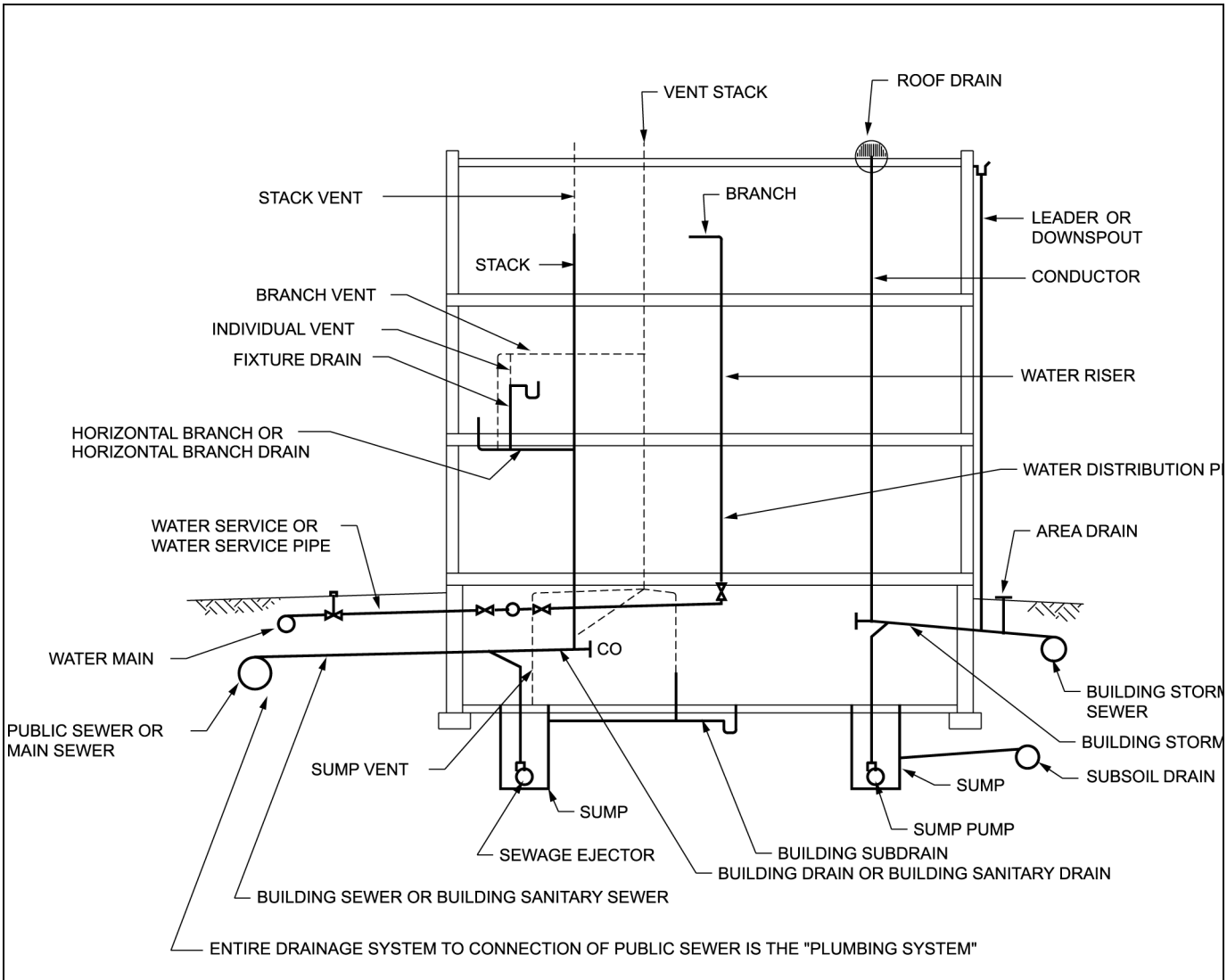

Figure 202(16)
PARTS OF A PLUMBING SYSTEM

INTERNATIONAL CODE COUNCIL®
Copyright © 2015 ICC. ALL RIGHTS RESERVED. Accessed by David Dammon on Jun 21, 2017 12:30:52 PM pursuant to License Agreement with ICC. No further reproduction or distribution authorized. ANY UNAUTHORIZED REPRODUCTION OR DISTRIBUTION IS A VIOLATION OF THE FEDERAL COPYRIGHT ACT AND THE LICENSE AGREEMENT, AND SUBJECT TO CIVIL AND CRIMINAL PENALTIES THEREUNDER.

tubs. Nonwater-supplied (waterless) urinals, floor sinks and floor drains are fixtures that only require connection to the drain system. An outdoor shower discharging to the ground is an example of a plumbing fixture that is connected only to a supply of water.

PLUMBING SYSTEM. A system that includes the water distribution pipes; plumbing fixtures and traps; water-treating or water-using equipment; soil, waste and vent pipes; and *building drains*; in addition to their respective connections, devices and appurtenances within a structure or premises; and the water service, *building sewer* and building storm *sewer* serving such structure or premises.

❖ The plumbing system includes all piping, fixtures and components that transport potable water and convey liquid and liquid-borne solid wastes [see Commentary Figure 202(16) and the definition of "Plumbing"]. Also included would be devices that treat the water prior to its use.

POLLUTION. An impairment of the quality of the potable water to a degree that does not create a hazard to public health but that does adversely and unreasonably affect the aesthetic qualities of such potable water for domestic use.

❖ Many books have been written trying to define the term "pollution." For use in the code, pollution is anything that reduces the quality of the potable water supply so that it is undesirable for consumption or use. A pollutant in the water supply causes the water to look, smell or taste bad, but does not make drinking the water harmful. This does not change the fact that polluted water is still considered to be nonpotable. Pollutants are thus not considered potentially harmful, whereas a contaminant would be considered potentially harmful. Refer to the definition of the term "Contamination" to find additional information and the differences between pollution and contamination.

The methods for determining potable and nonpotable water supplies are very closely regulated by the EPA. For the purposes of protecting a water supply, the code considers a polluted source to represent a low hazard when selecting a backflow preventer. Refer to Table 608.1 for potable protection requirements related to low-hazard situations.

It should be noted that most forms of pollution are the direct result of some action by humans on their environment and thus, humans are responsible for preventing this pollution.

POTABLE WATER. Water free from impurities present in amounts sufficient to cause disease or harmful physiological effects and conforming to the bacteriological and chemical quality requirements of the Public Health Service Drinking Water Standards or the regulations of the public health authority having jurisdiction.

❖ The EPA Clean Drinking Water Act defines the quality requirements for water to be classified as potable. The word "potable" means "fit to drink."

PRIVATE. In the classification of plumbing fixtures, "*private*" applies to fixtures in residences and apartments, and to fixtures in nonpublic toilet rooms of hotels and motels and similar installations in buildings where the plumbing fixtures are intended for utilization by a family or an individual.

❖ Because there are code requirements specific to public plumbing fixtures and facilities, the distinction must be made between public and private (see commentary, Section 403.3.

PUBLIC OR PUBLIC UTILIZATION. In the classification of plumbing fixtures, "*public*" applies to fixtures in general toilet rooms of schools, gymnasiums, hotels, airports, bus and railroad stations, public buildings, bars, public comfort stations, office buildings, stadiums, stores, restaurants and other installations where a number of fixtures are installed so that their utilization is similarly unrestricted.

❖ Public or public utilization is a descriptor for toilet facilities that are available to the general public. Employee plumbing fixtures are considered to be public fixtures unless their use is restricted to an individual (see the definition of "Private").

PUBLIC WATER MAIN. A water supply pipe for public utilization controlled by public authority.

❖ See the definition of and commentary to "Water main."

QUICK-CLOSING VALVE. A valve or faucet that closes automatically when released manually or that is controlled by a mechanical means for fast-action closing.

❖ A quick-closing valve would be any type of solenoid-actuated valve; spring-loaded, self-closing faucets or any other device capable of instantaneously reducing water flow from full flow to no flow. This rapid change from a full-flow to no-flow condition can cause water-hammer-related damage. Although most faucets can be manually closed fast enough to produce water hammer, it is not the intent of the code to consider manually closed valves or faucets as "quick closing."

Typical quick-closing valves include spring-loaded faucets and drinking fountain control valves that abruptly close when manually released; electrically actuated valves such as those found in dishwashing machines, clothes washing machines, boiler makeup water feeders, self-washing air cleaners or grease extractors; and process equipment and electronically controlled "touchless" faucets. Some self-closing valves and faucets are not considered as quick closing. For example, typical metering faucets and typical flushometer valves are slowly, automatically closed by a diaphragm/bleed orifice or pilot valve assembly. Additionally, the typical float-actuated valve is automatic, yet slow in closing (see commentary, Section 604.9).

RAINWATER. Water from natural precipitation.

❖ Water falling from the sky is an abundant source of water in some areas. However, some jurisdictions located in "dry" climate areas could have legal "rights"

INTERNATIONAL CODE COUNCIL®
Copyright © 2015 ICC. ALL RIGHTS RESERVED. Accessed by David Dammon on Jun 21, 2017 12:30:52 PM pursuant to License Agreement with ICC. No further reproduction or distribution authorized. ANY UNAUTHORIZED REPRODUCTION OR DISTRIBUTION IS A VIOLATION OF THE FEDERAL COPYRIGHT ACT AND THE LICENSE AGREEMENT, AND SUBJECT TO CIVIL AND CRIMINAL PENALTIES THEREUNDER.

to rainwater such that rainwater cannot be collected for a specific use on the building site. As water reservoirs and rivers dry up in these areas, any use that takes away from precipitation finding its way into those water impoundments would make a limited water problem even worse. Note that once rainwater contacts a surface at, or below grade, it is then called storm water (see the definition of "Storm water").

[M] READY ACCESS. That which enables a fixture, appliance or equipment to be directly reached without requiring the removal or movement of any panel, door or similar obstruction and without the use of a portable ladder, step stool or similar device.

❖ Ready access can be described as the capability of being quickly reached or approached for the purpose of operation, inspection, observation or, typically, an emergency action. Plumbing installations requiring ready access must not be covered or concealed by a door, panel or similar obstruction, nor are they allowed to be obstructed by physical obstacles, including elevation above a floor such that something must be stood upon to reach the item.

The term "door" sometimes causes questions about whether a room, that has something that requires ready access, is allowed to have a passage door on the room. For example, a door to a mechanical room where there is a floor drain. Section 412.2 requires that floor drains be provided with ready access. Does the code intend to allow for the room to have a passageway door? Probably so. Conversely, if a valve is required to have ready access, can the valve be located behind the door panel of a cabinet? Probably not.

RECLAIMED WATER. Nonpotable water that has been derived from the treatment of waste water by a facility or system licensed or permitted to produce water meeting the jurisdiction's water requirements for its intended uses. Also known as "recycled water."

❖ For decades, reclaimed water has been used for golf course irrigation in many jurisdictions. In the early days, those jurisdictions prohibited the use of reclaimed water for any purpose inside of buildings because of concerns about disinfection, the potential for the spread of what was thought to be "harmful" components in the water and the uncertainty about how to prevent such water from being inadvertently used for a potable water application. Many studies have been performed to allay the initial concerns and the color purple has been chosen to identify the piping and components that convey nonpotable water.

REDUCED PRESSURE PRINCIPLE BACKFLOW PREVENTION ASSEMBLY. A backflow prevention device consisting of two independently acting check valves, internally force-loaded to a normally closed position and separated by an intermediate chamber (or zone) in which there is an automatic relief means of venting to the atmosphere, internally loaded to a normally open position between two tightly closing shutoff valves and with a means for testing for tightness of the checks and opening of the relief means.

❖ This device is considered to be one of the most reliable mechanical devices (second only to an air gap) for the prevention of backflow. These devices use two spring-loaded check valves with a relief valve in between that monitors the system pressure upstream and downstream of the device. The zone between the check valves is maintained at a pressure that is less than the water supply pressure (see commentary, Section 608.13.2).

[A] REGISTERED DESIGN PROFESSIONAL. An individual who is registered or licensed to practice professional architecture or engineering as defined by the statutory requirements of the professional registration laws of the state or jurisdiction in which the project is to be constructed.

❖ Legal qualifications for engineers and architects are established by the state having jurisdiction. Licensing and registration of engineers and architects is accomplished by written or oral examinations offered by states or by reciprocity (licensing in other states).

RELIEF VALVE.

❖ In general, a relief valve is a safety device designed to prevent the development of a potentially dangerous condition in a closed piping system. This is normally associated with a closed system that has a heat source (see commentary, Section 504.4).

Pressure relief valve. A pressure-actuated valve held closed by a spring or other means and designed to relieve pressure automatically at the pressure at which such valve is set.

❖ This valve is designed to be actuated by excessive pressures to prevent rupture or explosion of tanks, vessels or piping. The degree of valve opening is directly proportional to the pressure acting on the valve disk.

Temperature and pressure relief (T&P) valve. A combination relief valve designed to function as both a temperature relief and a pressure relief valve.

❖ These devices combine the components of pressure and temperature relief valves and are designed to be actuated by excessive pressures, excessive temperatures or both.

Temperature relief valve. A temperature-actuated valve designed to discharge automatically at the temperature at which such valve is set.

❖ This valve is designed to be actuated by excessive temperatures to prevent dangerously high water temperatures that can cause tank, vessel or pipe explosions.

RELIEF VENT. A vent whose primary function is to provide circulation of air between drainage and vent systems.

❖ A relief vent is required for some circuit venting configurations and for stacks of more than 10 branch inter-

INTERNATIONAL CODE COUNCIL®
Copyright © 2015 ICC. ALL RIGHTS RESERVED. Accessed by David Dammon on Jun 21, 2017 12:30:52 PM pursuant to License Agreement with ICC. No further reproduction or distribution authorized. ANY UNAUTHORIZED REPRODUCTION OR DISTRIBUTION IS A VIOLATION OF THE FEDERAL COPYRIGHT ACT AND THE LICENSE AGREEMENT, AND SUBJECT TO CIVIL AND CRIMINAL PENALTIES THEREUNDER.

vals. The relief vent acts to relieve pressures that develop in stacks as a result of the flow of waste (see commentary, Section 914).

RIM. An unobstructed open edge of a fixture.

❖ The rim of a fixture or receptor is the reference point for the measurement of installation dimensions, such as for critical levels, air gaps, air breaks and horizontal vent piping (see the definition of "Flood level rim").

RISER. See "Water pipe, riser."

ROOF DRAIN. A drain installed to receive water collecting on the surface of a roof and to discharge such water into a leader or a conductor.

❖ Roof drains act as a receptor for storm water flowing across the surface of a building roof. Roof drains are equipped with inlet strainers that are designed to prevent the entry of leaves, debris and roof ballast materials.

ROUGH-IN. Parts of the plumbing system that are installed prior to the installation of fixtures. This includes drainage, water supply, vent piping and the necessary fixture supports and any fixtures that are built into the structure.

❖ Rough-in refers to the stage of construction prior to the installation of any materials that would conceal plumbing installations in the building structure. This term generally refers to the installation of drain, waste, vent and water distribution piping that will be concealed in floor, ceiling and wall cavities or underground or under slab. At this stage of construction, the plumbing systems are tested for leaks and the entire plumbing "rough-in" is inspected for code compliance.

SELF-CLOSING FAUCET. A faucet containing a valve that automatically closes upon deactivation of the opening means.

❖ Use of self-closing faucets is increasing, primarily in public restroom facilities, as public awareness of water conservation efforts increases. The flow of water automatically shuts off when the faucet handle is released, resulting in less water consumption per use.

SEPARATOR. See "Interceptor."

SEWAGE. Any liquid waste containing animal or vegetable matter in suspension or solution, including liquids containing chemicals in solution.

❖ Sewage is the general term referring to the combined discharge from all plumbing fixtures and primarily includes human bodily wastes and the wastes associated with cleaning, washing, bathing and food preparation.

SEWAGE EJECTOR. A device for lifting sewage by entraining the sewage in a high-velocity jet of steam, air or water.

❖ Ejectors are used to lift sewage from sumps serving subdrains. Ejectors are distinct from sewage pumps that use motor-driven impellers to lift the sewage [see Figure 712.1(1)].

SEWER.

❖ This is the general term used to describe piping that conducts waste from structures to the point of disposal. It also refers to piping within a public system that transports sewage to treatment facilities.

Building sewer. See "Building sewer."

❖ See the commentary to "Building sewer."

Public sewer. That part of the drainage system of pipes, installed and maintained by a city, township, county, public utility company or other public entity, and located on public property, in the street or in an approved dedicated easement of public or community use.

❖ A public sewer is the piping system used to collect sewage from building sewers and to transport it to treatment facilities.

Sanitary sewer. A *sewer* that carries sewage and excludes storm, surface and ground water.

❖ See the definition of "Building sewer, sanitary."

Storm sewer. A *sewer* that conveys rainwater, surface water, subsurface water and similar liquid wastes.

❖ This is the general term used to describe the piping that conducts waste other than sewage from structures to the point of disposal.

SLOPE. The fall (pitch) of a line of pipe in reference to a horizontal plane. In drainage, the slope is expressed as the fall in units vertical per units horizontal (percent) for a length of pipe.

❖ Commonly referred to as pitch, fall or grade, slope is the gradual change in elevation of horizontal piping. Slope is necessary to cause waste and sewage to flow by gravity (see commentary, Section 704.1).

SOIL PIPE. A pipe that conveys sewage containing fecal matter to the *building drain* or *building sewer*.

❖ In the plumbing trade, "soil pipe" is a common name for a cast-iron drainage pipe. The term, however, is not specific to cast-iron pipe and refers to any drain pipe that conveys the discharge of water closets or urinals or any other fixture that receives human waste.

SPILLPROOF VACUUM BREAKER. An assembly consisting of one check valve force-loaded closed and an air-inlet vent valve force-loaded open to atmosphere, positioned downstream of the check valve, and located between and including two tightly closing shutoff valves and a test cock.

❖ Spillproof vacuum breakers are designed primarily for indoor use where leakage or spillage caused by a loss of system pressure could cause problems such as water damage or health risks, but the performance requirements of a pressure-type vacuum breaker are still necessary.

INTERNATIONAL CODE COUNCIL®
Copyright © 2015 ICC. ALL RIGHTS RESERVED. Accessed by David Dammon on Jun 21, 2017 12:30:52 PM pursuant to License Agreement with ICC. No further reproduction or distribution authorized. ANY UNAUTHORIZED REPRODUCTION OR DISTRIBUTION IS A VIOLATION OF THE FEDERAL COPYRIGHT ACT AND THE LICENSE AGREEMENT, AND SUBJECT TO CIVIL AND CRIMINAL PENALTIES THEREUNDER.

STACK. A general term for any vertical line of soil, waste, vent or inside conductor piping that extends through at least one story with or without offsets.

❖ Traditionally, the term "stack" has been used to describe vertical piping [90 degrees (1.57 rad) from the horizontal] that extends through one or more stories of a building and constitutes a main to which branch piping connects. Vertical vent branch piping that extends to the open air or through two or more stories is considered a stack.

STACK VENT. The extension of a soil or waste *stack* above the highest horizontal drain connected to the *stack*.

❖ A stack vent is the dry extension of a soil or waste stack. Generally, a stack vent extends to the open air and can serve as a vent to which branch vents connect.

STACK VENTING. A method of venting a fixture or fixtures through the soil or waste *stack*.

❖ This is a method of wet venting where a uniformly oversized vertical drain serves as the vent for one or more fixtures. The fixtures being vented are independently connected to the stack. This venting method is limited to use with fixtures discharging waste only (see the definition of "Waste").

STERILIZER.

❖ A sterilizer is a plumbing appliance that uses heat to disinfect instruments, utensils and other equipment used in health care facilities.

Boiling type. A boiling-type sterilizer is a fixture of a nonpressure type utilized for boiling instruments, utensils or other equipment for disinfection. These devices are portable or are connected to the plumbing system.

❖ Boiling water is the oldest and most widely used form of microbial destruction. However, temperatures of water boiling at atmospheric pressure might not be high enough [212°F (100°C) or less] to kill all forms of bacteria. Thus, these types of sterilizers are not used widely where serious bacteria elimination is required.

Instrument. A device for the sterilization of various instruments.

❖ Usually this refers to a small bench top pressure-type, self-contained sterilizer used to disinfect hand instruments used in dental or minor surgery offices.

Pressure (autoclave). A pressure vessel fixture designed to utilize steam under pressure for sterilizing.

❖ Pressure sterilizers (autoclave) achieve temperatures well above 212°F (100°C) for complete bacteria elimination. The size of these devices can range from bench top size to room size units. The basic principle of operation is similar to that of a household pressure cooker. Water in a closed vessel having an airspace above the water is heated. Steam generated from the water rises into the airspace creating a pressure in the vessel. The increased pressure in the vessel raises the boiling point of the water. Thus, a steam temperature of greater than 212°F (100°C) is generated. For example, water heated in a closed vessel under a pressure of 10 psi (69.9 kPa) above atmospheric pressure will generate steam at a temperature of 240°F (115.6°C).

Pressure instrument washer sterilizer. A pressure vessel fixture designed to both wash and sterilize instruments during the operating cycle of the fixture.

❖ This device is a combination washer and a pressure-type sterilizer, all in one cabinet or unit (similar to a dishwasher). It removes debris from instruments and specialized surgical equipment (e.g, endoscopes).

Utensil. A device for the sterilization of utensils as utilized in health care services.

❖ This type of sterilizer is used for devices that are larger than small hand-held instruments and includes trays, pans, buckets, saws and drills.

Water. A device for sterilizing water and storing water.

❖ Sterilized water is required for many dental, medical and scientific procedures to prevent bacterial contamination. Water sterilizers are generally of the distillation type that condenses wet steam to produce sterile water.

STERILIZER VENT. A separate pipe or *stack*, indirectly connected to the building drainage system at the lower terminal, that receives the vapors from nonpressure sterilizers, or the exhaust vapors from pressure sterilizers, and conducts the vapors directly to the open air. Also called vapor, steam, atmospheric or exhaust vent.

❖ Sterilizer vents are independent of the sanitary venting system and serve only sterilizer appliances. Furthermore, sterilizer vents cannot serve more than one type of sterilizer (see commentary, Section 713.8).

STORM DRAIN. See "Drainage system, storm."

STORM WATER. Natural precipitation, including snowmelt, that has contacted a surface at or below grade.

❖ Although rainwater and snowmelt water make up storm water, for the purposes of Chapter 13, this water is not called storm water until it contacts grade areas such as sidewalks, earth, parking lots, paved areas, etc. Similarly rainwater directed into areas below grade such as underground piping or culverts leading to a river, stream, lake or pond, is considered storm water. Where there is a rainwater harvesting system having underground piping leading to a rainwater storage tank, the water in that piping and storage tank is not called storm water but rainwater (see the definition of "Rainwater").

[A] STRUCTURE. That which is built or constructed or a portion thereof.

❖ This definition is intentionally broad to include within its scope, and therefore the scope of the code (see commentary, Section 101.2), everything that is built as an improvement to real property. The phrase "or a portion thereof" is included so that those words do not have to be inserted at each location in the code where a provision applies to a portion of a structure.

INTERNATIONAL CODE COUNCIL®
Copyright © 2015 ICC. ALL RIGHTS RESERVED. Accessed by David Dammon on Jun 21, 2017 12:30:52 PM pursuant to License Agreement with ICC. No further reproduction or distribution authorized. ANY UNAUTHORIZED REPRODUCTION OR DISTRIBUTION IS A VIOLATION OF THE FEDERAL COPYRIGHT ACT AND THE LICENSE AGREEMENT, AND SUBJECT TO CIVIL AND CRIMINAL PENALTIES THEREUNDER.

SUBSOIL DRAIN. A drain that collects subsurface water or seepage water and conveys such water to a place of disposal.

❖ These drains are generally installed adjacent to the foundation of buildings to alleviate problems caused by subsurface (ground) water. Additionally, any other piping that collects either subsurface water or seepage would be termed a "subsoil drain."

SUMP. A tank or pit that receives sewage or liquid waste, located below the normal grade of the gravity system and that must be emptied by mechanical means.

❖ This term refers to the receiving tank or vessel used to collect and store waste from drainage systems that are incapable of draining by gravity. A sump generally houses an ejector or pump used to evacuate the contents of the sump. A sump can refer to a receiver of either waste water or storm water.

SUMP PUMP. An automatic water pump powered by an electric motor for the removal of drainage, except raw sewage, from a sump, pit or low point.

❖ These pumps are used for removing waste from sumps other than sewage sumps. Sump pumps handle storm water only.

SUMP VENT. A vent from pneumatic sewage ejectors, or similar equipment, that terminates separately to the open air.

❖ A sump vent is needed to neutralize pressures that develop in closed sumps as a result of either the rise and fall of waste levels or the operation of pneumatic ejectors.

SUPPORTS. Devices for supporting and securing pipe, fixtures and equipment.

❖ Types of supports include hangers, anchors, braces, brackets, strapping and any other material or device used to support plumbing system piping and components (see commentary, Section 308).

SWIMMING POOL. Any structure, basin, chamber or tank containing an artificial body of water for swimming, diving or recreational bathing having a depth of 2 feet (610 mm) or more at any point.

❖ Swimming pools, for the application of the code, are man-made structures designed to hold water. Bodies of water such as ponds, streams, lakes or retention ponds are not considered to be swimming pools.

Swimming pools are generally filled with potable water. The water in swimming pools is filtered to remove contaminants and debris and is chemically treated to control bacterial growth, plant life growth and acidity/alkalinity levels. Swimming pools are used for recreational purposes and include private and public swimming pools, indoor and outdoor swimming pools, hot tubs and spas. The water discharged from a swimming pool having water that meets the quality requirements for recreational swimming is considered to be clear-water waste.

Note that the IBC and the IRC reference the ISPSC for all pool and spa requirements. The ISPSC does not establish a minimum depth for classification as a swimming pool. If the pool has a filtration system and is intended for recreational use, then the pool qualifies as a swimming pool according to the ISPSC.

Bathtubs and therapeutic whirlpools used for hygienic or medical purposes are not considered to be swimming pools.

TEMPERED WATER. Water having a temperature range between 85°F (29°C) and 110°F (43°C).

❖ Tempered water (warm water) is at a temperature suitable for bathing, handwashing and similar purposes and is defined as a range between 85°F (29°C) and 110°F (43°C) (see commentary, Section 607.1).

THIRD-PARTY CERTIFICATION AGENCY. An *approved* agency operating a product or material certification system that incorporates initial product testing, assessment and surveillance of a manufacturer's quality control system.

❖ These agencies evaluate products, verify compliance with specific standards or criteria and conduct periodic inspections of the manufacturer's facilities to determine ongoing compliance with manufacturing processes, standards or criteria (see Section 303.4).

THIRD-PARTY CERTIFIED. Certification obtained by the manufacturer indicating that the function and performance characteristics of a product or material have been determined by testing and ongoing surveillance by an *approved third-party certification agency*. Assertion of certification is in the form of identification in accordance with the requirements of the *third-party certification agency*.

❖ A product that is certified by a third-party certification agency (see commentary, "Third-party certification agency") to comply with requisite standards or criteria, usually identified by a certification mark attached to or permanently marked on it. Additionally, the agency usually provides a list of the products it certifies, which provides information relative to the certification (see Section 303.4).

TOILET FACILITY. A room or space that contains not less than one water closet and one lavatory.

❖ The common household name for a water closet is "toilet." Most manufacturers of water closets call the product a "toilet." Thus, the tendency by many readers of the code is to assume that a toilet facility is a room or space that has a "toilet" (water closet). This misunderstanding can create a problem where the code requires separate (male/female) "toilet" facilities. One might (incorrectly) interpret this to mean that only separate (male/female) water closet compartments are required. The intent of the code is that a toilet room is a room or space that has not less than one water closet and one lavatory.

TRAP. A fitting or device that provides a liquid seal to prevent the emission of *sewer* gases without materially affecting the flow of sewage or waste water through the trap.

❖ The sole purpose of a trap is to isolate the interior of occupiable spaces from the sanitary drainage and vent system. A trap "traps" liquid waste and retains it to form a seal or barrier through which gases and vapors in the

INTERNATIONAL CODE COUNCIL®
Copyright © 2015 ICC. ALL RIGHTS RESERVED. Accessed by David Dammon on Jun 21, 2017 12:30:52 PM pursuant to License Agreement with ICC. No further reproduction or distribution authorized. ANY UNAUTHORIZED REPRODUCTION OR DISTRIBUTION IS A VIOLATION OF THE FEDERAL COPYRIGHT ACT AND THE LICENSE AGREEMENT, AND SUBJECT TO CIVIL AND CRIMINAL PENALTIES THEREUNDER.

drainage and vent system cannot pass under normal operating conditions. Traps are either separate devices or integral with fixtures. Other than a grease trap or trap that is integral with a fixture, the only type of trap permitted by the code is the "P" type (see commentary, Sections 1002.1, 1002.3, 1002.4 and 1002.5).

TRAP SEAL. The vertical distance between the weir and the top of the dip of the trap.

❖ The trap seal is a measurement of the quantity of liquid held in the dip of a trap. Trap seals are required to have a minimum depth (see commentary, Section 1002.4).

UNSTABLE GROUND. Earth that does not provide a uniform bearing for the barrel of the *sewer* pipe between the joints at the bottom of the pipe trench.

❖ Any earth that will be used to support underground sewer piping that is not capable of providing adequate, uniform bearing so that the sewer piping and its related fittings are not damaged is defined as "unstable ground." This term can relate to either earth that exists as is or any earth disturbed by construction that is not properly replaced and compacted.

Typically, when unstable ground is encountered during the course of construction, the portion of the ground that is unstable is either removed and replaced, or is made stable through various engineering methods, such as dewatering or chemical injections.

VACUUM. Any pressure less than that exerted by the atmosphere.

❖ Commonly referred to as "negative pressure" and "suction," vacuum is measured in inches of mercury or inches of water column. Any pressure below atmospheric pressure is a partial vacuum. A perfect vacuum is a pressure of zero pounds per square inch (psi) (0 kPa) absolute. Atmospheric pressure at sea level is approximately 14.7 psi (101 kPa), which converts to approximately 29.92 inches (760 mm) of mercury or approximately 34 feet (10 363 mm) of water. The phenomenon of siphonage depends on vacuum (negative pressures).

VACUUM BREAKER. A type of backflow preventer installed on openings subject to normal atmospheric pressure that prevents backflow by admitting atmospheric pressure through ports to the discharge side of the device.

❖ A vacuum breaker is a device used as a backflow preventer. Whenever this device senses a system pressure that is less than atmospheric pressure (e.g, a vacuum), a port opens to allow atmospheric pressure to enter the device to relieve (break) the vacuum condition in the piping.

VENT PIPE. See "Vent system."

❖ The term "vent pipe" refers to any pipe in the vent system that conducts air to the drainage system, from the drainage system or both.

VENT STACK. A vertical vent pipe installed primarily for the purpose of providing circulation of air to and from any part of the drainage system.

❖ A dry vent that extends from the base of a waste or soil stack and typically runs parallel and adjacent to the waste or soil stack it serves. The vent stack can connect either to the horizontal drain downstream of the drain stack or directly to the drainage stack (see commentary, Section 903.2).

VENT SYSTEM. A pipe or pipes installed to provide a flow of air to or from a drainage system, or to provide a circulation of air within such system to protect trap seals from siphonage and backpressure.

❖ A piping arrangement that is designed to maintain pressure fluctuation at fixture traps to within plus or minus 1 inch of water column (249 Pa) (see commentary, Section 901.2).

VERTICAL PIPE. Any pipe or fitting that makes an angle of 45 degrees (0.79 rad) or more with the horizontal.

❖ A vertical pipe is any pipe that is not defined as a horizontal pipe (see the definition of "Horizontal pipe"). Vertical pipes are pipes that are angled 45 degrees (0.79 rad) or more above the horizontal.

WALL-HUNG WATER CLOSET. A wall-mounted water closet installed in such a way that the fixture does not touch the floor.

❖ A wall-hung water closet is designed for installation above the floor. The water closet discharges horizontally through the wall (see Commentary Figure 405.4.3).

WASTE. The discharge from any fixture, appliance, area or appurtenance that does not contain fecal matter.

❖ Any plumbing fixture discharge other than that from a water closet, urinal, clinical sink or bedpan washer is defined as waste. This material does not contain human fecal matter.

WASTE PIPE. A pipe that conveys only waste.

❖ A waste pipe is any waste-conducting pipe not falling under the definition of "Soil pipe." Waste pipes do not convey human fecal matter.

WASTE RECEPTOR. A floor sink, standpipe, hub drain or floor drain that receives the discharge of one or more indirect waste pipes.

❖ A common assumption is that only floor sinks and hub drains are waste receptors. Standpipes and floor drains are rarely thought of as being waste receptors but they are commonly installed for capturing the flow from indirect waste pipes. A floor drain is only considered to be a waste receptor where it receives the discharge of one or more indirect waste pipes.

WATER COOLER. A drinking fountain that incorporates a means of reducing the temperature of the water supplied to it from the potable water distribution system.

❖ There has been much confusion over terminology regarding drinking fountains, water coolers and bot-

INTERNATIONAL CODE COUNCIL®
Copyright © 2015 ICC. ALL RIGHTS RESERVED. Accessed by David Dammon on Jun 21, 2017 12:30:52 PM pursuant to License Agreement with ICC. No further reproduction or distribution authorized. ANY UNAUTHORIZED REPRODUCTION OR DISTRIBUTION IS A VIOLATION OF THE FEDERAL COPYRIGHT ACT AND THE LICENSE AGREEMENT, AND SUBJECT TO CIVIL AND CRIMINAL PENALTIES THEREUNDER.

tled water dispensers. A water cooler is simply a drinking fountain that reduces the temperature of the water from the potable water supply system before sending the stream of drinking water to the user (see the definition of "Drinking fountain").

WATER DISPENSER. A plumbing fixture that is manually controlled by the user for the purpose of dispensing potable drinking water into a receptacle such as a cup, glass or bottle. Such fixture is connected to the potable water distribution system of the premises. This definition also includes a free-standing apparatus for the same purpose that is not connected to the potable water distribution system and that is supplied with potable water from a container, bottle or reservoir.

❖ This term is intended to encompass fixtures, other than drinking fountains and water coolers, that provide drinking water into a drinking water container such as a cup, glass or bottle. The potable water dispensed is from a connection to the potable water distribution system of the building. The term also encompasses devices that are not connected to the potable water system where the water is from a container, bottle or reservoir on the device.

WATER-HAMMER ARRESTOR. A device utilized to absorb the pressure surge (water hammer) that occurs when water flow is suddenly stopped in a water supply system.

❖ Water-hammer arrestors are factory-built mechanical devices that use expandable elements or piston-type compression chambers to dissipate the energy of rapidly decelerating water (see commentary, Section 604.9). Site-built air chambers do not qualify as acceptable water-hammer arresters.

[M] WATER HEATER. Any heating appliance or equipment that heats potable water and supplies such water to the potable *hot water* distribution system.

❖ The types of water heaters include storage (tank) type, circulating type and instantaneous type. Point-of-use water heaters typically supply hot water to a single fixture or outlet and are located in close proximity to it.

WATER MAIN. A water supply pipe or system of pipes, installed and maintained by a city, township, county, public utility company or other public entity, on public property, in the street or in an approved dedicated easement of public or community use.

❖ A water main is owned and operated by municipalities, rural water districts, privately owned water purveyors and other such entities.

WATER OUTLET. A discharge opening through which water is supplied to a fixture, into the atmosphere (except into an open tank that is part of the water supply system), to a boiler or heating system, or to any devices or equipment requiring water to operate but which are not part of the plumbing system.

❖ Literally, a water outlet is any point where water is withdrawn from the potable water distribution system. An outlet, such as a faucet or spigot, discharges water through the atmosphere into a fixture or receptacle. Outlets are not direct connections to other systems except into an open tank that is part of the water supply system (see commentary, Section 608.15).

WATER PIPE.

Riser. A water supply pipe that extends one full story or more to convey water to *branches* or to a group of fixtures.

❖ A riser extends vertically to supply water to upper stories.

Water distribution pipe. A pipe within the structure or on the premises that conveys water from the water service pipe, or from the meter when the meter is at the structure, to the points of utilization.

❖ Water distribution pipe refers to all potable water piping that is downstream of the water meter or termination of the water service.

Water service pipe. The pipe from the water main or other source of potable water supply, or from the meter when the meter is at the public right of way, to the water distribution system of the building served.

❖ Water pipe is any code-accepted pipe material used to convey potable water.

WATER SUPPLY SYSTEM. The water service pipe, water distribution pipes, and the necessary connecting pipes, fittings, control valves and all appurtenances in or adjacent to the structure or premises.

❖ The water supply system includes all piping and components that convey potable water from the public main or other source to the points of water usage.

WELL.

❖ A well is a vertical shaft that extends down into the earth for the purpose of extracting water from underground formations or strata. Wells can be constructed by drilling, boring or digging in the earth or created by driving a pipe (casing) into the earth. Wells are the source of water for many public water supply systems and are also used to serve private (individual) water supply systems. Depending on the location, some water from wells may be potable without requiring any treatment, whereas some must be treated to make it potable. The following four methods are the most common or typical forms of well construction and are self-defining.

Bored. A well constructed by boring a hole in the ground with an auger and installing a casing.

❖ See the commentary to "Well."

Drilled. A well constructed by making a hole in the ground with a drilling machine of any type and installing a casing and screen.

❖ See the commentary to "Well."

INTERNATIONAL CODE COUNCIL®
Copyright © 2015 ICC. ALL RIGHTS RESERVED. Accessed by David Dammon on Jun 21, 2017 12:30:52 PM pursuant to License Agreement with ICC. No further reproduction or distribution authorized. ANY UNAUTHORIZED REPRODUCTION OR DISTRIBUTION IS A VIOLATION OF THE FEDERAL COPYRIGHT ACT AND THE LICENSE AGREEMENT, AND SUBJECT TO CIVIL AND CRIMINAL PENALTIES THEREUNDER.

Driven. A well constructed by driving a pipe in the ground. The drive pipe is usually fitted with a well point and screen.

❖ See the commentary to "Well."

Dug. A well constructed by excavating a large-diameter shaft and installing a casing.

❖ See the commentary to "Well."

WHIRLPOOL BATHTUB. A plumbing appliance consisting of a bathtub fixture that is equipped and fitted with a circulating piping system designed to accept, circulate and discharge bathtub water upon each use.

❖ Whirlpool bathtubs are equipped with circulator pumps, suction fittings, piping and related appurtenances designed to agitate water in the tub for relaxation or therapeutic purposes (see commentary, Section 421). In recent years, consumers have embraced multihead luxury showers, which can discharge large volumes of water during a showering event. Unfortunately, there is the direct cost of the water and sewer charges and the indirect cost of high-capacity water heating systems and larger piping for high flows. Those facts coupled with not being a conservative water practice, have led some manufacturers to also offer "whirlpool tub/showers." These multipiece units utilize a bathtub with a vertical panel having multiple spray heads and jets. The bathtub serves as the water reservoir for a whirlpool-type pump to convey water to the shower heads and jets in a closed-system arrangement. An in-line heater maintains the desired water temperature. Once the tub is filled with a sufficient volume of water, the shower can be used as long as desired without further introduction of water, resulting in much less water use than a shower, where all the water discharged goes to the drain system.

YOKE VENT. A pipe connecting upward from a soil or waste *stack* to a vent *stack* for the purpose of preventing pressure changes in the *stacks*.

❖ This vent derives its name from the manner in which it connects a drainage stack to the attendant vent stack. Its purpose is to prevent pressure changes in the stack.

INTERNATIONAL CODE COUNCIL®
Copyright © 2015 ICC. ALL RIGHTS RESERVED. Accessed by David Dammon on Jun 21, 2017 12:30:52 PM pursuant to License Agreement with ICC. No further reproduction or distribution authorized. ANY UNAUTHORIZED REPRODUCTION OR DISTRIBUTION IS A VIOLATION OF THE FEDERAL COPYRIGHT ACT AND THE LICENSE AGREEMENT, AND SUBJECT TO CIVIL AND CRIMINAL PENALTIES THEREUNDER.

Chapter 3: General Regulations

General Comments

The content of Chapter 3 is often referred to as "miscellaneous," rather than general regulations. Chapter 3 received that label because it is the only chapter in the code whose requirements do not interrelate. If a requirement cannot be located in another chapter, it should be located in this chapter.

Some nonplumbing regulations merely reference other codes that have the specific requirements. The requirements provide a cross reference to the appropriate document, recognizing that it affects the plumbing system but the details are not specifically contained in the code (Sections 307, 309, 310 and 313 reference other *International Codes*®).

The jurisdictional requirements specify that the water and sewer must connect to the public system when a public system is provided (Sections 602.1 and 701.2 are more specific on this issue).

Nonplumbing requirements include surface requirements for walls and floors in a toilet room, light and ventilation, floodproofing and rodentproofing.

Purpose

Chapter 3 contains safety requirements for the installation of plumbing and nonplumbing requirements for toilet rooms, including requirements for the identification of pipe, pipe fittings, traps, fixtures, materials and devices used in plumbing systems.

The safety requirements provide protection for the building's structural members, stress and strain of pipe and sleeving. The building's structural stability is protected by the regulations for cutting and notching of structural members. Additional protection for the building occupants includes requirements to maintain the plumbing in a safe and sanitary condition, as well as privacy for those occupants.

SECTION 301 GENERAL

301.1 Scope. The provisions of this chapter shall govern the general regulations regarding the installation of plumbing not specific to other chapters.

❖ The requirements included in Chapter 3 are not interrelated, as is typical with other chapters. Many regulations are not specific plumbing requirements, but relate to the overall plumbing system.

301.2 System installation. Plumbing shall be installed with due regard to preservation of the strength of structural members and prevention of damage to walls and other surfaces through fixture usage.

❖ Plumbing components and materials are to be installed in accordance with the requirements of the applicable standard listed in the code.

Where a standard is not provided, the manufacturer's instructions must be followed. For example, because there are very few standards available that regulate the installation of valves, the manufacturer's instructions must be used to install these components.

301.3 Connections to drainage system. Plumbing fixtures, drains, appurtenances and appliances used to receive or discharge liquid waste or sewage shall be directly connected to the sanitary drainage system of the building or premises, in accordance with the requirements of this code. This section shall not be construed to prevent indirect waste systems required by Chapter 8.

Exception: Bathtubs, showers, lavatories, clothes washers and laundry trays shall not be required to discharge to the sanitary drainage system where such fixtures discharge to an *approved* system in accordance with Chapters 13 and 14.

❖ All waste water captured or generated within a building is required to be directed into the sanitary drainage system. In most cases, the connection to the drainage system is a direct connection, meaning that each drain pipe is routed in a continuous manner to its connecting point to a branch of the sanitary drainage system. However, there are some situations where it is not desirable to have a direct connection. For example, a direct connection of the drainage pipe of a commercial kitchen food preparation sink is not desirable because a waste-water backup could contaminate the contents of the sink, perhaps without being noticed by kitchen staff. In these special cases, the drainage pipe is required to discharge through an air break or an air gap into a waste receptor (usually a floor sink), which is indirectly connected to the sanitary drainage system. The outlet of the waste receptor is directly connected to the sanitary drainage system. Chapter 8 covers which fixtures and appliance drains are required to be indirect connected.

The exception to this section recognizes that certain waste-water flows can be a source of water that can be reused for the purposes of water-closet flushing, urinal flushing or subsurface irrigation. These waste-water flows must be collected by a drainage system that is wholly separate from the sanitary drainage system so that extensive treatment of such water is not required before reuse.

INTERNATIONAL CODE COUNCIL®
Copyright © 2015 ICC. ALL RIGHTS RESERVED. Accessed by David Dammon on Jun 21, 2017 12:30:52 PM pursuant to License Agreement with ICC. No further reproduction or distribution authorized. ANY UNAUTHORIZED REPRODUCTION OR DISTRIBUTION IS A VIOLATION OF THE FEDERAL COPYRIGHT ACT AND THE LICENSE AGREEMENT, AND SUBJECT TO CIVIL AND CRIMINAL PENALTIES THEREUNDER.

301.4 Connections to water supply. Every plumbing fixture, device or appliance requiring or using water for its proper operation shall be directly or indirectly connected to the water supply system in accordance with the provisions of this code.

❖ Fixtures, devices and appliances that require potable water or nonpotable water must be connected, directly or indirectly, to the water supply. In other words, a sink (other than a floor sink) cannot be installed without a faucet installed on the sink.

Indirect connections include faucets or fixture fittings discharging into fixtures such as tubs and lavatories. Direct connections occur at water closets and urinals. Water closets and urinals can be supplied with treated gray water through a direct connection to the fixture if the system meets the requirements of Chapter 13.

301.5 Pipe, tube and fitting sizes. Unless otherwise indicated, the pipe, tube and fitting sizes specified in this code are expressed in nominal or standard sizes as designated in the referenced material standards.

❖ Pipe, tube and fitting sizes referenced in the code refer to the inside diameter (ID) of the pipe, tube or fitting. The ID measurement in the text is expressed in both English and metric units (inches and millimeters). Systeme International d'Unites (SI) metric unit conversions are indicated at the bottom of each table.

301.6 Prohibited locations. Plumbing systems shall not be located in an elevator shaft or in an elevator equipment room.

Exception: Floor drains, sumps and sump pumps shall be permitted at the base of the shaft, provided that they are indirectly connected to the plumbing system and comply with Section 1003.4.

❖ Plumbing systems are prohibited in elevator shafts and elevator equipment rooms because of inaccessibility for repairs and the possible water damage that could be caused to the elevator equipment if a leak developed in the plumbing piping or components. The exception allows floor drains, sumps and sump pumps at the bottom of elevator shafts as long as they are indirectly connected to the plumbing system. An indirect connection is required to prevent waste from a plumbing system from backing up into the elevator shaft. Note that a back-water valve cannot be used as a substitute for the indirect connection.

Because the defined term "plumbing system" includes both sanitary drains and storm sewers, the designer has to make a decision of whether to put the discharge from the floor drain, sump or sump pump into the sanitary system or storm sewer. Two reasons for water to be in the base of an elevator shaft are: 1) the base of many elevator shafts is below grade where ground water (from rain events or a seasonally high water table) might enter through cracks and seams in the walls and floors of the shaft and 2) water from an activated fire sprinkler system could enter through elevator doors. If the water is considered to be storm water, Section 1101.3 would prohibit connection to the sanitary system. If the water is considered no different than what would enter a floor drain, then Section 301.3 would require its discharge to the sanitary system. Other considerations could be whether or not local storm water regulators or waste-water plant operators have authority to specify where such water should be discharged.

The exception references Section 1003.4 to alert the code user that if the elevator is a hydraulic type, an oil separator is required to be installed before the discharge of the floor drain, sump or sump pump enters the plumbing system.

301.7 Conflicts. In instances where conflicts occur between this code and the manufacturer's installation instructions, the more restrictive provisions shall apply.

❖ A conflict refers to instances where the code and manufacturer's instructions differ. The code official must evaluate each circumstance of perceived conflict and identify the requirements that provide the greatest level of protection for life and property.

SECTION 302
EXCLUSION OF MATERIALS DETRIMENTAL TO THE SEWER SYSTEM

302.1 Detrimental or dangerous materials. Ashes, cinders or rags; flammable, poisonous or explosive liquids or gases; oil, grease or any other insoluble material capable of obstructing, damaging or overloading the building drainage or *sewer* system, or capable of interfering with the normal operation of the sewage treatment processes, shall not be deposited, by any means, into such systems.

❖ This section prohibits the disposal of detrimental or dangerous materials into the sewer system. Such materials can cause the pipes to clog or accelerate the clogging of pipes, which prevents the proper disposal of sewage waste. Section 1003 contains design and installation details for the use of interceptors, grease traps and separators to remove oil, grease, sand and other detrimental substances.

Discharge of materials that are flammable or combustible into the public sewer system is prohibited because an accumulation of these types of materials poses a fire and explosion hazard. Insoluble chemicals that are not processed before disposal could react with other discharged chemicals to cause damage to the piping and components of the drainage, sewer and waste treatment systems. Section 803.2 provides details for using approved dilution or neutralizing devices to process harmful chemicals prior to disposal.

302.2 Industrial wastes. Waste products from manufacturing or industrial operations shall not be introduced into the *public sewer* until it has been determined by the code official or other authority having jurisdiction that the introduction

INTERNATIONAL CODE COUNCIL®
Copyright © 2015 ICC. ALL RIGHTS RESERVED. Accessed by David Dammon on Jun 21, 2017 12:30:52 PM pursuant to License Agreement with ICC. No further reproduction or distribution authorized. ANY UNAUTHORIZED REPRODUCTION OR DISTRIBUTION IS A VIOLATION OF THE FEDERAL COPYRIGHT ACT AND THE LICENSE AGREEMENT, AND SUBJECT TO CIVIL AND CRIMINAL PENALTIES THEREUNDER.

thereof will not damage the public *sewer* system or interfere with the functioning of the sewage treatment plant.

❖ Harmful or hazardous industrial waste must be treated before it is discharged to the sewer. This can require the complete removal or neutralization of certain chemicals or substances.

SECTION 303
MATERIALS

303.1 Identification. Each length of pipe and each pipe fitting, trap, fixture, material and device utilized in a plumbing system shall bear the identification of the manufacturer and any markings required by the applicable referenced standards.

❖ The manufacturer is given the option of determining the type of marking for the material. If there is no applicable standard or the applicable standard does not require that a material be identified, identification of the manufacturer is still required by the code. Where the code indicates compliance with an approved standard, the manufacturer must comply with the requirements for marking in accordance with the applicable standard [see Commentary Figures 303.1(1) and 303.1(2)].

303.2 Installation of materials. All materials used shall be installed in strict accordance with the standards under which the materials are accepted and *approved*. In the absence of such installation procedures, the manufacturer's instructions shall be followed. Where the requirements of referenced standards or manufacturer's installation instructions do not conform to minimum provisions of this code, the provisions of this code shall apply.

❖ Plumbing components and materials are to be installed in accordance with the requirements of the applicable standard listed in the code. Where a standard is not provided, the manufacturer's instructions must be followed. For example, because there are very few standards available that regulate the installation of valves, the manufacturer's instructions must be used to install these components.

303.3 Plastic pipe, fittings and components. All plastic pipe, fittings and components shall be third-party certified as conforming to NSF 14.

❖ Plastic piping, fittings and plastic pipe-related components, including solvent cements, primers, tapes, lubricants and seals used in plumbing systems, must be tested and certified as conforming to NSF 14. This includes all water service, water distribution, drainage piping and fittings and plastic piping system components, including but not limited to pipes, fittings, valves, joining materials, gaskets and appurtenances. This section does not apply to components that only include plastic parts such as brass valves with a plastic stem, or to fixture fittings such as fixture stop valves. Plastic piping systems, fittings and related components intended for use in the potable water supply system must comply with NSF 61 in addition to NSF 14.

303.4 Third-party certification. All plumbing products and materials shall be listed by a third-party certification agency as complying with the referenced standards. Products and materials shall be identified in accordance with Section 303.1.

❖ The term "third party" refers to an outside organization with no financial or other interest in the outcome.

The code requirements for testing and certification have frequently confused code officials and manufacturers over the years. Securing and submitting the necessary documentation for certain products and materials is often a challenge for contractors and engineers. The code official was also burdened with trying to keep up with the myriad of products he or she sees in the field and the documentation that has (or has not) been submitted. To simplify inspections and approvals, the code requires that all products and materials

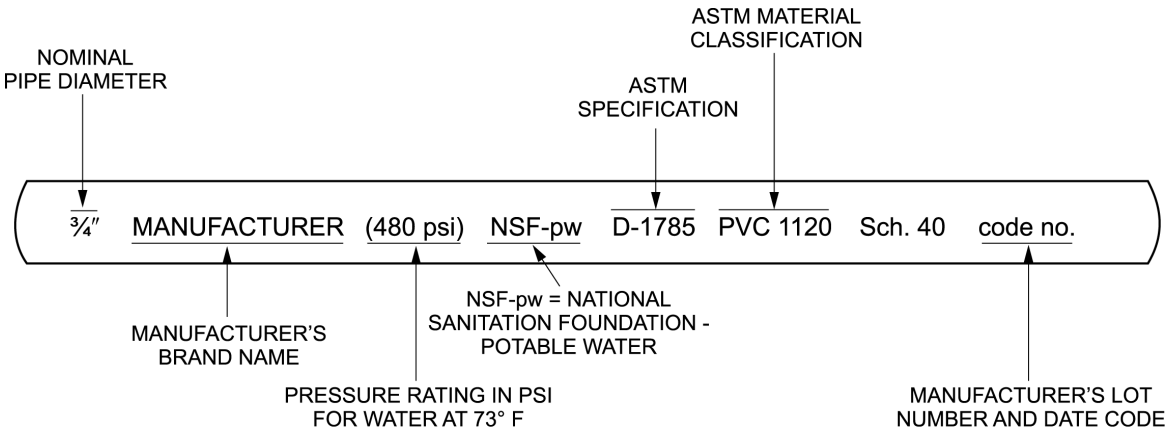

For SI: 1 inch = 25.4 mm, 1 pound per square inch = 6.895 kPa, °C = [(°F) - 32]/1.8.

Figure 303.1(1)
SAMPLE MARKING OF PVC PRESSURE PIPE

INTERNATIONAL CODE COUNCIL®
Copyright © 2015 ICC. ALL RIGHTS RESERVED. Accessed by David Dammon on Jun 21, 2017 12:30:52 PM pursuant to License Agreement with ICC. No further reproduction or distribution authorized. ANY UNAUTHORIZED REPRODUCTION OR DISTRIBUTION IS A VIOLATION OF THE FEDERAL COPYRIGHT ACT AND THE LICENSE AGREEMENT, AND SUBJECT TO CIVIL AND CRIMINAL PENALTIES THEREUNDER.

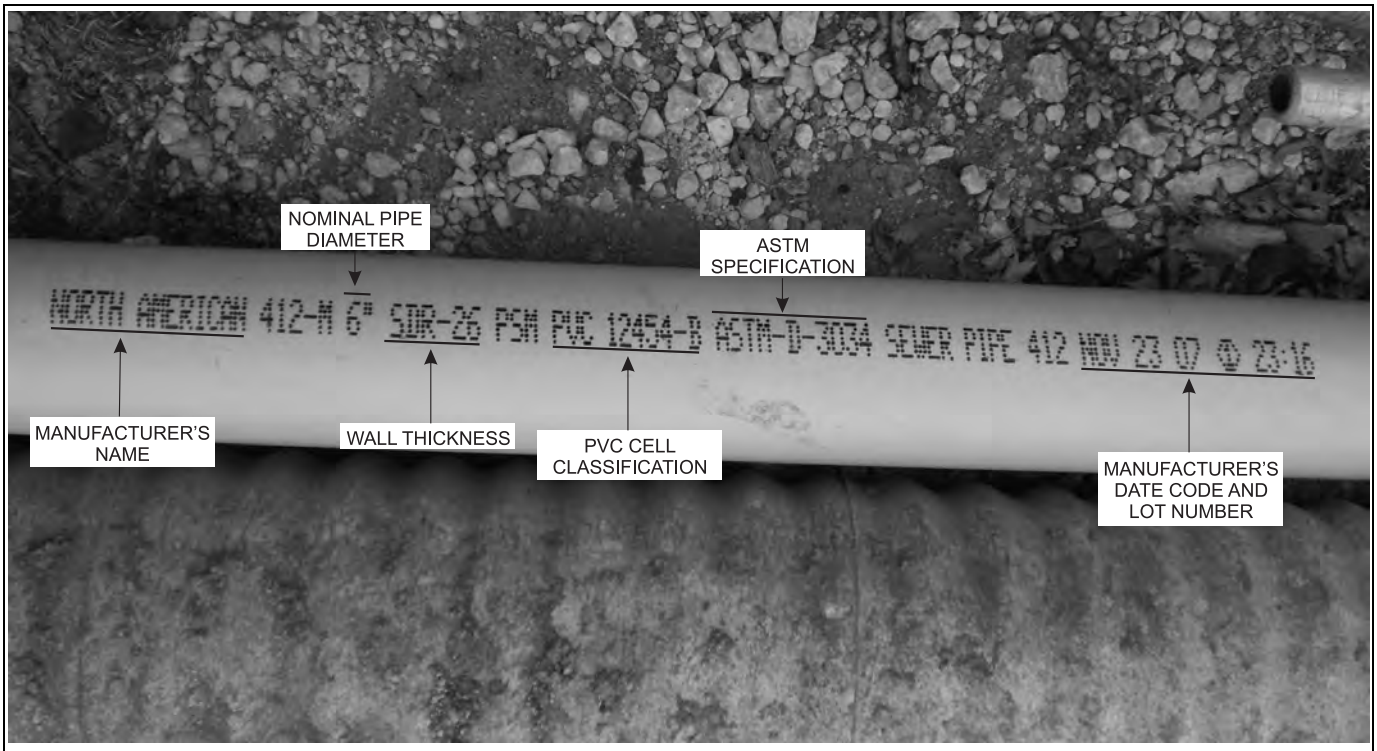

Figure 303.1(2)
MARKING OF PVC GRAVITY SEWER PIPE

be third-party certified. The code official only has to confirm that the product or material has the mark of the third-party certifying agency.

SECTION 304
RODENTPROOFING

304.1 General. Plumbing systems shall be designed and installed in accordance with Sections 304.2 through 304.4 to prevent rodents from entering structures.

❖ Rodents are known to be carriers of diseases and present serious health risks to humans. To prevent the spread of disease, Sections 304.2 through 304.4 require plumbing systems to be installed in a manner that will reduce the potential for rodent entry into structures.

304.2 Strainer plates. All strainer plates on drain inlets shall be designed and installed so that all openings are not greater than $^1/_2$ inch (12.7 mm) in least dimension.

❖ Rodents often travel and live within sanitary sewer systems. The limitation for opening size in strainer plates for floor and shower drains as well as receptor strainers provides two forms of protection. If rodents are in the sewer system, strainer plates prevent them from entering the building through the floor or shower drain. If rodents are within the structure itself, the strainer plate prevents rodent access to the drainage system.

304.3 Meter boxes. Meter boxes shall be constructed in such a manner that rodents are prevented from entering a structure by way of the water service pipes connecting the meter box and the structure.

❖ The water service pipe may be tunneled into the building from the meter box. When such an installation occurs, the annular space around the pipe must be protected to prevent rodents from getting into the building. This can be accomplished by a barrier to block their entry, such as a corrosion-resistant heavy wire screen or metal plate that is securely fastened in place.

304.4 Openings for pipes. In or on structures where openings have been made in walls, floors or ceilings for the passage of pipes, the annular space between the pipe and the sides of the opening shall be sealed with caulking materials or closed with gasketing systems compatible with the piping materials and locations.

❖ Rodents can enter a building through the annular spaces around piping that penetrates a wall, ceiling or floor. These spaces must be blocked using caulking or gasketing (see also commentary, Section 315).

SECTION 305
PROTECTION OF PIPES AND PLUMBING SYSTEM COMPONENTS

305.1 Corrosion. Pipes passing through concrete or cinder walls and floors or other corrosive material shall be protected against external corrosion by a protective sheathing or wrapping or other means that will withstand any reaction from the lime and acid of concrete, cinder or other corrosive material.

INTERNATIONAL CODE COUNCIL®
Copyright © 2015 ICC. ALL RIGHTS RESERVED. Accessed by David Dammon on Jun 21, 2017 12:30:52 PM pursuant to License Agreement with ICC. No further reproduction or distribution authorized. ANY UNAUTHORIZED REPRODUCTION OR DISTRIBUTION IS A VIOLATION OF THE FEDERAL COPYRIGHT ACT AND THE LICENSE AGREEMENT, AND SUBJECT TO CIVIL AND CRIMINAL PENALTIES THEREUNDER.

Sheathing or wrapping shall allow for movement including expansion and contraction of piping. The wall thickness of the material shall be not less than 0.025 inch (0.64 mm).

❖ Metallic piping must be protected from external corrosion in locations where the piping is in direct contact with materials known to be corrosive.

This section specifically identifies walls and floors built of cinder(s) or concrete as being corrosive. Cinders are a byproduct created from the burning of coal. Cinders contain sulfur compounds and, where exposed to moisture, these compounds can form acids that can be corrosive to metals. Cinders are sometimes used as an aggregate in lightweight (nonstructural) concrete for slab-on-grade floors and lightweight (nonstructural) "cinder blocks."

Concrete, in a wet slurry state, is caustic (pH level of 12 to 13) due to the limestone-based portland cement in the concrete reacting with water. Because concrete (and masonry units made from concrete) could contain acid-producing cinders and cured concrete is still somewhat caustic, metallic piping must be protected from direct contact with concrete or concrete masonry units.

Naturally corrosive soils, such as found in swamps, peat bogs or tidal marshes, can corrode metallic piping. Fill materials containing furnace slag, cinders, ash or spent industrial byproducts can also be corrosive to metallic piping. The designer or installer should consult with soils engineers, piping manufacturers as well as local code officials concerning the need for corrosion protection of metallic piping in contact with soil or fill materials of potentially corrosive nature.

Direct exposure of metallic piping to corrosive materials can be prevented by sheathing or wrapping of the piping. Sheathing involves inserting the piping into a flexible plastic sleeve of material. Wrapping of piping is where a flexible product is "wrapped" around the pipe circumference. Sheets of flexible plastic material can be wrapped around the circumference of the piping with sufficient overlap at the ends to ensure complete protection of the pipe.

Where sheathing or wrapping protects piping, it must allow for pipe movement. In other words, the sheathing or wrapping should not be adhered to the pipe so that the pipe cannot expand and contract within the protective material. This section requires the thickness of the sheathing or wrapping to be at least 0.025 inch (0.64 mm). Note that this thickness value is much greater that the commonly available flexible plastic sleeve materials (usually colored red or blue for pipe identification) of either 0.006 or 0.010 inch (0.15 mm or 0.25 mm) that are found to be stocked in the majority of plumbing supply houses. Although use of these thinner sheathing materials appears to be a widely accepted practice, these materials do not meet the minimum thickness requirement stated in this section. Therefore, the code official must approve the use of sheathing materials having a material thickness of less than 0.025 inch (0.64 mm) thick.

305.2 Stress and strain. Piping in a plumbing system shall be installed so as to prevent strains and stresses that exceed the structural strength of the pipe. Where necessary, provisions shall be made to protect piping from damage resulting from expansion, contraction and structural settlement.

❖ A plumbing system must not be damaged by stresses, strains or movement of the building components. In piping systems, provisions must be made for the expansion and contraction of the pipes themselves. Each piping material has a different rate of expansion and contraction that must be considered when designing the restraint system for the piping and the structure that surrounds the piping system.

Changes in temperature can cause distortion of the pipe material; for example, heat causes the material to expand. The greatest amounts of expansion and contraction in piping will occur along the length of the pipe. Hot water piping can experience significant movements in short runs of piping. Though the amount of expansion per unit length is low, large movements can occur in long lengths of pipe. Commentary Figure 305.2 contains the expansion rate for various pipe materials.

The most common method to absorb thermal expansion in plumbing piping systems is through the installation of one or more offsets in the piping. The typical offset piping arrangements used are the "L" bend (1-elbow change in direction), the "Z" bend (2-elbow offset) and the "U" bend (4-elbow offset) [see Commentary Figures 305.2(1) through 305.2(3)]. The

PIPING MATERIAL	RATE OF THERMAL EXPANSION in/in/°F
Brass-red	0.000009
Copper	0.00001
Cast iron	0.0000056
Carbon steel	0.000005
Ductile iron	0.0000067
Stainless steel	0.0000115
Borosilicate (glass)	0.0000018
ABS	0.00005
CPVC	0.000035
HDPE	0.00011
PE	0.00008
PEX	0.00093
PP	0.000065
PVC	0.00004
PVDF	0.000096

Source: *Facility Piping Systems Handbook*, 2nd Edition, Frankel, McGraw Hill, 2002.

For SI: 1 inch = 25.4 mm, °F = 68°C + 32.

Figure 305.2
THERMAL EXPANSION RATES FOR PIPING MATERIALS

INTERNATIONAL CODE COUNCIL®
Copyright © 2015 ICC. ALL RIGHTS RESERVED. Accessed by David Dammon on Jun 21, 2017 12:30:52 PM pursuant to License Agreement with ICC. No further reproduction or distribution authorized. ANY UNAUTHORIZED REPRODUCTION OR DISTRIBUTION IS A VIOLATION OF THE FEDERAL COPYRIGHT ACT AND THE LICENSE AGREEMENT, AND SUBJECT TO CIVIL AND CRIMINAL PENALTIES THEREUNDER.

length, *L*, in each of these figures is determined from the following equation:

$$L = [1.5 \times (E/S) \times D_o \times (G)]^{1/2}$$

where:

E = Modulus of elasticity at pipe temperature (psi)

S = Maximum allowable stress for the pipe material at the highest in-service pipe temperature (psi)

D_o = Outside diameter of pipe (inches)

G = Change in length of piping due to temperature change (inches). Thermal expansion rate of the pipe material from Commentary Table 305.2 × Change in temperature of the pipe (installation day to highest in-service temperature expected) × Length of pipe in feet between points where the pipe is restricted from expanding in length × 12 inches per foot.

The values for *E* and *S* are obtained from piping manufacturers, engineering publications or the material standards for the pipe products.

Sample Problem: A 160-foot-long straight run of 1-inch copper tube size CPVC pipe is to be installed to convey hot water at 140°F. The ends of the piping will be attached to equipment. The temperature at the time of installation will be 50°F. Determine the required offset length, *L*, to accommodate the thermal expansion that will occur when the system is operating.

Problem Approach

Obtain the thermal expansion rate from Commentary Table 305.2, calculate the amount of thermal expansion of the piping run, obtain the modulus of elasticity and allowable stress values from the piping manufacturer, and calculate the required offset length, *L*.

Solution

For CPVC piping material, the thermal expansion rate listed in Commentary Table 305.2 is 0.000035 inches/inch/°F. The change in temperature of the pipe from installation to service condition is 140°F minus 50°F, which equals 90°F. The change in length of the pipe, *G*, is calculated as follows:

G = 0.000035 inches/inch/°F × 90°F × 160 feet × 12 inches per foot

G = 6.1 inches

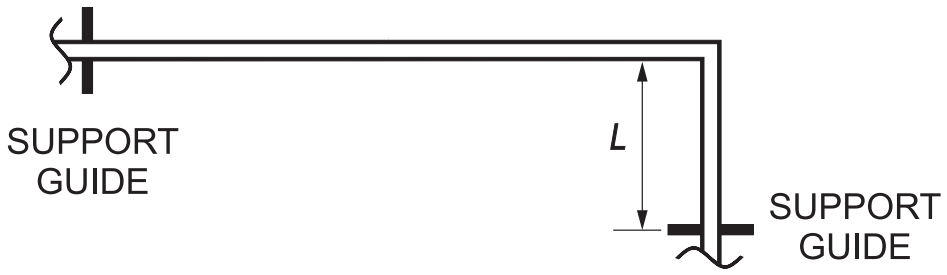

Figure 305.2(1)
"L" BEND

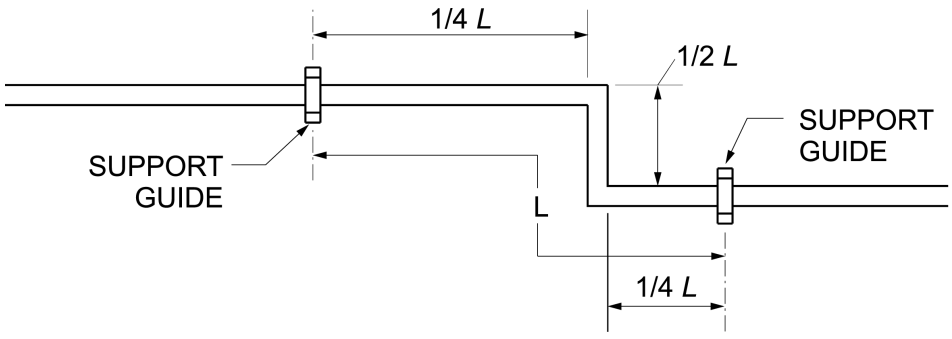

OFFSET PIPING MUST BE SUPPORTED WITH HANGERS, SLIDE PLATES OR SPRING HANGERS.

Figure 305.2(2)
"Z" BEND

INTERNATIONAL CODE COUNCIL®
Copyright © 2015 ICC. ALL RIGHTS RESERVED. Accessed by David Dammon on Jun 21, 2017 12:30:52 PM pursuant to License Agreement with ICC. No further reproduction or distribution authorized. ANY UNAUTHORIZED REPRODUCTION OR DISTRIBUTION IS A VIOLATION OF THE FEDERAL COPYRIGHT ACT AND THE LICENSE AGREEMENT, AND SUBJECT TO CIVIL AND CRIMINAL PENALTIES THEREUNDER.

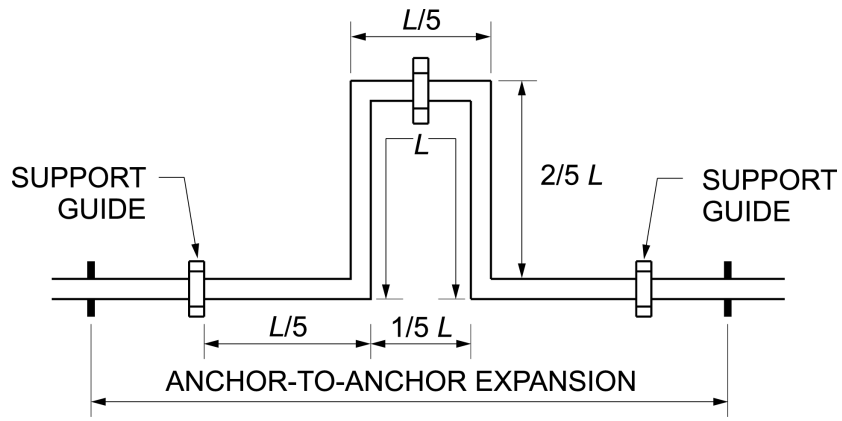

Figure 305.2(3)
"U" BEND

The pipe manufacturer provides a modulus of elasticity of 3.23×10^5 psi and an allowable stress of 1000 psi, both at the service temperature of 140°F. The outside diameter of the pipe, D_o, is 1.125 inches. Therefore,

$$L = [1.5 \times (E/S) \times D_o \times G]^{1/2}$$

$$L = [1.5 \times (3.23 \times 10^5/1000) \times 1.125 \times 12.5]^{1/2}$$

$$L = 57.7 \text{ inches}$$

Expansion joints can also be used to absorb thermal expansion. These products are preengineered or can be custom engineered for any application. The code does not regulate the design or installation of expansion joints.

The change in dimension due to temperature change is not limited to the length of the pipe but affects the diameter as well. As the temperature of a pipe increases, the pipe will "swell" to a larger diameter. If the thermal expansion is restrained such as by casting of the pipe in a concrete wall, significant stresses can develop in the pipe wall.

305.3 Pipes through foundation walls. Any pipe that passes through a foundation wall shall be provided with a relieving arch, or a pipe sleeve pipe shall be built into the foundation wall. The sleeve shall be two pipe sizes greater than the pipe passing through the wall.

❖ Piping installed through a foundation wall must be structurally protected from any transferred loading from the foundation wall. This protection must be provided by either a relieving arch or a pipe sleeve.

Where a pipe sleeve is used, it must be sized to be two pipe sizes larger than the pipe that passes through the pipe sleeve. For example, a 4-inch (102 mm) drainage pipe would require a 6-inch (152 mm) pipe sleeve. The annular space between the pipe sleeve and the pipe that passes through the sleeve will allow for any differential movement between the pipe and the wall. The pipe sleeve or relieving arch protects the pipe so that it will not be subjected to undue stresses that could cause it to rupture and leak [see Commentary Figures 305.3(1) and 305.3(2)].

In rare circumstances, it is sometimes necessary for a pipe to pass though a footing. For example, the slope of a building drain might not be able to be changed, resulting in the drainage pipe needing to pass through the footing. Although the code does not specifically address pipes passing through footings, the need for protecting pipes passing though footings is no different than for pipes passing through foundation walls. In these situations, protection of the pipe is not the only concern as the strength of footing could be compromised by the installation of a pipe sleeve or relieving arch. Any footing to be altered, either before or after placement of the footing, should be reviewed by a design professional to determine what footing design changes might be necessary to maintain the required footing strength.

Prior editions of the code required a relieving arch or a pipe sleeve for a pipe that passes under a footing. This was determined to be unnecessary as the footing already acts as a relieving arch to "span over" the area where the pipe passes under the footing. This is not to say that routing any size of or number of pipes under a footing is without consequences. Footings are designed to be uniformly supported by undisturbed or highly compacted soil. A trench for a pipe passing under the footing disrupts the uniform support for the footing. If the trench can be backfilled and compacted to the same level of compaction as the surrounding undisturbed or highly compacted soil, then the footing will be uniformly supported. But if the trench cannot be compacted sufficiently, such as where the trench is dug after the footing is in place, then the footing will not be uniformly supported by the soil; the footing will experience more stress than it was designed for. In actual practice, in a low-rise building where one or two "small" diameter pipes [≤ 8 inches (≤ 203 mm)] pass

INTERNATIONAL CODE COUNCIL®
Copyright © 2015 ICC. ALL RIGHTS RESERVED. Accessed by David Dammon on Jun 21, 2017 12:30:52 PM pursuant to License Agreement with ICC. No further reproduction or distribution authorized. ANY UNAUTHORIZED REPRODUCTION OR DISTRIBUTION IS A VIOLATION OF THE FEDERAL COPYRIGHT ACT AND THE LICENSE AGREEMENT, AND SUBJECT TO CIVIL AND CRIMINAL PENALTIES THEREUNDER.

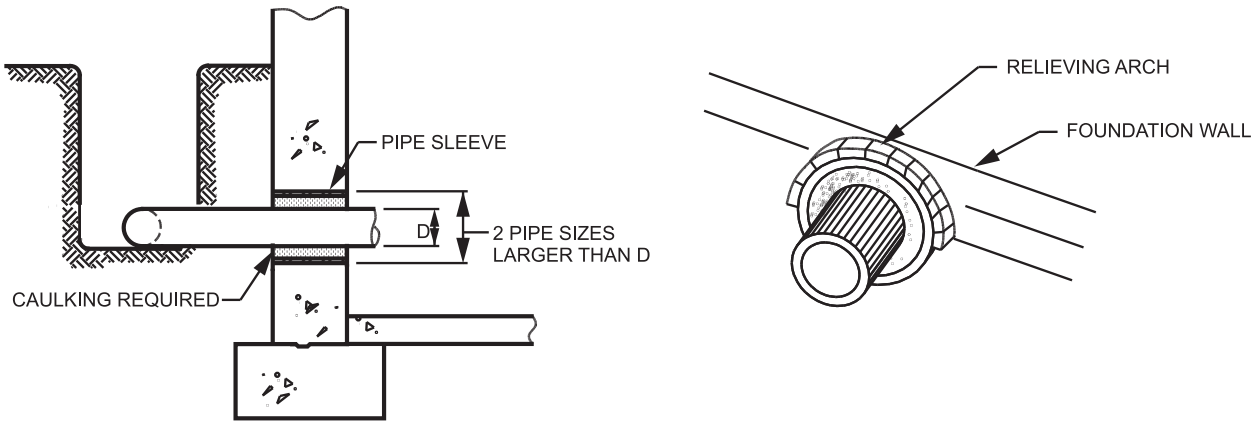

Figure 305.3(1)
PIPE PROTECTION



Figure 305.3(2)
BUILDING DRAIN PENETRATION THROUGH FOUNDATION WALL

under a footing in the same area, the footing will most likely have sufficient reserve capacity to span the trench. Larger buildings typically requiring larger pipes will have footings that are already designed for spanning over the trenches of these larger pipes. There are no "rules of thumb" to know when a footing design should be analyzed for adequacy. Installers and code officials need to be aware of the possible consequences to the footings and, where necessary, consult with a design professional concerning the footing design.

305.4 Freezing. Water, soil and waste pipes shall not be installed outside of a building, in attics or crawl spaces, concealed in outside walls, or in any other place subjected to freezing temperatures unless adequate provision is made to protect such pipes from freezing by insulation or heat or both. Exterior water supply system piping shall be installed not less than 6 inches (152 mm) below the frost line and not less than 12 inches (305 mm) below grade.

❖ Water, soil and waste pipes must be protected from freezing. Although vent piping is not required to be protected from freezing, it may be prudent to insulate vent pipes in extreme freezing climates to prevent condensation freezing and blocking of vents. Where a water or drain pipe is installed in an exterior wall or ceiling of a space intended for occupancy (in other words, a heated space), some degree of freeze protection can be achieved by making sure that the ther-

INTERNATIONAL CODE COUNCIL®
Copyright © 2015 ICC. ALL RIGHTS RESERVED. Accessed by David Dammon on Jun 21, 2017 12:30:52 PM pursuant to License Agreement with ICC. No further reproduction or distribution authorized. ANY UNAUTHORIZED REPRODUCTION OR DISTRIBUTION IS A VIOLATION OF THE FEDERAL COPYRIGHT ACT AND THE LICENSE AGREEMENT, AND SUBJECT TO CIVIL AND CRIMINAL PENALTIES THEREUNDER.

mal insulation for the wall (or ceiling) is installed between the outdoor surface and the piping [see Commentary Figures 305.4(1) and 305.4(2)]. Whether or not this arrangement will prevent freezing temperatures at the piping location depends on the climatic conditions, the thickness of insulation (between the outdoor surface and the piping) and the room temperature.

Note that there must always be a heat source along with an appropriate insulation thickness in order to protect pipes from freezing conditions. Insulation by itself (without a heat source) cannot protect a pipe from freezing; insulation only slows the rate of heat loss. The closer a pipe is to the heat source and the less insulation there is between the pipe and the heat source, the warmer the pipe will be. Commentary Figure 305.4(3) shows piping in an exterior wall of a building. The water distribution piping has been covered

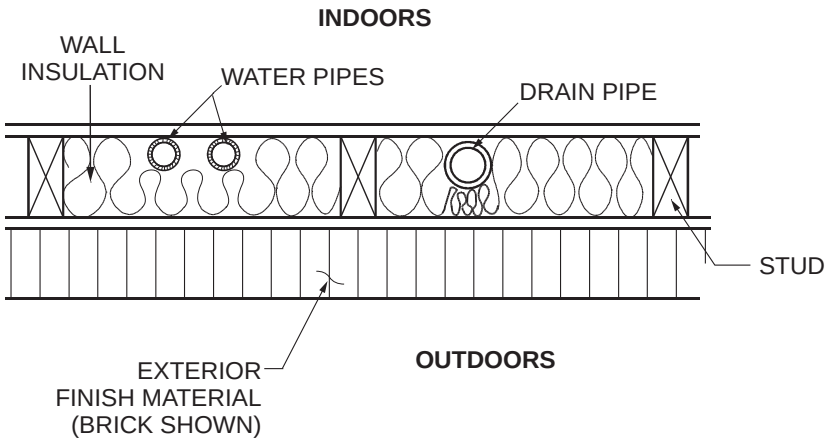

Figure 305.4(1)
PROTECTION AGAINST FREEZING



Figure 305.4(2)
WATER DISTRIBUTION PIPING IN EXTERIOR WALL

INTERNATIONAL CODE COUNCIL®
Copyright © 2015 ICC. ALL RIGHTS RESERVED. Accessed by David Dammon on Jun 21, 2017 12:30:52 PM pursuant to License Agreement with ICC. No further reproduction or distribution authorized. ANY UNAUTHORIZED REPRODUCTION OR DISTRIBUTION IS A VIOLATION OF THE FEDERAL COPYRIGHT ACT AND THE LICENSE AGREEMENT, AND SUBJECT TO CIVIL AND CRIMINAL PENALTIES THEREUNDER.



Figure 305.4(3)
PIPING IN EXTERIOR WALL

with foam tube insulation. On the left of the photo, note the close proximity of the horizontal water pipe to the exterior sheathing. While the insulation on the pipe between the pipe and the sheathing does help protect the pipe from outdoor temperatures, the insulation on the pipe between the pipe and the room will insulate the pipe from the heat coming from the room. In all likelihood, the wall insulation will be installed over the insulated pipe resulting in further insulation of the pipe from the room heat. On the right side of this photo, note the multitude of water distribution pipes behind the fixture location (probably a laundry tub). Again, while the pipe insulation between the pipes and the sheathing is beneficial for freeze protection of the pipes, the insulation on the room side of the pipes is detrimental because it insulates the pipes from the room heat. The congestion in this area will undoubtedly cause difficulty for installing wall insulation, especially between the piping and the sheathing. In the center of this photo, note that the trap for the clothes washer stand pipe is in close proximity to the sheathing so much so that it will be difficult to install any insulation between the trap and the sheathing. The arrangement and insulation of pipes shown in this figure would most likely only be suitable for a building located where freezing climatic conditions are unlikely or are of limited duration (such as hours).

Where piping is not directly adjacent to heated spaces in a building, electric resistance heat tapes or cables can be used to supply heat to the piping. Generally, heat tapes should not be used on piping in concealed spaces as the tapes can burn out and require replacement. However, as the code is silent with regard to the use of heat tape in a concealed area, the only recourse the code official has to prohibit such installations is to determine if the manufacturer's installation instructions limit the product use to unconcealed areas. There are heavy duty electric heat-tracing products that are suitable for concealed and earth burial applications. Note that plastic piping requires self-limiting-type heat tape to prevent overheating of the pipe.

The code does not provide any guidelines for insulating methods to ensure that piping will not be exposed to freezing temperatures. The code official is responsible for determining whether water and drain piping is adequately protected for the climatic conditions expected in the geographic area.

Freezeproof Hose Faucets

Hose bibbs and wall hydrants located on the exterior wall must be protected when installed in areas subject to freezing temperature. This can be accomplished by installing devices, such as freezeproof hose bibbs,

INTERNATIONAL CODE COUNCIL®
Copyright © 2015 ICC. ALL RIGHTS RESERVED. Accessed by David Dammon on Jun 21, 2017 12:30:52 PM pursuant to License Agreement with ICC. No further reproduction or distribution authorized. ANY UNAUTHORIZED REPRODUCTION OR DISTRIBUTION IS A VIOLATION OF THE FEDERAL COPYRIGHT ACT AND THE LICENSE AGREEMENT, AND SUBJECT TO CIVIL AND CRIMINAL PENALTIES THEREUNDER.

that locate the valve seat within the heated space and allow residual water within the hydrant to drain after the valve is closed. A freezeproof hose bibb cannot be installed with the valve seat located in an unheated garage or storage room. The valve seat must extend through to the heated side of the exterior wall. Valve casings on these devices are available in various lengths to accommodate a variety of wall thicknesses [see Commentary Figure 305.4(4)].

Freezer Floor Drains

Where floor drains are located in areas (e.g., walk-in freezers or frozen food warehouses) maintained at temperatures at or below 32°F (0°C), the traps for the floor drains could freeze and damage the piping.

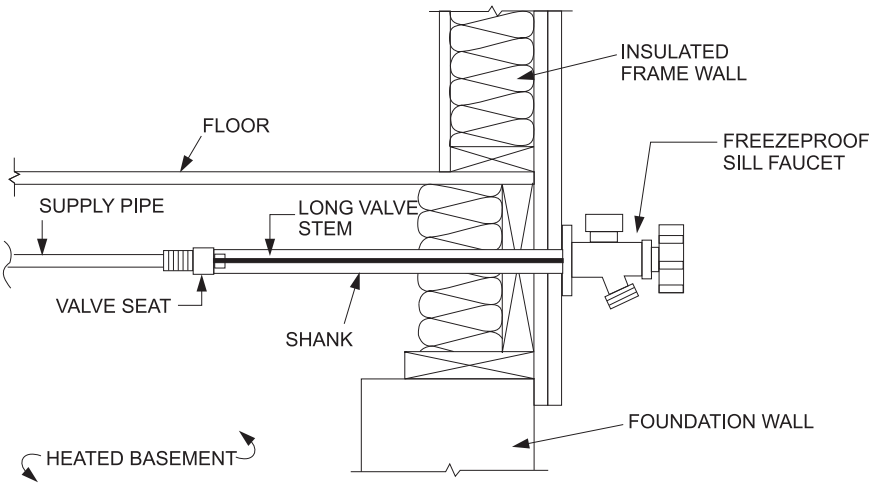

Figure 305.4(4)
TYPICAL FREEZEPROOF HOSE FAUCET INSTALLATION

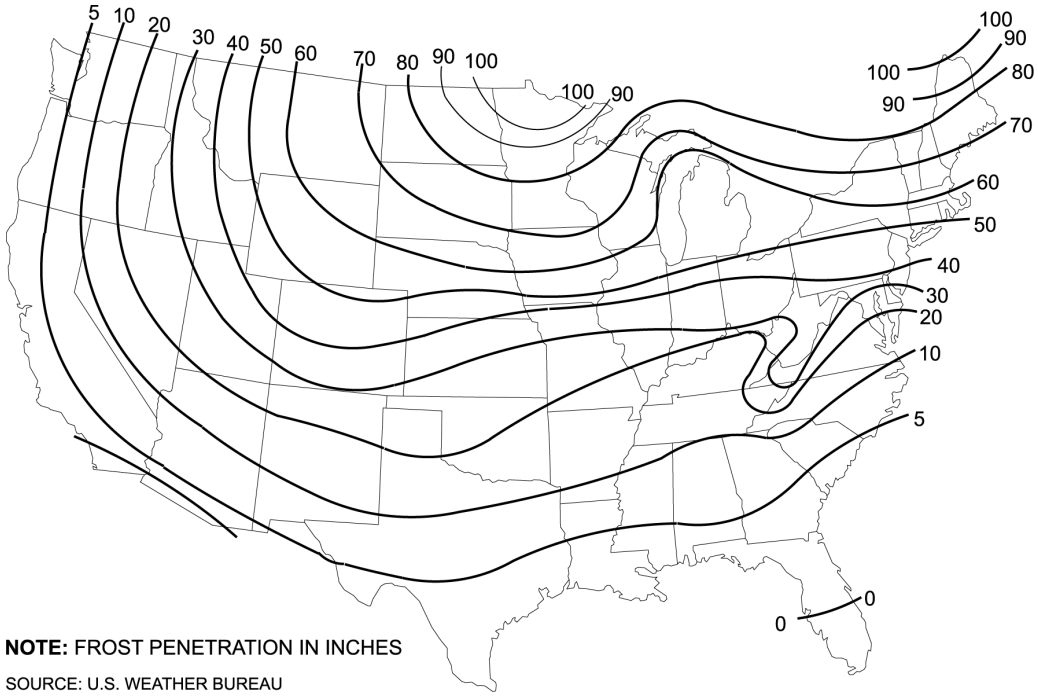

For SI: 1 inch = 25.4 mm.

Figure 305.4(5)
SEVERE FROST PENETRATION LEVELS

INTERNATIONAL CODE COUNCIL®
Copyright © 2015 ICC. ALL RIGHTS RESERVED. Accessed by David Dammon on Jun 21, 2017 12:30:52 PM pursuant to License Agreement with ICC. No further reproduction or distribution authorized. ANY UNAUTHORIZED REPRODUCTION OR DISTRIBUTION IS A VIOLATION OF THE FEDERAL COPYRIGHT ACT AND THE LICENSE AGREEMENT, AND SUBJECT TO CIVIL AND CRIMINAL PENALTIES THEREUNDER.

Therefore, floor drains in these areas must not have traps and must be indirect connected in accordance with Section 802.1.2.

Underground Water Service Piping

Water service piping that is installed exterior to a building and underground must be buried at least 12 inches (305 mm) below grade or 6 inches (152 mm) below the established frost penetration depth for the geographic area [see Commentary Figure 305.4(5)], whichever is the greater depth. For example, if the frost depth for the region is 24 inches (610 mm) below grade, the water service pipe must be installed so that the top surface of the pipe is at least 30 inches (762 mm) below grade. If the frost depth is 5 inches (127 mm) below grade, the water service pipe must be installed such that the top surface of the pipe is at least 12 inches (305 mm) below grade. Where frost penetration depth controls the burial depth, the 6-inch buffer protects the pipe from forces caused by the freezing and expansion of moisture in the above soil (i.e., "frost heave") [see Commentary Figure 305.4(6)]. The minimum burial depth of 12 inches (305 mm) protects the pipe from the most common accidental damage: shallow hand digging for landscape plantings.

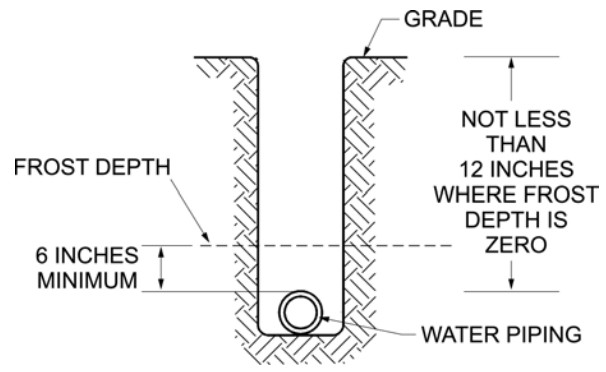

For SI: 1 inch = 25.4 mm.

Figure 305.4(6)
REQUIRED BURIAL DEPTH

Plumbing in Seasonal-use Buildings and Outdoor-use Areas

The potable water plumbing systems for poolside bathhouses, summer-use-only cabins and other unheated areas not used during freezing temperature conditions are typically designed in some way to be "winterized" so that water in the piping does not freeze and break the piping. Two common ways of accomplishing winterization of plumbing systems are: 1) gravity draining the potable water system to an outlet at the system's lowest point or 2) pumping an antifreeze solution into the potable water system to displace the water. Although the code is silent about winterization, there are a few code sections to consider: 1) stop and waste valves below grade (Section 608.7) and 2) introduction of chemicals into a potable water system (Sections 608.1 and 608.5).

Consider a poolside bathhouse built on a slab-on-grade foundation. Gravity draining of the water from the potable water system would require a drain outlet located below grade so that water in the system can drain down to an elevation below the frost line. But Section 608.7 prohibits stop and waste valves below grade because there is a high probability for the drain outlet valve to be left open during the off season such that ground water could enter and contaminate the potable water system. Therefore, gravity draining of the bathhouse potable water system through the below-grade outlet is not an acceptable method for winterizing. One possible solution for evacuating the water from the potable water system could be to design the system so that the water could be vacuumed out from one or more specifically designed above-grade openings that are connected directly to the low points in the system. Other parts of the potable water system would require careful piping installation to ensure that the water in the system gravity drains to the low points of the system.

A potable water system could also be winterized by pumping antifreeze into the system to displace the water throughout all of the piping. However, many commonly available antifreeze solutions (e.g., automobile cooling system coolants) are toxic and must not be ingested by humans. Even if toxic solutions are used and then flushed out of the system with potable water, the potential for contamination of the water is still too great to consider the use of toxic antifreezes. In general, plastic piping manufacturers recommend using only glycerin-based antifreeze solution as it is generally regarded as nontoxic and is chemically compatible with most types of plastic pipe materials listed in the code. The use of glycerin-based antifreeze for nonplastic piping should be equally acceptable. Waste glycerin antifreeze could be captured and stored for reuse or if disposed of, it should be done so in an environmentally safe manner.

305.4.1 Sewer depth. *Building sewers* that connect to private sewage disposal systems shall be installed not less than **[NUMBER]** inches (mm) below finished grade at the point of septic tank connection. *Building sewers* shall be installed not less than **[NUMBER]** inches (mm) below grade.

❖ A building sewer is not subject to the same constraints as a water pipe because a sewer carries heat to the surrounding soil as the drainage flows through it. A building sewer also has an intermittent flow. As a result, the frost depth is higher in the immediate area of the building sewer; therefore, the burial depth of a building sewer does not have to be below the recorded

INTERNATIONAL CODE COUNCIL®
Copyright © 2015 ICC. ALL RIGHTS RESERVED. Accessed by David Dammon on Jun 21, 2017 12:30:52 PM pursuant to License Agreement with ICC. No further reproduction or distribution authorized. ANY UNAUTHORIZED REPRODUCTION OR DISTRIBUTION IS A VIOLATION OF THE FEDERAL COPYRIGHT ACT AND THE LICENSE AGREEMENT, AND SUBJECT TO CIVIL AND CRIMINAL PENALTIES THEREUNDER.

frost depth. A typical burial depth for a building sewer ranges from 6 to 18 inches (152 to 457 mm).

The installation depth of the sewer pipe connecting to a septic tank could be different to facilitate the proper operation of the private sewage disposal system. The connection at the septic tank is typically 18 inches (457 mm) below grade; however, the code official is to determine the depths necessary for the locality.

305.5 Waterproofing of openings. Joints at the roof and around vent pipes shall be made water tight by the use of lead, copper, galvanized steel, aluminum, plastic or other *approved* flashings or flashing material. Exterior wall openings shall be made water tight.

❖ Where a pipe penetrates a roof or an exterior wall, the annular space around the pipe must be sealed, or the pipe must be provided with flashing to prevent the entry of moisture. If this annular space is improperly sealed or not sealed at all, moisture from precipitation can enter the structure and damage the surrounding structure and finishes.

Because of direct exposure to rain and, in colder climates, exposure to snow accumulation, piping that penetrates a roof must be provided with flashing. Many types of flashings have been developed to prevent leakage around penetrations. In a typical installation, the flashing surrounds the pipe and rises above the roof surface, and is made water tight by wrapping over the top of the pipe or applying an elastomeric seal around the pipe. The installation of materials, such as lead, that wrap over the top of the pipe must not reduce the required cross-sectional area of the vent terminal (see Commentary Figure 305.5).

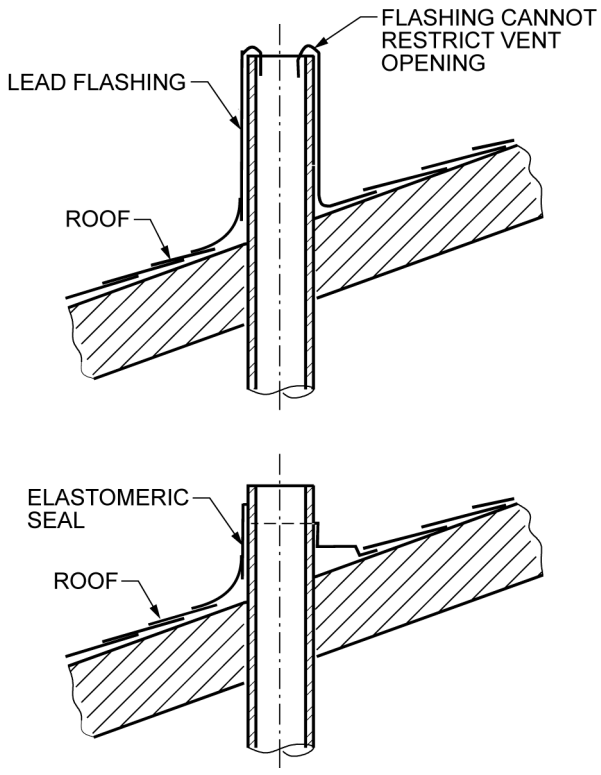

Figure 305.5
ROOF PENETRATIONS

Several of the flashing materials listed in Section 305.5 have been used for many years and are recognized as effective moisture penetration protection. This section also provides for the use of new and innovative materials that are not specifically listed when approved by the code official. Whenever an alternative material is proposed for use as a flashing, the material must be proven to be corrosion resistant and durable against the effects of exposure to the elements, including but not limited to resistance to impact, freeze-thaw and ultraviolet exposure and aging. Another consideration in the selection of the flashing material is that it must be compatible with the roof-covering material, the assembly penetrated and the pipe that it will be in contact with.

Because exterior walls are typically not subjected to the same severity of exposure as a roof, the space around pipes that penetrate exterior walls need not be sealed with flashing; rather, it must only be made water tight. Openings in exterior walls, therefore, can be sealed with an approved sealant, mechanical device, flashing or other approved method that will prevent penetration into the structure.

305.6 Protection against physical damage. In concealed locations where piping, other than cast-iron or galvanized steel, is installed through holes or notches in studs, joists, rafters or similar members less than $1^1/_2$ inches (38 mm) from the nearest edge of the member, the pipe shall be protected by steel shield plates. Such shield plates shall have a thickness of not less than 0.0575 inch (1.463 mm) (No. 16 gage). Such plates shall cover the area of the pipe where the member is notched or bored, and shall extend not less than 2 inches (51 mm) above sole plates and below top plates.

❖ This section is intended to minimize the possibility of drainage and water pipe damage caused by nails, screws or other fasteners. Because nails and screws are driven "blindly" after wall covering is placed, the shield must protect the pipe through the full width of the member on each side and must extend not less than 2 inches (51 mm) above or below the sole or top wall plates. Commentary Figure 305.6(1) shows typical shield plates. Commentary Figure 305.6(2) shows shield plates improperly installed because the plate(s) do not extend 2 inches (51 mm) below the bottom member of the double top plate. Cast-iron and galvanized steel pipe each have wall thicknesses greater than the required thicknesses for the shield plate, which makes them inherently resistant to nail and screw penetrations.

The shield plate minimum thickness specified represents the "low end" of the thickness tolerance range for No. 16 gage galvanized sheet metal in accordance with Sheet Metal and Air Conditioning Contractors National Association (SMACNA) heating, ventilation and air-conditioning (HVAC) duct construction standards. The "low end" thickness dimension is stated so

INTERNATIONAL CODE COUNCIL®
Copyright © 2015 ICC. ALL RIGHTS RESERVED. Accessed by David Dammon on Jun 21, 2017 12:30:52 PM pursuant to License Agreement with ICC. No further reproduction or distribution authorized. ANY UNAUTHORIZED REPRODUCTION OR DISTRIBUTION IS A VIOLATION OF THE FEDERAL COPYRIGHT ACT AND THE LICENSE AGREEMENT, AND SUBJECT TO CIVIL AND CRIMINAL PENALTIES THEREUNDER.

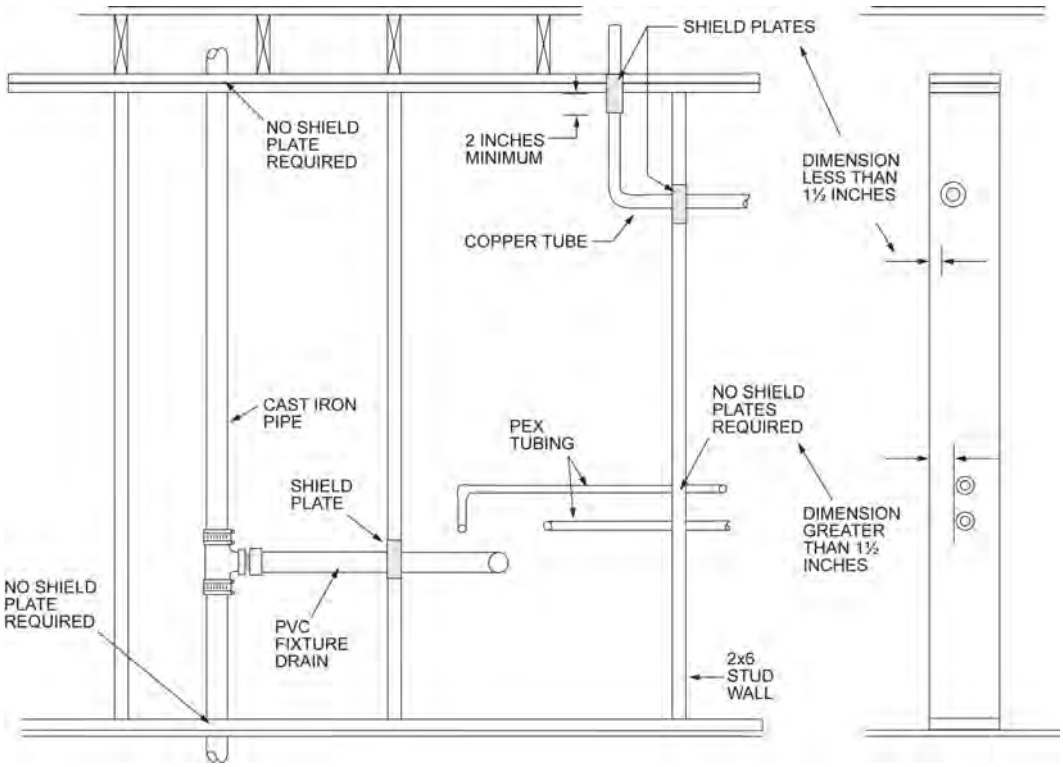

For SI: 1 inch = 25.4 mm.

Figure 305.6(1)
REQUIRED SHIELD PLATES



Figure 305.6(2)
PIPE PROTECTION VIOLATION

INTERNATIONAL CODE COUNCIL®
Copyright © 2015 ICC. ALL RIGHTS RESERVED. Accessed by David Dammon on Jun 21, 2017 12:30:52 PM pursuant to License Agreement with ICC. No further reproduction or distribution authorized. ANY UNAUTHORIZED REPRODUCTION OR DISTRIBUTION IS A VIOLATION OF THE FEDERAL COPYRIGHT ACT AND THE LICENSE AGREEMENT, AND SUBJECT TO CIVIL AND CRIMINAL PENALTIES THEREUNDER.

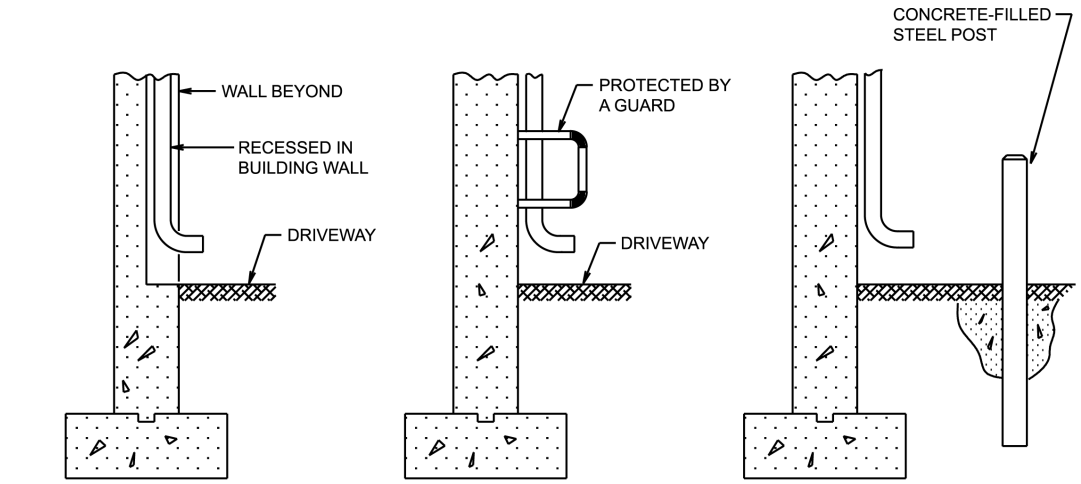

Figure 305.7
PROTECTION OF PLUMBING SYSTEM COMPONENTS

that if a field measurement of shield plate thickness is necessary, the absolute minimum thickness will allow all possible thicknesses of No. 16 gage shield plates to be acceptable. No. 16 gage has been proven to be the minimum thickness to prevent penetration by commonly used fasteners without causing noticeable "bulge" appearance problems in the covering materials.

305.7 Protection of components of plumbing system. Components of a plumbing system installed along alleyways, driveways, parking garages or other locations exposed to damage shall be recessed into the wall or otherwise protected in an *approved* manner.

❖ Plumbing system components such as water supply pipes, vents, stacks, leaders or downspouts that are subject to possible motor vehicle impact must be adequately protected (see Commentary Figure 305.7). The method of protection must be approved by the code official.

SECTION 306
TRENCHING, EXCAVATION AND BACKFILL

306.1 Support of piping. Buried piping shall be supported throughout its entire length.

❖ Piping that is installed below grade must be continuously supported to prevent a number of possible problems including, but not limited to, reverse slope (of gravity flow pipelines), flexible connector misalignment/failure and pipe breakage.

306.2 Trenching and bedding. Where trenches are excavated such that the bottom of the trench forms the bed for the pipe, solid and continuous load-bearing support shall be provided between joints. Bell holes, hub holes and coupling holes shall be provided at points where the pipe is joined. Such pipe shall not be supported on blocks to grade. In instances where the materials manufacturer's installation instructions are more restrictive than those prescribed by the code, the material shall be installed in accordance with the more restrictive requirement.

❖ A trench must be wide enough to allow for proper alignment of the piping system. Piping is best supported when it rests directly on the bottom of a solid, continuous trench for its entire length, as required by Section 306.1 (see Commentary Figure 306.2). Sections 306.2.1 through 306.2.3 contain specific requirements for excavating and rebedding the trench below the installation level of the pipe.

If bell or hub pipe is installed, the bottom of the trench must be dug out around the hub to maintain continuous support of the pipe (see Commentary Figure 306.2). For additional information on burial techniques, consult installation standards such as ASTM D2321 (plastic sewer) and ASTM D2774 (plastic pressure pipe).The standards include criteria such as the size of backfill particles, classification and compaction density requirements of various embedment materials and the deflection requirements of different pipe materials. They also address the minimum backfill cover required before heavy equipment can traverse the pipe trench. When the manufacturer's instructions are more restrictive than the requirements of this section, the manufacturer's instructions govern. The rationale for this is that the manufacturer has tested the assembly for various characteristics, including proper support of the piping system for various areas where the piping may be installed.

306.2.1 Overexcavation. Where trenches are excavated below the installation level of the pipe such that the bottom of the trench does not form the bed for the pipe, the trench shall be backfilled to the installation level of the bottom of the pipe

INTERNATIONAL CODE COUNCIL®
Copyright © 2015 ICC. ALL RIGHTS RESERVED. Accessed by David Dammon on Jun 21, 2017 12:30:52 PM pursuant to License Agreement with ICC. No further reproduction or distribution authorized. ANY UNAUTHORIZED REPRODUCTION OR DISTRIBUTION IS A VIOLATION OF THE FEDERAL COPYRIGHT ACT AND THE LICENSE AGREEMENT, AND SUBJECT TO CIVIL AND CRIMINAL PENALTIES THEREUNDER.

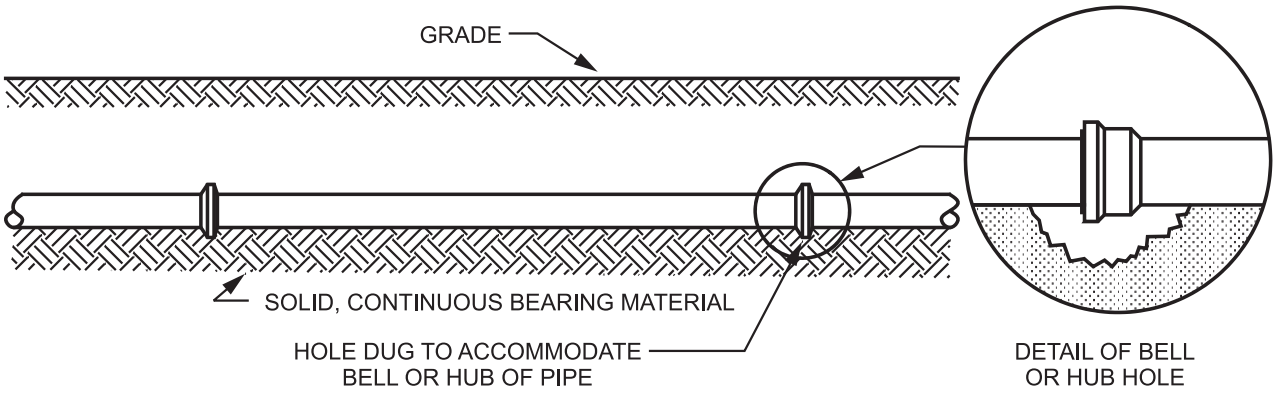

Figure 306.2
PIPE ON BOTTOM OF TRENCH

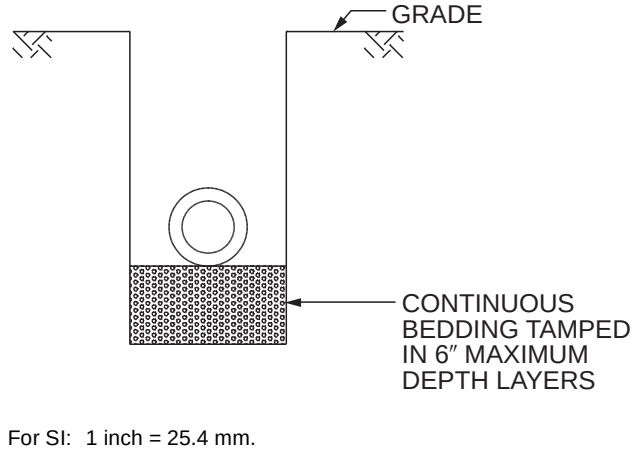

For SI: 1 inch = 25.4 mm.

Figure 306.2.1
OVEREXCAVATED TRENCH

with sand or fine gravel placed in layers not greater than 6 inches (152 mm) in depth and such backfill shall be compacted after each placement.

❖ Trench overexcavation occurs frequently because it is sometimes difficult to maintain an even grade line. The removal of large rocks, construction debris or abandoned piping can create voids below the desired grade line. Where overexcavation occurs, the trench bottom must be built up with compacted layers of sand or fine gravel (see Commentary Figure 306.2.1). The layers of fill material must not exceed 6 inches (152 mm) in thickness so that compaction is effective throughout the fill layer. Compaction is necessary to prevent future settling and to decrease the permeability of the fill material so that any ground-water flow does not wash-out the fill material.

306.2.2 Rock removal. Where rock is encountered in trenching, the rock shall be removed to not less than 3 inches (76 mm) below the installation level of the bottom of the pipe, and the trench shall be backfilled to the installation level of the bottom of the pipe with sand tamped in place so as to provide uniform load-bearing support for the pipe between joints. The pipe, including the joints, shall not rest on rock at any point.

❖ Piping must not be supported intermittently by hard surfaces, such as rock or concrete as this creates "point loads" on the pipe wall. Bedding provides a continuous "smooth" cradled support to ensure that the pipe is not exposed to concentrated "point" loads, which could ultimately cause pipe failure.

306.2.3 Soft load-bearing materials. If soft materials of poor load-bearing quality are found at the bottom of the trench, stabilization shall be achieved by overexcavating not less than two pipe diameters and backfilling to the installation level of the bottom of the pipe with fine gravel, crushed stone or a concrete foundation. The concrete foundation shall be bedded with sand tamped into place so as to provide uniform load-bearing support for the pipe between joints.

❖ If soil at the bottom of an excavated trench is of poor load-bearing quality, such as peat or muck, the trench must be overexcavated by two pipe diameters and the area backfilled with material that will properly support the piping (see commentary, Section 306.2.1). For example, where a 4-inch (102 mm) pipe is to be installed in a trench where there is soggy soil, the trench must be overexcavated at least 8 inches (203 mm) below the level where the pipe is to be installed. The overexcavated area must be backfilled with either crushed stone or fine gravel.

In some cases, the top of abandoned concrete foundations might be found at the bottom of the trench or new concrete might have to be placed to span "bottomless" soft earth locations. In either case, the pipe must be isolated from the concrete with a layer of tamped or compacted sand (two pipe diameters deep) to protect the pipe from the hard and often uneven concrete surface.

306.3 Backfilling. Backfill shall be free from discarded construction material and debris. Loose earth free from rocks, broken concrete and frozen chunks shall be placed in the

INTERNATIONAL CODE COUNCIL®
Copyright © 2015 ICC. ALL RIGHTS RESERVED. Accessed by David Dammon on Jun 21, 2017 12:30:52 PM pursuant to License Agreement with ICC. No further reproduction or distribution authorized. ANY UNAUTHORIZED REPRODUCTION OR DISTRIBUTION IS A VIOLATION OF THE FEDERAL COPYRIGHT ACT AND THE LICENSE AGREEMENT, AND SUBJECT TO CIVIL AND CRIMINAL PENALTIES THEREUNDER.

trench in 6-inch (152 mm) layers and tamped in place until the crown of the pipe is covered by 12 inches (305 mm) of tamped earth. The backfill under and beside the pipe shall be compacted for pipe support. Backfill shall be brought up evenly on both sides of the pipe so that the pipe remains aligned. In instances where the manufacturer's instructions for materials are more restrictive than those prescribed by the code, the material shall be installed in accordance with the more restrictive requirement.

❖ This section provides a general approach for backfilling piping that has been properly bedded in a trench. Proper backfilling technique is important to ensure that the pipe remains aligned in its bedded position especially where there will be loads from additional backfill above the 12 inches (305 mm) of tamped backfill cover over the pipe. Note that the last line of text in this section requires that the installer consider "manufacturer's installation instructions" to determine if more restrictive requirements exist. Different types of soil conditions, deep trenches or additional loads anticipated at grade level (such as rolling trucks) could require different backfilling methods.

It is not the intent of this section to require that all piping be buried with at least 12 inches (305 mm) of cover. Sections 305.4 and 305.4.1 indicate the required burial depths for some types of piping systems. Piping in trenches under a slab-on-ground building need not be buried any more than what is necessary to provide for a full thickness of the concrete slab above. Piping in trenches in a crawl space need not have any bedding or backfill installed as long as the piping is supported at the same required intervals as if the piping was suspended from the structure above.

Discarded construction materials such as broken concrete block, brick and lumber scraps must be cleared out of the backfill material to prevent the pipe from being misaligned or the pipe becoming "point loaded" from above when the backfill is compacted. Large rocks, frozen clumps of soil and broken concrete must also be kept out of the initial backfill (haunching) because these materials do not easily flow into the voids next to the pipe. The backfill for the sides of the pipe must readily flow and be easily placed to completely fill the open trench space next to the pipe. An even distribution of backfill along both sides of the pipe is required to prevent the pipe from being pushed sideways. Backfilling above the pipe is to be accomplished by placing 6 inches (152 mm) of backfill material in the trench, tamping that material firm and then placing another 6 inches (152 mm) of material in the trench and tamping that layer of material firm. The process is repeated until the tamped material above the top of the pipe is at least 12 inches thick (305 mm) (see Commentary Figure 306.3) or the trench is filled to grade. Any remaining backfill can then be placed into the trench in any layer thickness that can be adequately compacted with the available equipment or placed in the trench without compacting and left to naturally settle over time.

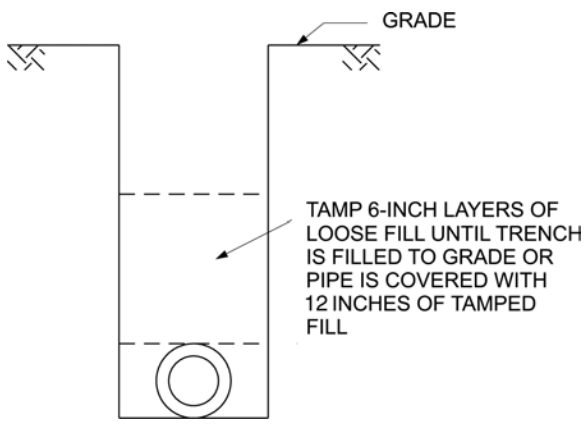

For SI: 1 inch = 25.4 mm.

Figure 306.3
TAMPING LOOSE FILL IN 6-INCH LAYERS

306.4 Tunneling. Where pipe is to be installed by tunneling, jacking or a combination of both, the pipe shall be protected from damage during installation and from subsequent uneven loading. Where earth tunnels are used, adequate supporting structures shall be provided to prevent future settling or caving.

❖ When installing pipe under a paved area or sidewalk, tunneling, jacking or a combination of both is required. The pipe must be protected by proper backfilling in the tunneled area to prevent caving or settlement around the piping system. The length of tunneling should be limited to only that required to clear the obstacle above. Tunnels of any length are difficult to refill with proper backfill and the longer the tunnel, the more difficult it is to prevent settlement or caving. If an uneven loading condition exists, the piping system could eventually fail.

SECTION 307
STRUCTURAL SAFETY

307.1 General. In the process of installing or repairing any part of a plumbing and drainage installation, the finished floors, walls, ceilings, tile work or any other part of the building or premises that must be changed or replaced shall be left in a safe structural condition in accordance with the requirements of the *International Building Code*.

❖ Quite often, the installation of a plumbing system affects other systems in the building. Structural components, for example, may have to be modified to allow for a plumbing system to be installed in accordance with code requirements. Any change to a building system or component that is necessary for the proper installation of the plumbing system must result in the modified building system or component still complying with the code requirements regulating that particular system. Structural components must meet the *International Building Code*® (IBC®) minimums.

INTERNATIONAL CODE COUNCIL®
Copyright © 2015 ICC. ALL RIGHTS RESERVED. Accessed by David Dammon on Jun 21, 2017 12:30:52 PM pursuant to License Agreement with ICC. No further reproduction or distribution authorized. ANY UNAUTHORIZED REPRODUCTION OR DISTRIBUTION IS A VIOLATION OF THE FEDERAL COPYRIGHT ACT AND THE LICENSE AGREEMENT, AND SUBJECT TO CIVIL AND CRIMINAL PENALTIES THEREUNDER.

307.2 Cutting, notching or bored holes. A framing member shall not be cut, notched or bored in excess of limitations specified in the *International Building Code*.

❖ The code recognizes that it is occasionally necessary to modify framing members by boring holes, notching or cutting in the course of installing plumbing piping or plumbing fixture supports. While the original intent of this section was to address modifications to solid sawn wood members (commonly called "dimensional lumber"), modern building construction includes a mix of "engineered" wood members and assemblies, cold-formed steel light-framed members, structural steel members and log members. To maintain a building's structural integrity, the load-carrying capacity of these members must not be reduced. If a structural member is modified beyond what is specifically permitted by the IBC, the member must be either replaced with an unmodified member or a structural analysis of that member must be performed by a registered design professional (and approved by the code official) to verify that the modified member will have the required structural capacity for the loading conditions. As either solution could be costly, the plumbing installer should carefully consider the specified limitations for modification of all framing members before such alterations are performed.

Bearing Walls Versus Nonbearing Walls

The terms "bearing" and "nonbearing" are used in the prescriptive allowances for the alteration of studs. In order to apply the allowances in the least restrictive manner, the plumbing installer must understand how the roof and floor loads of a building are supported by the wall framing. Exterior walls are always considered to be (load) bearing walls. Where floor joists, trusses or I-joists are supported by an interior wall, the wall is a (load) bearing wall. Roof trusses might also require support by interior walls and as such, those walls would be (load) bearing. However, not all walls located under the bottom chord of a roof truss are intended to support roof trusses. Where a wall only supports itself and no other framing member, it is non (load) bearing. If the plumbing installer has doubt about whether a wall is bearing or nonbearing, he should either consult with the party responsible for the framing design or assume that the wall is (load) bearing.

Sawn Wood Members

The IBC offers prescriptive allowances for cutting, notching and boring of sawn wood studs, joists and rafters. These allowances apply to wood-constructed buildings that have been designed in accordance with the allowable stress design method, the load-resistance design method or conventional light-frame construction design method. However, in rare cases, some portions of or entire sawn wood constructed structures might be specially designed such that standard limitations for cutting, notching or boring of members are restricted further or prohibited altogether. The plumbing contractor should always ask the general contractor or framing contractor where, if any, such special designs are located in the building.

Commentary Figure 307.2(1) shows the IBC limitations for modifications to wood studs. Commentary Figure 307.2(2) shows the IBC limitations for modifications to wood joists and rafters.

In Commentary Figure 307.2(3), the bearing wall studs have $2^1/_8$-inch (54 mm) holes drilled in 2 by 4 studs for passage of the $1^1/_2$-inch (38 mm) drain and vent pipes. The holes exceed 40 percent of the $3^1/_2$-inch (89 mm) actual depth of the stud and therefore, according to the IBC, the modified studs should have been evaluated by a design professional for structural adequacy. However, in this situation, the code official allowed the use of metal stud brackets (often called "stud shoes") to reinforce the studs at the oversized hole locations. Note that the IBC is silent on the use of metal stud shoes to reinforce wood studs where holes are larger than the IBC limitations. Although it may be common practice for stud shoes to be installed in these situations, the code official would have to approve their use. Commentary Figure 307.2(3) also shows notching on the face of the studs for $^3/_4$-inch (19 mm) copper water pipe. The allowable notch depth for a bearing stud is 25 percent of the stud depth or $^7/_8$ inch (22 mm). The notches in these studs are deeper than $^7/_8$ inch (22 mm) and thus are in violation of the notching rules.

Commentary Figures 307.2(4) through 307.2(9) show various violations of the cutting, notching and boring limitations for sawn wood members.

Sawn Wood Wall Top Plate Reinforcement

It is common for piping to be routed through holes or notches in the top plate of a (load) bearing wall (exterior or interior). Where this occurs, the IBC requires that the top wall plate be reinforced with a metal tie (reinforcing strap). The IBC is silent as to what size of hole can exist without a metal tie being installed. Where the plate is completely severed, the IBC is also silent as to whether a metal tie is required on both faces of the wall. The IBC is also silent as to how wide a notch or missing section of top plate can be. The ICC Plan Review Department provided the following guidance based upon common sense and general knowledge of the types of loads carried by the top plate of a prescriptively designed (load) bearing wall:

1. Where a hole in the top plate leaves less than 1 inch (25 mm) between the edge of the hole and a face of the wall, that face of the top plate requires a metal tie to be installed. If the hole leaves less than 1 inch (25 mm) between the edge of the hole and both faces of the wall, both faces of the top plate require a metal tie to be installed.

INTERNATIONAL CODE COUNCIL®
Copyright © 2015 ICC. ALL RIGHTS RESERVED. Accessed by David Dammon on Jun 21, 2017 12:30:52 PM pursuant to License Agreement with ICC. No further reproduction or distribution authorized. ANY UNAUTHORIZED REPRODUCTION OR DISTRIBUTION IS A VIOLATION OF THE FEDERAL COPYRIGHT ACT AND THE LICENSE AGREEMENT, AND SUBJECT TO CIVIL AND CRIMINAL PENALTIES THEREUNDER.

2. Where the top plate is notched 50 percent or less of the width of the top plate, a metal tie is only required to be installed on the notched face of the top plate. If the notch exceeds 50 percent of the width of the top plate (including complete severing of the top plate), both faces of the top plate require a metal tie.
3. If a metal tie is required to be installed on the face of a wall but that face has structural sheathing installed, the metal tie is not required to be installed on that wall face.
4. The length of a notch (or the length of the section of plate completely removed) should not exceed the length allowed by the metal tie manufacturer's installation instructions. Typically, metal tie manufacturers offer ties for a maximum notch length of 12 inches (305 mm).
5. The final determination on the extent of the reinforcement required for a top wall plate that has been notched or bored is the responsibility of the code official.

The metal tie must be at least $1^1/_2$ inch (38 mm) wide by 0.058 inch (1.47 mm) No.16 galvanized gage thick. Each end of the tie must be fastened to the top plate with six 16d nails [see Commentary Figure 307.2(10)].

Note that the installation of reinforcing ties on both faces of a wall presents a complication. As each tie requires six 16d [diameter of 0.162 inch (4 mm)] nails [$3^1/_2$ inches (89 mm) long] at each end of the tie, nailing a tie on the same plate member on both faces of the wall will split the wood member. From this, one could conclude that where a single top plate is used, it would be prudent to limit the depth of a notch or size of a bored hole in the plate such that only one metal tie is necessary. Where the top plate is a double (member) plate, one face of the wall could have the tie installed on the top member of the top plate and the other face of the wall have the tie installed on the lower member of the top plate. Some tie manufacturers might allow for the use of shorter (and smaller diameter) nails so as to permit nailing from both sides of the same top plate member without splitting the wood. Refer to the tie manufacturer's installation instructions for alternative fastener sizes. While shorter, smaller diameter nails might slightly decrease the load-carrying capacity of the tie, the consensus is that it is better to have the ties securely nailed to the plate member (with the

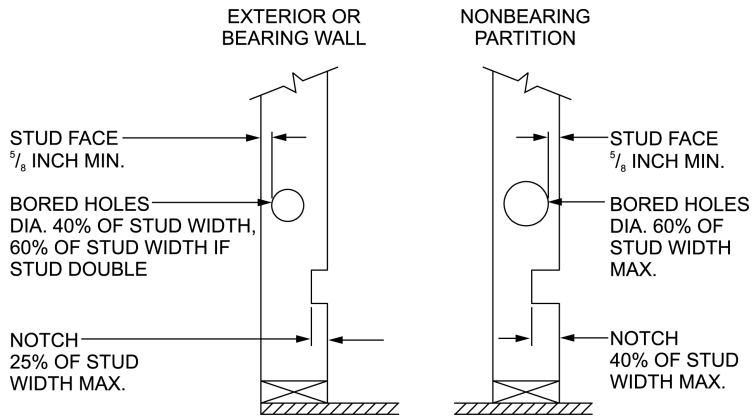

For SI: 1 inch = 25.4 mm.

Figure 307.2(1)
CUTTING, NOTCHING AND BORING OF WALL STUDS

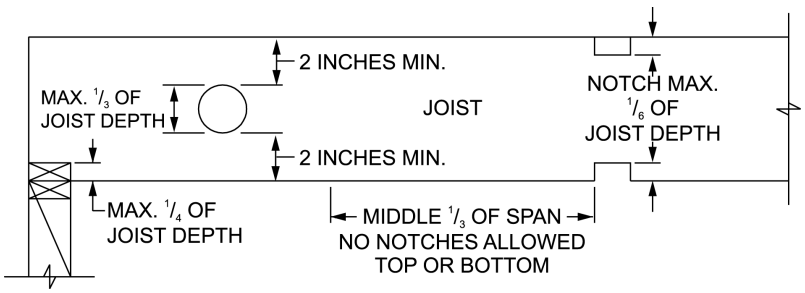

For SI: 1 inch = 25.4 mm.

Figure 307.2(2)
CUTTING, NOTCHING AND BORING OF FLOOR JOISTS, CEILING JOISTS AND RAFTERS

INTERNATIONAL CODE COUNCIL®
Copyright © 2015 ICC. ALL RIGHTS RESERVED. Accessed by David Dammon on Jun 21, 2017 12:30:52 PM pursuant to License Agreement with ICC. No further reproduction or distribution authorized. ANY UNAUTHORIZED REPRODUCTION OR DISTRIBUTION IS A VIOLATION OF THE FEDERAL COPYRIGHT ACT AND THE LICENSE AGREEMENT, AND SUBJECT TO CIVIL AND CRIMINAL PENALTIES THEREUNDER.

tie manufacturer's prescribed alternate fasteners) rather than the ties having little to no load-carrying capacity due to the plate member being split by 16d nailing on both faces of the plate member. Screws must not be used to fasten the ties to the plates unless specified by the tie manufacturer.

Where copper or plastic piping passes through wall frame members (including plates) within $1^1/_2$ inches (38 mm) of the edge of the plate (face of the wall), steel shield plates are required to be installed to protect the pipes from fastener penetration (see Section 305.6). The installation of the steel shield plates and the top plate reinforcing ties must be coordinated. If the top plate is a single member top plate (or a double mem-

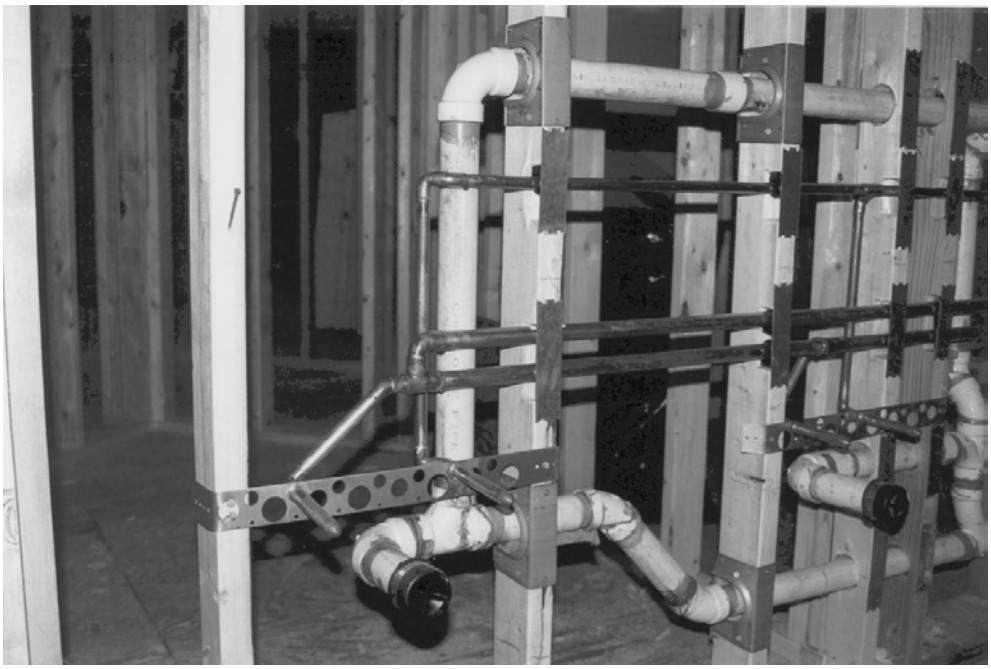

Figure 307.2(3)
NOTCHING AND BORING IN A WOOD-BEARING WALL



Figure 307.2(4)
VIOLATION: NOTCH IN FLOOR JOIST TOO DEEP



Figure 307.2(5)
VIOLATION: HOLES TOO CLOSE TO BOTTOM OF JOIST

INTERNATIONAL CODE COUNCIL®
Copyright © 2015 ICC. ALL RIGHTS RESERVED. Accessed by David Dammon on Jun 21, 2017 12:30:52 PM pursuant to License Agreement with ICC. No further reproduction or distribution authorized. ANY UNAUTHORIZED REPRODUCTION OR DISTRIBUTION IS A VIOLATION OF THE FEDERAL COPYRIGHT ACT AND THE LICENSE AGREEMENT, AND SUBJECT TO CIVIL AND CRIMINAL PENALTIES THEREUNDER.

ber top plate requiring a tie on the lower member of the top plate) then, in order to prevent a bulge in the wall covering material, the edges of the wall plate should be notched for the combined thicknesses of the shield plate, the tie, and the heads of the tie fastening nails. The shield plate would then be installed first with the tie installed over the shield plate. Although some tie/shield plate manufacturers offer wide shield plates that have the required height dimension to cover a double member top plate plus 2 inches (50 mm) below the



Figure 307.2(6)
VIOLATION: NOTCHES TOO DEEP IN WALL STUDS



Figure 307.2(7)
VIOLATION: EXTERIOR WALL STUD NOTCHED TOO DEEP



Figure 307.2(8)
VIOLATION: FLOOR JOIST COMPLETELY SEVERED

INTERNATIONAL CODE COUNCIL®
Copyright © 2015 ICC. ALL RIGHTS RESERVED. Accessed by David Dammon on Jun 21, 2017 12:30:52 PM pursuant to License Agreement with ICC. No further reproduction or distribution authorized. ANY UNAUTHORIZED REPRODUCTION OR DISTRIBUTION IS A VIOLATION OF THE FEDERAL COPYRIGHT ACT AND THE LICENSE AGREEMENT, AND SUBJECT TO CIVIL AND CRIMINAL PENALTIES THEREUNDER.



Figure 307.2(9)
VIOLATION: EXTERIOR WALL STUD COMPLETELY SEVERED

plate, these plates might not be suitable for use as top plate reinforcing ties. Use of a single shield plate to serve as the top plate reinforcing tie would require alternative approval by the code official in accordance with Section 105.2.

In summary, the plumbing designer or installer must carefully consider the impact of routing piping through the top plates of walls with respect to the requirements for metal ties (reinforcing straps). Commentary Figure 307.2(11) shows the severed top plates of an interior (load) bearing wall. Note that the close proximity of other pipes penetrating the plates would prevent the installation of the nails required for installation of the required reinforcing ties.

Engineered Wood Members

Engineered wood members are manufactured in many ways. The most common products used are laminated veneer lumber (LVL) beams [see Commentary Figure 307.2(12)], trusses of dimensional lumber, and I-joists of oriented strand board (OSB) webs with dimensional lumber top and bottom flanges (chords). LVL members must not be cut or notched. Because most LVL manufacturers either prohibit the installation of holes or severely limit the size, location and number of holes in LVL members, as a general rule, holes should never be bored in LVL members. Truss members must not be altered in any manner.

The top and bottom chords of I-joist members must never be cut or notched. Although most I-joist manufacturers allow holes to be cut in the web of the member, the maximum size and location of holes must be in accordance with the specific manufacturer's product instructions. The cutting, notching and boring limitations indicated for sawn lumber [Commentary Figure 307.2(1)] do not apply to I-joists. The installer and inspector must have access to the product instructions in order to determine if hole sizes and locations are acceptable. A review of several I-joist manufacturers' installation instructions does provide

INTERNATIONAL CODE COUNCIL®
Copyright © 2015 ICC. ALL RIGHTS RESERVED. Accessed by David Dammon on Jun 21, 2017 12:30:52 PM pursuant to License Agreement with ICC. No further reproduction or distribution authorized. ANY UNAUTHORIZED REPRODUCTION OR DISTRIBUTION IS A VIOLATION OF THE FEDERAL COPYRIGHT ACT AND THE LICENSE AGREEMENT, AND SUBJECT TO CIVIL AND CRIMINAL PENALTIES THEREUNDER.

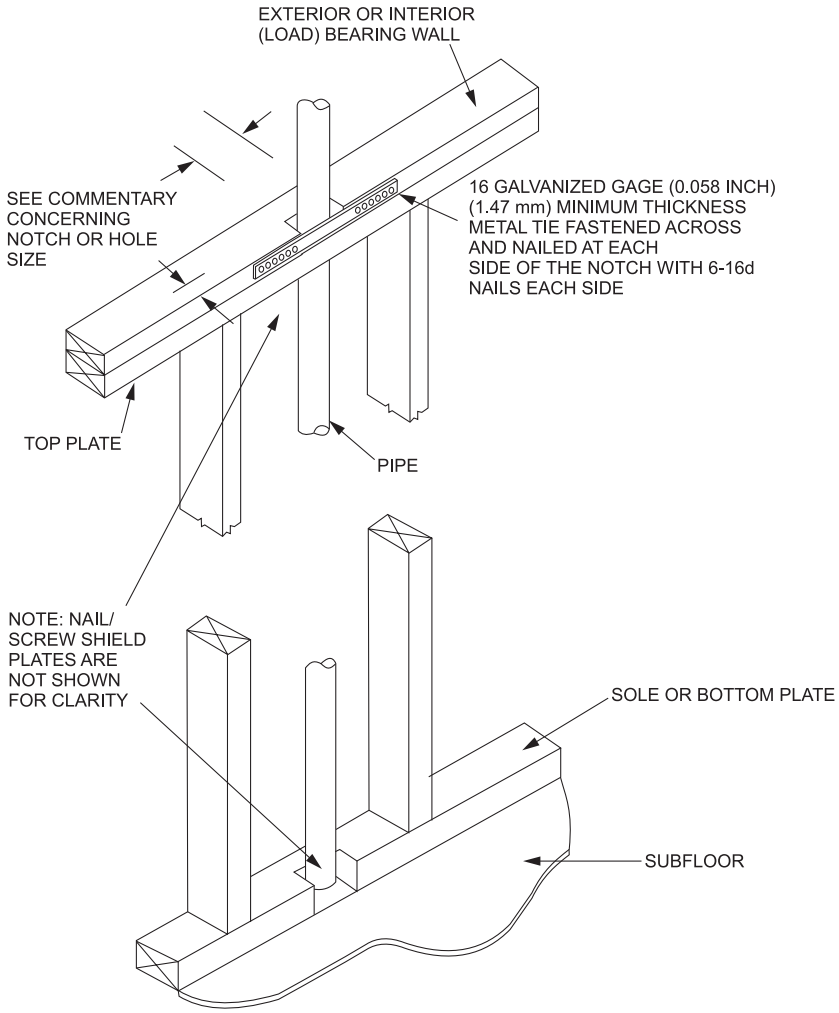

Figure 307.2(10)
REQUIRED TOP PLATE REINFORCEMENT



Figure 307.2(11)
VIOLATION: WALL TOP PLATES NOT REINFORCED

some generalizations that can help the plumbing installer generally plan piping routes as well as alert the inspector that a violation might exist. The generalizations are:

1. The closer the hole is located to the bearing locations (supports) of the I-joist, the smaller the allowable size of the hole becomes. Typically, holes near the bearing ends are limited to $1^1/_2$ inches (38 mm) in diameter with a spacing (hole edge to hole edge) of not less than 12 inches (305 mm).
2. As the hole location is placed farther from the bearing locations of the I-joist, the allowable size of the hole becomes larger. Large holes should be spaced apart (hole edge to hole edge) not less than the largest diameter or longest dimension of the largest hole.
3. Holes should be cut round, square or rectangular. The edge of any hole should not be any

INTERNATIONAL CODE COUNCIL®
Copyright © 2015 ICC. ALL RIGHTS RESERVED. Accessed by David Dammon on Jun 21, 2017 12:30:52 PM pursuant to License Agreement with ICC. No further reproduction or distribution authorized. ANY UNAUTHORIZED REPRODUCTION OR DISTRIBUTION IS A VIOLATION OF THE FEDERAL COPYRIGHT ACT AND THE LICENSE AGREEMENT, AND SUBJECT TO CIVIL AND CRIMINAL PENALTIES THEREUNDER.

closer than $^1/_4$ inch (6.4 mm) to a top or bottom chord of the I-joists.

Always refer to the I-joist manufacturer's installation instructions for specific hole limitations. Commentary Figures 307.2(13) through 307.2(16) show prohibited boring, cutting and notching of trusses and I-joists.

Cold-formed Steel Light-framed Members

Cold-formed steel light-framed members of trusses must not be altered in any manner. Flanges and lips of stud, floor joist, ceiling joist and rafter members must not be cut, notched, bored or punched [see Commentary Figure 307.2(18) for identification of flanges, lips and webs]. Holes in the webs of studs, floor joists, ceiling joists and rafter members are prohibited except where:

1. The holes are punched at the factory,
2. The design drawings for the building specifically indicate the location and size of holes or
3. The prescriptive design method was used for the building framing design.

Because the IBC limits the use of the prescriptive design method to only one- and two-family detached dwellings or townhouses up to three stories in height, a building outside that scope cannot be designed using the prescriptive method. [In most jurisdictions, the *International Residential Code*® (IRC®) is adopted as the controlling code for one- and two-family detached dwellings or townhouses up to three stories in height. Where the IRC is the adopted code for these types of structures, refer to the IRC for all structural and plumbing requirements]. The IBC references the



Figure 307.2(12)
LAMINATED VENEER LUMBER BEAM



Figure 307.2(13)
VIOLATION: TOP CHORD OF TRUSS NOTCHED



Figure 307.2(14)
VIOLATION: HOLE IN BOTTOM CHORD OF ROOF TRUSS



Figure 307.2(15)
VIOLATION: TOP CHORD OF I-JOIST COMPLETELY SEVERED

INTERNATIONAL CODE COUNCIL®
Copyright © 2015 ICC. ALL RIGHTS RESERVED. Accessed by David Dammon on Jun 21, 2017 12:30:52 PM pursuant to License Agreement with ICC. No further reproduction or distribution authorized. ANY UNAUTHORIZED REPRODUCTION OR DISTRIBUTION IS A VIOLATION OF THE FEDERAL COPYRIGHT ACT AND THE LICENSE AGREEMENT, AND SUBJECT TO CIVIL AND CRIMINAL PENALTIES THEREUNDER.

standard AISI A230 for the prescriptive design method for cold-formed steel light-framed construction. This standard has prescriptive allowances for holes and their location in the webs of studs, floor joists, ceiling joists and rafters [see Commentary Figures 307.2(19) and 307.2(20)]. The reader should bear in mind that one- and two-family detached dwellings or townhouses up to three stories in height could be designed using methods other than the prescriptive design and, as such, the prescriptive allowances for holes cannot be used for those buildings.

Structural Steel Members and Structural Steel Trusses

Any modifications to structural steel members [see Commentary Figure 307.2(17)] or structural steel trusses must be approved by a registered design professional.

Log Members

The IBC references the standard ICC-400 for the construction of log structures. ICC-400 Section 302.2.4 covers the limitations for notching and boring of holes in logs used in structural applications. Commentary

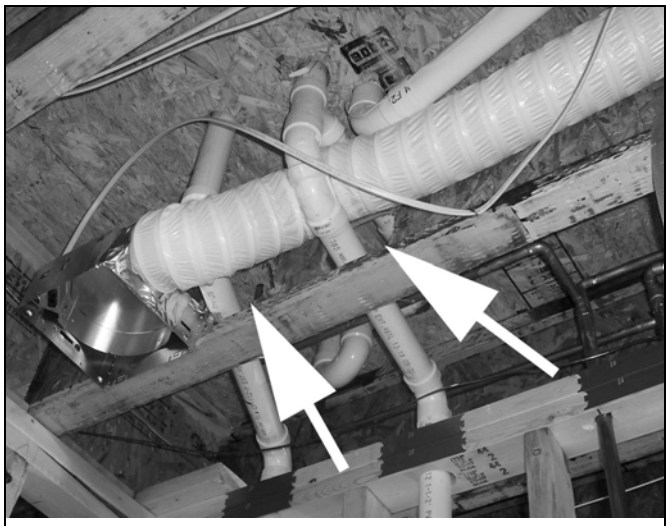

Figure 307.2(16)
VIOLATION: I-JOIST WEB HOLES IRREGULAR SHAPE, TOO LARGE, TOO CLOSE TOGETHER



Figure 307.2(17)
STRUCTURAL STEEL BEAM

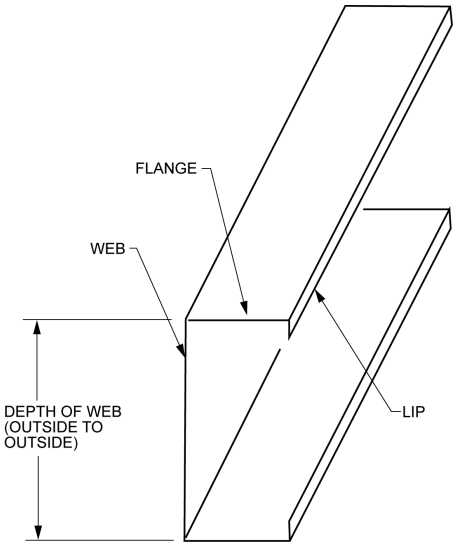

Figure 307.2(18)
FLANGE, LIP AND WEB OF COLD-FORMED STEEL LIGHT-FRAME MEMBER

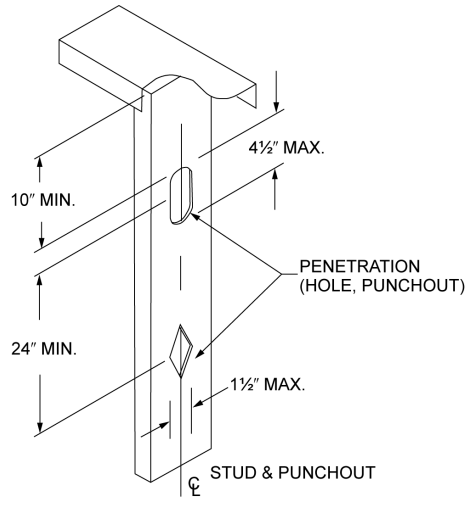

For SI: 1 inch = 25.4 mm.

Figure 307.2(19)
ALLOWABLE WEB HOLES IN STUDS (PRESCRIPTIVE DESIGN ONLY)

INTERNATIONAL CODE COUNCIL®
Copyright © 2015 ICC. ALL RIGHTS RESERVED. Accessed by David Dammon on Jun 21, 2017 12:30:52 PM pursuant to License Agreement with ICC. No further reproduction or distribution authorized. ANY UNAUTHORIZED REPRODUCTION OR DISTRIBUTION IS A VIOLATION OF THE FEDERAL COPYRIGHT ACT AND THE LICENSE AGREEMENT, AND SUBJECT TO CIVIL AND CRIMINAL PENALTIES THEREUNDER.

Figure 307.2(21) illustrates the notching and boring limitations.

307.3 Penetrations of floor/ceiling assemblies and fire-resistance-rated assemblies. Penetrations of floor/ceiling assemblies and assemblies required to have a fire-resistance rating shall be protected in accordance with the *International Building Code*.

❖ This section states that openings for plumbing pipe in fire-resistance-rated building assemblies must be fire-resistance rated. In addition to maintaining the structural integrity of walls, floors, ceilings and roofs when these elements are penetrated by the plumbing pipe, the penetrations must also be protected to prevent the passage of fire and other products of combustion through the fire-resistance-rated assembly because of the pipe penetrating the assembly. These penetrations

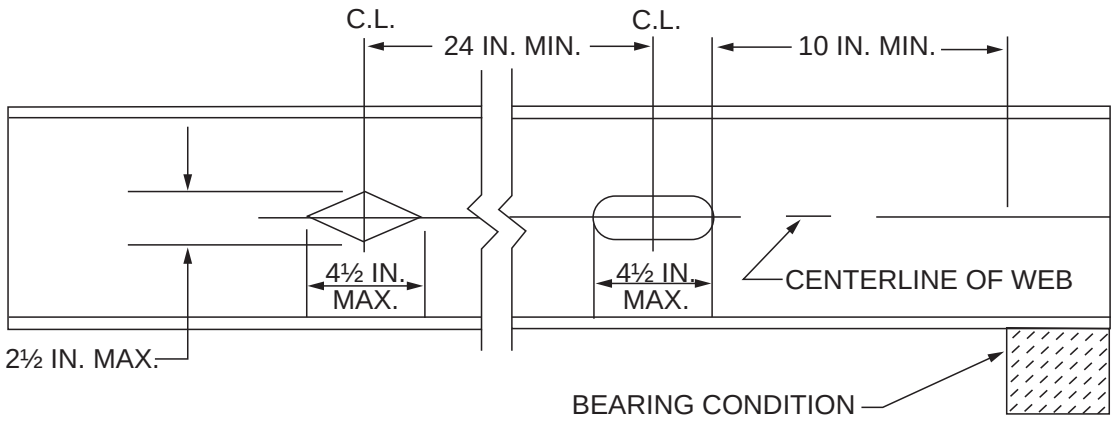

For SI: 1 inch = 25.4 mm.

Figure 307.2(20)
ALLOWABLE WEB HOLES IN MEMBERS OTHER THAN STUDS (PRESCRIPTIVE DESIGN ONLY)

d = depth of log at location of notch or hole measured perpendicular to the direction of the hole or notch.
ℓn = length of notch.
D_r = diameter of round hole.
D_s = depth of rectangular hole.
W_s = width of rectangular hole.
L = clear span of bending member.

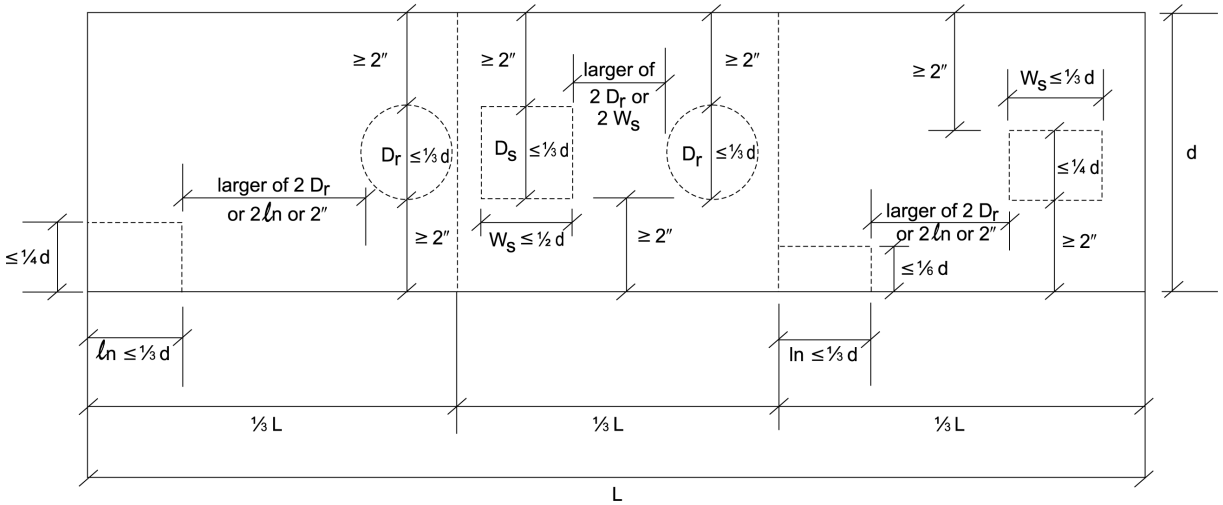

For SI: 1 inch = 25.4 mm.

Figure 307.2(21)
ALLOWABLE NOTCHING AND BORING OF STRUCTURAL LOG MEMBERS

INTERNATIONAL CODE COUNCIL®
Copyright © 2015 ICC. ALL RIGHTS RESERVED. Accessed by David Dammon on Jun 21, 2017 12:30:52 PM pursuant to License Agreement with ICC. No further reproduction or distribution authorized. ANY UNAUTHORIZED REPRODUCTION OR DISTRIBUTION IS A VIOLATION OF THE FEDERAL COPYRIGHT ACT AND THE LICENSE AGREEMENT, AND SUBJECT TO CIVIL AND CRIMINAL PENALTIES THEREUNDER.

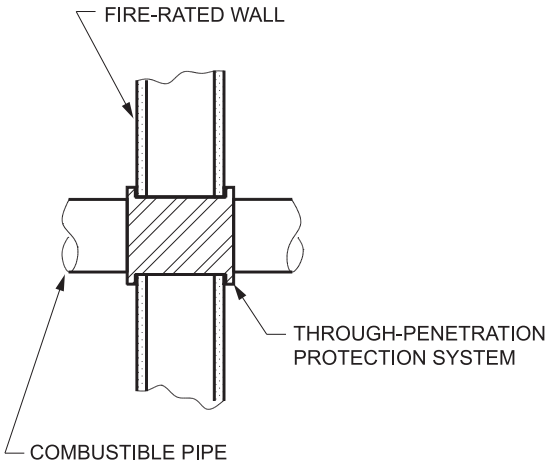

Figure 307.3(1)
COMBUSTIBLE PIPE PENETRATION OF FIRE-RATED WALL

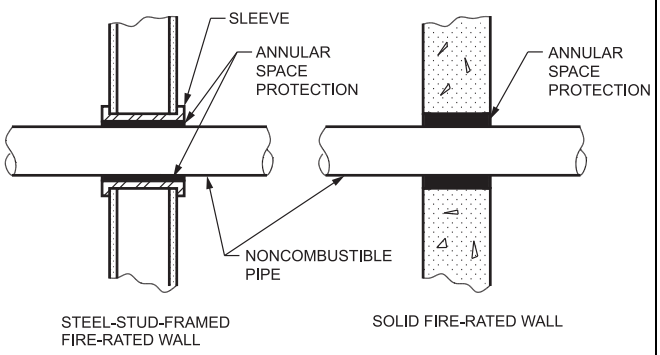

Figure 307.3(2)
ANNULAR SPACE PROTECTION

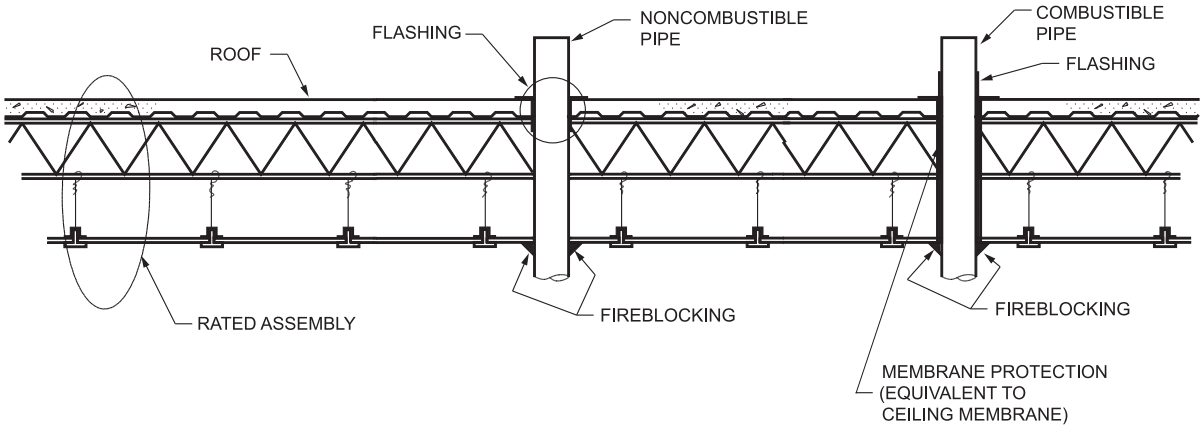

Figure 307.3(3)
PIPE PENETRATION OF FIRE-RESISTANCE-RATED ROOF/CEILING ASSEMBLY

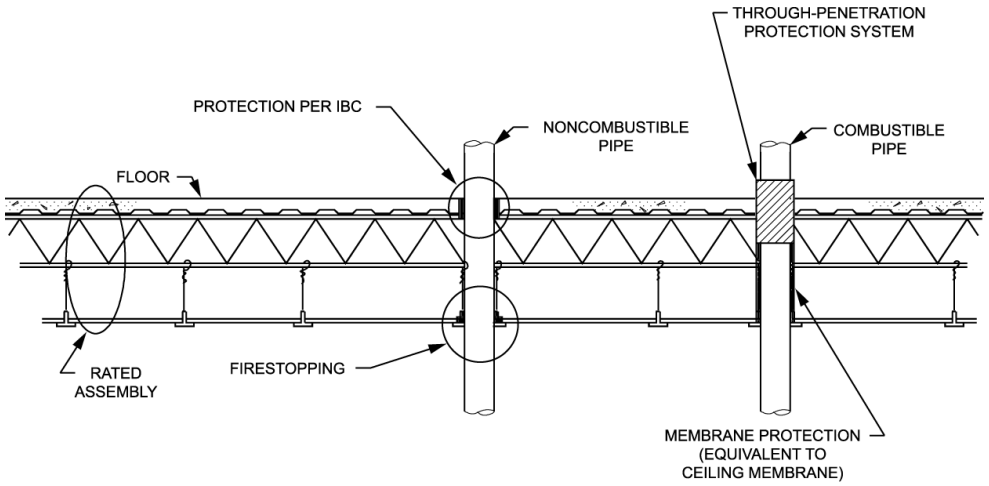

Figure 307.3(4)
PIPE PENETRATION OF FIRE-RESISTANCE-RATED FLOOR/CEILING ASSEMBLY

INTERNATIONAL CODE COUNCIL®
Copyright © 2015 ICC. ALL RIGHTS RESERVED. Accessed by David Dammon on Jun 21, 2017 12:30:52 PM pursuant to License Agreement with ICC. No further reproduction or distribution authorized. ANY UNAUTHORIZED REPRODUCTION OR DISTRIBUTION IS A VIOLATION OF THE FEDERAL COPYRIGHT ACT AND THE LICENSE AGREEMENT, AND SUBJECT TO CIVIL AND CRIMINAL PENALTIES THEREUNDER.

must be protected in accordance with the IBC [see Section 714 of the IBC and Commentary Figures 307.3(1) through 307.3(4)].

[BS] 307.4 Alterations to trusses. Truss members and components shall not be cut, drilled, notched, spliced or otherwise altered in any way without written concurrence and approval of a registered design professional. Alterations resulting in the addition of loads to any member (e.g., HVAC equipment, water heater) shall not be permitted without verification that the truss is capable of supporting such additional loading.

❖ Trusses are engineered products, and any alteration to specific elements may prevent the truss from per-

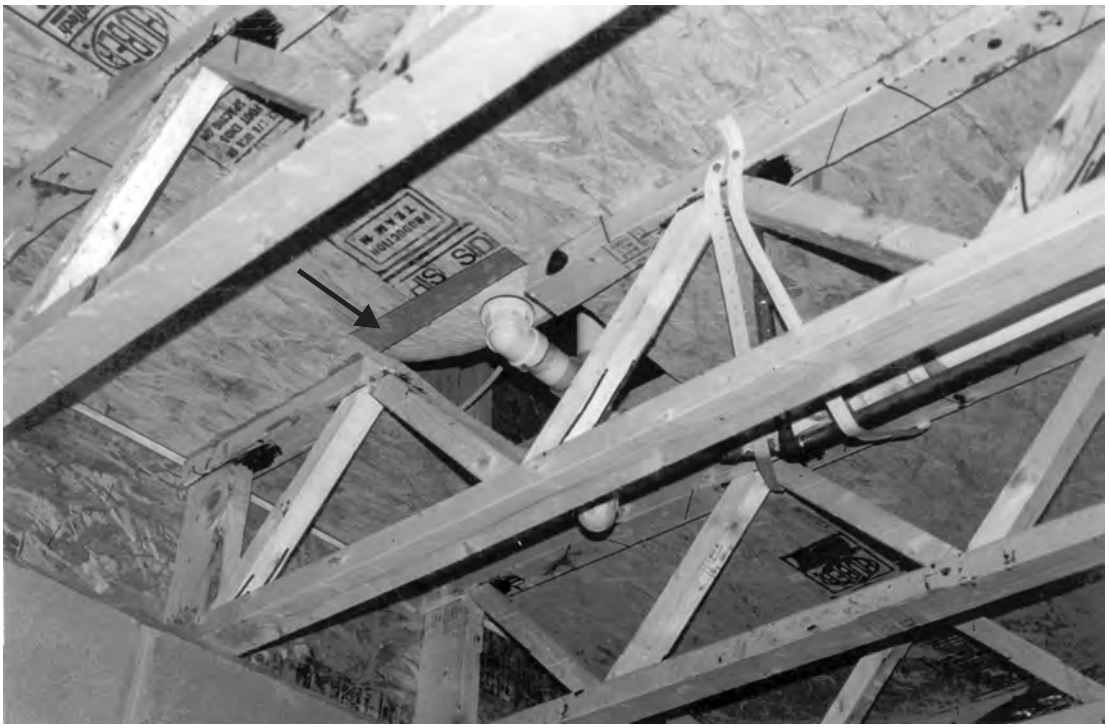

Figure 307.4
VIOLATION: TOP CHORD OF FLOOR TRUSS REMOVED

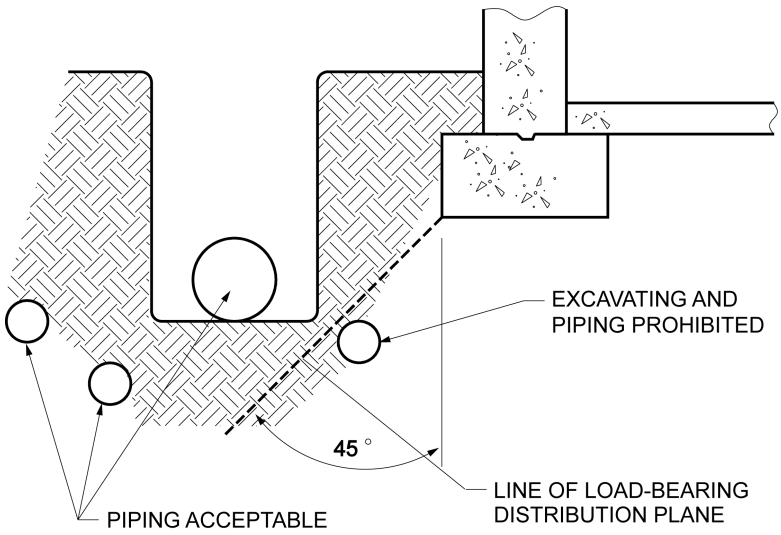

For SI: 1 degree = 0.01745 rad.

Figure 307.5
EXCAVATION IN RELATION TO FOOTING

INTERNATIONAL CODE COUNCIL®
Copyright © 2015 ICC. ALL RIGHTS RESERVED. Accessed by David Dammon on Jun 21, 2017 12:30:52 PM pursuant to License Agreement with ICC. No further reproduction or distribution authorized. ANY UNAUTHORIZED REPRODUCTION OR DISTRIBUTION IS A VIOLATION OF THE FEDERAL COPYRIGHT ACT AND THE LICENSE AGREEMENT, AND SUBJECT TO CIVIL AND CRIMINAL PENALTIES THEREUNDER.

forming as intended. The code does not permit drilling and notching of truss members and components without documentation that the design has taken this possibility into account. Additionally, trusses are designed to resist specific loads; the loading on the truss or on any of its members should not be changed without approval of a registered design professional (see Commentary Figure 307.4).

307.5 Protection of footings. Trenching installed parallel to footings and walls shall not extend into the bearing plane of a footing or wall. The upper boundary of the bearing plane is a line that extends downward, at an angle of 45 degrees (0.79 rad) from horizontal, from the outside bottom edge of the footing or wall.

❖ A footing requires a minimum load-bearing area to distribute the weight of the building. This load-bearing distribution plane extends downward at approximately a 45-degree (0.79 rad) angle from the base of the footing. Water, building drainage and building sewer piping must not be installed below this load-bearing plane. Excavation for the installation of pipe below the plane could affect the load capacity of the footing or cause the excavation to collapse (see Commentary Figure 307.5).

307.6 Piping materials exposed within plenums. Piping materials exposed within plenums shall comply with the provisions of the *International Mechanical Code*.

❖ Materials exposed within a plenum must be noncombustible or have a flame spread index of 25 or less and a smoke-developed index of 50 or less when tested in accordance with ASTM E84. Typically, the plenum space is often used to accommodate components of the plumbing system and other building systems such as electrical, fire protection and mechanical. The code permits exposure of limited types of combustibles used for these systems within the plenum. A flame spread index of 25 or less and a smoke-developed index of 50 or less are viewed as acceptable values for combustibles in a plenum because of the minimal risk associated with those materials.

SECTION 308
PIPING SUPPORT

308.1 General. Plumbing piping shall be supported in accordance with this section.

❖ There are many variables to consider during the design and installation of hangers and supports. Consideration must be given to the type and size of the pipe material; the weight of the pipe, fittings and contents; the structural element available for attachment; earthquake motions; vibration-sensitive applications and thermal expansion and contraction. Other load conditions to consider include the weight of valves and appurtenances; insulating materials; hanger and support components and wind, snow and ice loads.

308.2 Piping seismic supports. Where earthquake loads are applicable in accordance with the building code, plumbing piping supports shall be designed and installed for the seismic forces in accordance with the *International Building Code*.

❖ While the IBC prescribes the level of seismic forces to be considered in the design of buildings in seismic zones, it does not provide prescriptive methods for designing, sizing, or installing piping supports. A registered design professional should be consulted to provide the required seismic support designs and installation instructions.



Figure 308.3(1)
PLASTIC HANGER STRAP

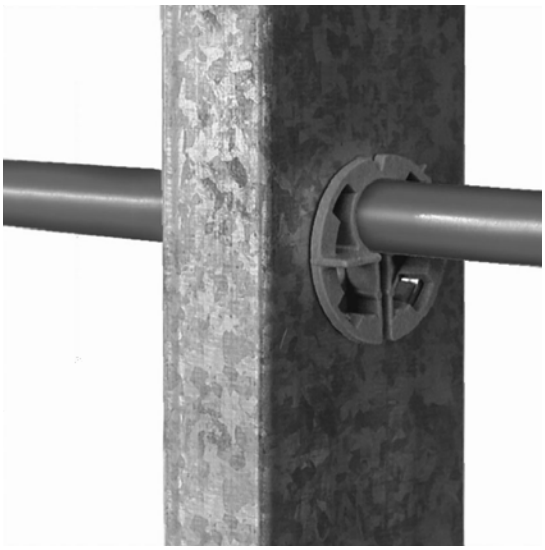

Figure 308.3(2)
PLASTIC INSERT FOR COPPER TUBING THROUGH METAL STUD
(Photo Courtesy of Holdrite-Hubbard Enterprises)

INTERNATIONAL CODE COUNCIL®
Copyright © 2015 ICC. ALL RIGHTS RESERVED. Accessed by David Dammon on Jun 21, 2017 12:30:52 PM pursuant to License Agreement with ICC. No further reproduction or distribution authorized. ANY UNAUTHORIZED REPRODUCTION OR DISTRIBUTION IS A VIOLATION OF THE FEDERAL COPYRIGHT ACT AND THE LICENSE AGREEMENT, AND SUBJECT TO CIVIL AND CRIMINAL PENALTIES THEREUNDER.

308.3 Materials. Hangers, anchors and supports shall support the piping and the contents of the piping. Hangers and strapping material shall be of *approved* material that will not promote galvanic action.

❖ The hangers and supports for plumbing system piping must be capable of supporting the load imposed by the piping system and not be detrimental to the pipe they support. When the hanger or strapping material is not compatible with the piping material it supports, corrosion caused by galvanic action can occur. This happens when dissimilar metals are in contact with one another and sufficient moisture is present to carry an electrical current. Such corrosion can deteriorate the hanger, anchor or piping to the point of failure.

Where metallic pipe is installed, the hangers or supports must be of similar material to prevent any corrosive galvanic action. For example, if the water distribution system is copper tubing or copper pipe, copper hangers, straps and clamps are required or such supports must be of a material or clad by a material (such as plastic) that will not react with copper. Some support devices have special plastic coatings or are made entirely of plastic to prevent contact of dissimilar metals and are acceptable alternatives [see Commentary Figures 308.3(1) and 308.3(2)].

308.4 Structural attachment. Hangers and anchors shall be attached to the building construction in an *approved* manner.

❖ The selection of an appropriate hanger or support depends on the structural element available for hanger attachment. The integrity of all hangers and anchors depends on the method of attachment to the building construction. The means of attachment must provide the required strength and must not adversely affect or overstress the construction to which it is attached. Ultimately, a support is only as strong as its means of attachment and the member to which it is attached (see Commentary Figure 308.4)



Figure 308.4
POOR HANGER ATTACHMENT

308.5 Interval of support. Pipe shall be supported in accordance with Table 308.5.

Exception: The interval of support for piping systems designed to provide for expansion/contraction shall conform to the engineered design in accordance with Section 316.1.

❖ Piping must be supported at distances not to exceed those indicated in Table 308.5. The exception allows for design of special piping support systems in order to accommodate the movements due to thermal expansion of piping.

The horizontal support intervals listed in the table are based on the limiting mid-span deflection (sag) of pipes. The maximum amount of sag occurs at a point equidistant from the supports when the pipe is full of water. The table is designed to limit sag (and the resulting pipe stress) as well as provide for the maintaining of slopes required for gravity drainage.

Because any given length of pipe becomes more resistant to mid-span deflection as the pipe diameter becomes larger, the spacing in the table is calculated for the pipe diameters at the low end of the pipe size ranges stated [see Commentary Figures 308.5(1) and 308.5(2)]. As this is a generalized table intended to cover a wide range of manufacturers, the installation instructions from the specific manufacturer should also be consulted to determine if support spacing is required to more be restrictive.

The spacing intervals indicated will result in the minimum number of supports allowed. Extra supports should be used where necessary to accommodate items such as fittings, connections, changes in direction or the connection to a vertical pipe.

Note a allows the hangers for cast-iron pipe to be increased to 10 feet (3048 mm) where 10-foot-long (3048 mm) sections of pipe are installed.

Note b specifies that smaller diameter vertical flexible piping cannot “bow” out of the initially installed straight line, in between required vertical supports, especially when filled with water (water distribution piping) or when subjected to hot water flow (drainage piping). The bowed piping can come in contact with adjacent piping, fittings or other objects (such as wall coverings) that might cause noise or damage to the piping. If the piping was allowed to bow unrestricted, high bending stresses could occur at the required vertical pipe supports. The purpose of the mid-story guide is to restrict the movement of the pipe in a direction perpendicular to the axis of the pipe. As a guide allows movement of the pipe in a direction parallel to the pipe axis, the guide is not required to firmly grip the pipe or absolutely prevent any movement whatsoever. For example, in wood frame construction, a mid-story pipe guide could be a block of wood (between studs) that has a clearance hole for the pipe to pass through. Other arrangements that substantially limit pipe movement in any direction perpendicular to the axis of the pipe will serve the intended purpose such

INTERNATIONAL CODE COUNCIL®
Copyright © 2015 ICC. ALL RIGHTS RESERVED. Accessed by David Dammon on Jun 21, 2017 12:30:52 PM pursuant to License Agreement with ICC. No further reproduction or distribution authorized. ANY UNAUTHORIZED REPRODUCTION OR DISTRIBUTION IS A VIOLATION OF THE FEDERAL COPYRIGHT ACT AND THE LICENSE AGREEMENT, AND SUBJECT TO CIVIL AND CRIMINAL PENALTIES THEREUNDER.

TABLE 308.5
HANGER SPACING

PIPING MATERIAL	MAXIMUM HORIZONTAL SPACING (feet)	MAXIMUM VERTICAL SPACING (feet)
Acrylonitrile butadiene styrene (ABS) pipe	4	10[b]
Aluminum tubing	10	15
Brass pipe	10	10
Cast-iron pipe	5[a]	15
Chlorinated polyvinyl chloride (CPVC) pipe and tubing, 1 inch and smaller	3	10[b]
Chlorinated polyvinyl chloride (CPVC) pipe and tubing, $1^1/_4$ inches and larger	4	10[b]
Copper or copper-alloy pipe	12	10
Copper or copper-alloy tubing, $1^1/_4$-inch diameter and smaller	6	10
Copper or copper-alloy tubing, $1^1/_2$-inch diameter and larger	10	10
Cross-linked polyethylene (PEX) pipe	2.67 (32 inches)	10[b]
Cross-linked polyethylene/ aluminum/cross-linked polyethylene (PEX-AL-PEX) pipe	2.67 (32 inches)	4
Lead pipe	Continuous	4
Polyethylene/aluminum/ polyethylene (PE-AL-PE) pipe	2.67 (32 inches)	4
Polyethylene of raised temperature (PE-RT) pipe	2.67 (32 inches)	10[b]
Polypropylene (PP) pipe or tubing 1 inch and smaller	2.67 (32 inches)	10[b]
Polypropylene (PP) pipe or tubing, $1^1/_4$ inches and larger	4	10[b]
Polyvinyl chloride (PVC) pipe	4	10[b]
Stainless steel drainage systems	10	10[b]
Steel pipe	12	15

For SI: 1 inch = 25.4 mm, 1 foot = 304.8 mm.

a. The maximum horizontal spacing of cast-iron pipe hangers shall be increased to 10 feet where 10-foot lengths of pipe are installed.

b. For sizes 2 inches and smaller, a guide shall be installed midway between required vertical supports. Such guides shall prevent pipe movement in a direction perpendicular to the axis of the pipe.

as a pipe strap or a pipe clamp. Using flexible strapping around a pipe and fastening the ends of the strapping to both adjacent studs only limits pipe movement in one direction (i.e., side to side) but not movement in a direction 90 degrees (1.57 rad.) from the strapped direction. Thus, this strapping arrangement would not be acceptable to meet the requirement of this note.

308.6 Sway bracing. Rigid support sway bracing shall be provided at changes in direction greater than 45 degrees (0.79 rad) for pipe sizes 4 inches (102 mm) and larger.

❖ This section contains lateral support requirements for pipe 4 inches (102 mm) and larger in diameter. The flow of waste in drainage piping subjects the piping to the forces that result from the momentum of the waste.

These forces are a product of the mass and velocity of the flow together with the change in direction of the pipe and can be quite large, especially in piping that is 4 inches (102 mm) and larger. Hangers alone might not be sufficient to resist such forces; therefore, rigid bracing is required at all changes of direction greater than 45 degrees (0.79 rad) for piping that is 4 inches (102 mm) or larger in size. Without adequate bracing, the piping could be damaged or joint failure could occur. Bracing is intended to restrict or eliminate lateral movement of both horizontal and vertical piping (see commentary, Section 308.7.1 and Commentary Figure 308.6).

308.7 Anchorage. Anchorage shall be provided to restrain drainage piping from axial movement.

❖ This section requires a method of resisting axial movement of piping systems to prevent joint separation, regardless of the type of fittings or connections used. In particular, mechanical couplings using an elastomeric seal (typically hubless piping systems) have a limited ability to resist axial movement (pulling apart); therefore, pipe restraints must be installed to prevent joint separation. The required anchorage locations of axial restraints are specified in Section 308.7.1. Such joints also have a limited ability to resist shear forces. The hanger and support system must, therefore, prevent the couplings and connections from being subjected to shear forces that can damage the joint (see Commentary Figure 308.7). Although mechanical couplings using elastomeric seals are most often the type of joint to experience damage caused by axial movement, this requirement pertains to all portions of drainage piping systems.

308.7.1 Location. For pipe sizes greater than 4 inches (102 mm), restraints shall be provided for drain pipes at all changes in direction and at all changes in diameter greater than two pipe sizes. Braces, blocks, rodding and other suitable methods as specified by the coupling manufacturer shall be utilized.

❖ In drain pipes that are large in diameter, particularly those having a diameter greater than 4 inches (102 mm), the flow of drainage can create sizable forces in the system resulting from the mass and velocity of the

INTERNATIONAL CODE COUNCIL®
Copyright © 2015 ICC. ALL RIGHTS RESERVED. Accessed by David Dammon on Jun 21, 2017 12:30:52 PM pursuant to License Agreement with ICC. No further reproduction or distribution authorized. ANY UNAUTHORIZED REPRODUCTION OR DISTRIBUTION IS A VIOLATION OF THE FEDERAL COPYRIGHT ACT AND THE LICENSE AGREEMENT, AND SUBJECT TO CIVIL AND CRIMINAL PENALTIES THEREUNDER.

waste. The force could have the effect of pushing apart mechanical and other types of couplings when there is a change in direction or diameter. To resist such forces in the piping, additional anchorage and supports would be necessary to hold the pipe and couplings in place and prevent joint separation caused by this dynamic force (see Commentary Figure 308.7.1).

308.8 Expansion joint fittings. Expansion joint fittings shall be used only where necessary to provide for expansion and contraction of the pipes. Expansion joint fittings shall be of the typical material suitable for use with the type of piping in which such fittings are installed.

❖ Plumbing and drainage pipe materials experience changes in length caused by the changing temperature of the pipe material, typically as a result of a change in water temperature or ambient air temperature. Repeated expansion and contraction of the pipe material can induce stress into the pipe and its attached fittings. To relieve this stress and thus prevent damage to the pipe, its fittings and the surrounding building components, properly designed expansion joints are installed in the piping runs. The designer of the piping system must determine whether an expansion joint in the pipe run is required based on the length of the run, the pipe material and diameter, the expected temperature range of the material inside the pipe and the exact configuration of the installed pipe and fittings.

Where installed, expansion joints must be of a material compatible with the pipe. The installer of the expansion joint must follow the manufacturer's instructions so that the finished joint is leak free while still providing the required expansion. Special attention needs to be given to the number and type of pipe hangers used when a pipe run is equipped with an expansion joint, so that the hangers do not restrict the movement of either the pipe or the expansion joint while providing the required support to both.

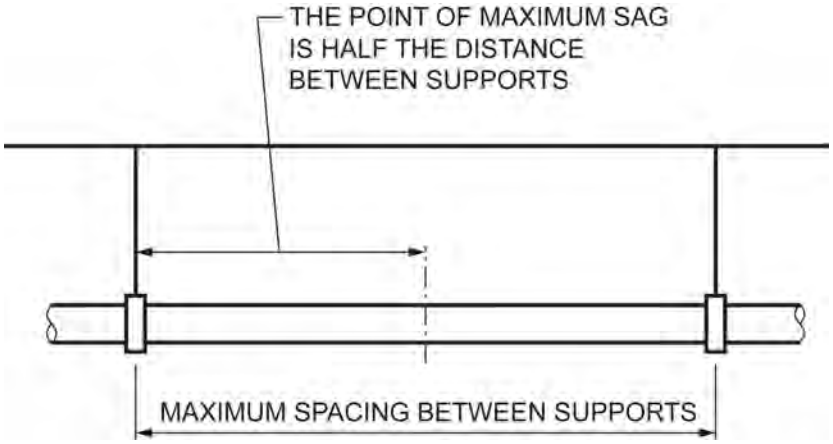

Figure 308.5(1)
POINT OF MAXIMUM SAG BETWEEN HANGERS

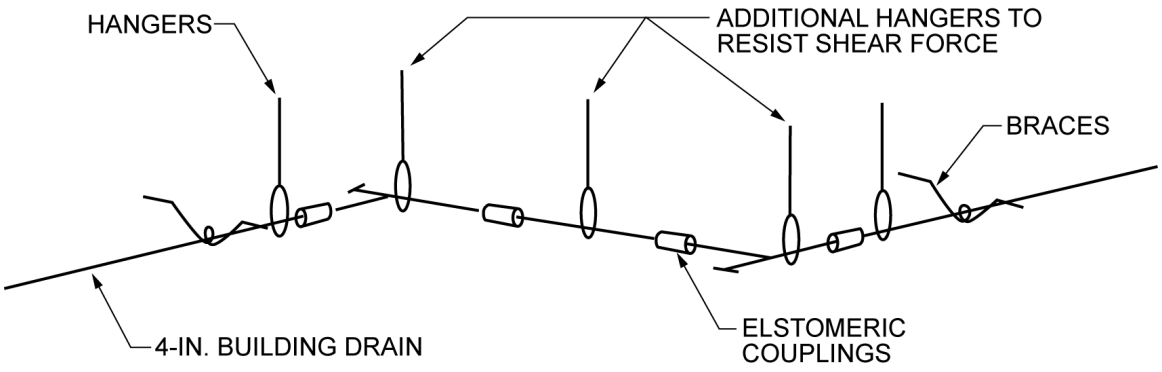

For SI: 1 inch = 25.4 mm.

Figure 308.5(2)
LOCATION OF HANGERS

INTERNATIONAL CODE COUNCIL®
Copyright © 2015 ICC. ALL RIGHTS RESERVED. Accessed by David Dammon on Jun 21, 2017 12:30:52 PM pursuant to License Agreement with ICC. No further reproduction or distribution authorized. ANY UNAUTHORIZED REPRODUCTION OR DISTRIBUTION IS A VIOLATION OF THE FEDERAL COPYRIGHT ACT AND THE LICENSE AGREEMENT, AND SUBJECT TO CIVIL AND CRIMINAL PENALTIES THEREUNDER.

308.9 Parallel water distribution systems. Piping bundles for manifold systems shall be supported in accordance with Table 308.5. Support at changes in direction shall be in accordance with the manufacturer's instructions. Where hot water piping is bundled with cold or hot water piping, each hot water pipe shall be insulated.

❖ A parallel water distribution system consists of a central distribution manifold having independent water distribution tubes supplying each plumbing fixture. This is analogous to an electrical circuit breaker panel feeding independent circuits. A typical central manifold is shown in Commentary Figure 604.10(2). As individual tubes lead from the central manifold, the tubing is often bundled for ease of routing. Bundles are typically loosely bound with plastic ties at intervals. The bundle is supported by hangers in accordance with the spacing requirements for the type of tubing as indicated in Table 308.5.

Where the tubing makes a small radius bend (turn), the bend must be supported according to the manufacturer's instructions. Special formed plastic brackets are often used to protect tight radius pipe bends. Otherwise, the tubing could flatten or kink over time and restrict flow to the fixtures [see Commentary Figures 308.9(1) through 308.9(4)].

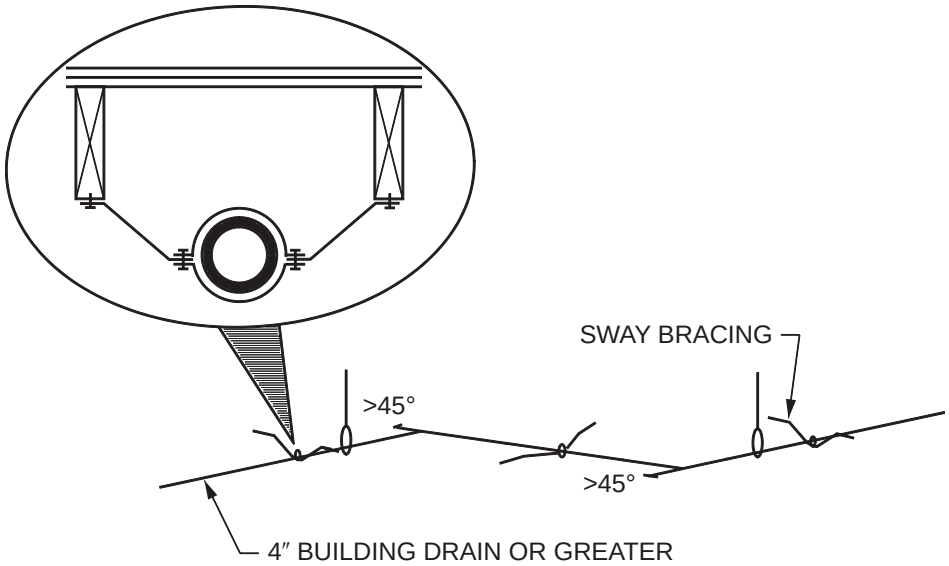

For SI: 1 inch = 25.4 mm, 1 degree = 0.0175 rad.

For SI: 1 inch = 25.4 mm, 1 degree = 0.01745 rad.

Figure 308.6
SWAY BRACING

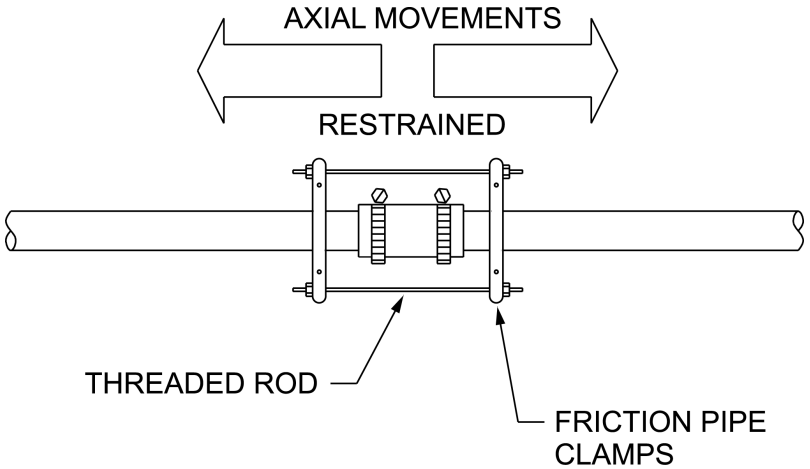

Figure 308.7
RESTRAINED COUPLING

INTERNATIONAL CODE COUNCIL®
Copyright © 2015 ICC. ALL RIGHTS RESERVED. Accessed by David Dammon on Jun 21, 2017 12:30:52 PM pursuant to License Agreement with ICC. No further reproduction or distribution authorized. ANY UNAUTHORIZED REPRODUCTION OR DISTRIBUTION IS A VIOLATION OF THE FEDERAL COPYRIGHT ACT AND THE LICENSE AGREEMENT, AND SUBJECT TO CIVIL AND CRIMINAL PENALTIES THEREUNDER.

Because tubes in contact with one another will transfer heat from one to the other, special attention must be given to bundling hot (or tempered) water tubes with other hot (or tempered) water tubes and especially cold water tubes. For the 2012 edition of the code, it is required that each individual hot water tube be insulated to protect against heat transfer to other tubes carrying water of a different temperature. Although this section does not require that tempered water tubing be individually insulated, it would seem to be prudent to also individually insulate such tubing to prevent heat loss to adjacent cooler temperature piping or heat gain from adjacent hotter temperature piping.

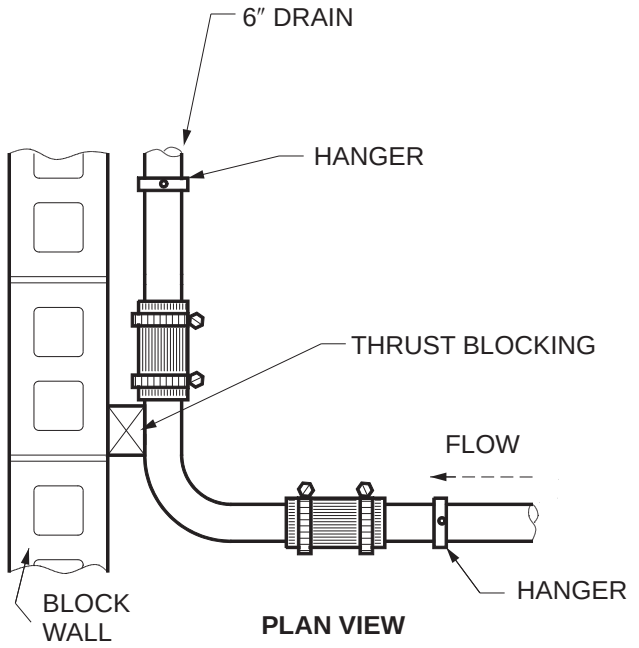

For SI: 1 inch = 25.4 mm.

Figure 308.7.1
ANCHORAGE LOCATION

SECTION 309
FLOOD HAZARD RESISTANCE

309.1 General. Plumbing systems and equipment in structures erected in *flood hazard areas* shall be constructed in accordance with the requirements of this section and the *International Building Code*.

❖ Buildings and structures erected in flood hazard areas must be designed to resist the forces caused by flooding, including flotation, collapse and lateral movement from flowing water, standing water or wave action. This section sets a broad requirement that plumbing systems and equipment are to be constructed according to the provisions of the IBC. Section 1612 of the IBC references ASCE 24, *Flood Resistant Design and Construction*. Where possible, plumbing fixtures and equipment are to be elevated above the elevation required by the IBC or they must be specifically designed and intended for placement in locations that may be inundated. For additional guidance, refer to FEMA 348, *Protecting Building Utilities from Flood Damage*.

[BS] 309.2 Flood hazard. For structures located in *flood hazard areas*, the following systems and equipment shall be located and installed as required by Section 1612 of the *International Building Code*.

1. Water service pipes.
2. Pump seals in individual water supply systems where the pump is located below the *design flood elevation*.
3. Covers on potable water wells shall be sealed, except where the top of the casing well or pipe sleeve is elevated to not less than 1 foot (305 mm) above the *design flood elevation*.
4. Sanitary drainage piping.
5. Storm drainage piping.
6. Manhole covers shall be sealed, except where elevated to or above the *design flood elevation*.
7. Other plumbing fixtures, faucets, fixture fittings, piping systems and equipment.
8. Water heaters.
9. Vents and vent systems.

Exception: The systems listed in this section are permitted to be located below the elevation required by Section 1612 of the *International Building Code* for utilities and attendant equipment, provided that the systems are designed and installed to prevent water from entering or accumulating within their components and the systems are constructed to resist hydrostatic and hydrodynamic loads and stresses, including the effects of buoyancy, during the occurrence of flooding up to such elevation.

❖ Although most plumbing facilities and system elements within a building or structure must be located at or above the elevation required by the code, certain plumbing system elements and equipment are expected to extend below that elevation. In such instances, the installation must be designed and installed to withstand anticipated flood forces. The flood forces may include buoyancy as well as dynamic loads imposed by moving water and/or waves and the impact of floating debris. This section specifically addresses those plumbing systems and equipment that are to withstand flood forces. It also identifies those systems and equipment that are to be sealed to prevent infiltration of floodwaters into the systems or loss of contents out of the systems during the conditions of flooding. For additional guidance, refer to FEMA 348.

1. Water service pipes located below elevated buildings and those buried below ground are to be water tight to prevent floodwater from entering the pipes. Water service pipes could develop leaks when subjected to the additional stress from floodwater. This means that the entire piping system subject to floodwater con-

INTERNATIONAL CODE COUNCIL®
Copyright © 2015 ICC. ALL RIGHTS RESERVED. Accessed by David Dammon on Jun 21, 2017 12:30:52 PM pursuant to License Agreement with ICC. No further reproduction or distribution authorized. ANY UNAUTHORIZED REPRODUCTION OR DISTRIBUTION IS A VIOLATION OF THE FEDERAL COPYRIGHT ACT AND THE LICENSE AGREEMENT, AND SUBJECT TO CIVIL AND CRIMINAL PENALTIES THEREUNDER.

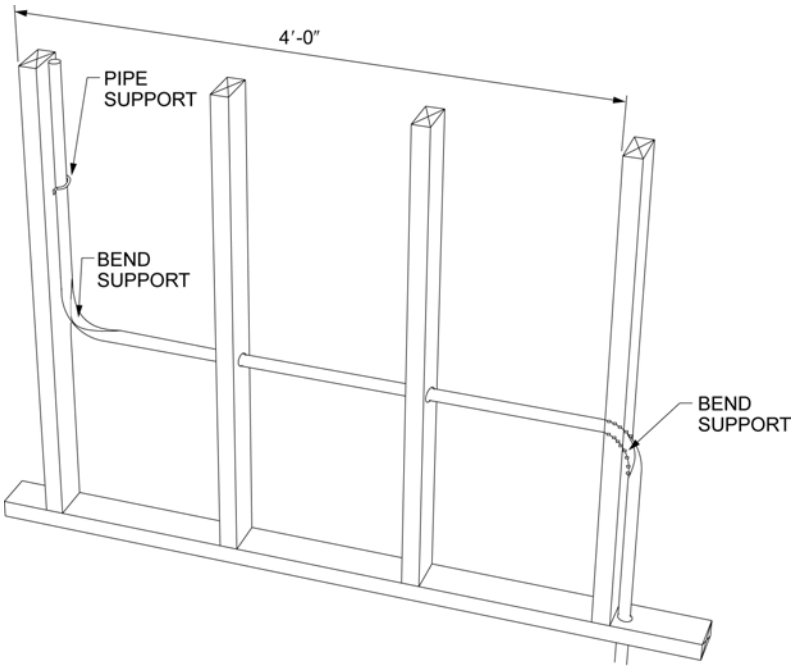

For SI: 1 inch = 25.4 mm, 1 foot = 304.8 mm.

Figure 308.9(1)
PIPE SUPPORT

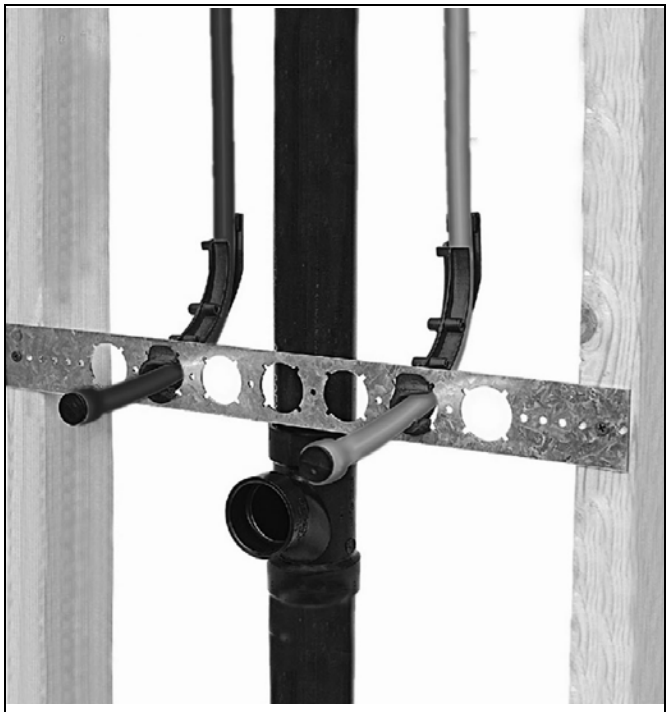

Figure 308.9(2)
PIPE BEND SUPPORT MAINTAINING BEND RADIUS
(Photo courtesy of Holdrite-Hubbard Enterprises)

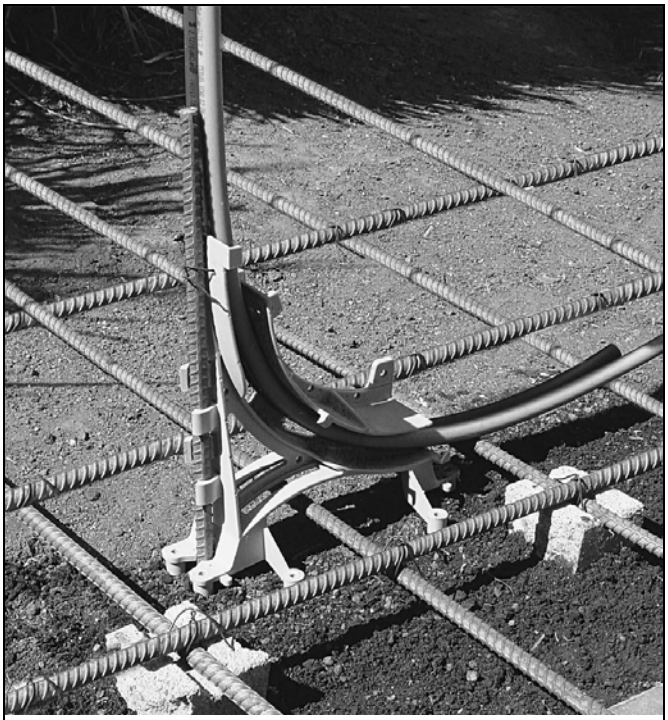

Figure 308.9(3)
PIPE BEND SUPPORT MAINTAINING BEND RADIUS
(Photo courtesy of Holdrite-Hubbard Enterprises)

INTERNATIONAL CODE COUNCIL®
Copyright © 2015 ICC. ALL RIGHTS RESERVED. Accessed by David Dammon on Jun 21, 2017 12:30:52 PM pursuant to License Agreement with ICC. No further reproduction or distribution authorized. ANY UNAUTHORIZED REPRODUCTION OR DISTRIBUTION IS A VIOLATION OF THE FEDERAL COPYRIGHT ACT AND THE LICENSE AGREEMENT, AND SUBJECT TO CIVIL AND CRIMINAL PENALTIES THEREUNDER.

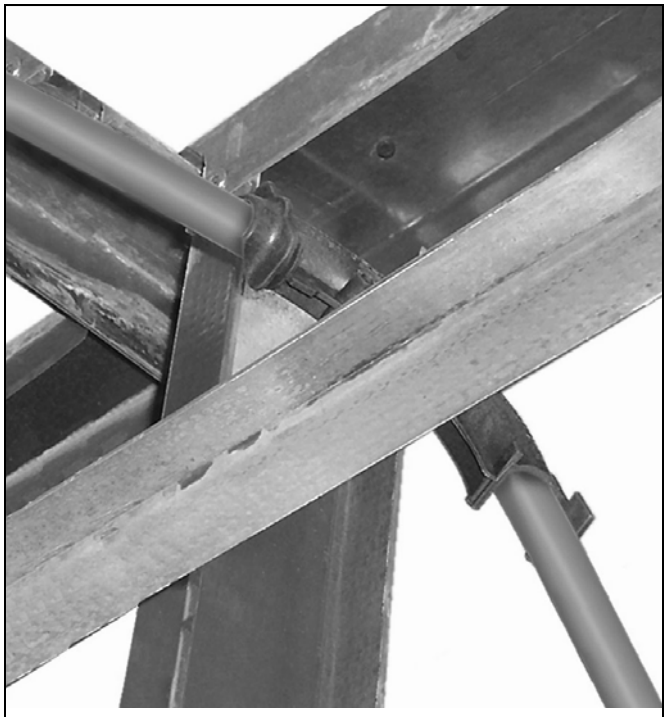

Figure 308.9(4)
PIPE BEND SUPPORT MAINTAINING BEND RADIUS
(Photo courtesy of Holdrite-Hubbard Enterprises)

tact must be designed accordingly; for example, using hangers that are capable of resisting not only the normal downward load of the pipe and its contents, but also lateral or upward forces on the pipe caused by floodwaters.

2. Pump seals in individual water supply systems are not normally considered water tight from the "outside." This item requires that these be capable of keeping out the floodwater.
3. To prevent contamination of the below-ground water supply, private well heads that are subject to submersion below the floodwater must be water tight. This should also include any attachment to the well head, such as the electrical connection.
4. Sanitary drainage piping should be designed so that the additional stress of the floodwater does not cause it to fail and thus contaminate the floodwater.
5. Storm drainage systems are not normally connected to any other system, such as the sanitary drainage system. The potential exists that the storm drainage system could carry water from the flood to an area currently not flooded. This item is trying to contain the potential damage from the floodwater to the areas immediately subject to that water.
6. As noted in Item 5 above, the concern is potential for floodwater to get into another area or system, which may cause backup into buildings. Therefore, there is a requirement for sealing these potential avenues for floodwater to travel.
7. This item is intended to cover any other item not specifically addressed in the six items above. It requires both the code official and the designer to verify that all plumbing systems subject to contact with the floodwater have been properly designed to withstand the forces of that water.
8. Water heaters and mechanical equipment must be protected from water or elevated above the elevation required by the code. Exposure to water can cause deterioration of most system components and serious malfunctions.
9. The venting system is no different from any other plumbing system component that must be protected from flood levels. Floodwaters can cause damage if the venting system is not properly anchored, supported, sealed, installed and elevated above the elevation required by the code or designed to prevent water from entering or accumulating within such system.

[BS] 309.3 Coastal high-hazard areas and coastal A zones. Structures located in coastal high-hazard areas and coastal A zones shall meet the requirements of Section 309.2. The plumbing systems, pipes and fixtures shall not be mounted on or penetrate through walls intended to break away under flood loads.

❖ Breakaway walls are required if elevated buildings in certain flood hazard areas (V zones and coastal A zones) have enclosed areas beneath the elevated floors. Breakaway walls are designed and constructed to fail under flood loads in order to avoid transferring the loads and damaging the primary structural support of the building. When plumbing systems, pipes and fixtures are mounted on or penetrate through the breakaway walls, they can prevent the walls from breaking away, thus transferring additional load to the building and increasing flood damage. Also, damage to the mechanical systems is certain to occur when the walls fail as intended.

SECTION 310
WASHROOM AND TOILET ROOM REQUIREMENTS

310.1 Light and ventilation. Washrooms and toilet rooms shall be illuminated and ventilated in accordance with the *International Building Code* and *International Mechanical Code*.

❖ In the early part of the 20th century, it was discovered that poorly ventilated bathing and toilet rooms in tenement housing were a leading cause of the spread of

INTERNATIONAL CODE COUNCIL®
Copyright © 2015 ICC. ALL RIGHTS RESERVED. Accessed by David Dammon on Jun 21, 2017 12:30:52 PM pursuant to License Agreement with ICC. No further reproduction or distribution authorized. ANY UNAUTHORIZED REPRODUCTION OR DISTRIBUTION IS A VIOLATION OF THE FEDERAL COPYRIGHT ACT AND THE LICENSE AGREEMENT, AND SUBJECT TO CIVIL AND CRIMINAL PENALTIES THEREUNDER.

disease to inhabitants of those structures. Poor illumination in these rooms compounded the problem by making it difficult to see spills and provide for proper housekeeping. Even though the requirement for illumination and ventilation is an *International Plumbing Code*® (IPC®) requirement, these features are specifically controlled by the IBC and the *International Mechanical Code*® (IMC®), respectively.

310.2 Location of fixtures and compartments. The location of plumbing fixtures and the requirements for compartments and partitions shall be in accordance with Section 405.3.

❖ See the commentary for Section 405.3.

310.3 Interior finish. Interior finish surfaces of toilet rooms shall comply with the *International Building Code*.

❖ Specifically, Section 1210 of the IBC has detailed requirements for the interior finishes of toilet rooms. The IBC sections require that, in other than dwelling units, the floor finish of toilet and bathing rooms must have a smooth, hard, nonabsorbent surface with a vertical base extending upward onto the walls at least 4 inches (102 mm). For all other toilet and bathing rooms, the IBC requires that the walls within 2 feet (610 mm) of urinals and water closets must have a smooth, hard, nonabsorbent surface to a height of 4 feet (1219 mm) above the floor. Two exceptions are provided for the wall requirement: 1) dwelling units and sleeping units and 2) toilet rooms not accessible to the public and having only one water closet.

A question that often arises is, what constitutes a "hard" wall surface? As the hard wall surface is required for public toilet facilities, it is generally expected that the walls will be subject to some abuse and vandalism. Gypsum board covering wall framing is not sufficiently strong (hard) enough to withstand the all too common abuse that is observed in many public toilet rooms. Another question that arises is, what constitutes a nonabsorbent surface? As gypsum board with any type of paint coating is easily scratched or the paper layer broken by a jab or punch, it is unlikely that such a surface will remain nonabsorbent over the life of the building. Concrete block, while hard, contains pores and crevices where bacteria is harbored and not easily removed by normal maintenance cleaning. Thus, painted concrete block that has not had the pores and crevices filled and smoothed by suitable block filler is not a nonabsorbent surface. Typically, grouted tile, cultured marble sheet and fiberglass beaded sheet have been used in these applications with good success. These types of finishes will allow thorough cleaning of the surfaces (see commentary, Section 419.3).

SECTION 311
TOILET FACILITIES FOR WORKERS

311.1 General. Toilet facilities shall be provided for construction workers and such facilities shall be maintained in a sanitary condition. Construction worker toilet facilities of the nonsewer type shall conform to ANSI Z4.3.

❖ Construction employees must have plumbing facilities available to them during the construction of a building. These facilities may be either permanent or portable. Portable facilities are regulated by ANSI Z4.3, which specifies various construction requirements. Commentary Figure 311.1 has been provided to show the minimum number of fixtures required by ANSI Z4.3.

NUMBER OF EMPLOYEES	MINIMUM NUMBER OF TOILET FACILITIES
	If serviced once per week[a]
1 - 10	1
11 - 20	2
21 - 30	3
31 - 40	4
Over 40	1 additional facility for each 10 additional employees
	If serviced more than once per week[a]
1 - 15	1
16 - 35	2
36 - 55	3
56 - 75	4
76 - 95	5
Over 95	1 additional facility for each 20 additional employees

a. "Servicing" refers to the emptying of waste and the cleaning of the toilet facility. A camp equipped with flush toilets shall meet the standard for "minimum number of toilet facilities if serviced more than once per week."

(Source: ANSI Z4.3-95)

Figure 311.1
MINIMUM NUMBER OF TOILET FACILITIES

SECTION 312
TESTS AND INSPECTIONS

312.1 Required tests. The permit holder shall make the applicable tests prescribed in Sections 312.2 through 312.10 to determine compliance with the provisions of this code. The permit holder shall give reasonable advance notice to the code official when the plumbing work is ready for tests. The equipment, material, power and labor necessary for the inspection and test shall be furnished by the permit holder and he or she shall be responsible for determining that the work will withstand the test pressure prescribed in the following tests. All plumbing system piping shall be tested with either water or, for piping systems other than plastic, by air. After the plumbing fixtures have been set and their traps filled with water, the entire drainage system shall be submitted to final tests. The code official shall require the removal of any cleanouts if necessary to ascertain whether the pressure has reached all parts of the system.

❖ This is a general section requiring the testing of plumbing systems in accordance with subsequent sections, as applicable. For example, if only a sewer line is installed, then only the sewer line test must be performed. If there is no storm drainage system, then

INTERNATIONAL CODE COUNCIL®
Copyright © 2015 ICC. ALL RIGHTS RESERVED. Accessed by David Dammon on Jun 21, 2017 12:30:52 PM pursuant to License Agreement with ICC. No further reproduction or distribution authorized. ANY UNAUTHORIZED REPRODUCTION OR DISTRIBUTION IS A VIOLATION OF THE FEDERAL COPYRIGHT ACT AND THE LICENSE AGREEMENT, AND SUBJECT TO CIVIL AND CRIMINAL PENALTIES THEREUNDER.

obviously no storm drainage system test can be performed.

Sections 312.2 through 312.8 describe various types of pressure tests to piping systems. Section 312.9 describes leak testing of field-installed shower receptor linings. Section 312.10 describes inspection and testing of backflow preventers.

Water or waste-water leaks from installed piping can have serious health consequences for the inhabitants of a building. Leaks can cause bacteria and mold to grow in concealed areas. If a leak continues long enough, structural members of the building can be compromised, rendering the building unsafe to occupy. Thus, it is very important that piping systems be tested at stages where leaks can be readily identified and repaired before piping is concealed

Backflow prevention assemblies, devices and methods are critical components in making sure that the potable water distribution system remains safe from contamination and pollution. As backflow prevention assemblies are field testable, Section 312.10 requires testing at the time of installation and every year thereafter. Although backflow devices and methods can only be field inspected, not field tested, their use is typically limited to low-hazard applications.

The code official's duty is only to witness the testing as the permit holder is responsible for conducting the tests. As code officials often have many project sites to visit in a day, the permit holder must provide reasonable advance notice that the project is ready for testing. All test equipment, power, water, materials and labor to conduct the test(s) are the permit holder's responsibility.

Because the minimum length of time for the pressure test is 15 minutes, the code official will probably take the opportunity to perform a visual inspection of the plumbing system under test to verify that the system has been installed in accordance with the requirements of the code. As this will likely be his or her only opportunity to spot violations before concealment, it is imperative that all the work that needs to be performed is done so before concealment. Nail/screw shield plates, sealing caulking, all required hangers/supports and piping identification must be done prior to the code official arriving at the project site for the test.

The medium for pressure testing of piping systems is ideally water because it is not compressible and a failure of a plumbing system under test will not be dangerous to nearby personnel; however, this code section allows for pipe system testing by forcing air into the piping as long as the piping is not of plastic material. There is an inherent danger in testing plastic piping with compressed air. Where compressed gas (air) is used, the energy stored in the compressed gas is significant. A pipe/fitting failure could result in pieces and shards of plastic being propelled at high velocity toward personnel.

The last two lines of this code section are somewhat mislocated. The requirement for final tests are covered in Section 312.4 and the requirement for having the plumbing fixtures set and traps filled with water should be part of that section. The removal of a cleanout plug to determine if test pressure has reached certain parts of the drainage system is only applicable to drainage and sewer system (rough-in) testing. Note, however, it would not be wise to remove any cleanout plugs while a system is pressurized.

312.1.1 Test gauges. Gauges used for testing shall be as follows:

1. Tests requiring a pressure of 10 pounds per square inch (psi) (69 kPa) or less shall utilize a testing gauge having increments of 0.10 psi (0.69 kPa) or less.
2. Tests requiring a pressure of greater than 10 psi (69 kPa) but less than or equal to 100 psi (689 kPa) shall utilize a testing gauge having increments of 1 psi (6.9 kPa) or less.
3. Tests requiring a pressure of greater than 100 psi (689 kPa) shall utilize a testing gauge having increments of 2 psi (14 kPa) or less.

❖ It is common to encounter test gauges that read in 1 or 2 pounds per square inch (psi) increments while attempting to perform a drain, waste and vent (DWV) inspection that only requires a 5 psi (34.5 kPa) test. A small drop in pressure will be difficult to notice on a gauge with 1 or 2 psig (6.895 or 13.79 kPa) increments and, therefore they are not appropriate for low test pressures.

In each case, the user needs to ensure that the proper pressure gauge was selected with respect to indicating range and design. Most standard dial-type pressure gauges use a bourdon tube sensing element generally made of a copper alloy (brass) or stainless steel. The construction is simple and operation does not require any additional power source. The C-shaped or spirally wound bourdon tube flexes when pressure is applied, producing a rotational movement, which in turn causes the pointer to indicate the measured pressure. Such gauges are the most accurate when reading in the midrange of their scale; therefore, the test gauge should be chosen to reflect the test pressure in the midrange of the scale. A shutoff valve should be installed between the measuring point and the pressure gauge with another valve to depressurize the gage only. This will allow an exchange of the pressure gauge and checks on the zero setting while the system remains under test pressure or operating pressure.

312.2 Drainage and vent water test. A water test shall be applied to the drainage system either in its entirety or in sections. If applied to the entire system, all openings in the piping shall be tightly closed, except the highest opening, and the system shall be filled with water to the point of overflow. If the system is tested in sections, each opening shall be tightly plugged except the highest openings of the section under test, and each section shall be filled with water, but no section shall be tested with less than a 10-foot (3048 mm) head of water. In testing successive sections, at least the upper 10 feet (3048 mm) of the next preceding section shall

INTERNATIONAL CODE COUNCIL®
Copyright © 2015 ICC. ALL RIGHTS RESERVED. Accessed by David Dammon on Jun 21, 2017 12:30:52 PM pursuant to License Agreement with ICC. No further reproduction or distribution authorized. ANY UNAUTHORIZED REPRODUCTION OR DISTRIBUTION IS A VIOLATION OF THE FEDERAL COPYRIGHT ACT AND THE LICENSE AGREEMENT, AND SUBJECT TO CIVIL AND CRIMINAL PENALTIES THEREUNDER.

be tested so that no joint or pipe in the building, except the uppermost 10 feet (3048 mm) of the system, shall have been submitted to a test of less than a 10-foot (3048 mm) head of water. This pressure shall be held for not less than 15 minutes. The system shall then be tight at all points.

❖ This section discusses the procedure for performing a water test on portions of or the entire DWV system. A rough-in test is commonly performed on the entire DWV system. In multistory buildings, this could be a dangerous practice because the lower floors are exposed to much higher head pressure than that for which the system was designed. This excess pressure could be detrimental to the plumbing system. Testing should be conducted in stages so that no one section of piping is exposed to excessive pressures.

This section requires that, except for the uppermost 10 feet (3048 mm) of the system, no section be tested with less than a 10-foot (3048 mm) head of water. This 10-foot (3048 mm) head of water is equivalent to 4.33 psi (30 kPa) and must be held tight for at least 15 minutes. The water test allows system defects to be found more readily than in air tests but introduces the risks of water damage to the structure, freeze damage to traps and piping system damage caused by excessive head pressures and excessive weight. This portion of the testing could be performed with air in compliance with Section 312.3 if the piping is not of plastic material.

312.3 Drainage and vent air test. Plastic piping shall not be tested using air. An air test shall be made by forcing air into the system until there is a uniform gauge pressure of 5 psi (34.5 kPa) or sufficient to balance a 10-inch (254 mm) column of mercury. This pressure shall be held for a test period of not less than 15 minutes. Any adjustments to the test pressure required because of changes in ambient temperatures or the seating of gaskets shall be made prior to the beginning of the test period.

❖ For other than systems made of plastic piping materials, this section allows pressure testing of DWV piping using compressed air. The closed piping system is filled with air until there is either a steady gauge pressure of 5 psi (34.5 kPa) or sufficient pressure to balance a 10-inch (254 mm) column of mercury. This pressure must be held for a period of not less than 15 minutes without the introduction of additional air.

Air tests are easy to apply; however, there are disadvantages to air testing. Defects in the system are more difficult to locate using an air test. System temperature changes can also cause misleading changes in pressure, which might be interpreted as a leak. In some cases, gasket or o-ring materials within valves will properly seal only after they are allowed a brief period to seal under pressure. Adjustments for changes in pressure resulting from ambient temperature fluctuations or the sealing of gaskets must be made prior to the start of the 15-minute test period.

Testing with a compressed gas (air) is inherently more hazardous to personnel than water testing because of the energy release that can occur from a system rupture or failure. Note that Section 312.1 prohibits the testing of all plastic piping with compressed air. The 5 psi (34.5 kPa) testing pressure stated in this section is often exceeded in the field by the persons performing the test to make the location of leaks easier. Increasing the test pressure beyond the safe limits of the material can result in a dangerous situation and must not be allowed.

312.4 Drainage and vent final test. The final test of the completed drainage and vent systems shall be visual and in sufficient detail to determine compliance with the provisions of this code. Where a smoke test is utilized, it shall be made by filling all traps with water and then introducing into the entire system a pungent, thick smoke produced by one or more smoke machines. When the smoke appears at *stack* openings on the roof, the *stack* openings shall be closed and a pressure equivalent to a 1-inch water column (248.8 Pa) shall be held for a test period of not less than 15 minutes.

❖ In preparation for the final drainage and vent test, the plumbing fixtures must be fully assembled, set and sealed to walls and floors, connected to the water supply system (if required), connected to the drain system (if required) and the fixture traps filled with liquid. Venting applications requiring an air admittance valve must have the valve installed. The items checked in the final visual test of the drainage and vent system is up to the discretion of the code official.

A smoke test of the completed drainage and vent system could be required by the code official where there is justification for such testing. Smoke testing requires that the outlet of the DWV system be plugged and a thick smoke be pumped into the DWV system so that smoke circulates throughout the entire system. After all vent openings are capped off, the system is then continuously pressurized to 1-inch water column (248.8 Pa) for a period of 15 minutes. During the test period, smoke must not be visually detected inside of the building in order for the system to pass the test [see Commentary Figures 312.4(1) and 312.4(2)].



Figure 312.4(1)
SMOKE-GENERATING EQUIPMENT
(Photo courtesy of Hurco Technologies, Inc.)

INTERNATIONAL CODE COUNCIL®
Copyright © 2015 ICC. ALL RIGHTS RESERVED. Accessed by David Dammon on Jun 21, 2017 12:30:52 PM pursuant to License Agreement with ICC. No further reproduction or distribution authorized. ANY UNAUTHORIZED REPRODUCTION OR DISTRIBUTION IS A VIOLATION OF THE FEDERAL COPYRIGHT ACT AND THE LICENSE AGREEMENT, AND SUBJECT TO CIVIL AND CRIMINAL PENALTIES THEREUNDER.

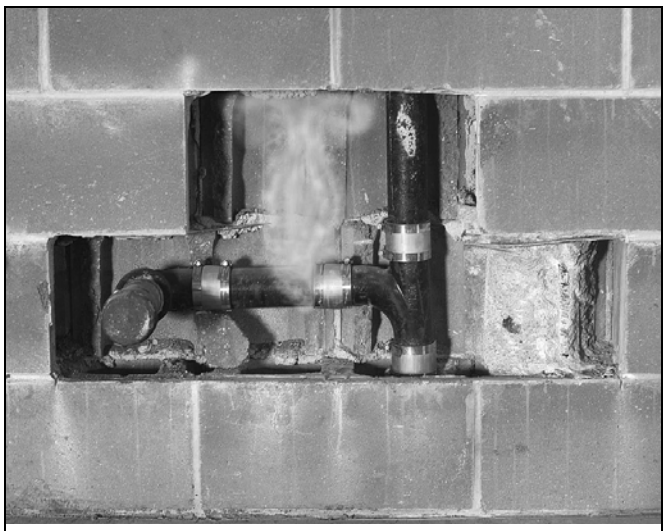

Figure 312.4(2)
SMOKE INDICATING PRESENCE OF LEAK
(Photo courtesy of Hurco Technologies, Inc.)

312.5 Water supply system test. Upon completion of a section of or the entire water supply system, the system, or portion completed, shall be tested and proved tight under a water pressure not less than the working pressure of the system; or, for piping systems other than plastic, by an air test of not less than 50 psi (344 kPa). This pressure shall be held for not less than 15 minutes. The water utilized for tests shall be obtained from a potable source of supply. The required tests shall be performed in accordance with this section and Section 107.

❖ The water supply system consists of piping from the water meter at the curb, the stop valve at the curb or the well system to the ends of the water distribution piping in the building. Where only portions of the water supply system have been installed or worked on, only those portions are required to be tested.

The term "working pressure" is not defined in the code. It it understood to be the maximum pressure in the water supply system under normal operating conditions. The working pressure can be different depending on where the pressure is measured in a system. For example, the working pressure in a water service line from the curb stop valve to the entry point into the building might be 120 psi (827 kPa). As this pressure is greater than 80 psi (551 kPa), in accordance with Section 604.8, a pressure-reducing valve must be installed to limit the pressure in the building's water distribution system to no greater than 80 psi (551 kPa). Therefore, the working pressure in the water distribution system portion of the water supply system is 80 psi (551 KPa) or less.

The phrase "the system shall be proved tight" means that by visual inspection, no evidence of leakage from the piping system is observed. Evidence of leakage is typically determined by attaching a pressure gage to the system, pressurizing the system to the test pressure and, without further addition of test water or air to the system, verifying after 15 minutes that the pressure gage indication has not changed from the reading taken at the beginning of the test. Note the critical test gage requirements of Section 312.1.1. Where minor repairs or modifications are made to a water supply system and the system is tested with water, the pressure gage method is not necessary because evidence of leakage could be determined simply by observing each piping connection for the presence of leaking water.

If air is used to test a water supply system of other than plastic material, the test pressure need only be 50 psi (344 kPa). Where testing with compressed air, it is advisable to allow the system under test pressure to thermally stabilize before the start of the observation period. Warm air from a compressor introduced into cold piping will cool and result in a decrease in the test pressure, falsely indicating a leak. Gaskets and o-rings in shower mixing valves are intended to seal against water pressure and typically do not initially seat or seal well when first pressurized with air. In most cases, leaks from these locations will eventually cease after a "seating in" period of time. Adjustments for changes in pressure resulting from ambient temperature fluctuations or the seating of gaskets must be made prior to the start of the 15-minute test period.

Air testing of water supply systems of plastic material is prohibited by the code and many plastic piping manufacturers due to the risk of personal injury caused by flying shards of plastic should the piping rupture. Compressed air stores potential energy not unlike a compressed coil spring stores energy. If the piping ruptures, the stored potential energy becomes kinetic energy that can propel plastic pieces with great force and velocity.

Section 107 specifies three general construction stages that require inspection: 1) underground rough-in; 2) above-ground rough-in and 3) final (completion of plumbing work). Depending on the size and required sequence of a project, multiple inspections may be necessary for each stage. The intent of this code section is to ensure that all underground and above-ground water supply system piping is tested prior to concealment so that any leaks can be readily located and repaired. The final inspection and "test" (Section 312.4) provides for visual inspection to find leaks in exposed water supply system connections, such as water heater piping, stop valves, supply tube connections and fixture/faucet assemblies.

312.6 Gravity sewer test. Gravity *sewer* tests shall consist of plugging the end of the *building sewer* at the point of connection with the public sewer, filling the *building sewer* with water, testing with not less than a 10-foot (3048 mm) head of water and maintaining such pressure for 15 minutes.

❖ The building sewer must be subjected to the same testing as required for the DWV system, except that air testing is not an option for building sewers. This section states specific points of procedure for conducting this test, including plugging the sewer at its point of connection with the public sewer, the minimum test water head and the time duration of the test.

INTERNATIONAL CODE COUNCIL®
Copyright © 2015 ICC. ALL RIGHTS RESERVED. Accessed by David Dammon on Jun 21, 2017 12:30:52 PM pursuant to License Agreement with ICC. No further reproduction or distribution authorized. ANY UNAUTHORIZED REPRODUCTION OR DISTRIBUTION IS A VIOLATION OF THE FEDERAL COPYRIGHT ACT AND THE LICENSE AGREEMENT, AND SUBJECT TO CIVIL AND CRIMINAL PENALTIES THEREUNDER.

312.7 Forced sewer test. Forced *sewer* tests shall consist of plugging the end of the *building sewer* at the point of connection with the public sewer and applying a pressure of 5 psi (34.5 kPa) greater than the pump rating, and maintaining such pressure for 15 minutes.

❖ Although not specifically defined in the code, the term "forced sewer" refers to any sewer system that cannot drain by gravity. The forced sewer has its contents placed under pressure for some length of travel. This length of travel is often a short vertical rise to allow the sewage to again travel using the forces of gravity. This type of arrangement normally involves the use of a sewage pump or sewage ejector (refer to Section 712 for requirements related to sumps and ejectors).

This section requires that the forced sewer be tested in a manner similar to that required for the gravity sewer, except that this test is to be conducted with an applied test pressure of 5 psi (34.5 kPa) greater than the highest pressure that the pump can generate. Many times, this pressure is called the "shutoff" pressure because for many pumps, the highest pressure is when the flow is zero. The pump pressure curve or data table must be reviewed to determine the maximum pump pressure.

Although this section does not specify the test medium (air or water), the intent is that forced sewers be tested using the same methods and precautions as gravity sewer testing, except that the pressure will be according to the maximum pump pressure.

312.8 Storm drainage system test. *Storm drain* systems within a building shall be tested by water or air in accordance with Section 312.2 or 312.3.

❖ Piping used for drainage of roof water that is located inside a building has the same potential for leaks and defects as building sanitary drainage system. Because of this potential, this section requires that piping used for storm drains, conductors or downspouts and related branch lines that are located inside a building be tested. This testing is to be performed in a manner similar to the methods that would be used to test building DWV systems.

312.9 Shower liner test. Where shower floors and receptors are made water tight by the application of materials required by Section 417.5.2, the completed liner installation shall be tested. The pipe from the shower drain shall be plugged water tight for the test. The floor and receptor area shall be filled with potable water to a depth of not less than 2 inches (51 mm) measured at the threshold. Where a threshold of at least 2 inches (51 mm) high does not exist, a temporary threshold shall be constructed to retain the test water in the lined floor or receptor area to a level not less than 2 inches (51 mm) deep measured at the threshold. The water shall be retained for a test period of not less than 15 minutes, and there shall not be evidence of leakage.

❖ Although Section 417.5.2 always required field-fabricated shower floors and receptors to be made "water tight" (i.e., free of any leaks when exposed to water) by the application of liner materials, in previous editions the code did not actually require testing to prove that the installation was leak free. Many jurisdictions have required testing of field-fabricated shower pans for many years due to the potential for water damage if the installation of liner material is not performed properly. The resulting water damage, increased difficulty in making repairs and additional expense involved with the discovery of a leak after a building has been completed prompted the addition of this testing requirement.

This section clearly spells out how to perform the test. The evidence of leakage could be either the lowering of the water level from the full threshold level or water drips/seepage outside of the receptor area (see Commentary Figure 312.9).

312.10 Inspection and testing of backflow prevention assemblies. Inspection and testing shall comply with Sections 312.10.1 and 312.10.2.

❖ Backflow prevention assemblies are critical components that protect the potable water system from pollution or contamination sources. As such, these assemblies must be inspected and tested after installation at the project site to ensure that the devices are providing the level of protection intended.

312.10.1 Inspections. Annual inspections shall be made of all backflow prevention assemblies and *air gaps* to determine whether they are operable.

❖ Backflow prevention assemblies, including air gaps, must be inspected annually. Air gaps must be inspected to determine that proper clearances are maintained in accordance with Table 608.15.1. Additionally, backflow prevention assemblies are to be inspected for damage or evidence of tampering that could cause the device to malfunction.

Because these devices must be periodically inspected, they cannot be located in concealed spaces. Depending on the type of device and the installed location, they might be located behind access panels. Backflow devices must not be allowed to be installed in a pit or other below grade locations as flooding could prevent the device from properly operating.

312.10.2 Testing. Reduced pressure principle, double check, pressure vacuum breaker, reduced pressure detector fire protection, double check detector fire protection, and spill-resistant vacuum breaker backflow preventer assemblies and hose connection backflow preventers shall be tested at the time of installation, immediately after repairs or relocation and at least annually. The testing procedure shall be performed in accordance with one of the following standards: ASSE 5013, ASSE 5015, ASSE 5020, ASSE 5047, ASSE 5048, ASSE 5052, ASSE 5056, CSA B64.10 or CSA B64.10.1.

❖ Most sections in the code that concern backflow prevention devices have been aligned to reflect the

INTERNATIONAL CODE COUNCIL®
Copyright © 2015 ICC. ALL RIGHTS RESERVED. Accessed by David Dammon on Jun 21, 2017 12:30:52 PM pursuant to License Agreement with ICC. No further reproduction or distribution authorized. ANY UNAUTHORIZED REPRODUCTION OR DISTRIBUTION IS A VIOLATION OF THE FEDERAL COPYRIGHT ACT AND THE LICENSE AGREEMENT, AND SUBJECT TO CIVIL AND CRIMINAL PENALTIES THEREUNDER.

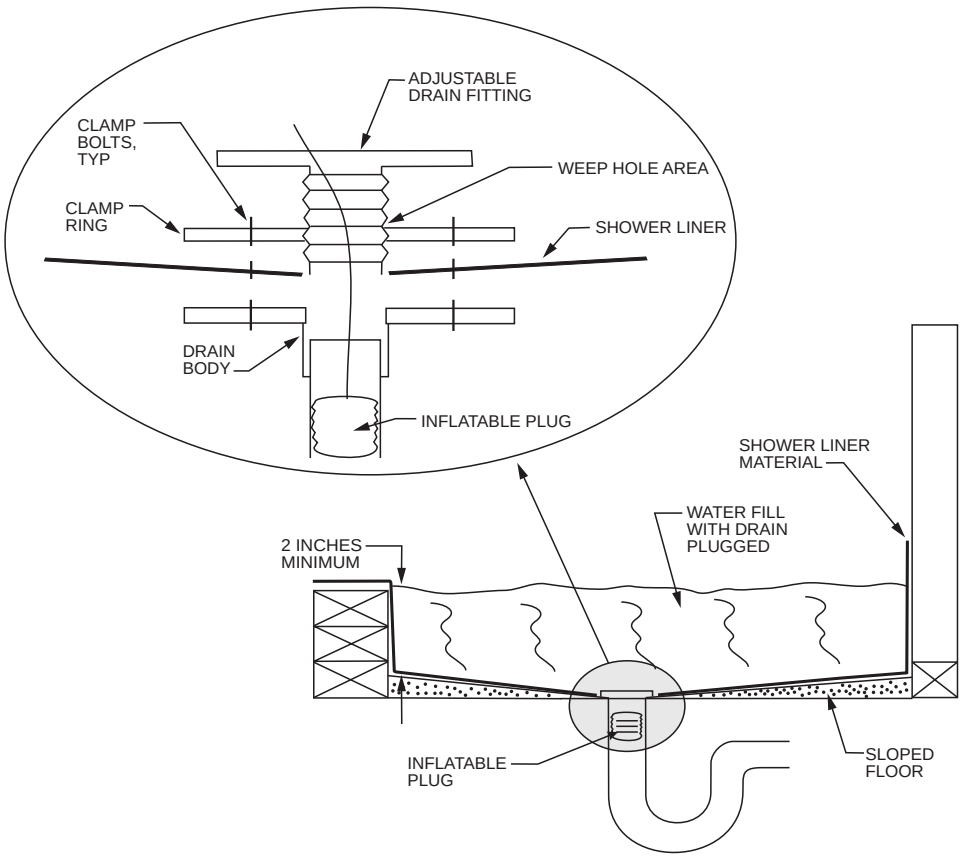

For SI: 1 inch = 25.4 mm.

Figure 312.9
TESTING OF FIELD-FABRICATED SHOWER LINER

names of the devices in accordance with the American Society of Sanitary Engineers (ASSE) standards names. There is a method to the naming convention:

1. *Backflow prevention assemblies* are those devices that have test ports and test valves to enable precise field testing with highly sensitive testing instruments to determine if the assembly will perform backflow prevention under various test conditions.
2. *Backflow preventers* are devices that do not have test ports to enable field testing, although some devices such as hose connection backflow preventers can be subjected to field conditions to cause a visible indication that the device is functional.
3. *Other methods of backflow prevention* include air gaps and barometric loops. Testing is not required as field dimensional checking is used to verify that the method will perform the intended function.

Each of the ASSE standards listed, with the exception of ASSE 5052, is the test procedure for a specific type of backflow prevention assembly. ASSE 5052 is the procedure for testing hose connection backflow preventers. The code requires that backflow prevention assemblies and hose connection backflow preventers be tested when the assembly is installed, after it is relocated, after repairs and at intervals not greater than one year apart. In most jurisdictions, backflow prevention assembly testers are required to be licensed by the state. This is to ensure that test personnel are qualified by initial training, initial skill testing and periodic training and testing for as long as they wish to maintain their certification. Although the code does not require assembly testing by certified testers, the code official will be obligated to follow any state laws concerning who can legally test backflow prevention assemblies. Because testing of hose connection backflow preventers does not involve specialized training, certified testers may not be required for testing of these simple devices.

How is the code official to enforce the annual and repair testing requirement of the code? Testing after the installation and initial testing of the assembly is the responsibility of the building owner as he or she is responsible for the safety of the potable water supply within his or her building. In most cases, the code official assumes that the building owner has the required tests performed just as the building owner would per-

INTERNATIONAL CODE COUNCIL®
Copyright © 2015 ICC. ALL RIGHTS RESERVED. Accessed by David Dammon on Jun 21, 2017 12:30:52 PM pursuant to License Agreement with ICC. No further reproduction or distribution authorized. ANY UNAUTHORIZED REPRODUCTION OR DISTRIBUTION IS A VIOLATION OF THE FEDERAL COPYRIGHT ACT AND THE LICENSE AGREEMENT, AND SUBJECT TO CIVIL AND CRIMINAL PENALTIES THEREUNDER.

form periodic maintenance and tests on other types of building equipment, such as HVAC units, filter replacements, etc. However, if the code official has: 1) doubts that testing is being performed; 2) heard of complaints about the condition of the building potable water supply or 3) observed during the course of other inspections that backflow prevention assemblies do not have up-to-date test tags, this section of the code gives the code official the authority to request to see the latest test records and require testing of the assemblies if inspection reveals testing has not been performed within the past year.

SECTION 313
EQUIPMENT EFFICIENCIES

313.1 General. Equipment efficiencies shall be in accordance with the *International Energy Conservation Code*.

❖ The *International Energy Construction Code*® (IECC®) requires minimum efficiencies for appliances and hot water storage tanks.

SECTION 314
CONDENSATE DISPOSAL

[M] 314.1 Fuel-burning appliances. Liquid combustion byproducts of condensing appliances shall be collected and discharged to an *approved* plumbing fixture or disposal area in accordance with the manufacturer's instructions. Condensate piping shall be of *approved* corrosion-resistant material and shall not be smaller than the drain connection on the appliance. Such piping shall maintain a horizontal slope in the direction of discharge of not less than one-eighth unit vertical in 12 units horizontal (1-percent slope).

❖ Condensation must be collected from appliances in accordance with the manufacturers' installation instructions and this section. High-efficiency condensing-type appliances (Category IV) and some mideffi-ciency appliances produce liquid as a combustion byproduct. This condensate is collected at various points in the appliance's heat exchangers and venting system and must be disposed of. Because of impurities in the fuel and combustion air, the condensate can be acidic, thus corrosive, to many materials. For example, such condensate can contain hydrochloric and also sulfuric acids. Such drain piping is part of the mechanical system and, as such, is also covered in the IMC. Although condensate piping is not plumbing, it is covered in the code because of the possibility of plumbers installing such piping.

[M] 314.2 Evaporators and cooling coils. Condensate drain systems shall be provided for equipment and appliances containing evaporators or cooling coils. Condensate drain systems shall be designed, constructed and installed in accordance with Sections 314.2.1 through 314.2.5.

❖ Appliances and equipment containing evaporators or cooling coils, including refrigeration, dehumidification and comfort cooling equipment, can produce condensate from the water vapor in the atmosphere. A drainage system is necessary to dispose of the condensate and prevent damage to the structure.

[M] 314.2.1 Condensate disposal. Condensate from all cooling coils and evaporators shall be conveyed from the drain pan outlet to an *approved* place of disposal. Such piping shall maintain a horizontal slope in the direction of discharge of not less than one-eighth unit vertical in 12 units horizontal (1-percent slope). Condensate shall not discharge into a street, alley or other areas so as to cause a nuisance.

❖ The "approved place of disposal" specified in this section will vary from jurisdiction to jurisdiction. While condensate is typically "clear" water, it can gather dust, bacteria and mold spores, which can result in a solids buildup in the waste stream. A slope of at least 1 percent creates a minimum flow velocity to aid in transport of these solids towards the point of disposal.

Some jurisdictions strictly forbid condensate from being drained into the sanitary sewer system primarily because of overloading the system, but could allow it, depending on the quantity of effluent produced. Common points of disposal are to grade in areas where a nuisance will not be created, onto rooftops where the condensate will evaporate or drain to grade, to seepage pits where soil condition allows or to a storm drain. Section 802.1.5 prohibits condensate drains from being directly connected to a sanitary sewer because of the possibility of sewer gases or sewage entering the equipment or system.

Additional consideration must be given to the disposal of condensate from fuel-burning appliances (see commentary, Section 314.1).

[M] 314.2.2 Drain pipe materials and sizes. Components of the condensate disposal system shall be cast iron, galvanized steel, copper, cross-linked polyethylene, polyethylene, ABS, CPVC or PVC or polypropylene pipe or tubing. All components shall be selected for the pressure and temperature rating of the installation. Joints and connections shall be made in accordance with the applicable provisions of Chapter 7 relative to the material type. Condensate waste and drain line size shall be not less than $^{3}/_{4}$-inch (19.1 mm) internal diameter and shall not decrease in size from the drain pan connection to the place of condensate disposal. Where the drain pipes from more than one unit are manifolded together for condensate drainage, the pipe or tubing shall be sized in accordance with Table 314.2.2.

❖ Condensate drains must be constructed of a material listed in this section. The previous editions of this section required that horizontal sections of the condensate piping be installed in uniform alignment at a uniform slope. This was to prevent dips and sags that could impede flow and also prevented the use of flexible piping that could not maintain a uniform slope. Section 314.2.1 requires a slope of at least 1 percent [$^{1}/_{8}$ inch per foot (10 mm per meter)]. Condensate drains must have the minimum prescribed slope to promote gravity drainage and lessen the possibility of clogging.

INTERNATIONAL CODE COUNCIL®
Copyright © 2015 ICC. ALL RIGHTS RESERVED. Accessed by David Dammon on Jun 21, 2017 12:30:52 PM pursuant to License Agreement with ICC. No further reproduction or distribution authorized. ANY UNAUTHORIZED REPRODUCTION OR DISTRIBUTION IS A VIOLATION OF THE FEDERAL COPYRIGHT ACT AND THE LICENSE AGREEMENT, AND SUBJECT TO CIVIL AND CRIMINAL PENALTIES THEREUNDER.

Greater slopes are allowed, and in all cases, the slope must be maintained in the direction flow such that no dips or reverse slopes occur.

While the code is clear on a minimum condensate pipe size, designers previously had no approved method for sizing condensate lines connecting multiple units. This table provides minimum sizing for those condensate piping system connecting multiple units.

[M] TABLE 314.2.2
CONDENSATE DRAIN SIZING

EQUIPMENT CAPACITY	MINIMUM CONDENSATE PIPE DIAMETER (inch)
Up to 20 tons of refrigeration	$^3/_4$ inch
Over 20 tons to 40 tons of refrigeration	1 inch
Over 40 tons to 90 tons of refrigeration	$1^1/_4$ inch
Over 90 tons to 125 tons of refrigeration	$1^1/_2$ inch
Over 125 tons to 250 tons of refrigeration	2 inch

For SI: 1 inch = 25.4 mm, 1 ton of capacity = 3.517 kW.

[M] 314.2.3 Auxiliary and secondary drain systems. In addition to the requirements of Section 314.2.1, where damage to any building components could occur as a result of overflow from the equipment primary condensate removal system, one of the following auxiliary protection methods shall be provided for each cooling coil or fuel-fired appliance that produces condensate:

1. An auxiliary drain pan with a separate drain shall be provided under the coils on which condensation will occur. The auxiliary pan drain shall discharge to a conspicuous point of disposal to alert occupants in the event of a stoppage of the primary drain. The pan shall have a depth of not less than $1^1/_2$ inches (38 mm), shall be not less than 3 inches (76 mm) larger than the unit or the coil dimensions in width and length and shall be constructed of corrosion-resistant material. Galvanized sheet metal pans shall have a thickness of not less than 0.0236-inch (0.6010 mm) (No. 24 gage) galvanized sheet metal. Nonmetallic pans shall have a thickness of not less than 0.0625 inch (1.6 mm).
2. A separate overflow drain line shall be connected to the drain pan provided with the equipment. Such overflow drain shall discharge to a conspicuous point of disposal to alert occupants in the event of a stoppage of the primary drain. The overflow drain line shall connect to the drain pan at a higher level than the primary drain connection.
3. An auxiliary drain pan without a separate drain line shall be provided under the coils on which condensate will occur. Such pan shall be equipped with a water-level detection device conforming to UL 508 that will shut off the equipment served prior to overflow of the pan. The auxiliary drain pan shall be constructed in accordance with Item 1 of this section.
4. A water-level detection device conforming to UL 508 shall be provided that will shut off the equipment served in the event that the primary drain is blocked.

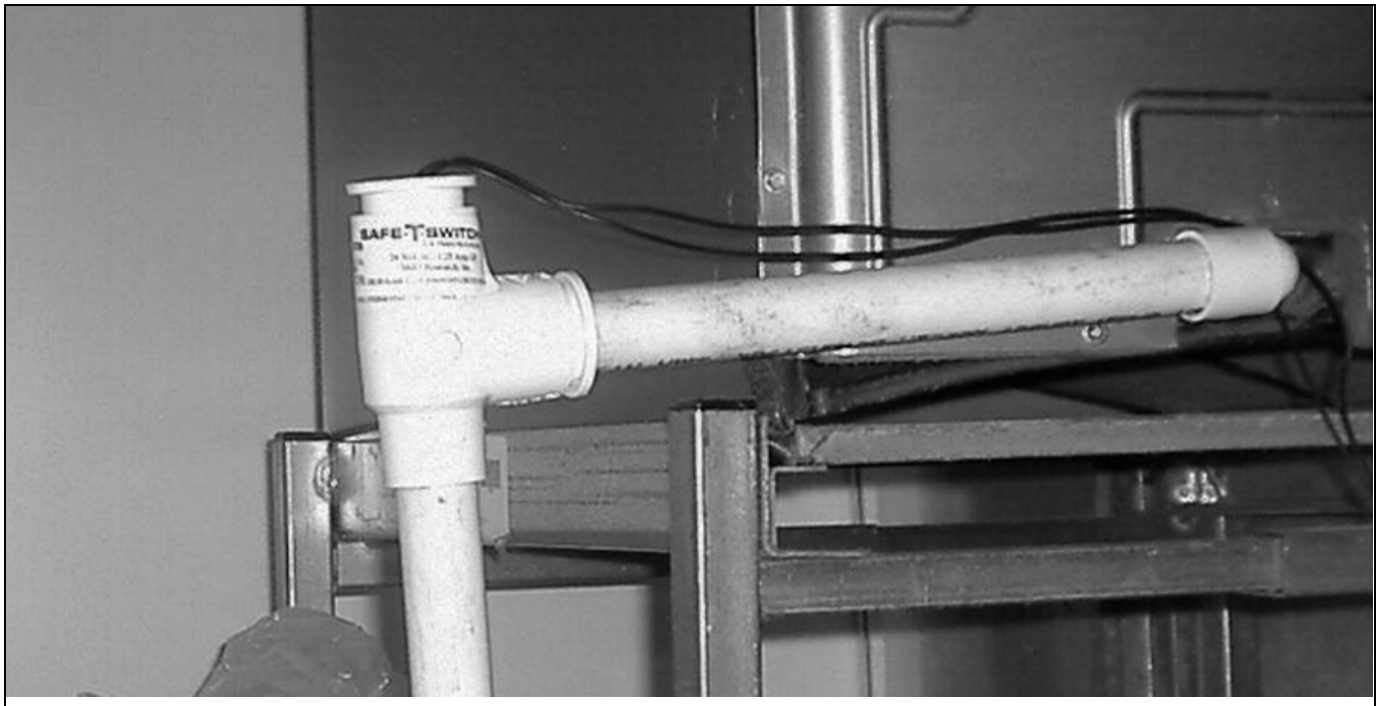

Figure 314.2.3(1)
CONDENSATE OVERFLOW SWITCH
(Photo courtesy of SMD Research, Inc.)

INTERNATIONAL CODE COUNCIL®
Copyright © 2015 ICC. ALL RIGHTS RESERVED. Accessed by David Dammon on Jun 21, 2017 12:30:52 PM pursuant to License Agreement with ICC. No further reproduction or distribution authorized. ANY UNAUTHORIZED REPRODUCTION OR DISTRIBUTION IS A VIOLATION OF THE FEDERAL COPYRIGHT ACT AND THE LICENSE AGREEMENT, AND SUBJECT TO CIVIL AND CRIMINAL PENALTIES THEREUNDER.

The device shall be installed in the primary drain line, the overflow drain line or in the equipment-supplied drain pan, located at a point higher than the primary drain line connection and below the overflow rim of such pan.

Exception: Fuel-fired appliances that automatically shut down operation in the event of a stoppage in the condensate drainage system.

❖ An auxiliary or secondary drain system is required for equipment locations where condensate overflow would cause damage to a building or its contents. These systems are intended to catch condensate spilling from the primary drain or drain pan if the primary drain becomes clogged. These methods protect the building from structural damage. This section applies to cooling and evaporator coils and condensing-type fuel-fired appliances.

Condensate drains are notorious for clogging because of debris (lint and dust) from air-handling systems and the natural affinity to produce slime growth in drain pans and pipes.

Note that four distinct options are provided for the auxiliary/secondary system. Option 1 is a redundant drain pan and drain piping system that is completely independent of the primary system. Option 2 is the simplest method because it involves only an overflow drain connected to the overflow opening on the primary pan. Such an opening is typically found on factory-built primary pans. The overflow drain must be completely independent of the primary drain. Option 3 involves an auxiliary pan without a drain and depends on a float switch or sensor to detect water in the pan and shut off the equipment producing the condensate [see Commentary Figure 314.2.3(3)]. Option 4 involves a float-switch assembly designed to be threaded into the overflow tapping provided on the primary pan or installed at some point in a drain line. Like Option 3, the float-switch assembly will detect overflow from the primary pan and shut off the equipment [See Commentary Figures 314.2.3(1) and (2)].

The exception is for fuel-fired appliances having integral controls to prevent operation of the appliance



Figure 314.2.3(2)
CONDENSATE OVERFLOW SWITCH
(Photo courtesy of SMD Research, Inc.)



Figure 314.2.3(3)
PRIMARY OR AUXILIARY DRAIN PAN FLOAT SWITCH
(Photo courtesy of SMD Research, Inc.)



Figure 314.2.3.2
FURNACE ELEVATED ABOVE TOP OF CONDENSATE PAN

INTERNATIONAL CODE COUNCIL®
Copyright © 2015 ICC. ALL RIGHTS RESERVED. Accessed by David Dammon on Jun 21, 2017 12:30:52 PM pursuant to License Agreement with ICC. No further reproduction or distribution authorized. ANY UNAUTHORIZED REPRODUCTION OR DISTRIBUTION IS A VIOLATION OF THE FEDERAL COPYRIGHT ACT AND THE LICENSE AGREEMENT, AND SUBJECT TO CIVIL AND CRIMINAL PENALTIES THEREUNDER.

if condensate is not draining. The standards for some appliances, such as gas-fired furnaces, will permit either of two performance modes for an appliance with a failed condensate drainage system: 1) the appliance will shut down or 2) the appliance will continue to operate, provided that such operation does not in any way present a hazard.

[M] 314.2.3.1 Water-level monitoring devices. On downflow units and all other coils that do not have a secondary drain or provisions to install a secondary or auxiliary drain pan, a water-level monitoring device shall be installed inside the primary drain pan. This device shall shut off the equipment served in the event that the primary drain becomes restricted. Devices installed in the drain line shall not be permitted.

❖ Some appliances (downflow type) and coil arrangements cannot be fitted with a secondary drain or installed with an auxiliary drain pan. This is particularly true for the typical rooftop HVAC unit where drain pan overflow could damage ducts and duct insulation. An internal water monitoring device must be used in these situations so that the device shuts off the unit prior to overflow of the primary drain pan. If the device was installed external to the appliance, a drain blockage in or near the appliance might occur upstream of the device, thereby rendering it useless.

[M] 314.2.3.2 Appliance, equipment and insulation in pans. Where appliances, equipment or insulation are subject to water damage when auxiliary drain pans fill such portions of the appliances, equipment and insulation shall be installed above the *flood level rim* of the pan. Supports located inside of the pan to support the appliance or equipment shall be water resistant and *approved*.

❖ If a condensate overflow situation occurs, appliances sitting directly on the bottom of the pan will be exposed to the condensate water, even though the pan may have a working drain. Most appliances are not suitable for constantly damp or intermittent wet environments. Sheet metal enclosures will quickly rust under these conditions. Exterior and interior insulation will be degraded by the water, providing ideal conditions for mold growth in concealed locations. This section requires that any such appliance be elevated above the flood rim level of the pan below so that the appliance is not directly exposed to wet conditions. The code is silent on what type of material is to be used for support other than requiring it to be water resistant and approved by the code official (see Commentary Figure 314.2.3.2).

[M] 314.2.4 Traps. Condensate drains shall be trapped as required by the equipment or appliance manufacturer.

❖ The appliance or equipment manufacturer determines the need for a trap and often specifies its depth and configuration. The traps addressed in this section are unrelated to plumbing traps and serve a different purpose. Condensate drain traps do not directly connect in any way to the plumbing DWV system of a building. Condensate drain traps are installed to prevent air from being pushed or pulled through the drain piping. Such airflow can impede condensate flow, causing overflow or abnormal water depth in drain pans. Some drain pans, such as those under pull-through cooling coils, might not drain without a trap to block airflow in the drain piping.

[M] 314.2.4.1 Ductless mini-split system traps. Ductless mini-split equipment that produces condensation shall be provided with an in-line check valve located in the drain line or a trap.

❖ See the definition of "Ductless Mini-split system" in the IMC. Such equipment may use a liquid seal trap or a check valve, depending on the design of the indoor unit, as both prevent airflow from interfering with condensate flow and prevent the escape of air through the drain.

[M] 314.2.5 Drain line maintenance. Condensate drain lines shall be configured to permit the clearing of blockages and performance of maintenance without requiring the drain line to be cut.

❖ Drains that convey condensate water from cooling coils and evaporators are known to develop blockages as a result of debris and biological growth in the system. These drains are commonly cleared of blockages by a compressed gas such as air or nitrogen being forced through the drain. It is inherently hazardous to pressurize plastic piping such as PVC and CPVC with a compressed gas because of the potential for violent rupture and propelled shards of plastic. The drains are seldom large enough to accommodate mechanical drain-cleaning (rodding) equipment. The code permits any arrangement that provides access to the drain interior without the drain being severed or cut. This includes capped or plugged tees and cross fittings, unions, removable mechanical couplings and specialty devices made specifically for the attachment of compressed-gas hoses. The intent is to prevent the spillage of condensate that would cause damage.

SECTION 315
PENETRATIONS

315.1 Sealing of annular spaces. The annular space between the outside of a pipe and the inside of a pipe sleeve or between the outside of a pipe and an opening in a building envelope wall, floor, or ceiling assembly penetrated by a pipe shall be sealed in an *approved* manner with caulking material, foam sealant or closed with a gasketing system. The caulking material, foam sealant or gasketing system shall be designed for the conditions at the penetration location and shall be compatible with the pipe, sleeve and building materials in contact with the sealing materials. Annular spaces created by pipes penetrating fire-resistance-rated assemblies or membranes of such assemblies shall be sealed or closed in accordance with Section 714 of the *International Building Code*.

❖ The annular space created between a pipe sleeve and a pipe or an opening in the building envelope and a pipe must be sealed to prevent airflow through the

INTERNATIONAL CODE COUNCIL®
Copyright © 2015 ICC. ALL RIGHTS RESERVED. Accessed by David Dammon on Jun 21, 2017 12:30:52 PM pursuant to License Agreement with ICC. No further reproduction or distribution authorized. ANY UNAUTHORIZED REPRODUCTION OR DISTRIBUTION IS A VIOLATION OF THE FEDERAL COPYRIGHT ACT AND THE LICENSE AGREEMENT, AND SUBJECT TO CIVIL AND CRIMINAL PENALTIES THEREUNDER.

space and to block the space from insects. The material used must be somewhat elastic to prevent structural loading of the pipe (see commentary, Sections 304.4 and 305.3) should there be some movement between the pipe and the opening. Caulking, expanding foam sealant or a gasketing system can be used to seal the ends of the annular space. It is not required to fill the entire annular space with material. The materials used to seal the annular space must be compatible with the pipe as well as the pipe sleeve material or building envelope materials [see Commentary Figure 307.3(2)].

Annular spaces created by penetrations in fire-resistance-rated assemblies must only be sealed in accordance with materials and methods specific to the firestop assembly chosen for the through penetration. All fire-resistance-rated through-penetration assemblies must be qualified by testing in accordance with ASTM E814 as required by the IBC [see Commentary Figures 307.3(3) and 307.3(4)].

SECTION 316
ALTERNATIVE ENGINEERED DESIGN

316.1 Alternative engineered design. The design, documentation, inspection, testing and approval of an *alternative engineered design* plumbing system shall comply with Sections 316.1.1 through 316.1.6.

❖ This section permits an engineer or architect to design a plumbing system that may not comply with all of the provisions found in Chapters 3 through 14. The design must be approved by the code official and must conform to accepted engineering principles. The engineered plumbing system must provide the level of protection of the public health, safety and welfare intended by the code.

316.1.1 Design criteria. An *alternative engineered design* shall conform to the intent of the provisions of this code and shall provide an equivalent level of quality, strength, effectiveness, fire resistance, durability and safety. Material, equipment or components shall be designed and installed in accordance with the manufacturer's instructions.

❖ Although an engineered plumbing system may not comply with all of the minimum requirements set forth in Chapters 3 through 14, it must comply with the intent of these provisions. This section permits use of standard engineering principles in the design of an innovative system as long as there is no sacrifice of quality, strength, effectiveness, fire resistance, durability and safety. This section further reinforces the intent of Section 105.2 for the acceptance of alternative materials and equipment. The requirement for compliance with the manufacturer's installation instructions is generally intended to address entire engineered systems, such as the siphonic roof drain system. The manufacturer or appropriate industry association provides criteria contained in design and installation handbooks. The manufacturer's instructions must be followed for all innovative fittings or products regulated by this section.

316.1.2 Submittal. The registered design professional shall indicate on the permit application that the plumbing system is an *alternative engineered design*. The permit and permanent permit records shall indicate that an *alternative engineered design* was part of the *approved* installation.

❖ The permit and permanent permit records must indicate that an alternative engineered design is part of the proposed plumbing design. This is essential information to have on file to maintain a complete legal record of the plumbing system. When future permits are applied for regarding alterations or modifications, appropriate measures can then be taken to determine that the future work will not adversely affect the system design.

316.1.3 Technical data. The registered design professional shall submit sufficient technical data to substantiate the proposed *alternative engineered design* and to prove that the performance meets the intent of this code.

❖ The appropriate information and data must be submitted to the code official to assist in the approval of the alternative engineered design. This is not an option. Acceptable data to substantiate the performance of the proposed plumbing system or components include results of tests performed by an approved third-party testing agency, design calculations or an evaluation report issued by an authoritative agency, such as ICC Evaluation Service.

316.1.4 Construction documents. The registered design professional shall submit to the code official two complete sets of signed and sealed construction documents for the *alternative engineering design.* The construction documents shall include floor plans and a riser diagram of the work. Where appropriate, the construction documents shall indicate the direction of flow, all pipe sizes, grade of horizontal piping, loading and location of fixtures and appliances.

❖ This section is used in conjunction with Section 106.3.1. The option for the code official to waive the requirements for filing construction documents, however, is not applicable. The required detailing of such documents is needed to provide the code official with the necessary information to review and approve the plans.

316.1.5 Design approval. Where the code official determines that the *alternative engineered design* conforms to the intent of this code, the plumbing system shall be *approved*. If the *alternative engineered design* is not *approved*, the code official shall notify the registered design professional in writing, stating the reasons thereof.

❖ The code official is responsible for determining whether the requested alternative engineered design provides the equivalent level of protection of public health, safety and welfare as required in the code. The code official's response to the design professional must be in writing, stating the reason for either accepting or rejecting the request. If the code official rejects the request for the alternative engineered system, the registered design professional may appeal the decision, as regulated by Section 109.

INTERNATIONAL CODE COUNCIL®
Copyright © 2015 ICC. ALL RIGHTS RESERVED. Accessed by David Dammon on Jun 21, 2017 12:30:52 PM pursuant to License Agreement with ICC. No further reproduction or distribution authorized. ANY UNAUTHORIZED REPRODUCTION OR DISTRIBUTION IS A VIOLATION OF THE FEDERAL COPYRIGHT ACT AND THE LICENSE AGREEMENT, AND SUBJECT TO CIVIL AND CRIMINAL PENALTIES THEREUNDER.

316.1.6 Inspection and testing. The *alternative engineered design* shall be tested and inspected in accordance with the requirements of Sections 107 and 312.

❖ As is the case for all plumbing installations, the code official must inspect the alternative engineered plumbing to verify that the work is in compliance with the construction documents. Section 107 requires the code official to witness the testing of the plumbing system before it is placed in service to verify that it is free from leaks or other defects, in accordance with Section 312.

Bibliography

The following resource materials are referenced in this chapter or are relevant to the subject matter addressed in this chapter.

ANSI Z4.3-95, *Minimum Requirements for Nonsewered Waste-Disposal Systems.* New York: American National Standards Institute, Inc., 1995.

Facility Piping Systems Handbook, 2nd Edition, Frankel, McGraw Hill, 2002.

INTERNATIONAL CODE COUNCIL®

Copyright © 2015 ICC. ALL RIGHTS RESERVED. Accessed by David Dammon on Jun 21, 2017 12:30:52 PM pursuant to License Agreement with ICC. No further reproduction or distribution authorized. ANY UNAUTHORIZED REPRODUCTION OR DISTRIBUTION IS A VIOLATION OF THE FEDERAL COPYRIGHT ACT AND THE LICENSE AGREEMENT, AND SUBJECT TO CIVIL AND CRIMINAL PENALTIES THEREUNDER.

Chapter 4:
Fixtures, Faucets and Fixture Fittings

General Comments

Determining the exact number of plumbing fixtures needed by the maximum number of possible users in any given building continues to be a challenging problem for the plumbing industry. Various methods have been used to evaluate the number and type of plumbing fixtures needed for an occupancy. Studies of office buildings have produced design guidelines based on occupancy times, arrival rates and patterns of fixture use that offer insight into the number of required plumbing fixtures for a desired level of service. The Building Technology Research Laboratory at the Stevens Institute of Technology conducted a study based on the Queueing Theory, which involves probabilities for waiting times and fixture use times based upon a preferred level of service. The study resulted in design guidelines for the quantities of fixtures needed in public toilet facilities. For residential-type buildings and health care facilities, plumbing fixture numbers are based on the minimum need, resulting in at least one water closet and one lavatory for each dwelling unit, guestroom or hospital room.

Studies completed by the U.S. military have been used for dormitories and prisons to determine the number of fixtures required based on a simultaneous need in a regimented society. This assumes that everyone rises at approximately the same time and has a limited amount of time to shower and use the water closet and lavatory.

The National Restaurant Association conducted a study based on the difference in use between a restaurant and a nightclub. It should be noted that the study did not take into account today's fast-food-style restaurant, nor did it allow for restaurants located along heavily traveled routes, such as those at highway rest stops or oases.

Fixture requirements for factory and industrial uses are based on the same requirements as for storage facilities. This method establishes a realistic minimum requirement for factory occupancies. The reasonableness in the number of plumbing fixtures was established through a limited study of factory projects in Henrico County, Virginia.

The fixture needs for the remaining occupancies were determined based on empirical data, experience and tradition. There are no exact studies providing values that are definitively supportable; the values have been modified periodically based on general observations. Various studies will most likely continue to be performed in order to develop a completely rational method for determining the minimum number of plumbing fixtures for any occupancy.

Purpose

The purpose of Chapter 4 is to provide a building with the necessary number of plumbing fixtures of a specific type and quality. The fixtures must be properly installed to be usable by the individuals occupying the building. The quality and design of every fixture must conform to the applicable referenced standard.

SECTION 401
GENERAL

401.1 Scope. This chapter shall govern the materials, design and installation of plumbing fixtures, faucets and fixture fittings in accordance with the type of *occupancy*, and shall provide for the minimum number of fixtures for various types of occupancies.

❖ This section contains the scoping requirements for Chapter 4. Compliance with this chapter will result in a building or structure having adequate plumbing fixtures for the sanitary, hygienic, cleaning, washing and food preparation needs of the occupants. Many of the requirements of this chapter have been duplicated in the *International Building Code*® (IBC®), Chapter 29, for the convenience of the architect, who is often responsible for the layout and number of plumbing fixtures when creating the floor plan of a building.

401.2 Prohibited fixtures and connections. Water closets having a concealed trap seal or an unventilated space or having walls that are not thoroughly washed at each discharge in accordance with ASME A112.19.2/CSA B45.1 shall be prohibited. Any water closet that permits siphonage of the contents of the bowl back into the tank shall be prohibited. Trough urinals shall be prohibited.

❖ Water closet fixture designs that do not adequately clean the inside bowl surfaces with flushing water can harbor bacteria, resulting in an insanitary condition. The inspection and testing requirements of ASME A112.19.2/CSA B45.1 ensure that water closet designs have the necessary scouring action as well as a visible trap seal. Water closets must not be located in unventilated spaces as stagnant air conditions in toilet rooms are known to have caused widespread public disease resulting in high mortality for building occupants. Tank-type water closets must be designed so

INTERNATIONAL CODE COUNCIL®
Copyright © 2015 ICC. ALL RIGHTS RESERVED. Accessed by David Dammon on Jun 21, 2017 12:30:52 PM pursuant to License Agreement with ICC. No further reproduction or distribution authorized. ANY UNAUTHORIZED REPRODUCTION OR DISTRIBUTION IS A VIOLATION OF THE FEDERAL COPYRIGHT ACT AND THE LICENSE AGREEMENT, AND SUBJECT TO CIVIL AND CRIMINAL PENALTIES THEREUNDER.

that the bowl contents cannot be siphoned into the tank as this can expose the occupants to water-borne diseases. Trough urinals are not allowed to be installed as they do not offer the necessary privacy to the users and urine stream splashing creates insanitary conditions for adjacent users.

401.3 Water conservation. The maximum water flow rates and flush volume for plumbing fixtures and fixture fittings shall comply with Section 604.4.

❖ The impetus for the plumbing code to begin regulating the amount of water used in the operation of certain plumbing fixtures was the Federal Energy Policy Act of 1992 (EPAct). The process of transporting raw water to treatment plants, the treatment of water, the conveyance of treated water to the users, the transportation of waste water to treatment plants, and the treatment of waste water consume tremendous amounts of energy. As the amount of water processed through this never-ending cycle becomes greater, the energy consumed increases proportionally. The production of energy for this purpose (primarily electricity) depletes the planet's nonrenewable resources of coal, gas, oil and fissionable materials. The purpose of the Energy Act of 1992 was to put controls in place to reduce the consumption rate of nonrenewable resources used for power generation. Among the many restrictions required by EPAct, certain plumbing fixtures were targeted for a reduction in the rate of water use. These flow and volume restrictions are reflected in Table 604.4.

Water is a resource that all life forms on this planet must have to survive. While there is an abundance of water on the Earth, the total amount of water is finite and is not necessarily located where water is needed. As the number of people on this planet continues to increase and as more countries become industrialized, the demand for potable water continues to rise. Many regions of the world are quickly depleting the once plentiful fresh water resources. Water conversation practices are now a major factor in building designs as there is already a real crisis of exhausting fresh water resources in some regions of the world.

SECTION 402
FIXTURE MATERIALS

402.1 Quality of fixtures. Plumbing fixtures shall be constructed of *approved* materials, with smooth, impervious surfaces, free from defects and concealed fouling surfaces, and shall conform to standards cited in this code. All porcelain enameled surfaces on plumbing fixtures shall be acid resistant.

❖ This section is provided to direct plumbing fixture standard creators as to the core requirements that all plumbing fixtures must meet. Most mass-produced plumbing fixtures for installation in accordance with the code have the design and quality regulated by the various standards as specified in the code. Where a plumbing fixture that doesn't have a standard is desired to be used, the information in this section assists the code official in evaluating the product in accordance with Section 105.2.

402.2 Materials for specialty fixtures. Materials for specialty fixtures not otherwise covered in this code shall be of stainless steel, soapstone, chemical stoneware or plastic, or shall be lined with lead, copper-base alloy, nickel-copper alloy, corrosion-resistant steel or other material especially suited to the application for which the fixture is intended.

❖ Most commercially available fixtures are designed and made in compliance with nationally recognized standards that are referenced in the code. Where a fixture is produced to a fixture standard not referenced by the code or no fixture standard exists, the code official must evaluate and approve the fixture in accordance with Section 105.2, regardless of whether the fixture is made of the materials listed in this section. For example, consider a stainless steel kitchen sink that is made from one of the materials listed in this section but is in compliance only with an unrecognized fixture standard. The faucet hole(s) and drain outlet dimensions could be such that fittings complying with the referenced standards in the code will not fit properly. The stainless steel material used to make the sink might be of a grade that will quickly corrode or be stained in normal service. Therefore, the code official might deem the fixture not suitable since he or she is charged with the responsibility to ensure that the sink will provide for reasonable durability, sanitary conditions and ease of maintenance.

Shower bases and group wash-up sinks made of terrazzo are fixtures that are not covered by standards referenced in the code and, as such, must be specifically approved by the code official.

Other specialty fixtures including lavatory bowls made of exotic metals, glass, and antique wash basins; bathtubs of hollowed-out blocks of granite or other natural materials such as wood and custom-fabricated copper kitchen sinks. If these products are not made to a referenced standard listed in the code, these products must be approved by the code official.

402.3 Sheet copper. Sheet copper for general applications shall conform to ASTM B152 and shall not weigh less than 12 ounces per square foot (3.7 kg/m^2).

❖ In the past, general-use sheet copper was predominantly used as a lining in plumbing fixtures. Today, the material is rarely used. The ASTM International (ASTM) standard regulates cold-rolled tempered sheet copper, hot-rolled tempered sheet copper and annealed copper sheet. Note that Section 425.3.3 permits the use of 10-ounce-per square-foot (0.026 kg/m^2) sheet copper to line flush tanks, and Section 902.2 permits the use of 8-ounce-per-square-foot (0.021 kg/m^2) sheet copper for vent flashings.

INTERNATIONAL CODE COUNCIL®
Copyright © 2015 ICC. ALL RIGHTS RESERVED. Accessed by David Dammon on Jun 21, 2017 12:30:52 PM pursuant to License Agreement with ICC. No further reproduction or distribution authorized. ANY UNAUTHORIZED REPRODUCTION OR DISTRIBUTION IS A VIOLATION OF THE FEDERAL COPYRIGHT ACT AND THE LICENSE AGREEMENT, AND SUBJECT TO CIVIL AND CRIMINAL PENALTIES THEREUNDER.

402.4 Sheet lead. Sheet lead for pans shall not weigh less than 4 pounds per square foot (19.5 kg/m^2) and shall be coated with an asphalt paint or other *approved* coating.

❖ In years past, general-use sheet lead was used to field fabricate shower pans. It was previously used as a liner on a more extensive basis in many other areas of plumbing systems. The approximate thickness of 4-pound-per-square-foot (20 kg/m^2) sheet lead is $^1/_{16}$ inch (1.6 mm).

SECTION 403
MINIMUM PLUMBING FACILITIES

403.1 Minimum number of fixtures. Plumbing fixtures shall be provided in the minimum number as shown in Table 403.1, based on the actual use of the building or space. Uses not shown in Table 403.1 shall be considered individually by the code official. The number of occupants shall be determined by the *International Building Code*.

❖ This section requires that the type and number of plumbing fixtures be based on the actual use of an occupancy and the occupant load as determined for the means of egress for a building or space. Occupancy loads are from Section 1004 of the IBC. Table 403.1 includes ratios indicating the maximum number of occupants that can be served by one fixture of each type. For example, "1 per 75" means one fixture will serve up to 75 occupants. These "ratios" are applied to the occupant load of the building or space in order to determine the total number of each required fixture type.

The "description" of plumbing fixture use determines which set of fixture ratios is used for calculating plumbing fixture requirements. In most cases, the description of plumbing fixture use will match the IBC occupancy classification. However, there are situations where a description of fixture use is different from the IBC occupancy classification.

Educational Facilities

Consider an educational facility (Grades 1-12) with a gymnasium with a stage. The IBC states that assembly areas that are accessory to Group E occupancies are not to be considered as a separate occupancy. Therefore, the number of water closets should be determined from Section 3 of Table 403.1, which requires one water closet per 50 occupants. Because this gymnasium has a stage, a greater occupant density than for a gymnasium-only space must be chosen as nonfixed chairs will most likely be set up for viewing on-stage activities. Therefore, for egress purposes, the gymnasium is considered to be an assembly area with an occupant density of 7 square feet (0.65 m^2) per person. The resulting occupant load number applied with a Group E occupancy plumbing fixture ratio would result in an excessive number of plumbing fixtures for the building. The correct approach is to consider the plumbing fixture ratios in the fourth row of Table 403.1 for gymnasium space, since these ratios reflect how the space is intended to be used with respect to the occupancy density chosen for the space. In other words, fixture ratios must be chosen to "agree" with the actual use of the space.

TABLE 403.1
MINIMUM NUMBER OF REQUIRED PLUMBING FIXTURES[a]
(See Sections 403.1.1 and 403.2)

NO.	CLASSIFICATION	OCCUPANCY	DESCRIPTION	WATER CLOSETS (URINALS: SEE SECTION 419.2)		LAVATORIES		BATHTUBS/ SHOWERS	DRINKING FOUNTAIN (SEE SECTION 410)	OTHER
				MALE	FEMALE	MALE	FEMALE			
1	Assembly	A-1[d]	Theaters and other buildings for the performing arts and motion pictures	1 per 125	1 per 65	1 per 200		—	1 per 500	1 service sink
		A-2[d]	Nightclubs, bars, taverns, dance halls and buildings for similar purposes	1 per 40	1 per 40	1 per 75		—	1 per 500	1 service sink
			Restaurants, banquet halls and food courts	1 per 75	1 per 75	1 per 200		—	1 per 500	1 service sink
		A-3[d]	Auditoriums without permanent seating, art galleries, exhibition halls, museums, lecture halls, libraries, arcades and gymnasiums	1 per 125	1 per 65	1 per 200		—	1 per 500	1 service sink
			Passenger terminals and transportation facilities	1 per 500	1 per 500	1 per 750		—	1 per 1,000	1 service sink
			Places of worship and other religious services	1 per 150	1 per 75	1 per 200		—	1 per 1,000	1 service sink

(continued)

INTERNATIONAL CODE COUNCIL®
Copyright © 2015 ICC. ALL RIGHTS RESERVED. Accessed by David Dammon on Jun 21, 2017 12:30:52 PM pursuant to License Agreement with ICC. No further reproduction or distribution authorized. ANY UNAUTHORIZED REPRODUCTION OR DISTRIBUTION IS A VIOLATION OF THE FEDERAL COPYRIGHT ACT AND THE LICENSE AGREEMENT, AND SUBJECT TO CIVIL AND CRIMINAL PENALTIES THEREUNDER.

TABLE 403.1 —continued
MINIMUM NUMBER OF REQUIRED PLUMBING FIXTURES[a]
(See Sections 403.1.1 and 403.2)

NO.	CLASSIFICATION	OCCUPANCY	DESCRIPTION	WATER CLOSETS (URINALS: SEE SECTION 419.2)		LAVATORIES		BATHTUBS/ SHOWERS	DRINKING FOUNTAIN (SEE SECTION 410)	OTHER
				MALE	FEMALE	MALE	FEMALE			
1 (cont.)	Assembly	A-4	Coliseums, arenas, skating rinks, pools and tennis courts for indoor sporting events and activities	1 per 75 for the first 1,500 and 1 per 120 for the remainder exceeding 1,500	1 per 40 for the first 1,520 and 1 per 60 for the remainder exceeding 1,520	1 per 200	1 per 150	—	1 per 1,000	1 service sink
		A-5	Stadiums, amusement parks, bleachers and grandstands for outdoor sporting events and activities	1 per 75 for the first 1,500 and 1 per 120 for the remainder exceeding 1,500	1 per 40 for the first 1,520 and 1 per 60 for the remainder exceeding 1,520	1 per 200	1 per 150	—	1 per 1,000	1 service sink
2	Business	B	Buildings for the transaction of business, professional services, other services involving merchandise, office buildings, banks, light industrial and similar uses	1 per 25 for the first 50 and 1 per 50 for the remainder exceeding 50		1 per 40 for the first 80 and 1 per 80 for the remainder exceeding 80		—	1 per 100	1 service sink[e]
3	Educational	E	Educational facilities	1 per 50		1 per 50		—	1 per 100	1 service sink
4	Factory and industrial	F-1 and F-2	Structures in which occupants are engaged in work fabricating, assembly or processing of products or materials	1 per 100		1 per 100		(see Section 411)	1 per 400	1 service sink
5	Institutional	I-1	Residential care	1 per 10		1 per 10		1 per 8	1 per 100	1 service sink
		I-2	Hospitals, ambulatory nursing home care recipient	1 per room[c]		1 per room[c]		1 per 15	1 per 100	1 service sink per floor
			Employees, other than residential care[b]	1 per 25		1 per 35		—	1 per 100	—
			Visitors, other than residential care	1 per 75		1 per 100		—	1 per 500	—
		I-3	Prisons[b]	1 per cell		1 per cell		1 per 15	1 per 100	1 service sink
			Reformatories, detention centers, and correctional centers[b]	1 per 15		1 per 15		1 per 15	1 per 100	1 service sink
			Employees[b]	1 per 25		1 per 35		—	1 per 100	—
		I-4	Adult day care and child day care	1 per 15		1 per 15		1	1 per 100	1 service sink

(continued)

INTERNATIONAL CODE COUNCIL®
Copyright © 2015 ICC. ALL RIGHTS RESERVED. Accessed by David Dammon on Jun 21, 2017 12:30:52 PM pursuant to License Agreement with ICC. No further reproduction or distribution authorized. ANY UNAUTHORIZED REPRODUCTION OR DISTRIBUTION IS A VIOLATION OF THE FEDERAL COPYRIGHT ACT AND THE LICENSE AGREEMENT, AND SUBJECT TO CIVIL AND CRIMINAL PENALTIES THEREUNDER.

TABLE 403.1 —continued
MINIMUM NUMBER OF REQUIRED PLUMBING FIXTURES[a]
(See Sections 403.1.1 and 403.2)

NO.	CLASSIFICATION	OCCUPANCY	DESCRIPTION	WATER CLOSETS (URINALS: SEE SECTION 419.2)		LAVATORIES		BATHTUBS/ SHOWERS	DRINKING FOUNTAIN (SEE SECTION 410)	OTHER
				MALE	FEMALE	MALE	FEMALE			
6	Mercantile	M	Retail stores, service stations, shops, salesrooms, markets and shopping centers	1 per 500		1 per 750		—	1 per 1,000	1 service sink[e]
7	Residential	R-1	Hotels, motels, boarding houses (transient)	1 per sleeping unit		1 per sleeping unit		1 per sleeping unit	—	1 service sink
		R-2	Dormitories, fraternities, sororities and boarding houses (not transient)	1 per 10		1 per 10		1 per 8	1 per 100	1 service sink
		R-2	Apartment house	1 per dwelling unit		1 per dwelling unit		1 per dwelling unit	—	1 kitchen sink per dwelling unit; 1 automatic clothes washer connection per 20 dwelling units
		R-3	Congregate living facilities with 16 or fewer persons	1 per 10		1 per 10		1 per 8	1 per 100	1 service sink
		R-3	One- and two-family dwellings and lodging houses with five or fewer guestrooms	1 per dwelling unit		1 per dwelling unit		1 per dwelling unit	—	1 kitchen sink per dwelling unit; 1 automatic clothes washer connection per dwelling unit
		R-4	Congregate living facilities with 16 or fewer persons	1 per 10		1 per 10		1 per 8	1 per 100	1 service sink
8	Storage	S-1 S-2	Structures for the storage of goods, warehouses, storehouse and freight depots. Low and Moderate Hazard.	1 per 100		1 per 100		See Section 411	1 per 1,000	1 service sink

a. The fixtures shown are based on one fixture being the minimum required for the number of persons indicated or any fraction of the number of persons indicated. The number of occupants shall be determined by the *International Building Code*.
b. Toilet facilities for employees shall be separate from facilities for inmates or care recipients.
c. A single-occupant toilet room with one water closet and one lavatory serving not more than two adjacent patient sleeping units shall be permitted provided that each patient sleeping unit has direct access to the toilet room and provision for privacy for the toilet room user is provided.
d. The occupant load for seasonal outdoor seating and entertainment areas shall be included when determining the minimum number of facilities required.
e. For business and mercantile occupancies with an occupant load of 15 or fewer, service sinks shall not be required.

INTERNATIONAL CODE COUNCIL®
Copyright © 2015 ICC. ALL RIGHTS RESERVED. Accessed by David Dammon on Jun 21, 2017 12:30:52 PM pursuant to License Agreement with ICC. No further reproduction or distribution authorized. ANY UNAUTHORIZED REPRODUCTION OR DISTRIBUTION IS A VIOLATION OF THE FEDERAL COPYRIGHT ACT AND THE LICENSE AGREEMENT, AND SUBJECT TO CIVIL AND CRIMINAL PENALTIES THEREUNDER.

A question that is often asked about Group E occupancies is whether the concept of nonsimultaneous occupancy could be considered in order to further reduce the number of required plumbing fixtures. For example, where a school auditorium is occupied by only the students within the school, the students are in either the classroom or the auditorium but not in both places at the same time. Therefore, why should each area require a number of fixtures as if both areas were occupied simultaneously? The code does not recognize a nonsimultaneous use concept for any building as simultaneous use could easily occur. For example, while students are in the classrooms, a school auditorium could be used temporarily for blood drives, regional science fairs, and town meetings. However, this is not to say that in some circumstances, a nonsimultaneous use could, in some way, be completely guaranteed such that the local code official might entertain a proposed reduction in the required number of plumbing fixtures for the building.

Business Facilities

Consider a barber college where the IBC classifies the entire building as a Group B occupancy. The building has several large assembly rooms where the intent is to have training sessions for large groups of students. Clearly, these areas are used for assembly and therefore, the use of the fixture ratios in Section 1, Row 4 of Table 403.1 should be used.

The choice of an occupancy use for the purposes of determining plumbing fixtures does not affect the occupancy group chosen for IBC purposes, that being for egress. In other words, using a previous example, the school gymnasium with stage space should be chosen to be "assembly use" for plumbing fixture requirements, but the entire building is still a Group E occupancy for the purposes of egress as far as the IBC is concerned.

Note that Section 1004.1.2 of the IBC has an exception that allows for the designer to present an "actual" occupancy load number to the code official for approval instead of the calculated load for the occupancy square footage. While this exception would allow a smaller occupancy load to be chosen for the purposes of determining the required number of plumbing fixtures, code officials must carefully consider and appropriately justify the reduction. The code official should consider the potential for the space to be loaded with more persons than stated by the designer, future use by different tenants of the same occupancy classification and the difficulty of enforcement of the maximum occupancy load based upon the limited number of fixtures provided

In Table 403.1, the brief wording in the "Description" column is not intended to be complete or all inclusive of all uses for a particular building or space. However, the descriptions do identify a majority of the types of uses encountered in the design of most buildings. Because the descriptions "narrow in" on what row of ratios to use, users of this table will benefit by using the description column as the entry point into the table. The number, classification and occupancy columns are intended only for reference purposes. The requirements for type and number of plumbing fixtures are driven by the actual use of a building or space, which is usually consistent with the occupancy group classification but not always.

Some use description rows have a different ratio for male and female water closets, and in some cases, lavatories. The smaller ratio for female fixtures provides an "equality of fixture availability" in those particular occupancies. The occupancies described by these use descriptions have historically had long lines of females waiting to use toilet facilities while male facilities had no lines. The reasons for this include the following:

1. For a variety of social and physical reasons, women generally take a longer period of time to use the facilities;
2. Women outnumber men in the general population and this becomes especially evident in large groups of people and
3. Women, in general, tend to use the facilities more frequently.

The term "potty parity" was coined in general sense to mean that a sufficient number of female plumbing fixtures were available such that women did not have to wait any longer than men (in a queue or line) to use an equivalent type of fixture as men. In a specific sense, "potty parity" also indicates the ratio of the number of male to the number of female fixtures of the same type. For example, if 24 male and 48 female water closets are installed in a building, then the potty parity is stated to be "1 to 2."

The code is silent concerning a requirement for child-size water closets. In a child care facility having children age six years old and under, the provision of child-size water closets (and sinks mounted at child height) could be beneficial to a facility's operation. Generally, for children over six years old, standard-size fixtures are suitable because most children have learned to use the same size fixtures in a home setting. Note that the accessibility standard, ICC/ANSI A117.1, as referenced by Section 404, has specific dimensional requirements for accessible child-size water closets.

Some school facilities are designed to have a single occupant toilet room that can be accessed only from within the classroom. The code is silent on whether the fixtures in this limited access toilet room can be counted toward the required number of plumbing fixtures for the building.

The intent of table Note d concerning outdoor seating and entertainment areas is to require that outdoor patios, decks, balconies, beer gardens and similar areas, whether those areas have seating or not, be included for calculating the number of plumbing fixtures. While seating does provide a definitive occupant load for these types of areas, there are many situations where these areas are not provided with seating in order to accommodate as many customers as possi-

INTERNATIONAL CODE COUNCIL®
Copyright © 2015 ICC. ALL RIGHTS RESERVED. Accessed by David Dammon on Jun 21, 2017 12:30:52 PM pursuant to License Agreement with ICC. No further reproduction or distribution authorized. ANY UNAUTHORIZED REPRODUCTION OR DISTRIBUTION IS A VIOLATION OF THE FEDERAL COPYRIGHT ACT AND THE LICENSE AGREEMENT, AND SUBJECT TO CIVIL AND CRIMINAL PENALTIES THEREUNDER.

ble. Therefore, the occupant load should be based upon standing space density. This occupant load number must be applied to the ratios for appropriate use description row in Table 403.1. For example, a restaurant has a fixed seating area with fixed booths and an outdoor entertainment area that has no seating or tables. The fixed seating area load is simply a count of the number of seats according to Section 1004.7 of the IBC. The restaurant fixture ratios (Section 1, Row 3 of Table 403.1) are then applied to this load to determine the number of plumbing fixtures for the fixed seating area. The outdoor area requires a different approach as it is a standing space area, not fixed seating. The occupant load is calculated from the area using Table 1004.4 of the IBC. Even though the building is a restaurant, this outdoor entertainment area might be used, not as a restaurant, but as a nightclub/dance floor. Therefore, the fixture ratios in Row 2 of Table 403.1 (for nightclub/dance halls) are applied to the standing occupant load. Using Row 3 fixture ratios for this area would be inappropriate. The use of proper occupant loads and use ratios will ensure that an adequate number of plumbing fixtures are provided where the occupant load is substantially increased by the addition of outdoor seating or standing areas.

Choosing the proper use description for a restaurant having a bar or for a nightclub serving food can be challenging. Some restaurant operations evolve into a nightclub/dance hall in the late evening. Bars with dance floors often have kitchens for preparing food to serve to patrons at the bar. The code is silent on how to determine which use description (restaurant or night club) is the best "fit" for the demand on the toilet facilities. The answer to this question lies in determining what use is primary. Is the bar's main purpose to support the restaurant operation? Or is the serving of food in support of the bar operation? In situations where there is no clear answer, perhaps considering the occupancy as a mixed use arrangement is a practical answer.

The drinking fountain ratio indicated for a use description does not necessarily imply that every tenant space must have a drinking fountain within that building. Just as toilet facilities are only required to be provided when a building or space is in use, the provision of a drinking fountain follows similar logic. For example, consider a strip center with multiple tenant spaces, each tenant space having the required number of plumbing fixtures for and within each space. The drinking fountain for that space (and all the adjacent spaces) could be located exterior to all the tenant spaces in a common area. The calculation for the required number of drinking fountains to be used by multiple occupancies is performed in the same manner as for other plumbing fixtures. See the Sample Problems in this commentary section.

The "service sinks" required by Table 403.1 are intended to be of a type suitable for janitorial and building maintenance purposes. Service sinks include mop sinks/basins, utility tub/sinks, janitor sinks, slop sinks and laundry trays. In all occupancy classifications, except Groups I-2, R-2 and R-3, only one service sink is required for the entire building, except that hospitals are required to have a service sink on each floor. The one service sink per building must be available from all portions of the building. The intent of the code is that employees and tenants of the building be able to access the required sink. This does not mean that the service sink is required to be in an open area of the building for use by any occupant (e.g., visitors). The service sink can be located in a locked janitor's closet for which all employees have access by key or door lock code to gain entry. However, the required service sink cannot be located in areas that are access controlled by a single tenant. For example, if the service sink is located on floor one within a tenant's space, it would be possible for the tenant of floor one to lock out (exclude) other tenants from accessing the required service sink. Therefore, that service sink within one tenant controlled space cannot be the required service sink for the building. Note e to the table allows business and mercantile occupancies of 15 or fewer persons to not require a service sink. Service sinks in these small occupancies are rarely used.

Although the IBC classifies parking garages as a Group S occupancy, there is no entry in Table 403.1 for parking structures. Furthermore, the exception in Section 403.3 exempts parking garages from having public toilet facilities. A parking garage is similar to a parking lot in that it is not normally the final destination of a person parking a car. The only reason a person is in a parking garage is to park their car and then leave. A parking lot, having no enclosing structure, is not required to be provided with toilet facilities for the occupants who are parking their vehicles, so it stands to reason that a parking garage would not be required to be provided with toilet facilities. When people drive into a parking garage, their normal expectation is that the toilet facilities will be located in the building or buildings served by the parking garage. If public toilet facilities were provided in a parking garage, significant maintenance, vandalism and security issues would probably result in the eventual closure of such facilities. However, not requiring public toilet facilities in a parking garage does not provide justification for not providing toilet facilities for parking garage employees (such as ticket kiosk attendants). These employees must be provided with toilet facilities in accordance with Section 403.3. However, these facilities are not required to be located in the parking garage but only within the travel limitations of Section 403.3.3.

403.1.1 Fixture calculations. To determine the occupant load of each sex, the total occupant load shall be divided in half. To determine the required number of fixtures, the fixture ratio or ratios for each fixture type shall be applied to the occupant load of each sex in accordance with Table 403.1. Fractional numbers resulting from applying the fixture ratios of Table 403.1 shall be rounded up to the next whole number. For calculations involving multiple *occupancies*, such frac-

INTERNATIONAL CODE COUNCIL®
Copyright © 2015 ICC. ALL RIGHTS RESERVED. Accessed by David Dammon on Jun 21, 2017 12:30:52 PM pursuant to License Agreement with ICC. No further reproduction or distribution authorized. ANY UNAUTHORIZED REPRODUCTION OR DISTRIBUTION IS A VIOLATION OF THE FEDERAL COPYRIGHT ACT AND THE LICENSE AGREEMENT, AND SUBJECT TO CIVIL AND CRIMINAL PENALTIES THEREUNDER.

tional numbers for each *occupancy* shall first be summed and then rounded up to the next whole number.

Exception: The total occupant load shall not be required to be divided in half where *approved* statistical data indicates a distribution of the sexes of other than 50 percent of each sex.

❖ This section requires that the occupant load be divided by two in order to determine the quantities of males and females. This is known as a 50-50 gender distribution meaning that 50 percent of the occupants are male and 50 percent of occupants are female. While a 50-50 distribution is used most of the time, there might be situations where this assumption is inaccurate. The exception to this section allows for a different gender distribution if statistical data is submitted and approved by the code official for a building or space. Examples that might require a modified distribution would be an all-women's health club, a males-only boarding school, a convent, or a monastery.

Once the appropriate use description row in Table 403.1 is chosen, the ratios for each fixture type and for each gender are used to determine the minimum number of plumbing fixtures for a building or space.

Although not specifically indicated in this code section, prior to performing any plumbing fixture calculations for a building or space, the exceptions of Section 403.2 must be reviewed for applicability. For example, a small restaurant could have two employees and 12 seats. If the fixture calculations were performed without consideration of Section 403.2, this restaurant would be required to have a toilet facility for each gender. However, because the occupancy load is less than 15, a single toilet facility is all that is required.

The following sample problems illustrate calculation methods for various situations.

Sample Problem 1: A mixed-use building has a business-use occupant load of 538, a library-use occupant load of 115 and storage-use occupant load of 82. The occupancies are not separate tenant spaces. Determine the total number of required plumbing fixtures for the building.

Problem Approach

Check Section 403.2 for applicability and, if not applicable, proceed with calculations.

Apply the gender distribution for each space use, calculate the number of fixtures required by each gender, sum the gender totals for each type of fixture from all spaces and round up the number of each type of fixture for each gender to a whole number. Note that drinking fountains are not gender specific. Therefore, the total number of occupants for the building is applied to the drinking fountain fixture ratio.

Solution—Part I

For business-use spaces, find the required ratios in Table 403.1, Section 2. Because a gender distribution was not specified, the number of occupants must be divided by two to obtain the number of occupants for each gender (refer to Section 403.1.1). Therefore, in this business-use space, there will be:

538/2 = 269 occupants of each gender

1. Calculate the number of water closets for 269 males:

   For the first 50 males, the ratio of 1 per 25 is applied:

   $50 \times 1/25 = 2$ water closets

   For the remaining number of males, the ratio of 1 per 50 is applied:

   $(269 - 50) \times 1/50 = 219 \times 1/50 = 4.38$ water closets

   The required number of water closets for males is:

   2 + 4.38 = 6.38 water closets for males

   Because the gender distribution is equal and the water closet ratio for females is the same as for males, the number of water closets for females is also 6.38.

2. Calculate the number of lavatories for 269 males:

   For the first 80 males, the ratio of 1 per 40 is applied:

   $80 \times 1/40 = 2$ lavatories

   For the remaining males, the ratio of 1 per 80 is applied:

   $(269 - 80) \times 1/80 = 189 \times 1/80 = 2.36$ lavatories

   The required number of lavatories for males is:

   2+ 2.36 = 4.36 lavatories for males

   Because the gender distribution is equal and the lavatory ratio for females is the same as for males, the number of lavatories for females is also 4.36.

3. Calculate the number of drinking fountains for 538 occupants:

   The ratio of 1 per 100 is applied:

   $538 \times 1/100 = 5.38$ drinking fountains for male and female use

Solution—Part II

For the library-use spaces, find the required ratios in Table 403.1, Section 1. Because a gender distribution was not specified, the number of occupants must be divided by two to obtain the number of occupants for

INTERNATIONAL CODE COUNCIL®
Copyright © 2015 ICC. ALL RIGHTS RESERVED. Accessed by David Dammon on Jun 21, 2017 12:30:52 PM pursuant to License Agreement with ICC. No further reproduction or distribution authorized. ANY UNAUTHORIZED REPRODUCTION OR DISTRIBUTION IS A VIOLATION OF THE FEDERAL COPYRIGHT ACT AND THE LICENSE AGREEMENT, AND SUBJECT TO CIVIL AND CRIMINAL PENALTIES THEREUNDER.

SPACE		WATER CLOSETS				LAVATORIES				DRINKING FOUNTAINS	SERVICE SINK
USE	LOAD	RATIO	MALE	RATIO	FEMALE	RATIO	MALE	FEMALE	DF RATIO		
Business	538	1 per 25 for the first 50 and 1 per 50 for the remainder exceeding 50	6.38	1 per 25 for the first 50 and 1 per 50 for the remainder exceeding 50	6.38	1 per 40 for the first 80 and 1 per 80 for the remainder exceeding 80	4.36	4.36	1 per 100	5.38	Note 1
Libraries, Halls, Museums, etc.	115	1/125	0.46	1/65	0.88	1/200	0.29	0.29	1 per 500	0.23	
Storage	82	1/100	0.41	1/100	0.41	1/100	0.41	0.41	1/1000	0.082	
Subtotals			7.25		7.67		5.06	5.06		5.69	
Required totals			8		8		6	6		6	

Notes:

1. The code requires only one service sink per building if all occupancies have access to the service sink at all times.

Figure 403.1(1)
SOLUTION SUMMARY FOR SAMPLE PROBLEM 1

each gender (refer to Section 403.1.1). Therefore, in this library-use space, there will be:

115/2 = 57.5 occupants of each gender

1. Calculate the number of water closets for males:

   The ratio of 1 per 125 is applied:

   57.5 × 1/125 = 0.46 water closets for males

2. Calculate the number of water closets for females:

   The ratio of 1 per 65 is applied:

   57.5 ×1/65 = 0.88 water closets for females

3. Calculate the number of lavatories for 57.5 males:

   The ratio of 1 per 200 is applied:

   57.5 × 1/200 = 0.29 lavatories for males

   Because the gender distribution is equal and the lavatory ratio for females is the same as for males, the number of lavatories for females is also 0.29.

4. Calculate the number of drinking fountains for 115 occupants:

   The ratio of 1 per 500 is applied:

   115 × 1/500 = 0.23 drinking fountains of both males and females.

Solution—Part III

For the storage-use space, find the required ratios in Table 403.1, Section 8. Because a gender distribution was not specified, the number of occupants must be divided by two to obtain the number of occupants for each gender (refer to Section 403.1.1). Therefore, in this storage-use space, there will be:

82/2 = 41 occupants of each gender

1. Calculate the number of water closets for 41 males:

   The ratio of 1 per 100 is applied:

   41 × 1/100 = 0.41 water closets for males

   Because the gender distribution is equal and the water closet ratio for females is the same as for males, the number of water closets for females is also 0.41.

2. Calculate the number of lavatories for 41 males:

   The ratio of 1 per 100 is applied:

   41 × 1/100 = 0.41 lavatories for males

   Because the gender distribution is equal and the lavatory ratio for females is the same as for males, the number of lavatories for females is also 0.41.

3. Calculate the number of drinking fountains for 82 occupants:

   The ratio of 1 per 1000 is applied:

   82 × 1/1000 = 0.082 drinking fountains for males and females.

Solution—Summary

See Commentary Figure 403.1(1) for the solution summary for Sample Problem 1. Note that if the raw fixture numbers were rounded prior to summation for the building, the calculated minimum fixture requirements would have been increased by one water closet

INTERNATIONAL CODE COUNCIL®
Copyright © 2015 ICC. ALL RIGHTS RESERVED. Accessed by David Dammon on Jun 21, 2017 12:30:52 PM pursuant to License Agreement with ICC. No further reproduction or distribution authorized. ANY UNAUTHORIZED REPRODUCTION OR DISTRIBUTION IS A VIOLATION OF THE FEDERAL COPYRIGHT ACT AND THE LICENSE AGREEMENT, AND SUBJECT TO CIVIL AND CRIMINAL PENALTIES THEREUNDER.

for each gender, one lavatory for each gender and two drinking fountains.

Sample Problem 2: A mixed-use building has a business-use occupant load of 940 and a restaurant-use occupant load of 360. The occupancies are separate tenant spaces. The toilet facilities are to be located in each tenant space. Determine the total number of required plumbing fixtures for the building.

Problem Approach

Check Section 403.2 for applicability and if not applicable, proceed with calculations.

Note that the plumbing fixtures required by each occupancy will be located in each tenant space. Thus, the required number of plumbing fixtures for each tenant space is calculated as if the space stood alone, in other words, in its own building.

Solution—Part I

For the business-use space, find the required ratios in Table 403.1, Section 2. Because a gender distribution was not specified, the number of occupants must be divided by two to obtain the number of occupants for each gender (refer to Section 403.1.1). Therefore, in this business-use space, there will be:

940/2 = 470 occupants of each gender

1. Calculate the number of water closets for 470 males:

   For the first 50 males, the ratio of 1 per 25 is applied:

   $50 \times 1/25 = 2$ water closets

   For the remaining number of males, the ratio of 1 per 50 is applied:

   $(470 - 50) \times 1/50 = 420 \times 1/50 =$ 8.4 water closets

   The required number of water closets for males is:

   2+ 8.4 = 10.4 water closets for males

   Because the gender distribution is equal and the water closet ratio for females is the same as for males, the number of water closets for females is also 10.4.

2. Calculate the number of lavatories for 470 males:

   For the first 80 males, the ratio of 1 per 40 is applied:

   $80 \times 1/40 = 2$ lavatories

   For the remaining males, the ratio of 1 per 80 is applied:

   $(470 - 80) \times 1/80 = 390 \times 1/80$ = 4.88 lavatories.

   The required number of lavatories for males is:

   2 + 4.88 = 6.88 lavatories for males

SPACE		WATER CLOSETS				LAVATORIES			DF	DRINKING	SERVICE
USE	LOAD	RATIO	MALE	RATIO	FEMALE	RATIO	MALE	FEMALE	RATIO	FOUNTAINS	SINK
Business	940	1 per 25 for the first 50 and 1 per 50 for the remainder exceeding 50	10.4	1 per 25 for the first 50 and 1 per 50 for the remainder exceeding 50	10.4	1 per 40 for the first 80 and 1 per 80 for the remainder exceeding 80	6.88	6.88	1 per 100	9.4	Note 1
Business Required Totals			11		11		7	7		10	
Restaurants, Banquet Halls, and Food Courts	360	1 per 75	2.4	1 per 75	2.4	1 per 200	0.9	0.9	1 per 500	0.72	
Restaurant Required Total			3		3		1	1		1	
Building Required Totals			14		14		8	8		11	

Notes:

1. The code only requires one service sink per building if all occupancies have access at all times. If this building has a central area (such as janitorial closet for the building) that both tenants can access at all times, only one service sink is required for the building. But if the service sink is located in either one of the tenant spaces, one tenant would not have access; therefore, the building would require two service sinks: one for each tenant.

Figure 403.1(2)
SOLUTION SUMMARY FOR SAMPLE PROBLEM 2

INTERNATIONAL CODE COUNCIL®
Copyright © 2015 ICC. ALL RIGHTS RESERVED. Accessed by David Dammon on Jun 21, 2017 12:30:52 PM pursuant to License Agreement with ICC. No further reproduction or distribution authorized. ANY UNAUTHORIZED REPRODUCTION OR DISTRIBUTION IS A VIOLATION OF THE FEDERAL COPYRIGHT ACT AND THE LICENSE AGREEMENT, AND SUBJECT TO CIVIL AND CRIMINAL PENALTIES THEREUNDER.

Because the gender distribution is equal and the lavatory ratio for females is the same as for males, the number of lavatories for females is also 6.88.

3. Calculate the number of drinking fountains for 940 occupants:

   The ratio of 1 per 100 is applied:

   940 × 1/100 = 9.4 drinking fountains for males and females

   Because the gender distribution is equal and the lavatory ratio for females is the same as for males, the number of lavatories for females is also 1.

3. Calculate the number of drinking fountains for 360 occupants:

   The ratio of 1 per 500 is applied:

   360 × 1/500 = 0.72 drinking fountains of both males and females.

Solution—Part II

For the restaurant-use space, find the required ratios in Table 403.1, Section 1. Because a gender distribution was not specified, the number of occupants must be divided by two to obtain the number of occupants for each gender (refer to Section 403.1.1). Therefore, in this restaurant-use space, there will be:

360/2 = 180 occupants of each gender

1. Calculate the number of water closets for males:

   The ratio of 1 per 75 is applied:

   180 × 1/ 75 = 2.4 water closets for males

   Therefore, 2.4 male water closets are needed.

   Because the gender distribution is equal and the water closet ratio for females is the same as for males, the number of water closets for females is also 2.4.

2. Calculate the number of lavatories for 180 males:

   180 × 1/ 200 = 0.9 lavatories for males are required.

   Therefore, 1 male lavatory is needed.

Solution—Summary

See Commentary Figure 403.1(2) for the solution summary for Sample Problem 2. Note that if the raw fixture numbers were rounded prior to summation for the building, the calculated minimum fixture requirements would have increased by one water closet for each gender, one lavatory for each gender and two drinking fountains.

Sample Problem 3: A stadium has an occupant load of 5,200. Urinals are to be substituted for male water closets to the maximum extent allowed. Determine the total number of required plumbing fixtures for the stadium.

Problem Approach

Check Section 403.2 for applicability and if not applicable, proceed with calculations.

Apply the gender distribution, calculate the number of fixtures required by each gender, sum the gender totals for each type of fixture and round up the number of each type of fixture for each gender to a whole number. Apply the urinal substitution (Section 419.2) to reduce the number of male water closets.

OCCUPANCY		WATER CLOSETS				LAVATORIES				DRINKING FOUNTAINS	
USE	LOAD	MALE RATIO	MALE	FEMALE RATIO	FEMALE	MALE RATIO	MALE	FEMALE RATIO	FEMALE	RATIO	ALL GENDERS
Stadiums	5200	1 per 75 for the first 1500 and 1 per 120 for the remainder exceeding 1500	29.17	1 per 40 for the first 1520 and 1 per 60 for the remainder exceeding 1520	56	1 per 200	13	1 per 150	17.3	1 per 1000	5.3
Required Totals			30		56		13		18		6

Required Totals with Urinal Substitution	URINALS	MALE W/C	FEMALE W/C	MALE LAV	FEMALE LAV	DRINKING FOUNTAINS	SERVICE SINKS
	20	10	56	13	18	6	1

Figure 403.1(3)
SOLUTION SUMMARY FOR SAMPLE PROBLEM 3

INTERNATIONAL CODE COUNCIL®
Copyright © 2015 ICC. ALL RIGHTS RESERVED. Accessed by David Dammon on Jun 21, 2017 12:30:52 PM pursuant to License Agreement with ICC. No further reproduction or distribution authorized. ANY UNAUTHORIZED REPRODUCTION OR DISTRIBUTION IS A VIOLATION OF THE FEDERAL COPYRIGHT ACT AND THE LICENSE AGREEMENT, AND SUBJECT TO CIVIL AND CRIMINAL PENALTIES THEREUNDER.

OCCUPANCY		WATER CLOSETS				LAVATORIES				DRINKING FOUNTAINS	
USE	LOAD	MALE RATIO	MALE	FEMALE RATIO	FEMALE	MALE RATIO	MALE	FEMALE RATIO	FEMALE	RATIO	ALL GENDERS
Theater	520	1 per 125	208	1 per 65	4	1 per 200	1.3	1 per 200	1.3	1 per 500	1.04
Required Totals			3		4		2		2		2

Figure 403.1(4)
SOLUTION SUMMARY FOR SAMPLE PROBLEM 4

	MALE TOILET FACILITY			FEMALE TOILET FACILITY				FAMILY OR ASSISTED-USE	
	URINAL	WATER CLOSETS	LAVATORIES	WATER CLOSETS	LAVATORIES	DRINKING FOUNTAINS	SERVICE SINK	WATER CLOSETS	LAVATORIES
Theater Building Totals with Urinal Substitution	1	1	1	4	2	2	1	1	1

Figure 403.1(5)
BUILDING PLUMBING FIXTURE TOTALS FOR SAMPLE PROBLEM 4

Solution

For the stadium-use occupancy, find the required ratios in Table 403.1 in row 8. Because a gender distribution was not specified, the number of occupants must be divided by two to obtain the number of occupants for each gender (refer to Section 403.1.1). Therefore, in this stadium-use building, there will be:

5,200/ 2 = 2,600 occupants of each gender

1. Calculate the number of water closets for 2,600 males:

   For the first 1,500 males, the ratio of 1 per 75 is applied:

   $1{,}500 \times 1/75 = 20$ water closets

   For the remaining number of males, the ratio of 1 per 120 is applied:

   $(2{,}600 - 1{,}500) \times 1/120 = 110 \times 1/120 = 9.17$ water closets

   The required number of water closets for males is:

   $20 + 9.17 = 29.17 \rightarrow$ Round to 30 water closets for males

2. Calculate the number of water closets for 2,600 females:

   For the first 1,520 females, the ratio of 1 per 40 is applied:

   $1{,}520 \times 1/40 = 38$ water closets

   For the remaining number of females, the ratio of 1 per 60 is applied:

   $(2{,}600 - 1{,}520) \times 1/60 = 1{,}080 \times 1/60 = 18$ water closets

   The required number of water closets for females is:

   $38 + 18 = 56$ water closets for females.

3. Calculate the number of lavatories for 2,600 males:

   The ratio of 1 per 200 is applied:

   $2{,}600 \times 1/200 = 13$ lavatories for males

4. Calculate the number of lavatories for 2,600 females:

   The ratio of 1 per 150 is applied:

   $2{,}600 \times 1/150 = 17.3$ lavatories $\rightarrow$ Round to 18 lavatories for females

5. Calculate the number of drinking fountains for 5,200 occupants

   The ratio of 1 per 1,000 is applied:

   $5{,}200 \times 1/1{,}000 = 5.2 \rightarrow$ Round to 6 drinking fountains for males and females

6. Calculate the number of urinals to be substituted for male water closets. Because a stadium is in the assembly classification, 67 percent of the water closets can be replaced with urinals.

   The ratio of 67/100 is applied:

   $30 \times 67/100 = 20.1$ urinals $\rightarrow$ Round *down* to 20 urinals because rounding up would result in the number of urinals being in excess of 67 percent of the required number of water closets.

Solution—Summary

See Commentary Figure 403.1(3) for the solution summary for Sample Problem 3.

403.1.2 Family or assisted-use toilet and bath fixtures. Fixtures located within family or assisted-use toilet and bathing rooms required by Section 1109.2.1 of the *International Building Code* are permitted to be included in the number of required fixtures for either the male or female occupants in assembly and mercantile *occupancies.*

❖ A family or assisted-use toilet room is required by the IBC in assembly or mercantile occupancies having an aggregate total of six or more required male and female water closets for the assembly or mercantile occupancy. The term "aggregate total" means the

INTERNATIONAL CODE COUNCIL®
Copyright © 2015 ICC. ALL RIGHTS RESERVED. Accessed by David Dammon on Jun 21, 2017 12:30:52 PM pursuant to License Agreement with ICC. No further reproduction or distribution authorized. ANY UNAUTHORIZED REPRODUCTION OR DISTRIBUTION IS A VIOLATION OF THE FEDERAL COPYRIGHT ACT AND THE LICENSE AGREEMENT, AND SUBJECT TO CIVIL AND CRIMINAL PENALTIES THEREUNDER.

combined number of required male and female water closets before any urinal substitutions. A family or assisted-use bathing room is required by the IBC in recreational facilities having separate-sex bathing rooms except where the separate-sex bathing rooms only have one shower or fixture. Family or assisted-use toilet (and bathing room) facilities are intended for use by individuals who need the assistance of a family member or care provider to properly use plumbing fixtures in a private and dignified manner. Fixtures located in family or assisted-use toilet or bathing rooms in assembly and mercantile occupancies are allowed to reduce the number of required fixtures for the building or space in either the male or female standard toilet rooms, but not both.

Sample Problem 4: A theater has an occupant load of 520. Urinals are to be substituted for male water closets to the maximum extent allowed. Determine the total number of plumbing fixtures that will be in building.

Problem Approach

Apply the gender distribution, calculate the number of fixtures required by each gender, sum the gender totals for each type of fixture and round up the number of each type of fixture for each gender to a whole number. Consider the IBC requirement for a family or assisted-use toilet room. Apply the urinal substitution (Section 419.2) to reduce the number of male water closets to the maximum extent possible.

Solution

Calculation method is similar to Sample Problem 1—Part II

Solution—Summary

See Commentary Figures 403.1(4) and 403.1(5) for the solution summary for Sample Problem 4.

403.2 Separate facilities. Where plumbing fixtures are required, separate facilities shall be provided for each sex.

Exceptions:

1. Separate facilities shall not be required for dwelling units and sleeping units.
2. Separate facilities shall not be required in structures or tenant spaces with a total occupant load, including both employees and customers, of 15 or fewer.
3. Separate facilities shall not be required in mercantile *occupancies* in which the maximum occupant load is 100 or fewer.

❖ Separate facilities are required for males and females. Exception 1 is redundant as Table 403.1 already indicates the types of occupancies where one single-occupancy toilet room is sufficient. Exception 2 allows one, single-occupant toilet room to be provided in small establishments because the space requirement and installation cost is considered to be a significant hardship for the minimal floor area that results in a 15-person occupant load. Exception 3 allows one single-occupant toilet room to be provided in what are considered to be small floor area mercantile establishments so as to not create a significant hardship in both space and installation cost. There is no specific documentation as to why a 15-person threshold was chosen for Exception 2 other than it was perceived to be reasonable for such small spaces. The 100-person threshold for Exception 3 was justified because small mercantile occupancies [1,500 to 3,000 square feet (139 to 279 m^2)] were unduly burdened by the requirement for two accessible toilet rooms. For a 1,500-square-foot (139 m^2) tenant space, two accessible toilet rooms occupy more than 5 percent of the total square footage. Since it is rare that these small establishments will ever experience the full design occupant load, there is no need to burden the tenant with two toilet rooms.

The separate facilities requirement for males and females addresses two main concerns: privacy and safety. Users of toilet facilities often experience embarrassment if members of the opposite sex are in the same room. This increased embarrassment can lead to difficulty or prevention of waste elimination for many users. While some of these inhibitions are often temporarily "given up" under special conditions such as in co-ed college dormitories or where one gender's facilities are inadequate under demand situations, these inhibitions quickly return for most people as it is innate to the human species to desire privacy during waste elimination. In a public environment, safety for female users of toilet facilities is of paramount concern. While a female restroom placard is no barrier to those intent on harming female occupants, a female user confronted by (or even hearing) a male in the female-only toilet facility will immediately recognize the potential threat and take action. A toilet facility intended to be used by both sexes simultaneously does not offer the same level of immediate situational awareness for females and therefore, it is not perceived as to be as safe as a facility intended for one gender only. Also, some individuals may be inhibited to use a facility that is used by the opposite sex because of notions of cleanliness and perceived appropriateness.

403.2.1 Family or assisted-use toilet facilities serving as separate facilities. Where a building or tenant space requires a separate toilet facility for each sex and each toilet facility is required to have only one water closet, two family or assisted-use toilet facilities shall be permitted to serve as the required separate facilities. Family or assisted-use toilet facilities shall not be required to be identified for exclusive use by either sex as required by Section 403.4.

❖ For a building or space having only one male water closet and one female water closet, two-family/assisted-use toilet rooms increase the overall availability of a toilet room when needed. A single-gender-based toilet can be unavailable for periods of up to 15 minutes when, for example, the current occupant is using it for companion care, to change diapers or to change a colostomy bag. Also, there is less impact to availability when one toilet room is being cleaned or

INTERNATIONAL CODE COUNCIL®
Copyright © 2015 ICC. ALL RIGHTS RESERVED. Accessed by David Dammon on Jun 21, 2017 12:30:52 PM pursuant to License Agreement with ICC. No further reproduction or distribution authorized. ANY UNAUTHORIZED REPRODUCTION OR DISTRIBUTION IS A VIOLATION OF THE FEDERAL COPYRIGHT ACT AND THE LICENSE AGREEMENT, AND SUBJECT TO CIVIL AND CRIMINAL PENALTIES THEREUNDER.

serviced. For decades, males and females have used the same toilet facility on airliners.

403.3 Required public toilet facilities. Customers, patrons and visitors shall be provided with *public* toilet facilities in structures and tenant spaces intended for public utilization. The number of plumbing fixtures located within the required toilet facilities shall be provided in accordance with Section 403 for all users. Employees shall be provided with toilet facilities in all *occupancies*. Employee toilet facilities shall be either separate or combined employee and *public* toilet facilities.

Exception: *Public* toilet facilities shall not be required in:

1. Open or enclosed parking garages where there are no parking attendants.
2. Structures and tenant spaces intended for quick transactions, including takeout, pickup and drop-off, having a public access area less than or equal to 300 square feet (28 m^2).

❖ Toilet facilities must be available for all public establishments that are used by persons engaged in activities involved with the purpose of the establishment. Public establishments include but are not limited to restaurants, nightclubs, theaters, offices, retail shops, stadiums, libraries and churches. Persons engaged in the activities of the establishment include, but are not limited to, buyers of merchandise, recipients of services, viewers of displays, receivers of information materials, employees and those persons in attendance with those engaging in the activities. The code is silent about whether the toilet facilities are for use by persons not engaged in the activities involved with the purpose of the establishment, such as passersby, street maintenance workers or vagrants. However, because the number of plumbing fixtures for any establishment is based only upon either the square footage or number of seats of the establishment's space, the intent of the code is to serve only the people involved with the activities of the establishment. The photo of the front door of the restaurant shown in Commentary Figure 403.3(1) might first appear to be in conflict with the requirements of this section; however, this sign actually captures the intent of this code section: "If you are engaged with the activities involved with the purpose of this establishment, toilet facilities are available for you."

The quantities of plumbing fixtures required for an establishment are specified in Section 403 of the code. Employees of the establishment must also have access to the toilet facilities for the establishment whether those facilities are separate from or combined with the facilities for the other users. Except for the specific requirements of I-2 occupancies, I-3 occupancies and Note b of Table 403.1, employee toilet facilities are not required to be separate from other toilet facilities.

Item 1 of the exception clarifies that even though a parking structure is classified as a Group S occupancy (storage structure) and Table 403.1 requires storage occupancies to have toilet facilities, parking structures are exempt from this requirement. Note that if a parking structure has attendants, they must be provided with toilet facilities within the travel limitations of the code.

Item 2 of the exception allows for small public-access areas in buildings and tenant spaces used for quick transactions, such as automated teller machine lobbies, shoe repair drop-off/pickup, dry cleaners, take-out only counters at restaurants (such as delicatessens, pizza and other takeout food) and entertainment ticket purchase/pickup lobbies, to not have public toilet facilities.

The intent is that the exception is for establishments where customers walk in, make a relatively fast transaction and walk out. In other words, the customer does not spend any time waiting, such as for orders to be prepared (food ordered upon walking in), filling out extensive forms, waiting on an order to be pulled or loaded (such as for parts and materials supply houses), waiting for a fuel tank to be filled, waiting for things to be repaired ("while-u-wait" services), waiting on estimates for repairs to be determined or shopping for merchandise on racks or shelves within the public access area of 300 square feet (28 m^2) or less. These small public-access areas typically would not have chairs, stools, benches, bars, merchandise shelving, catalog viewing/ordering desks or racks for products. The presence of these items might cause the customer to be inclined to spend more time than needed to make a simple and quick transaction.



Figure 403.3.(1)
RESTAURANT ENTRY SIGN

403.3.1 Access. The route to the *public* toilet facilities required by Section 403.3 shall not pass through kitchens, storage rooms or closets. Access to the required facilities shall be from within the building or from the exterior of the building. Routes shall comply with the accessibility requirements of the *International Building Code*. The public shall

INTERNATIONAL CODE COUNCIL®
Copyright © 2015 ICC. ALL RIGHTS RESERVED. Accessed by David Dammon on Jun 21, 2017 12:30:52 PM pursuant to License Agreement with ICC. No further reproduction or distribution authorized. ANY UNAUTHORIZED REPRODUCTION OR DISTRIBUTION IS A VIOLATION OF THE FEDERAL COPYRIGHT ACT AND THE LICENSE AGREEMENT, AND SUBJECT TO CIVIL AND CRIMINAL PENALTIES THEREUNDER.

have access to the required toilet facilities at all times that the building is occupied.

❖ It is inappropriate and dangerous to locate toilet facilities intended for use by persons who are not employees of the establishment, such that the path of travel is through kitchens, storage rooms or closets. This provision avoids placing occupants from the general public in an unfamiliar area of the building where they could be confused about the path of egress. Especially during an emergency situation, public users of the toilet facility will instinctively want to try to exit the building along the same path of travel used to access the toilet facilities, which could be through an area where the emergency condition exists such as a kitchen [see Commentary Figure 403.3.1(2)]. Note that Section 403.3.2 prohibits toilet rooms from directly opening into a room used for the preparation of food to be served to the public.

It has been common practice in many areas that the required toilet facilities were located on the outside of a building such as sometimes found in automotive service stations and convenience store buildings. Outlet mall complexes sometimes elect to have a central toilet facility building separate from the tenant spaces. While the code is silent as to whether the required toilet facilities are allowed to be in another building not under the direct control of the owner or tenant of the building from where the toilet user travels to the toilet facilities, the intent of the code is that public toilet facilities will be available (and open for use) when anyone is using a building or tenant space. However, it is unreasonable for toilet facilities in a building under different ownership or in a tenant space under different control to serve as the required toilet facilities for a building or tenant space.

Walk-up and drive-through service windows are unique applications with regard to the requirement for toilet facilities. Where these establishments do not allow customers to enter the building, the code is silent on whether toilet facilities for the public are required. However, if facilities were required, how would one calculate the occupant loading to determine the required number of fixtures? Examples are ice cream shops with only a walk-up window, coffee shops with only a drive-up window and 24-hour fast food drive-throughs that close the building entrances to walk-in customers during late night/early morning hours. Where outdoor seating for customers is made available by these types of businesses, it is the author's opinion that public toilet facilities for these walk-up/drive-through establishments should be available [see Commentary Figure 403.3.1(1)]. If such outdoor seating areas can be "closed for public use," such as by a perimeter "fence" and locked entry gates, the seating area is not available for use and no requirement would exist to provide public toilet facilities.

Variations of the above service window applications are dry cleaners, pizza pickups, and banks that provide service or products to customers from indoor counters or kiosks. Because the public must walk into these buildings for service, public toilet facilities are required. Obviously, these establishments are required to have toilet facilities for the employees; however, those facilities might not be properly located for public access. For example, if the location of the toilet facilities in a dry-cleaning establishment requires that the public walk a convoluted path around machinery and hanging clothes racks, the user could become confused about how to safely exit the toilet facilities and return to where he or she started. Public toilet facilities must be provided along an obvious and safe path of travel. Note that this path of travel must also meet the accessible route requirements for disabled persons. In the pizza pickup situation, because the public is not allowed to pass through a kitchen, the toilet facilities would have to be located on the customer side of the pickup counter. Banks (and check cashing establishments) do not have code restrictions for the areas that the public cannot pass through; however, the operators of these establishments might wish to restrict public access to "backroom" areas for security reasons. These self-imposed restrictions do not justify denying the public access to the toilet facilities located in restricted areas. If the toilet facilities are located in restricted areas, public toilet facilities must be provided outside of those self-imposed restricted areas.

[BG] 403.3.2 Prohibited toilet room location. Toilet rooms shall not open directly into a room used for the preparation of food for service to the public.

❖ This prohibition has been in the IBC for some time. The language is repeated here for convenience to the code user. This section provides a safeguard against a toilet room being used for food preparation functions, such as dumping of waste liquids and food scraps in a water closet.

403.3.3 Location of toilet facilities in occupancies other than malls. In occupancies other than covered and open mall buildings, the required *public* and employee toilet facilities shall be located not more than one story above or below the space required to be provided with toilet facilities, and the path of travel to such facilities shall not exceed a distance of 500 feet (152 m).

Exception: The location and maximum distances of travel to required employee facilities in factory and industrial *occupancies* are permitted to exceed that required by this section, provided that the location and maximum distance of travel are *approved*.

❖ To prevent health problems for building occupants related to difficulty in accessing a needed toilet facility in a timely fashion, the code clearly provides two conditions that must be met: 1) the required toilet facilities must be located within a certain travel distance and 2) the building occupant must not be required to travel beyond the next adjacent story above or below his or her location.

The distribution of plumbing fixtures within a building must satisfy the maximum travel limitations for occupants in the building. Sections 403.3.3 and 403.3.4

INTERNATIONAL CODE COUNCIL®
Copyright © 2015 ICC. ALL RIGHTS RESERVED. Accessed by David Dammon on Jun 21, 2017 12:30:52 PM pursuant to License Agreement with ICC. No further reproduction or distribution authorized. ANY UNAUTHORIZED REPRODUCTION OR DISTRIBUTION IS A VIOLATION OF THE FEDERAL COPYRIGHT ACT AND THE LICENSE AGREEMENT, AND SUBJECT TO CIVIL AND CRIMINAL PENALTIES THEREUNDER.

limit the horizontal and vertical distances that an occupant has to travel to use a toilet facility. A 20-story high-rise office building cannot have all of the required plumbing fixtures located on the 10th floor, as the path of travel must neither exceed a travel distance of 500 feet (152 m) nor require travel beyond the adjacent story above or below. While this travel path limitation can result in toilet facilities not being located on every floor of a multistory building, the intent of the code is for a proportional number of fixtures to be available for the intended occupant use. For example, occupants on the 20th, 19th, and 18th floors could reasonably be expected to utilize toilet facilities located only on the 19th floor [as long as the 500-foot (152 m) travel distance limitation is not exceeded]. However, that toilet facility cannot have just one fixture of each type to serve three floors of occupants. The distribution of fixtures must be proportioned according to the number of occupants that will be using the toilet facility. To illustrate, assume that each of the 20 floors in this high-rise business occupancy building has an occupant load of 100. Applying the business occupancy water closet fixture ratio to the occupant load for the entire building results in 21 male water closets required for the building. Three floors of occupants will require (150 floor occupants/1,000 total occupants) × 21 w/c = 3.15 or 4 male water closets on the 19th floor.

The exception in this section provides for the unique nature of the workplace factory and industrial occupancies where the designer is better equipped to determine the location of the employee toilet facilities.



Figure 403.3.1(1)
WALK-UP ICE CREAM SHOP WITH OUTDOOR SEATING

403.3.4 Location of toilet facilities in malls. In covered and open mall buildings, the required *public* and employee toilet facilities shall be located not more than one story above or below the space required to be provided with toilet facilities, and the path of travel to such facilities shall not exceed a distance of 300 feet (91 m). In mall buildings, the required facilities shall be based on total square footage within a covered mall building or within the perimeter line of an open mall building, and facilities shall be installed in each individual store or in a central toilet area located in accordance with this section. The maximum distance of travel to central toilet facilities in mall buildings shall be measured from the main entrance of any store or tenant space. In mall buildings, where employees' toilet facilities are not provided in the individual store, the maximum distance of travel shall be measured from the employees' work area of the store or tenant space.

❖ In covered and open malls, the path of travel to required toilet facilities must not exceed a distance of 300 feet (91 mm) and is measured from the main

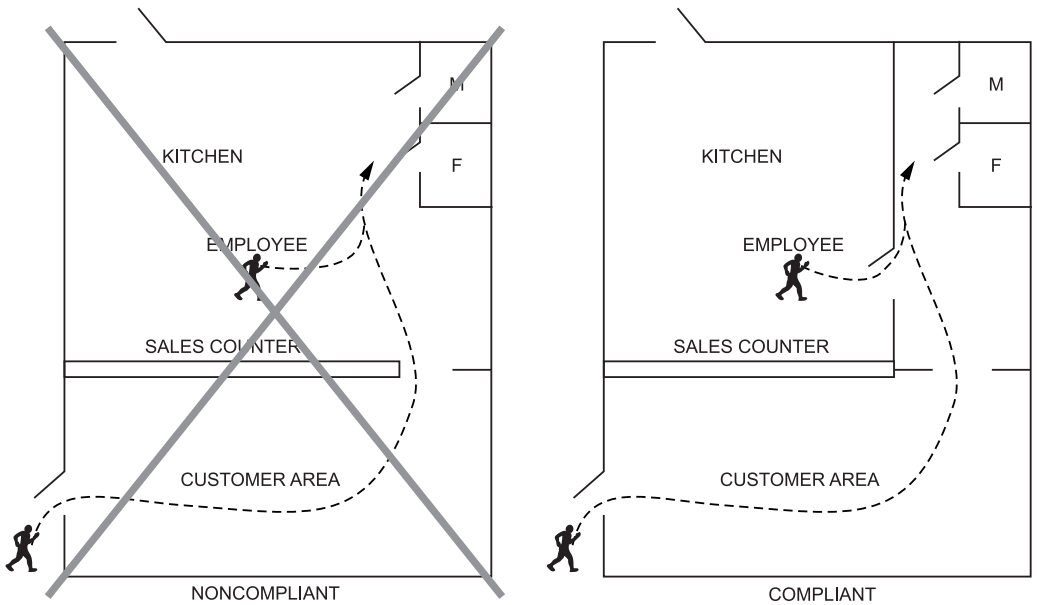

Figure 403.3.1(2)
CUSTOMER TOILET ACCESS

INTERNATIONAL CODE COUNCIL®
Copyright © 2015 ICC. ALL RIGHTS RESERVED. Accessed by David Dammon on Jun 21, 2017 12:30:52 PM pursuant to License Agreement with ICC. No further reproduction or distribution authorized. ANY UNAUTHORIZED REPRODUCTION OR DISTRIBUTION IS A VIOLATION OF THE FEDERAL COPYRIGHT ACT AND THE LICENSE AGREEMENT, AND SUBJECT TO CIVIL AND CRIMINAL PENALTIES THEREUNDER.

entrance of any store or tenant space. Note, however, that if the tenant space does not have toilets for the employees, the starting point for measuring the travel path is the employee's work area. As for other occupancies, the facilities must be located no more than one story above or below the occupant's location. This shorter travel distance addresses the fact that malls are frequently very congested and occupants are unfamiliar with their surroundings. It is also logical to reduce the travel time for employees for security reasons. The minimum number of required plumbing facilities is based on total square footage of the mall, including tenant spaces. This section does not prohibit the installation of separate employee toilet facilities in individual tenant spaces; however, such facilities are not deductible from the total number of common facilities required (see commentary, Section 403.4.1).

403.3.5 Pay facilities. Where pay facilities are installed, such facilities shall be in excess of the required minimum facilities. Required facilities shall be free of charge.

❖ Pay facilities have been included in some public areas to prevent vagrants from loitering in the public bathrooms. They may also be installed to offer customers greater amenities where the customer desires such upgrades. This section does not prevent pay facilities from being installed; rather, it requires that such facilities be in excess of those required by Section 403.

403.3.6 Door locking. Where a toilet room is provided for the use of multiple occupants, the egress door for the room shall not be lockable from the inside of the room. This section does not apply to family or assisted-use toilet rooms.

❖ A multiple-occupant toilet room could have a locking door to facilitate closure of the toilet facility for maintenance or for security when the toilet room is closed after a building's occupancy hours. This section prohibits that lock or any other lock from being engaged on the inside of the door so that users cannot lock themselves in the toilet room for whatever reason. This requirement is to prevent multiple-occupant toilet rooms from becoming safe havens for illicit activities. Because family/assisted-use toilet rooms are provided to offer privacy to a user and a family member or caretaker, the lock prohibition does not apply to those types of toilet rooms.

403.4 Signage. Required *public* facilities shall be provided with signs that designate the sex, as required by Section 403.2. Signs shall be readily visible and located near the entrance to each toilet facility. Signs for accessible toilet facilities shall comply with Section 1111 of the *International Building Code*.

❖ Public facilities must be designated by a legible sign for each sex and located at the entrance to such facilities. The code is silent on the specifics of how gender designation is displayed or stated. Where a toilet or bathing room is accessible, the signage must comply with Section 1111.1 of the IBC, which requires the International Symbol of Accessibility to be displayed at any accessible toilet or bathing room, including a family/assisted-use toilet or bathing room. In addition, Section 1111.2 requires directional signage (with the International Symbol of Accessibility) at inaccessible toilet and bathing rooms indicating the direction of accessible toilet or bathing facilities and at separate-sex toilet and bathing facilities indicating the direction of family or assisted-use toilet and bathing facilities, if provided.

403.4.1 Directional signage. Directional signage indicating the route to the required *public* toilet facilities shall be posted in a lobby, corridor, aisle or similar space, such that the sign can be readily seen from the main entrance to the building or tenant space.

❖ This section reinforces the intent of Section 403.3, which is to make sure that public toilet facilities are provided for spaces intended for public use. Where the public facilities are not clearly visible from within the public areas or the facilities are locked, patrons and visitors are sometimes told that public toilet facilities are not available or are for employee use only. Mandated directional signs will inform the public that public restrooms do exist and where they are located. It is difficult to tell a customer or patron that there are no public facilities when there is an obvious sign advertising their existence. This code requirement provides the code official with the means for issuing a citation to the building owner if the signs are found to be removed in an attempt by the building owner or tenant to limit public access to toilet facilities. The location of the sign must be near the main entrance to the building or tenant space. The code is silent on specific details of the signage such as wording, size, color or mounting height (see Commentary Figure 403.4.1).

Note that IBC Section 1111 covering signage for accessibility requires that directional signage be provided at the location of separate-sex toilet facilities indicating the location of family or assisted-use toilet facilities, if such separate-sex facilities are required.

403.5 Drinking fountain location. Drinking fountains shall not be required to be located in individual tenant spaces provided that *public* drinking fountains are located within a distance of travel of 500 feet (152 m) of the most remote location in the tenant space and not more than one story above or below the tenant space. Where the tenant space is in a covered or open mall, such distance shall not exceed 300 feet (91 m). Drinking fountains shall be located on an accessible route.

❖ This section clarifies the required location for drinking fountains with respect to the spaces that require access to drinking fountains. Drinking fountains are not required to be near toilet facilities, but because of the similar travel distance limitations, they might be in the same area as the toilet facility. Because all installed drinking fountains are required to be of Accessible design (either for standing or wheelchair-seated persons), they must be on an accessible route (see Chapter 11 of the IBC).

INTERNATIONAL CODE COUNCIL®
Copyright © 2015 ICC. ALL RIGHTS RESERVED. Accessed by David Dammon on Jun 21, 2017 12:30:52 PM pursuant to License Agreement with ICC. No further reproduction or distribution authorized. ANY UNAUTHORIZED REPRODUCTION OR DISTRIBUTION IS A VIOLATION OF THE FEDERAL COPYRIGHT ACT AND THE LICENSE AGREEMENT, AND SUBJECT TO CIVIL AND CRIMINAL PENALTIES THEREUNDER.

Previous to the addition of this section to the code, the designer of the building had the choice as to whether drinking fountains were to be installed in individual tenant spaces or in a common public area outside of the tenant space. Because the code did not specify a travel distance limitation, drinking fountains located in the common area for serving the tenant spaces could be located at any distance away from a tenant space. It was, therefore, acceptable to put all of the common area drinking fountains in a single location instead of spread around in the common area to better serve the demand for drinking water. Now, if common area drinking fountains are to be installed, they must be apportioned such that they serve the demands of the tenants within the travel distance limitations.

SECTION 404
ACCESSIBLE PLUMBING FACILITIES

404.1 Where required. Accessible plumbing facilities and fixtures shall be provided in accordance with the *International Building Code*.

❖ In almost all occupancies, toilet rooms, bathing rooms and kitchens as well as the plumbing fixtures contained within are required to be constructed in such a manner that persons with physical disabilities will have "access" to those facilities in a manner similar to persons without disabilities. A portion of the plumbing fixtures in each facility must be designed and installed so that persons with physical disabilities have the "ability" to use fixtures of a similar type to those used by persons not having disabilities. One- and two-family detached dwellings are exempt from the requirements to provide for accessibility. The requirement for "accessibility" is mandated by several Federal and state laws as well by the IBC.

In nearly all jurisdictions in the United States using the *International Codes*®, the federal requirements for accessibility are generally deemed to be accomplished if a building, site, or facility complies with the applicable provisions of Chapter 11 of IBC and ICC A117.1. Chapter 11 of the IBC regulates the extent (scoping) of required accessible features to be provided in various occupancies and ICC A117.1 regulates the (technical) characteristics of those accessible features.

While the adoption of the IBC is nearly 100 percent for all International Code Council® (ICC®) member jurisdictions, the reader must be made aware that there are jurisdictions that choose to delete, replace, or modify Chapter 11 of the IBC in favor of using other (or slightly modified) accessibility requirements or standards. Users of the code are cautioned to thoroughly review each jurisdiction's (and project's) specific requirements for accessibility to determine if Chapter 11 of the IBC and ICC A117.1 can be used for design and installation of accessible building features, or whether additional or alternative standards apply.

404.2 Accessible fixture requirements. Accessible plumbing fixtures shall be installed with the clearances, heights, spacings and arrangements in accordance with ICC A117.1.

❖ Prior to the 2015 edition of the code, the required clearances, heights, spacings and arrangements for accessible plumbing fixtures were covered by the IBC referencing the standard ICC A117.1. This code did not have a direct connection to ICC A117.1, which made responsibilities for compliance and inspection unclear. This new section for 2015 directly makes the connection to the referenced standard so responsibilities are clear.

Although ICC A117.1 is clear about many aspects of accessible plumbing fixture installations, the designer, the contractor and the inspector need to have an understanding of the impact that the standard's requirements have on piping layout and fixture installation. The following information is advisory. The requirements of the A117.1 standard and its interpretation thereof are the controlling requirements.

Dimension Reference Points and Dimension Ranges

The dimensions to floor and wall surfaces in all of the commentary figures for Section 404 (which are dimensionally identical to those in the ICC A117.1 standard) are to *finished* wall and floor surfaces and not to the face of a framed wall or top of a subfloor, respectively. Although this seems like a minor detail, this is often the cause of many plumbing fixture and plumbing trim location errors made by designers as well as plumbing contractors. Many of the dimensions shown in the standard (and in the commentary figures) are given as a dimension range [e.g.,16 to 18 inches (405 to 455 mm) or 34 inches (432 mm) maximum]. Improper understanding of the purpose and use of these dimension ranges could result in violations at final inspection.

The ranges on dimensions are not intended to give the designer or installer the initial "latitude" on where to locate the item. The ranges are also not intended to absorb errors due to misinterpreting specific measurement reference points or to permit a general carelessness in making measurements. The ranges are intended to allow for normal variances associated with field construction practices so that upon final inspection, a measurement of the location of the item has a very high probability of being within the required dimension range. The following examples illustrate some of the most commonly occurring problems.

Example A

Consider the required 16- to 18-inch (405 to 455 mm) dimension range for the centerline of a water closet for Accessible design to the finished surface of the adjacent sidewall. Suppose the designer chooses to show 18 inches (457 mm) on the drawing or the contractor chooses 18 inches (457 mm) (from the dimension

INTERNATIONAL CODE COUNCIL®
Copyright © 2015 ICC. ALL RIGHTS RESERVED. Accessed by David Dammon on Jun 21, 2017 12:30:52 PM pursuant to License Agreement with ICC. No further reproduction or distribution authorized. ANY UNAUTHORIZED REPRODUCTION OR DISTRIBUTION IS A VIOLATION OF THE FEDERAL COPYRIGHT ACT AND THE LICENSE AGREEMENT, AND SUBJECT TO CIVIL AND CRIMINAL PENALTIES THEREUNDER.

range shown in the standard) because "that's the dimension that we have used for years." The 18-inch (457 mm) dimension complies with the accessibility standard. The contractor necessarily makes adjustments to this dimension to be able to measure to reference points that he or she has available to work from such as a string line indicating where the face of a framed wall will be located or an existing block wall that will eventually be "furred out," insulated and covered with finish materials (e.g., gypsum board, cement board with tile, etc). Even though the contractor uses "correct" nominal thicknesses of materials to adjust the 18-inch (457 mm) dimension in order to locate the center of the drain piping for the water closet, small variations in measurement accuracy, actual material thicknesses, straightness of materials, placement of the future wall, the "plumbness" of the wall, the final mounting position of the fixture, and the perceived center of the water closet bowl could cause the final inspection measurement to exceed 18 inches (457 mm), some percentage of the time.

The lesson to be learned from this example is that the "target" dimension to be used for the initial layout should be the value that is midway between the extremes of the range. Therefore, in this example, the target dimension is 17 inches (432 mm).

Example B

Consider the 34-inch (864 mm) maximum dimension required for the height of a carrier-mounted lavatory above a finished floor. Suppose the designer shows 34 inches (864 mm) maximum on the drawing. If the contractor uses the 34-inch (864 mm) dimension as the basis for figuring out a dimension to an unfinished floor surface that he or she must use as a reference point, for similar reasons as given in Example A, the final inspection measurement could exceed 34 inches (864 mm) some percentage of the time.

The lesson to be learned from this example is that the "target" dimension for maximum (or minimum) dimensions to be used for the initial layout should be a value that slightly less than the maximum (or slightly more than the minimum). How much less (or more) must be based on an understanding of the possible variations that could be encountered in each situation.

Why is compliance to the dimensions in the ICC A117.1 standard so critical? Although the standard indicates that the dimensions "are subject to conventional industry tolerances," there has never been a consensus on what those tolerances should be. The standard also states "dimensions not stated as maximum or minimum are absolute." This seems to indicate that there is "no tolerance" for installations that have measurements that fall outside of the indicated dimension limits. Because of past litigation that has occurred in many jurisdictions, it has become commonplace for some code officials to expect plumbing fixtures for all levels of accessibility to be installed exactly to the dimensions shown on the project drawings or in the ICC A117.1 standard, if the project drawings lack the correct critical dimensions. The accessibility details on the project drawings should show the same dimensional limits and ranges as indicated in ICC A117.1. The plumbing contractor should interpret the dimensional limits and ranges appropriately to provide for the highest probability that the fixtures, upon final inspection, will be located within the dimensional limits or ranges.

Clear Floor Space and Approach Direction

The operation of a wheelchair requires ample floor area for turning and positioning. This required floor area is termed "clear floor space." The size and orientation of clear floor space around plumbing fixtures can impact the location and features required for the fixtures.

The direction of approach by a user of a wheelchair can also impact the location and features required for the fixtures. Fixtures are intended to be approached by either the forward or parallel methods. A forward approach is where the user approaches in a manner that is perpendicular to the wall that the back of the fixture is against. A parallel approach is where the user approaches in a manner that is parallel to the wall that the back of the fixture is against.

Required Clearances Around Grab Bars

The information on grab bar locations is provided in this commentary to illustrate potential interferences with plumbing components. The first potential for interference is between the required blocking in the walls for the grab bars and piping installed (or to be installed) in the walls. This is especially critical where framed walls are only $3^1/_2$ inches (89 mm) thick, because 2-inch (51 mm) nominal thickness blocking is typically installed for grab bar attachments. The second potential for interference is between the grab bars and plumbing components that are located within the finished area. The following provides the clearance requirements and examples of typical plumbing components located in finished areas.

For water closet grab bar installations, the minimum clearance between the top of a grab bar and any element protruding from the wall above is 12 inches (305 mm). A minimum clearance of $1^1/_2$ inches (38 mm) is required below, and at the ends of grab bars. For example, if a flushometer valve location is required to be below the rear-mounted grab bar of a water closet, the top of the flushometer valve is required to be located at least $1^1/_2$ inches (38 mm) below the bottom surface of the grab bar. A greater clearance might be necessary to enable proper access for repairing the valve without removal of the grab bar.

For grab bars in bathtubs and showers, the minimum clearance between the grab bar top and bottom surfaces and ends and other objects such as shower controls/shower fittings is $1^1/_2$ inches (38 mm). For example, the outermost point of a shower control handle must not pass any closer than $1^1/_2$ inches (38 mm) to a grab bar surface.

INTERNATIONAL CODE COUNCIL®
Copyright © 2015 ICC. ALL RIGHTS RESERVED. Accessed by David Dammon on Jun 21, 2017 12:30:52 PM pursuant to License Agreement with ICC. No further reproduction or distribution authorized. ANY UNAUTHORIZED REPRODUCTION OR DISTRIBUTION IS A VIOLATION OF THE FEDERAL COPYRIGHT ACT AND THE LICENSE AGREEMENT, AND SUBJECT TO CIVIL AND CRIMINAL PENALTIES THEREUNDER.

Four Levels of Accessibility

There are four designs for accessibility that can be required: Accessible, Type A, Type B and Type C. The Accessible design provides the greatest level of accessibility. Accessible design is used for public facilities as well as for some sleeping units and dwelling units. The standards in ICC A117.1 for the Accessible design are intended to be equivalent to the accessibility requirements of the Americans with Disabilities Act (ADA). The Type B design provides the most design flexibility for accessibility. The standards in ICC A117.1 for the Type B design are intended to comply with the requirements of the Federal Fair Housing Act. The Type A design provides a level of accessibility that is between the Accessible and Type B designs. Type A and B designs are used only for sleeping units and dwelling units. The Type C design is intended to be for single-family homes and townhouses. Where "aging in place" is a desired design feature, Type C design will not be discussed in this commentary. The architect or designer of a building is responsible for determining which of the designs for accessibility are required in a building as well as the locations of accessible toilet and bathing facilities and the quantities of plumbing fixtures required in those facilities.

Installation of Plumbing Fixtures in the Accessible Design

Water Closets for Wheelchair Access (Accessible Design)

Toilet and bathing rooms in the Accessible design must have accessible plumbing features installed in accordance with Sections 603 through Section 610 of ICC A117.1. Sections 603 and 604 of ICC A117.1 cover water closets (and grab bar locations). Commentary Figures 404(1) through 404(5) indicate the required dimensions for locating a water closet as well as the minimum clear floor space and grab bar locations for a water closet. The required dimension from the centerline of the water closet to the side wall having the grab bar must be from 16 to 18 inches (405 to 455 mm) to the finished wall surface. For reasons stated previously in this commentary, the recommended "target" dimension for installation is 17 inches (432 mm).

The heights of the water closets shown in the commentary figures are to the top of the seat and not to the top of the bowl rim or to the top of a lid (cover) for the seat. (Note that Section 420 of the code requires that any public or employee water closet must be of the elongated type and have an open-front seat.) A water closet in a single-occupant toilet room accessed only through a private office and not for public use is not required to have a seat height of 17 to 19 inches (430 to 480 mm) (see Section 1109.2 of the IBC, Exception 1, and Section 604.4 of ICC A117.1).

Even though the commentary figures depict a flush tank-type water closet, floor or wall-mount water closet bowls with flushometer valves could be used in these applications. As previously indicated, the ICC A117.1 standard specifies the minimum allowable clearances above, below and at the ends of grab bars. The standard intends that the area bound by the top of the clearance zone above the bar and the bottom of the clearance zone below the bar, extending in a direction that is horizontal and perpendicular away from the wall surface, is not to be blocked. Some operators of health care facilities require flushometer valves be located at or near the maximum allowable flush handle height elevation of 48 inches (1219 mm). This is to protect a seated user from abrasions that could be caused by the flushometer valve body located at lower elevations. This higher mounting height location will create an obstruction in front of the rear grab bar. In these situa-

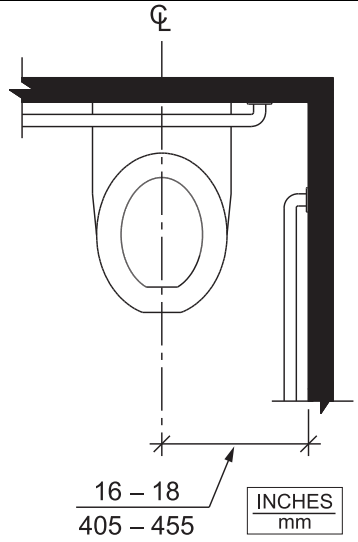

Figure 404(1)
WATER CLOSET LOCATIONS

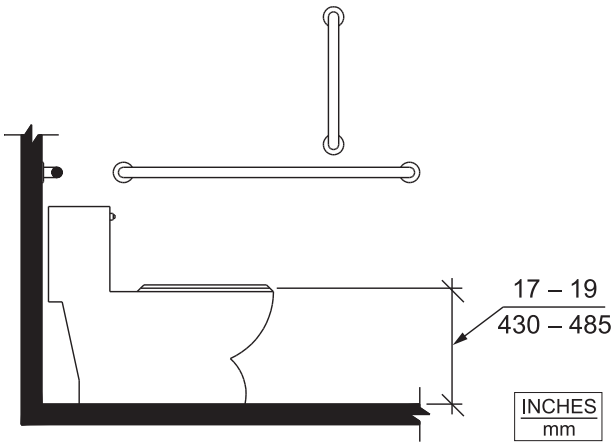

Figure 404(2)
WATER CLOSET HEIGHT

INTERNATIONAL CODE COUNCIL®
Copyright © 2015 ICC. ALL RIGHTS RESERVED. Accessed by David Dammon on Jun 21, 2017 12:30:52 PM pursuant to License Agreement with ICC. No further reproduction or distribution authorized. ANY UNAUTHORIZED REPRODUCTION OR DISTRIBUTION IS A VIOLATION OF THE FEDERAL COPYRIGHT ACT AND THE LICENSE AGREEMENT, AND SUBJECT TO CIVIL AND CRIMINAL PENALTIES THEREUNDER.

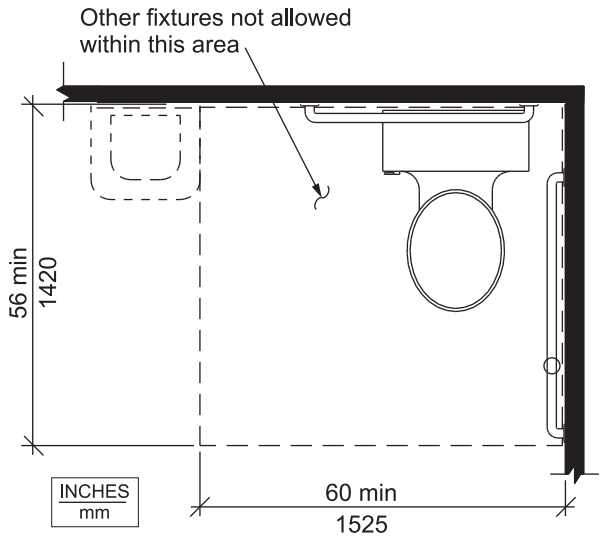

Figure 404(3)
SIZE OF CLEARANCE FOR WATER CLOSET

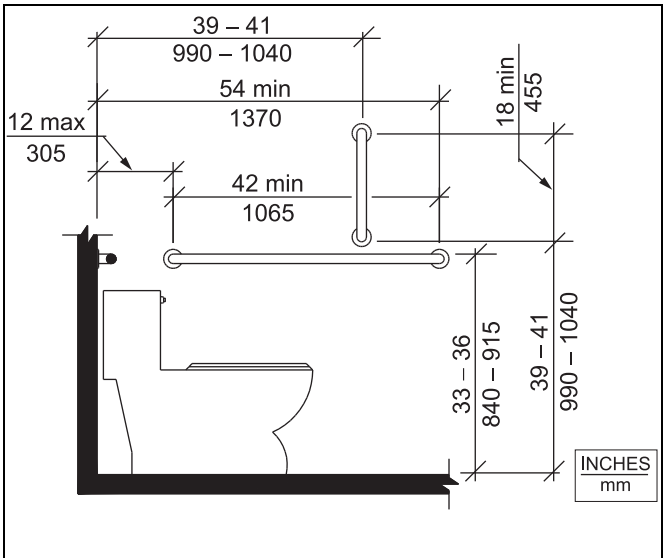

Figure 404(5)
SIDEWALL GRAB BAR FOR WATER CLOSET

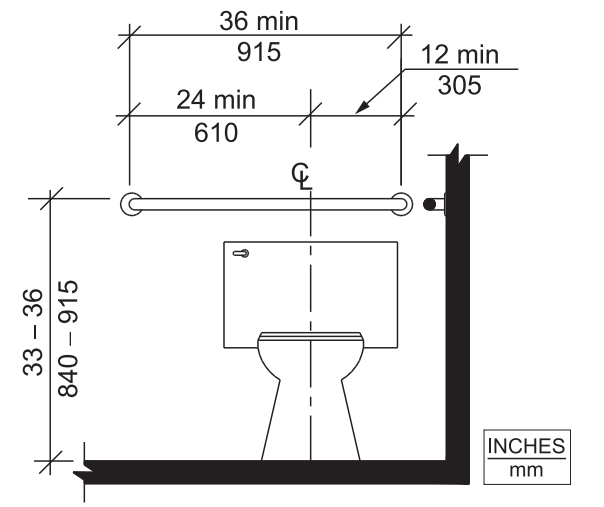

Figure 404(4)
REAR WALL GRAB BAR FOR WATER CLOSET

tions, the ICC A117.1 standard allows for the rear grab bar to be supplied in two sections or the one-piece bar shifted towards the open side of the water closet to eliminate interference with the flush valve.

The ICC A117.1 standard requires that a hand-actuated flush handle (for either a flush tank or flushometer) be on the "open side" of the water closet location. For example, where facing the water closet, if the wall is on the right, then the flush lever must be on the left. If the wall is on the left, the flush lever must be on the right. For flushometer valves, attention to this right/left detail at the rough-in stage will eliminate last minute corrective actions in order to pass final inspection. The required flush handle height is 15 to 48 inches (381 to 1219 mm) above the finished floor. This height range eliminates the possibility of a foot-operated flush device. Where flush tank water closets are utilized, right-hand flush lever configurations might be a special order, long delivery time item.

Flush valves and flush tank controls are required to meet accessible (operational) requirements. Flushometer and water closet tank manufacturers are responsible for determining which flushometers and water closet tank flush controls in their product lines comply with the requirements. Packaging, product labeling or specification sheets can be used to verify compliance. The indication for compliance might be the words "ADA-Compliant," "Compliant with (ICC) ANSI A117.1" or the International Symbol for Accessibility [see Commentary Figure 404(6)].

Commentary Figures 404(7) and 404(8) indicate the required dimensions for an accessible child-size water closet installation, should one be specified by the designer. The centerline-to-sidewall dimension range for an accessible child water closet is 12 to 18 inches (305 to 457 mm.) The required floor clearance area for the accessible child water closet is the same as for the standard accessible water closet as indicated in Commentary Figure 404(3). However, the sidewall grab bar height is lower than for a standard accessible water closet [see Commentary Figure 404(8)]. The flush handle height for a child water closet is required to be not more than 36 inches (914 mm) above the finished floor.

Water Closets for Ambulatory Access (Accessible Design)

Water closets for ambulatory access have a wall or partition on both sides of the water closet such that the compartment width is 36 inches (914 mm). This enables an ambulatory disabled user to use both side grab bars to assist in lowering onto and rising from the water closet seat. The ICC A117.1 standard allows for the water closet centerline to finished sidewall (or par-

INTERNATIONAL CODE COUNCIL®
Copyright © 2015 ICC. ALL RIGHTS RESERVED. Accessed by David Dammon on Jun 21, 2017 12:30:52 PM pursuant to License Agreement with ICC. No further reproduction or distribution authorized. ANY UNAUTHORIZED REPRODUCTION OR DISTRIBUTION IS A VIOLATION OF THE FEDERAL COPYRIGHT ACT AND THE LICENSE AGREEMENT, AND SUBJECT TO CIVIL AND CRIMINAL PENALTIES THEREUNDER.

tition) dimension to range from 17 to 19 inches (430 to 485 mm). For the reasons stated previously in this commentary, the recommended "target" dimension for installation is 18 inches (457 mm). The required flush handle height is 15 to 48 inches (381 mm to 1219 mm) above the finished floor. This height range eliminates the possibility of a foot-operated flush device.

Note that the IBC only requires a water closet for ambulatory access where there are six or more water closets in the same toilet room (or bathing room). This requirement does not increase the number of water closets but only requires one of the water closets to have ambulatory access.

Urinals for Wheelchair Access (Accessible Design)

Section 605 of ICC A117.1 specifies that urinals either be of the stall type (where the drain is very near or at floor level) or of a wall-hung type having the "rim" located at a maximum dimension of 17 inches (430 mm) above the finished floor [see Commentary Figures 404(9) and 404(10)]. The 17-inch (430 mm) dimension is a maximum height; a lesser dimension is acceptable. The "rim" of the urinal is understood to be that part of the fixture that is the highest point of the "bowl" that is the farthest point away from the wall mounting surface.

Flush handles can be located on either side of the centerline of a urinal. The required flush handle height is 15 to 48 inches (381 to 1219 mm) above the finished floor. This height range eliminates the possibility of a foot-operated flush device.

A critical point that is often overlooked by designers and contractors is the requirement for the distance between urinal partitions for the wheelchair access urinal to be at least 36 inches (914 mm). The centerline of the urinal must be not less than 18 inches (457 mm) from the face of each partition.

Note that where there is only one urinal in a toilet or bathing room, the urinal is not required to be accessible (see Section 1109.2 of the IBC, Exception 4). However, it might be prudent to install the urinal at the accessible height to allow use by wheelchair seated users as well as children.



Figure 404(6)
INTERNATIONAL SYMBOL FOR ACCESSIBILITY

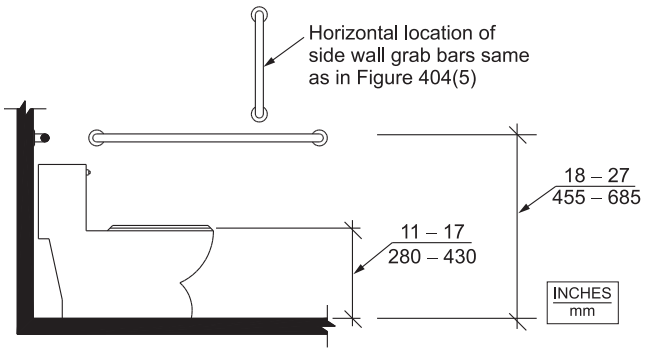

Figure 404(8)
CHILDREN'S WATER CLOSET HEIGHT AND SIDEWALL GRAB BARS

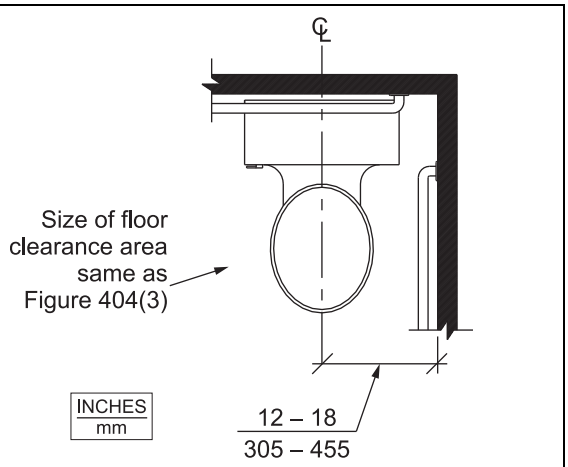

Figure 404(7)
CHILDREN'S WATER CLOSET LOCATION

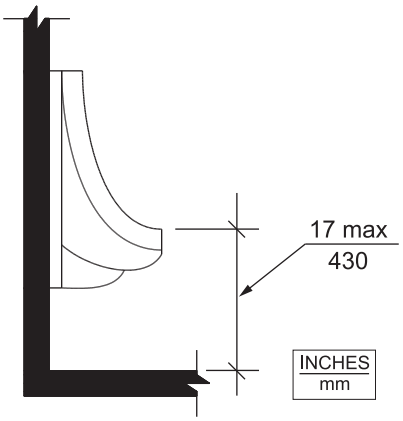

Figure 404(9)
WALL HUNG-TYPE URINAL

INTERNATIONAL CODE COUNCIL®
Copyright © 2015 ICC. ALL RIGHTS RESERVED. Accessed by David Dammon on Jun 21, 2017 12:30:52 PM pursuant to License Agreement with ICC. No further reproduction or distribution authorized. ANY UNAUTHORIZED REPRODUCTION OR DISTRIBUTION IS A VIOLATION OF THE FEDERAL COPYRIGHT ACT AND THE LICENSE AGREEMENT, AND SUBJECT TO CIVIL AND CRIMINAL PENALTIES THEREUNDER.

Wall-hung urinals installed as an accessible fixture must have a rear-wall-to-outermost-rim dimension of not less than 13 1/2 inches (343 mm). This provides for ease of use for wheelchair users.

Bathtubs (Accessible Design)

Section 607 of ICC A117.1 covers the requirements for bathtubs and grab bar locations. Commentary Figures 404(11) and 404(12) illustrate the two possible types of bathtub arrangements, one without a permanent seat and one with a permanent seat. The bathtub without a permanent seat requires a clear floor space in front of the tub of 30 inches (760 mm) by the length of the tub. For bathtubs with a permanent seat, the seat end of the tub must be located on the end where the 12-inch (305 mm) extended area of the required clear floor space is located [see Commentary Figure 404(12)]. The control end of the bathtub unit must be located on the end that is opposite of the 12-inch (305 mm) extended area of required clear floor space.

Commentary Figures 404(13) and (14) show the grab bar locations for bathtubs with and without permanent seats, respectively. This information is especially critical where the building walls are only 3 1/2 inches (89 mm) (rough dimension) deep, because 2-inch (50 mm) nominal thickness blocking is typically installed for grab bar attachments. Where a prefabricated Accessible design bathtub module already having factory-installed grab bars is being installed, blocking for the grab bars is typically not required to be installed in the building wall framing.

Bathtubs must have the water control located in the hatched area as shown in Commentary Figure 404(15). The depicted zone should not be interpreted as requiring that the entire control face plate (escutcheon) be located within the zone. For a single handle control, locating the centerline of the control handle (as well as a diverter spout) on the centerline of the tub meets the



Figure 404(10)
ACCESSIBLE HEIGHT URINAL ON LEFT

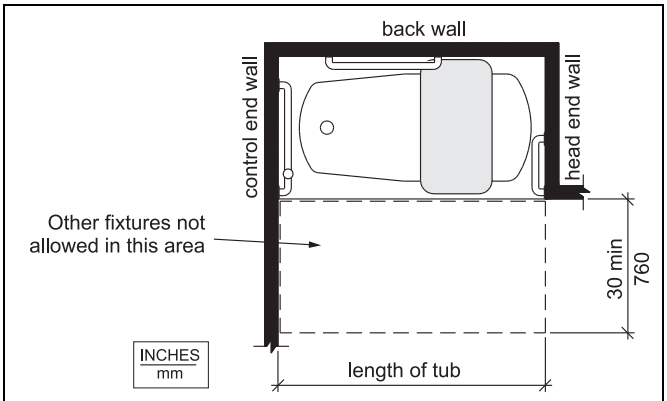

Figure 404(11)
BATHTUB WITHOUT PERMANENT SEAT

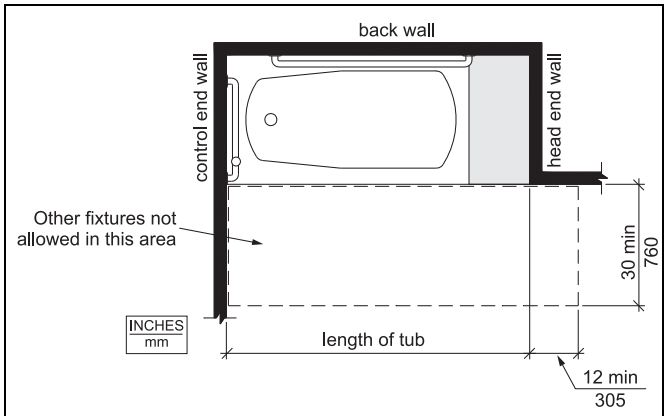

Figure 404(12)
BATHTUB WITH PERMANENT SEAT

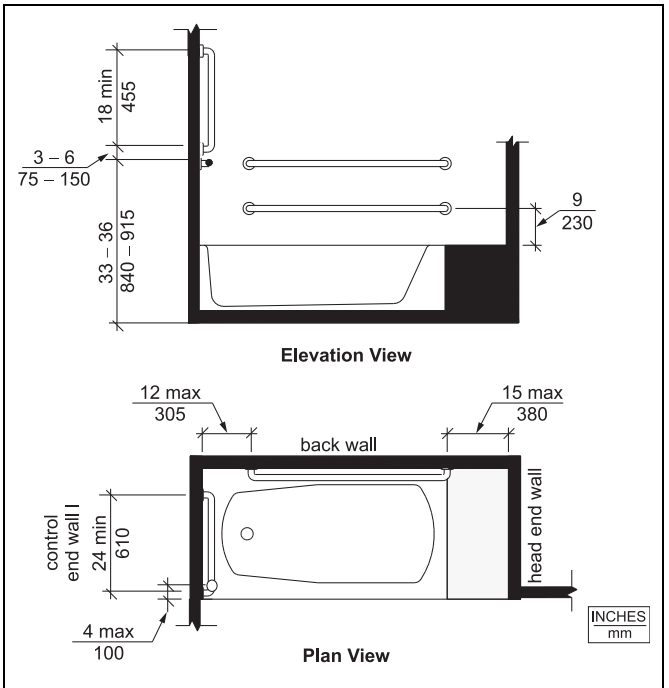

Figure 404(13)
GRAB BARS FOR BATHTUBS WITH PERMANENT SEATS

INTERNATIONAL CODE COUNCIL®
Copyright © 2015 ICC. ALL RIGHTS RESERVED. Accessed by David Dammon on Jun 21, 2017 12:30:52 PM pursuant to License Agreement with ICC. No further reproduction or distribution authorized. ANY UNAUTHORIZED REPRODUCTION OR DISTRIBUTION IS A VIOLATION OF THE FEDERAL COPYRIGHT ACT AND THE LICENSE AGREEMENT, AND SUBJECT TO CIVIL AND CRIMINAL PENALTIES THEREUNDER.

intent of ICC A117.1. Where multiple handle controls are installed, the centerline of the control handle farthest from the open side of the tub must be located no farther away than the centerline of the tub. Note that any control centerline should probably not be located very near to or on the top edge of the indicated hatched area due to the potential for interference of the control handle with the required grab bar location. The minimum allowable clearance of the path of the control handle to the grab bar is $1^1/_2$ inches (38 mm). The location of the control should also provide ample space for service access to the control without requiring removal of the grab bar. For the location of hand showers in bathtubs, see the section "Hand Showers (Accessible design)" within this commentary section.

Commentary Figures 404(11) through (15) and the text of ICC A117.1 do not specify a minimum or maximum width for the bathtub [e.g., 30 inches (762 mm), 36 inches (914 mm) and 42 inches (1067 mm)]. The ICC A117.1 standard originally based the control location requirements on a 30-inch-wide (762 mm) bathtub so that floor plans requiring accessible bathtubs would not require a floor space larger than that required for the minimum required bathtub size for a nonaccessible unit. This does not mean that a bathtub of a width greater than 30 inches (762 mm) cannot be used. However, it is advisable to consider limiting the most remote vertical edge of the designated control zone at a dimension that does not exceed 18 inches (457 mm) from the open side of the bathtub. This limitation is suggested in order to enable the control to still be within an easy side reach range for wheelchair-seated users who are parked outside the bathtub.

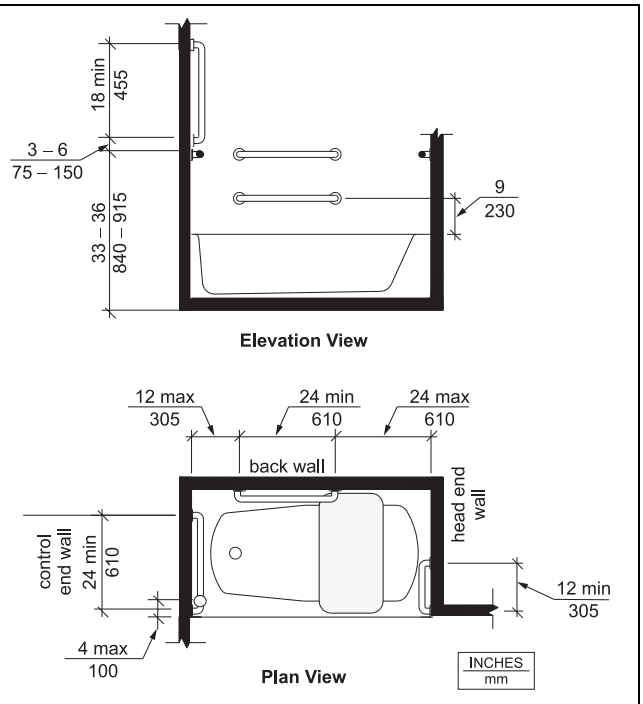

Figure 404(14)
GRAB BARS FOR BATHTUBS WITHOUT PERMANENT SEATS

The maximum height of the bathtub wall on the open side of the tub (i.e., the "apron" side) is controlled by the type of seat used for the installation. Where a removable seat is used, the apron side tub wall cannot be higher than the underside of the removable seat located with its top at 19 inches (483 mm) above the finished floor. Where a permanent seat is used, the wall can be no higher than 19 inches (483 mm) above the finished floor. While most standard bathtubs have apron sidewall heights less than 17 inches (432 mm), some models of soaker tubs, whirlpool tubs or free-standing tubs might have apron heights that exceed the allowable height dimension.

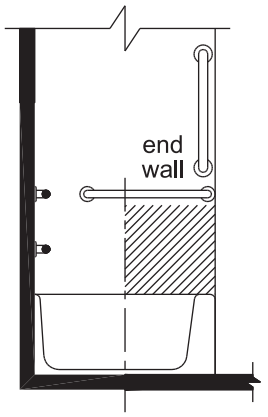

Figure 404(15)
LOCATION OF BATHTUB CONTROLS

Showers (Accessible Design)

Section 608 of ICC A117.1 covers the requirements for showers. There are three types of shower designs: 1) transfer type, 2) standard roll-in type and 3) alternate roll-in type.

Commentary Figure 404(16) illustrates the dimensional and clear floor space requirements for a transfer-type shower. The seat of the shower compartment must be arranged such that there is a clear floor space to position the wheelchair and align the wheelchair seat with the shower seat for a side transfer. This point is made to draw attention to the necessity for locating the control on the wall opposite the seat wall. Reversing the arrangement in some circumstances might not provide adequate wheelchair "rear parking area" [the 12-inch (305 mm) area past the opening of the shower] to enable alignment of the wheelchair seat to the shower seat for a proper and safe transfer of the user.

Commentary Figures 404(17) and (18) are provided to show the required grab bar installation so that the plumbing contractor can avoid installing piping in locations where blocking is required to be installed in the building framing.

Commentary Figure 404(18) also indicates the required zone to locate the control for a transfer shower. Refer to the previous commentary for bathtubs in this section for general information on control placement in the designated control zone.

INTERNATIONAL CODE COUNCIL®
Copyright © 2015 ICC. ALL RIGHTS RESERVED. Accessed by David Dammon on Jun 21, 2017 12:30:52 PM pursuant to License Agreement with ICC. No further reproduction or distribution authorized. ANY UNAUTHORIZED REPRODUCTION OR DISTRIBUTION IS A VIOLATION OF THE FEDERAL COPYRIGHT ACT AND THE LICENSE AGREEMENT, AND SUBJECT TO CIVIL AND CRIMINAL PENALTIES THEREUNDER.

Commentary Figure 404(19) shows the minimum dimensions for a standard roll-in shower. An accessible lavatory can be located in the 30-inch (762 mm) by 60-inch (1524 mm) clear floor space as shown in the figure. Note that the lavatory must be located on the wall opposite the seat wall.

Commentary Figure 404(20) is provided to show the required grab bar installation so that the plumbing contractor can avoid installing piping in locations where blocking might be required to be installed in the building framing.

Commentary Figure 404(21) indicates the allowable designated control location zone for a standard roll-in shower. The installer must determine which end of the shower will have the seat in order to properly locate the control. Refer to the previous commentary for bathtubs in this section for general information on control placement in the designated control zone.

Commentary Figure 404(22) shows the minimum dimensions for an alternate roll-in shower. The ICC A117.1 standard requires that this type of shower arrangement have a seat or at least have the blocking in the wall so that a seat can be installed at some future point in time.

Commentary Figure 404(23) is provided to show the required grab bar installation so that the plumbing contractor can avoid installing piping in locations where blocking might be required to be installed in the building framing.

The diagrams in Commentary Figure 404(24) illustrate where controls and hand-shower locations are required to be located, depending on the depth of the shower. If the shower depth is the minimum dimension of 36 inches (915 mm), the controls and hand shower can be located in either of the positions shown in Diagrams “a” and “b.” The shower-seated user is able to reach the controls in either position. If the

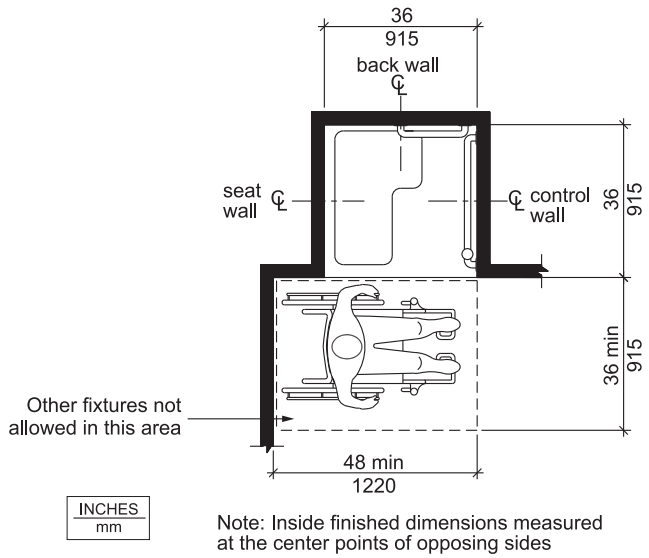

Figure 404(16)
TRANSFER-TYPE SHOWER COMPARTMENT SIZE AND CLEARANCE

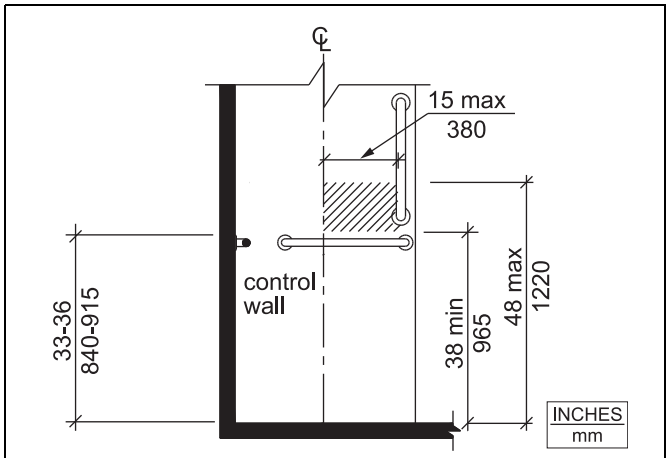

Figure 404(18)
TRANSFER-TYPE SHOWER CONTROL AND HAND SHOWER LOCATION

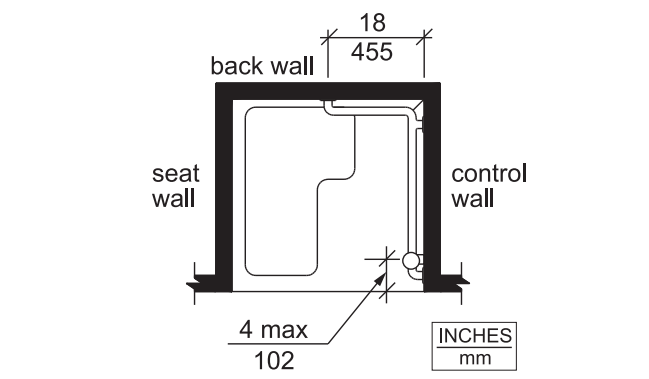

Figure 404(17)
GRAB BARS IN TRANSFER-TYPE SHOWERS

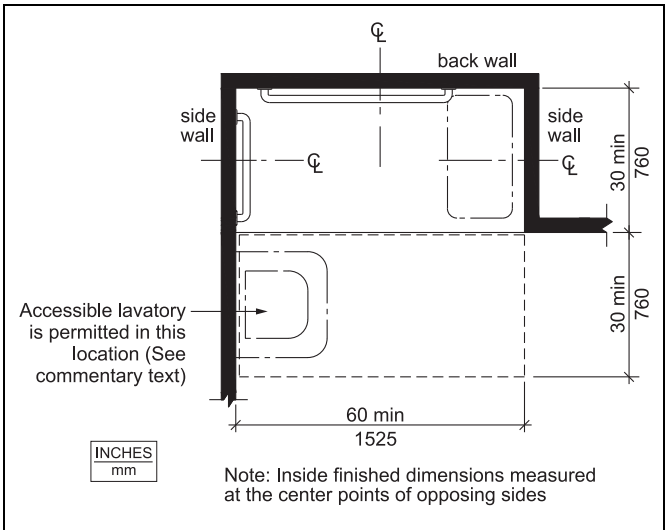

Figure 404(19)
STANDARD ROLL-IN-TYPE SHOWER COMPARTMENT SIZE AND CLEARANCE

INTERNATIONAL CODE COUNCIL®
Copyright © 2015 ICC. ALL RIGHTS RESERVED. Accessed by David Dammon on Jun 21, 2017 12:30:52 PM pursuant to License Agreement with ICC. No further reproduction or distribution authorized. ANY UNAUTHORIZED REPRODUCTION OR DISTRIBUTION IS A VIOLATION OF THE FEDERAL COPYRIGHT ACT AND THE LICENSE AGREEMENT, AND SUBJECT TO CIVIL AND CRIMINAL PENALTIES THEREUNDER.

depth of the shower is greater than 36 inches (915 mm), the controls and hand shower must be located according to Diagram "a" because the shower-seated user will not able to reach controls on a wall that is farther away than 36 inches (915 mm). The control and hand-shower locations are dictated by the seat location. Refer to the previous commentary under bathtubs in this section for general information on control placement in the designated control zone.

Hand Showers (Accessible Design)

All bathtubs and showers for the Accessible design must be provided with a hand shower. (It is optional for the hand shower to be placed in a vertically adjustable sliding mount.) The hand-shower mount (the holder) must be located in the designated control zone.

The hand-shower hose length must be at least 59 inches (1500 mm) long. ICC A117.1 does not specify a required location for the hose connect supply elbow. Because this item is not a "control," it is not required to be located in the designated control zone. However, one must consider where a hand-shower user will be seated in order to provide the user with ample usable hose length for showering of all body parts. For example, for a bathtub arrangement, locating the supply elbow near the traditional shower arm location might result in limited usability of the hand shower for the seated user. Another example would be locating the supply elbow too close to the grab bar surfaces such that the fittings or the hose, being relatively stiff and immovable, at the connection to the fitting presents an interference for use of the grab bars. Refer to previous commentary concerning required clearances around grab bars. The designer or installer has the responsibility to intelligently locate the supply fitting for the hand shower hose connection.

Hand-shower heads must have a control that provides a "leaky" shut off of the water flow. In other words, the "pause" control on the hand-shower head must not completely shut off the water flow so as to alert the user that the main water control is still open, to prevent the water in the hose from cooling off and to reduce the potential for cross flow between the hot and cold supply to the control valve. Note that Section

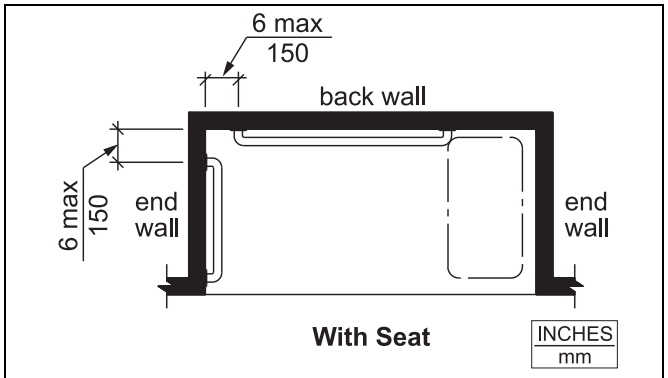

Figure 404(20)
GRAB BARS IN ALTERNATE ROLL-IN-TYPE SHOWERS

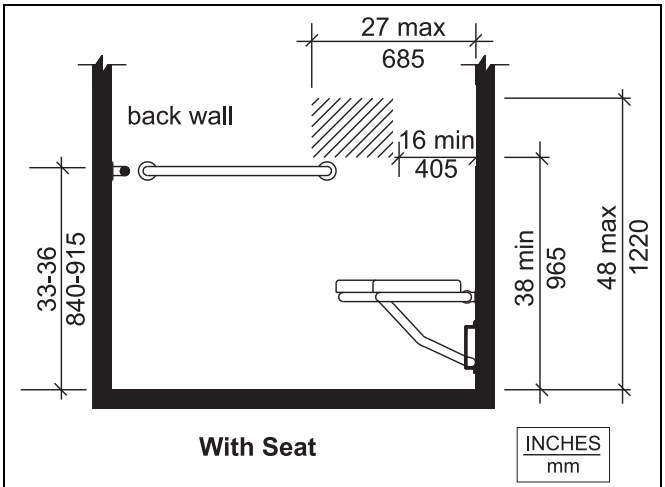

Figure 404(21)
STANDARD ROLL-IN-TYPE SHOWER CONTROL AND HAND SHOWER LOCATION

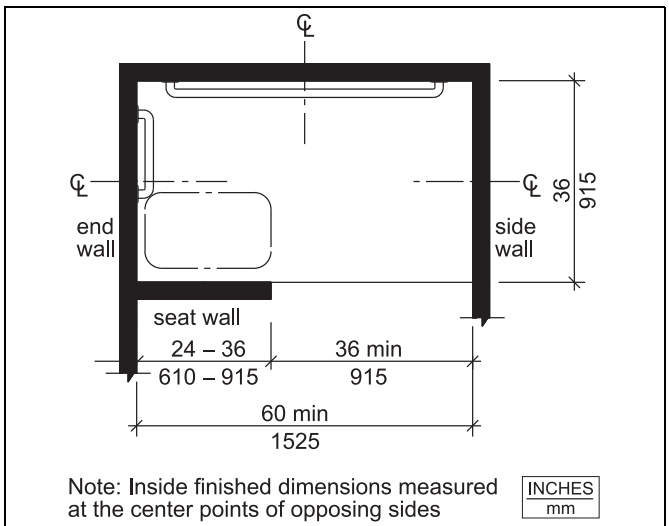

Figure 404(22)
ALTERNATE ROLL-IN-TYPE SHOWER COMPARTMENT SIZE AND CLEARANCE

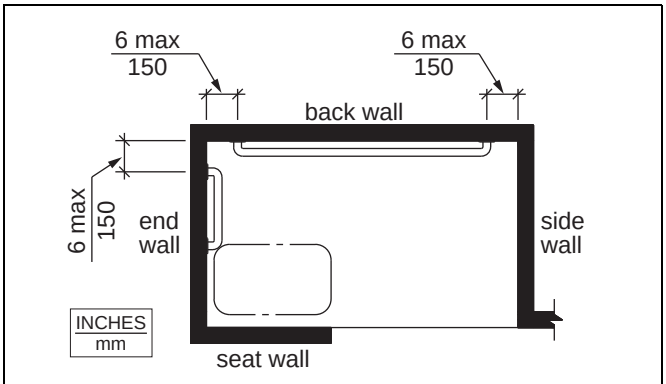

Figure 404(23)
GRAB BARS IN ALTERNATE ROLL-IN SHOWERS

INTERNATIONAL CODE COUNCIL®
Copyright © 2015 ICC. ALL RIGHTS RESERVED. Accessed by David Dammon on Jun 21, 2017 12:30:52 PM pursuant to License Agreement with ICC. No further reproduction or distribution authorized. ANY UNAUTHORIZED REPRODUCTION OR DISTRIBUTION IS A VIOLATION OF THE FEDERAL COPYRIGHT ACT AND THE LICENSE AGREEMENT, AND SUBJECT TO CIVIL AND CRIMINAL PENALTIES THEREUNDER.

424 of the code has requirements for hand showers as well as requirements for backflow protection for hand showers.

The requirements of ICC A117.1 do not directly address other possible arrangements for providing hand-shower water control. For example, some designs of shower controls use either an integral or separate transfer valve for controlling the water flow from the main water control to a fixed shower head, a body spray array or a hand shower. Should the transfer valve be located in the designated control zone indicated in Commentary Figure 404(15)? The answer is "yes" because it is a control.

Hand-shower manufacturers are responsible for determining which hand showers in their product lines comply with the Accessible design (operational) requirements. Packaging, product labeling or specification sheets can be used to verify compliance. The indication for compliance might be the words "ADA-Compliant," "Compliant with (ICC) ANSI A117.1" or the International Symbol for Accessibility [see Commentary Figure 404(6)].

A hand shower connected to a "push-pull"-type diverter valve assembly located on a shower head arm does not comply with the requirements of ICC A117.1 for the following reasons: 1) these types of diverter valves require significant grasping or twisting to operate and 2) the mounting height would be well outside of the designated control zone (e.g., they are usually intended to be attached to a shower head arm located for a standing person's height).

Lavatories and Sinks (Accessible Design)

Section 606 of ICC A117.1 covers the requirements for lavatories and sinks for the Accessible design. In the context of the ICC A117.1 standard, the term "sink" includes a sink in a kitchen, a wet bar or a break/lunch room. All lavatories and most sinks for the Accessible design must be capable of being used by a person in a wheelchair using a "forward approach" to the fixture. In other words, the feet and legs of the user seated in a wheelchair must be provided a clearance of specific dimensions under the plumbing fixture. Where a double bowl (kitchen) sink is installed, knee and toe clearances are only required under one of the bowls. There are a few limited exceptions for sink applications that allow for a parallel approach by a person in a wheelchair. Kitchen sinks (not in a space having a cooktop or range) and wet bar sinks are permitted to have a parallel approach. Although a parallel approach eliminates the need for providing knee/toe clearances and pipe protection under those fixtures,

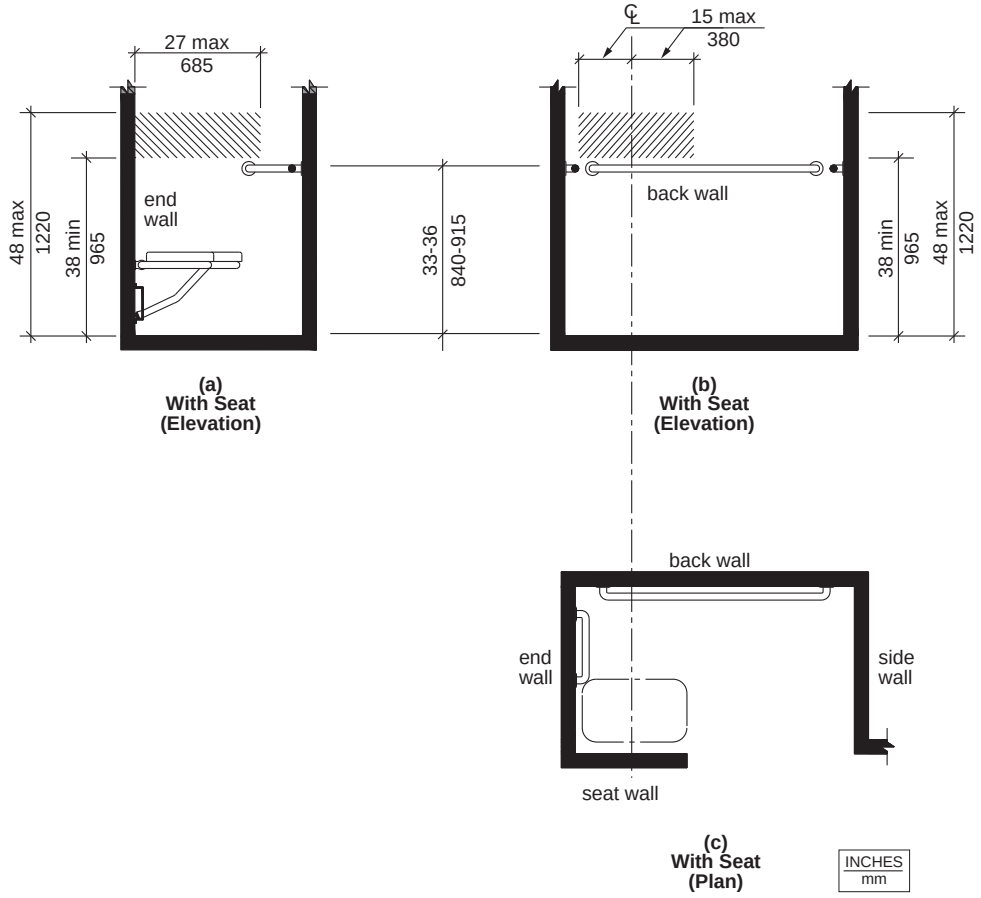

Figure 404(24)
ALTERNATE ROLL-IN-TYPE SHOWER CONTROL AND HAND SHOWER LOCATION

INTERNATIONAL CODE COUNCIL®
Copyright © 2015 ICC. ALL RIGHTS RESERVED. Accessed by David Dammon on Jun 21, 2017 12:30:52 PM pursuant to License Agreement with ICC. No further reproduction or distribution authorized. ANY UNAUTHORIZED REPRODUCTION OR DISTRIBUTION IS A VIOLATION OF THE FEDERAL COPYRIGHT ACT AND THE LICENSE AGREEMENT, AND SUBJECT TO CIVIL AND CRIMINAL PENALTIES THEREUNDER.

proper location of the sink with respect to the minimum clear floor space requirements is essential. The center of the sink bowl or the bowl of a double bowl sink for parallel approach can be at any location that is not less than 24 inches (610 mm) from at least one end of the clear floor space length dimension.

Commentary Figure 404(25) shows the maximum allowable height for a lavatory or a sink as measured from the finished floor to the rim of the lavatory or sink; or the counter surface that the sink is mounted to, whichever is higher. This requirement applies to sinks with forward or parallel approach. The "rim" is understood to be that part of the fixture that is the highest point of the "bowl" that is the closest to the user. The dimension is a maximum; the rim height could be located slightly lower to provide some reasonable installation tolerance for practicality. However, the installed rim height cannot be too low because of the 27-inch (685 mm) minimum knee clearance and the 8 inches (203 mm) minimum from the front edge to the beginning of the knee clearance under the sink as shown in Diagram "a" of Commentary Figure 404(26). Most wall-mount lavatories marketed for the Accessible design have "underside" bowl dimensions that easily accommodate a slightly lower rim mounting height [e.g., $33^{1}/_{2}$ inches (851 mm)] without violating the minimum required knee clearance under the lavatory [see Commentary Figure 404(27)]. However, where lavatories and sinks for the Accessible design are constructed using countertops with sink bowls attached, the designer/installer must carefully review the bowl projection below the countertop to ascertain whether adequate knee clearance will be provided at the chosen installation height of the bowl rim or countertop.

Commentary Figures 404(26) and 404(28) show the required knee and toe clearances for forward approach. This information is provided so that the plumbing installer realizes that plumbing components such as stops, traps and supply piping, as well as any exterior surfaces of chase coverings for piping, cannot be located in zones required for knee and toe clearances. One possible situation where piping might have to be located near to knee or toe clearance areas is where drain or supply piping cannot be installed in the wall that the lavatory is mounted because of firewall restrictions, freeze protection or retrofit considerations. Supply and drain piping can extend up from the floor in these applications, but only where placement does not violate the required clearance zones. Any piping under lavatories or sinks must be configured so that user contact is prevented (e.g., by the installation of a removable panel) or if piping (as well as stops, traps and other plumbing devices) is exposed, those items must have a smooth covering installed so as to protect the user from those surfaces (see Section 404.3).

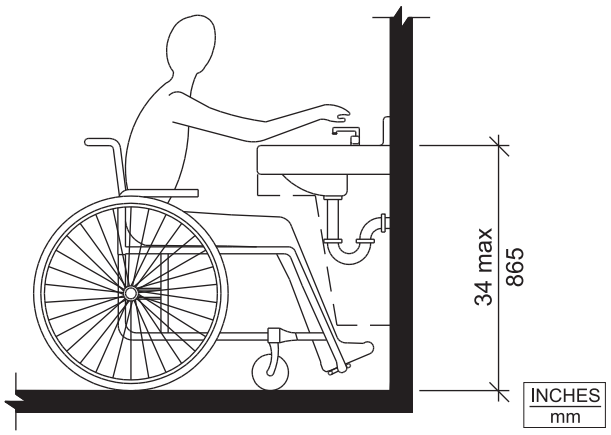

Figure 404(25)
HEIGHT OF LAVATORIES AND SINKS

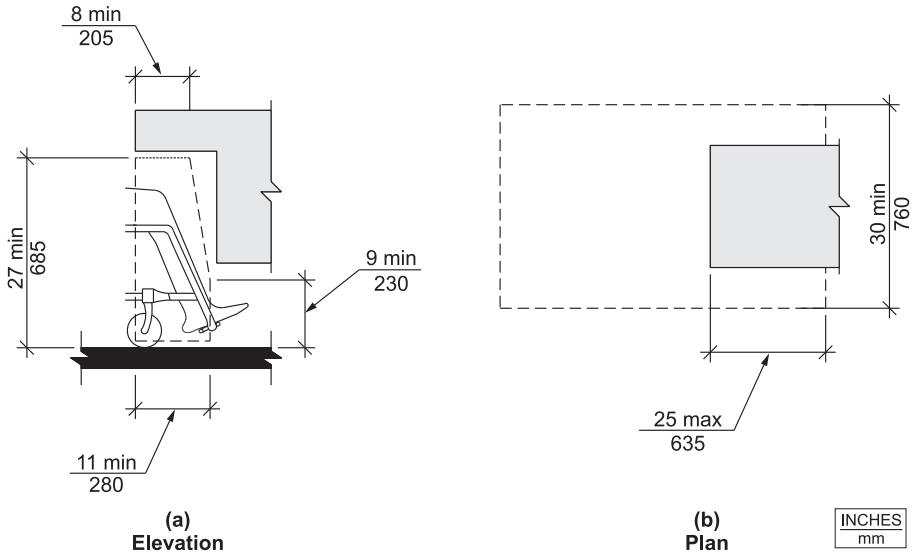

Figure 404(26)
KNEE CLEARANCE

INTERNATIONAL CODE COUNCIL®
Copyright © 2015 ICC. ALL RIGHTS RESERVED. Accessed by David Dammon on Jun 21, 2017 12:30:52 PM pursuant to License Agreement with ICC. No further reproduction or distribution authorized. ANY UNAUTHORIZED REPRODUCTION OR DISTRIBUTION IS A VIOLATION OF THE FEDERAL COPYRIGHT ACT AND THE LICENSE AGREEMENT, AND SUBJECT TO CIVIL AND CRIMINAL PENALTIES THEREUNDER.

Commentary Figure 404(29) shows an arrangement for a forward approach kitchen sink for Accessible design in an employee break room. A standard countertop height for kitchens and employee break rooms is approximately 36 inches (914 mm) above the floor. However, Accessible design requires that the portion of the countertop having the sink must have a height no greater than 34 inches (864 mm) from the top of the countertop (or bowl rim, whichever is higher) to the finished floor.

For a toilet or bathing room that can only be accessed through a private office, not for common or public use and intended for use by a single occupant, the lavatory height, knee and toe clearances do not apply (see Section 1109.2 of the IBC, Exception 1). However, the ICC A117.1 standard requires that the toilet and bathing room space and door width be sized so that the room can be easily converted to an Accessible design. Although not required by the standard, it would be prudent to locate the lavatory supply and drain piping such that if a conversion would occur, the required plumbing rework would be minimal.

Where a lavatory or sink will be used primarily by children of ages 6 through 12, Section 606.2 of ICC A117.1, Exception 3, allows the 27-inch (685 mm) minimum knee clearance limitation to be reduced to 24 inches (610 mm) and limits the bowl rim or countertop height to a maximum of 31 inches (785 mm) above the finished floor.

Drinking Fountains (Accessible Design)

Most occupancies require the installation of drinking fountains in common or public areas of the building (see Table 403.1 as well as Section 410.2). Where drinking fountains are provided, Chapter 11 of the IBC requires those drinking fountains to serve wheelchair-seated persons and standing persons.

For wheelchair-seated users, drinking fountains must be located with respect to the approach method to



Figure 404(27)
WALL-MOUNTED ACCESSIBLE LAVATORY



Figure 404(29)
ACCESSIBLE KITCHEN SINK

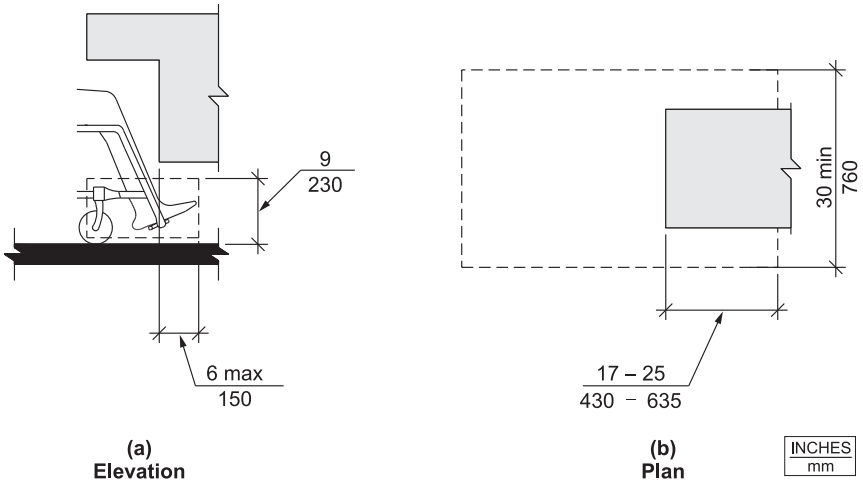

Figure 404(28)
TOE CLEARANCE

INTERNATIONAL CODE COUNCIL®
Copyright © 2015 ICC. ALL RIGHTS RESERVED. Accessed by David Dammon on Jun 21, 2017 12:30:52 PM pursuant to License Agreement with ICC. No further reproduction or distribution authorized. ANY UNAUTHORIZED REPRODUCTION OR DISTRIBUTION IS A VIOLATION OF THE FEDERAL COPYRIGHT ACT AND THE LICENSE AGREEMENT, AND SUBJECT TO CIVIL AND CRIMINAL PENALTIES THEREUNDER.

the drinking fountain. Drinking fountains are required to have a forward approach direction and require a clear floor space of 30 inches wide by 48 inches deep (762 mm by 1219 mm). The drinking fountain must be centered on the 30-inch (762 mm) width of the clear floor space. The required knee and toe clearances for a forward approach drinking fountain are the same as for forward approach lavatories and sinks [see Commentary Figures 404(26) and (28)].The spout outlet of a wheelchair-accessible drinking fountain can be no greater than 36 inches (915 mm) above the finished floor. The spout height can be slightly lower (to provide a reasonable installation tolerance) as long as the minimum knee and toe clearances below the unit can still be achieved. A review of most drinking fountain manufacturer's drawings shows plumbing rough-in and mounting dimensions based upon the minimum knee clearance height of 27 inches (685 mm) above finished floor. Although this guarantees that the spout outlet height will be well below the 36-inch (915 mm) maximum height required by ICC A117.1, careful consideration must be given to the thickness of floor coverings that might cause the knee clearance height to be violated.

Where a drinking fountain having only parallel approach is being replaced, the replacement must allow for a forward approach.

Drinking fountains to be used by standing persons must have the spout outlet installed at a height not less than 38 inches (965 mm) and no greater than 43 inches (1090 mm) above the finished floor.

Where drinking fountains are to be used primarily by wheelchair-seated children, a spout height no greater than 30 inches (760 mm) above the finished floor is allowed to be used but only where the drinking fountain is provided with the clear floor space for the parallel approach method. The lower spout height for this application does not allow for the required knee and toe clearance for a forward approach to the drinking fountain. Note that a parallel-approach drinking fountain is required to have the spout located 3 inches (76 mm) or less from the front of the drinking fountain.

Drinking fountains must comply with the accessible (operational) requirements of ICC A117.1 as well as meet the requirements of Section 410 of the code. Drinking fountain manufacturers are responsible for determining which drinking fountains in their product lines comply with the accessible (operational) requirements. Packaging, product labeling or specification sheets can be used to verify compliance. The indication for compliance might be the words "ADA-Compliant," "Compliant with (ICC) ANSI A117.1" or the International Symbol for Accessibility.

A typical arrangement of drinking fountains for both standing persons and wheelchair-seated persons is shown in Commentary Figure 404(30).

Enhanced Reach Range Lavatories (Accessible Design)

The IBC requires an enhanced reach range lavatory in toilet and bathing rooms having six or more lavatories. This requirement does not increase the number of lavatories; it only requires one of the lavatories to have enhanced reach range characteristics. It is a lavatory for use by those of short stature having short arm lengths. The requirements of Section 606.5 of ICC A117.1 are that the faucet controls and soap dispenser controls be located not greater than 11 inches (279 mm) from the front edge of the lavatory. This also means that water or soap streams from their respective spouts must also be positioned at a dimension not greater than 11 inches (279 mm) from the front edge of the lavatory. As this is a relatively new requirement, wall-mount lavatory manufacturers have not yet created special designs that meet this requirement. However, using certain currently available electronic sensor-controlled faucets and soap dispensers with certain Accessible design-compliant wall-mount lavatories, the 11-inch (279 mm) requirement could be achieved. Where a lavatory is constructed using a countertop with a separately mounted lavatory bowl, Accessible design-compliant faucets and soap dispensers can be located along the sides of the bowl to provide for the 11-inch (279 mm) reach range. The enhanced reach range lavatory is not required to be mounted at the Accessible design height [34 inches (864 mm) maximum]. Although not addressed in ICC A117.1, it is suggested by proponents of enhanced reach range lavatories that these types of lavatories have a rim height of not greater than 28 inches (711 mm) above the finished floor.

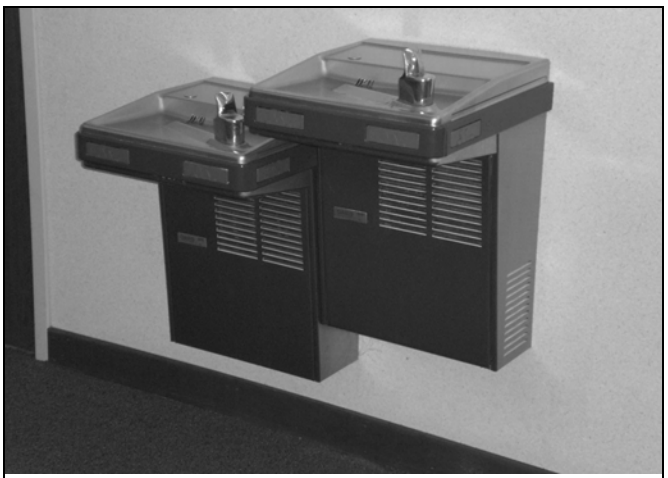

Figure 404(30)
ACCESSIBLE DRINKING FOUNTAIN

INTERNATIONAL CODE COUNCIL®
Copyright © 2015 ICC. ALL RIGHTS RESERVED. Accessed by David Dammon on Jun 21, 2017 12:30:52 PM pursuant to License Agreement with ICC. No further reproduction or distribution authorized. ANY UNAUTHORIZED REPRODUCTION OR DISTRIBUTION IS A VIOLATION OF THE FEDERAL COPYRIGHT ACT AND THE LICENSE AGREEMENT, AND SUBJECT TO CIVIL AND CRIMINAL PENALTIES THEREUNDER.

Faucets (Accessible Design)

Faucet manufacturers are responsible for determining which faucets in their product lines comply with the accessible (operational) requirements. Packaging, product labeling or specification sheets can be used to verify compliance. The indication for compliance might be the words "ADA-Compliant," "Compliant with (ICC) ANSI A117.1" or the International Symbol for Accessibility [see Commentary Figure 404(6)]. Note that metering faucets are required to stay open for at least 10 seconds.

Installation of Plumbing Fixtures in the Type A Design

The plumbing fixture installation requirements for the Type A design are covered by Section 1003.11 of ICC A117.1. The Type A design could be called the "adaptable design" as all of the "prep work" must be done to allow future changes to be easily accomplished in order for the access to plumbing fixtures to be similar to that provided in the Accessible design. Type A-designed facilities have door widths, clear floor spaces and other built-in features that are identical to what is required for the Accessible design, but the original finish construction has a residential look and feel. This residential look and feel is important in order to market Type A design units to persons who do not require or immediately want some of the obvious Accessible design features in their living environment. Because all buildings covered by the IBC are required to be designed for accessibility, the Type A designed unit satisfies the intent for accommodating someone who requires an Accessible design unit as well as satisfies the builder's, contractor's or owner's need to be able sell, rent or lease the unit to someone who does not want to live in an Accessible designed unit.

Water Closets for Wheelchair Access (Type A Design)

The only difference between a water closet for the Type A design and a water closet for the Accessible design is that the low end for the dimension range for the top of the water closet seat to the floor is 15 inches (381 mm) as opposed to 17 inches (432 mm). This allows for a more "standard height" water closet to be installed providing for a more aesthetically pleasing "residential-like" appearance. Grab bars are also not required to be initially installed but the blocking for the bars must be in place. A Type A design allows for a lavatory to be located on the rear wall alongside the water closet if the following conditions exist: 1) the side of the lavatory is located not less than 18 inches (455 mm) to the centerline of the water closet and 2) the clear floor space dimension for the water closet is not less than 66 inches (1676 mm), measured perpendicular from the rear wall, by a width of not less than 15 inches (381 mm), measured to either side of the centerline of the water closet.

Urinals for Wheelchair Access (Type A Design)

There is no requirement for urinals for the Type A design. However, there is nothing to prohibit the installation of a urinal in a Type A design unit other than the urinal must not be a substitute for an accessible water closet. The urinal does not have to be installed in accordance with the Accessible design dimensional requirements because the water closet serves as the required accessible fixture. However, it would be prudent to mount the urinal at or below the Accessible design height so that wheelchair users (as well as children) could benefit from the urinal installation.

Bathtubs (Type A Design)

Bathtubs are required to comply with the Accessible design except that countertops and cabinetry (with floor covering/finish under such cabinetry) are allowed to be installed at the control end of the bathtub's clear floor space. The countertops and cabinetry must be removable. The 12-inch (305 mm) extended area beyond the head end of the bathtub's clear floor space remains a requirement.

Showers (Type A Design)

The requirements for showers are the same as for the Accessible design for showers. Countertops and cabinetry (with floor covering/finish under such cabinetry) are allowed to be installed at the control end of the shower's clear floor space, provided that countertops and cabinetry are removable. Although not specifically stated in ICC A117.1, it should be intuitively obvious that this countertop/cabinet allowance must not be used where a transfer shower is installed. It is intended to be for standard roll-in shower designs only. The 12-inch (305 mm) extended area of the shower's clear floor space beyond the seat end of the shower (whether the seat is actually installed or not) remains a requirement.

Hand Showers (Type A Design)

The hand-shower requirements for Type A design are the same as for the Accessible design.

Lavatories (Type A Design)

The requirements for lavatories for Type A design are the same as for lavatories for Accessible design. However, the Type A design allows cabinetry to be installed under the lavatory provided that: 1) the cabinetry can be removed without removal of the lavatory (i.e., the lavatory or lavatory countertop is wall mounted or wall supported); 2) the current floor finish material extends up under such cabinetry and 3) the wall behind and surrounding the cabinet is finished. These provisions allow for the installation to initially have a more "residential-like" appearance but have the capability to be easily converted allowing forward approach to the lavatory. Refer to the previous discussion of water closets for the Type A design for an allowance for locating a lavatory adjacent to a water closet.

INTERNATIONAL CODE COUNCIL®
Copyright © 2015 ICC. ALL RIGHTS RESERVED. Accessed by David Dammon on Jun 21, 2017 12:30:52 PM pursuant to License Agreement with ICC. No further reproduction or distribution authorized. ANY UNAUTHORIZED REPRODUCTION OR DISTRIBUTION IS A VIOLATION OF THE FEDERAL COPYRIGHT ACT AND THE LICENSE AGREEMENT, AND SUBJECT TO CIVIL AND CRIMINAL PENALTIES THEREUNDER.

Sinks (Type A Design)

For a multiple-bowl sink, the knee and toe clearances according to Commentary Figures 404(27) and 404(29) are only required under one bowl. This allows ample area for the required drain piping connections under an adjacent bowl that ordinarily might not be easily accommodated if the knee and toe clearance were required under all bowls of a multiple-bowl sink. If the kitchen sink is of a single-bowl design, the knee and toe clearances must be provided under the entire sink (bowl).

Cabinetry is also allowed to be installed under the kitchen sink provided that: 1) the cabinetry can be removed without removal of the sink or countertop; 2) the current floor finish must extend under such cabinetry and 3) the wall behind and the sides of the cabinetry (adjacent to the cabinet to be removed) be finished before the cabinetry is initially installed under the kitchen sink.

Although not required by ICC A117.1, plumbing piping should not interfere with the removal of cabinetry, as the intent of the removable cabinet feature is that the cabinetry can be easily and economically removed to convert a Type A design sink installation to an Accessible design sink installation. Providing this ease of cabinet removability requirement might be problematic if plumbing piping is required to extend up from the floor, outside the wall cavity. Therefore, prior planning and coordination with the cabinet installer are recommended. There are no requirements for the removable cabinetry to be removed "intact"; it could be destructively dismantled. However, prudent design of the removable cabinetry would allow for nondestructive removal so that reinstallation is possible to return the room environment back to a more standard-looking "residential-like" environment.

Plumbing components such as stops and supply piping must not be in required knee and toe clearance areas and where located near to knee and toe clearances, those components must have a smooth covering installed to protect the user. It is the intent of ICC A117.1 that these coverings be installed upon initial installation of the plumbing installation so as to make the installation compliant without the cabinet in place. In other words, no components would be required to be added to the installation to comply with forward approach requirements.

Drinking Fountains (Type A Design)

There is no requirement for drinking fountains in a Type A design.

Enhanced Reach Range Lavatories (Type A Design)

There are no requirements for this type of lavatory in a Type A design.

Faucets (Type A Design)

Faucets must be located and comply with the requirements for Accessible design.

Installation of Plumbing Fixtures in the Type B Design

The plumbing fixture installation requirements for a Type B design are covered by Section 1004.11 of ICC A117.1. Although the Type B design could be considered to provide a lesser degree of accessibility than the designs previously discussed, the Type B design should be viewed as a design that provides for basic accessibility requirements rather than a downgraded Type A design or Accessible design. The Type B design can be either of an Option A or an Option B configuration.

Water Closets for Wheelchair Access (Type B, Option A Design)

The water closet centerline is required to be located at 16 (406 mm) to 18 inches (457 mm) from the finished surface of an adjacent wall or edge of adjacent fixture. However, where a swing up grab bar is to be installed adjacent to the water closet, the centerline of the water closet must be not less than 18 inches (457 mm) from the finished surface of an adjacent wall or edge of adjacent fixture [see Commentary Figure 404(31)]. The requirement for swing up grab bar is dependent on the approach direction to the water closet and the presence (or absence) of an adjacent sidewall. Refer to Sections 1004.11.1 and 1004.11.1.1 of ICC A117.1 for further details about grab bar installations around water closets.

Type B, Option A design requires a water closet seat height of 15 to 19 inches (380 to 483 mm) above the finished floor. Flush handle height must comply with that for Accessible design and the flush handle must be located on the open side of the water closet.

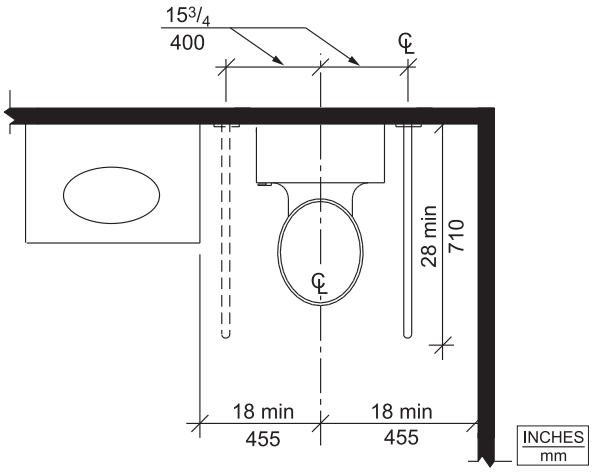

Figure 404(31)
SWING UP GRAB BAR FOR WATER CLOSET

Urinals for Wheelchair Access (Type B, Option A Design)

There are no requirements for urinals in the Type B design. A urinal could be installed in a Type B design

INTERNATIONAL CODE COUNCIL®
Copyright © 2015 ICC. ALL RIGHTS RESERVED. Accessed by David Dammon on Jun 21, 2017 12:30:52 PM pursuant to License Agreement with ICC. No further reproduction or distribution authorized. ANY UNAUTHORIZED REPRODUCTION OR DISTRIBUTION IS A VIOLATION OF THE FEDERAL COPYRIGHT ACT AND THE LICENSE AGREEMENT, AND SUBJECT TO CIVIL AND CRIMINAL PENALTIES THEREUNDER.

but it must not be a substitute for the accessible water closet. The urinal does not have to be installed in accordance with the Accessible design dimensional requirements because the water closet serves as the required accessible fixture. However, it would be prudent to install the urinal at or below the Accessible design height so that wheelchair users (as well as children) could benefit from the urinal installation.

Bathtubs (Type B, Option A Design)

For Type B, Option A design, Commentary Figures 404(32) and 404(33) show the required clear floor space for the two possible approaches to the bathtub. Diagram “a” of Commentary Figure 404(32) shows the required clear floor space where there is either no fixture located in the clear floor space or a lavatory in compliance with the Accessible design is located in the clear floor space. Diagram “b” of Commentary Figure 404(32) shows the required clear floor space where there is a countertop (with or without a vanity below) having a lavatory bowl. The lavatory in Diagram “b” must have the required clear space for a parallel approach to the lavatory [see commentary for “Lavatories (Type B, Option A Design)”]. The “jog” in the control end wall is the result of providing at least the required minimum length of clear floor space of 48 inches (1219 mm) plus the depth of the lavatory countertop.

Commentary Figure 404(33) shows the required clear floor space where there is a forward approach to the bathtub and a water closet is adjacent to the bathtub [see the previous commentary for “Water Closets for Wheelchair Access (Type B, Option A Design)”].

Blocking for bathtub grab bars is required to be installed in walls in accordance with the dimensional requirements for the Accessible design.

Showers (Type B, Option A Design)

If the only bathing fixture in the Type B, Option A designed unit is a shower, it must be at least the size of an Accessible design transfer-type shower as shown in Commentary Figure 404(16) with the following modifications:

1. The clear floor space is only required to be 30 inches (760 mm) in width.
2. The blocking for the seat is not required if the shower is larger in size than both of the minimum shower dimensions.

Blocking for grab bars is required to be installed in accordance with the dimensional requirements for the Accessible design transfer shower.

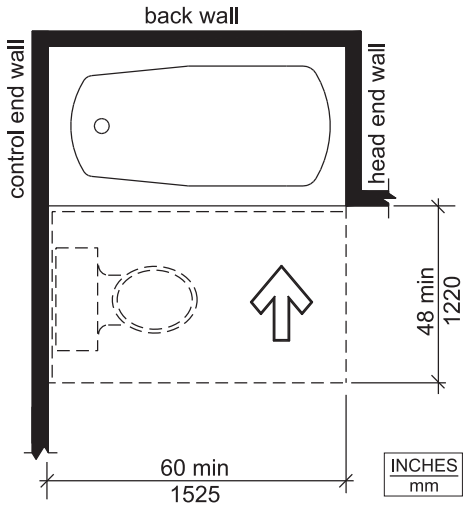

Figure 404(33)
FORWARD APPROACH BATHTUB IN TYPE B UNITS

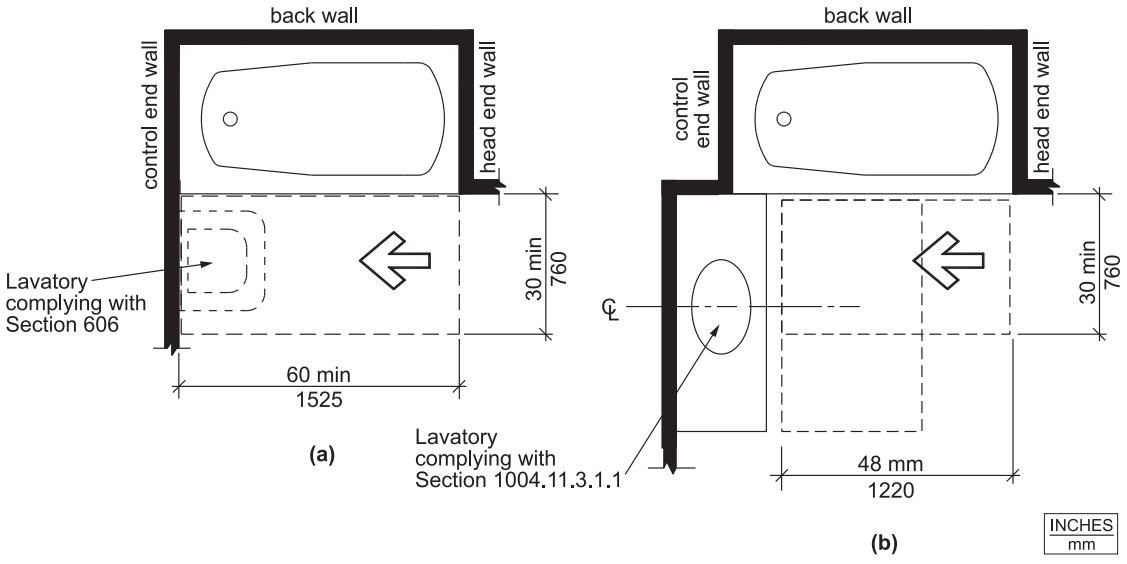

Figure 404(32)
PARALLEL APPROACH BATHTUB IN TYPE B UNITS

INTERNATIONAL CODE COUNCIL®
Copyright © 2015 ICC. ALL RIGHTS RESERVED. Accessed by David Dammon on Jun 21, 2017 12:30:52 PM pursuant to License Agreement with ICC. No further reproduction or distribution authorized. ANY UNAUTHORIZED REPRODUCTION OR DISTRIBUTION IS A VIOLATION OF THE FEDERAL COPYRIGHT ACT AND THE LICENSE AGREEMENT, AND SUBJECT TO CIVIL AND CRIMINAL PENALTIES THEREUNDER.

Hand Showers (Type B, Option A Design)

Hand showers are not required in either showers or bathtubs. Standard shower heads are acceptable. If a hand shower is installed, there are no requirements for supplying or installing the hand shower in accordance with previously discussed Accessible designs or that the hand shower be compliant with the operational requirements for accessible controls.

Lavatories (Type B, Option A Design)

There are three possible arrangements for lavatories in Type B, Option A units.

1. Where there is at least a 30-inch (762 mm) by 48-inch (1219 mm) clear floor space for parallel approach in front of the lavatory, with or without permanent cabinetry below, a lavatory can be installed [see Commentary Figure 404(32), Diagram "b"]. The lavatory bowl center must be not less than 24 inches (610 mm) from one end of the clear floor space length dimension. The height of the lavatory must be not greater than 34 inches (864 mm) above the finished floor.
2. Where there is at least a 30-inch (762 mm) by 60-inch (1219 mm) clear floor space for forward approach to the lavatory, a wall-mounted lavatory that complies with all of the requirements for an Accessible design lavatory can be installed [see Commentary Figure 404(32), Diagram "a"]. The lavatory bowl center must be not less than 15 inches (381 mm) from one end of the clear floor space width dimension.
3. Where removable cabinetry is planned for below a lavatory, a clear floor space of at least 30 inches (762 mm) by 60 inches (1219 mm) for forward approach (after the cabinet is removed) must be provided. The removable cabinet must not support the lavatory/countertop and the wall/floor must be finished under/behind the cabinet. The lavatory bowl center must be not less than 15 inches (381 mm) from either edge of the clear floor space width dimension. The lavatory/countertop must comply with the height, knee/toe clearances and pipe protection requirements required for an Accessible design lavatory. The intent of the ICC A117.1 standard is for the pipe protection to be installed at the time of the initial installation such that only cabinet removal is required to comply with forward approach lavatory requirements.

Drinking Fountains (Type B, Option A Design)

There is no requirement for drinking fountains in Type B, Option A units.

Sinks (Type B, Option A Design)

There are two possible arrangements for kitchen sinks:

1. Where the approach is parallel to the sink and knee/toe clearances are not provided under the sink, the sink can be any height. A clear floor space of at least 30 inches (762 mm) by 48 inches (1219 mm) for parallel approach must be provided in front of the sink. The center of the bowl (or one of the bowls of a two-bowl sink) must be not less than 24 inches (610 mm) from one end of the clear floor space length dimension.
2. A sink that complies with all of the requirements for Accessible design can be installed. A clear floor space of at least 30 inches (762 mm) by 48 inches (1219 mm) for forward approach must be provided in front of the bowl (or one of the bowls of a two-bowl sink). The center of the bowl (or one of the bowls of a two-bowl sink) must be not less than 15 inches (381 mm) from either edge of the clear floor space width dimension. The sink is also permitted to have parallel approach configuration having a clear floor space of at least 30 inches (762 mm) by 48 inches (1219 mm). The center of the bowl (or one of the bowls of a two-bowl sink) must be not less than 24 inches (610 mm) from one end of the clear floor space length dimension.

Enhanced Reach Range Lavatories (Type B, Option A Design)

There are no requirements for this type of lavatory in Type B, Option A design.

Faucets (Type B, Option A Design)

Faucets are required be compliant with the operational limitations required for accessible controls.

Water Closets for Wheelchair Access (Type B, Option B Design)

The water closet requirements are the same as for the Type B, Option A design.

Urinals for Wheelchair Access (Type B, Option B Design)

There is no discussion of urinals for the Type B design. However, there is nothing to prohibit the installation of a urinal in a Type B design unit other than the urinal must not be a substitute for an accessible water closet. The urinal does not have to be installed in accordance with the Accessible design dimensional requirements because the water closet serves as the required accessible fixture. However, it would be prudent to mount the urinal at the Accessible design height so that male wheelchair users (as well as children) could benefit from the urinal installation.

Bathtubs (Type B, Option B Design)

The bathtub requirements are the same as for the Type B, Option A design.

INTERNATIONAL CODE COUNCIL®
Copyright © 2015 ICC. ALL RIGHTS RESERVED. Accessed by David Dammon on Jun 21, 2017 12:30:52 PM pursuant to License Agreement with ICC. No further reproduction or distribution authorized. ANY UNAUTHORIZED REPRODUCTION OR DISTRIBUTION IS A VIOLATION OF THE FEDERAL COPYRIGHT ACT AND THE LICENSE AGREEMENT, AND SUBJECT TO CIVIL AND CRIMINAL PENALTIES THEREUNDER.

Showers (Type B, Option B Design)

The shower requirements are the same as for the Type B, Option A design.

Hand Showers (Type B, Option B Design)

Hand showers are required in compliance with Accessible design requirements.

Lavatories (Type B, Option B Design)

The lavatory requirements are the same as for the Type B, Option A design.

Sinks (Type B, Option B Design)

The sink requirements are the same as for the Type B, Option A design.

Drinking Fountains (Type B, Option B Design)

There is no requirement for drinking fountains in the Type B, Option B design.

Enhanced Reach Range Lavatories (Type B, Option B Design)

There are no requirements for this type of lavatory in the Type B, Option B design.

Faucets (Type B, Option B Design)

❖ Faucets are required be compliant with the operational limitations required for accessible controls.

404.3 Exposed pipes and surfaces. Water supply and drain pipes under accessible lavatories and sinks shall be covered or otherwise configured to protect against contact. Pipe coverings shall comply with ASME A112.18.9.

❖ Persons seated in a wheelchair and using a sink or lavatory designed for accessibility could have their legs come in contact with the drain trap and water supply tubing and valves under those plumbing fixtures. The traps, tubing and valves could have sharp edges that could abrade skin. One way to protect the wheelchair-seated person from coming in contact with those components is to build cabinetry to conceal the components. The cabinetry would need to be designed to allow the necessary leg and toe clearance for a wheelchair-seated person. Figures 306.2 and 306.3 in ICC A117.1 indicate the required clearance. Another way to protect the wheelchair-seated user is to install "covers" on the components. The covers must comply with ASME A112.18.9.

SECTION 405
INSTALLATION OF FIXTURES

405.1 Water supply protection. The supply lines and fittings for every plumbing fixture shall be installed so as to prevent backflow.

❖ This section identifies minimal installation requirements for water supply protection. Backflow prevention is perhaps the most important aspect of a plumbing code (see commentary, Section 608). All plumbing fixtures, plumbing appliances and water distribution system openings, outlets and connections are potentially capable of contaminating the potable water supply.

405.2 Access for cleaning. Plumbing fixtures shall be installed so as to afford easy access for cleaning both the fixture and the area around the fixture.

❖ Poorly designed facilities lead to challenges for housekeeping professions. For proper sanitation, every plumbing fixture must be capable of being cleaned. The installation of any fixture must not result in concealed spaces that do not facilitate proper cleaning.

405.3 Setting. Fixtures shall be set level and in proper alignment with reference to adjacent walls.

❖ The operational design of plumbing fixtures and the connections to those fixtures requires that the fixture be installed with certain surfaces either level or plumb. This level fixture setting is required regardless of any out-of-level or out-of-plumb condition of the building structure that the fixture attaches to or rests upon. For example, a floor surface around a water closet connection may be out of level, but when the water closet is installed, the base of the water closet must be either shimmed or grouted such that the fixture is in level condition. Where a water closet is in an out-of-level condition, the integral trap may not provide the required water seal depth and the flushing action within the fixture may be compromised. Where a wall-mounted lavatory is mounted to an out-of-plumb wall, water in the basin may not completely drain and the trap below may not have the required water seal depth due to also being in an out-of-plumb condition. The lavatory must be installed so as to be level, regardless of the wall condition.

Proper alignment to adjacent walls is a subjective requirement, but the intent is that the installed fixture appear to be "square" and "in alignment" with the walls that are in close proximity to the fixture. An example would be the clearance from the back of a water closet flush tank to the wall behind it. The gap should appear to be even. Another example is one-piece lavatory countertop with bowl on a vanity. The backsplash of the countertop should appear to be even against the wall so as to prevent large gaps that are difficult to caulk and maintain a seal against possible splashing. While the code is not specific on the precision of the alignments, the intent is to ensure that fixtures are installed with attention to details that could affect the operation and future sanitary condition of the fixture.

405.3.1 Water closets, urinals, lavatories and bidets. A water closet, urinal, lavatory or bidet shall not be set closer than 15 inches (381 mm) from its center to any side wall, partition, vanity or other obstruction, or closer than 30 inches (762 mm) center to center between adjacent fixtures. There shall be not less than a 21-inch (533 mm) clearance in front of the water closet, urinal, lavatory or bidet to any wall, fixture or door. Water closet compartments shall be not less than 30 inches (762 mm) in width and not less than 60 inches (1524 mm) in depth for floor-mounted water closets and not less

INTERNATIONAL CODE COUNCIL®
Copyright © 2015 ICC. ALL RIGHTS RESERVED. Accessed by David Dammon on Jun 21, 2017 12:30:52 PM pursuant to License Agreement with ICC. No further reproduction or distribution authorized. ANY UNAUTHORIZED REPRODUCTION OR DISTRIBUTION IS A VIOLATION OF THE FEDERAL COPYRIGHT ACT AND THE LICENSE AGREEMENT, AND SUBJECT TO CIVIL AND CRIMINAL PENALTIES THEREUNDER.

than 30 inches (762 mm) in width and 56 inches (1422 mm) in depth for wall-hung water closets.

❖ For the 2012 edition, Code Figure 405.3.1 was removed because the figure fell short of providing a clear understanding of the requirements and, in some cases, made the requirements more confusing. In the context of this section only, bathtubs and showers are not considered to be "fixtures" but "obstructions" for which the minimum clearance dimensions from the indicated fixtures must be observed. Required minimum clearances in front of bathtubs and showers are not addressed in the code.

The requirements for placement and installation of plumbing fixtures for accessibility in toilet and bathing facilities "override" this section's dimensional requirements for "nonaccessible" plumbing fixture installation (see commentary, Section 404). A critical point that is often overlooked by designers and contractors is the accessibility requirement that the distance between urinal partitions for the wheelchair-accessible urinal must be at least 36 inches (914 mm). The centerline of the wheelchair-accessible urinal must be at least 18 inches (457 mm) from the face of each partition and not the minimum of 15 inches (381 mm) as required for a nonaccessible urinal.

Even though the code section is silent on exactly how the dimensions indicated in this section are to be measured, the intent is that the dimensions are to be measured to finished surfaces of walls (including tile or other coverings) and to imaginary vertical planes located against the most exterior feature of a fixture or obstruction. The code is also silent on whether minor protrusions from walls such as paper product dispensers, hand dryers, cove moldings, diaper-changing units, display cases, vending machines and grab bars impact the measurements discussed in this section.

The centers of the fixtures discussed in this section are not specific points on the fixtures, but a point that is "derived." For example, a centerline of a lavatory bowl is typically ascertained by calculating the "halfway" dimension between the widest outside dimensions of the bowl. Given the difficulty in locating an exact center of a fixture and a lack of coordination between trades, establishing an inspection tolerance for the spacing and clearance dimensions required by this code section is next to impossible. However, code officials will necessarily impart their own acceptance criteria (i.e., tolerances) during an inspection in order to accept or reject a required clearance dimension. Therefore, designers of toilet facilities are cautioned against creating layouts, which require building to the exact minimum clearance dimensions. A fixture layout having greater-than-the-minimum-clearance dimensions is inherently easier to build and results in far less inspection difficulties.

Note that all of the minimum dimensions stated in this code section might be overridden by the accessibility requirements of Chapter 11 of the IBC. See the commentary for Section 404 for more information.

Good design practices for toilet facilities and bathrooms usually provide clearances in excess of the minimum requirements in order to provide for appealing aesthetics and user friendliness.

The 21-inch (533 mm) minimum clearance from the front edge of a fixture to any wall, fixture or door applies only to water closets, urinals, lavatories and bidets. This dimension has been determined to be the necessary space required by a user to properly and safely use these fixtures. A question that is frequently asked is: "Does the intent of the requirement for providing at least 21 inches clearance in front of a water closet, urinal, lavatory or bidet to any wall, fixture or door include the door in any position of its swing path?" The answer is no. The purpose of the 21-inch (533 mm) clearance is to provide the user adequate space in front of the fixture to use it comfortably. As the door in any open position is an object that can be moved out of the way to provide the user space, there is no need to provide additional clearance from the door in any position of its opening swing path. Toilet room doors are normally closed when the fixtures are being used, which is another reason why it is assumed that the user will have adequate space to be able to use the fixture after moving the door out of his or her way.

There are many real-world examples of where doors swing into this 21-inch (533 mm) clearance zone. One example is a typical three-fixture, minimum size, hotel/motel bathroom where the door swings through the clearance area in front of all three fixtures in the bathroom. Typical powder rooms in dwellings and single-occupant toilet rooms in commercial occupancies are commonly designed with doors that swing into the space in front of water closets and lavatories. Another example is the typical (nonaccessible) minimum size-[30-inch by 60-inch (762 mm by 1524 mm)] water closet compartment, where the door swings into the compartment. If the many users of the code enforced this section to require the clearance for the door swing path, there would have been many attempts over numerous past code cycles to change the code text to specifically state that requirement; however, there have been no such proposals brought forth. And, because it has been common practice to allow door swing paths into the fixture user area (as evidenced by the examples presented), the commentary authors have concluded that this code section does not intend to prohibit doors from swinging into the 21-inch (553 mm) clearance. In other words, if the code intended to measure from the door swing, there would be evidence that the code is being enforced that way, but it is apparently not being enforced that way.

Could there be some multiple-user toilet room arrangements where allowing the door swing path to encroach into the 21-inch (553 mm) user clearance area would, in some cases, be aggravating to the users of the toilet facility? There are bound to be some; however, in most cases, this potential problem is rarely encountered in real-world scenarios because accessibility travel path and clear floor space requirements

INTERNATIONAL CODE COUNCIL®
Copyright © 2015 ICC. ALL RIGHTS RESERVED. Accessed by David Dammon on Jun 21, 2017 12:30:52 PM pursuant to License Agreement with ICC. No further reproduction or distribution authorized. ANY UNAUTHORIZED REPRODUCTION OR DISTRIBUTION IS A VIOLATION OF THE FEDERAL COPYRIGHT ACT AND THE LICENSE AGREEMENT, AND SUBJECT TO CIVIL AND CRIMINAL PENALTIES THEREUNDER.

automatically require larger spaces in toilet rooms. If the code intended to apply to the door swing path, it would be stated outright, similar to the way the IBC addresses doors that swing into corridors, for example.

Note that the egress requirements of the IBC require that egress doors not be prevented from fully opening (see Commentary Figure 405.3.2).

If there are two fixtures facing each other, the 21-inch (533 mm) clearance in front of each fixture can overlap; however, the minimum egress width requirements in the IBC would most likely prevent a complete overlap of the frontal minimum clearances. Accessibility requirements for fixtures that are required to be accessible will require greater frontal approach dimensions. Door swing paths, in some accessible situations, are not allowed to overlap the accessible frontal approach dimensions.

The 15-inch (381 mm) minimum clearance dimension from the center of a fixture to any sidewall, partition, vanity or other obstruction only applies to water closets, urinals, lavatories and bidets. Note that the requirement does not include "to any fixture" as the 30-inch (762 mm) minimum center to center for fixtures, as discussed below, controls the spacing between fixtures. Fixtures that are required to be accessible require greater clearances from centerline to sidewall, partition, vanity or other obstructions (see commentary, Section 404).

The 30-inch (762 mm) minimum center-to-center dimension is only between the centers of water closets, urinals, lavatories and bidets. Public restrooms, having the requirement for partitions and compartments separating fixtures, cannot have fixtures located at the minimum of 30 inches (762 mm) center to center. The controlling aspect is the 15-inch (381 mm) minimum dimension from the center of the fixture to the required partition or compartment wall, not the center of the adjacent fixture. In other words, the thicknesses of partitions must be considered, thereby necessitating dimensions greater than 30 inches (762 mm) center to center.

Lavatories, both private and public, that are part of vanities require special attention. As indicated in the previous paragraph, a vanity, an "obstruction" in the context of this section, can be no closer than 15 inches (381 mm) to the centerline of an adjacent fixture. The center of the lavatory bowl, which is in the lavatory top that rests on the vanity, must be no closer than 30 inches (762 mm) to the centerline of an adjacent fixture. If the center of the lavatory is less than 15 inches (381 mm) from the side edge of the lavatory top, then the 30-inch (762 mm) center-to-center minimum dimension controls. If the center of the lavatory is greater than 15 inches (381 mm), then the 15 inches (381 mm) from the centerline of the adjacent fixture to the nearest obstruction (i.e., the edge of the lavatory top, not necessarily the vanity cabinet) controls (see Commentary Figure 405.3.1(1). Note that locating the vanity cabinet at 15 inches (381 mm) from the centerline of the adjacent fixture would not necessarily provide the required minimum clearance, as most lavatory tops overhang the edge of the vanity cabinet to some extent [e.g., $^3/_4$ inch (19.1 mm)]. For example, a 48-inch-wide (1219 mm) vanity cabinet is provided with a 49-inch-wide (1245 mm) cultured marble integral lavatory bowl countertop. Theoretically, this countertop could overhang along one side as much as 1 inch (25 mm).

Improper location of lavatories and lavatory vanities narrower than 30 inches (762 mm), offset-to-one-side bowls in lavatory countertops, and corner lavatory arrangements can unknowingly cause code violations. Where there is a strong emphasis on minimizing bathroom spaces, designers might be tempted to reduce the space for the lavatory by choosing a narrow vanity width or providing a wall mount or pedestal lavatory of a narrow dimension with the intent of locating this fixture as close as possible to a side wall. This can be a violation. Bowls in the lavatory countertops are often located offset to one side in order to provide clearance for vanity cabinet drawers beneath. Again, a violation can be created as there is not sufficient clearance from the center of the lavatory (bowl) to the adjacent sidewall or to an adjacent fixture to provide for proper use of the lavatory.

The code does not offer any specific insight concerning corner sinks. One possible method for determining the required clearances would be to establish a vertical plane perpendicular to a horizontal centerline extending from the corner though the center of the lavatory bowl and positioning this plane at the front edge of the fixture. This "user width" could be determined by measuring horizontally within the established plane from the centerline of the lavatory to a point where the plane insects the adjacent wall. The intent of this section appears to be to provide a "user width" of at least 30 inches (762 mm). If the measured dimensions left and right of the lavatory centerline are 15 inches (381 mm) or more, then the "user width" requirement of this section is satisfied. The front clearance measurement for this type of fixture could also utilize the imaginary front edge plane as a reference point. The intent of this section appears to be to provide a "user depth" of at least 21 inches (533 mm). Therefore, for a corner lavatory, the "user space" of 30 inches (762 mm) wide by 21 inches (533 mm) deep must not be encroached upon by other fixtures, closed doors or walls (see Commentary Figure 405.3.1(2).

For the 2012 edition of the code, the language of this section was amended to make a distinction between the compartment depths for wall-hung water closets [56 inches (1422 mm)] versus floor-mounted water closets [60 inches (1524 mm)]. The reason for this change was to align the code with the minimum requirement of the accessibility standard ANSI A117.1, which is referenced by the IBC. Note, however, that where accessible water closet compartments for children's use are concerned, the required minimum compartment depth according to ANSI A117.1 is 59 inches (1499 mm).

INTERNATIONAL CODE COUNCIL®
Copyright © 2015 ICC. ALL RIGHTS RESERVED. Accessed by David Dammon on Jun 21, 2017 12:30:52 PM pursuant to License Agreement with ICC. No further reproduction or distribution authorized. ANY UNAUTHORIZED REPRODUCTION OR DISTRIBUTION IS A VIOLATION OF THE FEDERAL COPYRIGHT ACT AND THE LICENSE AGREEMENT, AND SUBJECT TO CIVIL AND CRIMINAL PENALTIES THEREUNDER.

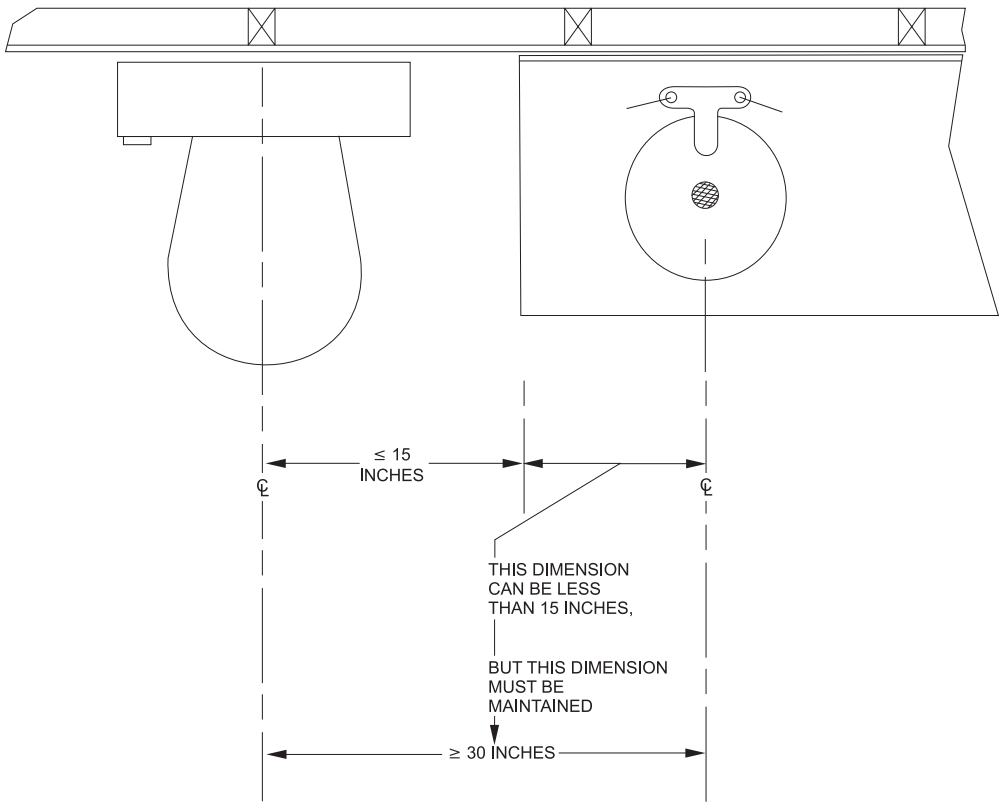

For SI: 1 inch = 25.4 mm.

Figure 405.3.1(1)
MINIMUM CLEARANCE BETWEEN FIXTURES

405.3.2 Public lavatories. In employee and *public* toilet rooms, the required lavatory shall be located in the same room as the required water closet.

❖ In employee and public toilet rooms, the required lavatory must be located in the same room as the required water closet or in an adjacent room connected by openings without doors. This provides the user with necessary sanitary facilities to promote proper hygiene and to prevent the spread of infectious diseases. In some public toilet arrangements, the water closets and urinals are located in a separate room from the lavatories, thereby requiring the user to engage doors to access the lavatories after using a urinal or water closet. Such an arrangement would be a violation of this section as the intent is that the lavatories be available to allow the user to wash his/her hands prior contacting any door handle or push plate for exiting the toilet facility.

405.3.3 Location of fixtures and piping. Piping, fixtures or equipment shall not be located in such a manner as to interfere with the normal operation of windows, doors or other means of egress openings.

❖ Fixtures and piping located in washrooms or toilet rooms cannot adversely affect the operation of building components such as windows and doors. The location of the fixtures and piping should not interfere with or block an occupant's egress to or from that space (see Commentary Figure 405.3.2). Obstructions caused by fixtures or piping can seriously hamper egress in an emergency condition or cause injury to the occupants.

405.3.4 Water closet compartment. Each water closet utilized by the *public* or employees shall occupy a separate compartment with walls or partitions and a door enclosing the fixtures to ensure privacy.

Exceptions:

1. Water closet compartments shall not be required in a single-occupant toilet room with a lockable door.
2. Toilet rooms located in child day care facilities and containing two or more water closets shall be permitted to have one water closet without an enclosing compartment.
3. This provision is not applicable to toilet areas located within Group I-3 housing areas.

❖ Psychological studies have proven that lack of privacy places a burden on an individual's physical ability to use bathroom facilities. This is caused by uneasiness, inhibition or indignation. A partitioned compartment can

INTERNATIONAL CODE COUNCIL®
Copyright © 2015 ICC. ALL RIGHTS RESERVED. Accessed by David Dammon on Jun 21, 2017 12:30:52 PM pursuant to License Agreement with ICC. No further reproduction or distribution authorized. ANY UNAUTHORIZED REPRODUCTION OR DISTRIBUTION IS A VIOLATION OF THE FEDERAL COPYRIGHT ACT AND THE LICENSE AGREEMENT, AND SUBJECT TO CIVIL AND CRIMINAL PENALTIES THEREUNDER.

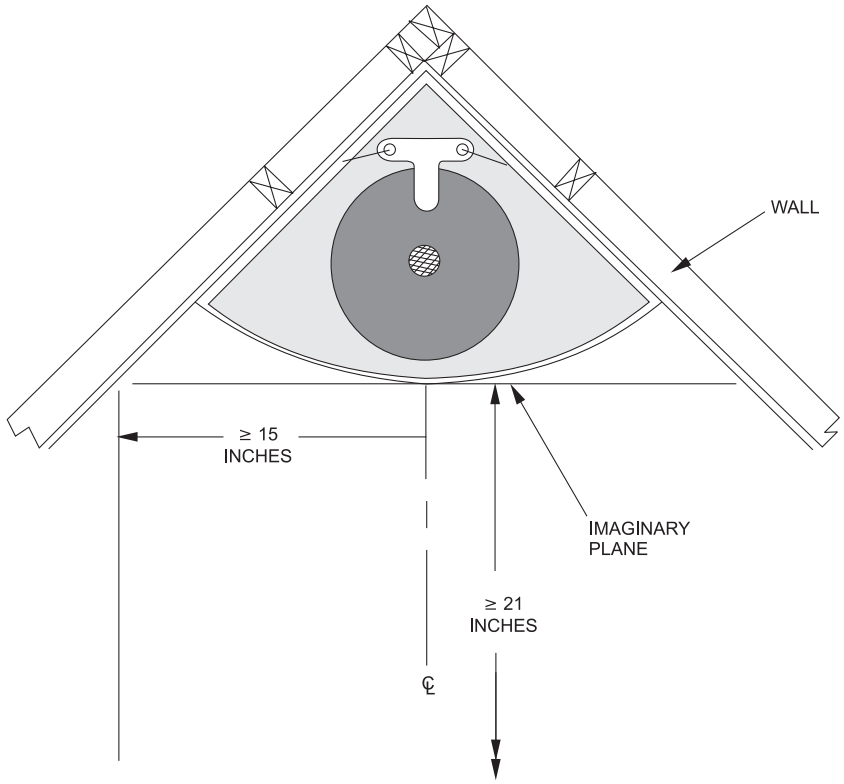

For SI: 1 inch = 25.4 mm.

Figure 405.3.1(2)
CORNER SINK USER CLEARANCE

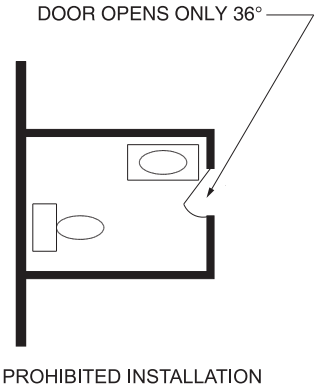

For SI: 1 degree = 0.0174.5 rad.

Figure 405.3.2
FIXTURE AND PIPING OBSTRUCTION

provide the necessary privacy. Also, a single-occupant toilet room with a lockable door can provide the required privacy as stated in Exception 1. Exception 2, allowing an unenclosed water closet in a child care facility, recognizes the need for people to be able to assist children. Exception 3 is to allow for security personal to better monitor for illicit activities of inmates in Group I-3 occupancies.

405.3.5 Urinal partitions. Each urinal utilized by the *public* or employees shall occupy a separate area with walls or partitions to provide privacy. The walls or partitions shall begin at a height not greater than 12 inches (305 mm) from and extend not less than 60 inches (1524 mm) above the finished floor surface. The walls or partitions shall extend from the wall surface at each side of the urinal not less than 18 inches (457 mm) or to a point not less than 6 inches (152 mm) beyond the outermost front lip of the urinal measured from the finished backwall surface, whichever is greater.

Exceptions:

1. Urinal partitions shall not be required in a single-occupant or family/assisted-use toilet room with a lockable door.
2. Toilet rooms located in child day care facilities and containing two or more urinals shall be permitted to have one urinal without partitions.

❖ Users of urinals in a public toilet room need to be afforded a level of privacy for the reasons stated in the commentary to Section 405.3.4. In addition, partitions aid in protecting adjacent users from splashing. Because of the likelihood of splashing, the partition surfaces must be designed so that they can be easily cleaned and sanitized during normal restroom maintenance. Exception 1 assumes that in a single-occupant toilet room or a family/assisted-use toilet room, privacy is afforded by locking the door. Exception 2 allows day

INTERNATIONAL CODE COUNCIL®
Copyright © 2015 ICC. ALL RIGHTS RESERVED. Accessed by David Dammon on Jun 21, 2017 12:30:52 PM pursuant to License Agreement with ICC. No further reproduction or distribution authorized. ANY UNAUTHORIZED REPRODUCTION OR DISTRIBUTION IS A VIOLATION OF THE FEDERAL COPYRIGHT ACT AND THE LICENSE AGREEMENT, AND SUBJECT TO CIVIL AND CRIMINAL PENALTIES THEREUNDER.

care and child care centers to have one urinal out of two or more urinals in a toilet room to be without partitions. This affords care providers the ability to assist or supervise certain children with the use of the urinal (e.g., those just learning to use a urinal or those with difficult clothing arrangements). Where urinal partitions are provided, occupants are more inclined to use a urinal rather than using a water closet for urination. This will result in less soiling of water closet seats and surrounding surfaces [see Commentary Figures 405.3.5(1) and 405.3.5(2)]. Note that where partitions are used, the distance from the center of the urinal to the face of the partition must be at least 15 inches (381 mm) to be in compliance with Section 405.3.1. The thickness of partitions cannot encroach into the required spaces for fixtures.

405.4 Floor and wall drainage connections. Connections between the drain and floor outlet plumbing fixtures shall be made with a floor flange or a waste connector and sealing gasket. The waste connector and sealing gasket joint shall comply with the joint tightness test of ASME A112.4.3 and shall be installed in accordance with the manufacturer's instructions. The flange shall be attached to the drain and anchored to the structure. Connections between the drain and wall-hung water closets shall be made with an *approved* extension nipple or horn adaptor. The water closet shall be bolted to the hanger with corrosion-resistant bolts or screws. Joints shall be sealed with an *approved* elastomeric gasket, flange-to-fixture connection complying with ASME A112.4.3 or an *approved* setting compound.

❖ For the 2012 edition of the code, another type of connection arrangement for floor outlet fixtures was added to this section. The water closet manufacturing industry refers to this "new" method as the "gasketed waste tube connection method" [see Commentary Figure 405.4(1)]. While this method is new for the North American plumbing industry, the gasketed waste tube connection method has been used in European countries (and countries using European standards) for many decades. This new connection method will allow for a wider selection of water closet designs that are already being sold in markets outside of North America. Note that this method does not require a floor flange. In some cases, the presence of a floor flange could interfere with the water closet installation. Note that without a floor flange to support the pipe at the floor, it will be necessary for the piping installer to adequately support/provide blocking for the pipe to remain stationary when the sealing gasket/waste tube assembly is pressed into the pipe opening (or pulled out from the opening). Also note that the rough-in dimension for gasketed waste tube connected water closets may not necessarily be standardized in the familiar 14-, 12- and 10-inch (356, 305 and 254 mm) center-of-outlet to face-of-finished-wall dimensions. Piping installers will need to know the exact model of water closet to be



Figure 405.3.5(1)
URINAL PARTITIONS
(Photo courtesy of Falcon Waterfree Technologies)

INTERNATIONAL CODE COUNCIL®
Copyright © 2015 ICC. ALL RIGHTS RESERVED. Accessed by David Dammon on Jun 21, 2017 12:30:52 PM pursuant to License Agreement with ICC. No further reproduction or distribution authorized. ANY UNAUTHORIZED REPRODUCTION OR DISTRIBUTION IS A VIOLATION OF THE FEDERAL COPYRIGHT ACT AND THE LICENSE AGREEMENT, AND SUBJECT TO CIVIL AND CRIMINAL PENALTIES THEREUNDER.

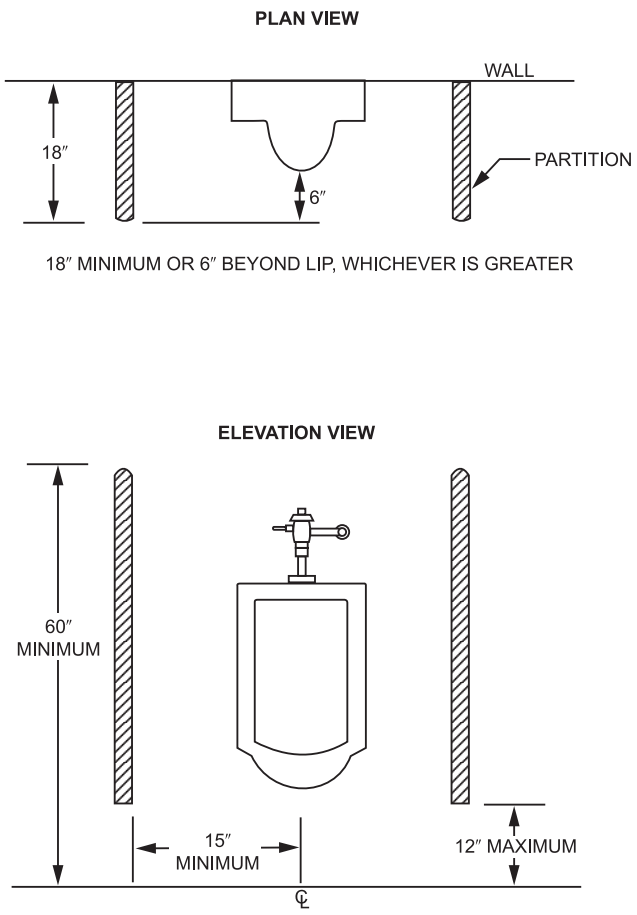

For SI: 1 inch = 25.4 mm.

Figure 405.3.5(2)
URINAL PARTITIONS

installed prior to installing the outlet pipe to ensure that the gasketed waste tube connection arrangement will work.

The flange connection method is the most common connection method used in North America. The bottom outlet of the water closet forms one half of the flange and the floor flange forms the other half of the connection [see Commentary Figure 405.4(2)]. The setting compound most commonly used is a ring made of a synthetic wax. In the past, putty was commonly used but this practice is rare as putty dries out and cracks. Elastomeric gaskets are also used between fixture outlets (horns) and flanges. Corrosion-resistant bolts or screws are required in this application so that there is not a reduction of strength of the fastener over time due to corrosion. Failure of the bolting of a wall-hung water closet could result in serious personal injury and fixture damage. The flange-to-fixture connection complying with ASME A112.4.3 is a special plastic fitting that is only suitable for floor-mounted, bottom discharge water closets. The device seals to the inside of the drain pipe with an elastomeric o-ring and seals to the outlet of the water closet bowl with an elastomeric gasket. The gasket does not adhere to the bowl but seals to the bowl when backpressure in the drain pipe occurs. Where this device is used, the floor flange only serves as an attachment point for the closet bowl bolts.

405.4.1 Floor flanges. Floor flanges for water closets or similar fixtures shall be not less than 0.125 inch (3.2 mm) thick for brass, 0.25 inch (6.4 mm) thick for plastic and 0.25 inch (6.4 mm) thick and not less than a 2-inch (51 mm) caulking depth for cast iron or galvanized malleable iron.

Floor flanges of hard lead shall weigh not less than 1 pound, 9 ounces (0.7 kg) and shall be composed of lead alloy with not less than 7.75-percent antimony by weight. Closet screws and bolts shall be of brass. Flanges shall be secured to the building structure with corrosion-resistant screws or bolts.

❖ Closet bolts must be made of brass because of its strength and corrosion resistance, because they alone

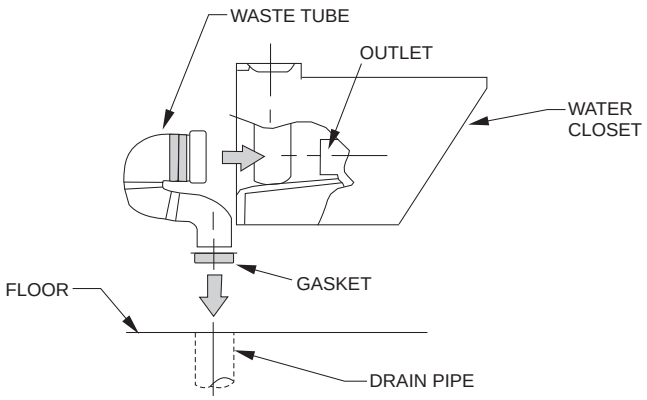

Figure 405.4(1)
GASKETED WASTE TUBE CONNECTION FOR WATER CLOSET

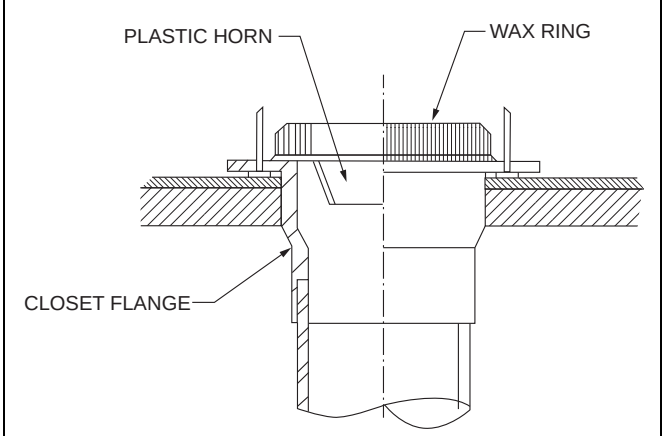

Figure 405.4(2)
WATER CLOSET FLOOR FLANGE

INTERNATIONAL CODE COUNCIL®
Copyright © 2015 ICC. ALL RIGHTS RESERVED. Accessed by David Dammon on Jun 21, 2017 12:30:52 PM pursuant to License Agreement with ICC. No further reproduction or distribution authorized. ANY UNAUTHORIZED REPRODUCTION OR DISTRIBUTION IS A VIOLATION OF THE FEDERAL COPYRIGHT ACT AND THE LICENSE AGREEMENT, AND SUBJECT TO CIVIL AND CRIMINAL PENALTIES THEREUNDER.

secure the water closet in place. Closet bolts are commonly available in other materials such as nylon and brass-plated steel; however, the code is specific on the use of brass for closet bolts.

Closet flanges must be firmly secured to the building structure because they receive the closet bolts that hold down the water closet. This ensures that the water closet is adequately supported and no load is transferred to any piping material attached to the flange. The fasteners securing the closet flange to the floor must also be corrosion resistant so that there is not a reduction of strength of the fasteners over time. Failure of these fasteners can allow the water closet to shift around and break down the wax ring seal resulting in undetectable water leakage under the water closet. Since the secure mounting of the water closet depends on the secure connection to the flange with brass closet bolts, it also depends on the secure mounting of the closet flange to the structure. The use of nails or drywall screws for installing closet flanges on wood subfloors is not code compliant and can result in structural damage soon after the initial installation.

With respect to securing closet flanges to concrete slabs, self-tapping, hex head, alloy carbon steel concrete screws are frequently used. The code does not define corrosion-resistant materials; therefore, it is unclear if alloy carbon steel has sufficient corrosion resistance to satisfy the intent of the code section or provide for a long service life. Other concrete attachment methods include drop-in-type lead or plastic anchors with flat head brass or stainless steel sheet metal screws. Solid brass and stainless steel screw materials have historically performed well in this application.

Occasionally, in light-frame construction, the required location for a water closet flange interferes with a structural member below the subfloor. Typically, if the structural member is "dead center" of where the water closet flange is to be located, the only two options are to either move the location of the water closet flange or move/modify the structural member. In some of these interference situations, only a small portion of the required hole in the subfloor is blocked by the structural member. Since the code does not prohibit the use of an "offset closet flange" in these situations, they can be used just as long as the structural member does not require notching in excess of the limitations. See the entire commentary to Section 307 for further information.

405.4.2 Securing floor outlet fixtures. Floor outlet fixtures shall be secured to the floor or floor flanges by screws or bolts of corrosion-resistant material.

❖ Floor outlet fixtures, such as water closets and bidets, are held in place by bolts or screws that attach to the floor structure or to a drain pipe floor flange, which is attached to the floor structure. These bolts and screws could be exposed to moisture and, therefore, must be corrosion resistant. The floor outlet fixture screws and bolts are usually constructed of brass (see commentary, Section 405.4.1).

405.4.3 Securing wall-hung water closet bowls. Wall-hung water closet bowls shall be supported by a concealed metal carrier that is attached to the building structural members so that strain is not transmitted to the closet connector or any other part of the plumbing system. The carrier shall conform to ASME A112.6.1M or ASME A112.6.2.

❖ Contrary to what the name implies, a wall-hung water closet is not actually supported by the wall that the water closet appears to be bolted to. The weight of the water closet and of the person sitting on the water closet is transferred through bolts or studs that are screwed into a robust metal carrier assembly. The carrier assembly is bolted to the floor behind the wall. The referenced standard ASME A112.6.1M or ASME A112.6.2 contains design and test requirements for the loading of the hanger (see Commentary Figure 405.4.3).

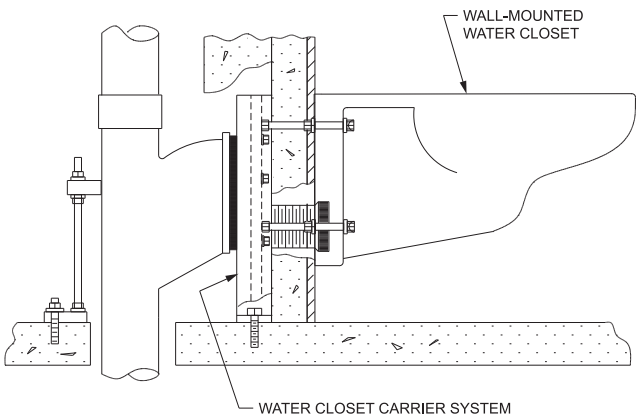

Figure 405.4.3
WALL-HUNG WATER CLOSET

405.5 Water-tight joints. Joints formed where fixtures come in contact with walls or floors shall be sealed.

❖ This section addresses the surface connection of the fixture to the floor or wall. The point of contact does not form a joint with any piping material; however, it is still an important area to seal where a fixture is installed to prevent a concealed fouling surface.

The contact joint is sealed with a substance such as plaster-of-paris, grout or caulking. The exact material selected to seal the joint should be capable of withstanding any anticipated movement of the fixture during its normal use. The seal prevents the accumulation of moisture, dirt or vermin that could lead to the growth of bacteria and structural deterioration in the concealed space [see Commentary Figures 405.5(1), 405.5(2) and 405.5(3)].

405.6 Plumbing in mental health centers. In mental health centers, pipes or traps shall not be exposed, and fixtures shall be bolted through walls.

❖ In certain mental health centers, care recipients are considered a danger to themselves; thus, special care is required to secure the plumbing fixtures and piping in these facilities.

INTERNATIONAL CODE COUNCIL®
Copyright © 2015 ICC. ALL RIGHTS RESERVED. Accessed by David Dammon on Jun 21, 2017 12:30:52 PM pursuant to License Agreement with ICC. No further reproduction or distribution authorized. ANY UNAUTHORIZED REPRODUCTION OR DISTRIBUTION IS A VIOLATION OF THE FEDERAL COPYRIGHT ACT AND THE LICENSE AGREEMENT, AND SUBJECT TO CIVIL AND CRIMINAL PENALTIES THEREUNDER.

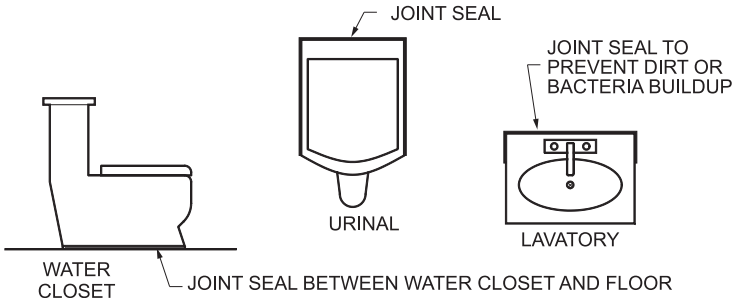

Figure 405.5(1)
JOINTS BETWEEN FIXTURES AND WALLS OR FLOORS



Figure 405.5(2)
VIOLATION: LAVATORY NOT ATTACHED OR SEALED TO WALL



Figure 405.5(3)
LAVATORY PROPERLY SEALED TO WALL

405.7 Design of overflows. Where any fixture is provided with an overflow, the waste shall be designed and installed so that standing water in the fixture will not rise in the overflow when the stopper is closed, and no water will remain in the overflow when the fixture is empty.

❖ An overflow outlet is sometimes provided for certain fixtures to limit the potential for the water level in the fixture to rise above the flood level rim when objects are immersed in the water. For example, if a bathtub (with the drain outlet closed) is filled to an elevation just below the overflow outlet and an average-sized person sits in the tub, the displaced water will cause the water level to rise in the tub, but most likely it will not overflow the top (flood level rim) of the tub. If the overflow did not exist, the user might be tempted to fill the tub to the flood level rim and, upon entering the tub, would cause spillage of water onto the floor outside of the tub. While the overflow location (elevation) provides some ensurance to protect against spillage of water outside of the fixture, the overflow outlet cannot protect against flooding due to large objects being immersed into the fixture or the fixture being supplied with water at a faster rate than what the overflow is capable of accepting. In other words, an overflow might not be capable of accommodating the rate of water discharged by a faucet that was opened and forgotten about.

This section also concerns the configuration of the overflow whether it is integral or external to the fixture. The overflow passageway must always discharge downstream of the closure device for the fixture (i.e., the pop-up or stopper) so that dirty tub water is never allowed to stand or rise in the overflow (see Commentary Figure 405.7).

405.7.1 Connection of overflows. The overflow from any fixture shall discharge into the drainage system on the inlet or fixture side of the trap.

Exception: The overflow from a flush tank serving a water closet or urinal shall discharge into the fixture served.

❖ Section 405.7 requires that the discharge of the overflow outlet be downstream of the closure device for the fixture. This section requires that the discharge of the overflow be directed to the inlet of a plumbing trap.

INTERNATIONAL CODE COUNCIL®
Copyright © 2015 ICC. ALL RIGHTS RESERVED. Accessed by David Dammon on Jun 21, 2017 12:30:52 PM pursuant to License Agreement with ICC. No further reproduction or distribution authorized. ANY UNAUTHORIZED REPRODUCTION OR DISTRIBUTION IS A VIOLATION OF THE FEDERAL COPYRIGHT ACT AND THE LICENSE AGREEMENT, AND SUBJECT TO CIVIL AND CRIMINAL PENALTIES THEREUNDER.

This is necessary to prevent sewer gases from the drainage system from entering the building through the overflow outlet.

The exception recognizes that flush tank overflows, because of their location within the flush tank, must discharge to the fixture served by the flush tank. Flush tanks normally have an open standpipe that allows any overflow condition in the tank to discharge directly into the water closet or urinal.

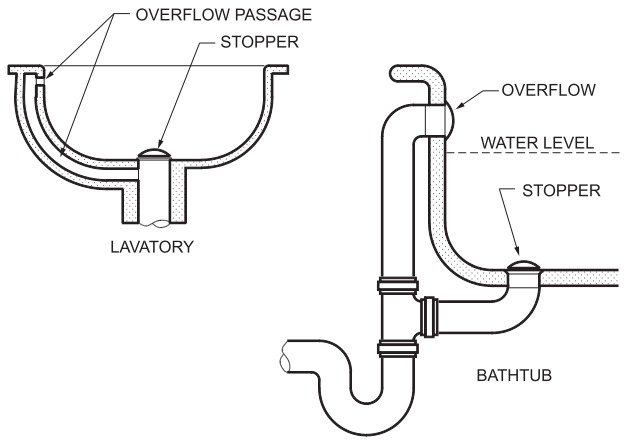

Figure 405.7
FIXTURE OVERFLOW

405.8 Slip joint connections. Slip joints shall be made with an *approved* elastomeric gasket and shall only be installed on the trap outlet, trap inlet and within the trap seal. Fixtures with concealed slip-joint connections shall be provided with an *access* panel or utility space not less than 12 inches (305 mm) in its smallest dimension or other *approved* arrangement so as to provide *access* to the slip joint connections for inspection and repair.

❖ An access panel is required only for slip-joint connections using an elastomeric gasket to seal the joint. Fixtures such as bathtubs and bidets commonly use slip joints in concealed spaces that would require access in accordance with this section. Access is not required should all the joints be soldered, solvent cemented or screwed joints. For example, Schedule 40 ABS and PVC tub waste and overflow assemblies are now widely available and allow all joints to be solvent cemented so that an access panel is not required.

405.9 Design and installation of plumbing fixtures. Integral fixture fitting mounting surfaces on manufactured plumbing fixtures or plumbing fixtures constructed on site shall meet the design requirements of ASME A112.19.2/CSA B45.1 or ASME A112.19.3/CSA B45.4.

❖ The design of fixture fitting mounting surfaces of manufactured and site-built plumbing fixtures must comply with ASME A112.19.2/CSA B45.1 or ASME A112.19.3/CSA B45.4. These standards cover the required hole size, hole spacing and mounting area size to enable standard (and code compliant) fixture fittings (faucets and waste assemblies) to be installed onto plumbing fixtures.

SECTION 406
AUTOMATIC CLOTHES WASHERS

406.1 Water connection. The water supply to an automatic clothes washer shall be protected against backflow by an *air gap* that is integral with the machine or a backflow preventer shall be installed in accordance with Section 608. *Air gaps* shall comply with ASME A112.1.2 or A112.1.3.

❖ Any appliance or piece of equipment with a potable water supply connection is a potential source of backflow contamination to the potable water supply. An automatic clothes washer is no exception. Many editions of the code leading up to the 2012 edition required that automatic clothes washing machines have an internal air gap that conformed to ASSE 1007. However, a review of automatic clothes washing machines for residential (domestic) use revealed that machine manufacturers have ceased indicating that their machines comply with ASSE 1007. Because machines no longer bear ASSE 1007 compliance information, the code requirement was removed for the 2012 edition to prevent a compliance issue during inspection.

The lack of external indication on automatic clothes washing machines or the mention in equipment manuals concerning the presence of an internal air gap offers little comfort to the code official that the potable water supply is properly protected against backflow. While there is a high probability that the majority of clothes washer manufacturers are providing appropriately designed air gaps internal to their machines, the lack of confirming evidence might cause code officials to require the machine water connections to have backflow preventers in accordance with Section 608. In addition to the cost implications of adding external backflow protection, there are the issues of supplying backflow preventers suitable for hot water, capturing water from the preventer caused by an upset condition/failure and required annual inspections.

406.2 Waste connection. The waste from an automatic clothes washer shall discharge through an *air break* into a standpipe in accordance with Section 802.4 or into a laundry sink. The trap and *fixture drain* for an automatic clothes washer standpipe shall be not less than 2 inches (51 mm) in diameter. The *fixture drain* for the standpipe serving an automatic clothes washer shall connect to a 3-inch (76 mm) or larger diameter fixture *branch* or *stack*. Automatic clothes washers that discharge by gravity shall be permitted to drain to a waste receptor or an *approved* trench drain.

❖ The minimum required size of a trap and fixture drain for an automatic clothes washer is 2 inches (51 mm). An automatic clothes washer fixture drain of 2 inches (51 mm) has no length limit but at the point where the fixture drain becomes a branch drain (that is, combines with another fixture drain), an increase to a 3-inch (76 mm) pipe size is required. Most modern automatic

INTERNATIONAL CODE COUNCIL®
Copyright © 2015 ICC. ALL RIGHTS RESERVED. Accessed by David Dammon on Jun 21, 2017 12:30:52 PM pursuant to License Agreement with ICC. No further reproduction or distribution authorized. ANY UNAUTHORIZED REPRODUCTION OR DISTRIBUTION IS A VIOLATION OF THE FEDERAL COPYRIGHT ACT AND THE LICENSE AGREEMENT, AND SUBJECT TO CIVIL AND CRIMINAL PENALTIES THEREUNDER.

clothes washers can pump waste at flows approaching 21 gallons (79.5 liters) per minute. These higher flows have caused trap siphonage and sudsing in other fixture drains downstream of the washing machine fixture drain connection where the drain piping remained a 2-inch (51 mm) size after the connection. Increasing the fixture branch drain size or stack size to 3-inch (76 mm) piping is necessary to eliminate these problems.

Where a clothes washer discharges to a laundry sink, the high rate of discharge does not affect the drain size for the laundry sink. The capacity of the laundry sink allows a slower discharge flow rate to the fixture drain. A clothes washer must discharge to the drainage system through an air break. A direct connection would allow sewage to back up into the appliance in the event of a blockage in the drain pipe. A clothes washer is usually discharged to an individually trapped standpipe or a laundry sink. The use of a laundry sink as a waste receptor is common practice. For commercial washers that discharge by gravity, trench drains are a suitable discharge point. Some large commercial machines drain by gravity by opening a solenoid-actuated valve located at the low point of the drum. Such machines could not use a standpipe (see Section 412 and Commentary Figure 406.2).

SECTION 407
BATHTUBS

407.1 Approval. Bathtubs shall conform to ASME A112.19.1/CSA B45.2, ASME A112.19.2/CSA B45.1, ASME A112.19.3/CSA B45.4 or CSA B45.5/IAPMO Z124**.**

❖ The referenced standards are for factory-made bathtubs of various materials. Bathtubs are available in many materials, including enameled cast iron, porcelain-enameled formed steel or plastic. Plastic bathtubs can be constructed of a variety of synthetic materials, including acrylonitrile butadiene styrene (ABS), polyvinyl chloride (PVC), gel-coated fiberglass-reinforced plastic, acrylic, cultured marble cast-filled fiberglass, polyester and cultured marble acrylic.

Plastic bathtub designs are subjected to an ignition test. Plastic bathtubs must be impregnated with fire-retardant chemicals to reduce their potential fuel contribution during a fire and to protect against accidental fire that might be caused by a plumber's torch or misplaced cigarette. However, it should be noted that plastic bathtub designs need not be subjected to flame spread and smoke-density tests such as ASTM E84.

Bathtubs are supplied in a variety of shapes and sizes designed for greater comfort in accommodating the human body. Some bathtubs are large enough to allow more than one user at a time. Large bathtubs



Figure 406.2
CLOTHES WASHER TRENCH DRAIN

INTERNATIONAL CODE COUNCIL®
Copyright © 2015 ICC. ALL RIGHTS RESERVED. Accessed by David Dammon on Jun 21, 2017 12:30:52 PM pursuant to License Agreement with ICC. No further reproduction or distribution authorized. ANY UNAUTHORIZED REPRODUCTION OR DISTRIBUTION IS A VIOLATION OF THE FEDERAL COPYRIGHT ACT AND THE LICENSE AGREEMENT, AND SUBJECT TO CIVIL AND CRIMINAL PENALTIES THEREUNDER.

could require special considerations for structural support. For example, consider a 67-inch (1702 mm) and 49-inch (1219 mm) rectangular two-person bathtub filled with water holding two people with a total weight in excess of 1,000 pounds (454 kg). With a support footprint area of only 37 inches by 44 inches (940 mm by 1118 mm), the resultant loading to the building floor would be approximately 90 pounds per square foot (439 kg/m^2). Because normal design floor loading (for a residential structure) is only 40 pounds per square foot (195 kg/m^2), the building structure might be required to be strengthened for large tubs.

For the 2012 code edition, all the standards in this section, with the exception of CSA B45.5, were updated because of a harmonization of standards that occurred since the last code edition. For more information on the harmonization of standards in the code, see the commentary to Section 405.9.

407.2 Bathtub waste outlets and overflows. Bathtubs shall be equipped with a waste outlet and an overflow outlet. The outlets shall be connected to waste tubing or piping not less than $1^1/_2$ inches (38 mm) in diameter. The waste outlet shall be equipped with a water-tight stopper.

❖ Previous code editions did not require bathtubs to have an overflow outlet. Because the *International Residential Code*® (IRC®) requires overflow outlets on bathtubs and the IPC committee concurred that an overflow outlet would provide some level of protection against tub overfill, an overflow outlet is now required. However, the code user should realize that most, if not all, of the overflow waste assemblies on the market are not designed to prevent overfilling of a bathtub. The primary purpose of an overflow is to drain excess water from the tub when a bather enters a "full" tub (that is, a tub filled with water to the elevation of the overflow outlet). The water level at the overflow point allows the bather to calmly move about without too much concern for sloshing water outside the bathtub. If the overflow was not provided, bathers might try to use the bathtub with it filled to the flood level rim, thus flooding the bathroom with water when they entered the tub. In this case, the presence of an overflow provides a reasonable level of protection against flooding. The other potential flooding situation arises when a user turns on the tub faucet, leaves the bathroom and is delayed in getting back to the room in enough time to turn the water off. Overflow waste assemblies are not designed to accommodate the water-flow rate that could possibly be discharged from a tub faucet. Although the presence of overflow might slightly delay overfilling of a bathtub from unattended filling, it will not prevent flooding if the filling of the tub is completely forgotten.

Waste overflows are sometimes used to access the drain piping for the purpose of rodding the trap and the drain piping to clear blockages in the drain system. A device for blocking the flow of tub water from the drain must be provided. The device could be as simple as a "pull out"-type rubber plug that tightly fits in the opening of the waste assembly or other approved methods, such as trip lever waste units, cable-actuated closure devices or metal push-pull or pop-up devices.

It should be noted that a tub waste (and overflow) assembly using slip joints must be located in areas that can be accessed in accordance with Section 405.8.

407.3 Glazing. Windows and doors within a bathtub enclosure shall conform to the safety glazing requirements of the *International Building Code*.

❖ Glass (clear or otherwise), light-transmitting ceramic or light-transmitting plastic used in doors, windows and enclosures of hot tubs, whirlpools, saunas, steam rooms, bathtubs and showers where the bottom edge is less than 60 inches (1524 mm) above the floor surface of the fixture or floor of the enclosed fixture must comply with the safety glazing requirements of Chapter 24 of the IBC. Due to the likely presence of water on the standing or walking surfaces within these types of enclosed areas, there is high probability of user slips and falls such that the user might thrust his or her arm or leg through the panel. Materials that shatter into large sharp shards would be extremely dangerous if installed immediately adjacent to these areas. A glazing material is considered "safe" if it complies with the impact testing requirements of the specific standards for the type of product. Glass block masonry walls are covered by Chapter 21 of the IBC and not the safety glazing requirements of Chapter 24 of the IBC.

Partitions and windows outside the enclosure need not be of safety glazing, except as might be required by other sections of the IBC. Exterior windows in exterior walls that serve as part of the tub enclosure must be of safety glazing unless the bottom exposed edge of the glass is at least 60 inches (1524 mm) above the tub floor surface. Note that the height dimension is taken from the tub floor and not from the finished floor outside the tub area or from a deck that might surround a tub. A sitting ledge or other horizontal surface provided around a tub next to large glass windows does not decrease the hazard of someone falling into the windows; therefore, safety glazing is required. If the width of the sitting ledge is increased such that it becomes more of a walking surface, it might not be considered part of the tub enclosure; however, the glazing would then have to be evaluated in accordance with the other safety glazing requirements of the IBC.

Note that with regard to bathtub and shower enclosures, the requirement for safety glazing is not dependent on the area (size) of the glazing panels or panes. The intent is to require safety glazing wherever it is possible for the user to fall into or thrust a limb into a glass panel.

407.4 Bathtub enclosure. Doors in a bathtub enclosure shall conform to ASME A112.19.15.

❖ This section concerns bathtubs and whirlpool bathtubs that have pressure-sealed doors. Such bathing units allow for the user to simply walk in to the tub without having to step over the wall of the tub. The easy entry allows for these tubs to be much deeper than standard tubs. Once the bather is inside the fixture, the door is

INTERNATIONAL CODE COUNCIL®
Copyright © 2015 ICC. ALL RIGHTS RESERVED. Accessed by David Dammon on Jun 21, 2017 12:30:52 PM pursuant to License Agreement with ICC. No further reproduction or distribution authorized. ANY UNAUTHORIZED REPRODUCTION OR DISTRIBUTION IS A VIOLATION OF THE FEDERAL COPYRIGHT ACT AND THE LICENSE AGREEMENT, AND SUBJECT TO CIVIL AND CRIMINAL PENALTIES THEREUNDER.

closed and a latch is actuated to positively lock the door water tight. Upon completion of bathing, the door can be opened only when the bathwater is drained from the vessel, thereby releasing the pressure on the door to enable the door latching/locking mechanism to be released and the door opened.

SECTION 408
BIDETS

408.1 Approval. Bidets shall conform to ASME A112.19.2/CSA B45.1.

❖ The bidet is a small bathing fixture used by both sexes. It is not designed for the elimination of human waste. Although used primarily to clean the perineal area, it can also be used for bathing other parts of the body, including feet. A bidet is normally equipped with a water spray, designed for external body cleaning, that directs a jet of water upward to the body. The standard referenced by this code section requires that the bidet meet material, dimensional and performance requirements.

408.2 Water connection. The water supply to a bidet shall be protected against backflow by an *air gap* or backflow preventer in accordance with Section 608.13.1, 608.13.2, 608.13.3, 608.13.5, 608.13.6 or 608.13.8.

❖ Most bidets present the hazard of a submerged outlet because the typical design uses a water supply nozzle located below the flood level rim of the fixture. This outlet is considered to be subject to high-hazard backsiphonage. Therefore, the water supply to a bidet must be protected from backflow in accordance with the provisions of Section 608 (see commentary, Section 608).

408.3 Bidet water temperature. The discharge water temperature from a bidet fitting shall be limited to a maximum temperature of 110°F (43°C) by a water temperature limiting device conforming to ASSE 1070 or CSA B125.3.

❖ Users of bidets would be at significant risk for scalding of sensitive areas of the body, if not for the code section's requirement for a water temperature limiting device. Temperature-limiting devices meeting ASSE 1070 or CSA B125.3 provide for temperature limiting control for flow rates as small as 0.5 gallons per minute (gpm) (1.89 L/m).

SECTION 409
DISHWASHING MACHINES

409.1 Approval. Commercial dishwashing machines shall conform to ASSE 1004 and NSF 3.

❖ The ASSE 1004 standard requires that the water supply to a commercial dishwashing machine be protected against backflow by an air gap in accordance with ASME A112.2 or a backflow preventer complying with ASSE 1001. The installation of the air gap and backflow preventer on a commercial dishwashing machine is regulated by ASSE 1004.

Commercial dishwashing machines must also conform to NSF 3, which establishes minimum public health and sanitation requirements for the materials, design, construction and performance of spray-type commercial dishwashing machines and their related components. The NSF 3 standard also references ASSE 1004 for water supply protection and gives provisions for the location of water supply piping and valves in relation to the machine tank or hood.

409.2 Water connection. The water supply to a dishwashing machine shall be protected against backflow by an *air gap* that is integral with the machine or a backflow preventer shall be installed in accordance with Section 608. *Air gaps* shall comply with ASME A112.1.2 or A112.1.3.

❖ The potable water supply to a dishwasher must be protected by an air gap integral to the machine or by an externally installed backflow preventer. Most, if not all, domestic dishwasher machine designs include an air gap in the water supply system of the unit. However, one way to verify that a dishwasher has an air gap device is to actually see the device on the dishwasher unit.

409.3 Waste connection. The waste connection of a dishwashing machine shall comply with Section 802.1.6 or 802.1.7, as applicable.

❖ Requirements for waste connections for dishwashers are described in Sections 802.1.6 and 802.1.7.

SECTION 410
DRINKING FOUNTAINS

410.1 Approval. Drinking fountains shall conform to ASME A112.19.1/CSA B45.2 or ASME A112.19.2/CSA B45.1 and water coolers shall conform to AHRI 1010. Drinking fountains and *water coolers* shall conform to NSF 61, Section 9. Electrically operated, refrigerated drinking *water coolers* shall be listed and labeled in accordance with UL 399.

❖ Each of the ASME/CSA standards referenced in this section are primarily concerned about basic dimensional requirements and quality tests for many types of plumbing fixtures made of vitreous china, nonvitreous ceramic, and porcelain enameled cast iron. Only two of these standards have some reference to drinking fountains. Those standards simply require that the bubbler head mounting base be above the rim (flood level rim) of the bowl and provide a few dimensions for the basic wall mount (with rear boss), semirecessed, and fully recessed drinking fountains that were commonly installed in buildings many years ago.

Drinking fountains are not required to provide chilled water. Whether designers, contractors and building officials realize this or not, most modern drinking fountains that supply just "cold water" as supplied from a potable water system do not comply with any standards listed in this section (other than Section 9 of NSF 61). Where a "drinking fountain" supplies chilled water, this unit is called a "bubbler-type pressure water cooler" (as defined by the ARI 1010 stan-

INTERNATIONAL CODE COUNCIL®
Copyright © 2015 ICC. ALL RIGHTS RESERVED. Accessed by David Dammon on Jun 21, 2017 12:30:52 PM pursuant to License Agreement with ICC. No further reproduction or distribution authorized. ANY UNAUTHORIZED REPRODUCTION OR DISTRIBUTION IS A VIOLATION OF THE FEDERAL COPYRIGHT ACT AND THE LICENSE AGREEMENT, AND SUBJECT TO CIVIL AND CRIMINAL PENALTIES THEREUNDER.

dard). It is assumed that even though the code requirement is for drinking fountains, bubble-type pressure water coolers are equivalent.

The commentary to Section 405 discusses drinking fountain height and clear floor area for wheelchair-seated persons. Because the IBC references ICC A117.1 and that standard requires a specific height for drinking fountains for standing persons, that requirement is repeated here: For a drinking fountain to be used by standing persons, the spout outlet of a drinking fountain must be not less than 38 inches (965 mm) but not greater than 43 inches (1090 mm) above the finished floor.

See the commentary to Section 403.5 concerning the location of drinking fountains.

410.2 Small occupancies. Drinking fountains shall not be required for an occupant load of 15 or fewer.

❖ This section was previously a footnote to Table 403.1. Buildings or tenant spaces with 15 or fewer occupants are not required to have a drinking fountain. The requirement for drinking fountains in all occupancies puts an undue hardship on small establishments where the floor space is usually limited. Adding to this problem is the requirement in Section 410.3 stating that where one drinking fountain is provided, two drinking fountains must be installed, one high (for standing persons) and one low (for wheelchair-seated persons). One required drinking fountain in a small establishment turns into an expensive space-consuming fixture that, according to the proponents of the original code change, rarely, if ever, is used.

[BE] 410.3 Provide high and low drinking fountains. Where drinking fountains are required, not fewer than two drinking fountains shall be provided. One drinking fountain shall comply with the requirements for people who use a wheelchair and one drinking fountain shall comply with the requirements for standing persons.

Exceptions:

1. A single drinking fountain with two separate spouts that complies with the requirements for people who use a wheelchair and standing persons shall be permitted to be substituted for two separate drinking fountains.
2. Where drinking fountains are primarily for children's use, the drinking fountains for people using wheelchairs shall be permitted to comply with the children's provisions in ICC A117.1 and drinking fountains for standing children shall be permitted to provide the spout at 30 inches (762 mm) minimum above floor.

❖ This section duplicates a similar section in Chapter 11 of the IBC. Where the required number of drinking fountains (from Code Table 403.1) to be installed is equal to one, this section requires two drinking fountains: one installed at a height for standing persons and one installed for use by wheelchair-seated persons. An exception in the IBC allows a single "combination unit" that has two spouts at different heights, each with a separate bowl. Chapter 11 of the IBC is specific in requiring that whatever the number of drinking fountains to be installed, they are to be of Accessible design for standing persons and wheelchair-seated persons (see Commentary Figure 410.2).

410.4 Substitution. Where restaurants provide drinking water in a container free of charge, drinking fountains shall not be required in those restaurants. In other occupancies where drinking fountains are required, *water dispensers* shall be permitted to be substituted for not more than 50 percent of the required number of drinking fountains.

❖ Restaurants are not required to have drinking fountains as long as water is served in a container, free of

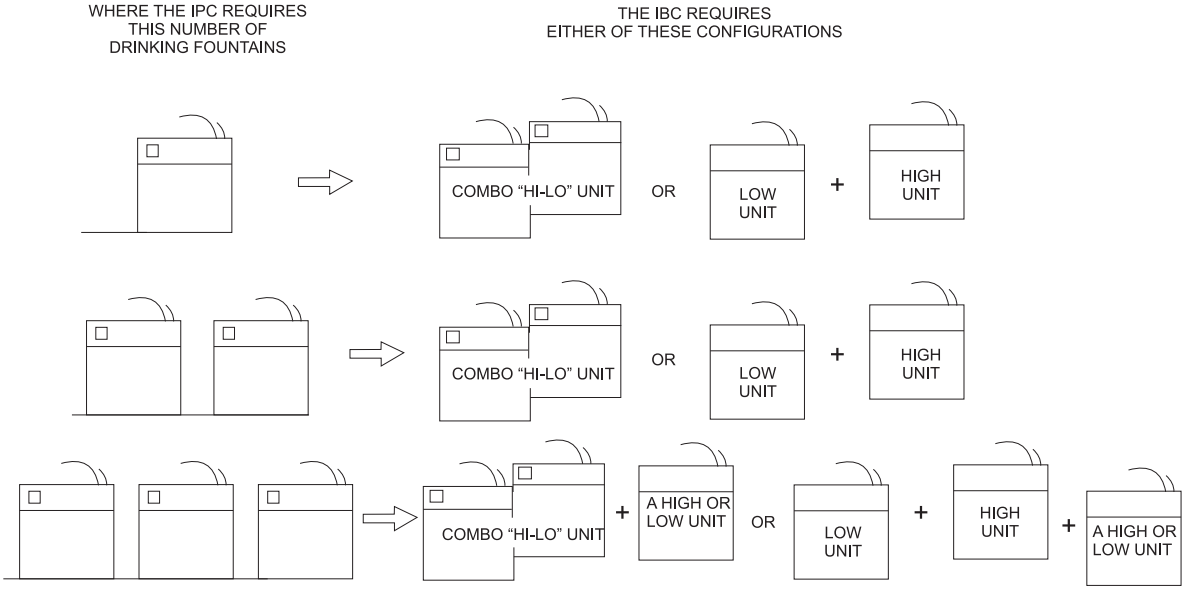

Figure 410.2
REQUIRED DRINKING FOUNTAINS AND CONFIGURATIONS

INTERNATIONAL CODE COUNCIL®
Copyright © 2015 ICC. ALL RIGHTS RESERVED. Accessed by David Dammon on Jun 21, 2017 12:30:52 PM pursuant to License Agreement with ICC. No further reproduction or distribution authorized. ANY UNAUTHORIZED REPRODUCTION OR DISTRIBUTION IS A VIOLATION OF THE FEDERAL COPYRIGHT ACT AND THE LICENSE AGREEMENT, AND SUBJECT TO CIVIL AND CRIMINAL PENALTIES THEREUNDER.

charge. Where a restaurant provides purchased beverages in disposable cups, drinking water must be still be free of charge even though the restaurant incurs a cost for the disposable cups. This substitution is only for restaurants and is not intended for other locations such as "quick" marts where a cup is used to obtain drinks from a fountain arrangement.

410.5 Prohibited location. Drinking fountains, *water coolers* and *water dispensers* shall not be installed in public restrooms.

❖ Installation of drinking fountains in public toilet rooms is prohibited. This prohibition is necessary to prevent the contamination of a drinking water unit. Biological aerosols (air-borne germs) present in toilet rooms can contaminate exposed surfaces.

SECTION 411
EMERGENCY SHOWERS AND EYEWASH STATIONS

411.1 Approval. Emergency showers and eyewash stations shall conform to ISEA Z358.1.

❖ Emergency showers and eyewash stations are sometimes installed in areas where an individual may come in contact with substances that are immediately harmful to the body. These emergency devices provide an instantaneous deluge of water to help neutralize any adverse reactions. Emergency showers and eyewash stations are typically located where people are exposed to chemicals, acids, nuclear products and fire. The water supply requirements for an emergency eyewash station depend on the manufacturer's requirements for the specific equipment installed (see Commentary Figure 411.1).

Although cold-flushing fluid temperatures provide immediate cooling after chemical contact, prolonged exposure to cold fluids affects the ability to maintain adequate body temperature and can result in the premature cessation of first aid treatment. The International Safety Equipment Association (ISEA) standard referenced (which is also ANSI Z358.1) covers minimum performance and use requirements for emergency shower, eyewash equipment, eye/face wash equipment, handheld drench hoses and combination shower and eyewash or eye/face equipment. The mandatory portion of the standard requires that the delivered flushing fluid temperature be tepid and defines tepid as being lukewarm; no temperature range is given. However, the voluntary (i.e., not enforceable) section of this standard contains a suggested temperature range. Ultimately, each installer of such equipment should consult a medical advisor for specific temperature settings based on the types of chemical exposure anticipated.

It is unclear whether emergency showers under this section are considered to be individual showers according to the code. Individual showers would require a mixing valve conforming to ASSE 1016 or CSA B125 (see Section 424.3); however, not just any ASSE 1016 valve may be suitable for the application because of the large flows and instantaneous temperature control needed. With respect to eyewash stations, the code and the ISEA/ANSI standard are silent on what type of temperature control is necessary.

Note that the code does not require the installation of emergency eyewash stations and showers. This section has been provided to address where they are installed. Usually, governmental agencies regulating worker and building occupant safety establish the circumstances under which these fixtures must be installed.



Figure 411.1
EMERGENCY SHOWER AND EYEWASH STATION
(Photo courtesy of B&I Contractors, Inc.)

411.2 Waste connection. Waste connections shall not be required for emergency showers and eyewash stations.

❖ The designer should take into account, where possible, the potential discharge volume from an emergency shower or eyewash with respect to cleanup procedures and property damage. Consideration should be given to the proper disposal of possible hazardous waste flushed from the user of emergency showers and eyewash stations.

INTERNATIONAL CODE COUNCIL®
Copyright © 2015 ICC. ALL RIGHTS RESERVED. Accessed by David Dammon on Jun 21, 2017 12:30:52 PM pursuant to License Agreement with ICC. No further reproduction or distribution authorized. ANY UNAUTHORIZED REPRODUCTION OR DISTRIBUTION IS A VIOLATION OF THE FEDERAL COPYRIGHT ACT AND THE LICENSE AGREEMENT, AND SUBJECT TO CIVIL AND CRIMINAL PENALTIES THEREUNDER.

SECTION 412
FLOOR AND TRENCH DRAINS

412.1 Approval. Floor drains shall conform to ASME A112.3.1, ASME A112.6.3 or CSA B79. Trench drains shall comply with ASME A112.6.3.

❖ Except as required by Section 412.4, floor drains and trench drains are typically installed at the discretion of the design professional where an accumulation of water on a floor or other horizontal area could create a personnel hazard or could cause damage to building finishes or structures.

ASME A112.6.3 specifies the design and quality criteria for floor drains and trench drains for buildings that are typically nonresidential. Materials covered by this standard are cast iron, copper alloy, leaded nickel bronze, ABS and PVC. Note that stainless steel is not included in the list of materials. ASME A112.3.1 specifies performance and installation requirements for floor drains of stainless steel material. Even though this standard also covers trench drains of stainless steel, the code only allows this standard to be used for floor drains. Trench drains must comply with ASME A112.6.3, which covers the design and quality criteria for drains made of cast iron, copper alloy, leaded nickel bronze, ABS and PVC. Because stainless steel is not in this list of materials, trench drains of stainless steel must be approved by the code official under Section 105.2 of the code.

CSA B79 specifies the requirements for residential floor drains constructed of cast iron, ductile iron, bronze, nickel bronze, white bronze, aluminum alloy, plastic and stainless steel.

Field-constructed floor drains and trench drains made of concrete are not covered by the above standards and therefore must be approved by the code official under Section 105.2, "Alternate materials, methods and equipment."

A floor drain is for draining liquids from indoor floor areas within a building. Floor drains are prohibited from connecting to a storm drain (see Section 1104.3) because building occupants typically assume that floor drains can be used for the disposal of any liquid. Therefore, a floor drain must be connected through a trap to a sanitary sewer system or a private sewage disposal system. Because Section 1101.3 prohibits storm water from being drained into a sanitary sewer, a floor drain must not be used for storm water disposal. For example, a rain water conductor must not discharge to a floor drain.

Trench drains are used in a variety of indoor and outdoor applications (see Commentary Figure 412.1). They are frequently used to intercept storm water at the toe of wide outdoor sloped areas such as driveways and parking lots. Where used to collect and convey only storm water, trench drain outlets are not required to be connected to a trap prior to connection to a storm water system. Trench drains are also used indoors where equipment and large areas are frequently washed down for maintenance and sanitization. A trench drain in this application must be connected through a trap to a sanitary sewer system or a private sewage disposal system.

Trench drains are also often located just inside the bay entrances of covered or indoor vehicle repair facilities. The primary intent of a trench drain in this application is to collect rainwater and ice/snow melt runoff from vehicles that are moved into a repair garage area. However, trench drains in these applications must be connected through a trap that is connected to an oil separator. The reason for this is the significant potential for the trench drain to receive grease-laden floor wash water and accidental or intentional spills of vehicle fluids. See Section 1003.4 concerning the requirement for an oil separator.

In vehicle repair facilities, multiple trench drain assemblies, each with an outlet, must not be connected together prior to connecting to a trap. Each outlet from a trench drain is considered to be a separate fixture and must have a trap installed and located in compliance with Section 1002.1. Because all traps must be vented, and trench drains are often used in large open areas without walls, a combination drain and vent system is typically used to connect the traps and carry the flow to the desired point of discharge.

The code does not provide a specific drainage fixture unit value for trench drains. Therefore, Table 709.2 must be used to determine the drainage fixture unit (dfu) value.

Commentary Figure 406.2 shows a trench drain serving as the waste discharge point for a commercial laundry washer.

412.2 Floor drains. Floor drains shall have removable strainers. The floor drain shall be constructed so that the drain is capable of being cleaned. *Access* shall be provided to the drain inlet. Ready *access* shall be provided to floor drains.

Exception: Floor drains serving refrigerated display cases shall be provided with *access*.

❖ The strainer of the floor drain is usually flush with the floor surface to alleviate tripping hazards; however, if the floor drain is located in a remote, typically untraveled area such as the corner or edge of a room, a dome-type strainer might be more suitable. All strainers must be removable to enable cleaning of the drain body and rodding of drain. Because floor drains are purposely located in areas where drainage is a necessity, either due to an emergency or normal maintenance, it is imperative that the drain be able to be serviced quickly and easily. Therefore, floor drains require ready access and must not be located under appliances, equipment or shelving, within wall cavities or covered by objects that might obscure their location.

The exception allows for floor drains located under refrigerated display cases because locating the drain exterior to the case footprint would most likely create a trip or fall hazard.

Some floor drain designs have an integral trap [see Commentary Figures 412.2(1) and 412.2(2)]. If a trap is not integral to the design, the drain must be con-

INTERNATIONAL CODE COUNCIL®
Copyright © 2015 ICC. ALL RIGHTS RESERVED. Accessed by David Dammon on Jun 21, 2017 12:30:52 PM pursuant to License Agreement with ICC. No further reproduction or distribution authorized. ANY UNAUTHORIZED REPRODUCTION OR DISTRIBUTION IS A VIOLATION OF THE FEDERAL COPYRIGHT ACT AND THE LICENSE AGREEMENT, AND SUBJECT TO CIVIL AND CRIMINAL PENALTIES THEREUNDER.



Figure 412.1
TRENCH DRAIN
(Photo courtesy of B&I Contractors, Inc.)

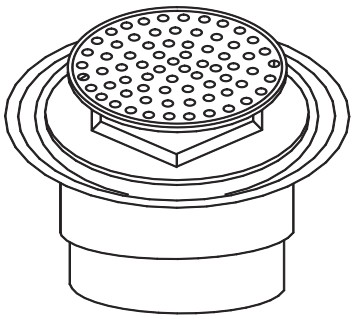

Figure 412.2(1)
TYPICAL FLOOR DRAIN WITHOUT INTEGRAL TRAP

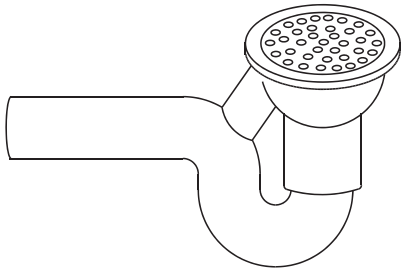

Figure 412.2(2)
TYPICAL FLOOR DRAIN WITH INTEGRAL TRAP

nected to a trap (see commentary, Sections 1002.1 and 1002.4).

A floor drain equipped with a combination strainer/funnel extending 1 inch (25 mm) or more above the finished floor surface is considered to be a waste receptor, even though it may also function as a floor drain.

412.3 Size of floor drains. Floor drains shall have a drain outlet not less than 2 inches (51 mm) in diameter.

❖ The outlet of a floor drain is required to be at least 2 inches (51 mm) in diameter so that the connected trap and drain can be easily rodded in case of a stoppage. Note that Section 412.4 requires floor drain outlets in public coin-operated laundries and in central washing facilities of multiple-family dwellings to be at least 3 inches (76 mm) in diameter.

412.4 Public laundries and central washing facilities. In public coin-operated laundries and in the central washing facilities of multiple-family dwellings, the rooms containing automatic clothes washers shall be provided with floor drains located to readily drain the entire floor area. Such drains shall have an outlet of not less than 3 inches (76 mm) in diameter.

❖ A floor drain is required in public coin-operated laundries and in central washing facilities of multiple-family dwellings that contain automatic clothes washers to capture spills of wash solutions, washing machine overflows and machine leakages. A floor drain with an outlet of not less than 3 inches (76 mm) in diameter is required because of the potential for large volumes of water discharging to the floor.

In most situations, floor drains are "emergency" fixtures; that is, they are only used in an emergency situation. As such, Section 709.1 indicates a dfu value of zero for emergency floor drains. Such fixtures do not add to the load used to compute drainage pipe sizing because their sole purpose is to serve only in the event of an emergency. However, because such floor drains rarely have any flow, they are required by Section 1002.4 to be provided with a means to protect the trap seal from loss by evaporation.

SECTION 413
FOOD WASTE DISPOSER UNITS

413.1 Approval. Domestic food waste disposers shall conform to ASSE 1008 and shall be listed and labeled in accordance with UL 430. Food waste disposers shall not increase the *drainage fixture unit* load on the sanitary drainage system.

❖ Food waste disposers are designed to reduce most foods, including bones, into small-size particles that will flow through the drainage lines. The term "grinder" is not widely accepted in the food waste disposal manufacturing industry. The term "grinder" could imply that the appliance merely changes solid food (such as meat) to ground-up meat (such as hamburger meat). However, disposers are designed to liquefy food so that when the food enters the sanitary drainage system, the discharge flows along the piping in a similar manner as water. Solids do not drop out of the flow to

INTERNATIONAL CODE COUNCIL®
Copyright © 2015 ICC. ALL RIGHTS RESERVED. Accessed by David Dammon on Jun 21, 2017 12:30:52 PM pursuant to License Agreement with ICC. No further reproduction or distribution authorized. ANY UNAUTHORIZED REPRODUCTION OR DISTRIBUTION IS A VIOLATION OF THE FEDERAL COPYRIGHT ACT AND THE LICENSE AGREEMENT, AND SUBJECT TO CIVIL AND CRIMINAL PENALTIES THEREUNDER.

create flow blockage problems. These appliances effectively "dispose of" the food by turning the food into a liquid flow stream.

Discharging fibrous or stringy food such as corn husks, celery, banana skins and onions in a food waste disposer is usually not recommended. Rather than reduce in size, the fibers tend to bypass the grinding hammers and slip down the drain, creating stoppages in the drainage piping.

Domestic food waste grinder disposers are supplied with water from a sink supply faucet and do not increase the dfu load of the kitchen sink. Domestic food waste disposers complying with ASSE 1008 are not intended for installation in food-handling establishments.

The requirement for listing and labeling to UL 430 is for electrical safety, as motors are subject to water leaks from the above grinding mechanism. Any electrical appliance connected to a system that conveys water or liquid waste has the potential to misdirect electrical current to appliance housings and onto other conductive paths that could come in contact with humans. The requirement for listing and labeling to a standard ensures that all necessary precautions have been taken by the manufacturer of food waste disposers to protect users of these appliances from hazards.

413.2 Domestic food waste disposer waste outlets. Domestic food waste disposers shall be connected to a drain of not less than $1^1/_2$ inches (38 mm) in diameter.

❖ A domestic food waste disposer is installed in conjunction with a kitchen sink. The drain pipe size required is consistent with that for a kitchen sink.

413.3 Commercial food waste disposer waste outlets. Commercial food waste disposers shall be connected to a drain not less than $1^1/_2$ inches (38 mm) in diameter. Commercial food waste disposers shall be connected and trapped separately from any other fixtures or sink compartments.

❖ Historically, the minimum size of a commercial food waste disposer drain has been 2 inches (51 mm). To help prevent contamination of other fixtures, commercial food waste disposers must be trapped and independently connected to the drainage system (see Commentary Figure 413.3). Although this section does not specifically state that an indirect connection is not allowed, the intent of the code is that the discharge be directly connected to the sanitary drain system (see Section 802.1). Food waste disposer discharge is often of a high-velocity nature such that an indirect connection would most likely result in significant splatter, clogging of a waste receptor, offensive odors, a potential health hazard and a maintenance problem. This would be analogous to providing an indirect connection for the discharge of a water closet. Obviously, water closets should not be indirect connected (see Section 802.1).

413.4 Water supply required. Food waste disposers shall be provided with a supply of cold water. The water supply shall be protected against backflow by an *air gap* or backflow preventer in accordance with Section 608.

❖ A supply of cold water is necessary to act as the transport vehicle and lubricant during the grinding operation. The water flushes the grinding chamber and carries the waste into the drain. If a waste disposer is used without running water, a drain blockage will result. While hot or warm water could be considered instead of cold water, most disposer manufacturers suggest cold water in order to keep greases more solid for best grinding action. The water supply serving a commercial food waste disposer must be protected from backflow by an air gap or backflow preventer in accordance with Section 608 (see Commentary Figure 413.3 and commentary to Section 608). In a residential kitchen sink application, the kitchen faucet spout mounted above the sink provides the necessary air gap for protection of the potable water supply.

SECTION 414
GARBAGE CAN WASHERS

414.1 Water connection. The water supply to a garbage can washer shall be protected against backflow by an *air gap* or a backflow preventer in accordance with Section 608.13.1, 608.13.2, 608.13.3, 608.13.5, 608.13.6 or 608.13.8.

❖ Water and waste connection requirements for garbage can washers are stated in this section. There are no

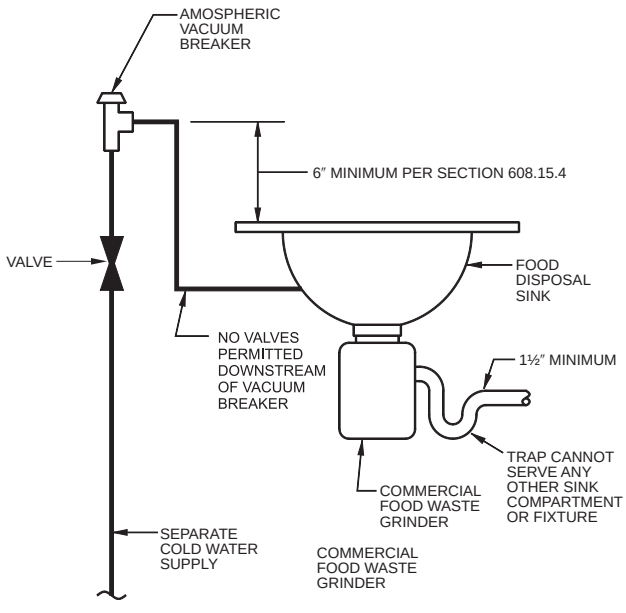

For SI: 1 inch = 25.4 mm.

Figure 413.3
COMMERCIAL FOOD WASTE GRINDER

INTERNATIONAL CODE COUNCIL®
Copyright © 2015 ICC. ALL RIGHTS RESERVED. Accessed by David Dammon on Jun 21, 2017 12:30:52 PM pursuant to License Agreement with ICC. No further reproduction or distribution authorized. ANY UNAUTHORIZED REPRODUCTION OR DISTRIBUTION IS A VIOLATION OF THE FEDERAL COPYRIGHT ACT AND THE LICENSE AGREEMENT, AND SUBJECT TO CIVIL AND CRIMINAL PENALTIES THEREUNDER.

referenced material or performance standards for these types of plumbing fixtures. These fixtures are typically floor sinks or receptors with a grated cover and a single-orifice spray nozzle protruding through the center of the grate. The spray nozzle directs a stream of water upward to clean the interior of an overturned garbage can.

A garbage can washer is a potential source of water supply contamination. The potable water supply to a garbage can washer is considered to be a submerged inlet subject to high-hazard backsiphonage and must be protected in accordance with the provisions of Section 608 (see commentary, Sections 608.13.1, 608.13.2, 608.13.3, 608.13.5, 608.13.6 and 608.13.8).

414.2 Waste connection. Garbage can washers shall be trapped separately. The receptacle receiving the waste from the washer shall have a removable basket or strainer to prevent the discharge of large particles into the drainage system.

❖ A removable basket on the drainage receptor is equivalent to a small waste interceptor. The basket collects the large garbage particles, preventing them from passing into the drainage system and creating a possible stoppage in the downstream drainage piping (see Commentary Figure 414.2).

SECTION 415
LAUNDRY TRAYS

415.1 Approval. Laundry trays shall conform to ASME A112.19.1/CSA B45.2, ASME A112.19.2/CSA B45.1, ASME A112.19.3/CSA B45.4 or CSA B45.5/IAPMO Z124.

❖ Material standards, along with waste outlet requirements for laundry trays, are provided in this section. A laundry tray is a sink typically used in a laundry room of a residential occupancy. The referenced standards regulate enameled cast-iron, plastic, stainless steel and nonvitreous ceramic laundry trays. Another common material used to construct laundry trays is soapstone. This type of laundry tray requires an alternative approval in accordance with Section 105.2 (see commentary, Section 402.2). It should be noted that concrete laundry trays are not permitted by this section because they do not provide a smooth, impervious sanitary surface. Besides serving as a sink in a laundry room, a laundry tray is commonly used to receive the discharge of an automatic clothes washer.

415.2 Waste outlet. Each compartment of a laundry tray shall be provided with a waste outlet not less than $1^1/_2$ inches (38 mm) in diameter and a strainer or crossbar to restrict the clear opening of the waste outlet.

❖ The outlet must be equipped with either a strainer or crossbar to catch debris or materials that could be discharged into the sink, causing drain clogging.

SECTION 416
LAVATORIES

416.1 Approval. Lavatories shall conform to ASME A112.19.1/CSA B45.2, ASME A112.19.2/CSA B45.1, ASME A112.19.3/CSA B45.4 or CSA B45.5/IAPMO Z124. Group wash-up equipment shall conform to the requirements of Section 402. Every 20 inches (508 mm) of rim space shall be considered as one lavatory.

❖ This section cites standards for lavatories, including cultured marble types, and their waste outlet requirements. This section also regulates group wash-up equipment.

Lavatory means wash basin. It is derived from the Latin word “lavatorium,” which means “washing vessel,” and the French word “laver,” meaning “to wash.” Lavatories are available in enameled cast iron, vitreous china, stainless steel, porcelain-enameled formed steel, plastic and nonvitreous ceramic. They also come in a variety of shapes and sizes such as wall-mounted, hanger-mounted, pedestal, rimmed, above-counter basins and under mounted types.

Standards previously required lavatories to have an overflow; however, that is not currently the case. The provision of an overflow and its location is an option of the manufacturer. The reason for eliminating the overflow requirement was the lack of use, which resulted in the growth of bacteria and microorganisms.

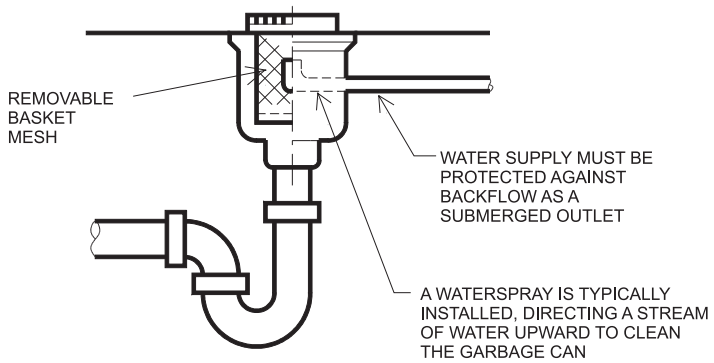

Figure 414.2
GARBAGE CAN WASHER

INTERNATIONAL CODE COUNCIL®
Copyright © 2015 ICC. ALL RIGHTS RESERVED. Accessed by David Dammon on Jun 21, 2017 12:30:52 PM pursuant to License Agreement with ICC. No further reproduction or distribution authorized. ANY UNAUTHORIZED REPRODUCTION OR DISTRIBUTION IS A VIOLATION OF THE FEDERAL COPYRIGHT ACT AND THE LICENSE AGREEMENT, AND SUBJECT TO CIVIL AND CRIMINAL PENALTIES THEREUNDER.

A group wash-up fixture, shown in Commentary Figure 416.1, is a single large basin accommodating more than one person. A group wash-up fixture has to comply with Sections 402.1 and 402.2 and be approved by the code official because it is generally not addressed by any of the referenced material or fixture standards. These fixtures are installed in areas subject to large volumes of traffic, such as facilities in sports arenas and schools.

The rim space calculation is used to determine the minimum number of required fixtures in accordance with Table 403.1 and the maximum permitted water consumption listed in Table 604.4. This calculation is not intended for use in determining the dfu value of the fixture, which is based on the trap size in accordance with Table 709.2.

416.2 Cultured marble lavatories. Cultured marble vanity tops with an integral lavatory shall conform to CSA B45.5/IAPMO Z124.

❖ Vanity tops with an integral lavatory that is all plastic must conform to the standard indicated. Lavatory units can be constructed of a variety of synthetic materials, including ABS, PVC, gel-coated fiberglass reinforced plastic, acrylic, cultured marble cast-filled fiberglass, polyester and cultured marble acrylic.

Cultured marble vanity tops are impregnated with fire-retardant chemicals, reducing the fuel contribution of the unit during a fire. They are also designed to resist the effect of a burning cigarette left unattended on the vanity top.

416.3 Lavatory waste outlets. Lavatories shall have waste outlets not less than $1^1/_4$ inches (32 mm) in diameter. A strainer, pop-up stopper, crossbar or other device shall be provided to restrict the clear opening of the waste outlet.

❖ The sizing requirements of Table 709.1 for a lavatory are emphasized. Each lavatory opening must have a restriction, preventing items such as rings, toothbrushes and cosmetic devices from inadvertently entering the drain.

416.4 Moveable lavatory systems. Moveable lavatory systems shall comply with ASME A112.19.12.

❖ Moveable and pivoting lavatories allow the user to adjust the location of a lavatory upward and downward, from side to side and front to back to maximize the ease of use of the fixture. Some products also pivot to allow greater ease of use. Commentary Figure 416.4 shows an adjustable shampoo bowl that complies with ASME A112.19.12.

416.5 Tempered water for public hand-washing facilities. *Tempered water* shall be delivered from lavatories and group wash fixtures located in public toilet facilities provided for customers, patrons and visitors. *Tempered water* shall be delivered through an *approved* water-temperature limiting device that conforms to ASSE 1070 or CSA B125.3.

❖ Prior to the 2012 code edition, it was not exceptionally clear what constituted a public hand-washing facility. Therefore, a conservative interpretation of this resulted in the inclusion of hand-washing sinks in commercial kitchens, restaurant bars, medical examination rooms, dental offices and other similar locations. The change for the 2012 edition clarifies that the requirement is only for lavatories and group wash fixtures in public toilet facilities for customers, patrons and visitors. Employee hand wash sinks, bar sinks and similar nonpublic, nontoilet room hand-washing fixtures do not require tempered water.

Hot water for public hand-washing facilities is rarely provided by a dedicated water heater set at a temperature that prevents scalding. In most cases, the hot water is provided from a central water heater that provides hot water for all purposes within the building. In occupancies that require high-temperature water for dishwashing, cleaning and other commercial applications, public users might be abruptly exposed to this excessively hot water without warning. Requiring the installation of a temperature-limiting device conforming to ASSE 1070 or CSA B125.3 will prevent scalding.

Note that an ASSE 1016 tempering valve cannot be used in this application because the testing protocol for

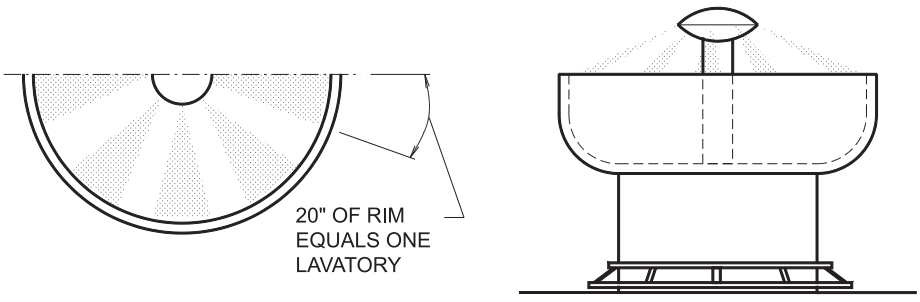

For SI: 1 inch = 25.4 mm.

Figure 416.1
GROUP WASH-UP FIXTURE

INTERNATIONAL CODE COUNCIL®
Copyright © 2015 ICC. ALL RIGHTS RESERVED. Accessed by David Dammon on Jun 21, 2017 12:30:52 PM pursuant to License Agreement with ICC. No further reproduction or distribution authorized. ANY UNAUTHORIZED REPRODUCTION OR DISTRIBUTION IS A VIOLATION OF THE FEDERAL COPYRIGHT ACT AND THE LICENSE AGREEMENT, AND SUBJECT TO CIVIL AND CRIMINAL PENALTIES THEREUNDER.

ASSE 1016 does not require the valve to perform the temperature control function at a flow less than 2.25 gpm (8.5 L/m). The ASSE 1070 and CSA B125.3 compliant tempering valves require temperature regulation at the manufacturer's stated minimum flow rate [usually 0.5 gpm (1.9 L/m)]. Because public hand-washing facilities are required to have flow regulated to no more than 0.5 gpm (1.9 L/m), an ASSE 1070 or CSA B125.3 compliant device is required.



Figure 416.4
ADJUSTABLE HEIGHT SHAMPOO BOWL
(Photo courtesy of Accessible Systems LLC)

SECTION 417
SHOWERS

417.1 Approval. Prefabricated showers and shower compartments shall conform to ASME A112.19.2/CSA B45.1 or CSA B45.5/IAPMO Z124. Shower valves for individual showers shall conform to the requirements of Section 424.3.

❖ This section contains requirements governing prefabricated showers and field-constructed shower compartments. Material standards are cited, as are water supply riser, waste outlet and sizing limitations for such compartments. Provisions are also established for the shower floor or receptor wall area, along with specific support and pan requirements. As with bathtubs, a cross reference to the IBC is provided for safety glazing requirements.

The referenced standards for prefabricated shower compartments regulate plastic and nonvitreous ceramic units. Prefabricated units could include the entire shower compartment or the shower floor or base. The plastic units or floors can be constructed of a variety of synthetic materials, including ABS, PVC, gel-coated fiberglass-reinforced plastic, acrylic, cultured marble cast-filled fiberglass, polyester and cultured marble acrylic. The units are impregnated with fire-retardant chemicals to reduce the fuel contribution during a fire and to protect against an accidental fire from a plumber's torch.

417.2 Water supply riser. Water supply risers from the shower valve to the shower head outlet, whether exposed or concealed, shall be attached to the structure. The attachment to the structure shall be made by the use of support devices designed for use with the specific piping material or by fittings anchored with screws.

❖ The shower riser pipe must be firmly attached to a building structural element to protect the piping from leaks caused by stress fractures or joint failures. If the riser is not firmly attached, the movement of the shower head may result in movement of the riser piping or possible failure of the piping.

Previous editions of the code called for attachment of the water supply riser to the structure in an "approved manner," which was much too ambiguous. As a result, steel nails bent over piping, roofing nails, copper-coated J-nails or hanger strap were often used to restrain the riser resulting in undesirable long term effects. This section now requires fittings (such as a drop ear elbow) to be screwed to the structure or use of a support system specifically designed for riser support [see Commentary Figures 417.2(1) and (2)].

Where a shower riser pipe is of the exposed type, the manufacturer typically provides a clamp or other means of support that matches the finish of the exposed riser. The clamp or other support must be firmly secured to a structural member and attached to the riser.

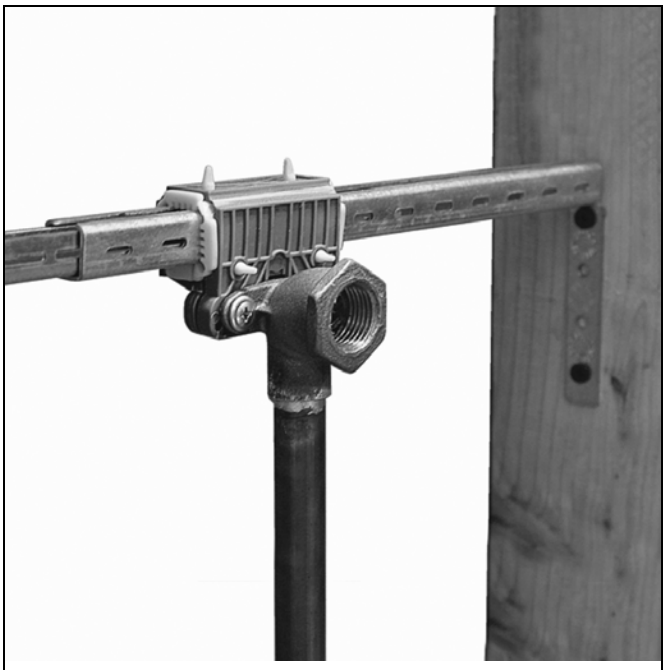

Figure 417.2(2)
SPECIAL BRACKET FOR SHOWER RISER
(Photo courtesy of Holdrite-Hubbard Enterprises)

INTERNATIONAL CODE COUNCIL®
Copyright © 2015 ICC. ALL RIGHTS RESERVED. Accessed by David Dammon on Jun 21, 2017 12:30:52 PM pursuant to License Agreement with ICC. No further reproduction or distribution authorized. ANY UNAUTHORIZED REPRODUCTION OR DISTRIBUTION IS A VIOLATION OF THE FEDERAL COPYRIGHT ACT AND THE LICENSE AGREEMENT, AND SUBJECT TO CIVIL AND CRIMINAL PENALTIES THEREUNDER.

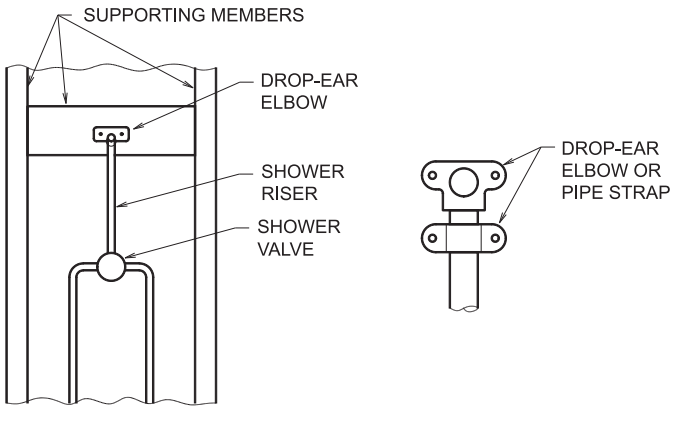

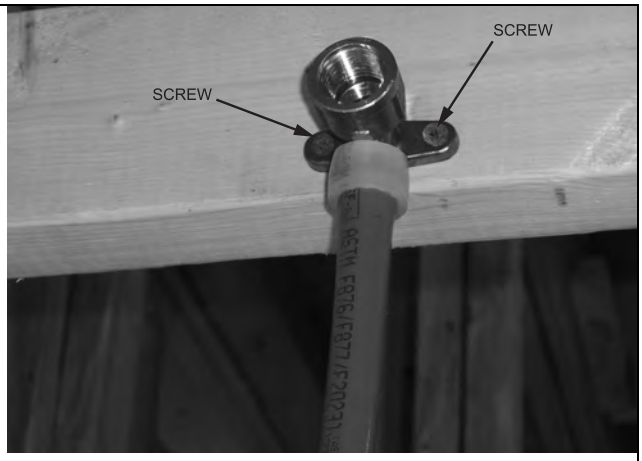

Figure 417.2(1)
SECURING SHOWER RISER

417.3 Shower waste outlet. Waste outlets serving showers shall be not less than $1^1/_2$ inches (38 mm) in diameter and, for other than waste outlets in bathtubs, shall have removable strainers not less than 3 inches (76 mm) in diameter with strainer openings not less than $^1/_4$ inch (6.4 mm) in least dimension. Where each shower space is not provided with an individual waste outlet, the waste outlet shall be located and the floor pitched so that waste from one shower does not flow over the floor area serving another shower. Waste outlets shall be fastened to the waste pipe in an *approved* manner.

❖ In gang or multiple showers, the shower room floor must slope toward the shower drains to prevent waste water from flowing from one shower area through another shower area. It would be undesirable and unhygienic for a bather to stand in waste water from someone else's shower (see Commentary Figure 417.3).

417.4 Shower compartments. Shower compartments shall be not less than 900 square inches (0.58 m^2) in interior cross-sectional area. Shower compartments shall be not less than 30 inches (762 mm) in least dimension as measured from the finished interior dimension of the compartment, exclusive of fixture valves, showerheads, soap dishes and safety grab bars or rails. Except as required in Section 404, the minimum required area and dimension shall be measured from the finished interior dimension at a height equal to the top of the threshold and at a point tangent to its centerline and shall be continued to a height not less than 70 inches (1778 mm) above the shower drain outlet.

Exception: Shower compartments having not less than 25 inches (635 mm) in minimum dimension measured from the finished interior dimension of the compartment, provided that the shower compartment has not less than 1,300 square inches (0.838 m^2) of cross-sectional area.

❖ Not less than 900 square inches (0.58 m^2) of interior cross-sectional area is required to facilitate an average-size standing adult cleaning the lower body extremities while bending over. A smaller-size shower would not provide adequate space. The 30-inch (762 mm) minimum dimension is based on this movement of the body while cleaning oneself (see Commentary Figure 417.4).

The exception allows for shower compartments with one dimension being as small as 25 inches (635 mm) so long as the compartment has at least a 1,300-square-inch (0.838 m^2) cross-sectional area. This is especially useful in remodeling situations where old bath tubs are removed and the space turned into a shower-only enclosure.

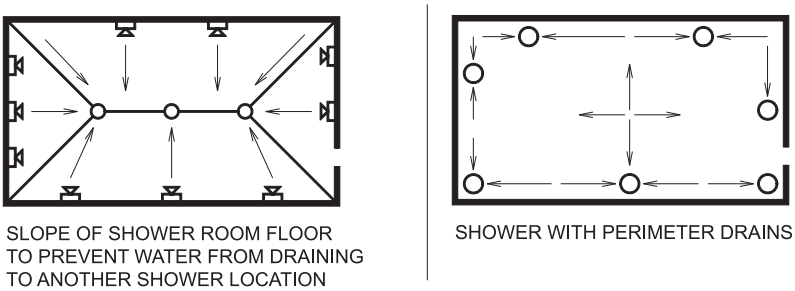

Figure 417.3
SHOWER FLOOR DESIGN

INTERNATIONAL CODE COUNCIL®
Copyright © 2015 ICC. ALL RIGHTS RESERVED. Accessed by David Dammon on Jun 21, 2017 12:30:52 PM pursuant to License Agreement with ICC. No further reproduction or distribution authorized. ANY UNAUTHORIZED REPRODUCTION OR DISTRIBUTION IS A VIOLATION OF THE FEDERAL COPYRIGHT ACT AND THE LICENSE AGREEMENT, AND SUBJECT TO CIVIL AND CRIMINAL PENALTIES THEREUNDER.

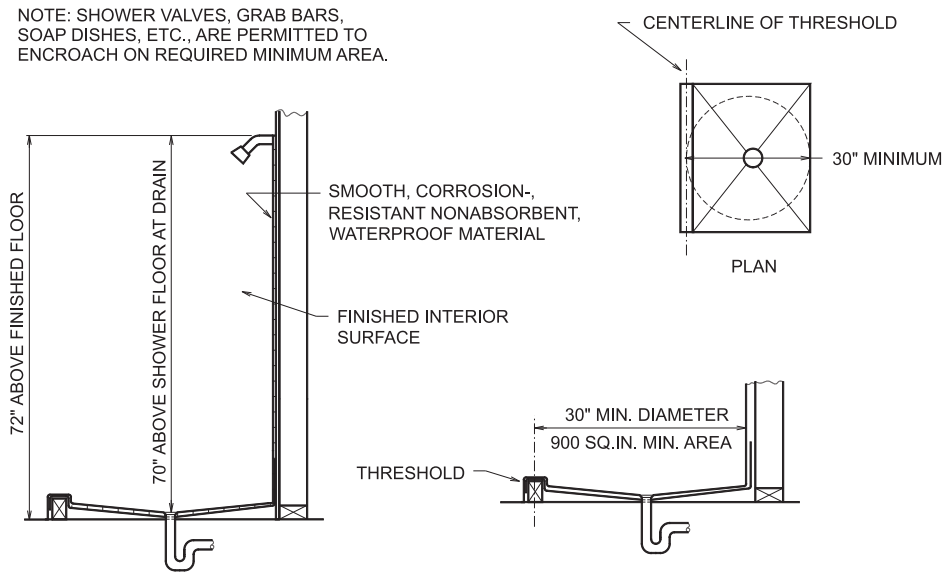

For SI: 1 inch = 25.4 mm, 1 square inch = 645.1 mm^2.

Figure 417.4
SHOWER COMPARTMENT

417.4.1 Floor and wall area. Bathtub floors, shower floors, wall areas above built-in tubs that have installed shower heads and walls in shower compartments shall be constructed of smooth, corrosion-resistant and nonabsorbent waterproof materials. Wall materials shall extend to a height of not less than 6 feet (1829 mm) above the room floor level, and not less than 70 inches (1778 mm) above the drain of the tub or shower. Such walls shall form a water-tight joint with each other and with either the tub or shower floor.

❖ The enclosure walls for tub/showers or showers must extend to a height of not less than 6 feet (1829 mm) above the floor level of the room or 70 inches (1778 mm) above the drain, whichever is greater (see Commentary Figure 417.4). The walls and bathtub or shower floors must be constructed of smooth, corrosion-resistant and nonabsorbent materials to protect the underlying building materials from water damage and to provide for a surface that can be easily cleaned. These requirements apply to both factory-fabricated enclosures and field-constructed enclosures.

Where field-constructed tub/shower or shower enclosures are concerned, the IBC (Sections 2509.2 and 1210.3) regulates the materials of construction. Where the finished surface of the enclosure wall will be tile, the backing for the tile must be made of glass mat water-resistant backing panels, discrete nonasbestos fiber-cement interior substrate or nonasbestos fiber-mat-reinforced cement substrate sheets. The walls above the required height of the tub/shower or shower enclosure are only required to be of water-resistant gypsum board (commonly called “green board” or “blue board”). Where water-resistant gypsum board is used within tub or shower compartment areas (including the ceiling), the IBC prohibits installation of a vapor barrier behind the board. Where water-resistant gypsum board is used on ceilings within tub or shower compartment areas, $^1/_2$-inch-thick (12.7 mm) board must be installed on a framing spacing of not greater than 12 inches (305 mm) center to center and $^5/_8$-inch-thick (15.9 mm) board must be installed on a framing spacing of not greater than 16 inches (406 mm) center to center. Water-resistant gypsum board may be used as a backing board for tile installed beyond the required tub/shower or shower enclosure walls.

After the tile has been installed and grouted, the corners of the enclosure walls and the walls to the tub or shower receptor must be caulked to make those joints water tight.

The height of the shower head above the floor is not regulated by the code. The common practice is to locate the riser fitting for the shower arm such that the shower head will be approximately 70 to 80 inches (1778 to 2032 mm) above the drain in the tub or shower. This allows for the shower arm to penetrate the wall above the required height of the enclosure wall and provides for ample adult standing height under the shower head.

417.4.2 Access. The shower compartment access and egress opening shall have a clear and unobstructed finished width of not less than 22 inches (559 mm). Shower compartments required to be designed in conformance to accessibility provisions shall comply with Section 404.1.

❖ Many injuries in the home are related to accidents caused by slips and falls occurring in the tub or shower. The minimum opening requirements for access to showers allow the user to have the room necessary to safely step in and out of the shower area without having to twist or turn through a narrow open-

INTERNATIONAL CODE COUNCIL®
Copyright © 2015 ICC. ALL RIGHTS RESERVED. Accessed by David Dammon on Jun 21, 2017 12:30:52 PM pursuant to License Agreement with ICC. No further reproduction or distribution authorized. ANY UNAUTHORIZED REPRODUCTION OR DISTRIBUTION IS A VIOLATION OF THE FEDERAL COPYRIGHT ACT AND THE LICENSE AGREEMENT, AND SUBJECT TO CIVIL AND CRIMINAL PENALTIES THEREUNDER.

ing. The 22 inches (559 mm) is based on the approximate shoulder width of an average adult. The minimum opening dimension also takes into account: 1) better access for servicing valves, shower head and drain; 2) emergency egress and 3) emergency response and rescue access.

417.5 Shower floors or receptors. Floor surfaces shall be constructed of impervious, noncorrosive, nonabsorbent and waterproof materials.

❖ The floor surfaces of the shower compartment must be made water tight with smooth, corrosion-resistant, nonabsorbent, waterproof materials. Joints created between the floor and walls of the shower must be properly flashed or caulked with sealants to avoid moisture penetration. The code does not currently require specialized slip-resistant floor surface.

417.5.1 Support. Floors or receptors under shower compartments shall be laid on, and supported by, a smooth and structurally sound base.

❖ An important requirement for shower floors is proper structural support. The support base for the shower floor must be designed for applicable dead and live loads.

417.5.2 Shower lining. Floors under shower compartments, except where prefabricated receptors have been provided, shall be lined and made water tight utilizing material complying with Sections 417.5.2.1 through 417.5.2.6. Such liners shall turn up on all sides not less than 2 inches (51 mm) above the finished threshold level. Liners shall be recessed and fastened to an *approved* backing so as not to occupy the space required for wall covering, and shall not be nailed or perforated at any point less than 1 inch (25 mm) above the finished threshold. Liners shall be pitched one-fourth unit vertical in 12 units horizontal (2-percent slope) and shall be sloped toward the fixture drains and be securely fastened to the waste outlet at the seepage entrance, making a water-tight joint between the liner and the outlet. The completed liner shall be tested in accordance with Section 312.9.

Exceptions:

1. Floor surfaces under shower heads provided for rinsing laid directly on the ground are not required to comply with this section.
2. Where a sheet-applied, load-bearing, bonded, waterproof membrane is installed as the shower lining, the membrane shall not be required to be recessed.

❖ Where a shower is built in place and not prefabricated, a shower pan is required under the shower's finished floor. Various materials are used for shower pans, including sheet lead, sheet copper, polyethylene sheet, chlorinated polyethylene sheet, preformed ABS, and bonded waterproof membranes. The shower pan is designed to collect water that leaks through the shower floor. The shower pan must connect to the shower drain with a flashing flange or clamping device and weep holes or seepage openings to allow the leaking water to enter the drainage system. The flashing flange or clamping device is used to clamp down the waterproof membrane and make a water-tight joint at the drain (see Commentary Figure 417.5.2).

A standard practice with lead and copper shower pans is to coat the finished shower pan with tar. If a plastic material or bonded waterproof membrane is installed, the shower pan must not be tarred because it may adversely affect or react with the plastic or membrane material. Care must be taken during the installation of a shower pan to prevent damage from occurring to the pan itself, which could result in a shower pan leak.

Exception 1 permits installing rinsing showers such as those used at beach facilities for sand removal without a shower pan liner. Note that this does not negate the requirements for shower floors in Section 417.5.

Because sheet-applied, load-bearing, bonded waterproof membranes are very thin, Exception 2 allows the installation of this material without recessing the material into the wall studs.

417.5.2.1 PVC sheets. Plasticized polyvinyl chloride (PVC) sheets shall meet the requirements of ASTM D4551. Sheets shall be joined by solvent welding in accordance with the manufacturer's installation instructions.

❖ PVC sheet material is a flexible plastic membrane that is fitted into a shower compartment on top of the subfloor to serve as the liner required by Section 417.5.2 to protect the building from water damage. The sheet is

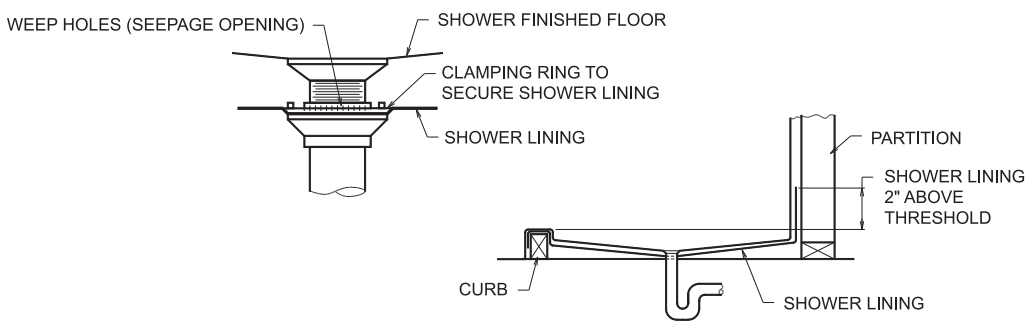

For SI: 1 inch = 25.4 mm.

Figure 417.5.2
SHOWER LINING CONNECTION

INTERNATIONAL CODE COUNCIL®
Copyright © 2015 ICC. ALL RIGHTS RESERVED. Accessed by David Dammon on Jun 21, 2017 12:30:52 PM pursuant to License Agreement with ICC. No further reproduction or distribution authorized. ANY UNAUTHORIZED REPRODUCTION OR DISTRIBUTION IS A VIOLATION OF THE FEDERAL COPYRIGHT ACT AND THE LICENSE AGREEMENT, AND SUBJECT TO CIVIL AND CRIMINAL PENALTIES THEREUNDER.

cut at the job site to accommodate the shower drain and line the subfloor, threshold and rough sidewalls of the shower compartment to a point at least 2 inches (51 mm) above the finished threshold level. The PVC sheet should be fastened to solid sidewalls and should not be nailed or perforated at any point below the flood level rim of the shower compartment. For the 2012 code edition, the thickness requirement for the material was removed because the standard already has puncture-resistance tests. Testing of materials has shown that thickness is not necessarily any indicator of puncture resistance.

417.5.2.2 Chlorinated polyethylene (CPE) sheets. Nonplasticized chlorinated polyethylene sheet shall meet the requirements of ASTM D4068. The liner shall be joined in accordance with the manufacturer's installation instructions.

❖ Chlorinated polyethylene (CPE) sheet material is a flexible plastic membrane that is fitted into a shower compartment on top of the subfloor to serve as the liner required by Section 417.5.2 to protect the building from water damage. The sheet is cut at the job site to accommodate the shower drain and line the subfloor, threshold and rough sidewalls of the shower compartment to a point at least 2 inches (51 mm) above the finished threshold level. The CPE sheet should be fastened to solid sidewalls and should not be nailed or perforated at any point below the flood level rim of the shower compartment. For the 2012 code edition, the thickness requirement for the material was removed because the standard already has puncture-resistance tests. Testing of materials has shown that thickness is not necessarily any indicator of puncture resistance.

417.5.2.3 Sheet lead. Sheet lead shall weigh not less than 4 pounds per square foot (19.5 kg/m^2) and shall be coated with an asphalt paint or other *approved* coating. The lead sheet shall be insulated from conducting substances other than the connecting drain by 15-pound (6.80 kg) asphalt felt or an equivalent. Sheet lead shall be joined by burning.

❖ Various materials are used for shower pans, including sheet lead. Shower pans are designed to collect the water that leaks through the shower floor. The bottom layer is fitted to the formed subbase and each succeeding layer thoroughly (hot mopped) to the one below.

417.5.2.4 Sheet copper. Sheet copper shall conform to ASTM B152 and shall weigh not less than 12 ounces per square foot (3.7 kg/m^2). The copper sheet shall be insulated from conducting substances other than the connecting drain by 15-pound (6.80 kg) asphalt felt or an equivalent. Sheet copper shall be joined by brazing or soldering.

❖ The industry standard addressing this product is ASTM B152. There are 13 different types of coppers listed in this standard; each has a unique property making it suitable for the specific application. Annealed (bendable) copper sheets are typically used for pan liners.

417.5.2.5 Sheet-applied, load-bearing, bonded, waterproof membranes. Sheet-applied, load-bearing, bonded, waterproof membranes shall meet requirements of ANSI A118.10 and shall be applied in accordance with the manufacturer's installation instructions.

❖ Sheet applied, load-bearing, bonded, waterproof membranes are used as part of a system of waterproofing for a shower floor when installing tile. The installation of this material must be in compliance with the manufacturer's instructions. The membrane is a finely woven cloth of synthetic fibers that is impregnated with a proprietary waterproofing system. The membrane has a stiffness similar to that of heavy brown paper and a roughness similar to that of burlap cloth. It can be cut with scissors as well as folded with a minimum radius to fit well into corners. Installation involves spreading a thin layer of special mortar base adhesive, laying the membrane on the mastic layer and then troweling (embedding) the membrane into the mastic. Seams in the membrane are made by overlapping the material and using mastic to adhere the overlapping materials.

417.5.2.6 Liquid-type, trowel-applied, load-bearing, bonded waterproof materials. Liquid-type, trowel- applied, load-bearing, bonded waterproof materials shall meet the requirements of ANSI A118.10 and shall be applied in accordance with the manufacturer's instructions.

❖ Liquid-type, trowel-applied, load-bearing, bonded waterproof materials are used as a system of waterproofing for a shower floor when installing tile. The installation of this material must be in compliance with the manufacturer's instructions. The material is best described as a stiff liquid that can be troweled or rolled on. The cured material forms a crack- resistant, watertight membrane.

417.6 Glazing. Windows and doors within a shower enclosure shall conform to the safety glazing requirements of the *International Building Code*.

❖ If a glass or plastic window or door is installed in a tub/shower or shower compartment, the IBC (Section 2406) requires the glazing (the glass or plastic) to be of safety glazing materials. This is required so that if a bather slips or falls and breaks the glazing, he or she will not be exposed to sharp, broken glazing material. Safety glazing is made to break into small rounded pieces that have minimal capacity to severely cut human skin (see commentary, Section 407.3).

SECTION 418
SINKS

418.1 Approval. Sinks shall conform to ASME A112.19.1/CSA B45.2, ASME A112.19.2/CSA B45.1, ASME A112.19.3/CSA B45.4 or CSA B45.5/IAPMO Z124.

❖ Standards containing material and performance requirements are provided in this section of the code for plumbing fixtures known as sinks. This section also contains waste outlet requirements for sinks. Sinks

INTERNATIONAL CODE COUNCIL®
Copyright © 2015 ICC. ALL RIGHTS RESERVED. Accessed by David Dammon on Jun 21, 2017 12:30:52 PM pursuant to License Agreement with ICC. No further reproduction or distribution authorized. ANY UNAUTHORIZED REPRODUCTION OR DISTRIBUTION IS A VIOLATION OF THE FEDERAL COPYRIGHT ACT AND THE LICENSE AGREEMENT, AND SUBJECT TO CIVIL AND CRIMINAL PENALTIES THEREUNDER.

are considered a different item than lavatories by the code, even though the terms can be used interchangeably.

Sinks are available in enameled cast iron, vitreous china, stainless steel, porcelain-enameled formed steel, plastic and nonvitreous ceramic materials. Soapstone sinks are not regulated by any standard; therefore, those sinks must be approved as an alternative in accordance with Section 105.2.

Although the most common classification is kitchen sinks, this section also regulates service sinks, bar sinks, mop sinks and wash sinks.

418.2 Sink waste outlets. Sinks shall be provided with waste outlets having a diameter not less than $1^1/_2$ inches (38 mm). A strainer or crossbar shall be provided to restrict the clear opening of the waste outlet.

❖ The waste discharge pipe from a sink must be not less that $1^1/_2$ inches (38 mm) in diameter. While some sinks are made with an integral waste discharge outlet, most have an opening that is suitable for the fitting of a waste outlet assembly that has the required waste outlet connection. For example, the typical stainless steel residential kitchen sink has an opening in the bottom of the sink that is approximately $3^1/_2$ inches (89 mm) in diameter. A waste outlet assembly (commonly called a "basket strainer assembly") or a food waste grinder attachment assembly is installed into this opening and the outlet of the assembly (or the disposer) is $1^1/_2$ inches (38 mm) in diameter. The requirement for a strainer or crossbar in the outlet is to catch dishcloths and other large pieces from entering and clogging the waste outlet piping.

418.3 Moveable sink systems. Moveable sink systems shall comply with ASME A112.19.12.

❖ See the commentary to Section 416.4.

SECTION 419
URINALS

419.1 Approval. Urinals shall conform to ASME A112.19.2/CSA B45.1, ASME A112.19.19 or CSA B45.5/IAPMO Z124. Urinals shall conform to the water consumption requirements of Section 604.4. Water-supplied urinals shall conform to the hydraulic performance requirements of ASME A112.19.2/CSA B45.1 or CSA B45.5/IAPMO Z124.

❖ A urinal is a fixture that has been designed specifically for urination; a water closet is primarily designed for defecation. Although urinals are normally associated with men, there have been urinals designed for women. Female urinals have not been popular because of clothing styles, the need for privacy and uncertainty regarding the proper use of the fixture.

Although it appears that the main feature in the design of the urinal was to have the user avoid contact with the fixture surface that can be contaminated, it was actually designed for practicality and speed. The installation of this fixture is the reason why there is frequently no line for the men's room, while a long line gathers for the women's room.

The design and construction of the urinal is regulated by the referenced standards. Trough urinals are prohibited because they do not conform to the referenced standards and are considered unhygienic.

There are four types of water-supplied urinals: stall, blowout, siphon jet and wash down. A stall urinal is floor mounted, with other urinals being predominantly wall hung. Both blowout and siphon-jet urinals flush completely by siphonic action; the contents of the bowl (and integral trap) are completely evacuated during the flushing cycle, and the integral trap of the fixture is refilled by water from the water flush tank or flushometer valve. Stall and wash-down urinals operate by having water calmly cascade down the inside back wall of the fixture to flood the urine in the drain area so that the mixed waste flow is pushed into the trap of the fixture. The contents remaining in the trap for the fixture is a mixture of urine and water. The water consumption limitation for water supplied urinals is 1.0 gallon (3.785 L) per flushing cycle (see commentary, Section 604.4).

Stall urinals require a separate trap to be installed below the floor line. In the past, many wall-hung washout urinals did not typically have an integral trap, but the required trap was a tubular type, exposed under the fixture. The exposed trap was often the source of leaks caused by the normal abuse often occurring in public toilet rooms. Almost all urinal manufacturers now design wall-hung wash-out urinals with an integral trap. While the new installation of a wall-hung, exposed trap wash-out urinal is not prohibited by the code, it is rarely done.

As water conservation has become more important in recent years, manufacturers have responded with waterless urinal designs. Waterless urinals are a popular consideration for sustainable "green" building projects. One design uses a special liquid that is less dense than the urine and the liquid creates the trap seal. Urine passes through the liquid seal and into the drain without affecting the liquid seal. The liquid is held in a special cartridge that is easily replaced for maintenance. Table 709.1 assigns a dfu value of 0.5 to "nonwater-supplied" urinals. Because of the obvious conservation of water, they are popular in areas having water shortages [see Commentary Figures 419.1(1) and (2)].

The absence of flushing water for nonwater-supplied urinals can present some unforeseen problems with respect to the drain piping for these fixtures. Concentrated urine has been known to deposit significant amounts of urea salts in the drain piping, resulting in restrictions of flow. The salts are especially difficult to remove and, in some cases, replacement of the piping is the only solution to the problem. Designers of toilet rooms that are planned to have nonwater-supplied urinals would be wise to arrange such fixtures so that the waste discharge from a water-supplied fixture is located and connected to the drainage piping upstream of the nonwater-supplied fixtures.

Where a wall-hung urinal is to be installed as an accessible fixture, the ICC A117.1-2009 standard

INTERNATIONAL CODE COUNCIL®
Copyright © 2015 ICC. ALL RIGHTS RESERVED. Accessed by David Dammon on Jun 21, 2017 12:30:52 PM pursuant to License Agreement with ICC. No further reproduction or distribution authorized. ANY UNAUTHORIZED REPRODUCTION OR DISTRIBUTION IS A VIOLATION OF THE FEDERAL COPYRIGHT ACT AND THE LICENSE AGREEMENT, AND SUBJECT TO CIVIL AND CRIMINAL PENALTIES THEREUNDER.

requires the urinal be not less than $13^1/_2$ inches (343 mm) from the front outer rim to the rear wall. This is to allow ease of use by persons sitting in a wheelchair.

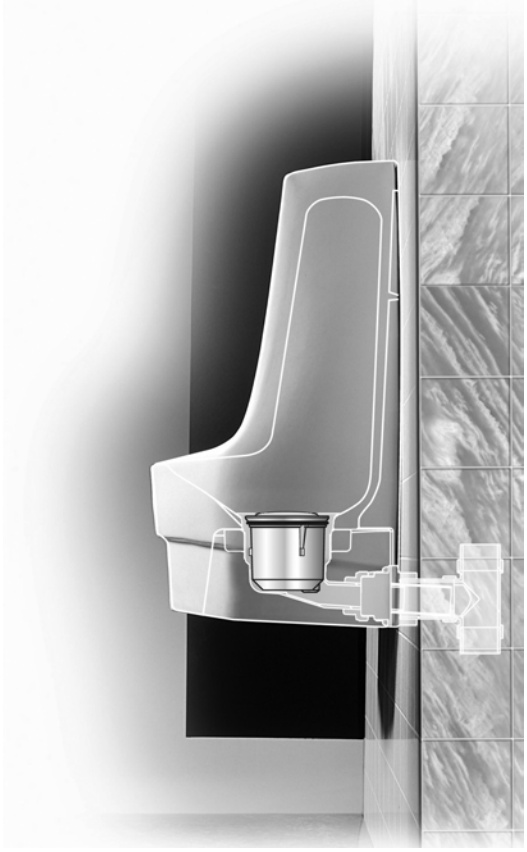

Figure 419.1(1)
WATERLESS URINAL
(Photo courtesy of Falcon Waterfree Technologies)

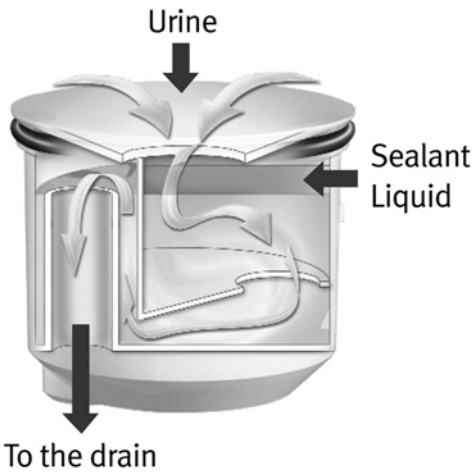

Figure 419.1(2)
WATERLESS URINAL CARTRIDGE
(Photo courtesy of Falcon Waterfree Technologies)

419.2 Substitution for water closets. In each bathroom or toilet room, urinals shall not be substituted for more than 67 percent of the required water closets in assembly and educational *occupancies*. Urinals shall not be substituted for more than 50 percent of the required water closets in all other *occupancies*.

❖ This section allows urinals to be substituted for a maximum of 67 percent of the required number of water closets in assembly and educational occupancies and a maximum of 50 percent in all other occupancies. For example, if five water closets are required in an educational occupancy men's room, the design professional may choose to install two water closets and three urinals, or three water closets and two urinals. If four urinals are installed, however, two water closets are also required. Experience has shown that water closet shortages result with a 67-percent substitution allowance in occupancies other than Groups E and A; thus, a 50-percent maximum allowance was introduced for those occupancies.

[BG] 419.3 Surrounding material. Wall and floor space to a point 2 feet (610 mm) in front of a urinal lip and 4 feet (1219 mm) above the floor and at least 2 feet (610 mm) to each side of the urinal shall be waterproofed with a smooth, readily cleanable, nonabsorbent material.

❖ Wall and floor space to a point 2 feet (610 mm) in front of a urinal lip and 4 feet (1219 mm) above the floor and at least 2 feet (610 mm) to each side of the urinal must be waterproofed with a smooth, readily cleanable, nonabsorbent material.

One of the major problems with the design of a urinal is the splash factor. When a forceful stream of urine hits the wall of the urinal or the water seal, there is a splash that could bounce out of the fixture. To prevent the splash from contaminating the building material surrounding the urinal, smooth, waterproof, nonabsorbent material is required on the surfaces most likely to be splashed. The finished material will allow for easy cleaning of the area, thus preventing any bacterial growth (see Commentary Figure 419.3). Note that there are requirements for urinal partitions in Section 310.5.

Section 1210.2 of the IBC also stipulates that the material be "hard." The intent of this section and the IBC section is that the surrounding material should not be of a type that is easily damaged such that the material could become absorbent and thus, not readily cleanable (and sanitized). Painted drywall, even where coated with highly durable paints, does not meet the intent of these sections. The typical materials used for this application are ceramic tile, fiberglass reinforced plastic (FRP) panels, phenolic panels, laminated plastic panels, painted steel and stainless steel. Painted concrete block and poured concrete walls that have had holes and cracks filled and smoothed with block filler material have also been used.

INTERNATIONAL CODE COUNCIL®
Copyright © 2015 ICC. ALL RIGHTS RESERVED. Accessed by David Dammon on Jun 21, 2017 12:30:52 PM pursuant to License Agreement with ICC. No further reproduction or distribution authorized. ANY UNAUTHORIZED REPRODUCTION OR DISTRIBUTION IS A VIOLATION OF THE FEDERAL COPYRIGHT ACT AND THE LICENSE AGREEMENT, AND SUBJECT TO CIVIL AND CRIMINAL PENALTIES THEREUNDER.

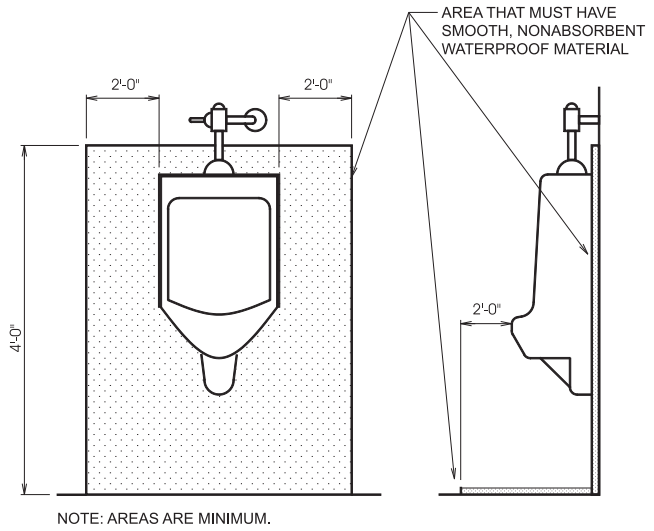

For SI: 1 inch = 25.4 mm, 1 foot = 304.8 mm.

Figure 419.3
URINAL SURROUNDING MATERIAL

SECTION 420
WATER CLOSETS

420.1 Approval. Water closets shall conform to the water consumption requirements of Section 604.4 and shall conform to ASME A112.19.2/CSA B45.1, ASME A112.19.3/CSA B45.4 or CSA B45.5/IAPMO Z124. Water closets shall conform to the hydraulic performance requirements of ASME A112.19.2/CSA B45.1. Water closet tanks shall conform to ASME A112.19.2/CSA B45.1, ASME A112.19.3/CSA B45.4 or CSA B45.5/IAPMO Z124. Electro-hydraulic water closets shall comply with ASME A112.19.2/CSA B45.1. Water closets equipped with a dual flushing device shall comply with ASME A112.19.14.

❖ The most recognizable and most used plumbing fixture is the water closet. Material and performance requirements are included in the referenced standards for water closets.

A water closet is referred to by many other names, including toilet and commode. The term “water closet” remains the technical expression. The term “water closet” originates from the first attempt to bring plumbing indoors. The human elimination process was done in a closet that contained a cistern. The closet was shaped like a chair to accommodate a person in the squatting or sitting position. The expression was soon associated with the room because it was the size of a closet. The term, however, applies today as the name of the fixture itself.

The most common word used in the United States to identify a water closet is “toilet.” The word “toilet” is derived from the French word “*toilette*,” meaning “dressing.” The word “toilet” was considered more socially acceptable than the term “water closet.” The word “toilet” more accurately describes the room in which water closets are installed.

The water closet is the primary fixture responsible for the modernization of plumbing. The fixture effectively disposes of human waste in a sanitary manner.

Water closets must be of the water-conservation type. The applicable fixture standards require a maximum average of not greater than 1.6 gallons (6.1 L) of water per flushing cycle. No cycle during the testing can exceed 2.0 gallons (7.6 L) per flush (see Section 604.4). The exceptions to Section 604.4 give the cases where use of a water closet with an increased water usage per flush, up to a maximum of 3.5 gallons (13 L) per flushing cycle, is permitted. To determine conformance, a representative model of the water closet must be tested for its flushing efficiency. The flushing test uses polypropylene balls and polyethylene granule discs. There is also a test for the ability to remove an ink stain on the inside surface of the water closet bowl, and a dye test measuring the exchange rate of water in the bowl. Another test measures the capacity of the drain line attached to the water closet to carry away the solids from the bowl following flushing.

There are three styles of water closets: close coupled, one piece and those using a flushometer valve.The close-coupled water closet has a bowl and separate gravity-type tank or flushometer tank that is supported by the bowl. A one-piece water closet is constructed with the gravity-type tank or flushometer tank and the bowl as one integral unit. A flushometer valve water closet is a bowl with a flushometer valve.

Water closet bowls come in six styles: blowout, siphon jet, reverse trap, washdown, siphon vortex and siphon wash. The following provides a brief description of each style:

Blowout: A blowout water closet must have a flushometer valve because the flushing relies on the higher pressure of the entering water. The water pressure forces the bowl contents through the trapway with little reliance on siphonic action. A blowout is the noisiest of the water closets.

Siphon jet: The siphon-jet bowl has a jet of water entering the bottom of the bowl directed into the trapway. Water enters through the rim of the bowl creating the siphon action started by the trapway opening. The water rises in the bowl until the siphon action draws the contents out of the bowl.

Reverse trap: The reverse trap is similar to the siphon-jet bowl. The difference between the two fixtures is the water surface area and the depth of the trap seal. The reverse-trap bowl is smaller in area with less of a trap seal.

Washdown: The washdown bowl has the trapway in the front of the bowl with a small water surface area. The siphon action is started by the water entering the rim.

Siphon vortex: The siphon vortex is a one-piece water closet. The water entering the rim at an angle creates a swirling vortex in the center of the bowl. In some designs, there is a flush-water opening in the

INTERNATIONAL CODE COUNCIL®
Copyright © 2015 ICC. ALL RIGHTS RESERVED. Accessed by David Dammon on Jun 21, 2017 12:30:52 PM pursuant to License Agreement with ICC. No further reproduction or distribution authorized. ANY UNAUTHORIZED REPRODUCTION OR DISTRIBUTION IS A VIOLATION OF THE FEDERAL COPYRIGHT ACT AND THE LICENSE AGREEMENT, AND SUBJECT TO CIVIL AND CRIMINAL PENALTIES THEREUNDER.

bowl near the trap opening that assists in the forming of the vortex. There is usually no flush-water opening in the trapway. The siphon action is created only by the water entering the rim of the bowl.

Siphon wash: The siphon wash is designed for maximum water conservation. The trap seal depth and water surface area are the smallest of all the designs. The flushing action is similar to the washdown principle.

Commentary Figure 420.1(1) shows a cutaway of four of the styles of water closet bowls. The top left is a siphon jet and the top right is a reverse trap. The bottom left is a blowout and the bottom right is a washdown [see Commentary Figure 420.1(2)].

The code does not specify the rim height of water closet bowls unless required to accommodate persons with disabilities (see commentary, Section 404). Although the referenced standards specify a bowl rim height between 14 and 15 inches (356 mm to 381 mm) above the floor, these standards also permit other rim heights for water closets intended for use by children, juveniles, the elderly and persons with disabilities [see Commentary Figure 420.1(3)].

Dual flushing devices for water closets have become a popular water closet design feature to achieve low-rated flush volumes. Dual-flush water closets offer a flushing mechanism that allows the user to choose between a standard flush volume (equal to or less than the federal and code-mandated maximum flush volume of 1.6 gallons (6 L) per flush) and a lower flush volume. Lower flush volumes can be used for flushing bowl contents that do not have solids (except for toilet paper), and the standard flush volume is used for flushing bowl contents having solids. Overall, dual-flush water closets can reduce water usage in a building. Some green building codes such as the *International Green Construction Code*® (IgCC®) require the installation of dual-flush water closets rated for 1.28 gallons (4.9 L) per flush. The rating of dual-flush water closets is the average of two low-flush volumes plus one standard-flush volume. The standard covering dual-flush water closets has been added to the IPC so that designers, installers and code officials will be ensured that these products will work as intended.

420.2 Water closets for public or employee toilet facilities. Water closet bowls for *public* or employee toilet facilities shall be of the elongated type.

❖ An elongated water closet bowl is required for public or employee use because it gives the user an extended area in which to eliminate human waste. The concept is to reduce the possibility of the user missing the bowl and soiling the water closet seat and surroundings.

The elongated water closet bowl also has a larger water surface area, which helps keep the inside surface of the bowl clean. An elongated water closet bowl is approximately 2 inches (51 mm) longer than a regu-

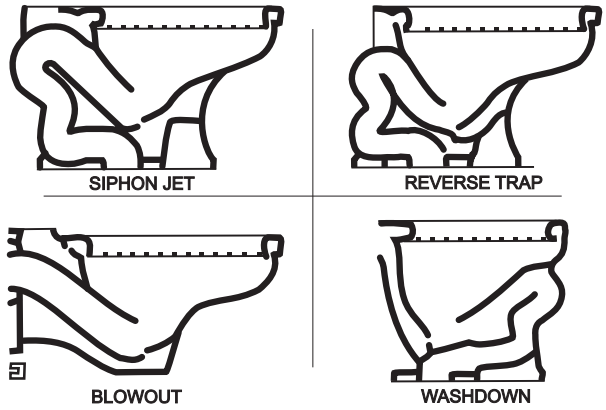

Figure 420.1(1)
BOWL DESIGN

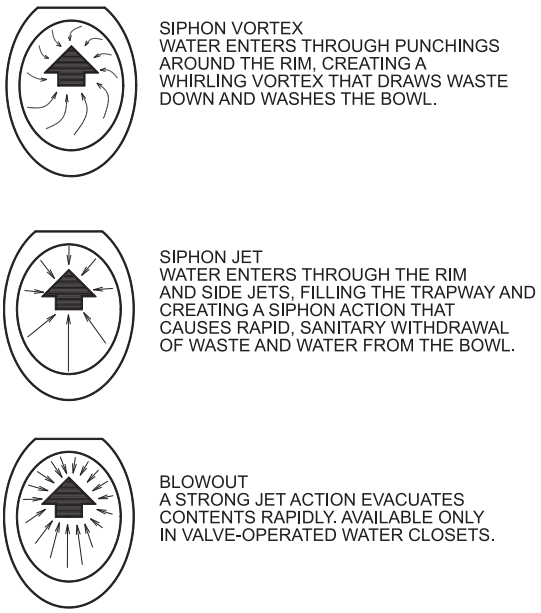

Figure 420.1(2)
FLUSHING ACTION FOR CERTAIN WATER CLOSETS

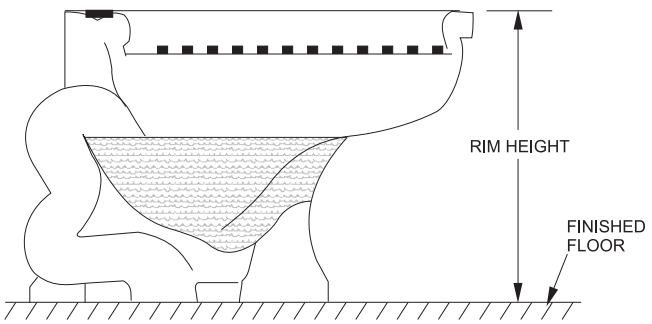

Figure 420.1(3)
DETERMINING WATER CLOSET RIM HEIGHT

INTERNATIONAL CODE COUNCIL®
Copyright © 2015 ICC. ALL RIGHTS RESERVED. Accessed by David Dammon on Jun 21, 2017 12:30:52 PM pursuant to License Agreement with ICC. No further reproduction or distribution authorized. ANY UNAUTHORIZED REPRODUCTION OR DISTRIBUTION IS A VIOLATION OF THE FEDERAL COPYRIGHT ACT AND THE LICENSE AGREEMENT, AND SUBJECT TO CIVIL AND CRIMINAL PENALTIES THEREUNDER.

lar round bowl. The bowl extension is toward the front of the fixture. Elongated bowls are not required for various nonpublic or nonemployee uses, including hotel guestrooms and private facilities.

420.3 Water closet seats. Water closets shall be equipped with seats of smooth, nonabsorbent material. All seats of water closets provided for *public* or employee toilet facilities shall be of the hinged open-front type. Integral water closet seats shall be of the same material as the fixture. Water closet seats shall be sized for the water closet bowl type.

❖ A water closet seat must be designed to facilitate cleaning and prevent the accumulation of dirt or bacterial growth. The seat must also be designed for the bowl on which it is installed.

The requirement for a hinged open-front seat was originally to aid women. The open seat, however, is equally beneficial to men. The open seat allows women to wipe the perineal area after using the water closet, while it also eliminates an area that could be contaminated with urine when used by men. The open-front design also eliminates the user's genital contact with the seat.

420.4 Water closet connections. A 4-inch by 3-inch (102 mm by 76 mm) closet bend shall be acceptable. Where a 3-inch (76 mm) bend is utilized on water closets, a 4-inch by 3-inch (102 mm by 76 mm) flange shall be installed to receive the fixture horn.

❖ A 4-inch by 3-inch (102 mm by 76 mm) closet bend is not considered a reduction in drainage pipe size (see Commentary Figure 420.4 and commentary, Section 704.2).

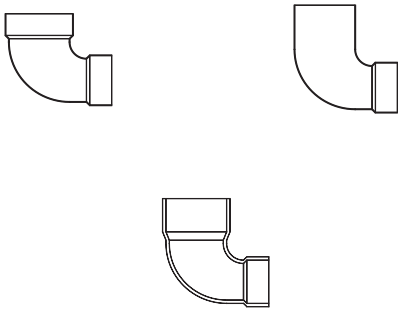

For SI: 1 inch = 25.4 mm.

Figure 420.4
ACCEPTABLE 4 × 3 CLOSET BENDS

SECTION 421
WHIRLPOOL BATHTUBS

421.1 Approval. Whirlpool bathtubs shall comply with ASME A112.19.7/CSA B45.10 and shall be listed and labeled in accordance with UL 1795.

❖ This section of the code provides material and performance requirements for bathtubs in which there is continuous movement of water. Installation requirements along with drain and suction fitting requirements are also provided.

ASME A112.19.7/CSA B45.10 was developed because of an increase in the use of whirlpool bathtubs. This standard regulates fixture design and construction, installation instructions and field-testing requirements. Whirlpool bathtubs must conform to this standard.

Listing and labeling of whirlpool tubs are necessary for electrical safety. Any electrical appliance connected to a system that conveys water or liquid waste has the potential to misdirect electrical current to appliance housings and onto other conductive paths that could come in contact with humans. The requirement for listing and labeling whirlpool tubs to a standard ensures that all necessary precautions have been taken by the manufacturer to protect users of these appliances from hazards.

421.2 Installation. Whirlpool bathtubs shall be installed and tested in accordance with the manufacturer's instructions. The pump shall be located above the weir of the fixture trap.

❖ The referenced standard requires the manufacturer to indicate that each whirlpool bathtub must be filled with water and tested during the rough-in inspection. This is necessary to determine whether there are any leaks in the factory-piped whirlpool lines that might have been caused by shipping, handling or installation.

The pump, being a mechanical device, must be accessible to facilitate any repairs, maintenance or replacement. The pump (circulation) must be located above the tub trap weir to verify that the pump body drains each time the tub is drained.

421.3 Drain. The pump drain and circulation piping shall be sloped to drain the water in the volute and the circulation piping when the whirlpool bathtub is empty.

❖ The whirlpool tub, suction lines and pump must be designed to drain completely after each use. This improves the sanitation of a whirlpool bathtub. Wastewater left standing in the pump body or other waterways will promote the growth of bacteria.

421.4 Suction fittings. Suction fittings for whirlpool bathtubs shall comply with ASME A112.19.7/CSA B45.10.

❖ ASME A112.19.7/CSA B45.10 was developed to regulate suction fittings on whirlpool bathtubs. The standard contains performance criteria for suction fittings. The purpose of the standard is to prevent the use of a fitting that may create a potential hazard for hair or body entrapment.

For the 2012 code edition, the standard in this section was updated because of a harmonization of standards that occurred since the last code edition. For more information on the harmonization of standards in the code, see the commentary to Section 405.9.

421.5 Access to pump. *Access* shall be provided to circulation pumps in accordance with the fixture or pump manufacturer's installation instructions. Where the manufacturer's instructions do not specify the location and minimum size of

INTERNATIONAL CODE COUNCIL®
Copyright © 2015 ICC. ALL RIGHTS RESERVED. Accessed by David Dammon on Jun 21, 2017 12:30:52 PM pursuant to License Agreement with ICC. No further reproduction or distribution authorized. ANY UNAUTHORIZED REPRODUCTION OR DISTRIBUTION IS A VIOLATION OF THE FEDERAL COPYRIGHT ACT AND THE LICENSE AGREEMENT, AND SUBJECT TO CIVIL AND CRIMINAL PENALTIES THEREUNDER.

field-fabricated access openings, an opening not less than 12 inches by 12 inches (305 mm by 305 mm) shall be installed to provide *access* to the circulation pump. Where pumps are located more than 2 feet (609 mm) from the access opening, an opening not less than 18 inches by 18 inches (457 mm by 457 mm) shall be installed. A door or panel shall be permitted to close the opening. In all cases, the access opening shall be unobstructed and of the size necessary to permit the removal and replacement of the circulation pump.

❖ A whirlpool pump must be accessible for removal for repairs/replacement. The opening is needed for access to the mounting bolts, pipe unions and electrical connections to physically remove the pump without damaging it or the surrounding finished walls or ceiling. The larger opening is required when the pump is located deeper in the enclosure because the service personnel will have to position more of their body in the opening to reach and remove the pump. Note that the whirlpool tub manufacturer may dictate specific access requirements and such requirements prevail over what is specified in this section [see Commentary Figures 421.5(1) and (2)].

421.6 Whirlpool enclosure. Doors within a whirlpool enclosure shall conform to ASME A112.19.15.

❖ See the commentary to Section 407.4.

SECTION 422
HEALTH CARE FIXTURES AND EQUIPMENT

422.1 Scope. This section shall govern those aspects of health care plumbing systems that differ from plumbing systems in other structures. Health care plumbing systems shall conform to the requirements of this section in addition to the other requirements of this code. The provisions of this section shall apply to the special devices and equipment installed and maintained in the following *occupancies*: nursing homes, homes for the aged, orphanages, infirmaries, first aid stations, psychiatric facilities, clinics, professional offices of dentists and doctors, mortuaries, educational facilities, surgery, dentistry, research and testing laboratories, establishments manufacturing pharmaceutical drugs and medicines and other structures with similar apparatus and equipment classified as plumbing.

❖ In health care facilities, there are plumbing fixtures that have special requirements because of their unique application or use. This section outlines occupancies where special health care plumbing devices and equipment may be installed. Although these fixtures are typically found in hospitals, they might be located in other health care facilities.

Note that the list of occupancies is not all inclusive. It is intended only to be representative of the occupan-



Figure 421.5(1)
NONCOMPLIANT WHIRLPOOL BATHTUB PUMP ACCESS

INTERNATIONAL CODE COUNCIL®
Copyright © 2015 ICC. ALL RIGHTS RESERVED. Accessed by David Dammon on Jun 21, 2017 12:30:52 PM pursuant to License Agreement with ICC. No further reproduction or distribution authorized. ANY UNAUTHORIZED REPRODUCTION OR DISTRIBUTION IS A VIOLATION OF THE FEDERAL COPYRIGHT ACT AND THE LICENSE AGREEMENT, AND SUBJECT TO CIVIL AND CRIMINAL PENALTIES THEREUNDER.

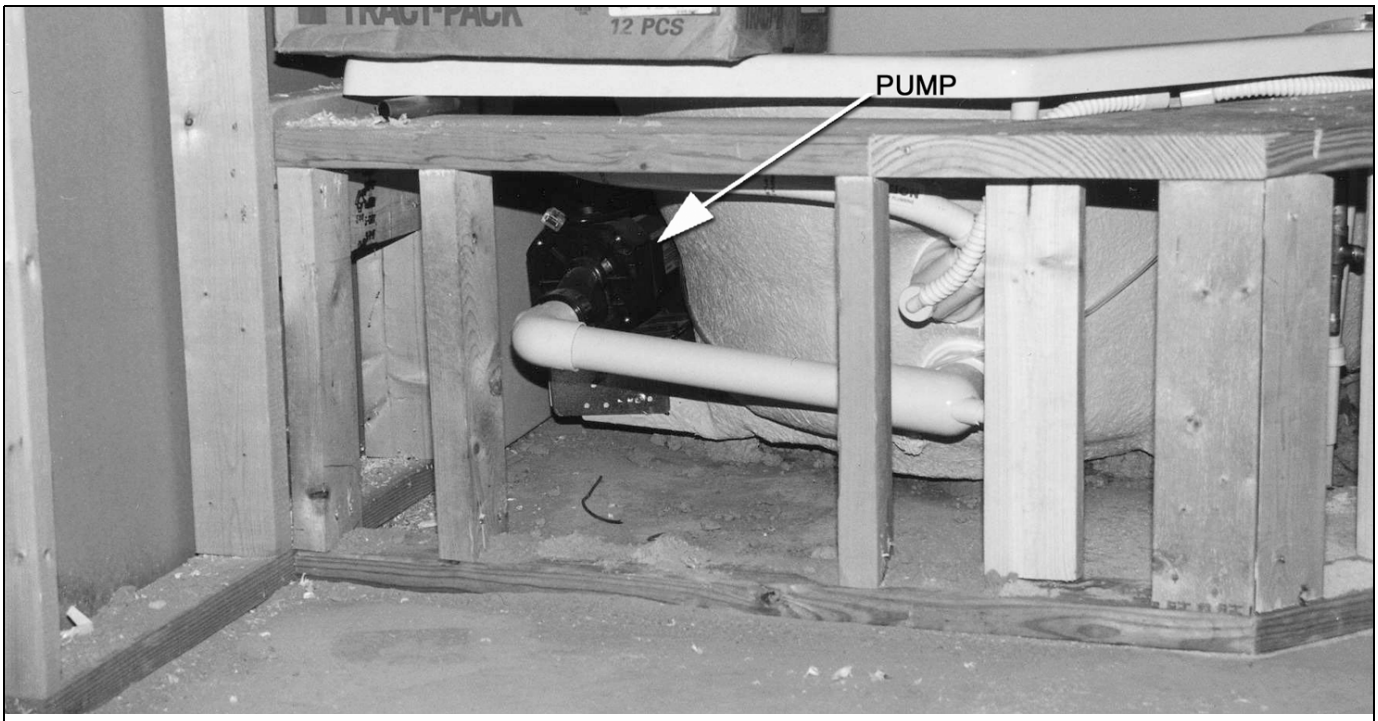

Figure 421.5(2)
NONCOMPLIANT WHIRLPOOL BATHTUB PUMP ACCESS

cies in which special plumbing fixtures are regulated by this chapter. Occupancies other than those listed can be equipped with some of these special fixtures. When this occurs, the requirement shown here would apply to those occupancies.

422.2 Approval. All special plumbing fixtures, equipment, devices and apparatus shall be of an *approved* type.

❖ Because many health care plumbing fixtures are not regulated by any fixture standards, each must be evaluated and approved by the code official. The code official should consider backflow prevention and the ability to maintain sanitary conditions of the special fixtures.

422.3 Protection. All devices, appurtenances, appliances and apparatus intended to serve some special function, such as sterilization, distillation, processing, cooling, or storage of ice or foods, and that connect to either the water supply or drainage system, shall be provided with protection against backflow, flooding, fouling, contamination of the water supply system and stoppage of the drain.

❖ This section requires protection of fixtures, appliances and equipment against contamination resulting from backflow. The water supply system must also be protected against contamination resulting from backflow from such fixtures, appliances and equipment.

This section combines the intent of Sections 608, 609 and 802.

422.4 Materials. Fixtures designed for therapy, special cleansing or disposal of waste materials, combinations of such purposes, or any other special purpose, shall be of smooth, impervious, corrosion-resistant materials and, where subjected to temperatures in excess of 180°F (82°C), shall be capable of withstanding, without damage, higher temperatures.

❖ This section requires the materials used for special plumbing fixtures to be cleanable and capable of resisting staining, corrosion and the accumulation of waste in any pores or other minute openings in the finish of the material. The material used for the fixture must also be capable of withstanding the temperatures to which it will be exposed during normal service conditions.

422.5 Access. *Access* shall be provided to concealed piping in connection with special fixtures where such piping contains steam traps, valves, relief valves, check valves, vacuum breakers or other similar items that require periodic inspection, servicing, maintenance or repair. *Access* shall be provided to concealed piping that requires periodic inspection, maintenance or repair.

❖ Any plumbing fixture, appliance or device having mechanical components must be accessible to facilitate any needed repair or maintenance. A mechanical component is always prone to failure and, therefore, access is required.

422.6 Clinical sink. A clinical sink shall have an integral trap in which the upper portion of a visible trap seal provides a water surface. The fixture shall be designed so as to permit complete removal of the contents by siphonic or blowout action and to reseal the trap. A flushing rim shall provide

INTERNATIONAL CODE COUNCIL®
Copyright © 2015 ICC. ALL RIGHTS RESERVED. Accessed by David Dammon on Jun 21, 2017 12:30:52 PM pursuant to License Agreement with ICC. No further reproduction or distribution authorized. ANY UNAUTHORIZED REPRODUCTION OR DISTRIBUTION IS A VIOLATION OF THE FEDERAL COPYRIGHT ACT AND THE LICENSE AGREEMENT, AND SUBJECT TO CIVIL AND CRIMINAL PENALTIES THEREUNDER.

water to cleanse the interior surface. The fixture shall have the flushing and cleansing characteristics of a water closet.

❖ A clinical sink is the main special fixture used in health care facilities. It is designed to both wash a bedpan and remove its contents; therefore, the other name for a clinical sink is a bedpan washer.

A clinical sink is like a water closet in that it has a flushing rim, which washes the interior walls of the fixture and discharges urine and fecal matter by siphonic action.

A hose or washing arm is provided with a clinical sink to wash the contents of the bedpan into the fixture. In some installations, a water closet functions as both a clinical sink and a water closet. The common use of the dual-purpose fixture reduces the number of plumbing fixtures required in a health care facility.

422.7 Prohibited usage of clinical sinks and service sinks. A clinical sink serving a soiled utility room shall not be considered as a substitute for, or be utilized as, a service sink. A service sink shall not be utilized for the disposal of urine, fecal matter or other human waste.

❖ A service sink is not designed for the elimination of human waste, nor does it have a flushing rim to clean the fixture with each use. By not completely eliminating the waste material via a flushing method, a service sink could allow bacteria to grow and infect the surrounding areas. A service sink and a clinical sink, therefore, must not be interchanged.

422.8 Ice prohibited in soiled utility room. Machines for manufacturing ice, or any device for the handling or storage of ice, shall not be located in a soiled utility room.

❖ In rooms where fecal matter is eliminated, biological aerosols are released into the air, making contact with exposed surfaces. The feces of an unhealthy person could also contain pathogens that may release into the air.

To avoid the possible contamination of fluid that is to be ingested, locating ice machines in the same room as a clinical sink is prohibited. For the same reason, installation of drinking fountains in toilet rooms is prohibited.

422.9 Sterilizer equipment requirements. The approval and installation of all sterilizers shall conform to the requirements of the *International Mechanical Code*.

❖ The *International Mechanical Code*® (IMC®) regulates the installation of appliances, including sterilizers. The appliance must bear the label of an approved agency and be installed in accordance with the manufacturer's instructions. If a sterilizer is gas fired, the *International Fuel Gas Code*® (IFGC®) specifies the requirements for gas piping, combustion air and venting.

422.9.1 Sterilizer piping. *Access* for the purposes of inspection and maintenance shall be provided to all sterilizer piping and devices necessary for the operation of sterilizers.

❖ The term "access" is defined in Chapter 2. Access to piping and devices associated with sterilizers is essential to allow for periodic inspection, maintenance and repair.

422.9.2 Steam supply. Steam supplies to sterilizers, including those connected by pipes from overhead mains or branches, shall be drained to prevent any moisture from reaching the sterilizer. The condensate drainage from the steam supply shall be discharged by gravity.

❖ Because condensate could contain contaminants that interfere with the operation of the sterilizer, it must not be allowed to enter the sterilizer. The condensate must be drained by gravity, which is the most dependable method. Drainage of the condensate also reduces the likelihood of it entering the sterilizer.

422.9.3 Steam condensate return. Steam condensate returns from sterilizers shall be a gravity return system.

❖ Steam condensate returns from sterilizers are required to drain by gravity to reduce the likelihood of condensate backing up into a sterilizer, which could violate the sterile conditions.

422.9.4 Condensers. Pressure sterilizers shall be equipped with a means of condensing and cooling the exhaust steam vapors. Nonpressure sterilizers shall be equipped with a device that will automatically control the vapor, confining the vapors within the vessel.

❖ To avoid the release of steam into the space that houses the sterilizer, units that operate above atmospheric pressures must condense the exhaust steam vapors. For the same reason, sterilizers that operate at approximately atmospheric pressure must confine the steam vapors within the vessel.

422.10 Special elevations. Control valves, vacuum outlets and devices protruding from a wall of an operating, emergency, recovery, examining or delivery room, or in a corridor or other location where patients are transported on a wheeled stretcher, shall be located at an elevation that prevents bumping the patient or stretcher against the device.

❖ Many of the control devices used in health care plumbing systems protrude from the wall. They must be located in a way to prevent any accidental contact by a patient in a wheelchair or stretcher. Besides protecting an individual from hitting any control device, it also protects the device from any possible damage.

SECTION 423
SPECIALTY PLUMBING FIXTURES

423.1 Water connections. Baptisteries, ornamental and lily pools, aquariums, ornamental fountain basins, swimming pools, and similar constructions, where provided with water supplies, shall be protected against backflow in accordance with Section 608.

❖ This section addresses the myriad of specialty and decorative items that are not commonly thought of as plumbing fixtures. The most important requirement for these types of construction is to prevent water supply

INTERNATIONAL CODE COUNCIL®
Copyright © 2015 ICC. ALL RIGHTS RESERVED. Accessed by David Dammon on Jun 21, 2017 12:30:52 PM pursuant to License Agreement with ICC. No further reproduction or distribution authorized. ANY UNAUTHORIZED REPRODUCTION OR DISTRIBUTION IS A VIOLATION OF THE FEDERAL COPYRIGHT ACT AND THE LICENSE AGREEMENT, AND SUBJECT TO CIVIL AND CRIMINAL PENALTIES THEREUNDER.

contamination. Note that Section 423.2 requires that specialty fixtures be approved by the code official. Requirements for specialty fixture materials are located in Section 402.2. Baptismal pools, ornamental ponds and fountains, swimming pools, specialty food service equipment, dispensers, pedicure chairs and ice makers are examples of items and equipment that, although not classified as plumbing fixtures, require a water supply connection or waste connection.

The majority of these "special fixtures" are not governed by standards; therefore, extraordinary precautions must be taken to verify that the potable water supply is not endangered. The code official must evaluate each installation independently to secure compliance with Section 608 (see commentary, Section 608).

A pedicure chair (having integral foot bathtub) that is permanently connected to the water supply and drain system is good example of a specialty plumbing fixture. While these factory-assembled units have water and waste connections and are conceptually similar to some appliances, such as a whirlpool tub, they might not be designed or tested to any plumbing code referenced standard. Therefore, the code official must review the equipment information prior to approving such fixtures for installation so he or she can advise the installer on special requirements for protecting the potable water supply from contamination.

423.2 Approval. Specialties requiring water and waste connections shall be submitted for approval.

❖ Fixtures or devices not conforming to referenced standards must be approved by the code official as an alternative material in accordance with Section 105.2. Water supplies serving such fixtures or devices must be protected against backflow to prevent contamination of the potable water supply (see Section 423.1).

423.3 Footbaths, pedicure baths and head shampoo sinks. The water supplied to specialty plumbing fixtures, such as pedicure chairs having an integral foot bathtub, footbaths, and head shampoo sinks, shall be limited to a maximum temperature of 120°F (49°C) by a water temperature limiting device that conforms to ASSE 1070 or CSA B125.3.

❖ Water heaters in establishments that include pedicure chairs with integral foot bathtubs, footbaths and head shampoo sinks are often overtaxed during periods of high usage. Because client satisfaction requires the use of very warm water, owners/operators of these establishments sometimes adjust water heater thermostats to high temperature settings to use less hot water volume for the desired mixed water temperatures. Clients' feet or heads could be inadvertently exposed to high water temperatures (greater than 120°F) that could cause skin burns. Temperature-limiting devices on the water supply to these specialty plumbing fixtures will prevent such exposures.

SECTION 424
FAUCETS AND OTHER FIXTURE FITTINGS

424.1 Approval. Faucets and fixture fittings shall conform to ASME A112.18.1/CSA B125.1. Faucets and fixture fittings that supply drinking water for human ingestion shall conform to the requirements of NSF 61, Section 9. Flexible water connectors exposed to continuous pressure shall conform to the requirements of Section 605.6.

❖ The indicated standard regulates plumbing supply fittings located between the supply line stop and the terminal fitting, inclusive. The terminal fitting is the fitting that has an open or atmospheric discharge (e.g., a faucet or hose bibb). This standard covers automatic compensating valves for individual wall-mounted showering systems, bath and shower supply fittings, bidet supply fittings, clothes washer supply fittings, drinking fountain supply fittings, humidifier supply stops, kitchen sink and lavatory supply fittings, laundry tub supply fittings, lawn and sediment faucets, metering and self-closing supply fittings and supply stops. The standard does not apply to pipes, tubes or the fittings for pipes and tubes.

The main focus of this standard is to ensure that mounting dimensions and connection interchangeability exist among manufacturers of these types of plumbing products. The standard also covers all of the quality requirements and uniform test methods including but not limited to, strength (pressure and structural), finish durability, operational life, back flow protection, force/torque to operate, and maximum leakage amounts for the fittings.

The second line of this code section requires that faucets and fittings that supply drinking water for human ingestion conform to the requirements of Section 9 of NSF 61. This is also a requirement of the ASME A112.18.1/CSA B125.1 standard. It is often assumed that because a potable water distribution system conveys potable water, water discharged from any point in the system is of drinking water quality. However, this is not the case as the following explanation of the Safe Drinking Water Act (SDWA) and NSF 61 will clarify.

In 1974, the SDWA was enacted by the United States Federal government to minimize chemical and bacterial contamination of drinking water. The Act authorized the U.S. Environmental Protection Agency (EPA) to set national health-based standards for drinking water to protect the public from naturally occurring and man-made contaminants. In 1986, an amendment to the SDWA addressed concerns for lead contamination of drinking water by requiring that all pipes, solders, pipe fittings and plumbing fixtures, intended to provide water for human consumption and sold after July 1986, be lead-free. Lead-free in this context is defined to mean that solder and flux cannot contain more than 0.2-percent lead and that pipes, fittings and fixtures cannot contain more than 8.0-per-

INTERNATIONAL CODE COUNCIL®
Copyright © 2015 ICC. ALL RIGHTS RESERVED. Accessed by David Dammon on Jun 21, 2017 12:30:52 PM pursuant to License Agreement with ICC. No further reproduction or distribution authorized. ANY UNAUTHORIZED REPRODUCTION OR DISTRIBUTION IS A VIOLATION OF THE FEDERAL COPYRIGHT ACT AND THE LICENSE AGREEMENT, AND SUBJECT TO CIVIL AND CRIMINAL PENALTIES THEREUNDER.

cent lead (see commentary, Sections 605.2 and 605.14.3).

Because studies indicated that plumbing (supply) fittings and fixtures within the last liter volume of the water discharge point were significant contributors of contaminants (especially lead) in dispensed water, the 1986 amendment to the SDWA also required that by August 1997, a set of voluntary consensus standards and testing protocols be developed for these products. In preparation for meeting the August 1997 deadline, the initial standard, NSF 61, *Drinking Water System Components—Health Effects*, was voluntarily developed in 1988 by a consortium of National Sanitation Foundation (NSF) International, the American Water Works Association and the Association of State Drinking Water Administrators with support from the U.S. EPA. In 1994, Section 9 of NSF 61 was completed to in order to comply with the August 1997 deadline.

The reader might question why plumbing (supply) fittings and fixtures within the last liter volume of the discharge point are required to comply with more stringent standards beyond that of a maximum lead content of 8 percent. Because the majority of plumbing (supply) fittings and fixtures are made from copper and brass alloys, the casting, forging, machining and finishing processes to produce those products can cause the lead in the alloys to be much more "leachable" than the lead in pipe and pipe fitting products. If water remains at rest in the plumbing (supply) fittings and fixtures for a long period of time such as might happen overnight, the next draw of water from the plumbing (supply) fittings or fixtures often contains a lead concentration much higher than the maximum allowable lead concentration established by the U.S. EPA for safe drinking water.

Section 9 of NSF 61 only covers plumbing (supply) fittings and fixtures intended by the manufacturer to supply water for human consumption. Examples are kitchen faucets, lavatory faucets, bar faucets, drinking fountains, residential icemakers, hot/cold water dispensers and commercial kitchen pot fillers. Section 9 of NSF 61 specifically excludes certain "end point" devices such as bath/shower valves, utility faucets, laboratory faucets, bidet controls, any faucets with hose thread fittings at the discharge point, nonlavatory hand wash stations, and faucets that are self-closing, metering or electronically activated. In summary, any end point device where the water is specifically intended to be drawn for consumption by humans must be certified to Section 9 of NSF 61.

The last line of this code section refers the reader to another section that specifically covers flexible water connectors as the requirements of this section do not apply to that type of product.

424.1.1 Faucets and supply fittings. Faucets and supply fittings shall conform to the water consumption requirements of Section 604.4.

❖ Faucets are the end point devices that allow the user to turn the water flow on and off, regulate the flow and in some cases, regulate the temperature at the point of use. A standard lavatory faucet is an example of an end point device that must have a water discharge rate of no greater than the maximum stated in Section 604.4. Faucets that are required to have the flow rate limited, utilize a removable flow restricting device at the outlet of the faucet, commonly called an aerator. Not all of these devices "aerate" (entrain air in) the flow stream.

The original use of aerators was to reduce the degree of flow stream splashing as it impacted the basin or objects being washed. Entrained air "softens" the impact of the flow stream. However, as water conservation was mandated (see Section 604.4), aerators took on the more important role of limiting flow from faucets and remain today as the key water flow limiting device for most faucets.

As stated previously, not all "aerators" entrain air into the flow stream. A common example is a laminar flow device found in many medical and dental faucet applications. In these environments, bacteria-laden room air entrained into the flow stream by an aerator is detrimental to infection control efforts. Since laminar flow devices do not entrain air into the flow stream, bacterial infection is reduced. Further towards the effort of infection control, some laminar flow devices now include minute amounts of silver (Ag), which has been proven to prevent bacteria growth within the laminar flow device during periods of nonuse.

In applications where water flow from faucets is significantly reduced such as in public lavatories [limited to 0.5 gallon per minute (1.89 L/m)], an aerated or laminar flow stream does not provide enough force to allow the user to effectively remove soap and dirt from the hands. A nonaerated spray pattern device is used that produces numerous small but powerful streams for better cleaning [see Commentary Figures 424.1.1(1) and (2)].

Supply fittings, as referenced in this section, are those devices downstream of faucets or control valves. Examples are shower heads and hand-held showers. Water conservation in these supply fittings is typically accomplished with internal flow restricting devices.

424.1.2 Waste fittings. Waste fittings shall conform to ASME A112.18.2/CSA B125.2, ASTM F409 or to one of the standards listed in Tables 702.1 and 702.4 for above-ground drainage and vent pipe and fittings.

❖ The indicated standards cover plumbing waste fittings of sizes 2 inches (51 mm) nominal and smaller and

INTERNATIONAL CODE COUNCIL®
Copyright © 2015 ICC. ALL RIGHTS RESERVED. Accessed by David Dammon on Jun 21, 2017 12:30:52 PM pursuant to License Agreement with ICC. No further reproduction or distribution authorized. ANY UNAUTHORIZED REPRODUCTION OR DISTRIBUTION IS A VIOLATION OF THE FEDERAL COPYRIGHT ACT AND THE LICENSE AGREEMENT, AND SUBJECT TO CIVIL AND CRIMINAL PENALTIES THEREUNDER.

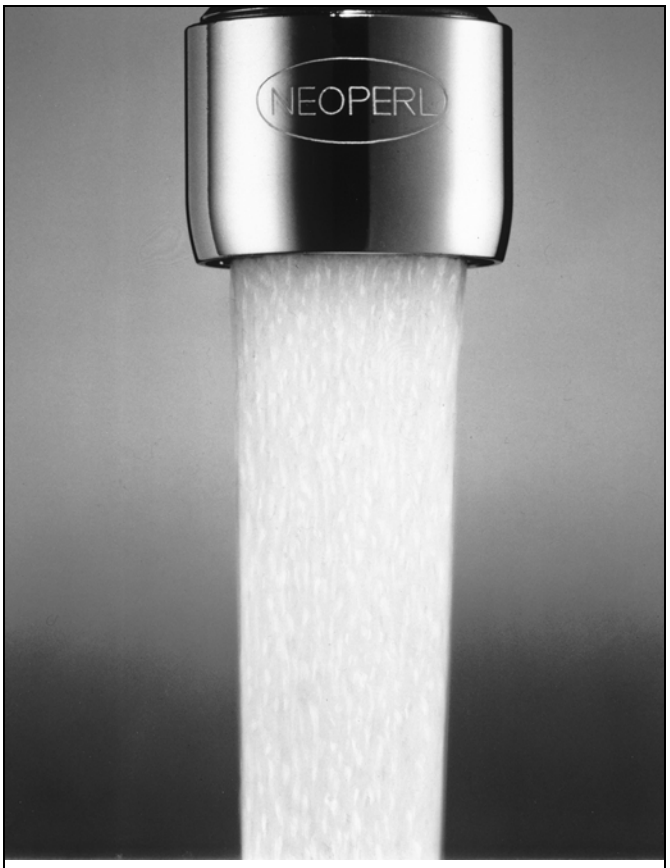

Figure 424.1.1(1)
AERATED STREAM AERATOR
(Photo courtesy of Neoperl, Inc.)

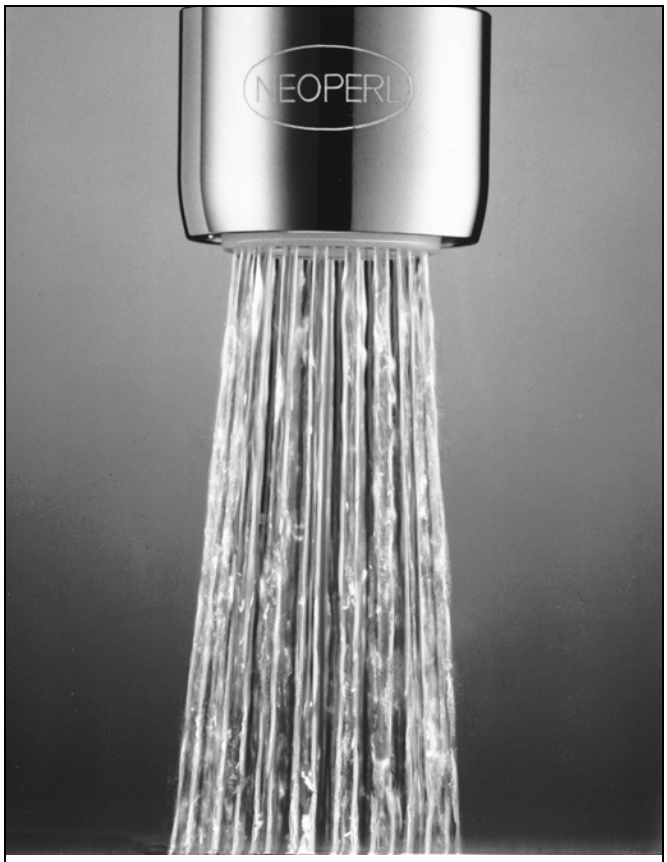

Figure 424.1.1(2)
SPRAY AERATOR
(Photo courtesy of Neoperl, Inc.)

include traps, tailpieces, trap wall adapters, diversion tees, twin waste elbows, overflow elbows, drain elbows and strainer bodies of various materials, including plastic.

ASTM F409 covers waste fittings made of plastic materials only.

The main focus of these standards is to assure that mounting dimensions and connection interchangeability exist among manufacturers of these types of plumbing products. The standard also covers all of the quality requirements and uniform test methods including but not limited to, strength (pressure and structural), finish, durability and maximum leakage amounts for the fittings.

424.2 Hand showers. Hand-held showers shall conform to ASME A112.18.1/CSA B125.1. Hand-held showers shall provide backflow protection in accordance with ASME A112.18.1/CSA B125.1 or shall be protected against backflow by a device complying with ASME A112.18.3.

❖ Because it is possible for a hand-held shower to be submerged in the bathtub or shower compartment base, a cross connection to waste water could be created. The hand-held shower must have adequate protection against backflow. The backflow protection may be integral to the hand-held shower or may be provided by an external backflow device that meets ASME A112.18.3. These types of showers are commonly installed in accessible shower enclosures. Their use, however, has increased in popularity in showers within a dwelling unit. The referenced standards specify the requirements for backflow protection of the hand-held shower.

A hand-held shower, used in a hand-held mode, is not considered to be the type of shower that requires a means to protect the user from scalding. The reason for this comes from the justifications that eventually led to the code requirement for anti-scald shower valves (see commentary, Section 424.3). Therefore, if the hand-held shower is mounted for use in a hands-free mode with the user in a standing position, a hand-held shower is no different than any other fixed-type shower head and must be supplied through an anti-scald shower valve in accordance with Section 424.3.

However, where a hand-held shower is used in a hand-held mode, most users, when subjected to a high temperature surge of water spray, will either drop or simply redirect the hand-held shower. If the user is standing, the potential for a fall injury is minimal. If the user is sitting, fall injuries cannot occur. Therefore, where a hand-held shower is used only in a hand-held mode, the water discharged from it is not required to be supplied through an antiscald shower valve.

INTERNATIONAL CODE COUNCIL®
Copyright © 2015 ICC. ALL RIGHTS RESERVED. Accessed by David Dammon on Jun 21, 2017 12:30:52 PM pursuant to License Agreement with ICC. No further reproduction or distribution authorized. ANY UNAUTHORIZED REPRODUCTION OR DISTRIBUTION IS A VIOLATION OF THE FEDERAL COPYRIGHT ACT AND THE LICENSE AGREEMENT, AND SUBJECT TO CIVIL AND CRIMINAL PENALTIES THEREUNDER.

For the 2012 code edition, all the standards in this section, with the exception of ASME A112.18.3, were updated because of a harmonization of standards that occurred since the last code edition. For more information on the harmonization of standards in the code, see the commentary to Section 405.9.

424.3 Individual shower valves. Individual shower and tub-shower combination valves shall be balanced-pressure, thermostatic or combination balanced-pressure/thermostatic valves that conform to the requirements of ASSE 1016/ASME A112.1016/CSA B125.16 or ASME A112.18.1/CSA B125.1 and shall be installed at the point of use. Shower and tub-shower combination valves required by this section shall be equipped with a means to limit the maximum setting of the valve to 120°F (49°C), which shall be field adjusted in accordance with the manufacturer's instructions. In-line thermostatic valves shall not be utilized for compliance with this section.

❖ Commentary Figure 424.3 shows exposure times at various water temperatures to cause third-degree burns to human skin. Industry safety experts have chosen 120°F (49°C) to be the maximum safe water for bathing purposes. In a showering application where the shower head is fixed, a user subjected to a surge of high temperature water usually reacts by abruptly moving away from the hot spray. This abrupt movement often causes falls resulting in the stunned user not being able to escape the scalding water stream. Children and some elderly persons often have delayed or no physical reaction to the scalding water such that they continue to stand in the stream. Therefore, showers and combination tub/showers must have a shower control valve that is capable of protecting an individual from being exposed to water temperatures in excess of 120°F (49°C). The control valve must be installed at the point of use. In other words, the person in the shower must have access to the control handle(s) of the valve.

There are two types of events that the control valve must be designed to protect against: 1) extreme temperature fluctuations from the user set temperature caused by changes in hot or cold water distribution line pressures and 2) extreme temperature conditions caused by the user either purposely or accidentally adjusting the control valve to deliver the hottest water available from the hot water distribution system. Where water inlet pressures or temperatures fluctuate during shower use, control valves complying with the standard must automatically and rapidly adjust to maintain the water discharge temperature to ±3.6°F (±2°C) of the user selected temperature.

The standards also require that shower control valves have a maximum temperature limit device that is not adjustable by the user at the point of use. The high-limit stop is typically an adjustable set screw or cam that is manually set to limit the travel of the control valve handle. The high-limit stop must be field adjusted at the time of installation to limit the delivered water temperature to a maximum of 120°F (49°C). Most control valve manufacturer's installation instructions require that a thermometer be used to verify the maximum discharge temperature from the valve.

The three types of shower control valves available are pressure balancing, thermostatic and combination thermostatic/pressure balancing. A pressure-balancing valve senses changes in pressure of the hot and cold water supplies (up to 50-percent pressure change). If the pressure on one side changes, the valve reacts so that the flow from each side of the valve is adjusted to maintain the user's temperature selection. The thermostatic valve senses the discharge water temperature and adjusts flows of supply water to the valve to maintain the user set temperature. A thermostatic valve provides some limited protection against hot and cold supply pressure fluctuations (up to 20-percent pressure change). A combination thermostatic/pressure-balancing valve adjusts to changes in supply pressures (up to 50-percent pressure change) and discharge temperature.

Pressure-balancing control valves are used in a majority of shower applications. One slight disadvantage of the pressure balanced-type control valve is that any change in the temperature setting of the water heating system will affect the maximum discharge temperature available from the control valve. If the system temperature is lowered, some users might complain that they are not receiving hot enough water. If the system temperature is raised, the maximum water temperature available from the valve might be in excess of 120°F (49°C). Seasonal fluctuations in the cold water supply temperature can also affect the maximum discharge temperature. Thus, pressure balancing-type control valves might require periodic readjustment of the high-limit setting.

The maximum discharge temperature from a thermostatic-type control valve is not affected by changes in the temperatures of the hot and cold water supplies to the valve except for when the hot water supply temperature falls below the high-limit setting. Although this type of valve might significantly reduce the need for readjustments to the high-limit setting, due to its inherent limited protection against supply side pressure changes, a thermostatic valve might not be suitable for applications where large pressure fluctuations (greater than a 20-percent change in pressure) are expected.

A combination pressure balanced/thermostatic control valve offers the greatest degree of protection for the shower user. As the name implies, this type of valve offers the best features of both the pressure balanced-type valve and the thermostatic-type valve designs.

This section does not apply to control valves that supply water only for filling tubs (see Section 424.5) or emergency showers (see Section 411). Inline-type thermostatic and pressure balancing valves do not satisfy the requirements of this section because they are not the final control valve that the user adjusts at the point of use and they do not have a high-limit setting feature.

INTERNATIONAL CODE COUNCIL®
Copyright © 2015 ICC. ALL RIGHTS RESERVED. Accessed by David Dammon on Jun 21, 2017 12:30:52 PM pursuant to License Agreement with ICC. No further reproduction or distribution authorized. ANY UNAUTHORIZED REPRODUCTION OR DISTRIBUTION IS A VIOLATION OF THE FEDERAL COPYRIGHT ACT AND THE LICENSE AGREEMENT, AND SUBJECT TO CIVIL AND CRIMINAL PENALTIES THEREUNDER.

TIME AND TEMPERATURE RELATIONSHIP TO SERIOUS BURNS		
	Time required for a third-degree burn to occur	
Water temperature	Adults (skin thickness of 2.5 mm)	Children (skin thickness of 56 mm)
155°F (68°C)	1 second	0.5 second
148°F (64°C)	2 seconds	1 second
140°F (60°C)	5 seconds	1 second
133°F (56°C)	15 seconds	4 seconds
127°F (53°C)	1 minute	10 seconds
124°F (51°C)	3 minutes	1.5 minutes
120°F (49°C)	5 minutes	2.5 minutes
100°F (38°C)	Safe temperature for bathing	Safe temperature for bathing

Figure 424.3
TEMPERATURE BURN CHART

424.4 Multiple (gang) showers. Multiple (gang) showers supplied with a single-tempered water supply pipe shall have the water supply for such showers controlled by an *approved* automatic temperature control mixing valve that conforms to ASSE 1069 or CSA B125.3, or each shower head shall be individually controlled by a balanced-pressure, thermostatic or combination balanced-pressure/thermostatic valve that conforms to ASSE 1016/ASME A112.1016/CSA B125.16 or ASME A112.18.1/CSA B125.1 and is installed at the point of use. Such valves shall be equipped with a means to limit the maximum setting of the valve to 120°F (49°C), which shall be field adjusted in accordance with the manufacturers' instructions.

❖ In a shower facility that has multiple shower areas where all shower heads are supplied with tempered water from a single source (a master valve), the tempered water supply must be controlled by an automatic temperature control mixing valve conforming to either of the referenced standards. Master thermostatic mixing valves must be sized to meet the peak demand of showers located downstream of the valve so that there is sufficient water volume during peak usage, and more importantly, so the master thermostatic mixing valve works properly. Regardless of shower control valve operation or supply pressure fluctuations, the user will be protected from scalding injury because the temperature of the water supplied to the shower will not exceed 120°F (49°C) [see Commentary Figures 424.4(1) and 424.4(2)].

In lieu of using a master thermostatic valve, each shower head must have a control valve at the point of use that is capable of protecting an individual from being scalded when taking a shower.

The water heater thermostat cannot be used instead of a master thermostatic valve or individually protected showers to limit water temperature to 120°F (49°C).

424.5 Bathtub and whirlpool bathtub valves. The *hot water* supplied to bathtubs and whirlpool bathtubs shall be limited to a maximum temperature of 120°F (49°C) by a water-temperature limiting device that conforms to ASSE 1070 or CSA B125.3, except where such protection is otherwise provided by a combination tub/shower valve in accordance with Section 424.3.

❖ This section addresses faucets used only for the filling of whirlpool tubs or bathtubs. The water discharged from these "tub filler" faucets must be limited to a maximum temperature of 120°F (49°C) to prevent skin burns (see commentary, Section 424.3). It is not

PLUMBING FIXTURE	MAXIMUM DISCHARGE TEMPERATURE
1. Bidet	≤ 110°F
2. Public hand-washing facilities	> 85°F and < 110°F
3. Individual shower valves	≤ 120°F
4. Multiple (gang) showers	≤ 120°F
5. Bathtub/whirlpool bathtubs	≤ 120°F

For SI: °C = [(°F) - 32]/1.8.

Figure 424.4(1)
MAXIMUM TEMPERATURES ALLOWED AT USE LOCATIONS

INTERNATIONAL CODE COUNCIL®
Copyright © 2015 ICC. ALL RIGHTS RESERVED. Accessed by David Dammon on Jun 21, 2017 12:30:52 PM pursuant to License Agreement with ICC. No further reproduction or distribution authorized. ANY UNAUTHORIZED REPRODUCTION OR DISTRIBUTION IS A VIOLATION OF THE FEDERAL COPYRIGHT ACT AND THE LICENSE AGREEMENT, AND SUBJECT TO CIVIL AND CRIMINAL PENALTIES THEREUNDER.

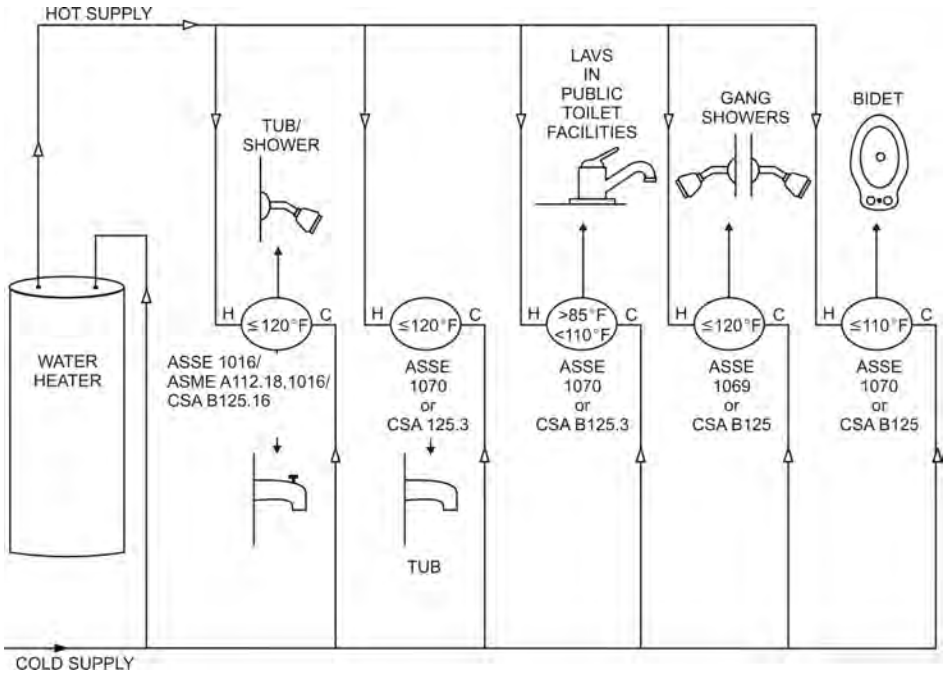

For SI: °C = [(°F) - 32]/1.8.

Figure 424.4(2)
TEMPERATURE CONTROL STANDARDS RELATED TO FIXTURE APPLICATIONS

uncommon for a user to fill a bathtub in advance, with water hotter than he or she could stand, in an attempt to compensate for the cooling effect caused by the tub walls or a planned delay in entering the tub. These users typically avoid burns by testing the temperature of the water in the tub and add cold water to temper the hot water before getting into the tub. However, there have been cases in which the user was sitting on the side of the tub, reached to adjust the control for cold water, accidentally slipped into the tub and received third-degree burns. In other cases, children placed in a tub being filled have been scalded because the water became hotter some time after an adult tested the flowing water temperature at the beginning of tub filling. In some cases, an unsupervised child has adjusted a faucet and caused scalding. While it would seem that hot water supply temperatures might be simply controlled by setting the water heater thermostat to 120°F (49°C), experience has indicated that this is an unreliable means for limiting the temperature of hot water in any type of building because thermostats are inaccurate and are too easy for laypersons to adjust. The adjustment to a higher temperature setting is usually in response to users' complaints that there is not enough hot water during periods of high demand. Adjusting a water heater to a higher temperature effectively creates more hot water volume. This is because less, higher temperature, hot water flow is required for any particular mixed hot water use and thus, there is effectively, more hot water available to the users. Because the code does not regulate the temperature to which water heater thermostats must be set and the thermostats are not tamperproof or have the necessary repeatable accuracy, water temperature control devices exterior to the water heater unit must be used to positively limit the discharge water temperature to 120°F (49°C).

The temperature-limiting device required by this section is a control valve that might require periodic adjustment, maintenance or replacement. Obviously, these valves should be located so that they can be accessed. Access panels in finished walls, floors or ceilings might be required in order to provide access.

This code section allows for a combination tub/shower valve (complying with ASME A112.18.1/CSA B125.1 or ASSE 1016/ASME A112.18.1016/CSA B125.16), with or without a fixed shower head, to be used for filling a tub, including a large whirlpool tub. However, in actual practice, the installation of a combination tub/shower valve as a tub filler for a large tub (such as a garden or whirlpool tub) is rarely done, for a few reasons: 1) faucet manufacturers generally do not provide or offer "extra long" wall-mount tub spouts to enable the discharge of the spout to be located over the tub well so as to not splash onto the tub deck and 2) the placement of the water control on the wall makes it difficult for a user sitting in a large tub to add more water if needed.

This "allowance" for a combination tub/shower valve for a tub application might lead the reader to assume that any device meeting ASME A112.18.1/CSA B125.1 is acceptable for meeting the require-

INTERNATIONAL CODE COUNCIL®
Copyright © 2015 ICC. ALL RIGHTS RESERVED. Accessed by David Dammon on Jun 21, 2017 12:30:52 PM pursuant to License Agreement with ICC. No further reproduction or distribution authorized. ANY UNAUTHORIZED REPRODUCTION OR DISTRIBUTION IS A VIOLATION OF THE FEDERAL COPYRIGHT ACT AND THE LICENSE AGREEMENT, AND SUBJECT TO CIVIL AND CRIMINAL PENALTIES THEREUNDER.

ments of this section but this is not the case. Combination tub/shower valves are the only ASME A112.18.1/CSA B125.1 device that can be used to meet the requirements of this section.

Why can't ASSE 1016 valves (other than combination tub/shower valves) be used for the ASSE 1070 or CSA B125.3 device required by this section? ASSE 1016 or CSA B125.3 devices, other than combination tub/shower valves, have a limited useful "maximum flow" rating. In other words, for flows in excess of 2.5 gpm (9.5 L/m), the pressure drop through these devices severely limits the user's ability to fill a large tub in short order. ASSE 1070 and CSA B125.3 devices have a much higher usable flow rate, typical of what is needed to rapidly fill a large bathtub or whirlpool tub. The code "allowance" to use a combination tub/shower valve complying with Section 424.3 for a bathtub filler faucet is a modest compromise directed at the most commonly installed, minimum size [30 inches (762 mm) by 60 inches (1524 mm) by 16 inches (406 mm) deep], standard tub found in nearly every private bathroom. The filling time of this standard tub size, using a combination tub/shower valve through a standard tub spout, is deemed "reasonable" based upon years of user experience with filling tubs through antiscald-type combination tub/shower valves. However, where tub sizes are larger, higher faucet flow rates are required to fill those tubs within an acceptable length of time. Requiring the use of an ASSE 1070 device with the higher flow through rating ensures that larger tubs can be filled quickly so that the tub water temperature has less time to "cool off" [since these devices are limiting the discharge temperature to 120°F (49°C)].

Where a hand-held shower is connected to a tub filler faucet (that is supplied by an ASSE 1070 or CSA B125.3 device), the hand shower is not required to be provided with water supplied through a combination tub/shower valve as is required for a standup-type "fixed" shower head application (see commentary, Section 424.2). The hand-held shower also does not "reclassify" a tub filler faucet as needing to be a "combination tub/shower valve" such that it would be required to comply with a combination tub/shower valve meeting ASSE 1016/ASME A112.18.1016/CSA B125.16 or a combination tub/shower valve meeting A112.18.1/CSA B125.1.

424.6 Hose-connected outlets. Faucets and fixture fittings with hose-connected outlets shall conform to ASME A112.18.3 or ASME A112.18.1/CSA B125.1.

❖ Typically, this is a deck-mounted fitting with a moveable spout or outlet connected to the body of the faucet through a flexible hose. Applications could include kitchen sinks, bar and lavatory sinks or shampoo bowls. The standard governing requirements for backflow protection devices in plumbing fixture fittings are found in ASME A112.18.3M or ASME A112.18.1/CSA B125.1. These standards establish the performance requirements for backflow prevention devices that provide protection consistent with the level of risk associated with the application.

424.7 Temperature-actuated, flow reduction valves for individual fixture fittings. Temperature-actuated, flow reduction devices, where installed for individual fixture fittings, shall conform to ASSE 1062. Such valves shall not be used alone as a substitute for the balanced-pressure, thermostatic or combination shower valves required in Section 424.3.

❖ Temperature-actuated flow reduction valves for individual fixture fittings must comply with the provisions set forth in ASSE 1062. These valves reduce flow to 0.25 gpm (0.95 L/m) or less automatically in response to outlet temperatures above a preset temperature not to exceed 120°F (49°C). This will limit exposure to high-temperature water discharge from an individual fixture fitting, such as bath and utility faucets, lavatory or sink faucets. These devices may not be used as a substitute for shower or tub/shower valves required in Section 424.3.

424.8 Transfer valves. Deck-mounted bath/shower transfer valves containing an integral atmospheric vacuum breaker shall conform to the requirements of ASME A112.18.1/CSA B125.1.

❖ Deck-mounted bath/shower transfer valves with integral backflow protection must comply with ASME A112.18.1/CSA B125.1. With the introduction of handheld showers and other bathing appliances mounted on the deck of bathtubs and other fixtures, the need for backflow and backsiphonage protection became evident. This is because the accessories that are being furnished typically incorporate a hose or pull out features that could be submerged. The standard combines safety features such as a vent to the atmosphere and check members to protect against backflow or backsiphonage.

424.9 Water closet personal hygiene devices. Personal hygiene devices integral to water closets or water closet seats shall conform to the requirements of ASME A112.4.2.

❖ These devices can be integral to some water closet designs or part of a water closet seat. Typical functions of personal hygiene devices are bidet spray and blow drying. The standard ensures that products have proper potable water backflow prevention, strength and dimensional conformity to fit a variety of water closets. Some models have wireless programmable wall controls for ease of use.

SECTION 425
FLUSHING DEVICES FOR WATER CLOSETS AND URINALS

425.1 Flushing devices required. Each water closet, urinal, clinical sink and any plumbing fixture that depends on trap siphonage to discharge the fixture contents to the drainage system shall be provided with a flushometer valve, flushometer tank or a flush tank designed and installed to supply water

INTERNATIONAL CODE COUNCIL®
Copyright © 2015 ICC. ALL RIGHTS RESERVED. Accessed by David Dammon on Jun 21, 2017 12:30:52 PM pursuant to License Agreement with ICC. No further reproduction or distribution authorized. ANY UNAUTHORIZED REPRODUCTION OR DISTRIBUTION IS A VIOLATION OF THE FEDERAL COPYRIGHT ACT AND THE LICENSE AGREEMENT, AND SUBJECT TO CIVIL AND CRIMINAL PENALTIES THEREUNDER.

in quantity and rate of flow to flush the contents of the fixture, cleanse the fixture and refill the fixture trap.

❖ This section contains the applicability requirements for flushing devices recognized by the code. Material and performance requirements are specified in referenced standards, as are provisions for flush tanks.

There are three classifications of devices that are required to flush a water closet, urinal or other self-siphoning type of plumbing fixture: a flush tank, a flushometer valve and a flushometer tank. The flush tank discharges to the fixture by gravity, using only the head pressure created by the height of the tank. A flushometer valve is a controlling device discharging to the fixture at the full line pressure of the water supply. A flushometer tank is a hydropneumatic tank that creates a flushing action like a flushometer valve and fills like a gravity tank.

425.1.1 Separate for each fixture. A flushing device shall not serve more than one fixture.

❖ Each fixture must have its own flushing device. Individual control valves are necessary in an effort to conserve water.

425.2 Flushometer valves and tanks. Flushometer valves and tanks shall comply with ASSE 1037 or CSA B125.3. Vacuum breakers on flushometer valves shall conform to the performance requirements of ASSE 1001 or CSA B64.1.1. *Access* shall be provided to vacuum breakers. Flushometer valves shall be of the water conservation type and shall not be used where the water pressure is lower than the minimum required for normal operation. When operated, the valve shall automatically complete the cycle of operation, opening fully and closing positively under the water supply pressure. Each flushometer valve shall be provided with a means for regulating the flow through the valve. The trap seal to the fixture shall be automatically refilled after each flushing cycle.

❖ There is a variety of styles of flushometer valves and tanks, all of which must be equipped with a vacuum breaker to prevent backflow. The flushometer valve operation is either a diaphragm type or a piston type. The majority of flushometer valves are diaphragm type because of its reliability. The working components of a flushometer valve are either exposed or concealed. When concealed, the valve must be accessible through an access opening, cover or plate.

Flushometers are either manually or automatically operated. Common manual valves are activated by a hand lever, push button or foot valve. Automatic valves are activated electrically by infrared sensors or other devices that sense the presence of an individual using the fixture. A segment diaphragm separates the valve into an upper and lower chamber with the pressure being the same on both sides of the diaphragm, equalized through the bypass in the diaphragm. The greater surface area on the top of the diaphragm holds the valve closed. The slightest touch of the handle grip in any direction pushes the plunger inward, which tilts the relief valve, releasing the pressure in the upper chamber. Then, the pressure below raises the diaphragm and working parts as a unit, allowing the water that flushes the bowl to go down through the barrel of the valve. While this is occurring, a small amount travels up through the bypass, gradually filling the upper chamber to close the valve.

The newest category of flushing device is a flushometer tank. The flushing device incorporates a hydropneumatic tank to flush the fixture at full line pressure. The flushing of the fixture is similar to a flushometer valve; however, the water demand is the same as a flush tank. Rather than using the water supply pressure from the piping system, a flushometer tank stores the necessary water for flushing in the hydropneumatic accumulator tank. The water in the tank is stored under a pressure equivalent to the water supply pressure connected to the tank.

425.3 Flush tanks. Flush tanks equipped for manual flushing shall be controlled by a device designed to refill the tank after each discharge and to shut off completely the water flow to the tank when the tank is filled to operational capacity. The trap seal to the fixture shall be automatically refilled after each flushing. The water supply to flush tanks equipped for automatic flushing shall be controlled with a timing device or sensor control devices.

❖ The flush tank is designed to permit a large volume of water to discharge at once, creating the flushing action in the fixture. The tank then refills while simultaneously refilling the trap seal of the fixture. Most flush tanks have a float device (fill valve) to open and close the water supply mechanism. When the tank empties, the float lowers, opening the fill valve. As the float rises, the water supply closes at the predetermined height in the tank.

425.3.1 Fill valves. Flush tanks shall be equipped with an antisiphon fill valve conforming to ASSE 1002 or CSA B125.3. The fill valve backflow preventer shall be located not less than 1 inch (25 mm) above the full opening of the overflow pipe.

❖ The fill valve is the refilling component that controls the flow of water into the flush tank. Because the fill valve connects the potable water to the flush tank, it must have adequate protection against backflow. The referenced standards require an antisiphon device in the fill valve. An antisiphon device is a type of vacuum breaker that must be located with its critical level not less than 1 inch (25 mm) above the overflow pipe to prevent its submersion.

425.3.2 Overflows in flush tanks. Flush tanks shall be provided with overflows discharging to the water closet or urinal connected thereto and shall be sized to prevent flooding the tank at the maximum rate at which the tanks are supplied with water according to the manufacturer's design conditions. The opening of the overflow pipe shall be located above the *flood level rim* of the water closet or urinal or above a secondary overflow in the flush tank.

❖ The overflow in the flush tank prevents flooding of the tank and submersion of the fill valve. The fill valve antisiphon device must be located above water at all times

INTERNATIONAL CODE COUNCIL®
Copyright © 2015 ICC. ALL RIGHTS RESERVED. Accessed by David Dammon on Jun 21, 2017 12:30:52 PM pursuant to License Agreement with ICC. No further reproduction or distribution authorized. ANY UNAUTHORIZED REPRODUCTION OR DISTRIBUTION IS A VIOLATION OF THE FEDERAL COPYRIGHT ACT AND THE LICENSE AGREEMENT, AND SUBJECT TO CIVIL AND CRIMINAL PENALTIES THEREUNDER.

to maintain the protection against backflow. The overflow discharges into the water closet or urinal, ultimately discharging to the drainage system.

Where the flush tank is a separate unit (two-piece water closets), the overflow is always above the flood level rim of the water closet or urinal. If the water closet or urinal drain is obstructed, the water discharges onto the floor before submerging the fill valve antisiphon device. In certain styles of one-piece water closets, the overflow opening is below the water closet flood level rim; therefore, openings are provided in the back of the tank to serve as a secondary overflow to prevent the submersion of the fill valve.

425.3.3 Sheet copper. Sheet copper utilized for flush tank linings shall conform to ASTM B152 and shall not weigh less than 10 ounces per square foot (0.03 kg/m^2).

❖ Years ago, flush tanks for urinals and water closets were made of wood and hung on the wall high above the fixture. Since wood was not impervious to water, sheet copper, formed and soldered, was used to line the wood tank. Today, perhaps only historical building renovations would require application of this code section.

425.3.4 Access required. All parts in a flush tank shall be accessible for repair and replacement.

❖ Flush pipes and fittings connect a water closet tank to the bowl or a flush tank to a urinal. ASME A112.19.5 specifies only the dimensional requirements for the flush pipe and fittings. For the material requirement, this section stipulates only that it must be nonferrous material, such as brass, copper alloy or plastic. These materials are intended to extend the life of the pipe and fittings.

425.4 Flush pipes and fittings. Flush pipes and fittings shall be of nonferrous material and shall conform to ASME A112.19.5/CSA B45.15.

❖ Flush pipes and fittings connect a water closet tank to the bowl or a flush tank to a urinal. The standard specifies only the dimensional requirements for the flush pipe and fittings. For the material requirement, this section stipulates only that it must be nonferrous material, such as brass, copper alloy or plastic. Use of these materials ensures long life of the pipe and fittings.

SECTION 426
MANUAL FOOD AND BEVERAGE DISPENSING EQUIPMENT

426.1 Approval. Manual food and beverage dispensing equipment shall conform to the requirements of NSF 18.

❖ NSF 18 establishes minimum food protection and sanitation requirements for the materials, design, construction and performance requirements for manual food and beverage dispensing equipment. This standard does not apply to vending machines, dispensing freezers and bulk milk-dispensing equipment covered by the scope of other NSF standards.

SECTION 427
FLOOR SINKS

427.1 Approval. Sanitary floor sinks shall conform to the requirements of ASME A112.6.7.

❖ Floor sinks must comply with ASME A112.6.7, which covers the material requirements for cast-iron and PVC sanitary floor sinks. All floor sinks must have a removable strainer or accessible grate.

INTERNATIONAL CODE COUNCIL®
Copyright © 2015 ICC. ALL RIGHTS RESERVED. Accessed by David Dammon on Jun 21, 2017 12:30:52 PM pursuant to License Agreement with ICC. No further reproduction or distribution authorized. ANY UNAUTHORIZED REPRODUCTION OR DISTRIBUTION IS A VIOLATION OF THE FEDERAL COPYRIGHT ACT AND THE LICENSE AGREEMENT, AND SUBJECT TO CIVIL AND CRIMINAL PENALTIES THEREUNDER.

Chapter 5: Water Heaters

General Comments

A water heater is any appliance that heats potable water and supplies it to the hot water distribution system of the building. Some water heaters might also provide hot water for space heating purposes in addition to supplying hot water to the water distribution system. The code does not apply to appliances, equipment and devices that provide hot water for the sole purpose of space heating (hydronic heating systems) because: 1) by definition in this code, a water heater supplies water to the potable water distribution system and 2) Section 607.1 of the code requires a supply of hot or tempered water to all plumbing fixtures and equipment used for bathing, washing, culinary purposes, cleansing, laundry or building maintenance within occupied structures. Hydronic heating systems are regulated by the *International Mechanical Code*® (IMC®).

Historically, the main focus of this chapter has been to regulate the installation and safety features for automatic storage tank water heaters and unfired hot water storage tanks. Other water heating methods and equipment such as solar, electric heat pump, ground source thermal transfer, boiler water recirculation, steam heat transfer, solid-fuel-fired technology and the necessary controls/safety devices for those methods are not specifically addressed in the code but many are covered in the IMC.

Questions often arise as to how the regulations in this chapter are intended to apply to these alternative water heating methods. Where the code does not specifically address those questions, the manufacturer's instructions must serve as the basis for installation of these products (see Section 502.1).

Wherever hot water is stored in a closed tank, there is a potential for explosion. There are documented cases where improperly installed (or poorly maintained) water heaters have exploded with such force that they have been propelled through floor and roof assemblies and over 100 feet (30 480 mm) in the air. Thus, the intent of this chapter is to regulate the materials, design and installation of water heaters and related safety devices in order to protect property and life.

Purpose

Chapter 5 regulates the design, approval and installation of water heaters and related safety devices. The intent is to minimize the hazards associated with the installation and operation of water heaters.

SECTION 501 GENERAL

501.1 Scope. The provisions of this chapter shall govern the materials, design and installation of water heaters and the related safety devices and appurtenances.

❖ This section defines the scope of the chapter and contains requirements for water heaters used for space heating, the installation of drain valves, the location of water heaters, third-party certification of water heaters, tankless water heaters, marking of storage tanks and temperature controls for hot water supply systems.

The materials, design and installation of water heaters and related safety equipment and appurtenances are regulated by this chapter. The requirements in this chapter are intended to establish that water heaters and the necessary controls and safety devices are designed and installed so that they perform in an acceptable manner.

501.2 Water heater as space heater. Where a combination potable water heating and space heating system requires water for space heating at temperatures greater than 140°F (60°C), a master thermostatic mixing valve complying with ASSE 1017 shall be provided to limit the water supplied to the potable *hot water* distribution system to a temperature of 140°F (60°C) or less. The potability of the water shall be maintained throughout the system.

❖ Where a water heater has a dual purpose of supplying hot water to both a potable hot water distribution system and a hot water space heating system, the maximum water temperature allowed for the potable hot water distribution system is 140°F (60°C). A master thermostatic mixing valve conforming to ASSE 1017 must be installed at the source of the hot water supply to limit the potable hot water distribution system water temperature to 140°F (60°C). Master thermostatic valves must not be used for limiting the final hot or tempered water temperatures at fixtures where they are required by the code to have a discharge temperature limit. For example, public handwashing lavatory hot water must be controlled (tempered) to be not greater that 110°F (43°C). This application requires an additional thermostatic mixing valve of a different type.

A water heater used to supply hot water to a space heating system must be protected from any conditions that can cause contamination of the potable water supply system. A typical installation might be an underfloor radiant heating system. Because the water heater is part of the potable water system, materials used in the heating system must be approved for use in a potable water system, and all connections must be protected against contamination. In the summer months when the heating system is inactive, a method to prevent stagnation of the water should be employed. Small orifices in the isolation valves are often used to

INTERNATIONAL CODE COUNCIL®
Copyright © 2015 ICC. ALL RIGHTS RESERVED. Accessed by David Dammon on Jun 21, 2017 12:30:52 PM pursuant to License Agreement with ICC. No further reproduction or distribution authorized. ANY UNAUTHORIZED REPRODUCTION OR DISTRIBUTION IS A VIOLATION OF THE FEDERAL COPYRIGHT ACT AND THE LICENSE AGREEMENT, AND SUBJECT TO CIVIL AND CRIMINAL PENALTIES THEREUNDER.

allow a small amount of water to circulate through the system to prevent stagnation. Chemicals of any type must not be added to the heating system, because this would directly contaminate the potable water supply. Protection of the potable water supply must be in accordance with Section 608 (see Commentary Figure 501.2).

501.3 Drain valves. Drain valves for emptying shall be installed at the bottom of each tank-type water heater and hot water storage tank. The drain valve inlet shall be not less than $^{3}/_{4}$-inch (19.1 mm) nominal iron pipe size and the outlet shall be provided with male garden hose threads.

❖ A storage tank-type water heater and a hot water storage tank must be drainable to facilitate service, sediment removal, repair or replacement. The ASSE 1005 standard was discontinued some time ago so the code language was changed to require the basic requirements for drain valves.

The reason the promulgator chose to discontinue publishing the ASSE 1005 standard is unknown. The standard did cover a number of details/requirements for water heater drain valves, including cycle testing and elevated temperature pressure testing. However, from a code-enforcement perspective, the code should not reference a standard that is no longer published. The two requirements that replace the compliance with ASSE 1005 are the minimum to ensure that the supplied/ installed valve provides for servicing of a water heater or hot water storage tank. The revised provision will allow other types of drain valves to be installed that, up to now, could not be installed because they did not comply with ASSE 1005. For example, some contractors install a $^{3}/_{4}$-inch (19.1 mm) full-port ball valve in this application so that at a future date, lime scale build-up at the drain outlet of the tank can be rodded through the valve to promote faster tank drain down.

501.4 Location. Water heaters and storage tanks shall be located and connected so as to provide *access* for observation, maintenance, servicing and replacement.

❖ Because water heaters and hot water storage tanks require routine inspections, maintenance, repairs and possible replacement, access is required. Further recommendations and requirements are stated in the manufacturer's instructions.

The code defines "Access" as being able to be reached but which first may require the removal of a panel, door or similar obstruction. Access to a water heater is not achieved if it is necessary to remove any portion of the structure's permanent finish materials, such as drywall, plaster, paneling, built-in furniture or cabinets or any other similar permanently affixed building component.

There is not always sufficient room for installation of a water heater in spaces such as basements, alcoves, utility rooms and furnace rooms. In an effort to save space or simplify an installation, water heaters are often installed in crawl spaces, attics or similar remote locations. Access to and servicing of water heaters could be difficult; therefore, a walkway, work space or

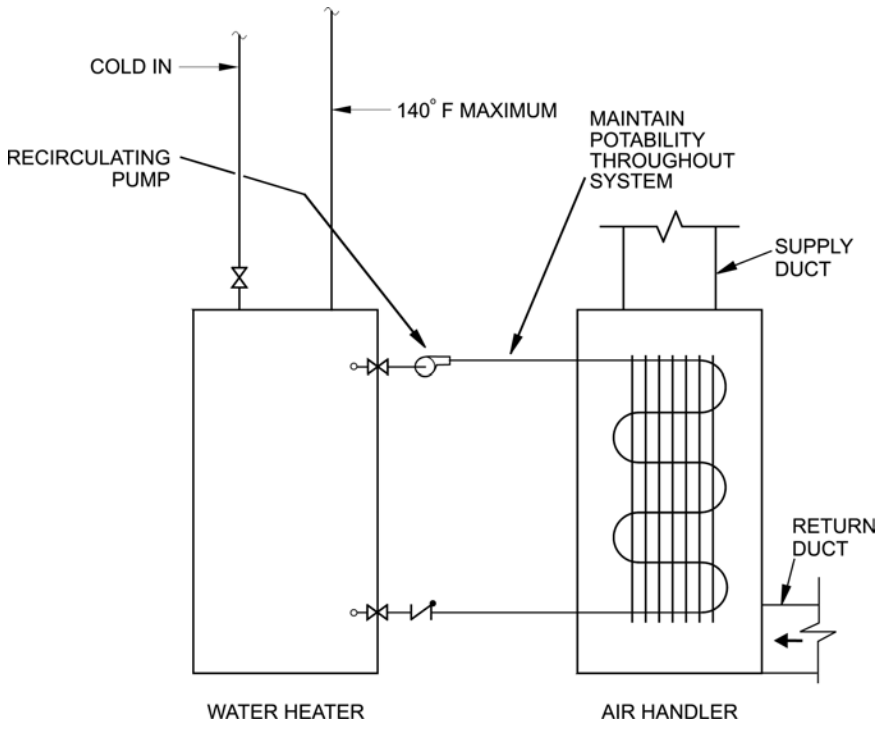

For SI: °C = [(°F) - 32]/1.8.

Figure 501.2
WATER-TO-AIR HEAT EXCHANGER

INTERNATIONAL CODE COUNCIL®
Copyright © 2015 ICC. ALL RIGHTS RESERVED. Accessed by David Dammon on Jun 21, 2017 12:30:52 PM pursuant to License Agreement with ICC. No further reproduction or distribution authorized. ANY UNAUTHORIZED REPRODUCTION OR DISTRIBUTION IS A VIOLATION OF THE FEDERAL COPYRIGHT ACT AND THE LICENSE AGREEMENT, AND SUBJECT TO CIVIL AND CRIMINAL PENALTIES THEREUNDER.

platform is necessary to provide a large enough path of travel to, and adequate space for, such activities in accordance with Section 502.3.

501.5 Water heater labeling. All water heaters shall be third-party certified.

❖ See the commentary to Section 303.4 for a general description of third-party certification of products. The code does not specify the standards that water heaters must comply with; it simply requires that all water heaters be third-party certified. Other *International Codes*® require compliance with the following standards as applicable to the type of water heating unit.

The *International Fuel Gas Code*® (IFGC®) requires that fuel gas-fired water heaters comply with one of the following:

ANSI Z21.10.1, *Gas Water Heaters–Volume I*. This standard covers gas-fired storage tank water heaters with a British thermal unit (Btu) input of 75,000 or less.

ANSI Z21.10.3, *Gas Water Heaters—Volume III.* This standard covers gas-fired storage tank water heaters with a Btu input greater than 75,000 as well as gas-fired circulating and (gas-fired) instantaneous water heaters.

The IMC requires that oil-fired water heaters comply with the following:

UL 732, *Oil-fired Storage Tank Water Heaters*. This standard covers oil-fired storage tank water heaters with a Btu input of no greater than 200,000, having a storage capacity no more than 120 gallons (454 L), and producing water temperatures no higher than 200°F (93°C).

The IMC requires that electric water heaters comply with one of the following as applicable:

UL 174, *Household Electric Storage Tank Water Heaters*. This standard covers household electric storage water heaters from 1 to 120 gallons (3.785 to 454 L) having an input of 12kW or less.

UL 1453, *Electric Booster and Commercial Storage Tank Water Heaters*. This standard covers commercial electric booster heaters and storage water heaters that meet at least one of the following criteria:

- Have a capacity over 120 gallons (454 L).
- Have an input greater than 12 kW.
- Have the capability of being set to discharge water temperature higher than 185°F (275°C).

Note that the IMC does not indicate a standard for hot water dispensers or electric instantaneous water heaters. This does not mean that these devices cannot be installed just because the codes do not specify a standard that is appropriate for a particular type of water heating unit. This code simply requires that water heaters be third-party certified so that any type of water heating unit that is not covered by the standards indicated by the IMC or the IFGC will be built and third-party certified to a nationally recognized standard. A few examples are:

UL 499, *Electric Heating Appliances.* This standard covers hot water dispensers of less than 1-gallon (3.785 L) capacity and all electric instantaneous water heaters.

UL 1995, *Heating and Cooling Equipment.* This standard covers electric heat pump water heaters.

The certification mark is the primary, if not the only, indicator to the installer, the inspector and the end user that the water heater has been evaluated and tested by an approved agency and has been determined to perform in an acceptable manner where installed and operated in accordance with the manufacturer's instructions.

The approved agency can require the manufacturer to alter, add or delete information in the installation instructions as necessary to achieve compliance with the applicable standard. Because water heaters must be installed in accordance with the manufacturer's instructions, these instructions must be available to the code official at the time of inspection to verify that the water heater has been properly installed.

501.6 Water temperature control in piping from tankless heaters. The temperature of water from tankless water heaters shall be not greater than 140°F (60°C) where intended for domestic uses. This provision shall not supersede the requirement for protective shower valves in accordance with Section 424.3.

❖ The intent of this section is to prevent excessively high water temperatures from reaching plumbing fixtures. Tankless water heaters do not have a storage capacity and are often called "instantaneous" because the water is heated at the same rate it is used. Instantaneous heaters can discharge an uncertain range of temperatures at any given time, depending on the flow demanded from the unit. Therefore, some form of temperature control is necessary to protect the user against exposure to excessively hot water discharged from domestic fixtures, such as lavatories, kitchen sinks, tubs and laundry trays. This could be accomplished by installation of a tempering valve [set at 140°F (60°C)] on the outlet of the water heater or by equipping the tankless water heater with a temperature-limiting device or thermostat that has a maximum setting of 140°F (60°C).

Where a tankless water heater is used to supply hot water to a shower or a tub/shower combination, the maximum shower or tub/shower control valve outlet temperature must be limited to 120°F (49°C) in accordance with Section 424.3.

In recent years, tankless water heaters have become increasingly popular because they occupy less floor space than a storage-type tank water heater, use zero energy in the standby mode and if properly maintained, can last considerably longer than a storage tank water heater. But perhaps their most advertised feature is that a tankless water heater can

INTERNATIONAL CODE COUNCIL®
Copyright © 2015 ICC. ALL RIGHTS RESERVED. Accessed by David Dammon on Jun 21, 2017 12:30:52 PM pursuant to License Agreement with ICC. No further reproduction or distribution authorized. ANY UNAUTHORIZED REPRODUCTION OR DISTRIBUTION IS A VIOLATION OF THE FEDERAL COPYRIGHT ACT AND THE LICENSE AGREEMENT, AND SUBJECT TO CIVIL AND CRIMINAL PENALTIES THEREUNDER.

provide an "unlimited" flow of hot water. This is opposed to a storage tank water heater that will eventually be depleted of its stored hot water, given enough time of hot water flowing from a hot water outlet. A tankless water heater instantly and continuously heats water as long as hot water is demanded at a fixture.

But if a tankless water heater can provide an "unlimited" flow of hot water, could installing a tankless water heater instead of a storage tank water heater be a solution to not running out of hot water? The answer depends on the flow rate demanded of the tankless water heater.

Tankless water heaters are rated to provide for a specific temperature increase (rise) of the incoming cold water at specific flow rate. For example, one rating might be: 50°F (27.8°C) temperature rise at 2.6 gallons per minute (gpm). If the cold water temperature flowing into the tankless heater is 60°F (15.6°C) and the flow through the heater is 2.6 gpm (15.6°C), the outlet water temperature will be 50°F (27.8°C) + 60°F (15.6°C) = 110°F (43.3°C). Therefore, if the hot water demand at the fixture is 2.6 gpm, hot water at a temperature of 110°F can be expected to be discharged at the hot water outlet (neglecting heat losses from the hot water piping system). This flow of hot water can continue indefinitely so, indeed, the user "never runs out of hot water."

However, one significant characteristic of tankless water heaters is that, as the flow through the water heater becomes greater, the temperature rise given to the water becomes less. Conversely, as the flow becomes less, the temperature rise given to the water becomes greater. Commentary Figure 501.6(1) shows typical capacity graphs for Model A and Model B electric tankless water heaters. Although some manufacturers might choose to show the same information in table form as shown in Commentary Figure 501.6(3), the concept is the same as that shown in a capacity graph. Commentary Figure 501.6(2) illustrates the operating point of 50°F (27.8°C) temperature rise at 2.6 gpm (9.8 L/m) for the Model A unit. If the flow through the unit is 3 gpm (11.4 L/m), the temperature rise would only be approximately 40°F (22.2°C). If the flow through the unit is only 1.5 gpm (5.7 L/m), the temperature rise would be 100°F (55.6°C) (ignoring any high-temperature limit control that might be present). What does this information mean in terms of the operation of plumbing fixtures in a building?

Consider a shower with one shower head that discharges at 2.5 gpm (9.8 L/m). Then consider a shower user desiring a shower water temperature of 110°F (43.3°C). If a Model A tankless water heater unit (as described previously) supplies hot water to the water distribution system, the shower user could turn the shower mixing valve almost all the way to the full hot position and enjoy a 110°F (43.3°C) shower, indefinitely. Now consider that, while the first user is showering, another user desires to wash his or her hands at a lavatory [flowing at 1.5 gpm (5.7 L/m)]. Assume that the lavatory user turns on only the hot water side of the

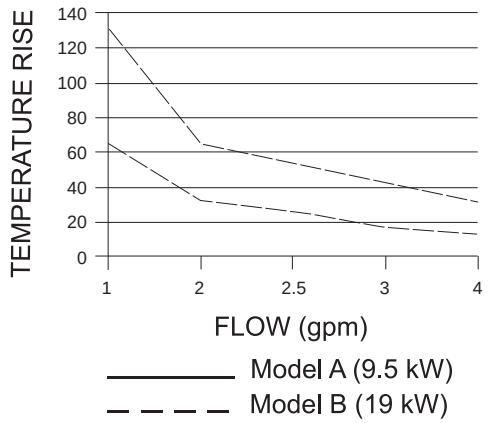

For SI: °C Rise = 1.8°F Rise.

Figure 501.6(1)
TYPICAL CAPACITY GRAPH
FOR TANKLESS WATER HEATERS

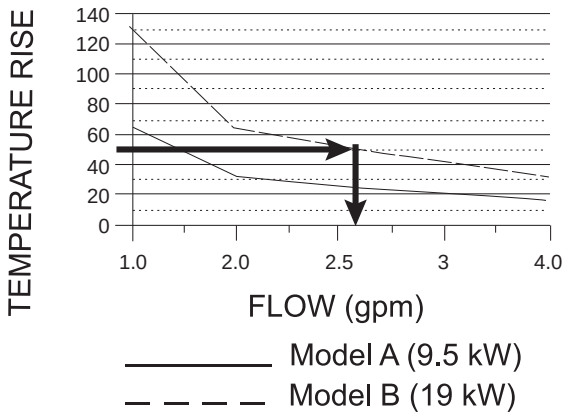

Figure 501.6(2)
OPERATING POINT FOR TANKLESS WATER HEATER

FLOW	TEMPERATURE RISE, °F		
	1.0 gpm	2.0 gpm	4.0 gpm
Model A (9.5 kW)	65	32	16
Model B (19 kW)	130	65	32

Figure 501.6(3)
TYPICAL CAPACITY TABLE FOR TANKLESS WATER HEATERS

INTERNATIONAL CODE COUNCIL®
Copyright © 2015 ICC. ALL RIGHTS RESERVED. Accessed by David Dammon on Jun 21, 2017 12:30:52 PM pursuant to License Agreement with ICC. No further reproduction or distribution authorized. ANY UNAUTHORIZED REPRODUCTION OR DISTRIBUTION IS A VIOLATION OF THE FEDERAL COPYRIGHT ACT AND THE LICENSE AGREEMENT, AND SUBJECT TO CIVIL AND CRIMINAL PENALTIES THEREUNDER.

faucet. What is the result of this action? Now the flow rate through the tankless water heater is 2.5 + 1.5 = 4 gpm (15.1 L/m). According to the graph shown in Commentary Figure 501.6(2), the Model A unit, at 4 gpm (15.1 L/m), has a temperature rise of only 30°F (16.7°C)—a drop of 20°F (15.1°C) from the 50°F (27.8°C) temperature rise at 2.5 gpm (9.8 L/m). The result is that both the shower user and the lavatory user will only receive 110°F - 20°F = 90°F (11.1°C) hot water. The shower user will most likely notice the change in temperature and will wonder what happened to his or her "hot water that never runs out."

The previous example, although simplified, illustrates the fact that for any tankless water heater (electric or fuel-gas type), beyond the rating of a particular unit, the temperature of the hot water becomes flow dependent. Note that this is substantially different from a storage tank water heater that provides the same temperature of hot water at any flow rate but only for a limited amount of time. Thus, users of tankless water heater systems might have to adjust their expectations concerning when and to what extent simultaneous hot water demands can be expected before temperature of the hot water received is affected.

There are many different models of electric and fuel gas-powered tankless water heaters, each having a specific capacity graph or table. If the largest tankless water heater cannot accommodate the total demand, additional tankless units can be added to meet the total demand. For electric units, each unit can be installed to serve a specific fixture or group of fixtures that can be accommodated by that unit. Where additional fuel gas units are required to meet the total demand, each unit could be connected to serve only specific fixture groups within the building. However, many fuel gas-powered unit controls are quite sophisticated so that multiple units can be connected to a common header and the controls interconnected so as to cause additional units to "come on line" when hot water demand increases beyond the capacity of the first unit.

501.7 Pressure marking of storage tanks. Storage tanks and water heaters installed for domestic hot water shall have the maximum allowable working pressure clearly and indelibly stamped in the metal or marked on a plate welded thereto or otherwise permanently attached. Such markings shall be in an accessible position outside of the tank so as to make inspection or reinspection readily possible.

❖ Storage tank water heaters, like all pressure vessels, must be able to withstand the working pressures to which they will be subjected. The maximum working pressure of the water heater must be known so that a properly rated relief valve not exceeding the manufacturer's rated working pressure can be installed. The working pressure must be marked in such a way that it is permanent, not susceptible to damage and legible for the life of the water heater. Therefore, if the relief valve requires replacement, a properly sized valve can be reinstalled. The marking on the water heater must be located so that it is readily accessible during inspections and servicing.

501.8 Temperature controls. Hot water supply systems shall be equipped with automatic temperature controls capable of adjustments from the lowest to the highest acceptable temperature settings for the intended temperature operating range.

❖ The intent of this section is to prohibit manually controlled water-heating systems that might cause dangerous water temperatures to be generated. Automatic controls provide for reliable, consistent operation of the unit and most often have integrated safety devices to protect the equipment from unsafe operating conditions. Where systems consist of circulating-type heaters with separate hot water storage tanks, automatic controls connected to a remote temperature sensor in the storage tank(s) are required for control of the stored water temperature.

The user must be provided with a means for adjustment of the temperature of the hot water generated so that an appropriate water temperature for the intended purposes can be selected. Other than the requirement in Section 501.6 for tankless water heaters, the code does not specify a minimum or maximum temperature setting for a water heater temperature control because of the variety of applications requiring "hot" water. A few examples are: 1) 180°F (82°C) hot water might be necessary for the operation of a commercial dishwasher to provide for sterilization of dishware; 2) 120°F (49°C) hot water might be required for the potable water distribution system of a hotel not having a kitchen and 3) 140°F (60°C) hot water might be required to provide for space heating in addition to supplying water to the potable water distribution system. The user and installer of the water heating system are responsible for selecting the appropriate temperature setting for the water heater.

Although the need for adjustability of the hot water temperature setting of a water heater is understandable, this adjustability feature has drawbacks. Where a water heater serves fixtures in addition to the appliances or equipment that require a hot water temperature greater than 120°F (49°C), the potential for skin burns exists at those fixtures. Commentary Table 424.3 is a temperature burn chart illustrating the amount of exposure time at various hot water temperatures for third-degree burns of human skin. Because most water heater temperature controls can be easily adjusted by nearly anyone, the code requires certain fixtures to have temperature limiting devices to protect users from scalding hot water. These fixtures include showers, bathtubs, whirlpool tubs, bidets and faucets for public hand washing. The requirements for temperature limiting devices for these fixtures are located in Chapter 4. All other fixtures such as sinks, lavatories in sleeping and dwelling units, bar sinks and laundry tubs are not required to have temperature limiting devices and, as such, could be locations where scald injury could occur.

A water heater temperature setting that is too low could possibly cause health problems, specifically Legionnaires' disease. The disease was realized and

INTERNATIONAL CODE COUNCIL®
Copyright © 2015 ICC. ALL RIGHTS RESERVED. Accessed by David Dammon on Jun 21, 2017 12:30:52 PM pursuant to License Agreement with ICC. No further reproduction or distribution authorized. ANY UNAUTHORIZED REPRODUCTION OR DISTRIBUTION IS A VIOLATION OF THE FEDERAL COPYRIGHT ACT AND THE LICENSE AGREEMENT, AND SUBJECT TO CIVIL AND CRIMINAL PENALTIES THEREUNDER.

named after an outbreak of pneumonia-like illness that was contracted by 221 persons attending an American Legion convention at a hotel in Philadelphia in July 1976. Two-thirds of the patients required hospitalization, of which 34 died. Although this type of bacteria had been in existence and causing disease for many years before that, this large-scale tragic event caused significant research to be performed to fully understand the origin and transmission of what is now called Legionella. Legionella are warm water organisms that are found primarily in surface waters of lakes, ponds, rivers and streams. Because Legionella are protected by being inside of host organisms, typical potable water supply disinfection methods do not eradicate the bacteria. Therefore, Legionella can be found in many potable water systems of buildings. The potential for Legionella to cause disease dramatically increases where conditions for growth (amplification) exist and actions/activities cause the bacteria to be inhaled (aspirated). Because the optimum temperature range for Legionella growth in potable water is 86°F to 104°F (30°C to 40°C), water heater temperature settings in this range should certainly be avoided. Temperatures of 122°F (50°C) for 2 hours or 140°F (60°C) for 2 minutes results in 90-percent destruction of Legionella bacteria. A temperature of approximately 158°F (70°C) results in instantaneous 100-percent destruction of the bacteria. Although not a requirement of the code, many hot water system designers require stored hot water to be at a temperature not less than 140°F (60°C) so as to reduce the potential for Legionella to exist and grow in hot water storage tanks. Regardless of the water heater temperature setting chosen, this code requires tempering valves to be installed at locations where the risk of scalding is especially high (see Chapter 4).

SECTION 502
INSTALLATION

502.1 General. Water heaters shall be installed in accordance with the manufacturer's instructions. Oil-fired water heaters shall conform to the requirements of this code and the *International Mechanical Code*. Electric water heaters shall conform to the requirements of this code and provisions of NFPA 70. Gas-fired water heaters shall conform to the requirements of the *International Fuel Gas Code*.

❖ The installation of a water heater relies heavily on the manufacturer's instructions, as the instructions are in integral part of the third-party certification for these appliances. However, in some cases, the referenced *International Codes* contain more restrictive requirements that must be followed as well. Fuel gas-fired water heater installation requirements are covered by the IFGC. The IMC covers installation requirements for oil-fired and electric water heaters.

Water heaters are appliances and, as such, the IMC or the IFGC contains additional requirements concerning them. For example, installation guidance for fuel pipe sizing and connections, appliance location and clearances, determination of the adequacy of combustion air, combustion air opening size and location and venting requirements are contained in the IFGC. NFPA 70 contains additional requirements for the installation of electric water heaters, such as the size of the electrical supply and disconnect provisions. In many situations, the installation requirements between the code and the manufacturer are identical. However, where there is a conflict between the code and the manufacturers' installation instructions, the requirements that provide the greatest level of safety apply.

Even if the water heating appliance appears to be in compliance with the manufacturer's instructions, the installation cannot be considered complete nor can it be approved until all associated components, connections and systems that serve the water heater are also in compliance with the applicable code provisions. For example, a fuel-fired water heater installation cannot be approved if the water heater is connected to a deteriorated, undersized or otherwise unsafe chimney or vent that does not comply with the IMC or the IFGC. Likewise, the same installation could not be approved if the existing fuel piping has insufficient capacity to supply the gas demand of the water heater, or the existing electrical supply conductors are inadequate or unsafe.

502.1.1 Elevation and protection. Elevation of water heater ignition sources and mechanical damage protection requirements for water heaters shall be in accordance with the *International Mechanical Code* and the *International Fuel Gas Code*.

❖ An ignition source could be an open flame such as a pilot light, an electrical switch, open resistance heating coils or an electrical igniter unit (such as hot surface or spark ignition types). Certain areas of a building are known to have a high potential for volatile liquids, such as gasoline and paint thinners, to be spilled or leak from their containers. Because the vapors of these liquids are heavier than air, they concentrate just above floor level, posing an explosion hazard. Testing has indicated that locating any possible ignition sources at some elevation above the floor in these areas provides a degree of safety due to the time delay for the vapors from a spilled combustible liquid to build up to ignitable concentrations at the elevation of the ignition source. However, given large enough spills and enough time, any ignition source in an enclosed area could cause an explosion.

Section 304.3 of the IMC requires that where equipment and appliances having an ignition source are located in hazardous locations, repair garages, private garages, motor fuel-dispensing facilities or parking garages, the ignition source must be located at least 18 inches (457 mm) above the floor of where the equipment rests. Equipment and appliances having an ignition source are prohibited in Group H occupancy or control areas where open use, handling or dispensing of combustible, flammable or explosive materials occurs. Note that rooms or spaces that are not part of the living space of a dwelling unit and that

INTERNATIONAL CODE COUNCIL®
Copyright © 2015 ICC. ALL RIGHTS RESERVED. Accessed by David Dammon on Jun 21, 2017 12:30:52 PM pursuant to License Agreement with ICC. No further reproduction or distribution authorized. ANY UNAUTHORIZED REPRODUCTION OR DISTRIBUTION IS A VIOLATION OF THE FEDERAL COPYRIGHT ACT AND THE LICENSE AGREEMENT, AND SUBJECT TO CIVIL AND CRIMINAL PENALTIES THEREUNDER.

communicate directly with a private garage are considered to be part of the private garage. For example, a storage room on the same level of the garage having a door into the garage is in "direct communication" (in terms of the exchange of air) with the garage.

Most electric water heater thermostats have enclosed contacts but they are not sealed gas tight. Therefore, if an electric water heater having a thermostat located less than 18 inches (457 mm) from the bottom of the unit, the IMC requires that the unit be elevated so the ignition source (thermostat) is at least 18 inches (457 mm) above the garage floor. Electric water heaters having all switching controls located above 18 inches (457 mm) from the bottom of the water heater are not required to be elevated.

Sections 305.2 and 305.3 of the IFGC mirror the same ignition source requirements as the IMC except where the appliance is listed as flammable vapor ignition resistant (FVIR). Note that an FVIR-listed appliance is still prohibited from be located in a Group H area. Although FVIR technology has been proven to be reliable, some jurisdictions might still require elevation of FVIR fuel gas-fired water heaters. Therefore, always check with the authority having jurisdiction regarding elevation requirements for FVIR-listed appliances. (See the IFGC commentary for more information on FVIR appliances.)

A frequently asked question is how this section should be applied to a replacement water heater that originally was not required by the code at that time to be elevated or have protection against mechanical damage. The code makes no distinction between an installation in new construction and installation in existing construction. Where installers are confronted with obstacles that appear to prevent strict compliance with the code, they should consult with the code official before performing the replacement work.

502.2 Rooms used as a plenum. Water heaters using solid, liquid or gas fuel shall not be installed in a room containing air-handling machinery where such room is used as a plenum.

❖ Installation of fuel-fired water heaters is not permitted in rooms that are used as a plenum because of the potential for toxic products of combustion to be spread throughout the building in the event that the water heater or venting system malfunctions. Also, the negative and positive pressures developed within a plenum space can seriously affect the operation of a fuel-fired water heater located there.

For example, if a natural-draft fuel-fired water heater was installed in a room used as a return air plenum, the negative pressure of the plenum could overcome the draft of the water heater's venting system, and flue gases could be drawn into the plenum space. The improper operation of a water heater will greatly accelerate the deterioration of the water heater and its vent.

502.3 Water heaters installed in attics. Attics containing a water heater shall be provided with an opening and unobstructed passageway large enough to allow removal of the water heater. The passageway shall be not less than 30 inches (762 mm) in height and 22 inches (559 mm) in width and not more than 20 feet (6096 mm) in length when measured along the centerline of the passageway from the opening to the water heater. The passageway shall have continuous solid flooring not less than 24 inches (610 mm) in width. A level service space not less than 30 inches (762 mm) in length and 30 inches (762 mm) in width shall be present at the front or service side of the water heater. The clear access opening dimensions shall be not less than 20 inches by 30 inches (508 mm by 762 mm) where such dimensions are large enough to allow removal of the water heater.

❖ There is not always sufficient room for installations of water heaters in spaces such as basements, alcoves, utility rooms and furnace rooms. In an effort to save space or simplify an installation, water heaters are often installed in attics. Access to water heaters in attics is often difficult due to the lack of walking surfaces other than the edges of exposed ceiling joists. The intent of this section is to require a suitable access opening, passageway and work space that will provide for safe access by service personnel and consideration for water heater replacement without the need for removal of permanent portions of the building structure.

It is not uncommon for water heaters that are located in attics to be placed into position long before finish wall, ceiling and door/access opening trim materials are installed. A water heater of a size that "just fits" through the rough opening between ceiling joists or a water heater that was set prior to the gable ends of the attic space are completed might not be removable after the finish materials are in place. Coordination is required between the building designer and supplier/installer of the water heater to ensure that water heaters can be replaced without compromising the integrity of the building structure or requiring significant repair work to the building.

502.4 Seismic supports. Where earthquake loads are applicable in accordance with the *International Building Code*, water heater supports shall be designed and installed for the seismic forces in accordance with the *International Building Code*.

❖ Chapter 16 of the *International Building Code*® (IBC®) contains seismic maps that designate which areas of the country must design for earthquake loads. Section 308.2 of the code requires that piping supports be designed to resist seismic loads in designated zones. Similarly, this section requires that water heater supports be designed to resist the same seismic loads in accordance with the IBC. Failure of water heater supports or dislocation of a water heater has been shown to be a threat to health and safety of the building occupants. The requirements of this section are the minimum required criteria in view of life safety considerations.

502.5 Clearances for maintenance and replacement. Appliances shall be provided with *access* for inspection, service, repair and replacement without disabling the function of a fire-resistance-rated assembly or removing permanent con-

INTERNATIONAL CODE COUNCIL®
Copyright © 2015 ICC. ALL RIGHTS RESERVED. Accessed by David Dammon on Jun 21, 2017 12:30:52 PM pursuant to License Agreement with ICC. No further reproduction or distribution authorized. ANY UNAUTHORIZED REPRODUCTION OR DISTRIBUTION IS A VIOLATION OF THE FEDERAL COPYRIGHT ACT AND THE LICENSE AGREEMENT, AND SUBJECT TO CIVIL AND CRIMINAL PENALTIES THEREUNDER.

struction, other appliances or any other piping or ducts not connected to the appliance being inspected, serviced, repaired or replaced. A level working space not less than 30 inches in length and 30 inches in width (762 mm by 762 mm) shall be provided in front of the control side to service an appliance.

❖ A water heater (an appliance) typically requires some inspection, service or repair over the life of the unit and eventually, the water heater requires replacement. Because previous editions of the code and many water heater manufacturers' installation instructions did not require a working space in front (control side) of the unit, some water heaters would be installed without consideration for providing ample access to the controls. With no prohibitions against installing piping, duct- work or other equipment not associated with the water heater such that access to the water heater was blocked, the code official had no code substantiation to require proper access to the water heater. Where the replacement of a "blocked" water heater was necessary, removal and replacement of those items as well as any permanent construction often resulted in improper reinstallation of those items because the persons performing water heater replacements are often unfamiliar with those other systems. Improper reinstallation (or worse, no reinstallation) of those removed items could lead to dangerous conditions.

The required size of the space in front (control side) of a water heater allows for ample kneeling area as well as provides a level area to set up a step ladder to access the top of tall water heaters, especially if the water heater is elevated above the floor. As this section prohibits removal of permanent construction even for replacement of the unit, building designers need to consider the size of the water heater with respect to its path of removal to the exterior of the building. During construction of a building, a water heater might be set before all of the walls, doorways and ceilings are completed, resulting in no possible way to move the old water heater out of building and move a new unit of similar size into position without removing permanent parts of the building. The removal and reinstallation of permanent portions of the building could cause problems with structural integrity, fire safety or operation of other building systems.

SECTION 503
CONNECTIONS

503.1 Cold water line valve. The cold water *branch* line from the main water supply line to each hot water storage tank or water heater shall be provided with a valve, located near the equipment and serving only the hot water storage tank or water heater. The valve shall not interfere or cause a disruption of the cold water supply to the remainder of the cold water system. The valve shall be provided with *access* on the same floor level as the water heater served.

❖ This section requires that a valve located near the water heater be installed in the cold water branch line from the main water supply. This section also provides requirements for separate water heater and storage tank hot water systems.

Valves are needed to isolate each hot water storage tank or water heater from the water distribution system to facilitate service, repair and replacement and to allow for emergency shut off in the event of a failure. The shutoff valve must be adjacent to the hot water storage tank or water heater, conspicuously located and within reach to permit it to be easily located and operated in the event of an emergency. The valve is to serve only the hot water storage tank or water heater, thereby not disrupting the flow of the cold water supply to other portions of the water distribution system when the hot water storage tank or water heater is taken out of service [see Commentary Figure 503.1(1)]. In accordance with Section 606.1, Item 8, the valve must be a full-open valve located on the water supply pipe to

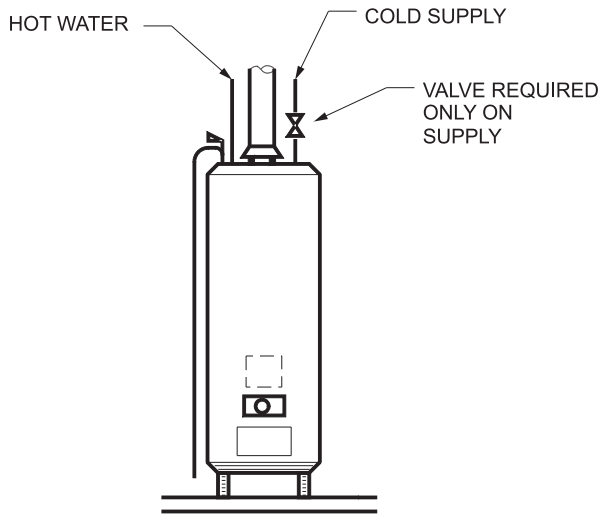

Figure 503.1(1)
WATER HEATER VALVE

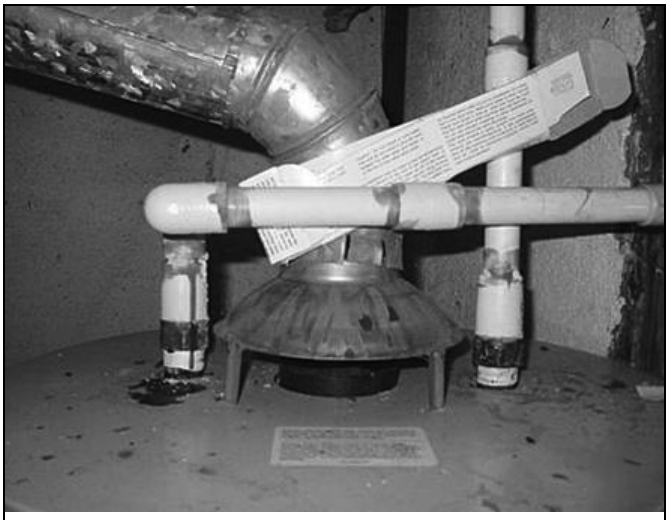

Figure 503.1(2)
PLASTIC PIPE TOO CLOSE TO DRAFT HOOD OF GAS-FIRED WATER HEATER

INTERNATIONAL CODE COUNCIL®
Copyright © 2015 ICC. ALL RIGHTS RESERVED. Accessed by David Dammon on Jun 21, 2017 12:30:52 PM pursuant to License Agreement with ICC. No further reproduction or distribution authorized. ANY UNAUTHORIZED REPRODUCTION OR DISTRIBUTION IS A VIOLATION OF THE FEDERAL COPYRIGHT ACT AND THE LICENSE AGREEMENT, AND SUBJECT TO CIVIL AND CRIMINAL PENALTIES THEREUNDER.

every water heater (see commentary, Section 606.1).

Where plastic cold and hot water piping connections are made to a draft hood equipped gas- or oil-fired water heater, the Plastic Pipe and Fittings Association recommends maintaining at least a 6-inch (152 mm) clearance between the piping and the draft hood/vent pipe. Metallic pipe or metallic flexible connectors should be used in these locations [see Commentary Figure 503.1(2)].

This section does not prohibit the installation of a shutoff valve on the hot water line from the water heater. Some installations might have a water heater located below the system being served and placement of a valve in the hot water line enables heater servicing without a drain down of the hot water distribution system. The code is silent on what type of valve should be used if a valve is installed at this location.

Heat Traps

The *International Energy Conservation Code*® (IECC®) requires that for commercial building (as defined by the IECC) water heater applications, heat traps must be installed on storage-type water heaters and hot water storage tanks. The reader should refer to the IECC to determine when heat traps must be installed.

Heat traps reduce standby heat loss caused by convection carrying heated water up vertical piping from the water heater. The heat trap requirement only applies to storage tank water heaters and hot water storage tanks with vertical piping connecting to the top of the tank or to the side of tank. Heat traps can either

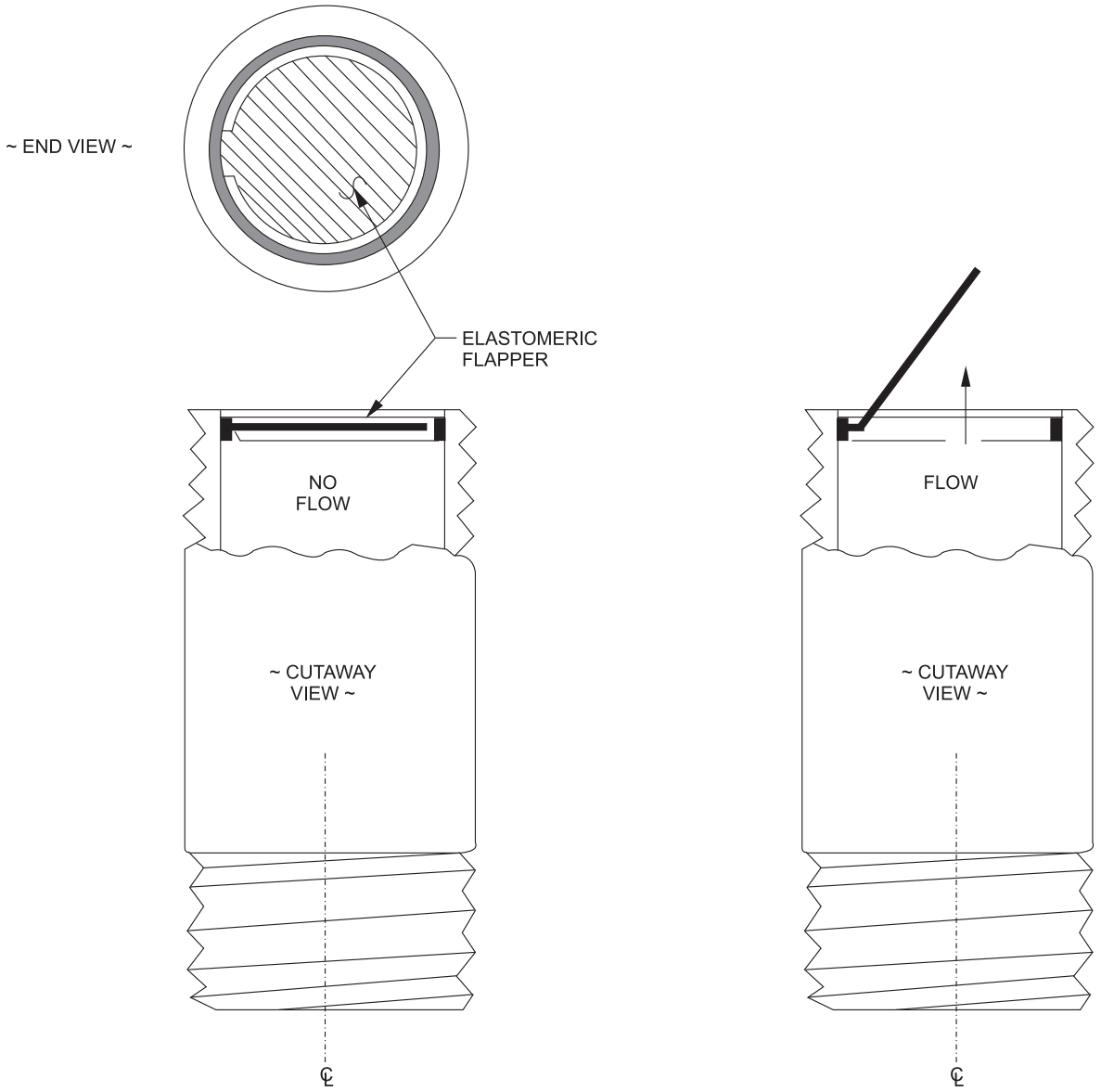

Figure 503.1(3)
SPECIAL HEAT TRAP PIPE NIPPLE

INTERNATIONAL CODE COUNCIL®
Copyright © 2015 ICC. ALL RIGHTS RESERVED. Accessed by David Dammon on Jun 21, 2017 12:30:52 PM pursuant to License Agreement with ICC. No further reproduction or distribution authorized. ANY UNAUTHORIZED REPRODUCTION OR DISTRIBUTION IS A VIOLATION OF THE FEDERAL COPYRIGHT ACT AND THE LICENSE AGREEMENT, AND SUBJECT TO CIVIL AND CRIMINAL PENALTIES THEREUNDER.

be of the "integral" type or be of an external piping configuration. An integral heat trap could be a specially designed pipe nipple having an internal elastomeric flapper to significantly block the natural flow of hot water caused by convection [see Commentary Figure 503.1(3)]. Other types of integral heat traps are: 1) a specially designed pipe nipple with an internal ball that either floats (for the cold water inlet) or sinks (for the hot water outlet) and 2) an elastomeric insert with multiple slits (creating flexible "blocking flaps") that are factory installed in the threaded opening of the water heater. Because all of these types of heat traps are installed in the inlet and outlet of the tank, they are considered to be "integral" to the tank.

In some cases, integral heat traps cannot be used because components are not available for the size of

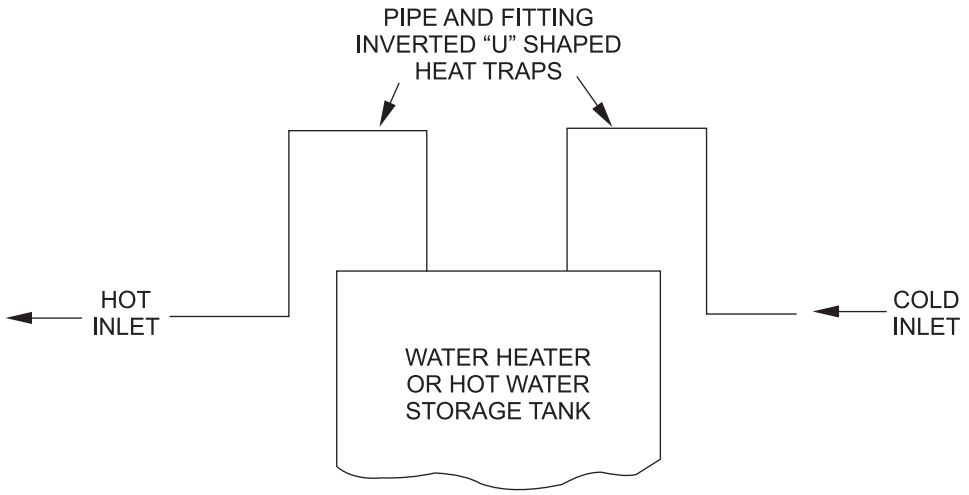

Figure 503.1(4)
PIPE AND FITTING U-SHAPE HEAT TRAPS

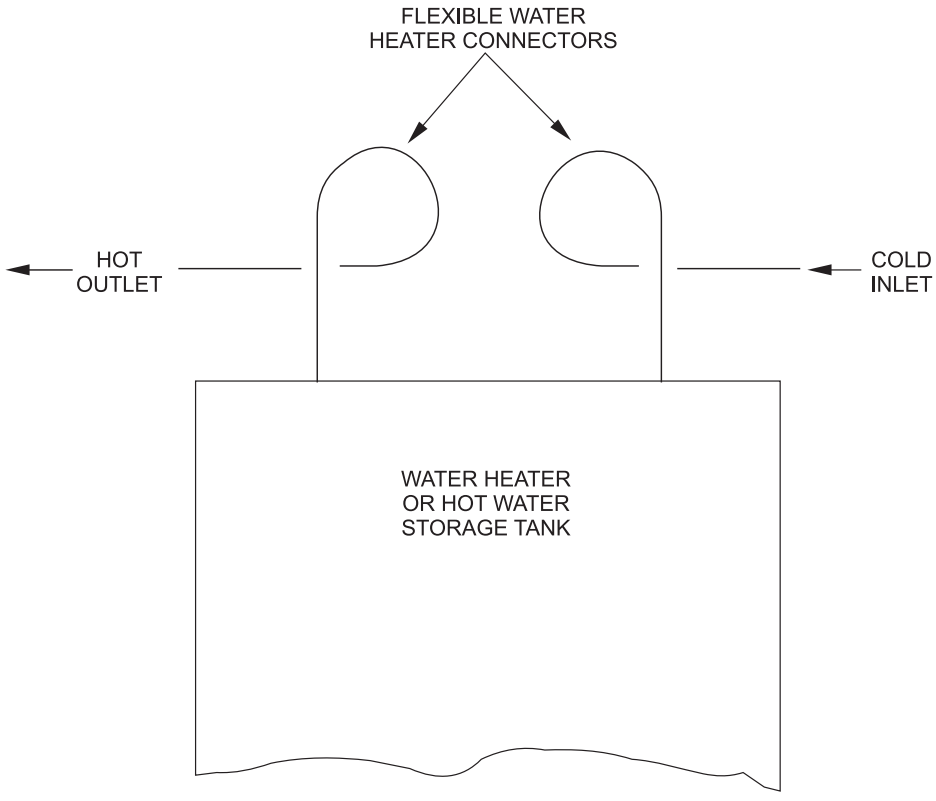

Figure 503.1(5)
FLEXIBLE WATER CONNECTOR LOOP HEATER

INTERNATIONAL CODE COUNCIL®
Copyright © 2015 ICC. ALL RIGHTS RESERVED. Accessed by David Dammon on Jun 21, 2017 12:30:52 PM pursuant to License Agreement with ICC. No further reproduction or distribution authorized. ANY UNAUTHORIZED REPRODUCTION OR DISTRIBUTION IS A VIOLATION OF THE FEDERAL COPYRIGHT ACT AND THE LICENSE AGREEMENT, AND SUBJECT TO CIVIL AND CRIMINAL PENALTIES THEREUNDER.

the connection. In these cases, the piping to the cold water inlet and from the hot water outlet must be arranged to interrupt the convective action of the hot water. This interruption can be accomplished using an inverted U-shaped piping arrangement or a piping loop [see Commentary Figures 503.1(4) and 503.1(5)]. This code and the IECC are silent concerning the dimensions required to make external heat traps.

See the commentary to Section 607.5 concerning external insulation requirements for hot water piping.

503.2 Water circulation. The method of connecting a circulating water heater to the tank shall provide proper circulation of water through the water heater. The pipe or tubes required for the installation of appliances that will draw from the water heater or storage tank shall comply with the provisions of this code for material and installation.

❖ Occupancies such as restaurants, motels, hotels and laundries typically have high demands for hot water. In such structures, it is not uncommon to have a separate water heater and storage tank. When a separate water heater and storage tank are installed, they must be connected to provide proper circulation of water through the water heater (see Commentary Figure 503.2).

Gravity and forced circulation are two methods of providing circulation between the water heater and the storage tank. Gravity circulation is achieved by locating the water heating equipment below the storage tank. As water is heated, the hot water will rise out of the heat source, through the piping and into the storage tank. As the water in the storage tank cools, it will travel by gravity through the pipe back to the heat source. Forced circulation uses a pump or a circulator to send the water between the heat source and the storage tank. When there is high demand for hot water, forced circulation is generally used to meet the demand because it allows for a much faster recovery time (i.e., it can replace the hot water used faster than the slower gravity system).

The manufacturer's installation instructions must be followed for proper operation of the system. The manufacturer will specify the direction of flow, the pipe and pump size, necessary valves, safety flow switches and pressure relief valves necessary for the efficient operation of the system and to prevent damage to the water heater.

The materials used in connecting the water heater to the storage tank and for the hot water distribution system must meet the minimum quality standards prescribed in Section 605 (see commentary, Section 605).

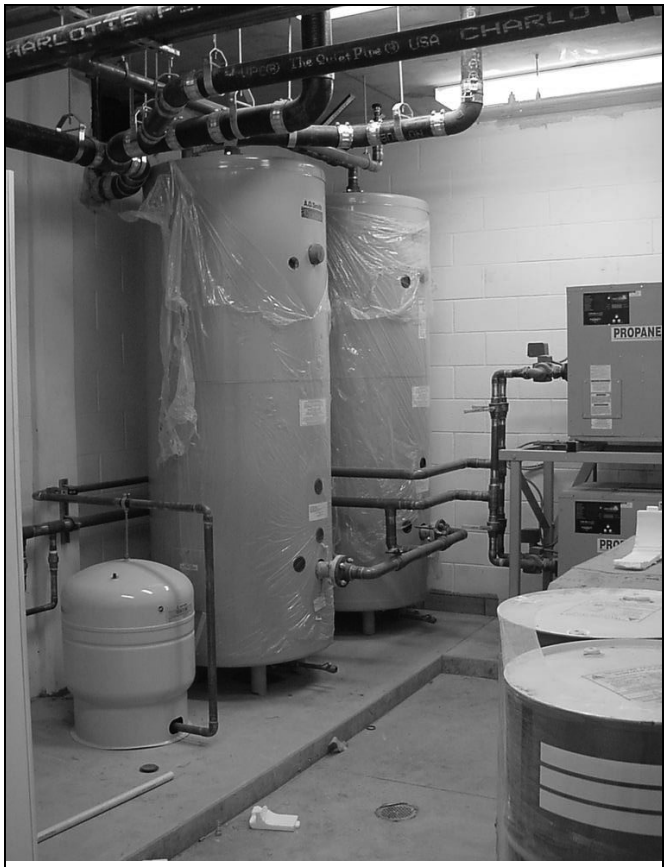

Figure 503.2
CIRCULATING-TYPE WATER HEATERS CONNECTED TO STORAGE TANKS
(Photo courtesy of B&I Contractors, Inc.)

SECTION 504
SAFETY DEVICES

504.1 Antisiphon devices. An *approved* means, such as a cold water "dip" tube with a hole at the top or a vacuum relief valve installed in the cold water supply line above the top of the heater or tank, shall be provided to prevent siphoning of any storage water heater or tank.

❖ Water heaters are designed to operate only when they are full of water. If some or all of the water is siphoned out of the tank during an interruption in the cold water supply, damage to the water heater from overheating could occur. Typically, water heater designs include a cold water "dip" tube, which directs the incoming cold water to the bottom of the tank. At the top of the tank, a hole is provided in the dip tube to prevent water from being siphoned from the tank through the tube. ANSI Z21.10.1 and UL 174 both require that the hole in the dip tube be located within 6 inches (152 mm) of the top of the tank.

If the water heater does not have an antisiphoning hole in the dip tube, a vacuum relief valve or other approved means must be installed to break any siphoning effect that might occur.

504.2 Vacuum relief valve. Bottom fed water heaters and bottom fed tanks connected to water heaters shall have a vacuum relief valve installed. The vacuum relief valve shall comply with ANSI Z21.22.

❖ A vacuum relief valve must be installed in bottom-fed water heaters and tanks connected to water heaters. The vacuum relief valve is intended to prevent a possible reduction within the tank to below atmospheric pressure (i.e., a partial vacuum). Many tanks are not

INTERNATIONAL CODE COUNCIL®
Copyright © 2015 ICC. ALL RIGHTS RESERVED. Accessed by David Dammon on Jun 21, 2017 12:30:52 PM pursuant to License Agreement with ICC. No further reproduction or distribution authorized. ANY UNAUTHORIZED REPRODUCTION OR DISTRIBUTION IS A VIOLATION OF THE FEDERAL COPYRIGHT ACT AND THE LICENSE AGREEMENT, AND SUBJECT TO CIVIL AND CRIMINAL PENALTIES THEREUNDER.

designed to resist external pressures exceeding internal pressures; therefore, a vacuum relief valve is necessary to prevent atmospheric pressure from possibly collapsing or otherwise damaging the tank or internal flueways.

The vacuum relief valve operates by automatically venting the system to the atmosphere when a partial vacuum is created, thereby permitting air to enter and maintaining the internal pressure (see Commentary Figure 504.2). Bottom-fed tanks would be susceptible to the creation of a vacuum by tank drainage resulting from negative supply pipe pressure or leakage.

Vacuum relief valves must be constructed and tested in accordance with ANSI Z21.22. This essentially requires the valve to be third-party certified as an indication to the installer, the inspector and the end user that it has been tested and evaluated by an approved agency and has been determined to perform in an acceptable manner. The presence of a certification mark is part of the information that the code official is to consider in the approval of the vacuum relief valve and the water heater.

504.3 Shutdown. A means for disconnecting an electric hot water supply system from its energy supply shall be provided in accordance with NFPA 70. A separate valve shall be provided to shut off the energy fuel supply to all other types of hot water supply systems.

❖ Just as the IMC and the IFGC require a shutoff valve (i.e., a disconnect means) for the energy supply, NFPA 70 requires electric water heaters have an electric disconnect switch. The shutoff valves for fuel-fired water heaters and disconnects for electric water heaters are necessary to allow for service, repairs and temporary and emergency shutdown (see Commentary Figure 504.3).

504.4 Relief valve. Storage water heaters operating above atmospheric pressure shall be provided with an *approved*, self-closing (levered) pressure relief valve and temperature relief valve or combination thereof. The relief valve shall conform to ANSI Z21.22. The relief valve shall not be used as a means of controlling thermal expansion.

❖ Every storage tank-type water heater must have both temperature and pressure relief protection to prevent tank failure. In many applications, the temperature and pressure relief valve safety functions are accomplished by a single combination-type pressure and temperature relief valve.

Where water is heated in a vessel open to atmospheric pressure (at sea level elevation), the water cannot be heated to a temperature any greater than 212°F (100°C) because water converts to steam at this temperature. However, if water is heated in a vessel that is under a pressure greater than atmospheric pressure, water temperatures greater than 212°F (100°C) are possible because the pressure in the vessel prevents the conversion of water into steam. Water at a temperature greater than its atmospheric pressure

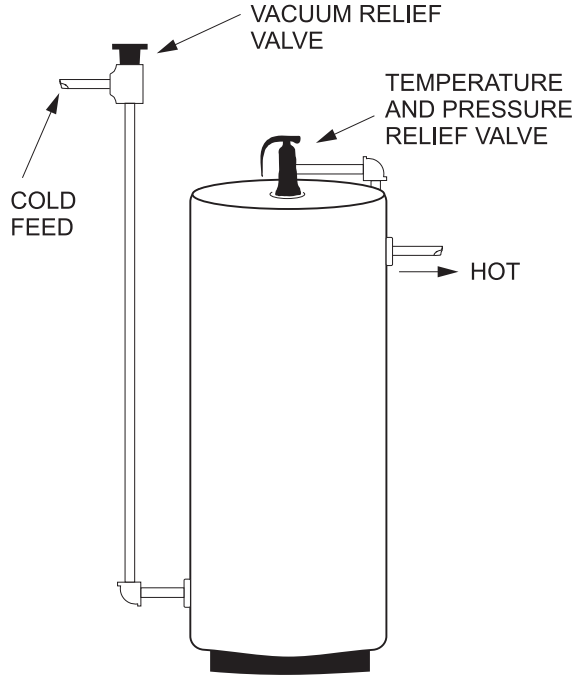

Figure 504.2
WATER HEATER WITH BOTTOM FEED



Figure 504.3
ELECTRIC DISCONNECT ADJACENT TO WATER HEATER
(Photo courtesy of B&I Contractors, Inc.)

INTERNATIONAL CODE COUNCIL®
Copyright © 2015 ICC. ALL RIGHTS RESERVED. Accessed by David Dammon on Jun 21, 2017 12:30:52 PM pursuant to License Agreement with ICC. No further reproduction or distribution authorized. ANY UNAUTHORIZED REPRODUCTION OR DISTRIBUTION IS A VIOLATION OF THE FEDERAL COPYRIGHT ACT AND THE LICENSE AGREEMENT, AND SUBJECT TO CIVIL AND CRIMINAL PENALTIES THEREUNDER.

boiling point is said to be superheated. If the pressure in a vessel containing superheated water is rapidly lowered such as would occur when the vessel ruptures, the water will instantly and violently boil to create steam. The conversion of water to steam is an expansive process, that is, steam created from water occupies significantly more volume. Every gallon (3.8 L) of water converted to steam (at atmospheric pressure) will occupy approximately 224 cubic feet (6.3 m^3).

Similar conditions in a storage tank-type water heater under normal water distribution system pressures could occur if the heating control failed to cease heating the water at the time the thermostat setting was achieved and the temperature and pressure relief valve was inoperable. The sudden release of energy (the conversion of water into steam) due to tank rupture can have devastating results. Exploding water heaters have been known to penetrate through several stories of a building, knock down concrete walls and be propelled through roofs to land over 100 yards away. Human deaths and injuries have been attributed to water heater explosions.

A temperature relief valve prevents the water temperature in the tank from exceeding 210°F (99°C). If the water temperature should near 210°F (99°C), the valve opens to relieve any pressure buildup in the tank and to allow cooler water to enter the tank to lower the tank water temperature. With a properly installed and operating temperature relief valve, the water in the tank never reaches a temperature where steam could be generated under any pressure condition.

Many water heater tanks are designed for a working pressure of no greater than one half of the design pressure for the tank. A pressure relief valve is required to prevent the tank pressure from exceeding the working pressure of the tank. Although the tank is designed for a pressure twice that of the working pressure, other factors such as variations in manufacturing, in-service corrosion and weld joint fatigue due to pressure cycling necessitate limiting the operating pressure to no greater than the "working pressure" tank rating. Although pressure relief valves might be available with various pressure relief settings, at no time should a water heater tank be protected by a relief valve having a pressure relief setting greater than the working pressure rating of the tank. However, installing a pressure relief valve having a relief setting lower than the working pressure of the tank is not prohibited.

Obviously, the design, construction and quality of pressure and temperature relief valves must be controlled to ensure that these devices reliably perform the intended safety functions. The ANSI Z21.22 standard prescribes the necessary features, construction and testing of temperature and pressure relief valves.

As stated previously, when water is heated, the water will expand in volume. If the water being heated is in a closed vessel, the increase in volume will result in an increase in pressure. A storage tank-type water heater connected to a water distribution system could be a "closed vessel" such that when the water is heated, the system pressure will rise (see commentary, Section 607.3.2). Where thermal expansion-caused pressures must be controlled, the water heater pressure relief valve must not be used as the method to control the pressure increases. Relief valves are not designed to act as operating controls. A relief valve required to open frequently could become damaged or inoperative due to wear, corrosion or the valve might leak because of debris in the seat area. In any case, the intended safety function of the valve could become compromised.

Note that this section does not address the relief valve requirements for instantaneous and circulating water heaters. However, where these types of gas-fired water heaters are used, the applicable standards for these products require overtemperature protection as part of the burner control system and overpressure protection by installation of a pressure relief valve on one of the water connections to the unit. The UL 499 standard for electric instantaneous water heaters requires that overtemperature protection be built into the temperature control system, but does not require overpressure protection (see Commentary Figure 504.4).



Figure 504.4
COMBINATION TEMPERATURE- AND PRESSURE-RELIEF VALVE
(Photo courtesy of CASH-ACME, Inc.)

504.4.1 Installation. Such valves shall be installed in the shell of the water heater tank. Temperature relief valves shall be so located in the tank as to be actuated by the water in the top 6 inches (152 mm) of the tank served. For installations with separate storage tanks, the *approved*, self-closing (levered) pressure relief valve and temperature relief valve or combination thereof conforming to ANSI Z21.22 valves shall be installed on both the storage water heater and storage tank.

INTERNATIONAL CODE COUNCIL®
Copyright © 2015 ICC. ALL RIGHTS RESERVED. Accessed by David Dammon on Jun 21, 2017 12:30:52 PM pursuant to License Agreement with ICC. No further reproduction or distribution authorized. ANY UNAUTHORIZED REPRODUCTION OR DISTRIBUTION IS A VIOLATION OF THE FEDERAL COPYRIGHT ACT AND THE LICENSE AGREEMENT, AND SUBJECT TO CIVIL AND CRIMINAL PENALTIES THEREUNDER.

There shall not be a check valve or shutoff valve between a relief valve and the heater or tank served**.**

❖ Storage tank water heaters commonly have one or more factory-installed threaded openings that are located to position the temperature-sensing element of a temperature relief valve within the top 6 inches (152 mm) of the tank. These openings can be on the side or the top of the tank and are typically marked "T&P Relief Valve" (see Commentary Figure 504.4.1). Because the highest water temperature in a storage tank water heater or hot water storage tank is at the top of the tank, the temperature sensing element of the relief valve must be positioned at that location to provide the earliest response to an over-temperature condition. As storage tank water heaters and hot water storage tanks are externally insulated, the temperature relief valve must be the proper length for the application. For example, it is not acceptable to install a "short-style" relief valve into a pipe coupling and then screw the coupling onto a pipe nipple that is screwed into the tank relief valve opening because the temperature-sensing element might not project sufficiently into the tank to properly sense the water temperature. Temperature relief valves are available with various body lengths to accommodate varying thicknesses of external tank insulation.

Where separate temperature and pressure relief valves are used for a storage tank water heater or a hot water storage tank, the pressure relief valve can be installed in any threaded opening in the tank. Or the pressure relief valve can be installed in the piping connected to the tank as long as there is not a shutoff or check valve installed between the pressure relief valve and the tank. For most applications, a combination temperature and pressure relief valve is used so that only one valve is needed.

For the 2012 code edition, this section was revised to clarify that each hot water storage tank and each storage tank water heater must have temperature and pressure relief valve protection. Even though a hot water system might have the storage water heater and a hot water storage tank connected by a pipe without any valves, both tanks require temperature and pressure relief valves (or a combination-type valve).

Shutoff or check valves must not be installed on either side (inlet or outlet) of a relief valve as this could render the relief valve inoperative, thereby creating a potentially dangerous condition.

504.5 Relief valve approval. Temperature and pressure relief valves, or combinations thereof, and energy cutoff devices shall bear the label of an *approved* agency and shall have a temperature setting of not more than 210°F (99°C) and a pressure setting not exceeding the tank or water heater manufacturer's rated working pressure or 150 psi (1035 kPa), whichever is less. The relieving capacity of each pressure relief valve and each temperature relief valve shall equal or exceed the heat input to the water heater or storage tank.

❖ Relief valves must be third-party certified by an approved agency as complying with ANSI Z21.22. The certification mark is the primary, if not the only, indication to the installer, the inspector and the end user that the relief valve has been tested and evaluated by an approved agency and has been determined to perform in an acceptable manner when installed and operated in accordance with its application, installation and operation instructions. The presence of a certification

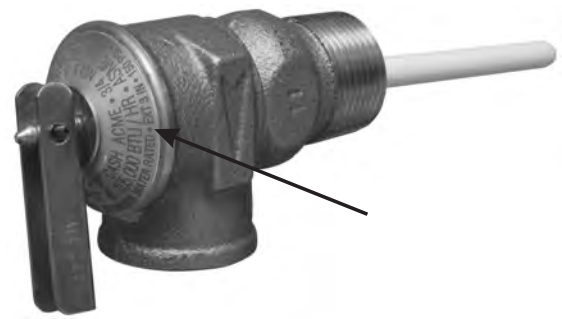

FIGURE 504.5
COMBINATION TEMPERATURE- AND PRESSURE-RELIEF VALVE LABEL
(Photo courtesy of CASH-ACME, Inc.)

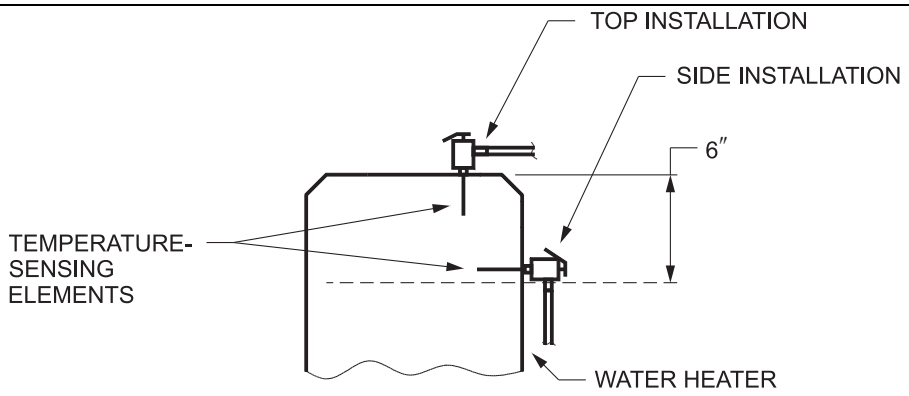

For SI: 1 inch = 25.4 mm.

Figure 504.4.1
TEMPERATURE- AND PRESSURE-RELIEF VALVE INSTALLATION

INTERNATIONAL CODE COUNCIL®
Copyright © 2015 ICC. ALL RIGHTS RESERVED. Accessed by David Dammon on Jun 21, 2017 12:30:52 PM pursuant to License Agreement with ICC. No further reproduction or distribution authorized. ANY UNAUTHORIZED REPRODUCTION OR DISTRIBUTION IS A VIOLATION OF THE FEDERAL COPYRIGHT ACT AND THE LICENSE AGREEMENT, AND SUBJECT TO CIVIL AND CRIMINAL PENALTIES THEREUNDER.

mark is part of the information that the code official is to consider in the approval of the relief valve and the water heater.

Water heater temperature relief valves must be designed to open at a temperature not higher than 210°F (99°C). A relief valve device must be able to dissipate energy at a rate equal to or greater than the energy input rate of the water heater. Relief valve sizing information is provided by both water heater and relief device manufacturers (see Commentary Figure 504.5).

Water heaters must be marked with the maximum working pressure and the relief valve must be set to open at this pressure or 150 pounds per square inch (psi) (1035 kPa), whichever is less. Marking requirements for water heaters will also specify the minimum required relief-valve capacity. An undersized (insufficient capacity) relief valve would be unable to prevent the water heater pressure from exceeding the maximum capacity and a dangerous vessel failure could result. Relief-valve capacity is expressed in terms of British thermal units per hour (Btu/h).

A relief valve is designed to open in direct proportion to the water pressure and temperature acting on its closure disk. The higher the temperature or pressure, the greater the force and the more the valve opens.

504.6 Requirements for discharge piping. The discharge piping serving a pressure relief valve, temperature relief valve or combination thereof shall:

1. Not be directly connected to the drainage system.
2. Discharge through an *air gap* located in the same room as the water heater.
3. Not be smaller than the diameter of the outlet of the valve served and shall discharge full size to the *air gap*.
4 Serve a single relief device and shall not connect to piping serving any other relief device or equipment.
5. Discharge to the floor, to the pan serving the water heater or storage tank, to a waste receptor or to the outdoors.
6. Discharge in a manner that does not cause personal injury or structural damage.
7. Discharge to a termination point that is readily observable by the building occupants.
8. Not be trapped.
9. Be installed so as to flow by gravity.
10. Terminate not more than 6 inches (152 mm) above and not less than two times the discharge pipe diameter above the floor or *flood level rim* of the waste receptor.
11. Not have a threaded connection at the end of such piping.
12. Not have valves or tee fittings.
13. Be constructed of those materials listed in Section 605.4 or materials tested, rated and *approved* for such use in accordance with ASME A112.4.1.

❖ Because the discharge pipe from a water heater temperature and pressure relief valve is an extension of the potable water distribution system, the outlet of the discharge pipe must be treated as a potable water supply system outlet. Although Section 608.15.1 already requires protection of potable water supply outlets by requiring an air gap, installers of water heaters might not realize that the termination point of the relief valve discharge pipe must also provide for an air gap.

The requirement for an air gap at the end of the discharge pipe automatically provides for an indirect connection, should it be desired for the discharge to be captured by any type of drainage system. However, as water heater installers might not realize that the discharge pipe is not a waste pipe; the requirement for indirect connection is reiterated in this section.

A water heater temperature and pressure relief valve is an important safety device for the water heater as well as for the water distribution system that it is connected to (see commentary, Section 504.4). If the water heater is operating properly, the pressure in the water distribution system is no greater than is required by the code and the relief valve is in proper operating condition; there should not be any water discharge from the relief valve. Therefore, any water discharge from a relief valve is an indication of a water distribution system problem, a water heater problem or that the relief valve is malfunctioning. Because all of these problems are safety related and should be rectified as soon as possible, the discharge from the relief valve is an important “telltale” indicator to alert the occupants of the building to call for service. Therefore, it is important to terminate the relief valve discharge pipe within the same room as the water heater since most building occupants will usually associate evidence of leaking water at or near a water heater location as a potential water damage problem that deserves immediate attention [see Commentary Figure 504.6(1)].

An even more compelling reason for the relief valve discharge pipe to terminate at an air gap in the same room as the water heater is that a continuous routing of the discharge pipe from the relief valve through concealed spaces to a remote termination point can pose an extreme risk. Because the satisfactory condition of the discharge pipe is just as important as a properly operating relief valve, the condition of the discharge pipe must be observable by all who might need to perform service to the relief valve. Concealed discharge piping cannot be readily observed to verify that: 1) it has not been damaged (i.e., flattened, bent or cut); 2) the proper slope for gravity drainage still exists; 3) the pipe has not been tapped into, valved off or capped inadvertently and 4) the pipe length and number of elbows in the pipe are not in excess of the valve manufacturer’s installation instructions. Since relief valve discharges are often just small amounts or continuous trickles of water, where freezing conditions might exist

INTERNATIONAL CODE COUNCIL®
Copyright © 2015 ICC. ALL RIGHTS RESERVED. Accessed by David Dammon on Jun 21, 2017 12:30:52 PM pursuant to License Agreement with ICC. No further reproduction or distribution authorized. ANY UNAUTHORIZED REPRODUCTION OR DISTRIBUTION IS A VIOLATION OF THE FEDERAL COPYRIGHT ACT AND THE LICENSE AGREEMENT, AND SUBJECT TO CIVIL AND CRIMINAL PENALTIES THEREUNDER.

in spaces containing concealed piping or at a remote termination point, these small flows could easily freeze resulting in blockage of the pipe. The code requirement for the relief valve discharge pipe to terminate at an air gap in the same room as the water heater eliminates all uncertainties about the condition of the discharge pipe and its termination point.

Even though discharge of water from a relief valve should be a very rare occurrence, when discharge does occur, the flow of water must have a way to escape the area without causing damage to the building structure such as wood members, drywall and insulation. Note that the code is not concerned with damage to an occupant's property within the building. For example, if a water heater is located in a garage with a floor that slopes to the exterior through a garage door opening, and the perimeter walls of the garage at the floor level are of concrete block construction (without insulation or drywall applied), the water from the discharge pipe could flow to the outdoors without the need for a floor drain or waste receptor. The code is not concerned about damage to an occupant's property that might be stored on the floor of the garage. However, if the perimeter walls of the garage are of wood construction (with or without insulation or drywall) that rests directly upon the floor of the garage, the potential for damage to the building structure exists. In this situation, the discharge of water from the relief valve pipe must be captured and conveyed to a drain system or to the outdoors. Although it might be argued that the slope of the garage floor would convey the water out the garage door to the outdoors before contacting the wall, concrete floors are rarely perfectly sloped and an occupant's property within the space might cause diversion of the water towards the walls, thus causing damage to the structure.

The discharge pipe of a temperature and pressure relief valve must not be of a size that is smaller than the relief valve outlet size at any point from the outlet to the termination of the pipe. For example, a reduction in the size of the pipe such as from $^{3}/_{4}$-inch (19.1 mm) nominal to $^{1}/_{2}$-inch (12.7 mm) nominal size will impede the discharge flow, and reduce the discharge capacity of the relief valve. The discharge pipe must not have valves or tees installed. Obviously, a valve in the pipe that could be inadvertently closed would obstruct the discharge pipe and a tee fitting would allow connection of piping from other sources, both of which are dangerous conditions. The code is silent concerning the use of types of relief valve discharge piping that require the use of insert fittings. Common examples are PEX and PEX-AL-PEX tubing. Whether or not these insert fittings constitute enough of a restriction in flow to cause a reduction in maximum discharge capacity of the relief valve is unknown. The authority having jurisdiction must make the decision on whether the use of insert fittings in relief valve discharge piping violates the intent of "no reduction in size" of the discharge pipe.

The relief valve discharge pipe must terminate no more than 6 inches (152 mm) but not less than two times the pipe diameter above the floor surface or a waste receptor (which includes a floor drain) in order to prevent hot water discharge from being directed onto a building occupant [see Commentary Figure 504.6(1)]. The relief valve discharge pipe is also allowed to dis-

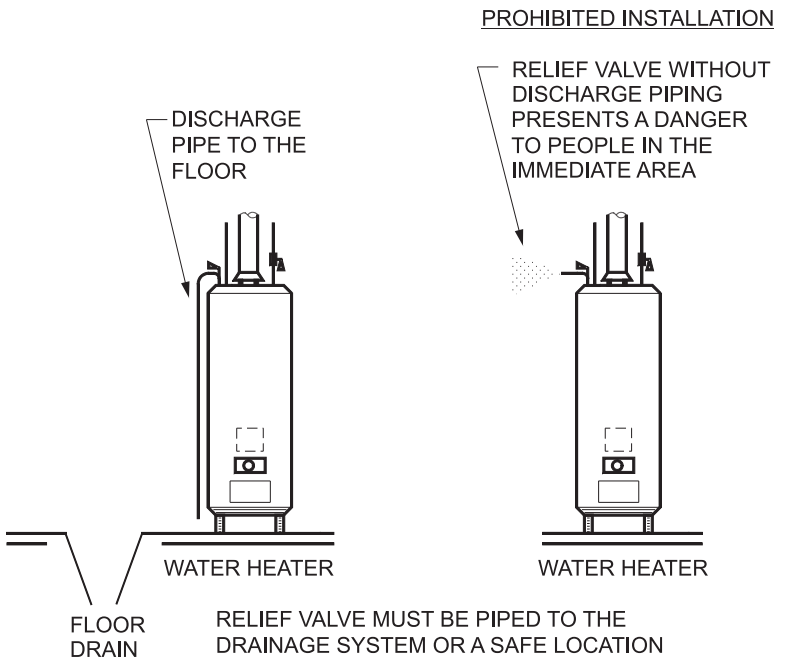

Figure 504.6(1)
RELIEF VALVE DISCHARGE

INTERNATIONAL CODE COUNCIL®
Copyright © 2015 ICC. ALL RIGHTS RESERVED. Accessed by David Dammon on Jun 21, 2017 12:30:52 PM pursuant to License Agreement with ICC. No further reproduction or distribution authorized. ANY UNAUTHORIZED REPRODUCTION OR DISTRIBUTION IS A VIOLATION OF THE FEDERAL COPYRIGHT ACT AND THE LICENSE AGREEMENT, AND SUBJECT TO CIVIL AND CRIMINAL PENALTIES THEREUNDER.

charge to the pan serving the water heater or hot water storage tank [see Commentary Figure 504.6(2)]. Obviously, for termination points to the floor, the floor must be a suitable location for water discharge as previously discussed. Otherwise, a floor drain or waste receptor must be provided to capture and direct discharges from the pipe. In multilevel buildings where water heaters are in the same location on each floor, it is common to provide an indirect piping system to capture any discharge and direct the flow to a single discharge location such as a floor drain on the first level [see Commentary Figure 504.6(3)] or to the outdoors. The code is silent as to the size/shape of waste receptors and the gravity drain line size for capturing and conveying the discharged water from relief valves.

Discharge of a relief valve to laundry trays/tubs, kitchen/utility sinks and shower floors are not suitable locations as this violates Item 6 of this code section. Persons using the fixture could be injured by hot water and steam that could come from the pipe.

The relief valve discharge pipe must drain by gravity and must not be trapped or have sags in the piping that would act as traps. Traps (or piping sags) would restrict the discharge flow and also cause water to be retained in the pipe. This retained water might cause a buildup of scale/corrosion in the pipe or, if the water heater is located in an area subject to freezing such as a garage or attic space, the water might freeze. Both situations have the potential to block the discharge flow from the relief valve, which would create a dangerous condition.

A threaded end on the termination of a relief valve discharge pipe is prohibited, as this would be an invitation for someone to screw on a cap or valve to stop water from dripping from the pipe. What might be perceived as a repair would, in reality, create a very dangerous condition [see Commentary Figure 504.6(4)].

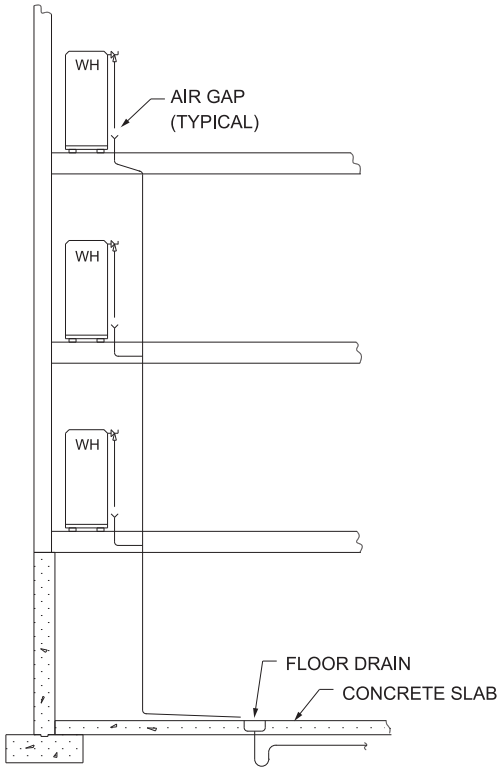

Figure 504.6(2)
RELIEF VALVE INDIRECT WASTE



Figure 504.6(3)
T&P RELIEF VALVE PERMITTED TO DISCHARGE TO THE PAN

INTERNATIONAL CODE COUNCIL®
Copyright © 2015 ICC. ALL RIGHTS RESERVED. Accessed by David Dammon on Jun 21, 2017 12:30:52 PM pursuant to License Agreement with ICC. No further reproduction or distribution authorized. ANY UNAUTHORIZED REPRODUCTION OR DISTRIBUTION IS A VIOLATION OF THE FEDERAL COPYRIGHT ACT AND THE LICENSE AGREEMENT, AND SUBJECT TO CIVIL AND CRIMINAL PENALTIES THEREUNDER.

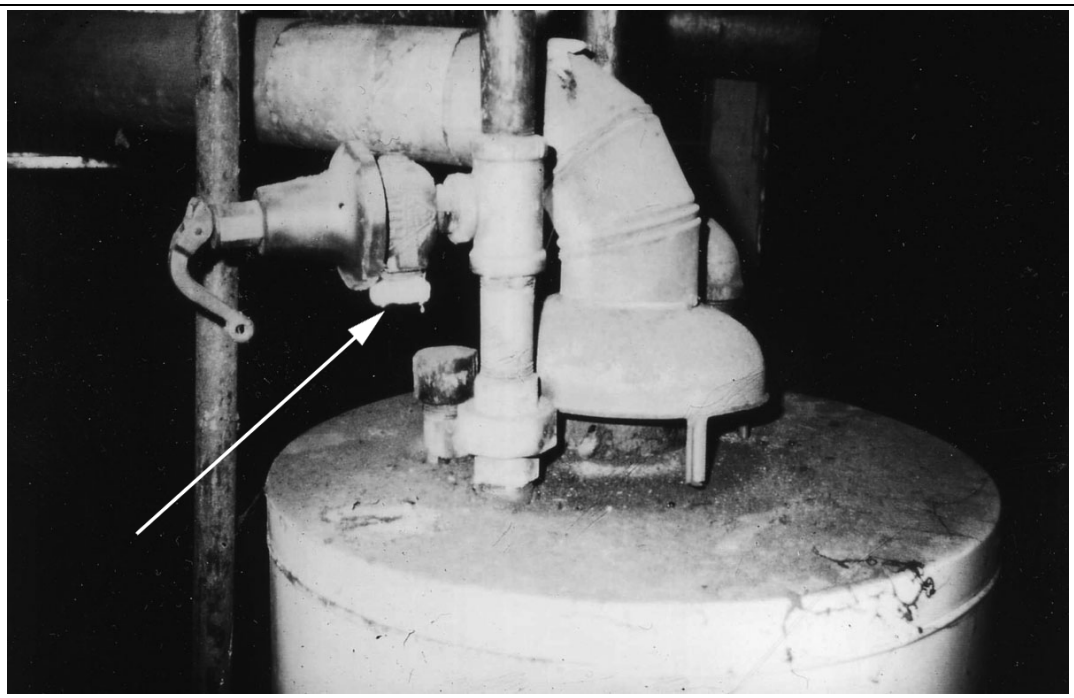

Figure 504.6(4)
CAPPED RELIEF VALVE TANK TAPPING AND PLUGGED RELIEF VALVE OPENING

Relief valve discharge piping must be one of the piping materials listed in Table 605.4. Although the pipe materials in this table must have a pressure rating of at least 100 psi (690 kPa) at 180°F (82°C) to serve as water distribution piping, all of these materials will most likely have the capability to survive limited exposure to higher temperatures at minimal (nearly atmospheric) pressure. Because a water heater relief valve is required to open at a water temperature of 210°F (99°C) and due to the short amount of time that this high temperature condition would usually exist (e.g., 15 minutes or less), any of the water distribution piping materials listed in Table 605.4 are deemed suitable for this application.

The code does not prohibit the use of the flexible types of water distribution piping listed in Table 605.4 for the relief valve discharge. However, Item 6 of this section would require that the end of the relief valve discharge pipe of flexible material be attached in some manner to direct the water flow to a "safe" location as well as prevent the end of the pipe from moving around so as to not expose a building occupant to a hot water discharge.

Relief valve discharge pipe assemblies manufactured in compliance with ASME A112.4.1 can also be used instead of one of the materials listed in Table 605.4. These assemblies are made of a material that can withstand 250°F (121°C) steam for 15 minutes without a change in the tube diameter and have a threaded fitting that allows hand tightening of the connection to the relief valve. These assemblies are not intended to have any additional fittings attached to or installed in the tubing or for the tubing to be lengthened with additional piping.

A frequently asked question is: How should this section (and even this chapter) be applied to the replacement of existing water heaters where the relief valve discharge pipe was originally allowed to terminate just above the floor, without a drain or waste receptor to capture the flow? The water heater might be in a basement where the building drain is above the elevation of the water heater temperature and pressure (T&P) valve or the water heater might be in the middle of a slab-on-grade building, without a nearby floor drain and not adjacent to an outside wall. Replacement appliances are subject to all of the requirements of the code in effect at the time of replacement. Where water heater replacement installers are confronted with obstacles that prevent strict compliance with this code section, they should consult with the code official before performing the replacement work.

504.7 Required pan. Where a storage tank-type water heater or a hot water storage tank is installed in a location where water leakage from the tank will cause damage, the tank shall be installed in a galvanized steel pan having a material thickness of not less than 0.0236 inch (0.6010 mm) (No. 24 gage), or other pans *approved* for such use.

❖ Where leaks from a storage tank-type water heater or hot water storage tank will cause damage to the building structure, the storage tank water heater or hot water storage tank must be installed in a pan. The pan must be made of galvanized steel of at least the thickness stated or be made of other materials as approved by the code official. Even though prefabricated alumi-

INTERNATIONAL CODE COUNCIL®
Copyright © 2015 ICC. ALL RIGHTS RESERVED. Accessed by David Dammon on Jun 21, 2017 12:30:52 PM pursuant to License Agreement with ICC. No further reproduction or distribution authorized. ANY UNAUTHORIZED REPRODUCTION OR DISTRIBUTION IS A VIOLATION OF THE FEDERAL COPYRIGHT ACT AND THE LICENSE AGREEMENT, AND SUBJECT TO CIVIL AND CRIMINAL PENALTIES THEREUNDER.

num and plastic pans are commonly available for many diameters of water heaters and are widely used by installers, these pans must be approved for use by the code official because they are not of galvanized steel. Note that the water heater manufacturer's instructions must also be reviewed for pan requirements because some manufacturers require the use of only a metal pan.

The required thickness of galvanized sheet metal coincides with the minimum thickness tolerance for 24-gage galvanized sheet metal so that a field measurement of thickness would allow for all thicknesses within the tolerance range of 24 gage to be acceptable.

504.7.1 Pan size and drain. The pan shall be not less than $1^1/_2$ inches (38 mm) in depth and shall be of sufficient size and shape to receive all dripping or condensate from the tank or water heater. The pan shall be drained by an indirect waste pipe having a diameter of not less than $^3/_4$ inch (19 mm). Piping for safety pan drains shall be of those materials listed in Table 605.4.

❖ The pan is required to capture water leakage from the water heater or hot water storage tank and convey the water to the pan drain. Therefore, the pan must be large enough to allow for the footprint of the tank as well as some drainage area around the tank so that the water can flow towards where the pan drain is connected to the pan. Generally, storage tank water heater manufacturers require that the pan minimum dimension be at least 2 inches (51 mm) greater than the diameter tank. The depth of the pan must be at least $1^1/_2$ (38 mm) inches to provide for the drain connection fitting, which is typically installed in the side wall of the pan. The pan drain must be at least a $^3/_4$-inch (19.1 mm) nominal pipe size and must be of one of the materials listed in Table 605.4. The pan drain pipe must not be directly connected to the sanitary drain system. Just as drain pipes downstream of the required air gaps at the relief valve discharge pipe termination can be combined together [see Commentary Figure 504.7(1)], pan drains can also be combined together in a similar manner to terminate at a single location at a floor drain, a waste receptor or to the outdoors.

Note that the pan drain pipe material must be of one of the materials listed for piping material suitable for water distribution system use. The concern is that a hot water storage tank or the water connections to the tank could leak hot water for extended periods of time until discovered. If the pan drain pipe material was not made of a material suitable for hot water, the pipe might sag between supports causing sluggish draining and clogging which could cause the drain pan to overflow.

A frequently asked question is: How should this section (and even this chapter) be applied to an existing water heater location that did not originally have a code requirement for installation of pan? The water heater

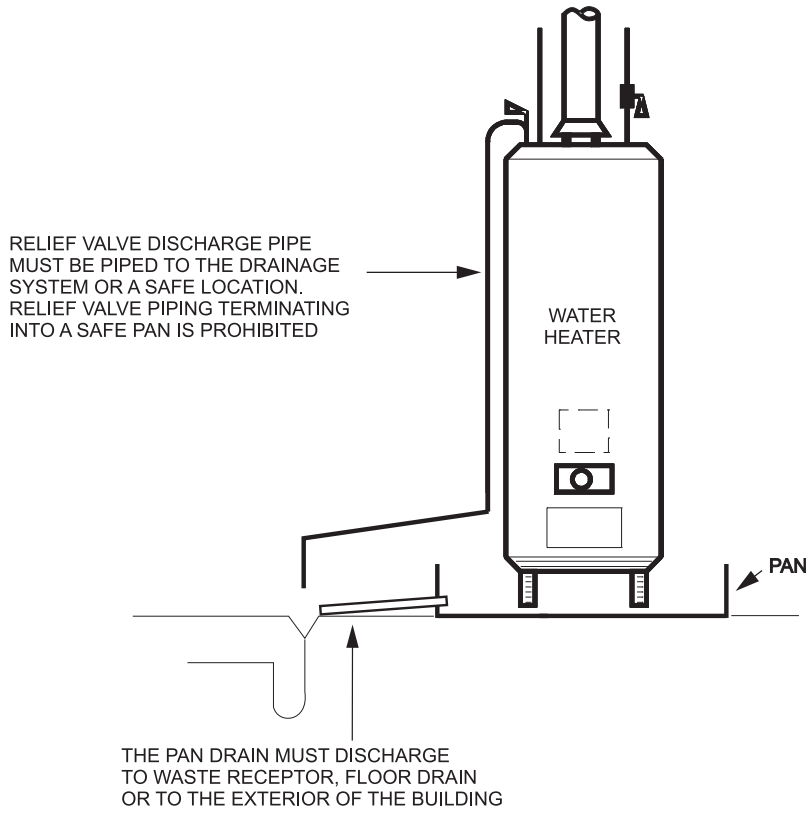

Figure 504.7(1)
WATER HEATER IN PAN

INTERNATIONAL CODE COUNCIL®
Copyright © 2015 ICC. ALL RIGHTS RESERVED. Accessed by David Dammon on Jun 21, 2017 12:30:52 PM pursuant to License Agreement with ICC. No further reproduction or distribution authorized. ANY UNAUTHORIZED REPRODUCTION OR DISTRIBUTION IS A VIOLATION OF THE FEDERAL COPYRIGHT ACT AND THE LICENSE AGREEMENT, AND SUBJECT TO CIVIL AND CRIMINAL PENALTIES THEREUNDER.

might be in a basement where the building drain is above the elevation of the bottom of the water heater or the water heater might be in the middle of a slab-on-grade building, without a nearby floor drain and not adjacent to an outside wall.

As stated in the commentary to Section 502.1.1, the code is silent on this topic, thus requiring the code official to determine to what degree the installation must comply with the code. Where water heater replacement installers are confronted with obstacles that prevent strict compliance with this code section, they should consult with the code official before performing the replacement work.

504.7.2 Pan drain termination. The pan drain shall extend full size and terminate over a suitably located indirect waste receptor or floor drain or extend to the exterior of the building and terminate not less than 6 inches (152 mm) and not more than 24 inches (610 mm) above the adjacent ground surface. Where a pan drain was not previously installed, a pan drain shall not be required for a replacement water heater installation.

❖ Although a pan drain is not required to follow the same rules as for gravity flow sanitary drainage, it should be obvious that any reductions in pan drain pipe size would restrict flow and be a potential clogging point, especially where pans have collected years of dust and possible rust flakes from corroding steel tanks. Since the drainage from the pan is basically clear water, the drain can terminate either outdoors or at a waste receptor or floor drain. Indirect connections at waste receptors or floor drains can be through either an air break or an air gap, since the only concern is to prevent a possible sewage backup into the pan. Where the pan drain terminates outdoors, a termination point of at least 6 inches (152 mm) above the ground protects the open end from being blocked by careless landscaping work and vegetation growth, which might also allow for insects to build nests in the opening. A maximum height of 24 inches (610 mm) provides an allowance for snow and ice build up on the ground but is low enough so as to not create a safety concern for passersby.

Replacement water heaters should be installed as if they are new water heaters. As such, the installation location might require a pan where one was not installed originally. Where the pan is required for the replacement installation, many times there is not a place for the pan drain to terminate. For example, the replacement of a water heater installed in a partially (or fully) finished basement would require a pan, but perhaps the building drain system is completely "overhead" or there is not a floor drain. Thus, there is not a drain for the pan drain to be routed to. In these situations, a pan drain is not required. Having a pan for the water heater will at least contain a small leak that might be noticed by the building occupants. Although the code does not require a water leak detection alarm, the building owner, occupants or even the water heater installer might be inclined to install a water leak detection alarm in the pan to provide a warning of the presence of water. Some water detection units have the capability to shut off the incoming water supply when a leak is detected.

SECTION 505
INSULATION

[E] 505.1 Unfired vessel insulation. Unfired hot water storage tanks shall be insulated to R-12.5 ($h \cdot ft^2 \cdot {}^oF$)/Btu (R-2.2 $m^2 \cdot K/W$).

❖ This section requires that unfired hot water storage tanks be insulated with not less than an *R*-value of 12.5 ($h \bullet ft^2 \bullet °F$)/Btu [R-2.2 $m^2 \bullet K/W$]. External insulation is necessary for unfired hot water storage tanks to conserve energy. Such tanks are used in conjunction with circulating-type water heaters, hot water supply boilers and various heat exchangers. Unlike storage-type water heaters, unfired storage tanks can be purchased without an insulation jacket or covering.

Bibliography

The following resource materials are referenced in this chapter or are relevant to the subject matter addressed in this chapter.

Legionella 2003: Update and Statement by the Association of Water Technologies. Rockville, MD: Association of Water Technologies.

INTERNATIONAL CODE COUNCIL®

Copyright © 2015 ICC. ALL RIGHTS RESERVED. Accessed by David Dammon on Jun 21, 2017 12:30:52 PM pursuant to License Agreement with ICC. No further reproduction or distribution authorized. ANY UNAUTHORIZED REPRODUCTION OR DISTRIBUTION IS A VIOLATION OF THE FEDERAL COPYRIGHT ACT AND THE LICENSE AGREEMENT, AND SUBJECT TO CIVIL AND CRIMINAL PENALTIES THEREUNDER.

Chapter 6:
Water Supply and Distribution

General Comments

Potable water is viewed by the U.S. government as a precious commodity. The U.S. Environmental Protection Agency's (EPA) Office of Drinking Water specifies the quality requirements for water to be classified as potable. Water quality requirements regarding allowable levels of contaminants are becoming increasingly restrictive.

With this emphasis on water quality, plumbing equipment manufacturers have become increasingly concerned with the potential for introducing contaminants into the water through material selection. Faucets that supply drinking water are required to comply with National Sanitation Foundation (NSF) standards No. 61 and 372 to confirm that the product has a very low lead content. U.S.federal law requires drinking water faucets and components to contain not more than 0.25-percent lead content. As such, manufacturers of products that convey drinking water are paying greater attention to the selection of materials that are exposed to potable water. All materials used in the potable water supply system must be evaluated for their possible effect on the potable water with which they are in contact.

As the supplies of suitable raw water to make potable water become less available, some jurisdictions are seeing water utilities providing reclaimed water service for their customers. Reclaimed water is tertiary treated waste water that has been sufficiently disinfected to be safe for exposure to humans but not of drinking-water quality. In the majority of areas where reclaimed water is in use, local regulations only allow the water to be used for outside irrigation demands.

The shortage and rising cost of potable water have inspired designers, water utilities and water conservation activists to investigate other sources for water for use inside and outside of buildings. Gray water (that discharged from bathtubs, showers, handwash sinks and clothes washers) is, once properly treated, a viable water source for flushing water closets and urinals and for water supply to below-grade irrigation systems. Although this chapter was originally intended to only cover the potable water distribution system, the distribution of nonpotable water within buildings is also covered by some of the regulations within this chapter.

Purpose

Chapter 6 regulates the supply of potable water from both public and individual sources to every fixture and outlet so that it remains potable and uncontaminated through cross connection. Chapter 6 also regulates the design of the water distribution system, which will allow fixtures to function properly. The unique requirements of the water supply for health care facilities are addressed separately. It is critical that the potable water supply system remain free of actual or potential sanitary hazards by providing protection against backflow.

SECTION 601
GENERAL

601.1 Scope. This chapter shall govern the materials, design and installation of water supply systems, both hot and cold, for utilization in connection with human occupancy and habitation and shall govern the installation of individual water supply systems.

❖ Although this code section was written long ago when only potable water sources were used for the water supply for all fixtures, portions of this chapter are also applicable to the water distribution systems of nonpotable water supplies, such as treated gray water and rainwater. Where a supply of potable water is available from a public water utility or an individual source (e.g., a private well), all requirements in this chapter are applicable.

601.2 Solar energy utilization. Solar energy systems used for heating potable water or using an independent medium for heating potable water shall comply with the applicable requirements of this code. The use of solar energy shall not compromise the requirements for cross connection or protection of the potable water supply system required by this code.

❖ Solar heating systems consist of two basic types: direct connection and indirect connection. In a direct connection system, the heat transfer fluid is potable water. This type of system has potential safety problems that must be addressed in its design, inspection and maintenance. See the *International Mechanical Code*® (IMC®) for information on the design and installation of solar heating systems. The main concerns are contamination of the potable water source from piping and joint materials used in the system and from the inadvertent introduction of nonpotable or toxic transfer fluids at a future date. The use of direct connection systems is typically limited to solar water-heating systems where the potable water is heated directly by the solar collector and circulated through the system, and is suited for use only in areas where the water in the collectors is not subject to freezing.

In an indirect connection system, a freeze-protected heat transfer fluid is circulated through a closed loop to a heat exchanger. The heat is then transferred indirectly to the potable water. The fluids in these systems are not potable and are occasionally toxic. The type of heat exchanger used in these systems

INTERNATIONAL CODE COUNCIL®
Copyright © 2015 ICC. ALL RIGHTS RESERVED. Accessed by David Dammon on Jun 21, 2017 12:30:52 PM pursuant to License Agreement with ICC. No further reproduction or distribution authorized. ANY UNAUTHORIZED REPRODUCTION OR DISTRIBUTION IS A VIOLATION OF THE FEDERAL COPYRIGHT ACT AND THE LICENSE AGREEMENT, AND SUBJECT TO CIVIL AND CRIMINAL PENALTIES THEREUNDER.

depends on the exact nature of the transfer fluid used. As required by Section 608.16.3, a single-wall heat exchanger may be used in systems where the fluid is nontoxic, and a double-wall heat exchanger must be used in systems using toxic fluids.

601.3 Existing piping used for grounding. Existing metallic water service piping used for electrical grounding shall not be replaced with nonmetallic pipe or tubing until other *approved* means of grounding is provided.

❖ In some older existing buildings, electrical equipment is grounded by connecting a grounding conductor to the interior metal water piping system. More commonly, a metal water pipe is used as a junction point for multiple grounding electrode conductors. The continuity of this electrical ground is essential to maintaining the safety of the electrical system. The replacement of a portion of that metal piping system with nonmetallic piping could interrupt the continuity of that electrical grounding system and create a potentially hazardous situation. When the replacement of any portion of an existing metal water piping system with nonmetallic piping is proposed, the method of maintaining electrical system continuity in the existing building must be approved by the code official.

Bonding of underground metallic water service piping is mandated in the *National Electric Code*® (NEC®) (NFPA 70) and the *International Residential Code*® (IRC®) as part of the grounding electrode system.

601.4 Tests. The potable water distribution system shall be tested in accordance with Section 312.5.

❖ Requirements for water supply system testing are described in Section 312.

601.5 Rehabilitation of piping systems. Where pressure piping systems are rehabilitated using an epoxy lining system, such lining system shall comply with ASTM F 2831.

❖ Metallic water-service piping and water distribution-piping can internally corrode, resulting in leaks. Replacing piping is often a very expensive option because of the process of getting to the piping, the extended labor time to replace the piping in confined areas, the process of repairing finished building materials that were removed and the time that the building or tenant space cannot be used during the replacement. Epoxy internal lining systems can be used to repair leaking piping without removal of the piping. Although some building materials might have to be removed for performing the lining work, the amount is often just a fraction of the materials removed to replace the piping. Piping is internally dried with hot air and grit-blasted to remove oxides and corrosion. The material and installation standard covers lining of piping $^1/_2$ inch (12.7 mm) to 36 inches (914 mm) in diameter by "blown through," spin cast or handsprayed methods. Curing of the coating is by either hot air or chemical reaction. For potable water service applications, the standard requires that the materials comply with NSF 14 and NSF 61. The standard requires pressure testing of the lined piping.

SECTION 602
WATER REQUIRED

602.1 General. Structures equipped with plumbing fixtures and utilized for human occupancy or habitation shall be provided with a potable supply of water in the amounts and at the pressures specified in this chapter.

❖ Table 403.1 specifies the minimum required number of fixtures for a building or tenant space. Even if there is only a single toilet room where the water closet uses gray water for flushing, the code requires a fixture for handwashing for which a potable water supply is required. If there is a plumbing fixture (requiring a supply of water) that is installed in a building that does not require any plumbing fixtures, a potable water supply is required for the building. The potable water supply must have the capacity to supply water at a pressure and flow rate that is required for the fixture to properly function.

602.2 Potable water required. Only potable water shall be supplied to plumbing fixtures that provide water for drinking, bathing or culinary purposes, or for the processing of food, medical or pharmaceutical products. Unless otherwise provided in this code, potable water shall be supplied to all plumbing fixtures.

❖ Potable water is required for all plumbing fixtures unless nonpotable water is used for purposes indicated in Chapter 13. Some common uses of nonpotable water are irrigation and the flushing of water closets and urinals.

The desire to use nonpotable water supplies is on the rise as a means of conserving water resources. Chapter 13 provides information on nonpotable water storage and handling.

602.3 Individual water supply. Where a potable public water supply is not available, individual sources of potable water supply shall be utilized.

❖ Where a public water system is unavailable at or near the location of the building, an individual water source must be provided. Note that an individual water supply must be determined to be potable before it can be used as a potable water source. The potability of water can only be determined by laboratory testing (see Section 602.3.3).

602.3.1 Sources. Dependent on geological and soil conditions and the amount of rainfall, individual water supplies are of the following types: drilled well, driven well, dug well, bored well, spring, stream or cistern. Surface bodies of water and land cisterns shall not be sources of individual water supply unless properly treated by *approved* means to prevent contamination.

❖ The sources for an individual water supply include wells, springs, cisterns, streams and surface water impoundments (man-made reservoirs). Wells are probably the most common source of individual water supply used today and consist of a vertical shaft that extends down into the earth to a water-bearing stratum. Wells may be bored, drilled, driven or dug. See

INTERNATIONAL CODE COUNCIL®
Copyright © 2015 ICC. ALL RIGHTS RESERVED. Accessed by David Dammon on Jun 21, 2017 12:30:52 PM pursuant to License Agreement with ICC. No further reproduction or distribution authorized. ANY UNAUTHORIZED REPRODUCTION OR DISTRIBUTION IS A VIOLATION OF THE FEDERAL COPYRIGHT ACT AND THE LICENSE AGREEMENT, AND SUBJECT TO CIVIL AND CRIMINAL PENALTIES THEREUNDER.

Section 202 for the definitions of each well type and the definition of "Cistern."

Water from surface water impoundments must be treated if used as a supply of potable water. This may include some form of chlorination or ozone treatment.

602.3.2 Minimum quantity. The combined capacity of the source and storage in an individual water supply system shall supply the fixtures with water at rates and pressures as required by this chapter.

❖ Some individual water supplies may not have the capacity to directly provide for the peak flow rate at the required pressure. A storage tank is often necessary to accumulate a volume of water to accommodate the demand on the building water distribution system. This section allows the combination of the source flow/pressure and a water storage tank to provide the required peak demand flow rate at the required pressure. For example, a well pump is typically used in combination with a water storage tank in order to provide for the peak water demand for a building.

602.3.3 Water quality. Water from an individual water supply shall be *approved* as potable by the authority having jurisdiction prior to connection to the plumbing system.

❖ An individual water supply source is always of unknown quality until the water from the source is tested under laboratory conditions. The only way the water supply can be approved is if a reputable test laboratory has determined that the water is potable (of drinking water quality).

602.3.4 Disinfection of system. After construction, the individual water supply system shall be purged of deleterious matter and disinfected in accordance with Section 610.

❖ A private water supply system must be disinfected after it has been constructed. Materials and equipment used for construction of wells could have been exposed to many kinds of pollutants and possibly, contaminants. Most well construction practices require "blowing" of the well (with compressed air) to determine the well's approximate water capacity. The test flushes water out of the well for a period of time, which helps to clear much of the debris from the well. However, as a precaution, the well must be disinfected before actual use of the water. The disinfection procedure must be as prescribed in Section 610 for all potable water systems (see commentary, Section 610). Typically, repairs do not introduce the higher potential for pollutants and contaminants. Additionally, when the well is in service, the need to get it back on-line does not typically allow time for the well to be disinfected.

602.3.5 Pumps. Pumps shall be rated for the transport of potable water. Pumps in an individual water supply system shall be constructed and installed so as to prevent contamination from entering a potable water supply through the pump units. Pumps shall be sealed to the well casing or covered with a water-tight seal. Pumps shall be designed to maintain a prime and installed such that ready *access* is provided to the pump parts of the entire assembly for repairs.

❖ Some materials used in the construction of pumps may not be suitable for contact with potable water. For example, a metal pump volute or impeller casting with a high-lead content would not be suitable for potable water service, as the lead could leach into the water system. Some pump designs could allow contamination of potable water by allowing undesirable materials to enter the flow stream. For example, shaft-bearing grease might be able to work its way into the water. Pump manufacturers offer specific pump models that are rated for pumping potable water.

Proper installation of a potable water pump is also very important towards keeping the condition of the water potable. Any water or contaminants outside of the pump, well casing or pump housing must be prevented from entering the pump or well. For example, potable water pumps must not be located in pits below grade, as ground water could flood the pit and possibly enter the pump. Pumps must also not require periodic priming (an initial filling with water) as part of their normal operation. As all pumps eventually require service or replacement, the installation must provide for ready access for performing those functions (see Chapter 2 definition of "Ready access").

602.3.5.1 Pump enclosure. The pump room or enclosure around a well pump shall be drained and protected from freezing by heating or other *approved* means. Where pumps are installed in basements, such pumps shall be mounted on a block or shelf not less than 18 inches (457 mm) above the basement floor. Well pits shall be prohibited.

❖ A well (pump) pit, being below grade, has the potential for collecting rainwater, surface water or ground water, which could enter the pump and contaminate the potable water. Where located in a basement, the potable water pump must be elevated in the event that the basement becomes partially flooded with ground water or a waste-water backup. Pumps located outside a building must be properly protected from freezing during the winter months. Insulated housings along with a heat source (a small electric heater or, sometimes, just an incandescent lightbulb) are typically used to protect the pump and piping from freezing. Insulation of the walls of a pump housing without the installation of a heat source is only suitable where climatic conditions are very mild (see commentary, Section 305.6).

SECTION 603
WATER SERVICE

603.1 Size of water service pipe. The water service pipe shall be sized to supply water to the structure in the quantities and at the pressures required in this code. The water service pipe shall be not less than $^3/_4$ inch (19.1 mm) in diameter.

❖ The water service system conveys water from a source of pressurized water supply to the beginning of the water distribution system in a building. The water service pipe is just one component of many in the water service system. The source of pressurized

INTERNATIONAL CODE COUNCIL®
Copyright © 2015 ICC. ALL RIGHTS RESERVED. Accessed by David Dammon on Jun 21, 2017 12:30:52 PM pursuant to License Agreement with ICC. No further reproduction or distribution authorized. ANY UNAUTHORIZED REPRODUCTION OR DISTRIBUTION IS A VIOLATION OF THE FEDERAL COPYRIGHT ACT AND THE LICENSE AGREEMENT, AND SUBJECT TO CIVIL AND CRIMINAL PENALTIES THEREUNDER.

water supply could be a public water main, a private well pump or several other types of arrangements. Where a public water main is the source of supply, the water service system includes the tap or tee on the water main, the utility water service connector pipe, the water service pipe, pipe fittings, valves, a water meter and, more frequently than not, a backflow prevention valve [see Commentary Figure 603.1(1)]. Where a private well pump is the source of pressurized water supply, the water service system includes a check valve, the drop pipe down the well casing to the pump, the water service pipe, pipe fittings, valves and a pressure tank [see Commentary Figure 603.1(2)]. Note that the water service system ends inside the building at the required main water service valve (see Section 606.1, Item 2).

Although this code section is focused only on the sizing of the water service pipe, the sizes of the other components in the water service system can have an impact on determining the required size of the water service pipe. Thus, in order to properly size a water service pipe, the entire water service system must be considered. Because the design of a water service system requires a basic knowledge of pressure change caused by elevation difference, peak water demand, pipe friction loss, pipe velocity effects, pipe material selection and fitting/component pressure losses, the following is provided to briefly explain each of these subjects.

Pressure Change Caused by Elevation Difference

Consider a pipe between a public water main and a plumbing fixture in a building as shown in Commentary Figure 603.1(3). As the water must flow uphill to reach the fixture, energy is consumed, which will result in a loss of pressure. Conversely, as shown by Commentary Figure 603.1(4), as water flows downhill to reach the fixture, energy is gained, which will result in an increase in pressure. Thus, changes in elevation must be considered when determining the pressure at the discharge end of the water service system. Pressure gains are a bonus when designing a water service system. Pressure losses, however, are of great concern because a lack of adequate pressure for the water distribution system could cause operational

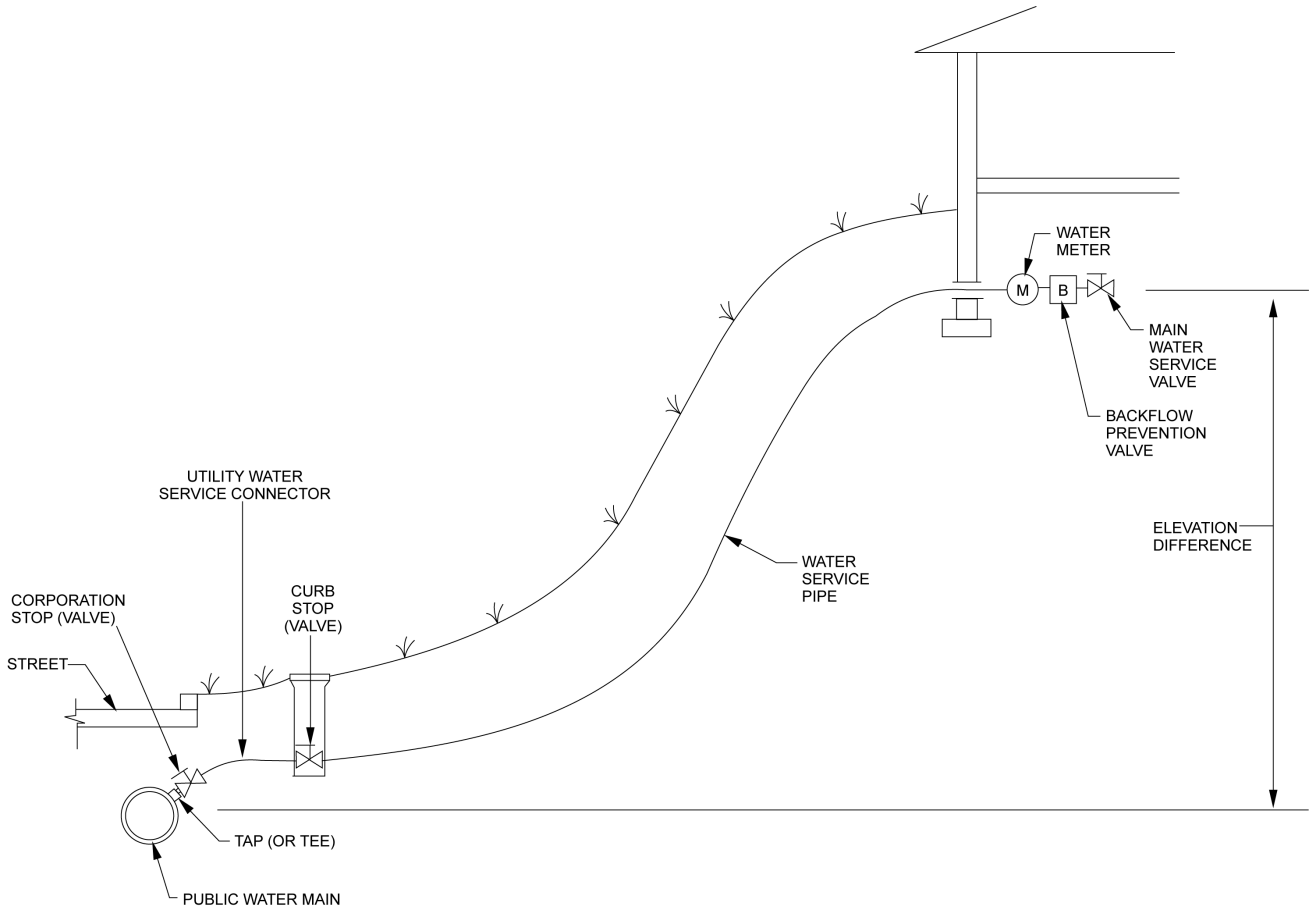

Figure 603.1(1)
WATER SERVICE SYSTEM, PUBLIC WATER MAIN

INTERNATIONAL CODE COUNCIL®
Copyright © 2015 ICC. ALL RIGHTS RESERVED. Accessed by David Dammon on Jun 21, 2017 12:30:52 PM pursuant to License Agreement with ICC. No further reproduction or distribution authorized. ANY UNAUTHORIZED REPRODUCTION OR DISTRIBUTION IS A VIOLATION OF THE FEDERAL COPYRIGHT ACT AND THE LICENSE AGREEMENT, AND SUBJECT TO CIVIL AND CRIMINAL PENALTIES THEREUNDER.

problems with plumbing fixtures. The following equation converts a change in elevation to pressure:

$$P = 0.433 \times h$$

where:

P = Pressure created by a head of water (pound per square inch, abbreviated as "psi").

h = Elevation difference (feet).

If the elevation of the outlet end of the water service system is higher than the elevation of the outlet of the pressurized water source, then pressure will be lost. If the elevation of the outlet end of the water service system is lower than the elevation of the outlet of the pressurized water source, then pressure will be gained.

Determining Peak Water Demand

Estimating the peak water demand (the maximum required water flow) for a building is the most difficult, and yet, the most important aspect of any water service system design problem. The term "peak water demand" is used to describe that flow, which is the maximum total water flow demand of the water distribution system at any given time. Peak water demand is not simply the addition of the maximum allowable flow rates of every fixture in the building because it is unrealistic, in most cases, to assume that all fixtures would be operating at the same time.

One commonly used and widely accepted method of estimating peak water demand is the "wsfu" method developed in 1923 by Dr. Roy B. Hunter. The "Hunter" method uses probability analysis to determine a frequency and duration of use for various types of fixtures. The method involves the use of unitless water demand factors called "water supply fixture units" (wsfu) for each common type of plumbing fixture. Actual studies of plumbing systems in federal buildings were performed to correlate the wsfu values to flow rates in gallons per minute (gpm). The results of these efforts were published in the National Bureau of Standards Report No. BMS 65, *Methods of Estimating Loads in Plumbing Systems*.

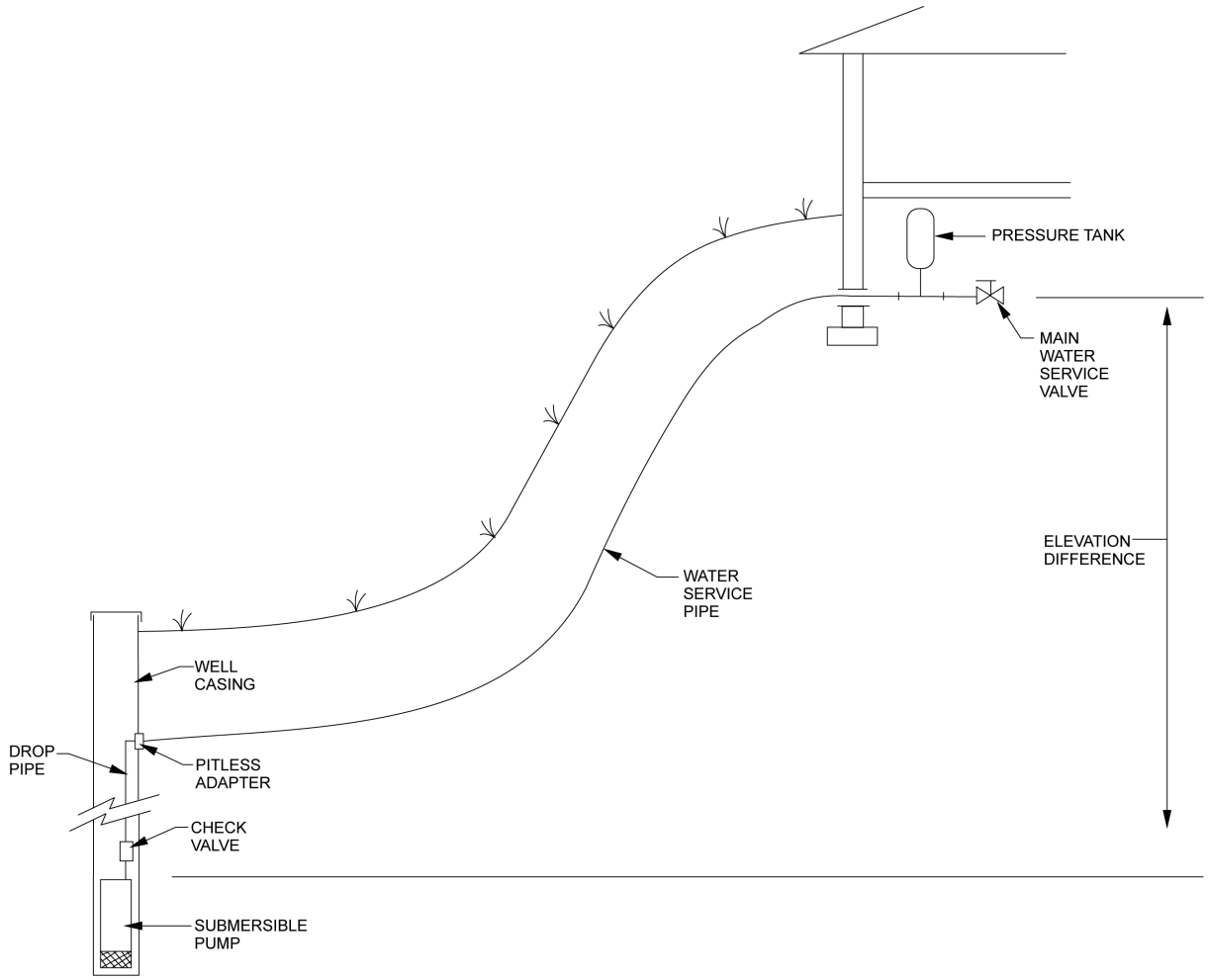

Figure 603.1(2)
WATER SERVICE SYSTEM, PRIVATE WELL

INTERNATIONAL CODE COUNCIL®
Copyright © 2015 ICC. ALL RIGHTS RESERVED. Accessed by David Dammon on Jun 21, 2017 12:30:52 PM pursuant to License Agreement with ICC. No further reproduction or distribution authorized. ANY UNAUTHORIZED REPRODUCTION OR DISTRIBUTION IS A VIOLATION OF THE FEDERAL COPYRIGHT ACT AND THE LICENSE AGREEMENT, AND SUBJECT TO CIVIL AND CRIMINAL PENALTIES THEREUNDER.

Because water conversation measures have been mandated throughout the years since Dr. Hunter's original research, more recent studies by various parties have made adjustments to his original wsfu values for plumbing fixtures to account for the reduced flow rates of more modern fixtures. As these newer studies were performed independently from one another, plumbing system designers have available to them several different sets of plumbing fixture wsfu values and correlating flow rates. Caution must be exercised to make sure that wsfu values and correlating flow rates from the various studies are not intermixed as doing so might produce erroneous results.

A shortcoming of the various wsfu methods currently available is that they may not provide suitable results for projects that have extremely high water demands or very low water demands. For example, the peak water demand at halftime in a football stadium could approach a flow rate as if all fixtures were operating simultaneously. The use of most wsfu methods would probably result in undersized piping for that application. Conversely, the peak water demand in a very small building with only a few fixtures could be very small and, as such, most wsfu methods would probably oversize the piping for that application. While oversizing of piping will not affect the operation of the fixtures, larger than necessary piping is not economical. However, undersized piping can create operational problems that might be difficult or impossible to rectify after completion of a building. Ultimately, the system designer uses his or her experience to know when "adjustments" of calculated pipe sizes are needed for specific applications in order to reduce the potential liability of a system not working under peak water demand conditions.

Table E103.3(2) in Appendix E of the code contains one commonly used tabulation of wsfu values for various plumbing fixtures and groups of plumbing fixtures. Table E103.3(3) is the coordinating table for converting these wsfu values to gallons-per-minute flow. Note that Table E103.3(3) is actually two tables—one that covers systems having predominantly flush-tank-type water closets and the other that covers systems having predominantly flushometer-type water closets. Although Appendix E does not provide any guidelines that define what "predominantly" means, a conservative design practice might be to choose the flushometer column whenever the total number of flushometers is greater than 10 percent of the total number of fixtures in the building.

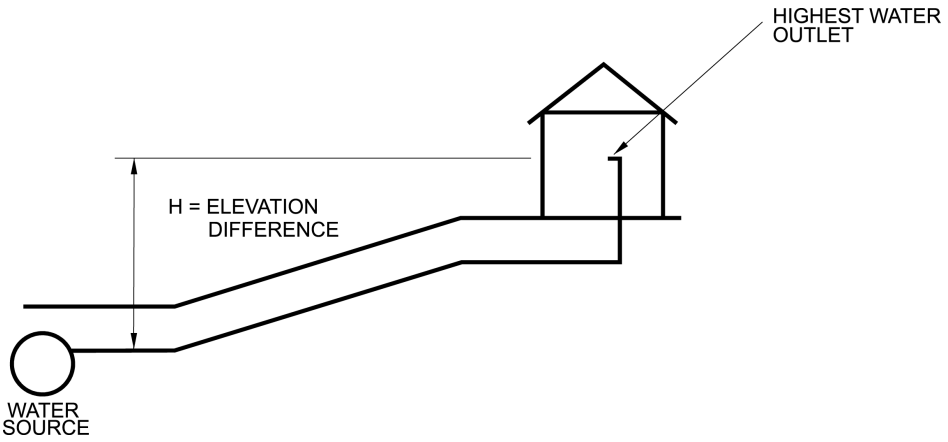

Figure 603.1(3)
DIFFERENCE IN ELEVATION, LOSS OF PRESSURE

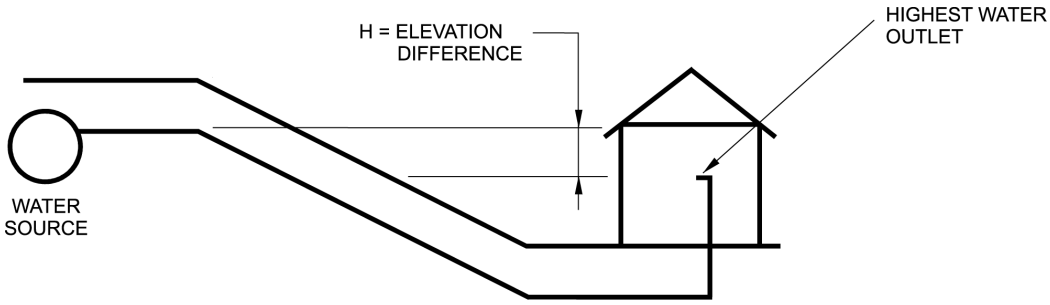

Figure 603.1(4)
DIFFERENCE IN ELEVATION, GAIN OF PRESSURE

INTERNATIONAL CODE COUNCIL®
Copyright © 2015 ICC. ALL RIGHTS RESERVED. Accessed by David Dammon on Jun 21, 2017 12:30:52 PM pursuant to License Agreement with ICC. No further reproduction or distribution authorized. ANY UNAUTHORIZED REPRODUCTION OR DISTRIBUTION IS A VIOLATION OF THE FEDERAL COPYRIGHT ACT AND THE LICENSE AGREEMENT, AND SUBJECT TO CIVIL AND CRIMINAL PENALTIES THEREUNDER.

Pipe Friction Loss

When water flows through a pipe, the friction of the water against the inside wall of the pipe resists the movement of the water. This resistance decreases the available flowing pressure at the discharge end of the pipe. As the water flows faster in the pipe, the resistance (and loss of pressure) becomes greater. This pressure loss is called "pressure drop caused by friction loss" or simply "friction loss."

One formula for determining the friction loss in a pipe is a variation of the Hazen-Williams equation:

$$f = 4.52 \times 100 \times (q^{1.85)}/[(C^{1.85}) \times (d^{4.8655})]$$

where:

f = Friction loss in psi per 100 feet of pipe.

d = Inside diameter of pipe or tube, inches.

q = Fluid flow, gpm.

C = Surface roughness constant.

Typical values for C, which take into account some increase in roughness of the inside wall as the pipe ages, are:

- Asbestos-cement - 140
- Cast iron - 100
- Cement-mortar-lined ductile iron pipe - 140
- Concrete - 100
- Copper - 150
- Steel - 120
- Galvanized steel - 120
- Polyethylene - 150
- Polyvinyl chloride (PVC) - 150
- Fiber-reinforced plastic (FRP) - 150

Although this equation allows the designer to calculate the friction loss for any given flow, pipe material and diameter, the equation is difficult to solve without a scientific calculator or computer spreadsheet. As such, some designers use commonly available pipe friction loss graphs. Commentary Figure 603.1(5) illustrates a friction loss graph for PEX tubing having SDR 9 wall thickness. To use a friction loss graph, the graph is entered on the vertical axis and the flow rate that is required by the application is located. From that point, moving horizontally to the right, the intersection with one of the tube size lines is found. From that intersection, moving vertically down to the horizontal axis, the pressure drop (friction loss) per 100 feet (30 480 mm) of tube is read. For example, given a flow of 10 gpm and a 1-inch (25 mm) tube, the pressure drop in 100 feet (30 480 mm) of tube is approximately 5.5 psi. In other words, if the water source has a pressure of 50 psi and a flow of 10 gpm through a 100-foot-long (30 480 mm) section of tubing, the flowing pressure at the discharge end of the tube would be 50 - 5.5 = 44.5 psi.

Using the same friction loss graph and 10 gallons per minute, a $^3/_4$-inch (19.1 mm) nominal tube size could have been chosen, resulting in approximately 22 psi of pressure drop in 100 feet (30 480 mm) of tube. As pipe sizes become smaller, the same flow results in a higher velocity in the pipe, which causes significantly more pressure drop. Based upon a manufacturer's recommended maximum velocity for the pipe material, the size of the pipe is chosen to provide for a pressure loss that allows for an acceptable amount of flowing pressure at the discharge end of the pipe.

Flow Velocity Limitations

The velocity of water flowing in a pipe must be sufficient to keep suspended material in the water from building up. But more importantly, the velocity cannot be too great so as to avoid the destructive effects of erosion, cavitation and pressure surges. High velocities can also cause noise that might be a nuisance to building inhabitants. Much experience and testing involving the sizing of various water pipes have resulted in a "general engineering practice" of limiting the maximum velocity in water service pipes to not greater than 8 feet per second (2.4 m/s). However, manufacturers of specific types (materials) of pipe may allow or suggest higher velocities in order to permit smaller pipe sizes for a given flow. Additional discussion of recommended velocity limits is provided in the commentary to Section 604.

High velocities can result in erosion of the pipe wall caused by entrained air bubbles, sand particles and other suspended solid matter in the water. Another problem with excessive velocity in the pipe is cavitation. Where there is a change in direction of the flow, such as at an elbow, vapor bubbles can form (the water "boils") and then collapse (the vapor condenses). The formation and collapse of these bubbles can have a very destructive effect on the pipe wall material [see Commentary Figure 603.1(6)].

"Water hammer" is another problem that can occur because of high velocity in the pipe. The term "water hammer" describes the noise and vibrations produced by destructive forces known as hydraulic shock, which is the result of water flow at high velocity being abruptly stopped. See the commentary to Section 604.9 for further discussion of water hammer.

Pipe Material Selection

Knowledge of local water conditions is necessary to choose an appropriate pipe material for the water service system. The water conditions can also have an impact on the size of the pipes. Water containing dissolved mineral salts, such as sulfates, bicarbonates, chlorides of calcium, sodium and magnesium, can form a scale or buildup on the inner wall of the pipe. This phenomenon, known as "caking," can significantly increase the friction loss in a pipe. Corrosive conditions can also occur in metallic piping where the water has significant amounts of dissolved gases such as oxygen and carbon dioxide. A chemical analysis of the proposed water supply may be necessary to determine dissolved solid content, pH range, car-

INTERNATIONAL CODE COUNCIL®
Copyright © 2015 ICC. ALL RIGHTS RESERVED. Accessed by David Dammon on Jun 21, 2017 12:30:52 PM pursuant to License Agreement with ICC. No further reproduction or distribution authorized. ANY UNAUTHORIZED REPRODUCTION OR DISTRIBUTION IS A VIOLATION OF THE FEDERAL COPYRIGHT ACT AND THE LICENSE AGREEMENT, AND SUBJECT TO CIVIL AND CRIMINAL PENALTIES THEREUNDER.

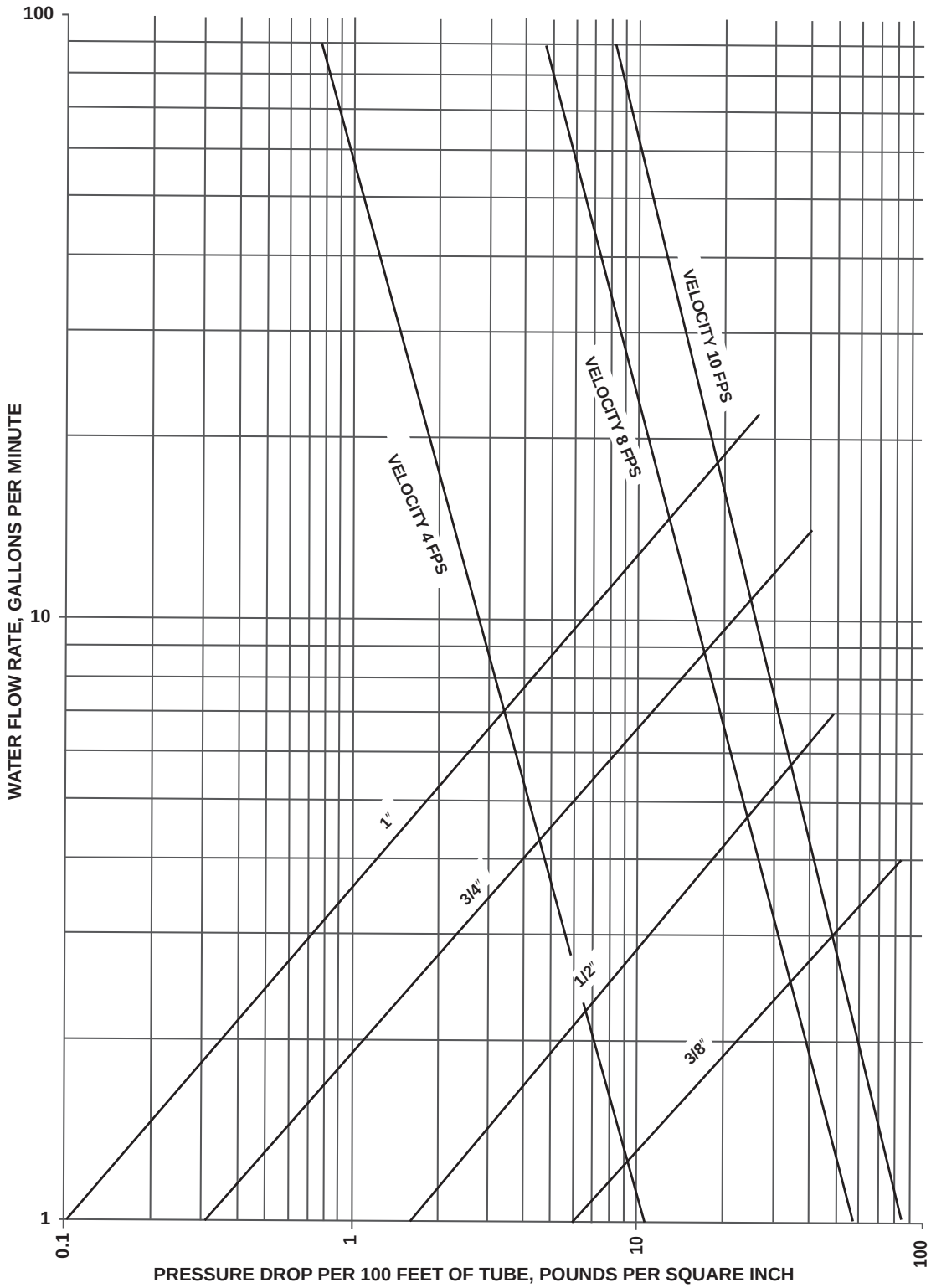

For SI: 1 inch = 25.4 mm, 1 foot = 304.8 mm, 1 gallon per minute = 3.785 L/m, 1 pound per square inch = 6.895 kPa, 1 foot per second = 0.3048 m/s.

Figure 603.1(5)
FRICTION LOSS IN SDR 9 PEX TUBING

INTERNATIONAL CODE COUNCIL®
Copyright © 2015 ICC. ALL RIGHTS RESERVED. Accessed by David Dammon on Jun 21, 2017 12:30:52 PM pursuant to License Agreement with ICC. No further reproduction or distribution authorized. ANY UNAUTHORIZED REPRODUCTION OR DISTRIBUTION IS A VIOLATION OF THE FEDERAL COPYRIGHT ACT AND THE LICENSE AGREEMENT, AND SUBJECT TO CIVIL AND CRIMINAL PENALTIES THEREUNDER.

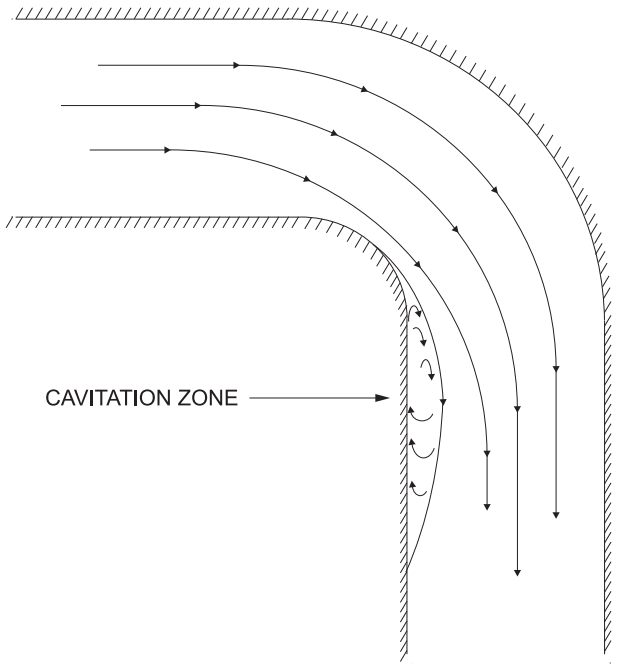

Figure 603.1(6)
CAVITATION

bon dioxide content and the presence of dissolved oxygen. Local code officials, water utilities and piping manufacturers are often the best sources for information concerning the choice of pipe materials for the available potable water to be used.

As most water service system piping is buried, soil conditions could be a factor in choosing an appropriate pipe material. Soils that are especially aggressive to metallic piping, such as saltwater marshland and high sulphur mineral content soils, might require that the piping be made of corrosion-resistant materials such as plastic. Where soils have residual amounts of solvents, fuels or where insecticides or fertilizers are consistently used on the soils above, metallic pipe materials might be a more suitable pipe material choice. Local experienced soils engineers should be consulted wherever questionable soil conditions are present.

Fittings, Valves and Other Component Friction Losses

Pipe fittings in a piping system cause turbulence in the water flow, resulting in additional friction loss. One method to account for the friction losses caused by fittings is called the "equivalent length method." In other words, the friction caused by a fitting can be equated to the friction loss of a straight length of pipe. Tables E103.3(5) and E103.3(6) in Appendix E indicate the equivalent length of pipe and tube, respectively, for various fittings and valves.

A more commonly used method to estimate the friction loss caused by fittings and valves is to estimate an amount for the equivalent length for fittings and valves as a percentage of the actual developed length of straight piping. In general, 50 percent is frequently found to be a reasonably accurate estimate. For example, if the length of straight piping to be installed is 70 feet (21 336 mm), then the equivalent length of pipe used for the friction loss determination will be:

Equivalent length of pipe = actual length of pipe + [actual length of pipe $\times$ (0.50)]

Equivalent length of pipe = 70 + (70 $\times$ 0.50)

Equivalent length of pipe = 105 feet (32 004 mm)

Using this equivalent length estimating method requires careful judgment. For example, if the straight amount of piping to be installed is only 10 feet (3048 mm), but there are a number of fittings and valves within that length, then the use of 50 percent to determine the actual friction loss will probably underestimate the actual friction loss. Conversely, if a pipeline is 100 feet (30 480 mm) long with few fittings and full-open valves, then the use of 50 percent will probably result in overestimation of the actual friction loss. Designers should bear in mind that it is generally better to err on the side of computing slightly more friction loss in order to avoid underestimating the pressure loss for a water service system.

Other components such as taps (connection points to the water main), water meters, backflow prevention valves, strainers and filters cause restriction to the flow and, therefore, those pressure losses must be accounted for when calculating the flowing pressure available at the discharge end of the water service system. "Tap or tee loss" is the pressure loss caused by the entry of flow into the connection fitting on the public water main pipe. Table E103.3(4) in Appendix E indicates the tap or tee losses for various pipe sizes at various flow rates.

Water meters for metering a public water supply for water billing purposes are most often the responsibility of the public water utility. At the initial design stage of the water service supply system, the designer usually does not know the meter size, type or model in order to account for the water meter pressure loss. Initially, the designer can use the chart in Commentary Figure 603.1(7) to estimate the maximum allowable friction loss through various sizes of displacement-type (nutating disc) water meters. Displacement-type meters are the most common type of meter used for small-to-medium size residential and light commercial buildings. As the chart in Commentary Figure 603.1(7) is known to yield much higher than actual pressure losses, once the designer completes the preliminary design of the water service system, he or she can then consult with the public water utility to determine the exact brand/model of water meter to be used so that a more accurate pressure loss for the water meter can be entered into the calculations.

INTERNATIONAL CODE COUNCIL®
Copyright © 2015 ICC. ALL RIGHTS RESERVED. Accessed by David Dammon on Jun 21, 2017 12:30:52 PM pursuant to License Agreement with ICC. No further reproduction or distribution authorized. ANY UNAUTHORIZED REPRODUCTION OR DISTRIBUTION IS A VIOLATION OF THE FEDERAL COPYRIGHT ACT AND THE LICENSE AGREEMENT, AND SUBJECT TO CIVIL AND CRIMINAL PENALTIES THEREUNDER.

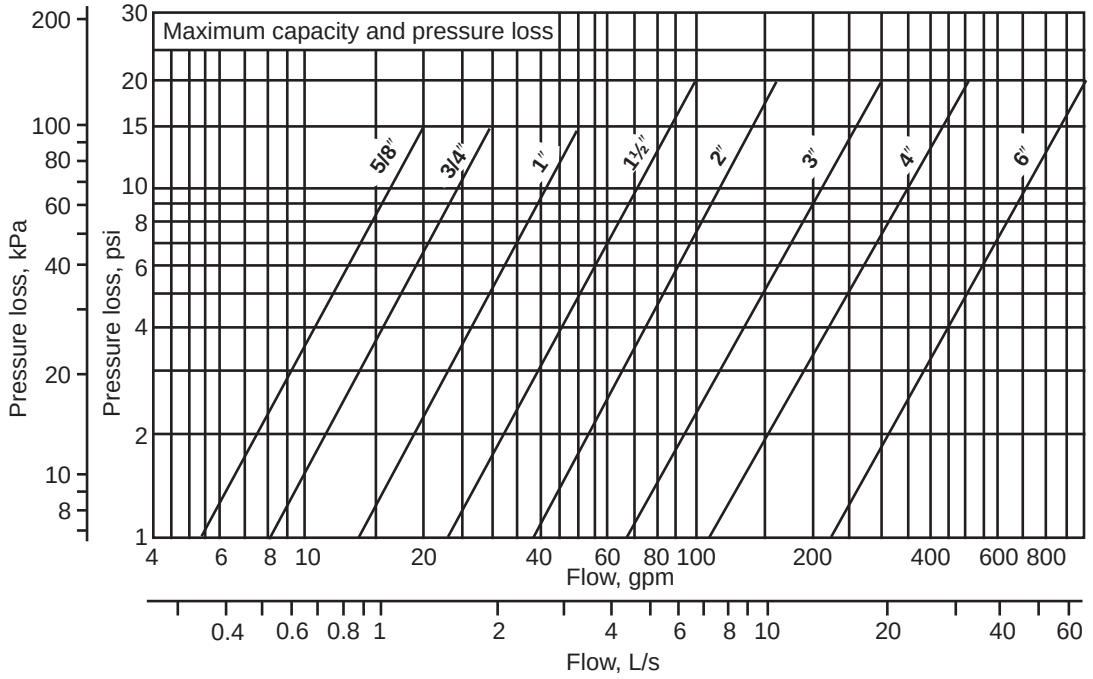

Figure 603.1(7)
FRICTION LOSS FOR DISPLACEMENT-TYPE WATER METERS
(Source: Standard Plumbing Engineering Design, Nielsen, L. 1982)

Pressure losses for all other components in the water service system, such as backflow prevention valves, strainers and filters, must be obtained from the manufacturers of those components.

A Method for Sizing a Water Service Pipe

The code does not dictate a method for determining water service pipe size. The following sample problem illustrates one method based upon engineering principles:

Sample Problem

Consider the water service system arrangement illustrated in Commentary Figure 603.1(1). This public building will have eight flush tank water closets and six lavatories. The public water main pressure ranges from 50 to 55 psi. The utility water service connector is $1^1/_4$-inch (32 mm) Type L copper and is 10 feet (3048 mm) long. The length of the Type L copper water service pipe will be 160 feet. The water meter pressure loss will be 3 psi. The backflow prevention valve pressure loss will be 2 psi. The three valves in the water service system are full-open ball valves. There are not any angle-type pipe fittings (elbows) in the water service system. The elevation difference is 20 feet (uphill). The flowing pressure required at the main water service valve must be not less than 25 psi. Determine the smallest water service pipe that can be used and the resulting flowing pressure available at the main water service valve just downstream of the water meter.

Solution

1. Determine the peak water demand for the building by summing the wsfu values for all the fixtures. From Table E103.3(2), a public flush tank water closet is 5 wsfu and a public lavatory is 2.0 wsfu. Therefore, the total wsfu is (8 × 5) + (6 × 2) = 52 wsfu. From Table E103.3(3), under "Predominantly Flush Tanks," the interpolated flow rate for 52 wsfu is approximately 30 gpm.
2. Determine the pressure change caused by elevation difference. Because the water must flow uphill to the outlet end of the water service system, there will be a pressure loss. The amount of pressure loss is:

   $P = 0.433 \times h$

   $P = 0.433 \times 20$ feet

   $P = 8.66$ psi

Because the water is flowing uphill, this pressure will be subtracted from the public water main pressure.

3. Determine the pressure loss caused by the tap on the water main. In Table E103.3(4), read down the left-hand column to find 30 gpm. Move across that row to the column for $1^1/_4$ inches (32 mm) and read a value of 0.69 psi as the pressure loss for the tap.
4. Determine the pressure loss through the utility water service connector. Using the friction loss

INTERNATIONAL CODE COUNCIL®
Copyright © 2015 ICC. ALL RIGHTS RESERVED. Accessed by David Dammon on Jun 21, 2017 12:30:52 PM pursuant to License Agreement with ICC. No further reproduction or distribution authorized. ANY UNAUTHORIZED REPRODUCTION OR DISTRIBUTION IS A VIOLATION OF THE FEDERAL COPYRIGHT ACT AND THE LICENSE AGREEMENT, AND SUBJECT TO CIVIL AND CRIMINAL PENALTIES THEREUNDER.

chart in Commentary Figure 603.1(8), find the point for 30 gpm on the vertical scale on the left side of the chart. Move horizontally to the right until intersecting the "$1^1/_4$-inch tube" size line. Note that the intersecting point is midway between the 10-feet-per-second and 5-feet-per-second velocity lines, indicating the pipe velocity is slightly less than 8 feet per second (which is below the limit according to good engineering practice). Move vertically down from the intersecting point to the horizontal axis and read a pressure drop of 7.5 psi per 100 feet (30 480 mm). The pressure loss for the 10-foot (3048 mm) length of utility water service connector is 7.5 psi × (10 feet/100 feet) = 0.75 psi.

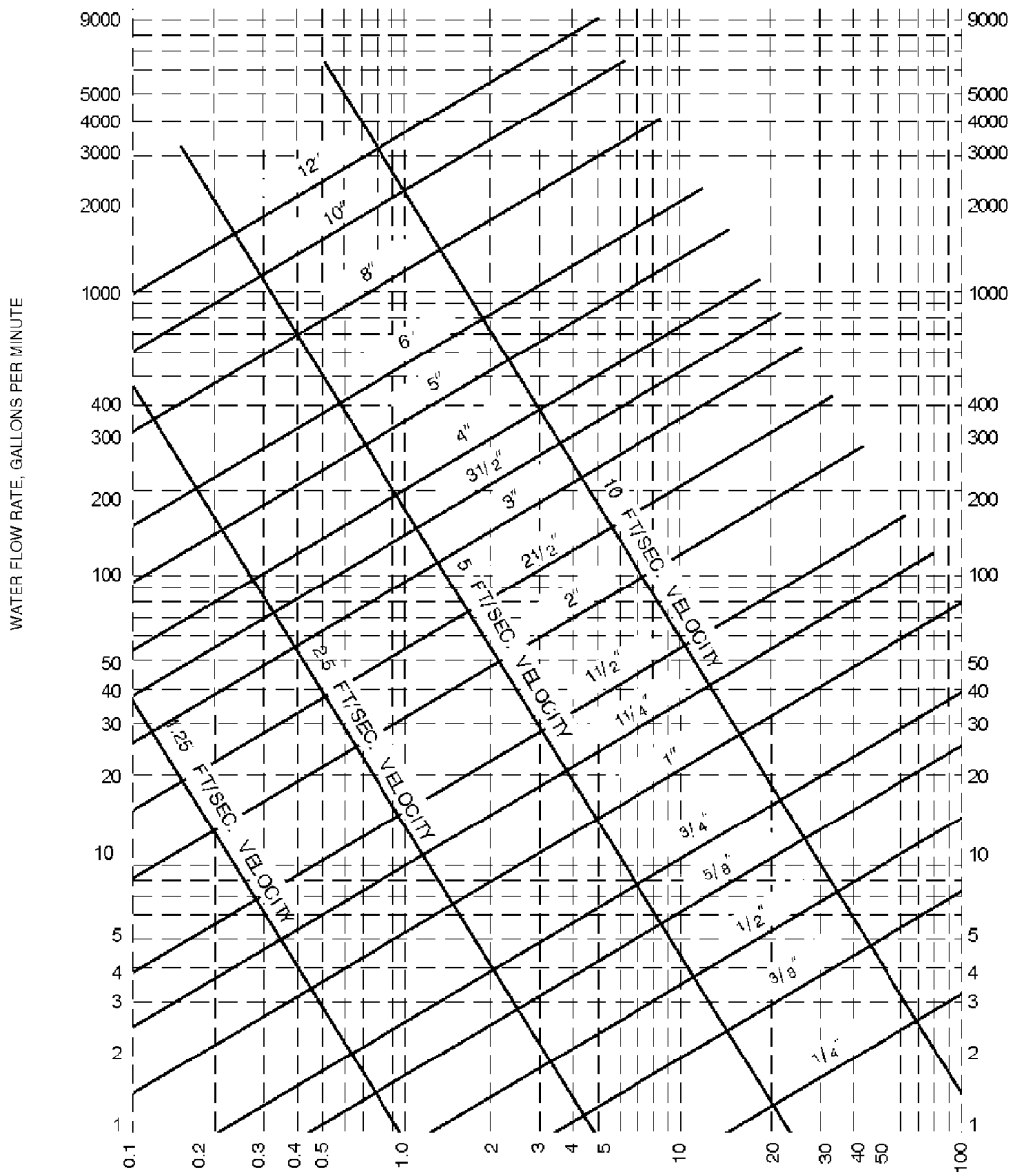

Note: Fluid velocities in excess of 5 to 8 feet/second are not usually recommended.

Figure 603.1(8)
FRICTION LOSS IN SMOOTH PIPE (Type L, ASTM B88 COPPER TUBING)

For SI: 1 inch = 25.4 mm, 1 foot = 304.8 mm, 1 gpm = 3.785 L/m, 1 psi = 6.895 kPa, 1 foot per second = 0.305 m/s.

a. This chart applies to smooth new copper tubing with recessed (streamline) soldered joints and to the actual sizes of types indicated on the diagram.

INTERNATIONAL CODE COUNCIL®
Copyright © 2015 ICC. ALL RIGHTS RESERVED. Accessed by David Dammon on Jun 21, 2017 12:30:52 PM pursuant to License Agreement with ICC. No further reproduction or distribution authorized. ANY UNAUTHORIZED REPRODUCTION OR DISTRIBUTION IS A VIOLATION OF THE FEDERAL COPYRIGHT ACT AND THE LICENSE AGREEMENT, AND SUBJECT TO CIVIL AND CRIMINAL PENALTIES THEREUNDER.

5. Choose a water service pipe size and determine the pressure loss through that pipe size. Using the friction loss chart in Commentary Figure 603.1(8), find the point for 30 gpm on the vertical scale on the left side of the chart. Move horizontally to the right until intersecting the $1^1/_4$-inch (32 mm) tube size line. Note that the intersecting point is midway between the 10-feet-per-second and 5- feet-per-second velocity lines, indicating the pipe velocity is slightly less than 8 feet per second (again, within the velocity limit according to good engineering practice). Move vertically down from the intersecting point to the horizontal axis to read a pressure drop of 7.5 psi per 100 feet. The pressure loss for the 160 foot length of water service pipe is 7.5 psi × (160 feet/100 feet) = 12 psi.
6. Determine pressure loss for the valves. In Table E103.3(6), enter the left-hand column to find the $1^1/_4$-inch (32 mm) tube size. Move across that row to the "Ball Valve" column and read a value of 0.5 feet equivalent length of tube (per valve). The pressure loss for the three valves is 7.5 psi × [(3 × 0.5 feet)/100 feet)] = 0.11 psi.
7. Determine the flowing pressure at the end of the water service system. Using the minimum pressure of 50 psi as the public water main pressure, subtract the following pressures: 8.66 (elevation), 0.69 (tap), 0.75 (utility connector pipe), 12.0 (water service pipe), 0.11 (three valves), 3 (water meter) and 2 (backflow prevention valve): 50 - (8.66 + 0.69 + 0.75 + 12 + 0.11 + 3 + 2) = 22.79 psi.

   NOTE: The resulting flowing pressure is less than the 25 psi required; therefore, the pressure drop in the water service system must be reduced to yield a greater flowing pressure. Choosing the next larger size of water service pipe could be a solution. The following check is performed to verify the size is adequate.
8. Choose a $1^1/_2$-inch (38 mm) water service pipe size and determine the pressure loss through the water service pipe. Using the friction loss chart in Commentary Figure 603.1(8), find the point for 30 gpm on the vertical scale on the left side of the chart. Move horizontally to the right until intersecting the $1^1/_2$-inch (38 mm) tube size line. Move vertically down from the intersecting point to the horizontal axis and read a pressure drop of 3.5 psi per 100 feet (30 480 mm). The pressure loss for the 160-foot length of $1^1/_4$-inch (32 mm) water service pipe is 3.5 psi × (160 feet/100 feet) = 5.6 psi. The revised flowing pressure is 50 - (8.66 + 0.69 + 0.75 + 5.6 + 0.11 + 3 + 2) = 29.19 psi. The design provides an acceptable amount of flowing pressure.

   NOTE: It is not necessary to increase the size of the valves, the water meter or backflow prevention valve because the calculation already includes the pressure losses for the initially chosen sizes of those components. In actual practice, the ball valves would most likely be increased to a $1^1/_2$-inch (38 mm) size for "connection convenience" to the $1^1/_2$-inch (38 mm) water service pipe. However, because water meters and backflow prevention valves are substantially more costly in larger sizes, the size of those components can remain at the $1^1/_4$-inch (32 mm) size as the system design is acceptable with those sizes.

For SI: 1 gallon per minute = 0.06309 L/s,
1 pound per square inch = 6.895 kPa,
1 foot per second = 0.3048 m/s,
1 inch = 25.4 mm, 1 foot = 304.8 mm.

Fire Sprinkler Systems

Fire sprinkler systems can impact the design of the water service system if the sprinkler system and the water distribution system share a single water service system. In most cases, the sprinkler system water demand will require the components of the water service system to be much larger than what is required by just the demand of the water distribution system alone. It is generally assumed that the sprinkler system and the water distribution system will not be operating simultaneously.

Minimum Size of the Water Service Pipe

The water service pipe must be not smaller than $^3/_4$-inch (19.1 mm) nominal pipe or tube size. Even though the water demand of a very small building might only need the flow that could be supplied from a smaller water supply pipe, the $^3/_4$-inch (19.1 mm) minimum size provides for a level of durability for installation handling and shifting/settling ground conditions. Table 605.3 lists the pipe materials that can be used for water service pipe.

603.2 Separation of water service and building sewer. Where water service piping is located in the same trench with the *building sewer*, such *sewer* shall be constructed of materials listed in Table 702.2. Where the *building sewer* piping is not constructed of materials listed in Table 702.2, the water service pipe and the *building sewer* shall be horizontally separated by not less than 5 feet (1524 mm) of undisturbed or compacted earth. The required separation distance shall not apply where a water service pipe crosses a *sewer* pipe, provided the water service is sleeved to a point not less than 5 feet (1524 mm) horizontally from the *sewer* pipe centerline on both sides of such crossing. The sleeve shall be of pipe materials listed in Table 605.3, 702.2 or 702.3. The required separation distance shall not apply where the bottom of the water service pipe, located within 5 feet (1524 mm) of the *sewer*, is not less than 12 inches (305 mm) above the highest point of the top of the *building sewer*.

❖ This section was completely reworded for the 2015 edition; however, the requirements were not changed.

INTERNATIONAL CODE COUNCIL®
Copyright © 2015 ICC. ALL RIGHTS RESERVED. Accessed by David Dammon on Jun 21, 2017 12:30:52 PM pursuant to License Agreement with ICC. No further reproduction or distribution authorized. ANY UNAUTHORIZED REPRODUCTION OR DISTRIBUTION IS A VIOLATION OF THE FEDERAL COPYRIGHT ACT AND THE LICENSE AGREEMENT, AND SUBJECT TO CIVIL AND CRIMINAL PENALTIES THEREUNDER.

The language in the previous editions was complex and seemed difficult to understand in an exception format.

The section begins with the most common method to install water service and sewer piping to a building: one trench is excavated and both water service and building sewer are installed in the same trench. In the majority of those situations, the building sewer is constructed of materials that are indicated in Table 702.2. Materials in that table are suitable for installation inside of a building (those materials also being indicated in Table 702.3 for building sewer piping). As Table 702.2 materials are more robust than the piping materials indicated only for building sewers, there is a low probability of sewage leaking from the building sewer.

The second sentence concerns building sewer piping that is of a material not indicated in Table 702.2. In other words, it is indicated only in Table 702.3. These piping materials are not as robust as those indicated in Table 702.2 and could leak sewage into the ground. Water service piping cannot be located in the same trench as these types of building sewer materials. Independent trenches must be excavated for the water service line and the building sewer so that not less than 5 feet of undisturbed earth are between the trenches. Compacted earth is considered to be the same as undisturbed earth.

The third sentence addresses the situation of a water service pipe crossing (either above or below) a building sewer that is of piping materials indicated only in Table 702.3. (Although the code doesn't directly state that the building sewer piping material referred to in this sentence is only one of those indicated in Table 702.3, it should be obvious because if the building sewer was of materials indicated in Table 702.2, the water service piping could be in the same trench or anywhere around a building sewer of a material indicated in Table 702.2.) The water service piping has to be sleeved for a length of not less than 5 feet on either side of the building sewer so that if the building sewer did leak sewage into the earth, the water service piping is not directly exposed. The sleeve material can be any of the materials indicated in Table 605.3, 702.2 or 702.3.

The last sentence concerns water service piping that is at an elevation that is not less than 12 inches above the highest part of the building sewer (where that sewer is of materials indicated only in Table 702.2). If sewage leaks from a building sewer, gravity will cause the sewage to seep downwards into the earth and not upwards. Therefore, if the water service piping is above the highest part of the building sewer, there is little probability of sewage contamination of the earth around the water service piping [see Commentary Figures 603.2(1) and 603.2(2)].

603.2.1 Water service near sources of pollution. Potable water service pipes shall not be located in, under or above cesspools, septic tanks, septic tank drainage fields or seepage pits (see Section 605.1 for soil and ground water conditions).

❖ Because private sewage disposal systems such as septic tanks, soil absorption systems (drainage fields) and cesspools rely on the infiltration of waste water into the soil as a method of treatment, locating a water service pipe in the area of these systems is prohibited. Commentary Figure 603.2.1 references the minimum horizontal separation distances between water source elements and components of soil absorption systems found in Sections 406 and 802 of the *International Private Sewage Disposal Code*® (IPSDC®).

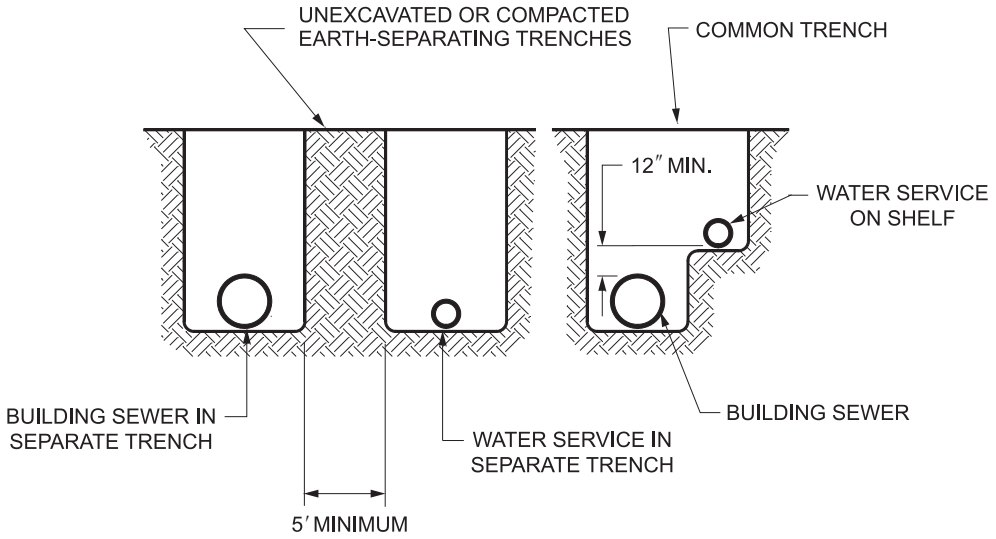

For SI: 1 inch = 25.4 mm, 1 foot = 304.8 mm.

Figure 603.2(1)
SEPARATION OF WATER SERVICE AND BUILDING SEWER

INTERNATIONAL CODE COUNCIL®
Copyright © 2015 ICC. ALL RIGHTS RESERVED. Accessed by David Dammon on Jun 21, 2017 12:30:52 PM pursuant to License Agreement with ICC. No further reproduction or distribution authorized. ANY UNAUTHORIZED REPRODUCTION OR DISTRIBUTION IS A VIOLATION OF THE FEDERAL COPYRIGHT ACT AND THE LICENSE AGREEMENT, AND SUBJECT TO CIVIL AND CRIMINAL PENALTIES THEREUNDER.

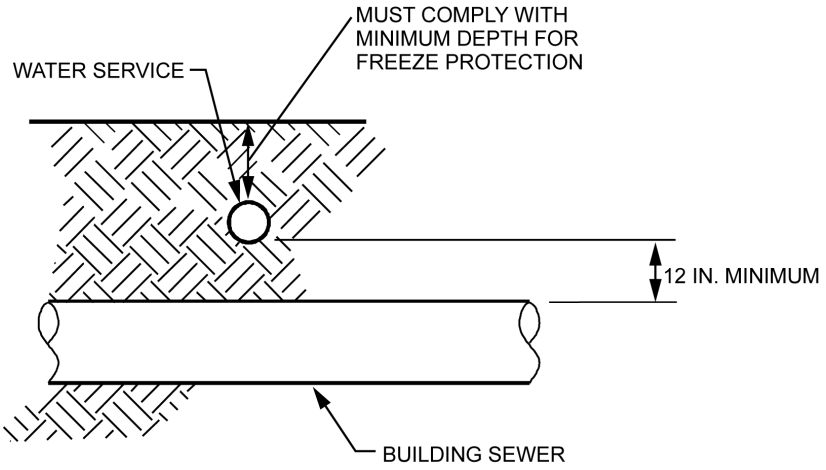

For SI: 1 inch = 25.4 mm.

Figure 603.2(2)
WATER SERVICE CROSSING OVER BUILDING SEWER

ELEMENT	ABSORPTION FIELD	SEPTIC OR TREATMENT TANK
	DISTANCE (feet)	
Cistern	50	25
Lot line	5	2
Spring	100	50
Water main	50	—[a]
Water service	10	5
Water well	50	25

For SI: 1 foot = 304.8 mm.

a. No limitation is listed in Table 802.8 of the IPSDC.

Figure 603.2.1
MINIMUM HORIZONTAL SEPARATION DISTANCES BETWEEN WATER SOURCE ELEMENTS AND SOIL ABSORPTION SYSTEM COMPONENTS

SECTION 604
DESIGN OF BUILDING WATER DISTRIBUTION SYSTEM

604.1 General. The design of the water distribution system shall conform to *accepted engineering practice*. Methods utilized to determine pipe sizes shall be *approved*.

❖ The water distribution system is the piping system within a building that conveys water from the main water service valve (at the termination of the water service system) to the connection points of plumbing fixtures and plumbing appliances. The sizes of the pipes in the water distribution system must be large enough to supply a sufficient volume of water at adequate pressure to allow the fixtures and equipment to properly function when operated during the period of peak water demand of the system.

There are many methods that can be used to determine pipe sizes for a water distribution system. The only code requirements concerning the method used are that: 1) the method is an accepted engineering practice and 2) the code official approves the method.

Sizing Individual Fixture Supply Pipes

Most water distribution pipe sizing methods are intended to be used for the sizing of only the branches, risers and mains of a system. The sizes of individual fixture supply pipes are determined from Table 604.5, unless the actual fixture requires larger pipe connections. For example, some designs of shower mixing valves have $^3/_4$-inch (19.1 mm) connections and, therefore, would require fixture supply pipes of $^3/_4$-inch (19.1 mm) and not the minimum size of $^1/_2$ inch (12.7 mm) indicated in the table. A basic assumption about the indicated pipe sizes in Table 604.5 is that the fixtures are within close proximity to the branches, risers and mains. For example, the length of fixture supply pipes should be limited to making the connection to a branch supply pipe that is either just below the floor or just above the ceiling for where the fixture is located.

Where a fixture is significantly remote from the branch supply pipe, the fixture supply pipe might have to be larger than the minimum size in order to provide adequate flow and pressure at the fixture. For example, a service sink could be located 150 feet (equivalent length) from a branch supply pipe. The minimum size fixture supply pipe, $^1/_2$ inch (12.7 mm), flowing 5 gpm, will have a pressure loss of 27 psi at the fixture end of the pipe. If the pressure in the branch, riser or main where the fixture pipe begins is low, then it is quite possible that a “no flow/low flow” condition could occur at the remote service sink. Pressure loss calcu-

INTERNATIONAL CODE COUNCIL®
Copyright © 2015 ICC. ALL RIGHTS RESERVED. Accessed by David Dammon on Jun 21, 2017 12:30:52 PM pursuant to License Agreement with ICC. No further reproduction or distribution authorized. ANY UNAUTHORIZED REPRODUCTION OR DISTRIBUTION IS A VIOLATION OF THE FEDERAL COPYRIGHT ACT AND THE LICENSE AGREEMENT, AND SUBJECT TO CIVIL AND CRIMINAL PENALTIES THEREUNDER.

lations should be performed to determine if a larger fixture supply pipe is necessary for remotely located fixtures.

Section C404.5.1 is newly added for the 2015 edition of the *International Energy Conservation Code.* The section requires that the size of hot (or tempered) water piping be limited, depending on the type of fixture being served, and the length of the piping be limited from the source of hot water. As the I-Codes are a family of integrated codes, these IECC requirements impact the design of the hot (or tempered) water distribution system. Section C404.5.1 was added to the IECC because of the (negative) energy implications of users not receiving hot (or tempered) water at fixtures in an amount of time that is considered reasonable. The simple explanation is the following. A user turns on a fixture in an attempt to receive hot (or tempered) water. The hot (or tempered) water starts moving from the hot (or tempered) water source towards the fixture. However, the user becomes impatient and doesn't wait long enough for the hot (or tempered) water to arrive and gives up. Some amount of time elapses and then the next user does the same thing. Between each event, when there is no flow, the water in the piping cools down. These events occur many, many times a day in many, many buildings. The result is that the energy to heat the water is "wasted" because it never arrives at the point of use. Moving the source of hot water closer to the fixtures is only a partial solution. IPC Section 607.2 requires that the source of water be not more than 50 feet (15 240 mm) of developed piping length away from the fixture. However, if the piping is large diameter and the flow from a single fixture is small, the result is the same: the hot (or tempered) water never reaches the fixture because the user gives up waiting. Certainly, there is a frustration factor for some users. For the users who are willing to wait or have no choice but to wait (as they might be attempting to shower), potable water is flowing down the drain. This is a related negative impact that is especially critical in regions where raw water supplies are dwindling. Also consider that if the pipe diameter is large and the user does wait for hot (or tempered) water to arrive, the entire length of large diameter piping has been filled with heated water, only to cool down until the next user arrives. In other words, large quantities of water are being heated, only to have that energy wasted by cooling when water is not being used.

Other than the requirement in Section 607.2, the code was silent concerning this very real energy problem. Therefore, IECC Section C404.5.1 provides the framework for designing hot (or tempered) water distribution systems that will be energy efficient and also save potable water.

IECC Section C404.5.1 classifies hot (or tempered) water use locations into two types: 1) public lavatories, and 2) all other fixtures and appliances. Public lavatories are in a separate category because these fixtures are required (see IPC Table 604.4) to have a very low flow rate (0.5 gpm). In IECC Table C404.5.1, for a public lavatory, the fixture supply pipe length from the source of tempered water to the lavatory is very short, for example, 2 feet (609 mm) of $^1/_2$-inch (12.7 mm) pipe. However, this table also introduces piping sizes that are smaller than $^1/_2$ inch (12.7 mm) in order to have more design flexibility for where the source of hot (or tempered) water can be located in relationship to the fixtures. The smaller pipe sizes might seem to be in conflict with the minimum fixture supply pipe sizes indicated in IPC Table 604.5. As the commentary for that table states, there are two purposes for the minimum pipe sizes: 1) to make the connections for shutoff valves (stops) of a consistent size and 2) to provide the designer with the latitude to not have to include the fixture supply piping in the pressure loss calculations for water distribution systems (provided that the fixtures are within close proximity to the branches, risers and mains). The designer's problem is that he/she doesn't really know how that last leg of the distribution system (the fixture supply pipe) will need to be routed. The sizes of the pipes in Table 604.5 are more than ample for any one fixture, providing that the piping lengths are relatively short. In other words, the designer need not be concerned about pressure losses in those short runs of piping.

However, the application of IECC Table C404.5.1 will make it necessary for the designer to scrutinize the pressure losses in hot (or tempered) water fixture supply pipes that are smaller than indicated in IPC Table 604.5. Although the designer may not have any more knowledge about the routing of the fixture supply pipe, decisions will need to be made about the where the source of hot water needs to located with respect to each fixture, the size of the fixture supply pipe (and the pressure loss in that pipe) and how that might impact the sizes of piping in the entire water distribution system. Does this mean that a smaller-than-normal required size of the hot water fixture supply pipe at its termination should violate the intent of IPC Table 604.5 to provide for consistency of size for connection (stop valve) purposes? Not currently, because there doesn't appear to be available hardware (stop valves) for piping (or tubing) for some of the smaller sizes, depending on the type of pipe or tubing material. Until the market responds with appropriate hardware for smaller pipe or tubing sizes, there will need to be a "conversion" or "adapter" fitting before the fixture supply pipe termination point so that currently available hardware can be utilized. And if appropriate hardware does become available, technically, the designer should submit this reduced-size fixture pipe termination hardware as an alternate method under Section 105.2 to receive approval from the code official.

The code is silent about the impact that smaller hot (or tempered) fixture supply pipes could have on the operation of the fixture that has "normal" (perhaps oversized) cold water fixture supply pipes. In other words, if the flowing pressures (of cold and hot water) at the fixture are significantly different, could there be

INTERNATIONAL CODE COUNCIL®
Copyright © 2015 ICC. ALL RIGHTS RESERVED. Accessed by David Dammon on Jun 21, 2017 12:30:52 PM pursuant to License Agreement with ICC. No further reproduction or distribution authorized. ANY UNAUTHORIZED REPRODUCTION OR DISTRIBUTION IS A VIOLATION OF THE FEDERAL COPYRIGHT ACT AND THE LICENSE AGREEMENT, AND SUBJECT TO CIVIL AND CRIMINAL PENALTIES THEREUNDER.

operational problems with the fixture? The design professional will need to explore this topic and adjust the design of the water distribution system accordingly.

The following methods for sizing water distribution piping systems do not address the sizing of hot (or tempered) water piping in relationship to the requirements of IECC Section C404.5.1. These methods are only for understanding of general concepts and are not mandated or suggested by the code. The presentation of these methods is not an indication that a code official would or should approve these methods. The plumbing design industry uses many alternative methods. The design professional is responsible for using his or her expertise and experience to choose an appropriate method for a specific application, client and jurisdiction.

A Method for Pipe Sizing by Maximum Allowable Flow Velocity (Method No. 1)

This method for pipe sizing is generally adequate for limited area, "compact" buildings, three stories or fewer in height with the longest piping run not exceeding 150 feet equivalent length from the main water service valve where the residual flowing pressure (for overcoming pipe friction losses) is greater than 20 psi. The resulting short piping lengths in a "compact," "low-rise" building and the relatively high available flowing pressure allows the designer the freedom to ignore pipe friction losses, thus simplifying the calculations to obtain pipe sizes.

Residual flowing pressure is determined by subtracting elevation pressure loss and the largest minimum fixture flow pressure (from Table 604.3) from the amount of flowing pressure available at the main water service valve. For example, a flush tank water closet requires a flow pressure of 20 psi. If the highest fixture in the water distribution system is 25 feet above the main water service valve, then the elevation pressure loss will be 25 feet × 0.433 psi/foot = 10.8 psi. If the flowing pressure available at the main water service valve is 60 psi, then the residual flowing pressure available (to overcome pipe friction losses) will be 60 - 20 - 10.8 = 29.2 psi.

To begin the sizing process, a schematic of the water distribution system is drawn, showing each of the fixtures with the hot and cold wsfu values. Starting at the most remote fixtures and working back towards the main water service valve, sum the individual hot and cold wsfu values along the branches, risers and mains. Stop the summation of cold and hot water wsfus where the cold water supply for the water heater connects to the cold water distribution piping. Sum the combined wsfu values for all fixtures in the system and, starting at the main water service valve and working towards where the cold water supply for the water heater connects to the cold water distribution piping, subtract cold wsfu values until reaching the cold water pipe connection going to the water heater. Using Table E103.3(3), convert all branch, riser and main wsfu values to gpm values.

Choose the type of pipe to be used and determine the maximum allowable velocity for that pipe material from Commentary Figure 604.1(1) or other reliable sources, such as piping manufacturers. Using the inside diameters of the type of pipe selected, calculate the maximum allowable flow rates for the pipe sizes that are required for the project. The following equation (an adapted version of the basic flow formula, $Q = A \times V$) is used to calculate the maximum allowable flow rate in gpm for a given inside pipe diameter and maximum allowable flow velocity:

$$q = 2.448\, d^2\, v$$

where,

q = Flow, gpm.

d = Inside pipe diameter, inches.

v = Flow velocity, feet per second.

Using the "gpm flow rates" for the branches, risers and mains of the system, assign pipe sizes based upon the maximum allowable flow rates for each pipe size. Review the completed schematic and adjust pipe sizes based upon experience.

Sample Problem 1

Commentary Figure 604.1(2) shows a schematic for a public occupancy building of three floors having identical fixtures on each floor (letters have been added to the diagram for commentary discussion purposes). The water closets are flush-tank type. Hot and cold wsfu values for each fixture were determined from

MATERIAL	PIPE OR TUBE SIZE (inches)	MAXIMUM VELOCITY (feet per second)
All pipe and tube material	1/2 and smaller	5
Brass pipe	5/8 and larger	8
Copper or copper-alloy pipe and tubing (hot water systems)	5/8 and larger	5
Copper or copper-alloy pipe and tubing (cold water systems)	5/8 and larger	8
Chlorinated polyvinyl (CPVC) plastic pipe	5/8 - 1 1 1/4 and larger	8 10
Cross-linked polyethylene (PEX) plastic tubing	5/8 and larger	8
Cross-linked polyethylene/ aluminum/cross-linked polyethylene (PEX-AL-PEX) pipe	5/8 and larger	8
Galvanized steel pipe	5/8 - 1 2 - 4 4 and larger	8 10 12
PE-AL-PE	5/8 and larger	8

For SI: 1 inch = 25.4 mm, 1 foot per second = 0.3048 m/s.

Figure 604.1(1)
MAXIMUM FLOW VELOCITY FOR VARIOUS PIPE

INTERNATIONAL CODE COUNCIL®
Copyright © 2015 ICC. ALL RIGHTS RESERVED. Accessed by David Dammon on Jun 21, 2017 12:30:52 PM pursuant to License Agreement with ICC. No further reproduction or distribution authorized. ANY UNAUTHORIZED REPRODUCTION OR DISTRIBUTION IS A VIOLATION OF THE FEDERAL COPYRIGHT ACT AND THE LICENSE AGREEMENT, AND SUBJECT TO CIVIL AND CRIMINAL PENALTIES THEREUNDER.

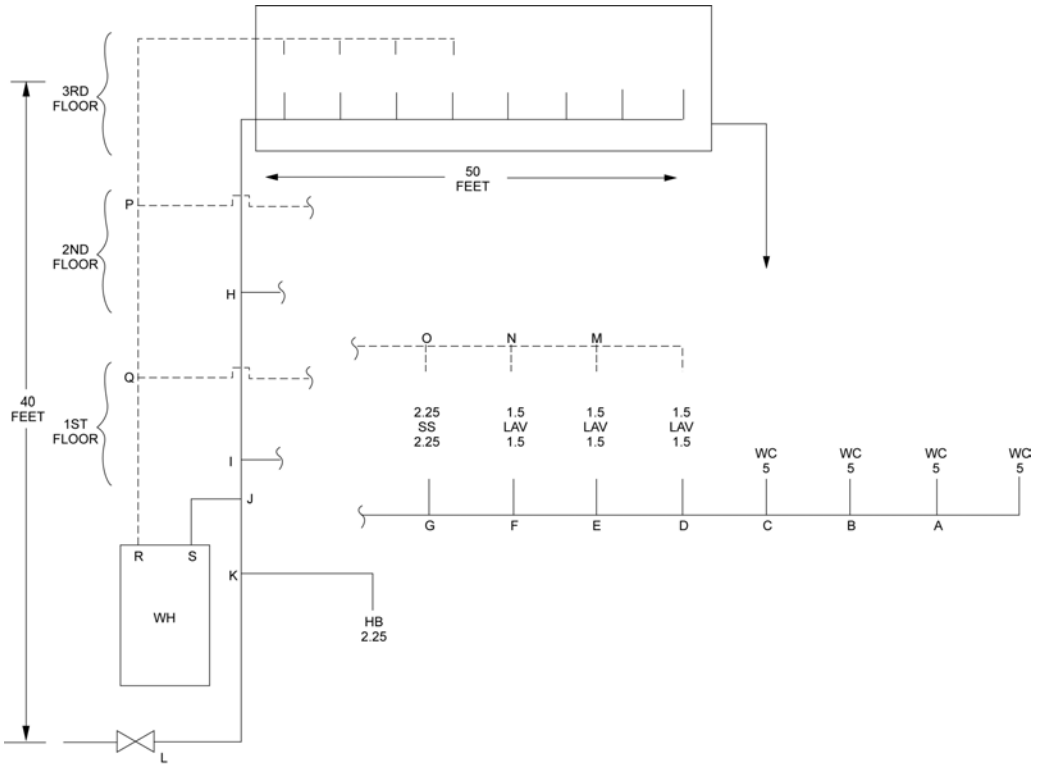

For SI: 1 foot = 304.8 mm.

Figure 604.1(2)
WATER SYSTEM SCHEMATIC, THREE-STORY COMPACT BUILDING

Table E103.3(2) and are noted on the diagram. The wsfu value for the hose bibb is assumed to be equivalent to cold wsfu value for a service sink. Type L copper piping will be used for the project. The water service system was designed to provide a flowing pressure of 60 psi at the main water service valve under conditions of peak water demand (89.25 wsfu, which is the sum of the combined wsfu values for all fixtures on the diagram).

Solution

Does the problem meet the criteria to use pipe sizing Method No. 1? Total equivalent length = (40 + 50) + (90 × 0.5) = 135 feet. Because this is less than 150 feet equivalent length, the first of the criteria for using Method No. 1 is satisfied. Is the residual flowing pressure available 20 psi or greater? The elevation pressure loss is (40 × 0.433) = 17.3 psi. The highest flowing pressure required by fixtures (from Table 604.3) is the water closet at 20 psi. Therefore, the residual flowing pressure available is 60 - 17.3 - 20 = 22.7 psi. Because this value exceeds 20 psi, the second criteria for using Method No. 1 is satisfied.

For Type L copper piping, the maximum allowable flow velocity [from Commentary Figure 604.1(1)] for cold water is 5 feet per second for $^1/_2$ inch (12.7 mm) and smaller and 8 feet per second for $^5/_8$ inch (15.9 mm) and larger. For hot water, the maximum allowable flow velocity is 5 feet per second. The maximum allowable flows for each pipe size are:

$^1/_2$ inch (ID = 0.545 inches) → $q = 2.448 (0.545^2)(5) = 3.6$ gpm cold and hot

$^3/_4$ inch (ID = 0.785 inches) → $q = 2.448 (0.785^2)(8) = 12$ gpm cold; 7.5 gpm hot

1 inch (ID = 1.025 inches) → $q = 2.448 (1.025^2)(8) = 20.6$ gpm cold; 12.9 gpm hot

$1^1/_4$ inch (ID = 1.265 inches) → $q = 2.448 (1.265^2)(8) = 31.3$ gpm cold; 19.6 gpm hot

$1^1/_2$ inch (ID = 1.505 inches) → $q = 2.448 (1.505^2)(8) = 44.4$ gpm cold; 27.8 gpm hot

2 inch (ID = 1.985 inches) → $q = 2.448 (1.985^2)(8) = 77.2$ gpm cold; 48.3 gpm hot

$2^1/_2$ inch (ID = 2.465 inches) → $2.448 (2.465^2)(8) = 118$ gpm cold; 73.8 gpm hot

Working back towards the water heater's cold water inlet connection to the cold water distribution system, sum the wsfu values for each branch, riser and main pipe section. Using Table E103.3(3), convert branch, riser and main pipe section wsfu values to gpm. Commentary Figure 604.1(3) shows the values determined and the pipe sizes assigned.

INTERNATIONAL CODE COUNCIL®
Copyright © 2015 ICC. ALL RIGHTS RESERVED. Accessed by David Dammon on Jun 21, 2017 12:30:52 PM pursuant to License Agreement with ICC. No further reproduction or distribution authorized. ANY UNAUTHORIZED REPRODUCTION OR DISTRIBUTION IS A VIOLATION OF THE FEDERAL COPYRIGHT ACT AND THE LICENSE AGREEMENT, AND SUBJECT TO CIVIL AND CRIMINAL PENALTIES THEREUNDER.

SECTION	WSFU	GPM	PIPE SIZE
A-B	10	14.6	1
B-C	15	17.5	1
C-D	20	19.6	1
D-E	21.5	20.2	1
E-F	23	20.7	1
F-G	24.5	21.3	1.25
G-H	26.75	22.1	1.25
H-I	52.5	29.9	1.25
I-J	79	37.7	1.5
M-N	3	6.5	.75
N-O	4.5	8.7	1
O-P	6.75	11.5	1
P-Q	13.5	16.8	1.25
Q-R	20.25	19.7	1.5
S-J	20.25	19.7	1
L-K	89.25	40.8	1.5
K-J	87	40.1	1.5

Figure 604.1(3)
SOLUTION FOR SAMPLE PROBLEM 1

Note that the sum of the wsfu values for I-J plus S-J (99.25) is greater than the wsfu value for Section J-K (87). This discrepancy will always exist because the sum of all of the individual hot and cold wsfu values will always be greater than the sum of the combined wsfu values for all the fixtures. However, once the wsfu values are converted to gpm values (43.3 and 40.1, respectively), the small difference in gpm will rarely require section I-J pipe size to be larger than Section J-K. In cases where there is a difference in pipe size, it should be intuitive that the pipe size for Section I-J does not need to be larger than Section J-K pipe size.

The size of individual fixture supply pipes can be as small as indicated in Table 604.5; however, common practice is to size most of the fixture supply pipes requiring fixture stop valves as $^1/_2$ inch (12.7 mm) in order to make it easier to install commonly available $^1/_2$-inch (12.7 mm) connection stop valves. Obviously, if the fixture supply pipe is required to be larger than $^1/_2$-inch (12.7 mm) pipe size (because of a large size fixture or faucet connection), fixture shutoff valves, where required, should be at least the same nominal size as the fixture supply pipe. For example, if a shower valve requires $^3/_4$-inch (19.1 mm) supply pipes, the fixture shutoff valves, where required, should be $^3/_4$-inch (19.1 mm) nominal size.

A Method for Pipe Sizing by Segment Friction Loss (Method No. 2)

This method for pipe sizing is generally adequate for buildings that are three stories or less in height, with piping runs of lengths over 150 feet or residual pressure less than 20 psi, or both. The reason why this method is limited to "low-rise" buildings is that as the water distribution system becomes taller than three stories, there can be problems with pressure availability at the highest fixtures during peak demand flow.

This method requires that the designer calculate a friction loss for each pipe segment of the water distribution system. The friction losses for each segment of pipe are summed and compared to the available flowing pressure for overcoming friction loss. If the sum of segment friction losses is larger than the available flowing pressure, the designer adjusts the pipe sizes to be larger so that the sum of the segment friction losses is less than the available flowing pressure. If the sum of the friction losses is significantly smaller than the available flowing pressure, the designer can decrease some pipe sizes to "use up" more flowing pressure.

Because of the number of calculations necessary for using this method, a computer spreadsheet is often the easiest way to perform the calculations and track the results. The design of smaller systems using this method can be accomplished by hand calculations and worksheet tabular forms; however, as trial and error calculation is always necessary and the potential for error is great, a spreadsheet is recommended.

Sample Problem 2

Consider the water distribution system for a 16-unit, single-story, extended-stay motel illustrated in Commentary Figure 604.1(4). The flowing pressure available at the main water service valve is 35 psi at the peak water demand flow of 91.2 wsfu. The highest plumbing fixture, a shower mixing valve, is 6 feet above the main water service valve elevation and requires a flow pressure of 20 psi. The pipe material is chosen to be Type L copper (flow velocity required to be 8 feet per second or less for cold and 5 feet per second or less for hot). What are the minimum pipe sizes for each pipe segment in the system?

Solution

The residual flowing pressure available to overcome pipe friction losses is 35 psi - (6 feet $\times$ 0.433 psi/foot) - 20 psi = 12.4 psi. A spreadsheet is developed for the cold side of the system [see Commentary Figure 604.1(5)].

Column B indicates the pipe section designation and Column C indicates the length of the pipe section in feet. Column D is the wsfu value for the segment of pipe. These values were obtained by starting at the most remote fixture connection points and working back towards Point Q, summing the wsfu demand of each apartment. The wsfu value for Section S-Q is the same as required at Point S.

Column E values will be obtained by using Table E103.3(3) to convert wsfu to gpm (interpolating as necessary). Column F will be the pipe size, in inches, that the designer chooses for the section. Column G will be the inside diameter, in inches, of the pipe chosen. Column H computes the velocity, *V,* in the pipe, in

INTERNATIONAL CODE COUNCIL®
Copyright © 2015 ICC. ALL RIGHTS RESERVED. Accessed by David Dammon on Jun 21, 2017 12:30:52 PM pursuant to License Agreement with ICC. No further reproduction or distribution authorized. ANY UNAUTHORIZED REPRODUCTION OR DISTRIBUTION IS A VIOLATION OF THE FEDERAL COPYRIGHT ACT AND THE LICENSE AGREEMENT, AND SUBJECT TO CIVIL AND CRIMINAL PENALTIES THEREUNDER.

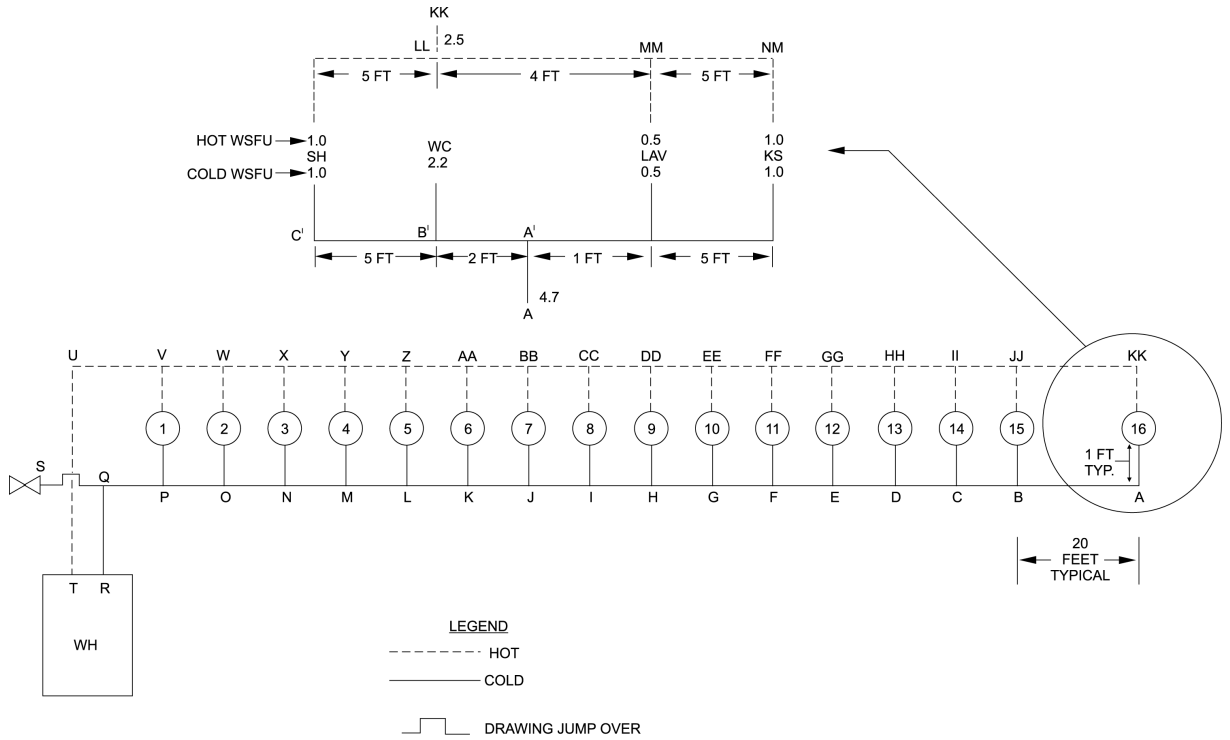

For SI: 1 foot = 304.8 mm.

Figure 604.1(4)
WATER SYSTEM SCHEMATIC, SINGLE-STORY, 16-UNIT MOTEL

feet per second, using the equation V = Column E/[2.448 (Column G)^2]. Column I is the equivalent length of fittings, in feet, that the designer inputs using Table E103.3(6) as a guide. Column J is the sum of the value in Column C and the value in Column J. Column K is the computation of loss, in psi, using a variation of the Hazen-Williams formula: Column K = Column J × 4.52 × (Column E)$^{1.85}$/[(150)$^{1.85}$ × (Column G)$^{4.8655}$]. Commentary Figure 604.1(6) shows the completed spreadsheet. The value at K21 is the sum of the pressure losses of all segments. This value must be less than the previously calculated residual flowing pressure of 12.4 psi.

Discussion

Initial selection of pipe sizes for each section begins with choosing pipe sizes that result in pipe velocities less than 8 fps. Fitting equivalent lengths (Column I) can be arbitrarily chosen as 1 foot (304.8 mm) in order to obtain a rough estimate of the actual pressure loss in the pipe section. The pipe sizes for each section are changed in a logical manner to result in a total pressure loss (the value at K21) that is less than the residual flowing pressure available. With the pipe sizes tentatively chosen, fitting equivalent lengths are adjusted based upon the tentative pipe sizes and the actual fittings used in each section. For example, Section S-Q flows into Section Q-P through a straight run of a tee fitting. From Table E103.3(6), for a 2-inch (51 mm) tube size, the equivalent length through a straight run of a tee is 0.5 feet. To be conservative, a value of 1 was used. In another example, Section B-A flows through a 90-degree elbow and from Table E103.3(6), for a $1^1/_2$-inch (38 mm) tube size, the fitting equivalent length is 4 feet. If, after adjusting the fitting equivalent lengths, the total pressure loss exceeds the residual flowing pressure, one or more pipe sections will have to be increased in size to lower the total pressure loss. Fitting equivalent lengths are adjusted for the revised pipe sizes and the total pressure loss is compared to the residual flowing pressure loss. The process continues until the designer is satisfied with the design.

Could some pipe sections be smaller to "use up" the entire 12.4 psi of residual flowing pressure? Perhaps, but doing so would be based upon the designer's experience and his or her confidence in the project information at hand. While there is a tendency to focus on determining the smallest possible pipe size for each section, doing so might ignore the labor efficiencies of using fewer sizes of pipe and requiring fewer "set up" changes to work with smaller pipe. Again, designer experience is necessary to make educated decisions concerning pipe sizes versus installation costs.

INTERNATIONAL CODE COUNCIL®
Copyright © 2015 ICC. ALL RIGHTS RESERVED. Accessed by David Dammon on Jun 21, 2017 12:30:52 PM pursuant to License Agreement with ICC. No further reproduction or distribution authorized. ANY UNAUTHORIZED REPRODUCTION OR DISTRIBUTION IS A VIOLATION OF THE FEDERAL COPYRIGHT ACT AND THE LICENSE AGREEMENT, AND SUBJECT TO CIVIL AND CRIMINAL PENALTIES THEREUNDER.

A	B	C	D	E	F	G	H	I	J	K
	COLD SECTION	LENGTH (feet)	WSFU	FLOW (gpm)	PIPE SIZE (inches)	PIPE INSIDE DIAMETER (inches)	VELOCITY (feet per second)	FTG LENGTH (feet)	TTL EQ LENGTH (feet)	LOSS (psi)
1	S-Q	20	91.2							
2	Q-P	20	75.2							
3	P-0	20	70.5							
4	O-N	20	65.8							
5	N-M	20	61.1							
6	M-L	20	56.4							
7	L-K	20	51.7							
8	K-J	20	47							
9	J-I	20	42.3							
10	I-H	20	37.6							
11	H-G	20	32.9							
12	G-F	20	28.2							
13	F-E	20	23.5							
14	E-D	20	18.8							
15	D-C	20	14.1							
16	C-B	20	9.4							
17	B-A	20	4.7							
18	A-A'	1	4.7							
19	A'-B'	2	3.2							
20	B'-C'	5	1							
21										

Figure 604.1(5)
SPREADSHEET SETUP FOR SAMPLE PROBLEM 2

To complete the design of the 16-unit, single-story, extended-stay motel, Commentary Figure 604.1(7) shows the completed spreadsheet for the hot side. Note that the flow velocity for all hot water pipes is kept below 5 fps in accordance with Commentary Figure 604.1(1).

Designing the hot side piping system follows the same process as was used for the cold side. Note the fitting lengths for Sections Q-R and T-U. Four 90-degree (1.57 rad) elbows have been anticipated (each 4 feet (1219 mm) in equivalent length), as heat trap piping arrangements are typically required for the inlet and outlet of large storage tank water heaters. Note the fitting length for Section R-T. As it is known that the water heater causes some pressure loss, the designer estimated this resistance to be equivalent to four 90-degree (1.57 rad) elbows and 5 feet (1524 mm) of (internal water heater dip tube) pipe.

A Method for Pipe Sizing by Uniform Friction Loss (Method No. 3)

This method can generally be used for any size building with any available supply pressure. The designer calculates friction losses [per 100 feet (30 480 mm)] for all pipe segments of a "basic design circuit" and compares those friction losses to a maximum allowable uniform friction loss for a basic design circuit. (The basic design circuit is the piping route from the main water service valve to the most remote fixture having the greatest demand at the highest elevation.) Pipe sizes are chosen based upon the maximum allowable velocity or maximum allowable friction loss [per 100 feet (30 480 mm)], whichever is smaller.

Sample Problem 3

Consider the cold water piping of a water distribution system for an apartment building of eight floors having 12 apartments on each floor. Each apartment has one bathroom group (flush tank water closet), a tankless water heater and a kitchen sink [see Commentary Figure 604.1(8)]. The wsfu values noted on the figure for each fixture and bathroom group are from Table E103.3(2). The piping will be Type L copper tube. The most remote fixture with the highest pressure requirement is the shower (20 psi minimum pressure required) on the eighth floor at the end of the branch run. The flowing pressure available at the main water

INTERNATIONAL CODE COUNCIL®
Copyright © 2015 ICC. ALL RIGHTS RESERVED. Accessed by David Dammon on Jun 21, 2017 12:30:52 PM pursuant to License Agreement with ICC. No further reproduction or distribution authorized. ANY UNAUTHORIZED REPRODUCTION OR DISTRIBUTION IS A VIOLATION OF THE FEDERAL COPYRIGHT ACT AND THE LICENSE AGREEMENT, AND SUBJECT TO CIVIL AND CRIMINAL PENALTIES THEREUNDER.

A	B	C	D	E	F	G	H	I	J	K
	COLD SECTION	LENGTH (inches)	WSFU	GPM	PIPE SIZE	PIPE ID	VELOCITY	FTG LGTH	TTL EQ LENGTH	LOSS
1	S-Q	20	91.2	64.7	2.00	1.985	6.7	1	21	0.7
2	Q-P	20	75.2	36.5	2.00	1.985	3.8	9	29	0.3
3	P-O	20	70.5	35	2.00	1.985	3.6	9	29	0.3
4	O-N	20	65.8	33.5	2.00	1.985	3.5	9	29	0.3
5	N-M	20	61.1	31.5	1.50	1.505	5.7	7	27	0.9
6	M-L	20	56.4	31	1.50	1.505	5.6	7	27	0.9
7	L-K	20	51.7	29.2	1.50	1.505	5.3	7	27	0.8
8	K-J	20	47	28.6	1.50	1.505	5.2	7	27	0.8
9	J-I	20	42.3	27	1.50	1.505	4.9	7	27	0.7
10	I-H	20	37.6	25	1.50	1.505	4.5	7	27	0.6
11	H-G	20	32.9	23.5	1.50	1.505	4.2	7	27	0.5
12	G-F	20	28.2	22.5	1.50	1.505	4.1	7	27	0.5
13	F-E	20	23.5	21	1.50	1.505	3.8	7	27	0.4
14	E-D	20	18.8	19	1.50	1.505	3.4	7	27	0.4
15	D-C	20	14.1	17	1.50	1.505	3.1	7	27	0.3
16	C-B	20	9.4	14	1.50	1.505	2.5	7	27	0.2
17	B-A	20	4.7	9	1.50	1.505	1.6	4	24	0.1
18	A-A'	1	4.7	9	0.75	0.785	6.0	3	4	0.3
19	A'-B'	2	3.2	6.8	0.75	0.785	4.5	1	3	0.1
20	B'-C'	5	1	3	0.50	0.545	4.1	2	7	0.4
21										9.7

Figure 604.1(6)
COMPLETED SPREADSHEET FOR SAMPLE PROBLEM 2—COLD SIDE

service valve is 75 psi. A normal amount of fittings will be used in the piping arrangements. Determine the minimum size of each of the piping segments using the uniform friction loss sizing method.

Solution

1. Calculate the length of piping in the basic design circuit: 5 feet + 5 feet + (6 x 20 feet) + (7 x 10 feet) + 5 feet + 5 feet. = 210 feet. Using an additional 50 percent of length to account for fittings: 210 + [210 × (50/100)] = 315 feet equivalent length.
2. Calculate the pressure available that can be used for friction loss in the basic design circuit: The pressure loss caused by elevation difference is (75 feet × 0.433) = 32.5 psi. The minimum pressure required at the shower fixture is 20 psi. Thus, the pressure remaining to overcome friction loss is (75 psi - 32.5 psi - 20 psi) = 22.5 psi.
3. Calculate the uniform friction loss per 100 feet for the basic design circuit: (22.5 psi/315 ft) × 100 = 7.1 psi per 100 feet.
4. Develop a table of pipe sizes and maximum allowable flow rates: Calculate the maximum flow at the 8 fps velocity limit from $q = 2.448\ d^2\ v$ [or read from the friction loss graph in Commentary Figure 603.1(8)] for each pipe size. NOTE: The flow rate associated with a friction loss of 7.1 psi per 100 feet (30 480 mm) for each size of pipe can be calculated from $q = 4.93\ p^{0.57}1d^{2.714}$ [or read from the friction loss chart in Commentary Figure 603.1(8)]. See Commentary Figure 604.1(9) for a summary of results. The smaller of the two gpm values for each pipe size is the maximum allowable flow rate for that pipe size.
5. Determine the wsfu for each pipe segment in the basic design circuit and list the values in a table. Using Table E103.3(3), convert wsfu values into flow rate of gpm for each section of pipe. Choose the pipe size for each pipe segment based upon the lesser of the flow rates (velocity or uniform friction loss) for each pipe size listed in Commentary Figure 604.1(9) [see Commentary Figure 604.1(10)].

INTERNATIONAL CODE COUNCIL®
Copyright © 2015 ICC. ALL RIGHTS RESERVED. Accessed by David Dammon on Jun 21, 2017 12:30:52 PM pursuant to License Agreement with ICC. No further reproduction or distribution authorized. ANY UNAUTHORIZED REPRODUCTION OR DISTRIBUTION IS A VIOLATION OF THE FEDERAL COPYRIGHT ACT AND THE LICENSE AGREEMENT, AND SUBJECT TO CIVIL AND CRIMINAL PENALTIES THEREUNDER.

A	B	C	D	E	F	G	H	I	J	K
	HOT SECTION	LENGTH (inches)	WSFU	GPM	PIPE SIZE (inches)	PIPE ID (inches)	VELOCITY (fps)	FTG LENGTH (feet)	TTL EQ LENGTH (feet)	LOSS (psi)
1	S-Q	20	91.2	64.7	2.00	1.985	6.7	1	21.0	0.7
2	Q-R	10	40	26.3	1.50	1.505	4.7	16	26.0	0.6
3	R-T	5	40	26.3	1.50	1.505	4.7	16	21.0	0.5
4	T-U	10	40	26.3	1.50	1.505	4.7	16	26.0	0.6
5	U-V	20	40	26.3	1.50	1.505	4.7	1	21.0	0.5
6	V-W	20	37.5	25.6	1.50	1.505	4.6	1	21.0	0.5
7	W-X	20	35	24.9	1.50	1.505	4.5	1	21.0	0.5
8	X-Y	20	32.5	24.1	1.50	1.505	4.3	1	21.0	0.4
9	Y-Z	20	30	23.3	1.50	1.505	4.2	1	21.0	0.4
10	Z-AA	20	27.5	22.4	1.50	1.505	4.0	1	21.0	0.4
11	AA-BB	20	25	21.5	1.50	1.505	3.9	1	21.0	0.4
12	BB-CC	20	22.5	20.6	1.50	1.505	3.7	1	21.0	0.3
13	CC-DD	20	20	19.6	1.50	1.505	3.5	1	21.0	0.3
14	DD-EE	20	17.5	18.6	1.50	1.505	3.4	1	21.0	0.3
15	EE-FF	20	15	17.7	1.50	1.505	3.2	1	21.0	0.2
16	FF-GG	20	12.5	16.3	1.25	1.265	4.2	1	21.0	0.5
17	GG-HH	20	10	14.6	1.25	1.265	3.7	1	21.0	0.4
18	HH-II	20	7.5	12.3	1.25	1.265	3.1	1	21.0	0.3
19	II-JJ	1	5	9.4	1.00	1.025	3.7	5	6.0	0.1
20	JJ-KK	2	4.7	9	1.00	1.025	3.5	5	7.0	0.2
21	KK-LL	1	2.5	5.7	0.75	0.785	3.8	5	6.0	0.2
22	LL-MM	4	0.5	4	0.75	0.785	2.7	2	6.0	0.1
23	MM-NN	5	1	3	0.50	0.545	4.1	2	7.0	0.4
										8.3

Figure 604.1(7)
COMPLETED SPREADSHEET FOR SAMPLE PROBLEM 2—HOT SIDE

INTERNATIONAL CODE COUNCIL®
Copyright © 2015 ICC. ALL RIGHTS RESERVED. Accessed by David Dammon on Jun 21, 2017 12:30:52 PM pursuant to License Agreement with ICC. No further reproduction or distribution authorized. ANY UNAUTHORIZED REPRODUCTION OR DISTRIBUTION IS A VIOLATION OF THE FEDERAL COPYRIGHT ACT AND THE LICENSE AGREEMENT, AND SUBJECT TO CIVIL AND CRIMINAL PENALTIES THEREUNDER.

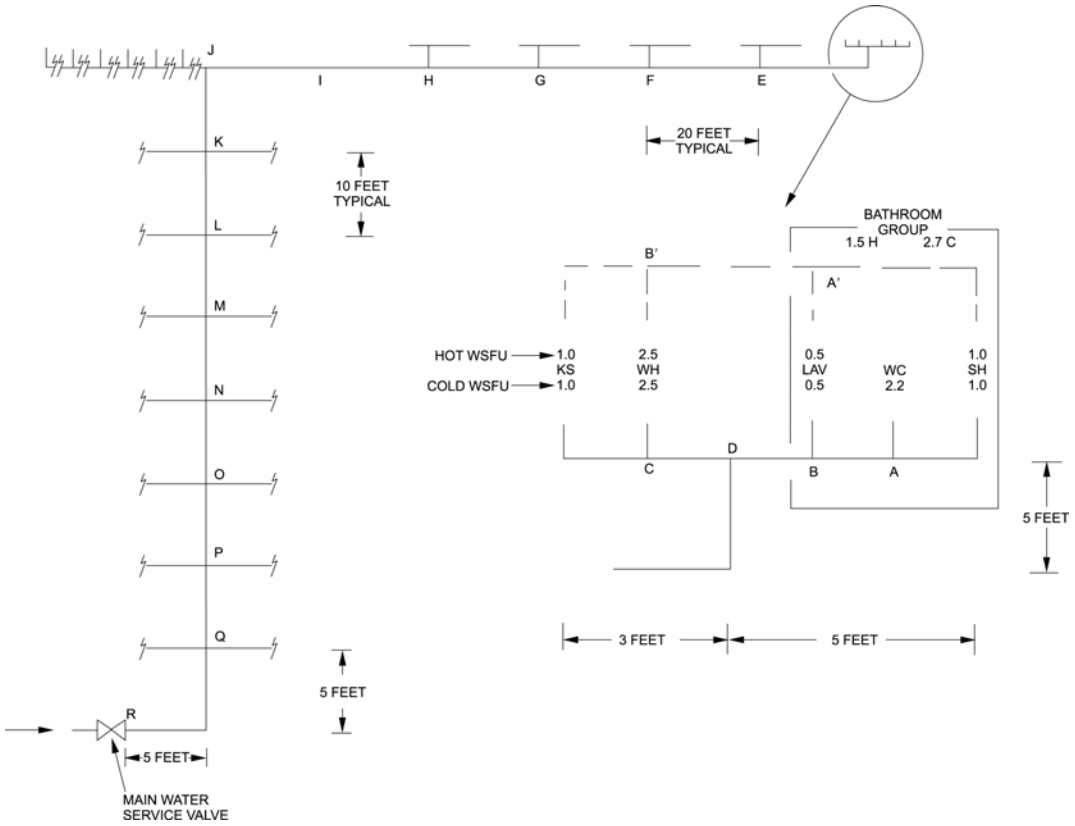

For SI: 1 foot = 304.8 mm.

Figure 604.1(8)
WATER SYSTEM SCHEMATIC, EIGHT-STORY, 96-UNIT APARTMENT BUILDING

PIPE SIZE (inches)	MAXIMUM ALLOWABLE FLOW BASED ON 8 FPS VELOCITY LIMIT GPM	MAXIMUM ALLOWABLE FLOW BASED ON UNIFORM FRICTION LOSS LIMIT OF 7.1 PSI PER 100 FT GPM
$^1/_2$	5.8	2.9
$^3/_4$	12.1	7.8
1	20.6	16.1
$1^1/_4$	31.3	28.6
$1^1/_2$	44.4	45.8
2	77.2	97.1
$2^1/_2$	118	174.7
3	169.8	283.1

Figure 604.1(9)
SAMPLE PROBLEM 3—PIPE SIZING TABLE

Water Distribution Pipe Sizing and Water Service Pipe Sizing Are Interrelated

Generally, a greater flowing pressure available at the termination point of the water service system (the main water service valve) will allow for smaller water distribution pipe sizes. Thus, the design of the water service system impacts the design of the water distribution system. If the pipe sizes of the water distribution system seem to be excessively large because of a lack of flowing pressure from the water service system, then the water service system might require design changes to make more flowing pressure available. Such changes might include choosing a larger

INTERNATIONAL CODE COUNCIL®
Copyright © 2015 ICC. ALL RIGHTS RESERVED. Accessed by David Dammon on Jun 21, 2017 12:30:52 PM pursuant to License Agreement with ICC. No further reproduction or distribution authorized. ANY UNAUTHORIZED REPRODUCTION OR DISTRIBUTION IS A VIOLATION OF THE FEDERAL COPYRIGHT ACT AND THE LICENSE AGREEMENT, AND SUBJECT TO CIVIL AND CRIMINAL PENALTIES THEREUNDER.

size of water service pipe, increasing the size of water service system components or both. Economics play a significant role in designing both systems. For example, increasing the size of a pressure-reducing valve to gain more flowing pressure from a water service system might be more cost effective than increasing the sizes of numerous water distribution pipes.

Summary

The code official is responsible for determining that the pipe sizes for the water distribution system were chosen using an accepted engineering practice. In order for the code official to provide his or her approval, documentation in the form of hand calculations, computer program methodology, inputs and outputs and copies of any other relevant data might have to be supplied for review. The project drawings must reflect the pipe sizes determined by the approved sizing method so that the contractor installs the correct size of piping and the code official has a document to field verify that the design pipe sizes were installed.

604.2 System interconnection. At the points of interconnection between the hot and cold water supply piping systems and the individual fixtures, appliances or devices, provisions shall be made to prevent flow between such piping systems.

❖ Where a plumbing fixture, device or appliance is provided with both a hot and a cold water supply connection (other than terminal devices that blend hot and cold water, such as tempering valves, pressure-bal-

SECTION	WSFU	GPM	PIPE SIZE
SH-A	1.0	—	1/2 a
WC-A	2.2	—	3/8 a
LAV-B	0.5	—	3/8 a
KS-C	1.0	—	1/2 a
SH-A'	1.0	—	1/2 a
LAV- A'	0.5	—	3/8 a
KS-B'	1.0	—	1/2 a
A-B	3.2	6.8	3/4
A'-B'	1.5	4.0	3/4
WH-B'	2.5	5.8	3/4
WH-C	2.5	5.8	3/4
B-D	2.7	6.1	3/4
C-D	3.5	7.3	3/4
D-E	6.2	10.9	1
E-F	12.4	16.2	1 1/4
F-G	18.6	19.0	1 1/4
G-H	24.8	21.4	1 1/4
H-I	31	23.6	1 1/4
I-J	37.2	25.5	1 1/4
J-K	74.4	36.3	1 1/2
K-L	148.8	54.5	2
L-M	223.2	69.6	2
M-N	297.6	84.5	2 1/2
N-O	372	99.4	2 1/2
O-P	446.4	113.8	2 1/2
P-Q	520.8	127.8	3
Q-R	595.2	141.5	3

a. Minimum fixture supply pipe in accordance with Table 604.5.

Figure 604.1(10)
SAMPLE PROBLEM 3—SECTION PIPE SIZES

INTERNATIONAL CODE COUNCIL®
Copyright © 2015 ICC. ALL RIGHTS RESERVED. Accessed by David Dammon on Jun 21, 2017 12:30:52 PM pursuant to License Agreement with ICC. No further reproduction or distribution authorized. ANY UNAUTHORIZED REPRODUCTION OR DISTRIBUTION IS A VIOLATION OF THE FEDERAL COPYRIGHT ACT AND THE LICENSE AGREEMENT, AND SUBJECT TO CIVIL AND CRIMINAL PENALTIES THEREUNDER.

anced mixing valves, etc., to achieve a desired temperature), the water must be supplied in such a way that there will be no possibility for the flow of cold water to the hot water piping or vice versa. This is required so the hot water supply does not become cooled or tempered below the temperature required (see the definition of "Hot water" in Section 202) by the introduction of cold water, and that when a fixture is operated to provide cold water; hot water is not delivered. Another concern is a continuous flow of cold water into the hot water supply, could lead to increased operation of the water heater in an attempt to maintain the water temperature, resulting in an increased use of energy and a shortened heater life.

This section might also be applicable to "no return pipe" hot water recirculation system arrangements, which have become popular in recent years. Although originally intended as a retrofit method of providing for hot water recirculation where the installation of hot water return piping was impossible or too costly, these systems are also being installed in new construction for the labor and materials savings. Although system component designs vary between manufacturers, the system concept utilizes a pump in the hot water line to cause hot water flow through a special valve and into the cold water line near a fixture that is most remote from the water heater. When the valve senses that the temperature of the hot water flow becomes warm [approximately 90°F (32°C)], the valve automatically closes to stop flow so that the cold water line does not become filled with hot water. The valve also prevents flow of hot water to the cold supply line while cold water is flowing from the faucet. The minimal flow rate through the valve limits the amounts of warm water flowing into the cold water line such that when the user opens only the cold water control of the faucet, warm water flows from the faucet for only a few seconds before cooler flow begins. Typically, most users rarely sense the short period of warm water flow from the cold-only operation of the faucet. Even if they did have their hand under the faucet at the moment the cold water valve was opened, the flow is well within safe "tempered water" temperatures. Thus, the user is protected from the potential of being inadvertently scalded by hot water flow from cold water operation of the faucet. Because the recirculation flow is minimal, the operational cost of these systems is generally much less than a system utilizing a dedicated hot water return pipe. Thus, the energy "waste" for this type of hot water recirculation system is no greater than for a system using a dedicated hot water return pipe. Therefore, with respect to the apparent intents of this section for scald protection and preventing hot water storage depletion (and the resultant energy waste), these "no return pipe" systems do not appear to be a violation of this section.

However, if this section is read and interpreted in a literal manner, these "no return pipe" recirculation systems constitute an interconnection between hot and cold systems that does allow flow to occur between the systems and, therefore, these systems would violate this section. Ultimately, the code official must decide if these "no return pipe" systems comply with or violate this section based upon his or her interpretation of this section.

604.3 Water distribution system design criteria. The water distribution system shall be designed, and pipe sizes shall be selected such that under conditions of peak demand, the capacities at the fixture supply pipe outlets shall be not less than shown in Table 604.3. The minimum flow rate and flow pressure provided to fixtures and appliances not listed in Table 604.3 shall be in accordance with the manufacturer's installation instructions.

❖ Designers of water distribution systems must know the minimum flowing pressure that each fixture in the system must have so that the fixture will properly operate during periods of peak water demand. Table 604.3 provides the minimum flowing pressures for common fixtures and plumbing appliances. The designer must use this information for determining pipe sizes in the water distribution system.

Table 604.3 also provides a flow-rate demand for common fixtures and plumbing appliances. Knowledge of a fixture's flow rate is necessary to determine the amount of pressure loss through the piping in the water distribution system. Too small of pipe for a given flow rate can cause high flow velocities, which can result in excessive pressure loss at the discharge end of the pipe.

Where a fixture or appliance is not listed in Table 604.3, the designer must obtain the necessary flowing pressure and flow-rate information from the manufacturer of the fixture or appliance.

Does this section conflict with the commonly accepted Hunter method of using wsfu values to determine flow rates for fixtures? (See the commentary to Section 603.1 for details concerning the Hunter method for determining peak water demand for water distribution systems.) The answer is not straightforward because the flow rates of Table 604.3 are not coupled to a frequency of use such that a peak water demand on the water distribution system can be determined. As stated in the commentary to Section 603.1, in most cases, peak water demand is not simply the addition of the maximum allowable flow rates of every fixture in the building because it is usually unrealistic to assume that all fixtures would be operating at the same time. Therefore, the flow rates of Table 604.3 might be somewhat useful when evaluating water distribution systems for buildings such as stadiums that have a peak water demand during halftime that approaches the flow of all fixtures operating simultaneously. Otherwise, without application of frequency-of-use/duration-of-use information to the flow rates of Table 604.3, most pipe sizes determined for "normal use" building water distribution systems will be oversized.

INTERNATIONAL CODE COUNCIL®
Copyright © 2015 ICC. ALL RIGHTS RESERVED. Accessed by David Dammon on Jun 21, 2017 12:30:52 PM pursuant to License Agreement with ICC. No further reproduction or distribution authorized. ANY UNAUTHORIZED REPRODUCTION OR DISTRIBUTION IS A VIOLATION OF THE FEDERAL COPYRIGHT ACT AND THE LICENSE AGREEMENT, AND SUBJECT TO CIVIL AND CRIMINAL PENALTIES THEREUNDER.

Note that some fixtures in Table 604.3 are also listed in Table 604.4 and that the actual maximum allowable flow rate for some fixtures is considerably less that the flow rate listed in Table 604.3 for the same fixture. This is another reason why determining pipe sizes using the flow rates in Table 604.3 could result in significant and unnecessary oversizing of piping.

Note a of Table 604.3 is a reminder to review Table 604.4 when reviewing the flow rate column.

Note b of Table 604.3 only requires that the capacity for piping serving a shower mixing valve be that of the lowest flow rating of the shower mixing valve. For many years since the showerhead flow rate was lowered to a maximum of 2.5 gallons per minute, product standards required that the mixing valve had to safely operate at a flow rate of 2.5 gallons per minute. In other words, at a flow rate of 2.5 gpm, the mixing valve must quickly self-adjust to prevent an outlet water temperature fluctuation exceeding plus or minus 3.6°F of the user set temperature. The required capacity (in Table 604.3) of the piping serving many fixtures has been reduced over several code editions so that this table now reflects a required piping flow rate of 2.5 gpm for shower mixing valves (matching the 2.5 gpm mixing valve scald-protection testing protocol). However, because of the strong emphasis on water use reduction, manufacturers now offer mixing valves that can safely operate at flows less than 2.5 gpm. Currently, most manufacturers are rating their pressure-balanced shower mixing valves at 1.5 gpm to comply with the scald-protection testing protocol of the standards. Note b allows the capacity of the piping serving those valves to be as low as the lowest rating of those mixing valves.

The table indicates a minimum required flow rate. Designers and installers could choose to install larger piping (as doing so would comply with the requirements of the table). However, larger piping than necessary is more costly to purchase, install and insulate (hot side only). Where the intent is to conserve water by choosing low flow-rated fixtures (and mixing valves), the installation of piping that is larger than necessary does not serve any purpose. The other added "benefit" of using the smallest size possible piping to serve a fixture is that the consumer (such as a condominium owner or an apartment dweller) cannot obtain a significantly higher flow rate by altering the fixture by changing the aerator or defeating the shower head flow restrictor. The smaller piping to the fixture might not be able to support the desired higher flow rate! See Section 607 for more information concerning smaller piping for the hot water supply to certain fixtures.

TABLE 604.3
WATER DISTRIBUTION SYSTEM DESIGN CRITERIA REQUIRED CAPACITY AT FIXTURE SUPPLY PIPE OUTLETS

FIXTURE SUPPLY OUTLET SERVING	FLOW RATE[a] (gpm)	FLOW PRESSURE (psi)
Bathtub, balanced-pressure, thermostatic or combination balanced-pressure/thermostatic mixing valve	4	20
Bidet, thermostatic mixing valve	2	20
Combination fixture	4	8
Dishwasher, residential	2.75	8
Drinking fountain	0.75	8
Laundry tray	4	8
Lavatory, private	0.8	8
Lavatory, private, mixing valve	0.8	8
Lavatory, public	0.4	8
Shower	2.5	8
Shower, balanced-pressure, thermostatic or combination balanced-pressure/thermostatic mixing valve	2.5[b]	20
Sillcock, hose bibb	5	8
Sink, residential	1.75	8
Sink, service	3	8
Urinal, valve	12	25
Water closet, blow out, flushometer valve	25	45
Water closet, flushometer tank	1.6	20
Water closet, siphonic, flushometer valve	25	35
Water closet, tank, close coupled	3	20
Water closet, tank, one piece	6	20

For SI: 1 pound per square inch = 6.895 kPa,
1 gallon per minute = 3.785 L/m.

a. For additional requirements for flow rates and quantities, see Section 604.4.

b. Where the shower mixing valve manufacturer indicates a lower flow rating for the mixing valve, the lower value shall be applied.

604.4 Maximum flow and water consumption. The maximum water consumption flow rates and quantities for all plumbing fixtures and fixture fittings shall be in accordance with Table 604.4.

Exceptions:

1. Blowout design water closets having a water consumption not greater than $3^1/_2$ gallons (13 L) per flushing cycle.
2. Vegetable sprays.
3. Clinical sinks having a water consumption not greater than $4^1/_2$ gallons (17 L) per flushing cycle.
4. Service sinks.
5. Emergency showers.

❖ Limiting water flow rates and volume per flush in certain fixtures is important to conserve not only our limited water supplies but also the energy required to

INTERNATIONAL CODE COUNCIL®
Copyright © 2015 ICC. ALL RIGHTS RESERVED. Accessed by David Dammon on Jun 21, 2017 12:30:52 PM pursuant to License Agreement with ICC. No further reproduction or distribution authorized. ANY UNAUTHORIZED REPRODUCTION OR DISTRIBUTION IS A VIOLATION OF THE FEDERAL COPYRIGHT ACT AND THE LICENSE AGREEMENT, AND SUBJECT TO CIVIL AND CRIMINAL PENALTIES THEREUNDER.

pump, transport, treat, condition and heat water. Water conservation lessens the burden on water treatment facilities and private sewage disposal systems. The relationship between water and energy usage is evidenced by the fact that the federal government water conservation requirements are part of the U.S. Energy Policy Act (EPAct).

Exception 1 exempts blowout water closets from the requirements of Table 604.4 because such fixtures depend on high-volume and high-velocity water flow to evacuate the contents of the bowl. Blowout water closets may not be able to function at lower consumption rates. Blowout fixtures were frequently installed in assembly occupancies because they are considered to be less susceptible to the abuse and vandalism typically associated with public toilet facilities. However, the use of blowout fixtures is dwindling in favor of using water closets meeting the 1.6 gallons per flush [6.1 liters per flush (L/f)] limitation.

Exception 2 exempts vegetable sprays because they are not included in EPAct.

Exception 3 exempts clinical sinks because they are specialty fixtures used in institutional occupancies for the disposal of human waste and the cleaning of bedpans.

Exception 4 exempts service sinks because such fixtures are used for maintenance and janitorial operations. Because service sink faucets are usually used to fill mop buckets and similar containers or the sink itself, there is nothing to be gained by limiting the flow rate of such faucets. The same logic is extended to mop sinks, pots-and-pans sinks and bathtubs. Such fixtures are filled with water or are used to fill other containers, and limiting the flow rate of the faucet will not affect the amount of water needed by the user of the fixture, but will increase the filling time with no apparent benefit.

Exception 5 exempts emergency showers because they are used only in the event of an emergency. Emergency showers are provided for body and eye washing in occupancies where people are exposed to chemical hazards. When addressing life safety, water consumption is not a concern.

When 1.6-gpf (6.1 L/f) water closets were first introduced decades ago, their overall performance was lackluster at best. Over the years, designs for the 1.6 gpf (6.1 L/f) models have greatly improved and now high-performing designs are available that consume only 1.28 gpf (4.85 liters per flush). Although both designs might require a “double flush” from time to time, overall, these low consumption water closets have a substantial impact on the saving of water.

One concern involving low-water consumption water closets is the possible occurrence of pipe blockages caused by the lack of water to keep solids in suspension. This problem could become a greater issue where oversized drain piping has been installed and where gray-water-producing fixtures are not contributing waste water to the water closet drain piping. With respect to the 1.6 gpf (6.1 L/f) water closets, the “dry drain” problem has occurred only in isolated situations where other factors, such as fixture abuse and improperly sloped piping, have been involved. However, as the installation of 1.28 gpf (4.85 L/f) water closets becomes more prevalent, it is expected that pipe stoppages will occur with greater frequency even where drain piping has been carefully installed at not less than the minimum slope and has not been oversized. Because water conservation for plumbing fixtures is here to stay, it is foreseeable that drain and vent sizing methodology could change in response to the reduced fixture discharge rates.

The fixtures listed in the Table 604.4 are those targeted by the U.S. EPAct to be regulated so that water consumption can be controlled. Because the flow rate from a faucet or shower head is dependent upon pressure, pressures are indicated. However, the indicated pressures are not to be interpreted as maximum pressures for each fixture. The maximum pressure allowed in a water distribution system is 80 psi (552 kPa) (see Section 604.8).

TABLE 604.4
MAXIMUM FLOW RATES AND CONSUMPTION FOR PLUMBING FIXTURES AND FIXTURE FITTINGS

PLUMBING FIXTURE OR FIXTURE FITTING	MAXIMUM FLOW RATE OR QUANTITY[b]
Lavatory, private	2.2 gpm at 60 psi
Lavatory, public (metering)	0.25 gallon per metering cycle
Lavatory, public (other than metering)	0.5 gpm at 60 psi
Shower head[a]	2.5 gpm at 80 psi
Sink faucet	2.2 gpm at 60 psi
Urinal	1.0 gallon per flushing cycle
Water closet	1.6 gallons per flushing cycle

For SI: 1 gallon = 3.785 L, 1 gallon per minute = 3.785 L/m, 1 pound per square inch = 6.895 kPa.

a. A hand-held shower spray is a shower head.

b. Consumption tolerances shall be determined from referenced standards.

604.5 Size of fixture supply. The minimum size of a fixture supply pipe shall be as shown in Table 604.5. The fixture supply pipe shall terminate not more than 30 inches (762 mm) from the point of connection to the fixture. A reduced-size flexible water connector installed between the supply pipe and the fixture shall be of an *approved* type. The supply pipe shall extend to the floor or wall adjacent to the fixture. The minimum size of individual distribution lines utilized in gridded or parallel water distribution systems shall be as shown in Table 604.5.

❖ The fixture supply pipe, by definition, is the pipe from a fixture branch (which supplies water for two or more fixtures) to the individual fixture (see Commentary Figure 604.5). There are two reasons why the code specifies the minimum size of individual fixture supply pipes. First, water distribution system pipe sizing methods might indicate that a smaller pipe would provide the necessary flow and pressure for a fixture. This could result in several different sizes of small pipes being “stubbed out” of walls and floors, making

INTERNATIONAL CODE COUNCIL®
Copyright © 2015 ICC. ALL RIGHTS RESERVED. Accessed by David Dammon on Jun 21, 2017 12:30:52 PM pursuant to License Agreement with ICC. No further reproduction or distribution authorized. ANY UNAUTHORIZED REPRODUCTION OR DISTRIBUTION IS A VIOLATION OF THE FEDERAL COPYRIGHT ACT AND THE LICENSE AGREEMENT, AND SUBJECT TO CIVIL AND CRIMINAL PENALTIES THEREUNDER.

it difficult to coordinate the connection of commonly available stop valves and other fixture fittings to those small pipes. Second, it is difficult to know at the design stage exactly how each fixture supply pipe will need to be routed so that an appropriate equivalent length of pipe can be determined for calculation of pressure loss in this final leg of the water distribution system. By specifying minimum pipe sizes, the code mostly eliminates the potential problem of having too small of pipe (resulting in too much pressure loss) for a fixture. Note the use of the phrase "mostly eliminates" in the previous sentence. The designer of the water distribution system should not assume that the minimize size for fixture supply pipes will be sufficient for all applications. For example, a shower mixing valve might have $^3/_4$-inch (19.1 mm) connection ports and, thus, the fixture supply pipe should be $^3/_4$ inch (19.1 mm) instead of the minimum size of $^1/_2$ inch (12.7 mm). Another example is where a fixture is located far away from the fixture branch pipe that supplies the fixture supply pipe. A long run of fixture supply pipe would result in significant pressure loss at the fixture end of the run. It may be necessary to increase the size of the fixture supply pipe for most of the length of the run in order to keep pressure loss to a minimum.

This section's requirement for locating the termination of the fixture supply pipe within 30 inches (762 mm) is for three reasons: 1) it limits the amount of friction loss caused by the small diameter connectors that are used; 2) it allows for a single length of commonly available connector lengths to make the connection (eliminating the need for couplings in the connector) and 3) it keeps the location of the fixture stop valves (where required) within close proximity of the fixture.

This section requires that the connector used between the termination of the fixture supply pipe and the fixture be approved (by the code official) so that "cobbled together" connection arrangements are not used. For example, it is unlikely that a code official would approve the use of rubber tubing forced onto barbed fittings as a connector in this application. Typically, connectors are soft (annealed) copper tubing (plain finish or chrome plated finish) with compression or flare end fittings, semirigid plastic tubing with compression or flare end fittings or flexible water connectors with braided reinforcement with flare or compression end fittings. Note that Section 605.6 requires that flexible water connectors conform to ASME A112.18.6.

The last sentence of Section 604.5 directs the code user to carefully look at Table 604.5 with respect to gridded and parallel water distribution systems. The intent is for the code user to notice Note a to realize that parallel water distribution systems (i.e., those having a central manifold) can have smaller water distribution (fixture supply) pipe sizes under certain conditions. (Note that Note a does not address gridded water distribution systems.) Because parallel water distribution systems generally have fewer fittings and the beginning of the fixture supply pipe starts at a central manifold that has significant flow and pressure availability, the fixture supply pipe can be smaller (by one pipe size) than what is necessary for a "mains, risers and branch"-type water distribution system design. The allowance for the one size smaller pipe is only applicable where the pressure at the meter location is not less than 35 psi (241 kPa) and the length of the distribution line (fixture supply pipe) is not greater than 50 feet (15 240 mm).

Although the code is silent about where the water meter location is in relationship to the central manifold for a parallel water distribution system, a reasonable assumption is that the two are most likely intended to be in very close proximity to one another. If this was not the case, and the meter was located at some distance away from the building (e.g., at the curb), there could be significant flowing pressure losses in the water service system to the building, resulting in less-than-required flowing pressure at the fixtures (see Table 604.3). However, even if the meter was located next to the central manifold and the available pressure was 35 psi, then a next size smaller tubing than what is required by Table 604.5 might not provide the required pressure at a remote fixture.

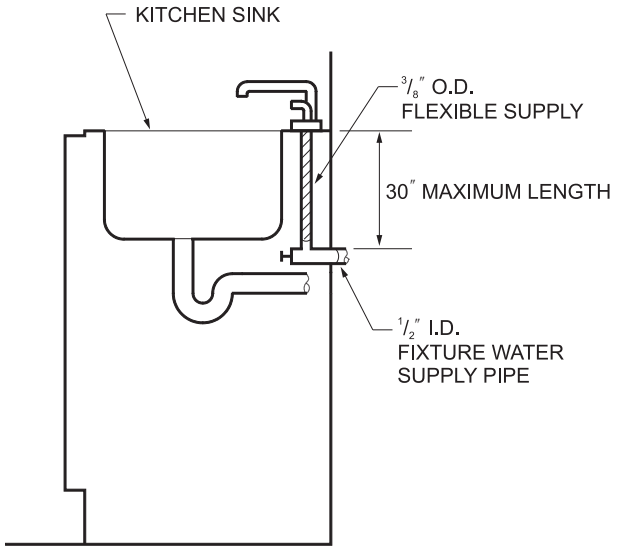

For SI: 1 inch = 25.4 mm.

Figure 604.5
WATER SUPPLY CONNECTION WITH REDUCED-SIZE FLEXIBLE SUPPLY

INTERNATIONAL CODE COUNCIL®
Copyright © 2015 ICC. ALL RIGHTS RESERVED. Accessed by David Dammon on Jun 21, 2017 12:30:52 PM pursuant to License Agreement with ICC. No further reproduction or distribution authorized. ANY UNAUTHORIZED REPRODUCTION OR DISTRIBUTION IS A VIOLATION OF THE FEDERAL COPYRIGHT ACT AND THE LICENSE AGREEMENT, AND SUBJECT TO CIVIL AND CRIMINAL PENALTIES THEREUNDER.

TABLE 604.5
MINIMUM SIZES OF FIXTURE WATER SUPPLY PIPES

FIXTURE	MINIMUM PIPE SIZE (inch)
Bathtubs[a] (60″ × 32″ and smaller)	1/2
Bathtubs[a] (larger than 60″ × 32″)	1/2
Bidet	3/8
Combination sink and tray	1/2
Dishwasher, domestic[a]	1/2
Drinking fountain	3/8
Hose bibbs	1/2
Kitchen sink[a]	1/2
Laundry, 1, 2 or 3 compartments[a]	1/2
Lavatory	3/8
Shower, single head[a]	1/2
Sinks, flushing rim	3/4
Sinks, service	1/2
Urinal, flush tank	1/2
Urinal, flushometer valve	3/4
Wall hydrant	1/2
Water closet, flush tank	3/8
Water closet, flushometer tank	3/8
Water closet, flushometer valve	1
Water closet, one piece[a]	1/2

For SI: 1 inch = 25.4 mm, 1 foot = 304.8 mm,
1 pound per square inch = 6.895 kPa.

a. Where the *developed length* of the distribution line is 50 feet or less, and the available pressure at the meter is 35 psi or greater, the minimum size of an individual distribution line supplied from a manifold and installed as part of a parallel water distribution system shall be one nominal tube size smaller than the sizes indicated.

604.6 Variable street pressures. Where street water main pressures fluctuate, the building water distribution system shall be designed for the minimum pressure available.

❖ In the design of a water distribution system, the lowest pressure in the public water main must be determined and used in the calculations to guarantee that adequate pressure water is available to the fixtures in the building during periods of peak water demand. In many areas of the country, the pressure in the public water main varies throughout the day and seasonally.

The lowest pressure in a public water main usually occurs in the summer because of the demands of lawn sprinkling and makeup water for air-conditioning cooling towers. The minimum pressure can usually be determined by a review of the records of pressures at different times of the day and year kept by the local water purveyor. The pressure can also be monitored in nearby buildings or ascertained from fire department hydrant inspections. However, future demands placed on a public water main as a result of community growth or expansion often result in a decrease of available pressure. While not required by the code, future public water main pressure losses caused by growth and expansion should be considered in determining the minimum available pressure for design purposes.

For individual water supply systems (e.g., wells), the lowest pressure for design pressure is the pump "cut in" pressure.

604.7 Inadequate water pressure. Wherever water pressure from the street main or other source of supply is insufficient to provide flow pressures at fixture outlets as required under Table 604.3, a water pressure booster system conforming to Section 606.5 shall be installed on the building water supply system.

❖ It might not be possible for a public water supply system to have the level of pressure required by some buildings. For example, a 500-foot-tall (152 500 mm) building with fixtures at the top floor would require a public water main pressure of at least 250 psi (1724 kPa) (accounting for pipe friction losses and elevation pressure loss). Also, some public water main systems are so antiquated that the public water main piping cannot withstand high pressures; therefore, water pressure boosting systems are necessary to raise the pressure of the incoming water supply so that adequate pressure is available at all fixtures in a building. Section 606.5 regulates the various methods for increasing the pressure of the water supply system (see commentary, Section 606.5).

604.8 Water pressure-reducing valve or regulator. Where water pressure within a building exceeds 80 psi (552 kPa) static, an *approved* water pressure-reducing valve conforming to ASSE 1003 or CSA B356 with strainer shall be installed to reduce the pressure in the building water distribution piping to not greater than 80 psi (552 kPa) static.

Exception: Service lines to sill cocks and outside hydrants, and main supply risers where pressure from the mains is reduced to 80 psi (552 kPa) or less at individual fixtures.

❖ The components and fixtures connected to a water distribution system are designed to properly operate and have reasonable life expectancy for pressures of not greater than 80 psi (552 kPa). Higher pressures can cause leaks from faucets, difficulty in operation of fixtures and reduced lifespan of other components such as water closet fill valves and electric solenoid water valves. Therefore, the code requires that in cases where the supply pressure is higher than 80 psig (552 kPa), a pressure-reducing valve be installed to reduce the pressure to 80 psi (552 kPa) or less.

Installation of a pressure-reducing valve requires that a strainer be installed along with the pressure-reducing valve to protect the valve's small passages and ports from dirt accumulation. A separate strainer is not always needed as some pressure-reducing valve designs have integral strainers. Strainers and pressure-reducing valves with integral strainers must be installed to enable access for removal of the strainer without removal of the strainer or valve (see Section 604.8.2).

INTERNATIONAL CODE COUNCIL®
Copyright © 2015 ICC. ALL RIGHTS RESERVED. Accessed by David Dammon on Jun 21, 2017 12:30:52 PM pursuant to License Agreement with ICC. No further reproduction or distribution authorized. ANY UNAUTHORIZED REPRODUCTION OR DISTRIBUTION IS A VIOLATION OF THE FEDERAL COPYRIGHT ACT AND THE LICENSE AGREEMENT, AND SUBJECT TO CIVIL AND CRIMINAL PENALTIES THEREUNDER.

The code provides an exception for allowing higher pressure for sillcocks and outside hydrants. It also allows higher pressure for water distribution system risers (in multistory buildings) where pressure-reducing valves are installed at points before branches serve fixtures.

There are two basic types of pressure-reducing valves: direct acting and pilot operated. Most applications use direct acting because of their ease of field adjustment and relatively low cost (as compared to pilot-operated valves). The direct-acting type uses spring force against a pressure diaphragm to accomplish pressure reduction. One shortcoming of direct-acting pressure-reducing valves is that of "fall-off" pressure. The fall-off pressure of a pressure-reducing valve varies by manufacturer, size and flow rate, but generally the fall-off pressure is in the 5- to 20-psi (34.5 to 137.8 kPa) range. For example, a direct-acting pressure-reducing valve set at 80 psi (552 kPa) static (no-flow condition) pressure and having a 20-psi (137.9 kPa) fall-off pressure at the design flow would only allow for 60-psi (414 kPa) pressure at design flow. Obviously, fall-off pressure has implications for the design of the water distribution system. Pilot-operated pressure-reducing valves do not have a fall-off pressure, but because of their relatively high cost, they are generally only used where precise control and absence of fall-off pressure are needed.

604.8.1 Valve design. The pressure-reducing valve shall be designed to remain open to permit uninterrupted water flow in case of valve failure.

❖ Water-pressure reducing valves must be designed so that if the pressure-reducing component of the valve fails to regulate the water pressure to the valve setting, the valve will remain in an open position to allow a continuous flow of water to the building. A valve without this fail-safe feature could close completely in event of a failure, thus depriving the building and its occupants of water service.

In the majority of cases where a pressure-reducing valve fails, the high side pressure is no longer reduced to acceptable downstream pressure levels. At the very least, this will only cause faucets to be more difficult to operate or drip from the spout. Pipes might thump or knock when a faucet is closed because of the higher flow rate at the elevated pressure condition. At the very worse, flexible fixture supply connectors and rubber washing machine hoses could blow off of their end connections and cause flooding. Where system pressures become greater than 150 psi (1024 kPa), water heater temperature and pressure relief valves begin leaking. Where the public water main pressure is 200 psi (1379 kPa) or greater, most manufacturers of pressure-reducing valves recommend the installation of two pressure-reducing valves, in series. While this arrangement provides for better pressure control and longer valve life, the effects of fall-off pressure during peak water demand could be significant.

Note that where public water main pressure exceeds 160 psi (1103 kPa), Section 605.3 requires that the water service piping pressure rating be at least that of the highest available pressure. Not all water service piping materials in Table 605.3 are suitable for pressures in excess of 160 psi (1103 kPa).

604.8.2 Repair and removal. Water pressure-reducing valves, regulators and strainers shall be so constructed and installed as to permit repair or removal of parts without breaking a pipeline or removing the valve and strainer from the pipeline.

❖ Water-pressure reducing valves, pressure regulators and strainers must be designed and installed to enable repairs (or cleaning, in the case of a strainer) without removal of the device from the pipe line. In the event of a valve malfunction, repairs can usually be made more quickly where removal of the device from the pipeline is not necessary. This limits the amount of time that a building water system is shut off, inconveniencing the building's occupants.

604.9 Water hammer. The flow velocity of the water distribution system shall be controlled to reduce the possibility of water hammer. A water-hammer arrestor shall be installed where *quick-closing valves* are utilized. Water-hammer arrestors shall be installed in accordance with the manufacturer's instructions. Water-hammer arrestors shall conform to ASSE 1010.

❖ Water hammer is a symptom of hydraulic shock occurring in a fluid-filled piping system. Hydraulic shock occurs when the velocity of fluid flowing through a pipe suddenly changes, such as when a valve closes. The change in velocity creates a pressure wave in the fluid upstream of the valve. The pressure wave travels at a velocity that is approximately equal to the speed of sound travel in the fluid. For water, that velocity (speed) is 4,660 feet per second (1421 meter per second), or in more familiar terms, over 3,000 miles per hour (4828 km/hr). The pressure wave travels upstream of the valve and bounces against turns (elbows and tees) in the piping. Some of the pressure wave continues upstream, bouncing off more piping turns while some of the wave is reflected back towards the closed valve. If the valve closes slowly, the reflected portions of the pressure wave dissipate through the still partially open valve. If the valve fully closes before the reflected portions of the pressure wave arrive at the valve, the wave will bounce against the closed valve and be re-reflected upstream. The pressure wave will continue bouncing back and forth until the friction forces in the fluid eventually cause the wave to dissipate. A strong pressure wave bouncing against a closed valve and turns (elbows and tees) in the piping can produce sounds similar to a hammer hitting a pipe, hence the term "water hammer." Note that hydraulic shock can be occurring and causing damage to the piping system even though the audible sounds (water hammer) of hydraulic shock are not present.

The speed of valve closure determines if hydraulic shock will occur in a pipe. The "critical" valve closure time is not a fixed value for all applications because it is dependent upon the length of piping leading up to

INTERNATIONAL CODE COUNCIL®
Copyright © 2015 ICC. ALL RIGHTS RESERVED. Accessed by David Dammon on Jun 21, 2017 12:30:52 PM pursuant to License Agreement with ICC. No further reproduction or distribution authorized. ANY UNAUTHORIZED REPRODUCTION OR DISTRIBUTION IS A VIOLATION OF THE FEDERAL COPYRIGHT ACT AND THE LICENSE AGREEMENT, AND SUBJECT TO CIVIL AND CRIMINAL PENALTIES THEREUNDER.

the valve, the elasticity of the pipe material, the diameter of pipe and the wall thickness of the pipe. The general range for critical valve closure time, assuming a pipe length of 10 feet (3048 mm), is about 0.02 second for $^1/_2$-inch (12.7 mm) plastic tube (PEX SDR 9) to about 0.005 second for $^1/_2$-inch (12.7 mm) copper tube (Type L). Even if the pipe length was assumed to be 100 feet (30 480 mm), the critical valve closure times would be only 0.2 and 0.05 seconds, respectively. A few time reference points are: 1) the blink of a human eye: 0.3 to 0.4 second and 2) the closure time of a small electric solenoid water valve: 0.01 to 0.06 second.

This code section requires "water-hammer arrestors" to be used where quick-closing valves are utilized. From a theoretical point of view, with respect to hydraulic shock, a quick-closing valve would be a valve that closes in less than or equal to the critical time for a specific arrangement of piping. However, because critical valve closure time is difficult, perhaps impossible, to accurately determine in any application, the code cannot specify an exact time threshold for when a valve should be considered "quick closing." Therefore, even after much public hearing discussion on this subject, the code continues to rely upon the following simple definition for a quick-closing valve: "any valve that closes automatically when released manually or that is controlled by mechanical means for fast action closing" (see the definition of "Quick-closing valve" in Chapter 2).

This simple definition for a quick-closing valve can cause code enforcement questions, for there are a number of automatically closing valves (and faucets) that are commonly used in or connected to water distribution systems. Examples are flushometer valves, mechanical metering faucets, spring-return-to-close faucet controls, washing machine water solenoid valves, dishwasher water solenoid valves and ice-maker water solenoid valves. Which valves should be considered quick closing? Given that small size electric solenoid water valves have closure times less than the critical valve closure times estimated previously, it is a reasonable conclusion that piping connecting to such valves should have a water-hammer arrestor installed. Because automatically closing "mechanical-type" valves and faucets are unlikely to have as fast a closing time as that of small electric solenoid valves, it is doubtful that the mechanical-type valves would require water-hammer arrestors. Ultimately, the code official will have to make the final determination on whether or not other automatically closing valves and faucets require the installation of water-hammer arrestors on the piping to the valves.

Mechanical water-hammer arrestors (shock arrestors) help decrease hydraulic shock intensity by absorbing most of the energy of the pressure wave [see Commentary Figure 604.9(1)]. Mechanical arrestors should be located where they produce the maximum effect of controlling the shock intensity. The manufacturer typically provides guidelines for locating the arrestor. Because many water-hammer arrestors are now permanently charged and factory sealed, they require no maintenance and should last the life of the plumbing system. For this reason, the code official could consider allowing such devices to be installed in concealed locations that do not have access.

Note the distinction between water-hammer arrestors and simple air chambers. An air chamber, as shown in Commentary Figure 604.9(2) and typically constructed of a capped section of vertical pipe, is not a long-term/maintenance-free solution for controlling water hammer. An air chamber located on the fixture supply pipe to every fixture was assumed to help control water hammer; however, air chambers become waterlogged after a short period of time. This is because air chambers allow a direct interface between the trapped air and the water, which allows the air to be absorbed or displaced to other parts of the plumbing system.

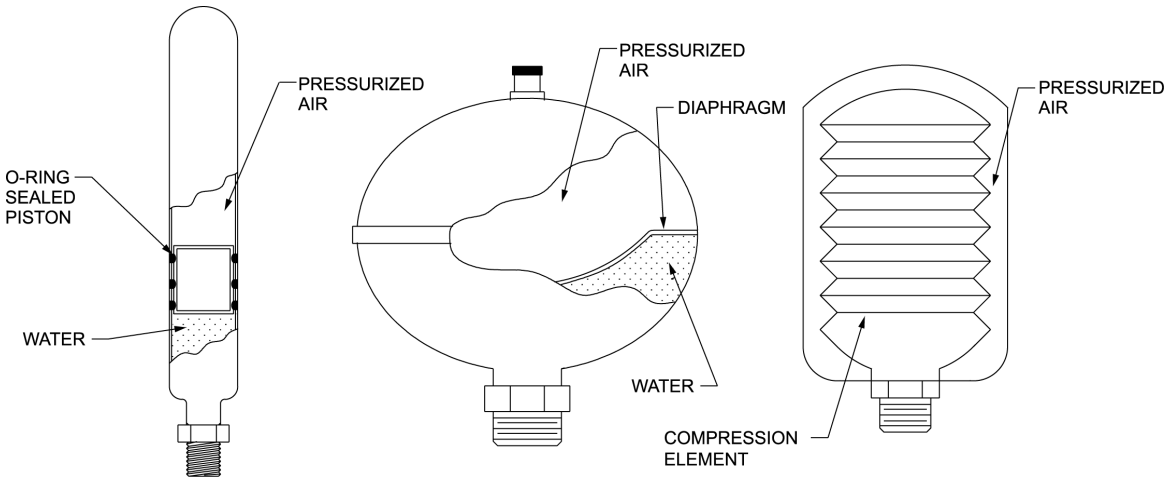

Figure 604.9(1)
EXAMPLE OF MECHANICAL WATER-HAMMER ARRESTORS

INTERNATIONAL CODE COUNCIL®
Copyright © 2015 ICC. ALL RIGHTS RESERVED. Accessed by David Dammon on Jun 21, 2017 12:30:52 PM pursuant to License Agreement with ICC. No further reproduction or distribution authorized. ANY UNAUTHORIZED REPRODUCTION OR DISTRIBUTION IS A VIOLATION OF THE FEDERAL COPYRIGHT ACT AND THE LICENSE AGREEMENT, AND SUBJECT TO CIVIL AND CRIMINAL PENALTIES THEREUNDER.

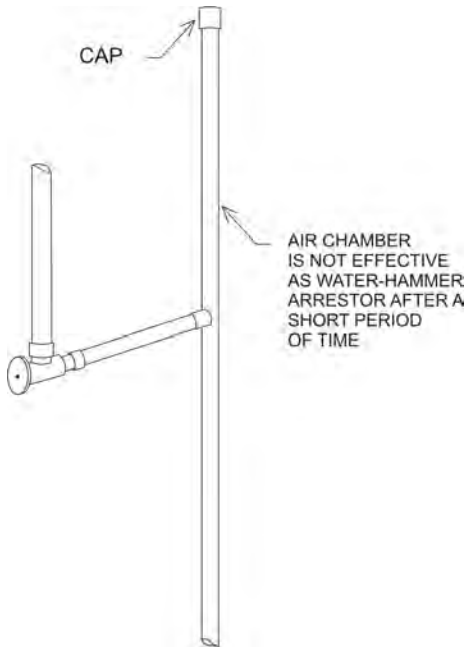

Figure 604.9(2)
AIR CHAMBER WATER-HAMMER ARRESTOR

Another way to reduce the intensity of hydraulic shock (and reduce the potential for water hammer) caused by quick-closing valves in the piping system is to choose larger pipe sizes, which will result in reduced flow velocities. The hydraulic shock pressure (in excess of the system pressure) is directly proportional to the flow velocity. While reducing the flow velocity does not eliminate the hydraulic shock, decreasing the normal flow velocity in a pipe by a factor of 2 will also decrease the hydraulic shock pressure by a factor of 2. Although reducing the flow velocity in a pipe connected to a quick-closing valve will go a long way towards reducing the potential for water hammer occurrence, this section still mandates the installation of a water-hammer arrestor where quick-closing valves are located.

604.10 Gridded and parallel water distribution system manifolds. Hot water and cold water manifolds installed with gridded or parallel connected individual distribution lines to each fixture or fixture fitting shall be designed in accordance with Sections 604.10.1 through 604.10.3.

❖ Traditionally, water distribution systems in buildings have been designed as "mains, risers and branch"-type systems (also known as "branch" systems). Gridded and parallel distribution systems differ from branch systems and use individual supply pipes that extend to each fixture or outlet from a central supply point. The central supply point is a multiple-outlet manifold to which the distribution lines connect. Manifold systems can be field-fabricated assemblies using conventional fittings or specialized fitting systems, or they could be constructed of factory-built units [see Commentary Figures 604.10(1) and 604.10(2)].

Parallel and gridded systems offer the advantages of simple design, small-size distribution lines and faster distribution of hot water. In branch distribution systems, the hot water contained in larger-diameter piping is often wasted by the user allowing the water to flow down the drain until it reaches the desired temperature. Where semirigid (bendable) tubing is used, gridded or parallel distribution systems can be installed with few, if any, fittings or connections in concealed spaces, thereby eliminating many potential leak points resulting in improved overall dependability of the system.

Table 604.10.1 dictates the minimum size of manifolds to be installed in parallel distribution systems. Table 604.3 dictates the minimum flow rates and flow pressures that must be provided at fixture outlets.

604.10.1 Manifold sizing. Hot water and cold water manifolds shall be sized in accordance with Table 604.10.1. The total gallons per minute is the demand of all outlets supplied.

❖ Manifolds serving gridded or parallel distribution systems must be sized in accordance with Table 604.10.1, based on both the total flow rate demand supplied by the manifold and the chosen design flow velocity of the system. Table 604.10.1 should be used by the designer to size manifold systems while considering the minimum and maximum flow rates required by Sections 604.3 and 604.4. The velocity rates given in Table 604.10.1 are not required minimum and maximum velocities for the design of the manifold system. As with all piping, the design flow velocity should not exceed that recommended by the pipe manufacturer. Generally, lower design flow velocities will prolong the life of the system and minimize noise [see Commentary Figure 604.1(1)].

The table provides sizing criteria for manifolds serving gridded or parallel distribution systems. Such systems are generally used in small buildings; therefore, the range of sizes is limited to those most likely to be encountered in such structures. The velocity columns represent the most common design velocities for the types of materials typically used in these systems. These do not represent required minimum and maximum velocities that must be used in the design of the manifold system.

TABLE 604.10.1
MANIFOLD SIZING

NOMINAL SIZE INTERNAL DIAMETER (inches)	MAXIMUM DEMAND (gpm)	
	Velocity at 4 feet per second	Velocity at 8 feet per second
$^1/_2$	2	5
$^3/_4$	6	11
1	10	20
$1^1/_4$	15	31
$1^1/_2$	22	44

For SI: 1 inch = 25.4 mm, 1 gallon per minute = 3.785 L/m, 1 foot per second = 0.305 m/s.

INTERNATIONAL CODE COUNCIL®
Copyright © 2015 ICC. ALL RIGHTS RESERVED. Accessed by David Dammon on Jun 21, 2017 12:30:52 PM pursuant to License Agreement with ICC. No further reproduction or distribution authorized. ANY UNAUTHORIZED REPRODUCTION OR DISTRIBUTION IS A VIOLATION OF THE FEDERAL COPYRIGHT ACT AND THE LICENSE AGREEMENT, AND SUBJECT TO CIVIL AND CRIMINAL PENALTIES THEREUNDER.

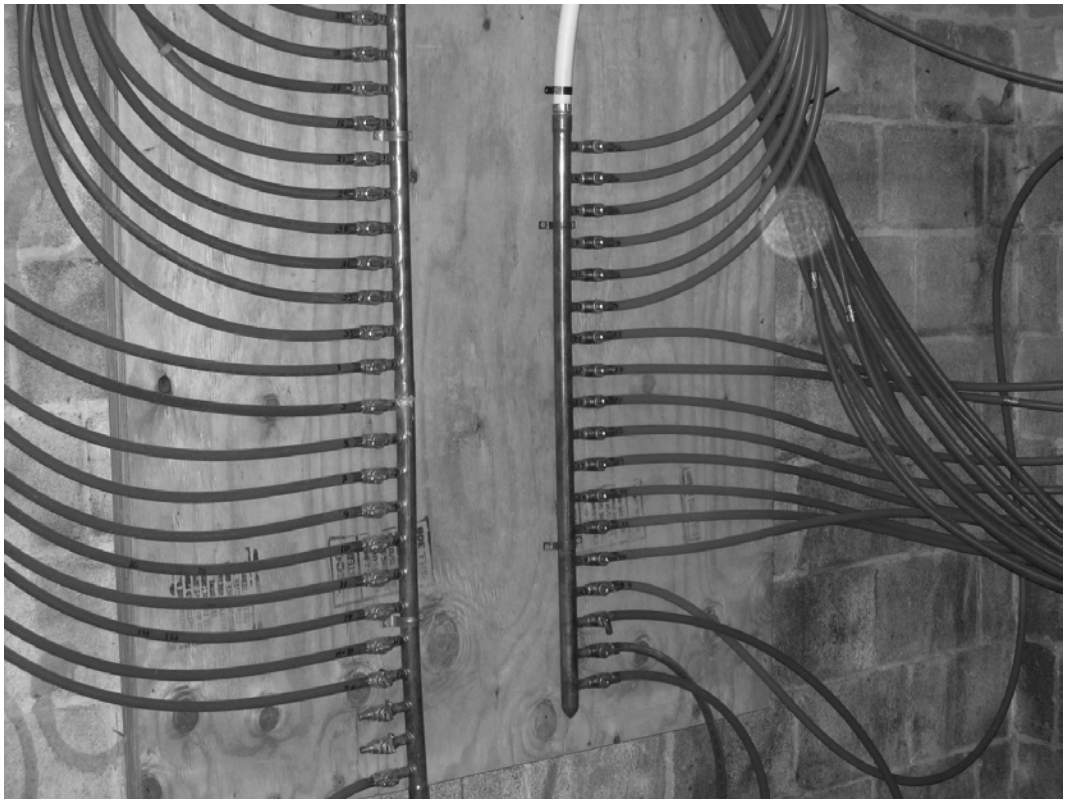

Figure 604.10(1)
FIELD-BUILT MANIFOLD FOR PARALLEL WATER DISTRIBUTION

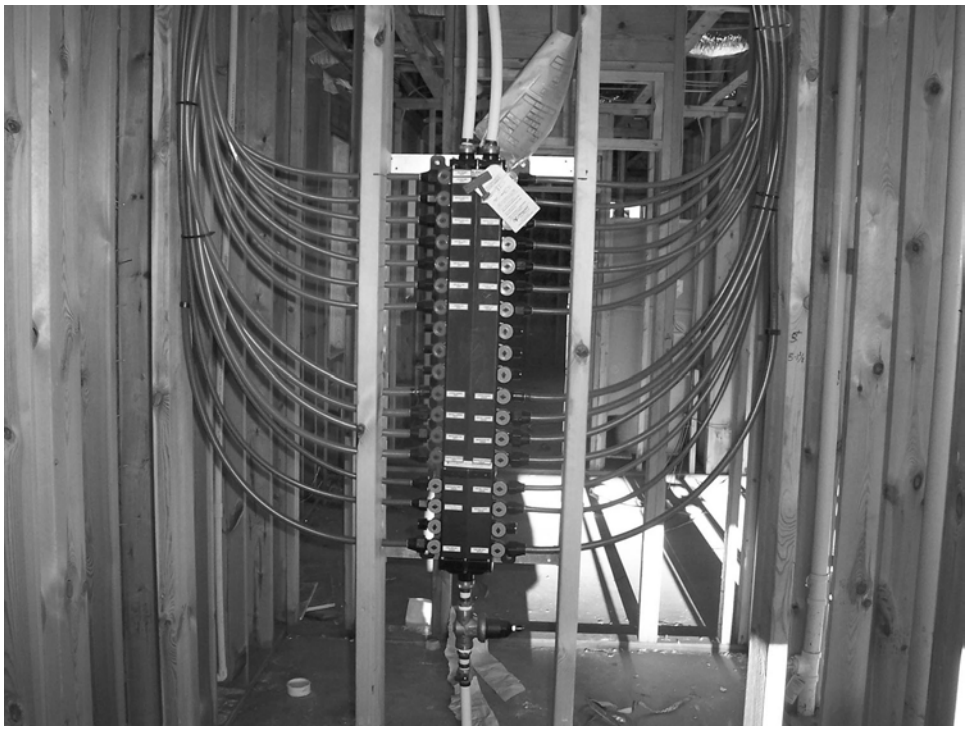

Figure 604.10(2)
FACTORY-BUILT MANIFOLD FOR PARALLEL WATER DISTRIBUTION

INTERNATIONAL CODE COUNCIL®
Copyright © 2015 ICC. ALL RIGHTS RESERVED. Accessed by David Dammon on Jun 21, 2017 12:30:52 PM pursuant to License Agreement with ICC. No further reproduction or distribution authorized. ANY UNAUTHORIZED REPRODUCTION OR DISTRIBUTION IS A VIOLATION OF THE FEDERAL COPYRIGHT ACT AND THE LICENSE AGREEMENT, AND SUBJECT TO CIVIL AND CRIMINAL PENALTIES THEREUNDER.

604.10.2 Valves. Individual fixture shutoff valves installed at the manifold shall be identified as to the fixture being supplied.

❖ Where parallel water distribution system manifolds are used, this section does not override the requirements of Item 1 in Section 606.2, which requires individual fixture supply shutoff valves. In most instances, the manifold valves are considered as branch control valves that could be used in isolating sections of the manifold system from the main water distribution supply. In the instance where a designer supplies one individual fixture directly from the manifold, such as a single-hose bibb opening, the manifold valve could be used to meet the requirements of Section 606.2 only if that valve is identified in accordance with Sections 604.10.2 and 606.4 and approved by the code official. The control function of valves located at the manifold would not be obvious; therefore, the valves must be labeled.

604.10.3 Access. *Access* shall be provided to manifolds with integral factory- or field-installed valves.

❖ Manifolds with valves, including those with field-installed valves, must be able to be accessed once the building is completed.

604.11 Individual pressure balancing in-line valves for individual fixture fittings. Where individual pressure balancing in-line valves for individual fixture fittings are installed, such valves shall comply with ASSE 1066. Such valves shall be installed in an accessible location and shall not be utilized alone as a substitute for the balanced pressure, thermostatic or combination shower valves required in Section 424.3.

❖ For faucets (fixture fittings) where the code does not require control of the temperature of the water discharge, there still may be a need (but not a code requirement) to keep the user-set, faucet-outlet temperature from fluctuating due to pressure changes in the water distribution system. For example, the water distribution system of a commercial kitchen having numerous pot and food preparation sinks could have significant pressure changes in both hot and cold piping systems caused by the simultaneous operation of two-handle, high-flow faucets typically used in these applications. The pressure changes in the systems could cause significant temperature changes at any one faucet, which would be annoying and perhaps dangerous. The ASSE 1066 pressure balancing valve has no adjustments and no upper temperature limit. The valve adjusts the flow rate through one side of the valve in order to compensate for a pressure differential between the sides (hot and cold) of up to 50 percent.

ASSE 1066 valves do not meet the requirements for balanced pressure, thermostatic or combination balanced-pressure/thermostatic mixing valves for showers (see Section 424.3). An ASSE 1066 valve is only intended for connection to a single-fixture fitting.

SECTION 605
MATERIALS, JOINTS AND CONNECTIONS

605.1 Soil and ground water. The installation of a water service or water distribution pipe shall be prohibited in soil and ground water contaminated with solvents, fuels, organic compounds or other detrimental materials causing permeation, corrosion, degradation or structural failure of the piping material. Where detrimental conditions are suspected, a chemical analysis of the soil and ground water conditions shall be required to ascertain the acceptability of the water service or water distribution piping material for the specific installation. Where detrimental conditions exist, *approved* alternative materials or routing shall be required.

❖ As most water service system piping is buried and some water distribution pipe is buried (e.g., slab-on-grade installations), soil conditions could be a factor in choosing an appropriate pipe material. Because soils are especially aggressive to metallic piping, such as saltwater marshland and high sulphur minerals, the piping might need to be made of nonmetallic materials. Or, if metallic piping must be used under these types of conditions, exterior protection such as plastic sleeving or specialized coatings might need to be used to ensure a reasonable life expectancy of the piping. Where soils have residual amounts of solvents, fuels or where insecticides or fertilizers are consistently used on the soils above, metallic pipe materials might be preferred over plastic piping. Local experienced soils engineers should be consulted wherever questionable soil conditions might be present.

605.2 Lead content of water supply pipe and fittings. Pipe and pipe fittings, including valves and faucets, utilized in the water supply system shall have not more than 8-percent lead content.

❖ A certain amount of lead in metallic materials makes the material softer and easier to machine (i.e., drill, turn, cut and mill); however, too high of a lead content in the internal "wetted" surfaces of the water-conveying products can allow significant leaching of lead into the potable water. Where the potable water is used for human consumption there is great concern about lead leaching because lead in drinking water was found to be a contributor of birth defects and childhood diseases. In June 1986, as authorized by the Safe Drinking Water Act (SWDA), the EPA required that the lead content in pipe, pipe fittings, faucets and valves conveying potable water be limited to not greater that 8 percent. (The same legislation also required that the lead content in solder and fluxes be reduced to not greater than 0.2 percent.) Further discussion regarding the SDWA can be found in the commentary to Section 424.1.

An amendment to the SDWA occurred in 2011 to further reduce the amount of lead in plumbing products. The amendment became law in January 2014. The amendment changes the meaning of "lead free" from 8 percent or less to 0.25 percent or less. However, the law also changes the determination of lead

INTERNATIONAL CODE COUNCIL®
Copyright © 2015 ICC. ALL RIGHTS RESERVED. Accessed by David Dammon on Jun 21, 2017 12:30:52 PM pursuant to License Agreement with ICC. No further reproduction or distribution authorized. ANY UNAUTHORIZED REPRODUCTION OR DISTRIBUTION IS A VIOLATION OF THE FEDERAL COPYRIGHT ACT AND THE LICENSE AGREEMENT, AND SUBJECT TO CIVIL AND CRIMINAL PENALTIES THEREUNDER.

content to a "weighted average of wetted surfaces method." Therefore, the SDWA no longer requires laboratory testing of water exposed to products to determine the lead content. However, this section remains in the code.

605.2.1 Lead content of drinking water pipe and fittings. Pipe, pipe fittings, joints, valves, faucets and fixture fittings utilized to supply water for drinking or cooking purposes shall comply with NSF 372 and shall have a weighted average lead content of 0.25 percent or less.

❖ In recent years, additional health study data has been gathered to indicate that limiting the lead content to not greater than 8 percent might not be restrictive enough to avoid human health problems. Initially, two states (California and Vermont) enacted legislation to require the lead content of pipe, pipe fittings, plumbing fittings and fixture fittings (faucets) to be not greater than 0.25 percent (by wetted surface weighted average method). The U.S. EPA followed up with similar recommendation for all states and the "low lead" amendment to the SDWA became law in January 2014 (see commentary to Section 605.2).

Neither NSF 372 nor federal law requires low-lead compliant products be marked or identified in any particular manner. Identification markings of "low-lead" products are not standardized among manufacturers or third-party certification agencies. Some manufacturers might make both low-lead compliant products and products that are intended to be used in systems such as hydronic heating systems and nonpotable water systems that do not require low-lead compliant products. Contractors will need to be aware of the difference to avoid using the wrong product, such as a noncompliant valve, in an application where a low-lead compliant valve is required. Code officials will need to be knowledgeable about various product markings and vigilant for improper application errors when making inspections. Other manufacturers that make products such as kitchen faucets, lavatory faucets and drinking fountains that are intended for sale in areas covered by federal law will have only the low-lead compliant versions available for sale in those areas. However, with the increasing global access to plumbing products, contractors and code officials will need to be careful about the products that are being installed to ensure that federal law is not violated. This code's requirement for third-party certification to NSF 372 will make such verifications easier.

Evaluation of products for compliance with the low-lead federal law (and NSF 372) is by calculation method only.

605.3 Water service pipe. Water service pipe shall conform to NSF 61 and shall conform to one of the standards listed in Table 605.3. Water service pipe or tubing, installed underground and outside of the structure, shall have a working pressure rating of not less than 160 psi (1100 kPa) at 73.4ºF (23ºC). Where the water pressure exceeds 160 psi (1100 kPa), piping material shall have a working pressure rating not less than the highest available pressure. Water service piping materials not third-party certified for water distribution shall terminate at or before the full open valve located at the entrance to the structure. Ductile iron water service piping shall be cement mortar lined in accordance with AWWA C104.

❖ Piping material that comes in contact with potable water is required to conform to the requirements of NSF 61. The intent is to control the potential adverse health effects produced by indirect additives, products and materials that go into the making of the pipe so that those substances do not pollute or contaminate potable water. Plastic water pipe tested and labeled in accordance with NSF 14 as potable water pipe (see commentary, Section 303.3) also conforms to NSF 61 because NSF 14 makes reference to and requires compliance with NSF 61.

Not all water service piping materials are suitable for use as water distribution piping (in other words, are found in Table 605.4). For example, PVC pipe is not suitable for water distribution pipe because it cannot meet the pressure/temperature requirement for water distribution pipe (100 psi at 180°F) (689 kPa at 82.2°C). The concern is that, if PVC piping was allowed to be used inside of a structure for cold water piping, it might be inadvertently used for a hot water pipe. Therefore, water service piping that is not also suitable for use as water distribution piping must terminate at or before the main water shutoff valve (see Section 606.1, Item 2). Up to the 2003 code edition, this section specified an arbitrary 5 feet (1524 mm) from the point of entry as the point where the water service pipe had to end and the water distribution pipe had to begin. The code was revised in 2006 to allow more flexibility as to where the full-open main water valve can be located and, therefore, where the water service pipe ends and water distribution pipe begins [see Commentary Figures 605.3(1) and 605.3(2)].

The requirement for ductile iron piping to be internally cement coated according to AWWA C104 is to prevent the formation of rust on the inside of the pipe, which could flake off and enter the water distribution system.

TABLE 605.3. See page 6-37.

Acrylonitrile butadiene styrene (ABS) plastic pipe. ABS pipe is rarely manufactured for water service. ASTM D 1527 is the referenced standard for Schedule 40 and 80 ABS pipe. The schedule number indicates the wall thickness: the higher the schedule number, the thicker the pipe wall. ASTM D 2282 is the referenced standard for SDR-PR pipe. "SDR" is an abbreviation for standard pipe dimension ratio, which is the ratio of pipe diameter to wall thickness. The "PR" designation indicates that the pipe is pressure rated. The

INTERNATIONAL CODE COUNCIL®
Copyright © 2015 ICC. ALL RIGHTS RESERVED. Accessed by David Dammon on Jun 21, 2017 12:30:52 PM pursuant to License Agreement with ICC. No further reproduction or distribution authorized. ANY UNAUTHORIZED REPRODUCTION OR DISTRIBUTION IS A VIOLATION OF THE FEDERAL COPYRIGHT ACT AND THE LICENSE AGREEMENT, AND SUBJECT TO CIVIL AND CRIMINAL PENALTIES THEREUNDER.

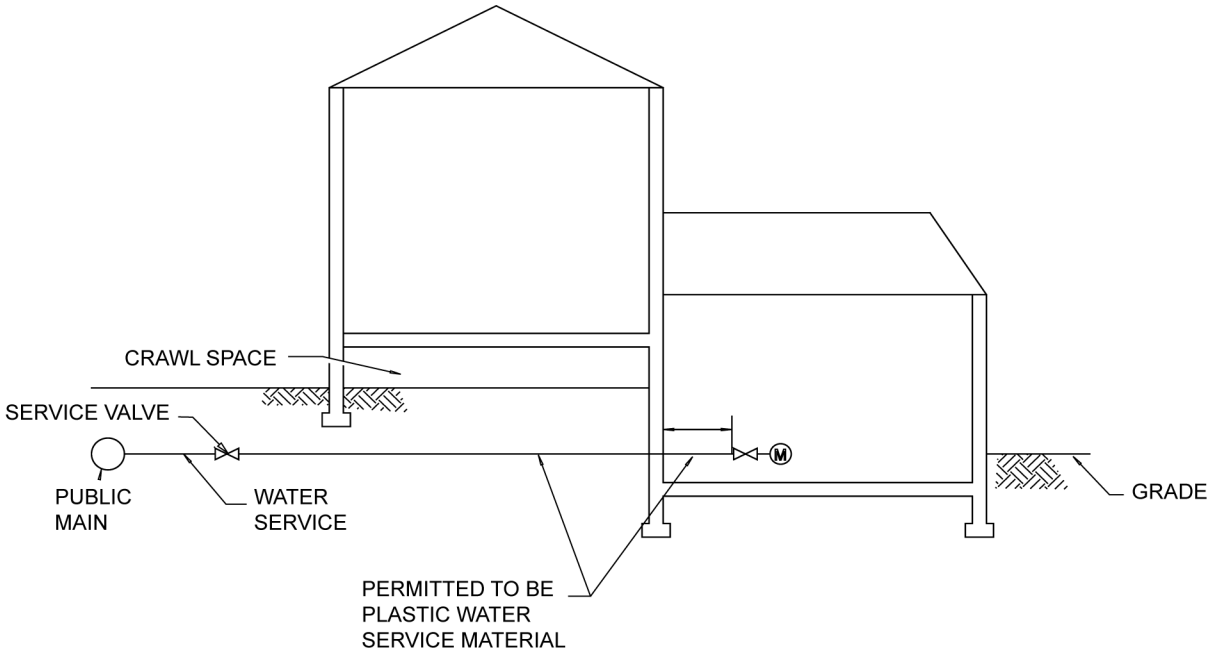

Figure 605.3(1)
PLASTIC WATER SERVICE EXTENDING INTO BUILDING

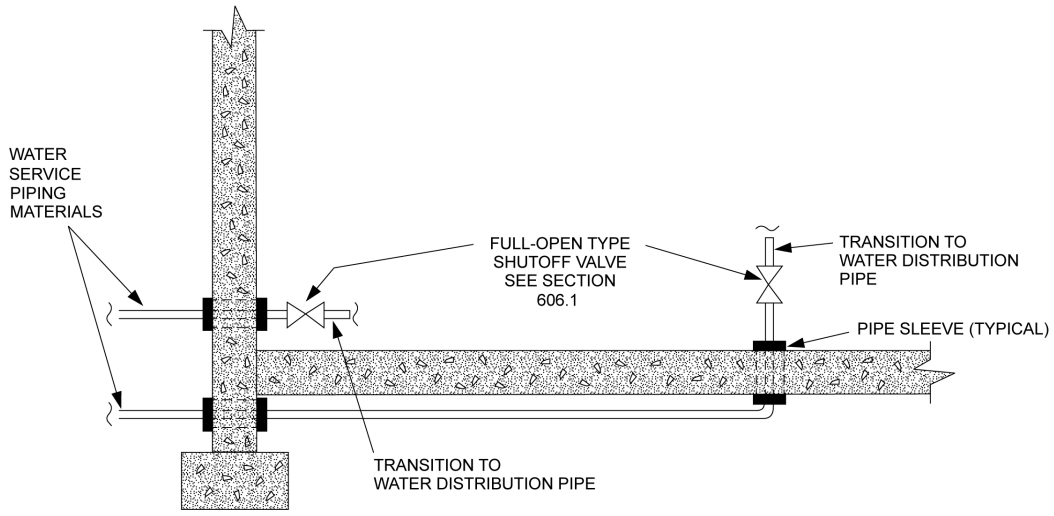

Figure 605.3(2)
PLASTIC WATER SERVICE EXTENDING UNDER SLAB AND THEN INTO BUILDING

pipe is black, must be rated for distribution of potable water and is marked at intervals of not more than 5 feet (1524 mm) with the following information:

- The manufacturer's name.
- The designation ASTM D 1527 or ASTM D 2282 SDR.
- Certification for conformance to NSF 61.
- Nominal pipe size.
- ABS 40 or 80 psi rating "ABS 1210."
- Coextruded ABS pipe "ABS Coex."

ASTM D 2468 is the standard for ABS plastic pipe fittings, Schedule 40. Fittings meeting the requirements of ASTM D 2468 are permitted with Schedule 40 pipe, and any fitting having a male thread must have an internal diameter not larger than Schedule 80 pipe of the same size.

Asbestos-cement pipe.

The 2015 IPC deleted asbestos cement pipe from Table 605.3 because of the concerns about working with this type of material (encapsulated asbestos) and because very little, if any, asbestos-cement pipe is

INTERNATIONAL CODE COUNCIL®
Copyright © 2015 ICC. ALL RIGHTS RESERVED. Accessed by David Dammon on Jun 21, 2017 12:30:52 PM pursuant to License Agreement with ICC. No further reproduction or distribution authorized. ANY UNAUTHORIZED REPRODUCTION OR DISTRIBUTION IS A VIOLATION OF THE FEDERAL COPYRIGHT ACT AND THE LICENSE AGREEMENT, AND SUBJECT TO CIVIL AND CRIMINAL PENALTIES THEREUNDER.

TABLE 605.3
WATER SERVICE PIPE

MATERIAL	STANDARD
Acrylonitrile butadiene styrene (ABS) plastic pipe	ASTM D 1527; ASTM D 2282
Brass pipe	ASTM B 43
Chlorinated polyvinyl chloride (CPVC) plastic pipe	ASTM D 2846; ASTM F 441; ASTM F 442; CSA B137.6
Chlorinated polyvinyl chloride/aluminum/chlorinated polyvinyl chloride (CPVC/AL/CPVC)	ASTM F 2855
Copper or copper-alloy pipe	ASTM B 42; ASTM B 302
Copper or copper-alloy tubing (Type K, WK, L, WL, M or WM)	ASTM B 75; ASTM B 88; ASTM B 251; ASTM B 447
Cross-linked polyethylene (PEX) plastic pipe and tubing	ASTM F 876; ASTM F 877; AWWA C904; CSA B137.5
Cross-linked polyethylene/aluminum/cross-linked polyethylene (PEX-AL-PEX) pipe	ASTM F 1281; ASTM F 2262; CSA B137.10
Cross-linked polyethylene/aluminum/high-density polyethylene (PEX-AL-HDPE)	ASTM F 1986
Ductile iron water pipe	AWWA C151/A21.51; AWWA C115/A21.15
Galvanized steel pipe	ASTM A 53
Polyethylene (PE) plastic pipe	ASTM D 2239; ASTM D 3035; AWWA C901; CSA B137.11
Polyethylene (PE) plastic tubing	ASTM D 2737; AWWA C901; CSA B137.1
Polyethylene/aluminum/polethylene (PE-AL-PE) pipe	ASTM F 1282; CSA B137.9
Polyethylene of raised temperature (PE-RT) plastic tubing	ASTM F 2769
Polypropylene (PP) plastic pipe or tubing	ASTM F 2389; CSA B137.11
Polyvinyl chloride (PVC) plastic pipe	ASTM D 1785; ASTM D 2241; ASTM D 2672; CSA B137.3
Stainless steel pipe (Type 304/304L)	ASTM A 312; ASTM A 778
Stainless steel pipe (Type 316/316L)	ASTM A 312; ASTM A 778

being produced in the United States. This information is left in this commentary to assist persons who might come across this type of piping during remodeling and repairs.

In the United States, this material was predominantly used for public water mains and forced sewer mains that were installed many decades ago. Outside the United States, this type of pipe is still being used for such purposes. Asbestos-cement pipe is manufactured in 4-, 6-, 8-, 10-, 12-, 14-, 16-, 18-, 20-, 24-, 30- and 36-inch diameters. The pipe size indicates the nominal inside diameter of the pipe.

The pipe is made by forming a pipe section from a slurry of asbestos fibers and portland cement or portland slag cement. The product is autoclaved (heat and pressure) to substantially harden the mixture. The ends of the pipe section are accurately machined smooth so that asbestos cement couplings with internal rubber sealing rings can be used to join pipe sections at installation. Because the asbestos is encapsulated and bonded within the pipe, this type of pipe has not been considered a health hazard. However, very little, if any, asbestos-cement pipe is being produced in the United States because there is a hazard of breathing asbestos during production and cutting. Rubber rings to seal the joints must conform to ASTM D 1869. The product is marked with the following information:

- The manufacturer's name or trade name.
- Class (100, 150 or 200 psi).
- Hydrostaticproof pressure.
- Date of manufacture.
- The designation ASTM C 296.
- Nominal pipe size.

Brass pipe. This piping material is made from red brass that is composed of approximately 85-percent copper and 15-percent zinc. The pipe is available in both standard and extra-strong weight. Extra-strong weight has the same outside diameter as steel pipe, but with a thicker pipe wall.

Standard-weight pipe is often called by the expression "Schedule 40," and extra-strong pipe is named "Schedule 80." Brass pipe dimensions are very similar to steel pipe dimensions. ASTM B 43 is the referenced standard for brass pipe, available in diameters from $^1/_8$ inch (3.2 mm) to 12 inches (305 mm) and manufactured in 12-foot (3658 mm) lengths. The pipe must be rated for distribution of potable water and is marked with the following information:

- The manufacturer's name.
- The designation ASTM B 43.
- Certification for conformance to NSF 61.

INTERNATIONAL CODE COUNCIL®
Copyright © 2015 ICC. ALL RIGHTS RESERVED. Accessed by David Dammon on Jun 21, 2017 12:30:52 PM pursuant to License Agreement with ICC. No further reproduction or distribution authorized. ANY UNAUTHORIZED REPRODUCTION OR DISTRIBUTION IS A VIOLATION OF THE FEDERAL COPYRIGHT ACT AND THE LICENSE AGREEMENT, AND SUBJECT TO CIVIL AND CRIMINAL PENALTIES THEREUNDER.

- Nominal pipe size.
- Schedule 40 standard weight or Schedule 80 extra-strong weight.

Chlorinated polyvinyl chloride (CPVC) plastic pipe and tubing. The plastic material used to produce CPVC pipe is similar to polyvinyl chloride (PVC) material except that the molecular structure has additional chlorine elements to improve the material strength properties at elevated temperature. CPVC plastic pipe and tubing may be either a white, a milky white (cream), gray or black color or, for fire sprinkler service, an orange color. The raw material is designated CPVC 4120. The "41" designation of CPVC 4120 identifies the specific type and quality of the CPVC material. The "20" designation of CPVC 4120 indicates the hydrostatic design stress of the material in hundreds of psi. In other words, CPVC 4120 has a hydrostatic design stress of 2,000 psi (13 790 kPa). Note that this is a material design property and not a pressure rating of the pipe.

ASTM D 2846 is the referenced standard for SDR 11 CPVC pipe, tube and CPVC socket fittings. "SDR" means "standard dimension ratio," which is a ratio of the average outside diameter to the minimum wall thickness. Tube outside diameter (OD) dimensions for tube products included in this standard match copper water tube sizes $^1/_4$, $^3/_8$, $^1/_2$, $^3/_4$, 1, $1^1/_4$, $1^1/_2$, and 2 inch. The pipe OD dimensions for pipe products included in this standard match steel pipe sizes $1^1/_2$ and 2 inch.

ASTM F 441 is the referenced standard for Schedule 40 and 80 plastic pipe, meaning that the OD dimensions of the pipe match those of steel pipe. Pipe sizes included in this standard are $^1/_4$, $^3/_8$, $^1/_2$, $^3/_4$, 1, $1^1/_4$, $1^1/_2$, 2, $2^1/_2$, 3, $3^1/_2$, 4, 5, 6, 8, 10, 12, 14, and 16 inch. The pipe wall thickness for Schedule 40 CPVC pipe is the same as for Schedule 40 steel pipe up to the 12-inch (305 mm) size. For the 14- and 16-inch sizes, the CPVC Schedule 40 pipe has thicker walls than steel pipe. The pipe wall thickness for Schedule 80 CPVC pipe is the same as for Schedule 80 steel pipe up to the 8-inch size. For sizes above 8-inch, CPVC Schedule 80 pipe has thicker walls than steel pipe. Pipe sizes included in this standard are $^1/_4$, $^3/_8$, $^1/_2$, $^3/_4$, 1, $1^1/_4$, $1^1/_2$, 2, $2^1/_2$, 3, $3^1/_2$, 4, 5, 6, 8, 10, 12, 14, and 16 inch.

ASTM F 442 is the referenced standard for SDR 13.5, 17, 21, 26 and 32.5 CPVC pipe. The pipe is also designated "PR," indicating that it is pressure rated for water. Pipe sizes included in this standard are $^1/_4$, $^3/_8$, $^1/_2$, $^3/_4$, 1, $1^1/_4$, $1^1/_2$, 2, $2^1/_2$, 3, $3^1/_2$, 4, 5, 6, 8, 10 and 12 inch. The OD dimensions of the pipes match those for steel pipe. The pipe wall thicknesses do not match steel pipe.

Section 303.3 requires identification of all plastic pipe and fittings with the mark of an approved agency establishing conformance to NSF 14 (see commentary, Section 303.4). Where used for drinking water, the product must be certified to NSF 61.

The product is marked at intervals of not more than 3 feet (914 mm) with the following information:

- The manufacturer's name.
- The standard designation (ASTM D 2846, ASTM D 441/442 or CSA B137.6).
- Certification for conformance to NSF 61.
- Nominal pipe size or nominal copper tube size.
- Type of plastic material (CPVC 4120).
- Schedule size and pressure rating (Schedule XX at 200 psi or SDR XX at 180 psi).

Copper or copper-alloy pipe. There are two types of copper pipe: threaded and threadless. Both pipes are seamless and have a chemical composition of 99.9-percent copper.

ASTM B 302 is the standard for threadless copper pipe for both regular and extra-strong weight, available in diameters from $^1/_4$ inch (6.4 mm) to 12 inches (305 mm) and manufactured in 20-foot (6096 mm) lengths. The pipe dimensions are similar to those of brass and steel pipe.

Threadless copper pipe has the same outside diameter as threaded copper pipe, steel pipe and brass pipe. The wall thickness of the pipe is less than that of threaded copper pipe; therefore, the inside diameter is greater. Threadless copper pipe is intended to be joined by brazing and is continuously marked in a gray color. The designation "TP" for threadless pipe is included in the marking. Section 303.4 also requires identification of copper pipe used for potable water with the mark of an approved third-party agency and notation that it conforms to the requirements of NSF 61 (see commentary, Section 303.4).The pipe must be rated for distribution of potable water and be marked with the following information:

- The manufacturer's name.
- The designation ASTM B 302 TP or ASTM B 42.
- Certification for conformance to NSF 61.
- Nominal pipe size.
- Schedule 40 standard weight or Schedule 80 extra-strong weight.

Copper or copper-alloy tubing (Type K, WK, L, WL, M or WM). The tubing is manufactured in two different tempers, which are identified as drawn (called "hard copper" with the designation "H") and annealed (called "soft copper" with the designation "O"). Hard (drawn) copper tubing comes in straight lengths, whereas soft (annealed) copper tubing comes in both straight lengths and coils.

Annealed copper and tempered drawn copper may be formed by bending. Bending tempered copper is identified on the pipe with the designation "BT." Only bending tempered copper tubing can be joined using flared connections.

Seamless copper water tubing is available in Type K, L or M. The tubing type indicates the wall thickness. Type K has the thickest wall, followed by Types L and M, respectively. ASTM B 75 is the referenced standard for annealed seamless copper tubing. ASTM B 88 and ASTM B 251 are the referenced standards for

INTERNATIONAL CODE COUNCIL®
Copyright © 2015 ICC. ALL RIGHTS RESERVED. Accessed by David Dammon on Jun 21, 2017 12:30:52 PM pursuant to License Agreement with ICC. No further reproduction or distribution authorized. ANY UNAUTHORIZED REPRODUCTION OR DISTRIBUTION IS A VIOLATION OF THE FEDERAL COPYRIGHT ACT AND THE LICENSE AGREEMENT, AND SUBJECT TO CIVIL AND CRIMINAL PENALTIES THEREUNDER.

both drawn and annealed seamless copper water tubing. The outside diameter of the tubing is the same for all three types; only the inside diameter varies with wall thickness. Welded copper tubing has the designation "WK," "WL" or "WM." The "W" indicates that the tubing has a welded (longitudinal) seam. ASTM B 447 is the referenced standard for welded copper tubing. Welded tubing dimensions correspond to Type K, L or M seamless tubing.

The types of copper tubing are identified with a continuous colored marking for ease of identification. These colored markings are as follows: Type K (WK) is green, Type L (WL) is blue and Type M (WM) is red. All are available in diameters from $^1/_4$ inch (6.4 mm) to 12 inches (305 mm). Straight lengths are manufactured in 12-foot (3658 mm), 18-foot (5486 mm) and 20-foot (6096 mm) lengths and annealed copper coils are manufactured in 40-foot (12 192 mm), 60-foot (18 288 mm) and 100-foot (30 480 mm) lengths.

The tubing must be rated for distribution of potable water and is marked at intervals of not more than 3 feet (914 mm) with the following information:

- The manufacturer's name.
- The standard designation (ASTM Number).
- NSF 61 certification mark.
- Nominal size (inches, CTS).
- Color marking green, blue or red.

Cross-linked polyethylene (PEX) plastic pipe tubing. The material is available in nominal pipe sizes (NPS) of $^1/_4$-inch (6.4 mm) through 2 inches (51 mm) and a standard dimension ratio of SDR 9. Commentary Figure 605.3(3) shows a sample marking for PEX tubing.

PEX tubing can be produced by numerous different manufacturing processes, such as the Engel, Silane, Monosil, Point a'Mousson, Daoplas and electron beam methods. Although each manufacturing process yields tubing complying with the referenced standards, each produces a tube that possesses unique characteristics.

The cross-linked molecular structuring gives the pipe additional resistance to rupture over a wider range of temperatures and pressures than that of other polyolefin plastics [polyethylene (PE) and polypropylene (PP)]. Because of PEX pipe's unique molecular structure and resistance to heat, heat fusion is not possible as a joining method. Because PEX is a member of the polyolefin plastic family, it is resistant to solvents. Therefore, PEX pipe cannot be joined by solvent cementing.

PEX pipe is flexible, allowing it to be bent. The tubing can be bent using either hot or cold bending methods.

For hot bending, a hot-air gun with a diffuser nozzle is used. The pipe must not be exposed to an open flame. The hot air meeting the pipe surface must not exceed 338°F (170°C), and the heat-up time must not exceed 5 minutes. The pipe is bent using conventional methods and is allowed to cool to room temperature before removal from the bending tool. The minimum hot-bending radius is two and one-half times the outside diameter. PEX can be bent at room temperature (cold bending) to a minimum radius of six times the outside diameter.

Mechanical connectors and fittings for PEX pipe are proprietary and must be used only with the pipe for which they have been designed and tested. Fitting systems currently available include compression fittings with inserts and ferrules or O-rings, insert fittings using a metallic lock (crimp) ring and insert fittings with compression collars using a cold flaring tool. It is important to consult the manufacturer's installation instructions to identify the fittings specified for use with each brand of PEX piping (see commentary, Section 605.17.2).

Cross-linked polyethylene/aluminum/cross-linked polyethylene (PEX-AL-PEX) pipe. PEX-AL-PEX is a composite pipe made of an aluminum tube laminated to interior and exterior layers of cross-linked polyethylene. The layers are bonded together with an adhesive. The cross-linked molecular structuring gives the pipe additional resistance to rupture than that of polyethylene (see the commentary for cross-linked polyethylene tubing in this section). Therefore, the pipe is suitable for hot and cold water distribution and is pressure rated for 125 psi at 180°F (862 kPa at 82°C).

Although it is partially plastic, the PEX-AL-PEX pipe resembles metal tubing in that it can be bent by hand or with a suitable bending device while maintaining its shape without fittings or supports. The minimum bending radius specified by manufacturers of this type of pipe is five times the outside diameter.

Mechanical joints are the only method currently available to join PEX-AL-PEX pipe. A number of proprietary mechanical-compression-type connectors have been developed for use with the composite pipe to permit transition to other pipes and fittings. Such fittings must be installed in accordance with the manufacturer's instructions (see commentary, Section 605.20.3).

Cross-linked polyethylene/aluminum/high-density polyethylene (PE-AL-HDPE) plastic pipe. This pipe is similar to cross-linked polyethylene/aluminum/cross-linked polyethylene (PEX-AL-PEX) pipe except the outer layer is made of high-density polyethylene instead of PEX. The OD dimensions of this pipe are 0.630 (16 mm), 0.787 (20 mm), 1.024 (26 mm), 1.260 (32 mm), 1.575 (40 mm), 1.969 (50 mm) and 2.48 inches (63 mm). The respective inside diameter dimensions are 0.453 (11.5 mm), 0.591 (15 mm), 0.787 (20 mm), 1.024 (26 mm), 1.299 (33 mm), 1.654 (42 mm) and 2.126 inches (54 mm).

Ductile-iron water pipe. The piping material is identified as either cast iron or ductile iron. Both materials are within the classification of cast iron. Ductile iron is a cast iron that is higher in ductility, resulting in the name "ductile iron." It is not as brittle as cast-iron pipe. Section 605.3 requires that the inside surface of duc-

INTERNATIONAL CODE COUNCIL®
Copyright © 2015 ICC. ALL RIGHTS RESERVED. Accessed by David Dammon on Jun 21, 2017 12:30:52 PM pursuant to License Agreement with ICC. No further reproduction or distribution authorized. ANY UNAUTHORIZED REPRODUCTION OR DISTRIBUTION IS A VIOLATION OF THE FEDERAL COPYRIGHT ACT AND THE LICENSE AGREEMENT, AND SUBJECT TO CIVIL AND CRIMINAL PENALTIES THEREUNDER.

tile-iron water pipe be cement-mortar lined in accordance with AWWA C104 [see Commentary Figure 605.3(1)]. This is necessary to provide a protective barrier between the potable water supply and the ductile-iron pipe to prevent impurities and contaminants from leaching into the water supply.

PIPE DIAMETER (inches)	MINIMUM LINING THICKNESS (inches)
3-12	1/4
14-24	3/32
30-54	1/8

For SI: 1 inch = 25.4 mm.

Figure 605.3(1)
DUCTILE IRON PIPE LINING THICKNESS

AWWA C151 and AWWA C115 are the referenced standards for ductile-iron water pipe. The pipe is manufactured with a bell hub end in lengths of 18 and 20 feet (5486 and 6096 mm). The pipe is available in diameters of 3 through 64 inches (76 through 1626 mm), and all required markings must be on or near the bell of the pipe with the following information:

- The manufacturer's name or mark.
- The country where cast.
- The weight, class or nominal thickness.
- The year in which the pipe is produced.
- The letters "DI" or the word "Ductile."

Galvanized steel pipe. A wide variety of pipe is classified as galvanized steel pipe. The grade of steel and the method of manufacturing can differ greatly.

The common pipe used in plumbing application is either continuous welded or electric-resistance welded (ERW). Continuous-welded pipe is heated and formed, whereas ERW pipe is cold rolled and welded.

Galvanized steel pipe is available in different wall thicknesses, the most common being standard weight, extra strong and double extra strong. These thicknesses are also referred to as Schedules 40, 80 and 160, respectively. As the schedule number increases, the wall thickness of the pipe increases. The outside diameter, however, remains the same for each pipe size. Steel pipe is hot dipped and zinc coated to produce a galvanized protective coating, both inside and outside. New galvanized pipe is a shiny silver, and, as the pipe ages, the coating oxidizes to protect the zinc. As a result, the color turns to a dull gray.

Galvanized steel pipe is sometimes called "galvanized pipe" or mistakenly called "wrought-iron pipe." Wrought-iron pipe has not been manufactured in the United States in more than 30 years. All pipe referred to as "wrought-iron pipe" is steel pipe.

The steel pipe industry claims to be responsible for nominal pipe dimensions, meaning the pipe is approximately the size by which it is identified. The dimensions date back to 1862 when Robert Briggs of Pascal Iron Works wrote the first pipe standards in the United States. It is believed that the dimensions were based on the pipe Briggs was manufacturing. That is why a 3/4-inch (19.1 mm) galvanized steel pipe has an out-side diameter of 1.05 inches (27 mm) and an average inside diameter of 0.824 inch (21 mm) for standard-weight pipe. The pipe is available in diameters of 1/8 inch through 26 inches (3.2 mm through 660 mm) and various lengths of 12 feet (3658 mm) to 22 feet (6706 mm). Galvanized steel pipe is marked with the following information:

- The manufacturer's name or mark.
- The type of pipe (i.e., A, B, XS, XXS).
- The specification number.
- The length of pipe.

See Commentary Figure 605.3(2) for dimensions of Schedule 40 steel pipe.

Polybutylene (PB) plastic pipe and tubing. Polybutylene pipe and tubing was the subject of much media attention decades ago. This was a result primarily of the settlement of a multimillion-dollar lawsuit and the announcement by the primary producer that it stopped manufacturing polybutylene resin for water supply piping. While some old stock of polybutylene may still be in warehouses, polybutylene pipe or tubing for potable water service or water distribution has not been produced in the United States for over 30 years. However, many homes built as late as the 1980s have had this product installed in water distribution systems. PB tubing for water service has been found installed as late as the 1990s as contractors and supply houses continued to deplete this obsolete stock. Because polybutylene pipe is no longer listed in the tables as an approved material for water service or water distribution piping, this material must not be installed in new construction, remodeling or repair work.

For reference and identification purposes only, PB pipe and tubing were marked "ASTM D 2662, D 2666, or D 3309." These materials were colored blue, black, or gray.

Polyethylene (PE) plastic pipe and tubing. Polyethylene is an inert polyolefin material. Because the material is highly resistant to chemical attack, solvent-cement joining of polyethylene pipe and tubing is not possible. Polyethylene pipe is blue or black when supplied for water service. The pipe is continuously marked with the manufacturer's name, the ASTM, AWWA or CSA standard and the grade of polyethylene.

Various grades of polyethylene resin can be used to produce pipe or tubing. In accordance with the ASTM standard, the material is identified by the term "PE," followed by four digits. The first digit indicates the type of material based on density. The second digit is the category identifying the extrusion flow rate. The last

INTERNATIONAL CODE COUNCIL®
Copyright © 2015 ICC. ALL RIGHTS RESERVED. Accessed by David Dammon on Jun 21, 2017 12:30:52 PM pursuant to License Agreement with ICC. No further reproduction or distribution authorized. ANY UNAUTHORIZED REPRODUCTION OR DISTRIBUTION IS A VIOLATION OF THE FEDERAL COPYRIGHT ACT AND THE LICENSE AGREEMENT, AND SUBJECT TO CIVIL AND CRIMINAL PENALTIES THEREUNDER.

NOMINAL PIPE SIZE (inches)	OUTSIDE DIAMETER (inches)	AVERAGE WALLTHICKNESS (inch)
$1^1/_4$	1.660	0.140
$1^1/_2$	1.9	0.145
2	2.375	0.154
$2^1/_2$	2.875	0.203
3	3.5	0.216
$3^1/_2$	4	0.226
4	4.5	0.226
5	5.563	0.258
6	6.625	0.280
8	8.625	0.322
10	10.75	0.365
12	12.75	0.375
14	14	0.437
16	16	0.5
18	18	0.562
20	20	.583
24	24	.687

For SI: 1 inch = 25.4 mm.

Figure 605.3(2)
STEEL PIPE DIMENSIONS
SCHEDULE 40

two digits show the hydrostatic design stress in hundreds of psi.

ASTM D 2239 is the referenced standard for SDIR-PR polyethylene pipe. The SDIRs of the pipe are 5.3, 7, 9, 11.5 and 15. The grades of polyethylene permitted include PE 1404, PE 2305, PE 2306, PE 3306, PE 3406 and PE 3408.

ASTM D 2737 is for polyethylene tubing with an SDR of 7.3, 9 and 11. The SDR for tubing is based on the average outside diameter.

Polyethylene/aluminum/polyethylene (PE-AL-PE) pipe. PE-AL-PE is identical to PEX-AL-PEX composite pipe except for the physical properties of the polyethylene. Polyethylene displays the same resistance to temperature and pressure as cross-linked polyethylene does; therefore, it is suitable for hot and cold water distribution and is pressure rated for 125 psi at 180°F (862 kPa at 82°C) (see the commentary to PEX-AL-PEX in this section).

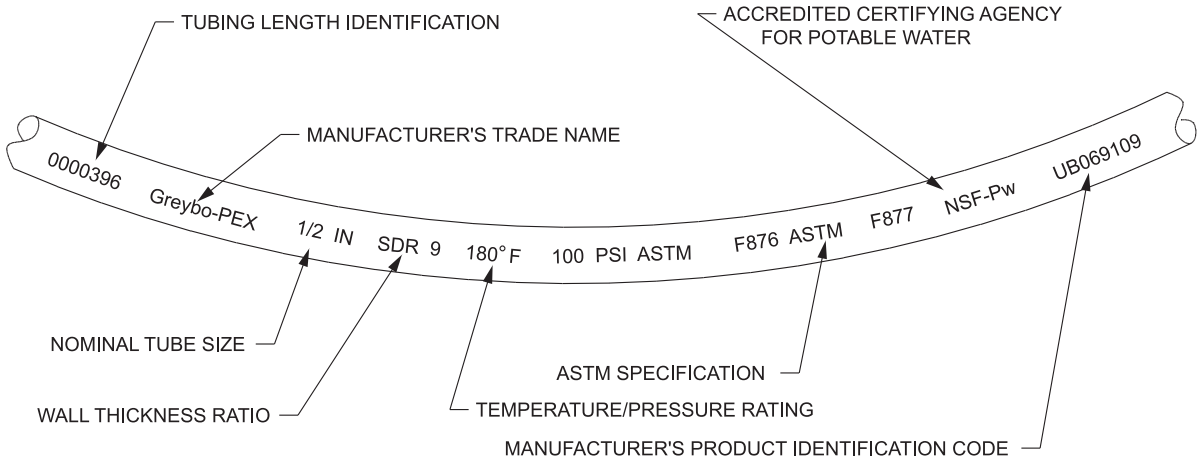

Figure 605.3(3)
SAMPLE MARKING OF PEX TUBING

INTERNATIONAL CODE COUNCIL®
Copyright © 2015 ICC. ALL RIGHTS RESERVED. Accessed by David Dammon on Jun 21, 2017 12:30:52 PM pursuant to License Agreement with ICC. No further reproduction or distribution authorized. ANY UNAUTHORIZED REPRODUCTION OR DISTRIBUTION IS A VIOLATION OF THE FEDERAL COPYRIGHT ACT AND THE LICENSE AGREEMENT, AND SUBJECT TO CIVIL AND CRIMINAL PENALTIES THEREUNDER.

Polyethylene of raised temperature (PE-RT) plastic tubing. Polyethylene of raised temperature is an inert polyolefin material. ASTM F 2769 covers tubing sizes $^1/_8$-, $^1/_4$-, $^5/_{16}$-, $^3/_8$-, $^1/_2$-, $^5/_8$-, $^3/_4$-, 1-, $1^1/_4$-, $1^1/_2$-, 2-, $2^1/_2$-, 3, $3^1/_2$-, 4-, $4^1/_2$-, 5- and 6-inch sizes. The wall thickness is based on an SDR of 9. Cold-bending radius must not be less than six times the outside diameter of the tubing. PE-RT must not be stored in locations or used in applications where there will be exposure to sunlight (UV light). PE-RT tubing is marked with the following information every 5 feet (1524 mm):

- The manufacturer's name or mark.
- The nominal tube size.
- Material specification in accordance with ASTM D 3350 (e.g., PE344373).
- Type of material (PE-RT).
- Standard Dimension Ratio SDR 9.
- Pressure rating (not less than 100 psi at 180°F and not less than 160 psi at 73°F).
- The specification number (ASTM F 2769).
- Chlorine-resistance classification code (e.g., CL1, CL3, or CL5).
- Standard designation for the fitting system(s) to be used with the tubing.
- Manufacturer's production code.
- Markings for NSF 14 and NSF 61.

Polypropylene (PP) pipe and tubing. Polypropylene is an inert polyolefin material. The pipe and tubing products are made of not more than 50 percent of other types of olefinic materials. ASTM F 2389 covers pipe sizes $^1/_2$, $^3/_4$, 1, $1^1/_2$, 2, 3, 4 and 6 inch. The pipe ODs match the dimensions of steel pipe. The pipe wall thicknesses match that of Schedule 80 steel pipe. The pipe is not to be externally threaded. ASTM F 2389 also covers metric size tubing in sizes 16, 20, 25, 32, 40, 50, 63, 75, 90, 110, 1125, 140 and 160 mm. The metric tubing wall thicknesses are according to the dimension ratio (DR) of the tubing. The available DRs are 11, 7.3, 6 and 5. The piping is joined using heat fusion methods. Polypropylene pipe is marked with the following information every 5 feet (1524 mm):

- The manufacturer's name or mark.
- The nominal pipe size.
- Pipe will be marked Schedule 80 or SCH 80.
- Type of material (PP-R).
- Pressure rating (100 psi at 180°F and 160 psi at 73°F).
- The specification number (ASTM F 2389 or CSA B137.11).
- Manufacturer's production code.
- Markings for NSF 14 and NSF 61.

Polyvinyl chloride (PVC) plastic pipe. PVC water service pipe is a different material than PVC drainage pipe, although both materials are white. The pipe must be continuously marked with the manufacturer's name, the ASTM or CSA standard and the grade of the PVC material.

A number of grades of PVC material are used to produce pipe. In accordance with the ASTM standards, the compounds are identified as PVC 12454-B, 12454-C and 14333-D. ASTM D 1785 is the referenced standard for Schedule 40, 80 and 160 PVC plastic pipe. These dimensions are the same as Schedule 40, 80 and 160 steel pipe.

ASTM D 2241 is the referenced standard for SDR-PR PVC plastic pipe. "SDR" means standard dimension ratio, which is the ratio between the average outside diameter of the pipe and the minimum wall thickness. "PR" indicates that the pipe is pressure rated. SDRs of the pipe are 13.5, 17, 21, 26, 32.5, 41 and 64.

ASTM D 2672 is the referenced standard for bell-end PVC plastic pipe conforming to either ASTM D 1785 or ASTM D 2241.

Stainless steel pipe (Types 304, 304L, 316 and 316L). Stainless steel is a family of iron-based alloys that must contain at least 10 percent or more chromium. The presence of chromium creates an invisible surface film that resists oxidation and makes the material corrosion resistant. Stainless steel is produced in an electric arc furnace using argon-oxygen degassing melting technology. This provides closely controlled chemistry in the final product. Most semifinished product receives a final annealing and pickling operation. The fact that stainless steel has a great resistance to corrosion means that using stainless will result in a very long pipe life compared to mild steel pipe. The benefits of stainless include corrosion resistance, fire and heat resistance, hygiene (easy cleaning ability), aesthetic appearance, strength-to-weight advantage, ease of fabrication, impact resistance and long-term value.

Wrought austenitic stainless steels unite a useful combination of outstanding corrosion and heat resistance with good mechanical properties over a wide temperature range. This type of pipe is typically used for chemicals, petroleum, pollution abatement, food processing, transportation equipment, water service and water distribution. There are several grades of stainless steel, such as ferritic, martensitic, austenitic, duplex and precipitation hardened. All grades other than the austenitic (300 series) stainless steels exhibit some degree of magnetism; the austenitic grades are nonmagnetic. Some austenitic welds may show some slight degree of magnetism because of the desired requirement to have a small amount of residual ferrite in the finished weld. Thus, one should not limit the selection of wrought austenitic stainless steels to those included herein, but rather should ask producers for the best grade—standard or specialty—for a particular use.

ASTM A 312 and ASTM A 778 are the referenced standards for water service and water distribution

INTERNATIONAL CODE COUNCIL®
Copyright © 2015 ICC. ALL RIGHTS RESERVED. Accessed by David Dammon on Jun 21, 2017 12:30:52 PM pursuant to License Agreement with ICC. No further reproduction or distribution authorized. ANY UNAUTHORIZED REPRODUCTION OR DISTRIBUTION IS A VIOLATION OF THE FEDERAL COPYRIGHT ACT AND THE LICENSE AGREEMENT, AND SUBJECT TO CIVIL AND CRIMINAL PENALTIES THEREUNDER.

pipe. The material is suitable for both applications. Types 304/304L and 316/316L are referenced in those standards. Type 304/304L is the low-carbon grade, which provides the designer higher minimum design properties, while offering the benefits of the low-carbon grades of material suitable for welding. Type 316/316L stainless steels are characterized by addition of molybdenum and are more corrosion resistant than Type 304/304L.

Standard wrought austenitic stainless steels can be supplied in a variety of standard finishes, which include dull and smooth, pickled, ground finishes up to 500 grit, electropolished, rouge polished and tumbled.

Annealed tubing can be formed to minimum bend radii of two to six times OD. Tube ends can be flanged, flared or beaded. In addition to mechanical fastening, standard wrought austenitic stainless steels may be joined by brazing, soldering or welding.

Brazing can be readily accomplished, but should be well above the heat sensitizing range. Brazing without fluxes can be done in vacuum or in atmospheres of dry hydrogen, argon or helium.

Stainless steel can also be soldered using, for example, tin-lead filler metals. Fluxes are required to break down the protective oxide film and permit wetting. Chloride-free or phosphate fluxes should be used. Inert gas shielding is necessary to prevent porosity and oxidation of the weld metal.

605.3.1 Dual check-valve-type backflow preventer. Dual check-valve backflow preventers installed on the water supply system shall comply with ASSE 1024 or CSA B64.6.

❖ Operators of public water systems are required by the SDWA to protect the public water systems from possible sources of contamination. Every water service connection to a public water main is a possible entry point for contamination and pollutants to the public water supply system. For example, cleaning crews of an office building might use chemicals in such a manner that the chemicals could be introduced in the water distribution system of the building should a backflow event occur. The contamination could flow into the water service system and then into the public water system. In order to protect the public water supply, the water purveyor usually has legal right to protect the public system by installing a backflow preventer at the water service connection or request (demand) that the building owner install a backflow preventer in the water service system to the building. A dual check valve-type backflow preventer offers a minimum level of protection against backpressure and backsiphonage. In many cases, the water purveyor provides and installs a dual check valve backflow preventer as part of installing the water meter. Where dual check valve backflow preventers are installed, they must comply with ASSE 1024 or CSA B 64.6.

605.4 Water distribution pipe. Water distribution pipe shall conform to NSF 61 and shall conform to one of the standards listed in Table 605.4. Hot water distribution pipe and tubing shall have a pressure rating of not less than 100 psi (690 kPa) at 180°F (82°C).

❖ Piping material that comes in contact with potable water is required to conform to NSF 61 (see commentary, Section 605.3). Pipe installed in a water distribu-

TABLE 605.4
WATER DISTRIBUTION PIPE

MATERIAL	STANDARD
Brass pipe	ASTM B 43
Chlorinated polyvinyl chloride (CPVC) plastic pipe and tubing	ASTM D 2846; ASTM F 441; ASTM F 442; CSA B137.6
Chlorinated polyvinyl chloride/aluminum/chlorinated polyvinyl chloride (CPVC/AL/CPVC)	ASTM F 2855
Copper or copper-alloy pipe	ASTM B 42; ASTM B 302
Copper or copper-alloy tubing (Type K, WK, L, WL, M or WM)	ASTM B 75; ASTM B 88; ASTM B 251; ASTM B 447
Cross-linked polyethylene (PEX) plastic tubing	ASTM F 876; ASTM F 877; CSA B137.5
Cross-linked polyethylene/aluminum/cross-linked polyethylene (PEX-AL-PEX) pipe	ASTM F 1281; ASTM F 2262; CSA B137.10
Cross-linked polyethylene/aluminum/high-density polyethylene (PEX-AL-HDPE)	ASTM F 1986
Ductile iron pipe	AWWA C151/A21.51; AWWA C115/A21.15
Galvanized steel pipe	ASTM A 53
Polyethylene/aluminum/polyethylene (PE-AL-PE) composite pipe	ASTM F 1282
Polyethylene of raised temperature (PE-RT) plastic tubing	ASTM F 2769
Polypropylene (PP) plastic pipe or tubing	ASTM F 2389; CSA B137.11
Stainless steel pipe (Type 304/304L)	ASTM A 312; ASTM A 778
Stainless steel pipe (Type 316/316L)	ASTM A 312; ASTM A 778

INTERNATIONAL CODE COUNCIL®
Copyright © 2015 ICC. ALL RIGHTS RESERVED. Accessed by David Dammon on Jun 21, 2017 12:30:52 PM pursuant to License Agreement with ICC. No further reproduction or distribution authorized. ANY UNAUTHORIZED REPRODUCTION OR DISTRIBUTION IS A VIOLATION OF THE FEDERAL COPYRIGHT ACT AND THE LICENSE AGREEMENT, AND SUBJECT TO CIVIL AND CRIMINAL PENALTIES THEREUNDER.

tion system must be capable of withstanding the working pressures of the system at the maximum hot water temperature that could be present in the system. The maximum allowable hot water temperature in a water distribution system is 180°F (82°C). The maximum allowable working pressure of a water distribution system is 80 psi (552 kPa) (see Section 604.8); however, as there can be pressure surges in a water distribution system, the maximum working pressure for the pipe is set at 100 psi (690 kPa).

605.5 Fittings. Pipe fittings shall be approved for installation with the piping material installed and shall comply with the applicable standards listed in Table 605.5. Pipe fittings utilized in water supply systems shall also comply with NSF 61. Ductile and gray iron pipe and pipe fittings utilized in water service piping systems shall be cement mortar lined in accordance with AWWA C104.

❖ Pipe (and tube) fittings must be appropriate for both the type of piping material and the service application. Even though a Schedule 40 PVC pipe fitting will fit Schedule 80 PVC pipe, the Schedule 40 fitting does not have the same pressure rating as the Schedule 80 pipe. Even though an insert fitting with crimp ring might appear to fit the PEX tubing of many manufacturers, only the fittings recommended by the manufacturer are to be used (see Section 605.17.2). Schedule 40 ABS pipe and fittings are dimensionally interchangeable with PVC Schedule 40 fittings; however, the code does not allow PVC and ABS to be solvent cemented together.

Compliance to NSF 61 for all water supply system components is paramount for protection of the public against contamination of the water supply (see commentary, Sections 605.2, 605.3 and 605.4).

Ductile and gray iron piping is frequently used for underground water service piping. Section 605.3 requires that such piping be cement mortar lined to protect the iron surface from rusting, giving the water a red tint. Fittings are no less subject to rusting so they too are required to be cement mortar lined. Note that the cement mortar lining requirement is only for water service piping applications. Although ductile iron and gray iron piping could be used as water distribution piping (inside of a building), the code does not require that the piping in those applications be cement mortar lined (see Section 605.4).

TABLE 605.5
PIPE FITTINGS

MATERIAL	STANDARD
Acrylonitrile butadiene styrene (ABS) plastic	ASTM D 2468
Cast-iron	ASME B16.4; ASME B16.12
Chlorinated polyvinyl chloride (CPVC) plastic	ASSE 1061; ASTM D 2846; ASTM F 437; ASTM F 438; ASTM F 439; CSA B137.6
Copper or copper alloy	ASSE 1061; ASME B16.15; ASME B16.18; ASME B16.22; ASME B16.23; ASME B16.26; ASME B16.29
Cross-linked polyethylene/aluminum/high-density polyethylene (PEX-AL-HDPE)	ASTM F 1986
Fittings for cross-linked polyethylene (PEX) plastic tubing	ASSE 1061, ASTM F 877; ASTM F 1807; ASTM F 1960; ASTM F 2080; ASTM F 2098, ASTM F 2159; ASTM F 2434; ASTM F 2735; CSA B137.5
Fittings for polyethylene of raised temperature (PE-RT) plastic tubing	ASTM F 1807; ASTM F 2098; ASTM F 2159; ASTM F 2735
Gray iron and ductile iron	AWWA C110/A21.10; AWWA C153/A21.53
Insert fittings for polyethylene/aluminum/polyethylene (PE-AL-PE) and cross-linked polyethylene/aluminum/cross-linked polyethylene (PEX-AL-PEX)	ASTM F 1974; ASTM F 1281; ASTM F 1282; CSA B137.9; CSA B137.10M
Malleable iron	ASME B16.3
Metal (brass) insert fittings for polyethylene/aluminum/polyethylene (PE-AL-PE) and cross-linked polyethylene/aluminum/cross-linked polyethylene (PEX-AL-PEX)	ASTM F 1974
Polyethylene (PE) plastic pipe	ASTM D 2609; ASTM D 2683; ASTM D 3261; ASTM F 1055; CSA B137.1
Polypropylene (PP) plastic pipe or tubing	ASTM F 2389; CSA B137.11
Polyvinyl chloride (PVC) plastic	ASTM D 2464; ASTM D 2466; ASTM D 2467; CSA B137.2; CSA B137.3
Stainless steel (Type 304/304L)	ASTM A 312; ASTM A 778
Stainless steel (Type 316/316L)	ASTM A 312; ASTM A 778
Steel	ASME B16.9; ASME B16.11; ASME B16.28

INTERNATIONAL CODE COUNCIL®
Copyright © 2015 ICC. ALL RIGHTS RESERVED. Accessed by David Dammon on Jun 21, 2017 12:30:52 PM pursuant to License Agreement with ICC. No further reproduction or distribution authorized. ANY UNAUTHORIZED REPRODUCTION OR DISTRIBUTION IS A VIOLATION OF THE FEDERAL COPYRIGHT ACT AND THE LICENSE AGREEMENT, AND SUBJECT TO CIVIL AND CRIMINAL PENALTIES THEREUNDER.

605.5.1 Mechanically formed tee fittings. Mechanically extracted outlets shall have a height not less than three times the thickness of the branch tube wall.

❖ Constructing a manifold from copper tube and copper tee fittings is labor intensive and costly. Special equipment was developed to enable a skilled tradesperson to fabricate branch outlets in copper tube without the need for fittings. The branch outlets are formed in a continuous operation by drilling a pilot hole and drawing out the wall of the copper tube to form a branch outlet. To ensure that the branch outlet provides for an adequate connection for the branch tube, the height of the formed branch outlet tube must be not less than three times the thickness of the tube wall (see Commentary Figure 605.5.1).



Figure 605.5.1
DRILLING AND PULLING BRANCH OUTLETS
(Photo courtesy of T-Drill Industries, Inc.)

605.5.1.1 Full flow assurance. Branch tubes shall not restrict the flow in the run tube. A dimple serving as a depth stop shall be formed in the branch tube to ensure that penetration into the collar is of the correct depth. For inspection purposes, a second dimple shall be placed $^{1}/_{4}$ inch (6.4 mm) above the first dimple. Dimples shall be aligned with the tube run.

❖ The branch tube to be inserted into the formed branch outlet on the main run of tube must not interfere with the flow path in the main run of tube. To ensure that this interference does not occur, the end of the tube to be connected to the branch outlet must be notched to approximate the curvature of the main run of tube. In conjunction with the notching of the end of the branch tube, two dimples are pressed into the side of the tube to prevent the tube from being inserted too far into the main run of tube (see Commentary Figure 605.5.1.1). The upper dimple provides an indicator for inspection purposes as the lower dimple is often obscured by brazing filler material.



Figure 605.5.1.1
SPECIALLY PREPARED BRANCH PIPE END
(Photo courtesy of T-Drill Industries, Inc.)

605.5.1.2 Brazed joints. Mechanically formed tee fittings shall be brazed in accordance with Section 605.14.1.

❖ Because the height of the formed branch outlet on the main run of tube is very short and is not formed with the exacting tolerances of a factory-produced socket fitting, soft soldering of a branch tube in the formed branch outlet is inadequate to ensure the joint strength necessary for a dependable connection.

Brazing of the joint, in accordance with Section 605.14.1, is required (see Commentary Figure 605.5.1.2).

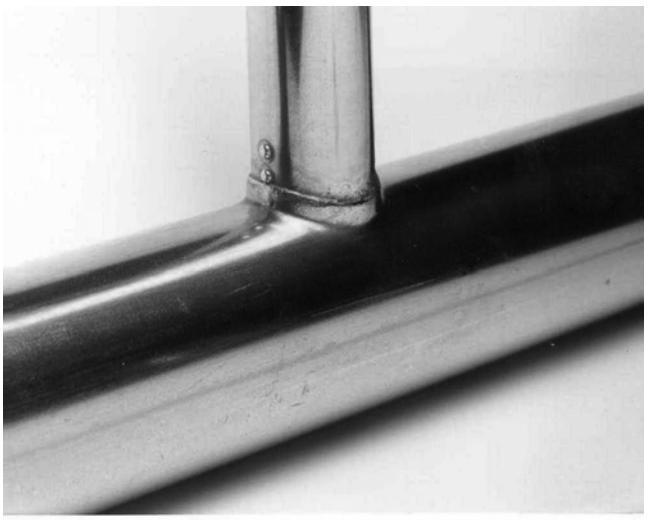

Figure 605.5.1.2
BRAZED CONNECTION
(Photo courtesy of T-Drill Industries, Inc.)

INTERNATIONAL CODE COUNCIL®
Copyright © 2015 ICC. ALL RIGHTS RESERVED. Accessed by David Dammon on Jun 21, 2017 12:30:52 PM pursuant to License Agreement with ICC. No further reproduction or distribution authorized. ANY UNAUTHORIZED REPRODUCTION OR DISTRIBUTION IS A VIOLATION OF THE FEDERAL COPYRIGHT ACT AND THE LICENSE AGREEMENT, AND SUBJECT TO CIVIL AND CRIMINAL PENALTIES THEREUNDER.

605.6 Flexible water connectors. Flexible water connectors exposed to continuous pressure shall conform to ASME A112.18.6/CSA B125.6. *Access* shall be provided to all flexible water connectors.

❖ ASTM A 112.18.6/CSA B125.6 is the referenced standard for flexible water connectors used in potable water systems. Compliance with the standard ensures that: 1) plastic materials coming into contact with potable water must comply with the applicable sections of NSF 14; 2) all other materials comply with the requirements of NSF 61; 3) solder and fluxes containing lead in excess of 0.2 percent are not used in the fabrication of the connector; 4) metal alloys exceeding 8-percent lead content are not used and 5) copper alloy components used contain not less than 58-percent copper (see commentary, Section 605.2). Flexible water connectors are designed to function at water pressure up to 125 psi (862 kPa) and supply temperature from 40°F to 180°F (4°C to 82°C).

605.7 Valves. Valves shall be compatible with the type of piping material installed in the system. Valves shall conform to one of the standards listed in Table 605.7 or shall be *approved*. Valves intended to supply drinking water shall meet the requirements of NSF 61.

❖ Valves must be of a material that is "compatible" with the pipe material so as to avoid valve and pipe failure caused by chemical or corrosive reactions. Table 605.7 contains a list of valve materials and the standards with which they must comply. For valve materials that are not indicated, such valves are required to be approved. Valves used for the supply of drinking water must comply with NSF 61; however, Sections 605.2 and 605.2.1 also apply in those situations.

Prior to the 2015 code, only ball valves, gate valves, butterfly valves, globe valves and plug valves that supplied drinking water were required to comply with NSF 61. Missing from this list were pressure-reducing valves, backflow-prevention valves, check valves and solenoid valves (which are typically a globe valve pattern). For the 2015 code, all types of valves that supply drinking water must comply with NSF 61. This increased coverage ensures that contaminants tested (especially lead) under NSF 61 are not being imparted to the drinking water supply for the building.

605.8 Manufactured pipe nipples. Manufactured pipe nipples shall conform to one of the standards listed in Table 605.8.

❖ Pipe nipples are short pieces [24 inches or less (610 mm)] of threaded pipe used in making up piping assemblies. The majority of brass, copper and galvanized steel pipe nipples are mass-produced in specific length increments in a factory as opposed to contractor- or supplier-made from pipe. Table 605.8 lists the referenced standards that apply to these manufactured products.

TABLE 605.8
MANUFACTURED PIPE NIPPLES

MATERIAL	STANDARD
Brass-, copper-, chromium-plated	ASTM B 687
Steel	ASTM A 733

❖ ASTM A 733 specifies material and dimensions for galvanized steel pipe nipples and stainless steel pipe nipples. Galvanized steel pipe nipples are made from ASTM A 53 or A 106 piping, which has been hot-dipped galvanized inside and out. Stainless steel nipples are made from ASTM A 312 piping. Steel pipe nipples are available in the range of nominal pipe sizes $^{3}/_{8}$ to 12 inches (3.2 mm to 305 mm) and in lengths up to 24 inches (610 mm).

ASTM B 687 requires brass- and chrome-plated nipples to be made from brass pipe conforming to ASTM B 43. Copper pipe nipples are made from copper pipe conforming to ASTM B 42. The nipples are available in pipe sizes $^{1}/_{4}$ inch to 8 inches (6.4 mm to 203 mm) and in lengths up to 12 inches (305 mm).

605.9 Prohibited joints and connections. The following types of joints and connections shall be prohibited:

1. Cement or concrete joints.
2. Joints made with fittings not *approved* for the specific installation.
3. Solvent-cement joints between different types of plastic pipe.
4. Saddle-type fittings.

❖ Pipe joints made with portland cement (such as brick mortar) or concrete are not effective in restraining and sealing a pipe joint because the materials are inflexi-

TABLE 605.7
VALVES

MATERIAL	STANDARD
Chlorinated polyvinyl chloride (CPVC) plastic	ASME A112.4.14; ASME A112.18.1/CSA B125.1; ASTM F 1970; CSA B125.3
Copper or copper alloy	ASME A112.4.14; ASME A112.18.1/CSA B125.1; ASME B16.34; CSA B125.3; MSS SP-67; MSS SP-80; MSS SP-110
Cross-linked polyethylene (PEX) plastic	ASME A112.4.14; ASME A112.18.1/CSA B125.1; CSA B125.3; NSF 359
Gray iron and ductile iron	AWWA C500; AWWA C504; AWWA C507; MSS SP-67; MSS SP-70; MSS SP-71; MSS SP-72; MSS SP-78
Polypropylene (PP) plastic	ASME A112.4.14; ASTM F 2389
Polyvinyl chloride (PVC) plastic	ASME A112.4.14; ASTM F 1970

INTERNATIONAL CODE COUNCIL®
Copyright © 2015 ICC. ALL RIGHTS RESERVED. Accessed by David Dammon on Jun 21, 2017 12:30:52 PM pursuant to License Agreement with ICC. No further reproduction or distribution authorized. ANY UNAUTHORIZED REPRODUCTION OR DISTRIBUTION IS A VIOLATION OF THE FEDERAL COPYRIGHT ACT AND THE LICENSE AGREEMENT, AND SUBJECT TO CIVIL AND CRIMINAL PENALTIES THEREUNDER.

ble and susceptible to cracking and displacement.

Fittings that are not approved for a specific installation can fail or be unacceptable because of a number of reasons, including: 1) incompatibility of materials; 2) not rated for the conditions of service or 3) contamination of the potable water supply.

A solvent-cement joint between a pipe and a fitting is a solvent "welding" process that melts the surfaces of the items to be joined. If the pipe and fitting material are not the same, it is questionable as to whether the fused zone of material in the joint has the same strength and durability as a joint made between identical materials. Note that Section 605.24.2 requires that joints between different grades of plastic pipe material must be made with an approved adapter fitting (see commentary, Section 605.24.2).

A saddle-type fitting is also known as a saddle tee or a saddle-tap tee. The installation of a saddle-type fitting essentially involves the drilling of a hole in the side of a pipe and installing a specially designed, rubber-gasketed, wide clamp around the pipe at the drilled hole location. The wide clamp has an internally threaded boss to enable connection of a threaded pipe or pipe fitting, forming a branch to the original pipe. Because of the gasket and the means of attachment of the clamp to the pipe, such saddle-type arrangements are not durable and, therefore, are undependable for long-term service.

605.10 ABS plastic. Joints between ABS plastic pipe and fittings shall comply with Sections 605.10.1 through 605.10.3.

❖ Acceptable joints for ABS plastic pipe are identified in the referenced sections.

605.10.1 Mechanical joints. Mechanical joints on water pipes shall be made with an elastomeric seal conforming to ASTM D 3139. Mechanical joints shall only be installed in underground systems, unless otherwise *approved*. Joints shall be installed only in accordance with the manufacturer's instructions.

❖ Mechanical joints are predominantly used in underground applications (e.g., bell or hub compression gasket joints) because earth burial provides axial restraint to keep the joint from separating. Because most mechanical joints are typically of the unrestrained type, above-ground mechanical joints are prohibited as most above-ground piping systems do not provide for the necessary axial restraint; however, there are situations where remodeling and system extension activities might make it impractical to install anything other than a mechanical joint. In these cases, the code official must evaluate the joint and determine if the arrangement provides for the required axial restraint to keep the joint intact during service. Note that the referenced standard regulates only the elastomeric material used to make the seal in a mechanical joint. The joint design and the installation details are the responsibility of the joint manufacturer.

605.10.2 Solvent cementing. Joint surfaces shall be clean and free from moisture. Solvent cement that conforms to ASTM D 2235 shall be applied to all joint surfaces. The joint shall be made while the cement is wet. Joints shall be made in accordance with ASTM D 2235. Solvent-cement joints shall be permitted above or below ground.

❖ Solvent welding ABS pipe and fittings together involves only the use of proper ABS solvent cement. No priming or solvent cleaning of the joint surfaces is required because ABS solvent cement is sufficiently aggressive enough to clean, prime and solvent weld all in one step. Solvent cement is not an adhesive or a filler as the term "cement" might imply. Solvent cement melts the surfaces to be joined together such that they merge together. As the solvent dissipates from the joint, the dissolved surfaces will harden as one and strengthen over time.

The keys to making consistent, high-quality solvent welded joints are:

- The pipe and fittings should be approximately the same temperature prior to solvent cementing.
- The pipe end and socket of the fitting must be clean, dry and free from grease, oil and other foreign materials.
- The solvent cement must be uniformly applied to the socket of the fitting and to the end of the pipe to the depth of the socket. Excessive solvent cement must be avoided to prevent a bead from forming on the inside of the pipe joint.
- The joint is made by twisting the pipe into the fitting socket immediately after applying the cement and while the cement is still wet. The pipe must be held together for a 5 to 10 seconds until the solvent cement begins to set as the pipe will tend to back out of the fitting.
- The small bead of solvent cement that forms between the pipe exterior and fitting should be removed with a clean cloth to avoid the possibility of weakening the pipe wall.
- There should be no rough handling of the joined pipe and fitting for at least 1 hour after the joint is assembled.
- The solvent welded joint should remain unpressurized for a period of 24 hours.

Because each type of solvent cement is specifically designed for a piping material, all-purpose solvent cement or universal solvent cement cannot be used to join ABS pipe or fittings unless the cement conforms to ASTM D 2235. Solvent cement must be identified on the can as complying with ASTM D 2235.

This section clarifies that solvent cementing is an acceptable ABS joining method for both above-ground and below-ground installations.

INTERNATIONAL CODE COUNCIL®
Copyright © 2015 ICC. ALL RIGHTS RESERVED. Accessed by David Dammon on Jun 21, 2017 12:30:52 PM pursuant to License Agreement with ICC. No further reproduction or distribution authorized. ANY UNAUTHORIZED REPRODUCTION OR DISTRIBUTION IS A VIOLATION OF THE FEDERAL COPYRIGHT ACT AND THE LICENSE AGREEMENT, AND SUBJECT TO CIVIL AND CRIMINAL PENALTIES THEREUNDER.

605.10.3 Threaded joints. Threads shall conform to ASME B1.20.1. Schedule 80 or heavier pipe shall be permitted to be threaded with dies specifically designed for plastic pipe. *Approved* thread lubricant or tape shall be applied on the male threads only.

❖ Pipe thread dimensions can be historically traced to Robert Briggs, already mentioned in the commentary to Table 605.3 for galvanized steel pipe. The standard identifies pipe dimensions as "NPT." Often thought of as an abbreviation, some of the terms from which NPT has been shortened are: National Pipe Thread, Nominal Pipe Thread and National Pipe Tapered Thread.

NPT is a coded designation: N stands for USA Standard, P indicates pipe and T means that the threads are tapered.

Thread lubricant (pipe-joint compound) must be specifically designed for ABS plastic pipe. It is not the same lubricant that is commonly used for metallic pipe, such as steel. This section prohibits cutting threads into Schedule 40 ABS pipe. Threaded joints in Schedule 40 ABS pipe must be accomplished with factory-fabricated fittings made for that purpose. This section also recognizes that Schedule 80 pipe has sufficient pipe-wall thickness and strength to permit field threading.

Thread lubricant and tape are designed for two purposes: to lubricate the joint for proper thread mating and to fill in small imperfections on the surfaces of the threads.

605.11 Brass. Joints between brass pipe and fittings shall comply with Sections 605.11.1 through 605.11.4.

❖ Acceptable joints for brass pipe or fittings are identified in the referenced sections.

605.11.1 Brazed joints. All joint surfaces shall be cleaned. An *approved* flux shall be applied where required. The joint shall be brazed with a filler metal conforming to AWS A5.8.

❖ Although brazed joints are similar to soldered joints, brazed joints are joined at a higher temperature [in excess of 1,000°F (538°C)]. Because of a brazed joint's inherent resistance to elevated temperatures, it is much stronger than a soldered joint. Brazing is often referred to as "silver soldering." Silver soldering is more accurately described as silver brazing and uses high-silver-bearing alloys primarily composed of silver, copper and zinc. Silver soldering (brazing) typically requires temperatures in excess of 1,000°F (538°C), and such solders are classified as "hard" solders.

There has always been confusion over the distinction between "silver solder" and "silver-bearing solder." Silver solders are unique and can be further subdivided into soft and hard categories, which are determined by the percentages of silver and the other component elements of the particular alloy. The distinction must be made that silver-bearing solders [with a melting point below 600°F (315°C)] are used in soft-soldered joints, whereas silver solders [with a melting point above 1,000°F (538°C)] are used in silver-brazed joints.

The two common series of filler metals used for brazing are BCuP and BAg. BCuP contains phosphorus and copper alloys. BAg contains 30- to 60-percent silver with zinc and copper alloys. Some of the BAg filler metals also contain cadmium.

The joint surfaces to be brazed must be cleaned, typically by polishing the pipe with an emery cloth. The socket fitting is cleaned with a tube fitting brush.

Brazing flux is applied to the joint surfaces. Certain types of BCuP filler metals do not require flux for certain types of joints. The manufacturer's recommendations should be consulted to determine when flux is necessary.

The joints are typically heated with an oxyacetylene torch, though an air acetylene torch can be used on a smaller-diameter pipe. The pipe and fitting must be at approximately the same temperature when making the joint. The filler metal flows to the heat with the aid of the flux. The pipe should first be heated above the fitting. When the flux becomes clear, the heat should be directed to the base of the fitting socket. When the flux becomes clear and quiet, the filler metal is applied to the joint. The heat draws the filler metal into the socket (see Commentary Figure 605.11.1). Any remaining flux residue should be removed from the pipe and joint surfaces.

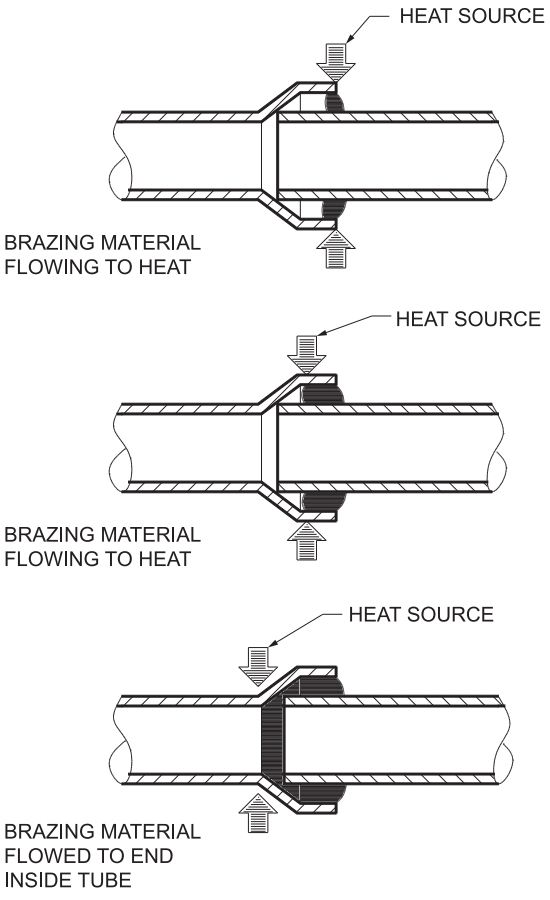

Figure 605.11.1
HEAT APPLICATION OF BRAZED JOINT

INTERNATIONAL CODE COUNCIL®
Copyright © 2015 ICC. ALL RIGHTS RESERVED. Accessed by David Dammon on Jun 21, 2017 12:30:52 PM pursuant to License Agreement with ICC. No further reproduction or distribution authorized. ANY UNAUTHORIZED REPRODUCTION OR DISTRIBUTION IS A VIOLATION OF THE FEDERAL COPYRIGHT ACT AND THE LICENSE AGREEMENT, AND SUBJECT TO CIVIL AND CRIMINAL PENALTIES THEREUNDER.

605.11.2 Mechanical joints. Mechanical joints shall be installed in accordance with the manufacturer's instructions.

❖ Mechanical joints are unique in that many acceptable types are available. Most mechanical joints use an elastomeric material to form a seal. Compression fittings that use a compression ring, which forms a metal-to-metal seal, are also considered as mechanical joints. In all cases, the joint must be carefully installed in accordance with the manufacturer's instructions.

605.11.3 Threaded joints. Threads shall conform to ASME B1.20.1. Pipe-joint compound or tape shall be applied on the male threads only.

❖ Pipe-joint compound is typically designed for metallic pipe. The pipe-joint compound used for brass pipe will also be applied for copper pipe and steel pipe (see commentary, Section 605.10.3).

605.11.4 Welded joints. All joint surfaces shall be cleaned. The joint shall be welded with an *approved* filler metal.

❖ A welded joint is similar to a brazed joint. The primary differences are the temperature at which the joint is made, the type of filler metals used and the fact that welding reaches the melting point of the base metal, whereas brazing temperatures are well below the melting point of the pipe (see commentary, Section 605.11.1).

605.12 Gray iron and ductile iron joints. Joints for gray and ductile iron pipe and fittings shall comply with AWWA C111/A21.11 and shall be installed in accordance with the manufacturer's instructions.

❖ This section requires rubber-gasket joints to connect ductile-iron water pipe. Although not specifically identified, the following are considered to be rubber-gasket joints:

Mechanical joints: a bottled joint of the stuffing type including a bell, an exterior flange with bolt openings, a socket, a sealing gasket, a follower gland with bolt holes and bolts.

Push-on joint: a single rubber-gasket joint consisting of a plain-end pipe forced into a socket and compressing the gasket around the outside of the pipe.

Flange joint: two flanged end pipes joined together by bolts that compress a ring gasket between the flange faces.

Modified push-on and mechanical joints: variations to the above-described joints that comply with the performance requirements of AWWA C111.

605.13 Copper pipe. Joints between copper or copper-alloy pipe and fittings shall comply with Sections 605.13.1 through 605.13.5.

❖ Acceptable joints for copper or copper-alloy pipe or fittings are identified in the referenced sections.

605.13.1 Brazed joints. All joint surfaces shall be cleaned. An *approved* flux shall be applied where required. The joint shall be brazed with a filler metal conforming to AWS A5.8.

❖ The installation technique and materials used to make a brazed joint for copper or copper-alloy pipe are identical to that of brass pipe and copper tubing (see commentary, Section 605.11.1).

605.13.2 Mechanical joints. Mechanical joints shall be installed in accordance with the manufacturer's instructions.

❖ Mechanical joints for copper or copper-alloy pipe are similar to those used to join brass pipe (see commentary, Section 605.11.2). Because the different mechanical joint couplings available are often unique to each manufacturer, the couplings must be installed in accordance with the manufacturer's instructions.

605.13.3 Solder joints. Solder joints shall be made in accordance with ASTM B 828. Cut tube ends shall be reamed to the full inside diameter of the tube end. Joint surfaces shall be cleaned. A flux conforming to ASTM B 813 shall be applied. The joint shall be soldered with a solder conforming to ASTM B 32. The joining of water supply piping shall be made with *lead-free solder and fluxes*. "Lead free" shall mean a chemical composition equal to or less than 0.2-percent lead.

❖ A soldered joint is the most common method of joining copper pipe and tubing.

Pipe must be cut square for proper alignment, adequate surface area for joining and an interior free from obstructions. When the pipe is cut, an edge (burr) is left protruding into the pipe. The pipe must be reamed to properly remove the burr. Chamfering is required to bevel the outer edge of a pipe cut end. Undercutting (excessive reaming) can reduce pipe wall thickness (see Commentary Figure 605.13.3).

ASTM B 32 covers many grades of solder, including tin-silver solders. Previously, the grades used in the plumbing industry were typically 40-60 (40-percent tin and 60-percent lead), 50-50 (50-percent tin and 50-percent lead) and 95-5 (95-percent tin and 5-percent antimony). Lead-based solders, however, are no longer permitted for joining copper tubing where used for the distribution of potable water.

Lead-based solders and fluxes have been implicated as a cause for an increased concentration of lead in drinking water. Potable water is exposed to the lead in the solder that commonly coats the inside surface of the pipe or fitting near the joint. The water can dissolve lead from the solder. The chemically combined or free lead in potable water can be ingested by drinking the water or by consuming food or beverages prepared with the water. In an effort to reduce the amount of lead in drinking water, lead-bearing solders and fluxes have been banned from use in joining water supply piping. After the code implemented requirements for lead-free solders and fluxes, the federal government followed suit. In June 1986, the EPA banned lead-bearing solders and fluxes throughout the country. Additionally, all solders and fluxes used on potable water lines must be tested and listed for compliance with NSF 61, which places further restrictions on the concentrations of lead permitted in these materials.

INTERNATIONAL CODE COUNCIL®
Copyright © 2015 ICC. ALL RIGHTS RESERVED. Accessed by David Dammon on Jun 21, 2017 12:30:52 PM pursuant to License Agreement with ICC. No further reproduction or distribution authorized. ANY UNAUTHORIZED REPRODUCTION OR DISTRIBUTION IS A VIOLATION OF THE FEDERAL COPYRIGHT ACT AND THE LICENSE AGREEMENT, AND SUBJECT TO CIVIL AND CRIMINAL PENALTIES THEREUNDER.

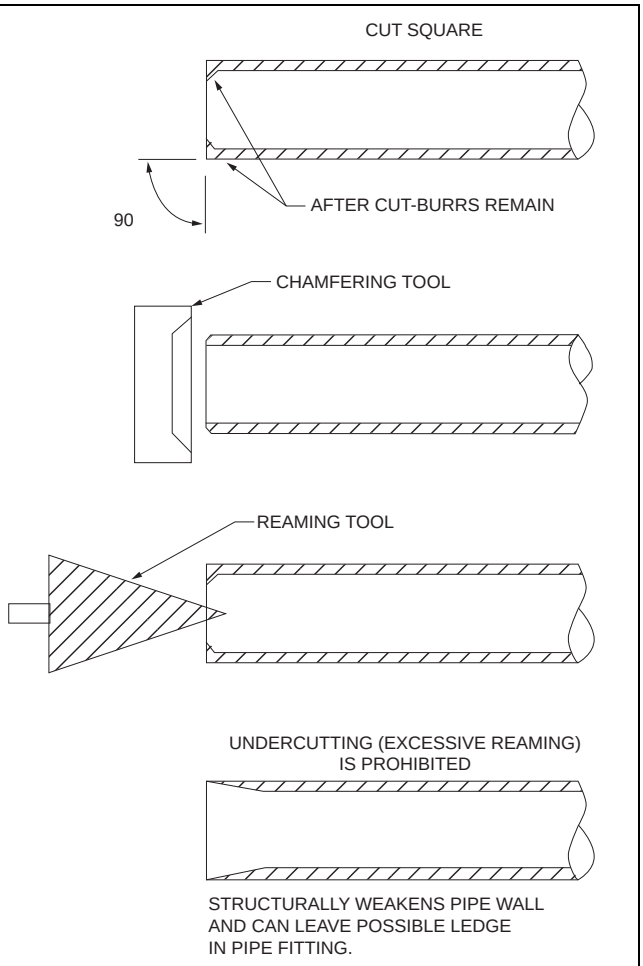

For SI: 1 degree = 0.01745 rad.

Figure 605.13.3
PREPARATION OF PIPE END

In addition to 95-5 (95-percent tin and 5-percent antimony), which is considered a viable alternative to lead solders in many applications, manufacturers have developed replacement solders for the plumbing industry.

Lead-bearing solder can sometimes be visually identified because the solder tends to darken with age. Replacement solders, tin-antimony solders and tin-silver solders tend to stay bright. Test kits are available that can be used to identify lead-bearing solders with absolute certainty.

ASTM B 828 governs the procedures for making capillary joints by soldering copper and copper alloy tubing and fittings. The joint surfaces for a soldered joint must be cleaned and shined bright, typically accomplished with emery cloth and specially designed fitting brushes. Once the copper is shined bright, the joint surfaces should not be touched by the human hand. The natural body oils on the hand will affect the making of the joint.

Flux must be applied to the joint surfaces. Flux is a chemically active material that removes and excludes oxides from the joint area during heating and allows the melted solder to spread out on the surfaces to be joined. The flux material must conform to ASTM B 813, which establishes minimum performance criteria, such as corrosivity and solubility, as well as a maximum lead content not to exceed 0.2 percent. The lead content is consistent with the 1986 amendments to the EPA Safe Drinking Water Act. The solder will flow by capillary action toward the heat. As such, the temperatures of the joint surfaces play a major role in making a properly soldered joint. The fitting and the pipe should be approximately the same temperature when the solder is applied. Heat causes the copper atoms to move further apart from each other and the solder atoms enter the spaces between the copper atoms, creating a strong bond when solidified.

If the temperatures are incorrect, either too high or uneven, the solder will run down the inside of the pipe and fitting or on the outside of the pipe. The result is a solder-lined pipe.

Care must also be exercised using wrought fittings because there is less of a ledge to prevent the flow of solder into the fitting socket. The same care must also be exercised when making a swage joint. A swage joint is where the end of one pipe is expanded to form a socket fitting. A swaging tool, similar to a hammer-type flaring tool, is used to expand the pipe. Because it is similar to a flared joint, only annealed and bending-tempered drawn copper can be swaged.

605.13.4 Threaded joints. Threads shall conform to ASME B1.20.1. Pipe-joint compound or tape shall be applied on the male threads only.

❖ Pipe-joint compound (also referred to as “pipe dope”) is typically designed for metallic pipe. Pipe-joint compound used for copper pipe can also be used for brass pipe and steel pipe (see commentary, Section 605.10.3). Pipe-joint compound and tape must not be applied to female threads because this would allow the compound to enter and contaminate the piping system.

605.13.5 Welded joints. Joint surfaces shall be cleaned. The joint shall be welded with an *approved* filler metal.

❖ The installation technique and materials used to make a welded joint for copper or copper-alloy pipe are similar to those for brass pipe (see commentary, Section 605.11.4).

605.14 Copper tubing. Joints between copper or copper-alloy tubing and fittings shall comply with Sections 605.14.1 through 605.14.5.

❖ Acceptable joints for copper or copper-alloy tubing or fittings are identified in the referenced sections.

605.14.1 Brazed joints. Joint surfaces shall be cleaned. An *approved* flux shall be applied where required. The joint shall be brazed with a filler metal conforming to AWS A5.8.

❖ The brazing of a joint for copper or copper-alloy tubing is identical to that of copper, copper-alloy and brass pipe (see commentary, Section 605.13.1).

INTERNATIONAL CODE COUNCIL®
Copyright © 2015 ICC. ALL RIGHTS RESERVED. Accessed by David Dammon on Jun 21, 2017 12:30:52 PM pursuant to License Agreement with ICC. No further reproduction or distribution authorized. ANY UNAUTHORIZED REPRODUCTION OR DISTRIBUTION IS A VIOLATION OF THE FEDERAL COPYRIGHT ACT AND THE LICENSE AGREEMENT, AND SUBJECT TO CIVIL AND CRIMINAL PENALTIES THEREUNDER.

605.14.2 Flared joints. Flared joints for water pipe shall be made by a tool designed for that operation.

❖ Because the pipe end is expanded in a flared joint, only annealed and bending-tempered drawn copper tubing may be flared. There are two types of flaring tools: hammer and screw yoke and block. The hammer-type flaring tool is inserted into the pipe and hammered to form a flare on the end of the pipe. With the screw yoke and block, the end of the pipe is firmly held by the block assembly. The screw yoke is attached to the block and a flared arbor is pressed into the pipe end, creating the flare.

The flared surface of the pipe is compressed against the mating surface of the fitting by the flare nut to form a water-tight seal. Commonly, pipe-joint compound is placed on flare-fitting threads to lubricate the assembly [see Commentary Figure 605.14.2(1)].

A flared joint can only be accomplished using soft (annealed) copper tubing because hard-drawn pipe is too easily split when flared. Because the joint can be readily dismantled and reassembled, it is in effect, a type of union connection [see Commentary Figure 605.14.2(2)].

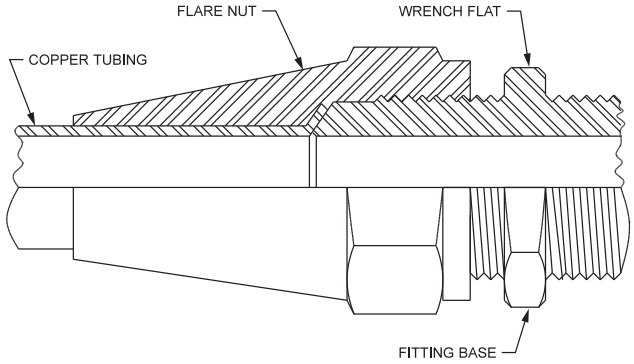

Figure 605.14.2(1)
TYPICAL FLARED TUBE JOINT

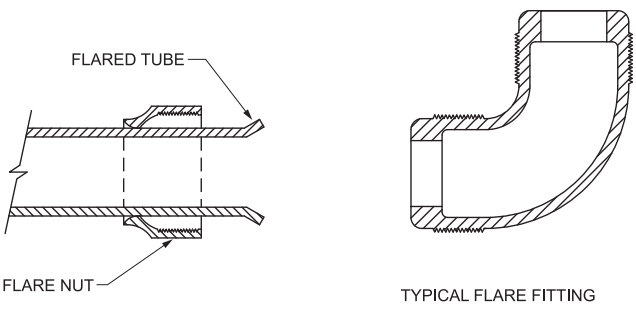

Figure 605.14.2(2)
TYPICAL FLARED TUBE JOINT

605.14.3 Grooved and shouldered mechanical joints. Grooved and shouldered mechanical joints shall comply with ASTM F 1476, shall be made with an *approved* elastomeric seal and shall be installed in accordance with the manufacturer's instructions. Such joints shall be exposed or concealed.

❖ The grooved and shouldered joint has a one-piece elastomeric gasket that is "clamped" around the outside of a specially prepared pipe end or boss of a fitting. The pipe ends (or bosses of fittings) are prepared with a circumferential groove on the outside diameter. The groove is either cut or rolled depending on the type of material. The clamp (usually in two halves) is made with internal "shoulders," one for each side of the joint. When the clamp is assembled around the joint (with the gasket in place), the clamp presses on the outside of the gasket while at the same time, engaging the clamp's shoulders into the grooves on the pipe ends. As the clamp is tightened the gasket is firmly clamped onto the outside of the pipe ends.

This type of connection is most visible to the layperson where it is used in the construction of fire sprinkler system piping (usually visible in stairwells and parking garages). Because of the speed at which these joints can be assembled by semiskilled labor and the very low probability of joint leakage at test pressures sometimes exceeding 250 psi, this is the preferred type of joint that has been used for decades in sprinkler service. However, this type of joint has been used for more than 80 years in various industrial sectors such as the refinery, power, oil field and marine fields. Besides the advantages of fast assembly and low probability of leaks, grooved and shouldered joints have "flexibility" to accommodate some installation misalignments and absorb some piping movements caused by thermal changes, equipment shifting and earthquakes. In many industrial environments, required changes, upgrades and repairs are more easily facilitated by the ease of disassembly and reassembly using the same components except for a new gasket.

The clamps, fittings, and gaskets are available in a wide variety of materials depending on the application. These joints can be used in concealed locations and underground, provided that the manufacturer of the joint does not limit the use of the material chosen to above-ground service only.

605.14.4 Mechanical joints. Mechanical joints shall be installed in accordance with the manufacturer's instructions.

❖ Mechanical joints for copper tubing include a large array of fittings. The most common mechanical joint is a compression fitting. This type of fitting uses a compression ring (ferrule) to form the seal. The ring compresses around the pipe as the fitting is tightened. Commonly, pipe-joint compound is used on the fitting threads to lubricate the assembly.

INTERNATIONAL CODE COUNCIL®
Copyright © 2015 ICC. ALL RIGHTS RESERVED. Accessed by David Dammon on Jun 21, 2017 12:30:52 PM pursuant to License Agreement with ICC. No further reproduction or distribution authorized. ANY UNAUTHORIZED REPRODUCTION OR DISTRIBUTION IS A VIOLATION OF THE FEDERAL COPYRIGHT ACT AND THE LICENSE AGREEMENT, AND SUBJECT TO CIVIL AND CRIMINAL PENALTIES THEREUNDER.

605.14.5 Press-connect joints. Press-connect joints shall conform to one of the standards listed in Table 605.5, and shall be installed in accordance with the manufacturer's instructions. Cut tube ends shall be reamed to the full inside diameter of the tube end. Joint surfaces shall be cleaned. The tube shall be fully inserted into the press-connect fitting. Press-connect joints shall be pressed with a tool certified by the manufacturer.

❖ These fittings have an internal O-ring that provides the sealing. The metal fitting is crimped onto the pipe or tube with a special tool designed for that purpose. Typically, crimping tools are not interchangeable between different manufacturer's fittings. Once crimped in position, the fitting cannot be removed, and the pipe cannot be rotated in the fitting. Connecting copper tubing and pipe in this manner is useful, especially where water in the piping cannot be evacuated to allow soldering or brazing, or where open flames (torches) cannot be used.

605.14.6 Solder joints. Solder joints shall be made in accordance with the methods of ASTM B 828. All cut tube ends shall be reamed to the full inside diameter of the tube end. All joint surfaces shall be cleaned. A flux conforming to ASTM B 813 shall be applied. The joint shall be soldered with a solder conforming to ASTM B 32. The joining of water supply piping shall be made with *lead-free solders and fluxes*. "Lead free" shall mean a chemical composition equal to or less than 0.2-percent lead.

❖ The requirements and procedures for a soldered joint for copper and copper-alloy tubing are identical to those for copper and copper-alloy pipe (see commentary, Section 605.14.3).

605.15 CPVC plastic. Joints between CPVC plastic pipe and fittings shall comply with Sections 605.15.1 through 605.15.3.

❖ Acceptable joints for CPVC plastic pipe or fittings are identified in the referenced sections.

605.15.1 Mechanical joints. Mechanical joints shall be installed in accordance with the manufacturer's instructions.

❖ Many mechanical joints use an elastomeric material to form a seal. Because mechanical joints are typically unique to each particular manufacturer, they must be installed in accordance with the manufacturer's instructions (see commentary, Section 605.10.1).

605.15.2 Solvent cementing. Joint surfaces shall be clean and free from moisture. Joints shall be made in accordance with the pipe manufacturer's installation instructions. Where such instructions require that a primer be used, the primer shall be applied to the joint surfaces and a solvent cement orange in color and conforming to ASTM F 493 shall be applied to the joint surfaces. Where such instructions allow for a one-step solvent cement, yellow in color and conforming to ASTM F 493, to be used, the joint surfaces shall not require application of a primer before the solvent cement is applied. The joint shall be made while the cement is wet and in accordance with ASTM D 2846 or ASTM F 493. Solvent cemented joints shall be permitted above or below ground.

❖ Solvent cementing of CPVC piping must be performed in accordance with the pipe manufacturer's instructions using a solvent cement that complies with ASTM F 493. Some pipe manufacturers may require specific brands or types of solvent cement be used for certain types and sizes of piping. The pipe and fitting surfaces to be joined must be free of dirt, grease, oil and any other foreign substances. It is critical that joint surfaces are dry, as solvent cement quickly congeals in the presence of water.

Some pipe manufacturer's instructions may require that a primer liquid be used to prepare the joint surfaces. Primer liquids break down the glossy surface finish of the plastic, help remove any remaining foreign substances from the joint area and begin to soften the plastic surfaces. Because of its softening capability, primer liquids must not be allowed to puddle inside of fittings. Some pipe manufacturers may require specific brands or types of primer liquids be used for certain types and sizes of piping. This section does not require primer liquids to be tinted with a color (such as purple or blue); however, a colored primer could be useful for the installer for determining if all joint surfaces have been primed.

Where priming of joint surfaces is required by the pipe manufacturer, the color of the solvent cement to be used must be orange. In general, solvent cement is applied to all joint surfaces immediately after the joint surfaces have been primed. Immediately after application of the solvent cement, the joint is assembled. The assembled joint is held in the assembled position for a period of time as required by the pipe manufacturer. Different sizes of piping require very specific assembly procedures and holding times. The piping manufacturer's instructions must be followed in every detail to ensure a proper joint.

Where the pipe manufacturer allows for a one-step solvent cementing process (in other words, priming of the joint surfaces is not required), the color of the solvent cement to be used must be yellow. One-step solvent cementing can be in accordance with either ASTM D 2846 or ASTM F 493.

Assembled and cured joints can be located above or below ground.

605.15.3 Threaded joints. Threads shall conform to ASME B1.20.1. Schedule 80 or heavier pipe shall be permitted to be threaded with dies specifically designed for plastic pipe, but the pressure rating of the pipe shall be reduced by 50 percent. Thread by socket molded fittings shall be permitted. *Approved* thread lubricant or tape shall be applied on the male threads only.

❖ The requirements regarding CPVC pipe are similar to those of ABS plastic pipe (see Section 605.10.3). The key difference is that when CPVC plastic pipe is field threaded (Schedule 80 or heavier), the pressure rating

INTERNATIONAL CODE COUNCIL®
Copyright © 2015 ICC. ALL RIGHTS RESERVED. Accessed by David Dammon on Jun 21, 2017 12:30:52 PM pursuant to License Agreement with ICC. No further reproduction or distribution authorized. ANY UNAUTHORIZED REPRODUCTION OR DISTRIBUTION IS A VIOLATION OF THE FEDERAL COPYRIGHT ACT AND THE LICENSE AGREEMENT, AND SUBJECT TO CIVIL AND CRIMINAL PENALTIES THEREUNDER.

of the pipe must be reduced by one-half because, when the pipe is tested for a specific pressure, the sample of the pipe subjected to testing had a full wall thickness. Therefore, reducing pipe-wall thickness with the threading affects the pressure rating of the pipe.

The use of molded fittings for the joining of plastic pipe does not result in the 50-percent reduction in the pressure rating of the pipe because the molded fittings are fabricated so that the wall thickness of the material is maintained at the threads.

605.16 Chlorinated polyvinyl chloride/aluminum/chlorinated polyvinyl chloride (CPVC/AL/CPVC) pipe and tubing. Joints between CPVC/AL/CPVC plastic pipe or CPVC fittings shall comply with Sections 605.16.1 and 605.16.2.

❖ There are two methods for joining CPVC/AL/CPVC piping to fittings: mechanical and solvent cementing.

605.16.1 Mechanical joints. Mechanical joints shall be installed in accordance with the manufacturer's instructions.

❖ The manufacturer of the mechanical joint controls whether or not their mechanical joints can be used on CPVC/AL/CPVC pipe. Although many mechanical joints are suitable (as indicated by the manufacturer) for CPVC piping, CPVC/AL/CPVC piping is different in many respects. If a mechanical joint connection is used, the end of the CPVC/AL/CPVC piping must have the F2855 bushing solvent cemented into the end of the pipe (see commentary, Section 605.3 concerning CPVC/AL/CPVC piping). Although Table 605.5 includes the push-fit fitting standard ASSE 1061, the manufacturer of fittings complying with that standard must verify that their push-fit fitting is suitable for use on CPVC/AL/CPVC pipe.

605.16.2 Solvent cementing. Joint surfaces shall be clean and free from moisture, and an approved primer shall be applied. Solvent cement, orange in color and conforming to ASTM F 493, shall be applied to joint surfaces. The joint shall be made while the cement is wet, and in accordance with ASTM D 2846 or ASTM F 493. Solvent cement joints shall be permitted above or below ground.

Exception: A primer is not required where all of the following conditions apply:

1. The solvent cement used is third-party certified as conforming to ASTM F 493.
2. The solvent cement used is yellow in color.
3. The solvent cement is used only for joining $^1/_2$-inch (12.7 mm) through 2-inch-diameter (51 mm) CPVC/AL/CPVC pipe and CPVC fittings.
4. The CPVC fittings are manufactured in accordance with ASTM D 2846.

❖ Solvent cementing of CPVC/AL/CPVC piping must be performed in accordance with the pipe manufacturer's instructions using a solvent cement that complies with ASTM F 493. Some pipe manufacturers may require specific brands or types of solvent cement be used for certain types and sizes of piping. The pipe and fitting surfaces to be joined must be free of dirt, grease, oil and any other foreign substances. Especially critical is the need for the joint surfaces to be dry as solvent cement quickly congeals in the presence of water.

Priming of joint surfaces is required. Primer liquids break down the glossy surface finish of the plastic, help remove any remaining foreign substances from the joint area and begin to soften the plastic surfaces. Because of its softening capability, primer liquids must not be allowed to puddle inside of fittings. Some pipe manufacturers may require specific brands or types of primer liquids be used for certain types and sizes of piping. The color of the solvent cement to be used must be orange.

In general, solvent cement is applied to all joint surfaces immediately after they have been primed. Immediately after application of the solvent cement, the joint is assembled. The assembled joint is held in the assembled position for a period of time as required by the pipe manufacturer. Different sizes of piping require very specific assembly procedures and holding times. The piping manufacturer's instructions must be followed in every detail to ensure a proper joint.

A one-step solvent cementing process (in other words, priming of the joint surfaces is not required) can be used, provided that all of the conditions of the exceptions are met.

Assembled and cured joints can be located above or below ground.

605.17 PEX plastic. Joints between cross-linked polyethylene plastic tubing and fittings shall comply with Sections 605.17.1 and 605.17.2.

❖ Acceptable joints for cross-linked PEX plastic tubing or fittings are identified in the referenced sections.

605.17.1 Flared joints. Flared pipe ends shall be made by a tool designed for that operation.

❖ Flared joints must be made with tools specific to the design of the connector system. The assembly method must be in accordance with the manufacturer's instructions specific to the type of connectors being used. Flare configurations will vary depending on the tool employed. Using a cold flaring tool, which expands the tubing outside diameter mechanically, secures the flared end between the fitting. The flared surface serves as the sealing area between the tubing and fitting.

605.17.2 Mechanical joints. Mechanical joints shall be installed in accordance with the manufacturer's instructions. Fittings for cross-linked polyethylene (PEX) plastic tubing shall comply with the applicable standards listed in Table 605.5 and shall be installed in accordance with the manufacturer's instructions. PEX tubing shall be factory marked with the appropriate standards for the fittings that the PEX manufacturer specifies for use with the tubing.

❖ ASTM F 877, ASTM F 1807, ASTM F 1960, ASTM F 2098, ASTM F 2159, ASTM F 2434 and ASTM F 2080 are the standards for insert fittings, crimp rings and manifolds for cross-linked PEX plastic tubing sys-

INTERNATIONAL CODE COUNCIL®
Copyright © 2015 ICC. ALL RIGHTS RESERVED. Accessed by David Dammon on Jun 21, 2017 12:30:52 PM pursuant to License Agreement with ICC. No further reproduction or distribution authorized. ANY UNAUTHORIZED REPRODUCTION OR DISTRIBUTION IS A VIOLATION OF THE FEDERAL COPYRIGHT ACT AND THE LICENSE AGREEMENT, AND SUBJECT TO CIVIL AND CRIMINAL PENALTIES THEREUNDER.

tems. They are intended for use in 100 psi (690 kPa) cold and hot water distribution systems operating at temperatures up to and including 180°F (82°C). Insert fittings must be installed in accordance with the manufacturers' instructions. One type of system has insert fittings joined to PEX tubing by the compression of a copper crimp ring around the outer circumference of the tubing, forcing the tubing material into annular spaces formed by ribs on the fittings.

The crimping procedure involves sliding the crimp ring onto the tubing, then inserting the ribbed end of the fitting into the end of the tubing until the tubing contacts the shoulder of the fitting or tube stop. The crimp ring must then be positioned on the tubing so the edge of the crimp ring is $^1/_8$ to $^1/_4$ inch (3.2 to 6.4 mm) from the end of the tube. The jaws of the crimping tool must be centered over the crimp ring, and the tool must be held so that the crimping jaws are approximately perpendicular to the axis of the barb. The jaws of the crimping tool must be closed around the crimp ring, compressing the crimp ring onto the tubing. The crimp ring must not be crimped more than once.

Another type of system uses a special expander tool inserted into the end of the PEX tubing and the tube is expanded. The tool is removed and the insert fitting is quickly inserted before the tubing shrinks back to its original diameter. Depending on the proprietary design, a PEX or metal ring or collar is forced over the tube, locking it to the insert fitting (see Commentary Figure 605.17.2).

Insert fittings and crimp rings are not considered to be interchangeable between different manufacturers of PEX tubing. Therefore, PEX fittings specified by each manufacturer as indicated by the markings on the tube must be used.



Figure 605.17.2
PEX TUBING CONNECTION

605.18 Steel. Joints between galvanized steel pipe and fittings shall comply with Sections 605.18.1 through 605.18.3.

❖ Acceptable joints for galvanized steel pipe or fittings are identified in the referenced sections.

605.18.1 Threaded joints. Threads shall conform to ASME B1.20.1. Pipe-joint compound or tape shall be applied on the male threads only.

❖ Pipe-joint compound is typically designed for metallic pipe. The pipe-joint compound used for steel pipe will also be used for copper pipe and brass pipe (see commentary, Section 605.10.3).The application of pipe-joint compound to only male threads prevents the compound from entering the piping system.

605.18.2 Mechanical joints. Joints shall be made with an *approved* elastomeric seal. Mechanical joints shall be installed in accordance with the manufacturer's instructions.

❖ A wide variety of mechanical joints are available to join steel pipe, including rolled groove, cut groove and plain-end types.

A union, often mistakenly identified as a mechanical joint, qualifies as a pipe fitting in accordance with Section 605.5.

605.18.3 Grooved and shouldered mechanical joints. Grooved and shouldered mechanical joints shall comply with ASTM F 1476, shall be made with an *approved* elastomeric seal and shall be installed in accordance with the manufacturer's instructions. Such joints shall be exposed or concealed.

❖ See the commentary for Section 605.14.3.

605.19 PE plastic. Joints between polyethylene plastic pipe or tubing and fittings shall comply with Sections 605.19.1 through 605.19.4.

❖ Acceptable joints for PE plastic pipe and tubing or fittings are identified in the referenced sections. Sections 605.19.1 and 605.19.3 are also applicable to PEX, PEX-AL-PEX composite pipe, and PE-AL-PE composite pipe.

605.19.1 Flared joints. Flared joints shall be permitted where so indicated by the pipe manufacturer. Flared joints shall be made by a tool designed for that operation.

❖ Flared joints must be made with tools specific to the design of the connector system. The assembly method must be in accordance with the manufacturer's instructions specific to the type of connectors being used. A cold flaring tool is used to expand the end of the pipe into a cone shape. The cone-shaped end of the pipe is "clamped" between the cone-shaped end of a fitting and the internal cone shape of a nut with threads onto the fitting.

605.19.2 Heat-fusion joints. Joint surfaces shall be clean and free from moisture. All joint surfaces shall be heated to melt temperature and joined. The joint shall be undisturbed until cool. Joints shall be made in accordance with ASTM D 2657.

❖ The method of heat fusion of polyethylene pipe or tubing is similar to that of polypropylene (see commentary, Section 605.20.1).

INTERNATIONAL CODE COUNCIL®
Copyright © 2015 ICC. ALL RIGHTS RESERVED. Accessed by David Dammon on Jun 21, 2017 12:30:52 PM pursuant to License Agreement with ICC. No further reproduction or distribution authorized. ANY UNAUTHORIZED REPRODUCTION OR DISTRIBUTION IS A VIOLATION OF THE FEDERAL COPYRIGHT ACT AND THE LICENSE AGREEMENT, AND SUBJECT TO CIVIL AND CRIMINAL PENALTIES THEREUNDER.

605.19.3 Mechanical joints. Mechanical joints shall be installed in accordance with the manufacturer's instructions.

❖ This section addresses mechanical joining methods for polyethylene piping. This section also applies to the joining of PEX, PEX-AL-PEX and PE-AL-PE piping (see commentary, Table 605.4).

Mechanical joints for these materials include insert-type fittings, metallic lock-ring fittings, compression fittings and crimp-type fittings. Each fitting is intended for a specific pipe material and cannot be interchanged unless specified by the pipe manufacturer. In all cases, the fittings connecting any type of polyethylene pipe must be assembled and installed in accordance with the manufacturer's instructions.

605.19.4 Installation. Polyethylene pipe shall be cut square, with a cutter designed for plastic pipe. Except where joined by heat fusion, pipe ends shall be chamfered to remove sharp edges. Kinked pipe shall not be installed. The minimum pipe bending radius shall be not less than 30 pipe diameters, or the minimum coil radius, whichever is greater. Piping shall not be bent beyond straightening of the curvature of the coil. Bends shall be prohibited within 10 pipe diameters of any fitting or valve. Stiffener inserts installed with compression-type couplings and fittings shall not extend beyond the clamp or nut of the coupling or fitting.

❖ Any properly made pipe joint requires that the pipe ends be cut square for proper alignment, proper insertion depth and adequate surface area for joining (see Commentary Figure 605.13.3). Because polyethylene plastic pipe and tubing can be kinked and stress-weakened, the minimum pipe bending radius is specified to not exceed the structural capacity of the material. The minimum bending radius must be not less than the radius of the pipe coil as it came from the manufacturer, or the minimum radius must be not less than 30 pipe diameters, whichever of these two criteria is the largest (see Commentary Figure 605.19.4). The pipe can be straightened as it is taken from the coil, but it cannot be bent in a direction opposite of the bending direction of the coil (see Commentary Figure 605.19.4).To avoid stress on connected fittings or valves, the location of pipe bends is restricted to specific distances from such components.

605.20 Polypropylene (PP) plastic. Joints between PP plastic pipe and fittings shall comply with Section 605.20.1 or 605.20.2.

❖ Acceptable joints for PP plastic pipe and tubing or fittings are identified in the referenced sections.

605.20.1 Heat-fusion joints. Heat-fusion joints for polypropylene pipe and tubing joints shall be installed with socket-type heat-fused polypropylene fittings, butt-fusion polypropylene fittings or electrofusion polypropylene fittings. Joint surfaces shall be clean and free from moisture. The joint shall be undisturbed until cool. Joints shall be made in accordance with ASTM F 2389.

❖ The method of heat fusion of polypylene pipe or tubing is similar to that for polybutylene (see commentary, Section 605.19.2).

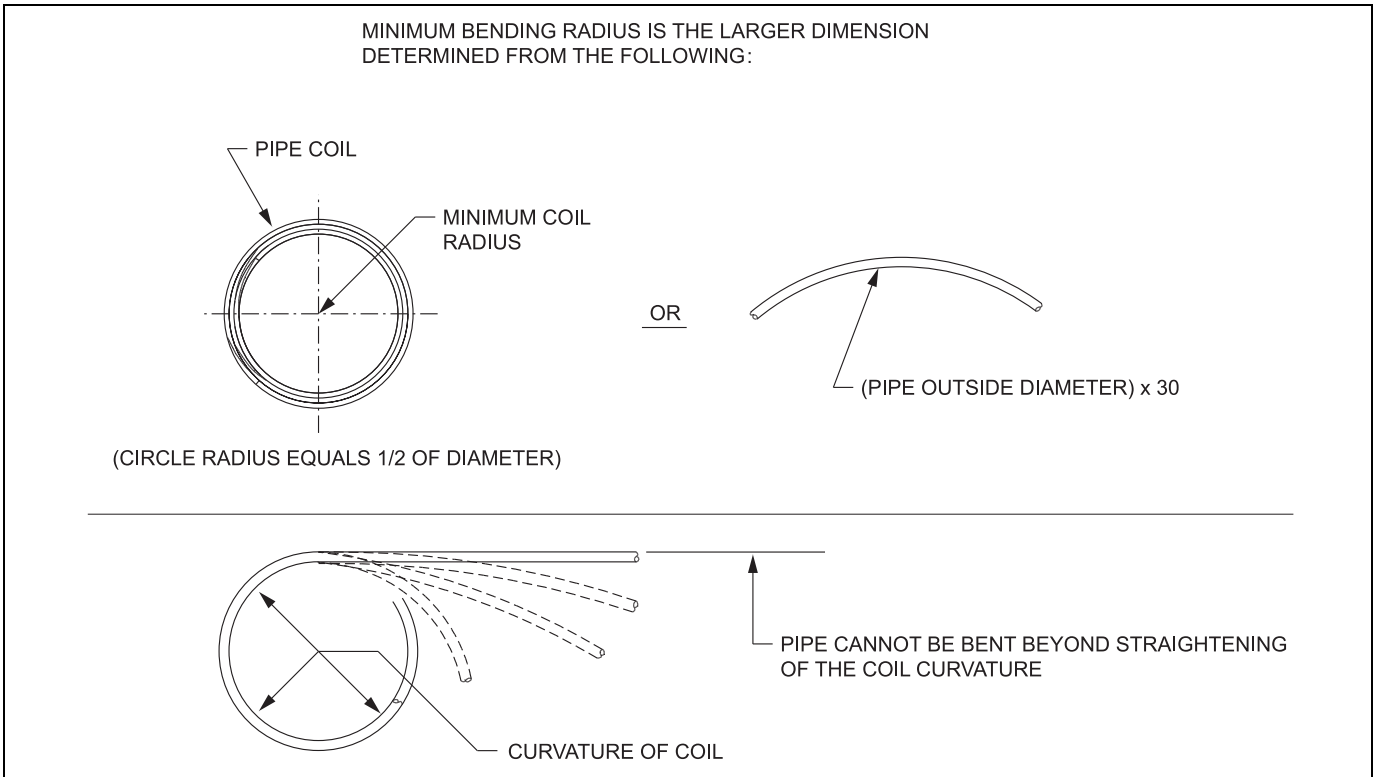

Figure 605.19.4
BENDING

INTERNATIONAL CODE COUNCIL®
Copyright © 2015 ICC. ALL RIGHTS RESERVED. Accessed by David Dammon on Jun 21, 2017 12:30:52 PM pursuant to License Agreement with ICC. No further reproduction or distribution authorized. ANY UNAUTHORIZED REPRODUCTION OR DISTRIBUTION IS A VIOLATION OF THE FEDERAL COPYRIGHT ACT AND THE LICENSE AGREEMENT, AND SUBJECT TO CIVIL AND CRIMINAL PENALTIES THEREUNDER.

605.20.2 Mechanical and compression sleeve joints. Mechanical and compression sleeve joints shall be installed in accordance with the manufacturer's instructions.

❖ This section addresses mechanical joining methods for polypropylene piping. Mechanical joints include insert-type fittings, metallic lock-ring fittings, compression fittings and crimp-type fittings.

Although an insert-type fitting reduces the inside diameter of the pipe, the reduction may be calculated as part of the design considerations of the water distribution system.

605.21 Polyethylene/aluminum/polyethylene (PE-AL-PE) and cross-linked polyethylene/aluminum/cross-linked polyethylene (PEX-AL-PEX). Joints between PE-AL-PE or PEX-AL-PEX pipe and fittings shall comply with Section 605.21.1.

❖ See the commentary to Section 605.21.1.

605.21.1 Mechanical joints. Mechanical joints shall be installed in accordance with the manufacturer's instructions. Fittings for PE-AL-PE and PEX-AL-PEX as described in ASTM F 1974, ASTM F 1281, ASTM F 1282, CSA B137.9 and CSA B137.10 shall be installed in accordance with the manufacturer's instructions.

❖ The ASTM standards listed are for insert fittings with either crimp rings or stainless steel clamps. Manufacturer's instructions must be followed for installation of the fittings to the pipe.

605.22 PVC plastic. Joints between PVC plastic pipe and fittings shall comply with Sections 605.22.1 through 605.22.3.

❖ Acceptable joints for PVC plastic pipe or fittings are identified in the referenced sections.

605.22.1 Mechanical joints. Mechanical joints on water pipe shall be made with an elastomeric seal conforming to ASTM D 3139. Mechanical joints shall not be installed in aboveground systems unless otherwise *approved*. Joints shall be installed in accordance with the manufacturer's instructions.

❖ PVC plastic hub pipe is connected using an elastomeric compression gasket (see commentary, Section 605.10.1).

605.22.2 Grooved and shouldered mechanical joints. Grooved and shouldered mechanical joints shall comply with ASTM F 1476, shall be made with an *approved* elastomeric seal and shall be installed in accordance with the manufacturer's instructions. Such joints shall be exposed or concealed.

❖ See the commentary for Section 605.14.3.

605.22.3 Solvent cementing. Joint surfaces shall be clean and free from moisture. A purple primer that conforms to ASTM F 656 shall be applied. Solvent cement not purple in color and conforming to ASTM D 2564 or CSA B137.3 shall be applied to all joint surfaces. The joint shall be made while the cement is wet and shall be in accordance with ASTM D 2855. Solvent-cement joints shall be permitted above or below ground.

❖ Like CPVC, PVC plastic pipe also requires a primer prior to solvent cementing. Although ASTM F 656 only recommends that PVC primer be purple, this is a code requirement. The purple coloring is intended to allow the installer and the inspector to verify that the required primer has been applied.

To distinguish the difference between primer and solvent cement, the solvent cement must be a color other than purple. Solvent cement for PVC is typically clear (see commentary, Sections 605.10.2 and 605.16.2). A PVC primer is first applied to both the pipe and the socket fitting, then PVC solvent cement is applied to both. The joint is made with a slight twisting until the pipe reaches the full depth of the socket fitting. It is then held in place until the solvent cement begins to set. The solvent cementing must be done in accordance with the referenced standard.

To minimize the health and fire hazards associated with solvent cements and primers, the manufacturers' instructions for the use and handling of these materials must be followed, in addition to the requirements in ASTM D 2855.

605.22.4 Threaded joints. Threads shall conform to ASME B1.20.1. Schedule 80 or heavier pipe shall be permitted to be threaded with dies specifically designed for plastic pipe, but the pressure rating of the pipe shall be reduced by 50 percent. Thread by socket molded fittings shall be permitted. *Approved* thread lubricant or tape shall be applied on the male threads only.

❖ The requirements regarding threaded joints for PVC plastic pipe are identical to those for CPVC plastic pipe (see commentary, Section 605.15.3).

605.23 Stainless steel. Joints between stainless steel pipe and fittings shall comply with Sections 605.23.1 and 605.23.3.

❖ Acceptable joints for stainless steel pipe or fittings are identified in the referenced sections.

605.23.1 Mechanical joints. Mechanical joints shall be installed in accordance with the manufacturer's instructions.

❖ Mechanical joints such as compression, grooved couplings, hydraulic pressed fittings or flange design can be used to join stainless steel pipe and fittings and are specified by the manufacturer. Such joints must be assembled and installed in compliance with the manufacturer's instructions.

605.23.2 Welded joints. All joint surfaces shall be cleaned. The joint shall be welded autogenously or with an *approved* filler metal as referenced in ASTM A 312.

❖ An important part of successful welding of the austenitic grades requires proper selection of alloy (for both the base metal and the filler rod) and corrects welding procedures. Two important objectives in making weld joints in austenitic stainless steel are: 1) preservation of corrosion resistance and 2) prevention of cracking. Welding naturally produces a temperature gradient in the metal being welded, ranging from the melting temperature of the fused weld metal to ambient temperature at some distance from the weld.

INTERNATIONAL CODE COUNCIL®
Copyright © 2015 ICC. ALL RIGHTS RESERVED. Accessed by David Dammon on Jun 21, 2017 12:30:52 PM pursuant to License Agreement with ICC. No further reproduction or distribution authorized. ANY UNAUTHORIZED REPRODUCTION OR DISTRIBUTION IS A VIOLATION OF THE FEDERAL COPYRIGHT ACT AND THE LICENSE AGREEMENT, AND SUBJECT TO CIVIL AND CRIMINAL PENALTIES THEREUNDER.

The two basic methods for welding stainless steels are fusion welding and resistance welding. In fusion welding, heat comes from an electric arc struck between an electrode and the metal to be welded. In resistance welding, bonding is the result of heat and pressure. Heat is produced by the resistance to the flow of electric current through the parts to be welded, and pressure is applied by the electrodes.

Welds and the surrounding area should be thoroughly cleaned to avoid impairment of corrosion resistance. Weld spatter, flux or scale may become focal points for corrosive attack if not properly removed, especially in aggressive environments.

605.23.3 Grooved and shouldered mechanical joints. Grooved and shouldered mechanical joints shall comply with ASTM F 1476, shall be made with an *approved* elastomeric seal and shall be installed in accordance with the manufacturer's instructions. Such joints shall be exposed or concealed.

❖ See the commentary for Section 605.14.3.

605.24 Joints between different materials. Joints between different piping materials shall be made with a mechanical joint of the compression or mechanical-sealing type, or as permitted in Sections 605.24.1, 605.24.2 and 605.24.3. Connectors or adapters shall have an elastomeric seal conforming to ASTM F 477. Joints shall be installed in accordance with the manufacturer's instructions.

❖ Mechanical joints can be used to join dissimilar piping materials. Because many piping materials have the same outside diameters, many fittings are designed by manufacturers for use with a number of different piping materials [see Commentary Figures 605.24.1(1) and (2)].

605.24.1 Copper or copper-alloy tubing to galvanized steel pipe. Joints between copper or copper-alloy tubing and galvanized steel pipe shall be made with a brass fitting or dielectric fitting or a dielectric union conforming to ASSE 1079. The copper tubing shall be soldered to the fitting in an *approved* manner, and the fitting shall be screwed to the threaded pipe.

❖ When copper or copper-alloy tubing is joined with galvanized steel pipe, protecting against galvanic corrosion is required. Galvanic corrosion occurs when two different metals come in contact in the presence of an electrolyte, such as water. Galvanic corrosion accelerates the natural corrosion process that occurs in all metals, and, because certain metals corrode faster than others, they have been placed in a hierarchy in order of rate of corrosion [see Commentary Figure 605.24.1(1)]. The more reactive metal at a connection is called the "anode" (galvanized steel pipe), and the less reactive metal is called the "cathode" (copper tubing). When the copper tubing and galvanized steel pipe are coupled, the galvanized steel pipe will tend to dissolve in the electrolyte, thereby generating electric current flow between the metals.

This section prescribes three methods of protection against galvanic corrosion: 1) a brass fitting such as a short section of brass pipe or a brass valve body; 2) a dielectric fitting such as a plastic-lined short pipe section or 3) a dielectric union either flange type or insulated-nut type. While the code text seems to imply that all of these types must conform to ASSE 1079, only the union type is covered by the referenced standard.

A variety of dielectric fitting designs is available. Commentary Figures 605.24.1(2) and 605.24.1(3) illustrate two of the most commonly used types. Other dielectric fittings of varying designs are available. Dielectric fittings provide an electrical barrier to prevent the passage of electric current either between dissimilar metals or between the piping and the electrolyte. Because the code does not define the term "dielectric fitting" or prescribe a standard for gauging the design or performance of a dielectric fitting, the code official must evaluate and approve the type of dielectric fitting and its application.

The joint between the copper tube and the threaded galvanized steel pipe can also be made with a cast-brass fitting. A wrought-copper fitting is not permitted for this transition. A cast-brass fitting is easily recognized by its yellowish color. The brass fitting serves as a buffer unlike the dielectric fitting, which provides an electrically insulating barrier. The brass fitting greatly retards the rate of corrosion. Because brass, copper and galvanized steel are dissimilar metals, there will be a minimal amount of corrosion among such materials.

Anode end (least noble, the reactive or corroding end)
- Magnesium
- Magnesium alloys
- Zinc
- Galvanized steel
- Aluminum
- Aluminum alloys
- Carbon steel
- Cast iron
- Stainless steel (active)
- Tin
- Lead
- Nickel (active)
- Brass
- Copper
- Bronze
- Nickel-copper alloys
- Nickel (passive)
- Titanium
- Silver
- Graphite
- Gold
- Platinum

Cathode end (most noble, the protected or less-reactive end)

Figure 605.24.1(1)
CORROSIVE HIERARCHY OF METALS

INTERNATIONAL CODE COUNCIL®
Copyright © 2015 ICC. ALL RIGHTS RESERVED. Accessed by David Dammon on Jun 21, 2017 12:30:52 PM pursuant to License Agreement with ICC. No further reproduction or distribution authorized. ANY UNAUTHORIZED REPRODUCTION OR DISTRIBUTION IS A VIOLATION OF THE FEDERAL COPYRIGHT ACT AND THE LICENSE AGREEMENT, AND SUBJECT TO CIVIL AND CRIMINAL PENALTIES THEREUNDER.

Because plastic is usually the material that provides the electrical barrier in a dielectric fitting, special care is necessary when applying heat to the joint to avoid damaging the plastic sleeve. This is usually accomplished by sliding the plastic sleeve and steel nut away from the area to be heated. The soldered joint must conform to the requirements of Section 605.13.3. Commentary Figure 605.24.1(4) illustrates the result of connecting copper piping directly to a steel water heater tank. Welds on the top of this water heater tank began to leak in less than six years of service.

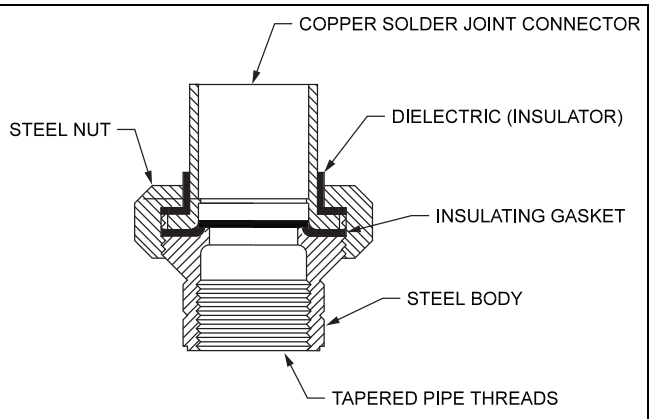

Figure 605.24.1(2)
DIELECTRIC UNION

605.24.2 Plastic pipe or tubing to other piping material. Joints between different types of plastic pipe or between plastic pipe and other piping material shall be made with *approved* adapters or transition fittings.

❖ The joining of differing types of plastic pipe (e.g., CPVC to PVC, ABS to PVC) and plastic pipe to other piping materials such as copper, brass and galvanized steel is allowed only through the use of adapter fittings. The adapter fittings must be evaluated individually and approved by the code official. Some key items to review when evaluating adapter fittings are joint tightness and compatibility of the adapter to the dissimilar materials being joined.



Figure 605.24.1(4)
CORROSION CAUSED BY ABSENCE OF DIELECTRIC FITTINGS

605.24.3 Stainless steel. Joints between stainless steel and different piping materials shall be made with a mechanical joint of the compression or mechanical sealing type or a dielectric fitting or a dielectric union conforming to ASSE 1079.

❖ Where two dissimilar metals are in contact in the presence of an electrolyte a battery effect is created, current flows and one of the metals corrodes. Any metal in this sense will tend to have corrosion accelerated when it is coupled in the presence of an electrolyte. A

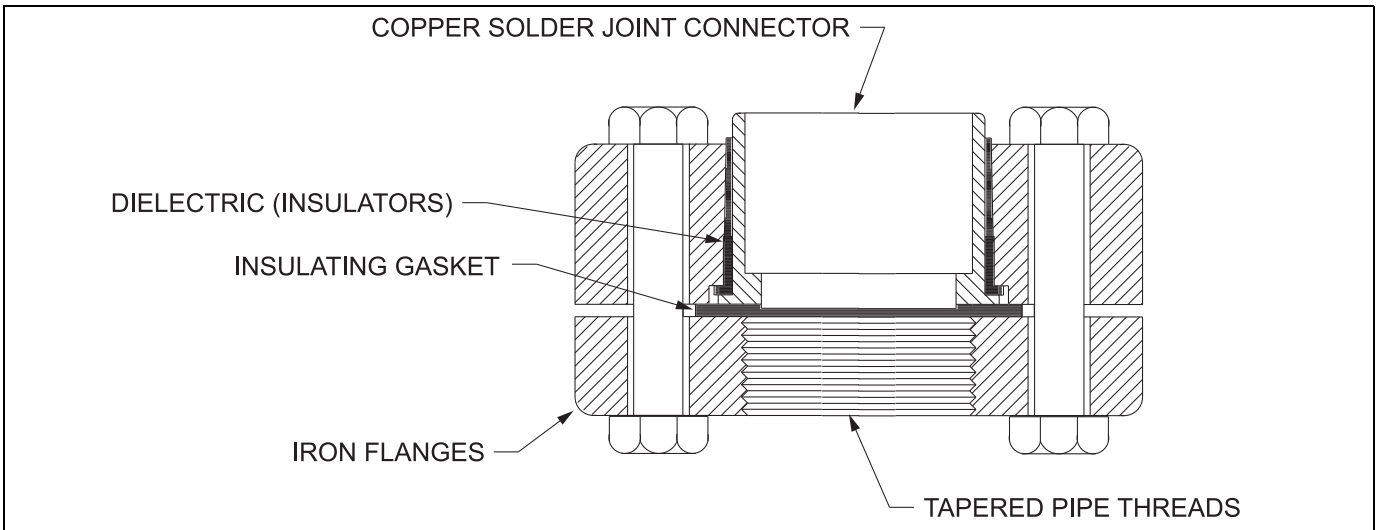

Figure 605.24.1(3)
DIELECTRIC FLANGE FITTING

INTERNATIONAL CODE COUNCIL®
Copyright © 2015 ICC. ALL RIGHTS RESERVED. Accessed by David Dammon on Jun 21, 2017 12:30:52 PM pursuant to License Agreement with ICC. No further reproduction or distribution authorized. ANY UNAUTHORIZED REPRODUCTION OR DISTRIBUTION IS A VIOLATION OF THE FEDERAL COPYRIGHT ACT AND THE LICENSE AGREEMENT, AND SUBJECT TO CIVIL AND CRIMINAL PENALTIES THEREUNDER.

very important factor to consider in evaluating the potential for galvanic corrosion is the relative surface area of the two different metals in contact.

In theory all metals immersed in a electrolyte, such as water, have a voltage potential. The relative activity of the metal is determined by voltage potential, with those metals with negative voltages being most active and more likely to corrode. For example, magnesium and iron have a negative voltage and corrode very rapidly when exposed to a moist atmosphere. Copper and stainless steel have a positive voltage and are less likely to corrode.

Dielectric sleeves may be used with flange bolting or as gaskets for connections between different types of materials to prevent such corrosion. The plastic or rubber gasket engages the thread of the fitting attached, thereby insulating the metal from the water. This prevents corrosion on either part.

While the code text seems to imply that all of these types must conform to ASSE 1079, only the union type is covered by the referenced standard [see Commentary Figures 605.24.1(1) and 605.24.1(2)].

605.25 PE-RT plastic. Joints between polyethylene of raised temperature plastic tubing and fittings shall be in accordance with Section 605.25.1.

❖ Polyethylene of raised temperature tubing can only be connected by mechanical joining methods in accordance with Section 605.25.1.

605.25.1 Mechanical joints. Mechanical joints shall be installed in accordance with the manufacturer's instructions. Fittings for polyethylene of raised temperature plastic tubing shall comply with the applicable standards listed in Table 605.5 and shall be installed in accordance with the manufacturer's instructions. Polyethylene of raised temperature plastic tubing shall be factory marked with the applicable standards for the fittings that the manufacturer of the tubing specifies for use with the tubing.

❖ Mechanical joints for these materials include insert-type fittings, metallic lock-ring fittings, compression fittings and crimp-type fittings. Each fitting is intended for a specific pipe material and cannot be interchanged unless specified by the pipe manufacturer. In all cases, the fittings connecting any type of polyethylene pipe must be assembled and installed in accordance with the manufacturer's instructions.

SECTION 606
INSTALLATION OF THE BUILDING WATER DISTRIBUTION SYSTEM

606.1 Location of full-open valves. Full-open valves shall be installed in the following locations:

1. On the building water service pipe from the public water supply near the curb.
2. On the water distribution supply pipe at the entrance into the structure.
3. On the discharge side of every water meter.
4. On the base of every water riser pipe in occupancies other than multiple-family residential *occupancies* that are two stories or less in height and in one- and two-family residential *occupancies*.
5. On the top of every water down-feed pipe in *occupancies* other than one- and two-family residential *occupancies*.
6. On the entrance to every water supply pipe to a dwelling unit, except where supplying a single fixture equipped with individual stops.
7. On the water supply pipe to a gravity or pressurized water tank.
8. On the water supply pipe to every water heater.

❖ Valves are needed to isolate components and portions of a water distribution system to facilitate service, repair and replacement and to allow emergency shutoff in the event of catastrophic leak. A full-open valve, as defined in the legacy codes, is a shutoff valve that, in the full-open position, has a straight-through flow passageway with a diameter of not less than one nominal pipe size smaller than the nominal pipe size of the connecting pipe, or with an area not less than 85 percent of the cross-sectional area of the connecting pipe. Unlike shutoff valves and stops, full-open valves cause very little resistance to flow and, therefore, cause minimal pressure loss downstream of the valve. Full-open valves are also referred to as "water service valves" and include gate, ball and butterfly valves.

The following discusses each one of this section's list items:

1. A curb valve (also known as a "curb stop") is typically installed by the water utility company at the end of the water utility service connector pipe [see Commentary Figure 606.1(1)]. Decades ago, a curb valve was typically a lubricated rotor (plug)-type valve. However, newer installations often use ball valve-type curb valves. Where the water meter is located near the curb, a valve in the water meter vault or crock could serve the same purpose as the curb valve.
2. Where the water meter is located inside the building, the building entrance valve is located before the water meter. Where the water meter is located outside of the building (such as in a vault or crock), the building entrance valve is the valve between the end of the water service system and the beginning of the water distribution system.
3. The location of a valve before and after the water meter allows meter replacement without having to drain down the building water distribution system or empty the water service system [see Commentary Figure 606.1(2)]. Where the water meter is in a vault or crock outside the building, a valve immediately downstream of

INTERNATIONAL CODE COUNCIL®
Copyright © 2015 ICC. ALL RIGHTS RESERVED. Accessed by David Dammon on Jun 21, 2017 12:30:52 PM pursuant to License Agreement with ICC. No further reproduction or distribution authorized. ANY UNAUTHORIZED REPRODUCTION OR DISTRIBUTION IS A VIOLATION OF THE FEDERAL COPYRIGHT ACT AND THE LICENSE AGREEMENT, AND SUBJECT TO CIVIL AND CRIMINAL PENALTIES THEREUNDER.

the water meter is not required since the building entrance valve can serve as the valve after the water meter.

4. A water pipe extending vertically through one or more stories and conveying water vertically upward is considered a riser. Valves at the base of risers are very helpful for servicing a multistory building so that the entire water distribution system does not require draining in order to facilitate repairs in one area [see Commentary Figure 606.1(3)]. One- and two-family residential buildings are exempt from the water riser valve requirement as are multiple-family dwellings that are not over two stories in height.
5. A water pipe extending vertically through one or more stories and conveying water vertically downward is considered a downfeed. Valves at the top of downfeeds are very helpful for servicing a multistory building so that only small areas of the building will be without water in order to facilitate repairs in one area [see Commentary Figure 606.1(3)]. One- and two-family residential buildings are exempt from the water downfeed valve requirement. Note, however, that multiple-family dwellings that are not over two stories in height are not exempt from the requirement for valves on downfeed pipes.
6. Where a building contains more than one dwelling unit, each dwelling unit must have a valve located at the entrance of every water distribution pipe to the dwelling unit. For example, consider a multiunit apartment building where each apartment is provided with a hot and a cold water supply pipe for delivery of water to the fixtures in the apartment. Both hot and cold water

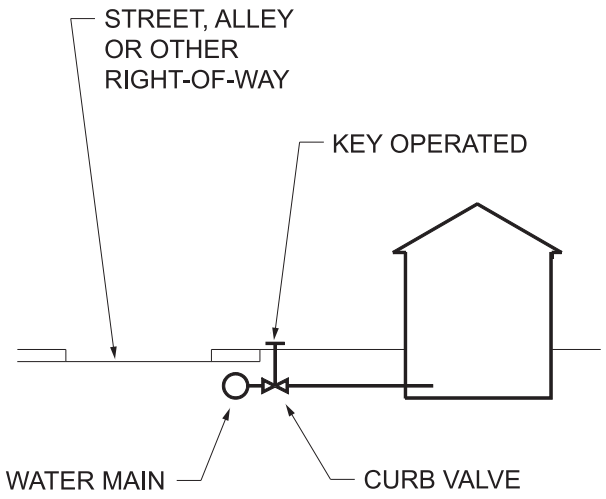

Figure 606.1(1)
CURB VALVE ON WATER SUPPLY

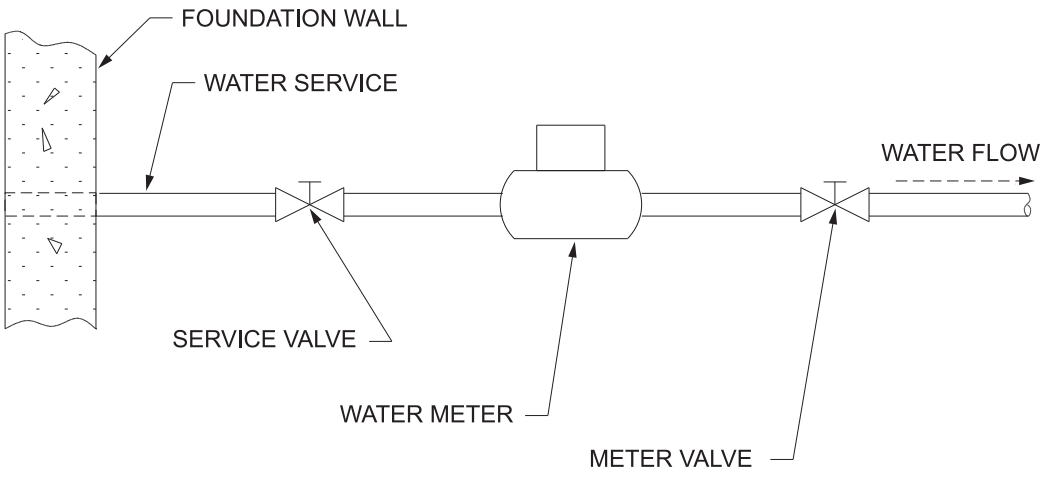

Figure 606.1(2)
VALVE AT ENTRANCE TO THE BUILDING AND ON THE DISCHARGE SIDE OF METER

INTERNATIONAL CODE COUNCIL®
Copyright © 2015 ICC. ALL RIGHTS RESERVED. Accessed by David Dammon on Jun 21, 2017 12:30:52 PM pursuant to License Agreement with ICC. No further reproduction or distribution authorized. ANY UNAUTHORIZED REPRODUCTION OR DISTRIBUTION IS A VIOLATION OF THE FEDERAL COPYRIGHT ACT AND THE LICENSE AGREEMENT, AND SUBJECT TO CIVIL AND CRIMINAL PENALTIES THEREUNDER.

supply pipes must have a full-open valve so that the water can be shut off to just that apartment's water distribution system. This allows for extended maintenance or remodeling activities without interruption of the water supplies for adjacent apartments [see Commentary Figure 606.1(4)].

The exception portion of this list item, "except where supplying a single fixture equipped with individual stops," might have several meanings. One possible interpretation is that where a single fixture in a dwelling unit is supplied from piping that is not shut off by the dwelling unit's required full-open valve(s) previously mentioned, that fixture's supply pipes are not required to have full-open valves if the fixture has individual stops (valves). For example, consider risers or downfeeds that supply only the kitchen sinks in a "stack" of dwelling units in an apartment building. The individual stop valves for the kitchen sink can serve as the water shutoff valves for the fixture supply pipes. Another possible interpretation might be that if every fixture in a dwelling unit has individual stops (valves), then full-open valves are not required on the water supply pipes to the dwelling unit. The code official must determine the final meaning of this item's exception statement.

7. Gravity water tanks and pressurized water tanks require service and replacement. The provision of a full-open valve on the water supply to such tanks allows for those activities without the need to shut off pumping systems and water supply systems [see Commentary Figure 606.1(5)].
8. Water heaters require periodic servicing such as temperature and pressure relief valve replacement, sediment removal and element/thermostat replacement. Eventual replacement of the water heater is often necessary. The provision of a full-open valve on the water supply to a water heater allows for those activities without interrupting the supply of cold water to the building

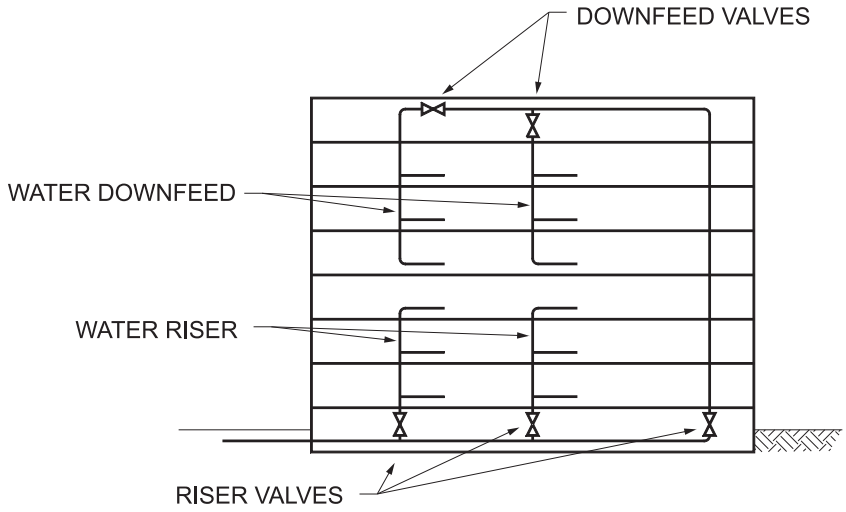

Figure 606.1(3)
VALVES FOR EACH RISER AND DOWNFEED

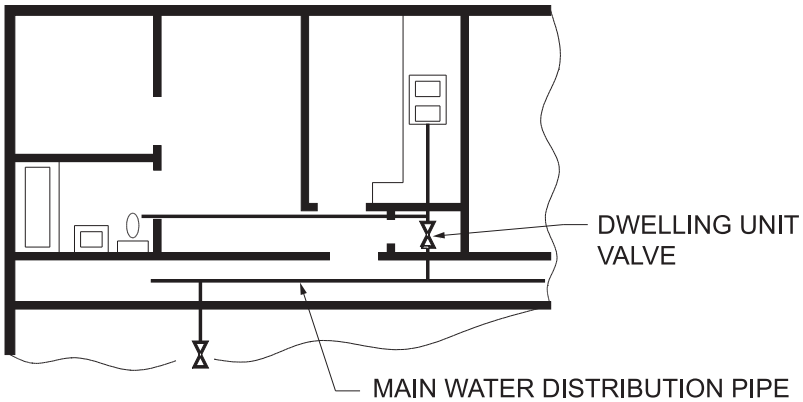

Figure 606.1(4)
DWELLING UNIT VALVE

INTERNATIONAL CODE COUNCIL®
Copyright © 2015 ICC. ALL RIGHTS RESERVED. Accessed by David Dammon on Jun 21, 2017 12:30:52 PM pursuant to License Agreement with ICC. No further reproduction or distribution authorized. ANY UNAUTHORIZED REPRODUCTION OR DISTRIBUTION IS A VIOLATION OF THE FEDERAL COPYRIGHT ACT AND THE LICENSE AGREEMENT, AND SUBJECT TO CIVIL AND CRIMINAL PENALTIES THEREUNDER.

[see Commentary Figure 606.1(6)]. Note that the code does not prohibit the installation of a valve on the hot water pipe from the water heater. Installation of such valves is sometimes prudent where portions of the hot water distribution system are located above the elevation of the water heater so that extensive draining of the hot water distribution system is not required for water heater service. Although the code is silent about the type of valve that should be used for this application, a full-open valve would be the best choice to avoid significant pressure losses in the hot water distribution system.

606.2 Location of shutoff valves. Shutoff valves shall be installed in the following locations:

1. On the fixture supply to each plumbing fixture other than bathtubs and showers in one- and two-family residential *occupancies*, and other than in individual sleeping units that are provided with unit shutoff valves in hotels, motels, boarding houses and similar *occupancies*.
2. On the water supply pipe to each sillcock.
3. On the water supply pipe to each appliance or mechanical equipment.

❖ Shutoff valves can be any type of valve, such as a globe valve, a ball valve (full open or reduced port), a gate valve or angle valve. A shutoff valve has no minimum requirements for the cross-sectional area of flow. The following discusses each of this section's list items:

1. Fixtures require a shutoff valve on each of the fixture supply pipes supplying water to the fixture so that if the fixture requires repair or replacement, the building's water distribution system does not have to be shut down and

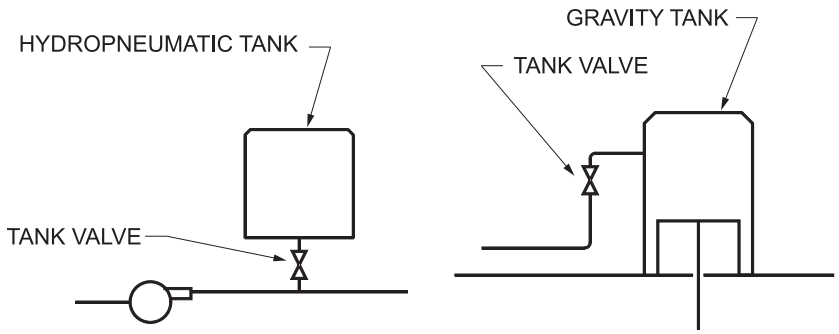

Figure 606.1(5)
VALVES ON SUPPLY TO EACH TANK

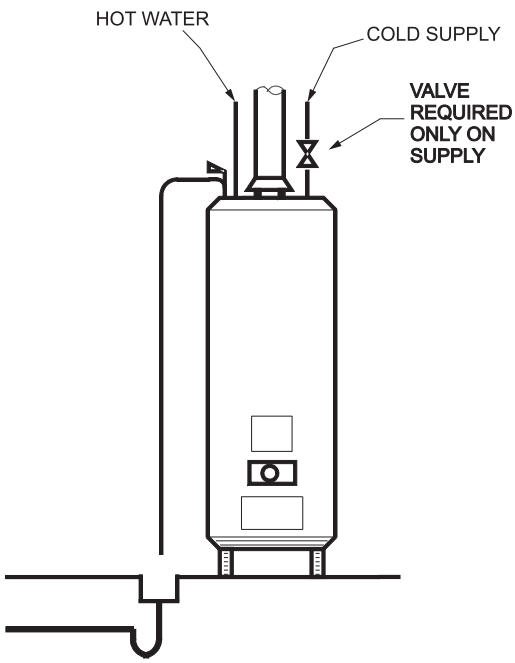

Figure 606.1(6)
WATER HEATER VALVE

INTERNATIONAL CODE COUNCIL®
Copyright © 2015 ICC. ALL RIGHTS RESERVED. Accessed by David Dammon on Jun 21, 2017 12:30:52 PM pursuant to License Agreement with ICC. No further reproduction or distribution authorized. ANY UNAUTHORIZED REPRODUCTION OR DISTRIBUTION IS A VIOLATION OF THE FEDERAL COPYRIGHT ACT AND THE LICENSE AGREEMENT, AND SUBJECT TO CIVIL AND CRIMINAL PENALTIES THEREUNDER.

drained. There are two exceptions within this list item. The first exception is that bathtub and shower faucets/mixing valves in one- and two-family residences are not required to have shutoff valves. The reason for this is that the fixture supply pipes to these faucets/mixing valves are concealed, making it difficult, if not impossible, to install shutoff valves with access. The second exception is where individual sleeping units in hotels, motels, boarding houses and similar occupancies have a unit shutoff valve (i.e., a valve that shuts off the water supply to only that unit), fixture shutoff valves are not required. The reason for this exception is to reduce the number of shutoff valves required in a building of that type since fixture shutoff valves can be a source of leaks.

The code does not directly specify the location for fixture shutoff valves. Where fixture supply pipes originate from a "mains, risers and branch"-type water distribution system, fixture shutoff valves are usually located adjacent to the fixture and, more commonly, attached to the end of the fixture supply pipes [see Commentary Figure 606.2(1)]. Note that Section 604.5 requires that fixture supply pipes must terminate not more than 30 inches (762 mm) from the point of connection to the fixture. Thus, fixture shutoff valves attached to the end of the fixture supply pipes will be located within 30 inches (762 mm) from the point of connection to the fixture. The shutoff valves that are typically installed at the end of fixture supply pipes are specialized fixture fittings that are called "stops" or "stop valves." Stop valves are available in straight pattern and angle pattern, are available with a variety of inlet and outlet connection sizes/configurations and, because, in some cases the fittings are exposed, are available in a variety of finishes such as chrome, brushed nickel and polished brass.

Where fixture supply pipes originate from a parallel water distribution central manifold with valves, the fixture shutoff valves could be the valves on the manifold. As long as the manifold shutoff valves can shut off the water supply to only an individual fixture, the manifold valves could serve as the fixture shutoff valves and stop valves would not be required adjacent to the fixture. Note Section 606.4 requires marking of valves that are not adjacent to the fixture.

2. A sillcock is a hose connection faucet located on the outside of a building. Sillcocks include hose bibbs and freezeproof hose faucets. Such faucets are often vandalized, abused (left running) and freeze damaged such that the water supply to the faucet must be shut off for extended periods of time. The shutoff valve is necessary to isolate the faucet from the remainder of the water distribution system [see Commentary Figure 606.2(2)]. The code is silent with respect to the location of the shutoff valve but if it is remote from the hose faucet, Section 606.4 requires labeling of the shutoff valve. Even if the shutoff valve is not remote from the hose faucet, Section 606.4 requires marking of the valve.
3. Appliances and equipment that require a water supply must have shutoff valves on the water supply pipes so that repairs and replacement can be performed without affecting the remainder of the water distribution system. The code is silent with respect to the location of the shutoff valve but if it is remote from the appliance or equipment, Section 606.4 requires labeling of the shutoff valve(s).

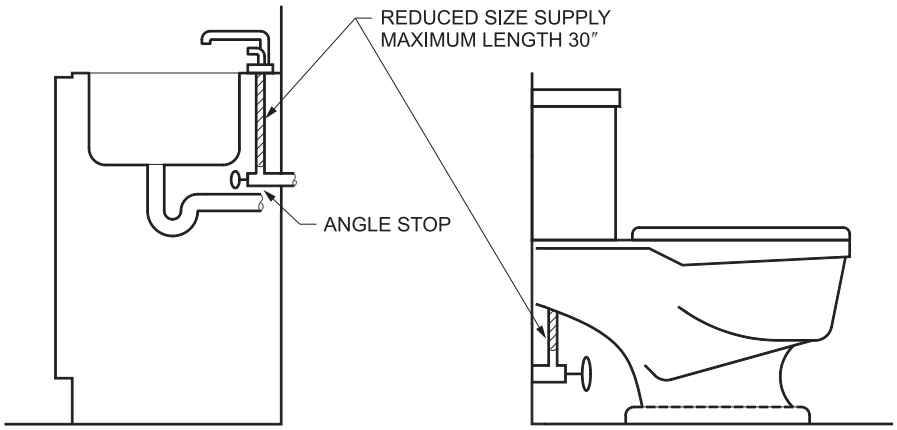

For SI: 1 inch = 25.4 mm.

Figure 606.2(1)
SHUTOFF VALVE FOR EACH FIXTURE

INTERNATIONAL CODE COUNCIL®
Copyright © 2015 ICC. ALL RIGHTS RESERVED. Accessed by David Dammon on Jun 21, 2017 12:30:52 PM pursuant to License Agreement with ICC. No further reproduction or distribution authorized. ANY UNAUTHORIZED REPRODUCTION OR DISTRIBUTION IS A VIOLATION OF THE FEDERAL COPYRIGHT ACT AND THE LICENSE AGREEMENT, AND SUBJECT TO CIVIL AND CRIMINAL PENALTIES THEREUNDER.

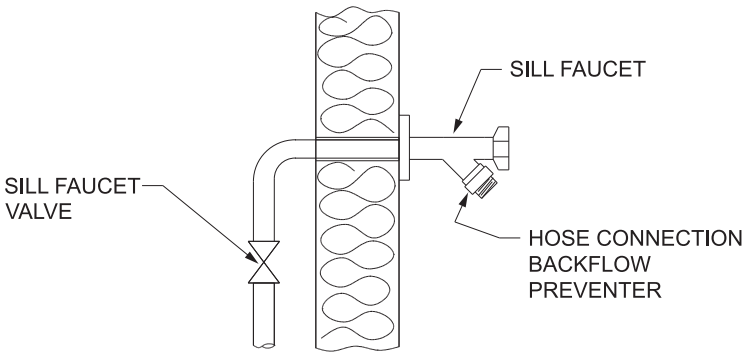

Figure 606.2(2)
SILL FAUCET VALVE

606.3 Access to valves. *Access* shall be provided to all full-open valves and shutoff valves.

❖ To serve their intended purpose, full-open and shutoff valves must be able to be accessed for operation (see the definition of "Access" in Chapter 2).

606.4 Valve identification. Service and hose bibb valves shall be identified. All other valves installed in locations that are not adjacent to the fixture or appliance shall be identified, indicating the fixture or appliance served.

❖ The term "service valve" in this section is intended to mean the main water service valve for the building. This valve will be the full-open valve between the end of the water service supply system and the beginning of the water distribution system. The code requirement for marking this valve should be obvious as locating this valve during an emergency would be critical.

The term "hose bibb valves" in this section refers to sillcocks, freezeproof outdoor faucets, yard hydrants and wall hydrants. Section 606.2 requires shutoff valves for these types of valves. The required shutoff valve for such hose connection faucets must have a tag or similar method of identification showing the valve's purpose. All other valves must be labeled if the valve's purpose is not obvious because of the proximity of the fixture or appliance served by the valve (see commentary, Section 604.10.2). Identification of these "remote" valves is necessary since service personnel can only see the valve; they will not have any clue as to what the valve is connected to because they are unable to trace concealed piping. Obviously, locating specific valves in an emergency is also important. Where a parallel water distribution system with a central manifold is installed, the valves on the manifold must be marked for the individual fixtures that the valves serve.

606.5 Water pressure booster systems. Water pressure booster systems shall be provided as required by Sections 606.5.1 through 606.5.10.

❖ Requirements for water pressure booster systems are described in Sections 606.5.1 through 606.5.10.

606.5.1 Water pressure booster systems required. Where the water pressure in the public water main or individual water supply system is insufficient to supply the minimum pressures and quantities specified in this code, the supply shall be supplemented by an elevated water tank, a hydropneumatic pressure booster system or a water pressure booster pump installed in accordance with Section 606.5.5.

❖ There is no guarantee that a public water main will have the required pressure for the water distribution system of a proposed new building. Some public water supply systems are so antiquated that the public water main piping cannot withstand pressures much over 30 psi (207 kPa). In other situations, a public water supply system might be installed in hilly terrain where the pressure will be low at the highest point in the system because pressures might be too great at the lowest point in the system. In an individual water supply system (well system), the depth of the well might limit the amount of pressure that the well pump can provide at grade level. In these types of situations, a method of boosting the existing water pressure must be provided so that a building's water distribution system has the necessary pressure to overcome piping friction losses and elevation pressure loss.

Generally, there are three types of water pressure boosting methods. The first and perhaps the oldest is that of a water tank (or tanks) placed on the roof of a building. Pumps in the basement of the building pump water from the source (the public main or well system) up to the tank to keep it filled. The tank gravity feeds the water distribution system of the building. The top of the tank is vented to the outdoors. A second method for boosting pressure is the use of a closed tank so that when water is pumped into the tank, the displaced air becomes pressurized. The air pressure in the tank provides the pressure onto the surface of the water. The third method is the use of variable speed pumps to push water into the water distribution system. These pumps automatically speed up and slow down to maintain a constant pressure based on the variations in demand (flow).

Any pump that draws directly from the public water

INTERNATIONAL CODE COUNCIL®
Copyright © 2015 ICC. ALL RIGHTS RESERVED. Accessed by David Dammon on Jun 21, 2017 12:30:52 PM pursuant to License Agreement with ICC. No further reproduction or distribution authorized. ANY UNAUTHORIZED REPRODUCTION OR DISTRIBUTION IS A VIOLATION OF THE FEDERAL COPYRIGHT ACT AND THE LICENSE AGREEMENT, AND SUBJECT TO CIVIL AND CRIMINAL PENALTIES THEREUNDER.

main or a well pump discharge must be protected against cavitation damage. Therefore, this section requires that the pump installation be in accordance with Section 606.5.5.

606.5.2 Support. All water supply tanks shall be supported in accordance with the *International Building Code*.

❖ The weight of a full water tank must be considered when calculating the dead loads in the building's structural design. Water weighs 62.4 pounds per cubic foot (1000 kg/m^3) or 8.34 pounds per gallon (1 kg/L).

606.5.3 Covers. All water supply tanks shall be covered to keep out unauthorized persons, dirt and vermin. The covers of gravity tanks shall be vented with a return bend vent pipe with an area not less than the area of the down-feed riser pipe, and the vent shall be screened with a corrosion-resistant screen of not less than 16 by 20 mesh per inch (630 by 787 mesh per m).

❖ This section refers to gravity water tanks that must be open to the outdoors. Because the water tank contains potable water, a cover provides protection against contamination and unauthorized entry. The vent is necessary to prevent pressures from developing in the tank resulting from water being withdrawn or pumped into the tank and to allow for thermal expansion.

606.5.4 Overflows for water supply tanks. A gravity or suction water supply tank shall be provided with an overflow with a diameter not less than that shown in Table 606.5.4. The overflow outlet shall discharge at a point not less than 6 inches (152 mm) above the roof or roof drain; floor or floor drain; or over an open water-supplied fixture. The overflow outlet shall be covered with a corrosion-resistant screen of not less than 16 by 20 mesh per inch (630 by 787 mesh per m) and by $^1/_4$-inch (6.4 mm) hardware cloth or shall terminate in a horizontal angle seat check valve. Drainage from overflow pipes shall be directed so as not to freeze on roof walks.

❖ Gravity or suction water tanks are not designed to be pressurized. They are designed to withstand the pressure exerted by the water being contained in the tank. As such, these tanks must have an overflow pipe installed on the top cover of the tank or on the side of the tank near the top. The pipe is routed to a roof drain, floor drain or, in some cases, to a water-supplied fixture having a drain. The end of the pipe must terminate above the drain or flood level rim of the fixture by at least 6 inches (152 mm) to prevent the possibility of the backsphonage of waste water into the overflow pipe. The pipe must be protected against entry by insects or small animals with a screen on the end of the open pipe or by a swing check valve installed in a horizontal pipe section. The size of the overflow pipe is based on its capacity to gravity discharge water at a rate that is commensurate with the pressurized filling rate.

TABLE 606.5.4
SIZES FOR OVERFLOW PIPES FOR WATER SUPPLY TANKS

MAXIMUM CAPACITY OF WATER SUPPLY LINE TO TANK (gpm)	DIAMETER OF OVERFLOW PIPE (inches)
0 – 50	2
50 – 150	$2^1/_2$
150 – 200	3
200 – 400	4
400 – 700	5
700 – 1,000	6
Over 1,000	8

For SI: 1 inch = 25.4 mm, 1 gallon per minute = 3.785 L/m.

606.5.5 Low-pressure cutoff required on booster pumps. A low-pressure cutoff shall be installed on all booster pumps in a water pressure booster system to prevent creation of a vacuum or negative pressure on the suction side of the pump when a positive pressure of 10 psi (68.94 kPa) or less occurs on the suction side of the pump.

❖ The creation of low pressures on the upstream (suction) side of pumps increases the possibility of backflow in the portion of the supply system that precedes the pumping equipment. Additionally, where there is inadequate pressure and volume of water on the suction side of the pump, cavitation can occur in the pump housing. Cavitation, which is the formation of partial vacuums within a flowing liquid (e.g., air bubbles), can rapidly deteriorate a pump impeller. Net positive suction head (NPSH) requirements vary with impeller design and must be checked for each pump. A low-pressure cutoff prevents the pump from operating when the supply pressure at the pump inlet is 10 psi (69 kPa) or less.

606.5.6 Potable water inlet control and location. Potable water inlets to gravity tanks shall be controlled by a fill valve or other automatic supply valve installed so as to prevent the tank from overflowing. The inlet shall be terminated so as to provide an *air gap* not less than 4 inches (102 mm) above the overflow.

❖ Float switches, float valves, electrode controllers and electronic level devices are used for controlling the flow of water into a tank. The water level in gravity tanks must be maintained by automatic means so that the supply of potable water is maintained. An air gap must be installed between the tank filling pipe termination and highest water level possible in the tank. The highest water level possible in the tank is the elevation of the overflow pipe connection to the tank.

606.5.7 Tank drain pipes. A valved pipe shall be provided at the lowest point of each tank to permit emptying of the tank. The tank drain pipe shall discharge as required for overflow pipes and shall not be smaller in size than specified in Table 606.5.7.

❖ A valve is required on every tank so that it can be emptied for service, repair or replacement of the tank.

INTERNATIONAL CODE COUNCIL®
Copyright © 2015 ICC. ALL RIGHTS RESERVED. Accessed by David Dammon on Jun 21, 2017 12:30:52 PM pursuant to License Agreement with ICC. No further reproduction or distribution authorized. ANY UNAUTHORIZED REPRODUCTION OR DISTRIBUTION IS A VIOLATION OF THE FEDERAL COPYRIGHT ACT AND THE LICENSE AGREEMENT, AND SUBJECT TO CIVIL AND CRIMINAL PENALTIES THEREUNDER.

TABLE 606.5.7
SIZE OF DRAIN PIPES FOR WATER TANKS

TANK CAPACITY (gallons)	DRAIN PIPE (inches)
Up to 750	1
751 to 1,500	$1^1/_2$
1,501 to 3,000	2
3,001 to 5,000	$2^1/_2$
5,000 to 7,500	3
Over 7,500	4

For SI: 1 inch = 25.4 mm, 1 gallon = 3.785 L.

❖ The valve at the base of the water tank is sized to empty the tank quickly.

606.5.8 Prohibited location of potable supply tanks. Potable water gravity tanks or manholes of potable water pressure tanks shall not be located directly under any soil or waste piping or any source of contamination.

❖ Any opening on a water tank must be protected against contamination. If drainage piping is located above a tank, there is a possibility of a leak from the piping or from a fixture served by such piping dripping onto the tank. Similar occurrences in the past have led to major outbreaks of disease.

606.5.9 Pressure tanks, vacuum relief. All water pressure tanks shall be provided with a vacuum relief valve at the top of the tank that will operate up to a maximum water pressure of 200 psi (1380 kPa) and up to a maximum temperature of 200ºF (93ºC). The size of such vacuum relief valve shall be not less than $^1/_2$ inch (12.7 mm).

Exception: This section shall not apply to pressurized captive air diaphragm/bladder tanks.

❖ This section addresses pressure tanks that are part of a water pressure booster system. There is always the possibility of a pressure tank being subjected to a vacuum, especially elevated tanks supplying downfeed piping. Many tanks are not designed for a vacuum condition; therefore, a vacuum relief valve is necessary to prevent atmospheric pressure from collapsing or otherwise damaging the tank. A vacuum relief valve is a type of check valve having a shielded inlet.

606.5.10 Pressure relief for tanks. Every pressure tank in a hydropneumatic pressure booster system shall be protected with a pressure relief valve. The pressure relief valve shall be set at a maximum pressure equal to the rating of the tank. The relief valve shall be installed on the supply pipe to the tank or on the tank. The relief valve shall discharge by gravity to a safe place of disposal.

❖ Hydropneumatic tanks are rated for a given pressure. When connected in line with pumping equipment, there is a possibility of exceeding the pressure rating of the tank. The pressure relief valve installed on the tank prevents the buildup of excessive pressure, thereby preventing the possibility of tank rupture or failure.

606.6 Water supply system test. Upon completion of a section of or the entire water supply system, the system, or portion completed, shall be tested in accordance with Section 312.

❖ It is advantageous to conduct a water test before the system is concealed. Any leaks are easily repaired at this time without damaging or replacing existing materials. The test pressure required by Section 312.5 using water must be equal to or greater than the working pressure of the water supply system that will serve the building water service and water distribution system. When using air, the test pressure must not be less than 50 psi (344 kPa) (see Section 312.5).

606.7 Labeling of water distribution pipes in bundles. Where water distribution piping is bundled at installation, each pipe in the bundle shall be indentified using stenciling or commercially available pipe labels. The identification shall indicate the pipe contents and the direction of flow in the pipe. The interval of the identification markings on the pipe shall not exceed 25 feet (7620 mm). There shall be not less than one identification label on each pipe in each room, space or story.

❖ Unlabeled bundled water piping presents major problems during renovations and repairs. With gray-water systems now being introduced or retrofitted into buildings, pipe identification becomes more critical since not all water piping will be potable water piping.

SECTION 607
HOT WATER SUPPLY SYSTEM

607.1 Where required. In residential *occupancies*, *hot water* shall be supplied to plumbing fixtures and equipment utilized for bathing, washing, culinary purposes, cleansing, laundry or building maintenance. In nonresidential *occupancies*, *hot water* shall be supplied for culinary purposes, cleansing, laundry or building maintenance purposes. In nonresidential *occupancies*, *hot water* or *tempered water* shall be supplied for bathing and washing purposes.

❖ Hot water is almost always necessary to achieve thorough cleaning of just about anything within a building. This section requires hot water to be supplied to plumbing fixtures and equipment that are used for culinary purposes (cleaning of pots, pans, dishes, flatware, cups and glasses), general cleansing (cleaning of fixtures, furniture, walls and floors), laundry (washing of clothing in machines and laundry trays) and building maintenance (cleaning of tools, paint brushes and dirty equipment).

Where bathing or washing (of the human body) is concerned, this section requires that plumbing fixtures used for those purposes in residential occupancies be supplied with hot water. In nonresidential occupancies, those same fixtures must be provided with either hot or tempered water. Chapter 2 defines “Hot water” as water having a temperature of 110°F (43°C) or greater. “Tempered water” is defined in Chapter 2 as

INTERNATIONAL CODE COUNCIL®
Copyright © 2015 ICC. ALL RIGHTS RESERVED. Accessed by David Dammon on Jun 21, 2017 12:30:52 PM pursuant to License Agreement with ICC. No further reproduction or distribution authorized. ANY UNAUTHORIZED REPRODUCTION OR DISTRIBUTION IS A VIOLATION OF THE FEDERAL COPYRIGHT ACT AND THE LICENSE AGREEMENT, AND SUBJECT TO CIVIL AND CRIMINAL PENALTIES THEREUNDER.

water having a temperature between (but not including) 85°F and 110°F (29°C and 43°C).

The decision to supply hot or tempered water to fixtures used for bathing or washing in buildings of nonresidential occupancy is the responsibility of the building designer with the exception of public hand-washing facilities. Section 416.5 requires the designer to provide only tempered water to be delivered from public hand-washing facilities. Providing tempered water for these applications offers greater energy savings as well as protects users from water temperatures that could be dangerous because of the potential for scald injury.

607.1.1 Temperature limiting means. A thermostat control for a water heater shall not serve as the temperature limiting means for the purposes of complying with the requirements of this code for maximum allowable *hot* or *tempered water* delivery temperature at fixtures.

❖ Because it is relatively easy to adjust a thermostat on a water heater and the fact that water heater thermostats do not hold water temperatures within a repeatable narrow range, water heater thermostats must not be used to control temperatures where maximum water temperatures must not be exceeded. Thermostatic water temperature control valves offer precise temperature control and repeatability. They are also a type of device that is unfamiliar to most laypersons such that it is unlikely that the device will be tampered with.

607.1.2 Tempered water temperature control. *Tempered water* shall be supplied through a water temperature limiting device that conforms to ASSE 1070 and shall limit the *tempered water* to a maximum of 110ºF (43ºC). This provision shall not supersede the requirement for protective shower valves in accordance with Section 424.3.

❖ Where tempered water is to be supplied to a tempered water system or to one or more fixtures, the temperature of the water must be controlled by a device that complies with ASSE 1070. These devices are thermostatic temperature control valves that precisely control the temperature of the water discharged from the valve so that the temperature is relatively constant. Where an ASSE 1070 device is used to supply water to one or more individual shower valves, Section 424.3 requiring the shower valves to comply with ASSE 1016 or ASME A112.18.1/CSA B125.1 still applies. This is because the ASSE 1070 device does not have the fast-response time that is required for individual shower valves.

607.2 Hot or tempered water supply to fixtures. The *developed length* of *hot* or *tempered water* piping, from the source of hot water to the fixtures that require *hot* or *tempered water*, shall not exceed 50 feet (15 240 mm). Recirculating system piping and heat-traced piping shall be considered to be sources of *hot* or *tempered water*.

❖ A significant amount of water can be wasted by a fixture user while waiting for hot water to arrive at the fixture. In addition to being an inconvenience, the costs for the water, for the energy to heat the water and for the disposal of the water are literally going down the drain. There will be less waste and inconvenience at the fixture where the source of hot water is located near to the fixture.

Hot water must be available within 50 feet (15 240 mm) of developed pipe length of the fixture requiring hot water. Where the developed length of piping is greater than 50 feet (15 240 mm), the distance must be reduced to be not greater than 50 feet (15 240 mm). The following example illustrates the impact of this 50-foot (30 480 mm) maximum length. A 50-foot (15 240 mm) length of $^1/_2$-inch (12.7 mm) copper tube contains approximately 0.6 gallon (2.3 liters) of water. A public lavatory is limited to a flow rate of 0.5 gpm (1.9 L/m). Therefore, if the entire 50-foot (15 240 mm) length of tube is at ambient temperature, the fixture user would have to wait approximately 1.2 minutes for hot water to arrive at the fixture. Under these conditions, most public lavatory users would have given up long before hot water arrived. In reality, where fixtures are being used frequently and the hot water piping system is well insulated, the wait time (and water waste) is substantially reduced.

The code is silent on the methods that can be used to ensure that a source of hot water is within the required distance limit. For example, if a lavatory is located 63 feet (19 202 mm) of developed piping length from a water heater, several methods could be used to reduce the distance to no greater than 50 feet (15 240 mm). The most common methods are: 1) locate the water heater closer to the fixture: 2) install a hot water recirculation system such that the piping of that system provides a connection point for hot water that is closer to the fixture or 3) install a pipe heating system on the piping beginning at the source of the hot water to a point that is closer to the fixture.

In small buildings where all the fixtures are clustered together in one location, it is often possible to locate a central water heater within the specified distance. Where a building is large and the fixtures requiring hot water are “spread out,” multiple water heating units can be strategically located to service groups of fixtures. Single “point of use” water heaters are frequently installed to provide hot water to just one fixture. In larger buildings where all of the water heating appliances are located in a mechanical room, it is often impossible to locate the mechanical room within 50 feet (15 240 mm) of developed piping length to all fixtures requiring hot water. Where water heating units cannot be located near to the fixtures, pumped hot water recirculation piping systems are typically installed to convey the hot water to a point near to all fixtures.

A hot water recirculating system circulates hot water from the water heater or hot water storage tank through a loop of piping that returns the water to the water heater or hot water storage tank. A continuous flow of hot water in the piping loop maintains a desired water

INTERNATIONAL CODE COUNCIL®
Copyright © 2015 ICC. ALL RIGHTS RESERVED. Accessed by David Dammon on Jun 21, 2017 12:30:52 PM pursuant to License Agreement with ICC. No further reproduction or distribution authorized. ANY UNAUTHORIZED REPRODUCTION OR DISTRIBUTION IS A VIOLATION OF THE FEDERAL COPYRIGHT ACT AND THE LICENSE AGREEMENT, AND SUBJECT TO CIVIL AND CRIMINAL PENALTIES THEREUNDER.

temperature at the point of connection for the piping to each fixture. Ideally, the location of the recirculation piping would pass in very close proximity to all fixtures requiring hot water. This code section only requires that the recirculation piping be within 50 feet (15 240 mm) of developed piping length to each fixture. There are also "no-return pipe" hot water recirculation systems available (see Commentary Figure 607.2).

Electric cable or steam tracing lines can also be used to maintain water temperatures in hot water piping.

Operating costs for the methods previously discussed are a concern for building designers, especially if they are designing for maximum energy efficiency. Recirculating pumps, heating cables and steam tracing all require energy. There is also the concern about heat loss from the piping which requires additional energy for maintaining the temperature of the hot water in the system.

607.2.1 Circulation systems and heat trace systems for maintaining heated water temperature in distribution systems. For Group R2, R3 and R4 occupancies that are three stories or less in height above grade plane, the installation of heated water circulation and temperature maintenance systems shall be in accordance with Section R403.5.1 of the *International Energy Conservation Code*. For other than Group R2, R3 and R4 occupancies that are three stories or less in height above grade plane, the installation of heated water circulation and heat trace systems shall be in accordance with Section C404.6 of the *International Energy Conservation Code*.

❖ The IECC has requirements for heated water circulation systems and heated water temperature maintenance systems (heat trace) because these systems can waste a significant amount of energy if not designed and installed to minimize energy consumption. This code section is somewhat complicated by the fact that the IECC is split into two parts: commercial buildings (IECC-CE) and residential buildings (IECC-RE). This code covers residential buildings that are classified by the IBC as Group R2, R3 or R4. However, where those buildings are "low rise" (i.e., three stories or less in height above grade plane), the IECC-RE requirements apply. For all other buildings covered by the IPC, the IECC-CE requirements apply.

This section is a pointer to alert the user of the IPC that requirements affecting heated water circulation systems and heated water temperature maintenance systems (heat trace) for water distribution systems exist in the IECC.

IECC C404.6 (and its subsections)

IECC C404.6 (and its subsections) prohibit gravity and thermo-syphon circulation systems. Automatic controls, temperature sensors and pumps must have access. Manual controls must have ready access. The controls for circulating hot water system pumps must start the pump when there is a demand for hot water within the occupancy. The controls must automatically turn off the pumps when the water in the circulation loop is either at the desired temperature or when there is not demand for hot water.

Electric heat trace systems must comply with IEEE 515.1. The controls these systems must be able to automatically adjust the energy input to the heat tracing to maintain the desired water temperature in the piping in accordance with the times when heated water is used in the occupancy. The heat trace system must be arranged to be turned off automatically when there is not a demand for hot water.

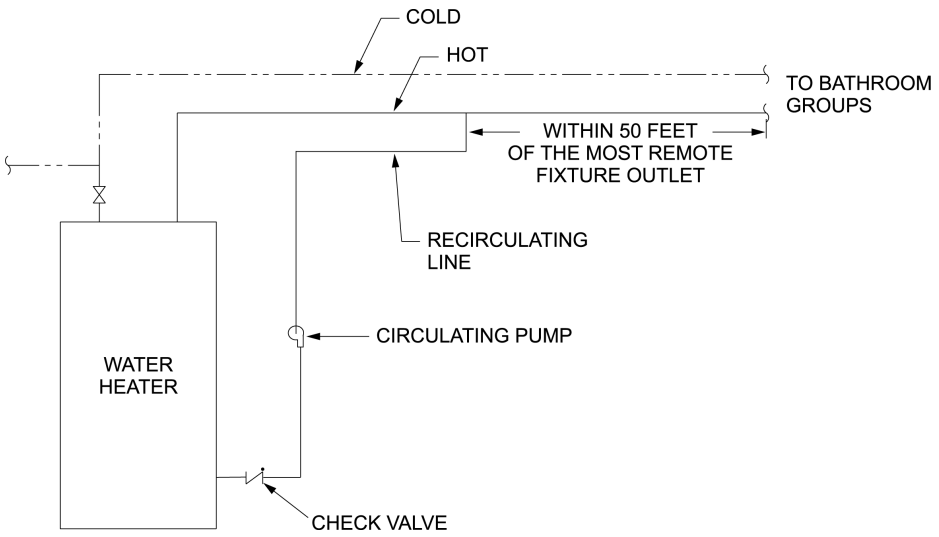

For SI: 1 foot = 304.8 mm.

Figure 607.2
AUTOMATIC TEMPERATURE MAINTENANCE SYSTEM BY HOT WATER (PUMPED) CIRCULATION LOOP

INTERNATIONAL CODE COUNCIL®
Copyright © 2015 ICC. ALL RIGHTS RESERVED. Accessed by David Dammon on Jun 21, 2017 12:30:52 PM pursuant to License Agreement with ICC. No further reproduction or distribution authorized. ANY UNAUTHORIZED REPRODUCTION OR DISTRIBUTION IS A VIOLATION OF THE FEDERAL COPYRIGHT ACT AND THE LICENSE AGREEMENT, AND SUBJECT TO CIVIL AND CRIMINAL PENALTIES THEREUNDER.

IECC R403.5.1 (and its subsections)

These sections have the same requirements as IECC C404.6 with one difference. The heat trace systems can comply with either IEEE 515.1 or UL 151.

607.2.1.1 Pump controls for hot water storage systems. The controls on pumps that circulate water between a water heater and a storage tank for heated water shall limit operation of the pump from heating cycle startup to not greater than 5 minutes after the end of the cycle.

❖ This section addresses water-heating systems that utilize a separate water-heating unit to generate hot water for storage in tanks. These systems have a circulating pump to move hot water into the storage tank (and cooler water back to the heating unit). This section requires that the circulation pump not continue to operate after the hot water storage tank is at the desired temperature. The run time of up to 5 minutes after the end of the heating cycle is to allow for the heating unit's heat exchanger to "cool down" and equalize temperature with the stored hot water. This section is duplicated in IECC-CE, but not in IECC-RE.

607.2.1.2 Demand recirculation controls for distribution systems. A water distribution system having one or more recirculation pumps that pump water from a heated water supply pipe back to the heated water source through a cold water supply pipe shall be a demand recirculation water system. Pumps shall have controls that comply with both of the following:

1. The control shall start the pump upon receiving a signal from the action of a user of a fixture or appliance, sensing the presence of a user of a fixture, or sensing the flow of hot or tempered water to a fixture fitting or appliance.
2. The control shall limit the temperature of the water entering the cold water piping to 104°F (40°C).

❖ This section applies only to heated water (hot or tempered water) recirculation systems that pump water back to the heated water source through a cold water supply pipe. Specialized equipment for recirculating hot water to remote fixture systems and back to the heated water source through a cold water supply pipe has been used for several decades. They were most often used as a retrofit for buildings where routing of dedicated return piping was too costly or impossible. See the commentary for Section 604.2 for additional understanding of "no dedicated return line" recirculation systems.

Extensive research by many organizations, including the Oak Ridge National Laboratory and the California Energy Commission, has determined that having hot water "ready and waiting" at fixtures is a significant energy waste. On the other hand, where a hot (or tempered) water circulation system is not provided, there is a significant waste of energy of heating water that never arrives at the intended point of use except where a large volume of cooler water is flushed down the drain in order to have the heated water arrive at the point of use. Certainly, such water waste is of concern (because of rising water and sewer charges) but more so, the waste of "embedded energy" (utility treatment and pumping energy) in that water is of equal or greater concern. The focus of the research was to determine how to best install and operate hot (or tempered) water recirculation systems for the lowest possible operating cost.

Section 607.2 has been in the code for many editions, primarily because of the inconvenience that users experience when trying to obtain hot (or tempered) water from fixtures. This requires that many building arrangements have a hot (or tempered) water recirculation system for fixtures. The code doesn't specify which type of recirculation system to use (dedicated return pipe or "cold water supply" return pipe). If a "cold water supply" return pipe system is chosen, then Section 607.2.1.2 applies.

This section introduces a new defined term of "Demand recirculation water system." See Chapter 2 for the definition and commentary to understand how this system works. Section 607.2.1.2 requires that if the recirculation system is of the "cold water supply" return pipe type of system, then the recirculation system is required to be a "demand recirculation water system." Items 1 and 2 of Section 607.2.1.2 specify how the pump controls must operate.

This code section is duplicated in both the IECC-CE and IECC-RE.

607.2.2 Piping for recirculation systems having master thermostatic valves. Where a thermostatic mixing valve is used in a system with a hot water recirculating pump, the *hot water* or *tempered water* return line shall be routed to the cold water inlet pipe of the water heater and the cold water inlet pipe or the hot water return connection of the thermostatic mixing valve.

❖ Where hot water systems have a master thermostatic mixing valve and a circulating pump downstream of the mixing valve to maintain temperatures at remote areas of the system, the hot water or tempered water return line from the mixing valve must be split and routed to the cold water inlet pipe of the water heater and the cold water inlet of the mixing valve or hot water return connection of the mixing valve [see Commentary Figure 607.2.3(1)]. If the hot water return pipe is routed only to the water heater [see Commentary Figure 607.2.3(2)], the mixed water system temperature will rise when there is no fixture use in the system. Where the hot water return pipe is routed only to the mixing valve [see Commentary Figure 607.2.3(3)], the mixed water system temperature will drop to ambient temperature when there is no fixture use in the system.

607.3 Thermal expansion control. Where a storage water heater is supplied with cold water that passes through a check valve, pressure reducing valve or backflow preventer, a thermal expansion tank shall be connected to the water heater

INTERNATIONAL CODE COUNCIL®
Copyright © 2015 ICC. ALL RIGHTS RESERVED. Accessed by David Dammon on Jun 21, 2017 12:30:52 PM pursuant to License Agreement with ICC. No further reproduction or distribution authorized. ANY UNAUTHORIZED REPRODUCTION OR DISTRIBUTION IS A VIOLATION OF THE FEDERAL COPYRIGHT ACT AND THE LICENSE AGREEMENT, AND SUBJECT TO CIVIL AND CRIMINAL PENALTIES THEREUNDER.

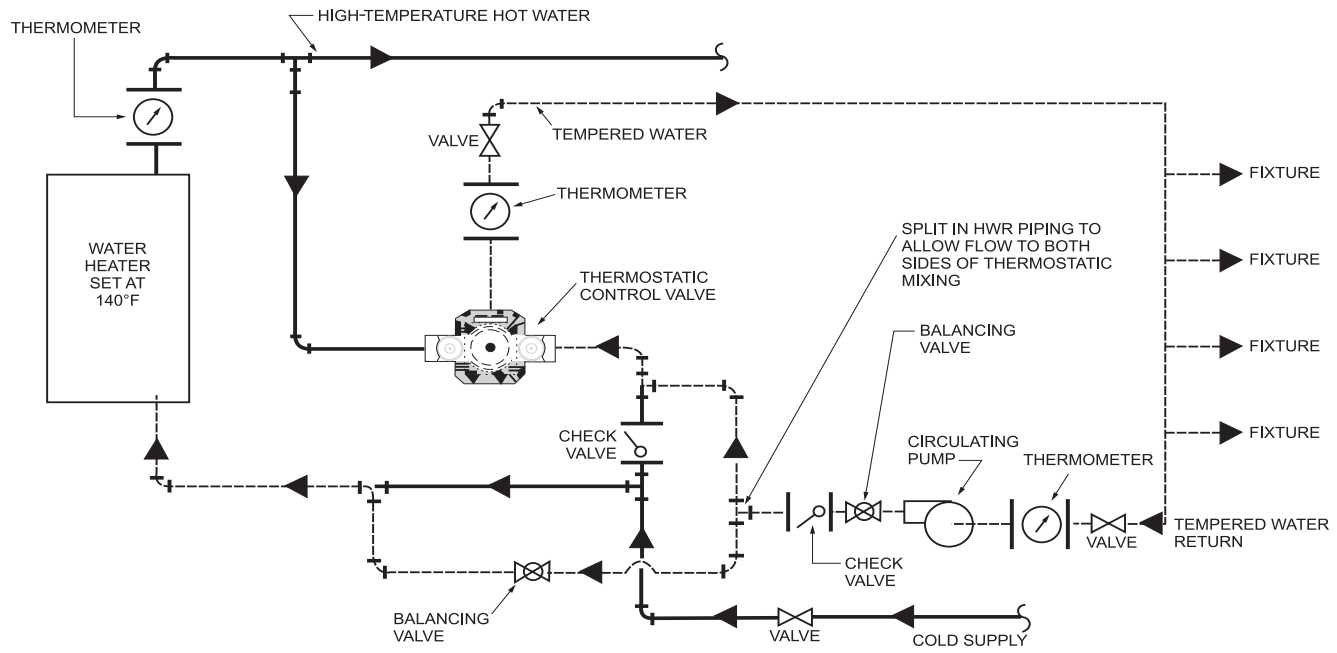

For SI: °C = [32 - (°F)]/1.8.

Figure 607.2.3(1)
PROPER RECIRCULATION RETURN

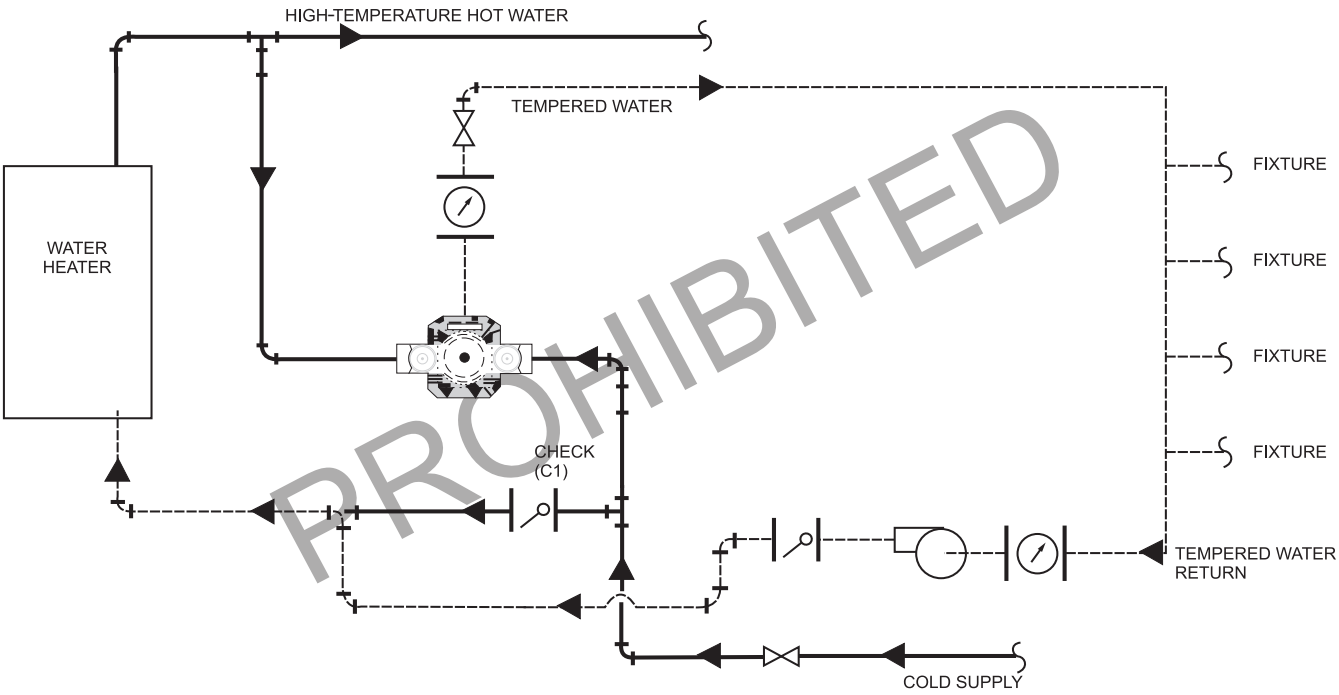

PROHIBITED

Figure 607.2.3(2)
PROHIBITED RECIRCULATION RETURN

INTERNATIONAL CODE COUNCIL®
Copyright © 2015 ICC. ALL RIGHTS RESERVED. Accessed by David Dammon on Jun 21, 2017 12:30:52 PM pursuant to License Agreement with ICC. No further reproduction or distribution authorized. ANY UNAUTHORIZED REPRODUCTION OR DISTRIBUTION IS A VIOLATION OF THE FEDERAL COPYRIGHT ACT AND THE LICENSE AGREEMENT, AND SUBJECT TO CIVIL AND CRIMINAL PENALTIES THEREUNDER.

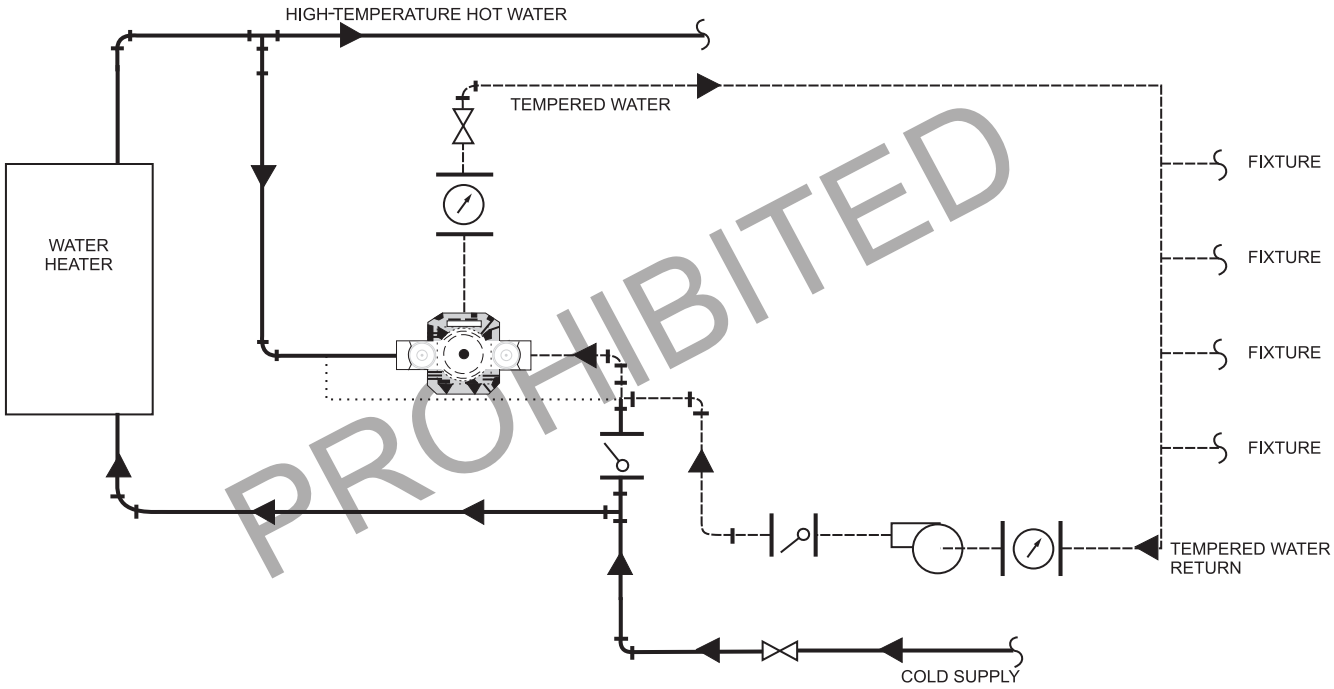

Figure 607.2.3(3)
PROHIBITED RECIRCULATION RETURN

cold water supply pipe at a point that is downstream of all check valves, pressure reducing valves and backflow preventers. Thermal expansion tanks shall be sized in accordance with the tank manufacturer's instructions and shall be sized such that the pressure in the water distribution system shall not exceed that required by Section 604.8.

❖ Liquids expand in volume when heated. If the liquid being heated completely fills a vessel of fixed volume, the pressure in the vessel will increase in proportion to the rise in temperature of the liquid. As long as sufficient heat is applied to cause a rise in liquid temperature, the pressure in the vessel will continue to rise until liquid is allowed to escape from the vessel (relieving the pressure) or the vessel ruptures due to overpressurization. Because a hot water distribution system is necessarily connected to a water heating device, there is the potential for thermal expansion to cause a rise in system pressure. The intent of this section is to require the control of any pressure increase caused by thermal expansion of water being heated.

Uncontrolled pressure increases caused by thermal expansion can have a detrimental effect on all components in a water distribution system. Faucets, typically designed for long-life operation at pressures not greater than 80 psig (552 kPa), will wear out rapidly and leak at higher pressures. Other system components, such as supply shutoff valves and flexible water supply connectors, may leak or fail at pressures exceeding 125 psig (862 kPa). Leaks might develop in water distribution piping that was tested to only the "working pressure" of the system. Water heater tank welds may fatigue and fail due to frequent pressure fluctuations caused by uncontrolled thermal expansion.

This begs the question: Is there any water distribution system where control of pressure due to thermal expansion is not required? The following examples illustrate the few cases where pressure control is not required or necessary:

Case A: Consider a building where the main water supply line pressure is always below 80 psig (therefore, no pressure-reducing valve is installed) and there are not any backflow preventers, check valves or other one-way flow devices in the system or in the connections to the main water supply line (the public water main). When water in the water distribution system is heated, the increased volume is easily absorbed by the massive volume of the water main and, thus, no pressure increase in the water distribution system can be detected. Since there is no pressure increase, no pressure control is required.

Case B: Consider a building where a private water source (e.g., a well system with an accumulator tank) supplies the water distribution system and no one-way flow devices (check valves) are between the accumulator tank and the water distribution system. The cut-off pressure setting of the pump is 60 psi. When water in

INTERNATIONAL CODE COUNCIL®
Copyright © 2015 ICC. ALL RIGHTS RESERVED. Accessed by David Dammon on Jun 21, 2017 12:30:52 PM pursuant to License Agreement with ICC. No further reproduction or distribution authorized. ANY UNAUTHORIZED REPRODUCTION OR DISTRIBUTION IS A VIOLATION OF THE FEDERAL COPYRIGHT ACT AND THE LICENSE AGREEMENT, AND SUBJECT TO CIVIL AND CRIMINAL PENALTIES THEREUNDER.

the water distribution system is heated, the increased volume is easily absorbed by the relatively large volume of the accumulator tank (also known as a pressure tank) and, thus, only a small pressure increase in the water distribution system can be detected. Therefore, no thermal expansion pressure control is required.

With respect to Case A, low-pressure [80 psig (552 kPa) or less] public water mains are becoming a rarity as fire service demands, new building construction demands, and better water main pipe materials all contribute towards new and replacement public water mains being designed for pressures much higher than 80 psig. Therefore, most buildings will require a pressure-reducing valve and, thus, a device to control pressures due to thermal expansion of water being heated is required.

Regardless of the public water main pressure (and the need for a pressure-reducing valve), it is becoming commonplace for water purveyors to install a backflow prevention device at the water meter or to require the building owner to provide a backflow prevention device in the water service piping to the building. The water purveyor requires these devices in order to comply with federal regulations and maintain certification as a safe drinking water provider. As such, most water providers have necessarily established backflow prevention programs in order to ensure that the public water system is protected from possible backflow contamination from buildings connected to the water system. At a minimum, most water purveyors install a dual check valve (in accordance with ASSE 1024 or CSA B64.6) on the upstream side of the water meter for a building. However, certain building occupancies, such as restaurants and factories, are required by the water purveyor to install backflow devices with a higher degree of protection. The installation of any backflow devices in the water service line will require the control of water distribution system pressures caused by thermal expansion of water being heated.

Note that existing buildings are typically not exempt from having to comply with a water purveyor's demands to install backflow protection. As water purveyors ramp up their backflow prevention programs, existing buildings (having no or limited backflow protection) are identified by their backflow hazard potential and a schedule for compliance is established. For example, the first year of a program might target all existing high-hazard factory and industrial occupancies. The next year might target all restaurants and smaller "medium-hazard" commercial establishments. The following year might be all residential irrigation systems. In some cases, periodic replacement of worn out, inaccurate outdated water meters often triggers the automatic installation of a backflow prevention device (dual check valve) with the new water meter. While most water providers will inform the building owner, by letter, that a backflow device was installed with the new water meter, these letters are often tossed aside without due respect for the need to install thermal expansion pressure control devices.

Beyond the requirements for backflow prevention devices, the installation of check valves (a one way flow device) is often necessary for proper operation of a plumbing system. A check valve is sometimes installed in the cold supply pipe to a water heater to prevent hot water migration into the cold water distribution piping. Some hot water recirculation systems require the installation of check valves that could result in a closed system. Water pressure booster pumps might also have internal check valves that could create a closed system.

Note that this section identifies only "storage water heating equipment" as the generator of hot water. While this appears to imply that thermal expansion-induced pressure increases are only created by storage tank water heaters, this is not the case. A question that is frequently asked is, "Does a water distribution system with a tankless water heater require control of pressure increases caused by thermal expansion?" The answer is provided in the following two system examples:

System A: Water distribution system with a tankless, on-demand water heater (electric or gas) without a storage tank. In this system, water is heated only when a hot water outlet is open. Because the water distribution system is now an "open" system (i.e., a hot water outlet is open), any thermal expansion is relieved through the open hot water outlet and no pressure increase can occur. When the outlet is closed, the system becomes a closed system but, since the flow has ceased, the tankless water heater stops heating the water. Therefore, methods for controlling pressure increases due to thermal expansion are not required.

System B: Water distribution system with tankless, on demand water heater (electric or gas) with a storage tank. The water service line has a backflow preventer (such as a dual check valve at the water meter). In this system, an unfired hot water storage tank may be required to provide for hot water recirculation to lessen the "wait time" for hot water to arrive at any fixture. Or the storage tank might be required to provide for large simultaneous hot water demands (that the tankless water heater cannot produce without the storage). For either reason, as the hot water storage tank cools off, a circulation pump is switched on to cause flow out of the storage tank, through the tankless water heater and back into the storage tank until the water in the storage tank is at an acceptable temperature level. Because there will be times where no hot water outlet is opened during the time that the tankless water heater is heating water, the water distribution system is a closed system. Therefore, a means for controlling pressure increases caused by the thermal expansion must be provided.

The method for controlling thermal expansion is the installation of a thermal expansion tank (see Commentary Figure 607.3). Prior to the 2015 edition, the code was open to any method that could control an

INTERNATIONAL CODE COUNCIL®
Copyright © 2015 ICC. ALL RIGHTS RESERVED. Accessed by David Dammon on Jun 21, 2017 12:30:52 PM pursuant to License Agreement with ICC. No further reproduction or distribution authorized. ANY UNAUTHORIZED REPRODUCTION OR DISTRIBUTION IS A VIOLATION OF THE FEDERAL COPYRIGHT ACT AND THE LICENSE AGREEMENT, AND SUBJECT TO CIVIL AND CRIMINAL PENALTIES THEREUNDER.

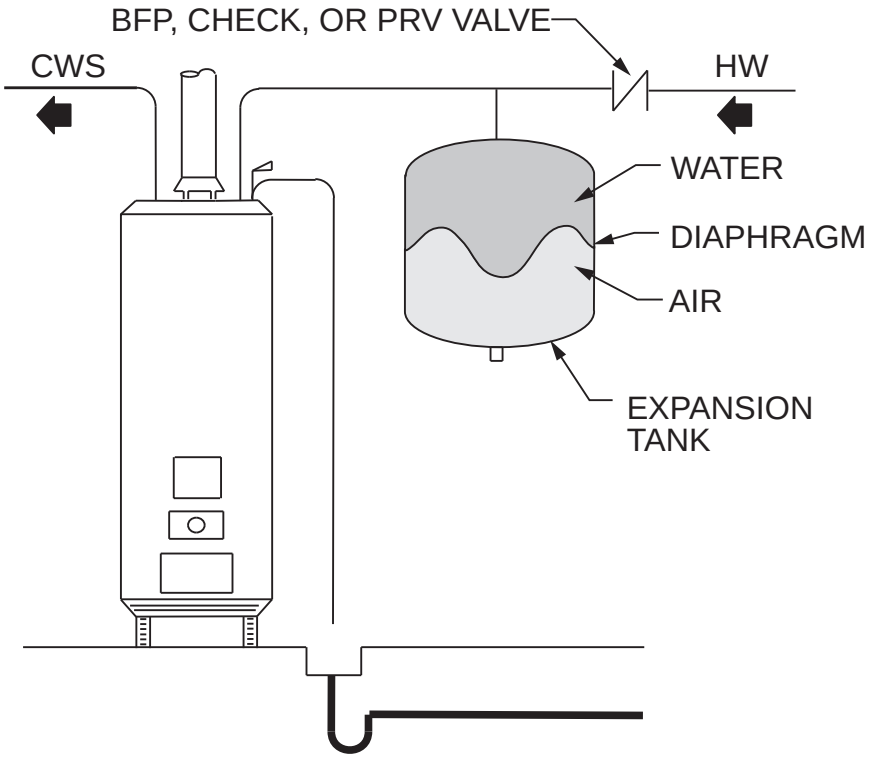

Figure 607.3
THERMAL EXPANSION CONTROL

increase in pressure caused by thermal expansion. One method was a pressure relief valve in the cold water line to the water heater that wasted a small amount of water to a drain or to the outdoors when the system pressure exceeded a set value such as 75, 80 or 125 psi. Another method was a specially designed water closet (tank type) fill valve with a pressure relief valve that would waste water to the flush tank when the system pressure exceeded a set value such as 80 psi. There are several reasons for this change:

1. Any device that "wastes" potable water is not in the spirit of water conservation that the code and the plumbing industry are moving towards. Although the amount/frequency of the water waste may be insignificant when the relief devices are new, constant operation can wear out the device such that it leaks constantly. This might occur for years before the building owner, occupant or astute service provider notices the problem.
2. The relief devices are not always where one would expect them. The replacement of a water closet (having the special fill valve) would remove the relief device without anyone discovering the impact to the system. Or a relief valve located far away from the water heater could be plugged to stop "nuisance" leaking.
3. The code did not indicate a relief pressure setting for these relief devices. Because there is a pressure relief valve on the storage water heater (and hot water storage), some have (incorrectly) considered this as the thermal expansion relief device, not realizing that there is a prohibition in Section 504.4 for the water heater pressure relief valve to serve as a thermal expansion device.

Section 604.8 requires that the pressure in the water distribution system not exceed 80 psi (552 kPa). Where a thermal expansion tank is required to control thermal expansion-caused pressure increases, the pressure in the water distribution system must be set at less than 80 psi. Although a thermal expansion tank does "control" the increase in pressure caused by thermal expansion, the size of the thermal expansion tank determines how much the water distribution system pressure will increase after the thermal expansion event. This is because a thermal expansion tank has an air-pressurized bladder in the tank. As the water in the system expands, the water moves into the thermal expansion tank to compress the air bladder. The pressure in the air bladder increases and the system (water distribution system and the air bladder) will be at a new pressure greater than before the thermal expansion event. If the initial air bladder volume is very small, the water volume expanding into the thermal expansion tank will cause a significant increase in air bladder pressure and thus, the final system pressure will be significantly greater than it was before the thermal expansion event. If the initial air bladder vol-

INTERNATIONAL CODE COUNCIL®
Copyright © 2015 ICC. ALL RIGHTS RESERVED. Accessed by David Dammon on Jun 21, 2017 12:30:52 PM pursuant to License Agreement with ICC. No further reproduction or distribution authorized. ANY UNAUTHORIZED REPRODUCTION OR DISTRIBUTION IS A VIOLATION OF THE FEDERAL COPYRIGHT ACT AND THE LICENSE AGREEMENT, AND SUBJECT TO CIVIL AND CRIMINAL PENALTIES THEREUNDER.

ume is very large, that same water volume expanding into the thermal expansion tank will cause very little increase in air bladder pressure and thus, the final system pressure will increase very little. The question is not whether the pressure will increase (because it always will), but how much will it increase based on the size of the thermal expansion tank chosen. The goal is to not allow the water distribution system pressure to exceed 80 psi. Therefore, the initial system pressure needs to be less than 80 psi before the thermal expansion event occurs. Sizing of the thermal expansion tank must be in accordance with the manufacturer's instructions.

Is a thermal expansion tank required to be at the water heater? The thermal expansion tank is only required to be downstream of any check valves, pressure-reducing valves or backflow preventers before the cold water supply reaches the water heater. Section 606.1 requires shutoff valves before the inlet to a storage water heater. However, the thermal expansion tank is not required to be located after these shutoff valves. Although having the thermal expansion tank at the water heater is often convenient for servicing, it is assumed that if the shutoff valve is closed, it is to remove the water heater from service and the energy source to the heater is turned off. Some reasons for the thermal expansion tank not to be located at the water heater are: 1) no available space and 2) one thermal expansion tank serves a multiheater system.

The code section does not prohibit the use of methods other than a thermal expansion tank (such as pressure relief valves) to control thermal expansion. Perhaps a pressure relief valve of robust design (for frequent operation) is located in a mechanical room where its purpose is well known and any discharges are routed to a water recycling system. However, those other methods would require code official approval under Section 105.2.

There are situations where installing a thermal expansion tank for every storage water heater might not make sense. For example, consider a water distribution system that has an initial pressure of 40 psi. This is one way to conserve water in a building, provided that the water distribution piping system is designed such that at this pressure and at periods of peak demand, the minimum pressures for proper operation of the fixtures are provided. When a thermal expansion event occurs, the volume of the entire system (both cold and hot) might be large enough such that the thermal expansion results in a final system pressure of 80 psi or less. This intent of the code section is to prevent the water distribution system pressure from exceeding 80 psi. The intent is not to prevent pressure fluctuations as those will always occur during the normal operation of the system. Another example is a multiple heater system. This could be a number of water heaters in a mechanical room serving a building or a water heater in every tenant space (or apartment) of a building with many spaces (or apartments). If there is not a check valve, backflow preventer or pressure-reducing valve between the heaters and one main thermal expansion tank, and the tank is sized appropriately, then one tank can work just as well as many smaller tanks for each water heater. However, the arrangements in these two examples would require code official approval under Section 105.2.

One topic that was discussed during the code change hearings for the proposal that made the changes to this section was whether a thermal expansion-caused pressure increase would ever occur in a large building such as an apartment building or a multistory condominium building where each unit had a water heater (provided that there were not any check valves, backflow preventers or pressure-reducing valves between the building's water service entrance and all of the water heaters). Even though the total volume of water that could be heated is significant, not all of those heaters will be heating at the same time. There only needs to be a few leaky water outlets in the entire water distribution system to relieve the thermal expansion-caused pressure increase from several water heaters heating simultaneously. Perhaps the only time that all water heaters in the building could be heating at the same time would be after utility services (gas or electric) were turned back on after being cut off for days. Even if that rare event happened, chances are good that many water outlets in the building would be frequently opened during the heating of water (i.e., the system would not be closed). This is a topic that the design professional and the code official will need to work out under Section 105.2.

607.4 Flow of hot water to fixtures. Fixture fittings, faucets and diverters shall be installed and adjusted so that the flow of hot water from the fittings corresponds to the left-hand side of the fixture fitting.

Exception: Shower and tub/shower mixing valves conforming to ASSE 1016/ASME A112.1016/CSA B125.16 or ASME A112.18.1/CSA B125.1, where the flow of hot water corresponds to the markings on the device.

❖ One of the oldest expressions in plumbing is: "Hot on the left, cold on the right." The code mandates that "hot" correspond to the left side of the fixture fitting for safety reasons. It has become an accepted practice to equate the left side of the faucet with hot water. The intent is to protect an individual from potential scalding when turning on what is believed to be cold water and get scalded by hot water.

Some manufacturers design a fixture fitting that can be reversed inside the faucet if a plumber inadvertently (or intentionally in the case of back-to-back faucets) pipes the water supplies in reverse. This type of installation would be acceptable. The exception provides for single-handle shower valves that comply with ASSE 1016/ASME A112.18.16/CSA B125.16 and that have identifiable hot designations on the control valve. These devices operate by rotating a single handle or knob away from the "off" position to initiate water flow. The handle is moved farther in the same direction to

INTERNATIONAL CODE COUNCIL®
Copyright © 2015 ICC. ALL RIGHTS RESERVED. Accessed by David Dammon on Jun 21, 2017 12:30:52 PM pursuant to License Agreement with ICC. No further reproduction or distribution authorized. ANY UNAUTHORIZED REPRODUCTION OR DISTRIBUTION IS A VIOLATION OF THE FEDERAL COPYRIGHT ACT AND THE LICENSE AGREEMENT, AND SUBJECT TO CIVIL AND CRIMINAL PENALTIES THEREUNDER.

increase the temperature of flowing water. Because the rotating operation is limited to one direction, the user cannot mistakenly activate water flow at the maximum hot-water setting without first rotating the handle or knob through the cold-water setting. Also, ASSE 1016/ASME A112.18.16/CSA B125.16 requires control valves to have settings that indicate clearly the direction or means of adjustment to change temperature.

[E] 607.5 Insulation of piping. For other than Group R2, R3 and R4 occupancies that are three stories or less in height above grade plane, piping to the inlet of a water heater and piping conveying water heated by a water heater shall be insulated in accordance with Section C404.4 of the *International Energy Conservation Code*. For Group R2, R3 and R4 occupancies that are three stories or less in height above grade plane, piping to the inlet of a water heater and piping conveying water heated by a water heater shall be insulated in accordance with Section R403.5.3 of the *International Energy Conservation Code*.

❖ The *International Energy Conservation Code* (IECC) has requirements for insulation of heated water piping because without insulation, these systems can waste a significant amount of energy and add to the cooling loads of buildings. This code section is somewhat complicated by the fact that the IECC is split into a commercial buildings part (IECC-CE) and a residential buildings part (IECC-RE). This code covers residential buildings that are classified by the IBC as Group R2, R3 or R4, however, where those buildings are "low-rise" buildings (i.e., three stories or less in height above grade plane), the IECC-RE requirements apply. For all other buildings covered by the IPC, the IECC-CE requirements apply.

This section is controlled by the IECC as indicated by the [E] at the beginning of the section number.

Why is a section on insulating heated water piping in the IPC? On most large projects, insulation installation is performed by an insulation contractor and those large projects often have insulation details on the drawings so that the plumbing designers/installers understand what allowances to make around the piping to accommodate the insulation thicknesses. But not all projects are large nor have such insulation details on the drawings. The plumbing designer and installer need to understand what the IECC's minimum insulation requirements are so allowances can be made for the insulation in accordance with the code (the IECC).

IECC Section C404.4

IECC Section C404.4 requires that hot water piping be insulated in accordance with Table C403.2.10. This table indicates the required insulation wall thicknesses and thermal conductivity rating, k, of the insulating material based upon the fluid temperature in the piping.

IECC Section C404.4 also requires that the inlet piping to a storage water heater or a hot water storage tank be insulated for not less than 8 feet of developed piping length or to the heat trap, whichever is less. See the commentary on heat traps in Section 503.1 for an understanding of heat traps for water heaters. The purpose of insulating the inlet piping is to reduce the "standby heat losses" because the heat travels a distance up the inlet pipe. If the inlet pipe was not insulated (because it is thought of as a cold water inlet pipe), during periods where hot water is not be used, the heat from the storage tank would radiate out from the inlet piping and be lost. The installation of a heat trap significantly reduces this heat loss. Note that if the heat trap is not integral to the water heater, then it is external to the tank and the piping to the heat trap must be insulated. Heat traps on water heaters are only required where the water heater is not part of a hot (or tempered) water recirculation system (See IECC Section 404.3).

One method for providing heated water to locations that are remote from the heated water source is to heat trace the hot water piping. Obviously, this piping needs to also be insulated. IECC Section C404.4 requires that the piping be insulated in accordance with Table C403.2.10 or the heat trace manufacturer's instructions.

For tubular-type insulation, insulation manufacturers' instructions require that all seams and joints in the tube be sealed. The insulation must be continuous around any corners (elbows and tees). Gaps and openings in the piping insulation system result in poor insulation performance.

Pipe insulation must be continuous except where the piping passes through a framing member. The hot water piping must be completely covered by the required insulation. The tubular pipe insulation manufacturer's instructions imply this but for inspection purposes this obvious requirement is stated. However, note the phrase "except where the piping passes through a framing member." Although the code requires continuous piping insulation, there could be significant structural ramifications if this allowance was not made. Consider a $^{3}/_{4}$-inch pipe ($^{7}/_{8}$-inch actual outside diameter) with $^{1}/_{2}$-inch wall tubular insulation. The outside diameter of the assembly is about 2 inches. Requiring 2-inch-diameter holes in structural members creates a lot of extra work and might not be structurally possible without making the structural member deeper or thicker. The code doesn't intend for insulation thickness to be driving the design of structural members. However, if an installer wants to install a hole large enough for the insulated pipe and the hole doesn't violate any structural member cutting, notching or boring limitation, that is not a violation of this code section. Although the larger hole might be more effort, routing a continuous-insulated piping assembly though the member might be easier in the long run (noting that many factory-insulated piping products are available).

The piping insulation required by the section is not associated with insulation requirements that might be

INTERNATIONAL CODE COUNCIL®
Copyright © 2015 ICC. ALL RIGHTS RESERVED. Accessed by David Dammon on Jun 21, 2017 12:30:52 PM pursuant to License Agreement with ICC. No further reproduction or distribution authorized. ANY UNAUTHORIZED REPRODUCTION OR DISTRIBUTION IS A VIOLATION OF THE FEDERAL COPYRIGHT ACT AND THE LICENSE AGREEMENT, AND SUBJECT TO CIVIL AND CRIMINAL PENALTIES THEREUNDER.

needed for the protection of the piping from freezing temperatures (see Section 305.4). This section is only concerned with the loss of heat from the piping to "within the building thermal envelope." Although routing of hot water piping in the exterior walls of a building is not commonly done in large buildings but on smaller buildings it is sometimes installed in this manner. Thus, the heated water piping is not completely "within the building thermal envelope" and is not totally "protected" from freezing.

External surface temperatures of the insulation of hot water piping could be an issue in some locations where personnel could touch the pipe insulation. The insulation thicknesses in Table C403.2.10 do increase for higher fluid temperatures in the piping, however, it is unknown if those values ensure an insulation surface temperature that is below what is needed for personnel protection.

IECC Section C404.4 has a list of exceptions for where piping insulation is **not** required to be installed. Many of these are common sense.

1. Insulation is not required from the connection at the end of the fixture supply pipe to the fixture of the plumbing appliance. The end of the fixture supply pipe is where the shutoff valve for the fixture or appliance is attached. It is too cumbersome to accomplish this and would most likely be discarded the first time a repair on the fixture was needed. Also, some fixtures have exposed and visible supply piping (e.g., pedestal lavatories) and certainly the occupant would not appreciate what might be the best attempt at insulating these connections. Note that this allowance for not installing insulation does not have anything to do with the requirements for supply piping "covers" where the fixture is intended for use by persons with disabilities (see Section 404).
2. Insulation is not required to be installed on valves, pumps, strainers and threaded unions in heated water piping that is 1 inch and smaller. These small components are difficult to insulate. There would be minimal energy benefit gained.
3. Insulation is not required to be installed on the piping from shower and bath "user controlled" mixing valves to the water outlets. This piping is of short length and the water is warm for only a short period of time. There would be minimal energy benefit gained.
4. Insulation is not required to be installed on the cold water piping that receives heated water as part of a water recirculation system that does not have a dedicated return pipe to the water heater. See Section 607.2.1.2 for an understanding of "no dedicated return pipe" recirculation systems. Circulating hot water back to the hot water source through a cold water supply pipe could cause someone to consider the cold water supply pipe as conveying heated water. That is not the intent of this section. The water in the cold water supply pipe will only be warm for a short distance away from the fixture. There is no energy savings by insulating the pipe, as the water in that pipe is intended to be used as cold water.
5. Insulation is not required to be installed on tubing from hot drinking-water heating units to the water outlet. This piping is of short length and the water in the tubing is hot for a short period of time. There would be minimal energy benefit gained.
6. Insulation is not required to be installed on piping at locations where a vertical support of the piping is installed. Vertical support of water piping requires that the support grip the pipe to be able to carry the weight of the pipe. Insulating the pipe through this type of support is impossible.

   For horizontal piping, the "hangers," "clamps," "hooks" or "straps" need to be large enough to accommodate the outside diameter of the insulation. This brings up the topic of saddles at horizontal support points. The insulation manufacturer must be consulted to determine if saddles are needed and how to accomplish support with the saddle.
7. Insulation is not required for heated water piping that is surrounded by insulation having a thermal resistance (R-value) of not less than R-3. There could be piping arrangements in buildings where the heated water piping is routed through an area that will have "building thermal envelope"-type insulation installed. In other words, insulation material that has published R-values and that is intended to be used in "flat" assemblies such as walls, floors and ceilings. Some common insulation materials are mineral wool, fiberglass and spray foams where an installed thickness provides for a specific insulation R-value. The exception does not necessarily mean that the insulation location is what actually defines the building thermal envelope (although it could be in that location). R-value-rated insulation can be used in other building locations that are within the space that the building thermal envelope surrounds. For example, insulation installed in walls for the reduction of noise or for the separation of conditioned spaces from semiconditioned spaces. This exception allows for R-value-rated insulation to do "double duty" by serving as the insulation for hot water piping and the insulation for the flat area.

   Does this exception mean that R-value insulation can be used to "wrap a pipe" and be the only function that the insulation serves? As stated previously, R-value insulation is intended

INTERNATIONAL CODE COUNCIL®
Copyright © 2015 ICC. ALL RIGHTS RESERVED. Accessed by David Dammon on Jun 21, 2017 12:30:52 PM pursuant to License Agreement with ICC. No further reproduction or distribution authorized. ANY UNAUTHORIZED REPRODUCTION OR DISTRIBUTION IS A VIOLATION OF THE FEDERAL COPYRIGHT ACT AND THE LICENSE AGREEMENT, AND SUBJECT TO CIVIL AND CRIMINAL PENALTIES THEREUNDER.

to be used in flat assemblies such as walls, floors and ceilings. Installing such insulation around a pipe at the minimum thickness that provides R-3 will not provide for the insulating effect that Table C403.2.10 intends. A circular profile is different than a flat surface. Could "overinsulating" with R-value insulation (where "wrapping a pipe" is performed) provide for the intended insulation effect? That might be possible; however, it would need to be approved by the code official under the alternate methods and materials section (Section 105.2) of the code. One example of this might be the use of spray foam to insulate hot water piping in a trench. Although extra insulation coverage (thickness) for an R-value greater than R-3 is planned for around the pipe, does that meet or exceed the insulating effect that Table C403.2.10 intends? Only a design professional could determine this.

For piping conveying fluids in the temperature range of 104 °F to 140 °F, Table C403.2.10 indicates a tubular insulation wall thickness of 1 inch (25 mm). Larger pipe sizes require greater wall thickness [unless Note "a" is used to reduce wall thickness back to 1 inch (25 mm)]. How can "burying" a hot water pipe in R-value rated wall (ceiling or floor) insulation "equate" to the required 1-inch (25 mm) thickness of tubular insulation on the pipe? One possible explanation is that in most cases, there is significantly more (thickness) of R-value insulation to the sides and "back" of the pipe as compared to the "front" side of the pipe where the minimum thickness might be in order to "just attain" an R-3 coverage. The average of the heat losses around the pipe is thought to be somewhat "equivalent" in the temperature range under consideration.

The code does not provide any details for the use of R-rated materials in order for this exception to be used. However, the discussion in the previous two paragraphs does provide a few general concepts that might be used to develop criteria where the exception can be used. For example, is it acceptable to strap a $1^1/_2$-inch diameter (38 mm) hot water pipe directly to a $3^1/_2$-inch-deep (89 mm) stud and place 1 inch (25 mm) (R-3) of fiberglass batt insulation behind and in front of the pipe? Or would it be better to route the pipe in the middle of the stud space so that there are many more inches of insulation on either side of the pipe? The designer, installer and code official will have to work out the answers to such questions.

IECC Section R403.5.3

IECC Section R403.5.3 recognizes two ways to insulate heated water piping: 1) put the piping in insulation having an R-value rating or 2) apply tubular pipe insulation having a thermal conductivity rating, k. Or in more simple terms, bury the pipe in "building thermal envelope" insulation (mineral wool, fiberglass batt, spray foam, etc.) or put insulation tubing (rubber, polyethylene, mineral wool, fiberglass, etc.) on the piping. Where R-value insulation is used, the installed R-value completely around the pipe cannot be less than R-3. Where tubular insulation is used, the wall thickness of tube cannot be less than $^1/_2$ inch (12.7 mm). The thermal conductivity rating, k, of the tube material cannot be greater than 0.31 Btu per inch/h $\times$ ft^2 $\times$ °F [0.45 W/(m $\times$ K)] at 200 °F (93.3 °C). Thermal conductivity, k, of a material is the ability of the material to transfer thermal energy. The lower the k value, the better the material is for insulating (keeping the heat in the pipe). The k ≤ 0.31 covers most of the commonly available materials.

Why is not tubular insulation "R-value rated"? Because the R-value is different for different pipe sizes and insulation wall thicknesses. There is a mathematical conversion that can approximate the R-value for a particular size of tubular insulation; however, it is only an estimate that is not verified by testing in accordance with a standard for such products. Tubular insulation is specified by wall thickness and k value.

The following example will illustrate the intent of IECC Section R403.5.3. A hot water pipe is routed from the water heater in the middle of an unheated basement, up through an exterior wall to a tub/shower fixture located on the second floor. The mixing valve control for the tub/shower is not located on the exterior wall but is located on an interior wall between the bathroom and a bedroom. Starting at the hot water outlet of the water heater, the piping runs straight up into the building thermal envelope insulation on the underside of the first floor. The piping between the water heater and underside of the floor above requires tubular insulation. Once the piping is in the insulation on the underside of the floor, the tubular insulation is stopped and the piping is "nested" into the fiberglass batt insulation so that the piping has not less than R-3 around the piping. Generally, standard fiberglass batt insulation has an R-value of about R-3 for 1-inch (25 mm) thickness. (High-performance fiberglass batt insulation has a slightly higher R-value per inch.) Proper nesting of the piping in the insulation will require that the piping installer coordinate with the insulation installer. After the piping reaches the exterior wall of the building and turns up through the sill plate, the exterior wall will be insulated with spray foam (closed cell) having an R-value of about R-6 per inch of thickness. As only R-3 is required for the piping insulation, the piping installer needs to locate the piping so that not less than $^1/_2$ inch (12.7 m) of space is available all around the pipe as the pipe is routed up through the exterior wall. Again, the piping installer will need to coordinate with the insulation installer to understand how to locate and keep the piping in place during the spraying process so that the required thickness of insulation is maintained around the piping. Once the piping reaches the joist or truss

INTERNATIONAL CODE COUNCIL®
Copyright © 2015 ICC. ALL RIGHTS RESERVED. Accessed by David Dammon on Jun 21, 2017 12:30:52 PM pursuant to License Agreement with ICC. No further reproduction or distribution authorized. ANY UNAUTHORIZED REPRODUCTION OR DISTRIBUTION IS A VIOLATION OF THE FEDERAL COPYRIGHT ACT AND THE LICENSE AGREEMENT, AND SUBJECT TO CIVIL AND CRIMINAL PENALTIES THEREUNDER.

space above the first floor, the piping exits the exterior wall and runs through the joist or truss area, over to and up into the interior wall to the mixing valve. Because those areas do not have building thermal insulation installed, the piping is insulated with tubular insulation.

IECC Section R403.5.3 has a few "rules and allowances" for the installation of insulation. The overall requirement is that the insulation be installed in accordance with the manufacturer's instructions.

For batt-type insulation, such instructions require that piping be "nested" into the insulation. All too commonly, batt insulation is installed with the entire batt thickness "behind" piping, cables and conduits in walls and ceilings. Compressing the insulation thickness to less than the intended installed thickness reduces the insulating value of the insulation product. And certainly, if the hot water piping is to take advantage of the insulation qualities of the building thermal envelope insulation, the piping needs to be carefully nested into the insulation and not have batt material packed in tightly around the piping. Compressing batt insulation reduces its insulating value. Lack of coordination between the insulation installer and the piping installer is the primary cause of poor piping insulation practices.

For tubular-type insulation, insulation manufacturers' instructions require that all seams and joints in the tube be sealed, and that the insulation be continuous around any corners (elbows and tees). All too commonly, length-way slit tubular insulation is installed on piping without sealing the slit or end to end joints. Insulation of elbows and tees is often poorly accomplished or not done at all. Gaps and openings in the piping insulation system result in poor insulation performance.

This leads into the next requirement of IECC Section R403.5.3, which is that pipe insulation must be continuous except where the piping passes through a framing member. The hot water piping must be completely covered by the required insulation. Even though the tubular pipe insulation manufacturer's instructions imply this, the "building thermal envelope" manufacturer's instructions do not directly address their product being used as piping insulation. Therefore, this is why this obvious requirement is stated. However, note the phrase "except where the piping passes through a framing member." Although the code requires continuous piping insulation, there could be significant structural ramifications if this allowance was not made. Consider a $^{3}/_{4}$-inch (19.1 m) pipe $^{7}/_{8}$-inch actual outside diameter) with $^{1}/_{2}$-inch (12.7 m) wall tubular insulation. The outside diameter of the assembly is about 2 inches (51 mm). Requiring 2-inch-diameter (51 mm) holes in structural members creates a lot of extra work and might not be structurally possible without making the structural member deeper or thicker. The code doesn't intend for insulation thickness to be driving the design of structural members. However, if an installer wants to install a hole large enough for the insulated pipe and the hole doesn't violate any structural member cutting, notching or boring limitation, that is not a violation of this code section. Although the larger hole might be more effort, routing a continuous-insulated piping assembly through the member might be easier in the long run (noting that many factory-insulated piping products are available).

IECC Section R403.5.3 also warns the reader that the piping insulation required by the section is not, in any way, associated with insulation requirements that might be needed for the protection of the piping from freezing temperatures (see Section 305.4). This section is only concerned with the loss of heat from the piping to "within the building thermal envelope." A routing of hot water piping in exterior walls is not completely "within the building thermal envelope." However, it is an accommodation because the residential building industry has been doing this "successfully" for decades. Note that this requirement for hot water piping insulation could work *against* the efforts for keeping piping routed in exterior walls from freezing. The more insulation between the "heat" of the interior of the building and the cold on the exterior of the building will make the piping colder (see commentary, Section 305.4).

IECC Section R403.5.3 also warns the reader about external surface temperatures of the insulation of hot water piping. This probably will not be an issue in a residential environment because hot water piping temperatures would rarely be great enough such that the temperature on the exterior of the insulation would be so extreme that someone could be burned by touching it. However, with the resurgence of solar thermal heating systems and the potentially high temperatures that those systems can generate, the insulation requirements of this section are intended to keep the temperature on the outside of the insulation at a level where people could not be burned.

IECC Section R403.5.3 has a list of exceptions for where piping insulation is **not** required to be installed. Many of these are common sense.

1. Insulation is not required on flexible connectors or reduced-size fixture supply tubing from the connection at the end of the fixture supply piping to a fixture fitting. It is too cumbersome to accomplish this and would most likely be discarded the first time a repair on the fixture was needed. Also, some fixtures have exposed and visible supply piping (e.g., pedestal lavatories) and certainly the occupant would not appreciate such attempts for insulating. Note that this allowance for not installing insulation does not have anything to do with the requirements for supply piping "covers" where the fixture is intended to be a fixture for use by persons with disabilities (see Section 404).
2. Insulation is not required to be installed on valves, pumps and threaded unions in heated water piping. In a residential environment,

INTERNATIONAL CODE COUNCIL®
Copyright © 2015 ICC. ALL RIGHTS RESERVED. Accessed by David Dammon on Jun 21, 2017 12:30:52 PM pursuant to License Agreement with ICC. No further reproduction or distribution authorized. ANY UNAUTHORIZED REPRODUCTION OR DISTRIBUTION IS A VIOLATION OF THE FEDERAL COPYRIGHT ACT AND THE LICENSE AGREEMENT, AND SUBJECT TO CIVIL AND CRIMINAL PENALTIES THEREUNDER.

these components are relatively small, making them difficult to insulate. There would be minimal energy benefit gained.

3. Insulation is not required to be installed on the piping from shower and bath mixing valves to the water outlets. This piping is of short length, and the water is warm for only a short period of time. There would be minimal energy benefit gained.
4. Insulation is not required to be installed on the cold water piping that receives heated water as part of a water recirculation system that does not have a dedicated return pipe to the water heater. See Section 607.2.1.2 for an understanding of "no dedicated return pipe" recirculation systems. Circulating hot water back to the hot water source through a cold water supply pipe could cause someone to consider the cold water supply pipe as conveying heated water. That is not the intent of this section. The water in the cold water supply pipe will only be warm for a short distance away from the fixture. There is no energy savings by insulating the pipe, as the water in that pipe is intended to be used as cold water.
5. Insulation is not required to be installed on tubing from hot drinking-water heating units to the water outlet. This piping is of short length and the water in the tubing is hot for a short period of time. There would be minimal energy benefit gained.
6. Insulation is not required to be installed on piping at locations where a vertical support of the piping is installed. Vertical support of water piping requires that the support grip the pipe to be able support the weight of the pipe. Insulating the pipe through this type of support is impossible. However, recognize that this exception applies only to vertical support of piping. It is intended that piping insulation be continuous "through" horizontal piping supports. This point deserves further explanation.

   Where batt insulation is used to insulate horizontal piping, insulating the back side of the support (and over the pipe) with the required thickness of insulation meets the requirement of the insulation being continuous through the horizontal piping support. For example, consider hot water piping routed in a ceiling joist space (parallel to the joists) in an attic. A 2 x 4 block is positioned across the joist space at a point about midway of the depth of the joists. The piping is laid on top of the 2 x 4 blocking. The insulator cuts open the insulation batt, places a portion of the batt thickness under the 2 x 4 and places the remainder of the batt thickness on top of the piping. As long as the required insulation thickness is below the blocking and on top of the piping, the insulation requirement is met. The same concept applies to blown-in or sprayed-in insulation. Again, coordination between the insulator and the piping installer is paramount to making this happen with minimal difficulty.

   Where tubular insulation is used for horizontal piping, the "hangers" clamps," "hooks" or "straps" need to be large enough to accommodate the outside diameter of the insulation. This brings up the topic of saddles at horizontal support points. The insulation manufacturer must be consulted to determine if saddles are needed and how to accomplish support with the saddle.
7. Insulation is not required to be installed on piping or tubing from a tankless water heater serving only one fixture. The intent of this exception is to cover the small tankless water heater that is surface mounted just below a lavatory. Similar to item 1, this application does not require insulation on the hot water tubing.

SECTION 608
PROTECTION OF POTABLE WATER SUPPLY

608.1 General. A potable water supply system shall be designed, installed and maintained in such a manner so as to prevent contamination from nonpotable liquids, solids or gases being introduced into the potable water supply through cross connections or any other piping connections to the system. Backflow preventer applications shall conform to Table 608.1, except as specifically stated in Sections 608.2 through 608.16.10.

❖ This section contains the requirements for protecting the potable water supply from contamination. The most important aspect of a plumbing code is the protection of the potable water system. History is filled with local and widespread occurrences of sickness and disease caused by not safeguarding the water supply. It is imperative that the potable water supply be maintained in a safe-for-drinking condition at all times and at all actual or potential connections and outlets.

To understand the importance of protecting the potable water supply, identifying potential threats and determining the appropriate backflow prevention method, an understanding of how backflow prevention can occur is necessary.

Backflow depends on atmospheric pressure, water pressures and variations in the water supply at any moment. The following is a discussion on pressure and backflow.

Pressure

Atmospheric pressure (psi): This is pressure exerted by the weight of the atmosphere above the earth. Atmospheric pressure at sea level is 14.7 psi (101 kPa), however, it varies with altitude [see Commentary Figure 608.1(1)].

INTERNATIONAL CODE COUNCIL®
Copyright © 2015 ICC. ALL RIGHTS RESERVED. Accessed by David Dammon on Jun 21, 2017 12:30:52 PM pursuant to License Agreement with ICC. No further reproduction or distribution authorized. ANY UNAUTHORIZED REPRODUCTION OR DISTRIBUTION IS A VIOLATION OF THE FEDERAL COPYRIGHT ACT AND THE LICENSE AGREEMENT, AND SUBJECT TO CIVIL AND CRIMINAL PENALTIES THEREUNDER.

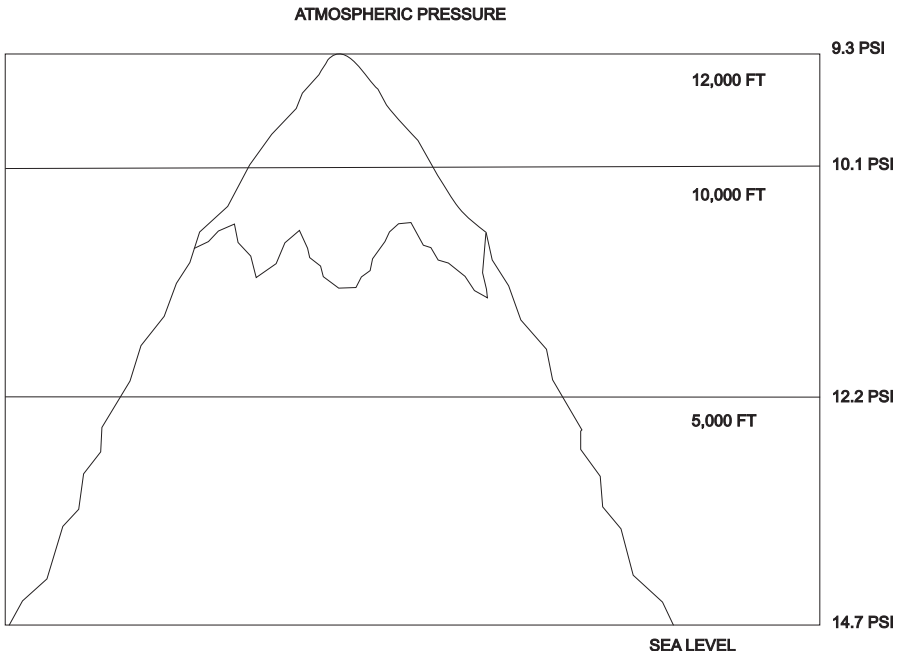

For SI: 1 foot = 304.8 mm, 1 pound per square inch = 6.895 kPa.

Figure 608.1(1)
ATMOSPHERIC PRESSURE

Gauge pressure (psig): The pressure read on a gauge. The reference point for the gauge is atmospheric pressure equal to zero. In other words, gauge pressure is the amount of pressure above or below atmospheric pressure.

Absolute pressure (psia): The sum of atmospheric pressure and gauge pressure. For example, if a gauge reads 20 psig (138 kPa), the absolute pressure would be determined as follows:

$P_{ABSOLUTE}$ = 14.7 psi (atmospheric) + 20 psi (gauge reading)

$P_{ABSOLUTE}$ = 34.7 psia

For SI: 1 pound per square inch = 6.895 kPa.

Water pressure: This is a function of the weight and height of a column of water. A cubic foot of water [see Commentary Figure 608.1(2)] weighs 62.4 pounds (28.3 kg); the pressure exerted at the base of the cube is 62.4 pounds per square foot (psf) (0.433 lb/in.^{2}). Therefore, the height of a column of water determines the pressure that is exerted at its base [see Commentary Figure 608.1(3)].

The diameter of the pipe or vessel has no bearing on this pressure. For example, a column of water 100 feet (30 480 mm) high and 20 feet (6096 mm) in diameter has the same pressure at its base as a 100-foot-high (30 480 mm) column of water, 1 inch (25 mm) in diameter [see Commentary Figure 608.1(4)]. Columns of water with a free surface (exposed to atmosphere) will have atmospheric pressure in addition to pressure caused by the weight of water exerted at its base [see Commentary Figure 608.1(5)].

Base pressure = 14.7 psi + 43.3 psig = 58.0 psia

Water pressure is sometimes referred to as "head pressure," "head" or "feet of head."

1 foot of head = 0.433 psig
100 feet of head = 43.3 psig

For SI: 1 pound per square inch = 6.895 kPa.

Backflow

Backflow is the flow of liquids in potable water distribution piping in reverse of their intended path. There are two types of pressure conditions that cause backflow: backsiphonage and backpressure.

Backsiphonage: The backflow of water caused by system pressure falling below atmospheric pressure. Atmosphere supplies the force that reverses flow. Any gauge reading of pressure below atmospheric pressure will be negative. Commentary Figures 608.1(6) and 608.1(7) illustrate the effect atmospheric pressure has on water. An open tube is inserted into a container of water in Commentary Figure 608.1(6). Atmospheric pressure acts equally on the surface of the water within the tube and on the outside of the tube.

If, as shown in Commentary Figure 608.1(7), the tube is sealed and a vacuum pump is used to evacuate all the air from the tube, a vacuum with a pressure of 0 psia (0 kPa) is created within the tube.

Because liquids will flow toward the point of lowest pressure, water will rise to 33.9 feet (10 333 mm). In other words, the weight of atmosphere at sea level balances the weight of a column of water 33.9 feet (10 333 mm) in height.

INTERNATIONAL CODE COUNCIL®
Copyright © 2015 ICC. ALL RIGHTS RESERVED. Accessed by David Dammon on Jun 21, 2017 12:30:52 PM pursuant to License Agreement with ICC. No further reproduction or distribution authorized. ANY UNAUTHORIZED REPRODUCTION OR DISTRIBUTION IS A VIOLATION OF THE FEDERAL COPYRIGHT ACT AND THE LICENSE AGREEMENT, AND SUBJECT TO CIVIL AND CRIMINAL PENALTIES THEREUNDER.

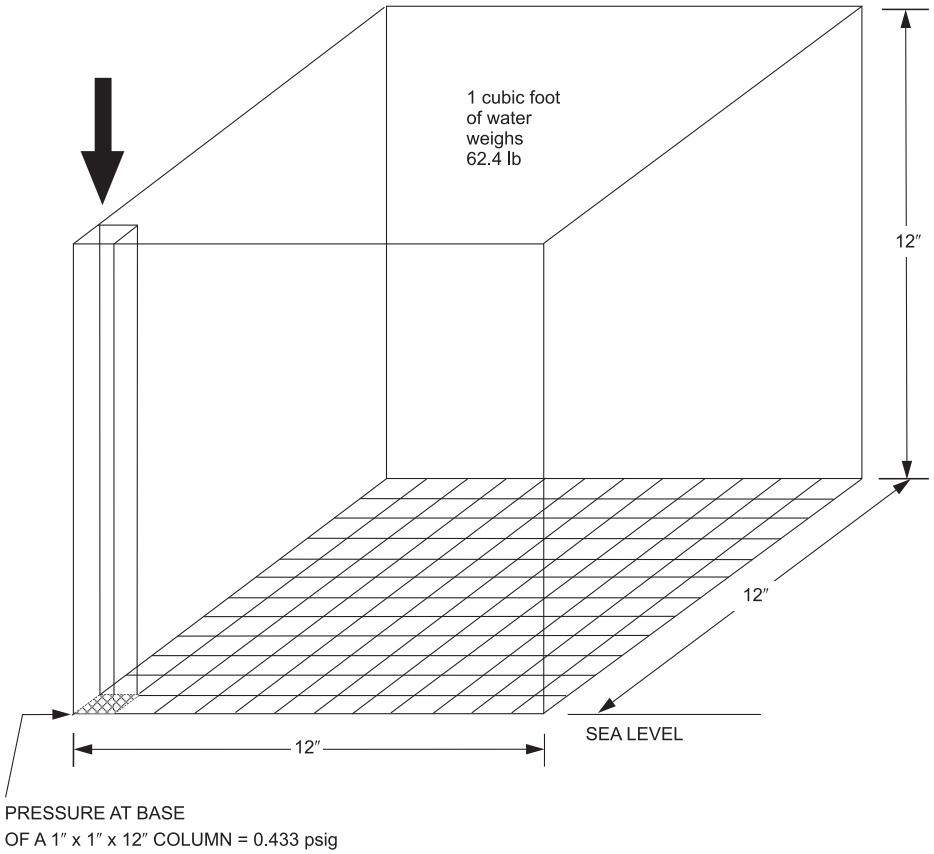

For SI: 1 inch = 25.4 mm, 1 pound per square inch = 6.895 kPa, 1 pound = 0.454 kg, 1 cubic foot = 7.48 gallons, 1 gallon = 8.33 pounds.

Figure 608.1(2)
PRESSURE EXERTED BY 1 CUBIC FOOT OF WATER

Backsiphonage occurs in the water distribution system when supply pressure falls below atmospheric pressure. The following are practical examples of conditions that can cause backsiphonage.

A simple siphon occurs when pressure is reduced by a difference in water levels at two separate points within a continuous fluid system [see Commentary Figure 608.1(8)].

Aspiration or venturi principle is achieved when reduced pressure is created within a fluid system as a result of fluid motion. Intentional or unintentional constriction of flow through an opening or pipe increases velocity and decreases pressure. If this point of reduction is linked to a source of pollution, backsiphonage of the pollutant can occur [see Commentary Figure 608.1(9)].

Supply pressure can be reduced at the pump intake or suction side. Insufficient water pressure or undersized piping supplying the pump can cause a negative pressure in the system, allowing contaminated water to be drawn into the system [see Commentary Figure 608.1(10)].

Backpressure: Pressure created in a nonpotable system in excess of the water supply mains causing backflow. Backpressure can be created by mechanical means, such as a pump; by static head pressure including an elevated tank or by thermal expansion from a heat source, such as a water heater.

TABLE 608.1. See page 6-83.

❖ Where the code does not specifically address backflow prevention methods or devices for a specific application in Sections 608.2 through 608.16.10, this table must be used to select a suitable method or device for the application. To use the table, first identify whether the potential hazard substance that might enter the potable water system is a low or high hazard to the potable water supply. Note a directs the reader to the Chapter 2 definitions of “Pollution” and “Contamination” for determining whether the hazard is low or high, respectively. Once the hazard is selected, this should eliminate some entries in the table as being viable for the application. Next, determine if the application will be subject to backpressure conditions. If so, this will eliminate additional table entries as being viable. (If not, then no table entries will be eliminated because all methods and devices are suitable for backsiphonage conditions.) Of the remaining entries, the code user must then select a method or device

INTERNATIONAL CODE COUNCIL®
Copyright © 2015 ICC. ALL RIGHTS RESERVED. Accessed by David Dammon on Jun 21, 2017 12:30:52 PM pursuant to License Agreement with ICC. No further reproduction or distribution authorized. ANY UNAUTHORIZED REPRODUCTION OR DISTRIBUTION IS A VIOLATION OF THE FEDERAL COPYRIGHT ACT AND THE LICENSE AGREEMENT, AND SUBJECT TO CIVIL AND CRIMINAL PENALTIES THEREUNDER.

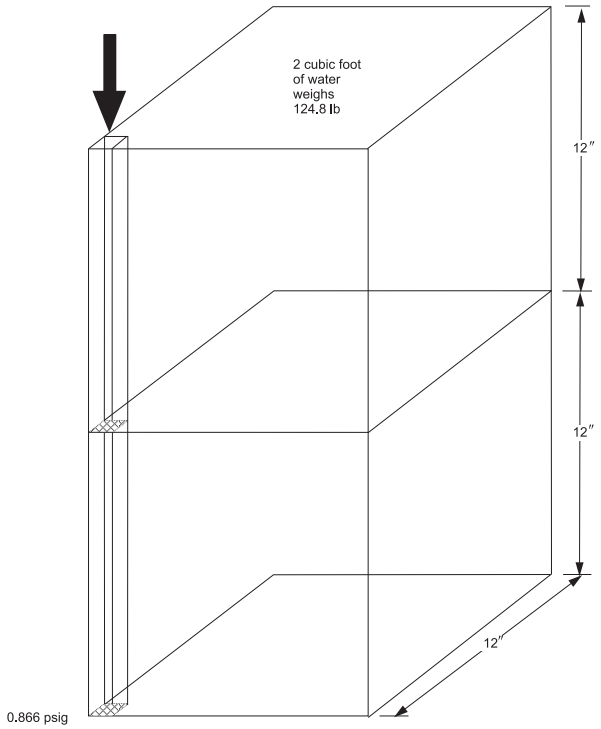

For SI: 1 inch = 25.4 mm, 1 psi = 6.895 kPa, 1 pound = 0.454 kg, 1 cubic foot = 7.48 gallons, 1 gallon = 8.33 gallons.

Figure 608.1(3)
PRESSURE EXERTED BY A COLUMN OF WATER

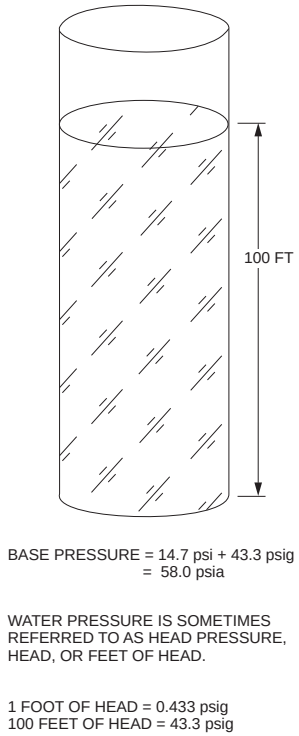

For SI: 1 inch = 25.4 mm, 1 pound per square inch = 6.896 kPa, 1 pound = 0.454 kg.

Figure 608.1(5)
COLUMN OF WATER EXPOSED TO ATMOSPHERE

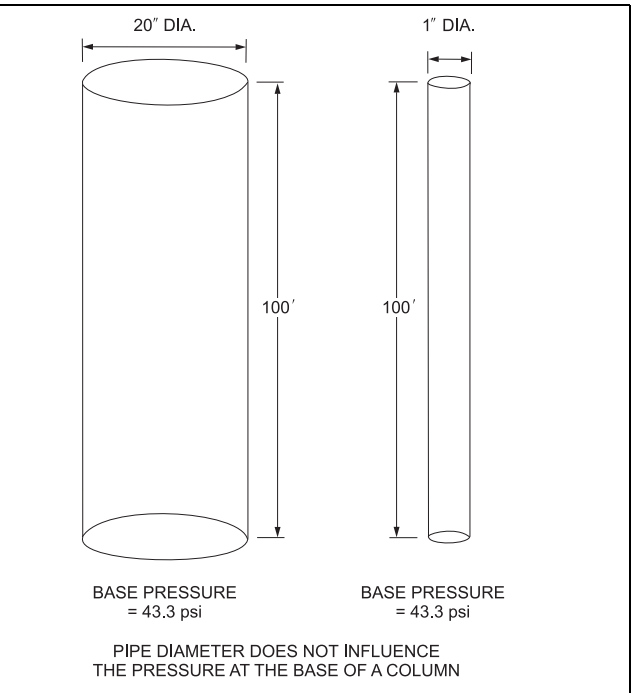

For SI: 1 inch = 25.4 mm, 1 pound per square inch = 6.896 kPa, 1 pound = 0.454 kg.

Figure 608.1(4)
BASE PRESSURE

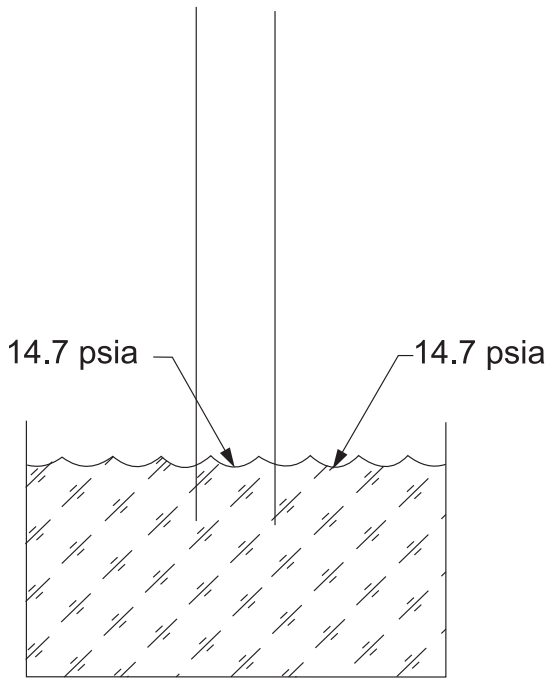

For SI: 1 pound per square inch = 6.895 kPa.

Figure 608.1(6)
OPEN TUBE INSERTED IN CONTAINER OF WATER

INTERNATIONAL CODE COUNCIL®
Copyright © 2015 ICC. ALL RIGHTS RESERVED. Accessed by David Dammon on Jun 21, 2017 12:30:52 PM pursuant to License Agreement with ICC. No further reproduction or distribution authorized. ANY UNAUTHORIZED REPRODUCTION OR DISTRIBUTION IS A VIOLATION OF THE FEDERAL COPYRIGHT ACT AND THE LICENSE AGREEMENT, AND SUBJECT TO CIVIL AND CRIMINAL PENALTIES THEREUNDER.

TABLE 608.1
APPLICATION OF BACKFLOW PREVENTERS

DEVICE	DEGREE OF HAZARD[a]	APPLICATION[b]	APPLICABLE STANDARDS
Backflow prevention assemblies:			
Double check backflow prevention assembly and double check fire protection backflow prevention assembly	Low hazard	Backpressure or backsiphonage Sizes $^3/_8$″–16″	ASSE 1015, AWWA C510, CSA B64.5, CSA B64.5.1
Double check detector fire protection backflow prevention assemblies	Low hazard	Backpressure or backsiphonage Sizes 2″–16″	ASSE 1048
Pressure vacuum breaker assembly	High or low hazard	Backsiphonage only Sizes $^1/_2$″–2″	ASSE 1020, CSA B64.1.2
Reduced pressure principle backflow prevention assembly and reduced pressure principle fire protection backflow assembly	High or low hazard	Backpressure or backsiphonage Sizes $^3/_8$″–16″	ASSE 1013, AWWA C511, CSA B64.4, CSA B64.4.1
Reduced pressure detector fire protection backflow prevention assemblies	High or low hazard	Backsiphonage or backpressure (Fire sprinkler systems)	ASSE 1047
Spill-resistant vacuum breaker assembly	High or low hazard	Backsiphonage only Sizes $^1/_4$″–2″	ASSE 1056
Backflow preventer plumbing devices:			
Antisiphon-type fill valves for gravity water closet flush tanks	High hazard	Backsiphonage only	ASSE 1002, CSA B125.3
Backflow preventer for carbonated beverage machines	Low hazard	Backpressure or backsiphonage Sizes $^1/_4$″–$^3/_8$″	ASSE 1022
Backflow preventer with intermediate atmospheric vents	Low hazard	Backpressure or backsiphonage Sizes $^1/_4$″–$^3/_4$″	ASSE 1012, CSA B64.3
Dual-check-valve-type backflow preventer	Low hazard	Backpressure or backsiphonage Sizes $^1/_4$″–1″	ASSE 1024, CSA B64.6
Hose connection backflow preventer	High or low hazard	Low head backpressure, rated working pressure, backpressure or backsiphonage Sizes $^1/_2$″–1″	ASME A112.21.3, ASSE 1052, CSA B64.2.1.1
Hose connection vacuum breaker	High or low hazard	Low head backpressure or backsiphonage Sizes $^1/_2$″, $^3/_4$″, 1″	ASME A112.21.3, ASSE 1011, CSA B64.2, CSA B64.2.1
Laboratory faucet backflow preventer	High or low hazard	Low head backpressure and backsiphonage	ASSE 1035, CSA B64.7
Pipe-applied atmospheric-type vacuum breaker	High or low hazard	Backsiphonage ony Sizes $^1/_4$″– 4″	ASSE 1001, CSA B64.1.1
Vacuum breaker wall hydrants, frost-resistant, automatic-draining-type	High or low hazard	Low head backpressure or backsiphonage Sizes $^3/_4$″, 1″	ASME A112.21.3, ASSE 1019, CSA B64.2.2
Other means or methods:			
Air gap	High or low hazard	Backsiphonage or backpressure	ASME A112.1.2
Air gap fittings for use with plumbing fixtures, appliances and appurtenances	High or low hazard	Backsiphonage or backpressure	ASME A112.1.3
Barometric loop	High or low hazard	Backsiphonage only	(See Section 608.13.4)

For SI: 1 inch = 25.4 mm.

a. Low hazard—See Pollution (Section 202).
High hazard—See Contamination (Section 202).

b. See Backpressure, low head (Section 202).
See Backsiphonage (Section 202).

INTERNATIONAL CODE COUNCIL®
Copyright © 2015 ICC. ALL RIGHTS RESERVED. Accessed by David Dammon on Jun 21, 2017 12:30:52 PM pursuant to License Agreement with ICC. No further reproduction or distribution authorized. ANY UNAUTHORIZED REPRODUCTION OR DISTRIBUTION IS A VIOLATION OF THE FEDERAL COPYRIGHT ACT AND THE LICENSE AGREEMENT, AND SUBJECT TO CIVIL AND CRIMINAL PENALTIES THEREUNDER.

based upon the specific application for which the description fits. For example, a backflow preventer for a carbonated beverage machine would be an inappropriate selection where a 4-inch (102 mm) backflow prevention device is needed for the application. Of the final list of viable entries, the best selection is typically the one that is most economical to purchase and install.

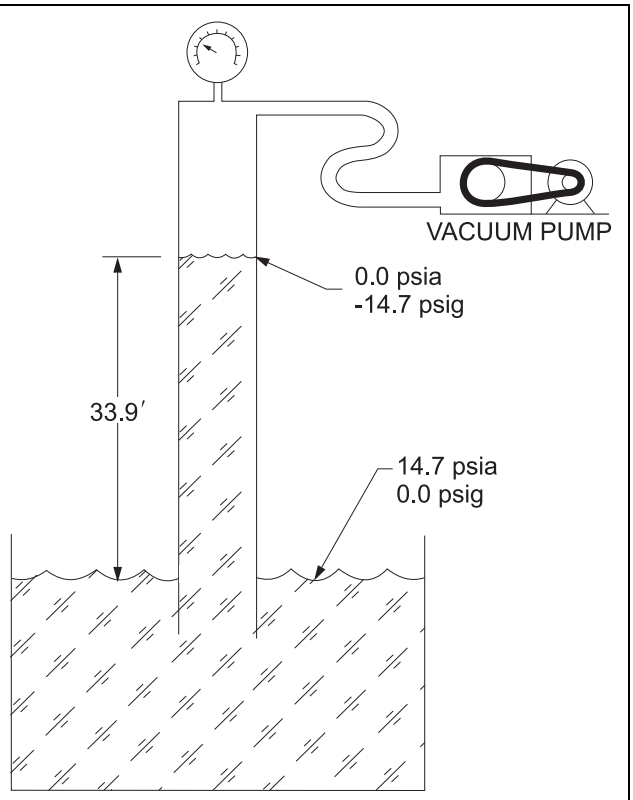

For SI: 1 foot = 304.8 mm, 1 pound per square inch = 6.895 kPa, 1 pound = 0.454 kg.

Figure 608.1(7)
VACUUM APPLIED TO A SEALED TUBE INSERTED IN A CONTAINER OF WATER

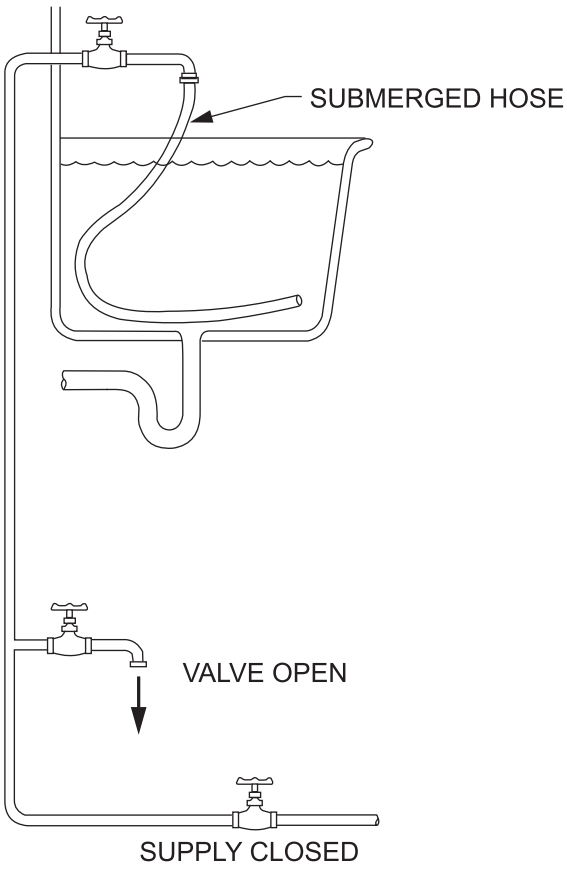

Figure 608.1(8)
EXAMPLE OF SIMPLE SIPHON

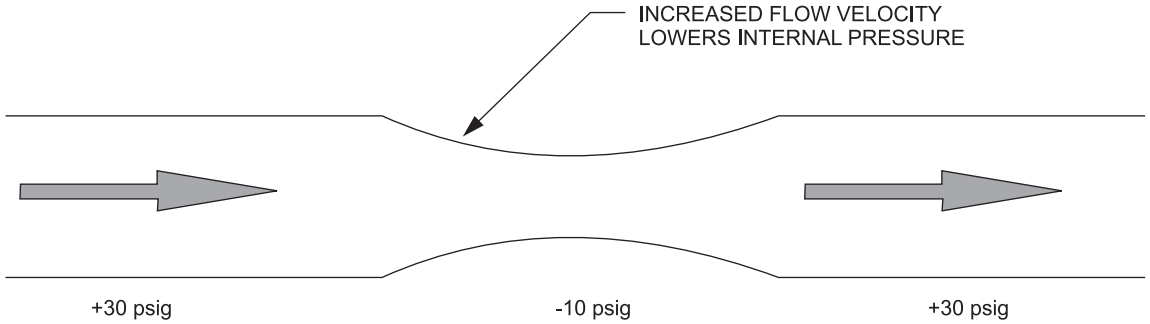

For SI: 1 pound per square inch = 6.895 kPa.

Figure 608.1(9)
EXAMPLE OF ASPIRATION OR VENTURI PRINCIPLE

INTERNATIONAL CODE COUNCIL®
Copyright © 2015 ICC. ALL RIGHTS RESERVED. Accessed by David Dammon on Jun 21, 2017 12:30:52 PM pursuant to License Agreement with ICC. No further reproduction or distribution authorized. ANY UNAUTHORIZED REPRODUCTION OR DISTRIBUTION IS A VIOLATION OF THE FEDERAL COPYRIGHT ACT AND THE LICENSE AGREEMENT, AND SUBJECT TO CIVIL AND CRIMINAL PENALTIES THEREUNDER.

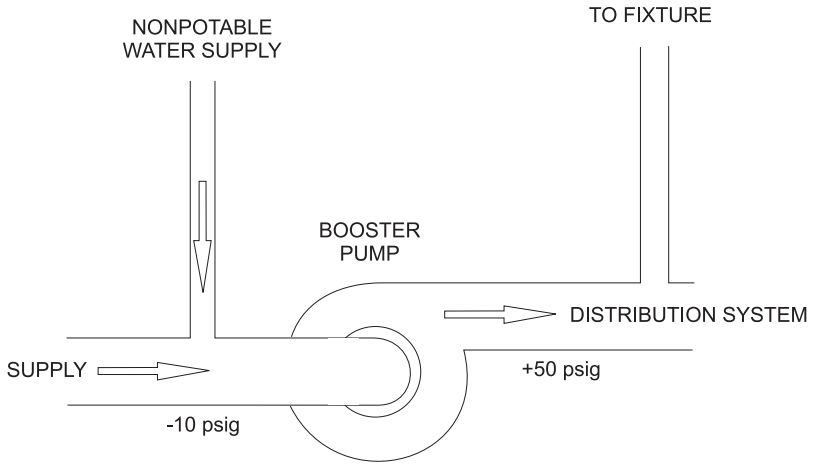

For SI: 1 pound per square inch = 6.895 kPa.

Figure 608.1(10)
EXAMPLE OF PUMP CAUSING NEGATIVE PRESSURE

608.2 Plumbing fixtures. The supply lines and fittings for plumbing fixtures shall be installed so as to prevent backflow. Plumbing fixture fittings shall provide backflow protection in accordance with ASME A112.18.1/CSA B125.1.

❖ To prevent the potable water supply system from being contaminated, plumbing fixtures must be installed in a manner that will prevent backflow. Backflow devices must be in accordance with ASME A112.18.1/CSA B125.1.

608.3 Devices, appurtenances, appliances and apparatus. Devices, appurtenances, appliances and apparatus intended to serve some special function, such as sterilization, distillation, processing, cooling, or storage of ice or foods, and that connect to the water supply system, shall be provided with protection against backflow and contamination of the water supply system. Water pumps, filters, softeners, tanks and other appliances and devices that handle or treat potable water shall be protected against contamination.

❖ This section requires backflow protection for fixtures, appliances and equipment that serve some special function and are connected to the potable water supply system. The specialty equipment being regulated is typically associated with sanitation, food service and health care facilities. This section combines the intents of Sections 608, 609 and 802.

Generally, one backflow prevention device is required for each fixture, appliance and appurtenance. The water downstream of a backflow prevention device is considered to be potable water until a backflow event occurs to cause the water to be nonpotable. Where a single fixture, piece of equipment or individual appliance is connected downstream of the backflow preventer, a malfunction of that appurtenance that causes the water to become nonpotable only affects the appurtenance causing the contamination. If multiple fixtures, appliances or appliances are supplied with water from a single backflow prevention device, the water contamination caused by one fixture could cause the other fixture to be supplied with nonpotable water. Thus, a backflow protection device is required for each item to prevent "cross contamination" between items.

Only where all of the connected fixtures do not require potable water could one backflow preventer serve all of those items. One example is a warehouse having multiple standard frostproof yard hydrants to supply water for floor and lot cleaning. Because a standard frostproof yard hydrant has a stop-and-waste valve below grade, the potable water supply to the hydrant must be protected from possible contamination from any one of those yard hydrants. One backflow preventer could serve this multiple hydrant system as long as the piping identification requirements of Section 608.8 are met (noting that the riser of the yard hydrant is part of the piping). Another example might be a series of machines requiring water (but not necessarily potable water) for cooling purposes. One backflow preventer could supply water for this equipment line. Again, note the piping identification requirements of Section 608.8.

608.3.1 Special equipment, water supply protection. The water supply for hospital fixtures shall be protected against backflow with a reduced pressure principle backflow prevention assembly, an atmospheric or spill-resistant vacuum breaker assembly, or an *air gap*. Vacuum breakers for bedpan washer hoses shall not be located less than 5 feet (1524 mm) above the floor. Vacuum breakers for hose connections in health care or laboratory areas shall not be less than 6 feet (1829 mm) above the floor.

❖ This section establishes the minimum level of protection required for the water supply to various health care fixtures. In health care facilities, the risk of contamination to the potable water supply is greater because of the biological hazards present in many of the procedures conducted. Therefore, to reduce the potential for contamination, procedures or processes that use a hose must have their vacuum breakers

INTERNATIONAL CODE COUNCIL®
Copyright © 2015 ICC. ALL RIGHTS RESERVED. Accessed by David Dammon on Jun 21, 2017 12:30:52 PM pursuant to License Agreement with ICC. No further reproduction or distribution authorized. ANY UNAUTHORIZED REPRODUCTION OR DISTRIBUTION IS A VIOLATION OF THE FEDERAL COPYRIGHT ACT AND THE LICENSE AGREEMENT, AND SUBJECT TO CIVIL AND CRIMINAL PENALTIES THEREUNDER.

installed at an elevation higher than that where the procedure is taking place.

608.4 Water service piping. Water service piping shall be protected in accordance with Sections 603.2 and 603.2.1.

❖ To reduce the risk of contaminating the potable water supply, water service piping must be installed in accordance with Sections 603.2 and 603.2.1.

608.5 Chemicals and other substances. Chemicals and other substances that produce either toxic conditions, taste, odor or discoloration in a potable water system shall not be introduced into, or utilized in, such systems.

❖ The prohibition of chemicals, regardless of hazard classification, includes the use of substances that clean the inside of the piping system or that de-lime various components, all of which could affect the potability of the water and, therefore, must never be added to the system. The generalization can be made that nothing should be introduced into a potable water supply after it leaves the water treatment facility.

608.6 Cross connection control. Cross connections shall be prohibited, except where *approved* backflow prevention assemblies, backflow prevention devices or other means or methods are installed to protect the potable water supply.

❖ A cross connection is where a system, other than a potable water system, is connected to or has the potential of being connected to a potable water system. If the cross connection is established and certain pressure conditions occur, pollutants or contaminants will enter the potable water supply. Systems other than potable water systems include nonpotable water, industrial fluid, gas or other substance-conveying systems. A cross connection could be established as the result of any of the following:

- Bypass arrangements;
- Jumper connections;
- Removable sections;
- Swivel or changeover devices;
- Direct connections and
- Submerged inlets.

Where it is necessary to establish a cross connection, the potable water supply must be protected by an approved means of backflow prevention assemblies, backflow prevention devices or other means and methods (see commentary, Section 608.1).

608.6.1 Private water supplies. Cross connections between a private water supply and a potable public supply shall be prohibited.

❖ A private water supply (auxiliary water supply) is a supply or source not under control or management of a public water purveyor. These sources typically include wells, springs and surface supply sources, such as lakes and reservoirs. These sources are subject to contamination by industrial or animal wastes, or other natural or man-made materials (see Commentary Figure 608.6.1).

608.7 Valves and outlets prohibited below grade. Potable water outlets and combination stop-and-waste valves shall not be installed underground or below grade. Freezeproof yard hydrants that drain the riser into the ground are considered to be stop-and-waste valves.

Exception: Freezeproof yard hydrants that drain the riser into the ground shall be permitted to be installed, provided that the potable water supply to such hydrants is protected upstream of the hydrants in accordance with Section 608 and the hydrants are permanently identified as nonpotable outlets by *approved* signage that reads as follows: "Caution, Nonpotable Water. Do Not Drink."

❖ Any fixture or device that incorporates a stop-and-waste feature is prohibited if the waste opening is underground or in any location where waste water or water-borne contaminants could enter the device or water supply from the ground or other source by reversal of flow.

Many water utilities routinely use stop-and-waste valves on curb stops and fire hydrants. Another common location for stop-and-waste valves is in yard hydrants equipped with a below-grade self-draining weep hole [see Commentary Figures 608.7(1) and 608.7(2)].

Sanitary yard hydrants are available that protect against ground-water contamination by eliminating

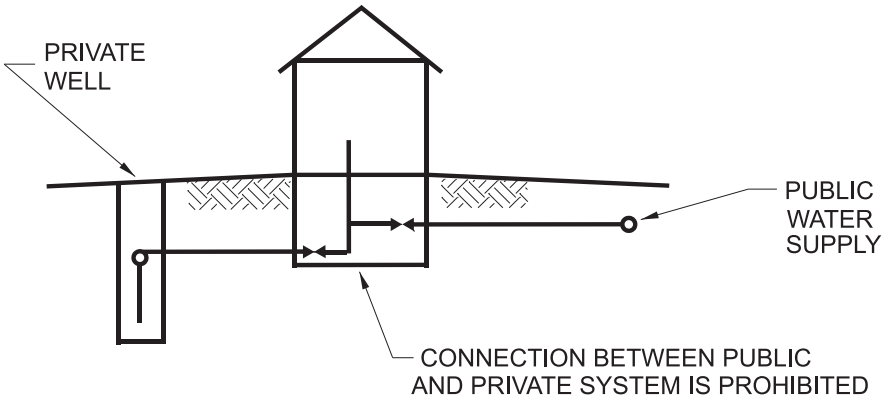

Figure 608.6.1
CONNECTION BETWEEN TWO SYSTEMS

INTERNATIONAL CODE COUNCIL®
Copyright © 2015 ICC. ALL RIGHTS RESERVED. Accessed by David Dammon on Jun 21, 2017 12:30:52 PM pursuant to License Agreement with ICC. No further reproduction or distribution authorized. ANY UNAUTHORIZED REPRODUCTION OR DISTRIBUTION IS A VIOLATION OF THE FEDERAL COPYRIGHT ACT AND THE LICENSE AGREEMENT, AND SUBJECT TO CIVIL AND CRIMINAL PENALTIES THEREUNDER.

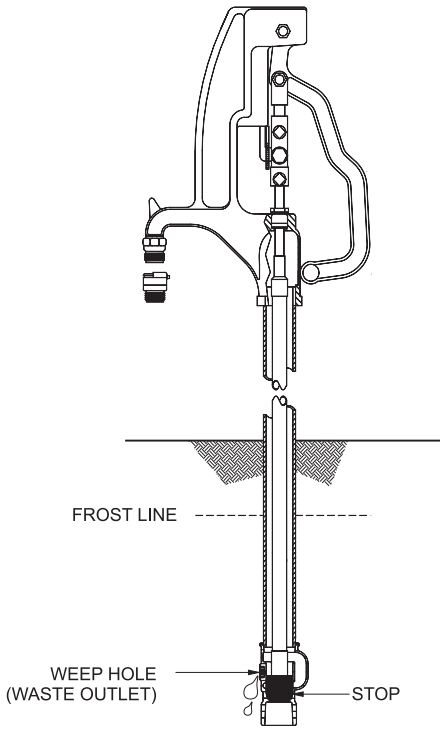

Figure 608.7(1)
YARD HYDRANT WITH STOP AND WASTE VALVE

the waste opening below grade. These devices use a sealed reservoir to collect water draining from the hydrant head and riser and empty the reservoir upon opening of the valve the next time the hydrant is in use.

The exception allows for installations of frostproof yard hydrants (having a combination stop-and-waste valve below grade) for applications where nonpotable water is acceptable for the use intended. Examples of nonpotable water use applications are hydrants used for farm area wash down, public park area cleaning and garbage area cleanup. Yard hydrants having stop and waste valves below grade must have backflow protection for the potable water supply to the hydrant, as specified in Section 608. In addition, the hydrants must be marked permanently with a sign having the code-specified words. The sign must meet the approval of the code official.

608.8 Identification of nonpotable water systems. Where nonpotable water systems are installed, the piping conveying the nonpotable water shall be identified either by color marking, metal tags or tape in accordance with Sections 608.8.1 through 608.8.2.3.

❖ Where nonpotable water supply systems are installed in a building, the piping of the nonpotable system must be identified so as to prevent advertent cross connection between different systems, especially the potable water system, during repairs or renovations. For example, a building could be provided with a recycled gray-water supply system that supplies nonpotable water for flushing urinals and water closets. Without identification of the recycled gray-water piping, the piping system might be assumed to convey potable



Figure 608.7(2)
PROHIBITED INSTALLATION OF YARD HYDRANTS CONNECTED TO WATER SERVICE LINES

INTERNATIONAL CODE COUNCIL®
Copyright © 2015 ICC. ALL RIGHTS RESERVED. Accessed by David Dammon on Jun 21, 2017 12:30:52 PM pursuant to License Agreement with ICC. No further reproduction or distribution authorized. ANY UNAUTHORIZED REPRODUCTION OR DISTRIBUTION IS A VIOLATION OF THE FEDERAL COPYRIGHT ACT AND THE LICENSE AGREEMENT, AND SUBJECT TO CIVIL AND CRIMINAL PENALTIES THEREUNDER.

water since it is commonplace for urinals and water closets to be supplied with potable water. A connection to an unmarked nonpotable piping system for the purposes of obtaining potable water could lead to significant health risks for the building's occupants.

608.8.1 Signage required. Nonpotable water outlets, such as hose connections, open ended pipes and faucets, shall be identified with signage that reads as follows: "Nonpotable water is utilized for [application name]. CAUTION: NONPOTABLE WATER – DO NOT DRINK." The words shall be legibly and indelibly printed on a tag or sign constructed of corrosion-resistant waterproof material or shall be indelibly printed on the fixture. The letters of the words shall be not less than 0.5 inch (12.7 mm) in height and in colors in contrast to the background on which they are applied. In addition to the required wordage, the pictograph shown in Figure 608.8.1 shall appear on the required signage.

❖ Some nonpotable water systems have outlets such as hose connections, open-ended pipes and faucets that could be mistaken for potable water outlets. Therefore, at these locations, the code requires signage to warn the building's occupants that water obtained from these outlets is not safe for drinking. The pictograph in Figure 608.8.1 conveys the intent in a visual manner.



Figure 608.8.1
"PICTOGRAPH—DO NOT DRINK"

608.8.2 Distribution pipe labeling and marking. Nonpotable distribution piping shall be purple in color and shall be embossed, or integrally stamped or marked, with the words: "CAUTION: NONPOTABLE WATER – DO NOT DRINK" or the piping shall be installed with a purple identification tape or wrap. Pipe identification shall include the contents of the piping system and an arrow indicating the direction of flow. Hazardous piping systems shall also contain information addressing the nature of the hazard. Pipe identification shall be repeated at intervals not exceeding 25 feet (7620 mm) and at each point where the piping passes through a wall, floor or roof. Lettering shall be readily observable within the room or space where the piping is located.

❖ Distribution piping conveying nonpotable water must be of purple color and have the caution lettering as indicated. Many types of water distribution pipe materials are offered with the external purple color and caution lettering. For those materials that are not offered with purple color or lettering, or in cases where the installer wishes to use standard colored pipe, the code allows for pipe identification using tapes or wraps. The tapes and wraps would need to be of purple color (primarily) and have the cautionary lettering. The intent of this section is not to require that elbows, tees and valves in the piping be purple colored or have the cautionary lettering. Identification of the pipe is all that is required, as the pipe is located where someone would most likely attempt to "tap into."

Piping identification must indicate the contents and the direction of flow, as well as any hazardous nature of the flow such as temperature, pressure and flammability and toxicity. The repetition of the identification locations is necessary so that those performing maintenance and modifications can easily find the pipe identification to determine the contents of the piping. Obviously, the pipe identification must be in a position such that a person within the room or space can easily see the identification markings.

608.8.2.1 Color. The color of the pipe identification shall be discernable and consistent throughout the building. The color purple shall be used to identify reclaimed, rain and gray water distribution systems.

❖ Where color is used for pipe identification, it must be clearly recognizable from any other pipe identification colors and be the same color for the same type of piping in the entire building. Where identifying reclaimed, rain and gray water distribution systems with color, the color purple must be used.

608.8.2.2 Lettering size. The size of the background color field and lettering shall comply with Table 608.8.2.2.

❖ See Table 608.8.2.2 for the required size of pipe identification.

TABLE 608.8.2.2
SIZE OF PIPE IDENTIFICATION

PIPE DIAMETER (inches)	LENGTH BACKGROUND COLOR FIELD (inches)	SIZE OF LETTERS (inches)
$^3/_4$ to $1^1/_4$	8	0.5
$1^1/_2$ to 2	8	0.75
$2^1/_2$ to 6	12	1.25
8 to 10	24	2.5
over 10	32	3.5

For SI 1 inch = 25.4 mm.

608.8.2.3 Identification tape. Where used, identification tape shall be at least 3 inches (76 mm) wide and have white or black lettering on a purple field stating "CAUTION: NONPOTABLE WATER – DO NOT DRINK." Identification tape shall be installed on top of nonpotable rainwater distribution

INTERNATIONAL CODE COUNCIL®
Copyright © 2015 ICC. ALL RIGHTS RESERVED. Accessed by David Dammon on Jun 21, 2017 12:30:52 PM pursuant to License Agreement with ICC. No further reproduction or distribution authorized. ANY UNAUTHORIZED REPRODUCTION OR DISTRIBUTION IS A VIOLATION OF THE FEDERAL COPYRIGHT ACT AND THE LICENSE AGREEMENT, AND SUBJECT TO CIVIL AND CRIMINAL PENALTIES THEREUNDER.

pipes, fastened at least every 10 feet (3048 mm) to each pipe length and run continuously the entire length of the pipe.

❖ This section provides requirements for identification tapes for nonpotable water distribution piping. Also, this section requires that identification tape used for rainwater distribution piping be located on "top" of the piping and fastened at 10-foot (3048 mm) intervals (and that the tape be continuous throughout the entire length of the pipe).

It is believed that this text comes from one of the many rainwater re-use "best practices" manuals that have been created over the last decade and that the text was selected primarily for the requirements for the identification tape. The part about use of the tape for identifying rainwater distribution piping, while important for buried rainwater distribution piping, doesn't seem to be logical to apply to rainwater piping inside of buildings (unless that piping is buried under the building).

The code doesn't specify how to use/apply identification tapes, other than the buried application for rainwater piping. Where tape is used for identifying buried piping for any nonpotable water distribution piping, the requirements for buried rainwater distribution piping appear to be reasonable, although this is not a code requirement. Where nonpotable water distribution piping is in a building (and not buried below the building), nonself-adhering tapes could be (spiral) wrapped around nonpotable water distribution piping, as simply fastening at 10-foot (3048 mm) intervals might not result in a "permanent" marking. For example, if the tape were fastened at 10-foot (3048 mm) intervals on a horizontal pipe, the tape could sag and eventually be torn off during other work. Spiral wrapping of tape is not a code requirement but seems to be a logical method.

Identification tapes could also be self-adhering. However, application of such tapes should take into consideration whether the adhesive will have a negative impact on the pipe material, if the adhesive will hold up in the expected environmental conditions (heat, condensation, etc.) and if the adhesive can be removed without damage to the piping, should a repair or alteration be necessary.

608.9 Reutilization prohibited. Water utilized for the cooling of equipment or other processes shall not be returned to the potable water system. Such water shall be discharged into a drainage system through an *air gap* or shall be utilized for nonpotable purposes.

❖ Water used for cooling or processing could become contaminated and, therefore, must not be returned to the potable water system. Water usage that has no effect on the potability of the water could be acceptable in accordance with Section 501.2 or under the alternative approval provisions of Section 105.2. Systems affecting the potability of the water are prohibited.

It is not the intent of this section to prohibit potable water heaters from supplying hot water to heat exchangers that are constructed of materials approved for potable water distribution piping. Such systems are used to provide space heating and are designed to have no effect on the potability of the water (see Section 501.2).

608.10 Reuse of piping. Piping that has been utilized for any purpose other than conveying potable water shall not be utilized for conveying potable water.

❖ When a fluid or gas other than potable water is conveyed through piping, it can react with the interior pipe wall. The interior of the pipe could develop deposits or a coating that could contaminate the potable water if that pipe is used in a potable water supply system. Therefore, piping used to convey potable water must either be new (unused) or have been previously used only to convey potable water.

608.11 Painting of water tanks. The interior surface of a potable water tank shall not be lined, painted or repaired with any material that changes the taste, odor, color or potability of the water supply when the tank is placed in, or returned to, service.

❖ Only coatings that do not affect the potability of the water can be applied to the inside of a potable water tank.

608.12 Pumps and other appliances. Water pumps, filters, softeners, tanks and other devices that handle or treat potable water shall be protected against contamination.

❖ Pumps, filters, tanks and apparatus for use with potable water in a water supply system must be designed and approved for this specific use. Such devices and equipment must be installed to prevent contamination. For example, a water softener regeneration cycle drain must be protected against backflow.

608.13 Backflow protection. Means of protection against backflow shall be provided in accordance with Sections 608.13.1 through 608.13.10.

❖ Sections 608.13.1 through 608.13.10 list the nine methods of protection against backflow that are recognized by the code. Any other method would require compliance with Table 608.1 or an alternative approval in accordance with Section 105.2.

608.13.1 Air gap. The minimum required *air gap* shall be measured vertically from the lowest end of a potable water outlet to the *flood level rim* of the fixture or receptacle into which such potable water outlet discharges. *Air gaps* shall comply with ASME A112.1.2 and *air gap* fittings shall comply with ASME A112.1.3.

❖ ASME A112.1.2 is the standard for air gaps, which require specific dimensions as illustrated in Table 608.15.1. An air gap is not a device and has no moving parts. It is, therefore, the most effective and dependable method of preventing backflow and should be used where feasible. However, when this method of separation is used, there must be an assurance or at least a level of awareness by the user that the air gap cannot be bypassed or defeated by adding a hose or extension from the end of the potable water

INTERNATIONAL CODE COUNCIL®
Copyright © 2015 ICC. ALL RIGHTS RESERVED. Accessed by David Dammon on Jun 21, 2017 12:30:52 PM pursuant to License Agreement with ICC. No further reproduction or distribution authorized. ANY UNAUTHORIZED REPRODUCTION OR DISTRIBUTION IS A VIOLATION OF THE FEDERAL COPYRIGHT ACT AND THE LICENSE AGREEMENT, AND SUBJECT TO CIVIL AND CRIMINAL PENALTIES THEREUNDER.

outlet to the source of contamination. The potable water opening or outlet must terminate at an elevation above the level of the source of contamination. The potable water could be contaminated only if the entire area or room becomes flooded to a depth that would submerge the potable water opening or outlet. An air gap installation must always be constructed so that the air gap remains permanently fixed. Air gaps can be fabricated from commercially available plumbing components or obtained as separate units and integrated into plumbing and piping systems.

This section requires air gaps to comply with Table 608.15.1 based on two variables:

- The size of the effective opening of the outlet or supply and
- The distance between the outlet and a wall or similar obstruction (see Table 608.15.1).

ASME A112.1.3 is the standard for air gap fittings for use with plumbing fixtures, appliances and appurtenances. This standard was developed for applications where an air gap fitting is manufactured for appliance applications.

608.13.2 Reduced pressure principle backflow prevention assemblies. Reduced pressure principle backflow prevention assemblies shall conform to ASSE 1013, AWWA C511, CSA B64.4 or CSA B64.4.1. Reduced pressure detector assembly backflow preventers shall conform to ASSE 1047. These devices shall be permitted to be installed where subject to continuous pressure conditions. The relief opening shall discharge by *air gap* and shall be prevented from being submerged.

❖ A reduced pressure principle backflow preventer is a device considered to be the most reliable mechanical method to prevent backflow. These devices consist of dual independently acting, spring-loaded check valves that are separated by a chamber or "zone" equipped with a relief valve. The pressure downstream of the device and in the central chamber between the check valves is maintained at a minimum of 2 psi (13.8 kPa) less than the potable water supply pressure at the device inlet, hence the name "reduced pressure principle." The relief valve located in the central chamber is held closed by the pressure differential between the inlet supply pressure and the central chamber pressure. If the inlet supply pressure decreases, the device will discharge water from the central chamber, thus maintaining a lower pressure in the chamber. In the event of backpressure or negative supply pressure, the relief valve will open to the atmosphere and drain any backflow that has leaked through the check valve. The relief vent will also allow air to enter to prevent any siphonage.

During a static or no-flow condition, both check valves and the relief vent remain closed. When there is normal flow, the two check valves open and the relief vent port remains closed. The supply pressure drops across the valve because of the force required to open the spring-loaded check valves. If backsiphonage or backpressure occurs, both check valves close, and the relief vent opens to the atmosphere, discharging the water in the intermediate zone. If both check valves are fouled and held in the open position, and there is either a backsiphonage or backpressure condition or both, the relief vent port opens, discharging the possibly contaminated water to the atmosphere and allowing air to enter to break the siphon. This gives a visual indication of a malfunction of one or both of the check valves or relief valve.

ASSE 1013 is the standard for two types of backflow prevention assemblies, identified as "reduced pressure principle backflow preventers" (RP) and "reduced pressure principle fire protection backflow preventers" (RPF). An RP device is designed for a working pressure of 150 psi (1024 kPa), and an RPF device is designed for a working pressure of 175 psi (1207 kPa). The RP and RPF are identical in their backflow protection. The RPF has specific performance requirements relating to its use on fire protection systems.

ASSE 1047 is the standard for devices known as "reduced pressure detector fire protection backflow prevention assemblies" (RPDF). This device is primarily used to protect the public water supply from contaminants found in fire sprinkler systems and to detect low rates of flow up to 0.126 L/s (2 gpm) within the sprinkler system caused by leakage or unauthorized use. This standard also allows provisions for alarm signaling devices to be included in the assembly. The application and installation of a reduced pressure principle backflow preventer is as follows:

- Provides protection against low- or high-hazard contamination.
- Provides protection against backsiphonage and backpressure backflow.
- The device can be used where it is under continuous pressure from the water supply.
- The relief vent opening must discharge through an air gap.
- The device must be accessible for testing and inspection.
- The device cannot be installed below grade where it may be subject to submersion.

Provisions must be made at or near the location of the installation to prevent drainage from the relief vent opening causing damage to the structure when the device is installed in a building or structure.

608.13.3 Backflow preventer with intermediate atmospheric vent. Backflow preventers with intermediate atmospheric vents shall conform to ASSE 1012 or CSA B64.3. These devices shall be permitted to be installed where subject to continuous pressure conditions. The relief opening shall discharge by *air gap* and shall be prevented from being submerged.

❖ A backflow preventer with intermediate atmospheric vent is a nontestable device consisting of two spring-loaded check valves in the closed position and a vent

INTERNATIONAL CODE COUNCIL®
Copyright © 2015 ICC. ALL RIGHTS RESERVED. Accessed by David Dammon on Jun 21, 2017 12:30:52 PM pursuant to License Agreement with ICC. No further reproduction or distribution authorized. ANY UNAUTHORIZED REPRODUCTION OR DISTRIBUTION IS A VIOLATION OF THE FEDERAL COPYRIGHT ACT AND THE LICENSE AGREEMENT, AND SUBJECT TO CIVIL AND CRIMINAL PENALTIES THEREUNDER.

to atmosphere between the two check valves. The design and principle of operation of these backflow preventers are similar to those of a reduced pressure principle backflow preventer. Supply pressure keeps the atmospheric vent closed, but zero supply pressure or backsiphonage will open the inner chamber to the atmosphere.

The application and installation of a backflow preventer with intermediate atmospheric vent is as follows:

- Provides protection against low-hazard contamination.
- Provides protection against backsiphonage and backpressure backflow.
- The relief vent opening must discharge through an air gap.
- The device can be used where it is under continuous pressure from the water supply.
- The device cannot be installed below grade where it may be subject to submersion.
- The device must be accessible for inspection and replacement.

Provisions must be made at or near the location of the installation to prevent drainage from the relief vent opening causing damage to the structure when the device is installed in a building or structure.

608.13.4 Barometric loop. Barometric loops shall precede the point of connection and shall extend vertically to a height of 35 feet (10 668 mm). A barometric loop shall only be utilized as an atmospheric-type or pressure-type vacuum breaker.

❖ The code considers a barometric loop to be equivalent to a vacuum breaker. A barometric loop may be installed in any location where the code would otherwise require a vacuum breaker.

The principle of a barometric loop is that siphon action is limited to the height that a column of water can be drawn. The 35-foot (10 668 mm) dimension is greater than the theoretical head of a pump suction. A perfect vacuum is equivalent to 0 psi (0 kPa) absolute (gauge pressure minus atmospheric pressure). Atmospheric pressure cannot support a water column in excess of 34 feet (10 363 mm) in height. Because siphonage is dependent on atmospheric pressure, siphonage cannot occur if the vertical distance exceeds 34 feet (10 363 mm).

A barometric loop would have control valves located in the vertical pipe or downstream of the connection (see Commentary Figure 608.13.4). A barometric loop cannot prevent backflow caused by backpressure.

608.13.5 Pressure vacuum breaker assemblies. Pressure vacuum breaker assemblies shall conform to ASSE 1020 or CSA B64.1.2. Spill-resistant vacuum breaker assemblies shall comply with ASSE 1056. These assemblies are designed for installation under continuous pressure conditions where the critical level is installed at the required height. Pressure vacuum breaker assemblies shall not be installed in locations where spillage could cause damage to the structure.

❖ A pressure vacuum breaker assembly contains one or two independently operating spring-loaded check valves and an independently operating spring-loaded air inlet valve located on the discharge side of the

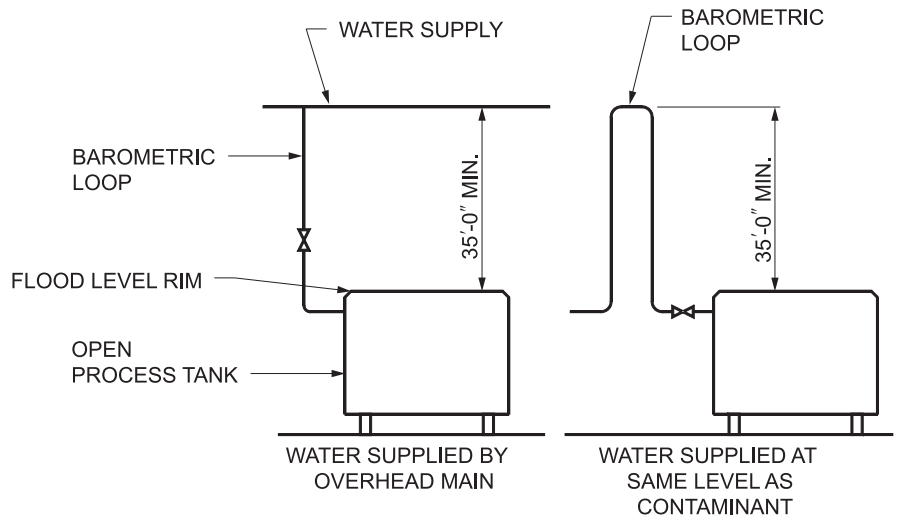

For SI: 1 foot = 304.8 mm.

Figure 608.13.4
BAROMETRIC LOOP

INTERNATIONAL CODE COUNCIL®
Copyright © 2015 ICC. ALL RIGHTS RESERVED. Accessed by David Dammon on Jun 21, 2017 12:30:52 PM pursuant to License Agreement with ICC. No further reproduction or distribution authorized. ANY UNAUTHORIZED REPRODUCTION OR DISTRIBUTION IS A VIOLATION OF THE FEDERAL COPYRIGHT ACT AND THE LICENSE AGREEMENT, AND SUBJECT TO CIVIL AND CRIMINAL PENALTIES THEREUNDER.

check valve. This device is testable because it has a shutoff valve and test cock at each end (see Commentary Figure 608.13.5). While a pressure vacuum breaker assembly operates by the same principle as an atmospheric vacuum breaker, a pressure vacuum breaker assembly is spring activated. The water pressure acting against the spring closes off the air opening. Because of the spring activation, a valve can be located downstream of a pressure vacuum breaker assembly. A spill-resistant vacuum breaker assembly is considered a pressure vacuum breaker assembly (see Section 608.13.8).

The application and installation of a pressure vacuum breaker assembly is as follows:

- Provides protection against low- and high-hazard contamination.
- Provides protection against backsiphonage only.
- Can be used where it is under continuous pressure from the water supply (valving permitted downstream).
- The device has a critical level of installation of 6 inches (152 mm) above flood level rim.
- The device must be accessible for testing and inspection.

When the device is installed in a building or structure, provisions must be made at or near the location of the installation to prevent damage caused by possible leakage from the air vent opening.

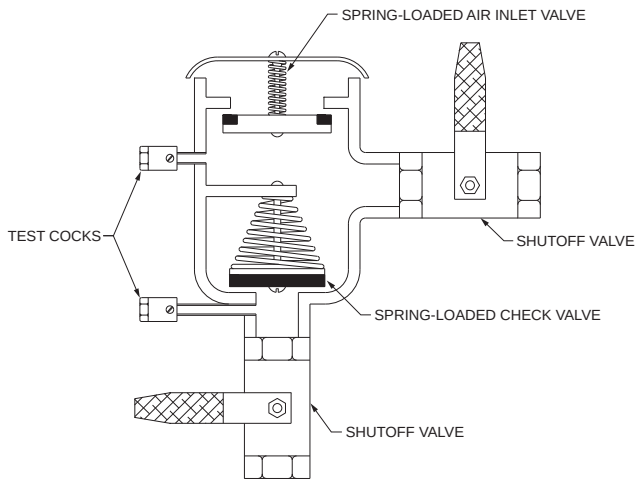

Figure 608.13.5
PRESSURE VACUUM BREAKER

608.13.6 Atmospheric-type vacuum breakers. Pipe-applied atmospheric-type vacuum breakers shall conform to ASSE 1001 or CSA B64.1.1. Hose-connection vacuum breakers shall conform to ASME A112.21.3, ASSE 1011, ASSE 1019, ASSE 1035, ASSE 1052, CSA B64.2, CSA B64.2.1, CSA B64.2.1.1, CSA B64.2.2 or CSA B64.7. These devices shall operate under normal atmospheric pressure when the critical level is installed at the required height.

❖ An atmospheric vacuum breaker is designed to prevent siphonic action from occurring downstream of the device. When siphon action or a vacuum is applied to the water supply, the vacuum breaker opens to the atmosphere, allowing air to enter the piping system, thus breaking the vacuum. This prevents contamination of the potable water system by stopping the backsiphonage backflow. When a siphon occurs on the supply inlet of the vacuum breaker, the disc float drops over the opening. Air enters the atmospheric port opening, allowing the remaining water in the piping downstream from the vacuum breaker to drain.

These devices are not effective in preventing backflow resulting from backpressure. The outlet of atmospheric vacuum breakers must remain open to the atmosphere by terminating with a pipe, spout or similar unobstructed opening. Valves must not be installed downstream of this device because this would subject the device to supply pressure, thereby rendering it inoperative.

Application and installation of an atmospheric-type vacuum breaker is as follows:

- Provides protection against low- or high-hazard contamination.
- Provides protection against backsiphonage only.
- The device cannot be installed where it is under continuous pressure from the water supply (12-hour or less intervals).
- Critical level installed 6 inches (152 mm) above highest point of use downstream.
- The device must be accessible for inspection and replacement.

Hose connection backflow preventers are designed to be installed on the discharge side of a hose-threaded outlet on a potable water system. This two-check device protects against backflow resulting from backsiphonage and low-head backpressure, under the high-hazard conditions present at a hose-threaded outlet. This device must be used only on systems where sources of backpressure are not introduced and where low-head backpressure does not exceed that generated by an elevated hose equal to or less than 10 feet (3048 mm) in height.

608.13.7 Double check backflow prevention assemblies. Double check backflow prevention assemblies shall conform to ASSE 1015, CSA B64.5, CSA B64.5.1 or AWWA C510. Double check detector fire protection backflow prevention assemblies shall conform to ASSE 1048. These assemblies shall be capable of operating under continuous pressure conditions.

❖ These assemblies are designed for low-hazard applications subject to backpressure and backsiphonage.

INTERNATIONAL CODE COUNCIL®
Copyright © 2015 ICC. ALL RIGHTS RESERVED. Accessed by David Dammon on Jun 21, 2017 12:30:52 PM pursuant to License Agreement with ICC. No further reproduction or distribution authorized. ANY UNAUTHORIZED REPRODUCTION OR DISTRIBUTION IS A VIOLATION OF THE FEDERAL COPYRIGHT ACT AND THE LICENSE AGREEMENT, AND SUBJECT TO CIVIL AND CRIMINAL PENALTIES THEREUNDER.

The devices consist of two independent spring-loaded check valves in series. Test cocks are provided to allow testing of the devices (see Commentary Figure 608.13.7). Note that these devices must not be confused with dual check-valve devices or two single check valves placed in series.

Double-detector fire protection check-valve assemblies are always allowed as an option where double check-valve backflow prevention assemblies are required because they offer identical protection. Double-detector assemblies provide the ability to monitor water flow through the device to determine whether there is a system leak or water is being intentionally withdrawn from the system downstream of the assembly.

608.13.8 Spill-resistant pressure vacuum breaker assemblies. Spill-resistant pressure vacuum breaker assemblies shall conform to ASSE 1056 or CSA B64.1.3. These assemblies are designed for installation under continuous-pressure conditions where the critical level is installed at the required height.

❖ A spill-resistant vacuum breaker assembly is sometimes referred to as a backsiphonage backflow vacuum breaker assembly. A spill-resistant vacuum breaker assembly can be installed in any location where the code requires a pressure vacuum breaker assembly. A spill-resistant vacuum breaker assembly is identical to a pressure vacuum breaker assembly except for an additional feature that significantly reduces the potential for water discharging through the air inlet vent each time the device is pressurized. As the name implies, spill resistant is not spillproof; therefore, careful consideration of the location of these devices is necessary to avoid the potential for water damage caused by leakage from the air inlet vent.

A spill-resistant vacuum breaker assembly is a testable device consisting of one check valve, spring loaded to the closed position, and an air inlet vent valve, spring loaded to the open position. The air inlet valve is located downstream from the check valve. The check valve and air inlet vent are located between two shutoff valves and two test cocks.

The application and installation of a spill-resistant vacuum breaker are as follows:

- Protects against low- and high-hazard contamination.
- Protects against backsiphonage backflow only.
- Can be subjected to continuous pressure (closed valves downstream is allowed).
- The critical level must be installed 6 inches (152 mm) above the highest outlet served.

The device must be located to allow for testing and inspection.

608.13.9 Chemical dispenser backflow devices. Back-flow devices for chemical dispensers shall comply with ASSE 1055 or shall be equipped with an *air gap* fitting.

❖ Chemical dispensing systems mix potable water with chemicals to provide the user with a ready-to-use chemical solution. These systems must be equipped with a backflow prevention device complying with ASSE 1055 or an air gap fitting, which is a device with an integral air gap. ASSE 1055 applies to devices classified as chemical dispensing systems having self-contained means of backflow protection, as follows:

Type A: These devices have the chemical(s) pressurized above atmospheric pressure.

Type B: These devices do not pressurize the chemical(s) above atmospheric pressure, with the only source of backpressure coming from an elevated hose.

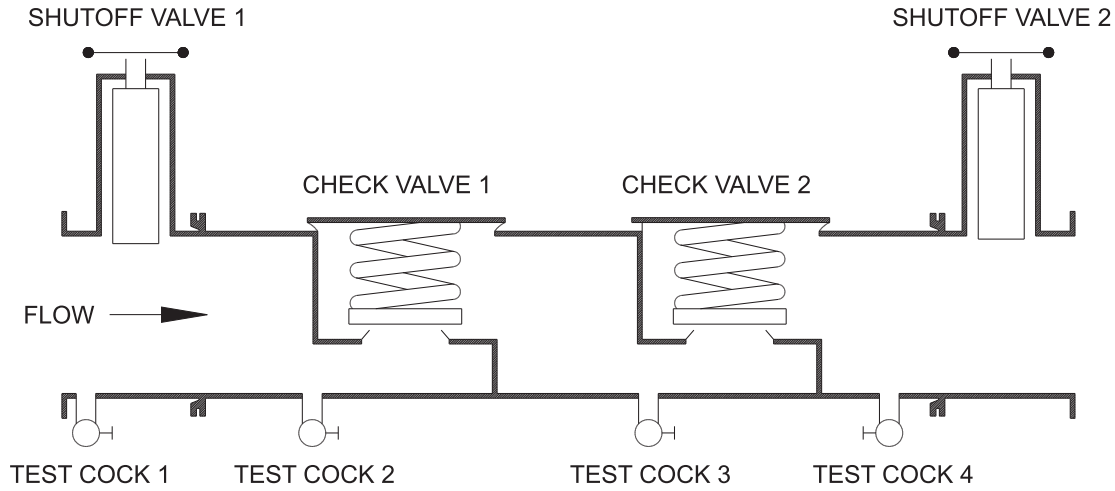

Figure 608.13.7
DOUBLE CHECK-VALVE ASSEMBLY

INTERNATIONAL CODE COUNCIL®
Copyright © 2015 ICC. ALL RIGHTS RESERVED. Accessed by David Dammon on Jun 21, 2017 12:30:52 PM pursuant to License Agreement with ICC. No further reproduction or distribution authorized. ANY UNAUTHORIZED REPRODUCTION OR DISTRIBUTION IS A VIOLATION OF THE FEDERAL COPYRIGHT ACT AND THE LICENSE AGREEMENT, AND SUBJECT TO CIVIL AND CRIMINAL PENALTIES THEREUNDER.

608.13.10 Dual check backflow preventer. Dual check backflow preventers shall conform to ASSE 1024 or CSA B64.6.

❖ This type of backflow preventer is not field testable. This device is distinctly different than a double check backflow prevention assembly, which is field testable. A dual check device is sometimes installed by the water utility in conjunction with the installation of the water meter for small buildings and residential homes where the water service is 1 inch (25 mm) and smaller.

608.14 Location of backflow preventers. Access shall be provided to backflow preventers as specified by the manufacturer's instructions.

❖ Every backflow preventer must be located so that it can be reached for inspection, testing, repair and replacement without removing a wall, floor, ceiling or other permanent portion of the building structure. It can be located behind access panels or in utility-type spaces. Backflow preventer devices, other than double-check-valve assemblies, have an atmospheric opening, and the location must take this into consideration. The devices must be located not only in ventilated spaces to allow air to enter them, but also where water discharge from them will not cause damage or create a hazard.

Backflow preventers must not be installed in locations subject to flooding, such as underground vaults. If the atmospheric opening on a backflow preventer is submerged, the protection provided by the device is lost.

608.14.1 Outdoor enclosures for backflow prevention devices. Outdoor enclosures for backflow prevention devices shall comply with ASSE 1060.

❖ ASSE 1060 is the standard that details the requirements of an outside enclosure for various types of backflow prevention assemblies. It includes enclosure types for freezing and nonfreezing locations. The enclosures incorporate features to provide for freeze protection, positive drainage to prevent submergence of the assembly, security and accessibility for testing and repair.

Freeze protection enclosures are divided into the following classes:

1. Class I enclosures are designed for all devices other than pressure and atmospheric vacuum breakers.
2. Class I-V enclosures are designed for pressure and atmospheric vacuum breakers.

Freeze-retardant enclosures are divided into the following classes:

1. Class II enclosures are designed for all devices other than pressure and atmospheric vacuum breakers.
2. Class II-V enclosures are designed for pressure and atmospheric vacuum breakers.

Enclosures without freeze protection are divided into the following classes:

1. Class III enclosures are designed for all devices other than pressure and atmospheric vacuum breakers.
2. Class III-V enclosures are designed for pressure and atmospheric vacuum breakers.

Freeze-protection enclosures are designed and constructed to maintain a minimum internal temperature of 40°F (4°C) when the external temperature is as low as -30°F (-34°C).

608.14.2 Protection of backflow preventers. Backflow preventers shall not be located in areas subject to freezing except where they can be removed by means of unions or are protected from freezing by heat, insulation or both.

❖ Frequently, backflow prevention valves are required to be located outside of buildings for a variety of reasons. If a valve will be exposed to freezing temperatures, the valve must be either protected during the freezing condition or removed during freezing weather. Where valves are necessary to function during freezing weather, removal is not possible, thus requiring that insulation or heat or both be used to keep the valve above freezing temperatures.

There is usually no question as to the need for an insulated enclosure and heat source for backflow preventers exposed to severe freezing weather. Valves exposed to milder winter conditions might only need insulating or where freezing conditions rarely exist, no protection may be an appropriate solution. The code is silent on the level of protection needed for these milder climates. Enclosure vendors and code officials could be sources for information to decide the degree of freeze protection required.

For those backflow prevention valve applications where use of the valve is seasonal such as for lawn sprinklers, or swimming pool water service, removal is usually the easiest solution. If removal is intended, unions must be provided to enable the valve to be easily removed without disturbing permanent piping. Even though the valve is removed, removal of the water in the remaining permanent piping should not be overlooked to prevent freeze damage to the piping.

608.14.2.1 Relief port piping. The termination of the piping from the relief port or *air gap* fitting of a backflow preventer shall discharge to an *approved* indirect waste receptor or to the outdoors where it will not cause damage or create a nuisance.

❖ In particular, reduced pressure zone (RPZ) backflow prevention valves will discharge water during a backflow event, a drop in supply pressure or where an obstruction (dirt) fouls the check valves. If the valve is located outdoors, an air gap fitting is usually not needed as the discharge dumps to the ground. If the valve is indoors or the discharge in an outdoor location would cause damage or a nuisance, the valve must be located over an appropriate waste receptor (floor

INTERNATIONAL CODE COUNCIL®
Copyright © 2015 ICC. ALL RIGHTS RESERVED. Accessed by David Dammon on Jun 21, 2017 12:30:52 PM pursuant to License Agreement with ICC. No further reproduction or distribution authorized. ANY UNAUTHORIZED REPRODUCTION OR DISTRIBUTION IS A VIOLATION OF THE FEDERAL COPYRIGHT ACT AND THE LICENSE AGREEMENT, AND SUBJECT TO CIVIL AND CRIMINAL PENALTIES THEREUNDER.

drain, sump with drain, etc.) to capture the flow from the relief port. If the relief port discharge must be piped to a suitable discharge point (either outdoors or to a nearby waste receptor), the relief port must be fitted with an air gap fitting (as supplied by the valve manufacturer) for connection of the relief discharge piping. Where the piping discharges to a waste receptor, it must connect indirectly.

In most situations, relief port discharges are a trickle of water that is easily accommodated by the pipe size dictated by the air gap connection. However, large obstructions (dirt, rocks, etc.) or sudden large drops in supply pressure may cause an extreme and prolonged discharge event such that the air gap fitting and relief pipe size will be ineffective in capturing the discharge. Designers should consider this type of event and provide for a means to capture and direct the flow from an extreme event to a safe location in order to avoid nearby equipment and property damage.

608.15 Protection of potable water outlets. All potable water openings and outlets shall be protected against backflow in accordance with Section 608.15.1, 608.15.2, 608.15.3, 608.15.4, 608.15.4.1 or 608.15.4.2.

❖ An opening or outlet is where the potable water system comes in contact with the atmosphere. This includes, but is not limited to, faucets, hose bibbs, plumbing fixtures, plumbing appliances and other points where water is withdrawn from the potable water supply system. The openings should be protected by one of four methods: air gap, backflow preventer with intermediate atmospheric vent, vacuum breaker or reduced pressure principle backflow preventer.

There are two types of cross-connection control philosophies: containment and isolation.

Containment: The practice of confining potential contamination within the facility where it arises by installing a backflow preventer at the meter or curb stop.

Isolation: The practice of confining potential contamination by installing a backflow preventer at each outlet or connection to a fixture or nonpotable system.

❖ The code requires isolation only for cross connections. The practice of containment is optional and widely used in waste-water treatment plants and marinas where potable water is supplied to boats and buildings with numerous nonpotable piping systems.

Many water supplies to commercial or industrial facilities have containment protection due in part to the complexity or diversity of use of the potable water supply within the facility. Although containment alone will protect the public water system, it does not protect the potable water within the facility.

608.15.1 Protection by air gap. Openings and outlets shall be protected by an *air gap* between the opening and the fixture *flood level rim* as specified in Table 608.15.1. Openings and outlets equipped for hose connection shall be protected by means other than an *air gap*.

❖ An air gap is the simplest, most common and most reliable form of backflow protection for openings and outlets. Most sink and lavatory faucets are designed with a built-in air gap. A hose connection outlet cannot rely on an air gap to provide backflow protection. Once a hose is added to the outlet, the air gap no longer exists. Therefore, an alternative method of backflow prevention is required for any hose outlet.

Although an air gap is an extremely effective backflow preventer, it does interrupt the piping flow with corresponding loss of pressure for subsequent use.

Consequently, air gaps are used primarily at end-of-the-line service where reservoirs or storage tanks are desired.

Additionally, it exposes the potable water supply to the surrounding air with its inherent bacteria, dust particles and other air-borne pollutants or contaminants. This presents a backflow potential and must be considered when selecting appropriate backflow methods.

An air gap must be inspected as frequently as mechanical backflow preventers in accordance with Section 312.9 [see Commentary Figures 608.15.1(1) and 608.15.1(2)].

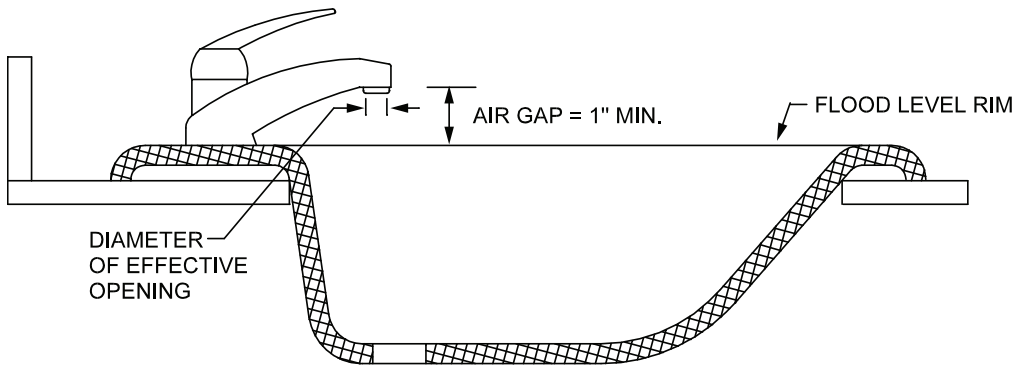

For SI: 1 inch = 25.4 mm.

Figure 608.15.1(1)
AIR GAP FOR A LAVATORY FAUCET

INTERNATIONAL CODE COUNCIL®
Copyright © 2015 ICC. ALL RIGHTS RESERVED. Accessed by David Dammon on Jun 21, 2017 12:30:52 PM pursuant to License Agreement with ICC. No further reproduction or distribution authorized. ANY UNAUTHORIZED REPRODUCTION OR DISTRIBUTION IS A VIOLATION OF THE FEDERAL COPYRIGHT ACT AND THE LICENSE AGREEMENT, AND SUBJECT TO CIVIL AND CRIMINAL PENALTIES THEREUNDER.

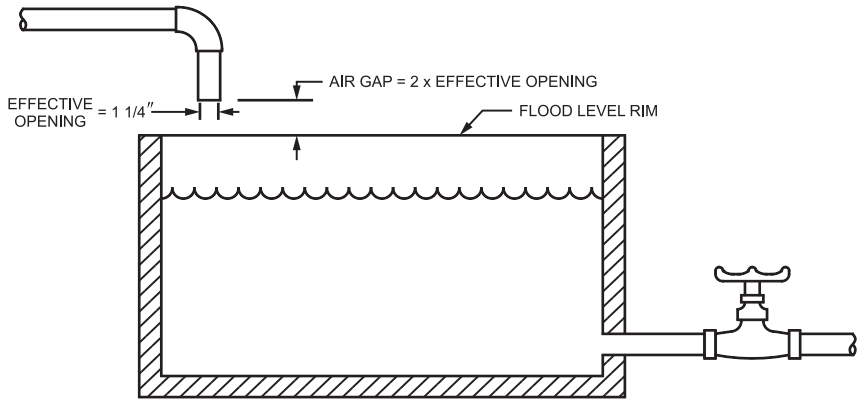

For SI: 1 inch = 25.4 mm.

Figure 608.15.1(2)
AIR GAP PIPING SYSTEM

608.15.2 Protection by reduced pressure principle backflow prevention assembly. Openings and outlets shall be protected by a reduced pressure principle backflow prevention assembly or a reduced pressure principle fire protection backflow prevention assembly on potable water supplies.

❖ A reduced pressure principle backflow prevention assembly or a reduced pressure principle fire-protection backflow prevention assembly can also be used to protect outlets and openings, although it is rarely used for this purpose (see commentary, Section 608.13.2).

TABLE 608.15.1. See below.

This table has been a mainstay in the plumbing industry since 1940.The values specified have not changed in more than 50 years.

The middle column of the table shows minimum air gap dimensions for outlets located away from walls or obstructions. The third column contains more stringent air gap dimensions when the outlet is located near a wall or obstruction [see Commentary Figures 608.15.1(3) and 608.15.1(4)].

608.15.3 Protection by a backflow preventer with intermediate atmospheric vent. Openings and outlets shall be protected by a backflow preventer with an intermediate atmospheric vent.

❖ The devices addressed in Section 608.13.3 are acceptable means of backflow prevention for openings and outlets.

608.15.4 Protection by a vacuum breaker. Openings and outlets shall be protected by atmospheric-type or pressure-type vacuum breakers. The critical level of the vacuum breaker shall be set not less than 6 inches (152 mm) above the *flood level rim* of the fixture or device. Fill valves shall be set in accordance with Section 425.3.1. Vacuum breakers shall not be installed under exhaust hoods or similar locations that will contain toxic fumes or vapors. Pipe-applied vacuum breakers shall be installed not less than 6 inches (152 mm) above the *flood level rim* of the fixture, receptor or device served.

❖ For a vacuum breaker to operate properly, it must be located above the flood level rim of the fixture or device that it is protecting.

TABLE 608.15.1
MINIMUM REQUIRED AIR GAPS

FIXTURE	MINIMUM AIR GAP	
	Away from a wall[a] (inches)	Close to a wall (inches)
Lavatories and other fixtures with effective openings not greater than $^1/_2$ inch in diameter	1	$1^1/_2$
Sinks, laundry trays, gooseneck back faucets and other fixtures with effective openings not greater than $^3/_4$ inch in diameter	$1^1/_2$	$2^1/_2$
Over-rim bath fillers and other fixtures with effective openings not greater than 1 inch in diameter	2	3
Drinking water fountains, single orifice not greater than $^7/_{16}$ inch in diameter or multiple orifices with a total area of 0.150 square inch (area of circle $^7/_{16}$ inch in diameter)	1	$1^1/_2$
Effective openings greater than 1 inch	Two times the diameter of the effective opening	Three times the diameter of the effective opening

For SI: 1 inch = 25.4 mm, 1 square inch = 645 mm^2.

a. Applicable where walls or obstructions are spaced from the nearest inside-edge of the spout opening a distance greater than three times the diameter of the *effective opening* for a single wall, or a distance greater than four times the diameter of the *effective opening* for two intersecting walls.

INTERNATIONAL CODE COUNCIL®
Copyright © 2015 ICC. ALL RIGHTS RESERVED. Accessed by David Dammon on Jun 21, 2017 12:30:52 PM pursuant to License Agreement with ICC. No further reproduction or distribution authorized. ANY UNAUTHORIZED REPRODUCTION OR DISTRIBUTION IS A VIOLATION OF THE FEDERAL COPYRIGHT ACT AND THE LICENSE AGREEMENT, AND SUBJECT TO CIVIL AND CRIMINAL PENALTIES THEREUNDER.

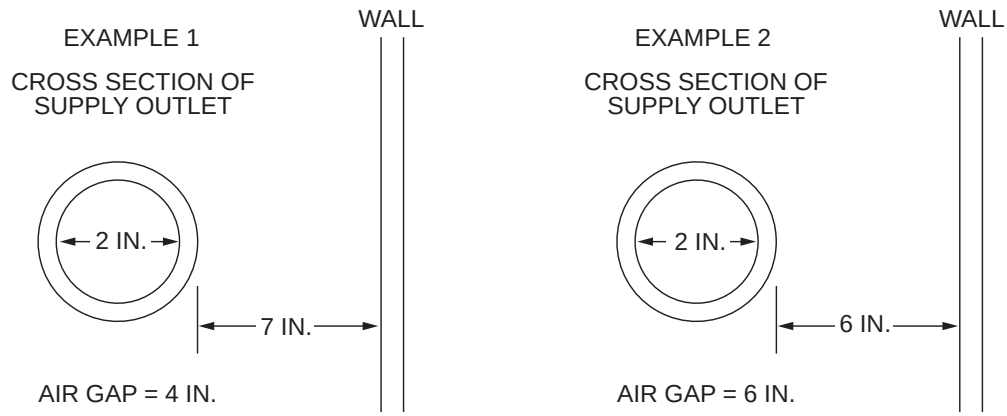

For SI: 1 inch = 25.4 mm.

Figure 608.15.1(3)
AIR GAPS—LOCATED NEAR SINGLE WALL

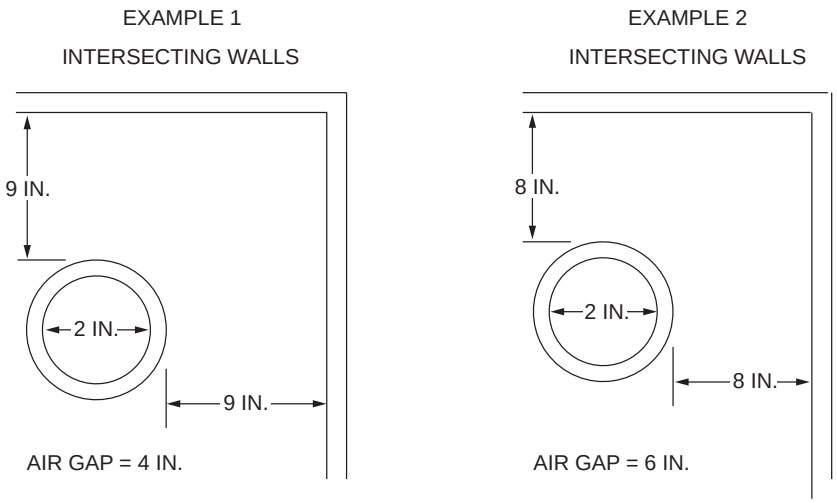

For SI: 1 inch = 25.4 mm.

Figure 608.15.1(4)
AIR GAPS—LOCATED NEAR INTERSECTING WALLS

If the vacuum breaker is below the flood level rim, it is subject to pressure from the fixture or outlet piping because of the static head (see commentary, Section 608.13.6).Valves cannot be located downstream from an atmospheric vacuum breaker. A downstream valve will subject the device to backpressure, thereby causing damage or impaired operation. All valves or controlling devices must be located upstream of the device. Valves may be downstream only where a pressure vacuum breaker is installed (see Commentary Figure 608.15.4).

608.15.4.1 Deck-mounted and integral vacuum breakers. *Approved* deck-mounted or equipment-mounted vacuum breakers and faucets with integral atmospheric vacuum breakers or spill-resistant vacuum breaker assemblies shall be installed in accordance with the manufacturer's instructions and the requirements for labeling with the critical level not less than 1 inch (25 mm) above the *flood level rim.*

❖ This section recognizes a type of vacuum breaker that is installed on the deck (horizontal surface at rim) of plumbing fixtures such as bathtubs, whirlpools, bidets and sinks. Such devices must be tested for installation with lesser distances between the critical level and the fixture flood level rim. Such devices are intended to be more aesthetically pleasing and would be built into fixture trim hardware, such as fill spouts or diverter controls.

INTERNATIONAL CODE COUNCIL®
Copyright © 2015 ICC. ALL RIGHTS RESERVED. Accessed by David Dammon on Jun 21, 2017 12:30:52 PM pursuant to License Agreement with ICC. No further reproduction or distribution authorized. ANY UNAUTHORIZED REPRODUCTION OR DISTRIBUTION IS A VIOLATION OF THE FEDERAL COPYRIGHT ACT AND THE LICENSE AGREEMENT, AND SUBJECT TO CIVIL AND CRIMINAL PENALTIES THEREUNDER.

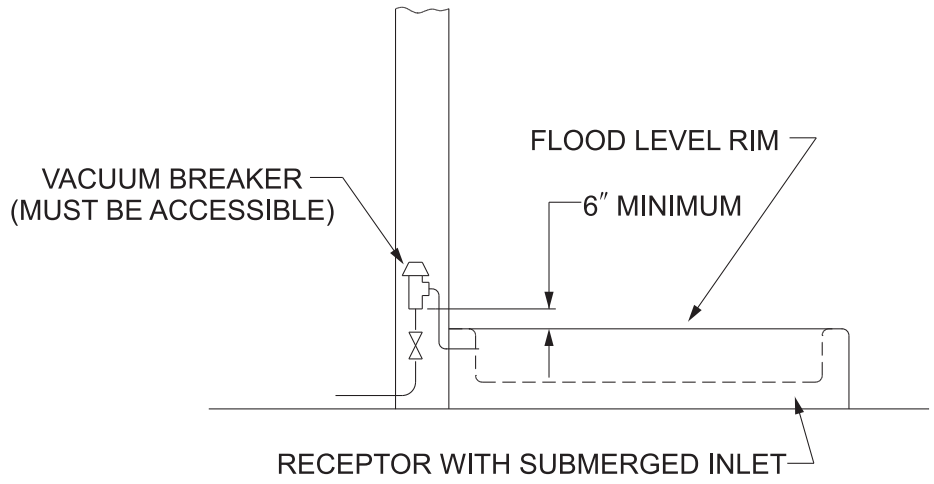

For SI: 1 inch = 25.4 mm.

Figure 608.15.4
SUBMERGED INLET PROTECTED BY VACUUM BREAKER

608.15.4.2 Hose connections. Sillcocks, hose bibbs, wall hydrants and other openings with a hose connection shall be protected by an atmospheric-type or pressure-type vacuum breaker or a permanently attached hose connection vacuum breaker.

Exceptions:

1. This section shall not apply to water heater and boiler drain valves that are provided with hose connection threads and that are intended only for tank or vessel draining.
2. This section shall not apply to water supply valves intended for connection of clothes washing machines where backflow prevention is otherwise provided or is integral with the machine.

❖ In accordance with this section, outlets and openings to which a hose can be connected must be protected by some type of vacuum breaker device. Commentary Figure 608.15.4.2(1) shows a hose connection in violation of this requirement. Commentary Figure 608.15.4.2(2) shows one type of hose faucet that has one type of integral vacuum breaker. Atmospheric vacuum breakers screwed onto the threads of the hose faucet may also be acceptable as long as the connection is permanent (locking type) or the threads between the hose faucet and the vacuum breaker are nonstandard (i.e., neither pipe threads nor garden hose threads). The devices addressed in Sections 608.13.2 and 608.13.3 would also be permitted because they would afford a greater level of protection. Where a hose can be elevated above the critical level of a vacuum breaker, the vacuum breaker must be designed to function under such conditions. For example, hose connection vacuum breakers incorporate a check valve in conjunction with an atmospheric port. Such devices can prevent siphonage and can also resist backflow caused by the head pressure developed in an elevated hose. In accordance with Table 608.1 and the definition for "Backflow, low head backpressure" in Section 202, this backpressure is limited to 10 feet (3048 mm) of water column or 4.33 psi (29.9 kPa). If the possibility exists for backpressure to exceed 10 feet (3048 mm) of water column [the equivalent of raising a hose filled with water 10 feet (3048 mm) above the vacuum breaker], another backflow prevention device, designed to handle greater backpressures, must be installed. If a hose is equipped with a control valve, an atmospheric vacuum breaker cannot be used to protect that outlet [see commentary, Section 608.15.4 and Commentary Figure 608.15.4.2(3)].



Figure 608.15.4.2(1)
HOSE (SILL) FAUCET WITHOUT VACUUM BREAKER

INTERNATIONAL CODE COUNCIL®
Copyright © 2015 ICC. ALL RIGHTS RESERVED. Accessed by David Dammon on Jun 21, 2017 12:30:52 PM pursuant to License Agreement with ICC. No further reproduction or distribution authorized. ANY UNAUTHORIZED REPRODUCTION OR DISTRIBUTION IS A VIOLATION OF THE FEDERAL COPYRIGHT ACT AND THE LICENSE AGREEMENT, AND SUBJECT TO CIVIL AND CRIMINAL PENALTIES THEREUNDER.

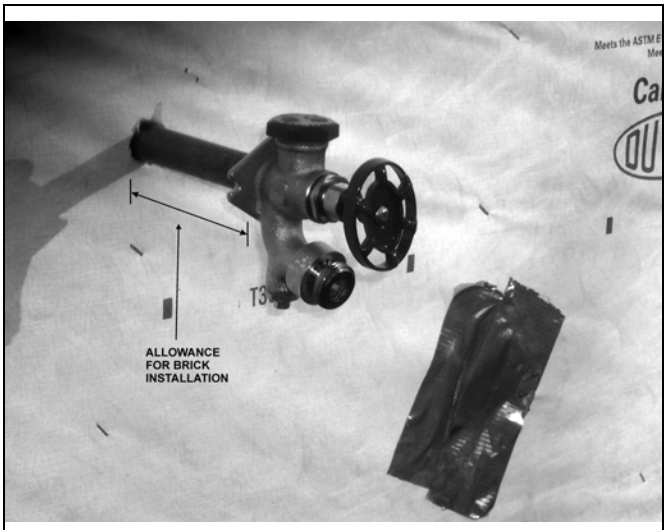

Figure 608.15.4.2(2)
HOSE (SILL) FREEZEPROOF FAUCET WITH INTEGRAL VACUUM BREAKER

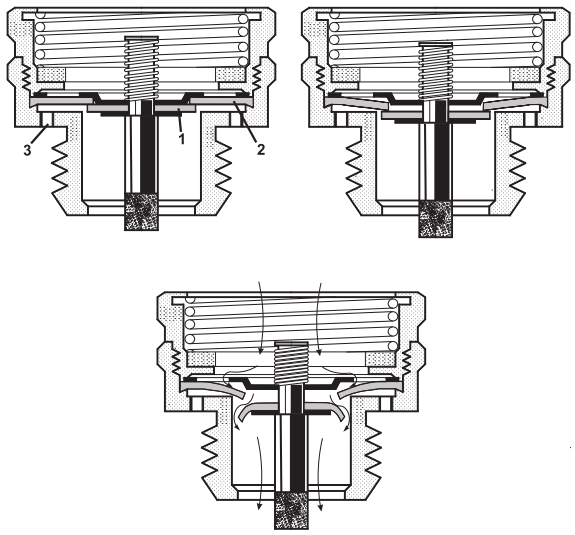

Figure 608.15.4.2(3)
HOSE CONNECTION VACUUM BREAKER

In Commentary Figure 608.15.4.2(3), the supply valve shutoff disc (1) seals against the diaphragm (2) when there is no flow in the pipe. The atmospheric port (3) is open. As flow occurs in the pipe, the atmospheric ports are closed before the supply valve disc opens. Note that this type of vacuum breaker can be acceptable only if the installation is made permanent (e.g., a locking break-off set screw).

The exceptions are intended to address situations where hose threads are commonly provided but do not require the installation of a vacuum breaker. The two exceptions are not exempting these outlets from any form of backflow prevention. In Exception 1, water heater and boiler drain valves (with or without hose threads) must be provided with an air gap, and in Exception 2, the clothes washing machine must be provided with an integral form of backflow prevention (typically an air gap between the fill pipe and the overflow rim of the washing machine tub).

Table 608.1 contains a reference to a relatively new device called a "hose connection backflow preventer." The device is testable and consists of two check valves spring loaded in the closed position with an atmospheric vent between them. The backflow preventer can be either an add-on device to or integral with a wall hydrant or hose bibb. Because the add-on device is designed to attach to hose threads, it would be appropriate for these devices to serve as the required method of backflow protection for hose connections.

608.16 Connections to the potable water system. Connections to the potable water system shall conform to Sections 608.16.1 through 608.16.10.

❖ Sections 608.16.1 through 608.16.10 regulate backflow prevention for direct connections between a potable and nonpotable system. A cross connection exists where there is no atmospheric opening (air gap) between the potable water supply and the source of contamination.

This section addresses cross connections that result from the direct connection of the potable water supply to a closed system such as boilers, vessels, tanks, heat exchangers and nonpotable piping systems.

608.16.1 Beverage dispensers. The water supply connection to beverage dispensers shall be protected against backflow by a backflow preventer conforming to ASSE 1022 or by an *air gap*. The portion of the backflow preventer device downstream from the second check valve and the piping downstream therefrom shall not be affected by carbon dioxide gas.

❖ The potable water supply to a carbonated beverage dispenser must be protected by a backflow preventer with an intermediate atmospheric vent conforming to ASSE 1022 or by an air gap. Concerns have been raised that a dual check valve alone will not show any visible indication of failure. The backflow preventer for beverage dispensing equipment includes two check valves and an atmospheric vent. If there is failure of the downstream check and the backpressure exceeds the supply pressure, the vent will discharge, giving a visual indication of the check valve's failure. Piping downstream of the backflow preventer with intermediate atmospheric vent must not be copper. These requirements are intended to prevent CO_2 backflow into copper water supply lines, which causes leaching of copper into the potable water supply (see Commentary Figure 608.16.1).

INTERNATIONAL CODE COUNCIL®
Copyright © 2015 ICC. ALL RIGHTS RESERVED. Accessed by David Dammon on Jun 21, 2017 12:30:52 PM pursuant to License Agreement with ICC. No further reproduction or distribution authorized. ANY UNAUTHORIZED REPRODUCTION OR DISTRIBUTION IS A VIOLATION OF THE FEDERAL COPYRIGHT ACT AND THE LICENSE AGREEMENT, AND SUBJECT TO CIVIL AND CRIMINAL PENALTIES THEREUNDER.

Prior to the 2009 edition of the code, a carbonated beverage dispenser backflow preventer that met the CSA B64.3.1 standard was acceptable. An in depth analysis comparing the test protocols between the ASSE and CSA standards suggested that the CSA standard was not equal to the requirements of ASSE. Because the use of ASSE 1022 devices has a long history of providing safe conditions, and the majority of beverage dispenser manufacturers only specify the ASSE 1022 device for use with their equipment, the CSA standard was removed from this section.

608.16.2 Connections to boilers. The potable supply to the boiler shall be equipped with a backflow preventer with an intermediate atmospheric vent complying with ASSE 1012 or CSA B64.3. Where conditioning chemicals are introduced into the system, the potable water connection shall be protected by an *air gap* or a reduced pressure principle backflow preventer, complying with ASSE 1013, CSA B64.4 or AWWA C511.

❖ Because boilers are pressurized vessels, the potential for backflow caused by backpressure is quite high. Any time the potable water supply pressure drops below boiler pressure, backflow can occur.

If a boiler system contains only untreated, unconditioned water supplied from a potable source, a backflow preventer with an intermediate atmospheric vent can be installed (see Commentary Figure 608.16.2).

If any chemicals are added to the boiler system, the potable water supply connection must be protected with a reduced pressure principle backflow preventer.

608.16.3 Heat exchangers. Heat exchangers utilizing an essentially toxic transfer fluid shall be separated from the potable water by double-wall construction. An *air gap* open

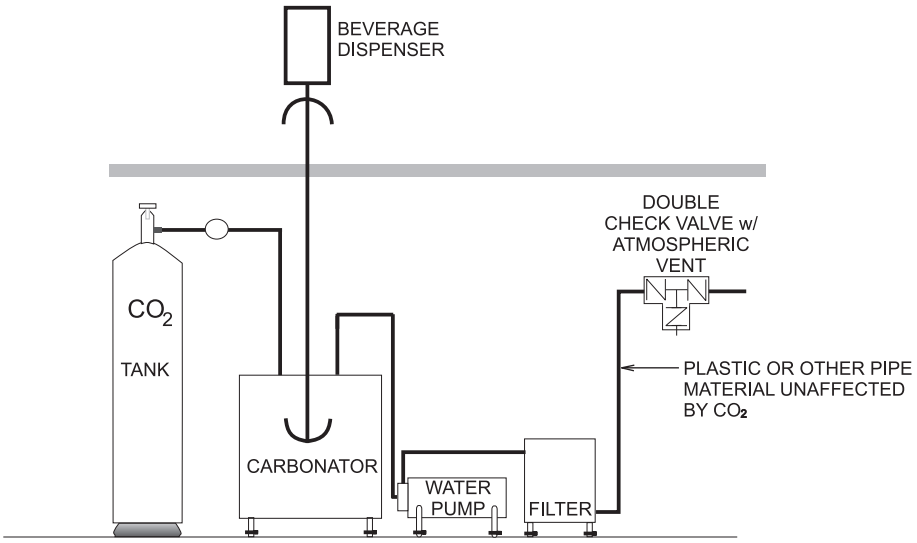

Figure 608.16.1
BEVERAGE DISPENSER

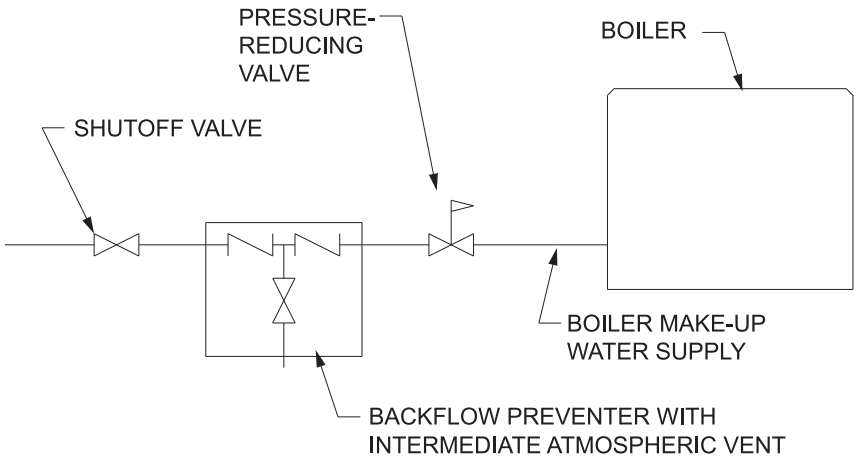

Figure 608.16.2
FOR BOILER WITHOUT CONDITIONING CHEMICALS

INTERNATIONAL CODE COUNCIL®
Copyright © 2015 ICC. ALL RIGHTS RESERVED. Accessed by David Dammon on Jun 21, 2017 12:30:52 PM pursuant to License Agreement with ICC. No further reproduction or distribution authorized. ANY UNAUTHORIZED REPRODUCTION OR DISTRIBUTION IS A VIOLATION OF THE FEDERAL COPYRIGHT ACT AND THE LICENSE AGREEMENT, AND SUBJECT TO CIVIL AND CRIMINAL PENALTIES THEREUNDER.

to the atmosphere shall be provided between the two walls. Heat exchangers utilizing an essentially nontoxic transfer fluid shall be permitted to be of single-wall construction.

❖ The extent of isolation required for a heat exchanger depends on the type of fluid used on the exchanger's nonpotable side. From the definition of "Essentially nontoxic transfer fluid," the Gosselin rating of nonpotable fluid must be evaluated. If the fluid has a Gosselin rating of 1, a single-wall heat exchanger is permitted.

The Gosselin rating is a measure of the toxicity of a substance. The name originates from one of the prime developers of the rating system, Dr. Robert E. Gosselin, professor of Pharmacology at Dartmouth Medical School in New Hampshire.

Gosselin toxicity ratings are the values used by medical personnel to analyze poison victims. The ratings are based on the probable lethal dose for a human. The six levels of Gosselin ratings are outlined in Commentary Figure 608.16.3(1).

Some of the commercially available transfer fluids with a Gosselin rating of 1 are identified in Commentary Figure 608.16.3(2).

If the heat transfer fluid has a Gosselin rating of 2 or more, a double-wall heat exchanger is required. The double-wall heat exchanger must have an intermediate space between the walls that is open to the atmosphere. This type of construction would allow any leakage of fluid through the walls of the heat exchanger to discharge externally to the heat exchanger where it would be observable [see Commentary Figure 608.16.3(3)].

TRADE NAME	MANUFACTURER
Caloria Ht-43	Exxon Co.
DowFrost	Dow
Drewsol	Drew Chemical
Freeze Proof	Commonwealth
Mobiltherm 603	Mobile Oil Co.
Mobiltherm Light	Mobile Oil Co.
Nutek 835	Nuclear Technology
Nutek 876	Nuclear Technology
Process Oil 3029	Exxon Co.
Propylene Glycol U.S.P.	Union Carbide
Solargard G.	Daystar Corp.
Solar Winter Ban	Solar Alternative Inc.
Sunsol 60	Sunworks
Suntemp	Resource Technology
Syltherm 444	Corp.
Therminal 66	Dow Corning Corp.
UCAR Food Freeze 35	Monsanto Co.
FDA Approved Boiler Additives	Union Carbide
Freon 12	
Freon 22	
Freon 112	
Freon 114	

Figure 608.16.3(2)
HEAT TRANSFER FLUIDS (ESSENTIALLY NONTOXIC) GOSSELIN RATING OF 1

TOXICITY RATING OR CLASS	PROBABLE ORAL LETHAL DOSE (HUMAN)	
	Dose	For 7 kg person (150 pounds)
6 Super toxic	Less than 5 mg/kg	A taste (less than 7 drops)
5 Extremely toxic	5-50 mg/kg	Between 7 drops and 1 teaspoon
4 very toxic	50-500 mg/kg	Between 1 teaspoon and 1 ounce
3 Moderately toxic	0.5-5 gm/kg	Between 1 ounce and 1 pint (pound)
2 Slightly toxic	5-15 gm/kg	Between 1 pint and 1 quart
1 Practically nontixic	Above 16 gm/kg	More than 1 quart (2.2 pounds)

Figure 608.16.3(1)
GOSSELIN RATINGS

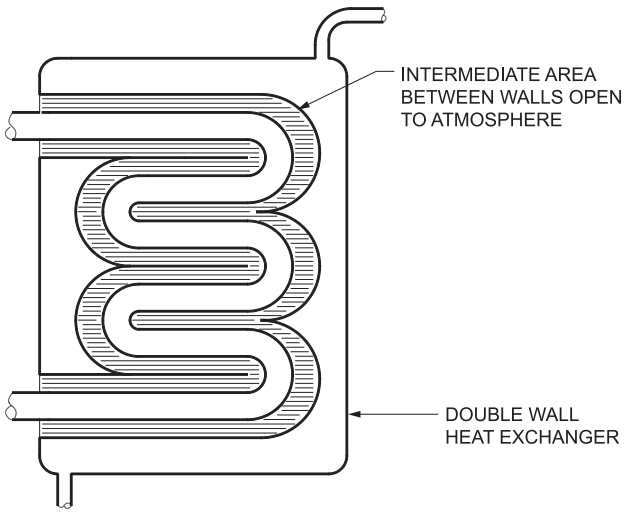

Figure 608.16.3(3)
DOUBLE WALL HEAT EXCHANGER

608.16.4 Connections to automatic fire sprinkler systems and standpipe systems. The potable water supply to automatic fire sprinkler and standpipe systems shall be protected against backflow by a double check backflow prevention

INTERNATIONAL CODE COUNCIL®
Copyright © 2015 ICC. ALL RIGHTS RESERVED. Accessed by David Dammon on Jun 21, 2017 12:30:52 PM pursuant to License Agreement with ICC. No further reproduction or distribution authorized. ANY UNAUTHORIZED REPRODUCTION OR DISTRIBUTION IS A VIOLATION OF THE FEDERAL COPYRIGHT ACT AND THE LICENSE AGREEMENT, AND SUBJECT TO CIVIL AND CRIMINAL PENALTIES THEREUNDER.

assembly, a double check fire protection backflow prevention assembly or a reduced pressure principle fire protection backflow prevention assembly.

Exceptions:

1. Where systems are installed as a portion of the water distribution system in accordance with the requirements of this code and are not provided with a fire department connection, isolation of the water supply system shall not be required.
2. Isolation of the water distribution system is not required for deluge, preaction or dry pipe systems.

❖ One of the most common arrangements for supplying water to an automatic fire sprinkler system or a fire service standpipe system is through a common water service system that also provides potable water to a building's water distribution system [see Commentary Figure 608.16.4(2)]. Because the water that initially fills the piping of the automatic fire sprinkler system is potable water, the degree of hazard to the potable water supply should a backflow event occur is low. In other words, the potable water supply might become polluted, but not contaminated (see Chapter 2 definitions of "Pollution" and "Contamination"). Therefore, a double check valve backflow protection assembly (or double check fire-protection backflow prevention assembly) is the minimum acceptable form of backflow prevention required between the potable water supply and the automatic fire sprinkler system.

However, if antifreeze or other chemicals are added to a sprinkler or standpipe system or if a nonpotable secondary water supply is or could be connected to the sprinkler or standpipe system, the potable water supply must be protected with a reduced pressure principle fire-protection backflow prevention assembly to protect the potable water supply (see commentary, Section 609.16.4.1). An example of a nonpotable secondary water supply would be the connection of a fire truck pumper unit through a fire department connection on the building where the pump is conveying nonpotable water such as from a pond or lake.

Exception 1 addresses the installation of dual-purpose (combination) water distribution and fire sprinkler piping systems. Where only spot protection is provided in limited-area sprinkler systems and in residential applications, it is common for fire sprinklers to be supplied directly from the building's potable water distribution system. In such systems, there is not a fire department connection through which water can be pumped into the system, and the entire piping system, including the sprinkler piping, is constructed of materials that are approved for potable water distribution. Because there is not a potential source of pollution or contamination in such systems and it would be nearly impossible to install, maintain and test a backflow preventer at each take-off point for a sprinkler, a backflow preventer is not required [see Commentary Figure 608.16.4(1)].

Note that Exception 1 is not intended to apply to separate (independent) water distribution and fire sprinkler systems that share only a common water service system [see Commentary Figure 608.16.4(2)]. Where the fire sprinkler and water distribution system do not share piping other than the water service system and even if the sprinkler system was constructed of materials approved for water distribution, isolation of the fire sprinkler system from the potable water supply system is still required because it keeps the sprinkler system or standpipe filled with water should a public water main lose pressure during a water main break or there is a heavy fire demand that might occur elsewhere.

Discussion of Exception 2 requires a brief explanation of wet-pipe, deluge, preaction and dry-pipe sprinkler systems. A wet-pipe sprinkler system is the most common type of system in most buildings. A network of pipes terminate at a number of closed sprinklers. Each sprinkler has a fuse-like device, that when heated above a certain temperature, melts or breaks to allow flow through the sprinkler. The entire sprinkler network is filled with water and kept under pressure. The only sprinklers that discharge water are the ones where the fusible device melts or breaks.

A deluge sprinkler system is comprised of a network of pipes terminating in a number of open "high-flow"-type sprinklers. There is no water in the system until a main valve is triggered to open by thermal sensors in the protected area. Once the valve opens, water flows from all sprinklers to deluge the entire protected area with water, even though only a portion of the area might be experiencing a fire condition.

A dry-pipe sprinkler system consists of a network of pipes terminating in a number of closed sprinklers. Just as in a wet-pipe system, each sprinkler has a fuse-like device, that when heated above a certain temperature, melts or breaks to allow flow through the sprinkler. However, instead of water filling the system, compressed air or compressed nitrogen is used to fill the system and is maintained by a small air compressor (or high-pressure tank) in order to keep a special check valve closed. The special check valve is connected to the potable water supply. Once a sprinkler activates (i.e., the fusible device melts or breaks), the compressed air (or gas) is released from the system, allowing the special check valve to open and water to flow into the network of piping and to the sprinklers. However, only the sprinklers that are activated will be discharging water into the area. Dry pipe systems are often used where areas to be sprinkler protected are subject to freezing temperatures.

A preaction sprinkler system is a cross between a deluge system and a dry-pipe system. The valve holding back water from entering the sprinkler system is electrically controlled by thermal sensors in the protected area. The sprinklers are also of the closed-with-fusible-device type. This type of system is typically used where it is desirable to not have water flow on just the independent action of a valve opening or a sprinkler opening. Both events must occur before water will flow from a sprinkler.

INTERNATIONAL CODE COUNCIL®
Copyright © 2015 ICC. ALL RIGHTS RESERVED. Accessed by David Dammon on Jun 21, 2017 12:30:52 PM pursuant to License Agreement with ICC. No further reproduction or distribution authorized. ANY UNAUTHORIZED REPRODUCTION OR DISTRIBUTION IS A VIOLATION OF THE FEDERAL COPYRIGHT ACT AND THE LICENSE AGREEMENT, AND SUBJECT TO CIVIL AND CRIMINAL PENALTIES THEREUNDER.

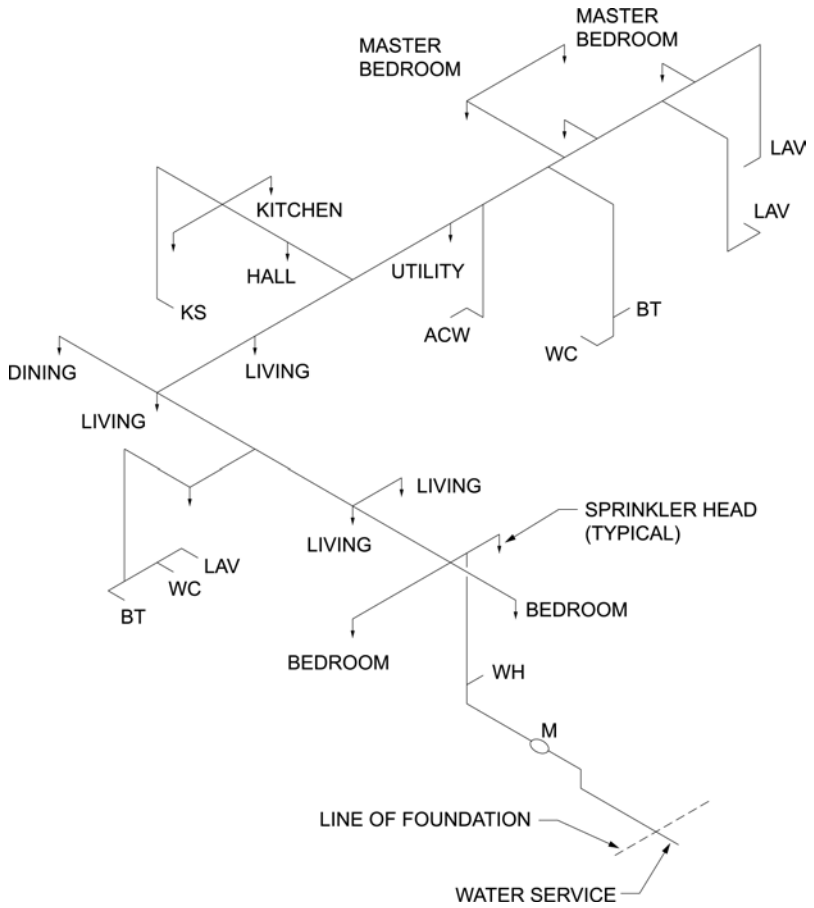

Figure 608.16.4(1)
COMBINATION WATER DISTRIBUTION/AUTOMATIC SPRINKLER SYSTEM

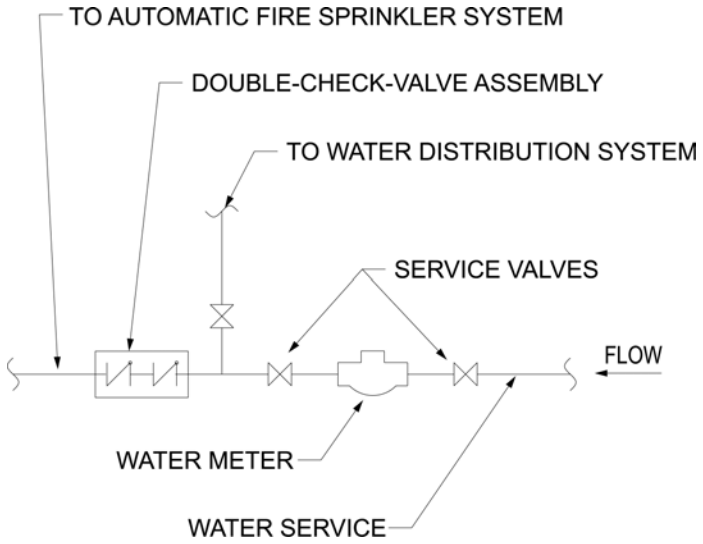

Figure 608.16.4(2)
COMMON FIRE SPRINKLER AND DOMESTIC WATER SUPPLY

INTERNATIONAL CODE COUNCIL®
Copyright © 2015 ICC. ALL RIGHTS RESERVED. Accessed by David Dammon on Jun 21, 2017 12:30:52 PM pursuant to License Agreement with ICC. No further reproduction or distribution authorized. ANY UNAUTHORIZED REPRODUCTION OR DISTRIBUTION IS A VIOLATION OF THE FEDERAL COPYRIGHT ACT AND THE LICENSE AGREEMENT, AND SUBJECT TO CIVIL AND CRIMINAL PENALTIES THEREUNDER.

Because deluge, dry-pipe and preaction sprinkler systems are not filled with any liquid that could pollute or contaminate the potable water supply, Exception 2 allows these systems to be installed without a backflow preventer. However, where a fire department connection or auxiliary source of water supply could introduce nonpotable water into a sprinkler system, a backflow preventer is required.

The following seven cases illustrate how to determine when a backflow preventer must be installed and which type (either double check or reduced pressure principle) is required to be installed:

Case 1: The suction piping system for pumping from a secondary source of potable water has underground piping that is in close proximity to a sanitary sewer, septic tank, seepage pit, privy, cesspool or a piping system carrying high-hazard materials. Table 608.17.1 and Section 703.1 can be used to establish acceptable vertical and horizontal separations from sources of contamination. If the underground piping is within any of the required separation distances, a reduced pressure principle fire-protection backflow prevention assembly is required at the connection of the sprinkler system to the potable water supply.

Case 2: The potability of the water entering through the fire department connection to the sprinkler system cannot be guaranteed. Tanks of fire trucks often contain corrosion inhibitors, antifreeze, extinguishing agents or other chemicals. Pumper trucks sometimes draw from lakes, ponds, rivers, reservoirs, nonpotable water wells, mill water systems or other industrial water sources. [AWWA Manual 14 indicates 1,700 feet (518 m) as the maximum distance for an auxiliary water source to be considered a potential suction supply.] If any of these conditions are anticipated, a reduced pressure principle fire-protection backflow prevention assembly is required at the connection of the sprinkler system to the potable water supply.

Case 3: The sprinkler system is directly connected to a nonpotable secondary water supply. A reduced pressure principle fire-protection backflow prevention assembly is required at the connection of the sprinkler system to the potable water supply.

Case 4: The sprinkler system contains chemical additives, antifreeze or liquid foam fire-extinguishing concentrates. A reduced pressure principle fire-protection backflow prevention assembly is required at the connection of the sprinkler system to the potable water supply.

Case 5: A wet sprinkler system where none of the conditions in Case 1 or 2 exist. A double check valve assembly is the minimum form of backflow protection at the connection of the sprinkler system to the potable water supply.

Case 6: A dry, preaction or deluge sprinkler system of any type of pipe material, where none of the conditions of Case 1 or 2 exist. No backflow preventer is required at the connection of the sprinkler system to the potable water supply.

Case 7: The sprinkler system is a multipurpose type system where all the piping in the system is suitable for use in water distribution systems. A backflow preventer is not required at the take-off points in the water distribution system for the sprinkler piping.

608.16.4.1 Additives or nonpotable source. Where systems under continuous pressure contain chemical additives or antifreeze, or where systems are connected to a nonpotable secondary water supply, the potable water supply shall be protected against backflow by a reduced pressure principle backflow prevention assembly or a reduced pressure principle fire protection backflow prevention assembly. Where chemical additives or antifreeze are added to only a portion of an automatic fire sprinkler or standpipe system, the reduced pressure principle backflow prevention assembly or the reduced pressure principle fire protection backflow prevention assembly shall be permitted to be located so as to isolate that portion of the system. Where systems are not under continuous pressure, the potable water supply shall be protected against backflow by an air gap or an atmospheric vacuum breaker conforming to ASSE 1001 or CSA B64.1.1.

❖ A nonpotable secondary water supply could be water from above- or below-ground tanks, private wells, ponds, reservoirs and lakes. In the event of loss or inadequacy of the potable water supply, the secondary nonpotable water source is pumped into the system, thereby contaminating the potable supply in the event backflow occurs. In some localities, fire departments will use mobile equipment to pump water from nonpotable sources through the fire department connection into the sprinkler system. Where chemicals, additives, antifreeze or nonpotable water are introduced into a sprinkler system, a reduced pressure principle backflow prevention assembly is required. It is not uncommon for a reduced pressure principle backflow prevention assembly to be installed on a branch of the sprinkler system to isolate only that portion of the system containing antifreeze.

Fire sprinkler systems that are not under continuous pressure are classified as indirect cross connections. When subject to only backsiphonage, these systems are to be protected by an atmospheric vacuum breaker conforming to ASSE 1001 or CSA B64.1.1. These devices protect the potable water supply against pollutants or contaminants that enter the system as a result of backsiphonage through the outlet. Under backsiphonage conditions, a small amount of water may exit through the air ports. These devices must be installed downstream of the last control valve and not be subjected to backpressure for more than 12 hours of continuous water pressure.

608.16.5 Connections to lawn irrigation systems. The potable water supply to lawn irrigation systems shall be protected against backflow by an atmospheric vacuum breaker, a pressure vacuum breaker assembly or a reduced pressure princi-

INTERNATIONAL CODE COUNCIL®
Copyright © 2015 ICC. ALL RIGHTS RESERVED. Accessed by David Dammon on Jun 21, 2017 12:30:52 PM pursuant to License Agreement with ICC. No further reproduction or distribution authorized. ANY UNAUTHORIZED REPRODUCTION OR DISTRIBUTION IS A VIOLATION OF THE FEDERAL COPYRIGHT ACT AND THE LICENSE AGREEMENT, AND SUBJECT TO CIVIL AND CRIMINAL PENALTIES THEREUNDER.

ple backflow prevention assembly. Valves shall not be installed downstream from an atmospheric vacuum breaker. Where chemicals are introduced into the system, the potable water supply shall be protected against backflow by a reduced pressure principle backflow prevention assembly.

❖ Lawn irrigation systems are not considered plumbing systems and begin at the point of connection to the potable water distribution (the point of connection being the backflow preventer interface). Irrigation system outlets can be below grade level, exposing them to contamination. The piping in irrigation systems is not regulated by the code. For these reasons, the minimum form of backflow prevention is an atmospheric vacuum breaker.

However, many irrigation systems use zone valve controls that could render atmospheric vacuum breakers inoperative; therefore, in many cases, atmospheric vacuum breakers are not permitted. Pressure vacuum breaker assemblies are designed to operate under pressure at the device outlet. These devices are permitted for all irrigation systems except those having chemical injection. Where fertilizers, herbicides, pesticides or any other chemicals can be introduced into an irrigation system, the potable water supply must be protected by a reduced pressure principle backflow prevention assembly.

It is not uncommon for lawn maintenance personnel to pump chemicals directly into an irrigation system, thereby creating a hazardous cross connection subject to backpressure. Installation of pumps, connections for pumping equipment and auxiliary air tanks on irrigation systems are also common to improve pressure. These types of installations produce backpressure within the system. Under these circumstances, the only acceptable means of backflow prevention is a reduced pressure principle backflow prevention assembly.

Because of the varying nature and unpredictable usage of irrigation systems, most installations are equipped with pressure vacuum breaker assemblies or reduced pressure principle backflow prevention assemblies.

608.16.6 Connections subject to backpressure. Where a potable water connection is made to a nonpotable line, fixture, tank, vat, pump or other equipment subject to high-hazard backpressure, the potable water connection shall be protected by a reduced pressure principle backflow prevention assembly.

❖ A reduced pressure principle backflow prevention assembly is the only acceptable means of protecting a direct connection between the potable water supply and a source of high-hazard contamination that can create a backpressure on the potable water supply. The backpressure can be created by mechanical means, such as a pump, or by static pressure head, including an elevated tank or pipe arrangement.

A direct connection to a pressurized source of contamination is the most dangerous form of cross connection; therefore, the most stringent means of backflow prevention is required, which is a reduced pressure principle backflow prevention assembly (see Commentary Figure 608.16.6).

This section is not intended to supersede the requirements of Section 608.16.4, which permits the use of a double check valve assembly for automatic fire sprinkler systems. Although a connection by the fire department during a fire will likely elevate the automatic sprinkler pressure beyond the domestic water supply pressure (resulting in backpressure), the double check valve backflow prevention assembly is tested and rated for backpressure applications typically associated with automatic sprinkler systems. However, a double check valve assembly is not rated for high-hazard applications; therefore, the potential sources of contamination must be analyzed before a backflow prevention device is selected (see commentary, Section 608.16.4).

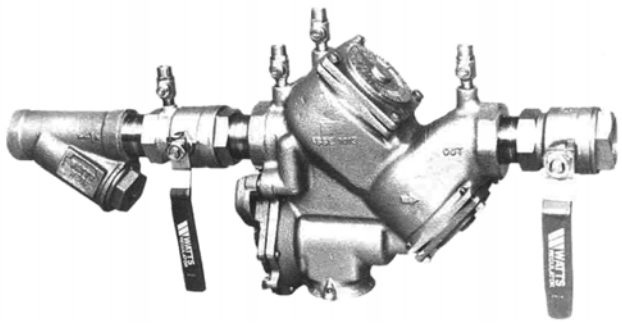

Figure 608.16.6
REDUCED PRESSURE PRINCIPLE BACKFLOW PREVENTER
(Photo courtesy of Watts Regulator Company)

608.16.7 Chemical dispensers. Where chemical dispensers connect to the potable water distribution system, the water supply system shall be protected against backflow in accordance with Section 608.13.1, 608.13.2, 608.13.5, 608.13.6, 608.13.8 or 608.13.9.

❖ Chemical dispensers are typically cleaning-related devices having multiple chambers that hold sanitizing solvents. They are stationary self-contained units that, when connected directly to the potable water supply, allow the user to mix the chemicals it contains with water, producing the desired type and strength of cleaning agent. Chemical dispensers are commonly found in a janitor closet or cleaning room in large commercial operations that require a higher-than-average level of sanitation, such as a school or hospital. A connection between the potable water supply and a chemical dispenser creates a situation that is susceptible to backsiphonage with the potential for backpressure. Because of these sources for contamination, chemical dispensers must be protected using an air gap, a reduced principle backflow preventer, a backflow preventer with intermediate vents, a pressure-

INTERNATIONAL CODE COUNCIL®
Copyright © 2015 ICC. ALL RIGHTS RESERVED. Accessed by David Dammon on Jun 21, 2017 12:30:52 PM pursuant to License Agreement with ICC. No further reproduction or distribution authorized. ANY UNAUTHORIZED REPRODUCTION OR DISTRIBUTION IS A VIOLATION OF THE FEDERAL COPYRIGHT ACT AND THE LICENSE AGREEMENT, AND SUBJECT TO CIVIL AND CRIMINAL PENALTIES THEREUNDER.

type vacuum breaker or an atmospheric-type vacuum breaker. After identifying the degree of hazard of the potential contaminants and establishing whether backsiphonage or backpressure can occur, the appropriate device can be selected using Table 608.1.

608.16.8 Portable cleaning equipment. Where the portable cleaning equipment connects to the water distribution system, the water supply system shall be protected against backflow in accordance with Section 608.13.1, 608.13.2, 608.13.3, 608.13.7 or 608.13.8.

❖ Portable cleaning equipment, similar to the chemical dispensers described in Section 608.16.7, are typically cleaning-related devices having multiple chambers that hold sanitizing solvents. These are self-contained mobile units that transport the chemicals with the unit. They can be connected directly to the potable water supply with a hose, which allows the user to mix the chemicals with water, producing the desired type and strength of cleaning agent. Because the location (elevation) of the hose is not restricted, any connection between the potable water supply and portable cleaning equipment is susceptible to backsiphonage with the potential for backpressure. Because of the sources for contamination, portable cleaning equipment must be protected using an air gap, a reduced pressure principle backflow preventer, a backflow preventer with intermediate vents or a double check valve assembly.

Because this cleaning equipment is portable, it is imperative that potential points of connection to the potable water supply be properly protected. Some manufacturers of portable cleaning equipment have tried to address this issue by installing a backflow preventer integral with the equipment. When evaluating this equipment, it is important to verify that the integral devices are rated for the type of hazard and installed in a fixed position with the critical level above the equipment outlet. See Section 608.13 for additional discussion on the proper selection of backflow prevention methods.

608.16.9 Dental pump equipment. Where dental pumping equipment connects to the water distribution system, the water supply system shall be protected against backflow in accordance with Section 608.13.1, 608.13.2, 608.13.5, 608.13.6 or 608.13.8.

❖ Dental equipment that is connected to the potable water supply and operates through the use of a pump is susceptible to backsiphonage with the potential for backpressure and therefore must be protected using an air gap, a pressure-type vacuum breaker or an atmospheric-type vacuum breaker.

This equipment could introduce pathogens or become reservoirs of water-borne disease because of contact with the microorganisms in a patient's mouth. These devices include water-flushed cuspidors, water/air syringes, water-powered aspirators/suction systems, water-flushed ultrasonic cleaning apparatus and water-cooled handpieces.

Some of this equipment has built-in air gaps and does not require external protection or is not provided with water power. However, water pumped into water/air syringes and drill handpieces connected to waterlines are still a significant backflow concern. Given the high-hazard nature of dental unit water lines, a backflow preventer must be installed to isolate them from the rest of the plumbing system.

The code requirements of Section 608.16.9 can be found to conflict with dental industry literature; therefore, the code official must consider the intent of these requirements. Biohazard contamination of the potable water supply has some of the most severe implications, which justifies thorough consideration and the necessity for protection against actual or potential sources of contamination. Therefore, each application of water supply use in conjunction with dental equipment must be scrutinized carefully, considering the design of the equipment and how the water supply integrates into the function of the equipment. The slightest potential for cross contamination must be addressed where potable water supply use is intergrated into the function of any medical equipment.

608.16.10 Coffee machines and noncarbonated beverage dispensers. The water supply connection to coffee machines and noncarbonated beverage dispensers shall be protected against backflow by a backflow preventer conforming to ASSE 1022 or by an *air gap*.

❖ The same protection must be provided for these types of devices as one must provide for carbonated drink dispensers.

608.17 Protection of individual water supplies. An individual water supply shall be located and constructed so as to be safeguarded against contamination in accordance with Sections 608.17.1 through 608.17.8.

❖ The important concern with an individual water supply is that the water remains potable and free from any contamination.

608.17.1 Well locations. A potable ground water source or pump suction line shall not be located closer to potential sources of contamination than the distances shown in Table 608.17.1. In the event the underlying rock structure is limestone or fragmented shale, the local or state health department shall be consulted on well site location. The distances in Table 608.17.1 constitute minimum separation and shall be increased in areas of creviced rock or limestone, or where the direction of movement of the ground water is from sources of contamination toward the well.

❖ A well must be separated from sources of contamination to reduce the possibility of affecting the potability of the water. An analysis of the well location must also include an evaluation of soil and drainage conditions of the area.

INTERNATIONAL CODE COUNCIL®
Copyright © 2015 ICC. ALL RIGHTS RESERVED. Accessed by David Dammon on Jun 21, 2017 12:30:52 PM pursuant to License Agreement with ICC. No further reproduction or distribution authorized. ANY UNAUTHORIZED REPRODUCTION OR DISTRIBUTION IS A VIOLATION OF THE FEDERAL COPYRIGHT ACT AND THE LICENSE AGREEMENT, AND SUBJECT TO CIVIL AND CRIMINAL PENALTIES THEREUNDER.

TABLE 608.17.1
DISTANCE FROM CONTAMINATION TO PRIVATE WATER SUPPLIES AND PUMP SUCTION LINES

SOURCE OF CONTAMINATION	DISTANCE (feet)
Barnyard	100
Farm silo	25
Pasture	100
Pumphouse floor drain of cast iron draining to ground surface	2
Seepage pits	50
Septic tank	25
Sewer	10
Subsurface disposal fields	50
Subsurface pits	50

For SI: 1 foot = 304.8 mm.

❖ The distances specified in the table have been established by soil scientists and engineers. They take into consideration the variety of soil conditions that may exist and have a built-in factor of safety to drastically reduce the possibility of a well becoming contaminated.

608.17.2 Elevation. Well sites shall be positively drained and shall be at higher elevations than potential sources of contamination.

❖ It is always preferable to have a well located at a higher elevation than any potential source of contamination. This is not always possible, however, especially when the source of contamination is located on an adjacent lot.

608.17.3 Depth. Private potable well supplies shall not be developed from a water table less than 10 feet (3048 mm) below the ground surface.

❖ So the water will remain potable, the well must be at least 10 feet (3048 mm) below grade. It is preferable, however, to have a well a minimum of 20-feet (6096 mm) deep. High water tables and shallow wells are more susceptible to contamination because of their close proximity to the ground surface (see Commentary Figure 608.17.3).

608.17.4 Water-tight casings. Each well shall be provided with a water-tight casing extending to not less than 10 feet (3048 mm) below the ground surface. Casings shall extend not less than 6 inches (152 mm) above the well platform. Casings shall be large enough to permit installation of a separate drop pipe. Casings shall be sealed at the bottom in an impermeable stratum or extend several feet into the water-bearing stratum.

❖ Any contaminant could enter the well with relative ease if the well does not have a proper casing. High water tables are more susceptible to contamination because of their close proximity to the ground surface (see Commentary Figure 608.17.4).

608.17.5 Drilled or driven well casings. Drilled or driven well casings shall be of steel or other *approved* material. Where drilled wells extend into a rock formation, the well casing shall extend to and set firmly in the formation. The annular space between the earth and the outside of the casing shall be filled with cement grout to a depth of not less than 10 feet (3048 mm) below the ground surface. In an instance of casing to rock installation, the grout shall extend to the rock surface.

❖ The most common type of well, a drilled well, can be drilled through rock. This is considered the best all-around method for constructing a well. A driven well is most practical when the water table is relatively shallow [not deeper than 50 feet (15 240 mm)].

The well casing must be installed to prohibit the entrance of contaminants. The grout between the earth and the well casing provides the well with an additional barrier of protection. Use of a drive shoe is recommended to prevent casing distortion (see Commentary Figure 608.17.5).

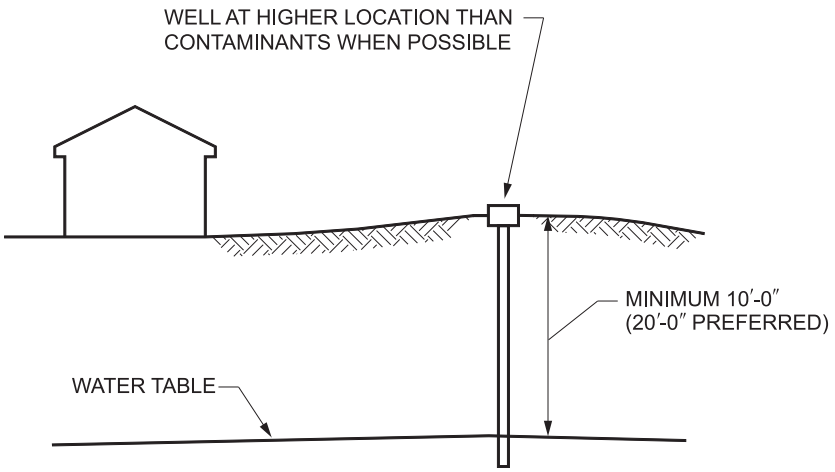

For SI: 1 inch = 25.4 mm, 1 foot = 304.8 mm.

Figure 608.17.3
DEPTH OF WELL

INTERNATIONAL CODE COUNCIL®
Copyright © 2015 ICC. ALL RIGHTS RESERVED. Accessed by David Dammon on Jun 21, 2017 12:30:52 PM pursuant to License Agreement with ICC. No further reproduction or distribution authorized. ANY UNAUTHORIZED REPRODUCTION OR DISTRIBUTION IS A VIOLATION OF THE FEDERAL COPYRIGHT ACT AND THE LICENSE AGREEMENT, AND SUBJECT TO CIVIL AND CRIMINAL PENALTIES THEREUNDER.

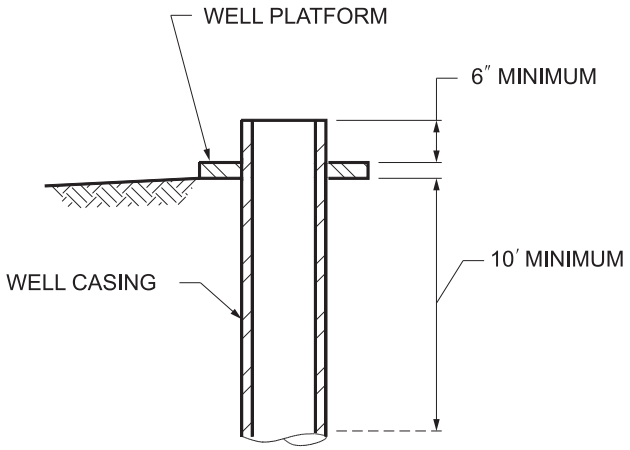

For SI: 1 inch = 25.4 mm, 1 foot = 304.8 mm.

Figure 608.17.4
WELL CASING

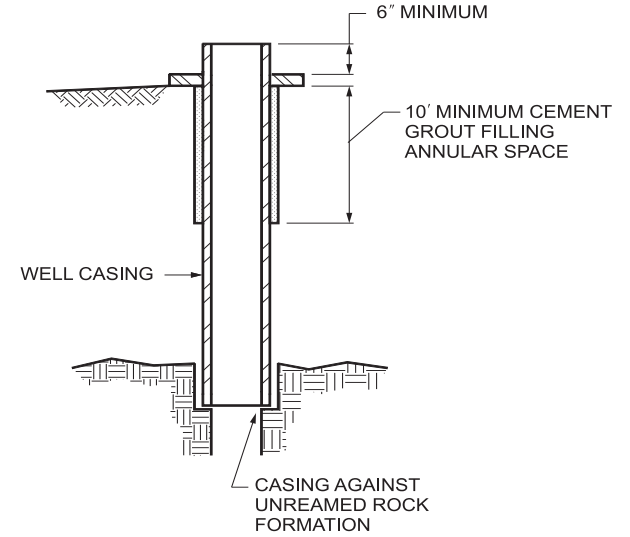

For SI: 1 inch = 25.4 mm, 1 foot = 304.8 mm.

Figure 608.17.5
CASING FOR DRILLED OR DRIVEN WELL

608.17.6 Dug or bored well casings. Dug or bored well casings shall be of water-tight concrete, tile or galvanized or corrugated metal pipe extending to not less than 10 feet (3048 mm) below the ground surface. Where the water table is more than 10 feet (3048 mm) below the ground surface, the water-tight casing shall extend below the table surface. Well casings for dug wells or bored wells constructed with sections of concrete, tile or galvanized or corrugated metal pipe shall be surrounded by 6 inches (152 mm) of grout poured into the hole between the outside of the casing and the ground and extending not less than 10 feet (3048 mm) below the ground surface.

❖ The opening is much larger with a dug or bored well than with a drilled well. A water-tight casing designed to resist cave-in is required to protect such a well from the entrance of a contaminant.

608.17.7 Cover. Potable water wells shall be equipped with an overlapping water-tight cover at the top of the well casing or pipe sleeve such that contaminated water or other substances are prevented from entering the well through the annular opening at the top of the well casing, wall or pipe sleeve. Covers shall extend downward not less than 2 inches (51 mm) over the outside of the well casing or wall. A dug well cover shall be provided with a pipe sleeve permitting the withdrawal of the pump suction pipe, cylinder or jet body without disturbing the cover. Where pump sections or discharge pipes enter or leave a well through the side of the casing, the circle of contact shall be water tight.

❖ A cover is important to protect the well water from contamination from an outside source. It must fit firmly to the casing with cracks or openings filled tightly to create a water-tight seal (see Commentary Figure 608.17.7).

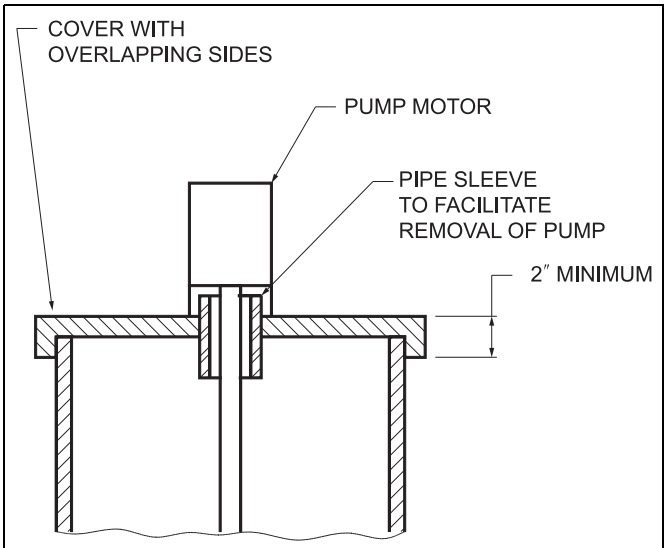

For SI: 1 inch = 25.4 mm.

Figure 608.17.7
DUG WELL COVER

608.17.8 Drainage. Potable water wells and springs shall be constructed such that surface drainage will be diverted away from the well or spring.

❖ One of the greatest threats to a well is the risk of contamination from surface drainage. To protect against this, surface drainage must be prevented from draining to the well area and must be diverted away from the casing. In flood-hazard and high-hazard zones, well casings must extend at least 1 foot (305 mm) above the base flood elevation, protecting the well from being contaminated by floodwaters.

SECTION 609
HEALTH CARE PLUMBING

609.1 Scope. This section shall govern those aspects of health care plumbing systems that differ from plumbing systems in other structures. Health care plumbing systems shall conform

INTERNATIONAL CODE COUNCIL®
Copyright © 2015 ICC. ALL RIGHTS RESERVED. Accessed by David Dammon on Jun 21, 2017 12:30:52 PM pursuant to License Agreement with ICC. No further reproduction or distribution authorized. ANY UNAUTHORIZED REPRODUCTION OR DISTRIBUTION IS A VIOLATION OF THE FEDERAL COPYRIGHT ACT AND THE LICENSE AGREEMENT, AND SUBJECT TO CIVIL AND CRIMINAL PENALTIES THEREUNDER.

to the requirements of this section in addition to the other requirements of this code. The provisions of this section shall apply to the special devices and equipment installed and maintained in the following occupancies: nursing homes, homes for the aged, orphanages, infirmaries, first aid stations, psychiatric facilities, clinics, professional offices of dentists and doctors, mortuaries, educational facilities, surgery, dentistry, research and testing laboratories, establishments manufacturing pharmaceutical drugs and medicines and other structures with similar apparatus and equipment classified as plumbing.

❖ This section governs the water supply to health care facilities and fixtures. Hospitals are required to have dual water services so that in the event of a water main or water service pipe break, the hospital will not experience a complete loss of water supply. In health care facilities there are unique plumbing fixtures with special requirements. Although typically found in hospitals, these fixtures could be located in other health care facilities. Note that the list of occupancies is not all-inclusive; it is intended only to be representative of the occupancies in which special plumbing fixtures are regulated by this chapter.

609.2 Water service. Hospitals shall have two water service pipes installed in such a manner so as to minimize the potential for an interruption of the supply of water in the event of a water main or water service pipe failure.

❖ This section applies only to hospitals. It is not applicable to other health care facilities, such as urgent care centers or doctors' offices. The intent of the section is to require two remote water services; however, they can connect to the same water main. Where a single water main is provided, it is desirable to connect the water services on opposite sides of the water main control valve. In the event that the water main control valve is closed, one of the two water service taps will remain in service (see Commentary Figure 609.2).

609.3 Hot water. *Hot water* shall be provided to supply all of the hospital fixture, kitchen and laundry requirements. Special fixtures and equipment shall have hot water supplied at a temperature specified by the manufacturer. The hot water system shall be installed in accordance with Section 607.

❖ The hot water demands of a hospital vary greatly depending on its type of equipment and the services provided. When a laundry is installed, the newer systems have a separate hot water supply system independent of the hospital system. The systems are designed for uninterrupted laundry service.

Kitchen equipment demands also vary depending on the type of kitchen and the accompanying equipment. The design professional must determine the needs of hospital systems when designing the hot water supply system.

609.4 Vacuum breaker installation. Vacuum breakers shall be installed not less than 6 inches (152 mm) above the *flood level rim* of the fixture or device in accordance with Section 608. The *flood level rim* of hose connections shall be the maximum height at which any hose is utilized.

❖ Because a vacuum breaker has a critical level and must not be subjected to any backpressure, vacuum breakers with hose connections must be elevated above the highest level that the hose can be raised (see commentary, Section 608.13). Vacuum breakers serving hose connections are typically located 7 feet (2134 mm) or more above the floor.

609.5 Prohibited water closet and clinical sink supply. Jet- or water-supplied orifices, except those supplied by the flush

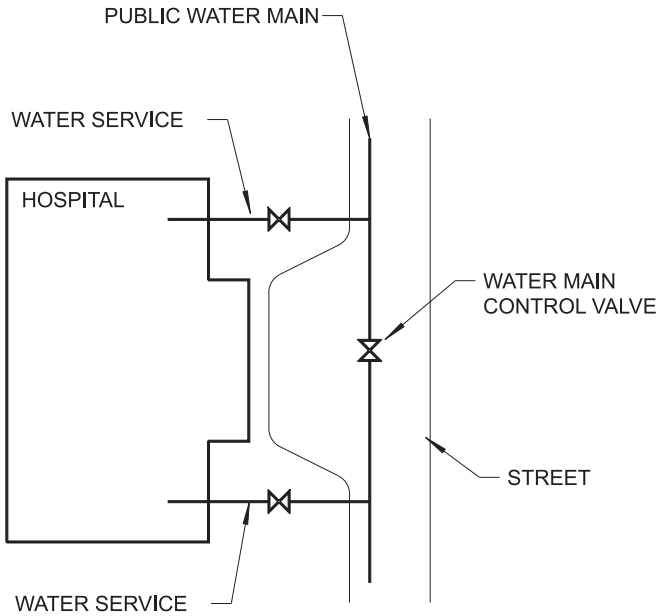

Figure 609.2
DUAL WATER SERVICE FOR HOSPITALS

INTERNATIONAL CODE COUNCIL®
Copyright © 2015 ICC. ALL RIGHTS RESERVED. Accessed by David Dammon on Jun 21, 2017 12:30:52 PM pursuant to License Agreement with ICC. No further reproduction or distribution authorized. ANY UNAUTHORIZED REPRODUCTION OR DISTRIBUTION IS A VIOLATION OF THE FEDERAL COPYRIGHT ACT AND THE LICENSE AGREEMENT, AND SUBJECT TO CIVIL AND CRIMINAL PENALTIES THEREUNDER.

connections, shall not be located in or connected with a water closet bowl or clinical sink. This section shall not prohibit an *approved* bidet installation.

❖ The concern with water closets and clinical sinks is that any submerged water supply outlet must be protected against backflow. If the water supply is through the flush connection, it is protected by the vacuum breaker of the flushing device.

609.6 Clinical, hydrotherapeutic and radiological equipment. Clinical, hydrotherapeutic, radiological or any equipment that is supplied with water or that discharges to the waste system shall conform to the requirements of this section and Section 608.

❖ This section parallels Section 423 in that it addresses any and all specialty-type fixtures, equipment and appliances that would not generally be classified as plumbing fixtures. The intent is to protect the potable water supply from backflow contamination that could be caused by the variety of special health care-related equipment supplied by the potable water distribution system. All such fixtures and equipment must comply with the provisions in Section 609 and with the water supply protection requirements of Section 608.

Because such fixtures and equipment are not normally viewed as plumbing fixtures, they are commonly overlooked during the design or plumbing inspection stages. Specialty fixtures and equipment could pose a backflow hazard equal to or greater than any typical plumbing fixture (see commentary, Section 608)

609.7 Condensate drain trap seal. A water supply shall be provided for cleaning, flushing and resealing the condensate trap, and the trap shall discharge through an *air gap* in accordance with Section 608.

❖ An indirect waste receptor or floor drain receiving the discharge of condensate in a health care facility must have a water supply for flushing the receptor and resealing the trap should the sealing water evaporate. There must be an air gap between the water supply opening and the waste receptor to protect against backflow.

609.8 Valve leakage diverter. Each water sterilizer filled with water through directly connected piping shall be equipped with an *approved* leakage diverter or bleed line on the water supply control valve to indicate and conduct any leakage of unsterile water away from the sterile zone.

❖ Sterilized water must be protected against leakage from the unsterile potable water supply.

SECTION 610
DISINFECTION OF POTABLE WATER SYSTEM

610.1 General. New potable water systems shall be purged of deleterious matter and disinfected prior to utilization. The method to be followed shall be that prescribed by the health authority or water purveyor having jurisdiction or, in the absence of a prescribed method, the procedure described in either AWWA C651 or AWWA C652, or as described in this section. This requirement shall apply to "on-site" or "in-plant" fabrication of a system or to a modular portion of a system.

1. The pipe system shall be flushed with clean, potable water until dirty water does not appear at the points of outlet.
2. The system or part thereof shall be filled with a water/chlorine solution containing not less than 50 parts per million (50 mg/L) of chlorine, and the system or part thereof shall be valved off and allowed to stand for 24 hours; or the system or part thereof shall be filled with a water/chlorine solution containing not less than 200 parts per million (200 mg/L) of chlorine and allowed to stand for 3 hours.
3. Following the required standing time, the system shall be flushed with clean potable water until the chlorine is purged from the system.
4. The procedure shall be repeated where shown by a bacteriological examination that contamination remains present in the system.

❖ Pipe and pipe fittings are potentially exposed to a variety of pollutants and contaminants from manufacturing, handling and installation. Extensive flushing of a completed potable water system with potable water is usually not adequate to ensure that bacteria or microorganisms that might be present will be flushed away. Disinfection is the only way to kill bacteria and microorganisms living within potable water systems.

The most common disinfection method is the exposure of the internal surfaces of the piping system to a chlorine solution. Chlorine breaks down the cell walls of bacteria and microorganisms and destroys the enzymes and structures inside the cell. This process is called "oxidation" and renders the remainder of the cells harmless.

Chlorine is available in water-based solutions having various concentrations of "free chlorine." Free chlorine is the portion of the solution that is available for disinfecting purposes. Free chlorine is typically indicated by the percentage of sodium hypochlorite in the solution. For example, the majority of common household bleaches have 5.25-percent NaOCl (sodium hypochlorite). Commonly available liquid pool chlorine has approximately 12-percent NaOCl. Dry chlorine tablets are also available that will, when dissolved in a specific volume of water, make a water-based solution of a specific concentration of free chlorine. Although pure chlorine is available in gaseous form, it is very dangerous if not handled with extreme care. Chlorine gas is colorless, spreads quickly and can result in death if inhaled only momentarily.

The true test of whether the piping system has been properly disinfected is for a bacteriological analysis to be performed. As the sampling procedures and testing protocols are critical, specialized testing agencies are used to determine if any bacteria or microrganisms are still present in the potable water system.

For the 2015 code, the requirement for disinfection

INTERNATIONAL CODE COUNCIL®
Copyright © 2015 ICC. ALL RIGHTS RESERVED. Accessed by David Dammon on Jun 21, 2017 12:30:52 PM pursuant to License Agreement with ICC. No further reproduction or distribution authorized. ANY UNAUTHORIZED REPRODUCTION OR DISTRIBUTION IS A VIOLATION OF THE FEDERAL COPYRIGHT ACT AND THE LICENSE AGREEMENT, AND SUBJECT TO CIVIL AND CRIMINAL PENALTIES THEREUNDER.

of a repaired water supply system was removed because 1) repairs are often minor as compared to the size of the entire system 2) there is better control of new/repair materials to avoid contaminants and 3) the required system downtime for disinfection cannot be tolerated.

SECTION 611
DRINKING WATER TREATMENT UNITS

611.1 Design. Drinking water treatment units shall meet the requirements of NSF 42, NSF 44, NSF 53, NSF 62 or CSA B483.1.

❖ This section contains the requirements for point of use and point of entry drinking water treatment units. These units are intended to augment the treatment of the drinking water by the municipality and to provide user treatment for private wells. Water delivered to a building is expected to be within established guidelines for health, odor and chemical content. These guidelines are established by the U.S. Department of Health and are applicable to potable water sources, whether they are public municipal water treatment facilities or individual private wells. Even though the guidelines make certain that the water is safe to consume, there are times when the water supply has an objectionable odor or dissolved materials within it are noticeable to the occupants of the building, particularly in drinking water.

NSF 42 contains requirements for units that are designed to improve the perceived quality of drinking water supplied to the occupants of the building. These units are typically installed either at the final distribution point of the drinking water, referred to as "point of use" units, or at a central location where several fixtures can be served from the same treatment unit, referred to as "point of entry" units.

Regardless of the location of the treatment units, their function is the same. These units are designed to reduce the amount of specific contaminants present in the water supply. The contaminants affect the aesthetic quality of the water, causing occupants to smell an offensive odor or to notice some chemical or particulate in the water. Most water treatment units are designed to remove certain odors or dissolved materials in the drinking water supply.

The user or installer of the treatment unit is responsible for the selection of the proper unit based on the offensive characteristics of the water and the unit's reported performance capabilities. Treatment units require periodic maintenance so they will continue to function as designed. Because of this requirement, the treatment unit must be installed in a location where it is accessible for maintenance.

NSF 53, similar to the NSF 42 standard discussed above, contains the standards for units designed to improve the quality of drinking water by removing dissolved materials or substances that might prove to have a negative effect on the health of the building occupants. These materials or substances could be microbiological, chemical or particulate and are often considered either an established or potential health hazard. Although the exact source of the potentially harmful material or substances is not known, the intent of these treatment units is to remove these materials or substances from the water just prior to its consumption by the occupants.

611.2 Reverse osmosis systems. The discharge from a reverse osmosis drinking water treatment unit shall enter the drainage system through an *air gap* or an *air gap* device that meets the requirements of NSF 58 or CSA B483.1.

❖ Similar to the drinking water treatment units discussed in Section 611.1, the reverse osmosis systems manufactured in accordance with NSF 58 are intended to remove specific contaminants from public or private drinking water supplies considered to be microbiologically safe. The treatment units designed in conformance with NSF 58 are intended to reduce the total dissolved solids (TDS) and other contaminants present in the drinking water, many of which are considered to be either established or potential health hazards.

A reverse osmosis system reduces the objectionable dissolved materials by the use of pressure to force the water through a filter membrane or medium in such a manner that the concentration level of the discharged water is less than the concentration of the incoming water. Reverse osmosis treatment systems are intended for installation as a point of use system. This means that the treatment unit serves the drinking water fixture located immediately adjacent to the treatment system.

Treatment units manufactured in accordance with this standard are to be clearly identified as conforming to this standard, including the specific performance claims of the unit as verified and substantiated by test data. The waste discharge from a reverse osmosis drinking water treatment unit must be designed, constructed and located so that the discharge orifice is directed downward and the lower edge of the outlet must be at an elevation not less than 2 inches (51 mm) above the flood rim of the waste receptacle.

611.3 Connection tubing. The tubing to and from drinking water treatment units shall be of a size and material as recommended by the manufacturer. The tubing shall comply with NSF 14, NSF 42, NSF 44, NSF 53, NSF 58 or NSF 61.

❖ The tubing used for drinking water treatment units must be of a size and material recommended by the manufacturer. The tubing materials are certified during the evaluation of the equipment for compliance with materials or products that come into contact with drinking water.

SECTION 612
SOLAR SYSTEMS

612.1 Solar systems. The construction, installation, alterations and repair of systems, equipment and appliances intended to utilize solar energy for space heating or cooling, domestic hot water heating, swimming pool heating or pro-

INTERNATIONAL CODE COUNCIL®
Copyright © 2015 ICC. ALL RIGHTS RESERVED. Accessed by David Dammon on Jun 21, 2017 12:30:52 PM pursuant to License Agreement with ICC. No further reproduction or distribution authorized. ANY UNAUTHORIZED REPRODUCTION OR DISTRIBUTION IS A VIOLATION OF THE FEDERAL COPYRIGHT ACT AND THE LICENSE AGREEMENT, AND SUBJECT TO CIVIL AND CRIMINAL PENALTIES THEREUNDER.

cess heating shall be in accordance with the *International Mechanical Code*.

❖ Solar energy can be used for a variety of purposes including space heating, space cooling, domestic water heating, swimming pool heating and process heating. Therefore, the scope encompasses all of these potential solar energy applications and includes the construction, installation, alteration and repair of all systems and equipment.

SECTION 613
TEMPERATURE CONTROL DEVICES AND VALVES

613.1 Temperature-actuated mixing valves. Temperature-actuated mixing valves, which are installed to reduce water temperatures to defined limits, shall comply with ASSE 1017. Such valves shall be installed at the hot water source.

❖ ASSE 1017 is the standard for temperature-actuated mixing valves for hot water distribution systems. Water mixing (also defined as "tempering" or "blending") valves are used extensively in applications for domestic service to mix hot and cold water to reduce high service water temperature to the building distribution piping system.

These devices are not intended for final temperature control at the fixtures and appliances (see ASSE 1016). Final control must be provided by suitable individual mixing devices, which should be supplemented by appropriate high-limit alarms or temperature-limiting devices at the point of use. These valves are designed for automatic control of hot water temperature and to maintain this temperature within a reasonable degree of uniformity.

Bibliography

The following resource materials are referenced in this chapter or are relevant to the subject matter addressed in this chapter.

Hunter, Roy B. *Water-Distribution Systems for Buildings.* Washington, DC: National Bureau of Standards, NBS BMS, 1941.

INTERNATIONAL CODE COUNCIL®
Copyright © 2015 ICC. ALL RIGHTS RESERVED. Accessed by David Dammon on Jun 21, 2017 12:30:52 PM pursuant to License Agreement with ICC. No further reproduction or distribution authorized. ANY UNAUTHORIZED REPRODUCTION OR DISTRIBUTION IS A VIOLATION OF THE FEDERAL COPYRIGHT ACT AND THE LICENSE AGREEMENT, AND SUBJECT TO CIVIL AND CRIMINAL PENALTIES THEREUNDER.

Chapter 7: Sanitary Drainage

General Comments

The conventional method of sizing a sanitary drainage system is by drainage fixture unit (dfu) load values. The drainage fixture unit approach takes into consideration the probability of a load on a drainage system.

The probability method of sizing drainage systems was developed largely by Dr. Roy Hunter. Through his research, Dr. Hunter attempted to standardize and simplify design principles, while reducing the cost of plumbing systems.

Fixture unit values were determined based on the average rate of discharge by a fixture, the time of a single operation and the frequency of use or interval between operations. The theoretical approach considers a large group of fixtures being connected to the plumbing system with only a small fraction of the total number of fixtures in use simultaneously. The probability method has also been effective in the design of smaller plumbing systems because of the excessive design factors added by Dr. Hunter.

Dr. Hunter sought an adequate design methodology to provide satisfactory service without interruption or inconvenience to the user.

Because the fixture unit values have a built-in probability factor, they cannot be directly translated into flow or discharge rates. For example, one dfu is equivalent to a discharge rate of 1 cubic foot per minute (0.4719 L/s) [approximately 7.5 gallons per minute (gpm) (28 L/min)]. Two independent fixtures, however, each having a value of one dfu, cannot be considered as having a combined discharge rate of 15 gpm (57 L/min) because the dfu value incorporates the element of probability.

Purpose

The purpose of Chapter 7 is to regulate the materials, design and installation of sanitary drainage piping systems as well as the connections made to the system. The intent is to design and install sanitary drainage systems that will function reliably, are neither undersized nor oversized and are constructed from materials, fittings and connections whose quality is regulated by this section.

In the 19th century, typhoid fever, cholera and dysentery were a threat to survival. The modern plumbing system, with proper drainage piping, has been one of the main reasons for the elimination of these diseases.

Medical professionals give much of the credit to the plumbing profession for improvements in health and longevity. Medicine alone would have only a marginal effect without improved sanitation practices.

SECTION 701 GENERAL

701.1 Scope. The provisions of this chapter shall govern the materials, design, construction and installation of sanitary drainage systems.

❖ This section establishes that design and installation provisions for sanitary drainage systems are located in Chapters 3, 7 and 10.

Chapter 7 regulates the design, sizing, components and installation of a sanitary drainage system. Many other chapters relate to Chapter 7 because they regulate components of sanitary drainage systems. For example, Chapters 3, 9 and 10 regulate pipe support, venting and traps, respectively, all of which are combined to create a sanitary drainage system.

701.2 Sewer required. Buildings in which plumbing fixtures are installed and premises having drainage piping shall be connected to a public *sewer*, where available, or an *approved* private sewage disposal system in accordance with the *International Private Sewage Disposal Code*.

❖ Plumbing fixtures installed in a building or structure must be directly connected to a drainage system. The sanitary drainage systems must connect to the public systems provided by the local jurisdiction or public utility if they are available. If a public system is not available, the drainage system must connect to an approved private sewage disposal system in accordance with the *International Private Sewage Disposal Code*® (IPSDC®), which contains requirements for the design and installation of private sewage disposal systems. This section must not be construed to prevent the indirect waste systems required by Chapter 8.

701.3 Separate sewer connection. A building having plumbing fixtures installed and intended for human habitation, occupancy or use on premises abutting on a street, alley or easement in which there is a public *sewer* shall have a separate connection with the *sewer*. Where located on the same lot, multiple buildings shall not be prohibited from connecting to a common *building sewer* that connects to the public *sewer*.

❖ This requirement intends to prohibit the combining of sewers serving different buildings prior to connection to the public sewer. The only exception is where the sewers to be combined are serving buildings on the same lot or parcel of land. This section does not prohibit the use of adjoining properties that have been included in a dedicated easement approved by the administrative authority. Commentary Figure 701.3(1)

INTERNATIONAL CODE COUNCIL®
Copyright © 2015 ICC. ALL RIGHTS RESERVED. Accessed by David Dammon on Jun 21, 2017 12:30:52 PM pursuant to License Agreement with ICC. No further reproduction or distribution authorized. ANY UNAUTHORIZED REPRODUCTION OR DISTRIBUTION IS A VIOLATION OF THE FEDERAL COPYRIGHT ACT AND THE LICENSE AGREEMENT, AND SUBJECT TO CIVIL AND CRIMINAL PENALTIES THEREUNDER.

illustrates the use of a dedicated public sewer easement to accommodate Buildings A and B. The common building sewer is actually an extension of the public sewer and under control of the public authority.

When the sanitary discharge from more than one building is connected to the public sewer by means of a shared or common sewer line, the responsibility for the maintenance of the common sewer line can become a problem. Should a stoppage develop in the common portion of the drain, all parties connected to the drain could disclaim responsibility for having the stoppage cleared. This presents a problem because there is no one party to hold responsible for the maintenance of the drain. Also, replacement or repairs of a sewer are the responsibility of all parties sharing a common drain connection, and the process of determining the point of origin of the wastes into the common drain is more difficult. The first sentence of this section is intended to apply to the connection of more than one building where each building is under separate ownership, and the second sentence applies in instances where connection of more than one structure is proposed where all the buildings are under the same ownership. The commercial property owner, such as a shopping complex owner, may want to build another building on his or her property, and connecting the new building sewer to existing sewers on the same property would be convenient and less expensive than making a new connection to the public sewer [see Commentary Figure 701.3(2)].

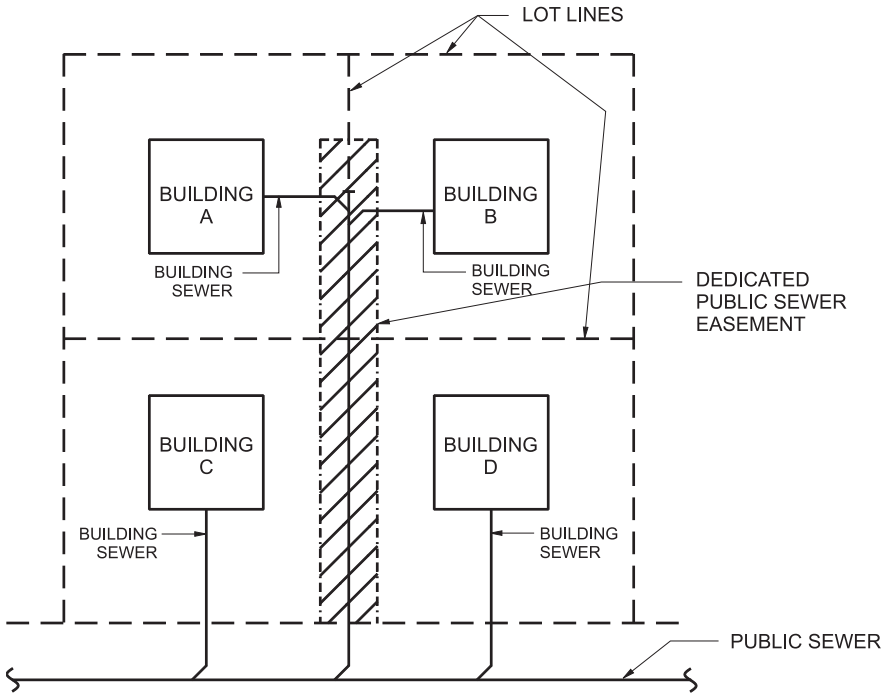

Figure 701.3(1)
COMMON BUILDING SEWER LOCATED WITHIN AN APPROVED PUBLIC SEWER EASEMENT

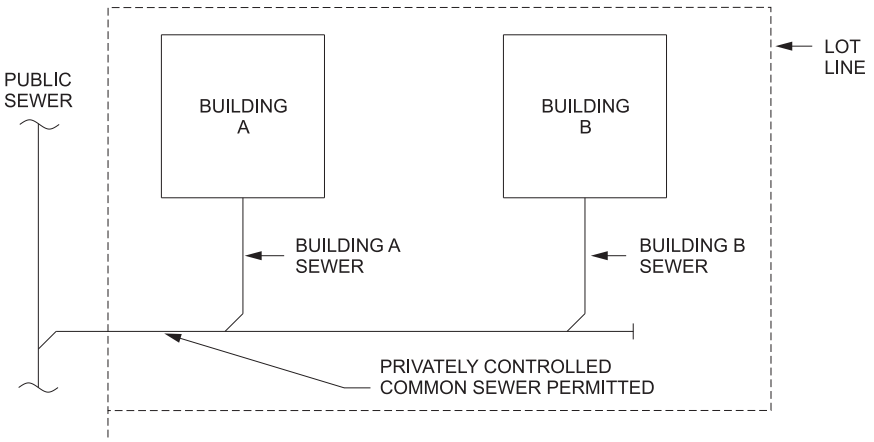

Figure 701.3(2)
BUILDINGS ON SAME LOT

INTERNATIONAL CODE COUNCIL®
Copyright © 2015 ICC. ALL RIGHTS RESERVED. Accessed by David Dammon on Jun 21, 2017 12:30:52 PM pursuant to License Agreement with ICC. No further reproduction or distribution authorized. ANY UNAUTHORIZED REPRODUCTION OR DISTRIBUTION IS A VIOLATION OF THE FEDERAL COPYRIGHT ACT AND THE LICENSE AGREEMENT, AND SUBJECT TO CIVIL AND CRIMINAL PENALTIES THEREUNDER.

701.4 Sewage treatment. Sewage or other waste from a plumbing system that is deleterious to surface or subsurface waters shall not be discharged into the ground or into any waterway unless it has first been rendered innocuous through subjection to an *approved* form of treatment.

❖ The discharge of untreated waste and sewage from a sanitary drainage system creates an environmental and human health hazard. This section requires treatment of sewage that poses a hazard before discharging to ponds, rivers, streams, lakes, aquifers or similar bodies of water. The form of treatment for the waste must be approved by the code official and is often governed by the local health department or state or U.S. Environmental Protection Agency (EPA) having jurisdiction. These requirements are also applicable to gray-water recycling systems, as stated in Appendix C of the code.

701.5 Damage to drainage system or public sewer. Waste detrimental to the public *sewer* system or to the functioning of the sewage-treatment plant shall be treated and disposed of in accordance with Section 1003 as directed by the code official.

❖ Materials that are detrimental to the drainage system must not discharge into such system. Any substances that will clog, produce explosive mixtures, degrade the pipes or their joints or any wastes that interfere with the sewage disposal or treatment process must not be allowed to enter the building drainage system. Sections 803.2 and 1003.1 contain requirements for collecting harmful materials and the neutralization of corrosive wastes (see commentary, Sections 803.2 and 1003.1).

701.6 Tests. The sanitary drainage system shall be tested in accordance with Section 312.

❖ Requirements for sanitary drainage and vent system testing are described in Section 312.

701.7 Engineered systems. Engineered sanitary drainage systems shall conform to the provisions of Sections 316 and 714.

❖ Engineered sanitary drainage systems are designed using approved computer program methods and may not comply with all the provisions prescribed in this chapter. The system design must be approved by the code official in accordance with Section 316 and must conform to the provisions of Section 714.

701.8 Drainage piping in food service areas. Exposed soil or waste piping shall not be installed above any working, storage or eating surfaces in food service establishments.

❖ A potential for contamination exists in areas where piping is exposed. This protection is necessary for health, safety and sanitation of food service areas. Many design alternatives are available, such as secondary containment, ceilings and perimeter installations that avoid these areas.

SECTION 702
MATERIALS

702.1 Above-ground sanitary drainage and vent pipe. Above-ground soil, waste and vent pipe shall conform to one of the standards listed in Table 702.1.

❖ This section contains material requirements for all sanitary drainage, waste and vent (DWV) systems. The referenced table specifies allowable piping materials for above-ground DWV systems. In selecting pipe and fittings, it is important to consider their reliability for installation in a drainage system. The corrosion resistance of the pipe and fittings is a measure of the ability of the materials used to resist both the internal corrosive effects of the effluent likely to flow through them and the effects of soils on their exterior. Corrosion can be reduced or eliminated by the application of coating, lining and cathodic protection. Physical strength of the pipe and fittings is another consideration because of the physical damage that may occur either during installation or after being placed in service. Fire-resistance rating of the pipe and fittings is a measure of their ability to remain intact and not fail, or to carry water, during a fire. Additionally, pipe, fittings, joints, hangers and supports should be selected taking this into consideration.

INTERNATIONAL CODE COUNCIL®
Copyright © 2015 ICC. ALL RIGHTS RESERVED. Accessed by David Dammon on Jun 21, 2017 12:30:52 PM pursuant to License Agreement with ICC. No further reproduction or distribution authorized. ANY UNAUTHORIZED REPRODUCTION OR DISTRIBUTION IS A VIOLATION OF THE FEDERAL COPYRIGHT ACT AND THE LICENSE AGREEMENT, AND SUBJECT TO CIVIL AND CRIMINAL PENALTIES THEREUNDER.

TABLE 702.1
ABOVE-GROUND DRAINAGE AND VENT PIPE

MATERIAL	STANDARD
Acrylonitrile butadiene styrene (ABS) plastic pipe in IPS diameters, including Schedule 40, DR 22 (PS 200) and DR 24 (PS 140); with a solid, cellular core or composite wall	ASTM D 2661; ASTM F 628; ASTM F 1488; CSA B181.1
Brass pipe	ASTM B 43
Cast-iron pipe	ASTM A 74; ASTM A 888; CISPI 301
Copper or copper-alloy pipe	ASTM B 42; ASTM B 302
Copper or copper-alloy tubing (Type K, L, M or DWV)	ASTM B 75; ASTM B 88; ASTM B 251; ASTM B 306
Galvanized steel pipe	ASTM A 53
Glass pipe	ASTM C 1053
Polyolefin pipe	ASTM F 1412; CSA B181.3
Polyvinyl chloride (PVC) plastic pipe in IPS diameters, including schedule 40, DR 22 (PS 200), and DR 24 (PS 140); with a solid, cellular core or composite wall	ASTM D 2665; ASTM F 891; ASTM F 1488; CSA B181.2
Polyvinyl chloride (PVC) plastic pipe with a 3.25-inch O.D. and a solid, cellular core or composite wall	ASTM D 2949, ASTM F 1488
Polyvinylidene fluoride (PVDF) plastic pipe	ASTM F 1673; CSA B181.3
Stainless steel drainage systems, Types 304 and 316L	ASME A112.3.1

❖ Table 702.1 identifies the materials that are approved and the standards with which these materials must comply.

Acrylonitrile butadiene styrene (ABS) plastic pipe.

The exterior of ABS plastic pipe is black in color. Depending on which standard the pipe is made to, the pipe can be solid wall or cellular core (frequently called "foam core"). The solid-wall pipe is produced by either a single extrusion or a simultaneous multiple coextrusion. The cellular core pipe is produced by a coextrusion process with concentric inner and outer solid ABS layers and the core consisting of closed-cell foamed plastic.

The pipe is marked with not less than the following information:

- The manufacturer's name.
- One or more standard designations: ASTM D 2661, ASTM F 628, ASTM F 1488, CSA B181.1.
- Nominal pipe size.
- "ABS DWV" for single extrusion pipe.
- "COEX ABS DWV" for coextruded pipe.
- "COEX ABS CELLULAR CORE DWV" for coextruded pipe with cellular core.

CSA B181.1: This standard covers ABS pipe and fittings for drain waste and vent applications. The available pipe sizes are $1^1/_4$ to 6 inches (32 to 152 mm) with the outside diameters and wall thicknesses matching Schedule 40 steel pipe.

ASTM D 2661: This standard covers ABS pipe and fittings for drain waste and vent applications. The available pipe sizes are $1^1/_4$ to 6 inches (32 to 152 mm) with the outside diameters and wall thicknesses matching Schedule 40 steel pipe. The pipe is made from virgin material with no reprocessed or recycled plastic. The standard allows single extruded and coextruded forms. Piping and fittings covered by this standard do not have a pressure rating.

ASTM F 628: This standard covers ABS pipe and fittings for drain waste and vent applications. The available pipe sizes are $1^1/_4$ to 6 inches (32 to 152 mm) with the outside diameters and wall thicknesses matching Schedule 40 steel pipe. The pipe is made from virgin material with no reprocessed or recycled plastic. The standard covers the cellular core form of pipe. Piping and fittings covered by this standard do not have a pressure rating.

ASTM F 1488: This standard covers composite pipe, which means that layers of the pipe could be of different materials such as PVC or CPVC. The pipe external layer is made from virgin ABS material with no reprocessed or recycled plastic. The standard covers coextruded forms, including the cellular core form. Piping covered by this standard does not have a pressure rating.

The available pipe sizes for the IPS-SCH 40 series are $1^1/_4$ to 12 inches (32 to 305 mm) including $2^1/_2$-, $3^1/_2$- and 5-inch (64, 89 and 127 mm) sizes with the outside diameters and wall thicknesses matching Schedule 40 steel pipe [except for the 12-inch (305 mm) size, which has an 0.460-inch (12 mm) wall thickness].

The available pipe sizes for the IPS-DR-PS series are $1^1/_4$ to 12 inches (32 to 305 mm) including $2^1/_2$,-$3^1/_2$-, and 5-inch (64, 89 and 127 mm) sizes with the outside diameters matching Schedule 40 steel pipe. The wall thickness is based upon a dimension ratio (DR) of 24 or 22 [corresponding to a pipe stiffness (PS) of PS140 and PS200, respectively].

Brass pipe

This piping material is made from red brass, which is composed of approximately 85-percent copper and 15-percent zinc. The pipe is available in both standard and extra-strong weight. Extra-strong weight has the same outside diameter as steel pipe, but with a thicker pipe wall.

Standard-weight pipe is named "Schedule 40," and extra-strong pipe is named "Schedule 80." Brass pipe dimensions are very similar to steel pipe dimensions. ASTM B 43 is the referenced standard for brass pipe, available in diameters from $^1/_8$ inch (3.2 mm) to 12

INTERNATIONAL CODE COUNCIL®
Copyright © 2015 ICC. ALL RIGHTS RESERVED. Accessed by David Dammon on Jun 21, 2017 12:30:52 PM pursuant to License Agreement with ICC. No further reproduction or distribution authorized. ANY UNAUTHORIZED REPRODUCTION OR DISTRIBUTION IS A VIOLATION OF THE FEDERAL COPYRIGHT ACT AND THE LICENSE AGREEMENT, AND SUBJECT TO CIVIL AND CRIMINAL PENALTIES THEREUNDER.

inches (305 mm) and manufactured in 12-foot (3658 mm) lengths. The pipe is marked with the following information:

- The manufacturer's name.
- The designation of ASTM B 43.
- Nominal pipe size.
- Schedule 40 or Schedule 80.

Cast-iron pipe

Cast-iron is manufactured in three classifications: service (standard) weight, extra-heavy weight and hubless. The pipe is usually lined internally with cement or coal-tar enamel and is coated externally with a variety of materials to reduce corrosion by soils. Two types of pipe ends are manufactured: hub-and-spigot and hubless. ASTM A 74 is the referenced standard for hub-and-spigot and is available in diameters from 3 to 15 inches (76 to 381 mm) and manufactured in 5- and 10-foot (1524 mm and 3048 mm) lengths. CISPI 301 and ASTM A 888 are the referenced standards for hubless pipe, which is available in diameters from $1^1/_2$ to 15 inches (38 to 381 mm) and manufactured in 5-, 10- and 18-foot (1524, 3048 and 5486 mm) lengths. The hub and spigot ends may be joined by either caulking or an elastomeric compression gasket. Hubless ends can be joined only by external compression couplings.

Cast-iron pipe is marked continuously on the barrel with the following information:

- The manufacturer's name or registered trademark.
- The country of origin.
- Letters to indicate the proper classification, extra heavy (XH) or service weight (SV).

Copper or copper-alloy pipe

See the commentary to Table 605.3, Copper or copper-alloy pipe.

Copper or copper-alloy tubing (Type K, L, M or DWV)

ASTM B 306 is the referenced standard for Type DWV copper tubing, which has a thinner pipe wall than Type M copper. The tubing is produced only in a drawn (hard) temper (see commentary, Table 605.3, Copper or copper-alloy tubing, Type K, L, M or DWV). Type DWV copper tubing is identified with a continuous yellow marking with the following information:

- The manufacturer's name or registered trademark and "DWV."
- The country of origin.

Galvanized steel pipe

The ASTM A 53 standard covers continuous welded and electric-resistance welded (ERW) pipe. Continuous-welded pipe is made from a flat strip of steel that is heated, formed into a cylinder and forged welded along the longitudinal seam. ERW pipe is made from a flat strip of steel that is cold formed into a cylinder and electric-resistance welded along the longitudinal seam.

Galvanized steel pipe is available in different wall thicknesses, the most common being standard, extra-strong and double-extra-strong weight. These thicknesses are also referred to as Schedules 40, 80 and 160, respectively. As the schedule number increases, the wall thickness of the pipe increases. The outside diameter, however, remains the same for each pipe size. Steel pipe is hot dipped and zinc coated to produce a galvanized protective coating, both inside and outside. New galvanized pipe is a shiny silver, and, as the pipe ages, the coating oxidizes to protect the zinc. As a result, the color turns to a dull gray.

Galvanized steel pipe is sometimes called "galvanized pipe" or mistakenly called "wrought-iron pipe." Wrought-iron pipe has not been manufactured in the United States in more than 30 years. All pipe referred to as "wrought-iron pipe" is steel pipe.

The steel pipe industry claims to be responsible for nominal pipe dimensions, meaning the pipe is approximately the size by which it is identified. The dimensions date back to 1862 when Robert Briggs of Pascal Iron Works wrote the first pipe standards in the United States. It is believed that the dimensions were based on the pipe Briggs was manufacturing. That is why a $^3/_4$-inch (19.1 mm) galvanized steel pipe has an outside diameter of 1.05 inches (27 mm) and an average inside diameter of 0.824 inch (21 mm) for standard-weight pipe. The pipe is available in diameters of $^1/_8$ inch through 26 inches (3.2 mm through 660 mm) and various lengths of 12 feet (3658 mm) to 22 feet (6706 mm).

Galvanized steel pipe is marked with the following information:

- The manufacturer's name or mark.
- The type of pipe (i.e., A, B, XS, XXS).
- The specification number.
- The length of pipe.

See Commentary Figure 702.1 for dimensions of Schedule 40 steel pipe.

Glass pipe

Borosilicate glass pipe is low-expansion, low-alkali-content glass pipe that is extremely chemical resistant. Glass pipe is used primarily for above-ground chemical waste drainage systems. ASTM C 1053 is the referenced standard for borosilicate glass pipe and fittings used for drainage, waste and vent systems and governs the chemical requirements, operating temperatures, pressure rating and dimensions for glass pipe and fittings. Glass piping has a minimum rated operating temperature of -40°F (-40°C) and a maximum operating temperature of 212°F (100°C). The maximum rated working pressure of glass DWV piping systems is the pressure caused by gravity flow. Glass pipe is manufactured in $1^1/_2$-, 2-, 3-, 4- and 6-inch (38, 51, 76, 102 and 152 mm) diameters and standard lengths of 5 and 10 feet (1524 and 3048 mm).

INTERNATIONAL CODE COUNCIL®
Copyright © 2015 ICC. ALL RIGHTS RESERVED. Accessed by David Dammon on Jun 21, 2017 12:30:52 PM pursuant to License Agreement with ICC. No further reproduction or distribution authorized. ANY UNAUTHORIZED REPRODUCTION OR DISTRIBUTION IS A VIOLATION OF THE FEDERAL COPYRIGHT ACT AND THE LICENSE AGREEMENT, AND SUBJECT TO CIVIL AND CRIMINAL PENALTIES THEREUNDER.

NOMINAL PIPE SIZE (inches)	OUTSIDE DIAMETER (inches)	AVERAGE WALL THICKNESS (inch)
$1^1/_4$	1.660	0.140
$1^1/_2$	1.9	0.145
2	2.375	0.154
$2^1/_2$	2.875	0.203
3	3.5	0.216
$3^1/_2$	4	0.226
4	4.5	0.226
5	5.563	0.258
6	6.625	0.280
8	8.625	0.322
10	10.75	0.365
12	12.75	0.375
14	14	0.437
16	16	0.5
18	18	0.562
20	20	.583
24	24	.687

For SI: 1 inch = 25.4 mm.

Figure 702.1
STEEL PIPE DIMENSIONS

Polyolefin pipe

Polyolefin is a term used to describe a family of plastics that includes polyethylene (PE) and polypropylene (PP). ASTM F 1412 and CSA B181.3 are the referenced standards for polyolefin pipe and fittings used in laboratory drainage systems for corrosive applications. This material may not be compatible with all chemicals, making consultation with the manufacturer necessary to determine the suitability of the pipe for a particular application (see commentary, Section 702.5). Polyolefin is identified with the following information:

- The manufacturer's name or trademark.
- The designation CSA B181.3 or the wording "Lab Drainage."
- Nominal pipe size.
- Raw material designation.

Polyvinyl chloride (PVC) plastic pipe

PVC plastic pipe for drainage and vent systems is available in solid wall, coextruded with either a cellular core or composite pipe. The pipe is either white or a milky white (cream) and is continuously marked with the manufacturer's name, the ASTM International (ASTM) or Canadian Standards Association (CSA) standard and Type DWV. Cellular core pipe is also marked "COEX CELLULAR CORE PVC PIPE," and composite pipe is marked with the applicable DR and PS, for example, DR35/PS50 or sewer and drain series DR35/PS50. If the pipe also conforms to the requirements for water service pipe, it will be double marked. ASTM D 2665 and CSA B 181.2 are the referenced standards for PVC plastic pipe and fittings. The pipe has the same dimensions as Schedule 40 steel pipe. For this reason, it is often called "Schedule 40 PVC drain pipe." ASTM F 891 is the referenced standard for coextruded cellular core PVC pipe. The standard specifies various grades of pipe. Only Schedule 40 pipe, also designated as Type DWV, is approved for above-ground use. ASTM F 1488 is the referenced standard for coextruded composite PVC pipe. The standard specifies various grades of pipe based on different DR and PS applications. IPS Schedule 40 and IPS DR-PS Series are used for above- or below-ground installation for drain, waste and vent pipe. Sewer and Drain DR-PS Series is used for gravity flow sewer and drain pipe. ASTM D 2949 is the referenced standard for 3-inch (76 mm) PVC plastic pipe and fittings only. The pipe has an outside diameter of $3^1/_4$ inches (83 mm), as compared to $3^1/_2$ inches (89 mm) for other 3-inch (76 mm) PVC plastic pipe. The inside diameter is the same as a 3-inch (76 mm) pipe conforming to ASTM D 2665. The resulting pipe wall is $^1/_8$ inch (3.2 mm) less in thickness.

The $3^1/_4$-inch (83 mm) outside diameter pipe was developed to permit installation of PVC plastic pipe in a nominal 2-inch by 4-inch (51 mm by 102 mm) stud wall cavity. The pipe is often incorrectly identified as Schedule 30 PVC plastic pipe or "thin" wall pipe.

CSA 181.2: This standard covers PVC pipe and fittings for drain waste and vent applications. OD and wall match Schedule 40 Steel up to 12 inches (305 mm). Over 12 inches (305 mm), walls are thicker than steel pipe sizes. Up to 24-inch (610 mm) size.

ASTM D 2665: This standard covers PVC pipe and fittings. The pipe is made in a single extrusion with the OD and wall matching Schedule 40 steel pipe up to 12 inches (305 mm). Over 12 inches (305 mm) and up to 24-inch (610 mm) size, the walls of the pipe are thicker than steel pipe sizes. Although this pipe is pressure tested, it is only indicated for DWV service.

ASTM D 2949: This standard covers PVC pipe and fittings for one size of pipe: $3^1/_4$ inches (83 mm) outside diameter. The pipe has a wall thickness of $^1/_8$ inch (3.2 mm).

ASTM F 891: This standard covers PVC coextruded cellular core pipe. It is suitable for nonpressure use. The OD and wall matches IPS Schedule 40 steel pipe except that the 12-inch (305 mm) size has a wall thickness of 0.406 inch (10.3 mm).

ASTM F 1488: This standard covers composite pipe, which means that layers of the pipe could be of different materials such as ABS or CPVC. The pipe external layer is made from virgin PVC material with no reprocessed or recycled plastic. The standard covers coextruded forms, including the cellular core form. Piping covered by this standard does not have a pressure rating.

INTERNATIONAL CODE COUNCIL®
Copyright © 2015 ICC. ALL RIGHTS RESERVED. Accessed by David Dammon on Jun 21, 2017 12:30:52 PM pursuant to License Agreement with ICC. No further reproduction or distribution authorized. ANY UNAUTHORIZED REPRODUCTION OR DISTRIBUTION IS A VIOLATION OF THE FEDERAL COPYRIGHT ACT AND THE LICENSE AGREEMENT, AND SUBJECT TO CIVIL AND CRIMINAL PENALTIES THEREUNDER.

The available pipe sizes for the IPS-SCH 40 series are $1^1/_4$ to 12 inches (32 to 305 mm) including $2^1/_2$-, $3^1/_2$- and 5-inch (66, 89 and 127 mm) sizes with the outside diameters and wall thicknesses matching Schedule 40 steel pipe [except for the 12-inch (305 mm) size, which has an 0.460-inch (11.7 mm) wall thickness].

The available pipe sizes for the IPS-DR-PS series are $1^1/_4$ to 12 inches (32 to 305 mm), including $2^1/_2$-, $3^1/_2$-, 5-inch (66, 89 and 127 mm) sizes with the outside diameters matching steel pipe. The wall thickness is based upon a DR of 24 or 22 (corresponding to PS 140 and PS 200, respectively).

Only the $3^1/_4$-inch (83 mm) OD size of the sewer and drain-DR-PS series is listed for above-ground drainage and vent applications pipe.

Polyvinylidene fluoride (PVDF) pipe

The ASTM F 1673 standard covers pipe and fittings for corrosive applications. The available pipe sizes are $1^1/_4$ to 12 inches (32 to 305 mm) with outside diameters matching steel pipe. The pipe is available in wall thicknesses matching Schedule 40 and Schedule 80 steel pipe dimensions. The pipe is also available in a wall thickness corresponding to a standard dimension ratio (SDR) of 21.

Stainless steel drainage systems

Stainless steel drainage and vent systems are made of stainless steel alloy of Type 304 or Type 316L. The thickness of the pipe wall is 0.040 inch (1 mm) except for 6-inch (152 mm) size, which has a pipe wall thickness of 0.060 inch (1.5 mm).

Stainless steel systems are used for both sanitary waste and chemical waste systems. ASME A112.3.1 is the referenced standard for stainless steel drainage system pipe and fittings. For building drainage and vent piping, Type 304 is approved for use only in above-ground applications and Type 316L is approved for use only in below-ground applications. Either type may be used for building sewers. Stainless steel drainage system pipe is manufactured in 2-, 3-, 4- and 6-inch (51, 76, 102 and 152 mm) diameters and in lengths of 3.3, 4.9, 6.6, 9.8 and 16.4 feet (1006, 1494, 2012, 2987 and 4999 mm). Stainless steel pipe is identified with the following information:

- Manufacturer's name or trademark.
- Designation ASTM A 112.3.1.
- Nominal pipe size.
- Date of manufacture.

702.2 Underground building sanitary drainage and vent pipe. Underground building sanitary drainage and vent pipe shall conform to one of the standards listed in Table 702.2.

❖ The referenced table specifies the acceptable piping materials for underground drainage and vent systems.

TABLE 702.2. See next column.

The materials listed in this table are for installation underground within a building.

Acrylonitrile butadiene styrene (ABS) plastic pipe

See the commentary to Table 702.1, ABS pipe.

Cast-iron pipe

See the commentary to Table 702.1, Cast-iron pipe.

Copper or copper-alloy tubing (Type K, L, M or DWV)

See the commentary to Table 702.1, Copper or copper-alloy tubing (Type K, L, M or DWV).

Polyolefin pipe

See the commentary to Table 702.1, Polyolefin pipe.

Polyvinyl chloride (PVC) plastic pipe

See the commentary to Table 702.1, PVC pipe.

Polyvinylidene fluoride (PVDF) pipe

See commentary for Table 702.1, PVDF pipe.

Stainless steel drainage systems

See the commentary to Table 702.1, Stainless steel drainage systems. Note that only Type 316L must be used underground within a building.

TABLE 702.2
UNDERGROUND BUILDING DRAINAGE AND VENT PIPE

MATERIAL	STANDARD
Acrylonitrile butadiene styrene (ABS) plastic pipe in IPS diameters, including Schedule 40, DR 22 (PS 200) and DR 24 (PS 140); with a solid, cellular core or composite wall	ASTM D 2661; ASTM F 628; ASTM F 1488; CSA B181.1
Cast-iron pipe	ASTM A 74; ASTM A 888; CISPI 301
Copper or copper-alloy tubing (Type K, L, M or DWV)	ASTM B 75; ASTM B 88; ASTM B 251; ASTM B 306
Polyolefin pipe	ASTM F 1412; CSA B181.3
Polyvinyl chloride (PVC) plastic pipe in IPS diameters, including Schedule 40, DR 22 (PS 200) and DR 24 (PS 140); with a solid, cellular core or composite wall	ASTM D 2665; ASTM F 891; ASTM F 1488; CSA B181.2
Polyvinyl chloride (PVC) plastic pipe with a 3.25-inch O.D. and a solid, cellular core or composite wall	ASTM D 2949, ASTM F 1488
Polyvinylidene fluoride (PVDF) plastic pipe	ASTM F 1673; CSA B181.3
Stainless steel drainage systems, Type 316L	ASME A 112.3.1

For SI: 1 inch = 25.4 mm.

INTERNATIONAL CODE COUNCIL®
Copyright © 2015 ICC. ALL RIGHTS RESERVED. Accessed by David Dammon on Jun 21, 2017 12:30:52 PM pursuant to License Agreement with ICC. No further reproduction or distribution authorized. ANY UNAUTHORIZED REPRODUCTION OR DISTRIBUTION IS A VIOLATION OF THE FEDERAL COPYRIGHT ACT AND THE LICENSE AGREEMENT, AND SUBJECT TO CIVIL AND CRIMINAL PENALTIES THEREUNDER.

702.3 Building sewer pipe. *Building sewer* pipe shall conform to one of the standards listed in Table 702.3.

❖ The referenced table specifies the acceptable piping materials for sanitary sewer systems.

TABLE 702.3
BUILDING SEWER PIPE

MATERIAL	STANDARD
Acrylonitrile butadiene styrene (ABS) plastic pipe in IPS diameters, including Schedule 40, DR 22 (PS 200) and DR 24 (PS 140); with a solid, cellular core or composite wall	ASTM D 2661; ASTM F 628; ASTM F 1488; CSA B181.1
Acrylonitrile butadiene styrene (ABS) plastic pipe in sewer and drain diameters, including SDR 42 (PS 20), PS 35, SDR 35 (PS 45), PS 50, PS 100, PS 140, SDR 23.5 (PS 150) and PS 200; with a solid, cellular core or composite wall	ASTM F 1488; ASTM D 2751
Cast-iron pipe	ASTM A 74; ASTM A 888; CISPI 301
Concrete pipe	ASTM C 14; ASTM C 76; CSA A257.1M; CSA A257.2M
Copper or copper-alloy tubing (Type K or L)	ASTM B 75; ASTM B 88; ASTM B 251
Polyethylene (PE) plastic pipe (SDR-PR)	ASTM F 714
Polyvinyl chloride (PVC) plastic pipe in IPS diameters, including Schedule 40, DR 22 (PS 200) and DR 24 (PS 140); with a solid, cellular core or composite wall	ASTM D 2665; ASTM F 891; ASTM F 1488
Polyvinyl chloride (PVC) plastic pipe in sewer and drain diameters, including PS 25, SDR 41 (PS 28), PS 35, SDR 35 (PS 46), PS 50, PS 100, SDR 26 (PS 115), PS 140 and PS 200; with a solid, cellular core or composite wall	ASTM F 891; ASTM F 1488; ASTM D 3034; CSA B182.2; CSA B182.4
Polyvinyl chloride (PVC) plastic pipe with a 3.25-inch O.D. and a solid, cellular core or composite wall	ASTM D 2949, ASTM F 1488
Polyvinylidene fluoride (PVDF) plastic pipe	ASTM F 1673; CSA B181.3
Stainless steel drainage systems, Types 304 and 316L	ASME A112.3.1
Vitrified clay pipe	ASTM C 4; ASTM C 700

For SI: 1 inch = 25.4 mm.

❖ Table 702.3 identifies the materials that are permitted and the standards with which these materials must comply.

Acrylonitrile butadiene styrene (ABS) plastic pipe

See the commentary to Table 702.1, ABS pipe. In addition to the pipe sizes described in the commentary to Table 702.1, the following piping is allowed to be used:

ASTM F 1488: The available pipe sizes for ABS Sewer and Drain-DR-PS series are 2, 3, 4, 6, 8, 9, 10 and 12 inches (51, 76, 102, 152, 203, 229, 250 and 305 mm) with the outside diameters of 2.25, 3.25, 4.215, 6.275, 8.4, 9.44, 10.5 and 12.5 inches (57, 83, 107, 159, 213, 240, 267 and 318 mm), respectively. The wall thicknesses are based upon DR of 38, 34, 27, 24 or 22 (corresponding to a PS of 35, 50, 100, 140 and 200, respectively).

ASTM D 2751: The available pipe sizes for ABS sewer pipe are 3, 4, 6, 8, 10 and 12 inches (76, 102, 152, 203, 250 and 305 mm) with the outside diameters of 3.25, 4.215, 6.275, 8.4, 10.5 and 12.5 inches (83, 107, 159, 213, 267 and 318 mm), respectively. The wall thicknesses are based upon SDR of 23.5, 35 and 42 (corresponding to a PS of 35, 50, 100, 140 and 200, respectively).

Cast-iron pipe

See the commentary to Table 702.1, Cast-iron pipe.

Concrete pipe

The pipe is made from portland cement, blast-furnace slag cement or portland-pozzolan cement-and-aggregate mixture. The pipe is produced both reinforced and nonreinforced. ASTM C 14 and CSA A 257.1 are the referenced standards for nonreinforced concrete pipe. ASTM C 14 concrete pipe is available in three classes: 1, 2 or 3. The pipe classification relates to the concrete strength based on diameter: Class 1 has the lowest strength requirements and Class 3 has the highest.The pipe is manufactured in diameters of 4 through 36 inches (102 through 914 mm). ASTM C 76 and CSA A 257.2 are the referenced standards for reinforced concrete pipe, which is strengthened with steel wire, hot rod or welded wire fabric. ASTM C 76 pipe is produced in five classes: 1, 2, 3, 4 or 5. The class determines the strength of the concrete, pipe and reinforcement geometry: Class 1 has the lowest strength requirements and Class 5 has the highest. The pipe is manufactured in sizes 12 inches (305 mm) and larger.

Copper or copper-alloy tubing (Type K, L, M or DWV)

See the commentary to Table 702.1, Copper or copper-alloy tubing (Type K, L, M or DWV)

Polyethylene (PE) plastic pipe

ASTM F 714 is the referenced standard for polyethylene plastic pipe based on outside diameters of $3^1/_2$ inches (90 mm) and larger. This piping material is intended for new construction and insertion renewal of old piping systems used for the transport of municipal sewage, domestic sewage, industrial process liquids

INTERNATIONAL CODE COUNCIL®
Copyright © 2015 ICC. ALL RIGHTS RESERVED. Accessed by David Dammon on Jun 21, 2017 12:30:52 PM pursuant to License Agreement with ICC. No further reproduction or distribution authorized. ANY UNAUTHORIZED REPRODUCTION OR DISTRIBUTION IS A VIOLATION OF THE FEDERAL COPYRIGHT ACT AND THE LICENSE AGREEMENT, AND SUBJECT TO CIVIL AND CRIMINAL PENALTIES THEREUNDER.

and effluents in both pressure and nonpressure systems. All pipes produced under ASTM F 714 are pressure rated. Polyethylene plastics are defined as plastics or resins prepared by the polymerization of no less than 85-percent ethylene and no less than 95 percent of total olefins with additional compounding ingredients.

Polyolefin pipe

See the commentary to Table 702.1, Polyolefin pipe.

Polyvinyl chloride (PVC) plastic pipe

See the commentary to Table 702.1, PVC pipe.

ASTM F 891 specifies sewer-grade pipe by a PS designation, in addition to Schedule 40 (Type DWV). PS indicates pipe stiffness. The acceptable grades for sewers are PS50 and PS100. The numerical designation indicates pipe stiffness in pounds per square inch (psi). The higher value indicates the thicker pipe wall. ASTM D 2665 and D 3034 cover sewer-grade PVC pipe and fittings. The materials may be used interchangeably. Both pipes are produced in an SDR of 35 and 41, with a hub end. The PVC material used to produce the pipe is classified as 12454-B, 12454-C or 13364-B. The pipe is produced in diameters of 4 through 15 inches (102 through 381 mm). CSA B182.2 is the referenced standard for SDR 28, 35 and 41 PVC sewer pipe and fittings, and CSA B 182.4 is the referenced standard for PVC ribbed sewer pipe and fittings (see commentary, Table 702.1).

Polyvinylidene fluoride (PVDF) pipe

See the commentary to Table 702.1, PVDF pipe.

Stainless steel drainage systems

See the commentary to Table 702.1, Stainless steel drainage systems.

Vitrified clay pipe

The pipe material is surface clay, fire clay, shale or a combination of these materials. The pipe is classified as standard strength, extra strength, extra quality and heavy duty. The classification designates the strength of the pipe. Vitrified clay pipe is produced in diameters of 3 inches (76 mm) and larger. Each length of pipe is marked with the manufacturer's name and the classification of the pipe.

702.4 Fittings. Pipe fittings shall be *approved* for installation with the piping material installed and shall comply with the applicable standards listed in Table 702.4.

❖ Fittings are designed to be installed in a particular system with a given material or combination of materials.

Drainage pattern fittings must be installed in drainage systems. Vent fittings are limited to the venting system. Many fittings are intended for use only for water distribution systems. There are also fittings available that may be used in any type of plumbing system. Fittings must be of the same material as, or compatible with, the pipe. This prevents any chemical or corrosive action between dissimilar materials. Many pipe standards also include fittings. There are a number of other standards that strictly regulate pipe fittings. For example, ASTM D 3311 addresses fitting patterns for ABS and PVC complying with ASTM D 2661, D 2665, F 628 and F 891. It does not address material or performance requirements, only fitting geometric and laying lengths. So in some instances, several referenced standards may regulate a single fitting.

TABLE 702.4
PIPE FITTINGS

MATERIAL	STANDARD
Acrylonitrile butadiene styrene (ABS) plastic pipe in IPS diameters	ASTM D 2661; ASTM F 628; CSA B181.1
Acrylonotrile butadiene styrene (ABS) plastic pipe in sewer and drain diameters	ASTM D 2751
Cast iron	ASME B 16.4; ASME B 16.12; ASTM A 74; ASTM A 888; CISPI 301
Copper or copper alloy	ASME B 16.15; ASME B 16.18; ASME B 16.22; ASME B 16.23; ASME B 16.26; ASME B 16.29
Glass	ASTM C 1053
Gray iron and ductile iron	AWWA C 110/A21.10
Malleable iron	ASME B 16.3
Polyolefin	ASTM F 1412; CSA B181.3
Polyvinyl chloride (PVC) plastic in IPS diameters	ASTM D 2665; ASTM F 1866
Polyvinyl chloride (PVC) plastic pipe in sewer and drain diameters	ASTM D 3034
Polyvinyl chloride (PVC) plastic pipe with a 3.25-inch O.D.	ASTM D 2949
Polyvinylidene fluoride (PVDF) plastic pipe	ASTM F 1673; CSA B181.3
Stainless steel drainage systems, Types 304 and 316L	ASME A 112.3.1
Steel	ASME B 16.9; ASME B 16.11; ASME B 16.28
Vitrified clay	ASTM C 700

For SI: 1 inch = 25.4 mm.

❖ The table specifies acceptable materials for pipe fittings, along with the appropriate standards with which the various fittings must comply.

Acrylonitrile butadiene styrene (ABS) plastic pipe fittings

See the commentary to Table 702.1, ABS pipe. In addition to that information, the following is provided:

The ASTM D 2751 standard covers solvent cement-type drainage fittings for ABS sewer pipe.

INTERNATIONAL CODE COUNCIL®
Copyright © 2015 ICC. ALL RIGHTS RESERVED. Accessed by David Dammon on Jun 21, 2017 12:30:52 PM pursuant to License Agreement with ICC. No further reproduction or distribution authorized. ANY UNAUTHORIZED REPRODUCTION OR DISTRIBUTION IS A VIOLATION OF THE FEDERAL COPYRIGHT ACT AND THE LICENSE AGREEMENT, AND SUBJECT TO CIVIL AND CRIMINAL PENALTIES THEREUNDER.

Cast-iron pipe fittings

See the commentary to Table 702.1, Cast iron pipe. In addition to that information, the following is provided:

The ASME B 16.4 standard covers threaded fittings made of gray iron. These are not drainage pattern fittings. These fittings are not suitable for use with cast-iron pipe used for DWV systems. The standard covers Class 125 and 250 fittings.

The ASME B 16.12 standard covers threaded fittings made of cast iron. These are special drainage pattern fittings for use with galvanized steel pipe. These fittings are not suitable for use with cast-iron pipe used for DWV systems.

Copper or copper-alloy tubing fittings

The standard ASME B 16.23 covers cast copper-alloy drainage fittings. The standard ASME B 16.29 covers wrought copper and wrought-copper drainage fittings. The standard ASME B 16.15 covers cast bronze-threaded fittings. The standard ASME B 16.22 covers wrought-copper and copper-alloy pressure fittings. The standard ASME B 16.18 covers cast copper-alloy pressure fittings. The standard ASME B 16.26 covers cast copper-alloy fittings for flared copper tubes.

Glass pipe fittings

See the commentary to Table 702.1, Glass pipe.

Gray Iron and ductile iron fittings

The standard AWWA C 110 covers gray iron and ductile iron fittings suitable for use with ductile iron pipe. However, the code does not recognize ductile iron pipe as an acceptable material for conveying waste water.

Malleable iron fittings

The ASME B 16.3 standard covers threaded fittings made of malleable iron. These are not drainage pattern fittings so these fittings cannot be used in drainage applications. Also, because these fittings are not recessed thread fittings, they cannot be used for vent piping.

Polyolefin pipe fittings

See the commentary to Table 702.1, Polyolefin pipe.

Polyvinyl chloride (PVC) plastic pipe fittings

See the commentary to Table 702.3, PVC pipe. In addition to that information, the following information is provided:

The standard ASTM F 1866 covers DWV fittings for PVC plastic piping that has an outside diameter matching Schedule 40 steel pipe. The standard also covers fabricated DWV fittings (as opposed to injection-molded, one-piece fittings).

Polyvinylidene fluoride pipe fittings

See the commentary to Table 702.1, PVDF pipe.

Stainless steel drainage system fittings

See the commentary to Table 702.1, Stainless steel drainage systems.

Steel pipe fittings

The standard ASME B 16.9 is for factory-made butt welded fittings ASME B16.11 is for forged fittings, socket and threaded types. ASME B 16.28 is for wrought steel butt-welding short radius elbows and returns.

Vitrified clay pipe

See the commentary to Table 702.3, Vitrified clay pipe.

702.5 Temperature rating. Where the waste water temperature will be greater than 140°F (60°C), the sanitary drainage piping material shall be rated for the highest temperature of the waste water.

❖ The pipe materials indicated in Tables 702.1 through 702.3 are suitable for waste water temperatures up to 140°F (60°C). Where waste water temperatures are expected to be greater than 140°F, the design professional needs to make sure that the selected pipe material can handle the higher temperature.

702.6 Chemical waste system. A chemical waste system shall be completely separated from the sanitary drainage system. The chemical waste shall be treated in accordance with Section 803.2 before discharging to the sanitary drainage system. Separate drainage systems for chemical wastes and vent pipes shall be of an *approved* material that is resistant to corrosion and degradation for the concentrations of chemicals involved.

❖ A measure of the degree of acidity or alkalinity of a liquid is its pH value, which defines the concentration of free hydrogen ions on a scale of 0 to 14. A pH value of 7 is considered neutral. As the value decreases, the liquid becomes more acidic; as the value increases, it becomes more alkaline. Mildly alkaline liquids are not harmful to a piping system. When the pH of a liquid is less than 6.8, it is considered to be corrosive. A drainage and vent system that handles waste with a pH lower than 5.5 is called an “acid waste system.” This type of system is usually found in hospitals, research laboratories, food processing plants, photo labs, battery rooms and similar facilities.

There is no universal material available to resist all chemical action. Each pipe has qualities that make it resistant to certain chemical waste systems. An individual analysis of compatibility is required for the installation of a chemical waste and vent system. Piping material such as borosilicate glass and polyolefin plastic is often used for special waste applications and is listed in Table 702.1; however, not all materials commonly used for chemical waste and vent systems are listed in the code. Materials such as high-silicon iron pipe, lead pipe and ceramic glazed or unglazed vitrified clay are commonly used. Some of those materials are proprietary products and cannot be listed in the code.

Acid wastes in the vapor state are more corrosive than in the liquid state; therefore, it is important to provide material that resists chemical action for the vent

INTERNATIONAL CODE COUNCIL®
Copyright © 2015 ICC. ALL RIGHTS RESERVED. Accessed by David Dammon on Jun 21, 2017 12:30:52 PM pursuant to License Agreement with ICC. No further reproduction or distribution authorized. ANY UNAUTHORIZED REPRODUCTION OR DISTRIBUTION IS A VIOLATION OF THE FEDERAL COPYRIGHT ACT AND THE LICENSE AGREEMENT, AND SUBJECT TO CIVIL AND CRIMINAL PENALTIES THEREUNDER.

piping as well as for the drainage piping. The code official must evaluate the material or rely on an evaluation by authoritative sources, and approve the product as an alternative material. Section 803 governs the requirements for discharge of special wastes into the sanitary drainage system.

702.7 Lead bends and traps. The wall thickness of lead bends and traps shall be not less than $^1/_8$ inch (3.2 mm).

❖ The walls of lead bends and traps must be at least $^1/_8$ inch (3.2 mm). They are typically installed in chemical waste systems.

SECTION 703
BUILDING SEWER

703.1 Building sewer pipe near the water service. The proximity of a *sewer* to a water service shall comply with Section 603.2.

❖ Where the building sewer is installed in close proximity to the water service, there is a concern that the water service could be subjected to contamination from a sewer leak or failure. To minimize the possibility of contamination, only materials with high reliability are allowed to be installed in a common trench. See Section 603.2 for additional requirements for water service and building sewer separation.

703.2 Drainage pipe in filled ground. Where a *building sewer* or *building drain* is installed on filled or unstable ground, the drainage pipe shall conform to one of the standards for ABS plastic pipe, cast-iron pipe, copper or copper-alloy tubing, or PVC plastic pipe listed in Table 702.3.

❖ Filled or unstable ground is considered to be a marshy or landfill area. Because of the increased possibility of movement, only the strongest materials with the greatest ability to maintain pipe alignment are permitted to be installed for the building sewer.

703.3 Sanitary and storm sewers. Where separate systems of sanitary drainage and storm drainage are installed in the same property, the sanitary and storm building sewers or drains shall be permitted to be laid side by side in one trench.

❖ The concern for contamination of the storm sewer from a sewer leak or failure is not as critical as that of contamination of the water service; therefore, it is permissible to place the storm and sanitary sewers side by side in the same trench.

703.4 Existing building sewers and drains. Existing *building sewers* and *drains* shall connect with new *building sewer* and drainage systems only where found by examination and test to conform to the new system in quality of material. The code official shall notify the owner to make the changes necessary to conform to this code.

❖ Use of an existing drainage system may continue to be used if the piping material is found to be in satisfactory condition. Some existing materials are no longer manufactured; however, the piping may be more than adequate. Materials of this type that may be encountered include wrought-iron pipe, cast-iron medium-weight pipe and cast-iron "victory" pipe.

703.5 Cleanouts on building sewers. Cleanouts on *building sewers* shall be located as set forth in Section 708.

❖ Improperly located cleanouts may create difficulties in the cleaning of stoppages in the drainage system. Cleanout locations and spacing requirements are stated in Section 708.

703.6 Combined sanitary and storm public sewer. Where the public sewer is a combined system for both sanitary and storm water, the sanitary sewer shall be connected independently to the public sewer.

❖ There are numerous major (older) cities where the public sewer system conveys both sanitary drainage and storm water drainage. Because storm water flows often create overflows of the public sewer system (and the state environmental authorities fine the cities for these overflows), cities are working to separate the public systems by installing a storm (only) sewer system. The sewers for new buildings must be separate to accommodate the future installation of public storm (only) sewers.

SECTION 704
DRAINAGE PIPING INSTALLATION

704.1 Slope of horizontal drainage piping. Horizontal drainage piping shall be installed in uniform alignment at uniform slopes. The slope of a horizontal drainage pipe shall be not less than that indicated in Table 704.1.

❖ This section contains installation requirements for sanitary drainage systems. The minimum desired velocity in a horizontal drain pipe is approximately 2 feet per second (0.61 m/s). This velocity is often referred to as the "scouring velocity," even though it may not always clean the walls of the drainage pipe. The scouring velocity is intended to keep solids in suspension. For example, if the velocity is too low where a drain pipe is excessively oversized, the solids tend to drop out of suspension, settling to the bottom of the pipe. This may eventually result in a drain stoppage. A greater velocity is required to move solids at rest than is required to keep moving solids in suspension. A true scouring velocity would then be higher than the velocity initially used to transport the solid.

TABLE 704.1
SLOPE OF HORIZONTAL DRAINAGE PIPE

SIZE (inches)	MINIMUM SLOPE (inch per foot)
$2^1/_2$ or less	$^1/_4$
3 to 6	$^1/_8$
8 or larger	$^1/_{16}$

For SI: 1 inch = 25.4 mm, 1 inch per foot = 83.33 mm/m.

❖ A simplified method of determining the minimum slope of a drainage pipe is provided. The slope listed for each given pipe size is intended to produce the mini-

INTERNATIONAL CODE COUNCIL®
Copyright © 2015 ICC. ALL RIGHTS RESERVED. Accessed by David Dammon on Jun 21, 2017 12:30:52 PM pursuant to License Agreement with ICC. No further reproduction or distribution authorized. ANY UNAUTHORIZED REPRODUCTION OR DISTRIBUTION IS A VIOLATION OF THE FEDERAL COPYRIGHT ACT AND THE LICENSE AGREEMENT, AND SUBJECT TO CIVIL AND CRIMINAL PENALTIES THEREUNDER.

mum required drainage flow velocity. A drainage pipe can be installed with greater slopes because a maximum slope is not prescribed. The slope is commonly expressed in percentages as total fall per length of pipe. For example, a 1-percent slope is approximately equivalent to $^1/_8$ inch per foot (10 mm per m) and a 2-percent slope is approximately equal to $^1/_4$ inch per foot (20 mm per m).

704.2 Change in size. The size of the drainage piping shall not be reduced in size in the direction of the flow. A 4-inch by 3-inch (102 mm by 76 mm) water closet connection shall not be considered as a reduction in size.

❖ One of the fundamental requirements of a drainage system is that the size of piping cannot be reduced in the direction of drainage flow. A size reduction would create an obstruction to flow, possibly resulting in a backup of flow, an interruption of service in the drainage system or stoppage in the pipe. A 4-inch by 3-inch (102 mm by 76 mm) water closet connection is not considered to be a reduction in pipe size.

704.3 Connections to offsets and bases of stacks. Horizontal *branches* shall connect to the bases of stacks at a point located not less than 10 times the diameter of the drainage *stack* downstream from the *stack*. Horizontal *branches* shall connect to horizontal *stack* offsets at a point located not less than 10 times the diameter of the drainage *stack* downstream from the upper *stack*.

❖ At the base of every stack, a phenomenon of flow may occur that is commonly called "hydraulic jump." Hydraulic jump is the rising in the depth of flow above a half full pipe. A horizontal drain designed in accordance with the code is expected to have a normal flow depth of not greater than half full. The rise in flow may be great enough to close off the opening of the pipe, thus creating pressure fluctuations in the system that may affect trap seals. Hydraulic jump occurs within a distance of 10 times the diameter of the drainage stack downstream of the stack connection. To avoid flow interference, backup of flow and extreme pressure fluctuations, horizontal branch connections are prohibited in this area. Hydraulic jump also results from the high-velocity vertical flow in the stack making a transition to a slower horizontal flow in the building drain. The initial velocity remains high in the horizontal building drain until flow levels off, achieving a uniform flow condition (see Commentary Figure 704.3). A horizontal stack offset creates flow conditions similar to that created at the base of any other stack. The stack above the offset connects to horizontal piping, thereby causing hydraulic jump.

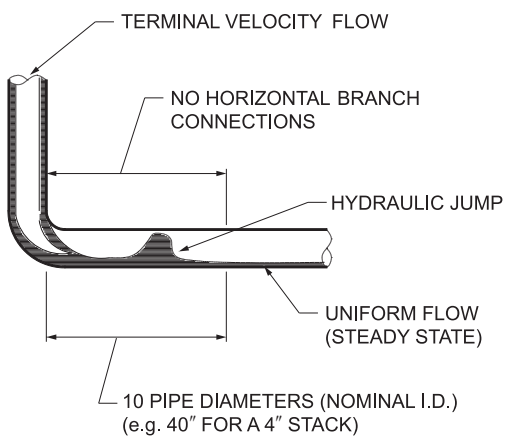

For SI: 1 inch = 25.4 mm.

Figure 704.3
HYDRAULIC JUMP

704.4 Future fixtures. Drainage piping for future fixtures shall terminate with an *approved* cap or plug.

❖ If piping is installed for future fixtures, it must be closed with caps or plugs to prevent the escape of sewer gas and waste and the entrance of foreign substances. Section 905.6 also requires a vent to be roughed in for drainage pipe that will serve fixtures to be installed in the future.

SECTION 705
JOINTS

705.1 General. This section contains provisions applicable to joints specific to sanitary drainage piping.

❖ This section contains requirements that apply to materials used for the joining of pipes and the installation of those materials. Acceptable joints and connections for the sanitary drainage piping materials addressed in Section 702 are listed in alphabetical order in this chapter. The main section title identifies the piping material to which the section applies. Subsequent sections list acceptable joints or connections for each particular material. Joints and connections between dissimilar materials are regulated in Section 705.19.

705.2 ABS plastic. Joints between ABS plastic pipe or fittings shall comply with Sections 705.2.1 through 705.2.3.

❖ Acceptable joints for ABS plastic pipe are identified in the referenced sections.

705.2.1 Mechanical joints. Mechanical joints on drainage pipes shall be made with an elastomeric seal conforming to ASTM C 1173, ASTM D 3212 or CSA B602. Mechanical joints shall be installed only in underground systems unless otherwise *approved*. Joints shall be installed in accordance with the manufacturer's instructions.

❖ Mechanical joints are predominantly used in underground applications (e.g., bell or hub compression gasket joints and elastomeric transition couplings). Mechanical joints are typically of the unrestrained type. Above-ground mechanical joints are limited primarily to rehabilitation installations and connections to existing systems when it is impractical to make another type of joint. Mechanical joints are sometimes used where other joining means cannot be used. For example, underground PVC pipe may be joined with an elastomeric coupling where, because of water in the trench, solvent cementing is not possible. The referenced standards are addressed only with respect to

INTERNATIONAL CODE COUNCIL®
Copyright © 2015 ICC. ALL RIGHTS RESERVED. Accessed by David Dammon on Jun 21, 2017 12:30:52 PM pursuant to License Agreement with ICC. No further reproduction or distribution authorized. ANY UNAUTHORIZED REPRODUCTION OR DISTRIBUTION IS A VIOLATION OF THE FEDERAL COPYRIGHT ACT AND THE LICENSE AGREEMENT, AND SUBJECT TO CIVIL AND CRIMINAL PENALTIES THEREUNDER.

the elastomeric material used to make the seal in a mechanical joint, not the entire coupling or fitting assembly.

705.2.2 Solvent cementing. Joint surfaces shall be clean and free from moisture. Solvent cement that conforms to ASTM D 2235 or CSA B181.1 shall be applied to all joint surfaces. The joint shall be made while the cement is wet. Joints shall be made in accordance with ASTM D 2235, ASTM D 2661, ASTM F 628 or CSA B181.1. Solvent-cement joints shall be permitted above or below ground.

❖ Solvent cementing is the most common method of joining ABS plastic pipe and fittings. This section clarifies that solvent cementing is an acceptable joining method for both above-ground and below-ground installations. Although it is the most common method, solvent cementing is one of the most misunderstood methods of joining pipe.

The ASTM and CSA referenced standards indicate how to handle solvent cement safely and recommend a practice for making joints. ABS solvent cement is a flammable liquid and a source of flammable vapors. It must be kept a safe distance away from any source of ignition. Solvent cement should also be used in a well-ventilated area. Prolonged breathing of solvent cement vapors can have adverse health effects. Solvent cement is also an eye and skin irritant. If contact with the eyes is possible, protective goggles should be worn. When frequent contact with the skin is likely, impervious gloves should be worn.

The pipe and fittings should be approximately the same temperature prior to solvent cementing. The pipe should be cut square and chamfered. The pipe end and socket fitting must be clean, dry and free from grease, oil and other foreign materials. The solvent cement must be uniformly applied to the socket of the fitting and to the end of the pipe to the depth of the socket. Excessive solvent cement should be avoided to prevent a puddle of cement from forming on the inside of the pipe joint, which may deform or structurally weaken the fitting or pipe. The joint is made by twisting the pipe into the fitting socket immediately after applying the cement. The pipe will tend to back out unless it is restrained; therefore, it must be held in place for a few seconds until the solvent cement begins to set.

A small bead of solvent cement forms between the pipe exterior and fitting. The bead must be removed with a clean cloth to avoid the possibility of weakening the pipe wall. There should be no rough handling of the pipe for at least 1 hour after the joint is made. A solvent-cement joint should remain for a period of 24 hours before being exposed to working pressure. Because each type of solvent cement is specifically designed for a given piping material, all-purpose solvent cement or universal solvent cement cannot be used to join ABS pipe or fittings unless it conforms to ASTM D 2235 or CSA B181.1.

Solvent cement for each plastic pipe material requires a unique mixture or combination of solvents and dissolved plastic resins to conform to the applicable standard. Although all-purpose cement may dissolve the surfaces of ABS, PVC and CPVC, it may be too aggressive or not aggressive enough to make a joint strong enough to meet the minimum strength requirements of the referenced standards. Solvent cement must be identified on its container as complying with the applicable ASTM or CSA standard.

705.2.3 Threaded joints. Threads shall conform to ASME B1.20.1. Schedule 80 or heavier pipe shall be permitted to be threaded with dies specifically designed for plastic pipe. *Approved* thread lubricant or tape shall be applied on the male threads only.

❖ Pipe thread dimensions can be historically traced to Robert Briggs, mentioned in the commentary to Table 605.3 for galvanized steel pipe. ASME B 1.20.1 identifies pipe dimensions as "NPT," which is often thought of as an abbreviation. Some of the terms from which NPT has been shortened are: National Pipe Thread, Nominal Pipe Thread and National Pipe Tapered Thread. NPT is a coded designation: "N" stands for USA Standard, "P" indicates pipe and "T" means that the threads are tapered.

Thread lubricant (pipe-joint compound) must be specifically designed for ABS plastic pipe. It is not the same lubricant that is commonly used for metallic pipe, such as steel. Thread lubricant and tape are designed for two purposes: to lubricate the joint for proper thread mating and to fill in small imperfections on the surfaces of the threads. Field threading of ABS is limited to solid-core Schedule 80 pipe because the wall thickness is sufficient to accommodate threads without affecting pipe strength.

705.3 Brass. Joints between brass pipe or fittings shall comply with Sections 705.3.1 through 705.3.4.

❖ Acceptable joints for brass pipe or fittings are identified in the referenced sections.

705.3.1 Brazed joints. All joint surfaces shall be cleaned. An *approved* flux shall be applied where required. The joint shall be brazed with a filler metal conforming to AWS A5.8.

❖ Although brazed joints are similar to soldered joints, brazed joints are joined at a higher temperature [in excess of 1,000°F (538°C)]. Because of the brazed joint's inherent resistance to elevated temperatures, it is much stronger than a soldered joint. Brazing is often referred to as "silver soldering." Silver soldering is more accurately described as silver brazing and uses high silver-bearing alloys primarily composed of silver, copper and zinc. Silver soldering (brazing) typically requires temperatures in excess of 1,000°F (538°C), and such solders are classified as "hard" solders.

There has always been confusion over the distinction between "silver solder" and "silver-bearing solder." Silver solders are unique and may be further subdivided into soft and hard categories, which are determined by the percentages of silver and the other component elements of the particular alloy. The distinction must be made that silver-bearing solders [with

INTERNATIONAL CODE COUNCIL®
Copyright © 2015 ICC. ALL RIGHTS RESERVED. Accessed by David Dammon on Jun 21, 2017 12:30:52 PM pursuant to License Agreement with ICC. No further reproduction or distribution authorized. ANY UNAUTHORIZED REPRODUCTION OR DISTRIBUTION IS A VIOLATION OF THE FEDERAL COPYRIGHT ACT AND THE LICENSE AGREEMENT, AND SUBJECT TO CIVIL AND CRIMINAL PENALTIES THEREUNDER.

a melting point less than 600°F (316°C)] are used in soft-soldered joints, whereas silver solders [with a melting point above 1,000°F (538°C)] are used in silver-brazed joints. The two common series of filler metals used for brazing are BCuP and BAg. BCuP contains phosphorus and copper alloys. BAg contains 30- to 60-percent silver with zinc and copper alloys. Some of the BAg filler metals also contain cadmium.

During brazing, such filler metal produces toxic fumes. Brazing should always be done in well-ventilated areas, and protective eye gear must also be worn. The joint surfaces to be brazed must be cleaned, which is typically accomplished by polishing the pipe with an emery cloth. The socket fitting is cleaned with a specially designed brush. Brazing flux is applied to the joint surfaces. Certain types of BCuP filler metals do not require flux for certain types of joints. The manufacturer's recommendations should be consulted to determine when flux is necessary. The joints are typically heated with an oxyacetylene torch, though an air acetylene torch may be used on a smaller-diameter pipe. The pipe and fitting must be at approximately the same temperature when making the joint. The filler metal flows to the heat with the aid of the flux. The pipe must first be heated above the fitting. When the flux becomes clear, the heat must be directed to the base of the fitting socket. When the flux becomes clear and quiet, the filler metal is applied to the joint. The heat draws the filler metal into the socket. Any remaining flux residue must be removed from the pipe and joint surfaces (see Commentary Figure 705.3.1).

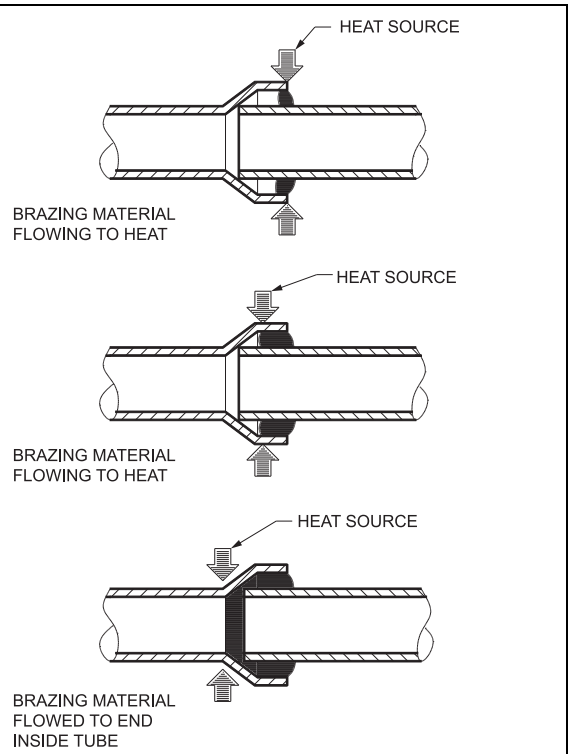

Figure 705.3.1
HEAT APPLICATION OF BRAZED JOINT

705.3.2 Mechanical joints. Mechanical joints shall be installed in accordance with the manufacturer's instructions.

❖ Mechanical joints are unique in that there are many acceptable types available. Most mechanical joints use an elastomeric material to form a seal. Compression fittings that use a compression ring (ferrule) which forms a metal-to-metal seal are also considered mechanical joints. In all cases, the joint must be carefully installed in accordance with the manufacturer's instructions.

705.3.3 Threaded joints. Threads shall conform to ASME B1.20.1. Pipe-joint compound or tape shall be applied on the male threads only.

❖ The pipe-joint compound is typically designed for all metallic pipe. Generally, the pipe-joint compound used for brass pipe may also be applied to copper and steel pipe (see commentary, Section 705.2.3).

705.3.4 Welded joints. All joint surfaces shall be cleaned. The joint shall be welded with an *approved* filler metal.

❖ A welded joint is similar to a brazed joint. The primary differences are the temperature at which the joint is made, the type of filler metal used and the fact that welding reaches the melting point of the base metal, whereas brazing temperatures are well below the melting point of the pipe (see commentary, Section 705.4.1).

705.4 Cast iron. Joints between cast-iron pipe or fittings shall comply with Sections 705.4.1 through 705.4.3.

❖ Acceptable joints for cast-iron pipe or fittings are identified in the referenced sections.

705.4.1 Caulked joints. Joints for hub and spigot pipe shall be firmly packed with oakum or hemp. Molten lead shall be poured in one operation to a depth of not less than 1 inch (25 mm). The lead shall not recede more than $^1/_8$ inch (3.2 mm) below the rim of the hub and shall be caulked tight. Paint, varnish or other coatings shall not be permitted on the jointing material until after the joint has been tested and *approved*. Lead shall be run in one pouring and shall be caulked tight. Acid-resistant rope and acidproof cement shall be permitted.

❖ A caulked joint is the oldest form of joining cast-iron pipe (see Commentary Figure 705.4.1). The joint is sealed with tightly packed oakum or hemp. The oakum or hemp expands the first time it becomes wet, thus sealing the joint. Lead is poured in place behind the oakum to prevent the oakum from expanding out of the joint. Quite often, a caulked joint will leak when it is first tested. This is a result of the oakum not yet expanding in place. Once the oakum has expanded, the joint will not leak.

The joint is made by packing the oakum or hemp into the hub fitting around the pipe to be joined. The surfaces must be dry to prevent the oakum from expanding prematurely. Once in place, the oakum is packed tight with a packing iron and hammer. Molten lead is poured in one continuous operation, securing the oakum. If the joint surfaces or oakum is wet when pouring the lead, rapidly expanding steam causes the

INTERNATIONAL CODE COUNCIL®
Copyright © 2015 ICC. ALL RIGHTS RESERVED. Accessed by David Dammon on Jun 21, 2017 12:30:52 PM pursuant to License Agreement with ICC. No further reproduction or distribution authorized. ANY UNAUTHORIZED REPRODUCTION OR DISTRIBUTION IS A VIOLATION OF THE FEDERAL COPYRIGHT ACT AND THE LICENSE AGREEMENT, AND SUBJECT TO CIVIL AND CRIMINAL PENALTIES THEREUNDER.

lead to pop or explode. After the lead solidifies, it must be packed tight. A properly made caulked joint will bear marks on the lead caused by a finishing iron used to pack the lead.

Because caulked joints are labor intensive and involve the risk of worker injury, and because lead is a health hazard, such joints are becoming increasingly rare. The code does not recognize a substitute for lead in caulked joints. In the case of remodeling and repair work where one or more caulked joints must be made to allow transitions to different types of piping, code officials had on occasion permitted the use of approved lead substitutes, such as cement-based compounds. Elastomeric seals are also available for making transition joints with hubbed cast-iron pipe (see commentary, Section 705.4.2).

705.4.2 Compression gasket joints. Compression gaskets for hub and spigot pipe and fittings shall conform to ASTM C 564 and shall be tested to ASTM C 1563. Gaskets shall be compressed when the pipe is fully inserted.

❖ A mechanical compression joint is used with hubbed cast-iron drainage pipe. The elastomeric gasket is often called a "rubber gasket" or "rubber joint." The gasket is inserted into the hub of the pipe. A lubricant is used to coat the end of the joining pipe and the gasket. The pipe is inserted into the hub using a special tool that pulls the pipe and hub together, compressing the gasket in the annular space between the pipe and the hub. The pipes must be completely pulled together to make the joint properly. A typical compression joint has two main compression points in the seal (see Commentary Figure 705.4.2).

705.4.3 Mechanical joint coupling. Mechanical joint couplings for hubless pipe and fittings shall consist of an elastomeric sealing sleeve and a metallic shield that comply with CISPI 310, ASTM C 1277 or ASTM C 1540. The elastomeric sealing sleeve shall conform to ASTM C 564 or CSA B602 and shall be provided with a center stop. Mechanical joint couplings shall be installed in accordance with the manufacturer's instructions.

❖ Mechanical joint couplings are devices used with hubless cast-iron drainage, waste and vent pipe and fittings. Mechanical joint couplings are manufactured in a variety of types, all of which include a metallic shield or sleeve elastomeric seal and a clamp assembly that compresses the seal around the outside circumfer-

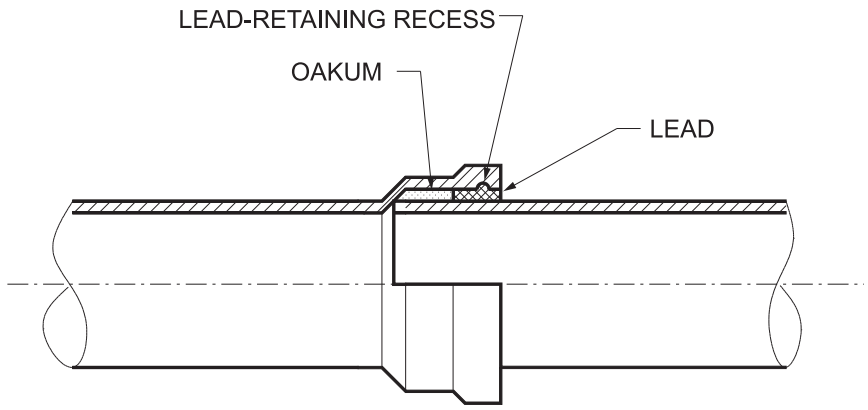

Figure 705.4.1
CAULKED JOINT FOR HUB AND SPIGOT (CAST-IRON)

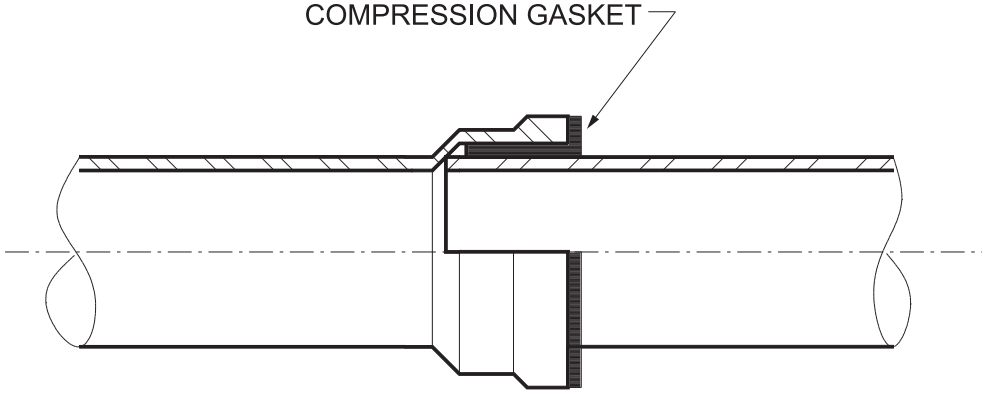

Figure 705.4.2
CAST-IRON COMPRESSION GASKET

INTERNATIONAL CODE COUNCIL®
Copyright © 2015 ICC. ALL RIGHTS RESERVED. Accessed by David Dammon on Jun 21, 2017 12:30:52 PM pursuant to License Agreement with ICC. No further reproduction or distribution authorized. ANY UNAUTHORIZED REPRODUCTION OR DISTRIBUTION IS A VIOLATION OF THE FEDERAL COPYRIGHT ACT AND THE LICENSE AGREEMENT, AND SUBJECT TO CIVIL AND CRIMINAL PENALTIES THEREUNDER.

ence of the pipe or fitting. Mechanical joint couplings are typically designed to resist the shear forces that can cause misalignment of pipe and fittings. ASTM C 564 and CSA CAN/CSA-B602 apply only to the elastomeric seal component of mechanical joint couplings. CISPI 310 and ASTM C 1277 address the entire coupling assembly. The center stop prevents the pipe or fitting from penetrating too far into the coupling. The center stop is designed to ensure proper penetration depth for both of the pipes or fittings being joined.

The code regulates the design and quality of the elastomeric seals and the overall design of mechanical joint coupling assemblies used to join cast-iron DWV pipe and fittings. CISPI 310 and ASTM C 1277 address couplings that use a metal shield. The shield protects the elastomeric seal and contributes to the shear force resistance and rigidity to the assembled joint. The use of coupling designs that do not use a metal shield may have to be approved in accordance with Section 105.2. Mechanical joints and mechanical joint couplings must be installed in accordance with the manufacturer's instructions (see Commentary Figure 705.4.3).

705.5 Concrete joints. Joints between concrete pipe and fittings shall be made with an elastomeric seal conforming to ASTM C 443, ASTM C 1173, CSA A257.3M or CSA B602.

❖ The only acceptable method of joining concrete pipe is an elastomeric gasket that fits in the hub of the pipe. The gasket is compressed between the hub and the pipe to form a seal. The ASTM and CSA standards regulate the design, material and performance of the elastomeric gasket (see Commentary Figure 705.5).

705.6 Copper pipe. Joints between copper or copper-alloy pipe or fittings shall comply with Sections 705.6.1 through 705.6.5.

❖ Acceptable joints for copper or copper-alloy pipe or fittings are identified in the referenced sections.

705.6.1 Brazed joints. All joint surfaces shall be cleaned. An *approved* flux shall be applied where required. The joint shall be brazed with a filler metal conforming to AWS A5.8.

❖ The installation technique and materials used to make a brazed joint for copper or copper-alloy pipe are identical to that of brass pipe and copper tubing (see commentary, Section 705.4.1).

705.6.2 Mechanical joints. Mechanical joints shall be installed in accordance with the manufacturer's instructions.

❖ Mechanical joints for copper or copper alloy pipe are similar to those used to join brass pipe (see commentary, Section 705.4.2). Because many different types of mechanical joints are available and most couplings are unique to one manufacturer, the joining method must be in accordance with the manufacturer's installation instructions. Such joints are highly resistant to being pulled apart.

705.6.3 Solder joints. Solder joints shall be made in accordance with the methods of ASTM B 828. Cut tube ends shall be reamed to the full inside diameter of the tube end. All joint

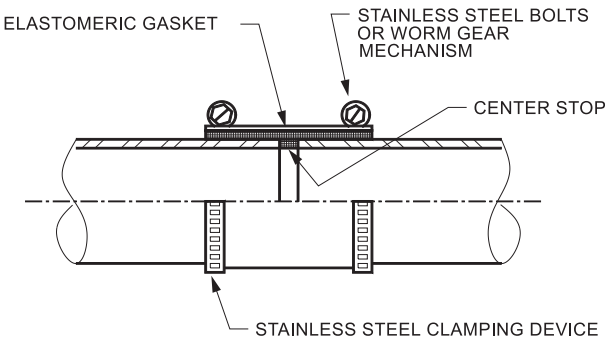

Figure 705.4.3
HUBLESS CAST-IRON DRAINAGE PIPE JOINT

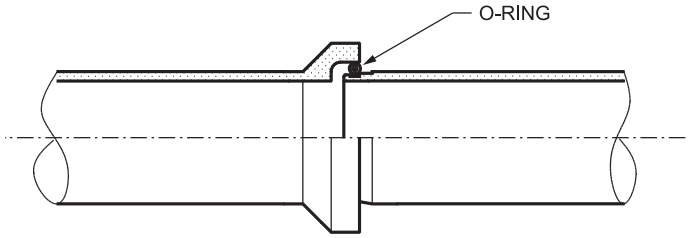

Figure 705.5
CONCRETE MECHANICAL JOINT

INTERNATIONAL CODE COUNCIL®
Copyright © 2015 ICC. ALL RIGHTS RESERVED. Accessed by David Dammon on Jun 21, 2017 12:30:52 PM pursuant to License Agreement with ICC. No further reproduction or distribution authorized. ANY UNAUTHORIZED REPRODUCTION OR DISTRIBUTION IS A VIOLATION OF THE FEDERAL COPYRIGHT ACT AND THE LICENSE AGREEMENT, AND SUBJECT TO CIVIL AND CRIMINAL PENALTIES THEREUNDER.

surfaces shall be cleaned. A flux conforming to ASTM B 813 shall be applied. The joint shall be soldered with a solder conforming to ASTM B 32.

❖ Soldering is the most common method of joining copper pipe and tubing. ASTM B 828 governs the procedures for making capillary joints by soldering copper and copper alloy tube and fittings. To consistently make satisfactory joints, the following sequence of joint preparation and operations must be followed: measuring and cutting, reaming, cleaning, fluxing, assembly and support, heating, applying the solder and cooling and cleaning. The joint surfaces must be accurately measured because if the tube is too short, it will not reach all the way into the fitting and a proper joint cannot be made. If the tube is too long, the system strain may affect service life.

Tubing may be cut in a number of different ways to produce a square end. The tubing may be cut with a tubing cutter, a hacksaw, an abrasive wheel or a band saw. Regardless of the method, the cut must be square with the run of the tube so it will seat properly in the fitting. The tubing ends, outside of the tube ends to the inside diameter of the tube, must be reamed to remove the burrs created by the cutting operation (see Commentary Figure 705.6.3).

The joint surfaces for a soldered joint must be cleaned to remove all oxides and surface soil from the tube ends and fittings. Cleaning may be accomplished using a sand cloth, an abrasive pad and a fitting brush. The space between the tube and the fitting is where the solder metal fills this gap by capillary action. The spacing is critical for the solder metal to flow into the gap and form a strong joint. Uniformity of capillary space will ensure metal capillary flow.

Once the joint surfaces are cleaned, do not touch the cleaned area with bare hands or oily gloves. Skin oils, lubricating oils or grease could interfere with the process. Apply a thin, even coating of flux to both the tubing and fitting that will dissolve and remove traces of oxide from the cleaned surfaces. Care must be taken in applying flux because excessive amounts will cause corrosion that may perforate the wall of the tubing, the fitting or both. The flux material must conform to ASTM B 813, which establishes minimum performance criteria. This also limits the maximum lead content to 0.2 percent.

Begin heating with the flame alternating from the fitting cup back onto the tube. Touch the solder to the joint and if the solder does not melt, remove it and continue the heating process. Once the melting temperatures are reached, apply heat to the base of the fitting to aid capillary action in drawing the molten solder into the cup toward the heat source. Molten solder metal is drawn into the joint by capillary action regardless of the direction that the metal is being fed (horizontal or vertical). If excessive heat is used, the flux will burn out and char the pipe, and where the temperature is too uneven, the solder will run down either the inside or the outside of the pipe. Either condition will prevent capillary action.

Allow the completed joint to cool naturally; cooling it with water will cause unnecessary shock and stress on the joint. When the joint is cool, clean off any remaining flux.

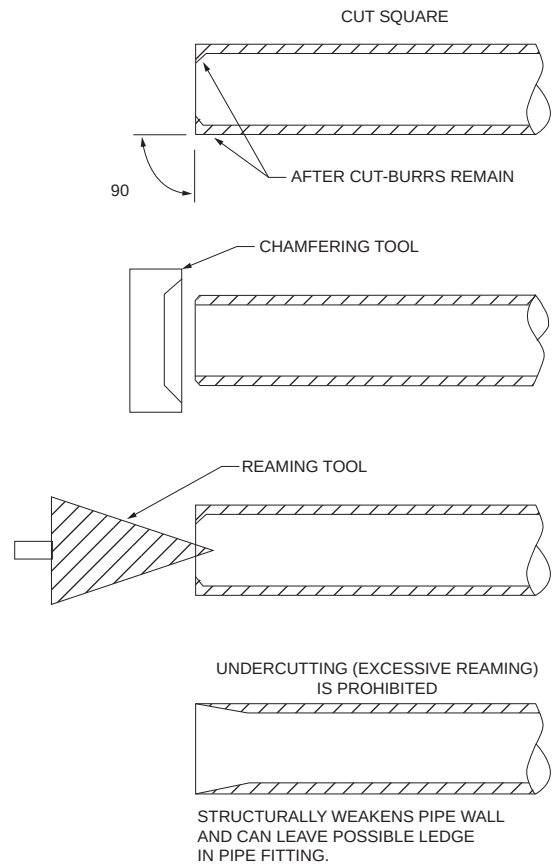

For SI: 1 degree = 0.0175 rad.

Figure 705.6.3
PREPARATION OF PIPE END

705.6.4 Threaded joints. Threads shall conform to ASME B1.20.1. Pipe-joint compound or tape shall be applied on the male threads only.

❖ Before assembly, the threads must be cleaned with a wire brush to remove burrs or chips resulting from the cutting process. Pipe-joint compound or Teflon tape is applied on the male thread to ensure a tight seal. If pipe-joint compound is applied to the female thread, it will enter the system. The male thread is placed inside the female thread and the joint is tightened using a pipe wrench. Threaded joints are generally limited to smaller pipe diameters because of the amount of effort required to turn a pipe of larger size in making the joint.

705.6.5 Welded joints. All joint surfaces shall be cleaned. The joint shall be welded with an *approved* filler metal.

❖ The installation technique and materials used to make a welded joint for copper or copper-alloy tubing are similar to that of brass pipe (see commentary, Section 705.3.4).

INTERNATIONAL CODE COUNCIL®
Copyright © 2015 ICC. ALL RIGHTS RESERVED. Accessed by David Dammon on Jun 21, 2017 12:30:52 PM pursuant to License Agreement with ICC. No further reproduction or distribution authorized. ANY UNAUTHORIZED REPRODUCTION OR DISTRIBUTION IS A VIOLATION OF THE FEDERAL COPYRIGHT ACT AND THE LICENSE AGREEMENT, AND SUBJECT TO CIVIL AND CRIMINAL PENALTIES THEREUNDER.

705.7 Copper tubing. Joints between copper or copper-alloy tubing or fittings shall comply with Sections 705.7.1 through 705.7.3.

❖ Acceptable joints for copper or copper-alloy tubing or fittings are identified in the referenced sections.

705.7.1 Brazed joints. All joint surfaces shall be cleaned. An *approved* flux shall be applied where required. The joint shall be brazed with a filler metal conforming to AWS A5.8.

❖ The brazing of a joint for copper or copper-alloy tubing is identical to that of copper, copper-alloy and brass pipe (see commentary, Section 705.4.1).

705.7.2 Mechanical joints. Mechanical joints shall be installed in accordance with the manufacturer's instructions.

❖ There is a variety of joining methods for mechanical joints for copper or copper-alloy tubing. The most common is the compression-type joint. This type of joint is made by placing a compression nut over the outside of the pipe followed by a compression ring. The pipe is inserted into the fitting and tightened. As the compression nut is tightened, the pipe and fitting are brought together, thereby forming a leakproof joint. Mechanical joints have some flexibility, allowing the pipes to be installed with an angle of deflection. Such joints are highly resistant to being pulled apart.

705.7.3 Solder joints. Solder joints shall be made in accordance with the methods of ASTM B 828. Cut tube ends shall be reamed to the full inside diameter of the tube end. All joint surfaces shall be cleaned. A flux conforming to ASTM B 813 shall be applied. The joint shall be soldered with a solder conforming to ASTM B 32.

❖ The requirements and procedures for a soldered joint for copper and copper-alloy tubing are identical to those for copper and copper-alloy pipe (see commentary, Section 705.6.3 and Commentary Figure 705.6.3).

705.8 Borosilicate glass joints. Glass-to-glass connections shall be made with a bolted compression-type, 300 series stainless steel coupling with contoured acid-resistant elastomeric compression ring and a fluorocarbon polymer inner seal ring; or with caulked joints in accordance with Section 705.8.1.

❖ Two methods are recognized for joining glass pipe: one is a mechanical compression joint that is used to join bead-end or plain-end glass pipe; the other is a caulked joint that is used to join bead-end glass pipe to hubbed pipe. The compression-type mechanical joint is available in two standard types: one type is used to join beaded-end glass pipe to beaded-end glass pipe, and the other one is used to join beaded-end glass pipe to plain-end glass pipe.

Both couplings consist of an elastomeric compression ring (typically rubber) with a chemically inert tetrafluoroethylene (TFE) inner seal ring and a stainless steel outer band with bolt. The bead-end to bead-end pipe connection is made by slipping the compression liner and inner seal ring over one section of pipe, aligning the pipes to be joined and sliding the compression liner over both bead ends. The stainless steel outer band is then slid over the compression liner and the joint is secured by tightening the bolt on the outer band. The bead-end to plain-end joint is made in a similar manner. The methods for joining glass pipe to other pipe materials are listed in Section 705.16.6.

705.8.1 Caulked joints. Lead-caulked joints for hub and spigot soil pipe shall be firmly packed with oakum or hemp and filled with molten lead not less than 1 inch (25 mm) in depth and not to recede more than $^1/_8$ inch (3.2 mm) below the rim of the hub. Paint, varnish or other coatings shall not be permitted on the jointing material until after the joint has been tested and *approved*. Lead shall be run in one pouring and shall be caulked tight. Acid-resistant rope and acidproof cement shall be permitted.

❖ The method recognized for joining glass pipe to hubbed pipe is a poured-lead caulk joint. This joint method is used to join beaded-end glass pipe to glass or metal hubbed pipe. The bead end of the glass pipe is inserted into the bell of the other pipe and oakum, hemp or acid-resistant rope is then packed around the glass pipe to prevent direct contact between the two pipes. The installation of the joint is identical to that of cast-iron pipe (see commentary, Section 705.4.1).

705.9 Steel. Joints between galvanized steel pipe or fittings shall comply with Sections 705.9.1 and 705.9.2.

❖ Acceptable joints for galvanized steel pipe or fittings are identified in the referenced sections.

705.9.1 Threaded joints. Threads shall conform to ASME B1.20.1. Pipe-joint compound or tape shall be applied on the male threads only.

❖ The pipe-joint compound used for steel pipe will also be used for both copper and brass pipe (see commentary, Section 705.2.3).The application of pipe-joint compound or Teflon tape to only male threads prevents the compound from entering the piping system.

705.9.2 Mechanical joints. Joints shall be made with an *approved* elastomeric seal. Mechanical joints shall be installed in accordance with the manufacturer's instructions.

❖ A wide variety of mechanical joints are available to join steel pipe, including plain or beveled ends, cut or rolled grooves. Each requires different pipe-end preparation in making a joint. Rolled grooves (instead of cut grooves) are used where the wall of the pipe is not thick enough to have a groove formed around the pipe near the ends. The coupling assembly for both types of grooving is the same. The joint consists of an inner elastomeric gasket and an outer two-piece (split) collar with integral bolts used for tightening. The assembly is placed over both ends and set into the grooves in the pipe. The bolts are tightened to the torque requirements listed in the manufacturer's installation instructions.

705.10 Lead. Joints between lead pipe or fittings shall comply with Sections 705.10.1 and 705.10.2.

❖ Acceptable joints for lead pipe or fittings are identified in the referenced sections.

INTERNATIONAL CODE COUNCIL®
Copyright © 2015 ICC. ALL RIGHTS RESERVED. Accessed by David Dammon on Jun 21, 2017 12:30:52 PM pursuant to License Agreement with ICC. No further reproduction or distribution authorized. ANY UNAUTHORIZED REPRODUCTION OR DISTRIBUTION IS A VIOLATION OF THE FEDERAL COPYRIGHT ACT AND THE LICENSE AGREEMENT, AND SUBJECT TO CIVIL AND CRIMINAL PENALTIES THEREUNDER.

705.10.1 Burned. Burned joints shall be uniformly fused together into one continuous piece. The thickness of the joint shall be at least as thick as the lead being joined. The filler metal shall be of the same material as the pipe.

❖ A burned joint is formed by fitting the end of one lead pipe into the flared end of another lead pipe. Heat is then applied evenly around the joint, melting the overlapping edges and fusing them together. Lead burning is a method used for joining sheet lead or making lead pans.

705.10.2 Wiped. Joints shall be fully wiped, with an exposed surface on each side of the joint not less than $^3/_4$ inch (19.1 mm). The joint shall be not less than $^3/_8$ inch (9.5 mm) thick at the thickest point.

❖ A wiped joint is formed by fitting the end of one pipe into the flared end of the other. Molten lead is poured onto the joint and wiped with a hand-held pad, providing a minimum dimension of $^3/_4$ inch (19.1 mm) and a maximum thickness of $^3/_8$ inch (9.5 mm) (see Commentary Figure 705.10.2). With the aid of modern technology and introduction of new materials, lead pipe is rarely used in drainage systems.

705.11 PVC plastic. Joints between PVC plastic pipe or fittings shall comply with Sections 705.11.1 through 705.11.3.

❖ Acceptable joints for PVC plastic pipe or fittings are identified in the referenced sections.

705.11.1 Mechanical joints. Mechanical joints on drainage pipe shall be made with an elastomeric seal conforming to ASTM C 1173, ASTM D 3212 or CSA B602. Mechanical joints shall not be installed in above-ground systems, unless otherwise *approved*. Joints shall be installed in accordance with the manufacturer's instructions.

❖ A typical underground sewer line is plastic hub pipe with an elastomeric compression gasket inside the hub. The pipe must be inserted to the full depth of the hub to make a proper joint (see commentary, Section 705.2.1). The typical mechanical joint must be restrained to prevent separation; therefore, such joints are limited to underground installations where restraint is accomplished by burial.

705.11.2 Solvent cementing. Joint surfaces shall be clean and free from moisture. A purple primer that conforms to ASTM F 656 shall be applied. Solvent cement not purple in color and conforming to ASTM D 2564, CSA B137.3, CSA B181.2 or CSA B182.1 shall be applied to all joint surfaces. The joint shall be made while the cement is wet and shall be in accordance with ASTM D 2855. Solvent-cement joints shall be permitted above or below ground.

Exception: A primer is not required where both of the following conditions apply:

1. The solvent cement used is third-party certified as conforming to ASTM D 2564.
2. The solvent cement is used only for joining PVC drain, waste and vent pipe and fittings in nonpressure applications in sizes up to and including 4 inches (102 mm) in diameter.

❖ PVC plastic pipe requires a primer prior to solvent cementing. Although ASTM F 656 only recommends that PVC primer be purple, this is a code requirement. The purple coloring is intended to allow the installer and the inspector to verify that the required primer has been applied. To distinguish the difference between primer and solvent cement, the solvent cement must be a color other than purple. Solvent cement for PVC is typically clear (see commentary, Section 705.2.2). A PVC primer is first applied to both the pipe and the socket fitting. The PVC solvent cement is then applied to the pipe and socket fitting. The joint is made with a slight twisting until the pipe reaches the full depth of the socket fitting. It is then held in place until the solvent cement begins to set. It is wise to wear impervious gloves to prevent solvent cement from coming into contact with the skin. The solvent-cementing procedure must be done in accordance with the referenced standard.

To minimize the health and fire hazards associated with solvent cements and primers, the manufacturers' instructions for the use and handling of these materials must be followed, in addition to the requirements found in ASTM D 2855.

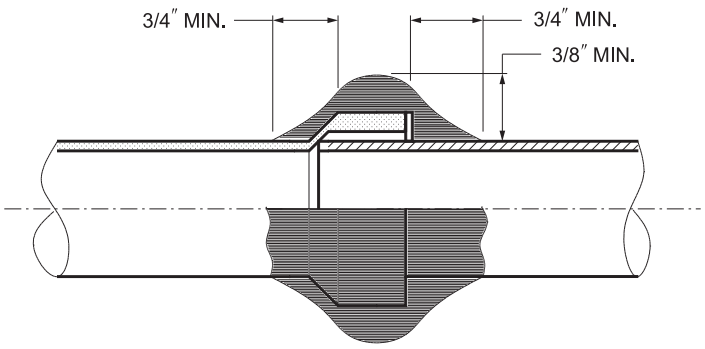

For SI: 1 inch = 25.4 mm.

Figure 705.10.2
LEAD-WIPED JOINT

INTERNATIONAL CODE COUNCIL®
Copyright © 2015 ICC. ALL RIGHTS RESERVED. Accessed by David Dammon on Jun 21, 2017 12:30:52 PM pursuant to License Agreement with ICC. No further reproduction or distribution authorized. ANY UNAUTHORIZED REPRODUCTION OR DISTRIBUTION IS A VIOLATION OF THE FEDERAL COPYRIGHT ACT AND THE LICENSE AGREEMENT, AND SUBJECT TO CIVIL AND CRIMINAL PENALTIES THEREUNDER.

The exception allows for primer to not be used for joints of piping that is 4 inches (102 mm) and smaller. Testing by NSF revealed that for nonpressure applications, a solvent cement-only joint provides adequate strength.

705.11.3 Threaded joints. Threads shall conform to ASME B1.20.1. Schedule 80 or heavier pipe shall be permitted to be threaded with dies specifically designed for plastic pipe. *Approved* thread lubricant or tape shall be applied on the male threads only.

❖ The requirements for threaded joints in PVC plastic pipe are identical to those of ABS and CPVC plastic pipe (see commentary, Section 705.2.3).

705.12 Vitrified clay. Joints between vitrified clay pipe or fittings shall be made with an elastomeric seal conforming to ASTM C 425, ASTM C 1173 or CSA B602.

❖ An acceptable joint for vitrified clay pipe is a mechanical joint sealed with an elastomeric material. This is a type of compression joint similar to that used with other hubbed pipe and fittings.

705.13 Polyethylene plastic pipe. Joints between polyethylene plastic pipe and fittings shall be underground and shall comply with Section 705.13.1 or 705.13.2.

❖ Acceptable joints for polyethylene plastic pipe or fittings are identified in the referenced sections. Note that joints can be located only underground.

705.13.1 Heat-fusion joints. Joint surfaces shall be clean and free from moisture. All joint surfaces shall be cut, heated to melting temperature and joined using tools specifically designed for the operation. Joints shall be undisturbed until cool. Joints shall be made in accordance with ASTM D 2657 and the manufacturer's instructions.

❖ Three types of processes are used: 1) hot plate welding for butt welding of pipes; 2) heat fusion for joining pipe to fittings and 3) electrofusion welding for joining pipe to fittings. Special clamping fixtures are used to hold the pipe ends and fittings in alignment. Some fixtures for small pipe diameters are small enough to hand carry; larger pipes require fixtures to be on a wheeled cart or even a motorized/tracked machine.

In the hot plate welding process, the ends of pipe are faced and squared with the centerline of the pipe using a rotating-blade planer block that accurately rotates around the pipe end while planing.

After cleaning debris from the pipes, the two pipe ends are clamped in precise alignment in the fixture so that no perceptible gap will exist between the pipe ends once they are pushed together. A plate with internal heating elements and a nonstick surface is inserted between and in contact with the two pipe ends. After sufficient heating to soften the ends of the pipe, the heating plate is removed and the ends of the pipe are mated with a specified force, "fusing" the softened pipe ends together. After an appropriate cooling time, the pipe is removed from the fixture and is ready for installation. A completed quality butt weld has: 1) complete and uniform beads; 2) bead rollback onto pipe and 3) proper alignment between the two pipes with centerlines parallel and, more importantly, outside wall surfaces in line (no offset).

In the heat fusion and electrofusion processes, a pipe end is joined to a fitting such as coupling, tee or valve having a recessed socket.

In the heat fusion method, the exterior of the pipe and interior of the fitting socket are electrically heated independently with specialized electric heating devices. Once the materials are sufficiently softened, the heating devices are removed and the pipe is precisely inserted in the socket fitting and allowed to cool.

In the electrofusion method, the socket fitting has a heating element "implant" that is connected to an appropriate power source. The pipe is inserted into the fitting and the heating element implant is energized for a specific period of time, causing the pipe and fitting interior to be softened and fused together. The joint is allowed to cool for an appropriate amount of time before the joint is disturbed.

All three processes require trained and qualified personnel as well as strict adherence to procedures to make fusion joints with integrity. Cleanliness and protection against weather elements during the process are essential to produce high-quality joints.

705.13.2 Mechanical joints. Mechanical joints in drainage piping shall be made with an elastomeric seal conforming to ASTM C 1173, ASTM D 3212 or CSA B602. Mechanical joints shall be installed in accordance with the manufacturer's instructions.

❖ Three types of mechanical joints can be used depending on the size of the pipe: 1) compression nut fittings [small diameters up to 2 inches (51 mm)]; 2) stab-type fittings [small diameters up to 2 inches (51 mm)], bolt-type compression fittings [from $1^1/_4$ inches (32 mm) and up] and 3) a variety of flanged ends. Each requires following the manufacturer's instructions for proper application and installation. Note that only joints using an elastomeric seal conforming to ASTM C 1173, D 3212 or CSA B602 comply with the code.

705.14 Polyolefin plastic. Joints between polyolefin plastic pipe and fittings shall comply with Sections 705.14.1 and 705.14.2.

❖ Acceptable joints for polyethylene plastic pipe or fittings are identified in the referenced sections.

705.14.1 Heat-fusion joints. Heat-fusion joints for polyolefin pipe and tubing joints shall be installed with socket-type heat-fused polyolefin fittings or electrofusion polyolefin fittings. Joint surfaces shall be clean and free from moisture. The joint shall be undisturbed until cool. Joints shall be made in accordance with ASTM F 1412 or CSA B181.3.

❖ Only the heat fusion and electrofusion process using socket-type fitting is allowed (see commentary, Section 705.16.1).

INTERNATIONAL CODE COUNCIL®
Copyright © 2015 ICC. ALL RIGHTS RESERVED. Accessed by David Dammon on Jun 21, 2017 12:30:52 PM pursuant to License Agreement with ICC. No further reproduction or distribution authorized. ANY UNAUTHORIZED REPRODUCTION OR DISTRIBUTION IS A VIOLATION OF THE FEDERAL COPYRIGHT ACT AND THE LICENSE AGREEMENT, AND SUBJECT TO CIVIL AND CRIMINAL PENALTIES THEREUNDER.

705.14.2 Mechanical and compression sleeve joints. Mechanical and compression sleeve joints shall be installed in accordance with the manufacturer's instructions.

❖ Three types of mechanical joints can be used depending upon the size of the pipe: 1) compression nut fittings [small diameters up to 2 inches (51 mm)]; 2) stab-type fittings [small diameters up to 2 inches (51 mm)] and 3) bolt-type compression fittings [from $1^1/_4$ inches (32 mm) and up], and a variety of flanged ends. Each requires following the manufacturer's instructions for proper application and installation.

705.15 Polyvinylidene fluoride plastic. Joints between polyvinylidene plastic pipe and fittings shall comply with Sections 705.15.1 and 705.15.2.

❖ This pipe material (pronounced poly-vy-NIL-ih-DEAN floor-IDE) is a highly nonreactive and pure thermoplastic fluoropolymer. Several different companies manufacture this material under trademarked trade names but the material is the same. Because of the multiple strong carbon-fluorine molecular bonds, the material has high purity, high strength, and an exceptional resistance to solvents, acids and bases, making it an excellent material for conveying corrosive wastes. It has a melting point of about 351°F (177°C) and is a low generator of heat and smoke in a fire event.

705.15.1 Heat-fusion joints. Heat-fusion joints for polyvinylidene fluoride pipe and tubing joints shall be installed with socket-type heat-fused polyvinylidene fluoride fittings or electrofusion polyvinylidene fittings and couplings. Joint surfaces shall be clean and free from moisture. The joint shall be undisturbed until cool. Joints shall be made in accordance with ASTM F 1673.

❖ Polyvinylidene fluoride pipe and tubing joints can be heat fused or electrofused in a manner similar to that used for polyolefin pipe.

705.15.2 Mechanical and compression sleeve joints. Mechanical and compression sleeve joints shall be installed in accordance with the manufacturer's instructions.

❖ Polyvinylidene fluoride pipe and tubing can be joined with compression fittings or mechanical joints that are specifically intended for use with the piping material. The manufacturer's instructions for installation of the fittings must be followed.

705.16 Joints between different materials. Joints between different piping materials shall be made with a mechanical joint of the compression or mechanical-sealing type conforming to ASTM C 1173, ASTM C 1460 or ASTM C 1461. Connectors and adapters shall be *approved* for the application and such joints shall have an elastomeric seal conforming to ASTM C 425, ASTM C 443, ASTM C 564, ASTM C 1440, ASTM F 477, CSA A257.3M or CSA B602, or as required in Sections 705.16.1 through 705.16.7. Joints between glass pipe and other types of materials shall be made with adapters having a TFE seal. Joints shall be installed in accordance with the manufacturer's instructions.

❖ Mechanical joints are typically used to join dissimilar piping materials. Because many piping materials have the same outside diameters, many fittings are designed by manufacturers for use with a number of different piping materials. Some mechanical joints are manufactured specifically for joining pipes having different outside diameters. Transition couplings use bushings (inserts) to match the outside diameters of the pipes or are simply designed to fit over different outside diameter pipe ends. ASTM C 1173, ASTM C 1460 or ASTM C 1461 are the standards for the complete coupling assembly, which includes an elastomeric gasket, a clamp assembly or both.

705.16.1 Copper or copper-alloy tubing to cast-iron hub pipe. Joints between copper or copper-alloy tubing and cast-iron hub pipe shall be made with a brass ferrule or compression joint. The copper or copper-alloy tubing shall be soldered to the ferrule in an *approved* manner, and the ferrule shall be joined to the cast-iron hub by a caulked joint or a mechanical compression joint.

❖ An adapter must be used when joining copper tubing to a cast-iron hub. The adapter is called by a wide variety of names, the most common being "soil adapter" or "caulk adapter." The adapter creates a spigot end similar to that of cast-iron pipe and fittings.

705.16.2 Copper or copper-alloy tubing to galvanized steel pipe. Joints between copper or copper-alloy tubing and galvanized steel pipe shall be made with a brass converter fitting or dielectric fitting. The copper tubing shall be soldered to the fitting in an *approved* manner, and the fitting shall be screwed to the threaded pipe.

❖ When joining copper or copper-alloy tubing with galvanized steel pipe, a method of protecting against galvanic corrosion is required. Galvanic corrosion occurs when two different metals come in contact in the presence of an electrolyte, such as water. Galvanic corrosion accelerates the natural corrosion process that occurs in metals, and, because certain metals corrode faster than others, they have been placed in a hierarchy in order of rate of corrosion. The more reactive metal at a connection is called the "anode" (galvanized steel pipe), and the less reactive metal is called the "cathode" (copper tubing). When the copper tubing and galvanized steel pipe are coupled, the galvanized steel pipe will tend to dissolve in the electrolyte, thereby generating electric current flow between the metals. This section prescribes two methods of protection against galvanic corrosion: dielectric fittings and brass fittings. The fittings are designed to provide a barrier or buffer between the two materials.

705.16.3 Cast-iron pipe to galvanized steel or brass pipe. Joints between cast-iron and galvanized steel or brass pipe

INTERNATIONAL CODE COUNCIL®
Copyright © 2015 ICC. ALL RIGHTS RESERVED. Accessed by David Dammon on Jun 21, 2017 12:30:52 PM pursuant to License Agreement with ICC. No further reproduction or distribution authorized. ANY UNAUTHORIZED REPRODUCTION OR DISTRIBUTION IS A VIOLATION OF THE FEDERAL COPYRIGHT ACT AND THE LICENSE AGREEMENT, AND SUBJECT TO CIVIL AND CRIMINAL PENALTIES THEREUNDER.

shall be made by either caulked or threaded joints or with an *approved* adapter fitting.

❖ Galvanized steel pipe and brass pipe may be caulked directly into the hub of cast-iron pipe without an adapter fitting. Certain cast-iron fittings have a female tapped inlet to permit a direct threaded connection (see Commentary Figure 705.16.3).

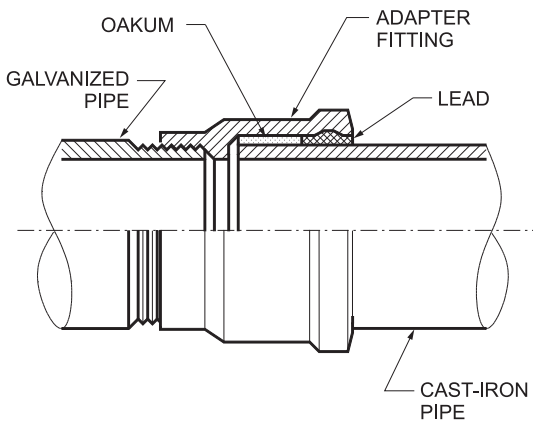

Figure 705.16.3
CAST-IRON ADAPTER FITTING

705.16.4 Plastic pipe or tubing to other piping material. Joints between different types of plastic pipe or between plastic pipe and other piping material shall be made with an *approved* adapter fitting. Joints between plastic pipe and cast-iron hub pipe shall be made by a caulked joint or a mechanical compression joint.

❖ ABS and PVC plastic pipe may connect directly into the hub of cast-iron pipe with a caulked joint or by using a compression gasket without the use of an adapter fitting. Special caulk-adapter plastic fittings are available that provide a spigot end for use with hubbed pipe and fittings. Where different grades of plastic pipe are joined or where plastic pipe and cast-iron spigot end pipe, Schedule 40 steel pipe or copper pipe are joined, an adapter fitting must be used.

705.16.5 Lead pipe to other piping material. Joints between lead pipe and other piping material shall be made by a wiped joint to a caulking ferrule, soldering nipple or bushing or shall be made with an *approved* adapter fitting.

❖ The common method of adapting to lead is by a wiped joint to a ferrule, nipple or bushing; however, a mechanical adapter fitting using an elastomeric material may also be used.

705.16.6 Borosilicate glass to other materials. Joints between glass pipe and other types of materials shall be made with adapters having a TFE seal and shall be installed in accordance with the manufacturer's instructions.

❖ Glass pipe may be joined to plain-end or threaded-end metal or plastic pipe with adapter couplings that incorporate a TFE (tetrafluoroethylene) seal. This seal isolates the glass pipe from contact with the pipe it is being joined to and helps provide a positive seal around the perimeter of the glass pipe. Typically, a manufacturer of glass pipe also makes the couplings that are designed for use with the pipe; therefore, the coupling manufacturer's installation instructions must be followed. The TFE seal is resistant to chemical attack, as is glass pipe. TFE is commonly known by the registered trademark name "Teflon."

705.16.7 Stainless steel drainage systems to other materials. Joints between stainless steel drainage systems and other piping materials shall be made with *approved* mechanical couplings.

❖ Joints between stainless steel drainage systems must be made with a mechanical coupling and have an elastomeric seal conforming to ASTM C 425, ASTM C 443, ASTM C 564, ASTM C 1173, ASTM D 1869, ASTM F 477, CAN/CSA A257.3M or CAN/CSA B602. Because many different types of mechanical joints are available and most couplings are unique to each manufacturer, the joining method must be in accordance with the manufacturer's installation instructions.

705.17 Drainage slip joints. Slip joints shall comply with Section 405.8.

❖ An elastomeric gasket must be used to make the seal for drainage slip joints [see Commentary Figures 705.17(1) and 705.17(2) and the definition of "Slip joint" in Chapter 2]. Slip joints cannot be concealed and are limited to those connections that occur between a fixture waste outlet and its connection to the fixture drain, including the trap adapter on the trap outlet arm. In locations where a slip joint connection is concealed, an access panel must be provided so that the connection can be serviced. This would include tub waste and overflow connections (see commentary, Section 405.8).

705.18 Caulking ferrules. Ferrules shall be of red brass and shall be in accordance with Table 705.18.

❖ Caulking ferrules are used to adapt cast-iron hub pipe to either copper tubing or threaded pipe. The ferrule is installed in the hub of the cast-iron pipe by either a caulked joint or an elastomeric gasket compression joint. The copper tubing is soldered to, or the threaded pipe is screwed into, the ferrule.

TABLE 705.18
CAULKING FERRULE SPECIFICATIONS

PIPE SIZES (inches)	INSIDE DIAMETER (inches)	LENGTH (inches)	MINIMUM WEIGHT EACH
2	$2^1/_4$	$4^1/_2$	1 pound
3	$3^1/_4$	$4^1/_2$	1 pound 12 ounces
4	$4^1/_4$	$4^1/_2$	2 pounds 8 ounces

For SI: 1 inch = 25.4 mm, 1 ounce = 28.35 g, 1 pound = 0.454 kg.

❖ The table specifies the acceptable dimensions and weights for caulking ferrules.

INTERNATIONAL CODE COUNCIL®
Copyright © 2015 ICC. ALL RIGHTS RESERVED. Accessed by David Dammon on Jun 21, 2017 12:30:52 PM pursuant to License Agreement with ICC. No further reproduction or distribution authorized. ANY UNAUTHORIZED REPRODUCTION OR DISTRIBUTION IS A VIOLATION OF THE FEDERAL COPYRIGHT ACT AND THE LICENSE AGREEMENT, AND SUBJECT TO CIVIL AND CRIMINAL PENALTIES THEREUNDER.

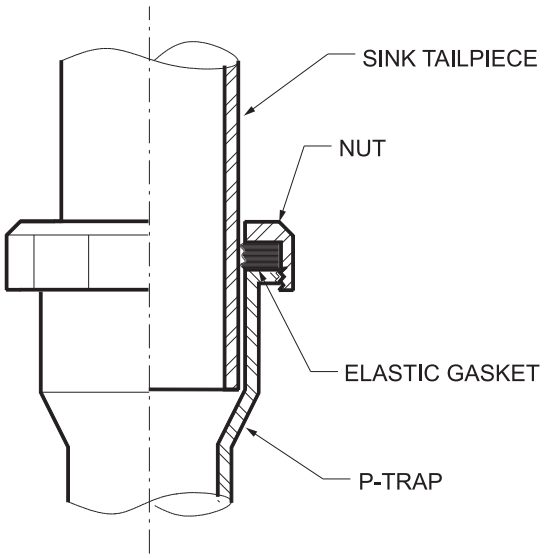

Figure 705.17(1)
SLIP JOINT

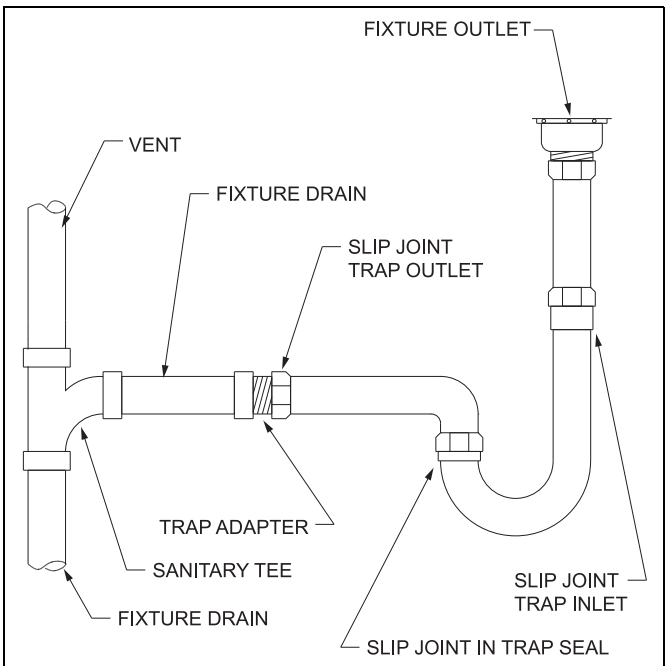

Figure 705.17(2)
SLIP JOINTS

705.19 Soldering bushings. Soldering bushings shall be of red brass and shall be in accordance with Table 705.19.

❖ A soldering bushing is used to adapt lead pipe to other piping materials.

TABLE 705.19
SOLDERING BUSHING SPECIFICATIONS

PIPE SIZES (inches)	MINIMUM WEIGHT EACH
$1^1/_4$	6 ounces
$1^1/_2$	8 ounces
2	14 ounces
$2^1/_2$	1 pound 6 ounces
3	2 pounds
4	3 pounds 8 ounces

For SI: 1 inch = 25.4 mm, 1 ounce = 28.35 g, 1 pound = 0.454 kg.

❖ The table specifies the acceptable weights for soldering bushing sizes.

705.20 Stainless steel drainage systems. O-ring joints for stainless steel drainage systems shall be made with an *approved* elastomeric seal.

❖ O-ring joints for stainless steel drainage systems are identical to those between stainless steel drainage systems and other piping materials (see commentary, Section 705.16.7).

SECTION 706
CONNECTIONS BETWEEN DRAINAGE PIPING AND FITTINGS

706.1 Connections and changes in direction. All connections and changes in direction of the sanitary drainage system shall be made with *approved* drainage fittings. Connections between drainage piping and fixtures shall conform to Section 405.

❖ This section contains the requirements for the proper use of fittings and connections used to accomplish changes in direction. The design of a drainage system is based on uniform flow in the piping. Special drainage fittings have been developed with design patterns providing the least resistance to flow. All types of connections and drainage fittings are subject to the approval of the code official. Section 405 regulates the installation of fixtures connected to the sanitary drainage system.

706.2 Obstructions. The fittings shall not have ledges, shoulders or reductions capable of retarding or obstructing flow in the piping. Threaded drainage pipe fittings shall be of the recessed drainage type. This section shall not be applicable to tubular waste fittings used to convey vertical flow upstream of the trap seal liquid level of a fixture trap.

❖ Because the flow of waste within the drainage system is slow and induced by gravity, any shoulder edge or obstruction on the inside surface of the pipe may inhibit or retard flow and likely cause a stoppage. Therefore, joints, connections and fittings must be of the drainage type, free from flow-obstructing ele-

INTERNATIONAL CODE COUNCIL®
Copyright © 2015 ICC. ALL RIGHTS RESERVED. Accessed by David Dammon on Jun 21, 2017 12:30:52 PM pursuant to License Agreement with ICC. No further reproduction or distribution authorized. ANY UNAUTHORIZED REPRODUCTION OR DISTRIBUTION IS A VIOLATION OF THE FEDERAL COPYRIGHT ACT AND THE LICENSE AGREEMENT, AND SUBJECT TO CIVIL AND CRIMINAL PENALTIES THEREUNDER.

ments. Recessed drainage-type threaded fittings are designed so that the inside surface of the pipe will be flush with the inside surface of the fitting. An offset closet flange is not considered an obstruction. Tubular waste fittings upstream of the trap seal sometimes have internal baffles that might appear to block flow; however, this section does not pertain to those fittings.

706.3 Installation of fittings. Fittings shall be installed to guide sewage and waste in the direction of flow. Change in direction shall be made by fittings installed in accordance with Table 706.3. Change in direction by combination fittings, side inlets or increasers shall be installed in accordance with Table 706.3 based on the pattern of flow created by the fitting. Double sanitary tee patterns shall not receive the discharge of back-to-back water closets and fixtures or appliances with pumping action discharge.

Exception: Back-to-back water closet connections to double sanitary tees shall be permitted where the horizontal *developed length* between the outlet of the water closet and the connection to the double sanitary tee pattern is 18 inches (457 mm) or greater.

❖ Drainage fittings and connections must provide a smooth transition of flow without creating obstructions or causing interference. The use of proper fittings helps to maintain the required flow velocities and reduces the possibility of stoppage in the drainage system. Combination fittings are commonly used in drainage systems and must be evaluated for their pattern of flow. Combination fittings include two or more fittings, such as combination wye and eighth bends or tee-wyes. A double sanitary tee (cross) cannot be used for connections to fixtures and appliances with pumping action because it has a short pattern for change of direction. In addition to blowout-type water closets, 1.6-gallon-per-flush (6.1 L/flush) flushometer tank (pressure assisted) and gravity tank-type fixtures may also produce crossover flow into the opposite fixture connection. The high-velocity flow may discharge through the opposing openings of a double sanitary tee, causing an interruption or blowback at the other fixture. Back-to-back water closets are fixtures that are installed directly opposite of each other and discharge through a short distance into a double pattern fitting. If back-to-back fixtures discharge through several feet of pipe or multiple changes of direction, the flow velocity in the fixture drains would decrease to the point where cross flow would not occur. The exception provides for back-to-back water closet connections to double sanitary tee patterns where the horizontal developed length between the outlet of the water closet and connection to the double sanitary tee pattern is 18 inches (457 mm) or more. The critical distance at which there is potential for crossover is a horizontal developed length of less than 10 times the diameter of the horizontal pipe, for example, 30 inches (762 mm) for a 3-inch-diameter (76 mm) pipe. Once the developed length is over 30 inches (762 mm), the surging flow conditions will no longer exist, and the frictional resistance of the pipe retards the velocity to that of uniform flow conditions.

It is mistakenly thought that the use of a double combination fitting as shown in Commentary Figure 706.3(5) is not permitted for the water closet arrangement because it will not permit the vent to connect above the trap weir. However, this arrangement is permitted because the vent connection limitation is designed to prevent self-siphonage, and water closets must self-siphon to operate properly. Use of fittings such as those having side inlets, heel inlets and specialty opening configurations is permitted only in applications that comply with the intent of Table 706.3 [see Commentary Figures 706.3(1) through (5)].

TABLE 706.3
FITTINGS FOR CHANGE IN DIRECTION

TYPE OF FITTING PATTERN	CHANGE IN DIRECTION		
	Horizontal to vertical	Vertical to horizontal	Horizontal to horizontal
Sixteenth bend	X	X	X
Eighth bend	X	X	X
Sixth bend	X	X	X
Quarter bend	X	X[a]	X[a]
Short sweep	X	X[a,b]	X[a]
Long sweep	X	X	X
Sanitary tee	X[c]	—	—
Wye	X	X	X
Combination wye and eighth bend	X	X	X

For SI: 1 inch = 25.4 mm.

a. The fittings shall only be permitted for a 2-inch or smaller *fixture drain*.

b. Three inches or larger.

c. For a limitation on double sanitary tees, see Section 706.3.

❖ When the flow is in the horizontal plane only, long-pattern fittings are necessary to prevent excessive reduction in flow velocity. When flow is from the horizontal to the vertical or from the vertical to the horizontal, a shorter pattern fitting may be used because the acceleration of flow caused by gravity will maintain higher velocities.

An "X" in a column indicates that a particular fitting is acceptable for the described change in direction. For example, the only "X" shown for a sanitary tee is in the column for horizontal to vertical change in direction. The table has been developed to identify where use of a particular drainage pattern fitting is allowed.

The terminology used to identify drainage pattern fittings was originally developed by the cast-iron soil pipe industry. The pattern of the fittings is regulated by the fitting standards referenced in Table 702.4. A fitting of one material will not necessarily look the same as a fitting of another material with the same name. Only cast-iron pipe fittings have a separate quarter-bend fitting and short-sweep fitting. For other drainage piping materials, a quarter bend and a short sweep are the same fitting.

INTERNATIONAL CODE COUNCIL®
Copyright © 2015 ICC. ALL RIGHTS RESERVED. Accessed by David Dammon on Jun 21, 2017 12:30:52 PM pursuant to License Agreement with ICC. No further reproduction or distribution authorized. ANY UNAUTHORIZED REPRODUCTION OR DISTRIBUTION IS A VIOLATION OF THE FEDERAL COPYRIGHT ACT AND THE LICENSE AGREEMENT, AND SUBJECT TO CIVIL AND CRIMINAL PENALTIES THEREUNDER.

Copper tubing fittings are unique by having only one sweep-type fitting identified as a DWV 90-degree (1.6 rad) elbow. This is considered a long-sweep drainage fitting. Some manufacturers make a copper fitting identified as a DWV 90-degree (1.6 rad) long radius elbow. This is also not included in the fitting standards, but could be used as a long sweep.

Note b permits the use of short-sweep fittings of 3 inches (76 mm) in diameter or larger where the change in direction is from the vertical to the horizontal.

Note a permits the use of 2-inch (51 mm) or smaller short-sweep and quarter-bend fittings for drains serving a single fixture where the change in direction is from the vertical to the horizontal or from the horizontal to the horizontal.

The intent of Note c is to allow short-pattern fittings for fixture drains, which are generally difficult to install using long-pattern fittings in frame construction. For example, a long-sweep PVC 90-degree (1.6 rad) elbow would not fit within a nominal 2-inch by 4-inch (51 mm by 102 mm) stud wall cavity where used to make a horizontal-to-horizontal change in direction. A quarter bend with a very short radius, less than that of a short sweep, is identified as a vent elbow or vent quarter bend. These particular fittings are designed for vent system applications only.

Double sanitary tees must not be installed where water closets or appliances with pump action are back to back. Appliances with pump action are typically washing machines or dishwashers (see commentary, Section 706.3).

Side inlet fittings are acceptable for drainage connections. The typical application for side inlet fittings is horizontal to vertical changes in direction involving side inlet sanitary tees, side inlet elbows and side inlet wyes. When used to connect a vent, however, the requirements for venting as specified in Section 905 must be met [see Commentary Figures 706.3(1) through 706.3(8)].

Low- and high-heel inlet elbows are acceptable depending on the application. A low-heel branch inlet must not be used for a drainage connection where solid waste enters the run of the elbow from the vertical. In such a case, solid waste could enter the branch inlet opening, causing a blockage. Because there is no waste flow in vent piping, and the airflow in vent piping may be in either direction, the types of fittings used in vent piping are not regulated by this section. For example, a sanitary tee placed on its back with the branch inlet connected to a vertical dry vent riser is a common installation practice and is not prohibited. In this application, the only waste flow is through the straight run of the fitting, and the branch inlet conducts only air into or out of the horizontal drain pipe. Note that the tee must be oriented to allow compliance with Section 905.3. The restrictions placed on the use of a sanitary tee are based on its inability to guide waste flow entering through the branch inlet. Such restrictions do not apply where the branch inlet is used for a dry vent connection in compliance with Section 905. In all cases, it is the intent of the code to require that fittings be installed in a manner that will encourage high-velocity drainage flow and minimize the chances of blockage.

The details of the patterns for drainage, waste and vent fittings made of PVC and ABS are covered by ASTM D 3311. This standard requires 90-degree (1.6 rad) fittings (except vent patterns) to have sockets aligned in the fitting to cause horizontal drainage pipes to have a slope of $^1/_4$ inch per foot (21 mm per m) [see Commentary Figure 706.3(9)]. In some applications, the use of these $^1/_4$-bend fittings, having an angle of 91.2 degrees, results in an improper alignment of the connecting pipes resulting in a poor joint. Commentary Figure 706.3(10) shows the correct orientation for the sanitary tee to prevent this piping alignment problem. Many plumber apprentices learned to install sanitary tees in vent piping in this manner after being told that the orientation promoted better airflow or allowed the condensate to flow better back to the drain; however, there is no technical substantiation for these explanations.

Sanitary tees may be used for horizontal drainage flow through the run of the tee where the branch of the tee is for venting only and is oriented within 45 degrees (0.79 rad) of the vertical. A sanitary tee can be installed on its back for venting applications in sanitary drainage.

Other bend patterns for DWV fittings of PVC and ABS do not have this special socket alignment; thus, an $^1/_8$ bend fitting is 45 degrees (0.79 rad), a $^1/_6$-bend fitting is 60 degrees (1 rad) and so forth. In some applications, use of these fittings might a create pipe slope problem [see Commentary Figure 706.3(10)]. Although the code is silent on the use of a close combination of fittings to serve the purpose of one fitting, full and square engagement of the pipes into a close combination "made up" 90-degree (1.57 rad) bend might produce undesirable results.

706.4 Heel- or side-inlet quarter bends. Heel-inlet quarter bends shall be an acceptable means of connection, except where the quarter bend serves a water closet. A low-heel inlet shall not be used as a wet-vented connection. Side-inlet quarter bends shall be an acceptable means of connection for drainage, wet venting and *stack* venting arrangements.

❖ Because of the possibility of waste from a water closet clogging a heel-inlet (either high or low heel) quarter bend, this fitting must not be used in a closet bend application. Similarly, low-heel-inlet quarter bends must not receive flow from drainage pipes that serve as wet vents for a fixture. Only side-inlet quarter bends can be used for these applications [see Commentary Figures 706.4(1), (2) and 706.3(6)]. Note the obvious cut floor joist violation in Commentary Figure 706.4(2).

INTERNATIONAL CODE COUNCIL®
Copyright © 2015 ICC. ALL RIGHTS RESERVED. Accessed by David Dammon on Jun 21, 2017 12:30:52 PM pursuant to License Agreement with ICC. No further reproduction or distribution authorized. ANY UNAUTHORIZED REPRODUCTION OR DISTRIBUTION IS A VIOLATION OF THE FEDERAL COPYRIGHT ACT AND THE LICENSE AGREEMENT, AND SUBJECT TO CIVIL AND CRIMINAL PENALTIES THEREUNDER.

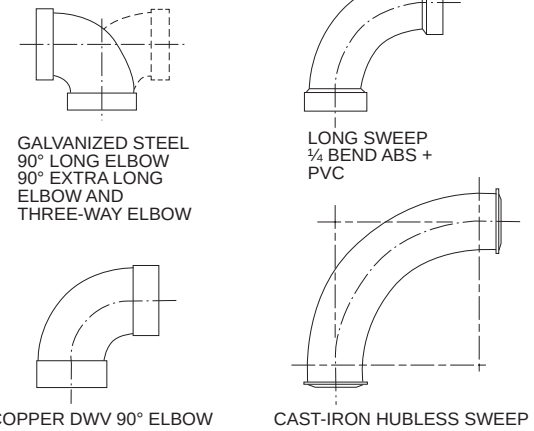

For SI: 1 degree = 0.0175 rad, 1 inch = 25.4 mm.

Figure 706.3(1)
COMPARISON OF DIFFERENT $1^{1}/_{2}$-INCH-LONG SWEEPS FOR VARIOUS PIPING MATERIALS

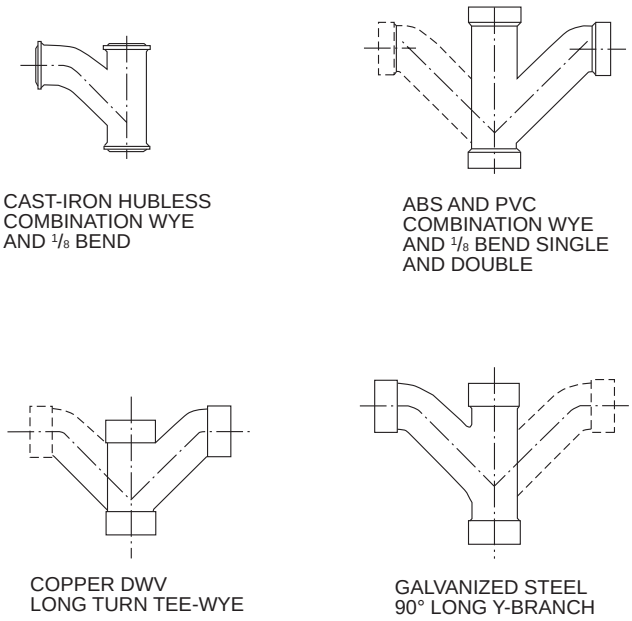

For SI: 1 degree = 0.0175 rad, 1 inch = 25.4 mm.

Figure 706.3(2)
COMPARISON OF 3-INCH COMBINATION WYE AND EIGHTH BEND FOR VARIOUS PIPING MATERIALS

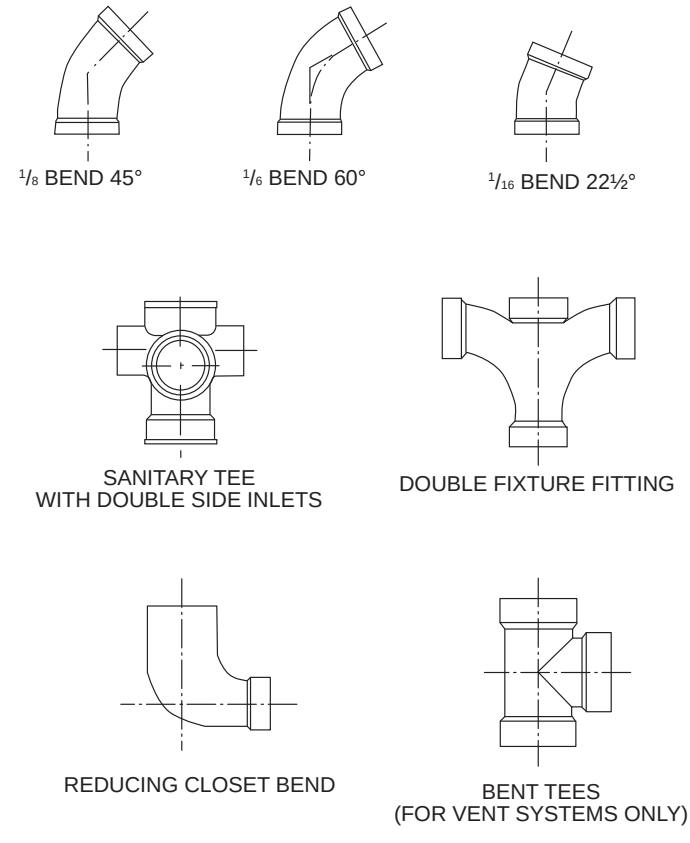

For SI: 1 degree = 0.0175 rad.

Figure 706.3(3)
DRAINAGE PATTERN FITTINGS
(continued)

INTERNATIONAL CODE COUNCIL®
Copyright © 2015 ICC. ALL RIGHTS RESERVED. Accessed by David Dammon on Jun 21, 2017 12:30:52 PM pursuant to License Agreement with ICC. No further reproduction or distribution authorized. ANY UNAUTHORIZED REPRODUCTION OR DISTRIBUTION IS A VIOLATION OF THE FEDERAL COPYRIGHT ACT AND THE LICENSE AGREEMENT, AND SUBJECT TO CIVIL AND CRIMINAL PENALTIES THEREUNDER.

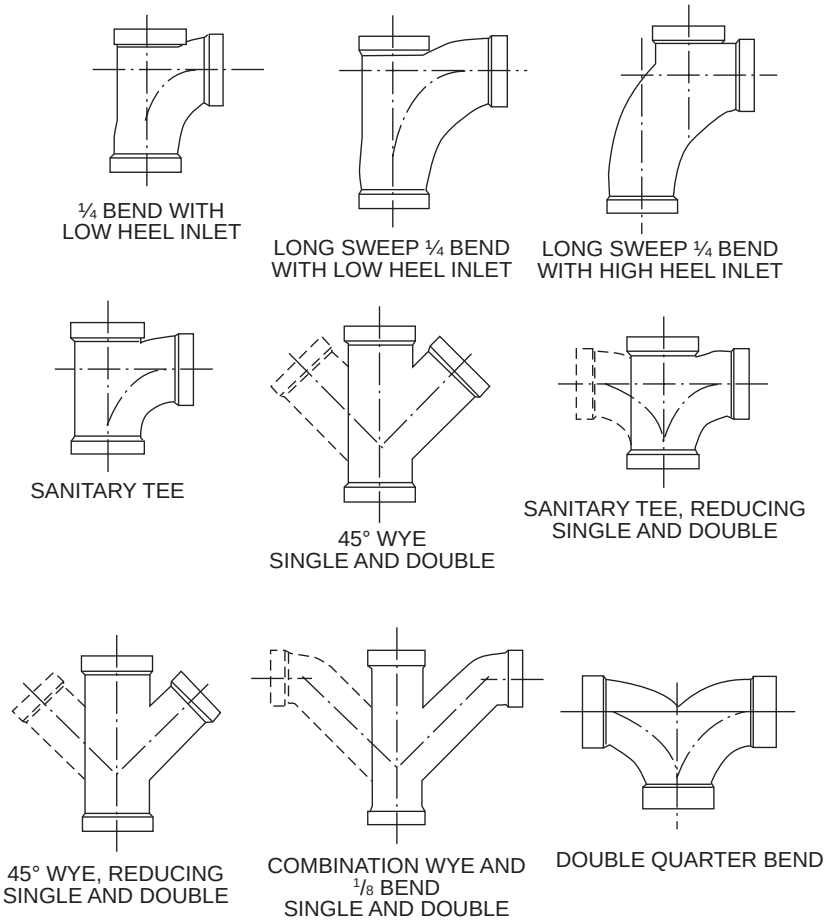

For SI: 1 degree = 0.0175 rad.

Figure 706.3(3)—continued
DRAINAGE PATTERN FITTINGS

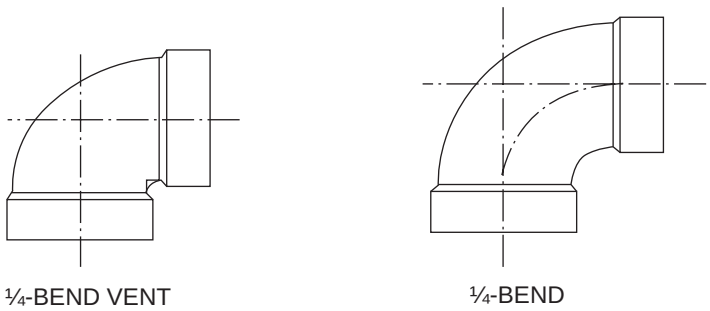

Figure 706.3(4)
DIFFERENCE BETWEEN PVC PLASTIC $^{1}/_{4}$-BEND SHORT SWEEP AND $^{1}/_{4}$-BEND VENT

INTERNATIONAL CODE COUNCIL®
Copyright © 2015 ICC. ALL RIGHTS RESERVED. Accessed by David Dammon on Jun 21, 2017 12:30:52 PM pursuant to License Agreement with ICC. No further reproduction or distribution authorized. ANY UNAUTHORIZED REPRODUCTION OR DISTRIBUTION IS A VIOLATION OF THE FEDERAL COPYRIGHT ACT AND THE LICENSE AGREEMENT, AND SUBJECT TO CIVIL AND CRIMINAL PENALTIES THEREUNDER.

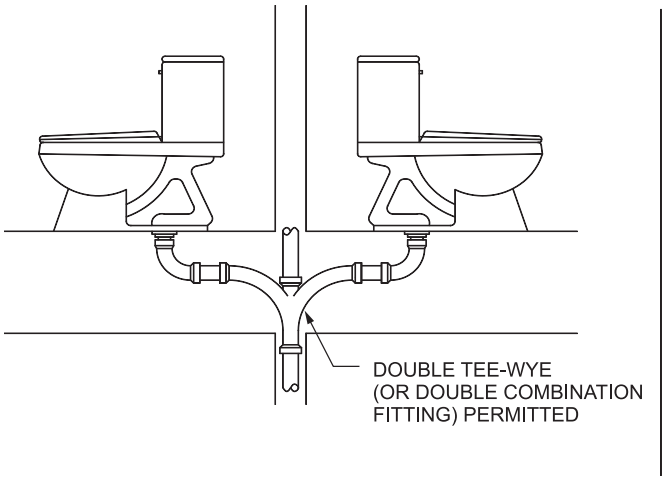

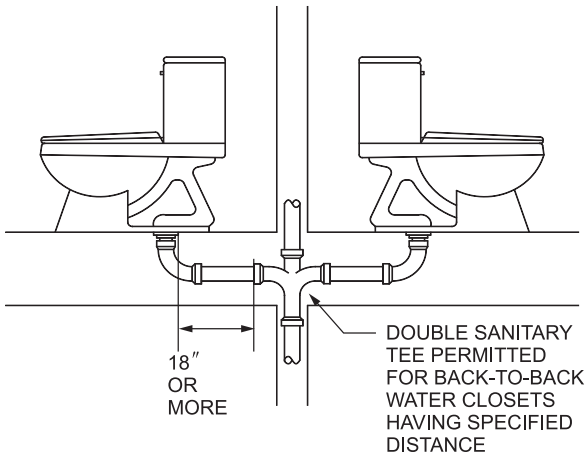

For SI: 1 inch = 25.4 mm.

Figure 706.3(5)
BACK-TO-BACK FIXTURES

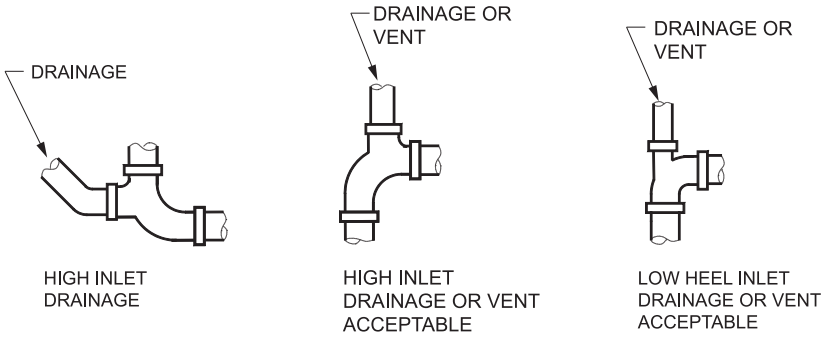

Figure 706.3(6)
HEEL INLET FITTINGS

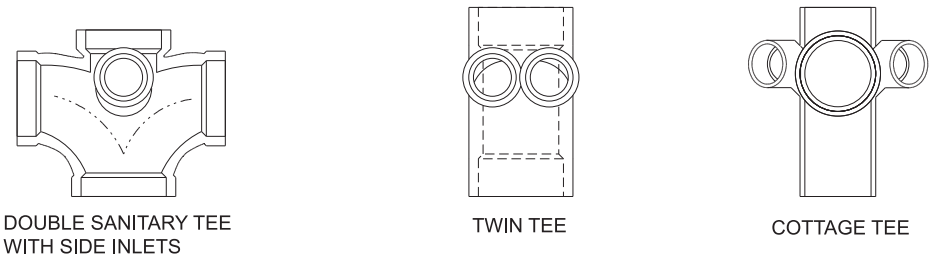

Figure 706.3(7)
COMBINATION TEES

INTERNATIONAL CODE COUNCIL®
Copyright © 2015 ICC. ALL RIGHTS RESERVED. Accessed by David Dammon on Jun 21, 2017 12:30:52 PM pursuant to License Agreement with ICC. No further reproduction or distribution authorized. ANY UNAUTHORIZED REPRODUCTION OR DISTRIBUTION IS A VIOLATION OF THE FEDERAL COPYRIGHT ACT AND THE LICENSE AGREEMENT, AND SUBJECT TO CIVIL AND CRIMINAL PENALTIES THEREUNDER.

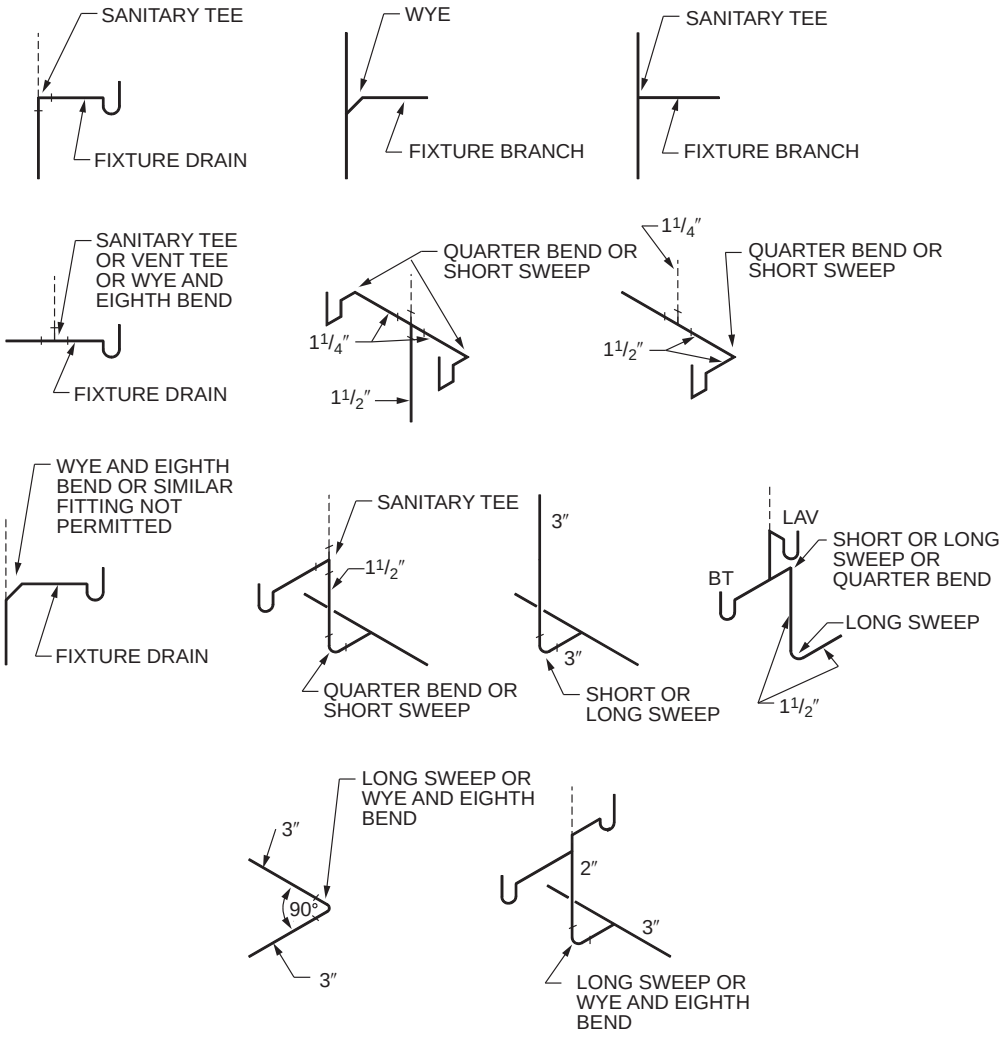

For SI: 1 inch = 25.4 mm, 1 degree = 0.0175 rad.

Figure 706.3(8)
FITTING USES

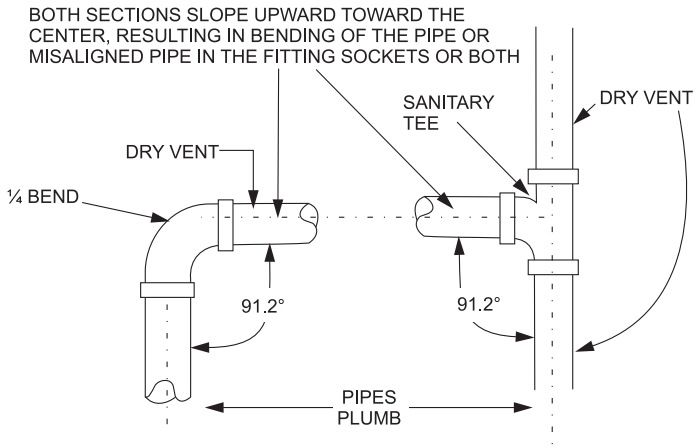

Figure 706.3(9)
IMPROPER USE OF DWV-PVC/ABS 90-DEGREE FITTINGS

INTERNATIONAL CODE COUNCIL®
Copyright © 2015 ICC. ALL RIGHTS RESERVED. Accessed by David Dammon on Jun 21, 2017 12:30:52 PM pursuant to License Agreement with ICC. No further reproduction or distribution authorized. ANY UNAUTHORIZED REPRODUCTION OR DISTRIBUTION IS A VIOLATION OF THE FEDERAL COPYRIGHT ACT AND THE LICENSE AGREEMENT, AND SUBJECT TO CIVIL AND CRIMINAL PENALTIES THEREUNDER.

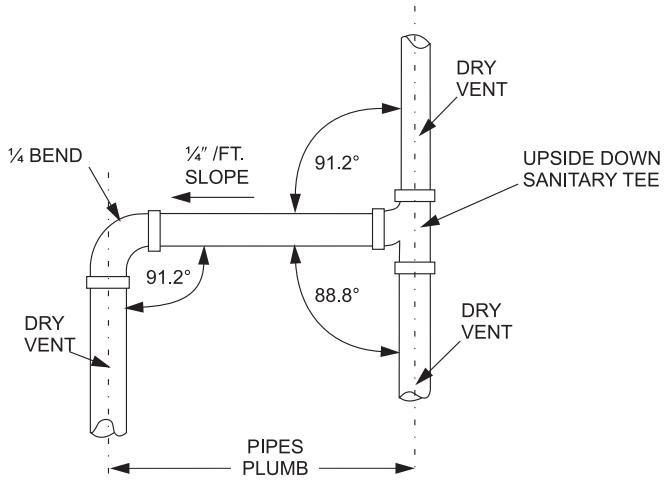

For SI: 1 inch = 25.4 mm, 1 degree = 0.0175 rad.

Figure 706.3(10)
PROPER USE OF DWV-PVC/ABS 90-DEGREE FITTINGS

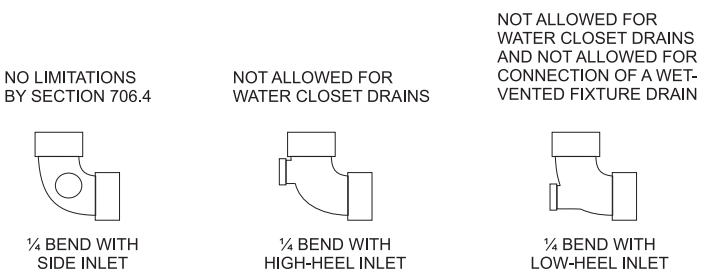

Figure 706.4(1)
HEEL- AND SIDE-INLET QUARTER BEND APPLICATION RESTRICTIONS



Figure 706.4(2)
SIDE-INLET QUARTER BEND FOR WATER CLOSET

INTERNATIONAL CODE COUNCIL®
Copyright © 2015 ICC. ALL RIGHTS RESERVED. Accessed by David Dammon on Jun 21, 2017 12:30:52 PM pursuant to License Agreement with ICC. No further reproduction or distribution authorized. ANY UNAUTHORIZED REPRODUCTION OR DISTRIBUTION IS A VIOLATION OF THE FEDERAL COPYRIGHT ACT AND THE LICENSE AGREEMENT, AND SUBJECT TO CIVIL AND CRIMINAL PENALTIES THEREUNDER.

SECTION 707
PROHIBITED JOINTS AND CONNECTIONS

707.1 Prohibited joints. The following types of joints and connections shall be prohibited:

1. Cement or concrete joints.
2. Mastic or hot-pour bituminous joints.
3. Joints made with fittings not *approved* for the specific installation.
4. Joints between different diameter pipes made with elastomeric rolling O-rings.
5. Solvent-cement joints between different types of plastic pipe.
6. Saddle-type fittings.

❖ This section contains requirements for joints between pipe and fittings of different materials.

Cement and concrete are not effective in sealing a pipe joint because such materials are inflexible and susceptible to cracking and displacement. A rolling O-ring has no resistance to being pushed or rolled out of a joint when exposed to pressure or the movement of pipe caused by expansion and contraction. A solvent-cement joint is a homogeneous chemical bond made between a pipe and a fitting. The bond is accomplished because the chemical composition of the joint surfaces is the same. If the materials are different, the joint may not form a proper chemical bond, and the strength and integrity of the joint will be adversely affected. For example, solvent cementing is prohibited between ABS and PVC, PVC and CPVC or ABS and CPVC (see commentary, Section 705.2.2). Saddle-type fittings that are moved out of alignment can weaken the pipe because of the pipe wall penetration and typically do not form a drainage pattern connection. "Saddle-type" fittings are commonly used for connecting a building sewer to an existing public sewer.

SECTION 708
CLEANOUTS

708.1 Cleanouts required. Cleanouts shall be provided for drainage piping in accordance with Sections 708.1.1 through 708.1.11.

❖ There must be points of access to drainage systems for clearing blockages. These access points are called cleanouts (see the definition for "Cleanout" in Chapter 2). Blockages in vertical piping rarely, if ever, occur because gravity will cause the blockage to move downward. Therefore, only horizontal piping is required to have cleanouts. In locating cleanouts, the designer or installer should consider the type of equipment that might be necessary for clearing blockages. Typical drain clearing/cleaning equipment includes hand-held cable augers, flat tapes, power-driven cables from $^1/_4$ diameter to $1^1/_8$-inch diameter (or larger), and water jetting hoses from $^1/_4$-inch (6.4 mm) diameter to 1 inch (25 mm) diameter (or larger). This equipment, especially power driven units, can be sizable and heavy. A large machine could be difficult to maneuver into smaller areas, let alone be safe to operate in a confined area. This section does provide a few limitations for where cleanouts can be located. Otherwise, the experience of the designer or installer is leaned upon heavily to determine the best, most logical locations for cleanouts.

A frequently asked question is whether mechanical joints such as elastomeric connections (hubless joint connectors) can be considered as cleanouts. A significant amount of drain cleaning is performed by personnel that, although trained on drain cleaning methods and equipment, may not have the necessary training on the proper removal and reinstallation of piping. Hangers could be left out, couplings reused or couplings overtightened such that the plumbing system might not work as intended or become a hazard (either environmentally or structurally). In the author's opinion, appropriate cleanout access such as removal of a cleanout plug is a far superior and a safer approach to provide access to the drainage system. However, some code officials might believe that removal of piping connectors would provide the intended access. The code is silent on this topic.

708.1.1 Horizontal drains and building drains. Horizontal drainage pipes in buildings shall have cleanouts located at intervals of not more than 100 feet (30 480 mm). *Building drains* shall have cleanouts located at intervals of not more than 100 feet (30 480 mm) except where manholes are used instead of cleanouts, the manholes shall be located at intervals of not more than 400 feet (122 m). The interval length shall be measured from the cleanout or manhole opening, along the *developed length* of the piping to the next drainage fitting providing access for cleaning, the end of the horizontal drain or the end of the *building drain*.

Exception: Horizontal *fixture drain* piping serving a nonremovable trap shall not be required to have a cleanout for the section of piping between the trap and the vent connection for such trap.

❖ Modern drain-cleaning equipment is available with cable (or jetter hose) length to clear blockages in horizontal drainage piping that is 100 feet (30 480 mm) (or less) in developed piping length from the cleanout opening. Manholes are sometimes used for cleanouts for larger diameter piping. The larger piping diameter allows for larger diameter cables (or larger diameter/higher pressure jetter hoses) to be used that are capable of clearing blockages in horizontal drainage piping that is 400 feet (122 m) in length (or less). A key point to consider in locating cleanouts is that the lengths indicated in this section are measured from the cleanout opening to the farthest point where the next cleanout allows access to the horizontal drain piping. For example, if the cleanout is on a stack and the cleanout opening is 10 feet (30 480 mm) above the horizontal drain pipe (that the stack connects to), then the length of horizontal drainage piping that can be cleared is only 90 feet. The lengths in this section are for drainage piping that does not have changes in direction any

INTERNATIONAL CODE COUNCIL®
Copyright © 2015 ICC. ALL RIGHTS RESERVED. Accessed by David Dammon on Jun 21, 2017 12:30:52 PM pursuant to License Agreement with ICC. No further reproduction or distribution authorized. ANY UNAUTHORIZED REPRODUCTION OR DISTRIBUTION IS A VIOLATION OF THE FEDERAL COPYRIGHT ACT AND THE LICENSE AGREEMENT, AND SUBJECT TO CIVIL AND CRIMINAL PENALTIES THEREUNDER.

greater than 45 degrees (0.79 rad). See Section 708.1.4 for horizontal changes in direction that are greater than 45 degrees (0.79 rad).

The exception covers the special circumstance for horizontal drain piping that begins with a nonremovable trap such as for a floor drain or a shower drain. It is understood that a cable or jetter hose can be negotiated through a trap. However, the convoluted path of the trap creates additional drag on a cable such that running the cable for too far of a distance from the trap can cause high stresses in the cable resulting in a greater potential for cable breakage. Therefore, the cleanout access for these horizontal drains can be located downstream of these traps for a distance of up to the maximum allowable pipe length between the trap and the vent connection for the trap (see Table 909.1 for trap-to-vent distances).

708.1.2 Building sewers. *Building sewers* smaller than 8 inches (203 mm) shall have cleanouts located at intervals of not more than 100 feet (30 480 mm). *Building sewers* 8 inches (203 mm) and larger shall have a manhole located not more than 200 feet (60 960 mm) from the junction of the *building drain* and *building sewer* and at intervals of not more than 400 feet (122 m). The interval length shall be measured from the cleanout or manhole opening, along the *developed length* of the piping to the next drainage fitting providing access for cleaning, a manhole or the end of the *building sewer*.

❖ The commentary for Section 708.1.1 explains most of the information in this section. Sewers that are 8 inches (203 mm) or larger are required to have manholes for cleanout access because the large cables (or jetter hoses) needed for these pipelines cannot be easily negotiated through the standard pattern wye and $^1/_8$-bend fitting that would be needed to bring the cleanout access opening to grade level. Building sewers could be broken at wye and $^1/_8$-bend entry into the horizontal drainage piping resulting in earth or stone backfill later migrating into the sewer. Manholes for these larger cables and hoses provide the needed space for access to the piping. Note that the first manhole for an 8-inch (203 mm) or larger diameter sewer is not required to be at the building. A manhole located up to 200 feet (60 960 mm) away from the building can be used to clear blockages in the sewer line back towards the building (see Commentary Figure 708.1.2).

708.1.3 Building drain and building sewer junction. The junction of the *building drain* and the *building sewer* shall be served by a cleanout that is located at the junction or within 10 feet (3048 mm) of the *developed length* of piping upstream of the junction. For the requirements of this section, the removal of the water closet shall not be required to provide cleanout access.

❖ The building sewer begins at the termination of the building drain that ends, by definition, at a point that is 30 inches (762 mm) from the outside wall of the building. Access to the building sewer is very important because blockages can frequently occur as the result of low-flow velocities being unable to transport solids and tree roots that can penetrate the sewer. Blockages might also be the result of other underground utilities that were installed by underground horizontal directional boring methods or "slit" trenching, both of which can sever/penetrate a building sewer without the knowledge of the equipment operator.

The allowance to have the cleanout located upstream of the building drain/building sewer juncture but up to 10 feet (3048 mm) provides for building sewer cleanouts to be in basements, crawl spaces, interior rooms or corridors. The removal of a water closet to provide cleanout access has a twofold purpose: 1) water closets are either in a water closet compartment or a small single-user toilet room. Although removal of the water closet could be a cleanout (see "Cleanout" definition in Chapter 2), such spaces are usually not large enough to facilitate the safe operation of cable machines that are powerful enough to have root cutting capability and 2) the location of a wall (stack) or floor cleanout that requires removal of the water closet to gain safe access to the cleanout defeats the purpose of having installed the cleanout—to facilitate drain clearing. For example, a cleanout might be located directly behind a water closet, on the (close) wall side of a water closet or on the floor next to the water closet such that the water closet would need to be removed to enable positioning of a large drain-cleaning machine near the cleanout opening. A heavy machine near or on the closet flange could cause damage to the flange that might not be properly repaired. The location of a building sewer cleanout on the interior of a building needs to be well thought out (see Commentary Figure 708.1.3).

It is important to maintain safety and situational awareness when attempting to clear building sewer blockages. As stated previously, underground hori-

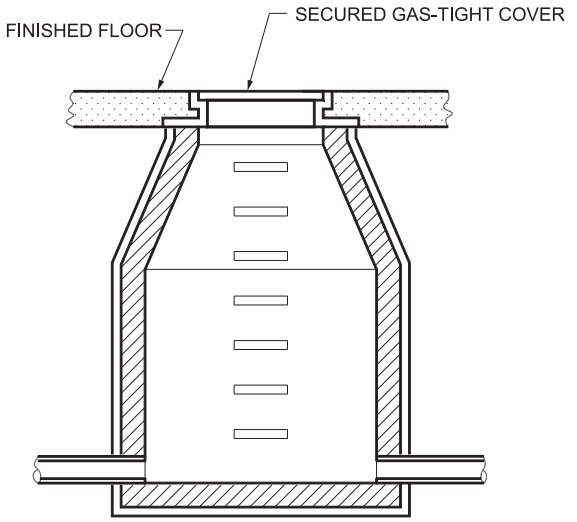

Figure 708.1.2
MANHOLES INSIDE THE BUILDING

INTERNATIONAL CODE COUNCIL®
Copyright © 2015 ICC. ALL RIGHTS RESERVED. Accessed by David Dammon on Jun 21, 2017 12:30:52 PM pursuant to License Agreement with ICC. No further reproduction or distribution authorized. ANY UNAUTHORIZED REPRODUCTION OR DISTRIBUTION IS A VIOLATION OF THE FEDERAL COPYRIGHT ACT AND THE LICENSE AGREEMENT, AND SUBJECT TO CIVIL AND CRIMINAL PENALTIES THEREUNDER.

zontal directional boring or slit trenching are frequently being used to install many types of underground utilities. Because building sewers are usually not marked on drawings, are frequently made of nonmetallic materials and are rarely installed with detectable tapes or wires such that detection equipment can locate them, a building sewer could have been inadvertently penetrated by a utility service. And that may be the reason for the sewer blockage! Thus, drain cleaning personnel need to be aware of any evidence (including information from the building occupant/owner) of recent construction activities in the area that could have impacted the sewer line. Especially if those activities involve natural gas lines or electric power cabling. There have been injuries and deaths associated with sewer cleaning work where gas lines or electric cables had penetrated a sewer and were cut by the sewer cleaning operations.

708.1.4 Changes of direction. Where a horizontal drainage pipe, a *building drain* or a *building sewer* has a change of horizontal direction greater than 45 degrees (0.79 rad), a cleanout shall be installed at the change of direction. Where more than one change of horizontal direction greater than 45 degrees (0.79 rad) occurs within 40 feet (12 192 mm) of *developed length* of piping, the cleanout installed for the first change of direction shall serve as the cleanout for all changes in direction within that 40 feet (12 192 mm) of *developed length* of piping.

❖ Table 706.3 covers what types of fittings can be used for changes in direction of drainage piping. However, where there are many changes in direction greater than 45 degrees (0.79 rad), it becomes more difficult for the drain-cleaning equipment (cables or jetter hoses) to negotiate the turns. The length of 40 feet (12 192 mm) is based on the ability of the drain-cleaning equipment to negotiate all of the turns without significant problems.

Where the length of drainage piping to be cleared is longer than 40 feet (12 192), then accommodations are necessary to ease the way for the cable or jetter hose for these longer pipelines. The accommodation is to not use single fitting patterns for changes in direction greater than 45 degrees (0.79 rad).

A single-pattern fitting or a fitting made up from "combining" fittings to make a pattern that is virtually identical to a single fitting must be avoided. Examples are: 1) a $^1/_4$-bend long sweep fitting can be duplicated by assembling a $^1/_8$-bend spigot end elbow into the hub end of a $^1/_8$-bend elbow and 2) a combination wye and $^1/_8$-bend fitting can be duplicated by assembling a $^1/_8$-bend spigot end elbow into the branch of a wye fitting. A frequent question is whether two $^1/_8$-bend pattern fittings can be connected together by a short length of pipe and not be considered duplicating a single pattern fitting (and not requiring a cleanout for that change in direction). For example, making a 90-degree (1.57 rad) change in direction using two $^1/_8$-bend fittings (hubs on both ends) connected by a "make-up" length of pipe (such that the hub end of each fitting touches the other). The code does allow 45-degree (0.79 rad) changes in direction and does not state how far apart those changes are required to be. The logical conclusion is that the length of pipe between the two fittings could be minimal and the made-up fitting still be in compliance such that a cleanout would not be required. This might not necessarily be the same conclusion arrived at by the local code official. Additionally, the type of pipe material (and how the fittings are made for that type of pipe such as hubless cast-iron fittings versus plastic fittings) might alter the code official's viewpoint in the matter. In the author's opinion, if a length of pipe needs to be used to make up a fitting to accomplish a change of direc-

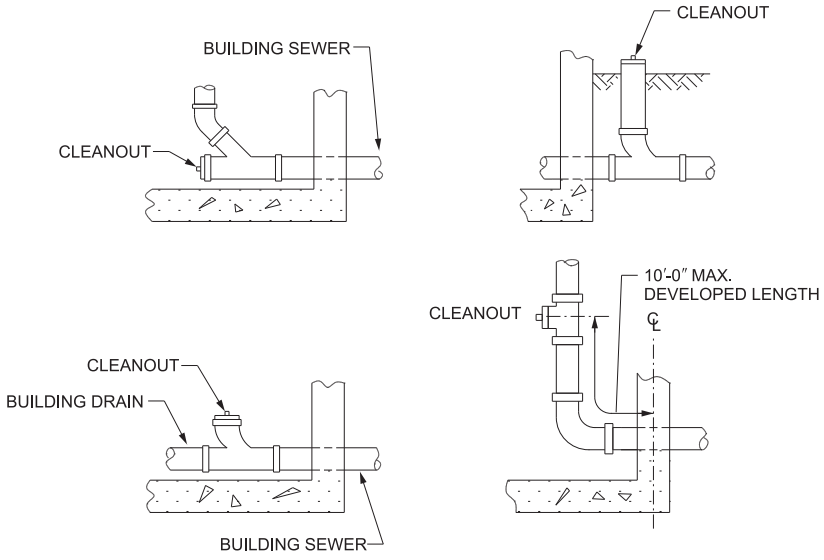

For SI: 1 inch = 25.4 mm, 1 foot = 304 mm.

Figure 708.1.3
CLEANOUTS AT SEWER JUNCTION

INTERNATIONAL CODE COUNCIL®
Copyright © 2015 ICC. ALL RIGHTS RESERVED. Accessed by David Dammon on Jun 21, 2017 12:30:52 PM pursuant to License Agreement with ICC. No further reproduction or distribution authorized. ANY UNAUTHORIZED REPRODUCTION OR DISTRIBUTION IS A VIOLATION OF THE FEDERAL COPYRIGHT ACT AND THE LICENSE AGREEMENT, AND SUBJECT TO CIVIL AND CRIMINAL PENALTIES THEREUNDER.

tion greater than 45 degrees (0.79 rad), then it would be better to plan for and use a length that clearly separates the two fittings into two separate changes in direction rather than be frowned upon for causing the question to be raised in the first place (see Commentary Figure 708.1.4).

708.1.5 Cleanout size. Cleanouts shall be the same size as the piping served by the cleanout, except that cleanouts for piping larger than 4 inches (102 mm) need not be larger than 4 inches (102 mm).

Exceptions:

1. A removable P-trap with slip or ground joint connections can serve as a cleanout for drain piping that is one size larger than the P-trap size.
2. Cleanouts located on *stacks* can be one size smaller than the *stack* size.
3. The size of cleanouts for cast-iron piping can be in accordance with the referenced standards for cast-iron fittings as indicated in Table 702.4.

❖ Cleanout openings for $1^1/_4$-, $1^1/_2$-, 2-, $2^1/_2$-, 3- and 4-inch pipes must not be smaller than the pipe served, thus allowing use of full-bore cleaning equipment. For larger piping, a 4-inch (102 mm) opening is considered adequate for today's cleaning equipment, and full-bore cleaning equipment is typically not used for larger piping [see Commentary Figure 708.1.5(1)].

Manufactured cleanout fittings, like pipe, are sized by nominal dimensions. An industry rule of thumb for pipes larger than 4 inches (102 mm) is that the cleanout is sized in accordance with Commentary Figure 708.1.5(2). The requirements contained in this figure, although not required by the code, are intended to facilitate the use of drain-cleaning attachments (heads) and equipment of the proper size to accomplish full-bore or near full-bore pipe cleaning.

Commentary Figure 708.1.5(2) contains minimum cleanout sizes for larger-diameter drains and sewers. The cleanout sizing is based solely on the need to provide a large enough access opening into the drain pipe for adequate service with larger drain-cleaning equipment. The figure provides sizing for drainage pipe that is 10 inches (254 mm) or larger in diameter. The 8-inch (203 mm) minimum cleanout size for a 10-inch (254 mm) or larger drain, however, applies only to cleanouts serving drains other than building sewers because Section 708.1.4 requires a manhole for all building sewers 8 inches (203 mm) or larger.

Exception 1 allows a smaller nominal size fitting to serve as a cleanout for a larger nominal pipe size. This exception is very specific and limited to removable "P" traps. Exception 1 is intended to permit the removal of fixture traps to provide access to the connecting drains. Exception 2 accommodates some stack fitting designs that have always had the "one pipe size smaller" cleanout opening.

Exception 3 references Table 702.4 where the cast-iron fitting standards ASTM A 74, ASTM A 888 or CISPI 301 are indicated. Cleanout sizes for those fittings vary depending on the fitting chosen.

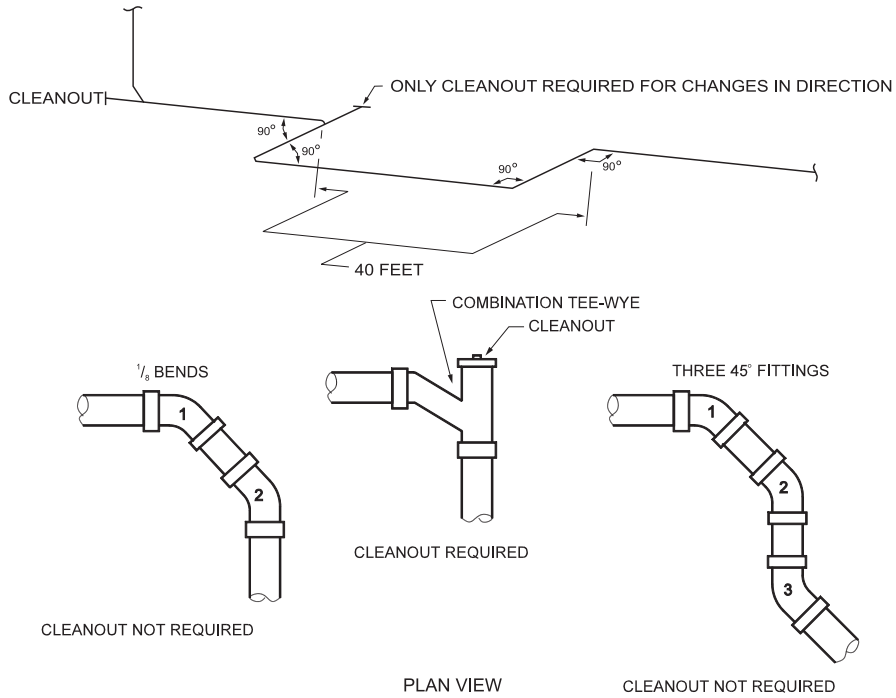

For SI: 1 degree = 0.0175 rad, 1 foot = 304.8 mm.

Figure 708.1.4
CLEANOUTS

INTERNATIONAL CODE COUNCIL®
Copyright © 2015 ICC. ALL RIGHTS RESERVED. Accessed by David Dammon on Jun 21, 2017 12:30:52 PM pursuant to License Agreement with ICC. No further reproduction or distribution authorized. ANY UNAUTHORIZED REPRODUCTION OR DISTRIBUTION IS A VIOLATION OF THE FEDERAL COPYRIGHT ACT AND THE LICENSE AGREEMENT, AND SUBJECT TO CIVIL AND CRIMINAL PENALTIES THEREUNDER.

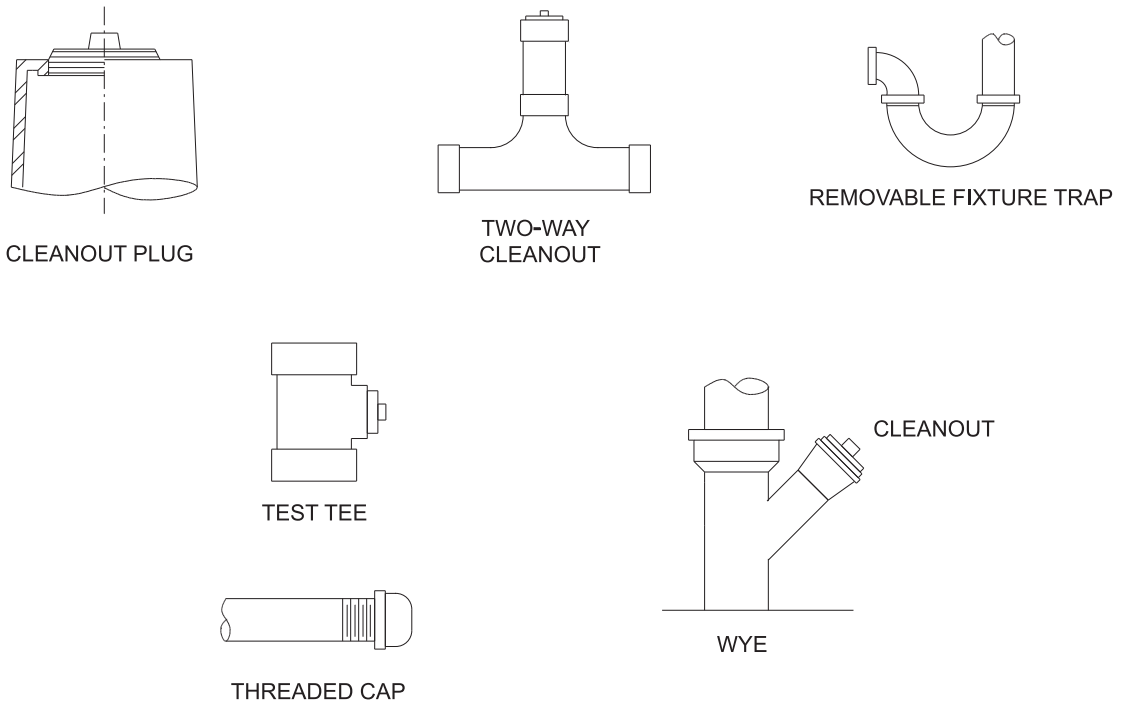

Figure 708.1.5(1)
ACCEPTABLE CLEANOUTS

NOMINAL PIPE SIZE (inches)	NOMINAL SIZE CLEANOUT (inches)
5	4
6	4
8	6
10 and above	8

Figure 708.1.5(2)
CLEANOUT SIZES FOR CAST-IRON PIPING

708.1.6 Cleanout plugs. Cleanout plugs shall be of brass, plastic or other *approved* materials. Cleanout plugs for borosilicate glass piping systems shall be of borosilicate glass. Brass cleanout plugs shall conform to ASTM A 74 and shall be limited for use only on metallic piping systems. Plastic cleanout plugs shall conform to the referenced standards for plastic pipe fittings, as indicated in Table 702.4. Cleanout plugs shall have a raised square head, a countersunk square head or a countersunk slot head. Where a cleanout plug will have a trim cover screw installed into the plug, the plug shall be manufactured with a blind end threaded hole for such purpose.

❖ Metallic cleanout plugs must be brass to provide for easy removal. If the cleanout plug is corroded in place, the brass plug is a soft enough material to be chiseled out. Brass cleanout plugs are limited to metallic fittings because the metal plug threads may damage the softer plastic threads of a fitting. Plastic plugs are intended for use with plastic fittings; however, this section does not prohibit the use of plastic plugs with metallic fittings. Like brass plugs, plastic plugs are less likely to seize in metallic fittings. The cleanout plug must have a square turning surface to allow for ease of removal while minimizing the possibility of stripping the surface during removal.

708.1.7 Manholes. Manholes and manhole covers shall be of an *approved* type. Manholes located inside of a building shall have gas-tight covers that require tools for removal.

❖ There many designs for manholes and manhole covers. Frequently, jurisdictions have specifications on manhole design and require specially embossed covers to be used. The code official must approve the design.

Where manholes are installed inside of buildings, the manhole covers must be of gas-tight design to prevent sewer gases from entering the building. Covers need to be bolted down or otherwise require tools to remove so access is limited.

The designer specifying the installation of manholes in areas subject to flooding must consider the protection of manholes from the effects of floodwaters. Floodwaters may damage or completely displace manholes and covers if they are not properly sealed and secured. Additionally, submerged manhole openings (covers) may allow floodwaters to enter the drainage system. The manhole cover may be located above the base flood level elevation or designed to resist hydrostatic forces when submerged in water and dynamic forces resulting from wave action or high-velocity water.

INTERNATIONAL CODE COUNCIL®
Copyright © 2015 ICC. ALL RIGHTS RESERVED. Accessed by David Dammon on Jun 21, 2017 12:30:52 PM pursuant to License Agreement with ICC. No further reproduction or distribution authorized. ANY UNAUTHORIZED REPRODUCTION OR DISTRIBUTION IS A VIOLATION OF THE FEDERAL COPYRIGHT ACT AND THE LICENSE AGREEMENT, AND SUBJECT TO CIVIL AND CRIMINAL PENALTIES THEREUNDER.

708.1.8 Installation arrangement. The installation arrangement of a cleanout shall enable cleaning of drainage piping only in the direction of drainage flow.

Exceptions:

1. Test tees serving as cleanouts.
2. A two-way cleanout installation that is *approved* for meeting the requirements of Section 708.1.3.

❖ Many fixtures and buildings have been damaged by drain cleaning work that allowed the cable or jetter hose to be routed in an upstream direction. Drainage piping frequently smaller in diameter at upstream locations and augers can break or permanently jam in the piping. Almost every plumbing contractor has heard of stories or has personally witnessed the aftermath of a cleaning cable that found its way out through a water closet, breaking the water closet and causing significant wall, floor and ceiling damage in a toilet room. Cleanouts must be well thought out so the preferred cleanout arrangement is for cleaning in a downstream direction.

Exception 1 recognizes that a test tee might be required to be installed for a cleanout. The intent is not for enabling drain cleaning in the upstream direction. The drainage piping upstream of the test tee (serving as a cleanout) must have the required cleanout. Though not required by the code, some permanent indication of flow should be indicated on test tees serving as cleanouts, except those where the direction of flow is obvious, such as on a vertical pipe.

Exception 2 recognizes a specialized two-way cleanout fitting that is constructed with a branch throat that curves toward both the upstream and downstream directions of the run of the fitting. This fitting is only allowed to be used for the building drain/building sewer cleanout requirement of Section 708.1.3 (see Commentary Figure 708.1.8). This fitting is sometimes used as a retrofit for existing buildings where the building drain was not provided with an upstream cleanout. A question that is often asked is how far below grade can a two-way cleanout fitting be located? The concern is about being able to reliably guide the cleaning cable (or jetter hose) in the intended direction (and not in an unintended direction). Or it should be obvious that the cleanout is a specialized two-way cleanout fitting so that a drain cleaner doesn't just assume that the fitting will always direct the cable downstream. The code is silent on this issue.

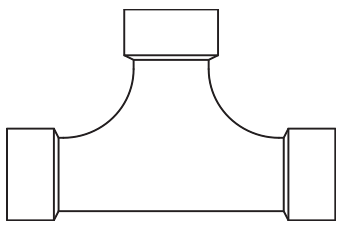

Figure 708.1.8
TWO-WAY CLEANOUT FITTING

708.1.9 Required clearance. Cleanouts for 6-inch (153 mm) and smaller piping shall be provided with a clearance of not less than 18 inches (457 mm) from, and perpendicular to, the face of the opening to any obstruction. Cleanouts for 8-inch (203 mm) and larger piping shall be provided with a clearance of not less than 36 inches (914 mm) from, and perpendicular to, the face of the opening to any obstruction.

❖ The usability of cleanouts is not to be compromised by their placement in the building. The required clearances in this section are the *minimum* conditions that will allow the cleanout to be used for the intended purpose. The designer is encouraged to provide additional clearance whenever possible and practical. The required clearances are to be measured perpendicular to the face of the cleanout opening to any obstruction. Obstructions could mean fixed equipment, plumbing fixtures and equipment, appliances that cannot be moved by hand only (such as ice machines), or permanent building construction such as water closet compartment panels that are fixed to the building (see Commentary Figure 708.1.9).

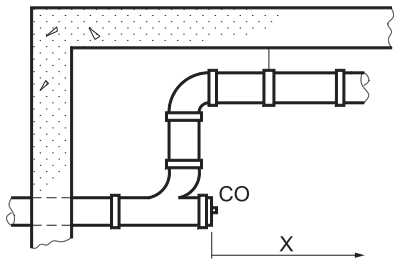

MINIMUM CLEARANCE:
X = MINIMUM 18″ FOR 6″ AND SMALLER PIPES
X = MINIMUM 36″ FOR 8″ AND LARGER PIPES

For SI: 1 inch = 25.4 mm.

Figure 708.1.9
CLEARANCE FOR CLEANOUTS

708.1.10 Cleanout access. Required cleanouts shall not be installed in concealed locations. For the purposes of this section, concealed locations include, but are not limited to, the inside of plenums, within walls, within floor/ceiling assemblies, below grade and in crawl spaces where the height from the crawl space floor to the nearest obstruction along the path from the crawl space opening to the clean-out location is less than 24 inches (610 mm). Cleanouts with openings at a finished wall shall have the face of the opening located within $1^1/_2$ inches (38 mm) of the finished wall surface. Cleanouts located below grade shall be extended to grade level so that the top of the cleanout plug is at or above grade. A cleanout installed in a floor or walkway that will not have a trim cover installed shall have a countersunk plug installed so the top surface of the plug is flush with the finished surface of the floor or walkway.

❖ A cleanout cannot be located in permanently concealed areas, be concealed by permanent finish materials or be located in an area that cleaning equipment could not be obviously moved to perform the work. A

INTERNATIONAL CODE COUNCIL®
Copyright © 2015 ICC. ALL RIGHTS RESERVED. Accessed by David Dammon on Jun 21, 2017 12:30:52 PM pursuant to License Agreement with ICC. No further reproduction or distribution authorized. ANY UNAUTHORIZED REPRODUCTION OR DISTRIBUTION IS A VIOLATION OF THE FEDERAL COPYRIGHT ACT AND THE LICENSE AGREEMENT, AND SUBJECT TO CIVIL AND CRIMINAL PENALTIES THEREUNDER.

cleanout that cannot be found is a useless cleanout. A cleanout that is poorly located (such as in floor/ceiling area) such that it presents difficulties resulting in building damage is not an intelligent choice (see Commentary Figure 708.1.10).

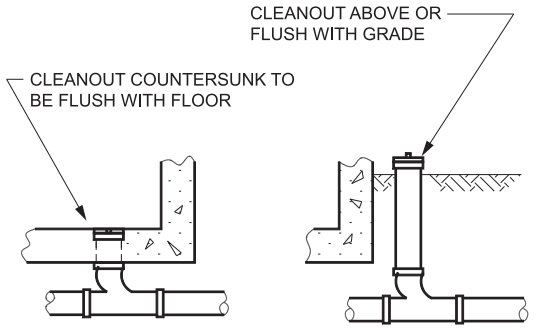

Figure 708.1.10
CLEANOUT INSTALLATIONS

708.1.10.1 Cleanout plug trim covers. Trim covers and access doors for cleanout plugs shall be designed for such purposes and shall be *approved*. Trim cover fasteners that thread into cleanout plugs shall be corrosion resistant. Cleanout plugs shall not be covered with mortar, plaster or any other permanent material.

❖ Trim covers and access panels are required to be designed for such purpose so that they are recognizable as a potential location for a cleanout. Such covers and panels must be approved by the code official so that obscure and inappropriate methods for covering up cleanouts are not chosen (see Commentary Figure 708.1.10.1).

708.1.10.2 Floor cleanout assemblies. Where it is necessary to protect a cleanout plug from the loads of vehicular traffic, cleanout assemblies in accordance with ASME A112.36.2M shall be installed.

❖ Load-rated cleanout assemblies are required for vehicular traffic areas.

708.1.11 Prohibited use. The use of a threaded cleanout opening to add a fixture or to extend piping shall be prohibited except where another cleanout of equal size is installed with the required access and clearance.

❖ If a cleanout opening is eliminated by a permanent piping connection, a new approved cleanout of equal access and capacity must be installed. In existing structures, cleanouts provide a convenient opening for the connection of new piping in remodeling, addition and alteration work. The cleanout fitting is commonly removed to allow a new connection; however, a substitute cleanout must be provided to serve in the same capacity as the cleanout that was eliminated. Many threaded cleanout openings have only a few threads and, therefore, are not intended to receive threaded pipe or male adapters.

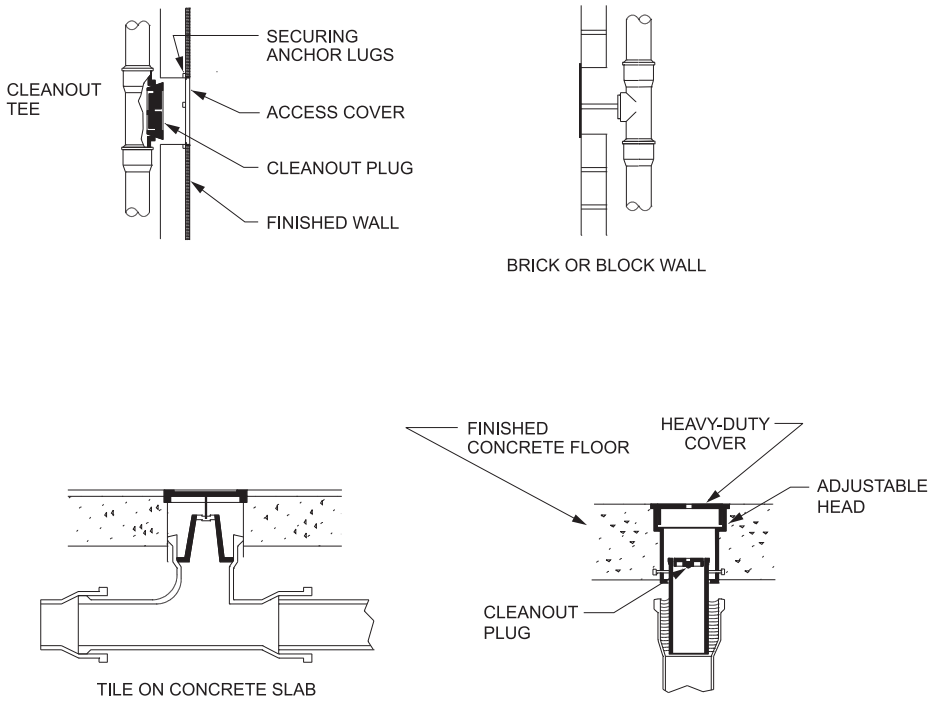

Figure 708.1.10.1
CLEANOUTS ON CONCEALED PIPING

INTERNATIONAL CODE COUNCIL®
Copyright © 2015 ICC. ALL RIGHTS RESERVED. Accessed by David Dammon on Jun 21, 2017 12:30:52 PM pursuant to License Agreement with ICC. No further reproduction or distribution authorized. ANY UNAUTHORIZED REPRODUCTION OR DISTRIBUTION IS A VIOLATION OF THE FEDERAL COPYRIGHT ACT AND THE LICENSE AGREEMENT, AND SUBJECT TO CIVIL AND CRIMINAL PENALTIES THEREUNDER.

SECTION 709
FIXTURE UNITS

709.1 Values for fixtures. *Drainage fixture unit* values as given in Table 709.1 designate the relative load weight of different kinds of fixtures that shall be employed in estimating the total load carried by a soil or waste pipe, and shall be used in connection with Tables 710.1(1) and 710.1(2) of sizes for soil, waste and vent pipes for which the permissible load is given in terms of fixture units.

❖ This section contains the requirements to establish fixture unit amounts for plumbing fixtures for use in determining drainage system piping size. For a discussion on the determination of fixture units, see the General Comments at the beginning of this chapter. The term "fixture unit" refers to "drainage fixture units." Refer to the commentary on the definitions of "Fixture units" and "Drainage fixture units" in Chapter 2.

The method of sizing a sanitary drainage system is based on the dfu values listed in Table 709.1.

TABLE 709.1. See page 7-39.

❖ This table identifies common plumbing fixtures with their corresponding dfu values. The dfu values are used to determine the load on a drain, which, in turn, is used to determine the minimum drainage pipe size requirement for the load served. In determining the fixture unit values, each fixture was evaluated for its impact on the sanitary drainage system. The original development of fixture unit values was based on an arbitrary scale established by Dr. Hunter. Dr. Hunter conceived the idea of assigning a fixture unit value to represent the degree to which a fixture loads a system when used at the maximum assumed frequency. The scale was based on two fixtures: the lavatory and water closet (public). Dr. Hunter determined that a lavatory load on a drainage system was one-sixth of that for a water closet. Hence, the lavatory was assigned the value of 1 while the water closet was 6.

The sole purpose of the fixture unit concept is to make it possible to calculate the design load on the system directly when the system is composed of different kinds of fixtures, each having a different loading characteristic. The last column of the table lists the minimum trap size required for the corresponding fixture. Minimum trap size is also the minimum drainage pipe size because the size of a drainage pipe cannot be reduced in the direction of flow (see commentary, Section 1002.5). Although the code does not regulate the maximum size of a fixture trap, traps should not be oversized because the reduced flow volume and velocity will impair the trap's self-scouring ability.

Note a references Table 709.2 for determining dfu values for commercial washing machines with traps larger than 3 inches (76 mm) in diameter.

Note b allows for shower heads and whirlpool attachments to a bathtub fixture without increasing the fixture unit value.

Note c references Sections 709.2 through 709.4 to determine fixture unit values of plumbing fixtures not found in the table and fixtures with intermittent flows.

Note d requires consistency between the fixture outlet size and trap size of urinals and water closets. Both the trap size and the design of a water closet are regulated by ANSI Z124.4 and ASME A112.19.2.

Note e permits assigning a water closet or urinal a lower dfu value than that listed in the table when appropriate testing justifies the reduction. This can be significant when installing 1.6-gallon-per-flush (6.1 L per flush) water closets because some manufacturers have conducted tests and determined that such fixtures have a dfu value of 2. An emergency floor drain is installed in areas such as toilet rooms, boiler rooms and laundry rooms and is used only in cases of fixture overflow, water pipe failure and vandalism (see commentary, Section 412.4). Such floor drains do not add to the normal load of the drainage system.

Note f permits adding fixtures to a dwelling unit bathroom group to the dfu value of the bathroom group fixture count.

Note g references Section 406.3 for sizing requirements for the trap and fixture drain for an automatic clothes washer and the branch drain or drainage stack.

Note h addresses waste receptors and the appropriate determination of dfu loads based upon what is being discharged to the waste receptor. Section 709.4 requires a minimum dfu load to be assumed for a trap size if the sum of indirectly connected fixtures to the waste receptor is less than the minimum dfu load for the trap size. Section 709.4.1 allows for the special application of condensate drains for refrigerated cases and a reduction of dfu load (see commentary, Section 704.4.1)

709.2 Fixtures not listed in Table 709.1. Fixtures not listed in Table 709.1 shall have a *drainage fixture unit* load based on the outlet size of the fixture in accordance with Table 709.2. The minimum trap size for unlisted fixtures shall be the size of the drainage outlet but not less than $1^1/_4$ inches (32 mm).

❖ When a specific plumbing fixture is not listed in Table 709.1, the dfu value is based on the outlet size of the fixture. For example, floor sinks (receptors) are not listed in Table 709.1; therefore, Table 709.2 would be used. A $1^1/_4$-inch (32 mm) drain is the minimum acceptable size to permit proper open channel flow in the pipe for sanitary drainage. The minimum trap size is based on this pipe size (see commentary, Section 709.4).

INTERNATIONAL CODE COUNCIL®
Copyright © 2015 ICC. ALL RIGHTS RESERVED. Accessed by David Dammon on Jun 21, 2017 12:30:52 PM pursuant to License Agreement with ICC. No further reproduction or distribution authorized. ANY UNAUTHORIZED REPRODUCTION OR DISTRIBUTION IS A VIOLATION OF THE FEDERAL COPYRIGHT ACT AND THE LICENSE AGREEMENT, AND SUBJECT TO CIVIL AND CRIMINAL PENALTIES THEREUNDER.

TABLE 709.1
DRAINAGE FIXTURE UNITS FOR FIXTURES AND GROUPS

FIXTURE TYPE	DRAINAGE FIXTURE UNIT VALUE AS LOAD FACTORS	MINIMUM SIZE OF TRAP (inches)
Automatic clothes washers, commercial[a,g]	3	2
Automatic clothes washers, residential[g]	2	2
Bathroom group as defined in Section 202 (1.6 gpf water closet)[f]	5	—
Bathroom group as defined in Section 202 (water closet flushing greater than 1.6 gpf)[f]	6	—
Bathtub[b] (with or without overhead shower or whirlpool attachments)	2	1 1/2
Bidet	1	1 1/4
Combination sink and tray	2	1 1/2
Dental lavatory	1	1 1/4
Dental unit or cuspidor	1	1 1/4
Dishwashing machine[c], domestic	2	1 1/2
Drinking fountain	1/2	1 1/4
Emergency floor drain	0	2
Floor drains[h]	2[h]	2
Floor sinks	Note h	2
Kitchen sink, domestic	2	1 1/2
Kitchen sink, domestic with food waste disposer and/or dishwasher	2	1 1/2
Laundry tray (1 or 2 compartments)	2	1 1/2
Lavatory	1	1 1/4
Shower (based on the total flow rate through showerheads and body sprays)		
Flow rate:		
5.7 gpm or less	2	1 1/2
Greater than 5.7 gpm to 12.3 gpm	3	2
Greater than 12.3 gpm to 25.8 gpm	5	3
Greater than 25.8 gpm to 55.6 gpm	6	4
Service sink	2	1 1/2
Sink	2	1 1/2
Urinal	4	Note d
Urinal, 1 gallon per flush or less	2[e]	Note d
Urinal, nonwater supplied	1/2	Note d
Wash sink (circular or multiple) each set of faucets	2	1 1/2
Water closet, flushometer tank, public or private	4[e]	Note d
Water closet, private (1.6 gpf)	3[e]	Note d
Water closet, private (flushing greater than 1.6 gpf)	4[e]	Note d
Water closet, public (1.6 gpf)	4[e]	Note d
Water closet, public (flushing greater than 1.6 gpf)	6[e]	Note d

For SI: 1 inch = 25.4 mm, 1 gallon = 3.785 L, gpf = gallon per flushing cycle, gpm = gallon per minute.

a. For traps larger than 3 inches, use Table 709.2.

b. A showerhead over a bathtub or whirlpool bathtub attachment does not increase the *drainage fixture unit* value.

c. See Sections 709.2 through 709.4.1 for methods of computing unit value of fixtures not listed in this table or for rating of devices with intermittent flows.

d. Trap size shall be consistent with the fixture outlet size.

e. For the purpose of computing loads on *building drains* and *sewers*, water closets and urinals shall not be rated at a lower *drainage fixture unit* unless the lower values are confirmed by testing.

f. For fixtures added to a *bathroom group*, add the *dfu* value of those additional fixtures to the *bathroom group* fixture count.

g. See Section 406.3 for sizing requirements for *fixture drain*, branch drain and drainage *stack* for an automatic clothes washer standpipe.

h. See Sections 709.4 and 709.4.1.

INTERNATIONAL CODE COUNCIL®
Copyright © 2015 ICC. ALL RIGHTS RESERVED. Accessed by David Dammon on Jun 21, 2017 12:30:52 PM pursuant to License Agreement with ICC. No further reproduction or distribution authorized. ANY UNAUTHORIZED REPRODUCTION OR DISTRIBUTION IS A VIOLATION OF THE FEDERAL COPYRIGHT ACT AND THE LICENSE AGREEMENT, AND SUBJECT TO CIVIL AND CRIMINAL PENALTIES THEREUNDER.

TABLE 709.2
DRAINAGE FIXTURE UNITS FOR FIXTURE DRAINS OR TRAPS

FIXTURE DRAIN OR TRAP SIZE (inches)	DRAINAGE FIXTURE UNIT VALUE
$1^1/_4$	1
$1^1/_2$	2
2	3
$2^1/_2$	4
3	5
4	6

For SI: 1 inch = 25.4 mm.

❖ If a fixture is not listed in the table, the dfu value is based on the outlet or trap size of the fixture. This method of assigning fixture unit values is consistent with the historical development of sizing methodology because the outlet size restricts the discharge flow rate of the fixture. Special consideration should be given to the sizing of receptors, such as floor sinks that receive the discharge of multiple indirectly connected fixtures. For example, the table may be inappropriate for determining the fixture unit value for an indirect waste receptor with a 4-inch (102 mm) trap that serves five or six $1^1/_2$-inch-diameter (38 mm) culinary fixture drains (see commentary, Section 709.4).

709.3 Values for continuous and semicontinuous flow. *Drainage fixture unit* values for continuous and semicontinuous flow into a drainage system shall be computed on the basis that 1 gpm (0.06 L/s) of flow is equivalent to two fixture units.

❖ Equipment that discharges either continuously or semicontinuously, such as pumps and ejectors, is assigned two fixture units for each gallon per minute (gpm) of discharge rate. For example, a continuously operating pump with a discharge rate of 20 gpm (78 L/min) would have a dfu value of 40. This conversion applies only to the type of continuous flow addressed in this section. Because a dfu is based on probability, only whole numbers are used to express fixture unit values. A fractional fixture unit value is always rounded up to the next whole number. This calculation does not work in reverse. The relationship of dfu to gpm is not a constant ratio that allows direct conversion of units. Thus, it cannot be determined that a dfu value of 40 would yield a continuous flow of 20 gpm (78 L/min).

709.4 Values for indirect waste receptor. The *drainage fixture unit* load of an indirect waste receptor receiving the discharge of indirectly connected fixtures shall be the sum of the *drainage fixture unit* values of the fixtures that discharge to the receptor, but not less than the *drainage fixture unit* value given for the indirect waste receptor in Table 709.1 or 709.2.

❖ Waste receptors such as hub drains and floor sinks are typically used to receive waste from multiple indirectly connected fixtures (see Section 802). The simultaneous discharge of indirectly connected fixtures may result in a greater load on the drainage system than accounted for by Table 709.2. For example, a 3-inch (76 mm) hub drain could be serving four $1^1/_2$-inch (38 mm) indirect wastes, which may represent a total load of 8 dfu (4 by 2 dfu); however, Table 709.2 would assign a total load of only 5 dfu. If the total dfu load determined by this section is less than that given by Table 709.1 or 709.2, as applicable, the table values must prevail.

709.4.1 Clear-water waste receptors. Where waste receptors such as floor drains, floor sinks and hub drains receive only clear-water waste from display cases, refrigerated display cases, ice bins, coolers and freezers, such receptors shall have a *drainage fixture unit* value of one-half.

❖ In large food stores and warehouses having many refrigerated display cases and freezer units, many traps are installed with either hub drains or waste receptors to collect the condensate from the units. Even though the condensate flow from each unit is only a trickle, the trap sizes dictated the size of the drain system connecting all the traps. For example, a 3-inch (76 mm) trap with hub drain has a drainage fixture unit value (derived Table 709.2.) of 5 dfu. In situations with several hundred traps, the total dfu load results in unnecessarily large pipe sizes compared to the actual flow in the pipe. This section allows the designer to use a smaller more realistic dfu loading for these applications.

SECTION 710
DRAINAGE SYSTEM SIZING

710.1 Maximum fixture unit load. The maximum number of *drainage fixture units* connected to a given size of *building sewer*, *building drain* or horizontal *branch* of the *building drain* shall be determined using Table 710.1(1). The maximum number of drainage fixture units connected to a given size of horizontal *branch* or vertical soil or waste *stack* shall be determined using Table 710.1(2).

❖ This section contains the requirements for the sizing of gravity drainage piping.

The maximum number of dfu that can be connected to a drainage pipe is given in Tables 710.1(1) and 710.1(2) and is dependent on whether the pipe is a building drain, sewer, stack or horizontal branch.

710.1.1 Horizontal stack offsets. Horizontal *stack* offsets shall be sized as required for building drains in accordance with Table 710.1(1), except as required by Section 711.3.

❖ Horizontal offsets (see the definition of "Horizontal pipe" in Chapter 2) cause a disruption of flow in the stack, and horizontal piping has less flow capacity than vertical piping. The vertical flow must convert to a horizontal flow in horizontal offsets; therefore, the increased turbulence and decreased flow capacity of the horizontal offset must be considered.

In many cases, Table 710.1(1) will require that the diameter of the offset be larger than the stack piping above it. The reference to Section 711.3 in the last

INTERNATIONAL CODE COUNCIL®
Copyright © 2015 ICC. ALL RIGHTS RESERVED. Accessed by David Dammon on Jun 21, 2017 12:30:52 PM pursuant to License Agreement with ICC. No further reproduction or distribution authorized. ANY UNAUTHORIZED REPRODUCTION OR DISTRIBUTION IS A VIOLATION OF THE FEDERAL COPYRIGHT ACT AND THE LICENSE AGREEMENT, AND SUBJECT TO CIVIL AND CRIMINAL PENALTIES THEREUNDER.

phrase of this section is of no consequence because Section 711.3 would require the same sizing as this section.

TABLE 710.1(1)
BUILDING DRAINS AND SEWERS

DIAMETER OF PIPE (inches)	MAXIMUM NUMBER OF DRAINAGE FIXTURE UNITS CONNECTED TO ANY PORTION OF THE BUILDING DRAIN OR THE BUILDING SEWER, INCLUDING BRANCHES OF THE BUILDING DRAIN[a]			
	Slope per foot			
	1/16 inch	1/8 inch	1/4 inch	1/2 inch
1 1/4	—	—	1	1
1 1/2	—	—	3	3
2	—	—	21	26
2 1/2	—	—	24	31
3	—	36	42	50
4	—	180	216	250
5	—	390	480	575
6	—	700	840	1,000
8	1,400	1,600	1,920	2,300
10	2,500	2,900	3,500	4,200
12	3,900	4,600	5,600	6,700
15	7,000	8,300	10,000	12,000

For SI: 1 inch = 25.4 mm, 1 inch per foot = 83.3 mm/m.

a. The minimum size of any *building drain* serving a water closet shall be 3 inches.

❖ This table gives the maximum fixture units that can be connected to building drains, sewers and every horizontal branch connecting to a building drain. Such drains are the lowest portions of the system that drain horizontally by gravity (see the definition of "Building drain" in Chapter 2). The pipe diameters indicated are the nominal dimension designations for piping material. These dimensions are regulated by the piping material standards referenced in this chapter.

The minimum size of each pipe section is based on the slope of the pipe (pitch or grade) and the number of dfu that connect to that section. Drainage fixture units are additive in the direction of flow. The dfu values listed in the table are the maximum value for the given pipe size and slope.

The principle of a building drain flowing approximately half full at a maximum capacity design load was used by Dr. Hunter to develop a sizing method. The sizing is based further on a steady-state flow condition in the pipe (level flow).

The building drain actually has a combination of a steady-state and surging (highly fluctuating) flow. Surging flow results from the high entrance velocity from the discharge of a fixture, horizontal branch or stack.

The dfu load values in this table are conservative, and half-full flow will rarely, if ever, occur [see Commentary Figure 710.1(1)].

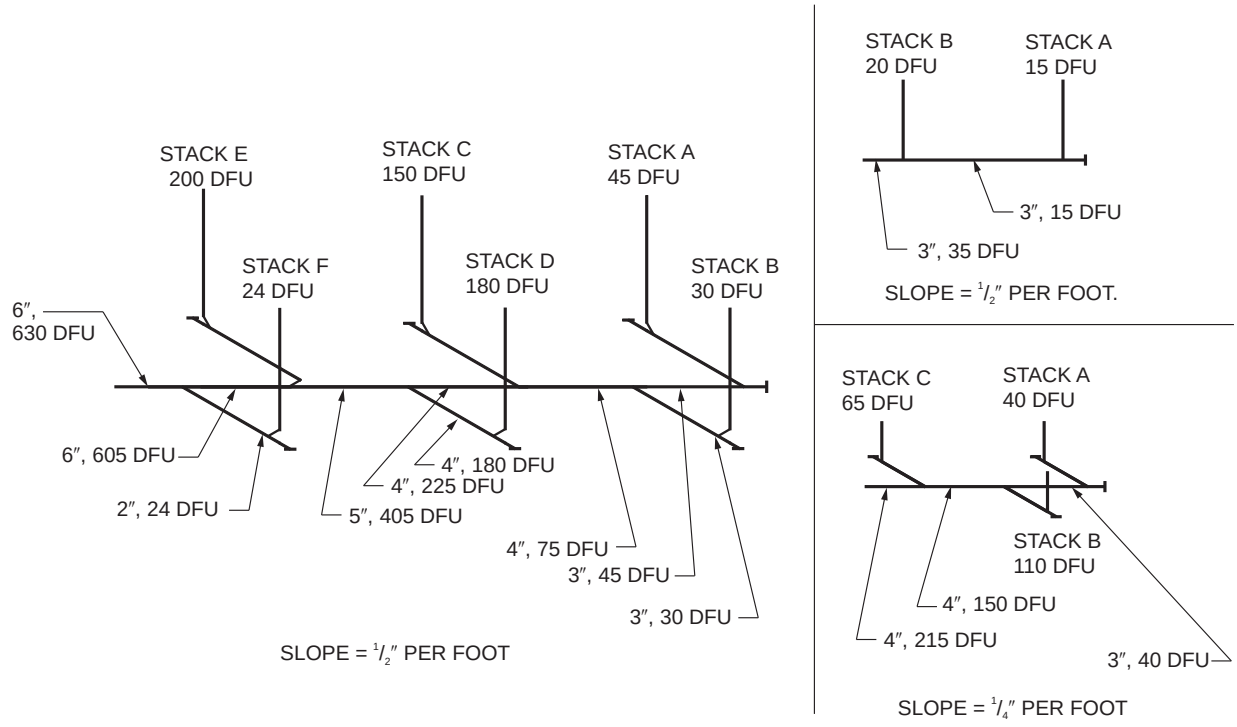

For SI: 1 inch = 25.4 mm, 1 inch per foot = 83.3 mm/m.

Figure 710.1(1)
BUILDING DRAIN SIZING

INTERNATIONAL CODE COUNCIL®
Copyright © 2015 ICC. ALL RIGHTS RESERVED. Accessed by David Dammon on Jun 21, 2017 12:30:52 PM pursuant to License Agreement with ICC. No further reproduction or distribution authorized. ANY UNAUTHORIZED REPRODUCTION OR DISTRIBUTION IS A VIOLATION OF THE FEDERAL COPYRIGHT ACT AND THE LICENSE AGREEMENT, AND SUBJECT TO CIVIL AND CRIMINAL PENALTIES THEREUNDER.

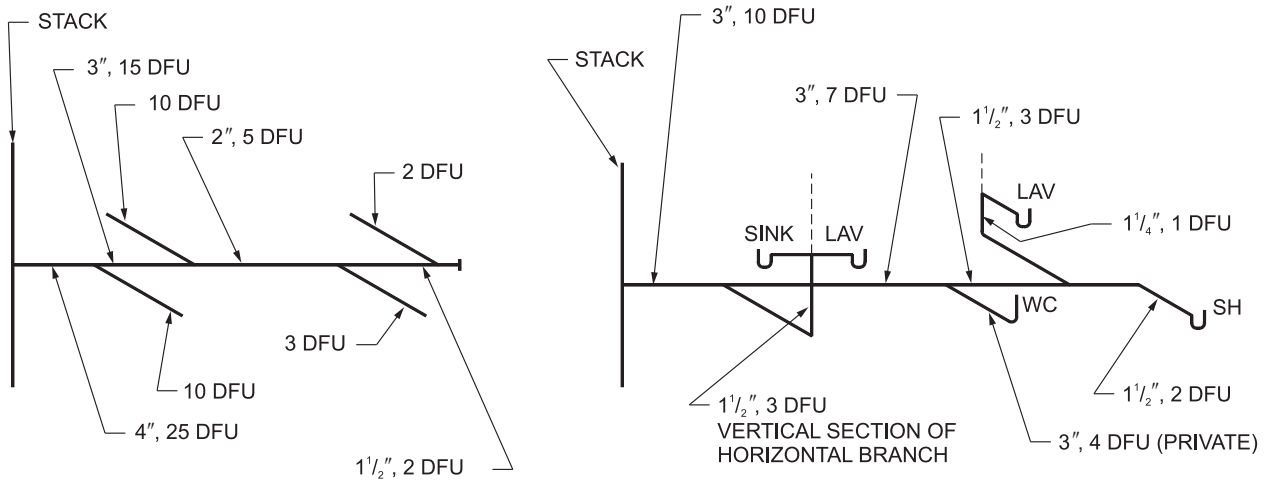

For SI: 1 inch = 25.4 mm.

Figure 710.1(2)
HORIZONTAL BRANCH
(Complete venting not shown)

710.1.2 Vertical stack offsets. Vertical *stack* offsets shall be sized as required for straight stacks in accordance with Table 710.1(2), except where required to be sized as a *building drain* in accordance with Section 711.1.1.

❖ Because vertical offsets (see the definition of "Vertical pipe" in Chapter 2) do not have as much impact on flow in the stack, such offsets are sized no differently than the stack itself (see commentary, Section 711.1.1).

TABLE 710.1(2)
HORIZONTAL FIXTURE BRANCHES AND STACKS[a]

DIAMETER OF PIPE (inches)	MAXIMUM NUMBER OF DRAINAGE FIXTURE UNITS (dfu)			
		Stacks[b]		
	Total for horizontal branch	Total discharge into one branch interval	Total for stack of three branch Intervals or less	Total for stack greater than three branch intervals
1 1/2	3	2	4	8
2	6	6	10	24
2 1/2	12	9	20	42
3	20	20	48	72
4	160	90	240	500
5	360	200	540	1,100
6	620	350	960	1,900
8	1,400	600	2,200	3,600
10	2,500	1,000	3,800	5,600
12	3,900	1,500	6,000	8,400
15	7,000	Note c	Note c	Note c

For SI: 1 inch = 25.4 mm.

a. Does not include branches of the building drain. Refer to Table 710.1(1).

b. Stacks shall be sized based on the total accumulated connected load at each story or branch interval. As the total accumulated connected load decreases, stacks are permitted to be reduced in size. Stack diameters shall not be reduced to less than one-half of the diameter of the largest stack size required.

c. Sizing load based on design criteria.

❖ The table may be considered as four separate tables: one for sizing horizontal branches connecting to a stack, one for limiting the discharge per branch interval for any height stack, one for sizing stacks three branch intervals or less in height and one for sizing stacks more than three branch intervals in height. The pipe dimensions listed in the first column are again the nominal dimension designations identified in the pipe standards.

To size a horizontal branch, only the first two columns of the table are required. The second column relates only to horizontal branches; it does not affect the sizing of stacks. A horizontal branch, however, may have a vertical section of pipe.

The table lists the maximum number of fixture units that can be discharged into a given size pipe. As the number of dfu increases in the direction of flow, the pipe may also have to be increased in size.

The dfu load value for a horizontal branch is typically lower than the permitted load for a building drain, a branch of a building drain or a sewer the same size as listed in Table 710.1(1). When sizing a horizontal branch, consideration must be given to the flow entering a stack. If there is simultaneous flow in the stack and horizontal branch, the flow in the horizontal branch may adversely affect the flow in the stack, and the flow in the stack may impede the flow in the horizontal branch. A significant flow in the stack may cause a backup of flow in the horizontal branch connecting to the stack. The table accounts for the effect on the stack by limiting the load capacity of the horizontal branch [see Commentary Figure 710.1(3)].

INTERNATIONAL CODE COUNCIL®
Copyright © 2015 ICC. ALL RIGHTS RESERVED. Accessed by David Dammon on Jun 21, 2017 12:30:52 PM pursuant to License Agreement with ICC. No further reproduction or distribution authorized. ANY UNAUTHORIZED REPRODUCTION OR DISTRIBUTION IS A VIOLATION OF THE FEDERAL COPYRIGHT ACT AND THE LICENSE AGREEMENT, AND SUBJECT TO CIVIL AND CRIMINAL PENALTIES THEREUNDER.

The table does not have an entry for a $1^1/_4$-inch-diameter (32 mm) pipe, and the most upstream lavatory in Commentary Figure 710.1(2) is served by a $1^1/_4$-inch (32 mm) horizontal fixture branch. This is intended to illustrate that the omission of a $1^1/_4$-inch (32 mm) pipe from the table does not prohibit its use as a horizontal drain. A $1^1/_4$-inch (32 mm) pipe is limited to 1 dfu.

When sizing a stack, there are three main criteria that must be considered: the discharge into a branch interval of a stack, the total discharge into a stack and the total number of branch intervals on the stack.

For sizing a stack of three branch intervals or less, the third and fourth columns of the table are used [see Commentary Figure 710.1(3)]. Within any given branch interval, the maximum amount of discharge a stack may receive is limited. If the maximum discharge per branch interval is exceeded, the stack would have to be increased in size. The discharge may be received from more than one horizontal branch.

Commentary Figure 710.1(4), Example 1, depicts two 3-inch (76 mm) horizontal branches connecting within one branch interval. The total fixture unit load is 30, meaning that the stack diameter must be a minimum of 4 inches (102 mm). The example demonstrates a situation where the branches must be only 3 inches (76 mm) and, because of the location of their connection to the stack, a larger-size stack is required. In this example, the total permitted capacity of a 3-inch (76 mm) stack was not exceeded; only the limitation for a given branch interval was exceeded.

The flow, discharging within a branch interval, is limited to avoid interference with the flow in the stack. The collision of horizontal flow in a branch with the vertical flow in a stack may disrupt the annular flow pattern in the stack. This disruption may cause the cross-sectional area of the stack to be partially or completely filled with waste, which in turn causes the formation of slugs or pistons of waste in the stack. As stated previously, the flow from the horizontal branches may greatly affect the pressure differentials in the drainage system.

Another example of the limitations for a given branch interval, as shown in Commentary Figure 710.1(4), Example 2, is a single 4-inch (102 mm) pipe connecting to a stack.

If a total of 110 dfu discharged into a horizontal branch, the pipe size is a minimum of 4 inches (102 mm). The stack receiving the discharge of the branch must be a minimum of 5 inches (127 mm).The horizontal branch exceeds the 90 dfu limitation for a single branch interval of a 4-inch (102 mm) stack.

The stack is also sized based on the total dfu discharge to the stack. The discharge of each horizontal branch is added to compute the stack's total dfu load.

For sizing stacks over three branch intervals, the third and fifth columns are used [see Commentary Figure 710.1(3)]. The difference in sizing the taller stacks is the total dfu load permitted in the stack. Taller stacks are allowed a much greater capacity than stacks three branch intervals or less [see Commentary Figures 710.1(5) and 710.1(6)]. The flow in the stack, based on the table, will occupy approximately one-quarter of the cross-sectional area of the pipe under the maximum design condition. Dr. Hunter discovered in his early research that this capacity of flow results in the drainage spiraling down the pipe wall with a center core of air. Only small volumes of waste tend to fall down the inner core of the stack. As the volume increases, any slug of water is forced by air frictional factors against the pipe wall [see Commentary Figure 710.1(7)].

After a short distance of fall [approximately 15 feet (4572 mm)], terminal velocity is reached by the drainage flow in the stack. Terminal velocity is the maximum speed of drainage flow in the stack, resulting from a balancing of air and pipe wall friction with gravitational force.

Although terminal velocity always occurs in a tall stack, it rarely occurs in shorter stacks of three branch intervals or less. This phenomenon is reflected in the table by permitting a greater capacity of flow in stacks with more than three branch intervals.

Note a of the table is a reminder that Table 710.1(1) is to be used for sizing horizontal branches of the building drain.

Note b permits reducing the size of the stack in the direction opposite of flow as the dfu load decreases. This is commonly referred to as "telescoping the stack." A stack cannot be reduced to less than half the diameter of its base where it terminates as a stack vent [see Commentary Figure 710.1(8)].

DIAMETER OF PIPE (inches)	TOTAL DISCHARGE INTO ONE BRANCH INTERVAL	TOTAL FOR STACK GREATER THAN THREE BRANCH INTERVALS
$1^1/_2$	2	8
2	6	24
$2^1/_2$	9	42
3	20	72
4	90	500
5	2000	1,100
6	350	1,900
8	600	3,600
10	1,000	5,600
12	1,500	8,400
15	—	—

For SI: 1 inch = 25.4 mm.

Figure 710.1(3)
ALLOWABLE STACK DRAINAGE FIXTURE UNITS

INTERNATIONAL CODE COUNCIL®
Copyright © 2015 ICC. ALL RIGHTS RESERVED. Accessed by David Dammon on Jun 21, 2017 12:30:52 PM pursuant to License Agreement with ICC. No further reproduction or distribution authorized. ANY UNAUTHORIZED REPRODUCTION OR DISTRIBUTION IS A VIOLATION OF THE FEDERAL COPYRIGHT ACT AND THE LICENSE AGREEMENT, AND SUBJECT TO CIVIL AND CRIMINAL PENALTIES THEREUNDER.

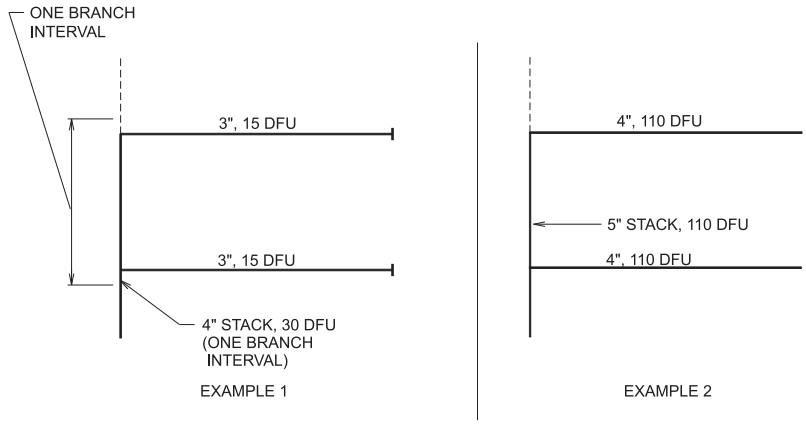

For SI: 1 inch = 25.4 mm.

Figure 710.1(4)
STACK SIZING

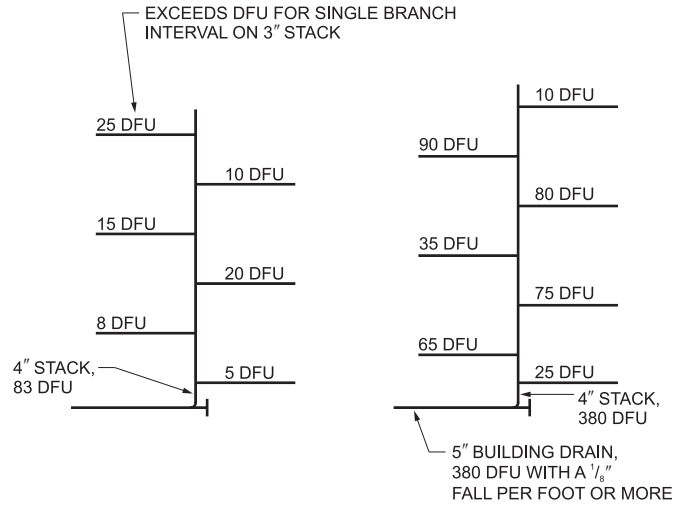

For SI: 1 inch = 25.4 mm.

Figure 710.1(5)
EXAMPLE OF SIZING STACK GREATER THAN THREE BRANCH INTERVALS

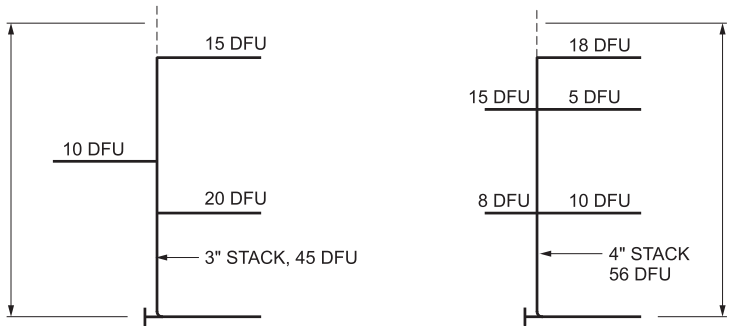

For SI: 1 inch = 25.4 mm.

Figure 710.1(6)
SIZING OF STACK THREE BRANCH INTERVALS OR LESS

INTERNATIONAL CODE COUNCIL®
Copyright © 2015 ICC. ALL RIGHTS RESERVED. Accessed by David Dammon on Jun 21, 2017 12:30:52 PM pursuant to License Agreement with ICC. No further reproduction or distribution authorized. ANY UNAUTHORIZED REPRODUCTION OR DISTRIBUTION IS A VIOLATION OF THE FEDERAL COPYRIGHT ACT AND THE LICENSE AGREEMENT, AND SUBJECT TO CIVIL AND CRIMINAL PENALTIES THEREUNDER.

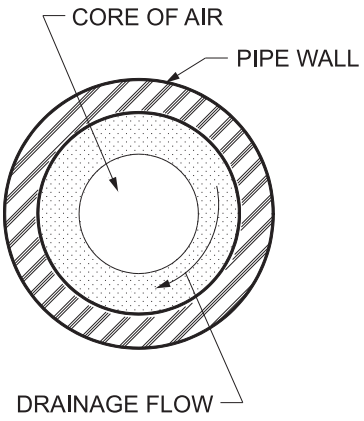

Figure 710.1(7)
FLOW IN A STACK

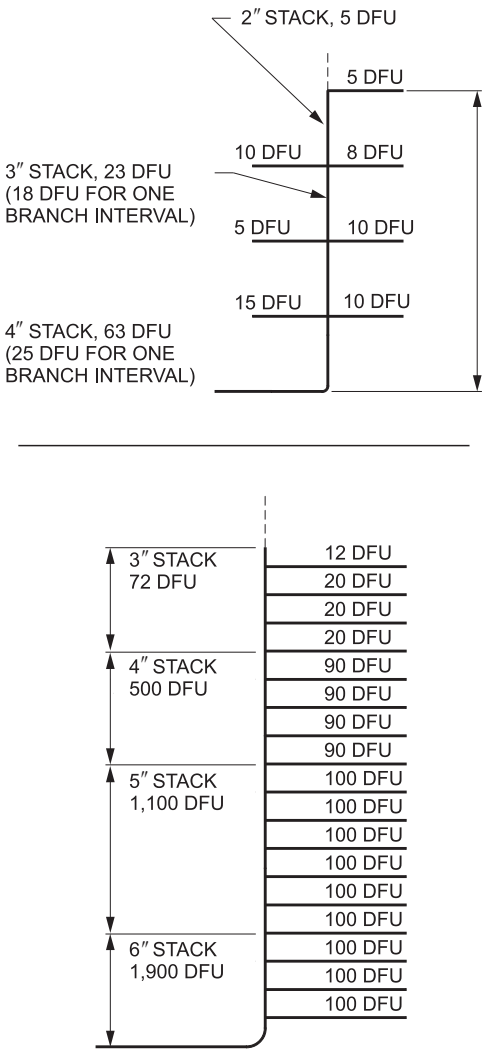

For SI: 1 inch = 25.4 mm.

Figure 710.1(8)
REDUCING SIZE OF DRAINAGE STACK

710.2 Future fixtures. Where provision is made for the future installation of fixtures, those provided for shall be considered in determining the required sizes of drain pipes.

❖ Anticipated dfu loads for future plumbing fixtures must be considered in the design of the spacing. Piping installed for future plumbing fixtures must be closed to prevent the escape of sewer gas and waste and to prevent the entrance of foreign substances. Section 905.6 also requires that a vent be roughed in for drainage pipe that will serve fixtures to be installed in the future.

SECTION 711
OFFSETS IN DRAINAGE PIPING IN BUILDINGS OF FIVE STORIES OR MORE

711.1 Horizontal branch connections above or below vertical stack offsets. If a horizontal *branch* connects to the *stack* within 2 feet (610 mm) above or below a vertical *stack* offset, and the offset is located more than four *branch intervals* below the top of the *stack*, the offset shall be vented in accordance with Section 906.

❖ Offsets in stacks produce turbulent flow that can create pressure fluctuations in the stack. Stacks having five or more branch intervals above a vertical offset have been found to have significant pressure fluctuations in the stack at locations within 2 feet (610 mm) above and below the vertical offset. These pressure fluctuations can adversely affect the liquid seal in traps connected to horizontal branches that connect to the stack within 2 feet (610 mm) above or below the offset. If the horizontal branch connections to the stack are more than 2 feet (610 mm) above and below the vertical offset, the pressure fluctuations near the offset will not disrupt the liquid seals of the traps connected to the horizontal branches. Therefore, venting of the offset is not required [see Commentary Figure 711.1(1)]. However, if a horizontal branch does connect within 2 feet (610 mm) of a vertical offset, either above or below, the traps connected to that branch will experience significant pressure fluctuations that could cause the liquid seal in the traps to be siphoned out or blown out. Therefore, venting of the vertical offset in accordance with Section 907 is required to neutralize the pressure fluctuations [see Commentary Figure 711.1(2)].

711.1.1 Omission of vents for vertical stack offsets. Vents for vertical offsets required by Section 711.1 shall not be required where the *stack* and its offset are sized as a *building drain* [see Table 710.1(1)].

❖ This section presents an alternative to the venting requirements of Section 711.1 for stacks having vertical offsets and a horizontal branch connecting within 2 feet (610 mm) above or below the offset. If the stack and the offset are sized as if they were building drains, the additional airspace created by this pipe oversizing provides the necessary venting. Note that this does not necessarily mean that the stack and offset size will always need to be increased in size. For example,

INTERNATIONAL CODE COUNCIL®
Copyright © 2015 ICC. ALL RIGHTS RESERVED. Accessed by David Dammon on Jun 21, 2017 12:30:52 PM pursuant to License Agreement with ICC. No further reproduction or distribution authorized. ANY UNAUTHORIZED REPRODUCTION OR DISTRIBUTION IS A VIOLATION OF THE FEDERAL COPYRIGHT ACT AND THE LICENSE AGREEMENT, AND SUBJECT TO CIVIL AND CRIMINAL PENALTIES THEREUNDER.

from the fifth column of Table 710.1(2), a load of 50 dfu requires a stack and offset size of 3 inches (76 mm). If this size is checked against the fifth column of Table 710.1(1), a load of 50 dfu on a building drain requires a pipe size of 3 inches (76 mm). Thus, no increase in the size of the stack or the offset is necessary because the stack and offset are already sufficiently underloaded (or oversized) to provide the necessary airspace for venting without installing the relief venting required by Section 711.1. In other words, oversizing (or underutilization) of the stack and the offset sufficiently controls the pressure fluctuations in the stack without the need for additional venting. However, in another example, if the upper stack load was 400 dfu, the required stack size in accordance with the fifth column of Table 710.1(2) is 4 inches (102 mm). Compare this to the fifth column of Table 710.1(1) where a building drain size of 5 inches (127 mm) is required to carry the 400 dfu. Thus, for a modest size increase of the drainage stack and the offset, the offset vent piping system can be eliminated [see Commentary Figure 711.1(1)].

711.2 Horizontal stack offsets. A *stack* with a horizontal offset located more than four *branch intervals* below the top of the *stack* shall be vented in accordance with Section 907 and sized as follows:

1. The portion of the *stack* above the offset shall be sized as for a vertical *stack* based on the total number of *drainage fixture units* above the offset.
2. The offset shall be sized in accordance with Section 710.1.1.
3. The portion of the *stack* below the offset shall be sized as for the offset or based on the total number of *drainage fixture units* on the entire *stack*, whichever is larger [see Table 710.1(2), Column 5].

❖ Offsets in stacks produce turbulent flow that can create pressure fluctuations in the stack. Stacks having five or more branch intervals above a horizontal offset have significant pressure fluctuations. These pressure fluctuations can adversely affect the liquid seal in traps connected to branches that connect to the stack nearest to the offset. Therefore, in order to control the pressure fluctuations, the horizontal offset must be

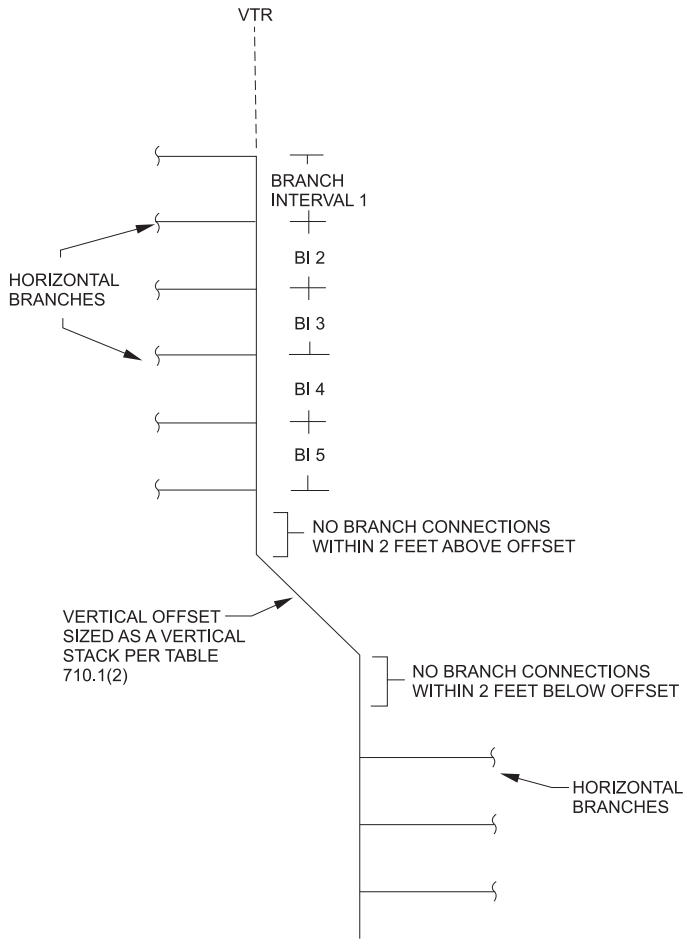

For SI: 1 foot = 304.8 mm.

Figure 711.1(1)
VERTICAL STACK OFFSET WITHOUT BRANCH CONNECTIONS WITHIN 2 FEET ABOVE OR BELOW OFFSET

INTERNATIONAL CODE COUNCIL®
Copyright © 2015 ICC. ALL RIGHTS RESERVED. Accessed by David Dammon on Jun 21, 2017 12:30:52 PM pursuant to License Agreement with ICC. No further reproduction or distribution authorized. ANY UNAUTHORIZED REPRODUCTION OR DISTRIBUTION IS A VIOLATION OF THE FEDERAL COPYRIGHT ACT AND THE LICENSE AGREEMENT, AND SUBJECT TO CIVIL AND CRIMINAL PENALTIES THEREUNDER.

vented in accordance with Section 907, the offset piping must be sized as if it were a building drain and the lower stack must be at least as big as the horizontal offset piping or larger if the total (upper plus lower) stack load requires a larger size.

The upper section of the stack (i.e., above the offset) is sized as if it were a separate stack by using Table 710.1(2). The horizontal offset is sized as if it was a building drain by using Table 710.1(1). Note that the correct slope column of Table 710.1(2) must be used. [Where slope of the offset is greater than $^1/_2$ inch per foot (12.7 mm), the $^1/_2$-inch-per-foot column is used for sizing]. The stack below the offset is sized by using the fifth column of Table 710.1(2) and the number of dfu for the entire stack. At a minimum, the lower stack must be not less than the offset piping [see Commentary Figure 711.2(1)].

Example

Consider the stack with a horizontal offset as shown in Commentary Figure 711.2(2). The upper stack has a load of 360 dfu. The fifth column of Table 710.1(2) requires the stack to be 4 inches (102 mm). The stack cannot be reduced in diameter (telescoped) since the cumulative load on the stack decreases (going up the stack) because a 3-inch (76 mm) stack cannot accept a single branch discharge over 20 dfu. The load on the offset is 360 dfu and, when sizing this offset as if it were a building drain [Table 710.1(1)], the offset piping must be not less than 5 inches (127 mm). Because the offset piping is required to be 5 inches (127 mm), the lower stack must be at least 5 inches (127 mm). However, for the entire stack, the load is 1,160 dfu. The lower stack section is sized by the fifth column of Table 710.1(2), which requires a stack size

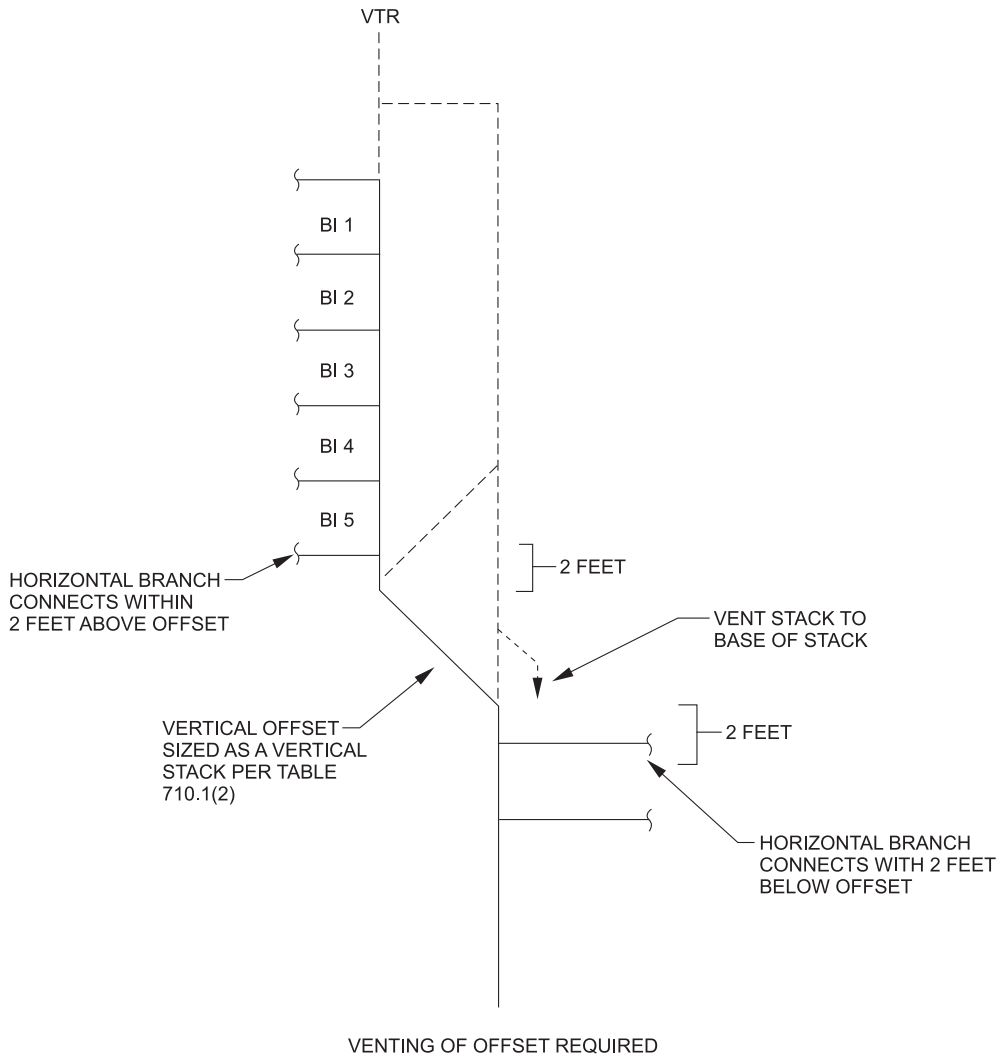

For SI: 1 foot = 304.8 mm.

Figure 711.1(2)
VERTICAL STACK OFFSET WITH BRANCH CONNECTIONS WITHIN 2 FEET ABOVE OR BELOW OFFSET

INTERNATIONAL CODE COUNCIL®
Copyright © 2015 ICC. ALL RIGHTS RESERVED. Accessed by David Dammon on Jun 21, 2017 12:30:52 PM pursuant to License Agreement with ICC. No further reproduction or distribution authorized. ANY UNAUTHORIZED REPRODUCTION OR DISTRIBUTION IS A VIOLATION OF THE FEDERAL COPYRIGHT ACT AND THE LICENSE AGREEMENT, AND SUBJECT TO CIVIL AND CRIMINAL PENALTIES THEREUNDER.

of 6 inches (152 mm) to carry 1,160 dfu. Thus, the upper stack would be 4 inches (102 mm), the offset would be 5 inches (127 mm) and the lower stack would be 6 inches (152 mm). The vent piping would be installed in accordance with Section 907 (sizing in accordance with Section 906.1).

711.2.1 Omission of vents for horizontal stack offsets. Vents for horizontal stack offsets required by Section 711.2 shall not be required where the stack and its offset are one pipe size larger than required for a building drain [see Table 710.1(1)] and the entire stack and offset are not less in cross-sectional area than that required for a straight stack plus the area of an offset vent as provided for in Section 907.

❖ This section provides an alternative to the venting requirements of Section 711.2 for stacks having horizontal offsets. If the stack above and below the offset and the horizontal offset are sized one pipe size larger than the pipe size required for a building drain and the resulting stack and offset piping size provides the same or larger cross-sectional area than would be required for a straight stack plus the area of the required offset vent piping as required by Section 907, then venting of the offset in accordance is not required (see Commentary Figure 711.2.1). This generous stack and offset oversizing requirement provides for plenty of airspace to neutralize pressure fluctuation caused by the horizontal offset.

711.3 Offsets below lowest branch. Where a vertical offset occurs in a soil or waste *stack* below the lowest horizontal *branch*, a change in diameter of the *stack* because of the offset shall not be required. If a horizontal offset occurs in a soil or waste *stack* below the lowest horizontal *branch*, the required diameter of the offset and the *stack* below it shall be determined as for a *building drain* in accordance with Table 710.1(1).

❖ No size increase is required in vertical offsets that are below the lowest horizontal branch connection to the stack [see Commentary Figure 711.3(1)]. The pressure differences created by such offsets mainly affect the behavior of horizontal branches downstream of the offset, and if there are no horizontal branches downstream, there is nothing to protect by sizing increases. Horizontal offsets that are below the lowest horizontal branch connection must be sized as a building drain in accordance with Table 710.1(1) [see Commentary Figure 711.3(2)]. Because of the greater offset angle, oversizing is required to minimize pressure fluctuations; however, offset venting is not required.

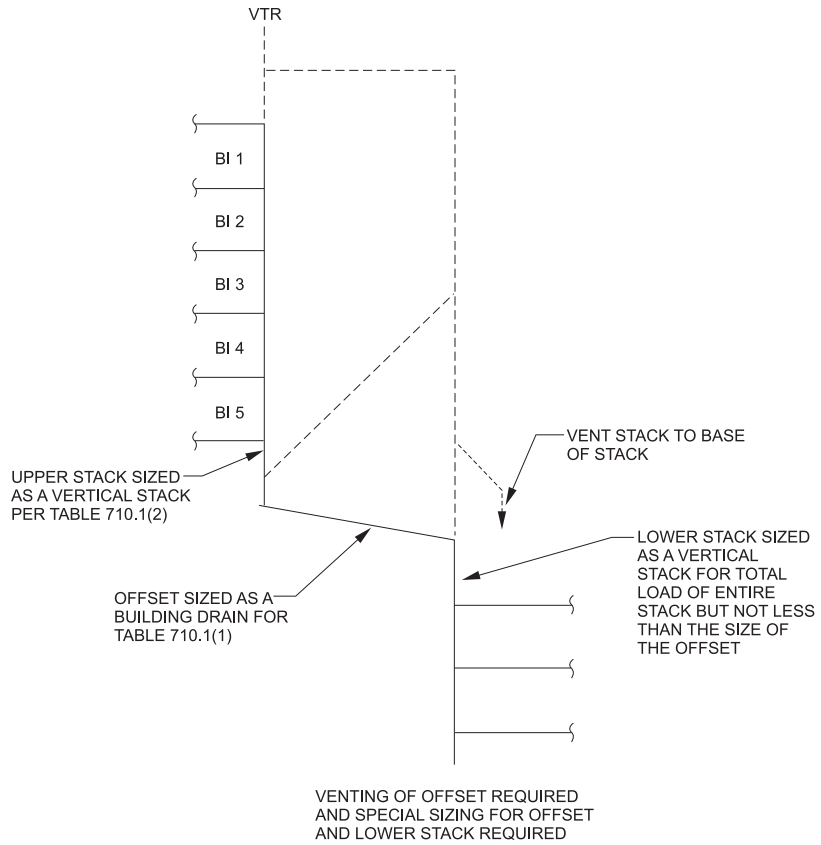

Figure 711.2(1)
HORIZONTAL STACK OFFSET WITH VENTING

INTERNATIONAL CODE COUNCIL®
Copyright © 2015 ICC. ALL RIGHTS RESERVED. Accessed by David Dammon on Jun 21, 2017 12:30:52 PM pursuant to License Agreement with ICC. No further reproduction or distribution authorized. ANY UNAUTHORIZED REPRODUCTION OR DISTRIBUTION IS A VIOLATION OF THE FEDERAL COPYRIGHT ACT AND THE LICENSE AGREEMENT, AND SUBJECT TO CIVIL AND CRIMINAL PENALTIES THEREUNDER.

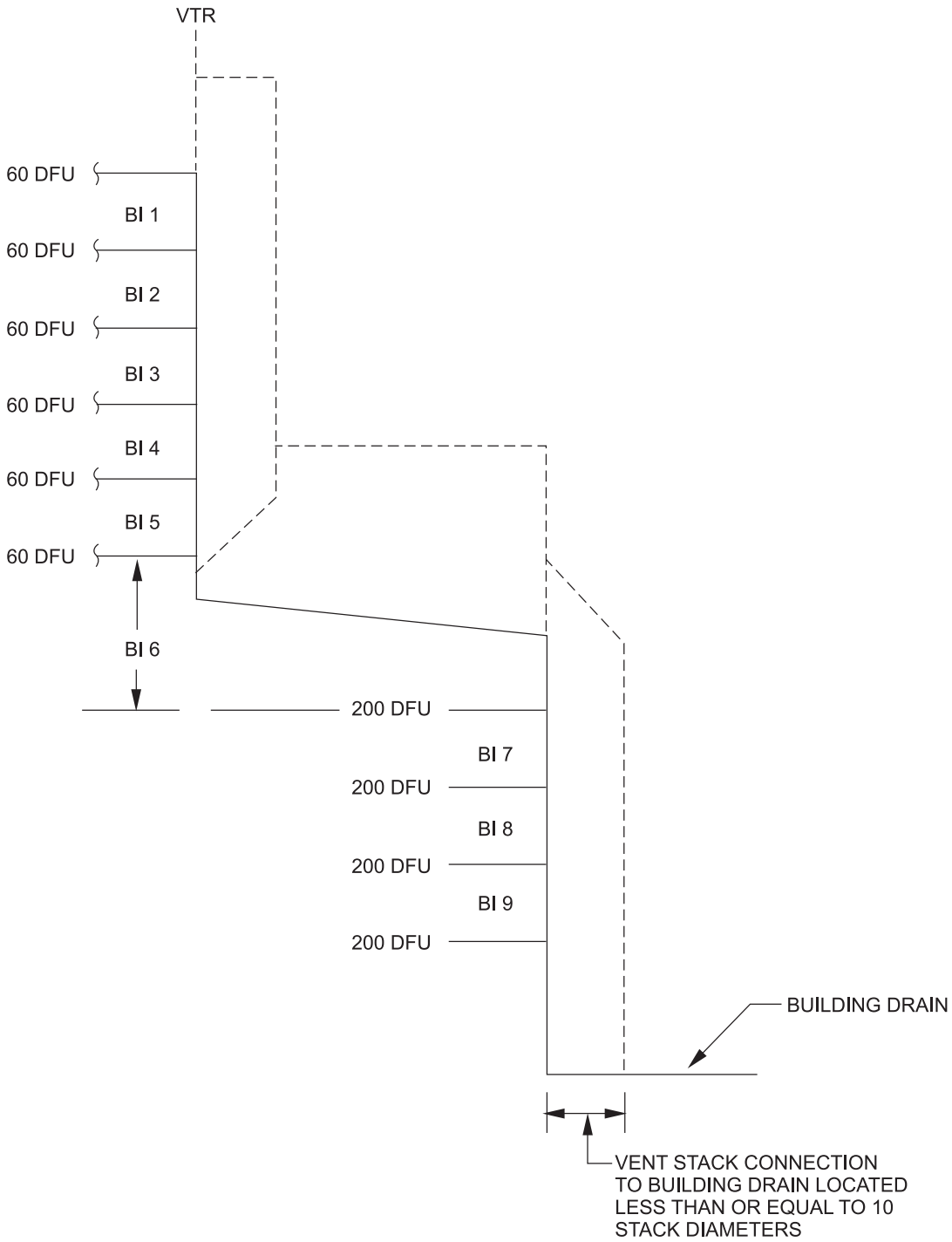

Figure 711.2(2)
HORIZONTAL STACK OFFSET WITH VENTING EXAMPLE

INTERNATIONAL CODE COUNCIL®
Copyright © 2015 ICC. ALL RIGHTS RESERVED. Accessed by David Dammon on Jun 21, 2017 12:30:52 PM pursuant to License Agreement with ICC. No further reproduction or distribution authorized. ANY UNAUTHORIZED REPRODUCTION OR DISTRIBUTION IS A VIOLATION OF THE FEDERAL COPYRIGHT ACT AND THE LICENSE AGREEMENT, AND SUBJECT TO CIVIL AND CRIMINAL PENALTIES THEREUNDER.

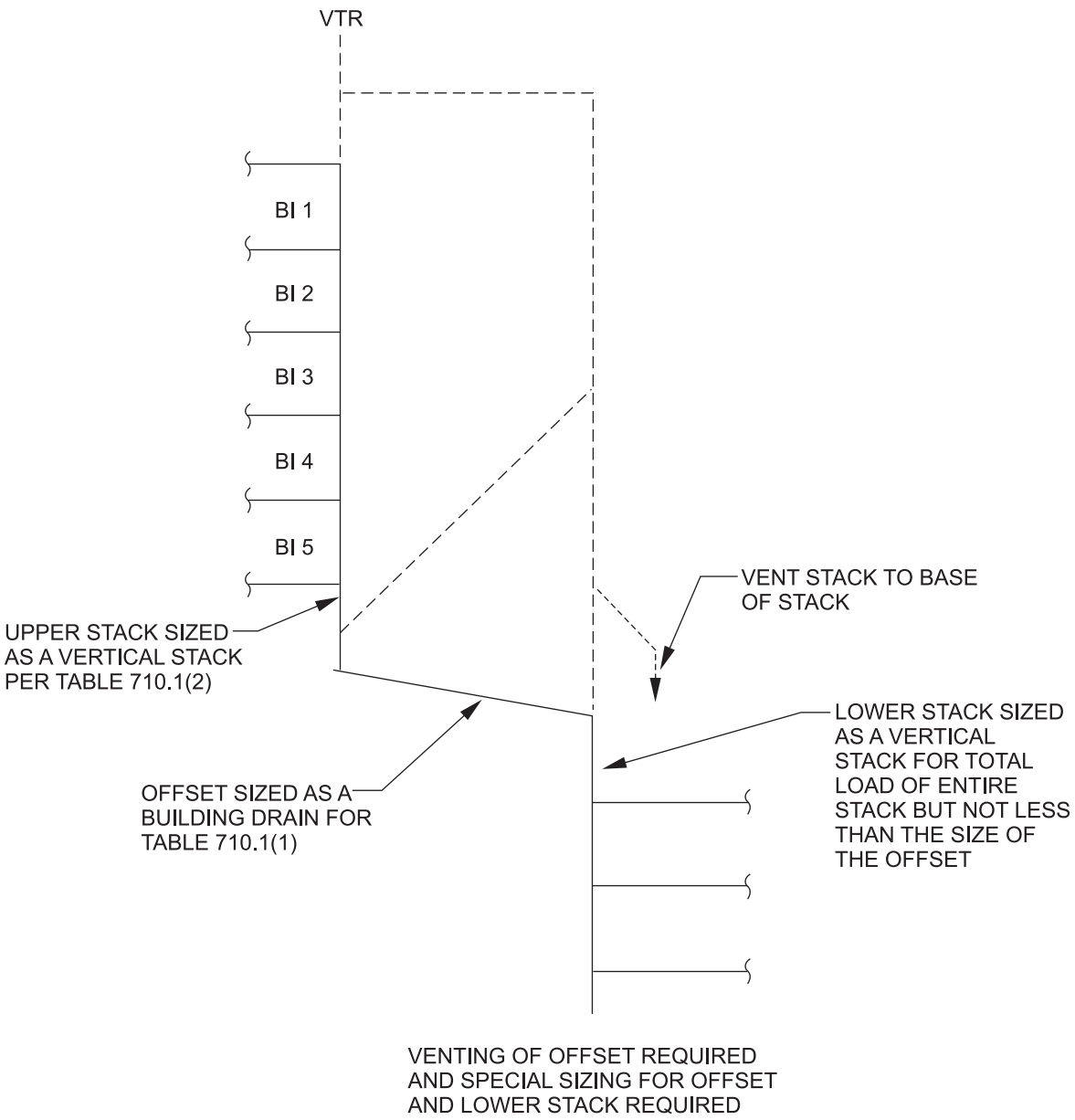

Figure 711.2.1
HORIZONTAL STACK OFFSET—VENTING NOT REQUIRED

INTERNATIONAL CODE COUNCIL®
Copyright © 2015 ICC. ALL RIGHTS RESERVED. Accessed by David Dammon on Jun 21, 2017 12:30:52 PM pursuant to License Agreement with ICC. No further reproduction or distribution authorized. ANY UNAUTHORIZED REPRODUCTION OR DISTRIBUTION IS A VIOLATION OF THE FEDERAL COPYRIGHT ACT AND THE LICENSE AGREEMENT, AND SUBJECT TO CIVIL AND CRIMINAL PENALTIES THEREUNDER.

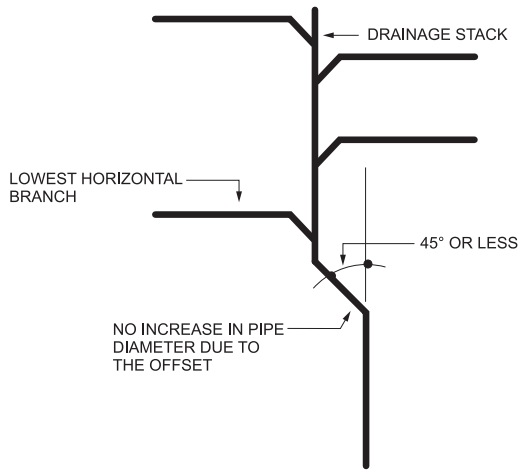

For SI: 1 degree = 0.0175 rad.

Figure 711.3(1)
VERTICAL OFFSET SIZING WHERE THERE ARE NO STACK CONNECTIONS BELOW OFFSET

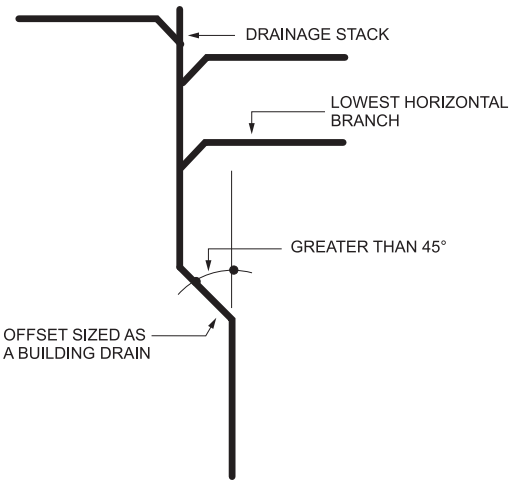

For SI: 1 degree = 0.0175 rad.

Figure 711.3(2)
HORIZONTAL OFFSET SIZING WHERE THERE ARE NO STACK CONNECTIONS BELOW OFFSET

SECTION 712
SUMPS AND EJECTORS

712.1 Building subdrains. *Building subdrains* that cannot be discharged to the *sewer* by gravity flow shall be discharged into a tightly covered and vented sump from which the liquid shall be lifted and discharged into the building gravity drainage system by automatic pumping equipment or other *approved* method. In other than existing structures, the sump shall not receive drainage from any piping within the building capable of being discharged by gravity to the *building sewer*.

❖ Where the drainage system or portions of it cannot discharge by gravity to the sewer, the drainage is collected in a tightly sealed and vented sump and pumped to a gravity sewer or drain. The sump must be sized to provide adequate holding capacity and to limit the retention period of the waste. Though not specifically required by the code, the intent of this section is that the capacity of the sump must not exceed one-half of a day's (12 hours) discharge load from the piping system connected to the sump under normal use. The intent is to keep the waste retention period short to prevent the sump from acting as a waste decomposition (septic) tank.

The minimum capacity of the sump must be such that the pumping equipment operates for at least 15 seconds per pumping cycle to prevent short cycling, thereby extending the life of the equipment.

The cover for the sump must be gas tight to prevent the escape of sewer gas into the building (see commentary, Section 916.5). Sumps, other than pneumatic ejectors, must be vented in accordance with Section 916.5.1.

INTERNATIONAL CODE COUNCIL®
Copyright © 2015 ICC. ALL RIGHTS RESERVED. Accessed by David Dammon on Jun 21, 2017 12:30:52 PM pursuant to License Agreement with ICC. No further reproduction or distribution authorized. ANY UNAUTHORIZED REPRODUCTION OR DISTRIBUTION IS A VIOLATION OF THE FEDERAL COPYRIGHT ACT AND THE LICENSE AGREEMENT, AND SUBJECT TO CIVIL AND CRIMINAL PENALTIES THEREUNDER.

Sumps receiving water closet and urinal discharge use a sewage ejector to pump the soil and waste to a gravity drain. Quite often, the pumping equipment is referred to as a sewage pump by technical standards. A pneumatic ejector is a special type of sewage "pump" that operates by air pressure, which forces the sewage from the pressurized receiver instead of mechanically pumping it. Pneumatic ejectors require special relief vents to instantaneously relieve the pressure in the receiver [see commentary, Section 916.5.2 as well as Commentary Figures 712.1(1) and 712.1(2) for two types of pumps].

712.2 Valves required. A check valve and a full open valve located on the discharge side of the check valve shall be installed in the pump or ejector discharge piping between the pump or ejector and the gravity drainage system. *Access* shall be provided to such valves. Such valves shall be located above the sump cover required by Section 712.1 or, where the discharge pipe from the ejector is below grade, the valves shall be accessibly located outside the sump below grade in an access pit with a removable *access* cover.

❖ The discharge piping must have a check valve to prevent the previously pumped waste from returning to

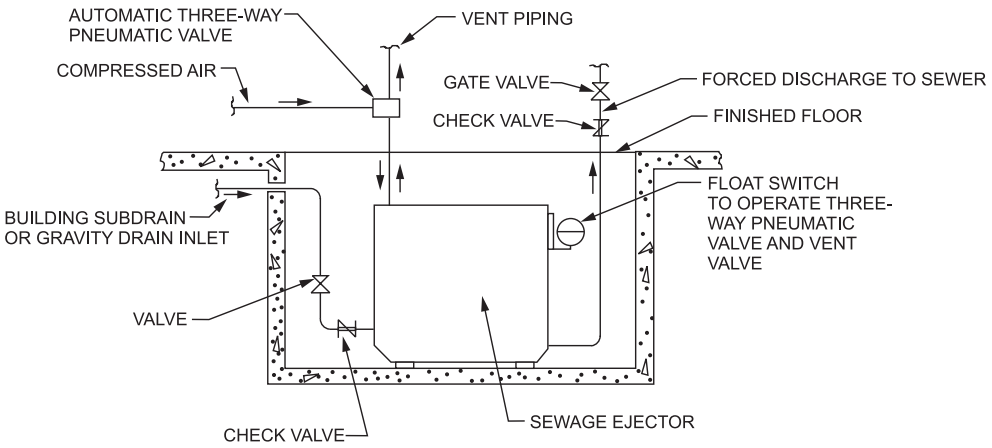

Figure 712.1(1)
PNEUMATIC SEWAGE EJECTOR

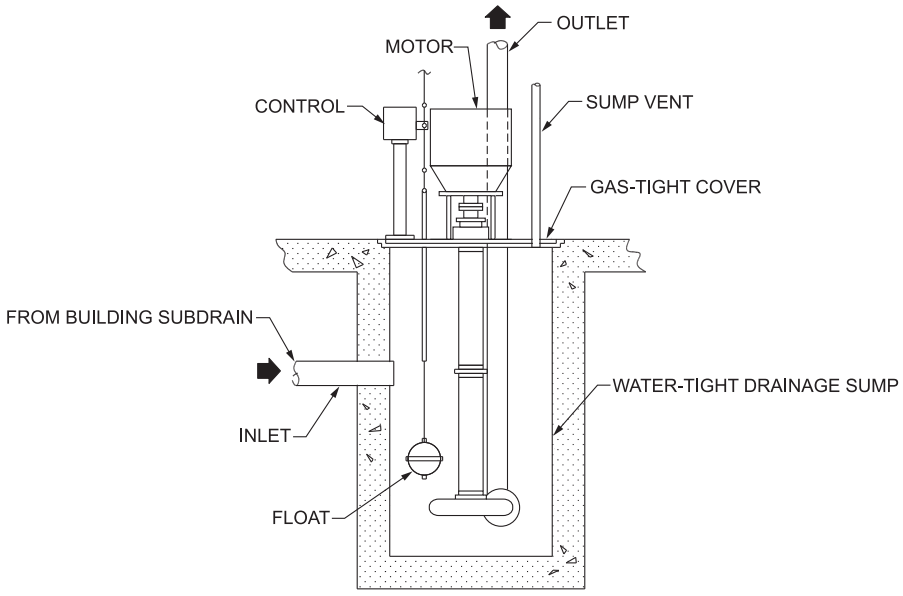

Figure 712.1(2)
VERTICAL SUSPENDED WET PIT SEWAGE PUMP

INTERNATIONAL CODE COUNCIL®
Copyright © 2015 ICC. ALL RIGHTS RESERVED. Accessed by David Dammon on Jun 21, 2017 12:30:52 PM pursuant to License Agreement with ICC. No further reproduction or distribution authorized. ANY UNAUTHORIZED REPRODUCTION OR DISTRIBUTION IS A VIOLATION OF THE FEDERAL COPYRIGHT ACT AND THE LICENSE AGREEMENT, AND SUBJECT TO CIVIL AND CRIMINAL PENALTIES THEREUNDER.

the sump pit when the pump or ejector shuts off. This prolongs the life of the pumping equipment and conserves energy (see Commentary Figure 712.2). The check valve will also prevent the gravity drainage system from backing up into the sump or receiver.

The requirement for installation of a full-open valve on the discharge side of the check valve indicates a similar concern. There will be some point over the service life of the sump or check valve when replacement or repairs are necessary. This full-open valve is there to prevent waste from running back into the discharge piping when maintenance is performed on the check valve or pump/ejector. It also allows isolation of the drainage system to prevent backups and sewer gas leakage during pump replacement and maintenance. Both valves must be accessible for maintenance on the pump and be installed on the discharge pipe between the pump or ejector and the gravity drainage system.

712.3 Sump design. The sump pump, pit and discharge piping shall conform to the requirements of Sections 712.3.1 through 712.3.5.

❖ This is the main section, under which Sections 712.3.1 to 712.3.5 will give the specific requirements for the construction of the sump pump, the pit and the discharge piping related to sumps and ejectors. Section 712.3.1 relates to sump pump construction. Section 712.3.2 relates to pit construction. Section 712.3.3 relates to discharge piping. Section 712.3.4 contains the amount of space to be maintained between the inlet piping into the sump pit and the top of the effluent level. Section 712.3.5 contains requirements for the connection of the discharge piping to the drainage system.

712.3.1 Sump pump. The sump pump capacity and head shall be appropriate to anticipated use requirements.

❖ The sewage pump or pneumatic ejector must be sized properly to accommodate the peak flow into the receiver or pit, to provide the head pressure required to lift or eject waste, to prevent excessive cycling of the pumping equipment and to handle the type of waste that discharges to the sump.

Sewage pumps and ejectors must be able to handle, without creating blockages, the types of solid waste discharged into the sump pit or receiver. Pumps and ejectors serving water closets must be able to handle the solids associated with soil drainage.

Grinder pumps and grinder ejectors that serve water closets are exempt from the 2-inch (51 mm) spherical solids-handling requirements of this section. These pumps and ejectors reduce solids to a near-liquid state and pump the slurry to the drainage system. The liquidized solids pass readily through the pump and into the drainage system, thus reducing the possibility of creating a stoppage in either the pump or the receiving drainage line.

In certain instances, the design professional may choose to install duplex pumping equipment. Duplex pumping installations consist of two pumps with special controls installed to alternate pump duty. If the inflow into the sump is at a high rate or one pump fails to operate, the second pump provides assistance.

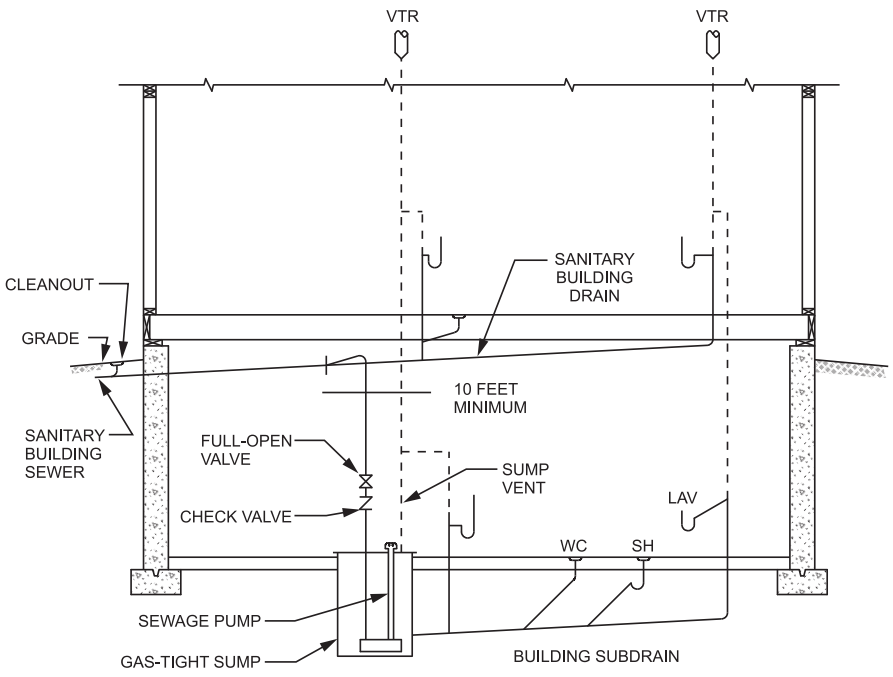

For SI: 1 foot = 304.8 mm.

Figure 712.2
SEWAGE EJECTOR INSTALLATION

INTERNATIONAL CODE COUNCIL®
Copyright © 2015 ICC. ALL RIGHTS RESERVED. Accessed by David Dammon on Jun 21, 2017 12:30:52 PM pursuant to License Agreement with ICC. No further reproduction or distribution authorized. ANY UNAUTHORIZED REPRODUCTION OR DISTRIBUTION IS A VIOLATION OF THE FEDERAL COPYRIGHT ACT AND THE LICENSE AGREEMENT, AND SUBJECT TO CIVIL AND CRIMINAL PENALTIES THEREUNDER.

The intent behind duplex pumping equipment is to reduce the possibility of disruption of service of the plumbing system. If a pump fails, it may be repaired while the drainage system functions normally with the remaining pump. Duplex pumping equipment is not required by the code.

The sewage pump or ejector must have a minimum capacity that is based on the size of the discharge pipe. The required capacity provides a full-flow velocity of at least 2 feet per second (0.61 m/s) in the discharge pipe (see Table 712.4.2).

712.3.2 Sump pit. The sump pit shall be not less than 18 inches (457 mm) in diameter and not less than 24 inches (610 mm) in depth, unless otherwise *approved*. The pit shall be accessible and located such that all drainage flows into the pit by gravity. The sump pit shall be constructed of tile, concrete, steel, plastic or other *approved* materials. The pit bottom shall be solid and provide permanent support for the pump. The sump pit shall be fitted with a gas-tight removable cover that is installed flush with grade or floor level, or above grade or floor level. The cover shall be adequate to support anticipated loads in the area of use. The sump pit shall be vented in accordance with Chapter 9.

❖ As discussed in the commentary to Section 712.1, the sump pit must be properly sized to receive waste and sewage from the plumbing fixtures that it will serve, as well as proper operation of the pump.

In this section, the minimum dimensions of 18 inches (457 mm) in diameter and 24 inches (610 mm) in depth are given, unless the designer or manufacturer presents calculations and other supporting data that will allow the code official to determine that other dimensions work for the situation being addressed. This approval is strictly on a case-by-case basis by the code official. This section states that the sump pit is to be accessible for maintenance and requires that all drainage flow into the pit must be by the force of gravity.

The sump pit must be constructed of a durable material, such as tile, concrete, steel, plastic or other approved materials. The bottom of the sump pit must be solid and structurally capable of supporting the sump pump. The sump pit must have a gas-tight removable cover to prevent the escape of sewer gas. This cover is to be structurally capable of supporting the weight of loads it will receive based on the location of the sump pit. The sump pit must be vented in accordance with Chapter 9 (see commentary, Section 916.5). The sump pit cover must be readily removable; therefore, the method used to connect the vent to the sump pit must be designed for disassembly.

712.3.3 Discharge pipe and fittings. Discharge pipe and fittings serving sump pumps and ejectors shall be constructed of materials in accordance with Sections 712.3.3.1 and 712.3.3.2 and shall be *approved*.

❖ The discharge pipe and fitting materials must be approved by the code official (see commentary, Section 712.2).

712.3.3.1 Materials. Pipe and fitting materials shall be constructed of brass, copper, CPVC, ductile iron, PE, or PVC.

❖ Previous editions of the code were silent on the type of pipe materials used for pump discharge. The materials listed are determined to be suitable for handling clear water or sewage.

712.3.3.2 Ratings. Pipe and fittings shall be rated for the maximum system operating pressure and temperature. Pipe fitting materials shall be compatible with the pipe material. Where pipe and fittings are buried in the earth, they shall be suitable for burial.

❖ The pump discharge piping and fittings must be suitable for the internal pressure and fluid temperatures to be encountered. If buried in the earth, the materials must be able to withstand earth loads from above.

Refer to Commentary Figures 712.1(1) and 712.1(2) for illustrations of sumps and related components.

712.3.4 Maximum effluent level. The effluent level control shall be adjusted and maintained to at all times prevent the effluent in the sump from rising to within 2 inches (51 mm) of the invert of the gravity drain inlet into the sump.

❖ This section states that the control mechanism that starts and stops the pump must be maintained and adjusted to limit the level of effluent in the sump to not higher than 2 inches (51 mm) below the invert level of the gravity drainage pipe(s) entering the sump. This requirement is to reduce the chance that the gravity drainage piping will become flooded or clogged because of standing effluent in the sump that may back up into the drain piping.

712.3.5. Pump connection to the drainage system. Pumps connected to the drainage system shall connect to a *building sewer*, *building drain*, soil *stack*, waste *stack* or *horizontal branch drain*. Where the discharge line connects into horizontal drainage piping, the connection shall be made through a wye fitting into the top of the drainage piping and such wye fitting shall be located not less than 10 pipe diameters from the base of any soil *stack*, waste *stack* or *fixture drain*.

❖ This is part of the main section, titled "Sumps and ejectors." As such, it may be interpreted to be applicable to both sewage pumps (including the "grinder type") and pneumatic sewage ejectors. The terms "sewage pump" and "ejector" are sometimes used interchangeably to describe the same device. This section imposes certain restrictions on how and where sewage pumps and pneumatic sewage ejectors connect to the gravity drainage system.

In previous editions of the code, the connection of the ejector or pump discharge piping was required to be only to the building sewer or to the building drain. This severe limitation for the connection point was found to be unnecessary since the pump or ejector discharge flow can be accommodated by most any drain pipe (horizontal or vertical) that is sized large enough to accept both the gravity flow in the drain plus the pumped flow. The 10-foot (3048 mm) distance between the connection point and any upstream ver-

INTERNATIONAL CODE COUNCIL®
Copyright © 2015 ICC. ALL RIGHTS RESERVED. Accessed by David Dammon on Jun 21, 2017 12:30:52 PM pursuant to License Agreement with ICC. No further reproduction or distribution authorized. ANY UNAUTHORIZED REPRODUCTION OR DISTRIBUTION IS A VIOLATION OF THE FEDERAL COPYRIGHT ACT AND THE LICENSE AGREEMENT, AND SUBJECT TO CIVIL AND CRIMINAL PENALTIES THEREUNDER.

tical stack connection was also found to be severely limiting. The connection of the discharge to a horizontal drain needs to avoid sections of the horizontal drain where gravity flow in the pipe might be turbulent so pressure surges or backups do not occur. Thus, a pump or ejector discharge pipe connection to a horizontal drain must be located at least 10 (stack or fixture drain) pipe diameters away from a soil stack, waste stack or fixture drain connection to the horizontal drain. Note that the connection arrangement to horizontal piping using a wye fitting in the top half of the pipe is still required to allow the pumped waste flow to blend into the gravity flow in the pipe with the least amount of disruption.

The code is silent on the connection arrangement of pump or ejector discharge piping to stacks. Although use of a wye fitting might create less disruption of the flow in the stack, a sanitary tee connection might not be any more disruptive to stack flow than the discharge of a fully loaded horizontal branch drain would cause. Even though this code section does not prohibit connecting the pumped discharge to one side of a double sanitary tee in a stack, a gravity flow pipe connection should probably not be located directly across from a pumped discharge connection unless the stack size is significantly larger than the pumped discharge connection.

A question that is often asked about pumps or ejectors discharging to gravity drain piping is how to size a gravity drain pipe for a "gallon-per-minute" flow. While Section 709.3 states that the dfu load for semicontinuous flows is 2 dfu for 1 gpm, it is unclear whether this should apply to the intermittent discharge of a pump or ejector. As an example, consider a 2-inch (51 mm) discharge pipe having a 21-gpm (79 L/m) flow (refer to Table 712.4.2). Using the 2-dfu-to-1-gpm (3.8 L/m) equivalency yields a 42-dfu load on the gravity flow pipe that the discharge pipe connects to. A review of Table 710.1(2) indicates that at least a 4-inch (102 mm) horizontal drain or at least a 3-inch (76 mm) stack would be necessary to accommodate this load. While these required sizes of drain or stack in this example might seem reasonable, the problem is that, typically, the smallest 2-inch (51 mm) discharge sewage pump is capable of at least 50 gpm (1894 m) at low head [e.g., 10 foot (3053 mm)] conditions. Using the 2-dfu-to-1-gpm (3.8 L/m) conversion now yields a 100 dfu load! That dfu load combined with the gravity flow dfu design load for the pipe could require significantly larger drain or stack sizes. The designer of the system has the responsibility to decide how to size the gravity flow pipe to accommodate the pumped discharge flow.

712.4 Sewage pumps and sewage ejectors. A sewage pump or sewage ejector shall automatically discharge the contents of the sump to the building drainage system.

❖ This section is redundant with Section 712.1 and requires such equipment to operate automatically.

712.4.1 Macerating toilet systems. Macerating toilet systems shall comply with ASME A112.3.4/CSA B45.9 and shall be installed in accordance with the manufacturer's instructions.

❖ Macerating toilet systems are unique in that there are many acceptable types available. CSA B45.9 and ASME A112.3.4 are the standards for macerating toilet systems. Such systems must be installed in accordance with the manufacturer's instructions for their proper use and function. A macerating/pumping system encompasses three components: the container that houses the operating mechanisms, the pressure chamber that automatically activates and deactivates the macerating pump and an induction motor that drives the shredder blades and pump assembly. Such systems collect waste from a single water closet, lavatories, bathtub or any combination thereof located in the same room, and grind and pump these macerated wastes to some point in the sanitary drainage system [see Commentary Figure 712.4.1(1)]. This system is designed for above-the-floor installation and incorporates either a directly affixed macerating tank and integral grinder/pump mechanism or an integral system consisting of a single water closet with a built-in grinder/pump mechanism [see Commentary Figure 712.4.1(2)].

712.4.2 Capacity. A sewage pump or sewage ejector shall have the capacity and head for the application requirements. Pumps or ejectors that receive the discharge of water closets shall be capable of handling spherical solids with a diameter of up to and including 2 inches (51 mm). Other pumps or ejectors shall be capable of handling spherical solids with a diameter of up to and including 1 inch (25 mm). The capacity of a pump or ejector based on the diameter of the discharge pipe shall be not less than that indicated in Table 712.4.2.

Exceptions:

1. Grinder pumps or grinder ejectors that receive the discharge of water closets shall have a discharge opening of not less than $1^1/_4$ inches (32 mm).
2. Macerating toilet assemblies that serve single water closets shall have a discharge opening of not less than $^3/_4$ inch (19.1 mm).

❖ The sewage pump or ejector must be sized properly to accommodate the peak flow into the receiver, to provide the head pressure required for the elevation of lift, to prevent excessive cycling of the pumping equipment and to handle the type of waste that discharges to the sump. Sewage pumps and ejectors must be able to handle, without creating blockages, the types of solid waste discharged into the sump or receiver. Pumps and ejectors serving water closets must be able to handle the solids associated with soil drainage. Grinder pumps/ejectors and macerating toilet assemblies that serve water closets are exempt from the 2-inch (51 mm) spherical solids-handling requirements of this section. These pumps and ejectors pulverize solids to a near liquid state and pump the slurry

INTERNATIONAL CODE COUNCIL®
Copyright © 2015 ICC. ALL RIGHTS RESERVED. Accessed by David Dammon on Jun 21, 2017 12:30:52 PM pursuant to License Agreement with ICC. No further reproduction or distribution authorized. ANY UNAUTHORIZED REPRODUCTION OR DISTRIBUTION IS A VIOLATION OF THE FEDERAL COPYRIGHT ACT AND THE LICENSE AGREEMENT, AND SUBJECT TO CIVIL AND CRIMINAL PENALTIES THEREUNDER.



Figure 712.4.1(1)
MACERATING TOILET SYSTEMS
(Photo courtesy of SFA Saniflo)

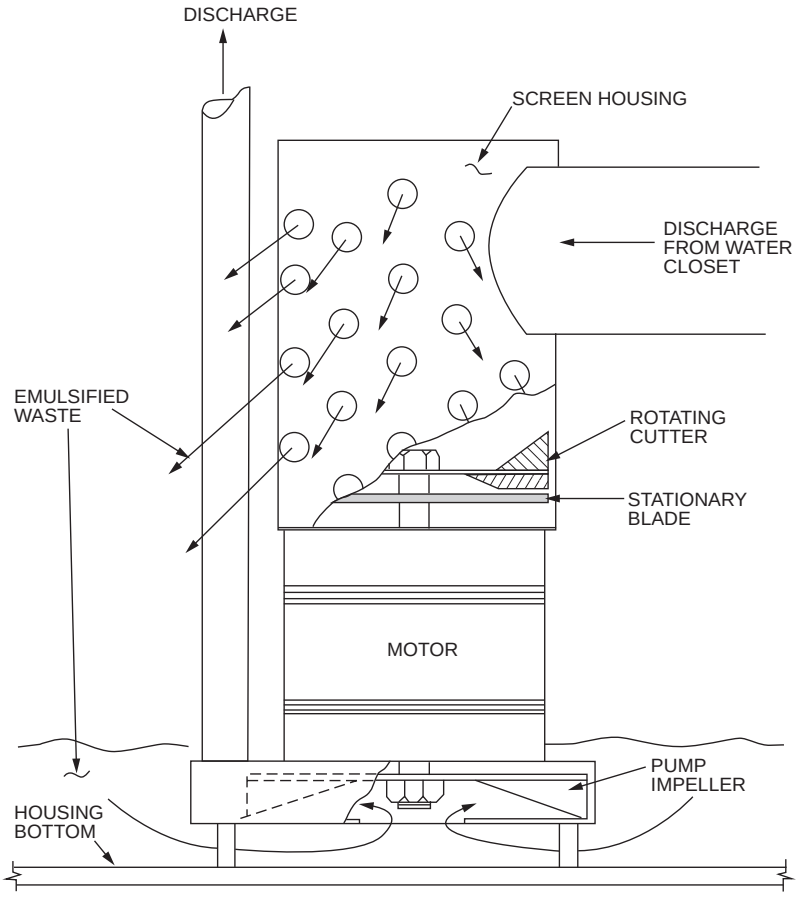

Figure 712.4.1(2)
MACERATING TOILET SYSTEMS

INTERNATIONAL CODE COUNCIL®
Copyright © 2015 ICC. ALL RIGHTS RESERVED. Accessed by David Dammon on Jun 21, 2017 12:30:52 PM pursuant to License Agreement with ICC. No further reproduction or distribution authorized. ANY UNAUTHORIZED REPRODUCTION OR DISTRIBUTION IS A VIOLATION OF THE FEDERAL COPYRIGHT ACT AND THE LICENSE AGREEMENT, AND SUBJECT TO CIVIL AND CRIMINAL PENALTIES THEREUNDER.

to the drainage system. The $1^1/_4$-inch (32 mm) minimum-size discharge for grinder pumps and ejectors and $^3/_4$-inch (19.1 mm) minimum-size discharge for macerating grinder/pump systems will permit solids that are completely reduced to pass without creating a stoppage.

TABLE 712.4.2
MINIMUM CAPACITY OF SEWAGE PUMP OR SEWAGE EJECTOR

DIAMETER OF THE DISCHARGE PIPE (inches)	CAPACITY OF PUMP OR EJECTOR (gpm)
2	21
$2^1/_2$	30
3	46

For SI: 1 inch = 25.4 mm, 1 gallon per minute = 3.785 L/m.

❖ Table 712.4.2 specifies sewage pump capacity in gallons per minute with respect to the pump's discharge opening size. This relationship between pipe size and pump capacity will maintain flow velocity in the piping to help prevent blockage and restriction.

SECTION 713
HEALTH CARE PLUMBING

713.1 Scope. This section shall govern those aspects of health care plumbing systems that differ from plumbing systems in other structures. Health care plumbing systems shall conform to this section in addition to the other requirements of this code. The provisions of this section shall apply to the special devices and equipment installed and maintained in the following occupancies: nursing homes; homes for the aged; orphanages; infirmaries; first aid stations; psychiatric facilities; clinics; professional offices of dentists and doctors; mortuaries; educational facilities; surgery, dentistry, research and testing laboratories; establishments manufacturing pharmaceutical drugs and medicines; and other structures with similar apparatus and equipment classified as plumbing.

❖ Section 713 regulates the installation of special fixtures and the related waste and vent connections found in health care facilities. The special plumbing fixtures addressed in this section include clinical sinks, bedpan washers, bedpan steamers, vacuum fluid suction systems, sterilizers and hydrotherapeutic baths.

Section 713.1 defines the scope of this chapter and describes the occupancies involved. Section 202 contains the definitions of key terms and phrases used throughout this section.

Section 422 regulates the use of special fixtures in the health care industry.

Section 609 governs the water supply to health care facilities and fixtures. Hospitals are required to have dual water services so that in the event of a water main or water service pipe break, the hospital will not experience a complete loss of water supply.

The unique plumbing fixtures in health care facilities are regulated by the special requirements of this section as well as those previously mentioned such as Sections 202, 422 and 609. Health care fixtures must be installed to maintain the same level of sanitation and protection against backflow as other plumbing fixtures.

Some of the requirements for health care fixtures in this section may appear archaic. As technology improves, the fixtures change. Requirements addressing older fixtures will no longer be applicable to certain newer fixtures.

This is most evident with bedpan washers and sterilizers. Water closets are often equipped with an add-on flushing mechanism that may function as a bedpan washer. Installation of a separate fixture may not be needed.

Sterilizers may have a local or vapor vent connection. The new units are designed to condense the vapor rather than discharge it through a vent.

Although the code lists many applications, some are bound to be missing. The requirements for plumbing installations in health care facilities apply to facilities whether or not they are specifically listed. These requirements are to be considered the minimum special attention given to health care plumbing. The fixture installer must carefully follow any other requirements contained in the manufacturer's instructions.

This section regulates the waste and vent connections for health care plumbing fixtures, appliances and equipment. The requirements of this section are in addition to other applicable code requirements (see commentary, Sections 202, 422 and 609).

713.2 Bedpan washers and clinical sinks. Bedpan washers and clinical sinks shall connect to the drainage and vent system in accordance with the requirements for a water closet. Bedpan washers shall also connect to a local vent.

❖ These fixtures are to be vented and connected to the drainage system like a water closet because they receive similar human waste and function in a similar manner. A local vent is required because a bedpan washer uses high-temperature hot water to clean the bedpan. A clinical sink is not equipped with a local vent (see commentary, Section 713.3).

713.3 Indirect waste. Sterilizers, steamers and condensers shall discharge to the drainage through an indirect waste pipe by means of an *air gap*. Where a battery of not more than three sterilizers discharges to an individual receptor, the distance between the receptor and a sterilizer shall not exceed 8 feet (2438 mm). The indirect waste pipe on a bedpan steamer shall be trapped.

❖ An indirect waste pipe protects sterilizers, steamers and condensers from contamination from the drainage system through the use of the required air gap. An indirect waste pipe is typically piped individually to the indirect waste receptor. This section permits a common indirect waste pipe for two or three sterilizers installed together (see Commentary Figure 713.3). Additionally, the indirect waste pipe on the bedpan steamer must be trapped to prevent the escape of steam vapors and odor.

INTERNATIONAL CODE COUNCIL®
Copyright © 2015 ICC. ALL RIGHTS RESERVED. Accessed by David Dammon on Jun 21, 2017 12:30:52 PM pursuant to License Agreement with ICC. No further reproduction or distribution authorized. ANY UNAUTHORIZED REPRODUCTION OR DISTRIBUTION IS A VIOLATION OF THE FEDERAL COPYRIGHT ACT AND THE LICENSE AGREEMENT, AND SUBJECT TO CIVIL AND CRIMINAL PENALTIES THEREUNDER.

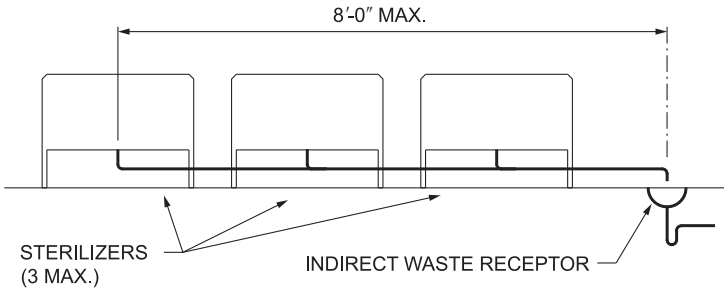

For SI: 1 inch = 25.4 mm, 1 foot = 304.8 mm.

Figure 713.3
COMMON INDIRECT WASTE PIPE FOR STERILIZERS

713.4 Vacuum system station. Ready *access* shall be provided to vacuum system station receptacles. Such receptacles shall be built into cabinets or recesses and shall be visible.

❖ Vacuum system stations are typically installed in recesses in locations where medical professionals have ready access to them. The person locating the station must take into consideration the movements of personnel during an operation or emergency procedure.

These stations are to be visible to allow for ready supervision of the equipment to make sure it is functioning as required.

713.5 Bottle system. Vacuum (fluid suction) systems intended for collecting, removing and disposing of blood, pus or other fluids by the bottle system shall be provided with receptacles equipped with an overflow prevention device at each vacuum outlet station.

❖ A vacuum or fluid suction system is a central system of piping in a health care facility, with terminals located throughout the building. The terminals are typically found in operating rooms, emergency rooms, delivery rooms, recovery rooms, intensive care rooms and similar locations.

Typically, a bottle collector connects to the terminal when the suction system is used. Fluids collected must be discharged to the bottle while the vacuum system remains free of fluids; therefore, a means of preventing the overflow of the bottle is required. This is commonly done by having a separate vacuum trap with a shutoff installed between the suction collection bottle and the vacuum system terminal inlet.

713.6 Central disposal system equipment. Central vacuum (fluid suction) systems shall provide continuous service. Systems equipped with collecting or control tanks shall provide for draining and cleaning of the tanks while the system is in operation. In hospitals, the system shall be connected to the emergency power system. The exhausts from a vacuum pump serving a vacuum (fluid suction) system shall discharge separately to open air above the roof.

❖ The vacuum system is essential for a health care facility and must operate under all conditions. To provide continuous service, at least two vacuum pumps are installed. These systems must also connect to the building's emergency power system (see Commentary Figure 713.6).

Many systems operate with a receiver tank to prevent the constant cycling of the vacuum pumps. The tanks must be equipped with a drain and must be arranged for the cleaning of the tank while the system is still in service. This is accomplished with a bypass piping arrangement located around the receiver tank. This section also requires the exhaust from the vacuum pump to discharge to the outdoors at an elevation that is above the roof of the building in which the equipment is located. The exhaust may be considered a biohazard and must be discharged in a manner similar to plumbing vent terminals.

713.7 Central vacuum or disposal systems. Where the waste from a central vacuum (fluid suction) system of the barometric-lag, collection-tank or bottle-disposal type is connected to the drainage system, the waste shall be directly connected to the sanitary drainage system through a trapped waste.

❖ Certain vacuum systems are designed to connect directly to the drainage system. These types of installations cannot be connected by an indirect waste pipe. Rather, they must be directly connected. This is intended to minimize possible contamination by preventing the waste from being exposed to the atmosphere. The connection must be trapped to protect the system from sewer gases.

713.7.1 Piping. The piping of a central vacuum (fluid suction) system shall be of corrosion-resistant material with a smooth interior surface. A *branch* shall be not less than $^{1}/_{2}$-inch (12.7 mm) nominal pipe size for one outlet and shall be sized in accordance with the number of vacuum outlets. A main shall be not less than 1-inch (25 mm) nominal pipe size. The pipe sizing shall be increased in accordance with the manufacturer's instructions as stations are increased.

❖ The common piping materials used in vacuum systems are copper tubing, galvanized steel pipe and stainless steel pipe. These materials are corrosion resistant and have smooth interior surfaces. The sizing, cleanout and access requirements are considered the very minimum acceptable.

INTERNATIONAL CODE COUNCIL®
Copyright © 2015 ICC. ALL RIGHTS RESERVED. Accessed by David Dammon on Jun 21, 2017 12:30:52 PM pursuant to License Agreement with ICC. No further reproduction or distribution authorized. ANY UNAUTHORIZED REPRODUCTION OR DISTRIBUTION IS A VIOLATION OF THE FEDERAL COPYRIGHT ACT AND THE LICENSE AGREEMENT, AND SUBJECT TO CIVIL AND CRIMINAL PENALTIES THEREUNDER.

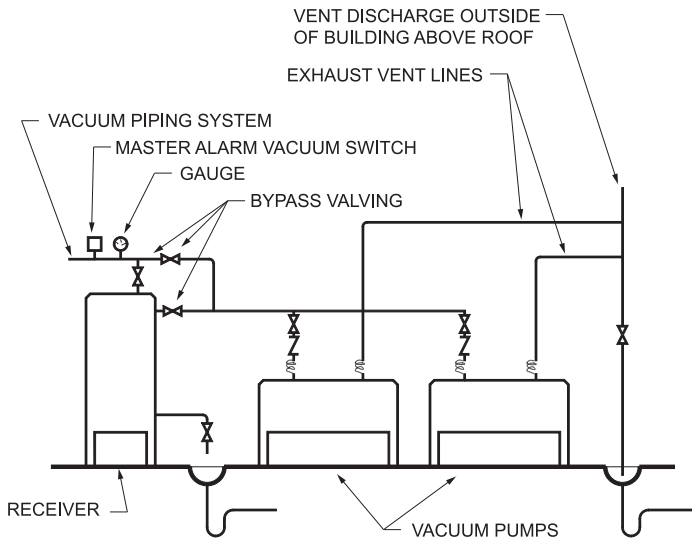

Figure 713.6
CENTRAL VACUUM SYSTEM
(Shown for illustrative purposes only)

713.7.2 Velocity. The velocity of airflow in a central vacuum (fluid suction) system shall be less than 5,000 feet per minute (25 m/s).

❖ The air velocity of a vacuum system is limited to 5,000 feet per minute (25 m/s) to reduce the noise factor and erosion in the piping.

713.8 Vent connections prohibited. Connections between local vents serving bedpan washers or sterilizer vents serving sterilizing apparatus and normal sanitary plumbing systems are prohibited. Only one type of apparatus shall be served by a local vent.

❖ Both a local vent and a sterilizer vent are used for the removal of condensate and odor. Both vents function differently than a vent system designed to protect the trap seals in a drainage system. Local vents must be completely independent of the sanitary drain and waste venting system. An interconnection between local vents and sanitary drain and waste vents would allow sewer gases to enter the local vents, thereby resulting in equipment contamination and the escape of sewer gases into the building interior.

Each local or sterilizer vent must be designed to serve only one type of equipment to prevent possible cross contamination. A local vent connecting to equipment used to clean or sterilize bedpans must not connect to any other sterilizer vents. Although the equipment might be sterilizing the bedpan, there could be bacterial growth in the local vent originating from human waste. The installer must carefully read and follow the fixture manufacturer's instructions.

713.9 Local vents and stacks for bedpan washers. Bedpan washers shall be vented to open air above the roof by means of one or more local vents. The local vent for a bedpan washer shall be not less than a 2-inch-diameter (51 mm) pipe. A local vent serving a single bedpan washer is permitted to drain to the fixture served.

❖ A local vent is occasionally referred to as a "vapor vent." It connects to the fixture or equipment and is designed to vent steam or hot water vapor and foul odors. The local vent prevents water vapor from escaping into the room or space. Besides increasing the humidity or forming condensation, escaping water vapor may also contain biological contaminants. Local vents are disappearing with the use of modern equipment designed to contain and condense the water vapor in the equipment. This type of equipment may not provide a connection for, nor does it require, a local vent. This requirement applies only to bedpan washers having a connection for a local vent.

713.9.1 Multiple installations. Where bedpan washers are located above each other on more than one floor, a local vent *stack* is permitted to be installed to receive the local vent on the various floors. Not more than three bedpan washers shall be connected to a 2-inch (51 mm) local vent *stack*, not more than six to a 3-inch (76 mm) local vent *stack* and not more than 12 to a 4-inch (102 mm) local vent *stack*. In multiple installations, the connections between a bedpan washer local vent and a local vent *stack* shall be made with tee or tee-wye sanitary pattern drainage fittings installed in an upright position.

❖ The requirements for this section may be simplified into a table form [see Commentary Figure 713.9.1(2)]. The stack may be increased in size as additional bedpan washers connect to the local vent stack [see Commentary Figure 713.9.1(1)].

INTERNATIONAL CODE COUNCIL®
Copyright © 2015 ICC. ALL RIGHTS RESERVED. Accessed by David Dammon on Jun 21, 2017 12:30:52 PM pursuant to License Agreement with ICC. No further reproduction or distribution authorized. ANY UNAUTHORIZED REPRODUCTION OR DISTRIBUTION IS A VIOLATION OF THE FEDERAL COPYRIGHT ACT AND THE LICENSE AGREEMENT, AND SUBJECT TO CIVIL AND CRIMINAL PENALTIES THEREUNDER.

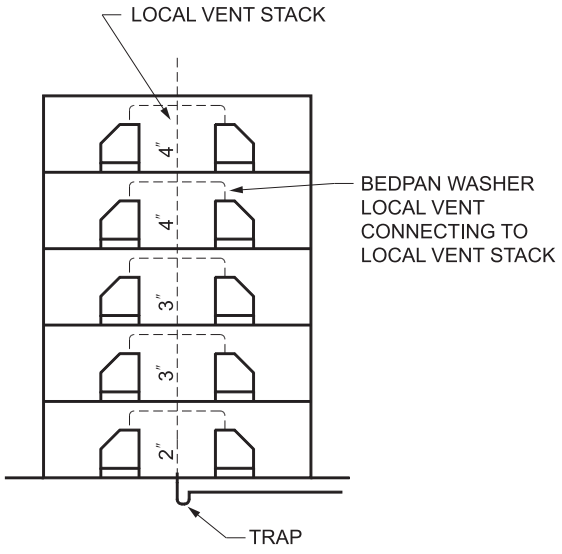

For SI: 1 inch = 25.4 mm.

Figure 713.9.1(1)
LOCAL VENT STACK

LOCAL VENT STACK SIZE (inches)	MAXIMUM NUMBER OF BEDPAN WASHERS
2	3
3	6
4	12

For SI: 1 inch = 25.4 mm.

Figure 713.9.1(2)
MULTIPLE CONNECTION FOR BEDPAN WASHERS TO LOCAL VENT STACK

713.9.2 Trap required. The bottom of the local vent *stack*, except where serving only one bedpan washer, shall be drained by means of a trapped and vented waste connection to the sanitary drainage system. The trap and waste shall be the same size as the local vent *stack*.

❖ Because a local vent is designed to remove water vapor, there will be a certain amount of water condensing inside the pipe. The condensate must be drained to the sanitary drainage system to prevent the local vent stack from accumulating water. The connection to the drainage system must be by means of a trapped and vented waste connection (see Commentary Figure 713.9.2).

713.9.3 Trap seal maintenance. A water supply pipe not less than $^1/_4$ inch (6.4 mm) in diameter shall be taken from the flush supply of each bedpan washer on the discharge or fixture side of the vacuum breaker, shall be trapped to form not less than a 3-inch (76 mm) water seal and shall be connected to the local vent *stack* on each floor. The water supply shall be installed so as to provide a supply of water to the local vent *stack* for cleansing and drain trap seal maintenance each time a bedpan washer is flushed.

❖ A $^1/_4$-inch (6.4 mm) tube is looped to form a trap and is connected to the local vent. With each use of the bedpan washer, water is discharged to maintain the trap seal of the drainage connection. The looped tube must be connected downstream of the fixture's vacuum breaker to prevent a cross connection.

713.10 Sterilizer vents and stacks. Multiple installations of pressure and nonpressure sterilizers shall have the vent connections to the sterilizer vent *stack* made by means of inverted wye fittings. *Access* shall be provided to vent connections for the purpose of inspection and maintenance.

❖ A sterilizer vent is similar to a local vent. The vent is designed to remove the steam vapor developed in sterilizer equipment (see Commentary Figure 713.10).

Like local vents, sterilizer vents are not used because current equipment condenses the steam vapor in the equipment.

713.10.1 Drainage. The connection between sterilizer vent or exhaust openings and the sterilizer vent *stack* shall be designed and installed to drain to the funnel or basket-type waste fitting. In multiple installations, the sterilizer vent *stack* shall be drained separately to the lowest sterilizer funnel or basket-type waste fitting or receptor.

❖ The sterilizer vent exhausts the steam created in the sterilizer. As a result, condensation forms inside the piping. To maintain proper operation of the system, the sterilizer vent must be designed to drain the condensate to an indirect waste receptor at the base of the vent.

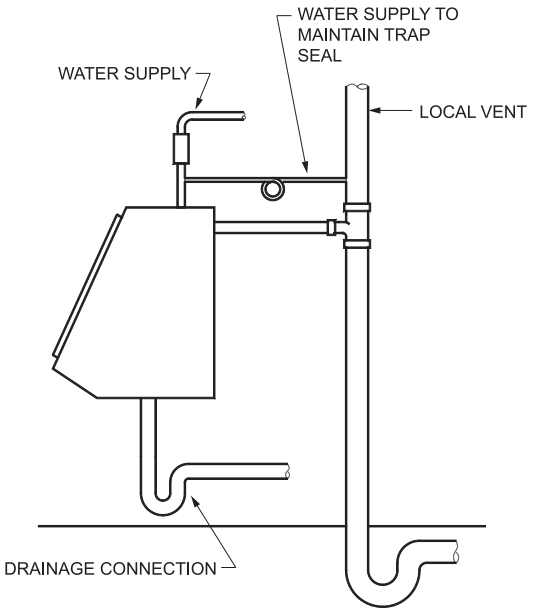

Figure 713.9.2
BOTTOM CONNECTION TO LOCAL VENT STACK

INTERNATIONAL CODE COUNCIL®
Copyright © 2015 ICC. ALL RIGHTS RESERVED. Accessed by David Dammon on Jun 21, 2017 12:30:52 PM pursuant to License Agreement with ICC. No further reproduction or distribution authorized. ANY UNAUTHORIZED REPRODUCTION OR DISTRIBUTION IS A VIOLATION OF THE FEDERAL COPYRIGHT ACT AND THE LICENSE AGREEMENT, AND SUBJECT TO CIVIL AND CRIMINAL PENALTIES THEREUNDER.

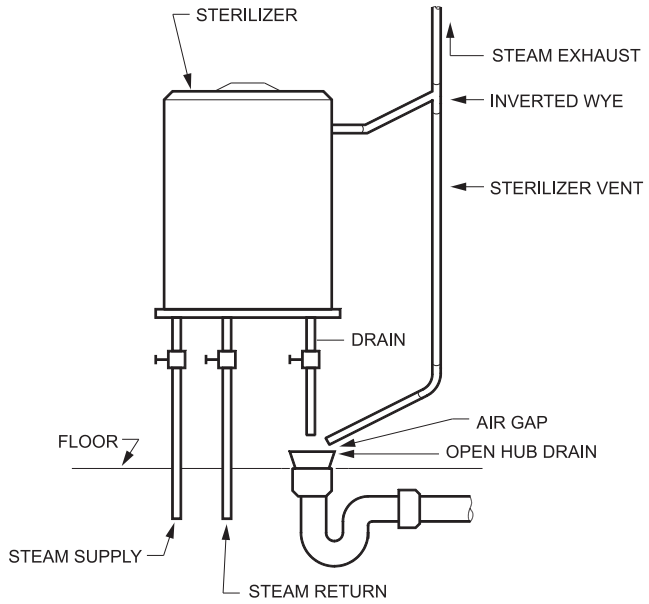

Figure 713.10
STERILIZER PIPING

713.11 Sterilizer vent stack sizes. Sterilizer vent *stack* sizes shall comply with Sections 713.11.1 through 713.11.4.

❖ The requirements for sterilizer vent stack sizes are described in Sections 713.11.1 through 713.11.4.

713.11.1 Bedpan steamers. The minimum size of a sterilizer vent serving a bedpan steamer shall be $1^1/_2$ inches (38 mm) in diameter. Multiple installations shall be sized in accordance with Table 713.11.1.

❖ The minimum size sterilizer vent is $1^1/_2$ inches (38 mm). When multiple sterilizer vents are interconnected, the piping must be sized in accordance with Table 713.11.1.

TABLE 713.11.1
STACK SIZES FOR BEDPAN STEAMERS AND BOILING-TYPE STERILIZERS (Number of Connections of Various Sizes Permitted to Various-sized Sterilizer Vent Stacks)

STACK SIZE (inches)	CONNECTION SIZE		
	$1^1/_2$"		2"
$1^1/_2$[a]	1	or	0
2[a]	2	or	1
2[b]	1	and	1
3[a]	4	or	2
3[b]	2	and	2
4[a]	8	or	4
4[b]	4	and	4

For SI: 1 inch = 25.4 mm.
a. Total of each size.
b. Combination of sizes.

❖ This table often appears confusing because of the use of the terms "or" and "and." When the term "or" is used under the permitted connection size, it means that either one or the other listed connection is permitted. When the term "and" is used, it means that both of the listed connections are permitted together.

713.11.2 Boiling-type sterilizers. The size of a sterilizer vent *stack* shall be not less than 2 inches (51 mm) in diameter where serving a utensil sterilizer and not less than $1^1/_2$ inches (38 mm) in diameter where serving an instrument sterilizer. Combinations of boiling-type sterilizer vent connections shall be sized in accordance with Table 713.11.1.

❖ Table 713.11.1 is also used for sizing boiling-type sterilizer vent stacks. Refer to Section 713.11.1 for commentary on the use of the table.

713.11.3 Pressure sterilizers. Pressure sterilizer vent *stacks* shall be $2^1/_2$ inches (64 mm) minimum. Those serving combinations of pressure sterilizer exhaust connections shall be sized in accordance with Table 713.11.3.

❖ Pressure sterilizer vent stacks must not be less than $2^1/_2$ inches (64 mm) in diameter; however, where such stacks serve multiple pressure sterilizers, the vent stacks must be sized in accordance with Table 713.11.3.

TABLE 713.11.3
STACK SIZES FOR PRESSURE STERILIZERS (Number of Connections of Various Sizes Permitted To Various-sized Vent Stacks)

STACK SIZE (inches)	CONNECTION SIZE			
	$^3/_4$"	1"	$1^1/_4$"	$1^1/_2$"
$1^1/_2$[a]	3 or	2 or	1	—
$1^1/_2$[b]	2 and	1	—	—
2[a]	6 or	3 or	2 or	1
2[b]	3 and	2	—	—
2[b]	2 and	1 and	1	—
2[b]	1 and	1 and	—	1
3[a]	15 or	7 or	5 or	3
3[b]	1 and	1 and 5 and	2 and	2 1

For SI: 1 inch = 25.4 mm.
a. Total of each size.
b. Combination of sizes.

❖ The table dictates the allowable number of individual sterilizer vent connections to a vent stack. Connections are listed as numbers and combinations of various sizes (see commentary, Table 713.11.1). The rows designated by Note a allow one or more connections of a single sterilizer exhaust connection size. Note a rows do not permit commingling of different sterilizer exhaust connection sizes. The rows designated by Note b allow multiple connections of sterilizer exhausts that are combinations of sizes.

713.11.4 Pressure instrument washer sterilizer sizes. The diameter of a sterilizer vent *stack* serving an instrument washer sterilizer shall be not less than 2 inches (51 mm). Not more than two sterilizers shall be installed on a 2-inch (51

INTERNATIONAL CODE COUNCIL®
Copyright © 2015 ICC. ALL RIGHTS RESERVED. Accessed by David Dammon on Jun 21, 2017 12:30:52 PM pursuant to License Agreement with ICC. No further reproduction or distribution authorized. ANY UNAUTHORIZED REPRODUCTION OR DISTRIBUTION IS A VIOLATION OF THE FEDERAL COPYRIGHT ACT AND THE LICENSE AGREEMENT, AND SUBJECT TO CIVIL AND CRIMINAL PENALTIES THEREUNDER.

mm) *stack*, and not more than four sterilizers shall be installed on a 3-inch (76 mm) *stack*.

❖ The requirements of this section are illustrated in Commentary Figure 713.11.4.

STACK SIZE (inches)	NUMBER OF STERILIZERS CONNECTED
2	2
3	4

For SI: 1 inch = 25.4 mm.

Figure 713.11.4
PRESSURE INSTRUMENT WASHER STERILIZER SIZES

SECTION 714
COMPUTERIZED DRAINAGE DESIGN

714.1 Design of drainage system. The sizing, design and layout of the drainage system shall be permitted to be designed by *approved* computer design methods.

❖ This section establishes a parameter for sizing a drainage system using a computerized method. Various computer programs have been developed using the same technical guidelines used to develop the sizing tables in Sections 703, 706, 710 and 711. One of the major differences is that the computerized methods are more exact, knowing the exact discharge considerations or load on the drainage system fixture profiles, material specifications and slope of drainage piping.

714.2 Load on drainage system. The load shall be computed from the simultaneous or sequential discharge conditions from fixtures, appurtenances and appliances or the peak usage design condition.

❖ When sizing to exact parameters, the discharge conditions for the particular system must be known. This is similar to determining the peak demand of the water distribution system, as indicated in the commentary to Section 604.3.

714.2.1 Fixture discharge profiles. The discharge profiles for flow rates versus time from fixtures and appliances shall be in accordance with the manufacturer's specifications.

❖ Each fixture has a specific discharge profile, plotting flow rates versus time. When designing by a computerized method, the actual discharge profile of the individual fixtures being installed may be used. The table in Section 604.3 applies a conservative, general discharge profile for each category of fixtures.

714.3 Selections of drainage pipe sizes. Pipe shall be sized to prevent full-bore flow.

❖ The drainage system must be designed to maintain open channel flow (gravity). If full-bore flow is achieved, the piping may have pressure flow occurring. This may be detrimental to the operation of the system because the venting design provisions are based on the hydraulics of a gravity system.

714.3.1 Selecting pipe wall roughness. Pipe size calculations shall be conducted with the pipe wall roughness factor (ks), in accordance with the manufacturer's specifications and as modified for aging roughness factors with deposits and corrosion.

❖ Exact sizing uses the parameters of the given material to be installed. The roughness coefficient of the interior pipe wall is used in sizing. Pipe wall roughness is a factor used to determine the flow losses attributable to friction. These factors must contain modifying factors that reflect that changes occur as the pipe ages and develops deposits and corrosion.

714.3.2 Slope of horizontal drainage piping. Horizontal drainage piping shall be designed and installed at slopes in accordance with Table 704.1.

❖ Piping sized by a computerized method is subject to the same slope requirements as conventionally sized piping. The minimum slope must be as specified in Table 704.1. Refer to that section and its commentary for related issues, requirements and concerns.

SECTION 715
BACKWATER VALVES

715.1 Sewage backflow. Where plumbing fixtures are installed on a floor with a finished floor elevation below the elevation of the manhole cover of the next upstream manhole in the public *sewer*, such fixtures shall be protected by a backwater valve installed in the *building drain*, or horizontal *branch* serving such fixtures. Plumbing fixtures installed on a floor with a finished floor elevation above the elevation of the manhole cover of the next upstream manhole in the public *sewer* shall not discharge through a backwater valve.

Exception: In existing buildings, fixtures above the elevation of the manhole cover of the next upstream manhole in the public *sewer* shall not be prohibited from discharging through a backwater valve.

❖ A backwater valve is required in areas where the public sewer might back up into the building through the sanitary drainage system [see Commentary Figure 715.1(1)]. Where plumbing fixtures are located on a floor that is above the next upstream manhole cover from the building sewer connection to the public sewer, the public sewer will back up through the street manhole before entering the building.

Public sewers might become blocked or overloaded, which will result in sewage backing up into the manholes and any laterals (taps) connected to the sewer system. The point of overflow for the public sewer will be the top of the manholes in the backed-up portion of the system.

Fixtures or drains located on a floor that is at an elevation below that of the tops of the manholes for the relative portion of the sewer system are subject to backflow and must be protected by backwater valves [see Commentary Figure 715.1(2)]. Plumbing fixtures that are not subject to backflow are not permitted to discharge through a backwater valve. In theory, limit-

INTERNATIONAL CODE COUNCIL®
Copyright © 2015 ICC. ALL RIGHTS RESERVED. Accessed by David Dammon on Jun 21, 2017 12:30:52 PM pursuant to License Agreement with ICC. No further reproduction or distribution authorized. ANY UNAUTHORIZED REPRODUCTION OR DISTRIBUTION IS A VIOLATION OF THE FEDERAL COPYRIGHT ACT AND THE LICENSE AGREEMENT, AND SUBJECT TO CIVIL AND CRIMINAL PENALTIES THEREUNDER.

ing the fixtures that discharge through a backwater valve will prevent waste from upstream fixtures from backing up through downstream fixtures because it cannot pass through the backwater valve when the public sewer is blocked or overloaded. Additionally, the valve will be protected from excess wear and potential failure resulting from debris and accumulations.

715.2 Material. Bearing parts of backwater valves shall be of corrosion-resistant material. Backwater valves shall comply with ASME A112.14.1, CSA B181.1 or CSA B181.2.

❖ This section requires that bearing parts of the backwater valve be made of corrosion-resistant materials so that the valve remains operable for its expected life, thus protecting the building it serves. This section also gives the industry standards to which the backwater valve must be manufactured. As required in Section 107, these backwater valves are to be inspected and verified by an independent third-party quality-assurance facility.

715.3 Seal. Backwater valves shall be so constructed as to provide a mechanical seal against backflow.

❖ A backwater valve is designed to prevent the backflow of drainage in a piping system. The valve incorporates a swing check on the inlet side of the body. This section requires that the swing check have a positive seal against the backflow of drainage. Some backwater valves are also equipped with a gate valve that is manually operated to close the outlet side of the device. Backwater valves equipped with gate valves are typically used in areas subject to severe flooding conditions [see Commentary Figure 715.1(2)].

715.4 Diameter. Backwater valves, when fully opened, shall have a capacity not less than that of the pipes in which they are installed.

❖ This section simply requires that the capacity of the pipe in which the backwater valve is located not be reduced by the valve. This would include components of the backwater valve, including any optional manual gate valves. Backwater valves are designed so as to not create a restriction in the piping.

715.5 Location. Backwater valves shall be installed so that *access* is provided to the working parts for service and repair.

❖ Because a backwater valve has movable parts, there is a possibility of stoppage or malfunction. This section requires that backwater valves be located to be accessible to permit the necessary maintenance or repairs.

SECTION 716
VACUUM DRAINAGE SYSTEMS

716.1 Scope. Vacuum drainage systems shall be in accordance with Sections 716.2 through 716.4.

❖ This section regulates the design and installation methods for vacuum drainage systems. Plumbing systems are designed to drain by gravity whenever possible; however, there are many instances where the discharge from plumbing fixtures must be lifted by a vacuum to an approved point of disposal. This type of system is commonly specified in railcars, aircraft, buses, marine vessels, recreational vehicles and land-based projects.

716.2 System design. Vacuum drainage systems shall be designed in accordance with the vacuum drainage system manufacturer's instructions. The system layout, including piping layout, tank assemblies, vacuum pump assembly and other components necessary for proper function of the system shall be in accordance with the manufacturer's instructions. Plans, specifications and other data for such systems shall be submitted to the code official for review and approval prior to installation.

❖ The vacuum system connections are made on the inlet rather than on the outlet as is the case with sewage ejectors or pumps. The wastes in these types of systems are being pulled, not pushed, through the piping system. Typically, the waste is introduced into the system from plumbing fixtures, conveyed to a collection tank and then to an approved point of disposal. A grinding pump that macerates waste is often installed prior to the collection tank, thereby providing additional holding capacity. The negative pressure is maintained in the system by a vacuum pump. A con-

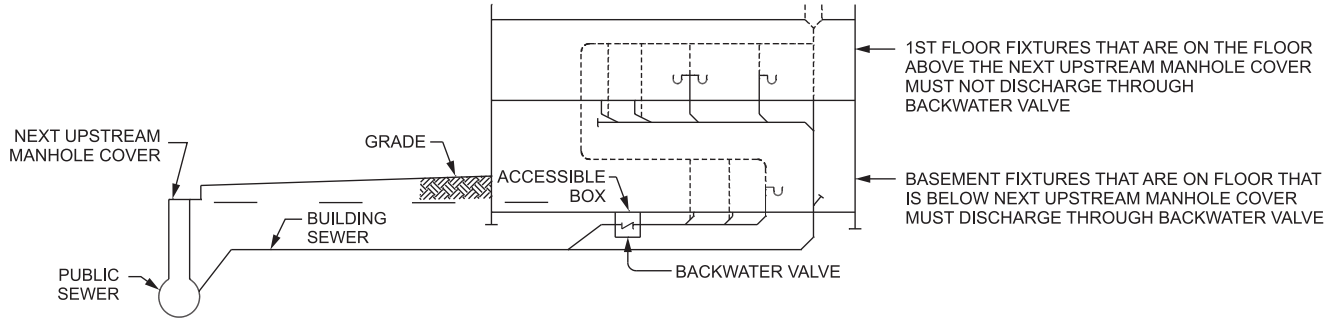

Figure 715.1(1)
BACKWATER VALVE

INTERNATIONAL CODE COUNCIL®
Copyright © 2015 ICC. ALL RIGHTS RESERVED. Accessed by David Dammon on Jun 21, 2017 12:30:52 PM pursuant to License Agreement with ICC. No further reproduction or distribution authorized. ANY UNAUTHORIZED REPRODUCTION OR DISTRIBUTION IS A VIOLATION OF THE FEDERAL COPYRIGHT ACT AND THE LICENSE AGREEMENT, AND SUBJECT TO CIVIL AND CRIMINAL PENALTIES THEREUNDER.

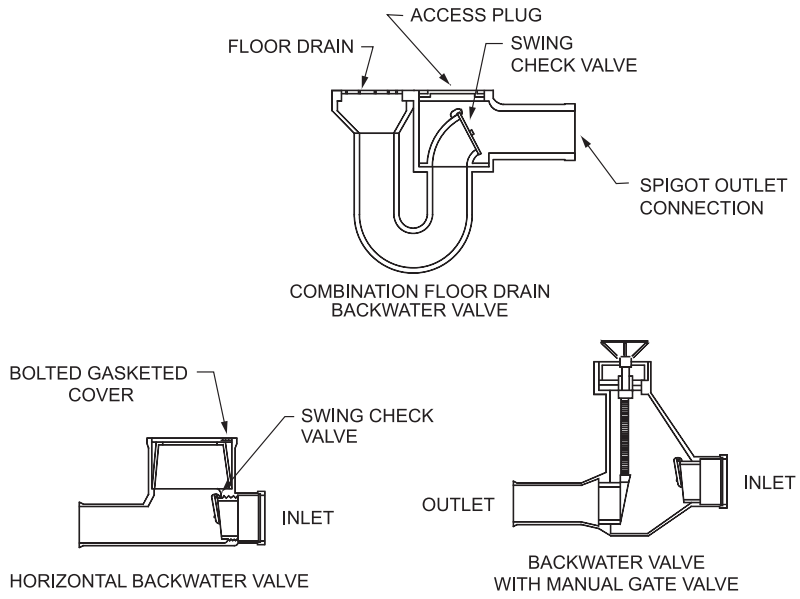

Figure 715.1(2)
BACKWATER VALVES

trol panel links the system and typically includes a timing valve, discharge valve and water valve. For example, when the flush mechanism is activated for a water closet, the discharge valve opens, allowing atmospheric pressure to force waste through the piping to the vacuum tank. At the same time, the water valve injects water to rinse the bowl. A lavatory or sink waste flows by gravity to an interface valve, which then opens and allows the waste to enter the vacuum piping. The discharge from showers or floor drains is typically collected in a holding tank, and when the tank is filled, a pressure sensor triggers an actuator to open a valve, allowing the waste to move into the vacuum piping. A control system automatically regulates the operation of the vacuum and sewage ejector pumps. The vacuum pump creates a vacuum in the system by pumping air from the vacuum tank and piping. Once a predetermined level of sewage is reached in the vacuum tank, the sewage is automatically pumped out by sewage ejector pumps to a treatment plant or sewer main. Manufacturers must provide detailed installation and servicing instructions with each type of system.

716.2.1 Fixtures. Gravity-type fixtures installed in vacuum drainage systems shall comply with Chapter 4.

❖ Fixtures utilized in a vacuum system must adhere to the same standards for plumbing fixtures in Chapter 4 of the code. Plumbing fixtures regulated in this type of system must be free from deficiencies that affect the fixture's intended purpose. The referenced standards specify quality, dimensions, construction requirements and the testing of such fixtures.

716.2.2 Drainage fixture units. *Drainage fixture units* for gravity drainage systems that discharge into, or receive discharge from, vacuum drainage systems shall be based on the values in this chapter.

❖ Table 709.1 of the code provides the drainage fixture unit (dfu) value for various type of fixtures. A water closet installed in a vacuum system typically discharges 1.1 liters or 1 quart of water per flush. Note e in this table indicates that water closets and urinals may have a lower dfu value confirmed by test results. Many vacuum-type water closets have a dfu value lower than the same fixture type indicated in Table 709.1.

716.2.3 Water supply fixture units. Water supply fixture units shall be based on the values in Chapter 6 of this code, except that the water supply fixture unit for a vacuum-type water closet shall be 1.

❖ The demand on the water supply system for vacuum-drained fixtures will be the same as if the fixtures were gravity drained. Methods for determining water supply pipe sizes usually involve some type of dimensionless value assigned to a fixture so that flow rates can be determined (and pipe sizes determined), based on the total number of fixtures (of all types) in a building. The dimensionless values take into account flow rates and the *probability of use* of fixtures. One common name for this dimensionless value is the "water supply fixture unit." Although Chapter 6 does not directly address water supply fixture units, the typical approved methods that conform to accepted engineering practice commonly utilize water supply fixture units for determining water supply piping systems.

INTERNATIONAL CODE COUNCIL®
Copyright © 2015 ICC. ALL RIGHTS RESERVED. Accessed by David Dammon on Jun 21, 2017 12:30:52 PM pursuant to License Agreement with ICC. No further reproduction or distribution authorized. ANY UNAUTHORIZED REPRODUCTION OR DISTRIBUTION IS A VIOLATION OF THE FEDERAL COPYRIGHT ACT AND THE LICENSE AGREEMENT, AND SUBJECT TO CIVIL AND CRIMINAL PENALTIES THEREUNDER.

The code requirement for the water supply fixture unit for a water closet on a vacuum drainage system to be 1 is an indication that the water closet will require minimal water requirements for flushing. The vacuum system evacuates the bowl. Water is only necessary for bowl refill so that there is a water surface.

716.2.4 Traps and cleanouts. Gravity drainage fixtures shall be provided with traps and cleanouts in accordance with this chapter and Chapter 10.

❖ Drainage piping in a vacuum system must have cleanouts installed in accordance with Section 708. Fixture traps must be provided in accordance with Section 1002.1. Many vacuum systems can eliminate fixture venting because of the positive seal between discharge waste water and the fixture; hence, the necessity for traps. The code official must evaluate each system individually based on the manufacturer's recommended installation instructions and the requirements of the code.

716.2.5 Materials. Vacuum drainage pipe, fitting and valve materials shall be in accordance with the vacuum drainage system manufacturer's instructions and the requirements of this chapter.

❖ Before installation of drainage pipes and fittings, the manufacturer's recommendations must be consulted in order to evaluate the type of material to be used. Table 702.1 provides the acceptable material to be used in vacuum systems.

716.3 Testing and demonstrations. After completion of the entire system installation, the system shall be subjected to a vacuum test of 19 inches (483 mm) of mercury and shall be operated to function as required by the code official and the manufacturer of the vacuum drainage system. Recorded proof of all tests shall be submitted to the code official.

❖ Vacuum systems must be subjected to testing to determine potential defects and leaks. Vacuum pumps maintain an operating range of 16 to 20 inches (406 to 508 mm) of mercury vacuum. Differential air pressure propels the sewage at velocities of 15 to 18 feet per second (4.5 to 5.5 m/s). Such systems are subjected to a vacuum test of 19 inches (483 mm) of mercury, which equals 9.3 pounds per square inch (64 kPa) of air pressure.

716.4 Written instructions. Written instructions for the operation, maintenance, safety and emergency procedures shall be provided to the building owner. The code official shall verify that the building owner is in receipt of such instructions.

❖ Manufacturer's installation instructions must be provided because they are an enforceable extension of the code for determining whether a system has been properly installed. A detailed description of operating maintenance, safety and emergency procedures is required to reflect the scope of information needed to determine compliance.

SECTION 717
REPLACEMENT OF UNDERGROUND SEWERS BY PIPE-BURSTING METHODS

717.1 General. This section shall govern the replacement of existing *building sewer* piping by pipe-bursting methods.

❖ This is a method for replacing existing building piping that does not require complete excavation of the existing piping. This methods uses an expanding mandrel that is attached to the end of the replacement pipe. The mandrel (with the replacement pipe in tow) is pulled by a cable through the existing sewer line. The mandrel has a hydraulically activated expanding shell that breaks (bursts) the existing pipe to make room for the new pipe as it is pulled into position.

The method requires that launching and receiving pits be excavated at the beginning and ending points of the pipe to be replaced. If there are any lateral connections that need to be made between the beginning and the end, excavated pits are required at those locations as well.

717.2 Applicability. The replacement of *building sewer* piping by pipe-bursting methods shall be limited to gravity drainage piping of sizes 6 inches (152 mm) and smaller. The replacement piping shall be of the same nominal size as the existing piping.

❖ Although the pipe-bursting method of underground pipe replacement is used for large pipe sizes, the code limits its use to the replacement of pipes that are 6 inches (152 mm) and smaller. The code also limits this method to use on gravity sewers and a replacement using the same size as existing piping.

717.3 Pre-installation inspection. The existing piping sections to be replaced shall be inspected internally by a recorded video camera survey. The survey shall include notations of the position of cleanouts and the depth of connections to the existing piping.

❖ An internal video camera survey of the existing installation is required to identify problem areas and location of connections and cleanouts.

717.4 Pipe. The replacement piping shall be manufactured with a standard dimension ratio (SDR) of 17 and in compliance with ASTM F 714.

❖ The only material that the code allows for sewer replacement is polyethylene plastic pipe (ASTM F714) having an SDR 17 wall thickness. This pipe is an outer-diameter- and wall-thickness-controlled product. SDR 17 provides for an inside diameter that is very close to the inside diameter of PVC and cast-iron sewer piping of the same nominal pipe size

717.5 Pipe fittings. Pipe fittings to be connected to the replacement piping shall be of extra-high molecular weight PE3408 material and shall be manufactured with an SDR of 17 and in compliance with ASTM D 2683.

❖ Fittings for this material must be compatible with the pipe. The requirement for compliance to ASTM D2683 avoids the use of butt welded fittings. A butt-welded fit-

INTERNATIONAL CODE COUNCIL®
Copyright © 2015 ICC. ALL RIGHTS RESERVED. Accessed by David Dammon on Jun 21, 2017 12:30:52 PM pursuant to License Agreement with ICC. No further reproduction or distribution authorized. ANY UNAUTHORIZED REPRODUCTION OR DISTRIBUTION IS A VIOLATION OF THE FEDERAL COPYRIGHT ACT AND THE LICENSE AGREEMENT, AND SUBJECT TO CIVIL AND CRIMINAL PENALTIES THEREUNDER.

ting could have internal edges that could catch and restrict flow. Use of a socket fitting allows for pipe ends to be deburred/chamfered before assembly.

717.6 Cleanouts. Where the existing *building sewer* did not have cleanouts meeting the requirements of this code, cleanout fittings shall be installed as required by this code.

❖ Cleanouts are required in accordance with Section 708, whether the existing sewer had them or not.

717.7 Post-installation inspection. The completed replacement piping section shall be inspected internally by a recorded video camera survey. The video survey shall be reviewed and *approved* by the code official prior to pressure testing of the replacement piping system.

❖ An internal video camera survey of the completed installation is required to be reviewed by the code official prior to pressure testing of replacement pipe, including all connections to the replacement pipe.

717.8 Pressure testing. The replacement piping system as well as the connections to the replacement piping shall be tested in accordance with Section 312.

❖ As with any installation of a new sewer, pressure testing is required.

INTERNATIONAL CODE COUNCIL®

Copyright © 2015 ICC. ALL RIGHTS RESERVED. Accessed by David Dammon on Jun 21, 2017 12:30:52 PM pursuant to License Agreement with ICC. No further reproduction or distribution authorized. ANY UNAUTHORIZED REPRODUCTION OR DISTRIBUTION IS A VIOLATION OF THE FEDERAL COPYRIGHT ACT AND THE LICENSE AGREEMENT, AND SUBJECT TO CIVIL AND CRIMINAL PENALTIES THEREUNDER.

Chapter 8: Indirect/special Waste

General Comments

An indirect waste pipe is a method of discharging waste from a fixture or appliance into the sanitary drainage system to prevent backflow and possible contamination. The waste pipe discharges through an air gap or air break into an open receptor or standpipe. Section 801 outlines the scope of the chapter, which is to indicate how to protect fixtures from possible contamination and to indicate how to dispose of special wastes properly. Section 802 requires most plumbing fixtures and appliances in food-handling establishments to discharge through an indirect waste. This eliminates a possible cause of food contamination from the sanitary drainage system. Section 802 also regulates the location of floor drains in food storage areas and waste water from swimming pools, pool filters and deck drains. Section 803 regulates special wastes that require treatment before being discharged to the sanitary drainage system, such as waste from a chemical laboratory.

Commonly referred to as "open site" or "safe waste," an indirect waste pipe is a means of protecting a fixture or appliance in the event of a backup of the sanitary drainage system. Sewage cannot back up into a fixture or appliance if a stoppage occurs downstream of the waste receptor receiving the discharge of an indirect waste pipe. Instead, sewage will spill onto the surrounding floor area. This protection is necessary when the contamination presents a health hazard or creates a potential cross connection with the potable water system. Note that an indirect waste pipe conveying waste from a fixture such as a sink, floor drain or swimming pool is part of the drainage system and, therefore, must conform to other applicable provisions of the code, including those found in Chapters 3 and 7. Condensate disposal piping must comply with Section 314 of the code, which is identical to and controlled by Section 307 of the *International Mechanical Code*® (IMC®). This section requires condensate pipe to be cast iron, galvanized steel, copper, cross-linked polyethylene (PEX), polyethylene (PE), polybutylene (PB), acrylonitrile butadiene styrene (ABS), chlorinated polyvinyl (CPVC) or polyvinyl chloride (PVC). Condensate piping must be not less than $^{3}/_{4}$-inch (19.1 mm) internal diameter and sized in accordance with an approved method. Where condensate is generated by multiple refrigeration units, the minimum size of the piping carrying the combined flows must be in accordance with Table 314.2.2 of this code. A condensate drain is required to have a trap installed if required by the equipment or appliance manufacturer. Condensate drain traps are not required to be vented as is required for sanitary drainage traps.

Purpose

Chapter 8 regulates drainage installations requiring an indirect connection to the sanitary drainage system. Fixtures and plumbing appliances, such as those associated with food preparation or handling, health care facilities and potable liquids, must be protected from contamination that can result from connection to the drainage system. An indirect connection prevents sewage from backing up into a fixture or appliance, thus providing protection against potential health hazards. The chapter also regulates special wastes containing hazardous chemicals. The waste must be treated to prevent any damage to the piping or sewage treatment process.

SECTION 801 GENERAL

801.1 Scope. This chapter shall govern matters concerning indirect waste piping and special wastes. This chapter shall further control matters concerning food-handling establishments, sterilizers, clear-water waste, swimming pools, methods of providing *air breaks* or *air gaps*, and neutralizing devices for corrosive wastes.

❖ This section outlines the scope of the chapter, which is to protect fixtures and appliances from possible contamination and to dispose of special wastes properly.

Indirect waste connections are necessary where a higher degree of health protection from sewage backup into the fixture or appliance is required because of the nature of its use. The chapter also has performance requirements for the neutralizing of special waste.

801.2 Protection. Devices, appurtenances, appliances and apparatus intended to serve some special function, such as sterilization, distillation, processing, cooling, or storage of ice or foods, and that discharge to the drainage system, shall be provided with protection against backflow, flooding, fouling, contamination and stoppage of the drain.

❖ This section requires protection of appliances and specialized equipment against contamination resulting from backflow. This section combines the intent of Sections 608, 609 and 802.

SECTION 802 INDIRECT WASTES

802.1 Where required. Food-handling equipment, in other than dwelling units, clear-water waste, dishwashing machines and utensils, pots, pans and dishwashing sinks shall discharge through an indirect waste pipe as specified in Sections

INTERNATIONAL CODE COUNCIL®
Copyright © 2015 ICC. ALL RIGHTS RESERVED. Accessed by David Dammon on Jun 21, 2017 12:30:52 PM pursuant to License Agreement with ICC. No further reproduction or distribution authorized. ANY UNAUTHORIZED REPRODUCTION OR DISTRIBUTION IS A VIOLATION OF THE FEDERAL COPYRIGHT ACT AND THE LICENSE AGREEMENT, AND SUBJECT TO CIVIL AND CRIMINAL PENALTIES THEREUNDER.

802.1.1 through 802.1.8. Health-care related fixtures, devices and equipment shall discharge to the drainage system through an indirect waste pipe by means of an *air gap* in accordance with this chapter and Section 713.3. Fixtures not required by this section to be indirectly connected shall be directly connected to the plumbing system in accordance with Chapter 7.

❖ This section establishes where an indirect waste is required, as well as appropriate indirect waste methods and installation procedures. The requirements for indirect wastes are described in Sections 802.1.1 through 802.1.8. Health care plumbing fixtures, appliances and equipment that must discharge through an indirect waste are included in Section 713.3. Fixtures that need not be indirectly connected by Chapter 8 must be directly connected to the plumbing system in accordance with Section 301.3.

802.1.1 Food handling. Equipment and fixtures utilized for the storage, preparation and handling of food shall discharge through an indirect waste pipe by means of an air gap. Each well of a multiple-compartment sink shall discharge independently to a waste receptor.

❖ All food must be protected from possible contamination caused by the sanitary drainage system. The requirement for indirect waste connections extends to all storage, cooking and preparation equipment, including vegetable sinks; food-washing sinks; refrigerated cases and cabinets; ice boxes; ice-making machines; steam kettles; steam tables; potato peelers; egg boilers; coffee urns and brewers; drink dispensers and similar types of equipment and fixtures [see Commentary Figures 802.1.1(1), 802.1.1(2) and 802.1.1(3)]. Food stored in walk-in coolers and freezers is specifically addressed in Section 802.1.2. Dishwashing sinks do not require an indirect waste connection because they are designed for use with contaminated water and do not come in contact with food. Furthermore, many of these fixtures in a food-handling establishment connect to a grease interceptor. If the discharge were through an indirect waste connection, the grease would tend to collect in the waste receptor, creating a health hazard. It is common, however, for local health officials to require such sinks to discharge through an indirect waste connection because sinks designated for dish, pot, pan and utensil washing are often used also for food preparation/washing. However, domestic and commercial dishwashing machines must discharge indirectly through an air gap or air break into a standpipe or waste receptor or as allowed by Section 802.1.6 (see Commentary Figure 802.1.6 or 802.1.7).

Occasionally, commercial kitchen designers will desire to mount a food waste grinder to a food preparation sink for ease of disposal of food prep wastes such as leaves, skins, spoiled produce, bones and meat trimmings. Unfortunately, this creates several code conflicts. A food waste grinder is not a plumbing "fixture" that is required to be indirect connected; therefore, it must be direct connected to the drain system. However, because the discharge of the food waste grinder is also the outlet for the food-prep sink, this section requires the drain to be indirectly connected. The concern of the code for indirectly connecting drains of food prep sinks is to avoid

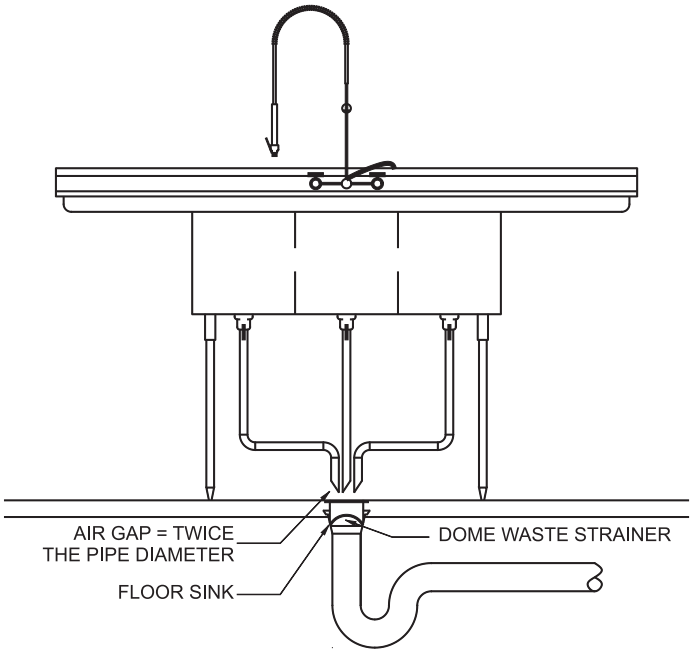

Figure 802.1.1(1)
INDIRECTLY CONNECTED THREE-COMPARTMENT FOOD PREPARATION SINK

INTERNATIONAL CODE COUNCIL®
Copyright © 2015 ICC. ALL RIGHTS RESERVED. Accessed by David Dammon on Jun 21, 2017 12:30:52 PM pursuant to License Agreement with ICC. No further reproduction or distribution authorized. ANY UNAUTHORIZED REPRODUCTION OR DISTRIBUTION IS A VIOLATION OF THE FEDERAL COPYRIGHT ACT AND THE LICENSE AGREEMENT, AND SUBJECT TO CIVIL AND CRIMINAL PENALTIES THEREUNDER.

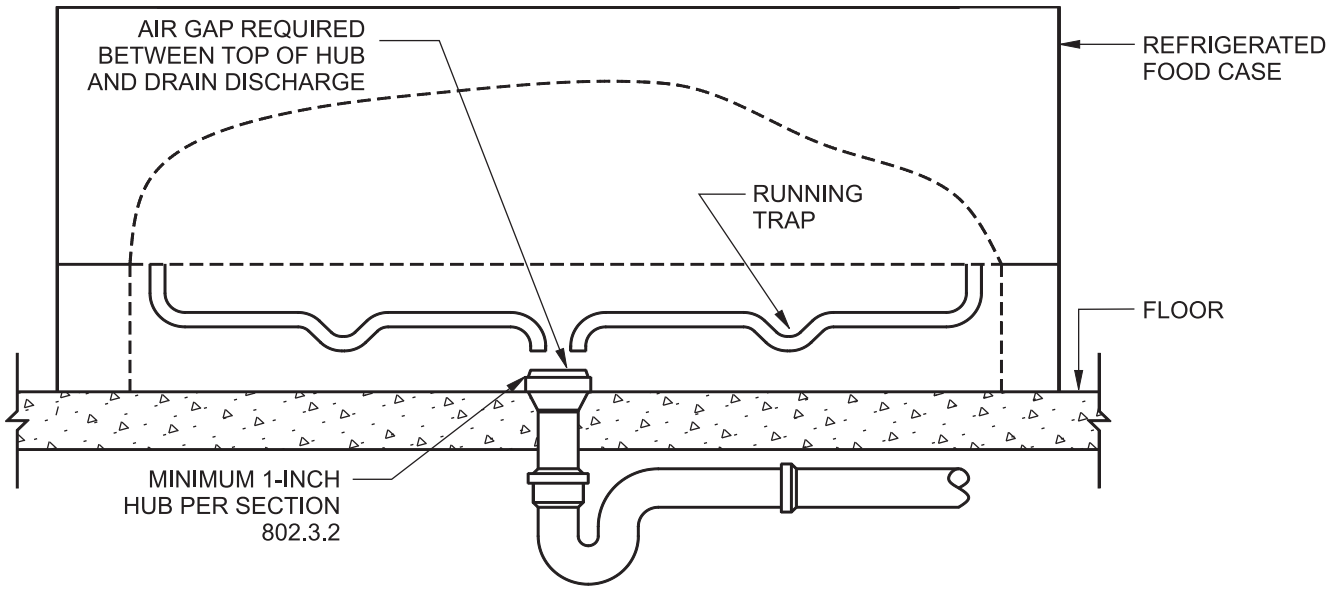

For SI: 1 inch = 25.4 mm.

Figure 802.1.1(2)
REFRIGERATED FOOD CASE DISCHARGING TO HUB DRAIN

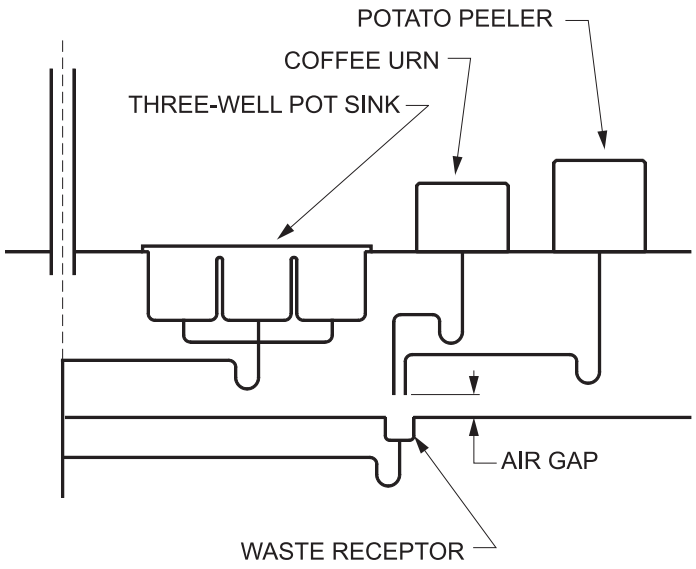

Figure 802.1.1(3)
RESTAURANT KITCHEN INDIRECT WASTE

contamination of food from a backup of the drainage system. Therefore, the code's intent is to protect food from bacterial contamination. Without question, the grinding chamber of a food waste grinder will always contain significant bacteria regardless of any cleaning or sanitation practices. Although, not directly stated in the code, the requirement for food waste grinders to be directly connected and the code's intent to protect food from contamination suggests that food waste grinders must not be installed on food-prep sinks.

802.1.2 Floor drains in food storage areas. Floor drains located within walk-in refrigerators or freezers in food service and food establishments shall be indirectly connected to the sanitary drainage system by means of an *air gap*. Where a floor drain is located within an area subject to freezing, the waste line serving the floor drain shall not be trapped and shall indirectly discharge into a waste receptor located outside of the area subject to freezing.

Exception: Where protected against backflow by a backwater valve, such floor drains shall be indirectly connected

INTERNATIONAL CODE COUNCIL®
Copyright © 2015 ICC. ALL RIGHTS RESERVED. Accessed by David Dammon on Jun 21, 2017 12:30:52 PM pursuant to License Agreement with ICC. No further reproduction or distribution authorized. ANY UNAUTHORIZED REPRODUCTION OR DISTRIBUTION IS A VIOLATION OF THE FEDERAL COPYRIGHT ACT AND THE LICENSE AGREEMENT, AND SUBJECT TO CIVIL AND CRIMINAL PENALTIES THEREUNDER.

to the sanitary drainage system by means of an *air break* or an *air gap*.

❖ This section is consistent with the intent of Section 802.1.1, which is to protect food stored in walk-in refrigerators and freezers from possible contamination caused by the sanitary drainage system. Floor drains located in these areas must be indirectly connected to the sanitary drainage system through an air gap. The exception allows for floor drains in refrigerators and freezers to connect by means of an air break. This maintains backflow protection while providing an indirect waste connection option for large food storage areas where it is impractical to elevate the cooler/freezer floor to a level necessary to achieve an air gap (see Commentary Figure 802.1.2). Section 305.6 prohibits locating traps in areas subject to freezing, and Section 802.2 requires indirect waste piping to be trapped where the length limit is exceeded.

802.1.3 Potable clear-water waste. Where devices and equipment, such as sterilizers and relief valves, discharge potable water to the building drainage system, the discharge shall be through an indirect waste pipe by means of an *air gap*.

❖ Clear-water waste includes all of the various condensate drains plus the other devices and systems listed. Clear-water wastes are not required to discharge to the sanitary drainage system. However, where they

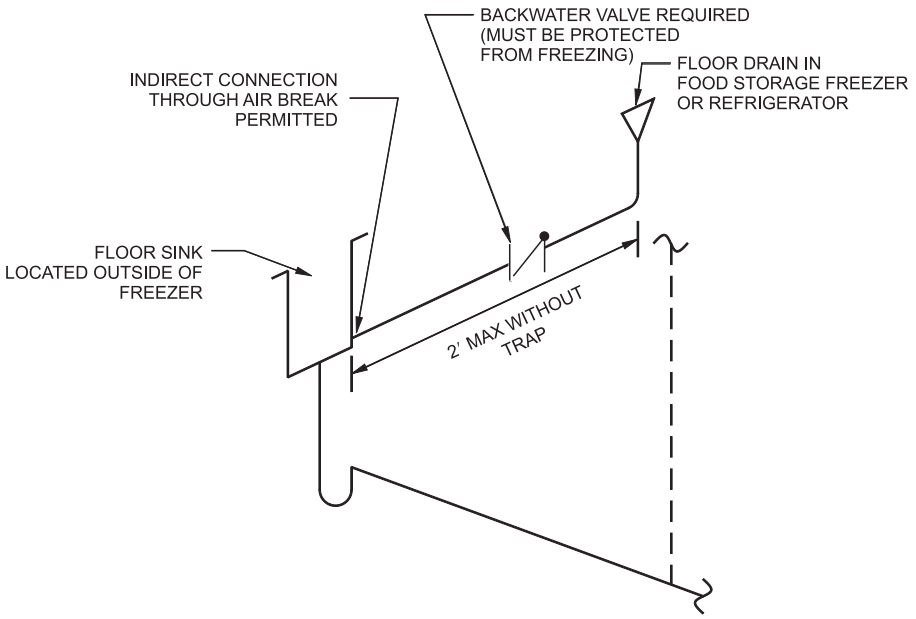

For SI: 1 foot = 304.8 mm.

Figure 802.1.2
FLOOR DRAIN IN FOOD STORAGE FREEZER

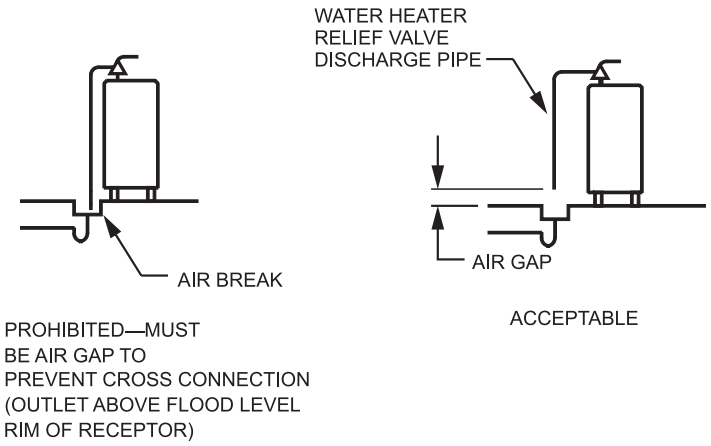

Figure 802.1.3
INDIRECT WASTE

INTERNATIONAL CODE COUNCIL®
Copyright © 2015 ICC. ALL RIGHTS RESERVED. Accessed by David Dammon on Jun 21, 2017 12:30:52 PM pursuant to License Agreement with ICC. No further reproduction or distribution authorized. ANY UNAUTHORIZED REPRODUCTION OR DISTRIBUTION IS A VIOLATION OF THE FEDERAL COPYRIGHT ACT AND THE LICENSE AGREEMENT, AND SUBJECT TO CIVIL AND CRIMINAL PENALTIES THEREUNDER.

do, an indirect waste connection by means of an air gap is required. An air gap prevents possible cross connection between potable water source and the drain system (see Commentary Figure 802.1.3). Indirect waste pipes from potable water sources should not be connected together (manifolded) as the discharge from one source might possibly contaminate the other source of potable water. For example, the connection of two separate ice storage bin indirect waste pipes would be prohibited. Each must discharge independently to the waste receptor.

802.1.4 Swimming pools. Where waste water from swimming pools, backwash from filters and water from pool deck drains discharge to the building drainage system, the discharge shall be through an indirect waste pipe by means of an *air gap*.

❖ This section addresses the method of discharge where a swimming pool drain connects to the drain-

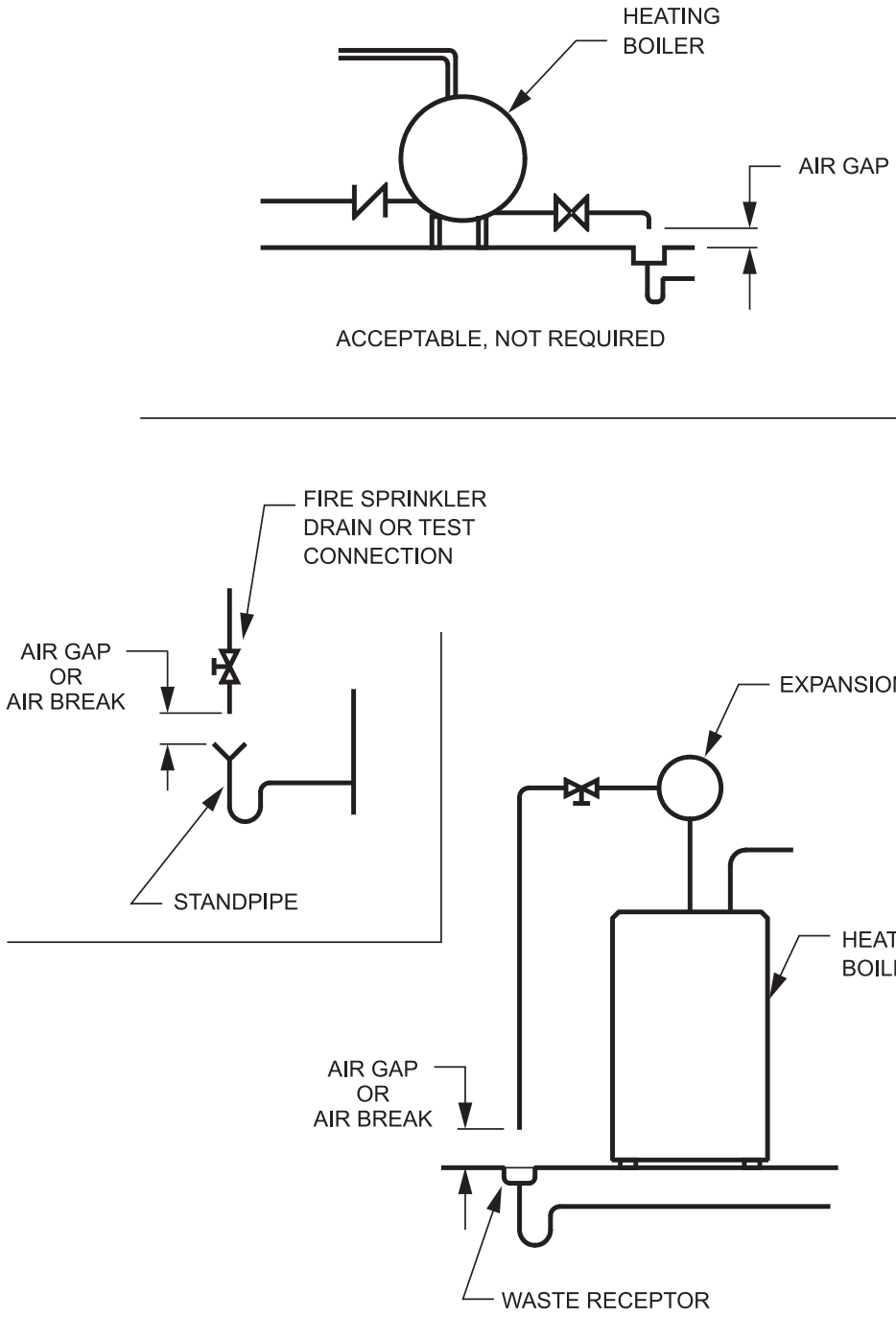

Figure 802.1.5
INDIRECT WASTE—CLEAR-WATER WASTE

INTERNATIONAL CODE COUNCIL®
Copyright © 2015 ICC. ALL RIGHTS RESERVED. Accessed by David Dammon on Jun 21, 2017 12:30:52 PM pursuant to License Agreement with ICC. No further reproduction or distribution authorized. ANY UNAUTHORIZED REPRODUCTION OR DISTRIBUTION IS A VIOLATION OF THE FEDERAL COPYRIGHT ACT AND THE LICENSE AGREEMENT, AND SUBJECT TO CIVIL AND CRIMINAL PENALTIES THEREUNDER.

age system. An indirect waste connection by means of an air gap is required.

802.1.5 Nonpotable clear-water waste. Where devices and equipment such as process tanks, filters, drips and boilers discharge nonpotable water to the building drainage system, the discharge shall be through an indirect waste pipe by means of an *air break* or an *air gap*.

❖ Where there is no possibility of contaminating the potable water (nonpotable discharge), the indirect waste may be by means of an air gap or air break. An air break is often preferred to reduce any splashing that may occur. This section does not require the devices and equipment listed to discharge to the drainage system; it only indicates the method of discharge if they do connect (see Commentary Figure 802.1.5).

802.1.6 Domestic dishwashing machines. Domestic dishwashing machines shall discharge indirectly through an *air gap* or *air break* into a waste receptor in accordance with Section 802.2, or discharge into a wye branch fitting on the tailpiece of the kitchen sink or the dishwasher connection of a food waste disposer. The waste line of a domestic dishwashing machine discharging into a kitchen sink tailpiece or food waste disposer shall connect to a deck-mounted air gap or the waste line shall rise and be securely fastened to the underside of the sink rim or counter.

❖ Dishwashing machines must discharge indirectly to the drainage system. An indirect connection by air gap

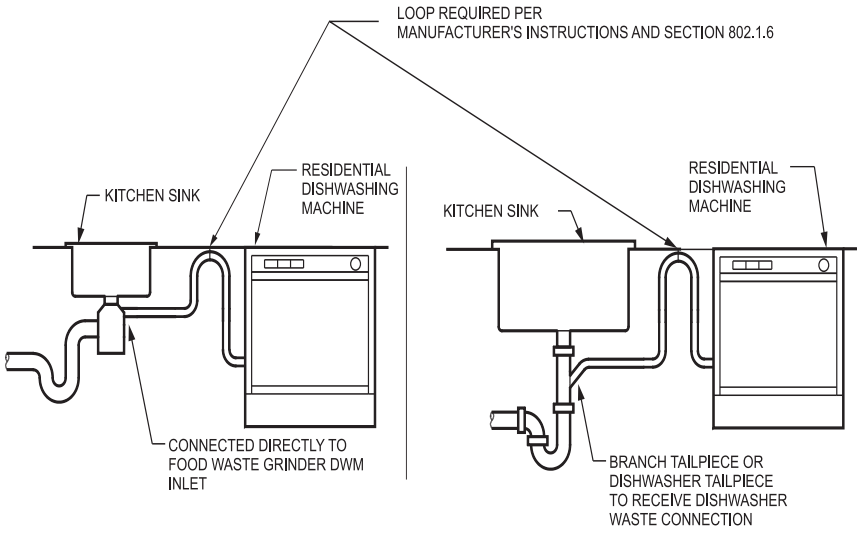

Figure 802.1.6
RESIDENTIAL DISHWASHER WASTE CONNECTIONS

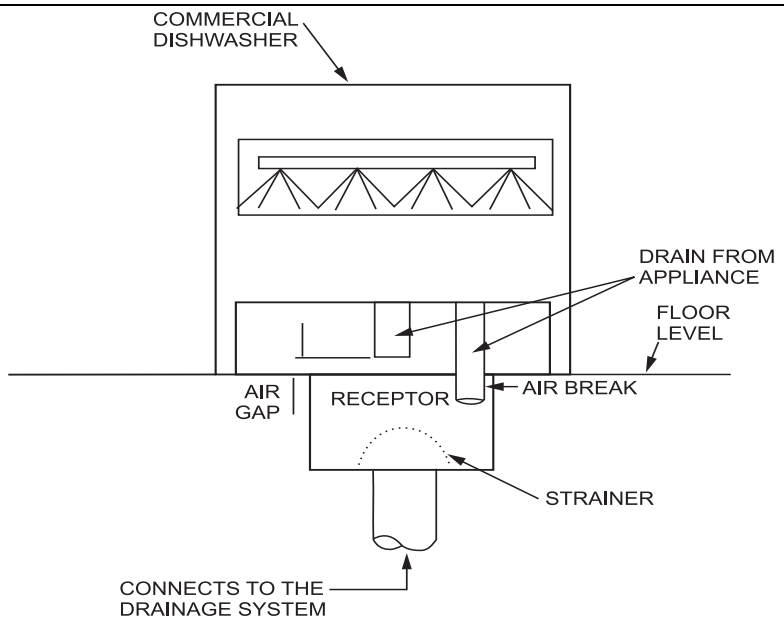

Figure 802.1.7
COMMERCIAL DISHWASHER WASTE CONNECTION

INTERNATIONAL CODE COUNCIL®
Copyright © 2015 ICC. ALL RIGHTS RESERVED. Accessed by David Dammon on Jun 21, 2017 12:30:52 PM pursuant to License Agreement with ICC. No further reproduction or distribution authorized. ANY UNAUTHORIZED REPRODUCTION OR DISTRIBUTION IS A VIOLATION OF THE FEDERAL COPYRIGHT ACT AND THE LICENSE AGREEMENT, AND SUBJECT TO CIVIL AND CRIMINAL PENALTIES THEREUNDER.

or air break is required. The waste line must be looped as high as possible and securely fastened to the underside of the sink rim or countertop to minimize the potential for waste backflow into the dishwasher cabinet (see Commentary Figure 802.1.6).

802.1.7 Commercial dishwashing machines. The discharge from a commercial dishwashing machine shall be through an *air gap* or *air break* into a waste receptor in accordance with Section 802.2.

❖ The waste from a commercial dishwashing machine must discharge by means of an air gap or air break to prevent sewage from backing up into the dishwashing compartment in the event of a stoppage in the drainage system (see Commentary Figure 802.1.7). In accordance with ASSE 1004, the minimum drain connection is $1^1/_2$ inches (38 mm) nominal size.

802.1.8 Food utensils, dishes, pots and pans sinks. Sinks, in other than dwelling units, used for the washing, rinsing or sanitizing of utensils, dishes, pots, pans or service ware used in the preparation, serving or eating of food shall discharge indirectly through an *air gap* or an *air break* to the drainage system.

❖ Because commercial kitchen pot-and-pan sinks are typically required by the local health department regulations to indirectly connect to the sanitary drainage system, the code requires these sinks to be indirectly connected. The logic for this is that, even though such sinks are said to be used only for washing dishes, pots and pans, the truth is that, many times, the sink is often used as a food-preparation sink.

802.2 Installation. Indirect waste piping shall discharge through an *air gap* or *air break* into a waste receptor. Waste receptors shall be trapped and vented and shall connect to the building drainage system. Indirect waste piping that exceeds 30 inches (762 mm) in *developed length* measured horizontally, or 54 inches (1372 mm) in total *developed length*, shall be trapped.

Exception: Where a waste receptor receives only clear-water waste and does not directly connect to a sanitary drainage system, the receptor shall not require a trap.

❖ To minimize bacterial growth and odor in indirect waste piping, a trap is required when the piping exceeds 30 inches (762 mm) in developed length measured horizontally or 54 inches (1372 mm) in total developed length. The trap requirement is intended to apply only to fixtures or devices that are open to the room atmosphere. It does not apply to an indirect

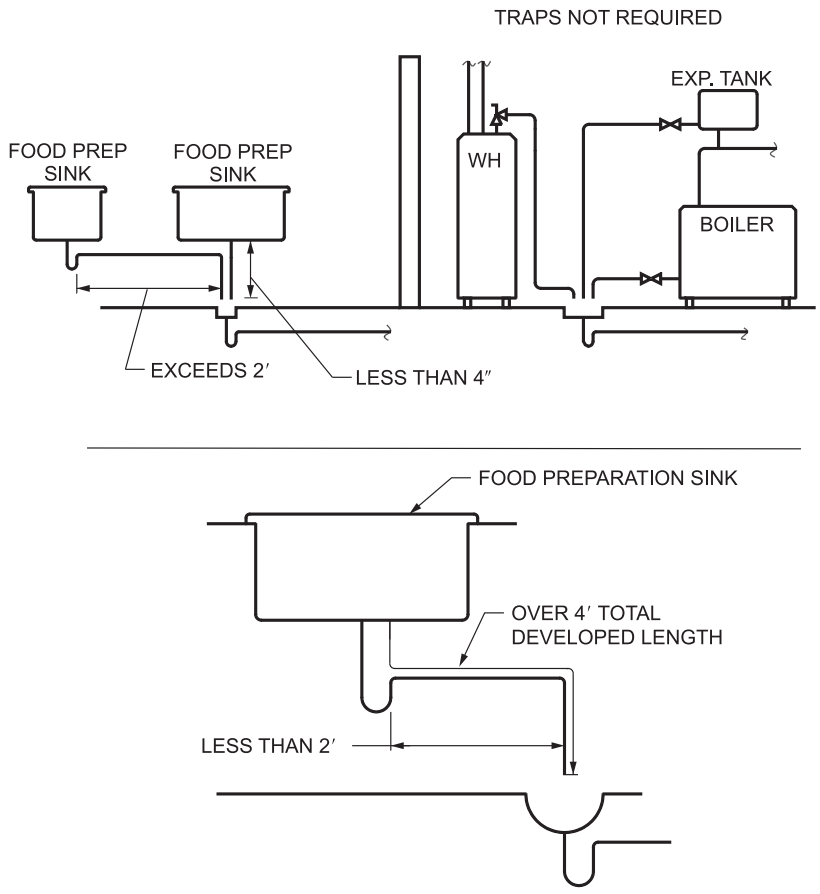

For SI: 1 inch = 25.4 mm, 1 foot = 304.8 mm.

Figure 802.2
TRAPS FOR INDIRECT WASTE PIPES

INTERNATIONAL CODE COUNCIL®
Copyright © 2015 ICC. ALL RIGHTS RESERVED. Accessed by David Dammon on Jun 21, 2017 12:30:52 PM pursuant to License Agreement with ICC. No further reproduction or distribution authorized. ANY UNAUTHORIZED REPRODUCTION OR DISTRIBUTION IS A VIOLATION OF THE FEDERAL COPYRIGHT ACT AND THE LICENSE AGREEMENT, AND SUBJECT TO CIVIL AND CRIMINAL PENALTIES THEREUNDER.

waste pipe making a direct connection to a device, such as a water heater relief valve. A trapped relief valve discharge pipe is prohibited because it creates a restriction, causes backpressure to develop and could possibly freeze, creating a blockage. The trap prescribed by this section does not require a vent because such trap does not serve the same purpose as other traps in the drainage system (see Commentary Figure 802.2).

802.2.1 Air gap. The *air gap* between the indirect waste pipe and the *flood level rim* of the waste receptor shall be not less than twice the effective opening of the indirect waste pipe.

❖ An air gap is a drainage pipe that terminates above the flood level rim of the waste receptor. Any stoppage downstream of the waste receptor will result in waste overflowing the receptor without submerging the indirect waste pipe outlet. This type of indirect waste connection offers the highest level of protection by not allowing any possibility for backsiphoning of waste or sewage (see Commentary Figure 802.2.1). An air gap is always acceptable where an air break is specified.

802.2.2 Air break. An *air break* shall be provided between the indirect waste pipe and the trap seal of the waste receptor.

❖ The indirect waste pipe is allowed to extend below the flood level rim, but it must terminate above the seal of the trap serving the waste receptor [see Commentary Figures 802.2.2(1) and 802.2.2(2)]. An air gap is always acceptable where an air break is specified.

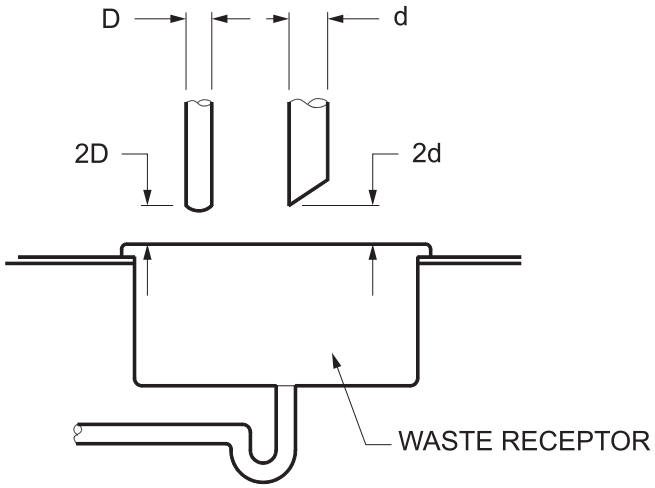

Figure 802.2.1
AIR GAP

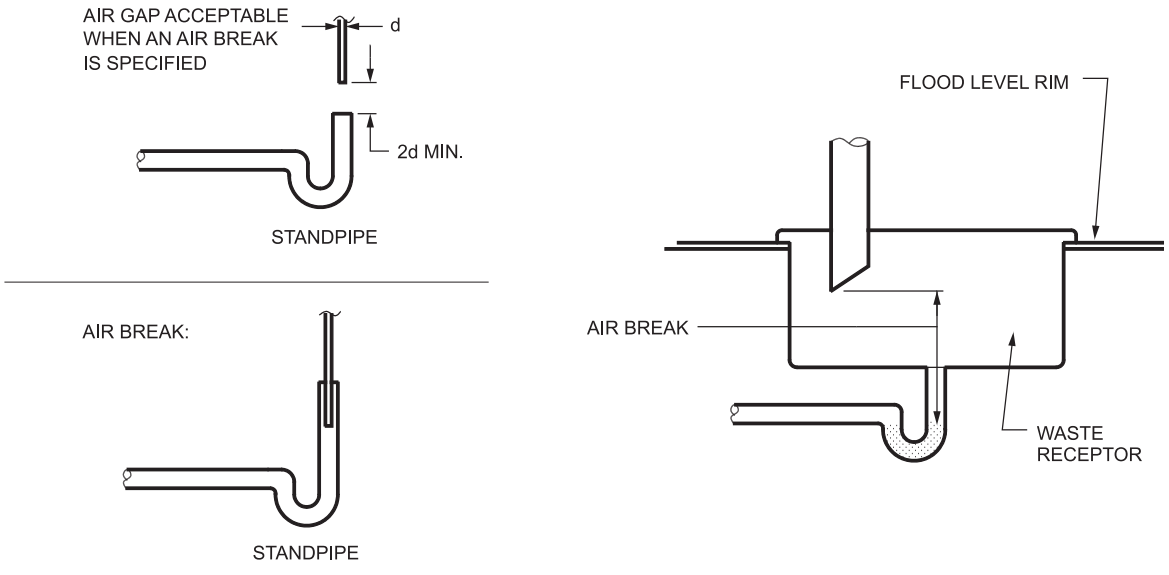

Figure 802.2.2(1)
AIR BREAK

INTERNATIONAL CODE COUNCIL®
Copyright © 2015 ICC. ALL RIGHTS RESERVED. Accessed by David Dammon on Jun 21, 2017 12:30:52 PM pursuant to License Agreement with ICC. No further reproduction or distribution authorized. ANY UNAUTHORIZED REPRODUCTION OR DISTRIBUTION IS A VIOLATION OF THE FEDERAL COPYRIGHT ACT AND THE LICENSE AGREEMENT, AND SUBJECT TO CIVIL AND CRIMINAL PENALTIES THEREUNDER.

802.3 Waste receptors. For other than hub drains that receive only clear-water waste and standpipes, a removable strainer or basket shall cover the outlet of waste receptors. Waste receptors shall not be installed in concealed spaces. Waste receptors shall not be installed in plenums, crawl spaces, attics, interstitial spaces above ceilings and below floors. Ready *access* shall be provided to waste receptors.

❖ There are no specific standards regulating waste receptors. They may be identified by various names, including open hub drain, floor sink and waste sink. A floor drain can be considered to be a waste receptor where an indirect waste pipe is directed into it or where it is fitted with a means (such as a funnel attachment) to receive an indirect waste pipe. Otherwise, a floor drain is a plumbing fixture intended to drain a floor surface and is not subject to the code requirements for waste receptors.

Floor sinks are specialized sinks designed to be installed in the floor. Manufacturers produce a special line of fixtures designed to be used as waste receptors, some of which look like kitchen sinks. A laundry sink is commonly used as a waste receptor to receive the discharge of an automatic clothes washer [see Commentary Figures 802.3(1) and 802.3(2)]. Waste receptors must be located to allow adequate ventilation and air circulation, minimize misuse, prevent a tripping or walking hazard and allow maintenance. [see Commentary Figure 802.3(3)].

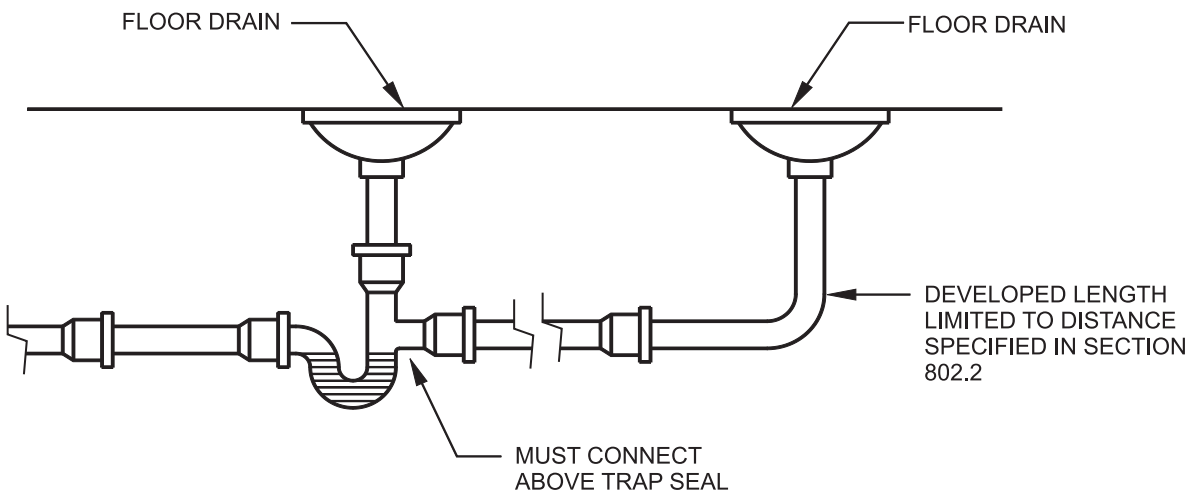

Figure 802.2.2(2)
AIR BREAK

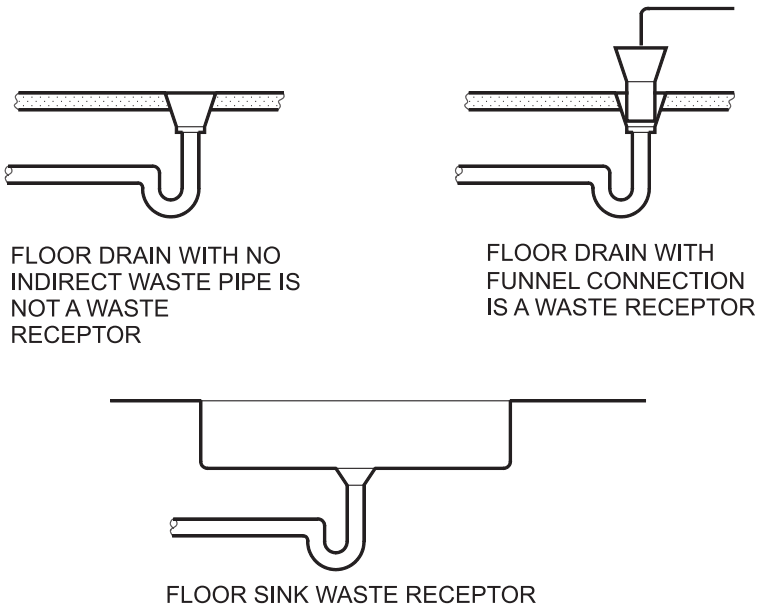

Figure 802.3(1)
WASTE RECEPTORS

INTERNATIONAL CODE COUNCIL®
Copyright © 2015 ICC. ALL RIGHTS RESERVED. Accessed by David Dammon on Jun 21, 2017 12:30:52 PM pursuant to License Agreement with ICC. No further reproduction or distribution authorized. ANY UNAUTHORIZED REPRODUCTION OR DISTRIBUTION IS A VIOLATION OF THE FEDERAL COPYRIGHT ACT AND THE LICENSE AGREEMENT, AND SUBJECT TO CIVIL AND CRIMINAL PENALTIES THEREUNDER.

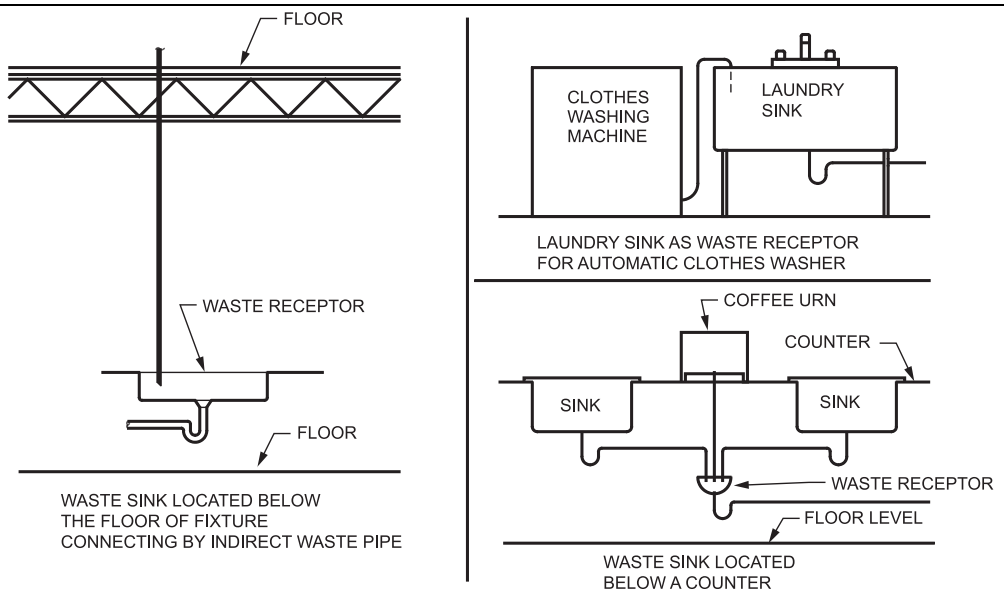

Figure 802.3(2)
WASTE RECEPTORS

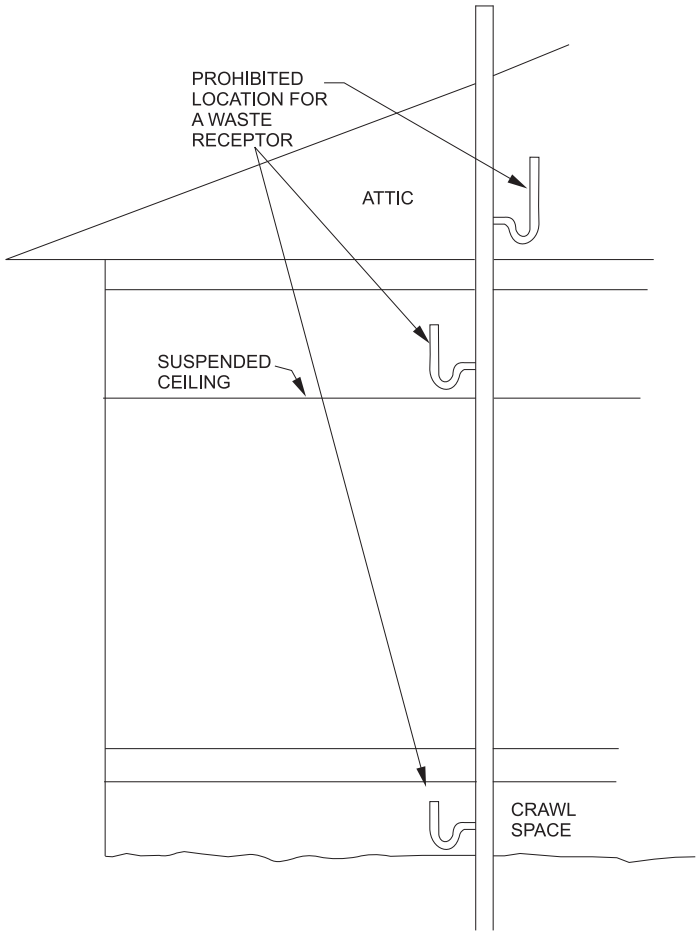

Figure 802.3(3)
PROHIBITED LOCATIONS FOR WASTE RECEPTORS

INTERNATIONAL CODE COUNCIL®
Copyright © 2015 ICC. ALL RIGHTS RESERVED. Accessed by David Dammon on Jun 21, 2017 12:30:52 PM pursuant to License Agreement with ICC. No further reproduction or distribution authorized. ANY UNAUTHORIZED REPRODUCTION OR DISTRIBUTION IS A VIOLATION OF THE FEDERAL COPYRIGHT ACT AND THE LICENSE AGREEMENT, AND SUBJECT TO CIVIL AND CRIMINAL PENALTIES THEREUNDER.

802.3.1 Size of receptors. A waste receptor shall be sized for the maximum discharge of all indirect waste pipes served by the receptor. Receptors shall be installed to prevent splashing or flooding.

❖ Sizing a waste receptor is as difficult as sizing a drainage system. There must be a determination of the probability of simultaneous discharge of the various fixtures connecting to the same waste receptor. The receptor must be capable of accepting all of the discharge without overflowing. The code does not specify a method for sizing receptors; however, it would be logical to size the drain for the receptor based on the total drainage fixture units (dfus) that discharge to the receptor. While accepting the discharge of an indirect waste pipe, the receptor is simultaneously discharging to the drainage system at a rate based on the size of its drain pipe.

Two major problems in the design and sizing of a waste receptor are splashing and flooding. Both must be minimized to avoid creating an insanitary condition. Both the shape of the waste receptor and the discharge rate of the indirect waste pipe affect the amount of splashing and flooding involved. A shallow, flat bottom receptor receiving a high rate of discharge will splash to the exterior of the receptor.

The depth and bowl shape may have to be selected to reduce splashing. Another means of reducing splashing into a waste receptor is by terminating the indirect waste pipe with a diagonally cut end. The lower section of the diagonal cut is faced to the closest exterior wall of the waste receptor. If the waste receptor receives only the discharge of emergency drains, such as a temperature and pressure relief valve, splashing is of little concern. If the receptor is used only during an emergency, not on an everyday basis, such limited use will not create any major health hazard [see Commentary Figures 802.3.1(1) and 802.3.1(2)].

A high rate of discharge also increases a waste receptor's susceptibility to flooding. The designer should pay particular attention to receptor depth, trap sizing and the free area of the drain's protective grating. As is often the case, the waste receptor trap size restricts the discharge flow rate of the fixture. A close coordination of the sizing of the trap, rate of discharge, receptor depth and drain selection will circumvent an insanitary flooding condition.

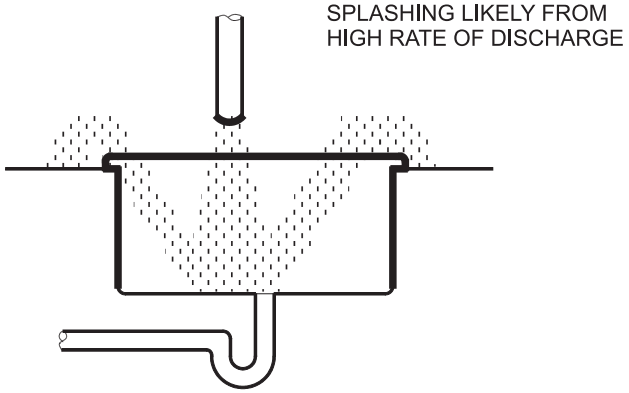

Figure 802.3.1(1)
SHALLOW, FLAT BOTTOM WASTE RECEPTOR

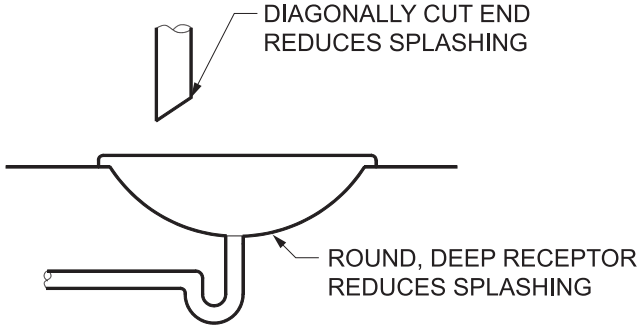

Figure 802.3.1(2)
SIZE AND SHAPE OF WASTE RECEPTOR

802.3.2 Hub drains. A hub drain shall be in the form of a hub or a pipe extending not less than 1 inch (25 mm) above a water-impervious floor.

❖ An open hub drain is a common method of providing a waste receptor in water-impervious floors. It eliminates the need to provide a separate fixture with a strainer. A hubbed drain pipe or plain-end section of pipe serves as the receptor for receiving indirect waste. An open hub drain is restricted to clear-water waste without solids, unless the hub drain has a strainer. The pipe or hub is required to be a minimum of 1 inch (25 mm) above the floor to prevent the drain from serving as a floor drain (see Commentary Figure 802.3.2).

802.3.3 Standpipes. Standpipes shall be individually trapped. Standpipes shall extend not less than 18 inches (457

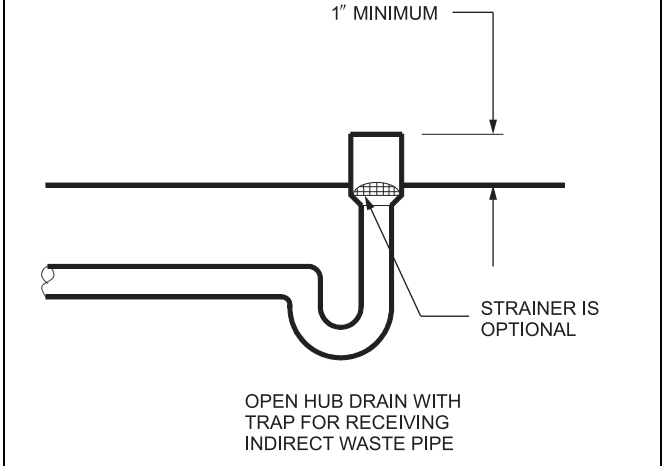

For SI: 1 inch = 25.4 mm.

Figure 802.3.2
CLEAR-WATER WASTE RECEPTOR

INTERNATIONAL CODE COUNCIL®
Copyright © 2015 ICC. ALL RIGHTS RESERVED. Accessed by David Dammon on Jun 21, 2017 12:30:52 PM pursuant to License Agreement with ICC. No further reproduction or distribution authorized. ANY UNAUTHORIZED REPRODUCTION OR DISTRIBUTION IS A VIOLATION OF THE FEDERAL COPYRIGHT ACT AND THE LICENSE AGREEMENT, AND SUBJECT TO CIVIL AND CRIMINAL PENALTIES THEREUNDER.

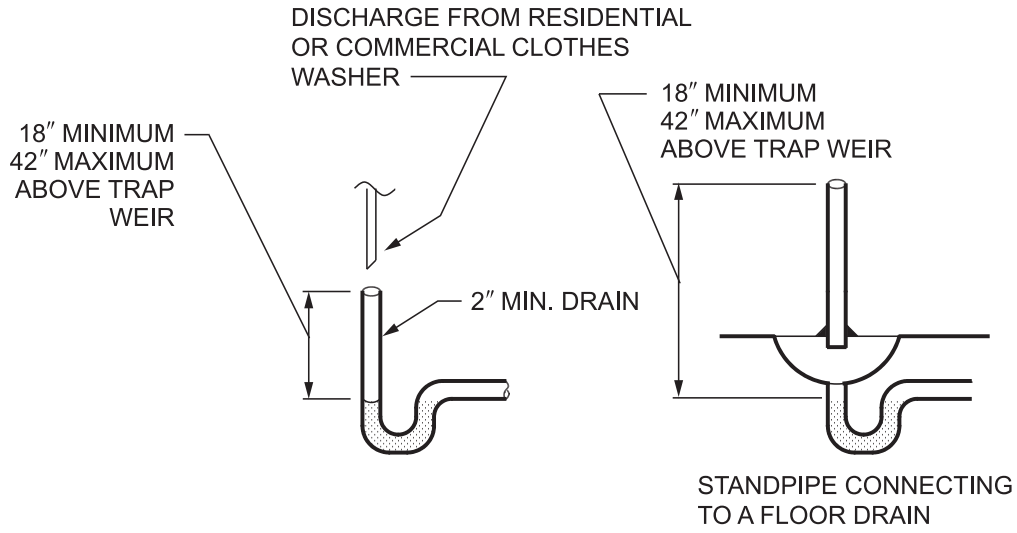

For SI: 1 inch = 25.4 mm.

Figure 802.3.3
STANDPIPES

mm) but not greater than 42 inches (1066 mm) above the trap weir. *Access* shall be provided to standpipes and drains for rodding.

❖ A standpipe can serve as a waste receptor. The minimum dimension for the height of the receptor is intended to provide minimal retention capacity and head pressure to prevent an overflow. This is especially necessary when the standpipe receives a high rate of discharge, such as the pumped discharge of a clothes washer (see Commentary Figure 802.3.3). The maximum height requirement is intended to control the waste flow velocity at the trap inlet. Excessive inlet velocity can promote trap siphonage.

SECTION 803
SPECIAL WASTES

803.1 Neutralizing device required for corrosive wastes. Corrosive liquids, spent acids or other harmful chemicals that destroy or injure a drain, *sewer*, soil or waste pipe, or create noxious or toxic fumes or interfere with sewage treatment processes shall not be discharged into the plumbing system without being thoroughly diluted, neutralized or treated by passing through an *approved* dilution or neutralizing device. Such devices shall be automatically provided with a sufficient supply of diluting water or neutralizing medium so as to make the contents noninjurious before discharge into the drainage system. The nature of the corrosive or harmful waste and the method of its treatment or dilution shall be *approved* prior to installation.

❖ When deleterious waste is suspected, it must be completely analyzed for any detrimental effects on the sanitary drainage system, public sewer or sewage treatment facility. A special waste system must treat any deleterious waste and reduce the threat to an acceptable level before it is discharged to the sanitary drainage system. The code does not specify what an "acceptable level" is because it varies by pipe material and type of waste. Special waste systems are associated with atypical plumbing systems, including laboratories, chemical plants, processing plants and hospitals. They may be necessary, however, when emergency shower systems are installed for use by persons exposed to harmful chemicals or nuclear material.

803.2 System design. A chemical drainage and vent system shall be designed and installed in accordance with this code. Chemical drainage and vent systems shall be completely separated from the sanitary systems. Chemical waste shall not discharge to a sanitary drainage system until such waste has been treated in accordance with Section 803.1.

❖ When a chemical drainage system is installed, the drainage and vent piping must still conform to all code requirements. The pipe sizing and installation would have to conform to the requirements of Chapters 7 and 9 and other chapters as applicable. Both the drainage and vent piping must be completely separate systems. Although it is understood that the drainage piping must be separate until the waste is treated or neutralized, it is always questionable whether a separate system is necessary for a vent. The reason for a completely separate vent system is the uncertainty of the nature of fumes and vapors in a chemical waste system. The gases in the chemical drain, waste and vent (DWV) system could be incompatible with the piping materials and gases in the normal DWV system. Because the effect of combining the systems is unknown, such venting systems are kept separate.

INTERNATIONAL CODE COUNCIL®
Copyright © 2015 ICC. ALL RIGHTS RESERVED. Accessed by David Dammon on Jun 21, 2017 12:30:52 PM pursuant to License Agreement with ICC. No further reproduction or distribution authorized. ANY UNAUTHORIZED REPRODUCTION OR DISTRIBUTION IS A VIOLATION OF THE FEDERAL COPYRIGHT ACT AND THE LICENSE AGREEMENT, AND SUBJECT TO CIVIL AND CRIMINAL PENALTIES THEREUNDER.

SECTION 804
MATERIALS, JOINTS AND CONNECTIONS

804.1 General. The materials and methods utilized for the construction and installation of indirect waste pipes and systems shall comply with the applicable provisions of Chapter 7.

❖ This section references all of the acceptable materials and methods described in Chapter 7 that are used specifically for the installation and joining of indirect waste pipes and systems.

INTERNATIONAL CODE COUNCIL®
Copyright © 2015 ICC. ALL RIGHTS RESERVED. Accessed by David Dammon on Jun 21, 2017 12:30:52 PM pursuant to License Agreement with ICC. No further reproduction or distribution authorized. ANY UNAUTHORIZED REPRODUCTION OR DISTRIBUTION IS A VIOLATION OF THE FEDERAL COPYRIGHT ACT AND THE LICENSE AGREEMENT, AND SUBJECT TO CIVIL AND CRIMINAL PENALTIES THEREUNDER.

INTERNATIONAL CODE COUNCIL®
Copyright © 2015 ICC. ALL RIGHTS RESERVED. Accessed by David Dammon on Jun 21, 2017 12:30:52 PM pursuant to License Agreement with ICC. No further reproduction or distribution authorized. ANY UNAUTHORIZED REPRODUCTION OR DISTRIBUTION IS A VIOLATION OF THE FEDERAL COPYRIGHT ACT AND THE LICENSE AGREEMENT, AND SUBJECT TO CIVIL AND CRIMINAL PENALTIES THEREUNDER.

Chapter 9: Vents

General Comments

In the most common method of venting, each trap or trapped fixture is provided with a separate or individual vent, which then connects to the building's main venting system. The minimum size of any vent is one-half of the required size of the drain pipe, but not less than $1^1/_4$ inches (32 mm) (see commentary, Section 906.2).

Other methods of venting include common venting (Section 911), wet venting (Section 912), waste stack venting (Section 913), circuit venting (Section 914), combination waste and vent (Section 915), island fixture venting (Section 916) and single stack venting (Section 917).

A common vent is a single vent pipe that vents more than one fixture. It functions as an individual vent for each fixture. Wet venting is a method of venting single or double bathroom groups or combinations thereof. One vent pipe may function as a vent for all of the fixtures connected to the wet vent. Circuit venting is the venting of a battery of up to eight fixtures with a single vent pipe. A combination waste and vent system is restricted to floor drains, sinks, drinking fountains and lavatories. The system relies on the oversizing of the drain pipe. Island fixture venting is a method of individual or common venting in which the vent is installed below the flood level rim of the fixture before rising to connect to another vent or vent terminal. A waste stack vent is a method of venting individual fixtures through a drainage stack. The oversized stack functions as a vent.

Other areas addressed in Chapter 9 include outdoor vent extension requirements (Section 904), vent terminals and frost closure (Section 903), vent grade (Section 905), trap to vent distance limitations (Section 909) and relief vents (Section 908).

Some have compared a vent system to the open/closed straw phenomenon. For example, imagine that a soda straw is inserted into a glass of water. A thumb is placed over the open end of the straw, and the straw is raised above the glass. Water remains in the straw until the thumb is removed. The claim is made that without a vent, the drainage system would not properly operate—just as the straw did not empty with the thumb over the top. (This analogy is not completely accurate because a drainage system is not flowing completely full as is the soda straw; therefore, a column of water could not be suspended in this manner.) Drainage systems are designed to flow partially filled.

The vent system reduces the pressure differentials in the drainage system, thus protecting the trap seals from positive pressures, self-siphonage and induced siphonage that may result in complete or partial loss of the seals.

To better understand venting methods and terminology, all venting methods may be conceptually categorized as either dry vents or wet vents. Vent stacks, stack vents, branch vents, relief vents, island vents and individual vents are dry vents. Wet vents, circuit vents, combination drain and vents, waste stack vents and different level common vents are versions of "wet venting," in which the vent is wetted by drainage flow.

Purpose

The purpose of venting is to protect the trap seal of each trap. The vents are designed to maintain maximum differential pressures at each trap of not more than 1 inch of water column (249 Pa). Pressure fluctuations are created by waste flow in the drainage system. Venting is not intended to provide for the circulation of air within the drainage system. If there were no traps in a drainage system, venting would not be required. The system would function adequately because it would be open to the atmosphere at the fixture connections, thereby allowing airflow.

Chapter 9 covers the requirements for vents and venting. Knowing why venting is required makes it easier to understand the intent of this chapter. Venting protects every trap against the loss of its seal. Provisions set forth in this chapter are geared toward limiting the air pressure differentials in the drainage system to a maximum of 1 inch of water column (249 Pa) above or below atmospheric pressure (i.e., positive or negative pressures)

SECTION 901 GENERAL

901.1 Scope. The provisions of this chapter shall govern the materials, design, construction and installation of vent systems.

❖ Chapter 9 describes a variety of methods to vent plumbing fixtures and traps. Some methods have been laboratory tested to determine sizing and installation requirements that provide proper venting to a drainage system. Other venting methods have been field tested, establishing a long history of satisfactory service.

INTERNATIONAL CODE COUNCIL®
Copyright © 2015 ICC. ALL RIGHTS RESERVED. Accessed by David Dammon on Jun 21, 2017 12:30:52 PM pursuant to License Agreement with ICC. No further reproduction or distribution authorized. ANY UNAUTHORIZED REPRODUCTION OR DISTRIBUTION IS A VIOLATION OF THE FEDERAL COPYRIGHT ACT AND THE LICENSE AGREEMENT, AND SUBJECT TO CIVIL AND CRIMINAL PENALTIES THEREUNDER.

901.2 Trap seal protection. The plumbing system shall be provided with a system of vent piping that will permit the admission or emission of air so that the seal of any fixture trap shall not be subjected to a pressure differential of more than 1 inch of water column (249 Pa).

❖ Protection of the trap seal means that during the normal operation of the plumbing system, the water seal remains in the trap. Each trap has a minimum of a 2-inch (51 mm) trap seal depth translating to a hydrostatic pressure equal to a 2-inch water column (498 Pa). If exposed to a 1-inch water column (249 Pa) pressure differential, a 1-inch (25 mm) water seal remains in the trap. The vent methods identified in this chapter are intended to limit the air pressure differential at trap seals to 1 inch of water column (249 Pa) or less (see commentary, Sections 1002 through 1002.5).

Air pressure fluctuations downstream of the trap caused by certain flow conditions can occur. High positive pressures could force the trap seal back into the fixture, possibly resulting in water spilling onto the floor from fixtures such as floor drains. This will also result in sewer gases being pushed through the trap seal. For example, bubbles rising through the trap seal of a water closet are an indication of excessive positive pressure on the drainage side of the trap.

When a trap seal is exposed to a lower pressure on the drainage side of the trap, the water seal will rise and flow over the trap weir and into the drainage system. This will result in a complete or partial loss of the trap water seal. The lower pressure on the drainage side of the trap (also called "negative pressure" or "partial vacuum") causes loss of trap seal that is proportional to the amount of negative pressure. Such a pressure differential must never exceed 1 inch of water column (249 Pa) [see Commentary Figures 901.2(1) and 901.2(2)].

Section 1002.4 contains additional provisions to protect a trap seal that is subject to loss by evaporation, which might occur where trap seals do not regularly receive waste.

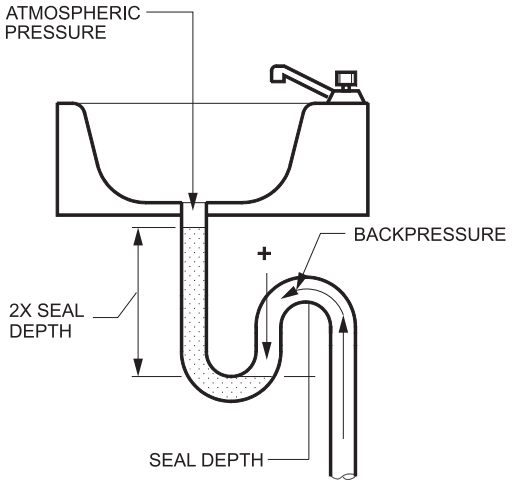

Figure 901.2(2)
MAXIMUM TRAP SEAL RESISTANCE

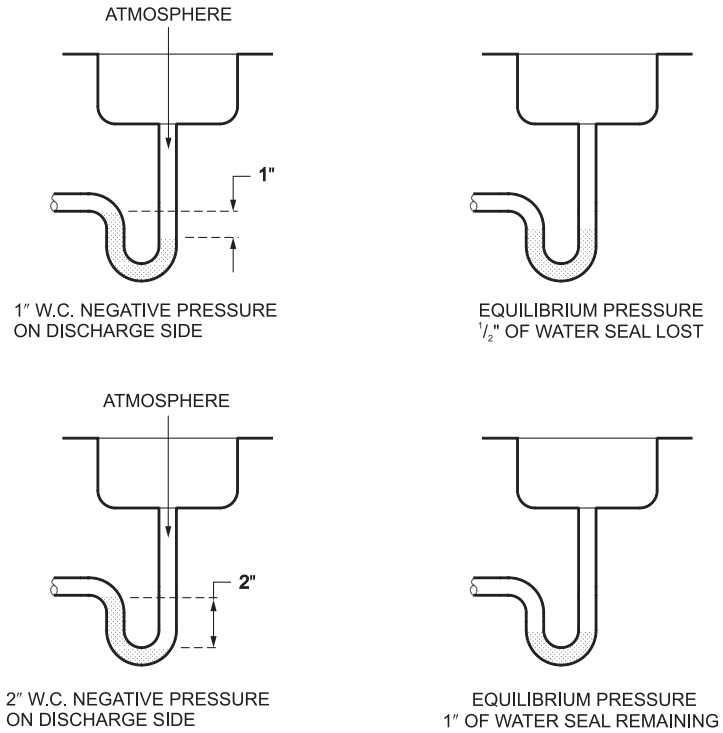

For SI: 1 inch = 25.4 mm.

Figure 901.2(1)
LOSS OF TRAP SEAL

INTERNATIONAL CODE COUNCIL®
Copyright © 2015 ICC. ALL RIGHTS RESERVED. Accessed by David Dammon on Jun 21, 2017 12:30:52 PM pursuant to License Agreement with ICC. No further reproduction or distribution authorized. ANY UNAUTHORIZED REPRODUCTION OR DISTRIBUTION IS A VIOLATION OF THE FEDERAL COPYRIGHT ACT AND THE LICENSE AGREEMENT, AND SUBJECT TO CIVIL AND CRIMINAL PENALTIES THEREUNDER.

901.2.1 Venting required. Traps and trapped fixtures shall be vented in accordance with one of the venting methods specified in this chapter.

❖ This section establishes that traps and trapped fixtures must be vented. This section also indicates that the method of venting can be any one of the applicable methods described in Chapter 9. Proper application of these venting options can substantially reduce the amount of pipe and fittings while still providing proper venting. Inspectors and plumbers often overlook the opportunities afforded by the different venting methods. For example, a particular installation might not be in compliance with the code for a certain type of vent; however, that same installation might comply if it were considered as a different type of vent system or slightly modified to comply with the rules of a different type of venting system.

901.3 Chemical waste vent systems. The vent system for a chemical waste system shall be independent of the sanitary vent system and shall terminate separately through the roof to the outdoors or to an air admittance valve that complies with ASSE 1049. Air admittance valves for chemical waste systems shall be constructed of materials *approved* in accordance with Section 702.5 and shall be tested for chemical resistance in accordance with ASTM F 1412.

❖ Where a chemical waste system is installed, the drainage system must be separate from the sanitary system (see commentary, Section 803.2). The vent system is also required to be separate. The fumes and vapors in a chemical vent system may adversely affect a sanitary vent system. In accordance with Section 702.5, vent materials must be resistant to corrosion and degradation from the chemical waste and vapors involved.

For the 2012 code edition, air-admittance valves are allowed to be used on chemical waste vent systems. The air-admittance valves must comply with ASSE 1049, which requires that testing of the valve materials comply with ASTM F 1412.

901.4 Use limitations. The plumbing vent system shall not be utilized for purposes other than the venting of the plumbing system.

❖ The venting system is designed for a specific function and cannot be used for any other purpose because that might interfere with the proper operation of the plumbing system or create an extreme hazard. For example, vent piping must not serve as a drain for condensate from heating, ventilating and air-conditioning (HVAC) equipment. Such use introduces waste into piping that is not intended to convey waste and might allow sewer gases to enter the buildings via the condensate drain connection.

901.5 Tests. The vent system shall be tested in accordance with Section 312.

❖ This section requires that vent systems be tested in accordance with Section 312, which describes the tests and inspections necessary to verify a vent system performs as required by the code. Although visual inspections play a vital part in the integrity of the system, it is impossible for the code official to identify defects without testing.

901.6 Engineered systems. Engineered venting systems shall conform to the provisions of Section 919.

❖ This section requires that the design of alternative vent systems be in accordance with Section 919. Section 919 describes an alternative sizing method for individual fixture vents, which may not comply with the requirements of this chapter. Specific requirements are applicable, however, with respect to design criteria, submittals, technical data, construction documents, design approval and inspection and tests.

SECTION 902
MATERIALS

902.1 Vents. The materials and methods utilized for the construction and installation of venting systems shall comply with the applicable provisions of Section 702.

❖ This section requires the construction and installation of venting systems, which are a necessary part of the complete sanitary drainage system, to comply with Section 702, which includes requirements for materials used in the sanitary drainage system (see commentary, Section 702).

902.2 Sheet copper. Sheet copper for vent pipe flashings shall conform to ASTM B 152 and shall weigh not less than 8 ounces per square foot (2.5 kg/m^2).

❖ Sheet copper was a predominant material used as a lining in plumbing fixtures. Today, it is rarely used because of the high cost of material and labor. Often in today's roofing systems, copper is replaced with rubber or asphaltic materials because they are less costly and labor intensive. The ASTM International (ASTM) standard regulates cold-rolled tempered sheet copper, hot-rolled tempered sheet copper and annealed sheet copper. When sheet copper is used for flashing around vents, the sheeting must not weigh less than 8 ounces per square foot (2.5 kg/m^2). This provides better durability and protection for the area being penetrated by the vent. Sheet copper is still used for flashing on long-life roof systems, such as slate or tile. Copper can cause corrosion to occur when used with or contacting other metals; therefore, the designer who specifies copper flashing must use only copper or carefully isolate it from other metals.

902.3 Sheet lead. Sheet lead for vent pipe flashings shall weigh not less than 3 pounds per square foot (15 kg/m^2) for field-constructed flashings and not less than $2^1/_2$ pounds per square foot (12 kg/m^2) for prefabricated flashings.

❖ Where sheet lead is used in flashing installations around vent pipe, it must weigh at least 3 pounds per square foot (15 kg/m^2) where constructed at the job site and $2^1/_2$ pounds per square foot (12 kg/m^2) for prefabricated units.

Lead flashing is usually wrapped over the exposed

INTERNATIONAL CODE COUNCIL®
Copyright © 2015 ICC. ALL RIGHTS RESERVED. Accessed by David Dammon on Jun 21, 2017 12:30:52 PM pursuant to License Agreement with ICC. No further reproduction or distribution authorized. ANY UNAUTHORIZED REPRODUCTION OR DISTRIBUTION IS A VIOLATION OF THE FEDERAL COPYRIGHT ACT AND THE LICENSE AGREEMENT, AND SUBJECT TO CIVIL AND CRIMINAL PENALTIES THEREUNDER.

rim of the vent terminal. If the flashing is not properly formed around the internal surface of the vent pipe, it will reduce the effective cross-sectional area of the vent terminal and restrict the flow of air into and out of the drainage system. This may compromise the effectiveness of the vent system to protect trap seals and may promote frost closure at the vent terminal.

SECTION 903
VENT TERMINALS

903.1 Roof extension. Open vent pipes that extend through a roof shall be terminated not less than [**NUMBER**] inches (mm) above the roof. Where a roof is to be used for assembly or as a promenade, observation deck, sunbathing deck or similar purposes, open vent pipes shall terminate not less than 7 feet (2134 mm) above the roof.

❖ This section contains requirements for the location, installation and protection of vent terminals.

Where the roof is occupied for any purpose, such as a sunning or promenade deck, plumbing vents must extend at least 7 feet (2134 mm) above the roof to prevent harmful sewer gases from polluting the area. The sewer gases will tend to disperse into the air, rather than accumulate near the roof surface. The minimum termination height must be determined by the local jurisdiction based on its snowfall rates. The termination height should be no less than 6 inches (152 mm) above the roof to protect the terminal from being blocked by snow and to allow sufficient length of pipe for proper roof flashing.

The vent terminal through the roof must be designed to tolerate movement resulting from expansion and contraction of the piping material. This is extremely important where the vent is a piping material with a high rate of expansion and contraction, such as acrylonitrile butadiene styrene (ABS) and polyvinyl chloride (PVC) plastic pipe. Vent terminals extending higher than the distances specified in Table 308.5 for vertical pipe hanger spacing must have intermediate supports (see Commentary Figure 903.1).

903.2 Frost closure. Where the 97.5-percent value for outside design temperature is 0°F (-18°C) or less, vent extensions through a roof or wall shall be not less than 3 inches (76 mm) in diameter. Any increase in the size of the vent shall be made not less than 1 foot (305 mm) inside the thermal envelope of the building.

❖ The possibility of frost closure occurs only in areas of the country having cold climates with winter outside $97^1/_2$-percent design temperatures of 0°F (-18°C) or less. Temperatures for many cities in the United States are shown in Appendix D. For example, Pueblo, Colorado, has a winter $97^1/_2$-percent temperature of 0°F (-18°C) and would require a minimum of 3 inches (76 mm) in diameter vent.

A vent 3 inches (76 mm) or larger in size is not likely to completely close up from frost. However, vents smaller than 3 inches (76 mm) in diameter must be increased in size where frost closure is possible. Any increase must occur within the structure to protect the smaller-diameter pipe from direct exposure to the outside atmosphere. The vent pipes must increase diameter starting at not less than 1 foot (305 mm) inside the building's thermal envelope. In other words, the vent enlargement occurs inside the heated zone of the building.

See the "Degree Day and Design Temperature" table (located in Appendix D) and the ASHRAE *Fundamentals Handbook* for temperature information.

903.3 Flashings. The juncture of each vent pipe with the roof line shall be made water tight by an *approved* flashing.

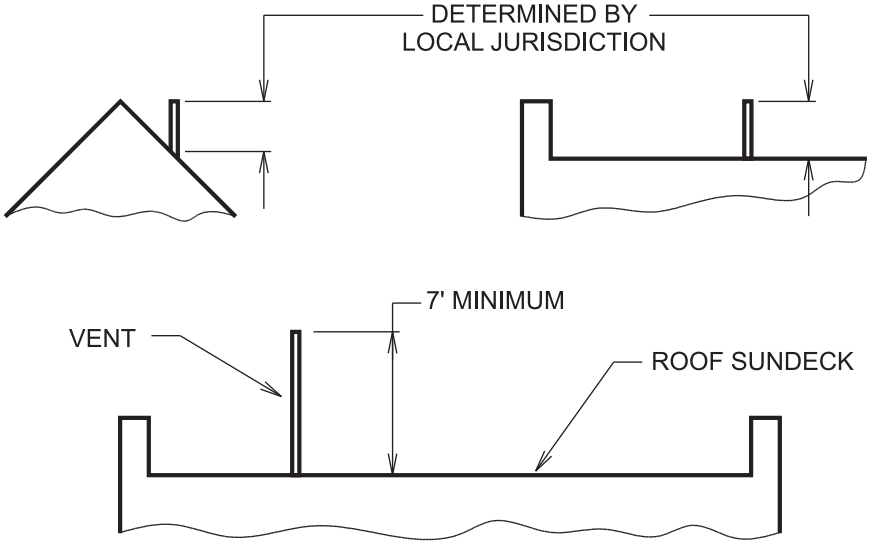

For SI: 1 foot = 304.8 mm.

Figure 903.1
VENT TERMINAL

INTERNATIONAL CODE COUNCIL®
Copyright © 2015 ICC. ALL RIGHTS RESERVED. Accessed by David Dammon on Jun 21, 2017 12:30:52 PM pursuant to License Agreement with ICC. No further reproduction or distribution authorized. ANY UNAUTHORIZED REPRODUCTION OR DISTRIBUTION IS A VIOLATION OF THE FEDERAL COPYRIGHT ACT AND THE LICENSE AGREEMENT, AND SUBJECT TO CIVIL AND CRIMINAL PENALTIES THEREUNDER.

❖ Water that is allowed to enter between the intersections of roofing and vent piping will cause decay of the wood and degradation of other building materials; therefore, flashings, including those of materials described in Sections 902.2 and 902.3, are required at these intersections.

903.4 Prohibited use. A vent terminal shall not be used for any purpose other than a vent terminal.

❖ The use of the vent terminal to support imposed loads is prohibited.

903.5 Location of vent terminal. An open vent terminal from a drainage system shall not be located directly beneath any door, openable window, or other air intake opening of the building or of an adjacent building, and any such vent terminal shall not be within 10 feet (3048 mm) horizontally of such an opening unless it is 3 feet (914 mm) or more above the top of such opening.

❖ The vent terminal must be located away from any building air intake opening (gravity or mechanical) to reduce the possibility of sewer gases entering a building (see Commentary Figure 903.5).

903.6 Extension through the wall. Vent terminals extending through the wall shall terminate at a point not less than 10 feet (3048 mm) from a lot line and not less than 10 feet (3048 mm) above average ground level. Vent terminals shall not terminate under the overhang of a structure with soffit vents. Sidewall vent terminals shall be protected to prevent birds or rodents from entering or blocking the vent opening.

❖ Sidewall vent terminations are an alternative to roof penetrations that may result in significant cost savings and a more aesthetically pleasing installation. For example, a sidewall vent may be preferred to penetrating membrane built-up, slate or tile roofs. Such roof penetrations are difficult to make leakproof, may be expensive and are often considered unsightly.

In multistory buildings where remodeling work is being done, a sidewall vent termination can serve as a welcome alternative to running vent piping through finished or occupied stories above.

Where a sidewall vent is installed, the vent opening must be protected with a screen or louver to prevent birds from building a nest in the pipe. This also prevents rodents from entering the vent system (see Commentary Figure 903.6). Such vents must not terminate where the emissions from the vent can either cause structural damage or enter the building envelope through soffit vents. Such vents must also comply with the location requirements of Section 903.5.

903.7 Extension outside a structure. In climates where the 97.5-percent value for outside design temperature is less than 0°F (-18°C), vent pipes installed on the exterior of the structure shall be protected against freezing by insulation, heat or both.

❖ A vent pipe located outside a building increases the likelihood of frost closure in colder climates. To prevent a buildup of frost on the inside of the vent pipe, it must be protected. If provided with adequate insula-

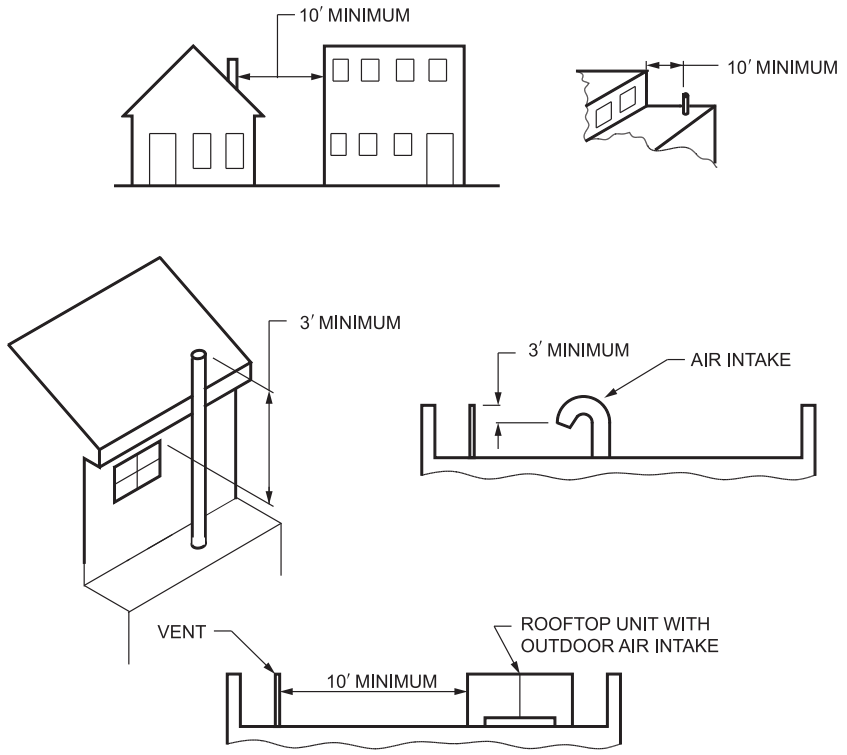

For SI: 1 foot = 304.8 mm.

Figure 903.5
SEPARATION OF VENT TERMINAL

INTERNATIONAL CODE COUNCIL®
Copyright © 2015 ICC. ALL RIGHTS RESERVED. Accessed by David Dammon on Jun 21, 2017 12:30:52 PM pursuant to License Agreement with ICC. No further reproduction or distribution authorized. ANY UNAUTHORIZED REPRODUCTION OR DISTRIBUTION IS A VIOLATION OF THE FEDERAL COPYRIGHT ACT AND THE LICENSE AGREEMENT, AND SUBJECT TO CIVIL AND CRIMINAL PENALTIES THEREUNDER.

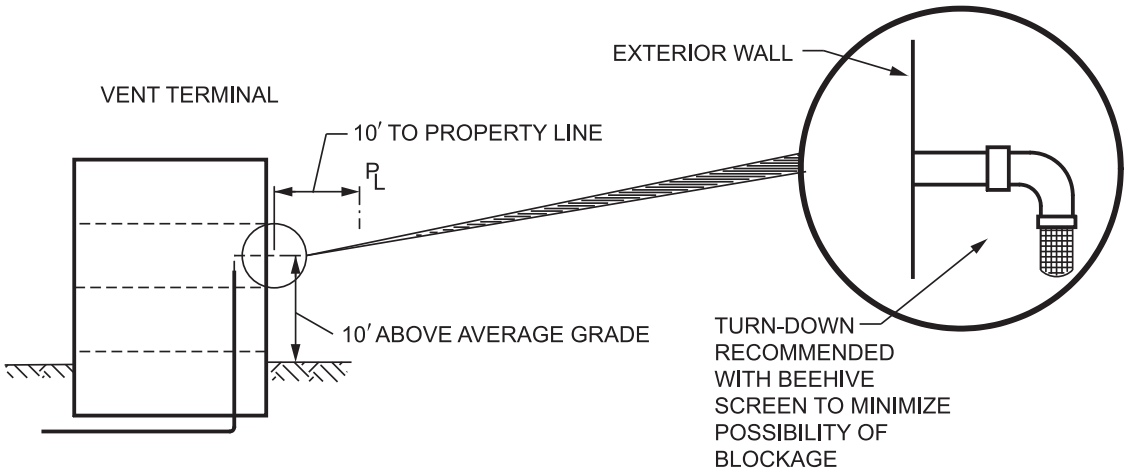

For SI: 1 foot = 304.8 mm.

Figure 903.6
SIDEWALL VENT

tion, the heat of the vent gases and vapors may be relied upon to prevent frost from developing in the vent pipe.

SECTION 904
OUTDOOR VENT EXTENSIONS

904.1 Required vent extension. The vent system serving each *building drain* shall have not less than one vent pipe that extends to the outdoors.

❖ The intent of this section of the code is to make sure that the building drain is vented to the outdoors. The required vent connecting to the outdoors can be satisfied in a number of ways including using a: 1) soil stack vent; 2) waste stack vent; 3) individual fixture vent; 4) common vent; 5) vent stack or 6) relief vent.

The code does not specify where the required vent must be located or the required routing except that it must eventually connect to the building drain either directly or through an extension of a drain. Therefore, any vent connecting to a soil or waste stack, any vent stack, any relief vent or any fixture vent may be considered as the required vent extension to outdoors [see Section 904.1.1 and Commentary Figures 904.1(1) through (3)]. However, in no case can the required vent extension to outdoors be less than one-half of the required size of the building drain (see Sections 904.1.2 and 906.1).

The following examples illustrate the required vent extension for building drains with a soil stack:

Example A:

A 3-inch (76 mm) soil stack with a stack vent serving as the required vent extension to the outdoors, connecting to a 3-inch (76 mm) building drain, must have at least a $1^1/_2$-inch (38 mm) stack vent [maximum of 102 fixture units served and a maximum 25-foot (7620 mm) developed length] in accordance with Section 906.1 and Table 906.1. This $1^1/_2$-inch (38 mm) stack vent is the minimum size required to comply with this section because it is at least one-half the size of the building drain.

Example B:

A 3-inch (76 mm) soil stack with a stack vent serving as the required vent extension to the outdoors, connecting to a 4-inch (102 mm) building drain, must have at least a 2-inch (51 mm) stack vent [maximum of 102 fixture units served and a maximum 86-foot (26 213 mm) developed length] in accordance with Section 906.1 and Table 906.1. The 2-inch (51 mm) stack vent is the minimum size required for the purpose of complying with this section because the 4-inch (102 mm) building drain requires a vent extension to outdoors of not less than one-half the building drain size.

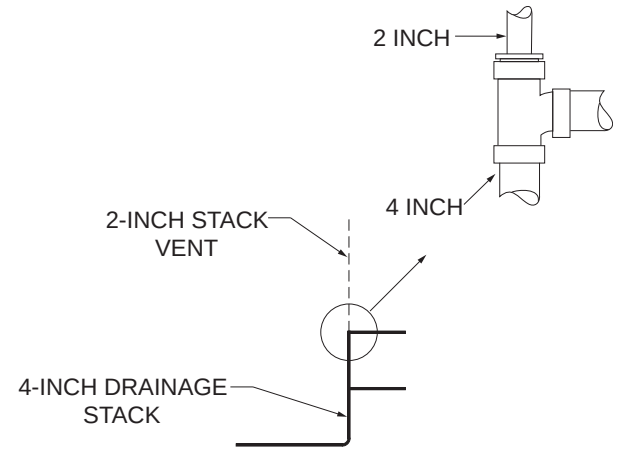

For SI: 1 inch = 25.4 mm.

Figure 904.1(1)
REDUCTION OF STACK VENT CONNECTION

INTERNATIONAL CODE COUNCIL®
Copyright © 2015 ICC. ALL RIGHTS RESERVED. Accessed by David Dammon on Jun 21, 2017 12:30:52 PM pursuant to License Agreement with ICC. No further reproduction or distribution authorized. ANY UNAUTHORIZED REPRODUCTION OR DISTRIBUTION IS A VIOLATION OF THE FEDERAL COPYRIGHT ACT AND THE LICENSE AGREEMENT, AND SUBJECT TO CIVIL AND CRIMINAL PENALTIES THEREUNDER.

Example C:

A $1^1/_2$-inch (38 mm) waste stack with a $1^1/_2$-inch (38 mm) stack vent serving as the required vent extension to the outdoors, connecting to a 4-inch (102 mm) building drain, must have at least a 2-inch (51 mm) stack vent in accordance with Section 906.1.Therefore, the waste stack must also be at least 2 inches (51 mm) from the dry vent connection down to the building drain. If the waste stack with stack vent was not serving as the required vent extension to the outdoors, the stack could remain at $1^1/_2$ inches (38 mm) and the stack vent $1^1/_2$ inches (38 mm) [maximum of two fixture units served in accordance with Table 913.4 and a maximum 150-foot (45 720 mm) developed length in accordance with Table 906.1].

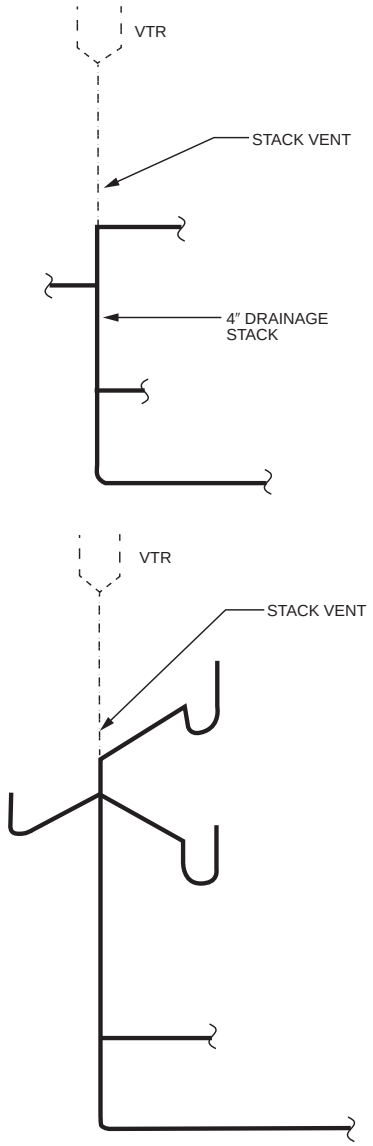

For SI: 1 inch = 25.4 mm.

Figure 904.1(2)
STACK VENT

Example D:

A 3-inch (76 mm) building drain with a $1^1/_2$-inch (38 mm) vented individual lavatory drain serving as the required vent extension to the outdoors must have at least a $1^1/_2$-inch (38 mm) vent [up to 40-feet (12 192 mm) developed length] in accordance with Section 906.2 because the vent must be at least one-half the size of the drain that it serves. If this fixture drain with vent was not serving as the required vent extension to the outdoors, the vent size minimum would be $1^1/_4$ inches (32 mm) [up to 40-feet (12 192 mm) developed length].

Example E:

A 4-inch (102 mm) building drain with a $1^1/_2$-inch (38 mm) individual vented lavatory drain serving as the required vent extension to the outdoors must have at least a 2-inch (51 mm) vent [up to 40-feet (12 192 mm) developed length] in accordance with Section 906.2 because the vent must be at least one-half the size of the drain it serves. Therefore, any portion of the fixture drain downstream of the vent connection must also be at least 2 inches (51 mm). If this fixture drain with vent was not serving as the required vent extension to the outdoors, the vent size minimum would be $1^1/_4$ inches (32 mm) [up to 40-feet (12 192 mm) developed length to outdoors].

904.1.1 Installation. The required vent shall be a dry vent that connects to the *building drain* or an extension of a drain that connects to the *building drain*. Such vent shall not be an island fixture vent as allowed by Section 916.

❖ A vent leading to the outdoors that connects directly to the building drain or to a drain connecting to the building drain can be used for the required vent extension. Island fixture vents cannot be used for this function because of the high potential for clogging of the vent piping that has horizontal components below the flood rim level of the island fixture (see commentary, Section 904.1).

904.1.2 Size. The required vent shall be sized in accordance with Section 906.2 based on the required size of the *building drain*.

❖ The minimum size is based on Section 906.2 unless required to have a 3-inch (76 mm) minimum diameter vent terminal as required by Section 903.2 (see commentary, Section 903.2).

904.2 Vent stack required. A vent *stack* shall be required for every drainage *stack* that has five *branch intervals* or more.

Exception: Drainage stacks installed in accordance with Section 913.

❖ If a drainage stack is five or more branch intervals in height, a vent stack is required. If the drainage stack is less than five branch intervals in height, a vent stack is not required because the pressures in the drainage stack are not likely to create an air pressure differential at the trap seals in excess of 1 inch of water column (249 Pa). Vent stacks are dry and required to connect at or near the base of the stack served to act

INTERNATIONAL CODE COUNCIL®
Copyright © 2015 ICC. ALL RIGHTS RESERVED. Accessed by David Dammon on Jun 21, 2017 12:30:52 PM pursuant to License Agreement with ICC. No further reproduction or distribution authorized. ANY UNAUTHORIZED REPRODUCTION OR DISTRIBUTION IS A VIOLATION OF THE FEDERAL COPYRIGHT ACT AND THE LICENSE AGREEMENT, AND SUBJECT TO CIVIL AND CRIMINAL PENALTIES THEREUNDER.

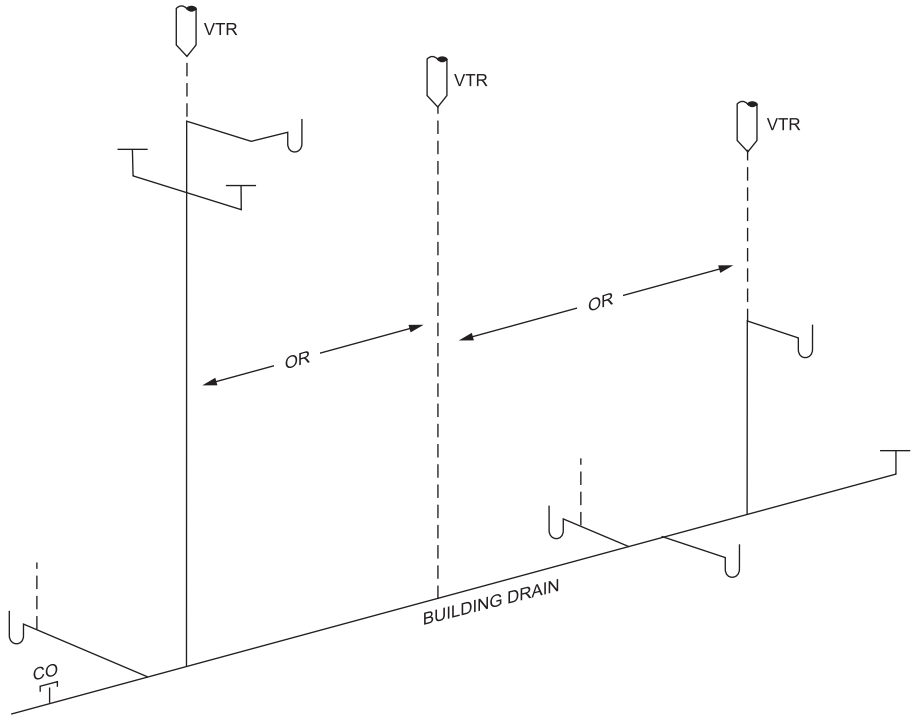

Figure 904.1(3)
REQUIRED VENT TO OUTDOORS

as a relief vent for the pressures that develop in the lowest portion of stacks (see commentary, Section 904.4). The code does not require stack vents for drainage stacks except as required by Section 913.3 because the minimum required venting of each fixture has been accomplished when the system complies with the venting methods outlined in this chapter. A stack vent is typically used as a collection point for vent pipes so that a single roof penetration can be made. Keep in mind that "vent stacks" and "stack vents" are distinct (see Section 202).

The exception allows waste stack vented systems to not to have a vent stack when the stack has five or more branch intervals connected. Waste stack vented systems (see Section 913) are already oversized to provide for adequate venting without the need for additional venting.

904.3 Vent termination. Vent *stacks* or *stack vents* shall terminate outdoors to the open air or to a stack-type air admittance valve in accordance with Section 918.

❖ No vent is allowed to terminate as an open-ended pipe in an attic, cupola, open parking structure, screened-in porch or any other space within a building envelope, regardless of how well such space is ventilated. The vent must extend to the outdoors if it is the required vent extension for the building drain. If the vent is not the required vent extension for the building drain, it may terminate outdoors or terminate with an air admittance valve in accordance with Section 918.

904.4 Vent connection at base. Vent *stacks* shall connect to the base of the drainage *stack*. The vent *stack* shall connect at or below the lowest horizontal *branch*. Where the vent *stack* connects to the *building drain*, the connection shall be located downstream of the drainage *stack* and within a distance of 10 times the diameter of the drainage *stack*.

❖ A drainage stack of five or more branch intervals must be vented at or below the lowest branch connection to relieve the positive pressure developed in the stack. The connection can be to the stack or to the building drain downstream of the stack and within a distance of 10 times the drainage stack diameter.

The size of the vent connection to the drainage system must be not less than the size required for the vent stack. Vent stacks are sized in accordance with Section 906.1, based on the size of the drainage stack at its base. Where the vent stack is connected to the building drain at the base of the drainage stack, the point of connection must be within the section of horizontal drain where the greatest air pressure fluctuations and turbulence occur (see commentary, Section 704.3 and Commentary Figure 904.4).

904.5 Vent headers. *Stack vents* and vent stacks connected into a common vent header at the top of the *stacks* and extending to the open air at one point shall be sized in accordance with the requirements of Section 906.1. The number of fixture units shall be the sum of all fixture units on all *stacks* connected thereto, and the *developed length* shall be the longest vent length from the intersection at the base of the most distant *stack* to the vent terminal in the open air, as a direct extension of one *stack*.

INTERNATIONAL CODE COUNCIL®
Copyright © 2015 ICC. ALL RIGHTS RESERVED. Accessed by David Dammon on Jun 21, 2017 12:30:52 PM pursuant to License Agreement with ICC. No further reproduction or distribution authorized. ANY UNAUTHORIZED REPRODUCTION OR DISTRIBUTION IS A VIOLATION OF THE FEDERAL COPYRIGHT ACT AND THE LICENSE AGREEMENT, AND SUBJECT TO CIVIL AND CRIMINAL PENALTIES THEREUNDER.

❖ It is quite often economically or aesthetically desirable to connect a number of vent stacks or stack vents to a common header to minimize the number of penetrations of the roof. The header must be adequately sized to both supply and relieve air in every vent stack simultaneously.

Section 906.1 requires that the header be sized to carry the total fixture unit load served by the vent stacks connected to the header. In determining the developed length, the longest vent lengths connected thereto are added to the overall length of the header.

Example:

Commentary Figure 904.5 illustrates how to determine the size of a vent header connecting four vent stacks serving soil stacks more than three branch intervals in height.

The fixture unit served by each vent stack is added as it connects to the header. Each section of the header is sized as a vent stack serving the accumulated load being vented by the individual vent stacks.

The section of the vent header between vent stack A and vent stack B is a horizontal offset of vent stack A.

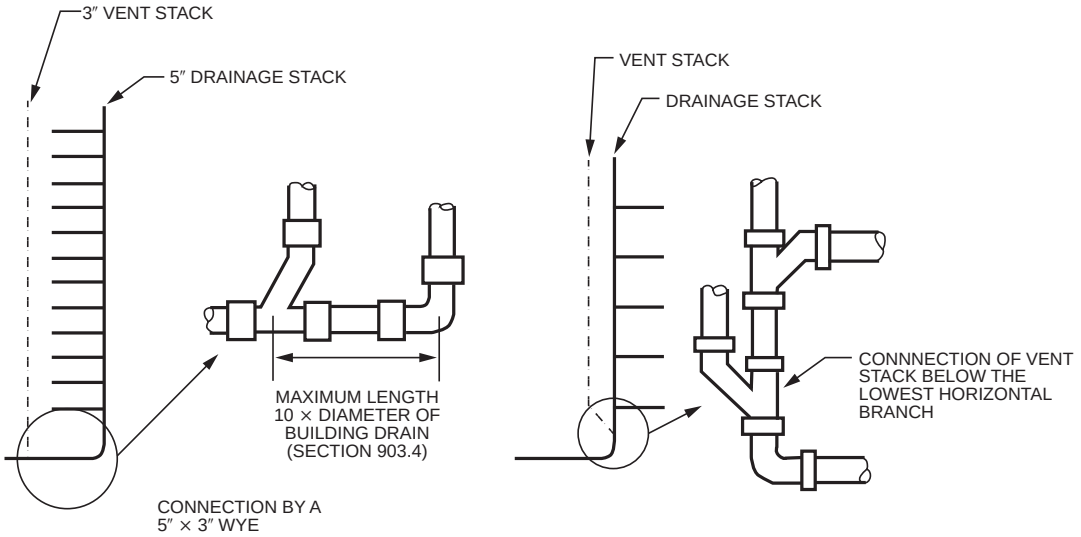

For SI: 1 inch = 25.4 mm.

Figure 904.4
VENT CONNECTION AT BASE OF STACK

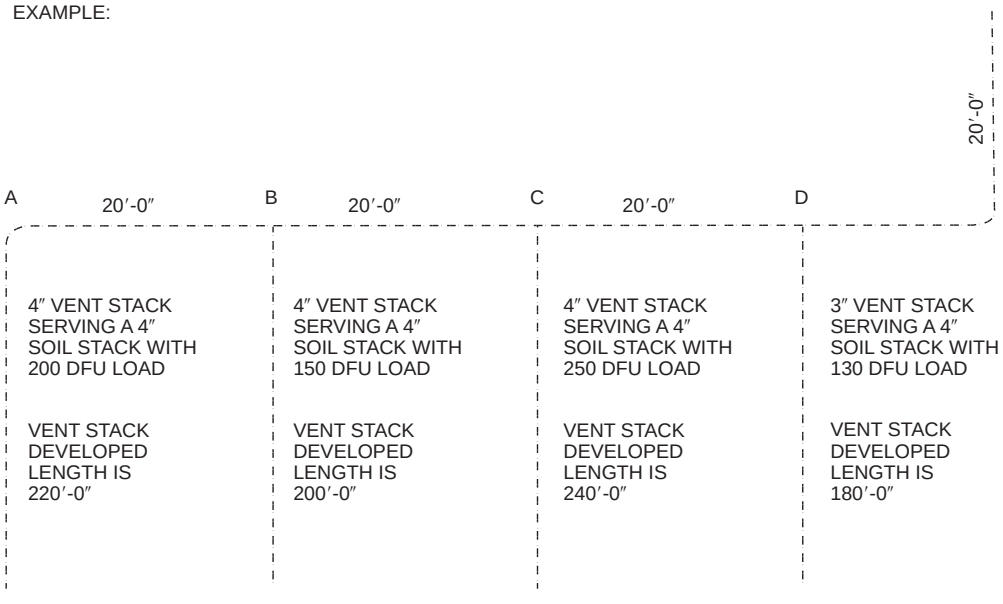

For SI: 1 inch = 25.4 mm, 1 foot = 304.8 mm.

Figure 904.5
VENT HEADERS

INTERNATIONAL CODE COUNCIL®
Copyright © 2015 ICC. ALL RIGHTS RESERVED. Accessed by David Dammon on Jun 21, 2017 12:30:52 PM pursuant to License Agreement with ICC. No further reproduction or distribution authorized. ANY UNAUTHORIZED REPRODUCTION OR DISTRIBUTION IS A VIOLATION OF THE FEDERAL COPYRIGHT ACT AND THE LICENSE AGREEMENT, AND SUBJECT TO CIVIL AND CRIMINAL PENALTIES THEREUNDER.

Therefore, it is the same size as vent stack A. The developed length for vent stack A is 240 feet (220 feet + 20 feet) (73 152 mm).The number of drainage fixture units (dfu) served by vent stack A is 200.

The total fixture unit load served by the vent header between stacks B and C is 350 drainage fixture unit (dfu) (200 dfu + 150 dfu). The section of the header between vent stacks B and C is sized based on the accumulated load of drainage stacks A and B and the longest developed length of either stack A or B. The developed length is the longest vent length from the base of the most distant stack (vent stack A) to the vent terminal in the open air. In this example, the developed length is 220 feet + 20 feet + 20 feet + 20 feet + 20 feet = 300 feet (91 440 mm).

From Table 906.1, the stack and the vent must be 4 inches (102 mm), which can serve up to 540 fixture units at a maximum developed length of 580 feet (176.8 m); therefore, the size required for the vent stack header is 4 inches (102 mm).

The total fixture unit load served by the vent header between vent stacks C and D is 600 dfu, which exceeds 540 dfu listed as the maximum total for a 4-inch (102 mm) drainage stack; therefore, a 5-inch (127 mm) drainage stack and vent would be required, which may serve up to 1,400 dfu at a maximum developed length of 590 feet (179.8 m). Thus, the required size of the vent stack header is 5 inches (127 mm).

The total fixture unit load between vent stack D and the termination is 730 dfu. This value is still within the capacity of a 5-inch (127 mm) drainage stack and vent stack; therefore, the size of the vent stack header between stack D and the termination is still 5 inches (127 mm).

SECTION 905
VENT CONNECTIONS AND GRADES

905.1 Connection. Individual, *branch* and circuit vents shall connect to a vent *stack, stack vent,* air admittance valve or extend to the open air.

❖ This section further emphasizes the requirement that vents are to extend to the outdoors except where allowed to terminate with an air admittance valve. This might be accomplished by connecting to a vent stack or a stack vent that extends outdoors and terminates to the open air (see commentary, Section 904.3) or by extending these vents independently to the outdoors. This prevents sewer gases from escaping into the building. The use of air admittance valves must comply with the provisions of Section 918.

905.2 Grade. Vent and *branch* vent pipes shall be so graded and connected as to drain back to the drainage pipe by gravity.

❖ Vents convey water vapor from the drainage system that might condense in the vent piping. Also, rainwater can enter a vent system at the vent termination; therefore, the vent must be graded (sloped) to the drainage system, thus preventing any accumulation of condensate or rainwater. The slope of a vent pipe does not affect the movement of air inside the pipe. It makes no

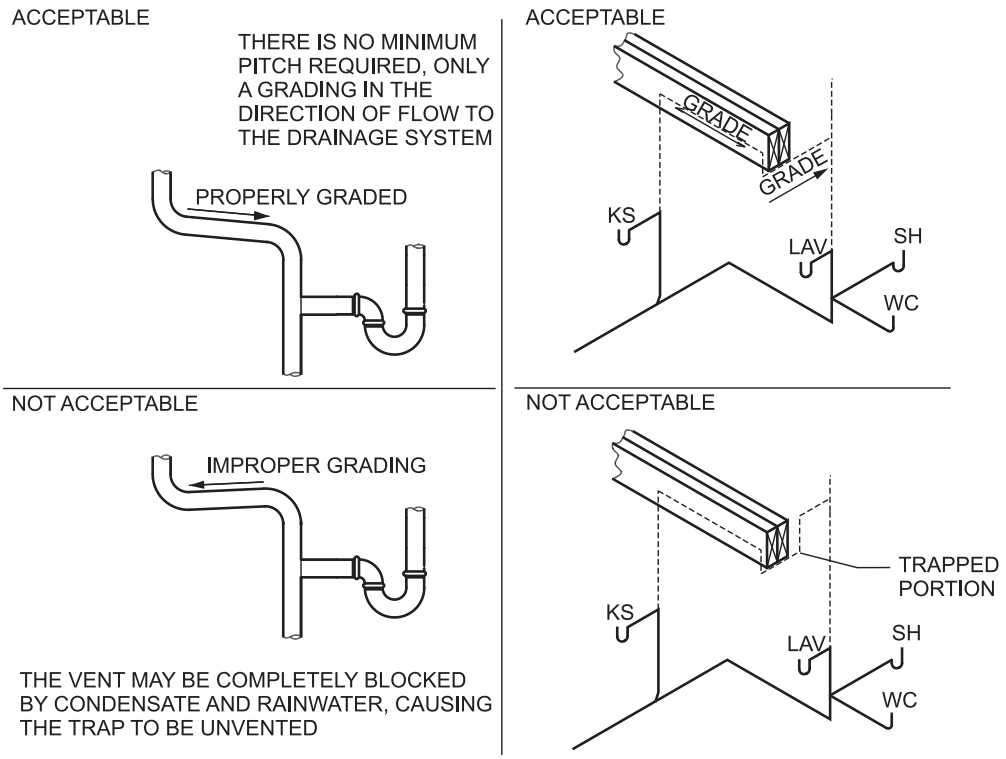

Figure 905.2
GRADE OF VENTS

INTERNATIONAL CODE COUNCIL®
Copyright © 2015 ICC. ALL RIGHTS RESERVED. Accessed by David Dammon on Jun 21, 2017 12:30:52 PM pursuant to License Agreement with ICC. No further reproduction or distribution authorized. ANY UNAUTHORIZED REPRODUCTION OR DISTRIBUTION IS A VIOLATION OF THE FEDERAL COPYRIGHT ACT AND THE LICENSE AGREEMENT, AND SUBJECT TO CIVIL AND CRIMINAL PENALTIES THEREUNDER.

difference whether the vent piping is sloped to drain back to the drain piping served by the vent or the vent piping slopes to drain to a vent stack or stack vent, provided that water will not stand in any portion of the venting system (see Commentary Figure 905.2).

Vent piping must be supported according to Table 308.5 to maintain slope and to prevent sags where condensate could collect and restrict airflow.

905.3 Vent connection to drainage system. Every dry vent connecting to a horizontal drain shall connect above the centerline of the horizontal drain pipe.

❖ When drainage enters a pipe, it is naturally assumed that the liquid proceeds down the pipe in the direction of flow. Being a liquid, however, the drainage seeks its own level and may move against the direction of flow before reversing and draining down the pipe. When this occurs, the solids may drop out of suspension to the bottom of the pipe. In a drain, the solids will again move down the pipe with the next discharge of liquid into the drain.

If the horizontal pipe serves only as a dry vent, the solids have no possibility of being brought back into suspension and, over a period of time, the horizontal vent pipe may be completely obstructed by waste. To avoid these blockages, the vent must connect to horizontal drains above the centerline (see Commentary Figure 905.3). The intent is to prevent waste from entering a dry vent by connecting the vent above the flow line of the drain. Such connections will result in vent piping that forms an angle of 45-degrees (0.79 rad) or more with the horizontal.

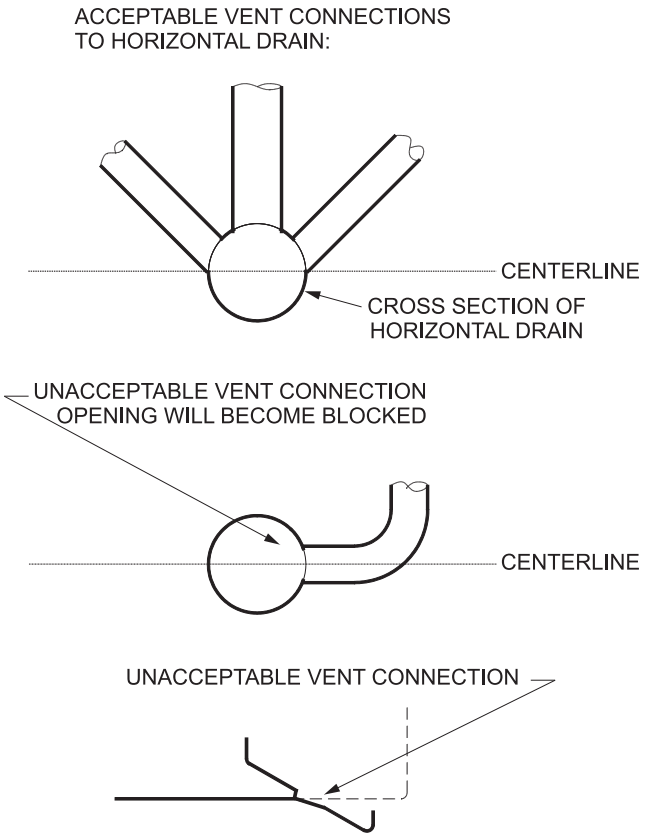

Figure 905.3
VENT CONNECTIONS

905.4 Vertical rise of vent. Every dry vent shall rise vertically to a point not less than 6 inches (152 mm) above the *flood level rim* of the highest trap or trapped fixture being vented.

Exception: Vents for interceptors located outdoors.

❖ This code provision is very important for the proper design, longevity and maintenance-free operation of a plumbing system. Surprisingly, this is also one of the most frequently violated code provisions.

The intent of this section is to prohibit horizontal vent piping from occurring where it will be subjected to waste flow. A vertical rise of the vent pipe substantially reduces the possibility of it having a blockage or stoppage. Most pipe stoppages occur in horizontal pipes. The vertical rise of the vent to a point above the flood level rim is necessary to protect the vent from a backup of waste in the event of blockage in the drainage system. A blockage causes the drainage to rise in the vent pipe and in the plumbing fixture. Any drainage system backup will flow over the fixture's flood level rim, thereby preventing it from entering the horizontal vent pipe.

A stoppage in the drain may be easily cleared by rodding through a cleanout; however, this is not the case with a vent blockage, which is seldom, if ever, accessible (see Commentary Figure 905.4).

A vent blockage will rarely produce any noticeable or recognizable symptoms of a problem; therefore, extraordinary precautions are taken to protect vents. Note that a drain obstruction will always be apparent, but a vent obstruction will almost never be apparent to the building occupants. It is often argued that horizontal vent runs below the fixture rim are necessary in order to place the vent connection within the distance limits of Section 909.1. This argument may be valid if the code specified individual fixture vents as the only venting option; however, this is not the case. The code allows many venting options; thus, there is always an option to avoid the installation of horizontal vents below the fixture flood rim.

The exception provides a measure of design flexibility and acknowledges where a gravity grease interceptor is located in an open parking area, it is impossible to install a vent that rises 6 inches (152 mm) above the top of the interceptor.

905.5 Height above fixtures. A connection between a vent pipe and a vent *stack* or *stack vent* shall be made at not less than 6 inches (152 mm) above the *flood level rim* of the highest fixture served by the vent. Horizontal vent pipes forming *branch* vents, relief vents or loop vents shall be located not less than 6 inches (152 mm) above the *flood level rim* of the highest fixture served.

❖ This section expresses the same concern as the previous section. In the event of drain stoppage, waste

INTERNATIONAL CODE COUNCIL®
Copyright © 2015 ICC. ALL RIGHTS RESERVED. Accessed by David Dammon on Jun 21, 2017 12:30:52 PM pursuant to License Agreement with ICC. No further reproduction or distribution authorized. ANY UNAUTHORIZED REPRODUCTION OR DISTRIBUTION IS A VIOLATION OF THE FEDERAL COPYRIGHT ACT AND THE LICENSE AGREEMENT, AND SUBJECT TO CIVIL AND CRIMINAL PENALTIES THEREUNDER.

could rise into the vent piping. Over a period of time, the vent piping may become blocked with solids that have settled out of the waste liquids. Additionally, individual, common or branch vents that improperly connect to vent stacks or stack vents may become drains if the fixture drain or drains served are blocked or restricted. It is entirely possible for a vent to serve unintentionally as a drain, and this condition may go unnoticed for a long period of time [see Commentary Figures 905.5(1) and 905.5(2)].

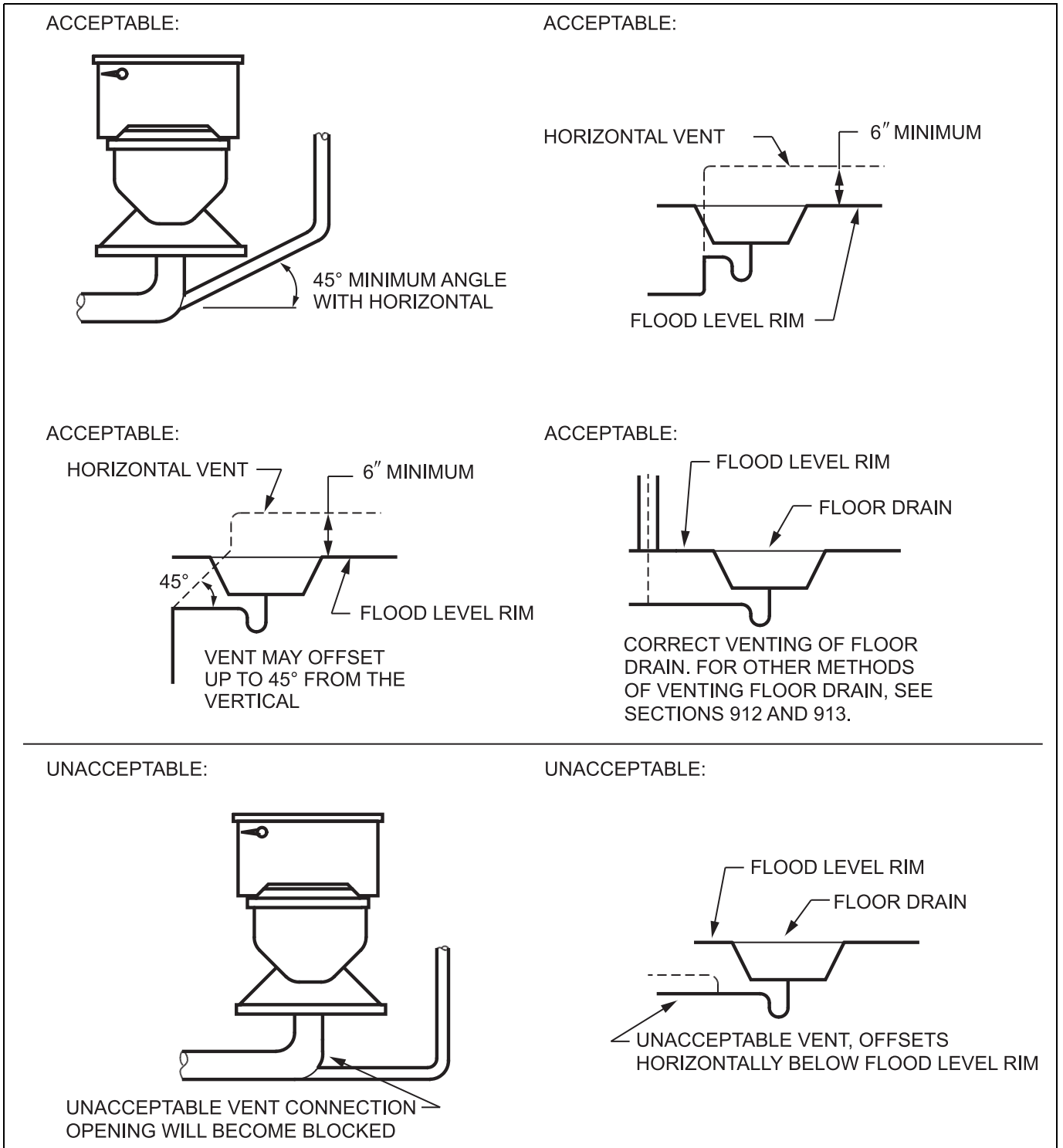

For SI: 1 inch = 25.4 mm, 1 degree = 0.0175 rad.

Figure 905.4
VERTICAL RISE OF VENT

INTERNATIONAL CODE COUNCIL®
Copyright © 2015 ICC. ALL RIGHTS RESERVED. Accessed by David Dammon on Jun 21, 2017 12:30:52 PM pursuant to License Agreement with ICC. No further reproduction or distribution authorized. ANY UNAUTHORIZED REPRODUCTION OR DISTRIBUTION IS A VIOLATION OF THE FEDERAL COPYRIGHT ACT AND THE LICENSE AGREEMENT, AND SUBJECT TO CIVIL AND CRIMINAL PENALTIES THEREUNDER.

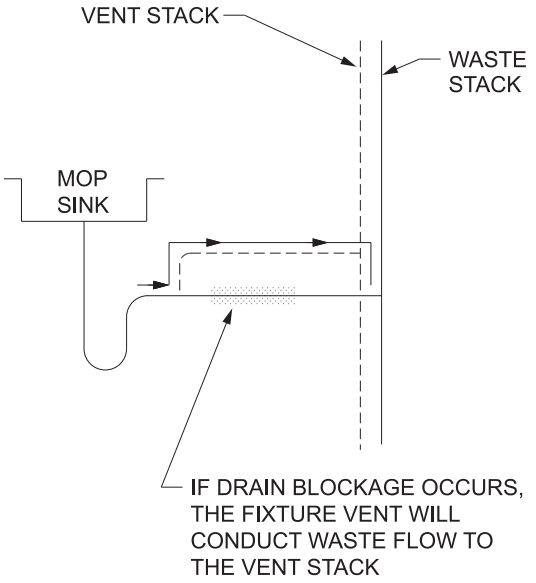

Figure 905.5(1)
IMPROPERLY CONNECTED VENT SERVING A DRAIN

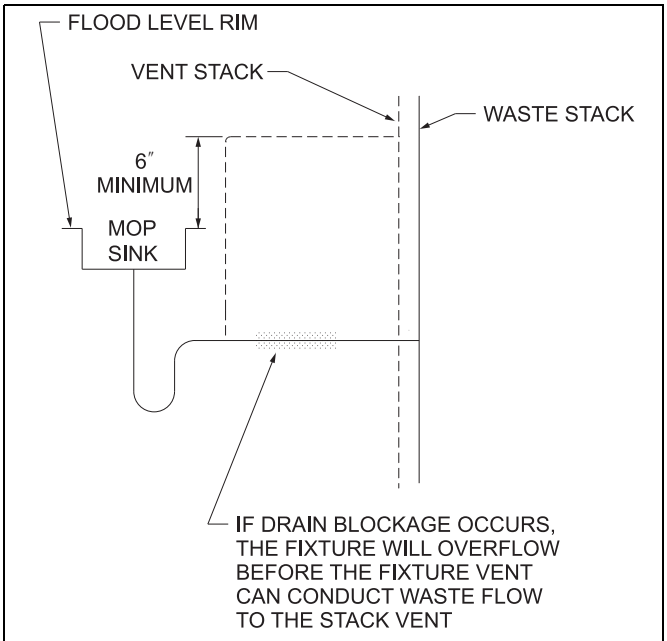

For SI: 1 inch = 25.4 mm.

Figure 905.5(2)
PROPERLY CONNECTED VENT SERVING A DRAIN

A properly installed horizontal dry vent pipe will never contain waste liquids because the fixture or fixtures served will overflow before the waste can enter the vent piping [see Commentary Figure 905.5(3) and commentary, Section 905.4].

905.6 Vent for future fixtures. Where the drainage piping has been roughed-in for future fixtures, a rough-in connection for a vent shall be installed. The vent size shall be not less than one-half the diameter of the rough-in drain to be served.

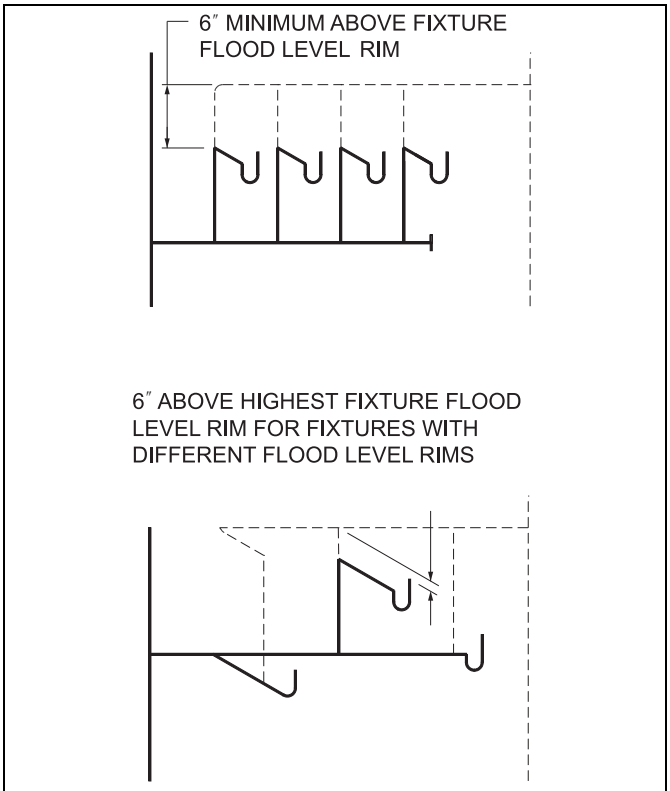

For SI: 1 inch = 25.4 mm.

Figure 905.5(3)
HORIZONTAL BRANCH VENT ELEVATION

The vent rough-in shall connect to the vent system, or shall be vented by other means as provided for in this chapter. The connection shall be identified to indicate that it is a vent.

❖ Section 710.2 addresses the installation of drainage pipe for future plumbing fixtures. Where future fixture rough-in piping occurs, vent piping must also be installed. This section does not necessarily require complete connection of the rough-in vent to the future fixture drainage pipe. The vent pipe is simply roughed-in in a manner to remain accessible for future connection when plumbing fixtures are installed. The vent rough-in must be tied in to the vent system, as required by Section 905.1, or must extend to a vent terminal in the outdoors.

The vent rough-in requirement of this section is intended to make sure that a venting means will be available in advance of the future fixture installation. It also eliminates the cost and hardship associated with the installation of vent piping at the time fixtures are installed. It is common to find that fixtures have been installed without vents because a vent was not provided for future use.

Note that a future fixture rough-in may be served by a wet vent, common vent, waste stack vent, circuit vent, combination drain and vent or an air admittance valve; therefore, a dry vent rough-in may not be required. Venting configurations must be sized and installed to accommodate future fixture installations.

INTERNATIONAL CODE COUNCIL®
Copyright © 2015 ICC. ALL RIGHTS RESERVED. Accessed by David Dammon on Jun 21, 2017 12:30:52 PM pursuant to License Agreement with ICC. No further reproduction or distribution authorized. ANY UNAUTHORIZED REPRODUCTION OR DISTRIBUTION IS A VIOLATION OF THE FEDERAL COPYRIGHT ACT AND THE LICENSE AGREEMENT, AND SUBJECT TO CIVIL AND CRIMINAL PENALTIES THEREUNDER.

Where the installation of a future fixture will require making a connection to the vent rough-in, such connection must be identified as a vent so that the purpose of the original installation is evident when the future fixture is installed.

SECTION 906
VENT PIPE SIZING

906.1 Size of stack vents and vent stacks. The minimum required diameter of *stack vents* and vent *stacks* shall be determined from the *developed length* and the total of *drainage fixture units* connected thereto in accordance with Table 906.1, but in no case shall the diameter be less than one-half the diameter of the drain served or less than $1^1/_4$ inches (32 mm).

❖ The sizing criteria for stack vents and vent stacks are based on three variables: the developed length of the vent, the size of the stack served by the vent and the total dfu connected to the stack.

The vent is sized in accordance with Table 906.1, but in no case is the vent pipe diameter to be less than one-half the required diameter of the drain served or less than $1^1/_4$ inches (32 mm).

The developed length of the vent pipe must also be considered when sizing the vent system. The flow of air that a given pipe size can convey with a limited friction loss depends on the pipe length. The longer the pipe, the greater the effect friction will have on the flow of air. If the resistance to airflow is too high, the pressure drop will be excessive, and the vent will be unable to prevent air pressure differentials from exceeding 1 inch of water column (249 Pa). For example, if the pressure loss in a vent caused by pipe friction exceeds 2 inches of water column (498 Pa), pressures in the drainage system would exceed 2 inches of water column (498 Pa) before any air would move through the vent to neutralize pressure fluctuations. The vent pipe is often increased in size to compensate for this effect. Refer to the description of "Developed length" in Section 906.3. Commentary Figures 906.1(1), 906.1(2) and 906.1(3) contain examples for proper sizing of vents.

TABLE 906.1. See page 9-16.

This table contains the requirements for sizing the piping serving as a stack vent or a vent stack. Included in this table are the size of the soil or waste stack to be vented, the number of (drainage) fixture units connected to the drain line being vented and the developed length of vent pipe. Since the sizing limitations are in one table, the user can easily determine that the requirements for stack vents and vent stacks have been satisfied.

906.2 Vents other than stack vents or vent stacks. The diameter of individual vents, *branch* vents, circuit vents and relief vents shall be not less than one-half the required diameter of the drain served. The required size of the drain shall be determined in accordance with Table 710.1(2). Vent pipes shall not be less than $1^1/_4$ inches (32 mm) in diameter. Vents exceeding 40 feet (12 192 mm) in *developed length* shall be increased by one nominal pipe size for the entire *developed length* of the vent pipe. Relief vents for soil and waste *stacks* in buildings having more than 10 *branch intervals* shall be sized in accordance with Section 908.2.

❖ This section contains the sizing criteria for dry portions of a conventional venting system, including individual vents, branch vents, circuit vents, relief vents, common vents and dry vent connections to wet vents. The size of the vent is based on two variables: the required size of the drain served by the vent and the developed length of the vent.

The sizing of vent pipes other than vent stacks and stack vents is very similar to the method used to size the vent stacks and the stack vents discussed in Section 906.1. The drainage piping is sized in accordance with Table 710.1(2) based on the drainage fixture load determined by Tables 709.1 and 709.2 and Sections 709.3 and 709.4. The vent size is then determined to be a minimum of one-half the required diameter of the drain served, but not less than $1^1/_4$ inches (32 mm).

Note that this section ties vent sizing to the drain sizing criteria of Table 710.1(2) for horizontal fixture branches, which results in more conservative vent sizing. For example, a circuit-vented branch serving 30 dfu may consist of a 3-inch (76 mm) drain and a $1^1/_2$-inch (38 mm) circuit vent in accordance with Table 710.1(1), but would have to consist of a 4-inch (102 mm) drain and a 2-inch (51 mm) circuit vent in accordance with Table 710.1(2). The developed length of the vent pipe must also be considered when sizing the vent system. The amount of air that a given pipe size can convey depends on its length. The effect of friction

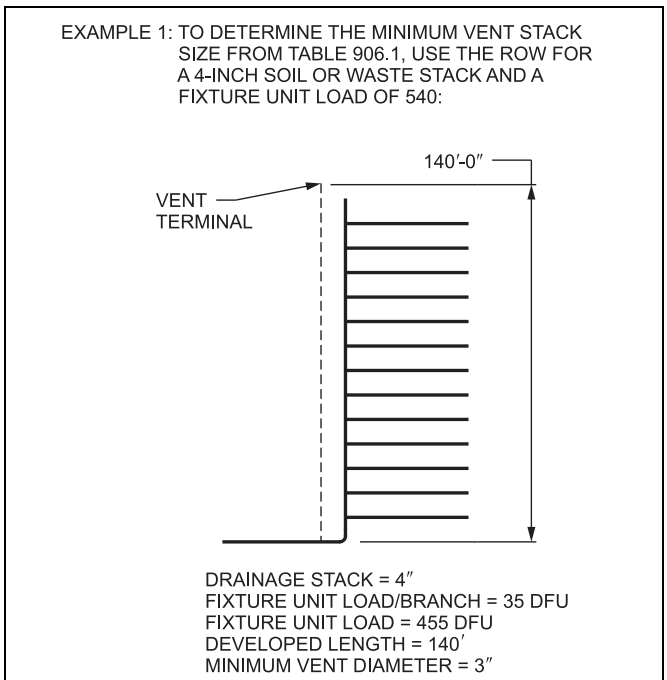

For SI: 1 inch = 25.4 mm, 1 foot = 304.8 mm.

Figure 906.1(1)
VENT STACK SIZING

INTERNATIONAL CODE COUNCIL®
Copyright © 2015 ICC. ALL RIGHTS RESERVED. Accessed by David Dammon on Jun 21, 2017 12:30:52 PM pursuant to License Agreement with ICC. No further reproduction or distribution authorized. ANY UNAUTHORIZED REPRODUCTION OR DISTRIBUTION IS A VIOLATION OF THE FEDERAL COPYRIGHT ACT AND THE LICENSE AGREEMENT, AND SUBJECT TO CIVIL AND CRIMINAL PENALTIES THEREUNDER.

increases as pipe length increases and has a greater effect on the flow of air. If the friction increases to such a level that the vent is not able to prevent pressure differentials from exceeding 1 inch of water column (249 Pa), the vent pipe size must be increased to compensate for this effect. Refer to the definition of "Developed length" in Section 906.3. Commentary Figures 906.2(1) through 906.2(4) contain several examples for proper sizing of vents. This section makes the assumption that a developed length exceeding 40 feet (12 192 mm) will result in excessive friction losses; therefore, such vents must be increased by one nominal pipe size. A vent increased in size in accordance with this section would be allowed to have an unlimited developed length; however, there will always be some length at which the friction loss would again be excessive. It is assumed that the natural constraints of construction practice will prevent vent lengths that would exceed the friction losses of a vent increased by one nominal pipe size. Note that the increase in pipe size caused by the 40-foot (12 192 mm) length limitation will increase the size of the entire developed length of the vent, not only the portion that extends beyond 40 feet (12 192 mm).

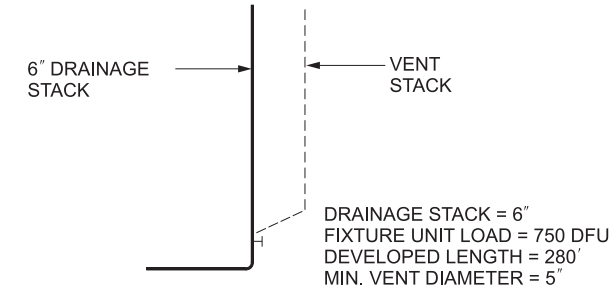

For SI: 1 inch = 25.4 mm, 1 foot = 304.8 mm.

Figure 906.1(2)
VENT STACK SIZING

906.3 Developed length. The *developed length* of individual, *branch,* circuit and relief vents shall be measured from the farthest point of vent connection to the drainage system to the point of connection to the vent *stack, stack vent* or termination outside of the building.

❖ Section 906.2 requires that a vent pipe be increased one nominal pipe size when its developed length exceeds 40 feet (12 192 mm). This section establishes how to determine the developed length for individual, branch, circuit and relief vents [see Commentary Figures 906.3(1) and 906.3(2)].

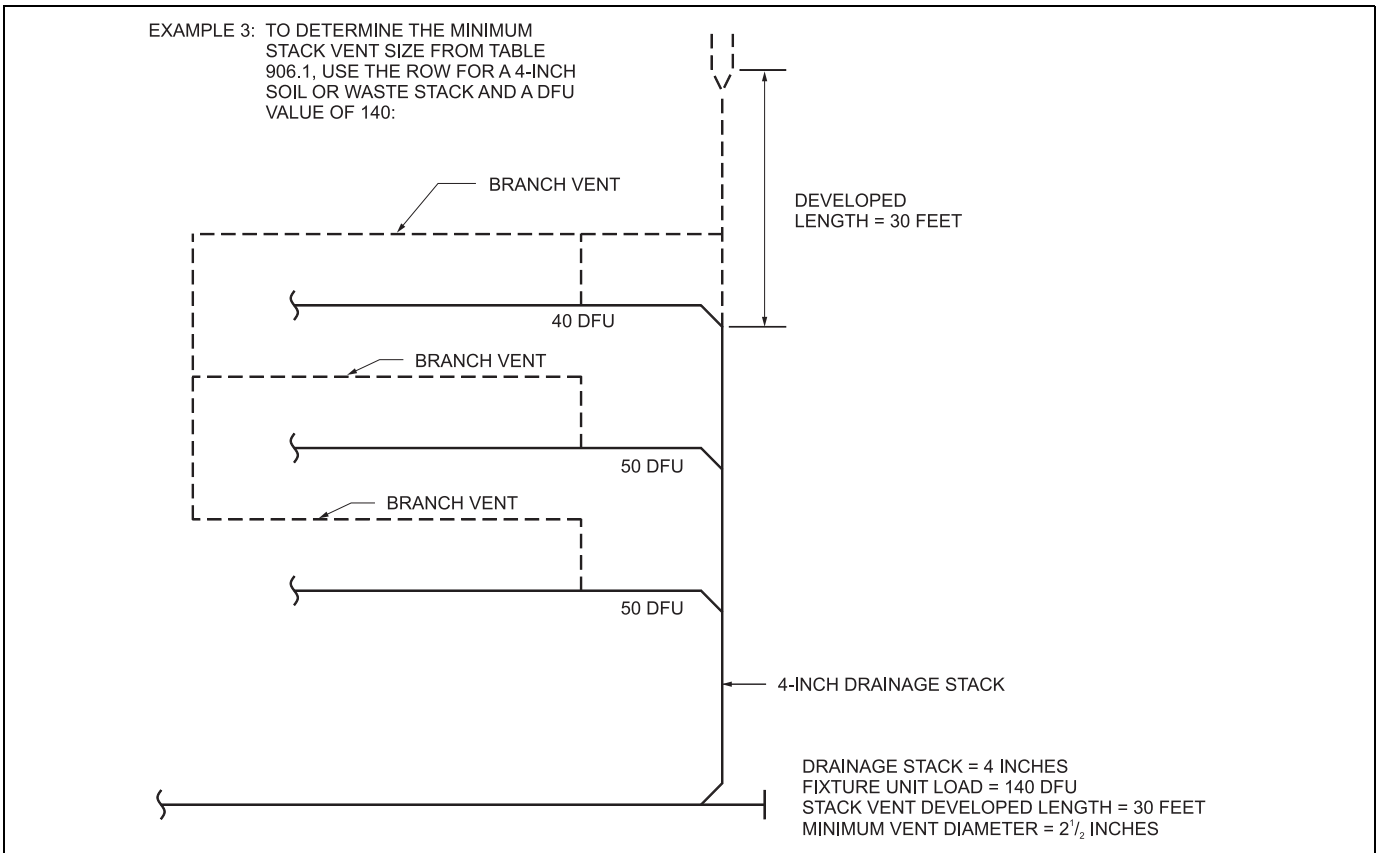

For SI: 1 inch = 25.4 mm, 1 foot = 304.8 mm.

Figure 906.1(3)
STACK VENT SIZING

INTERNATIONAL CODE COUNCIL®
Copyright © 2015 ICC. ALL RIGHTS RESERVED. Accessed by David Dammon on Jun 21, 2017 12:30:52 PM pursuant to License Agreement with ICC. No further reproduction or distribution authorized. ANY UNAUTHORIZED REPRODUCTION OR DISTRIBUTION IS A VIOLATION OF THE FEDERAL COPYRIGHT ACT AND THE LICENSE AGREEMENT, AND SUBJECT TO CIVIL AND CRIMINAL PENALTIES THEREUNDER.

TABLE 906.1
SIZE AND DEVELOPED LENGTH OF STACK VENTS AND VENT STACKS

DIAMETER OF SOIL OR WASTE STACK (inches)	TOTAL FIXTURE UNITS BEING VENTED (dfu)	MAXIMUM DEVELOPED LENGTH OF VENT (feet)[a] DIAMETER OF VENT (inches)										
		1 1/4	1 1/2	2	2 1/2	3	4	5	6	8	10	12
1 1/4	2	30										
1 1/2	8	50	150	—	—	—	—	—	—	—	—	—
1 1/2	10	30	100									
2	12		75	200								
2	20	30	50	150		—	—	—	—	—	—	—
2 1/2	42	26	30	100	300							
3	10		42	150	360	1,040						
3	21	—	32	110	270	810	—	—	—	—	—	—
3	53		27	94	230	680						
3	102		25	86	210	620						
4	43	—		35	85	250	980	—	—	—	—	—
4	140			27	65	200	750					
4	320			23	55	170	640					
4	540	—	—	21	50	150	580	—	—	—	—	—
5	190				28	82	320	990				
5	490				21	63	250	760				
5	940	—	—	—	18	53	210	670	—	—	—	—
5	1,400				16	49	190	590				
6	500					33	130	400	1,000			
6	1,100	—	—	—	—	26	100	310	780	—	—	—
6	2,000					22	84	260	660			
6	2,900					20	77	240	600			
8	1,800	—	—	—	—		31	95	240	940	—	—
8	3,400						24	73	190	729		
8	5,600						20	62	160	610		
8	7,600	—	—	—	—	—	18	56	140	560		—
10	4,000							31	78	310	960	
10	7,200							24	60	240	740	
10	11,000	—	—	—	—	—	—	20	51	200	630	—
10	15,000							18	46	180	571	
12	7,300								31	120	380	940
12	13,000	—	—	—	—	—	—	—	24	94	300	720
12	20,000								20	79	250	610
12	26,000								18	72	230	500
15	15,000	—	—	—	—	—	—	—		40	130	310
15	25,000									31	96	240
15	38,000	—	—	—	—	—	—	—	—	26	81	200
15	50,000									24	74	180

For SI: 1 inch = 25.4 mm, 1 foot = 304.8 mm.

a. The *developed length* shall be measured from the vent connection to the open air.

The developed length of a vent is measured from the farthest point of connection to the drainage system to a vent stack, stack vent or termination outdoors. Where connecting to a vent stack or stack vent, either one must be sized to supply adequate air to each vent connection. For example, the circumstance may arise where the size of a stack vent or vent stack would have to be increased to serve a connected, individual, branch, circuit or relief vent. Consideration must be given to the fact that the developed length of a stack vent will also contribute to the overall friction loss of any vent connected to the stack vent. For example, a 2-inch (51 mm) branch vent connecting to a 2-inch (51 mm) stack vent will have an overall friction loss that is based on the developed length of the branch vent plus the developed length of the stack vent.

If a vent does not connect to a vent stack or stack vent, the developed length is measured to the point of termination in the outdoor air.

INTERNATIONAL CODE COUNCIL®
Copyright © 2015 ICC. ALL RIGHTS RESERVED. Accessed by David Dammon on Jun 21, 2017 12:30:52 PM pursuant to License Agreement with ICC. No further reproduction or distribution authorized. ANY UNAUTHORIZED REPRODUCTION OR DISTRIBUTION IS A VIOLATION OF THE FEDERAL COPYRIGHT ACT AND THE LICENSE AGREEMENT, AND SUBJECT TO CIVIL AND CRIMINAL PENALTIES THEREUNDER.

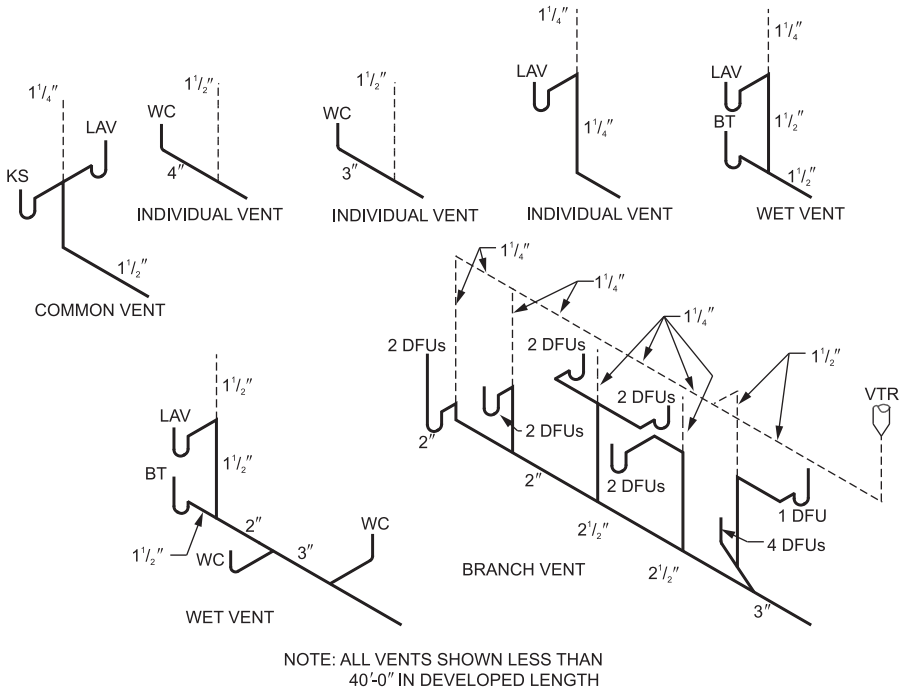

NOTE: ALL VENTS SHOWN LESS THAN 40′-0″ IN DEVELOPED LENGTH

For SI: 1 inch = 25.4 mm, 1 foot = 304.8 mm.

Figure 906.2(1)
VENT SIZING

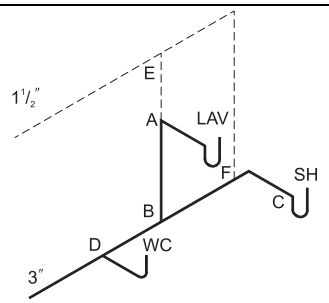

NOTE: ALL VENTS SHOWN LESS THAN 40′-0″ IN DEVELOPED LENGTH

SECTION	LAV SOURCE OF WET VENT	SHOWER SOURCE OF WET VENT
A-B	1½″	1¼″
B-D	2″	2″
C-F	1½″	1½″
B-F	1½″	2″
A-E	1½″	1¼″
E-F	1¼″	1½″

For SI: 1 inch = 25.4 mm, 1 foot = 304.8 mm.

Figure 906.2(2)
VENT SIZING

906.4 Multiple branch vents. Where multiple *branch* vents are connected to a common *branch* vent, the common *branch* vent shall be sized in accordance with this section based on the size of the common horizontal drainage *branch* that is or would be required to serve the total *drainage fixture unit* load being vented.

❖ A common branch vent with multiple branch vent connections must be sized as though it were serving a branch drain sized to carry the total fixture load of all drains served by the branch vents.

Example:

Determine the proper sizes for the vent system shown in Commentary Figure 906.4. Note that vent developed lengths are assumed to be less than 40 feet (12 192 mm) up to point Z.

The total dfu load of the horizontal drain branches served by branch vents A, B and C at point W is 16 dfu. In accordance with Table 710.1(2), the minimum required size of a horizontal drain branch with that load is 3 inches (76 mm); therefore, the size of the common branch vent between points W and X is 1½ inches (38 mm).

The horizontal drain branch served by the common branch vent at point X is 19 dfu. Table 710.1(2) requires the horizontal branch drain to be 3 inches (76 mm). The common branch vent between points X and Y is then required to be 1½ inches (38 mm). Because the horizontal branch drain size is 3 inches (76 mm), the common branch vent between points Y and Z must also be 1½ inches (38 mm) in diameter. Because the dfu load of the horizontal drain branch served by the common branch vent at point Z is 22 dfu, the vertical vent at point Z must be at least 2 inches (51 mm) in diameter. If the developed length of the vertical vent from point Z to the vent terminal plus the developed length of any branch vent exceeds 40 feet (12 192 mm), the vertical vent and such branch vent must be increased in diameter by one pipe size.

INTERNATIONAL CODE COUNCIL®
Copyright © 2015 ICC. ALL RIGHTS RESERVED. Accessed by David Dammon on Jun 21, 2017 12:30:52 PM pursuant to License Agreement with ICC. No further reproduction or distribution authorized. ANY UNAUTHORIZED REPRODUCTION OR DISTRIBUTION IS A VIOLATION OF THE FEDERAL COPYRIGHT ACT AND THE LICENSE AGREEMENT, AND SUBJECT TO CIVIL AND CRIMINAL PENALTIES THEREUNDER.

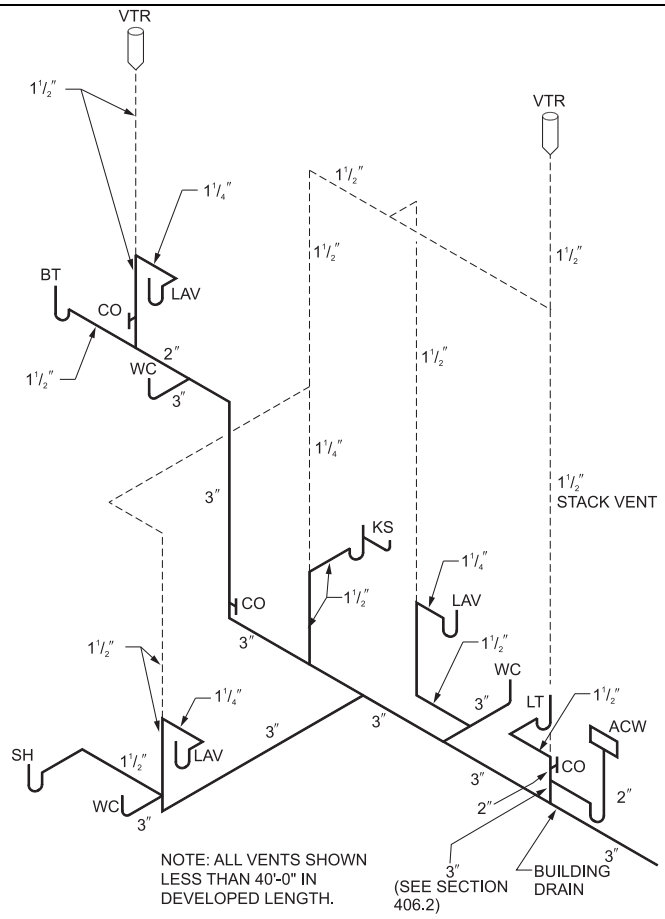

For SI: 1 inch = 25.4 mm, 1 foot = 304.8 mm.

Figure 906.2(3)
VENT SIZING

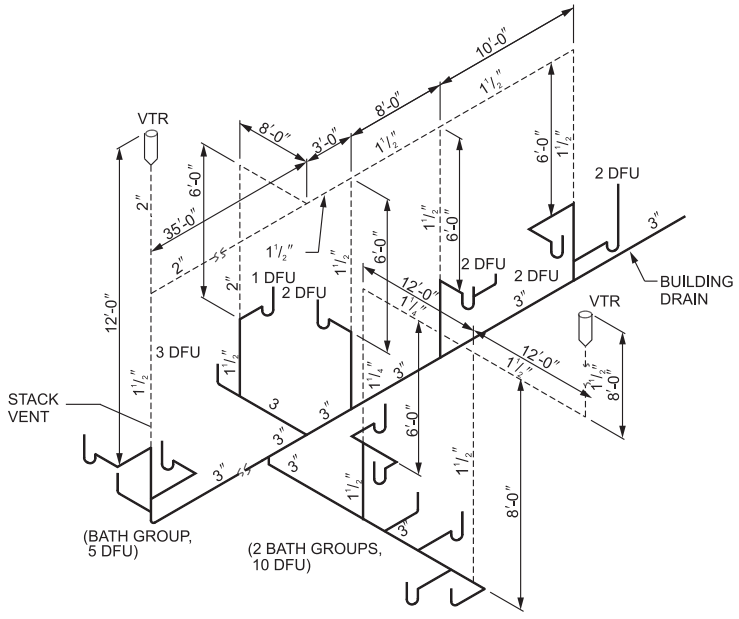

For SI: 1 inch = 25.4, 1 foot = 304.8 mm.

Figure 906.2(4)
VENT SIZING

INTERNATIONAL CODE COUNCIL®
Copyright © 2015 ICC. ALL RIGHTS RESERVED. Accessed by David Dammon on Jun 21, 2017 12:30:52 PM pursuant to License Agreement with ICC. No further reproduction or distribution authorized. ANY UNAUTHORIZED REPRODUCTION OR DISTRIBUTION IS A VIOLATION OF THE FEDERAL COPYRIGHT ACT AND THE LICENSE AGREEMENT, AND SUBJECT TO CIVIL AND CRIMINAL PENALTIES THEREUNDER.

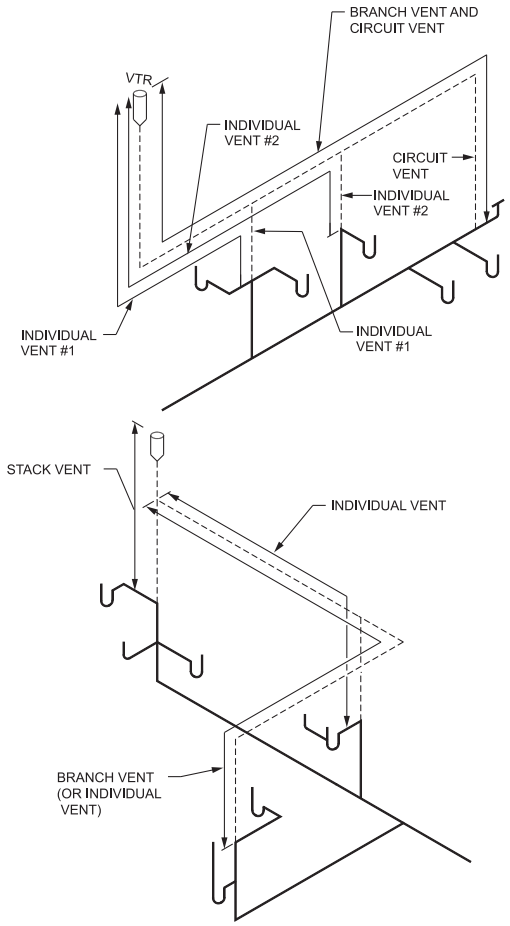

Figure 906.3(1)
DEVELOPED LENGTH OF VENTS

906.5 Sump vents. Sump vent sizes shall be determined in accordance with Sections 906.5.1 and 906.5.2.

❖ The following sections specify the method of sizing sump vents and sewage ejector relief pipes.

906.5.1 Sewage pumps and sewage ejectors other than pneumatic. Drainage piping below *sewer* level shall be vented in the same manner as that of a gravity system. Building sump vent sizes for sumps with sewage pumps or sewage ejectors, other than pneumatic, shall be determined in accordance with Table 906.5.1.

❖ Sumps receiving sanitary drainage must be vented. Where a sewage pump is used, the vent is allowed to connect to the building venting system. Table 906.5.1 specifies the minimum vent pipe size based on the discharge capacity of the pump and the developed length of vent pipe. The sump vent must be a minimum of $1^1/_4$ inches (32 mm) (see Commentary Figure 906.5.1).

Building subdrain systems, including their venting systems, are designed no differently than gravity drainage systems, except that a sewage pump or ejector is required. The vents for both gravity and subdrain systems may be combined if pneumatic ejector vents are independently terminated to the outdoors (see Section 906.5.2).

906.5.2 Pneumatic sewage ejectors. The air pressure relief pipe from a pneumatic sewage ejector shall be connected to an independent vent *stack* terminating as required for vent extensions through the roof. The relief pipe shall be sized to relieve air pressure inside the ejector to atmospheric pressure, but shall be not less than $1^1/_4$ inches (32 mm) in size.

❖ Pneumatic sewage ejectors operate at high air pressures, forcing the sewage from the ejector sump to the gravity drainage system. An independent vent is necessary to relieve the pressure in the sump at the com-

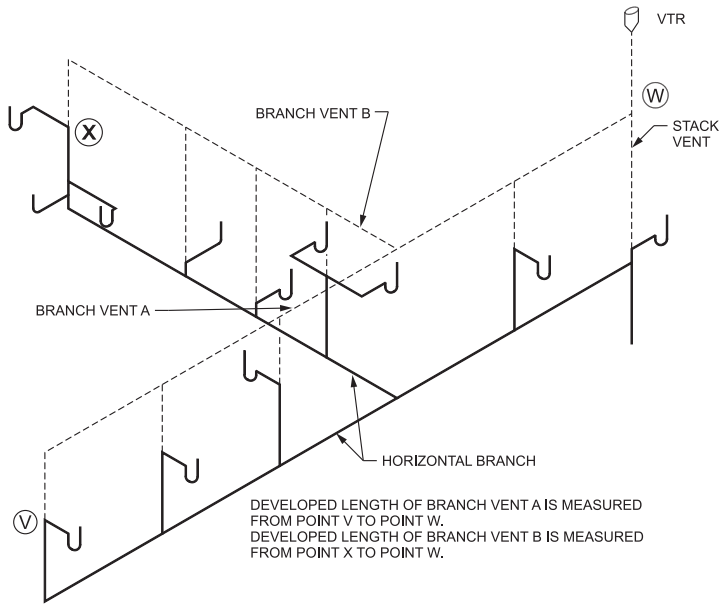

Figure 906.3(2)
DEVELOPED LENGTH OF VENTS

INTERNATIONAL CODE COUNCIL®
Copyright © 2015 ICC. ALL RIGHTS RESERVED. Accessed by David Dammon on Jun 21, 2017 12:30:52 PM pursuant to License Agreement with ICC. No further reproduction or distribution authorized. ANY UNAUTHORIZED REPRODUCTION OR DISTRIBUTION IS A VIOLATION OF THE FEDERAL COPYRIGHT ACT AND THE LICENSE AGREEMENT, AND SUBJECT TO CIVIL AND CRIMINAL PENALTIES THEREUNDER.

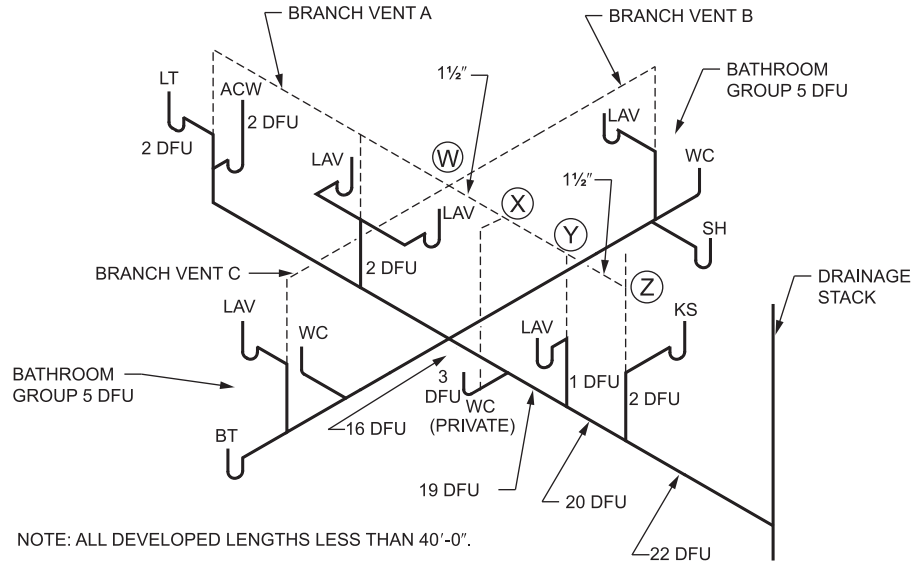

For SI: 1 inch = 25.4 mm, 1 foot = 304.8 mm.

Figure 906.4
COMMON BRANCH VENT

pletion of the ejector cycle. If such a vent is connected to the building venting system, tremendous pressure differentials would be created, disrupting the normal operation of the drainage system.

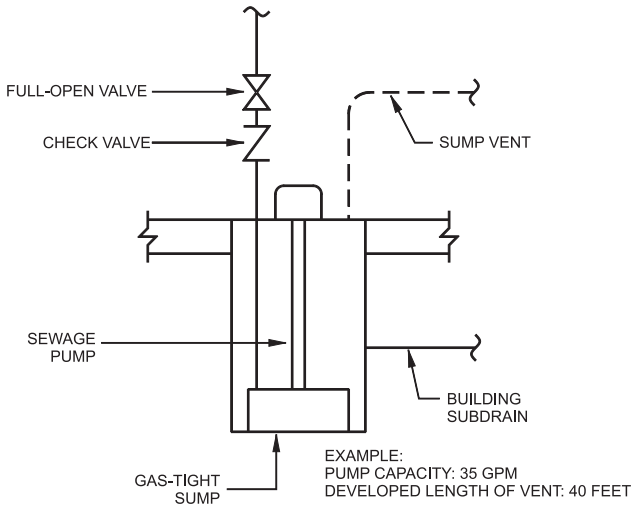

For SI: 1 foot = 304.8 mm, 1 gallon per minute = 3.785 L/m.

Figure 906.5.1
SUMP VENT

SECTION 907
VENTS FOR STACK OFFSETS

907.1 Vent for horizontal offset of drainage stack. Horizontal offsets of drainage *stacks* shall be vented where five or more *branch intervals* are located above the offset. The offset shall be vented by venting the upper section of the drainage *stack* and the lower section of the drainage *stack*.

❖ This section requires venting offsets to reduce air pressure differentials. Offsets involve changes in the direction of flow from true vertical to greater than 45 degrees (0.79 rad) from vertical. Such changes upset the nonturbulent annular flow in the stack, thus creating turbulent flow with the possibility for full bore flow in sections of the offset. Significant pressure fluctuations may result, which are stabilized by the offset vents. Refer to Section 704.3 for information on hydraulic jump.

An offset is vented to reduce the air pressure differentials that occur in the drainage stack and offset (see the commentary to Section 704.3 for flow in an offset). Venting is necessary when the drainage stack above the offset is five or more branch intervals in height.

An offset in a drainage stack is vented as two separate stacks with a vent connection for both the upper stack and the lower stack (see commentary, Sections 907.2 and 907.3). The offset vents must be no less than the size of the vent stack, which is determined in accordance with Section 906.

TABLE 906.5.1. See page 9-21.

The vent for a sump provides a supply of air into the sump while the pumping equipment is operating. The supply of air prevents a pressure differential from occurring on the drainage supply pipe.

The sump vent also allows air to be displaced when drainage is filling the sump and air to be admitted when the sump is emptied. Because the air requirements are minimal, the resulting pipe size is small.

INTERNATIONAL CODE COUNCIL®
Copyright © 2015 ICC. ALL RIGHTS RESERVED. Accessed by David Dammon on Jun 21, 2017 12:30:52 PM pursuant to License Agreement with ICC. No further reproduction or distribution authorized. ANY UNAUTHORIZED REPRODUCTION OR DISTRIBUTION IS A VIOLATION OF THE FEDERAL COPYRIGHT ACT AND THE LICENSE AGREEMENT, AND SUBJECT TO CIVIL AND CRIMINAL PENALTIES THEREUNDER.

TABLE 906.5.1
SIZE AND LENGTH OF SUMP VENTS

DISCHARGE CAPACITY OF PUMP (gpm)	MAXIMUM DEVELOPED LENGTH OF VENT (feet)[a]					
	Diameter of vent (inches)					
	$1^1/_4$	$1^1/_2$	2	$2^1/_2$	3	4
10	No limit[b]	No limit	No limit	No limit	No limit	No limit
20	270	No limit	No limit	No limit	No limit	No limit
40	72	160	No limit	No limit	No limit	No limit
60	31	75	270	No limit	No limit	No limit
80	16	41	150	380	No limit	No limit
100	10[c]	25	97	250	No limit	No limit
150	Not permitted	10[c]	44	110	370	No limit
200	Not permitted	Not permitted	20	60	210	No limit
250	Not permitted	Not permitted	10	36	132	No limit
300	Not permitted	Not permitted	10[c]	22	88	380
400	Not permitted	Not permitted	Not permitted	10[c]	44	210
500	Not permitted	Not permitted	Not permitted	Not permitted	24	130

For SI: 1 inch = 25.4 mm, 1 foot = 304.8 mm, 1 gallon per minute = 3.785 L/m.

a. *Developed length* plus an appropriate allowance for entrance losses and friction due to fittings, changes in direction and diameter. Suggested allowances shall be obtained from NBS Monograph 31 or other *approved* sources. An allowance of 50 percent of the *developed length* shall be assumed if a more precise value is not available.

b. Actual values greater than 500 feet.

c. Less than 10 feet.

The developed length of a sump vent is measured from the sump connection to a vent stack or stack vent connection. If the sump vent does not connect to a vent stack, the developed length is measured to the point of termination outside. In accordance with Note a, the overall (equivalent) length of a vent is the actual developed length plus an allowance for the equivalent length of fittings. For example, using the rule-of-thumb 50-percent allowance, a sump vent with an actual developed length of 90 feet (27 432 mm) would have an overall developed length of 135 feet (41 148 mm) because of the addition of the equivalent lengths of fittings.

907.2 Upper section. The upper section of the drainage *stack* shall be vented as a separate *stack* with a vent *stack* connection installed in accordance with Section 904.4. The offset shall be considered the base of the *stack*.

❖ The vent for the upper section of the stack must connect to the stack in accordance with Section 904.4. The venting would be equivalent to venting the upper section as if it were a separate stack. If the vent stack for the upper section does not connect to the vent stack for the lower section (see commentary, Section 907.3), the vent need be sized only for the upper section (see Commentary Figure 907.2).

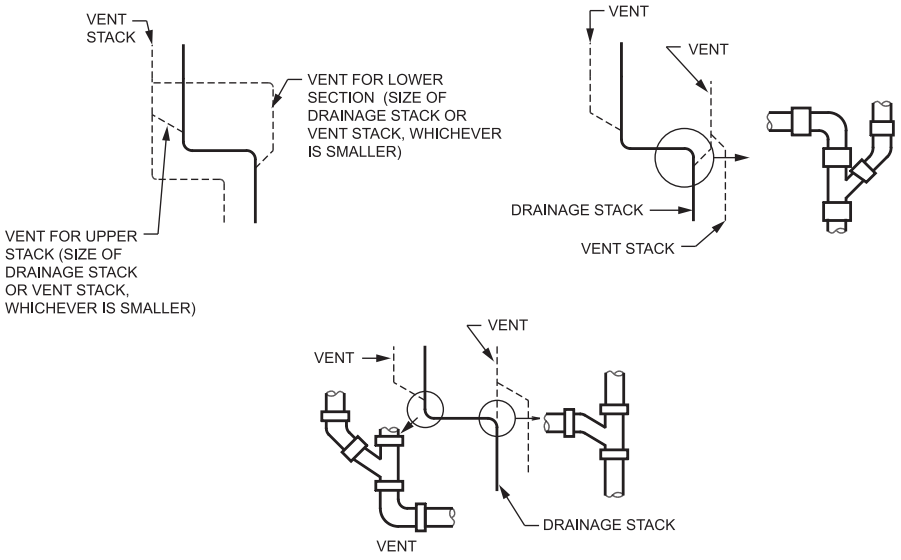

Figure 907.2
VENT CONNECTIONS FOR HORIZONTAL OFFSET

INTERNATIONAL CODE COUNCIL®
Copyright © 2015 ICC. ALL RIGHTS RESERVED. Accessed by David Dammon on Jun 21, 2017 12:30:52 PM pursuant to License Agreement with ICC. No further reproduction or distribution authorized. ANY UNAUTHORIZED REPRODUCTION OR DISTRIBUTION IS A VIOLATION OF THE FEDERAL COPYRIGHT ACT AND THE LICENSE AGREEMENT, AND SUBJECT TO CIVIL AND CRIMINAL PENALTIES THEREUNDER.

907.3 Lower section. The lower section of the drainage *stack* shall be vented by a yoke vent connecting between the offset and the next lower horizontal *branch*. The yoke vent connection shall be permitted to be a vertical extension of the drainage *stack*. The size of the yoke vent and connection shall be a minimum of the size required for the vent *stack* of the drainage *stack*.

❖ The vent for the lower section of the stack may connect as an extension of the drainage stack (similar to a stack vent) or as a yoke vent. A yoke vent is an upright (vertical) wye connection to the vertical stack. The vent system for the lower section must be sized for the total load on the drainage stack. The size of the vent connection must not be less than the size of the vent stack that serves the drainage stack (see Commentary Figure 907.2).

SECTION 908
RELIEF VENTS—STACKS OF MORE THAN 10 BRANCH INTERVALS

908.1 Where required. Soil and waste *stacks* in buildings having more than 10 *branch intervals* shall be provided with a relief vent at each tenth interval installed, beginning with the top floor.

❖ This section requires a method of relieving pressure conditions in drainage stacks more than 10 branch intervals in height.

The flow in a drainage stack creates both negative and positive pressures. The vent system is designed to equalize the air pressures at the trap seal. A relief vent is required to assist the fixture venting and the venting at the base of the stack by providing midpoint connections to the stack. The relief vent prevents excessive pressure from being created by emitting or admitting air at specified points within the stack. A relief vent must be located every 10 branch intervals, measured from the highest horizontal drainage branch, which is typically the top floor. The interval breaks are then calculated downward to the base of the stack (see Commentary Figure 908.1).

908.2 Size and connection. The size of the relief vent shall be equal to the size of the vent *stack* to which it connects. The lower end of each relief vent shall connect to the soil or waste *stack* through a wye below the horizontal *branch* serving the floor, and the upper end shall connect to the vent *stack* through a wye not less than 3 feet (914 mm) above the floor.

❖ This section requires the size of the relief vent to be at least equal to the size of the vent stack to which it connects. This is considered the minimum necessary to provide sufficient venting capacity in both the relief vent and the stack vent to which it is connected.

The lower end of the relief vent is connected to the soil or waste stack below the level of the horizontal branch that serves the floor level within the branch interval required to have the relief vent. The location of this connection is intended to allow waste that might get into the relief vent, including condensation, to reach a waste line. This connection is made using a wye fitting installed as a drainage fitting in order to not impair the flow. The upper connection of the relief vent is made to the vent stack and is to be located a minimum of 3 feet (914 mm) above the floor level of the same horizontal branch. This connection is made using a wye fitting installed in an inverted position. The 3-foot (914 mm) minimum height required is a common theme in this chapter and is intended to prevent waste flow from entering the vent stack.

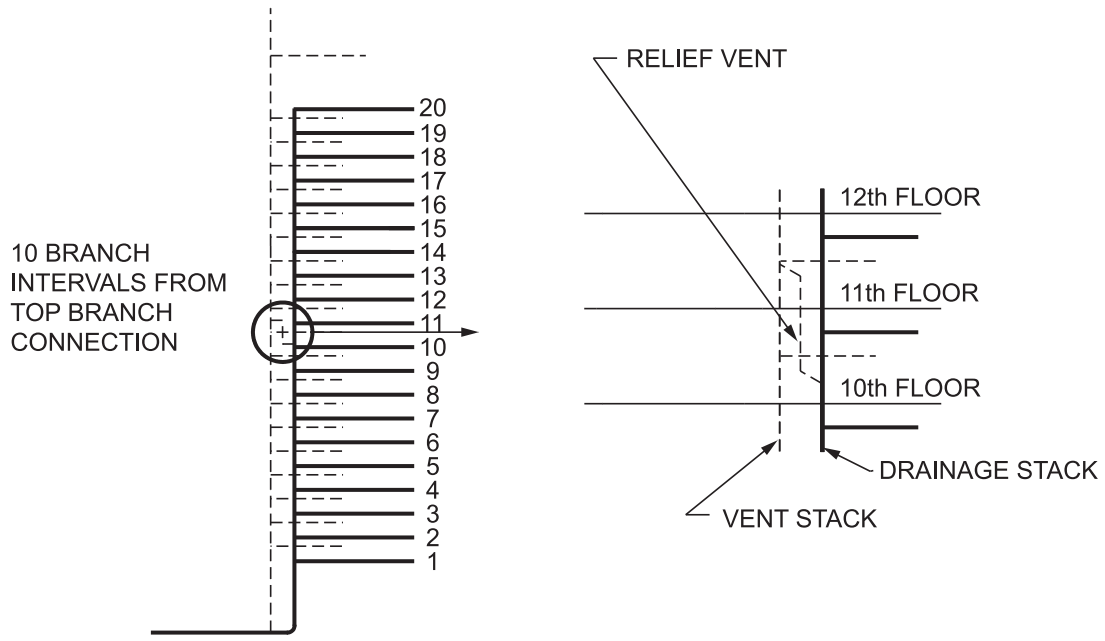

Figure 908.1
RELIEF VENT CONNECTION

INTERNATIONAL CODE COUNCIL®
Copyright © 2015 ICC. ALL RIGHTS RESERVED. Accessed by David Dammon on Jun 21, 2017 12:30:52 PM pursuant to License Agreement with ICC. No further reproduction or distribution authorized. ANY UNAUTHORIZED REPRODUCTION OR DISTRIBUTION IS A VIOLATION OF THE FEDERAL COPYRIGHT ACT AND THE LICENSE AGREEMENT, AND SUBJECT TO CIVIL AND CRIMINAL PENALTIES THEREUNDER.

SECTION 909
FIXTURE VENTS

909.1 Distance of trap from vent. Each fixture trap shall have a protecting vent located so that the slope and the *developed length* in the *fixture drain* from the trap weir to the vent fitting are within the requirements set forth in Table 909.1.

Exception: The *developed length* of the *fixture drain* from the trap weir to the vent fitting for self-siphoning fixtures, such as water closets, shall not be limited.

❖ This section contains the location and installation requirements for vent pipes serving as fixture vents. The distance from every trap to its vent is limited to reduce the possibility of the trap self-siphoning. Self-siphoning of a trap is the siphoning caused by the discharge from the fixture the trap serves. The intent is to locate the vent within the hydraulic gradient of the fixture drain so as to prevent the opening to the vent from being occluded by waste flow [see commentary, Section 909.2 and Commentary Figure 909.1(1)].

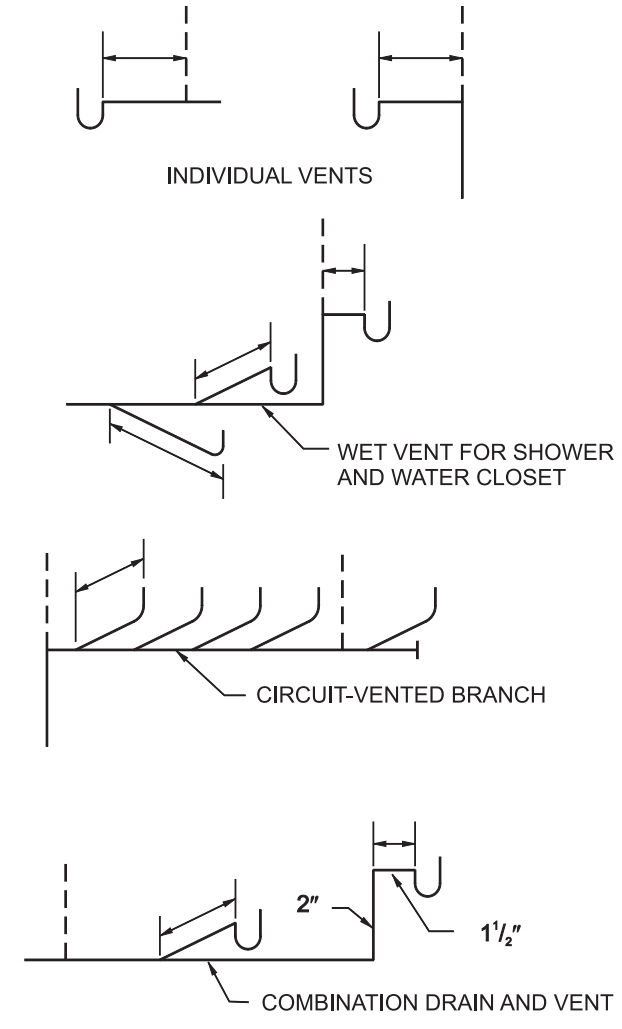

For SI: 1 inch = 25.4 mm.

Figure 909.1(1)
DISTANCE FROM TRAP TO VENT

Self-siphoning fixtures, such as water closets and siphon action urinals, can have an unlimited distance from the trap weir to the vent. The maximum distance between the trap weir and the vent is to protect the trap against self-siphoning. Fixtures that depend on siphon action for proper operation will operate properly no matter how far the vent is located from the fixture.

Studies have been done addressing the trap-to-vent distance for a water closet. Because the water closet relies on self-siphonage to operate properly, and the trap is resealed after each use, there is no need for limiting the distance from the water closet to a vent. The water closet fixture drain must be vented in all cases, but limiting the distance between the vent connection and the water closet appears to serve no purpose. A water closet or other self-siphoning fixture drain can have a total fall greater than the diameter of the fixture drain. This is reinforced by Section 909.2.

Commentary Figure 909.1(2) illustrates the slope required to achieve the maximum length of a $1^1/_2$-inch (38 mm) fixture drain between the trap and the vent serving the trap. For shorter distances between the trap weir, the fixture drain could be sloped greater that $^1/_4$ inch per foot (6 mm per 300 mm) as long as the elevation of the trap weir is not higher than the elevation of the top of the vent opening. Because some drainage fittings might not accommodate the connection of a fixture drain having a significant slope, it would be prudent to set all fixture drain pipes from the trap weir to the vent at a slope of $^1/_4$ inch per foot (6 mm per 300 mm). Note that the illustration shows the measurement of the pipe length to be from the bottom of each fitting's hub and not necessarily from the trap weir to the top of the opening of the fitting in the stack. There are two reasons for this: 1) the depth of flow slightly decreases as the liquid flows towards the vent opening because the flow velocity increases slightly due to the slope of the fixture drain and 2) the indicated points are easily identified in the field whereas the exact points of the trap weir and the vent opening locations are difficult to determine.

TABLE 909.1
MAXIMUM DISTANCE OF FIXTURE TRAP FROM VENT

SIZE OF TRAP (inches)	SLOPE (inch per foot)	DISTANCE FROM TRAP (feet)
$1^1/_4$	$^1/_4$	5
$1^1/_2$	$^1/_4$	6
2	$^1/_4$	8
3	$^1/_8$	12
4	$^1/_8$	16

For SI: 1 inch = 25.4 mm, 1 foot = 304.8 mm, 1 inch per foot = 83.3 mm/m.

❖ The distances listed in Table 909.1 are intended to prevent the weir of the trap from being located above the highest inlet to the vent. As the total change in elevation of a fixture drain (resulting from the fixture drain's slope) approaches the inside diameter of the drain, the weir of the trap approaches the highest level

INTERNATIONAL CODE COUNCIL®
Copyright © 2015 ICC. ALL RIGHTS RESERVED. Accessed by David Dammon on Jun 21, 2017 12:30:52 PM pursuant to License Agreement with ICC. No further reproduction or distribution authorized. ANY UNAUTHORIZED REPRODUCTION OR DISTRIBUTION IS A VIOLATION OF THE FEDERAL COPYRIGHT ACT AND THE LICENSE AGREEMENT, AND SUBJECT TO CIVIL AND CRIMINAL PENALTIES THEREUNDER.

of the vent connection and self-siphoning is more likely.

When the trap weir rises above the highest inlet of the vent opening, it is commonly referred to as either a full or half S trap. This slang expression is derived from the concept that such a piping arrangement creates a self-siphoning potential similar to that of an S trap [see Commentary Figures 909.1(1) and 909.1(2)]. The intent of Section 909.2 is to prevent creating an S-trap effect, which increases the possibility of self-siphonage.

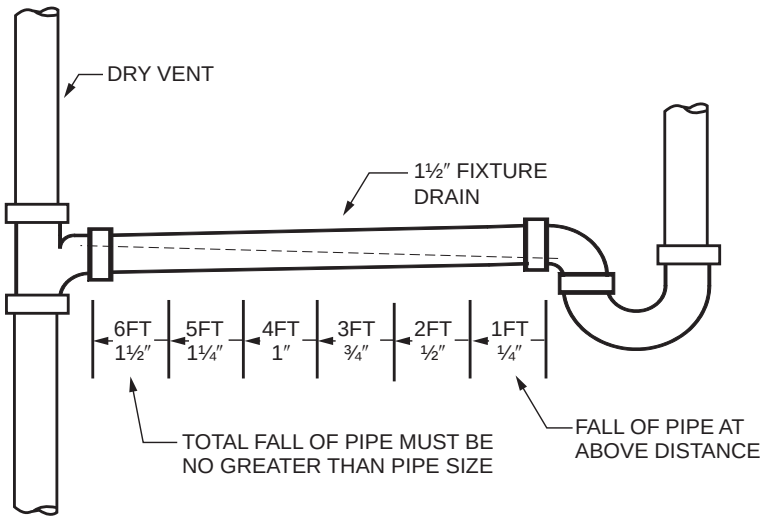

For SI: 1 inch = 25.4 mm.

Figure 909.1(2)
MAXIMUM FALL OF FIXTURE DRAIN BETWEEN TRAP AND VENT

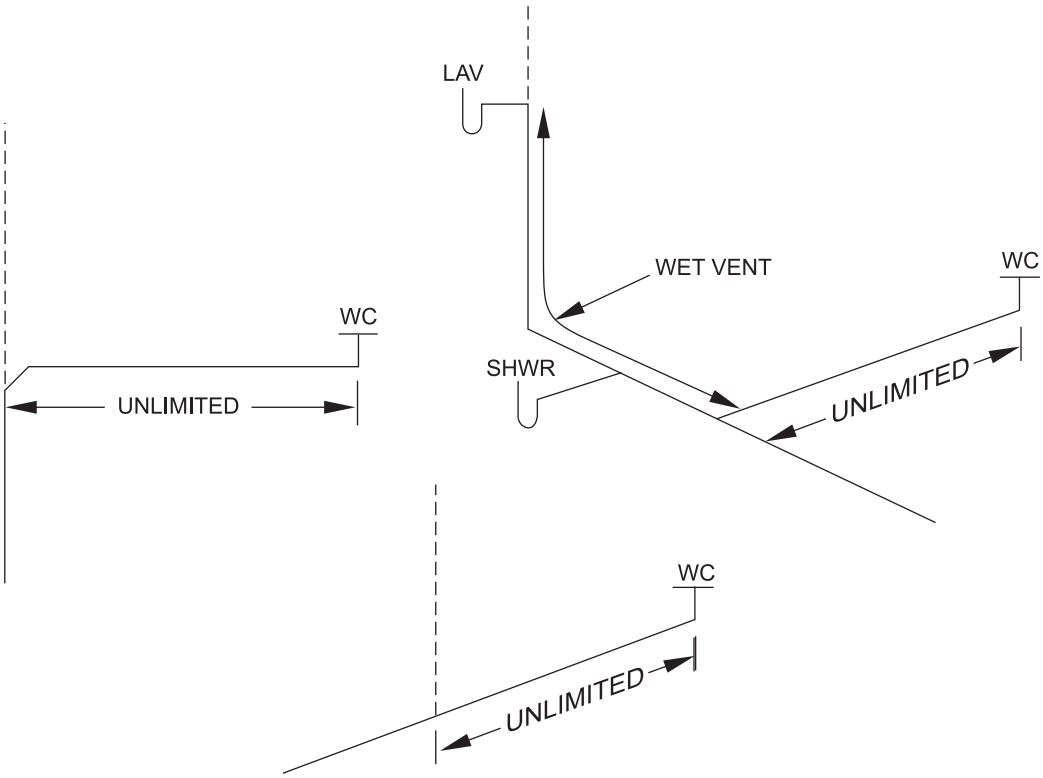

Figure 909.1(3)
TRAP TO VENT DISTANCE FOR WATER CLOSETS

INTERNATIONAL CODE COUNCIL®
Copyright © 2015 ICC. ALL RIGHTS RESERVED. Accessed by David Dammon on Jun 21, 2017 12:30:52 PM pursuant to License Agreement with ICC. No further reproduction or distribution authorized. ANY UNAUTHORIZED REPRODUCTION OR DISTRIBUTION IS A VIOLATION OF THE FEDERAL COPYRIGHT ACT AND THE LICENSE AGREEMENT, AND SUBJECT TO CIVIL AND CRIMINAL PENALTIES THEREUNDER.

909.2 Venting of fixture drains. The total fall in a *fixture drain* due to pipe slope shall not exceed the diameter of the *fixture drain*, nor shall the vent connection to a *fixture drain*, except for water closets, be below the weir of the trap.

❖ This section reinforces the requirement in Section 909.1. The trap weir must stay below the highest inlet to the vent except for fixtures with integral traps (see commentary, Section 909.1). The fixture drain cannot offset vertically or drop vertically, other than the required slope, between the trap and its vent connection.

The type of fitting used to connect a fixture drain to the fixture branch is also limited. Where the fixture drain pipe runs horizontally and then turns vertically at the point of connection to the vent, a short-pattern fitting is necessary to keep the trap weir below the highest inlet to the vent. The type of transition fitting will necessarily be a sanitary tee except where the vent connects to the horizontal portion of the fixture drain. Although a long-pattern fitting (including a tee-wye or a combination wye-eighth bend) is recommended for creating the proper flow into the vertical drain, such a fitting greatly increases the possibility of self-siphonage of the trap seal and is, therefore, prohibited by this section [see Commentary Figures 909.2(1) and (2)].

Water closets are not regulated by this section. This section specifies a requirement to reduce the possibility of self-siphoning of the trap seal for a given fixture. Water closets (and siphon-action urinals), however, are designed for siphon action of the fixture. The fixture traps must self-siphon during each flushing cycle to accomplish total evacuation of the fixture contents. The flushing device is further designed to refill the trap seal at the completion of the flushing cycle. This operation may be observed during each flushing cycle of a water closet when the water in the bowl is almost completely removed. This self-siphoning action is what the requirements of Sections 909.1 and 909.2 attempt to prevent in other fixtures [see Commentary Figure 909.1(3)].

909.3 Crown vent. A vent shall not be installed within two pipe diameters of the trap weir.

❖ Crown venting is any arrangement in which a vent connects at the top of the weir (crown) of a trap. Crown vented "P" and "S" traps used to be manufactured with vent connections as an integral part of the trap.

The problem with this type of connection is that the vent opening becomes blocked, thus closing the vent. The blockage is a result of the action of the drainage flowing through the trap. The flow direction and velocity will force waste up into the vent connection, eventually clogging it with debris. The vent connection must therefore be a minimum of two pipe diameters downstream from the trap weir to prevent the vent from becoming blocked [see Commentary Figures 909.3(1) and 909.3(2)].

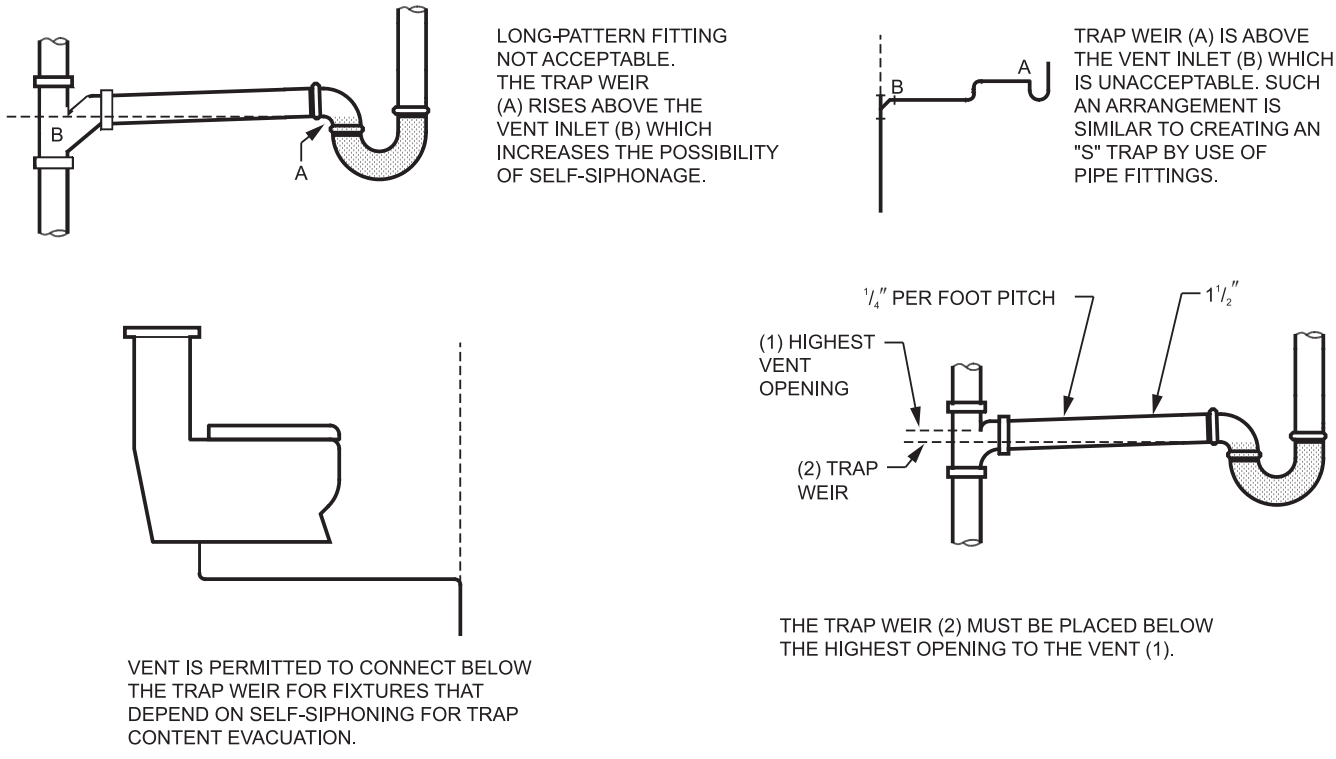

For SI: 1 inch = 25.4 mm, 1 inch per foot = 83.33 mm/m.

Figure 909.2(1)
VENT CONNECTION

INTERNATIONAL CODE COUNCIL®
Copyright © 2015 ICC. ALL RIGHTS RESERVED. Accessed by David Dammon on Jun 21, 2017 12:30:52 PM pursuant to License Agreement with ICC. No further reproduction or distribution authorized. ANY UNAUTHORIZED REPRODUCTION OR DISTRIBUTION IS A VIOLATION OF THE FEDERAL COPYRIGHT ACT AND THE LICENSE AGREEMENT, AND SUBJECT TO CIVIL AND CRIMINAL PENALTIES THEREUNDER.

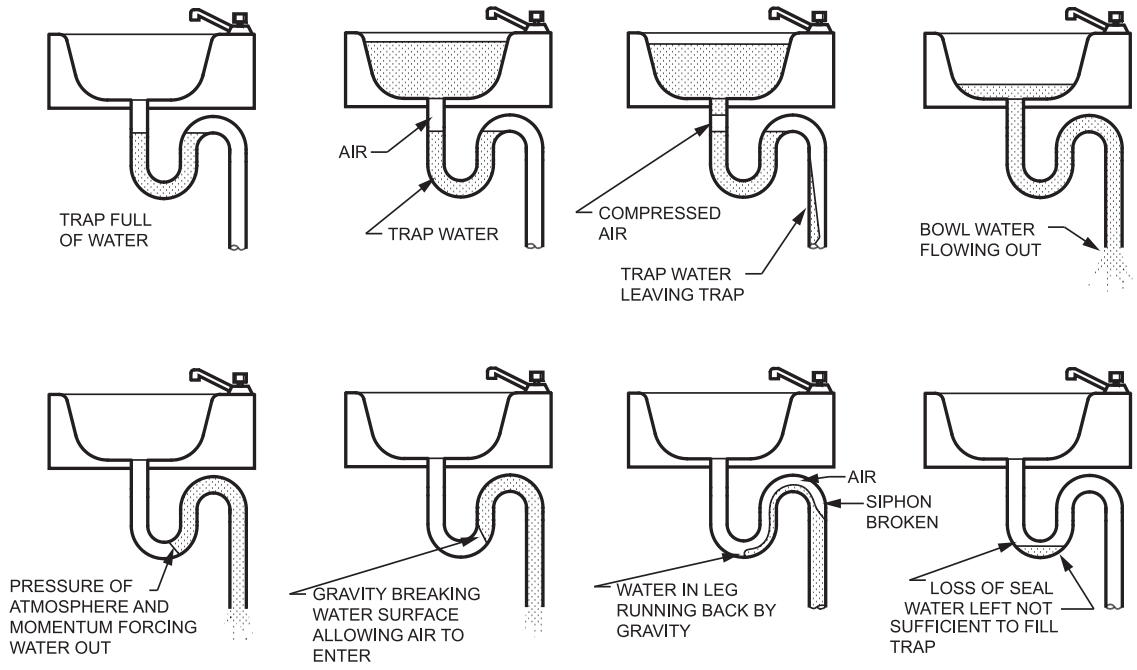

Figure 909.2(2)
SELF-SIPHONING PHENOMENON

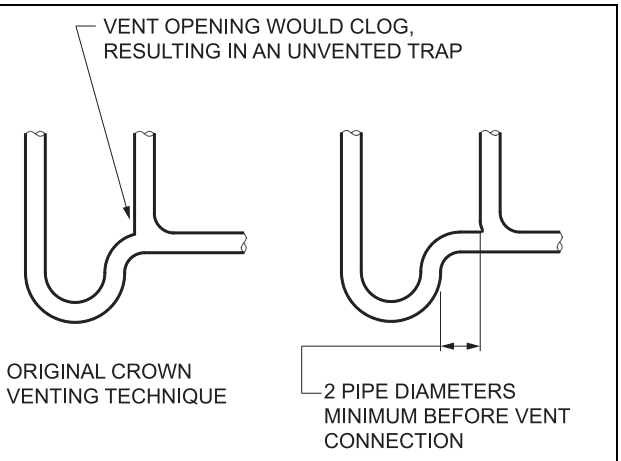

TRAP SIZE	MINIMUM DISTANCE TRAP TO VENT
$1^1/_4''$	$2^1/_2''$
$1^1/_2''$	$3''$
$2''$	$4''$
$3''$	$6''$

For SI: 1 inch = 25.4 mm.

Figure 909.3(1)
CROWN VENTING

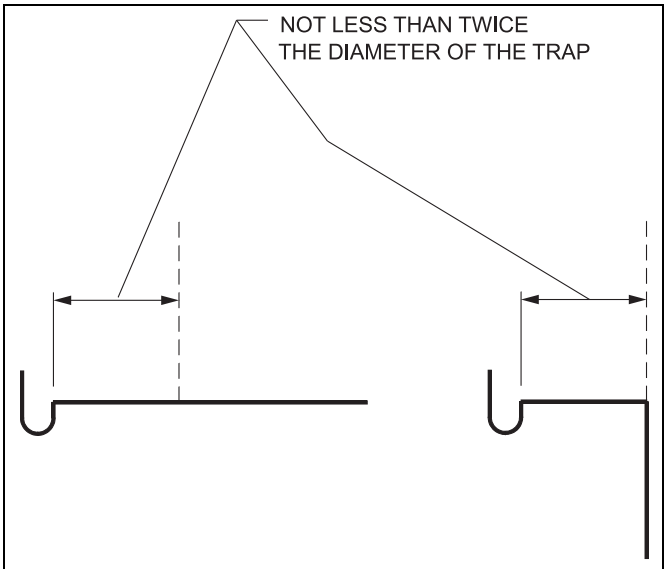

Figure 909.3(2)
MINIMUM TRAP TO VENT DISTANCE

SECTION 910
INDIVIDUAL VENT

910.1 Individual vent permitted. Each trap and trapped fixture is permitted to be provided with an individual vent. The individual vent shall connect to the *fixture drain* of the trap or trapped fixture being vented.

❖ The simplest form of venting any trap or trapped fixture is an individual vent for each trap. A single vent pipe is connected between the trap or fixture and the branch connection to the drainage system. The protecting vent must be between the fixture trap and the source of pressure fluctuations. If drainage flows from another fixture between the vent connection and the

INTERNATIONAL CODE COUNCIL®
Copyright © 2015 ICC. ALL RIGHTS RESERVED. Accessed by David Dammon on Jun 21, 2017 12:30:52 PM pursuant to License Agreement with ICC. No further reproduction or distribution authorized. ANY UNAUTHORIZED REPRODUCTION OR DISTRIBUTION IS A VIOLATION OF THE FEDERAL COPYRIGHT ACT AND THE LICENSE AGREEMENT, AND SUBJECT TO CIVIL AND CRIMINAL PENALTIES THEREUNDER.

fixture trap, the vent is not installed as an individual vent. The only drainage flowing past a properly installed individual vent is from the fixture being vented.

An individual vent was previously called a "revent." This expression dates back to the original concepts in venting when it was believed that the only vent necessary was an extension of the drainage stack through the roof. It was later determined that a stack vent was inadequate for protecting the trap seals. Individual vents were added to assist the stack vent in protecting the trap seals. The individual vent was called a "revent" because it was considered to be additional venting to an already-vented system. The definition of the prefix "re-" is "repetition of a previous action." The name was changed to "individual vent" when it was determined that a stack vent was unnecessary if each trap was protected by a vent [see Commentary Figures 910.1(1) and 910.1(2)].

SECTION 911
COMMON VENT

911.1 Individual vent as common vent. An individual vent is permitted to vent two traps or trapped fixtures as a common vent. The traps or trapped fixtures being common vented shall be located on the same floor level.

❖ For common venting, the vent is classified and sized as an individual vent. The fixture drains being common vented are allowed to connect to either a vertical or horizontal drainage pipe. Any two fixtures can be common vented. Where pump-action discharge fixtures or water closets are common vented, Section 706.3 requires directional drainage fittings to prevent the discharge action of one fixture from interfering with the other fixture or causing a blowback into another fixture.

If two water closets are installed back to back at the same level and are common vented, the connection to the vertical drainage branch must be through a double combination wye and eighth bend. An exception for the installation of back-to-back water closet connections allows the use of a double sanitary tee where the distance between the outlet of the water closet and the

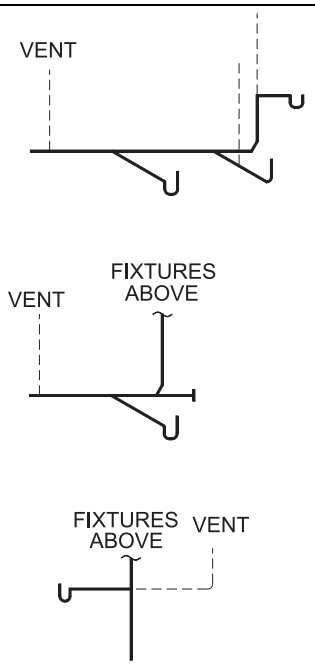

Figure 910.1(2)
IMPROPERLY INSTALLED INDIVIDUAL VENTS

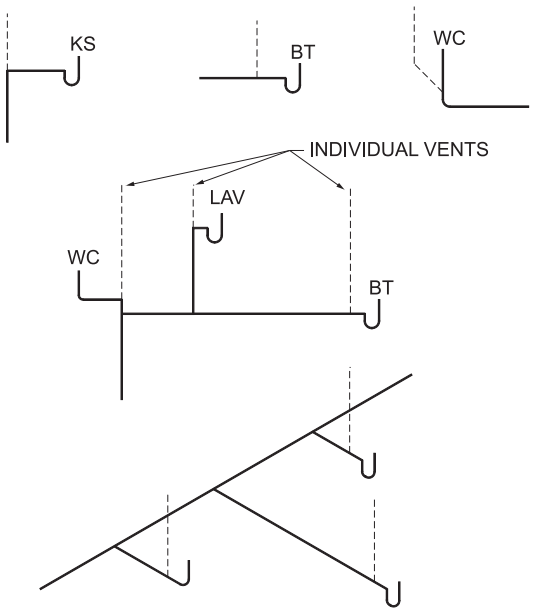

Figure 910.1(1)
INDIVIDUAL VENTS

INTERNATIONAL CODE COUNCIL®
Copyright © 2015 ICC. ALL RIGHTS RESERVED. Accessed by David Dammon on Jun 21, 2017 12:30:52 PM pursuant to License Agreement with ICC. No further reproduction or distribution authorized. ANY UNAUTHORIZED REPRODUCTION OR DISTRIBUTION IS A VIOLATION OF THE FEDERAL COPYRIGHT ACT AND THE LICENSE AGREEMENT, AND SUBJECT TO CIVIL AND CRIMINAL PENALTIES THEREUNDER.

connection to the double sanitary tee pattern is 18 inches (457 mm) or more. The fixtures being common vented must be located on the same floor level so that the flow velocities are kept low by the limiting distance of the vertical drop of waste [see Commentary Figures 911.1 and 706.3(5)].

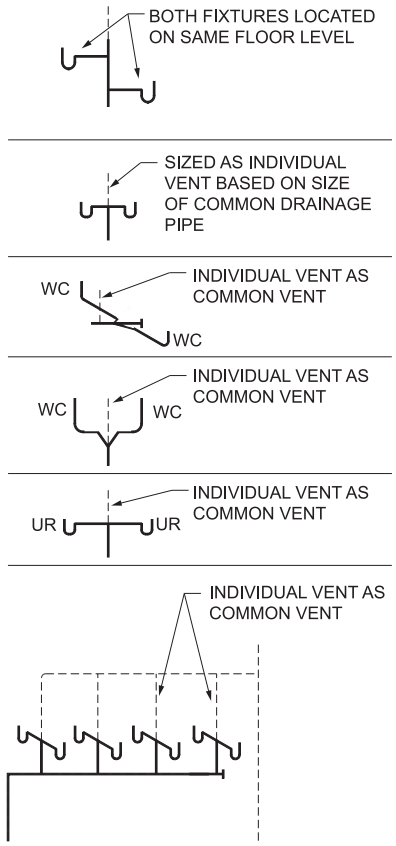

Figure 911.1
COMMON VENTS

911.2 Connection at the same level. Where the fixture drains being common vented connect at the same level, the vent connection shall be at the interconnection of the fixture drains or downstream of the interconnection.

❖ The most popular form of common venting is connecting two fixtures at the same level. A typical installation is two horizontal drains connecting to a vertical drain through a double-pattern fitting. The extension of the vertical pipe serves as the vent; however, two drains connecting horizontally to a horizontal drain through a double-pattern fitting is also a form of common venting. The vent is allowed to connect at the interconnection of the fixture drains or downstream along the horizontal drain.

The requirements of Section 905 regarding vent connection would apply, as well as those of Section 909.The trap-to-vent distances for each of the fixtures must comply with Table 909.1 (see commentary, Section 911.1 and Commentary Figure 911.2).

911.3 Connection at different levels. Where the fixture drains connect at different levels, the vent shall connect as a vertical extension of the vertical drain. The vertical drain pipe connecting the two *fixture drains* shall be considered the vent for the lower *fixture drain*, and shall be sized in accordance with Table 911.3. The upper fixture shall not be a water closet.

❖ This section applies only to vertical drain applications. Two fixtures within a single story are allowed to connect at different levels to a vertical drain and still be common vented. The vent remains an individual vent serving as a common vent. The drain pipe between the upper fixture and the lower fixture, however, must meet the oversizing requirement specified in Table 911.3. Although drainage flows in the pipe between the upper and lower fixture connections, the section of pipe is not classified as a wet vent despite the fact that it functions in the same manner as a wet vent. The

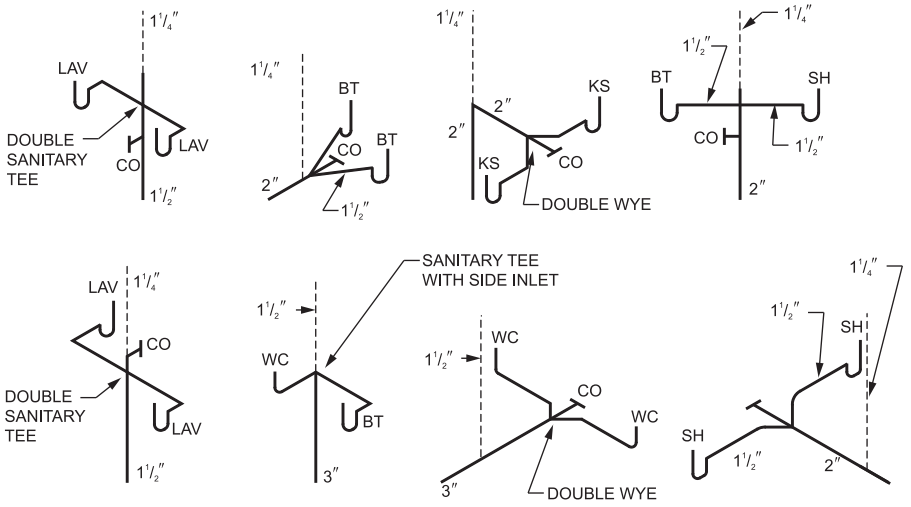

For SI: 1 inch = 25.4 mm.

Figure 911.2
COMMON VENTS WITH FIXTURE DRAINS CONNECTING AT SAME LEVEL

INTERNATIONAL CODE COUNCIL®
Copyright © 2015 ICC. ALL RIGHTS RESERVED. Accessed by David Dammon on Jun 21, 2017 12:30:52 PM pursuant to License Agreement with ICC. No further reproduction or distribution authorized. ANY UNAUTHORIZED REPRODUCTION OR DISTRIBUTION IS A VIOLATION OF THE FEDERAL COPYRIGHT ACT AND THE LICENSE AGREEMENT, AND SUBJECT TO CIVIL AND CRIMINAL PENALTIES THEREUNDER.

pipe is wet and does serve as a vent; however, it is classified as a common vent for purposes of the code (see Commentary Figure 911.3).

The fixture at the higher level is not allowed to be a water closet because the pressures created by the high-volume rapid discharge of a water closet could adversely affect the venting of lower fixtures.

TABLE 911.3
COMMON VENT SIZES

PIPE SIZE (inches)	MAXIMUM DISCHARGE FROM UPPER FIXTURE DRAIN (dfu)
$1^1/_2$	1
2	4
$2^1/_2$ to 3	6

For SI: 1 inch = 25.4 mm.

❖ The sizing of the common vent serving as a drain for the upper fixture and vent for the lower fixture is the same as the sizing for a wet vent. The same concepts of venting apply, hence the same sizing. The dry vent extension above the upper fixture connection is sized as an individual vent and is based on the largest fixture drain served. For example, the size of a dry vent serving a lavatory and water closet connecting at different levels is $1^1/_2$ inches (38 mm) because the water closet fixture drain cannot be less than 3 inches (76 mm).

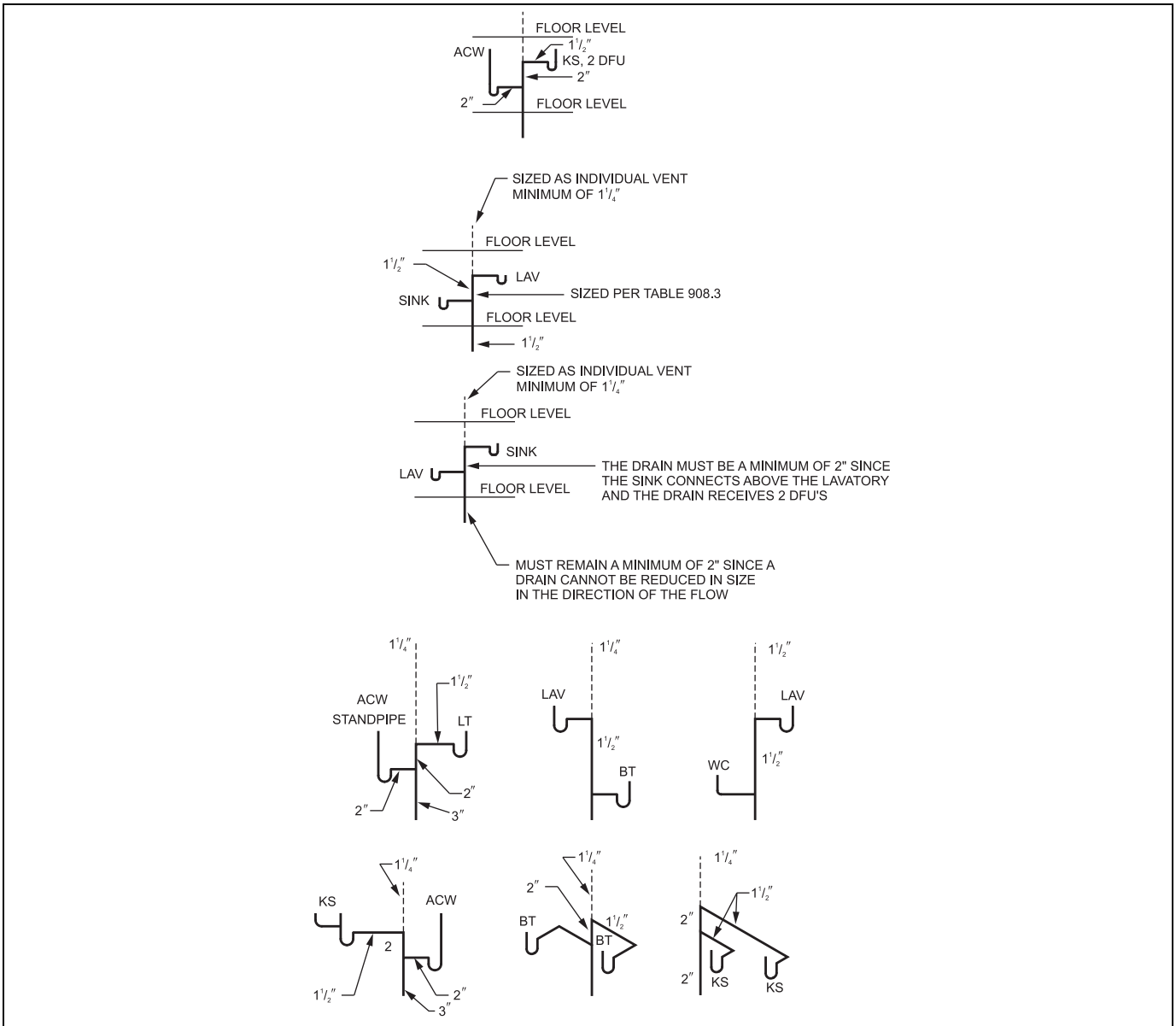

For SI: 1 inch = 25.4 mm.

Figure 911.3
COMMON VENTS WITH FIXTURE DRAINS CONNECTING AT DIFFERENT LEVELS

INTERNATIONAL CODE COUNCIL®
Copyright © 2015 ICC. ALL RIGHTS RESERVED. Accessed by David Dammon on Jun 21, 2017 12:30:52 PM pursuant to License Agreement with ICC. No further reproduction or distribution authorized. ANY UNAUTHORIZED REPRODUCTION OR DISTRIBUTION IS A VIOLATION OF THE FEDERAL COPYRIGHT ACT AND THE LICENSE AGREEMENT, AND SUBJECT TO CIVIL AND CRIMINAL PENALTIES THEREUNDER.

SECTION 912
WET VENTING

912.1 Horizontal wet vent permitted. Any combination of fixtures within two *bathroom groups* located on the same floor level is permitted to be vented by a horizontal wet vent. The wet vent shall be considered the vent for the fixtures and shall extend from the connection of the dry vent along the direction of the flow in the drain pipe to the most downstream *fixture drain* connection to the *horizontal branch drain*. Each wet-vented *fixture drain* shall connect independently to the horizontal wet vent. Only the fixtures within the *bathroom groups* shall connect to the wet-vented *horizontal branch drain*. Any additional fixtures shall discharge downstream of the horizontal wet vent.

❖ A horizontal wet vent is a horizontal branch drain pipe that is sized larger than is required by Section 710. The oversizing of the pipe allows for a large airspace above the maximum probable waste flow level in the pipe so as to provide for adequate venting air in the same pipe as the waste flow. In other words, the horizontal wet vent is a special type of vent pipe that is "wet" because it carries waste flow. Commentary Figure 912.1(1) shows a commonly installed horizontal wet vent for a single bathroom group. A horizontal wet vent can be used only for a limited number and type of fixtures contained in a maximum of two bathroom groups (see the definition of "Bathroom group" in Section 202).

The acceptance of horizontal wet venting for bathroom groups is based on the low probability of simultaneous discharge from the types of fixtures within the group, significant oversizing of the drain pipe and the limited number of drainage fixtures units allowed. Years of satisfactory performance of horizontal wet venting of bathroom groups in single-family residential dwellings [as covered by the *International Residential Code*® (IRC®)] has proven this method of venting. This method is similar to the long-proven methods of circuit venting and combination waste and vent arrangements that also use airspace above the waste flow level for venting fixtures connected to a horizontal drain pipe.

The maximum number and type of fixtures that can be accommodated by a horizontal wet vent are: two water closets, two lavatories, two bidets, two emergency floor drains (see definition of "Emergency floor drain" in Section 202) and two bathing fixtures (either bathtubs or showers). Note that a urinal is not on the list of bathroom group fixtures that can be served by a horizontal wet vent. A horizontal wet vent could have as few as two fixtures or as many as 10 fixtures, but no more than two fixtures of any type can be connected to the system. For example, three lavatories or three water closets cannot be connected to a horizontal wet vent. No other types of fixtures are allowed to discharge into the horizontal wet vent system. All fixtures connecting to a horizontal wet vent must be within the same floor level to avoid high flow velocities, which could cause excessive turbulence that might block the airspace (venting area) above the waste flow level.

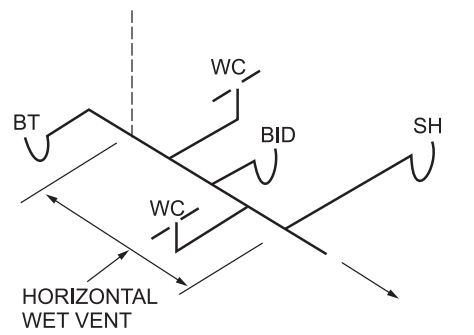

Figure 912.1(1)
HORIZONTAL WET VENTING OF BATHROOM FIXTURES

As with other horizontal wet venting methods (e.g., combination waste and vent and circuit vent), the main section of the horizontal wet vent pipe is intended to be installed horizontally without vertical offsets with each fixture drain connected "independently" to the horizontal drain in order to keep flow turbulence at a minimum. Note that fixtures connecting though a double pattern fitting are considered to be independently connected to the horizontal wet vent. The individual fixture drains vented by horizontal wet vent must enter the horizontal wet vent in the horizontal plane so that the connection is not below the trap weir of the connected fixture. Water closets, having integral traps that depend on self-siphoning, are exempt from this requirement. Other fixtures that are not vented by the horizontal wet vent (i.e., vented by a dry vent) can enter the horizontal wet vent horizontally, vertically or at any angle in between. The minimum slopes of the piping and the required fittings must be in accordance with Chapter 7. While there is no specified maximum slope for the horizontal sections of horizontal wet vent piping, the intent is to avoid high flow velocities, which might disrupt the airspace for venting. Thus, the horizontal wet vent pipe is intended to be installed at or near the minimum slope requirements for horizontal branch drains.

Section 912.2.1 regulates the dry vent connection to the horizontal wet vent, but is discussed in this commentary section for continuity. The dry vent for a horizontal wet vent must connect to a vent stack, stack vent, air admittance valve or terminate outdoors.

The required vent could be a dry vent directly connected to the main section of the horizontal wet vent pipe downstream of the most upstream fixture [see Commentary Figure 912.1(2)]. In this arrangement, the dry vent is classified as an individual vent for the most upstream fixture. The required vent could be a dry vent for common vented fixtures [see Commentary Figure 912.1(3)].

The last sentence of Section 912.2.1 attempts to reinforce the definition of a horizontal wet vent so that improper fixture connections are avoided. A horizontal wet vent begins at the dry vent connection and extends downstream to the last fixture being wet vented. The horizontal wet vent does not extend upstream of the

INTERNATIONAL CODE COUNCIL®
Copyright © 2015 ICC. ALL RIGHTS RESERVED. Accessed by David Dammon on Jun 21, 2017 12:30:52 PM pursuant to License Agreement with ICC. No further reproduction or distribution authorized. ANY UNAUTHORIZED REPRODUCTION OR DISTRIBUTION IS A VIOLATION OF THE FEDERAL COPYRIGHT ACT AND THE LICENSE AGREEMENT, AND SUBJECT TO CIVIL AND CRIMINAL PENALTIES THEREUNDER.

dry vented fixture connection. Thus, multiple interconnected fixture drains that connect upstream of the dry vented fixture connection or the dry vent connection are not vented by the horizontal wet vent. Commentary Figures 912.1(4) and (5) are examples of prohibited arrangements.

Not all fixtures connected to a horizontal wet vent are required to be vented by the horizontal wet vent [see Commentary Figure 912.1(6)]. In this arrangement the shower trap was required to be located at a distance that exceeded the maximum trap-to-vent distance requirements of Table 909.1, thus requiring the trap to be independently vented. Any number of individually vented fixtures of the types allowed for a bathroom group can connect to the horizontal wet vent as long as the total number of fixtures allowed for the bathroom groups is not exceeded [see Commentary Figure 912.1(7)].

The sizing for both the horizontal and vertical "wet" sections of a horizontal wet vent is regulated by Section 912.3 and Table 912.3. A unique feature of a horizontal wet vent that is different from other horizontal "wet-type" venting methods described in this chapter is that the pipe does not have to be of uniform size throughout. The horizontal wet vent pipe size need only increase so as to accommodate the connected load and provide adequate airspace above the flow line for venting. Note that the last fixture downstream, vented by the horizontal wet vent, does not contribute to the dfu loading and thus does not contribute to the sizing of the wet vent. Where a water closet is connected to a horizontal wet vent, the piping must be at least 3 inches (76 mm) in diameter from the fixture, downstream to the end of the horizontal wet vent. Pipe sizes larger than the minimum required size might be necessary in order to satisfy clean-out access provisions as required by Chapter 7. The code does not specify a maximum

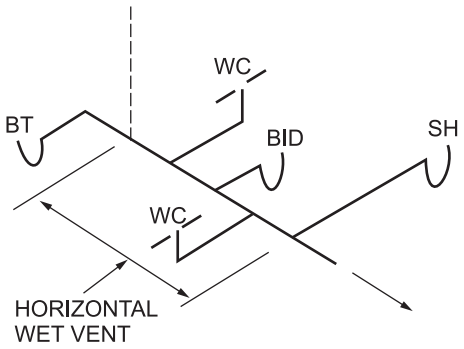

Figure 912.1(2)
HORIZONTAL WET VENT WITH INDIVIDUAL VENT

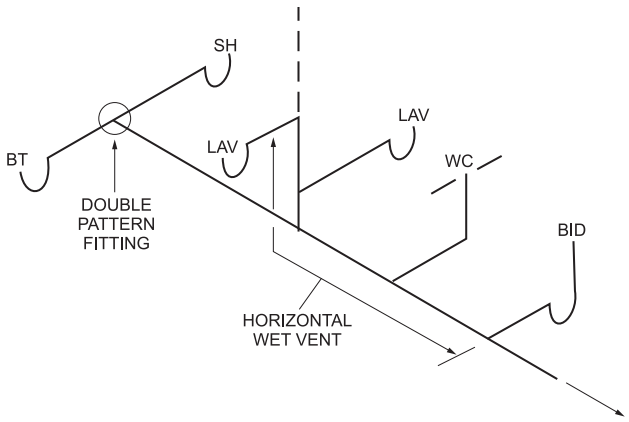

Figure 912.1(4)
PROHIBITED CONNECTION OF TWO FIXTURES UPSTREAM OF DRY-VENTED FIXTURE CONNECTION

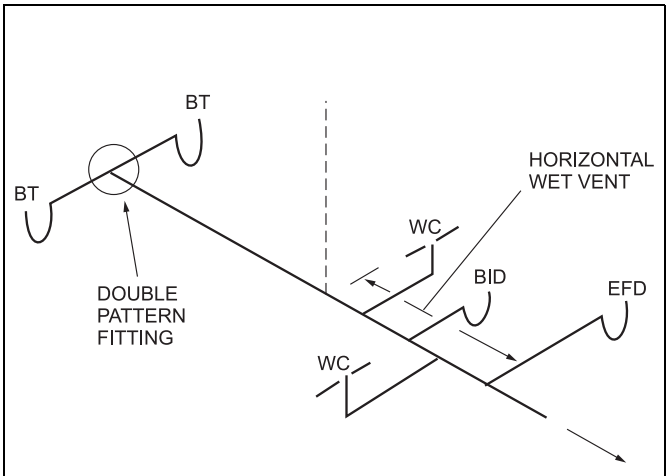

Figure 912.1(3)
HORIZONTAL WET VENT WITH COMMON VENTED FIXTURES UPSTREAM

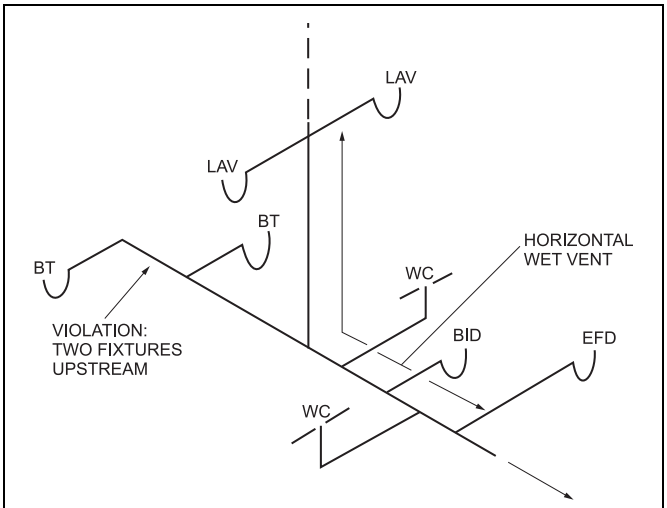

Figure 912.1(5)
PROHIBITED CONNECTION OF TWO FIXTURES UPSTREAM OF DRY-VENTED FIXTURE CONNECTION

INTERNATIONAL CODE COUNCIL®
Copyright © 2015 ICC. ALL RIGHTS RESERVED. Accessed by David Dammon on Jun 21, 2017 12:30:52 PM pursuant to License Agreement with ICC. No further reproduction or distribution authorized. ANY UNAUTHORIZED REPRODUCTION OR DISTRIBUTION IS A VIOLATION OF THE FEDERAL COPYRIGHT ACT AND THE LICENSE AGREEMENT, AND SUBJECT TO CIVIL AND CRIMINAL PENALTIES THEREUNDER.

length for a horizontal wet vent. However, since this method was originally developed for applications where two bathroom groups were adjacent or back to back, the intent for the use of this method is that the fixtures to be horizontally wet vented are to be in the same vicinity and not in remote groups.

Various acceptable horizontal wet vent arrangements, complete with the required pipe sizes, are shown in Commentary Figures 912.1(8) through (12). Horizontal offsets are shown, as well as pipe size increases as required by the increase in dfu loading in accordance with Table 912.3. Using pipe sizes greater than those required by Table 912.3 is acceptable. However, as with any horizontal drain installed at near minimum slope, excessive oversizing could result in sluggish flow and clogging problems.

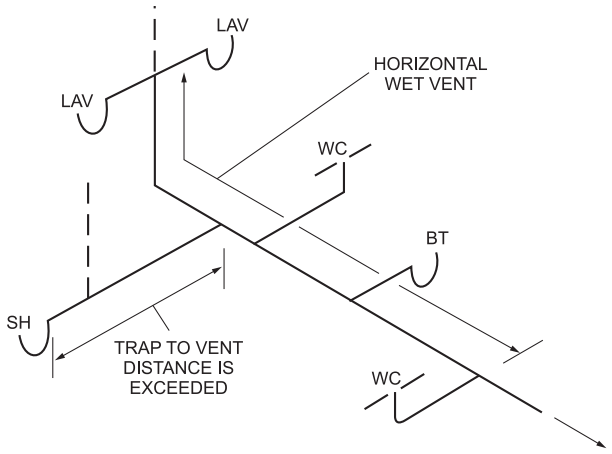

Figure 912.1(6)
HORIZONTAL WET VENT WITH COMMON VENT WITH AN ADDITIONAL INDIVIDUALLY DRY-VENTED FIXTURE

Commentary Figure 912.1(11) is a good example to illustrate the dry vent sizing requirements for horizontal wet vents. The size of the required dry vent for a horizontal wet vent is regulated by Section 912.3. For dry vents that are not the "required" dry vent for the horizontal wet vent, sizing is to be in accordance with the appropriate sections covering those venting methods. For example, if the dry vent of an individually vented lavatory fixture is not serving as the required vent for the horizontal wet vent, then the minimum size of the dry vent is $1^1/_4$ inches (32 mm) in accordance with Section 906.2. However, if this dry vent is the "required" dry vent for a horizontal wet vent that serves a 3-inch (76 mm) drain, then the required dry vent must be at least $1^1/_2$ inches (38 mm) since the required vent must be at least one-half the size of the "largest required diameter of pipe within the wet-vented system." This is the reason why the dry vent shown in Commentary Figure 912.1(11) is $1^1/_2$ inches (38 mm) and not $1^1/_4$ inches (32 mm).

Prohibited horizontal wet vented arrangements are illustrated in Commentary Figures 912.1(13) through (18). Notes in each figure indicate the reason for noncompliance.

Commentary Figures 912.1(19) through (24) show examples of proper horizontal wet venting.

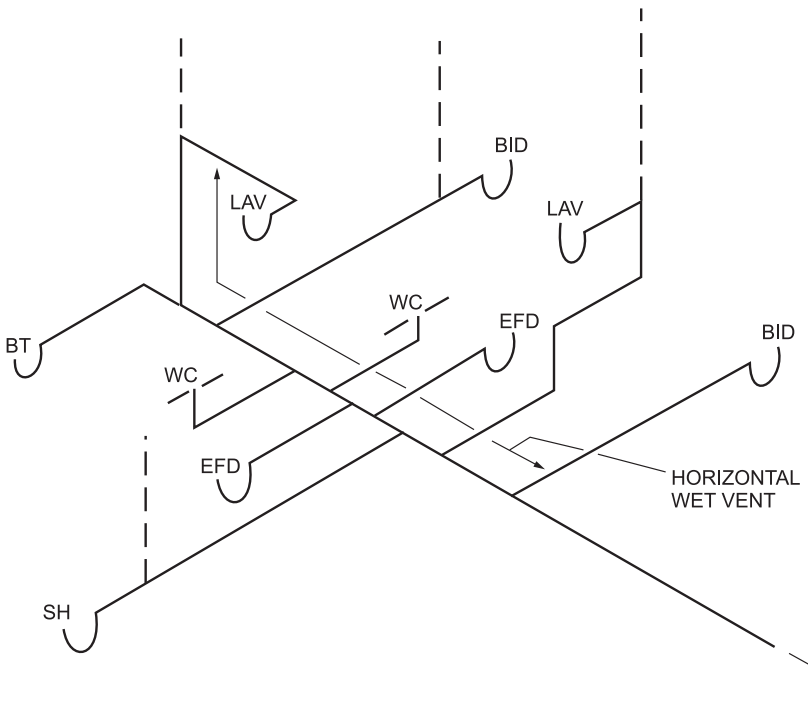

Figure 912.1(7)
HORIZONTAL WET VENT WITH THREE ADDITIONAL INDEPENDENTLY VENTED FIXTURES

INTERNATIONAL CODE COUNCIL®
Copyright © 2015 ICC. ALL RIGHTS RESERVED. Accessed by David Dammon on Jun 21, 2017 12:30:52 PM pursuant to License Agreement with ICC. No further reproduction or distribution authorized. ANY UNAUTHORIZED REPRODUCTION OR DISTRIBUTION IS A VIOLATION OF THE FEDERAL COPYRIGHT ACT AND THE LICENSE AGREEMENT, AND SUBJECT TO CIVIL AND CRIMINAL PENALTIES THEREUNDER.

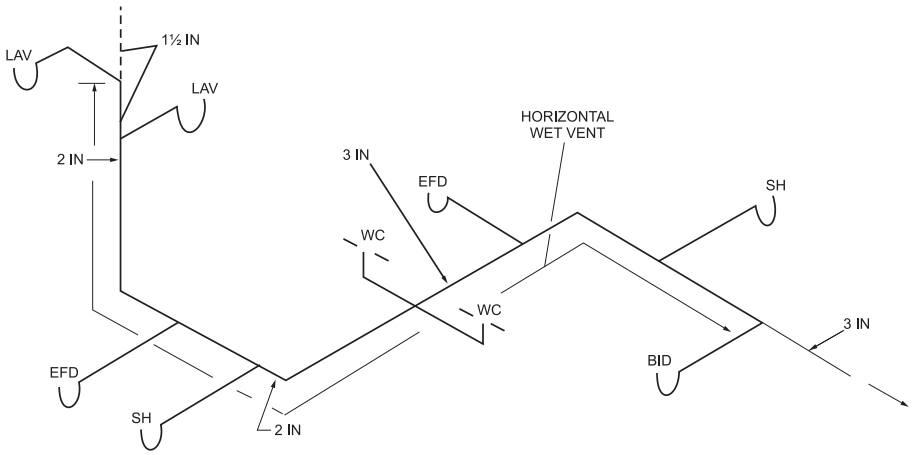

For SI: 1 inch = 25.4 mm.

Figure 912.1(8)
HORIZONTAL WET VENT SIZING (PRIVATE BATH GROUP)

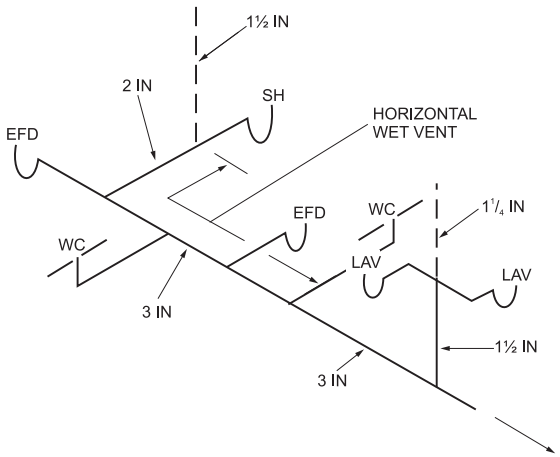

For SI: 1 inch = 25.4 mm.

Figure 912.1(9)
HORIZONTAL WET VENT (PUBLIC BATH GROUP)

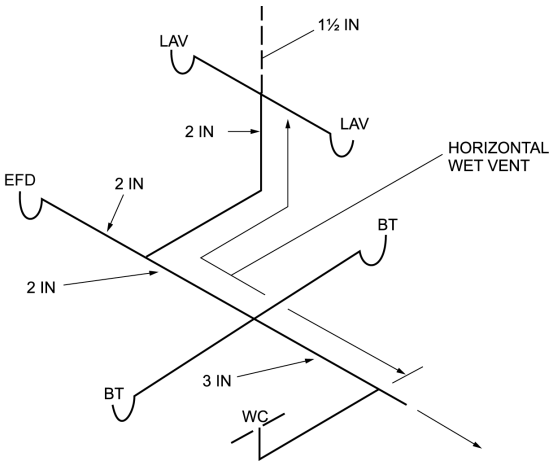

For SI: 1 inch = 25.4 mm.

Figure 912.1(10)
HORIZONTAL WET VENT

INTERNATIONAL CODE COUNCIL®
Copyright © 2015 ICC. ALL RIGHTS RESERVED. Accessed by David Dammon on Jun 21, 2017 12:30:52 PM pursuant to License Agreement with ICC. No further reproduction or distribution authorized. ANY UNAUTHORIZED REPRODUCTION OR DISTRIBUTION IS A VIOLATION OF THE FEDERAL COPYRIGHT ACT AND THE LICENSE AGREEMENT, AND SUBJECT TO CIVIL AND CRIMINAL PENALTIES THEREUNDER.

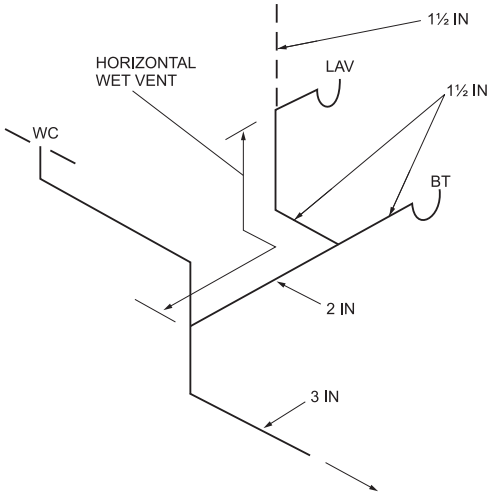

For SI: 1 inch = 25.4 mm.

Figure 912.1(11)
HORIZONTAL WET VENT

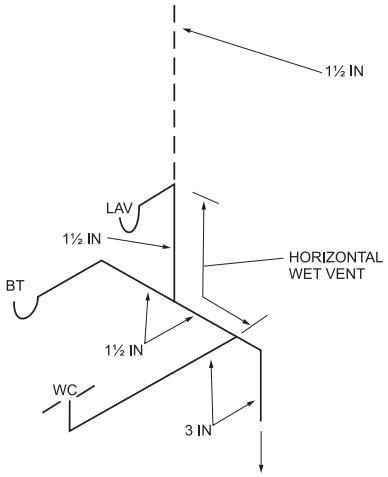

For SI: 1 inch = 25.4 mm.

Figure 912.1(12)
HORIZONTAL WET VENT

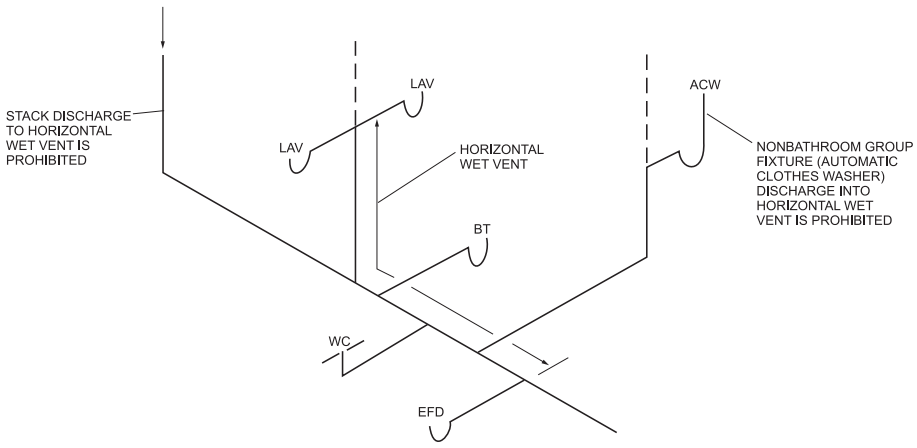

Figure 912.1(13)
NONCOMPLIANT HORIZONTAL WET VENT

INTERNATIONAL CODE COUNCIL®
Copyright © 2015 ICC. ALL RIGHTS RESERVED. Accessed by David Dammon on Jun 21, 2017 12:30:52 PM pursuant to License Agreement with ICC. No further reproduction or distribution authorized. ANY UNAUTHORIZED REPRODUCTION OR DISTRIBUTION IS A VIOLATION OF THE FEDERAL COPYRIGHT ACT AND THE LICENSE AGREEMENT, AND SUBJECT TO CIVIL AND CRIMINAL PENALTIES THEREUNDER.

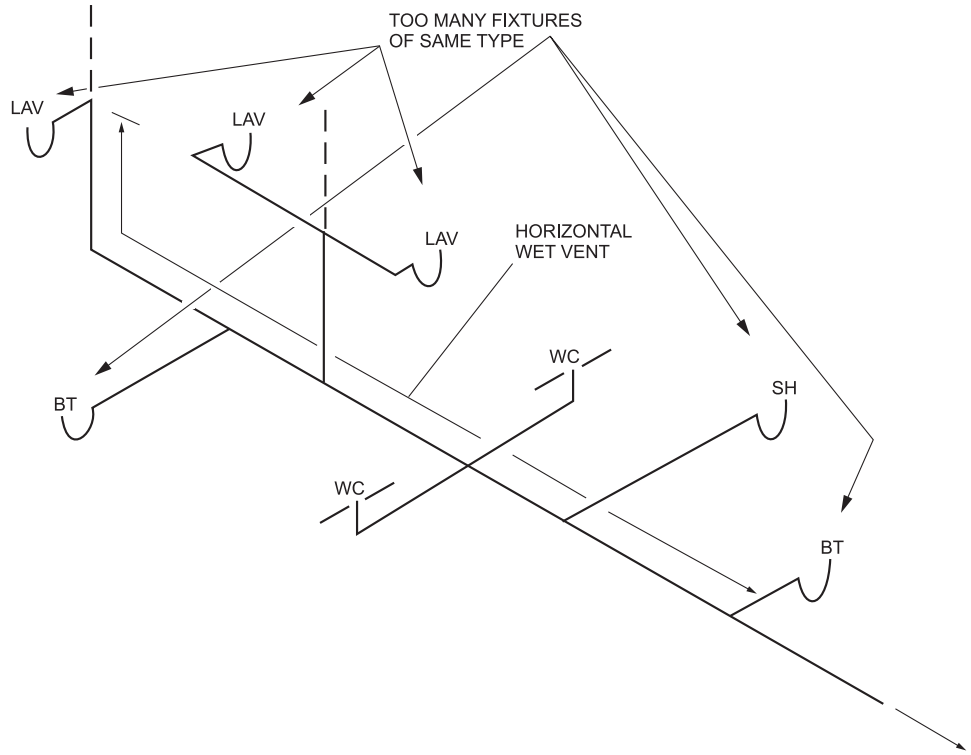

Figure 912.1(14)
NONCOMPLIANT HORIZONTAL WET VENT

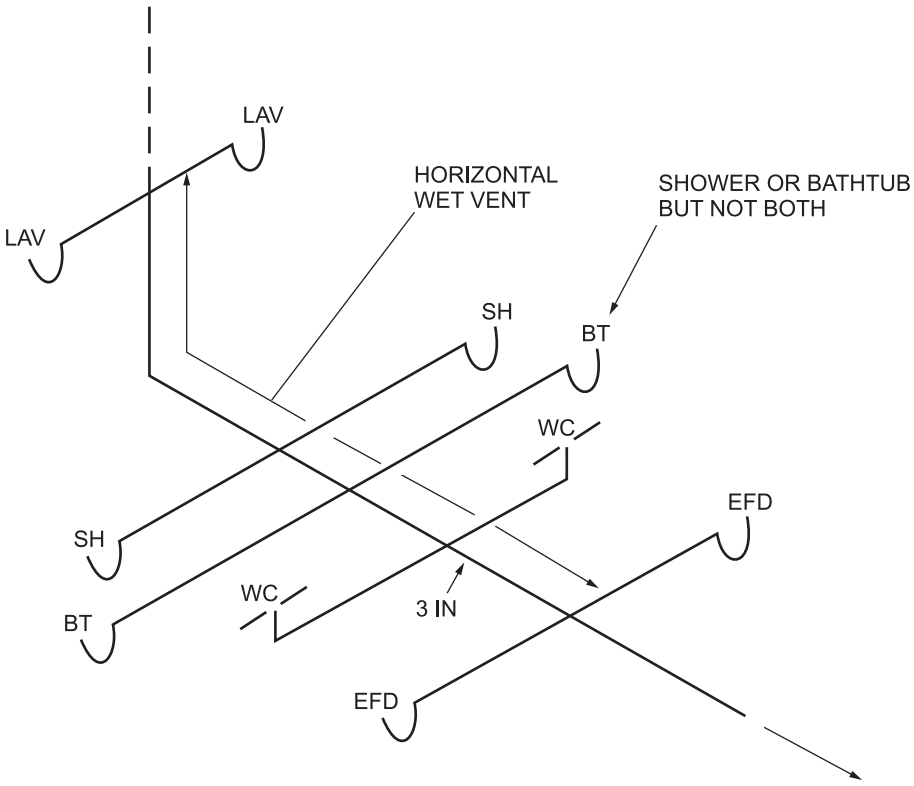

Figure 912.1(15)
NONCOMPLIANT HORIZONTAL WET VENT

INTERNATIONAL CODE COUNCIL®
Copyright © 2015 ICC. ALL RIGHTS RESERVED. Accessed by David Dammon on Jun 21, 2017 12:30:52 PM pursuant to License Agreement with ICC. No further reproduction or distribution authorized. ANY UNAUTHORIZED REPRODUCTION OR DISTRIBUTION IS A VIOLATION OF THE FEDERAL COPYRIGHT ACT AND THE LICENSE AGREEMENT, AND SUBJECT TO CIVIL AND CRIMINAL PENALTIES THEREUNDER.

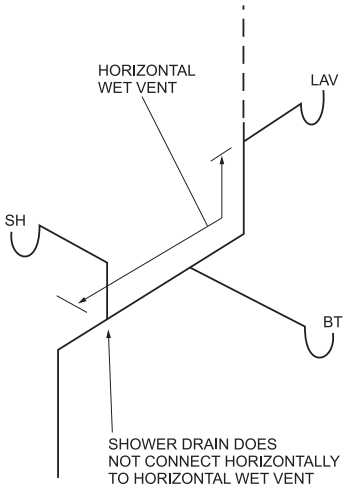

Figure 912.1(16)
NONCOMPLIANT HORIZONTAL WET VENT

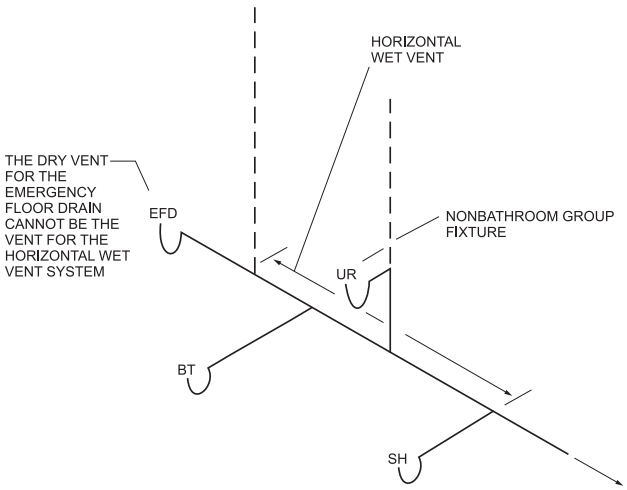

Figure 912.1(17)
NONCOMPLIANT HORIZONTAL WET VENT

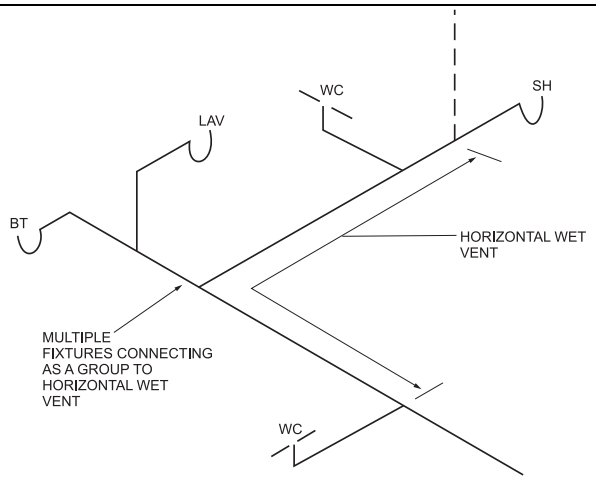

Figure 912.1(18)
NONCOMPLIANT HORIZONTAL WET VENT

INTERNATIONAL CODE COUNCIL®
Copyright © 2015 ICC. ALL RIGHTS RESERVED. Accessed by David Dammon on Jun 21, 2017 12:30:52 PM pursuant to License Agreement with ICC. No further reproduction or distribution authorized. ANY UNAUTHORIZED REPRODUCTION OR DISTRIBUTION IS A VIOLATION OF THE FEDERAL COPYRIGHT ACT AND THE LICENSE AGREEMENT, AND SUBJECT TO CIVIL AND CRIMINAL PENALTIES THEREUNDER.

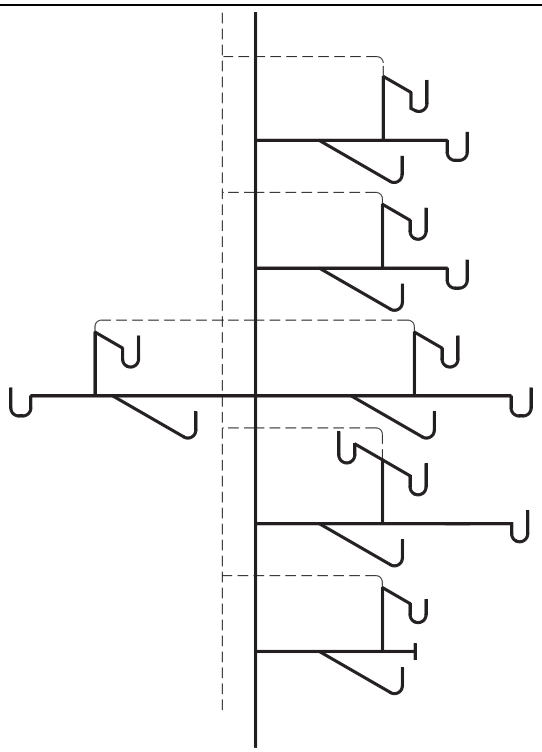

Figure 912.1(19)
MULTIFLOOR WET VENTING

THE DISTANCE FROM EACH TUB TO POINT C MUST BE WITHIN THE DISTANCE SPECIFIED IN TABLE 906.1

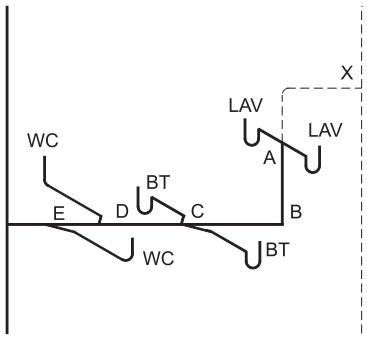

DRAIN COMPONENT	MIN. SIZE	DFU (TABLE 709.1)
LAV DRAIN	$1^1/_4$″	1
BT DRAIN	$1^1/_2$″	2
WC DRAIN	3″	3
A-B[a]	2″[a]	2
B-C[a]	2″[a]	2
C-D[a]	$2^1/_2$″[a]	6
D-E[a]	3″[a]	9
A-X	$1^1/_2$″	NA

a. FROM TABLE 912.3
NA. NOT APPLICABLE

For SI: 1 inch = 25.4 mm.

Figure 912.1(21)
DOUBLE BATHROOM GROUP (PRIVATE) WET VENT

DRAIN COMPONENT	MIN. SIZE	DFU (TABLE 709.1)
LAV FIXTURE DRAIN	$1^1/_4$″	1
SH FIXTURE DRAIN	$1^1/_2$″	2
WC FIXTURE DRAIN	3″	3
A-B[a]	$1^1/_2$″[a]	1
B-C[a]	2″[a]	3
A-X	$1^1/_2$″	NA

a. FROM TABLE 912.3
NA. NOT APPLICABLE

THE WET VENT EXTENDS FROM C TO A

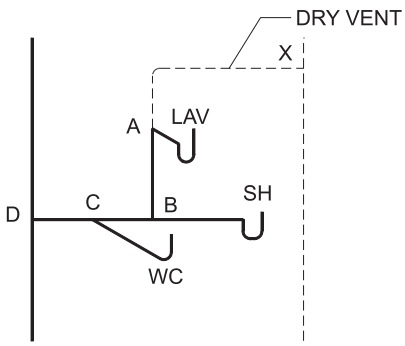

SIZING OF THE SYSTEM IS ACCORDING TO TABLE

For SI: 1 inch = 25.4 mm.

Figure 912.1(20)
SINGLE BATHROOM GROUP (PRIVATE) WET VENT

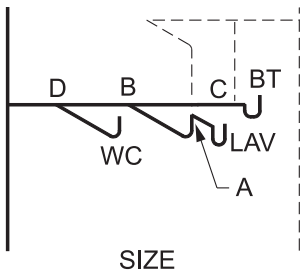

SIZE

SECTION	WHEN WET VENT STARTS AT A	WHEN WET VENT STARTS AT C
A-B	$1^1/_2$″	$1^1/_4$″
B-C	$1^1/_2$″	2″
B-D	2″	2″

WHEN THE BATHTUB FIXTURE DRAIN EXCEEDS THE DISTANCE FROM TRAP TO VENT REQUIREMENTS, AN ADDITIONAL INDIVIDUAL VENT IS ADDED FOR THE FIXTURE. THE WET VENT MAY BE CONSIDERED AS EITHER SECTION A-D BY USE OF THE LAV CONNECTION, OR SECTION C-D BY USE OF THE BATHTUB CONNECTION.

For SI: 1 inch = 25.4 mm.

Figure 912.1(22)
WET VENT VARIATIONS FOR A SINGLE BATHROOM GROUP

INTERNATIONAL CODE COUNCIL®
Copyright © 2015 ICC. ALL RIGHTS RESERVED. Accessed by David Dammon on Jun 21, 2017 12:30:52 PM pursuant to License Agreement with ICC. No further reproduction or distribution authorized. ANY UNAUTHORIZED REPRODUCTION OR DISTRIBUTION IS A VIOLATION OF THE FEDERAL COPYRIGHT ACT AND THE LICENSE AGREEMENT, AND SUBJECT TO CIVIL AND CRIMINAL PENALTIES THEREUNDER.

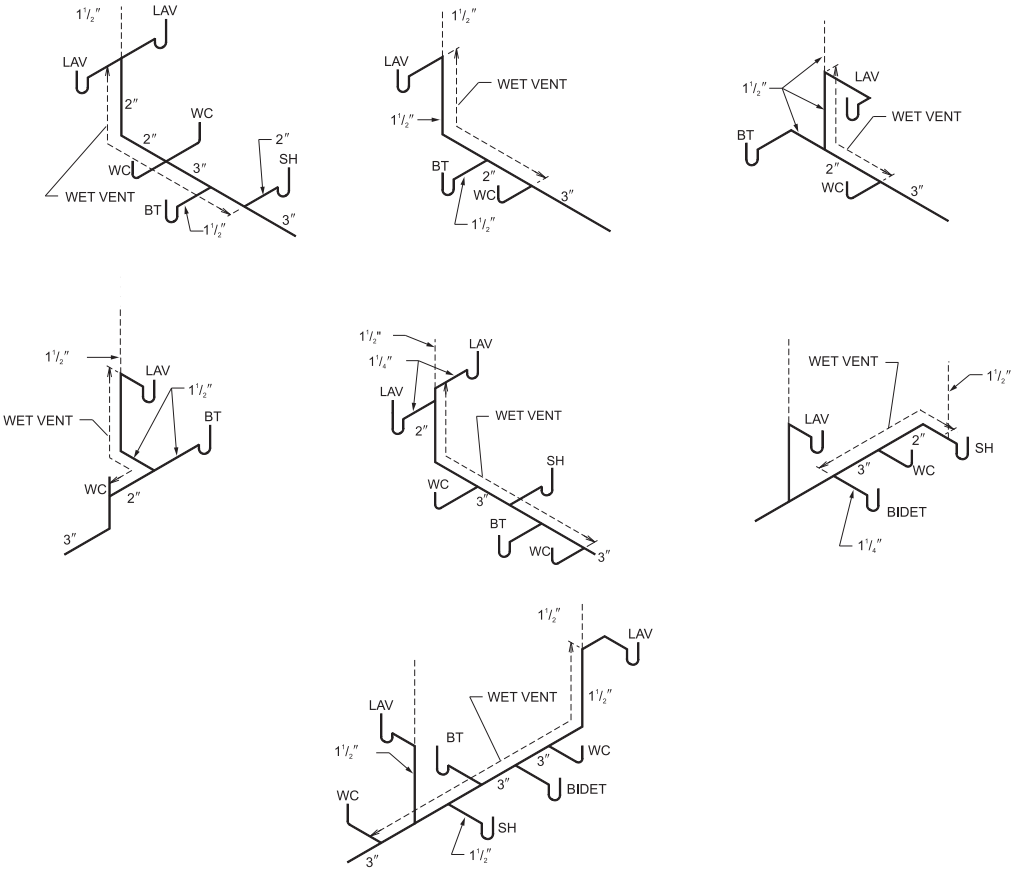

For SI: 1 inch = 25.4 mm.

Figure 912.1(23)
HORIZONTAL WET VENTING

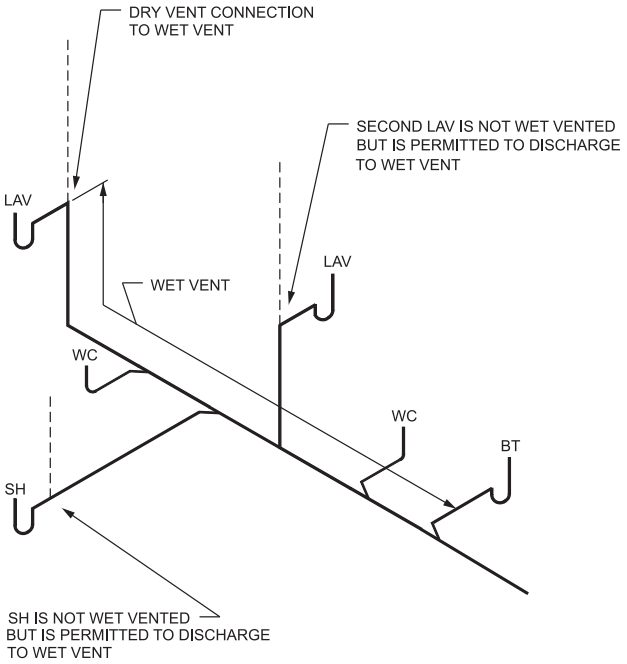

Figure 912.1(24)
MULTIPLE INDIVIDUAL VENTS

INTERNATIONAL CODE COUNCIL®
Copyright © 2015 ICC. ALL RIGHTS RESERVED. Accessed by David Dammon on Jun 21, 2017 12:30:52 PM pursuant to License Agreement with ICC. No further reproduction or distribution authorized. ANY UNAUTHORIZED REPRODUCTION OR DISTRIBUTION IS A VIOLATION OF THE FEDERAL COPYRIGHT ACT AND THE LICENSE AGREEMENT, AND SUBJECT TO CIVIL AND CRIMINAL PENALTIES THEREUNDER.

912.1.1 Vertical wet vent permitted. Any combination of fixtures within two bathroom groups located on the same floor level is permitted to be vented by a vertical wet vent. The vertical wet vent shall be considered the vent for the fixtures and shall extend from the connection of the dry vent down to the lowest *fixture drain* connection. Each wet-vented fixture shall connect independently to the vertical wet vent. Water closet drains shall connect at the same elevation. Other *fixture drains* shall connect above or at the same elevation as the water closet fixture drains. The dry-vent connection to the vertical wet vent shall be an individual or common vent serving one or two fixtures.

❖ Vertical wet vents used to be referred to as "stack venting." The vertical wet vent extends from the connection to the dry vent down to the lowest fixture drain connection. A common example of vertical wet venting of a single bathroom group is shown in Commentary Figure 912.1.1(1). The two most important requirements of vertical wet venting are that all fixtures must connect above or at the water closet connection elevation and all fixtures must connect independently to the vertical wet vent. Note that fixtures connected through a double pattern fitting are considered to be independently connected. If more than one water closet is to be connected, both must connect at the same elevation [see Commentary Figure 912.1.1(2)]. Note that in this figure, a double sanitary tee is only acceptable where the water closet drain connection to the sanitary tee is 18 inches (457 mm) or more in horizontal developed length distance from the outlet of the water closet (see Section 706.3 Exception). Otherwise, the water closets must connect through double wye and eighth-bend fitting (also known as a "double T-wye") [see Commentary Figure 912.1.1(3)].

Any combination of fixtures within two bathroom groups located on the same floor level can be installed without individual fixture vents (see the definition of "Bathroom group" in Section 202). However, each fixture drain must connect to the wet vent within the maximum length for trap-to-vent distance as specified in Table 909.1. Note that a bathroom group does not include a urinal fixture. Without being specifically stated, the vertical wet vent must be vertical without

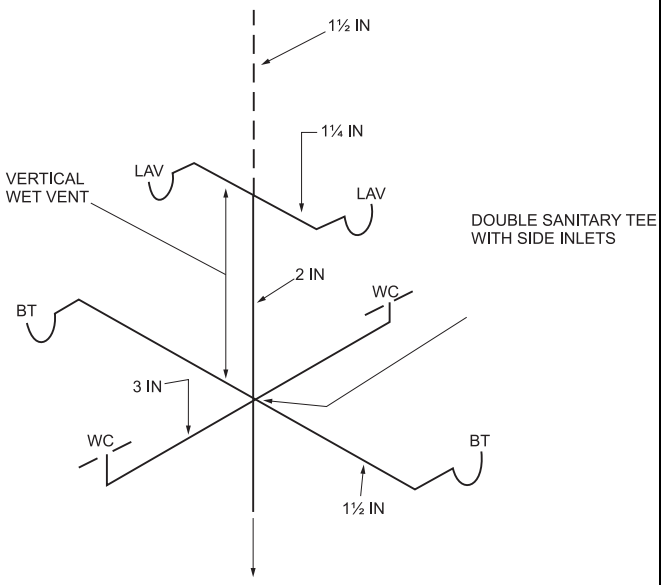

For SI: 1 inch = 25.4 mm.

Figure 912.1.1(2)
VERTICAL WET VENT OF TWO BATHROOM GROUPS

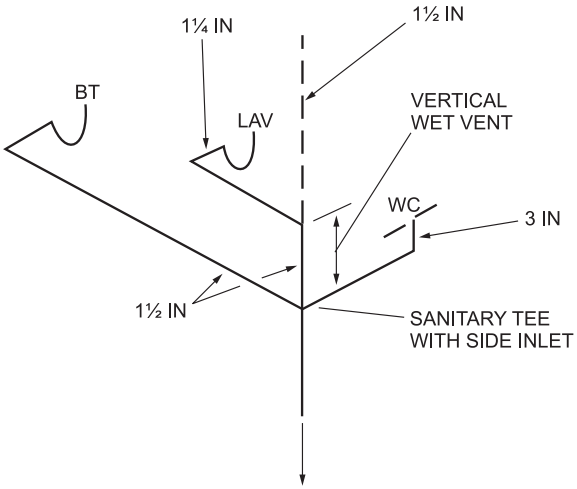

For SI: 1 inch = 25.4 mm.

Figure 912.1.1(1)
VERTICAL WET VENT OF SINGLE BATHROOM GROUP

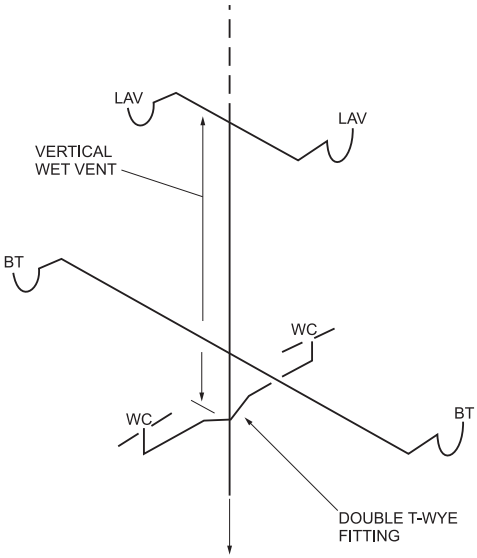

For SI: 1 inch = 25.4 mm.

Figure 912.1.1(3)
VERTICAL WET VENT OF TWO BATHROOM GROUPS

INTERNATIONAL CODE COUNCIL®
Copyright © 2015 ICC. ALL RIGHTS RESERVED. Accessed by David Dammon on Jun 21, 2017 12:30:52 PM pursuant to License Agreement with ICC. No further reproduction or distribution authorized. ANY UNAUTHORIZED REPRODUCTION OR DISTRIBUTION IS A VIOLATION OF THE FEDERAL COPYRIGHT ACT AND THE LICENSE AGREEMENT, AND SUBJECT TO CIVIL AND CRIMINAL PENALTIES THEREUNDER.

vertical or horizontal offsets. Commentary Figure 912.1.1(4) illustrates various vertical wet vent arrangements.

Section 912.2.2 regulates how the dry vent connection is made to the vertical wet vent and Section 912.3 regulates the size of the dry vent. Both are discussed in this commentary section for continuity. The dry vent is an extension of the vertical wet vent and is connected to a vent stack, stack vent, air admittance valve or point of termination outside of the building. The dry vent size must be at least one-half of the largest required pipe size served by the wet vent. For example, in Commentary Figure 912.1.1(2), the largest pipe served by the vertical wet vent is 3 inches (76 mm), requiring the dry vent to be a minimum of $1^1/_2$ inches (38 mm). If the run of the dry vent from the start of the dry vent fixture connection to the termination of the vent (to a vent stack, stack vent, air admittance valve or termination outdoors) exceeds 40-feet (12 192 mm) developed length, Section 906.2 requires the dry vent size to be increased by one nominal pipe size for its entire length.

912.2 Dry vent connection. The required dry-vent connection for wet-vented systems shall comply with Sections 912.2.1 and 912.2.2.

❖ See the commentary to Sections 912.2.1 and 912.2.2.

912.2.1 Horizontal wet vent. The dry-vent connection for a horizontal wet-vent system shall be an individual vent or a common vent for any *bathroom group* fixture, except an *emergency floor drain*. Where the dry-vent connects to a water closet *fixture drain*, the drain shall connect horizontally to the horizontal wet-vent system. Not more than one wet-vented *fixture drain* shall discharge upstream of the dry-vented *fixture drain* connection.

❖ See the commentary to Section 912.1. Note that previous code editions did not allow a water closet to be the upstream dry-vented fixture. Because a water closet can be dry vented in a nonwet-vented system, there is not any technical reason why this venting arrangement will not work in a wet-vented system, Thus, this edition of the code allows a dry-vented water closet to be the dry-vented fixture that vents the horizontal wet vent.

Another change for this edition is that two (or more) fixture drains cannot connect upstream of the dry-vented fixture drain connection for a horizontal wet-vented system. Commentary Figure 912.1(5) illustrates one common violation. As the figure shows, the wet vent does not continue horizontally upstream towards the bathtub. The section of pipe between the first bathtub upstream and the dry-vented fixture connection is simply an individual fixture drain that con-

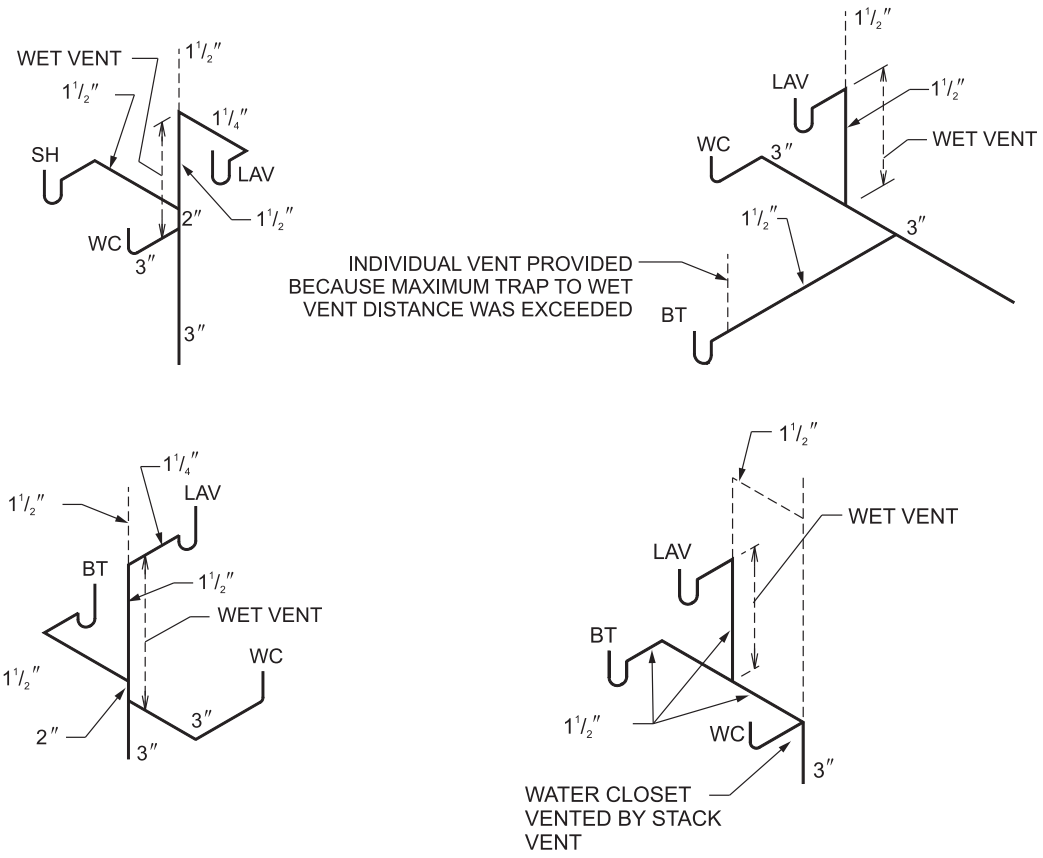

For SI: 1 inch = 25.4 mm.

Figure 912.1.1(4)
VERTICAL WET VENTING

INTERNATIONAL CODE COUNCIL®
Copyright © 2015 ICC. ALL RIGHTS RESERVED. Accessed by David Dammon on Jun 21, 2017 12:30:52 PM pursuant to License Agreement with ICC. No further reproduction or distribution authorized. ANY UNAUTHORIZED REPRODUCTION OR DISTRIBUTION IS A VIOLATION OF THE FEDERAL COPYRIGHT ACT AND THE LICENSE AGREEMENT, AND SUBJECT TO CIVIL AND CRIMINAL PENALTIES THEREUNDER.

nects to the wet vent. Because the code requires that each fixture trap be provided with its own vent (see Section 909.1) (i.e., each fixture does not connect individually to the horizontal wet vent), the most upstream bathtub fixture drain in Commentary Figure 912.1(5) does not have a vent. The violation illustrated in Commentary Figure 912.1(4) follows the same reasoning.

912.2.2 Vertical wet vent. The dry-vent connection for a vertical wet-vent system shall be an individual vent or common vent for the most upstream *fixture drain*.

❖ See the commentary to Section 912.1.1.

912.3 Size. The dry vent serving the wet vent shall be sized based on the largest required diameter of pipe within the wet-vent system served by the dry vent. The wet vent shall be of a size not less than that specified in Table 912.3, based on the fixture unit discharge to the wet vent.

❖ See the commentary to Sections 912.1 and 912.1.1, which specifically reference this section for horizontal wet vents and vertical wet vents, respectively.

Each section of the wet-vented system is individually sized, depending on the dfu load carried by that section. In other words, wet vent piping size increases as the load increases. As opposed to circuit venting, a wet-vented horizontal branch drain need not be uniformly sized. The fixture unit loads shown in Table 912.3 range from 1 dfu (single lavatory or bidet) to 12 dfu (two bathroom groups) (see the definition of "Bathroom group" in Section 202).

TABLE 912.3
WET VENT SIZE

WET VENT PIPE SIZE (inches)	DRAINAGE FIXTURE UNIT LOAD (dfu)
$1^1/_2$	1
2	4
$2^1/_2$	6
3	12

For SI: 1 inch = 25.4 mm.

❖ The table states the drain pipe oversizing that is fundamental to wet venting. The sizing of wet vent piping is based on the fixture unit load discharging through such piping. When comparing Table 710.1(2) to Table 912.3, the degree of wet-vent oversizing is evident. The individual fixture drains are sized in accordance with Section 710.1.

The developed length of a fixture drain is measured from the fixture to the point of connection to the wet vent. The length of the fixture drain is limited to the distance specified in Table 906.1 (see commentary, Sections 909.1 and 909.1.1).

SECTION 913
WASTE STACK VENT

913.1 Waste stack vent permitted. A waste *stack* shall be considered a vent for all of the fixtures discharging to the *stack* where installed in accordance with the requirements of this section.

❖ A waste stack vent uses the waste stack as the vent for fixtures other than urinals and water closets. The principles of use are based on some of the original research that was done in development of the first plumbing codes. The system has been identified by a variety of names, including vertical wet vent, Philadelphia single-stack and multifloor stack venting. Note that due to the oversized design of a waste stack vent system, no relief vents are needed for stacks greater than 10 branch intervals.

913.2 Stack installation. The waste *stack* shall be vertical, and both horizontal and vertical offsets shall be prohibited between the lowest *fixture drain* connection and the highest *fixture drain* connection. *Fixture drains* shall connect separately to the waste *stack*. The *stack* shall not receive the discharge of water closets or urinals.

❖ Because the drainage stack serves as the vent, there are certain limitations on the design to prevent pressures in the system from exceeding plus or minus 1 inch of water column (249 Pa).The system is identified as a "waste" stack vent because it prohibits the connection of water closets and urinals. Only "waste" may discharge to the stack.

Water closets and some urinals have a surging discharge that results in too great a pressure fluctuation in the system. The system can serve sinks, lavatories, bathtubs, bidets, showers, floor drains, drinking fountains and standpipes.

To preserve the desirable annular flow in the stack, offsets (of any degree) are prohibited and the stack must be vertical [90 degrees (1.57 rad) from horizontal] from the lowest fixture connection to the highest fixture connection. Offsets are permitted in the drainage stack below the lowest branch connection to the waste stack vent and within the dry stack vent portion (see commentary, Section 913.3).

Each fixture must connect independently through a single or double sanitary tee to the drainage stack. Independent connections will prevent large discharges into the stack at any one point and will direct the flow into the stack with minimum interference with any vertical flow already occurring, thus minimizing pressure fluctuations [see Commentary Figures 913.2(1) and 913.2(2)].

913.3 Stack vent. A *stack vent* shall be provided for the waste *stack*. The size of the *stack vent* shall be not less than the size of the waste *stack*. Offsets shall be permitted in the *stack vent*, shall be located not less than 6 inches (152 mm)

INTERNATIONAL CODE COUNCIL®
Copyright © 2015 ICC. ALL RIGHTS RESERVED. Accessed by David Dammon on Jun 21, 2017 12:30:52 PM pursuant to License Agreement with ICC. No further reproduction or distribution authorized. ANY UNAUTHORIZED REPRODUCTION OR DISTRIBUTION IS A VIOLATION OF THE FEDERAL COPYRIGHT ACT AND THE LICENSE AGREEMENT, AND SUBJECT TO CIVIL AND CRIMINAL PENALTIES THEREUNDER.

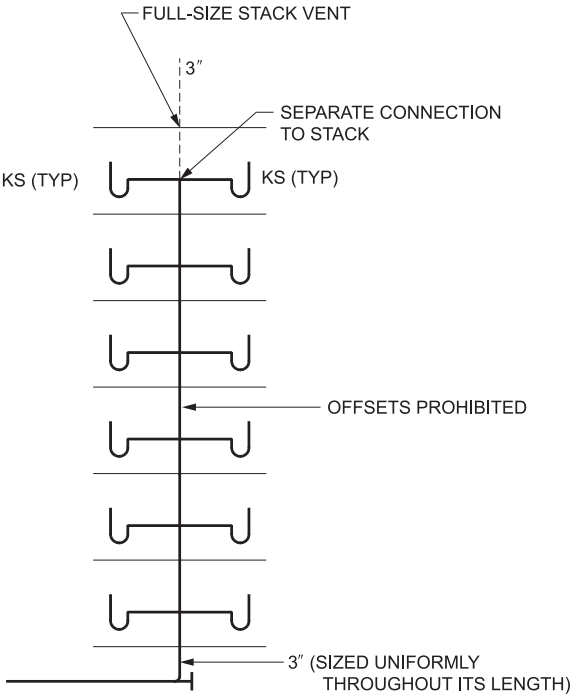

For SI: 1 inch = 25.4 mm.

Figure 913.2(1)
WASTE STACK VENT

above the flood level of the highest fixture and shall be in accordance with Section 905.2. The *stack vent* shall be permitted to connect with other *stack vents* and vent *stacks* in accordance with Section 904.5.

❖ A full-size stack vent provides the vent opening to the outdoors, allowing the stack to remain at neutral pressures. This is the only type of stack addressed in the code that is required to have a stack vent. Offsets are allowed in the stack vent because such offsets are dry and have no effect on the annular flow in the waste stack. As always, dry vents must not run horizontally below the flood level rim of fixtures because this may allow waste and solids to enter the vent and impair its function. The stack vent can be terminated at a stack type air admittance valve, extended to the outdoors or tied into another vent stack, stack vent or vent header (see Commentary Figure 913.3).

913.4 Waste stack size. The waste *stack* shall be sized based on the total discharge to the *stack* and the discharge within a *branch* interval in accordance with Table 913.4. The waste *stack* shall be the same size throughout its length.

❖ Two factors govern sizing of the waste stack vent: the total discharge into the stack and the total discharge within any one branch interval. The size of the stack must be uniform from the base of the stack to the stack vent terminal to allow unimpeded air movement to control pressure fluctuations.

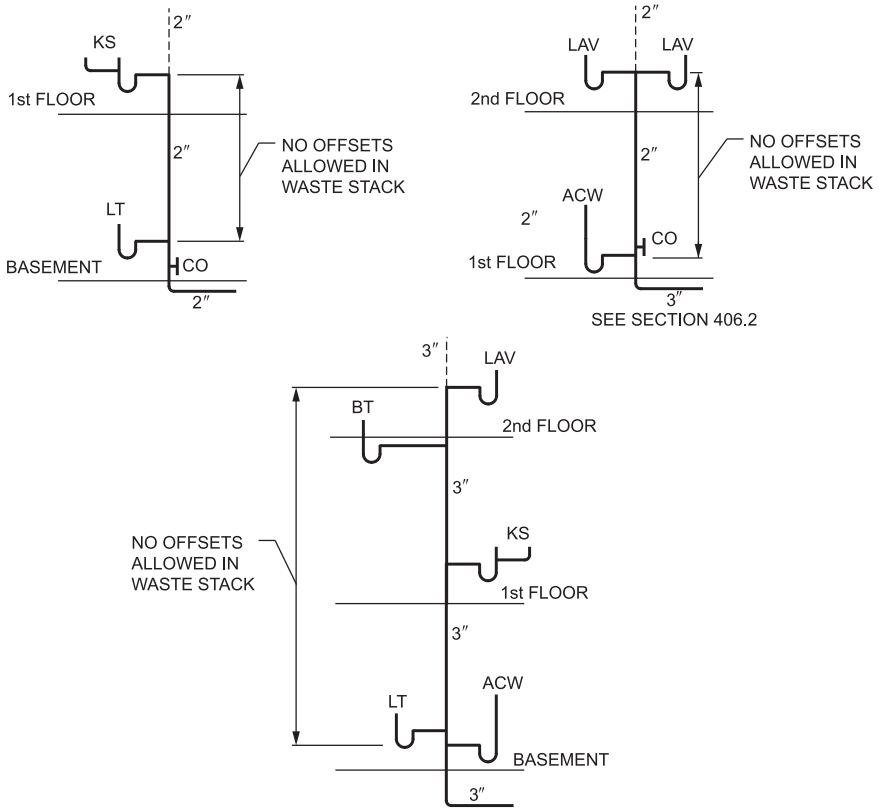

For SI: 1 inch = 25.4 mm.

Figure 913.2(2)
WASTE STACK VENT

INTERNATIONAL CODE COUNCIL®
Copyright © 2015 ICC. ALL RIGHTS RESERVED. Accessed by David Dammon on Jun 21, 2017 12:30:52 PM pursuant to License Agreement with ICC. No further reproduction or distribution authorized. ANY UNAUTHORIZED REPRODUCTION OR DISTRIBUTION IS A VIOLATION OF THE FEDERAL COPYRIGHT ACT AND THE LICENSE AGREEMENT, AND SUBJECT TO CIVIL AND CRIMINAL PENALTIES THEREUNDER.

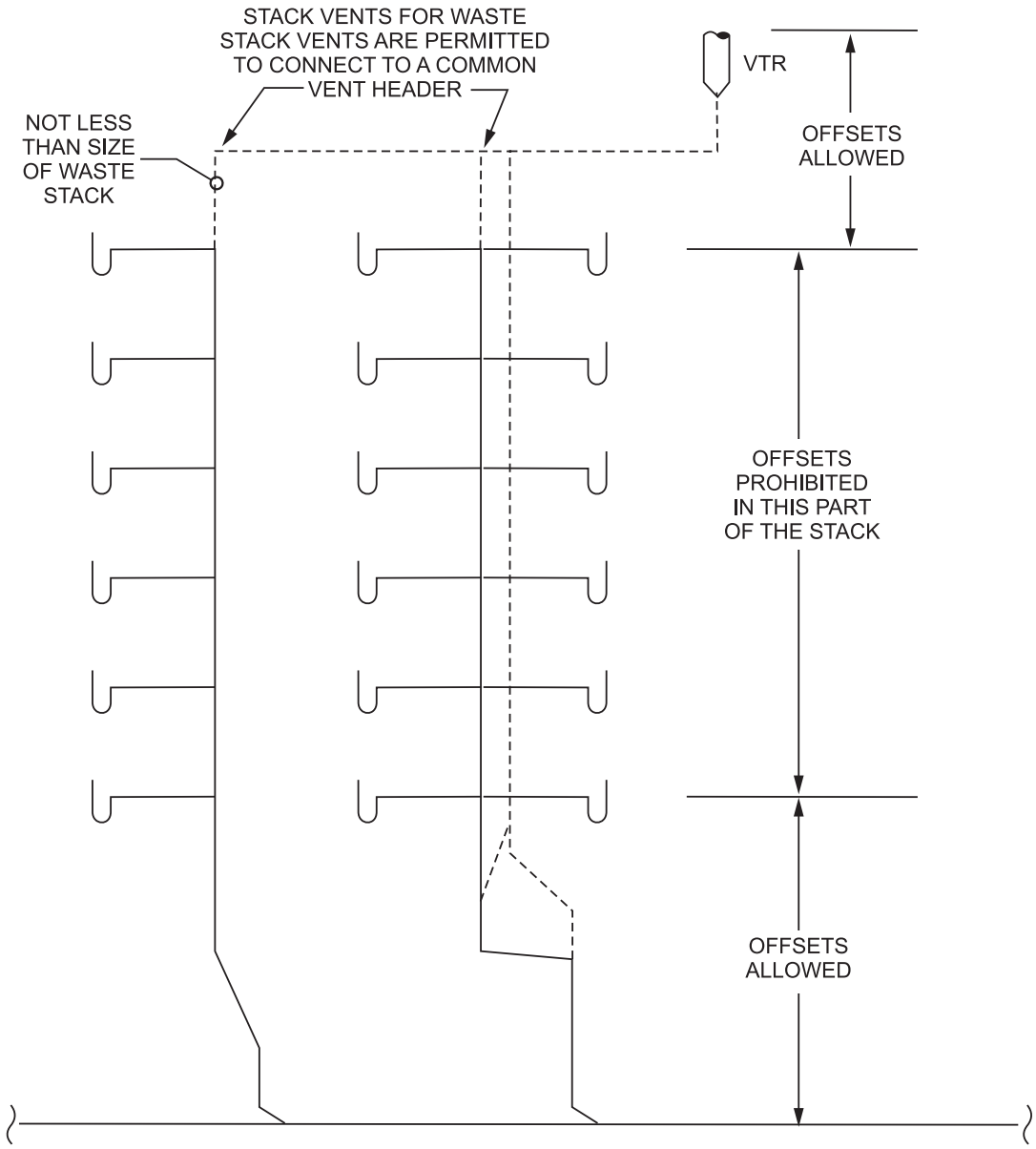

Figure 913.3
WASTE STACK VENT OFFSETS AND STACK VENT CONNECTIONS

TABLE 913.4
WASTE STACK VENT SIZE

STACK SIZE (inches)	MAXIMUM NUMBER OF DRAINAGE FIXTURE UNITS (dfu)	
	Total discharge into one branch interval	Total discharge for stack
$1^1/_2$	1	2
2	2	4
$2^1/_2$	No limit	8
3	No limit	24
4	No limit	50
5	No limit	75
6	No limit	100

For SI: 1 inch = 25.4 mm.

❖ To reduce the possibility of exceeding plus or minus 1 inch of water column (249 Pa) pressure, the stack is greatly oversized. Although Chapter 7 permits a drainage stack to be fully loaded, a waste stack vent may be loaded only to a fraction of its total capacity. Full loading of a stack will result in pressure fluctuations that will necessitate additional venting for fixtures connecting to the stack.

INTERNATIONAL CODE COUNCIL®
Copyright © 2015 ICC. ALL RIGHTS RESERVED. Accessed by David Dammon on Jun 21, 2017 12:30:52 PM pursuant to License Agreement with ICC. No further reproduction or distribution authorized. ANY UNAUTHORIZED REPRODUCTION OR DISTRIBUTION IS A VIOLATION OF THE FEDERAL COPYRIGHT ACT AND THE LICENSE AGREEMENT, AND SUBJECT TO CIVIL AND CRIMINAL PENALTIES THEREUNDER.

SECTION 914
CIRCUIT VENTING

914.1 Circuit vent permitted. A maximum of eight fixtures connected to a horizontal *branch* drain shall be permitted to be circuit vented. Each *fixture drain* shall connect horizontally to the horizontal *branch* being circuit vented. The *horizontal branch drain* shall be classified as a vent from the most downstream *fixture drain* connection to the most upstream *fixture drain* connection to the horizontal *branch.*

❖ Circuit venting involves up to eight fixtures and a single vent. A dry vent connects between the two most upstream fixtures on the horizontal branch. The horizontal branch serves as a "wet vent" for the battery of fixtures. The piping arrangement has the appearance of multiple fixtures connecting to a horizontal branch, with only the most upstream fixture being individually vented.

The principle of circuit venting is that the flow of drainage never exceeds a half-full flow condition. The air for venting the fixtures circulates in the top half of the horizontal branch drain pipe. The flow velocity in the horizontal branch is slow and nonturbulent, thereby preventing pressure differentials from affecting the connecting fixtures [see Commentary Figure 914.1(1)]. The circuit-vented fixtures must connect to the circuit-vented branch in the horizontal plane to limit the amount of turbulence created by fixture discharge [see Commentary Figure 914.1(2)].

914.1.1 Multiple circuit-vented branches. Circuit-vented horizontal *branch* drains are permitted to be connected together. Each group of a maximum of eight fixtures shall be considered a separate circuit vent and shall conform to the requirements of this section.

❖ Circuit-vented branches may connect either in series or in parallel. Each group of up to eight fixtures must be considered as a separate circuit-vented branch and be installed accordingly.

The concept of multiple circuit-vented branches is that horizontal flow in a drain pipe does not require a large quantity of air to balance the pressure. The slower flow velocity in a horizontal drain also prevents pressure fluctuations that may affect the traps of the connecting fixtures (see Commentary Figure 914.1.1).

914.2 Vent connection. The circuit vent connection shall be located between the two most upstream fixture drains. The vent shall connect to the horizontal *branch* and shall be installed in accordance with Section 905. The circuit vent pipe shall not receive the discharge of any soil or waste.

❖ The circuit vent must connect between the two most upstream fixture drains to allow proper circulation of air. The vent is located so that the most upstream fixture discharges past the vent connection, thereby washing that section of pipe and preventing the buildup of solids. For this reason, the most upstream fixture should not be a fixture that is seldom used (such as a floor drain). When back-to-back fixtures are installed, the vent is connected between the most upstream pairs (see commentary, Section 914.1 and Commentary Figure 914.2).

Section 905 requires that the vent connect vertically to the drain and rise vertically to 6 inches (152 mm) above the flood level rim before offsetting horizontally.

914.3 Slope and size of horizontal branch. The slope of the vent section of the *horizontal branch drain* shall be not greater than one unit vertical in 12 units horizontal (8.3-percent slope). The entire length of the vent section of the *horizontal branch drain* shall be sized for the total drainage discharge to the *branch.*

❖ The principle of a circuit vent is that the drainage branch is entirely horizontal. A maximum pitch of 1 inch per foot (83 mm/m) ensures that the branch remains horizontal without any vertical offsets.

The horizontal drainage branch must also be uniformly sized to establish consistent flow characteristics and the free movement of air. Because it is uniformly sized for its full length, the horizontal branch will be oversized for all but the most downstream portion. Table 710.1(2) is used to size the horizontal branch (see Commentary Figure 914.3).

914.3.1 Size of multiple circuit vent. Each separate circuit-vented horizontal *branch* that is interconnected shall be sized independently in accordance with Section 914.3. The downstream circuit-vented horizontal *branch* shall be sized for the total discharge into the *branch*, including the upstream *branches* and the fixtures within the *branch*.

❖ Each circuit-vented branch must be uniformly sized based on the total drainage load on that branch, including any drainage load from upstream branches. If an increase in pipe size is required, the location must be at the interconnection of the circuit-vented branches (see Commentary Figure 914.3.1).

914.4 Relief vent. A relief vent shall be provided for circuit-vented horizontal *branches* receiving the discharge of four or more water closets and connecting to a drainage *stack* that receives the discharge of soil or waste from upper horizontal *branches*.

❖ If a circuit-vented horizontal branch connects to a drainage stack that is receiving drainage discharge from floors above, a relief vent is required if more than three water closets connect to the circuit-vented horizontal branch. The relief vent will prevent any pressure differential in the drainage stack from affecting the horizontal branch by relieving the pressures.

INTERNATIONAL CODE COUNCIL®
Copyright © 2015 ICC. ALL RIGHTS RESERVED. Accessed by David Dammon on Jun 21, 2017 12:30:52 PM pursuant to License Agreement with ICC. No further reproduction or distribution authorized. ANY UNAUTHORIZED REPRODUCTION OR DISTRIBUTION IS A VIOLATION OF THE FEDERAL COPYRIGHT ACT AND THE LICENSE AGREEMENT, AND SUBJECT TO CIVIL AND CRIMINAL PENALTIES THEREUNDER.

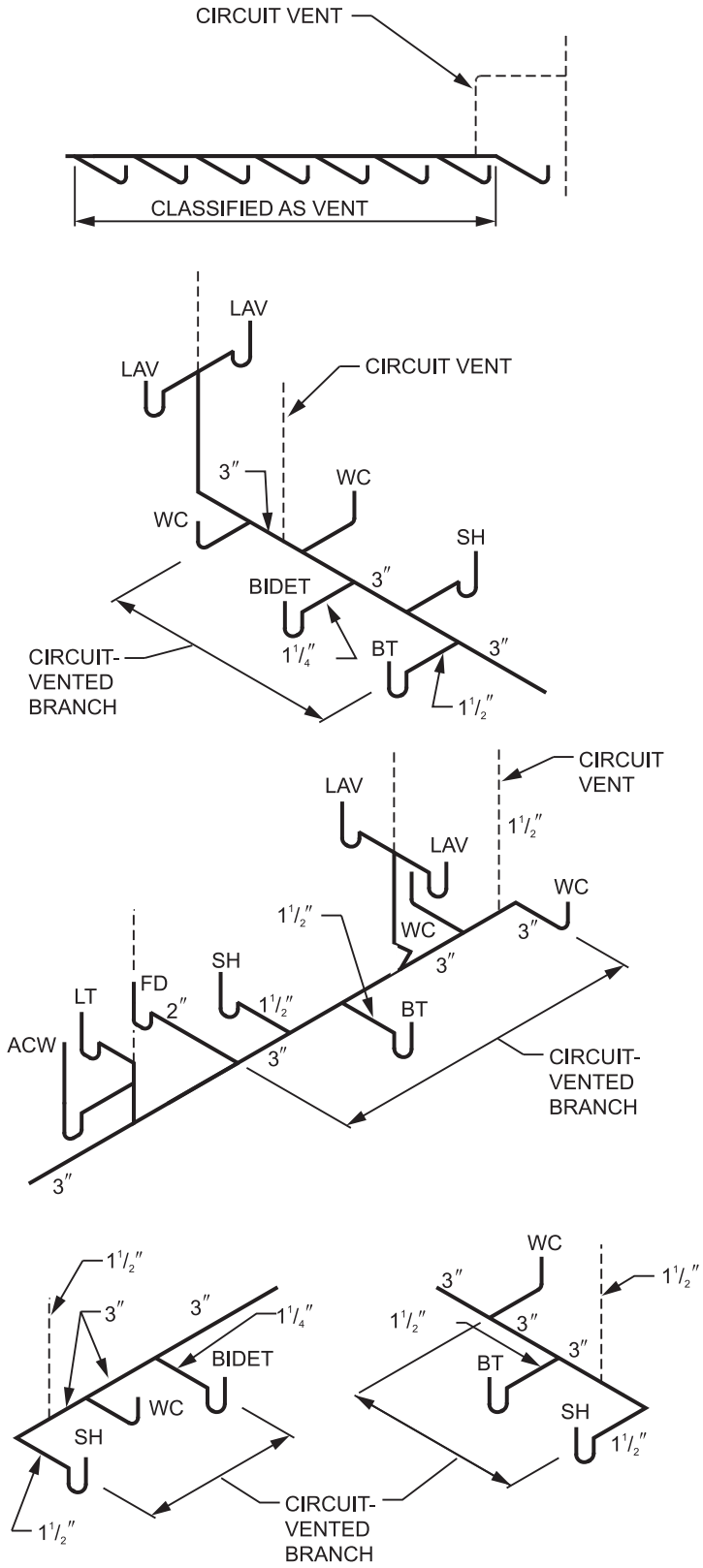

For SI: 1 inch = 25.4 mm.

Figure 914.1(1)
CIRCUIT VENTING

INTERNATIONAL CODE COUNCIL®
Copyright © 2015 ICC. ALL RIGHTS RESERVED. Accessed by David Dammon on Jun 21, 2017 12:30:52 PM pursuant to License Agreement with ICC. No further reproduction or distribution authorized. ANY UNAUTHORIZED REPRODUCTION OR DISTRIBUTION IS A VIOLATION OF THE FEDERAL COPYRIGHT ACT AND THE LICENSE AGREEMENT, AND SUBJECT TO CIVIL AND CRIMINAL PENALTIES THEREUNDER.



Figure 914.1(2)
ROUGH-IN FOR EIGHT CIRCUIT-VENTED FIXTURES
(Photo courtesy of B&I Contractors)

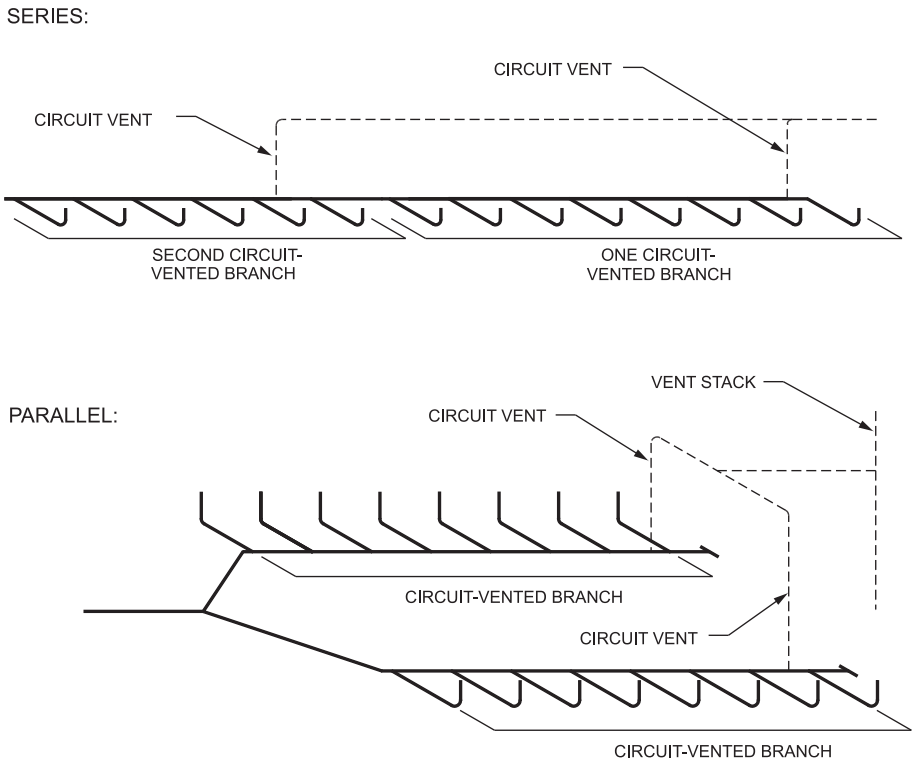

Figure 914.1.1
MULTIPLE CIRCUIT-VENTED BRANCHES

INTERNATIONAL CODE COUNCIL®
Copyright © 2015 ICC. ALL RIGHTS RESERVED. Accessed by David Dammon on Jun 21, 2017 12:30:52 PM pursuant to License Agreement with ICC. No further reproduction or distribution authorized. ANY UNAUTHORIZED REPRODUCTION OR DISTRIBUTION IS A VIOLATION OF THE FEDERAL COPYRIGHT ACT AND THE LICENSE AGREEMENT, AND SUBJECT TO CIVIL AND CRIMINAL PENALTIES THEREUNDER.

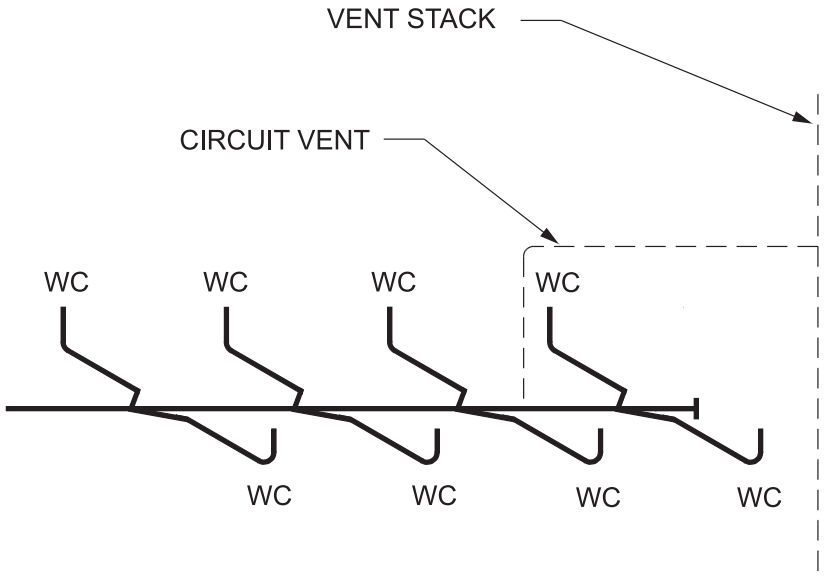

Figure 914.2
BACK-TO-BACK WATER CLOSETS CIRCUIT VENTED

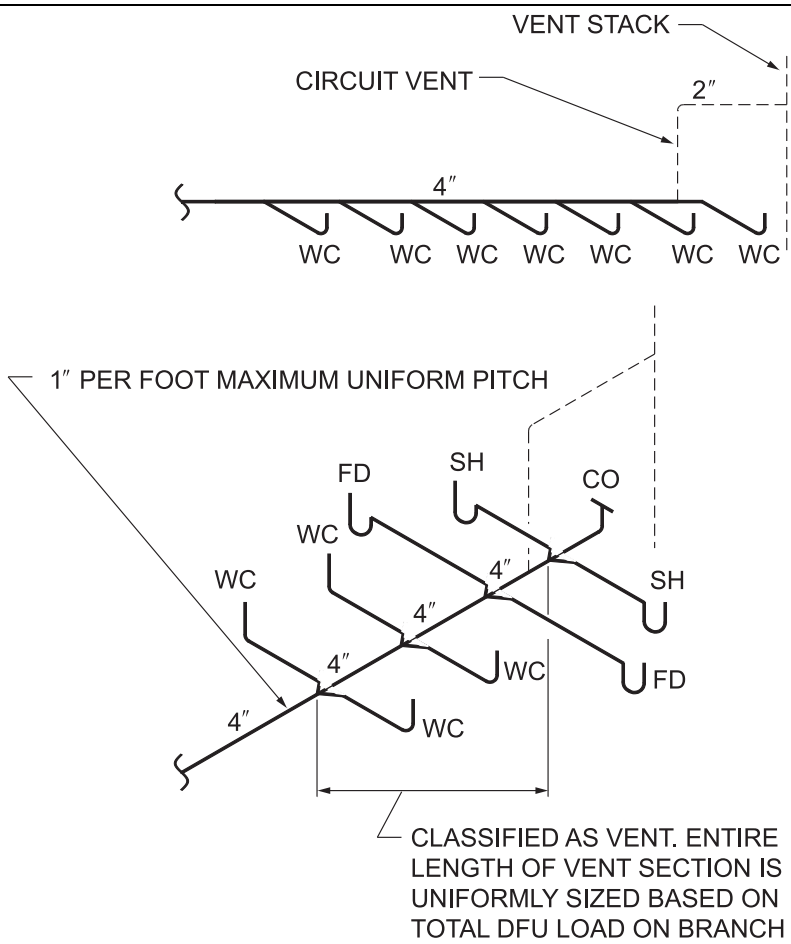

For SI: 1 inch = 25.4 mm.

Figure 914.3
SIZING A CIRCUIT VENT SYSTEM

INTERNATIONAL CODE COUNCIL®
Copyright © 2015 ICC. ALL RIGHTS RESERVED. Accessed by David Dammon on Jun 21, 2017 12:30:52 PM pursuant to License Agreement with ICC. No further reproduction or distribution authorized. ANY UNAUTHORIZED REPRODUCTION OR DISTRIBUTION IS A VIOLATION OF THE FEDERAL COPYRIGHT ACT AND THE LICENSE AGREEMENT, AND SUBJECT TO CIVIL AND CRIMINAL PENALTIES THEREUNDER.

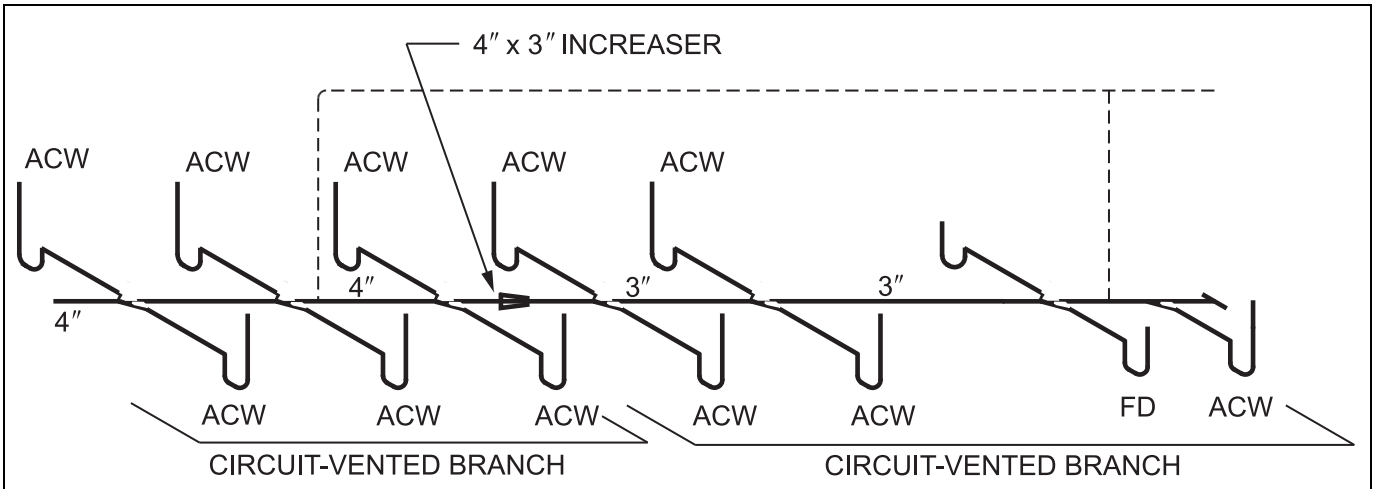

For SI: 1 inch = 25.4 mm.

Figure 914.3.1
SIZING MULTIPLE CIRCUIT-VENTED BRANCHES

914.4.1 Connection and installation. The relief vent shall connect to the horizontal *branch* drain between the *stack* and the most downstream *fixture drain* of the circuit vent. The relief vent shall be installed in accordance with Section 905.

❖ The relief vent must connect between the stack and the most downstream fixture on the horizontal branch. The relief vent is sized in accordance with Section 906.2 (see Commentary Figure 914.4.1).

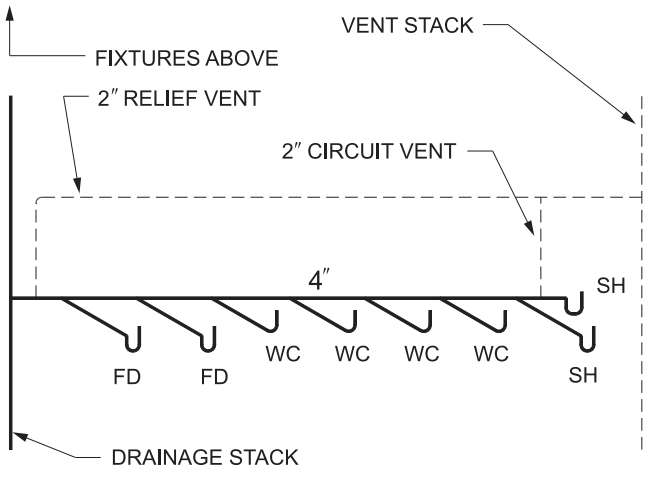

For SI: 1 inch = 25.4 mm.

Figure 914.4.1
CIRCUIT VENT WITH RELIEF VENT CONNECTION

914.4.2 Fixture drain or branch. The relief vent is permitted to be a *fixture drain* or fixture *branch* for fixtures located within the same *branch interval* as the circuit-vented horizontal *branch*. The maximum discharge to a relief vent shall be four fixture units.

❖ Unlike the circuit vent, which must be dry, the relief vent is permitted to serve as a drain for fixtures installed within the same circuit-vented branch. When a relief vent serves as a fixture branch, that vent is subject to the same sizing requirements as a common vent or wet vent. A $1^1/_2$-inch (38 mm) relief vent may receive 1 dfu and a 2-inch (51 mm) or larger relief vent is limited to 4 dfu.

914.5 Additional fixtures. Fixtures, other than the circuit-vented fixtures, are permitted to discharge to the *horizontal branch drain*. Such fixtures shall be located on the same floor as the circuit-vented fixtures and shall be either individually or common vented.

❖ Where additional fixtures (other than the circuit-vented fixtures) are located on the same floor as a circuit-vented branch, such fixtures are allowed to connect to the circuit-vented branch. The additional fixtures must be separately vented, and the additional drainage load of those fixtures must be considered in sizing the circuit-vented branch [see Commentary Figures 914.5(1) and 914.5(2)]. This provision is intended to allow the connection of lavatories, urinals and similar fixtures that are located in the same area as the circuit-vented fixtures. This is common practice for toilet room installations that use circuit vents.

INTERNATIONAL CODE COUNCIL®
Copyright © 2015 ICC. ALL RIGHTS RESERVED. Accessed by David Dammon on Jun 21, 2017 12:30:52 PM pursuant to License Agreement with ICC. No further reproduction or distribution authorized. ANY UNAUTHORIZED REPRODUCTION OR DISTRIBUTION IS A VIOLATION OF THE FEDERAL COPYRIGHT ACT AND THE LICENSE AGREEMENT, AND SUBJECT TO CIVIL AND CRIMINAL PENALTIES THEREUNDER.

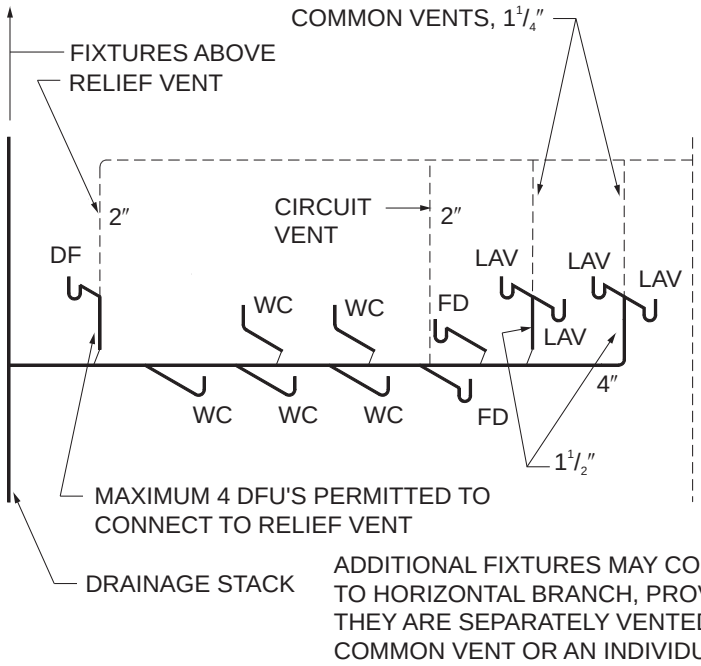

For SI: 1 inch = 25.4 mm.

Figure 914.5(1)
CIRCUIT-VENTED BRANCH WITH ADDITIONAL FIXTURE CONNECTIONS

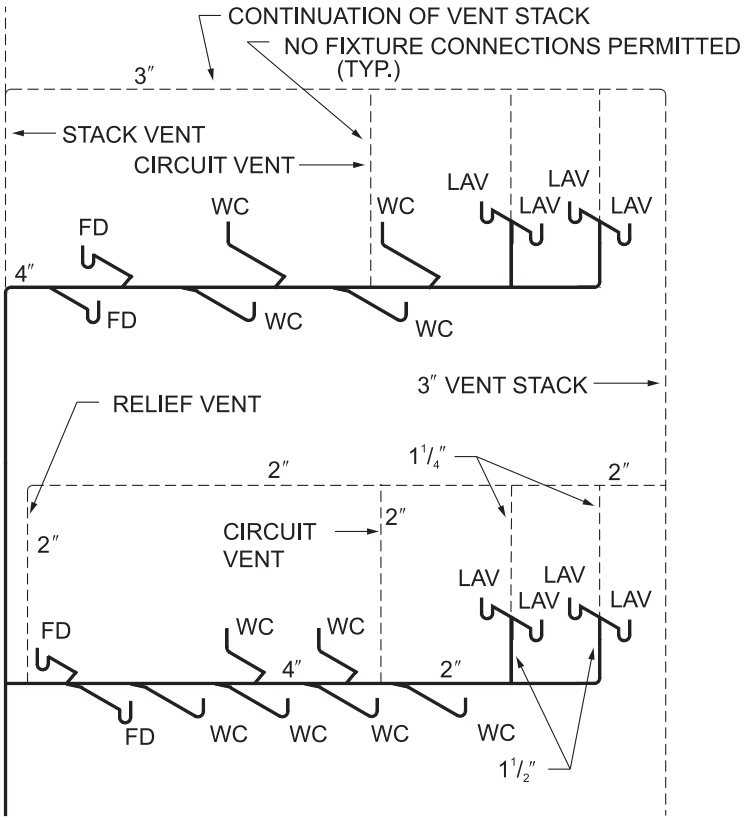

For SI: 1 inch = 25.4 mm.

Figure 914.5(2)
CIRCUIT-VENTED BRANCH WITH ADDITIONAL FIXTURE CONNECTIONS

INTERNATIONAL CODE COUNCIL®
Copyright © 2015 ICC. ALL RIGHTS RESERVED. Accessed by David Dammon on Jun 21, 2017 12:30:52 PM pursuant to License Agreement with ICC. No further reproduction or distribution authorized. ANY UNAUTHORIZED REPRODUCTION OR DISTRIBUTION IS A VIOLATION OF THE FEDERAL COPYRIGHT ACT AND THE LICENSE AGREEMENT, AND SUBJECT TO CIVIL AND CRIMINAL PENALTIES THEREUNDER.

SECTION 915
COMBINATION WASTE AND VENT SYSTEM

915.1 Type of fixtures. A *combination waste and vent system* shall not serve fixtures other than floor drains, sinks, lavatories and drinking fountains. *Combination waste and vent systems* shall not receive the discharge from a food waste disposer or clinical sink.

❖ This section contains requirements for a venting method serving floor drains, sinks, lavatories and drinking fountains. Like wet vents and circuit vents, a combination waste and vent system is another variation of "wet" venting. Although the specific requirements for each are unique, all of the "wet" venting means (circuit, wet and combination) utilize the same basic principle of oversized drains with ample space for airflow above the waste flow.

The number of fixtures connecting to a combination waste and vent system is unlimited, provided that the fixtures are floor drains, sinks, lavatories or drinking fountains. The system is commonly used where floor drains are installed in large open areas that cannot accommodate vertical vent risers from the floor drains. A combination waste and vent is also practical to use where island sinks are installed in dwelling units, laboratories and classrooms.

To prevent blockages, such systems are intended to receive only clear and gray-water wastes. Because of the low-flow velocities and volumes that occur in these systems, any solids introduced would accumulate, causing blockages and reduction of the internal cross-sectional area of the piping. Therefore, water closets, sinks equipped with food waste grinders, clinical sinks and fixtures that discharge solid waste are not allowed to be served by a combination waste and vent system. Ground food waste might collect in the drain, causing blockages. Combination waste and vent systems are oversized drains; therefore, the velocity of the flow will be low, thereby reducing normally available scouring action.

915.2 Installation. The only vertical pipe of a combination waste and vent system shall be the connection between the fixture drain and the horizontal combination waste and vent pipe. The vertical distance shall not exceed 8 feet (2438 mm).

❖ In a combination waste and vent system, the drain serves as the vent for the fixture. The system is intended to be a horizontal piping system, with the only vertical piping [limited to 8 feet (2438 mm) in height] being the vertical portion of a fixture drain located above the level of the combination waste and vent [see Commentary Figure 915.2(5)].

Each fixture drain connected to a combination waste and vent system is sized in accordance with Chapter 7. Depending on the method by which it is sized, the fixture drain may or may not be considered as a portion of the combination waste and vent system. Where the fixture drain is sized as a combination waste and vent in accordance with Table 915.2.2, the trap-to-vent distances listed in Table 909.1 do not apply because the drain is also a vent for its entire length.

Additional installation requirements for the combination waste and vent and the fixture branch or drain connections are contained in Sections 915.2.1 through 915.2.5 [see Commentary Figures 915.2(1) through 915.2(5)].

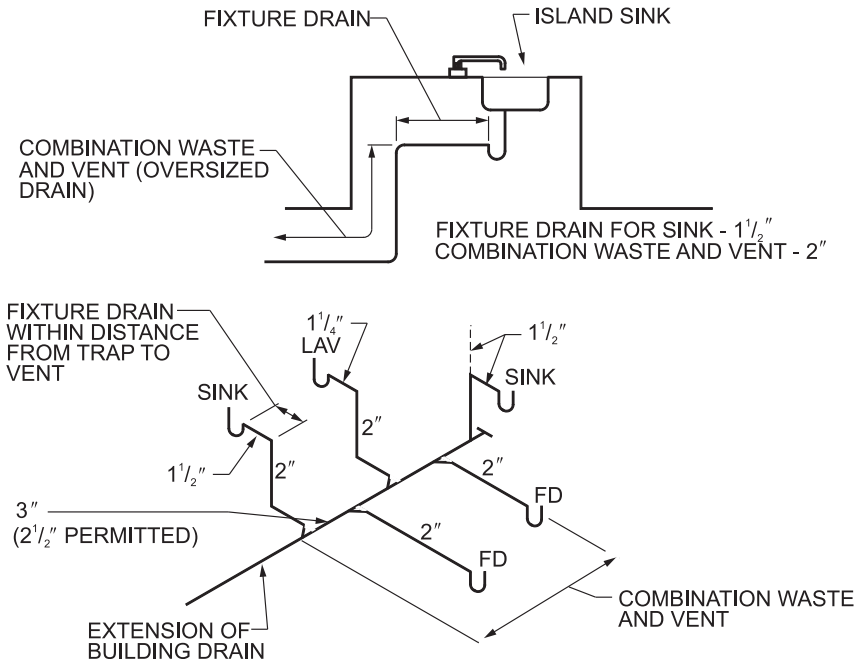

For SI: 1 inch = 25.4 mm.

Figure 915.2(1)
COMBINATION WASTE AND VENT

INTERNATIONAL CODE COUNCIL®
Copyright © 2015 ICC. ALL RIGHTS RESERVED. Accessed by David Dammon on Jun 21, 2017 12:30:52 PM pursuant to License Agreement with ICC. No further reproduction or distribution authorized. ANY UNAUTHORIZED REPRODUCTION OR DISTRIBUTION IS A VIOLATION OF THE FEDERAL COPYRIGHT ACT AND THE LICENSE AGREEMENT, AND SUBJECT TO CIVIL AND CRIMINAL PENALTIES THEREUNDER.

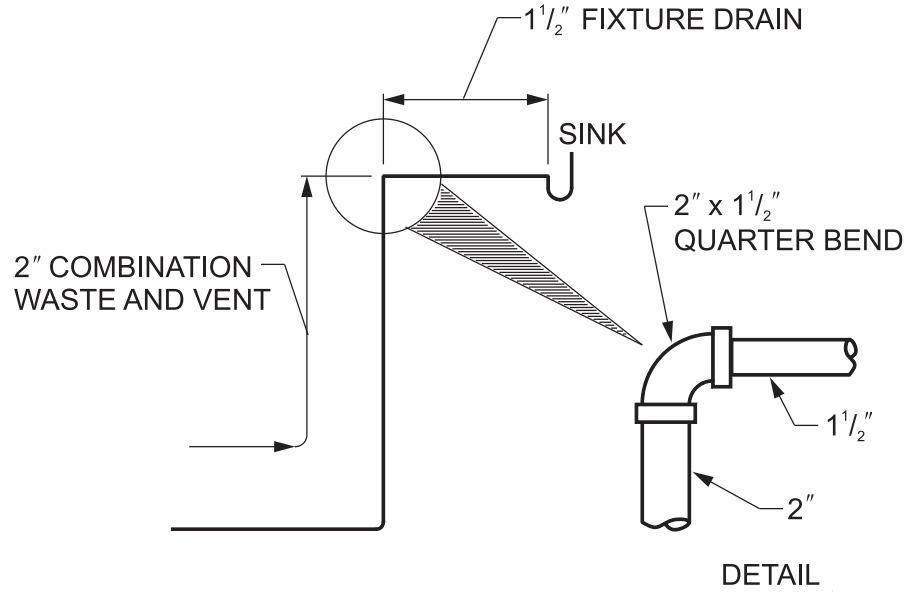

For SI: 1 inch = 25.4 mm.

Figure 915.2(2)
COMBINATION WASTE AND VENT

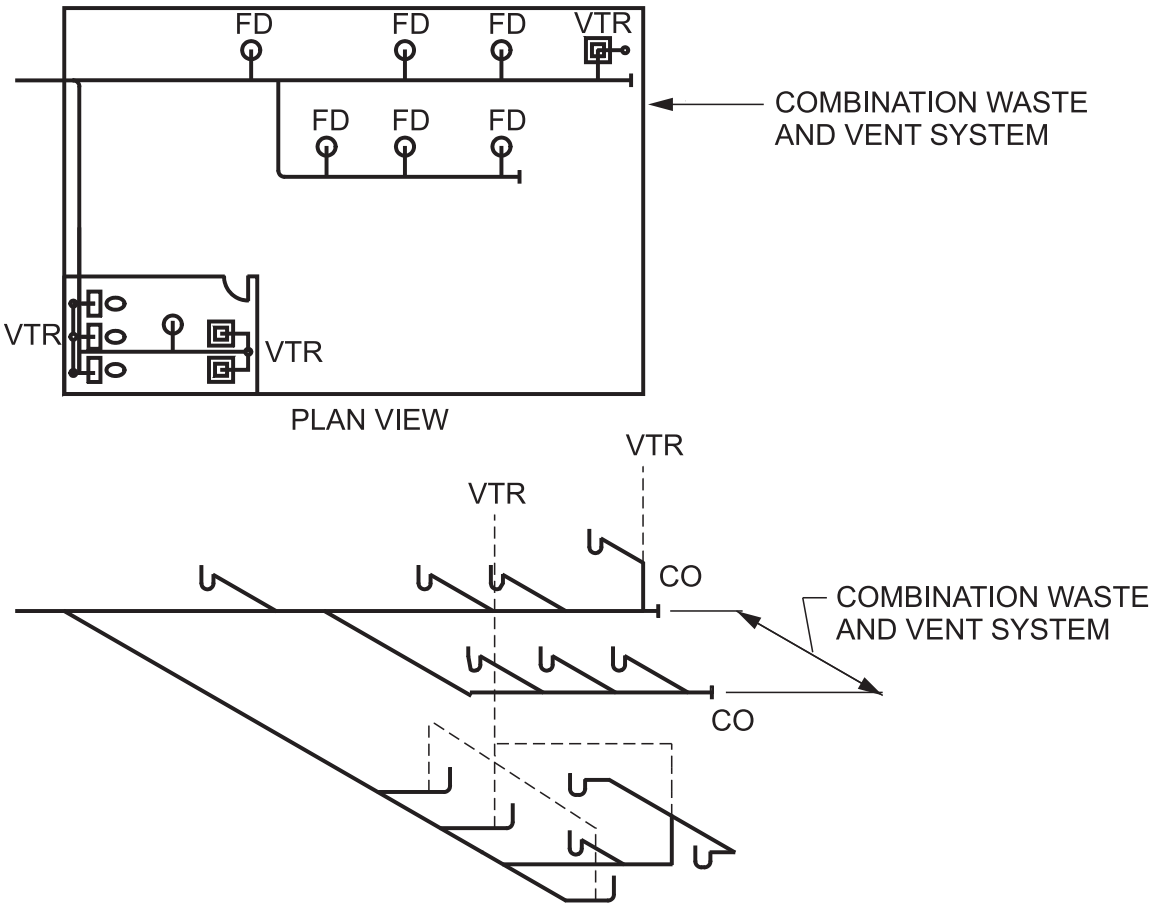

For SI: 1 inch = 25.4 mm.

Figure 915.2(3)
COMBINATION WASTE AND VENT

INTERNATIONAL CODE COUNCIL®
Copyright © 2015 ICC. ALL RIGHTS RESERVED. Accessed by David Dammon on Jun 21, 2017 12:30:52 PM pursuant to License Agreement with ICC. No further reproduction or distribution authorized. ANY UNAUTHORIZED REPRODUCTION OR DISTRIBUTION IS A VIOLATION OF THE FEDERAL COPYRIGHT ACT AND THE LICENSE AGREEMENT, AND SUBJECT TO CIVIL AND CRIMINAL PENALTIES THEREUNDER.

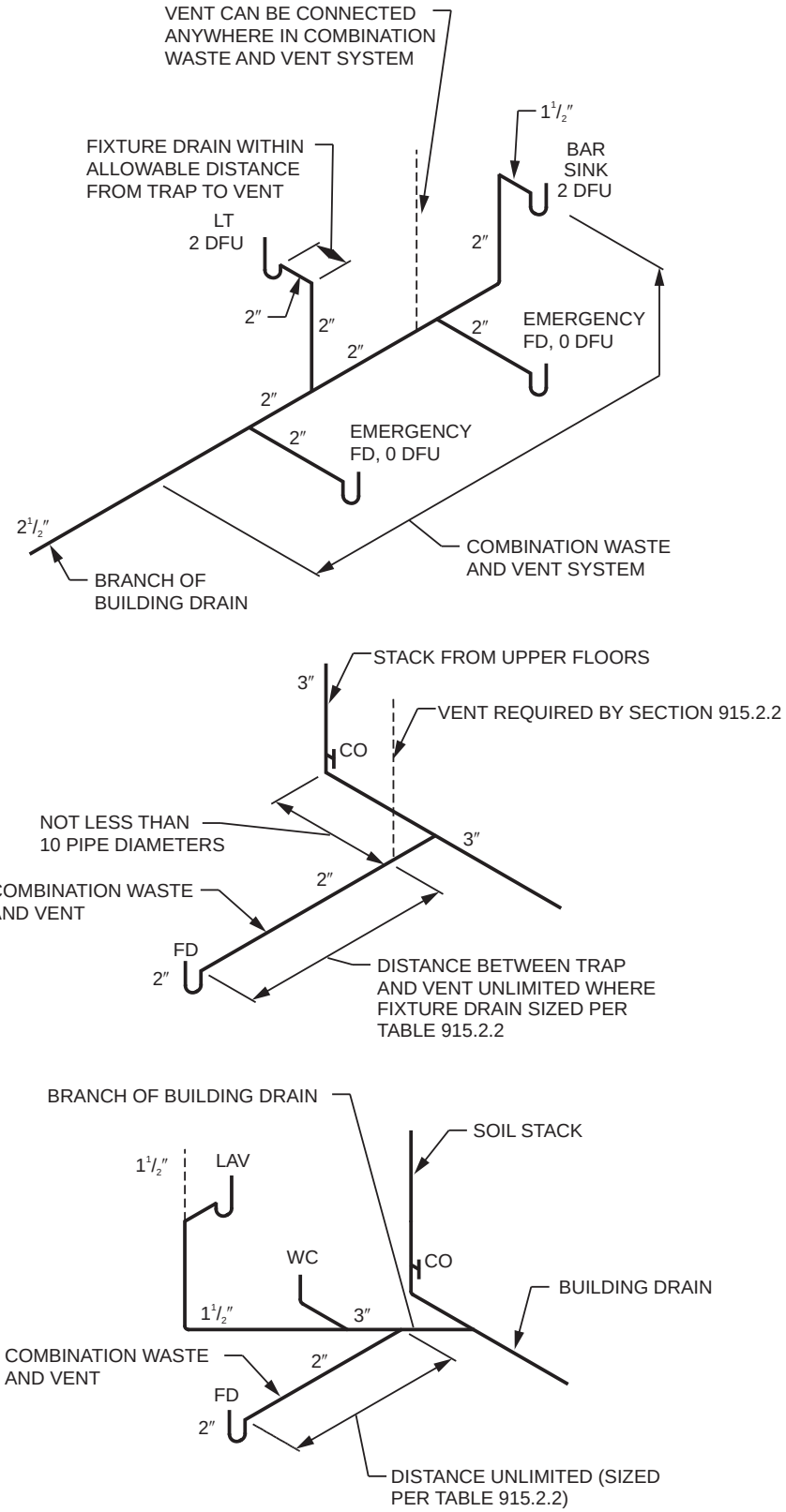

For SI: 1 inch = 25.4 mm.

Figure 915.2(4)
COMBINATION WASTE AND VENT

INTERNATIONAL CODE COUNCIL®
Copyright © 2015 ICC. ALL RIGHTS RESERVED. Accessed by David Dammon on Jun 21, 2017 12:30:52 PM pursuant to License Agreement with ICC. No further reproduction or distribution authorized. ANY UNAUTHORIZED REPRODUCTION OR DISTRIBUTION IS A VIOLATION OF THE FEDERAL COPYRIGHT ACT AND THE LICENSE AGREEMENT, AND SUBJECT TO CIVIL AND CRIMINAL PENALTIES THEREUNDER.

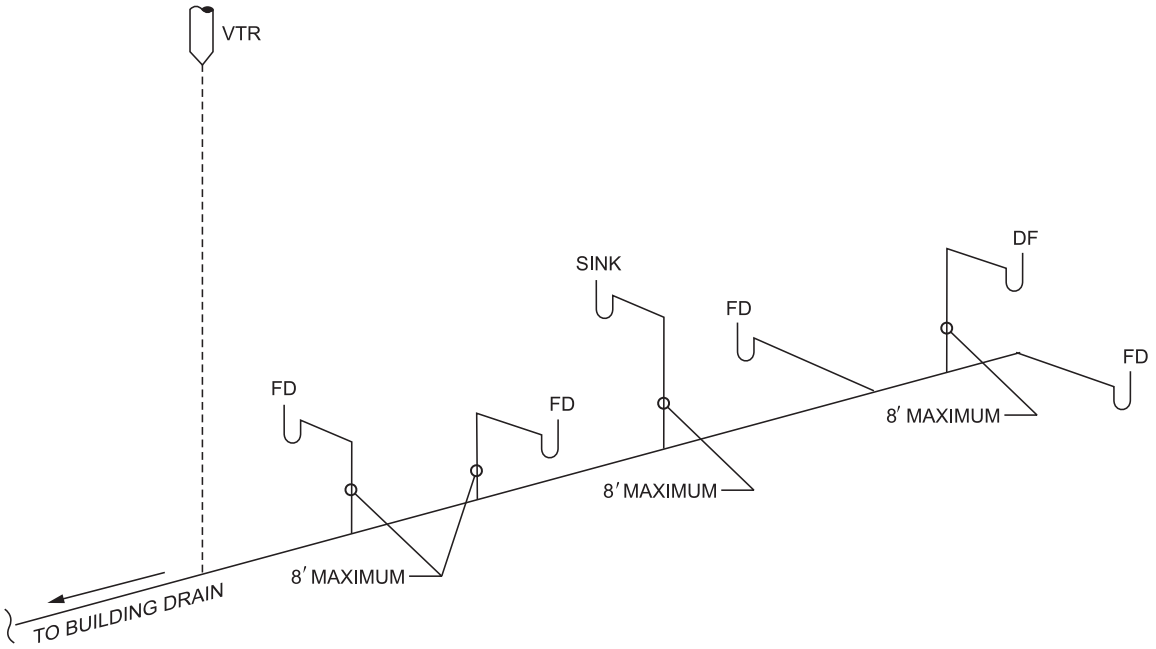

For SI: 1 foot = 304.8 mm.

Figure 915.2(5)
VERTICAL FIXTURE DRAIN COMPONENT IN COMBINATION DRAIN AND VENT SYSTEM

915.2.1 Slope. The slope of a horizontal combination waste and vent pipe shall not exceed one-half unit vertical in 12 units horizontal (4-percent slope) and shall not be less than that indicated in Table 704.1.

❖ This section specifies the maximum and minimum slopes for the combination waste and vent to regulate the flow velocity of the waste. The intent of this section is to provide a minimum slope to facilitate drainage by gravity while providing a maximum slope to limit flow velocity to a range that minimizes adverse pressure fluctuations. This section and Section 915.2 act together to make sure such systems maintain a low-flow velocity by incorporating height limitations on vertical piping.

915.2.2 Size and length. The size of a combination waste and vent pipe shall be not less than that indicated in Table 915.2.2. The horizontal length of a *combination waste and vent system* shall be unlimited.

❖ The referenced table sizes the drain serving as a combination waste and vent. Because of the degree of oversizing and the low slope for such piping, the flow velocity and depth will be low. These facts indicate that such systems cannot tolerate waste discharge containing solids, hence the reason for excluding the discharge from water closets, food waste grinders, clinical sinks and other fixtures that might discharge solids.

TABLE 915.2.2
SIZE OF COMBINATION WASTE AND VENT PIPE

DIAMETER PIPE (inches)	MAXIMUM NUMBER OF DRAINAGE FIXTURE UNITS (dfu)	
	Connecting to a horizontal branch or stack	Connecting to a building drain or building subdrain
2	3	4
$2^1/_2$	6	26
3	12	31
4	20	50
5	160	250
6	360	575

For SI: 1 inch = 25.4 mm.

❖ The system requires that the combination drain and vent pipe be oversized drainage for two reasons. First, the velocity of the drainage flowing in the pipe is greatly reduced by oversizing the pipe, which reduces the possibility of creating a siphon or blowback action. Second, the cross-sectional area of waste flow (or depth of drainage) in the pipe is reduced by increasing the drainage pipe size, which results in a greater area of the pipe above the flow of drainage to permit the movement of air for venting.

Note that when connecting to a stack or an unvented horizontal drain, a combination drain and vent system must have a dry vent connection (see commentary, Sections 915.2.3 and 915.2.4).

INTERNATIONAL CODE COUNCIL®
Copyright © 2015 ICC. ALL RIGHTS RESERVED. Accessed by David Dammon on Jun 21, 2017 12:30:52 PM pursuant to License Agreement with ICC. No further reproduction or distribution authorized. ANY UNAUTHORIZED REPRODUCTION OR DISTRIBUTION IS A VIOLATION OF THE FEDERAL COPYRIGHT ACT AND THE LICENSE AGREEMENT, AND SUBJECT TO CIVIL AND CRIMINAL PENALTIES THEREUNDER.

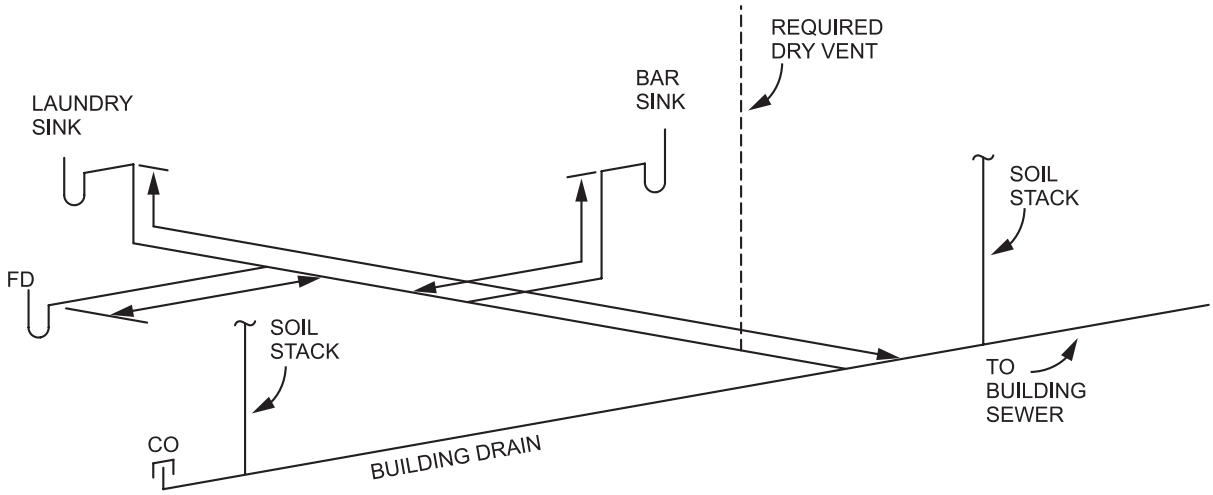

Figure 915.2.2(1)
COMBINATION WASTE AND VENT

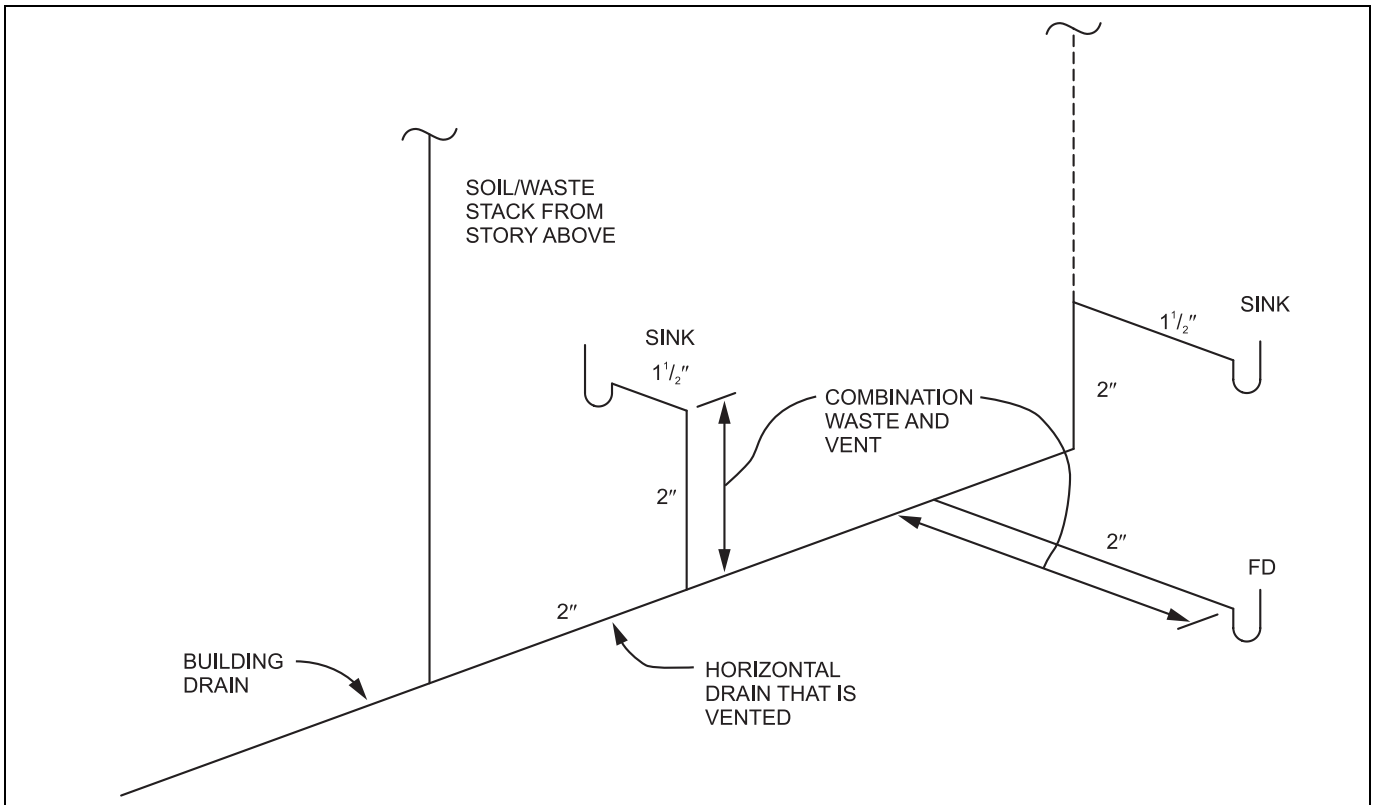

For SI: 1 inch = 25.4 mm.

Figure 915.2.2(2)
COMBINATION WASTE AND VENT

INTERNATIONAL CODE COUNCIL®
Copyright © 2015 ICC. ALL RIGHTS RESERVED. Accessed by David Dammon on Jun 21, 2017 12:30:52 PM pursuant to License Agreement with ICC. No further reproduction or distribution authorized. ANY UNAUTHORIZED REPRODUCTION OR DISTRIBUTION IS A VIOLATION OF THE FEDERAL COPYRIGHT ACT AND THE LICENSE AGREEMENT, AND SUBJECT TO CIVIL AND CRIMINAL PENALTIES THEREUNDER.

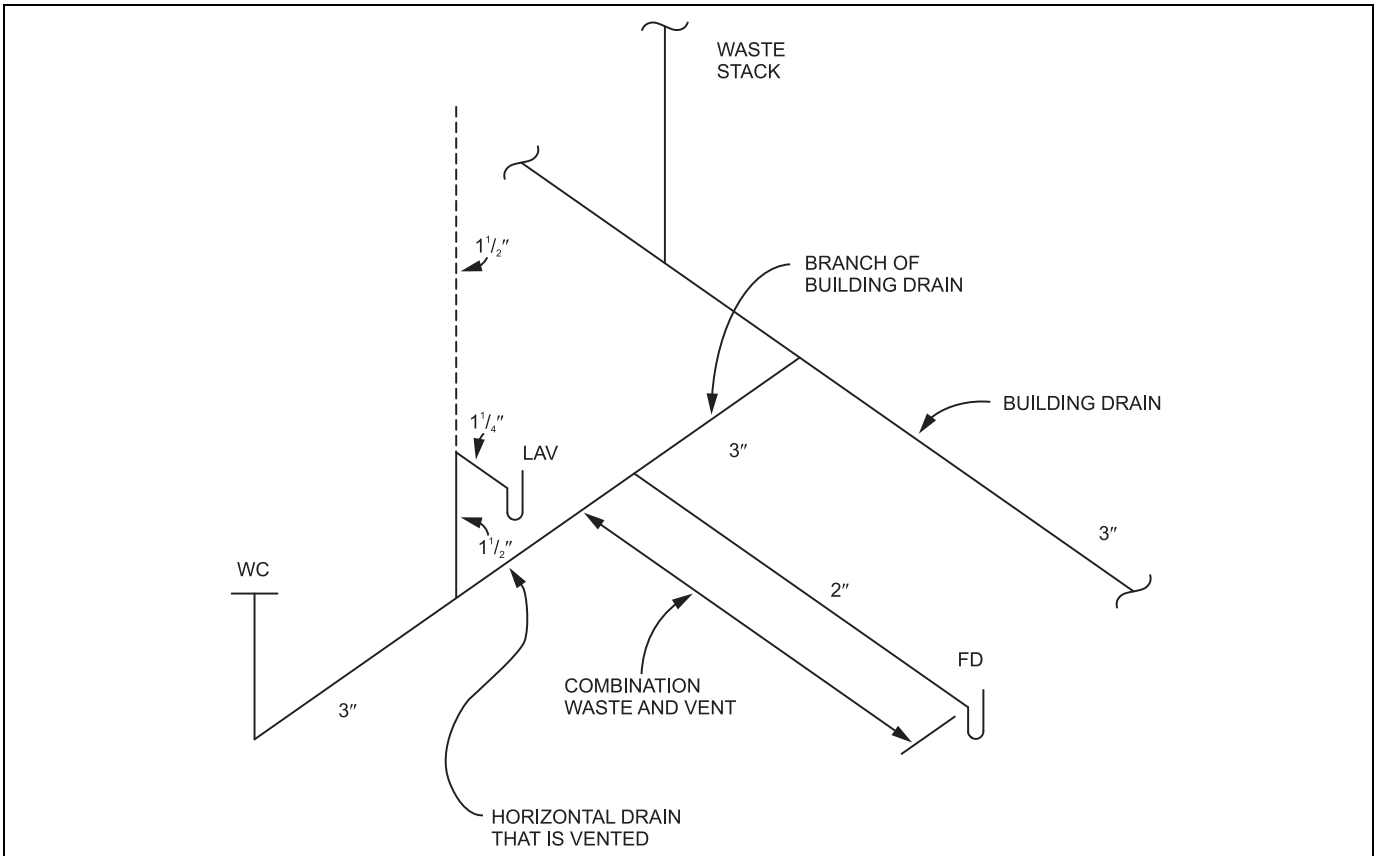

For SI: 1 inch = 25.4 mm.

Figure 915.2.2(3)
COMBINATION WASTE AND VENT

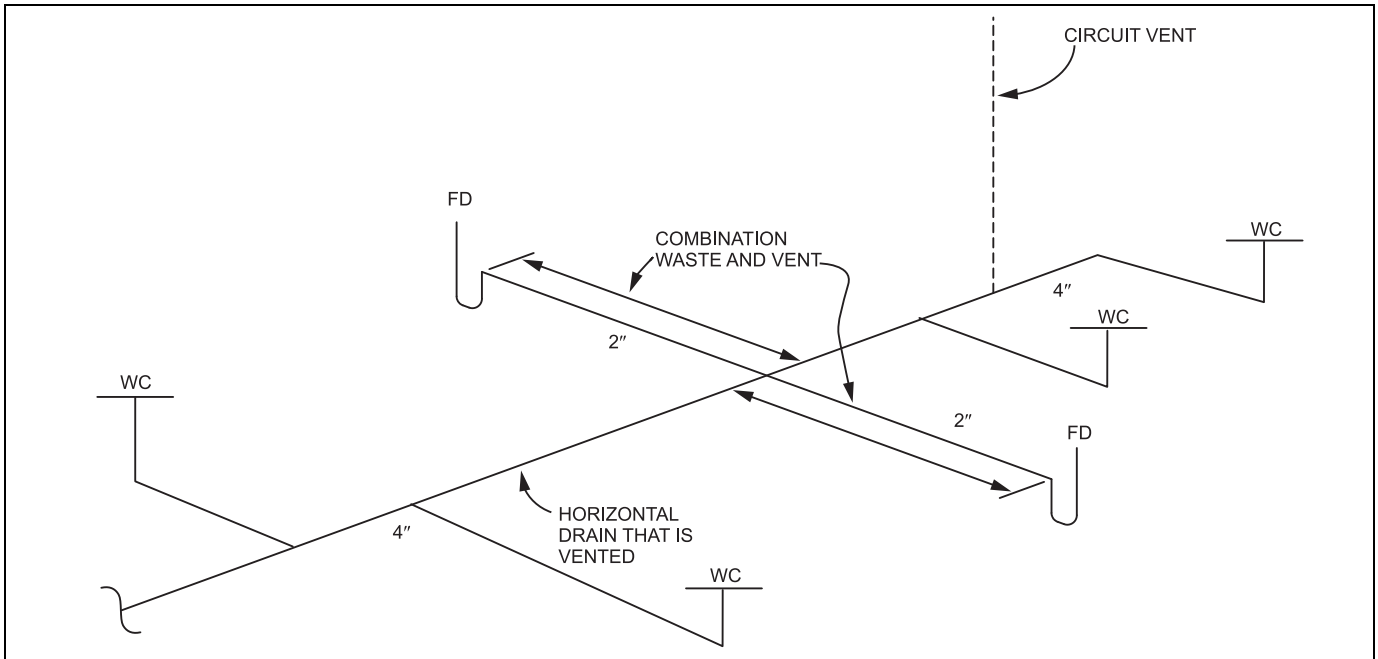

For SI: 1 inch = 25.4 mm.

Figure 915.2.2(4)
COMBINATION WASTE AND VENT

INTERNATIONAL CODE COUNCIL®
Copyright © 2015 ICC. ALL RIGHTS RESERVED. Accessed by David Dammon on Jun 21, 2017 12:30:52 PM pursuant to License Agreement with ICC. No further reproduction or distribution authorized. ANY UNAUTHORIZED REPRODUCTION OR DISTRIBUTION IS A VIOLATION OF THE FEDERAL COPYRIGHT ACT AND THE LICENSE AGREEMENT, AND SUBJECT TO CIVIL AND CRIMINAL PENALTIES THEREUNDER.

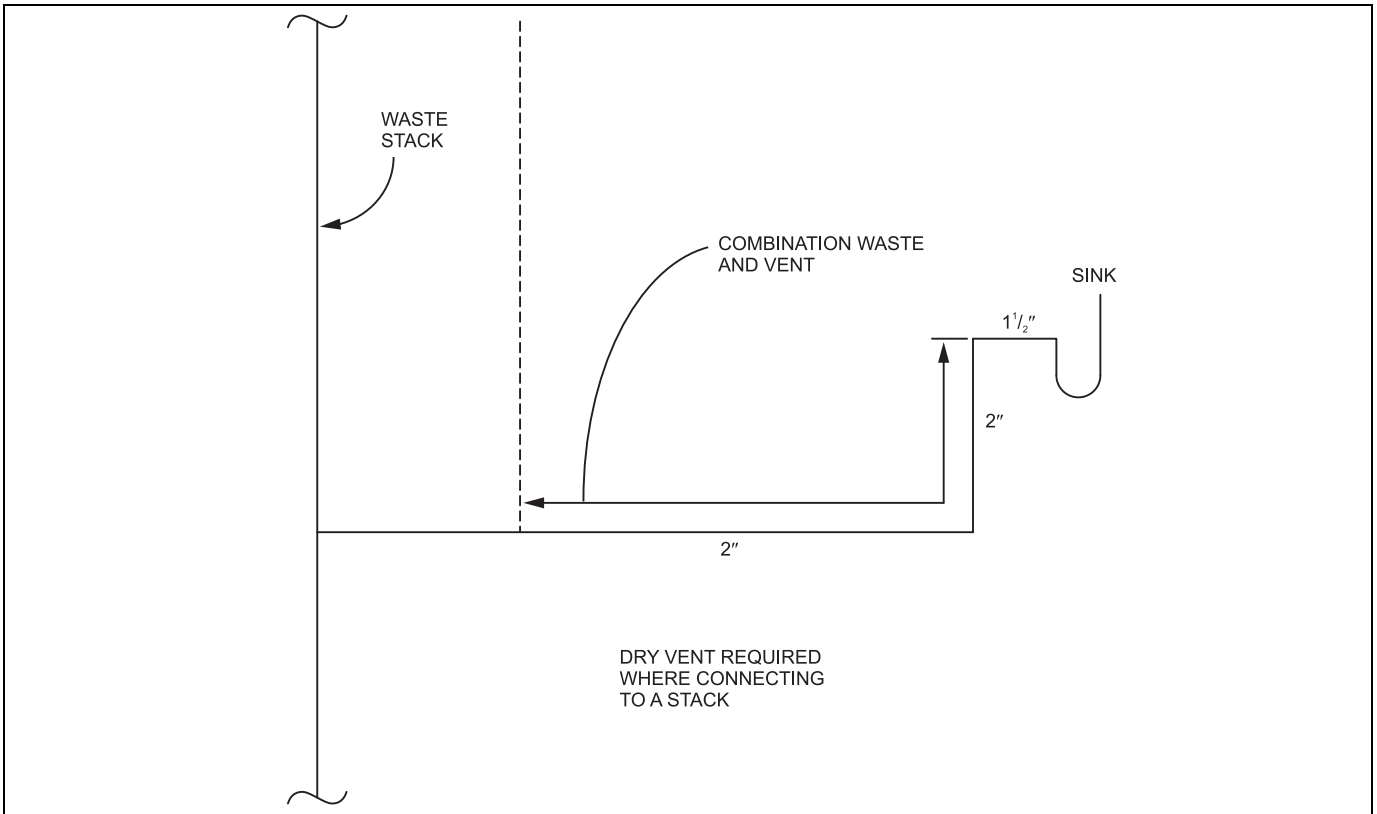

For SI: 1 inch = 25.4 mm.

Figure 915.2.2(5)
COMBINATION WASTE AND VENT

915.2.3 Connection. The *combination waste and vent system* shall be provided with a dry vent connected at any point within the system or the system shall connect to a horizontal drain that serves vented fixtures located on the same floor. *Combination waste and vent systems* connecting to building drains receiving only the discharge from one or more stacks shall be provided with a dry vent. The vent connection to the combination waste and vent pipe shall extend vertically to a point not less than 6 inches (152 mm) above the flood level rim of the highest fixture being vented before offsetting horizontally.

❖ A dry vent pipe must connect somewhere within the combination waste and vent system, or the system must connect to a horizontal drain that is vented. A horizontal drain that is vented is any horizontal drain that permits the free flow of air above the liquid flow level in the drain pipe. The code does not define "horizontal drain that is vented," and this has been and still is the subject of much debate. This section implies that any horizontal drain is vented if it is serving fixtures within the same story that are vented by a method in this chapter [see Commentary Figures 915.2.2(1) through 915.2.2(5)]. For example, a branch of a building drain that serves only an individually vented laundry sink would be considered a horizontal drain that is vented. Keep in mind that the sink drain would have to be oversized to allow for both the simultaneous flow of waste and air and the connection of a 2-inch (51 mm) or larger combination drain and vent pipe. Building drains and branches of building drains that receive only the discharge of stacks are not considered to be horizontal drains that are vented. Clearly, by their nature, wet-vent systems, circuit-vent systems and combination waste and vent systems are "horizontal drains that are vented." Section 704.3 prohibits the connection of horizontal branches at or near waste and soil stacks unless those connections are 10 pipe (stack) diameters downstream from the stack.

If a building drain receives only the discharge of stacks, it cannot be considered as a "horizontal drain that is vented" because of the positive pressures expected to occur in such piping. Because the combination waste and vent system is both a drain and a vent for its entire length, it is not important where the dry vent connects to the system. In fact, where these systems connect to a horizontal drain that is vented, the combination waste and vent may be considered as "end vented" because the vent source is at the termination of the combination system. If a combination waste and vent system connects to a stack, a dry vent must connect directly to the combination waste and vent system (see the column titled "Connecting to a horizontal branch or stack" in Table 915.2.2).

This section expresses the same concern as Section 905.4 regarding vertical rise of the dry vent above the flood level rim. The vertical rise of the vent to a

INTERNATIONAL CODE COUNCIL®
Copyright © 2015 ICC. ALL RIGHTS RESERVED. Accessed by David Dammon on Jun 21, 2017 12:30:52 PM pursuant to License Agreement with ICC. No further reproduction or distribution authorized. ANY UNAUTHORIZED REPRODUCTION OR DISTRIBUTION IS A VIOLATION OF THE FEDERAL COPYRIGHT ACT AND THE LICENSE AGREEMENT, AND SUBJECT TO CIVIL AND CRIMINAL PENALTIES THEREUNDER.

point above the flood level rim is necessary to protect the vent against clogging (see commentary, Sections 905.4 and 905.5).

915.2.4 Vent size. The vent shall be sized for the total *drainage fixture unit* load in accordance with Section 906.2.

❖ Where a dry vent connects directly to the combination waste and vent, the vent must be sized in accordance with Section 906.2. The dry vent sizing need not be based on the installed size of the combination waste and vent pipe, but rather on the size of a drain pipe required to carry the dfu load served by the combination drain and vent system.

915.2.5 Fixture branch or drain. The *fixture branch* or *fixture drain* shall connect to the combination waste and vent within a distance specified in Table 909.1. The combination waste and vent pipe shall be considered the vent for the fixture.

❖ The oversized horizontal drain branch is considered to be the vent for any individual fixture it serves. The distance from the fixture trap to the connection to the combination waste and vent system is limited to the length specified in Table 909.1 (see commentary, Section 909.1). Note that the length of a fixture drain sized in accordance with Table 915.2.2 can be unlimited because it, too, is considered a combination waste and vent.

SECTION 916
ISLAND FIXTURE VENTING

916.1 Limitation. Island fixture venting shall not be permitted for fixtures other than sinks and lavatories. Residential kitchen sinks with a dishwasher waste connection, a food waste disposer, or both, in combination with the kitchen sink waste, shall be permitted to be vented in accordance with this section.

❖ This section contains a venting option for plumbing fixtures located where an individual vent cannot be installed without horizontal sections of piping below the flood level rim of the fixture served.

Island fixture venting is another method of venting island sinks and lavatories. The other options are a combination drain and vent regulated by Section 912 and air admittance valves in accordance with Section 918. This section also clarifies that a food waste grinder, a dishwasher or both may be connected to a kitchen sink drain that is served by an island vent where the installation occurs in a residential occupancy.

916.2 Vent connection. The island fixture vent shall connect to the *fixture drain* as required for an individual or common vent. The vent shall rise vertically to above the drainage outlet of the fixture being vented before offsetting horizontally or vertically downward. The vent or *branch vent* for multiple island fixture vents shall extend to a point not less than 6 inches (152 mm) above the highest island fixture being vented before connecting to the outside vent terminal.

❖ For an island fixture vent, the installation is similar to a conventional drainage system that is either individually or common vented. The only difference is that the vent cannot rise 6 inches (152 mm) above the flood level rim before offsetting horizontally. The vent offsets horizontally below the flood level rim so that the piping can be contained under the cabinet or other fixture support. The concern with a vent offsetting horizontally below the flood level rim of the fixture is the possibility of waste backing up into the vent. To cause a stoppage in the drain to be noticeable to the occupants, the vent must rise above the bottom of the fixture bowl before offsetting. This will result in the water rising in the fixture if there is a stoppage (see Commentary Figure 916.2).

The island vent must rise to at least 6 inches (152 mm) above the fixture flood level rim before connect-

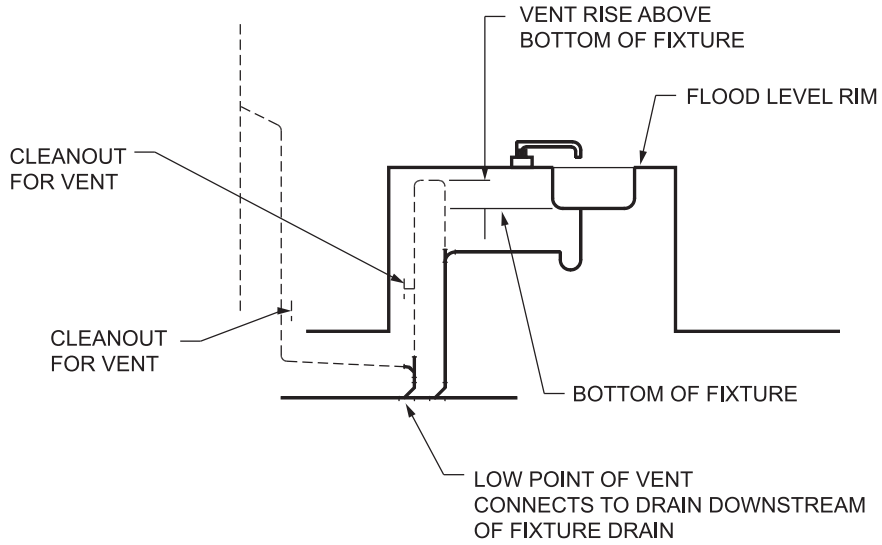

Figure 916.2
ISLAND FIXTURE VENT

INTERNATIONAL CODE COUNCIL®
Copyright © 2015 ICC. ALL RIGHTS RESERVED. Accessed by David Dammon on Jun 21, 2017 12:30:52 PM pursuant to License Agreement with ICC. No further reproduction or distribution authorized. ANY UNAUTHORIZED REPRODUCTION OR DISTRIBUTION IS A VIOLATION OF THE FEDERAL COPYRIGHT ACT AND THE LICENSE AGREEMENT, AND SUBJECT TO CIVIL AND CRIMINAL PENALTIES THEREUNDER.

ing to any other vent or vent terminal. In the event of drain stoppage, waste may be discharged to other vents or the vent terminal if this installation precaution was not taken.

916.3 Vent installation below the fixture flood level rim. The vent located below the *flood level rim* of the fixture being vented shall be installed as required for drainage piping in accordance with Chapter 7, except for sizing. The vent shall be sized in accordance with Section 906.2. The lowest point of the island fixture vent shall connect full size to the drainage system. The connection shall be to a vertical drain pipe or to the top half of a horizontal drain pipe. Cleanouts shall be provided in the island fixture vent to permit rodding of all vent piping located below the *flood level rim* of the fixtures. Rodding in both directions shall be permitted through a cleanout.

❖ Because it is possible to have the vent fill with waste when it is located below the flood level rim, the vent must be installed as a drain. The installation will require drainage pattern fittings and a cleanout. The cleanout may be used to rod in both directions because the piping is a vent. A connection to the drainage piping is required at the lowest point of the vent to prevent it from retaining water and becoming blocked by water or waste (see commentary, Section 916.2). The vent will have to be at a higher elevation than the drain pipe to allow the vent to drain any waste water that has collected therein.

SECTION 917
SINGLE STACK VENT SYSTEM

917.1 Where permitted. A drainage *stack* shall serve as a single stack vent system where sized and installed in accordance with Sections 917.2 through 917.9. The drainage *stack* and *branch* piping shall be the vents for the drainage system. The drainage *stack* shall have a *stack vent*.

❖ The single stack venting system is a method of venting similar to the waste stack venting method, combined with the combination waste and vent method. In other words, the venting of the drainage stack and fixtures is accomplished by oversizing of the drainage stack and the vertical sections of fixture drains so that sufficient venting air is available for the fixtures located within relative close proximity of the stack. The roots of this venting method are in the Philadelphia Single Stack Method that has been successfully used in Philadelphia, Pennsylvania for over 100 years.

At a minimum, the single stack venting system has only a stack vent that must terminate to the outdoors. Where the length of fixture drains exceeds certain limits, additional venting for those drains is required to be vented in accordance with any one of the many venting methods in this chapter (see Section 917.6).

The single stack method is ideal for multistory buildings that have small-to-medium size toilet rooms that are "stacked" one above the other. Such arrangements are typical in hotels, condominiums and apartment buildings (see Commentary Figure 917.8).

917.2 Stack size. Drainage *stacks* shall be sized in accordance with Table 917.2. *Stacks* shall be uniformly sized based on the total connected *drainage fixture unit* load. The *stack vent* shall be the same size as the drainage *stack*. A 3-inch (76 mm) *stack* shall serve not more than two water closets.

❖ The size of a single stack drainage stack is based upon the height and the total number of dfu connected to the stack. Table 917.2 provides the stack dfu limitations according to stack height. The height of the stack is from the connection to the building drain to the most upper drainage connection to the stack. Drainage stacks must be the same size from the base to the termination of the stack vent to the outdoors. The requirement for the stack vent to be the same size as the drainage stack allows the stack vent to be of any length on its path to its termination point outdoors.

For a 3-inch (76 mm) stack, there is a limitation of two water closets on the stack to limit the amount of solids in this small diameter stack so that airflow is not impeded.

TABLE 917.2
SINGLE STACK SIZE

STACK SIZE (inches)	MAXIMUM CONNECTED DRAINAGE FIXTURE UNITS		
	Stacks less than 75 feet in height	Stacks 75 feet to less than 160 feet in height	Stacks 160 feet and greater in height
3	24	NP	NP
4	225	24	NP
5	480	225	24
6	1,015	480	225
8	2,320	1,015	480
10	4,500	2,320	1,015
12	8,100	4,500	2,320
15	13,600	8,100	4,500

For SI: 1 inch = 25.4 mm, 1 foot = 304.8 mm.

❖ Table 917.2 is used simply by identifying the column that includes the height of the stack and then reading down that column to identify the row that has a dfu value that meets or exceeds the total dfu load on the stack. Once the row is identified, the user will find the stack size required from the first left-hand column. For example, if the total load on the stack is 1,000 dfu and the height of the stack is 100 feet (30 480 mm), the third column from the left is chosen and the row for an 8-inch (203 mm) stack size is identified. The "NP" in the table means "not possible."

917.3 Branch size. Horizontal *branches* connecting to a single stack vent system shall be sized in accordance with Table 710.1(2). Not more than one water closet shall discharge into a 3-inch (76 mm) horizontal *branch* at a point within a developed length of 18 inches (457 mm) measured horizontally from the *stack*.

INTERNATIONAL CODE COUNCIL®
Copyright © 2015 ICC. ALL RIGHTS RESERVED. Accessed by David Dammon on Jun 21, 2017 12:30:52 PM pursuant to License Agreement with ICC. No further reproduction or distribution authorized. ANY UNAUTHORIZED REPRODUCTION OR DISTRIBUTION IS A VIOLATION OF THE FEDERAL COPYRIGHT ACT AND THE LICENSE AGREEMENT, AND SUBJECT TO CIVIL AND CRIMINAL PENALTIES THEREUNDER.

Where a water closet is within 18 inches (457 mm) measured horizontally from the *stack* and not more than one fixture with a drain size of not more than $1^1/_2$ inches (38 mm) connects to a 3-inch (76 mm) horizontal *branch*, the *branch* drain connection to the *stack* shall be made with a sanitary tee.

❖ The sizing of the horizontal branches that connect to the stack is in accordance with Table 710.1(2). Only the first and second columns of this table are to be used for sizing. The remaining columns of the table covering stacks have no relationship to this section. For example, if a horizontal branch is required to carry 200 dfu, then a 5-inch (127 mm) horizontal branch is required.

A 3-inch (76 mm) horizontal branch with a water closet located within 18-inch (457 mm) horizontal

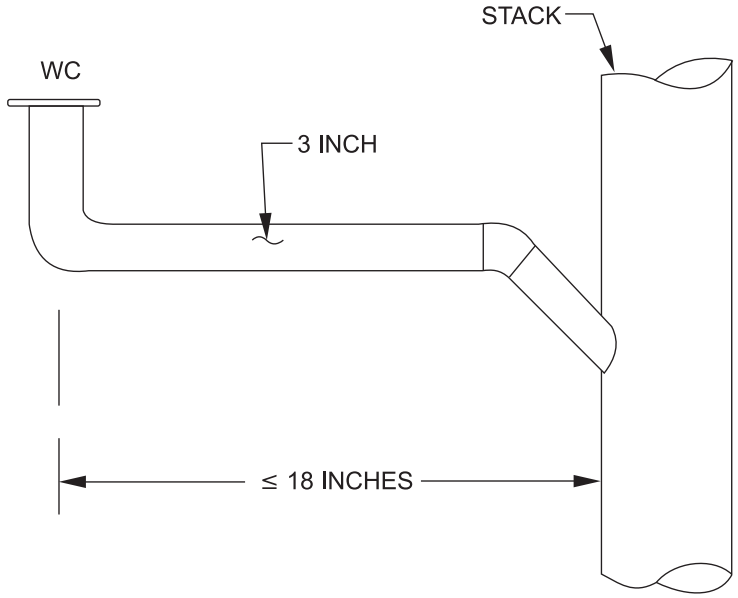

For SI: 1 inch = 25.4 mm.

Figure 917.3(1)
WATER CLOSET WITHIN 18 INCHES OF STACK AND 3-INCH HORIZONTAL BRANCH CONNECTING TO WYE ON STACK

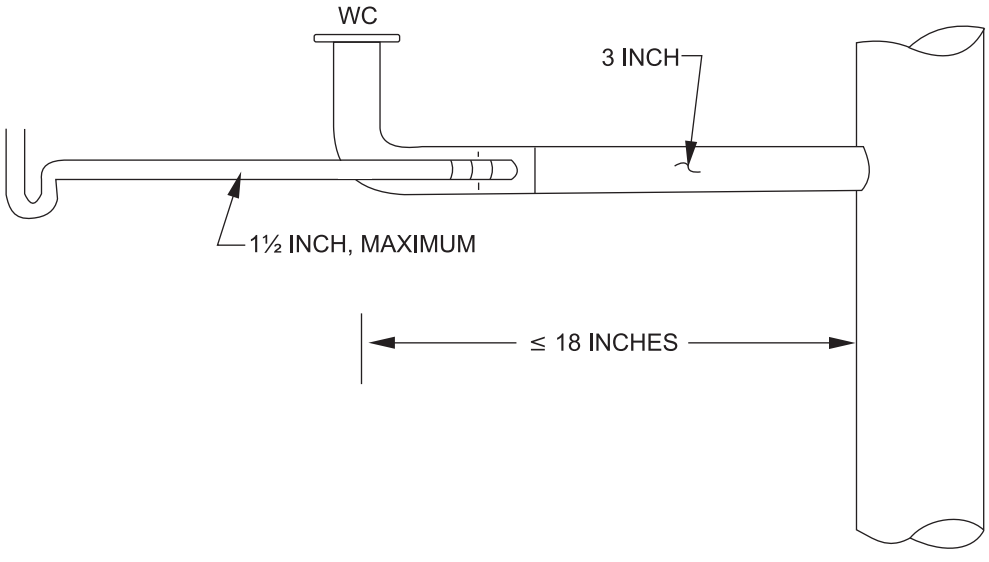

For SI: 1 inch = 25.4 mm.

Figure 917.3(2)
WATER CLOSET WITHIN 18 INCHES OF STACK AND 3-INCH HORIZONTAL BRANCH CONNECTING TO SANITARY TEE ON STACK

INTERNATIONAL CODE COUNCIL®
Copyright © 2015 ICC. ALL RIGHTS RESERVED. Accessed by David Dammon on Jun 21, 2017 12:30:52 PM pursuant to License Agreement with ICC. No further reproduction or distribution authorized. ANY UNAUTHORIZED REPRODUCTION OR DISTRIBUTION IS A VIOLATION OF THE FEDERAL COPYRIGHT ACT AND THE LICENSE AGREEMENT, AND SUBJECT TO CIVIL AND CRIMINAL PENALTIES THEREUNDER.

developed length of the stack has special limitations. If a water closet is located within 18-inch (457 mm) horizontal developed length of the stack and the connection is not made with a sanitary tee (i.e., the connection to the stack is made through a wye), then the only fixture that can be served by that horizontal branch is that water closet [see Commentary Figure 917.3(1)]. If the connection to the stack of a 3-inch (76 mm) horizontal branch serving a single water closet is made using a sanitary tee, then one fixture having a $1^1/_2$-inch (38 mm) drain can also be connected to the 3-inch (76 mm) horizontal branch [see Commentary Figure 917.3(2)].

917.4 Length of horizontal branches. The length of horizontal *branches* shall conform to the requirements of Sections 917.4.1 through 917.4.3.

❖ This section refers the reader to subsections covering the length limitations for horizontal branches before additional venting is required.

917.4.1 Water closet connection. Water closet connections shall be not greater than 4 feet (1219 mm) in *developed length* measured horizontally from the *stack*.

Exception: Where the connection is made with a sanitary tee, the maximum *developed length* shall be 8 feet (2438 mm).

❖ Where a horizontal branch connects to the stack through a wye connection and the branch carries the discharge of one or more water closets, the water closets must be not more than 4 feet (1219 mm) in horizontal developed length from the stack [see Commentary Figure 917.4.1(1)]. If the connection at the stack is made with a sanitary tee, the distance limitation is extended to 8 feet (2438 mm) in horizontal developed length [see Commentary Figure 917.4.1(2)].

917.4.2 Fixture connections. Fixtures other than water closets shall be located not greater than 12 feet (3657 mm) in developed length, measured horizontally from the *stack*.

❖ See Commentary Figure 917.4.2.

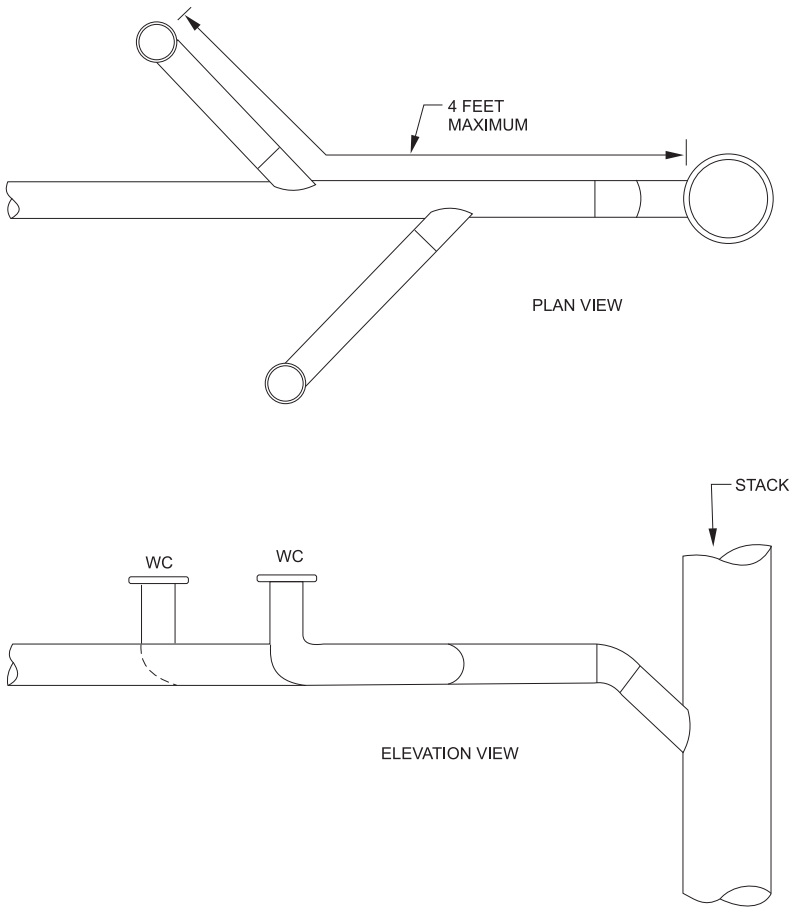

For SI: 1 foot = 304.8 mm.

Figure 917.4.1(1)
WATER CLOSETS NOT MORE THAN 4 FEET FROM STACK WHEN BRANCH CONNECTS THROUGH WYE TO STACK

INTERNATIONAL CODE COUNCIL®
Copyright © 2015 ICC. ALL RIGHTS RESERVED. Accessed by David Dammon on Jun 21, 2017 12:30:52 PM pursuant to License Agreement with ICC. No further reproduction or distribution authorized. ANY UNAUTHORIZED REPRODUCTION OR DISTRIBUTION IS A VIOLATION OF THE FEDERAL COPYRIGHT ACT AND THE LICENSE AGREEMENT, AND SUBJECT TO CIVIL AND CRIMINAL PENALTIES THEREUNDER.

917.4.3 Vertical piping in branch. The length of vertical piping in a *fixture drain* connecting to a horizontal *branch* shall not be considered in computing the fixture's distance in *developed length* measured horizontally from the *stack*.

❖ This section simply confirms what is already stated by the phrase "distance in developed length measured horizontally from the stack."

917.5 Minimum vertical piping size from fixture. The vertical portion of piping in a *fixture drain* to a horizontal *branch* shall be 2 inches (51 mm). The minimum size of the vertical portion of piping for a water-supplied urinal or standpipe shall be 3 inches (76 mm). The maximum vertical drop shall be 4 feet (1219 mm). *Fixture drains* that are not increased in size, or have a vertical drop in excess of 4 feet (1219 mm), shall be individually vented.

❖ This section specifies the minimum sizes for the vertical portions of the fixture drains (other than water closets) that are connected to horizontal branches. Vertical sections of fixture drains are required for fixtures such as lavatories, wall-hung urinals and standpipes with traps above the horizontal branch. The minimum size for any vertical section of fixture drain is 2 inches (51 mm), except where standpipes and water-supplied urinals have vertical sections of fixture drains, then the vertical section must be 3 inches (76 mm) (see Commentary Figure 917.4.2). If the vertical sections of the fixture drains cannot be of these minimum sizes (i.e., they are of normal size), then the fixture drains must be vented by a method other than the single stack method.

The height of the vertical section must not be greater than 4 feet (1219 mm). If the height is greater than 4 feet (1219 mm), then the fixture requires venting by a method other than the single stack method. In most situations, fixtures will not be greater than 4 feet (1219 mm) above the horizontal branch so additional venting methods are typically not required.

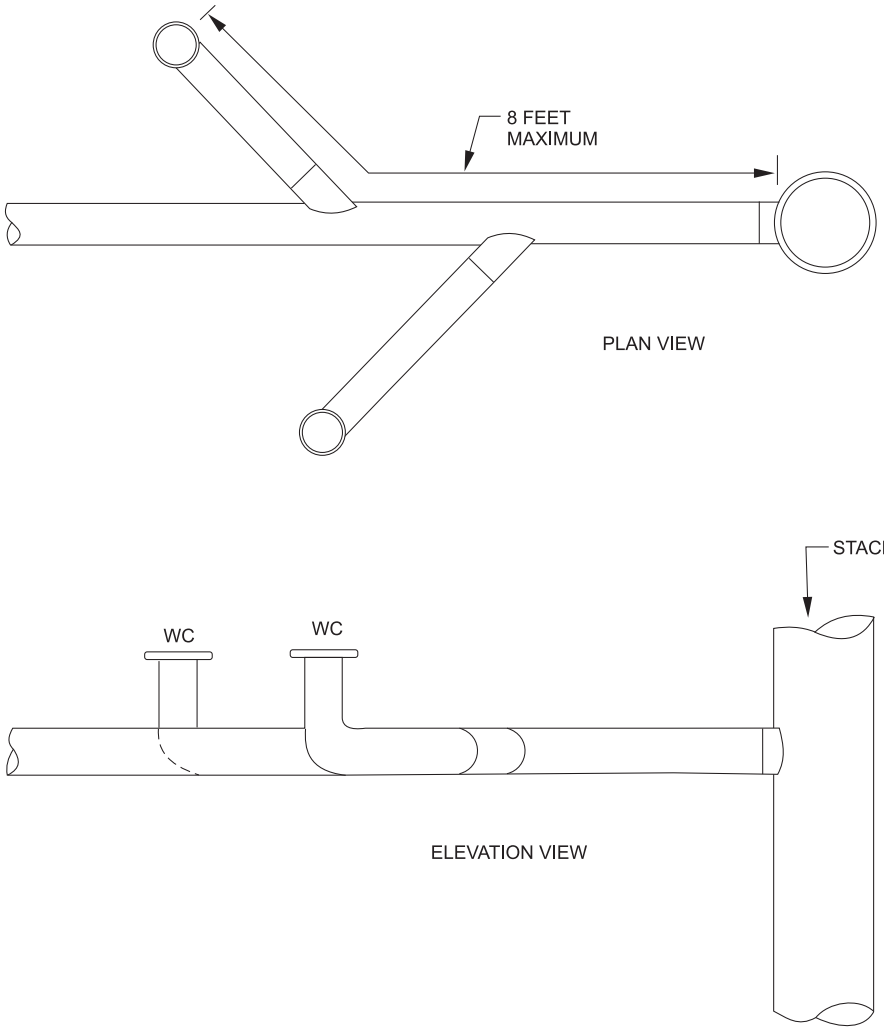

For SI: 1 foot = 304.8 mm.

Figure 917.4.1(2)
WATER CLOSETS NOT MORE THAN 8 FEET FROM STACK WHEN BRANCH CONNECTS THROUGH SANITARY TEE TO STACK

INTERNATIONAL CODE COUNCIL®
Copyright © 2015 ICC. ALL RIGHTS RESERVED. Accessed by David Dammon on Jun 21, 2017 12:30:52 PM pursuant to License Agreement with ICC. No further reproduction or distribution authorized. ANY UNAUTHORIZED REPRODUCTION OR DISTRIBUTION IS A VIOLATION OF THE FEDERAL COPYRIGHT ACT AND THE LICENSE AGREEMENT, AND SUBJECT TO CIVIL AND CRIMINAL PENALTIES THEREUNDER.

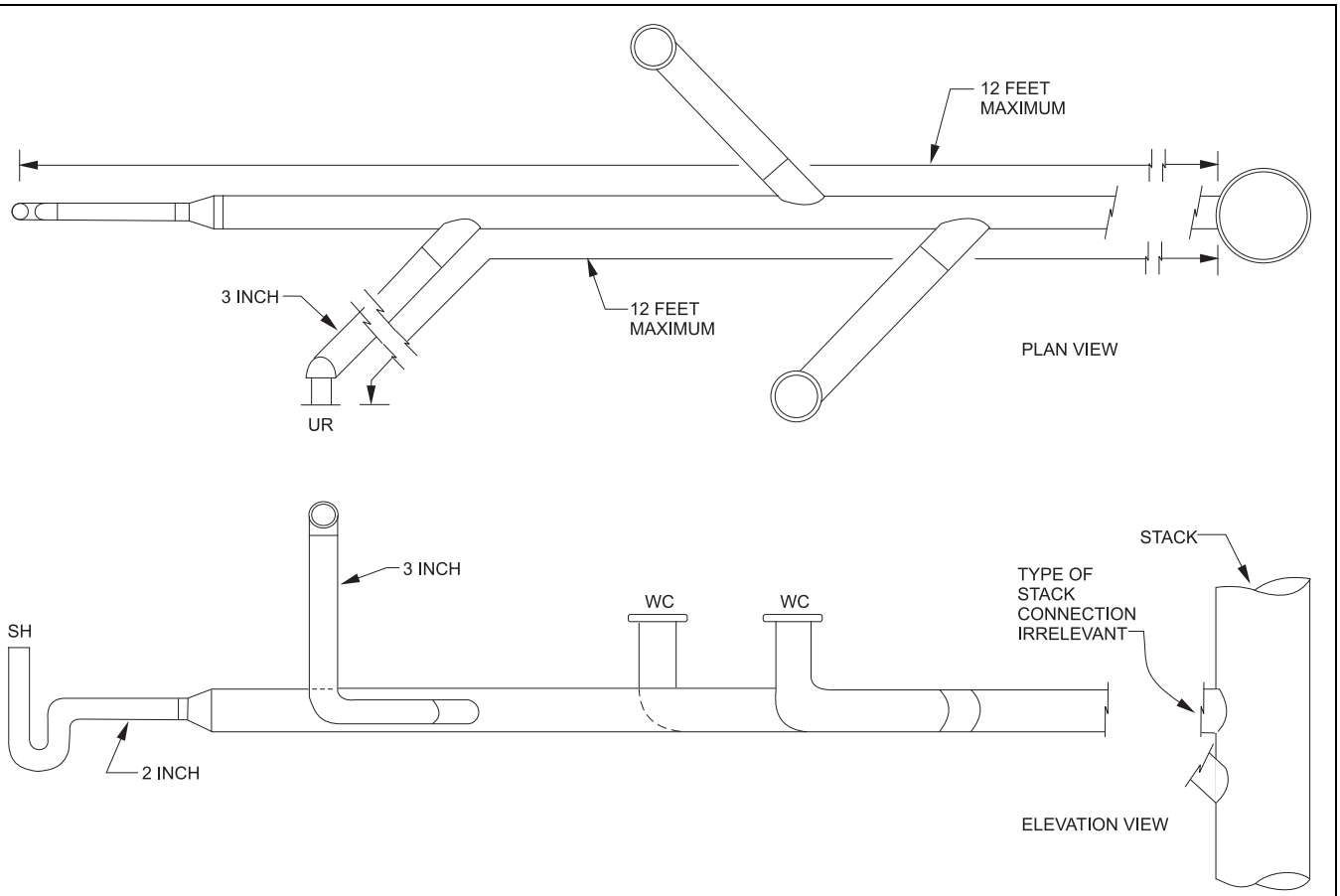

For SI: 1 inch = 25.4 mm, 1 foot = 304.8 mm.

Figure 917.4.2
MAXIMUM HORIZONTAL DEVELOPED LENGTH FROM STACK FOR FIXTURES OTHER THAN WATER CLOSETS

917.6 Additional venting required. Additional venting shall be provided where more than one water closet discharges to a horizontal *branch* and where the distance from a fixture trap to the stack exceeds the limits in Section 917.4. Where additional venting is required, the fixture(s) shall be vented by individual vents, common vents, wet vents, circuit vents, or a combination waste and vent pipe. The dry vent extensions for the additional venting shall connect to a *branch vent*, vent *stack*, *stack vent*, air admittance valve, or shall terminate outdoors.

❖ In arrangements where a horizontal branch carries the discharge of two or more water closets and the horizontal developed length of other fixtures discharging to the horizontal branch exceeds the limitations of Section 917.4, then those fixtures (other than the water closets) located beyond the developed length limitation require venting by a method other than the single stack method. The section indicates all the types of venting that can be used for this purpose.

917.7 Stack offsets. Where *fixture drains* are not connected below a horizontal offset in a *stack*, a horizontal offset shall not be required to be vented. Where horizontal *branches* or *fixture drains* are connected below a horizontal offset in a *stack*, the offset shall be vented in accordance with Section 907. Fixture connections shall not be made to a *stack* within 2 feet (610 mm) above or below a horizontal offset.

❖ This section addresses horizontal offsets in a single stack vent system. Where horizontal branches or fixture drains connect below a horizontal offset of a stack, the offset requires venting in accordance with Section 907. Fixture drain connections to the stack must not be made in the area of the stack that is 2 feet (610 mm) above or below the horizontal offset. Where there are no fixtures below the horizontal offset, the offset does not require venting (see Commentary Figure 917.7).

917.8 Prohibited lower connections. *Stacks* greater than 2 *branch intervals* in height shall not receive the discharge of horizontal *branches* on the lower two floors. There shall be no connections to the *stack* between the lower two floors and a distance of not less than 10 pipe diameters downstream from the base of the single stack vented system.

❖ See Commentary Figure 917.8.

INTERNATIONAL CODE COUNCIL®
Copyright © 2015 ICC. ALL RIGHTS RESERVED. Accessed by David Dammon on Jun 21, 2017 12:30:52 PM pursuant to License Agreement with ICC. No further reproduction or distribution authorized. ANY UNAUTHORIZED REPRODUCTION OR DISTRIBUTION IS A VIOLATION OF THE FEDERAL COPYRIGHT ACT AND THE LICENSE AGREEMENT, AND SUBJECT TO CIVIL AND CRIMINAL PENALTIES THEREUNDER.

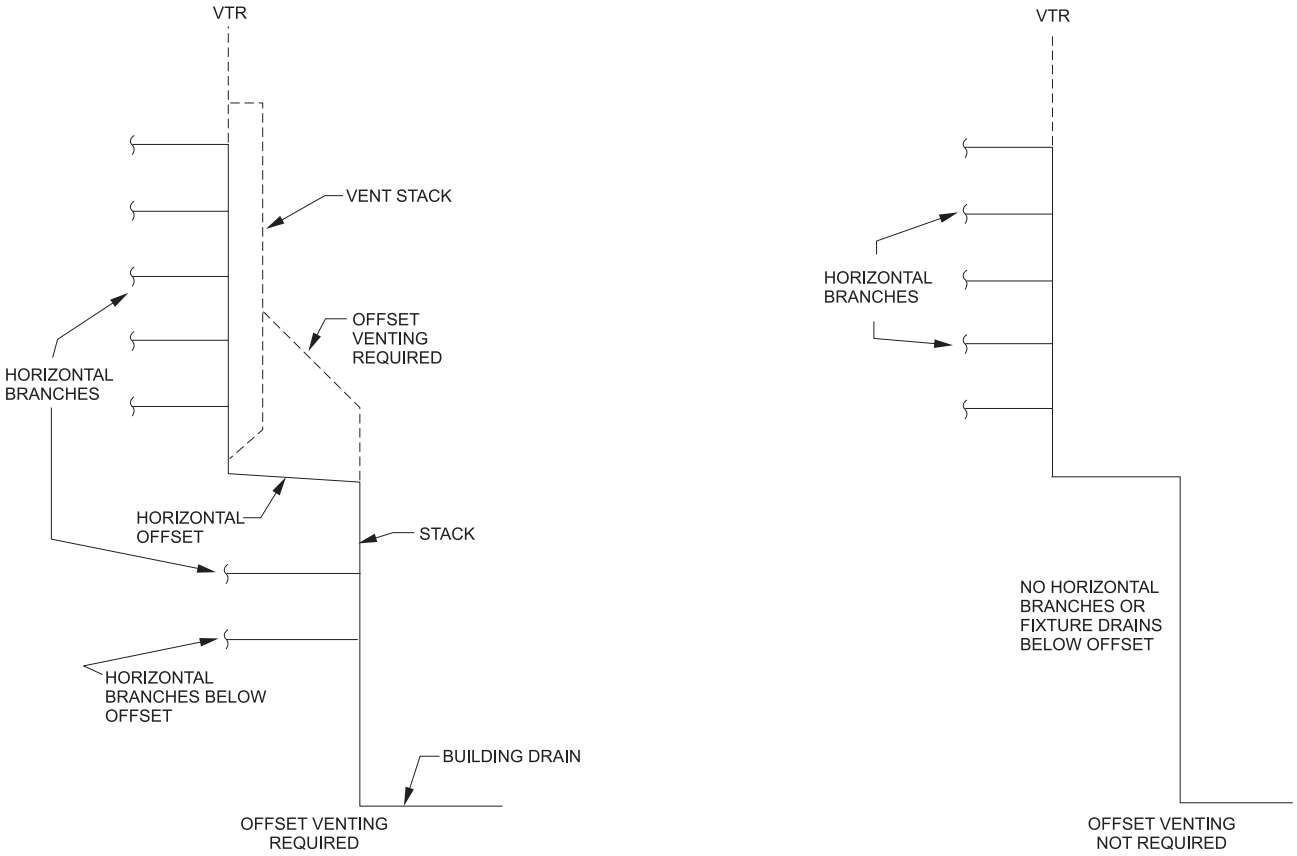

Figure 917.7
OFFSET VENTING REQUIREMENT FOR SINGLE STACK VENT SYSTEM

917.9 Sizing building drains and sewers. The *building drain* and *building sewer* receiving the discharge of a single stack vent system shall be sized in accordance with Table 710.1(1).

❖ The total number of dfu coming from the stack is used to size the building drain and building sewer in accordance with Table 710.1(1).

SECTION 918
AIR ADMITTANCE VALVES

918.1 General. Vent systems utilizing air admittance valves shall comply with this section. Stack-type air admittance valves shall conform to ASSE 1050. Individual and branch-type air admittance valves shall conform to ASSE 1051.

❖ This section contains the requirements for air admittance valves. Air admittance valves must comply with the provisions of ASSE 1050 or ASSE 1051, both of which require marking of each device with the name of the manufacturer, model number or device description and the device classification.

The ASSE 1051 standard divides the classification of air admittance valves into two types: ASSE 1051—Type A and ASSE 1051—Type B. Type A air admittance valves are permitted to serve only as a vent for an individual fixture, and Type B air admittance valves are permitted to serve one or more individual vents (see the definition of "Air admittance valve" in Section 202).

918.2 Installation. The valves shall be installed in accordance with the requirements of this section and the manufacturer's instructions. Air admittance valves shall be installed after the DWV testing required by Section 312.2 or 312.3 has been performed.

❖ The installation of air admittance valves must conform to the requirements of Sections 918.3 through 918.8 and the manufacturer's instructions. Where differences occur between the provisions of the code and the manufacturer's instructions, the most restrictive provisions must be applied.

Air admittance valves are designed to withstand limited positive pressures and because extreme pressures may damage the devices, they must not be subjected to the pressures of system testing. Drain, waste and vent testing involves pressures far in excess of the pressures of normal system operation.

INTERNATIONAL CODE COUNCIL®
Copyright © 2015 ICC. ALL RIGHTS RESERVED. Accessed by David Dammon on Jun 21, 2017 12:30:52 PM pursuant to License Agreement with ICC. No further reproduction or distribution authorized. ANY UNAUTHORIZED REPRODUCTION OR DISTRIBUTION IS A VIOLATION OF THE FEDERAL COPYRIGHT ACT AND THE LICENSE AGREEMENT, AND SUBJECT TO CIVIL AND CRIMINAL PENALTIES THEREUNDER.

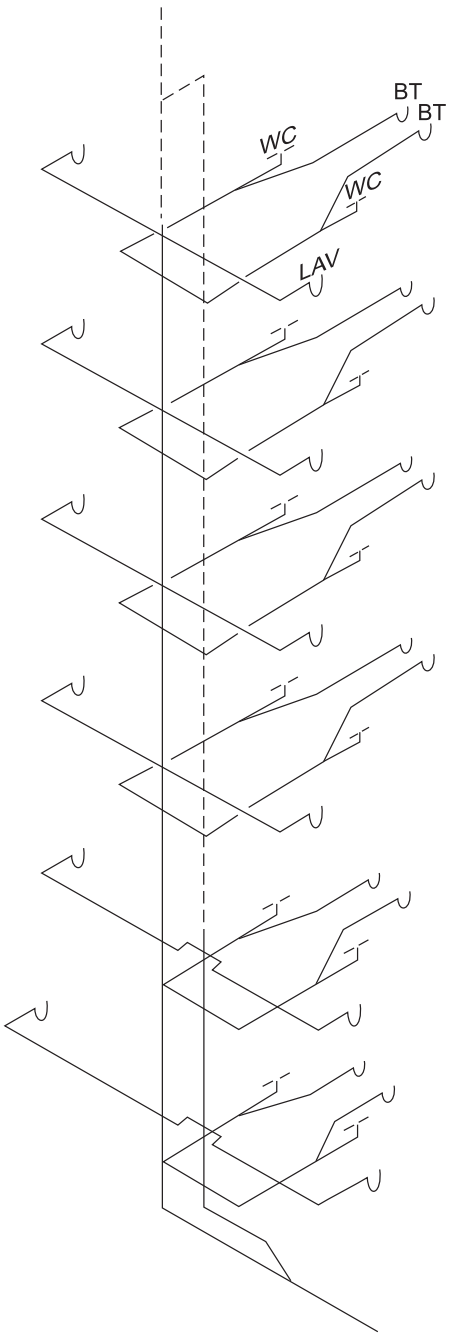

Figure 917.8
LOWER TWO FLOORS ON SEPARATE STACK

918.3 Where permitted. Individual, *branch* and circuit vents shall be permitted to terminate with a connection to an individual or branch-type air admittance valve in accordance with Section 918.3.1. *Stack vents* and vent *stacks* shall be permitted to terminate to stack-type air admittance valves in accordance with Section 918.3.2.

❖ This section directs the reader to the appropriate code sections according to the type of venting application. Section 918.3.1 is for individual and branch venting applications. Section 918.3.2 is for stack vent and vent stack applications.

918.3.1 Horizontal branches. Individual and branch-type air admittance valves shall vent only fixtures that are on the same floor level and connect to a *horizontal branch drain*. Where the horizontal *branch* is located more than four branch intervals from the top of the stack, the horizontal *branch* shall be provided with a relief vent that shall connect to a vent stack or stack vent, or extend outdoors to the open air. The relief vent shall connect to the *horizontal branch drain* between the stack and the most downstream *fixture drain* connected to the *horizontal branch drain*. The relief vent shall be sized in accordance with Section 906.2 and installed in accordance with Section 905. The relief vent shall be permitted to serve as the vent for other fixtures.

❖ As drainage flows down a stack, it tends to draw air downward with it. Air located in the drainage stack ahead of the flow also tends to be pushed downward by the flowing drainage—similar to the action of a piston in a cylinder. Measurements at various elevations of the air pressure in a stack (flowing at near full capacity) with many branch intervals will indicate that the flow creates negative pressures in the upper part of the stack and positive pressures in the lower part of the stack [see Commentary Figure 918.3.1(1)].

A horizontal branch drain served by an air admittance valve must be located within the top four branch intervals of the stack where pressure differentials would be tolerable. Otherwise, a method of relieving pressure is required because of the greater pressure differentials expected in lower portions of a stack (see commentary, Section 918.3.2). Commentary Figures 918.3.1(2) through 918.3.1(5) show various applications for using air admittance valves. Commentary Figure 918.3.1(6) shows a prohibited use of an air admittance valve.

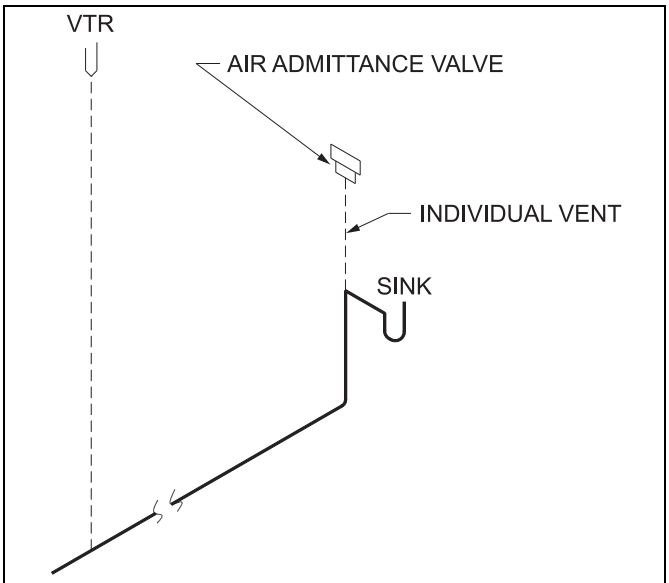

Figure 918.3.1(1)
AIR ADMITTANCE—INDIVIDUAL VENT

INTERNATIONAL CODE COUNCIL®
Copyright © 2015 ICC. ALL RIGHTS RESERVED. Accessed by David Dammon on Jun 21, 2017 12:30:52 PM pursuant to License Agreement with ICC. No further reproduction or distribution authorized. ANY UNAUTHORIZED REPRODUCTION OR DISTRIBUTION IS A VIOLATION OF THE FEDERAL COPYRIGHT ACT AND THE LICENSE AGREEMENT, AND SUBJECT TO CIVIL AND CRIMINAL PENALTIES THEREUNDER.

918.3.2 Stack. Stack-type air admittance valves shall be prohibited from serving as the vent terminal for vent *stacks* or *stack vents* that serve drainage *stacks* having more than six *branch intervals*.

❖ When a building has a drainage stack that has more than six branch intervals, stack-type air admittance valves must not be used to vent these drains. The pressure fluctuations in stacks with more than six branch intervals can be excessive, and could cause the loss of trap water seals, thereby allowing sewer gases into the building (see Commentary Figure 918.3.2).

918.4 Location. Individual and branch-type air admittance valves shall be located a minimum of 4 inches (102 mm) above the *horizontal branch drain* or *fixture drain* being vented. Stack-type air admittance valves shall be located not less than 6 inches (152 mm) above the *flood level rim* of the highest fixture being vented. The air admittance valve shall be located within the maximum *developed length* permitted for the vent. The air admittance valve shall be installed not less than 6 inches (152 mm) above insulation materials.

❖ An air admittance valve has one moving part (a seal), which must be maintained a safe distance above the drain served. In the event of a drain stoppage, the seal may become inoperable or operate improperly if waste is permitted to rise into the air admittance valve assembly. Note that the air admittance valve need not extend above the flood level rim of the fixture served (see Commentary Figure 918.4) because in the event of a drain blockage, such device will trap air between it and the rising waste, thereby protecting the device from contamination.

The maximum developed length of a vent pipe equipped with an air admittance valve is regulated by

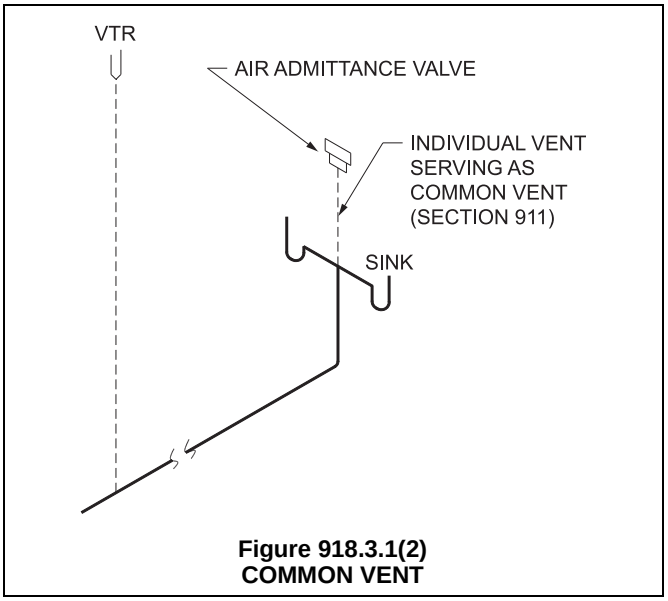

Figure 918.3.1(2)
COMMON VENT

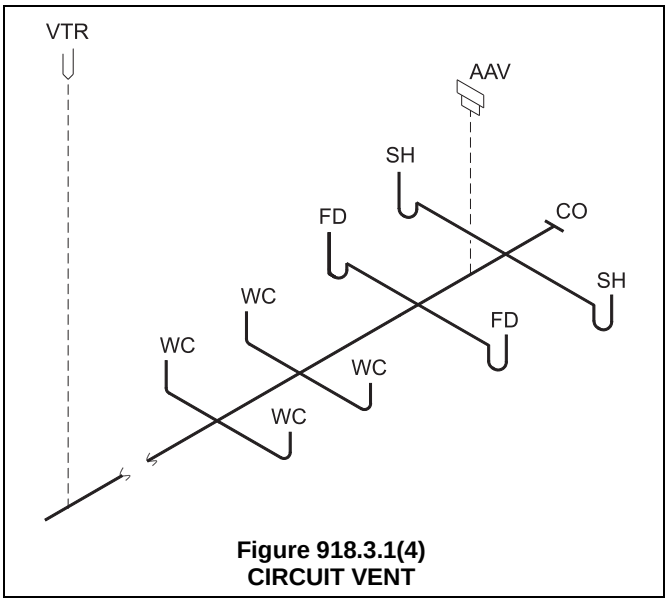

Figure 918.3.1(4)
CIRCUIT VENT

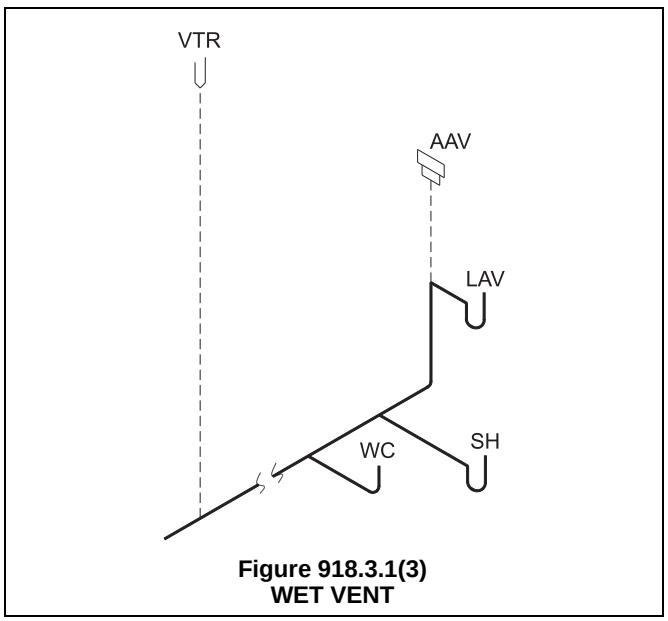

Figure 918.3.1(3)
WET VENT

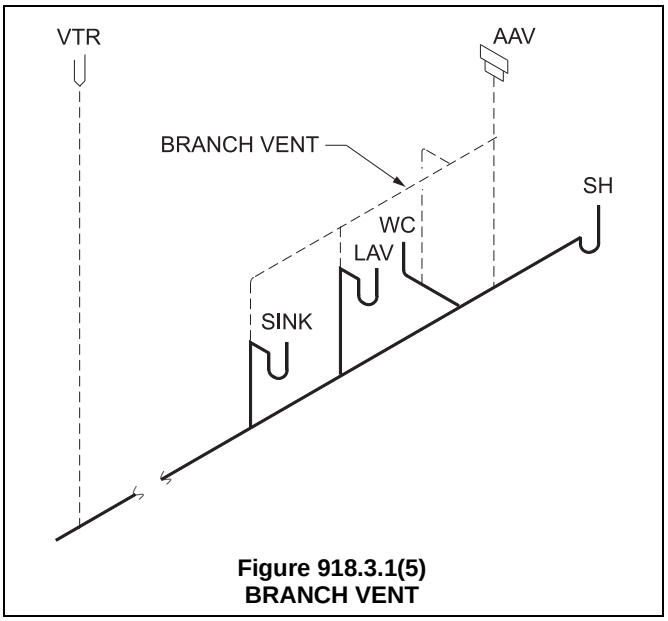

Figure 918.3.1(5)
BRANCH VENT

INTERNATIONAL CODE COUNCIL®
Copyright © 2015 ICC. ALL RIGHTS RESERVED. Accessed by David Dammon on Jun 21, 2017 12:30:52 PM pursuant to License Agreement with ICC. No further reproduction or distribution authorized. ANY UNAUTHORIZED REPRODUCTION OR DISTRIBUTION IS A VIOLATION OF THE FEDERAL COPYRIGHT ACT AND THE LICENSE AGREEMENT, AND SUBJECT TO CIVIL AND CRIMINAL PENALTIES THEREUNDER.

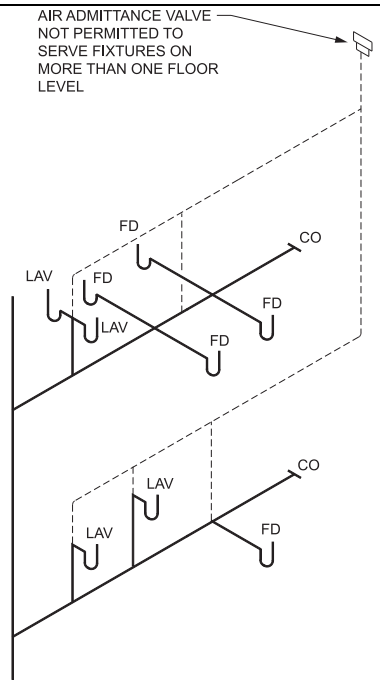

Figure 918.3.1(6)
VENT CONNECTION NOT PERMITTED

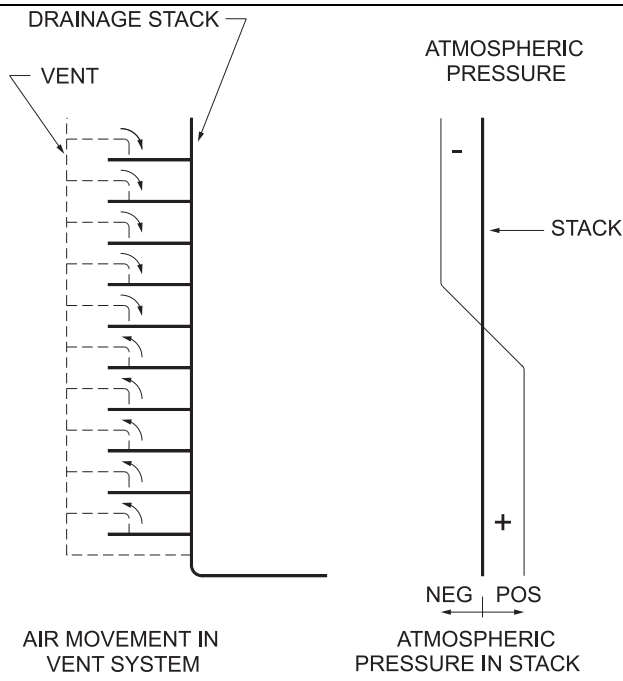

Figure 918.3.2
PRESSURE IN DRAINAGE STACK

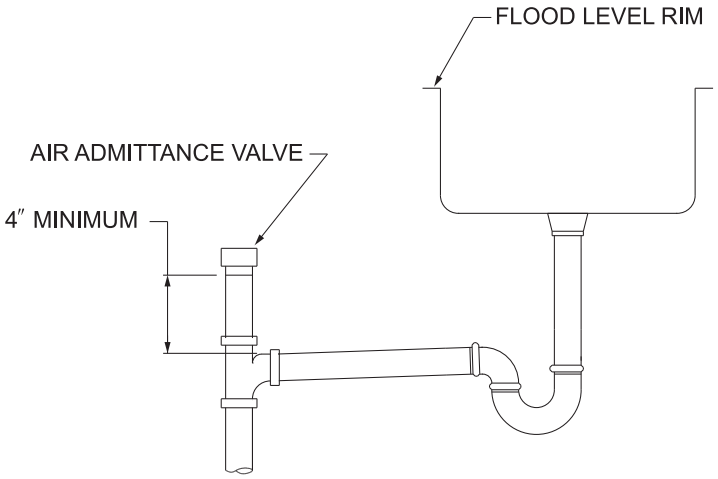

For SI: 1 inch = 25.4 mm.

Figure 918.4
DISTANCE ABOVE DRAIN

Sections 906.2 and 906.3. Section 906.2 requires increasing the size of a vent exceeding 40 feet (12 192 mm) in developed length (measured from the air admittance valve to the point of connection to the drain pipe) by one nominal pipe size.

The distance between a trap and its protecting vent must also meet the maximum developed length requirements of Table 909.1.

An air admittance valve must be located a safe distance above insulation materials that may block air inlets or otherwise impair the operation of the device.

918.5 Access and ventilation. Access shall be provided to all air admittance valves. Such valves shall be installed in a location that allows air to enter the valve.

❖ Because an air admittance valve is a device with a moving part, it must be accessible for inspection, service, repair or replacement. The code defines "Access (to)" as being able to be reached but that first may require the removal of a panel, door or similar obstruction. Access to an air admittance valve is not achieved if it is necessary to remove any portion of the structure's permanent finish materials such as drywall, plaster, paneling, built-in furniture or cabinets or any

INTERNATIONAL CODE COUNCIL®
Copyright © 2015 ICC. ALL RIGHTS RESERVED. Accessed by David Dammon on Jun 21, 2017 12:30:52 PM pursuant to License Agreement with ICC. No further reproduction or distribution authorized. ANY UNAUTHORIZED REPRODUCTION OR DISTRIBUTION IS A VIOLATION OF THE FEDERAL COPYRIGHT ACT AND THE LICENSE AGREEMENT, AND SUBJECT TO CIVIL AND CRIMINAL PENALTIES THEREUNDER.

other similar permanently affixed building component.

Where air admittance valves are located in confined spaces, ventilation openings are required. Because these devices admit air into the drainage system, an unimpeded air supply must be available at all times. Additionally, access and ventilation requirements are addressed in the manufacturer's installation instructions.

918.6 Size. The air admittance valve shall be rated in accordance with the standard for the size of the vent to which the valve is connected.

❖ The size of the vent pipe to which the air admittance valve is connected is regulated by Section 916. The air admittance valve is sized based on the required size of the vent pipe and the dfu load limitations found in the manufacturer's installation instructions. The dfu load rating is based on testing performed in accordance with ASSE 1051. The air admittance valves now available have dfu limitations that are consistent with the maximum number permitted on a horizontal branch as found in Table 710.1(2).

918.7 Vent required. Within each plumbing system, not less than one *stack vent* or vent *stack* shall extend outdoors to the open air.

❖ Conventional venting methods are intended to relieve both positive and negative pressures that occur in the drainage system. The primary function of an air admittance valve is relieving negative pressures. The intent of this section is to require at least one conventional vent pipe per plumbing system to terminate outside the building. The vent to the open air serves both to enhance the positive pressure neutralization in the drainage system and to protect the plumbing system from pressure excursions caused by the use of public sewer cleaning equipment (see Commentary Figure 918.7). This section does not limit the size of the plumbing system or the distances to the required stack vent or vent stack and states no required size for the stack vent or vent stack.

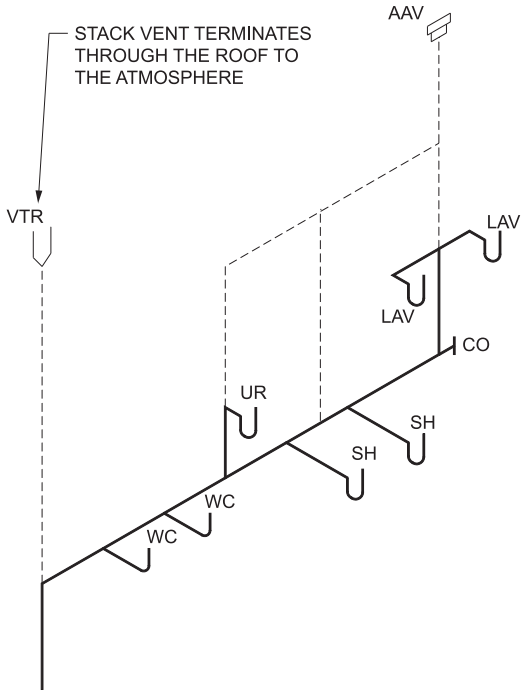

Figure 918.7
VENT TO THE OPEN AIR REQUIRED

918.8 Prohibited installations. Air admittance valves shall not be installed in nonneutralized special waste systems as described in Chapter 8 except where such valves are in compliance with ASSE 1049, are constructed of materials *approved* in accordance with Section 702.5 and are tested for chemical resistance in accordance with ASTM F 1412. Air admittance valves shall not be located in spaces utilized as supply or return air plenums. Air admittance valves without an engineered design shall not be utilized to vent sumps or tanks of any type.

❖ Because of the deleterious nature of the material and vapors associated with corrosive wastes, standard construction air admittance valves are prohibited for use with such systems. Special chemically resistant air admittance valves that comply with ASSE 1049 and are tested for chemical resistance in accordance with ASTM F 1412 are the only type that can be used for venting nonneutralized chemical waste systems.

Air admittance valves are not permitted in spaces where pressure conditions adversely affect the valve's operation. They are also not allowed in concealed wall and ceiling spaces used as plenums as part of an air distribution system that is under negative or positive pressure. An air admittance valve located in this environment will be affected and may not function properly. For example, if located in a return plenum, greater negative pressure will be allowed to develop in the drain before the device will open and admit air to the drainage system. If located in a supply plenum, the device may be held open continuously because the pressure at the device inlet will be greater than the internal pressure of the drainage system; this is the case when the device functions normally to neutralize negative pressures.

Air admittance valves must not be used to vent sumps or tanks as there is positive pressure created when the tank or sump is filling. Because air admittance valves cannot relieve positive pressure within the sump or tank, the positive pressure might be relieved through the traps of the fixtures connected to the sump or tank. However, where air admittance valves are used as part of an engineered design that allows for positive pressure relief in other ways, air admittance valves can be used to allow air into the tank or sump (see Commentary Figures 918.8(1) and (2)].

INTERNATIONAL CODE COUNCIL®
Copyright © 2015 ICC. ALL RIGHTS RESERVED. Accessed by David Dammon on Jun 21, 2017 12:30:52 PM pursuant to License Agreement with ICC. No further reproduction or distribution authorized. ANY UNAUTHORIZED REPRODUCTION OR DISTRIBUTION IS A VIOLATION OF THE FEDERAL COPYRIGHT ACT AND THE LICENSE AGREEMENT, AND SUBJECT TO CIVIL AND CRIMINAL PENALTIES THEREUNDER.

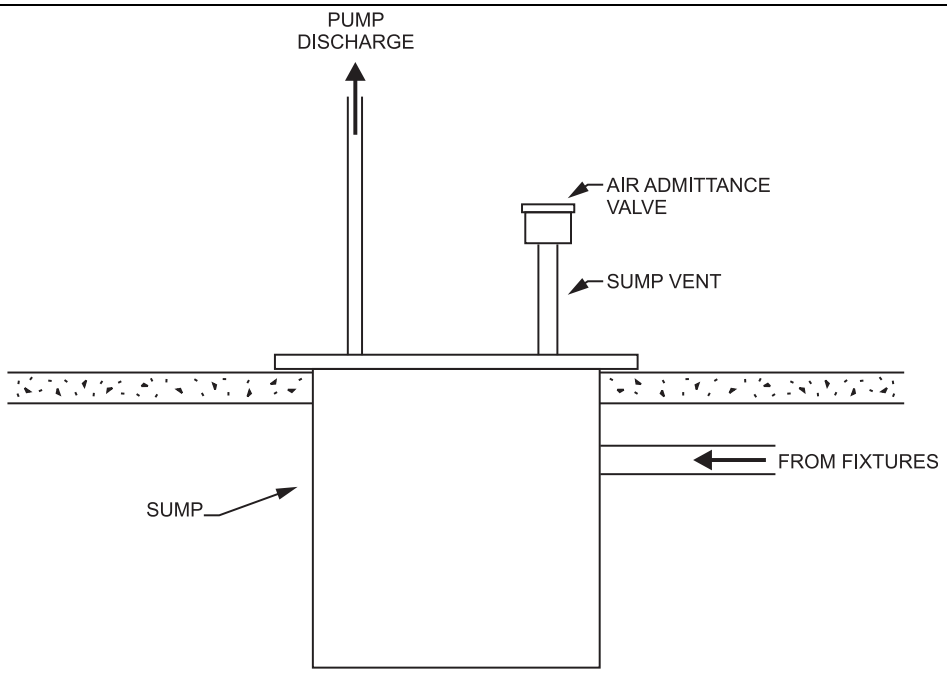

Figure 918.8(1)
PROHIBITED USE OF AIR ADMITTANCE VALVE

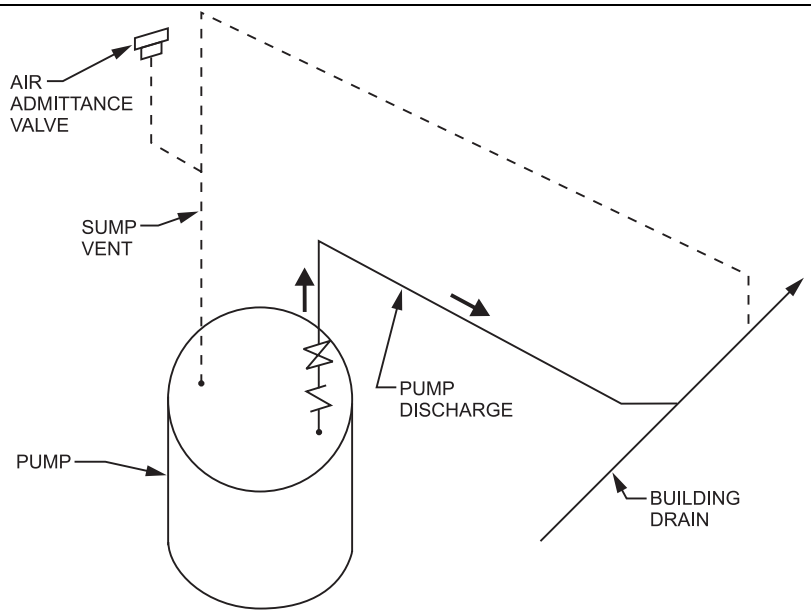

Figure 918.8(2)
ONE MANUFACTURER'S ENGINEERED DESIGN FOR USE OF AN AIR ADMITTANCE VALVE ON A SUMP

SECTION 919
ENGINEERED VENT SYSTEMS

919.1 General. Engineered vent systems shall comply with this section and the design, submittal, approval, inspection and testing requirements of Section 105.4.

❖ This section contains an alternative sizing method for individual vents. An engineered vent system is considered to be an alternative engineered design. As such, it must comply with both the requirements specifically for this engineered vent system as well as the general design, documentation, inspection, testing and approval of an alternative engineered design (see commentary, Section 105.4). Note that the engineered vent system must be designed, signed and sealed by a registered design professional (see commentary, Section 105.4.4).

INTERNATIONAL CODE COUNCIL®
Copyright © 2015 ICC. ALL RIGHTS RESERVED. Accessed by David Dammon on Jun 21, 2017 12:30:52 PM pursuant to License Agreement with ICC. No further reproduction or distribution authorized. ANY UNAUTHORIZED REPRODUCTION OR DISTRIBUTION IS A VIOLATION OF THE FEDERAL COPYRIGHT ACT AND THE LICENSE AGREEMENT, AND SUBJECT TO CIVIL AND CRIMINAL PENALTIES THEREUNDER.

919.2 Individual branch fixture and individual fixture header vents. The maximum *developed length* of individual fixture vents to vent branches and vent headers shall be determined in accordance with Table 919.2 for the minimum pipe diameters at the indicated vent airflow rates.

The individual vent airflow rate shall be determined in accordance with the following:

$$Q_{h,b} = N_{n,b}\, Q_v \qquad \textbf{(Equation 9-1)}$$

For SI: $Q_{h,b} = N_{n,b}\, Q_v$ (0.4719 L/s)

where:

$N_{n,b}$ = Number of fixtures per header (or vent *branch*) ÷ total number of fixtures connected to vent *stack.*

$Q_{h,b}$ = Vent *branch* or vent header airflow rate (cfm).

Q_v = Total vent *stack* airflow rate (cfm).

$Q_v\,(\text{gpm}) = 27.8\, r_s^{\,2/3}\,(1 - r_s)\,D^{\,8/3}$

$Q_v\,(\text{cfm}) = 0.134\, Q_v(\text{gpm})$

where:

D = Drainage *stack* diameter (inches).

Q_w = Design discharge load (gpm).

r_s = Waste water flow area to total area.

$$= \frac{Q_w}{27.8\, D^{8/3}}$$

Individual vent airflow rates are obtained by equally distributing $Q_{h,b}$ into one-half the total number of fixtures on the *branch* or header for more than two fixtures; for an odd number of total fixtures, decrease by one; for one fixture, apply the full value of $Q_{h,b}$.

Individual vent *developed length* shall be increased by 20 percent of the distance from the vent *stack* to the fixture vent connection on the vent *branch* or header.

❖ The individual vent pipe size could be reduced to as small as $^1/_2$ inch (12.7 mm) in diameter by calculating the vent airflow rate. The sizing method is based on every fixture being individually vented and connected to a vent header or vent stack. The reduced size applies only to the length of the individual vent up to the point where it connects to either the branch vent or vent stack. This distance is also the individual vent-developed length.

Each fixture or group of fixtures must be individually calculated to determine the individual vent airflow rate that is applied to Section 918.2 to determine the individual vent minimum pipe size. For example purposes, the fifth floor of a 10-story building will be

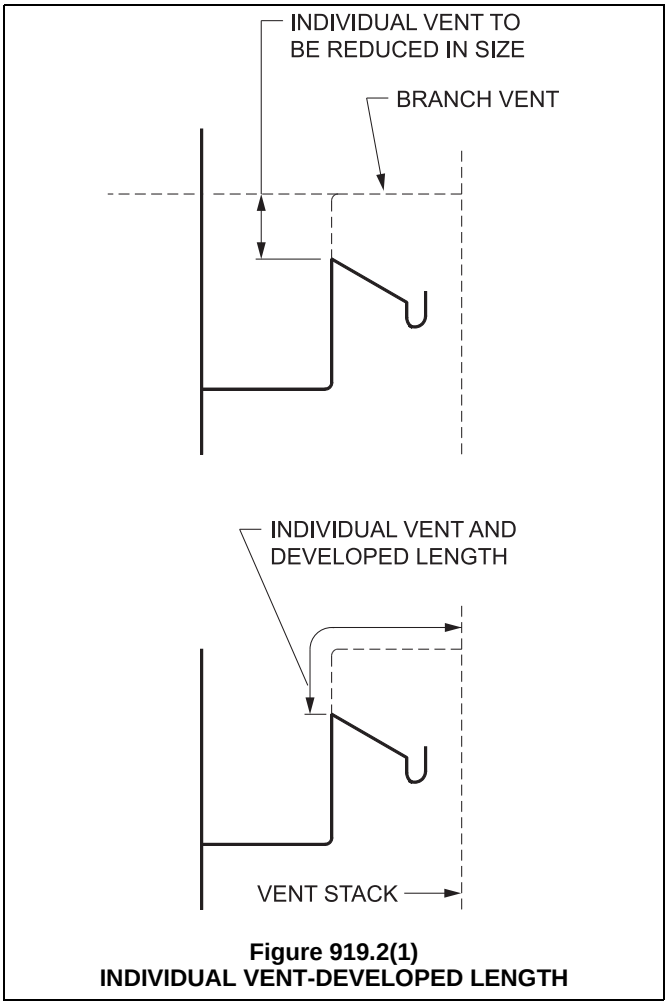

Figure 919.2(1)
INDIVIDUAL VENT-DEVELOPED LENGTH

TABLE 919.2
MINIMUM DIAMETER AND MAXIMUM LENGTH OF INDIVIDUAL BRANCH FIXTURE VENTS AND INDIVIDUAL FIXTURE HEADER VENTS FOR SMOOTH PIPES

DIAMETER OF VENT PIPE (inches)	INDIVIDUAL VENT AIRFLOW RATE (cubic feet per minute)																			
	Maximum developed length of vent (feet)																			
	1	2	3	4	5	6	7	8	9	10	11	12	13	14	15	16	17	18	19	20
$^1/_2$	95	25	13	8	5	4	3	2	1	1	1	1	1	1	1	1	1	1	1	1
$^3/_4$	100	88	47	30	20	15	10	9	7	6	5	4	3	3	3	2	2	2	2	1
1	—	—	100	94	65	48	37	29	24	20	17	14	12	11	9	8	7	7	6	6
$1^1/_4$	—	—	—	—	—	—	—	100	87	73	62	53	46	40	36	32	29	26	23	21
$1^1/_2$	—	—	—	—	—	—	—	—	—	—	—	100	96	84	75	65	60	54	49	45
2	—	—	—	—	—	—	—	—	—	—	—	—	—	—	—	—	—	—	—	100

For SI: 1 inch = 25.4 mm, 1 cubic foot per minute = 0.4719 L/s, 1 foot = 304.8 mm.

INTERNATIONAL CODE COUNCIL®
Copyright © 2015 ICC. ALL RIGHTS RESERVED. Accessed by David Dammon on Jun 21, 2017 12:30:52 PM pursuant to License Agreement with ICC. No further reproduction or distribution authorized. ANY UNAUTHORIZED REPRODUCTION OR DISTRIBUTION IS A VIOLATION OF THE FEDERAL COPYRIGHT ACT AND THE LICENSE AGREEMENT, AND SUBJECT TO CIVIL AND CRIMINAL PENALTIES THEREUNDER.

analyzed to determine the minimum individual vent pipe size [see Commentary Figures 918.2(1) and 918.2(2)].

Example:

Building statistics:	
Building height	10 stories
Total dfus to drainage stack	320
Size of drainage stack [Table 710.1(2)]	4 inches
Size of vent stack with developed length exceeding 40 feet (Section 916.1)	$2^1/_2$ inches
Total number of plumbing fixtures	108
Fifth Floor	
Number of fixtures (1 sink, 3 water closets, 5 lavatories, 3 showers)	12
Total dfu for horizontal branch	31
Size of horizontal branch [Table 710.1(2)]	4 inches
Size of branch vent (Section 916.2)	2 inches
Maximum developed length of individual vent	25 feet

The Q (gpm) must first be calculated using the equation:

$$Q \text{ (gpm)} = 27.8 r_s^{2/3}(1\text{-}r_s)D^{8/3}$$

The diameter of the drainage stack (D) is 4 inches (102 mm). The r_s may be determined by calculation or by use of the values in Commentary Figure 919.2 (an excerpt from *National Bureau of Standards Monograph 31*).

Commentary Figure 919.2 lists an r_s of 0.25 for a 4-inch (102 mm) stack with a total fixture unit load of 320. Substituting the values into the equation, it reads:

$$Q \text{ (gpm)} = 27.8\ (0.25)^{2/3}\ (1\text{-}0.25)(4)^{8/3}$$

$$Q \text{ (gpm)} = 333.6 \text{ gpm}$$

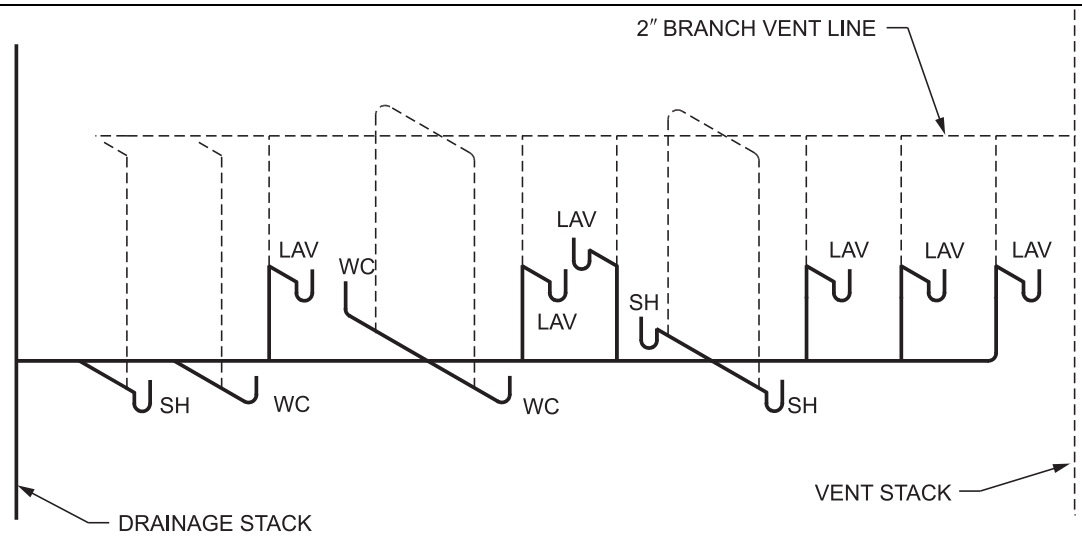

For SI: 1 inch = 25.4 mm.

Figure 919.2(2)
EXAMPLE OF ENGINEERED REDUCED-SIZE VENT

STACK DIAMETER (inches)	EQUIVALENT LOAD (fixture units)	PROPORTION OF CROSS SECTION OCCUPIED BY FALLING WATER	WATER DISCHARGE RATE (gpm)
4	43	0.15	47.5
4	140	0.20	76.7
4	320	0.25	111.0
4	530	0.29	144.0
4	580	0.30	151.0
4	850	0.33	180.0

For SI: 1 inch = 25.4 mm, 1 gallon per minute = 3.785 L/m.

Figure 919.2
MAXIMUM LOADS ON MULTIPLE-STORY DRAINAGE STACKS

INTERNATIONAL CODE COUNCIL®
Copyright © 2015 ICC. ALL RIGHTS RESERVED. Accessed by David Dammon on Jun 21, 2017 12:30:52 PM pursuant to License Agreement with ICC. No further reproduction or distribution authorized. ANY UNAUTHORIZED REPRODUCTION OR DISTRIBUTION IS A VIOLATION OF THE FEDERAL COPYRIGHT ACT AND THE LICENSE AGREEMENT, AND SUBJECT TO CIVIL AND CRIMINAL PENALTIES THEREUNDER.

The value Q (gpm) must be converted to Q (cfm) by the following equation:

$$Q \text{ (cfm)} = 0.134\ Q \text{ (gpm)}$$

Substituting the value for Q (gpm):

$$Q \text{ (cfm)} = 0.134 \text{ (333.6 gpm)}$$

$$Q \text{ (cfm)} = 44.7 \text{ cfm}$$

The vent header airflow rate is calculated using the equation:

$$Q_{h,b} = N_{n,b}\ Q$$

The value of $N_{n,b}$ for the fifth floor is equal to the number of fixture vents on the fifth floor divided by the total number of fixtures connected to the drainage stack.

Substituting the values into the vent header equation:

$$Q_{h,b} = (0.11)(44.7 \text{ cfm})$$

$$Q_{h,b} = 4.9 \text{ cfm}$$

The individual vent airflow rate is calculated by dividing the branch airflow rate by half the number of fixtures connected to the branch. The fifth floor has 12 fixtures, half of which equals six. The individual vent airflow rate becomes:

$$\text{Individual vent airflow rate} = 4.9 \text{ cfm}/6 = 0.82$$

The value used for Table 919.2 is rounded up to 1. With a maximum developed length of 25 feet (7620 mm), each individual vent on the fifth floor may be a minimum size of $^1/_2$ inch (12.7 mm).

For SI: 1 inch = 25.4 mm, 1 foot = 304.8 mm,
1 gallon per minute = 3.785 L/m,
1 cubic foot per minute = 0.4719 L/s.

Note that the example listed here would be solved in a similar manner for a design using metric values or "System International" (SI). The information shown in the code text as "For SI" includes the necessary conversion factor to change the resultant value from cubic feet per minute (cfm) to liters per second (L/s).

When the individual vent airflow rate is determined by the equation in Section 919.2, the size and developed length are determined by Table 919.2. The values in the table indicate the maximum developed length for a given pipe size and the individual vent airflow rate. Note that as a precaution against vent blockage, it may be desirable to use larger-diameter vent piping from the connection to the fixture drain to the point 6 inches (152 mm) above the flood level rim of the fixture served.

SECTION 920
COMPUTERIZED VENT DESIGN

920.1 Design of vent system. The sizing, design and layout of the vent system shall be permitted to be determined by *approved* computer program design methods.

❖ This section provides an alternative sizing method for venting systems, similar to Section 918.

This section is the logical complement to Section 714, which addresses computerized drainage system design (see commentary, Section 714).

920.2 System capacity. The vent system shall be based on the air capacity requirements of the drainage system under a peak load condition.

❖ This section says to design for the worst-case scenario. The airflow capacity of the venting system must be equal to or greater than the capacity demanded by a drainage system under its maximum anticipated load condition.

Bibliography

The following resource materials are referenced in this chapter or are relevant to the subject matter addressed in this chapter.

ASHRAE, *Fundamentals Handbook 2001.* Atlanta, GA: American Society of Heating, Refrigerating and Air-Conditioning Engineers, Inc., 2001.

ASSE 1051-02, *Performance Requirements for Air Admittance Valves for Plumbing Drainage Systems, Fixtures and Branch Devices.* Westlake, OH: American Society of Sanitary Engineers, 2002.

"Vents and Venting" (Chapter 17). *ASPE Data Book.* Westlake, CA: American Society of Plumbing Engineers, 1991.

INTERNATIONAL CODE COUNCIL®
Copyright © 2015 ICC. ALL RIGHTS RESERVED. Accessed by David Dammon on Jun 21, 2017 12:30:52 PM pursuant to License Agreement with ICC. No further reproduction or distribution authorized. ANY UNAUTHORIZED REPRODUCTION OR DISTRIBUTION IS A VIOLATION OF THE FEDERAL COPYRIGHT ACT AND THE LICENSE AGREEMENT, AND SUBJECT TO CIVIL AND CRIMINAL PENALTIES THEREUNDER.

INTERNATIONAL CODE COUNCIL®
Copyright © 2015 ICC. ALL RIGHTS RESERVED. Accessed by David Dammon on Jun 21, 2017 12:30:52 PM pursuant to License Agreement with ICC. No further reproduction or distribution authorized. ANY UNAUTHORIZED REPRODUCTION OR DISTRIBUTION IS A VIOLATION OF THE FEDERAL COPYRIGHT ACT AND THE LICENSE AGREEMENT, AND SUBJECT TO CIVIL AND CRIMINAL PENALTIES THEREUNDER.

Chapter 10:
Traps, Interceptors and Separators

General Comments

The plumbing trap is, perhaps, the single most important device in a sanitary plumbing system as it prevents exposure of a building's occupants to sewer gases and vapors contained within the drainage system. Many requirements in the code are based upon protecting the "liquid seal" created by traps located at every plumbing fixture. Many more complicated designs of trap devices have been developed, used and abandoned throughout plumbing history in favor of the simplicity and reliability of the "U"-shaped trap.

If only "domestic" waste water generated by humans for bathing, household cooking and cleaning and the flushing of waste eliminations was to be conveyed and treated, there would be no need for interceptors and separators. However, our society also generates commercial and industrial waste waters from manufacturing processes, mass food production, vehicle cleaning, chemical production and product recycling that has components that are detrimental to the piping systems and waste-water treatment processes. These materials must be prevented from entering waste-water systems by the use of interceptors and separators.

Purpose

This chapter contains design requirements and installation limitations for traps. Prohibited types of traps are specifically identified. Where fixtures do not frequently replenish the liquid in traps, a method is provided to insure that the trap seal of the trap will be replenished.

Requirements for the design and location of various types of interceptors and separators are provided. Specific venting requirements are given for separators and interceptors as those requirements are not addressed in Chapter 9.

SECTION 1001
GENERAL

1001.1 Scope. This chapter shall govern the material and installation of traps, interceptors and separators.

❖ This section contains the scope of the chapter, which is to provide and maintain a physical barrier between a building and its drainage system, protect the drainage system from prohibited materials and prevent the emission of sewer gases into the building.

SECTION 1002
TRAP REQUIREMENTS

1002.1 Fixture traps. Each plumbing fixture shall be separately trapped by a liquid-seal trap, except as otherwise permitted by this code. The vertical distance from the fixture outlet to the trap weir shall not exceed 24 inches (610 mm), and the horizontal distance shall not exceed 30 inches (610 mm) measured from the centerline of the fixture outlet to the centerline of the inlet of the trap. The height of a clothes washer standpipe above a trap shall conform to Section 802.4. A fixture shall not be double trapped.

Exceptions:

1. This section shall not apply to fixtures with integral traps.
2. A combination plumbing fixture is permitted to be installed on one trap, provided that one compartment is not more than 6 inches (152 mm) deeper than the other compartment and the waste outlets are not more than 30 inches (762 mm) apart.
3. A grease interceptor intended to serve as a fixture trap in accordance with the manufacturer's installation instructions shall be permitted to serve as the trap for a single fixture or a combination sink of not more than three compartments where the vertical distance from the fixture outlet to the inlet of the interceptor does not exceed 30 inches (762 mm) and the *developed length* of the waste pipe from the most upstream fixture outlet to the inlet of the interceptor does not exceed 60 inches (1524 mm).
4. Floor drains in multilevel parking structures that discharge to a building storm *sewer* shall not be required to be individually trapped. Where floor drains in multilevel parking structures are required to discharge to a combined *building sewer* system, the floor drains shall not be required to be individually trapped provided that they are connected to a main trap in accordance with Section 1103.1.

❖ This section provides design and installation criteria for fixture traps, which are needed to protect building occupants from the hazards associated with the contents of drainage systems. A trap is the method used

INTERNATIONAL CODE COUNCIL®
Copyright © 2015 ICC. ALL RIGHTS RESERVED. Accessed by David Dammon on Jun 21, 2017 12:30:52 PM pursuant to License Agreement with ICC. No further reproduction or distribution authorized. ANY UNAUTHORIZED REPRODUCTION OR DISTRIBUTION IS A VIOLATION OF THE FEDERAL COPYRIGHT ACT AND THE LICENSE AGREEMENT, AND SUBJECT TO CIVIL AND CRIMINAL PENALTIES THEREUNDER.

to keep sewer gases from emanating out of the drainage system. The liquid seal prevents sewer gases and aerosol-borne bacteria from entering the building space. Sewer gases often contain methane gas and could cause an explosion when exposed to an ignition source.

The configuration of a trap interferes with the flow of drainage; however, the interference is minimal because of the construction of the trap and the relatively high inlet velocity of the waste flow [see Commentary Figure 1002.1(1), Exception 1]. Double trapping of a fixture is prohibited because of the additional obstruction of flow and potential for stoppages. Double trapping will cause air to be trapped between two trap seals, and the "air-bound" drain will impede the flow.

The primary purpose of the horizontal distance of 30 inches (762 mm) from a fixture outlet to the trap weir is to limit the amount of bacterial growth and resulting odor. It is desirable to locate the trap as close as possible to the fixture. Buildup on the wall of the fixture outlet pipe will breed bacteria and cause odors to develop. The vertical distance is also limited to control the velocity of the drainage flow. If the trap has a long vertical separation distance from the fixture, the velocity of flow at the trap inlet can create a self-siphoning of the trap [see Commentary Figure 1002.1(1), Exception 2].

Exception 1 addresses fixtures such as water closets and urinals that have integral traps and, therefore, do not require a field-installed trap [see Commentary Figure 1002.1(1), Exception 1].

Exception 2 allows a single trap to serve multiple compartment sinks and other combination fixtures. A difference in elevation of sink wells (compartments) in combination fixtures will affect the vertical distance between the fixture outlet and the trap. The head pressure difference caused by elevation could affect the drainage rate of the fixture or cause waste from one well of a sink to discharge into a lower well. The limitation on distance between outlets is intended to minimize the amount of waste piping on the inlet side of the trap [see Commentary Figure 1002.1(1), Exception 2].

Exception 3 in Commentary Figure 1002.1(2) intends to permit the common practice of allowing a grease interceptor to act as the fixture trap where recommended by the grease interceptor manufacturer. Because grease interceptors function like a trap, double trapping will result where the typically designed grease interceptor is preceded by a fixture trap. Grease Interceptors of the submerged inlet design will not allow the gases in the holding tank to enter the fixture drain; therefore, the source of odor would be limited to the section of piping between the fixture outlet and the interceptor inlet [see Commentary Figure 1002.1(2)].

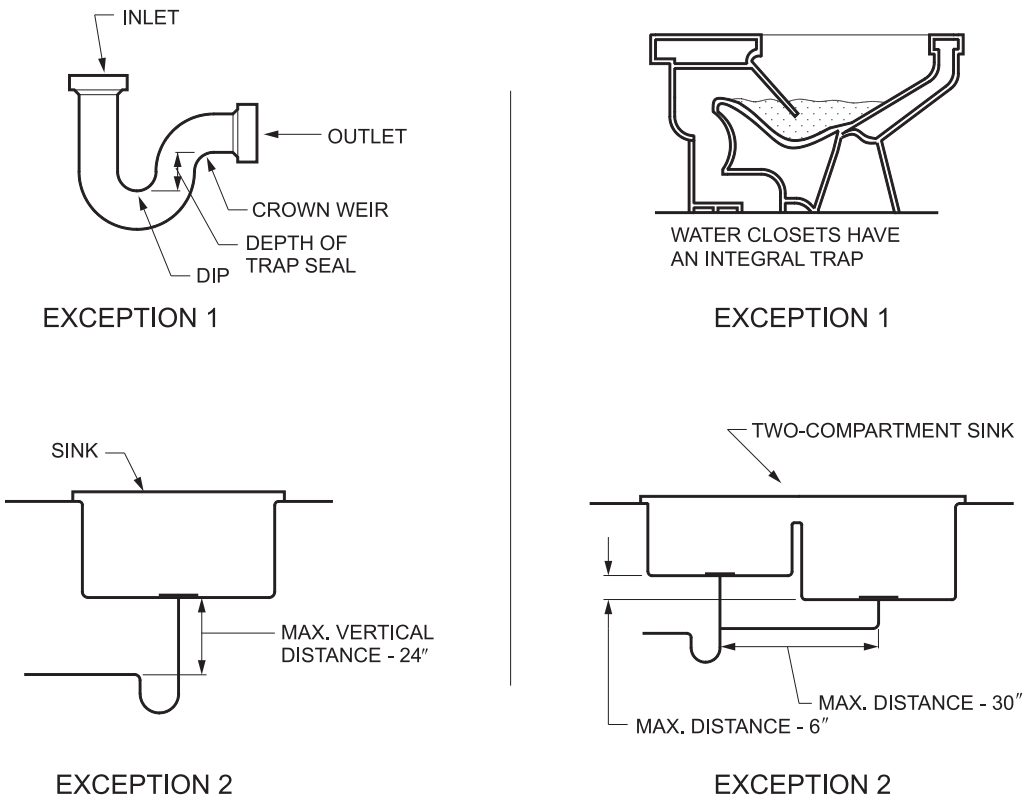

For SI: 1 inch = 25.4 mm.

Figure 1002.1(1)
TRAP REQUIREMENTS

INTERNATIONAL CODE COUNCIL®
Copyright © 2015 ICC. ALL RIGHTS RESERVED. Accessed by David Dammon on Jun 21, 2017 12:30:52 PM pursuant to License Agreement with ICC. No further reproduction or distribution authorized. ANY UNAUTHORIZED REPRODUCTION OR DISTRIBUTION IS A VIOLATION OF THE FEDERAL COPYRIGHT ACT AND THE LICENSE AGREEMENT, AND SUBJECT TO CIVIL AND CRIMINAL PENALTIES THEREUNDER.

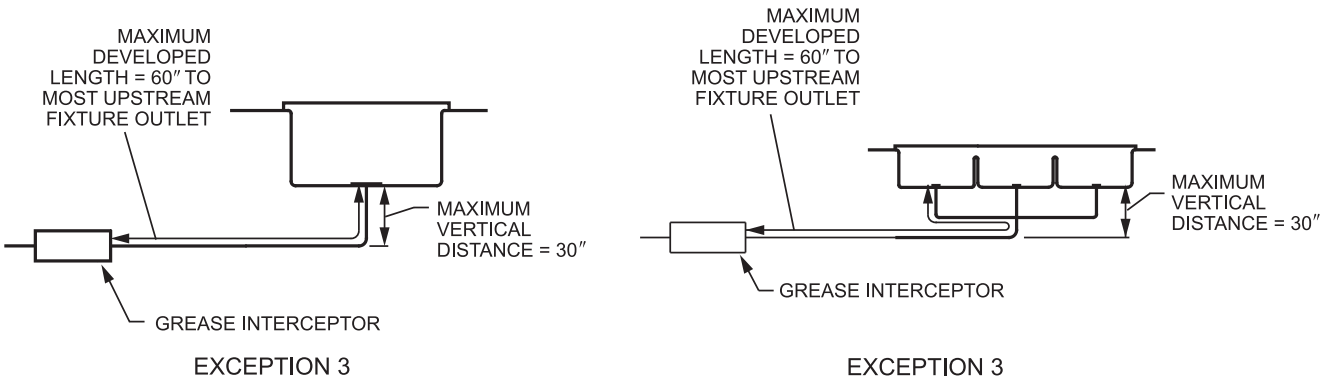

For SI: 1 inch = 25.4 mm.

Figure 1002.1(2)
TRAP REQUIREMENTS

Exception 4 exempts the requirement for providing traps for floor drains in parking garages where the floor drains connect to a storm sewer (but not a combined sewer). Traps can be damaged where the garage air temperature is below freezing even though the traps are heat traced and insulated. Traps are for preventing the emission of sanitary sewer gases from entering a building. There is no need for a trap where the trap is not connected to a sanitary sewer system. Exception 4 also exempts the requirement for providing traps for each floor drain in a parking garage where the floor drain system is required to connect to a combined sewer system. Traps for floor drains in parking garages are subject to freeze damage and typically do not receive enough flow during drier weather to keep individual traps with sufficient liquid seal to prevent sewer gases from escaping. By having one main trap to isolate the combined public sewer from the parking garage floor drains, the garage is protected from sewer gas so individual floor drain traps are not necessary.

1002.2 Design of traps. Fixture traps shall be self-scouring. Fixture traps shall not have interior partitions, except where such traps are integral with the fixture or where such traps are constructed of an *approved* material that is resistant to corrosion and degradation. Slip joints shall be made with an *approved* elastomeric gasket and shall be installed only on the trap inlet, trap outlet and within the trap seal.

❖ A trap must have a pattern allowing unobstructed flow to the drain. Interior partitions are allowed where constructed of a material resistant to corrosion and degradation. Bottle traps, having an interior partition, are commonly used in areas where the tailpiece of the fixture is very close to the wall such as is sometimes encountered with pedestal lavatory installation. However, the use of bottle traps is not limited to only close quarter installations as they are also used where a more "refined" appearance is desired for an exposed trap application.

Most traps are premanufactured; however, a trap can be field fabricated with pipe and fittings (see commentary, Section 705.16 and Commentary Figure 1002.2).

1002.3 Prohibited traps. The following types of traps are prohibited:

1. Traps that depend on moving parts to maintain the seal.
2. Bell traps.
3. Crown-vented traps.
4. Traps not integral with a fixture and that depend on interior partitions for the seal, except those traps constructed of an *approved* material that is resistant to corrosion and degradation.
5. "S" traps.
6. Drum traps.

   Exception: Drum traps used as solids interceptors and drum traps serving chemical waste systems shall not be prohibited.

❖ A trap is intended to be a simple U-shaped piping arrangement that offers minimal resistance to flow. Based on their design or configuration, prohibited traps are not a simple U-shape piping design. Such traps typically impede drainage flow by moving parts,

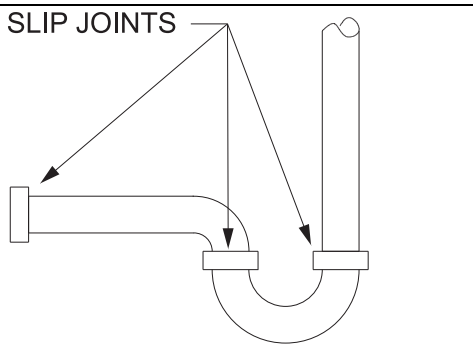

Figure 1002.2
SLIP JOINTS IN TRAPS

INTERNATIONAL CODE COUNCIL®
Copyright © 2015 ICC. ALL RIGHTS RESERVED. Accessed by David Dammon on Jun 21, 2017 12:30:52 PM pursuant to License Agreement with ICC. No further reproduction or distribution authorized. ANY UNAUTHORIZED REPRODUCTION OR DISTRIBUTION IS A VIOLATION OF THE FEDERAL COPYRIGHT ACT AND THE LICENSE AGREEMENT, AND SUBJECT TO CIVIL AND CRIMINAL PENALTIES THEREUNDER.

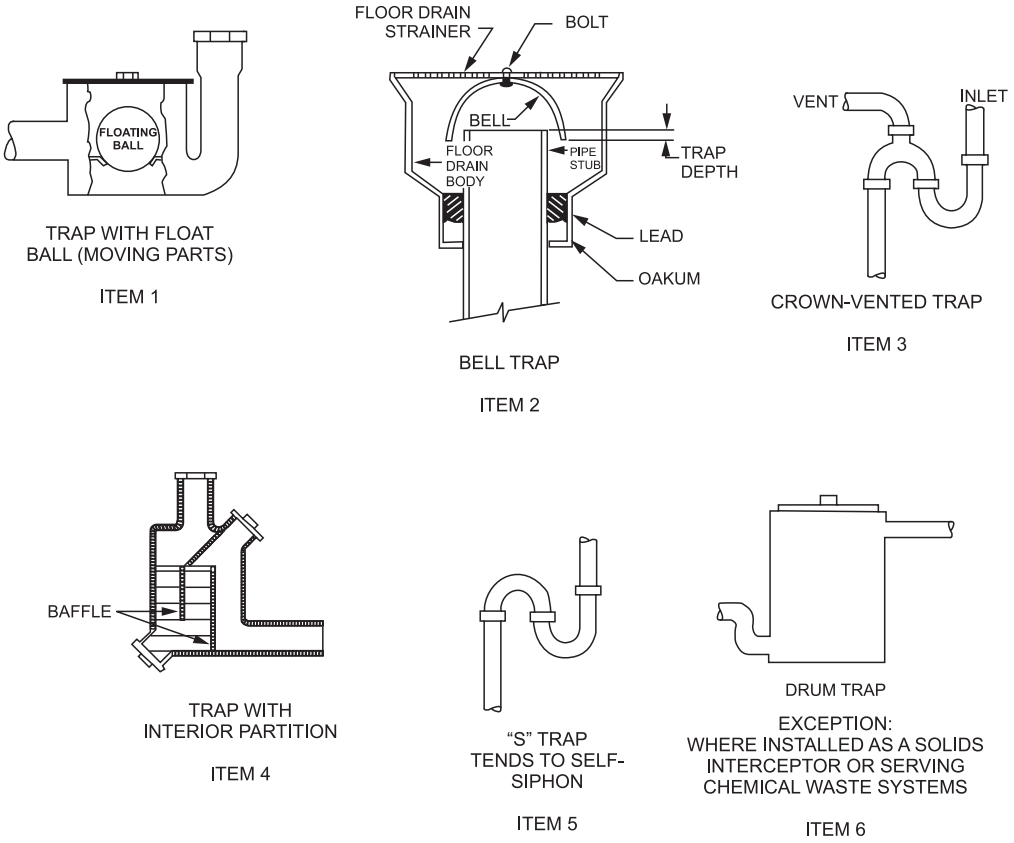

Figure 1002.3
PROHIBITED TRAPS

design (tends to clog with debris), flow pattern and ability to lose a trap seal (see Commentary Figure 1002.3).

Item 1 refers to mechanical traps that use moving parts such as floats or flappers. Such designs are not dependable because of corrosion, clogging and waste deposits that interfere with the operation of moving components and seals.

Item 2 prohibits bell traps that, because of their design, tend to clog with debris, and their trap seal has a larger exposed surface area that accelerates evaporation.

Item 3 more accurately describes a venting arrangement than a type of trap. A crown-vented trap is a factory-made or field-constructed "P" or "S" trap that has a vent opening located in the crown of the outlet weir of the trap. The flow pattern and momentum of waste flow will cause waste to enter and eventually clog the vent connection.

Item 4 refers to independent traps that are not integral with fixtures. For example, water closet traps are partition traps but, of course, are not prohibited because they are regulated as part of the fixture.

Partition traps are single-wall traps that rely on a single partition to separate the house side of the trap from the sewer side of the trap. Partition traps made of materials that are not corrosion resistant can structurally fail without any leakage that would indicate a failure of the partition; therefore, the inability to maintain a trap seal would not be indicated by a partition trap.

Item 5 prohibits factory-made and field-constructed "S" configuration traps because of their inherent ability to self-siphon, which results in a loss of trap seal.

Item 6 prohibits drum traps because they are not self-cleaning and therefore clog easily. An exception provides for the use of such traps where installed as a solids interceptor or serving chemical waste systems. Many drum traps are used to prevent solids from entering the drainage system. Hair traps, metal traps, plaster traps and single-fixture acid neutralizers are variations of the drum-trap design.

1002.4 Trap seals. Each fixture trap shall have a liquid seal of not less than 2 inches (51 mm) and not more than 4 inches (102 mm), or deeper for special designs relating to accessible fixtures.

❖ A liquid seal of 2 inches (51 mm) is standard for most traps. Some larger pipes, 3 through 6 inches (76 through 152 mm), have a greater seal of up to 4 inches (102 mm) to construct a smooth pattern of flow for the given pipe size [See Commentary Figure 1002.1(1), Exception 1].

INTERNATIONAL CODE COUNCIL®
Copyright © 2015 ICC. ALL RIGHTS RESERVED. Accessed by David Dammon on Jun 21, 2017 12:30:52 PM pursuant to License Agreement with ICC. No further reproduction or distribution authorized. ANY UNAUTHORIZED REPRODUCTION OR DISTRIBUTION IS A VIOLATION OF THE FEDERAL COPYRIGHT ACT AND THE LICENSE AGREEMENT, AND SUBJECT TO CIVIL AND CRIMINAL PENALTIES THEREUNDER.

A trap seal must be deep enough to resist the pressures that can develop in a properly vented drainage system, but not deep enough to promote the retention of solids or the growth of bacteria.

Traps that do not periodically receive waste discharge will eventually lose their seal as a result of evaporation. The rate of trap seal evaporation is somewhat dependent on the location of the trap. For example, water in fixture traps in environments with high ambient temperatures or high-volume air movement will evaporate rapidly. Fixtures, such as floor drains, typically have trap seals that are subject to loss by evaporation and, therefore, must be protected by trap seal primers (see Commentary Figure 1002.4). A deep seal will not prevent the loss of a trap seal, but will simply lengthen the time it will take for it to evaporate.

1002.4.1 Trap seal protection. Trap seals of *emergency floor drain* traps and trap seals subject to evaporation shall be protected by one of the methods in Sections 1002.4.1.1 through 1002.4.1.4.

❖ There are two methods to protect the trap seal against evaporation: 1) a trap seal primer, and 2) a trap seal protection device. Sections 1002.4.1.1 through 1002.4.1.4 cover these methods.

1002.4.1.1 Potable water-supplied trap seal primer valve. A potable water-supplied trap seal primer valve shall supply water to the trap. Water-supplied trap seal primer valves shall conform to ASSE 1018. The discharge pipe from the trap seal primer valve shall connect to the trap above the trap seal on the inlet side of the trap.

❖ The trap primer concept is simple: add a small amount of water to the trap every so often and the trap seal will remain intact. A potable water-supplied trap primer connects to the potable water distribution system and supplies a small amount of potable water to the trap when a triggering event occurs. For one type of potable water trap seal primer, the triggering event is the use of cold water at a fixture. The cold water distribution piping near the fixture experiences a slight drop of pressure when the cold water valve at the fixture is opened. The trap seal primer device senses the drop in pressure and briefly opens a valve to "waste" a small amount of potable water into a tube that is connected to the trap. Frequent use of the fixture ensures that the trap seal doesn't evaporate. The discharge tube must connect at a level higher than the trap seal so that the tube doesn't become blocked by waste debris floating in or on top of the trap seal (see Commentary Figure 1002.4.1.1).

1002.4.1.2 Reclaimed or gray water-supplied trap seal primer valve. A reclaimed or gray water-supplied trap seal primer valve shall supply water to the trap. Water-supplied trap seal primer valves shall conform to ASSE 1018. The quality of reclaimed or gray water supplied to trap seal primer valves shall be in accordance with the requirements of the manufacturer of the trap seal primer valve. The discharge pipe from the trap seal primer valve shall connect to the trap above the trap seal, on the inlet side of the trap.

❖ See the commentary for Section 1002.4.1.1, except the valve is connected to a pressurized reclaimed water source or a pressurized (and treated) gray-water source. The triggering fixture could be a water closet or a urinal that is supplied with reclaimed or gray water for flushing. The discharge tube must connect at a level higher than the trap seal, so that the tube doesn't become blocked by waste debris floating in or on top of the trap seal. Note that trap seal primer

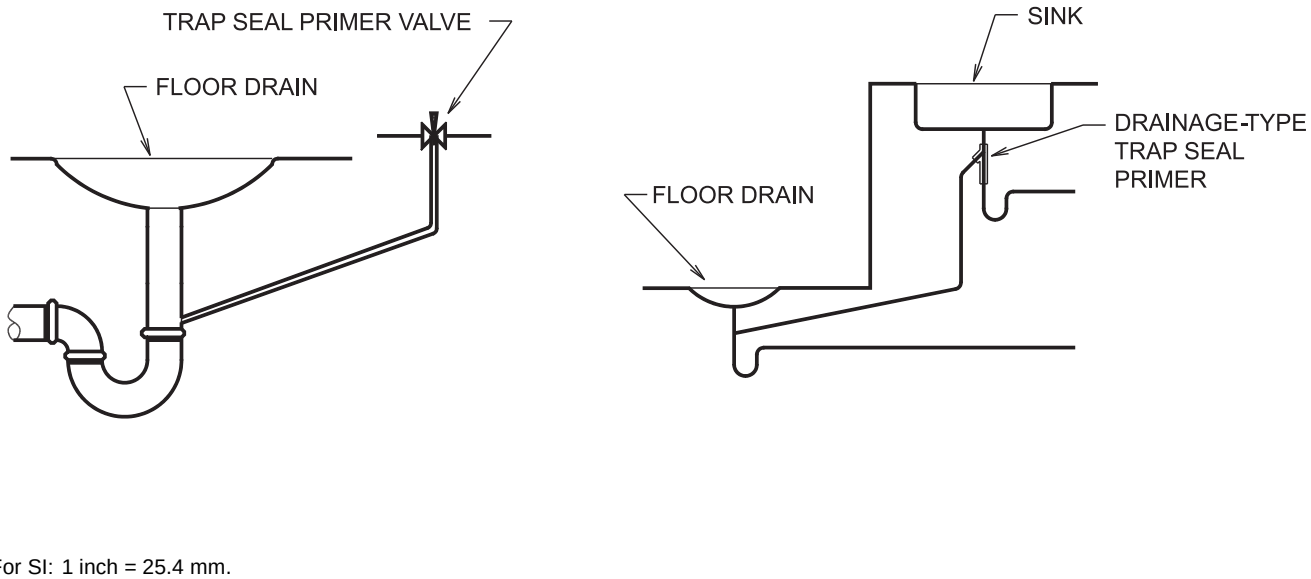

For SI: 1 inch = 25.4 mm.

Figure 1002.4
TRAP SUBJECT TO EVAPORATION

INTERNATIONAL CODE COUNCIL®
Copyright © 2015 ICC. ALL RIGHTS RESERVED. Accessed by David Dammon on Jun 21, 2017 12:30:52 PM pursuant to License Agreement with ICC. No further reproduction or distribution authorized. ANY UNAUTHORIZED REPRODUCTION OR DISTRIBUTION IS A VIOLATION OF THE FEDERAL COPYRIGHT ACT AND THE LICENSE AGREEMENT, AND SUBJECT TO CIVIL AND CRIMINAL PENALTIES THEREUNDER.



Figure 1002.4.1.1
TRAP PRIMER FOR FLOOR DRAINS

valve manufacturers provide the needed water quality requirements for the nonpotable water to be used in the trap seal primer valve.

1002.4.1.3 Waste water-supplied trap primer device. A waste water-supplied trap primer device shall supply water to the trap. Waste water-supplied trap primer devices shall conform to ASSE 1044. The discharge pipe from the trap seal primer device shall connect to the trap above the trap seal on the inlet side of the trap.

❖ This type of device simply diverts some raw gray water from a fixture that discharges gray water. The fixture is typically a lavatory. Usually such lavatory has a grid strainer outlet to keep debris from being discharged from the fixture. However, a grid strainer is not a code requirement.

1002.4.1.4 Barrier-type trap seal protection device. A barrier-type trap seal protection device shall protect the floor drain trap seal from evaporation. Barrier-type floor drain trap seal protection devices shall conform to ASSE 1072. The devices shall be installed in accordance with the manufacturer's instructions.

❖ This device is an elastomeric "check valve" that is inserted into the pipe opening of a floor drain. When the floor drain is accepting water, the flapper allows the water to flow into the pipe. Otherwise, the flapper returns to its closed position to prevent trap seal evaporation from exposure to the air in the room.

1002.5 Size of fixture traps. Fixture trap size shall be sufficient to drain the fixture rapidly and not less than the size indicated in Table 709.1. A trap shall not be larger than the drainage pipe into which the trap discharges.

❖ The minimum fixture trap sizes are listed in Table 709.1. The minimum trap sizes for fixtures not listed in Table 709.1 must be the size of the fixture outlet, but in no case less than $1^1/_4$ inches (32 mm). The code does not prescribe a maximum trap size; however, if a trap is oversized, it will not scour (cleanse) itself and is therefore prone to clogging. A trap that is larger than the drainage pipe into which it discharges is also subject to frequent clogging because the reduced size outlet pipe will not allow a waste flow velocity that is adequate to scour and clean the trap (see commentary, Table 709.1 and Section 704.2).

1002.6 Building traps. Building (house) traps shall be prohibited.

❖ A building trap creates a problem because it is an obstruction to flow, possibly causing a complete stoppage in the drainage system.

1002.7 Trap setting and protection. Traps shall be set level with respect to the trap seal and, where necessary, shall be protected from freezing.

❖ Traps must be set level to maintain the trap seal depth and reduce the possibility of self-siphoning (see Commentary Figure 1002.7).

1002.8 Recess for trap connection. A recess provided for connection of the underground trap, such as one serving a bathtub in slab-type construction, shall have sides and a bottom of corrosion-resistant, insect- and verminproof construction.

❖ Where a trap is installed below the building, such as in a recess below a slab on grade, requirements similar to those in the *International Building Code*® (IBC®) for

INTERNATIONAL CODE COUNCIL®
Copyright © 2015 ICC. ALL RIGHTS RESERVED. Accessed by David Dammon on Jun 21, 2017 12:30:52 PM pursuant to License Agreement with ICC. No further reproduction or distribution authorized. ANY UNAUTHORIZED REPRODUCTION OR DISTRIBUTION IS A VIOLATION OF THE FEDERAL COPYRIGHT ACT AND THE LICENSE AGREEMENT, AND SUBJECT TO CIVIL AND CRIMINAL PENALTIES THEREUNDER.

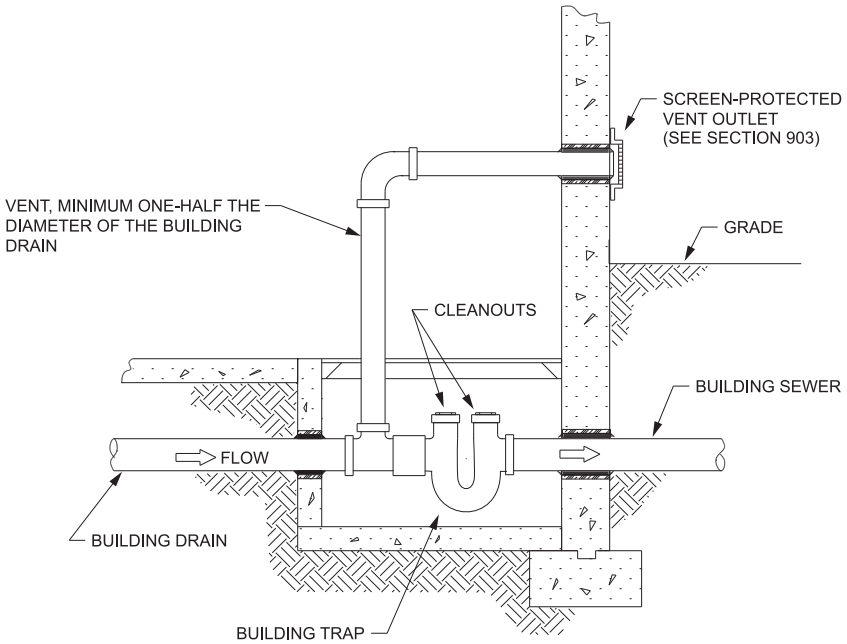

Figure 1002.6
BUILDING TRAP

waterproofing, ratproofing and termite protection apply (see Commentary Figure 1002.6).

1002.9 Acid-resisting traps. Where a vitrified clay or other brittleware, acid-resisting trap is installed underground, such trap shall be embedded in concrete extending 6 inches (152 mm) beyond the bottom and sides of the trap.

❖ Because of their brittle nature, earthenware-type traps, including vitrified clay, must be embedded in concrete where installed below grade (see Section 702.5).

1002.10 Plumbing in mental health centers. In mental health centers, pipes and traps shall not be exposed.

❖ In certain mental health centers, patients are considered a danger to themselves. As a result of this concern, special care is required to secure the plumbing fixtures and piping in these facilities.

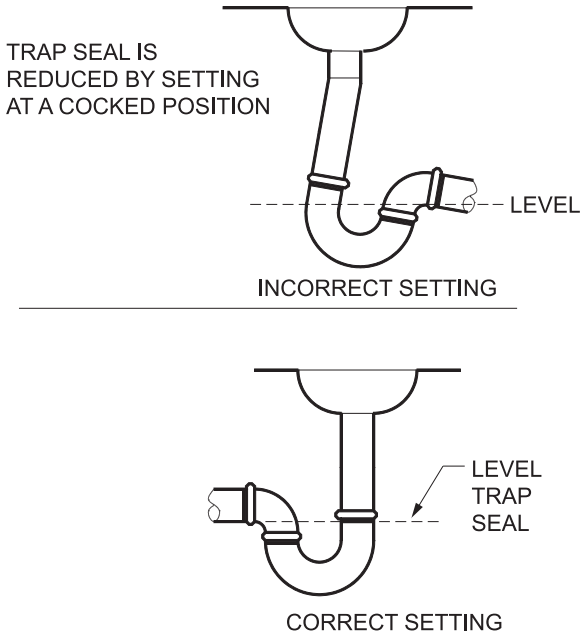

Figure 1002.7
INSTALLATION OF TRAP

SECTION 1003
INTERCEPTORS AND SEPARATORS

1003.1 Where required. Interceptors and separators shall be provided to prevent the discharge of oil, grease, sand and other substances harmful or hazardous to the public sewer, the private sewage system or the sewage treatment plant or processes.

❖ The design and installation of sanitary drain and sewer systems and the waste treatment systems for disposal of waste water are based upon the known general characteristics of "domestic" waste water. Domestic waste water is largely that which is generated by the use of water by humans for bathing, household cooking and cleaning and for the flushing of waste eliminations from humans. Waste waters generated from commercial and industrial sources such as manufacturing processes, mass food production, vehicle cleaning, chemical production and product recycling can have detrimental effects to the materials and methods used to convey the waste water as well as the mechanical, biological and chemical processes used to make the waste water safe to discharge into the environment. Therefore, these

INTERNATIONAL CODE COUNCIL®
Copyright © 2015 ICC. ALL RIGHTS RESERVED. Accessed by David Dammon on Jun 21, 2017 12:30:52 PM pursuant to License Agreement with ICC. No further reproduction or distribution authorized. ANY UNAUTHORIZED REPRODUCTION OR DISTRIBUTION IS A VIOLATION OF THE FEDERAL COPYRIGHT ACT AND THE LICENSE AGREEMENT, AND SUBJECT TO CIVIL AND CRIMINAL PENALTIES THEREUNDER.

"commercial/industrial" waste waters must have the detrimental components removed in order for the waste water to be safe for drainage systems and less problematic for domestic waste-water treatment biological and chemical processes.

The terms "separator" and "interceptor" are used interchangeably in this code, this commentary and by many involved in the separator/interceptor industry. Both terms mean a device that causes one or more entrained materials in a waste-water flow to divert from the flow for retention within the device or follow a different flow path for capture and retention outside the device. The retained materials require periodic removal from the devices or storage vessels in order to maintain the efficiency and function of the separating device. The removal and disposal of these detrimental wastes from the devices or storage vessels is typically performed by specialized service companies that are state licensed to transport and dispose of the wastes in an environmentally safe manner. Note that separators/interceptors do not chemically alter commercial/industrial waste water but only mechanically separate out physical components from waste-water flows. Section 803 covers applications where waste-water flows require adjustment of pH, temperature reduction, noxious odor abatement or removal of hazardous chemicals.

This section identifies grease, oil and sand as specific substances of concern that require removal from waste water before discharge to public sewers, private sewage systems or public sewage treatment plants. The congealing nature of grease can cause severe clogging problems in sewers, resulting in waste-water overflows into buildings or to the environment. Oil can be detrimental to sewage treatment processes as it tends to float on water surfaces making it difficult to capture and remove in the treatment process. Sand can be abrasive to most sewer line materials and the pumps used to move waste water. Sand can also build up and cause clogging problems in manholes located where turns occur in gravity sewer lines. Sections 1003.3 and 1003.4 indicate what occupancy uses specifically require oil and grease interceptors, respectively. Sections 1003.6, 1003.7, and 1003.8 require separators for commercial laundries, bottling establishments and slaughterhouses, respectively. The code does not require sand interceptors for a specific occupancy use; however, where sand interceptors are installed, Section 1003.5 has design requirements for those interceptors. Other occupancies that might require separators include: hospitals; fowl-, fish- or meat-packaging plants; canneries; cement producers; beauty salons; refineries and machine shops. The code official is responsible for identifying any other occupancy uses where similar discharges might require a separator.

It is not the intent of this section to require interceptors to protect the drain piping system within a building or the building sewer. However, locating interceptors as close to the point where harmful substances enter the building drainage system has the benefit of reducing maintenance required for the building drainage system and the building sewer. The designer of the building or tenant space is responsible for locating interceptors with respect to the occupant's expectations for frequency and degree of building drainage system and building sewer maintenance, ease of interceptor cleaning and building floor space allocation for such equipment.

Where waste-water flows are destined for a private sewage disposal system which ultimately discharges to the environment through various ground infiltration methods, state and county ground-water environmental control departments might require additional separators, special local treatment methods, holding tanks, or monitoring stations. Those requirements are not covered by this code and can vary from state to state.

1003.2 Approval. The size, type and location of each interceptor and of each separator shall be designed and installed in accordance with the manufacturer's instructions and the requirements of this section based on the anticipated conditions of use. Wastes that do not require treatment or separation shall not be discharged into any interceptor or separator.

❖ Interceptors are devices that are designed to remove a specific substance from a waste-water stream flowing at a maximum rate of flow. Although the code has a few requirements for the design of certain types of interceptors, the interceptor designer/manufacturer is responsible for all other details of construction such as

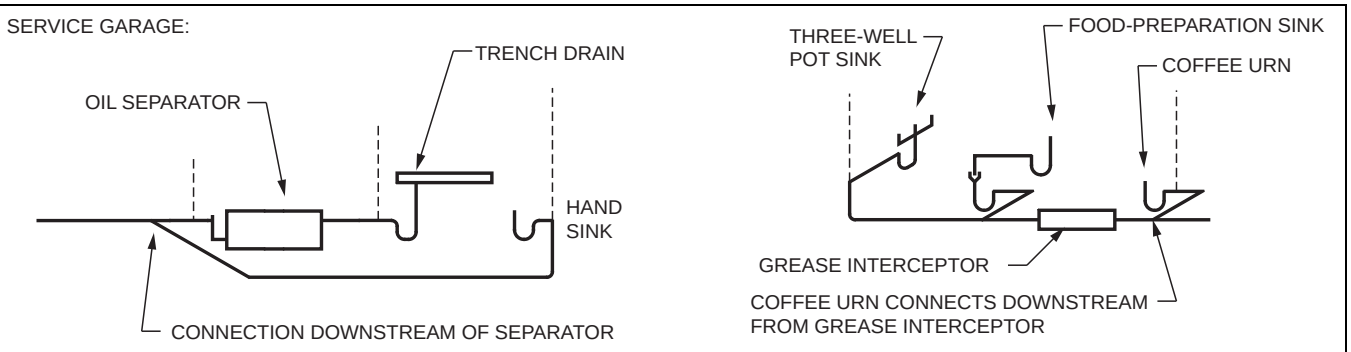

Figure 1003.2
INTERCEPTORS AND SEPARATORS

INTERNATIONAL CODE COUNCIL®
Copyright © 2015 ICC. ALL RIGHTS RESERVED. Accessed by David Dammon on Jun 21, 2017 12:30:52 PM pursuant to License Agreement with ICC. No further reproduction or distribution authorized. ANY UNAUTHORIZED REPRODUCTION OR DISTRIBUTION IS A VIOLATION OF THE FEDERAL COPYRIGHT ACT AND THE LICENSE AGREEMENT, AND SUBJECT TO CIVIL AND CRIMINAL PENALTIES THEREUNDER.

size and materials as well as the installation alignments, elevations and access requirements for maintenance. Because the size and, therefore, the cost of interceptors are directly proportional to the flow rate, and some waste-water flows not having substances that require removal might have substances that will cause problems in separation; only the waste-water flows having the substances that need to be removed are allowed to be routed through an interceptor (see Commentary Figure 1003.2). The commentary to Section 1003.1 provides information regarding the location of interceptors.

1003.3 Grease interceptors. Grease interceptors shall comply with the requirements of Sections 1003.3.1 through 1003.3.5.

❖ The need for and the performance of grease interceptors have received increased visibility over the years due to costly sewer overflows as a result of congealed grease clogging public sewer lines. Although grease problems in public sewer systems have existed since the first commercial kitchens discharged to public sewers, the extreme attention to preventing grease discharges into public sewers is due largely to the severe fines levied by state environmental health departments for waste-water overflows, which are in violation of the Federal Clean Air and Water Act. Once hot grease enters the sewer system, it cools and congeals in the pipes creating blockages for waste-water flow. Even though sewer system operators are accustomed to routine maintenance cleaning of sewer lines, it is nearly impossible for any reasonable cleaning program to keep sewers free of grease so that overflows do not occur. Therefore, many sewer system operators are establishing severe limits for grease concentration in discharges, extraordinary inspection/reporting requirements and strong enforcement procedures for the producers of grease-laden waste waters in order to attack the problem at the source.

The code does not prescribe grease concentration limits for waste-water discharge or inspection/maintenance requirements for grease interceptors. The only code requirement for the performance of grease interceptors is provided in the applicable referenced standards in Section 1003.3.4. The performance requirements provided in the standards are not a guarantee that any grease interceptor covered by those standards will limit the grease concentration in the waste water to the levels required by local sewer system operators or waste-water discharge enforcement agencies. The designer/manufacturer is responsible for providing a device design that meets customer-specified removal rates for the concentration of grease-laden waste water as specified by the customer.

There are two types of grease interceptors that are commonly used for grease-laden waste-water applications: 1) gravity and 2) hydromechanical. The terms for these two types of grease interceptors have recently come into use because the code-defined term for one of these devices was changed in the 2003 edition. Prior to that edition, gravity-type grease interceptors were called grease interceptors and hydromechanical-type grease interceptors were called grease traps. The term “trap” was changed to interceptor because not all grease trap designs provide a “trap-like” function in so far as preventing sewer gases from backflowing through the device and escaping from untrapped fixture drains. Changing the term “trap” to “interceptor” did not recognize that and in doing so, the distinction between the two types of interceptors was blurred.

The gravity-type grease interceptor is large in size [e.g., at least 500 gallons (1893 L) in volume], and provides for extremely low flow velocity through the unit to allow the grease to collect in a compartment [see Commentary Figure 1003.3(1)]. The hydromechanical-type grease interceptor is small in size [e.g., typically less than 250 gallons (946 L) in volume], of fabricated steel construction and utilizes changes in flow direction along with air-entrainment to cause grease to be retained in the device [see Commentary Figure 1003.3(2)]. Both rely upon gravity as the means of separation. As the code requires all grease interceptors to comply with the referenced standards as stated in Section 1003.3.4, this automatically excludes gravity-type grease interceptors from complying with the code. The code does not reference any standards for gravity-type grease interceptors.

However, gravity-type grease interceptors are sometimes required by jurisdictions instead of what is required by the code simply due to local experience, familiarity and comfort with gravity-type units. In some areas, grease interceptor installations are controlled not by code officials but by departments of health, waste-water system utility operators or environmental discharge departments, none of which are bound by the code. There are few published “standards” for the design of gravity-type grease interceptors. Decades of design experience by credible engineering concerns have resulted in design philosophies and construction criteria that have proven that gravity-type grease interceptors can provide for adequate grease removal from most waste-water flows. However, due to the variety of fats, oils and greases (FOG) produced by some applications and tighter limitations by certain jurisdictions on discharges of FOG, gravity-type grease interceptors alone might not produce the desired results. Hydromechanical devices fitted to the discharge of upstream grease-producing fixtures and equipment might be necessary in addition to gravity-type interceptors in order to attain compliance with local discharge limits of FOG.

Note that an automatic grease removal device is not a third type of grease interceptor but only a variation of the hydromechanical type that offers automatic removal of collected grease to an external container.

INTERNATIONAL CODE COUNCIL®
Copyright © 2015 ICC. ALL RIGHTS RESERVED. Accessed by David Dammon on Jun 21, 2017 12:30:52 PM pursuant to License Agreement with ICC. No further reproduction or distribution authorized. ANY UNAUTHORIZED REPRODUCTION OR DISTRIBUTION IS A VIOLATION OF THE FEDERAL COPYRIGHT ACT AND THE LICENSE AGREEMENT, AND SUBJECT TO CIVIL AND CRIMINAL PENALTIES THEREUNDER.

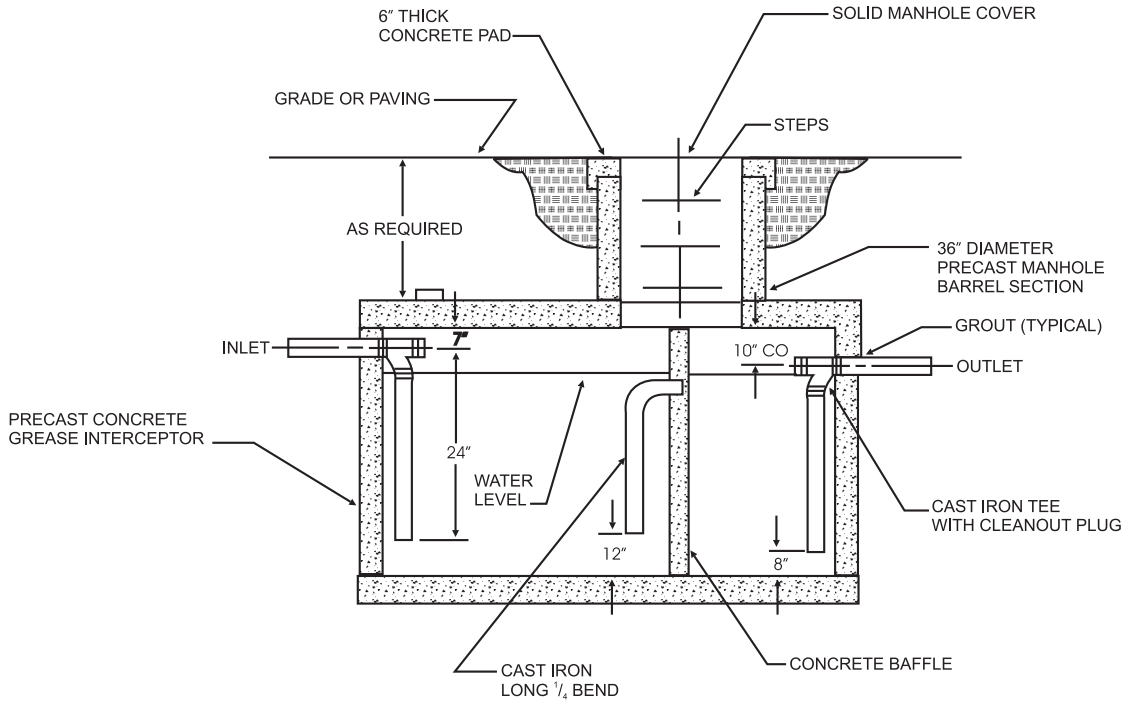

For SI: 1 inch = 25.4 mm.

Figure 1003.3(1)
TYPICAL GRAVITY-TYPE GREASE INTERCEPTOR

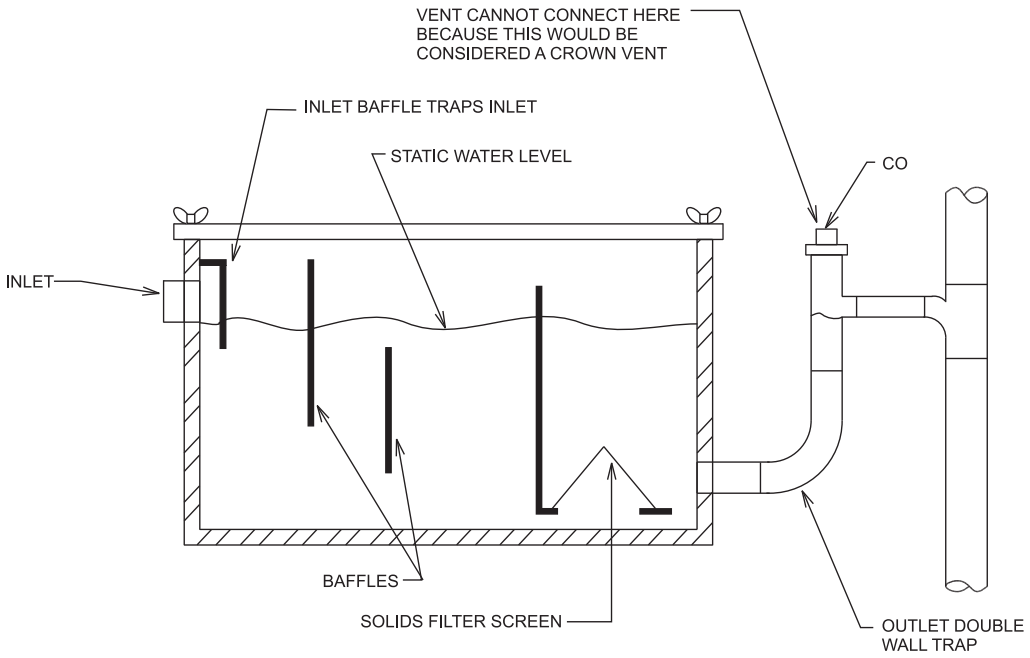

Figure 1003.3(2)
TYPICAL HYDROMECHANICAL GREASE INTERCEPTOR

INTERNATIONAL CODE COUNCIL®
Copyright © 2015 ICC. ALL RIGHTS RESERVED. Accessed by David Dammon on Jun 21, 2017 12:30:52 PM pursuant to License Agreement with ICC. No further reproduction or distribution authorized. ANY UNAUTHORIZED REPRODUCTION OR DISTRIBUTION IS A VIOLATION OF THE FEDERAL COPYRIGHT ACT AND THE LICENSE AGREEMENT, AND SUBJECT TO CIVIL AND CRIMINAL PENALTIES THEREUNDER.

1003.3.1 Grease interceptors and automatic grease removal devices required. A grease interceptor or automatic grease removal device shall be required to receive the drainage from fixtures and equipment with grease-laden waste located in food preparation areas, such as in restaurants, hotel kitchens, hospitals, school kitchens, bars, factory cafeterias and clubs. Fixtures and equipment shall include pot sinks, prerinse sinks; soup kettles or similar devices; wok stations; floor drains or sinks into which kettles are drained; automatic hood wash units and dishwashers without prerinse sinks. Grease interceptors and automatic grease removal devices shall receive waste only from fixtures and equipment that allow fats, oils or grease to be discharged. Where lack of space or other constraints prevent the installation or replacement of a grease interceptor, one or more grease interceptors shall be permitted to be installed on or above the floor and upstream of an existing grease interceptor.

❖ This section requires grease interceptors for the waste water generated by specific fixtures, equipment and certain floor drains in food preparation areas for occupancy uses where food is commercially prepared. Although the text provides a list of occupancy uses, this list is not all-inclusive but an indication as to the types of facilities that might have a food preparation area. For example, church kitchens, catering kitchens, delis, meat markets and recreation center kitchens could be occupancy uses that could be generators of grease-laden waste waters. The code official has the responsibility to define the fixtures and equipment and their intended uses that constitute the need for grease interception. For example, a bar that only serves beverages in glasses and uses a dishwasher or three-compartment sink to clean only the glasses would not require a grease interceptor. However, a bar that also serves food (if only heated in a microwave or convection oven) on reusable plates with silverware might require a grease interceptor for the three-compartment sink or dishwasher that washes those items.

Only the waste-water flows that require grease interception are allowed to be connected to a grease interceptor. Although this requirement is generally stated in Section 1003.2, it is even a more critical requirement for grease interceptors as cooler waste water, as well as waste-water flows with high concentrations of cleaning chemicals, sugars or acids, can affect the separation efficiency of a grease interceptor (see Commentary Figure 1003.2).

The last line of this section is intended to cover situations where gravity-type grease interceptors cannot be installed or the existing gravity grease interceptor is determined to be too small, where replacement with a larger unit is not possible for a variety of reasons (i.e., not enough space, too costly, etc.). Where these situations are encountered, the code allows grease interceptors (typically hydromechanical type) to be installed upstream of the existing gravity grease interceptor (or where a gravity grease interceptor would normally be located) in order to satisfy the jurisdictional requirements for a gravity grease interceptor [see Commentary Figures 1003.3.1(1) through 1003.3.1(5)].

1003.3.2 Food waste disposers. Where food waste disposers connect to grease interceptors, a solids interceptor shall separate the discharge before connecting to the grease interceptor. Solids interceptors and grease interceptors shall be sized and rated for the discharge of the food waste disposers. Emulsifiers, chemicals, enzymes and bacteria shall not discharge into the food waste disposer.

❖ As the code only recognizes the hydromechanical type of grease interceptors, the intent of this section is to prevent large particles of ground-up food discharged by the food waste disposer from clogging or rapidly filling these types of grease interceptors. Hydromechanical-type grease interceptors have numerous baffles, sometimes with small openings for flow such that food particles could block the flow. Also, the storage capacity for solids in these relatively small units is limited. Without a solids interceptor on the discharge of the food waste disposer, a hydromechanical grease interceptor could become inefficient or blocked within hours of being cleaned. Therefore, a solids interceptor is required for the food waste disposer discharge before connection to a hydromechanical grease interceptor (see Commentary Figure 1003.3.2).

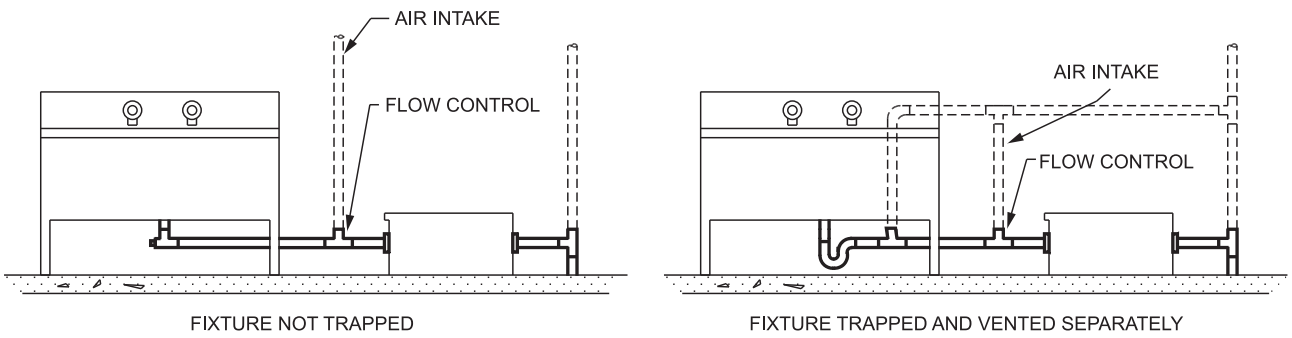

Figure 1003.3.1(1)
TYPICAL SINGLE-FIXTURE INSTALLATIONS

INTERNATIONAL CODE COUNCIL®
Copyright © 2015 ICC. ALL RIGHTS RESERVED. Accessed by David Dammon on Jun 21, 2017 12:30:52 PM pursuant to License Agreement with ICC. No further reproduction or distribution authorized. ANY UNAUTHORIZED REPRODUCTION OR DISTRIBUTION IS A VIOLATION OF THE FEDERAL COPYRIGHT ACT AND THE LICENSE AGREEMENT, AND SUBJECT TO CIVIL AND CRIMINAL PENALTIES THEREUNDER.

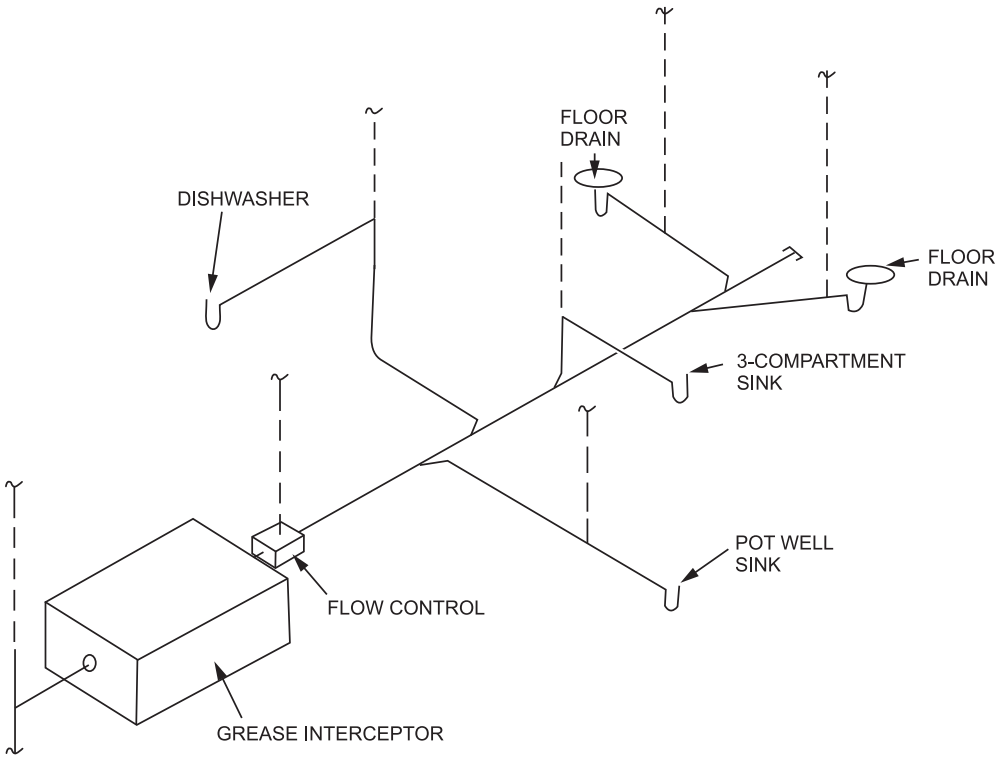

Figure 1003.3.1(2)
GREASE INTERCEPTOR FOR FIXTURES

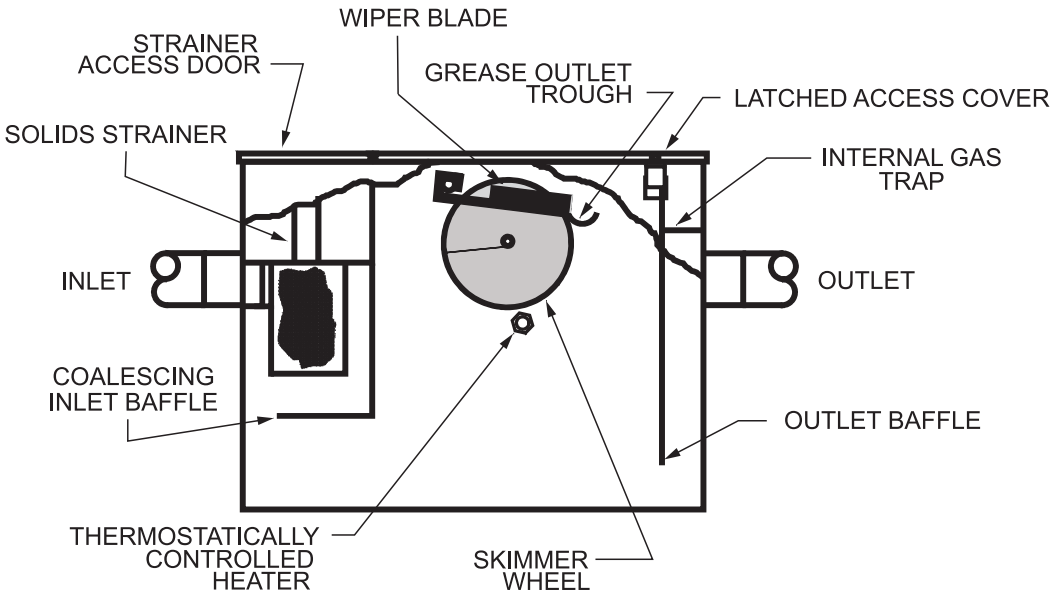

Figure 1003.3.1(3)
AUTOMATIC GREASE INTERCEPTOR

Even though a solids interceptor "filters out" large particles of ground-up food, there is still a grease and flow load that must be accommodated by the grease interceptor. The specifier of the interceptor must include this information on the request for the interceptor or provide for an interceptor somewhat larger than the size selected to accommodate all other flows to provide for more storage capacity.

INTERNATIONAL CODE COUNCIL®
Copyright © 2015 ICC. ALL RIGHTS RESERVED. Accessed by David Dammon on Jun 21, 2017 12:30:52 PM pursuant to License Agreement with ICC. No further reproduction or distribution authorized. ANY UNAUTHORIZED REPRODUCTION OR DISTRIBUTION IS A VIOLATION OF THE FEDERAL COPYRIGHT ACT AND THE LICENSE AGREEMENT, AND SUBJECT TO CIVIL AND CRIMINAL PENALTIES THEREUNDER.

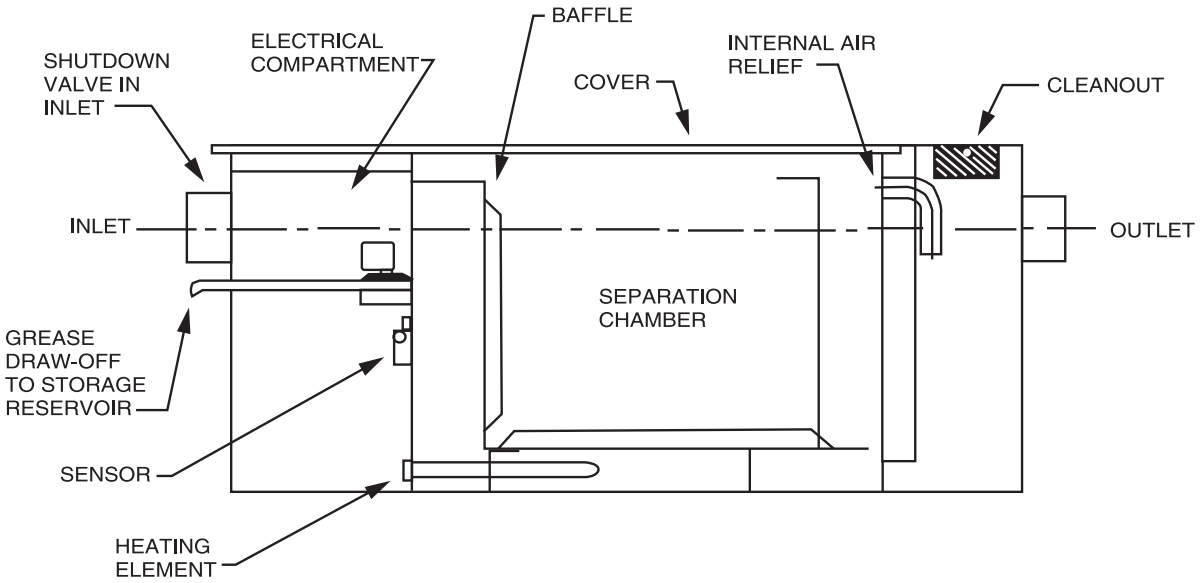

Figure 1003.3.1(4)
SENSOR-CONTROLLED GREASE RECOVERY DEVICE

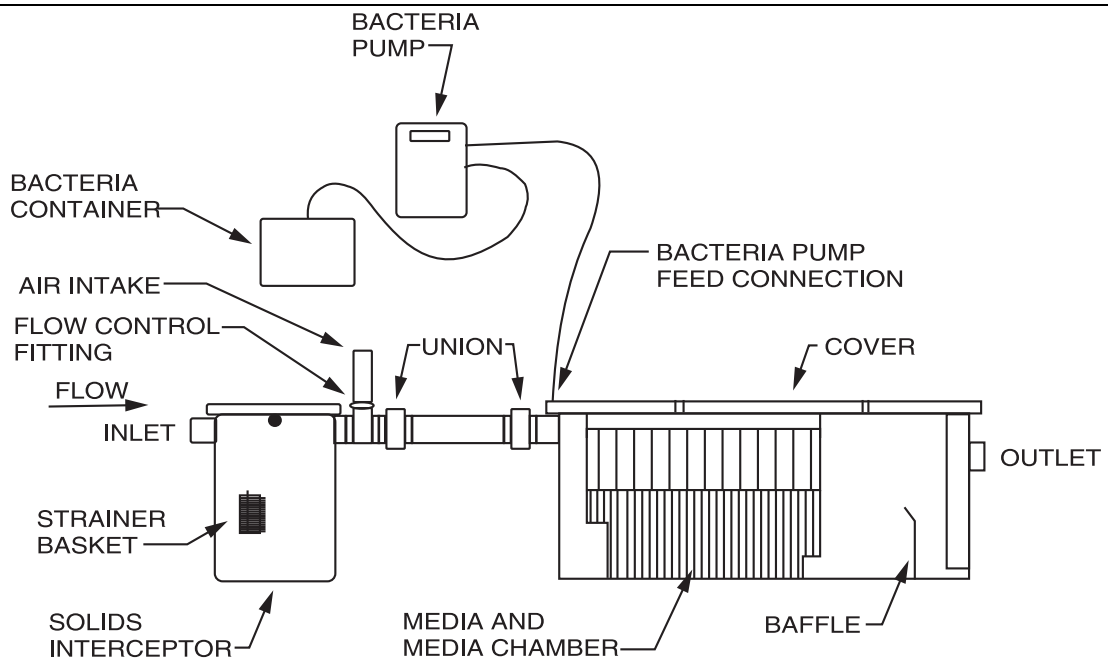

Figure 1003.3.1(5)
BIOREMEDIATION GREASE INTERCEPTOR

This section does not require that flow from a food waste disposer be routed through a grease interceptor. The code does not prohibit the discharge from a food waste disposer from connecting downstream of a grease interceptor (either of the hydromechanical type or of the gravity type). There are mixed opinions concerning where food waste disposer discharges should be connected. Because studies have indicated that dishwasher prerinse (food scrap) sinks are a significant source of grease waste water and that many food waste disposer installations receive the waste from prerinse sinks, the disposer discharge should go

INTERNATIONAL CODE COUNCIL®
Copyright © 2015 ICC. ALL RIGHTS RESERVED. Accessed by David Dammon on Jun 21, 2017 12:30:52 PM pursuant to License Agreement with ICC. No further reproduction or distribution authorized. ANY UNAUTHORIZED REPRODUCTION OR DISTRIBUTION IS A VIOLATION OF THE FEDERAL COPYRIGHT ACT AND THE LICENSE AGREEMENT, AND SUBJECT TO CIVIL AND CRIMINAL PENALTIES THEREUNDER.

through the grease interceptor. However, since a food waste disposer operates best with a cold water flow and chops the food waste (and the grease contained within) into solidified particles, the particles will readily flow in the sewer system without the congealing problems associated with hot or warm grease-laden wastewater discharges. Manufacturers of food waste disposers understandably find the requirement for a solids interceptor for the disposer discharge illogical, especially where jurisdictions require them for gravity-type grease interceptors. Ultimately, the code official or the public sewer system operators will make the decision on where food waste disposer will be connected.

As reducing problems associated with grease clogging in plumbing piping systems as well as the cost of interceptor cleaning is a marketable concept, many producers of emulsifiers, chemicals, enzymes and bacteria products offer products that are marketed to aid in the reduction of grease. While the effectiveness of these products is beyond the discussion of this commentary, the manufacturers of hydromechanical grease interceptors are certain that the addition of these products to the flow stream and into the grease interceptor are detrimental to the operation of the interceptor. Thus, this code section, with the assumption that the grinder is discharging to a hydromechanical grease interceptor, prohibits the addition of these products to a food waste grinder. The intent of the prohibition has no relevance to the protection of food waste grinders nor is it intended to apply to food waste grinders discharging only to gravity-type grease interceptors.

Note that for gravity-type interceptors with large pathways for internal flow, limited number of baffles and significant storage capacity, clogging and solids buildup due to food waste disposer discharge is usually a nonissue unless maintenance cleaning (usually on a weekly or monthly basis) is ignored.

1003.3.3 Grease interceptors and automatic grease removal devices not required. A grease interceptor or an automatic grease removal device shall not be required for individual dwelling units or any private living quarters.

❖ The volume and concentration of grease in the wastewater discharge from a dwelling unit or private living quarters are usually not a significant source of grease discharged to public sewer systems. Therefore, the complications with installation and the resulting expense (initially and ongoing) of a grease interceptor are not warranted. However, this does not mean that users and owners of individual or private living quarters should not be encouraged to "can the grease (cooking oils and fats)" rather than pour such waste down the drain. Many public sewer system operators realize that even small quantities of grease from many locations can result in sewer system problems. With advance techniques in real-time grease monitoring and the ease of camera inspection of sewer lines, users who are chronic dumpers of fats, oils and greases into the public sewer system or even clandestine commercial kitchen operations might be identified for enforcement follow-up.

1003.3.4 Hydromechanical grease interceptors, fats, oils and greases disposal systems and automatic grease removal devices. Hydromechanical grease interceptors; fats, oils, and greases disposal systems and automatic grease removal devices shall be sized in accordance with ASME A112.14.3, ASME 112.14.4, ASME A112.14.6, CSA B481.3 or PDI G101. Hydromechanical grease interceptors; fats, oils, and greases disposal systems and automatic grease removal devices shall be designed and tested in accordance with ASME A112.14.3, ASME 112.14.4, CSA B481.1, PDI G101 or PDI G102. Hydromechanical grease interceptors; fats, oils,

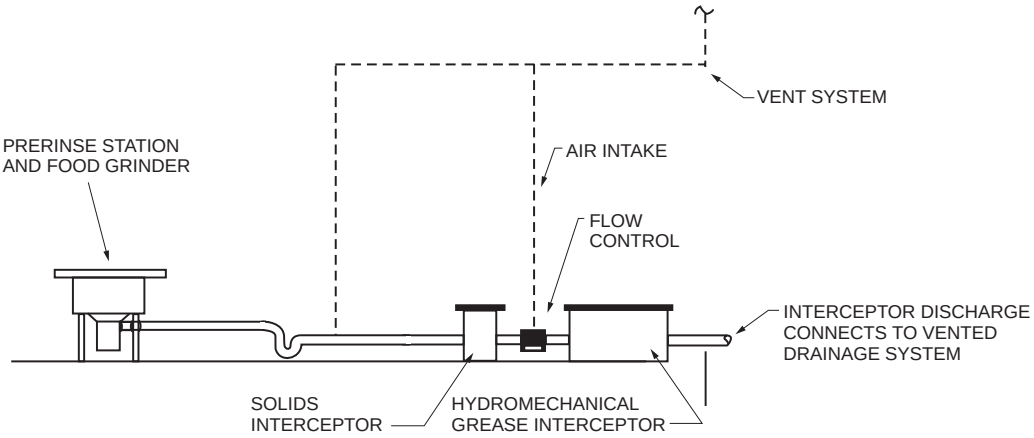

Figure 1003.3.2
FOOD WASTE GRINDER CONNECTING TO GREASE INTERCEPTOR

INTERNATIONAL CODE COUNCIL®
Copyright © 2015 ICC. ALL RIGHTS RESERVED. Accessed by David Dammon on Jun 21, 2017 12:30:52 PM pursuant to License Agreement with ICC. No further reproduction or distribution authorized. ANY UNAUTHORIZED REPRODUCTION OR DISTRIBUTION IS A VIOLATION OF THE FEDERAL COPYRIGHT ACT AND THE LICENSE AGREEMENT, AND SUBJECT TO CIVIL AND CRIMINAL PENALTIES THEREUNDER.

and greases disposal systems and automatic grease removal devices shall be installed in accordance with the manufacturer's instructions. Where manufacturer's instructions are not provided, hydromechanical grease interceptors*;* fats, oils, and greases disposal systems and automatic grease removal devices shall be installed in compliance with ASME A112.14.3, ASME 112.14.4, ASME A112.14.6, CSA B481.3 or PDI G101.

❖ The referenced standards PDI G101 and ASME A112.14.3 are nearly identical and describe the testing and certification ratings (flow-through and grease retention) for a specific manufacturer's design of a (hydromechanical) grease interceptor. The CSA B481.3 standard is a similar testing standard for hydromechanical) grease interceptors. These standards do not specify any construction requirements other than the use of standard pipe threads for any external threaded connections. ASME A112.14.4 is the standard for automatic grease removal devices, an "automatic purging" variation of hydromechanical grease interceptors (see Commentary Figure 1003.3.4).

The standard ASME A112.14.6 covers FOG disposal systems. The acronym "FOG" stands for "fats, oils and greases." This is a somewhat recent plumbing system solution that processes grease-laden waste into gray water so that FOG doesn't create problems in public sewer systems, waste-water treatment facilities and private sewage disposal systems. Rather than having a grease interceptor that needs frequent periodic cleaning (and the subsequent waste disposal) to comply with a jurisdiction's limitations on grease discharge to the sewer, these systems bioremediate the FOG at the source. Although these systems might have higher initial costs, in the long run, such systems could have lower operational costs while providing better effluent quality (lower grease concentrations) that some jurisdictions have mandated.

The standards do not provide any mandatory sizing methods for hydromechanical grease interceptors or automatic grease removal devices. Some of these standards provide a sizing method in a nonmandatory appendix of each standard. Sizing methods for grease interceptors have been debated for decades. Although there is most likely a point at which a grease interceptor that is too small does reduce the removal efficiency under ideal conditions (i.e., just cleaned), there is no penalty (other than initial cost) for the selection of a unit larger than required. A larger unit than "required by the numbers" might cost only slightly more, with the benefit of less frequent cleanings (cleaning being a cost as well). Note that when choosing any interceptor, coordination of the outlet connection size with the drainage piping downstream of the interceptor is critical. Larger inceptors might have a larger (standard) outlet connection than what is planned for the facility. Section 704.2 prohibits the reduction in pipe size in the direction of flow. Ultimately, the performance of any grease interceptor is directly related to adherence to an appropriate maintenance schedule for actual loading conditions. Maintenance schedules are usually developed after

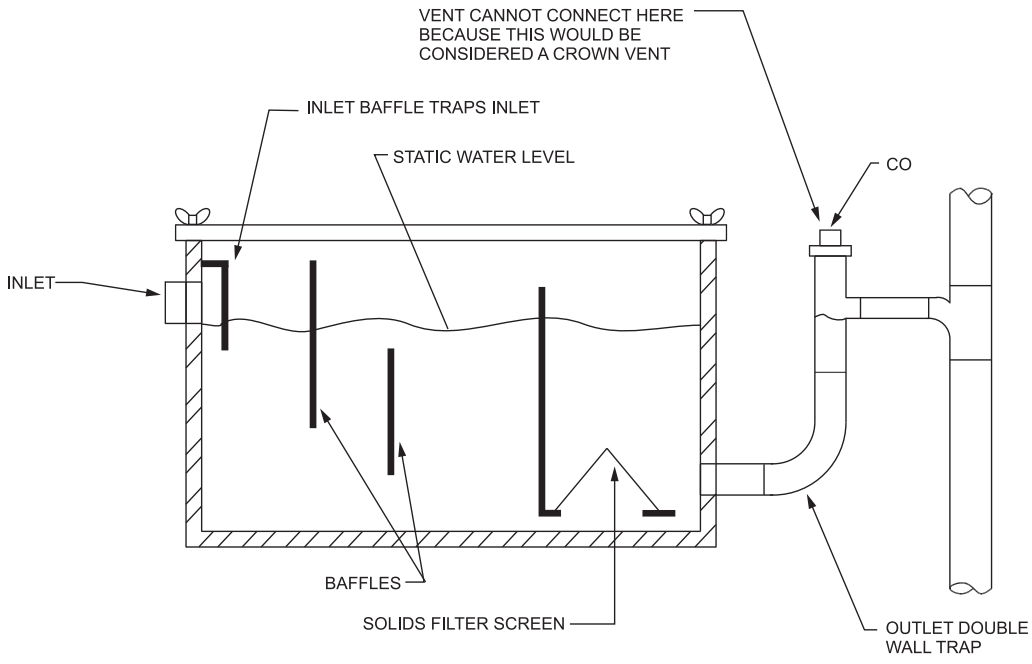

Figure 1003.3.4
TYPICAL HYDROMECHANICAL GREASE INTERCEPTOR

INTERNATIONAL CODE COUNCIL®
Copyright © 2015 ICC. ALL RIGHTS RESERVED. Accessed by David Dammon on Jun 21, 2017 12:30:52 PM pursuant to License Agreement with ICC. No further reproduction or distribution authorized. ANY UNAUTHORIZED REPRODUCTION OR DISTRIBUTION IS A VIOLATION OF THE FEDERAL COPYRIGHT ACT AND THE LICENSE AGREEMENT, AND SUBJECT TO CIVIL AND CRIMINAL PENALTIES THEREUNDER.

monitoring grease collection amounts over numerous cleanings to determine an optimum cleaning frequency. However, local jurisdictions might require that cleanings occur at intervals no less than weekly or monthly (regardless of whether the cleaning is actually needed or not) based upon their experience with the type of facility operation. Although a discussion of a "best" method for sizing grease interceptors is not within the scope of this commentary, the following discussion of sizing methods is provided for informational purposes only. Grease interceptor manufacturers might also provide sizing methods for their interceptor design. The authority having jurisdiction is responsible for providing or approving the methods used for sizing grease interceptors.

Generally, there are four sizing methods that are used in the prefabricated grease interceptor industry (both gravity and hydromechanical types): 1) the PDI method; 2) the 1980 USEPA "seats" method; 3) the 1980 USEPA "meals" method and 4) the "dfu" method. Some jurisdictions use methods similar to these but have added other requirements or changed the "constants" used in the equations. Others have developed completely different methods that will not be discussed in this commentary. Grease interceptor designs can also be "engineered." There are no consensus standards for the sizing of grease interceptors. The authority having jurisdiction must provide or approve the sizing method to be used.

The PDI method

This method is published in the nonmandatory Appendix A of the Plumbing and Drainage Institute's (PDI) standard PDI G101. This method derives a gallon-per-minute (gpm) flow-through rate for selecting a hydromechanical grease interceptor.

Sample Problem 1: A delicatessen has a three-compartment sink for washing utensils, pots and pans used for preparing meats and other deli products for sale. Each compartment of the sink is 24 inches wide by 24 inches long by 18 inches deep (610 mm by 610 mm by 457 mm) (maximum water depth). The three-compartment sink will be directly connected through a flow control located at the same elevation as the inlet to the interceptor. The highest water elevation in the sink will be no greater than 6 feet (1829 mm) above the inlet to the grease interceptor. Determine the required grease interceptor size

Problem Approach

Calculate the total water holding volume of the sink in gallons, assume a drain time for the sink and choose a "certified" size from Table 1003.3.4.1. Check with the manufacturer to determine if special flow-control orifice size is required for the elevation difference between the water level and the interceptor inlet.

Solution

Total sink volume = $[3 \times (24 \times 24 \times 18)]/231$ cubic inches per gallon

Total sink volume = 134 gallons

Consider the fact that the actual water capacity in the sink will be no greater than approximately 75 percent of the sink due to the volume taken up by the items being washed and the typical fill levels. Therefore,

Actual sink volume = $(75/100) \times 134$ gallons

Actual sink volume = 101 gallons

Consider the fact that the time to drain the sink is not critical. Therefore, assume a 2-minute drain time. (To be more conservative, a 1-minute drain time could be assumed). Therefore,

Flow rate through interceptor = 101 gallons/2 minutes
= 51 gallons per minute

Refer to Table 1003.3.4.1 to determine that a 75 gpm flow-through rating exceeds the required 51 gallons per minute. Although a 50-gpm unit is technically not large enough for the application, use of a 50-gpm-rated interceptor (with a 50-gpm flow control) would be suitable as the only drawback would be that the drain time for the sink would be slightly greater.

Sample Problem 2: Determine the required grease interceptor size for a hotel restaurant kitchen having the following fixtures. The grease interceptor(s) will be located in the floor of the one-level kitchen:

One three-compartment sink for washing cooking utensils, pots and pans. Each compartment of the sink is 24 inches wide by 24 inches long by 18 inches (610 mm by 610 mm by 457 mm) deep (maximum water depth).

One two-compartment sink for food preparation. Each compartment of the sink is 24 inches wide by 24 inches long by 18 inches (610 mm by 610 mm by 457 mm) deep (maximum water depth).

One one-compartment sink for food preparation. The sink compartment is 24 inches wide by 24 inches long by 12 inches (610 mm by 610 mm by 304.8 mm) deep (maximum water depth).

One steam kettle with a 60-gallon capacity.

One dishwasher with a 30-gpm rating for washing plates, bowls and silverware.

One glassware washer with a 20-gpm rating for washing glasses and cups.

One prewash station (no food waste grinder) with 1.6 gpm.

All of the above fixtures (and compartments of sinks) will be individually indirect connected to the drain system.

Three hand sinks.

One mop (service sink).

Three floor drains.

Problem Approach

Eliminate fixtures that do not produce a grease load from the calculations, calculate the total water holding

INTERNATIONAL CODE COUNCIL®
Copyright © 2015 ICC. ALL RIGHTS RESERVED. Accessed by David Dammon on Jun 21, 2017 12:30:52 PM pursuant to License Agreement with ICC. No further reproduction or distribution authorized. ANY UNAUTHORIZED REPRODUCTION OR DISTRIBUTION IS A VIOLATION OF THE FEDERAL COPYRIGHT ACT AND THE LICENSE AGREEMENT, AND SUBJECT TO CIVIL AND CRIMINAL PENALTIES THEREUNDER.

volume of the sinks in gallons, assume a drain time for the sinks, add equipment discharge rates, add up all the discharge rates and choose a "certified" size from Table 1003.3.4.1.

Solution—Part I

The glassware washer, hand sinks, mop sink and floor drains are not significant grease contributors and therefore are eliminated from the computation. The drain piping from these fixtures must not discharge to the grease interceptor.

Solution—Part 2

Three-compartment sink:

Total sink volume = [3 × (24 × 24 × 18)]/231 cubic inches per gallon

Total sink volume = 134 gallons

Consider the fact that the actual water capacity in the sink will be no greater than approximately 75 percent of the sink due to the volume taken up by the items being washed. Therefore,

Actual sink volume = (75/100) × 134 gallons
= 101 gallons

Because the discharge of the sink compartments is individually indirect connected into floor sinks, the draining of the sink will be rapid. Assuming a 1-minute drain time:

Flow rate from entire sink = 101 gallons/1 minute
= 101 gallons per minute

Two-compartment sink:

Total sink volume = [2 compartments × (24 × 24 × 18)] / 231 cubic inches per gallon

Total sink volume = 90 gallons

Consider the fact that the actual water capacity in the sink will be no greater than approximately 75 percent of the sink due to the volume taken up by the items being washed and necessary "freeboard" space above the waterline. Therefore,

Actual sink volume = (75/100) × 90 gallons

Actual sink volume = 68 gallons

Because the discharge of the sink compartments is individually indirect connected into floor sinks, the draining of the sink will be rapid. Assuming a 1-minute drain time:

Flow rate through interceptor = 68 gallons/1 minute
= 68 gallons per minute

One-compartment sink:

Total sink volume = [1 compartment × (24 × 24 × 18)]/231 cubic inches per gallon
= 45 gallons

Consider the fact that the actual water capacity in the sink will be no greater than approximately 75 percent of the sink due to the volume taken up by the items being washed and necessary "freeboard" space above the waterline. Therefore,

Actual sink volume = (75/100) × 45 gallons
= 34 gallons

Because the discharge of the sink compartments is individually indirect connected into floor sinks, the draining of the sink will be rapid. Assuming a 1-minute drain time:

Flow rate through interceptor = 45 gallons/1 minute
= 45 gallons per minute

Solution—Part 3

The following equipment discharge rates are identified:

Dishwasher: 30 gpm

Steam kettle: 60 gallons (assume a drain time of 2 minutes) = 30 gpm

Prerinse station: 1.6 gpm

Total flow rate from all sinks and equipment = 101 + 68 + 45 + 30 + 30 + 1.6
= 276 gpm

Because the total flow rate exceeds 100 gpm (the maximum allowable flow rate for a certified grease interceptor), several grease interceptors will be required. The following example is one of many possible ways to configure the drain system for this kitchen.

Grease interceptor No. 1: 100-gpm rating with 100-gpm flow control to accommodate the three-compartment sink.

Grease interceptor No. 2: 100-gpm rating with 100-gpm flow control to accommodate the two-compartment sink, the dishwasher and the prerinse station.

Grease interceptor No. 3: 75-gpm rating with 75-gpm flow control to accommodate the one-compartment sink and the steam kettle.

The "seats" method for restaurants

In 1980, the U.S. Environmental Protection Agency (EPA) released the *Design Manual: Onsite Wastewater Treatment and Disposal Systems* (U.S. EPA document no. 625/1-80-012). The derived interceptor volume (in gallons) is intended for choosing a gravity-type grease interceptor. Note that the interceptor is not sized for a flow-through rating (gallons per minute). Section 8.2 of the manual offers the following formula for deriving the size of a gravity-type grease interceptor for a restaurant:

Grease interceptor size, gallons[1] = $D \times GL \times ST \times (HR/2) \times LF$

where:

D = number of seats in dining area

GL = gallons of waste water per meal, normally 5 gallons

ST = storage capacity factor, minimum value = 1.7
maximum value = 2.5

INTERNATIONAL CODE COUNCIL®
Copyright © 2015 ICC. ALL RIGHTS RESERVED. Accessed by David Dammon on Jun 21, 2017 12:30:52 PM pursuant to License Agreement with ICC. No further reproduction or distribution authorized. ANY UNAUTHORIZED REPRODUCTION OR DISTRIBUTION IS A VIOLATION OF THE FEDERAL COPYRIGHT ACT AND THE LICENSE AGREEMENT, AND SUBJECT TO CIVIL AND CRIMINAL PENALTIES THEREUNDER.

HR = number of hours open

LF = loading factor,
1.25 for interstate freeway locations
1.0 for other freeways
1.0 for recreational areas
0.8 main highways
0.8 other highways

Note 1: minimum volume is 750 gallons.

The "meals" method for hospitals, nursing homes and other types of commercial kitchens

This method was also published in the 1980 U.S. EPA's *Design Manual: Onsite Wastewater Treatment and Disposal Systems* (U.S. EPA document no. 625/1-80-012). The derived interceptor volume (in gallons) is intended for choosing a gravity-type grease interceptor. Note that the interceptor is not sized for a flow-through rating (gpm). Section 8.2 of the manual offers the following formula for deriving the size of a gravity-type grease interceptor for commercial kitchens other than a restaurant kitchen:

Grease interceptor size, gallons[1] =

$$M \times GL \times ST \times 2.5 \times LF$$

where:

M = number of meals served per day

GL = gallons of waste water per meal, normally 4.5 gallons

LF = loading factor,
1.25 for kitchens with food waste grinders and dishwashing
1.0 for kitchens without food waste grinders but with dishwashers
0.75 for kitchens with food waste grinders but without dishwashers
0.5 for kitchens without food waste grinders and dishwashers

ST = storage capacity factor, minimum value = 1.7
maximum value = 2.5

Note 1: minimum volume is 750 gallons.

The "dfu" method

This method provides a table that equates the number of drainage fixture units (dfu) for the total drainage flow requiring grease interception, to the required interceptor capacity. Separate tables are often provided to size hydromechanical and gravity-type grease interceptors, respectively. Although some tables are developed by arbitrary assignments of sizes to flows, other tables are developed by converting the number of dfu (as assigned by the adopted plumbing code) to a gpm flow. The choice of a hydromechanical grease interceptor is straightforward whereas, for a gravity-type interceptor, sizing is based upon providing at least a 30-minute retention time through the grease interceptor vessel. Because dfu assignments vary between model codes, the reader is cautioned about applying one code's dfu assignments to another model code's interceptor sizing tables.

1003.3.4.1 Grease interceptor capacity. Grease interceptors shall have the grease retention capacity indicated in Table 1003.3.4.1 for the flow-through rates indicated.

❖ Table 1003.3.4.1 comes directly from the PDI G101 and ASME A112.14.3 standards. Note a is not included in the standard's table but was added to the code in the 2006 edition. The minimum grease retention capacity for a hydromechanical grease interceptor provides for a "reasonable" interceptor cleaning interval for an "average" concentration of grease within the waste water at the interceptor's rated flow. The minimum grease retention capacity was determined by extensive testing long ago and establishes a performance baseline for all manufacturers to comply with. Because the grease concentration in grease-laden waste water varies widely, the actual cleaning interval necessary for the maximum desired grease concentration at the outlet of the interceptor is determined by observation or testing.

The PDI G101 and ASME A112.14.3 standards only provide for testing and certification for flow-through ratings of up to 100 gpm. Because some interceptor manufacturers produce designs having flow-through ratings greater than 100 gpm, Note a was added to Table 1003.3.4.1 to extend the same baseline of performance to these larger designs. However, since the standards do not provide for testing of these larger units, hydromechanical grease interceptor designs over 100 gpm must be submitted for approval under Section 105.2 since they cannot meet the testing and certification requirements of Section 1003.3.4.

TABLE 1003.3.4.1
CAPACITY OF GREASE INTERCEPTORS[a]

TOTAL FLOW-THROUGH RATING (gpm)	GREASE RETENTION CAPACITY (pounds)
4	8
6	12
7	14
9	18
10	20
12	24
14	28
15	30
18	36
20	40
25	50
35	70
50	100
75	150
100	200

For SI: 1 gallon per minute = 3.785 L/m, 1 pound = 0.454 kg.

a. For total flow-through ratings greater than 100 (gpm), double the flow-through rating to determine the grease retention capacity (pounds).

INTERNATIONAL CODE COUNCIL®
Copyright © 2015 ICC. ALL RIGHTS RESERVED. Accessed by David Dammon on Jun 21, 2017 12:30:52 PM pursuant to License Agreement with ICC. No further reproduction or distribution authorized. ANY UNAUTHORIZED REPRODUCTION OR DISTRIBUTION IS A VIOLATION OF THE FEDERAL COPYRIGHT ACT AND THE LICENSE AGREEMENT, AND SUBJECT TO CIVIL AND CRIMINAL PENALTIES THEREUNDER.

❖ Table 1003.3.4.1 indicates the standard "sizes" (flow-through ratings) of hydromechanical grease interceptors to which numerous manufacturers have designed, tested and certified their units to meet the requirements of PDI G101 and ASME A112.14.3. The use of standard sizes allows for manufacturers to produce a tested and certified unit without having to test and certify the actual unit being constructed for a customer. This allows for faster delivery times and allows manufacturers to build frequently purchased sizes in advance of customer orders. While it might be possible to order a "nonstandard" size, the delivery time and cost for special testing and certification of such a unit will most likely be substantially more than if the next larger size of standard unit was ordered. This is not to say that a nonstandard unit could not be ordered, but given that most projects have significant time and financial constraints, ordering standard sizes should offer the best economy.

The grease retention capacity for each of the standard interceptor sizes is the minimum required capacity. Larger grease retention capacities offer the advantage of decreased cleaning frequency; however, if the local jurisdiction requires a cleaning interval of not less than a certain frequency, the additional grease capacity might never be used.

1003.3.4.2 Rate of flow controls. Grease interceptors shall be equipped with devices to control the rate of water flow so that the water flow does not exceed the rated flow. The flow-control device shall be vented and terminate not less than 6 inches (152 mm) above the flood rim level or be installed in accordance with the manufacturer's instructions.

❖ A hydromechanical grease interceptor is designed for a maximum flow-through rate to allow for gravity separation to occur and so that velocities within the unit do not cause excessive turbulence, which might cause "carryover" of grease to the outlet. The rate of discharge from an individual plumbing fixture varies depending on the "head" (height of water) in each receptor (sink compartment), the number of sink compartments discharged at once and the configuration of the compartment outlets and the drain piping. The probability of simultaneous discharge of multiple plumbing fixtures along with other equipment (e.g., dishwashers, kettles) also varies. The selection of a grease interceptor size might be predicated on only certain combinations of fixtures discharging simultaneously in order to optimize interceptor sizing for the most probable flow condition. Note that the sample problems for the PDI sizing method provided in the commentary for Section 1003.3.4 include assumptions for the drain times of sinks. In reality, sinks could drain faster than the assumed time and more fixtures/equipment could discharge simultaneously than was considered in the selection of the interceptor size. Therefore, the interceptor must be provided with a flow-control device to limit flow rate to the interceptor (see Commentary Figure 1003.3.4.2).

Although an interceptor might be sized to accommodate the maximum possible flow rate of all plumbing fixtures and equipment (i.e., simultaneous discharge), the flow control is still required as it also serves to entrain air into the waste flow to aid in the grease separation process. Entrained air in the waste causes the grease, oils and fats to become more

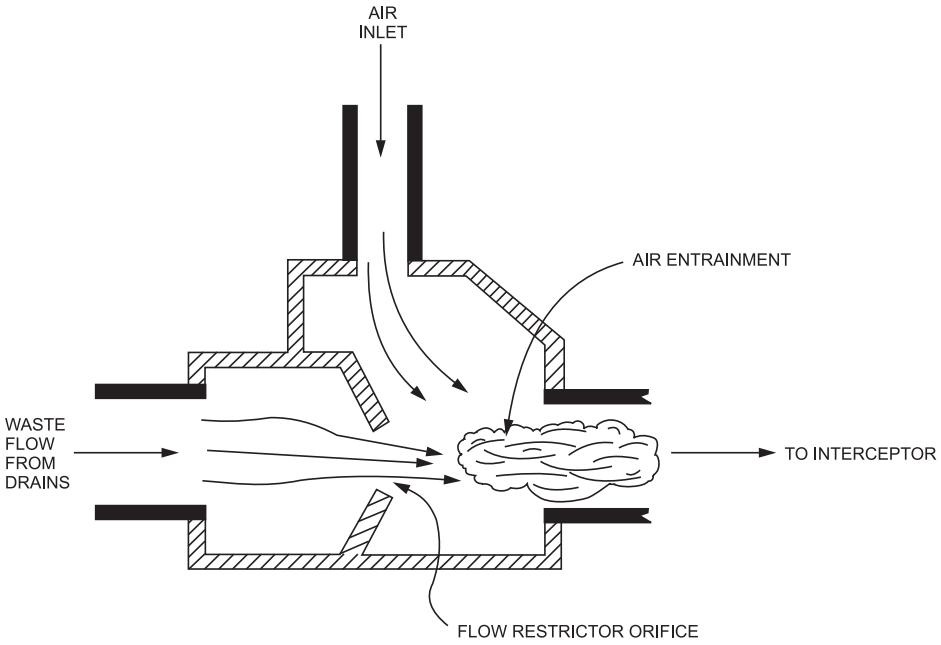

Figure 1003.3.4.2
FLOW CONTROL DEVICE

INTERNATIONAL CODE COUNCIL®
Copyright © 2015 ICC. ALL RIGHTS RESERVED. Accessed by David Dammon on Jun 21, 2017 12:30:52 PM pursuant to License Agreement with ICC. No further reproduction or distribution authorized. ANY UNAUTHORIZED REPRODUCTION OR DISTRIBUTION IS A VIOLATION OF THE FEDERAL COPYRIGHT ACT AND THE LICENSE AGREEMENT, AND SUBJECT TO CIVIL AND CRIMINAL PENALTIES THEREUNDER.

buoyant in order to more readily rise to the retention area within the interceptor.

The requirement in the second sentence in this section for the flow control to be "vented" ensures that the flow control will be installed with a means to readily obtain air for entrainment into the waste flow. The requirement for the air intake to terminate (with the same room as the fixture) no less than 6 inches (152 mm) above the flood level rim of the fixture applies only to a specific fixture/interceptor arrangement as follows: The grease interceptor must be capable of serving as a fixture trap for a single fixture or combination sink of no more than three compartments and must be within a specific proximity to the fixture (see Exception 3 of Section 1002.1). Terminating the flow control vent 6 inches (152 mm) above the fixture flood level rim prevents waste overflow through the vent should the grease interceptor become clogged. Otherwise, all fixture and equipment drains must be trapped and vented as required by Chapter 9 and the flow control air intake must be connected to the sanitary drain vent system or must terminate outdoors in accordance with the requirements for vent terminations in Chapter 9.

The manufacturer's installation instructions will indicate whether the grease interceptor can serve as a trap for a single fixture or combination sink and might require additional vent connections to the interceptor as well.

The code does not prohibit a grease interceptor from being indirectly connected to a sanitary drainage system through a waste receptor. For example, where a grease interceptor serves an adjacent untrapped single-fixture or multicompartment combination sink (as allowed by Exception 3 of Section 1002.1), the interceptor could discharge, through an air break, into a waste receptor such as a floor sink. This is especially useful where a change in kitchen configuration requires the addition of a floor-mounted interceptor for a new or relocated fixture. Note that in this arrangement, if a vent is required for the interceptor, it must vent to the room or to the outdoors. The vent must not connect to the sanitary vent system.

1003.3.5 Automatic grease removal devices. Where automatic grease removal devices are installed, such devices shall be located downstream of each fixture or multiple fixtures in accordance with the manufacturer's instructions. The automatic grease removal device shall be sized to pretreat the measured or calculated flows for all connected fixtures or equipment. Ready *access* shall be provided for inspection and maintenance.

❖ Automatic grease removal devices serve the same function as grease interceptors except that the unpleasant task of removing the grease is performed by automated internal means such as a pump or skimmer that discharges the collected grease to a container outside of the interceptor. The container, when full, is replaced with an empty one. Although ASME A112.14.4 is the standard for automatic grease removal devices, the standard requires that grease removal devices comply with the ratings and grease retention capacities required by ASME A112.14.3 for hydromechanical grease interceptors.

Note that this section requires ready access for grease removal devices so that maintenance and repairs can be properly performed.

1003.3.6 Gravity grease interceptors and gravity grease interceptors with fats, oils, and greases disposal systems. The required capacity of gravity grease interceptors and gravity grease interceptors with fats, oils, and greases disposal systems shall be determined by multiplying the peak drain flow into the interceptor in gallons per minute by a retention time of 30 minutes. Gravity grease interceptors shall be designed and tested in accordance with IAPMO/ANSI Z1001. Gravity grease interceptors with fats, oils, and greases disposal systems shall be designed and tested in accordance with ASME A112.14.6 and IAPMO/ANSI Z1001. Gravity grease interceptors and gravity grease interceptors with fats, oils, and greases disposal systems shall be installed in accordance with manufacturer's instructions. Where manufacturer's instructions are not provided, gravity grease interceptors and gravity grease interceptors with fats, oils, and greases disposal systems shall be installed in compliance with ASME A112.14.6 and IAPMO/ANSI Z1001.

❖ Gravity grease interceptors remove grease from waste-water flows by reducing the waste-water flow velocity so that the grease floats and solids settle to the bottom of the tank. Waste water between these two layers is allowed to pass into the sewer system. Gravity grease interceptors are usually located outside a building or under a parking lot or driveway so that there is ease of access for the pumping truck that must come periodically to remove the accumulated grease (see Commentary Figure 1003.3.6).

Gravity grease interceptors can be fitted with a fats, oils and greases (FOG) disposal system so that grease material can be reduced into a gray water form, thus extending the required cleaning intervals for the tank (see Section 1003.3.4).

1003.3.7 Direct connection. The discharge piping from a grease interceptor shall be directly connected to the sanitary drainage system.

❖ Although it may seem like common sense, grease interceptors must not indirectly connect to the sanitary drainage system. The discharge can be extremely unpleasant, especially where the interceptor is located inside of a building.

1003.4 Oil separators required. At repair garages where floor or trench drains are provided, car washing facilities, factories where oily and flammable liquid wastes are produced and hydraulic elevator pits, oil separators shall be installed into which oil-bearing, grease-bearing or flammable wastes shall be discharged before emptying into the building drainage system or other point of disposal.

Exception: An oil separator is not required in hydraulic elevator pits where an approved alarm system is installed.

INTERNATIONAL CODE COUNCIL®
Copyright © 2015 ICC. ALL RIGHTS RESERVED. Accessed by David Dammon on Jun 21, 2017 12:30:52 PM pursuant to License Agreement with ICC. No further reproduction or distribution authorized. ANY UNAUTHORIZED REPRODUCTION OR DISTRIBUTION IS A VIOLATION OF THE FEDERAL COPYRIGHT ACT AND THE LICENSE AGREEMENT, AND SUBJECT TO CIVIL AND CRIMINAL PENALTIES THEREUNDER.

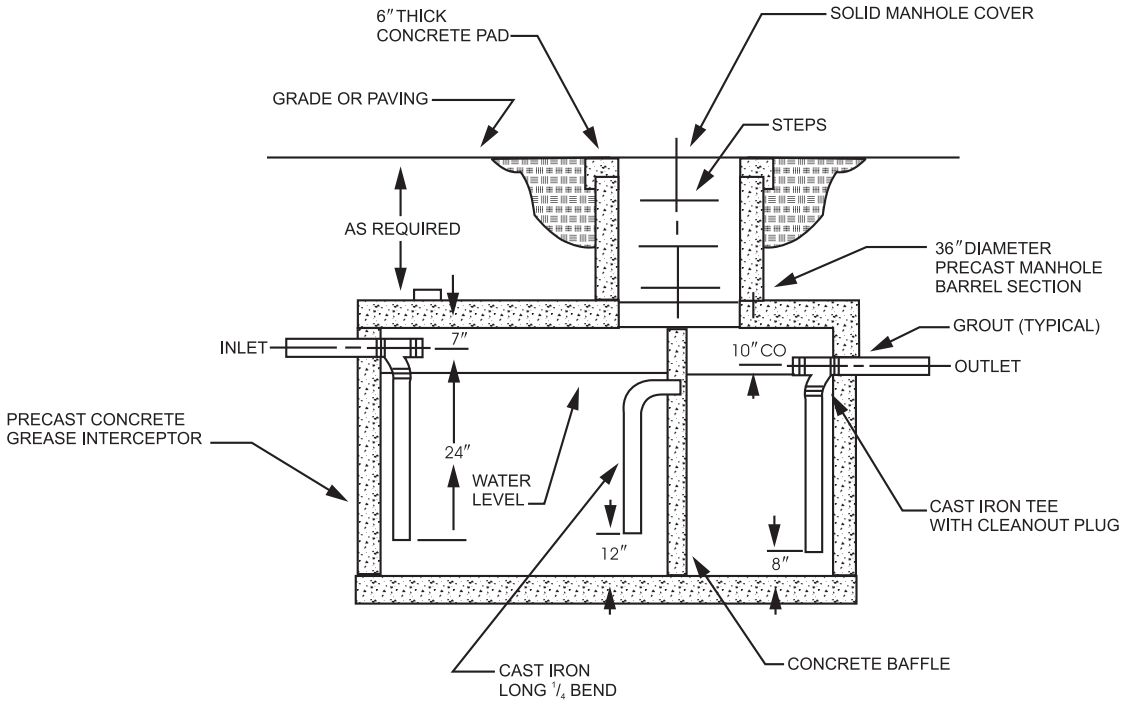

For SI: 1 inch = 25.4 mm.

Figure 1003.3.6
TYPICAL GRAVITY-TYPE GREASE INTERCEPTOR

Such alarm systems shall not terminate the operation of pumps utilized to maintain emergency operation of the elevator by fire fighters.

❖ Readers of this section must remember the overall intent of Section 1003 (see Section 1003.1), which is to prevent oil, grease and other harmful substances (e.g., flammable liquid wastes) from being discharged to a public sewer or a private sewage disposal system. As the scope of the code covers the installation of plumbing fixtures including floor and trench drains, all of which would ultimately be connected to the building's drainage system (leading to the sewer), the concern of this section is only for situations where fixtures will exist and those fixtures are likely to "capture" the subject detrimental wastes. For example, consider an automotive repair shop with a toilet (or bath) facility but without floor drains or trench drains in the vehicle service area. Simply because work in the facility could cause oil, grease or flammable liquid wastes to be generated does not mean that an oil separator is required for the facility. There has to be a likely method for those materials to enter the drainage system. Is it likely that the toilet (or bath) facility will be capturing significant detrimental wastes? Probably not. However, if the repair area has floor or trench drains, then it is very likely that an oil or fuel spill could occur at some point (or the floor be "hosed down," flushing the detrimental wastes into floor or trench drains), such drains would need to be connected to an oil separator in the drain piping system before that drain piping is connected to the building drainage system (or building sewer).

The same is true for factories that produce oily or flammable liquid wastes and car-washing facilities. A separator is only required for those types of facilities that have a likely method, such as floor or trench drains, for the wastes to enter the drainage system. Most car-washing facilities will require floor or trench drains for the simple reason that wash/rinse water must be recycled to minimize operational costs and to comply with local and state environmental regulations (that typically would not allow wash water into storm sewers or onto the ground). Whether or not the oil or flammable liquid wastes-producing factory will have floor or trench drains is a decision made by the designer of the facility.

This section does not require that the indicated facilities have floor or trench drains installed so that an oil separator can be installed.

A question often asked is whether any plumbing fixture, other than floor or trench drains, might be likely to capture oil, grease and other harmful substances. In other words, could someone pour waste oil into a water closet? Certainly, anything might be possible, but is it likely to happen? And if there was concern about a water closet used for that purpose, how could an oil separator function without clogging because the separator would eventually plug with human wastes?

INTERNATIONAL CODE COUNCIL®
Copyright © 2015 ICC. ALL RIGHTS RESERVED. Accessed by David Dammon on Jun 21, 2017 12:30:52 PM pursuant to License Agreement with ICC. No further reproduction or distribution authorized. ANY UNAUTHORIZED REPRODUCTION OR DISTRIBUTION IS A VIOLATION OF THE FEDERAL COPYRIGHT ACT AND THE LICENSE AGREEMENT, AND SUBJECT TO CIVIL AND CRIMINAL PENALTIES THEREUNDER.

It is not the intent of this section to require that an oil separator serve all plumbing fixtures installed in the indicated facilities. Although the occupants (soiled from working) will wash their hands or even shower at these facilities in order to aid in the complete removal of oil or grease, it is understood that the majority of oily and greasy substances will have already been removed from the body by the use of shop towels and absorbent cloths. The quantity of oil and grease from showering or hand washing will be negligible such that those fixtures can safely discharge directly to the sanitary drain system (without the need to be connected to a separator).

Service sinks, especially those used for washing/rinsing floor mops and for the discharging of mop water, might seem to be a "borderline" fixture for consideration to be connected to an oil separator. However, mopping usually requires detergents/chemicals and at the point that the mopped wastes combine with those detergents/chemicals, the oil and grease becomes an emulsion. Therefore, the oil cannot be separated from the water.

Most (perhaps all) elevators have a sump (a pit) at the bottom of the elevator shaft because the elevator "code" (standard), ASME A17.1/CSA B44 as referenced by the IBC, requires that there be a method for draining liquids from the bottom of the shaft. This is to remove any rainwater that might enter through an above-roof penthouse that houses traction equipment but more so, for water that could enter through door openings during a building fire event. Also, water could enter the shaft when a water pipe breaks or a water heater tank leaks. For hydraulic elevators, hydraulic fluid (an oil-based product) could leak because of a leaking pipe connection or worn lift piston seals.

The sump must be evacuated by either draining by gravity or by an automatic pump. The end of the gravity drainage piping or the sump pump discharge pipe must indirectly connect to the building drainage system. In other words, the termination end of the piping must be at a waste receptor. Note that although Section 301.6 prohibits plumbing from being located in the elevator shaft or equipment room, it is understood that where a sump pump is located at the bottom of the shaft, there will need to be pump discharge from the pump to outside of the shaft. The expectation is that such pump piping be routed as directly as possible to the side of the shaft and not turn upward and alongside of where the elevator car travels (see commentary, Section 301.6).

For hydraulic elevators, because of the potentially oily nature of the sump discharge, an oil separator is required on the sump discharge pipe before the indirect connection to the building drainage system. Where the discharge is from a sump pump, the oil separator would need to be rated for the maximum flow rate of the pump, adjusted for the flowing pressure losses through the piping and oil separator. The ASME A17.1/CSA B44 standard requires the pump to have a capacity of not less than 50 gpm (2013 edition). However, depending on the pump chosen, the actual flow rate could be much greater. To be effective, the oil separator should be sized for actual flow rate. Properly sized oil separators are large, depending on the manufacturer and model chosen. For a gravity flow discharge arrangement, ample elevation difference must be provided to accommodate the height of the separator.

The exception allows for an oil separator to not be installed on the discharge of a sump for a hydraulic elevator where there is an approved oil alarm system installed in the sump. The code is silent concerning the details of an approved oil alarm system. As the intent of the base code section is to prevent oil discharge to the sanitary drain system, an approved alarm system should have the means to prevent such discharge.

Some sump pump manufacturers offer an "oil alarm" control for their sump pumps and those controls do have the capability of turning off the pump (and also indicating an alarm in some manner) when oil is sensed. As oil floats on top of water, it seems reasonable to assume that such an alarm system could accommodate the addition of water to the sump and turn on the pump (to pump water) until the water level decreased, oil is sensed and the control again, shuts off the pump. The control alarm, indicating that oil was sensed, is a warning to the building maintenance staff, that action needs to be taken (seek out the source of the oil leak). However, control arrangements can vary and there is the possibility that some controls might not shut off the pump and oil is pumped to the drainage (only indicating that oil was sensed at some point in time) or some controls might "lock out" the pump until the problem is resolved and the control is manually reset. Note that a gravity-drained sump could also be stopped from draining by the installation of an automatically controlled valve.

However, this does not necessarily mean that the sump should not be evacuated when oil is sensed in the sump. Shutting off the pump (or drain) could conflict with how the authority having jurisdiction for the elevator "code" (standard ASME A17.1/CSA B44) interprets that code. In addition, the last sentence of the exception does not allow stopping of a (sump) pump for a hydraulic elevator that is used for emergency operation by fire fighters.

If the interpretation of ASME A17.1/CSA B44 is that under all conditions (emergency or otherwise) the sump must be evacuated, either an oil separator would be required or some other means for preventing oil from being discharged to the drainage system would have to be provided. Those means might be an intelligent control system that pumps oil to a holding tank and only water is pumped to the drainage system. Other means would require approval in accordance with Section 105.2.

INTERNATIONAL CODE COUNCIL®
Copyright © 2015 ICC. ALL RIGHTS RESERVED. Accessed by David Dammon on Jun 21, 2017 12:30:52 PM pursuant to License Agreement with ICC. No further reproduction or distribution authorized. ANY UNAUTHORIZED REPRODUCTION OR DISTRIBUTION IS A VIOLATION OF THE FEDERAL COPYRIGHT ACT AND THE LICENSE AGREEMENT, AND SUBJECT TO CIVIL AND CRIMINAL PENALTIES THEREUNDER.

1003.4.1 Separation of liquids. A mixture of treated or untreated light and heavy liquids with various specific gravities shall be separated in an *approved* receptacle.

❖ There is a variety of designs for oil separators. Typically an oil separator is a large tank designed to retain oil by minimizing turbulent flow. Oil is removed through a draw-off pipe and grease, sludge and solids settle to the bottom or collect on the filter screen. Oil separators function by relying on the differences in specific gravity (density) of the waste water and oil.

1003.4.2 Oil separator design. Oil separators shall be listed and labeled, or designed in accordance with Sections 1003.4.2.1 and 1003.4.2.2.

❖ The design criteria for effective performance depend on the minimum cross-sectional area and the minimum ratio of depth to width. In turn, design and shape of the separator depend on the character and quality of the oils to be separated. A properly sized separator allows the separation and prevents the evacuation of solids into the drainage system. Where an oil separator is not designed in accordance with Sections 1003.4.2.1 and 1003.4.2.2, then the oil separator must be listed and labeled. Listing and labeling ensures that the design has been tested against some performance criteria and certified that the design meets or exceeds that criteria.

1003.4.2.1 General design requirements. Oil separators shall have a depth of not less than 2 feet (610 mm) below the invert of the discharge drain. The outlet opening of the separator shall have not less than an 18-inch (457 mm) water seal.

❖ The sizing specified in this section relates to the open-tank-type separator. The minimum depth is necessary to provide sludge and solids retention capacity and to obtain efficient retention of oil or other volatile liquid wastes by minimizing turbulent flow through the separator. The outlet must be designed to provide at least 18 inches (457 mm) of liquid seal to provide for the storage of oil to at least that depth.

1003.4.2.2 Garages and service stations. Where automobiles are serviced, greased, repaired or washed or where gasoline is dispensed, oil separators shall have a capacity of not less than 6 cubic feet (0.168 m^3) for the first 100 square feet (9.3 m^2) of area to be drained, plus 1 cubic foot (0.028 m^3) for each additional 100 square feet (9.3 m^2) of area to be drained into the separator. Parking garages in which servicing, repairing or washing is not conducted, and in which gasoline is not dispensed, shall not require a separator. Areas of commercial garages utilized only for storage of automobiles are not required to be drained through a separator.

❖ In addition to the general requirements of Section 1003.4.2.1, this section specifically applies to motor vehicle garages or service stations where lubrication, oil changing, fuel dispensing, repair work or hand or mechanical washing takes place. The intent of this section is to require separators in locations where flammable or combustible liquids are to be discharged into the drainage system, typically in occupancies provided with floor or trench drains.

The requirement for a separator does not, in itself, create the requirement for floor or trench drains. Where a drainage system is provided in these occupancies, provisions must be made to prevent flammable and combustible liquids from entering the drainage system, sewers and waste treatment facilities.

The sizing of a separator can be reduced to two equations as follows:

Floor Area ≤ 100 square feet $C = 6$

Floor Area > 100 square feet $C = 5 + (A/100)$

where:

C = Minimum capacity of separator (ft^3).

A = Floor area served (ft^2).

For SI: 1 square foot = 0.0929 m^2, 1 cubic foot = 0.0283 m^3.

Garages used exclusively for parking or storage of automobiles do not normally produce wastes requiring separation; therefore, separators are not required for drains in such locations.

1003.5 Sand interceptors in commercial establishments. Sand and similar interceptors for heavy solids shall be designed and located so as to be provided with ready *access* for cleaning, and shall have a water seal of not less than 6 inches (152 mm).

❖ Like grease interceptors, sand interceptors need periodic maintenance to function correctly. They must be installed to allow access for cleaning and servicing. Note that this section does not require installation of sand or heavy solids interceptors but only regulates their installation and design.

1003.6 Clothes washer discharge interceptor. Clothes washers shall discharge through an interceptor that is provided with a wire basket or similar device, removable for cleaning, that prevents passage into the drainage system of solids $^1/_2$ inch (12.7 mm) or larger in size, string, rags, buttons or other materials detrimental to the public sewage system.

Exceptions:

1. Clothes washers in individual dwelling units shall not be required to discharge through an interceptor.
2. A single clothes washer designed for use in individual dwelling units and installed in a location other than an individual dwelling unit shall not be required to discharge through an interceptor.

❖ Clothes washer discharge must pass through an interceptor that is capable of preventing string, lint and other solids from entering a drainage system that leads to a public sewage system. These materials can foul rotating equipment and other mechanisms in public sewer pumping systems and waste-water treatment plants. The filter, screen or basket will accumulate this debris, so the interceptor must allow

INTERNATIONAL CODE COUNCIL®
Copyright © 2015 ICC. ALL RIGHTS RESERVED. Accessed by David Dammon on Jun 21, 2017 12:30:52 PM pursuant to License Agreement with ICC. No further reproduction or distribution authorized. ANY UNAUTHORIZED REPRODUCTION OR DISTRIBUTION IS A VIOLATION OF THE FEDERAL COPYRIGHT ACT AND THE LICENSE AGREEMENT, AND SUBJECT TO CIVIL AND CRIMINAL PENALTIES THEREUNDER.

for cleaning and removing of such materials. Although this section implies that this requirement is only for drainage systems that lead to a public sewage system, discharge of these materials would be just as detrimental to private sewage disposal systems.

Exception 1 is an allowance for not providing an interceptor for clothes washers in an individual dwelling unit such as an apartment or condominium. There could be large single-family homes (required to be covered by the IBC and not the IRC) where either multiple "household-use" clothes washers or clothes washers that are similar to larger washers (that can handle quilts and rugs) found in a self-serve laundries. These are not required to discharge to an interceptor.

Exception 2 is an allowance for not providing an interceptor for two "household-use"-type clothes washers that are in a location other than an individual dwelling unit. For example, a pair of washers in a common laundry room for an entire small apartment building, or a pair of washers on each floor of an apartment building.

1003.7 Bottling establishments. Bottling plants shall discharge process wastes into an interceptor that will provide for the separation of broken glass or other solids before discharging waste into the drainage system.

❖ Drains from areas in both bottling and food processing plants where glass bottles and jars are used as containers present a greater problem from broken glass than generally recognized. Separators should be located to intercept and treat this waste separately from the remainder of the processing area.

1003.8 Slaughterhouses. Slaughtering room and dressing room drains shall be equipped with *approved* separators. The separator shall prevent the discharge into the drainage system of feathers, entrails and other materials that cause clogging.

❖ The type of interceptors necessary to protect slaughtering room drains depends to a great extent on the particular operation. For example, in a poultry processing plant, separators have various-size screens designed to prevent feathers from the killing and defeathering area from entering the drainage system. Additionally, the drainage system will need protection against entrails and other heavy solids that could gain entry from the cutting room. In such operations, a screen or basket-type interceptor is necessary to prevent the passage of feathers, entrails and similar animal matter.

1003.9 Venting of interceptors and separators. Interceptors and separators shall be designed so as not to become air bound. Interceptors and separators shall be vented in accordance with one of the methods in Chapter 9.

❖ Most interceptors and separators require venting of the containment tank and the outlet trap if so equipped. Typically, a vent is required to allow the escape or admittance of air to compensate for the variable fluid level in the tank. Interceptors and separators with integral traps must be vented to prevent the tank from emptying its contents by siphon action. Oil and gasoline separators require vents independent of the sanitary drain venting system to help control and dissipate vapor buildup that may occur in the holding tank. (see Commentary Figure 1003.9).

1003.10 Access and maintenance of interceptors and separators. *Access* shall be provided to each interceptor and separator for service and maintenance. Interceptors and separators shall be maintained by periodic removal of accumulated grease, scum, oil, or other floating substances and solids deposited in the interceptor or separator.

❖ For an interceptor or separator to function properly, it must be cleaned periodically. The solids and liquids, such as grease, oil, large solids, feathers or glass, must be removed before they exceed the capacity of the interceptor or separator. An interceptor or separator that has not been cleaned will cause stoppage in the drainage system.

When a grease interceptor or oil separator reaches its maximum retention capacity, it will cease to function, which will allow oil and grease to pass through to the sewage system and possibly clog the drainage pipes downstream. An interceptor or separator that is no longer functioning properly will not provide any indication of malfunction; therefore, such devices must be periodically monitored to determine the volume of substances being retained. Oil separators are typically equipped with test cocks to determine the need for oil removal from the device.

Grease interceptors that have not been properly maintained have caused some jurisdictions and health authorities to prohibit the location of these devices in kitchens. Without proper maintenance, interceptors would become full of grease and eventually restrict or plug the interceptors and drain lines downstream, causing greasy waste to leak from the cover of the interceptor. The resulting mess is considered a health hazard.

Some manufacturers have addressed the problems associated with the lack of maintenance by providing various methods of removing or drawing off the grease from the grease interceptor semiautomatically or automatically. Additionally, the use of bacteria (bioremediation) traps and digests greases in the interceptor to convert them into the byproducts of digestion; however, these devices still require periodic maintenance and cleaning

INTERNATIONAL CODE COUNCIL®
Copyright © 2015 ICC. ALL RIGHTS RESERVED. Accessed by David Dammon on Jun 21, 2017 12:30:52 PM pursuant to License Agreement with ICC. No further reproduction or distribution authorized. ANY UNAUTHORIZED REPRODUCTION OR DISTRIBUTION IS A VIOLATION OF THE FEDERAL COPYRIGHT ACT AND THE LICENSE AGREEMENT, AND SUBJECT TO CIVIL AND CRIMINAL PENALTIES THEREUNDER.

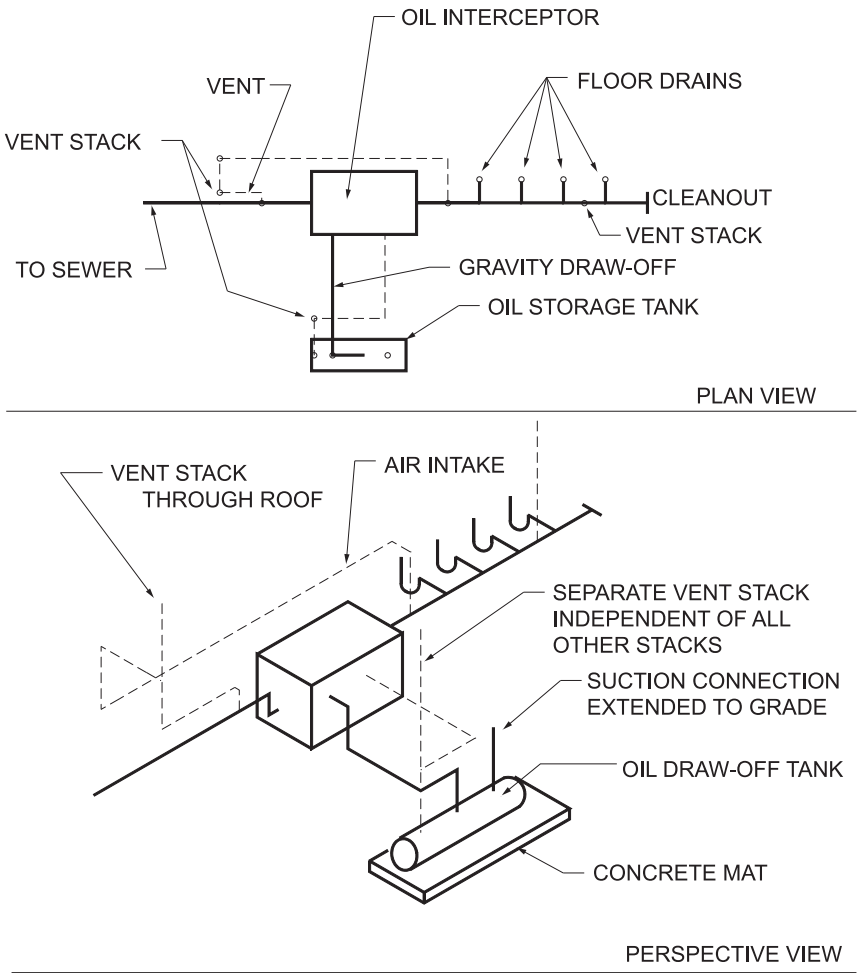

Figure 1003.9
VENTING OF INTERCEPTORS AND SEPARATORS

SECTION 1004
MATERIALS, JOINTS AND CONNECTIONS

1004.1 General. The materials and methods utilized for the construction and installation of traps, interceptors and separators shall comply with this chapter and the applicable provisions of Chapters 4 and 7. The fittings shall not have ledges, shoulders or reductions capable of retarding or obstructing flow of the piping.

❖ The materials and methods used to install traps, interceptors and separators are regulated by different sections in Chapters 4 and 7. Section 405.8 requires that slip joint connections be made only on the trap inlet, trap outlet and within the trap seal. Additionally, fixtures with such connections must have an access opening at least 12 inches (305 mm) in diameter. Section 405.7.1 requires that the overflow from any fixture discharge into the drainage system on the inlet or fixture side of the trap (except water closets and urinals). Section 702 requires the material used to complete the sanitary system to conform to the standards listed in Table 702.1, 702.2, 702.3 or 702.4. Section 705 regulates the method of joining pipe and fittings. Section 707 states the joining methods that are prohibited. Section 708 governs the location, installation, maintenance, size and clearances of drainage pipe cleanouts. Section 709 regulates drain pipe sizing.

Bibliography

The following resource materials are referenced in this chapter or are relevant to the subject matter addressed in this chapter.

PDI G101 (2003), *Testing and Rating Procedure for Grease Interceptors with Appendix of Sizing and Installation Data.* South Easton, MA: Plumbing and Drainage Institute, 2003

INTERNATIONAL CODE COUNCIL®
Copyright © 2015 ICC. ALL RIGHTS RESERVED. Accessed by David Dammon on Jun 21, 2017 12:30:52 PM pursuant to License Agreement with ICC. No further reproduction or distribution authorized. ANY UNAUTHORIZED REPRODUCTION OR DISTRIBUTION IS A VIOLATION OF THE FEDERAL COPYRIGHT ACT AND THE LICENSE AGREEMENT, AND SUBJECT TO CIVIL AND CRIMINAL PENALTIES THEREUNDER.

INTERNATIONAL CODE COUNCIL®
Copyright © 2015 ICC. ALL RIGHTS RESERVED. Accessed by David Dammon on Jun 21, 2017 12:30:52 PM pursuant to License Agreement with ICC. No further reproduction or distribution authorized. ANY UNAUTHORIZED REPRODUCTION OR DISTRIBUTION IS A VIOLATION OF THE FEDERAL COPYRIGHT ACT AND THE LICENSE AGREEMENT, AND SUBJECT TO CIVIL AND CRIMINAL PENALTIES THEREUNDER.

Chapter 11: Storm Drainage

General Comments

Storm drainage systems are generally assumed to be systems for the collection and transport of rainwater and ground water away from a building. The final disposal of this water normally occurs at some remote location, typically a stream, river or lake. This discharged water is normally left untreated.

The code prohibits the connection of floor drains to the storm drainage system (see commentary, Section 1101.3). If the purpose of this prohibition is to prevent the connection of floor drains located within the building to the storm drainage system, it raises the question of whether floor drains that are part of an open parking garage are included in this limitation. When a parking garage does not contain repair and service operations or other similar activity, it can be considered equivalent to a parking lot that is commonly drained to the storm drainage system. The code is silent on this specific issue and, therefore, the code will be interpreted and applied by the code official, based on the facts related to the individual parking garage. If the parking garage will function as a parking lot, with no increased possibility that repair and service operations will occur, floor drains in the garage could be connected to the storm drainage system the same as for a parking lot.

This chapter also covers the collection and discharge of subsoil water at the exterior of the building. This subsoil water is to be prevented from entering the building and causing possible damage to the structure and its contents. This subsoil water collection and discharge requirement, while not specifically stated, needs to be coordinated with the *International Building Code*® (IBC®) and its requirement for foundation wall dampproofing. These two elements, when properly designed and installed, will work together to keep subsoil water out of the building.

Purpose

Chapter 11 regulates the removal of storm water typically associated with rainfall. The proper installation of a storm drainage system reduces the possibility of structural collapse on a flat roof, prevents the leakage of water through the roof, prevents damage to the footings and foundation of the building and prevents flooding of the lower levels of the building.

SECTION 1101 GENERAL

1101.1 Scope. The provisions of this chapter shall govern the materials, design, construction and installation of storm drainage.

❖ Chapter 11 is one of the few chapters in the code that contains requirements that are applicable beyond the building itself. The main concern is protection of the building from the effects of rainwater; therefore, the regulations apply to roofs and paved areas around the building. Once driveways and walkways are paved, the ground does not have the ability to absorb the rainwater. A storm water system is necessary to control the runoff from roofs and paved areas.

1101.2 Disposal. Rainwater from roofs and storm water from paved areas, yards, courts and courtyards shall drain to an *approved* place of disposal. For one- and two-family dwellings, and where *approved*, storm water is permitted to discharge onto flat areas, such as streets or lawns, provided that the storm water flows away from the building.

❖ This section requires the safe control and disposal of rainwater that has fallen on roofs, paved areas, yards, courts and courtyards. Note that once rainwater has fallen on any surface other than the roof, the water is called storm water. The disposal location of rainwater and storm water is of upmost importance, as these flows can be significant at times. The presence of a new structure along with its associated driveways, parking lots and walkways creates a much greater flow rate during a rainfall event as compared to the original undisturbed natural landscape. The water cannot soak into the earth, be absorbed by plants and cannot be slowed by grasses and natural contours on its way to eventually being collected by streams and rivers. The increase in flow rate is capable of causing severe erosion of the land resulting in significant volumes of earth (with its contaminants) being moved into natural waterways. These events upset the natural ecosystem of the region and create many problems in the water ways that are further downstream. Many jurisdictions have stringent requirements for controlling the flow of storm water into streams, rivers or ponds. Storm water detention basins are often required to slow the storm flow discharge so that storm water is released to the environment in a controlled manner that doesn't impact the surrounding ecosystems.

Next to any building, it is paramount to control storm water and rainwater so that the building foundation is not compromised. This includes keeping water away from ground surfaces adjacent to foundation walls that are basement walls so that they are not subjected to undue water pressure that might cause wall leaks, resulting in a "wet basement."

INTERNATIONAL CODE COUNCIL®
Copyright © 2015 ICC. ALL RIGHTS RESERVED. Accessed by David Dammon on Jun 21, 2017 12:30:52 PM pursuant to License Agreement with ICC. No further reproduction or distribution authorized. ANY UNAUTHORIZED REPRODUCTION OR DISTRIBUTION IS A VIOLATION OF THE FEDERAL COPYRIGHT ACT AND THE LICENSE AGREEMENT, AND SUBJECT TO CIVIL AND CRIMINAL PENALTIES THEREUNDER.

Where public storm sewers are available, storm water detention basins are also used to prevent the sewers from being overloaded during peak periods of rainfall.

The majority of buildings will require a storm water drainage system to manage the rainwater and storm water at the building site. However, some buildings might be approved for draining storm water onto flat areas adjacent to the building, provided that the water flows away from the building. One- and two-family dwellings do not require such approval, provided that the water is directed away from the building.

1101.3 Prohibited drainage. Storm water shall not be drained into *sewers* intended for sewage only.

❖ A sanitary sewer system will become overloaded during a rainstorm if storm water is discharged into it. Typically, sewage treatment plants are not designed to take the surcharge imposed on them from additional storm water discharge. Discharging storm water into the sanitary system could result in either flooding and backups or the polluting of nearby waterways that receive inadequately treated sanitary discharge. The intent is to discharge into sanitary sewers only that which requires treatment.

The only exception to the prohibition stated in this section occurs where combined sanitary and storm sewers exist, as they do in many older cities (see commentary, Section 1108), and the code official approves such discharge connection.

1101.4 Tests. The conductors and the building *storm drain* shall be tested in accordance with Section 312.

❖ This section references Section 312, which establishes testing and inspection requirements for the completed, installed storm drainage system. The required testing is the same as would be required for the sanitary drainage system. When the storm system handles the discharge from a large roof area, and the storm discharge piping is contained on the interior of the building, the potential for vast building damage exists if the storm drainage system fails. The volume of water, pressures and dynamic forces that are possible in these systems oftentimes greatly exceed that for sanitary drainage systems. Unlike sanitary systems, storm drainage systems can be designed for full-bore flow, meaning that the storm system would have to function under more severe service conditions.

1101.5 Change in size. The size of a drainage pipe shall not be reduced in the direction of flow.

❖ One of the fundamental requirements of any form of drainage system is that reduction of the piping size is not permitted in the direction of drainage flow. This is also the case with storm drainage systems. A size reduction creates an obstruction to the flow of discharge, possibly resulting in a backup, an interruption of service in the drainage system or a stoppage occurring in the piping.

1101.6 Fittings and connections. All connections and changes in direction of the storm drainage system shall be made with *approved* drainage-type fittings in accordance with Table 706.3. The fittings shall not obstruct or retard flow in the system.

❖ This section requires the use of approved drainage-type fittings in the storm drainage system to make necessary directional changes. Although the flow through the storm drainage system is significantly different from that of the sanitary drainage system, a smooth transition of flow is still necessary (see commentary, Section 706.3).

1101.7 Roof design. Roofs shall be designed for the maximum possible depth of water that will pond thereon as determined by the relative levels of roof deck and overflow weirs, scuppers, edges or serviceable drains in combination with the deflected structural elements. In determining the maximum possible depth of water, all primary roof drainage means shall be assumed to be blocked. The maximum possible depth of water on the roof shall include the height of the water required above the inlet of the secondary roof drainage means to achieve the required flow rate of the secondary drainage means to accommodate the design rainfall rate as required by Section 1106.

❖ The roof structure must be capable of supporting the maximum ponding of water that will occur when the primary roof drainage means are blocked. Section 1108, requires the installation of a secondary (emergency) roof drainage system to limit the amount of rainwater that could be retained on top of the roof. This also limits the potential increased load to be structurally supported by the roof. Refer to Section 1108 to determine how elements such as scuppers, overflow weirs, serviceable drains and other similar openings, along with the roof edge itself, are addressed in the code.

Although not totally defined, the primary storm drainage system is generally interpreted to include roof drains, leaders, conductors and horizontal storm drains within the structure. Although not immune to failure, the storm sewer system is usually not considered to be part of the building's primary roof drainage means. On large roofs with multiple, independently drained areas or bays, the primary drainage means for each such area could be considered separately.

The maximum depth of the ponding water should be measured to the highest flow depth allowed by the design of the secondary (emergency) roof drainage system. The volume of flow into a scupper or roof drain is a function of water depth at the scupper or roof drain. A scupper or roof drain, for example, will typically not reach its maximum flow capacity until the water has reached a certain depth above the weir of the drain. This means that water may necessarily pond on a roof in order for the drain to reach design flow conditions for the drainage system. Commentary Figure 1101.7.1 shows several roof drains and the depth of water (hydraulic heads) above the drain inlet.

Consideration must be given to roof structure deflection, which will increase the volume of water held by ponding. An improperly designed roof could

INTERNATIONAL CODE COUNCIL®
Copyright © 2015 ICC. ALL RIGHTS RESERVED. Accessed by David Dammon on Jun 21, 2017 12:30:52 PM pursuant to License Agreement with ICC. No further reproduction or distribution authorized. ANY UNAUTHORIZED REPRODUCTION OR DISTRIBUTION IS A VIOLATION OF THE FEDERAL COPYRIGHT ACT AND THE LICENSE AGREEMENT, AND SUBJECT TO CIVIL AND CRIMINAL PENALTIES THEREUNDER.

collapse under the weight of the water held on it [see Commentary Figure 1101.7(1)]. The roof structure in Commentary Figure 1101.7(2) must be designed to support the weight of water at the maximum possible depth. The maximum depth is determined assuming that the primary drainage system is blocked and the water must rise above the scuppers to a height sufficient to cause flow. Because of the many variables, each roof drainage system design must be evaluated individually, taking into consideration such factors as

DRAINAGE SYSTEM	FLOW RATE (gpm)									
	Depth of water above drain inlet (hydraulic head) (inches)									
	1	2	2.5	3	3.5	4	4.5	5	7	8
4-inch-diameter drain	80	170	180							
6-inch-diameter drain	100	190	270	380	540					
8-inch-diameter drain	125	230	340	560	850	1,100	1,170			
6-inch-wide, open-top scupper	18	50	*	90	*	140	*	194	321	393
24-inch-wide, open-top scupper	72	200	*	360	*	560	*	776	1,284	1,572
6-inch-wide, 4-inch-high, closed top scupper	18	50	*	90	*	140	*	177	231	253
24-inch-wide, 4-inch-high, closed-top scupper	72	200	*	360	*	560	*	708	924	1,012
6-inch-wide, 6-inch-high, closed-top scupper	18	50	*	90	*	140	*	194	303	343
24-inch-wide, 6-inch-high, closed-top scupper	72	200	*	360	*	560	*	776	1,212	1,372

For SI: 1 inch = 25.4 mm, 1 gallon per minute = 3.785 L/m.
Source: Factory Mutual Engineering Corp. Loss Prevention Data 1-54.

Figure 1101.7(1)
FLOW RATE, IN GALLONS PER MINUTE, OF VARIOUS SCUPPERS AT VARIOUS WATER DEPTHS

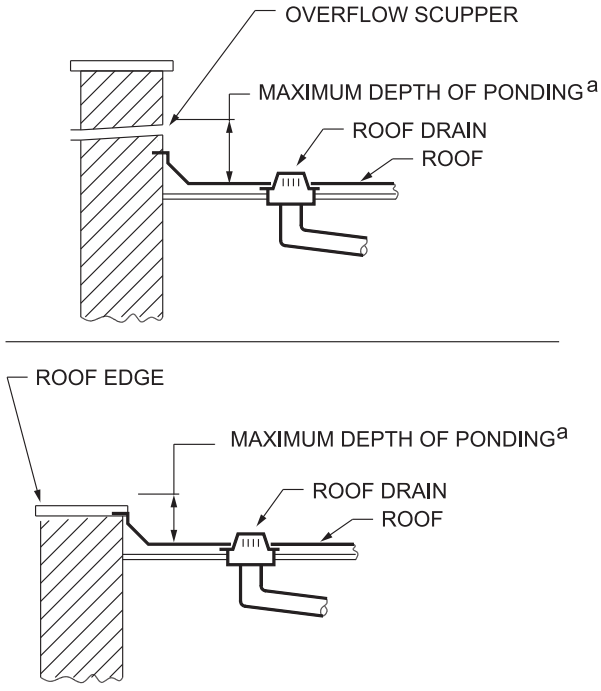

a: THE LEVEL MUST RISE ABOVE THE WEIR TO INDUCE FLOW. THE LEVEL WILL CONTINUE TO RISE UNTIL THE DISCHARGE AND RAINFALL RATE REACH EQUILIBRIUM. THE MAXIMUM DEPTH MUST BE CONSIDERED IN CALCULATING ROOF LOADS.

Figure 1101.7(2)
ROOF DRAIN WITH OVERFLOW

INTERNATIONAL CODE COUNCIL®
Copyright © 2015 ICC. ALL RIGHTS RESERVED. Accessed by David Dammon on Jun 21, 2017 12:30:52 PM pursuant to License Agreement with ICC. No further reproduction or distribution authorized. ANY UNAUTHORIZED REPRODUCTION OR DISTRIBUTION IS A VIOLATION OF THE FEDERAL COPYRIGHT ACT AND THE LICENSE AGREEMENT, AND SUBJECT TO CIVIL AND CRIMINAL PENALTIES THEREUNDER.

roof drain capacity at ponding depth, roof type, roof configurations, mains and sewer sizes, drain capacities, locations of trees, climate and probability of system failures.

The secondary (emergency) roof drainage system must be completely independent of the primary roof drainage system so that a failure in the primary system does not influence the proper functioning of the secondary system. The secondary (emergency) roof drainage system discharge must occur in a location above grade that will be noticed by either the users or service personnel of the building. The discharge point becomes a visual indication that the primary system has failed or become blocked.

1101.8 Cleanouts required. Cleanouts shall be installed in the storm drainage system and shall comply with the provisions of this code for sanitary drainage pipe cleanouts.

Exception: Subsurface drainage system.

❖ The cleanout requirements apply to drainage systems without making a distinction between sanitary and storm with the exception of subsurface drainage systems. These systems serve to drain water away from foundations and use perforated pipe. A storm drain is susceptible to stoppage in the same way as a sanitary system; hence, cleanouts are necessary as required by Section 708.

1101.9 Backwater valves. Storm drainage systems shall be provided with backwater valves as required for sanitary drainage systems in accordance with Section 715.

❖ Although backwater valves are typically associated with the installation of the sanitary sewer and the connection between the building and the sanitary sewer, they are also installed on storm systems connected to combination storm and sanitary sewers. There is often a danger of backflow of storm water into a building using combination storm and sanitary drainage systems where the public sewer becomes overloaded, clogged or surcharged. To prevent damage from backflow, a backwater valve should be installed in accordance with Section 715 [see Commentary Figure 1111.1(1)].

SECTION 1102
MATERIALS

1102.1 General. The materials and methods utilized for the construction and installation of storm drainage systems shall comply with this section and the applicable provisions of Chapter 7.

❖ This section requires the use of approved sanitary drainage-type piping, fittings and any other components in the storm drainage system. Although the flow through the storm drainage system is significantly different from that of the sanitary drainage system (see commentary, Section 1101.6), the need to provide a system with a smooth flow of discharge is still a valid concern; therefore, this section requires compliance with the requirements in Chapter 7.

1102.2 Inside storm drainage conductors. Inside storm drainage conductors installed above ground shall conform to one of the standards listed in Table 702.1.

❖ Any of the materials acceptable for sanitary drainage are allowable for storm drainage; hence, the reference to Table 702.1, which is the table for above-ground sanitary drainage and vent pipe.

1102.3 Underground building storm drain pipe. Underground building *storm drain* pipe shall conform to one of the standards listed in Table 702.2.

❖ Similar to above-ground piping, as discussed in Section 1102.2, any of the piping materials listed in Table 702.2 for underground building drainage and vent pipe are acceptable for use as building storm drain piping underground.

1102.4 Building storm sewer pipe. Building storm *sewer* pipe shall conform to one of the standards listed in Table 1102.4.

❖ The referenced table specifies acceptable piping materials for storm sewers (see commentary, Table 1102.4).

TABLE 1102.4
BUILDING STORM SEWER PIPE

MATERIAL	STANDARD
Acrylonitrile butadiene styrene (ABS) plastic pipe	ASTM D 2661; ASTM D 2751; ASTM F 628; CSA B181.1; CSA B182.1
Cast-iron pipe	ASTM A 74; ASTM A 888; CISPI 301
Concrete pipe	ASTM C 14; ASTM C 76; CSA A257.1M; CSA A257.2M
Copper or copper-alloy tubing (Type K, L, M or DWV)	ASTM B 75; ASTM B 88; ASTM B 251; ASTM B 306
Polyethylene (PE) plastic pipe	ASTM F 2306/F 2306M
Polyvinyl chloride (PVC) plastic pipe (Type DWV, SDR26, SDR35, SDR41, PS50 or PS100)	ASTM D 2665; ASTM D 3034; ASTM F 891; CSA B182.4; CSA B181.2; CSA B182.2
Vitrified clay pipe	ASTM C 4; ASTM C 700
Stainless steel drainage systems, Type 316L	ASME A112.3.1

❖ The table identifies the materials that are permitted and the standards with which these materials must comply.

ASTM D 2751 is the referenced standard for typical acrylonitrile butadiene styrene (ABS) sewer pipe and fittings. The pipe may be produced from ABS material with a cell classification of 1-3-3, 3-2-2 or 2-2-3. This pipe is produced in standard dimension ratios (SDRs) of 23.5, 35 and 42. SDR is the ratio between the average outside diameter of the pipe and the minimum

INTERNATIONAL CODE COUNCIL®
Copyright © 2015 ICC. ALL RIGHTS RESERVED. Accessed by David Dammon on Jun 21, 2017 12:30:52 PM pursuant to License Agreement with ICC. No further reproduction or distribution authorized. ANY UNAUTHORIZED REPRODUCTION OR DISTRIBUTION IS A VIOLATION OF THE FEDERAL COPYRIGHT ACT AND THE LICENSE AGREEMENT, AND SUBJECT TO CIVIL AND CRIMINAL PENALTIES THEREUNDER.

wall thickness. The other standards referenced are for Schedule 40 plastic pipe fittings and Schedule 40 drain, waste and vent (DWV) pipe with a cellular core.

Cast-iron pipe is available in two pipe styles: hubbed and hubless. Hubbed cast-iron pipe is the oldest type. It uses a hub at joints and connections; hubless pipe is joined using mechanical couplings. Hubbed cast iron is produced in two weights: service and extra heavy. Extra heavy is characterized by a thicker pipe wall.

Previously, other grades of cast-iron pipe were produced: medium weight and "victory pipe." Medium-weight pipe was a class between extra-heavy and service-weight pipe. A pipe referred to as "victory pipe" was manufactured during World War II—it was lighter and had a thinner pipe wall than service-weight pipe.

The wall thickness of hubless cast-iron pipe is approximately equal to service-weight hub pipe. Hubless pipe is produced both with and without a spigot bead. Cast-iron pipe is commonly referred to as "soil pipe" or "cast-iron soil pipe." The term "soil pipe" was used when cast iron was essentially the only material used for soil drainage pipes. The term is still in use today when differentiating between cast-iron pipe used for drainage and cast-iron pipe used for water. Cast iron is typically produced in 5-foot (1524 mm) and 10-foot (3048 mm) lengths. The pipe is marked with the manufacturer's name and designated as hubless, extra heavy (XH) or service (SV).

Concrete pipe is made from portland cement, blast-furnace slag cement or portland-pozzolan cement and aggregate mixture. The pipe is produced both reinforced and nonreinforced.

ASTM C 14 and CAN/CSA A257.1M are the referenced standards for unnreinforced concrete pipe. ASTM C 14 concrete pipe is available in three classes: 1, 2 or 3. The pipe classification relates to the concrete strength based on diameter. Class 1 has the lowest strength requirements and Class 3 has the highest. The pipe is manufactured in diameters of 4 through 36 inches (102 through 914 mm).

ASTM C 76 and CAN/CSA A257.2M are the referenced standards for reinforced concrete pipe, which is strengthened with either steel wire, hot rod or welded wire fabric. ASTM C 76 pipe is produced in five classes: 1, 2, 3, 4 or 5. The class determines the strength of the concrete, pipe and reinforcement geometry. The pipe is manufactured in sizes 12 inches (305 mm) and larger.

Copper or copper-alloy tubing (Type K, L, M or DWV) is manufactured in two different tempers: drawn (called hard copper with the designation "H") and annealed (called soft copper with the designation "O"). Drawn copper tubing typically comes in straight lengths, where annealed copper tubing typically comes in both straight lengths and coils. Annealed and tempered drawn copper can be formed by bending. Bending-tempered copper tubing is identified on the pipe with the designation "BT."

The four types of copper tubing are identified with a colored marking system for ease of identification, as follows:

- Green—Type K copper tubing
- Blue—Type L copper tubing
- Red—Type M copper tubing
- Yellow—Type DWV copper tubing

Corrugated double wall polyethylene (PE) pipe (ASTM F 2306) for storm water conveyance has been in widespread use by utilities and road building contractors for over 20 years. Single wall corrugated PE pipe has been approved for use in subsoil drain systems for many years but for reasons unexplained, the double wall version was never proposed for inclusion in the list of approved materials for building storm drains. The double wall version of PE pipe covered by the referenced ASTM International (ASTM) number has a smooth, uniform bore with a corrugated exterior that imparts strength to resist crushing.

Polyvinyl chloride (PVC) plastic pipe (Type DWV, SDR 26, SDR 35, SDR 41, PS 50 or PS 100) is regulated by ASTM F 891, which specifies that sewer grade pipe be designated by a "PS" in addition to a Schedule 40 designation (Type DWV). PS indicates pipe stiffness.The grades of PVC plastic pipes used in sewers are PS 50 and 100. The numerical designation indicates the pipe stiffness in pounds per square inch (psi). The higher value indicates plastic pipe with a thicker pipe wall.

ASTM D 2665 and ASTM D 3034 are the standards regulating sewer-grade PVC pipe and fittings. The materials may be used interchangeably. Both pipes are produced in SDRs of 35 and 41, with a hub end. The PVC material used to produce the pipe is classified as 12454-B, 12454-C or 13364-B. The pipe is produced in diameters of 4 through 15 inches (102 mm through 381 mm). CSA B182.2 is the referenced standard for SDR 28, 35 and 41 PVC sewer pipe and fittings, and CSA B182.4 is the referenced standard for PVC ribbed sewer pipe and fittings.

Vitrified clay pipe is surface clay, fire clay, shale or a combination of the materials, and is classified as standard strength, extra strength, extra quality or heavy duty. The classification determines the strength of the pipe. It is produced in diameters of 3 inches (76 mm) and larger. Each length of pipe is marked with the manufacturer's name and the classification of the pipe.

Type 316L stainless steel provides excellent corrosion resistance when installed either above or below ground in a storm sewer system. Stainless steel pipe and fittings have been used for years worldwide to convey sanitary wastes because of the strength, durability and corrosion resistance of the material. The additional cost of installing stainless steel piping can often be offset by the piping's longer expected life.

INTERNATIONAL CODE COUNCIL®
Copyright © 2015 ICC. ALL RIGHTS RESERVED. Accessed by David Dammon on Jun 21, 2017 12:30:52 PM pursuant to License Agreement with ICC. No further reproduction or distribution authorized. ANY UNAUTHORIZED REPRODUCTION OR DISTRIBUTION IS A VIOLATION OF THE FEDERAL COPYRIGHT ACT AND THE LICENSE AGREEMENT, AND SUBJECT TO CIVIL AND CRIMINAL PENALTIES THEREUNDER.

1102.5 Subsoil drain pipe. Subsoil drains shall be open-jointed, horizontally split or perforated pipe conforming to one of the standards listed in Table 1102.5.

❖ The materials not described herein are described in detail in the commentary to Table 1102.4. PE plastic pipe: ASTM F 405 is the referenced standard for corrugated pipe and PE tubing. The pipe is available with perforations and is classified as either standard or heavy-duty tubing.

PVC plastic pipe (type sewer pipe, PS 25, PS 50 or PS 100): ASTM D 2729 regulates thin-wall drain pipe, which is available as both perforated and solid wall pipe.

TABLE 1102.5
SUBSOIL DRAIN PIPE

MATERIAL	STANDARD
Cast-iron pipe	ASTM A 74; ASTM A 888; CISPI 301
Polyethylene (PE) plastic pipe	ASTM F 405; CSA B182.1; CSA B182.6; CSA B182.8
Polyvinyl chloride (PVC) Plastic pipe (type sewer pipe, SDR35, PS25, PS50 or PS100)	ASTM D 2729; ASTM D 3034, ASTM F 891; CSA B182.2; CSA B182.4
Stainless steel drainage systems, Type 316L	ASME A 112.3.1
Vitrified clay pipe	ASTM C 4; ASTM C 700

1102.6 Roof drains. Roof drains shall conform to ASME A112.6.4 or ASME A112.3.1.

❖ ASME A112.6.4 regulates the design and construction of roof drains. Roof drains must have either a dome or grate covering the opening. This helps restrict leaves and debris from entering the storm drainage piping and creating a stoppage. Because roof drains are exposed to extreme temperatures, it is common practice to install an expansion joint between the roof drain and the storm drainage pipe.

ASME A112.3.1 provides details for Types 304 and 316L stainless steel roof drains.

1102.7 Fittings. Pipe fittings shall be *approved* for installation with the piping material installed, and shall conform to the respective pipe standards or one of the standards listed in Table 1102.7. The fittings shall not have ledges, shoulders or reductions capable of retarding or obstructing flow in the piping. Threaded drainage pipe fittings shall be of the recessed drainage type.

❖ Each fitting is designed to be installed in a particular system with a given material or combination of materials. Drainage pattern fittings must be installed in drainage systems. Vent fittings are limited to the venting system. Fittings are also available that could be used in any type of plumbing system.

Fittings must be the same material as, or compatible with, the pipe. This prevents any chemical or corrosive action between dissimilar materials.

Many pipe standards also include provisions regulating fittings. There are, however, a number of standards that strictly regulate pipe fittings.

TABLE 1102.7
PIPE FITTING

MATERIAL	STANDARD
Acrylonitrile butadiene styrene (ABS) plastic	ASTM D 2661; ASTM D 3311; CSA B181.1
Cast-iron	ASME B16.4; ASME B16.12; ASTM A 888; CISPI 301; ASTM A 74
Coextruded composite ABS and drain DR-PS in PS35, PS50, PS100, PS140, PS200	ASTM D 2751
Coextruded composite ABS DWV Schedule 40 IPS pipe (solid or cellular core)	ASTM D 2661; ASTM D 3311; ASTM F 628
Coextruded composite PVC DWV Schedule 40 IPS-DR, PS140, PS200 (solid or cellular core)	ASTM D 2665; ASTM D 3311; ASTM F 891
Coextruded composite PVC sewer and drain DR-PS in PS35, PS50, PS100, PS140, PS200	ASTM D 3034
Copper or copper alloy	ASME B16.15; ASME B16.18; ASME B16.22; ASME B16.23; ASME B16.26; ASME B16.29
Gray iron and ductile iron	AWWA C110/A21.10
Malleable iron	ASME B16.3
Plastic, general	ASTM F 409
Polyethylene (PE) plastic pipe	ASTM F 2306/F 2306M
Polyvinyl chloride (PVC) plastic	ASTM D 2665; ASTM D 3311; ASTM F 1866
Steel	ASME B16.9; ASME B16.11; ASME B16.28
Stainless steel drainage systems, Type 316L	ASME A112.3.1

SECTION 1103
TRAPS

1103.1 Main trap. Leaders and *storm drains* connected to a combined sewer shall be trapped. Individual storm water traps shall be installed on the storm water drain *branch* serving each conductor, or a single trap shall be installed in the main *storm drain* just before its connection with the combined *building sewer* or the *public sewer*. Leaders and storm drains connected to a building storm sewer shall not be required to be trapped.

❖ This section regulates the installation of traps on combination sanitary and storm sewer systems (see Commentary Figure 1103.1).

INTERNATIONAL CODE COUNCIL®
Copyright © 2015 ICC. ALL RIGHTS RESERVED. Accessed by David Dammon on Jun 21, 2017 12:30:52 PM pursuant to License Agreement with ICC. No further reproduction or distribution authorized. ANY UNAUTHORIZED REPRODUCTION OR DISTRIBUTION IS A VIOLATION OF THE FEDERAL COPYRIGHT ACT AND THE LICENSE AGREEMENT, AND SUBJECT TO CIVIL AND CRIMINAL PENALTIES THEREUNDER.

The trap on the storm drain is intended to prevent sewer gas from entering the system and is required only where the storm drain discharges into the sanitary sewer system. Unlike a sanitary system, a storm drainage system is not designed for any precautions against sewer gas. Any storm drain connection to a combination sanitary and storm sewer must be trapped to prevent the escape of sewer gases. For example, an air intake opening for an air-handling unit may be located next to a roof drain. A properly located trap prevents sewer gas from escaping through a roof drain and entering the outdoor air intake.

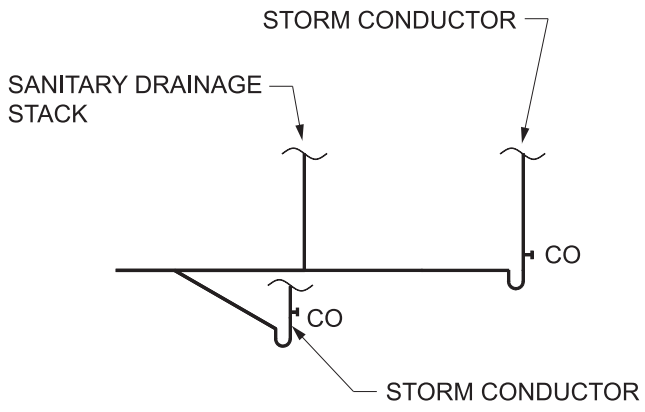

Figure 1103.1
TRAPS ON STORM DRAINS THAT CONNECT TO COMBINATION SANITARY AND STORM SEWER SYSTEMS

1103.2 Material. Storm water traps shall be of the same material as the piping system to which they are attached.

❖ This section simply requires that the material for the trap on the storm sewer line connecting to the combination sanitary and storm sewer be the same material as the combination sanitary and storm sewer.

1103.3 Size. Traps for individual conductors shall be the same size as the horizontal drain to which they are connected.

❖ This section requires that the trap be the same size as the horizontal drain pipe to which it discharges to prevent any obstruction of flow in the piping.

1103.4 Cleanout. An accessible cleanout shall be installed on the building side of the trap.

❖ This section requires the installation of an accessible cleanout and also states where it should be located.

SECTION 1104
CONDUCTORS AND CONNECTIONS

1104.1 Prohibited use. Conductor pipes shall not be used as soil, waste or vent pipes, and soil, waste or vent pipes shall not be used as conductors.

❖ This section regulates the installation of conductors, leaders and connections.

A sanitary drainage stack and storm drainage conductors are designed differently and serve different purposes. They cannot be interconnected and the components of the two different systems cannot be interchanged (see commentary, Sections 1101.3 and 1104.3).

1104.2 Floor drains. Floor drains shall not be connected to a *storm drain.*

❖ To prevent contamination of the storm water discharge with chemicals, waste, sewage, etc., the code prohibits the connection of floor drains to a storm drain. A floor drain connected to a storm drainage system invites the discharge of sanitary waste into the storm system, which will create an environmental hazard, considering that storm drainage is discharged to the environment without treatment. Another concern is that under flow conditions, a floor drain connection will act as a relief opening, thereby allowing water flow into the building.

Areaway drains serving subsurface spaces outside of the building, such as window wells or basement or cellar entrance wells, are typically not considered to be floor drains when applying this section. Additionally, where approved by the code official, if a parking garage will function only as a parking lot, with no increased possibility that repair and service operations will occur, floor drains in the garage could be connected to the storm drainage system the same as for a parking lot.

SECTION 1105
ROOF DRAINS

1105.1 General. Roof drains shall be installed in accordance with the manufacturer's instructions. The inside opening for the roof drain shall not be obstructed by the roofing membrane material.

❖ Because roof drains penetrate the roof of the building, their proper installation is necessary to prevent water leaking into the structure. The manufacturer's installation instructions provide the necessary procedures for making sure that the roof drain is properly mounted and sealed to the roof assembly. The last line of this section is a reminder for inspectors to make sure that roofing membrane materials are properly trimmed to allow full flow to pass through the roof drain.

1105.2 Roof drain flow rate. The published roof drain flow rate, based on the head of water above the roof drain, shall be used to size the storm drainage system in accordance with Section 1106. The flow rate used for sizing the storm drainage piping shall be based on the maximum anticipated ponding at the roof drain.

❖ A research project by the American Society of Plumbing Engineers (ASPE) Research Foundation revealed that roof drains are the limiting factor in the design of

INTERNATIONAL CODE COUNCIL®
Copyright © 2015 ICC. ALL RIGHTS RESERVED. Accessed by David Dammon on Jun 21, 2017 12:30:52 PM pursuant to License Agreement with ICC. No further reproduction or distribution authorized. ANY UNAUTHORIZED REPRODUCTION OR DISTRIBUTION IS A VIOLATION OF THE FEDERAL COPYRIGHT ACT AND THE LICENSE AGREEMENT, AND SUBJECT TO CIVIL AND CRIMINAL PENALTIES THEREUNDER.

storm drain systems. The previous design philosophy (for over 40 years) was that the diameter of the piping system was the limiting factor. Any roof drain sized for the required pipe size was assumed to be capable of accepting the design flow rate for the system. Actual testing of many different sizes and configurations of roof drains from a variety of manufacturers indicated that the roof drain assembly is the limiting factor.

SECTION 1106
SIZE OF CONDUCTORS, LEADERS AND STORM DRAINS

1106.1 General. The size of the vertical conductors and leaders, building *storm drains*, building storm *sewers* and any horizontal branches of such drains or *sewers* shall be based on the 100-year hourly rainfall rate indicated in Figure 1106.1 or on other rainfall rates determined from *approved* local weather data.

❖ This section regulates the size of storm drainage systems as a function of a 60-minute duration, 100-year rainfall rate on the roof or paved area to be drained. Selection of the correct rainfall rate is critical for the proper sizing of the storm drain system.

Figure 1106.1 spans five consecutive pages of the code and is broken into major regions of the country. This figure indicates the rainfall rates for a storm of 1-hour duration and a 100-year return period. Rainfall rates indicate the maximum rate of rainfall within a given period of time occurring every so many years. For example, Figure 1106.1 of the code indicates a rainfall rate of 2.1 inches (53 mm) per hour for Burlington, Vermont. Thus, it is predicted that it will rain 2.1 inches (53 mm) within 1 hour once every 100 years.

The rainfall rates are calculated by a statistical analysis of weather records. Because the statistics are based on previous or historical weather conditions, it is conceivable to have two 100-year storms in one week's time. The probability of this occurring, however, is very low.

1106.2 Size of storm drain piping. Vertical and horizontal *storm drain* piping shall be sized based on the flow rate through the roof drain. The flow rate in *storm drain* piping shall not exceed that specified in Table 1106.2.

Example:

Building location: Charleston, South Carolina

Horizontal projected roof area: 50,000 square feet

Number of conductors: 5

Rainfall rate: 4.3 inches per hour (from Figure 1106.1 or Appendix B of the code)

For SI: 1 inch = 25.4 mm, 1 square foot = 0.0929 m^2.

1106.3 Vertical leader sizing. Vertical leaders shall be sized based on the flow rate from horizontal gutters or the maximum flow rate through roof drains. The flow rate through vertical leaders shall not exceed that specified in Table 1106.3.

❖ Unlike a sanitary drainage system, a horizontal storm drain or sewer is sized for a full-flow condition. The pipe may be filled to capacity under a worst-case condition, and is still sized for gravity flow. Under "normal" operation, the storm sewer is not full and functions more like a sanitary sewer.

1106.4 Vertical walls. In sizing roof drains and storm drainage piping, one-half of the area of any vertical wall that diverts rainwater to the roof shall be added to the projected roof area for inclusion in calculating the required size of vertical conductors, leaders and horizontal storm drainage piping.

❖ This section includes the requirement for the mandatory inclusion of half of the area of vertical walls, including parapet walls, that are adjacent to and above a roof area, into the calculation for projected horizontal roof area when sizing storm drainage components. This acknowledges that vertical walls can catch and divert rainwater onto the roof. This additional water must be accounted for in the sizing of the components that will catch and discharge this water (see Commentary Figure 1106.4). This additional water must also be accounted for in the design of a controlled flow system (see commentary, Section 1110).

The example in Commentary Figure 1106.4 illustrates how to compute the wall area that must be added to the lower projected roof area for sizing the storm drains.

1106.5 Parapet wall scupper location. Parapet wall roof drainage scupper and overflow scupper location shall comply with the requirements of Section 1503.4 of the *International Building Code*.

❖ This section requires that the parapet wall scuppers be installed to satisfy the requirements of the IBC. This is a statement of mandatory coordination between two parts of the code; in this case, plumbing and building. There are other sections that require this coordination, but are not specifically referenced. Section 1101.7, for example, requires that a roof be designed structurally to support the maximum depth of rainwater that can pond on it, but does not require designing a roof in accordance with the requirements of the IBC, even though it would apply as well.

1106.6 Size of roof gutters. Horizontal gutters shall be sized based on the flow rate from the roof surface. The flow rate in horizontal gutters shall not exceed that specified in Table 1106.6.

❖ Roof gutters are designed for full-flow drainage, assuming the volume of rainwater associated with a 60-minute duration, 100-year rain. The sizing table is based on full capacity of the gutters. The size and number of conductors or leader connections to a roof gutter system must be adequate to prevent overflow of the gutters.

INTERNATIONAL CODE COUNCIL®
Copyright © 2015 ICC. ALL RIGHTS RESERVED. Accessed by David Dammon on Jun 21, 2017 12:30:52 PM pursuant to License Agreement with ICC. No further reproduction or distribution authorized. ANY UNAUTHORIZED REPRODUCTION OR DISTRIBUTION IS A VIOLATION OF THE FEDERAL COPYRIGHT ACT AND THE LICENSE AGREEMENT, AND SUBJECT TO CIVIL AND CRIMINAL PENALTIES THEREUNDER.



For SI: 1 inch = 25.4 mm.
Source: National Weather Service, National Oceanic and Atmospheric Administration, Washington D.C.

FIGURE 1106.1
100-YEAR, 1-HOUR RAINFALL (INCHES) EASTERN UNITED STATES

INTERNATIONAL CODE COUNCIL®
Copyright © 2015 ICC. ALL RIGHTS RESERVED. Accessed by David Dammon on Jun 21, 2017 12:30:52 PM pursuant to License Agreement with ICC. No further reproduction or distribution authorized. ANY UNAUTHORIZED REPRODUCTION OR DISTRIBUTION IS A VIOLATION OF THE FEDERAL COPYRIGHT ACT AND THE LICENSE AGREEMENT, AND SUBJECT TO CIVIL AND CRIMINAL PENALTIES THEREUNDER.

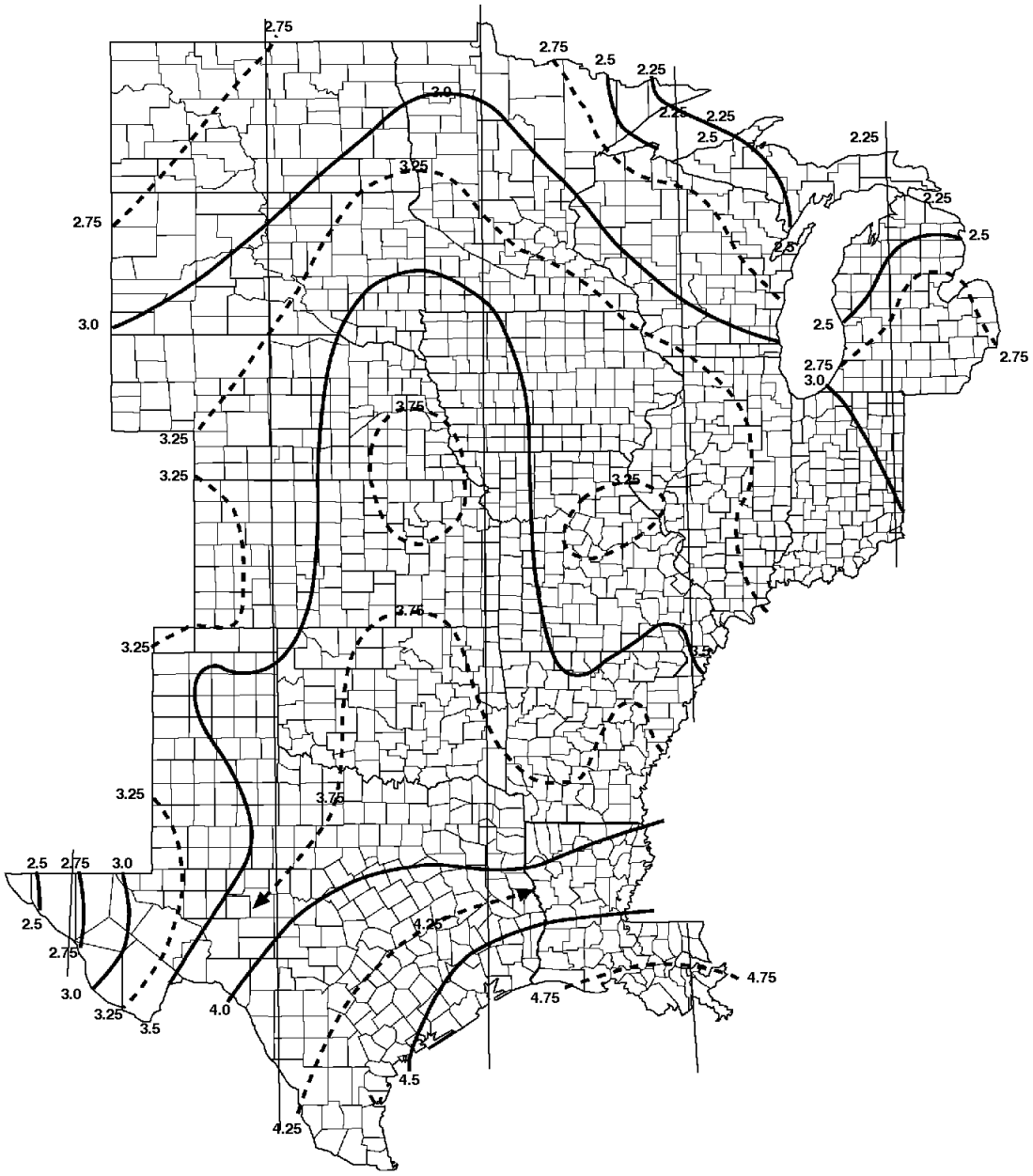

For SI: 1 inch = 25.4 mm.
Source: National Weather Service, National Oceanic and Atmospheric Administration, Washington D.C.

FIGURE 1106.1—continued
100-YEAR, 1-HOUR RAINFALL (INCHES) CENTRAL UNITED STATES

INTERNATIONAL CODE COUNCIL®
Copyright © 2015 ICC. ALL RIGHTS RESERVED. Accessed by David Dammon on Jun 21, 2017 12:30:52 PM pursuant to License Agreement with ICC. No further reproduction or distribution authorized. ANY UNAUTHORIZED REPRODUCTION OR DISTRIBUTION IS A VIOLATION OF THE FEDERAL COPYRIGHT ACT AND THE LICENSE AGREEMENT, AND SUBJECT TO CIVIL AND CRIMINAL PENALTIES THEREUNDER.

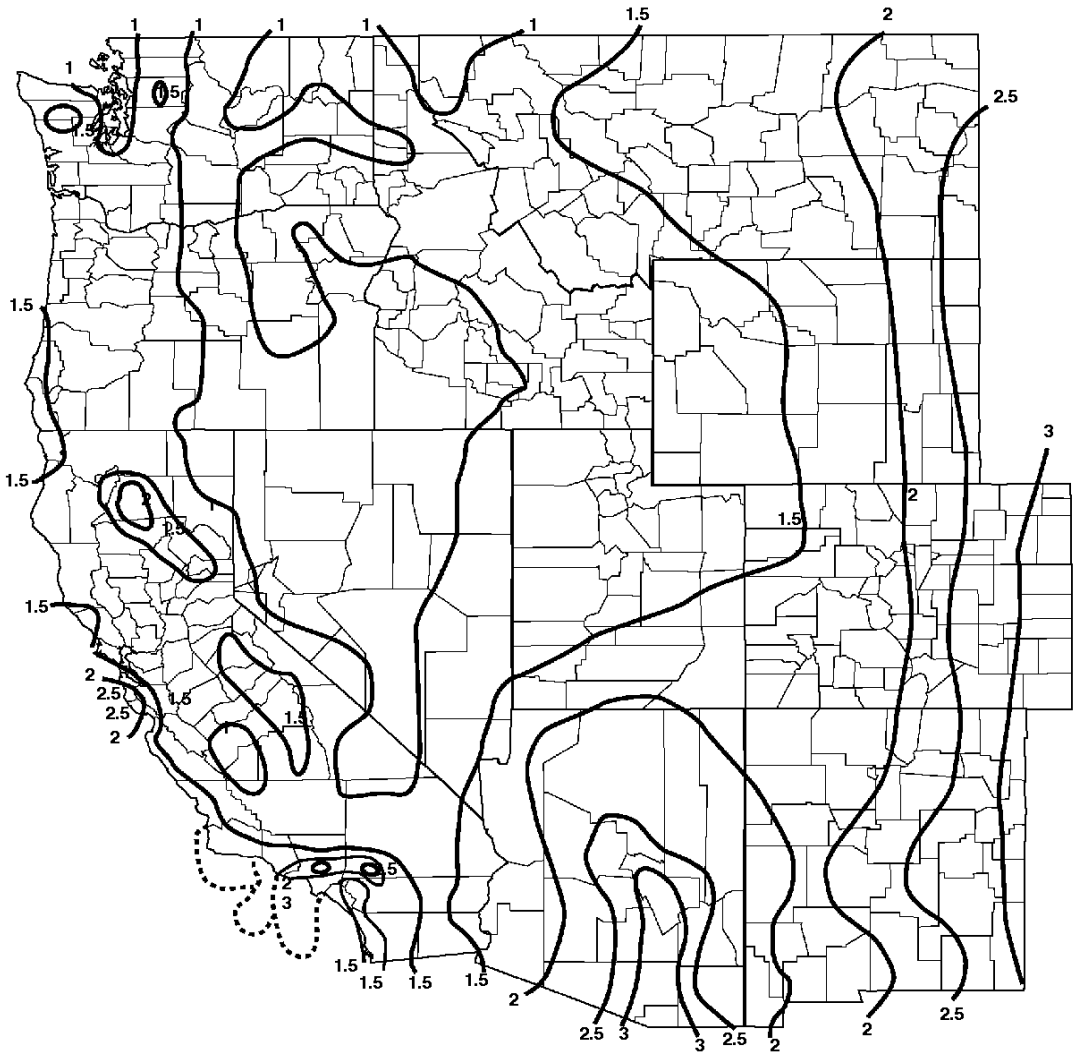

For SI: 1 inch = 25.4 mm.
Source: National Weather Service, National Oceanic and Atmospheric Administration, Washington D.C.

FIGURE 1106.1—continued
100-YEAR, 1-HOUR RAINFALL (INCHES) WESTERN UNITED STATES

INTERNATIONAL CODE COUNCIL®
Copyright © 2015 ICC. ALL RIGHTS RESERVED. Accessed by David Dammon on Jun 21, 2017 12:30:52 PM pursuant to License Agreement with ICC. No further reproduction or distribution authorized. ANY UNAUTHORIZED REPRODUCTION OR DISTRIBUTION IS A VIOLATION OF THE FEDERAL COPYRIGHT ACT AND THE LICENSE AGREEMENT, AND SUBJECT TO CIVIL AND CRIMINAL PENALTIES THEREUNDER.

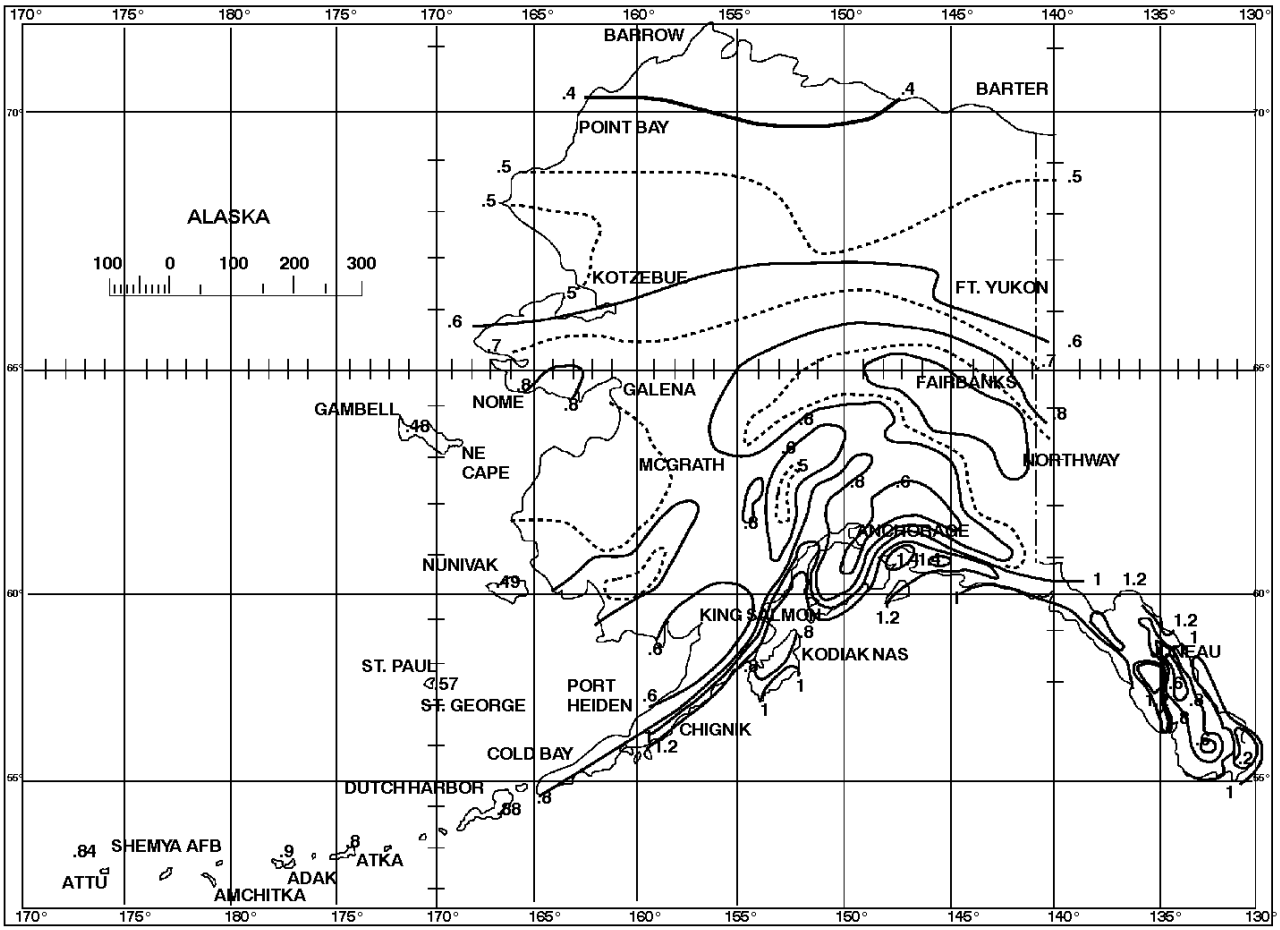

For SI: 1 inch = 25.4 mm.
Source: National Weather Service, National Oceanic and Atmospheric Administration, Washington D.C.

FIGURE 1106.1—continued
100-YEAR, 1-HOUR RAINFALL (INCHES) ALASKA

INTERNATIONAL CODE COUNCIL®
Copyright © 2015 ICC. ALL RIGHTS RESERVED. Accessed by David Dammon on Jun 21, 2017 12:30:52 PM pursuant to License Agreement with ICC. No further reproduction or distribution authorized. ANY UNAUTHORIZED REPRODUCTION OR DISTRIBUTION IS A VIOLATION OF THE FEDERAL COPYRIGHT ACT AND THE LICENSE AGREEMENT, AND SUBJECT TO CIVIL AND CRIMINAL PENALTIES THEREUNDER.

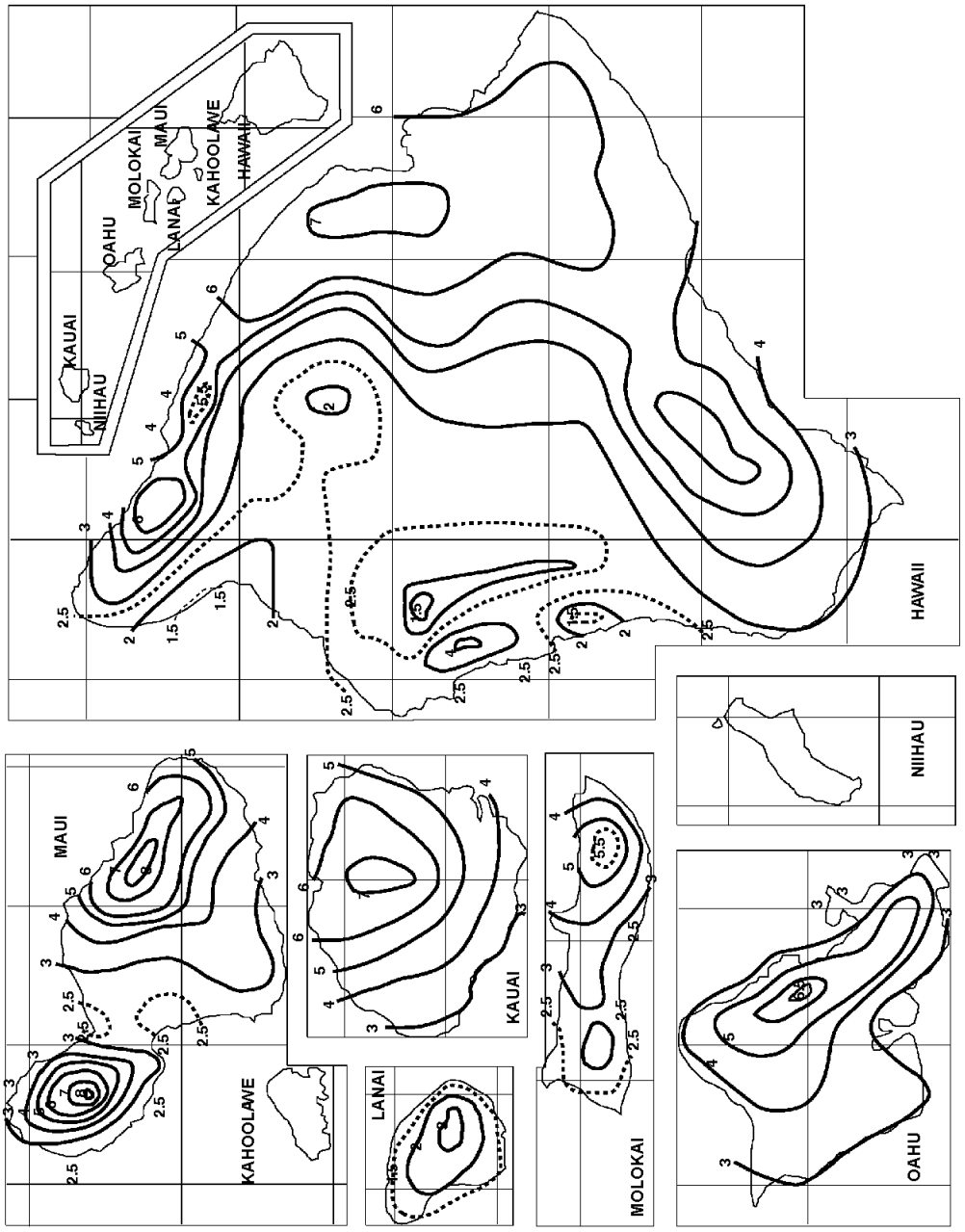

FIGURE 1106.1—continued
100-YEAR, 1-HOUR RAINFALL (INCHES) HAWAII

For SI: 1 inch = 25.4 mm.
Source: National Weather Service, National Oceanic and Atmospheric Administration, Washington, D.C.

INTERNATIONAL CODE COUNCIL®
Copyright © 2015 ICC. ALL RIGHTS RESERVED. Accessed by David Dammon on Jun 21, 2017 12:30:52 PM pursuant to License Agreement with ICC. No further reproduction or distribution authorized. ANY UNAUTHORIZED REPRODUCTION OR DISTRIBUTION IS A VIOLATION OF THE FEDERAL COPYRIGHT ACT AND THE LICENSE AGREEMENT, AND SUBJECT TO CIVIL AND CRIMINAL PENALTIES THEREUNDER.

TABLE 1106.2
STORM DRAIN PIPE SIZING

PIPE SIZE (inches)	CAPACITY (gpm)				
	VERTICAL DRAIN	SLOPE OF HORIZONTAL DRAIN			
		1/16 inch per foot	1/8 inch per foot	1/4 inch per foot	1/2 inch per foot
2	34	15	22	31	44
3	87	39	55	79	111
4	180	81	115	163	231
5	311	117	165	234	331
6	538	243	344	487	689
8	1,117	505	714	1,010	1,429
10	2,050	927	1,311	1,855	2,623
12	3,272	1,480	2,093	2,960	4,187
15	5,543	2,508	3,546	5,016	7,093

For SI: 1 inch = 25.4 mm, 1 foot = 304.8 mm, 1 gallon per minute = 3.785 L/m.

TABLE 1106.3
VERTICAL LEADER SIZING

SIZE OF LEADER (inches)	CAPACITY (gpm)
2	30
2 × 2	30
$1^1/_2 \times 2^1/_2$	30
$2^1/_2$	54
$2^1/_2 \times 2^1/_2$	54
3	92
2 × 4	92
$2^1/_2 \times 3$	92
4	192
$3 \times 4^1/_4$	192
$3^1/_2 \times 4$	192
5	360
4 × 5	360
$4^1/_2 \times 4^1/_2$	360
6	563
5 × 6	563
$5^1/_2 \times 5^1/_2$	563
8	1208
6 × 8	1208

For SI: 1 inch = 25.4 mm, 1 gallon per minute = 3.785 L/m.

INTERNATIONAL CODE COUNCIL®
Copyright © 2015 ICC. ALL RIGHTS RESERVED. Accessed by David Dammon on Jun 21, 2017 12:30:52 PM pursuant to License Agreement with ICC. No further reproduction or distribution authorized. ANY UNAUTHORIZED REPRODUCTION OR DISTRIBUTION IS A VIOLATION OF THE FEDERAL COPYRIGHT ACT AND THE LICENSE AGREEMENT, AND SUBJECT TO CIVIL AND CRIMINAL PENALTIES THEREUNDER.

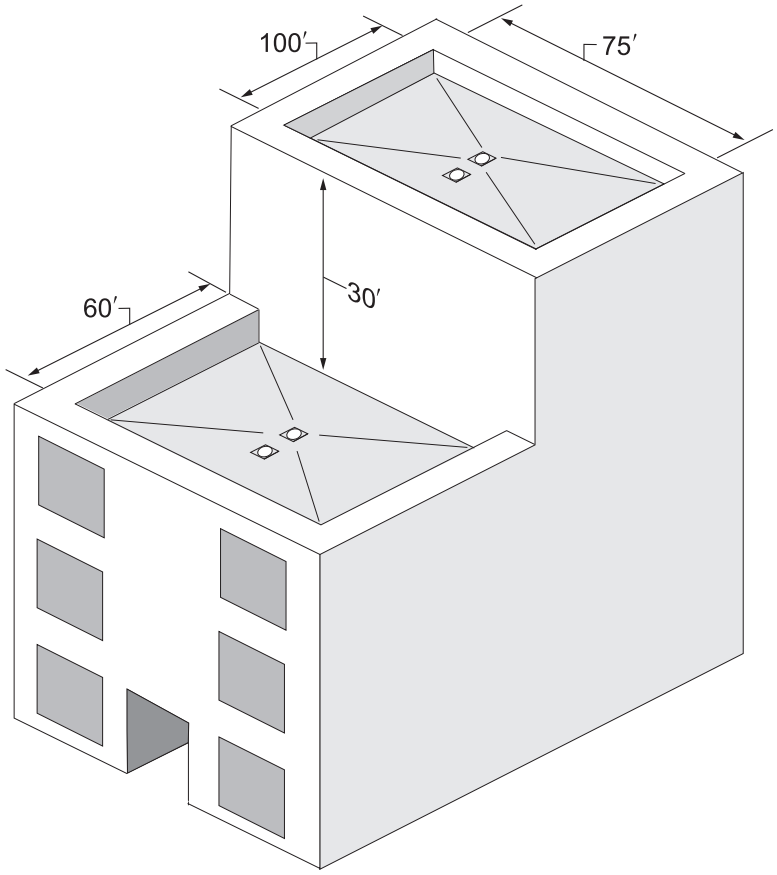

LOWER ROOF
PROJECTED ROOF AREA
60 × 75 = 4,500 sq.ft.

VERTICAL WALL AREA

$$\frac{30 \times 75}{2} = \frac{2{,}250}{2} \text{ sq.ft.}$$

$$= 1{,}125 \text{ sq.ft.}$$

PROJECTED ROOF AREA USED
TO SIZE LOWER ROOF DRAINS
4,500 + 1,125 = 5,625 sq.ft.

For SI: 1 foot = 304.8 mm, 1 square foot = 0.0929 m^2.

Figure 1106.4
VERTICAL WALLS

SECTION 1107
SIPHONIC ROOF DRAINAGE SYSTEMS

1107.1 General. Siphonic roof drains and drainage systems shall be designed in accordance with ASME A112.6.9 and ASPE 45.

❖ Siphonic roof drainage systems are vastly different than gravity roof drainage systems. Special roof drain designs are necessary to make siphonic roof drainage systems work efficiently. The piping for siphonic roof drainage systems is smaller in diameter than is required for gravity roof drainage systems because the piping is designed to flow completely full. Full flow is developed by the action of storm water falling down through vertical piping so that a negative pressure is developed above the falling water. The negative pressure "draws" additional flow through the special roof drain until all of the piping in the siphonic roof drainage system is flowing full and is creating the maximum "suction" possible at the roof drain.

SECTION 1108
SECONDARY (EMERGENCY) ROOF DRAINS

1108.1 Secondary (emergency overflow) drains or scuppers. Where roof drains are required, secondary (emergency overflow) roof drains or scuppers shall be provided where the roof perimeter construction extends above the roof in such a manner that water will be entrapped if the primary drains allow buildup for any reason. Where primary and secondary roof drains are manufactured as a single assembly, the inlet and outlet for each drain shall be independent.

❖ This section requires all buildings to have some method for preventing the accumulation of unplanned excessive rainwater. A secondary drainage system is required where the building has parapet walls or other construction on the perimeter of the building that would cause ponding. See Section 1101.7 regarding roof loads resulting from ponding on roofs.

The intent of this section is to limit the amount of ponding water that will be placed on the roof by rainfall. If the building is designed so water cannot pond

INTERNATIONAL CODE COUNCIL®
Copyright © 2015 ICC. ALL RIGHTS RESERVED. Accessed by David Dammon on Jun 21, 2017 12:30:52 PM pursuant to License Agreement with ICC. No further reproduction or distribution authorized. ANY UNAUTHORIZED REPRODUCTION OR DISTRIBUTION IS A VIOLATION OF THE FEDERAL COPYRIGHT ACT AND THE LICENSE AGREEMENT, AND SUBJECT TO CIVIL AND CRIMINAL PENALTIES THEREUNDER.

TABLE 1106.6
HORIZONTAL GUTTER SIZING

GUTTER DIMENSIONS[a] (inches)	SLOPE (inch per foot)	CAPACITY (gpm)
$1^1/_2 \times 2^1/_2$	$^1/_4$	26
$1^1/_2 \times 2^1/_2$	$^1/_2$	40
4	$^1/_8$	39
$2^1/_4 \times 3$	$^1/_4$	55
$2^1/_4 \times 3$	$^1/_2$	87
5	$^1/_8$	74
$4 \times 2^1/_2$	$^1/_4$	106
$3 \times 3^1/_2$	$^1/_2$	156
6	$^1/_8$	110
3×5	$^1/_4$	157
3×5	$^1/_2$	225
8	$^1/_{16}$	172
8	$^1/_8$	247
$4^1/_2 \times 6$	$^1/_4$	348
$4^1/_2 \times 6$	$^1/_2$	494
10	$^1/_{16}$	331
10	$^1/_8$	472
5×8	$^1/_4$	651
4×10	$^1/_2$	1055

For SI: 1 inch = 25.4 mm, 1 foot = 304.8 mm, 1 gallon per minute = 3.785 L/m, 1 inch per foot = 83.3 mm/m.

a. Dimensions are width by depth for rectangular shapes. Single dimensions are diameters of a semicircle.

on the roof, such as roofs sloped toward the edge of the building, secondary drainage is not required (see Commentary Figure 1108.1). This simple concept should be carried to all portions of the roof, so that if any portion is designed so water can pond, secondary drains would be required.

Bear in mind that a roof could be intentionally designed to allow ponding to some design depth such as for a rainwater harvesting system.

1108.2 Separate systems required. Secondary roof drain systems shall have the end point of discharge separate from the primary system. Discharge shall be above grade, in a location that would normally be observed by the building occupants or maintenance personnel.

❖ This section requires the installation of a completely separate system for secondary roof drains. This eliminates past confusion over how far the secondary roof drain piping had to run before it could be connected to the primary drainage system. This section requires that the two systems be completely independent and that they have separate points of discharge. This requirement is consistent with the IBC as well as ASCE 7, which is referenced by the IBC.

This system is designed to function in an emergency situation; therefore, it is required to discharge above grade. By requiring this discharge above grade, the discharge will be a means of signaling that there is a problem with the primary drain that requires immediate attention. Additionally, because this discharge is not a constant means of relieving the roof rainwater, it would not normally constitute a runoff problem. Discharge into an open ditch is considered "above grade." Even though this section has been interpreted to prohibit open ditch discharge, that is incorrect. The intent is to prohibit hidden discharge points. Commentary Figure 1108.2(1) illustrates typical examples of separate secondary drains. Commentary Figure 1108.2(2) illustrates the secondary drain improperly connecting to the primary roof drain.

INTERNATIONAL CODE COUNCIL®
Copyright © 2015 ICC. ALL RIGHTS RESERVED. Accessed by David Dammon on Jun 21, 2017 12:30:52 PM pursuant to License Agreement with ICC. No further reproduction or distribution authorized. ANY UNAUTHORIZED REPRODUCTION OR DISTRIBUTION IS A VIOLATION OF THE FEDERAL COPYRIGHT ACT AND THE LICENSE AGREEMENT, AND SUBJECT TO CIVIL AND CRIMINAL PENALTIES THEREUNDER.

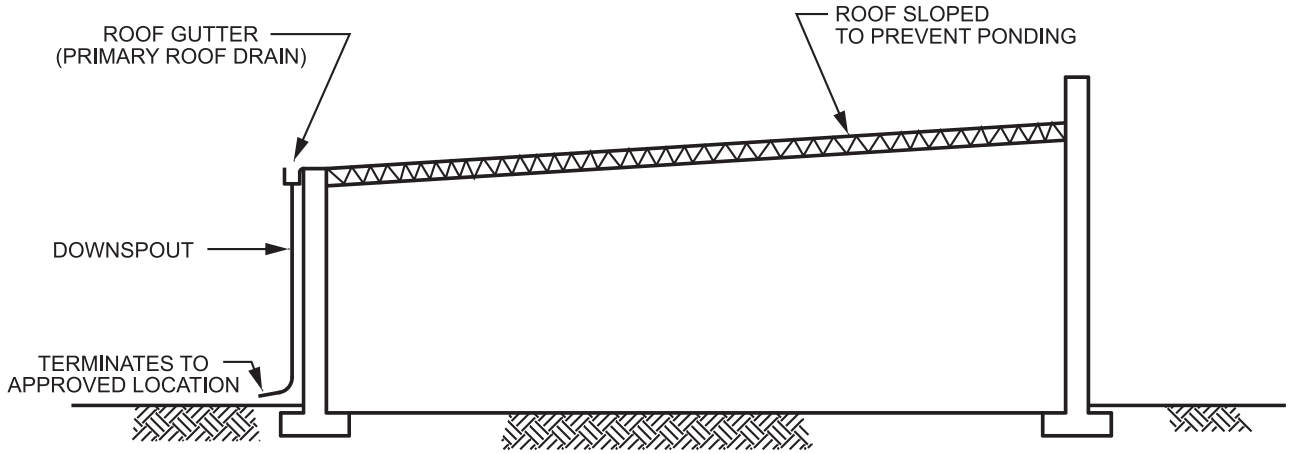

Figure 1108.1
SECONDARY ROOF DRAINAGE NOT REQUIRED

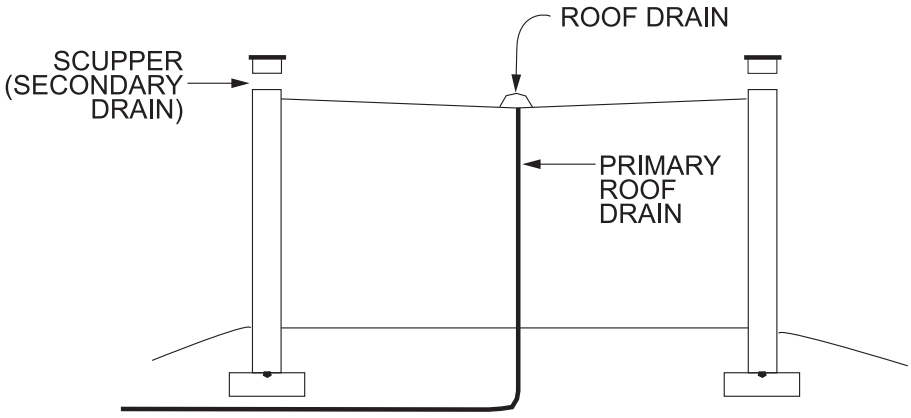

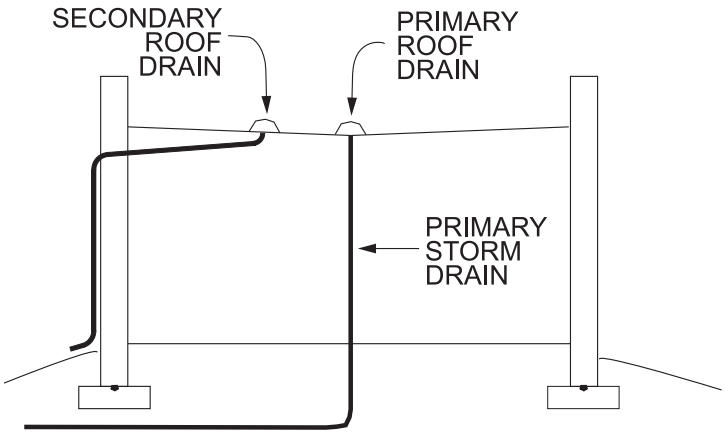

Figure 1108.2(1)
SEPARATE PRIMARY AND SECONDARY ROOF DRAINS

INTERNATIONAL CODE COUNCIL®
Copyright © 2015 ICC. ALL RIGHTS RESERVED. Accessed by David Dammon on Jun 21, 2017 12:30:52 PM pursuant to License Agreement with ICC. No further reproduction or distribution authorized. ANY UNAUTHORIZED REPRODUCTION OR DISTRIBUTION IS A VIOLATION OF THE FEDERAL COPYRIGHT ACT AND THE LICENSE AGREEMENT, AND SUBJECT TO CIVIL AND CRIMINAL PENALTIES THEREUNDER.

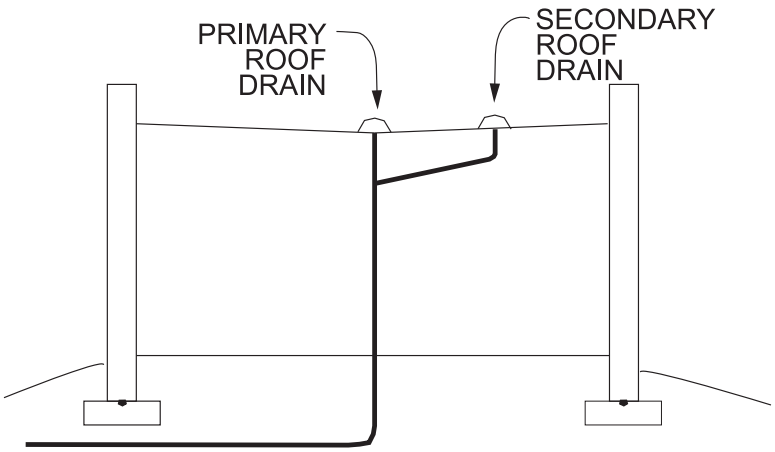

Figure 1108.2(2)
PROHIBITED SECONDARY ROOF DRAIN CONNECTION

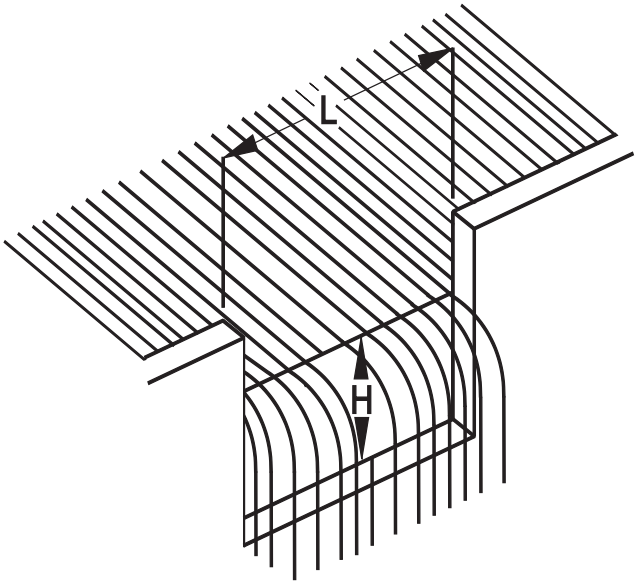

HEAD (*H*) (inches)	CAPACITY OF SCUPPER (gallons per minute)									
	Length (*L*) of scupper (inches)									
	4	6	8	10	12	18	24	30	36	48
1	10.7	17.4	23.4	29.3	35.4	53.4	71.5	89.5	107.5	143.7
2	30.5	47.5	64.4	81.4	98.5	149.4	200.3	251.1	302.1	404.0
3	52.9	84.1	115.2	146.3	177.8	271.4	364.9	458.5	552.0	739.0
4	76.7	124.6	172.6	220.5	269.0	413.3	557.5	701.8	846.0	1135.0
6	123.3	211.4	299.5	387.5	476.5	741.1	1005.8	1270.4	1535.0	2067.5

For SI: 1 inch = 25.4 mm, 1 foot = 304.8 mm, 1 gallon per minute = 3.785 L/m.

Based on the Francis formula:

$Q = 3.33 (L - 0.2H) H^{1.5}$

Where:

Q = Flow rate (cubic feet per second).

L = Length of scupper opening (feet).

H = Head on scupper [feet (measured 6 feet back from opening)].

Figure 1108.3
SIZE OF SCUPPERS

INTERNATIONAL CODE COUNCIL®
Copyright © 2015 ICC. ALL RIGHTS RESERVED. Accessed by David Dammon on Jun 21, 2017 12:30:52 PM pursuant to License Agreement with ICC. No further reproduction or distribution authorized. ANY UNAUTHORIZED REPRODUCTION OR DISTRIBUTION IS A VIOLATION OF THE FEDERAL COPYRIGHT ACT AND THE LICENSE AGREEMENT, AND SUBJECT TO CIVIL AND CRIMINAL PENALTIES THEREUNDER.

1108.3 Sizing of secondary drains. Secondary (emergency) roof drain systems shall be sized in accordance with Section 1106 based on the rainfall rate for which the primary system is sized. Scuppers shall be sized to prevent the depth of ponding water from exceeding that for which the roof was designed as determined by Section 1101.7. Scuppers shall have an opening dimension of not less than 4 inches (102 mm). The flow through the primary system shall not be considered when sizing the secondary roof drain system.

❖ This section gives the method for sizing the secondary (emergency) roof drainage system and its associated components. Sizing the components of a secondary drainage system is identical to sizing the primary system. The same tables and rainfall rates are used.

Instead of installing a secondary system of roof drains and pipes, many designers install scuppers to allow rainwater to overflow the roof. The height and length of a scupper is critical in determining the maximum depth of ponding on a roof. Although the code states that the minimum scupper dimension is 4 inches (102 mm), it would be necessary to increase the length dimension to keep the ponding depth at or below the level for which the roof was designed. Commentary Figure 1108.3 contains a table and equation that can be used to design the scupper.

SECTION 1109
COMBINED SANITARY AND STORM PUBLIC SEWER

1109.1 General. Where the *public sewer* is a combined system for both sanitary and storm water, the *storm sewer* shall be connected independently to the *public sewer*.

❖ Eventually, most municipalities having combined public sewers will need to separate the combined sewer into separate sanitary sewers and storm sewers to reduce sewage overflows during rainfall events. New construction must prepare for this by making the building storm sewer separate, even though currently the building sewer connects to the combined public sewer system.

SECTION 1110
CONTROLLED FLOW ROOF DRAIN SYSTEMS

1110.1 General. The roof of a structure shall be designed for the storage of water where the storm drainage system is engineered for controlled flow. The controlled flow roof drain system shall be an engineered system in accordance with this section and the design, submittal, approval, inspection and testing requirements of Section 316.1. The controlled flow system shall be designed based on the required rainfall rate in accordance with Section 1106.1.

❖ This section contains requirements for a storm drainage system that is designed as a controlled-flow system. Often such a system is used to maintain a small level of water on the roof to help with cooling. Section 1107 also contains a requirement for emergency systems.

Controlled-flow roof drainage systems have smaller diameter storm drainage pipes relying on the roof to serve as a temporary storage or retention basin. Rainwater collects on the roof while the vertical conductors discharge at an assumed rate.

The principles of design for a controlled-flow roof drainage system are the same as for a retention basin or a dam for flood control. The water discharges at a gradual rate and continues after the storm has subsided.

Many engineers will size such a system for a maximum period of storage, usually 24 hours. The storm used for sizing is typically a 25-year frequency storm. (When listed as a 25-year storm without a period of intensity, it includes the total amount of rainfall for the duration of the storm.) The engineer may further design for a maximum depth of water of 3 inches (76 mm).

A controlled-flow system is an alternative engineering design practice and is not required by the code. In accordance with Section 1101.7, the structural engineer must design for the roof loads imposed by any depth of ponding. Such a system replaces the primary system of Section 1105 and does not replace the emergency system of Section 1107.

This section also requires the testing, inspecting and approval requirements contained in Sections 105.3 and 105.4 (see commentary, Sections 105.3 and 105.4).

1110.2 Control devices. The control devices shall be installed so that the rate of discharge of water per minute shall not exceed the values for continuous flow as indicated in Section 1110.1.

❖ A controlled-flow system relies on a gradual discharge to the drainage system. A controlling device, usually a properly sized roof drain, is necessary to control the discharge to the system.

1110.3 Installation. Runoff control shall be by control devices. Control devices shall be protected by strainers.

❖ Control devices are usually roof drains that are properly sized (see commentary, Section 1110.2). This section requires that whatever control device is used must be protected by a strainer against blockage.

1110.4 Minimum number of roof drains. Not less than two roof drains shall be installed in roof areas 10,000 square feet (929 m^2) or less and not less than four roof drains shall be installed in roofs over 10,000 square feet (929 m^2) in area.

❖ For controlled-flow systems, a system redundancy safety precaution is built into the design by the requirement for a minimum of two drains for roof areas of 10,000 square feet (929 m^2) or less. The objective is that if one drain becomes clogged, the other would allow water to drain. For larger buildings in excess of 10,000 square feet (929 m^2) of roof area, a minimum of four roof drains is required (see Commentary Figure 1110.4). Although no specific requirements exist in this section covering design of the controlled-flow system, the potential for partial clogging of part of the sys-

INTERNATIONAL CODE COUNCIL®
Copyright © 2015 ICC. ALL RIGHTS RESERVED. Accessed by David Dammon on Jun 21, 2017 12:30:52 PM pursuant to License Agreement with ICC. No further reproduction or distribution authorized. ANY UNAUTHORIZED REPRODUCTION OR DISTRIBUTION IS A VIOLATION OF THE FEDERAL COPYRIGHT ACT AND THE LICENSE AGREEMENT, AND SUBJECT TO CIVIL AND CRIMINAL PENALTIES THEREUNDER.

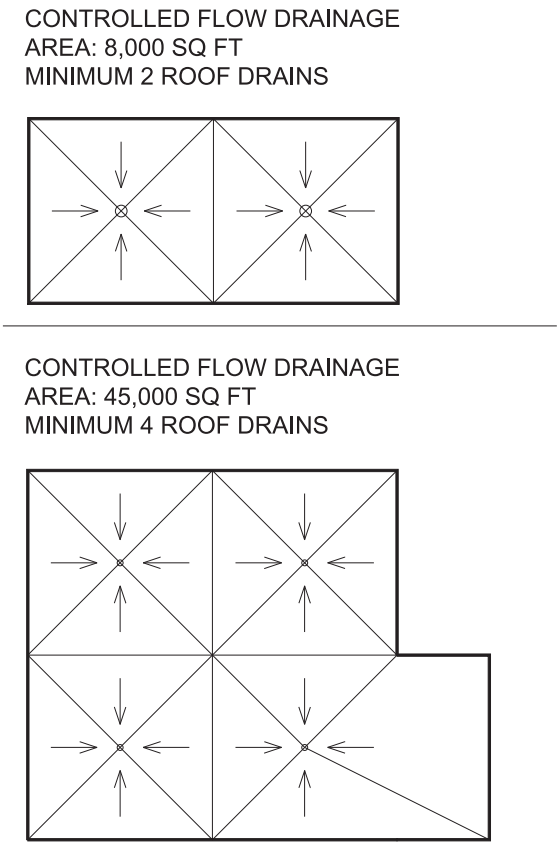

For SI: 1 square foot = 0.0929 m^2.

Figure 1110.4
MINIMUM NUMBER OF ROOF DRAINS FOR CONTROLLED FLOW

tem must be evaluated so that the contained water will drain off the roof without any structural or other problems.

SECTION 1111
SUBSOIL DRAINS

1111.1 Subsoil drains. Subsoil drains shall be open-jointed, horizontally split or perforated pipe conforming to one of the standards listed in Table 1102.5. Such drains shall not be less than 4 inches (102 mm) in diameter. Where the building is subject to backwater, the subsoil drain shall be protected by an accessibly located backwater valve. Subsoil drains shall discharge to a trapped area drain, sump, dry well or *approved* location above ground. The subsoil sump shall not be required to have either a gas-tight cover or a vent. The sump and pumping system shall comply with Section 1113.1.

❖ This section requires that subsoil drain material conform to the requirements for subsoil drain pipe contained in Table 1102.5. The collection of water into these subsoil drain pipes should be either open jointed, horizontally split or perforated. The minimum allowable size for a subsoil drain pipe is 4 inches (102 mm).

As with other below-grade piping, subsoil drain piping must have an accessible backwater valve if the area being drained is subject to backwater conditions [see Commentary Figure 1111.1(1)].

The discharge of the subsoil drain system is regulated in this section. Discharge to either another storm water discharge area drain, a storm water sump, a storm water dry well or an approved above-ground discharge point in the adjacent grading of the property is allowed. When a subsoil sump is used, a gas-tight cover is not required on top of the sump or to vent the sump because it is not connected to a sanitary sewer; thus, there are no sewer gases to be concerned about [see Commentary Figure 1111.1(2)]. If the discharge is to a sump, the sump and pumping systems must be installed in accordance with Section 1113.1.

INTERNATIONAL CODE COUNCIL®
Copyright © 2015 ICC. ALL RIGHTS RESERVED. Accessed by David Dammon on Jun 21, 2017 12:30:52 PM pursuant to License Agreement with ICC. No further reproduction or distribution authorized. ANY UNAUTHORIZED REPRODUCTION OR DISTRIBUTION IS A VIOLATION OF THE FEDERAL COPYRIGHT ACT AND THE LICENSE AGREEMENT, AND SUBJECT TO CIVIL AND CRIMINAL PENALTIES THEREUNDER.

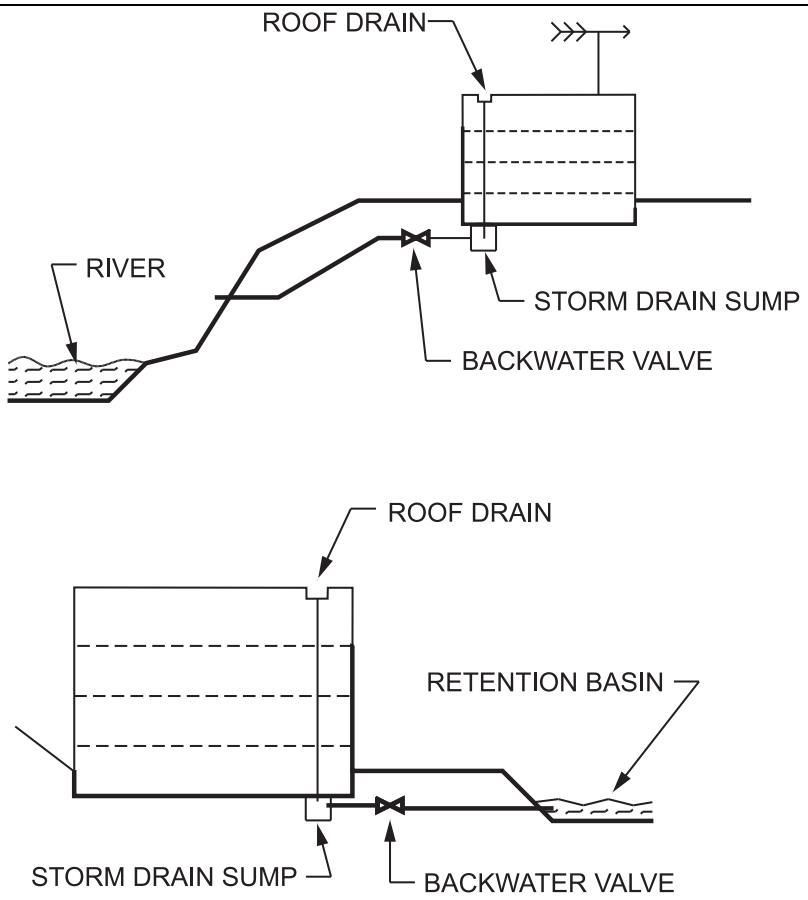

Figure 1111.1(1)
SUBSOIL DRAIN SUBJECT TO BACKFLOW

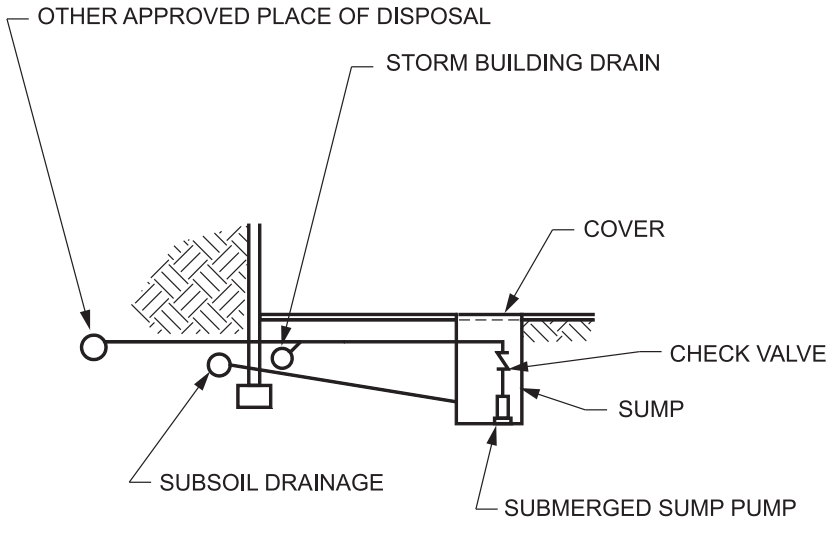

Figure 1111.1(2)
SUBSOIL DRAIN

INTERNATIONAL CODE COUNCIL®
Copyright © 2015 ICC. ALL RIGHTS RESERVED. Accessed by David Dammon on Jun 21, 2017 12:30:52 PM pursuant to License Agreement with ICC. No further reproduction or distribution authorized. ANY UNAUTHORIZED REPRODUCTION OR DISTRIBUTION IS A VIOLATION OF THE FEDERAL COPYRIGHT ACT AND THE LICENSE AGREEMENT, AND SUBJECT TO CIVIL AND CRIMINAL PENALTIES THEREUNDER.

SECTION 1112
BUILDING SUBDRAINS

1112.1 Building subdrains. *Building subdrains* located below the *public sewer* level shall discharge into a sump or receiving tank, the contents of which shall be automatically lifted and discharged into the drainage system as required for building sumps. The sump and pumping equipment shall comply with Section 1113.1.

❖ This section regulates the installation of building subdrains located below the public sewer.

The building subdrains identified include subsoil drainage around the perimeter of the building (foundation drains) and other clear-water storm drains, such as basement window well and outdoor stairwell drains.

Storm rainwater systems that discharge into sumps and sump pump systems need not conform to Sections 712 and 906.5 for sanitary sump drainage systems. The sump and pumping systems must comply with Section 1113.1.

This section requires that the collected storm water that is fed into the sump automatically be discharged from the sump. This requirement is intended to protect against flooding and potential damage to the building should someone fail to turn on the pump when necessary. Additionally, this will help minimize damage to the pump caused by unnecessary extended operation.

The discharge from the sump can be to grade in the surrounding area of the building if the discharge does not create a nuisance to the surrounding area and is approved by the code official. The sump pump system receiving subsoil drainage can also discharge to the storm drainage system.

Subsoil drainage should not be discharged into the sanitary drainage system because it places a substantial burden on the sanitary treatment facility (see commentary, Section 1108). This is also a concern in areas that still use combined sanitary and storm sewer systems.

SECTION 1113
SUMPS AND PUMPING SYSTEMS

1113.1 Pumping system. The sump pump, pit and discharge piping shall conform to Sections 1113.1.1 through 1113.1.4.

❖ This section regulates the sumps and pumping systems associated with subsoil drains and building subdrains.

1113.1.1 Pump capacity and head. The sump pump shall be of a capacity and head appropriate to anticipated use requirements.

❖ This section requires that the pump be sized properly to function under the anticipated load. The sump pump system must be designed to remove the subsoil drainage at the anticipated inflow rate under a worst-case condition. The sizing is determined by evaluating the local ground conditions, the length of piping and the weather in the area. A worst-case condition for subsoil drainage usually happens in the spring when heavy rains occur and any snow accumulation melts. The selection of a sump pump should include consideration for the on-off cycle time and the duration of operation of the pump in the "on" phase.

1113.1.2 Sump pit. The sump pit shall be not less than 18 inches (457 mm) in diameter and not less than 24 inches (610 mm) in depth, unless otherwise *approved*. The pit shall be accessible and located such that all drainage flows into the pit by gravity. The sump pit shall be constructed of tile, steel, plastic, cast iron, concrete or other *approved* material, with a removable cover adequate to support anticipated loads in the area of use. The pit floor shall be solid and provide permanent support for the pump.

❖ This section requires that the minimum dimensions of the sump pit be 18 inches (457 mm) in diameter and 24 inches (610 mm) deep. The pit size is very important in the design of the system because it determines the amount of water that is stored in the system prior to discharge. It also determines the operation time of the pump for each "on" cycle (see commentary, Section 712.3.2).

The pit must be constructed of tile, steel, plastic, cast iron, concrete or any material that performs like these and is approved by the code official. The pit must have a removable cover to allow access to the pump and other related items, such as the check valve. The cover is to be structurally capable of holding anticipated loads. The pit must also have a floor that is capable of permanently supporting the pump, including piping that bears on the pump. This requirement basically eliminates the use of gravel as the bottom of the sump because gravel would not allow for the permanent support of the pump.

1113.1.3 Electrical. Electrical service outlets, when required, shall meet the requirements of NFPA 70.

❖ Where a pump is power by electricity, the electrical receptacles are required to be installed in accordance with NFPA 70. The commentary user should consult that document for specific requirements.

1113.1.4 Piping. Discharge piping shall meet the requirements of Section 1102.2, 1102.3 or 1102.4 and shall include a gate valve and a full flow check valve. Pipe and fittings shall be the same size as, or larger than, the pump discharge tapping.

Exception: In one- and two-family dwellings, only a check valve shall be required, located on the discharge piping from the pump or ejector.

❖ The piping material used for the sump discharge must conform to the requirements contained in Sections 1102.2, 1102.3 and 1102.4, which refer to Tables 702.1, 702.2 and 1102.4, respectively. The piping in the sump system discharge line must have a check valve and a full-open valve installed to permit maintenance on the other components of the system. The requirement for a full-open valve does not apply to one- and two-family dwellings. This check valve

INTERNATIONAL CODE COUNCIL®
Copyright © 2015 ICC. ALL RIGHTS RESERVED. Accessed by David Dammon on Jun 21, 2017 12:30:52 PM pursuant to License Agreement with ICC. No further reproduction or distribution authorized. ANY UNAUTHORIZED REPRODUCTION OR DISTRIBUTION IS A VIOLATION OF THE FEDERAL COPYRIGHT ACT AND THE LICENSE AGREEMENT, AND SUBJECT TO CIVIL AND CRIMINAL PENALTIES THEREUNDER.

should be placed as close as practical to the sump pump and is required to prevent discharge water from the pump from running back into the pit after the pump stops, thus preventing the constant cycling of the sump pump.

Access must be provided to such valves and located above the sump cover. Where the discharge pipe is below grade, the valve must be located outside the sump below grade in an access pit with a removable cover.

Pipe and fittings of the discharge piping are not to be smaller than the size of the discharge outlet of the pump itself. Reduced-size discharge piping will affect pumping capacity, thereby causing the system not to function as designed.

Bibliography

The following resource materials are referenced in this chapter or are relevant to the subject matter addressed in this chapter.

Storm Drainage System Research Project Flow Rate Through Roof Drains. Rosemont, IL: American Society of Plumbing Engineers, 2012.

INTERNATIONAL CODE COUNCIL®
Copyright © 2015 ICC. ALL RIGHTS RESERVED. Accessed by David Dammon on Jun 21, 2017 12:30:52 PM pursuant to License Agreement with ICC. No further reproduction or distribution authorized. ANY UNAUTHORIZED REPRODUCTION OR DISTRIBUTION IS A VIOLATION OF THE FEDERAL COPYRIGHT ACT AND THE LICENSE AGREEMENT, AND SUBJECT TO CIVIL AND CRIMINAL PENALTIES THEREUNDER.

INTERNATIONAL CODE COUNCIL®
Copyright © 2015 ICC. ALL RIGHTS RESERVED. Accessed by David Dammon on Jun 21, 2017 12:30:52 PM pursuant to License Agreement with ICC. No further reproduction or distribution authorized. ANY UNAUTHORIZED REPRODUCTION OR DISTRIBUTION IS A VIOLATION OF THE FEDERAL COPYRIGHT ACT AND THE LICENSE AGREEMENT, AND SUBJECT TO CIVIL AND CRIMINAL PENALTIES THEREUNDER.

Chapter 12:
Special Piping and Storage Systems

General Comments

Even though the gases used in medical and inhalation anesthetic systems are nonflammable, they are frequently oxidizing gases and, as such, create an environment that supports combustion and where ignition of combustible materials might occur. Therefore, the proper design, installation and performance of these systems is essential to protect against the physical hazard they could pose. The portion of these systems not regulated by this chapter and the *International Fire Code*® (IFC®) is the mechanical exhaust of vacuum systems, which must be designed and installed in accordance with the requirements of the *International Mechanical Code*® (IMC®).

The nonmedical oxygen systems regulated by this chapter are bulk oxygen storage systems and oxygen-fuel gas systems used for welding and cutting. Bulk oxygen storage systems contain oxygen in either a liquid or gaseous state, which though nonflammable, possesses properties that support combustion. In a pure oxygen environment, many materials that do not burn in air can burn under pressure. The proper selection of materials used as components of bulk oxygen systems as well as the location of bulk oxygen storage containers are essential to minimizing the potential fire hazards posed by an oxygen-enriched environment.

Welding and cutting operations using fuel gas and oxygen pose an inherent risk of fire or explosion because of the combined presence of flammable gases, flames and oxygen. Additionally, the generation of acetylene gas, the most common flammable gas used with oxygen for welding and cutting operations, and the storage and use of calcium carbide to produce acetylene gas and other hazardous processes, are regulated by this chapter. Calcium carbide, when exposed to water, generates acetylene gas, which poses an explosion hazard where not properly stored and handled.

Purpose

This chapter sets the requirements for the design, installation, storage, handling and use of nonflammable medical gas systems, including inhalation anesthetic and vacuum piping systems, bulk oxygen storage systems and oxygen-fuel gas systems used for welding and cutting operations.The intent of these requirements is to minimize the potential fire and explosion hazards associated with the gases used in these systems.

SECTION 1201
GENERAL

1201.1 Scope. The provisions of this chapter shall govern the design and installation of piping and storage systems for nonflammable medical gas systems and nonmedical oxygen systems. All maintenance and operations of such systems shall be in accordance with the *International Fire Code*.

❖ This chapter contains the requirements and referenced standards that regulate nonflammable medical gas, inhalation anesthetic, vacuum piping and nonmedical oxygen systems. The referenced standards contain the design, installation, system components, materials, testing, operation, maintenance and safety requirements for these systems. The IFC regulates the maintenance and operation of these systems.

SECTION 1202
MEDICAL GASES

[F] 1202.1 Nonflammable medical gases. Nonflammable medical gas systems, inhalation anesthetic systems and vacuum piping systems shall be designed and installed in accordance with NFPA 99.

Exceptions:

1. This section shall not apply to portable systems or cylinder storage.
2. Vacuum system exhaust terminations shall comply with the *International Mechanical Code*.

❖ This section contains the requirements and referenced standards that apply to nonflammable medical gas, inhalation anesthetic and vacuum piping systems.

NFPA 99 applies to nonflammable medical gas, inhalation anesthetic and permanently installed vacuum piping systems, with the exception of portable systems and the storage of gas cylinders. The mechanical exhaust of vacuum piping systems is also exempt from NFPA 99 requirements and must comply with the requirements of the IMC.

Gases such as oxygen, nitrous oxide, compressed air, carbon dioxide, helium, nitrogen and various mixtures of these gases are typically used in medical gas-piping systems.

Oxygen and nitrous oxide are two of the most common gases used in medical gas and inhalation anesthetic systems. Even though these two gases are nonflammable, they are strong oxidizing gases, and their presence creates an environment where the potential for fire, chemical, mechanical and electrical hazards exists. Being a strong oxidizer, these gases, either by themselves or in combination, provide an environment that lowers the ignition energies of combustibles.

INTERNATIONAL CODE COUNCIL®
Copyright © 2015 ICC. ALL RIGHTS RESERVED. Accessed by David Dammon on Jun 21, 2017 12:30:52 PM pursuant to License Agreement with ICC. No further reproduction or distribution authorized. ANY UNAUTHORIZED REPRODUCTION OR DISTRIBUTION IS A VIOLATION OF THE FEDERAL COPYRIGHT ACT AND THE LICENSE AGREEMENT, AND SUBJECT TO CIVIL AND CRIMINAL PENALTIES THEREUNDER.

Because of the hazards that medical gases and inhalation anesthetics pose, NFPA 99 contains specific criteria for connection of the gas source to the distribution piping system, system identification and system alarm requirements. These requirements help reduce the potential for mistaken interconnection of a gas system to a vacuum system, which could present a fire and explosion hazard.

NFPA 99 requires that pipe and fittings used in a medical gas system must be of Type K or L (ASTM B 819) copper tubing, precleaned and capped. Additionally, pipe must be identified with one of the following markings: OXY, MED, OXY/MED, ACR/OXY or ACR/MED. Valves, fittings and other piping components must be cleaned for "oxygen service" by the manufacturer or an approved supplier, with the result a sealed, oil-free fitting enclosed in a dry nitrogen-purged container.

The piping system must be continuously purged prior to, during and after installation with oil-free dry nitrogen to prevent the formation of scale within the tubing. Openings must be plugged or capped to prevent debris or contamination on the inside of the tube.

The soldered or brazed joint is to be visually checked after it has been washed with hot water and a stainless steel wire brush has been used to remove scale. The following conditions are considered unacceptable:

1. Flux or flux residue present.
2. Excessive oxidation of the joint.
3. Cracks in the tube or component.
4. Cracks in the braze filler metal.
5. Presence of unmelted filler metal.
6. Presence of filler metal clearly visible around the entire joint and at the interface between the socket and tube.
7. Failure of the joint to hold the test pressure.

Vacuum system piping must be corrosion-resistant metal such as seamless copper water tube (ASTM B 88, Types K, L and M), copper ACR tube (ASTM B 280), copper medical gas tube (ASTM B 819), stainless steel tube or galvanized steel pipe (ASTM A 53). Joints in copper must be soldered or brazed. Joints in stainless steel tube must be brazed or welded. Joints in galvanized piping must be flanged or threaded. The vacuum piping must be marked or labeled prior to installation with one of the following markings: Medical-Surgical Vacuum or MED/SURG VAC. They must be marked not more than 20 feet (6096 mm) apart. Vacuum systems must never be converted for use as gas systems.

Where flux is used for soldered or brazed joints, it must be used sparingly to avoid excess flux inside the joint. If flux has been used, it must be washed with hot water.

NFPA 99 contains requirements regarding flammable inhalation anesthetic gases; however, use of flammable inhalation gases is not permitted in a piped distribution system. According to B.R. Klein, in 1950 the NFPA Committee on Gases prohibited piped distribution of flammable anesthetic gases to eliminate one possible source of explosion and fire in health care facilities. The IFC also contains requirements applicable to the storage, use and handling of compressed gases used in connection with nonflammable medical gases and inhalation anesthetic systems. The mechanical exhaust discharge and discharge termination of vacuum piping systems must comply with the IMC.

SECTION 1203
OXYGEN SYSTEMS

[F] 1203.1 Design and installation. Nonmedical oxygen systems shall be designed and installed in accordance with NFPA 55 and NFPA 51.

❖ This section contains the general requirements and referenced standards that apply to nonmedical oxygen systems.

NFPA 55 applies to bulk oxygen systems that are located at a consumer site and have a storage capacity exceeding 20,000 cubic feet (566 m^3) of liquid or gaseous oxygen, including unconnected reserves. The bulk oxygen originates off site, and the supply is delivered to the premises by mobile delivery equipment. This standard does not apply to oxygen manufacturing plants, oxygen suppliers or systems having capacities less than 20,000 cubic feet (566 m^3).

Oxygen is an odorless, tasteless, colorless, nontoxic nonflammable gas. Although oxygen gas is nonflammable, it is an oxidizer, and as such creates an environment where the ignition of combustibles could occur.

The location of bulk storage systems is critical to protect them from becoming involved in fires that originate from sources adjacent to the system. NFPA 55 contains the minimum clearance requirements between bulk oxygen storage containers and adjacent structures, combustible materials stored on site, places of public assembly, public sidewalks, parked vehicles, adjoining property lines and other storage containers containing flammable and combustible liquids or gases.

The standard requires that bulk oxygen storage containers comply with Section VIII of the ASME *Boiler and Pressure Vessel Code* and be corrosion resistant, or designed, constructed, tested and maintained in accordance with U.S. Department of Transportation (DOT) specifications and regulations for 4L containers. The containers must also be equipped with safety relief valves. Piping, tubing and fittings used for bulk oxygen systems must be suitable for oxygen service and must conform to the requirements

INTERNATIONAL CODE COUNCIL®
Copyright © 2015 ICC. ALL RIGHTS RESERVED. Accessed by David Dammon on Jun 21, 2017 12:30:52 PM pursuant to License Agreement with ICC. No further reproduction or distribution authorized. ANY UNAUTHORIZED REPRODUCTION OR DISTRIBUTION IS A VIOLATION OF THE FEDERAL COPYRIGHT ACT AND THE LICENSE AGREEMENT, AND SUBJECT TO CIVIL AND CRIMINAL PENALTIES THEREUNDER.

of ASME B 31.3 for chemical plant and petroleum refinery piping joints in piping, and tubing must be either welded or brazed, flanged, threaded, socket, slip or compression fittings. The use of gaskets and threaded sealants must be suitable for oxygen service. Brazing materials must have a melting point above 1,000°F (538°C). Field-assembled piping must be tested prior to being placed in service, and the bulk oxygen storage location must be permanently identified with signage stating "Oxygen—No Smoking—No Open Flames" or an equivalent warning.

The IFC also contains requirements applicable to the storage, handling and transportation of liquid oxygen.

NFPA 51 applies to oxygen-fuel gas systems for welding, cutting and allied processes, the use and storage of fuels, acetylene generation and calcium carbide storage. The standard does not apply to systems consisting of regulators, hoses, a torch and a single tank each of oxygen and fuel gas. Additionally, in systems where oxygen is not used with fuel gases, the manufacture of gases and filling of cylinders, the storage of empty cylinders and compressed air-fuel systems are not governed by this standard.

Oxygen-fuel gas systems for welding and cutting consist of flammable fuel gases such as acetylene, hydrogen, LP-gas, natural gas or stabilized methylacetylene-propadiene used with oxygen to create a high-temperature flame. Although NFPA 51 applies to fuel gases used with oxygen, very specific regulations governing the generation of acetylene and the storage of calcium carbide are stated because acetylene is the most commonly used gas for welding and cutting.

Acetylene is a colorless, flammable gas produced by the direct combination of hydrogen and carbon. The generation of acetylene gas is limited by NFPA 51 to the carbide-to-water process, in which pieces of calcium carbide are placed in water. The calcium carbide, a gray, stone-like material produced by the smelting of lime and coke, reacts with water to produce gas bubbles that are the acetylene gas.

Acetylene generators must be listed and are not permitted to generate acetylene at pressures exceeding 15 pounds per square inch (103 kPa) gauge. Acetylene generated at higher pressures is unstable and will, under certain circumstances, decompose into hydrogen and carbon with explosive violence.

Acetylene generators must be installed on a level foundation, protected from freezing and have sufficient area around them for maintenance, operation, adjustment and charging. Rooms or buildings in which acetylene generators are located must have explosion relief vents at not less than 1 square foot per 50 cubic feet (0.0929 m^2/1.4 m^3) of room volume.

Cylinders used for the storage of fuel gases or oxygen are required to conform to U.S. DOT or Canada Transport Commission regulations.

Pipe and fittings must comply with ANSI B31.3. Pipe must be Schedule 40 steel, brass, copper or stainless steel, and fittings must be standard weight in sizes up to and including 6 inches (152 mm) in diameter. Copper tubing must be Type K or L in accordance with ASTM B 88. Piping for acetylene and methylacetylene-propadiene systems must be steel. Joints in steel piping must be welded, threaded or flanged. Joints in brass or copper pipe must be welded, brazed, threaded or flanged. Where brazed, joints must be made with a silver-brazing alloy or similar high-melting-point filler metal.

Piping must be visually inspected for contaminants prior to assembly and the assembled must be system blown out with compressed air. Prior to being placed in service, the entire system must be pressure tested to a minimum 1.5 times the maximum operating pressure.

Finally, piping systems must be provided with a protective equipment device designed to prevent not only backflow of oxygen into the fuel gas supply but also a flashback of flame into the gas supply. The device must also prevent the development of an oxygen-fuel gas mixture at pressures that if ignited will achieve combustion pressure that will cause the device to fail and thus not prevent both of the previous items from occurring. Pressure relief devices are also required, and listed shutoff valves and backflow check valves must be installed at every fuel gas and oxygen outlet station.

The IFC contains requirements applicable to welding and cutting operations and equipment, calcium carbide and acetylene generators and related piping manifolds, hose systems and other system components for fuel gas and oxygen systems. It also contains provisions for the storage, use and handling of both compressed gases used in cutting and welding operations and calcium carbide.

Bibliography

The following resource materials are referenced in this chapter or are relevant to the subject matter addressed in this chapter.

ASME B31.3-02, *Process Piping*. New York: American Society of Mechanical Engineers, 2002.

NFPA 50-01, *Bulk Oxygen Systems at Consumer Sites.* Quincy, MA: National Fire Protection Association, 2001.

NFPA 51-02, *Design and Installation of Oxygen-Fuel Gas Systems for Welding, Cutting, and Allied Processes.* Quincy, MA: National Fire Protection Association, 2002.

NFPA 99-15, *Health Care Facilities Code,* Quincy, MA: National Fire Protection Association, 2015.

INTERNATIONAL CODE COUNCIL®
Copyright © 2015 ICC. ALL RIGHTS RESERVED. Accessed by David Dammon on Jun 21, 2017 12:30:52 PM pursuant to License Agreement with ICC. No further reproduction or distribution authorized. ANY UNAUTHORIZED REPRODUCTION OR DISTRIBUTION IS A VIOLATION OF THE FEDERAL COPYRIGHT ACT AND THE LICENSE AGREEMENT, AND SUBJECT TO CIVIL AND CRIMINAL PENALTIES THEREUNDER.

INTERNATIONAL CODE COUNCIL®
Copyright © 2015 ICC. ALL RIGHTS RESERVED. Accessed by David Dammon on Jun 21, 2017 12:30:52 PM pursuant to License Agreement with ICC. No further reproduction or distribution authorized. ANY UNAUTHORIZED REPRODUCTION OR DISTRIBUTION IS A VIOLATION OF THE FEDERAL COPYRIGHT ACT AND THE LICENSE AGREEMENT, AND SUBJECT TO CIVIL AND CRIMINAL PENALTIES THEREUNDER.

Chapter 13: Nonpotable Water Systems

General Comments

Inadequate quantities of fresh water supplies in many areas of the world have created a need to reduce the demand on potable water supply systems. One way to reduce the potable water demand is to use nonpotable water instead of potable water for various applications. Because flows of raw nonpotable water are intermittent, collection systems are necessary to store the water until needed. Such storage systems must be designed to accommodate a reasonable quantity of these waters. Depending on the source of the nonpotable water and the intended end use, various water treatment methods may be required.

Purpose

This chapter specifies the collection systems, storage tank sizing and the treatment requirements for reusing nonpotable water.

SECTION 1301 GENERAL

1301.1 Scope. The provisions of Chapter 13 shall govern the materials, design, construction and installation of systems for the collection, storage, treatment and distribution of nonpotable water. The use and application of nonpotable water shall comply with laws, rules and ordinances applicable in the jurisdiction.

❖ This chapter covers the required details about collecting, storing, treating and distributing nonpotable water. The end use for these waters is controlled by the rules established in each jurisdiction. For example, collecting and using rainwater might be allowed in Atlanta, Georgia, whereas that practice might not be allowed in Denver, Colorado.

1301.2 Water quality. Nonpotable water for each end use application shall meet the minimum water quality requirements as established for the intended application by the laws, rules and ordinances applicable in the jurisdiction. Where nonpotable water from different sources is combined in a system, the system shall comply with the most stringent of the requirements of this code that are applicable to such sources.

❖ The quality required for the nonpotable water to be used in a particular application must be established by each jurisdiction. It is hoped that, eventually, quality requirements for nonpotable water used in specific applications will become somewhat standardized, similar to the standardization of the quality for potable drinking water. However, unlike potable water where the ultimate use is human ingestion, the use of nonpotable water can be quite varied such that setting an ultimate quality standard for any one use will most likely be impractical. Another compounding issue is the extremely wide (quality) variations of raw sources of nonpotable water. For example, raw water sources for potable water are typically lakes, rivers and underground aquifers that provide "nature cleansed" water for starting the potable water treatment process. Treatment is fairly straightforward because the quality and consistency of the raw water source are known. For nonpotable water, the raw water source can vary greatly depending on what nonpotable waters are collected, the combinations of different nonpotable waters and the volumes of each, all of which can vary over any period of time. Of course, the goal is not to "overtreat" the nonpotable water for an end use application, as this can be costly in terms of initial equipment installation and long-term operation. Conversely, there is the inherent obligation for ensuring that the use of the nonpotable water does not create hazards for living organisms that come into contact with it. For example, some raw nonpotable waters might have a pH characteristic that can be accommodated by flush valves for water closets and urinals, but are unsuitable for drip irrigation for landscaping. A treatment process to correct the pH so that the nonpotable water can be used for both the landscaping and the flushing applications might be appropriate. However, why use pH-adjusting treatment for that volume of nonpotable water that is used only for flushing (when the flush valves can accommodate the non pH-adjusted water)? Treating all of the (combined) water for the highest quality required for any one use might make sense, depending on what treatments are necessary. However, the code does not prohibit combining the raw sources, treating that water to a certain quality level and then sending part of that water to another location for additional treatment for a specific end use application that requires a "higher" quality level. This provides a better understanding of the last sentence of the section: Only where the raw water sources are combined, and treated, stored and used as a combined treated source do the most stringent code requirements apply for treatment.

1301.2.1 Residual disinfectants. Where chlorine is used for disinfection, the nonpotable water shall contain not more than 4 ppm (4mg/L) of chloramines or free chlorine when tested in accordance with ASTM D1253. Where ozone is used for disinfection, the nonpotable water shall

INTERNATIONAL CODE COUNCIL®
Copyright © 2015 ICC. ALL RIGHTS RESERVED. Accessed by David Dammon on Jun 21, 2017 12:30:52 PM pursuant to License Agreement with ICC. No further reproduction or distribution authorized. ANY UNAUTHORIZED REPRODUCTION OR DISTRIBUTION IS A VIOLATION OF THE FEDERAL COPYRIGHT ACT AND THE LICENSE AGREEMENT, AND SUBJECT TO CIVIL AND CRIMINAL PENALTIES THEREUNDER.

not contain gas bubbles having elevated levels of ozone at the point of use.

Exception: Reclaimed water sources shall not be required to comply with these requirements.

❖ Chlorinating and ozonizing are two of the most common methods for disinfection of water. Chlorine is inexpensive to obtain and ozone is easy to make on site. They are effective, very controllable and the results (bacteria kill) are well established for the quantities and detention times needed for volumes of water. Some "overdisinfection" is necessary to ensure that a minimum level of disinfected product is maintained. But too much disinfected product in the water is costly in the long run and does not yield any better results (the bacteria is dead—more disinfection is unnecessary). The excess disinfection product offgases out of the water and produces undesirable effects in the short term. For chlorine, that effect is an unpleasant odor, similar to the air around most indoor public swimming pools. For ozone, that effect is an effervescence bubbling up and out of the water along with a sweet, pungent smell that is similar to how the air smells on a calm summer day just prior to the beginning of thunderstorm. These effects in an outdoor environment are typically of no concern. However, in an indoor environment, the effects can be a nuisance to the building occupants and, depending on the concentrations and length of exposure, could impact the health of the occupants. Therefore, this section requires control in the use of these products.

The use of ultraviolet light for disinfection instead of chlorine or ozone will require approval by the code official in accordance with Section 105.2.

The exception for reclaimed water recognizes that such water is disinfected at the source by the water utility that provides the water. See the definition for "Reclaimed water" in Chapter 2.

1301.2.2 Filtration required. Nonpotable water utilized for water closet and urinal flushing applications shall be filtered by a 100-micron or finer filter.

Exception: Reclaimed water sources shall not be required to comply with these requirements.

❖ Water closet fill valves (and flush valves) and urinal flush valves have small-diameter waterways that could become clogged with particulate matter in nonpotable water. The 100-micron filter requirement ensures that valves will function as the manufacturer intended.

The exception for reclaimed water recognizes that such water is filtered at the source by the water utility that provides the water. See the definition for "Reclaimed water" in Chapter 2.

1301.3 Signage required. Nonpotable water outlets such as hose connections, open ended pipes and faucets shall be identified at the point of use for each outlet with signage that reads as follows: "Nonpotable water is utilized for [application name]. CAUTION: NONPOTABLE WATER – DO NOT DRINK." The words shall be legibly and indelibly printed on a tag or sign constructed of corrosion-resistant waterproof material or shall be indelibly printed on the fixture. The letters of the words shall be not less than 0.5 inch (12.7 mm) in height and in colors in contrast to the background on which they are applied. In addition to the required wordage, the pictograph shown in Figure 1301.3 shall appear on the signage required by this section.

❖ This section is identical to Section 608.8.1. See the commentary for that section.



FIGURE 1301.3
PICTOGRAPH—DO NOT DRINK

1301.4 Permits. Permits shall be required for the construction, installation, alteration and repair of nonpotable water systems. Construction documents, engineering calculations, diagrams and other such data pertaining to the nonpotable water system shall be submitted with each permit application.

❖ Although Section 106 requires permits for the work covered by the code, this section reinforces that requirement, as not everyone considers all nonpotable water system work as needing a permit. For example, rainwater collection and distribution systems have been installed for many decades without a thought towards compliance with a code. There have been guidelines developed by numerous jurisdictions where water shortages are a significant problem. Some guidelines have been adopted and made part of the laws so that code officials could enforce them. In other areas, the guidelines are not law. This section makes it clear that this chapter is enforceable when the code is adopted.

1301.5 Potable water connections. Where a potable system is connected to a nonpotable water system, the potable water supply shall be protected against backflow in accordance with Section 608.

❖ This section simply refers back to the backflow prevention section for where nonpotable water might possibly contaminate a potable water supply system when a backflow event (in the potable water system) occurs.

INTERNATIONAL CODE COUNCIL®
Copyright © 2015 ICC. ALL RIGHTS RESERVED. Accessed by David Dammon on Jun 21, 2017 12:30:52 PM pursuant to License Agreement with ICC. No further reproduction or distribution authorized. ANY UNAUTHORIZED REPRODUCTION OR DISTRIBUTION IS A VIOLATION OF THE FEDERAL COPYRIGHT ACT AND THE LICENSE AGREEMENT, AND SUBJECT TO CIVIL AND CRIMINAL PENALTIES THEREUNDER.

1301.6 Approved components and materials. Piping, plumbing components and materials used in collection and conveyance systems shall be manufactured of material approved for the intended application and compatible with any disinfection and treatment systems used.

❖ The use of the term "approved" may or may not mean approved by the code official, as the code does not provide a basis for which the materials can be evaluated for some applications. For example, a gray water collection system inside of (and below) the building will be constructed of piping materials that comply with Tables 702.1 and 702.1 and 702.4. However, should the continuation of that piping outside of the building be allowed to comply with Table 702.3 (building sewer piping)? The code official might agree that it does comply with the code but manufacturers of systems that "process" the nonpotable waters might not agree.

1301.7 Insect and vermin control. The system shall be protected to prevent the entrance of insects and vermin into storage tanks and piping systems. Screen materials shall be compatible with contacting system components and shall not accelerate the corrosion of system components.

❖ Large floating "mats" of dead insects and vermin in storage tanks will decompose and create odors through the tank vent. Although it is usually not possible to eliminate all insects from entry, those that do enter hopefully will become waterlogged and sink to the bottom of the tank. Sections 1302.5 and 1303.8 provide additional requirements for on-site nonpotable water and rainwater, respectively. Filtering to remove insects and vermin from reclaimed water is performed at the water utility that distributes the reclaimed water.

Screens for storage tank vents must not be of materials that are incompatible with the material that they are in contact with so that the screen does not corrode and fall off the opening.

It is uncertain whether this section requires screens at each vent pipe termination (of the vent piping required for equalizing pressures in drain piping system) to prevent the entry of insects and vermin into the piping system. Any insect and vermin would be captured by filters installed before the storage tank. The code official will need to make this decision.

1301.8 Freeze protection. Where sustained freezing temperatures occur, provisions shall be made to keep storage tanks and the related piping from freezing.

❖ Because storage tanks have a large volume of water, it would take an "amount of time" of exposure to freezing temperatures for the water in the tank to begin freezing. The amount of time it will take for the water to freeze will depend on many factors, such as sunlight (see Section 1301.9.2), wind, movement of water in the tank and the lowest temperature. For these reasons, many nonpotable water tanks are buried underground. However, some climates could have only "mildly freezing" temperatures that only last for a few hours a day. In regions that do have freezing temperatures, storage tanks could be located outdoors under open shelters or enclosed in shelter buildings that have very little or no heat. Tank contents that are kept moving by a circulation system could endure "mildly freezing" overnight conditions.

The exposure of piping, pumps and other equipment to freezing conditions is a more serious issue as in most cases, the water is not moving. See the commentary for Section 305.4 concerning protection of piping against freezing. Note that while the piping, pumps and other equipment might need protection (insulation, heat or both) against freezing conditions, that is not an indication that the storage tank needs similar protection.

1301.9 Nonpotable water storage tanks. Nonpotable water storage tanks shall comply with Sections 1301.9.1 through 1301.9.11.

❖ A storage tank can be of any shape and be of a multitude of materials. The following sections provide the requirements for storage tanks.

1301.9.1 Sizing. The holding capacity of the storage tank shall be sized in accordance with the anticipated demand.

❖ Ideally, all nonpotable water collected and stored will (eventually) be reused for another purpose. However, that is not the case with raw gray water, as Section 1302.6 prohibits untreated gray water from being retained for more than 24 hours. Another factor is that there is not enough demand (use) for the collected nonpotable water. For example, a system collects large volumes of rainwater in a continuously "rainy" region; however, the rainwater is only used to flush water closets (the installed nonwater urinals not needing water). Does it make sense to install a large storage tank to retain all of the rainwater? Perhaps not. After careful analysis of the rainwater flows (historical weather data) and the demands (anticipated use of the fixtures that will use the water), the designer of the system will make the decision on the size of the storage tank.

1301.9.2 Location. Storage tanks shall be installed above or below grade. Above-grade storage tanks shall be protected from direct sunlight and shall be constructed using opaque, UV-resistant materials such as, but not limited to, heavily tinted plastic, fiberglass, lined metal, concrete, wood, or painted to prevent algae growth, or shall have specially constructed sun barriers including, but not limited to, installation in garages, crawl spaces or sheds. Storage tanks and their manholes shall not be located directly under soil piping, waste piping or any source of contamination.

❖ Storage tanks can be located anywhere, such as inside of buildings, on roofs or on grade (with proper shelter) or underground (inside or outside of the building footprint). The designer chooses the location that best suits the needs of the system that he or she is designing.

INTERNATIONAL CODE COUNCIL®
Copyright © 2015 ICC. ALL RIGHTS RESERVED. Accessed by David Dammon on Jun 21, 2017 12:30:52 PM pursuant to License Agreement with ICC. No further reproduction or distribution authorized. ANY UNAUTHORIZED REPRODUCTION OR DISTRIBUTION IS A VIOLATION OF THE FEDERAL COPYRIGHT ACT AND THE LICENSE AGREEMENT, AND SUBJECT TO CIVIL AND CRIMINAL PENALTIES THEREUNDER.

Tanks above grade need to be protected so that the material of the tank's outer wall is not degraded by exposure to sunlight, as sunlight includes wavelengths in the ultraviolet (UV) range. Most untinted thermoplastic materials such as polypropylene and polyethylene can start cracking because the sun's UV radiation causes degradation of the connection points within the molecules of plastic materials. The cracking continues until the material loses enough strength to fail. Although "above grade" usually means outdoors and above grade, the situation would be the same for a plastic storage tank located inside of a standard glass greenhouse (plain glass being able to pass some UV radiation). Does this mean that storage tanks located in a room inside of a building where a wall window allows natural light into the room must be heavily tinted? Perhaps not, as the exposure to sunlight will probably be incidental or only be directly shining on the tank for a very limited amount of time (as the sun moves though the sky). However, if the room has many clear skylights (not tinted—such as might be found in a warehouse), that thought might have to be re-evaluated. Note that this section is only concerned about exposure of the tank to sunlight. However, the sun is not the only generator of UV radiation. A shop that performs open welding could cause significant UV radiation towards a plastic tank if the tank was not shielded in some manner.

Plastic tanks can be protected against UV radiation by the addition of pigments that absorb the UV rays. As UV absorbers (UVAs) will degrade over long periods of time, significant UVA pigments must be added to compensate for the UVA degradation. Thus, the code requires "heavily tinted" plastic tank materials.

Another reason for keeping direct sunlight off of a translucent tank is to prevent algae growth in the water. Algae need sunlight to propagate. Unchecked algae growth causes significant equipment problems and can create difficult-to-solve water quality issues.

Lined metal tanks are one type of metal tank. This specifically refers to carbon steel metal that will rust and produce scale (corrode). Typical linings are epoxy coatings that are applied after the carbon steel metal is sandblasted clean. Presumably, stainless steel tanks would not require a lining because stainless steel (if the proper series of stainless steel is chosen) will not corrode.

The requirement for storage tanks (and their manholes) to not be located under soil or waste piping, or any "source of contamination," is to make sure that the quality of the water in the tank does not become something other than expected.

1301.9.3 Materials. Where collected on site, water shall be collected in an *approved* tank constructed of durable, nonabsorbent and corrosion-resistant materials. The storage tank shall be constructed of materials compatible with any disinfection systems used to treat water upstream of the tank and with any systems used to maintain water quality in the tank. Wooden storage tanks that are not equipped with a makeup water source shall be provided with a flexible liner.

❖ Storage tanks must be approved by the code official. There are many types of arrangements of "tanks" that are not of the durability, nonabsorbency and corrosion resistance needed for long-term use as a permanent system for the intended use. For example, a field-built brick (or block) structure with a rubber lining that was adhered to the walls might hold water for the initial test, but is that an appropriate long-term solution? The code official must make the decision.

The tank materials must be compatible with the disinfection and treatment methods for the water that will be stored in the tank. For example, if alternate approval was obtained for the use of UV lamps in the tank for disinfection of the water, then a tank made of untinted plastic might not be compatible with the disinfection method (see commentary, Section 1301.9.2).

The watertightness of wooden storage tanks depends upon the wood planking "swelling" and closing off the gaps between the planks. If the water level in a wood tank is allowed to decrease for long periods of time such as a day, the planks dry out, shrink and the gaps open up to cause leaks. Makeup water added to the tank keeps the planks wet. The makeup water would not be needed at any time that the water level in the tank becomes low, but only when the tank level remains low for a period of time where the planks would start drying out. If adding makeup water does not make sense in the scheme of collecting as much nonpotable water as possible (and reducing the use of potable water), then a wood tank would have to be lined with a flexible liner so that the water level could remain low for long periods of time. For example, rainwater might be used from rainwater storage at a very slow rate while rainwater is collected in "surges" (rainfall events). Filing the wood tank to the overflow point to keep the wood from drying out would be senseless.

1301.9.4 Foundation and supports. Storage tanks shall be supported on a firm base capable of withstanding the weight of the storage tank when filled to capacity. Storage tanks shall be supported in accordance with the *International Building Code*.

❖ Water weighs 62.4 pounds per cubic feet or 8.34 pounds per gallon. A 100-gallon tank will weigh 834 pounds (378 kg) plus the weight of the tank itself. The weight of a filled water tank is always significant, but especially so when supported by a building structure. Chapter 16 of the *International Building Code*â (IBCâ) covers the structural design of buildings, including wind, ice build-up and earthquake loads. For underground tanks, Chapter 18 of the IBC covers soils and foundations.

1301.9.4.1 Ballast. Where the soil can become saturated, an underground storage tank shall be ballasted, or otherwise secured, to prevent the tank from floating out of the ground

INTERNATIONAL CODE COUNCIL®
Copyright © 2015 ICC. ALL RIGHTS RESERVED. Accessed by David Dammon on Jun 21, 2017 12:30:52 PM pursuant to License Agreement with ICC. No further reproduction or distribution authorized. ANY UNAUTHORIZED REPRODUCTION OR DISTRIBUTION IS A VIOLATION OF THE FEDERAL COPYRIGHT ACT AND THE LICENSE AGREEMENT, AND SUBJECT TO CIVIL AND CRIMINAL PENALTIES THEREUNDER.

when empty. The combined weight of the tank and hold down ballast shall meet or exceed the buoyancy force of the tank. Where the installation requires a foundation, the foundation shall be flat and shall be designed to support the weight of the storage tank when full, consistent with the bearing capability of adjacent soil.

❖ Uplift forces of an empty underground tank vary significantly when the ground around the tank becomes saturated with water. The effect is no different than placing a ping pong ball under water and releasing it. It will return to the surface. The effect was scientifically discovered by Archimedes of Syracuse (Greece) around 250 B.C. His principle states: "Any object, wholly or partially immersed in a fluid, is buoyed up by a force equal to the weight of the fluid displaced by the object." In other words, objects have "buoyancy"; however, when the weight of the object is greater than the weight of the fluid displaced, the object is not buoyant (and is not uplifted towards the surface of the water).

Consider a tank of 5,000-gallon (18927 L) capacity. The uplift force of that tank (empty and neglecting the empty weight of the tank) in fully saturated soil is 5,000 gallons x 8.34 pounds per gallon or 41700 pounds (18914 kg). That amount of force will cause a $1^1/_8$-inch nominal diameter reinforcing bar (40 ksi yield strength) to begin to pull apart. The design of the straps and their connections to the tank and to the concrete foundation must be carefully considered to prevent underground tanks from "popping up and out of the ground."

The (concrete) foundation that the tank rests upon must also be properly designed to accept the loads from the tank (filled to capacity) without failure and to not overload the soil that the foundation rests upon.

1301.9.4.2 Structural support. Where installed below grade, storage tank installations shall be designed to withstand earth and surface structural loads without damage and with minimal deformation when empty or filled with water.

❖ A underground tank must be able to support the earth loads against the sides and top of the tank. If the tank is under a road, driveway or parking lot, vehicle loads add to the loads that the tank must withstand. Where the tank is adjacent to the road, driveway or parking lot, some of those loads could distribute to areas beyond those directly under the tank. Water-saturated soils also impart significant loads to the sides of an empty tank.

1301.9.5 Makeup water. Where an uninterrupted supply is required for the intended application, potable or reclaimed water shall be provided as a source of makeup water for the storage tank. The makeup water supply shall be protected against backflow in accordance with Section 608. A full-open valve located on the makeup water supply line to the storage tank shall be provided. Inlets to the storage tank shall be controlled by fill valves or other automatic supply valves installed to prevent the tank from overflowing and to prevent the water level from dropping below a predetermined point. Where makeup water is provided, the water level shall not be permitted to drop below the source water inlet or the intake of any attached pump.

❖ A makeup water supply for the storage tank is necessary where a constant supply of nonpotable water is depended upon, for example, where rainwater or treated gray water is used to flush water closets and urinals. If the volume of raw nonpotable water supply is not sufficient to keep up with the demand, then additional water must be added to the tank to keep the nonpotable water supply system going. Makeup water does not necessarily need to be potable water, but often it is. The connection of makeup water to a storage tank must comply with Section 608 to protect the higher quality makeup water from contamination in a backflow event.

The intent of this section is that the makeup water be supplied to the tank by automatic means. The term "fill valve" implies the type of mechanical "float-type" fill valve that is found in a flush tank water closet or at the top of a vat. The valve also could be the type that is electrically controlled (such as a solenoid valve) through float switches or other water level detection devices. A full open valve is required to be on the makeup water line so that the "fill valve" or other automatic control valve can be removed, repaired or replaced.

Obviously, the makeup water fill valve must shut before water in the tank begins to empty out through the overflow of the tank. However, the shutoff point does not need to be at the overflow level in order to leave room for the addition of nonpotable water from the original sources. The valve must open before the water in the tank reaches a certain "low" level as determined by the designer of the system. In most nonpotable water storage tanks, especially those storing water with some particulate matter, the incoming water (both the original water and makeup) is introduced into the tank at a point below the water surface and somewhat above the bottom of the tank. This is to reduce "stirring" of the floating debris on the surface of water in the tank. Entry of water into the tank should be as calm as possible. Allowing the level of water to drop below the inlet level would only introduce turbulence on the surface of the water resulting in the particulate becoming entrained throughout the tank. This could later negatively impact the operation of pumps, valves and filters in the distribution system.

1301.9.6 Overflow. The storage tank shall be equipped with an overflow pipe having a diameter not less than that shown in Table 606.5.4. The overflow pipe shall be protected from insects or vermin and shall discharge in a manner consistent with storm water runoff requirements of the jurisdiction. The overflow pipe shall discharge at a sufficient distance from the tank to avoid damaging the tank foundation or the adjacent property. Drainage from overflow pipes shall be directed to

INTERNATIONAL CODE COUNCIL®
Copyright © 2015 ICC. ALL RIGHTS RESERVED. Accessed by David Dammon on Jun 21, 2017 12:30:52 PM pursuant to License Agreement with ICC. No further reproduction or distribution authorized. ANY UNAUTHORIZED REPRODUCTION OR DISTRIBUTION IS A VIOLATION OF THE FEDERAL COPYRIGHT ACT AND THE LICENSE AGREEMENT, AND SUBJECT TO CIVIL AND CRIMINAL PENALTIES THEREUNDER.

prevent freezing on roof walkways. The overflow drain shall not be equipped with a shutoff valve. A cleanout shall be provided on each overflow pipe in accordance with Section 708.

❖ Storage tanks can become filled to capacity and additional water added to the tank has to go somewhere or the collection system will back up and cause problems. The overflow is another location where insects and vermin can enter the storage tank so a screen is necessary (see commentary, Section 1301.7). In some situations, such as rainwater storage tanks, the overflow could discharge to a storm sewer or a natural waterway. Because it is rainwater, it would seem logical to allow it to flow into the storm sewer or natural waterway. However, that depends on the storm water runoff requirements of the jurisdiction. If the rainwater has been treated (other than screening for particulate) or potable (or other nonpotable) water is used for the makeup water supply, there could be restrictions against discharging to a storm sewer or natural waterway. If the local jurisdiction does not know, state environmental agencies should be consulted to determine the answer. In the United States, the Environmental Protection Agency (EPA) considers storm water discharges as point sources of pollution because rainwater could contain harmful pollutants that could wash into streams, rivers, lakes and coastal water. Most states administer the National Pollutant Discharge Elimination System (NPDES) stormwater program. However, in some states and territories and all tribal lands, the EPA directly administers the program.

Although this section implies that any nonpotable water (other than rainwater) could be allowed to overflow to a storm sewer or waterway, it is doubtful that this would be allowed in any jurisdiction, pursuant to the overriding requirements of the EPA. Additionally, even though reclaimed water is of an equal quality (or perhaps of higher quality) than what exits the tertiary stage of the municipal wastewater treatment facility that distributes the reclaimed water, reclaimed water may not necessarily be allowed to flow into storm sewers or waterways.

If the flow of water from the overflow is allowed to drain onto the ground around the outside of a storage tank, it must be routed to drain away from the tank area and not toward a building or an adjacent lot. Foundations for the tank and a building can be quickly undermined when excess water surcharges the soil at these locations. Adjacent lot owners would not appreciate such overflows.

Where a water tank is on a roof (as many water tanks have been in New York City), water coming out of an overflow during freezing water creates hazardous conditions on the roof walkways. Prior planning to put the overflow and walkways in different locations is necessary.

Overflows could become clogged, especially where the overflow has an outlet screen. A cleanout is necessary to clear blockages.

1301.9.7 Access. Not less than one access opening shall be provided to allow inspection and cleaning of the tank interior. Access openings shall have an *approved* locking device or other approved method of securing access. Below-grade storage tanks, located outside of the building, shall be provided with a manhole either not less than 24 inches (610 mm) square or with an inside diameter not less than 24 inches (610 mm). Manholes shall extend not less than 4 inches (102 mm) above ground or shall be designed to prevent water infiltration. Finished grade shall be sloped away from the manhole to divert surface water. Manhole covers shall be secured to prevent unauthorized access. Service ports in manhole covers shall be not less than 8 inches (203 mm) in diameter and shall be not less than 4 inches (102 mm) above the finished grade level. The service port shall be secured to prevent unauthorized access.

Exception: Storage tanks less than 800 gallons (3028 L) in volume and installed below grade shall not be required to be equipped with a manhole, but shall have a service port not less than 8 inches (203 mm) in diameter.

❖ Storage tanks, big and small, need to be accessed for inspection. Above-ground tanks are not required to have a manhole access, only an inspection access. Below-grade tanks must have manhole access except where the tank has a capacity of less than 800 gallons (3028 L). All openings must be secured to prevent unauthorized access.

1301.9.8 Venting. Storage tanks shall be provided with a vent sized in accordance with Chapter 9 and based on the aggregate diameter of all tank influent pipes. The reservoir vent shall not be connected to sanitary drainage system vents. Vents shall be protected from contamination by means of an *approved* cap or U-bend installed with the opening directed downward. Vent outlets shall extend not less than 4 inches (102 mm) above grade or as necessary to prevent surface water from entering the storage tank. Vent openings shall be protected against the entrance of vermin and insects in accordance with the requirements of Section 1301.7.

❖ As the water level in the tank rises and drops, air needs to escape and enter the tank to prevent pressure (especially negative pressure) from building up.

1301.9.9 Draining of tanks. Where tanks require draining for service or cleaning, tanks shall be drained by using a pump or by a drain located at the lowest point in the tank. The tank drain pipe shall discharge as required for overflow pipes and shall not be smaller in size than specified in Table 606.5.7. Not less than one cleanout shall be provided on each drain pipe in accordance with Section 708.

❖ A tank can be drained by a pump or by a drain near the bottom of the tank. Most of the time, draining is required to clean the tank of accumulated debris. In-tank pumps and level controls are usually accessible by lifting them out of the tank so draining is not required for those repairs. Where there is a tank drain, this section requires a “tank drain pipe.” In other words, there needs to be a pipe connected near the

INTERNATIONAL CODE COUNCIL®
Copyright © 2015 ICC. ALL RIGHTS RESERVED. Accessed by David Dammon on Jun 21, 2017 12:30:52 PM pursuant to License Agreement with ICC. No further reproduction or distribution authorized. ANY UNAUTHORIZED REPRODUCTION OR DISTRIBUTION IS A VIOLATION OF THE FEDERAL COPYRIGHT ACT AND THE LICENSE AGREEMENT, AND SUBJECT TO CIVIL AND CRIMINAL PENALTIES THEREUNDER.

bottom of the tank, presumably with a valve, so that drain flow can be controlled. A "drain plug" alone would not meet the intent of this section as once the plug was removed, there would not be any way to control the discharge. This is reinforced by Item 2 of Section 1301.9.11.

1301.9.10 Marking and signage. Each nonpotable water storage tank shall be labeled with its rated capacity. The contents of storage tanks shall be identified with the words "CAUTION: NONPOTABLE WATER – DO NOT DRINK." Where an opening is provided that could allow the entry of personnel, the opening shall be marked with the words, "DANGER – CONFINED SPACE." Markings shall be indelibly printed on the tank or on a tag or sign constructed of corrosion-resistant waterproof material that is mounted on the tank. The letters of the words shall be not less than 0.5 inch (12.7 mm) in height and shall be of a color in contrast with the background on which they are applied.

❖ The requirements of this section are straightforward. A capacity label, especially for underground tanks, is useful when the contents have to be pumped out and hauled to a disposal point.

1301.9.11 Storage tank tests. Storage tanks shall be tested in accordance with the following:

Storage tanks shall be filled with water to the overflow line prior to and during inspection. All seams and joints shall be left exposed and the tank shall remain water tight without leakage for a period of 24 hours.

1. After 24 hours, supplemental water shall be introduced for a period of 15 minutes to verify proper drainage of the overflow system and that there are no leaks.
2. The tank drain shall be observed for proper operation.
3. The makeup water system shall be observed for proper operation and successful automatic shutoff of the system at the refill threshold shall be verified.

❖ The requirements of this section are straightforward. Although 24 hours seems like a long test period, it might take that amount of time for a small leak to develop enough of a puddle to be observed. For a lined carbon steel tank, even a small leak could become a much larger leak over time (because of corrosion), so it is useful to wait a day to find leaks. For wood tanks, the tank will have to filled well ahead of the test period so that the wood can swell and close up any gaps.

1301.10 System abandonment. If the owner of an on-site nonpotable water reuse system or rainwater collection and conveyance system elects to cease use of, or fails to properly maintain such system, the system shall be abandoned and shall comply with the following:

1. All system piping connecting to a utility-provided water system shall be removed or disabled.
2. The distribution piping system shall be replaced with an *approved* potable water supply piping system. Where an existing potable pipe system is already in place, the fixtures shall be connected to the existing system.
3. The storage tank shall be secured from accidental access by sealing or locking tank inlets and access points, or filling with sand or equivalent.

❖ Nonpotable water reuse systems do require maintenance and must be kept in good repair to provide water for the intended fixtures or other uses. However, there will be times that abandonment of some systems will be necessary.

1301.11 Trenching requirements for nonpotable water piping. Nonpotable water collection and distribution piping and reclaimed water piping shall be separated from the *building sewer* and potable water piping underground by 5 feet (1524 mm) of undisturbed or compacted earth. Nonpotable water collection and distribution piping shall not be located in, under or above cesspools, septic tanks, septic tank drainage fields or seepage pits. Buried nonpotable water piping shall comply with the requirements of Section 306.

Exceptions:

1. The required separation distance shall not apply where the bottom of the nonpotable water pipe within 5 feet (1524 mm) of the *sewer* is not less than 12 inches (305 mm) above the top of the highest point of the *sewer* and the pipe materials conform to Table 702.3.
2. The required separation distance shall not apply where the bottom of the potable water service pipe within 5 feet (1524 mm) of the nonpotable water pipe is a minimum of 12 inches (305 mm) above the top of the highest point of the nonpotable water pipe and the pipe materials comply with the requirements of Table 605.4.
3. Nonpotable water pipe is permitted to be located in the same trench with a *building sewer*, provided that such *sewer* is constructed of materials that comply with the requirements of Table 702.2.
4. The required separation distance shall not apply where a nonpotable water pipe crosses a *sewer* pipe, provided that the pipe is sleeved to at least 5 feet (1524 mm) horizontally from the *sewer* pipe centerline on both sides of such crossing, with pipe materials that comply with Table 702.2.
5. The required separation distance shall not apply where a potable water service pipe crosses a nonpotable water pipe, provided that the potable water service pipe is sleeved for a distance of at least 5 feet (1524 mm) horizontally from the centerline of the nonpotable pipe on both sides of such crossing, with pipe materials that comply with Table 702.2.

INTERNATIONAL CODE COUNCIL®
Copyright © 2015 ICC. ALL RIGHTS RESERVED. Accessed by David Dammon on Jun 21, 2017 12:30:52 PM pursuant to License Agreement with ICC. No further reproduction or distribution authorized. ANY UNAUTHORIZED REPRODUCTION OR DISTRIBUTION IS A VIOLATION OF THE FEDERAL COPYRIGHT ACT AND THE LICENSE AGREEMENT, AND SUBJECT TO CIVIL AND CRIMINAL PENALTIES THEREUNDER.

6. Irrigation piping located outside of a building and downstream of the backflow preventer is not required to meet the trenching requirements where nonpotable water is used for outdoor applications.

❖ These are the same requirements (excluding Exception 5) as for the installation of a potable water supply system. Nonpotable water irrigation piping does not need separation from the building sewer because this would be too difficult to accomplish and would be of limited benefit.

1301.12 Outdoor outlet access. Sillcocks, hose bibbs, wall hydrants, yard hydrants and other outdoor outlets supplied by nonpotable water shall be located in a locked vault or shall be operable only by means of a removable key.

❖ Rainwater (or possibly reclaimed water) could have a variety of uses outside of a building. Rainwater could be used to water gardens and vegetation, or to wash vehicles. Reclaimed water might be able to be used for outdoor heavy equipment washdowns. The outlets to connect to these water sources need to be controlled so that unauthorized use does not occur.

SECTION 1302
ON-SITE NONPOTABLE WATER REUSE SYSTEMS

1302.1 General. The provisions of Section 1302 shall govern the construction, installation, alteration and repair of on-site nonpotable water reuse systems for the collection, storage, treatment and distribution of on-site sources of nonpotable water as permitted by the jurisdiction.

❖ This section is about the specific details for on-site nonpotable water reuse systems. Refer to the definition of "On-site nonpotable water reuse system" in Chapter 2.

1302.2 Sources. On-site nonpotable water reuse systems shall collect waste discharge from only the following sources: bathtubs, showers, lavatories, clothes washers and laundry trays. Water from other *approved* nonpotable sources including swimming pool backwash operations, air conditioner condensate, rainwater, cooling tower blow-down water, foundation drain water, steam system condensate, fluid cooler discharge water, food steamer discharge water, combination oven discharge water, industrial process water and fire pump test water shall also be permitted to be collected for reuse by on-site nonpotable water reuse systems, as *approved* by the code official and as appropriate for the intended application.

❖ Essentially, an on-site nonpotable water reuse system only collects gray water. However, there are many other kinds of nonpotable water that could be available at the building site. Some of these might be generated in quantities that overshadow the flow of gray water into the system. The "qualities" of gray water are well understood. Other nonpotable waters are quite different from gray water and any one could have a significant impact on the suitably of the water for an end use application. For example, cooling tower blow-down water could have such a high level of total dissolved solids that for an end use such as water closet flushing, the bowls of the water closets become scaled and hard to clean. Problems with water closet fill and flush valves, and clogging of the internal waterways of the water closet could occur. Therefore, the code official needs to approve these other nonpotable water sources for inclusion.

1302.2.1 Prohibited sources. Waste water containing urine or fecal matter shall not be diverted to on-site nonpotable water reuse systems and shall discharge to the sanitary drainage system of the building or premises in accordance with Chapter 7. Reverse osmosis system reject water, water softener discharge water, kitchen sink waste water, dishwasher waste water and waste water discharged from wet-hood scrubbers shall not be collected for reuse in an on-site nonpotable water reuse system.

❖ There are certain nonpotable waters already known to be detrimental to on-site nonpotable water reuse systems. They are prohibited to be included.

1302.3 Traps. Traps serving fixtures and devices discharging waste water to on-site nonpotable water reuse systems shall comply with Section 1002.4.

❖ Plumbing fixtures (and clothes washer waste receptors) are already required to have traps that comply with Section 1002.4, Where other nonpotable water is collected by the on-site nonpotable water reuse systems, a trap is required between the connection of the piping from the nonpotable water source and the collection piping leading to the on-site nonpotable water reuse systems. The trap is required to also to comply with Section 1002.4. In most cases, these additional nonpotable waters will be connected indirectly to the gray water piping system. Indirect connections and waste receptors are covered in Chapter 8.

1302.4 Collection pipe. On-site nonpotable water reuse systems shall utilize drainage piping *approved* for use in plumbing drainage systems to collect and convey untreated water for reuse. Vent piping *approved* for use in plumbing venting systems shall be utilized for vents in the gray water system. Collection and vent piping materials shall comply with Section 702.

❖ The piping used for collecting all on-site nonpotable water must comply with Section 702. Vent piping must also be in accordance with Section 702.

1302.4.1 Installation. Collection piping conveying untreated water for reuse shall be installed in accordance with Section 704.

❖ Installation of the collection piping must comply with Section 704.

1302.4.2 Joints. Collection piping conveying untreated water for reuse shall utilize joints *approved* for use with the distribution piping and appropriate for the intended applications as specified in Section 705.

❖ Joints in collection piping must comply with Section 705.

INTERNATIONAL CODE COUNCIL®
Copyright © 2015 ICC. ALL RIGHTS RESERVED. Accessed by David Dammon on Jun 21, 2017 12:30:52 PM pursuant to License Agreement with ICC. No further reproduction or distribution authorized. ANY UNAUTHORIZED REPRODUCTION OR DISTRIBUTION IS A VIOLATION OF THE FEDERAL COPYRIGHT ACT AND THE LICENSE AGREEMENT, AND SUBJECT TO CIVIL AND CRIMINAL PENALTIES THEREUNDER.

1302.4.3 Size. Collection piping conveying untreated water for reuse shall be sized in accordance with drainage sizing requirements specified in Section 710.

❖ Although this section indicates that the drain piping is to be sized in accordance with Section 710, the flows from nonpotable water sources (other than the allowed plumbing fixtures) are not measured in drainage fixture units (dfu). In most cases, a maximum flow rate in gallons per minute can be computed for these flows. Section 709.3 can be used to determine an approximate number of dfu for a gallon-per-minute flow rate so the tables in Section 710 can be used.

1302.4.4 Labeling and marking. Additional marking of collection piping conveying untreated water for reuse shall not be required beyond that required for sanitary drainage, waste and vent piping by Chapter 7.

❖ As the code does not require labeling/marking of sanitary drainage piping, including piping that conveys only gray water, the code does not require labeling/marking for nonpotable water collection piping.

1302.5 Filtration. Untreated water collected for reuse shall be filtered as required for the intended end use. Filters shall be accessible for inspection and maintenance. Filters shall utilize a pressure gauge or other *approved* method to provide indication when a filter requires servicing or replacement. Filters shall be installed with shutoff valves immediately upstream and downstream to allow for isolation during maintenance.

❖ Filters are typically installed to filter the flow before entering the storage tank so that debris is kept out of the tank. Some type of alert system is required to indicate when the filter needs to be cleaned or changed.

1302.6 Disinfection and treatment. Where the intended application for nonpotable water collected on site for reuse requires disinfection or other treatment or both, it shall be disinfected as needed to ensure that the required water quality is delivered at the point of use. Nonpotable water collected on site containing untreated gray water shall be retained in collection reservoirs for a maximum of 24 hours.

❖ Some nonpotable water, such as gray water, will need disinfection before being used for certain applications. Other nonpotable waters, such as rainwater, will not require disinfection for certain applications. The designer decides what waters need disinfection in order to meet the jurisdiction's water quality requirements for the end use application. Note that untreated gray water cannot be stored for longer than 24 hours because of the significant bacteria present in the water.

1302.6.1 Gray water used for fixture flushing. Gray water used for flushing water closets and urinals shall be disinfected and treated by an on-site water reuse treatment system complying with NSF 350.

❖ Untreated gray water, even though disinfected, is too much of a health risk to be used inside of a building for the purposes of flushing water closets and urinals. Gray water must be processed through treatment equipment that complies with NSF 350.

1302.7 Storage tanks. Storage tanks utilized in on-site nonpotable water reuse systems shall comply with Sections 1301.9 and 1302.7.1 through 1302.7.3.

❖ In addition to Section 1301.9, there are requirements for nonpotable water tanks in other sections of the code.

1302.7.1 Location. Storage tanks shall be located with a minimum horizontal distance between various elements as indicated in Table 1302.7.1.

❖ Table 1302.7.1 indicates the minimum required clearance between nonpotable water storage tanks and sources of possible contamination, water services that could be contaminated, adjacent lot lines and the critical root zone of trees that must be protected.

1302.7.2. Design and construction. Storage tanks shall be designed and constructed in accordance with Chapters 16 through 22 of the *International Building Code* and in accordance with the following standards, as appropriate for the material of the storage tank: AWWA D100, AWWA D115, AWWA D120, UL 58, UL 1746, UL 1316, UL 142, API 12F or API 12D.

❖ The reference to Chapters 16 through 22 of the IBC is threefold, and intended to make sure that the reader understands the implication of the loads that the fully filled tank will have on the 1) building, 2) foundation (either the building or the tank foundation) and 3) adjacent structures, such as retaining walls. The tanks are required to be designed and constructed to standards.

TABLE 1302.7.1
LOCATION OF NONPOTABLE WATER REUSE STORAGE TANKS

ELEMENT	MINIMUM HORIZONTAL DISTANCE FROM STORAGE TANK (feet)
Critical root zone (CRZ) of protected trees	2
Lot line adjoining private lots	5
Seepage pits	5
Septic tanks	5
Water wells	50
Streams and lakes	50
Water service	5
Public water main	10

For SI: 1 foot = 304.8 mm.

INTERNATIONAL CODE COUNCIL®
Copyright © 2015 ICC. ALL RIGHTS RESERVED. Accessed by David Dammon on Jun 21, 2017 12:30:52 PM pursuant to License Agreement with ICC. No further reproduction or distribution authorized. ANY UNAUTHORIZED REPRODUCTION OR DISTRIBUTION IS A VIOLATION OF THE FEDERAL COPYRIGHT ACT AND THE LICENSE AGREEMENT, AND SUBJECT TO CIVIL AND CRIMINAL PENALTIES THEREUNDER.

The construction of some tanks might need to have special inspection at the point of manufacture (see Chapter 17 of the IBC).

1302.7.3 Outlets. Outlets shall be located not less than 4 inches (102 mm) above the bottom of the storage tank and shall not skim water from the surface.

❖ The "outlet" referred to is not the drain outlet of the tank. The purpose of the section is to allow some volume for sediment to settle in the bottom of the tank and to not have pump intakes or intake piping (or floating intake mechanisms) pulling water (and sediment) from this area. This is the same reason for prohibiting intake at the surface of the water: to avoid pulling in floating debris from the water surface.

1302.8 Valves. Valves shall be supplied on on-site nonpotable water reuse systems in accordance with Sections 1302.8.1 and 1302.8.2.

❖ There are two valves that must be provided on nonpotable water reuse systems: a bypass valve and a backwater valve for the overflow and drain of the storage tank.

1302.8.1 Bypass valve. One three-way diverter valve listed and labeled to NSF 50 or other approved device shall be installed on collection piping upstream of each storage tank, or drainfield, as applicable, to divert untreated on-site reuse sources to the sanitary *sewer* to allow servicing and inspection of the system. Bypass valves shall be installed downstream of fixture traps and vent connections. Bypass valves shall be marked to indicate the direction of flow, connection and storage tank or drainfield connection. Bypass valves shall be installed in accessible locations. Two shutoff valves shall not be installed to serve as a bypass valve.

❖ There will be situations where flow to the nonpotable water storage tank must be diverted. One of those times will be during cleaning of the tank. The flow must be positively diverted so that it is known that the flow is not backing up in the building but is being diverted to an appropriate location. The only way to positively know is by installing a three-way diverter valve where the flow can only be diverted from one outlet to the other outlet (without the incoming flow being blocked). Note the last sentence of the section that prohibits two independent valves from being used to divert the flow. Opening and closing two independent valves could result in both valves being inadvertently closed. The requirement for listing and labeling of the three-way valve to NSF 50 ensures that the valve is of quality construction and meets durability requirements, as this valve might be installed outdoors.

1302.8.2 Backwater valve. One or more backwater valves shall be installed on each overflow and tank drain pipe. Backwater valves shall be in accordance with Section 715.

❖ Contamination of a nonpotable water storage tank by any type of external water must be avoided. A backwater valve is a check valve for nonpotable water in gravity flow piping. Although the reference is to Section 715, Section 715.1 does not apply because this section always requires backwater valves. Sections 715.2 through 715.5 apply.

1302.9 Pumping and control system. Mechanical equipment including pumps, valves and filters shall be easily accessible and removable in order to perform repair, maintenance and cleaning. The minimum flow rate and flow pressure delivered by the pumping system shall be appropriate for the application and in accordance with Section 604.

❖ Equipment must be maintained, repaired or replaced so access will be needed to perform that work. How easy that access will be is up to the designer of the system and the area that he or she has to fit the system into. Every effort should be made to think about how components can be taken apart while still connected to the system. Where components need to be replaced, the designer needs to think about the clearances necessary for removal of the component. For example, many underground storage tanks have submersible pumps attached to discharge piping such that the entire vertical section of discharge piping has to be lifted out to bring the pump up to, and out of, the tank. Will there be sufficient overhead clearance at the completion of the entire project? Sometimes, at the "rough-in" installation of a large tank, it does appear that there is sufficient clearance. However, afterwards a large duct or a fire water line is routed across the area counted on for removal of the pump.

The pumps must have the capacity to provide the necessary flow and pressure for proper operation of the plumbing fixtures (water closets and urinals).

1302.10 Water pressure-reducing valve or regulator. Where the water pressure supplied by the pumping system exceeds 80 psi (552 kPa) static, a pressure-reducing valve shall be installed to reduce the pressure in the nonpotable water distribution system piping to 80 psi (552 kPa) static or less. Pressure-reducing valves shall be specified and installed in accordance with Section 604.8.

❖ Most pumps have a variation in pressure output that changes with the flow rate. Typically, the highest output pressure is when the flow rate is zero (or nearly zero). As outlets in the distribution system open, the flow rate from the pump increases to match the demand and the pressure that the pump generates is somewhat less. As more outlets open, the flow becomes greater and the outlet pressure of the pump becomes even less. Because of this effect, a pump model is chosen to supply the minimum required pressure when the demand (flow rate) of the system is at the greatest. Thus, at low demands (flow rates), the pressure in the system can easily exceed 80 psi (552 kPa) and a pressure regulator is required to keep the system pressure from exceeding 80 psi (552 kPa). Note that in distribution systems of multistory buildings, the pressure in the riser(s) might need to be significantly greater than 80 psi (552 kPa) to counter the effect of pressure loss caused by elevation change. Pressure reducers are installed for the branches for

INTERNATIONAL CODE COUNCIL®
Copyright © 2015 ICC. ALL RIGHTS RESERVED. Accessed by David Dammon on Jun 21, 2017 12:30:52 PM pursuant to License Agreement with ICC. No further reproduction or distribution authorized. ANY UNAUTHORIZED REPRODUCTION OR DISTRIBUTION IS A VIOLATION OF THE FEDERAL COPYRIGHT ACT AND THE LICENSE AGREEMENT, AND SUBJECT TO CIVIL AND CRIMINAL PENALTIES THEREUNDER.

the fixtures on lower floor levels to maintain the pressure in those branches at or below 80 psi (552 kPa) for those floors.

Variable speed pumps for water distribution can resolve the problem of needing to choose a pump that has a much higher pressure at low/no-flow conditions so that there is adequate pressure at peak flow conditions. A variable speed pump changes the rotational speed pump impeller to better match the pump's outlet pressure in response to the flow rate, However, for multistory buildings, there will still be the need for reducing pressures for the branches serving the lower floors.

1302.11 Distribution pipe. Distribution piping utilized in on-site nonpotable water reuse systems shall comply with Sections 1302.11.1 through 1302.11.3.

Exception: Irrigation piping located outside of the building and downstream of a backflow preventer.

❖ Distribution piping begins at the treated water storage tank and ends at the termination of the fixture supply pipe such as at a water closet or urinal. Where the end use of the nonpotable water is not a plumbing fixture, then the piping ends at a control valve for the system that utilizes the nonpotable water.

The exception for irrigation systems allows for piping not complying with this section to begin after the backflow preventer for the irrigation system.

1302.11.1 Materials, joints and connections. Distribution piping shall conform to the standards and requirements specified in Section 605.

❖ In order to maintain consistency in pipe sizes, materials and connections of water distribution piping, both potable and nonpotable, the material must comply with the requirements of Section 605. Although there is very little difference between Tables 605.3 and 605.4, one notable difference is that PVC piping is not indicated in Table 605.4. For a potable water supply system, PVC is not allowed to be used for water distribution piping (piping that is downstream of the main water shutoff valve for the building) primarily because the material is not rated for hot water service. Where piping potable water systems inside of a building, there is the concern that PVC piping could be inadvertently used for a hot water line and that the piping could fail under that service condition. Because nonpotable water would not be heated prior to use in a building, it is questionable as to whether this (potable water system) limitation for use of PVC piping for nonpotable water distribution (in a building) is necessary or appropriate. The code official will have to make this decision.

1302.11.2 Design. On-site nonpotable water reuse distribution piping systems shall be designed and sized in accordance with Section 604 for the intended application.

❖ Section 604 requires that water distribution systems be designed in accordance with an accepted engineering practice and provides basic design criteria. A nonpotable water distribution system serving fixtures (water closets and urinals) needs to provide the same pressures and flow rates to the fixtures as if those fixtures were supplied by a potable water system.

1302.11.3 Marking. On-site nonpotable water distribution piping labeling and marking shall comply with Section 608.8.

❖ The term "labeling" in this section is not to be confused with requirements for third-party inspection and certification of products (e.g., the "listing and labeling" to a standard) (see commentary, Section 608.8).

1302.12 Tests and inspections. Tests and inspections shall be performed in accordance with Sections 1302.12.1 through 1302.12.6.

❖ Piping must be tested after it is installed to ensure the integrity of the installation. Note that the tests of piping are not necessarily attempting to replicate an actual condition of service. This section is also concerned with water quality at the point of use.

1302.12.1 Collection pipe and vent test. Drain, waste and vent piping used for on-site water reuse systems shall be tested in accordance with Section 312.

❖ Sections 312.2 and 312.3 cover testing of drainage and vent piping inside a building (including under the building). Note that Section 312.3 (covering air testing of piping) prohibits air testing of plastic piping. Where drainage piping is outside of a building, either above or below ground, Sections 312.6 and 312.7 apply even though the piping is not sewer piping (carrying sewage with fecal matter). See the commentary for Section 1302.12.2 concerning storage tank vent piping testing.

1302.12.2 Storage tank test. Storage tanks shall be tested in accordance with Section 1301.9.11.

❖ This section simply addresses the storage tank tests in Section 1301.9.11. In some situations, vent piping for storage tanks will be completely outdoors. The storage tank test does not include testing of the vent piping because the vent piping is completely outdoors, including the vent terminal. However, in other situations, the storage tank vent piping will be indoors (primarily because the storage tank is inside of, or under, the building). This vent piping should most likely be tested, however, not as a part of testing the storage tank. Although it would be possible to temporarily block the tank overflow and fill the storage tank completely until the water spilled out of the top of the vent pipe, storage tanks might not be designed for more than the pressure of just the tank being filled to capacity (tank overflow level). Adding the head pressure of a vertical run of vent piping, perhaps several stories or more, could overstress the storage tank walls.

This does not necessarily mean that storage tank (indoor) vent piping should not be tested. Testing of the tank vent piping might require that a valve be installed in the vent piping just above the tank, the

INTERNATIONAL CODE COUNCIL®
Copyright © 2015 ICC. ALL RIGHTS RESERVED. Accessed by David Dammon on Jun 21, 2017 12:30:52 PM pursuant to License Agreement with ICC. No further reproduction or distribution authorized. ANY UNAUTHORIZED REPRODUCTION OR DISTRIBUTION IS A VIOLATION OF THE FEDERAL COPYRIGHT ACT AND THE LICENSE AGREEMENT, AND SUBJECT TO CIVIL AND CRIMINAL PENALTIES THEREUNDER.

valve closed and the vent piping filled with water for the leak check. After the test, the valve could be opened, the water in the piping drained to the tank, and the valve removed so that final vent-to-tank connections can be completed.

1302.12.3 Water supply system test. The testing of makeup water supply piping and distribution piping shall be conducted in accordance with Section 312.5.

❖ Makeup water supply piping could be another nonpotable water supply or, more often, a potable water supply. In either situation, the piping must be leak free. Note that air testing of plastic piping is prohibited. Additionally, where piping other than plastic is tested, test air pressure is only required to be 50 psi (345 kPa). Where water testing is performed, the test pressure must be the working pressure of the system.

However, in service, the piping is only required to be leak free at the normal water pressures encountered. This does not mean that all water piping to the storage tank will experience the same pressure. For example, in a large nonpotable water reuse system, the makeup water control valve might be a 3-inch (76 mm) motorized ball valve located some distance away from the storage tank. The valve might even be below the top of the storage tank. When the valve opens, the piping downstream of the valve will only be subjected to the pressure of the flow resistance in the downstream piping and any difference in the elevation between the valve and the outlet of the piping. That pressure will most likely be much less than the static pressure upstream of the makeup water valve. The point is that for the piping from the makeup water valve to the storage tank, the "test" of the piping should simply be a visual test. There is no need to "temporarily install a test valve" right at the tank for testing this piping at full line pressure. In this example, this would be a 3-inch (76 mm) valve, a needless expenditure.

Testing of distribution piping is not any different than for potable water.

1302.12.4 Inspection and testing of backflow prevention assemblies. The testing of backflow preventers and backwater valves shall be conducted in accordance with Section 312.10.

❖ Section 312.10 covers the inspection and testing of backflow prevention assemblies and hose connection backflow preventers. The section also covers the inspection of air gaps. A backflow prevention assembly is a type of backflow preventer that can be field tested using sensitive, calibrated gauges to determine if the assembly is operational. Backflow prevention assemblies have "test cocks" for attachment of the gauge's test hoses.

A hose connection backflow preventer is a very simple device to test. All that is necessary is to hold the open outlet of a connected hose above the elevation of the hose connection backflow preventer (doing this all with the valve before the backflow preventer, shut off). The contents of the hose will flow back to the backflow preventer and out its ports.

An air gap can be visually inspected to verify that the required open air distance is provided (see Section 608.15.1).

All other types of backflow preventers cannot be field tested nor should any attempts be made to perform a field test, as this could damage the device such that it might not perform the intended function under service conditions.

1302.12.5 Inspection of vermin and insect protection. Inlets and vents to the system shall be inspected to verify that each is protected to prevent the entrance of insects and vermin into the storage tank and piping systems in accordance with Section 1301.7.

❖ This section simply refers back to Section 1301.7 so that verification can be made that protection has been provided.

1302.12.6 Water quality test. The quality of the water for the intended application shall be verified at the point of use in accordance with the requirements of the jurisdiction.

❖ The jurisdiction allowed the installation of the nonpotable water reuse system based upon the premise that a certain quality level would be achieved by the treatment and disinfection of the system. The installer has to perform tests to show that the system provides that quality.

1302.13 Operation and maintenance manuals. Operation and maintenance materials shall be supplied with nonpotable on-site water reuse systems in accordance with Sections 1302.13.1 through 1302.13.4.

❖ The following sections indicate the minimum requirements for operation and maintenance manuals supplied with on-site nonpotable water reuse systems. As these systems can be very diverse and some are very customized, exceeding these minimum requirements is encouraged. For example, photographs of components, photograph sequences of specialized repair procedures, dimensional drawings including orientation references, common component manufacturer's part numbers and electronic files of the entire O&M package would be well received by the system owner. These systems can be complex, and because numerous repair and maintenance firms will be required to work on them, perhaps for many generations, information must be complete and clear. It is likely with the current diversity and number of firms providing these systems, there will be future mergers and acquisitions that will make future identification of particular systems difficult with dwindling numbers of people remaining who will remember those "older" systems, let alone have access to the original records.

1302.13.1 Manual. A detailed operations and maintenance manual shall be supplied in hardcopy form with all systems.

❖ A hard copy (a booklet or binder) of the manual must be provided for system users.

INTERNATIONAL CODE COUNCIL®
Copyright © 2015 ICC. ALL RIGHTS RESERVED. Accessed by David Dammon on Jun 21, 2017 12:30:52 PM pursuant to License Agreement with ICC. No further reproduction or distribution authorized. ANY UNAUTHORIZED REPRODUCTION OR DISTRIBUTION IS A VIOLATION OF THE FEDERAL COPYRIGHT ACT AND THE LICENSE AGREEMENT, AND SUBJECT TO CIVIL AND CRIMINAL PENALTIES THEREUNDER.

1302.13.2 Schematics. The manual shall include a detailed system schematic, and the locations and a list of all system components, including manufacturer and model number.

❖ A schematic can be in many forms, but in terms of these types of systems, the schematic would most likely be in the form of primarily showing tanks, pumps and treatment units in their approximate "physical forms" with the piping shown as lines connecting those components. Valves, meters and controls are typically shown in a common "legend" format for quick comprehension of their functionality. A numbered list similar to a "bill of material" identifies every item on the schematic.

1302.13.3 Maintenance procedures. The manual shall provide a schedule and procedures for all system components requiring periodic maintenance. Consumable parts, including filters, shall be noted along with part numbers.

❖ An on-site nonpotable water reuse system is much more complex than a potable water system for a building. Scheduled maintenance is paramount to making sure that the nonpotable water delivered for an end use does not become a health hazard for the occupants. The other reason for performing required maintenance of these systems is that where the end use for the water is for flushing water closets and urinals, the building owner can ill afford to have these fixtures not operational. If those fixtures do not work, the building will be condemned and evacuated until such time that the system is repaired and the fixtures are operational. This is a totally different concept for most building owners, unaware of the implications of poor or no maintenance of these systems. If the public water supply to a building is shut off because of a utility piping problem (e.g., water line break in the street, fire hydrant broken), the building owner is not to blame and the occupants will "make do" with the inconvenience. However, with an on-site nonpotable water reuse system, the building owner is fully responsible for providing the nonpotable water to the water closets and urinals. The health department and code enforcement department might not look as favorably at a building owner's lack of nonpotable water.

1302.13.4 Operations procedures. The manual shall include system startup and shutdown procedures. The manual shall include detailed operating procedures for the system.

❖ This requirement about indicating what the system components do over a period of time is so that the operator knows when the system is not properly operating. That period of time also includes startup and shutdown of the system where the operator is usually needed to override certain automatic functions.

SECTION 1303
NONPOTABLE RAINWATER COLLECTION AND DISTRIBUTION SYSTEMS

1303.1 General. The provisions of Section 1303 shall govern the construction, installation, alteration and repair of rainwater collection and conveyance systems for the collection, storage, treatment and distribution of rainwater for nonpotable applications, as permitted by the jurisdiction.

❖ Rainwater is very plentiful in many areas of the United States, and so there is a heavy reliance on this water source. However, other areas do not have much water fall so there is no advantage to capturing what little does fall. Additionally, there are areas of the country that have legal restrictions about capturing and reusing rainwater. These areas are concerned about yearly replenishment of lakes and underground aquifers that provide the raw water source for making potable water. The more rainwater that is captured and used in a building, the less of that water finds its way back into the natural waterways that feed the lakes and rivers. It is a very delicate problem for some areas. Thus, the jurisdiction decides whether rainwater collection and distribution systems can be installed depending on the end use application. For example, a rainwater collection system for outdoor irrigation might be approved because the water will drain to the natural waterways. However, that same rainwater collection system might not be approved where the system is used to supply water closets and urinals.

1303.2 Collection surface. Rainwater shall be collected only from above-ground impervious roofing surfaces constructed from *approved* materials. Collection of water from vehicular parking or pedestrian surfaces shall be prohibited except where the water is used exclusively for landscape irrigation. Overflow and bleed-off pipes from roof-mounted appliances including, but not limited to, evaporative coolers, water heaters, and solar water heaters shall not discharge onto rainwater collection surfaces.

❖ Before it comes in contact with a surface, rainwater is certainly of much higher "quality" than gray water. One can drink collected rainwater out of a clean drinking cup that was put outside during a rainfall event and be fairly confident that they would not experience ill effects. People have been doing this for thousands of years and even today, some people still capture rainwater for drinking and cooking. However, rainwater could become nonpotable before reaching a collection surface because of airborne pollutants that the rainwater picks up as it falls from the sky. Imagine the condition of rainwater in an area around a large coal-fired boiler such as found in a power plant. Furthermore, the collection of rainwater (contacting a roof surface) adds more pollutants to the water, as collection surfaces (roofs) have bird droppings, airborne particulates, dirt with pesticides and a host of many other things that would make the rainwater unsafe for drinking.

The requirement for roofing surfaces (used for the collection of rainwater) to be of materials approved by the code official is to make sure that the roof material itself does not add any more contamination to the rainwater that the end use application cannot have or that the treatment processes for the rainwater cannot remove before end use. For example, a roof made of

INTERNATIONAL CODE COUNCIL®
Copyright © 2015 ICC. ALL RIGHTS RESERVED. Accessed by David Dammon on Jun 21, 2017 12:30:52 PM pursuant to License Agreement with ICC. No further reproduction or distribution authorized. ANY UNAUTHORIZED REPRODUCTION OR DISTRIBUTION IS A VIOLATION OF THE FEDERAL COPYRIGHT ACT AND THE LICENSE AGREEMENT, AND SUBJECT TO CIVIL AND CRIMINAL PENALTIES THEREUNDER.

copper with lead-soldered joints might not be appropriate for the end use of the rainwater to be drinking water because of the potential for copper and lead contamination that might not be able to be removed by the proposed treatment process.

Any other potential sources of contamination, such as bleedoffs and overflows from mechanical systems, and relief valves from water heaters, must not be allowed to discharge to the roof surface also to make sure that the roof material doesn't add contaminants to the rainwater.

1303.3 Debris excluders. Downspouts and leaders shall be connected to a roof washer and shall be equipped with a debris excluder or equivalent device to prevent the contamination of collected rainwater with leaves, sticks, pine needles and similar material. Debris excluders and equivalent devices shall be self-cleaning.

❖ The debris excluder can be an integral part of the roof washer or it can be separate. The debris excluder screens out sticks, leaves and other large particles from the rainwater flow. As debris captured in the debris excluder can build up quickly, these devices are required to be self-cleaning.

1303.4 Roof washer. A sufficient amount of rainwater shall be diverted at the beginning of each rain event, and not allowed to enter the storage tank, to wash accumulated debris from the collection surface. The amount of rainfall to be diverted shall be field adjustable as necessary to minimize storage tank water contamination. The roof washer shall not rely on manually operated valves or devices, and shall operate automatically. Diverted rainwater shall not be drained to the roof surface, and shall be discharged in a manner consistent with the storm water runoff requirements of the jurisdiction. Roof washers shall be accessible for maintenance and service.

❖ The term "roof washer" can be misleading. The roof washer is actually a device that wastes the initial flow of rainwater coming from the roof so that the highly contaminated rainwater is diverted from the storage tank. This device must be adjustable so that the amount of water wasted can be varied to meet the actual conditions of service. The basis of adjustment is usually water testing to determine the level of contaminants in the water going to the storage tank. Once set, the roof washer may not need adjustment unless conditions of the captured rainwater change.

1303.5 Roof gutters and downspouts. Gutters and downspouts shall be constructed of materials that are compatible with the collection surface and the rainwater quality for the desired end use. Joints shall be water tight.

❖ The construction materials for gutters and downspouts must be "compatible" with the raw rainwater quality that is needed for the end uses. The intent is the same as for roof materials that collect rainwater (see commentary, Section 1303.3). As gutters are often in direct contact with roofing materials (the collection surface), material compatibility between the two surfaces must be considered. For example, an aluminum collection surface (roofing) might not be compatible with galvanized steel gutters (see commentary, Section 1304.6).

1303.5.1 Slope. Roof gutters, leaders and rainwater collection piping shall slope continuously toward collection inlets. Gutters and downspouts shall have a slope of not less than $^1/_8$ inch per foot (10.4 mm/m) along their entire length, and shall not permit the collection or pooling of water at any point.

Exception: Siphonic drainage systems installed in accordance with the manufacturer's instructions shall not be required to have a slope.

❖ Once rainwater is collected by gutters, the rainwater must be kept moving towards the storage tank so that particulate matter and debris do not drop out of the flow. Pockets and pools of nonmoving water will begin to create bacteria "nests" that will contaminate the stored rainwater after the roof washer has wasted the highly contaminated initial flow from the roof.

Siphonic drain systems are not required to have sloped piping as they operate, when under full siphon flow, as full flow piping.

1303.5.2 Size. Gutters and downspouts shall be installed and sized in accordance with Section 1106.6 and local rainfall rates.

❖ The code specifies the requirements for gutter sizes in Section 1106.6. For sizing for flow, downspouts are considered to be vertical and horizontal storm drain piping, which is covered by Section 1106.2. Downspouts not of a round shape, such as corrugated or rectangular, can be approximated as round shape. A corrugated-material round downspout could be approximated as the pipe size having the same or smaller internal diameter as the smallest inside diameter of the corrugated shape. A rectangular size could be approximated as a round shape using Equation 11-1 in Table 1106.2(2) of the 2012 IPC.

1303.5.3 Cleanouts. Cleanouts shall be provided in the water conveyance system to allow *access* to all filters, flushes, pipes and downspouts.

❖ There needs to be access to the collection and conveyance systems and filters for conveying rainwater, so that debris can be periodically cleared from those systems.

1303.6 Drainage. Water drained from the roof washer or debris excluder shall not be drained to the sanitary sewer. Such water shall be diverted from the storage tank and discharge in a location that will not cause erosion or damage to property in accordance with the *International Building Code*. Roof washers and debris excluders shall be provided with an automatic means of self-draining between rain events, and shall not drain onto roof surfaces.

❖ The first sentence reinforces Section 1101.3 to prohibit storm water (rainwater) from entering a drain system for sewage only. Note that the code no longer allows combined (both sewer and storm) building

INTERNATIONAL CODE COUNCIL®
Copyright © 2015 ICC. ALL RIGHTS RESERVED. Accessed by David Dammon on Jun 21, 2017 12:30:52 PM pursuant to License Agreement with ICC. No further reproduction or distribution authorized. ANY UNAUTHORIZED REPRODUCTION OR DISTRIBUTION IS A VIOLATION OF THE FEDERAL COPYRIGHT ACT AND THE LICENSE AGREEMENT, AND SUBJECT TO CIVIL AND CRIMINAL PENALTIES THEREUNDER.

sewers, as Section 1109.1 requires separate building storm sewers and building sewers, even though the public sewer may be a combined sewer (see commentary, Section 1109.1). Control of rainwater runoff from a roof washer or debris excluder is required to avoid erosion and other possible negative effects (see commentary, Section 1301.9.1).

Roof washers and debris excluders must be self-draining so that there is not captive water that could harbor mosquitos. Also, captive water during freezing temperatures could freeze and damage these devices.

The water and debris that is prevented from going to the storage tank should not be drained to the roof surface, as this will only reintroduce the contaminants to the collection system after the roof washer has cycled for the initial rainwater flow.

1303.7 Collection pipe. Rainwater collection and conveyance systems shall utilize drainage piping *approved* for use within plumbing drainage systems to collect and convey captured rainwater. Vent piping *approved* for use within plumbing venting systems shall be utilized for vents within the rainwater system. Collection and vent piping materials shall comply with Section 702.

❖ Where piping is used to convey rainwater, or to vent rainwater systems, the piping must comply with materials that are in accordance with Section 702. See the commentary for Section 1303.4 for gutters and downspouts.

1303.7.1 Installation. Collection piping conveying captured rainwater shall be installed in accordance with Section 704.

❖ See the commentary for Section 1302.4.1.

1303.7.2 Joints. Collection piping conveying captured rainwater shall utilize joints *approved* for use with the distribution piping and appropriate for the intended applications as specified in Section 705.

❖ See the commentary for Section 1302.4.2.

1303.7.3 Size. Collection piping conveying captured rainwater shall be sized in accordance with drainage sizing requirements specified in Section 710.

❖ See the commentary for Section 1302.4.3.

1303.7.4 Marking. Additional marking of collection piping conveying captured rainwater for reuse shall not be required beyond that required for sanitary drainage, waste and vent piping by Chapter 7.

❖ See the commentary for Section 1302.4.4.

1303.8 Filtration. Collected rainwater shall be filtered as required for the intended end use. Filters shall be accessible for inspection and maintenance. Filters shall utilize a pressure gauge or other *approved* method to provide indication when a filter requires servicing or replacement. Filters shall be installed with shutoff valves installed immediately upstream and downstream to allow for isolation during maintenance.

❖ See the commentary for Section 1302.5.

1303.9 Disinfection. Where the intended application for rainwater requires disinfection or other treatment or both, it shall be disinfected as needed to ensure that the required water quality is delivered at the point of use. Where chlorine is used for disinfection or treatment, water shall be tested for residual chlorine in accordance with ASTM D1253. The levels of residual chlorine shall not exceed that allowed for the intended use in accordance with the requirements of the jurisdiction.

❖ Collected rainwater will not require disinfection for many end use applications. The designer decides whether there is need for disinfection in order to meet the jurisdiction's water quality requirements for the end use application.

1303.10 Storage tanks. Storage tanks utilized in nonpotable rainwater collection and conveyance systems shall comply with Sections 1301.9 and 1303.10.1 through 1303.10.3.

❖ In addition to Section 1301.9, there are requirements for nonpotable water tanks in other sections of the code.

1303.10.1 Location. Storage tanks shall be located with a minimum horizontal distance between various elements as indicated in Table 1303.10.1.

❖ This section refers to Table 1303.10.1 which is similar except there is not a concern for the rainwater contaminating other water sources. The distance to the critical root zone is reduced as compared to Table 1302.7.1 because rainwater doesn't offer the roots as much "incentive" to travel towards the storage tank where the tank is underground.

1303.10.2 Inlets. Storage tank inlets shall be designed to introduce collected rainwater into the tank with minimum tur-

TABLE 1303.10.1
LOCATION OF RAINWATER STORAGE TANKS

ELEMENT	MINIMUM HORIZONTAL DISTANCE FROM STORAGE TANK (feet)
Critical root zone (CRZ) of protected trees	2
Lot line adjoining private lots	5
Seepage pits	5
Septic tanks	5

For SI: 1 foot = 304.8 mm.

INTERNATIONAL CODE COUNCIL®
Copyright © 2015 ICC. ALL RIGHTS RESERVED. Accessed by David Dammon on Jun 21, 2017 12:30:52 PM pursuant to License Agreement with ICC. No further reproduction or distribution authorized. ANY UNAUTHORIZED REPRODUCTION OR DISTRIBUTION IS A VIOLATION OF THE FEDERAL COPYRIGHT ACT AND THE LICENSE AGREEMENT, AND SUBJECT TO CIVIL AND CRIMINAL PENALTIES THEREUNDER.

bulence, and shall be located and designed to avoid agitating the contents of the storage tank.

❖ The introduction of rainwater into a storage tank (already having some water in the tank) must be in a manner that limits agitation of the water. Typically, the water is introduced below a certain water "low point" level but above the bottom of the tank. Although there is usually not too much floating debris on the surface of the water, a biofilm does develop on the surface of the water and the bottom of the tank. The biofilms are helpful in maintaining the water in good condition. Therefore, avoiding unnecessary turbulence contributes to the health of these biofilms.

1303.10.3 Outlets. Outlets shall be located at least 4 inches (102 mm) above the bottom of the storage tank and shall not skim water from the surface.

❖ The purpose of the section is to allow some volume for sediment to settle in the bottom of the tank and to not have pump intakes or intake piping (or floating intake mechanisms) pulling water (and sediment) from this area.

1303.11 Valves. Valves shall be supplied on rainwater collection and conveyance systems in accordance with Section 1303.11.1.

❖ The code only requires a valve (a backwater valve) on the overflow outlet of a rainwater storage tank. This is to prevent contamination of the water contents of the tank should the tank overflow be submerged (usually by floodwaters).

The code does not require a valve for the inlet of the tank; however, valves might be necessary so that maintenance can be performed on the storage tank. Such inlet valves would not necessarily need to be a three-way valve (see Section 1302.8.1). One valve could be used for the tank inlet and the inlet piping arranged so that the inlet piping (before the valve) "overflows" to a storm sewer or alternate discharge point while the tank is out of service. However, such an overflow would have to be protected by a backwater valve.

1303.11.1 Backwater valve. Backwater valves shall be installed on each overflow and tank drain pipe. Backwater valves shall be in accordance with Section 715.

❖ See the commentary for Section 1302.8.2.

1303.12 Pumping and control system. Mechanical equipment including pumps, valves and filters shall be easily accessible and removable in order to perform repair, maintenance and cleaning. The minimum flow rate and flow pressure delivered by the pumping system shall be appropriate for the application and in accordance with Section 604.

❖ See the commentary for Section 1302.9.

1303.13 Water pressure-reducing valve or regulator. Where the water pressure supplied by the pumping system exceeds 80 psi (552 kPa) static, a pressure-reducing valve shall be installed to reduce the pressure in the rainwater distribution system piping to 80 psi (552 kPa) static or less. Pressure-reducing valves shall be specified and installed in accordance with Section 604.8.

❖ See the commentary for Section 1302.10.

1303.14 Distribution pipe. Distribution piping utilized in rainwater collection and conveyance systems shall comply with Sections 1303.14.1 through 1303.14.3.

Exception: Irrigation piping located outside of the building and downstream of a backflow preventer.

❖ See the commentary for Section 1302.11.

1303.14.1 Materials, joints and connections. Distribution piping shall conform to the standards and requirements specified in Section 605 for nonpotable water.

❖ See the commentary for Section 1302.11.1.

1303.14.2 Design. Distribution piping systems shall be designed and sized in accordance with Section 604 for the intended application.

❖ See the commentary for Section 1302.11.2.

1303.14.3 Marking. Nonpotable rainwater distribution piping labeling and marking shall comply with Section 608.8.

❖ See the commentary for Section 1302.11.3

1303.15 Tests and inspections. Tests and inspections shall be performed in accordance with Sections 1303.15.1 through 1303.15.8.

❖ Piping must be tested after it is installed to ensure the integrity of the installation. Note that the tests of piping are not necessarily attempting to replicate an actual condition of service. Gutters need to be inspected to make sure they have proper slope. This section is also concerned with water quality at the point of use.

1303.15.1 Roof gutter inspection and test. Roof gutters shall be inspected to verify that the installation and slope is in accordance with Section 1303.5.1. Gutters shall be tested by pouring not less than 1 gallon (3.8 L) of water into the end of the gutter opposite the collection point. The gutter being tested shall not leak and shall not retain standing water.

❖ Water cannot be collected from roof surfaces unless the water can make it to the storage tank. Improperly sloped gutters (usually backwardly sloped or without slope) will cause overflow during peak rainfall events resulting in loss of rainwater. Standing water in gutters will evaporate (another loss) or create pools where mosquitos can proliferate. Leaky gutters also waste rainwater. Pouring water into the most remote end of a gutter system is the simplest way determine proper slope and to find leaks. Note that the minimum quantity of 1 gallon (3.8 L) is to prevent someone from pouring a smaller amount of water into the gutter and, because the water did not leak out of the gutter (because it did not arrive at all points in the gutter system), the gutter is considered "leak free." The intent of this section is to introduce sufficient water to the gutter to test the gutter system for leaks, flow direction and standing water.

INTERNATIONAL CODE COUNCIL®
Copyright © 2015 ICC. ALL RIGHTS RESERVED. Accessed by David Dammon on Jun 21, 2017 12:30:52 PM pursuant to License Agreement with ICC. No further reproduction or distribution authorized. ANY UNAUTHORIZED REPRODUCTION OR DISTRIBUTION IS A VIOLATION OF THE FEDERAL COPYRIGHT ACT AND THE LICENSE AGREEMENT, AND SUBJECT TO CIVIL AND CRIMINAL PENALTIES THEREUNDER.

1303.15.2 Roofwasher test. Roofwashers shall be tested by introducing water into the gutters. Proper diversion of the first quantity of water in accordance with the requirements of Section 1303.4 shall be verified.

❖ At the same time that the gutters are being tested, the roof washer operation can be tested. The initial amount of rainwater diversion is chosen by the designer. Knowing that the roof washer is adjustable, verification of the amount for this test is not necessary. The only verification necessary is that the device wastes the initial flow and returns to a position to allow the flow to be sent to the storage tank.

1303.15.3 Collection pipe and vent test. Drain, waste and vent piping used for rainwater collection and conveyance systems shall be tested in accordance with Section 312.

❖ See the commentary for Section 1302.12.1.

1303.15.4 Storage tank test. Storage tanks shall be tested in accordance with Section 1301.9.11.

❖ See the commentary for Section 1302.12.2.

1303.15.5 Water supply system test. The testing of makeup water supply piping and distribution piping shall be conducted in accordance with Section 312.5.

❖ Makeup water supply piping will be a potable water supply. The piping must be leak free. Note that air testing of plastic piping is prohibited. Where piping other than plastic is tested, test air pressure is only required to be 50 psi (345 kPa). Where water testing is performed, the test pressure must be the working pressure of the system.

However, in service, the piping is only required to be leak free at the normal water pressures encountered. This does not mean that all water piping to the storage tank will experience the same pressure. For example, in a large nonpotable water reuse system, the makeup water control valve might be a 3-inch (76 mm) motorized ball valve located some distance away from the storage tank. The valve might even be below the top of the storage tank. When the valve opens, the piping downstream of the valve will only be subjected to the pressure of the flow resistance in the downstream piping and any difference in the elevation between the valve and the outlet of the piping. That pressure will most likely be much less than the static pressure upstream of the makeup water valve. The point is that for the piping from the makeup water valve to the storage tank, the "test" of the piping should simply be a visual test. There is no need to "temporarily install a test valve" right at the tank for testing this piping at full line pressure. In this example, this would be a 3-inch (76 mm) valve, a needless expenditure.

Testing of distribution piping is not any different than for potable water.

1303.15.6 Inspection and testing of backflow prevention assemblies. The testing of backflow preventers and backwater valves shall be conducted in accordance with Section 312.10.

❖ See the commentary for Section 1302.12.4.

1303.15.7 Inspection of vermin and insect protection. Inlets and vents to the system shall be inspected to verify that each is protected to prevent the entrance of insects and vermin into the storage tank and piping systems in accordance with Section 1301.7.

❖ This section simply refers back to Section 1301.7 so that verification can be made that protection has been provided.

1303.15.8 Water quality test. The quality of the water for the intended application shall be verified at the point of use in accordance with the requirements of the jurisdiction. Except where site conditions as specified in ASTM E2727 affect the rainwater, collected rainwater shall be considered to have the parameters indicated in Table 1303.15.8.

❖ The jurisdiction allowed the installation of the nonpotable rainwater reuse system based upon the premise that a certain quality level, at the end use point, would be achieved by the treatment and disinfection systems. The installer has to perform tests to show that the system provides that quality at the end use point. This does not mean the collected rainwater in the storage tank must meet these requirements because the treatment of rainwater occurs after the storage tank.

The designers of nonpotable rainwater collection and distribution systems must rely upon a standard for raw rainwater quality in order to design downstream treatment systems to provide the required quality (required by the jurisdiction) at the end use point. The raw rainwater quality is specified in ASTM E2727 with the parameters in that standard duplicated in Table 1303.15.8. Where the raw rainwater quality (that which comes out of the storage tank) is not within these specifications, then the downstream treatment systems will be unable to make the necessary corrections to provide the desired end use water quality.

TABLE 1303.15.8
RAINWATER QUALITY

PARAMETER	VALUE
pH	6.0-7.0
BOD	Not greater than 10 mg/L
NTU	Not greater than 2
Fecal coliform	No detectable fecal coli in 100 mL
Sodium	No detectable sodium in 100 mL
Chlorine	No detectable chlorine in 100 mL
Enteroviruses	No detectable enteroviruses in 100 mL

INTERNATIONAL CODE COUNCIL®
Copyright © 2015 ICC. ALL RIGHTS RESERVED. Accessed by David Dammon on Jun 21, 2017 12:30:52 PM pursuant to License Agreement with ICC. No further reproduction or distribution authorized. ANY UNAUTHORIZED REPRODUCTION OR DISTRIBUTION IS A VIOLATION OF THE FEDERAL COPYRIGHT ACT AND THE LICENSE AGREEMENT, AND SUBJECT TO CIVIL AND CRIMINAL PENALTIES THEREUNDER.

1303.16 Operation and maintenance manuals. Operation and maintenance manuals shall be supplied with rainwater collection and conveyance systems in accordance with Sections 1303.16.1 through 1303.16.4.

❖ See the commentary for Section 1302.13.

1303.16.1 Manual. A detailed operations and maintenance manual shall be supplied in hardcopy form with all systems.

❖ See the commentary for Section 1302.13.1.

1303.16.2 Schematics. The manual shall include a detailed system schematic, and locations and a list of all system components, including manufacturer and model number.

❖ See the commentary for Section 1302.13.2.

1303.16.3 Maintenance procedures. The manual shall provide a maintenance schedule and procedures for all system components requiring periodic maintenance. Consumable parts, including filters, shall be noted along with part numbers.

❖ See the commentary for Section 1302.13.3.

1303.16.4 Operations procedures. The manual shall include system startup and shutdown procedures, as well as detailed operating procedures.

❖ See the commentary for Section 1302.16.4.

SECTION 1304
RECLAIMED WATER SYSTEMS

1304.1 General. The provisions of this section shall govern the construction, installation, alteration and repair of systems supplying nonpotable reclaimed water.

❖ In most situations, reclaimed water is supplied to a building site by a public water supply utility (see the definition for "Reclaimed water" in Chapter 2). The systems that provide reclaimed water to the building site are similar to how a public utility supplies potable water to a building site. The public water supply utility goes to great lengths to make sure that these nonpotable water supplies are well marked/identified in order to avoid inadvertent connection to those systems. In most situations, piping, valves and backflow preventers are colored purple.

However, the code does not limit the use of reclaimed water to only that which is supplied by the public water supply utility. A building site could have a waste water facility (licensed by authorities having jurisdiction over such facilities) where the effluent is of a quality that meets the jurisdiction's requirements for reclaimed water.

1304.2 Water pressure-reducing valve or regulator. Where the reclaimed water pressure supplied to the building exceeds 80 psi (552 kPa) static, a pressure-reducing valve shall be installed to reduce the pressure in the reclaimed water distribution system piping to 80 psi (552 kPa) static or less. Pressure-reducing valves shall be specified and installed in accordance with Section 604.8.

❖ See the commentary for Section 1302.10.

1304.3 Reclaimed water systems. The design of the reclaimed water systems shall conform to ASTM E2635 and *accepted engineering practice*.

❖ ASTM E2635 covers the portions of a system to make reclaimed water from available nonpotable water on site. As each of these systems will be custom engineered for the specific building site, accepted engineering practices must be used.

1304.3.1 Distribution pipe. Distribution piping shall comply with Sections 1304.3.1.1 through 1304.3.1.3.

Exception: Irrigation piping located outside of the building and downstream of a backflow preventer.

❖ See the commentary for Section 1302.11.

1304.3.1.1 Materials, joints and connections. Distribution piping conveying reclaimed water shall conform to standards and requirements specified in Section 605 for nonpotable water.

❖ See the commentary for Section 1302.11.1.

1304.3.1.2 Design. Distribution piping systems shall be designed and sized in accordance with Section 604 for the intended application.

❖ See the commentary for Section 1302.11.2.

1304.3.1.3 Labeling and marking. Nonpotable rainwater distribution piping labeling and marking shall comply with Section 608.8.

❖ See the commentary for Section 1302.11.3.

1304.4 Tests and inspections. Tests and inspections shall be performed in accordance with Sections 1304.4.1 and 1304.4.2.

❖ Piping must be tested after it is installed to ensure the integrity of the installation and that the piping does not leak.

1304.4.1 Water supply system test. The testing of makeup water supply piping and reclaimed water distribution piping shall be conducted in accordance with Section 312.5.

❖ See the commentary for Section 1302.12.3.

1304.4.2 Inspection and testing of backflow prevention assemblies. The testing of backflow preventers shall be conducted in accordance with Section 312.10.

❖ See the commentary for Section 1302.12.4.

INTERNATIONAL CODE COUNCIL®
Copyright © 2015 ICC. ALL RIGHTS RESERVED. Accessed by David Dammon on Jun 21, 2017 12:30:52 PM pursuant to License Agreement with ICC. No further reproduction or distribution authorized. ANY UNAUTHORIZED REPRODUCTION OR DISTRIBUTION IS A VIOLATION OF THE FEDERAL COPYRIGHT ACT AND THE LICENSE AGREEMENT, AND SUBJECT TO CIVIL AND CRIMINAL PENALTIES THEREUNDER.

Chapter 14:
Subsurface Landscape Irrigation Systems

General Comments

Section 1302.6 prohibits the storage of untreated gray water for more than 24 hours. Although untreated gray water could be discharged to the public sewer system (or a private sewage disposal system), another possible building site use for this water would be subsurface irrigation. Reusing gray water on site lessens the load on public sewer systems and septic tank systems, while at the same time adding beneficial nutrients to the soil and eventual recharging of local aquifers.

Purpose

This chapter specifies the design and construction of systems that can accept gray water without compromising the environment.

SECTION 1401
GENERAL

1401.1 Scope. The provisions of Chapter 14 shall govern the materials, design, construction and installation of subsurface landscape irrigation systems connected to nonpotable water from on-site water reuse systems.

❖ The chapter provides specific details for designing and constructing subsurface irrigation systems.

1401.2 Materials. Above-ground drain, waste and vent piping for subsurface landscape irrigation systems shall conform to one of the standards listed in Table 702.1. Subsurface landscape irrigation, underground building drainage and vent pipe shall conform to one of the standards listed in Table 702.2.

❖ The piping for above-ground landscape systems must comply with the standards in Tables 702.1 and 702.2. The appropriate pipe fittings from Table 702.4 must be used to make connections in the pipe

1401.3 Tests. Drain, waste and vent piping for subsurface landscape irrigation systems shall be tested in accordance with Section 312.

❖ Sections 312.2 and 312.3 cover testing of drainage and vent piping inside a building (including under the building). Note that Section 312.3 covering air testing of piping prohibits air testing of plastic piping. Where drainage piping is outside of a building, either above or below ground, Sections 312.6 and 312.7 apply even though the piping is not sewer piping (carrying sewage with fecal matter).

1401.4 Inspections. Subsurface landscape irrigation systems shall be inspected in accordance with Section 107.

❖ Systems need to be inspected prior to concealment to make sure that the installation meets the requirements of the code.

1401.5 Disinfection. Disinfection shall not be required for on-site nonpotable water reuse for subsurface landscape irrigation systems.

❖ Water sent to a subsurface irrigation system is not required to be disinfected as it will not come in contact with humans.

1401.6 Coloring. On-site nonpotable water reuse for subsurface landscape irrigation systems shall not be required to be dyed.

❖ Coloring of the water is not required because the water is not visible to humans.

SECTION 1402
SYSTEM DESIGN AND SIZING

1402.1 Sizing. The system shall be sized in accordance with the sum of the output of all water sources connected to the subsurface irrigation system. Where gray water collection piping is connected to subsurface landscape irrigation systems, gray water output shall be calculated according to the gallons-per-day-per-occupant number based on the type of fixtures connected. The gray water discharge shall be calculated by the following equation:

$$C = A \times B \qquad \textbf{(Equation 14-1)}$$

where:

A = Number of occupants:

Residential—Number of occupants shall be determined by the actual number of occupants, but not less than two occupants for one bedroom and one occupant for each additional bedroom.

Commercial—Number of occupants shall be determined by the *International Building Code*.

B = Estimated flow demands for each occupant:

Residential—25 gallons per day (94.6 lpd) per occupant for showers, bathtubs and lavatories and 15 gallons per day (56.7 lpd) per occupant for clothes washers or laundry trays.

Commercial—Based on type of fixture or water use records minus the discharge of fixtures other than those discharging gray water.

INTERNATIONAL CODE COUNCIL®
Copyright © 2015 ICC. ALL RIGHTS RESERVED. Accessed by David Dammon on Jun 21, 2017 12:30:52 PM pursuant to License Agreement with ICC. No further reproduction or distribution authorized. ANY UNAUTHORIZED REPRODUCTION OR DISTRIBUTION IS A VIOLATION OF THE FEDERAL COPYRIGHT ACT AND THE LICENSE AGREEMENT, AND SUBJECT TO CIVIL AND CRIMINAL PENALTIES THEREUNDER.

C = Estimated gray water discharge based on the total number of occupants.

❖ The volume of gray-water discharge from residential buildings is the estimated number of occupants living in the building times a fixed amount of 25 gallons per day (94.6 L/day). An additional 15 gallons per day (56.7 L/day) per occupant is added if clothes washers or laundry trays exist. The number of occupants for the building must be not less than two for the first bedroom and one for each additional bedroom.

The volume of gray-water discharge from commercial buildings can be determined by two methods. The first method requires the designer to determine the number of times that a gray-water-producing fixture is used by the occupants of the building and estimate the volume produced by such fixtures. The second method involves observing water use records of a similar existing building and subtracting out the estimated volume used for nongray-water-producing fixtures. Chapter 7 of the *International Green Construction Code*® (IGCC®) offers generally accepted numbers for daily uses per occupant for common plumbing fixtures, including water closets and urinals. By knowing the flush volume of each fixture and the maximum building occupant load, the anticipated daily volume of gray water needed can be determined.

1402.2 Percolation tests. The permeability of the soil in the proposed absorption system shall be determined by percolation tests or permeability evaluation.

❖ In order to determine how large the subsurface irrigation system (the absorption system) must be to accommodate the maximum daily flow of gray water, tests must be performed to determine the subsurface soil's capacity for accepting the flow. Soil testing can be by the percolation test method or permeability evaluation method.

1402.2.1 Percolation tests and procedures. At least three percolation tests in each system area shall be conducted. The holes shall be spaced uniformly in relation to the bottom depth of the proposed absorption system. More percolation tests shall be made where necessary, depending on system design.

❖ A percolation test involves digging at least three holes to a depth where the proposed absorption system is to be installed. The undisturbed soil at the bottom of the hole will be representative of the soil that must absorb the gray-water flow.

1402.2.1.1 Percolation test hole. The test hole shall be dug or bored. The test hole shall have vertical sides and a horizontal dimension of 4 inches to 8 inches (102 mm to 203 mm). The bottom and sides of the hole shall be scratched with a sharp-pointed instrument to expose the natural soil. All loose material shall be removed from the hole and the bottom shall be covered with 2 inches (51 mm) of gravel or coarse sand.

❖ The percolation test holes must be of the same size and shape so that the test results from multiple holes can be compared. The surfaces of holes must be scratched to break up any soil smearing that could block the flow of test water. Test holes are made purposely small in horizontal dimension so a limited amount of water is necessary to perform the test. The placement of gravel or coarse sand in the bottom of the hole prevents scouring of the bottom of the test hole as test water is poured into it.

1402.2.1.2 Test procedure, sandy soils. The hole shall be filled with clear water to a minimum of 12 inches (305 mm) above the bottom of the hole for tests in sandy soils. The time for this amount of water to seep away shall be determined, and this procedure shall be repeated if the water from the second filling of the hole seeps away in 10 minutes or less. The test shall proceed as follows: Water shall be added to a point not more than 6 inches (152 mm) above the gravel or coarse sand. Thereupon, from a fixed reference point, water levels shall be measured at 10-minute intervals for a period of 1 hour. Where 6 inches (152 mm) of water seeps away in less than 10 minutes, a shorter interval between measurements shall be used, but in no case shall the water depth exceed 6 inches (152 mm). Where 6 inches (152 mm) of water seeps away in less than 2 minutes, the test shall be stopped and a rate of less than 3 minutes per inch (7.2 s/mm) shall be reported. The final water level drop shall be used to calculate the percolation rate. Soils not meeting the above requirements shall be tested in accordance with Section 1303.7.1.3.

❖ To prepare sandy soil for the percolation test, 12 inches (305 mm) of water is poured into the test hole and allowed to drain out. Another 12 inches (305 mm) of water is added to the hole and, if the time that it takes to drain out is 10 minutes or less, then the hole is repeatedly filled with 12 inches (305 mm) of water until the time that it takes for the water to drain away is greater than 10 minutes.

For the sandy soil percolation test, the hole is filled with 6 inches (152 mm) of water and the level measured from a fixed reference point is taken every 10 minutes. If the 6 inches (152 mm) of water completely drains from the hole in less than 10 minutes, then the measurement interval must be shortened so that some water remains in the hole at the end of the measurement interval. If the 6 inches (152 mm) of water completely drains out in 2 minutes or less, then a percolation rate of 3 minutes per inch (7.2 s/mm) is assigned. If the 6 inches (152 mm) of water drains out slower than 2 minutes, then the percolation rate is determined from the final water level drop in the test hole. For example, assume that the measurement interval is 5 minutes and the last water level drop (before the hole becomes completely empty) was $^3/_4$ inch (19.1 mm). The percolation rate would be 5 minutes/0.75 inch (19.1 mm) = 6.7 minutes per inch.

1402.2.1.3 Test procedure, other soils. The hole shall be filled with clear water, and a minimum water depth of 12 inches (305 mm) shall be maintained above the bottom of the hole for a 4-hour period by refilling whenever necessary or by use of an automatic siphon. Water remaining in the hole after 4 hours shall not be removed. Thereafter, the soil shall be allowed to swell not less than 16 hours or more than 30

INTERNATIONAL CODE COUNCIL®
Copyright © 2015 ICC. ALL RIGHTS RESERVED. Accessed by David Dammon on Jun 21, 2017 12:30:52 PM pursuant to License Agreement with ICC. No further reproduction or distribution authorized. ANY UNAUTHORIZED REPRODUCTION OR DISTRIBUTION IS A VIOLATION OF THE FEDERAL COPYRIGHT ACT AND THE LICENSE AGREEMENT, AND SUBJECT TO CIVIL AND CRIMINAL PENALTIES THEREUNDER.

hours. Immediately after the soil swelling period, the measurements for determining the percolation rate shall be made as follows: any soil sloughed into the hole shall be removed and the water level shall be adjusted to 6 inches (152 mm) above the gravel or coarse sand. Thereupon, from a fixed reference point, the water level shall be measured at 30-minute intervals for a period of 4 hours, unless two successive water level drops do not vary by more than $^1/_{16}$ inch (1.59 mm). At least three water level drops shall be observed and recorded. The hole shall be filled with clear water to a point not more than 6 inches (152 mm) above the gravel or coarse sand whenever it becomes nearly empty. Adjustments of the water level shall not be made during the three measurement periods except to the limits of the last measured water level drop. When the first 6 inches (152 mm) of water seeps away in less than 30 minutes, the time interval between measurements shall be 10 minutes and the test run for 1 hour. The water depth shall not exceed 5 inches (127 mm) at any time during the measurement period. The drop that occurs during the final measurement period shall be used in calculating the percolation rate.

❖ For other than sandy soils, the soil in the test hole has to be prepared by soaking with not less than 12 inches (305 mm) of water for 4 hours. After the soaking period, the water is left in the hole and the soil allowed to swell for not less than 16 hours or more than 30 hours. Immediately after the swelling period, the water in the hole must be adjusted to a 6-inch (152 mm) depth above the bottom of the hole and measurements of the water level drop taken at 30-minute intervals for 4 hours. If two consecutive water level drops do not vary more than $^1/_{16}$ inch (1.6 mm), then the test can be stopped and the percolation rate can be determined from the last water level drop.

If the water in the hole drains out in less than 30 minutes, then water level drop measurements must be taken at 10-minute intervals for a total of 1 hour. After each measurement, the hole must be refilled to at least 5 inches (127 mm) above the bottom of the hole.

1402.2.1.4 Mechanical test equipment. Mechanical percolation test equipment shall be of an *approved* type.

❖ Another way to determine soil percolation rates is by using mechanical percolation test equipment such as a permeameter. Such equipment must be approved by the code official.

1402.2.2 Permeability evaluation. Soil shall be evaluated for estimated percolation based on structure and texture in accordance with accepted soil evaluation practices. Borings shall be made in accordance with Section 1402.2.1.1 for evaluating the soil.

❖ The soil from the bored percolation test hole must be evaluated for the type of soil structure and texture to determine if the soil is suitable for absorbing water. Evidence of soil mottling could indicate that a seasonal high water table exists, even though the test hole soil is dry.

1402.3 Subsurface landscape irrigation site location. The surface grade of all soil absorption systems shall be located at a point lower than the surface grade of any water well or reservoir on the same or adjoining lot. Where this is not possible, the site shall be located so surface water drainage from the site is not directed toward a well or reservoir. The soil absorption system shall be located with a minimum horizontal distance between various elements as indicated in Table 1402.3. Private sewage disposal systems in compacted areas, such as parking lots and driveways, are prohibited. Surface water shall be diverted away from any soil absorption site on the same or neighboring lots.

❖ Because gray water contains bacteria, it is important to make sure that the soil absorption system be located away and preferably downhill from water reservoirs and water wells. Table 1402.3 indicates the minimum distances that tanks and absorption systems must be located from certain features on the lot.

TABLE 1402.3
LOCATION OF SUBSURFACE IRRIGATION SYSTEM

ELEMENT	MINIMUM HORIZONTAL DISTANCE	
	HOLDING TANK (feet)	IRRIGATION DISPOSAL FIELD (feet)
Buildings	5	2
Lot line adjoining private property	5	5
Water wells	50	100
Streams and lakes	50	50
Seepage pits	5	5
Septic tanks	0	5
Water service	5	5
Public water main	10	10

For SI: 1 foot = 304.8 mm.

SECTION 1403
INSTALLATION

1403.1 Installation. Absorption systems shall be installed in accordance with Sections 1403.1.1 through 1403.1.5 to provide landscape irrigation without surfacing of water.

❖ This section directs the reader to the subsections that regulate the installation of absorption systems.

1403.1.1 Absorption area. The total absorption area required shall be computed from the estimated daily gray water discharge and the design-loading rate based on the percolation rate for the site. The required absorption area equals the estimated gray water discharge divided by the design-loading rate from Table 1403.1.1.

❖ The area of the absorption system is determined by dividing the estimated number of gray-water gallons per day by the design loading rate from Table 1403.1.1. The design loading rate is a function of the percolation test results.

INTERNATIONAL CODE COUNCIL®
Copyright © 2015 ICC. ALL RIGHTS RESERVED. Accessed by David Dammon on Jun 21, 2017 12:30:52 PM pursuant to License Agreement with ICC. No further reproduction or distribution authorized. ANY UNAUTHORIZED REPRODUCTION OR DISTRIBUTION IS A VIOLATION OF THE FEDERAL COPYRIGHT ACT AND THE LICENSE AGREEMENT, AND SUBJECT TO CIVIL AND CRIMINAL PENALTIES THEREUNDER.

TABLE 1403.1.1
DESIGN LOADING RATE

PERCOLATION RATE (minutes per inch)	DESIGN LOADING FACTOR (gallons per square foot per day)
0 to less than 10	1.2
10 to less than 30	0.8
30 to less than 45	0.72
45 to 60	0.4

For SI: 1 minute per inch = min/25.4 mm, 1 gallon per square foot = 40.7 L/m^2.

1403.1.2 Seepage trench excavations. Seepage trench excavations shall be not less than 1 foot (304 mm) in width and not greater than 5 feet (1524 mm) in width. Trench excavations shall be spaced not less than 2 feet (610 mm) apart. The soil absorption area of a seepage trench shall be computed by using the bottom of the trench area (width) multiplied by the length of pipe. Individual seepage trenches shall be not greater than 100 feet (30 480 mm) in *developed length.*

❖ One method for making a subsurface irrigation system is to dig a trench 1 to 5 feet (304 to 1524 mm) in width and place a distribution pipe along the center of the width of the trench. Trenches are dug to a depth of where the percolation tests were performed. Where multiple trenches are required, they must be not less than 2 feet (610 mm) apart. Trenches are limited to 100 feet (30 480 mm) in length as this is a practical limit for keeping the entire trench bottom level. The absorption area of the trench is the width of the trench multiplied by the length of the pipe to be placed in the trench.

1403.1.3 Seepage bed excavations. Seepage bed excavations shall be not less than 5 feet (1524 mm) in width and have more than one distribution pipe. The absorption area of a seepage bed shall be computed by using the bottom of the trench area. Distribution piping in a seepage bed shall be uniformly spaced not greater than 5 feet (1524 mm) and not less than 3 feet (914 mm) apart, and greater than 3 feet (914 mm) and not less than 1 foot (305 mm) from the sidewall or headwall.

❖ Another method for making a subsurface irrigation system is to excavate an area that is not less than 5 feet (1524 mm) wide and place multiple distribution pipes, equally spaced from 3 to 5 feet (914 to 1524 mm) apart in the excavated area. The distribution pipes must be not closer than 1 foot (305 mm) and not more than 3 feet (914 mm) from the headwall and sidewalls. The absorption area of the trench is the width of the excavated bed area multiplied by the length of the bed area.

1403.1.4 Excavation and construction. The bottom of a trench or bed excavation shall be level. Seepage trenches or beds shall not be excavated where the soil is so wet that such material rolled between the hands forms a soil wire. All smeared or compacted soil surfaces in the sidewalls or bottom of seepage trench or bed excavations shall be scarified to the depth of smearing or compaction and the loose material removed. Where rain falls on an open excavation, the soil shall be left until sufficiently dry so a soil wire will not form when soil from the excavation bottom is rolled between the hands. The bottom area shall then be scarified and loose material removed.

❖ Care must be taken to not excavate or work in trenches or beds when the soil is wet so that a soil wire can be formed between the hands. Smeared and compacted soil must be scarified (scratched) to break up the smearing and compaction. Loose soil must be removed from the trench or bed area. The bottom of bed and trench areas must be level.

1403.1.5 Aggregate and backfill. Not less than 6 inches in depth of aggregate, ranging in size from $^1/_2$ to $2^1/_2$ inches (12.7 mm to 64 mm), shall be laid into the trench below the distribution piping elevation. The aggregate shall be evenly distributed not less than 2 inches (51 mm) in depth over the top of the distribution pipe. The aggregate shall be covered with *approved* synthetic materials or 9 inches (229 mm) of uncompacted marsh hay or straw. Building paper shall not be used to cover the aggregate. Not less than 9 inches (229 mm) of soil backfill shall be provided above the covering.

❖ The bottom of the bed or trench area must have aggregate placed to a depth of 6 inches (152 mm). Then the distribution pipe is laid on top of the aggregate and covered with 2 inches (51 mm) of aggregate. The installer has the choice of covering the aggregate with synthetic materials or 9 inches (229 mm) of marsh hay or straw. The trench or bed is then covered by not less than 9 inches (229 mm) of soil backfill.

1403.2 Distribution piping. Distribution piping shall be not less than 3 inches (76 mm) in diameter. Materials shall comply with Table 1403.2. The top of the distribution pipe shall be not less than 8 inches (203 mm) below the original surface. The slope of the distribution pipes shall be not less than 2 inches (51 mm) and not greater than 4 inches (102 mm) per 100 feet (30 480 mm).

❖ Distribution piping must be at least 3 inches (76 mm) in diameter and be of one of the materials listed in Table 1403.2. The elevation of the top of the pipe in the trench or bed must be not less than 8 inches (203 mm) below the original grade elevation. The distribution pipe must be sloped at least 2 inches (51 mm) per 100 feet (30 480 mm) but not more than 4 inches (102 mm) per 100 feet (30 480 mm).

TABLE 1403.2
DISTRIBUTION PIPE

MATERIAL	STANDARD
Polyethylene (PE) plastic pipe	ASTM F405
Polyvinyl chloride (PVC) plastic pipe	ASTM D729
Polyvinyl chloride (PVC) plastic pipe with a 3.5-inch O.D. and solid cellular core or composite wall	ASTM F1488

For SI: 1 inch = 25.4 mm.

INTERNATIONAL CODE COUNCIL®
Copyright © 2015 ICC. ALL RIGHTS RESERVED. Accessed by David Dammon on Jun 21, 2017 12:30:52 PM pursuant to License Agreement with ICC. No further reproduction or distribution authorized. ANY UNAUTHORIZED REPRODUCTION OR DISTRIBUTION IS A VIOLATION OF THE FEDERAL COPYRIGHT ACT AND THE LICENSE AGREEMENT, AND SUBJECT TO CIVIL AND CRIMINAL PENALTIES THEREUNDER.

1403.2.1 Joints. Joints in distribution pipe shall be made in accordance with Section 705 of this code.

❖ Distribution piping must be joined by one of the methods in Section 705, as applicable to the type of pipe being used.

Bibliography

The following resource materials are referenced in this chapter or are relevant to the subject matter addressed in this chapter.

Art Ludwig. *Builder's Greywater Guide.* Oasis Design, 1995-2006.

Graywater Guide. Department of Water Resources, State of California, January 1995.

INTERNATIONAL CODE COUNCIL®
Copyright © 2015 ICC. ALL RIGHTS RESERVED. Accessed by David Dammon on Jun 21, 2017 12:30:52 PM pursuant to License Agreement with ICC. No further reproduction or distribution authorized. ANY UNAUTHORIZED REPRODUCTION OR DISTRIBUTION IS A VIOLATION OF THE FEDERAL COPYRIGHT ACT AND THE LICENSE AGREEMENT, AND SUBJECT TO CIVIL AND CRIMINAL PENALTIES THEREUNDER.

INTERNATIONAL CODE COUNCIL®
Copyright © 2015 ICC. ALL RIGHTS RESERVED. Accessed by David Dammon on Jun 21, 2017 12:30:52 PM pursuant to License Agreement with ICC. No further reproduction or distribution authorized. ANY UNAUTHORIZED REPRODUCTION OR DISTRIBUTION IS A VIOLATION OF THE FEDERAL COPYRIGHT ACT AND THE LICENSE AGREEMENT, AND SUBJECT TO CIVIL AND CRIMINAL PENALTIES THEREUNDER.

Chapter 15: Referenced Standards

General Comments

This chapter lists the standards that are referenced in various sections of this document. The standards are listed herein by the promulgating agency of the standard, the standard identification, the date and title, and the section or sections of this document that reference the standard. The application of the referenced standards is as specified in Section 102.8.

It is important to understand that not every document related to building design and construction is qualified to be a "referenced standard." The International Code Council® (ICC®) has adopted a criterion that standards referenced in the *International Codes*® and standards intended for adoption into the *International Codes* must meet to qualify as a referenced standard. The policy is summarized as follows:

- Code references: The scope and application of the standard must be clearly identified in the code text.
- Standard content: The standard must be written in mandatory language and be appropriate for the subject covered. The standard shall not have the effect of requiring proprietary materials or prescribing a proprietary testing agency.
- Standard promulgation: The standard must be readily available and developed and maintained in a consensus process such as ASTM or ANSI.

The ICC Code Development Procedures, of which the standards policy is a part, are updated periodically. A copy of the latest version can be obtained from the ICC offices.

Once a standard is incorporated into the code through the code development process, it becomes an enforceable part of the code. When the code is adopted by a jurisdiction, the standard also is part of that jurisdiction's adopted code. It is for this reason that the criteria were developed. Compliance with this policy means that documents incorporated into the code are developed through the use of a consensus process, written in mandatory language, and do not mandate the use of proprietary materials or agencies. The requirement for a standard to be developed through a consensus process is vital because it means that the standard will be representative of the most current body of available knowledge on the subject as determined by a broad spectrum of interested or affected parties without dominance by any single interest group. A true consensus process has many attributes, including but not limited to:

- An open process that has formal (published) procedures that allow for the consideration of all viewpoints,
- A definitive review period that allows for the standard to be updated or revised,
- A process of notification to all interested parties and
- An appeals process.

Many available documents related to design, installation and construction, though useful, are not "standards" and are not appropriate for reference in the code. Often, these documents are developed or written with the intention of being used for regulatory purposes and are unsuitable for use as a regulation because of extensive use of recommendations, advisory comments and nonmandatory terms. Typical examples of such documents include installation instructions, guidelines and practices.

The objective of ICC's standards policy is to provide regulations that are clear, concise and enforceable—thus the requirement for standards to be written in mandatory language. This requirement is not intended to mean that a standard cannot contain informational or explanatory material that will aid the user of the standard in its application. When it is the desire of the standard's promulgating agency for such material to be included, however, the information must appear in a nonmandatory location, such as an annex or appendix, and be clearly identified as not being part of the standard.

Overall, standards referenced by the code must be authoritative, relevant, up to date and, most important, reasonable and enforceable. Standards that comply with the ICC standards policy fulfill these expectations.

Purpose

As a performance-oriented code, the code contains numerous references to documents that are used to regulate materials and methods of construction. The references to these documents within the code text consist of the promulgating agency's acronym and its publication designation (e.g., ASME A112.1.3) and a further indication that the document being referenced is the one that is listed in Chapter 15. Chapter 15 contains all of the information that is necessary to identify the specific referenced document. Included is the following information on a document's promulgating agency (see Figure 15):

- The promulgating agency (i.e., the agency's title),
- The promulgating agency's acronym and
- The promulgating agency's address. For example, a reference to an ASME standard within the code indicates that the document is promulgated by the American Society of Mechanical Engineers

INTERNATIONAL CODE COUNCIL®
Copyright © 2015 ICC. ALL RIGHTS RESERVED. Accessed by David Dammon on Jun 21, 2017 12:30:52 PM pursuant to License Agreement with ICC. No further reproduction or distribution authorized. ANY UNAUTHORIZED REPRODUCTION OR DISTRIBUTION IS A VIOLATION OF THE FEDERAL COPYRIGHT ACT AND THE LICENSE AGREEMENT, AND SUBJECT TO CIVIL AND CRIMINAL PENALTIES THEREUNDER.

- (ASME), which is located in New York City. Chapter 15 lists the standards agencies alphabetically for ease of identification.

Chapter 15 also includes the following information on the referenced document itself (see Figure 15):

- The document's publication designation,
- The document's edition year,
- The document's title,
- Any addenda or revisions to the document that are applicable and
- Every section of the code in which the document is referenced.

For example, a reference to ASME A112.1.3 indicates that this document can be found in Chapter 15 under the heading ASME. The specific standards designation is A112.1.3. For convenience, these designations are listed in alphanumeric order. Chapter 15 identifies that ASME A112.1.3 is titled *Air Gap Fittings for Use with Plumbing Fixtures, Appliances and Appurtenances*; the applicable edition (i.e., its year of publication) is 2000; and it is referenced in two sections of the code.

The key aspect of the manner in which standards are referenced by the code is that a specific edition of a specific standard is clearly identified. In this manner, the requirements necessary for compliance can be readily determined. The basis for code compliance is, therefore, established and available on an equal basis to the code official, the contractor, the designer and the owner.

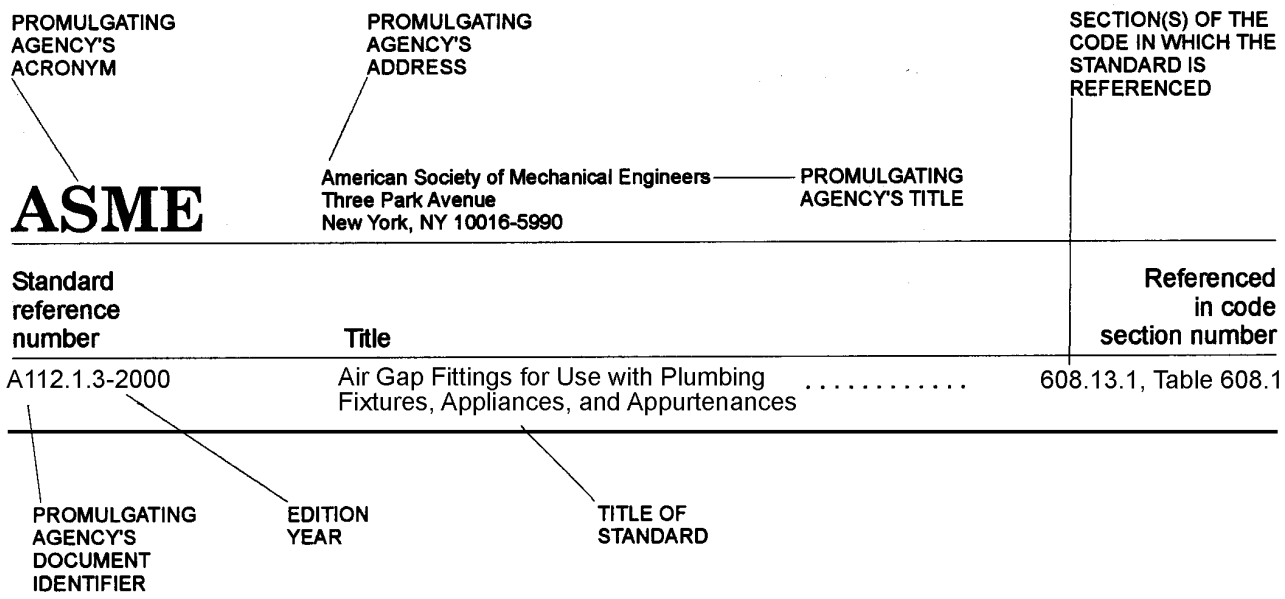

Figure 15
REFERENCED STANDARDS

This chapter lists the standards that are referenced in various sections of this document. The standards are listed herein by the promulgating agency of the standard, the standard identification, the effective date and title, and the section or sections of this document that reference the standard. The application of the referenced standards shall be as specified in Section 102.8.

AHRI Air-Conditioning, Heating, & Refrigeration Institute
4100 North Fairfax Drive, Suite 200
Arlington, VA 22203

Standard reference number	Title	Referenced in code section number
1010—02	Self-contained, Mechanically Refrigerated Drinking-Water Coolers.	410.1

INTERNATIONAL CODE COUNCIL®
Copyright © 2015 ICC. ALL RIGHTS RESERVED. Accessed by David Dammon on Jun 21, 2017 12:30:52 PM pursuant to License Agreement with ICC. No further reproduction or distribution authorized. ANY UNAUTHORIZED REPRODUCTION OR DISTRIBUTION IS A VIOLATION OF THE FEDERAL COPYRIGHT ACT AND THE LICENSE AGREEMENT, AND SUBJECT TO CIVIL AND CRIMINAL PENALTIES THEREUNDER.

ANSI

American National Standards Institute
25 West 43rd Street, Fourth Floor
New York, NY 10036

Standard reference number	Title	Referenced in code section number
A118.10—99	Specifications for Load Bearing, Bonded, Waterproof Membranes for Thin Set Ceramic Tile and Dimension Stone Installation	417.5.2.5, 417.5.2.6
Z4.3—95	Minimum Requirements for Nonsewered Waste-disposal Systems	311.1
Z21.22—99 (R2003)	Relief Valves for Hot Water Supply Systems with Addenda Z21.22a—2000 (R2003) and Z21.22b—2001 (R2003)	504.2, 504.4, 504.4.1
CSA B45.5—11/ IAPMO Z124—11	Plastic Plumbing Fixtures	407.1, 415.1, 416.1, 416.2, 417.1, 418.1, 419.1, 420.1

API

American Petroleum Institute
1220 L Street NW
Washington, DC 20005-4070

Standard reference number	Title	Referenced in code section number
12D—2008	Specification for Field Welded Tanks for Storage of Production Liquids, effective April 1, 2009	1302.7.2
12F—2008	Specification for Shop Welded Tanks for Storage of Production Liquids, effective April 1 2009	1302.7.2

ASME

American Society of Mechanical Engineers
Three Park Avenue
New York, NY 10016-5990

Standard reference number	Title	Referenced in code section number
A112.1.2—2004	Air Gaps in Plumbing Systems	406.1, 409.2, Table 608.1, 608.13.1
A112.1.3—2000 (R2011)	Air Gap Fittings for Use with Plumbing Fixtures, Appliances and Appurtenances	406.1, 409.2, Table 608.1, 608.13.1, 1102.6
A112.3.1—2007	Stainless Steel Drainage Systems for Sanitary, DWV, Storm and Vacuum Applications Above and Below Ground	412.1, Table 702.1, Table 702.2, Table 702.3, Table 702.4, Table 1102.4, Table 1102.5, 1102.6, Table 1102.7
ASME A112.3.4—2013/ CSA B45.9—2013	Macerating Toilet Systems and Related Components	712.4.1
A112.4.1—2009	Water Heater Relief Valve Drain Tubes	504.6
A112.4.2—2009	Water Closet Personal Hygiene Devices	424.9
A112.4.3—1999 (R2010)	Plastic Fittings for Connecting Water Closets to the Sanitary Drainage System	405.4
A112.4.14—2004 (R2010)	Manually Operated, Quarter-Turn Shutoff Valves for Use in Plumbing Systems	Table 605.7
A112.6.1M—1997 (R2008)	Floor-affixed Supports for Off-the-floor Plumbing Fixtures for Public Use	405.4.3
A112.6.2—2000 (R2010)	Framing-affixed Supports for Off-the-floor Water Closets with Concealed Tanks	405.4.3
A112.6.3—2001 (R2007)	Floor and Trench Drains	412.1
A112.6.4—2003 (R2008)	Roof, Deck, and Balcony Drains	1102.6
A112.6.7—2010	Enameled and Epoxy-coated Cast-iron and PVC Plastic Sanitary Floor Sinks	427.1
A112.6.9—2005 (R2010)	Siphonic Roof Drains	1107.1
A112.14.1—2003	Backwater Valves	715.2
A112.14.3—2000	Grease Interceptors	1003.3.4
A112.14.4—2001 (Reaffirmed 2007)	Grease Removal Devices	1003.3.4
A112.14-14.6—2010	FOG (Fats, Oils and Greases) Disposal Systems	1003.3.4, 1003.3.6
A112.18.1—2012/ CSA B125.1—2012	Plumbing Supply Fittings	424.1, 424.2, 424.3, 424.4, 424.6, 424.8, 605.7, 607.4, 608.2
A112.18.2—2011/ CSA B125.2—2011	Plumbing Waste Fittings	424.1.2
A112.18.3—2002 (Reaffirmed 2008)	Performance Requirements for Backflow Protection Devices and Systems in Plumbing Fixture Fittings	424.2, 424.6

INTERNATIONAL CODE COUNCIL®
Copyright © 2015 ICC. ALL RIGHTS RESERVED. Accessed by David Dammon on Jun 21, 2017 12:30:52 PM pursuant to License Agreement with ICC. No further reproduction or distribution authorized. ANY UNAUTHORIZED REPRODUCTION OR DISTRIBUTION IS A VIOLATION OF THE FEDERAL COPYRIGHT ACT AND THE LICENSE AGREEMENT, AND SUBJECT TO CIVIL AND CRIMINAL PENALTIES THEREUNDER.

ASME—continued

A112.18.6/ CSA B125.6—2009	Flexible Water Connectors	605.6
A112.18.7—1999 (Reaffirmed 2004)	Deck mounted Bath/Shower Transfer Valves with Integral Backflow Protection	424.8
A112.18.9—2011	Protectors/Insulators for Exposed Waste and Supplies on Accessible Fixtures	404.3
A112.19.1/—2013 CSA B45.2—2013	Enameled Cast Iron and Enameled Steel Plumbing Fixtures	407.1, 410.1, 415.1, 416.1, 418.1
A112.19.2—2013/ CSA B45.1—13	Ceramic Plumbing Fixtures	401.2, 405.9, 407.1, 408.1, 410.1, 415.1, 416.1, 417.1, 418.1, 419.1, 420.1
A112.19.3—2008/ CSA B45.4—08(R2013)	Stainless Steel Plumbing Fixtures	405.9, 407.1, 415.1, 416.1, 418.1, 420.1
A112.19.5/—2011 CSA B45.15—2011	Flush Valves and Spuds for Water-closets, Urinals, and Tanks	425.4
A112.19.7M—2012/ CSA B45.10—2012	Hydromassage Bathtub Systems	421.1, 421.4
A112.19.12—2006	Wall Mounted and Pedestal Mounted, Adjustable, Elevating, Tilting and Pivoting Lavatory, Sink and Shampoo Bowl Carrier Systems and Drain Systems	416.4, 418.3
A112.19.14-2006(R2011)	Six-Liter Water Closets Equipped with a Dual Flushing Device	420.1
A112.19.15—2005	Bathtub/Whirlpool Bathtubs with Pressure Sealed Doors	407.4, 421.6
A112.19.19—2006	Vitreous China Nonwater Urinals	419.1, 421.6
A112.21.3-1985(R2007)	Hydrants for Utility and Maintenance Use	Table 608.1, 608.13.6
A112.36.2M—1991 (R2008)	Cleanouts	708.1.10.2
ASSE 1016/ ASME A112.1016/ CSA B125.16-2011	Performance Requirements for Individual Thermostatic, Pressure Balancing and Combination Control Valves for Individual Fixture Fittings	424.3, 424.4, 607.4
B1.20.1—1983(R2006)	Pipe Threads, General Purpose (inch)	605.10.3, 605.11.3, 605.13.4, 605.15.3, 605.18.1, 605.22.4, 705.2.3, 705.3.3, 705.6.4, 705.19.1, 705.11.3
B 16.3—2011	Malleable Iron Threaded Fittings Classes 150 and 300	Table 702.4, Table 1102.7
B 16.4—2011	Gray Iron Threaded Fittings Classes 125 and 250	Table 605.5, Table 702.4, Table 1102.7
B 16.9—2007	Factory-made Wrought Steel Buttwelding Fittings	Table 605.5, Table 702.4, Table 1102.7
B 16.11—2011	Forged Fittings, Socket-welding and Threaded	Table 605.5, Table 702.4, Table 1102.7
B 16.12—2009	Cast-iron Threaded Drainage Fittings	Table 702.4, Table 1102.7
B 16.15—2011	Cast Bronze Threaded Fittings	Table 605.5, Table 702.4, Table 1102.7
B 16.18—2012	Cast Copper Alloy Solder Joint Pressure Fittings	Table 605.5, Table 702.4, Table 1102.7
B 16.22—2001(R2010)	Wrought Copper and Copper Alloy Solder Joint Pressure Fittings	Table 605.5, Table 702.4, Table 1102.7
B 16.23—2011	Cast Copper Alloy Solder Joint Drainage Fittings DWV	Table 702.4, Table 1102.7
B 16.26—2011	Cast Copper Alloy Fittings for Flared Copper Tubes	Table 605.5, Table 702.4, Table 1102.7
B 16.28—1994	Wrought Steel Buttwelding Short Radius Elbows and Returns	Table 605.5, Table 702.4, Table 1102.7
B 16.29—2012	Wrought Copper and Wrought Copper Alloy Solder Joint Drainage Fittings (DWV)	Table 702.4, Table 1102.7
B16.34—2009	Valves Flanged, Threaded and Welding End	Table 605.7
B16.51—2011	Copper and Copper Alloy Press-Connect Pressure Fittings	Table 605.5

ASPE

American Society of Plumbing Engineers
8614 Catalpa Avenue, Suite 1007
Chicago, IL 60656-1116

Standard reference number	Title	Referenced in code section number
45—2013	Siphonic Roof Drainage Systems	1107.1

INTERNATIONAL CODE COUNCIL®
Copyright © 2015 ICC. ALL RIGHTS RESERVED. Accessed by David Dammon on Jun 21, 2017 12:30:52 PM pursuant to License Agreement with ICC. No further reproduction or distribution authorized. ANY UNAUTHORIZED REPRODUCTION OR DISTRIBUTION IS A VIOLATION OF THE FEDERAL COPYRIGHT ACT AND THE LICENSE AGREEMENT, AND SUBJECT TO CIVIL AND CRIMINAL PENALTIES THEREUNDER.

ASSE

American Society of Sanitary Engineering
901 Canterbury Road, Suite A
Westlake, OH 44145

Standard reference number	Title	Referenced in code section number
1001—08	Performance Requirements for Atmospheric Type Vacuum Breakers	425.2, Table 608.1, 608.13.6, 608.16.4.1
1002—08	Performance Requirements for Antisiphon Fill Valves (Ballcocks) for Gravity Water Closet Flush Tanks	425.3.1, Table 608.1
1003—09	Performance Requirements for Water Pressure Reducing Valves	604.8
1004—08	Performance Requirements for Backflow Prevention Requirements for Commercial Dishwashing Machines	409.1
1005—99	Performance Requirements for Water Heater Drain Valves	501.3
1008—06	Performance Requirements for Plumbing Aspects of Food Waste Disposer Units	413.1
1010—04	Performance Requirements for Water Hammer Arresters	604.9
1011—04	Performance Requirements for Hose Connection Vacuum Breakers	Table 608.1, 608.13.6
1012—09	Performance Requirements for Backflow Preventers with Intermediate Atmospheric Vent	Table 608.1, 608.13.3, 608.16.2
1013—09	Performance Requirements for Reduced Pressure Principle Backflow Preventers and Reduced Pressure Principle Fire Protection Backflow Preventers	Table 608.1, 608.13.2, 608.16.2
1015—09	Performance Requirements for Double Check Backflow Prevention Assemblies and Double Check Fire Protection Backflow Prevention Assemblies	Table 608.1, 608.13.7
ASSE 1016/ ASME A112.1016/ CSA B125.16—2011	Performance Requirements for Individual Thermostatic, Pressure Balancing and Combination Control Valves for Individual Fixture Fittings	424.3, 424.4, 607.4
1017—2010	Performance Requirements for Temperature Actuated Mixing Valves for Hot Water Distribution Systems	501.2, 613.1
1018—2010	Performance Requirements for Trap Seal Primer Valves; Potable Water Supplied	1002.4.1.2
1019—2010	Performance Requirements for Vacuum Breaker Wall Hydrants, Freeze Resistant, Automatic Draining Type	Table 608.1, 608.13.6, 608.13.10
1020—04	Performance Requirements for Pressure Vacuum Breaker Assembly	Table 608.1, 608.13.5
1022—03	Performance Requirements for Backflow Preventer for Beverage Dispensing Equipment	Table 608.1, 608.16.1, 608.16.10
1024—04	Performance Requirements for Dual Check Valve Type Backflow Preventers (for Residential Supply Service or Individual Outlets)	605.3.1, Table 608.1, 608.13.10
1035—08	Performance Requirements for Laboratory Faucet Backflow Preventers	Table 608.1, 608.13.6
1037—90	Performance Requirements for Pressurized Flushing Devices for Plumbing Fixtures	425.2
1044—2010	Performance Requirements for Trap Seal Primer Devices Drainage Types and Electronic Design Types	1002.4.1.3
1047—2009	Performance Requirements for Reduced Pressure Detector Fire Protection Backflow Prevention Assemblies	Table 608.1, 608.13.2
1048—2009	Performance Requirements for Double Check Detector Fire Protection Backflow Prevention Assemblies	Table 608.1, 608.13.7
1049—2009	Performance Requirements for Individual and Branch Type Air Admittance Valves for Chemical Waste Systems	901.3, 918.8
1050—2009	Performance Requirements for Stack Air Admittance Valves for Sanitary Drainage Systems	918.1
1051—2009	Performance Requirements for Individual and Branch Type Air Admittance Valves for Sanitary Drainage Systems-fixture and Branch Devices	918.1
1052—04	Performance Requirements for Hose Connection Backflow Preventers	Table 608.1, 608.13.6
1055—2009	Performance Requirements for Chemical Dispensing Systems	608.13.9
1056—2010	Performance Requirements for Spill Resistant Vacuum Breaker	Table 608.1, 608.13.5, 608.13.8
1060—2006	Performance Requirements for Outdoor Enclosures for Fluid Conveying Components	608.14.1
1061—2010	Performance Requirements for Removable and Nonremovable Push Fit Fittings	Table 605.5
1062—2006	Performance Requirements for Temperature Actuated, Flow Reduction Valves to Individual Supply Fittings	424.7
1066—2009	Performance Requirements for Individual Pressure Balancing In-line Valves for Individual Fixture Fittings	604.11
1069—05	Performance Requirements for Automatic Temperature Control Mixing Valves	424.4
1070—04	Performance Requirements for Water-temperature Limiting Devices	408.3, 416.5, 423.3, 424.5, 607.1.2
1072—07	Performance Requirements for Barrier Type Floor Drain Tap Seal Protection Devices	1002.4.14
1079—2005	Performance Requirements for Dielectric Pipe Unions	605.24.1, 605.24.3
5013—2009	Performance Requirements for Testing Reduced Pressure Principle Backflow Prevention Assembly (RPA) and Reduced Pressure Fire Protection Backflow Preventers (RFP)	312.10.2

INTERNATIONAL CODE COUNCIL®
Copyright © 2015 ICC. ALL RIGHTS RESERVED. Accessed by David Dammon on Jun 21, 2017 12:30:52 PM pursuant to License Agreement with ICC. No further reproduction or distribution authorized. ANY UNAUTHORIZED REPRODUCTION OR DISTRIBUTION IS A VIOLATION OF THE FEDERAL COPYRIGHT ACT AND THE LICENSE AGREEMENT, AND SUBJECT TO CIVIL AND CRIMINAL PENALTIES THEREUNDER.

ASSE—continued

5015—2009	Performance Requirements for Testing Double Check Valve Backflow Prevention Assemblies (DC) and Double Check Fire Protection Backflow Prevention Assemblies (DCF) 312.10.2
5020—2009	Performance Requirements for Testing Pressure Vacuum Breaker Assemblies (PVBA) 312.10.2
5047—98	Performance Requirements for Testing Reduced Pressure Detector Fire Protection Backflow Prevention Assemblies (RPDA) 312.10.2
5048—2009	Performance Requirements for Testing Double Check Valve Detector Assembly (DCDA) 312.10.2
5052—98	Performance Requirements for Testing Hose Connection Backflow Preventers 312.10.2
5056—98	Performance Requirements for Testing Spill Resistant Vacuum Breaker (SRVB) 312.10.2

ASTM

ASTM International
100 Barr Harbor Drive
West Conshohocken, PA 19428-2959

Standard reference number	Title	Referenced in code section number
A53/A 53M—12	Specification for Pipe, Steel, Black and Hot-dipped, Zinc-coated Welded and Seamless	Table 605.3, Table 605.4, Table 702.1
A74—13a	Specification for Cast-iron Soil Pipe and Fittings	Table 702.1, Table 702.2, Table 702.3, Table 702.4, 708.2, 708.7, Table 1102.4, Table 1102.5, Table 1102.7
A312/A 312M—13a	Specification for Seamless, Welded, And Heavily Cold Worked Austenitic Stainless Steel Pipes	Table 605.3, Table 605.4, Table 605.5, 605.23.2
A733—2003(2009)e1	Specification for Welded and Seamless Carbon Steel and Austenitic Stainless Steel Pipe Nipples	Table 605.8
A778—01(2009)e1	Specification for Welded Unannealed Austenitic Stainless Steel Tubular Products	Table 605.3, Table 605.4, Table 605.5
A888—13a	Specification for Hubless Cast-iron Soil Pipe and Fittings for Sanitary and Storm Drain, Waste, and Vent Piping Application	Table 702.1, Table 702.2, Table 702.3, Table 702.4, 708.7, Table 1102.4, Table 1102.5, Table 1102.7
B32—08	Specification for Solder Metal	605.13.3, 605.14.6, 705.6.3, 705.17.3
B42—10	Specification for Seamless Copper Pipe, Standard Sizes	Table 605.3, Table 605.4, Table 702.1
B43—09	Specification for Seamless Red Brass Pipe, Standard Sizes	Table 605.3, Table 605.4, Table 702.1
B75—11	Specification for Seamless Copper Tube	Table 605.3, Table 605.4, Table 702.1, Table 702.2, Table 702.3, Table 1102.4
B88—09	Specification for Seamless Copper Water Tube	Table 605.3, Table 605.4, Table 702.1, Table 702.2, Table 702.3, Table 1102.4
B152/B 152M—13	Specification for Copper Sheet, Strip Plate and Rolled Bar	402.3, 417.5.2.4, 425.3.3, 902.2
B251—10	Specification for General Requirements for Wrought Seamless Copper and Copper-alloy Tube	Table 605.3, Table 605.4, Table 702.1, Table 702.2, Table 702.3, Table 1102.4
B302—12	Specification for Threadless Copper Pipe, Standard Sizes	Table 605.3, Table 605.4, Table 702.1
B306—09	Specification for Copper Drainage Tube (DWV)	Table 702.1, Table 702.2, Table 1102.4
B447—12a	Specification for Welded Copper Tube	Table 605.3, Table 605.4
B687—99(2011)	Specification for Brass, Copper and Chromium-plated Pipe Nipples	Table 605.8
B813—10	Specification for Liquid and Paste Fluxes for Soldering of Copper and Copper Alloy Tube	605.13.3, 605.14.6, 705.6.3, 705.7.3
B828—02(2010)	Practice for Making Capillary Joints by Soldering of Copper and Copper Alloy Tube and Fittings	605.13.3, 605.14.6, 705.6.3, 705.17.3
C4—04(2009)	Specification for Clay Drain Tile and Perforated Clay Drain Tile	Table 702.3, Table 1102.4, Table 1102.5
C14—11	Specification for Nonreinforced Concrete Sewer, Storm Drain and Culvert Pipe	Table 702.3, Table 1102.4
C76—13a	Specification for Reinforced Concrete Culvert, Storm Drain and Sewer Pipe	Table 702.3, Table 1102.4
C425—04(2009)	Specification for Compression Joints for Vitrified Clay Pipe and Fittings	705.12, 705.16
C443—12	Specification for Joints for Concrete Pipe and Manholes, Using Rubber Gaskets	705.5, 705.16
C564—12	Specification for Rubber Gaskets for Cast-iron Soil Pipe and Fittings	705.4.2, 705.4.3, 705.16
C700—13	Specification for Vitrified Clay Pipe, Extra Strength, Standard Strength, and Perforated	Table 702.3, Table 702.4, Table 1102.4, Table 1102.5
C1053—00(2010)	Specification for Borosilicate Glass Pipe and Fittings for Drain, Waste, and Vent (DWV) Applications	Table 702.1, Table 702.4
C1173—10e1	Specification for Flexible Transition Couplings for Underground Piping System	705.2.1, 705.5, 705.11.1, 705.12, 705.13.2, 705.16

INTERNATIONAL CODE COUNCIL®
Copyright © 2015 ICC. ALL RIGHTS RESERVED. Accessed by David Dammon on Jun 21, 2017 12:30:52 PM pursuant to License Agreement with ICC. No further reproduction or distribution authorized. ANY UNAUTHORIZED REPRODUCTION OR DISTRIBUTION IS A VIOLATION OF THE FEDERAL COPYRIGHT ACT AND THE LICENSE AGREEMENT, AND SUBJECT TO CIVIL AND CRIMINAL PENALTIES THEREUNDER.

ASTM—continued

C1277—12	Specification for Shielded Coupling Joining Hubless Cast-iron Soil Pipe and Fittings 705.4.3
C1440—08	Specification for Thermoplastic Elastomeric (TPE) Gasket Materials for Drain, Waste, and Vent (DWV), Sewer, Sanitary and Storm Plumbing Systems 705.16
C1460—08	Specification for Shielded Transition Couplings for Use with Dissimilar DWV Pipe and Fittings Above Ground 705.16
C1461—08	Specification for Mechanical Couplings Using Thermoplastic Elastomeric (TPE) Gaskets for Joining Drain, Waste and Vent (DWV) Sewer, Sanitary and Storm Plumbing Systems for Above and Below Ground Use 705.19
C1540—11	Specification for Heavy Duty Shielded Couplings Joining Hubless Cast-iron Soil Pipe and Fittings 705.4.3
C1563—13	Standard Test Method for Gaskets for Use in Connection with Hub and Spigot Cast Iron Soil Pipe and Fittings for Sanitary Drain, Waste, Vent and Storm Piping Applications 705.4.2
D1253—08	Standard Test Method For Residual Chlorine in Water. 1301.2.1, 1303.9
D1527—99(2005)	Specification for Acrylonitrile-Butadiene-Styrene (ABS) Plastic Pipe, Schedules 40 and 80 . . . . . .Table 605.3
D1785—12	Specification for Poly (Vinyl Chloride) (PVC) Plastic Pipe, Schedules 40, 80 and 120. . . . . .Table 605.3
D2235—04(2011)	Specification for Solvent Cement for Acrylonitrile-Butadiene-Styrene (ABS) Plastic Pipe and Fittings. 605.10.2, 705.2.2, 705.2.2, 705.7.2
D2239—12a	Specification for Polyethylene (PE) Plastic Pipe (SIDR-PR) Based on Controlled Inside Diameter . . . . . .Table 605.3
D2241—09	Specification for Poly (Vinyl Chloride) (PVC) Pressure-rated Pipe (SDR-Series). . . . . .Table 605.3
D2282—99(2005)	Specification for Acrylonitrile-Butadiene-Styrene (ABS) Plastic Pipe (SDR-PR) . . . . . .Table 605.3
D2464—06	Specification for Threaded Poly (Vinyl Chloride) (PVC) Plastic Pipe Fittings, Schedule 80 . . . . . .Table 605.5
D2466—06	Specification for Poly (Vinyl Chloride) (PVC) Plastic Pipe Fittings, Schedule 40. . . . . .Table 605.5
D2467—06	Specification for Poly (Vinyl Chloride) (PVC) Plastic Pipe Fittings, Schedule 80. . . . . .Table 605.5
D2468—96a	Specification for Acrylonitrile-Butadiene-Styrene (ABS) Plastic Pipe Fittings, Schedule 40 . . . . . .Table 605.5
D2564—12	Specification for Solvent Cements for Poly (Vinyl Chloride) (PVC) Plastic Piping Systems 605.22.3, 705.11.2, 705.14.2
D2609—02(2008)	Specification for Plastic Insert Fittings for Polyethylene (PE) Plastic Pipe . . . . . .Table 605.5
D2657—07	Practice for Heat Fusion-joining of Polyolefin Pipe and Fitting Waste, and Vent Pipe and Fittings. 605.19.2, 705.13.1
D2661—11	Specification for Acrylonitrile-Butadiene-Styrene (ABS) Schedule 40 Plastic Drain, Waste, and Vent Pipe and Fittings . . . . . Table 702.1, Table 702.2, Table 702.3, Table 702.4, 705.2.2, 705.7.2, Table 1102.4, Table 1102.7
D2665—12	Specification for Poly (Vinyl Chloride) (PVC) Plastic Drain, Waste, and Vent Pipe and Fittings. . . . . Table 702.1, Table 702.2, Table 702.3, Table 702.4, Table 1102.4, Table 1102.7
D2672—96a(2009)	Specification for Joints for IPS PVC Pipe Using Solvent Cement . . . . . .Table 605.3
D2683—10e1	Standard Specification for Socket-type Polyethylene fittings for Outside Diameter-controlled Polyethylene Pipe and Tubing . . . . . Table 605.5, 717.5
D2729—11	Specification for Poly (Vinyl Chloride) (PVC) Sewer Pipe and Fittings . . . . . Table 1102.5, Table 1403.2
D2737—2012a	Specification for Polyethylene (PE) Plastic Tubing. . . . . .Table 605.3
D2751—05	Specification for Acrylonitrile-Butadiene-Styrene (ABS) Sewer Pipe and Fittings. . . . . Table 702.3, Table 702.4, Table 1102.4, Table 1102.7
D2846/D 2846M—09be1	Specification for Chlorinated Poly (Vinyl Chloride) (CPVC) Plastic Hot and Cold Water Distribution Systems. . . . . Table 605.3, Table 605.4, Table 605.5, 605.15.2, 605.16.2
D2855—96(2010)	Standard Practice for Making Solvent-cemented Joints with Poly (Vinyl Chloride) (PVC) Pipe and Fittings. 605.22.3, 705.11.2
D2949—10	Specification for 3.25-in Outside Diameter Poly (Vinyl Chloride) (PVC) Plastic Drain, Waste, and Vent Pipe and Fittings . . . . . Table 702.1, Table 702.2, Table 702.3, Table 702.4, Table 1102.7
D3034—08	Specification for Type PSM Poly (Vinyl Chloride) (PVC) Sewer Pipe and Fittings . . . . . Table 702.3, Table 702.4, Table 1102.4, Table 1102.5, Table 1102.7
D3035—2012e1	Standard Specification for Polyethylene (PE) Plastic Pipe (DR-PR) Based on Controlled Outside Diameter . . . . . .Table 605.3
D3139—98(2011)	Specification for Joints for Plastic Pressure Pipes Using Flexible Elastomeric Seals. 605.10.1, 605.22.1
D3212—07	Specification for Joints for Drain and Sewer Plastic Pipes Using Flexible Elastomeric Seals. 705.2.1, 705.11.1, 705.13.2

INTERNATIONAL CODE COUNCIL®
Copyright © 2015 ICC. ALL RIGHTS RESERVED. Accessed by David Dammon on Jun 21, 2017 12:30:52 PM pursuant to License Agreement with ICC. No further reproduction or distribution authorized. ANY UNAUTHORIZED REPRODUCTION OR DISTRIBUTION IS A VIOLATION OF THE FEDERAL COPYRIGHT ACT AND THE LICENSE AGREEMENT, AND SUBJECT TO CIVIL AND CRIMINAL PENALTIES THEREUNDER.

ASTM—continued

D3261—12	Specification for Butt Heat Fusion Polyethylene (PE) Plastic fittings for Polyethylene (PE) Plastic Pipe and Tubing. . . . . Table 605.5
D3311—11	Specification for Drain, Waste and Vent (DWV) Plastic Fittings Patterns . . . . . Table 1102.7
D4068—09	Specification for Chlorinated Polyethlene (CPE) Sheeting for Concealed Water-containment Membrane 417.5.2.2
D4551—12	Specification for Poly (Vinyl Chloride) (PVC) Plastic Flexible Concealed Water-containment Membrane 417.5.2.1
E2635—08	Standard Practice for Water Conservation in Buildings Through In-Situ Water Reclamation 1304.3
E2727—10	Standard Practice for the Assessment of Rainwater Quality 1302.8.1
F405—05	Specification for Corrugated Polyethylene (PE) Pipe and Fittings. . . . . .Table 1102.5, Table 1403.2
F409—12	Specification for Thermoplastic Accessible and Replaceable Plastic Tube and Tubular Fittings . . . . . 424.1.2, Table 1102.7
F437—09	Specification for Threaded Chlorinated Poly (Vinyl Chloride) (CPVC) Plastic Pipe Fittings, Schedule 80. . . . . Table 605.5
F438—09	Specification for Socket-type Chlorinated Poly (Vinyl Chloride) (CPVC) Plastic Pipe Fittings, Schedule 40. . . . . Table 605.5
F439—12	Standard Specification for Chlorinated Poly (Vinyl Chloride) (CPVC) Plastic Pipe Fittings, Schedule 80. . . . . Table 605.5
F441/F 441M—13	Specification for Chlorinated Poly (Vinyl Chloride) (CPVC) Plastic Pipe, Schedules 40 and 80 . . . . . .Table 605.3, Table 605.4
F442/F 442M—13	Specification for Chlorinated Poly (Vinyl Chloride) (CPVC) Plastic Pipe (SDR-PR) . . . . . .Table 605.3, Table 605.4
F477—10	Specification for Elastomeric Seals (Gaskets) for Joining Plastic Pipe 605.24,705.16
F493—10	Specification for Solvent Cements for Chlorinated Poly (Vinyl Chloride) (CPVC) Plastic Pipe and Fittings 605.15.2, 605.16.2
F628—08	Specification for Acrylonitrile-Butadiene-Styrene (ABS) Schedule 40 Plastic Drain, Waste, and Vent Pipe with a Cellular Core . . . . . .Table 702.1, Table 702.2, Table 702.3, Table 702.4, 705.2.2, Table 1102.4, Table 1102.7
F656—10	Specification for Primers for Use in Solvent Cement Joints of Poly (Vinyl Chloride) (PVC) Plastic Pipe and Fittings 605.22.3, 705.11.2, 705.14.2
F714—2013	Specification for Polyethylene (PE) Plastic Pipe (SDR-PR) Based on Outside Diameter . . . .Table 702.3, 717.4
F876—2013	Specification for Cross-linked Polyethylene (PEX) Tubing. . . . . .Table 605.3, Table 605.4
F877—2011a	Specification for Cross-linked Polyethylene (PEX) Plastic Hot and Cold Water Distribution Systems . . . . . Table 605.3, Table 605.4, Table 605.5
F891—10	Specification for Coextruded Poly (Vinyl Chloride) (PVC) Plastic Pipe with a Cellular Core . . . . . Table 702.1 Table 702.2, Table 702.3, Table 1102.4, Table 1102.5, Table 1102.7
F1055—13	Standard Specification for Electrofusion Type Polyethylene Fittings for Outside Diameter Controlled Polyethylene and Crosslinked Polyethylene Pipe and Tubing . . . . . Table 605.5
F1281—11	Specification for Cross-linked Polyethylene/Aluminum/ Cross-linked Polyethylene (PEX-AL-PEX) Pressure Pipe . . . . . Table 605.3, Table 605.4, Table 605.5, 605.21.1
F1282—10	Specification for Polyethylene/Aluminum/Polyethylene (PE-AL-PE) Composite Pressure Pipe. . . . . Table 605.3, Table 605.4, Table 605.5, 605.21.1
F1412—09	Specification for Polyolefin Pipe and Fittings for Corrosive Waste Drainage. . . . . Table 702.1, Table 702.2, Table 702.4, 705.14.1, 901.3
F1476—07	Standard Specification for Performance of Gasketed Mechanical Couplings for Use in Piping Applications . . . . . .Table 605.5, 605.14.3, 605.18.3, 605.22.2, 605.23.3
F1488—09e1	Specification for Coextruded Composite Pipe . . . . . Table 702.1, Table 702.2, Table 702.3, Table 1403.2
F1548—01(2006)	Standard Specification for the Performance of Fittings for Use with Gasketed Mechanical Couplings Used in Piping Applications . . . . . Table 605.5
F1673—10	Polyvinylidene Fluoride (PVDF) Corrosive Waste Drainage Systems . . .Table 702.1, Table 702.2, Table 702.3, Table 702.4, 705.15.1
F1807—13	Specification for Metal Insert Fittings Utilizing a Copper Crimp Ring for SDR9 Cross-linked Polyethylene (PEX) Tubing and SDR9 Polyethylene of Raised Temperature (PE-RT) Tubing. . . . . Table 605.5
F1866—07	Specification for Poly (Vinyl Chloride) (PVC) Plastic Schedule 40 Drainage and DWV Fabricated Fittings . . . . . .Table 702.4, Table 1102.7
F1960—12	Specification for Cold Expansion Fittings with PEX Reinforcing Rings for use with Cross-linked Polyethylene (PEX) Tubing. . . . . Table 605.5
F1970—12	Special Engineered Fittings, Appurtenances or Valves for use in Poly (Vinyl Chloride) (PVC) OR Chlorinated Poly (Vinyl Chloride) (CPVC) Systems. . . . . Table 605.7
F1974—09	Specification for Metal Insert Fittings for Polyethylene/Aluminum/Polyethylene and Cross-linked Polyethylene/Aluminum/Cross-linked Polyethylene Composite Pressure Pipe. . . . . Table 605.5, 605.21.1
F1986—01(2011)	Specification for Multilayer Pipe, Type 2, Compression Fittings and Compression Joints for Hot and Cold Drinking Water Systems . . . . . Table 605.3, Table 605.4, Table 605.5

INTERNATIONAL CODE COUNCIL®
Copyright © 2015 ICC. ALL RIGHTS RESERVED. Accessed by David Dammon on Jun 21, 2017 12:30:52 PM pursuant to License Agreement with ICC. No further reproduction or distribution authorized. ANY UNAUTHORIZED REPRODUCTION OR DISTRIBUTION IS A VIOLATION OF THE FEDERAL COPYRIGHT ACT AND THE LICENSE AGREEMENT, AND SUBJECT TO CIVIL AND CRIMINAL PENALTIES THEREUNDER.

ASTM—continued

F2080—12	Specifications for Cold-expansion Fittings with Metal Compression-sleeves for Cross-linked Polyethylene (PEX) Pipe	Table 605.5
F2098—08	Standard specification for Stainless Steel Clamps for Securing SDR9 Cross-linked Polyethylene (PEX) Tubing to Metal and Plastic Insert Fittings	Table 605.5
F2159—11	Specification for Plastic Insert Fittings Utilizing a Copper Crimp Ring for SDR9 Cross-linked Polyethylene (PEX) Tubing and SDR9 Polyethylene of Raised Temperature (PE-RT) Tubing	Table 605.5
F2262—09	Specification for Cross-linked Polyethylene/Aluminum/ Cross-linked Polyethylene Tubing OD Controlled SDR9	Table 605.3, Table 605.4
F2306/F 2306M—13	12" to 60" Annular Corrugated Profile-wall Polyethylene (PE) Pipe and Fittings for Gravity Flow Storm Sewer and Subsurface Drainage Applications	Table 1102.4, Table 1102.7
F2389—10	Specification for Pressure-rated Polypropylene (PP) Piping Systems	Table 605.3, Table 605.4, Table 605.5, Table 605.7, 605.20.1
F2434—09	Standard Specification for Plastic Insert Fittings Utilizing a Copper Crimp Ring for SDR9 Cross-linked Polyethylene (PEX) Tubing and SDR9 Cross-linked Polyethylene/Aluminum/ Cross-linked Polyethylene (PEX AL-PEX) Tubing	Table 605.5
F2735—09	Standard Specification for Plastic Insert Fittings for SDR9 Cross-linked Polyethylene (PEX) and Polyethylene of Raised Temperature (PE-RT) Tubing	Table 605.5
F2769—10	Polyethylene or Raised Temperature (PE-RT) Plastic Hot and Cold Water Tubing and Distribution Systems	Table 605.3, Table 605.4, Table 605.5
F2831—11	Standard Practice for Internal Non Structural Epoxy Barrier Coating Material Used In Rehabilitation of Metallic Pressurized Piping Systems	601.5
F2855—11	Specification Poly (Vinyl Chloride)/Aluminum/Poly (Vinyl Chloride) (CPVC/AL/CPVC) Composite Pressure Tubing	Table 605.3, Table 605.4

AWS

American Welding Society
8669 NW 36 Street, #130
Doral, FL 33166

Standard reference number	Title	Referenced in code section number
A5.8M/A5.8—2011	Specifications for Filler Metals for Brazing and Braze Welding	605.11.1, 605.13.1, 605.14.1, 705.3.1, 705.6.1, 705.7.1

AWWA

American Water Works Association
6666 West Quincy Avenue
Denver, CO 80235

Standard reference number	Title	Referenced in code section number
C104/A21.4-08	Cement-mortar Lining for Ductile-iron Pipe and Fittings for Water	605.3, 605.5
C110/A21.10—12	Ductile-iron and Gray-iron Fittings	Table 605.5, Table 702.4, Table 1102.7
C111/A21.11-12	Rubber-gasket Joints for Ductile-iron Pressure Pipe and Fittings	605.12
C115/A21.15—11	Flanged Ductile-iron Pipe with Ductile-iron or Gray-iron Threaded Flanges	Table 605.3, Table 605.4
C151/A21.51—09	Ductile-iron Pipe, Centrifugally Cast for Water	Table 605.3, Table 605.4
C153—00/A21.53—11	Ductile-iron Compact Fittings for Water Service	Table 605.5
C500—09	Standard for Metal-Seated Gate Valves for Water Supply Service	Table 605.7
C504—10	Standard for Rubber-Seated Butterfly Valves	Table 605.7
C507—11	Standard for Ball Valves, 6 In. Through 60 In.	Table 605.7
C510—07	Double Check Valve Backflow Prevention Assembly	Table 608.1, 608.13.7
C511—07	Reduced-pressure Principle Backflow Prevention Assembly	Table 608.1, 608.13.2, 608.16.2
C651—05	Disinfecting Water Mains	610.1
C652—11	Disinfection of Water-storage Facilities	610.1
C901—08	Polyethylene (PE) Pressure Pipe and Tubing $^1/_2$ inch (13 mm) Through 3 inch (76 mm) for Water Service	Table 605.3
C904—08	Cross-linked Polyethylene (PEX) Pressure Pipe $^1/_2$ inch (13 mm) Through 3 inch (76 mm) for Water Service	Table 605.3
D100—05	Standard for Welded Carbon Steel Tanks for Water Storage	1302.7.2
D115—06	Standard for Tendon Prestressed-Concrete Water Tanks	1302.7.2
D120—09	Standard for Thermosetting Fiberglass-Reinforced Plastic Tanks	1302.7.2

INTERNATIONAL CODE COUNCIL®
Copyright © 2015 ICC. ALL RIGHTS RESERVED. Accessed by David Dammon on Jun 21, 2017 12:30:52 PM pursuant to License Agreement with ICC. No further reproduction or distribution authorized. ANY UNAUTHORIZED REPRODUCTION OR DISTRIBUTION IS A VIOLATION OF THE FEDERAL COPYRIGHT ACT AND THE LICENSE AGREEMENT, AND SUBJECT TO CIVIL AND CRIMINAL PENALTIES THEREUNDER.

CISPI

Cast Iron Soil Pipe Institute
5959 Shallowford Road, Suite 419
Chattanooga, TN 37421

Standard reference number	Title	Referenced in code section number
301—04a	Specification for Hubless Cast-iron Soil Pipe and Fittings for Sanitary and Storm Drain, Waste and Vent Piping Applications	Table 702.1, Table 702.2, Table 702.3, Table 702.4, 708.7, Table 1102.4, Table 1102.5, Table 1102.7
310—04	Specification for Coupling for Use in Connection with Hubless Cast-iron Soil Pipe and Fittings for Sanitary and Storm Drain, Waste and Vent Piping Applications	705.4.3

CSA

CSA Group
8501 East Pleasant Valley
Cleveland, OH 44131-5516

Standard reference number	Title	Referenced in code section number
A257.1M—2009	Circular Concrete Culvert, Storm Drain, Sewer Pipe and Fittings	Table 702.3, Table 1102.4
A257.2M—2009	Reinforced Circular Concrete Culvert, Storm Drain, Sewer Pipe and Fittings	Table 702.3, Table 1102.4
A257.3M—2009	Joints for Circular Concrete Sewer and Culvert Pipe, Manhole Sections and Fittings Using Rubber Gaskets	705.5, 705.16
ASME A112.18.1—2012/ CSA B125.1—2012	Plumbing Supply Fittings	424.1, 424.2, 424.3, 424.4, 424.6, 424.8, 605.7, 607.4, 608.2
ASME A112.18.2—2011/ CSA B125.2—2011	Plumbing Waste Fittings	424.1.2
ASME A112.19.2—2013/ B45.1—2013	Ceramic Plumbing Fixtures	401.2, 405.9, 407.1, 408.1, 410.1, 415.1, 416.1, 417.1, 418.1, 419.1, 420.1
ASME A112.19.1—2013/ CSA B45.2—2013	Enameled Cast-iron and Enameled Steel Plumbing Fixtures	407.1, 410.1, 415.1, 416.1, 418.1
ASME A112.19.3—2008/ CSA B45.4—08(R2013)	Stainless-steel Plumbing Fixtures	405.9, 407.1, 415.1, 416.1, 418.1, 420.1
ASME A112.19.5—2011/ CSA B45.15—2011	Flush Valves and Spuds for Water Closets, Urinals and Tanks	425.4
ASME A112.19.7—2012/ CSA B45.10—2012	Hydromassage Bathtub Systems	421.1, 421.4
CSA B45.5—11/ IAPMO Z124-2011	Plastic Plumbing Fixtures	407.1, 415.1, 416.1, 416.2, 417.1, 419.1, 420.1
ASME A112.3.4—2013/ CSA B45.9—2013	Macerating Systems and Related Components	712.4.1
ASSE 1016/ ASME A112.1016/ CSA B125.16—2011	Performance Requirements for Individual Thermostatic, Pressure Balancing and Combination Control Valves for Individual Fixture Fittings	424.3, 424.4, 607.4
B64.1.1—11	Vacuum Breakers, Atmospheric Type (AVB)	425.2, Table 608.1, 608.13.6, 608.16.4.1
B64.1.2—11	Pressure Vacuum Breakers, (PVB)	Table 608.1, 608.13.5
B64.1.3—11	Spill Resistant Pressure Vacuum Breaks (SRPVB)	608.13.8
B64.2—11	Vacuum Breakers, Hose Connection Type (HCVB)	Table 608.1, 608.13.6
B64.2.1—11	Vacuum Breakers, Hose Connection (HCVB) with Manual Draining Feature	Table 608.1, 608.13.6
B64.2.1.1—11	Hose Connection Dual Check Vacuum Breakers, (HCDVB)	Table 608.1, 608.13.6
B64.2.2—11	Vacuum Breakers, Hose Connection Type (HCVB) with Automatic Draining Feature	Table 608.1, 608.13.6
B64.3—11	Backflow Preventers, Dual Check Valve Type with Atmospheric Port (DCAP)	Table 608.1, 608.13.3, 608.16.2
B64.4—11	Backflow Preventers, Reduced Pressure Principle Type (RP)	Table 608.1, 608.13.2, 608.16.2
B64.4.1—11	Reduced Pressure Principle for Fire Sprinklers (RPF)	Table 608.1, 608.13.2
B64.5—11	Double Check Backflow Preventers (DCVA)	Table 608.1, 608.13.7
B64.5.1—11	Double Check Valve Backflow Preventer for Fire Systems (DCVAF)	Table 608.1 608.13.7
B64.6—11	Dual Check Backflow PreventersValve (DuC)	605.3.1, Table 608.1, 608.13.10
B64.7—11	Laboratory Faucet Vacuum Breakers (LFVB)	Table 608.1, 608.13.6
B64.10—11	Manual for the Selection and Installation of Backflow Prevention Devices	312.10.2

INTERNATIONAL CODE COUNCIL®
Copyright © 2015 ICC. ALL RIGHTS RESERVED. Accessed by David Dammon on Jun 21, 2017 12:30:52 PM pursuant to License Agreement with ICC. No further reproduction or distribution authorized. ANY UNAUTHORIZED REPRODUCTION OR DISTRIBUTION IS A VIOLATION OF THE FEDERAL COPYRIGHT ACT AND THE LICENSE AGREEMENT, AND SUBJECT TO CIVIL AND CRIMINAL PENALTIES THEREUNDER.

CSA—continued

B64.10.1—11	Maintenance and Field Testing of Backflow Preventers	312.10.2
B79—08(R2013)	Commercial and Residential Drains, and Cleanouts	412.1
B125.3—2012	Plumbing Fittings	408.3, 416.5, 423.3, 424.4, 424.5, 425.2, 425.3.1, Table 605.7, Table 608.1
B137.1—13	Polyethylene (PE) Pipe, Tubing and Fittings for Cold Water Pressure Services	Table 605.3, Table 605.5
B137.2—13	Polyvinylchloride PVC Injection-moulded Gasketed Fittings for Pressure Applications	Table 605.5
B137.3—13	Rigid Poly (Vinyl Chloride) (PVC) Pipe for Pressure Applications	Table 605.3 Table 605.5, 605.22.3, 705.11.2, 705.14.2
B137.5—13	Cross-linked Polyethylene (PEX) Tubing Systems for Pressure Applications	Table 605.3, Table 605.4, Table 605.5
B137.6—13	CPVC Pipe, Tubing and Fittings for Hot and Cold Water Distribution Systems	Table 605.3, Table 605.4, Table 605.5
B137.9—13	Polyethylene/Aluminum/ Polyethylene Composite Pressure Pipe Systems	Table 605.3, Table 605.5, 605.21.1
B137.10—13	Cross-linked Polyethylene/Aluminum/ Polyethylene Composite Pressure Pipe Systems	Table 605.3, Table 605.4, Table 605.5, 605.21.1
B137.11—13	Polypropylene (PP-R) Pipe and Fittings for Pressure Applications	Table 605.3, Table 605.4, Table 605.5
B181.1—11	Acrylonitrile-butadiene-styrene ABS Drain, Waste and Vent Pipe and Pipe Fittings	Table 702.1, Table 702.2, Table 702.3, Table 702.4, 705.2.2, 715.2, Table 1102.4, Table 1102.7
B 181.2—11	Polyvinylchloride PVC and chlorinated polyvinylchloride (CPVC) Drain, Waste, and Vent Pipe and Pipe Fittings	Table 702.1 Table 702.2, 705.11.2, 705.14.2, 715.2
B 181.3—11	Polyolefin and Polyvinylidene Fluoride (PVDF) Laboratory Drainage Systems	Table 702.1, Table 702.2, Table 702.3, Table 702.4, 705.14.1
B182.1—11	Plastic Drain and Sewer Pipe and Pipe Fittings	705.11.2, 705.14.2, Table 1102.4, Table 1102.5
B182.2—11	PSM Type Polyvinylchloride PVC Sewer Pipe and Fittings	Table 702.3, Table 1102.4, Table 1102.5
B182.4—11	Profile Polyvinylchloride PVC Sewer Pipe and Fittings	Table 702.3, Table 1102.4, Table 1102.5
B182.6—11	Profile Polyethylene (PE) Sewer Pipe and Fittings for Leak-proof Sewer Applications	Table 1102.5
B182.8—11	Profile Polyethylene (PE) Storm Sewer and Drainage Pipe and Fittings	Table 1102.5
B356—10	Water Pressure Reducing Valves for Domestic Water Systems	604.8
B483.1—14	Drinking Water Treatment Units	611.1, 611.2
B481.1—12	Testing and Rating of Grease interceptors Using Lard	1003.3.4
B481.3—12	Sizing, Selection, Location and Installation of Grease Interceptors	1003.3.4
B602—10	Mechanical Couplings for Drain, Waste and Vent Pipe and Sewer Pipe	705.2.1, 705.4.3, 705.5, 705.11.1, 705.12, 705.13.2, 705.16

IAPMO

IAPMO Group
4755 E. Philadelphia
Ontario, CA 91761

Standard reference number	Title	Referenced in code section number
Z1001-2007	Prefabricated Gravity Grease Interceptors	1003.3.6
CSA B45.5—11/ IAPMO Z124—2011	Plastic Plumbing Fixtures	407.1, 415.1, 416.1, 416.2, 417.1, 419.1, 420.1

ICC

International Code Council, Inc.
500 New Jersey Ave, NW
6th Floor
Washington, DC 20001

Standard reference number	Title	Referenced in code section number
A117.1—2009	Accessible and Usable Buildings and Facilities	404.2
IBC—15	International Building Code®	201.3, 307.1, 307.2, 307.3, 308.2, 309.1, 309.2, 310.1, 310.3, 315.1, 403.1, Table 403.1, 403.4, 404.1, 407.3, 417.6, 502.4, 606.5.2, 1106.5, 1301.9.4, 1307.7.2, 1303.6, 1402.1
IECC—15	International Energy Conservation Code®	313.1, 607.5
IFC—15	International Fire Code®	201.3, 1201.1

INTERNATIONAL CODE COUNCIL®
Copyright © 2015 ICC. ALL RIGHTS RESERVED. Accessed by David Dammon on Jun 21, 2017 12:30:52 PM pursuant to License Agreement with ICC. No further reproduction or distribution authorized. ANY UNAUTHORIZED REPRODUCTION OR DISTRIBUTION IS A VIOLATION OF THE FEDERAL COPYRIGHT ACT AND THE LICENSE AGREEMENT, AND SUBJECT TO CIVIL AND CRIMINAL PENALTIES THEREUNDER.

ICC—continued

IFGC—15	International Fuel Gas Code®	101.2, 201.3, 502.1, 502.1.1
IMC—15	International Mechanical Code®	201.3, 307.7, 310.1, 422.9, 502.1, 502.1.1, 612.1, 1202.1
IPSDC—15	International Private Sewage Disposal Code®	701.2
IRC—15	International Residential Code®	101.2

ISEA

International Safety Equipment Association
1901 N. Moore Street, Suite 808
Arlington, VA 22209

Standard reference number	Title	Referenced in code section number
ANSI/ISEA Z358.1—2009	Emergency Eyewash and Shower Equipment	411.1

MSS

Manufacturers Standardization Society of the Valve and Fittings Industry, Inc.
127 Park Street, NE
Vienna, VA 22180-4602

Standard reference number	Title	Referenced in code section number
SP-67—2011	Butterfly Valves	Table 605.7
SP-70—2011	Gray Iron Gate Valves, Flanged and Threaded Ends	Table 605.7
SP-71—2011	Gray Iron Swing Check Valves, Flanged and Threaded Ends	Table 605.7
SP-72—2010	Ball Valves with Flanged or Butt-Welding Ends for General Service	Table 605.7
SP-78—2011	Cast Iron Plug Valves, Flanged and Threaded Ends	Table 605.7
SP-80—2008	Bronze Gate, Globe, Angle and Check Valves	Table 605.7
SP-110—2010	Ball Valves, Threaded, Socket Welded, Solder Joint, Grooved and Flared Ends	Table 605.7

NFPA

National Fire Protection Association
1 Batterymarch Park
Quincy, MA 02169-7471

Standard reference number	Title	Referenced in code section number
51—13	Design and Installation of Oxygen-fuel Gas Systems for Welding, Cutting and Allied Processes	1203.1
55—13	Compressed Gases and Cryogenic Fluids Code	1203.1
70—14	National Electric Code	502.1, 504.3, 1113.1.3
99—15	Health Care Facilities Code	1202.1

NSF

NSF International
789 Dixboro Road, P.O. Box 130140
Ann Arbor, MI 48105

Standard reference number	Title	Referenced in code section number
3—2010	Commercial Warewashing Equipment	409.1
14—2011	Plastic Piping System Components and Related Materials	303.3, 611.3
18—2012	Manual Food and Beverage Dispensing Equipment	426.1
42—2011	Drinking Water Treatment Units-Aesthetic Effects	611.1, 611.3
44—2012	Residential Cation Exchange Water Softeners	611.1, 611.3
50—2012	Equipment for Swimming Pools, Spas, Hot Tubs and other Recreational Facilities	1302.8.1
53—2011a	Drinking Water Treatment Units—Health Effects	611.1, 611.3
58—2012	Reverse Osmosis Drinking Water Treatment Systems	611.2, 611.3

INTERNATIONAL CODE COUNCIL®
Copyright © 2015 ICC. ALL RIGHTS RESERVED. Accessed by David Dammon on Jun 21, 2017 12:30:52 PM pursuant to License Agreement with ICC. No further reproduction or distribution authorized. ANY UNAUTHORIZED REPRODUCTION OR DISTRIBUTION IS A VIOLATION OF THE FEDERAL COPYRIGHT ACT AND THE LICENSE AGREEMENT, AND SUBJECT TO CIVIL AND CRIMINAL PENALTIES THEREUNDER.

NSF—continued

61—2012	Drinking Water System Components—Health Effects	410.1, 424.1, 605.3, 605.4, 605.5, 605.7, 611.3
62—2012	Drinking Water Distillation Systems	611.1
350—2011	Onsite Residential and Commercial Water Reuse Treatment Systems	1302.6.1
359—2011	Valves for Crosslinked Polyethylene (PEX) Water Distribution Tubing Systems	Table 605.7
372—2010	Drinking Water Systems Components—Lead Content	605.2.1

PDI

Plumbing and Drainage Institute
800 Turnpike Street, Suite 300
North Andover, MA 01845

Standard reference number	Title	Referenced in code section number
PDI G101 (2012)	Testing and Rating Procedure for Grease Interceptors with Appendix of Sizing and Installation Data	1003.3.4
PDI G102 (2009)	Testing and Certification for Grease Interceptors with Fog Sensing and Alarm Devices	1003.3.4

UL

UL LLC
333 Pfingsten Road
Northbrook, IL 60062-2096

Standard reference number	Title	Referenced in code section number
58—1996	Steel Underground Tanks for Flammable and Combustible Liquids—with revisions through July 27, 1998	1302.7.2
142—2006	Steel Aboveground Tanks for Flammable and Combustible Liquids—with revisions through February 12, 2010	1302.7.2
399—2008	Drinking-Water Coolers—with revisions through January 14, 2011	410.1
430—2009	Waste Disposers—with revisions through March 23, 2011.	413.1
508—99	Industrial Control Equipment—with revisions through March 2013	314.2.3
1316—1994	Glass-Fiber Reinforced Plastic Underground Storage Tanks for Petroleum Products, Alcohols and Alcohol Gasoline Mixtures—with revisions through May 12, 2006	1302.7.2
1746—2007	External Corrosion Protection Systems for Steel Underground Storage Tanks	1302.7.2
1795—2009	Hydromassage Bathtubs including revisions through August 23, 2011	421.1

INTERNATIONAL CODE COUNCIL®
Copyright © 2015 ICC. ALL RIGHTS RESERVED. Accessed by David Dammon on Jun 21, 2017 12:30:52 PM pursuant to License Agreement with ICC. No further reproduction or distribution authorized. ANY UNAUTHORIZED REPRODUCTION OR DISTRIBUTION IS A VIOLATION OF THE FEDERAL COPYRIGHT ACT AND THE LICENSE AGREEMENT, AND SUBJECT TO CIVIL AND CRIMINAL PENALTIES THEREUNDER.

INTERNATIONAL CODE COUNCIL®
Copyright © 2015 ICC. ALL RIGHTS RESERVED. Accessed by David Dammon on Jun 21, 2017 12:30:52 PM pursuant to License Agreement with ICC. No further reproduction or distribution authorized. ANY UNAUTHORIZED REPRODUCTION OR DISTRIBUTION IS A VIOLATION OF THE FEDERAL COPYRIGHT ACT AND THE LICENSE AGREEMENT, AND SUBJECT TO CIVIL AND CRIMINAL PENALTIES THEREUNDER.

Appendix A: Plumbing Permit Fee Schedule

General Comments

Appendix A is a sample, guide or prototype of a permit fee schedule. Once established, the schedule should be made available to all plumbing contractors to aid them in preparing bids and applying for permits. This sample fee schedule will more than likely have to be modified to account for local contractor licensing laws, local practices and the typical work seen in the particular jurisdiction. The ultimate goal is to develop a fee schedule that is fair to all permit applicants. The permit fee schedule needs to balance the revenues necessary for department funding without becoming a financial burden to the contractors and building owners purchasing the plumbing permits.

Purpose

Section 106.6 requires that fees be collected for the issuance of plumbing work permits. These fees support the department of plumbing inspection. Many department costs must be funded, including inspector salaries, clerical worker salaries, legal assistance costs, office space costs, equipment costs, insurance costs, education costs and transportation costs. The majority of plumbing inspection departments are either totally or partially funded by permit fees.

Section 106.6.2 requires the creation of a permit fee schedule for permit issuance in the jurisdiction. This schedule sets the fees for permits based on the total cost of the proposed work or the total number of fixtures, devices, water and drainage outlets and systems or some combination of the above. Some jurisdictions simply charge a fee for the number of each type of fixture; others charge a fee based on a percentage of the total plumbing job cost. For example, a $10 fee per $1,000 of job cost would be a 1-percent fee. In all cases, the fees must be determined at the local level based on the needs of the plumbing department. The fees will depend on the amount of funding, if any, that the plumbing department receives from sources other than permit fees.

The provisions contained in this appendix are not mandatory unless specifically referenced in the adopting ordinance.

Permit Issuance

1. For issuing each permit. . . . . $ _____
2. For issuing each supplemental permit . . . . . _____

Unit Fee Schedule

1. For each plumbing fixture or trap or set of fixtures on one trap (including water, drainage piping and backflow protection thereof). . . . . _____
2. For each building sewer and each trailer park sewer . . . . . _____
3. Rainwater systems—per drain (inside building) . . . . . _____
4. For each cesspool (where permitted) . . . . . _____
5. For each private sewage disposal system . . . . . _____
6. For each water heater and/or vent. . . . . _____
7. For each industrial waste pretreatment interceptor including its trap and vent, excepting kitchen-type grease interceptors functioning as fixture traps . . . . . _____
8. For installation, alteration or repair of water-piping and/or water-treating equipment, each. . . . . _____
9. For repair or alteration of drainage or vent piping, each fixture. . . . . _____
10. For each lawn sprinkler system on any one meter including backflow protection devices therefor . . . . . _____

(continued)

INTERNATIONAL CODE COUNCIL®
Copyright © 2015 ICC. ALL RIGHTS RESERVED. Accessed by David Dammon on Jun 21, 2017 12:30:52 PM pursuant to License Agreement with ICC. No further reproduction or distribution authorized. ANY UNAUTHORIZED REPRODUCTION OR DISTRIBUTION IS A VIOLATION OF THE FEDERAL COPYRIGHT ACT AND THE LICENSE AGREEMENT, AND SUBJECT TO CIVIL AND CRIMINAL PENALTIES THEREUNDER.

Unit Fee Schedule—continued

11. For atmospheric-type vacuum breakers not included in Item 2:

    1 to 5. . . . . _____

    over 5, each . . . . . _____

12. For each backflow protective device other than atmospheric-type vacuum breakers:

    2 inches (51 mm) and smaller . . . . . _____

    Over 2 inches (51 mm). . . . . _____

Other Inspections and Fees

1. Inspections outside of normal business hours (minimum charge two hours) . . . . . _____ per hour
2. Reinspection fee assessed under provisions of Section 107.4.3. . . . . _____each
3. Inspections for which no fee is specifically indicated (minimum charge one-half hour) . . . . . _____ per hour
4. Additional plan review required by changes, additions or revisions to approved plans (minimum charge one-half hour). . . . . _____ per hour

INTERNATIONAL CODE COUNCIL®

Copyright © 2015 ICC. ALL RIGHTS RESERVED. Accessed by David Dammon on Jun 21, 2017 12:30:52 PM pursuant to License Agreement with ICC. No further reproduction or distribution authorized. ANY UNAUTHORIZED REPRODUCTION OR DISTRIBUTION IS A VIOLATION OF THE FEDERAL COPYRIGHT ACT AND THE LICENSE AGREEMENT, AND SUBJECT TO CIVIL AND CRIMINAL PENALTIES THEREUNDER.

Appendix B: Rates of Rainfall for Various Cities

General Comments

Gutters, leaders, conductors and downspouts are all components of the storm drainage system and are sized based on the rainfall rate. The rainfall rates, in inches per hour, are based on a storm of 1-hour duration and a 100-year return period. The rainfall rates shown in this appendix are derived from Figure 1106.1. Rainfall rates indicate the maximum rate of rainfall within a given period of time. The rainfall rates are calculated from a statistical analysis of weather records. The roof area listed must be matched to the local rainfall rate.

Purpose

Appendix B provides the hourly rainfall rates indicated in Figure 1106.1.

This appendix is informative and is not part of the code.

Rainfall rates, in inches per hour, are based on a storm of 1-hour duration and a 100-year return period. The rainfall rates shown in the appendix are derived from Figure 1106.1.

Alabama:
Birmingham 3.8
Huntsville 3.6
Mobile 4.6
Montgomery 4.2

Alaska:
Fairbanks 1.0
Juneau 0.6

Arizona:
Flagstaff 2.4
Nogales 3.1
Phoenix 2.5
Yuma 1.6

Arkansas:
Fort Smith 3.6
Little Rock 3.7
Texarkana 3.8

California:
Barstow 1.4
Crescent City 1.5
Fresno 1.1
Los Angeles 2.1
Needles 1.6
Placerville 1.5
San Fernando 2.3
San Francisco 1.5
Yreka 1.4

Colorado:
Craig 1.5
Denver 2.4
Durango 1.8
Grand Junction 1.7
Lamar 3.0
Pueblo 2.5

Connecticut:
Hartford 2.7
New Haven 2.8
Putnam 2.6

Delaware:
Georgetown 3.0
Wilmington 3.1

District of Columbia:
Washington 3.2

Florida:
Jacksonville 4.3
Key West 4.3
Miami 4.7
Pensacola 4.6
Tampa 4.5

Georgia:
Atlanta 3.7
Dalton 3.4
Macon 3.9
Savannah 4.3
Thomasville 4.3

Hawaii:
Hilo 6.2
Honolulu 3.0
Wailuku 3.0

Idaho:
Boise 0.9
Lewiston 1.1
Pocatello 1.2

Illinois:
Cairo 3.3
Chicago 3.0
Peoria 3.3
Rockford 3.2
Springfield 3.3

Indiana:
Evansville 3.2
Fort Wayne 2.9
Indianapolis 3.1

Iowa:
Davenport 3.3
Des Moines 3.4
Dubuque 3.3
Sioux City 3.6

Kansas:
Atwood 3.3
Dodge City 3.3
Topeka 3.7
Wichita 3.7

Kentucky:
Ashland 3.0
Lexington 3.1
Louisville 3.2
Middlesboro 3.2
Paducah 3.3

Louisiana:
Alexandria 4.2
Lake Providence 4.0
New Orleans 4.8
Shreveport 3.9

Maine:
Bangor 2.2
Houlton 2.1
Portland 2.4

Maryland:
Baltimore 3.2
Hagerstown 2.8
Oakland 2.7
Salisbury 3.1

Massachusetts:
Boston 2.5
Pittsfield 2.8
Worcester 2.7

Michigan:
Alpena 2.5
Detroit 2.7
Grand Rapids 2.6
Lansing 2.8
Marquette 2.4
Sault Ste. Marie 2.2

Minnesota:
Duluth 2.8
Grand Marais 2.3
Minneapolis 3.1
Moorhead 3.2
Worthington 3.5

Mississippi:
Biloxi 4.7
Columbus 3.9
Corinth 3.6
Natchez 4.4
Vicksburg 4.1

Missouri:
Columbia 3.2
Kansas City 3.6
Springfield 3.4
St. Louis 3.2

INTERNATIONAL CODE COUNCIL®
Copyright © 2015 ICC. ALL RIGHTS RESERVED. Accessed by David Dammon on Jun 21, 2017 12:30:52 PM pursuant to License Agreement with ICC. No further reproduction or distribution authorized. ANY UNAUTHORIZED REPRODUCTION OR DISTRIBUTION IS A VIOLATION OF THE FEDERAL COPYRIGHT ACT AND THE LICENSE AGREEMENT, AND SUBJECT TO CIVIL AND CRIMINAL PENALTIES THEREUNDER.

Montana:
Ekalaka 2.5
Havre 1.6
Helena 1.5
Kalispell 1.2
Missoula 1.3

Nebraska:
North Platte 3.3
Omaha 3.8
Scottsbluff 3.1
Valentine 3.2

Nevada:
Elko 1.0
Ely 1.1
Las Vegas 1.4
Reno 1.1

New Hampshire:
Berlin 2.5
Concord 2.5
Keene 2.4

New Jersey:
Atlantic City 2.9
Newark 3.1
Trenton 3.1

New Mexico:
Albuquerque 2.0
Hobbs 3.0
Raton 2.5
Roswell 2.6
Silver City 1.9

New York:
Albany 2.5
Binghamton 2.3
Buffalo 2.3
Kingston 2.7
New York 3.0
Rochester 2.2

North Carolina:
Asheville 4.1
Charlotte 3.7
Greensboro 3.4
Wilmington 4.2

North Dakota:
Bismarck 2.8
Devils Lake 2.9
Fargo 3.1
Williston 2.6

Ohio:
Cincinnati 2.9
Cleveland 2.6
Columbus 2.8
Toledo 2.8

Oklahoma:
Altus 3.7
Boise City 3.3
Durant 3.8
Oklahoma City 3.8

Oregon:
Baker 0.9
Coos Bay 1.5
Eugene 1.3
Portland 1.2

Pennsylvania:
Erie 2.6
Harrisburg 2.8
Philadelphia 3.1
Pittsburgh 2.6
Scranton 2.7

Rhode Island:
Block Island 2.75
Providence 2.6

South Carolina:
Charleston 4.3
Columbia 4.0
Greenville 4.1

South Dakota:
Buffalo 2.8
Huron 3.3
Pierre 3.1
Rapid City 2.9
Yankton 3.6

Tennessee:
Chattanooga 3.5
Knoxville 3.2
Memphis 3.7
Nashville 3.3

Texas:
Abilene 3.6
Amarillo 3.5
Brownsville 4.5
Dallas 4.0
Del Rio 4.0
El Paso 2.3
Houston 4.6
Lubbock 3.3
Odessa 3.2
Pecos 3.0
San Antonio 4.2

Utah:
Brigham City 1.2
Roosevelt 1.3
Salt Lake City 1.3
St. George 1.7

Vermont:
Barre 2.3
Bratteboro 2.7
Burlington 2.1
Rutland 2.5

Virginia:
Bristol 2.7
Charlottesville 2.8
Lynchburg 3.2
Norfolk 3.4
Richmond 3.3

Washington:
Omak 1.1
Port Angeles 1.1
Seattle 1.4
Spokane 1.0
Yakima 1.1

West Virginia:
Charleston 2.8
Morgantown 2.7

Wisconsin:
Ashland 2.5
Eau Claire 2.9
Green Bay 2.6
La Crosse 3.1
Madison 3.0
Milwaukee 3.0

Wyoming:
Cheyenne 2.2
Fort Bridger 1.3
Lander 1.5
New Castle 2.5
Sheridan 1.7
Yellowstone Park 1.4

INTERNATIONAL CODE COUNCIL®
Copyright © 2015 ICC. ALL RIGHTS RESERVED. Accessed by David Dammon on Jun 21, 2017 12:30:52 PM pursuant to License Agreement with ICC. No further reproduction or distribution authorized. ANY UNAUTHORIZED REPRODUCTION OR DISTRIBUTION IS A VIOLATION OF THE FEDERAL COPYRIGHT ACT AND THE LICENSE AGREEMENT, AND SUBJECT TO CIVIL AND CRIMINAL PENALTIES THEREUNDER.

Appendix C: Structural Safety

General Comments

Although the title of Section C101 is "Cutting, Notching and Boring in Wood Members," it also includes some regulations pertaining to structural steel and cold-formed steel structural members.

Purpose

This appendix contains criteria limiting the cutting away of a structural member during the installation of a plumbing system. These provisions are needed for the safety of the joists, studs, beams, columns or other structural members that support the building.

The provisions contained in this appendix are not mandatory unless specifically referenced in the adopting ordinance.

SECTION C101
CUTTING, NOTCHING AND BORING IN WOOD MEMBERS

[BS] C101.1 Joist notching. Notches on the ends of joists shall not exceed one-fourth the joist depth. Holes bored in joists shall not be within 2 inches (51 mm) of the top or bottom of the joist, and the diameter of any such hole shall not exceed one-third the depth of the joist. Notches in the top or bottom of joists shall not exceed one-sixth the depth and shall not be located in the middle third of the span.

❖ Wood is comprised of relatively small elongated cells oriented parallel to each other and bound together physically and chemically by lignin. The cells are continuous from end to end of a piece of lumber. When a beam or joist is notched or cut, the cell strands are interrupted. In notched beams, the effective depth is reduced equal to the depth of the notch (see Commentary Figure C101.1).

Some designs and installation practices require that limited notching and cutting occur. Notching should be avoided when possible. Holes bored in beams and joists create the same problems as notches. When necessary, the holes should be located in areas with the least stress concentration, generally along the neutral axis of the joist. Beams subject to high horizontal shear stress (short span/heavy load) should never be cut. Wood members having a thickness greater than 4 inches (102 mm) should never be notched on the tension side of the member, except at the ends of the members.

[BS] C101.2 Stud cutting and notching. In exterior walls and bearing partitions, any wood stud is permitted to be cut or notched to a depth not exceeding 25 percent of its width. Cutting or notching of studs to a depth not greater than 40 percent of the width of the stud is permitted in nonbearing partitions supporting no loads other than the weight of the partition.

❖ To maintain the cross-sectional bearing area, studs should not be cut, notched or bored. When the alteration exceeds that specified in this section, the studs should be doubled or otherwise reinforced to provide the required strength (see Commentary Figure C101.2).

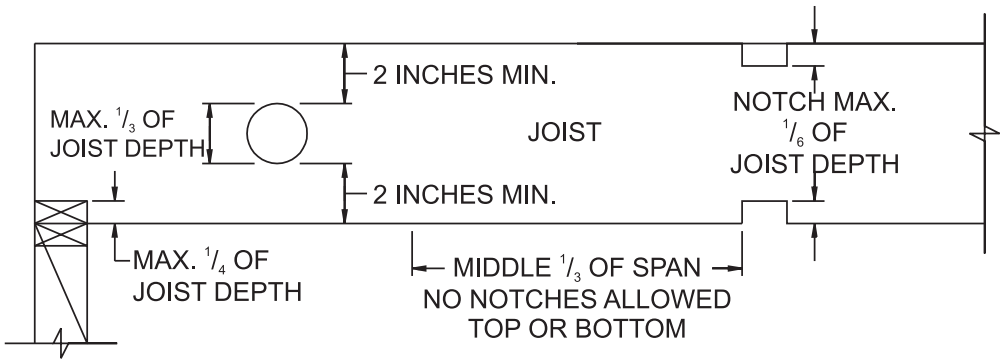

For SI: 1 inch = 25.4 mm.

Figure C101.1
CUTTING, NOTCHING AND BORING JOISTS

INTERNATIONAL CODE COUNCIL®
Copyright © 2015 ICC. ALL RIGHTS RESERVED. Accessed by David Dammon on Jun 21, 2017 12:30:52 PM pursuant to License Agreement with ICC. No further reproduction or distribution authorized. ANY UNAUTHORIZED REPRODUCTION OR DISTRIBUTION IS A VIOLATION OF THE FEDERAL COPYRIGHT ACT AND THE LICENSE AGREEMENT, AND SUBJECT TO CIVIL AND CRIMINAL PENALTIES THEREUNDER.

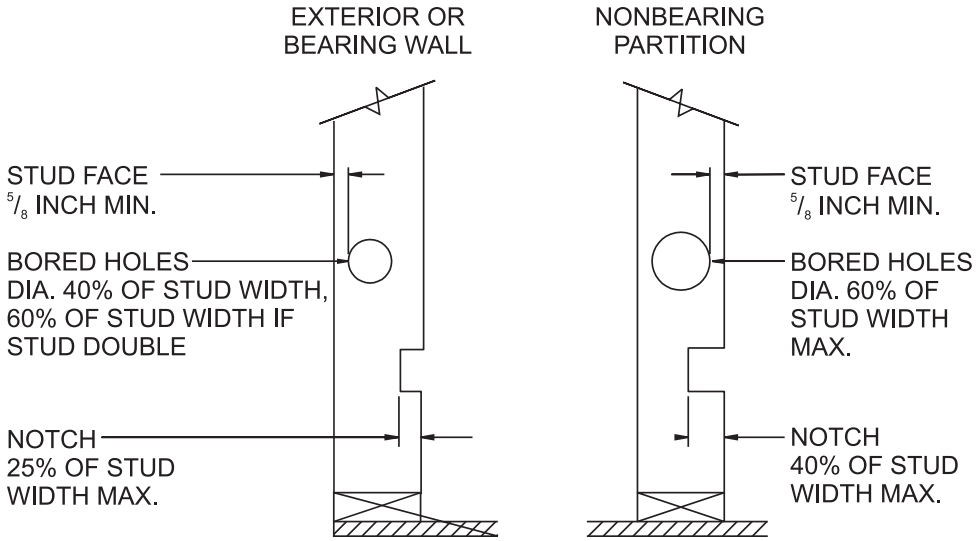

For SI: 1 inch = 25.4 mm.

Figure C101.2
CUTTING, NOTCHING AND BORED HOLES

[BS] C101.3 Bored holes. The diameter of bored holes in wood studs shall not exceed 40 percent of the stud depth. The diameter of bored holes in wood studs shall not exceed 60 percent of the stud depth in nonbearing partitions. The diameter of bored holes in wood studs shall not exceed 60 percent of the stud depth in any wall where each stud is doubled, provided that not more than two such successive doubled studs are so bored. The edge of the bored hole shall not be closer than $^5/_8$ inch (15.9 mm) to the edge of the stud. Bored holes shall be not located at the same section of stud as a cut or notch.

❖ Because of the redundancy of wood construction, limited hole boring is encouraged. This section describes the limits for bored holes in load-bearing and nonload-bearing wood studs. Commentary Figure C101.2 illustrates the requirements of this section.

[BS] C101.4 Cutting, notching and boring holes in structural steel framing. The cutting, notching and boring of holes in structural steel framing members shall be as prescribed by the registered design professional.

❖ This section does not allow the cutting, notching or boring of structural steel girders, beams, joists, columns or other structural steel members unless it is approved first by the registered design professional responsible for the structural design of the building. The code does not provide any prescriptive limits as it does for wood framing. Since there are so many conditions that could be encountered, it is best for the design professional to consider them on a case-by-case basis.

[BS] C101.5 Cutting, notching and boring holes in cold-formed steel framing. Flanges and lips of load-bearing cold-formed steel framing members shall not be cut or notched. Holes in webs of load-bearing cold-formed steel framing members shall be permitted along the centerline of the web of the framing member and shall not exceed the dimensional limitations, penetration spacing or minimum hole edge distance as prescribed by the registered design professional. Cutting, notching and boring holes of steel floor/roof decking shall be as prescribed by the registered design professional.

❖ No cutting, notching or boring is allowed at all in the flanges of the cold-formed lips of load-bearing studs, beams, columns or other load-carrying members, as that would result in a significant reduction of the load-carrying capacity.

This section requires the approval of the registered design professional prior to the boring of any holes in webs of any cold-formed steel member that is load bearing. The code does not provide any prescriptive limits as it does for wood framing.

[BS] C101.6 Cutting, notching and boring holes in nonstructural cold-formed steel wall framing. Flanges and lips of nonstructural cold-formed steel wall studs shall not be cut or notched. Holes in webs of nonstructural cold-formed steel wall studs shall be permitted along the centerline of the web of the framing member, shall not exceed $1^1/_2$ inches (38 mm) in width or 4 inches (102 mm) in length, and the holes shall not be spaced less than 24 inches (610 mm) center to center from another hole or less than 10 inches (254 mm) from the bearing end.

❖ This section applies to nonload-bearing studs in partition walls. The holes in the studs are limited to a series of holes in the web, as described in this section. Some cold-formed studs are manufactured with these web openings already cut out for the installation of piping and electrical wiring.

INTERNATIONAL CODE COUNCIL®
Copyright © 2015 ICC. ALL RIGHTS RESERVED. Accessed by David Dammon on Jun 21, 2017 12:30:52 PM pursuant to License Agreement with ICC. No further reproduction or distribution authorized. ANY UNAUTHORIZED REPRODUCTION OR DISTRIBUTION IS A VIOLATION OF THE FEDERAL COPYRIGHT ACT AND THE LICENSE AGREEMENT, AND SUBJECT TO CIVIL AND CRIMINAL PENALTIES THEREUNDER.

Appendix D: Degree Day and Design Temperatures

This appendix is informative and is not part of the code.

General Comments

Appendix D specifies outdoor design conditions. Although the data were extracted from the 1985 ASHRAE *Handbook of Fundamentals*, updated values for design conditions can be obtained from the 1987, 1993, 1997 and 2001 editions of the ASHRAE handbook. The exterior design conditions are described below in three groups. The groups are established according to how the data are used.

Purpose

Appendix D is reprinted for informational purposes and provides climate conditions for 223 locations throughout the United States. These summaries include sources for heating degree days and values of dry-bulb and wet-bulb temperatures to be used for evaluating the protection of vent terminals or the thickness of insulation required for recirculating hot water distribution systems as required by the code. The appendix also assigns the outdoor design conditions required for the calculations called for in the *International Property Maintenance Code*® (IPMC®) for minimum space heating requirements.

Load Calculations

Outdoor design temperatures are used in the load calculations required by the IPMC for determining minimum heating facilities for residential structures (see Sections 602.2 and 602.3 of the IPMC).

Winter Design Dry-Bulb ($97^1/_2$ percent). This is the outdoor dry-bulb temperature used to calculate heating loads. The value means that, on average, the outdoor temperature will be above this temperature for $97^1/_2$ percent of the hours during the heating season. For the northern hemisphere, the heating season in the United States is the three-month winter period from December through February.

Summer Design Dry-Bulb ($2^1/_2$ percent). This is the outdoor dry-bulb temperature used to calculate cooling loads. The value means that, on average, the outdoor temperature will be above this temperature for $2^1/_2$ percent of the hours during the cooling season. For the northern hemisphere, the cooling season in the United States is the four-month summer period from May through August.

Mean Coincident Wet-Bulb ($2^1/_2$ percent). This is the outdoor wet-bulb temperature used to calculate cooling loads. The value means that, on average, the outdoor temperature will be above this temperature for $2^1/_2$ percent of the hours during the cooling season.

Piping Insulation

Distribution losses impact building energy use both in the energy required to make up for the lost heat and in the additional load that can be placed on the space cooling system if the heat is released to the air-conditioned space. In circulating systems, hot water is exposed to loss throughout the entire distribution system as long as the water is circulating. These losses can be limited by insulating the entire hot water supply and return piping system to the requirements of the *International Energy Conservation Code*® (IECC®).

Protection of Vent Terminals

The possibility of frost closure of vent terminals predominantly occurs in areas of the country having cold climates, as determined where the winter design dry-bulb ($97^1/_2$ percent) temperature is less than 0°F (-18°C) (see Sections 903.2 and 903.7).

INTERNATIONAL CODE COUNCIL®
Copyright © 2015 ICC. ALL RIGHTS RESERVED. Accessed by David Dammon on Jun 21, 2017 12:30:52 PM pursuant to License Agreement with ICC. No further reproduction or distribution authorized. ANY UNAUTHORIZED REPRODUCTION OR DISTRIBUTION IS A VIOLATION OF THE FEDERAL COPYRIGHT ACT AND THE LICENSE AGREEMENT, AND SUBJECT TO CIVIL AND CRIMINAL PENALTIES THEREUNDER.

TABLE D101
DEGREE DAY AND DESIGN TEMPERATURES[a] FOR CITIES IN THE UNITED STATES

STATE	STATION[b]	HEATING DEGREE DAYS (yearly total)	DESIGN TEMPERATURES			DEGREES NORTH LATITUDE[c]
			Winter	Summer		
			97 1/2%	Dry bulb 2 1/2%	Wet bulb 2 1/2%	
AL	Birmingham	2,551	21	94	77	33°30′
	Huntsville	3,070	16	96	77	34°40′
	Mobile	1,560	29	93	79	30°40′
	Montgomery	2,291	25	95	79	32°20′
AK	Anchorage	10,864	-18	68	59	61°10′
	Fairbanks	14,279	-47	78	62	64°50′
	Juneau	9,075	1	70	59	58°20′
	Nome	14,171	-27	62	56	64°30′
AZ	Flagstaff	7,152	4	82	60	35°10′
	Phoenix	1,765	34	107	75	33°30′
	Tuscon	1,800	32	102	71	33°10′
	Yuma	974	39	109	78	32°40′
AR	Fort Smith	3,292	17	98	79	35°20′
	Little Rock	3,219	20	96	79	34°40′
	Texarkana	2,533	23	96	79	33°30′
CA	Fresno	2,611	30	100	71	36°50′
	Long Beach	1,803	43	80	69	33°50′
	Los Angeles	2,061	43	80	69	34°00′
	Los Angeles[d]	1,349	40	89	71	34°00′
	Oakland	2,870	36	80	64	37°40′
	Sacramento	2,502	32	98	71	38°30′
	San Diego	1,458	44	80	70	32°40′
	San Francisco	3,015	38	77	64	37°40′
	San Francisco[d]	3,001	40	71	62	37°50′
CO	Alamosa	8,529	-16	82	61	37°30′
	Colorado Springs	6,423	2	88	62	38°50′
	Denver	6,283	1	91	63	39°50′
	Grand Junction	5,641	7	94	63	39°10′
	Pueblo	5,462	0	95	66	38°20′
CT	Bridgeport	5,617	9	84	74	41°10′
	Hartford	6,235	7	88	75	41°50′
	New Haven	5,897	7	84	75	41°20′
DE	Wilmington	4,930	14	89	76	39°40′
DC	Washington	4,224	17	91	77	38°50′
FL	Daytona	879	35	90	79	29°10′
	Fort Myers	442	44	92	79	26°40′
	Jacksonville	1,239	32	94	79	30°30′
	Key West	108	57	90	79	24°30′
	Miami	214	47	90	79	25°50′
	Orlando	766	38	93	78	28°30′
	Pensacola	1,463	29	93	79	30°30′
	Tallahassee	1,485	30	92	78	30°20′
	Tampa	683	40	91	79	28°00′
	West Palm Beach	253	45	91	79	26°40′

(continued)

INTERNATIONAL CODE COUNCIL®
Copyright © 2015 ICC. ALL RIGHTS RESERVED. Accessed by David Dammon on Jun 21, 2017 12:30:52 PM pursuant to License Agreement with ICC. No further reproduction or distribution authorized. ANY UNAUTHORIZED REPRODUCTION OR DISTRIBUTION IS A VIOLATION OF THE FEDERAL COPYRIGHT ACT AND THE LICENSE AGREEMENT, AND SUBJECT TO CIVIL AND CRIMINAL PENALTIES THEREUNDER.

TABLE D101—continued
DEGREE DAY AND DESIGN TEMPERATURES[a] FOR CITIES IN THE UNITED STATES

STATE	STATION[b]	HEATING DEGREE DAYS (yearly total)	DESIGN TEMPERATURES			DEGREES NORTH LATITUDE[c]
			Winter	Summer		
			97½%	Dry bulb 2½%	Wet bulb 2½%	
GA	Athens	2,929	22	92	77	34°00′
	Atlanta	2,961	22	92	76	33°40′
	Augusta	2,397	23	95	79	33°20′
	Columbus	2,383	24	93	78	32°30′
	Macon	2,136	25	93	78	32°40′
	Rome	3,326	22	93	78	34°20′
	Savannah	1,819	27	93	79	32°10′
HI	Hilo	0	62	83	74	19°40′
	Honolulu	0	63	86	75	21°20′
ID	Boise	5,809	10	94	66	43°30′
	Lewiston	5,542	6	93	66	46°20′
	Pocatello	7,033	-1	91	63	43°00′
IL	Chicago (Midway)	6,155	0	91	75	41°50′
	Chicago (O'Hare)	6,639	-4	89	76	42°00′
	Chicago[d]	5,882	2	91	77	41°50′
	Moline	6,408	-4	91	77	41°30′
	Peoria	6,025	-4	89	76	40°40′
	Rockford	6,830	-4	89	76	42°10′
	Springfield	5,429	2	92	77	39°50′
IN	Evansville	4,435	9	93	78	38°00′
	Fort Wayne	6,205	1	89	75	41°00′
	Indianapolis	5,699	2	90	76	39°40′
	South Bend	6,439	1	89	75	41°40′
IA	Burlington	6,114	-3	91	77	40°50′
	Des Moines	6,588	-5	91	77	41°30′
	Dubuque	7,376	-7	88	75	42°20′
	Sioux City	6,951	-7	92	77	42°20′
	Waterloo	7,320	-10	89	77	42°30′
KS	Dodge City	4,986	5	97	73	37°50′
	Goodland	6,141	0	96	70	39°20′
	Topeka	5,182	4	96	78	39°00′
	Wichita	4,620	7	98	76	37°40′
KY	Covington	5,265	6	90	75	39°00′
	Lexington	4,683	8	91	76	38°00′
	Louisville	4,660	10	93	77	38°10′
LA	Alexandria	1,921	27	94	79	31°20′
	Baton Rouge	1,560	29	93	80	30°30′
	Lake Charles	1,459	31	93	79	30°10′
	New Orleans	1,385	33	92	80	30°00′
	Shreveport	2,184	25	96	79	32°30′
ME	Caribou	9,767	-13	81	69	46°50′
	Portland	7,511	-1	84	72	43°40′
MD	Baltimore	4,654	13	91	77	39°10′
	Baltimore[d]	4,111	17	89	78	39°20′
	Frederick	5,087	12	91	77	39°20′

(continued)

INTERNATIONAL CODE COUNCIL®
Copyright © 2015 ICC. ALL RIGHTS RESERVED. Accessed by David Dammon on Jun 21, 2017 12:30:52 PM pursuant to License Agreement with ICC. No further reproduction or distribution authorized. ANY UNAUTHORIZED REPRODUCTION OR DISTRIBUTION IS A VIOLATION OF THE FEDERAL COPYRIGHT ACT AND THE LICENSE AGREEMENT, AND SUBJECT TO CIVIL AND CRIMINAL PENALTIES THEREUNDER.

TABLE D101—continued
DEGREE DAY AND DESIGN TEMPERATURES[a] FOR CITIES IN THE UNITED STATES

STATE	STATION[b]	HEATING DEGREE DAYS (yearly total)	DESIGN TEMPERATURES			DEGREES NORTH LATITUDE[c]
			Winter	Summer		
			97½%	Dry bulb 2½%	Wet bulb 2½%	
MA	Boston	5,634	9	88	74	42°20′
	Pittsfield	7,578	-3	84	72	42°30′
	Worcester	6,969	4	84	72	42°20′
MI	Alpena	8,506	-6	85	72	45°00′
	Detroit (City)	6,232	6	88	74	42°20′
	Escanaba[d]	8,481	-7	83	71	45°40′
	Flint	7,377	1	87	74	43°00′
	Grand Rapids	6,894	5	88	74	42°50′
	Lansing	6,909	1	87	74	42°50′
	Marquette[d]	8,393	-8	81	70	46°30′
	Muskegon	6,696	6	84	73	43°10′
	Sault Ste. Marie	9,048	-8	81	70	46°30′
MN	Duluth	10,000	-16	82	70	46°50′
	Minneapolis	8,382	-12	89	5	44°50′
	Rochester	8,295	-12	87	75	44°00′
MS	Jackson	2,239	25	95	78	32°20′
	Meridian	2,289	23	95	79	32°20′
	Vicksburg[d]	2,041	26	95	80	32°20′
MO	Columbia	5,046	4	94	77	39°00′
	Kansas City	4,711	6	96	77	39°10′
	St. Joseph	5,484	2	93	79	39°50′
	St. Louis	4,900	6	94	77	38°50′
	St. Louis[d]	4,484	8	94	77	38°40′
	Springfield	4,900	9	93	77	37°10′
MT	Billings	7,049	-10	91	66	45°50′
	Great Falls	7,750	-15	88	62	47°30′
	Helena	8,129	-16	88	62	46°40′
	Missoula	8,125	-6	88	63	46°50′
NE	Grand Island	6,530	-3	94	74	41°00′
	Lincoln[d]	5,864	-2	95	77	40°50′
	Norfolk	6,979	-4	93	77	42°00′
	North Platte	6,684	-4	94	72	41°10′
	Omaha	6,612	-3	91	77	41°20′
	Scottsbluff	6,673	-3	92	68	41°50′
NV	Elko	7,433	-2	92	62	40°50′
	Ely	7,733	-4	87	59	39°10′
	Las Vegas	2,709	28	106	70	36°10′
	Reno	6,332	10	92	62	39°30′
	Winnemucca	6,761	3	94	62	40°50′
NH	Concord	7,383	-3	87	73	43°10′
NJ	Atlantic City	4,812	13	89	77	39°30′
	Newark	4,589	14	91	76	40°40′
	Trenton[d]	4,980	14	88	76	40°10′
NM	Albuquerque	4,348	16	94	65	35°00′
	Raton	6,228	1	89	64	36°50′
	Roswell	3,793	18	98	70	33°20′
	Silver City	3,705	10	94	64	32°40′

(continued)

INTERNATIONAL CODE COUNCIL®
Copyright © 2015 ICC. ALL RIGHTS RESERVED. Accessed by David Dammon on Jun 21, 2017 12:30:52 PM pursuant to License Agreement with ICC. No further reproduction or distribution authorized. ANY UNAUTHORIZED REPRODUCTION OR DISTRIBUTION IS A VIOLATION OF THE FEDERAL COPYRIGHT ACT AND THE LICENSE AGREEMENT, AND SUBJECT TO CIVIL AND CRIMINAL PENALTIES THEREUNDER.

TABLE D101—continued
DEGREE DAY AND DESIGN TEMPERATURES[a] FOR CITIES IN THE UNITED STATES

STATE	STATION[b]	HEATING DEGREE DAYS (yearly total)	DESIGN TEMPERATURES			DEGREES NORTH LATITUDE[c]
			Winter	Summer		
			97 1/2%	Dry bulb 2 1/2%	Wet bulb 2 1/2%	
NY	Albany	6,875	-1	88	74	42°50′
	Albany[d]	6,201	1	88	74	42°50′
	Binghamton	7,286	1	83	72	42°10′
	Buffalo	7,062	6	85	73	43°00′
	NY (Central Park)[d]	4,871	15	89	75	40°50′
	NY (Kennedy)	5,219	15	87	75	40°40′
	NY(LaGuardia)	4,811	15	89	75	40°50′
	Rochester	6,748	5	88	73	43°10′
	Schenectady[d]	6,650	1	87	74	42°50′
	Syracuse	6,756	2	87	73	43°10′
NC	Charlotte	3,181	22	93	76	35°10′
	Greensboro	3,805	18	91	76	36°10′
	Raleigh	3,393	20	92	77	35°50′
	Winston-Salem	3,595	20	91	75	36°10′
ND	Bismarck	8,851	-19	91	71	46°50′
	Devils Lake[d]	9,901	-21	88	71	48°10′
	Fargo	9,226	-18	89	74	46°50′
	Williston	9,243	-21	88	70	48°10′
OH	Akron-Canton	6,037	6	86	73	41°00′
	Cincinnati[d]	4,410	6	90	75	39°10′
	Cleveland	6,351	5	88	74	41°20′
	Columbus	5,660	5	90	75	40°00′
	Dayton	5,622	4	89	75	39°50′
	Mansfield	6,403	5	87	74	40°50′
	Sandusky[d]	5,796	6	91	74	41°30′
	Toledo	6,494	1	88	75	41°40′
	Youngstown	6,417	4	86	73	41°20′
OK	Oklahoma City	3,725	13	97	77	35°20′
	Tulsa	3,860	13	98	78	36°10′
OR	Eugene	4,726	22	89	67	44°10′
	Medford	5,008	23	94	68	42°20′
	Portland	4,635	23	85	67	45°40′
	Portland[d]	4,109	24	86	67	45°30′
	Salem	4,754	23	88	68	45°00′
PA	Allentown	5,810	9	88	75	40°40′
	Erie	6,451	9	85	74	42°10′
	Harrisburg	5,251	11	91	76	40°10′
	Philadelphia	5,144	14	90	76	39°50′
	Pittsburgh	5,987	5	86	73	40°30′
	Pittsburgh[d]	5,053	7	88	73	40°30′
	Reading[d]	4,945	13	89	75	40°20′
	Scranton	6,254	5	87	73	41°20′
	Williamsport	5,934	7	89	74	41°10′
RI	Providence	5,954	9	86	74	41°40′
SC	Charleston	2,033	27	91	80	32°50′
	Charleston[d]	1,794	28	92	80	32°50′
	Columbia	2,484	24	95	78	34°00′

(continued)

INTERNATIONAL CODE COUNCIL®
Copyright © 2015 ICC. ALL RIGHTS RESERVED. Accessed by David Dammon on Jun 21, 2017 12:30:52 PM pursuant to License Agreement with ICC. No further reproduction or distribution authorized. ANY UNAUTHORIZED REPRODUCTION OR DISTRIBUTION IS A VIOLATION OF THE FEDERAL COPYRIGHT ACT AND THE LICENSE AGREEMENT, AND SUBJECT TO CIVIL AND CRIMINAL PENALTIES THEREUNDER.

TABLE D101—continued
DEGREE DAY AND DESIGN TEMPERATURES[a] FOR CITIES IN THE UNITED STATES

STATE	STATION[b]	HEATING DEGREE DAYS (yearly total)	DESIGN TEMPERATURES			DEGREES NORTH LATITUDE[c]
			Winter	Summer		
			97½%	Dry bulb 2½%	Wet bulb 2½%	
SD	Huron	8,223	-14	93	75	44°30′
	Rapid City	7,345	-7	92	69	44°00′
	Sioux Falls	7,839	-11	91	75	43°40′
TN	Bristol	4,143	14	89	75	36°30′
	Chattanooga	3,254	18	93	77	35°00′
	Knoxville	3,494	19	92	76	35°50′
	Memphis	3,232	18	95	79	35°00′
	Nashville	3,578	14	94	77	36°10′
TX	Abilene	2,624	20	99	74	32°30′
	Austin	1,711	28	98	77	30°20′
	Dallas	2,363	22	100	78	32°50′
	El Paso	2,700	24	98	68	31°50′
	Houston	1,396	32	94	79	29°40′
	Midland	2,591	21	98	72	32°00′
	San Angelo	2,255	22	99	74	31°20′
	San Antonio	1,546	30	97	76	29°30′
	Waco	2,030	26	99	78	31°40′
	Wichita Falls	2,832	18	101	76	34°00′
UT	Salt Lake City	6,052	8	95	65	40°50′
VT	Burlington	8,269	-7	85	72	44°30′
VA	Lynchburg	4,166	16	90	76	37°20′
	Norfolk	3,421	22	91	78	36°50′
	Richmond	3,865	17	92	78	37°30′
	Roanoke	4,150	16	91	74	37°20′
WA	Olympia	5,236	22	83	66	47°00′
	Seattle-Tacoma	5,145	26	80	64	47°30′
	Seattle[d]	4,424	27	82	67	47°40′
	Spokane	6,655	2	90	64	47°40′
WV	Charleston	4,476	11	90	75	38°20′
	Elkins	5,675	6	84	72	38°50′
	Huntington	4,446	10	91	77	38°20′
	Parkersburg[d]	4,754	11	90	76	39°20′
WI	Green Bay	8,029	-9	85	74	44°30′
	La Crosse	7,589	-9	88	75	43°50′
	Madison	7,863	-7	88	75	43°10′
	Milwaukee	7,635	-4	87	74	43°00′
WY	Casper	7,410	-5	90	61	42°50′
	Cheyenne	7,381	-1	86	62	41°10′
	Lander	7,870	-11	88	63	42°50′
	Sheridan	7,680	-8	91	65	44°50′

a. All data were extracted from the 1985 ASHRAE Handbook, Fundamentals Volume.

b. Design data developed from airport temperature observations unless noted.

c. Latitude is given to the nearest 10 minutes. For example, the latitude for Miami, Florida, is given as 25°50′, or 25 degrees 50 minutes.

d. Design data developed from office locations within an urban area, not from airport temperature observations.

INTERNATIONAL CODE COUNCIL®
Copyright © 2015 ICC. ALL RIGHTS RESERVED. Accessed by David Dammon on Jun 21, 2017 12:30:52 PM pursuant to License Agreement with ICC. No further reproduction or distribution authorized. ANY UNAUTHORIZED REPRODUCTION OR DISTRIBUTION IS A VIOLATION OF THE FEDERAL COPYRIGHT ACT AND THE LICENSE AGREEMENT, AND SUBJECT TO CIVIL AND CRIMINAL PENALTIES THEREUNDER.

Bibliography

The following resource materials are referenced in this chapter or are relevant to the subject matter addressed in this chapter.

ASHRAE, *Handbook of Fundamentals*. Atlanta, GA: American Society of Heating, Refrigerating and Air-Conditioning Engineers, Inc., 2001.

IECC-15, *International Energy Conservation Code*. Washington, DC: International Code Council, 2014.

IPMC-15, *International Property Maintenance Code*. Washington, DC: International Code Council, 2014.

Owenby, J.R., D.S. Ezell, and R.R. Heim, Jr. *Annual Degree Days to Selected Bases Derived from the 1961 to 1990 Normals: Climatography of the United States No. 81—Supplement No. 2*. Asheville, N.C.: U.S. Department of Commerce, National Oceanic and Atmospheric Administration, National Climatic Data Center, 1992.

U.S. Department of Energy (DOE) 90.1, *Code Compliance Manual*. Prepared by Eley Associates under contract to the Building Standards and Guidelines Program. Richland, WA: Pacific Northwest National Laboratory, 1995.

INTERNATIONAL CODE COUNCIL®

Copyright © 2015 ICC. ALL RIGHTS RESERVED. Accessed by David Dammon on Jun 21, 2017 12:30:52 PM pursuant to License Agreement with ICC. No further reproduction or distribution authorized. ANY UNAUTHORIZED REPRODUCTION OR DISTRIBUTION IS A VIOLATION OF THE FEDERAL COPYRIGHT ACT AND THE LICENSE AGREEMENT, AND SUBJECT TO CIVIL AND CRIMINAL PENALTIES THEREUNDER.

INTERNATIONAL CODE COUNCIL®

Copyright © 2015 ICC. ALL RIGHTS RESERVED. Accessed by David Dammon on Jun 21, 2017 12:30:52 PM pursuant to License Agreement with ICC. No further reproduction or distribution authorized. ANY UNAUTHORIZED REPRODUCTION OR DISTRIBUTION IS A VIOLATION OF THE FEDERAL COPYRIGHT ACT AND THE LICENSE AGREEMENT, AND SUBJECT TO CIVIL AND CRIMINAL PENALTIES THEREUNDER.

Appendix E: Sizing of Water Piping System

General Comments

The design of a water supply system ensures adequate water supply to all fixtures at all times and achieves economic sizing of the piping. To do this, the maximum probable rate of flow or demand for which provisions should be made to every portion of the system is used. The demand cannot be determined exactly because most fixtures are used intermittently, and the probability of simultaneous use of such fixtures cannot be established. To be acceptable for estimating the demand of the water supply system, a method must produce the estimated demand for all fixtures on the system during periods of peak demand, avoid oversizing of the piping and be adaptable for estimating the demand of like fixtures as well as different types of fixtures and building occupancy classifications. This procedure takes into consideration the pressure, velocity limitations, materials and characteristics of the water source and demand.

Purpose

Appendix E describes two methods of sizing a water supply system. These methods provide plumbing fixtures and equipment with water in sufficient volume and adequate pressures to enable them to function properly without excessive noise under normal conditions of use. There are many other sizing or design methods conforming to good engineering practices.

The provisions contained in this appendix are not mandatory unless specifically referenced in the adopting ordinance.

SECTION E101 GENERAL

E101.1 Scope.

E101.1.1 This appendix outlines two procedures for sizing a water piping system (see Sections E103.3 and E201.1). The design procedures are based on the minimum static pressure available from the supply source, the head changes in the system caused by friction and elevation, and the rates of flow necessary for operation of various fixtures.

E101.1.2 Because of the variable conditions encountered in hydraulic design, it is impractical to specify definite and detailed rules for sizing of the water piping system. Accordingly, other sizing or design methods conforming to good engineering practice standards are acceptable alternatives to those presented herein.

SECTION E102 INFORMATION REQUIRED

E102.1 Preliminary. Obtain the necessary information regarding the minimum daily static service pressure in the area where the building is to be located. If the building supply is to be metered, obtain information regarding friction loss relative to the rate of flow for meters in the range of sizes likely to be used. Friction loss data can be obtained from most manufacturers of water meters.

E102.2 Demand load.

E102.2.1 Estimate the supply demand of the building main and the principal branches and risers of the system by totaling the corresponding demand from the applicable part of Table E103.3(3).

E102.2.2 Estimate continuous supply demands in gallons per minute (L/m) for lawn sprinklers, air conditioners, etc., and add the sum to the total demand for fixtures. The result is the estimated supply demand for the building supply.

❖ The determination of water demand by the occupants of a building can be very difficult. Studies by Roy B. Hunter starting in 1923 resulted in a method of weighting plumbing fixtures with their water supply load producing effects. Based on experience of using this method for the plumbing design in large federal buildings, Hunter revised the method slightly and then published it in 1940. In 1968, Elmer Jones of the Agricultural Research Service further revised the method using data from small housing developments. This method of estimating demand has been widely recognized as the generally accepted method to produce reliable water demand for all types of occupancies.

Determining occupant water demand involves the probability of use, the rate of use and the length of use. Not all fixtures will be used simultaneously (although halftime at spectator-viewed sporting events may come close), the fixtures are not necessarily operated in the same manner, and the time spent using a fixture varies from person to person. Although sizing a system for continuous operation of all fixtures would be the easiest solution, the resulting pipe sizes might be unrealistically large and thus costly to install. However, on the same note, undersize piping could result in user complaints or even dangerous conditions caused by low water pressure. Special occupancies such as health care, schools, restaurants and stadiums usually require significant

INTERNATIONAL CODE COUNCIL®
Copyright © 2015 ICC. ALL RIGHTS RESERVED. Accessed by David Dammon on Jun 21, 2017 12:30:52 PM pursuant to License Agreement with ICC. No further reproduction or distribution authorized. ANY UNAUTHORIZED REPRODUCTION OR DISTRIBUTION IS A VIOLATION OF THE FEDERAL COPYRIGHT ACT AND THE LICENSE AGREEMENT, AND SUBJECT TO CIVIL AND CRIMINAL PENALTIES THEREUNDER.

engineering expertise to properly design water systems for these applications.

SECTION E103
SELECTION OF PIPE SIZE

E103.1 General. Decide from Table 604.3 what is the desirable minimum residual pressure that should be maintained at the highest fixture in the supply system. If the highest group of fixtures contains flushometer valves, the pressure for the group should be not less than 15 pounds per square inch (psi) (103.4 kPa) flowing. For flush tank supplies, the available pressure should be not less than 8 psi (55.2 kPa) flowing, except blowout action fixtures must be not less than 25 psi (172.4 kPa) flowing.

E103.2 Pipe sizing.

E103.2.1 Pipe sizes can be selected according to the following procedure or by other design methods conforming to acceptable engineering practice and *approved* by the administrative authority. The sizes selected must not be less than the minimum required by this code.

❖ In general, plumbing fixtures require at least 8 psig (55 kPa) of flowing pressure to perform adequately. There are special fixtures that require higher pressures under flowing conditions such as flush valve-type water closets and temperature-controlling (e.g., balanced-pressure/thermostatic control valves) shower controls. The fixture that has the highest flowing pressure demand in the system controls the limit for pressure loss used for system sizing.

E103.2.2 Water pipe sizing procedures are based on a system of pressure requirements and losses, the sum of which must not exceed the minimum pressure available at the supply source. These pressures are as follows:

1. Pressure required at fixture to produce required flow. See Sections 604.3 and 604.5.
2. Static pressure loss or gain (due to head) is computed at 0.433 psi per foot (9.8 kPa/m) of elevation change.

   Example: Assume that the highest fixture supply outlet is 20 feet (6096 mm) above or below the supply source. This produces a static pressure differential of 20 feet by 0.433 psi/foot (2096 mm by 9.8 kPa/m) and an 8.66 psi (59.8 kPa) loss.
3. Loss through water meter. The friction or pressure loss can be obtained from meter manufacturers.
4. Loss through taps in water main.
5. Losses through special devices such as filters, softeners, backflow prevention devices and pressure regulators. These values must be obtained from the manufacturers.
6. Loss through valves and fittings. Losses for these items are calculated by converting to equivalent length of piping and adding to the total pipe length.
7. Loss due to pipe friction can be calculated when the pipe size, the pipe length and the flow through the pipe are known. With these three items, the friction loss can be determined. For piping flow charts not included, use manufacturers' tables and velocity recommendations.

   Note: For the purposes of all examples, the following metric conversions are applicable:

   1 cubic foot per minute = 0.4719 L/s

   1 square foot = 0.0929 m^2

   1 degree = 0.0175 rad

   1 pound per square inch = 6.895 kPa

   1 inch = 25.4 mm

   1 foot = 304.8 mm

   1 gallon per minute = 3.785 L/m

❖ Frictional losses resulting from the flow of fluids in piping, fittings and standard components are well established from equations of fluid mechanics and testing. Textbooks, handbooks and other reputable publications as well as specific manufacturer's data are resources for frictional loss values. The most important aspect of the information gathering process is to make sure that no component is missed or considered to be "negligible" so that it is not reflected on the computation sheet. As projects come to life, actual component data sheet information should be compared to that used for calculation purposes to assure that all losses are accounted for.

E103.3 Segmented loss method. The size of water service mains, *branch* mains and risers by the segmented loss method, must be determined according to water supply demand [gpm (L/m)], available water pressure [psi (kPa)] and friction loss caused by the water meter and *developed length* of pipe [feet (m)], including equivalent length of fittings. This design procedure is based on the following parameters:

- Calculates the friction loss through each length of the pipe.
- Based on a system of pressure losses, the sum of which must not exceed the minimum pressure available at the street main or other source of supply.
- Pipe sizing based on estimated peak demand, total pressure losses caused by difference in elevation, equipment, *developed length* and pressure required at most remote fixture, loss through taps in water main, losses through fittings, filters, backflow prevention devices, valves and pipe friction.

Because of the variable conditions encountered in hydraulic design, it is impractical to specify definite and detailed rules for sizing of the water piping system. Current sizing methods do not address the differences in the probability of use and flow characteristics of fixtures between types of occupancies. Creating an exact model of predicting the demand for a building is impossible and final studies assessing the impact of water conservation on demand are not yet complete. The following steps are necessary for the segmented loss method.

1. **Preliminary.** Obtain the necessary information regarding the minimum daily static service pressure in the area where the building is to be located. If the building supply is to be metered, obtain information regarding

INTERNATIONAL CODE COUNCIL®
Copyright © 2015 ICC. ALL RIGHTS RESERVED. Accessed by David Dammon on Jun 21, 2017 12:30:52 PM pursuant to License Agreement with ICC. No further reproduction or distribution authorized. ANY UNAUTHORIZED REPRODUCTION OR DISTRIBUTION IS A VIOLATION OF THE FEDERAL COPYRIGHT ACT AND THE LICENSE AGREEMENT, AND SUBJECT TO CIVIL AND CRIMINAL PENALTIES THEREUNDER.

friction loss relative to the rate of flow for meters in the range of sizes to be used. Friction loss data can be obtained from manufacturers of water meters. It is essential that enough pressure be available to overcome all system losses caused by friction and elevation so that plumbing fixtures operate properly. Section 604.6 requires the water distribution system to be designed for the minimum pressure available taking into consideration pressure fluctuations. The lowest pressure must be selected to guarantee a continuous, adequate supply of water. The lowest pressure in the public main usually occurs in the summer because of lawn sprinkling and supplying water for air-conditioning cooling towers. Future demands placed on the public main as a result of large growth or expansion should also be considered. The available pressure will decrease as additional loads are placed on the public system.

2. **Demand load.** Estimate the supply demand of the building main and the principal branches and risers of the system by totaling the corresponding demand from the applicable part of Table E103.3(3). When estimating peak demand sizing methods typically use water supply fixture units (w.s.f.u.) [see Table E103.3(2)]. This numerical factor measures the load-producing effect of a single plumbing fixture of a given kind. The use of such fixture units can be applied to a single basic probability curve (or table), found in the various sizing methods [Table E103.3(3)]. The fixture units are then converted into gallons per minute (L/m) flow rate for estimating demand.

    2.1. Estimate continuous supply demand in gallons per minute (L/m) for lawn sprinklers, air conditioners, etc., and add the sum to the total demand for fixtures. The result is the estimated supply demand for the building supply. Fixture units cannot be applied to constant use fixtures such as hose bibbs, lawn sprinklers and air conditioners. These types of fixtures must be assigned the gallon per minute (L/m) value.

❖ The code is silent on how to select and apply the values from Table E103.3(2) for an application. One approach to selection would be to use the individual cold and hot water supply fixture unit values for each fixture with no consideration given to the column headed "Total." This would be a conservative method that yields higher overall water demand from the system and may result in pipe sizes larger than if values from the "Total" column were used with appropriate guidance. Note that the "Total" column is not the sum of the fixture hot and cold values, but is a weighted total representing the "load producing effect" of that fixture's combined hot and cold water demand on the water distribution system. A fixture "total" water demand value could be used when the water flow through the pipe section is the result of both hot and cold water being used at the fixture. But if the pipe is carrying water flow as a result of only hot water flow, individual hot and cold fixture water supply fixture units need to be used for the demand loading.

3. **Selection of pipe size.** This water pipe sizing procedure is based on a system of pressure requirements and losses, the sum of which must not exceed the minimum pressure available at the supply source. These pressures are as follows:

    3.1. Pressure required at the fixture to produce required flow. See Section 604.3 and Section 604.5.

    3.2. Static pressure loss or gain (because of head) is computed at 0.433 psi per foot (9.8 kPa/m) of elevation change.

    3.3. Loss through a water meter. The friction or pressure loss can be obtained from the manufacturer.

    3.4. Loss through taps in water main [see Table E103.3(4)].

    3.5. Losses through special devices such as filters, softeners, backflow prevention devices and pressure regulators. These values must be obtained from the manufacturers.

    3.6. Loss through valves and fittings [see Tables E103.3(5) and E103.3(6)]. Losses for these items are calculated by converting to equivalent length of piping and adding to the total pipe length.

    3.7. Loss caused by pipe friction can be calculated when the pipe size, the pipe length and the flow through the pipe are known. With these three items, the friction loss can be determined using Figures E103.3(2) through E103.3(7). When using charts, use pipe inside diameters. For piping flow charts not included, use manufacturers' tables and velocity recommendations. Before attempting to size any water supply system, it is necessary to gather preliminary information which includes available pressure, piping material, select design velocity, elevation differences and *developed length* to most remote fixture. The water supply system is divided into sections at major changes in elevation or where branches lead to fixture groups. The peak demand must be determined in each part of the hot and cold water supply system which includes the corresponding water supply fixture unit and conversion to gallons per minute (L/m) flow rate to be expected through each section. Sizing methods require the determination of the "most hydraulically remote" fixture to compute the pressure loss caused by pipe and fittings. The hydraulically remote fixture represents the most downstream fixture along the circuit of piping requiring the most available pressure to operate properly. Consideration must be given to all pressure demands and losses, such as friction caused by pipe, fittings and equipment, elevation and the residual pressure required by Table 604.3. The two most common and frequent complaints about the

INTERNATIONAL CODE COUNCIL®
Copyright © 2015 ICC. ALL RIGHTS RESERVED. Accessed by David Dammon on Jun 21, 2017 12:30:52 PM pursuant to License Agreement with ICC. No further reproduction or distribution authorized. ANY UNAUTHORIZED REPRODUCTION OR DISTRIBUTION IS A VIOLATION OF THE FEDERAL COPYRIGHT ACT AND THE LICENSE AGREEMENT, AND SUBJECT TO CIVIL AND CRIMINAL PENALTIES THEREUNDER.

water supply system operation are lack of adequate pressure and noise.

❖ The "Segmented Loss Method" is also known as the "Velocity-Pressure Drop" method. Once flow through a pipe is known in gallons per minute (L/m) for any particular pipe section under consideration, a pipe size can be selected based on a recommended maximum velocity of the water through a specific pipe material.

Experience and extensive research on all types of pipe materials have produced general guidelines for recommended maximum velocities in domestic water piping. For cold water piping, maximum velocities in the range of 5 to 8 feet per second (1.5 to 2.4 m/s) are typical and for hot water piping, especially for temperatures above 150°F (66°C), maximum velocities of 4 feet per second (1.2 m/s) are typical. However, the type of pipe material has a significant impact on the maximum recommended velocities. For example, in general, manufacturers of cross-linked polyethylene tubing (PEX) allow velocities to approach 12 feet per second (3.7 m/s) in both hot [maximum 140°F (60°F)] and cold piping, whereas, copper piping manufacturers recommend using the lower velocity general guidelines as mentioned above.

Control of velocity in piping is necessary for a variety of reasons. High velocities create flowing "noise" and increased possibility for erosion of the pipe material. High velocities also contribute to water hammer problems because rapidly flowing fluid has very high energy. When high-energy fluid is stopped abruptly, that energy dissipates in a shock wave moving upstream from the valve that closed, causing noise and instantaneous high pressures (and possibly damaging forces) within the pipe. But most importantly, high fluid velocities cause a loss in flowing pressure. The inside wall of new building water distribution pipe, while visually appearing smooth, has a roughness that fluid moving though the pipe tends to "drag" on. The higher the velocity is in the pipe, the greater the drag (friction) forces are on the fluid. For any fluid flowing full in a pipe, given an initial flowing pressure and velocity at the beginning of a section of pipe, at any downstream point in the pipe, there will be a decrease in the flowing pressure in the pipe. The friction takes energy away from the fluid. This loss of energy (i.e., pressure) caused by fluid flow dragging on the inside walls of a pipe is called pressure drop or pressure loss.

Friction loss (or pressure drop) graphs are available for a variety of pipe materials. Figures E103.3(2) through (4) are for new copper water piping (Types K, L and M, respectively) with recessed, streamline soldered joints (see graph Note a). Note that these graphs show velocity lines only up to 10 feet per second (3 m/s). The code does not provide specific friction loss graphs for any other types of water pipe as listed in Tables 605.3 and 605.4. but provides only the graphs in Figures E103.3(5) through (7). Figure E103.3(5), although not specifically labeled as such, is the friction loss graph for Schedule 40 new steel pipe with inside walls of "fairly smooth" condition. New galvanized steel piping, rarely used in modern construction for water distribution, is considered to have a "fairly smooth" inside wall condition when new. However, once galvanized steel pipe has been in service for an extended length of time, the inside wall condition usually degrades to what is considered to be a "fairly rough or rough" condition as a result of corrosion and deposit build up. The pipe material and wall thickness used as the basis for Figures E103.3(6) and (7) is not specified, only the condition of the pipe interior. Figure E103.3(7) also has an apparent discrepancy in specifying the inside wall condition at the top of the graph as "rough." The caption of the graph says "fairly rough" and Note a says "very rough."

Perhaps of most importance is not what the friction losses are when piping is new but what the friction losses will be after extended service. Friction loss graphs for a range of inside wall surface conditions are available from many sources to aid the system designer in determining accurate values for expected pressure drop.

Problem: What size Type L copper water pipe, service and distribution will be required to serve a two-story factory building having on each floor, back-to-back, two toilet rooms each equipped with hot and cold water? The highest fixture is 21 feet (6401 mm) above the street main, which is tapped with a 2-inch (51 mm) corporation cock at which point the minimum pressure is 55 psi (379.2 kPa). In the building basement, a 2-inch (51 mm) meter with a maximum pressure drop of 11 psi (75.8 kPa) and 3-inch (76 mm) reduced pressure principle backflow preventer with a maximum pressure drop of 9 psi (621 kPa) are to be installed. The system is shown by Figure E103.3(1). To be determined are the pipe sizes for the service main and the cold and hot water distribution pipes.

Solution: A tabular arrangement such as shown in Table E103.3(1) should first be constructed. The steps to be followed are indicated by the tabular arrangement itself as they are in sequence, columns 1 through 10 and lines A through L.

Step 1

Columns 1 and 2: Divide the system into sections breaking at major changes in elevation or where branches lead to fixture groups. After point B [see Figure E103.3(1)], separate consideration will be given to the hot and cold water piping. Enter the sections to be considered in the service and cold water piping in Column 1 of the tabular arrangement. Column 1 of Table E103.3(1) provides a line-by-line recommended tabular arrangement for use in solving pipe sizing.

The objective in designing the water supply system is to ensure an adequate water supply and pressure to all fixtures and equipment. Column 2 provides the pounds per square inch (psi) to be considered separately from the minimum pressure available at the main. Losses to take into consideration are the following: the differences in eleva-

INTERNATIONAL CODE COUNCIL®
Copyright © 2015 ICC. ALL RIGHTS RESERVED. Accessed by David Dammon on Jun 21, 2017 12:30:52 PM pursuant to License Agreement with ICC. No further reproduction or distribution authorized. ANY UNAUTHORIZED REPRODUCTION OR DISTRIBUTION IS A VIOLATION OF THE FEDERAL COPYRIGHT ACT AND THE LICENSE AGREEMENT, AND SUBJECT TO CIVIL AND CRIMINAL PENALTIES THEREUNDER.

tions between the water supply source and the highest water supply outlet, meter pressure losses, the tap in main loss, special fixture devices such as water softeners and backflow prevention devices and the pressure required at the most remote fixture outlet. The difference in elevation can result in an increase or decrease in available pressure at the main. Where the water supply outlet is located above the source, this results in a loss in the available pressure and is subtracted from the pressure at the water source. Where the highest water supply outlet is located below the water supply source, there will be an increase in pressure that is added to the available pressure of the water source.

Column 3: According to Table E103.3(3), determine the gpm (L/m) of flow to be expected in each section of the system. These flows range from 28.6 to 108 gpm. Load values for fixtures must be determined as water supply fixture units and then converted to a gallon-per-minute (gpm) rating to determine peak demand. When calculating peak demands, the water supply fixture units are added and then converted to the gallon-per-minute rating. For continuous flow fixtures such as hose bibbs and lawn sprinkler systems, add the gallon-per-minute demand to the intermittent demand of fixtures. For example, a total of 120 water supply fixture units is converted to a demand of 48 gallons per minute. Two hose bibbs × 5 gpm demand = 10 gpm. Total gpm rating = 48.0 gpm + 10 gpm = 58.0 gpm demand.

Step 2

Line A: Enter the minimum pressure available at the main source of supply in Column 2. This is 55 psi (379.2 kPa). The local water authorities generally keep records of pressures at different times of day and year. The available pressure can also be checked from nearby buildings or from fire department hydrant checks.

Line B: Determine from Table 604.3 the highest pressure required for the fixtures on the system, which is 15 psi (103.4 kPa), to operate a flushometer valve. The most remote fixture outlet is necessary to compute the pressure loss caused by pipe and fittings, and represents the most downstream fixture along the circuit of piping requiring the available pressure to operate properly as indicated by Table 604.3.

Line C: Determine the pressure loss for the meter size given or assumed. The total water flow from the main through the service as determined in Step 1 will serve to aid in the meter selected. There are three common types of water meters; the pressure losses are determined by the American Water Works Association Standards for displacement type, compound type and turbine type. The maximum pressure loss of such devices takes into consideration the meter size, safe operating capacity (gpm) and maximum rates for continuous operations (gpm). Typically, equipment imparts greater pressure losses than piping.

Line D: Select from Table E103.3(4) and enter the pressure loss for the tap size given or assumed. The loss of pressure through taps and tees in pounds per square inch (psi) are based on the total gallon-per-minute flow rate and size of the tap.

Line E: Determine the difference in elevation between the main and source of supply and the highest fixture on the system. Multiply this figure, expressed in feet, by 0.43 psi (2.9 kPa). Enter the resulting psi loss on Line E. The difference in elevation between the water supply source and the highest water supply outlet has a significant impact on the sizing of the water supply system. The difference in elevation usually results in a loss in the available pressure because the water supply outlet is generally located above the water supply source. The loss is caused by the pressure required to lift the water to the outlet. The pressure loss is subtracted from the pressure at the water source. Where the highest water supply outlet is located below the water source, there will be an increase in pressure which is added to the available pressure of the water source.

Lines F, G and H: The pressure losses through filters, backflow prevention devices or other special fixtures must be obtained from the manufacturer or estimated and entered on these lines. Equipment such as backflow prevention devices, check valves, water softeners, instantaneous or tankless water heaters, filters and strainers can impart a much greater pressure loss than the piping. The pressure losses can range from 8 psi to 30 psi.

Step 3

Line I: The sum of the pressure requirements and losses that affect the overall system (Lines B through H) is entered on this line. Summarizing the steps, all of the system losses are subtracted from the minimum water pressure. The remainder is the pressure available for friction, defined as the energy available to push the water through the pipes to each fixture. This force can be used as an average pressure loss, as long as the pressure available for friction is not exceeded. Saving a certain amount for available water supply pressures as an area incurs growth, or because of aging of the pipe or equipment added to the system is recommended.

Step 4

Line J: Subtract Line I from Line A. This gives the pressure that remains available from overcoming friction losses in the system. This figure is a guide to the pipe size that is chosen for each section, incorporating the total friction losses to the most remote outlet (measured length is called developed length).

> **Exception:** When the main is above the highest fixture, the resulting psi must be considered a pressure gain (static head gain) and omitted from the sums of Lines B through H and added to Line J.

The maximum friction head loss that can be tolerated in the system during peak demand is the difference between the static pressure at the highest and most remote outlet at no-flow conditions and the minimum flow pressure required at that outlet. If the losses are within the required limits, then every run of pipe will also be within the required friction head loss. Static pressure loss is the most

INTERNATIONAL CODE COUNCIL®
Copyright © 2015 ICC. ALL RIGHTS RESERVED. Accessed by David Dammon on Jun 21, 2017 12:30:52 PM pursuant to License Agreement with ICC. No further reproduction or distribution authorized. ANY UNAUTHORIZED REPRODUCTION OR DISTRIBUTION IS A VIOLATION OF THE FEDERAL COPYRIGHT ACT AND THE LICENSE AGREEMENT, AND SUBJECT TO CIVIL AND CRIMINAL PENALTIES THEREUNDER.

remote outlet in feet × 0.433 = loss in psi caused by elevation differences.

Step 5

Column 4: Enter the length of each section from the main to the most remote outlet (at Point E). Divide the water supply system into sections breaking at major changes in elevation or where branches lead to fixture groups.

Step 6

E103.3.3. Selection of pipe size, Step 6 Column 5: When selecting a trial pipe size, the length from the water service or meter to the most remote fixture outlet must be measured to determine the developed length. However, in systems having a flushometer valve or temperature controlled shower at the top most floors the developed length would be from the water meter to the most remote flushometer valve on the system. A rule of thumb is that size will become progressively smaller as the system extends farther from the main source of supply. Trial pipe size may be arrived at by the following formula:

Line J: (Pressure available to overcome pipe friction) × 100/equivalent length of run total *developed length* to most remote fixture × percentage factor of 1.5 (note: a percentage factor is used only as an estimate for friction losses imposed for fittings for initial trial pipe size) = psi (average pressure drops per 100 feet of pipe).

For trial pipe size see Figure E 103.3(3) (Type L copper) based on 2.77 psi and a 108 gpm = $2^{1}/_{2}$ inches. To determine the equivalent length of run to the most remote outlet, the *developed length* is determined and added to the friction losses for fittings and valves. The developed lengths of the designated pipe sections are as follows:

A - B	54 ft
B - C	8 ft
C - D	13 ft
D - E	150 ft

Total developed length = 225 ft

The equivalent length of the friction loss in fittings and valves must be added to the *developed length* (most remote outlet). Where the size of fittings and valves is not known, the added friction loss should be approximated. A general rule that has been used is to add 50 percent of the *developed length* to allow for fittings and valves. For example, the equivalent length of run equals the *developed length* of run (225 ft × 1.5 = 338 ft). The total equivalent length of run for determining a trial pipe size is 338 feet.

Example: 9.36 (pressure available to overcome pipe friction) × 100/ 338 (equivalent length of run = 225 × 1.5) = 2.77 psi (average pressure drop per 100 feet of pipe).

Step 7

Column 6: Select from Table E103.3(6) the equivalent lengths for the trial pipe size of fittings and valves on each pipe section. Enter the sum for each section in Column 6. (The number of fittings to be used in this example must be an estimate.) The equivalent length of piping is the developed length plus the equivalent lengths of pipe corresponding to friction head losses for fittings and valves. Where the size of fittings and valves is not known, the added friction head losses must be approximated. An estimate for this example is found in Table E.1.

Step 8

Column 7: Add the figures from Column 4 and Column 6, and enter in Column 7. Express the sum in hundreds of feet.

Step 9

Column 8: Select from Figure E103.3(3) the friction loss per 100 feet (30 480 mm) of pipe for the gallon-per-minute flow in a section (Column 3) and trial pipe size (Column 5). Maximum friction head loss per 100 feet is determined on the basis of total pressure available for friction head loss and the longest equivalent length of run. The selection is based on the gallon-per-minute demand, the uniform friction head loss, and the maximum design velocity. Where the size indicated by hydraulic table indicates a velocity in excess of the selected velocity, a size must be selected which produces the required velocity.

Step 10

Column 9: Multiply the figures in Columns 7 and 8 for each section and enter in Column 9.

Total friction loss is determined by multiplying the friction loss per 100 feet (30 480 mm) for each pipe section in the total *developed length* by the pressure loss in fittings expressed as equivalent length in feet. Note: Section C-F should be considered in the total pipe friction losses only if greater loss occurs in Section C-F than in pipe section D-E. Section C-F is not considered in the total *developed length*. Total friction loss in equivalent length is determined in Table E.2.

Step 11

Line K: Enter the sum of the values in Column 9. The value is the total friction loss in equivalent length for each designated pipe section.

Step 12

Line L: Subtract Line J from Line K and enter in Column 10.

The result should always be a positive or plus figure. If it is not, repeat the operation using Columns 5, 6, 8 and 9 until a balance or near balance is obtained. If the difference between Lines J and K is a high positive number, it is an indication that the pipe sizes are too large and should be reduced, thus saving materials. In such a case, the operations using Columns 5, 6, 8 and 9 should again be repeated.

The total friction losses are determined and subtracted from the pressure available to overcome pipe friction for trial pipe size. This number is critical as it provides a guide to whether the pipe size selected is too large and the process should be repeated to obtain an economically designed system.

INTERNATIONAL CODE COUNCIL®
Copyright © 2015 ICC. ALL RIGHTS RESERVED. Accessed by David Dammon on Jun 21, 2017 12:30:52 PM pursuant to License Agreement with ICC. No further reproduction or distribution authorized. ANY UNAUTHORIZED REPRODUCTION OR DISTRIBUTION IS A VIOLATION OF THE FEDERAL COPYRIGHT ACT AND THE LICENSE AGREEMENT, AND SUBJECT TO CIVIL AND CRIMINAL PENALTIES THEREUNDER.

Answer: The final figures entered in Column 5 become the design pipe size for the respective sections. Repeating this operation a second time using the same sketch but considering the demand for hot water, it is possible to size the hot water distribution piping. This has been worked up as a part of the overall problem in the tabular arrangement used for sizing the service and water distribution piping. Note that consideration must be given to the pressure losses from the street main to the water heater (Section A-B) in determining the hot water pipe sizes.

TABLE E.1

COLD WATER PIPE SECTION	FITTINGS/VALVES	PRESSURE LOSS EXPRESSED AS EQUIVALENT LENGTH OF TUBE (feet)	HOT WATER PIPE SECTION	FITTINGS/ VALVES	PRESSURE LOSS EXPRESSED AS EQUIVALENT OF TUBE (feet)
A-B	3-2$^1/_2$″ Gate valves	3	A-B	3-2$^1/_2$″ Gate valves	3
	1-2$^1/_2$″ Side branch tee	12		1-2$^1/_2$″ Side branch tee	12
B-C	1-2$^1/_2$″ Straight run tee	0.5	B-C	1-2″ Straight run tee	7
				1-2″ 90-degree ell	0.5
C-F	1-2$^1/_2$″ Side branch tee	12	C-F	1-1$^1/_2$″ Side branch tee	7
C-D	1-2$^1/_2$″ 90-degree ell	7	C-D	1-$^1/_2$″ 90-degree ell	4
D-E	1-2$^1/_2$″ Side branch tee	12	D-E	1-1$^1/_2$″ Side branch tee	7

For SI: 1 foot = 304.8 mm, i inch = 25.4 mm.

TABLE E.2

PIPE SECTIONS	FRICTION LOSS EQUIVALENT LENGTH (feet)	
	Cold Water	Hot Water
A-B	0.69 × 3.2 = 2.21	0.69 × 3.2 = 2.21
B-C	0.085 × 3.1 = 0.26	0.16 × 1.4 = 0.22
C-D	0.20 × 1.9 = 0.38	0.17 × 3.2 = 0.54
D-E	1.62 × 1.9 = 3.08	1.57 × 3.2 = 5.02
Total pipe friction losses (Line K)	5.93	7.99

For SI: 1 foot = 304.8 mm, 1 gpm = 3.785 L/m.

INTERNATIONAL CODE COUNCIL®
Copyright © 2015 ICC. ALL RIGHTS RESERVED. Accessed by David Dammon on Jun 21, 2017 12:30:52 PM pursuant to License Agreement with ICC. No further reproduction or distribution authorized. ANY UNAUTHORIZED REPRODUCTION OR DISTRIBUTION IS A VIOLATION OF THE FEDERAL COPYRIGHT ACT AND THE LICENSE AGREEMENT, AND SUBJECT TO CIVIL AND CRIMINAL PENALTIES THEREUNDER.

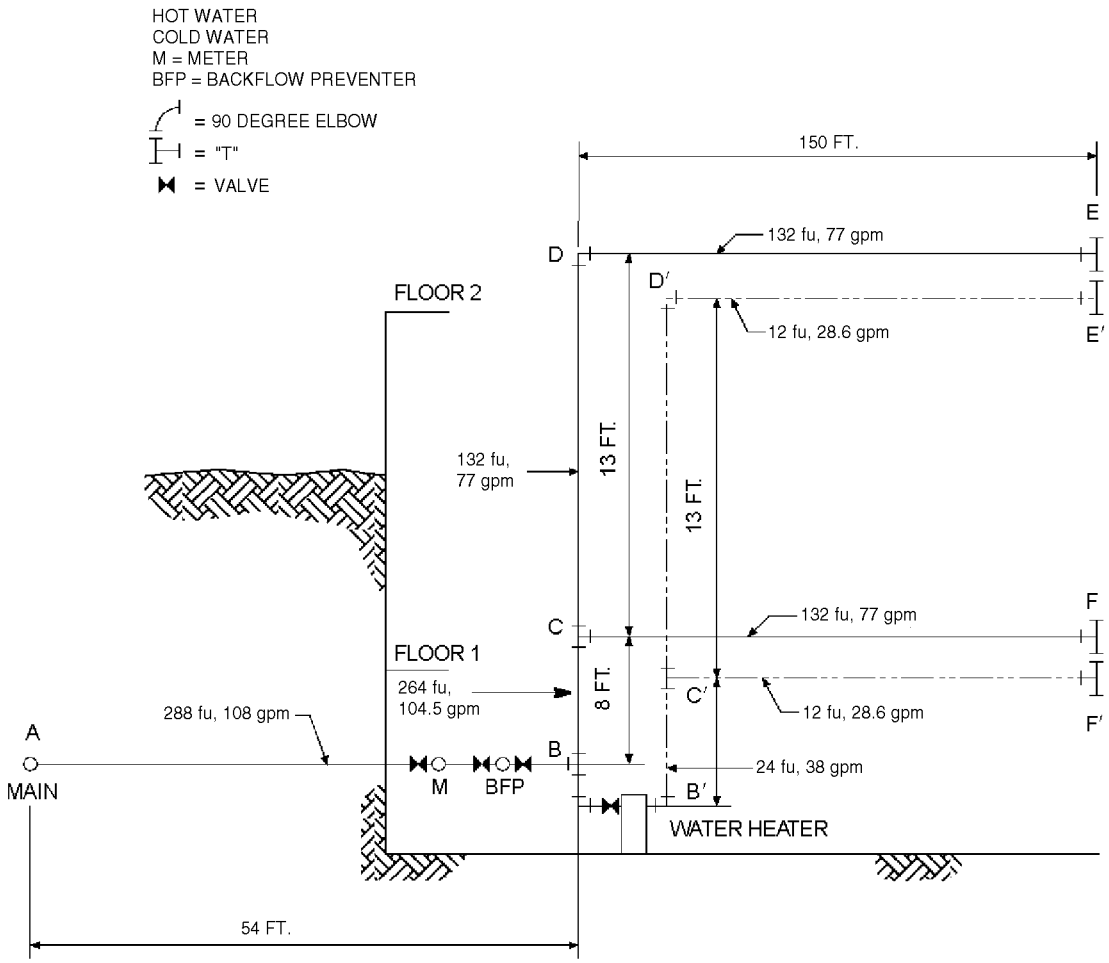

For SI: 1 foot = 304. mm, 1 gpm = 3.785 L/m.

FIGURE E103.3(1)
EXAMPLE—SIZING

INTERNATIONAL CODE COUNCIL®
Copyright © 2015 ICC. ALL RIGHTS RESERVED. Accessed by David Dammon on Jun 21, 2017 12:30:52 PM pursuant to License Agreement with ICC. No further reproduction or distribution authorized. ANY UNAUTHORIZED REPRODUCTION OR DISTRIBUTION IS A VIOLATION OF THE FEDERAL COPYRIGHT ACT AND THE LICENSE AGREEMENT, AND SUBJECT TO CIVIL AND CRIMINAL PENALTIES THEREUNDER.

TABLE E103.3(1)
RECOMMENDED TABULAR ARRANGEMENT FOR USE IN SOLVING PIPE SIZING PROBLEMS

COLUMN	1		2	3	4	5	6	7	8	9	10
Line	Description		Lb per square inch (psi)	Gal. per min through section	Length of section (feet)	Trial pipe size (inches)	Equivalent length of fittings and valves (feet)	Total equivalent length col. 4 and col. 6 (100 feet)	Friction loss per 100 feet of trial size pipe (psi)	Friction loss in equivalent length col. 8 x col. 7 (psi)	Excess pressure over friction losses (psi)
A	Service and cold water distribution piping[a]	Minimum pressure available at main	55.00								
B		Highest pressure required at a fixture (Table 604.3)	15.00								
C		Meter loss 2″ meter	11.00								
D		Tap in main loss 2″ tap (Table E103A)	1.61								
E		Static head loss 21 × 43 psi	9.03								
F		Special fixture loss backflow preventer	9.00								
G		Special fixture loss—Filter	0.00								
H		Special fixture loss—Other	0.00								
I		Total overall losses and requirements (Sum of Lines B through H)	45.64								
J		Pressure available to overcome pipe friction (Line A minus Lines B to H)	9.36								
	DESIGNATION	FU	264								
	Pipe section (from diagram) Cold water Distribution piping	AB	288	108.0	54	$2^1/_2$	15.00	0.69	3.2	2.21	—
		BC	264	104.5	8	$2^1/_2$	0.5	0.85	3.1	0.26	—
		CD	132	77.0	13	$2^1/_2$	7.00	0.20	1.9	0.38	—
		CF[b]	132	77.0	150	$2^1/_2$	12.00	1.62	1.9	3.08	—
		DE[b]	132	77.0	150	$2^1/_2$	12.00	1.62	1.9	3.08	—
K	Total pipe friction losses (cold)			—	—	—	—	—	—	5.93	—
L	Difference (Line J minus Line K)			—	—	—	—	—	—	—	3.43
	Pipe section (from diagram) Diagram Hot water Distribution Piping	A′B′	288	108.0	54	$2^1/_2$	12.00	0.69	3.3	2.21	—
		B′C′	24	38.0	8	2	7.5	0.16	1.4	0.22	—
		C′D′	12	28.6	13	$1^1/_2$	4.0	0.17	3.2	0.54	—
		C′F′[b]	12	28.6	150	$1^1/_2$	7.00	1.57	3.2	5.02	—
		D′E′[b]	12	28.6	150	$1^1/_2$	7.00	1.57	3.2	5.02	—
K	Total pipe friction losses (hot)			—	—	—	—	—	—	7.99	—
L	Difference (Line J minus Line K)			—	—	—	—	—	—	—	1.37

For SI: 1 inch = 25.4 mm, 1 foot = 304.8 mm, 1 psi = 6.895 kPa, 1 gpm = 3.785 L/m.

a. To be considered as pressure gain for fixtures below main (to consider separately, omit from "I" and add to "J").

b. To consider separately, in K use C-F only if greater loss than above.

INTERNATIONAL CODE COUNCIL®
Copyright © 2015 ICC. ALL RIGHTS RESERVED. Accessed by David Dammon on Jun 21, 2017 12:30:52 PM pursuant to License Agreement with ICC. No further reproduction or distribution authorized. ANY UNAUTHORIZED REPRODUCTION OR DISTRIBUTION IS A VIOLATION OF THE FEDERAL COPYRIGHT ACT AND THE LICENSE AGREEMENT, AND SUBJECT TO CIVIL AND CRIMINAL PENALTIES THEREUNDER.

TABLE E103.3(2)
LOAD VALUES ASSIGNED TO FIXTURES[a]

FIXTURE	OCCUPANCY	TYPE OF SUPPLY CONTROL	LOAD VALUES, IN WATER SUPPLY FIXTURE UNITS (wsfu)		
			Cold	Hot	Total
Bathroom group	Private	Flush tank	2.7	1.5	3.6
Bathroom group	Private	Flushometer valve	6.0	3.0	8.0
Bathtub	Private	Faucet	1.0	1.0	1.4
Bathtub	Public	Faucet	3.0	3.0	4.0
Bidet	Private	Faucet	1.5	1.5	2.0
Combination fixture	Private	Faucet	2.25	2.25	3.0
Dishwashing machine	Private	Automatic	—	1.4	1.4
Drinking fountain	Offices, etc.	$^3/_8$″ valve	0.25	—	0.25
Kitchen sink	Private	Faucet	1.0	1.0	1.4
Kitchen sink	Hotel, restaurant	Faucet	3.0	3.0	4.0
Laundry trays (1 to 3)	Private	Faucet	1.0	1.0	1.4
Lavatory	Private	Faucet	0.5	0.5	0.7
Lavatory	Public	Faucet	1.5	1.5	2.0
Service sink	Offices, etc.	Faucet	2.25	2.25	3.0
Shower head	Public	Mixing valve	3.0	3.0	4.0
Shower head	Private	Mixing valve	1.0	1.0	1.4
Urinal	Public	1″ flushometer valve	10.0	—	10.0
Urinal	Public	$^3/_4$″ flushometer valve	5.0	—	5.0
Urinal	Public	Flush tank	3.0	—	3.0
Washing machine (8 lb)	Private	Automatic	1.0	1.0	1.4
Washing machine (8 lb)	Public	Automatic	2.25	2.25	3.0
Washing machine (15 lb)	Public	Automatic	3.0	3.0	4.0
Water closet	Private	Flushometer valve	6.0	—	6.0
Water closet	Private	Flush tank	2.2	—	2.2
Water closet	Public	Flushometer valve	10.0	—	10.0
Water closet	Public	Flush tank	5.0	—	5.0
Water closet	Public or private	Flushometer tank	2.0	—	2.0

For SI: 1 inch = 25.4 mm, 1 pound = 0.454 kg.

a. For fixtures not listed loads should be assumed by comparing the fixture to one listed using water in similar quantities and at similar rates. The assigned loads for fixtures with both hot and cold water supplies are given for separate hot and cold water loads and for total load. The separate hot and cold water loads being three-fourths of the total load for the fixture in each case.

INTERNATIONAL CODE COUNCIL®
Copyright © 2015 ICC. ALL RIGHTS RESERVED. Accessed by David Dammon on Jun 21, 2017 12:30:52 PM pursuant to License Agreement with ICC. No further reproduction or distribution authorized. ANY UNAUTHORIZED REPRODUCTION OR DISTRIBUTION IS A VIOLATION OF THE FEDERAL COPYRIGHT ACT AND THE LICENSE AGREEMENT, AND SUBJECT TO CIVIL AND CRIMINAL PENALTIES THEREUNDER.

TABLE E103.3(3)
TABLE FOR ESTIMATING DEMAND

SUPPLY SYSTEMS PREDOMINANTLY FOR FLUSH TANKS			SUPPLY SYSTEMS PREDOMINANTLY FOR FLUSHOMETER VALVES		
Load	Demand		Load	Demand	
(Water supply fixture units)	(Gallons per minute)	(Cubic feet per minute)	(Water supply fixture units)	(Gallons per minute)	(Cubic feet per minute)
1	3.0	0.04104	—	—	—
2	5.0	0.0684	—	—	—
3	6.5	0.86892	—	—	—
4	8.0	1.06944	—	—	—
5	9.4	1.256592	5	15.0	2.0052
6	10.7	1.430376	6	17.4	2.326032
7	11.8	1.577424	7	19.8	2.646364
8	12.8	1.711104	8	22.2	2.967696
9	13.7	1.831416	9	24.6	3.288528
10	14.6	1.951728	10	27.0	3.60936
11	15.4	2.058672	11	27.8	3.716304
12	16.0	2.13888	12	28.6	3.823248
13	16.5	2.20572	13	29.4	3.930192
14	17.0	2.27256	14	30.2	4.037136
15	17.5	2.3394	15	31.0	4.14408
16	18.0	2.90624	16	31.8	4.241024
17	18.4	2.459712	17	32.6	4.357968
18	18.8	2.513184	18	33.4	4.464912
19	19.2	2.566656	19	34.2	4.571856
20	19.6	2.620128	20	35.0	4.6788
25	21.5	2.87412	25	38.0	5.07984
30	23.3	3.114744	30	42.0	5.61356
35	24.9	3.328632	35	44.0	5.88192
40	26.3	3.515784	40	46.0	6.14928
45	27.7	3.702936	45	48.0	6.41664
50	29.1	3.890088	50	50.0	6.684
60	32.0	4.27776	60	54.0	7.21872
70	35.0	4.6788	70	58.0	7.75344
80	38.0	5.07984	80	61.2	8.181216
90	41.0	5.48088	90	64.3	8.595624
100	43.5	5.81508	100	67.5	9.0234
120	48.0	6.41664	120	73.0	9.75864
140	52.5	7.0182	140	77.0	10.29336
160	57.0	7.61976	160	81.0	10.82808
180	61.0	8.15448	180	85.5	11.42964
200	65.0	8.6892	200	90.0	12.0312
225	70.0	9.3576	225	95.5	12.76644
250	75.0	10.026	250	101.0	13.50168

(continued)

INTERNATIONAL CODE COUNCIL®
Copyright © 2015 ICC. ALL RIGHTS RESERVED. Accessed by David Dammon on Jun 21, 2017 12:30:52 PM pursuant to License Agreement with ICC. No further reproduction or distribution authorized. ANY UNAUTHORIZED REPRODUCTION OR DISTRIBUTION IS A VIOLATION OF THE FEDERAL COPYRIGHT ACT AND THE LICENSE AGREEMENT, AND SUBJECT TO CIVIL AND CRIMINAL PENALTIES THEREUNDER.

TABLE E103.3(3)-continued
TABLE FOR ESTIMATING DEMAND

SUPPLY SYSTEMS PREDOMINANTLY FOR FLUSH TANKS			SUPPLY SYSTEMS PREDOMINANTLY FOR FLUSHOMETER VALVES		
Load	Demand		Load	Demand	
(Water supply fixture units)	(Gallons per minute)	(Cubic feet per minute)	(Water supply fixture units)	(Gallons per minute)	(Cubic feet per minute)
275	80.0	10.6944	275	104.5	13.96956
300	85.0	11.3628	300	108.0	14.43744
400	105.0	14.0364	400	127.0	16.97736
500	124.0	16.57632	500	143.0	19.11624
750	170.0	22.7256	750	177.0	23.66136
1,000	208.0	27.80544	1,000	208.0	27.80544
1,250	239.0	31.94952	1,250	239.0	31.94952
1,500	269.0	35.95992	1,500	269.0	35.95992
1,750	297.0	39.70296	1,750	297.0	39.70296
2,000	325.0	43.446	2,000	325.0	43.446
2,500	380.0	50.7984	2,500	380.0	50.7984
3,000	433.0	57.88344	3,000	433.0	57.88344
4,000	525.0	70.182	4,000	525.0	70.182
5,000	593.0	79.27224	5,000	593.0	79.27224

For SI: 1 inch = 25.4 mm, 1 gallon per minute = 3.785 L/m, 1 cubic foot per minute = 0.28 m^3 per minute.

TABLE E103.3(4)
LOSS OF PRESSURE THROUGH TAPS AND TEES IN POUNDS PER SQUARE INCH (psi)

	SIZE OF TAP OR TEE (inches)						
GALLONS PER MINUTE	$^5/_8$	$^3/_4$	1	$1^1/_4$	$1^1/_2$	2	3
10	1.35	0.64	0.18	0.08	—	—	—
20	5.38	2.54	0.77	0.31	0.14	—	—
30	12.10	5.72	1.62	0.69	0.33	0.10	—
40	—	10.20	3.07	1.23	0.58	0.18	—
50	—	15.90	4.49	1.92	0.91	0.28	—
60	—	—	6.46	2.76	1.31	0.40	—
70	—	—	8.79	3.76	1.78	0.55	0.10
80	—	—	11.50	4.90	2.32	0.72	0.13
90	—	—	14.50	6.21	2.94	0.91	0.16
100	—	—	17.94	7.67	3.63	1.12	0.21
120	—	—	25.80	11.00	5.23	1.61	0.30
140	—	—	35.20	15.00	7.12	2.20	0.41
150	—	—	—	17.20	8.16	2.52	0.47
160	—	—	—	19.60	9.30	2.92	0.54
180	—	—	—	24.80	11.80	3.62	0.68
200	—	—	—	30.70	14.50	4.48	0.84
225	—	—	—	38.80	18.40	5.60	1.06
250	—	—	—	47.90	22.70	7.00	1.31
275	—	—	—	—	27.40	7.70	1.59
300	—	—	—	—	32.60	10.10	1.88

For SI: 1 inch = 25.4 mm, 1 pound per square inch = 6.895 kpa, 1 gallon per minute = 3.785 L/m.

INTERNATIONAL CODE COUNCIL®
Copyright © 2015 ICC. ALL RIGHTS RESERVED. Accessed by David Dammon on Jun 21, 2017 12:30:52 PM pursuant to License Agreement with ICC. No further reproduction or distribution authorized. ANY UNAUTHORIZED REPRODUCTION OR DISTRIBUTION IS A VIOLATION OF THE FEDERAL COPYRIGHT ACT AND THE LICENSE AGREEMENT, AND SUBJECT TO CIVIL AND CRIMINAL PENALTIES THEREUNDER.

TABLE E103.3(5)
ALLOWANCE IN EQUIVALENT LENGTHS OF PIPE FOR FRICTION LOSS IN VALVES AND THREADED FITTINGS (feet)

FITTING OR VALVE	PIPE SIZE (inches)							
	1/2	3/4	1	1 1/4	1 1/2	2	2 1/2	3
45-degree elbow	1.2	1.5	1.8	2.4	3.0	4.0	5.0	6.0
90-degree elbow	2.0	2.5	3.0	4.0	5.0	7.0	8.0	10.0
Tee, run	0.6	0.8	0.9	1.2	1.5	2.0	2.5	3.0
Tee, branch	3.0	4.0	5.0	6.0	7.0	10.0	12.0	15.0
Gate valve	0.4	0.5	0.6	0.8	1.0	1.3	1.6	2.0
Balancing valve	0.8	1.1	1.5	1.9	2.2	3.0	3.7	4.5
Plug-type cock	0.8	1.1	1.5	1.9	2.2	3.0	3.7	4.5
Check valve, swing	5.6	8.4	11.2	14.0	16.8	22.4	28.0	33.6
Globe valve	15.0	20.0	25.0	35.0	45.0	55.0	65.0	80.0
Angle valve	8.0	12.0	15.0	18.0	22.0	28.0	34.0	40.0

For SI: 1 inch = 25.4 mm, 1 foot = 304.8 mm, 1 degree = 0.0175 rad.

TABLE E103.3(6)
PRESSURE LOSS IN FITTINGS AND VALVES EXPRESSED AS EQUIVALENT LENGTH OF TUBE[a] (feet)

NOMINAL OR STANDARD SIZE (inches)	FITTINGS					VALVES			
	Standard Ell		90-Degree Tee						
	90 Degree	45 Degree	Side Branch	Straight Run	Coupling	Ball	Gate	Butterfly	Check
3/8	0.5	—	1.5	—	—	—	—	—	1.5
1/2	1	0.5	2	—	—	—	—	—	2
5/8	1.5	0.5	2	—	—	—	—	—	2.5
3/4	2	0.5	3	—	—	—	—	—	3
1	2.5	1	4.5	—	—	0.5	—	—	4.5
1 1/4	3	1	5.5	0.5	0.5	0.5	—	—	5.5
1 1/2	4	1.5	7	0.5	0.5	0.5	—	—	6.5
2	5.5	2	9	0.5	0.5	0.5	0.5	7.5	9
2 1/2	7	2.5	12	0.5	0.5	—	1	10	11.5
3	9	3.5	15	1	1	—	1.5	15.5	14.5
3 1/2	9	3.5	14	1	1	—	2	—	12.5
4	12.5	5	21	1	1	—	2	16	18.5
5	16	6	27	1.5	1.5	—	3	11.5	23.5
6	19	7	34	2	2	—	3.5	13.5	26.5
8	29	11	50	3	3	—	5	12.5	39

For SI: 1 inch = 25.4 mm, 1 foot = 304.8 mm, 1 degree = 0.01745 rad.

a. Allowances are for streamlined soldered fittings and recessed threaded fittings. For threaded fittings, double the allowances shown in the table. The equivalent lengths presented above are based on a C factor of 150 in the Hazen-Williams friction loss formula. The lengths shown are rounded to the nearest half-foot.

INTERNATIONAL CODE COUNCIL®
Copyright © 2015 ICC. ALL RIGHTS RESERVED. Accessed by David Dammon on Jun 21, 2017 12:30:52 PM pursuant to License Agreement with ICC. No further reproduction or distribution authorized. ANY UNAUTHORIZED REPRODUCTION OR DISTRIBUTION IS A VIOLATION OF THE FEDERAL COPYRIGHT ACT AND THE LICENSE AGREEMENT, AND SUBJECT TO CIVIL AND CRIMINAL PENALTIES THEREUNDER.

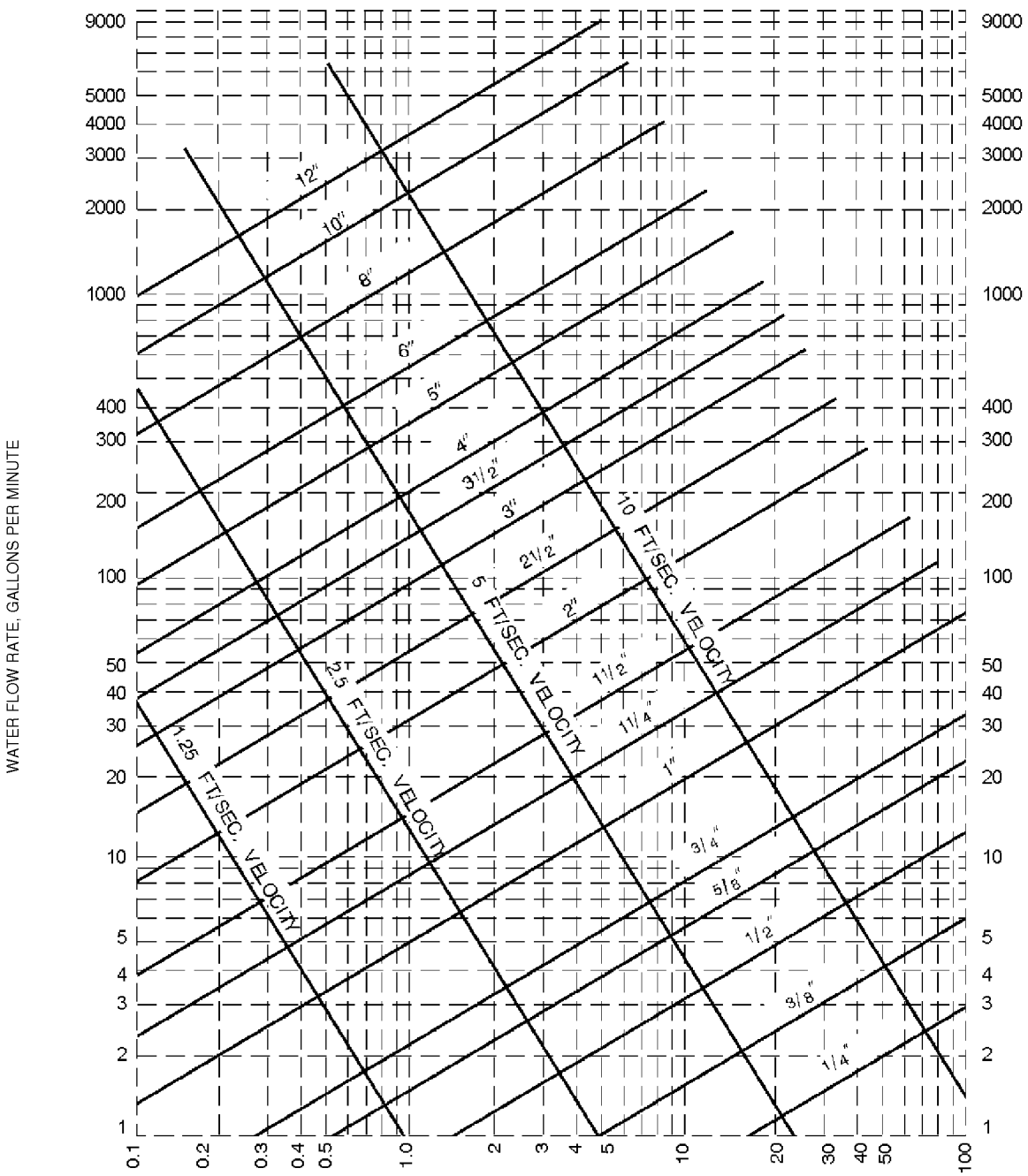

Note: Fluid velocities in excess of 5 to 8 feet/second are not usually recommended.

For SI: 1 inch = 25.4 mm, 1 foot = 304.8 mm, 1 gpm = 3.785 L/m, 1 psi = 6.895 kPa,1 foot per second = 0.305 m/s.

a. This chart applies to smooth new copper tubing with recessed (streamline) soldered joints and to the actual sizes of types indicated on the diagram.

FIGURE E103.3(2)
FRICTION LOSS IN SMOOTH PIPE[a] (TYPE K, ASTM B88 COPPER TUBING)

INTERNATIONAL CODE COUNCIL®
Copyright © 2015 ICC. ALL RIGHTS RESERVED. Accessed by David Dammon on Jun 21, 2017 12:30:52 PM pursuant to License Agreement with ICC. No further reproduction or distribution authorized. ANY UNAUTHORIZED REPRODUCTION OR DISTRIBUTION IS A VIOLATION OF THE FEDERAL COPYRIGHT ACT AND THE LICENSE AGREEMENT, AND SUBJECT TO CIVIL AND CRIMINAL PENALTIES THEREUNDER.

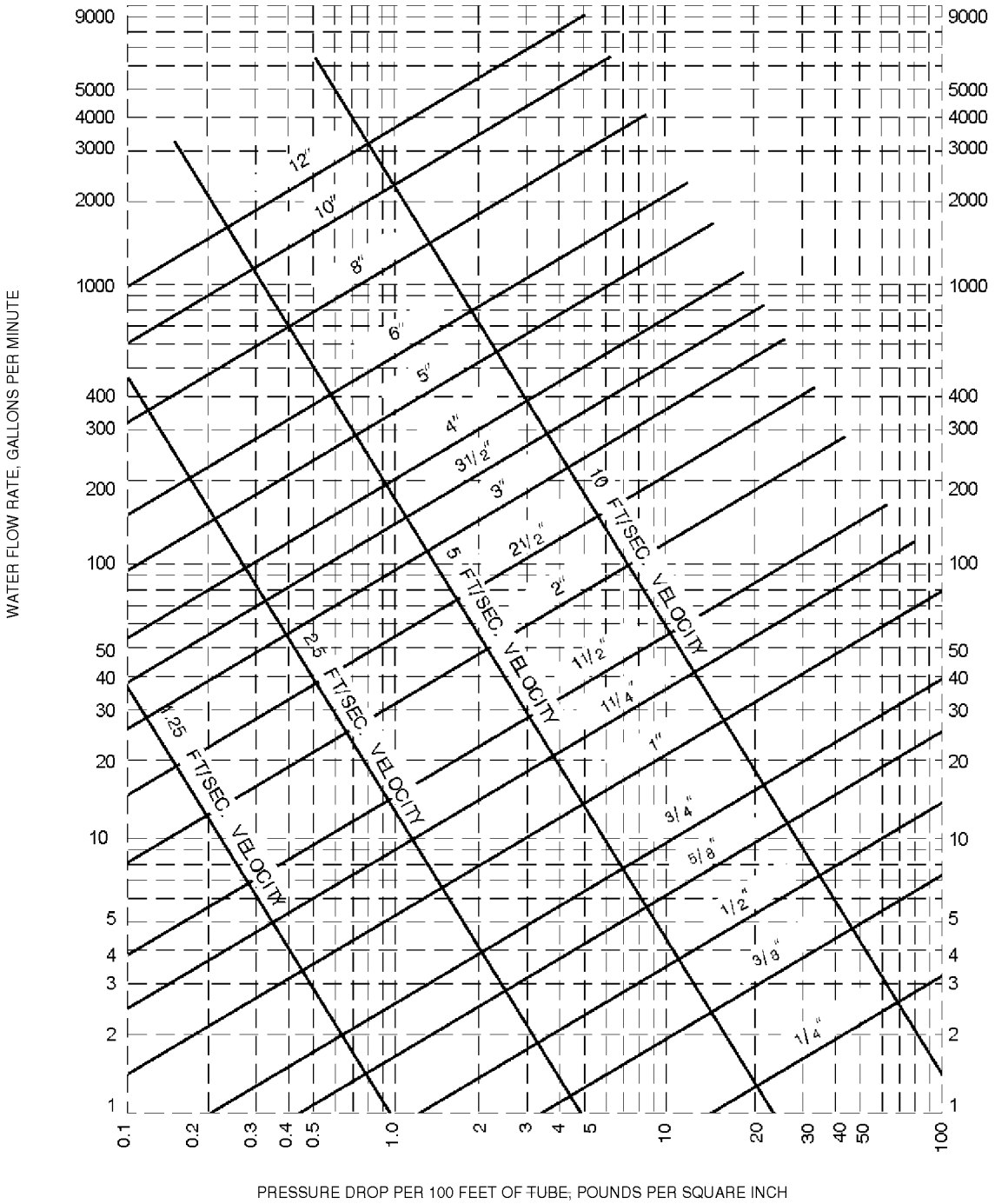

Note: Fluid velocities in excess of 5 to 8 feet/second are not usually recommended.

For SI: 1 inch = 25.4 mm, 1 foot = 304.8 mm, 1 gpm = 3.785 L/m, 1 psi = 6.895 kPa, 1 foot per second = 0.305 m/s.

a. This chart applies to smooth new copper tubing with recessed (streamline) soldered joints and to the actual sizes of types indicated on the diagram.

FIGURE E103.3(3)
FRICTION LOSS IN SMOOTH PIPE[a] (TYPE L, ASTM B88 COPPER TUBING)

INTERNATIONAL CODE COUNCIL®
Copyright © 2015 ICC. ALL RIGHTS RESERVED. Accessed by David Dammon on Jun 21, 2017 12:30:52 PM pursuant to License Agreement with ICC. No further reproduction or distribution authorized. ANY UNAUTHORIZED REPRODUCTION OR DISTRIBUTION IS A VIOLATION OF THE FEDERAL COPYRIGHT ACT AND THE LICENSE AGREEMENT, AND SUBJECT TO CIVIL AND CRIMINAL PENALTIES THEREUNDER.

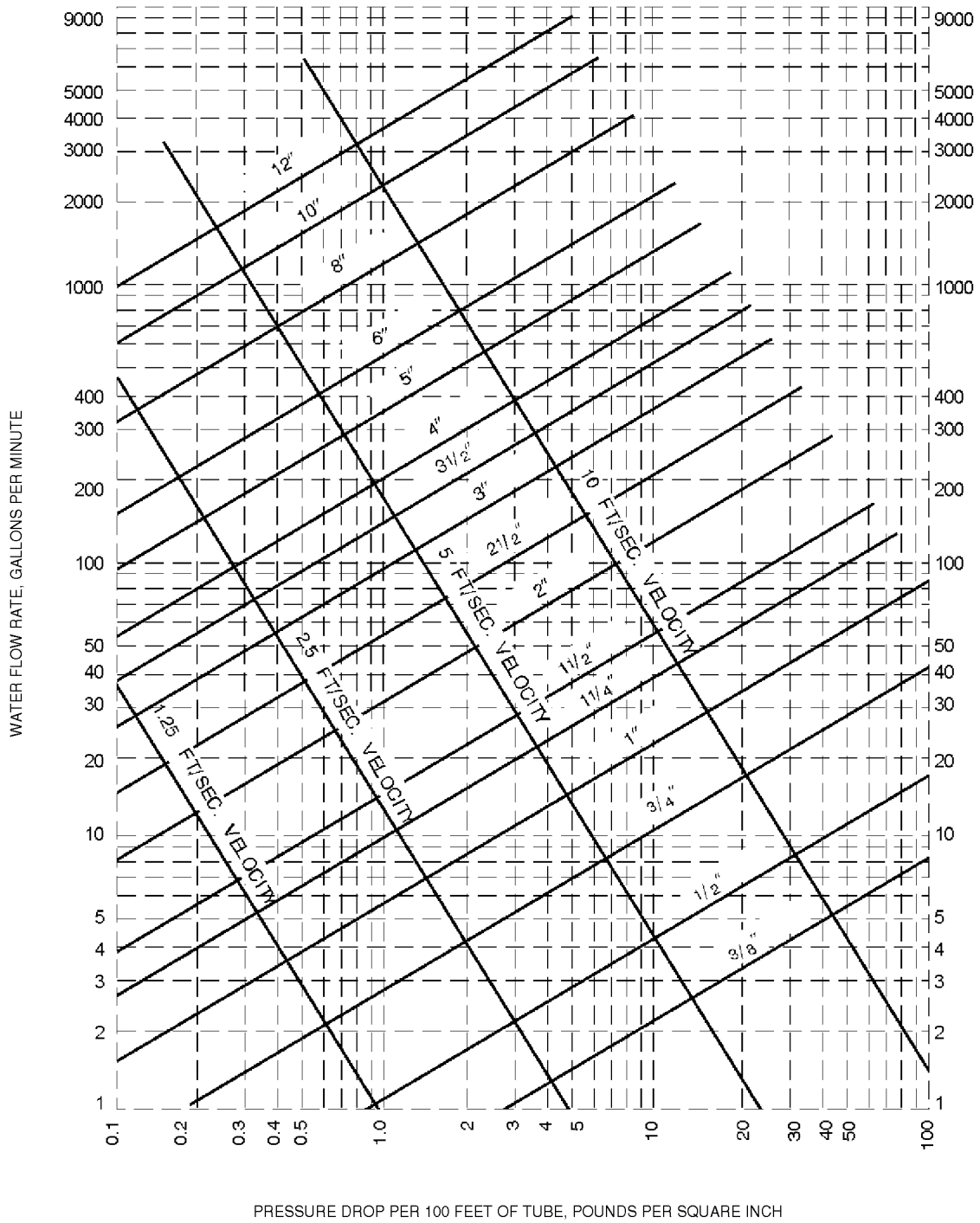

Note: Fluid velocities in excess of 5 to 8 feet/second are not usually recommended.

For SI: 1 inch = 25.4 mm, 1 foot = 304.8 mm, 1 gpm = 3.785 L/m, 1 psi = 6.895 kPa, 1 foot per second = 0.305 m/s.

a. This chart applies to smooth new copper tubing with recessed (streamline) soldered joints and to the actual sizes of types indicated on the diagram.

FIGURE E103.3(4)
FRICTION LOSS IN SMOOTH PIPE[a] (TYPE M, ASTM B88 COPPER TUBING)

INTERNATIONAL CODE COUNCIL®
Copyright © 2015 ICC. ALL RIGHTS RESERVED. Accessed by David Dammon on Jun 21, 2017 12:30:52 PM pursuant to License Agreement with ICC. No further reproduction or distribution authorized. ANY UNAUTHORIZED REPRODUCTION OR DISTRIBUTION IS A VIOLATION OF THE FEDERAL COPYRIGHT ACT AND THE LICENSE AGREEMENT, AND SUBJECT TO CIVIL AND CRIMINAL PENALTIES THEREUNDER.

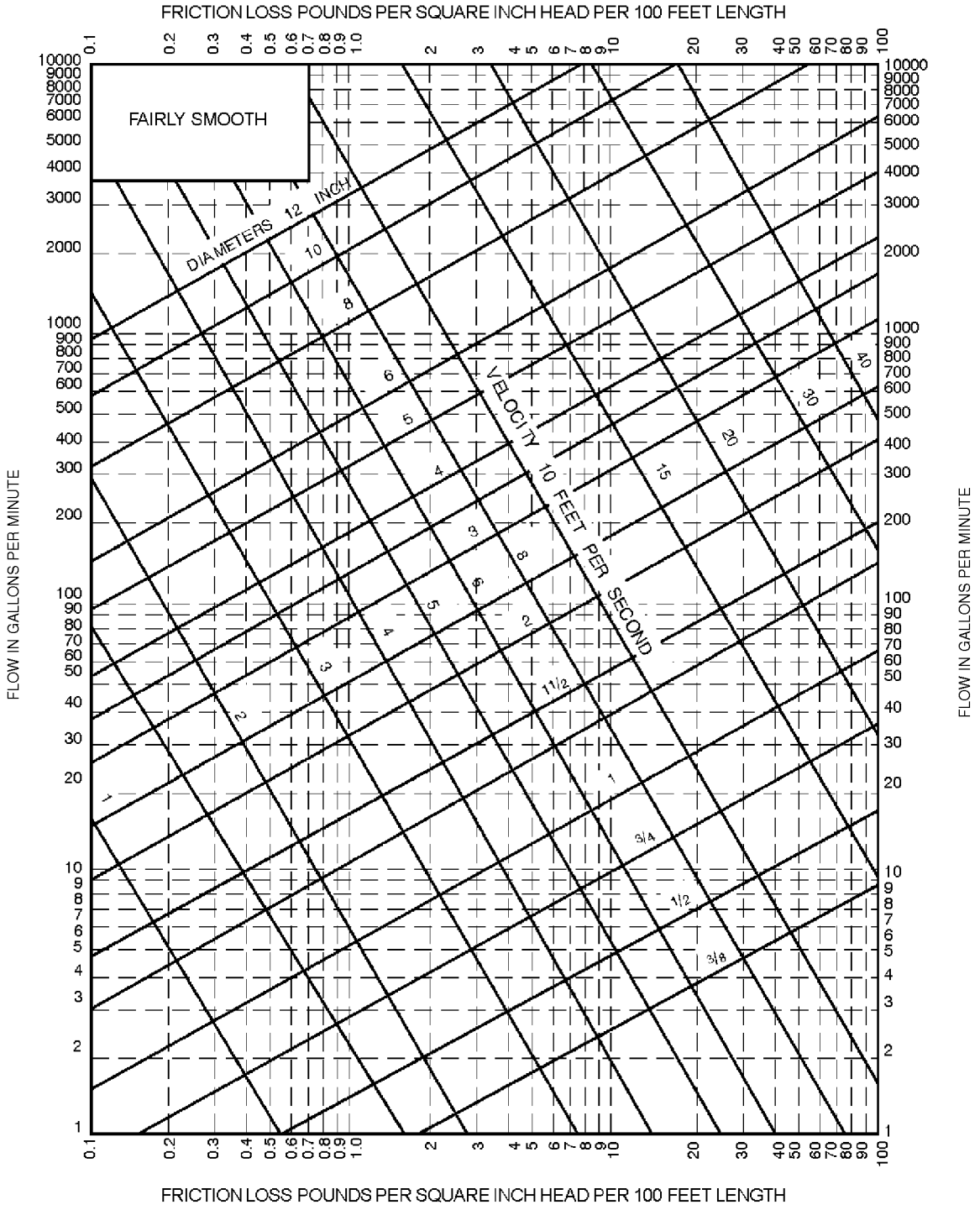

For SI: 1 inch = 25.4 mm, 1 foot = 304.8 mm, 1 gpm = 3.785 L/m, 1 psi = 6.895 kPa, 1 foot per second = 0.305 m/s.
a. This chart applies to smooth new steel (fairly smooth) pipe and to actual diameters of standard-weight pipe.

FIGURE E103.3(5)
FRICTION LOSS IN FAIRLY SMOOTH PIPE[a]

INTERNATIONAL CODE COUNCIL®
Copyright © 2015 ICC. ALL RIGHTS RESERVED. Accessed by David Dammon on Jun 21, 2017 12:30:52 PM pursuant to License Agreement with ICC. No further reproduction or distribution authorized. ANY UNAUTHORIZED REPRODUCTION OR DISTRIBUTION IS A VIOLATION OF THE FEDERAL COPYRIGHT ACT AND THE LICENSE AGREEMENT, AND SUBJECT TO CIVIL AND CRIMINAL PENALTIES THEREUNDER.

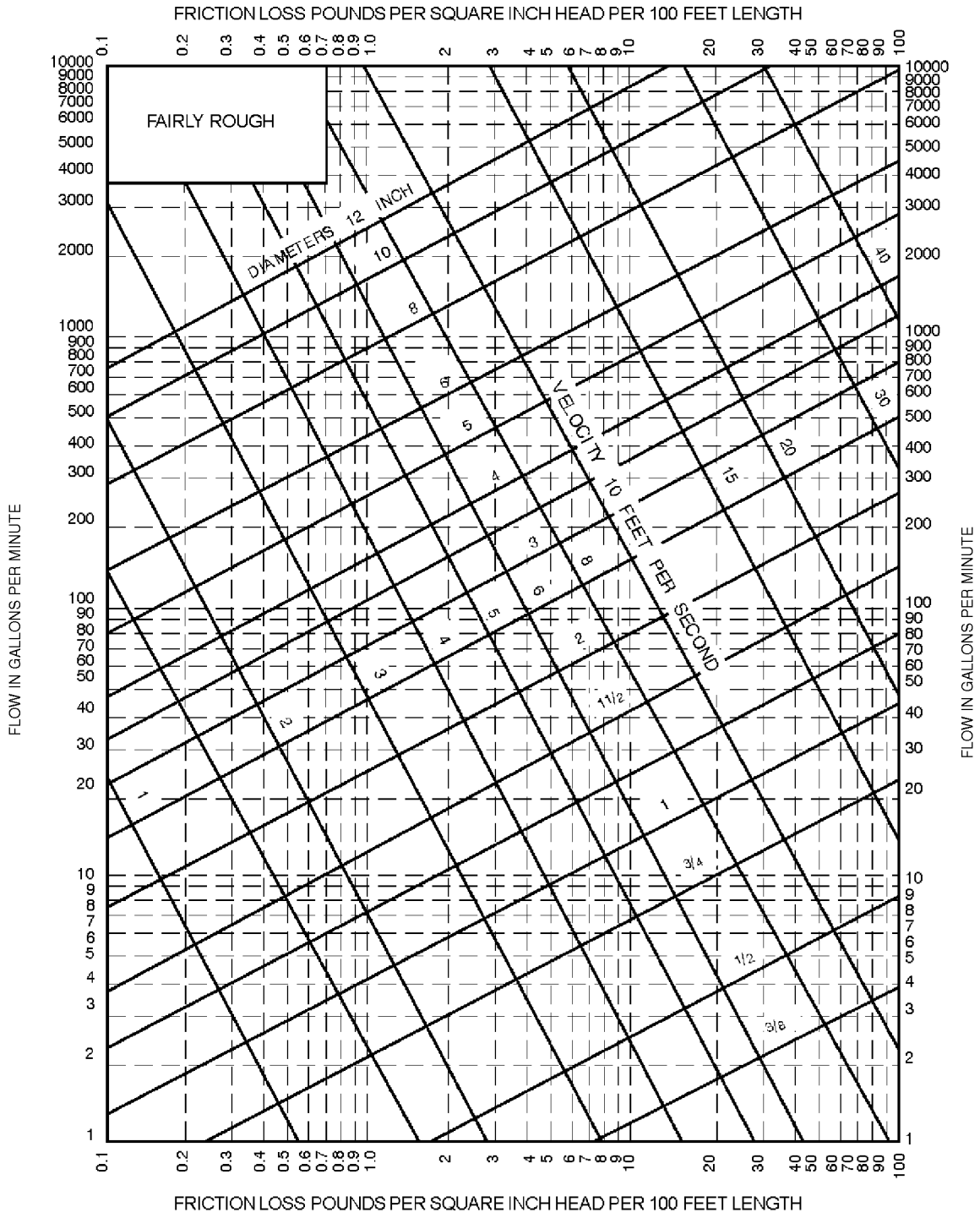

For SI: 1 inch = 25.4 mm, 1 foot = 304.8 mm, 1 gpm = 3.785 L/m, 1 psi = 6.895 kPa, 1 foot per second = 0.305 m/s.

a. This chart applies to fairly rough pipe and to actual diameters which in general will be less than the actual diameters of the new pipe of the same kind.

FIGURE E103.3(6)
FRICTION LOSS IN FAIRLY ROUGH PIPE[a]

INTERNATIONAL CODE COUNCIL®
Copyright © 2015 ICC. ALL RIGHTS RESERVED. Accessed by David Dammon on Jun 21, 2017 12:30:52 PM pursuant to License Agreement with ICC. No further reproduction or distribution authorized. ANY UNAUTHORIZED REPRODUCTION OR DISTRIBUTION IS A VIOLATION OF THE FEDERAL COPYRIGHT ACT AND THE LICENSE AGREEMENT, AND SUBJECT TO CIVIL AND CRIMINAL PENALTIES THEREUNDER.

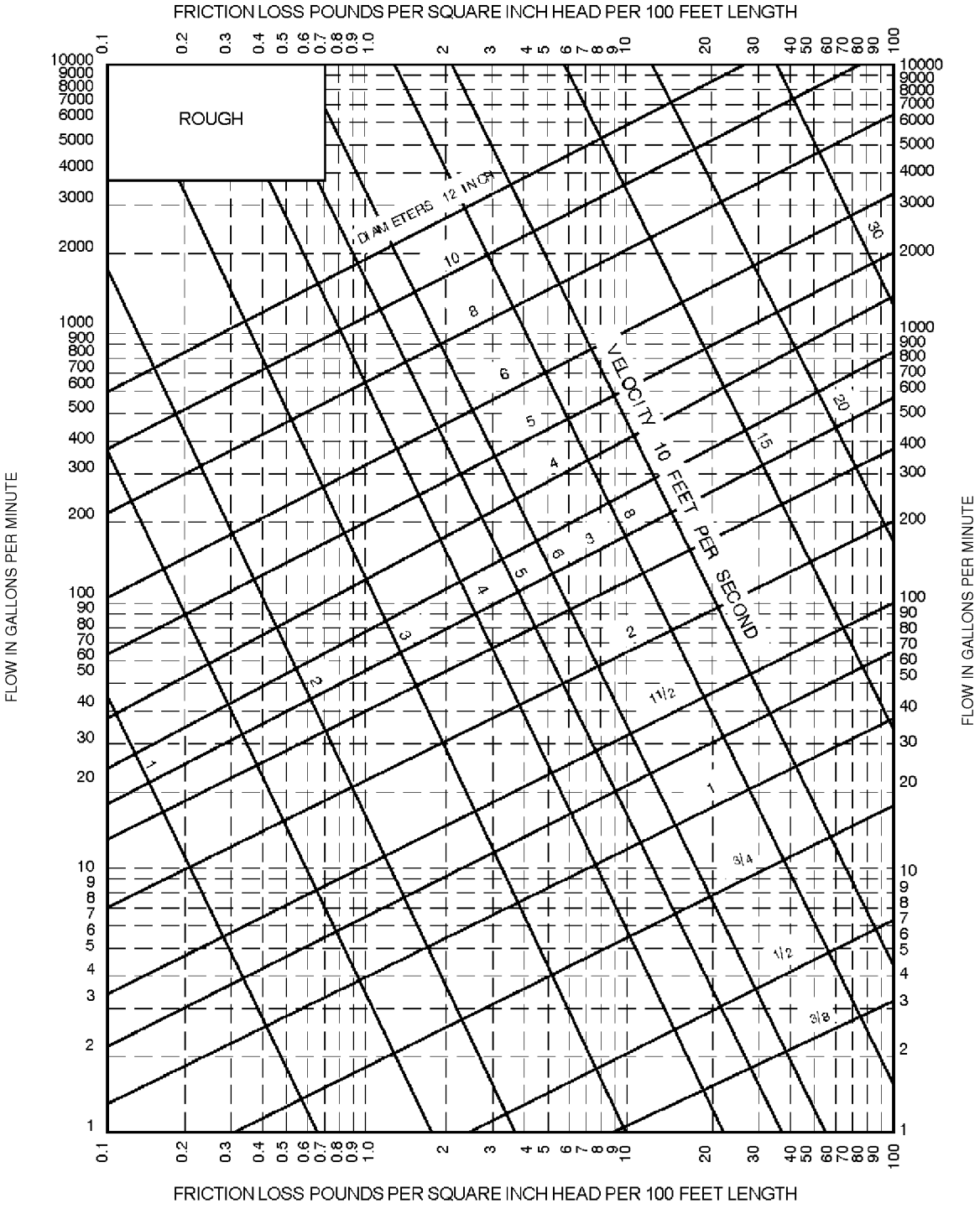

For SI: 1 inch = 25.4 mm, 1 foot = 304.8 mm, 1 gpm = 3.785 L/m, 1 psi = 6.895 kPa, 1 foot per second = 0.305 m/s.
a. This chart applies to very rough pipe and existing pipe and to their actual diameters.

FIGURE E103.3(7)
FRICTION LOSS IN ROUGH PIPE[a]

INTERNATIONAL CODE COUNCIL®
Copyright © 2015 ICC. ALL RIGHTS RESERVED. Accessed by David Dammon on Jun 21, 2017 12:30:52 PM pursuant to License Agreement with ICC. No further reproduction or distribution authorized. ANY UNAUTHORIZED REPRODUCTION OR DISTRIBUTION IS A VIOLATION OF THE FEDERAL COPYRIGHT ACT AND THE LICENSE AGREEMENT, AND SUBJECT TO CIVIL AND CRIMINAL PENALTIES THEREUNDER.

SECTION E201
SELECTION OF PIPE SIZE

E201.1 Size of water-service mains, branch mains and risers. The minimum size water service pipe shall be $^{3}/_{4}$ inch (19.1 mm). The size of water service mains, *branch* mains and risers shall be determined according to water supply demand [gpm (L/m)], available water pressure [psi (kPa)] and friction loss due to the water meter and *developed length* of pipe [feet (m)], including equivalent length of fittings. The size of each water distribution system shall be determined according to the procedure outlined in this section or by other design methods conforming to acceptable engineering practice and *approved* by the code official:

1. Supply load in the building water-distribution system shall be determined by total load on the pipe being sized, in terms of water-supply fixture units (w.s.f.u.), as shown in Table E103.3(2). For fixtures not listed, choose a w.s.f.u. value of a fixture with similar flow characteristics.
2. Obtain the minimum daily static service pressure [psi (kPa)] available (as determined by the local water authority) at the water meter or other source of supply at the installation location. Adjust this minimum daily static pressure [psi (kPa)] for the following conditions:
    2.1. Determine the difference in elevation between the source of supply and the highest water supply outlet. Where the highest water supply outlet is located above the source of supply, deduct 0.5 psi (3.4 kPa) for each foot (0.3 m) of difference in elevation. Where the highest water supply outlet is located below the source of supply, add 0.5 psi (3.4 kPa) for each foot (0.3 m) of difference in elevation.
    2.2. Where a water pressure reducing valve is installed in the water distribution system, the minimum daily static water pressure available is 80 percent of the minimum daily static water pressure at the source of supply or the set pressure downstream of the pressure reducing valve, whichever is smaller.
    2.3. Deduct all pressure losses due to special equipment such as a backflow preventer, water filter and water softener. Pressure loss data for each piece of equipment shall be obtained through the manufacturer of such devices.
    2.4. Deduct the pressure in excess of 8 psi (55 kPa) due to installation of the special plumbing fixture, such as temperature controlled shower and flushometer tank water closet. Using the resulting minimum available pressure, find the corresponding pressure range in Table E201.1.
3. The maximum *developed length* for water piping is the actual length of pipe between the source of supply and the most remote fixture, including either hot (through the water heater) or cold water branches multiplied by a factor of 1.2 to compensate for pressure loss through fittings. Select the appropriate column in Table E201.1 equal to or greater than the calculated maximum *developed length*.
4. To determine the size of water service pipe, meter and main distribution pipe to the building using the appropriate table, follow down the selected "maximum *developed length*" column to a fixture unit equal to, or greater than the total installation demand calculated by using the "combined" water supply fixture unit column of Table E103.3(2). Read the water service pipe and meter sizes in the first left-hand column and the main distribution pipe to the building in the second left-hand column on the same row.
5. To determine the size of each water distribution pipe, start at the most remote outlet on each *branch* (either hot or cold *branch*) and, working back toward the main distribution pipe to the building, add up the water supply fixture unit demand passing through each segment of the distribution system using the related hot or cold column of Table E103.3(2). Knowing demand, the size of each segment shall be read from the second left-hand column of the same table and maximum *developed length* column selected in Steps 1 and 2, under the same or next smaller size meter row. In no case does the size of any *branch* or main need to be larger that the size of the main distribution pipe to the building established in Step 4.

SECTION E202
DETERMINATION OF PIPE VOLUMES

E202.1 Determining volume of piping systems. Where required for engineering design purposes, Table E202.1 shall be used to determine the approximate internal volume of water distribution piping.

INTERNATIONAL CODE COUNCIL®
Copyright © 2015 ICC. ALL RIGHTS RESERVED. Accessed by David Dammon on Jun 21, 2017 12:30:52 PM pursuant to License Agreement with ICC. No further reproduction or distribution authorized. ANY UNAUTHORIZED REPRODUCTION OR DISTRIBUTION IS A VIOLATION OF THE FEDERAL COPYRIGHT ACT AND THE LICENSE AGREEMENT, AND SUBJECT TO CIVIL AND CRIMINAL PENALTIES THEREUNDER.

TABLE E201.1
MINIMUM SIZE OF WATER METERS, MAINS AND DISTRIBUTION PIPING
BASED ON WATER SUPPLY FIXTURE UNIT VALUES (w.s.f.u.)

METER AND SERVICE PIPE (inches)	DISTRIBUTION PIPE (inches)	MAXIMUM DEVELOPMENT LENGTH (feet)									
Pressure Range 30 to 39 psi		40	60	80	100	150	200	250	300	400	500
3/4	1/2[a]	2.5	2	1.5	1.5	1	1	0.5	0.5	0	0
3/4	3/4	9.5	7.5	6	5.5	4	3.5	3	2.5	2	1.5
3/4	1	32	25	20	16.5	11	9	7.8	6.5	5.5	4.5
1	1	32	32	27	21	13.5	10	8	7	5.5	5
3/4	1 1/4	32	32	32	32	30	24	20	17	13	10.5
1	1 1/4	80	80	70	61	45	34	27	22	16	12
1 1/2	1 1/4	80	80	80	75	54	40	31	25	17.5	13
1	1 1/2	87	87	87	87	84	73	64	56	45	36
1 1/2	1 1/2	151	151	151	151	117	92	79	69	54	43
2	1 1/2	151	151	151	151	128	99	83	72	56	45
1	2	87	87	87	87	87	87	87	87	87	86
1 1/2	2	275	275	275	275	258	223	196	174	144	122
2	2	365	365	365	365	318	266	229	201	160	134
2	2 1/2	533	533	533	533	533	495	448	409	353	311

METER AND SERVICE PIPE (inches)	DISTRIBUTION PIPE (inches)	MAXIMUM DEVELOPMENT LENGTH (feet)									
Pressure Range 40 to 49 psi		40	60	80	100	150	200	250	300	400	500
3/4	1/2[a]	3	2.5	2	1.5	1.5	1	1	0.5	0.5	0.5
3/4	3/4	9.5	9.5	8.5	7	5.5	4.5	3.5	3	2.5	2
3/4	1	32	32	32	26	18	13.5	10.5	9	7.5	6
1	1	32	32	32	32	21	15	11.5	9.5	7.5	6.5
3/4	1 1/4	32	32	32	32	32	32	32	27	21	16.5
1	1 1/4	80	80	80	80	65	52	42	35	26	20
1 1/2	1 1/4	80	80	80	80	75	59	48	39	28	21
1	1 1/2	87	87	87	87	87	87	87	78	65	55
1 1/2	1 1/2	151	151	151	151	151	130	109	93	75	63
2	1 1/2	151	151	151	151	151	139	115	98	77	64
1	2	87	87	87	87	87	87	87	87	87	87
1 1/2	2	275	275	275	275	275	275	264	238	198	169
2	2	365	365	365	365	365	349	304	270	220	185
2	2 1/2	533	533	533	533	533	533	533	528	456	403

(continued)

INTERNATIONAL CODE COUNCIL®
Copyright © 2015 ICC. ALL RIGHTS RESERVED. Accessed by David Dammon on Jun 21, 2017 12:30:52 PM pursuant to License Agreement with ICC. No further reproduction or distribution authorized. ANY UNAUTHORIZED REPRODUCTION OR DISTRIBUTION IS A VIOLATION OF THE FEDERAL COPYRIGHT ACT AND THE LICENSE AGREEMENT, AND SUBJECT TO CIVIL AND CRIMINAL PENALTIES THEREUNDER.

TABLE E201.1—continued
MINIMUM SIZE OF WATER METERS, MAINS AND DISTRIBUTION PIPING
BASED ON WATER SUPPLY FIXTURE UNIT VALUES (w.s.f.u.)

METER AND SERVICE PIPE (inches)	DISTRIBUTION PIPE (inches)	MAXIMUM DEVELOPMENT LENGTH (feet)									
Pressure Range 50 to 60 psi		40	60	80	100	150	200	250	300	400	500
3/4	1/2 [a]	3	3	2.5	2	1.5	1	1	1	0.5	0.5
3/4	3/4	9.5	9.5	9.5	8.5	6.5	5	4.5	4	3	2.5
3/4	1	32	32	32	32	25	18.5	14.5	12	9.5	8
1	1	32	32	32	32	30	22	16.5	13	10	8
3/4	1 1/4	32	32	32	32	32	32	32	32	29	24
1	1 1/4	80	80	80	80	80	68	57	48	35	28
1 1/2	1 1/4	80	80	80	80	80	75	63	53	39	29
1	1 1/2	87	87	87	87	87	87	87	87	82	70
1 1/2	1 1/2	151	151	151	151	151	151	139	120	94	79
2	1 1/2	151	151	151	151	151	151	146	126	97	81
1	2	87	87	87	87	87	87	87	87	87	87
1 1/2	2	275	275	275	275	275	275	275	275	247	213
2	2	365	365	365	365	365	365	365	329	272	232
2	2 1/2	533	533	533	533	533	533	533	533	533	486

METER AND SERVICE PIPE (inches)	DISTRIBUTION PIPE (inches)	MAXIMUM DEVELOPMENT LENGTH (feet)									
Pressure Range Over 60		40	60	80	100	150	200	250	300	400	500
3/4	1/2 [a]	3	3	3	2.5	2	1.5	1.5	1	1	0.5
3/4	3/4	9.5	9.5	9.5	9.5	7.5	6	5	4.5	3.5	3
3/4	1	32	32	32	32	32	24	19.5	15.5	11.5	9.5
1	1	32	32	32	32	32	28	28	17	12	9.5
3/4	1 1/4	32	32	32	32	32	32	32	32	32	30
1	1 1/4	80	80	80	80	80	80	69	60	46	36
1 1/2	1 1/4	80	80	80	80	80	80	76	65	50	38
1	1 1/2	87	87	87	87	87	87	87	87	87	84
1 1/2	1 1/2	151	151	151	151	151	151	151	144	114	94
2	1 1/2	151	151	151	151	151	151	151	151	118	97
1	2	87	87	87	87	87	87	87	87	87	87
1 1/2	2	275	275	275	275	275	275	275	275	275	252
2	2	365	368	368	368	368	368	368	368	318	273
2	2 1/2	533	533	533	533	533	533	533	533	533	533

For SI: 1 inch = 25.4, 1 foot = 304.8 mm.
a. Minimum size for building supply is 3/4-inch pipe.

INTERNATIONAL CODE COUNCIL®
Copyright © 2015 ICC. ALL RIGHTS RESERVED. Accessed by David Dammon on Jun 21, 2017 12:30:52 PM pursuant to License Agreement with ICC. No further reproduction or distribution authorized. ANY UNAUTHORIZED REPRODUCTION OR DISTRIBUTION IS A VIOLATION OF THE FEDERAL COPYRIGHT ACT AND THE LICENSE AGREEMENT, AND SUBJECT TO CIVIL AND CRIMINAL PENALTIES THEREUNDER.

TABLE E202.1
INTERNAL VOLUME OF VARIOUS WATER DISTRIBUTION TUBING

OUNCES OF WATER PER FOOT OF TUBE							
Size Nominal, Inch	Copper Type M	Copper Type L	Copper Type K	CPVC CTS SDR 11	CPVC SCH 40	Composite ASTM F1281	PEX CTS SDR 9
3/8	1.06	0.97	0.84	N/A	1.17	0.63	0.64
1/2	1.69	1.55	1.45	1.25	1.89	1.31	1.18
3/4	3.43	3.22	2.90	2.67	3.38	3.39	2.35
1	5.81	5.49	5.17	4.43	5.53	5.56	3.91
1 1/4	8.70	8.36	8.09	6.61	9.66	8.49	5.81
1 1/2	12.18	11.83	11.45	9.22	13.20	13.88	8.09
2	21.08	20.58	20.04	15.79	21.88	21.48	13.86

For SI: 1 ounce = 0.030 liter.

INTERNATIONAL CODE COUNCIL®
Copyright © 2015 ICC. ALL RIGHTS RESERVED. Accessed by David Dammon on Jun 21, 2017 12:30:52 PM pursuant to License Agreement with ICC. No further reproduction or distribution authorized. ANY UNAUTHORIZED REPRODUCTION OR DISTRIBUTION IS A VIOLATION OF THE FEDERAL COPYRIGHT ACT AND THE LICENSE AGREEMENT, AND SUBJECT TO CIVIL AND CRIMINAL PENALTIES THEREUNDER.

INTERNATIONAL CODE COUNCIL®
Copyright © 2015 ICC. ALL RIGHTS RESERVED. Accessed by David Dammon on Jun 21, 2017 12:30:52 PM pursuant to License Agreement with ICC. No further reproduction or distribution authorized. ANY UNAUTHORIZED REPRODUCTION OR DISTRIBUTION IS A VIOLATION OF THE FEDERAL COPYRIGHT ACT AND THE LICENSE AGREEMENT, AND SUBJECT TO CIVIL AND CRIMINAL PENALTIES THEREUNDER.

INDEX

A

ABS PIPE
Approved standards . . . . . Table 605.3, Table 605.5, Table 702.1, Table 702.2, Table 702.3, Table 702.4, Table 1102.4, Table 1102.7
Support . . . . . .Table 308.5
ACCESS TO
Air admittance valve 918.5
Appliances 502.5
Backflow preventers 608.14
Backwater valve 715.5
Cleanouts . . . 708.1.10, 708.4, 708.9, 1103.4, 1301.8
Filters 1302.5, 1302.9, 1303.8, 1303.12
Fixtures 405.2
Flexible water connectors 605.6
Floor drain 412.2
Flush tank components 425.3.4
Grease removal devices 1003.3.5
Interceptors and separators 1003.5, 1003.10
Manifolds 604.10.3
Piping 422.5, 422.9.1
Plumbing fixtures 405.2
Pumps 602.3.5, 1302.9, 1302.12
Reservoir or interior 1301.9.7
Roof washers 1303.4
Shower compartment 417.4.2
Slip joints 405.8
Standpipes 802.3.3
Sump 712.3.2
Vacuum breakers 425.2
Vacuum station 713.4
Valves 503.1, 604.11, 606.3, 712.2, 715.5, 918.5, 1302.8.1, 1302.9, 1303.12
Waste receptors 802.3
Water heaters 502.3, 502.5
Whirlpool pump 421.5
ACCESSIBLE PLUMBING FACILITIES
Clearances 404.2
Protection required 404.3
Route 403.5
Signs 403.4
Where required 404.1
ADMINISTRATION
Applicability 102
Approval 105, 106.5.7, 107.5
Inspections 107
Intent 101.3, 109.1
Maintenance 102.3
Means of appeal 109
Scope 101.2
Validity 106.5.2
Violations 108
AIR ADMITTANCE VALVES
Chemical waste 901.3
Definition 202
Where permitted 903.4, 905.1, 917.6, 918
AIR BREAK
Definition 202
Method of providing 802.1.5, 802.1.6, 802.1.7, 802.1.8, 802.2
Required 406.2, 802.1.2, 802.1.5, 802.3.3
AIR GAP
Annual inspection of 312.10.1
Application of . . . . . Table 608.1
Bidet 408.2
Clothes washer 406.1
Definition 202
Dishwasher 409.2
Method of providing 608.15.1, 802.2.1
Required 413.4, 414.1, 506.4, 606.5.6, 608.3.1, 608.9, 608.13.1, 608.13.3, 608.13.9, 608.14.2.1, 608.15.1, 608.16.1, 608.16.2, 608.16.4.1, 608.16.10, 609.7, 611.2, 713.3, 802.1, 802.1.1, 802.1.2, 802.1.3, 802.1.4, 802.1.5, 802.1.6, 802.1.7, 802.1.8, 802.2, 802.2.1
AIR TEST 312.3, 312.5, 312.8
ALTERNATIVE ENGINEERED DESIGN
Definition 202
Requirements for 316
Special inspections of 107.3
ALTERNATE ON-SITE NONPOTABLE WATER
Definition 202
ALTERATIONS AND REPAIRS . . . 102.4, 307.4, 612.1
ALTERNATIVE MATERIALS AND EQUIPMENT 105.2
APPROVED
Definition 202
ATMOSPHERIC VACUUM BREAKER . . . . . 424.8, Table 608.1, 608.13.6, 608.15.4, 608.15.4.2, 608.16.4.1, 608.16.5
AUTOMATIC CLOTHES WASHER . . . . . 301.3, Table 403.1, 406, 412.4, 608.15.4.2, Table 709.1, 1002.4, 1003.6, 1302.2

INTERNATIONAL CODE COUNCIL®
Copyright © 2015 ICC. ALL RIGHTS RESERVED. Accessed by David Dammon on Jun 21, 2017 12:30:52 PM pursuant to License Agreement with ICC. No further reproduction or distribution authorized. ANY UNAUTHORIZED REPRODUCTION OR DISTRIBUTION IS A VIOLATION OF THE FEDERAL COPYRIGHT ACT AND THE LICENSE AGREEMENT, AND SUBJECT TO CIVIL AND CRIMINAL PENALTIES THEREUNDER.

B

BACKFILLING 306.3
BACKFLOW PREVENTER
Definition 202
Required 608.1
Standards . . . . . Table 608.1
Testing 312.10.2
BACKFLOW PROTECTION 608.1
BACKWATER VALVES
Where required 715
BALL COCK (see FILL VALVE)
BAROMETRIC LOOP 608.13.4
BATHTUBS 407
BEDPAN STEAMERS 202
BEDPAN WASHERS 202
BIDETS 408
BOOSTER SYSTEM 606.5
BOTTLING ESTABLISHMENT 1003.7
BRASS PIPE
Approved standards . . . . . Table 605.3, Table 605.4, Table 605.8, Table 702.1
BUILDING DRAIN
Branches of . . . . . Table 710.1(2)
Definition 202
Material . . . . . Table 702.1, Table 702.2
Sizing . . . . . Table 710.1(1)
BUILDING DRAINAGE SYSTEMS
Below sewer level 712.1
BUILDING SEWER
Definition 202
Material . . . . . Table 702.3
Sizing . . . . . Table 710.1(1)
BUILDING SYSTEMS
Connection to public sewer 701.2
BUILDING TRAPS 1002.6

C

CAST-IRON PIPE
Approved standards . . . . . Table 702.1, Table 702.2, Table 702.3, Table 702.4
CAULKING FERRULES 705.18
CHANGE IN DIRECTION OF DRAINAGE PIPING . . . . . Table 706.3
CHEMICAL WASTE
Exclusion from the sewer 803.2
Neutralizing 803.1
Requirements 702.6
System venting 901.3
CIRCUIT VENT 914
CIRCULATING HOT WATER SYSTEM 202
CLAY PIPE . . . . . Table 702.3
CLEANOUTS
Building drain 708.3.1.1
Change of direction 708.1.4
Clearances 708.1.9
Condensate drain 314.2.5
Definition 202
Direction of flow 708.1.8
Floor accessed 708.1.10.2
Horizontal drains 708.1.1
Location of 708.1.10
Manholes 708.1.1, 708.1.2, 708.1.7
On stacks 708.1.5
Plugs, materials for 708.1.6
Prohibited use of 708.1.11
Sewers 708.1.2
Size 708.1.5
Trim covers for plugs 708.1.10.1
Where required 708.1
CLEARANCES 502.5
CLEAR WATER WASTE 802.1.5
CODE OFFICIAL
Application for permit 106.3
Appointment 103.2
Definition 202
Department records 104.7
Duties and powers 104
General 104.1
Identification 104.5
Inspections 107
COLLECTION PIPE 202
COMBINATION WASTE AND VENT SYSTEM . . . 915
COMBINED BUILDING DRAIN 202
COMMON VENT 202, 911
COMPARTMENTS 405.3.1, 405.3.4
CONCRETE PIPE
Where permitted . . . . . Table 702.3
CONDENSATE DRAINS
Cleanouts 314.2.5
Piping material 314.2.2
Mini-split systems 314.2.4.1
Traps 314.2.4
CONDUCTOR 202
CONFLICTS 301.7
CONNECTION TO PLUMBING SYSTEM REQUIRED 701.2
CONNECTIONS TO SUMPS AND EJECTORS
Below sewer level 712.1

INTERNATIONAL CODE COUNCIL®
Copyright © 2015 ICC. ALL RIGHTS RESERVED. Accessed by David Dammon on Jun 21, 2017 12:30:52 PM pursuant to License Agreement with ICC. No further reproduction or distribution authorized. ANY UNAUTHORIZED REPRODUCTION OR DISTRIBUTION IS A VIOLATION OF THE FEDERAL COPYRIGHT ACT AND THE LICENSE AGREEMENT, AND SUBJECT TO CIVIL AND CRIMINAL PENALTIES THEREUNDER.

CONSERVATION, WATER AND ENERGY
Fixtures 604.4
Flow rates . . . . . .Table 604.3
Insulation 505, 607.5
CONSTRUCTION DOCUMENTS 106.3.1
CONTROLLED FLOW STORM DRAINAGE 1110
COPPER OR COPPER-ALLOY PIPE OR TUBING
Approved standards . . . . . Table 605.3, Table 605.4
CPVC PIPE OR TUBING
Approved standards . . . . . Table 605.3, Table 605.4
CROSS CONNECTIONS 608
CUTTING OR NOTCHING, STRUCTURAL MEMBERS . . . . . .307.2, 307.4, Appendix C

D

DEMAND RECIRCULATION WATER SYSTEM
Definition 202
Controls 607.2.1.2
DESIGN PROFESSIONAL 105.4.2, 105.4.3, 105.4.4, 105.4.5, 107.2.2, 109.2.1
DETRIMENTAL WASTES 302
DISHWASHING MACHINE 409
DISINFECTION OF POTABLE WATER SYSTEM 610
DISTANCE OF TRAP FROM VENT . . . . . Table 909.1
DISTRIBUTION SYSTEM (See WATER)
DRAIN
Roof 1105
Storm 1106
DRAINAGE FIXTURE UNITS
Definition 202
Values for continuous flow 709.3
Values for fixtures . . . . . .Table 709.1
DRAINAGE SYSTEM
Connection to sewer or private disposal system 701.2
Determining size 710.1
Fixture units . . . . . .Table 709.1
Indirect waste 802
Joints 705
Materials 702
Material detrimental to 302
Obstructions 706.2
Offset sizing 711
Provisions for future fixtures 710.2
Sizing . . . . . .Table 710.1(1), Table 710.1(2)
Slope of piping . . . . . .Table 704.1
Sumps and ejectors 712
Testing 312
DRINKING FOUNTAINS
Accessibility requirements 410.3
Approvals 410.1
Definition 202
Location 403.5
Number required . . . . . Table 403.1
Prohibited location 410.5
Small occupancies 410.2
Substitution for 410.4

E

EJECTORS 712
EJECTOR CONNECTION 712.3.5
ELEVATOR SHAFT 301.6
EMPLOYEE FACILITIES 403.3
ENGINEERED DESIGN, ALTERNATIVE 316
EXCAVATION 306
EXISTING BUILDING PLUMBING SYSTEMS 102.2

F

FACILITIES, TOILET 403
FAMILY AND ASSISTED USE 403.1.2, 403.2.1
FAUCETS 424
FEES 106.6
FERRULES (See CAULKING FERRULES)
FILL VALVE 425.3.1
FITTINGS
Drainage system 706
Approved standards . . . . . Table 605.5, Table 702.4
FIXTURE CALCULATIONS 403.1.1
FIXTURE FITTINGS 424
FIXTURE LOCATION 405.3.1
FIXTURE TRAPS 1002
Acid-resisting 1002.9
Building 1002.6
Design of 1002.2
For each fixture 1002.1
Prohibited 1002.3
Seals 1002.4
Seal protection 1002.4.1
Setting and protection 1002.7
Size 1002.5
FIXTURE UNITS, DRAINAGE
Definition 202
Values for continuous flow 709.3
Values for fixtures . . . . . 709.1, Table 709.1
FIXTURES (See PLUMBING FIXTURES)

INTERNATIONAL CODE COUNCIL®
Copyright © 2015 ICC. ALL RIGHTS RESERVED. Accessed by David Dammon on Jun 21, 2017 12:30:52 PM pursuant to License Agreement with ICC. No further reproduction or distribution authorized. ANY UNAUTHORIZED REPRODUCTION OR DISTRIBUTION IS A VIOLATION OF THE FEDERAL COPYRIGHT ACT AND THE LICENSE AGREEMENT, AND SUBJECT TO CIVIL AND CRIMINAL PENALTIES THEREUNDER.

FLOOD LEVEL RIM 202
FLOOD-RESISTANT CONSTRUCTION
Design flood elevation 202
Flood hazard area 202
Flood hazard resistance 309
FLOOR DRAINS. . . . . 412, Table 709.1
FLOOR DRAINS, EMERGENCY . . . . 202, Table 709.1
FLOOR FLANGES 405.4.1, 405.4.2
FLOW RATES. . . . . 604.3, Table 604.3, Table 604.4, 604.10
FLUSHING DEVICES
Dual 420.1
Flush tanks 425.3, 604.3, 604.5
Flushometer tanks 425.2, 604.3, 604.5
Flushometer valves 425.2, 604.3, 604.5
Required 425
FOOD HANDLING DRAINAGE 802.1.1, 802.1.8
FOOD WASTE DISPOSER 413
FOOTBATHS 423.3
FOOTINGS, PROTECTION OF 307.5
FREEZING, PROTECTION OF BACKFLOW DEVICES 608.14.2
FREEZING, PROTECTION OF PIPES. 305.4
FROST CLOSURE 903.2
FUTURE FIXTURES. 704.4

G

GALVANIZED STEEL PIPE . . . . . Table 605.3, Table 605.4, 605.18
GARBAGE CAN WASHERS 414
GARBAGE DISPOSALS (See FOOD WASTE DISPOSER)
GENERAL REGULATIONS 301
Conflicts 301.7
Connection to plumbing system. 301.3
Connection to public water and sewer . . 301.3, 301.4
Elevator machinery rooms 301.6
Health and safety . . . 108.7, 108.7.1, 108.7.2, 108.7.3
Materials detrimental 302, 302.1, 302.2
Piping sizes indicated 301.5
Protection of pipes 305
Rodentproofing 304, 304.1, 304.2, 304.3, 304.4
Sleeves 305.3
Strains and stresses in pipe. 305.2
Toilet facilities for workers 311
Trenching, excavation and backfill. 306
Washroom requirements 310
GRAY WATER (See also ALTERNATE ON-SITE NONPOTABLE WATER)
Definition 202
Color of distribution piping 608.8.2.1
Flushing 1302.6.1
Subsurface irrigation 1402.1
Trap priming 1002.4.1.2
GREASE INTERCEPTORS 202, 1003
Approved standards 1003.3.4, 1003.3.6
Capacity . . . . . Table 1003.3.4.1, 1003.4.2.1, 1003.4.2.2
Discharge 1003.3.7
Gravity-type 1003.3.6
Hydromechanical-type 1003.3.4
Not required 1003.3.3
Required. 1003.1
GUTTERS . . . . . 1106.6, Table 1106.6

H

HANGERS AND SUPPORTS
Attachment to buildings 308.4
Definitions 202
Material 308.3
Seismic. 308.2
Spacing . . . . . Table 308.5
HEALTH AND SAFETY 101.3
HEALTH CARE PLUMBING. 422, 609, 713
HEAT EXCHANGERS. 608.16.3
HORIZONTAL PIPE
Definition 202
Slope for drainage 704.1
HOSPITAL PLUMBING FIXTURES 422
Clinical sinks 422.6
Height of special controls 422.10
Sterilizer equipment 422.9
HOT WATER
Circulating system 202, 607.2.1
Definition 202
Demand recirculation water system 607.2.1.2
Flow of hot water to fixtures 607.4
Heaters and tanks . . . . . Chapter 5
Pipe insulation 607.5
Pumps for water heaters 607.2.1
Recirculating systems with thermostatic mixing valves 607.2.2
Supply system 607
Temperature maintenance (Heat trace) 607.2.1
HOUSE TRAP (See BUILDING TRAPS)

I

INDIRECT WASTE 802
Air gap or break 802.2.1, 802.2.2
Food handling establishment 802.1.1
Receptors. 802.3

INTERNATIONAL CODE COUNCIL®
Copyright © 2015 ICC. ALL RIGHTS RESERVED. Accessed by David Dammon on Jun 21, 2017 12:30:52 PM pursuant to License Agreement with ICC. No further reproduction or distribution authorized. ANY UNAUTHORIZED REPRODUCTION OR DISTRIBUTION IS A VIOLATION OF THE FEDERAL COPYRIGHT ACT AND THE LICENSE AGREEMENT, AND SUBJECT TO CIVIL AND CRIMINAL PENALTIES THEREUNDER.

Special wastes 803
Waste water temperature 702.5
Where required 802.1
INDIVIDUAL VENT 910
INSPECTION 107.1
Final 107.1
Reinspection 107.4.3
Required 107.2
Rough-in 107.2
Scheduling of 107.2
Testing 107.4
INSPECTOR (See CODE OFFICIAL)
INSULATION 505, 607.5
INTERCEPTORS AND SEPARATORS 1003
Access to 1003.10
Approved standards 1003.3.4, 1003.3.6
Bottling establishments 1003.7
Capacity of grease interceptors . . . .Table 1003.3.4.1
Clothes washers 1003.6
Connection of discharge 1003.3.7
Definition 202
Fats, oils and greases systems 1003.3.6
Not required 1003.3.3
Oil and flammable liquids separators 1003.4
Rate of flow control for grease interceptors 1003.3.4.2
Required 1003.1
Slaughterhouses 1003.8
Venting 905.4, 1003.9
IRRIGATION, LAWN 608.16.5
ISLAND FIXTURE VENT 916

J

JOINTS AND CONNECTIONS 605, 705
ABS plastic pipe 605.10, 705.2
Between different materials 605.24, 705.16
Brass pipe 605.11, 705.3
Brazed joints 605.11.1, 605.13.1, 605.14.1, 705.4.1, 705.6.1. 705.7.1
Cast-iron pipe 705.4
Caulked joint 705.4.1, 705.8.1
Concrete pipe 705.5
Copper or copper-alloy pipe 605.13, 705.6
Copper or copper-alloy tubing 605.14, 705.7
CPVC plastic pipe 605.15, 605.16
Expansion joints 308.8
Galvanized steel pipe 605.18
Grooved and shouldered 605.14.3, 605.18.3, 605.22.2, 605.23.3
Mechanical joints 605, 705
Polyethylene plastic pipe or tubing (PE) 605.19
Polyethylene of raised temperature (PE-RT) 605.25
Polypropylene plastic pipe or tubing (PP) 605.20
Prohibited 605.9, 707
PVC plastic pipe 605.22, 705.11
Slip joints 405.8, 1002.2
Soldered joints 605.13.3, 605.14.6, 705.6.3, 705.7.3
Solvent cementing 605, 705
Stainless steel 605.23
Threaded 605.10.3, 605.11.3, 605.13.4, 605.15.3, 605.18.1, 605.22.4, 705.2.3, 705.3.3, 705.6.4, 705.9.1, 705.11.3
Vitrified clay pipe 705.12
Welded 605.11.4, 605.13.5, 605.23.2, 705.3.4, 705.6.5

K

KITCHEN 418

L

LABELING, BUNDLED WATER PIPING 606.7
LAUNDRIES (See CLOTHES WASHERS)
LAUNDRY TRAY 415
LAUNDRY TUB (See LAUNDRY TRAY)
LAVATORIES 416
LEADERS 1106
LIGHT AND VENTILATION REQUIREMENT . . . 310.1
LOADING, DRAINAGE FIXTURE UNITS . . . . . Table 709.1
LOCATION
Anchorage for drain piping 308.7
Drinking fountain 403.5
Fixtures 405.3
Fixtures, obstruction 405.3.3
Potable water supply tanks 606.5.8
Prohibited, drinking fountain 410.5
Secondary roof drain discharge 1108.2
Storage tanks 1302.7.1, 1303.10.1
Subsoil irrigation 1402.3
Toilet facilities, malls 403.3.4
Toilet facilities, other than in malls 403.3.3
Toilet room and kitchen 403.3.2
Trench 307.5
Valves 606.1, 606.2
Vent terminal 903.5
Water heater 501.4
Wells 608.7.1

INTERNATIONAL CODE COUNCIL®
Copyright © 2015 ICC. ALL RIGHTS RESERVED. Accessed by David Dammon on Jun 21, 2017 12:30:52 PM pursuant to License Agreement with ICC. No further reproduction or distribution authorized. ANY UNAUTHORIZED REPRODUCTION OR DISTRIBUTION IS A VIOLATION OF THE FEDERAL COPYRIGHT ACT AND THE LICENSE AGREEMENT, AND SUBJECT TO CIVIL AND CRIMINAL PENALTIES THEREUNDER.

M

MANHOLES 708.1.1, 708.1.7
MANIFOLDS 604.10
MATERIAL
Above-ground drainage and vent pipe . . . . . Table 702.1
Alternative 105.2
Approval 107.2.3
Building sewer pipe 702.3
Building storm sewer pipe 1102.4
Chemical waste system 702.6
Fittings . . . . . Table 605.5, Table 702.4, Table 1102.7
Identification 303.1
Joints 605, 705
Roof drains 1105
Sewer pipe 702.3
Standards . . . . . Chapter 15
Storm drainage pipe . . . . . Table 1102.4
Subsoil drain pipe 1102.5
Underground building drainage and vent pipe 702.2
Vent pipe 702.1, 702.2
Water distribution pipe . . . . . Table 605.4
Water service pipe . . . . . Table 605.3
MATERIAL, FIXTURES
Quality 402.1
Special use 402.2
MATERIAL, SPECIAL
Caulking ferrules 705.18
Cleanout plugs 708.1.6
Sheet copper 402.3
Sheet lead 402.4
Soldering bushings 705.19
MECHANICAL JOINTS 605, 705
MEDICAL GAS, NONFLAMMABLE 1202.1

N

NONPOTABLE WATER REUSE SYSTEMS 1302
NONPOTABLE WATER SYSTEMS
Identification 608.8
Disinfection 1301.2.1
Filtration 1301.2.2
Piping color 608.2.1
Protection of potable water from 608.1, 1301.5
Requirements for . . . . . Chapter 13
Signage 1301.3
Tanks 1301.9

O

OFFSETS
Definitions 202
Drainage 711
Venting 907
OPENINGS
Through walls or roofs 304.5, 305.5, 315
OVERFLOW 407.2

P

PARKING GARAGE 403.3, 1002.1
PAN, WATER HEATER 504.7
PARTITIONS 405.3.4, 405.3.5
PEDICURE BATHS 423.3
PERMIT
Application for 106.3
Conditions of 106.5
Fees 106.6
Suspension of 106.5.5
PENETRATIONS 315
PIPE BURSTING 717
PIPING
Construction documents 105.4.4
Drainage, horizontal slope . . . . . Table 704.1
Drainage piping installation 704
Drainage piping offset, size 710, 711
Joints 605, 705
Rehabilitation of the inside of 601.5
PIPING PROTECTION
Backfilling 306.3
Corrosion 305.1
Expansion and contraction 305.2
Exposed locations 305.6
Foundation wall 305.3
Freezing 305.6
Penetration by fasteners 305.6
Structural settlement 305.2
Tunneling 306.4
PLUMBING FACILITIES 403
PLUMBING FIXTURES
Accessible 404
Automatic clothes washers 406
Bidet 408
Clearances 404.2, 405.3
Definition 202
Dishwashing machine 409
Drainage fixture unit values . . . . . Table 709.1
Drinking fountain 202, 410
Emergency showers 411

INTERNATIONAL CODE COUNCIL®
Copyright © 2015 ICC. ALL RIGHTS RESERVED. Accessed by David Dammon on Jun 21, 2017 12:30:52 PM pursuant to License Agreement with ICC. No further reproduction or distribution authorized. ANY UNAUTHORIZED REPRODUCTION OR DISTRIBUTION IS A VIOLATION OF THE FEDERAL COPYRIGHT ACT AND THE LICENSE AGREEMENT, AND SUBJECT TO CIVIL AND CRIMINAL PENALTIES THEREUNDER.

Eyewash stations 411
Floor sinks 427
Floor and trench drains 412
Food waste disposer 413
Future fixtures 704.4
Garbage can washer 414
Hospital 422
Installation 405
Joints at wall or floor 405.5
Kitchen sink 418
Laundry tray 415
LAUNDRY TUB (See LAUNDRY TRAY)
Lavatories 416
Minimum number of 403.1
Materials 402.1
Ornamental pools 423.1
Quality 402.1
Separate facilities 403.2
Setting 405.3
Showers 417
Sinks 418
Slop sinks 418
Urinals 419
Water closets 420
Water coolers 202, 410
Water supply protection 608
PLUMBING INSPECTOR (See CODE OFFICIAL)
PNEUMATIC EJECTORS 712
POLYETHYLENE PIPE OR TUBING
PE-AL-PE approved standards . . . . . Table 605.3, Table 605.4
PEX approved standards . . . . . Table 605.3, Table 605.4
PEX-AL-PEX approved standards . . . . . Table 605.3, Table 605.4
(PE-RT) approved standards . . . . . Table 605.3, Table 605.4
POLYPROPYLENE (PP) PIPE OR TUBING
Approved standards . . . . . Table 605.3, Table 605.4
POTABLE WATER, PROTECTION OF 608
PRESSURE OF WATER DISTRIBUTION 604.6
PROHIBITED
Joints and connections 605.9, 707
Traps 1002.3
PROTECTION OF POTABLE WATER 603.2, 608
PUMPING EQUIPMENT 712
PVC PIPE . . . . . Table 605.3, Table 605.4, Table 702.1, Table 702.2, Table 702.3

Q

QUALITY OF WATER
General 608.1
QUICK CLOSING VALVES (See WATER, HAMMER)

R

RAINWATER COLLECTION AND DISTRIBUTION SYSTEMS 1303
RAINWATER DRAINAGE . . . . . Chapter 11
RECLAIMED WATER SYSTEMS 1304
REDUCED PRESSURE PRINCIPLE BACKFLOW PREVENTER
Definition 202
Periodic inspections 312.10
Standard . . . . . Table 608.1
Where required 608.15.2, 608.16.2, 608.16.4, 608.16.4.1, 608.16.5, 608.16.6
REFERENCED STANDARDS . . . . . Chapter 15
RELIEF VALVES 504.4, 504.5, 504.6
Definition 202
RELIEF VENT 906.2, 908, 914.4
Definition 202
ROOF DRAINS
Definition 202
Rating for water height above 1101.7, 1105.2
ROUGH-IN INSPECTION 107.2

S

SANITARY SEWER (See BUILDING SEWER)
SANITARY TEES 706.3
SCREWED JOINTS (See JOINTS AND CONNECTIONS)
SEPARATE FACILITIES 403.2
SERVICE SINKS . . . . . Table 403.1, 418
SEWER (See BUILDING SEWER)
SHEET COPPER 402.3
SHEET LEAD 402.4
SHAMPOO SINKS 423.3
SHOWER LINER
Material 312.9
Testing 417.5.2
SHOWERS
Approvals for prefabricated types 417.1
Compartment size 417.4
Required number 403.1
Wall protection for 417.4.1
Water supply riser for 417.2
SILL COCK 424, 608.15.4.2

INTERNATIONAL CODE COUNCIL®
Copyright © 2015 ICC. ALL RIGHTS RESERVED. Accessed by David Dammon on Jun 21, 2017 12:30:52 PM pursuant to License Agreement with ICC. No further reproduction or distribution authorized. ANY UNAUTHORIZED REPRODUCTION OR DISTRIBUTION IS A VIOLATION OF THE FEDERAL COPYRIGHT ACT AND THE LICENSE AGREEMENT, AND SUBJECT TO CIVIL AND CRIMINAL PENALTIES THEREUNDER.

SINGLE STACK VENT SYSTEM 917
SINKS 418
SIPHONIC ROOF DRAINAGE SYSTEMS 1107
SIZING
Drainage system 710
Fixture drain 709
Fixture water supply 604.5
Vent system 906
Water distribution system 604
Water service 603.1
SLAUGHTERHOUSES 1003.8
SLEEVES 305.3
SLIP JOINTS (See JOINTS AND CONNECTIONS)
SOLDERING BUSHINGS 705.19
SOLVENT CEMENTING (See JOINTS AND CONNECTIONS)
SPECIAL PLUMBING FIXTURES 423
SPECIAL WASTES 803
STAINLESS STEEL PIPE
Approved standards for drainage systems . . . . . Table 702.1,Table 702.2, Table 702.3, Table 702.4, Table 1102.4, Table 1102.5, Table 1102.7
Approved standards for water systems . . . . . Table 605.3, Table 605.4
STANDARDS (See REFERENCED STANDARDS)
STANDPIPE DRAIN 802.3.3
STEEL PIPE (See also MATERIAL)
Galvanized, approved standards . . . . . Table 605.4
Stainless, approved standards . . . . . Table 702.1, Table 702.2, Table 702.3, Table 702.4, Table 1102.4, Table 1102.5, Table 1102.7
STERILIZER PIPE 422.9
STORM DRAINS
Building size 1106.1
Building subdrains 1112.1
Building subsoil drains 1111.1
Conductors and connections 1104
Definition 202
General 1101
Prohibited drainage 1101.3
Roof drains 1102.6, 1105
Secondary roof drains 1108
Sizing of conductors, leaders and storm drains . 1106
Sizing of roof gutters 1106.6
Sizing of vertical conductors and leaders 1106.2
Traps 1103
Where required 1101.2
STRAPS (See HANGERS AND SUPPORTS)
STRUCTURAL SAFETY . . . . . 307, Appendix C
SUBDRAIN BUILDING 1112.1
SUBSOIL DRAIN PIPE 1111.1
SUBSOIL LANDSCAPE IRRIGATION SYSTEMS . . . . . Chapter 14
SUMP VENT 906.5
SUMP PUMP DISCHARGE PIPE 712.3.3
SUMPS 1113
SUPPORTS (See also PIPING PROTECTION) . . . 308
SWIMMING POOL
Definition 202
SWIMMING POOL DRAINAGE 802.1.4

T

TEMPERATURE AND PRESSURE RELIEF VALVE 504
TEMPERATURE CONTROL
Mixing valves . . . 424.3, 424.4, 424.5, 607.2.2, 613.1
TEMPERATURE OF WASTE WATER 702.5
TEMPERED WATER 202, 607.1.1, 607.1.2
TEST
Drainage and vent air test 312.3
Drainage and vent final test 312.4
Drainage and vent water test 312.2
Forced sewer test 312.7
Gravity sewer test 312.6
Percolation test 1402.2
Required tests 312.1
Shower liner 312.19
Test gauges 312.1.1
Test of backflow prevention devices 312.10
Test of conductors 312.8
THERMAL EXPANSION CONTROL 607.3
THREADED JOINTS (See JOINTS AND CONNECTIONS)
TOILET FACILITIES
Definition 202
Required 403
Signs 403.4
Travel distance 403.3.3, 403.3.4
Workers' 311
TOILET ROOM DOOR LOCKING 403.3.6
TOILETS (See WATER CLOSETS)
TRAP SEAL PROTECTION 1002.4.1
TRAPS
Acid-resisting 1002.9
Building 1002.6
Design 1002.2
Prohibited types 1002.3
Seal 1002.4
Separate for each fixture 1002.1
Size . . . . . Table 709.1, Table 709.2
TRENCH DRAINS 412

INTERNATIONAL CODE COUNCIL®
Copyright © 2015 ICC. ALL RIGHTS RESERVED. Accessed by David Dammon on Jun 21, 2017 12:30:52 PM pursuant to License Agreement with ICC. No further reproduction or distribution authorized. ANY UNAUTHORIZED REPRODUCTION OR DISTRIBUTION IS A VIOLATION OF THE FEDERAL COPYRIGHT ACT AND THE LICENSE AGREEMENT, AND SUBJECT TO CIVIL AND CRIMINAL PENALTIES THEREUNDER.

TRENCHING, EXCAVATION AND BACKFILL 306
TUNNELING 306.4

U

UNDERGROUND DRAINAGE AND VENT PIPE 702.2
URINAL PARTITIONS 405.3.5
URINALS 419

V

VACUUM BREAKERS . . . . . Table 608.1, 608.13.5, 608.13.6, 608.13.8, 608.15.4
VACUUM DRAINAGE SYSTEMS 716
VACUUM SYSTEM, MEDICAL 1202.1
VALVES
Air admittance 202, 918
Approved standards . . . . . .Table 605.7
Backwater 715
Definition 202
Pressure reducing 604.8
Relief 202, 504.4
Stop and waste 608.7
Temperature-actuated flow reduction valves . . .424.6
Transfer valves 424.8
VENT
Individual 910
Sizing 906
VENT RELIEF SIZE 908
VENT STACK
Definition 202, 904.2
VENTS AND VENTING
Branch vents 906.4
Circuit 914
Combination waste 915
Common 911
Definition 202
Distance from trap . . . . . .Table 909.1
Engineered systems 919
Island fixture 916
Required vent 904.1
Single stack 917
Vent stack 904.2
Vent terminal 903
Waste stack 913
Wet vent 912

W

WALL-HUNG WATER CLOSETS 420
WASTE
Indirect 802
Special 803
WASTE RECEPTORS
Definition 202
WASTE STACK 913
WASTE WATER TEMPERATURE 702.5
WATER
Cross connection 608.6
Distribution system design 604
Distribution piping material . . . . . Table 605.4
Excessive pressure 604.8
Hammer 604.9
Pressure booster 606.5
Rain 202
Reclaimed 202
Service 603
Service piping material . . . . . Table 605.3
Storm 202
WATER CLOSETS 420
WATER CLOSET COMPARTMENTS 405.3.4
WATER CLOSET PERSONAL HYGIENE DEVICE 424.9
WATER CONSERVATION
Fixtures 604.4
Flow rates . . . . . Table 604.4
WATER COOLER
Approvals 410.1
Definition 202
Prohibited location 410.5
WATER DISPENSER
Definition 202
Prohibited location 410.5
Substitution for drinking fountain 410.4
WATER HEATER PAN 504.7
WATER HEATERS
Definition 202
Requirements for . . . . . Chapter 5
WATER TREATMENT
Drinking water systems 611
Softeners 608.3
WET VENT 912
WIPED JOINTS 705.10.2
WORKERS' TOILET FACILITIES 311

INTERNATIONAL CODE COUNCIL®
Copyright © 2015 ICC. ALL RIGHTS RESERVED. Accessed by David Dammon on Jun 21, 2017 12:30:52 PM pursuant to License Agreement with ICC. No further reproduction or distribution authorized. ANY UNAUTHORIZED REPRODUCTION OR DISTRIBUTION IS A VIOLATION OF THE FEDERAL COPYRIGHT ACT AND THE LICENSE AGREEMENT, AND SUBJECT TO CIVIL AND CRIMINAL PENALTIES THEREUNDER.

INTERNATIONAL CODE COUNCIL®
Copyright © 2015 ICC. ALL RIGHTS RESERVED. Accessed by David Dammon on Jun 21, 2017 12:30:52 PM pursuant to License Agreement with ICC. No further reproduction or distribution authorized. ANY UNAUTHORIZED REPRODUCTION OR DISTRIBUTION IS A VIOLATION OF THE FEDERAL COPYRIGHT ACT AND THE LICENSE AGREEMENT, AND SUBJECT TO CIVIL AND CRIMINAL PENALTIES THEREUNDER.

ICC INTERNATIONAL CODE COUNCIL®

People Helping People Build a Safer World®

Valuable Guides to Changes in the 2015 I-Codes®

NEW!

FULL COLOR! HUNDREDS OF PHOTOS AND ILLUSTRATIONS!

SIGNIFICANT CHANGES TO THE 2015 INTERNATIONAL CODES®

Practical resources that offer a comprehensive analysis of the critical changes made between the 2012 and 2015 editions of the codes. Authored by ICC code experts, these useful tools are "must-have" guides to the many important changes in the 2015 International Codes.



SIGNIFICANT CHANGES TO THE IBC, 2015 EDITION
#7024S15

SIGNIFICANT CHANGES TO THE IRC, 2015 EDITION
#7101S15

SIGNIFICANT CHANGES TO THE IFC, 2015 EDITION
#7404S15

SIGNIFICANT CHANGES TO THE IPC/IMC/IFGC, 2015 EDITION
#7202S15

Changes are identified then followed by in-depth discussion of how the change affects real world application. Photos, tables and illustrations further clarify application.

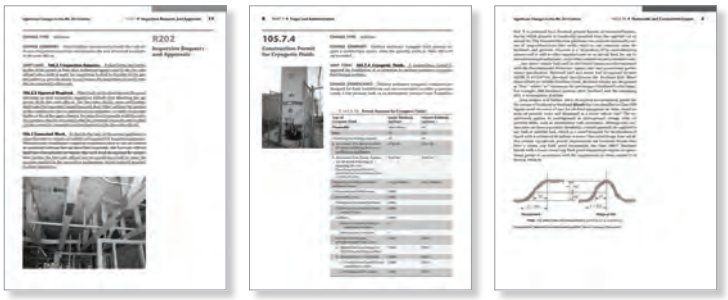

ORDER YOUR HELPFUL GUIDES TODAY!
1-800-786-4452 | www.iccsafe.org/books

HIRE ICC TO TEACH

Want your group to learn the Significant Changes to the I-Codes from an ICC expert instructor? Schedule a seminar today!
email: **ICCTraining@iccsafe.org** | phone: **1-888-422-7233 ext. 33818**

14-09379

INTERNATIONAL CODE COUNCIL®

Copyright © 2015 ICC. ALL RIGHTS RESERVED. Accessed by David Dammon on Jun 21, 2017 12:30:52 PM pursuant to License Agreement with ICC. No further reproduction or distribution authorized. ANY UNAUTHORIZED REPRODUCTION OR DISTRIBUTION IS A VIOLATION OF THE FEDERAL COPYRIGHT ACT AND THE LICENSE AGREEMENT, AND SUBJECT TO CIVIL AND CRIMINAL PENALTIES THEREUNDER.

ICC EVALUATION SERVICE







APPROVE WITH CONFIDENCE

- ICC-ES® Evaluation Reports are the most widely accepted and trusted in the nation.
- ICC-ES is dedicated to providing evaluation reports, PMG and Building Product Listings to the highest quality and technical excellence.
- ICC-ES is a subsidiary of ICC®, the publisher of the IBC®, IRC®, IPC® and other I-Codes®.

We do thorough evaluations. You approve with confidence.

ICC ES · ICC ES PMG · ICC ES LISTED

Look for the ICC-ES marks of conformity before approving for installation

Code Officials — Contact Us With Your Questions About ICC-ES Reports at:
800-423-6587 ext. ES help (374357) or email EShelp@icc-es.org
www.icc-es.org

14-09329

Subsidiary of ICC INTERNATIONAL CODE COUNCIL®

INTERNATIONAL CODE COUNCIL®

Copyright © 2015 ICC. ALL RIGHTS RESERVED. Accessed by David Dammon on Jun 21, 2017 12:30:52 PM pursuant to License Agreement with ICC. No further reproduction or distribution authorized. ANY UNAUTHORIZED REPRODUCTION OR DISTRIBUTION IS A VIOLATION OF THE FEDERAL COPYRIGHT ACT AND THE LICENSE AGREEMENT, AND SUBJECT TO CIVIL AND CRIMINAL PENALTIES THEREUNDER.

INTERNATIONAL CODE COUNCIL®

People Helping People Build a Safer World®

The International Code Council's Training and Education Department

Industry professionals look to ICC to provide the critical knowledge and experiences necessary to excel in today's challenging world. ICC's educational programs cover a broad spectrum of code and construction related topics, offering some of the highest quality instruction direct from the source.

INSTITUTES

Acquire Skills, Share Experiences, Earn CEUs

ICC's training institutes offer a comprehensive education experience and a great way to earn much needed CEUs. Learn best practices from the leading experts in the field, build your network of professional contacts and share experiences. Institutes are held across the country throughout the year. To see the full schedule go to www.iccsafe.org/training.

HIRE ICC TO TEACH

Bring ICC On-Site and Earn CEUs

Give your group the confidence they need to meet tough challenges head-on so they can reach their full potential. ICC's course catalog contains a wide variety of educational topics that are available for contract at a location of your choice. Customized training is also available to fit your needs. For our full course catalogue go to www.iccsafe.org/hireicc.

ICC ONLINE CAMPUS

Earn CEUs at Your Own Pace

Online courses offer access to a comprehensive training and education portal, providing you with an effective and convenient tool to enhance your professional skills. Courses are available anytime for 99 days following registration. For a quick and easy way to earn CEUs towards your certification, try our Online Certifications Renewal section. Go to www.iccsafe.org/onlinecampus for our full offerings.

For more information about ICC's Training please contact us at **888-ICC-SAFE (422-7233) ext. 33818** or email us at **icctraining@iccsafe.org.**

14-09372

INTERNATIONAL CODE COUNCIL®

Copyright © 2015 ICC. ALL RIGHTS RESERVED. Accessed by David Dammon on Jun 21, 2017 12:30:52 PM pursuant to License Agreement with ICC. No further reproduction or distribution authorized. ANY UNAUTHORIZED REPRODUCTION OR DISTRIBUTION IS A VIOLATION OF THE FEDERAL COPYRIGHT ACT AND THE LICENSE AGREEMENT, AND SUBJECT TO CIVIL AND CRIMINAL PENALTIES THEREUNDER.

INTERNATIONAL CODE COUNCIL®

People Helping People Build a Safer World®

GET IMMEDIATE DOWNLOADS OF THE STANDARDS YOU NEED

Browse hundreds of industry standards adopted by reference. Available to you 24/7!

Count on ICC for standards from a variety of publishers, including:

ACI	CPSC	GYPSUM
AISC	CSA	HUD
ANSI	DOC	ICC
APA	DOJ	ISO
APSP	DOL	NSF
ASHRAE	DOTn	SMACNA
ASTM	FEMA	USC
AWC	GBI	



DOWNLOAD YOUR STANDARDS TODAY!
WWW.ICCSAFE.ORG/BOOKS

14-09376

INTERNATIONAL CODE COUNCIL®

Copyright © 2015 ICC. ALL RIGHTS RESERVED. Accessed by David Dammon on Jun 21, 2017 12:30:52 PM pursuant to License Agreement with ICC. No further reproduction or distribution authorized. ANY UNAUTHORIZED REPRODUCTION OR DISTRIBUTION IS A VIOLATION OF THE FEDERAL COPYRIGHT ACT AND THE LICENSE AGREEMENT, AND SUBJECT TO CIVIL AND CRIMINAL PENALTIES THEREUNDER.

IMC®

2015 CODE AND COMMENTARY

The complete IMC with commentary after each section

ICC INTERNATIONAL CODE COUNCIL

INTERNATIONAL CODE COUNCIL®

Copyright © 2015 ICC. ALL RIGHTS RESERVED. Accessed by David Dammon on Jun 21, 2017 12:30:52 PM pursuant to License Agreement with ICC. No further reproduction or distribution authorized. ANY UNAUTHORIZED REPRODUCTION OR DISTRIBUTION IS A VIOLATION OF THE FEDERAL COPYRIGHT ACT AND THE LICENSE AGREEMENT, AND SUBJECT TO CIVIL AND CRIMINAL PENALTIES THEREUNDER.

2015 IMC®

CODE AND COMMENTARY

The complete IMC with commentary after each section

ICC
INTERNATIONAL CODE COUNCIL®

INTERNATIONAL CODE COUNCIL®

Copyright © 2015 ICC. ALL RIGHTS RESERVED. Accessed by David Dammon on Jun 21, 2017 12:30:52 PM pursuant to License Agreement with ICC. No further reproduction or distribution authorized. ANY UNAUTHORIZED REPRODUCTION OR DISTRIBUTION IS A VIOLATION OF THE FEDERAL COPYRIGHT ACT AND THE LICENSE AGREEMENT, AND SUBJECT TO CIVIL AND CRIMINAL PENALTIES THEREUNDER.

2015 International Mechanical Code® Commentary

First Printing: October 2014

ISBN: 978-1-60983-291-9

COPYRIGHT © 2014
by
INTERNATIONAL CODE COUNCIL, INC.

ALL RIGHTS RESERVED. This 2015 *International Mechanical Code® Commentary* is a copyrighted work owned by the International Code Council, Inc. Without advance written permission from the copyright owner, no part of this book may be reproduced, distributed, or transmitted in any form or by any means, including, without limitation, electronic, optical or mechanical means (by way of example, and not limitation, photocopying, or recording by or in an information storage retrieval system). For information on permission to copy material exceeding fair use, please contact: Publications, 4051 Flossmoor Road, Country Club Hills, IL 60478. Phone 1-888-ICC-SAFE (422-7233).

Trademarks: "International Code Council," the "International Code Council" logo and the "International Mechanical Code" are trademarks of the International Code Council, Inc.

PRINTED IN THE U.S.A.

INTERNATIONAL CODE COUNCIL®

Copyright © 2015 ICC. ALL RIGHTS RESERVED. Accessed by David Dammon on Jun 21, 2017 12:30:52 PM pursuant to License Agreement with ICC. No further reproduction or distribution authorized. ANY UNAUTHORIZED REPRODUCTION OR DISTRIBUTION IS A VIOLATION OF THE FEDERAL COPYRIGHT ACT AND THE LICENSE AGREEMENT, AND SUBJECT TO CIVIL AND CRIMINAL PENALTIES THEREUNDER.

PREFACE

Internationally, code officials recognize the need for a modern, up-to-date mechanical code addressing the design and installation of mechanical systems through requirements emphasizing performance. The *International Mechanical Code* is designed to meet these needs through model code regulations that safeguard the public health and safety in all communities, large and small.

The principal purpose of this Commentary is to provide a basic volume of knowledge and facts relating to the code. The Commentary provides it in a small package and at reasonable cost thorough coverage of many issues likely to be dealt with when using the *International Mechanical Code*—and then supplements that coverage with historical and technical background.

Strenuous effort has been put into keeping the vast quantity of material accessible and its method of presentation useful. With a comprehensive yet concise summary of each section, the Commentary is a convenient reference for mechanical regulations. In the chapters that follow, discussions focus on the full meaning and implications of the code text. Guidelines suggest the most effective method of application, and the consequences of not adhering to the code text. Illustrations are provided to aid understanding; they do not necessarily illustrate the only methods of achieving code compliance.

The format of the Commentary includes the full text of each section, table and figure in the code, followed immediately by the commentary applicable to that text. At the time of printing, the Commentary reflects the most up-to-date text of the 2015 *International Mechanical Code*. Each section's narrative includes a statement of its objective and intent, and usually includes a discussion about why the requirement commands the conditions set forth. Code text and commentary text are easily distinguished from each other. All code text is shown as it appears in the *International Mechanical Code*, and all commentary is indented below the code text and begins with the symbol ❖.

Readers should note that the Commentary is to be used in conjunction with the *International Mechanical Code* and not as a substitute for the code. **The Commentary is advisory only;** the code official alone possesses the authority and responsibility for interpreting the code.

Comments and recommendations are encouraged, for through your input, we can improve future editions. Please direct your comments to the Codes and Standards Development Department at the Central Regional Office.

ICC gratefully acknowledges the contributions to this commentary provided by Rebecca Quinn, Jeffrey Shapiro and Guy McMann.

INTERNATIONAL CODE COUNCIL®
Copyright © 2015 ICC. ALL RIGHTS RESERVED. Accessed by David Dammon on Jun 21, 2017 12:30:52 PM pursuant to License Agreement with ICC. No further reproduction or distribution authorized. ANY UNAUTHORIZED REPRODUCTION OR DISTRIBUTION IS A VIOLATION OF THE FEDERAL COPYRIGHT ACT AND THE LICENSE AGREEMENT, AND SUBJECT TO CIVIL AND CRIMINAL PENALTIES THEREUNDER.

INTERNATIONAL CODE COUNCIL®
Copyright © 2015 ICC. ALL RIGHTS RESERVED. Accessed by David Dammon on Jun 21, 2017 12:30:52 PM pursuant to License Agreement with ICC. No further reproduction or distribution authorized. ANY UNAUTHORIZED REPRODUCTION OR DISTRIBUTION IS A VIOLATION OF THE FEDERAL COPYRIGHT ACT AND THE LICENSE AGREEMENT, AND SUBJECT TO CIVIL AND CRIMINAL PENALTIES THEREUNDER.

TABLE OF CONTENTS

CHAPTER 1 SCOPE AND ADMINISTRATION. . . . . 1-1 – 1-20

CHAPTER 2 DEFINITIONS. . . . . 2-1 – 2-32

CHAPTER 3 GENERAL REGULATIONS. . . . . 3-1 – 3-46

CHAPTER 4 VENTILATION. . . . . 4-1 – 4-32

CHAPTER 5 EXHAUST SYSTEMS . . . . . 5-1 – 5-134

CHAPTER 6 DUCT SYSTEMS . . . . . 6-1 – 6-70

CHAPTER 7 COMBUSTION AIR. . . . . 7-1 – 7-4

CHAPTER 8 CHIMNEYS AND VENTS . . . . . 8-1 – 8-30

CHAPTER 9 SPECIFIC APPLIANCES, FIREPLACES AND SOLID FUEL-BURNING EQUIPMENT. . . . . 9-1 – 9-18

CHAPTER 10 BOILERS, WATER HEATERS AND PRESSURE VESSELS . . . . . 10-1 – 10-22

CHAPTER 11 REFRIGERATION. . . . . 11-1 – 11-32

CHAPTER 12 HYDRONIC PIPING . . . . . 12-1 – 12-26

CHAPTER 13 FUEL OIL PIPING AND STORAGE. . . . . 13-1 – 13-10

CHAPTER 14 SOLAR SYSTEMS . . . . . 14-1 – 14-10

CHAPTER 15 REFERENCED STANDARDS . . . . . 15-1 – 15-12

APPENDIX A CHIMNEY CONNECTOR PASS-THROUGHS . . . . . A-1 – A-2

APPENDIX B RECOMMENDED PERMIT FEE SCHEDULE . . . . . B-1 – B-2

INDEX . . . . . INDEX-1 – INDEX-6

INTERNATIONAL CODE COUNCIL®

Copyright © 2015 ICC. ALL RIGHTS RESERVED. Accessed by David Dammon on Jun 21, 2017 12:30:52 PM pursuant to License Agreement with ICC. No further reproduction or distribution authorized. ANY UNAUTHORIZED REPRODUCTION OR DISTRIBUTION IS A VIOLATION OF THE FEDERAL COPYRIGHT ACT AND THE LICENSE AGREEMENT, AND SUBJECT TO CIVIL AND CRIMINAL PENALTIES THEREUNDER.

INTERNATIONAL CODE COUNCIL®
Copyright © 2015 ICC. ALL RIGHTS RESERVED. Accessed by David Dammon on Jun 21, 2017 12:30:52 PM pursuant to License Agreement with ICC. No further reproduction or distribution authorized. ANY UNAUTHORIZED REPRODUCTION OR DISTRIBUTION IS A VIOLATION OF THE FEDERAL COPYRIGHT ACT AND THE LICENSE AGREEMENT, AND SUBJECT TO CIVIL AND CRIMINAL PENALTIES THEREUNDER.

Chapter 1:
Scope and Administration

General Comments

This chapter contains provisions for the application, enforcement and administration of subsequent requirements of the code. In addition to establishing the scope of the code, Chapter 1 identifies which mechanical equipment, appliances and systems it covers. Sections 101 and 102 establish the scope and applicability of the code and address existing equipment and systems. Section 103 establishes the department of mechanical inspection and the appointment of department personnel. Section 104 contains the duties and authority of the code official for rulemaking, permits, inspections and right of entry. Section 105 deals with approval of modifications, alternative materials, methods and equipment. Section 106 states when permits, construction document submittals, permit issuance and fees are required. Section 107 includes inspection duties of the code official or an inspection agency that has been approved by the code official, mechanical system testing, contractor responsibilities, notice of approval and temporary connections for testing mechanical systems. Administrative provisions for violations are addressed in Section 108, including provisions covering unlawful acts, violation notices, prosecution, penalties, stop work orders and unsafe mechanical systems. Section 109 establishes the board of appeals and includes provisions for application for appeal, membership of the board, board meeting notices, open hearing requirements, when postponements are in order, appeals board decisions and court review.

The law of building regulation is based on the police power of the state. This police power is the source of all authority to enact building regulations. Police power is the power of the state to legislate for the general welfare of its citizens. This power enables passage of such laws as a mechanical code. It is from the police power delegated by the state legislature that local governments are able to enact building regulations. If the state legislature has limited this power in any way, the municipality may not exceed these limitations. Although the municipality may not further delegate its police power by delegating the burden of determining code compliance to the building owner, contractor or architect, it may turn over the administration of building regulations to a municipal official, such as a code official, if he or she is given sufficient criteria to clearly establish the basis for deciding whether or not a proposed building, including its mechanical systems, conforms to the code.

Chapter 1 of the code is largely concerned with maintaining "due process of law" in enforcing the performance criteria contained in the body of the code. Only through careful observation of the administrative provisions can the code official demonstrate "equal protection under the law." Although the administrative and enforcement section of a code is geared toward the code official, the provisions also establish the rights and privileges of the design professional, the contractor and the building owner. The position of the code official is to review the proposed and completed work and to determine whether a mechanical system installation conforms to the code requirements. The design professional is responsible for the design of a safe mechanical system. The contractor is responsible for installing the system in strict accordance with the plans. During the construction of a mechanical system, the code official reviews the activity to see that the spirit and intent of the law are being met and that the mechanical system provides adequate protection of public health. As a public servant, the code official enforces the code in an unbiased, proper manner. Every individual is guaranteed equal enforcement of the code. Furthermore, design professionals, contractors and building owners have the right of due process for any requirement in the code.

Purpose

A mechanical code, as with any other code, is intended for adoption as a legally enforceable document to safeguard health, safety, property and public welfare. A mechanical code cannot be effective without adequate provisions for its administration and enforcement. The official charged with the administration and enforcement of mechanical regulations has a great responsibility, and with this responsibility goes authority. No matter how detailed the mechanical code may be, the code official must, to some extent, exercise judgment in determining code compliance. The code official has the responsibility for establishing that the homes in which the citizens of the community reside and the buildings in which they work are designed and constructed to be reasonably free from hazards associated with the presence and use of mechanical equipment, appliances and systems. The code intends to establish a minimum acceptable level of safety.

INTERNATIONAL CODE COUNCIL®
Copyright © 2015 ICC. ALL RIGHTS RESERVED. Accessed by David Dammon on Jun 21, 2017 12:30:52 PM pursuant to License Agreement with ICC. No further reproduction or distribution authorized. ANY UNAUTHORIZED REPRODUCTION OR DISTRIBUTION IS A VIOLATION OF THE FEDERAL COPYRIGHT ACT AND THE LICENSE AGREEMENT, AND SUBJECT TO CIVIL AND CRIMINAL PENALTIES THEREUNDER.

PART 1–SCOPE AND APPLICATION

SECTION 101
GENERAL

[A] 101.1 Title. These regulations shall be known as the *Mechanical Code* of **[NAME OF JURISDICTION]**, hereinafter referred to as "this code."

❖ This section identifies the adopted regulations by the insertion of the name of the adopting jurisdiction into the code. This is one of several places in the code that the adopting agency must "fill in the brackets" to insert information that is specific to the local jurisdiction (see the sample ordinance in the front of the code book).

[A] 101.2 Scope. This code shall regulate the design, installation, maintenance, *alteration* and inspection of mechanical systems that are permanently installed and utilized to provide control of environmental conditions and related processes within buildings. This code shall also regulate those mechanical systems, system components, *equipment* and appliances specifically addressed herein. The installation of fuel gas distribution piping and *equipment*, fuel gas-fired appliances and fuel gas-fired *appliance* venting systems shall be regulated by the *International Fuel Gas Code*.

Exception: Detached one- and two-family dwellings and multiple single-family dwellings (townhouses) not more than three stories high with separate means of egress and their accessory structures shall comply with the *International Residential Code*.

❖ This section describes the types of mechanical systems covered by the code. The code is applicable from the initial design of mechanical systems, through installation and construction and into the maintenance of operating systems. The scope of the code is primarily focused on heating, ventilating and air-conditioning (HVAC) systems, those items specifically addressed in the code and those building "service" items that make a building comfortable, functional and safe. The code is intended to cover all mechanical appliances, equipment and systems that are specifically intended, designed and necessary for the general safety and well-being of the occupants of a building. The code intends to regulate the installation, operation and maintenance of any and all equipment and appliances that can affect the health, safety and welfare of building occupants.

Note that this section references the *International Fuel Gas Code*® (IFGC®) for fuel-gas-related regulations. This is a result of a written cooperative agreement between the International Code Council® (ICC®) and the American Gas Association (AGA) to promulgate the IFGC. All regulations for the installation of fuel gas distribution piping and equipment, fuel gas-fired appliances and fuel gas-fired appliance venting systems have been removed from the code. See the IFGC for fuel-gas-related requirements.

The exception sends the user to the *International Residential Code*® (IRC®) for one- and two-family dwellings and townhouses not more than three stories in height. It is the intent of the ICC family of codes that the *International Mechanical Code*® (IMC®) be applied to structures not within the scope of the IRC. For example, a four-story single-family dwelling would be subject to the provisions of the IMC.

[A] 101.2.1 Appendices. Provisions in the appendices shall not apply unless specifically adopted.

❖ This section clarifies that the appendices are not part of the code unless specifically included in the adopting ordinance of the jurisdiction. Otherwise, the appendices are not intended to be enforceable.

[A] 101.3 Intent. The purpose of this code is to establish minimum standards to provide a reasonable level of safety, health, property protection and public welfare by regulating and controlling the design, construction, installation, quality of materials, location, operation and maintenance or use of mechanical systems.

❖ The intent of the code is to set forth requirements that establish the minimum acceptable level of protection of life or limb, health, property and public welfare. The intent becomes important in the application of such sections as Sections 102, 104.2, 105.2 and 108, as well as any enforcement-oriented interpretive action or judgment. Like any code, the written text is subject to interpretation. Interpretations should not be affected by economics or the potential impact on any party. The only consideration should be protection of the public health, safety and welfare.

[A] 101.4 Severability. If a section, subsection, sentence, clause or phrase of this code is, for any reason, held to be unconstitutional, such decision shall not affect the validity of the remaining portions of this code.

❖ Once the code is adopted, only a court can set aside any provisions of the code. This is essential to safeguard the application of the code text if a provision of the code is declared illegal or unconstitutional. This section would preserve the legislative action that put the legal provisions in place.

SECTION 102
APPLICABILITY

[A] 102.1 General. Where there is a conflict between a general requirement and a specific requirement, the specific requirement shall govern. Where, in a specific case, different sections of this code specify different materials, methods of construction or other requirements, the most restrictive shall govern.

❖ Bear in mind that conflicts within the code rarely, if ever, occur, but if they do, this section applies. Specific requirements of the code override or take precedence over general requirements. For example, in the 2006 edition of the code, Section 401.4 required a 10-foot (3048 mm) separation between all exhaust openings and property lines, whereas Section

INTERNATIONAL CODE COUNCIL®
Copyright © 2015 ICC. ALL RIGHTS RESERVED. Accessed by David Dammon on Jun 21, 2017 12:30:52 PM pursuant to License Agreement with ICC. No further reproduction or distribution authorized. ANY UNAUTHORIZED REPRODUCTION OR DISTRIBUTION IS A VIOLATION OF THE FEDERAL COPYRIGHT ACT AND THE LICENSE AGREEMENT, AND SUBJECT TO CIVIL AND CRIMINAL PENALTIES THEREUNDER.

501.2.1, Item 3 required a 3-foot (914.4 mm) separation for a specific type of exhaust. In this case, Section 501.2.1 would overrule. This conflict was resolved in the 2009 edition of the code.

[A] 102.2 Existing installations. Except as otherwise provided for in this chapter, a provision in this code shall not require the removal, *alteration* or abandonment of, nor prevent the continued utilization and maintenance of, a mechanical system lawfully in existence at the time of the adoption of this code.

❖ An existing mechanical system is generally considered to be "grandfathered" in with code adoption if the system meets a minimum level of safety. Frequently, the criteria for this level are the regulations (or code) under which the existing building was originally constructed. If there are no previous code criteria to apply, the code official is to apply those provisions of the code that are reasonably applicable to existing buildings. A specific level of safety is dictated by provisions dealing with hazard abatement in existing buildings and maintenance provisions, as contained in this code, the *International Property Maintenance Code*® (IPMC®) and the *International Fire Code*® (IFC®).

[A] 102.3 Maintenance. Mechanical systems, both existing and new, and parts thereof shall be maintained in proper operating condition in accordance with the original design and in a safe and sanitary condition. Devices or safeguards that are required by this code shall be maintained in compliance with the edition of the code under which they were installed. The owner or the owner's authorized agent shall be responsible for maintenance of mechanical systems. To determine compliance with this provision, the code official shall have the authority to require a mechanical system to be reinspected.

The inspection for maintenance of HVAC systems shall be performed in accordance with ASHRAE/ACCA/ANSI Standard 180.

❖ All mechanical systems and equipment are subject to deterioration resulting from aging, wear, accumulation of dirt and debris, corrosion and other factors. Maintenance is necessary to keep mechanical systems and equipment in proper operating condition. All required safety devices and controls must be maintained to continue providing the protection that they afford. Existing equipment and systems could be equipped with safety devices or other measures that were necessary because of the nature of the equipment, and such safeguards may have been required by a code that predates the current code. All safeguards required by previous or present codes must be maintained for the life of the equipment or system served by those safeguards.

Maintenance inspections must be performed in accordance with ASHRAE/ACCA/ANSI Standard 180 so that all components of the mechanical system requiring maintenance are properly addressed.

The maintenance of mechanical systems as prescribed in this section is the responsibility of the property owner. The owner may authorize another party to be responsible for the property, in which case that party is responsible for the maintenance of the mechanical systems involved.

The reinspection authority of the code official is needed to accomplish compliance with the maintenance requirements in this section.

[A] 102.4 Additions, alterations or repairs. Additions, alterations, renovations or repairs to a mechanical system shall conform to that required for a new mechanical system without requiring the existing mechanical system to comply with all of the requirements of this code. Additions, alterations or repairs shall not cause an existing mechanical system to become unsafe, hazardous or overloaded.

Minor additions, alterations, renovations and repairs to existing mechanical systems shall meet the provisions for new construction, unless such work is done in the same manner and arrangement as was in the existing system, is not hazardous and is *approved*.

❖ Simply stated, new work must comply with the current requirements for new work. Any alteration or addition to an existing system involves some extent of new work and that new work is subject to the requirements of the code. Additions or alterations can place additional loads or different demands on an existing system and those loads or demands could necessitate changing all or part of the existing system. Additions and alterations must not cause an existing system to be any less in compliance with the code than it was before the changes.

[A] 102.5 Change in occupancy. It shall be unlawful to make a change in the *occupancy* of any structure which will subject the structure to any special provision of this code applicable to the new *occupancy* without approval. The code official shall certify that such structure meets the intent of the provisions of law governing building construction for the proposed new *occupancy* and that such change of *occupancy* does not result in any hazard to the public health, safety or welfare.

❖ When a building undergoes a change of occupancy, the mechanical system must be evaluated to determine what effect the change of occupancy has on it. If an existing system serves an occupancy that is different from the occupancy it served when the code went into effect, the mechanical system must comply with the applicable code requirements for a mechanical system serving the newer occupancy. Depending on the nature of the previous occupancy, changing a building's occupancy classification could result in a change to the mechanical system. For example, if a mercantile building was converted to a restaurant, additional ventilation would be required for the public based on the increased occupant load.

[A] 102.6 Historic buildings. The provisions of this code relating to the construction, *alteration*, repair, enlargement, restoration, relocation or moving of buildings or structures shall not be mandatory for existing buildings or structures identified and classified by the state or local jurisdiction as

INTERNATIONAL CODE COUNCIL®
Copyright © 2015 ICC. ALL RIGHTS RESERVED. Accessed by David Dammon on Jun 21, 2017 12:30:52 PM pursuant to License Agreement with ICC. No further reproduction or distribution authorized. ANY UNAUTHORIZED REPRODUCTION OR DISTRIBUTION IS A VIOLATION OF THE FEDERAL COPYRIGHT ACT AND THE LICENSE AGREEMENT, AND SUBJECT TO CIVIL AND CRIMINAL PENALTIES THEREUNDER.

historic buildings where such buildings or structures are judged by the code official to be safe and in the public interest of health, safety and welfare regarding any proposed construction, *alteration*, repair, enlargement, restoration, relocation or moving of buildings.

❖ This section gives the code official the widest possible flexibility in enforcing the code when the building in question has historic value. This flexibility, however, is not without conditions. The most important criterion for application of this section is that the building must be specifically classified as being of historic significance by a qualified party or agency. Usually, this is done by a state or local authority after considerable scrutiny of the historical value of the building. Most, if not all, states have such authorities, as do many local jurisdictions. The agencies with such authority typically exist at the state or local government level.

[A] 102.7 Moved buildings. Except as determined by Section 102.2, mechanical systems that are a part of buildings or structures moved into or within the jurisdiction shall comply with the provisions of this code for new installations.

❖ Buildings that have been relocated are subject to the requirements of the code as if they were new construction. Placing a building where one did not previously exist is the same as constructing a new building. This section requires alteration of the existing mechanical systems to the extent necessary to bring them into compliance with the provisions of the code applicable to new construction or requires that the existing mechanical system comply with Section 102.2.

[A] 102.8 Referenced codes and standards. The codes and standards referenced herein shall be those that are listed in Chapter 15 and such codes and standards shall be considered as part of the requirements of this code to the prescribed extent of each such reference and as further regulated in Sections 102.8.1 and 102.8.2.

Exception: Where enforcement of a code provision would violate the conditions of the listing of the *equipment* or *appliance*, the conditions of the listing and the manufacturer's installation instructions shall apply.

❖ A referenced standard or portion of one is an enforceable extension of the code as if the content of the standard were included in the body of the code. For example, Sections 603.4 and 603.5 reference the Sheet Metal and Air-Conditioning Contractors National Association (SMACNA) duct construction standards in their entirety for the construction of metal and nonmetallic ducts. Section 301.7 references NFPA 70 for all electrical installations associated with the equipment and appliances regulated by the code. The use and application of referenced standards are limited to those portions of the standards that are specifically identified. It is the intention of the code to be in harmony with the referenced standards. If conflicts occur because of scope or purpose, the code text governs.

The exception recognizes the extremely unlikely but possible occurrence of the code requiring or allowing something less restrictive or stringent than the product's listing or manufacturer's instructions. The intent is for the highest level of safety to prevail. Thus, this exception allows for the conditions of the listing or the manufacturer's installation instructions to override the code requirement if the listing or installation instructions are more restrictive.

[A] 102.8.1 Conflicts. Where conflicts occur between provisions of this code and the referenced standards, the provisions of this code shall apply.

❖ The code takes precedence when the requirements of the standard conflict with the requirements of the code. Although it is the intention of the code to be in harmony with referenced standards, the code text governs if conflicts occur.

[A] 102.8.2 Provisions in referenced codes and standards. Where the extent of the reference to a referenced code or standard includes subject matter that is within the scope of this code, the provisions of this code, as applicable, shall take precedence over the provisions in the referenced code or standard.

❖ Although a standard or code is referenced, its full scope and content are not necessarily applicable. The standard (or code) is applicable only to the extent indicated in the text in which the standard is specifically referenced. A referenced standard or a portion thereof is an enforceable extension of the code as if the content of the standard were included in the body of the code. The use and application of referenced standards are limited to those portions of the standards that are specifically identified.

[A] 102.9 Requirements not covered by this code. Requirements necessary for the strength, stability or proper operation of an existing or proposed mechanical system, or for the public safety, health and general welfare, not specifically covered by this code, shall be determined by the code official.

❖ New technology will sometimes result in a situation or circumstance not specifically covered by the code. This section of the code gives the code official the authority to decide whether and how the code can be used to cover the new situation. Clearly such a section is needed and the code official's reasonable application of the section is necessary. The purpose of the section, however, is not to impose requirements that may be preferred when the code provides alternative methods or is not silent on the circumstances. Additionally, the section can be used to implement the general performance-oriented language of the code to specific enforcement situations.

[A] 102.10 Other laws. The provisions of this code shall not be deemed to nullify any provisions of local, state or federal law.

❖ Other laws enacted by the local, state or federal government may be applicable to a condition that is also governed by a requirement in the code. In such cir-

INTERNATIONAL CODE COUNCIL®
Copyright © 2015 ICC. ALL RIGHTS RESERVED. Accessed by David Dammon on Jun 21, 2017 12:30:52 PM pursuant to License Agreement with ICC. No further reproduction or distribution authorized. ANY UNAUTHORIZED REPRODUCTION OR DISTRIBUTION IS A VIOLATION OF THE FEDERAL COPYRIGHT ACT AND THE LICENSE AGREEMENT, AND SUBJECT TO CIVIL AND CRIMINAL PENALTIES THEREUNDER.

cumstances, the requirements of the code are in addition to those other laws, even though the building official may not be responsible for the enforcement of those laws. For example, the health department might require the pots and pans sink's waste lines in a restaurant to be indirectly connected, whereas the plumbing code allows these sinks to be either directly or indirectly connected.

[A] 102.11 Application of references. Reference to chapter section numbers, or to provisions not specifically identified by number, shall be construed to refer to such chapter, section or provision of this code.

❖ In a situation where the code may make reference to a chapter, section number or to another code provision without specifically identifying its location in the code, assume that the referenced section, chapter, or provision is in this code and not in a referenced code or standard.

PART 2–ADMINISTRATION AND ENFORCEMENT

SECTION 103
DEPARTMENT OF MECHANICAL INSPECTION

[A] 103.1 General. The department of mechanical inspection is hereby created and the executive official in charge thereof shall be known as the code official.

❖ The executive official in charge of the mechanical department is named the "code official" by this section. In actuality, the person who is in charge of the department may hold a different title, such as building commissioner, mechanical inspector or construction official. For the purpose of the code, that person is referred to as the "code official."

[A] 103.2 Appointment. The code official shall be appointed by the chief appointing authority of the jurisdiction.

❖ This section establishes the code official as an appointed position and gives the circumstances under which the code official can be removed from office.

[A] 103.3 Deputies. In accordance with the prescribed procedures of this jurisdiction and with the concurrence of the appointing authority, the code official shall have the authority to appoint a deputy code official, other related technical officers, inspectors and other employees. Such employees shall have powers as delegated by the code official.

❖ This section provides the code official with the authority to appoint other individuals to assist with the administration and enforcement of the code. These individuals have authority and responsibility as designated by the code official.

[A] 103.4 Liability. The code official, member of the board of appeals or employee charged with the enforcement of this code, while acting for the jurisdiction in good faith and without malice in the discharge of the duties required by this code or other pertinent law or ordinance, shall not thereby be rendered civilly or criminally liable personally, and is hereby relieved from personal liability for any damage accruing to persons or property as a result of an act or by reason of an act or omission in the discharge of official duties.

❖ This section tells us that a code official or an employee in his or her department should not be held personally liable for damage to persons or property resulting from enforcing code requirements in a lawful and honest way. The appointing authority is responsible for providing lawyers to handle any lawsuits against these employees. The best way to be certain that the code official's action is a "lawful duty" is to always cite the applicable code section on which the enforcement action is based.

[A] 103.4.1 Legal defense. Any suit or criminal complaint instituted against any officer or employee because of an act performed by that officer or employee in the lawful discharge of duties and under the provisions of this code shall be defended by the legal representatives of the jurisdiction until the final termination of the proceedings. The code official or any subordinate shall not be liable for costs in an action, suit or proceeding that is instituted in pursuance of the provisions of this code.

❖ See commentary for Section 103.4.

SECTION 104
DUTIES AND POWERS OF THE CODE OFFICIAL

[A] 104.1 General. The code official is hereby authorized and directed to enforce the provisions of this code. The code official shall have the authority to render interpretations of this code and to adopt policies and procedures in order to clarify the application of its provisions. Such interpretations, policies and procedures shall be in compliance with the intent and purpose of this code. Such policies and procedures shall not have the effect of waiving requirements specifically provided for in this code.

❖ The duty of the code official is to enforce the code, and he or she is the "authority having jurisdiction" for all matters relating to the code and its enforcement. It is the duty of the code official to interpret the code and to determine compliance. Code compliance will not always be easy to determine and will require judgment and expertise, particularly when enforcing the provisions of Sections 105.1 and 105.2. In exercising this authority, however, the code official cannot set aside or ignore any provision of the code.

[A] 104.2 Applications and permits. The code official shall receive applications, review *construction documents* and issue permits for the installation and *alteration* of mechanical systems, inspect the premises for which such permits have been issued and enforce compliance with the provisions of this code.

❖ The code enforcement process is normally initiated with an application for a permit. The code official is responsible for processing the applications and issuing permits for the installation, replacement, addition to or modification of mechanical systems in accordance with the code.

INTERNATIONAL CODE COUNCIL®
Copyright © 2015 ICC. ALL RIGHTS RESERVED. Accessed by David Dammon on Jun 21, 2017 12:30:52 PM pursuant to License Agreement with ICC. No further reproduction or distribution authorized. ANY UNAUTHORIZED REPRODUCTION OR DISTRIBUTION IS A VIOLATION OF THE FEDERAL COPYRIGHT ACT AND THE LICENSE AGREEMENT, AND SUBJECT TO CIVIL AND CRIMINAL PENALTIES THEREUNDER.

[A] 104.3 Inspections. The code official shall make all of the required inspections, or shall accept reports of inspection by *approved* agencies or individuals. Reports of such inspections shall be in writing and be certified by a responsible officer of such *approved* agency or by the responsible individual. The code official is authorized to engage such expert opinion as deemed necessary to report upon unusual technical issues that arise, subject to the approval of the appointing authority.

❖ The code official is required to make inspections as necessary to determine compliance with the code or to accept written reports of inspections by an approved agency. The inspection of the work in progress or accomplished is another significant element in determining code compliance. Even though a department does not have the resources to inspect every aspect of all work, the required inspections are those that are dictated by administrative rules and procedures based on many factors, including available inspection resources. In order to expand the resources available for inspections, the code official may approve an inspection agency that, in the code official's opinion, possesses the proper qualifications to perform the inspections. When unusual, extraordinary or complex technical issues arise concerning either mechanical installations or the safety of an existing mechanical system, the code official has the authority to seek the opinion and advice of experts. A technical report from an expert requested by the code official can be used to assist the code official in the approval process.

[A] 104.4 Right of entry. Where it is necessary to make an inspection to enforce the provisions of this code, or where the code official has reasonable cause to believe that there exists in a building or upon any premises any conditions or violations of this code that make the building or premises unsafe, insanitary, dangerous or hazardous, the code official shall have the authority to enter the building or premises at all reasonable times to inspect or to perform the duties imposed upon the code official by this code. If such building or premises is occupied, the code official shall present credentials to the occupant and request entry. If such building or premises is unoccupied, the code official shall first make a reasonable effort to locate the owner, the owner's authorized agent or other person having charge or control of the building or premises and request entry. If entry is refused, the code official has recourse to every remedy provided by law to secure entry.

Where the code official has first obtained a proper inspection warrant or other remedy provided by law to secure entry, an owner, the owner's authorized agent or occupant or person having charge, care or control of the building or premises shall not fail or neglect, after proper request is made as herein provided, to promptly permit entry therein by the code official for the purpose of inspection and examination pursuant to this code.

❖ The first part of this section establishes the right of the code official to enter the premises to conduct the permit inspections required by Section 107. Permit application forms typically include a statement in the certification signed by the applicant (who is the owner or owner's agent) granting the code official the authority to enter areas covered by the permit, as needed, to enforce code provisions related to the permit. The right to enter other structures or premises is more limited. First, to protect the right of privacy, the owner or occupant must grant the code official permission before an interior inspection of the property can be conducted. Permission is not required for inspections that can be accomplished from within the public right-of-way. Second, access may be denied by the owner or occupant. Unless the inspector has reasonable cause to believe that a violation of the code exists, access may be unattainable. Third, code officials must present proper identification (see commentary, Section 104.6) and request admittance during reasonable hours—usually the normal business hours of the establishment—to be admitted. Fourth, inspections must be aimed at securing or determining compliance with the provisions and intent of the regulations that are specifically within the established scope of the code official's authority.

Searches to gather information for the purpose of enforcing the other codes, ordinances or regulations are considered unreasonable and are prohibited by the Fourth Amendment to the U.S. Constitution. "Reasonable cause" in the context of this section must be distinguished from "probable cause," which is required to gain access to property in criminal cases. The burden of proof establishing reasonable cause may vary among jurisdictions. Usually, an inspector must show that the property is subject to inspection under the provisions of the code; that the interests of the public health, safety and welfare outweigh the individual's right to maintain privacy; and that the inspection is required solely to determine compliance with the provisions of the code.

Many jurisdictions do not recognize the concept of an administrative warrant and may require the code official to prove probable cause in order to gain access upon refusal. This burden of proof is usually greater, often requiring the code official to state in advance why access is needed (usually access is restricted to gathering evidence for seeking an indictment or making an arrest); what specific items or information is sought; its relevance to the case against the subject; how knowledge of the relevance of the information or items sought was obtained; and how the evidence sought will be used. In all such cases, the right to privacy must always be weighed against the right of the code official to conduct an inspection to verify that the public health, safety and welfare are not in jeopardy. Such important and complex constitutional issues should be discussed with the jurisdiction's legal counsel. Jurisdictions should establish procedures for securing the necessary court orders when an inspection is deemed necessary following a refusal.

The last paragraph in this section requires the owner or occupant to permit entry for inspection, if a

INTERNATIONAL CODE COUNCIL®
Copyright © 2015 ICC. ALL RIGHTS RESERVED. Accessed by David Dammon on Jun 21, 2017 12:30:52 PM pursuant to License Agreement with ICC. No further reproduction or distribution authorized. ANY UNAUTHORIZED REPRODUCTION OR DISTRIBUTION IS A VIOLATION OF THE FEDERAL COPYRIGHT ACT AND THE LICENSE AGREEMENT, AND SUBJECT TO CIVIL AND CRIMINAL PENALTIES THEREUNDER.

proper inspection warrant or other documentation required by law has been obtained.

[A] 104.5 Identification. The code official shall carry proper identification when inspecting structures or premises in the performance of duties under this code.

❖ This section requires the code official (including by definition all authorized designees) to carry identification when conducting the duties of the position. The identification removes any question of the purpose and authority of the inspector.

[A] 104.6 Notices and orders. The code official shall issue all necessary notices or orders to ensure compliance with this code.

❖ An important element of code enforcement is the necessary advisement of deficiencies and corrections, which is accomplished through notices and orders. The code official is required to issue orders to abate illegal or unsafe conditions. Sections 108.7, 108.7.1, 108.7.2 and 108.7.3 contain additional information concerning these notices.

[A] 104.7 Department records. The code official shall keep official records of applications received, permits and certificates issued, fees collected, reports of inspections, and notices and orders issued. Such records shall be retained in the official records for the period required for retention of public records.

❖ In keeping with the need for an efficiently conducted business practice, the code official must keep records pertaining to permit applications, permits, fees collected, inspections, notices and orders issued. Such documentation provides a valuable resource if questions arise regarding the department's actions with respect to a building. This section requires that other documents be kept for the length of time mandated by a jurisdiction's, or its state's, laws or administrative rules for retaining public records.

SECTION 105
APPROVAL

[A] 105.1 Modifications. Where there are practical difficulties involved in carrying out the provisions of this code, the code official shall have the authority to grant modifications for individual cases upon application of the owner or owner's authorized agent, provided that the code official shall first find that special individual reason makes the strict letter of this code impractical and the modification is in compliance with the intent and purpose of this code and does not lessen health, life and fire safety requirements. The details of action granting modifications shall be recorded and entered in the files of the mechanical inspection department.

❖ The code official may amend or make exceptions to the code, as needed, where strict compliance is impractical. Only the code official has authority to grant modifications. Consideration of a particular difficulty is to be based on the application of the owner and a demonstration that the intent of the code is accomplished. This section is not intended to permit setting aside or ignoring a code provision; rather, it is intended to provide acceptance of equivalent protection. Such modifications do not, however, extend to actions that are necessary to correct violations of the code. In other words, a code violation or the expense of correcting one cannot constitute a practical difficulty.

[A] 105.2 Alternative materials, methods, equipment and appliances. The provisions of this code are not intended to prevent the installation of any material or to prohibit any method of construction not specifically prescribed by this code, provided that any such alternative has been *approved*. An alternative material or method of construction shall be *approved* where the code official finds that the proposed design is satisfactory and complies with the intent of the provisions of this code, and that the material, method or work offered is, for the purpose intended, not less than the equivalent of that prescribed in this code in quality, strength, effectiveness, fire resistance, durability and safety. Where the alternative material, design or method of construction is not approved, the *code official* shall respond in writing, stating the reasons why the alternative was not approved.

❖ The code is not intended to discourage innovative ideas or technological advances. A comprehensive regulatory document such as a mechanical code, cannot envision and then address all future innovations in the industry. As a result, a performance code must be applicable to and provide a basis for the approval of an increasing number of newly developed, innovative materials, systems and methods for which no code text or referenced standards yet exist. The fact that a material, product or method of construction is not addressed in the code is not an indication that the material, product or method is prohibited. The code official is expected to apply sound technical judgment in accepting materials, systems or methods that, while not anticipated by the drafters of the current code text, can be demonstrated to offer equivalent performance. By virtue of its text, the code regulates new and innovative construction practices while addressing the relative safety of building occupants. The code official is responsible for determining whether a requested alternative provides a level of protection of the public health, safety and welfare equivalent to that required by the code. The last sentence requires that the reasons why a proposed alternative was disapproved be provided in writing to the applicant. The applicant for a code modification or variance deserves to know why their proposed alternative was unacceptable. This will help the applicant prepare their case and will also discourage authorities from making determinations without having solid justification based on the spirit and intent of the codes.

INTERNATIONAL CODE COUNCIL®
Copyright © 2015 ICC. ALL RIGHTS RESERVED. Accessed by David Dammon on Jun 21, 2017 12:30:52 PM pursuant to License Agreement with ICC. No further reproduction or distribution authorized. ANY UNAUTHORIZED REPRODUCTION OR DISTRIBUTION IS A VIOLATION OF THE FEDERAL COPYRIGHT ACT AND THE LICENSE AGREEMENT, AND SUBJECT TO CIVIL AND CRIMINAL PENALTIES THEREUNDER.

[A] 105.2.1 Research reports. Supporting data, where necessary to assist in the approval of materials or assemblies not specifically provided for in this code, shall consist of valid research reports from *approved* sources.

❖ When an alternative material or method is proposed for construction, it is incumbent upon the code official to determine whether this alternative is, in fact, an equivalent to the methods prescribed by the code. Reports providing evidence of this equivalency are required to be supplied by an approved source, meaning a source that the code official finds to be reliable and accurate. The ICC Evaluation Service (ICC-ES) is one example of an agency that provides research reports for alternative materials and methods.

[A] 105.3 Required testing. Where there is insufficient evidence of compliance with the provisions of this code, or evidence that a material or method does not conform to the requirements of this code, or in order to substantiate claims for alternative materials or methods, the code official shall have the authority to require tests as evidence of compliance to be made at no expense to the jurisdiction.

❖ Sufficient technical data, test reports and documentation must be submitted for evaluation by the code official to provide the basis on which he or she can make a decision regarding an alternative material or type of equipment. If evidence satisfactory to the code official proves that the alternative equipment, material or construction method is equivalent to that required by the code, he or she is obligated to approve it. Any such approval cannot have the effect of waiving any requirements of the code. The burden of proof of equivalence lies with the applicant who proposes the use of alternative equipment, materials or methods.

[A] 105.3.1 Test methods. Test methods shall be as specified in this code or by other recognized test standards. In the absence of recognized and accepted test methods, the code official shall approve the testing procedures.

❖ The code official must require the submission of any appropriate information and data to assist in the determination of equivalency. This information must be submitted before a permit can be issued. The type of information required includes test data in accordance with the referenced standards, evidence of compliance with the referenced standard specifications and design calculations. A research report issued by an authoritative agency is particularly useful in providing the code official with the technical basis for evaluation and approval of new and innovative materials and components. The use of authoritative research reports can greatly assist the code official by reducing the time-consuming engineering analysis necessary to review materials and products. Failure to substantiate a request for the use of an alternative method is a valid reason for the code official to deny a request.

[A] 105.3.2 Testing agency. Tests shall be performed by an *approved* agency.

❖ The testing agency must be approved by the code official. The testing agency should have technical expertise, test equipment and quality assurance to properly conduct and report the necessary testing.

[A] 105.3.3 Test reports. Reports of tests shall be retained by the code official for the period required for retention of public records.

❖ Test reports for retrieval of substantiation of the modification based on the tests are to be retained in accordance with public record laws. The attorney of the jurisdiction could be asked for the specific time period stated in applicable laws of the locality.

[A] 105.4 Approved materials and equipment. Materials, *equipment* and devices *approved* by the code official shall be constructed and installed in accordance with such approval.

❖ The code is a compilation of criteria with which materials, equipment, devices and systems must comply to be suitable for a particular application. The code official has a duty to evaluate such materials, equipment, devices and systems for code compliance and when compliance is determined, approve the same for use. The materials, equipment, devices and systems must be constructed and installed in compliance with, and all conditions and limitations considered as a basis for, that approval. For example, the manufacturer's instructions and recommendations are to be followed if the approval of the material was based, even in part, on those instructions and recommendations. The approval authority given to the code official is a significant responsibility and is a key to code compliance. The approval process is first technical and then administrative and must be approached as such. For example, if data to determine code compliance is required, such data should be in the form of test reports or engineering analysis and not simply taken from a sales brochure.

[A] 105.5 Material, equipment and appliance reuse. Materials, *equipment*, appliances and devices shall not be reused unless such elements have been reconditioned, tested and placed in good and proper working condition and *approved*.

❖ The code criteria for materials, equipment and appliances have changed over the years. Evaluation of testing and materials technology has permitted the development of new criteria that the old materials may not satisfy. As a result, used materials must be evaluated in the same manner as new materials. Used (previously installed) equipment and appliances must be equivalent to that required by the code if they are to be used again in a new installation.

INTERNATIONAL CODE COUNCIL®
Copyright © 2015 ICC. ALL RIGHTS RESERVED. Accessed by David Dammon on Jun 21, 2017 12:30:52 PM pursuant to License Agreement with ICC. No further reproduction or distribution authorized. ANY UNAUTHORIZED REPRODUCTION OR DISTRIBUTION IS A VIOLATION OF THE FEDERAL COPYRIGHT ACT AND THE LICENSE AGREEMENT, AND SUBJECT TO CIVIL AND CRIMINAL PENALTIES THEREUNDER.

SECTION 106
PERMITS

[A] 106.1 Where required. An owner, owner's authorized agent or contractor who desires to erect, install, enlarge, alter, repair, remove, convert or replace a mechanical system, the installation of which is regulated by this code, or to cause such work to be performed, shall first make application to the code official and obtain the required permit for the work.

Exception: Where *equipment* and *appliance* replacements or repairs must be performed in an emergency situation, the permit application shall be submitted within the next working business day of the department of mechanical inspection.

❖ In general, a permit is required for all activities that are regulated by the code, and these activities cannot begin until the permit is issued. A mechanical permit is required for the installation, replacement, alteration or modification of mechanical systems and components that are in the scope of applicability of the code. Replacement of an existing piece of equipment or related piping is treated no differently than a new installation in new building construction. The permit causes the work to be inspected to determine compliance with the intent of the code. The exception provides for prompt permit applications for situations where equipment and appliance replacements and repairs are done to address an emergency situation. This action enables the department of mechanical inspection to promptly inspect the work.

[A] 106.1.1 Annual permit. Instead of an individual construction permit for each alteration to an already *approved* system or equipment or application installation, the code official is authorized to issue an annual permit upon application therefor to any person, firm or corporation regularly employing one or more qualified tradespersons in the building, structure or on the premises owned or operated by the applicant for the permit.

❖ Sometimes the AHJ will issue an annual permit for buildings such as hospitals, school campuses, industrial and manufacturing plants, and the like, where work that requires a permit is ongoing throughout the year. Such occupancies typically have their own full-time engineering and trades employees to design, oversee and perform the work. Some buildings are altered continuously because of changes in technologies and changing operations within the occupancy. It would be burdensome to obtain numerous permits throughout the year on a continuous basis. It is the responsibility of the permit holder to make arrangements with the code official regarding periodic inspections for the work. This is especially important for work that will be concealed.

[A] 106.1.2 Annual permit records. The person to whom an annual permit is issued shall keep a detailed record of alterations made under such annual permit. The code official shall have access to such records at all times or such records shall be filed with the code official as designated.

❖ Annual permits need to be monitored to prevent abuse of the privilege and to allow for changes in the scope of the work or changes in who is performing the work. Accurate record keeping of the work performed will advise the code official of situations where a project-specific permit needs to be issued instead of being under the umbrella of an annual permit.

[A] 106.2 Permits not required. Permits shall not be required for the following:

1. Portable heating appliances.
2. Portable ventilation appliances and *equipment*.
3. Portable cooling units.
4. Steam, hot water or chilled water piping within any heating or cooling *equipment* or appliances regulated by this code.
5. The replacement of any minor part that does not alter the approval of *equipment* or an *appliance* or make such *equipment* or *appliance* unsafe.
6. Portable evaporative coolers.
7. Self-contained refrigeration systems that contain 10 pounds (4.5 kg) or less of refrigerant, or that are actuated by motors of 1 horsepower (0.75 kW) or less.
8. Portable fuel cell appliances that are not connected to a fixed piping system and are not interconnected to a power grid.

Exemption from the permit requirements of this code shall not be deemed to grant authorization for work to be done in violation of the provisions of this code or other laws or ordinances of this jurisdiction.

❖ The mechanical installations intended to be exempt from the requirement for a permit are very limited as evidenced by Items 1 through 8. Items 1, 2, 3 and 6 pertain to appliances and equipment that are temporarily used and are not designed for permanent installation. Examples of portable heating, cooling and ventilating appliances and equipment include space heaters; construction site heaters; window unit air conditioners; ventilating fans and blowers; and cooling and ventilation equipment for localized manufacturing processes.

Item 8 also includes the term "portable," but it is used to differentiate this equipment from the permanently installed fuel cell appliances that are hard-piped to a fuel source, such as a natural gas line and/or connected to the electrical generation power grid (see commentary, Section 924). Portable fuel cell appliances are fueled by on-board gas cylinders and are used as portable generators for such use as charging the batteries of electric cars.

Item 4 applies to steam and water piping that is contained within a packaged assembly or within the enclosure of HVAC equipment, such as air-handling

INTERNATIONAL CODE COUNCIL®
Copyright © 2015 ICC. ALL RIGHTS RESERVED. Accessed by David Dammon on Jun 21, 2017 12:30:52 PM pursuant to License Agreement with ICC. No further reproduction or distribution authorized. ANY UNAUTHORIZED REPRODUCTION OR DISTRIBUTION IS A VIOLATION OF THE FEDERAL COPYRIGHT ACT AND THE LICENSE AGREEMENT, AND SUBJECT TO CIVIL AND CRIMINAL PENALTIES THEREUNDER.

units, heat pumps, cooling towers, chiller units, fan coil units and similar assemblies. This piping is considered part of the equipment and is, therefore, subject to the requirements for the equipment.

Item 5 applies to the replacements of equipment components and appliance components that are minor. A permit would be required if the component replacement could potentially affect either the safety of the equipment or the conditions of approval of the equipment. For example, replacement of a defective control with a control of the same type and specifications as the original factory-supplied control would not require a permit. Replacement of a burner assembly with a burner assembly having a different input capacity or that is designed to burn a different fuel would require a permit.

Item 7 applies to package-type equipment such as freezers, walk-in and reach-in coolers, refrigerated cabinets and cases and similar equipment in which all components of the refrigeration system are located within a single enclosure. The refrigerant charge and compressor motor horsepower are the thresholds of applicability of this item.

The equipment, piping and installation of the eight described items must comply with the code even though a permit is not required for the minor items.

[A] 106.3 Application for permit. Each application for a permit, with the required fee, shall be filed with the code official on a form furnished for that purpose and shall contain a general description of the proposed work and its location. The application shall be signed by the owner or the owner's authorized agent. The permit application shall indicate the proposed *occupancy* of all parts of the building and of that portion of the site or lot, if any, not covered by the building or structure and shall contain such other information required by the code official.

❖ This section limits permit applicants to the building owner or an authorized agent of the owner. An owner's authorized agent could be anyone who is given written permission to act in the owner's interest to obtain a permit, such as an architect, engineer, contractor, tenant or other. Permit forms will generally have enough space for a very brief description of the work to be accomplished, which is sufficient for small jobs. For larger projects, the description will be contained in construction documents.

[A] 106.3.1 Construction documents. *Construction documents*, engineering calculations, diagrams and other data shall be submitted in two or more sets with each application for a permit. The code official shall require *construction documents*, computations and specifications to be prepared and designed by a *registered design professional* where required by state law. Where special conditions exist, the code official is authorized to require additional *construction documents* to be prepared by a *registered design professional*. *Construction documents* shall be drawn to scale and shall be of sufficient clarity to indicate the location, nature and extent of the work proposed and show in detail that the work conforms to the provisions of this code. *Construction documents* for buildings more than two stories in height shall indicate where penetrations will be made for mechanical systems, and the materials and methods for maintaining required structural safety, fire-resistance rating and fireblocking.

Exception: The code official shall have the authority to waive the submission of *construction documents*, calculations or other data if the nature of the work applied for is such that reviewing of *construction documents* is not necessary to determine compliance with this code.

❖ When the work is of a "minor nature," either in scope or needed description, the code official may use judgment in determining the need for a detailed description of the work. An example of minor work that may not involve a detailed description is the replacement of an existing piece of equipment in a mechanical system or the replacement or repair of a defective portion of a piping system. These provisions are intended to reflect the minimum scope of information needed to determine code compliance. Complex mechanical systems often contain special conditions that can require the involvement of a registered design professional, such as a registered engineer or architect. Many boilers, high heat appliances and appliances located in hazardous areas can create dangerous situations that require more details to be provided on additional construction documents. A statement on the construction documents, such as "All mechanical work must comply with the 2006 edition of the ICC *International Mechanical Code*," is not an acceptable substitute for showing the required information. This section also requires the code official to determine that state professional registration laws are complied with as they apply to the preparation of construction documents.

[A] 106.3.2 Preliminary inspection. Before a permit is issued, the code official is authorized to inspect and evaluate the systems, *equipment*, buildings, devices, premises and spaces or areas to be used.

❖ Some projects might require a preliminary inspection by the code official prior to a permit being issued. This is especially useful for remodel and addition projects where the conditions of the existing building mechanical systems are unknown or are of questionable condition. This section authorizes the code official to make such inspections.

[A] 106.3.3 Time limitation of application. An application for a permit for any proposed work shall be deemed to have been abandoned 180 days after the date of filing, unless such application has been pursued in good faith or a permit has been issued; except that the code official shall have the authority to grant one or more extensions of time for additional periods not exceeding 180 days each. The extension shall be requested in writing and justifiable cause demonstrated.

❖ Once an application for a permit has been submitted for proposed work, a time limit of 180 days is established for issuance of the permit. This prevents the

INTERNATIONAL CODE COUNCIL®
Copyright © 2015 ICC. ALL RIGHTS RESERVED. Accessed by David Dammon on Jun 21, 2017 12:30:52 PM pursuant to License Agreement with ICC. No further reproduction or distribution authorized. ANY UNAUTHORIZED REPRODUCTION OR DISTRIBUTION IS A VIOLATION OF THE FEDERAL COPYRIGHT ACT AND THE LICENSE AGREEMENT, AND SUBJECT TO CIVIL AND CRIMINAL PENALTIES THEREUNDER.

code official from having to hold onto incomplete or delayed applications for an indefinite amount of time. The code official can grant extensions for this time period if provided with a written request with justifiable reasons for the extension request.

[A] 106.4 Permit issuance. The application, *construction documents* and other data filed by an applicant for a permit shall be reviewed by the code official. If the code official finds that the proposed work conforms to the requirements of this code and all laws and ordinances applicable thereto, and that the fees specified in Section 106.5 have been paid, a permit shall be issued to the applicant.

❖ This section requires the code official to review all submittals for a permit for compliance with the code and further requires code officials to verify that the project will be carried out in accordance with other applicable laws as well. This may involve interagency communication and cooperation so that all laws are being obeyed. Once the code official finds this to be so, a permit may be issued upon payment of the required fees.

[A] 106.4.1 Approved construction documents. When the code official issues the permit where *construction documents* are required, the *construction documents* shall be endorsed in writing and stamped "*APPROVED*." Such *approved construction documents* shall not be changed, modified or altered without authorization from the code official. Work shall be done in accordance with the *approved construction documents*.

The code official shall have the authority to issue a permit for the construction of part of a mechanical system before the *construction documents* for the entire system have been submitted or *approved*, provided adequate information and detailed statements have been filed complying with all pertinent requirements of this code. The holder of such permit shall proceed at his or her own risk without assurance that the permit for the entire mechanical system will be granted.

❖ Construction documents that reflect compliance with code requirements form an integral part of the permit process. Successful completion of the work depends on these documents. This section requires the code official to stamp the complying construction documents as being "*APPROVED*" and fixes the status of the document in time. *Approved* documents may not be revised without the express authorization of the code official to maintain the code-compliance level of the documents.

[A] 106.4.2 Validity. The issuance of a permit or approval of *construction documents* shall not be construed to be a permit for, or an approval of, any violation of any of the provisions of this code or of other ordinances of the jurisdiction. A permit presuming to give authority to violate or cancel the provisions of this code shall be invalid.

The issuance of a permit based upon *construction documents* and other data shall not prevent the code official from thereafter requiring the correction of errors in said *construction documents* and other data or from preventing building operations from being carried on thereunder where in violation of this code or of other ordinances of this jurisdiction.

❖ This powerful code section states the fundamental premise that the permit is only a license to proceed with the work. It is not a license to violate, cancel or set aside any provisions of the code. This statement is important because it means that despite any errors in the approval process, the permit applicant is responsible for code compliance.

[A] 106.4.3 Expiration. Every permit issued by the code official under the provisions of this code shall expire by limitation and become null and void if the work authorized by such permit is not commenced within 180 days from the date of such permit, or if the work authorized by such permit is suspended or abandoned at any time after the work is commenced for a period of 180 days. Before such work recommences, a new permit shall be first obtained and the fee therefor shall be one-half the amount required for a new permit for such work, provided that changes have not been made and will not be made in the original *construction documents* for such work, and provided further that such suspension or abandonment has not exceeded one year.

❖ The permit becomes invalid under two distinct situations, but both are based on a six-month period. The first situation is when no work has been started six months from issuance of the permit. The second situation is when there is no continuation of authorized work for six months. The person who was issued the permit should be notified, in writing, that the permit is invalid and what steps must be taken to restart the work. This section also provides the administrative authority with a means of offsetting the costs associated with the administration of expired, reissued permits by charging a nominal fee for permit reissuance. If, however, the nature or scope of the work to be resumed is different from that contemplated by the original permit, the permit process essentially starts from "scratch" and full fees are charged. The same procedure would also apply if the work has not commenced within one year of the date of permit issuance or if work has been suspended for a year or more.

[A] 106.4.4 Extensions. A permittee holding an unexpired permit shall have the right to apply for an extension of the time within which the permittee will commence work under that permit when work is unable to be commenced within the time required by this section for good and satisfactory reasons. The code official shall extend the time for action by the permittee for a period not exceeding 180 days if there is reasonable cause. A permit shall not be extended more than once. The fee for an extension shall be one-half the amount required for a new permit for such work.

❖ Although it is customary for a project to begin immediately following issuance of a permit, there may be occasions when an unforeseen delay may occur. This section intends to afford the permit holder an opportunity to apply for and receive a single 180-day extension of time within which to begin a project

INTERNATIONAL CODE COUNCIL®
Copyright © 2015 ICC. ALL RIGHTS RESERVED. Accessed by David Dammon on Jun 21, 2017 12:30:52 PM pursuant to License Agreement with ICC. No further reproduction or distribution authorized. ANY UNAUTHORIZED REPRODUCTION OR DISTRIBUTION IS A VIOLATION OF THE FEDERAL COPYRIGHT ACT AND THE LICENSE AGREEMENT, AND SUBJECT TO CIVIL AND CRIMINAL PENALTIES THEREUNDER.

under a still-valid permit (less than 180 days old). The applicant must, however, give the code official an adequate explanation for the delay in starting a project, which could include such things as the need to obtain approvals or permits for the project from other agencies having jurisdiction. This section requires the code official to determine what constitutes "good and satisfactory" reasons for any delay, and further allows the jurisdiction to offset its administrative costs for extending the permit by charging one-half the permit fee for the extension.

[A] 106.4.5 Suspension or revocation of permit. The code official shall have the authority to suspend or revoke a permit issued under the provisions of this code wherever the permit is issued in error or on the basis of incorrect, inaccurate or incomplete information, or in violation of any ordinance or regulation or any of the provisions of this code.

❖ A permit is in reality a license to proceed with the work. The code official, however, must revoke all permits shown to be based, all or in part, on any false statement or misrepresentation of fact. An applicant may subsequently reapply for a permit with the appropriate corrections or modifications made to the application and the construction documents.

[A] 106.4.6 Retention of construction documents. One set of *approved construction documents* shall be retained by the code official for a period of not less than 180 days from date of completion of the permitted work, or as required by state or local laws. One set of *approved construction documents* shall be returned to the applicant, and said set shall be kept on the site of the building or job at all times during which the work authorized thereby is in progress.

❖ Once the code official has stamped or endorsed as approved the construction documents on which the permit is based (see commentary, Section 106.4.1), one set of approved construction documents must be kept on the construction site to serve as the basis for all subsequent inspections. To avoid confusion, the construction documents on the site must be precisely the documents that were approved and stamped because inspections are to be based on these approved documents. Additionally, the contractor cannot determine compliance with the approved construction documents unless those documents are readily available. Unless the approved construction documents are available, the inspection should be postponed and work on the project halted.

[A] 106.4.7 Previous approvals. This code shall not require changes in the *construction documents*, construction or designated *occupancy* of a structure for which a lawful permit has been heretofore issued or otherwise lawfully authorized, and the construction of which has been pursued in good faith within 180 days after the effective date of this code and has not been abandoned.

❖ This section provides the code official with a useful tool to protect the continuity of permits issued under previous codes or code editions, as long as such permits are being actively executed subsequent to the effective date of the ordinance adopting the newer code.

[A] 106.4.8 Posting of permit. The permit or a copy shall be kept on the site of the work until the completion of the project.

❖ This section requires the permit (or a copy of the permit) to be on the work site until the project is completed. Having the permit at the job site provides project information and evidence to anyone needing to know if the project has been duly authorized.

[A] 106.5 Fees. A permit shall not be issued until the fees prescribed in Section 106.5.2 have been paid, nor shall an amendment to a permit be released until the additional fee, if any, due to an increase of the mechanical system, has been paid.

❖ All fees are to be paid prior to permit issuance. This requirement establishes that the permit applicant intends to proceed with the work and also facilitates payment.

[A] 106.5.1 Work commencing before permit issuance. Any person who commences work on a mechanical system before obtaining the necessary permits shall be subject to 100 percent of the usual permit fee in addition to the required permit fees.

❖ This section is intended to serve as a deterrent to proceeding with work on a mechanical system without a permit (except as provided in Sections 106.1 and 106.2). As a punitive measure, it doubles the permit fee to be charged. This section does not, however, intend to penalize a contractor called upon to do emergency work after hours if he or she promptly notifies the code official the next business day, obtains the requisite permit for the work done and has the required inspections performed.

[A] 106.5.2 Fee schedule. The fees for mechanical work shall be as indicated in the following schedule.

[JURISDICTION TO INSERT APPROPRIATE SCHEDULE]

❖ A published fee schedule must be established for plans examination, permits and inspections. Ideally, the department should generate revenues that cover operating costs and expenses. The permit fee schedule is an integral part of this process.

[A] 106.5.3 Fee refunds. The code official shall authorize the refunding of fees as follows.

1. The full amount of any fee paid hereunder which was erroneously paid or collected.
2. Not more than **[SPECIFY PERCENTAGE]** percent of the permit fee paid where work has not been done under a permit issued in accordance with this code.
3. Not more than **[SPECIFY PERCENTAGE]** percent of the plan review fee paid where an application for a permit for which a plan review fee has been paid is withdrawn or canceled before any plan review effort has been expended.

INTERNATIONAL CODE COUNCIL®
Copyright © 2015 ICC. ALL RIGHTS RESERVED. Accessed by David Dammon on Jun 21, 2017 12:30:52 PM pursuant to License Agreement with ICC. No further reproduction or distribution authorized. ANY UNAUTHORIZED REPRODUCTION OR DISTRIBUTION IS A VIOLATION OF THE FEDERAL COPYRIGHT ACT AND THE LICENSE AGREEMENT, AND SUBJECT TO CIVIL AND CRIMINAL PENALTIES THEREUNDER.

The code official shall not authorize the refunding of any fee paid, except upon written application filed by the original permittee not later than 180 days after the date of fee payment.

❖ This section allows for a partial refund of fees resulting from the revocation, abandonment or discontinuance of a mechanical project for which a permit has been issued and fees have been collected. The incomplete work for which the excess fees are to be refunded refers to the work that would have been required by the department had the permit not been terminated. The refund of fees should be related to the cost of enforcement services not provided because of termination of the project.

SECTION 107
INSPECTIONS AND TESTING

[A] 107.1 General. The code official is authorized to conduct such inspections as are deemed necessary to determine compliance with the provisions of this code. Construction or work for which a permit is required shall be subject to inspection by the code official, and such construction or work shall remain accessible and exposed for inspection purposes until *approved*. Approval as a result of an inspection shall not be construed to be an approval of a violation of the provisions of this code or of other ordinances of the jurisdiction. Inspections presuming to give authority to violate or cancel the provisions of this code or of other ordinances of the jurisdiction shall not be valid.

❖ The inspection function is one of the more important aspects of building department operations. This section authorizes the code official to inspect the work for which a permit has been issued and requires that the work to be inspected remain accessible to the code official until inspected and approved. Any expense incurred in removing or replacing material that conceals an item to be inspected is not the responsibility of the code official or the jurisdiction. As with the issuance of permits (see Section 106.4.2), an approval as a result of an inspection is not a license to violate the code. Any work approved which might contain a violation of the code does not relieve the applicant from complying with the code.

[A] 107.2 Required inspections and testing. The code official, upon notification from the permit holder or the permit holder's agent, shall make the following inspections and other such inspections as necessary, and shall either release that portion of the construction or shall notify the permit holder or the permit holder's agent of violations that must be corrected. The holder of the permit shall be responsible for the scheduling of such inspections.

1. Underground inspection shall be made after trenches or ditches are excavated and bedded, piping installed, and before backfill is put in place. Where excavated soil contains rocks, broken concrete, frozen chunks and other rubble that would damage or break the piping or cause corrosive action, clean backfill shall be on the job site.
2. Rough-in inspection shall be made after the roof, framing, fireblocking and bracing are in place and all ducting and other components to be concealed are complete, and prior to the installation of wall or ceiling membranes.
3. Final inspection shall be made upon completion of the mechanical system.

Exception: Ground-source heat pump loop systems tested in accordance with Section 1210.10 shall be permitted to be backfilled prior to inspection.

The requirements of this section shall not be considered to prohibit the operation of any heating *equipment* or appliances installed to replace existing heating *equipment* or appliances serving an occupied portion of a structure provided that a request for inspection of such heating *equipment* or appliances has been filed with the department not more than 48 hours after such replacement work is completed, and before any portion of such *equipment* or appliances is concealed by any permanent portion of the structure.

❖ Inspections are necessary to determine that an installation conforms to all code requirements. Because the majority of a mechanical system is hidden within the building enclosure, periodic inspections are necessary before portions of the system are concealed. The code official is required to determine that mechanical systems and equipment are installed in accordance with the approved construction documents and the applicable code requirements. All inspections that are necessary to provide verification must be conducted. Generally, the administrative rules of a department may list the interim inspections to be required. Construction that occurs in steps or phases may necessitate multiple inspections; therefore, an exact number of required inspections cannot be specified. Where violations are noted and corrections are required, reinspections may be necessary. As time permits, frequent inspections of some job sites, especially where the work is complex, can be beneficial if they detect code compliance problems or potential problems before they develop or become more difficult to correct. The contractor, builder, owner or other authorized party is responsible for arranging for the required inspections and coordinating inspections to prevent work from being concealed before it is inspected.

1. Inspection of underground piping is especially important because once it is covered, it is the most challenging part of a mechanical system in which to detect a leak. If repairs are necessary, underground repairs are proportionally more expensive because of the need for heavy equipment and the more labor-intensive nature of working below grade level. To reduce possible damage to pipe from rubble, rocks and other rough materials, excavations must be bedded and backfilled with clean fill materials spread and tamped to

INTERNATIONAL CODE COUNCIL®
Copyright © 2015 ICC. ALL RIGHTS RESERVED. Accessed by David Dammon on Jun 21, 2017 12:30:52 PM pursuant to License Agreement with ICC. No further reproduction or distribution authorized. ANY UNAUTHORIZED REPRODUCTION OR DISTRIBUTION IS A VIOLATION OF THE FEDERAL COPYRIGHT ACT AND THE LICENSE AGREEMENT, AND SUBJECT TO CIVIL AND CRIMINAL PENALTIES THEREUNDER.

provide adequate support and protection for piping.

2. A rough-in inspection is an inspection of all parts of the mechanical system that will eventually be concealed in the building structure. The inspection must be made before any of the system is closed up or hidden from view. To gain approval, the mechanical systems must pass the required rough-in tests.

   A rough-in inspection may be completed all at one time or as a series of inspections. This is administratively determined by the local inspections department and is typically dependent on the size of the job.

3. A final inspection may be done as a series of inspections or all at one time, similar to a rough-in inspection. A final inspection is required prior to approval of mechanical work and installations. For the construction of a new building, final approval is required prior to the issuance of the certificate of occupancy as specified in the building code. To verify that all previously issued correction orders have been complied with and to determine whether subsequent violations exist, a final inspection must be made. All violations observed during the final inspection must be noted and the permit holder advised.

   The final inspection is made after the completion of the work or installation. Typically, the final inspection is an inspection of all that was installed after the rough-in inspection and not concealed in the building construction. Subsequent reinspections are necessary if the final inspection has generated a notice of violation.

   The exception is in relation to Item 1 in this section, which requires inspection before backfill is put in place. The construction sequence of ground-source heat pump loop systems involves trenching, placement and testing of that portion of the system; backfilling; then trenching for another portion of the system. Thus, the exception is needed so that an inspection is not necessary for each test and prior to the backfilling operation for each portion of the system. The frequency of inspection would otherwise be excessive.

   The last paragraph of this section provides for prompt operation of replacement heating equipment or appliances, and this allows the occupied areas of a facility to be heated as soon as the new heating equipment or appliance is installed. Any corrections to the installation that are identified by field inspection are to be done.

[A] 107.2.1 Other inspections. In addition to the inspections specified in Section 107.2, the code official is authorized to make or require other inspections of any construction work to ascertain compliance with the provisions of this code and other laws that are enforced.

❖ Any item regulated by the code is subject to inspection by the code official to determine compliance with the applicable code provision, and no list can include all types of work in a given building. Also, other inspections before, during or after the rough-in could be necessary. This section gives the code official the authority to inspect any regulated work.

[A] 107.2.2 Inspection requests. It shall be the duty of the holder of the permit or their duly authorized agent to notify the code official when work is ready for inspection. It shall be the duty of the permit holder to provide *access* to and means for inspections of such work that are required by this code.

❖ This section clarifies that it is the responsibility of the permit holder to arrange for the required inspections when the work is completed. It also establishes his or her responsibility for keeping the work open for inspection and providing all means needed to accomplish the inspections.

[A] 107.2.3 Approval required. Work shall not be done beyond the point indicated in each successive inspection without first obtaining the approval of the code official. The code official, upon notification, shall make the requested inspections and shall either indicate the portion of the construction that is satisfactory as completed, or notify the permit holder or his or her agent wherein the same fails to comply with this code. Any portions that do not comply shall be corrected and such portion shall not be covered or concealed until authorized by the code official.

❖ This section establishes that work cannot progress beyond the point of a required inspection without the code official's approval. Upon making the inspection, the code official must either approve the completed work or notify the permit holder or other responsible party of that which does not comply with the code. Approvals and notices of noncompliance must be in writing, as required by Section 104.3, to avoid any misunderstanding as to what is required. Any work not approved cannot be concealed until it has been corrected and approved by the code official.

[A] 107.2.4 Approved inspection agencies. The code official is authorized to accept reports of *approved* agencies, provided that such agencies satisfy the requirements as to qualifications and reliability.

❖ The determination as to whether to accept an agency test report rests with the code official and the reporting agency must be acceptable to the code official. Appropriate criteria on which to base approval of an inspection agency can be found in Sections 301.5.2.1 through 301.5.2.3.

[A] 107.2.5 Evaluation and follow-up inspection services. Prior to the approval of a prefabricated construction assembly having concealed mechanical work and the issuance of a mechanical permit, the code official shall require the submittal of an evaluation report on each prefabricated construction assembly, indicating the complete details of the mechanical

INTERNATIONAL CODE COUNCIL®
Copyright © 2015 ICC. ALL RIGHTS RESERVED. Accessed by David Dammon on Jun 21, 2017 12:30:52 PM pursuant to License Agreement with ICC. No further reproduction or distribution authorized. ANY UNAUTHORIZED REPRODUCTION OR DISTRIBUTION IS A VIOLATION OF THE FEDERAL COPYRIGHT ACT AND THE LICENSE AGREEMENT, AND SUBJECT TO CIVIL AND CRIMINAL PENALTIES THEREUNDER.

system, including a description of the system and its components, the basis upon which the system is being evaluated, test results and similar information, and other data as necessary for the code official to determine conformance to this code.

❖ As an alternative to the physical inspection by the code official in the plant or location where prefabricated components are produced (such as modular homes and prefabricated structures), the code official has the option of accepting an evaluation report from an approved agency detailing such inspections. Evaluation reports can serve as the basis from which the code official will determine code compliance.

[A] 107.2.5.1 Evaluation service. The code official shall designate the evaluation service of an *approved* agency as the evaluation agency, and review such agency's evaluation report for adequacy and conformance to this code.

❖ The code official is required to review all submitted reports for conformity to the applicable code requirements. If, in the judgment of the code official, the submitted reports are acceptable, the code official should document the basis for the approval.

[A] 107.2.5.2 Follow-up inspection. Except where ready access is provided to mechanical systems, service *equipment* and accessories for complete inspection at the site without disassembly or dismantling, the code official shall conduct the in-plant inspections as frequently as necessary to ensure conformance to the *approved* evaluation report or shall designate an independent, *approved* inspection agency to conduct such inspections. The inspection agency shall furnish the code official with the follow-up inspection manual and a report of inspections upon request, and the mechanical system shall have an identifying label permanently affixed to the system indicating that factory inspections have been performed.

❖ The owner is required to provide special inspections of fabricated assemblies at the fabrication plant. The code official or an approved inspection agency must conduct periodic in-plant inspections to ensure conformance to the approved evaluation report described in Section 107.2.5. Such inspections would not be required where the mechanical systems can be inspected completely at the job site.

[A] 107.2.5.3 Test and inspection records. Required test and inspection records shall be available to the code official at all times during the fabrication of the mechanical system and the erection of the building; or such records as the code official designates shall be filed.

❖ All testing and inspection records related to a fabricated assembly must be filed with the code official to maintain a complete and legal record of the assembly and erection of the building.

[A] 107.3 Testing. Mechanical systems shall be tested as required in this code and in accordance with Sections 107.3.1 through 107.3.3. Tests shall be made by the permit holder and observed by the code official.

❖ The concept of this section is that the testing of mechanical systems is required where testing is specified in the technical chapters of the code. See the "tests" listing in the index of the code for examples of mechanical systems that require testing.

[A] 107.3.1 New, altered, extended or repaired systems. New mechanical systems and parts of existing systems, which have been altered, extended, renovated or repaired, shall be tested as prescribed herein to disclose leaks and defects.

❖ Testing is necessary to make sure that the system is free from leaks or other defects. Testing is also required, to the extent specified in the technical chapters of the code, for portions of existing systems that have been altered, extended, renovated or repaired.

[A] 107.3.2 Apparatus, material and labor for tests. Apparatus, material and labor required for testing a mechanical system or part thereof shall be furnished by the permit holder.

❖ The permit holder is responsible for performing tests, as well as for supplying all of the labor and apparatus necessary to conduct the tests. The code official observes but never performs the test.

[A] 107.3.3 Reinspection and testing. Where any work or installation does not pass an initial test or inspection, the necessary corrections shall be made so as to achieve compliance with this code. The work or installation shall then be resubmitted to the code official for inspection and testing.

❖ If a system or a portion of a system does not pass the initial test or inspection, violations must be corrected and the system must be reinspected. To encourage code compliance and to cover the expense of the code official's time, many code enforcement jurisdictions charge fees for inspections that are required subsequent to the first reinspection.

[A] 107.4 Approval. After the prescribed tests and inspections indicate that the work complies in all respects with this code, a notice of approval shall be issued by the code official.

❖ After the code official has performed the required inspections and observed any required equipment and system tests (or has received written reports of the results of such tests), he or she must determine whether the installation or work is in compliance with all applicable sections of the code. The code official must issue a written notice of approval if the subject work or installation is in apparent compliance with the code. The notice of approval is given to the permit holder and a copy of the notice is retained on file by the code official.

[A] 107.4.1 Revocation. The code official is authorized to, in writing, suspend or revoke a notice of approval issued under the provisions of this code wherever the notice is issued in error, on the basis of incorrect information supplied, or where it is determined that the building or structure, premise or portion thereof is in violation of any ordinance or regulation or any of the provisions of this code.

INTERNATIONAL CODE COUNCIL®
Copyright © 2015 ICC. ALL RIGHTS RESERVED. Accessed by David Dammon on Jun 21, 2017 12:30:52 PM pursuant to License Agreement with ICC. No further reproduction or distribution authorized. ANY UNAUTHORIZED REPRODUCTION OR DISTRIBUTION IS A VIOLATION OF THE FEDERAL COPYRIGHT ACT AND THE LICENSE AGREEMENT, AND SUBJECT TO CIVIL AND CRIMINAL PENALTIES THEREUNDER.

❖ This section is needed to give the code official the authority to revoke a notice of approval for the reasons indicated in the code text. The code official can suspend the notice until all of the code violations are corrected.

[A] 107.5 Temporary connection. The code official shall have the authority to authorize the temporary connection of a mechanical system to the sources of energy for the purpose of testing mechanical systems or for use under a temporary certificate of *occupancy*.

❖ Typical procedure for a local jurisdiction is to withhold the issuance of the certificate of occupancy until approvals have been received from each code official responsible for inspection of the structure. The code official is permitted to issue a temporary authorization to make connections to the public utility system prior to the completion of all work. The certification is intended to acknowledge that, because of seasonal limitations, time constraints, the need for testing or partial operation of equipment, some building systems may be connected even though the building is not suitable for final occupancy. The intent of this section is that a request for temporary occupancy or the connection and use of mechanical equipment or systems should be granted when the requesting permit holder has demonstrated to the code official's satisfaction that the public health, safety and welfare will not be endangered. The code official should view the issuance of a "temporary authorization or certificate of occupancy" as substantial an act as the issuance of the final certificate. Indeed, the issuance of a temporary certificate of occupancy offers a greater potential for conflict because once the building or structure is occupied, it is very difficult to remove the occupants through legal means.

[A] 107.6 Connection of service utilities. A person shall not make connections from a utility, source of energy, fuel or power to any building or system that is regulated by this code for which a permit is required, until authorized by the code official.

❖ This section establishes the authority of the code official to approve utility connections to a building, such as water, sewer, electricity, gas and steam, and to require their disconnection when such approval has not been granted. For the protection of building occupants, including workers, such systems must have had final inspection approvals, except as allowed by Section 110.3 for temporary connections.

SECTION 108
VIOLATIONS

[A] 108.1 Unlawful acts. It shall be unlawful for a person, firm or corporation to erect, construct, alter, repair, remove, demolish or utilize a mechanical system, or cause same to be done, in conflict with or in violation of any of the provisions of this code.

❖ Violations of the code are prohibited. This is the basis for all citations and correction notices related to violations of the code.

[A] 108.2 Notice of violation. The code official shall serve a notice of violation or order to the person responsible for the erection, installation, *alteration*, extension, repair, removal or demolition of mechanical work in violation of the provisions of this code, or in violation of a detail statement or the *approved construction documents* thereunder, or in violation of a permit or certificate issued under the provisions of this code. Such order shall direct the discontinuance of the illegal action or condition and the abatement of the violation.

❖ The code official is required to notify the person responsible for the erection or use of a building found to be in violation of the code. The section that is allegedly being violated must be cited so that the responsible party can respond to the notice.

[A] 108.3 Prosecution of violation. If the notice of violation is not complied with promptly, the code official shall request the legal counsel of the jurisdiction to institute the appropriate proceeding at law or in equity to restrain, correct or abate such violation, or to require the removal or termination of the unlawful *occupancy* of the structure in violation of the provisions of this code or of the order or direction made pursuant thereto.

❖ The code official must pursue, through the use of legal counsel of the jurisdiction, legal means to correct the violation. This is not optional. Any extensions of time so that the violations may be corrected voluntarily must be for a reasonable, bona fide cause or the code official may be subject to criticism for "arbitrary and capricious" actions. In general, it is better to have a standard time limitation for correction of violations. Departures from this standard must be for a clear and reasonable purpose, usually stated in writing by the violator.

[A] 108.4 Violation penalties. Persons who shall violate a provision of this code or shall fail to comply with any of the requirements thereof or who shall erect, install, alter or repair mechanical work in violation of the *approved construction documents* or directive of the code official, or of a permit or certificate issued under the provisions of this code, shall be guilty of a **[SPECIFY OFFENSE]**, punishable by a fine of not more than **[AMOUNT]** dollars or by imprisonment not exceeding **[NUMBER OF DAYS]**, or both such fine and imprisonment. Each day that a violation continues after due notice has been served shall be deemed a separate offense.

❖ A standard fine or other penalty as deemed appropriate by the jurisdiction is prescribed in this section. Additionally, this section identifies a principle that "each day that a violation continues shall be deemed a separate offense" for the purpose of applying the prescribed penalty in order to facilitate prompt resolution.

[A] 108.5 Stop work orders. Upon notice from the code official that mechanical work is being performed contrary to the provisions of this code or in a dangerous or unsafe manner, such work shall immediately cease. Such notice shall be in

INTERNATIONAL CODE COUNCIL®
Copyright © 2015 ICC. ALL RIGHTS RESERVED. Accessed by David Dammon on Jun 21, 2017 12:30:52 PM pursuant to License Agreement with ICC. No further reproduction or distribution authorized. ANY UNAUTHORIZED REPRODUCTION OR DISTRIBUTION IS A VIOLATION OF THE FEDERAL COPYRIGHT ACT AND THE LICENSE AGREEMENT, AND SUBJECT TO CIVIL AND CRIMINAL PENALTIES THEREUNDER.

writing and shall be given to the owner of the property, or to the owner's authorized agent, or to the person doing the work. The notice shall state the conditions under which work is authorized to resume. Where an emergency exists, the code official shall not be required to give a written notice prior to stopping the work. Any person who shall continue any work on the system after having been served with a stop work order, except such work as that person is directed to perform to remove a violation or unsafe condition, shall be liable for a fine of not less than **[AMOUNT]** dollars or more than **[AMOUNT]** dollars.

❖ Upon receipt of a violation notice from the code official, the contractor must immediately stop construction activities identified in the notice, except as expressly permitted to correct the violation. A stop work order can result in inconvenience and monetary loss to the affected parties; therefore, justification must be evident and judgement must be exercised before a stop work order is issued. A stop work order can prevent a violation from becoming worse and more difficult or expensive to correct. A stop work order may be issued where work is proceeding without a permit to perform the work. Hazardous conditions could develop where the code official is unaware of the nature of the work and a permit for the work has not been issued. The issuance of a stop work order on a mechanical system may result from work done by the mechanical contractor that affects a nonmechanical component. For example, if a mechanical contractor cuts a structural element to install piping, the structure may be weakened enough to cause a partial or complete structural failure. As determined by the adopting jurisdiction, a penalty may be assessed for failure to comply with this section and the dollar amount is to be inserted in the blanks provided.

[A] 108.6 Abatement of violation. The imposition of the penalties herein prescribed shall not preclude the legal officer of the jurisdiction from instituting appropriate action to prevent unlawful construction or to restrain, correct or abate a violation, or to prevent illegal *occupancy* of a building, structure or premises, or to stop an illegal act, conduct, business or utilization of the mechanical system on or about any premises.

❖ Despite the assessment of a penalty in the form of a fine or imprisonment against a violator, the violation itself must still be corrected. Failure to make the necessary corrections will result in the violator being subject to additional penalties as described in the preceding section.

[A] 108.7 Unsafe mechanical systems. A mechanical system that is unsafe, constitutes a fire or health hazard, or is otherwise dangerous to human life, as regulated by this code, is hereby declared as an unsafe mechanical system. Use of a mechanical system regulated by this code constituting a hazard to health, safety or welfare by reason of inadequate maintenance, dilapidation, fire hazard, disaster, damage or abandonment is hereby declared an unsafe use. Such unsafe *equipment* and appliances are hereby declared to be a public nuisance and shall be abated by repair, rehabilitation, demolition or removal.

❖ Unsafe conditions include those that constitute a health hazard, fire hazard, explosion hazard, shock hazard, asphyxiation hazard, physical injury hazard or are otherwise dangerous to human life and property. In the course of performing duties, the code official may identify a hazardous condition that must be declared in violation of the code and, therefore, must be abated.

[A] 108.7.1 Authority to condemn mechanical systems. Whenever the code official determines that any mechanical system, or portion thereof, regulated by this code has become hazardous to life, health, property, or has become insanitary, the code official shall order in writing that such system either be removed or restored to a safe condition. A time limit for compliance with such order shall be specified in the written notice. A person shall not use or maintain a defective mechanical system after receiving such notice.

Where such mechanical system is to be disconnected, written notice as prescribed in Section 108.2 shall be given. In cases of immediate danger to life or property, such disconnection shall be made immediately without such notice.

❖ When a mechanical system is determined to be unsafe, the code official is required to notify the owner or agent of the building as the first step in correcting the difficulty. The notice is to describe the repairs and improvements necessary to correct the deficiency or require removal or replacement of the unsafe equipment or system. Such notices must specify a time frame in which the corrective actions must occur. Additionally, the notice should require the immediate response of the owner or agent. If the owner or agent is not available, public notice of the declaration should suffice for complying with this section. The code official may also determine that disconnection of the system is necessary to correct an unsafe condition and must give written notice to that effect (see commentary, Section 108.2), unless immediate disconnection is essential for public health and safety reasons (see commentary, Section 108.7.2).

[A] 108.7.2 Authority to order disconnection of energy sources. The code official shall have the authority to order disconnection of energy sources supplied to a building, structure or mechanical system regulated by this code, where it is determined that the mechanical system or any portion thereof has become hazardous or unsafe. Written notice of such order to disconnect service and the causes therefor shall be given within 24 hours to the owner, the owner's authorized agent and occupant of such building, structure or premises, provided, however, that in cases of immediate danger to life or property, such disconnection shall be made immediately without such notice. Where energy sources are provided by a public utility, the code official shall immediately notify the serving utility in writing of the issuance of such order to disconnect.

INTERNATIONAL CODE COUNCIL®
Copyright © 2015 ICC. ALL RIGHTS RESERVED. Accessed by David Dammon on Jun 21, 2017 12:30:52 PM pursuant to License Agreement with ICC. No further reproduction or distribution authorized. ANY UNAUTHORIZED REPRODUCTION OR DISTRIBUTION IS A VIOLATION OF THE FEDERAL COPYRIGHT ACT AND THE LICENSE AGREEMENT, AND SUBJECT TO CIVIL AND CRIMINAL PENALTIES THEREUNDER.

❖ Disconnecting a mechanical system from the energy supply is the most radical method of hazard abatement available to the code official and should be reserved for cases in which all other lesser remedies have proven ineffective. Such an action must be preceded by written notice to the owner and any occupants of the building being ordered to disconnect. Disconnection must be accomplished within the time frame established by the code official in the written notification to disconnect. When the hazard to the public health and welfare is so imminent as to mandate immediate disconnection, the code official has the authority and even the obligation to cause disconnection without notice.

[A] 108.7.3 Connection after order to disconnect. A person shall not make energy source connections to mechanical systems regulated by this code which have been disconnected or ordered to be disconnected by the code official, or the use of which has been ordered to be discontinued by the code official until the code official authorizes the reconnection and use of such mechanical systems.

Where a mechanical system is maintained in violation of this code, and in violation of a notice issued pursuant to the provisions of this section, the code official shall institute appropriate action to prevent, restrain, correct or abate the violation.

❖ When any mechanical system is maintained in violation of the code, and in violation of any notice issued pursuant to the provisions of this section, the code official is to institute appropriate action to prevent, restrain, correct or abate the violation. Once the reason for discontinuation of use or disconnection of the mechanical system no longer exists, only the code official may authorize resumption of use or reconnection of the system after it is demonstrated to the code official's satisfaction that all repairs or other work are in compliance with applicable sections of the code. This section also requires the code official to take action to abate code violations (see commentary, Section 108.2).

SECTION 109
MEANS OF APPEAL

[A] 109.1 Application for appeal. A person shall have the right to appeal a decision of the code official to the board of appeals. An application for appeal shall be based on a claim that the true intent of this code or the rules legally adopted thereunder have been incorrectly interpreted, the provisions of this code do not fully apply, or an equally good or better form of construction is proposed. The application shall be filed on a form obtained from the code official within 20 days after the notice was served.

❖ This section literally allows any person to appeal a decision of the code official. In practice, this section has been interpreted to permit appeals only by those aggrieved parties with a material or definitive interest in the decision of the code official. An aggrieved party may not appeal a code requirement per se. The intent of the appeal process is not to waive or set aside a code requirement; rather, it is intended to provide a means of reviewing a code official's decision on an interpretation or application of the code or to review the equivalency of protection to the code requirements.

[A] 109.1.1 Limitation of authority. The board of appeals shall not have authority relative to interpretation of the administration of this code nor shall such board be empowered to waive requirements of this code.

❖ This section establishes limits on the board of appeals. The board may not interpret the administration provisions of the code but does have interpretation authority regarding the technical requirements of the code. The board is not allowed to set aside any of the technical requirements of the code; however, it is allowed to consider alternative methods of compliance with the technical requirements.

[A] 109.2 Membership of board. The board of appeals shall consist of five members appointed by the chief appointing authority as follows: one for 5 years; one for 4 years; one for 3 years; one for 2 years; and one for 1 year. Thereafter, each new member shall serve for 5 years or until a successor has been appointed.

❖ The board of appeals is to consist of five members appointed on a rotating basis by the "chief appointing authority"; typically, the mayor or city manager. This method of appointment allows for a smooth transition of board of appeals members, thus ensuring continuity of action over the years.

[A] 109.2.1 Qualifications. The board of appeals shall consist of five individuals, one from each of the following professions or disciplines.

1. *Registered design professional* who is a registered architect; or a builder or superintendent of building construction with not less than 10 years' experience, 5 of which shall have been in responsible charge of work.
2. *Registered design professional* with structural engineering or architectural experience.
3. *Registered design professional* with mechanical and plumbing engineering experience; or a mechanical contractor with not less than 10 years' experience, 5 of which shall have been in responsible charge of work.
4. *Registered design professional* with electrical engineering experience; or an electrical contractor with not less than 10 years' experience, 5 of which shall have been in responsible charge of work.
5. *Registered design professional* with fire protection engineering experience; or a fire protection contractor

INTERNATIONAL CODE COUNCIL®
Copyright © 2015 ICC. ALL RIGHTS RESERVED. Accessed by David Dammon on Jun 21, 2017 12:30:52 PM pursuant to License Agreement with ICC. No further reproduction or distribution authorized. ANY UNAUTHORIZED REPRODUCTION OR DISTRIBUTION IS A VIOLATION OF THE FEDERAL COPYRIGHT ACT AND THE LICENSE AGREEMENT, AND SUBJECT TO CIVIL AND CRIMINAL PENALTIES THEREUNDER.

with not less than 10 years' experience, 5 of which shall have been in responsible charge of work.

❖ The board of appeals consists of five persons with the qualifications and experience indicated in this section. One must be a registered design professional (see Item 2) with structural or architectural experience. The others must be registered design professionals, construction superintendents or contractors with experience in the various areas of building construction. These requirements are important in that technical people rule on technical matters. The board of appeals is not the place for policy or political deliberations. It is intended that these matters be decided purely on their technical merits, with due regard for state-of-the-art construction technology.

[A] 109.2.2 Alternate members. The chief appointing authority shall appoint two alternate members who shall be called by the board chairman to hear appeals during the absence or disqualification of a member. Alternate members shall possess the qualifications required for board membership and shall be appointed for 5 years, or until a successor has been appointed.

❖ This section authorizes the chief appointing authority to appoint two alternate members who are to be available if the principal members of the board are absent or disqualified. Alternate members must possess the same qualifications as the principal members and are appointed for a term of 5 years, or until such time that a successor is appointed.

[A] 109.2.3 Chairman. The board shall annually select one of its members to serve as chairman.

❖ It is customary to determine chairmanship annually so that a regular opportunity is available to evaluate and either reappoint the current chairman or appoint a new one.

[A] 109.2.4 Disqualification of member. A member shall not hear an appeal in which that member has a personal, professional or financial interest.

❖ All members must disqualify themselves from any appeal in which they have a personal, professional or financial interest.

[A] 109.2.5 Secretary. The chief administrative officer shall designate a qualified clerk to serve as secretary to the board. The secretary shall file a detailed record of all proceedings in the office of the chief administrative officer.

❖ The chief administrative officer is to designate a qualified clerk to serve as secretary to the board. The secretary is required to file a detailed record of all proceedings in the office of the chief administrative officer.

[A] 109.2.6 Compensation of members. Compensation of members shall be determined by law.

❖ Members of the board of appeals need not be compensated unless required by the local municipality or jurisdiction.

[A] 109.3 Notice of meeting. The board shall meet upon notice from the chairman, within 10 days of the filing of an appeal, or at stated periodic meetings.

❖ The board must meet within 10 days of the filing of an appeal, or at regularly scheduled meetings.

[A] 109.4 Open hearing. Hearings before the board shall be open to the public. The appellant, the appellant's representative, the code official and any person whose interests are affected shall be given an opportunity to be heard.

❖ All hearings before the board must be open to the public. The person who filed the appeal, his or her representative, the code official and any person whose interests are affected must be heard.

[A] 109.4.1 Procedure. The board shall adopt and make available to the public through the secretary procedures under which a hearing will be conducted. The procedures shall not require compliance with strict rules of evidence, but shall mandate that only relevant information be received.

❖ The board is required to establish and make available to the public written procedures detailing how hearings are to be conducted. Additionally, this section provides that although strict rules of evidence are not applicable, the information presented must be relevant to the appeal.

[A] 109.5 Postponed hearing. When five members are not present to hear an appeal, either the appellant or the appellant's representative shall have the right to request a postponement of the hearing.

❖ When all five members of the board are not present, either the person making the appeal or his or her representative may request a postponement of the hearing.

[A] 109.6 Board decision. The board shall modify or reverse the decision of the code official by a concurring vote of three members.

❖ A concurring vote of three members of the board is needed to modify or reverse the decision of the code official.

[A] 109.6.1 Resolution. The decision of the board shall be by resolution. Certified copies shall be furnished to the appellant and to the code official.

❖ A formal decision in the form of a resolution is required to provide an official record. Copies of this resolution are to be furnished to both the person making the appeal and the code official. The code official is bound by the action of the board of appeals, unless it is the opinion of the code official that the board of appeals has acted improperly. In such cases, relief through the court having jurisdiction may be sought by corporate council.

[A] 109.6.2 Administration. The code official shall take immediate action in accordance with the decision of the board.

❖ To avoid any undue delay in the progress of construction, the code official is required to act quickly on

INTERNATIONAL CODE COUNCIL®
Copyright © 2015 ICC. ALL RIGHTS RESERVED. Accessed by David Dammon on Jun 21, 2017 12:30:52 PM pursuant to License Agreement with ICC. No further reproduction or distribution authorized. ANY UNAUTHORIZED REPRODUCTION OR DISTRIBUTION IS A VIOLATION OF THE FEDERAL COPYRIGHT ACT AND THE LICENSE AGREEMENT, AND SUBJECT TO CIVIL AND CRIMINAL PENALTIES THEREUNDER.

the board's decision. This action may be to enforce the decision or to seek legislative relief if the board's action can be demonstrated to be inappropriate.

[A] 109.7 Court review. Any person, whether or not a previous party of the appeal, shall have the right to apply to the appropriate court for a writ of certiorari to correct errors of law. Application for review shall be made in the manner and time required by law following the filing of the decision in the office of the chief administrative officer.

❖ This section allows any person to request a review by the court of jurisdiction if that person believes errors of law have occurred. Application for the review must be made after the decision of the board is filed with the chief administrative officer. This helps to establish the observance of due process for all concerned.

SECTION 110
TEMPORARY EQUIPMENT, SYSTEMS AND USES

[A] 110.1 General. The code official is authorized to issue a permit for temporary *equipment*, systems and uses. Such permits shall be limited as to time of service, but shall not be permitted for more than 180 days. The code official is authorized to grant extensions for demonstrated cause.

❖ The code official is permitted to issue temporary authorization to make connections to a public utility system prior to completion of all work. This acknowledges that, because of seasonal limitations, time constraints, or the need for testing or partial operations of equipment, some building systems may be safely connected even though the building is not suitable for final occupancy. The temporary connection and utilization of connected equipment should be approved when the requesting permit holder has demonstrated to the code official's satisfaction that public health, safety and welfare will not be endangered.

[A] 110.2 Conformance. Temporary *equipment*, systems and uses shall conform to the structural strength, fire safety, means of egress, accessibility, light, ventilation and sanitary requirements of this code as necessary to ensure the public health, safety and general welfare.

❖ Even though a utility connection may be temporary, the only way to make sure that the public health, safety, and general welfare are protected is for those temporary connections to comply with the code.

[A] 110.3 Temporary utilities. The code official is authorized to give permission to temporarily supply utilities before an installation has been fully completed and the final certificate of completion has been issued. The part covered by the temporary certificate shall comply with the requirements specified for temporary lighting, heat or power in the code.

❖ Commonly, the utilities on many construction sites are installed and energized long before all aspects of the system are completed. This section would allow such temporary systems to continue, provided that they comply with the applicable safety provisions of the code.

[A] 110.4 Termination of approval. The code official is authorized to terminate such permit for temporary *equipment*, systems or uses and to order the temporary *equipment*, systems or uses to be discontinued.

❖ This section provides the code official with the necessary authority to terminate the permit for temporary equipment, systems, and uses if conditions of the permit have been violated or if temporary equipment or systems pose an imminent hazard to the public. This enables the code official to act quickly when time is of the essence in order to protect public health, safety and welfare.

Bibliography

The following resource materials were used in the preparation of the commentary for this chapter of the code:

"Building Valuation Data." As published in the International Code Council's *Building Safety Journal Online*. Whittier, CA: International Code Council, Semiannually in May/June and November/December Issues.

IFC-15, *International Fire Code*. Washington, DC: International Code Council, Inc., 2014.

IFGC-15, *International Fuel Gas Code*. Washington, DC: International Code Council, Inc., 2014.

IPMC-15, *International Property Maintenance Code*. Washington, DC: International Code Council, Inc., 2014.

IRC-15, *International Residential Code*. Washington, DC: International Code Council, Inc., 2014.

Legal Aspects of Code Administration. Washington, DC: International Code Council, 2002.

NFPA 70-14, *National Electrical Code*. Quincy, MA: National Fire Protection Association, 2013.

INTERNATIONAL CODE COUNCIL®
Copyright © 2015 ICC. ALL RIGHTS RESERVED. Accessed by David Dammon on Jun 21, 2017 12:30:52 PM pursuant to License Agreement with ICC. No further reproduction or distribution authorized. ANY UNAUTHORIZED REPRODUCTION OR DISTRIBUTION IS A VIOLATION OF THE FEDERAL COPYRIGHT ACT AND THE LICENSE AGREEMENT, AND SUBJECT TO CIVIL AND CRIMINAL PENALTIES THEREUNDER.

Chapter 2: Definitions

General Comments

Chapter 2 establishes the meanings of key words and terms used in the code.

Section 201 addresses the practical concerns encountered in writing a technical document as they relate to the use of gender, tense and singular versus plural. This section also provides the code official with guidance for finding definitions of those words or terms not defined herein.

Section 202 is an alphabetical listing of the terms commonly used throughout the code and that are required for the effective application of code requirements.

Purpose

Codes, by their very nature, are technical documents. Literally every word, term and punctuation mark can add to or change the meaning of the intended result. This is even more so with performance code text where the desired result often takes on more importance than the specific words.

Furthermore, the code, with its broad scope of applicability, includes terms used in a variety of construction disciplines. These terms can often have multiple meanings depending on the context or discipline being used at the time.

For these reasons, a consensus on the specific meaning of terms contained in the code must be maintained. Chapter 2 performs this function by stating clearly what specific terms mean for the purpose of the code.

SECTION 201 GENERAL

201.1 Scope. Unless otherwise expressly stated, the following words and terms shall, for the purposes of this code, have the meanings indicated in this chapter.

❖ This chapter contains definitions of terms that are associated with the subject matter of this code. Definitions of terms are necessary for the understanding and application of the code requirements.

201.2 Interchangeability. Words used in the present tense include the future; words in the masculine gender include the feminine and neuter; the singular number includes the plural and the plural, the singular.

❖ Although the definitions contained in Chapter 2 are to be taken literally, gender and tense are considered to be interchangeable; thus, any grammatical inconsistencies within the code text will not hinder the understanding or enforcement of the requirements.

201.3 Terms defined in other codes. Where terms are not defined in this code and are defined in the *International Building Code*, *International Fire Code*, *International Fuel Gas Code* or the *International Plumbing Code*, such terms shall have meanings ascribed to them as in those codes.

❖ When a word or term that is not defined in this chapter appears in the code, other references may be used to find its definition, such as the *International Building Code*® (IBC®), the *International Fire Code*® (IFC®), the *International Fuel Gas Code*® (IFGC®) or the *International Plumbing Code*® (IPC®). These codes contain additional definitions (some parallel and duplicative) that may be used in the enforcement of this code or in the enforcement of the other codes by reference.

201.4 Terms not defined. Where terms are not defined through the methods authorized by this section, such terms shall have ordinarily accepted meanings such as the context implies.

❖ Another resource for defining words or terms not defined in this chapter or in other codes is their "ordinarily accepted meanings." The intent of this statement is that a dictionary definition may suffice, if the definition is in context.

In some cases, construction terms used throughout the code may not be defined in Chapter 2 or in a dictionary. In such case, one would first turn to the definitions contained in the referenced standards (see Chapter 15) and then to published textbooks on the subject in question.

SECTION 202 GENERAL DEFINITIONS

❖ This portion of the commentary addresses only those terms whose definitions appear in Chapter 2. The commentary for definitions that are located elsewhere in the code can be found in the indicated sections that contain those definitions.

INTERNATIONAL CODE COUNCIL®
Copyright © 2015 ICC. ALL RIGHTS RESERVED. Accessed by David Dammon on Jun 21, 2017 12:30:52 PM pursuant to License Agreement with ICC. No further reproduction or distribution authorized. ANY UNAUTHORIZED REPRODUCTION OR DISTRIBUTION IS A VIOLATION OF THE FEDERAL COPYRIGHT ACT AND THE LICENSE AGREEMENT, AND SUBJECT TO CIVIL AND CRIMINAL PENALTIES THEREUNDER.

ABRASIVE MATERIALS. Moderately abrasive particulate in high concentrations, and highly abrasive particulate in moderate and high concentrations, such as alumina, bauxite, iron silicate, sand and slag.

❖ Abrasive materials flowing in a duct can cause erosion damage to the duct system and air-moving equipment.

ABSORPTION SYSTEM. A refrigerating system in which refrigerant is pressurized by pumping a chemical solution of refrigerant in absorbent, and then separated by the addition of heat in a generator, condensed (to reject heat), expanded, evaporated (to provide refrigeration), and reabsorbed in an absorber to repeat the cycle; the system may be single or multiple effect, the latter using multiple stages or internally cascaded use of heat to improve efficiency.

❖ Absorption refrigeration systems use two fluids (an absorbent and a refrigerant) and a heat source to remove heat through evaporation at a lower pressure and to reject the heat through condensation at a higher pressure. Typical absorption systems use ammonia as the refrigerant and water as the absorbent, or lithium bromide as the absorbent and water as the refrigerant.

ACCESS (TO). That which enables a device, *appliance* or *equipment* to be reached by ready access or by a means that first requires the removal or movement of a panel, door or similar obstruction [see also "Ready access (to)"].

❖ Providing access to mechanical equipment and appliances is necessary to facilitate inspection, observation, maintenance, adjustment, repair or replacement. Access to equipment means that the equipment can be physically reached without having to remove a permanent portion of the structure. It is acceptable, for example, to install equipment in an interstitial space that would require lay-in suspended ceiling panels to be removed to gain access. Mechanical equipment would not be considered as being provided with access if it were necessary to remove or open any portion of a structure other than panels, doors, covers or similar obstructions intended to be removed or opened. Also, see the definition of "Ready access (to)."

Access can be described as the capability of being reached or approached for the purpose of inspection, observation, maintenance, adjustment, repair or replacement. Achieving access may first require the removal or opening of a panel, door or similar obstruction and may require the overcoming of an obstacle such as elevation.

AIR. All air supplied to mechanical *equipment* and appliances for *combustion*, ventilation, cooling and similar purposes. Standard air is air at standard temperature and pressure, namely, 70ºF (21ºC) and 29.92 inches of mercury (101.3 kPa).

❖ The term "air," for the purposes of the code, includes air used, moved or conditioned by the mechanical systems that are regulated by the code.

AIR CONDITIONING. The treatment of air so as to control simultaneously the temperature, humidity, cleanness and distribution of the air to meet the requirements of a conditioned space.

❖ Air conditioning is commonly referred to only in the context of cooling and dehumidifying air; however, the definition also indicates a much broader scope. In essence, the process of providing ventilation air to a space constitutes air conditioning because the introduction of any ventilation air is an attempt to control the indoor environment.

AIR-CONDITIONING SYSTEM. A system that consists of heat exchangers, blowers, filters, supply, exhaust and return ducts, and shall include any apparatus installed in connection therewith.

❖ This definition is limited to the components commonly used in a mechanical air-conditioning system. Additional apparatus considered as part of the air-conditioning system would include thermostats, humidistats, dampers and any other controls needed for the system to operate properly.

AIR DISPERSION SYSTEM. Any diffuser system designed to both convey air within a room, space or area and diffuse air into that space while operating under positive pressure. Systems are commonly constructed of, but not limited to, fabric or plastic film.

❖ A simple example of an air dispersion system is a tube or hose with holes in it that connects to the supply air duct. This tube extends into the conditioned space and distributes the air more uniformly throughout the space.

Air dispersion systems usually connect to the supplying air duct at a sidewall. The supplying air duct conveys air from the air-handling unit to the destination room, space or area. At this point, a sidewall grille or other type of diffuser could be used to diffuse the air into the space. This diffuser would rely on the velocity of the exiting air and its direction to meet requirements of the space. For this example, the air dispersion system would be mounted in place of the sidewall grille. By the air dispersion system being physically longer, the velocity of air exiting the system is more uniformly distributed throughout the space.

This technology has been used for over 50 years in the United States, and longer in Europe. The concept, in the United States, originated in the agricultural industry, and through innovative fabric technology and proven performance, has evolved into an attractive means to diffuse air within various spaces. These spaces include where food is processed (refrigeration), industrial, warehouses, retail, convention centers, offices, athletic, and laboratory environments. These systems are tested and listed in accordance with UL 2518.

AIR DISTRIBUTION SYSTEM. Any system of ducts, plenums and air-handling *equipment* that circulates air within a

INTERNATIONAL CODE COUNCIL®
Copyright © 2015 ICC. ALL RIGHTS RESERVED. Accessed by David Dammon on Jun 21, 2017 12:30:52 PM pursuant to License Agreement with ICC. No further reproduction or distribution authorized. ANY UNAUTHORIZED REPRODUCTION OR DISTRIBUTION IS A VIOLATION OF THE FEDERAL COPYRIGHT ACT AND THE LICENSE AGREEMENT, AND SUBJECT TO CIVIL AND CRIMINAL PENALTIES THEREUNDER.

space or spaces and includes systems made up of one or more air-handling units.

❖ An air distribution system consists of air-moving equipment; intakes and outlets; supply and return openings and the interconnecting ductwork, plenums and conduit necessary to conduct airflow to and from the inlets and outlets. The primary characteristic is the ability of the system to distribute and circulate air throughout one or more spaces within a building. Air distribution systems in the context of the code are environmental air-conditioning systems that heat, cool and ventilate the occupied spaces of a building. Exhaust equipment, makeup air supply units, rooftop units, turnover units and unit heaters are examples of equipment commonly installed without distribution ductwork. Such installations would not be considered as air distribution systems. Air distribution systems are capable of supplying air to and removing air from spaces and recirculating all or a portion of the air handled.

For the purpose of applying Section 606, an air distribution system that employs multiple air handlers operating in parallel would be considered a single system with an airflow capacity equal to the sum of the individual air handlers. Individual air handlers that operate independently and do not share common supply return ducts would be considered as separate systems (see commentary, Section 606).

AIR, EXHAUST. Air being removed from any space, *appliance* or piece of *equipment* and conveyed directly to the atmosphere by means of openings or ducts.

❖ Exhaust air may be from a space, an appliance or a piece of equipment. Exhaust air may or may not contain contaminants from the space being exhausted.

Exhaust air systems are terminated outside the building, in some cases after the exhaust air has been treated to remove any harmful emissions. Exhaust air is not recirculated.

AIR-HANDLING UNIT. A blower or fan used for the purpose of distributing supply air to a room, space or area.

❖ In addition to blowers, air-handling units may contain heat exchangers, filters and means to control air volume.

AIR, MAKEUP. Any combination of outdoor and transfer air intended to replace exhaust air and exfiltration.

❖ Makeup air is not to be confused with combustion air. Makeup air replaces the air being exhausted through such systems as bathroom and toilet exhausts, kitchen exhaust hoods, hazardous exhaust systems and clothes dryer exhaust systems (refer to Chapter 5 for specific requirements for makeup air). Exhaust systems cannot function at design capacity without adequate volumes of makeup air to replace the air being exhausted. Makeup air generally refers to outdoor air, but can be any combination of outdoor air and transfer air.

AIR, OUTDOOR. Ambient air that enters a building through a ventilation system, through intentional openings for natural ventilation, or by infiltration.

AIR, TRANSFER. Air moved from one indoor space to another.

[A] ALTERATION. A change in a mechanical system that involves an extension, addition or change to the arrangement, type or purpose of the original installation.

❖ An alteration is any modification or change made to an existing installation. For example, changing refrigerant types or heat transfer fluids in a system would be considered alterations.

APPLIANCE. A device or apparatus that is manufactured and designed to utilize energy and for which this code provides specific requirements.

❖ An appliance is a manufactured component or assembly of components that converts one form of energy into a different form of energy to serve a specific purpose. The term “appliance” generally refers to residential- and commercial-type equipment that is manufactured in standardized sizes or types. The term “appliance” is generally not associated with industrial-type equipment. For the application of the code provisions, the terms “appliance” and “equipment” are mutually exclusive.

Examples of appliances include furnaces; boilers; water heaters; room heaters; refrigeration units; cooking equipment; clothes dryers; wood stoves; pool, spa and hot tub heaters; unit heaters; ovens and similar fuel-fired or electrically operated appliances (see the definition of “Equipment”).

APPLIANCE, EXISTING. Any *appliance* regulated by this code which was legally installed prior to the effective date of this code, or for which a permit to install has been issued.

❖ The definition creates a distinction between legally existing appliances and illegally existing appliances. Any appliance that is installed without a permit, if a permit was required at the time of installation, is not a legally existing appliance. An appliance that was illegally installed prior to the effective date of the code is not considered existing, but is “new,” and therefore subject to enforcement of the requirements for new installations. This definition is important in the application of Section 102.2 of the code.

APPLIANCE TYPE.

High-heat appliance. Any *appliance* in which the products of *combustion* at the point of entrance to the flue under normal operating conditions have a temperature greater than 2,000ºF (1093ºC).

❖ A high-heat appliance is one in which the temperature of the products of combustion, measured at the point of entry to the flue under normal operating conditions, exceeds 2,000°F (1093°C). High-heat appliances include industrial furnaces, retorts and kilns.

Low-heat appliance (residential appliance). Any *appliance* in which the products of *combustion* at the point of

INTERNATIONAL CODE COUNCIL®
Copyright © 2015 ICC. ALL RIGHTS RESERVED. Accessed by David Dammon on Jun 21, 2017 12:30:52 PM pursuant to License Agreement with ICC. No further reproduction or distribution authorized. ANY UNAUTHORIZED REPRODUCTION OR DISTRIBUTION IS A VIOLATION OF THE FEDERAL COPYRIGHT ACT AND THE LICENSE AGREEMENT, AND SUBJECT TO CIVIL AND CRIMINAL PENALTIES THEREUNDER.

entrance to the flue under normal operating conditions have a temperature of 1,000ºF (538ºC) or less.

❖ Residential appliances, including solid-fuel appliances, are classified in this category.

Medium-heat appliance. Any *appliance* in which the products of *combustion* at the point of entrance to the flue under normal operating conditions have a temperature of more than 1,000ºF (538ºC), but not greater than 2,000ºF (1093ºC).

❖ This classification includes industrial-type equipment, such as furnaces, kilns, ovens, dryers and incinerators.

APPLIANCE, VENTED. An *appliance* designed and installed in such a manner that all of the products of *combustion* are conveyed directly from the *appliance* to the outdoor atmosphere through an *approved chimney* or vent system.

❖ The majority of fuel-fired appliances are designed to vent the products of combustion to the outdoors through one or more specific types of vent or chimney (see Section 801.2).

[A] APPROVED. Acceptable to the code official.

❖ As related to the process of acceptance of mechanical installations, including materials, equipment and construction systems, this definition identifies where the ultimate authority rests. Whenever this term is used, it means that only the enforcing authority can accept a specific body, document, installation, component, etc., as complying with the code. The need for code official approval is usually specified in the code only where there is no other stated criteria or standard that can be used to determine that something is acceptable. The codes generally avoid requiring specific code official approval of something without providing the code official with information necessary to make such a determination.

[A] APPROVED AGENCY. An established and recognized agency that is regularly engaged in conducting tests or furnishing inspection services where such agency has been approved by the code official.

❖ The word "approved" means "as approved by the code official." The basis for approval of an agency for a particular activity may include the capacity and capability of the agency to perform the work in accordance with Sections 301.8 through 301.8.2.3.

AUTOMATIC BOILER. Any class of boiler that is equipped with the controls and limit devices specified in Chapter 10.

❖ As opposed to manually operated boilers, automatic boilers are designed to operate safely with only periodic human attention and supervision.

BATHROOM. A room containing a bathtub, shower, spa or similar bathing fixture.

❖ A bathroom is a room or space that contains bathing fixtures with or without other plumbing fixtures. Examples of bathing fixtures include bathtubs, showers and spas.

BOILER. A closed heating *appliance* intended to supply hot water or steam for space heating, processing or power purposes. Low-pressure boilers operate at pressures less than or equal to 15 pounds per square inch (psi) (103 kPa) for steam and 160 psi (1103 kPa) for water. High-pressure boilers operate at pressures exceeding those pressures.

❖ Boilers are usually manufactured of steel, cast iron or copper and are used to transfer heat, from the combustion of a fuel or from an electric-resistance element, to water to make steam or pressurized hot water for heating or other process or power purposes.

Boilers are usually installed in closed systems where the heat transfer medium is recirculated and retained within the system. Hot water supply boilers are normally part of open systems where the heated water is supplied and used externally to the boiler. Large domestic (potable) water heating systems often use hot water supply boilers.

Boilers must be labeled and installed in accordance with the manufacturer's installation instructions and the applicable sections of the code. Boilers are rated in accordance with standards published by the American Society of Mechanical Engineers (ASME), the Hydronics Institute, the Steel Boiler Institute (SBI), the CSA Group (CSA) and the American Boiler Manufacturers Association (ABMA). Boilers can be classified by working temperature; working pressure; type of fuel used (or electric boilers); materials of construction; heat exchanger configuration; and whether or not the heat transfer medium changes phase from a liquid to a vapor.

BOILER ROOM. A room primarily utilized for the installation of a boiler.

❖ A room or space that contains a boiler is not necessarily a boiler room unless that room or space is used primarily for that purpose. For example, a basement floor area in which a boiler is located, but which also contains storage areas, electrical, plumbing and mechanical equipment, does not constitute a boiler room because the primary purpose of that space is not to house the boiler. However, if partitions are erected around the boiler to isolate it from other areas of the floor, a boiler room has been created.

BRAZED JOINT. A gas-tight joint obtained by the joining of metal parts with metallic mixtures or alloys which melt at a temperature above 1,000ºF (538ºC), but lower than the melting temperature of the parts to be joined.

❖ Although both are made with filler metals, brazing must not be confused with soldering. Brazed joints are associated with copper and copper alloy piping materials in the context of the code.

BRAZING. A metal joining process wherein coalescence is produced by the use of a nonferrous filler metal having a melting point above 1,000ºF (538ºC), but lower than that of the base metal being joined. The filler material is distributed

INTERNATIONAL CODE COUNCIL®
Copyright © 2015 ICC. ALL RIGHTS RESERVED. Accessed by David Dammon on Jun 21, 2017 12:30:52 PM pursuant to License Agreement with ICC. No further reproduction or distribution authorized. ANY UNAUTHORIZED REPRODUCTION OR DISTRIBUTION IS A VIOLATION OF THE FEDERAL COPYRIGHT ACT AND THE LICENSE AGREEMENT, AND SUBJECT TO CIVIL AND CRIMINAL PENALTIES THEREUNDER.

between the closely fitted surfaces of the joint by capillary attraction.

❖ Brazing is the act of producing a brazed joint. Brazing is often referred to as silver soldering. Silver soldering is more accurately described as silver brazing and employs high-silver-bearing alloys primarily composed of silver, copper and zinc. Silver soldering (brazing) typically requires temperatures in excess of 1,000°F (538°C) and the solders are classified as "hard" solders (see the commentary for "Brazed joint").

Confusion has always been present with respect to the distinction between "silver solder" and "silver-bearing" solder. Silver solders are unique and can be further subdivided into soft and hard categories, which are determined by the percentages of silver and the other component elements of the particular alloy. The distinction is that silver-bearing solders [melting point less than 600°F (316°C)] are used in soft-soldered joints, and silver solders [melting point greater than 1,000°F (538°C)] are used in silver-brazed joints.

Brazed joints have traditionally been required for systems containing hazardous refrigerants and for piping and components that are located in environmental air ducts. Brazed joints are considered to have superior strength and stress resistance and, because of the high melting point, are less likely to fail when exposed to fire.

Brazing with a filler metal conforming to AWS A5.8 produces a strong joint that will perform under extreme service conditions. The surfaces to be brazed must be cleaned to be free from oxides and impurities. Flux should be applied as soon as possible after the surfaces have been cleaned. Flux helps to remove residual traces of oxides, to promote wetting and to protect the surfaces from oxidation during heating. Care should be taken to prevent flux from entering the piping system during the brazing operation because flux that remains may corrode the pipe or contaminate the system.

Air and residual refrigerants should be removed from the pipe being brazed by purging the piping with a nonflammable gas such as carbon dioxide or nitrogen. Purging the system has several benefits, such as preventing oxidation from occurring on the inside of the pipe and preventing the creation of toxic gases that can result from the chemical breakdown of some refrigerants. Additionally, purging will eliminate the possibility of an explosion from flammable refrigerants or vaporized oil in the pipe, which could ignite when mixed with air. In a system that has been charged with refrigerant, purging the system eliminates the possibility of the torch igniting the refrigerant and creating highly toxic phosgene gas.

BREATHING ZONE. The region within an occupied space between planes 3 and 72 inches (76 and 1829 mm) above the floor and more than 2 feet (610 mm) from the walls of the space or from fixed air-conditioning *equipment*.

❖ This is the portion of an occupied space that is considered to be the location of the occupants. People will generally not be close to the floor or the walls. The amount of ventilation air required by Chapter 4 to be provided to the occupied space must be distributed throughout the breathing zone to minimize stagnant pockets and stratified layers of air [see Commentary Figure 202(1)]. In previous editions of the code, this was called the occupied zone.

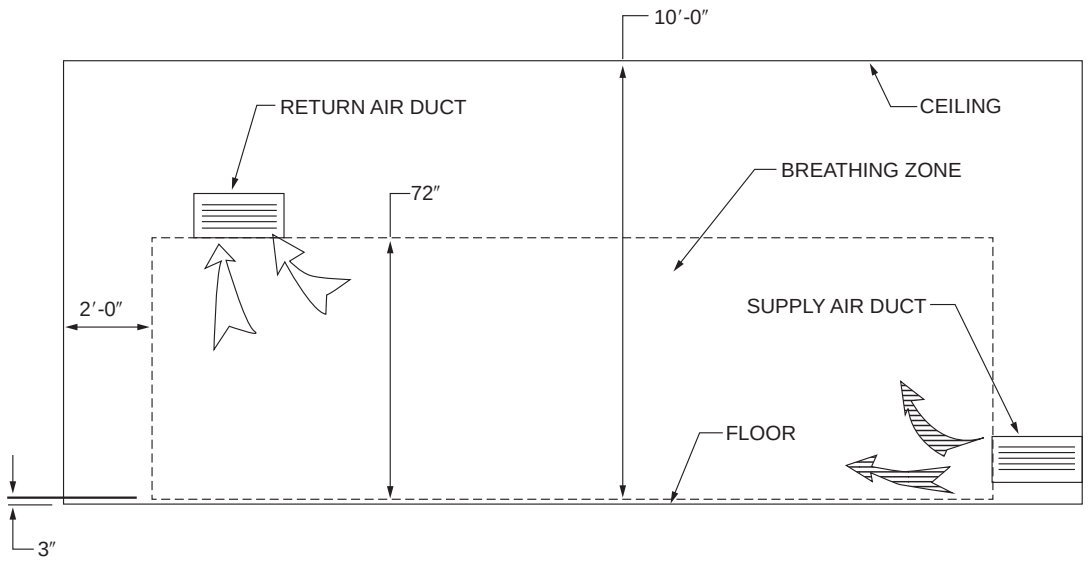

For SI: 1 inch = 25.4 mm, 1 foot = 304.8 mm.

Figure 202(1)
BREATHING ZONE

INTERNATIONAL CODE COUNCIL®
Copyright © 2015 ICC. ALL RIGHTS RESERVED. Accessed by David Dammon on Jun 21, 2017 12:30:52 PM pursuant to License Agreement with ICC. No further reproduction or distribution authorized. ANY UNAUTHORIZED REPRODUCTION OR DISTRIBUTION IS A VIOLATION OF THE FEDERAL COPYRIGHT ACT AND THE LICENSE AGREEMENT, AND SUBJECT TO CIVIL AND CRIMINAL PENALTIES THEREUNDER.

BTU. Abbreviation for British thermal unit, which is the quantity of heat required to raise the temperature of 1 pound (454 g) of water 1ºF (0.56ºC) (1 Btu = 1055 J).

❖ The Btu (J) is a unit of energy measurement. Fuel-fired appliances and equipment are rated based upon their Btu/h (W) input or output.

[A] BUILDING. Any structure occupied or intended for supporting or sheltering any *occupancy*.

❖ This definition indicates that where this term is used in the code, it means a structure erected to provide shelter or support for some activity or occupancy.

[BF] CEILING RADIATION DAMPER. A *listed* device installed in a ceiling membrane of a fire-resistance-rated floor/ceiling or roof/ceiling assembly to limit automatically the radiative heat transfer through an air inlet/outlet opening.

❖ Habitable spaces that require a ceiling assembly having a fire-resistance rating will often have either heating and cooling supply outlets or return air intakes in the ceiling assembly. Because such penetrations in a fire-resistance-rated assembly present locations where heat and smoke could bypass the rated assembly, devices are required to be installed in the outlet and intake openings to automatically block flow of the heat and smoke when significant heat is sensed at that location. Typical ceiling radiation dampers are shown in Commentary Figure 607.1(4).

CHIMNEY. A primarily vertical structure containing one or more flues, for the purpose of carrying gaseous products of *combustion* and air from a fuel-burning *appliance* to the outdoor atmosphere.

❖ Chimneys differ from vents in their materials of construction and the type of appliance they are designed to serve. Chimneys are capable of venting much higher temperature flue gases than vents.

Factory-built chimney. A *listed* and *labeled chimney* composed of factory-made components, assembled in the field in accordance with manufacturer's instructions and the conditions of the listing.

❖ A factory-built chimney is a manufactured listed and labeled chimney that has been tested by an approved agency to determine its performance characteristics. Factory built chimneys are manufactured in two basic designs: either a double-wall insulated design or a triple-wall air-cooled design. Both designs use stainless steel inner liners to resist the corrosive effects of combustion products.

Masonry chimney. A field-constructed *chimney* composed of solid masonry units, bricks, stones or concrete.

❖ Masonry chimneys can have one or more flues within them, and are field constructed of brick, stone, concrete and fire-clay materials. Masonry chimneys can stand alone or be part of a masonry fireplace.

Metal chimney. A field-constructed *chimney* of metal.

❖ A metal chimney is an unlisted chimney constructed and installed in accordance with NFPA 211 and is sometimes referred to as a "smokestack." Metal chimneys are typically field constructed and installed in industrial structures. Metal chimneys are not to be confused with listed "factory-built" chimneys, even though they are both constructed of metal.

CHIMNEY CONNECTOR. A pipe that connects a fuel-burning *appliance* to a *chimney*.

❖ Chimney connectors are sections of pipe used to convey combustion products from an appliance flue outlet to a chimney inlet. Factory-built chimneys can directly connect to some appliances without the need for a connector; however, masonry chimneys cannot directly connect to an appliance because of the chimney's weight (see the commentary for "Vent connector").

CLEARANCE. The minimum distance through air measured between the heat-producing surface of the mechanical *appliance*, device or *equipment* and the surface of the combustible material or assembly.

❖ Clearances between sources of heat and combustibles are always airspace clearances.

CLOSED COMBUSTION SOLID-FUEL-BURNING APPLIANCE. A heat-producing *appliance* that employs a *combustion* chamber that does not have openings other than the flue collar, fuel charging door and adjustable openings provided to control the amount of *combustion air* that enters the *combustion* chamber.

❖ These appliances produce higher flue gas temperatures, compared to open stoves and fireplaces, because of the lack of dilution air entering the firebox.

CLOTHES DRYER. An *appliance* used to dry wet laundry by means of heat.

❖ Although the term "clothes dryer" is well-recognized in modern societies, the term might not have the same meaning in areas where hanging clothes in open air for drying is common practice. This definition clarifies that it is an appliance that uses heat to dry clothes.

[A] CODE. These regulations, subsequent amendments thereto, or any emergency rule or regulation that the administrative authority having jurisdiction has lawfully adopted.

❖ The adopted regulations are generally referred to as "the code" and include not only the *International Mechanical Code*® (IMC®) but any adopted modifications to the code and all other related rules and regulations promulgated and enacted by the jurisdiction.

[A] CODE OFFICIAL. The officer or other designated authority charged with the administration and enforcement of this code, or a duly authorized representative.

❖ The statutory power to enforce the code is normally vested in a building department (or the like) of a state, county or municipality whose designated enforcement officer is termed the "code official" (see commentary, Sections 103 and 104).

[BF] COMBINATION FIRE/SMOKE DAMPER. A *listed* device installed in ducts and air transfer openings designed to

INTERNATIONAL CODE COUNCIL®
Copyright © 2015 ICC. ALL RIGHTS RESERVED. Accessed by David Dammon on Jun 21, 2017 12:30:52 PM pursuant to License Agreement with ICC. No further reproduction or distribution authorized. ANY UNAUTHORIZED REPRODUCTION OR DISTRIBUTION IS A VIOLATION OF THE FEDERAL COPYRIGHT ACT AND THE LICENSE AGREEMENT, AND SUBJECT TO CIVIL AND CRIMINAL PENALTIES THEREUNDER.

close automatically upon the detection of heat and resist the passage of flame and smoke. The device is installed to operate automatically, be controlled by a smoke detection system, and where required, is capable of being positioned from a fire command center.

❖ This definition was added to the 2009 edition of the code because the IBC has included this defined term for several editions but the IMC was silent. This type of damper combines the functions of a fire damper and a smoke damper all in one unit for compactness and economy. The damper is automatically controlled by a smoke detection system and, where required, can also have the opening position controlled from a remote command station. Operation from a remote location could be necessary for control and evacuation of smoke during fire-fighting activities.

COMBUSTIBLE ASSEMBLY. Wall, floor, ceiling or other assembly constructed of one or more component materials that are not defined as noncombustible.

❖ A combustible assembly is composed of one or more combustible components that do not comply with the requirements of ASTM E136 as a noncombustible material (see the definition of "Noncombustible").

[F] COMBUSTIBLE LIQUID. A liquid having a closed cup flash point at or above 100ºF (38ºC). Combustible liquids shall be subdivided as follows:

Class II. Liquids having a closed cup flash point at or above 100ºF (38ºC) and below 140ºF (60ºC).

Class IIIA. Liquids having a closed cup flash point at or above 140ºF (60ºC) and below 200ºF (93ºC).

Class IIIB. Liquids having a closed cup flash point at or above 200ºF (93ºC).

The category of combustible liquids does not include compressed gases or cryogenic fluids.

❖ Combustible liquids differ from flammable liquids in that the closed cup flash point of combustible liquids is at or above 100°F (38°C) (see the definition of "Flash point"). The range of flash point dictates the class of combustible liquid. The flash point range of 100°F to 140°F (38°C to 60°C) for Class II liquids was based on a possible indoor ambient temperature exceeding 100°F (38°C). Only a moderate degree of heating would be required to bring the liquid to its flash point in this type of condition. Class Ill liquids, which have flash points higher than 140°F (60°C), would require a significant heat source in addition to ambient temperature conditions to reach their flash point (see the definition of "Flammable liquids"). Class III liquids are further divided into Class IIIA and Class IIIB liquids to indicate the two closed cup flash point ranges above 140°F.

COMBUSTIBLE MATERIAL. Any material not defined as noncombustible.

❖ All materials are considered combustible unless they pass the ASTM E136 test referenced in the code. Combustible materials are those materials that are capable of burning, generally in air, under normal conditions of ambient temperature and pressure. Note that gypsum board (drywall, sheetrock) is considered to be a combustible material in the code.

The IBC considers gypsum board to be a noncombustible material on the basis of Section 703.5.2 of the IBC. The code does not have similar text.

COMBUSTION. In the context of this code, refers to the rapid oxidation of fuel accompanied by the production of heat or heat and light.

❖ The primary components of combustion are fuel, oxygen and heat. The code regulates many aspects of combustion technology, including the process of combustion and providing sufficient air; the use of energy produced from combustion; the safe venting of the products of combustion; combustion efficiency; the containment and control of combustion and the fuel supplies for combustion equipment and appliances.

COMBUSTION AIR. Air necessary for complete *combustion* of a fuel, including *theoretical air* and excess air.

❖ The process of combustion requires a specific amount of oxygen to initiate and sustain the combustion reaction. Combustion air includes primary air, secondary air, draft hood dilution air and excess air. Combustion air is the amount of atmospheric air required for complete combustion of a fuel and is related to the molecular composition of the fuel being burned, the design of the fuel-burning equipment and the percentage of oxygen in the combustion air. Too little combustion air will result in incomplete combustion of a fuel and the possible formation of carbon deposits (soot), carbon monoxide, toxic alcohols, ketones, aldehydes, nitrous oxides and other byproducts. The required amount of combustion air is usually stated in terms of cubic feet per minute (m^3/s) or pounds per hour (kg/h).

COMBUSTION CHAMBER. The portion of an *appliance* within which *combustion* occurs.

❖ Combustion chambers are either open to the atmosphere at the burners or are isolated (sealed) from the atmosphere at the burners. For solid fuels, combustion chambers are often referred to as "fireboxes."

COMBUSTION PRODUCTS. Constituents resulting from the *combustion* of a fuel with the oxygen of the air, including the inert gases, but excluding excess air.

❖ Combustion products include water, carbon dioxide, carbon monoxide, nitrogen oxides and various trace compounds.

COMMERCIAL COOKING APPLIANCES. Appliances used in a commercial food service establishment for heating or cooking food and which produce grease vapors, steam, fumes, smoke or odors that are required to be removed through a local exhaust ventilation system. Such appliances include deep fat fryers; upright broilers; griddles; broilers; steam-jacketed kettles; hot-top ranges; under-fired broilers (charbroilers); ovens; barbecues; rotisseries; and similar

INTERNATIONAL CODE COUNCIL®
Copyright © 2015 ICC. ALL RIGHTS RESERVED. Accessed by David Dammon on Jun 21, 2017 12:30:52 PM pursuant to License Agreement with ICC. No further reproduction or distribution authorized. ANY UNAUTHORIZED REPRODUCTION OR DISTRIBUTION IS A VIOLATION OF THE FEDERAL COPYRIGHT ACT AND THE LICENSE AGREEMENT, AND SUBJECT TO CIVIL AND CRIMINAL PENALTIES THEREUNDER.

appliances. For the purpose of this definition, a food service establishment shall include any building or a portion thereof used for the preparation and serving of food.

❖ This definition is important in the application of Section 507, which requires a commercial kitchen hood above commercial cooking equipment. A definition of "Food service establishment" is included within this definition. "Food service" includes operations, such as preparing, handling, cleaning, cooking and packaging food items of any kind (see commentary, Section 507.2).

COMMERCIAL COOKING RECIRCULATING SYSTEM. Self-contained system consisting of the exhaust hood, the cooking *equipment*, the filters and the fire suppression system. The system is designed to capture cooking vapors and residues generated from commercial cooking *equipment*. The system removes contaminants from the *exhaust air* and recirculates the air to the space from which it was withdrawn.

❖ Recirculating exhaust systems are also referred to as "ductless hoods" because they discharge into the room in which the appliance is located instead of through a duct system to the outdoors. The requirements for these systems are found in UL 710B. Because the emissions (effluent) treatment components cannot remove products of combustion of a fuel, those systems are limited to electrically heated cooking appliances. UL 710B has the same basic requirements as UL 710 for ducted hoods, but requires additional emissions tests and the fire-extinguishing system is tested as an integral part of the hood.

COMMERCIAL KITCHEN HOODS.

❖ All of the defined commercial hoods are included in the sizing tables in Section 507.5. The configurations of the various types of hoods require different volumes of exhaust air to properly capture the cooking effluents from the cooking appliances.

Backshelf hood. A backshelf hood is also referred to as a low-proximity hood, or as a sidewall hood where wall mounted. Its front lower lip is low over the *appliance*(s) and is "set back" from the front of the appliance(s). It is always closed to the rear of the appliances by a panel where free-standing, or by a panel or wall where wall mounted, and its height above the cooking surface varies. (This style of hood can be constructed with partial end panels to increase its effectiveness in capturing the effluent generated by the cooking operation).

❖ See Commentary Figures 202(2) and 507.4.2.

Double-island canopy hood. A double-island canopy hood is placed over back-to-back appliances or *appliance* lines. It is open on all sides and overhangs both fronts and the sides of the *appliance*(s). It could have a wall panel between the backs of the appliances. (The fact that *exhaust air* is drawn from both sides of the double canopy to meet in the center causes each side of this hood to emulate a wall canopy hood, and thus it functions much the same with or without an actual wall panel between the backs of the appliances).

❖ See Commentary Figures 202(2) and 507.4.1(5).

Eyebrow hood. An eyebrow hood is mounted directly to the face of an *appliance*, such as an oven and dishwasher, above the opening(s) or door(s) from which effluent is emitted, extending past the sides and overhanging the front of the opening to capture the effluent.

❖ See Commentary Figure 202(2).

Pass-over hood. A pass-over hood is a free-standing form of a backshelf hood constructed low enough to pass food over the top.

❖ See Commentary Figure 202(2).

Single-island canopy hood. A single-island canopy hood is placed over a single *appliance* or *appliance* line. It is open on all sides and overhangs the front, rear and sides of the *appliance*(s). A single-island canopy is more suscepti-

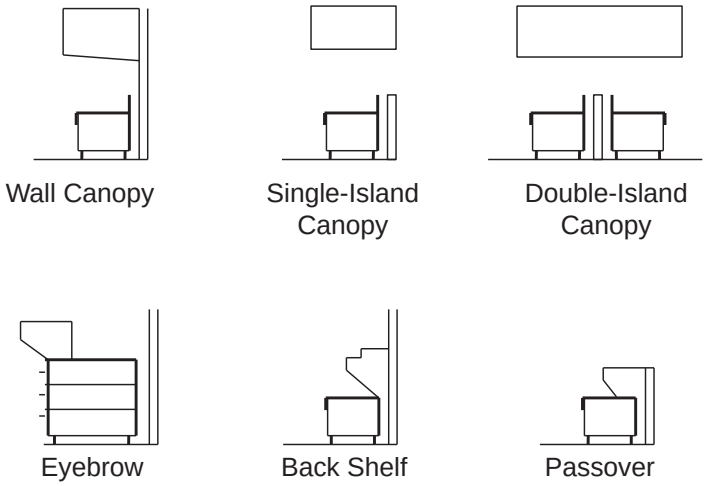

Figure 202(2)
COMMERCIAL KITCHEN HOODS

INTERNATIONAL CODE COUNCIL®
Copyright © 2015 ICC. ALL RIGHTS RESERVED. Accessed by David Dammon on Jun 21, 2017 12:30:52 PM pursuant to License Agreement with ICC. No further reproduction or distribution authorized. ANY UNAUTHORIZED REPRODUCTION OR DISTRIBUTION IS A VIOLATION OF THE FEDERAL COPYRIGHT ACT AND THE LICENSE AGREEMENT, AND SUBJECT TO CIVIL AND CRIMINAL PENALTIES THEREUNDER.

ble to cross drafts and requires a greater *exhaust air* flow than an equivalent sized wall-mounted canopy to capture and contain effluent generated by the cooking operation(s).

❖ See Commentary Figures 202(2) and 507.4.1(4).

Wall canopy hood. A wall canopy exhaust hood is mounted against a wall above a single *appliance* or line of *appliance*(s), or it could be free-standing with a back panel from the rear of the appliances to the hood. It overhangs the front and sides of the *appliance*(s) on all open sides.

The wall acts as a back panel, forcing the *makeup air* to be drawn across the front of the cooking *equipment*, thus increasing the effectiveness of the hood to capture and contain effluent generated by the cooking operation(s).

❖ See Commentary Figures 202(2) and 507.4.1(3).

COMPENSATING HOODS. *Compensating hoods* are those having integral (built-in) *makeup air* supply. The *makeup air* supply for such hoods is generally supplied from: short-circuit flow from inside the hood, air curtain flow from the bottom of the front face, and front face discharge from the outside front wall of the hood. The compensating makeup airflow can also be supplied from the rear or side of the hood, or the rear, front or sides of the cooking *equipment*. The makeup airflow can be one or a combination of methods.

❖ A "short circuit" hood is a type of compensating hood that is designed to provide makeup air directly into the hood intake area. A label, as required in Section 508.2, specifies a minimum total exhaust flow and a maximum makeup airflow that is to be supplied to the compensating hood to ensure capture and containment of the exhaust effluent (see commentary, Section 508.2).

COMPRESSOR. A specific machine, with or without accessories, for compressing a gas.

❖ A compressor is the heart of a mechanical refrigeration system. It is used in a vapor refrigeration cycle to raise the pressure and enthalpy of the refrigerant into the superheated vapor state, at which point the refrigerant vapor enters the condenser and transfers heat energy to a cooler medium. There are two basic types of compressors: positive displacement and dynamic. Positive-displacement compressors increase the pressure of the refrigerant vapor by reducing the volume of the compressor chamber, such as in a reciprocating piston, screw, scroll or rotary compressor. Dynamic compressors, such as centrifugal compressors, increase the pressure of the refrigerant vapor by a continuous transfer of angular momentum from the rotating member to the vapor.

COMPRESSOR, POSITIVE DISPLACEMENT. A compressor in which increase in pressure is attained by changing the internal volume of the compression chamber.

❖ See the commentary for "Compressor."

COMPRESSOR UNIT. A compressor with its prime mover and accessories.

❖ A compressor unit includes the compressor, the motor or engine that drives it and related controls and hardware.

CONCEALED LOCATION. A location that cannot be accessed without damaging permanent parts of the building structure or finish surface. Spaces above, below or behind readily removable panels or doors shall not be considered as concealed.

❖ For example, the space above a "drop-in" tile suspended ceiling system would not be considered as a concealed location.

CONDENSATE. The liquid that condenses from a gas (including flue gas) caused by a reduction in temperature.

❖ Condensate forms when the temperature of a vapor is lowered to its dew point temperature. Air-conditioning systems produce condensate when an airstream contacts cooling coils. The moisture in the air condenses on the cold surface of the coils and the air is "dehumidified." High-efficiency (84 percent and up) fuel-burning appliances produce condensate from the combustion gases. Condensate also forms within improperly designed chimneys and vents when the products of combustion (which contain water vapor) contact the colder walls of the flue. If the temperature of the products of combustion is lowered to the dew point temperature of the water vapor, condensate will form on the inside walls of the vent or chimney. Condensed steam in hydronic systems is also referred to as "condensate."

CONDENSER. A heat exchanger designed to liquefy refrigerant vapor by removal of heat.

❖ In a refrigeration system, the condenser is a heat exchanger that passes (rejects) heat from the system to a cooler medium, such as air or water. As it passes through the condenser, the refrigerant condenses from a vapor into a liquid at the same temperature and pressure. The liquid refrigerant is usually subcooled in or after the condenser before it is passed through the expansion valve, orifice or other restrictor. To maximize heat transfer, condenser design usually includes low thermal-resistance tubes that isolate the refrigerant from the cooling fluid. The condenser rejects the heat of vaporization, compressor heat and any superheat that was absorbed in the system evaporator section.

CONDENSING UNIT. A specific refrigerating machine combination for a given refrigerant, consisting of one or more power-driven compressors, condensers and, where required, liquid receivers, and the regularly furnished accessories.

❖ Condensing units always include compressors and condenser heat exchangers, and convert refrigerant vapor to liquid.

INTERNATIONAL CODE COUNCIL®
Copyright © 2015 ICC. ALL RIGHTS RESERVED. Accessed by David Dammon on Jun 21, 2017 12:30:52 PM pursuant to License Agreement with ICC. No further reproduction or distribution authorized. ANY UNAUTHORIZED REPRODUCTION OR DISTRIBUTION IS A VIOLATION OF THE FEDERAL COPYRIGHT ACT AND THE LICENSE AGREEMENT, AND SUBJECT TO CIVIL AND CRIMINAL PENALTIES THEREUNDER.

CONDITIONED SPACE. An area, room or space that is enclosed within the building thermal envelope and that is directly heated or cooled or that is indirectly heated or cooled. Spaces are indirectly heated or cooled where they communicate through openings with conditioned spaces, where they are separated from conditioned spaces by uninsulated walls, floors or ceilings, or where they contain uninsulated ducts, piping or other sources of heating or cooling.

❖ Conditioned spaces are intentionally (directly) heated or cooled by the expenditure of energy or are indirectly heated or cooled by being exposed to uninsulated pipes or ducts, uninsulated walls, floors or ceilings or by being connected with conditioned spaces through openings. The term typically refers to conditioning for human comfort.

[A] CONSTRUCTION DOCUMENTS. The written, graphic and pictorial documents prepared or assembled for describing the design, location and physical characteristics of the elements of the project necessary for obtaining a building permit. The construction drawings shall be drawn to an appropriate scale.

❖ To determine that proposed construction is in compliance with code requirements, sufficient information must be submitted to the code official for review. This typically consists of the drawings (floor plans, elevations, sections, details, etc.), specifications and product information describing the proposed work.

CONTROL. A manual or automatic device designed to regulate the gas, air, water or electrical supply to, or operation of, a mechanical system.

❖ A control is a device designed to respond to changes in temperature, pressure, liquid or gas flow rates, current, voltage, resistance, humidity and/or liquid levels.

CONVERSION BURNER. A burner designed to supply gaseous fuel to an *appliance* originally designed to utilize another fuel.

❖ Typical conversion burners are designed to convert an appliance such as a boiler from solid fuel fired to oil fired.

COOKING APPLIANCE. See "*Commercial cooking appliances.*"

❖ See the commentary for "Commercial cooking appliances."

DAMPER. A manually or automatically controlled device to regulate draft or the rate of flow of air or *combustion* gases.

❖ A damper is used in an air distribution system as a restrictor to regulate airflow through ductwork. When used in flues venting combustion gases, a damper is used to regulate draft (see commentary, Sections 803.5 and 803.6).

Volume damper. A device that, where installed, will restrict, retard or direct the flow of air in a duct, or the products of *combustion* in a heat-producing *appliance*, its vent connector, vent or *chimney* therefrom.

❖ See the commentary for "Damper."

[BS] DESIGN FLOOD ELEVATION. The elevation of the "design flood," including wave height, relative to the datum specified on the community's legally designated flood hazard area map. In areas designated as Zone AO, the *design flood elevation* shall be the elevation of the highest existing grade of the building's perimeter plus the depth number, in feet, specified on the flood hazard map. In areas designated as Zone AO where a depth number is not specified on the map, the depth number shall be taken as being equal to 2 feet (610 mm).

❖ The design flood elevation is the height to which floodwaters are predicted to rise during passage or occurrence of the design flood. Unless a community has adopted another flood hazard map or otherwise designated the design flood, the design flood elevation is the base flood elevation shown on the Flood Insurance Rate Maps (FIRM). The datum specified on the flood hazard map is important because it may differ from the datum used locally for other purposes. Also, the datum shown on the FIRM may change over time, as FEMA updates and revises the maps.

Some flood hazard maps have areas denoted as AO Zones, identifying areas subject to sheet flow flooding, shallow flooding or ponding. Specific instruction for these zones is provided in the code because the maps specify a flood depth above grade rather than a height above datum.

FEMA refers to some areas subject to shallow flooding and/or unpredictable flow paths as AH Zones. AH Zones have specified base flood elevations and they are treated the same as the other A Zones with base flood elevations.

DESIGN WORKING PRESSURE. The maximum allowable working pressure for which a specific part of a system is designed.

❖ Piping, vessels, ductwork systems and related components are designed to operate within specific pressure ranges. Operation at pressures outside these ranges could result in the failure of one or more system components. The design working pressure is established by the manufacturer of the material or system and is based on material strengths and safety factors.

DIRECT REFRIGERATION SYSTEM. A system in which the evaporator or condenser of the refrigerating system is in direct contact with the air or other substances to be cooled or heated.

❖ In a direct system, the air or substance to be conditioned is passed over or is otherwise in contact with the condenser or evaporator heat exchangers. Heat exchanger failure would allow refrigerants to enter the air or substance being conditioned.

DIRECT-VENT APPLIANCES. Appliances that are constructed and installed so that all air for *combustion* is derived from the outdoor atmosphere and all flue gases are discharged to the outdoor atmosphere.

❖ Such appliances are built with independent exhaust and intake pipes, or have concentric pipes that vent

INTERNATIONAL CODE COUNCIL®
Copyright © 2015 ICC. ALL RIGHTS RESERVED. Accessed by David Dammon on Jun 21, 2017 12:30:52 PM pursuant to License Agreement with ICC. No further reproduction or distribution authorized. ANY UNAUTHORIZED REPRODUCTION OR DISTRIBUTION IS A VIOLATION OF THE FEDERAL COPYRIGHT ACT AND THE LICENSE AGREEMENT, AND SUBJECT TO CIVIL AND CRIMINAL PENALTIES THEREUNDER.

through the inner pipe and convey combustion air in the annular space between pipe walls (see commentary, Sections 304.1 and 804.1).

DISCRETE PRODUCT. Products that are noncontinuous, individual, distinct pieces such as, but not limited to, electrical, plumbing and mechanical products and duct straps, duct fittings, duct registers and pipe hangers.

❖ This definition relates to Section 602.2.1.5 for products installed in plenums. Discrete products are not in sheet-goods form or continuous forms such as piping, tubing, wiring, conduit and ducts. Discrete products are tested differently because of their form and the nature of the testing apparatus.

DRAFT. The pressure difference existing between the *appliance* or any component part and the atmosphere, that causes a continuous flow of air and products of *combustion* through the gas passages of the *appliance* to the atmosphere.

❖ Draft is the negative static pressure, measured relative to atmospheric pressure, that is developed in chimneys and vents and in the flue-ways of fuel-burning appliances. Draft can be produced by hot flue-gas buoyancy ("stack effect") or mechanically by fans and exhausters or by a combination of both natural and mechanical means.

Induced draft. The pressure difference created by the action of a fan, blower or ejector, that is located between the *appliance* and the *chimney* or vent termination.

❖ Induced draft systems use a fan or blower to boost or "induce" draft in a venting system that produces insufficient natural draft. Draft inducers are separate field-installed units that are located between an appliance and its venting system. Draft inducers are used with natural draft venting systems to overcome the resistance of vent or chimney connectors and to compensate for the inability of the chimney or vent to produce sufficient and reliable draft.

Draft induction is also a design principle used in many fan-assisted appliances. Draft inducer fans or blowers that are integral with fuel-fired appliances are necessary to overcome the internal resistance of the heat exchanger flue passageways. To attain higher thermal transfer efficiencies, some heat exchanger designs use flue passageways that retain the combustion gases longer over a greater surface area, thus extracting more heat. Such heat exchanger designs cannot rely upon natural (gravity) venting to overcome the higher resistance to flow and, therefore, must rely on mechanical means to pull the combustion gases through the heat exchanger.

Induced draft systems are not to be confused with systems using power exhausters or other self-venting equipment.

Natural draft. The pressure difference created by a vent or *chimney* because of its height, and the temperature difference between the flue gases and the atmosphere.

❖ Natural draft systems do not use mechanical devices such as fans or blowers, but instead rely on the principle of buoyancy to carry the products of combustion to the atmosphere. Because of the difference in temperature and the resultant difference in density between the hot products of combustion and the ambient atmosphere, the gases within the chimney or flue will rise, creating a buoyant "draft." The phenomenon of natural draft is sometimes referred to as "stack effect" and is measured in inches of water column (kPa). The amount of draft is affected by the height of the chimney or vent and also by the ability of the chimney or vent to maintain the temperature differential between the combustion gases and the ambient air.

DRIP. The container placed at a low point in a system of piping to collect condensate and from which the condensate is removable.

❖ Drip reservoirs, also referred to as "drip legs," are made up of pipe and fittings and are intended to collect liquid in piping systems where condensables are possible. A "drip leg" is distinct from a "sediment trap," even though they may be constructed identically.

DRY CLEANING SYSTEMS. Dry cleaning plants or systems are classified as follows:

Type I. Those systems using Class I flammable liquid solvents having a flash point below 100ºF (38ºC).

Type II. Those systems using Class II combustible liquid solvents having a flash point at or above 100ºF (38ºC) and below 140ºF (60ºC).

Type III. Those systems using Class III combustible liquid solvents having a flash point at or above 140ºF (60ºC).

Types IV and V. Those systems using Class IV nonflammable liquid solvents.

❖ Five dry cleaning types are defined. The classification is dependent on the flash point of the flammable or combustible liquid solvent being used.

DUCT. A tube or conduit utilized for conveying air. The air passages of self-contained systems are not to be construed as air ducts.

❖ Ducts can be factory manufactured or field constructed of sheet metal, gypsum board, fibrous glass board or other approved material. Ducts are used in air distribution systems, exhaust systems, smoke control systems and combustion air supply systems.

Air passageways that are integral parts of an air handler, packaged air-conditioning unit or similar piece of self-contained, factory-built equipment are not considered as ducts in the context of the code.

DUCT FURNACE. A warm-air furnace normally installed in an air distribution duct to supply warm air for heating. This definition shall apply only to a warm-air heating *appliance* that, for air circulation, depends on a blower not furnished as part of the furnace.

❖ Duct furnaces are vented appliances (if fuel fired) and consist of a heat source, heat exchangers and related

INTERNATIONAL CODE COUNCIL®
Copyright © 2015 ICC. ALL RIGHTS RESERVED. Accessed by David Dammon on Jun 21, 2017 12:30:52 PM pursuant to License Agreement with ICC. No further reproduction or distribution authorized. ANY UNAUTHORIZED REPRODUCTION OR DISTRIBUTION IS A VIOLATION OF THE FEDERAL COPYRIGHT ACT AND THE LICENSE AGREEMENT, AND SUBJECT TO CIVIL AND CRIMINAL PENALTIES THEREUNDER.

controls. Duct furnaces depend on an external air handler or blower.

DUCT SYSTEM. A continuous passageway for the transmission of air that, in addition to ducts, includes duct fittings, dampers, plenums, fans and accessory air-handling *equipment* and appliances.

❖ Duct systems are part of an air distribution system and include supply, return and relief/exhaust air systems.

DUCTLESS MINI-SPLIT SYSTEM. A heating and cooling system that is comprised of one or multiple indoor evaporator/air-handling units and an outdoor condensing unit that is connected by refrigerant piping and electrical wiring. A ductless mini-split system is capable of cooling or heating one or more rooms without the use of a traditional ductwork system.

❖ These systems have become popular in recent years both for smaller spaces and for alterations of existing buildings, because the systems do not need ductwork and occupy very little space. For example, they are popular for adding cooling to existing schools and churches where it would be difficult to install ductwork and conventional systems. Generally, multiple systems are installed to provide the needed coverage and capacity. The evaporator and air-handler are combined in a single enclosure that is suitably "dressed up" to be exposed on finished walls of building interiors. Otherwise, such systems are the same as the traditional split system having separate condensing units and evaporator fan /coil units, interconnected by refrigerant piping and control wiring.

[BG] DWELLING. A building or portion thereof that contains not more than two *dwelling* units.

❖ A dwelling can be a single unit or a two-family unit, often referred to as a "duplex" or a "two-flat" (see the definition of "Dwelling unit").

[BG] DWELLING UNIT. A single unit providing complete, independent living facilities for one or more persons, including permanent provisions for living, sleeping, eating, cooking and sanitation.

❖ Many code provisions address dwelling units specifically. All of the elements listed in the definition must be present for a dwelling unit to exist. See the IBC for additional information on dwelling units.

ELECTRIC HEATING APPLIANCE. An *appliance* that produces heat energy to create a warm environment by the application of electric power to resistance elements, refrigerant compressors or dissimilar material junctions.

❖ Such appliances are not fuel fired and include heat pumps and electric resistance units.

ENERGY RECOVERY VENTILATION SYSTEM. Systems that employ air-to-air heat exchangers to recover energy from or reject energy to *exhaust air* for the purpose of preheating, pre-cooling, humidifying or dehumidifying outdoor *ventilation air* prior to supplying such air to a space, either directly or as part of an HVAC system.

❖ An energy recovery ventilation system uses what would otherwise be wasted energy in exhaust air to precondition the incoming ventilation air stream. This preconditioning conserves energy that would otherwise be required by the heating, ventilating and air-conditioning (HVAC) system to heat, cool, humidify or dehumidify ventilation air once it entered the building, room or space for which it was intended (see commentary, Section 514).

ENVIRONMENTAL AIR. Air that is conveyed to or from occupied areas through ducts which are not part of the heating or air-conditioning system, such as ventilation for human usage, domestic kitchen range exhaust, bathroom exhaust, domestic clothes dryer exhaust and parking garage exhaust.

❖ The types of air considered to be environmental air are included in this definition. These include typical building ventilation air, as required in Chapter 4, domestic kitchen and clothes dryer exhaust and exhaust air from both domestic and commercial bathrooms. Commercial cooking exhaust systems are not considered to be environmental air. Hazardous exhaust, such as flammable and explosive vapors; fumes; smoke; spray residues and mists; vapors from corrosive liquids; noxious and toxic gases and other items listed in Section 502 would not be considered environmental air. Dust, stock and refuse systems as detailed in Section 511 are also not considered to be environmental air.

EQUIPMENT. All piping, ducts, vents, control devices and other components of systems other than appliances which are permanently installed and integrated to provide control of environmental conditions for buildings. This definition shall also include other systems specifically regulated in this code.

❖ In the code, appliances are not referred to as equipment and vice versa. Throughout the code, the terms "equipment" and "appliance" have been used as necessary to match the terms with the intent and context of the code text. Traditionally, the term "equipment" has referred to large machinery and specialized hardware not thought of as an "appliance." See the definition of "Appliance" and the commentary for Section 301.7.

EQUIPMENT, EXISTING. Any *equipment* regulated by this code which was legally installed prior to the effective date of this code, or for which a permit to install has been issued.

❖ Although the term "equipment" does not include appliances, it is appropriate to apply this definition to both equipment and appliances. Mechanical equipment that has been illegally installed prior to the effective date of the code is not considered as existing, and is subject to all of the requirements of the code for new installations. Sections that address

INTERNATIONAL CODE COUNCIL®
Copyright © 2015 ICC. ALL RIGHTS RESERVED. Accessed by David Dammon on Jun 21, 2017 12:30:52 PM pursuant to License Agreement with ICC. No further reproduction or distribution authorized. ANY UNAUTHORIZED REPRODUCTION OR DISTRIBUTION IS A VIOLATION OF THE FEDERAL COPYRIGHT ACT AND THE LICENSE AGREEMENT, AND SUBJECT TO CIVIL AND CRIMINAL PENALTIES THEREUNDER.

existing mechanical systems and installations include Sections 102 and 108.

EVAPORATIVE COOLER. A device used for reducing the sensible heat of air for cooling by the process of evaporation of water into an airstream.

❖ Also known as "swamp coolers," such units are used in arid climates and use water as a refrigerant. These units substantially increase the humidity of the air being conditioned.

EVAPORATIVE COOLING SYSTEM. The *equipment* and appliances intended or installed for the purpose of environmental cooling by an evaporative cooler from which the conditioned air is distributed through ducts or plenums to the conditioned area.

❖ In applications using an evaporative cooler attached to an air distribution system, special consideration must be given to the type of materials used because of the high water vapor content of the air being distributed (see Section 603.5.1). Manufacturer's instructions must be consulted concerning approval of the materials to be used. Materials include duct liners, fibrous glass duct, flexible air duct and connectors, and duct tape.

EVAPORATOR. That part of the system in which liquid refrigerant is vaporized to produce refrigeration.

❖ A refrigeration system uses an evaporator to transfer heat from the refrigeration load to the refrigerant fluid. The evaporator is a heat-absorbing heat exchanger. The evaporation process takes place in the evaporator at a constant pressure and temperature, and the refrigerant will change from a liquid state to a saturated vapor as it absorbs heat from the refrigerated space or substance. Heat absorbed by the refrigerant vapor is referred to as "superheat" (or heat in excess of the heat of vaporization). Evaporators are generally constructed of metallic tubes with either plate fins or spine fins attached to enhance the heat transfer capabilities.

EXCESS AIR. The amount of air provided in addition to *theoretical air* to achieve complete *combustion* of a fuel, thereby preventing the formation of dangerous products of *combustion*.

❖ The introduction and efficient intermixing of primary and secondary combustion air into natural-draft fuel-fired appliances is not precise and is coupled with the induced air inflow caused by the internal draft. To achieve complete oxidation (combustion), more air (excess) will be introduced into the appliances than is theoretically necessary for the complete combustion of the fuel.

EXFILTRATION. Uncontrolled outward air leakage from conditioned spaces through unintentional openings in ceilings, floors and walls to unconditioned spaces or the outdoors caused by pressure differences across these openings resulting from wind, the stack effect created by temperature differences between indoors and outdoors, and imbalances between supply and exhaust airflow rates.

EXHAUST SYSTEM. An assembly of connected ducts, plenums, fittings, registers, grilles and hoods through which air is conducted from the space or spaces and exhausted to the outdoor atmosphere.

❖ In addition to those components already mentioned, air-handling equipment blowers and fans are also included as part of an exhaust air system.

EXTRA-HEAVY-DUTY COOKING APPLIANCE. Extra-heavy-duty cooking appliances are those utilizing open flame combustion of solid fuel at any time.

❖ The increased amount of smoke and grease-laden vapor produced by appliances such as wood-fired grills and barbecue pits is reflected in the larger required amount of airflow in Section 507.5.1 as compared to the other appliance duties. These appliances combust solid fuel, including cord wood, charcoal and wood chips and pieces. Any appliance that uses wood or wood chips for food flavoring purposes is considered to be an extra-heavy-duty appliance if the wood ever combusts with open flames at any time the appliance is operating, whether being used for cooking, being prepared for cooking, in startup mode, in standby mode or in shutdown mode. If the wood only smolders and smokes without ever producing open flames, the appliance is not considered to be extra-heavy-duty.

[BF] FIRE DAMPER. A *listed* device installed in ducts and air transfer openings designed to close automatically upon detection of heat and to restrict the passage of flame. Fire dampers are classified for use in either static systems that will automatically shut down in the event of a fire, or in dynamic systems that continue to operate during a fire. A dynamic fire damper is tested and rated for closure under elevated temperature airflow.

❖ This definition was added to the 2009 edition of the code because the IBC has included this defined term for several editions but the IMC was silent. Ductwork for HVAC and exhaust systems often passes through fire-resistance-rated walls, ceilings or floors. The open duct presents a potential bypass for fire to breach the fire-resistance-rated assembly. A fire damper senses the heat of a fire and automatically closes to maintain the required fire resistance rating of the rated assembly. The design of fire dampers is specific as to the duct orientation (e.g., vertical or horizontal), as well as the capacity to close against a moving airstream or not. As the air in the duct and the duct itself could become very hot before the damper actuates, the design of the damper and its testing and rating must account for these elevated temperatures.

FIREPLACE. An assembly consisting of a hearth and fire chamber of noncombustible material and provided with a *chimney*, for use with solid fuels.

❖ Fireplaces burn solid fuels (wood, coal, etc.) and are not referred to as appliances in the code. Construction of masonry fireplaces is covered by the IBC.

INTERNATIONAL CODE COUNCIL®
Copyright © 2015 ICC. ALL RIGHTS RESERVED. Accessed by David Dammon on Jun 21, 2017 12:30:52 PM pursuant to License Agreement with ICC. No further reproduction or distribution authorized. ANY UNAUTHORIZED REPRODUCTION OR DISTRIBUTION IS A VIOLATION OF THE FEDERAL COPYRIGHT ACT AND THE LICENSE AGREEMENT, AND SUBJECT TO CIVIL AND CRIMINAL PENALTIES THEREUNDER.

Factory-built fireplace. A *listed* and *labeled* fireplace and *chimney* system composed of factory-made components, and assembled in the field in accordance with manufacturer's instructions and the conditions of the listing.

❖ Factory-built fireplaces are solid-fuel-burning units having a fire chamber that is intended to be either open to the room or, if equipped with doors, operated with the doors either open or closed. Figures 903.1(1) and 903.1(2) show two common styles of factory-built fireplaces: a recessed wall fireplace and a free-standing fireplace stove. Note that fireplaces are not referred to as appliances. The term "fireplace" describes a complete assembly, which includes the hearth, the fire chamber and a chimney. A factory-built fireplace is composed of factory-built components representative of the prototypes tested, and is installed in accordance with the manufacturer's installation instructions to form the completed fireplace (see commentary, Section 903).

Masonry fireplace. A field-constructed fireplace composed of solid masonry units, bricks, stones or concrete.

❖ Masonry fireplaces must be constructed in accordance with the requirements found in the IBC. These specific requirements are based on tradition and field experience and describe the conventional fireplace that has proven to be reliable where properly constructed, used and maintained.

FIREPLACE STOVE. A free-standing chimney-connected solid-fuel-burning heater, designed to be operated with the fire chamber doors in either the open or closed position.

❖ Fireplace stoves are generally of the free-standing type and heat a space by direct radiation. Installation of the various types of fireplace stoves must be in compliance with the listing of the stove (see commentary, Section 308.7 and Chapter 8).

[FG] FLAME SAFEGUARD. A device that will automatically shut off the fuel supply to a main burner or group of burners when the means of ignition of such burners becomes inoperative, and when flame failure occurs on the burner or group of burners.

❖ These devices are primary safety controls and are installed on all automatically operated fuel-fired appliances (see IFGC, Section 602.2).

[BF] FLAME SPREAD INDEX. The numerical value assigned to a material tested in accordance with ASTM E84 or UL 723.

❖ The ASTM E84 test method includes measurements of surface flame spread index (and smoke density index) in comparison with test results obtained by using select red oak as a control material. Red oak is used as a control material for furnace calibration because it is a fairly uniform grade of lumber that is readily available nationally, is uniform in thickness and moisture content and generally gives consistent and reproducible results.

FLAMMABILITY CLASSIFICATION. Refrigerants shall be assigned to one of the three classes—1, 2 or 3—in accordance with ASHRAE 34. For Classes 2 and 3, the heat of *combustion* shall be calculated assuming that *combustion* products are in the gas phase and in their most stable state.

Class 1. Refrigerants that do not show flame propagation when tested in air at 14.7 psia (101 kPa) and 140ºF (60ºC).

Class 2. Refrigerants having a lower flammability limit (LFL) of more than 0.00625 pound per cubic foot (0.10 kg/m3) at 140ºF (60ºC) and 14.7 psia (101 kPa) and a heat of combustion of less than 8169 Btu/lb (19 000 kJ/kg).

Class 3. Refrigerants that are highly flammable, having a LFL of less than or equal to 0.00625 pound per cubic foot (0.10 kg/m3) at140ºF (60ºC) and 14.7 psia (101 kPa) or a heat of combustion greater than or equal to 8169 Btu/lb (19 000 kJ/kg).

❖ All refrigerants are classified relative to flammability and health effects (see commentary, Section 1103).

[F] FLAMMABLE LIQUIDS. Any liquid that has a flash point below 100ºF (38ºC), and has a vapor pressure not exceeding 40 psia (276 kPa) at 100ºF (38ºC). Flammable liquids shall be known as Class I liquids and shall be divided into the following classifications:

Class IA. Liquids having a flash point below 73ºF (23ºC) and a boiling point below 100ºF (38ºC).

Class IB. Liquids having a flash point below 73ºF (23ºC) and a boiling point at or above 100ºF (38ºC).

Class IC. Liquids having a flash point at or above 73ºF (23ºC) and below 100ºF (38ºC).

❖ Although all flammable liquids have a flash point less than 100°F (38°C) (see the definition of "Flammable liquids"), the further classification of the Class I liquid is dependent on the boiling point (the temperature at which the vapor pressure of the liquid is equal to the external pressure on the liquid). The flash point limitation of 100°F (38°C) for flammable liquids assumes possible indoor ambient temperature conditions of 100°F (38°C). For the purpose of classifying a material as a flammable or combustible liquid, a vapor pressure (the pressure exerted by the vapor of a material that is in equilibrium with its solid or liquid phase) limitation of 40 psia (276 kPa absolute) at 100°F (38°C) is used as the defining criterion. A liquid is further defined as having a fluidity greater than 300 penetration asphalt when tested in accordance with ASTM D5. Three hundred penetration asphalt is the most fluid grade of paving asphalt recognized by ASTM D946. Liquids not meeting these characteristics would not be classified as a flammable or combustible liquid (see the definition of "Combustible liquids").

[F] FLAMMABLE VAPOR OR FUMES. Mixtures of gases in air at concentrations equal to or greater than the LFL and less than or equal to the upper flammability limit (UFL).

❖ Flammable vapors include those generated from flammable liquids, such as paint thinners, gasoline and other flammable solvents. Many flammable vapors are heavier than air. Material Safety Data

INTERNATIONAL CODE COUNCIL®
Copyright © 2015 ICC. ALL RIGHTS RESERVED. Accessed by David Dammon on Jun 21, 2017 12:30:52 PM pursuant to License Agreement with ICC. No further reproduction or distribution authorized. ANY UNAUTHORIZED REPRODUCTION OR DISTRIBUTION IS A VIOLATION OF THE FEDERAL COPYRIGHT ACT AND THE LICENSE AGREEMENT, AND SUBJECT TO CIVIL AND CRIMINAL PENALTIES THEREUNDER.

Sheets (MSDS) provide information on the flammability of a substance.

[F] FLASH POINT. The minimum temperature corrected to a pressure of 14.7 psia (101 kPa) at which the application of a test flame causes the vapors of a portion of the sample to ignite under the conditions specified by the test procedures and apparatus. The flash point of a liquid shall be determined in accordance with ASTM D56, ASTM D93 or ASTM D3278.

❖ The flash point is the characteristic used in the classification of flammable and combustible liquids. The Tag Closed Tester (ASTM D56) and the Pensky-Martens Closed Tester (ASTM D93) are the referenced test procedures for determining the flash points of liquids. The applicability of the respective test method is dependent on the viscosity of the test liquid and the expected flash point.

FLEXIBLE AIR CONNECTOR. A conduit for transferring air between an air duct or plenum and an air terminal unit or between an air duct or plenum and an air inlet or air outlet. Such conduit is limited in its use, length and location.

❖ Such connectors are distinguished from flexible ducts by the way that they are tested, listed, labeled, identified and limited by the code. Flexible connectors are designed to connect air terminal devices to rigid ductwork. A common application is for connecting ceiling diffusers in suspended ceilings to a rigid duct above the ceiling. This facilitates the final connection to air terminal devices that do not have an exact known location until the final phase of construction.

FLOOR AREA, NET. The actual occupied area, not including unoccupied accessory areas or thicknesses of walls.

❖ Section 401.3 requires that occupied spaces be ventilated. This definition defines those areas considered as being occupied and to correlate with the same definition in the IBC. The IBC definition also includes corridors, stairways and closets as unoccupied spaces (see commentary, Section 403.3).

[FG] FLOOR FURNACE. A completely self-contained furnace suspended from the floor of the space being heated, taking air for *combustion* from outside such space and with means for observing flames and lighting the *appliance* from such space.

❖ Floor furnaces supply heat through a floor grille placed directly over the unit's heat exchanger. Typically floor furnaces are classified as gravity-type furnaces. Air is circulated from a gravity-type floor furnace by convection. Floor furnaces may be equipped with manufacturer-provided fans to circulate the air.

FLUE. A passageway within a *chimney* or vent through which gaseous *combustion* products pass.

❖ This term is typically associated with chimneys. A flue may be constructed of masonry, metal or plastic products that are approved for the particular application for which the flue is used. The flue passageway includes all the components that make up the chimney or vent from the point of attachment to the appliance or equipment to the point of termination.

FLUE CONNECTION (BREECHING). A passage for conducting the products of *combustion* from a fuel-fired *appliance* to the vent or *chimney* (see also "*Chimney* connector" and "Vent connector").

❖ The term is typically associated with chimneys. This term is synonymous with "chimney connector" and is typically associated with industrial and commercial equipment and incinerators. Dampers, draft controls and sensors are commonly located on the breeching.

FLUE GASES. Products of *combustion* and excess air.

❖ The exact composition of flue gases will depend on the materials being burned. The primary components of flue gases are nitrogen, carbon dioxide, water vapor, particulates and a myriad of compounds and trace elements that vary with the nature of the fuel. Carbon monoxide is also a component of flue gas.

FLUE LINER (LINING). A system or material used to form the inside surface of a flue in a *chimney* or vent, for the purpose of protecting the surrounding structure from the effects of *combustion* products and conveying *combustion* products without leakage to the atmosphere.

❖ Flue liners must be resistant to heat and the corrosive action of the products of combustion. Flue liners provide insulation to retard the transfer of heat to the chimney structure and limit exposure of the chimney structure to the harmful effects of combustion products. Flue liners are generally made of fire-clay tile, refractory brick, poured-in-place refractory materials and stainless steel alloys for solid fuels. Flue liners used with gas-fired appliances are typically made of stainless steel or aluminum.

[FG] FUEL GAS. A natural gas, manufactured gas, liquefied petroleum gas or a mixture of these.

❖ The nature of fuel gases makes proper design, installation and selection of materials and devices necessary to minimize the possibility of fire or explosion. Bringing fuel gases into a building is in itself a risk. The provisions of the code are intended to reduce that risk to a level comparable to that associated with other energy sources such as electricity.

The two most commonly used fuel gases are natural gas and liquefied petroleum gas (LP-gas or LPG). These fuel gases have the following characteristics or properties.

FUEL OIL. Kerosene or any hydrocarbon oil having a flash point not less than 100ºF (38ºC).

❖ Fuel oils are classified by grades, with a No. 2 grade being the most common used for residential and light commercial heating applications. Kerosene is No. 1 grade fuel oil.

INTERNATIONAL CODE COUNCIL®
Copyright © 2015 ICC. ALL RIGHTS RESERVED. Accessed by David Dammon on Jun 21, 2017 12:30:52 PM pursuant to License Agreement with ICC. No further reproduction or distribution authorized. ANY UNAUTHORIZED REPRODUCTION OR DISTRIBUTION IS A VIOLATION OF THE FEDERAL COPYRIGHT ACT AND THE LICENSE AGREEMENT, AND SUBJECT TO CIVIL AND CRIMINAL PENALTIES THEREUNDER.

FUEL-OIL PIPING SYSTEM. A closed piping system that connects a combustible liquid from a source of supply to a fuel-oil-burning *appliance*.

❖ A fuel-oil piping system includes the piping, valves and fittings. Also included in the fuel-oil piping system, if they are installed, are pumps, reservoirs, regulators, strainers, filters, relief valves, oil preheaters, controls and gauges. The piping materials and the method of joining sections of pipe must be approved. All other components included in the piping system should be labeled and installed to comply with the manufacturer's instructions.

FURNACE. A completely self-contained heating unit that is designed to supply heated air to spaces remote from or adjacent to the *appliance* location.

❖ The single most distinguishing characteristic of furnaces is that they use air as the heat transfer medium. Furnaces can be fueled by gas, oil, solid fuel or electricity, and can use fans, blowers and gravity (convection) to circulate the heated air to and from the unit. In the context of the code, the primary usage of the term "furnace" refers to heating appliance units that combine a combustion chamber with related components, one or more heat exchangers and an air-handling system.

FURNACE ROOM. A room primarily utilized for the installation of fuel-burning, space-heating and water-heating appliances other than boilers (see also "Boiler room").

❖ A room or space that contains a furnace or water heater is not necessarily a furnace room unless that room or space is used primarily for that purpose. For example, a basement space in which a furnace is located, but which also contains storage areas and electrical, mechanical and plumbing equipment, does not constitute a furnace room because the primary purpose of the space is not to house the furnace. However, if partitions are erected that serve to enclose and isolate the furnace or water heater from other areas of the floor, a furnace room has been created.

FUSIBLE PLUG. A device arranged to relieve pressure by operation of a fusible member at a predetermined temperature.

❖ A fusible plug is designed to open at a set temperature when the fusible element melts and allows the pressure of the system to force the plug out of the relief opening. A fusible plug is a "one-time" device and cannot be reused.

GROUND SOURCE HEAT PUMP LOOP SYSTEM. Piping buried in horizontal or vertical excavations or placed in a body of water for the purpose of transporting heat transfer liquid to and from a heat pump. Included in this definition are closed loop systems in which the liquid is recirculated and open loop systems in which the liquid is drawn from a well or other source.

❖ Closed loop systems consist of loops of piping that act as a heat exchanger. A heat transfer fluid, typically water or a water/antifreeze mixture, is circulated through the piping for the purpose of extracting heat from or rejecting heat to the earth or a body of water. The ground source loop system serves either the condensing or evaporation side of a refrigerant cycle heat pump system. Such systems are part of a geothermal heating and cooling (HVAC) system.

HAZARDOUS LOCATION. Any location considered to be a fire hazard for flammable vapors, dust, combustible fibers or other highly combustible substances. The location is not necessarily categorized in the *International Building Code* as a high-hazard use group classification.

❖ The environment in which mechanical equipment and appliances operate plays a significant role in the safe performance of the equipment installation. Locations that may contain ignitable or explosive atmospheres are classified as hazardous locations for the installation of mechanical equipment and appliances. For example, repair garages can be classified as hazardous locations. Repair garages can contain gasoline vapors from vehicles stored within them as well as other volatile chemicals. As evidenced by Sections 304.3 through 304.7, public and private garages can be considered hazardous locations because of the presence of motor vehicles and because they may be used for storing paint, varnish, thinners, lawn and home maintenance products and other chemicals.

HEAT EXCHANGER. A device that transfers heat from one medium to another.

❖ All vented fuel-fired appliances employ heat exchangers of various configurations to capture heat from the combustion gases and transfer that heat to the heating medium. Heat exchangers also transfer heat from one medium to another, such as air-to-air, water-to-water, water-to-air, steam-to-water, steam-to-air, refrigerant-to-water, refrigerant-to-air and other combinations.

Heat exchanger designs are diverse, but they all rely on the same basic concept of using a heat-conducting material as the interface between the media where the exchange of heat is to occur.

HEAT PUMP. A refrigeration system that extracts heat from one substance and transfers it to another portion of the same substance or to a second substance at a higher temperature for a beneficial purpose.

❖ Heat pumps are referred to as reverse cycle refrigeration systems. Special controls and valves allow the system to be used as a comfort heating system, comfort cooling system and potable water heating system. Auxiliary heat is often installed in heat pumps in the form of electric resistance heat or fuel-fired furnaces. In most cases, the design and installation of heat pumps are more critical than other types of comfort air-conditioning systems because of the heat transfer process and the amount of air that must be circulated. Heat pump types include water source (hydronic loop and wells), ground source (earth loop) and air source.

INTERNATIONAL CODE COUNCIL®
Copyright © 2015 ICC. ALL RIGHTS RESERVED. Accessed by David Dammon on Jun 21, 2017 12:30:52 PM pursuant to License Agreement with ICC. No further reproduction or distribution authorized. ANY UNAUTHORIZED REPRODUCTION OR DISTRIBUTION IS A VIOLATION OF THE FEDERAL COPYRIGHT ACT AND THE LICENSE AGREEMENT, AND SUBJECT TO CIVIL AND CRIMINAL PENALTIES THEREUNDER.

HEAT TRANSFER LIQUID. The operating or thermal storage liquid in a mechanical system, including water or other liquid base, and additives at the concentration present under operating conditions used to move heat from one location to another. Refrigerants are not included as heat transfer liquids.

❖ Heat transfer liquid is the working fluid in hydronic and solar heating or cooling systems. The liquid is pumped from a heat exchanger or collector, where heat is absorbed by the liquid, to the heat exchanger, where the liquid releases the heat energy to another fluid, airstream or some form of thermal storage mass. Some of the commonly used heat transfer fluids are: water, water/ethylene glycol, water/propylene glycol, silicone oils, paraffinic oils and aromatic oils.

HEAVY-DUTY COOKING APPLIANCE. Heavy-duty cooking *appliances* include electric under-fired broilers, electric chain (conveyor) broilers, gas under-fired broilers, gas chain (conveyor) broilers, gas open-burner ranges (with or without oven), electric and gas wok ranges, smokers, smoker ovens, and electric and gas over-fired (upright) broilers and salamanders.

❖ The list of appliances included in the definition is fairly comprehensive and is intended to represent most of the common appliances that would be classified as "heavy-duty." This classification of appliances produces the most heat, smoke and grease-laden vapors where the cooking fuel is gas or electric (see the definition of "Extra-heavy-duty cooking appliances"). The higher airflow rate reflected in Section 507.5.2 is required for the capture and containment of the cooking effluent.

HIGH-PROBABILITY SYSTEMS. A refrigeration system in which the basic design or the location of components is such that a leakage of refrigerant from a failed connection, seal or component will enter an *occupancy* classified area, other than the *machinery room*.

❖ Chapter 11 and ASHRAE 15 classify refrigeration systems into either high-probability or low-probability systems. A high-probability system exists when the components of the system are located where a refrigerant leak could cause refrigerant to enter the occupied space. A direct system is a high-probability system. A low-probability system exists when the components of the system are located where a refrigerant leak will not discharge refrigerant into the occupied space. An indirect system is a low-probability system.

HIGH-SIDE PRESSURE. The parts of a refrigerating system subject to condenser pressure.

❖ The high-side pressure of the refrigeration system is the pressure of the refrigerant in the portion of the system located between the outlet of the compressor and the inlet to the expansion valve, capillary tube or restrictor device, which also includes the condenser.

HOOD. An air intake device used to capture by entrapment, impingement, adhesion or similar means, grease, moisture, heat and similar contaminants before they enter a duct system.

❖ A kitchen exhaust system that includes the hood serving a commercial cooking appliance is a specialized exhaust system. A commercial cooking appliance can generate significant heat as well as large quantities of air contaminants, such as grease vapors, moisture, smoke and combustion byproducts.

Type I. A kitchen hood for collecting and removing grease vapors and smoke. Such hoods are equipped with a fire suppression system.

❖ A Type I exhaust system is required for cooking appliances that are used for commercial purposes and that produce grease-laden vapors and/or smoke. Because of the high potential for grease fires at the cooking appliance and in the hood and duct system, Type I hoods are required to be fitted with a fire suppression system to extinguish an out-of-control fire event at the appliance.

Type II. A general kitchen hood for collecting and removing steam, vapor, heat, odors and products of *combustion*.

❖ A Type II exhaust hood is considered a light-duty hood that would typically be installed over steam kettles, conventional ovens, food warmers, some types of enclosed pizza ovens, steam tables and dishwashing machines. A Type II hood is not intended for grease or smoke removal. The primary purpose of a Type II hood is to capture and remove water vapor, waste heat and any products of combustion that might be associated with the heating of the appliance, such as from fuel gas combustion.

[FG] HYDROGEN GENERATING APPLIANCE. A self-contained package or factory-matched packages of integrated systems for generating gaseous hydrogen. Hydrogen generating appliances utilize electrolysis, reformation, chemical, or other processes to generate hydrogen.

❖ Hydrogen generators use water or hydrocarbon fuels as a feedstock for generation of pure hydrogen or a hydrogen-rich gas. Hydrogen generating appliances based on chemical reformers separate out the hydrogen from fossil fuels, such as natural gas, propane, gasoline, etc. This is the same high-temperature chemical process used at large oil-refineries to produce hydrogen. By generating the hydrogen on-site at the fueling station or customer's facility, these hydrogen generating appliances avoid the high cost of either liquefying hydrogen and delivering it by cryogenic tanker truck, or installing a national hydrogen pipeline system that could cost many tens of billions of dollars. In effect, these on-site hydrogen generating appliances take advantage of one of two existing energy infrastructures: either the natural gas distribution system or the electrical grid. Hydrogen is being generated to fuel a new line of developmental vehicles and to generate electric power in fuel cell power systems.

INTERNATIONAL CODE COUNCIL®
Copyright © 2015 ICC. ALL RIGHTS RESERVED. Accessed by David Dammon on Jun 21, 2017 12:30:52 PM pursuant to License Agreement with ICC. No further reproduction or distribution authorized. ANY UNAUTHORIZED REPRODUCTION OR DISTRIBUTION IS A VIOLATION OF THE FEDERAL COPYRIGHT ACT AND THE LICENSE AGREEMENT, AND SUBJECT TO CIVIL AND CRIMINAL PENALTIES THEREUNDER.

Installation requirements for these appliances are found in Chapter 7 of the IFGC and ventilation requirements for spaces containing the appliances are found in Section 304.4 of this code.

IGNITION SOURCE. A flame, spark or hot surface capable of igniting flammable vapors or fumes. Such sources include *appliance* burners, burner ignitors and electrical switching devices.

❖ This definition is important in the application of Section 304.3 regarding the elevation of ignition sources. By means of this definition, Section 304.3 applies to unintentional ignition sources such as electrical switching devices, as well as intentional ignition sources such as pilot lights, spark ignitors and hot surface ignitors.

In the context of Section 304.3, an ignition source is something capable of igniting flammable vapors that are present in the atmosphere in the locations listed in Section 304.3.

[F] IMMEDIATELY DANGEROUS TO LIFE OR HEALTH (IDLH). The concentration of airborne contaminants that poses a threat of death, immediate or delayed permanent adverse health effects, or effects that could prevent escape from such an environment. This contaminant concentration level is established by the National Institute of Occupational Safety and Health (NIOSH) based on both toxicity and flammability. It is generally expressed in parts per million by volume (ppm v/v) or milligrams per cubic meter (mg/m^3).

❖ Where the necessary IDLH data are not available, an industrial hygienist, chemist, toxicologist or other approved agency personnel should be consulted for proper determination of the nature of the hazard involved.

INDIRECT REFRIGERATION SYSTEM. A system in which a secondary coolant cooled or heated by the refrigerating system is circulated to the air or other substance to be cooled or heated. Indirect systems are distinguished by the following methods of application:

❖ Such systems are low-probability systems.

Closed system. A system in which a secondary fluid is either cooled or heated by the refrigerating system and then circulated within a closed circuit in indirect contact with the air or other substance to be cooled or heated.

❖ Closed indirect systems involve heat exchangers between the refrigerant and the substance to be heated or cooled.

Double-indirect open-spray system. A system in which the secondary substance for an indirect open-spray system is heated or cooled by an intermediate coolant circulated from a second enclosure.

❖ Such systems involve multiple heat exchangers and heat transfer fluids.

Open-spray system. A system in which a secondary coolant is cooled or heated by the refrigerating system and then circulated in direct contact with the air or other substance to be cooled or heated.

❖ Open-spray systems typically use brine as the heat transfer medium.

Vented closed system. A system in which a secondary coolant is cooled or heated by the refrigerating system and then passed through a closed circuit in the air or other substance to be cooled or heated, except that the evaporator or condenser is placed in an open or appropriately vented tank.

❖ These systems are closed systems except that the secondary heat transfer medium is open to the atmosphere.

INFILTRATION. Uncontrolled inward air leakage to conditioned spaces through unintentional openings in ceilings, floors and walls from unconditioned spaces or the outdoors caused by pressure differences across these openings resulting from wind, the stack effect created by temperature differences between indoors and outdoors, and imbalances between supply and exhaust airflow rates.

INTERLOCK. A device actuated by another device with which it is directly associated, to govern succeeding operations of the same or allied devices. A circuit in which a given action cannot occur until after one or more other actions have taken place.'

❖ The term "interlock" was used indiscriminately in the code, and in some cases it meant one thing and in others it had a different meaning. Adding a definition for the term and deleting the term in some locations made the code clear on what type of control arrangement was actually intended. For example, Section 508.1 was changed to require simultaneous (parallel) starting of kitchen exhaust fans and makeup air fans instead of referring to an interlock control arrangement. Obviously, a true interlock control arrangement is more complex than simply wiring for parallel starting and involves feedback between related components of a system so as to dictate a controlled sequence of actions. See Sections 504.9 and 507.1.1 which use the term interlock and also Section 804.3.2 which does not use the term, but nonetheless requires an interlock. The term is also used in the IFGC, Sections 304.9.2, 304.10 and 505.1.1 and is implied in Sections 503.3.3 and 503.3.4.

A good example of an interlock is the control arrangement between a venting system power exhauster and a gas-fired boiler. The gas-fired boiler depends on the exhauster to convey the vent gases to the outdoors, therefore, the boiler must know the operational status of the exhauster to prevent a very unsafe condition. The exhauster is monitored by supervisory controls (typically pressure switches) that provide feedback to the boiler to prevent the boiler from firing if the exhauster is not producing the required draft. The sequence of operation is as follows: a call for heat will start the exhauster and after the exhauster is proven to be operating properly, a supervisory control will signal the boiler to fire. If the

INTERNATIONAL CODE COUNCIL®
Copyright © 2015 ICC. ALL RIGHTS RESERVED. Accessed by David Dammon on Jun 21, 2017 12:30:52 PM pursuant to License Agreement with ICC. No further reproduction or distribution authorized. ANY UNAUTHORIZED REPRODUCTION OR DISTRIBUTION IS A VIOLATION OF THE FEDERAL COPYRIGHT ACT AND THE LICENSE AGREEMENT, AND SUBJECT TO CIVIL AND CRIMINAL PENALTIES THEREUNDER.

exhauster fails at any time, the boiler will be automatically shut down.

JOINT, FLANGED. A joint made by bolting together a pair of flanged ends.

❖ Flanges are commonly used with large piping at locations where the piping must be capable of being disassembled periodically and at connections to valves, regulators, devices and equipment. Full-face gaskets must be used with bronze and cast-iron flange fittings. Typically, materials for flange gaskets include metal or metal-jacketed asbestos; asbestos and aluminum "O" rings; or spiral-wound metal gaskets. Gaskets must be replaced whenever a joint is opened. The gasket material must be compatible with the piping contents to prevent a chemical reaction.

JOINT, FLARED. A metal-to-metal compression joint in which a conical spread is made on the end of a tube that is compressed by a flare nut against a mating flare.

❖ Because the pipe end is expanded in a flared joint, only annealed and bending-tempered soft-drawn copper tubing may be flared. Commonly used flaring tools use a screw yoke and block assembly or an expander tool that is driven into the tube with a hammer. The flared tubing end is compressed between a fitting seat and a threaded nut to form a metal-to-metal seal.

JOINT, PLASTIC ADHESIVE. A joint made in thermoset plastic piping by the use of an adhesive substance which forms a continuous bond between the mating surfaces without dissolving either one of them.

❖ Unlike solvent-welded joints, adhesive (glue) joints are surface bonded.

JOINT, PLASTIC HEAT FUSION. A joint made in thermoplastic piping by heating the parts sufficiently to permit fusion of the materials when the parts are pressed together.

❖ Heat-fusion joints for plastic pipe are analogous to the welding of steel pipe. Only polyethylene and polybutylene pipe may be joined by heat fusion, and only in accordance with the pipe manufacturer's instructions. The process involves heating the pipe and fittings with a special iron. When the parts to be joined reach their melting points, they are assembled and allowed to fuse together.

JOINT, PLASTIC SOLVENT CEMENT. A joint made in thermoplastic piping by the use of a solvent or solvent cement which forms a continuous bond between the mating surfaces.

❖ It is important to identify the materials being joined because some plastics cannot be joined by the solvent-cementing process, often referred to as "solvent welding." A solvent-cemented joint is equivalent to chemically welding the fitting and the piping material, resulting in a bond of homogeneous, continuous material. Polyethylene and polybutylene pipe are chemically inert with respect to the solvents in solvent cements and, therefore, cannot be joined by this method. Solvent cements contain a chemical solvent for the plastic material and the plastic raw material (resin). The solvent dissolves the plastic and allows the plastic resin to solidify in the void between the joined parts. Primers are necessary to prepare the surface of the fittings and pipe by softening and dissolving the outer finish surface.

JOINT, SOLDERED. A gas-tight joint obtained by the joining of metal parts with metallic mixtures of alloys which melt at temperatures between 400ºF (204ºC) and 1,000ºF (538ºC).

❖ A soldered joint is the most common method of joining copper pipe and tubing. Pipe must be cut square to provide proper alignment, adequate surface area for joining and an interior free from obstructions. When the pipe is cut, an edge (burr) is left protruding into the pipe. The pipe must be reamed to properly remove the burr. Chamfering is required to bevel the outer edge of a pipe cut end. Undercutting (excessive reaming) can reduce pipe wall thickness. ASTM B32 covers many grades of solder, including tin-silver solders.

ASTM B828 governs the procedures for making capillary joints by soldering of copper and copper alloy tubing and fittings. The joint surfaces for a soldered joint must be cleaned to expose untarnished metal, typically accomplished with emery cloth and specially designed socket brushes. Once the copper is sanded and/or brushed, the joint surfaces should not be touched by the human hand since the natural body oils on the hand will affect the joining process.

Flux must be applied to all joint surfaces. Flux is a chemically active material that removes and excludes oxides from the joint area during heating and allows the melted solder to spread out on the surfaces to be joined. The solder will flow by capillary action toward the heat. The temperatures of the joint surfaces, therefore, play a major role in making a properly soldered joint. The fitting and the pipe should be approximately the same temperature when the solder is applied. Heating the copper causes the copper atoms to move farther apart from each other and the solder atoms enter the spaces between the copper atoms, creating a strong bond when the solder solidifies.

If the temperatures are either too high or uneven, the solder will run down the inside of the pipe and fitting or on the outside of the pipe. The result is a solder-lined pipe. Overheating can also nullify the effect of the flux and oxides can form on the copper surfaces, preventing the solder from penetrating.

JOINT, WELDED. A gas-tight joint obtained by the joining of metal parts in molten state.

❖ A welded joint is similar to a brazed joint. The primary differences are the temperature at which the joint is made, the type of filler metals used and the fact that welding reaches the melting point of the base metal, whereas brazing temperatures are well below the melting point of the pipe and fittings.

[A] LABELED. *Equipment*, materials or products to which have been affixed a label, seal, symbol or other identifying mark of a nationally recognized testing laboratory, inspection agency or other organization concerned with product evalua-

INTERNATIONAL CODE COUNCIL®
Copyright © 2015 ICC. ALL RIGHTS RESERVED. Accessed by David Dammon on Jun 21, 2017 12:30:52 PM pursuant to License Agreement with ICC. No further reproduction or distribution authorized. ANY UNAUTHORIZED REPRODUCTION OR DISTRIBUTION IS A VIOLATION OF THE FEDERAL COPYRIGHT ACT AND THE LICENSE AGREEMENT, AND SUBJECT TO CIVIL AND CRIMINAL PENALTIES THEREUNDER.

tion that maintains periodic inspection of the production of the above-labeled items and whose labeling indicates either that the *equipment*, material or product meets identified standards or has been tested and found suitable for a specified purpose.

❖ When a product is labeled, the label indicates that the material has been tested for conformance to an applicable standard and that the component is subject to third-party inspection to verify that the minimum level of quality required by the standard is maintained. Labeling provides a readily available source of information that is useful for field inspection of installed products. The label identifies the product or material and provides other information that can be further investigated if there is question concerning the suitability of the product or material for the specific installation. The labeling agency performing the third-party inspection must be approved by the code official. The basis for this approval may include, but is not necessarily limited to, the capacity and capability of the agency to perform the specific testing and inspection.

The referenced standard often states the minimum identifying information that must be on a label. The data contained on a label typically includes, but is not necessarily limited to, name of the manufacturer; product name or serial number; installation specifications; applicable tests and standards; and the approved testing and labeling agency.

This definition was modified for the 2009 edition to correlate with the definitions provided in other *International Codes*® (I-Codes®).

LIGHT-DUTY COOKING APPLIANCE. Light-duty cooking *appliances* include gas and electric ovens (including standard, bake, roasting, revolving, retherm, convection, combination convection/steamer, countertop conveyorized baking/finishing, deck and pastry), electric and gas steam-jacketed kettles, electric and gas pasta cookers, electric and gas compartment steamers (both pressure and atmospheric) and electric and gas cheesemelters.

❖ The list of appliances included in this definition is fairly comprehensive and is intended to represent most of the common appliances that would be classified as "light duty." This classification of appliances produces the smallest amounts of heat, smoke and grease-laden vapors as indicated by the lower airflow requirements in Section 507.5.4. Pasta cookers were removed from the medium-duty cooking appliance definition and added to this definition because otherwise pasta cookers would require a Type I hood having a fire suppression system. A pasta cooker does not generate any significant amount of grease-laden vapors.

[FG] LIMIT CONTROL. A device responsive to changes in pressure, temperature or level for turning on, shutting off or throttling the gas supply to an *appliance*.

❖ Limit controls are safety devices used to protect equipment, appliances, property and persons. These controls act at their setpoint to limit a condition such as temperature or pressure and include high and low limits. This definition applies to controls for all types of fuel: gas, liquid and solid.

LIMITED CHARGE SYSTEM. A system in which, with the compressor idle, the design pressure will not be exceeded when the refrigerant charge has completely evaporated.

❖ Limited charge systems are designed so that the maximum system design pressure will not be exceeded if all of the refrigerant in the system is converted to vapor. Very high vapor pressures can develop when liquid refrigerant in a closed system is exposed to heat in standby storage or in a fire.

[A] LISTED. *Equipment*, materials, products or services included in a list published by an organization acceptable to the code official and concerned with evaluation of products or services that maintains periodic inspection of production of *listed equipment* or materials or periodic evaluation of services and whose listing states either that the *equipment*, material, product or service meets identified standards or has been tested and found suitable for a specified purpose.

❖ This definition was modified in the 2009 edition to correlate with the definition of "Listed" in other I-codes. When a product is listed, it indicates that it has been tested for conformance to an applicable standard and is subject to a third-party inspection quality assurance (QA) program. The QA verifies that the minimum level of quality required by the appropriate standard is maintained. The agency performing the third-party inspection must be approved by the code official, and the basis for this approval may include, but is not limited to, the capacity and capability of the agency to perform the specified testing and inspection.

LIVING SPACE. Space within a *dwelling unit* utilized for living, sleeping, eating, cooking, bathing, washing and sanitation purposes.

❖ This definition clarifies the meaning of the term as it is used in Section 304.3. It is not the intent to require elevating appliances in laundry, utility and toilet rooms that open to the habitable spaces of a dwelling unit and that also have a door that opens to a garage.

LOWER EXPLOSIVE LIMIT (LEL). See "LFL."

❖ See the commentary for "LFL."

LOWER FLAMMABLE LIMIT (REFRIGERANT) (LFL). The minimum concentration of refrigerant that is capable of propagating a flame through a homogeneous mixture of refrigerant and air.

❖ Substances that are flammable or explosive when mixed with air have concentration limits within which a mixture will propagate a flame or become explosive. These limits can be determined from product information such as that found in an MSDS furnished by the manufacturer.

[F] LOWER FLAMMABLE LIMIT (LFL). The minimum concentration of vapor in air at which propagation of flame

INTERNATIONAL CODE COUNCIL®
Copyright © 2015 ICC. ALL RIGHTS RESERVED. Accessed by David Dammon on Jun 21, 2017 12:30:52 PM pursuant to License Agreement with ICC. No further reproduction or distribution authorized. ANY UNAUTHORIZED REPRODUCTION OR DISTRIBUTION IS A VIOLATION OF THE FEDERAL COPYRIGHT ACT AND THE LICENSE AGREEMENT, AND SUBJECT TO CIVIL AND CRIMINAL PENALTIES THEREUNDER.

will occur in the presence of an ignition source. The LFL is sometimes referred to as LEL or lower explosive limit.

❖ Substances that are flammable or explosive when mixed with air have concentration limits within which a mixture will propagate a flame or become explosive. These limits can be determined from product information such as that found in material safety data sheets (MSDS) furnished by the manufacturer.

LOW-PRESSURE HOT-WATER-HEATING BOILER. A boiler furnishing hot water at pressures not exceeding 160 psi (1103 kPa) and at temperatures not exceeding 250ºF (121ºC).

❖ See the commentary for "Boiler."

LOW-PRESSURE STEAM-HEATING BOILER. A boiler furnishing steam at pressures not exceeding 15 psi (103 kPa).

❖ See the commentary for "Boiler."

LOW-PROBABILITY SYSTEMS. A refrigeration system in which the basic design or the location of components is such that a leakage of refrigerant from a failed connection, seal or component will not enter an occupancy-classified area, other than the *machinery room*.

❖ See the commentary for "High-probability systems."

LOW-SIDE PRESSURE. The parts of a refrigerating system subject to evaporator pressure.

❖ The low-side pressure of the refrigeration system is the pressure of the refrigerant in the portion of the system located between the outlet of the expansion or restrictor device and the inlet to the compressor, which includes the evaporator.

MACHINERY ROOM. A room meeting prescribed safety requirements and in which refrigeration systems or components thereof are located (see Sections 1105 and 1106).

❖ Machinery rooms serve to accommodate refrigeration equipment but may also be used to house other equipment and appliances in addition to the refrigeration equipment. ASHRAE 15 defines a machinery room as "a space that is designed to safely house compressors and pressure vessels." Machinery rooms are considered special because of the potential hazard associated with leaking refrigerant equipment. Some refrigerants pose flammability and toxicity hazards to the occupants of the structure, and specially designed rooms are necessary to address those hazards. Sections 1105 and 1106 state the requirements for the construction of machinery rooms.

MECHANICAL DRAFT SYSTEM. A venting system designed to remove flue or vent gases by mechanical means, that consists of an induced-draft portion under nonpositive static pressure or a forced-draft portion under positive static pressure.

❖ Such systems do not depend upon draft; they use fans or blowers.

Forced-draft venting system. A portion of a venting system using a fan or other mechanical means to cause the removal of flue or vent gases under positive static pressure.

❖ Power exhausters and some power burner systems are examples of forced-draft systems. Vents and chimneys must be listed for positive pressure applications where used with forced-draft systems.

Induced-draft venting system. A portion of a venting system using a fan or other mechanical means to cause the removal of flue or vent gases under nonpositive static vent pressure.

❖ Induced-draft venting is commonly accomplished with field-installed inducer fans designed to supplement natural draft chimneys or vents.

Power venting system. A portion of a venting system using a fan or other mechanical means to cause the removal of flue or vent gases under positive static vent pressure.

❖ See the commentary for "Forced-draft venting system."

MECHANICAL EQUIPMENT/APPLIANCE ROOM. A room or space in which nonfuel-fired mechanical *equipment* and *appliances* are located.

❖ Mechanical equipment rooms typically contain fans, blowers, air-handling units, filters, pneumatic compressors, pumps, refrigeration equipment and other related equipment. The room may or may not be used for purposes other than housing mechanical equipment. Mechanical equipment rooms do not house gas, liquid- or solid-fuel-burning equipment or appliances. A mechanical equipment/appliance room is distinct from a machinery room.

MECHANICAL EXHAUST SYSTEM. A system for removing air from a room or space by mechanical means.

❖ A mechanical exhaust system uses a fan or other air-handling equipment to exhaust air to the outdoors. Mechanical exhaust systems include those used for hazardous exhaust and commercial kitchen exhaust. Mechanical exhaust systems may or may not include ductwork as part of the system and may include air cleaning or filtering equipment and fire suppression equipment.

MECHANICAL JOINT.

1. A connection between pipes, fittings, or pipes and fittings that is not welded, brazed, caulked, soldered, solvent cemented or heat fused.
2. A general form of gas or liquid-tight connections obtained by the joining of parts through a positive holding mechanical construction such as, but not limited to, flanged, screwed, clamped or flared connections.

❖ There are many different configurations of mechanical joints with some designs being proprietary.

INTERNATIONAL CODE COUNCIL®
Copyright © 2015 ICC. ALL RIGHTS RESERVED. Accessed by David Dammon on Jun 21, 2017 12:30:52 PM pursuant to License Agreement with ICC. No further reproduction or distribution authorized. ANY UNAUTHORIZED REPRODUCTION OR DISTRIBUTION IS A VIOLATION OF THE FEDERAL COPYRIGHT ACT AND THE LICENSE AGREEMENT, AND SUBJECT TO CIVIL AND CRIMINAL PENALTIES THEREUNDER.

MECHANICAL SYSTEM. A system specifically addressed and regulated in this code and composed of components, devices, *appliances* and *equipment*.

❖ Mechanical systems include, among others, refrigeration systems, air-conditioning systems, exhaust systems, piping systems, duct systems, venting systems, hydronic systems and ventilation systems. A mechanical system may be considered any of the above systems or incorporate one or more of the systems. The system includes all of the equipment and appliances required to perform the function for which the system is designed.

MEDIUM-DUTY COOKING APPLIANCE. Medium-duty cooking *appliances* include electric discrete element ranges (with or without oven), electric and gas hot-top ranges, electric and gas griddles, electric and gas double-sided griddles, electric and gas fryers (including open deep fat fryers, donut fryers, kettle fryers and pressure fryers), electric and gas conveyor pizza ovens, electric and gas tilting skillets (braising pans) and electric and gas rotisseries.

❖ The list of appliances included in the definition is fairly comprehensive and is intended to represent most of the common appliances that would be classified as "medium duty." The airflow rates required in Section 507.5.3 are less than those required for the heavy-duty cooking appliances but high enough to adequately capture and contain the cooking effluents. Electric and gas pasta cookers were removed from this definition and placed under the definition for "Light-duty cooking appliance."

MODULAR BOILER. A steam or hot-water-heating assembly consisting of a group of individual boilers called modules intended to be installed as a unit without intervening stop valves. Modules are under one jacket or are individually jacketed. The individual modules shall be limited to a maximum input rating of 400,000 Btu/h (117 228 W) gas, 3 gallons per hour (gph) (11.4 L/h) oil, or 115 kW (electric).

❖ Modular units are designed to permit close matching of boiler capacity to building loads and to allow for future expansion of capacity by the addition of modules to a boiler "package" or battery. Modules are, by definition, a number of units that are operated as a single boiler and, therefore, cannot have isolating valves at each module (see commentary, Section 1005.1).

NATURAL DRAFT SYSTEM. A venting system designed to remove flue or vent gases under nonpositive static vent pressure entirely by natural draft.

❖ Natural draft chimneys and vents do not rely upon any mechanical means to convey combustion products to the outdoors. Draft is produced by the temperature difference between the combustion gases (flue gases) and the ambient atmosphere. Hotter gases are less dense and more buoyant than surrounding cooler gases; therefore, they rise, producing a draft.

NATURAL VENTILATION. The movement of air into and out of a space through intentionally provided openings, such as windows and doors, or through nonpowered ventilators.

❖ Natural ventilation relies on pressure differences created by wind or convective air currents to induce airflow through openings in the building envelope.

NET OCCUPIABLE FLOOR AREA. The floor area of an *occupiable space* defined by the inside surfaces of its walls but excluding shafts, column enclosures and other permanently enclosed, inaccessible and unoccupiable areas. Obstructions in the space such as furnishings, display or storage racks and other obstructions, whether temporary or permanent, shall not be deducted from the space area.

❖ This is the measurable floor area used to calculate the breathing zone outdoor air requirements in Chapter 4. Obstructions, such as display shelving, furniture and racks, are not deducted from the gross floor area.

NONABRASIVE/ABRASIVE MATERIALS. Nonabrasive particulate in high concentrations, moderately abrasive particulate in low and moderate concentrations, and highly abrasive particulate in low concentrations, such as alfalfa, asphalt, plaster, gypsum and salt.

❖ When combined, abrasive and nonabrasive materials have to be addressed as a mixture if they are exhausted through the same ductwork. The ratios of abrasive to nonabrasive materials are related to the nature of the abrasive material.

NONCOMBUSTIBLE MATERIALS. Materials that, when tested in accordance with ASTM E136, have at least three of four specimens tested meeting all of the following criteria:

1. The recorded temperature of the surface and interior thermocouples shall not at any time during the test rise more than 54ºF (30ºC) above the furnace temperature at the beginning of the test.
2. There shall not be flaming from the specimen after the first 30 seconds.
3. If the weight loss of the specimen during testing exceeds 50 percent, the recorded temperature of the surface and interior thermocouples shall not at any time during the test rise above the furnace air temperature at the beginning of the test, and there shall not be flaming of the specimen.

❖ A material is defined as a noncombustible material when three of four tested specimens have passed the test method prescribed in ASTM E136. The use of the test standard is limited to elementary materials and excludes laminated and coated materials because of the uncertainties associated with more complex materials and with products that cannot be tested in a realistic configuration. The test standard is also limited to solid materials and does not measure the self-heating tendencies of large masses of materials, such as resin-impregnated mineral fiber insulation.

INTERNATIONAL CODE COUNCIL®
Copyright © 2015 ICC. ALL RIGHTS RESERVED. Accessed by David Dammon on Jun 21, 2017 12:30:52 PM pursuant to License Agreement with ICC. No further reproduction or distribution authorized. ANY UNAUTHORIZED REPRODUCTION OR DISTRIBUTION IS A VIOLATION OF THE FEDERAL COPYRIGHT ACT AND THE LICENSE AGREEMENT, AND SUBJECT TO CIVIL AND CRIMINAL PENALTIES THEREUNDER.

The criterion requiring four test specimens recognizes the variable nature of the measurements and the fact that there are difficulties in observing the presence and duration of flaming.

The need to measure the duration of flaming and the rise in temperature recognizes that a brief period of flaming and a small amount of heating are not considered serious limitations on the use of building materials. Test results have shown that such criteria limit the combustible portion of noncombustible materials to a maximum of 3 percent. The 50-percent weight-loss limitation precludes the possibility that combustion of low-density materials will occur so rapidly that the recorded temperature rise and the measured flaming duration will be less than the prescribed limitations. The 50-percent limitation is considered appropriate for materials that contain appreciable quantities of combined water or gaseous components. Note that the provision in the IBC for classifying a composite material is not applicable.

[A] OCCUPANCY. The purpose for which a building, or portion thereof, is utilized or occupied.

❖ The occupancy classification of a building is an indication of the level of hazard to which the occupants are exposed as a function of the actual building use. Occupancy in terms of a group classification is one of the primary considerations in the development and application of many code requirements that are designed to offset the hazards specific to each group designation.

OCCUPATIONAL EXPOSURE LIMIT (OEL). The time-weighted average (TWA) concentration for a normal eight-hour workday and a 40-hour workweek to which nearly all workers can be repeatedly exposed without adverse effect, based on the OSHA PEL, ACGIH TLV-TWA, AIHA WEEL, or consistent value.

OCCUPIABLE SPACE. An enclosed space intended for human activities, excluding those spaces intended primarily for other purposes, such as storage rooms and *equipment* rooms, that are only intended to be occupied occasionally and for short periods of time.

❖ This is generally all of the spaces within a structure that can be used by people for daily activities. Crawl spaces, attics, closets and shafts are examples of spaces that are not considered to be occupiable even though they can be occupied for brief periods, such as when servicing mechanical equipment.

OFFSET (VENT). A combination of *approved* bends that make two changes in direction bringing one section of the vent out of line but into a line parallel with the other section.

❖ Offsets are used to route vents around obstructions or to direct the location of vent penetrations through construction assemblies. Any limitations of vent capacity as a result of offsets will be specified by the vent and appliance manufacturer's installation instructions.

OUTDOOR AIR. Air taken from the outdoors, and therefore not previously circulated through the system.

❖ Outdoor air, commonly referred to as "fresh air," is mused for ventilation, makeup air and combustion air.

OUTDOOR OPENING. A door, window, louver or skylight openable to the outdoor atmosphere.

❖ Outdoor openings include those used for mechanical and gravity air movement and allow the exchange of air between a building interior and the outside atmosphere.

OUTLET. A threaded connection or bolted flange in a piping system to which a gas-burning *appliance* is attached.

❖ A gas outlet is analogous to an electrical receptacle outlet. See Section 404.16 of the IFGC for requirements regarding the location of gas piping outlets.

PANEL HEATING. A method of radiant space heating in which heat is supplied by large heated areas of room surfaces. The heating element usually consists of warm water piping, warm air ducts, or electrical resistance elements embedded in or located behind ceiling, wall or floor surfaces.

❖ Panel heating involves the low-temperature heating of large wall, ceiling or floor surfaces as opposed to higher-temperature heating of small radiating elements, such as a steam radiator.

PELLET FUEL-BURNING APPLIANCE. A closed-combustion, vented *appliance* equipped with a fuel-feed mechanism for burning processed pellets of solid fuel of a specified size and composition.

❖ This term refers to an appliance that uses solid fuel in the form of pellets in a closed combustion system. The pellets consist of a blend of wood waste products (sawdust and chips) that is compressed and extruded into small pellets. The pellets are fed into the appliance at a controlled rate, resulting in consistent burning.

PIPING. Where used in this code, "piping" refers to either pipe or tubing, or both.

❖ Piping includes tubing and pipe used to convey, among other substances, fuels, water, heat transfer fluids, fire suppression agents, steam and refrigerants.

Pipe. A rigid conduit of iron, steel, copper, brass or plastic.

❖ Commonly used pipes include those made of steel, copper, brass and plastic. Pipe is a rigid material.

Tubing. Semirigid conduit of copper, aluminum, plastic or steel.

❖ Commonly used tubing is made of copper, aluminum, plastic or steel. Tubing is typically semirigid.

PLASTIC, THERMOPLASTIC. A plastic that is capable of being repeatedly softened by increase of temperature and hardened by decrease of temperature.

❖ Polyvinyl chloride (PVC) is a type of thermoplastic. Thermoplastics can be solvent welded and fusion welded.

INTERNATIONAL CODE COUNCIL®
Copyright © 2015 ICC. ALL RIGHTS RESERVED. Accessed by David Dammon on Jun 21, 2017 12:30:52 PM pursuant to License Agreement with ICC. No further reproduction or distribution authorized. ANY UNAUTHORIZED REPRODUCTION OR DISTRIBUTION IS A VIOLATION OF THE FEDERAL COPYRIGHT ACT AND THE LICENSE AGREEMENT, AND SUBJECT TO CIVIL AND CRIMINAL PENALTIES THEREUNDER.

PLASTIC, THERMOSETTING. A plastic that is capable of being changed into a substantially infusible or insoluble product when cured under application of heat or chemical means.

❖ Polyethylene (PE) and polybutylene (PB) are types of thermosetting plastics. Thermosetting plastics cannot be solvent welded.

PLENUM. An enclosed portion of the building structure, other than an *occupiable space* being conditioned, that is designed to allow air movement, and thereby serve as part of an air distribution system.

❖ A plenum is part of an air distribution system and is usually concealed within the building construction. Plenums can be used for supply, return, exhaust, relief and ventilation air, and can occur in ceiling, attic or under floor spaces; mechanical equipment rooms (air handler rooms) and stud and joist cavities. The definition clarifies that plenums are uninhabitable, unoccupiable cavities and interstitial spaces only; an unoccupiable room or space is not a plenum (see commentary for Section 602 for restrictions on the use of plenums).

PORTABLE FUEL CELL APPLIANCE. A fuel cell generator of electricity, which is not fixed in place. A portable fuel cell *appliance* utilizes a cord and plug connection to a grid-isolated load and has an integral fuel supply.

❖ These appliances are a smaller version of the stationary fuel cell power plants addressed in Section 924 of this code and defined in this section. Connecting the appliance to the local electrical power grid or hard-piping fuel to the appliance would constitute a permanent installation and require permitting in accordance with Section 106 (see commentary, Section 924 and Section 202, "Hydrogen generating appliances").

POWER BOILER. See "Boiler."

❖ See the commentary for "Boiler."

[A] PREMISES. A lot, plot or parcel of land, including any structure thereon.

❖ When this term is used in the code, the entire lot and all of the structures on it should be included within the scope of that code requirement.

PRESS JOINT. A permanent mechanical joint incorporating an elastomeric seal or an elastomeric seal and corrosion-resistant grip ring. The joint is made with a pressing tool and jaw or ring approved by the fitting manufacturer.

❖ This type of joint is permanent once installed. The joint relies upon an elastomeric seal for water or gas tightness. A special pressing tool is required to make the joint.

PRESSURE, FIELD TEST. A test performed in the field to prove system tightness.

❖ Installed systems of piping and pressure vessels are tested on the job site to verify that the system is free of leaks.

PRESSURE-LIMITING DEVICE. A pressure-responsive mechanism designed to stop automatically the operation of the pressure-imposing element at a predetermined pressure.

❖ In the context of refrigeration systems, the function of a pressure-limiting device is to shut off the compressor when the system pressure reaches a predetermined maximum setting.

PRESSURE RELIEF DEVICE. A pressure-actuated valve or rupture member designed to relieve excessive pressure automatically.

❖ Pressure relief devices are used as safety devices to prevent pressure in a refrigeration system, or other closed system, from exceeding the maximum design pressure of the system or equipment. These devices may be self-closing relief valves or one-time, nonreusable, rupture-type devices or combinations of both.

PRESSURE RELIEF VALVE. A pressure-actuated valve held closed by a spring or other means and designed to relieve pressure automatically in excess of the device's setting.

❖ Pressure relief valves are intended to prevent harm to life and property. These valves are safety devices used to relieve abnormal pressures and to prevent the overpressurization of the vessel or system to which the valves are connected. Pressure relief valves are designed to operate (discharge) only when an abnormal pressure exists in a system. They are not to be used as regulating valves, nor are they intended to control or regulate flow or pressure. Pressure relief valves are set at the factory to begin opening at a predetermined pressure, and are rated according to the maximum energy discharge per unit of time, usually in units of British thermal units per hour (Btu/h)(W).

Pressure relief valves must be properly sized and rated for the boiler, pressure vessel or system served; otherwise, a system malfunction could cause the pressure within the system to continue to rise, thereby creating a hazardous condition. Pressure relief valves do not open fully when they reach the factory-preset pressure; rather, the valves open an amount proportional to the forces produced by the pressure in the system. The valves open fully at a certain percentage above the preset pressure, then close when the pressure drops below the preset pressure. Pressure relief valves are sometimes combined in the same body with temperature relief valves, creating combination temperature and pressure relief valves.

PRESSURE VESSELS. Closed containers, tanks or vessels that are designed to contain liquids or gases, or both, under pressure.

❖ These vessels include boilers, hot water storage tanks, pneumatic tanks, hydropneumatic tanks and pressurized fuel tanks.

PRESSURE VESSELS—REFRIGERANT. Any refrigerant-containing receptacle in a refrigerating system. This does

INTERNATIONAL CODE COUNCIL®
Copyright © 2015 ICC. ALL RIGHTS RESERVED. Accessed by David Dammon on Jun 21, 2017 12:30:52 PM pursuant to License Agreement with ICC. No further reproduction or distribution authorized. ANY UNAUTHORIZED REPRODUCTION OR DISTRIBUTION IS A VIOLATION OF THE FEDERAL COPYRIGHT ACT AND THE LICENSE AGREEMENT, AND SUBJECT TO CIVIL AND CRIMINAL PENALTIES THEREUNDER.

not include evaporators where each separate section does not exceed 0.5 cubic foot (0.014 m^3) of refrigerant-containing volume, regardless of the maximum inside dimensions, evaporator coils, controls, headers, pumps and piping.

❖ Containers and reservoirs in refrigeration systems are pressure vessels and they include receivers, oil separators and storage containers.

PROTECTIVE ASSEMBLY (REDUCED CLEARANCE). Any noncombustible assembly that is *labeled* or constructed in accordance with Table 308.4.2 and is placed between combustible materials or assemblies and mechanical appliances, devices or *equipment*, for the purpose of reducing required airspace clearances. Protective assemblies attached directly to a combustible assembly shall not be considered as part of that combustible assembly.

❖ Such assemblies are used to allow reduction of the required clearance to combustibles based on the protection afforded by the assembly (see commentary, Section 308).

PURGE. To clear of air, water or other foreign substances.

❖ Piping systems are purged (flushed) to remove gaseous, liquid or solid contaminants that could be harmful to the piping contents, the piping system or the system components, or that could create a fire or explosion hazard.

PUSH-FIT JOINTS. A type of mechanical joint consisting of elastomeric seals and corrosion-resistant tube grippers. Such joints are permanent or removable depending on the design.

❖ These joints are a relatively new technology intended primarily for use with copper pipe and tubing. They are considered to be a type of mechanical joint (see the definition for "Mechanical joint").

QUICK-OPENING VALVE. A valve that opens completely by fast action, either manually or automatically controlled. A valve requiring one-quarter round turn or less is considered to be quick opening.

❖ Quick-opening valves are fast-acting valves designed to open fully with a rotor or stem rotation of 90 degrees (1.6 rad) (quarter turn) or less. Ball valves and gas cocks are examples.

RADIANT HEATER. A heater designed to transfer heat primarily by direct radiation.

❖ Radiant heaters use heated metallic or ceramic elements and reflectors to produce radiant heat energy output. Radiant heaters are used where heating of an entire space, such as an automotive repair shop, is either not desirable or not practical.

READY ACCESS (TO). That which enables a device, *appliance* or *equipment* to be directly reached, without requiring the removal or movement of any panel, door or similar obstruction [see "Access (to)"].

❖ Ready access can be described as the capability of being quickly reached or approached for the purpose of operation, inspection, observation or emergency action. Ready access means that nothing must be moved or removed (such as doors or panels), that there are no physical obstructions and that there is no change in elevation to reach the required location. This definition does not view an ingress/egress door as an obstruction.

RECEIVER, LIQUID. A vessel permanently connected to a refrigeration system by inlet and outlet pipes for storage of liquid refrigerant.

❖ Receivers are located between the condenser and the expansion valve or restrictor device and serve to collect and temporarily store the liquid refrigerant output of the condenser.

RECIRCULATED AIR. Air removed from a conditioned space and intended for reuse as supply air.

❖ Conditioned air is recirculated in building spaces by air handlers and other HVAC system components. Only air not used as ventilation air may be recirculated.

RECLAIMED REFRIGERANTS. Refrigerants reprocessed to the same specifications as for new refrigerants by means including distillation. Such refrigerants have been chemically analyzed to verify that the specifications have been met. Reclaiming usually implies the use of processes or procedures that are available only at a reprocessing or manufacturing facility.

❖ As required by federal law, unused refrigerants are recovered and reused or are taken to a reclamation facility to be reconditioned. Section 1102.2.2.3 describes limitations on the reuse of reclaimed refrigerants.

RECOVERED REFRIGERANTS. Refrigerants removed from a system in any condition without necessarily testing or processing them.

❖ Because it is illegal and harmful to the environment to release ozone-depleting refrigerants into the atmosphere, used refrigerants are recovered (captured and contained) from systems being repaired, relocated or retired.

RECYCLED REFRIGERANTS. Refrigerants from which contaminants have been reduced by oil separation, removal of noncondensable gases, and single or multiple passes through devices that reduce moisture, acidity and particulate matter, such as replaceable core filter driers. These procedures usually are performed at the field job site or in a local service shop.

❖ The cleanup process for used refrigerants can occur at the job site where the refrigerants were recovered or at a remote shop location. Note the distinction between recycled and reclaimed refrigerants.

REFRIGERANT. A substance utilized to produce refrigeration by its expansion or vaporization.

❖ The refrigerant is the working fluid in refrigeration and air-conditioning systems. In vapor refrigeration cycles, refrigerants absorb heat from the load side at the evaporator and reject heat at the condenser. In

INTERNATIONAL CODE COUNCIL®
Copyright © 2015 ICC. ALL RIGHTS RESERVED. Accessed by David Dammon on Jun 21, 2017 12:30:52 PM pursuant to License Agreement with ICC. No further reproduction or distribution authorized. ANY UNAUTHORIZED REPRODUCTION OR DISTRIBUTION IS A VIOLATION OF THE FEDERAL COPYRIGHT ACT AND THE LICENSE AGREEMENT, AND SUBJECT TO CIVIL AND CRIMINAL PENALTIES THEREUNDER.

addition to suitable thermodynamic properties, the selection of a refrigerant must also take into consideration chemical stability, flammability, toxicity and environmental compatibility. Refrigeration is a result of the physical laws of vaporization (evaporation) of liquids. Basically, evaporation of liquid refrigerant is an endothermic process and condensing of vapors is an exothermic process.

REFRIGERANT SAFETY CLASSIFICATIONS. Groupings that indicate the toxicity and flammability classes in accordance with Section 1103.1. The classification group is made up of a letter (A or B) that indicates the toxicity class, followed by a number (1, 2 or 3) that indicates the flammability class. Refrigerant blends are similarly classified, based on the compositions at their worst cases of fractionation, as separately determined for toxicity and flammability. In some cases, the worst case of fractionation is the original formulation.

Flammability. See "Flammability classification."

Toxicity. See "Toxicity classification."

❖ The toxicity and flammability of refrigerants are classified in order to apply appropriate safety requirements. The classification scheme is based on ASHRAE 34.

REFRIGERATED ROOM OR SPACE. A room or space in which an evaporator or brine coil is located for the purpose of reducing or controlling the temperature within the room or space to below 68ºF (20ºC).

❖ These spaces are cooled by direct or indirect systems to any temperature below human comfort levels.

REFRIGERATING SYSTEM. A combination of interconnected refrigerant-containing parts constituting one closed refrigerant circuit in which a refrigerant is circulated for the purpose of extracting heat.

❖ Refrigerating systems include at minimum a pressure-imposing element or generator, an evaporator, a condenser and interconnecting piping. A single piece of equipment can contain multiple refrigeration systems (circuits).

REFRIGERATION CAPACITY RATING. Expressed as 1 horsepower (0.75 kW), 1 ton or 12,000 Btu/h (3.5 kW), shall all mean the same quantity.

❖ The terms "1 ton," "1 horsepower" and "12,000 Btu/h" are equivalent capacities and are industry vernacular referring to an equivalent quantity of refrigerating effect.

REFRIGERATION MACHINERY ROOM. See "*Machinery room*."

❖ See the commentary for "Machinery room."

REFRIGERATION SYSTEM, ABSORPTION. A heat-operated, closed-refrigeration cycle in which a secondary fluid (the absorbent) absorbs a primary fluid (the refrigerant) that has been vaporized in the evaporator.

❖ Absorption systems are powered by a heat source instead of a pressure-imposing element (compressor). Ammonia (R-717) is commonly the refrigerant in absorption systems.

Direct system. A system in which the evaporator is in direct contact with the material or space refrigerated, or is located in air-circulating passages communicating with such spaces.

❖ See the commentary for "Direct refrigeration system."

Indirect system. A system in which a brine coil cooled by the refrigerant is circulated to the material or space refrigerated, or is utilized to cool the air so circulated. Indirect systems are distinguished by the type or method of application.

❖ An indirect system is classified as a low-probability system. See the commentary for "High probability systems."

REFRIGERATION SYSTEM CLASSIFICATION. Refrigeration systems are classified according to the degree of probability that leaked refrigerant from a failed connection, seal or component will enter an occupied area. The distinction is based on the basic design or location of the components.

❖ Refrigerant systems are classified as either high-probability or low-probability systems based on the potential for leakage into an occupied space. These classifications are used to apply the appropriate safety requirements for a given system.

REFRIGERATION SYSTEM, MECHANICAL. A combination of interconnected refrigeration-containing parts constituting one closed refrigerant circuit in which a refrigerant is circulated for the purpose of extracting heat and in which a compressor is used for compressing the refrigerant vapor.

❖ As opposed to heat-operated chemical systems, mechanical systems use compressors.

REFRIGERATION SYSTEM, SELF-CONTAINED. A complete factory-assembled and tested system that is shipped in one or more sections and that does not have refrigerant-containing parts that are joined in the field by other than companion or block valves.

❖ These systems, as opposed to split systems, contain all components in a single package and include types such as through-the-wall units and roof-top units.

[A] REGISTERED DESIGN PROFESSIONAL. An individual who is registered or licensed to practice their respective design profession as defined by the statutory requirements of the professional registration laws of the state or jurisdiction in which the project is to be constructed.

❖ Legal qualifications for engineers and architects are established by each state. Engineers and architects are licensed and registered using written or oral examinations offered by states or by reciprocity (licensing in other states).

RETURN AIR. Air removed from an *approved* conditioned space or location and recirculated or exhausted.

❖ Return air is air that is being returned to the air handler. Note that only air in excess of the required venti-

INTERNATIONAL CODE COUNCIL®
Copyright © 2015 ICC. ALL RIGHTS RESERVED. Accessed by David Dammon on Jun 21, 2017 12:30:52 PM pursuant to License Agreement with ICC. No further reproduction or distribution authorized. ANY UNAUTHORIZED REPRODUCTION OR DISTRIBUTION IS A VIOLATION OF THE FEDERAL COPYRIGHT ACT AND THE LICENSE AGREEMENT, AND SUBJECT TO CIVIL AND CRIMINAL PENALTIES THEREUNDER.

lation air can be recirculated (see commentary, Section 403.2.1).

RETURN AIR SYSTEM. An assembly of connected ducts, plenums, fittings, registers and grilles through which air from the space or spaces to be heated or cooled is conducted back to the supply unit (see also "Supply air system").

❖ In addition to those components already mentioned, air-handling equipment, dampers, controls and conditioning equipment are also included as part of the return air system.

[FG] ROOM HEATER VENTED. A free-standing heating unit burning solid or liquid fuel for direct heating of the space in and adjacent to that in which the unit is located.

❖ These heaters are space heating appliances that vent the products of combustion to the outdoors.

SAFETY VALVE. A valve that relieves pressure in a steam boiler by opening fully at the rated discharge pressure. The valve is of the spring-pop type.

❖ Safety valves, sometimes referred to as "pop-off valves," are used with steam systems and have an adjustable or fixed spring that regulates the popping action and the opening pressure setting. Generally, safety valves discharge to the outdoors through piping or discharge to the surrounding atmosphere through openings in the valve housing. Safety valves "pop" wide open at the preset pressure, remaining in that position until the pressure in the vessel has dropped below the preset pressure level, at which time the valve returns to the closed position.

SELF-CONTAINED EQUIPMENT. Complete, factory-assembled and tested, heating, air-conditioning or refrigeration *equipment* installed as a single unit, and having all working parts, complete with motive power, in an enclosed unit of said machinery.

❖ This type of equipment does not require any additional components when installed and is factory assembled and tested. Window air conditioners and packaged terminal units are examples of self-contained units.

[BF] SHAFT. An enclosed space extending through one or more stories of a building, connecting vertical openings in successive floors, or floors and the roof.

❖ A shaft is an enclosed, vertical passage that passes through stories and floor levels within a building. Shafts are sometimes referred to as "chases" (see the commentary for "Shaft enclosure").

[BF] SHAFT ENCLOSURE. The walls or construction forming the boundaries of a shaft.

❖ Shaft enclosures must be constructed and fire-resistance rated to comply with the IBC.

[BG] SLEEPING UNIT. A room or space in which people sleep, which can also include permanent provisions for living, eating, and either sanitation or kitchen facilities but not both. Such rooms and spaces that are also part of a *dwelling unit* are not sleeping units.

❖ This definition is included to coordinate the Fair Housing Act Guidelines with the code. The definition for "Sleeping unit" is needed to clarify the differences between sleeping units and dwelling units. Some examples of sleeping units would be a hotel guestroom, a dormitory room, a boarding house, etc. Another example would be an addition to a studio apartment with a kitchenette (i.e., microwave, sink, refrigerator). Since the cooking arrangements are not permanent, this configuration would be considered a sleeping unit, not a dwelling unit. As already defined in the code, a dwelling unit must contain permanent facilities for living, sleeping, eating, cooking and sanitation.

[BF] SMOKE DAMPER. A *listed* device installed in ducts and air transfer openings designed to resist the passage of smoke. The device is installed to operate automatically, controlled by a smoke detection system, and where required, is capable of being positioned from a fire command center.

❖ Similar to a fire damper, smoke dampers are intended to restrict the passage of smoke through ducts or openings in structural assemblies such as smoke barriers and corridor walls. The smoke leakage rates of these devices are used to classify them in accordance with UL 555S.

[BF] SMOKE-DEVELOPED INDEX. A numerical value assigned to a material tested in accordance with ASTM E84.

❖ Materials are tested in accordance with ASTM E84 to determine the flame spread and smoke-developed indexes of the material. By limiting these parameters, the material's contribution to smoke and spread of flame is lessened. The smoke-developed index is a factor determined by comparison to the smoke-developed index of untreated red oak wood.

SOLID FUEL (COOKING APPLICATIONS). Applicable to commercial food service operations only, solid fuel is any bulk material such as hardwood, mesquite, charcoal or briquettes that is combusted to produce heat for cooking operations.

❖ This definition is needed for the application of Sections 507.2.2 and 507.5.1. The key to the definition is that the solid fuel is combusted to produce heat for cooking, as opposed to solid fuel that is combusted solely to impart flavor to the food being cooked. Many variations of cooking appliances exist, including those that use solid fuel only and those that use solid fuel in conjunction with gas or electric heat. See definition of "Extra-heavy-duty cooking appliance."

SOURCE CAPTURE SYSTEM. A mechanical exhaust system designed and constructed to capture air contaminants at their source and to exhaust such contaminants to the outdoor atmosphere.

❖ These systems include hose-type exhaust systems for direct attachment to motor vehicle engine exhaust

INTERNATIONAL CODE COUNCIL®
Copyright © 2015 ICC. ALL RIGHTS RESERVED. Accessed by David Dammon on Jun 21, 2017 12:30:52 PM pursuant to License Agreement with ICC. No further reproduction or distribution authorized. ANY UNAUTHORIZED REPRODUCTION OR DISTRIBUTION IS A VIOLATION OF THE FEDERAL COPYRIGHT ACT AND THE LICENSE AGREEMENT, AND SUBJECT TO CIVIL AND CRIMINAL PENALTIES THEREUNDER.

pipes and hood systems for individual contaminant producing machines. Such systems use hoods or direct attachments to equipment to capture contaminants to prevent their escape into the atmosphere in which the contaminant source is located.

[FG] STATIONARY FUEL CELL POWER PLANT. A self-contained package or factory-matched packages which constitute an automatically operated assembly of integrated systems for generating useful electrical energy and recoverable thermal energy that is permanently connected and fixed in place.

❖ Stationary fuel cell appliances cannot exceed 1,000 kW of power output, listed and tested in accordance with ANSI Z21.83 and installed in accordance with NFPA 853 and the manufacturer's instructions (see commentary, Section 924 and Section 202, "Hydrogen generating appliances"). These appliances may be independent of or connected to the local electrical power grid and may be fueled by fuel tanks or permanent piping systems.

STEAM-HEATING BOILER. A boiler operated at pressures not exceeding 15 psi (103 kPa) for steam.

❖ Boilers of this type produce steam for comfort heating.

STOP VALVE. A shutoff valve for controlling the flow of liquid or gases.

❖ Stop valves are used to shut off the flow within a system to isolate portions of the system for repairs, replacement or maintenance.

[BG] STORY. That portion of a building included between the upper surface of a floor and the upper surface of the floor next above, except that the topmost story shall be that portion of a building included between the upper surface of the topmost floor and the ceiling or roof above.

❖ The definition is required for the application of certain sections of the code, including Sections 506.3.5, 606.2.3, 607.6.1 and 607.6.3.

STRENGTH, ULTIMATE. The highest stress level that the component will tolerate without rupture.

❖ The ultimate strength of a material or component is used with safety factors to determine the maximum allowable working pressure or stress for that material or component.

SUPPLY AIR. That air delivered to each or any space supplied by the air distribution system or the total air delivered to all spaces supplied by the air distribution system, which is provided for ventilating, heating, cooling, humidification, dehumidification and other similar purposes.

❖ As opposed to return air, supply air is delivered to the conditioned space by an air handler and may or may not be returned to the air handler. Supply air can include ventilation air.

SUPPLY AIR SYSTEM. An assembly of connected ducts, plenums, fittings, registers and grilles through which air, heated or cooled, is conducted from the supply unit to the space or spaces to be heated or cooled (see also "Return air system").

❖ In addition to those components already mentioned, air-handling equipment, dampers, controls and conditioning equipment are also included as part of the supply air system.

THEORETICAL AIR. The exact amount of air required to supply oxygen for complete *combustion* of a given quantity of a specific fuel.

❖ The calculation of theoretical air is based on ideal conditions that do not often occur in actual appliance operation (see the commentary for "Combustion air" and "Excess air").

THERMAL RESISTANCE (*R*). A measure of the ability to retard the flow of heat. The *R*-value is the reciprocal of thermal conductance.

❖ Insulation marketed and sold in the United States is rated with an *R*-value, which is the commonly accepted unit of measurement for thermal resistance. As the *R*-value of an element or assembly increases, the transmission of heat energy through the element or assembly decreases [see Commentary Figure 202(3)].

[P] THIRD-PARTY CERTIFICATION AGENCY. An approved agency operating a product or material certification system that incorporates initial product testing, assessment and surveillance of a manufacturer's quality control system.

❖ These agencies evaluate products, verify compliance with specific standards or criteria and conduct periodic inspections of the manufacturer's facilities to determine ongoing compliance with manufacturing processes, standards or criteria.

[P] THIRD-PARTY CERTIFIED. Certification obtained by the manufacturer indicating that the function and performance characteristics of a product or material have been determined by testing and ongoing surveillance by an approved third-party certification agency. Assertion of certification is in the form of identification in accordance with the requirements of the third-party certification agency.

❖ A product that is certified by a third-party certification agency (see commentary, "Third-party certification agency") to comply with requisite standards or criteria, usually identified by a certification mark attached to or permanently marked on it. Additionally, the agency usually provides a list of the products it certifies, which provides information relative to the certification.

[P] THIRD-PARTY TESTED. Procedure by which an approved testing laboratory provides documentation that a product, material or system conforms to specified requirements.

❖ A product that has been tested by an approved agency (see the definition of and commentary for "Approved agency") to determine compliance with specific product standards or criteria.

INTERNATIONAL CODE COUNCIL®
Copyright © 2015 ICC. ALL RIGHTS RESERVED. Accessed by David Dammon on Jun 21, 2017 12:30:52 PM pursuant to License Agreement with ICC. No further reproduction or distribution authorized. ANY UNAUTHORIZED REPRODUCTION OR DISTRIBUTION IS A VIOLATION OF THE FEDERAL COPYRIGHT ACT AND THE LICENSE AGREEMENT, AND SUBJECT TO CIVIL AND CRIMINAL PENALTIES THEREUNDER.

TLV-TWA (THRESHOLD LIMIT VALUE-TIME-WEIGHTED AVERAGE). The time-weighted average concentration of a refrigerant or other chemical in air for a normal 8-hour workday and a 40-hour workweek, to which nearly all workers are repeatedly exposed, day after day, without adverse effects, as adopted by the American Conference of Government Industrial Hygienists (ACGIH).

❖ These values are based on experimental test data compiled for toxicity to humans and animals. This definition relates to Table 1103.1. Where no value is stated in the table, no value has been determined for that refrigerant.

TOILET ROOM. A room containing a water closet and, frequently, a lavatory, but not a bathtub, shower, spa or similar bathing fixture.

❖ As opposed to bathrooms, toilet room plumbing fixtures include only human waste elimination fixtures and hand-washing fixtures.

TOXICITY CLASSIFICATION. Refrigerants shall be classified for toxicity in one of two classes in accordance with ASHRAE 34:

Class A. Refrigerants that have an occupational exposure limit (OEL) of 400 parts per million (ppm) or greater.

Class B. Refrigerants that have an OEL of less than 400 ppm.

❖ The classification scheme is used to apply appropriate safety requirements for any given refrigerant.

TRANSITION FITTINGS, PLASTIC TO STEEL. An adapter for joining plastic pipe to steel pipe. The purpose of this fitting is to provide a permanent, pressure-tight connection between two materials which cannot be joined directly one to another.

❖ The joining of piping of dissimilar materials, such as plastic and steel, requires specialized transition fittings. For example, such fittings are used with underground plastic fuel-gas piping and steel meter-setting risers.

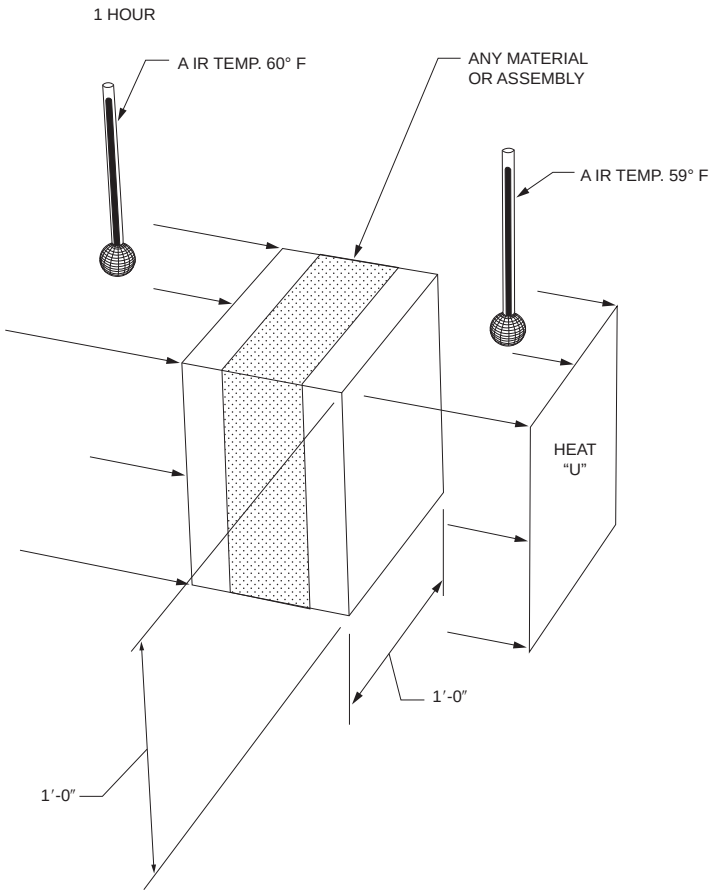

For SI: 1 foot = 304.8 mm, °C = (°F-32)/1.8.

Figure 202(3)
THERMAL RESISTANCE

INTERNATIONAL CODE COUNCIL®
Copyright © 2015 ICC. ALL RIGHTS RESERVED. Accessed by David Dammon on Jun 21, 2017 12:30:52 PM pursuant to License Agreement with ICC. No further reproduction or distribution authorized. ANY UNAUTHORIZED REPRODUCTION OR DISTRIBUTION IS A VIOLATION OF THE FEDERAL COPYRIGHT ACT AND THE LICENSE AGREEMENT, AND SUBJECT TO CIVIL AND CRIMINAL PENALTIES THEREUNDER.

UNIT HEATER. A self-contained *appliance* of the fan type, designed for the delivery of warm air directly into the space in which the *appliance* is located.

❖ Unit heaters are similar to warm-air furnaces except that they are not designed for use with ductwork. These heaters are typically suspended from ceilings or roof structures.

VENT. A pipe or other conduit composed of factory-made components, containing a passageway for conveying *combustion* products and air to the atmosphere, *listed* and *labeled* for use with a specific type or class of *appliance*.

❖ In code terminology, vents are distinguished from chimneys and usually are constructed of factory-made listed and labeled components intended to function as a system. Type B and BW vents are constructed of galvanized steel and aluminum sheet metal, and are double wall and air insulated. Such vents are designed to vent gas-fired appliances and equipment that are equipped with draft hoods or are specifically listed (labeled) for use with Type B or BW vents. Type L vents are typically constructed of sheet steel and stainless steel. They are double wall and air insulated, and are designed to vent gas- and oil-fired appliances and equipment. Some appliances are designed for use with corrosion-resistant vents, such as those made of plastic pipe and special alloys of stainless steel.

Pellet vent. A vent *listed* and *labeled* for use with *listed* pellet-fuel-burning appliances.

❖ Pellet vents (PL) are specialized vents similar in design and construction to Type L vents. Pellet vents must not be used with any appliances other than pellet-burning appliances.

Type L vent. A vent *listed* and *labeled* for use with the following:

1. Oil-burning appliances that are *listed* for use with Type L vents.
2. Gas-fired appliances that are *listed* for use with Type B vents.

❖ See the commentary for "Vent."

VENT CONNECTOR. The pipe that connects an *approved* fuel-fired *appliance* to a vent.

❖ In most cases, appliances are not located directly in line with the vertically rising chimney or vent; therefore, a vent connector is necessary to connect the appliance flue outlet to the vent. Vent connectors can be single- or double-wall pipes and are usually made from galvanized steel, stainless steel or aluminum sheet metal. In many installations, the vent connectors must be constructed of the same material as the vent, as is typically done with Type B vent systems.

VENT DAMPER DEVICE, AUTOMATIC. A device intended for installation in the venting system, in the outlet of an individual automatically operated fuel-burning *appliance* that is designed to open the venting system automatically when the *appliance* is in operation and to close off the venting system automatically when the *appliance* is in a standby or shutdown condition.

❖ These devices conserve energy by preventing airflow in the venting system during the appliance "OFF" cycle. Conditioned air is conveyed to the outdoors through the vent and unconditioned outdoor air replaces it by infiltration. Vent dampers also conserve energy by limiting standby losses (stack losses) for appliances, such as boilers and storage type water heaters. Interrupting the draft in the appliance flueways will help retain the residual and stored heat energy in the heat exchangers, heat transfer fluids and stored hot water.

VENTILATION. The natural or mechanical process of supplying conditioned or unconditioned air to, or removing such air from, any space.

❖ Ventilation can be used for comfort cooling, control of air contaminants, equipment cooling and replenishing oxygen levels.

VENTILATION AIR. That portion of supply air that comes from the outside (outdoors), plus any recirculated air that has been treated to maintain the desired quality of air within a designated space.

❖ Ventilation air is supplied to remove or dilute indoor air contaminants. In the context of Chapter 4, ventilation air is 100-percent outdoor air that is not recirculated.

VENTING SYSTEM. A continuous open passageway from the flue collar of an *appliance* to the outdoor atmosphere for the purpose of removing flue or vent gases. A venting system is usually composed of a vent or a *chimney* and vent connector, if used, assembled to form the open passageway.

❖ Venting systems operate by either gravity (natural draft) or mechanical means. Venting systems include both vents and chimneys.

WATER HEATER. Any heating *appliance* or *equipment* that heats potable water and supplies such water to the potable hot water distribution system.

❖ A water heater is a closed pressure vessel or heat exchanger that is provided with a heat source and that supplies potable (drinkable) water to the building's hot water distribution system. Large commercial water heaters are sometimes referred to as "hot water supply boilers." Water heaters can be of the storage type with integral storage vessel, circulating type for use with an external storage vessel, tankless instantaneous type without storage capacity and point-of-use type with or without storage capacity. Water heaters are regulated by this code and the IPC because they have elements and installation requirements for both mechanical and plumbing systems.

INTERNATIONAL CODE COUNCIL®
Copyright © 2015 ICC. ALL RIGHTS RESERVED. Accessed by David Dammon on Jun 21, 2017 12:30:52 PM pursuant to License Agreement with ICC. No further reproduction or distribution authorized. ANY UNAUTHORIZED REPRODUCTION OR DISTRIBUTION IS A VIOLATION OF THE FEDERAL COPYRIGHT ACT AND THE LICENSE AGREEMENT, AND SUBJECT TO CIVIL AND CRIMINAL PENALTIES THEREUNDER.

ZONE. One *occupiable space* or several occupiable spaces with similar *occupancy* classification (see Table 403.3.1.1), occupant density, zone air distribution effectiveness and zone primary airflow rate per unit area.

❖ One occupiable space can be considered to be a single zone, or multiple zones. More than one occupiable space could be treated as multiple zones or as a single zone. It all depends upon the similarity of the spaces with regard to occupancy classification, population density and ventilation system design. Simply put, a zone is an occupiable space or spaces that have the same characteristics and demands upon the HVAC systems.

Bibliography

The following resource materials were used in the preparation of the commentary for this chapter of the code:

IBC-15, *International Building Code*. Washington, DC: International Code Council, 2014.

IFC-15, *International Fire Code*. Washington, DC: International Code Council, 2014.

IFGC-15, *International Fuel Gas Code*. Washington, DC: International Code Council, 2014.

IPC-15, *International Plumbing Code*. Washington, DC: International Code Council, 2014.

INTERNATIONAL CODE COUNCIL®
Copyright © 2015 ICC. ALL RIGHTS RESERVED. Accessed by David Dammon on Jun 21, 2017 12:30:52 PM pursuant to License Agreement with ICC. No further reproduction or distribution authorized. ANY UNAUTHORIZED REPRODUCTION OR DISTRIBUTION IS A VIOLATION OF THE FEDERAL COPYRIGHT ACT AND THE LICENSE AGREEMENT, AND SUBJECT TO CIVIL AND CRIMINAL PENALTIES THEREUNDER.

INTERNATIONAL CODE COUNCIL®
Copyright © 2015 ICC. ALL RIGHTS RESERVED. Accessed by David Dammon on Jun 21, 2017 12:30:52 PM pursuant to License Agreement with ICC. No further reproduction or distribution authorized. ANY UNAUTHORIZED REPRODUCTION OR DISTRIBUTION IS A VIOLATION OF THE FEDERAL COPYRIGHT ACT AND THE LICENSE AGREEMENT, AND SUBJECT TO CIVIL AND CRIMINAL PENALTIES THEREUNDER.

Chapter 3:
General Regulations

General Comments

A fundamental principle of the code is its dependence on the listing and labeling method of approval for appliances and equipment. Section 301.4 prohibits the installation of unlisted appliances except where approved in accordance with Section 105.

Purpose

Chapter 3 contains requirements for the safe and proper installation of mechanical equipment and appliances to ensure protection of life and property

SECTION 301
GENERAL

301.1 Scope. This chapter shall govern the approval and installation of all equipment and appliances that comprise parts of the building mechanical systems regulated by this code in accordance with Section 101.2.

❖ This section states that this chapter governs the approval and installation of all mechanical equipment and appliances that are regulated by the code. Section 101.2 establishes the scope of application of the code (see commentary, Section 101.2).

301.2 Energy utilization. Heating, ventilating and air-conditioning systems of all structures shall be designed and installed for efficient utilization of energy in accordance with the *International Energy Conservation Code*.

❖ Appliances and equipment that use depletable energy sources must be designed and installed to use energy efficiently. The *International Energy Conservation Code*® (IECC®) is the applicable document for regulating the efficiency and performance of the appliances and heating, ventilating and air-conditioning (HVAC) systems. Special applications such as process heating or cooling should be designed for the maximum energy efficiency attainable.

301.3 Identification. Each length of pipe and tubing and each pipe fitting utilized in a mechanical system shall bear the identification of the manufacturer.

❖ The manufacturer is given the option of determining the type of marking for the material. If there is no applicable standard or the applicable standard does not require that a material be identified, identification of the manufacturer is still required by the code. Where the code indicates compliance with an approved standard, the manufacturer must comply with the requirements for marking in accordance with the applicable standard.

301.4 Plastic pipe, fittings and components. Plastic pipe, fittings and components shall be *third-party certified* as conforming to NSF 14.

❖ Plastic piping, fittings and plastic pipe-related components, including solvent cements, primers, tapes, lubricants and seals used in mechanical systems, must be tested and certified as conforming to NSF 14. This includes all piping and fittings and plastic piping system components, including but not limited to pipes, fittings, valves, joining materials, gaskets and appurtenances. This section does not apply to components that only include plastic parts such as brass valves with a plastic stem.

301.5 Third-party testing and certification. Piping, tubing and fittings shall comply with the applicable referenced standards, specifications and performance criteria of this code and shall be identified in accordance with Section 301.3. Piping, tubing and fittings shall either be tested by an approved third-party testing agency or certified by an approved *third-party certification agency*.

❖ The term "third party" refers to an outside organization with no financial or other interest in the outcome. The term "tested" means that the product or material was initially tested, a report or documentation was developed, but retesting at a later date is not performed. The term "certified" means that the product or material was initially tested and a program of periodic testing ensures that the product or material continues to meet the specified requirements.

301.6 Fuel gas appliances and equipment. The approval and installation of fuel gas distribution piping and *equipment*, fuel gas-fired appliances and fuel gas-fired *appliance* venting systems shall be in accordance with the *International Fuel Gas Code*.

❖ Editions of the code prior to the year 2000 addressed installation requirements that were exclusively fuel-gas-related. Starting with the 2000 edition of the code, the provisions that exclusively addressed fuel-

INTERNATIONAL CODE COUNCIL®
Copyright © 2015 ICC. ALL RIGHTS RESERVED. Accessed by David Dammon on Jun 21, 2017 12:30:52 PM pursuant to License Agreement with ICC. No further reproduction or distribution authorized. ANY UNAUTHORIZED REPRODUCTION OR DISTRIBUTION IS A VIOLATION OF THE FEDERAL COPYRIGHT ACT AND THE LICENSE AGREEMENT, AND SUBJECT TO CIVIL AND CRIMINAL PENALTIES THEREUNDER.

gas installations were deleted from the code as the first edition of the *International Fuel Gas Code*® (IFGC®) was developed in 1997. The creation of the IFGC was the result of an agreement between the International Code Council® (ICC®) and the American Gas Association (AGA) to develop and maintain a stand-alone fuel gas code for the family of *International Codes*® (I-Codes®). With the support and input of the fuel gas industry, the IFGC is kept current with new developments and technology in the fuel gas industry. Any code provision that addressed only a fuel-gas-related subject was removed from the code. Code provisions that could apply to other types of fuel (oil, kerosene, wood, coal, pellets, etc.) as well as fuel gas were modified to no longer refer to fuel-gas-related subjects. The IFGC is an inseparable partner to the IMC. Together, they cover all currently used fuels with the most up-to-date text possible.

301.7 Listed and labeled. Appliances regulated by this code shall be *listed* and *labeled* for the application in which they are installed and used, unless otherwise *approved* in accordance with Section 105.

Exception: Listing and labeling of *equipment* and appliances used for refrigeration shall be in accordance with Section 1101.2.

❖ Mechanical appliances must be listed and labeled by an approved agency to show that they comply with the applicable national standards. The code requires listing and labeling for appliances such as boilers, furnaces, space heaters, direct-fired heaters, cooking appliances, clothes dryers, rooftop HVAC units, etc. The code also requires listing for system components as specifically stated in the text addressing those components. The label is the primary, if not the only, assurance to the installer, the inspector and the end-user that a similar appliance has been tested and evaluated by an approved agency and has been determined to perform safely and efficiently when installed and operated in compliance with its listing.

The presence of a label is part of the information that the code official is to consider in the approval of appliances. The only exception to the labeling requirement is when the code official approves the use of a specific appliance with the authority granted in Section 105. The requirement that appliances are to be used only in accordance with their listing is intended to prevent the use of products that have a listing for a particular application but are being used in an application for which they have not been tested. An example would be a fan that is listed for use as a bathroom exhaust fan but is installed for use as an in-line restaurant power ventilator. Another potential misapplication could be duct wrap that has been tested and listed for small ducts but is installed on a much larger diameter duct. Such misapplication has the potential to create hazardous life safety situations.

Caution should be exercised when considering the approval of unlisted and unlabeled appliances. Approval of unlabeled appliances must be based on documentation that demonstrates compliance with applicable standards or, where no product standards exist, that the appliance is appropriate for the intended use and will provide the same level of performance as would listed and labeled appliances. A fundamental principle of the code is the reliance on the listing and labeling process to ensure appliance performance; approvals granted in accordance with Section 105 must be well justified with supporting documentation. To the code official, the installer and the end-user, very little is known about the performance of an appliance that is not tested and built to an appliance standard.

301.8 Labeling. Labeling shall be in accordance with the procedures set forth in Sections 301.8.1 through 301.8.2.3.

❖ As the commentary for Section 301.7 states, the product label is the primary, if not the only, assurance to the code official that the appliance is safe for installation. The labeling of an appliance ensures that testing in compliance with an applicable standard has been performed and that the product will perform acceptably when installed and operated in accordance with the appliance's listing. Before an appliance or other component can be labeled, the code requires specific actions by qualified agencies and personnel. Sections 301.8.1 through 301.8.2.3 describe the requirements that must be complied with before a label can be issued for the appliance or equipment.

301.8.1 Testing. An *approved* agency shall test a representative sample of the mechanical *equipment* and appliances being *labeled* to the relevant standard or standards. The *approved* agency shall maintain a record of all of the tests performed. The record shall provide sufficient detail to verify compliance with the test standard.

❖ An approved agency is one that complies with the requirements of Sections 301.8.2.1 through 301.8.2.3 and is approved by the code official (see commentary, Section 301.8.2.1). The only way that an approved agency can verify that equipment and appliances meet the requirements of the relevant standard(s) is by testing of the appliance or equipment under controlled conditions in a testing laboratory. For mass-produced identical products, the approved agency rarely tests each product. Typically, a representative random sample of a "production run" of products is tested. For example, a test protocol might require that three units out of 1,000 units produced be tested. As long as the design and manufacturing processes for identically produced products do not change, the established sampling and testing frequency provides a high level of assurance that each produced product would pass the test, if actually tested.

The approved agency is responsible for maintaining a record of specific information concerning the product tested, as well as the results of the tests per-

INTERNATIONAL CODE COUNCIL®
Copyright © 2015 ICC. ALL RIGHTS RESERVED. Accessed by David Dammon on Jun 21, 2017 12:30:52 PM pursuant to License Agreement with ICC. No further reproduction or distribution authorized. ANY UNAUTHORIZED REPRODUCTION OR DISTRIBUTION IS A VIOLATION OF THE FEDERAL COPYRIGHT ACT AND THE LICENSE AGREEMENT, AND SUBJECT TO CIVIL AND CRIMINAL PENALTIES THEREUNDER.

formed. The test standards detail what information is important to record. The records provide proof that the testing was actually performed and that appliance or equipment met or exceeded the minimum requirements of the applicable product standards.

There are numerous standards, not all of which are specifically referenced in the code, applicable to various appliances and equipment. For this reason, the approved agency determines the standards to be used for testing and then, in turn, as the basis for labeling. Each standard contains safety requirements for a given appliance or piece of equipment and specifies tests that must be performed. The labeling agency must maintain sufficient detailed documentation to demonstrate compliance with the test standard. The code official may require that copies of the test reports be submitted to determine the validity of the label.

Examples of standards that are used as a basis for testing and labeling include:

- UL 641—Low-Temperature Venting Systems, Type L;
- UL 727—Oil-Fired Central Furnaces; and
- UL 1482—Room Heaters, Solid-Fuel Type.

The basis for a label is the requirement for testing a representative, perhaps identical, sample of the appliance to indicate conformance to a required standard. For this reason, the appliance must meet the requirements of the standard (see commentary, Section 304.1).

301.8.2 Inspection and identification. The *approved* agency shall periodically perform an inspection, which shall be in-plant if necessary, of the mechanical *equipment* and appliances to be *labeled*. The inspection shall verify that the *labeled* mechanical *equipment* and appliances are representative of the mechanical *equipment* and appliances tested.

❖ The approved agency whose identification insignia appears on the label is required to perform periodic in-plant inspections to verify that the manufactured product is equivalent to the sample that was tested. Because the label is good only for the products that were tested, the in-plant inspections are intended to discover any design changes or production quality control problems. If any discrepancies are found, the labeling agency would discontinue labeling of the particular product and the manufacturer would be required to resolve the problem and, if necessary, have the revised product retested before the labeling process is resumed. The code official may require copies of the periodic inspection reports to determine that the in-plant inspections are being performed in compliance with the requirements for a labeled product.

Because appliances and equipment are tested under specific conditions of installation and operation in accordance with the manufacturer's instructions, the issuance of a label requires that these instructions be provided to the installer and end-user to ensure that the product is not misapplied or improperly installed. Because the code requires that the labeled appliances and equipment be installed and operated in accordance with the manufacturer's instructions, the instructions must be attached to or shipped with each appliance. In-plant inspections by the approved agency ensures that the instructions are being shipped with the product, that the design of the product has not substantially changed and that any change in manufacturing processes will not require a change in the testing protocol.

301.8.2.1 Independent. The agency to be *approved* shall be objective and competent. To confirm its objectivity, the agency shall disclose all possible conflicts of interest.

❖ As a part of the basis for a code official's approval of a particular labeling agency, the agency must demonstrate its independence from the manufacturer of the product as well as competence to perform the required tests. The judgment of objectivity is linked to the financial and fiduciary independence of the agency. The competence of the agency is judged by its experience and organization, and the experience of its personnel. As a hypothetical example, the Acme Inspection Agency is testing oil-fired furnaces for the Real Hot Furnace Company. After some investigation, it is discovered that both Acme and Real Hot are subsidiaries of the same parent company. The inspection agency and manufacturer clearly have a relationship that is inappropriate from the standpoint of conflict of interest, and the objectivity of the inspection agency is sufficiently questionable for the code official to justify not approving Acme as a testing and labeling agency for equipment produced by the Real Hot Furnace Company.

While code officials could do their own investigations of testing agencies, many rely upon accredited third-party evaluation services to perform such investigations. One such service is the ICC Evaluation Service (ICC-ES®). ICC-ES evaluation reports are public documents, available free of charge on the worldwide Web, not only to building regulators and manufacturers, but also to contractors, specifiers, architects, engineers, and anyone else with an interest in the building industry.

301.8.2.2 Equipment. An *approved* agency shall have adequate *equipment* to perform all required tests. The *equipment* shall be periodically calibrated.

❖ An agency must have proper equipment to perform the specific tests and inspections as required by the product and test standards. Referring to the example in the commentary for Section 301.8.2.1, if the Acme Inspection Agency had the facilities to test only fire doors, they would not be the appropriate agency for testing of an oil-fired furnace. Although this example is oversimplified, the point is that the inspection agency must have all of the necessary equipment to perform the testing required by the applicable standard.

INTERNATIONAL CODE COUNCIL®
Copyright © 2015 ICC. ALL RIGHTS RESERVED. Accessed by David Dammon on Jun 21, 2017 12:30:52 PM pursuant to License Agreement with ICC. No further reproduction or distribution authorized. ANY UNAUTHORIZED REPRODUCTION OR DISTRIBUTION IS A VIOLATION OF THE FEDERAL COPYRIGHT ACT AND THE LICENSE AGREEMENT, AND SUBJECT TO CIVIL AND CRIMINAL PENALTIES THEREUNDER.

The agency must also keep records of maintenance and calibration of their test and inspection equipment to demonstrate that the equipment can be relied upon to produce accurate, consistent and reproducible results. Often testing apparatus, instruments and equipment must be capable of measurements using very small units of measure within a specified tolerance. To produce accurate, dependable readings and reliable test results, testing apparatus, many pieces of equipment and instruments must be routinely calibrated to established references, such as those maintained by the National Institute of Standards and Technology (NIST).

While code officials could question specific testing agencies with respect to their testing equipment, many rely upon accredited third-party evaluation services to perform such verifications. One such service is the ICC-ES.

301.8.2.3 Personnel. An *approved* agency shall employ experienced personnel educated in conducting, supervising and evaluating tests.

❖ The competence of an inspection agency is based on the agency having the proper equipment to perform the test, as stated in Section 301.8.2.2, and also on the experience and abilities of its personnel. The best calibrated equipment can produce accurate results only when operated by experienced personnel who are trained to conduct, supervise and evaluate tests. For example, consider a newly formed agency that has employed individuals who do not have experience related to the testing to be conducted and have not been adequately trained. The code official may require information that demonstrates the agency personnel have the capability to properly perform the tests. The capabilities and experience of supervisory personnel overseeing their work are also important.

While code officials could question specific testing agencies with respect to their testing personnel, many rely upon accredited third-party evaluation services to perform such verifications. One such service is the ICC-ES.

301.9 Label information. A permanent factory-applied nameplate(s) shall be affixed to appliances on which shall appear in legible lettering, the manufacturer's name or trademark, the model number, serial number and the seal or mark of the *approved* agency. A label shall also include the following:

1. Electrical *equipment* and appliances: Electrical rating in volts, amperes and motor phase; identification of individual electrical components in volts, amperes or watts, motor phase; Btu/h (W) output; and required clearances.
2. Absorption units: Hourly rating in Btu/h (W); minimum hourly rating for units having step or automatic modulating controls; type of fuel; type of refrigerant; cooling capacity in Btu/h (W); and required clearances.
3. Fuel-burning units: Hourly rating in Btu/h (W); type of fuel *approved* for use with the *appliance*; and required clearances.
4. Electric comfort heating appliances: electric rating in volts, amperes and phase; Btu/h (W) output rating; individual marking for each electrical component in amperes or watts, volts and phase; and required clearances from combustibles.

❖ This section requires that the label be a plate, tag or other item made and printed of materials that will have a permanence to last the intended life of the product. In general, label materials other than metal tags or plates usually consist of material that is similar in appearance to a decal, and the label, its adhesive and the printed information are all durable and water resistant. Because of the important information given by a label, the intent is that the label be permanent, not susceptible to damage and legible for the life of the appliance or equipment to which it is attached. The standards that appliances are tested against usually specify the required label performance criteria, the method of attachment and required label information. The code requires that the label be affixed permanently and intends that the label be in a prominent location on the appliance or equipment. Although this section specifies the information that must appear on the label, relevant product standards might require additional information or the manufacturer might choose to provide additional information on the label. Commentary Figure 301.9 shows a typical appliance label.

301.10 Electrical. Electrical wiring, controls and connections to *equipment* and appliances regulated by this code shall be in accordance with NFPA 70.

❖ Field-installed power wiring and control wiring for appliances and equipment must be installed in accordance with NFPA 70.

The power wiring includes all the wiring, disconnects, overcurrent protection devices, starters and related hardware used to supply electrical power to the appliance or equipment. The control wiring includes all the wiring, devices and related hardware that connect the main unit to all external controls and accessories, such as temperature and pressure sensors, thermostats, exhausters, equipment contactors, interlock controls and remote damper motors. The internal factory wiring of appliances and equipment is not covered by this section unless it is specifically addressed in NFPA 70; however, such wiring is covered by the testing and review performed by an approved agency as part of the labeling process.

The mechanical or electrical code official responsible for the inspection of appliances and equipment must be familiar with the applicable sections of NFPA 70.

INTERNATIONAL CODE COUNCIL®
Copyright © 2015 ICC. ALL RIGHTS RESERVED. Accessed by David Dammon on Jun 21, 2017 12:30:52 PM pursuant to License Agreement with ICC. No further reproduction or distribution authorized. ANY UNAUTHORIZED REPRODUCTION OR DISTRIBUTION IS A VIOLATION OF THE FEDERAL COPYRIGHT ACT AND THE LICENSE AGREEMENT, AND SUBJECT TO CIVIL AND CRIMINAL PENALTIES THEREUNDER.

301.11 Plumbing connections. Potable water supply and building drainage system connections to *equipment* and appliances regulated by this code shall be in accordance with the *International Plumbing Code*.

❖ Plumbing connections to appliances and equipment regulated by the code must be in accordance with the *International Plumbing Code*® (IPC®).

Hydronic systems normally require a means of supplying fill and makeup water to replace any water lost to evaporation, leakage or intentional draining. Where direct connections are made to the potable water supply, the connections must be isolated from the potable water source. This provision is intended to protect the potable water system from contamination by backflow when a direct connection is made to a hydronic system. Hydronic systems are normally pressurized, contain nonpotable water and fluids, and can contain conditioning chemicals or antifreeze solutions. Low-temperature hydronic fluids and cooling towers have also been associated with disease-causing organisms such as the Legionnaires' disease bacterium. The potable water system must be protected from potential contamination resulting from connection to hydronic systems, water-wash filter systems, cooling towers, solar systems, water-cooled heat exchangers, cooking appliances, ice makers, humidifiers, evaporative coolers, etc.

In addition, water heaters must also be considered as both mechanical appliances (equipment) and plumbing appliances and, therefore, must comply with both this code and the IPC.

A water heater installation is complex in that it has a fuel or power supply; a chimney or vent connection, if fuel fired; a combustion air supply, if fuel fired; connections to the plumbing potable water distribution system; and controls and devices to prevent a multitude of potential hazards from conditions such as excessively high temperatures, pressures and ignition failure.

It is not uncommon for jurisdictions to issue both plumbing and mechanical permits for water heater installations, or to require that the installer be licensed in both the plumbing and mechanical trades when performing such installations (see commentary, Section 1002). There is no way to avoid the "code crossover" for water heaters because they are clearly plumbing and mechanically related and under the purview of both plumbing and mechanical codes. This section also triggers the IPC for the drainage associated with mechanical appliances and equipment, such as those addressed in Section 307.

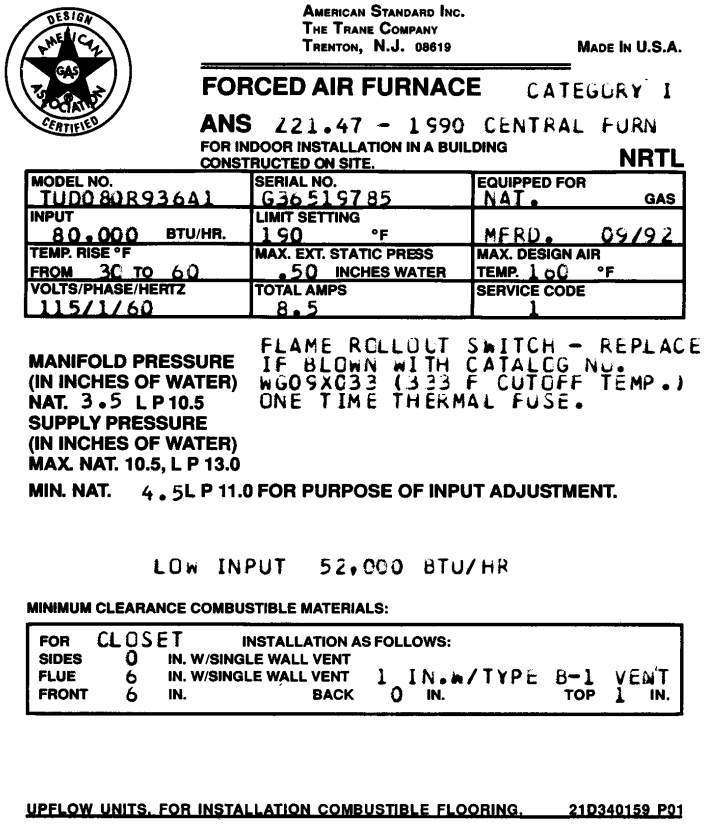

Figure 301.9
TYPICAL LABEL FOR A CATEGORY I GAS-FIRED FURNACE
(Courtesy of Trane and American-Standard Company)

INTERNATIONAL CODE COUNCIL®
Copyright © 2015 ICC. ALL RIGHTS RESERVED. Accessed by David Dammon on Jun 21, 2017 12:30:52 PM pursuant to License Agreement with ICC. No further reproduction or distribution authorized. ANY UNAUTHORIZED REPRODUCTION OR DISTRIBUTION IS A VIOLATION OF THE FEDERAL COPYRIGHT ACT AND THE LICENSE AGREEMENT, AND SUBJECT TO CIVIL AND CRIMINAL PENALTIES THEREUNDER.

301.12 Fuel types. Fuel-fired appliances shall be designed for use with the type of fuel to which they will be connected and the altitude at which they are installed. Appliances that comprise parts of the building mechanical system shall not be converted for the usage of a different fuel, except where *approved* and converted in accordance with the manufacturer's instructions. The fuel input rate shall not be increased or decreased beyond the limit rating for the altitude at which the *appliance* is installed.

❖ Mechanical appliances are usually designed by the manufacturer to operate on one specifically designated type of fuel. An element of information used for the approval of appliances is the label, which ensures that the appliance has been tested in accordance with a valid standard and determined to perform acceptably when installed and operated in accordance with the appliance listing (see commentary, Section 301.8). The fuel used in the appliance test must be based on the type of fuel specified by the manufacturer. When an appliance is converted to a different type of fuel, the original label that appears on the appliance is no longer valid. Because the original approval of the appliance is based in part on the label, the appliance is no longer approved for use.

Requiring approval of fuel conversions by the code official and that they be in compliance with the manufacturer's installation instructions is the only way to ensure that the conversion will allow for the safe operation of the appliance. Fuel conversions that are not performed correctly can adversely affect the performance of burners, the venting of combustion gases and the proper clearance to combustibles.

Before a fuel conversion is performed, the manufacturer must be contacted to obtain installation instructions outlining the procedures to follow to ensure proper operation of the appliance. In most cases, conversion kits are available from the manufacturer along with the installation instructions. Once a conversion has been completed, a supplemental label must be installed to update the information contained on the original label, thereby alerting service personnel to the modifications.

All fuel-fired appliances are designed to operate with a maximum and minimum heat energy input capacity. This capacity is field adjusted to suit the elevation because of the change in air density at different elevations. Alteration of heat energy input beyond the allowable limits can result in hazardous overfiring or underfiring. Either condition can cause operation problems that include overheating, vent failure, corrosion, poor draft and poor combustion.

301.13 Vibration isolation. Where vibration isolation of *equipment* and appliances is employed, an *approved* means of supplemental restraint shall be used to accomplish the support and restraint.

❖ Where vibration isolation connections are used in ducts and piping and where equipment is mounted with vibration dampers, support is required for the ducts, piping and equipment to maintain positioning and alignment and to prevent stress and strain on the vibration connectors and dampers.

301.14 Repair. Defective material or parts shall be replaced or repaired in such a manner so as to preserve the original approval or listing.

❖ Repair work must not alter the nature of appliances and equipment in a way that would invalidate the listing or conditions of approval. For example, replacement of safety control devices with different devices could alter the design and operation of an appliance from that intended by the manufacturer and the listing agency.

301.15 Wind resistance. Mechanical *equipment*, appliances and supports that are exposed to wind shall be designed and installed to resist the wind pressures determined in accordance with the *International Building Code*.

❖ Installations of mechanical equipment and appliances that are subject to wind forces must be designed to resist those forces. The wind pressures must be based on the wind provisions in the *International Building Code*® (IBC®) for the site. The requirements in the IBC are based on ASCE 7. The wind pressure requirements are based on the exposure of the building and wind speeds for that region.

[BS] 301.16 Flood hazard. For structures located in flood hazard areas, mechanical systems, equipment and appliances shall be located at or above the elevation required by Section 1612 of the *International Building Code* for utilities and attendant equipment.

Exception: Mechanical systems, equipment and appliances are permitted to be located below the elevation required by Section 1612 of the of the *International Building Code* for utilities and attendant equipment provided that they are designed and installed to prevent water from entering or accumulating within the components and to resist hydrostatic and hydrodynamic loads and stresses, including the effects of buoyancy, during the occurrence of flooding up to such elevation.

❖ In flood hazard areas, mechanical systems, equipment and appliances must be elevated above the elevation specified in the IBC. Exposure to water can damage most mechanical system components as well as cause serious appliance and equipment malfunctions. For example, the majority of appliance manufacturers require the replacement of safety controls or entire appliances that have been submerged in flood waters. See FEMA 348 for additional guidance.

The exception to this section provides criteria for placing specific equipment below the required elevation. To do so, the equipment must be designed to prevent the entry or accumulation of water. Standard equipment that typically is installed at-grade is not designed to withstand the entry of water and would not meet the requirements of this exception.

INTERNATIONAL CODE COUNCIL®
Copyright © 2015 ICC. ALL RIGHTS RESERVED. Accessed by David Dammon on Jun 21, 2017 12:30:52 PM pursuant to License Agreement with ICC. No further reproduction or distribution authorized. ANY UNAUTHORIZED REPRODUCTION OR DISTRIBUTION IS A VIOLATION OF THE FEDERAL COPYRIGHT ACT AND THE LICENSE AGREEMENT, AND SUBJECT TO CIVIL AND CRIMINAL PENALTIES THEREUNDER.

[BS] 301.16.1 Coastal high hazard areas and coastal A zones. In coastal high hazard areas and coastal A zones, mechanical systems and *equipment* shall not be mounted on or penetrate walls intended to break away under flood loads.

❖ Section 1612 of the IBC requires exterior walls that enclose areas below elevated buildings to break away under flood loads in coastal high-hazard areas (Zone V) and coastal A Zones. Breakaway walls are designed and constructed to fail under flood loads in order to avoid transferring their loads and damaging the primary structural support of the building. When mechanical or plumbing system components penetrate or are attached to the breakaway walls, they can prevent the wall from breaking away, thus transferring additional loads to the building and increasing flood damage. Also, damage to the mechanical systems is certain to occur when the walls fail as intended.

301.17 Rodentproofing. Buildings or structures and the walls enclosing habitable or occupiable rooms and spaces in which persons live, sleep or work, or in which feed, food or foodstuffs are stored, prepared, processed, served or sold, shall be constructed to protect against the entrance of rodents in accordance with the *International Building Code*.

❖ This section references the IBC for the requirements to prevent rodent infestation of a building. Appendix F of the IBC addresses two mechanical issues. The first is the requirement to protect the annular spaces around openings in exterior walls or interior walls enclosing rooms where persons live or where food is prepared or stored. The annular spaces can be sealed by any effective method, but the primary methods used are to seal off the annular space with a hard material such as mortar, or to place a metal collar around the penetrating pipe or duct. The collar material must be durable for the weather exposure and strong enough to prevent the rodents from chewing through and entering the building.

The second IBC requirement is to cover ventilation or combustion air openings with wire cloth of at least 0.035-inch (0.61 mm) wire to prevent the entry of rodents through the opening (see Section 401.5). Instead of the wire cloth, the code allows the openings to be protected by solid sheet metal guards that must be arranged to prevent rodent access.The guard material must be resistant to exposure to the elements.

301.18 Seismic resistance. Where earthquake loads are applicable in accordance with the *International Building Code*, mechanical system supports shall be designed and installed for the seismic forces in accordance with the *International Building Code*.

❖ Building mechanical systems are required by the IBC to be designed for specified seismic forces. This section references the detailed mechanical equipment and component seismic support requirements contained in the IBC to bring these requirements to the attention of the design professional and the permit applicant.

Large-diameter piping, mechanical equipment and large HVAC ducts must be braced for earthquake loads as stated in the IBC. The failure of the supports for these components has been shown to be a threat to health and safety in geographical areas where moderate- to high-magnitude earthquakes are likely to occur. The geographical locations where the earthquake design is required for certain piping, mechanical equipment and HVAC ducts, and the size of the components that must be braced are specified in the IBC.

SECTION 302
PROTECTION OF STRUCTURE

302.1 Structural safety. The building or structure shall not be weakened by the installation of mechanical systems. Where floors, walls, ceilings or any other portion of the building or structure are required to be altered or replaced in the process of installing or repairing any system, the building or structure shall be left in a safe structural condition in accordance with the *International Building Code*.

❖ The installation of mechanical systems must not adversely affect the structural integrity of the building components. The IBC dictates the structural safety requirements that must be applied to any structural portion of the building that is penetrated, altered or removed during the installation, replacement or repair of a mechanical system (see commentary, Sections 302.3 through 302.5.3).

302.2 Penetrations of floor/ceiling assemblies and fire-resistance-rated assemblies. Penetrations of floor/ceiling assemblies and assemblies required to have a fire-resistance rating shall be protected in accordance with Chapter 7 of the *International Building Code*.

❖ Penetrations of fire-resistance-rated assemblies can diminish the integrity of the assembly, allowing smoke and fire to pass through and cause it to fail prematurely. For example, the IBC and this code allow the penetration of a fire-resistance-rated floor/ceiling assembly by an air duct if the penetration is protected with a fire damper installed at the floor line and the air duct does not connect more than two stories. If the air duct penetrates more than one floor/ceiling assembly, the penetrations must be protected by a shaft enclosure (see Section 607.6).

[BS] 302.3 Cutting, notching and boring in wood framing. The cutting, notching and boring of wood framing members shall comply with Sections 302.3.1 through 302.3.4.

❖ The sections referenced contain prescriptive sizes and locations of acceptable cuts, notches and bored holes in wood framing members. Ideally, framing members should not be altered in any way, but because this is not always practical, the code permits alterations that do not significantly weaken the members.

INTERNATIONAL CODE COUNCIL®
Copyright © 2015 ICC. ALL RIGHTS RESERVED. Accessed by David Dammon on Jun 21, 2017 12:30:52 PM pursuant to License Agreement with ICC. No further reproduction or distribution authorized. ANY UNAUTHORIZED REPRODUCTION OR DISTRIBUTION IS A VIOLATION OF THE FEDERAL COPYRIGHT ACT AND THE LICENSE AGREEMENT, AND SUBJECT TO CIVIL AND CRIMINAL PENALTIES THEREUNDER.

[BS] 302.3.1 Joist notching. Notches on the ends of joists shall not exceed one-fourth the joist depth. Holes bored in joists shall not be within 2 inches (51 mm) of the top or bottom of the joist, and the diameter of any such hole shall not exceed one-third the depth of the joist. Notches in the top or bottom of joists shall not exceed one-sixth the depth and shall not be located in the middle third of the span.

❖ The code recognizes that at times floor and ceiling joists must be cut, notched or bored. The provisions are based on location and size limitations to ensure that the structural member can support the load (see Commentary Figure 302.3.1).

A notch or cut will decrease the allowable stress of the member. A notch or cut may place a lumber defect that was previously in a low-stress location in the interior of the board, to a high-stress area at the edge of the notch or cut. Cutting and notching also cause shear stress concentrations in the member at the corners of the notch or cut. Because of these shear stress concentrations, the full extent of the damage to the member cannot be calculated. In consideration of the detrimental effects of cutting and notching, it is a good practice to avoid cutting, notching or boring adjacent to areas of the member that contain knots and, where possible, use rounded or sloped edged notches to reduce the stress concentrations at the corners.

Notches are not to exceed those permitted in this section unless a structural analysis is completed by a qualified design professional.

Holes cut and bored in joists and studs have the same effect as notches. Holes reduce the strength of the member. This section permits drilling holes in wood structural members within certain limitations. The limitations given in this section are not to be exceeded unless a structural analysis is completed by a qualified design professional.

[BS] 302.3.2 Stud cutting and notching. In exterior walls and bearing partitions, a wood stud shall not be cut or notched in excess of 25 percent of its depth. In nonbearing partitions that do not support loads other than the weight of the partition, a stud shall not be cut or notched in excess of 40 percent of its depth.

❖ The load-sharing characteristics of a wall with studs, sheathing and plates allow for the stated limitation for notches in load-bearing studs. The maximum notch in

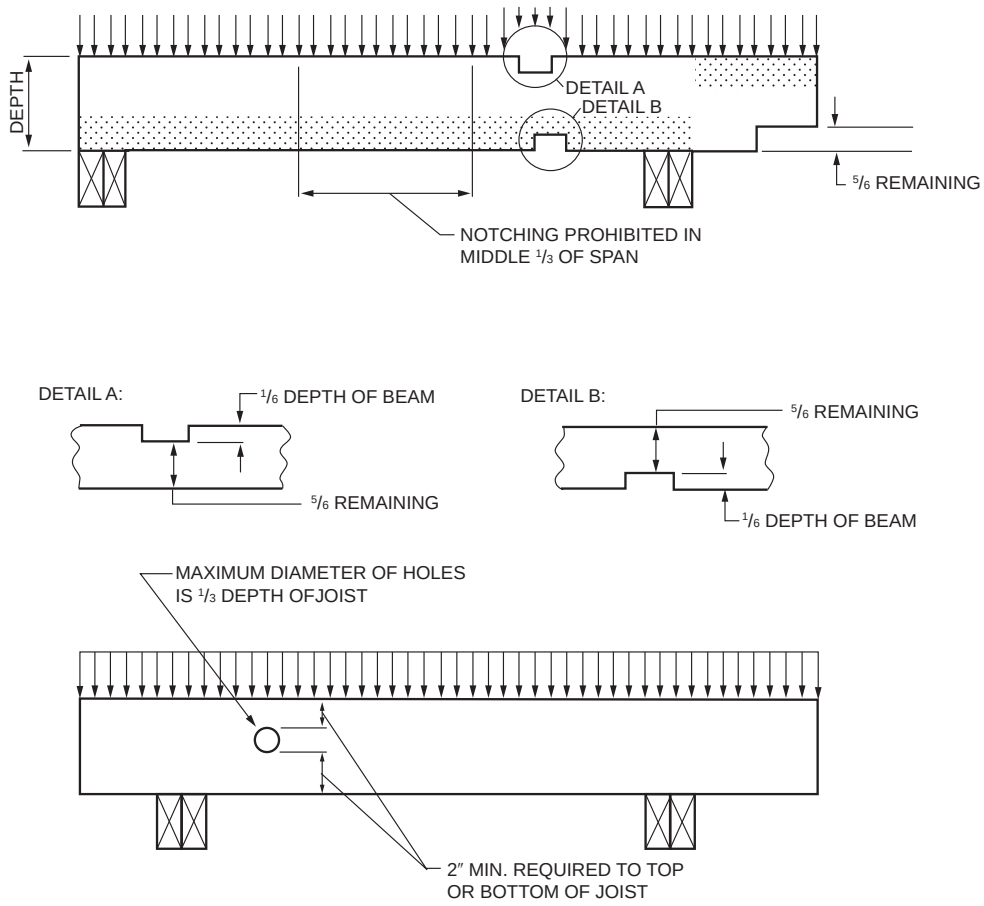

For SI: 1 inch = 25.4 mm.

Figure 302.3.1
HOLES AND NOTCHES IN WOOD JOISTS

INTERNATIONAL CODE COUNCIL®
Copyright © 2015 ICC. ALL RIGHTS RESERVED. Accessed by David Dammon on Jun 21, 2017 12:30:52 PM pursuant to License Agreement with ICC. No further reproduction or distribution authorized. ANY UNAUTHORIZED REPRODUCTION OR DISTRIBUTION IS A VIOLATION OF THE FEDERAL COPYRIGHT ACT AND THE LICENSE AGREEMENT, AND SUBJECT TO CIVIL AND CRIMINAL PENALTIES THEREUNDER.

a stud is not to exceed 25 percent of its depth unless the stud is reinforced to resist the anticipated load (see Commentary Figure 302.3.2). See the commentary to Section 302.3.1 for further discussion of the effects of notching and cutting.

[BS] 302.3.3 Bored holes. The diameter of bored holes in wood studs shall not exceed 40 percent of the stud depth. The diameter of bored holes in wood studs shall not exceed 60 percent of the stud depth in nonbearing partitions. The diameter of bored holes in wood studs shall not exceed 60 percent of the stud depth in any wall where each stud is doubled, provided that not more than two such successive doubled studs are so bored. The edge of the bored hole shall be not closer than $^{5}/_{8}$ inch (15.9 mm) to the edge of the stud. Bored holes shall be not located at the same section of stud as a cut or notch.

❖ This section specifies the limits on bored holes in wood studs (see Commentary Figure 302.3.3). The 40-percent limit is intended for studs in exterior walls and for load-bearing walls. The 60-percent limit for doubled studs is also intended to apply to studs in exterior walls and other load-bearing walls. Bored holes not greater than 60-percent are allowed in any nonload-bearing stud.

The bored-hole edge location limitations maintain the load-carrying capacity of the stud. These limits are intended to apply to load-bearing and nonload-bearing partitions and studs in exterior walls. A bored hole in the same cross section as a cut or notch could cause the stud to fail.

[BS] 302.3.4 Engineered wood products. Cuts, notches and holes bored in trusses, structural composite lumber, structural glue-laminated members and I-joists are prohibited except where permitted by the manufacturer's recommendations or where the effects of such alterations are specifically considered in the design of the member by a registered design professional.

❖ The structural elements of engineered wood systems, such as metal-plate-connected parallel-chord wood trusses, premanufactured I-joists and metal-plate connected wood roof trusses, must not be altered in anyway unless the manufacturer's installation instructions specifically address the allowable alterations considered in the design of the product. As an alternative, a structural analysis by a qualified design professional is acceptable.

[BS] 302.4 Alterations to trusses. Truss members and components shall not be cut, drilled, notched, spliced or otherwise altered in any way without written concurrence and approval of a *registered design professional*. Alterations resulting in the addition of loads to any member, such as HVAC *equipment* and water heaters, shall not be permitted without verification that the truss is capable of supporting such additional loading.

❖ Trusses are designed and constructed to support specific loads and must not be altered without being evaluated by a registered design professional. The allowable field alterations described in Section 302.3 for joists, rafters and studs cannot be applied to designed trusses. Adding the weight of mechanical equipment such as HVAC units to the truss load is also prohibited without an evaluation of the effects.

[BS] 302.5 Cutting, notching and boring in steel framing. The cutting, notching and boring of steel framing members shall comply with Sections 302.5.1 through 302.5.3.

❖ The sections referenced contain prescriptive sizes and locations of acceptable cuts, notches and bored holes in steel framing members.

[BS] 302.5.1 Cutting, notching and boring holes in structural steel framing. The cutting, notching and boring of holes in structural steel framing members shall be as prescribed by the *registered design professional*.

❖ This section does not allow cutting, notching or boring of structural steel framing members without approval by a registered design professional. Unlike Section 302.3, which allows field cutting, notching and boring of wood studs and joists within the prescribed limits, this section requires that alterations to steel structural framing members be allowed only as dictated by a design professional prior to the alteration. The code official should not approve any alterations to structural members unless a signed drawing or revision is on the job site showing the allowed size and location of the cut, notch or bored hole.

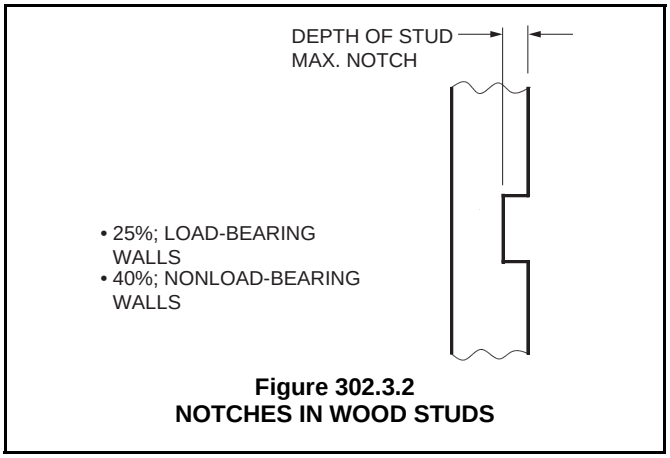

Figure 302.3.2
NOTCHES IN WOOD STUDS

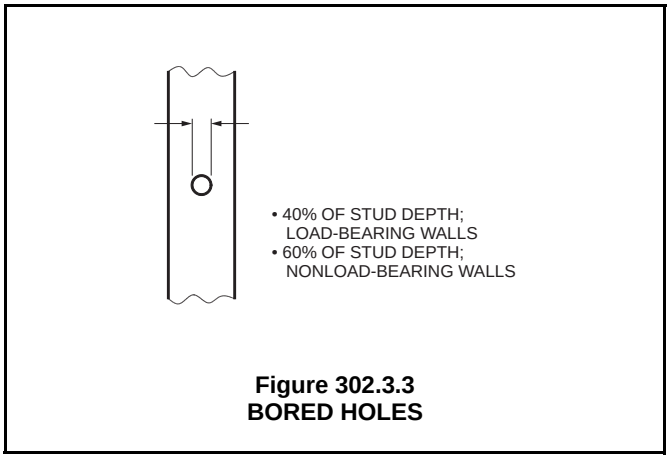

Figure 302.3.3
BORED HOLES

INTERNATIONAL CODE COUNCIL®
Copyright © 2015 ICC. ALL RIGHTS RESERVED. Accessed by David Dammon on Jun 21, 2017 12:30:52 PM pursuant to License Agreement with ICC. No further reproduction or distribution authorized. ANY UNAUTHORIZED REPRODUCTION OR DISTRIBUTION IS A VIOLATION OF THE FEDERAL COPYRIGHT ACT AND THE LICENSE AGREEMENT, AND SUBJECT TO CIVIL AND CRIMINAL PENALTIES THEREUNDER.

[BS] 302.5.2 Cutting, notching and boring holes in cold-formed steel framing. Flanges and lips of load-bearing cold-formed steel framing members shall not be cut or notched. Holes in webs of load-bearing cold-formed steel framing members shall be permitted along the centerline of the web of the framing member and shall not exceed the dimensional limitations, penetration spacing or minimum hole edge distance as prescribed by the *registered design professional*. Cutting, notching and boring holes of steel floor/roof decking shall be as prescribed by the *registered design professional*.

❖ This section does not allow any cutting or notching of the flanges and lips of any load-bearing, cold-formed steel-framing member because these operations would substantially weaken the member. Bored holes in the web of steel-framing members are allowed only as directed by a registered design professional. Cutting, notching and boring of steel floor/roof decking is allowed only as directed by a registered design professional (see commentary, Section 302.5.1). Where possible, the holes that are prebored at the factory in steel-framing members should be used instead of making new holes on the job site.

[BS] 302.5.3 Cutting, notching and boring holes in nonstructural cold-formed steel wall framing. Flanges and lips of nonstructural cold-formed steel wall studs shall not be cut or notched. Holes in webs of nonstructural cold-formed steel wall studs shall be permitted along the centerline of the web of the framing member, shall not exceed $1^1/_2$ inches (38 mm) in width or 4 inches (102 mm) in length, and shall not be spaced less than 24 inches (610 mm) center to center from another hole or less than 10 inches (254 mm) from the bearing end.

❖ Similar to Section 302.5.2, this section does not allow any cutting or notching of the flanges and lips of any cold-formed steel-framing member. However, holes may be made in the web of nonstructural cold-formed steel wall studs without the involvement of a registered design professional if the prescribed size, location and spacing requirements are met.

SECTION 303
EQUIPMENT AND APPLIANCE LOCATION

303.1 General. *Equipment* and appliances shall be located as required by this section, specific requirements elsewhere in this code and the conditions of the *equipment* and *appliance* listing.

❖ Section 303 is a consolidation of the code's generally applicable location requirements and limitations. The listing for an appliance or equipment will often contain location requirements parallel with or in addition to these sections.

303.2 Hazardous locations. Appliances shall not be located in a *hazardous location* unless *listed* and *approved* for the specific installation.

❖ Mechanical appliances that are to be installed in a hazardous location must be approved and listed for use in that location. A hazardous location is defined as any location considered to be a potential fire hazard from flammable vapors, dust, combustible fibers or other highly combustible substances. This location is not necessarily classified in the IBC or NFPA 70 as a high-hazard occupancy classification. Appliances located in a hazardous location require special design, construction and installation because of the potential for an explosion or fire caused by the presence of dust, flammable vapors and highly combustible materials.

This section does not specify the type of appliance to be used in any particular hazardous location; therefore, the code official must evaluate information submitted by the designer on the intended occupancy of a space, the specification for the appliance and the location of the appliance in the space to determine the appropriate requirements. For example, these requirements may include spark-resistant materials for moving parts, such as fan blades; explosionproof construction for electrical switches, starters and motors; or sealed combustion chambers for fuel-burning appliances.

Examples of appliances installed in a hazardous location are a fuel-burning water heater in an area where fuel is dispensed, an industrial baking facility where fine flour dust is present around a fuel-burning furnace or a paint shop where paint fumes and vapors are present around an electric unit heater.

303.3 Prohibited locations. Fuel-fired appliances shall not be located in, or obtain *combustion* air from, any of the following rooms or spaces:

1. Sleeping rooms.
2. Bathrooms.
3. Toilet rooms.
4. Storage closets.
5. Surgical rooms.

Exception: This section shall not apply to the following appliances:

1. *Direct-vent* appliances that obtain all *combustion* air directly from the outdoors.
2. Solid fuel-fired appliances, provided that combustion air is provided in accordance with the manufacturers' instructions.
3. Appliances installed in a dedicated enclosure in which all *combustion* air is taken directly from the outdoors, in accordance with Chapter 7. *Access* to such enclosure shall be through a solid door, weather-stripped in accordance with the exterior door air leakage requirements of the *International Energy Conservation Code* and equipped with an *approved* self-closing device.

❖ The intent of this section is to prevent fuel-fired appliances from being installed in rooms and spaces where the combustion process could pose a threat to

INTERNATIONAL CODE COUNCIL®
Copyright © 2015 ICC. ALL RIGHTS RESERVED. Accessed by David Dammon on Jun 21, 2017 12:30:52 PM pursuant to License Agreement with ICC. No further reproduction or distribution authorized. ANY UNAUTHORIZED REPRODUCTION OR DISTRIBUTION IS A VIOLATION OF THE FEDERAL COPYRIGHT ACT AND THE LICENSE AGREEMENT, AND SUBJECT TO CIVIL AND CRIMINAL PENALTIES THEREUNDER.

the occupants. Potential threats include depleted oxygen levels and elevated levels of carbon dioxide, nitrous oxides and carbon monoxide and other combustion gases.

In small rooms, such as bedrooms and bathrooms, the doors are typically closed when the room is occupied, which could allow combustion gases to build up to life-threatening levels. In bedrooms, occupants would not be alert or aware of impending danger.

In surgical rooms, oxygen and flammable anesthetic gases are used.

If an appliance obtains combustion air from a room or space, it communicates with the atmosphere in that room or space whether or not it is considered to be installed. An appliance can be in a room, closet or alcove and obtain combustion air from an adjacent room, which is why Section 303.3 is worded to address both the actual location of an appliance and its source of combustion air. In other words, an appliance in a closet accessed from a bedroom is no different from an appliance located within the bedroom.

Exception 1 recognizes that direct-vent appliances have sealed combustion chambers and obtain all combustion air directly from the outdoors.

Exception 2 exempts solid-fuel-fired appliances if the room construction and volume are such that combustion air is supplied as specified in the appliance manufacturer's instructions. If a solid-fuel-fired appliance was not venting properly, smoke would enter the room and alert the occupants.

Exception 3 would allow installation of fuel-fired appliances within a separate dedicated space that is accessed from the rooms and spaces listed in this section. A separated space containing the appliance must be open to the outdoors in accordance with Chapter 7, and the access door to the space must be sealed in accordance with IECC requirements for exterior doors to prevent communication between atmospheres in the separated spaces. The door must also be self-closing and not rely on occupants to keep it closed. The enclosure should not be used for storage or any other purpose.

303.4 Protection from damage. Appliances shall not be installed in a location where subject to mechanical damage unless protected by *approved* barriers.

❖ Appliances must be installed with consideration for potential damage from occupant activities. Damage results in property loss and can cause hazardous malfunctions, fires or explosions. Potential damage includes impact from occupants, vehicles, stored materials and operations that occur in an occupancy. Barriers must be approved and strong enough to resist the type of impact anticipated.

303.5 Indoor locations. Furnaces and boilers installed in closets and alcoves shall be listed for such installation.

❖ An appliance must be listed for closet/alcove installation if it is installed in a space defined in this section as a closet or alcove. This section defines a closet or alcove by establishing minimum volume criteria. Simply stated, if the room or space volume is less than the stated minimum volume, that room or space is considered to be a closet or alcove.

These volume criteria have traditionally been used to determine whether or not the required clearances to combustibles can be reduced by protection methods such as those found in Section 308 of the code. Fuel-fired appliances installed in small rooms or spaces can pose a potential fire hazard because of the heat emanating from the appliance and the inadequate ventilation afforded by the boundaries of small enclosures.

For appliances installed in closets or alcoves, the clearances stated in the listing (label) are necessary for ventilation cooling of the appliance and must not be reduced as provided for in Section 308 (see Section 308.2). Water heaters were added to the list of appliances that must be listed for installation in a closet or alcove. The concern for adequate room or space volume is no less important for a fuel-fired water heater than it is for fuel-fired furnaces or boilers.

303.6 Outdoor locations. Appliances installed in other than indoor locations shall be *listed* and *labeled* for outdoor installation.

❖ Appliances installed outdoors must be specifically listed for outdoor installation. If an appliance is not labeled for outdoor installation, it must not be installed outdoors because of the risk of malfunction and accelerated deterioration from weather and ambient temperatures. The manufacturer's instructions and listing must be consulted to determine whether a particular appliance is designed for or can be made suitable for outdoor installation. For example, furnaces cannot be installed outdoors in cold climates regardless of any weatherproof enclosure, unless the heat exchanger, burner assemblies and venting system are designed for exposure to temperatures below normal indoor temperatures. Cold ambient temperatures can cause harmful condensation to occur on heat exchanger surfaces of fuel-fired appliances.

Additionally, there may be other local ordinances that govern the outdoor installation of appliances. Before installing an appliance outdoors, consult local zoning regulations, ordinances and subdivision covenants. Many of these regulations strictly limit the location of outdoor mechanical equipment and appliances. Also, for roof installations, the roof structure must be shown to support all imposed static and dynamic structural loads. Substantiating data on the structural adequacy of the entire installation must be submitted and approved.

303.7 Pit locations. Appliances installed in pits or excavations shall not come in direct contact with the surrounding soil. The sides of the pit or excavation shall be held back not less than 12 inches (305 mm) from the *appliance*. Where the depth exceeds 12 inches (305 mm) below adjoining grade, the

INTERNATIONAL CODE COUNCIL®
Copyright © 2015 ICC. ALL RIGHTS RESERVED. Accessed by David Dammon on Jun 21, 2017 12:30:52 PM pursuant to License Agreement with ICC. No further reproduction or distribution authorized. ANY UNAUTHORIZED REPRODUCTION OR DISTRIBUTION IS A VIOLATION OF THE FEDERAL COPYRIGHT ACT AND THE LICENSE AGREEMENT, AND SUBJECT TO CIVIL AND CRIMINAL PENALTIES THEREUNDER.

walls of the pit or excavation shall be lined with concrete or masonry. Such concrete or masonry shall extend not less than 4 inches (102 mm) above adjoining grade and shall have sufficient lateral load-bearing capacity to resist collapse. The *appliance* shall be protected from flooding in an *approved* manner.

❖ Where installed in a depression, appliances could be damaged by corrosion or a malfunction could be caused by blockage of an opening caused by entry of soil. Because a depression could hold water, protection from flooding is also necessary.

[BF] 303.8 Elevator shafts. Mechanical systems shall not be located in an elevator shaft.

❖ The code views an elevator shaft as an unnecessarily, risky location for mechanical system components. There is a potential for leaks to occur in mechanical system equipment and piping that could release refrigerants, products of combustion, heat transfer fluids and other substances into the shaft, which could damage the elevator and harm its passengers. Because the elevator is often relied upon for fire-fighting access, as well as egress for those with disabilities, the shaft must be maintained free from contaminants and potential hazards that could render the elevator inoperative or unsafe for the occupants. The location of mechanical equipment in an elevator shaft could also create access problems for service of the mechanical equipment and the elevator equipment.

SECTION 304
INSTALLATION

304.1 General. *Equipment* and appliances shall be installed as required by the terms of their approval, in accordance with the conditions of the listing, the manufacturer's installation instructions and this code. Manufacturer's installation instructions shall be available on the job site at the time of inspection.

❖ Manufacturer's installation instructions are thoroughly evaluated by the listing agency, verifying that a safe installation is prescribed. The listing agency can require that the manufacturer alter, delete or add information to the instructions, as necessary, to achieve compliance with applicable standards and code requirements. Manufacturer's installation instructions are an enforceable extension of the code and must be in the hands of the code official when an inspection takes place. Without access to the instructions, the code official would be unable to complete an inspection.

When an appliance is tested to obtain a listing and label, the approved agency installs the appliance in accordance with the manufacturer's installation instructions. The appliance is tested under these conditions; thus, the installation instructions become an integral part of the labeling process (see Commentary Figure 304.1).

The listing and labeling process ensures that the appliance and its installation instructions are in compliance with applicable standards. Therefore, an installation in accordance with the manufacturer's instructions is required, except where the code requirements are more stringent. An inspector must carefully and completely read and comprehend the manufacturer's instructions to properly perform an installation inspection.

In some cases, the code will specifically address an installation requirement that is also addressed in the manufacturer's installation instructions. The code requirements may be the same or may exceed the requirements in the manufacturer's installation instructions or the manufacturer's installation instructions could contain requirements that exceed those in the code. In all cases, the more restrictive requirements would apply (see commentary, Section 304.2).

In addition to the installation requirements for the appliance or equipment itself, this section also regulates the connections to appliances and equipment by requiring compliance with other applicable sections of the code. These connections include, but are not limited to, fuel and electrical supplies; control wiring; hydronic piping; chimneys; vents and ductwork. Some overlap or coincidence of connection requirements may occur in the code and the manufacturer's installation instructions. Where differences or conflicts occur, the requirements that provide the greatest level of safety apply.

Even if an installation appears to be in compliance with the manufacturer's instructions, the installation cannot be complete or approved until all associated components, connections and systems that serve the appliance or equipment are also in compliance with the applicable provisions of the code. For example, an oil-fired boiler installation must not be approved if the boiler is connected to a deteriorated, undersized or otherwise unsafe chimney or vent. Likewise, the same installation must not be approved if the existing oil piping is in poor condition or if the electrical supply circuit is inadequate or unsafe.

In the case of replacement installations, the intent of this section is to require new work associated with the installation to comply with the code without necessarily requiring full compliance for the existing, unchanged portions of the related ductwork, piping, electrical, venting and similar mechanical systems. For example, if a furnace is replaced in an existing building, the new work and connections involved with the replacement would be treated as new construction and the existing unaltered system components would be considered as existing mechanical systems. Existing mechanical systems are accepted on the basis that they are free from hazard although not necessarily compliant with current codes. The code is not retroactive except where specifically stated that it applies to existing systems.

Manufacturer's installation instructions are often updated and changed for various reasons, such as

INTERNATIONAL CODE COUNCIL®
Copyright © 2015 ICC. ALL RIGHTS RESERVED. Accessed by David Dammon on Jun 21, 2017 12:30:52 PM pursuant to License Agreement with ICC. No further reproduction or distribution authorized. ANY UNAUTHORIZED REPRODUCTION OR DISTRIBUTION IS A VIOLATION OF THE FEDERAL COPYRIGHT ACT AND THE LICENSE AGREEMENT, AND SUBJECT TO CIVIL AND CRIMINAL PENALTIES THEREUNDER.

changes in the appliance or equipment design, revisions to the product standard and as a result of field experience related to existing installations. The code official should stay abreast of any changes by reviewing the manufacturer's instructions for every installation.

Equipment and appliances must be installed in accordance with the manufacturer's installation instructions. The manufacturer's label and installation instructions must be consulted in determining whether or not an appliance or piece of equipment can be installed and operated in a particular hazardous location. The manufacturer's installation instructions must be available on the job site when the equipment is being inspected.

304.2 Conflicts. Where conflicts between this code and the conditions of listing or the manufacturer's installation instructions occur, the provisions of this code shall apply.

Exception: Where a code provision is less restrictive than the conditions of the listing of the *equipment* or *appliance*

CONTENTS **PAGE**

INSTALLATION
General Installation Instructions 2
Inspection 3
Installation, Clearances and Support 3
Coil Enclosure Installation 4
Return Air — Upflow Models 4
Return Air — Downflow Models 5
Duct Connections 6
Electrical Connections 7
Gas Piping 7
Venting and Condensate Drain — (Pub. No. 18-CH15D3)
START-UP and ADJUSTMENTS
Preliminary Inspections 8
Sequence of Operations 8
Lighting Instructions 8
Combustion and Input Check 8
Burner Adjustments 10
High Altitude Adjustment 10
Control and Safety Switch Adjustments 10
OPERATING INFORMATION 11
MAINTENANCE 12
FIELD WIRING DIAGRAM 14

ACCESSORIES

If installing furnace on combustible floor, sub-base (BAYBASE201 or BAYBASE202) must be used depending on furnace width. Installation instructions are packed with the accessories. If a 30″ wide coil is to be used with a 24″ wide furnace, sub-base BAYBASE203 must be used.

In year-round air conditioning installations where the coil enclosure is used with the downflow furnace — a sub-base is not required beneath the coil enclosure on combustible flooring.

DUCT CONNECTIONS

Air duct systems should be installed in accordance with standards for air conditioning systems, National Fire Protection Association Pamphlet No. 90. They should be sized in accordance with ACCA Manual D or whichever is applicable. Check on controls to make certain they are correct for the electrical supply.

Central furnaces, when used with cooling units, shall be installed in parallel or on the upstream side of the cooling units to avoid condensation in the heating element. This applies unless the furnace has been specifically approved for downstream installation. With a parallel flow arrangement, the dampers or other means used to control air flow shall be adequate to prevent chilled air from entering the furnace. If manually operated, it must be equipped with a means to prevent operation of either unit unless the damper is in full heat or cool position.

The installer must make the plenum chamber at least 8 inches in depth and sufficiently wide to take the largest duct to be attached to it.

Though these units have been specifically designed for quiet, vibration free operation, air ducts can act as sounding boards. If poorly installed, air ducts can amplify the slightest vibration to the annoyance level. If this is the case, a flex connector of nonflammable material may be installed in the return and supply ducts.

Where the furnace is located adjacent to the living area, the system should be carefully designed with returns to minimize noise transmission through the return air grille. Although these winter air conditioners are designed with large blowers operating at moderate speeds, any blower moving a high volume of

Figure 304.1
EXCERPTS FROM TYPICAL MANUFACTURER'S INSTALLATION MANUALS
(Courtesy of Trane and American-Standard Company)

(continued)

INTERNATIONAL CODE COUNCIL®
Copyright © 2015 ICC. ALL RIGHTS RESERVED. Accessed by David Dammon on Jun 21, 2017 12:30:52 PM pursuant to License Agreement with ICC. No further reproduction or distribution authorized. ANY UNAUTHORIZED REPRODUCTION OR DISTRIBUTION IS A VIOLATION OF THE FEDERAL COPYRIGHT ACT AND THE LICENSE AGREEMENT, AND SUBJECT TO CIVIL AND CRIMINAL PENALTIES THEREUNDER.

or the manufacturer's installation instructions, the conditions of the listing and the manufacturer's installation instructions shall apply.

❖ Although very rare, there are some code provisions that intentionally differ or conflict with the manufacturer's installation instructions. For example, Section 903.3 places a restriction on unvented gas log heaters that may or may not agree with the manufacturer's instructions; however, this restriction is intentional and overrides the manufacturer's instructions.

Section 303.3 is another example of code text that intends to override any manufacturer's instructions to the contrary. It is not the intent of this section to cause the manufacturer's requirements that are more stringent or restrictive than the code to be ignored. In the context of this section, conflict refers to instances in which the code intends to require a greater level of safety.

The code official must evaluate each circumstance of perceived conflict and secure the requirements that provide the greatest protection of life and prop-

air will produce audible noise. This noise could be objectionable when unit is located very close to a living area. It is often advisable to carry the return air ducts under the floor or through the attic. Such design permits the installation of air return remote from the living area (i.e., central hall).

When furnace is installed so supply ducts carry air circulated by the furnace to areas outside the space containing the furnace, air shall also be handled by a duct(s) sealed to the furnace and terminating outside the space containing the furnace.

WHERE THERE IS NO COMPLETE RETURN DUCT SYSTEM, THE RETURN CONNECTION MUST BE RUN FULL SIZE FROM THE FURNACE TO A LOCATION OUTSIDE THE UTILITY ROOM, BASEMENT, ATTIC OR CRAWL SPACE.

IMPORTANT: Do not take return air through back of furnace cabinet.

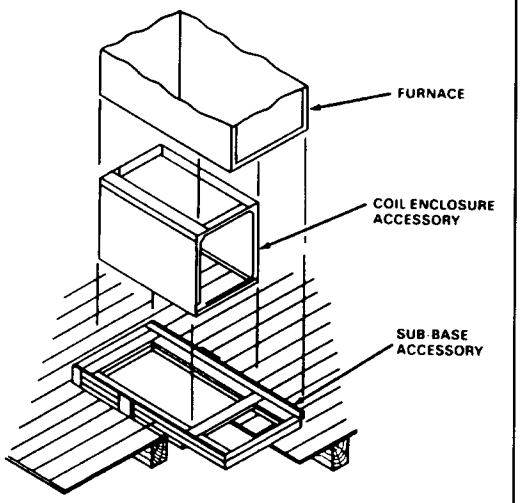

EXPLODED VIEW OR FURNACE, COIL ENCLOSURE & SUB-BASE

GENERAL INFORMATION NOTES

The TUX and TDX series central furnaces have been classified as Category IV furnaces in accordance with ANSI Z21.64-"latest edition" standards. Category IV furnaces operate with a positive vent pressure and with a vent gas temperature less than 140° F. above its dewpoint. These conditions require special venting systems, which must be gas tight and water tight. The special venting system requirements for these Gas Furnaces are outlined in INSTALLER'S GUIDE (Pub. No. 18-CH15D3), Venting and Condensate Drain Instructions.

GENERAL INSTALLATION INSTRUCTIONS

The manufacturer assumes no responsibility for equipment installed in violation of any code or regulation. The User's Information Manual will instruct you in the service and care of your unit. Have your installer go over the operational portion of that manual with you so you fully understand how your warm air furnace functions.

It is recommended that Manual J of the Air Conditioning Contractors Association (ACCA) or A.R.I. 230 be followed in estimating heating requirements. When estimating heating requirements for installation at altitudes above 2000 ft. remember the gas input must be reduced (See GAS INPUT ADJUSTMENT).

Locate the furnace as close to the flue as permissible and as centralized about the air distribution system as practical.

A gas-fired furnace for installation in a residential garage must be installed so the burner(s) and the ignition source are located not less than 18 inches above the floor. The furnace must be located or protected to avoid physical damage by vehicles.

Consider all clearances that are required:

A. Clearance from combustible materials and for service accessibility (See INSTALLATION CLEARANCES).

B. Clearance for attaching duct work (See DUCT CONNECTIONS).

C. Clearance for proper installation of venting and for running condensate drain to the floor drain (See VENTING AND CONDENSATE DRAIN INSTRUCTIONS, Pub. No. 18-CH15D3).

D. Clearances for any external filter racks or sub-bases to be used.

E. Clearances for gas piping (See GAS PIPING).

The installation must conform with local gas company regulations, national and local electrical codes, local building, plumbing codes.

Figure 304.1—continued
EXCERPTS FROM TYPICAL MANUFACTURER'S INSTALLATION MANUALS
(Courtesy of Trane and American-Standard Company)

INTERNATIONAL CODE COUNCIL®
Copyright © 2015 ICC. ALL RIGHTS RESERVED. Accessed by David Dammon on Jun 21, 2017 12:30:52 PM pursuant to License Agreement with ICC. No further reproduction or distribution authorized. ANY UNAUTHORIZED REPRODUCTION OR DISTRIBUTION IS A VIOLATION OF THE FEDERAL COPYRIGHT ACT AND THE LICENSE AGREEMENT, AND SUBJECT TO CIVIL AND CRIMINAL PENALTIES THEREUNDER.

erty. At the time of this publication, there are no known instances where the code would require something less stringent than the manufacturer's installation instructions, and this is extremely unlikely to occur in any case. The exception recognizes that the code depends on the listing/labeling process and the manufacturer's instructions for the majority of installation requirements for mechanical equipment and appliances. The conditions of the listing cannot be violated so that a lesser degree of safety would occur.

304.3 Elevation of ignition source. Equipment and appliances having an *ignition source* and located in hazardous locations and public garages, private garages, repair garages, automotive motor fuel-dispensing facilities and parking garages shall be elevated such that the source of ignition is not less than 18 inches (457 mm) above the floor surface on which the *equipment* or *appliance* rests. For the purpose of this section, rooms or spaces that are not part of the living space of a *dwelling unit* and that communicate directly with a private garage through openings shall be considered to be part of the private garage.

Exception: Elevation of the ignition source is not required for appliances that are listed as flammable vapor ignition resistant.

❖ To reduce the fire/explosion hazard in hazardous areas, the potential sources of ignition must be elevated above the surface supporting the equipment or appliance. It is not the intent to measure the elevation from the surface of a dedicated appliance stand or other structure built to support the appliance where that stand or structure does not afford room for the storage of flammable liquids. Some flammable and combustible liquids typically associated with hazardous locations give off vapors that are more dense than air and tend to collect near the floor. The 18-inch (457 mm) height requirement is intended to reduce the possibility of fire or explosion by keeping ignition sources elevated above the anticipated level of accumulated vapors. The 18-inch (457 mm) value is a minimum requirement and must be increased when required by the manufacturer's installation instructions. This section will effectively prohibit the installation of most furnaces, boilers, space heaters, clothes dryers and water heaters directly on the floor of residential garages and other occupancies where flammable or combustible vapors may be present.

The accumulation of flammable vapors more than 18 inches (457 mm) deep is unlikely in most ventilated locations; therefore, maintaining all possible sources of ignition at least 18 inches (457 mm) above the floor will substantially reduce the risk of explosion and fire (see Commentary Figure 304.3).

In the context of this section, a source of ignition could be a pilot flame, burner, burner igniter or electrical component capable of producing a spark. The term "ignition source" is defined and can be interpreted as meaning an intentional source of ignition such as for a burner, or an unintentional source of ignition for any flammable vapors that may be present (see the definition of "Ignition source").

An appliance installed in a closet or room that is accessible only from the garage must be considered as part of the garage for application of this section. Even though the room may be separated from the garage by walls and a door, there is no practical means of making the door vapor tight or any assurance that the door will remain closed during normal use. An appliance room that is accessed only from the outdoors or from the living space would not be considered as part of the garage. Rooms such as utility rooms or laundry rooms that communicate both with the garage and the living space are considered as part of the living space and not part of the garage (see the definition of "Living space").

The exception acknowledges and allows the installation of appliances that are flammable vapor ignition resistant (FVIR) without elevation above the garage floor. FVIR-type appliances are designed to not ignite flammable vapors outside of the appliance combustion chamber. Oil, solid-fuel and electric FVIR appliances are not known by the author to exist.

304.3.1 Parking garages. Connection of a parking garage with any room in which there is a fuel-fired *appliance* shall be by means of a vestibule providing a two-doorway separation, except that a single door is permitted where the sources

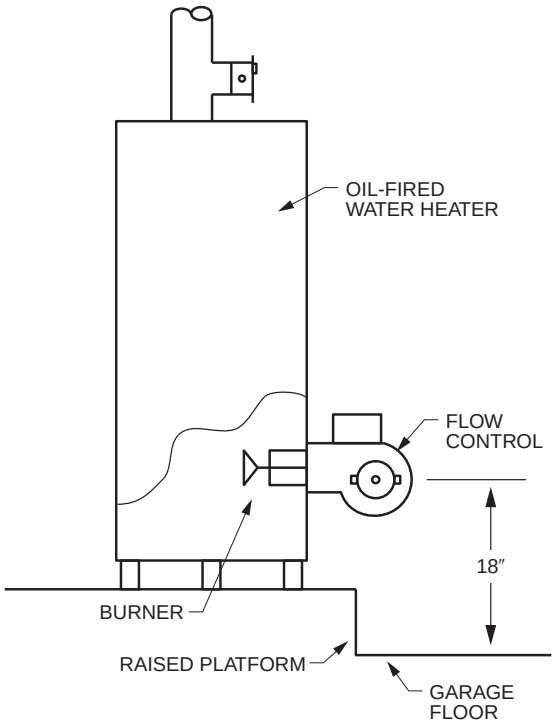

For SI: 1 inch = 25.4 mm.

Figure 304.3
OIL-FIRED WATER HEATER INSTALLATION IN A HAZARDOUS LOCATION

INTERNATIONAL CODE COUNCIL®
Copyright © 2015 ICC. ALL RIGHTS RESERVED. Accessed by David Dammon on Jun 21, 2017 12:30:52 PM pursuant to License Agreement with ICC. No further reproduction or distribution authorized. ANY UNAUTHORIZED REPRODUCTION OR DISTRIBUTION IS A VIOLATION OF THE FEDERAL COPYRIGHT ACT AND THE LICENSE AGREEMENT, AND SUBJECT TO CIVIL AND CRIMINAL PENALTIES THEREUNDER.

of ignition in the *appliance* are elevated in accordance with Section 304.3.

Exception: This section shall not apply to *appliance* installations complying with Section 304.6.

❖ In order to minimize the possibility of any spilled flammable liquids and the resulting vapors from coming in contact with the ignition source of a fuel-fired appliance in a parking garage, such equipment must be separated from the areas where the vehicles are parked. Doors connecting the equipment rooms and the main parking area must be arranged with a vestibule or air-lock so that one must pass through two doors prior to entering the other room. An allowance is made where the appliance is elevated at least 18 inches (457 mm) above the floor of the equipment room in accordance with Section 304.3. In such cases, a single door can separate the spaces. If this allowance is used, care must be taken by the code and fire officials that these special stipulations are part of the certificate of occupancy.

The exception recognizes that appliances installed at least 8 feet (2438 mm) above the floor in accordance with Section 304.6 would require neither a two-doorway separation nor, obviously, the 18-inch (457 mm) elevation.

304.4 Prohibited equipment and appliance location. Equipment and appliances having an *ignition source* shall not be installed in Group H occupancies or control areas where open use, handling or dispensing of combustible, flammable or explosive materials occurs.

❖ The installation of appliances and equipment having an ignition source within Group H occupancies or control areas where combustible, flammable or explosive materials are used, handled or dispensed is prohibited regardless of elevation of the ignition source. These requirements were previously included in Section 304.3. Because of the importance of not placing ignition sources in Group H occupancies, and because it was a distinct requirement, this requirement was placed in this independent section.

[FG] 304.5 Hydrogen-generating and refueling operations. Hydrogen-generating and refueling appliances shall be installed and located in accordance with their listing and the manufacturer's instructions. Ventilation shall be required in accordance with Section 304.5.1, 304.5.2 or 304.5.3 in public garages, private garages, repair garages, automotive motor fuel-dispensing facilities and parking garages that contain hydrogen-generating appliances or refueling systems. For the purpose of this section, rooms or spaces that are not part of the living space of a *dwelling unit* and that communicate directly with a private garage through openings shall be considered to be part of the private garage.

❖ The use of hydrogen to fuel vehicles and generate electricity in fuel cell appliances to replace petroleum-based fuels is a rapidly developing technology. Key factors in the increased use of hydrogen are the reduced atmospheric emissions associated with hydrogen and the nation's shift to renewable sources of energy.

Typically, the code official will encounter two classes of equipment—those that generate hydrogen for use by other equipment, such as vehicles, and those that use hydrogen as their energy input, such as fuel cell appliances (see commentary, Section 924.1).

The equipment must be located and installed in accordance with the listing of the equipment and the manufacturer's instructions.

This section intends to minimize the potential for explosions by limiting the source of hydrogen gas and by requiring sufficient ventilation to dissipate any leakage.

[FG] 304.5.1 Natural ventilation. Indoor locations intended for hydrogen-generating or refueling operations shall be limited to a maximum floor area of 850 square feet (79 m^2) and shall communicate with the outdoors in accordance with Sections 304.5.1.1 and 304.5.1.2. The maximum rated output capacity of hydrogen-generating appliances shall not exceed 4 standard cubic feet per minute (0.00189 m^3/s) of hydrogen for each 250 square feet (23.2 m^2) of floor area in such spaces. The minimum cross-sectional dimension of air openings shall be 3 inches (76 mm). Where ducts are used, they shall be of the same cross-sectional area as the free area of the openings to which they connect. In such locations, *equipment* and appliances having an *ignition source* shall be located such that the source of ignition is not within 12 inches (305 mm) of the ceiling.

❖ The 850-square-foot (79 m^2) maximum floor space used for hydrogen generation or refueling and the maximum rated output capacity of such appliances are intended to limit the amount of hydrogen gas that can accumulate in the space, thus minimizing the potential for explosions.

The location of an ignition source parallels the intent of Section 304.3, but with respect to the ceiling instead of the floor. This section does not apply to spaces that only house vehicles and that do not contain hydrogen-generating or refueling operations. Because it is more buoyant, hydrogen will dissipate more quickly than natural gas, and much more quickly than either propane or gasoline, both of which have vapors that are heavier than air and will linger at an accident site. However, hydrogen and natural gas can both accumulate in unventilated pockets at the top of indoor structures and could represent a risk in such situations.

Similarly, gasoline fumes can accumulate at the floor level in unventilated spaces, posing a different risk. Thus, ignition sources must be avoided at the top of any unventilated spaces for hydrogen gas. Also, hydrogen is odorless, colorless and burns with a flame that is not generally visible to the human eye. This means that it is unlikely that people will be able to detect unsafe conditions without appropriate instrumentation. This is similar to a situation where carbon monoxide (CO) accumulates in a structure.

INTERNATIONAL CODE COUNCIL®
Copyright © 2015 ICC. ALL RIGHTS RESERVED. Accessed by David Dammon on Jun 21, 2017 12:30:52 PM pursuant to License Agreement with ICC. No further reproduction or distribution authorized. ANY UNAUTHORIZED REPRODUCTION OR DISTRIBUTION IS A VIOLATION OF THE FEDERAL COPYRIGHT ACT AND THE LICENSE AGREEMENT, AND SUBJECT TO CIVIL AND CRIMINAL PENALTIES THEREUNDER.

[FG] 304.5.1.1 Two openings. Two permanent openings shall be provided within the garage. The upper opening shall be located entirely within 12 inches (305 mm) of the ceiling of the garage. The lower opening shall be located entirely within 12 inches (305 mm) of the floor of the garage. Both openings shall be provided in the same exterior wall. The openings shall communicate directly with the outdoors and shall have a minimum free area of $^1/_2$ square foot per 1,000 cubic feet (1 m^2/610 m^3) of garage volume.

❖ The location requirement will prevent the openings from being more than 12 inches (305 mm) tall because the required openings must be entirely within the 12 inches (305 mm) of wall space measured down from the ceiling and up from the floor (see Commentary Figure 304.5.1.1). The openings must be in the same wall to help create a gravity flow of gases driven by the natural buoyancy of hydrogen gas. The bottom opening is an air inlet and the top is an air outlet.

[FG] 304.5.1.2 Louvers and grilles. In calculating free area required by Section 304.5.1, the required size of openings shall be based on the net free area of each opening. If the free area through a design of louver or grille is known, it shall be used in calculating the size opening required to provide the free area specified. If the design and free area are not known, it shall be assumed that wood louvers will have 25 percent free area and metal louvers and grilles will have 75 percent free area. Louvers and grilles shall be fixed in the open position.

❖ This section recognizes that louvers and grilles are usually installed over air inlets and outlets to prevent rain, snow and animals from entering the building. When louvers or grilles are used, the solid portion of the louver or grille must be considered when determining the unobstructed (net clear) area of the opening.

Air openings are sized based on there being a free, unobstructed area for the passage of air into the space. Louvers or grilles placed over these openings reduce the area of the openings because of the area occupied by the solid portions of the grille or louver. The reduction in area must be considered because only the unobstructed area can be credited toward the required opening size.

The reduction in opening area caused by the presence of grilles or louvers will always require openings to be larger than determined from the sizing ratios of this chapter and larger than any duct of the minimum required size that might connect to these openings.

[FG] 304.5.2 Mechanical ventilation. Indoor locations intended for hydrogen-generating or refueling operations shall be ventilated in accordance with Section 502.16. In such locations, *equipment* and appliances having an *ignition source* shall be located such that the source of ignition is below the mechanical ventilation outlet(s).

❖ Section 502.16 contains criteria for the design and operation of a mechanical ventilation system in repair garages for natural-gas and hydrogen-fueled vehicles. This section makes Section 502.16 applicable to indoor spaces containing hydrogen-generating and/or refueling operations. Although Section 502.16 does not specify that the outlet must be within 12 inches (305 mm) of the ceiling, as is required for natural ventilation, it does require the opening to be located at the high point of the space. This section requires that any ignition source must be located below the

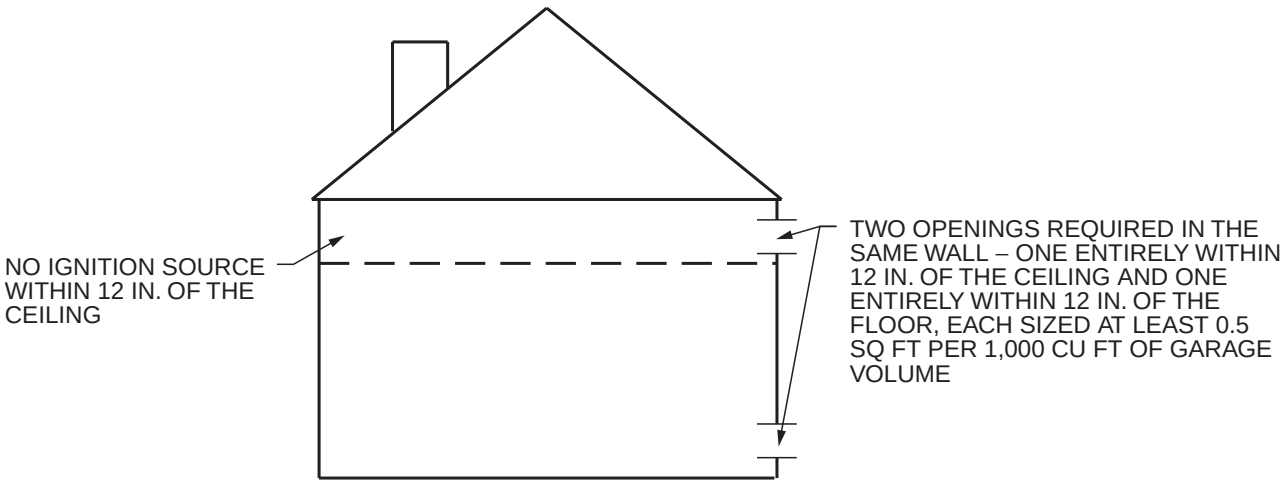

For SI: 1 inch = 25.4 mm, 1 square foot = 0.0929 m^2, 1 cubic foot = 0.02832 m^3.

Figure 304.5.1.1
NATURAL VENTILATION OF SPACES CONTAINING HYDROGEN-GENERATING APPLIANCES

INTERNATIONAL CODE COUNCIL®
Copyright © 2015 ICC. ALL RIGHTS RESERVED. Accessed by David Dammon on Jun 21, 2017 12:30:52 PM pursuant to License Agreement with ICC. No further reproduction or distribution authorized. ANY UNAUTHORIZED REPRODUCTION OR DISTRIBUTION IS A VIOLATION OF THE FEDERAL COPYRIGHT ACT AND THE LICENSE AGREEMENT, AND SUBJECT TO CIVIL AND CRIMINAL PENALTIES THEREUNDER.

mechanical exhaust outlet opening. It also does not require the ignition source to be located more than 12 inches (305 mm) below the ceiling as is required for natural ventilation.

[FG] 304.5.3 Specially engineered installations. As an alternative to the provisions of Sections 304.5.1 and 304.5.2, the necessary supply of air for ventilation and dilution of flammable gases shall be provided by an *approved* engineered system.

❖ The code is not intended to inhibit innovative ideas or technological advances. A comprehensive regulatory document, such as a mechanical code, cannot envision and then address all future innovations in the industry. As a result, a performance code must be applicable to and provide a basis for the approval of an increasing number of newly developed, innovative materials, systems and methods for which no code text or referenced standards yet exist. The fact that a material, product or method of construction is not addressed in the code is not an indication that prohibition of the material, product or method is intended. The code official is expected to apply sound technical judgment in accepting materials, systems or methods that, while not anticipated by the drafters of the current code text, can be demonstrated to offer equivalent performance. By virtue of its text, the code regulates new and innovative construction practices while addressing the relative safety of building occupants. The code official is responsible for determining whether a requested alternative provides a level of protection of the public health, safety and welfare as required by the code.

304.6 Public garages. Appliances located in public garages, motor fueling-dispensing facilities, repair garages or other areas frequented by motor vehicles, shall be installed not less than 8 feet (2438 mm) above the floor. Where motor vehicles are capable of passing under an *appliance*, the *appliance* shall be installed at the clearances required by the *appliance* manufacturer and not less than 1 foot (305 mm) higher than the tallest vehicle garage door opening.

Exception: The requirements of this section shall not apply where the appliances are protected from motor vehicle impact and installed in accordance with Section 304.3 and NFPA 30A.

❖ Appliances located within building areas where the general public—including employees—operate, repair or fuel motor vehicles must be installed in a manner that provides protection from vehicle impact and limits the possibility of the equipment becoming an ignition source for any flammable/explosive vapors which could collect near the floor. Appliance protection is necessary because the resulting damage from vehicle impact could cause an explosion or fire.

The requirement that appliances be located a minimum of 8 feet (2438 mm) above the floor is intended to provide sufficient clearance for motor vehicles to pass under the appliance without impact. Although 8 feet (2438 mm) is the minimum height requirement, a clearance of at least 1 foot (305 mm) must always be maintained between the top of the highest vehicle entry opening and the bottom of any appliance that is installed where vehicles can pass underneath [see Commentary Figure 304.6(1)]. If the tallest vehicle entry opening is 7 feet (2134 mm) or less in height, the height requirement of 8 feet (2438 mm) will result in a clearance of at least 1 foot (305 mm). If the tallest vehicle entry opening is greater than 7 feet (2134

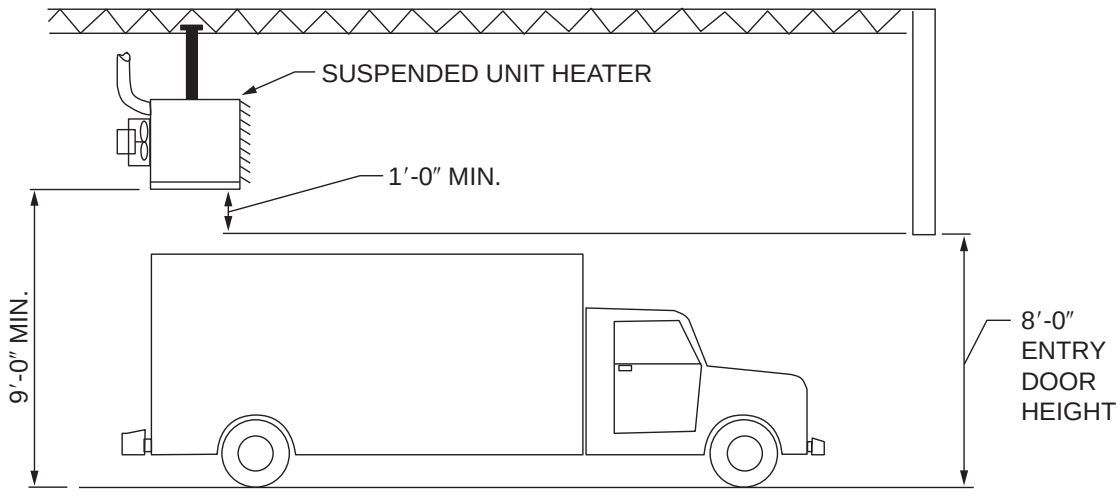

For SI: 1 inch = 25.4 mm, 1 foot = 304.8 mm.

Figure 304.6(1)
APPLIANCE INSTALLATION IN A PUBLIC GARAGE

INTERNATIONAL CODE COUNCIL®
Copyright © 2015 ICC. ALL RIGHTS RESERVED. Accessed by David Dammon on Jun 21, 2017 12:30:52 PM pursuant to License Agreement with ICC. No further reproduction or distribution authorized. ANY UNAUTHORIZED REPRODUCTION OR DISTRIBUTION IS A VIOLATION OF THE FEDERAL COPYRIGHT ACT AND THE LICENSE AGREEMENT, AND SUBJECT TO CIVIL AND CRIMINAL PENALTIES THEREUNDER.

mm) in height, the minimum installation height requirement must be increased to provide a clearance of not less than 1 foot (305 mm). In buildings such as warehouses, where forklifts or other similar elevating vehicles are used, consideration should also be given to the potential for impact from such vehicles. In vehicle repair garages where vehicles are put on lifts, suspended appliances should not be located over the lift area unless the bottom of the suspended heater is higher than the tallest vehicle that could enter the garage plus the highest lift position above the floor. Although this section does not specifically discuss the elevation of suspended appliances over lifts, it would be prudent to add 1 foot (305 mm) to the highest elevation of the vehicle on the lift to ensure a reasonable allowance for construction tolerances.

Except for suspended unit heaters, elevating of appliances above motor vehicles is often impractical, difficult to accomplish, and creates access problems. As such, the exception in this section allows appliances to not be elevated, provided that the appliances are installed in accordance with Section 304.3, protected from vehicle impact and where repair garages or fuel-dispensing facilities are concerned, in accordance with NFPA 30A. NFPA 30A introduces additional criteria and stipulations for nonresidential structures, such as separation and protection of heating appliances. For some applications, NFPA 30A requires continuous mechanical ventilation and could prohibit any operations involving the dispensing or transferring of Class I or II flammable and combustible liquids or liquefied petroleum gas (LP-gas). Even though this section has the exception for nonelevation of appliances, the requirements of NFPA 30A could still require appliance elevation under certain circumstances.

Where appliances are not elevated, the code does not specify how an appliance must be protected from vehicle impact. The most apparent method would be to locate the appliance where it could not reasonably be struck by a vehicle. Another method of protection would be to place one or more barriers in the path of vehicle travel. Commentary Figure 304.6(2) illustrates several methods that could be used to provide a degree of protection for appliances in the path of vehicular travel. The barriers shown in the commentary figure will not eliminate all possibility of a motor vehicle contacting the appliances but will offer a reasonable warning to a driver who is slowly navigating near the appliances. Obviously, if the motor vehicle is narrow enough (e.g., a motorcycle) or a vehicle is traveling at significant speed, such barriers will offer little protection for the appliances. The space required to service, repair and replace an appliance must be taken into account when considering the location and type of barriers. Section 306.1 has requirements for working space in front of the appliance and prohibits the removal of permanent construction (e.g., a pipe embedded in concrete) for service, repair or replacement of the appliance. While a wheel barrier could be located so that the front end of nearly all types of motor vehicles would not contact the appliance, the backing in of a motor vehicle might require the wheel barrier to be located much further away from the appliance. A wheel barrier could also be a pedestrian trip hazard if located in an intended walkway. Where large motor vehicles such as busses and semi-tractor vehicles will be maneuvered near appliances and equipment to be protected, consideration should be given to the size and strength of barriers provided. For example, while the operator of a passenger car will probably be adequately warned by a standard sized concrete wheel barrier or a 3-foot (914 mm) tall, 2-inch (51mm) pipe bollard, operators of larger vehicles might not see such obstructions much less notice impacting such small barriers. Although this section does not specifically require the impact protection provided to stop any type of vehicle at any speed, the intent is for the impact protection to cause the driver to want to stop vehicle movement out of concern for damage that could be occurring. The choice of the type, structural capacity and the location of barriers is the responsibility of the designer.

304.7 Private garages. Appliances located in private garages and carports shall be installed with a minimum clearance of 6 feet (1829 mm) above the floor.

Exception: The requirements of this section shall not apply where the appliances are protected from motor vehicle impact and installed in accordance with Section 304.3.

❖ Appliances located in a private garage or carport must be protected from vehicle impact. This section is applicable to appliances located in an area where motor vehicles can be operated, and includes appliances under which a vehicle can pass and those located anywhere in a vehicle's path where impact is possible. The 6-foot (1829 mm) minimum height requirement is intended to provide adequate clearance above the typical automobile (see Commentary Figure 304.7). With the popularity of conversion vans and recreational vehicles that can be much higher than other automobiles, the 6-foot (1829 mm) minimum installation height above the floor may not provide adequate clearance; additional height might be necessary. The height of the vehicle entry opening of the garage or carport can be used as a guide in determining how tall of a vehicle could be driven into the garage or carport.

INTERNATIONAL CODE COUNCIL®
Copyright © 2015 ICC. ALL RIGHTS RESERVED. Accessed by David Dammon on Jun 21, 2017 12:30:52 PM pursuant to License Agreement with ICC. No further reproduction or distribution authorized. ANY UNAUTHORIZED REPRODUCTION OR DISTRIBUTION IS A VIOLATION OF THE FEDERAL COPYRIGHT ACT AND THE LICENSE AGREEMENT, AND SUBJECT TO CIVIL AND CRIMINAL PENALTIES THEREUNDER.

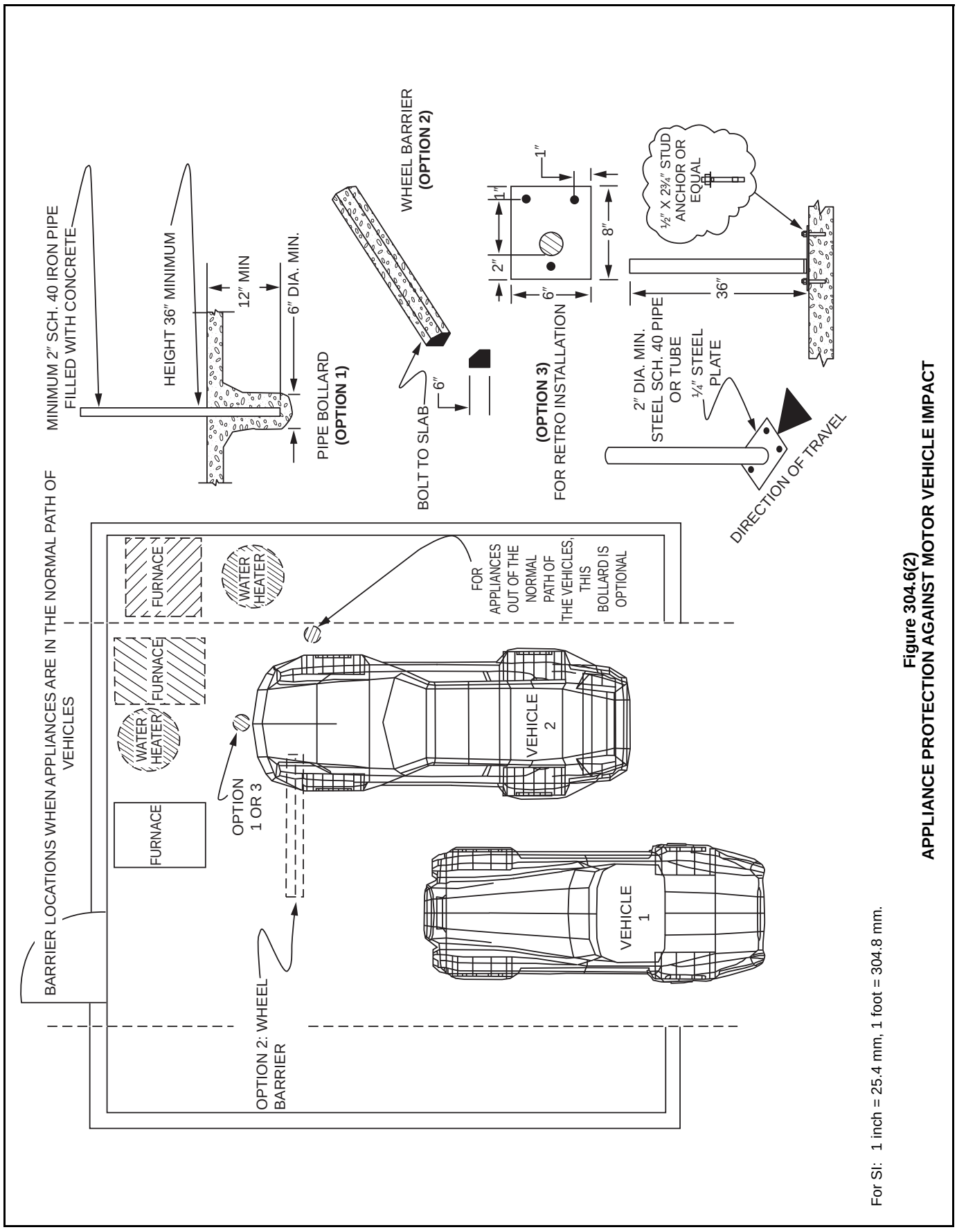

For SI: 1 inch = 25.4 mm, 1 foot = 304.8 mm.

Figure 304.6(2)
APPLIANCE PROTECTION AGAINST MOTOR VEHICLE IMPACT

INTERNATIONAL CODE COUNCIL®
Copyright © 2015 ICC. ALL RIGHTS RESERVED. Accessed by David Dammon on Jun 21, 2017 12:30:52 PM pursuant to License Agreement with ICC. No further reproduction or distribution authorized. ANY UNAUTHORIZED REPRODUCTION OR DISTRIBUTION IS A VIOLATION OF THE FEDERAL COPYRIGHT ACT AND THE LICENSE AGREEMENT, AND SUBJECT TO CIVIL AND CRIMINAL PENALTIES THEREUNDER.

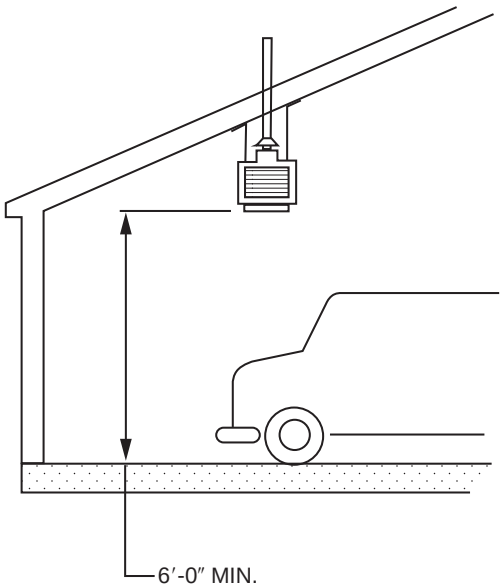

For SI: 1 inch = 25.4 mm, 1 foot = 304.8 mm.

Figure 304.7
SUSPENDED APPLIANCE IN RESIDENTIAL GARAGE

304.8 Construction and protection. Boiler rooms and furnace rooms shall be protected as required by the *International Building Code.*

❖ A "Boiler room" is defined as a room primarily used for the installation of a boiler. A "Furnace room" is defined as a room primarily used for the installation of fuel-fired space heating and water heating appliances other than boilers. Even though the code defines these terms, it is not the intent to require fuel-burning appliances to be enclosed or installed in rooms used primarily for that purpose. A room housing a boiler or a furnace does not necessarily constitute a boiler or furnace room. The key to whether or not a room is a boiler or furnace room can be found in the definitions of these terms. Both definitions state that the room is primarily used for the installation of these appliances. When the room or space is large in comparison to the space occupied by the appliance and has other uses besides housing the boiler, water heater or furnace, it should not be considered as a boiler or furnace room. For example, a boiler or furnace can be installed in a finished basement recreation room without being enclosed and separated from the living space. The basement in which the appliance is located would not be considered a boiler or furnace room. Similarly, an appliance located in an attic space would not cause the attic to be considered a furnace room.

When a boiler or furnace is installed in a room that is used primarily for housing the boiler or furnace, the resulting boiler or furnace room is regulated by the IBC. Depending on the size of the appliances therein, Table 509 of the IBC requires such rooms to either be enclosed with fire-resistance-rated separation assemblies or protected with an automatic fire-extinguishing system.

Either separation or protection is required because a boiler, furnace or similar fuel-fired appliance installed in an enclosed space is considered to be a greater hazard than if the appliance or equipment were out in the open and unenclosed. This is based on the fact that furnace or boiler rooms are very often used for unapproved storage and a fire hazard is created by combustible materials stored close to fuel-fired appliances. A small enclosed space typically invites the storage of combustibles and, because of the nature of the typical storage, it is difficult, if not impossible, to maintain the required clearances from the heat-producing appliance. It is not uncommon to find highly combustible materials such as paper, cardboard, rags, cleaning chemicals and similar materials placed directly against vent or chimney connectors, draft hoods, combustion chambers and other components having a required minimum clearance to combustibles.

304.9 Clearances to combustible construction. Heat-producing *equipment* and *appliances* shall be installed to maintain the required *clearances* to combustible construction as specified in the listing and manufacturer's instructions. Such clearances shall be reduced only in accordance with Section 308. *Clearances* to combustibles shall include such considerations as door swing, drawer pull, overhead projections or shelving and window swing, shutters, coverings and drapes. Devices such as doorstops or limits, closers, drapery ties or guards shall not be used to provide the required *clearances.*

❖ Requirements for clearances to combustibles are emphasized because of the potential fire hazard posed when those clearances are not observed. Maintaining an appropriate distance from the outer surfaces of an appliance or piece of equipment to combustible materials reduces the possibility of ignition of combustible materials.

The minimum clearances to combustibles are specified in the manufacturer's installation instructions for a labeled appliance. Because an approved agency tests appliances in accordance with these instructions, the clearances required are necessary for correct installation and operation of the appliance.

Reduction of the required clearances to combustibles is allowed only when the combustibles are protected by one of the methods outlined in Section 308 and clearance reduction is not prohibited by Section 308 or the appliance and equipment listing (see commentary, Section 308). Note that the manufacturer's specified minimum clearances and the clearances specified in Section 308 are all airspace clearances, and those spaces cannot be filled with insulation or any other material, even if the material is noncombustible. In some cases, the manufacturer's installation instructions will specify absolute minimum clearances that may not be reduced by any clearance reduction method.

The most common wall covering material—gypsum wallboard—is a combustible finish material for the

INTERNATIONAL CODE COUNCIL®
Copyright © 2015 ICC. ALL RIGHTS RESERVED. Accessed by David Dammon on Jun 21, 2017 12:30:52 PM pursuant to License Agreement with ICC. No further reproduction or distribution authorized. ANY UNAUTHORIZED REPRODUCTION OR DISTRIBUTION IS A VIOLATION OF THE FEDERAL COPYRIGHT ACT AND THE LICENSE AGREEMENT, AND SUBJECT TO CIVIL AND CRIMINAL PENALTIES THEREUNDER.

purpose of the code. As a result, gypsum wallboard as well as all other combustible wall finishes must be separated from an appliance or equipment in compliance with the prescribed clearance to combustibles (see Section 507.9 for an exception specific to gypsum wallboard). Clearances to combustibles also apply to furnishings, window treatments and moveable items that can be placed within the required clearance range of appliances and equipment.

304.10 Clearances from grade. Equipment and *appliances* installed at grade level shall be supported on a level concrete slab or other *approved* material extending not less than 3 inches (76 mm) above adjoining grade or shall be suspended not less than 6 inches (152 mm) above adjoining grade. Such support shall be in accordance with the manufacturer's installation instructions.

❖ For support and protection from physical damage and contact with soil or water for appliances and equipment installed at grade level indoors or outdoors, the appliances and equipment must be supported on a level concrete slab or other material accepted by the code official, or must be suspended above exposed earth. These slabs must rise at least 3 inches (76 mm) above the surrounding earth. Premanufactured "pads" or support devices could have special requirements for support or connections to support structures. The manufacturer's instructions must be followed.

[BE] 304.11 Guards. Guards shall be provided where various components that require service and roof hatch openings are located within 10 feet (3048 mm) of a roof edge or open side of a walking surface and such edge or open side is located more than 30 inches (762 mm) above the floor, roof, or grade below. The guard shall extend not less than 30 inches (762 mm) beyond each end of components that require service. The top of the guard shall be located not less than 42 inches (1067 mm) above the elevated surface adjacent to the guard. The guard shall be constructed so as to prevent the passage of a 21-inch-diameter (533 mm) sphere and shall comply with the loading requirements for guards specified in the *International Building Code*.

Exception: Guards are not required where permanent fall arrest/restraint anchorage connector devices that comply with ANSI/ASSE Z 359.1 are affixed for use during the entire lifetime of the roof covering. The devices shall be re-evaluated for possible replacement when the entire roof covering is replaced. The devices shall be placed not more than 10 feet (3048 mm) on center along hip and ridge lines and placed not less than 10 feet (3048 mm) from roof edges and the open sides of walking surfaces.

❖ Mechanical equipment and appliances require routine inspection, maintenance and repair. Where the units requiring service or the roof hatch openings are located within 10 feet (3048 mm) of a roof edge or open side with a drop greater than 30 inches (762 mm), a possibility exists for the service person or inspector to be injured by a fall. Appliances installed on roofs are occasionally accessed during inclement weather, emergency situations and darkness. The requirements of this section are intended to protect personnel from the hazard of falls during all conditions. This section pertains to mechanical equipment and appliances, exhaust fans and system components regulated by the code that require routine inspection, maintenance and repair.

The guard serves as a warning and as a protective barrier, and must be 42 inches (1067 mm) high and constructed to prevent the passage of a 21-inch (533 mm) sphere [see Commentary Figure 304.11(1)]. The requirement for the guard to extend 30 inches (7625 mm) beyond each end of the equipment and appliances provides added protection for the installer or service technician by enlarging the protected area beyond the immediate area of the equipment or appliance. The guardrail must be constructed to resist the imposed loading conditions. It should be noted that the guard requirement applies to roof hatch openings and not doors that open to the roof.

Guards are not required on roofs where anchorage-connector devices are installed at specified intervals and locations that allow service personnel to use safety harnesses and lines as part of a fall-arresting system [see Commentary Figure 304.11(2)]. The new exception is aimed at sloped roofs where such safety systems are typically utilized, but would apply to flat roofs as well, even though there would be no ridge and hip lines. Restraint systems have limited application for flat roofs, where mechanical appliances and equipment are typically located, because of the impracticality of workers navigating around rooftop heating, ventilation and air conditioning (HVAC) units while tethered to anchorage points. Where appliances and mechanical equipment that require service are installed on roof surfaces with a slope of 3 in 12 and greater, Section 306.5.1 of the IMC requires that service platforms with guards be provided, without exception; thus, the new exception is applicable to roofs having a slope of less than 3 in 12 (25-percent slope).

Questions occasionally arise about this section relative to photovoltaic collectors on roofs, however, photovoltaic collectors are electrical components that do not fall within the scope of the IMC. Note that Section 605 of the IFC contains requirements relative to such collectors on roofs.

304.12 Area served. Appliances serving different areas of a building other than where they are installed shall be permanently marked in an *approved* manner that uniquely identifies the *appliance* and the area it serves.

❖ In the event of an emergency or the need for repair or servicing, the area served by the appliances must be easily identifiable. The need for identification is apparent, for example, when a service person looks across the flat roof of a large expansive building and sees a "sea" of rooftop units, each serving some unknown space or tenant below.

INTERNATIONAL CODE COUNCIL®
Copyright © 2015 ICC. ALL RIGHTS RESERVED. Accessed by David Dammon on Jun 21, 2017 12:30:52 PM pursuant to License Agreement with ICC. No further reproduction or distribution authorized. ANY UNAUTHORIZED REPRODUCTION OR DISTRIBUTION IS A VIOLATION OF THE FEDERAL COPYRIGHT ACT AND THE LICENSE AGREEMENT, AND SUBJECT TO CIVIL AND CRIMINAL PENALTIES THEREUNDER.

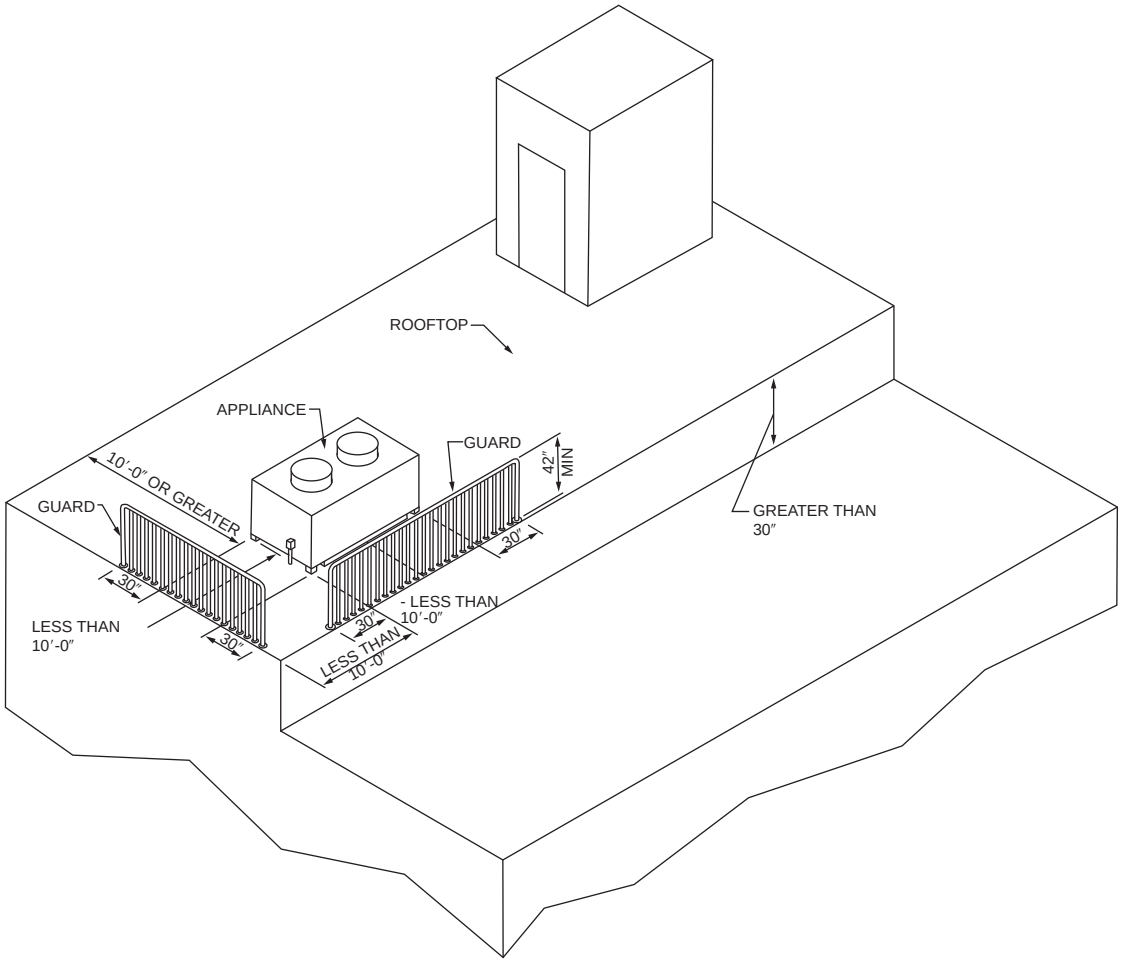

For SI: 1 inch = 25.4 mm, 1 foot = 304.8 mm.

Figure 304.11(1)
GUARD REQUIREMENTS



For SI: 1 inch = 25.4 mm, 1 foot = 304.8 mm.

Figure 304.11(2)
FALL ARREST/RESTRAINT DEVICE

INTERNATIONAL CODE COUNCIL®
Copyright © 2015 ICC. ALL RIGHTS RESERVED. Accessed by David Dammon on Jun 21, 2017 12:30:52 PM pursuant to License Agreement with ICC. No further reproduction or distribution authorized. ANY UNAUTHORIZED REPRODUCTION OR DISTRIBUTION IS A VIOLATION OF THE FEDERAL COPYRIGHT ACT AND THE LICENSE AGREEMENT, AND SUBJECT TO CIVIL AND CRIMINAL PENALTIES THEREUNDER.

SECTION 305
PIPING SUPPORT

305.1 General. Mechanical system piping shall be supported in accordance with this section.

❖ Piping systems, including hydronic, refrigerant, condensate and fuel oil, must be supported as required by this section.

305.2 Materials. Pipe hangers and supports shall have sufficient strength to withstand all anticipated static and specified dynamic loading conditions associated with the intended use. Pipe hangers and supports that are in direct contact with piping shall be of *approved* materials that are compatible with the piping and that will not promote galvanic action.

❖ As with all piping systems, the support of the system is as important as any other part of the overall design. Proper supports are necessary to maintain piping alignment and slope, to support the weight of the pipe and its contents, to control movement and to resist dynamic loads such as thrust. Inadequate support can cause piping to fail under its own weight, resulting in fire, explosion or property damage. Building design must take into consideration the structural loads created by the support of piping systems.

Hangers or supports must not react with or be detrimental to the pipe they support. Hangers or supports for metallic pipe must be of a material that is compatible with the pipe to prevent any corrosive action. For example, copper, copper-clad or specially coated hangers are required if the piping system is constructed of copper tubing. Hangers and supports are typically constructed of noncombustible materials to prevent premature failure in a fire.

305.3 Structural attachment. Hangers and anchors shall be attached to the building construction in an *approved* manner.

❖ A support or hanger can be no stronger than its attachment; therefore, the proper fasteners must be used and installed with the necessary workmanship. Supports for piping systems must also be attached to building construction so that they do not adversely affect the structural integrity of the building.

305.4 Interval of support. Piping shall be supported at distances not exceeding the spacing specified in Table 305.4, or in accordance with ANSI/MSS SP-58.

❖ The Manufacturers Standardization Society of the Valve & Fittings Industry, Inc.'s (MSS) Pipe Hangers and Supports Standard SP-58 may be used to determine hanger spacing as an alternative to Table 305.4. The MSS standard recognizes the different support needs of piping relative to pipe diameter and specifies a greater interval between supports as the pipe increases in diameter. As the pipe diameter is increased, the material has a greater inherent (beam) strength (see Commentary Figure 305.4).

TABLE 305.4. See next column.

❖ The support spacing listed in the table is intended to reduce sag and stress in the piping system. The maximum amount of sag occurs at a point halfway

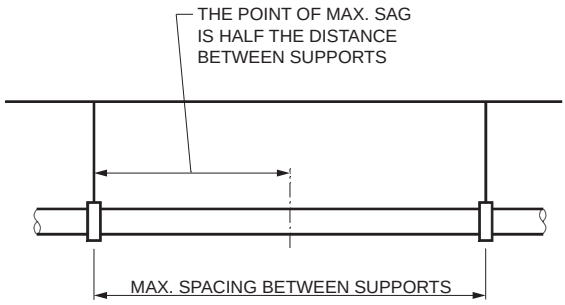

Figure 305.4
POINT OF SAG BETWEEN HANGERS

TABLE 305.4
PIPING SUPPORT SPACING[a]

PIPING MATERIAL	MAXIMUM HORIZONTAL SPACING (feet)	MAXIMUM VERTICAL SPACING (feet)
ABS pipe	4	10[c]
Aluminum pipe and tubing	10	15
Brass pipe	10	10
Brass tubing, $1^1/_4$-inch diameter and smaller	6	10
Brass tubing, $1^1/_2$-inch diameter and larger	10	10
Cast-iron pipe[b]	5	15
Copper or copper-alloy pipe	12	10
Copper or copper-alloy tubing, $1^1/_4$-inch diameter and smaller	6	10
Copper or copper-alloy tubing, $1^1/_2$-inch diameter and larger	10	10
CPVC pipe or tubing, 1 inch and smaller	3	10[c]
CPVC pipe or tubing, $1^1/_4$-inch and larger	4	10[c]
Lead pipe	Continuous	4
PB pipe or tubing	$2^2/_3$ (32 inches)	4
PE-RT < 1 inches	$2^2/_3$ (32 inches)	10[c]
PE-RT > $1^1/_4$ inches	4	10[c]
PEX tubing	$2^2/_3$ (32 inches)	10[c]
Polypropylene (PP) pipe or tubing, 1 inch or smaller	$2^2/_3$ (32 inches)	10[c]
Polypropylene (PP) pipe or tubing, $1^1/_4$ inches or larger	4	10[c]
PVC pipe	4	10[c]
Steel tubing	8	10
Steel pipe	12	15

For SI: 1 inch = 25.4 mm, 1 foot = 304.8 mm.

a. See Section 301.18.

b. The maximum horizontal spacing of cast-iron pipe hangers shall be increased to 10 feet where 10-foot lengths of pipe are installed.

c. Mid-story guide.

INTERNATIONAL CODE COUNCIL®
Copyright © 2015 ICC. ALL RIGHTS RESERVED. Accessed by David Dammon on Jun 21, 2017 12:30:52 PM pursuant to License Agreement with ICC. No further reproduction or distribution authorized. ANY UNAUTHORIZED REPRODUCTION OR DISTRIBUTION IS A VIOLATION OF THE FEDERAL COPYRIGHT ACT AND THE LICENSE AGREEMENT, AND SUBJECT TO CIVIL AND CRIMINAL PENALTIES THEREUNDER.

between supports and will increase over time if not properly supported. The mid-story guides required by Note c are necessary to prevent excess lateral motion in vertical installations of plastic pipe and tubing. Such lateral motion can result in damage to the pipe and joints.

305.5 Protection against physical damage. In concealed locations where piping, other than cast-iron or steel, is installed through holes or notches in studs, joists, rafters or similar members less than $1^1/_2$ inches (38 mm) from the nearest edge of the member, the pipe shall be protected by shield plates. Protective steel shield plates having a minimum thickness of 0.0575 inch (1.463 mm) (No. 16 gage) shall cover the area of the pipe where the member is notched or bored, and shall extend not less than 2 inches (51 mm) above sole plates and below top plates.

❖ This section is intended to minimize the possibility of damage to refrigerant piping and other mechanical piping from nails, screws or other fasteners. Because nails and screws sometimes miss the stud, rafter joist or top or sole plate, the shield must protect the pipe through the full width of the member and must extend not less than 2 inches (51 mm) above or below the sole or top plates, respectively. Commentary Figure 305.5 shows typical shield plates. Cast-iron and galvanized steel pipe have wall thicknesses greater than the required thickness of the shield plate, which makes them inherently resistant to nail and screw penetrations. The thickness dimension for the steel shield plate was changed to reflect the low-end tolerance thickness for 0.0625-inch nominal thickness steel.

SECTION 306
ACCESS AND SERVICE SPACE

306.1 Access. Appliances, controls devices, heat exchangers and HVAC system components that utilize energy shall be accessible for inspection, service, repair and replacement without disabling the function of a fire-resistance-rated assembly or removing permanent construction, other appliances, venting systems or any other piping or ducts not connected to the *appliance* being inspected, serviced, repaired or replaced. A level working space not less than 30 inches deep and 30 inches wide (762 mm by 762 mm) shall be provided in front of the control side to service an *appliance*.

❖ Because appliances require routine maintenance, repairs and possible replacement, access to appliances is required. The code defines "Access" as being reachable, but which might first require the removal of a panel, door or similar obstruction. An appliance or piece of equipment is not accessible if any portion of the structure's permanent finish materials, such as drywall, plaster, paneling, built-in furniture or cabinets, or any other similar permanently affixed building component must be removed. The access to the appliance must also not require removal or disconnection of other appliances and the ducts, piping or vent systems associated with other appliances. The section is not intended to lessen or negate the access recommendations or requirements stated in the appliance manufacturer's installation instructions but to establish minimum access requirements. As such, the provisions stated here are intended to supplement the manufacturer's installation instructions. This section also applies to equipment such as control devices, fan/coil units, heat

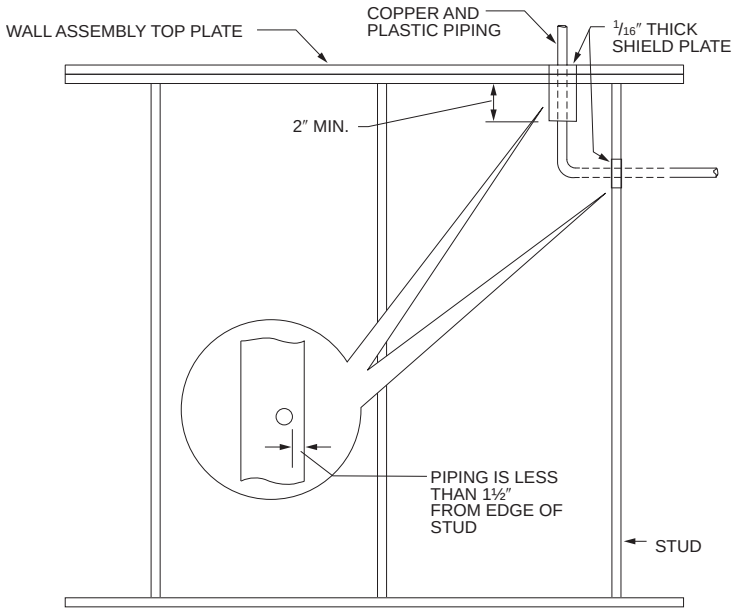

For SI: 1 inch = 25.4 mm.

Figure 305.5
PIPE PROTECTION

INTERNATIONAL CODE COUNCIL®
Copyright © 2015 ICC. ALL RIGHTS RESERVED. Accessed by David Dammon on Jun 21, 2017 12:30:52 PM pursuant to License Agreement with ICC. No further reproduction or distribution authorized. ANY UNAUTHORIZED REPRODUCTION OR DISTRIBUTION IS A VIOLATION OF THE FEDERAL COPYRIGHT ACT AND THE LICENSE AGREEMENT, AND SUBJECT TO CIVIL AND CRIMINAL PENALTIES THEREUNDER.

exchangers, blowers and any HVAC system component that consumes power. Sometimes such equipment is placed in locations that do not afford access, because such equipment is not treated with the same status as appliances. The last sentence of this section applies only to appliances. See definition of "Access."

306.1.1 Central furnaces. Central furnaces within compartments or alcoves shall have a minimum working space *clearance* of 3 inches (76 mm) along the sides, back and top with a total width of the enclosing space being not less than 12 inches (305 mm) wider than the furnace. Furnaces having a firebox open to the atmosphere shall have not less than 6 inches (152 mm) working space along the front *combustion* chamber side. *Combustion air* openings at the rear or side of the compartment shall comply with the requirements of Chapter 7.

Exception: This section shall not apply to replacement appliances installed in existing compartments and alcoves where the working space clearances are in accordance with the *equipment* or *appliance* manufacturer's installation instructions.

❖ Central furnaces that are installed in compartments or alcoves must have clearances from the enclosure so that the furnace can be removed, maintained or repaired as necessary. Chapter 7 regulates combustion air ducts and openings for free movement of air.

The minimum clearances specified in the code apply even though the manufacturer's instructions might permit a lesser clearance. Clearances provide access, ventilation cooling of the appliance and equipment and protection for surrounding combustibles. The front (fire box) clearance helps protect combustibles against flame roll-out and allows free movement of combustion air. The exception exempts replacement appliances and equipment installed in existing compartments or alcoves if the installation complies with the manufacturer's instructions.

306.2 Appliances in rooms. Rooms containing appliances shall be provided with a door and an unobstructed passageway measuring not less than 36 inches (914 mm) wide and 80 inches (2032 mm) high.

Exception: Within a *dwelling unit*, appliances installed in a compartment, alcove, basement or similar space shall be accessed by an opening or door and an unobstructed passageway measuring not less than 24 inches (610 mm) wide and large enough to allow removal of the largest *appliance* in the space, provided that a level service space of not less than 30 inches (762 mm) deep and the height of the *appliance*, but not less than 30 inches (762 mm), is present at the front or service side of the *appliance* with the door open.

❖ Access opening and passageway dimensions are specified to afford service personnel reasonable access to appliances and to allow for the passage of system components. Quite often appliances, such as furnaces, boilers and water heaters are installed in spaces with little or no forethought about future access for maintenance or replacement.

306.3 Appliances in attics. Attics containing appliances shall be provided with an opening and unobstructed passageway large enough to allow removal of the largest *appliance*. The passageway shall be not less than 30 inches (762 mm) high and 22 inches (559 mm) wide and not more than 20 feet (6096 mm) in length measured along the centerline of the passageway from the opening to the *appliance*. The passageway shall have continuous solid flooring not less than 24 inches (610 mm) wide. A level service space not less than 30 inches (762 mm) deep and 30 inches (762 mm) wide shall be present at the front or service side of the *appliance*. The clear access opening dimensions shall be not less than 20 inches by 30 inches (508 mm by 762 mm), and large enough to allow removal of the largest *appliance*.

Exceptions:

1. The passageway and level service space are not required where the *appliance* is capable of being serviced and removed through the required opening.
2. Where the passageway is unobstructed and not less than 6 feet (1829 mm) high and 22 inches (559 mm) wide for its entire length, the passageway shall be not greater than 50 feet (15 250 mm) in length.

❖ There is not always sufficient room for mechanical equipment and appliances to be installed in spaces such as basements, alcoves, utility rooms and furnace rooms. In an effort to save floor space or simplify an installation, appliances and mechanical equipment are often installed on roofs, in attics or in similar remote locations. Access to appliances and equipment could be difficult because of roof slope, stone roof ballasts or the lack of a walking surface, such as might occur in an attic or similar space with exposed ceiling joists. The intent of this section is to require a suitable access opening, passageway and work space that will allow reasonably easy access without endangering the service person (see Commentary Figure 306.3). The longer the attic passageway, the more the service person will be exposed to extreme temperatures and risk of injury.

Exception 1 allows the passageway and level service space to be eliminated if the technician can reach the appliance through the access opening without having to step into the attic. Exception 2 allows the length of the passageway to be extended to 50 feet (15 250 mm) if there is at least 6 feet (1829 mm) of clear headroom for the entire length of the passageway. This is allowed because there is less danger of lengthy exposure to extreme temperatures if the service personnel can walk erect and unimpeded to the equipment rather than crawling.

Note that some appliances might not be listed for attic installation or might otherwise be unsuitable for such conditions.

306.3.1 Electrical requirements. A luminaire controlled by a switch located at the required passageway opening and a

INTERNATIONAL CODE COUNCIL®
Copyright © 2015 ICC. ALL RIGHTS RESERVED. Accessed by David Dammon on Jun 21, 2017 12:30:52 PM pursuant to License Agreement with ICC. No further reproduction or distribution authorized. ANY UNAUTHORIZED REPRODUCTION OR DISTRIBUTION IS A VIOLATION OF THE FEDERAL COPYRIGHT ACT AND THE LICENSE AGREEMENT, AND SUBJECT TO CIVIL AND CRIMINAL PENALTIES THEREUNDER.

receptacle outlet shall be provided at or near the *appliance* location in accordance with NFPA 70.

❖ A lighting outlet and receptacle outlet will encourage and facilitate appliance maintenance. The receptacle will accommodate power tools, drop lights and diagnostic instruments. Also, these outlets will negate the need for extension cords, which can be hazardous to service personnel. Exposed-lamp lighting fixtures should be located or have guards installed to avoid impact by personnel. Note that the required luminaire (lighting fixture) is intended only to allow the attic to be safely navigated, and is not necessarily intended to be a "work light" to illuminate the appliance. Work lights, trouble lights and flashlights may still be necessary for servicing appliances. The IRC requires that the luminaire be protected from damage if it is an exposed lamp, such as the typical porcelain lamp holder with an Edison base incandescent lamp or compact fluorescent lamp. Impact with such lamps can cause injury to personnel, could create a shock and fire hazard and could cause a navigation hazard when the attic or crawl space suddenly goes dark. See Section 306.4.1.

306.4 Appliances under floors. Underfloor spaces containing appliances shall be provided with an access opening and unobstructed passageway large enough to remove the largest *appliance*. The passageway shall be not less than 30 inches (762 mm) high and 22 inches (559 mm) wide, nor more than 20 feet (6096 mm) in length measured along the centerline of the passageway from the opening to the *appliance*. A level service space not less than 30 inches (762 mm) deep and 30 inches (762 mm) wide shall be present at the front or service side of the *appliance*. If the depth of the passageway or the service space exceeds 12 inches (305 mm) below the adjoining grade, the walls of the passageway shall be lined with concrete or masonry. Such concrete or masonry shall extend not less than 4 inches (102 mm) above the adjoining grade and shall have sufficient lateral-bearing capacity to resist col-

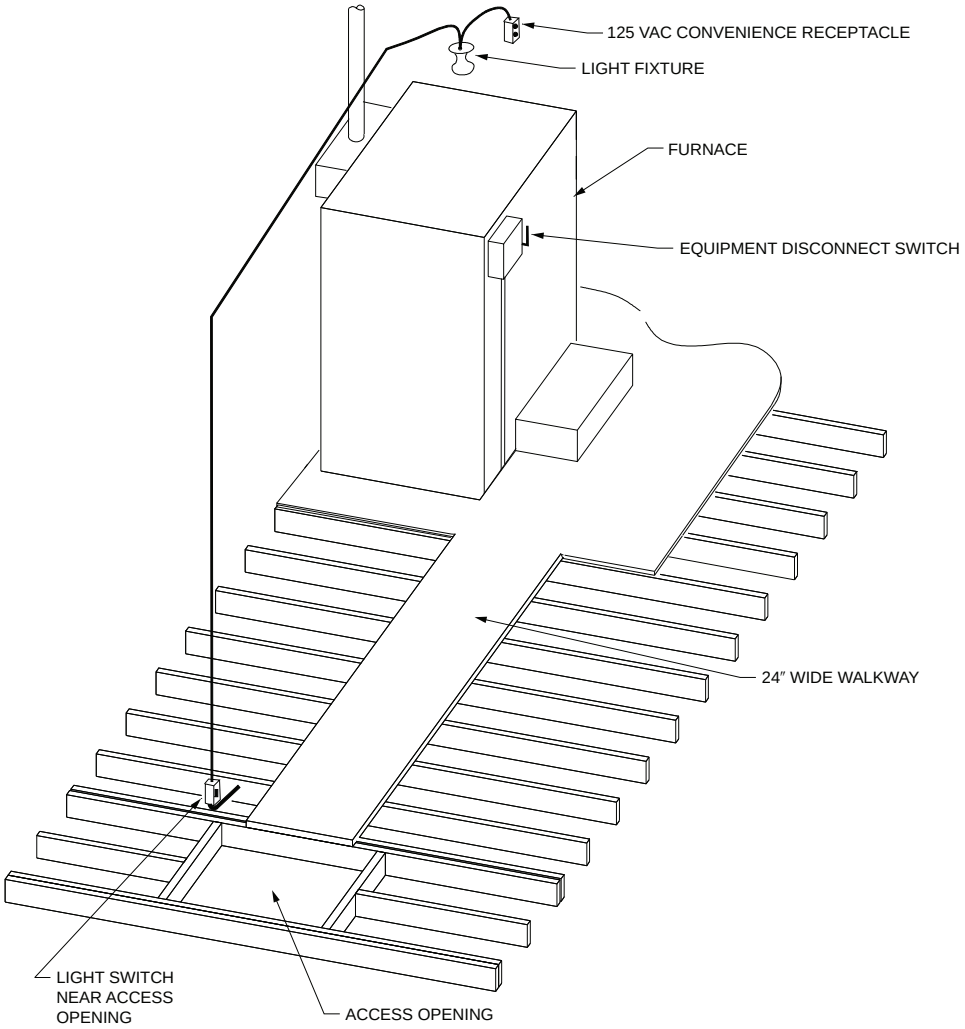

For SI: 1 inch = 25.4 mm.

Figure 306.3
REMOTE LOCATION REQUIREMENTS (ATTIC INSTALLATION)

INTERNATIONAL CODE COUNCIL®
Copyright © 2015 ICC. ALL RIGHTS RESERVED. Accessed by David Dammon on Jun 21, 2017 12:30:52 PM pursuant to License Agreement with ICC. No further reproduction or distribution authorized. ANY UNAUTHORIZED REPRODUCTION OR DISTRIBUTION IS A VIOLATION OF THE FEDERAL COPYRIGHT ACT AND THE LICENSE AGREEMENT, AND SUBJECT TO CIVIL AND CRIMINAL PENALTIES THEREUNDER.

lapse. The clear access opening dimensions shall be not less than 22 inches by 30 inches (559 mm by 762 mm), and large enough to allow removal of the largest *appliance*.

Exceptions:

1. The passageway is not required where the level service space is present when the access is open and the *appliance* is capable of being serviced and removed through the required opening.
2. Where the passageway is unobstructed and not less than 6 feet high (1929 mm) and 22 inches (559 mm) wide for its entire length, the passageway shall not be limited in length.

❖ The intent of this section, which applies to crawl spaces, is the same as for Section 306.3. The more difficult access to appliances and equipment is, the less likely it is that the appliance or equipment will be inspected and serviced. Attic and crawl space installations suffer from the "out-of-sight, out-of-mind" syndrome (see commentary, Section 306.3).

Exception 1 has the same intent as the first exception of Section 306.3. Exception 2 allows unlimited length of the passageway if there is at least 6 feet (1829 mm) of clear headroom for the entire length of the passageway (see commentary, Section 306.3).

306.4.1 Electrical requirements. A luminaire controlled by a switch located at the required passageway opening and a receptacle outlet shall be provided at or near the *appliance* location in accordance with NFPA 70.

❖ Heating, air-conditioning and refrigeration equipment and appliances located in attics and under-floor spaces are generally not easy to access. The light switch, lighting fixture and receptacle outlet required by this section provide safety and protection, as well as convenience, for servicers of the equipment and appliances. The receptacle will accommodate power tools, drop lights and diagnostic instruments. Also, these provisions will negate the need for extension cords, which can be hazardous to service personnel. Note that NFPA 70 requires ground fault circuit interrupter protection for receptacles located in a crawl space. Exposed-lamp lighting fixtures should be located or have guards installed to avoid impact by personnel. Note that the required luminaire (lighting fixture) is intended only to allow the attic to be safely navigated, and is not necessarily intended to be a "work light" to illuminate the appliance. Work lights, trouble lights and flashlights may still be necessary for servicing appliances. The IRC requires that the luminaire be protected from damage if it is an exposed lamp, such as the typical porcelain lamp holder with an Edison base incandescent lamp or compact fluorescent lamp. Impact with such lamps can cause injury to personnel, could create a shock and fire hazard and could cause a navigation hazard when the attic or crawl space suddenly goes dark.

306.5 Equipment and appliances on roofs or elevated structures. Where *equipment* requiring access or appliances are located on an elevated structure or the roof of a building such that personnel will have to climb higher than 16 feet (4877 mm) above grade to access such equipment or appliances, an interior or exterior means of access shall be provided. Such access shall not require climbing over obstructions greater than 30 inches (762 mm) in height or walking on roofs having a slope greater than 4 units vertical in 12 units horizontal (33-percent slope). Such access shall not require the use of portable ladders. Where access involves climbing over parapet walls, the height shall be measured to the top of the parapet wall.

Permanent ladders installed to provide the required access shall comply with the following minimum design criteria:

1. The side railing shall extend above the parapet or roof edge not less than 30 inches (762 mm).
2. Ladders shall have rung spacing not to exceed 14 inches (356 mm) on center. The uppermost rung shall be not greater than 24 inches (610 mm) below the upper edge of the roof hatch, roof or parapet, as applicable.
3. Ladders shall have a toe spacing not less than 6 inches (152 mm) deep.
4. There shall be not less than 18 inches (457 mm) between rails.
5. Rungs shall have a diameter not less than 0.75-inch (19 mm) and be capable of withstanding a 300-pound (136.1 kg) load.
6. Ladders over 30 feet (9144 mm) in height shall be provided with offset sections and landings capable of withstanding 100 pounds per square foot (488.2 kg/m^2). Landing dimensions shall be not less than 18 inches (457 mm) and not less than the width of the ladder served. A guard rail shall be provided on all open sides of the landing.
7. Climbing clearance. The distance from the centerline of the rungs to the nearest permanent object on the climbing side of the ladder shall be not less than 30 inches (762 mm) measured perpendicular to the rungs. This distance shall be maintained from the point of ladder access to the bottom of the roof hatch. A minimum clear width of 15 inches (381 mm) shall be provided on both sides of the ladder measured from the midpoint of and parallel with the rungs except where cages or wells are installed.
8. Landing required. The ladder shall be provided with a clear and unobstructed bottom landing area having a minimum dimension of 30 inches (762 mm) by 30 inches (762 mm) centered in front of the ladder.
9. Ladders shall be protected against corrosion by *approved* means.
10. Access to ladders shall be provided at all times.

INTERNATIONAL CODE COUNCIL®
Copyright © 2015 ICC. ALL RIGHTS RESERVED. Accessed by David Dammon on Jun 21, 2017 12:30:52 PM pursuant to License Agreement with ICC. No further reproduction or distribution authorized. ANY UNAUTHORIZED REPRODUCTION OR DISTRIBUTION IS A VIOLATION OF THE FEDERAL COPYRIGHT ACT AND THE LICENSE AGREEMENT, AND SUBJECT TO CIVIL AND CRIMINAL PENALTIES THEREUNDER.

Catwalks installed to provide the required access shall be not less than 24 inches (610 mm) wide and shall have railings as required for service platforms.

Exception: This section shall not apply to Group R-3 occupancies.

❖ The requirements of this section concern the safety of maintenance and inspection personnel where appliances and equipment are located on roofs or on top of structures. The first sentence establishes 16 feet above grade as the maximum height that personnel will have to climb on a portable ladder. If the climbing height exceeds 16 feet, then a permanent means of access, either from the interior of the building or exterior of the building, must be provided. Note that the last sentence of the first paragraph requires that parapet wall height be included in the climbing height. It is dangerous for maintenance personnel, often carrying tools, parts and diagnostic equipment, to have to negotiate lengthy extension ladders to gain access to the work area [see Commentary Figures 306.5(1) and 306.5(2)].

What the 16-foot maximum climbing height means is that buildings (with appliances or equipment on the roof) that are over one story in height will need permanent ladders, stairways or a combination thereof, installed.

Access to the equipment or appliances cannot require climbing over obstructions greater than 30 inches high. For example, a 36-inch duct running across the roof would require permanent steps or ladders to climb over the duct. Fire walls that extend up from the roof surface more than 30 inches would also require permanent steps or ladders.

Access to the equipment or appliances must not require walking on a roof slope greater than 4 units vertical in 12 units horizontal. Roofs with steep slopes are very difficult to traverse and maintain secure footing. Also, the potential for dropped items to roll off the roof and injure a passerby is great.

Item 1 provides for safe handholds to be able to get on and off the ladder. Item 2 assures that the rung spacing is not so great that climbing would be difficult and that the top rung is not too far below the walking surface that it could not be easily reached. Item 3 provides for adequate space behind the ladder so that a foot can be solidly placed on the rungs. Item 4 provides for an adequate width for even the largest of personnel. Item 5 makes sure that the rungs have sufficient strength.

Item 6 provides a safe resting point for climbs that are over 30 feet. Item 7 provides for adequate clearance between the climbing side of the ladder and any obstruction. Item 7 also provides for adequate width beyond the sides of the ladder. Item 8 requires that the base of the ladder have a clear area for enabling proper access to the ladder.

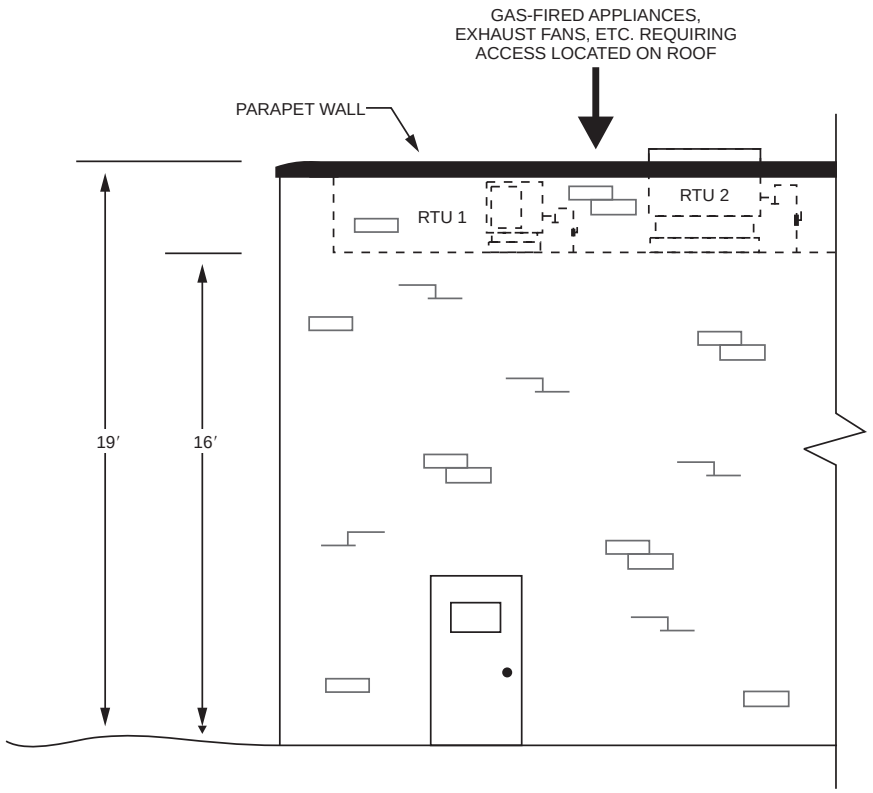

Figure 306.5(1)
ACCESS HEIGHT ABOVE GRADE

INTERNATIONAL CODE COUNCIL®
Copyright © 2015 ICC. ALL RIGHTS RESERVED. Accessed by David Dammon on Jun 21, 2017 12:30:52 PM pursuant to License Agreement with ICC. No further reproduction or distribution authorized. ANY UNAUTHORIZED REPRODUCTION OR DISTRIBUTION IS A VIOLATION OF THE FEDERAL COPYRIGHT ACT AND THE LICENSE AGREEMENT, AND SUBJECT TO CIVIL AND CRIMINAL PENALTIES THEREUNDER.

Item 9 requires that the ladder be protected from corrosion by an approved means. Typically, steel ladders are hot dipped galvanized. Item 10 requires that access to ladders be provided at all times so that alternative, perhaps unsafe, access means are not attempted because the ladder is blocked by machinery or permanent construction.

The catwalk requirements for a minimum width of 24 inches (610 mm) and installation of guards meeting the requirements of Section 304.11 result in a minimum level of safety for anyone using a catwalk to access mechanical equipment.

The exception exempts one- and two-family dwellings from the access requirements primarily because permanent stairs and ladders are aesthetically unappealing and cost prohibitive for such dwellings.

306.5.1 Sloped roofs. Where appliances, *equipment*, fans or other components that require service are installed on a roof having a slope of three units vertical in 12 units horizontal (25-percent slope) or greater and having an edge more than 30 inches (762 mm) above grade at such edge, a level platform shall be provided on each side of the *appliance* or *equipment* to which access is required for service, repair or maintenance. The platform shall be not less than 30 inches (762 mm) in any dimension and shall be provided with guards. The guards shall extend not less than 42 inches (1067 mm) above the platform, shall be constructed so as to prevent the passage of a 21-inch-diameter (533 mm) sphere and shall comply with the loading requirements for guards specified in the *International Building Code*. Access shall not require walking on roofs having a slope greater than four units vertical in 12 units horizontal (33-percent slope). Where access involves obstructions greater than 30 inches (762 mm) in height, such obstructions shall be provided with ladders installed in accordance with Section 306.5 or stairways installed in accordance with the requirements specified in the *International Building Code* in the path of travel to and from appliances, fans or *equipment* requiring service.

❖ A work space platform with guards will provide protection for service personnel and will facilitate inspection, servicing and repairing appliances, equipment or other components. Working on a sloped surface is difficult, dangerous and results in tools and materials sliding off roofs, possibly endangering persons below. Because of the additional expense and unattractive appearance of roof platforms, this section may have the effect of discouraging the installation of appliances on sloped roofs. This section, like Section 304.11, is intended to include equipment such as kitchen exhaust and makeup air fans that require routine servicing (see Commentary Figure 306.5.1).

The guard serves as a warning and as a protective barrier, and must be 42 inches (1067 mm) high and

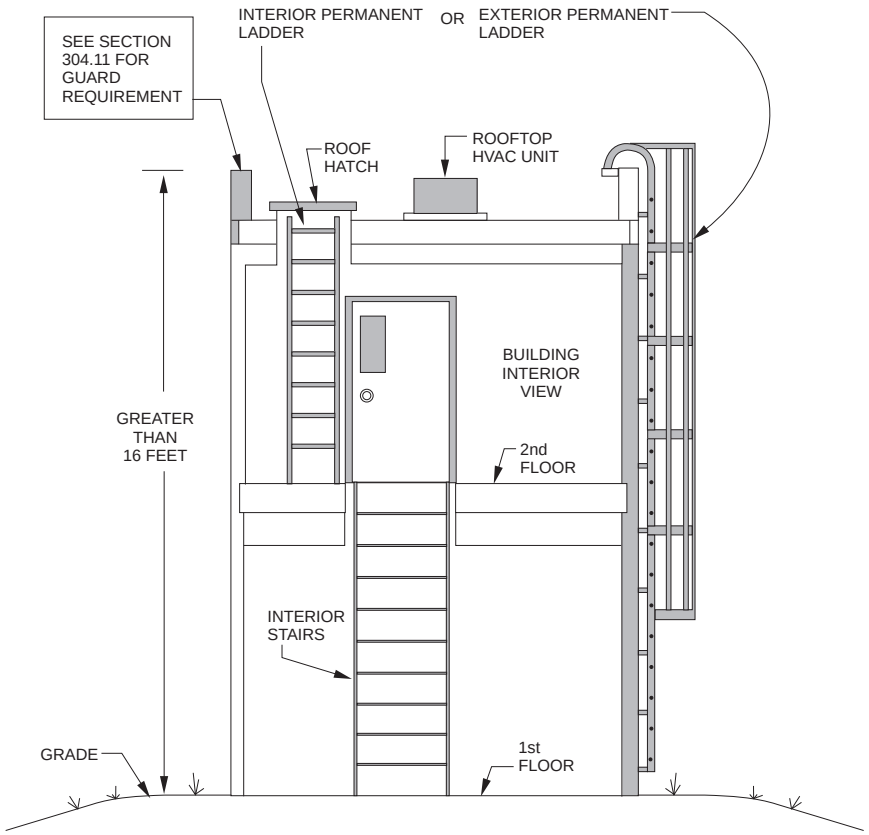

For SI: 1 foot = 305 mm.

Figure 306.5(2)
APPLIANCE ACCESS

INTERNATIONAL CODE COUNCIL®
Copyright © 2015 ICC. ALL RIGHTS RESERVED. Accessed by David Dammon on Jun 21, 2017 12:30:52 PM pursuant to License Agreement with ICC. No further reproduction or distribution authorized. ANY UNAUTHORIZED REPRODUCTION OR DISTRIBUTION IS A VIOLATION OF THE FEDERAL COPYRIGHT ACT AND THE LICENSE AGREEMENT, AND SUBJECT TO CIVIL AND CRIMINAL PENALTIES THEREUNDER.

constructed to prevent the passage of a 21-inch (533 mm) sphere [see Commentary Figure 304.11(1)]. The requirement for the guard to extend 30 inches (762 mm) beyond each end of the equipment, appliance or roof hatch opening provides added protection for the installer or service technician by enlarging the protected area beyond the immediate area of the equipment, appliance or roof hatch. The guardrail must be constructed to resist the imposed loading conditions.

Many installations on roofs are located 20, 50 or even as much as 100 feet (30 480 mm) from the roof's edge. It can be very dangerous to traverse those distances on a sloped roof, especially when carrying tools and repair parts. For this reason, the code prohibits installations requiring walking on a roof with a slope greater than 4 units vertical in 12 units horizontal (33 percent). Similarly, it can be difficult and dangerous to climb over obstructions greater than 30 inches (762 mm) when carrying tools and repair parts. Such obstacles require either permanent stairs or ladders to assist in crossing over the obstacle.

306.5.2 Electrical requirements. A receptacle outlet shall be provided at or near the *equipment* location in accordance with NFPA 70.

❖ The receptacle outlet required by this section provides convenience for servicers of the equipment and appliances on the roof. The receptacle will accommodate power tools, drop lights and diagnostic instruments. Also, these provisions will negate the need for extension cords, which can be hazardous to service personnel.

SECTION 307
CONDENSATE DISPOSAL

307.1 Fuel-burning appliances. Liquid *combustion* by-products of condensing appliances shall be collected and discharged to an *approved* plumbing fixture or disposal area in accordance with the manufacturer's installation instructions. Condensate piping shall be of *approved* corrosion-resistant material and shall not be smaller than the drain connection on the appliance. Such piping shall maintain a minimum horizontal slope in the direction of discharge of not less than one-eighth unit vertical in 12 units horizontal (1-percent slope).

❖ This section contains detailed requirements for the disposal of condensate from appliances and equipment such as evaporators, cooling coils and condensing fuel-fired appliances. Condensation must be collected from appliances and equipment in compliance with the manufacturer's installation instructions and this section. High-efficiency condensing-type appliances and some mid-efficiency appliances produce water as a combustion byproduct. This condensate is collected at various points in the appliance heat exchangers and venting system and must be disposed of. Because of impurities in the fuel and combustion air, the condensate can be acidic and thus corrosive to many materials. For example, condensate can contain hydrochloric and sulfuric acids. The slope requirement promotes drainage and eliminates low points (dips) in the piping that would trap water and air that would impede flow.

307.2 Evaporators and cooling coils. Condensate drain systems shall be provided for *equipment* and appliances containing evaporators or cooling coils. Condensate drain systems

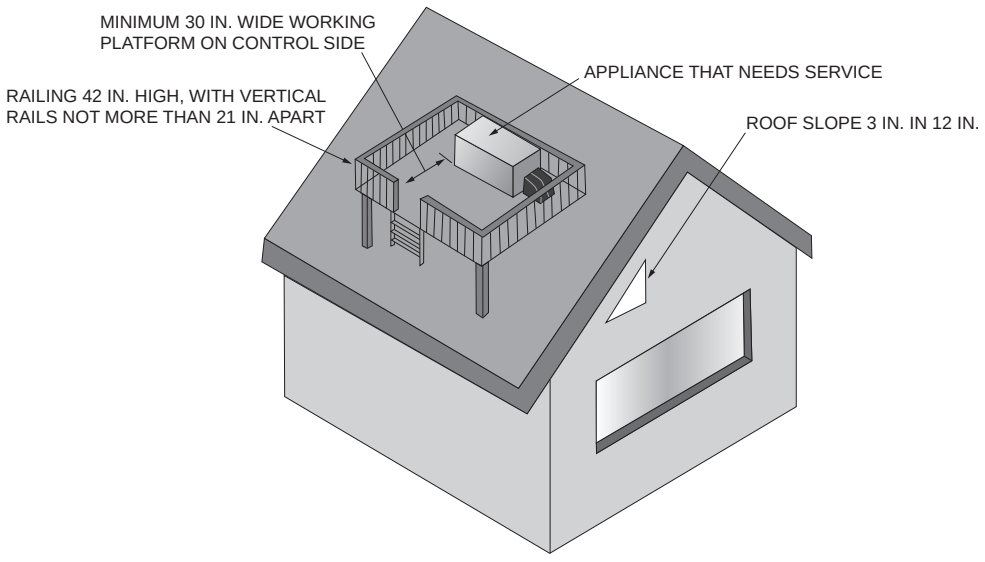

For SI: 1 inch = 25.4 mm.

Figure 306.5.1
APPLIANCES AND EQUIPMENT ON SLOPED ROOFS

INTERNATIONAL CODE COUNCIL®
Copyright © 2015 ICC. ALL RIGHTS RESERVED. Accessed by David Dammon on Jun 21, 2017 12:30:52 PM pursuant to License Agreement with ICC. No further reproduction or distribution authorized. ANY UNAUTHORIZED REPRODUCTION OR DISTRIBUTION IS A VIOLATION OF THE FEDERAL COPYRIGHT ACT AND THE LICENSE AGREEMENT, AND SUBJECT TO CIVIL AND CRIMINAL PENALTIES THEREUNDER.

shall be designed, constructed and installed in accordance with Sections 307.2.1 through 307.2.5.

Exception: Evaporators and cooling coils that are designed to operate in sensible cooling only and not support condensation shall not be required to meet the requirements of this section.

❖ Appliances and equipment containing evaporators or cooling coils, including refrigeration, dehumidification and comfort cooling equipment, can produce condensate from the water vapor in the atmosphere. A drainage system is necessary to dispose of the condensate and prevent damage to the structure. The exception recognizes that some evaporators and cooling coils do not cause condensation of water vapor, therefore, condensate drains are unnecessary.

307.2.1 Condensate disposal. Condensate from all cooling coils and evaporators shall be conveyed from the drain pan outlet to an *approved* place of disposal. Such piping shall maintain a minimum horizontal slope in the direction of discharge of not less than one-eighth unit vertical in 12 units horizontal (1-percent slope). Condensate shall not discharge into a street, alley or other areas so as to cause a nuisance.

❖ Condensate disposal is a local issue dependent on specific local conditions, such as soil conditions, contour of the area, sewer loading and water treatment plant capacity. Because of this, the approval of the disposal place is the responsibility of the local jurisdiction. Some of the locations that could be accepted are storm or sanitary sewers, rooftops, French drains, drainage ditches, collection ponds or simply into the yard, as is typical for most homes.

Some water treatment facilities operate near maximum capacity and do not allow condensate disposal into the sanitary sewer because condensate does not require treatment. If connected to the sanitary sewer, the connection must be indirect in compliance with the IPC to prevent sewer gases from entering the equipment or system. Disposal to a rooftop will allow the condensate to evaporate on the roof surface or be directed to the roof drain system or gutters. French drains, or seepage pits, are effective depending on the permeability of the soil, the rate of discharge and the size of the pit.

The piping conveying the condensate to its disposal point must be properly sloped to ensure drainage just the same as any drainage system. Sagging pipe could trap water and air that would impede the flow of the condensate.

307.2.2 Drain pipe materials and sizes. Components of the condensate disposal system shall be cast iron, galvanized steel, copper, cross-linked polyethylene, polyethylene, ABS, CPVC, PVC, or polypropylene pipe or tubing. Components shall be selected for the pressure and temperature rating of the installation. Joints and connections shall be made in accordance with the applicable provisions of Chapter 7 of the *International Plumbing Code* relative to the material type. Condensate waste and drain line size shall be not less than $^3/_4$-inch (19 mm) internal diameter and shall not decrease in size from the drain pan connection to the place of condensate disposal. Where the drain pipes from more than one unit are manifolded together for condensate drainage, the pipe or tubing shall be sized in accordance with Table 307.2.2.

❖ Condensate drains must be constructed of a material listed in this section. Note that the materials listed are corrosion resistant. The $^3/_4$-inch (19 mm) minimum pipe size, as well as the pipe sizes required by Table 307.2.2, will ensure that the condensate will flow properly. The $^3/_4$-inch (19 mm) diameter is intended to be a nominal measurement. When drains are merged, the piping must be sized for the aggregate flow by using Table 307.2.2.

TABLE 307.2.2
CONDENSATE DRAIN SIZING

EQUIPMENT CAPACITY	MINIMUM CONDENSATE PIPE DIAMETER
Up to 20 tons of refrigeration	$^3/_4$ inch
Over 20 tons to 40 tons of refrigeration	1 inch
Over 40 tons to 90 tons of refrigeration	$1^1/_4$ inches
Over 90 tons to 125 tons of refrigeration	$1^1/_2$ inches
Over 125 tons to 250 tons of refrigeration	2 inches

1 inch = 25.4 mm, 1 ton = 3.517 kW.

❖ The condensate pipe size for an individual unit must not be less than that specified by the equipment manufacturer. Where the condensate lines from multiple units are manifolded together, Table 307.2.2 must be used for sizing the combined condensate drain pipe.

307.2.3 Auxiliary and secondary drain systems. In addition to the requirements of Section 307.2.1, where damage to any building components could occur as a result of overflow from the *equipment* primary condensate removal system, one of the following auxiliary protection methods shall be provided for each cooling coil or fuel-fired *appliance* that produces condensate:

1. An auxiliary drain pan with a separate drain shall be provided under the coils on which condensation will occur. The auxiliary pan drain shall discharge to a conspicuous point of disposal to alert occupants in the event of a stoppage of the primary drain. The pan shall have a minimum depth of $1^1/_2$ inches (38 mm), shall be not less than 3 inches (76 mm) larger than the unit, or the coil dimensions in width and length and shall be constructed of corrosion-resistant material. Galvanized sheet steel pans shall have a minimum thickness of not less than 0.0236 inch (0.6010 mm) (No. 24 gage). Nonmetallic pans shall have a minimum thickness of not less than 0.0625 inch (1.6 mm).
2. A separate overflow drain line shall be connected to the drain pan provided with the *equipment*. Such overflow drain shall discharge to a conspicuous point of disposal to alert occupants in the event of a stoppage of the primary drain. The overflow drain line shall connect to the drain pan at a higher level than the primary drain connection.

INTERNATIONAL CODE COUNCIL®
Copyright © 2015 ICC. ALL RIGHTS RESERVED. Accessed by David Dammon on Jun 21, 2017 12:30:52 PM pursuant to License Agreement with ICC. No further reproduction or distribution authorized. ANY UNAUTHORIZED REPRODUCTION OR DISTRIBUTION IS A VIOLATION OF THE FEDERAL COPYRIGHT ACT AND THE LICENSE AGREEMENT, AND SUBJECT TO CIVIL AND CRIMINAL PENALTIES THEREUNDER.

3. An auxiliary drain pan without a separate drain line shall be provided under the coils on which condensate will occur. Such pan shall be equipped with a water-level detection device conforming to UL 508 that will shut off the *equipment* served prior to overflow of the pan. The auxiliary drain pan shall be constructed in accordance with Item 1 of this section.
4. A water-level detection device conforming to UL 508 shall be provided that will shut off the *equipment* served in the event that the primary drain is blocked. The device shall be installed in the primary drain line, the overflow drain line, or in the equipment-supplied drain pan, located at a point higher than the primary drain line connection and below the overflow rim of such pan.

Exception: Fuel-fired appliances that automatically shut down operation in the event of a stoppage in the condensate drainage system.

❖ An auxiliary (redundant) drain pan or a secondary drain is required for equipment locations where condensate overflow would cause damage to a building or its contents. The purpose of the auxiliary drain pan and secondary drain is to catch condensate spilling from the primary condensate removal system in the equipment. This "back-up" protects the building from structural and finish damage.

Condensate drains are notorious for clogging because of debris (lint, dust) from air-handling systems and the natural affinity to produce slime growths in drain pans and pipes. It is relatively common for condensate overflows to cause damage to buildings. This section lists four options for preventing damage where the equipment is located in spaces, such as attics, above suspended ceilings and furred spaces and locations on upper stories. One of the four methods must be used.

Method 1 uses an auxiliary drain pan below the coils on which condensation will occur with an independent drain line that discharges to a location that is easily observable to notify the building occupants that a problem with the primary pan exists. The code prescribes the depth of the pan and specific material thicknesses to ensure that the pan will be corrosion resistant and will have sufficient holding capacity and capture ability. The thickness of metallic material was changed to reflect the low end tolerance for No. 24 gage galvanized sheet metal.

Method 2 uses an independent overflow drain line connected to the primary drain pan at a point higher than the primary drain line. Most evaporator coil pans are factory provided with an overflow drain tap that can be used for this purpose. As in Method 1, the point of discharge must be easily observable.

Method 3 uses a water-level detection device, usually a float switch or electronic sensor that must conform to the requirements of UL 508, located in the auxiliary drain pan. These detection devices will shut down the equipment before the pan overflows. There is no requirement for a separate drain line in this method. Commentary Figure 307.2.3(1) shows a typical float switch for a drain pan.

Method 4 also uses a water-level detection device located in the drain line from the primary drain pan or the overflow line from the primary drain pan rather than the secondary drain pan in Method 3. See Commentary Figures 307.2.3(2) and 307.2.3(3).

Both Methods 3 and 4 will notify the building occupants that a blockage has occurred because the cooling system will cease to function.

The exception recognizes that some fuel-fired appliances that produce condensate have a built-in method of shutting down when a blockage occurs.

307.2.3.1 Water-level monitoring devices. On downflow units and all other coils that do not have a secondary drain or provisions to install a secondary or auxiliary drain pan, a water-level monitoring device shall be installed inside the primary drain pan. This device shall shut off the *equipment* served in the event that the primary drain becomes restricted. Devices installed in the drain line shall not be permitted.

❖ The intent of this section is to provide adequate overflow protection on all coils that do not have a secondary drain and have no provisions for a secondary or auxiliary drain pan. A water-level monitoring device, like the one shown in Commentary Figure 307.2.3(1), is required to be installed in the primary drain pan. An in-line detection device is not allowed by this section because a blockage inside the pan at the drain hole would not be detected by the in-line device because



Figure 307.2.3(1)
PRIMARY AND AUXILIARY
DRAIN PAN FLOAT SWITCH
(Courtesy of SMD Research, Inc.)

INTERNATIONAL CODE COUNCIL®
Copyright © 2015 ICC. ALL RIGHTS RESERVED. Accessed by David Dammon on Jun 21, 2017 12:30:52 PM pursuant to License Agreement with ICC. No further reproduction or distribution authorized. ANY UNAUTHORIZED REPRODUCTION OR DISTRIBUTION IS A VIOLATION OF THE FEDERAL COPYRIGHT ACT AND THE LICENSE AGREEMENT, AND SUBJECT TO CIVIL AND CRIMINAL PENALTIES THEREUNDER.

the water would overflow from the pan and never reach the in-line detector. When the water overflows from the pan, it typically runs into the duct, causing mold and mildew problems. It will eventually leak out through the joints or seams and cause damage to the building structure or its contents.

307.2.3.2 Appliance, equipment and insulation in pans. Where appliances, *equipment* or insulation are subject to water damage when auxiliary drain pans fill, that portion of the *appliance*, *equipment* and insulation shall be installed above the rim of the pan. Supports located inside of the pan to support the *appliance* or *equipment* shall be water resistant and *approved*.

❖ Where appliances, such as upflow furnaces and air handlers are installed such that supports are resting in the bottom of the auxiliary drain pan, all portions that are subject to water damage must be installed above the flood level rim of the pan (see Commentary Figure 307.2.3.2). Electrical components, metal items subject to rust and insulation within the appliance are examples of items that are subject to damage when submerged in water.

307.2.4 Traps. Condensate drains shall be trapped as required by the *equipment* or *appliance* manufacturer.

❖ The appliance or equipment manufacturer determines the need for a trap and often specifies the depth and configuration of the trap. The traps addressed in this section are unrelated to plumbing traps and serve a different purpose. Condensate drain traps do not directly connect in any way to the plumbing drain or the waste and vent system of a building. Condensate drain traps are installed to prevent air from being pushed or pulled through the drain piping. Airflow can impede condensate flow, causing overflow or abnormal water depth in drain pans. Some drain pans, such as those under pull-through cooling coils, may not drain at all without a trap to block airflow in the drain piping. Airflow in a condensate drain also wastes energy.



Figure 307.2.3(2)
CONDENSATE OVERFLOW SWITCH
(Courtesy of SMD Research, Inc.)



Figure 307.2.3(3)
IN-LINE CONDENSATE OVERFLOW SWITCH
(Courtesy of SMD Research, Inc.)

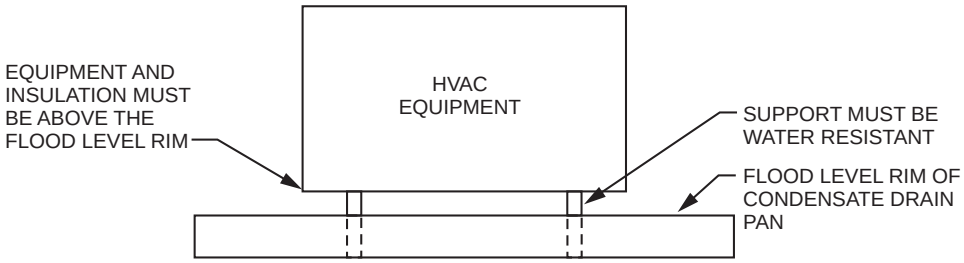

Figure 307.2.3.2
APPLIANCES, EQUIPMENT AND INSULATION IN PANS

INTERNATIONAL CODE COUNCIL®
Copyright © 2015 ICC. ALL RIGHTS RESERVED. Accessed by David Dammon on Jun 21, 2017 12:30:52 PM pursuant to License Agreement with ICC. No further reproduction or distribution authorized. ANY UNAUTHORIZED REPRODUCTION OR DISTRIBUTION IS A VIOLATION OF THE FEDERAL COPYRIGHT ACT AND THE LICENSE AGREEMENT, AND SUBJECT TO CIVIL AND CRIMINAL PENALTIES THEREUNDER.

307.2.4.1 Ductless mini-split system traps. Ductless mini-split equipment that produces condensate shall be provided with an inline check valve located in the drain line, or a trap.

❖ See definition of "Ductless mini-split system." Such equipment may use a liquid seal trap or a check valve, depending on the design of the indoor unit, as both accomplish the same function to prevent airflow from interfering with condensate flow and prevent the escape of air through the drain.

307.2.5 Drain line maintenance. Condensate drain lines shall be configured to permit the clearing of blockages and performance of maintenance without requiring the drain line to be cut.

❖ Drains that convey condensate water from cooling coils and evaporators are known to develop blockages as a result of debris and biological growth in the system. These drains are commonly cleared of blockages by a compressed gas such as air or nitrogen being forced through the drain. It is inherently hazardous to pressurize plastic piping such as PVC and CPVC with a compressed gas because of the potential for violent rupture and propelled shards of plastic. The drains are seldom large enough to accommodate mechanical drain cleaning (rodding) equipment. The code permits any arrangement that provides access to the drain interior without the drain being severed or cut. This includes capped or plugged tees and cross fittings, unions, removable mechanical couplings and specialty devices made specifically for the purpose. The intent is to prevent the spillage of condensate that would cause damage to the structure. See Commentary Figure 307.2.5.

307.3 Condensate pumps. Condensate pumps located in uninhabitable spaces, such as attics and crawl spaces, shall be connected to the appliance or equipment served such that when the pump fails, the appliance or equipment will be prevented from operating. Pumps shall be installed in accordance with the manufacturers' instructions.

❖ Condensate pumps are often located in attics and crawl spaces and above ceilings where they are not readily observable. If they fail, the condensate overflow can cause structural damage to the building, especially where the overflow will not be noticed immediately. The majority of such pumps are equipped with simple float controls that can be wired in series with the appliance/equipment control circuit. When the pump system fails, the float will rise in the reservoir and open a switch before the condensate starts to overflow the reservoir. These float controls are commonly not connected, and in other cases the pump might not be equipped with an overflow switch. This new code section requires the installation of con-

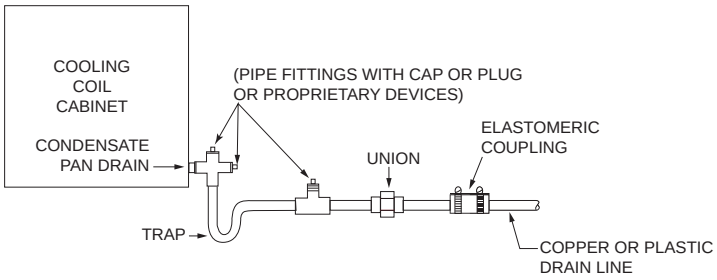

For SI: 1 inch = 25.4 mm, 1 foot = 304.8 mm.

Figure 307.2.5
DRAIN LINE ACCESS MEANS

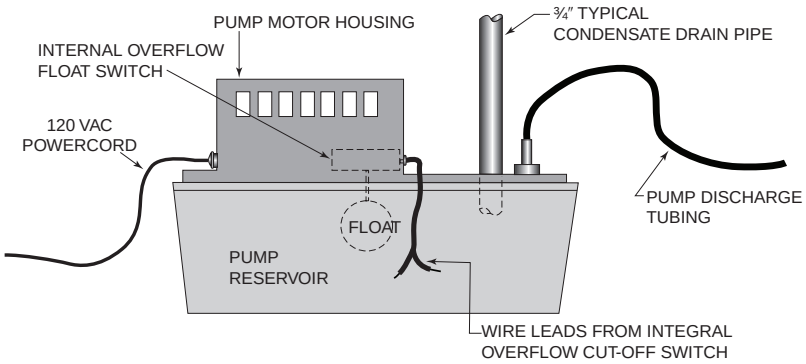

For SI: 1 inch = 25.4 mm, 1 foot = 304.8 mm.

Figure 307.3
CONDENSATE PUMP

INTERNATIONAL CODE COUNCIL®
Copyright © 2015 ICC. ALL RIGHTS RESERVED. Accessed by David Dammon on Jun 21, 2017 12:30:52 PM pursuant to License Agreement with ICC. No further reproduction or distribution authorized. ANY UNAUTHORIZED REPRODUCTION OR DISTRIBUTION IS A VIOLATION OF THE FEDERAL COPYRIGHT ACT AND THE LICENSE AGREEMENT, AND SUBJECT TO CIVIL AND CRIMINAL PENALTIES THEREUNDER.

densate pumps that have this overflow shutoff capability and requires that the appliance/equipment served be connected to take advantage of that feature. See Commentary Figure 307.3.

SECTION 308
CLEARANCE REDUCTION

308.1 Scope. This section shall govern the reduction in required *clearances* to combustible materials and combustible assemblies for *chimneys,* vents, kitchen exhaust equipment, mechanical appliances, and mechanical devices and *equipment.*

❖ Heat-producing appliances and mechanical equipment must be installed with the required minimum clearances to combustible materials indicated by their listing label. It is not uncommon to encounter practical or structural difficulties in maintaining clearances. Therefore, clearance-reduction methods have been developed to allow, in some cases, reduction of the minimum prescribed clearance distance while achieving equivalent protection. An important understanding is that all prescribed clearances to combustibles are airspace clearances measured from the heat source to the face of the nearest combustible surface, even if that combustible surface is not visible; for example, a wood stud located behind a metal panel [see Commentary Figure 308.1(1)].

When using the assemblies described in Table 308.6, the clearance is measured from the heat source to the face of the combustible surface. In the case of listed equipment, the required clearances are intended to be clear airspace and, therefore, the space is not to be filled with insulation or any other material, including pipes, ducts and conduits. This is especially important where clearances are required from appliances and equipment that rely on the airspace for convection cooling and to maintain its proper operation.

The requirements in Sections 308.2 through 308.4.2.5 are based on the principles of heat transfer. Mechanical equipment or appliances producing heat will, by themselves, become hot, and many appliances have hot exterior surfaces by design. The heat energy is then radiated to objects surrounding the appliances or equipment. When mechanical equipment and appliances are tested, the minimum clearances are established so that radiant and, to a lesser extent, convective heat transfer do not represent an ignition hazard to adjacent surfaces and objects. This distance is called the "required clearance" to combustible materials. Appliance and equipment labels are required to specify minimum clearances in all directions.

This section permits the use of materials and systems to act as radiation shields, allowing a reduction in the amount of heat energy transferred to surrounding objects and reducing the required clearances between mechanical appliances and equipment and combustible material. Commentary Figures 308.1(2) and 308.1(3) illustrate some methods of clearance reduction.

The definition of "Noncombustible" in the code differs from the definition of "Noncombustible" in the IBC. The difference is necessary because this code is concerned with the exposure to a continuous heat source, while the IBC emphasizes the behavior of the material under actual fire conditions. An example of this difference is how gypsum wallboard is categorized. In this code, gypsum wallboard is considered to be a combustible material because it is paper faced and breaks down when heated. The IBC classifies it

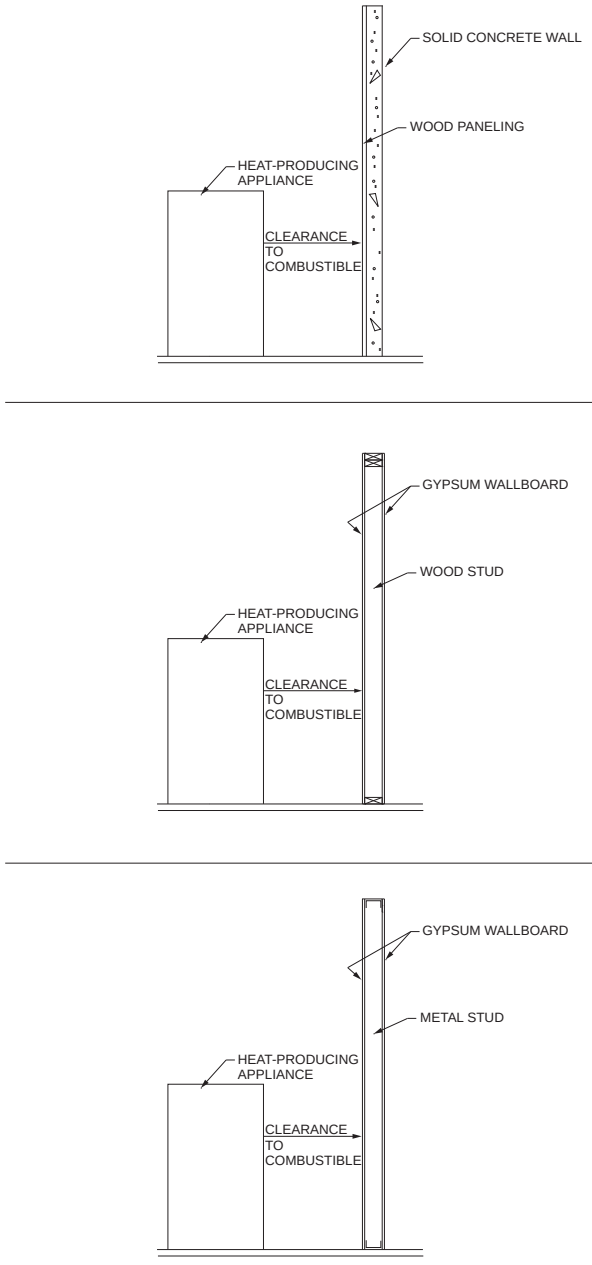

Figure 308.1(1)
CLEARANCE TO COMBUSTIBLES—
EXAMPLES OF HOW TO MEASURE

INTERNATIONAL CODE COUNCIL®
Copyright © 2015 ICC. ALL RIGHTS RESERVED. Accessed by David Dammon on Jun 21, 2017 12:30:52 PM pursuant to License Agreement with ICC. No further reproduction or distribution authorized. ANY UNAUTHORIZED REPRODUCTION OR DISTRIBUTION IS A VIOLATION OF THE FEDERAL COPYRIGHT ACT AND THE LICENSE AGREEMENT, AND SUBJECT TO CIVIL AND CRIMINAL PENALTIES THEREUNDER.

as a noncombustible material because it is used as a thermal barrier. The paper face of gypsum board has a flame spread index that is measurable in the ASTM E84 test. This alone identifies the need to classify gypsum wallboard as a combustible material for the purpose of requiring a separation from heat-producing equipment and appliances. Thus, with respect to the requirements of this section, applying gypsum wallboard to a wood frame wall does not reduce the required clearance to combustibles and does not change the fact that the adjacent surface is combustible.

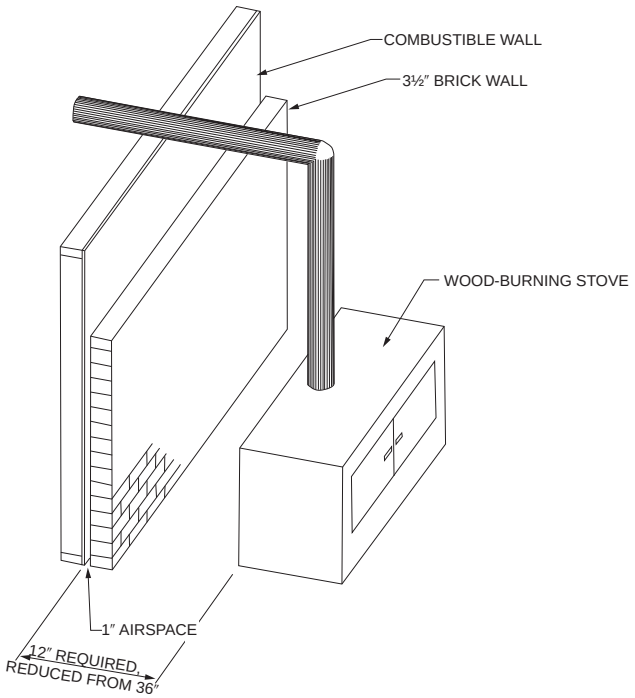

For SI: 1 inch = 25.4 mm.

Figure 308.1(2)
REDUCED CLEARANCE FOR $3^1/_2$-INCH BRICK WALL

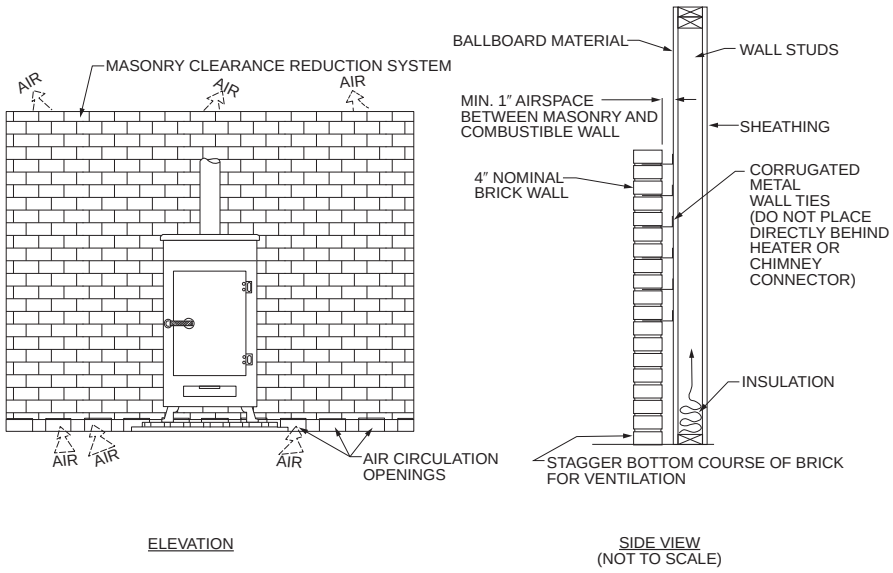

For SI: 1 inch = 25.4 mm.

Figure 308.1(3)
VENTILATED MASONRY CLEARANCE REDUCTION SYSTEM

INTERNATIONAL CODE COUNCIL®
Copyright © 2015 ICC. ALL RIGHTS RESERVED. Accessed by David Dammon on Jun 21, 2017 12:30:52 PM pursuant to License Agreement with ICC. No further reproduction or distribution authorized. ANY UNAUTHORIZED REPRODUCTION OR DISTRIBUTION IS A VIOLATION OF THE FEDERAL COPYRIGHT ACT AND THE LICENSE AGREEMENT, AND SUBJECT TO CIVIL AND CRIMINAL PENALTIES THEREUNDER.

Although plaster and gypsum, by themselves, are classified as noncombustible materials, under continued exposure to heat, these materials will gradually decompose as water molecules are driven out of the material. The resulting cracks and spalling of these materials after prolonged exposure to heat makes them unsuitable for protecting underlying combustible material. Therefore, plaster or gypsum products applied to wood lath, plasterboard, and drywall do not protect the combustible materials behind these products.

Section 308.2 and Sections 308.4.2.1 through 308.4.2.5 specifically prohibit the reduction of clearances in applications described in each of those sections.

308.2 Listed appliances and equipment. The reduction of the required *clearances* to combustibles for *listed* and *labeled* appliances and *equipment* shall be in accordance with the requirements of this section except that such clearances shall not be reduced where reduction is specifically prohibited by the terms of the *appliance* or *equipment* listing.

❖ The clearances specified in the typical appliance or equipment listing are clearances to unprotected combustibles, and unless clearance reduction is prohibited by the listing or label, reduction is allowed in accordance with Section 308 (see Commentary Figure 308.2). The listing of an appliance or piece of equipment could prohibit the reduction of the manufacturer's specified clearances, and in such cases the provisions of Section 308 cannot be applied. Note that it is not the intent to allow clearance reduction for appliances installed in closets and alcoves in accordance with Section 303.5.

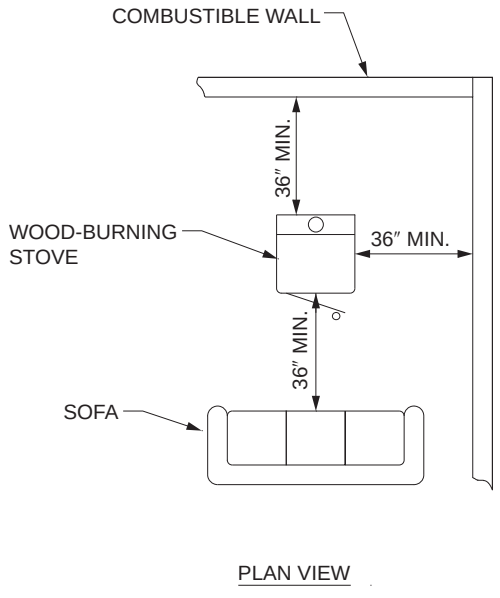

For SI: 1 inch = 25.4 mm.

Figure 308.2
TYPICAL CLEARANCES FOR A RADIANT-TYPE WOOD-BURNING STOVE

308.3 Protective assembly construction and installation. Reduced *clearance* protective assemblies, including structural and support elements, shall be constructed of noncombustible materials. Spacers utilized to maintain an airspace between the protective assembly and the protected material or assembly shall be noncombustible. Where a space between the protective assembly and protected combustible material or assembly is specified, the same space shall be provided around the edges of the protective assembly and the spacers shall be placed so as to allow air circulation by convection in such space. Protective assemblies shall not be placed less than 1 inch (25 mm) from the mechanical appliances, devices or *equipment*, regardless of the allowable reduced *clearance*.

❖ Spacers are used to support an assembly or material and maintain an airspace between the protection and that which is being protected. The airspace must be created so that unimpeded convection air currents can flow through the airspace. Most of the methods in Table 308.4.2 depend on convective cooling as an essential part of the system. All protection assemblies must also maintain a minimum clearance from the heat source to reduce the conduction of heat and allow convective cooling on the exposed side of the protective element (see Commentary Figure 308.3).

308.4 Allowable reduction. The reduction of required *clearances* to combustible assemblies or combustible materials shall be based on the utilization of a reduced *clearance* protective assembly in accordance with Section 308.4.1 or 308.4.2.

❖ The permissible methods of clearance reduction fall into two categories: factory-built listed and labeled assemblies and field-constructed assemblies specified in Table 308.4.2.

308.4.1 Labeled assemblies. The allowable clearance reduction shall be based on an approved reduced clearance protective assembly that is listed and labeled in accordance with UL 1618.

❖ For a device or system to be labeled as a method for reducing clearances to combustibles, it must be tested. The code requires that the UL 1618 standard be used by the testing agency for determining the performance of materials used for reducing clearances.

The test for floor and wall protection essentially consists of erecting a test enclosure that includes both the heat-producing appliances and the device or system intended to provide the necessary protection. The various tests are performed and temperatures are monitored on both sides of the protection using thermocouples. During the test, if the temperature rise on the surfaces of the protection exposed to the heat source has not exceeded 117°F (47°C), and the temperature rise on the unexposed surfaces of the protection has not exceeded 90°F (32°C), the product passes the test. The product may then be used to reduce the required clearances to combustibles for similar heat-producing appliances.

INTERNATIONAL CODE COUNCIL®
Copyright © 2015 ICC. ALL RIGHTS RESERVED. Accessed by David Dammon on Jun 21, 2017 12:30:52 PM pursuant to License Agreement with ICC. No further reproduction or distribution authorized. ANY UNAUTHORIZED REPRODUCTION OR DISTRIBUTION IS A VIOLATION OF THE FEDERAL COPYRIGHT ACT AND THE LICENSE AGREEMENT, AND SUBJECT TO CIVIL AND CRIMINAL PENALTIES THEREUNDER.

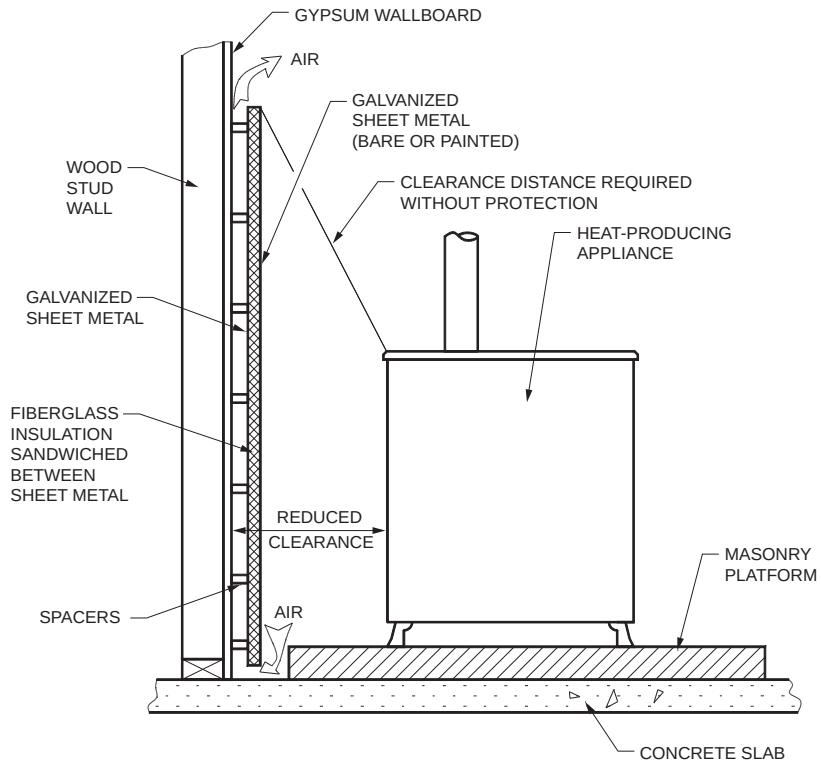

Figure 308.3
REDUCED CLEARANCE TO COMBUSTIBLES

After a product successfully passes the test, it is eligible for listing and labeling. In the field, a device or assembly that is listed and labeled for use as a method of reducing clearances to combustible materials can be approved only if it is installed in strict compliance with its listing, label and the manufacturer's installation instructions, as required in Section 304.1.

308.4.2 Reduction table. The allowable *clearance* reduction shall be based on one of the methods specified in Table 308.4.2. Where required *clearances* are not listed in Table 308.4.2, the reduced *clearances* shall be determined by linear interpolation between the distances listed in the table. Reduced *clearances* shall not be derived by extrapolation below the range of the table.

❖ Another option for reducing the required clearances to combustible materials is to use one of the on-site field-constructed methods specified in Table 308.4.2.

TABLE 308.4.2. See page 3-40.

❖ The bold numbers in the column headings of Table 308.4.2 represent the clearances to combustible material and assemblies (36, 18, 9, and 6 inches) as required by the appliance or equipment installation instructions where a reduced clearance protection assembly is not provided. The numbers to the right of each method indicate the permissible reduced clearance as measured from the heat-producing appliances to the face of the combustible surface that is behind the protection material or assembly.

The rationale behind the methods of protection listed in Table 308.4.2 is based on the ability of the protection material or assembly to reduce radiant heat transmission from the appliance and equipment to the combustible material so that the temperature rise of the combustible material will remain below the maximum allowed.

Although the materials referred to in Table 308.4.2 are common construction materials, confusion over the term "inorganic insulating board" frequently arises. This term refers to noncombustible mineral boards and other noncombustible insulating boards that are not made of carbon-based compounds. Carbon-based compounds are those found in cellulose (wood), plastics and other materials manufactured from raw materials that once existed as living organisms. Note that cement board materials must have a specified maximum C (conductance) value in addition to being noncombustible.

Note a specifies a maximum thermal conductivity value (C) of 1.0 (Btu/h · in)/(ft^2 · h · °F) for insulating board used as a component of clearance reduction methods [conductivity value is the reciprocal of the *R*-value; C = 1/R]. This translates into a minimum required insulation *R*-value of 1.0 (ft^2 · h · °F)/Btu/h per inch of insulating material. The methods in Table 308.4.2 control heat transmission by reflecting heat

INTERNATIONAL CODE COUNCIL®
Copyright © 2015 ICC. ALL RIGHTS RESERVED. Accessed by David Dammon on Jun 21, 2017 12:30:52 PM pursuant to License Agreement with ICC. No further reproduction or distribution authorized. ANY UNAUTHORIZED REPRODUCTION OR DISTRIBUTION IS A VIOLATION OF THE FEDERAL COPYRIGHT ACT AND THE LICENSE AGREEMENT, AND SUBJECT TO CIVIL AND CRIMINAL PENALTIES THEREUNDER.

radiation, retarding thermal conductance and providing convective cooling. Where sheet metal materials or metal plates are specified, the effectiveness of the protection can be enhanced by the reflective surface of the metal. Painting or otherwise covering the surface would reduce the metal's ability to reflect radiant heat and, depending on the color, could increase heat absorption. The airspace between the protected surface and the clearance-reduction method allows convection air currents to cool the protection assembly by carrying away heat that has been conducted through the assembly. Where a clearance-reduction assembly must be spaced 1 inch (25 mm) off the wall, the top, bottom and sides of the assembly must remain open to permit unrestricted airflow (convection currents). If these openings were not there, the air cooling would not take place and the protection assembly would not be as effective in limiting the temperature rise on the protected surfaces. Ideally, the protection assembly should be open on all sides to provide maximum ventilation. Commentary Figures 308.1(3) and 308.4.2(1) through 308.4.2(4) show assemblies incorporating an airspace.

Spacers must be noncombustible. Spacers should not be placed directly behind the heat source because the location would increase the amount of heat conduction through the spacer, thus creating a "hot spot." Commentary Figure 308.4.2(4) specifically shows a noncombustible spacer arrangement.

The performance of a protective assembly when applied to a horizontal surface, such as a ceiling, will differ substantially from the same assembly placed in a vertical plane. Obviously, temperatures at a ceiling surface will be higher because of natural convection and because the air circulation between the method of protection and the protected ceiling surface will be substantially reduced or nonexistent. It is for these reasons that Table 308.4.2 is divided into two application groups.

The manufacturer's instructions or label for many appliances will state an absolute minimum clearance, regardless of any clearance reduction method used. Those clearance requirements take precedence over Table 308.4.2. For example, a typical wood-burning room heater will require in all cases an airspace clearance of at least 12 inches (305 mm), with no further reduction allowed (see commentary, Section 308.4.2.1).

The methods in Table 308.4.2 are intended to be permanent installations properly supported to prevent displacement or deformation. Movement could adversely affect the performance of the protection method, thus posing a potential fire hazard.

The assemblies in Table 308.4.2 are the product of experience and testing. To achieve predictable and dependable performance, the components of the various assemblies cannot be mixed, matched, combined or otherwise rearranged to comprise new assemblies, and materials cannot be substituted for those prescribed in the table. Any alterations or substitutions could have an effect on the assembly and its performance would have to be tested and approved.

Table 308.4.2 does not specify the method of measuring the reduced clearance; however, the intent is to measure the reduced clearance from the heat

TABLE 308.4.2
CLEARANCE REDUCTION METHODS[b]

TYPE OF PROTECTIVE ASSEMBLY[a]	REDUCED CLEARANCE WITH PROTECTION (inches)[a]							
	Horizontal combustible assemblies located above the heat source				Horizontal combustible assemblies located beneath the heat source and all vertical combustible assemblies			
	Required clearance to combustibles without protection (inches)[a]				Required clearance to combustibles without protection (inches)			
	36	18	9	6	36	18	9	6
Galvanized sheet steel, having a minimum thickness of 0.0236 inch (No. 24 gage), mounted on 1-inch glass fiber or mineral wool batt reinforced with wire on the back, 1 inch off the combustible assembly	18	9	5	3	12	6	3	3
Galvanized sheet steel, having a minimum thickness of 0.0236 inch (No. 24 gage), spaced 1 inch off the combustible assembly	18	9	5	3	12	6	3	2
Two layers of galvanized sheet steel, having a minimum thickness of 0.0236 inch (No. 24 gage), having a 1-inch airspace between layers, spaced 1 inch off the combustible assembly	18	9	5	3	12	6	3	3
Two layers of galvanized sheet steel, having a minimum thickness of 0.0236 inch (No. 24 gage), having 1 inch of fiberglass insulation between layers, spaced 1 inch off the combustible assembly	18	9	5	3	12	6	3	3
0.5-inch inorganic insulating board, over 1 inch of fiberglass or mineral wool batt, against the combustible assembly	24	12	6	4	18	9	5	3
$3^1/_2$-inch brick wall, spaced 1 inch off the combustible wall	—	—	—	—	12	6	6	6
$3^1/_2$-inch brick wall, against the combustible wall	—	—	—	—	24	12	6	5

For SI: 1 inch = 25.4 mm, °C = [(°F)-32]/1.8, 1 pound per cubic foot = 16.02 kg/m^3, 1.0 Btu • in/(ft^2 • h • °F) = 0.144 W/m^2 • K.

a. Mineral wool and glass fiber batts (blanket or board) shall have a minimum density of 8 pounds per cubic foot and a minimum melting point of 1,500°F. Insulation material utilized as part of a clearance reduction system shall have a thermal conductivity of 1.0 Btu • in/(ft^2 • h • °F) or less. Insulation board shall be formed of noncombustible material.

b. For limitations on clearance reduction for solid fuel-burning appliances, masonry chimneys, connector pass-throughs, masonry fire places and kitchen ducts, see Sections 308.4.2.1 through 308.4.2.5.

INTERNATIONAL CODE COUNCIL®
Copyright © 2015 ICC. ALL RIGHTS RESERVED. Accessed by David Dammon on Jun 21, 2017 12:30:52 PM pursuant to License Agreement with ICC. No further reproduction or distribution authorized. ANY UNAUTHORIZED REPRODUCTION OR DISTRIBUTION IS A VIOLATION OF THE FEDERAL COPYRIGHT ACT AND THE LICENSE AGREEMENT, AND SUBJECT TO CIVIL AND CRIMINAL PENALTIES THEREUNDER.

source to the combustible material, disregarding any intervening protection assembly.

The thicknesses of galvanized sheet metal were changed to reflect the low end of the tolerance for No. 24 gage. This allows the field inspector to verify and accept all thicknesses of material that could be supplied for No. 24 gage. Note b was added to clarify that in some applications the clearance reduction methods are not applicable.

308.4.2.1 Solid fuel-burning appliances. The *clearance* reduction methods specified in Table 308.4.2 shall not be utilized to reduce the *clearance* required for solid fuel-burning appliances that are *labeled* for installation with clearances of 12 inches (305 mm) or less. Where appliances are *labeled* for installation with *clearances* of greater than 12 inches (305 mm), the *clearance* reduction methods of Table 308.4.2 shall not reduce the *clearance* to less than 12 inches (305 mm).

❖ Section 308.4.2 does not apply to the installation of solid-fuel-burning appliances listed for clearances of 12 inches (305 mm) or less. If the listed clearance is greater than 12 inches (305 mm), Section 308.4.2 is applicable if the reduced clearance is not less than 12 inches (305 mm). Solid-fuel-fired appliances can produce high-intensity radiant heat and have wide variations in heat output. With small clearances, the protection method could be inadequate because of the radiation intensity, reradiation from the protection assembly and inability of the protection method to dissipate the heat energy at the rate received from the appliance. A minimum distance is also beneficial to promote convection cooling.

308.4.2.2 Masonry chimneys. The *clearance* reduction methods specified in Table 308.4.2 shall not be utilized to reduce the *clearances* required for masonry *chimneys* as specified in Chapter 8 and the *International Building Code*.

❖ Clearances for masonry chimneys and masonry fireplace's are stated in the IBC. Chapter 8 simply refers to the IBC for masonry chimney construction (see commentary, Section 801.3). The required clearances for low-heat masonry chimneys are already quite small and not within the confines of Table 308.6. Also, the testing and research that led to the creation of the table involved heat-producing appliances or equipment operating in "free air" in a room or space. The effect of clearance reduction for masonry assemblies could be unpredictable and disastrous.

Masonry chimneys are typically enclosed within building construction and therefore would not be cooled by convection air currents.

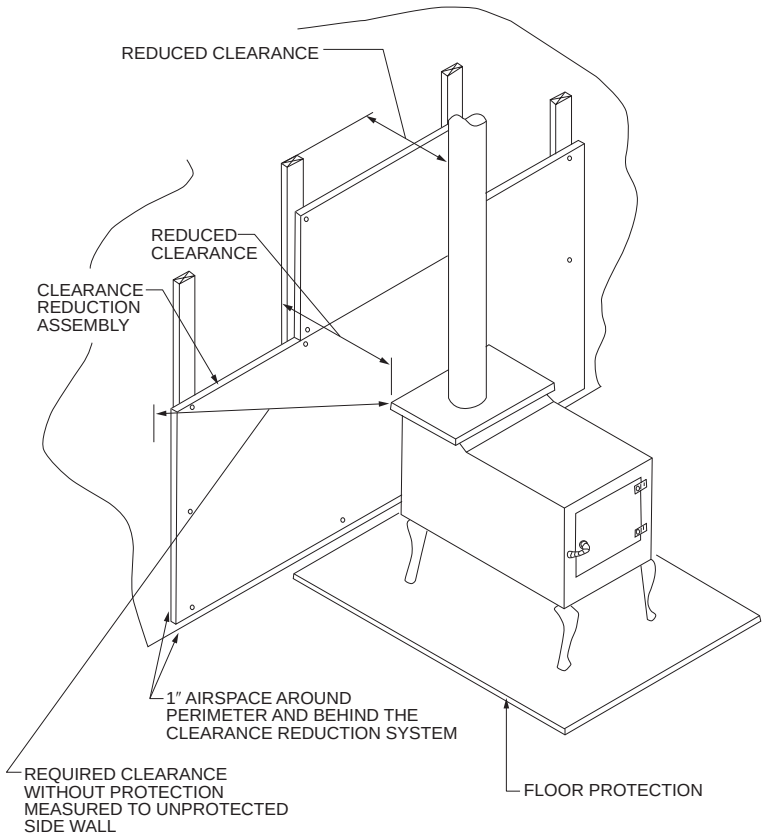

For SI: 1 inch = 25.4 mm.

FIGURE 308.4.2(1)
REDUCED CLEARANCE TO COMBUSTIBLES

INTERNATIONAL CODE COUNCIL®
Copyright © 2015 ICC. ALL RIGHTS RESERVED. Accessed by David Dammon on Jun 21, 2017 12:30:52 PM pursuant to License Agreement with ICC. No further reproduction or distribution authorized. ANY UNAUTHORIZED REPRODUCTION OR DISTRIBUTION IS A VIOLATION OF THE FEDERAL COPYRIGHT ACT AND THE LICENSE AGREEMENT, AND SUBJECT TO CIVIL AND CRIMINAL PENALTIES THEREUNDER.

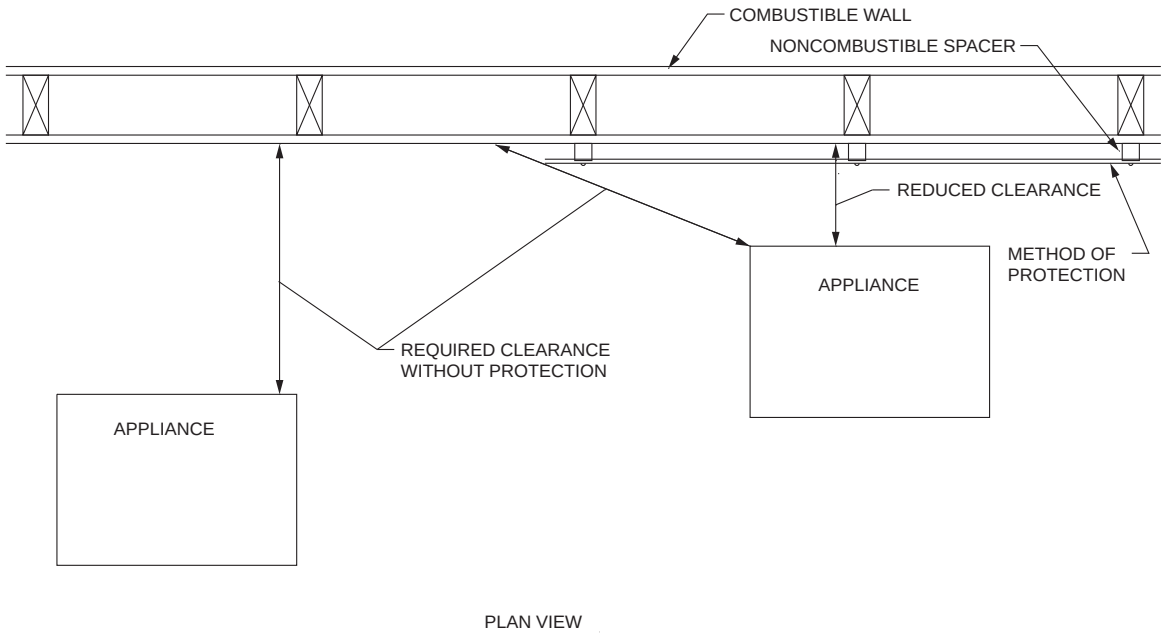

Figure 308.4.2(2)
CLEARANCE TO COMBUSTIBLES

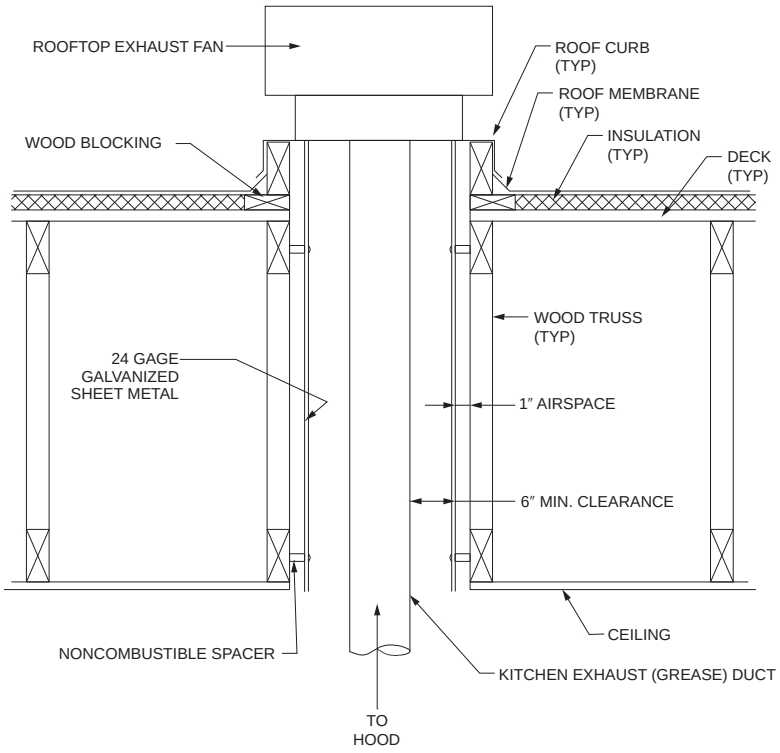

For SI: 1 inch = 25.4 mm.

FIGURE 308.4.2(3)
CLEARANCE TO COMBUSTIBLES

INTERNATIONAL CODE COUNCIL®
Copyright © 2015 ICC. ALL RIGHTS RESERVED. Accessed by David Dammon on Jun 21, 2017 12:30:52 PM pursuant to License Agreement with ICC. No further reproduction or distribution authorized. ANY UNAUTHORIZED REPRODUCTION OR DISTRIBUTION IS A VIOLATION OF THE FEDERAL COPYRIGHT ACT AND THE LICENSE AGREEMENT, AND SUBJECT TO CIVIL AND CRIMINAL PENALTIES THEREUNDER.

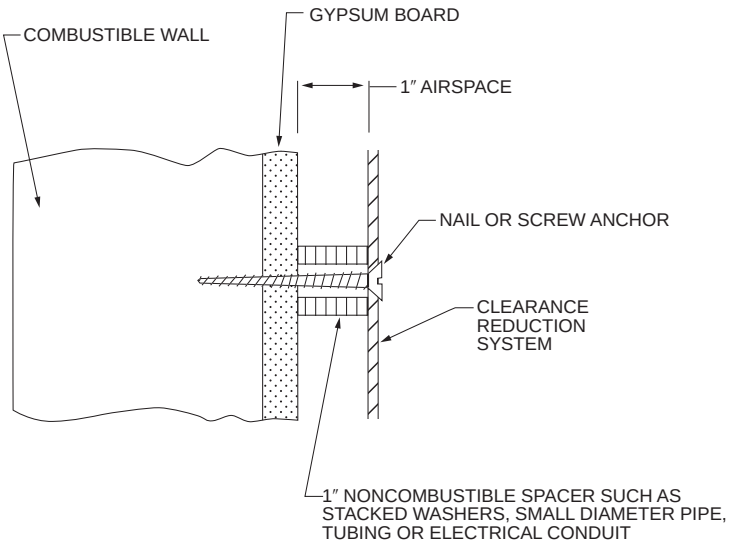

For SI: 1 inch = 25.4 mm.

Figure 308.4.2(4)
CLEARANCE TO COMBUSTIBLES

308.4.2.3 Chimney connector pass-throughs. The *clearance* reduction methods specified in Table 308.4.2 shall not be utilized to reduce the clearances required for *chimney* connector pass-throughs as specified in Section 803.10.4.

❖ The assemblies found in Section 803.10.4 are, in effect, clearance-reduction methods in themselves. These assemblies have been tested and any deviation or further reduction of clearance could change the assembly's performance (see commentary, Section 308.4.2.2).

308.4.2.4 Masonry fireplaces. The *clearance* reduction methods specified in Table 308.4.2 shall not be utilized to reduce the clearances required for masonry fireplaces as specified in Chapter 8 and the *International Building Code*.

❖ Using the same logic expressed for masonry chimneys, the required clearances to combustibles for masonry fireplaces cannot be reduced (see commentary, Section 308.4.2.2).

308.4.2.5 Kitchen exhaust ducts. The *clearance* reduction methods specified in Table 308.4.2 shall not be utilized to reduce the minimum *clearances* required by Section 506.3.11.1 for kitchen exhaust ducts enclosed in a shaft.

❖ The intent of this section is not to allow the minimum "observation" clearance of Section 506.3.11.1 to be reduced. As stated in Section 308.1, Section 308 applies to the clearances required by Sections 506.3.6 and 507.2.6.

SECTION 309
TEMPERATURE CONTROL

[BG] 309.1 Space-heating systems. Interior spaces intended for human occupancy shall be provided with active or passive space-heating systems capable of maintaining an indoor temperature of not less than 68°F (20°C) at a point 3 feet (914 mm) above floor on the design heating day. The installation of portable space heaters shall not be used to achieve compliance with this section.

Exceptions:

1. Interior spaces where the primary purpose is not associated with human comfort.
2. Group F, H, S and U occupancies.

❖ The intent of this section is to require some form of space heating system for all interior spaces intended for human occupancy. The heating appliances listed in this code and in the IFGC can be used individually or in combination to provide the heat source to meet this requirement. It should be noted that the IFGC prohibits the use of unvented room heaters as the sole source of heat in a building.

The prescribed temperature of 68°F (20°C) is considered the minimum temperature to maintain an acceptable comfort level for humans. This was the temperature setting for thermostats the federal government recommended for energy savings following the oil shortages of the 1970s. This section does not allow portable space heaters to satisfy the requirement for space heating.

Exception 1 exempts spaces in which human occupancy is not the primary use of the space. An example would be a large storage warehouse. Exception 2 is similar to Exception 1 in that it exempts spaces where human comfort is not relevant and where the conditions in the space are dictated by the operations and processes that occur in the space. Occupancy Groups F, H, S and U include, among many others, factories, laundries, food processing facilities, manu-

INTERNATIONAL CODE COUNCIL®
Copyright © 2015 ICC. ALL RIGHTS RESERVED. Accessed by David Dammon on Jun 21, 2017 12:30:52 PM pursuant to License Agreement with ICC. No further reproduction or distribution authorized. ANY UNAUTHORIZED REPRODUCTION OR DISTRIBUTION IS A VIOLATION OF THE FEDERAL COPYRIGHT ACT AND THE LICENSE AGREEMENT, AND SUBJECT TO CIVIL AND CRIMINAL PENALTIES THEREUNDER.

facturing facilities, hazardous material storage and production facilities, warehouses, barns, greenhouses and agricultural buildings.

SECTION 310
EXPLOSION CONTROL

[F] 310.1 Required. Structures occupied for purposes involving explosion hazards shall be provided with explosion control where required by the *International Fire Code*. Explosion control systems shall be designed and installed in accordance with Section 911 of the *International Fire Code*.

❖ The sudden increase in pressure inside a building caused by an explosion can cause massive damage to the building, including raising the roof or leveling the walls. A properly designed explosion control system will limit the damage by allowing the expanding gases to discharge through the vents, thus limiting the internal pressure to a value the structure can withstand.

Section 911 of the *International Fire Code*® (IFC®) contains guidance for the installation and operation of explosion (deflagration) venting in buildings where an explosion hazard exists. Some of the occupancies in the IFC requiring explosion control are facilities that manufacture or store hazardous materials, such as organic coating materials, flammable liquids, oxidizers, flammable gases and others. Note that deflagration venting may not be used as a means to protect buildings from deflagration hazards. An obvious facility that is not included is one that manufacturers or stores fireworks and/or explosives. Table 911.1 of the IFC does not allow explosion (deflagration) venting as a means of explosion control.

Explosion venting is allowed only in exterior walls and roofs, except that specially designed shafts vented to the outside of the building may be used. The size and design of the vents must be sufficient to relieve the sudden increase in internal pressure from an explosion to minimize damage to the structure, contents and occupants. The required vent area is dependent on the expected intensity of the explosion, the strength of the building components (columns, girders, walls, roof, etc.) and the opening response time of the vents.

SECTION 311
SMOKE AND HEAT VENTS

[F] 311.1 Required. *Approved* smoke and heat vents shall be installed in the roofs of one-story buildings where required by the *International Fire Code*. Smoke and heat vents shall be designed and installed in accordance with the *International Fire Code*.

❖ The heated products of combustion, which are less dense than the surrounding air, will rise and accumulate under the roof of a building. If the gases are not removed from the building by mechanical means or through smoke and heat vents, the layer of gases and smoke will build until the entire building is filled. Smoke and heat vents help provide better visibility and additional time for the occupants to exit the building and also help remove some of the toxic by products of the fire that endanger the lives of the occupants and the fire fighters.

Section 910 of the IFC contains guidance for the design and installation of smoke and heat vents. The IFC requires vents in Group F-1 and S-1 buildings larger than 50,000 square feet (4645 m^2), certain Group H-1, H-2 and H-3 occupancies, buildings containing high-piled combustibles or rack storage and Group F-1 and S-1 occupancies where the maximum exit travel distance has been increased in accordance with the IBC.

SECTION 312
HEATING AND COOLING LOAD CALCULATIONS

312.1 Load calculations. Heating and cooling system design loads for the purpose of sizing systems, appliances and *equipment* shall be determined in accordance with the procedures described in the ASHRAE/ACCA Standard 183. Alternatively, design loads shall be determined by an *approved* equivalent computation procedure, using the design parameters specified in Chapter 3 [CE] of the *International Energy Conservation Code*.

❖ This section was changed to require heating and cooling load calculations to be performed using ASHRAE/ACCA Standard 183. This standard contains all relevant sizing information that is provided in the ASHRAE *Handbook of Fundamentals* but in a more organized and straightforward format. Factors that are involved in calculating loads include types of building materials, building orientation, shading of the building, heat gains and losses from fenestration products (windows, doors, skylights, etc.), heat gains and losses through walls, floors and roof assemblies, duct heat gains and losses and internal heat sources, such as lighting, equipment and occupant load.

Where energy recovery systems are incorporated into an HVAC system, substantial amounts of energy can be recovered or shed to significantly reduce heating and cooling loads, respectively. These load reductions must be factored into sizing the HVAC system so that the system will not be oversized, less efficient and less able to control humidity in the cooling mode.

Design heating and cooling loads can also be computed by other equivalent procedures as approved by the code official. Where equivalent procedures are used, Chapter 3 of the IECC must be consulted for the design parameters.

INTERNATIONAL CODE COUNCIL®
Copyright © 2015 ICC. ALL RIGHTS RESERVED. Accessed by David Dammon on Jun 21, 2017 12:30:52 PM pursuant to License Agreement with ICC. No further reproduction or distribution authorized. ANY UNAUTHORIZED REPRODUCTION OR DISTRIBUTION IS A VIOLATION OF THE FEDERAL COPYRIGHT ACT AND THE LICENSE AGREEMENT, AND SUBJECT TO CIVIL AND CRIMINAL PENALTIES THEREUNDER.

Bibliography

The following resource materials were used in the preparation of the commentary for this chapter of the code:

IBC-15, *International Building Code*. Washington, DC: International Code Council, 2014.

IECC-15, *International Energy Conservation Code*. Washington, DC: International Code Council, 2014.

IFC-15, *International Fire Code*. Washington, DC: International Code Council, 2014.

IFGC-15, *International Fuel Gas Code*. Washington, DC: International Code Council, 2014.

IPC-15, *International Plumbing Code*. Washington, DC: International Code Council, 2014.

INTERNATIONAL CODE COUNCIL®
Copyright © 2015 ICC. ALL RIGHTS RESERVED. Accessed by David Dammon on Jun 21, 2017 12:30:52 PM pursuant to License Agreement with ICC. No further reproduction or distribution authorized. ANY UNAUTHORIZED REPRODUCTION OR DISTRIBUTION IS A VIOLATION OF THE FEDERAL COPYRIGHT ACT AND THE LICENSE AGREEMENT, AND SUBJECT TO CIVIL AND CRIMINAL PENALTIES THEREUNDER.

INTERNATIONAL CODE COUNCIL®
Copyright © 2015 ICC. ALL RIGHTS RESERVED. Accessed by David Dammon on Jun 21, 2017 12:30:52 PM pursuant to License Agreement with ICC. No further reproduction or distribution authorized. ANY UNAUTHORIZED REPRODUCTION OR DISTRIBUTION IS A VIOLATION OF THE FEDERAL COPYRIGHT ACT AND THE LICENSE AGREEMENT, AND SUBJECT TO CIVIL AND CRIMINAL PENALTIES THEREUNDER.

Chapter 4: Ventilation

General Comments

Mechanical ventilation uses fans or blowers to force the movement of air to and from the ventilated spaces. These systems can be dedicated to ventilation or can be part of a heating, cooling and air-conditioning system that serves the space to be ventilated. Spaces not served by an air-handling system, such as those heated and cooled by hot and chilled water, often depend on air-moving equipment that is devoted solely to providing ventilation.

Ventilation air is distinct from combustion air. Ventilation air is required for the occupants of the building; combustion air is necessary for the proper operation of fuel-burning appliances.

The term "occupied" or "occupiable" as used in this chapter also includes those spaces that are inhabited or habitable.

Natural ventilation is dependent on several factors, including: the location of ventilation openings; wind speed and direction; seasonal climate; temperature differences between indoors and outdoors; the building infiltration rate; ventilation opening shape and configuration; barometric pressure; the shape, height and proximity of adjacent structures; ventilation opening size; the number and distribution of openings in the open position and the personal habits and desires of the occupants. Natural ventilation, other than building infiltration and exfiltration through cracks and joints in the building envelope, occurs only when required openings to the outdoors are open.

Natural ventilation is not an exact science. The actual quantity of air movement through windows, doors and other gravity openings cannot be predicted because of the changing variables that affect airflow. The most unpredictable variable affecting natural ventilation is the fact that all such ventilation, other than infiltration and exfiltration, is dependent on one or more manual operations by the occupants of the room or space.

Where contaminants are known to be present in quantities large enough to be irritating or harmful to the occupants' health, naturally ventilated spaces must have mechanical exhaust systems capable of collecting and removing those contaminants. The mechanical exhaust system must comply with this chapter and Chapter 5 which contains exhaust system design criteria. Section 401.6 contains examples of the types of contaminant sources that require a mechanical exhaust system. The application of this section requires the judgment of the designer and the code official on a case-by-case basis. Chapter 5 also prescribes ventilation design for special areas listed there. Spaces designated by Note b of Table 403.3.1.1 are examples of spaces requiring mechanical exhaust systems to control contaminants.

In all but mild seasonal temperatures, natural ventilation and human comfort are in direct conflict. It is human nature to avoid opening windows and doors in the winter or summer months when the outdoor conditions are not within the human comfort zone, especially when energy is being expended to heat or cool the building interior.

Section 401 states the scope of the chapter and addresses by what means and when ventilation is to occur. It also covers general installation requirements and exhaust systems for local sources of contamination.

Section 402 contains all the requirements for natural ventilation.

Section 403 addresses mechanical means of ventilation.

Section 404 contains requirements for the ventilation of enclosed parking garages.

Section 405 states the minimum requirements for ventilation system controls.

Section 406 contains requirements for the ventilation of crawl spaces, attic spaces and similar uninhabited spaces.

Purpose

Chapter 4 includes means for protecting building occupant health by controlling the quality of indoor air and protecting property from the effects of inadequate ventilation. In some cases, ventilation is required to prevent or reduce a health hazard by removing contaminants at their source.

Ventilation is the exchange of air from one space to another, usually between an interior space and the outdoors. Ventilation is both necessary and desirable for the control of air contaminants, moisture and temperature. Habitable and occupiable spaces are ventilated to promote a healthy and comfortable environment for the occupants. Uninhabited and unoccupied spaces are ventilated to protect the building structure from the harmful effects of excessive humidity and heat. Ventilation of specific occupancies is necessary to minimize the potential for toxic or otherwise harmful substances to reach dangerously high concentrations in the air.

INTERNATIONAL CODE COUNCIL®
Copyright © 2015 ICC. ALL RIGHTS RESERVED. Accessed by David Dammon on Jun 21, 2017 12:30:52 PM pursuant to License Agreement with ICC. No further reproduction or distribution authorized. ANY UNAUTHORIZED REPRODUCTION OR DISTRIBUTION IS A VIOLATION OF THE FEDERAL COPYRIGHT ACT AND THE LICENSE AGREEMENT, AND SUBJECT TO CIVIL AND CRIMINAL PENALTIES THEREUNDER.

SECTION 401
GENERAL

401.1 Scope. This chapter shall govern the ventilation of spaces within a building intended to be occupied. Mechanical exhaust systems, including exhaust systems serving clothes dryers and cooking appliances; hazardous exhaust systems; dust, stock and refuse conveyor systems; subslab soil exhaust systems; smoke control systems; energy recovery ventilation systems and other systems specified in Section 502 shall comply with Chapter 5.

❖ This section establishes the scope of the chapter and the basic requirements for where, when and how ventilation is to be provided. This chapter regulates ventilation for rooms and spaces within building interiors that are intended for occupancy or inhabitability. This chapter also includes provisions for the ventilation of unoccupied spaces such as attics and crawl spaces (see commentary, Section 406).

Smoke control systems, smoke venting, mechanical exhaust systems and combustion air supplies are not within the scope of this chapter, but are regulated by other sections of the code, the *International Fuel Gas Code*® (IFGC®) and the *International Building Code*® (IBC®) as follows:

Smoke Control Systems	Section 513 IBC Section 909
Combustion Air (for appliances not fuel-gas fired)	Chapter 7
Combustion Air (for fuel-gas-fired appliances)	IFGC Section 304

Chapter 5 addresses exhaust systems; however, ventilation is often accomplished using an exhaust-and-makeup-air arrangement such as for toilet rooms, bathrooms, kitchens and specific occupancies denoted by Notes b, g and h in Table 403.3.1.1.

401.2 Ventilation required. Every occupied space shall be ventilated by natural means in accordance with Section 402 or by mechanical means in accordance with Section 403. Where the air infiltration rate in a dwelling unit is less than 5 air changes per hour when tested with a blower door at a pressure of 0.2-inch water column (50 Pa) in accordance with Section R402.4.1.2 of the *International Energy Conservation Code*, the dwelling unit shall be ventilated by mechanical means in accordance with Section 403. Ambulatory care facilities and Group I-2 occupancies shall be ventilated by mechanical means in accordance with Section 407.

❖ Two distinct requirements are established by this section: all occupied spaces must be ventilated and ventilation can by accomplished by either natural (gravity) or mechanical means, with exceptions. The method of ventilation, mechanical or natural, is the choice of the owner or designer except for dwelling units having less than 5 air changes per hour (5 ACH50) and except for ambulatory care facilities and Group I-2 occupancies. If the ACH rate is less than 5 in a dwelling unit, mechanical ventilation is required whether or not natural ventilation criteria have been met. This section is coordinated with Section R303.4 of the *International Residential Code*® (IRC®) and Section 1203.1 of the IBC relative to dwelling unit ventilation. The *International Energy Conservation Code*® (IECC®) mandates that dwelling units be tested for air infiltration to further its goal of creating tighter buildings for the purpose of energy conservation and this same testing is also an indicator of when a building has become too tight to rely on natural ventilation. Testing is performed with an apparatus called a blower door and involves measuring the amount of air that the blower has to push into or pull out of a building in order to maintain a pressure differential between the indoors and outdoors of 0.2 inches of water column (50 Pa). The greater the volumetric flow rate through the blower to maintain the constant pressure differential, the greater the leakage in the building envelope. Multiple studies have shown that natural ventilation alone is not sufficient for dwellings that are tightly sealed such that their infiltration rate is below 5 air changes per hour (ACH). For perspective, 50 Pa = 0.2 inches water column; 1-inch water column = 250 Pa. Traditionally, 0.35 air changes per hour or 15 cfm per occupant has been the required mechanical ventilation rate allowed as an alternative to natural ventilation. An ACH of 0.35 at typical ambient pressure differentials is roughly equivalent to 7 to 10 ACH at a 50 Pa differential, thus the threshold of 5 ACH50 is comparable to the traditional ventilation rate. Note that the IECC intends for the infiltration rate to be 5 ACH50 or less, consistent with the trend for tighter building envelopes. As dwelling envelopes become more air tight, there is evidence that indoor contaminants levels are rising. Poor indoor air quality, the inability to predict ventilation rates from natural ventilation and the decreasing rates of infiltration have all led to this requirement for mechanical ventilation in dwellings. Also, several state codes now mandate mechanical ventilation in dwellings. The requirement for mechanical ventilation applies whether or not the natural ventilation provisions of Section 402 are applied.

The ventilation methodology of this chapter assumes that either the natural or mechanical ventilation method is being used. The code assumes that a building will be in full compliance with one method or the other. There are no provisions in the code for a ventilation system that depends simultaneously on both natural and mechanical ventilation. No criteria are given to evaluate ventilation effectiveness when natural and mechanical ventilation methods are used simultaneously for a room or space. This would be combining apples and oranges because mechanical ventilation is quantifiable and natural ventilation is not. On the other hand, the code does not expressly prohibit the combined use of both natural and mechanical methods. If both natural and mechanical means of ventilation are viable as stand-alone methods, logic would dictate that, for example, 50 percent

INTERNATIONAL CODE COUNCIL®
Copyright © 2015 ICC. ALL RIGHTS RESERVED. Accessed by David Dammon on Jun 21, 2017 12:30:52 PM pursuant to License Agreement with ICC. No further reproduction or distribution authorized. ANY UNAUTHORIZED REPRODUCTION OR DISTRIBUTION IS A VIOLATION OF THE FEDERAL COPYRIGHT ACT AND THE LICENSE AGREEMENT, AND SUBJECT TO CIVIL AND CRIMINAL PENALTIES THEREUNDER.

of the required natural ventilation combined with 50 percent of the required mechanical ventilation would satisfy the intent of the code. Of course, the sum of such fractions (percentages) of the two methods would have to equal or exceed 100 percent. A possible drawback to such a hybrid system would be that the occupants might assume that because some mechanical ventilation is installed, it is therefore unnecessary to open any windows, not realizing that the mechanical ventilation is providing only a portion of the required outdoor air. Note that a system using both natural and mechanical ventilation methods would supply varying and unpredictable ventilation because the natural ventilation component will be unquantifiable.

Of course, naturally ventilated spaces can be served by exhaust systems, such as those prescribed by Section 401.6, and such designs can easily demonstrate compliance with the applicable code provisions.

A building may contain more than one type of ventilation system for different spaces within the same building. For example, an office building with an attached parking garage might use a natural ventilation system for the office structure and mechanical ventilation systems for the parking garage, toilet rooms and smoking lounges. Ambulatory care facilities and Group I-2 occupancies are defined in the IBC.

ASHRAE 170 is a ventilation standard for health care facilities, and it contains special provisions for the unique nature of such occupancies. The ventilation provisions of Section 403 of the 2012 IMC specific to health care facilities no longer apply. The health care industry helped develop ASHRAE 170 to address the special needs for ventilation of health care facilities. Ambulatory care facilities are those where the patients enter and exit the facility under their own power, but the patients are incapacitated for some period of time while receiving treatment or testing. The facilities include oral surgery offices, eye surgery clinics and colonoscopy clinics, among others.

See Section 407.

401.3 When required. Ventilation shall be provided during the periods that the room or space is occupied.

❖ Ventilation must be provided at all times that the room or space is occupied, but can cease when the room or space is unoccupied. This requires a mechanical ventilation system to be designed with controls that provide for continuous ventilation air movement during the entire time that the building is occupied. For example, if a building uses the heating, ventilation and air-conditioning (HVAC) system as the means of providing mechanical ventilation, the HVAC system is not allowed to cycle the air handler off and on. Rather than cycling the blower with the call for heat or cooling, the blower must run continuously while the building is occupied if it is the means of providing mechanical ventilation. This is typically accomplished with timers and energy management control systems (see Section 405.1). Note that even though ventilation must be continuous while the building is occupied, Section 403.3.1.3 allows the mechanical ventilation rate to modulate in proportion to the number of occupants in the space being ventilated. Ventilation required by Section 406 is not related to occupancy.

401.4 Intake opening location. Air intake openings shall comply with all of the following:

1. Intake openings shall be located not less than 10 feet (3048 mm) from lot lines or buildings on the same lot.
2. Mechanical and gravity outdoor air intake openings shall be located not less than 10 feet (3048 mm) horizontally from any hazardous or noxious contaminant source, such as vents, streets, alleys, parking lots and loading docks, except as specified in Item 3 or Section 501.3.1. Outdoor air intake openings shall be permitted to be located less than 10 feet (3048 mm) horizontally from streets, alleys, parking lots and loading docks provided that the openings are located not less than 25 feet (7620 mm) vertically above such locations. Where openings front on a street or public way, the distance shall be measured from the closest edge of the street or public way.
3. Intake openings shall be located not less than 3 feet (914 mm) below contaminant sources where such sources are located within 10 feet (3048 mm) of the opening.
4. Intake openings on structures in flood hazard areas shall be at or above the elevation required by Section 1612 of the *International Building Code* for utilities and attendant equipment.

❖ This section addresses intake openings and Section 501.3.1 addresses exhaust openings. These two sections must be applied in harmony because they both can affect the separation between intakes and exhaust openings. To prevent the introduction of contaminants into the ventilation air of a building, Item 1 requires a minimum separation of 10 feet (3048 mm) between outdoor air intake openings and any lot lines or buildings on the same lot. Item 2 addresses powered intakes, (mechanical) and gravity (nonmechanical) intakes and requires separation from potentially harmful contaminant sources including chimneys and vents, plumbing vents and areas where motor vehicles operate. In this item, the 10-foot (3048 mm) distance would be measured from the closest edge of a street, alley, parking lot and loading dock. The last sentence of Item 2 addresses intake openings that face a street or public way [see Commentary Figures 401.4(1) and 401.4(2)].

Item 3 addresses those cases where the required 10-foot (3048 mm) separation cannot be met. For example, if the 10-foot (3048 mm) horizontal separation required in Item 2 cannot be achieved, the intake could be located at least 3 feet (914.4 mm) below the

INTERNATIONAL CODE COUNCIL®
Copyright © 2015 ICC. ALL RIGHTS RESERVED. Accessed by David Dammon on Jun 21, 2017 12:30:52 PM pursuant to License Agreement with ICC. No further reproduction or distribution authorized. ANY UNAUTHORIZED REPRODUCTION OR DISTRIBUTION IS A VIOLATION OF THE FEDERAL COPYRIGHT ACT AND THE LICENSE AGREEMENT, AND SUBJECT TO CIVIL AND CRIMINAL PENALTIES THEREUNDER.

contaminant source. The code assumes that the contaminants likely to be present are buoyant in air because of their temperature or specific gravity and they will rise above and away from the intake opening.

Item 4 intends to prevent floodwaters from entering a building through an air intake opening. IBC Section 1612 refers to ASCE 24 which requires mechanical systems, equipment and appliances and air intake openings to meet specific elevation requirements. In addition, this prevents water from floods up to the base flood from entering a building through an air intake openings and causing damage to equipment.

See Chapter 8 and the IFGC for specific regulations for the location of chimney, vent, exhauster, mechanical draft system and appliance vent terminations for fuel-fired appliances. The specific provisions of Chapter 8 and the IFGC take precedence over the general provisions of this section.

See Sections 501.3 and 501.3.1 and consider the fact that an existing intake opening can be impacted by the installation of a new exhaust termination, as well as the fact that an existing exhaust termination can affect the location of a newly installed intake opening.

401.5 Intake opening protection. Air intake openings that terminate outdoors shall be protected with corrosion-resistant screens, louvers or grilles. Openings in louvers, grilles and screens shall be sized in accordance with Table 401.5, and shall be protected against local weather conditions. Louvers that protect air intake openings in structures located in hurricane-prone regions, as defined in the *International Building Code*, shall comply with AMCA 550. Outdoor air intake openings located in exterior walls shall meet the provisions for exterior wall opening protectives in accordance with the *International Building Code.*

❖ This section aims to protect intake openings, other than windows and doors, from penetration by precipitation, small animals, vermin and debris. The opening sizes for residential intake opening protection range from $^1/_4$ inch to $^1/_2$ inch (6.35 mm to 12.7 mm) and the opening sizes for nonresidential intake opening protection are larger than $^1/_4$ inch (6.35 mm) up to a maximum of 1 inch, as dictated by Table 401.5. The opening size in louvers, grilles and screens must be large enough to inhibit blockage by debris and to prevent significant resistance to airflow, and yet must be small enough to keep out what is intended to be kept out. A screen of the stated mesh sizes would restrict the passage of rodents and large insects and would be resistant to blockage by lint, debris and plant fibers. Louvers in hurricane-prone areas must be resistant to wind-driven rain, hence the requirement to comply with AMCA 500.

TABLE 401.5
OPENING SIZES IN LOUVERS, GRILLES AND SCREENS PROTECTING AIR INTAKE OPENINGS

OUTDOOR OPENING TYPE	MINIMUM AND MAXIMUM OPENING SIZES IN LOUVERS, GRILLES AND SCREENS MEASURED IN ANY DIRECTION
Intake openings in residential occupancies	Not < $^1/_4$ inch and not > $^1/_2$ inch
Intake openings in other than residential occupancies	> $^1/_4$ inch and not > 1 inch

For SI: 1 inch = 25.4 mm.

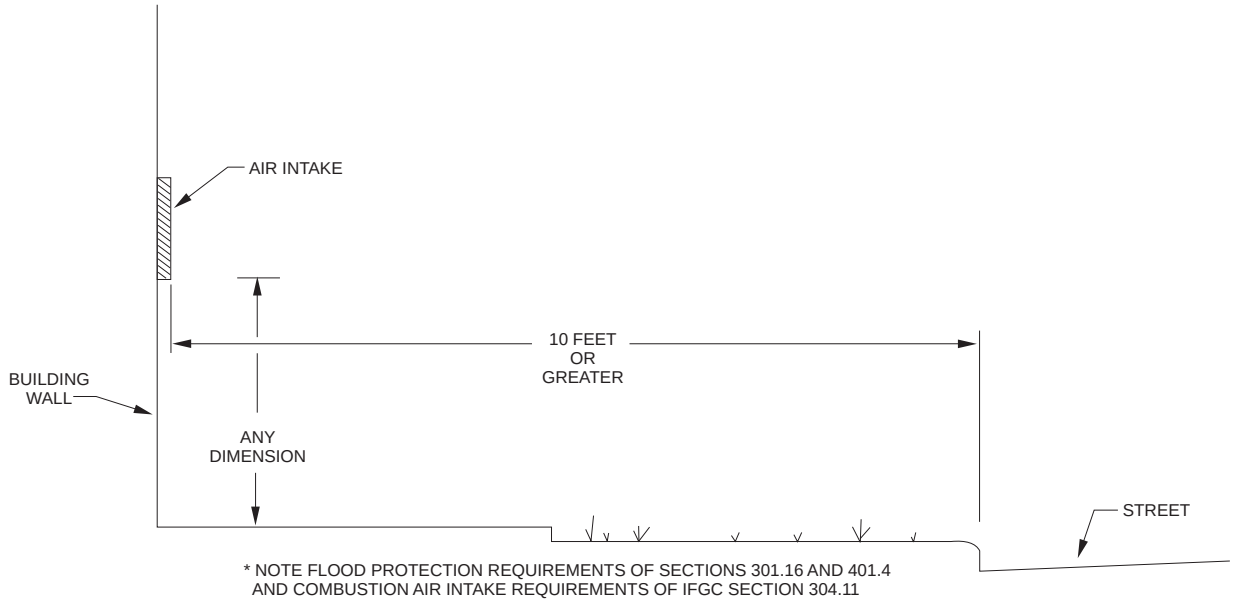

For SI: 1 inch = 25.4 mm, 1 foot = 304.8 mm.

Figure 401.4(1)
INTAKE OPENING

INTERNATIONAL CODE COUNCIL®
Copyright © 2015 ICC. ALL RIGHTS RESERVED. Accessed by David Dammon on Jun 21, 2017 12:30:52 PM pursuant to License Agreement with ICC. No further reproduction or distribution authorized. ANY UNAUTHORIZED REPRODUCTION OR DISTRIBUTION IS A VIOLATION OF THE FEDERAL COPYRIGHT ACT AND THE LICENSE AGREEMENT, AND SUBJECT TO CIVIL AND CRIMINAL PENALTIES THEREUNDER.

401.6 Contaminant sources. Stationary local sources producing air-borne particulates, heat, odors, fumes, spray, vapors, smoke or gases in such quantities as to be irritating or injurious to health shall be provided with an exhaust system in accordance with Chapter 5 or a means of collection and removal of the contaminants. Such exhaust shall discharge directly to an *approved* location at the exterior of the building.

❖ Stationary local sources include equipment, machinery, processes, chemical handling and storage and special-purpose rooms or areas that produce contaminants in quantities that constitute a health hazard to the building occupants. The contaminants must be removed by an exhaust system or by decontamination equipment designed to collect and remove the contaminants.

This section recognizes that natural and mechanical ventilation methods, in themselves, cannot effectively collect and remove contaminants produced by many types of local sources. Section 402 certainly does not address specific contaminant sources and Section 403 addresses only those contaminant sources listed in Table 403.3.1.1. There are many possible sources of contaminants that would be unaddressed if not for Section 401.6. This section is written in performance language and requires a case-by-case evaluation by the designer and the code official to determine the quantity and type of contamination present, whether or not any action needs to be taken and, if so, the method of contaminant control and removal.

The exhaust termination must comply with Sections 501.3, 501.3.1 and 501.3.2.

Attics and crawl spaces are not considered to be outdoors and exhaust ducts cannot terminate in these spaces. Exhaust ducts must connect directly to terminals that pass through the building envelope to the outside atmosphere. Pointing, aiming or similarly directing an exhaust duct at an attic louver, grille, ridge vent, eave vent or soffit vent, for example, in no way ensures that all or any of the exhaust will reach the outdoors. In fact, it is possible that the majority, if not all, of the exhaust vapors and gases will discharge to the attic space rather than to the outdoors.

In the case of a duct that turns down to a soffit vent, the exhaust can rise into the attic as opposed to falling through the perforated soffit. The flow of air through any attic ventilation opening is dependent on attic temperature, wind direction, wind speed and opening configuration and location. In other words, attic air movement is unpredictable and may often be in the opposite direction to that intended. Additionally, grilles and louvers offer resistance and interfere with the exhaust flow directed at them. This may cause deflection of exhaust back into the attic. In cold climates, discharge of exhaust air into an attic space can result in moisture condensation on structural and insulation materials.

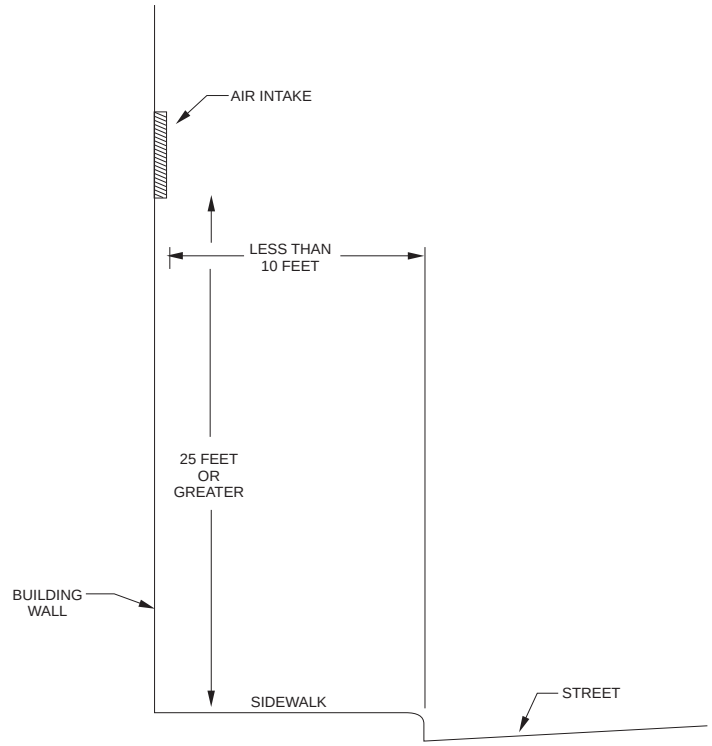

For SI: 1 foot = 304.8 mm.

Figure 401.4(2)
INTAKE OPENING

INTERNATIONAL CODE COUNCIL®
Copyright © 2015 ICC. ALL RIGHTS RESERVED. Accessed by David Dammon on Jun 21, 2017 12:30:52 PM pursuant to License Agreement with ICC. No further reproduction or distribution authorized. ANY UNAUTHORIZED REPRODUCTION OR DISTRIBUTION IS A VIOLATION OF THE FEDERAL COPYRIGHT ACT AND THE LICENSE AGREEMENT, AND SUBJECT TO CIVIL AND CRIMINAL PENALTIES THEREUNDER.

SECTION 402
NATURAL VENTILATION

[BG] 402.1 Natural ventilation. *Natural ventilation* of an occupied space shall be through windows, doors, louvers or other openings to the outdoors. The operating mechanism for such openings shall be provided with ready access so that the openings are readily controllable by the building occupants.

❖ This section presents the standard of natural ventilation for all occupied spaces. Openings to the outdoor air, such as doors, windows, louvers, etc., provide natural ventilation. The section does not, however, state or intend that the doors, windows or openings actually be constantly open. The intent is that they be maintained in an operable condition so that they are available for use at the discretion of the occupant. Section 402 is consistent with Section 1203.5 of the IBC. See Section 1203.5.2.1 of the IBC, which requires mechanical ventilation in rooms that contain bathing fixtures. Bathtubs, showers, spas and similar bathing fixtures add moisture to the indoor air that must be controlled to prevent unhealthy conditions and damage to building components.

[BG] 402.2 Ventilation area required. The minimum openable area to the outdoors shall be 4 percent of the floor area being ventilated.

❖ This section specifies the ratio of openable doors, windows and other openings to the floor space being ventilated, but does not address the distribution around the space or location of these openings. It is the designer's responsibility to distribute openings so as to accomplish the natural ventilation of the space. The placement of ventilation openings should be planned to induce airflow through the space. For example, placing all openings on the same wall will probably not be as effective as placing openings on opposite walls.

When inadequate natural ventilation is provided, mechanical ventilation can supplement any inadequacy (see Section 403). The plan reviewer can determine compliance with this section. For example, in Commentary Figure 402.2, the combined openable area (the net free area of a door, window, louver, vent or skylight, etc., when fully open) of double-hung Windows B and C is equal to 4 percent of the floor area [300 × 0.04 = 12 square feet (1.1 m^2)]. Note that only half of the area of the double-hung windows is considered to be openable. The openable area of Window A is not required and need not open onto a court or yard complying with Section 1206 of the IBC.

[BG] 402.3 Adjoining spaces. Where rooms and spaces without openings to the outdoors are ventilated through an adjoining room, the opening to the adjoining rooms shall be unobstructed and shall have an area not less than 8 percent of the floor area of the interior room or space, but not less than 25 square feet (2.3 m^2). The minimum openable area to the outdoors shall be based on the total floor area being ventilated.

Exception: Exterior openings required for ventilation shall be permitted to open into a thermally isolated sunroom addition or patio cover, provided that the openable area between the sunroom addition or patio cover and the interior room has an area of not less than 8 percent of the floor area of the interior room or space, but not less than 20 square feet (1.86 m^2). The minimum openable area to the outdoors shall be based on the total floor area being ventilated.

❖ Adjacent spaces with large connecting openings between them can share sources of ventilation. This section deals with the natural ventilation of connecting interior spaces. The intent is to allow a space without its own ventilation openings to the outdoors to be ventilated by connecting such space to another space that does have openings to the outdoors. It is not the intent to allow any space to be ventilated by another space that does not have openings to the outdoors. In other words, this section applies only to adjacent rooms and spaces, and it is not intended to allow rooms and spaces to be connected in a series of more than two rooms. Imagine Room A connected

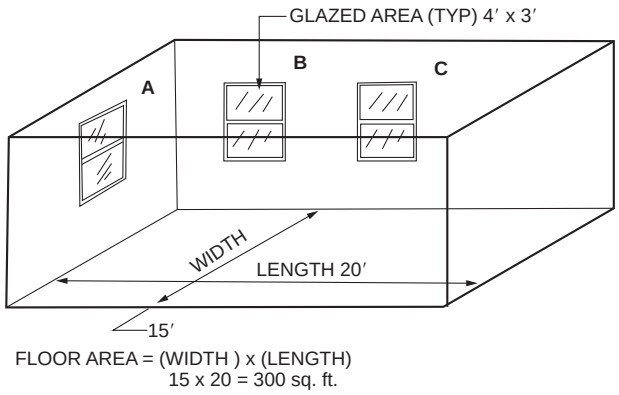

For SI: 1 foot = 304.8 mm, 1 square foot = 0.0929 m^2.

Figure 402.2
NATURAL LIGHT AND VENTILATION WINDOWS

INTERNATIONAL CODE COUNCIL®
Copyright © 2015 ICC. ALL RIGHTS RESERVED. Accessed by David Dammon on Jun 21, 2017 12:30:52 PM pursuant to License Agreement with ICC. No further reproduction or distribution authorized. ANY UNAUTHORIZED REPRODUCTION OR DISTRIBUTION IS A VIOLATION OF THE FEDERAL COPYRIGHT ACT AND THE LICENSE AGREEMENT, AND SUBJECT TO CIVIL AND CRIMINAL PENALTIES THEREUNDER.

through an opening to Room B, which is, in turn, connected to yet another Room C and only Room A or C in the series has openings to the outdoors. Clearly the farther the room is from the outdoor openings, the less that ventilation will occur. It is the designer's obligation to locate openings between rooms with exterior openings and connecting spaces without exterior openings to allow for natural ventilation of the connected space.

For purposes of ventilation, this section establishes a minimum openness requirement for the common wall between a room with openings to the outdoors and an interior room without openings to the outdoors. The minimum amount of open area required in that common wall is 8 percent of the floor area of the interior room that has no openings or 25 square feet (2.33 m^2), whichever is greater. The openable area of the openings to the outdoors in the "outer" room must be equal to or greater than 4 percent (the same as required by Section 402.2) of the total combined floor areas being ventilated. Commentary Figure 402.3 shows a cutaway of an interior room (Room A) adjacent to a room with openings to the outdoors (Room B). The openable area of openings to the outdoors in Space B must be equal to or greater than 0.04 times the area of the entire space (floor area of Space A plus floor area of interior Space B). The opening in the wall between the adjacent spaces must be a minimum of 25 square feet (2.33 m^2), but not less than 0.08 times the floor area of interior Space A. Because the opening between the adjacent spaces must be unobstructed to comply with this section, a door cannot be installed in the opening.

[BG] 402.4 Openings below grade. Where openings below grade provide required *natural ventilation*, the outside horizontal clear space measured perpendicular to the opening shall be one and one-half times the depth of the opening. The depth of the opening shall be measured from the average adjoining ground level to the bottom of the opening.

❖ This section is applicable whenever occupied spaces below grade depend on natural ventilation through structures like window wells. To provide adequate ventilation, this section sets the minimum horizontal clear space adjacent to the opening used for natural ventilation. Without this minimum horizontal area, air movement through the opening will be inadequate.

As illustrated in Commentary Figure 402.4, the opening area required for the story below grade intended for human occupancy is:

$$A = 0.04(L \times W)$$

The area of the window in the vertical plane (wh) must equal or exceed the required opening area. Additionally, the horizontal dimension from the window to the well wall must equal $1^1/_2$ times the depth of the openable portion of the window.

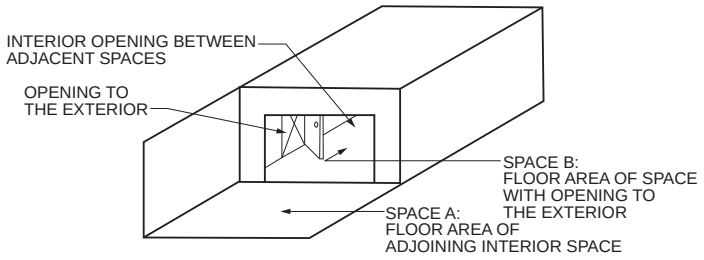

Figure 402.3
NATURAL VENTILATION FROM ADJOINING SPACE

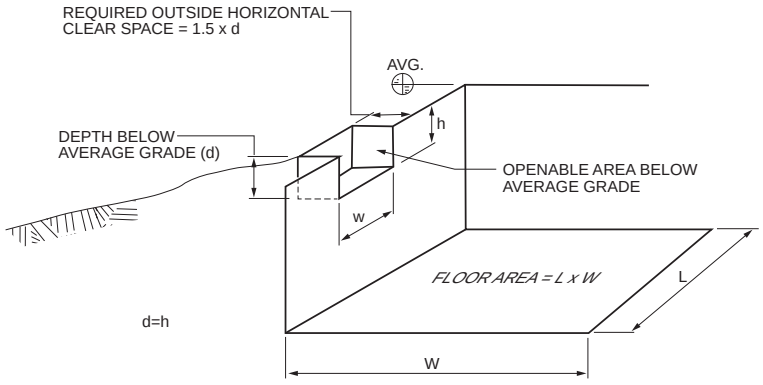

Figure 402.4
VENTILATION OPENINGS BELOW GRADE

INTERNATIONAL CODE COUNCIL®
Copyright © 2015 ICC. ALL RIGHTS RESERVED. Accessed by David Dammon on Jun 21, 2017 12:30:52 PM pursuant to License Agreement with ICC. No further reproduction or distribution authorized. ANY UNAUTHORIZED REPRODUCTION OR DISTRIBUTION IS A VIOLATION OF THE FEDERAL COPYRIGHT ACT AND THE LICENSE AGREEMENT, AND SUBJECT TO CIVIL AND CRIMINAL PENALTIES THEREUNDER.

SECTION 403
MECHANICAL VENTILATION

403.1 Ventilation system. Mechanical ventilation shall be provided by a method of supply air and return or *exhaust air* except that mechanical ventilation air requirements for Group R-2, R-3 and R-4 occupancies three stories and less in height above grade plane shall be provided by an exhaust system, supply system or combination thereof. The amount of supply air shall be approximately equal to the amount of return and *exhaust air*. The system shall not be prohibited from producing negative or positive pressure. The system to convey *ventilation air* shall be designed and installed in accordance with Chapter 6.

❖ This section addresses the mechanical method of ventilation. Mechanical ventilation is the alternative to having natural ventilation. As discussed in Section 401.2, both natural and mechanical ventilation can be provided to a space; however, one method must be in full compliance with the applicable sections of the code or the approved design must use both methods. The code does not state acceptance criteria that can be used to evaluate a ventilation system that depends on both natural and mechanical ventilation components. Mechanical ventilation systems must also comply with the applicable sections of Chapters 3, 5 and 6.

Technological advances are enabling mechanical ventilation to become increasingly economical as a method for ventilating occupied spaces. For example, ventilation systems can be equipped with air-to-air heat exchangers [energy recovery ventilators (ERVs)] that are designed to efficiently extract (reclaim) heat from exhaust air and use that heat to preheat the incoming outdoor makeup air. As a result, air can be exchanged between the indoors and the outdoors with only a slight loss of heat energy. Thus, heat reclamation equipment saves the energy that would otherwise be lost in the exhaust or relief air. ERVs can also be used to extract or reject sensible heat from the outdoor airstream, thus reducing cooling and heating loads. Such equipment is also capable of exchanging water vapor across the exhaust and makeup airstreams, thus retaining the moisture in the indoor space in the heating season or rejecting moisture to the outdoors in the cooling season.

Because certain types of ERVs can allow some degree of cross leakage and carryover between the airstreams, consideration must be given to the type of unit chosen for each application [see Commentary Figure 403.1(1)].

Mechanical ventilation is accomplished by air-handling equipment, fans, blowers and a distribution system that force air to flow through the space being ventilated. The components of a mechanical ventilation system can be dedicated for space ventilation or can be part of an HVAC system that serves the space [see Commentary Figure 403.1(2)].

The air distribution system can involve a duct network or it can be as simple as an exhaust opening with one or more outdoor air openings. A mechanical ventilation system can incorporate a gravity supply, return or exhaust operation within the system. As an example of a gravity supply system, a mechanical ventilation system for an auto repair shop may be equipped with a mechanical exhaust system to remove contaminants within the space. Instead of a blower to draw in supply air, the design relies on louvers placed within the exterior walls to allow outdoor air to enter the space when the exhaust system is operating and thereby creating a negative pressure in the building with respect to the outdoors.

Unlike natural ventilation, mechanical ventilation does not depend on unpredictable air pressure differentials between the indoors and outdoors to create airflow. Mechanical ventilation has the advantage of being both predictable and dependable because it is not subject to all of the variables that affect natural ventilation. The volume of air supplied to a space must be approximately equal to the volume of air removed from the space. Otherwise, the space will be either positively or negatively pressurized and the actual ventilation flow rate will be equivalent to the lower rate of either the air supply or air exhaust. To provide the required flow of outdoor air through a space, the rate of air leaving the space must be approximately equal to the rate being supplied. The intent is to make the minimum required airflow rate attainable. Slight negative or positive pressurization of spaces is often desirable to control contaminant or

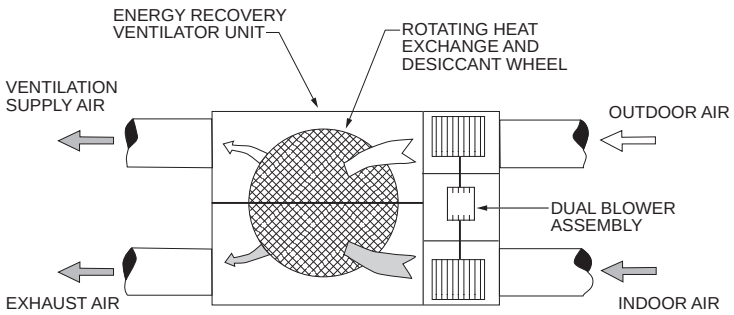

Figure 403.1(1)
AN ENERGY-CONSERVING ALTERNATIVE TO NATURAL VENTILATION

INTERNATIONAL CODE COUNCIL®
Copyright © 2015 ICC. ALL RIGHTS RESERVED. Accessed by David Dammon on Jun 21, 2017 12:30:52 PM pursuant to License Agreement with ICC. No further reproduction or distribution authorized. ANY UNAUTHORIZED REPRODUCTION OR DISTRIBUTION IS A VIOLATION OF THE FEDERAL COPYRIGHT ACT AND THE LICENSE AGREEMENT, AND SUBJECT TO CIVIL AND CRIMINAL PENALTIES THEREUNDER.

odor migration to or from a space and is, therefore, not prohibited. In the context of the code, negative and positive air pressures refer to pressures that are below or above atmospheric pressure or a reference pressure in another room or space.

Mechanical ventilation systems are air distribution systems, and the components of mechanical ventilation systems are subject to the requirements of Chapter 6, which regulates air distribution systems.

Mechanical ventilation systems involve electrical components and controls that must comply with Section 301.10. See Section 403.3 which makes a distinction between Group R-2, R-3 and R-4 occupancies and all other occupancies.

403.2 Outdoor air required. The minimum outdoor airflow rate shall be determined in accordance with Section 403.3.

Exception: Where the *registered design professional* demonstrates that an engineered ventilation system design will prevent the maximum concentration of contaminants from exceeding that obtainable by the rate of outdoor air ventilation determined in accordance with Section 403.3, the minimum required rate of outdoor air shall be reduced in accordance with such engineered system design.

❖ Section 403 represents an indirect method of controlling air quality by diluting contaminants (ventilation rate procedure) to an acceptable level by introducing outdoor air. Although an engineered ventilation system may be approved by the code official as an alternative design in accordance with Section 105, the exception to this section provides a direct reference to such an alternative design in this section. An engineered ventilation system is more of a direct method of controlling air quality and would be classified as an "Indoor Air Quality Procedure" in ASHRAE 62.1. ASHRAE 62.1, as a whole, is not a referenced standard in the code (with the exception of a limited reference in Section 403.3.1.1.2.3.2), but, the exception to this section could certainly be viewed as allowing the indoor air quality (IAQ) method of that standard as one of the possible means of complying with the exception. The design professional is responsible for demonstrating to the code official that a proposed engineered system will result in air quality at least equivalent to that achievable by the ventilation rate method of Section 403. A demonstration of equivalence would involve detailed analysis of at least the following: the anticipated contaminants of concern in the space to be ventilated; the anticipated sources and concentrations of the contaminants of concern; the acceptable occupant exposure limits or concentration levels for those contaminants; and the means and methods to control the contaminants. The design documentation should include all criteria and assumptions regarding occupancy conditions, equipment/system performance and contaminants. An engineered ventilation system would be allowed to supply outdoor air at any rate essential to the performance of the design.

403.2.1 Recirculation of air. The outdoor air required by Section 403.3 shall not be recirculated. Air in excess of that required by Section 403.3 shall not be prohibited from being recirculated as a component of supply air to building spaces, except that:

1. Ventilation air shall not be recirculated from one *dwelling* to another or to dissimilar occupancies.
2. Supply air to a swimming pool and associated deck areas shall not be recirculated unless such air is dehumidified to maintain the relative humidity of the area at 60 percent or less. Air from this area shall not be recirculated to other spaces where more than 10 percent of the resulting supply airstream consists of air recirculated from these spaces.

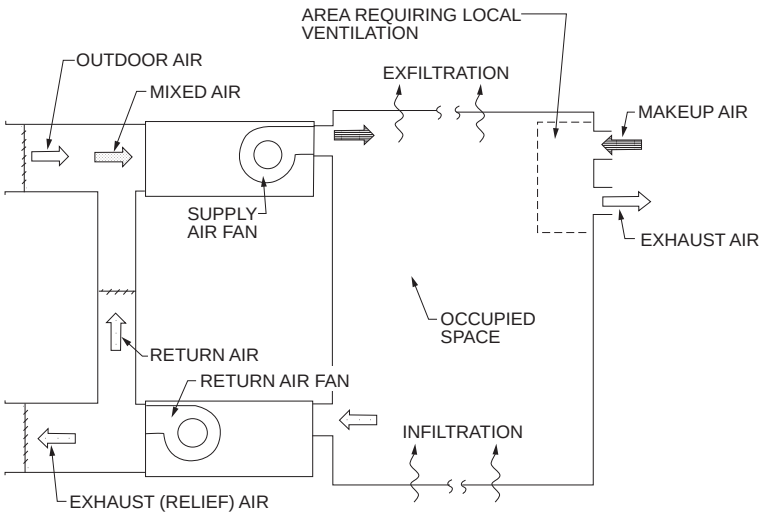

Figure 403.1(2)
TYPICAL HVAC SYSTEM

INTERNATIONAL CODE COUNCIL®
Copyright © 2015 ICC. ALL RIGHTS RESERVED. Accessed by David Dammon on Jun 21, 2017 12:30:52 PM pursuant to License Agreement with ICC. No further reproduction or distribution authorized. ANY UNAUTHORIZED REPRODUCTION OR DISTRIBUTION IS A VIOLATION OF THE FEDERAL COPYRIGHT ACT AND THE LICENSE AGREEMENT, AND SUBJECT TO CIVIL AND CRIMINAL PENALTIES THEREUNDER.

3. Where mechanical exhaust is required by Note b in Table 403.3.1.1, recirculation of air from such spaces shall be prohibited. Recirculation of air that is contained completely within such spaces shall not be prohibited. Where recirculation of air is prohibited, all air supplied to such spaces shall be exhausted, including any air in excess of that required by Table 403.3.1.1.
4. Where mechanical exhaust is required by Note g in Table 403.3.1.1, mechanical exhaust is required and recirculation from such spaces is prohibited where more than 10 percent of the resulting supply airstream consists of air recirculated from these spaces. Recirculation of air that is contained completely within such spaces shall not be prohibited.

❖ The amount of ventilation air is always permitted to exceed the minimum quantities specified by Table 403.3.1.1. The ventilation air amounts specified by Table 403.3.1.1 consist of 100-percent outdoor air, none of which can be recirculated. Only the ventilation air that is in excess of the required amount is permitted to be recirculated, except as prohibited by Items 3 and 4 in conjunction with Notes b and g of Table 403.3.1.1. The intent of Section 403 is to bring in outdoor air, force it through the occupied space and then discharge an equal amount of air back to the outdoors. In other words, the inflow rate of outdoor air prescribed by Section 403.3 is always balanced by an outflow rate by means of exhaust or relief. This is what the code means by saying that the required ventilation air cannot be recirculated. Older editions of codes used to require a rate of ventilation air with only a fraction of that air being outdoor air (i.e., ventilation air was a mix of recirculated air and outdoor air). However, this has not been the case for many years. The ventilation required by Section 403.3 is 100-percent outdoor air, no fraction of which is recirculated within the space served. If more outdoor air is introduced into a space than is required by Section 403.3, that excess air can be recirculated within the space or to other spaces, except as limited by Items 1 through 4.

Any occupancy will have environmental air that contains odors or contaminants that are peculiar or unique to that specific occupancy. For this reason, Item 1 states that ventilation air must not be recirculated to an occupancy of dissimilar use, or from one dwelling unit to another. This requirement is not affected by occupancy classification or tenant space separations. For example, a building classified as a single occupancy, such as a library, may contain a cafeteria. Because the cafeteria and library are of dissimilar occupancies, the ventilation air from one must not be recirculated to the other. Likewise, dissimilar occupancies are not limited to multiple tenancy and can occur in a single tenant space. Recirculating air to another occupancy or area of dissimilar use from which it is taken could subject the occupants to contaminants or odors that are not inherent to that specific occupancy. Such contaminants and odors could be harmful to the occupants or judged to be objectionable.

Mixed occupancy buildings may have different environmental air in each area and recirculation of air between those areas would be prohibited (for example, offices located in a factory). Conversely, mixed occupancy buildings may have similar environmental air in each area and recirculation of air between those areas would be allowed (for example, offices located in a library). Buildings of a single occupancy might contain areas or incidental uses that have different environmental air, therefore, recirculation of air between the areas would be prohibited (for example, a kitchen incidental to an office building or a dressing room incidental to a theater).

Ventilation airflow that is in excess of the required minimum rate is allowed by Item 2 to recirculate in swimming pool areas if the humidity of the area is controlled to maintain a relative humidity of 60 percent or less. Swimming pool areas generate high humidity levels and the air in those spaces must be dehumidified if a portion of it is to be recirculated as permitted by this section. Any recirculation of air from the swimming pool area is restricted to that area and cannot be circulated or transferred to any other area unless the resulting supply airstream consists of not more than 10 percent air from the swimming pool area (i.e., the portion of the mixed supply air that came from the swimming pool space cannot exceed 10 percent of the total). This will allow the designer to take advantage of the energy recovery ventilation technology to capture some of the energy from the humid swimming pool air and reduce the heating or cooling load for the building (see the commentary, Item 4).

Item 3 relates to Note b of Table 403.3.1.1 and is an exception to the recirculation allowance for air in excess of the required outdoor ventilation rate. For example, all air delivered to a public toilet room or a smoking lounge would have to be exhausted, regardless of how much is required exhaust and how much is in excess of the required exhaust rate, unless the toilet room is served by a dedicated air handler that serves no other space. No return can be taken directly or indirectly from such spaces. This item does not prohibit space conditioning air from being recirculated within the same space, rather it prohibits air from being recirculated from this space to some other space. In other words, air that is contained and retained within a space can be recirculated if such air is in excess of the required outdoor air rate. For example, consider a beauty and nail salon in a strip mall where such space is served by a dedicated rooftop HVAC unit. The code does not intend to prevent space conditioning air from being turned over (recirculated) within the salon. If this were not the case, such tenants would not be able to afford to heat and cool their space because they would be conditioning 100-percent outdoor air. Besides, the atmosphere within the salon is considered to be healthy for occu-

INTERNATIONAL CODE COUNCIL®
Copyright © 2015 ICC. ALL RIGHTS RESERVED. Accessed by David Dammon on Jun 21, 2017 12:30:52 PM pursuant to License Agreement with ICC. No further reproduction or distribution authorized. ANY UNAUTHORIZED REPRODUCTION OR DISTRIBUTION IS A VIOLATION OF THE FEDERAL COPYRIGHT ACT AND THE LICENSE AGREEMENT, AND SUBJECT TO CIVIL AND CRIMINAL PENALTIES THEREUNDER.

pancy where the provisions of Section 403.3 have been applied; therefore, there should be no problem with recirculating such "healthy" air within the same space. The intent of Note b is to prevent air from the salon from being circulated to some other tenant space. In other words, all return air taken from this salon must be returned only to the same salon. Imagine an air handler that serves two different spaces and one of the spaces is identified with Note b in Table 403.3.1.1. In this case, all supply air delivered by the air handler to the space governed by Note b would have to be exhausted so as to prevent any of such supply air from being returned to the air handler where it would then contaminate the other space served by the system. The key to understanding Item 3 is to keep in mind the intent to prevent contaminated air from spreading beyond the space of origin. As another example, consider smoking lounges and toilet rooms. Air within these spaces can be recirculated within the spaces provided that the required amount of air is exhausted as required by Table 403.3.1.1 and provided that no air is circulated to any other space. The third sentence of Item 3 is not an independent requirement and is tied to the first sentence relative to the intent to prevent air from being recirculated from one space or occupancy to another. This sentence has been misinterpreted to prevent recirculation of air within a single space served by a dedicated air handler and this is not the intent. The focus of Item 3 is air handlers that serve multiple zones, spaces or occupancies such that return taken from a space designated with Note b would be distributed to other spaces not so designated.

Item 4 allows the relaxation of the prohibition on recirculation of air from certain rooms and spaces consistent with ASHRAE 62.1. This was added to the code because an absolute ban on recirculation from certain rooms is unfounded and presents a significant barrier to the use of technology that recovers energy from exhaust air to reduce the load on heating and cooling systems from required outdoor ventilation air. The technology and these systems are referred to as ERV systems. See Section C403.2.7 in the IECC regarding the required use of ERV systems. The absolute ban on recirculation presents a significant barrier to the use of energy recovery technology. The lack of opportunity to recover energy from the exhaust air of toilet and locker rooms unnecessarily limits the overall effectiveness and feasibility of ERV technology—the energy in that air is lost to the atmosphere because of the absolute ban on recirculation.

Some of the various types of ERV systems on the market today do not completely eliminate leakage between the exhaust and supply airstreams. Many systems on the market have been engineered to the point that actual leakage is under 5 percent. ERVs designed for sensible heat recovery only are capable of having 0-percent cross-stream leakage, but this is not the case for ERVs that recover latent heat energy (moisture). The most effective technologies have some inherent leakage and even in cases where additional measures, such as purge, could be used to reduce the leakage, the additional equipment and operating costs may not be justified. This section uses 10 percent, not only for consistency with ASHRAE 62.1, but also to provide a level playing field for the entire industry. Ten percent is a limitation that all current suppliers of ERV systems can meet and this section does not create an advantage for one type of system or manufacturer over another.

Note that the intent of Note g is similar to that of Note b in that it intends to prevent air from being circulated to some other space or occupancy and does not prevent recirculation of air within the subject space. Air other than the required outdoor airflow rate required by Table 403.3.1.1 can be recirculated within the space designated with Note g, but cannot be circulated outside of such space, except for the 10-percent limit. In other words, mixed air delivered to some other space could contain up to 10-percent air from the space designated with Note g.

403.2.2 Transfer air. Except where recirculation from such spaces is prohibited by Table 403.3.1.1, air transferred from occupiable spaces is not prohibited from serving as *makeup air* for required exhaust systems in such spaces as kitchens, baths, toilet rooms, elevators and smoking lounges. The amount of transfer air and *exhaust air* shall be sufficient to provide the flow rates as specified in Section 403.3.1.1. The required outdoor airflow rates specified in Table 403.3.1.1 shall be introduced directly into such spaces or into the occupied spaces from which air is transferred or a combination of both.

❖ Spaces served by exhaust systems must be supplied with makeup air to replace the exhausted air. This makeup air is commonly supplied in the form of "transfer air" that has been drawn (transferred) from adjoining spaces. For example: toilet, bath and locker rooms often receive makeup air from adjoining assembly areas; kitchens receive makeup air from dining areas; and elevators and smoking lounges receive makeup air from lobby and open floor areas. Note that the underlying principle is to transfer air only in the direction from "cleaner" to "dirtier" environments. Exhaust with transfer makeup air systems is typically used where control of odor migration is desired. Air in spaces designated by Notes b and g of Table 403.3.1.1 must be exhausted to the outdoors and, therefore, cannot be circulated or transferred to any other space. This section lists examples of the types of spaces intended to be covered and, therefore, similar spaces can be considered by the code official.

Ventilation air cannot consist entirely of reused air, meaning that the ventilation air that is transferred into a space cannot consist entirely of the ventilation air that was required to be delivered to an adjoining space. Transfer air will consist of some reused ventilation air and some unused ventilation air, because the space from which the transfer air is taken is, in effect, over ventilated. For example, if the required

INTERNATIONAL CODE COUNCIL®
Copyright © 2015 ICC. ALL RIGHTS RESERVED. Accessed by David Dammon on Jun 21, 2017 12:30:52 PM pursuant to License Agreement with ICC. No further reproduction or distribution authorized. ANY UNAUTHORIZED REPRODUCTION OR DISTRIBUTION IS A VIOLATION OF THE FEDERAL COPYRIGHT ACT AND THE LICENSE AGREEMENT, AND SUBJECT TO CIVIL AND CRIMINAL PENALTIES THEREUNDER.

ventilation air for a kitchen area is not introduced directly into the kitchen, the air would have to be introduced into an adjacent area from which the air is transferred into the kitchen. Consider a large toilet room that needs 700 cubic feet per minute (cfm) (0.33 m^3/s) of exhaust and is accessed from a lobby. If the required outdoor air is not introduced directly into the toilet room, 700 cfm would have to be introduced into the adjoining lobby in addition to the required ventilation air for the lobby, then air from the lobby could be transferred to the toilet room.

For kitchens, some transfer air is typically taken from dining rooms. The makeup air requirements for the kitchen exhaust hood system will often exceed the required ventilation rate for the kitchen; therefore, the makeup air with the required minimum outdoor air component can serve as the ventilation air for the kitchen. In the case where transfer air is taken from a dining room, the air is actually outdoor air that has been supplied to the dining room by the dining room ventilation system. Any of the required outdoor air for the kitchen that is to be supplied by transfer air from the dining room will have to be added to the required outdoor air rate for the dining room.

403.3 Outdoor air and local exhaust airflow rates. Group R-2, R-3 and R-4 occupancies three stories and less in height above grade plane shall be provided with outdoor air and local exhaust in accordance with Section 403.3.2. All other buildings intended to be occupied shall be provided with outdoor air and local exhaust in accordance with Section 403.3.1.

❖ This section segregates the mechanical ventilation provisions into those for Groups R-2, R-3 and R-4 that are a maximum of three stories above grade plane and those for all other occupancies. This is consistent with the current division of coverage in ASHRAE 62.1 and 62.2. Section 403.3.2 is patterned after ASHRAE 62.2, thus the IMC ventilation requirements are applied consistently with the current scopes of both ASHRAE 62.1 and 62.2.

403.3.1 Other buildings intended to be occupied. The design of local exhaust systems and ventilation systems for outdoor air for occupancies other than Group R-2, R-3 and R-4 three stories and less above grade plane shall comply with Sections 403.3.1.1 through 403.3.1.5.

❖ Sections 403.3.1.1 through 403.3.1.5 are based on ASHRAE 62.1. See Section 403.3.2.

403.3.1.1 Outdoor airflow rate. Ventilation systems shall be designed to have the capacity to supply the minimum outdoor airflow rate, determined in accordance with this section. In each occupiable space, the ventilation system shall be designed to deliver the required rate of outdoor airflow to the *breathing zone*. The occupant load utilized for design of the ventilation system shall be not less than the number determined from the estimated maximum occupant load rate indicated in Table 403.3.1.1. Ventilation rates for occupancies not represented in Table 403.3.1.1 shall be those for a listed *occupancy* classification that is most similar in terms of occupant density, activities and building construction; or shall be determined by an *approved* engineering analysis. The ventilation system shall be designed to supply the required rate of *ventilation air* continuously during the period the building is occupied, except as otherwise stated in other provisions of the code.

With the exception of smoking lounges, the ventilation rates in Table 403.3.1.1 are based on the absence of smoking in occupiable spaces. Where smoking is anticipated in a space other than a smoking lounge, the ventilation system serving the space shall be designed to provide ventilation over and above that required by Table 403.3.1.1 in accordance with accepted engineering practice.

Exception: The occupant load is not required to be determined based on the estimated maximum occupant load rate indicated in Table 403.3.1.1 where *approved* statistical data document the accuracy of an alternate anticipated occupant density.

❖ Table 403.3.1.1 prescribes the amount of ventilation that must be supplied to any ventilated space. The actual amount (rate) supplied must equal or exceed the rate dictated by the table and related equations.

Many users of Section 403.3 have found that in most cases, the ventilation rates have decreased from those required by the 2006 edition of the code. This can be explained by several reasons, including the fact that the later versions of Section 403.3 account for the effectiveness of the air delivery system, thus allowing the economy of doing more with less (or at least the same with less). In other words, the rate can decrease if the ventilation air is delivered so as to be more effective, as opposed to requiring higher ventilation rates in order to compensate for less effectiveness. Also, the rates can decrease because the code now assumes that there is no smoking in all occupancies except smoking lounges.

Two very significant features of Table 403.3.1.1 are that it prescribes outdoor air only and the occupant load is determined by the table as opposed to the IBC. Table 403.3.1.1 was significantly revised in the 2009 edition and now includes a rate per person and a rate per floor area, both of which apply in most cases. Section 403.3 and the tables therein are based on ASHRAE 62.1, the 2004 edition. It must be understood that Table 403.3.1.1 cannot be used without applying the equations in Sections 403.3.1.1.1 through 403.3.1.1.2.3.4. The table does not stand alone. In fact, the application of Table 403.3.1.1 has become more complex than ever and requires the application of at least two mathematical equations for single-zone systems and several more for multiple-zone recirculating systems. The increased complexity could encourage code officials to require the design professionals to submit ventilation calculations in accordance with Section 106.3.1.

Another significant change is that Table 403.3.1.1 assumes that there is no smoking in all occupancies with the only exception being “smoking lounges.” If smoking is allowed by state or local law in an occupancy, the ventilation for that occupancy must be

INTERNATIONAL CODE COUNCIL®
Copyright © 2015 ICC. ALL RIGHTS RESERVED. Accessed by David Dammon on Jun 21, 2017 12:30:52 PM pursuant to License Agreement with ICC. No further reproduction or distribution authorized. ANY UNAUTHORIZED REPRODUCTION OR DISTRIBUTION IS A VIOLATION OF THE FEDERAL COPYRIGHT ACT AND THE LICENSE AGREEMENT, AND SUBJECT TO CIVIL AND CRIMINAL PENALTIES THEREUNDER.

increased over that prescribed by Section 403.3 and, because the code does not state by how much the ventilation must be increased, the system will have to be engineered and approved by the code official. Recall that the 2006 and earlier editions of the code assumed some moderate amount of smoking in occupancies, but were otherwise silent on smoking. Now the code has clearly stated that it is based on the absence of smoking because there is insufficient data to determine the amount of ventilation for areas in which smoking is permitted and because of the fundamental belief that secondhand smoke is harmful in any concentration.

Although the definition of "Ventilation air" states that it can be a combination of outdoor air and recirculated air, this section makes no allowance for the recirculation of any portion of the required amount of ventilation air. Note that Section 403.2.1 addresses the recirculation of that portion of ventilation air that is in excess of the required amount.

ASHRAE 62.1 permits the use of properly cleaned recirculated air to reduce the outdoor air component of ventilation air if the recirculated air is treated in accordance with the Indoor Air Quality Procedure contained in ASHRAE 62.1. Although the Indoor Air Quality Procedure of ASHRAE 62.1 is not expressly referred to as an option in the code, its use would be permitted if approved by the code official in accordance with Section 105.2 or the exception to Section 403.2. Note that demonstrating compliance with the Indoor Air Quality Procedure of ASHRAE 62.1 is not a simple task and the air treatment involved will likely be much more complex than particulate filtering alone. Sufficient documentation, specifications and analysis must be submitted to the code official for any proposed application of the Indoor Air Quality Procedure of ASHRAE 62.1.

Table 403.3.1.1 is used to determine the maximum occupant load of any room or space and it is this number that must be the basis for the design capacity of a mechanical ventilation system when the ventilation rate is based on the number of occupants. Note that the "Occupant Density" column does not specify a "default" occupant density. There is no other occupancy calculation for which this column becomes the "default" and this column always determines the mandatory occupant density. This section and its exception refer to the "estimated maximum occupant load rate" in Table 403.3.1.1, but the table refers to this rate as the "occupant density." Note also that the design capacity must be based on the maximum occupant load. The actual quantity of outdoor air supplied can be based on the number of occupants at any given time (see commentary, Section 403.3.1.3). In accordance with this section and Section 401.3, the ventilation air must be supplied during the periods that the room or space is occupied. When the room or space is not occupied, the ventilation air can be reduced or shut down completely.

Where a space or occupancy is not represented in the table, the user can base the ventilation rate on the table entry that most closely resembles the subject space or occupancy. Where nothing in the table is truly representative of the subject space or occupancy, an approved engineering analysis must specify the required ventilation rate.

The exception allows the occupant load for ventilation to be based on the actual occupant load for which the space is designed where it can be shown to the code official's satisfaction that the occupant load is realistic. The occupant density entries in Table 403.3.1.1 are based on empirical data and are reasonably accurate for the typical cases in each type of occupancy. Sufficient documentation must be submitted to the code official to justify any deviation from the prescribed occupant densities.

The ventilation rates prescribed by this section are based on the Ventilation Rate Procedure of ASHRAE 62.1, which can be described as the dilution rate method. Outdoor air is brought into the space being ventilated in sufficient quantities to dilute the contaminants to an acceptable level and, thus, control the indoor air quality (see commentary, Table 403.3.1.1).

To be effective, ventilation air must be delivered to the occupied space at the location of the occupants and in a manner that causes a cross-sectional flow through all portions of the occupied space. Building occupants occupy a zone that extends upward from the floor to approximately 6 feet (1829 mm) in height and that extends to within approximately 2 feet (610 mm) of the enclosing walls of the space (see the definition of "Breathing zone"). The intent is simply to ventilate where the beneficiaries of the ventilation are located. Commentary Figure 403.3.1.1 shows a dashed line that represents the breathing zone described in this section. Note that it is not the intent of this section to require that outlet diffusers and return air inlets be located within the zone described in this section. If that were so, it would prevent the use of ceiling and floor diffusers. Rather, the intent is to require that the system be designed with the proper airflow characteristics to enable delivery of the required amount of ventilation air to the breathing zone, and be designed to minimize stagnant pockets of air (dead zones) within the breathing zone (see Commentary Figure 403.3.1.1).

TABLE 403.3.1.1. See pages 4-17 through 4-20.

❖ Table 403.3.1.1 is based on ASHRAE 62.1 and prescribes both the use of 100-percent outdoor air as ventilation air and an occupant load calculation method that is independent of the IBC.

Ventilation rates are prescribed based on the actual use (occupancy) of a room or space. The occupancy of the space may or may not coincide with the occupancy of the building or space in accordance with the IBC. If a particular occupancy cannot be found in the table, a similar occupancy classification should be chosen that is closely related to the actual

INTERNATIONAL CODE COUNCIL®
Copyright © 2015 ICC. ALL RIGHTS RESERVED. Accessed by David Dammon on Jun 21, 2017 12:30:52 PM pursuant to License Agreement with ICC. No further reproduction or distribution authorized. ANY UNAUTHORIZED REPRODUCTION OR DISTRIBUTION IS A VIOLATION OF THE FEDERAL COPYRIGHT ACT AND THE LICENSE AGREEMENT, AND SUBJECT TO CIVIL AND CRIMINAL PENALTIES THEREUNDER.

occupancy (e.g., a drug store most closely resembles retail sales). Occupancies not addressed in Table 403.3.1.1 are not exempt from ventilation requirements. The code cannot prescribe ventilation rates for all of the possible occupancies; therefore, some judgment has to be made. Ventilation rates for occupancies that are clearly not represented in Table 403.3.1.1, such as factory and industrial occupancies, must be determined on a case-by-case basis by an engineering analysis approved by the code official. Note that ASHRAE 62.1 may contain additional guidance for some occupancies that are not listed in Table 403.3.1.1. For example, ASHRAE 62.1 references the American Conference on Governmental Industrial Hygienists' (ACGIH) publication titled *Industrial Ventilation—A Manual of Recommended Practice*.

The majority of occupancies listed in Table 403.3.1.1 are those in which the primary sources of air contamination are the occupants themselves at various everyday activities and also the contents of the space. Table entries, such as warehouses, shipping/receiving, repair garages and ice arenas obviously address contaminants that are related to processes or material storage. When the parameter listed in the table for outdoor air is based on cubic feet per minute per square foot only [$m^3/(s \cdot m^2)$], the anticipated contaminants in the space are not people related and, therefore, the contaminants do not depend on the occupant load. For example, the required outdoor ventilation air for retail stores, shipping and receiving is 0.12 cfm/ft^2 [0.0006 $m^3/(s \cdot m^2)$]. The anticipated contaminants are not people related, but are associated with wares, stock, merchandise and storage. Table 403.3.1.1 does not attempt to address factory/industrial-type occupancies because the possible number of contaminants would be enormous and the conditions in such occupancies could be unpredictable. Also, for many potential contaminants, the effect on humans is unknown.

Because the occupant load calculation method of the table is not based on egress capacity, the occupant load numbers determined by the table will not always parallel those numbers determined in accordance with the IBC.

The ventilation prescribed by the table is accomplished by bringing in the required amount of outdoor air and expelling, relieving or exhausting an approximately equal quantity of indoor air. Instructions shown in the table and the information given in Notes a through h describe the application and use of the table along with any special requirements applicable to a specific occupancy.

Note a of the table states that the estimated occupant load is based on the net occupiable floor area of the space to be ventilated. The "net occupiable floor area" is very well defined in Chapter 2. Note b in Table 403.3.1.1 specifies that some occupancies, such as smoking lounges, beauty and nail salons, and repair garages, must have mechanical exhaust

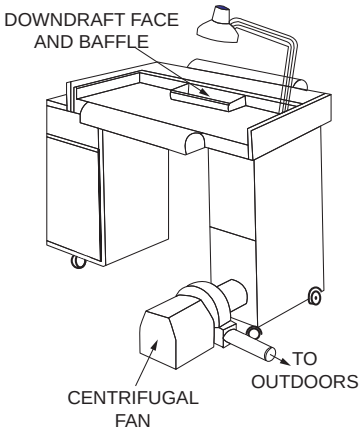

Figure 403.3.1.1(2)
MANICURE EXHAUST TABLE

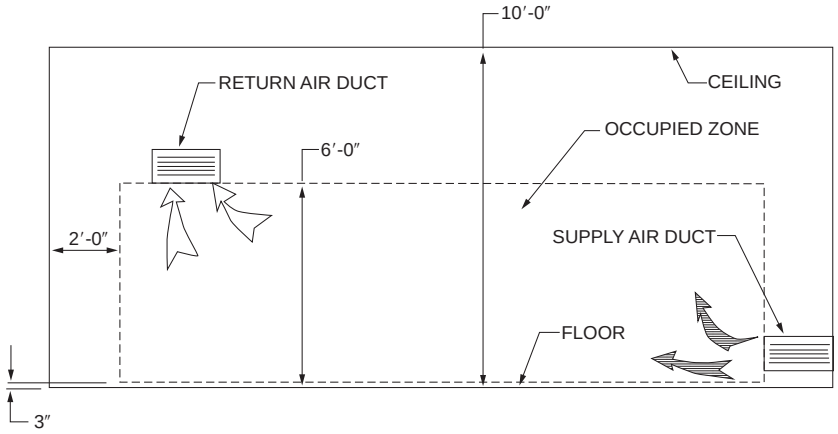

For SI: 1 inch = 25.4 mm, 1 foot = 304.8 mm.

Figure 403.3.1.1
OCCUPIED ZONE

INTERNATIONAL CODE COUNCIL®
Copyright © 2015 ICC. ALL RIGHTS RESERVED. Accessed by David Dammon on Jun 21, 2017 12:30:52 PM pursuant to License Agreement with ICC. No further reproduction or distribution authorized. ANY UNAUTHORIZED REPRODUCTION OR DISTRIBUTION IS A VIOLATION OF THE FEDERAL COPYRIGHT ACT AND THE LICENSE AGREEMENT, AND SUBJECT TO CIVIL AND CRIMINAL PENALTIES THEREUNDER.

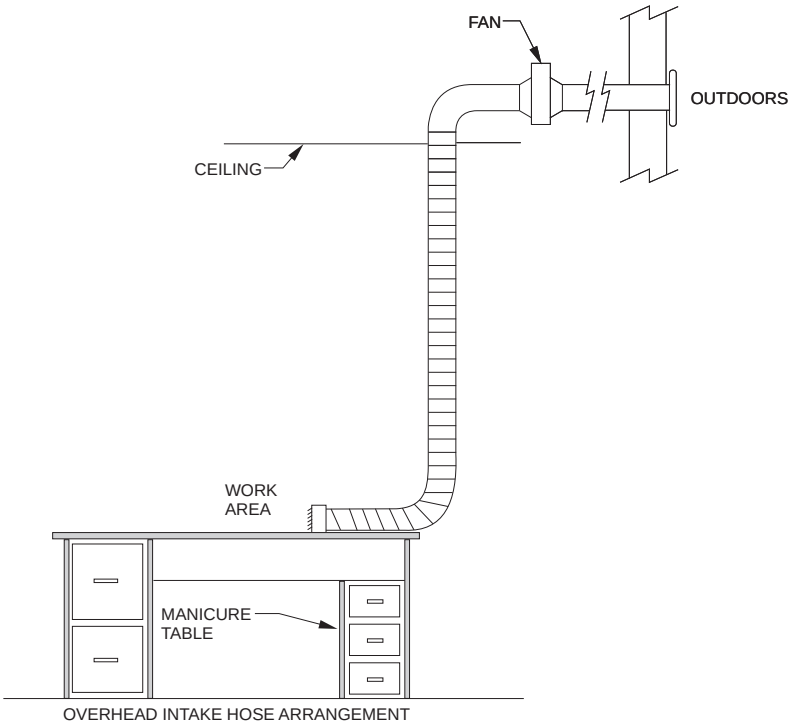

Figure 403.3.1.1(1)
NAIL SALON STATIONS

systems installed to exhaust the contaminants produced by that occupancy. The air supplied to these occupancies cannot be circulated to other occupancies (see commentary, Section 403.2.1, Item 3).

Note c intends to exempt from the ventilation requirements spaces in buildings having temperatures well below human comfort levels and that are not continuously occupied. For example, a meat-processing plant, where the employees work in a cold environment, is considered to be continuously occupied and, therefore, must exhibit compliance with the ventilation requirements in the table. The cold meat-storage spaces would not.

Note d provides the option of using the intermittent ventilation design associated with the use of CO and NO_x detectors in enclosed parking garages (see commentary, Sections 404.1, 404.2 and 404.3).

Note e explains the intent of the dual rates for exhaust in public toilet rooms, that being, the higher rate applies where the exhaust system operates intermittently and the lower rate applies only where the exhaust system operates continuously while occupied.

Note f explains the intent of the dual rates for exhaust; the higher rate applies when the exhaust is operated on an intermittent basis, such as when tied to the lighting switch or when operated by the occupant by means of a manual switch.

Note that the intent of Note g is similar to that of Note b in that it intends to prevent air from being cir-

INTERNATIONAL CODE COUNCIL®
Copyright © 2015 ICC. ALL RIGHTS RESERVED. Accessed by David Dammon on Jun 21, 2017 12:30:52 PM pursuant to License Agreement with ICC. No further reproduction or distribution authorized. ANY UNAUTHORIZED REPRODUCTION OR DISTRIBUTION IS A VIOLATION OF THE FEDERAL COPYRIGHT ACT AND THE LICENSE AGREEMENT, AND SUBJECT TO CIVIL AND CRIMINAL PENALTIES THEREUNDER.

culated to some other space or occupancy and does not prevent recirculation of air within the subject space. Air other than the required outdoor airflow rate required by Table 403.3.1.1 can be recirculated within the space designated with Note g, but cannot be circulated outside of such space, except for the 10-percent limit. In other words, mixed air delivered to some other space could contain up to 10 percent air taken from the space designated with Note g (see commentary, Section 403.2.1).

Note h addresses nail salons and requires a source capture system for each table/station in addition to the other requirements for ventilation and exhaust in Table 403.3.1.1. Of course, it is likely that some beauty salons will contain nail stations which would trigger the requirements of Note h. The intent is to require a moveable hood that can be placed over the nails (hands or feet) being serviced or a special table with exhaust air intake openings and baffles that will capture the chemical vapors at their source and exhaust them to the outdoors [see Commentary Figures 403.3.1.1(1) and 403.3.1.1(2)]. See the definitions of "Exhaust system" and "Source capture system." An exhaust fan located in a ceiling or anywhere else other than right next to the chemical source does not meet the intent of the code. Also, an exhaust system that captures the vapors, passes them through a filtering system and discharges the air back into the room does not meet the intent of the code and any such system would have to be approved by the code official under Section 105.2. See the commentary for Item 3 of Section 403.2.1 for discussion of recirculation of space conditioning air. Note the allowance to count the exhaust flow from continuously operating source capture systems toward the required exhaust flow in Table 403.3.1.1. See Section 502.20.

Notes b and g in Table 403.3.1.1 have also been misinterpreted so that designers thought they should prevent the air within a space from being recirculated within that space—and that all return air from the HVAC system had to be exhausted. The notes were misread and the intent misunderstood. Note b says that recirculation of air "from such spaces" is prohibited, which means that the air in the space could not be transferred to some other space. For example, a beauty salon could be affected by Note b, and the air in that salon could not be circulated to another occupancy. However, the air in the salon could be recirculated within the salon to the extent that the ventilation complies with Section 403.2.1. If this were not the case, the beauty salon owner/tenant could not afford to heat and cool the space. Recent revisions to Notes b and g correlate with changes to Section 403.2.1. The prohibitions on recirculation of air apply where air is circulated among multiple spaces, not where the air is recirculated within the same space.

Changes to Section 403.2.1 and Table 403.3.1.1 clarify that recirculation of air within a space is allowed. In previous editions of the code, Item 3 in Section 403.2.1 has been misinterpreted. It states that in a space identified by Note b in the table, air cannot be circulated from such space to some other space. Therefore, if different spaces are served by the same HVAC air handler, the only way to prevent air in one space from being picked up by the air handler and distributed to other spaces is to exhaust all of the air supplied to that one space.

403.3.1.1.1 Zone outdoor airflow. The minimum outdoor airflow required to be supplied to each zone shall be determined as a function of *occupancy* classification and space air distribution effectiveness in accordance with Sections 403.3.1.1.1.1 through 403.3.1.1.1.3.

❖ See the definition of "Zone" in Chapter 2. The zone is where the occupants are located and the required zone outdoor airflow rate is determined (in most cases) by a combined rate per person and rate per area. It is also affected by the configuration of the air distribution system (see Sections 403.3.1.1.1.1 and 403.3.1.1.1.2).

403.3.1.1.1.1 Breathing zone outdoor airflow. The outdoor airflow rate required in the *breathing zone* (V_{bz}) of the *occupiable space* or spaces in a zone shall be determined in accordance with Equation 4-1.

$$V_{bz} = R_p P_z + R_a A_z \qquad \textbf{(Equation 4-1)}$$

where:

A_z = Zone floor area: the *net occupiable floor area* of the space or spaces in the zone.

P_z = Zone population: the number of people in the space or spaces in the zone.

R_p = People outdoor air rate: the outdoor airflow rate required per person from Table 403.3.1.1.

R_a = Area outdoor air rate: the outdoor airflow rate required per unit area from Table 403.3.1.1.

❖ The equation sums the rate per person times the number of occupants and the rate per area times the square footage of the zone floor. As can be seen from this equation, the code now combines two different airflow requirements that were previously independent in editions of the code prior to 2009. The basis for this approach is that studies have shown that the effects of people-produced contaminants and the effects of building- and building content-produced contaminants are additive in their effect on occupants (see Example 1 under Section 403.3.1.1.2.3.4).

403.3.1.1.1.2 Zone air distribution effectiveness. The zone air distribution effectiveness (E_z) shall be determined using Table 403.3.1.1.1.2.

❖ The location of supply and return air grilles, diffusers and registers and the temperature of the supply air all affect the movement of air through a conditioned space. Some air distribution configurations are better (more effective) than others at achieving a uniform flow through a space. Uniform flow helps to prevent dead (stagnant) zones and short-circuited flow. Venti-

INTERNATIONAL CODE COUNCIL®
Copyright © 2015 ICC. ALL RIGHTS RESERVED. Accessed by David Dammon on Jun 21, 2017 12:30:52 PM pursuant to License Agreement with ICC. No further reproduction or distribution authorized. ANY UNAUTHORIZED REPRODUCTION OR DISTRIBUTION IS A VIOLATION OF THE FEDERAL COPYRIGHT ACT AND THE LICENSE AGREEMENT, AND SUBJECT TO CIVIL AND CRIMINAL PENALTIES THEREUNDER.

lation works best when airflow sweeps through the entire cross section of a space, thereby reaching all occupants and flushing out contaminants. The intent of this section is to rate the air distribution system as to its ability to produce effective ventilation. Table 403.3.1.1.1.2 was developed based on fluid modeling analysis that considers the buoyancy of air masses and predicts air movement, eddy flow, air mixing and flow patterns. The table ratings may not be what one would expect based on the system configuration, but they are logical when the fluid flow analysis is viewed.

The effectiveness number (E_z) is applied in Equation 4-2 of Section 403.3.1.1.1.3 and the purpose of that calculation is to adjust the breathing zone airflow rate to account for the effectiveness of the air distribution system in delivering the ventilation air (see commentary, Section 403.3.1.1.1.3).

TABLE 403.3.1.1
MINIMUM VENTILATION RATES

OCCUPANCY CLASSIFICATION	OCCUPANT DENSITY #/1000 FT^2 [a]	PEOPLE OUTDOOR AIRFLOW RATE IN BREATHING ZONE, R_p CFM/PERSON	AREA OUTDOOR AIRFLOW RATE IN BREATHING ZONE, R_a CFM/FT^2 [a]	EXHAUST AIRFLOW RATE CFM/FT^2 [a]
Correctional facilities				
Booking/waiting	50	7.5	0.06	—
Cells				
without plumbing fixtures	25	5	0.12	—
with plumbing fixtures[g]	25	5	0.12	1.0
Day room	30	5	0.06	—
Dining halls (see food and beverage service)	—	—	—	—
Guard stations	15	5	0.06	—
Dry cleaners, laundries				
Coin-operated dry cleaner	20	15	—	—
Coin-operated laundries	20	7.5	0.06	—
Commercial dry cleaner	30	30	—	—
Commercial laundry	10	25	—	—
Storage, pick up	30	7.5	0.12	—
Education				
Art classroom[g]	20	10	0.18	0.7
Auditoriums	150	5	0.06	—
Classrooms (ages 5-8)	25	10	0.12	—
Classrooms (age 9 plus)	35	10	0.12	—
Computer lab	25	10	0.12	—
Corridors (see public spaces)	—	—	—	—
Day care (through age 4)	25	10	0.18	—
Lecture classroom	65	7.5	0.06	—
Lecture hall (fixed seats)	150	7.5	0.06	—
Locker/dressing rooms[g]	—	—	—	0.25
Media center	25	10	0.12	—
Multiuse assembly	100	7.5	0.06	—
Music/theater/dance	35	10	0.06	—
Science laboratories[g]	25	10	0.18	1.0
Smoking lounges[b]	70	60	—	—
Sports locker rooms[g]	—	—	—	0.5
Wood/metal shops[g]	20	10	0.18	0.5
Food and beverage service				
Bars, cocktail lounges	100	7.5	0.18	—
Cafeteria, fast food	100	7.5	0.18	—
Dining rooms	70	7.5	0.18	—
Kitchens (cooking)[b]	—	—	—	0.7

(continued)

INTERNATIONAL CODE COUNCIL®
Copyright © 2015 ICC. ALL RIGHTS RESERVED. Accessed by David Dammon on Jun 21, 2017 12:30:52 PM pursuant to License Agreement with ICC. No further reproduction or distribution authorized. ANY UNAUTHORIZED REPRODUCTION OR DISTRIBUTION IS A VIOLATION OF THE FEDERAL COPYRIGHT ACT AND THE LICENSE AGREEMENT, AND SUBJECT TO CIVIL AND CRIMINAL PENALTIES THEREUNDER.

TABLE 403.3.1.1—continued
MINIMUM VENTILATION RATES

OCCUPANCY CLASSIFICATION	OCCUPANT DENSITY #/1000 FT^{2} [a]	PEOPLE OUTDOOR AIRFLOW RATE IN BREATHING ZONE, R_p CFM/PERSON	AREA OUTDOOR AIRFLOW RATE IN BREATHING ZONE, R_a CFM/FT^{2} [a]	EXHAUST AIRFLOW RATE CFM/FT^{2} [a]
Hotels, motels, resorts and dormitories				
Bathrooms/toilet—private[g]	—	—	—	25/50[f]
Bedroom/living room	10	5	0.06	—
Conference/meeting	50	5	0.06	—
Dormitory sleeping areas	20	5	0.06	—
Gambling casinos	120	7.5	0.18	—
Lobbies/prefunction	30	7.5	0.06	—
Multipurpose assembly	120	5	0.06	—
Offices				
Conference rooms	50	5	0.06	—
Main entry lobbies	10	5	0.06	—
Office spaces	5	5	0.06	—
Reception areas	30	5	0.06	—
Telephone/data entry	60	5	0.06	—
Private dwellings, single and multiple				
Garages, common for multiple units[b]	—	—	—	0.75
Kitchens[b]	—	—	—	25/100[f]
Living areas[c]	Based upon number of bedrooms. First bedroom, 2; each additional bedroom, 1	0.35 ACH but not less than 15 cfm/person	—	—
Toilet rooms and bathrooms[g]	—	—	—	20/50[f]
Public spaces				
Corridors	—	—	0.06	—
Courtrooms	70	5	0.06	—
Elevator car	—	—	—	1.0
Legislative chambers	50	5	0.06	—
Libraries	10	5	0.12	—
Museums (children's)	40	7.5	0.12	—
Museums/galleries	40	7.5	0.06	—
Places of religious worship	120	5	0.06	—
Shower room (per shower head)[g]	—	—	—	50/20[f]
Smoking lounges[b]	70	60	—	—
Toilet rooms — public[g]	—	—	—	50/70[e]
Retail stores, sales floors and showroom floors				
Dressing rooms	—	—	—	0.25
Mall common areas	40	7.5	0.06	—
Sales	15	7.5	0.12	—
Shipping and receiving	—	—	0.12	—
Smoking lounges[b]	70	60	—	—
Storage rooms	—	—	0.12	—
Warehouses (see storage)	—	—	—	—

(continued)

INTERNATIONAL CODE COUNCIL®
Copyright © 2015 ICC. ALL RIGHTS RESERVED. Accessed by David Dammon on Jun 21, 2017 12:30:52 PM pursuant to License Agreement with ICC. No further reproduction or distribution authorized. ANY UNAUTHORIZED REPRODUCTION OR DISTRIBUTION IS A VIOLATION OF THE FEDERAL COPYRIGHT ACT AND THE LICENSE AGREEMENT, AND SUBJECT TO CIVIL AND CRIMINAL PENALTIES THEREUNDER.

TABLE 403.3.1.1—continued
MINIMUM VENTILATION RATES

OCCUPANCY CLASSIFICATION	OCCUPANT DENSITY #/1000 FT^{2} [a]	PEOPLE OUTDOOR AIRFLOW RATE IN BREATHING ZONE, R_p CFM/PERSON	AREA OUTDOOR AIRFLOW RATE IN BREATHING ZONE, R_a CFM/FT^{2} [a]	EXHAUST AIRFLOW RATE CFM/FT^{2} [a]
Specialty shops				
Automotive motor-fuel dispensing stations[b]	—	—	—	1.5
Barber	25	7.5	0.06	0.5
Beauty salons[b]	25	20	0.12	0.6
Nail salons [b, h]	25	20	0.12	0.6
Embalming room[b]	—	—	—	2.0
Pet shops (animal areas)[b]	10	7.5	0.18	0.9
Supermarkets	8	7.5	0.06	—
Sports and amusement				
Bowling alleys (seating areas)	40	10	0.12	—
Disco/dance floors	100	20	0.06	—
Game arcades	20	7.5	0.18	—
Gym, stadium, arena (play area)	—	—	0.30	—
Health club/aerobics room	40	20	0.06	—
Health club/weight room	10	20	0.06	—
Ice arenas without combustion engines	—	—	0.30	0.5
Spectator areas	150	7.5	0.06	—
Swimming pools (pool and deck area)	—	—	0.48	—
Storage				
Repair garages, enclosed parking garages[b,d]	—	—	—	0.75
Warehouses	—	—	0.06	—
Theaters				
Auditoriums (see education)	—	—	—	—
Lobbies	150	5	0.06	—
Stages, studios	70	10	0.06	—
Ticket booths	60	5	0.06	—
Transportation				
Platforms	100	7.5	0.06	—
Transportation waiting	100	7.5	0.06	—

(continued)

TABLE 403.3.1.1.1.2
ZONE AIR DISTRIBUTION EFFECTIVENESS[a,b,c,d]

AIR DISTRIBUTION CONFIGURATION	E_z
Ceiling or floor supply of cool air	1.0[e]
Ceiling or floor supply of warm air and floor return	1.0
Ceiling supply of warm air and ceiling return	0.8[f]
Floor supply of warm air and ceiling return	0.7
Makeup air drawn in on the opposite side of the room from the exhaust and/or return	0.8
Makeup air drawn in near to the exhaust and/or return location	0.5

For SI: 1 foot = 304.8 mm, 1 foot per minute = 0.00506 m/s,
°C = [(°F) – 32]/1.8.

a. "Cool air" is air cooler than space temperature.
b. "Warm air" is air warmer than space temperature.
c. "Ceiling" includes any point above the breathing zone.
d. "Floor" includes any point below the breathing zone.
e. Zone air distribution effectiveness of 1.2 shall be permitted for systems with a floor supply of cool air and ceiling return, provided that low-velocity displacement ventilation achieves unidirectional flow and thermal stratification.
f. Zone air distribution effectiveness of 1.0 shall be permitted for systems with a ceiling supply of warm air, provided that supply air temperature is less than 15°F above space temperature and provided that the 150-foot-per-minute supply air jet reaches to within $4^{1}/_{2}$ feet of floor level.

403.3.1.1.1.3 Zone outdoor airflow. The zone outdoor airflow rate (V_{oz}), shall be determined in accordance with Equation 4-2.

$$V_{oz} = \frac{V_{bz}}{E_z} \qquad \textbf{(Equation 4-2)}$$

❖ The (E_z) value determined in the previous section is applied in Equation 4-2 to determine the required out-

INTERNATIONAL CODE COUNCIL®
Copyright © 2015 ICC. ALL RIGHTS RESERVED. Accessed by David Dammon on Jun 21, 2017 12:30:52 PM pursuant to License Agreement with ICC. No further reproduction or distribution authorized. ANY UNAUTHORIZED REPRODUCTION OR DISTRIBUTION IS A VIOLATION OF THE FEDERAL COPYRIGHT ACT AND THE LICENSE AGREEMENT, AND SUBJECT TO CIVIL AND CRIMINAL PENALTIES THEREUNDER.

TABLE 403.3.1.1—continued
MINIMUM VENTILATION RATES

OCCUPANCY CLASSIFICATION	OCCUPANT DENSITY #/1000 FT^{2} [a]	PEOPLE OUTDOOR AIRFLOW RATE IN BREATHING ZONE, R_p CFM/PERSON	AREA OUTDOOR AIRFLOW RATE IN BREATHING ZONE, R_a CFM/FT^{2} [a]	EXHAUST AIRFLOW RATE CFM/FT^{2} [a]
Workrooms				
Bank vaults/safe deposit	5	5	0.06	—
Computer (without printing)	4	5	0.06	—
Copy, printing rooms	4	5	0.06	0.5
Darkrooms	—	—	—	1.0
Meat processing[c]	10	15	—	—
Pharmacy (prep. area)	10	5	0.18	—
Photo studios	10	5	0.12	—

For SI: 1 cubic foot per minute = 0.0004719 m^3/s, 1 ton = 908 kg, 1 cubic foot per minute per square foot = 0.00508 $m^3/(s \cdot m^2)$, °C = [(°F) -32]/1.8, 1 square foot = 0.0929 m^2.

a. Based upon *net occupiable floor area*.

b. Mechanical exhaust required and the recirculation of air from such spaces is prohibited. Recirculation of air that is contained completely within such spaces shall not be prohibited (see Section 403.2.1, Item 3).

c. Spaces unheated or maintained below 50°F are not covered by these requirements unless the occupancy is continuous.

d. Ventilation systems in enclosed parking garages shall comply with Section 404.

e. Rates are per water closet or urinal. The higher rate shall be provided where the exhaust system is designed to operate intermittently. The lower rate shall be permitted only where the exhaust system is designed to operate continuously while occupied.

f. Rates are per room unless otherwise indicated. The higher rate shall be provided where the exhaust system is designed to operate intermittently. The lower rate shall be permitted only where the exhaust system is designed to operate continuously while occupied.

g. Mechanical exhaust is required and recirculation from such spaces is prohibited except that recirculation shall be permitted where the resulting supply airstream consists of not more than 10 percent air recirculated from these spaces. Recirculation of air that is contained completely within such spaces shall not be prohibited (see Section 403.2.1, Items 2 and 4).

h. For nail salons, each manicure and pedicure station shall be provided with a *source capture system* capable of exhausting not less than 50 cfm per station. Exhaust inlets shall be located in accordance with Section 502.20. Where one or more required source capture systems operate continuously during occupancy, the exhaust rate from such systems shall be permitted to be applied to the exhaust flow rate required by Table 403.3.1.1 for the nail salon.

door airflow rate. The result, (V_{oz}), is adjusted upward in many cases; unaffected in some cases; and even adjusted downward in the case described in Note f of Table 403.3.1.1.1.3. For example, if E_z is 1, the rate determined in accordance with Equation 4-1 of Section 403.3.1.1.1.1 is unchanged; and if E_z is 0.5, the rate from Section 403.3.1.1.1.1 is doubled to account for the poor performance of the air distribution system (see Sections 403.3.1.1.2 through 403.3.1.1.2.3.4).

403.3.1.1.2 System outdoor airflow. The outdoor air required to be supplied by each ventilation system shall be determined in accordance with Sections 403.3.1.1.2.1 through 403.3.1.1.2.3 as a function of system type and zone outdoor airflow rates.

❖ The actual amount of outdoor air that a ventilation system must deliver is determined in accordance with Section 403.3.1.1.2.1, 403.3.1.1.2.2 or 403.3.1.1.2.3, depending on whether the delivery system serves multiple zones or only one zone, and depending upon whether the system supplies mixed outdoor and recirculated air or only outdoor air.

403.3.1.1.2.1 Single zone systems. Where one air handler supplies a mixture of outdoor air and recirculated return air to only one zone, the system outdoor air intake flow rate (V_{ot}) shall be determined in accordance with Equation 4-3.

$$V_{ot} = V_{oz} \qquad \textbf{(Equation 4-3)}$$

❖ This type of system calculation is as simple as it gets. If the ventilation system delivers outdoor air and recirculated air to only one zone (see the definition of "Zone"), the total outdoor air component of the delivered air is the same as calculated in Section 403.3.1.1.1.3. In other words, since there is only one zone, the zone outdoor air rate is also the total outdoor air rate (see Example 1 under Section 403.3.1.1.2.3.4).

403.3.1.1.2.2 100-percent outdoor air systems. Where one air handler supplies only outdoor air to one or more zones, the system outdoor air intake flow rate (V_{ot}) shall be determined using Equation 4-4.

$$V_{ot} = \Sigma_{all\ zones} V_{oz} \qquad \textbf{(Equation 4-4)}$$

❖ If the ventilation system supplies only outdoor air, with no recirculated air component, and serves multiple zones, the total amount of outdoor air is simply the sum of the zone outdoor air rates. The Greek letter Σ (Sigma) in Equation 4-4 means "sum" and the subscript "all zones" that follows Σ mean that the summing is applied to all of the zones in a multiple zone system. Recall Section 403.3.1.1.2.1, which dealt with single zone systems.

403.3.1.1.2.3 Multiple zone recirculating systems. Where one air handler supplies a mixture of outdoor air and recirculated return air to more than one zone, the system outdoor air

INTERNATIONAL CODE COUNCIL®
Copyright © 2015 ICC. ALL RIGHTS RESERVED. Accessed by David Dammon on Jun 21, 2017 12:30:52 PM pursuant to License Agreement with ICC. No further reproduction or distribution authorized. ANY UNAUTHORIZED REPRODUCTION OR DISTRIBUTION IS A VIOLATION OF THE FEDERAL COPYRIGHT ACT AND THE LICENSE AGREEMENT, AND SUBJECT TO CIVIL AND CRIMINAL PENALTIES THEREUNDER.

intake flow rate (V_{ot}) shall be determined in accordance with Sections 403.3.1.1.2.3.1 through 403.3.1.1.2.3.4.

❖ This section addresses ventilation air systems that supply both outdoor air and recirculated air, and that supply such mixture to multiple zones. It becomes more complicated now because different zones will have different required rates of outdoor air and the typical air-handling system will not be able to deliver a different ratio of outdoor air to recirculated air for each of the zones having different ratio requirements. For example, if an air handler is supplying air that is 25-percent outdoor air and 75-percent recirculated air, how can that same air handler deliver 15-percent outdoor air to one zone, 30-percent outdoor air to another and 25 percent to others? Sections 403.3.1.1.2.3.1 through 403.3.1.1.2.3.4 address this dilemma by adjusting the total required outdoor air rate to compensate for the inability to deliver different outdoor air ratios to different zones. The theory behind this method is that the spaces having outdoor air rate requirements lower than the "critical" space (Maximum Z_p) will be overventilated and the "unused" (excess) outdoor air will be recirculated to provide a fraction of the outdoor air needed for the "critical" space. The effect of this compensation will be an increase in outdoor air for the "noncritical" (Lower Z_p) spaces and a decrease in outdoor air for the critical space (see Example 2 on page 4-23).

403.3.1.1.2.3.1 Primary outdoor air fraction. The primary outdoor air fraction (Z_p) shall be determined for each zone in accordance with Equation 4-5.

$$Z_p = \frac{V_{oz}}{V_{pz}} \qquad \textbf{(Equation 4-5)}$$

where:

V_{pz} = Primary airflow: The airflow rate supplied to the zone from the air-handling unit at which the outdoor air intake is located. It includes outdoor intake air and recirculated air from that air-handling unit but does not include air transferred or air recirculated to the zone by other means. For design purposes, V_{pz} shall be the zone design primary airflow rate, except for zones with variable air volume supply and V_{pz} shall be the lowest expected primary airflow rate to the zone when it is fully occupied.

❖ Equation 4-5 is solved solely for the purpose of establishing a ventilation system efficiency value (E_v). That value comes from Table 403.3.1.1.2.3.2. In other words, Equation 4-5 yields a value for Z_p which is then entered into Table 403.3.1.1.2.3.2 to determine E_v. The outdoor/primary fraction (Z_p) is the ratio of outdoor air to total air delivered by the ventilation system (i.e., the percentage of outdoor air in the total supply air divided by 100). Finally, the value for E_v is entered into Equation 4-8.

403.3.1.1.2.3.2 System ventilation efficiency. The system ventilation efficiency (E_v) shall be determined using Table 403.3.1.1.2.3.2 or Appendix A of ASHRAE 62.1.

❖ The system ventilation efficiency is a measure of how well a system delivers outdoor air to the zone that requires the largest ratio of outdoor air to total supply (primary) air (i.e., Maximum Z_p). As can be seen in the table, the larger the outdoor/primary air ratio, the lower the system efficiency, and as can be seen in Equation 4-8, the lower the system efficiency in the denominator, the greater the amount of outdoor air that the system must supply (see Example 2). Appendix A of ASHRAE 62.1 provides a more detailed and, therefore, more precise method for determining the value of E_v where this is preferred to using Table 403.3.1.1.2.3.2. According to ASHRAE 62.1, Table 403.3.1.1.2.3.2 (ASHRAE Table 6-3) might yield unrealistically low efficiency values (E_v) where the value of Z_p is greater than 0.15; therefore, a designer may want to use the Appendix A methodology and, possibly, reduce the outdoor air intake flow rate determined by Equation 4-8.

As the outdoor air demand of any one zone becomes significantly greater than the demand of the other zones served by the same air-handling system, it becomes more difficult for the air-handling system to ensure delivery of the outdoor air to the high-demand (critical) zone. Thus, there is the need to establish a system efficiency rating. If the entire system was designed to deliver outdoor air to all zones served at the same rate as the "critical" (Maximum Z_p) zone, the intent of the code would be satisfied; however, the noncritical zones would all be over ventilated. Over-ventilation is not a code violation, but it will cause increased energy consumption from heating, cooling, humidification and dehumidification systems, increased fan power and filter maintenance (see Sections 403.3.1.1.2.3.3 and 403.3.1.1.2.3.4).

TABLE 403.3.1.1.2.3.2
SYSTEM VENTILATION EFFICIENCY[a,b]

Max (Z_p)	E_v
≤ 0.15	1
≤ 0.25	0.9
≤ 0.35	0.8
≤ 0.45	0.7
≤ 0.55	0.6
≤ 0.65	0.5
≤ 0.75	0.4
> 0.75	0.3

a. *Max* (Z_p) is the largest value of Z_p calculated using Equation 4-5 among all the zones served by the system.

b. Interpolating between table values shall be permitted.

403.3.1.1.2.3.3 Uncorrected outdoor air intake. The uncorrected outdoor air intake flow rate (V_{ou}) shall be determined in accordance with Equation 4-6.

$$V_{ou} = D\Sigma_{all\ zones} R_p P_z + \Sigma_{all\ zones} R_a A_z \qquad \textbf{(Equation 4-6)}$$

INTERNATIONAL CODE COUNCIL®
Copyright © 2015 ICC. ALL RIGHTS RESERVED. Accessed by David Dammon on Jun 21, 2017 12:30:52 PM pursuant to License Agreement with ICC. No further reproduction or distribution authorized. ANY UNAUTHORIZED REPRODUCTION OR DISTRIBUTION IS A VIOLATION OF THE FEDERAL COPYRIGHT ACT AND THE LICENSE AGREEMENT, AND SUBJECT TO CIVIL AND CRIMINAL PENALTIES THEREUNDER.

where:

D = Occupant diversity: the ratio of the system population to the sum of the zone populations, determined in accordance with Equation 4-7.

$$D = \frac{P_s}{\Sigma_{all\ zones} P_z} \quad \textbf{(Equation 4-7)}$$

where:

P_s = System population: The total number of occupants in the area served by the system. For design purposes, P_s shall be the maximum number of occupants expected to be concurrently in all zones served by the system.

❖ The uncorrected outdoor air intake is the total outdoor air rate that the ventilation system must deliver if the system efficiency (E_v) is 1 (100 percent). Section 403.3.1.1.2.3.4 comes into play where the system efficiency is less than 1 (e.g., if E_v is 1, Equation 4-8 becomes $V_{ot} = V_{ou}$). The purpose of this section is to determine the total amount of outdoor air that must be brought in by the ventilation system where such system is serving multiple zones with differing outdoor air rate demands. Recall that this all started with Section 403.3.1.1.2.3 and terminates at Section 403.3.1.1.2.3.4 (see Examples 2 and 3). The occupant diversity factor is optional, see Example 2.

403.3.1.1.2.3.4 Outdoor air intake flow rate. The outdoor air intake flow rate (V_{ot}) shall be determined in accordance with Equation 4-8.

$$V_{ot} = \frac{V_{ou}}{E_v} \quad \textbf{(Equation 4-8)}$$

❖ This is the final step that determines the amount of outdoor air that must be brought into the air-handling system at the outdoor air intake opening. The result of this exercise is that the total amount of required outdoor air ends up being less than if the maximum Z_p was applied to all zones. See Examples 2 and 3 in which it is evident that the outdoor air rate can be reduced in accordance with Section 403.3.1.1.2.3, compared to supplying outdoor air to all zones served at the same outdoor/primary air fraction (Z_p) as the critical zone (Maximum Z_p).

Example 1: Single-zone Recirculating System

A 3,000-square-foot dining room is served by a rooftop air-handling unit by means of ducted ceiling supply registers and ceiling return grilles. Determine the system outdoor air intake flow rate (V_{ot}) for the dining room.

Application

This dining room with a single rooftop unit is considered to be a single-zone system. In order to determine the outdoor air intake flow rate (V_{ot}) for a single-zone system using Equation 4-3, the breathing zone airflow rate (V_{bz}) of the occupied space must first be determined using Equation 4-1. Then, the zone airflow effectiveness (E_z) must be determined in accordance with Table 403.3.1.1.1.2. Next, the zone outdoor airflow rate (V_{oz}) must be determined using Equation 4-2. The outdoor air intake flow rate for a single-zone system is then simply $V_{ot} = V_{oz}$, Equation 4-3.

Step 1: Determine occupant load (P_z) for the room for use in Equation 4-1:

From Table 403.3.1.1 for dining rooms, the occupant density of 70 occupants/1,000 ft^2 is used:

3,000 ft^2 × 70

1,000 ft^2 = 210 occupants = P_z

Step 2: Determine the breathing zone outdoor airflow (V_{bz}) for the room:

First, the outdoor air rates for people (R_p) and area (R_a) must be obtained for the dining room from Table 403.3.1.1:

R_p = 7.5 cfm/person and R_a = 0.18 cfm/ft^2

Equation 4-1 can now be solved:

$V_{bz} = R_p P_z + R_a A_z$

V_{bz} = (7.5 cfm/person × 210 people) + (0.18 cfm/ft^2 × 3,000 ft^2)

V_{bz} = 2,115 cfm

Step 3: Determine the zone outdoor airflow (V_{oz}):

It is given that the room is served by a rooftop air handling unit by means of ducted ceiling supply registers and ceiling return grilles. Thus, the zone air distribution effectiveness (E_z) can be obtained from Table 403.3.1.1.1.2. In cooling mode, E_z = 1.0, and in heating mode, E_z = 0.8. The most restrictive value, E_z = 0.8, must be used (assume that Note f of Table 403.3.1.1.1.2 does not apply).

Equation 4-2 can now be solved for the room:

$V_{oz} = V_{bz}$

E_z

Cooling Mode: V_{oz} = 2,115

1.0 = 2,115 cfm

Heating Mode: V_{oz} = 2,115

0.8 = 2,644 cfm

As a result, the greater system demand for the dining room requires 2,644 cfm of outdoor air in heating mode. This value of V_{oz} should be used to determine the maximum system requirement for outdoor air intake flow rate (V_{ot}), Equation 4-3:

$V_{ot} = V_{oz}$ = 2,644 cfm

In comparison, the amount of outdoor air required using the 2006 code would be based on the same occupant load. However, the outdoor air ratio is 20 cfm per person. Therefore, the amount of outdoor air is 210 occupants × 20 cfm/occupant = 4,200 cfm of outdoor air required.

INTERNATIONAL CODE COUNCIL®
Copyright © 2015 ICC. ALL RIGHTS RESERVED. Accessed by David Dammon on Jun 21, 2017 12:30:52 PM pursuant to License Agreement with ICC. No further reproduction or distribution authorized. ANY UNAUTHORIZED REPRODUCTION OR DISTRIBUTION IS A VIOLATION OF THE FEDERAL COPYRIGHT ACT AND THE LICENSE AGREEMENT, AND SUBJECT TO CIVIL AND CRIMINAL PENALTIES THEREUNDER.

Example 2: Multiple-zone Recirculating Systems

A single-story 8,000-square-foot office building consists of 7,250 square feet of general office space and a 500-square-foot conference room.

The building is served by a rooftop unit by means of ducted ceiling supply registers and ceiling return grilles. The primary airflow provided by the rooftop unit is 8,100 cfm for the office space and 780 cfm for the conference room. Determine the outdoor air intake flow rate for the system serving the office area and conference room.

Application

This office area and conference room constitutes two separate zones that are served by a single rooftop unit. In order to determine the outdoor air intake flow rate (V_{ot}) for a multiple-zone system using Equation 4-8, the breathing zone airflow rate (V_{bz}) of the occupied space must first be determined using Equation 4-1. Then, the zone airflow effectiveness (E_z) must be determined in accordance with Table 403.3.1.1.1.2. Next, the zone outdoor airflow rate (V_{oz}) must be determined using Equation 4-2. After determining the previously listed variables, the outdoor air intake flow rate for a multiple-zone recirculating system must be determined using Sections 403.3.1.1.2.3.1 through 403.3.1.1.2.3.4. The primary outdoor air fraction (Z_p) must be determined using Equation 4-5. Then the system ventilation efficiency (E_v) is determined in accordance with Table 403.3.1.1.2.3.2 and the uncorrected outdoor air intake flow rate (V_{ou}) is determined using Equations 4-6 and 4-7.

Finally, the outdoor air intake flow rate (V_{ot}) is determined using Equation 4-8.

Step 1: Determine occupant loads (P_z) for each zone:

For the general office space (Zone 1), the occupant density of 5 occupants/1,000 ft^2 is used (from Table 403.3 for office spaces).

P_z (Zone 1) = 7,250 ft^2 × 5 occupants/1,000 ft^2 = 37

For the conference room (Zone 2), the occupant density of 50 occupants/1,000 ft^2 is used.

P_z (Zone 2) = 500 ft^2 × 50 occupants/1000 ft^2 = 25

Step 2: Determine the breathing zone outdoor airflow (V_{bz}) for each zone:

First, the outdoor air rates for people (R_p) and area (R_a) must be obtained for each zone from Table 403.3.1.1:

Zone 1 values: R_p (Zone 1) = 5 cfm/person and R_a (Zone 1) = 0.06 cfm/ ft^2

Zone 2 values: R_p (Zone 2) = 5 cfm/person and R_a (Zone 2) = 0.06 cfm/ ft^2

Equation 4-1 can now be solved for each zone:

$V_{bz} = R_pP_z + R_aA_z$

Zone 1: V_{bz} = (5 cfm/person × 37 people) + (0.06 cfm/ft^2 × 7,250 ft^2)

V_{bz} = 620 cfm

Zone 2: V_{bz} = (5 cfm/person x 25 people) + (0.06 cfm/ft^2 × 500 ft^2)

V_{bz} = 155 cfm

Step 3: Determine the zone outdoor airflow (V_{oz}) for each zone:

It is given that the room is served by a rooftop air-handling unit by means of ducted ceiling supply registers and ceiling return grilles. Thus, the zone air distribution effectiveness (E_z) can be obtained from Table 403.3.1.1.1.2. In cooling mode, E_z = 1.0, and in heating mode, E_z = 0.8 (assume that Note f of Table 403.3.1.1.1.2 does not apply).

Equation 4-2 can now be solved for each zone:

$V_{oz} = V_{bz}/E_z$

E_z

Zone 1: Cooling Mode: V_{oz} = 620 cfm

1.0 = 620 cfm

Heating Mode: V_{oz} = 620 cfm

0.8 = 775 cfm

Zone 2: Cooling Mode: V_{oz} = 155 cfm

1.0 = 155 cfm

Heating Mode: V_{oz} = 155 cfm

0.8 = 194 cfm

Step 4: Determine the primary outdoor air fraction (Z_p) for each zone:

The primary airflow (V_{pz}) is given:

V_{pz} (Zone 1) = 8,100 cfm and V_{pz} (Zone 2) = 780 cfm.

Equation 4-5 can now be solved for each zone:

$Z_p = V_{oz}$

V_{pz}

Zone 1: Z_p = 775 cfm/8,100 cfm = 0.096

Zone 2: Z_p = 194 cfm/780 cfm = 0.25

Step 5: Determine the system ventilation efficiency (E_v):

The largest value of Z_p among all zones served by the system must be used. Therefore, for Z_p = 0.25, Table 403.3.1.1.2.3.2 yields E_v = 0.9.

Step 6: Determine the uncorrected outdoor air intake flow rate (V_{ou}):

Note that the occupant diversity (D) calculation is optional, meaning that if no diversity is desired to be applied or if there is insufficient information for apply-

INTERNATIONAL CODE COUNCIL®
Copyright © 2015 ICC. ALL RIGHTS RESERVED. Accessed by David Dammon on Jun 21, 2017 12:30:52 PM pursuant to License Agreement with ICC. No further reproduction or distribution authorized. ANY UNAUTHORIZED REPRODUCTION OR DISTRIBUTION IS A VIOLATION OF THE FEDERAL COPYRIGHT ACT AND THE LICENSE AGREEMENT, AND SUBJECT TO CIVIL AND CRIMINAL PENALTIES THEREUNDER.

ing Equation 4-7, the designer can simply set *D* equal to 1 in Equation 4-6. The occupant diversity is used to account for occupants who will be either in one zone or the other at any given time. For this example, it is assumed that *D* is equal to 1 so as to make the results of Section 403.3.1.1.2.3 more obvious, thereby making the example more meaningful. If, however, an occupant diversity (*D*) was applied in this example it would be calculated as follows:

The design assumption is that the conference room (Zone 2) may at times be occupied by outside visitors to conduct a presentation or meet with the staff with the balance of the conference room occupancy consisting of staff. An assumption is made that, on average, 80 percent of the conference room zone occupancy will be comprised of staff that normally occupies the Zone 1 office area.

This results in a system population (P_s) as follows:

P_s = system population = Zone 1 population + Zone 2 visitors

P_s = 37 people + (25 people × 0.2 visitor rate) = 42 occupants which are expected to be concurrently in all zones served by the system. The denominator of Equation 4-7 is simply the sum of the occupant loads of all zones, that being the sum of Zone 1, 37 occupants and Zone 2, 25 occupants.

Equation 4-7 can now be solved for *D*, occupant diversity:

$$D = \frac{P_s}{\Sigma_{all\ zones} P_z}$$

D = 42 occupants/(37 occupants + 25 occupants) = 42/62 = 0.68

As stated earlier, D = 1 will be used in the remainder of this example.

Equation 4-6 is solved as follows:

$$V_{ou} = D \times \Sigma_{all\ zones} R_p P_z + \Sigma_{all\ zones} R_a A_z$$

$V_{ou} = D$ {[R_p (Zone 1) x P_z (Zone 1)] + [R_p (Zone 2) x P_z (Zone 2)]} + {[(R_a (Zone 1) × A_z (Zone 1)] + [R_a (Zone 2) × A_z (Zone 2)]}

V_{ou} = 1[(5 cfm/person × 37 people) + (5 cfm/person × 25 people)] + [(0.06 cfm/ft^2 × 7,250 ft^2) + (0.06 cfm/ft^2 × 500 ft^2)]

V_{ou} = 185 + 125 + 435 + 30 = 775 cfm

Step 7: Determine the outdoor air intake flow rate (V_{ot}):

Equation 4-8 gives the adjusted overall outdoor air flow rate required for the system, using the most restrictive value for system ventilation efficiency (Step 5), E_v:

$V_{ot} = V_{ou}$

E_v

V_{ot} = 775 cfm/0.9 = 861 cfm

This is the overall amount of outdoor air supplied by the rooftop unit to both zones.

Now consider what the overall amount of outdoor air would have been if the Maximum Z_p of 0.25 had been applied to both Zones 1 and 2 instead of working through the process of calculating the "corrected" outdoor air intake flow rate as performed in this example.

For Zone 1, the outdoor/primary air fraction (Z_p) of 0.25 would require that 2,025 cfm be supplied to Zone 1 (2,025/8,100 = 0.25).

For Zone 2, the outdoor/primary air fraction (Z_p) of 0.25 would require the same as before, 194 cfm. (194/780 = 0.25).

Adding both zones: 2,025 + 194 = 2,219 cfm. As can be seen, the process of Section 403.3.2.3 has reduced (corrected) the outdoor rate by 1,358 cfm. If the occupant diversity factor (*D*) had been applied in this example, the true nature of the "correction" from Equation 4-8 would have been obscured.

In comparison, the amount of outdoor air required using the 2006 code would be the following:

Zone 1:

7,250 ft^2 × 7 occupants

1,000 ft^2 = 51 occupants × 20 cfm/occupant = 1,020 cfm OA

Zone 2:

500 ft^2 × 50 occupants

1,000 ft^2 = 25 occupants × 20 cfm/occupant = 500 cfm OA

Total amount of outdoor air supplied by the rooftop unit is 1,520 cfm under the 2006 code.

Example 3: Multiple-zone Recirculating Systems

A wing of a new high school consists of a 2,200-square-foot art classroom, a 1,400-square-foot science lab, a 1,200-square-foot computer lab and a 750-square-foot corridor. The entire wing is to be served by a single central air-handling unit in an adjoining mechanical room, via ceiling supply and ceiling return grilles and registers.

The primary airflow provided for the building consists of 2,800 cfm for the art classroom, 2,400 cfm for the science lab, 1,800 cfm for the computer lab and 500 cfm for the corridor. Determine the outdoor air intake flow rate for the building area.

Step 1: Determine occupant loads (P_z) for each zone:

For the art classroom (Zone 1), Table 403.3.1.1 under the Education occupancy, the occupant density is:

P_z (Zone 1) = (2,200 ft^2/1,000 ft^2) × 20 occupants

INTERNATIONAL CODE COUNCIL®
Copyright © 2015 ICC. ALL RIGHTS RESERVED. Accessed by David Dammon on Jun 21, 2017 12:30:52 PM pursuant to License Agreement with ICC. No further reproduction or distribution authorized. ANY UNAUTHORIZED REPRODUCTION OR DISTRIBUTION IS A VIOLATION OF THE FEDERAL COPYRIGHT ACT AND THE LICENSE AGREEMENT, AND SUBJECT TO CIVIL AND CRIMINAL PENALTIES THEREUNDER.

P_z (Zone 1) = 44 occupants

For the science lab (Zone 2), the maximum occupancy is given as:

P_z (Zone 2) = (1,400 ft^2/1,000 ft^2) × 25 = 35 occupants)

For the computer lab (Zone 3), the maximum occupancy is:

P_z (Zone 3) = (1,200 ft^2/1,000 ft^2) × 25 occupants

P_z (Zone 3) = 30 occupants

For the corridor (Zone 4), no specific occupancy criterion is given; therefore, from Table 403.3.1.1 under the Education occupancy, the table says to go to Public Spaces for corridor requirements. The table entry for corridors does not have a value listed in the Occupant Density or People outdoor air rate columns; therefore, P_z (Zone 4) = 0, and only requires the Area Outdoor Airflow Rate in Breathing Zone component to be considered, which will occur later in the example.

Step 2: Determine the breathing zone outdoor airflow (V_{bz}) for each zone:

First, the outdoor air rates for people (R_p) and area (R_a) must be obtained for each zone from Table 403.3.1.1:

Zone 1 values R_p (Zone 1) = 10 cfm/person; R_a (Zone 1) = 0.18 cfm/ft^2

Zone 2 values: R_p (Zone 2) = 10 cfm/person; R_a (Zone 2) = 0.18 cfm/ft^2

Zone 3 values: R_p (Zone 3) = 10 cfm/person; R_a (Zone 3) = 0.12 cfm/ft^2

Zone 4 values: R_p (Zone 4) = 0 cfm/person; R_a (Zone 4) = 0.06 cfm/ft^2

Equation 4-1 can now be solved for each zone:

$V_{bz} = R_p(\text{Pz}) + R_a(A_z)$

Zone 1: V_{bz} (Zone 1) = 10 cfm/person (44 people) + 0.18 cfm/ft^2 (2,200 ft^2)

V_{bz} (Zone 1) = 836 cfm

Zone 2: V_{bz} (Zone 2) = 10 cfm/person (35 people) + 0.18 cfm/ft^2 (1,400 ft^2)

V_{bz} (Zone 2) = 602 cfm

Zone 3: V_{bz} (Zone 3) = 10 cfm/person (30 people) + 0.12 cfm/sq ft (1,200 ft^2)

V_{bz} (Zone 3) = 444 cfm

Zone 4: V_{bz} (Zone 4) = 0 cfm/person (0 people) + 0.06 cfm/sq ft (750 ft^2)

V_{bz} (Zone 4) = 45 cfm

Step 3: Determine the zone outdoor airflow (V_{oz}) for each zone:

It is given that the building is served by a rooftop air-handling unit via ceiling supply and ceiling return. Thus, the zone air distribution effectiveness (E_z) can be obtained from Table 403.3.1.1.1.2; in cooling mode, E_z = 1.0, and in heating mode, E_z = 0.8 (assume that Note f to the Table is not applicable in this example).

Equation 4-2 can now be solved for each zone:

$V_{oz} = V_{bz} / E_z$

Zone 1: Cooling Mode V_{oz} (Zone 1) = 836 cfm/1.0 = 836 cfm

Heating Mode: V_{oz} (Zone 1) = 836 cfm/0.8 = 1,045 cfm

Zone 2: Cooling Mode: V_{oz} (Zone 2) = 602 cfm/1.0 = 602 cfm

Heating Mode: V_{oz} (Zone 2) = 602 cfm/0.8 = 753 cfm

Zone 3: Cooling Mode: V_{oz} (Zone 3) = 444 cfm/1.0 = 444 cfm

Heating Mode: V_{oz} (Zone 3) = 444 cfm/0.8 = 555 cfm

Zone 4: Cooling Mode: V_{oz} (Zone 4) = 45 cfm/1.0 = 45 cfm

Heating Mode: V_{oz} (Zone 4) = 45 cfm/0.8 = 57 cfm

Step 4: Determine the primary outdoor air fraction (Z_p) for each zone:

The primary airflow (V_{pz}) is given for each Zone: V_{pz} (Zone 1) = 2,800 cfm; V_{pz} (Zone 2) = 2,400 cfm; V_{pz} (Zone 3) = 1,800 cfm; and V_{pz} (Zone 4) = 500 cfm.

The primary airflow (V_{pz}) is given for each Zone: V_{pz} (Zone 1) = 2,800 cfm; V_{pz} (Zone 2) = 2,400 cfm; V_{pz} (Zone 3) = 1,800 cfm; and V_{pz} (Zone 4) = 500 cfm.

$Z_p = V_{oz}/V_{pz}$

Zone 1: Z_p (Zone 1) = 1,045 cfm/2,800 cfm = 0.37

Zone 2: Z_p (Zone 2) = 753 cfm/2,400 cfm = 0.31

Zone 3: Z_p (Zone 3) = 555 cfm/1,800 cfm = 0.31

Zone 4: Z_p (Zone 4) = 57 cfm/500 cfm = 0.12

Step 5: Determine the system ventilation efficiency (E_v):

The largest value of Z_p among all zones served by the system must be used; thus, for Z_p = 0.37 (largest value among all zones), Table 403.3.1.1.2.3.2 yields a value of 0.7 for E_v.

Step 6: Determine the uncorrected outdoor air intake (V_{ou}):

For occupant diversity (D), Equation 4-7 is used to account for occupants who will either be in one zone or the other at any given time.

For this example, the school district has noted that the art classroom and computer lab will be normally occupied throughout the school day; however, the school district estimates that the science lab will be used only for two or three periods a day for combined classes and special events; thus, it is only occupied

INTERNATIONAL CODE COUNCIL®
Copyright © 2015 ICC. ALL RIGHTS RESERVED. Accessed by David Dammon on Jun 21, 2017 12:30:52 PM pursuant to License Agreement with ICC. No further reproduction or distribution authorized. ANY UNAUTHORIZED REPRODUCTION OR DISTRIBUTION IS A VIOLATION OF THE FEDERAL COPYRIGHT ACT AND THE LICENSE AGREEMENT, AND SUBJECT TO CIVIL AND CRIMINAL PENALTIES THEREUNDER.

roughly 50 percent of the school day. However, since the science lab will draw its population from other areas of the campus, there is no assumed occupant diversity between the classrooms and labs within our analysis. Additionally, the corridor will be normally unoccupied, and will only have occupants between classes; as such, the corridor does not factor into the occupancy diversity calculation, but is considered only for area outdoor air rate.

Since no one zone will draw occupants away from another zone, the occupant diversity value for our example is $D = 1.0$.

Equation 4-6 can now be solved:

$V_{ou} = D\ [\sum_{all\ zones}\ (R_p P_z)] + [\sum_{all\ zones}\ (R_a A_z)]$

$V_{ou} = D\ \{[R_p\ (\text{Zone 1}) \times P_z\ (\text{Zone 1})] + [R_p\ (\text{Zone 2}) \times P_z\ (\text{Zone 2})] + [R_p\ (\text{Zone 3}) \times P_z\ (\text{Zone 3})] + [R_p\ (\text{Zone 4}) \times P_z\ (\text{Zone 4})]\} + \{[R_a\ (\text{Zone 1}) \times A_z\ (\text{Zone 1})] + [R_a\ (\text{Zone 2}) \times A_z\ (\text{Zone 2})] + [R_a\ (\text{Zone 3}) \times A_z\ (\text{Zone 3})] + [R_a\ (\text{Zone 4}) \times A_z\ (\text{Zone 4})]\}$

$V_{ou} = 1.0\ [(10\ \text{cfm/person} \times 44\ \text{people}) + (10\ \text{cfm/person} \times 35\ \text{people}) + (10\ \text{cfm/person} \times 30\ \text{people}) + (0\ \text{cfm/person} \times 0\ \text{people})] + [(0.18\ \text{cfm/ft}^2 \times 2{,}200\ \text{ft}^2) + (0.18\ \text{cfm/ft}^2 \times 1{,}400\ \text{ft}^2) + (0.12\ \text{cfm/ft}^2 \times 1{,}200\ \text{ft}^2) + (0.06\ \text{cfm/ft}^2 \times 750\ \text{ft}^2)]$

$V_{ou} = [1{,}090] + [837]$

$V_{ou} = 1{,}927\ \text{cfm}$

Step 7: Determine the outdoor air intake flow rate (V_{ot}):

Equation 4-8 gives the adjusted overall outdoor air flow rate required for the system, using the most restrictive value for system ventilation efficiency, E_v:

$V_{ot} = V_{ou}/E_v$

$V_{ot} = 1{,}927\ \text{cfm}/0.7 = 2{,}753\ \text{cfm}$

Compare with the 2006 code Table 403.3 method:

Art Classroom = (2,200 ft^2/1,000 ft^2) × 50 occupants = 110 occupants (110 × 15 cfm/occupant = 1,650 cfm)

Science Lab = (1,400 ft^2/1,000 ft^2) × 30 occupants = 42 occupants (42 × 20 cfm/occupant = 840 cfm)

Computer Lab = (1,200 ft^2/1,000 ft^2) × 50 occupants = 60 occupants (60 × 15 cfm/occupant = 900 cfm)

Corridor = (750 ft^2 × 0.05 cfm/ft^2 = 38 cfm)

In the 2006 edition of the code, (1,650 + 840 + 900 + 38) = 3,428 cfm would have been required.

Note that the science lab and computer lab both require an exhaust system in accordance with Table 403.3, and such system is in addition to the ventilation calculated in this example (see Section 403.4).

403.3.1.2 Exhaust ventilation. Exhaust airflow rate shall be provided in accordance with the requirements of Table 403.3.1.1. Outdoor air introduced into a space by an exhaust system shall be considered as contributing to the outdoor airflow required by Table 403.3.1.1.

❖ Table 403.3.1.1 has an additional column that was new to the 2009 edition of the code; an exhaust airflow cfm/ft^2 column. The required exhaust rate airflow must occur and any other ventilation rates prescribed by the table must be satisfied. For example, science labs under "Education" require an exhaust rate, an outdoor air rate per person and an outdoor air rate per square footage. Such cases in the table are associated with extraordinary contaminants thereby justifying an exhaust system that will help maintain a pressure differential to prevent the migration of contaminants to other spaces.

It is important to understand how to apply Table 403.3.1.1 where the table specifies both outdoor air rates and exhaust rates for the same occupancy. Where this happens in the table (for example, science labs and barber shops), both the outdoor air and exhaust requirements apply and this could be misinterpreted to mean that the outdoor air needed as makeup air for the exhaust system must be in addition to the outdoor air required based on the occupant load and area of the space. Consider a barber shop of 1000 square feet with a zone air distribution effectiveness (E_z) of one. It will require 500 cfm of exhaust ventilation and 247.5 cfm of outdoor air. Rather than requiring a total outdoor air rate of 747.5 cfm to satisfy both ventilation needs (i.e., 247.5 cfm OA ventilation plus 500 cfm OA as makeup for the exhaust), the code intends to allow the 247.5 cfm of outdoor air to serve as part of the makeup air for the exhaust system with the remaining 252.5 cfm of makeup air being from some other source.

The code intends to make sure that a minimum rate of outdoor air is supplied to the space for occupant well-being in the case where the makeup air for the exhaust system is composed entirely of used ventilation air transferred in from some other space. In most designs, the outdoor air required based on occupant load and area will be used to satisfy a portion of the makeup air required for the exhaust system. The exhaust rate specified in the table will almost always exceed the ventilation outdoor air rate, therefore, the makeup air demand for the exhaust system will have to be satisfied by other sources of air in addition to the outdoor air required based on occupant load and area of the space. The additional makeup air may be provided by air transferred directly from another space, air supplied from return air from another space or outdoor air, including infiltration.

403.3.1.3 System operation. The minimum flow rate of outdoor air that the ventilation system must be capable of supplying during its operation shall be permitted to be based on

INTERNATIONAL CODE COUNCIL®
Copyright © 2015 ICC. ALL RIGHTS RESERVED. Accessed by David Dammon on Jun 21, 2017 12:30:52 PM pursuant to License Agreement with ICC. No further reproduction or distribution authorized. ANY UNAUTHORIZED REPRODUCTION OR DISTRIBUTION IS A VIOLATION OF THE FEDERAL COPYRIGHT ACT AND THE LICENSE AGREEMENT, AND SUBJECT TO CIVIL AND CRIMINAL PENALTIES THEREUNDER.

the rate per person indicated in Table 403.3.1.1 and the actual number of occupants present.

❖ In accordance with Section 403.3.1.1, the ventilation system is required to have the airflow capacity calculated in accordance with Table 403.3.1.1 and the related subsections. However, in actual operation, the ventilation system is permitted to supply an airflow quantity based on the actual number of occupants that are present in the space being ventilated. The key words in these sections are system "design" and "operation." The design capacity will not always be the capacity at which the system is operated. Note that this section speaks only of the rate per person and the occupant load, not the rate per floor area; therefore, this section would not apply where Table 403.3.1.1 calls for only a rate per floor area in an occupancy. No occupant density is given in such cases. This section applies to the people outdoor air rate (R_a) with no apparent allowance for resetting the area outdoor airflow rate (R_a). ASHRAE 62.1 has a provision (Dynamic reset) which is similar to this section and like this section, it does not indicate how this is to be applied to the area outdoor airflow rate (R_a).

With the exception of those locations in Section 406, ventilation is not required in spaces that are unoccupied; however, ventilation could be necessary during unoccupied periods to prevent the accumulation of contaminants injurious to people, building contents or the structure itself. Therefore, ventilation of a space before and after it is occupied can be necessary to dilute contaminants prior to its next occupied period.

The intent of this section is to allow the rate of ventilation to modulate in proportion to the number of occupants. This can result in significant energy savings. Current technology can permit the design of ventilation systems that are capable of detecting the occupant load of the space and automatically adjusting the ventilation rate accordingly. For example, carbon dioxide (CO_2) detectors can be used to sense the level of CO_2 concentrations that are indicative of the number of occupants. People emit predictable quantities of CO_2 for any given activity, and this knowledge can be used to estimate the occupant load in a space. Occupancies, such as large assembly rooms, could use electronic ingress and egress monitoring technology that keeps an accurate count of the number of occupants at any time.

Note that carbon dioxide (CO_2) concentration monitoring is intended only as a means of determining the approximate number of occupants present at any one time. Carbon dioxide concentration is not intended to be the sole benchmark or measure of ventilation effectiveness. Carbon dioxide is just one of multiple contaminants of concern. It is not the intent of the code to allow ventilation to be controlled solely by the concentration of CO_2 in the space as the only parameter. For example, setting an arbitrary sensor threshold of 1,000 parts per million (ppm) of CO_2 and allowing the ventilation system to cycle off and on based only on the CO_2 concentration being above or below that setpoint does not meet the intent of the code.

403.3.1.4 Variable air volume system control. Variable air volume air distribution systems, other than those designed to supply only 100-percent outdoor air, shall be provided with controls to regulate the flow of outdoor air. Such control system shall be designed to maintain the flow rate of outdoor air at a rate of not less than that required by Section 403.3 over the entire range of supply air operating rates.

❖ Variable air volume HVAC systems continuously vary the supply air delivery rates to a room or space based on the need for heating or cooling within that room or space. Active outdoor air controls are necessary to maintain the required outdoor airflow rate at or above the minimum required for a room or space over the entire range of supply air delivery rates. This is especially critical when several variable air volume (VAV) boxes are served by a single air-handling unit. To accomplish this, the percentage of outdoor air in the mixed air supply to the VAV terminals must be automatically adjusted in response to the output of the VAV terminal units.

Because the required ventilation air is strictly outdoor air, any recirculation of air in a space is solely a function of the heating, cooling and air-conditioning system design. Heating, cooling and air-conditioning system design is basically independent of ventilation system design except for the fact that the heating, cooling and air-conditioning system is typically used to supply the required rate of outdoor airflow, and the HVAC system design must account for the sensible and latent heat of the outdoor air. In HVAC systems, such as VAV systems, it is difficult to control the rate of outdoor air being supplied because the volume of air supplied through VAV systems varies depending on the comfort heating and cooling demand on the system, while the ventilation requirements are constant when the building is occupied and the occupant numbers are constant. In addition, the outdoor air is normally supplied to the main air handler of the system and the individual VAV units do not control the percentage of outdoor air in the air supply from the main air handler. It is not uncommon for HVAC systems to use an independent outdoor air system to ensure that the outdoor air rate is achieved in zones served by VAV systems. Hardware and controls are available that would allow VAV systems to provide feedback to the main air handler to cause continuous resetting of the outdoor air intake rate, thus overcoming the problem of providing ventilation air through a VAV system. See the following example scenarios for VAV systems.

Example 4:

Scenario 1:

Each of three zones requires 50 cfm (0.024 m^3/s) of outdoor air.

INTERNATIONAL CODE COUNCIL®
Copyright © 2015 ICC. ALL RIGHTS RESERVED. Accessed by David Dammon on Jun 21, 2017 12:30:52 PM pursuant to License Agreement with ICC. No further reproduction or distribution authorized. ANY UNAUTHORIZED REPRODUCTION OR DISTRIBUTION IS A VIOLATION OF THE FEDERAL COPYRIGHT ACT AND THE LICENSE AGREEMENT, AND SUBJECT TO CIVIL AND CRIMINAL PENALTIES THEREUNDER.

Assume that VAV boxes are serving unequal zone loads and are operating as follows:

VAV 1 is operating at full output, 200 cfm (0.094 m^3/s).

VAV 2 is operating at half output, 100 cfm (0.047 m^3/s).

VAV 3 is operating at minimum output, 50 cfm (0.024 m^3/s).

- In this scenario, the supply air to the VAV boxes must be 100-percent outdoor air to satisfy Zone 3 because any recirculated air supplied to the system would dilute the air supplied to Zone 3 to less than 100 percent.
- The required outdoor air rate is 150 cfm (0.071 m^3/s) total for Zones 1, 2 and 3. When all three VAVs operate at 100-percent outdoor air, the system would be over-ventilating with a total outdoor air rate of 350 cfm (0.165 m^3/s).

Scenario 2:

Assume that the same VAV boxes are operating as follows:

VAV 1 is operating at 100 cfm (0.047 m^3/s).

VAV 2 is operating at 150 cfm (0.071 m^3/s).

VAV 3 is operating at 200 cfm (0.094 m^3/s).

- The required outdoor air rate for the supply air to the VAV boxes must be 50 percent to satisfy Zone 1, and since the outdoor air is supplied by the main air handler, all of the other zones would also receive 50 percent outdoor air.
- The required outdoor air rate is still 150 cfm (0.071 m^3/s) total for all zones.
- The system would again be over ventilating with a total outdoor air rate of 225 cfm (0.106 m^3/s).

403.3.1.5 Balancing. The *ventilation* air distribution system shall be provided with means to adjust the system to achieve not less than the minimum ventilation airflow rate as required by Sections 403.3 and 403.3.1.2. Ventilation systems shall be balanced by an *approved* method. Such balancing shall verify that the ventilation system is capable of supplying and exhausting the airflow rates required by Sections 403.3 and 403.3.1.2.

❖ Balancing of HVAC systems involves the adjustment of the system so that it will perform in the manner intended by the designer. It is an essential part of the final testing and approval of the system and should be performed by experienced and qualified individuals. Balancing of the ventilation system is absolutely necessary to ensure that the system satisfies the requirements of the code. The code does not require balancing of heating and cooling systems where the systems are not supplying ventilation air (see Section 603.18). To ensure that the system can be properly balanced, a sufficient number of dampers and flow-balancing devices must be installed in the system. This section intends to verify that the code-prescribed rate of ventilation is achieved.

403.3.2 Group R-2, R-3 and R-4 occupancies, three stories and less. The design of local exhaust systems and ventilation systems for outdoor air in Group R-2, R-3 and R-4 occupancies three stories and less in height above grade plane shall comply with Sections 403.3.2.1 through 403.3.2.3.

❖ The new text simplifies the mechanical ventilation compliance path for Group R-2, R-3 and R-4 buildings three stories or less in height above grade plane to be consistent with those in the 2015 IRC and ASHRAE 62.2. These buildings more closely match the scope of ASHRAE 62.2 than ASHRAE 62.1, and it is not necessary that they be subject to the rigor of the design calculations of ASHRAE 62.1/IMC Section 403. Section 403 of the IMC is based on ASHRAE 62.1. One advantage gained by aligning the mechanical ventilation path for these buildings with ASHRAE 62.2 and the 2015 IRC Section M1507 is that only one equation is necessary instead of the multiple equations that a designer could have to solve if following the prescriptive requirements of Section 403. This new text works in conjunction with Section 401.2, which mandates mechanical ventilation instead of natural ventilation where the building is so tightly constructed as to have less than five air changes per hour (ACH50 is the air change per hour determined with a pressure differential of 50 Pa). The IECC and IRC energy code provisions require that these buildings have ACH50 rates not greater than five in certain climates zones and not greater than three in the other climate zones. Because of the energy code requirements, the dwellings will be so air-tight that mechanical ventilation will almost always be required by Section 401.2.

403.3.2.1 Outdoor air for dwelling units. An outdoor air ventilation system consisting of a mechanical exhaust system, supply system or combination thereof shall be installed for each dwelling unit. Local exhaust or supply systems, including outdoor air ducts connected to the return side of an air handler, are permitted to serve as such a system. The outdoor air ventilation system shall be designed to provide the required rate of outdoor air continuously during the period that the building is occupied. The minimum continuous outdoor airflow rate shall be determined in accordance with Equation 4-9.

$$Q_{OA} = 0.03A_{floor} + 7.5(N_{br} + 1) \quad \textbf{(Equation 4-9)}$$

where:

Q_{OA} = outdoor airflow rate, cfm

A_{floor} = floor area, ft^2

N_{br} = number of bedrooms; not to be less than one

Exception: The outdoor air ventilation system is not required to operate continuously where the system has controls that enable operation for not less than 1 hour of

INTERNATIONAL CODE COUNCIL®
Copyright © 2015 ICC. ALL RIGHTS RESERVED. Accessed by David Dammon on Jun 21, 2017 12:30:52 PM pursuant to License Agreement with ICC. No further reproduction or distribution authorized. ANY UNAUTHORIZED REPRODUCTION OR DISTRIBUTION IS A VIOLATION OF THE FEDERAL COPYRIGHT ACT AND THE LICENSE AGREEMENT, AND SUBJECT TO CIVIL AND CRIMINAL PENALTIES THEREUNDER.

each 4-hour period. The average outdoor air flow rate over the 4-hour period shall be not less than that prescribed by Equation 4-9.

❖ This methodology for mechanical ventilation of dwellings units is very similar to what is in the IRC and ASHRAE 62.2, yet more simple than both comparisons. The required system can utilize supply fans and relief openings; supply fans and exhaust fans; or exhaust fans and gravity intake openings. The bathroom and kitchen local exhaust fans are permitted to be the required system; however, it is the author's opinion that such fans are intended to be controlled by manual or automated controls that are distinct from the typical wall switches that normally control such fans. Otherwise, the occupants may not realize that the local exhaust fans are supposed to run continuously or as prescribed in the exception to this section. There is no mechanical ventilation system if the occupants simply turn off the bathroom and kitchen exhaust fans when they exit the room. The exception clearly suggests that automatic controls are necessary in order to accomplish the intermittent operation prescribed therein. Obviously, the occupants could not be depended on to control intermittent operation manually. Where continuous operation is chosen, the system controls should be such that the occupants recognize the controls as being part of a required dwelling unit ventilation system. For example, the fans could be controlled by a switch or circuit breaker that is labeled "mechanical ventilation system."

Example 5:

Given: 2,000-square-foot dwelling with four bedrooms located in an R-2 apartment building.

Q_{oa} = 0.03(2,000) + 7.5(4+1) = 60 + 37.5 = 97.5 cfm

If kitchen and bathroom exhaust fans were used as the means of providing the required ventilation, they would have to have a capacity of 97.5 cfm and operate continuously, or the system would have to operate at some other rate for one or more hours in each 4-hour period with the average exhaust rate being at least 97.5 cfm. For example: the fans could run at a rate of 390 cfm for one hour and zero cfm for the remaining three hours, or the fans could run at a rate of 195 cfm for two hours and zero for the remaining two hours, etc. The less time the fans run, the higher the flow rate must be to compensate. Note that Section 403.3.2.3 states minimum flow rates for kitchen and bathroom exhaust for both continuous and intermittent operation and these rates must prevail. This example was chosen because it is likely that the kitchen and bathroom exhaust fans will be utilized as the required ventilation system because such fans will already be part of the dwelling unit design and it could be more cost effective to utilize these fans instead of providing another system that is dedicated to ventilation.

Where exhaust fans are used as the dwelling's required mechanical ventilation system, consideration should be given to the operating noise level (sones) of the fans. Noisy fans will be objectionable to the occupants and they will find a way to disable the system. The intent of the code will not be accomplished if the occupants won't allow the system to operate. Exhaust systems are often designed with the fans located in an attic, for example, with only noiseless intake opening in the rooms served by the exhaust systems.

403.3.2.2 Outdoor air for other spaces. Corridors and other common areas within the conditioned space shall be provided with outdoor air at a rate of not less than 0.06 cfm per square foot of floor area.

❖ This section addresses the spaces in an apartment building (R-2), for example, that are not within a dwelling unit. The areas of conditioned spaces such corridors, foyers and vestibules must be provided with ventilation air independently of the dwelling units. The ventilation systems must operate continuously because such spaces are assumed to be occupied at all times and there is no option in the code for intermittent operation. Simply total the areas of such spaces in square feet and multiple by 0.06 cfm to determine the total required ventilation rate. As always, the location of exhaust, supply, intake and relief opening should be chosen so as to allow an air flow pattern that will effectively distribute the ventilation effects.

403.3.2.3 Local exhaust. Local exhaust systems shall be provided in kitchens, bathrooms and toilet rooms and shall have the capacity to exhaust the minimum airflow rate determined in accordance with Table 403.3.2.3.

❖ Where mechanical ventilation is triggered by Section 401.2, Section 403.3.2.3 mandates the installation of mechanical exhaust systems in kitchens, bathrooms and toilet rooms. Note that this section does not mandate that range hoods be installed; rather, it mandates that some form of mechanical exhaust be provided whether it be a range hood or a general kitchen exhaust system. See Section 505.4 mandating range hoods for other than Group R occupancies.

The example shown in the commentary to Section 403.3.2.1 uses the kitchen and bathroom exhaust fans as the ventilation system. Where this is the case, Table 403.3.2.3, Equation 4-9 and the exception in Section 403.3.2.1 can appear to be in conflict; therefore, the highest airflow rate determined must apply. See Section 102.1. In the application of Section 403.3.2.1, Table 403.3.2.3 cannot be overlooked. For example, consider a bathroom exhaust fan used for both local exhaust and the whole-house mechanical ventilation system. Such system must meet the flow rate requirements of both Sections 403.3.2.1 and 403.3.2.3 (either continuous or intermittent for each). In a three-bedroom, 1,800-square-foot apartment

INTERNATIONAL CODE COUNCIL®
Copyright © 2015 ICC. ALL RIGHTS RESERVED. Accessed by David Dammon on Jun 21, 2017 12:30:52 PM pursuant to License Agreement with ICC. No further reproduction or distribution authorized. ANY UNAUTHORIZED REPRODUCTION OR DISTRIBUTION IS A VIOLATION OF THE FEDERAL COPYRIGHT ACT AND THE LICENSE AGREEMENT, AND SUBJECT TO CIVIL AND CRIMINAL PENALTIES THEREUNDER.

using a bath fan for whole-house mechanical ventilation:

A. Continuous operation: 84 cfm is required, which also meets the minimum continuous requirement of 20 cfm from Table 403.3.2.3.

B. Intermittent operation: The bath fan could be operated at 50% of the time at 168 cfm or 25% of the time at 336 cfm (other options possible) which also meets the requirement of Table 403.3.2.3 for 50 cfm intermittent.

Consider: 1,000-square-foot, one-bedroom apartment using bathroom fan as whole-house ventilation system. (0.03 x 1,000) + (7.5 x 2) =45 cfm.

A. Continuous operation: 45 cfm meets the minimum required continuous rate of 20 cfm from Table 403.3.2.3.

B. Intermittent operation: 45 cfm does NOT meet the required minimum rate of Table 403.3.2.3, therefore the 50 cfm is the minimum instead of 45 cfm.

TABLE 403.3.2.3
MINIMUM REQUIRED LOCAL EXHAUST RATES FOR GROUP R-2, R-3 AND R-4 OCCUPANCIES

AREA TO BE EXHAUSTED	EXHAUST RATE CAPACITY
Kitchens	100 cfm intermittent or 25 cfm continuous
Bathrooms and toilet rooms	50 cfm intermittent or 20 cfm continuous

For SI: 1 cubic foot per minute = 0.0004719 m^3/s.

SECTION 404
ENCLOSED PARKING GARAGES

404.1 Enclosed parking garages. Where mechanical ventilation systems for enclosed parking garages operate intermittently, such operation shall be automatic by means of carbon monoxide detectors applied in conjunction with nitrogen dioxide detectors. Such detectors shall be installed in accordance with their manufacturers' recommendations.

❖ This section applies to parking garages, not repair garages. The intent is that the exhaust system can operate continuously or intermittently. Intermittent operation must be automatic and Section 404.2 requires that the automatic operation maintain an exhaust rate of not less than 0.05 cfm per square foot. In other words, if the system is automated to operate intermittently, the exhaust rate can never go to zero; the exhaust rate must be either the full rate of 0.75 cfm per square foot or 0.05 cfm per square foot, as determined by the CO and NO_2 detectors.

As a means of conserving energy, ventilation systems for enclosed public parking garages are allowed to alternate or modulate between full capacity and the minimum capacity specified in Section 404.2. The alternating or modulating operation must be accomplished using approved detection devices that are capable of detecting the presence of CO and NO_2. This section is referenced by Note d of Table 403.3.1.1 and is intended to apply to parking garages for vehicles such as automobiles, buses and fleet vehicles.

Note that the detection system cannot rely solely on measuring carbon monoxide (CO) because other gaseous and particulate contaminants can reach harmful concentrations long before CO levels rise to the detection threshold of the CO detectors. The intent is to require both CO and NO_2 detectors used together.

404.2 Minimum ventilation. Automatic operation of the system shall not reduce the ventilation airflow rate below 0.05 cfm per square foot (0.00025 $m^3/s \cdot m^2$) of the floor area and the system shall be capable of producing a ventilation airflow rate of 0.75 cfm per square foot (0.0038 $m^3/s \cdot m^2$) of floor area.

❖ The required ventilation rate for enclosed public parking garages is 0.75 cfm/ft^2 [0.0038 $m^3/(s \cdot m^2)$] of floor area; however, the rate at which the system operates is permitted to be reduced to not less than 0.05 cfm/ft^2 [0.00025 $m^3/(s \cdot m^2)$] when the detection systems described in Section 404.1 indicate that there are no occupants or vehicles operating in the garage, or the CO and NO_x concentration levels are within design limits. The exhaust system must be capable of operating automatically at the full rate required by this section and Table 403.3.1.1 (see commentary, Section 404.1). This section simply provides an alternative to continuous ventilation at the 0.75-cfm/ft^2 rate by allowing a reduced continuous rate when the detection system says that it is safe to do so.

404.3 Occupied spaces accessory to public garages. Connecting offices, waiting rooms, ticket booths and similar uses that are accessory to a public garage shall be maintained at a positive pressure and shall be provided with ventilation in accordance with Section 403.3.1.

❖ This section requires that occupied accessory spaces in public garages be adequately separated from the public garage parking area so that a positive pressure can be maintained in the accessory spaces. Maintenance of a positive pressure with respect to the parking areas is intended to prevent contaminants from migrating into spaces that are occupied for extended periods. In addition, compliance with Section 403.3.1.1 and Table 403.3.1.1 is required. The positive pressure required by this section is to be maintained at all times that the accessory spaces are occupied. Note that the ventilation air for the enclosed accessory spaces must come from the outdoors, not the interior of the parking garage, otherwise, it would make no sense to require positive pressurization to keep out garage contaminants.

INTERNATIONAL CODE COUNCIL®
Copyright © 2015 ICC. ALL RIGHTS RESERVED. Accessed by David Dammon on Jun 21, 2017 12:30:52 PM pursuant to License Agreement with ICC. No further reproduction or distribution authorized. ANY UNAUTHORIZED REPRODUCTION OR DISTRIBUTION IS A VIOLATION OF THE FEDERAL COPYRIGHT ACT AND THE LICENSE AGREEMENT, AND SUBJECT TO CIVIL AND CRIMINAL PENALTIES THEREUNDER.

SECTION 405
SYSTEMS CONTROL

405.1 General. Mechanical ventilation systems shall be provided with manual or automatic controls that will operate such systems whenever the spaces are occupied. Air-conditioning systems that supply required *ventilation air* shall be provided with controls designed to automatically maintain the required outdoor air supply rate during occupancy.

❖ This section requires that the system that supplies ventilation air, whether it is a dedicated ventilation air system or HVAC system, have controls that will cause ventilation to occur whenever the space is occupied. A dedicated ventilation air system can have manual or automatic controls. If the ventilation air is supplied by an HVAC system, the controls must be automatic and set to supply the required ventilation air at any time the space is occupied. Automatic control is easily accomplished by timers, thermostats with fan programming ability and energy management systems (see commentary, Section 401.3).

SECTION 406
VENTILATION OF UNINHABITED SPACES

406.1 General. Uninhabited spaces, such as crawl spaces and attics, shall be provided with *natural ventilation* openings as required by the *International Building Code* or shall be provided with a mechanical exhaust and supply air system. The mechanical exhaust rate shall be not less than 0.02 cfm per square foot ($0.00001\ m^3/s \cdot m^2$) of horizontal area and shall be automatically controlled to operate when the relative humidity in the space served exceeds 60 percent.

❖ This section addresses spaces that are not intended to be occupied. The ventilation prescribed herein is intended to control temperature, humidity and vapors that emanate from the structure or the earth.

In lieu of natural ventilation required by the IBC, mechanical ventilation can be supplied in accordance with this section.

Without adequate ventilation, such spaces can suffer damage to structural and insulation materials resulting from high temperatures and excessive moisture and molds. These conditions can also affect the performance and the life span of mechanical equipment, appliances and electrical components located in the spaces. This section specifies the required exhaust rate when mechanical ventilation is chosen as the means of ventilation for spaces described herein. Such mechanical systems normally consist of nothing more than an exhaust fan and properly located air inlet openings to the outdoors.

The mechanical ventilation system must be operated automatically by a humidistat control. Operation by a control that senses only relative humidity is appropriate for crawl spaces; however, it may be desirable for attic ventilation systems to also be activated by temperature-sensitive controls for summer seasons. Note that the outdoor air being supplied to such spaces might have a higher relative humidity than the control setpoint; therefore, the system will run continuously and perhaps elevate the relative humidity of the space. In other words, trying to maintain the relative humidity in a space to 60 percent or less will require that the outdoor ventilation air have a relative humidity of 60 percent or less. So-called "smart vents" are available that can recognize when bringing in humid outdoor air will not accomplish the intent of this section.

SECTION 407
AMBULATORY CARE FACILITIES AND GROUP I-2 OCCUPANCIES

407.1 General. Mechanical ventilation for ambulatory care facilities and Group I-2 occupancies shall be designed and installed in accordance with this code and ASHRAE 170.

❖ ASHRAE 170 is a ventilation standard for health care facilities, and it contains special provisions for the unique nature of such occupancies. The ventilation provisions of Section 403 of the 2012 IMC specific to health care facilities no longer apply. The health care industry helped develop ASHRAE 170 to address the special needs for ventilation of health care facilities. Ambulatory care facilities are those where the patients enter and exit the facility under their own power, but the patients are incapacitated for some period of time while receiving treatment or testing. The facilities include oral surgery offices, eye surgery clinics and colonoscopy clinics, among others.

ASHRAE 170 contains requirements that are unique to patient-care areas and their related support areas. The standard intends to control occupant comfort, odor migration and the spread of disease causing pathogens. It includes special requirements for the location of outdoor air intakes; air filtering and filter monitoring; the control of relative humidity; and the creation of infection isolation rooms. ASHRAE 170 also provides ventilation rates for many specialty rooms in health care facilities.

Bibliography

The following resource materials were used in the preparation of the commentary for this chapter of the code:

IBC-15, *International Building Code.* Washington, DC: International Code Council, 2014.

IECC-15, *International Energy Conservation Code*. Washington, DC: International Code Council, 2014.

IFGC-15, *International Fuel Gas Code*. Washington, DC: International Code Council, 2014.

INTERNATIONAL CODE COUNCIL®
Copyright © 2015 ICC. ALL RIGHTS RESERVED. Accessed by David Dammon on Jun 21, 2017 12:30:52 PM pursuant to License Agreement with ICC. No further reproduction or distribution authorized. ANY UNAUTHORIZED REPRODUCTION OR DISTRIBUTION IS A VIOLATION OF THE FEDERAL COPYRIGHT ACT AND THE LICENSE AGREEMENT, AND SUBJECT TO CIVIL AND CRIMINAL PENALTIES THEREUNDER.

INTERNATIONAL CODE COUNCIL®
Copyright © 2015 ICC. ALL RIGHTS RESERVED. Accessed by David Dammon on Jun 21, 2017 12:30:52 PM pursuant to License Agreement with ICC. No further reproduction or distribution authorized. ANY UNAUTHORIZED REPRODUCTION OR DISTRIBUTION IS A VIOLATION OF THE FEDERAL COPYRIGHT ACT AND THE LICENSE AGREEMENT, AND SUBJECT TO CIVIL AND CRIMINAL PENALTIES THEREUNDER.

Chapter 5:
Exhaust Systems

General Comments

Where contaminants are known to be present in quantities that are irritating or harmful to the occupants' health or are hazardous in a fire, both naturally and mechanically ventilated spaces must be equipped with mechanical exhaust systems capable of collecting and removing the contaminants.

As the chapter title implies, Chapter 5 is a compilation of exhaust-system-related code requirements ranging from clothes dryer exhaust and hazardous exhaust to smoke control systems. This chapter addresses exhaust air systems mostly for their impact on the level of fire safety performance provided by the building, and not so much from the standpoint of airflow design or system efficiency. The design, construction, installation, alteration and repair of commercial kitchen exhaust systems are addressed as well.

The code regulates the materials and methods used for constructing and installing ducts, system controls, exhaust, equipment, fire protection systems, smoke control systems and related components. Air brought into the building for ventilation, combustion or makeup is protected from contamination by the outdoor discharge provisions of this chapter. The *International Building Code*® (IBC®) is referenced repeatedly in this chapter for fire protection measures such as fireblocking, draftstopping, fire-resistance-rated assemblies, penetration protection, smoke control systems, and fire protection and suppression systems. A kitchen exhaust system serving commercial cooking appliances is one of the specialized exhaust systems specifically covered in Chapter 5. A commercial cooking appliance can generate large quantities of air contaminants, such as grease vapors, water vapors, smoke, fuel-gas combustion byproducts and waste heat. Without a properly designed kitchen exhaust system, serious health and fire hazards can develop.

The code official must be aware of the effect that exhaust systems can have on the space conditioning and ventilation systems. For example, improperly designed kitchen exhaust systems can create negative pressure conditions, which can affect the operation of fuel-burning equipment and appliances, the operation of the kitchen and other exhaust systems, and the operation of doors.

Chapter 5 of the code also addresses exhaust systems for some specific occupancies and activities that have the potential for introducing toxic, flammable or otherwise hazardous substances into the indoor environment. The smoke control provisions of Section 513 provide an occupiable route for evacuation or relocation of building occupants in case of a fire. These provisions are not intended to protect contents, enable quick restoration of operations or assist with fire suppression.

Purpose

Chapter 5 provides guidelines for reasonable protection of life, property and health from the hazards associated with exhaust systems, air contaminants and smoke development in the event of a fire. In most cases, these hazards involve materials and gases that are flammable, explosive, toxic or otherwise hazardous. This chapter contains requirements for the installation of exhaust systems, with an emphasis on the structural integrity of the systems and equipment involved and the overall impact of the systems on the fire safety performance of the building. Design considerations, such as energy efficiency, cost effectiveness, system efficiency and convenience, are the responsibility of the design professional.

SECTION 501
GENERAL

501.1 Scope. This chapter shall govern the design, construction and installation of mechanical exhaust systems, including exhaust systems serving clothes dryers and cooking appliances; hazardous exhaust systems; dust, stock and refuse conveyor systems; subslab soil exhaust systems; smoke control systems; energy recovery ventilation systems and other systems specified in Section 502.

❖ This chapter regulates the design, construction and installation of exhaust equipment. The scope of coverage includes the types of exhaust systems specifically addressed in the chapter. Note that the scope of Chapter 4 is general ventilation and the scope of this chapter is specific mechanical exhaust systems. This chapter applies to systems handling hazardous and nonhazardous exhaust, as well as those exhaust systems necessary for specific equipment, operations and sources of contamination. The definition of "Mechanical exhaust system" in Chapter 2 does not specifically mention specialized exhaust systems such as refuse conveyors, commercial kitchen systems and those smoke control systems that include mechanical exhaust systems. This section states that Chapter 5 covers these systems.

INTERNATIONAL CODE COUNCIL®
Copyright © 2015 ICC. ALL RIGHTS RESERVED. Accessed by David Dammon on Jun 21, 2017 12:30:52 PM pursuant to License Agreement with ICC. No further reproduction or distribution authorized. ANY UNAUTHORIZED REPRODUCTION OR DISTRIBUTION IS A VIOLATION OF THE FEDERAL COPYRIGHT ACT AND THE LICENSE AGREEMENT, AND SUBJECT TO CIVIL AND CRIMINAL PENALTIES THEREUNDER.

501.2 Independent system required. Single or combined mechanical exhaust systems for environmental air shall be independent of all other exhaust systems. Dryer exhaust shall be independent of all other systems. Type I exhaust systems shall be independent of all other exhaust systems except as provided in Section 506.3.5. Single or combined Type II exhaust systems for food-processing operations shall be independent of all other exhaust systems. Kitchen exhaust systems shall be constructed in accordance with Section 505 for domestic equipment and Sections 506 through 509 for commercial equipment.

❖ To minimize the potential for spreading contaminants, hazardous exhaust, fire and smoke to other parts of the building, most exhaust systems are prohibited from connecting with dissimilar exhaust systems serving the building. Without complete isolation, the fire, health and explosion hazards inherent in some exhaust systems cannot be confined to those systems, would jeopardize other systems and parts of the building. For example, a Type I exhaust system conveying commercial kitchen exhaust must not share ducts or exhaust equipment with any other exhaust system, including other commercial kitchen exhaust systems, except as provided for in Section 506.3.5 (see commentary, Section 506.3.5). This is because of the potential for spreading smoke, grease-laden air and fire from the kitchen exhaust system to other parts of the building. Although grease is not involved, there is the potential for fire and smoke to spread from the kitchen to other parts of the building; therefore, exhaust ducts serving Type II exhaust systems are prohibited from interconnecting with any other exhaust ducts other than Type II exhaust ducts.

Hazardous exhaust systems must be independent in accordance with Section 510.4 (see commentary, Section 510.4). This section does not prohibit exhaust systems exhausting environmental air from sharing common ducts, risers, fans and other exhaust system components. Environmental air is defined as air that is conveyed from occupied spaces such as ventilation for human usage, domestic kitchen range exhaust, bathroom exhaust and domestic dryer exhaust. Note that while domestic dryers are included in the definition of "Environmental air," this section specifically prohibits clothes dryers from being connected to any other exhaust system. Clothes dryer exhaust systems can only be combined where serving clothes dryers located in a multistory building in accordance with Section 504.10.

501.3 Exhaust discharge. The air removed by every mechanical exhaust system shall be discharged outdoors at a point where it will not cause a public nuisance and not less than the distances specified in Section 501.3.1. The air shall be discharged to a location from which it cannot again be readily drawn in by a ventilating system. Air shall not be exhausted into an attic, crawl space, or be directed onto walkways.

Exceptions:

1. Whole-house ventilation-type attic fans shall be permitted to discharge into the attic space of *dwelling units* having private attics.
2. Commercial cooking recirculating systems.
3. Where installed in accordance with the manufacturer's instructions and where mechanical or *natural ventilation* is otherwise provided in accordance with Chapter 4, *listed* and *labeled* domestic ductless range hoods shall not be required to discharge to the outdoors.

❖ The primary intent of this section is to avoid exhausting contaminants into areas that may be occupied by people or into other buildings. The term "public nuisance" has a legal history and a support basis could be defined in most cases. Public nuisance is a criminal wrong; it is an act or omission that obstructs, damages, or inconveniences the rights of the community. It would negatively affect the comfort, convenience, welfare, safety, health and quality of life of members of the public as a collective. Public nuisance could be addressed by the legal staff of the jurisdiction. Although there are certainly situations in which a health hazard is clearly present, other conditions that represent an unreasonable interference with the enjoyment of life and property require a subjective decision by the code official. Throughout this subjective evaluation, the code official should consider a "public nuisance" as something that is dangerous to human life or detrimental to health, or renders the air or human food, drink or water supply unwholesome.

A public nuisance is much more than or much worse than simply an annoyance or an inconvenience. The scope of the term is rather broad in intent, and allows the code official to decide what may or may not constitute a public nuisance. Unfortunately, it is not easy to determine whether or not a public nuisance will be present. The conditions under which an exhaust system performs vary considerably with the change of seasons, ambient temperatures and prevailing winds. The code official should gather as much information as possible regarding the installation to evaluate the hypothetical worst case. This would include the characteristics and geometry of the installation, as well as the local ambient conditions, so that an educated decision can be made to determine the "nuisance effect" of an exhaust outlet.

Similarly, to prevent the introduction of contaminants into the ventilation air of a building, exhaust opening(s) must not direct exhaust so that it could "...be readily drawn in by a ventilating system." In this situation, the code official must determine an appropriate separation or location for the placement of

INTERNATIONAL CODE COUNCIL®
Copyright © 2015 ICC. ALL RIGHTS RESERVED. Accessed by David Dammon on Jun 21, 2017 12:30:52 PM pursuant to License Agreement with ICC. No further reproduction or distribution authorized. ANY UNAUTHORIZED REPRODUCTION OR DISTRIBUTION IS A VIOLATION OF THE FEDERAL COPYRIGHT ACT AND THE LICENSE AGREEMENT, AND SUBJECT TO CIVIL AND CRIMINAL PENALTIES THEREUNDER.

intake and exhaust openings. The evaluation of each installation should consider the orientation of the exhaust or intake opening and its location relative to a source of contaminants or adjacent intake opening, as well as to the direction of the prevailing winds at the location.

Bear in mind that the air exhausts discharging from a dwelling unit (clothes dryer, kitchen and bathroom) are generally not considered to be significantly hazardous and are of low volume. Furthermore, placing the source of contamination above an air intake takes advantage of the fact that when sources of contamination are lighter (less dense) than the surrounding air they will rise above the vicinity of an air intake located below. The requirements for the termination of commercial kitchen exhaust systems, refuse conveyor systems, subslab exhaust systems and smoke control systems are located in Sections 506.3.13, 506.4.2, 506.5.5, 511.2, 512.4 and 513.10.3, respectively, while requirements for termination of vents and chimneys are in Chapter 8 and the *International Fuel Gas Code*® (IFGC®).

Attics and crawl spaces are not considered to be outdoors. Exhaust ducts cannot terminate in these spaces. Exhaust ducts must connect directly to terminals that pass through the building envelope to the outside atmosphere. Pointing, aiming or similarly directing an exhaust pipe or duct at an opening in the envelope of the building (that is, attic louver, grille, ridge vent, eave vent or soffit vent) in no way ensures that all or any of the exhaust will reach the outdoors. In fact, it is possible that the majority, if not all, of the exhaust vapors and gases will discharge to the attic space rather than to the outdoors.

In the case of a duct that terminates in a ventilated soffit, the exhaust can rise into the attic as opposed to falling through the perforated soffit. The flow of air through an opening for attic ventilation is dependent on attic temperature, wind direction, wind speed and opening configuration and location, making attic air movement unpredictable and often in a direction not intended. Additionally, grilles and louvers offer resistance and interfere with the exhaust flow directed at them. This may cause deflection of exhaust back into the attic.

Exhaust air terminations must not be directed onto walkways. For obvious health reasons, exhaust air cannot be directed onto walkways in such a manner that the users of the walkway are subjected to the exhaust airstream.

Exception 1 to this section addresses a mechanical alternative to the natural ventilation of a dwelling unit. A whole-house ventilation-type attic fan is less source specific than a dryer, bathroom or kitchen exhaust system. Whole-house ventilation systems are installed to provide a fresh airflow for the occupants either continuously or at timed intervals. The exception is specific to whole-house ventilation-type attic fans that create an airflow through open windows. Source-specific fans (bathroom exhaust or kitchen exhaust) would not qualify for the exception because their primary function is to exhaust moisture, odors, fumes or products of combustion. The contaminants associated with these functions might be harmful to the occupants, detrimental to the structural integrity of the building or even impact the fire safety performance of the building, and must discharge directly outdoors. The exception applies only to whole-house fans dedicated solely to ventilation and comfort cooling. Within the context of the code, a “private attic” is one in which air discharged from one tenant space cannot enter another tenant’s attic space.

Exception 2 addresses recirculating systems for commercial cooking appliances. The cooking effluent is treated to remove grease and smoke particles, and is then returned to the kitchen area rather than discharging to the outdoors. The system must be listed and designed for the cooking appliances being served (see Section 507.1).

Exception 3 parallels Exception 1 to Section 505.1 to eliminate what some perceive to be a conflict between these sections. In reality, a recirculating (ductless) range hood is not an exhaust system, because it does not exhaust air.

501.3.1 Location of exhaust outlets. The termination point of exhaust outlets and ducts discharging to the outdoors shall be located with the following minimum distances:

1. For ducts conveying explosive or flammable vapors, fumes or dusts: 30 feet (9144 mm) from property lines; 10 feet (3048 mm) from operable openings into buildings; 6 feet (1829 mm) from exterior walls and roofs; 30 feet (9144 mm) from combustible walls and operable openings into buildings which are in the direction of the exhaust discharge; 10 feet (3048 mm) above adjoining grade.
2. For other product-conveying outlets: 10 feet (3048 mm) from the property lines; 3 feet (914 mm) from exterior walls and roofs; 10 feet (3048 mm) from operable openings into buildings; 10 feet (3048 mm) above adjoining grade.
3. For all *environmental air* exhaust: 3 feet (914 mm) from property lines; 3 feet (914 mm) from operable openings into buildings for all occupancies other than Group U, and 10 feet (3048 mm) from mechanical air intakes. Such exhaust shall not be considered hazardous or noxious.
4. Exhaust outlets serving structures in flood hazard areas shall be installed at or above the elevation required by Section 1612 of the *International Building Code* for utilities and attendant equipment.
5. For specific systems see the following sections:
    5.1. Clothes dryer exhaust, Section 504.4.
    5.2. Kitchen hoods and other kitchen exhaust *equipment*, Sections 506.3.13, 506.4 and 506.5.
    5.3. Dust stock and refuse conveying systems, Section 511.2.

INTERNATIONAL CODE COUNCIL®
Copyright © 2015 ICC. ALL RIGHTS RESERVED. Accessed by David Dammon on Jun 21, 2017 12:30:52 PM pursuant to License Agreement with ICC. No further reproduction or distribution authorized. ANY UNAUTHORIZED REPRODUCTION OR DISTRIBUTION IS A VIOLATION OF THE FEDERAL COPYRIGHT ACT AND THE LICENSE AGREEMENT, AND SUBJECT TO CIVIL AND CRIMINAL PENALTIES THEREUNDER.

5.4. Subslab soil exhaust systems, Section 512.4.

5.5. Smoke control systems, Section 513.10.3.

5.6. Refrigerant discharge, Section 1105.7.

5.7. Machinery room discharge, Section 1105.6.1.

❖ This section details the requirements for the termination points of exhaust ducts. Except for a few notable exceptions (see commentary, Section 501.2), the requirements for termination points for all exhaust ducts are conveniently located in this section. This section gives distances that must be maintained, depending on the type of exhaust, and is more specific than the general requirement that the discharge of exhaust must not create a public nuisance. In addition, see Chapter 8 and the IFGC for specific regulations for the location of exhaust vent terminations for fuel-fired appliances.

Item 1 details the requirements for termination points for exhaust ducts that convey explosive or flammable vapors, fumes or dusts, like those exhaust systems that serve operations involving the application of flammable finishes (see Section 502.7), hazardous exhaust systems (see Section 510), and dust, stock and refuse conveyor systems (see Section 511). The intent of this section is to reduce the exposure from the dangerous vapors in the exhaust. This is done to:

1. Protect other parts of the building;
2. Protect other buildings;
3. Reduce a potential reaction from materials that may be incompatible; and
4. Reduce the severity of a fire, in case of an ignition.

Flammable finishes, as well as vapors that are considered flammable, including dusts, have more restrictive termination requirements than other vapors due to the potential for ignition. To avoid recirculation of flammable vapors, fumes or dusts back into the building, the exhaust outlets and ducts must be designed and located to reduce such exposures. This may be achieved by separating the exhaust outlet from openings in the building, walls and roof where sources of ignition or incompatible materials may be present [see Commentary Figures 501.3.1(1) and 501.3.1(2)].

For health and safety reasons, hazardous exhaust cannot be directed onto adjacent property. Maintaining the required distance allows the hazardous contents of the exhaust to disperse into the atmosphere, thereby minimizing the exposure of the adjoining property to the potential ignition hazard of a burning ember or spark, or the hazardous, noxious and objectionable odors emitted from such systems. Wind and wind-induced eddy currents can react with building structural surfaces to create air pressure zones that can diminish exhaust flow or redirect exhaust into nearby building openings, such as fresh air or combustion air intakes and operable windows.

Exhaust systems sometimes incorporate rotating hoods over the discharge opening to prevent high winds from restricting the flow of exhaust gases out of the system. The hoods align themselves with the direction of the wind to allow the unimpeded and, sometimes, induced discharge from the exhaust outlet. The termination height specified for combustible walls is more restrictive to allow the concentration of explosive or flammable constituents in the exhaust to diminish before landing or accumulating on a combustible wall. The code official must consider prevailing wind conditions in locating hazardous exhaust outlets with respect to other building openings.

Item 2 details the provisions regarding the termination points of other product-conveying ducts, such as those exhausting nonflammable and nonexplosive dusts and waste products. This item states the location of exhaust outlets to be well into the undisturbed wind stream and away from the cavity and wake (eddy) zones around the building. This counteracts the negative effects of wind-induced conditions and also prevents the reentry of exhaust products into the building through openings and fresh air intakes.

Item 3 details the provisions for termination points for exhaust ducts that convey environmental air. “Environmental air” is defined in Section 202 as “air that is conveyed to or from occupied areas through ducts which are not part of the heating or air-conditioning system, such as ventilation for human usage, domestic kitchen range exhaust, bathroom exhaust, domestic clothes dryer exhaust and parking garage exhaust.” In general, air that is exhausted from the occupied space, where the occupied space is not subject to any contaminants from a process or operation, would have to meet the termination requirements in Item 3. Note that since the definition of “Environmental air” includes domestic kitchen range exhaust, bathroom exhaust and domestic clothes dryer exhaust, these exhaust terminations would only be required to be 3 feet (914 mm) from operable openings into a building (i.e., windows and doors). Since these three exhaust sources are common in multiple-family residential buildings where the dwelling units are naturally ventilated, the exhaust terminations that penetrate through the exterior wall will only need to be located 3 feet (914 mm) from windows that are providing natural ventilation to the dwelling unit.

Considering that the exhaust from a dwelling unit is not considered to be hazardous or noxious and is of low volume, the 3-foot (914 mm) separation from windows seems reasonable. In accordance with Section 401.4, Item 2, mechanical and gravity outdoor air intakes must be located not less than 10 feet (3048 mm) from any hazardous or noxious contaminant, however, environmental air exhaust is not considered to be hazardous or noxious. Therefore, a 3-foot (914 mm) separation from gravity openings and a 10-foot

INTERNATIONAL CODE COUNCIL®
Copyright © 2015 ICC. ALL RIGHTS RESERVED. Accessed by David Dammon on Jun 21, 2017 12:30:52 PM pursuant to License Agreement with ICC. No further reproduction or distribution authorized. ANY UNAUTHORIZED REPRODUCTION OR DISTRIBUTION IS A VIOLATION OF THE FEDERAL COPYRIGHT ACT AND THE LICENSE AGREEMENT, AND SUBJECT TO CIVIL AND CRIMINAL PENALTIES THEREUNDER.

(3048 mm) separation from mechanical air intakes would be required for exhaust from a bathroom or kitchen and domestic clothes dryer exhaust in a residential dwelling unit.

Based on the definition of environmental air, mechanical exhaust from a parking garage can also be considered environmental air since the parking deck is intended to be occupied by the people parking their cars and the exhaust system is not part of the heating or air-conditioning system. While the vehicle exhaust would be considered a contaminant, the exhaust rate of 0.75 cubic foot per minute per square foot (cfm/ft^2) for a parking garage is considered to be sufficient to provide the occupants with a safe environment. Therefore, the exhaust from a parking garage would then be treated the same as any other environmental air exhaust.

Item 4 requires termination points to be located at or above the elevation required by the IBC so that outlets are not blocked by flood water, which could cause systems to fail and possibly cause exhaust to back up into buildings during flooding conditions up to that elevation. In addition, this prevents water from floods up to the base flood from entering a building through an exhaust outlet and causing damage to equipment.

Item 5 directs the user to other sections of the code for specific exhaust systems. Note that while users are directed to Section 504.4 for clothes dryer exhaust, the requirements in this section are for general termination and installation. As discussed above for Item 3, clothes dryer exhaust must meet the specific termination requirements for environmental air ducts. In addition, the reference to Section 511 for dust, stock and refuse conveying systems is for outlets for exhaust that exceed 600°F (315°C) that must be designed as a chimney in accordance with Table 511.2. Outlets for exhaust that do not exceed 600°F (315°C) must be in compliance with the termination requirements in Item 1.

501.3.2 Exhaust opening protection. Exhaust openings that terminate outdoors shall be protected with corrosion- resistant screens, louvers or grilles. Openings in screens, louvers and grilles shall be sized not less than $^1/_4$ inch (6.4 mm) and not larger than $^1/_2$ inch (12.7 mm). Openings shall be protected against local weather conditions. Louvers that protect exhaust openings in structures located in hurricane-prone regions, as defined in the *International Building Code*, shall comply with AMCA Standard 550. Outdoor openings located in exterior walls shall meet the provisions for exterior wall opening protectives in accordance with the *International Building Code.*

❖ Exhaust air terminations must be equipped with corrosion-resistant screens, grilles or louvers to prevent foreign objects (such as insects or debris) from entering the system or the building. Also, the openings must be protected against the entry of falling or wind-driven water, snow and ice. Additionally, in hurricane-prone areas, louvers must be tested to determine their water rejection capabilities. Tests conducted in accordance with the standard are intended to show that the louver will limit water infiltration during high-velocity wind conditions. This allows a facility, either essential or nonessential, to continue to operate with the exhaust system in operation.

Exhaust systems sometimes incorporate rotating hoods over the opening to prevent high winds from restricting the flow of gases out of the system. The hoods align themselves with the direction of the wind to allow unimpeded and, actually induced, discharge from the exhaust outlet. Rotating turbines are also used to serve as both weather protection and as a means of inducing airflow.

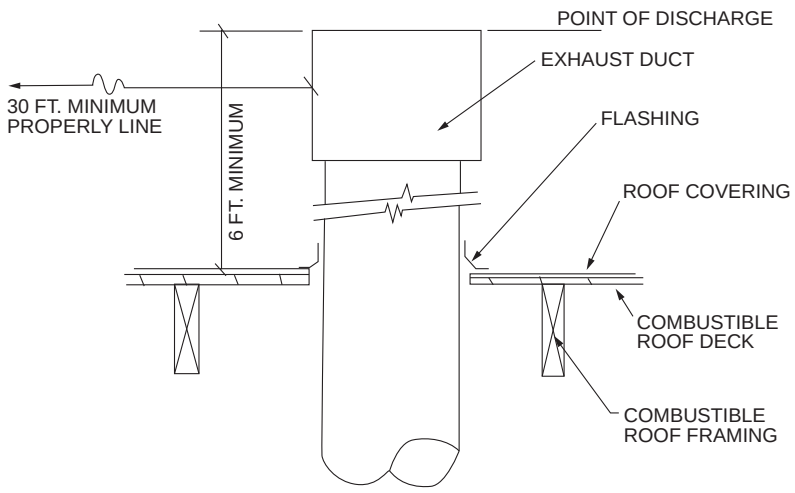

For SI: 1 foot = 304.8 mm.

Figure 501.3.1(1)
SEPARATION REQUIREMENTS FOR ROOF EXHAUST (EXPLOSIVE OR FLAMMABLE) DUCT TERMINATIONS

INTERNATIONAL CODE COUNCIL®
Copyright © 2015 ICC. ALL RIGHTS RESERVED. Accessed by David Dammon on Jun 21, 2017 12:30:52 PM pursuant to License Agreement with ICC. No further reproduction or distribution authorized. ANY UNAUTHORIZED REPRODUCTION OR DISTRIBUTION IS A VIOLATION OF THE FEDERAL COPYRIGHT ACT AND THE LICENSE AGREEMENT, AND SUBJECT TO CIVIL AND CRIMINAL PENALTIES THEREUNDER.

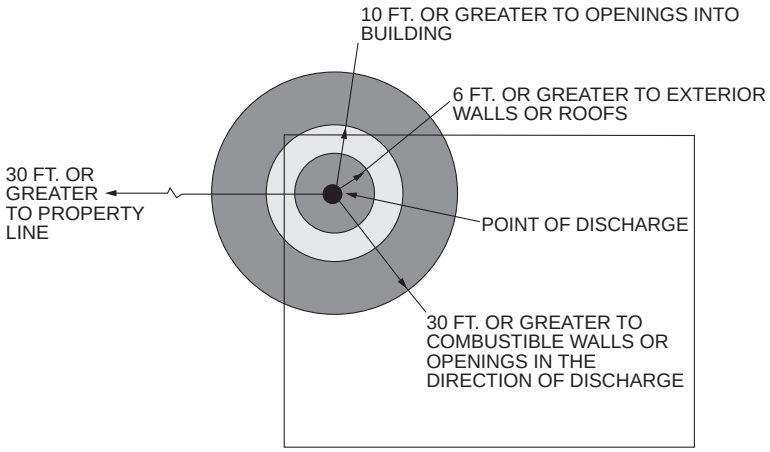

For SI: 1 foot = 304.8 mm.

Figure 501.3.1(2)
SEPARATION REQUIREMENTS FOR ROOF EXHAUST (EXPLOSIVE OR FLAMMABLE) DUCT TERMINATIONS

The opening size in screens, louvers and grilles must be within the specified range. The opening size must be large enough to inhibit blockage by debris and to prevent significant resistance to airflow, and yet must be small enough to keep out what is intended to be kept out. A screen of the stated size would restrict the passage of rodents and large insects, and would be resistant to blockage by lint, debris and plant fibers.

501.4 Pressure equalization. Mechanical exhaust systems shall be sized to remove the quantity of air required by this chapter to be exhausted. The system shall operate when air is required to be exhausted. Where mechanical exhaust is required in a room or space in other than occupancies in R-3 and *dwelling units* in R-2, such space shall be maintained with a neutral or negative pressure. If a greater quantity of air is supplied by a mechanical ventilating supply system than is removed by a mechanical exhaust for a room, adequate means shall be provided for the natural or mechanical exhaust of the excess air supplied. If only a mechanical exhaust system is installed for a room or if a greater quantity of air is removed by a mechanical exhaust system than is supplied by a mechanical ventilating supply system for a room, adequate *makeup air* shall be provided to satisfy the deficiency.

❖ Unlike natural ventilation, mechanical ventilation does not depend on unknown air pressure differentials between the indoors and outdoors to create airflow. Mechanical ventilation has the advantage of being both predictable and dependable because it is not subject to all of the variables that affect natural ventilation. The volume of air supplied to a space and the volume of air removed from a space must be approximately equal. Otherwise, the space will be either positively or negatively pressurized and the actual flow rate will be equivalent to the lower rate of either the air supply or the air exhaust. The minimum required airflow rate must be attainable and unaffected by the building's exhaust system(s). Slight negative or positive pressurization of spaces is often desirable to control contaminant or odor migration to or from a space and is, therefore, not prohibited. In the context of the code, negative and positive air pressures refer to pressures that are below or above atmospheric pressure or a reference pressure in another room or space.

Additionally, spaces served by exhaust systems must be supplied with makeup air to replace the air exhausted. The code is clear that the makeup air must be a reliable source, such as supply air or transfer air, rather than relying on the infiltration rate of the building. Relying on the infiltration rate is not acceptable since variables, such as air pressure differential and wind velocity, can result in inadequate makeup air being supplied. Makeup air is commonly provided in the form of "transfer air" that has been drawn (transferred) from adjoining spaces or directly from the outdoors. Exhaust systems with transfer makeup air are typically used where control of odor migration is desired. For example, toilet, bath and locker rooms often receive makeup air from adjoining assembly areas; kitchens receive makeup air from dining areas; and elevators and smoking lounges receive makeup air from lobby and open-floor areas. Conversely, where additional air is supplied to a space above and beyond the air that is exhausted from that space, means must be provided to discharge the excess supply air, either by natural or mechanical means. Gravity relief dampers may be used in such circumstances to dissipate excess air to the outdoors when a designated setpoint pressure is reached to maintain a space at neutral pressure. Air in spaces designated by Notes b and g of Table 403.3.1.1 must be exhausted to the outdoors and, therefore, cannot be

INTERNATIONAL CODE COUNCIL®
Copyright © 2015 ICC. ALL RIGHTS RESERVED. Accessed by David Dammon on Jun 21, 2017 12:30:52 PM pursuant to License Agreement with ICC. No further reproduction or distribution authorized. ANY UNAUTHORIZED REPRODUCTION OR DISTRIBUTION IS A VIOLATION OF THE FEDERAL COPYRIGHT ACT AND THE LICENSE AGREEMENT, AND SUBJECT TO CIVIL AND CRIMINAL PENALTIES THEREUNDER.

recirculated or transferred to any other space. Exhaust systems can negatively affect other building systems and appliances; therefore, any such effects must be considered in the design, plan review and inspection phases of construction.

501.5 Ducts. Where exhaust duct construction is not specified in this chapter, such construction shall comply with Chapter 6.

❖ The function of any duct is to convey air between specific points in an air distribution or exhaust system. Chapter 6 contains requirements for the construction of ducts used for general exhaust and makeup air. The construction of clothes dryer exhaust systems; commercial kitchen exhaust systems; hazardous exhaust systems; dust, stock and refuse conveying systems; subslab soil exhaust systems; and smoke control systems are also subject to the provisions of Chapter 6, as well as Sections 504, 506, 510, 511, 512 and 513, respectively. As referenced by this section, Chapter 6 addresses additional performance aspects of ductwork relating to construction, installation, dimensional and structural stability, leakage control, thermal performance, durability, support, vapor permeance and airflow resistance. This section recognizes that Chapter 5 contains duct construction requirements that are specific to certain systems and, therefore, such specific requirements override the general requirements of Chapter 6. The duct systems addressed in Chapter 5 are subject to any requirements of Chapter 6 that are not overridden by a requirement in Chapter 5. Because of this section, no exhaust duct construction is left unregulated.

SECTION 502
REQUIRED SYSTEMS

502.1 General. An exhaust system shall be provided, maintained and operated as specifically required by this section and for all occupied areas where machines, vats, tanks, furnaces, forges, salamanders and other *appliances, equipment* and processes in such areas produce or throw off dust or particles sufficiently light to float in the air, or which emit heat, odors, fumes, spray, gas or smoke, in such quantities so as to be irritating or injurious to health or safety.

❖ Stationary local sources, in addition to those specifically identified, include equipment, machinery, processes, chemical handling and storage, and special-purpose rooms or areas that produce contaminants in quantities that are a health hazard to the building occupants. Exhaust systems must be designed to collect and remove the contaminants. This section addresses specific sources of contaminants and the requirements for exhaust systems to control them. The exhaust systems required by this section are independent of and in addition to any natural or mechanical ventilation required by Chapter 4.

The code recognizes that natural and mechanical ventilation methods, in themselves, cannot effectively collect and remove contaminants produced by local sources. This section is written in performance language and requires a case-by-case evaluation by the designer and the code official to determine the quantity and type of contamination present, whether any action needs to be taken, and, if so, the method of contaminant control and removal. As with all exhaust systems addressed in the code, the exhaust must extend to and terminate to the outdoors. The exhaust termination must be approved and comply with Section 501.3.

Spaces served or affected by exhaust systems must be supplied with makeup air to replace the air exhausted (see commentary, Section 501.4). The volume of makeup air introduced to the space(s) must be approximately equal to the volume of air exhausted.

502.1.1 Exhaust location. The inlet to an exhaust system shall be located in the area of heaviest concentration of contaminants.

❖ To be effective, an exhaust system intake must be located where the exhaust airflow will pick up, entrain and transport the contaminant. The exhaust inlet should be as close as possible to the source of contamination and should be designed to capture the contaminants before they can disperse into the space.

[F] 502.1.2 Fuel-dispensing areas. The bottom of an air inlet or exhaust opening in fuel-dispensing areas shall be located not more than 18 inches (457 mm) above the floor.

❖ If fuel is dispensed within a building, the required exhaust system must be designed with intake openings located within 18 inches (457 mm) of the floor so that any accumulated, heavier-than-air vapors will be pulled into the exhaust flow. Airflow must be designed to circulate across the entire exposed floor area to dilute and exhaust vapors within 18 inches (457 mm) of the floor and to reduce the potential for accumulation of flammable vapor-air mixtures (see commentary, Section 304.3).

502.1.3 Equipment, appliance and service rooms. *Equipment, appliance* and system service rooms that house sources of odors, fumes, noxious gases, smoke, steam, dust, spray or other contaminants shall be designed and constructed so as to prevent spreading of such contaminants to other occupied parts of the building.

❖ This section parallels Section 502.1 with the intent to control the spread of offensive or harmful contaminants to other parts of the building. This section is stated in performance language and does not specify that the means of contaminant control must incorporate an exhaust system.

INTERNATIONAL CODE COUNCIL®
Copyright © 2015 ICC. ALL RIGHTS RESERVED. Accessed by David Dammon on Jun 21, 2017 12:30:52 PM pursuant to License Agreement with ICC. No further reproduction or distribution authorized. ANY UNAUTHORIZED REPRODUCTION OR DISTRIBUTION IS A VIOLATION OF THE FEDERAL COPYRIGHT ACT AND THE LICENSE AGREEMENT, AND SUBJECT TO CIVIL AND CRIMINAL PENALTIES THEREUNDER.

[F] 502.1.4 Hazardous exhaust. The mechanical exhaust of high concentrations of dust or hazardous vapors shall conform to the requirements of Section 510.

❖ Hazardous exhaust systems are addressed in Section 510. Where a fire or explosion hazard exists as defined in Section 510.2, a mechanical exhaust system would be subject to the requirements for hazardous exhaust systems (see commentary, Section 510).

[F] 502.2 Aircraft fueling and defueling. Compartments housing piping, pumps, air eliminators, water separators, hose reels and similar *equipment* used in aircraft fueling and defueling operations shall be adequately ventilated at floor level or within the floor itself.

❖ The vapor from aircraft fuel is highly flammable and is heavier than air. As a result, the vapors accumulate near the floor, requiring the exhaust system to be at floor level or in the floor with ducts running under the slab. Venting of compartments housing this equipment provides both dilution air to keep possible air-vapor mixtures below the flammable range and airflow for dissipation of any vapors present.

[F] 502.3 Battery-charging areas for powered industrial trucks and equipment. Ventilation shall be provided in an *approved* manner in battery-charging areas for powered industrial trucks and *equipment* to prevent a dangerous accumulation of flammable gases.

❖ Charging lead-acid or nickel-iron batteries is a process of electrolysis in which oxides created by the operation of the battery are reduced to metal and redeposited on the electrode plates. The process results in the rejuvenation of the electrolyte in the battery and the emission of both oxygen and hydrogen gases, as well as corrosive fumes. Hydrogen is highly flammable and if these gases are allowed to accumulate in an enclosed space, they could eventually reach an ignitable or detonable level. The charging area must be ventilated to carry off and dilute the concentrations of hazardous gases. This section is stated in performance language and does not provide a specific exhaust rate that will prevent the accumulation of an ignitable or detonable gas (see commentary, Section 502.4).

[F] 502.4 Stationary storage battery systems. Stationary storage battery systems, as regulated by Section 608 of the *International Fire Code,* shall be provided with ventilation in accordance with this chapter and Section 502.4.1 or 502.4.2.

Exception: Lithium-ion and lithium metal polymer batteries shall not require additional ventilation beyond that which would normally be required for human occupancy of the space.

❖ Section 608 of the *International Fire Code*® (IFC®) applies to certain sizes of stationary storage battery systems that are used for standby power, emergency power or uninterruptible power systems (UPS). It does not apply to individual stationary storage batteries such as those used in vehicles, personal computer UPS devices, emergency lights, fire alarm panels and similar installations. This section is intended to apply to battery charging systems regulated by Section 608 of the IFC. The requirements in Section 608 of the IFC apply only to nonrecombinant (flooded) batteries having an electrolyte capacity of more than 50 gallons (189 L) and to recombinant [valve-regulated lead-acid (VRLA) and lithium-ion] batteries having an electrolyte capacity of more than 1,000 pounds (454 kg). For a more detailed discussion of the different types of stationary lead-acid battery systems, see the IFC commentary to Section 608.

Generally, with lead-acid battery systems, the main concern is the production of hydrogen and oxygen within an enclosed space. With good air circulation around a battery, hydrogen accumulation is normally not a problem. Hydrogen has a wide flammability range and is the lightest element on the Periodic Table of Elements, having an atomic number of 1. The gas mixture is explosive when the amount of hydrogen in air exceeds 4 percent by volume. To address the concern of hydrogen generation and containment in small areas, a minimum ventilation criterion is set. This section provides two methods of compliance in Sections 502.4.1 and 502.4.2 from which the designer may choose. The exception recognizes the reduced fugitive gas hazard of sealed batteries that contain higher viscosity electrolytes.

[F] 502.4.1 Hydrogen limit in rooms. For flooded lead acid, flooded nickel cadmium and VRLA batteries, the ventilation system shall be designed to limit the maximum concentration of hydrogen to 1.0 percent of the total volume of the room.

❖ This method of compliance is a performance-based approach that sets the maximum concentration of hydrogen at 1.0 percent of the total volume of the room and leaves it to the designer to design the system to maintain that level of concentration or less. If the exhaust fans do not run continuously, they must be able to be turned on automatically when hydrogen accumulation exceeds 1.0 percent of the total volume of the room. This method requires an analysis of plausible failure scenarios to justify the ventilation rate ultimately chosen.

[F] 502.4.2 Ventilation rate in rooms. Continuous ventilation shall be provided at a rate of not less than 1 cubic foot per minute per square foot (cfm/ft^2) [0.00508 m^3/(s • m^2)] of floor area of the room.

❖ This method of compliance is a prescriptive method that establishes a minimum required continuous ventilation rate of 1 cfm/ft^2 [0.00508 m^3/ (s · m^2)] of room area. If the hydrogen limit in Section 502.4.1 cannot be maintained at this exhaust rate, a higher rate would be required.

[F] 502.4.3 Supervision. Mechanical ventilation systems required by Section 502.4 shall be supervised by an approved central, proprietary or remote station service or shall initiate

INTERNATIONAL CODE COUNCIL®
Copyright © 2015 ICC. ALL RIGHTS RESERVED. Accessed by David Dammon on Jun 21, 2017 12:30:52 PM pursuant to License Agreement with ICC. No further reproduction or distribution authorized. ANY UNAUTHORIZED REPRODUCTION OR DISTRIBUTION IS A VIOLATION OF THE FEDERAL COPYRIGHT ACT AND THE LICENSE AGREEMENT, AND SUBJECT TO CIVIL AND CRIMINAL PENALTIES THEREUNDER.

an audible and visual signal at a constantly attended on-site location.

❖ The ventilation system in Section 502.4 is required to reduce the likelihood that the concentration of hydrogen will reach 1 percent or present an explosion hazard. Without a supervised system or a signal at a constantly attended location, the required ventilation system could fail without warning, allowing hydrogen concentrations to build to hazardous levels.

[F] 502.5 Valve-regulated lead-acid batteries in cabinets. Valve-regulated lead-acid (VRLA) batteries installed in cabinets, as regulated by Section 608.6.2 of the *International Fire Code*, shall be provided with ventilation in accordance with Section 502.5.1 or 502.5.2.

❖ VRLA batteries differ substantially from the stationary lead-acid batteries addressed in Section 502.4 in design, operation and, especially, potential hazard. A VRLA battery consists of sealed cells furnished with a valve that opens to vent the battery whenever the internal pressure exceeds the ambient pressure by a predetermined amount. This increases the possibility of an explosive amount of hydrogen gas accumulating in the battery cabinet. Compliance with this section can be accomplished by either of two methods: limiting hydrogen concentrations (see Section 502.5.1) or providing a minimum ventilation rate (see Section 502.5.2).

Section 608.1 of the IFC limits the scope of VRLA batteries covered by this section to large systems having an electrolyte capacity greater than 50 gallons (189 L), such as those commonly used in cellular telephone sites. Personal computer UPS devices, emergency lights, fire alarm panels and similar installations are intended to be excluded from the provisions of this section.

[F] 502.5.1 Hydrogen limit in cabinets. The cabinet ventilation system shall be designed to limit the maximum concentration of hydrogen to 1.0 percent of the total volume of the cabinet during the worst-case event of simultaneous boost charging of all batteries in the cabinet.

❖ VRLA batteries are commonly placed in battery cabinets that are exhausted to the outdoors. This method requires that the hydrogen-generation calculations be performed for the worst-case scenario of all batteries in the room being charged simultaneously. The limit for hydrogen concentration and the methods of achieving that limit are the same as those discussed in Section 502.4.1.

[F] 502.5.2 Ventilation rate in cabinets. Continuous cabinet ventilation shall be provided at a rate of not less than 1 cubic foot per minute per square foot (cfm/ft^2) [0.00508 m^3/(s • m^2)] of the floor area covered by the cabinet. The room in which the cabinet is installed shall be ventilated as required by Section 502.4.1 or 502.4.2.

❖ The formula for determining the exhaust rate for the ventilation of the battery cabinet is the same as that discussed in Section 502.4.2. Note that the ventilation rate is based on the floor area covered by the cabinet and not the area within the cabinet. This section also requires that the room in which the battery cabinet is located be ventilated by one of the methods in Section 502.4.1 or 502.4.2, in addition to the required ventilation for the cabinet. This provides a back-up ventilation system in case the cabinet leaks or the cabinet ventilation system fails.

[F] 502.5.3 Supervision. Mechanical ventilation systems required by Section 502.5 shall be supervised by an approved central, proprietary or remote station service or shall initiate an audible and visual signal at a constantly attended on-site location.

❖ The ventilation system in Section 502.5 is required to reduce the likelihood that the concentration of hydrogen will reach 1 percent or present an explosion hazard. Without a supervised system or a signal at a constantly attended location, the required ventilation system could fail without warning, allowing hydrogen concentrations to build to hazardous levels.

[F] 502.6 Dry cleaning plants. Ventilation in dry cleaning plants shall be adequate to protect employees and the public in accordance with this section and DOL 29 CFR Part 1910.1000, where applicable.

❖ Dry cleaning refers to the cleaning of clothing, wearing apparel, fabrics, textiles, drapes, rugs and similar materials using chemical solvents. These solvents can be flammable or combustible and toxic. The intent of this section is to provide a level of ventilation in dry cleaning plants that is adequate to protect the plant employees and the public from the hazards associated with dry cleaning operations using any of the various classes of dry cleaning solvents, both in approved dry cleaning machines, and in spotting and pretreating operations in the open. To achieve this objective, this section requires that mechanical ventilation systems comply with the provisions of Sections 502.6.1 through 502.6.3. Compliance with the applicable provisions of the Occupational Safety and Health Administration (OSHA) workplace regulations pertaining to air contaminants contained in DOL 29 CFR, Part 1910.1000 is also required.

[F] 502.6.1 Type II systems. Type II dry cleaning systems shall be provided with a mechanical ventilation system that is designed to exhaust 1 cubic foot of air per minute for each square foot of floor area (1 cfm/ft^2) [0.00508 m^3/(s • m^2)] in dry cleaning rooms and in drying rooms. The ventilation system shall operate automatically when the dry cleaning *equipment* is in operation and shall have manual controls at an *approved* location.

❖ Type I dry cleaning systems use Class I flammable liquid solvents [flash points less than 73°F (23°C)] and are prohibited by the IFC because of the dangers involved with Class I solvents (see IFC commentary, Chapter 12). Type II systems use Class II combustible liquid solvents [flash points 100°F (38°C) to 140°F (60°C)], such as Stoddard solvent. These solvents

INTERNATIONAL CODE COUNCIL®
Copyright © 2015 ICC. ALL RIGHTS RESERVED. Accessed by David Dammon on Jun 21, 2017 12:30:52 PM pursuant to License Agreement with ICC. No further reproduction or distribution authorized. ANY UNAUTHORIZED REPRODUCTION OR DISTRIBUTION IS A VIOLATION OF THE FEDERAL COPYRIGHT ACT AND THE LICENSE AGREEMENT, AND SUBJECT TO CIVIL AND CRIMINAL PENALTIES THEREUNDER.

are generally safer than Class I solvents and are typically used in closed systems. Nevertheless, because the potential exists for fugitive vapors, NFPA 70 classifies the entire dry cleaning room of a Type II plant as a Class I, Division 2, hazardous (classified) location.

This section intends to prevent solvent vapors from Type II dry cleaning systems from accumulating to an ignitable concentration in the room in which such appliances are located by providing adequate mechanical ventilation. The prescribed rate of mechanical ventilation will also help prevent the ambient temperature in the room from exceeding the flash point of the solvent being used in the cleaning process. It is not the intent that this system be classified as a "hazardous exhaust system" as addressed in Section 510. However, due to the nature of the vapors being exhausted this system should be independent of all other exhaust and ventilation systems.

The required ventilation rate of 1 cfm/ft^2 [0.00508 m^3/(s • m^2)] of floor area is typical of that required in hazardous-materials-related areas where fugitive flammable vapors must be diluted or removed. Although its exact technical origins are not known, this requirement may have been derived from a rule of thumb (possibly from the insurance industry) that established a ventilation requirement in flammable and combustible liquid use areas of six air changes per hour and that has proven to be effective over the years. Though providing effective ventilation and hazard mitigation, the rate of airflow in industrial or storage buildings with larger-than-average floor-to-floor and floor-to-roof dimensions would require large, costly mechanical equipment installations and create concerns over energy conservation. To deal with those concerns, a design ceiling height of 10 feet (3048 mm) was assumed in recognition of the fact that solvent vapors, being heavier than air, will gather at the lowest point in the room. Each square foot of building area, then, would represent 10 cubic feet (0.28 m^3) and, at the rate of six air changes per hour, 60 cubic feet (1.7 m^3) of air per hour would be moved, which yields 1 cfm/ft^2 [0.00508 m^3/(s • m^2)] per square foot of room area.

To be effective, the exhaust equipment must be interlocked with the dry cleaning equipment to be in simultaneous operation with it. Manual controls are also required for additional flexibility and reliability in the event that mechanical system run-on after the dry cleaning system is shut down is desired or needed. The location of the controls is to be approved by the code official.

[F] 502.6.2 Type IV and V systems. Type IV and V dry cleaning systems shall be provided with an automatically activated exhaust ventilation system to maintain an air velocity of not less than 100 feet per minute (0.51 m/s) through the loading door when the door is opened.

Exception: Dry cleaning units are not required to be provided with exhaust ventilation where an exhaust hood is installed immediately outside of and above the loading door which operates at an airflow rate as follows:

$$Q = 100 \times A_{LD} \qquad \textbf{Equation 5-1)}$$

where:

Q = Flow rate exhausted through the hood, cubic feet per minute.

A_{LD}= Area of the loading door, square feet.

❖ This section intends to prevent solvent vapors from Type IV and V dry cleaning systems from escaping into the room in which the appliances are located by drawing the required exhaust airflow into the unit through the open door at the minimum velocity of 100 feet per minute (0.51 m/s). In this way, exposure of employees (in Type IV systems) or the public (in Type V systems) to potentially harmful solvent vapors is minimized. The exhaust capability contemplated by this section is integral with the dry cleaning unit. Its operation must be interlocked with the unit door to automatically start the required exhaust airflow as soon as the unit door is opened. It is not the intent that this system be classified as a hazardous exhaust system as addressed in Section 510. However, due to the nature of the vapors being exhausted, this system should be independent of all other exhaust and ventilation systems.

The exception provides a design alternative to achieve the goal of solvent vapor capture at the door opening through the installation of, what is often referred to as, an "eyebrow hood" located immediately above the dry cleaning unit's door opening so that the exhaust airflow will sweep across the loading door opening of the machine and capture any escaping solvent vapors. This kind of hood may be integral with the unit or may be an after-market-installed accessory to the unit. In either case, it must be either interlocked with the unit door to automatically start the required exhaust airflow as soon as the unit door is opened or operate continuously whenever the dry cleaning machine is in operation.

Exhaust hoods are not designed for a constant air velocity in all parts of the hood, such as can be achieved by drawing air into a dry cleaning machine through a machine-loading door opening. Therefore, the exhaust capability for this alternative design calculated in accordance with Equation 5-1 will be expressed as a flow rate (cfm) rather than a fixed velocity. The fan will be drawing in a large volume of environmental air to achieve the prescribed exhaust airflow across the entire loading door opening. For example, applying the formula to a dry cleaning unit that has a 2-foot-diameter (610 mm) circular loading/unloading door, the exhaust flow rate (Q) would be calculated as follows:

$$Q = 100 \times A_{LD}$$

$$A_{LD} = \pi r^2$$

where = π = 3.14 and r = 1, therefore

INTERNATIONAL CODE COUNCIL®
Copyright © 2015 ICC. ALL RIGHTS RESERVED. Accessed by David Dammon on Jun 21, 2017 12:30:52 PM pursuant to License Agreement with ICC. No further reproduction or distribution authorized. ANY UNAUTHORIZED REPRODUCTION OR DISTRIBUTION IS A VIOLATION OF THE FEDERAL COPYRIGHT ACT AND THE LICENSE AGREEMENT, AND SUBJECT TO CIVIL AND CRIMINAL PENALTIES THEREUNDER.

$Q = 100 \times (3.14 \times 12)$

$Q = 100 \times 3.14$

$Q = 314$ cfm (0.148 m^3/s)

It is not the intent that this system be classified as a "hazardous exhaust system" as addressed in Section 510. However, due to the nature of the vapors being exhausted, this system should be independent of all other exhaust and ventilation systems.

[F] 502.6.3 Spotting and pretreating. Scrubbing tubs, scouring, brushing or spotting operations shall be located such that solvent vapors are captured and exhausted by the ventilating system.

❖ Spotting and pretreating operations consist of soaking or direct local application of cleaning solvents to articles about to be dry cleaned. These operations are performed to concentrate the solvent's cleaning power on the removal of more stubborn stains, such as those from grease, oils, make-up, paint, dirt or petroleum products, such as tar, asphalt sealer, etc. The operations typically take place on spotting tables or in scrubbing tubs in the open in the dry cleaning plant. The IFC limits solvent use for spotting or pretreating to Class II or III solvents and, by exception, allows up to 1 gallon (3.8 L) of strictly controlled Class I solvent and limits these operations to Type II, III and IV dry cleaning plants. When locating the spotting or pretreating operation within the plant, care must be taken to choose a location that will allow adequate airflow on all sides of the spotting or pretreating equipment to maximize the effectiveness of the exhaust system (required by Section 502.6.1) in preventing the accumulation of hazardous vapor concentrations.

[F] 502.7 Application of flammable finishes. Mechanical exhaust as required by this section shall be provided for operations involving the application of flammable finishes.

❖ This section is focused on the hazards posed by the vapors and particulates generated when flammable or combustible materials are used as finishes. These provisions come from the IFC and are found primarily in Chapter 24. Flammable finishes can include spray finishing, floor finishing, dip tanks and automobile undercoating.

[F] 502.7.1 During construction. Ventilation shall be provided for operations involving the application of materials containing flammable solvents in the course of construction, *alteration* or demolition of a structure.

❖ Fires are more likely to occur during construction because there are typically more combustible materials present in the form of construction materials and debris. Additionally, when buildings are being constructed, altered or demolished, there is a tendency to forget that the same hazards or increased fire hazards exist, especially since fire protection systems may not yet be operational. Therefore, this section requires specifically that ventilation be provided during those operations.

[F] 502.7.2 Limited spraying spaces. Positive mechanical ventilation that provides not less than six complete air changes per hour shall be installed in limited spraying spaces. Such system shall meet the requirements of the *International Fire Code* for handling flammable vapors. Explosion venting is not required.

❖ A limited spraying space is a small area in which spot painting and touch up can occur. It is limited, in the IFC, to 9 square feet (0.83 m^2) but can occur in more areas than where typical spray finishing would be allowed. One of the criteria to allow this activity is that the ventilation system must be sized to provide six air changes per hour. However, if the quantity of hazardous material in the room or control area in which the limited spray area is located exceeds the allowable quantities for hazardous materials given in Chapter 50 or 57 of the IFC, both exhaust ventilation requirements for flammable vapors in those chapters and the requirement in this section have to be met. A typical example would be a plating shop where allowable quantities of corrosives and toxins are exceeded (Group H-4) and where exhaust ventilation at a rate of 1 cfm/ft^2 [0.00508 $m^3/(s \cdot m^2)$] of floor area is required. If a limited spray area is located in such a room, the most restrictive requirement has to be met; that is, the greater of 1 cfm/ft^2 [0.00508 $m^3/(s \cdot m^2)$] or six air changes per hour. The vapor density of the material should be taken into account (whether vapors are heavier or lighter than air) when considering the location of exhaust inlets. Additionally, conformance to the general requirements of Section 502 is recommended, especially Section 502.1.1 ("inlet to an exhaust system shall be located in the area of heaviest concentration of contaminants"). The IFC has additional restrictions, such as frequency of spraying and requirements for classified electrical areas.

[F] 502.7.3 Flammable vapor areas. Mechanical ventilation of flammable vapor areas shall be provided in accordance with Sections 502.7.3.1 through 502.7.3.6.

❖ The following sections are focused on the ventilation of areas. Flammable vapor areas are any areas in which flammable and combustible liquids are found in vapor or atomized form. "Flammable vapor areas" are defined in Section 202 of the IFC and include, but are not limited to, the interior of spray booths, spray rooms, ducts or any portion of the building that is likely to contain these vapors. The terms "spray booth" and "spray room" are also defined in the IFC. Flammable vapor areas may include areas just outside of the openings of a spray booth because those areas may contain overspray. The proper design and installation of exhaust ventilation systems in flammable vapor areas is critical because of the potential production of large amounts of flammable vapors in the processes. It is the author's opinion that exhaust systems in spray finishing areas are not required to comply with Section 510, which regulates hazardous exhaust systems. Compliance with Section 502.7 and

INTERNATIONAL CODE COUNCIL®
Copyright © 2015 ICC. ALL RIGHTS RESERVED. Accessed by David Dammon on Jun 21, 2017 12:30:52 PM pursuant to License Agreement with ICC. No further reproduction or distribution authorized. ANY UNAUTHORIZED REPRODUCTION OR DISTRIBUTION IS A VIOLATION OF THE FEDERAL COPYRIGHT ACT AND THE LICENSE AGREEMENT, AND SUBJECT TO CIVIL AND CRIMINAL PENALTIES THEREUNDER.

Chapter 24 of the IFC is considered as abating the hazard and the hazardous exhaust provisions in Section 510 are not applicable. Additionally, compliance with general Section 502, especially Section 502.1.1, is required. The location of the heaviest concentration resulting from the physical characteristics of a material (for example, vapor density) or the process (such as atomization of the material) must be considered when inlets to exhaust systems are designed.

[F] 502.7.3.1 Operation. Mechanical ventilation shall be kept in operation at all times while spraying operations are being conducted and for a sufficient time thereafter to allow vapors from drying coated articles and finishing material residue to be exhausted. Spraying *equipment* shall be interlocked with the ventilation of the flammable vapor area such that spraying operations cannot be conducted unless the ventilation system is in operation.

❖ For effective ventilation, the system must run continuously during the spraying operation phase and the drying phase of a process when vapors are generated. The interlock between the ventilation and spraying equipment will reduce the likelihood of human error, such as the operator's failure to activate the ventilation system prior to the use of the spray equipment. Operating spray equipment without having the exhaust system in operation could allow fugitive flammable vapors to migrate to areas that may contain unprotected ignition sources and ignite. Continuous operation of ventilation systems could also be an integral component of the design of certain alternative fire-extinguishing systems, such as dry chemical systems.

[F] 502.7.3.2 Recirculation. Air exhausted from spraying operations shall not be recirculated.

Exceptions:

1. Air exhausted from spraying operations shall be permitted to be recirculated as *makeup air* for unmanned spray operations provided that:
   1.1. The solid particulate has been removed.
   1.2. The vapor concentration is less than 25 percent of the lower flammable limit (LFL).
   1.3. *Approved equipment* is used to monitor the vapor concentration.
   1.4. An alarm is sounded and spray operations are automatically shut down if the vapor concentration exceeds 25 percent of the LFL.
   1.5. In the event of shutdown of the vapor concentration monitor, 100 percent of the air volume specified in Section 510 is automatically exhausted.
2. Air exhausted from spraying operations is allowed to be recirculated as *makeup air* to manned spraying operations where all of the conditions provided in Exception 1 are included in the installation and documents have been prepared to show that the installation does not pose a life safety hazard to personnel inside the spray booth, spraying space or spray room.

❖ The prohibition of recirculation is specifically directed to the concern that exhaust system makeup air not be added to the fire hazard of the spray area. The exceptions are fairly specific and focus on the lower flammable limit (LFL) and the monitoring of that limit. The exceptions are based on the environmental community's concerns about the volume of emissions generated by spray finishing. The permissible exposure limit (PEL) is generally more restrictive than the LFL.

The recirculation of exhausted air containing flammable vapors could help spread the hazard of flash fires from the area of vapor generation to other parts of the building. At best, it would adversely affect only the area of vapor generation in that it could render the exhaust ventilation useless. It may also give the operators of the facility a false sense that the level of ventilation is safe for the system.

There are two exceptions, one for unmanned spray operations and the other for manned spray operations. The requirements are the same except that for manned spray operations there is an increased concern over how the recirculated air will affect personnel involved in the spraying operations. Therefore, specific evidence must be available to demonstrate that recirculation will not be harmful to the operators.

Exception 1 lists five conditions that must be met for the recirculation of exhausted air in unmanned spray operations. If solid particulates (dusts) are removed from the exhausted air, the exhausted air is no longer considered a fire hazard because the potential for a dust explosion is eliminated. "Flammable vapors" are defined by Section 202 in the IFC as flammable constituents in air that exceed 25 percent of the LFL. By reducing the flammable vapor concentrations to less than 25 percent of the LFL, the exhausted air is no longer considered a flammable vapor. To increase the likelihood that the concentrations remain at less than 25 percent of the LFL, flammable vapor detection systems must automatically shut down the operations, set off an alarm and exhaust 100 percent of the air. This would allow for energy conservation in unmanned operations, without compromising the safety features typically associated with such ventilation systems.

Exception 2 is applicable to manned operations where additional documentation is need to reduce the risk to personnel, such as people operating the spray equipment, from an injury or life safety standpoint. This documentation may include a risk analysis of fire and health hazards associated with the operation of this equipment when some portion of the exhausted air is recirculated.

In general, fire safety efforts have received some assistance from the environmental regulations that have placed restrictions on the amount of volatile organic compounds (VOCs) emitted to the atmo-

INTERNATIONAL CODE COUNCIL®
Copyright © 2015 ICC. ALL RIGHTS RESERVED. Accessed by David Dammon on Jun 21, 2017 12:30:52 PM pursuant to License Agreement with ICC. No further reproduction or distribution authorized. ANY UNAUTHORIZED REPRODUCTION OR DISTRIBUTION IS A VIOLATION OF THE FEDERAL COPYRIGHT ACT AND THE LICENSE AGREEMENT, AND SUBJECT TO CIVIL AND CRIMINAL PENALTIES THEREUNDER.

sphere. This, in turn, limits the types of materials used and lowers the flammability characteristics through the use of less volatile liquids.

[F] 502.7.3.3 Air velocity. The ventilation system shall be designed, installed and maintained so that the flammable contaminants are diluted in noncontaminated air to maintain concentrations in the exhaust air flow below 25 percent of the contaminant's lower flammable limit (LFL). In addition, the spray booth shall be provided with mechanical ventilation so that the average air velocity through openings is in accordance with Sections 502.7.3.3.1 and 502.7.3.3.2.

❖ This section contains performance-based criteria to quantify the amount of exhaust in relation to the control of the contaminant source. In other words, a direct solution is to restrict the concentration of all known contaminants of concern to a specified and acceptable level. That "level" is below 25 percent of the lower flammable limit for a particular contaminant. Where the concentration of a flammable contaminant in air is maintained below 25 percent of the lower flammability limit for that contaminant, there is insufficient fuel vapor in the gas phase to sustain homogeneous ignition. Managing the contaminant(s) in a diluted state means that there is less chance of catastrophic flame propagation, ignition or explosion. The quantity or volume of exhaust required is source specific.

[F] 502.7.3.3.1 Open face or open front spray booth. For spray application operations conducted in an open face or open front spray booth, the ventilation system shall be designed, installed and maintained so that the average air velocity into the spray booth through all openings is not less than 100 feet per minute (0.51 m/s).

> **Exception:** For fixed or automated electrostatic spray application equipment, the average air velocity into the spray booth through all openings shall be not less than 50 feet per minute (0.25 m/s).

❖ To facilitate the keeping of flammable vapors within a designated spraying space and limiting the amount of overspray, the code requires that the exhaust system be adequately sized to maintain an average velocity over the open face of the booth or booth cross section of no less than 100 feet per minute (0.51 m/s), which is the minimum velocity to capture particulate spray material. To determine the minimum ventilation/exhaust capacity in cubic feet per minute [cfm (m^3/s)], multiply the booth width [feet (mm)] by booth height [feet (mm)] by 100 [linear feet per minute (m/s)].

In electrostatic spray application, paint, in the form of either powdered particles or atomized liquid, is initially projected towards a conductive workpiece using normal spraying methods, and is then accelerated toward the workpiece by a powerful electrostatic charge. This process is much more efficient than ordinary spray finishing, using 95% of sprayed paint, thus reducing over-spray The exception recognizes this efficiency by allowing the air velocity across openings to be one-half of that required for ordinary spraying. See the IFC commentary to Section 2407 for further discussion of electrostatic apparatus.

[F] 502.7.3.3.2 Enclosed spray booth or spray room with openings for product conveyance. For spray application operations conducted in an enclosed spray booth or spray room with openings for product conveyance, the ventilation system shall be designed, installed and maintained so that the average air velocity into the spray booth through openings is not less than 100 feet per minute (0.51 m/s).

Exceptions:

1. For fixed or automated electrostatic spray application equipment, the average air velocity into the spray booth through all openings shall be not less than 50 feet per minute (0.25 m/s).
2. Where methods are used to reduce cross drafts that can draw vapors and overspray through openings from the spray booth or spray room, the average air velocity into the spray booth or spray room shall be that necessary to capture and confine vapors and overspray to the spray booth or spray room.

❖ To facilitate the keeping of flammable vapors within a designated spraying space and limiting the amount of overspray, the code requires that the exhaust system be adequately sized to maintain an average velocity through the openings in the booth of no less than 100 feet per minute (0.51 m/s), which is the minimum velocity to capture particulate spray material.

In electrostatic spray application, paint, in the form of either powdered particles or atomized liquid, is initially projected towards a conductive workpiece using normal spraying methods, and is then accelerated toward the workpiece by a powerful electrostatic charge. This process is much more efficient than ordinary spray finishing, using 95% of sprayed paint, thus reducing over-spray. Exception 1 recognizes this efficiency by allowing the air velocity across openings to be one-half of that required for ordinary spraying.

Competing airflows (cross drafts) in a space in which a spraying operation is located can cause a "reverse air flow" that can draw vapors or overspray out of the spray booth or spray room. Exception 2 provides a performance oriented exhaust air velocity option where the effect of such cross drafts is reduced or eliminated.

[F] 502.7.3.4 Ventilation obstruction. Articles being sprayed shall be positioned in a manner that does not obstruct collection of overspray.

❖ When ventilation systems for spray operations are designed and installed, the configuration and position of the object being sprayed must be considered because it might disrupt the ventilation pattern in both cross-draft and down-draft ventilation spray booths, thereby compromising the effectiveness of the ventilation system.

INTERNATIONAL CODE COUNCIL®
Copyright © 2015 ICC. ALL RIGHTS RESERVED. Accessed by David Dammon on Jun 21, 2017 12:30:52 PM pursuant to License Agreement with ICC. No further reproduction or distribution authorized. ANY UNAUTHORIZED REPRODUCTION OR DISTRIBUTION IS A VIOLATION OF THE FEDERAL COPYRIGHT ACT AND THE LICENSE AGREEMENT, AND SUBJECT TO CIVIL AND CRIMINAL PENALTIES THEREUNDER.

[F] 502.7.3.5 Independent ducts. Each spray booth and spray room shall have an independent exhaust duct system discharging to the outdoors.

Exceptions:

1. Multiple spray booths having a combined frontal area of 18 square feet (1.67 m^2) or less are allowed to have a common exhaust where identical spray-finishing material is used in each booth. If more than one fan serves one booth, such fans shall be interconnected so that all fans operate simultaneously.
2. Where treatment of exhaust is necessary for air pollution control or energy conservation, ducts shall be allowed to be manifolded if all of the following conditions are met:
   2.1. The sprayed materials used are compatible and will not react or cause ignition of the residue in the ducts.
   2.2. Nitrocellulose-based finishing material shall not be used.
   2.3. A filtering system shall be provided to reduce the amount of overspray carried into the duct manifold.
   2.4. Automatic sprinkler protection shall be provided at the junction of each booth exhaust with the manifold, in addition to the protection required by this chapter.

❖ This section requires independent duct exhaust of residue from spray-finishing operations. These ducts must be routed directly to the exterior of the building to reduce the likelihood of incompatible materials reacting or a fire or explosion in one booth or duct spreading to other booths or ducts.

Exception 1 applies to very small spray booths where the vapor area is very small compared to the area of standard spray booths. Because these individual smaller spray booths are considered as one fire area from a ventilation standpoint, all identical materials are to be used when this exception applies. This will ensure that incompatible materials are not used in booths with a common exhaust system.

Exception 2 notes that because the exhausted air is at times treated, it can be manifolded. However, special hazards must be avoided to ensure fire protection safety. Incompatible materials must be separated in case of a reaction within the ducts.

Nitrocellulose and nitrocellulose-based products are unstable materials that can easily be ignited and, once ignited, need large quantities of water for suppression. Additionally, nitrocellulose is incompatible with many materials (alkalis, amines, etc.). The cleaning products used in other booths may even ignite the nitrocellulose-based products in a manifolded exhaust system. Therefore, the exhaust of nitrocellulose-based products is considered an exception to this section.

Additional protection, such as filtering and sprinklers at the junction of each booth exhaust, is also required.

[F] 502.7.3.6 Fan motors and belts. Electric motors driving exhaust fans shall not be placed inside booths or ducts. Fan rotating elements shall be nonferrous or nonsparking or the casing shall consist of, or be lined with, such material. Belts shall not enter the duct or booth unless the belt and pulley within the duct are tightly enclosed.

❖ This requirement within the ventilation section is intended to reduce sources of ignition from spark-producing elements. This section prohibits electric motors that drive exhaust fans from being placed within booths or ducts. This would increase the likelihood that overspray in the booth or duct cannot accumulate on the motor housing, which could ultimately cause the motor to overheat. Products that are subject to sparking should be avoided within spray areas. Belts that drive exhaust fans are not permitted within the spraying area because they are a potential ignition hazard, unless the belts and pulleys are tightly enclosed to prevent solvents in exhaust air from degrading the belt materials and causing a failure of the ventilation system.

Fans used for exhaust systems must also be of nonsparking materials or, alternatively, the surface of the fan housing must be of a nonsparking material. This requirement prevents a fan from causing sparks if it strikes the casing. Note, however, that the term “nonsparking” is somewhat inaccurate. Parts made of brass and similar nonsparking materials produce sparks with ignition energies too low to ignite flammable vapors. Nevertheless, such parts should be designed carefully to avoid producing sufficient frictional heat to cause an ignition.

[F] 502.7.4 Dipping operations. Flammable vapor areas of dip tank operations shall be provided with mechanical ventilation adequate to prevent the dangerous accumulation of vapors. Required ventilation systems shall be so arranged that the failure of any ventilating fan will automatically stop the dipping conveyor system.

❖ This section includes performance-based language that requires ventilation to prevent the dangerous accumulation of vapors. Dipping operations, by nature, have a large surface area of the dipping material and product exposed to the atmosphere. It is important to note that this section does not dictate a particular air change rate because the ventilation system design depends on the operations being conducted and the type of liquid being used. Some materials are more volatile than others; i.e., more readily emit vapors to the atmosphere. Additionally, conveyor systems used with dipping operations need to be interlocked with the ventilation system to avoid continuation of operations in the event of a ventilation system failure.

[F] 502.7.5 Electrostatic apparatus. The flammable vapor area in spray-finishing operations involving electrostatic

INTERNATIONAL CODE COUNCIL®
Copyright © 2015 ICC. ALL RIGHTS RESERVED. Accessed by David Dammon on Jun 21, 2017 12:30:52 PM pursuant to License Agreement with ICC. No further reproduction or distribution authorized. ANY UNAUTHORIZED REPRODUCTION OR DISTRIBUTION IS A VIOLATION OF THE FEDERAL COPYRIGHT ACT AND THE LICENSE AGREEMENT, AND SUBJECT TO CIVIL AND CRIMINAL PENALTIES THEREUNDER.

apparatus and devices shall be ventilated in accordance with Section 502.7.3.

❖ Electrostatic spray-finishing and powder-coating operations electrically charge the materials, which helps to attract the coating material to the object being painted or coated. This generally reduces the amount of overspray generated, which is both more fire safe and more efficient. Electrostatic operations, while producing less overspray, would still require ventilation in accordance with the requirements for normal spray operations as described in Section 502.7.3. This includes the interlocking of the operations with the ventilation systems.

[F] 502.7.6 Powder coating. Exhaust ventilation for powder-coating operations shall be sufficient to maintain the atmosphere below one-half of the minimum explosive concentration for the material being applied. Nondeposited, air-suspended powders shall be removed through exhaust ducts to the powder recovery system.

❖ As with dipping operations, the purpose of this section is to keep the atmosphere below an explosive concentration. Powder would be dealt with as a combustible dust. Powder coating creates explosive atmospheres because of the large surface areas of the particles when dispersed in the air. The explosive limit or concentration, just as with flammable vapors, will depend on the type of material being used. For example, Factory Mutual tested several powder-coating materials and found a range of lower explosive limit (LEL) of 0.026 to 0.097 ounce per square foot (oz/ft^2) and autoignition temperatures between 790°F to 1,039°F (412°C to 559°C). Therefore, ventilation system requirements may vary from one type of coating to another. Additionally, a collection system is required to collect any unused powder.

This requirement is similar to the ventilation requirements for flammable vapors in its intent to limit the amount of vapors or dusts to a concentration that would not support ignition. Therefore, "one-half the minimum explosive concentration" for powder coating is similar in intent to the "25 percent of the lower flammable limit (LFL)" in Section 502.7.3.2. The safety factor in the combustible dust is 2, while the safety factor for the LFL is 4. This is partly the result of the lower ignitability of a dust compared to a vapor.

[F] 502.7.7 Floor resurfacing operations. To prevent the accumulation of flammable vapors during floor resurfacing operations, mechanical ventilation at a minimum rate of 1 cfm/ft^2 [0.00508 m^3/(s • m^2)] of area being finished shall be provided. Such exhaust shall be by *approved* temporary or portable means. Vapors shall be exhausted to the exterior of the building.

❖ An issue that has not been properly addressed in past codes is the concept of ventilation of areas where floors are being refinished. In some of the older codes, this subject was addressed only for bowling alley floor resurfacing. These activities are now addressed explicitly by the *International Codes*® (I-Codes®) and would require a minimum ventilation rate of 1 cfm/ft^2 [0.00508 m^3/(s • m^2)] of space being refinished even in the most remote areas or corners where finishing and surfacing takes place. This criterion is similar to that used for other sections of the I-Codes, such as for the ventilation of rooms housing lead-acid battery systems. This particular ventilation can be either temporary or permanent; i.e., the normal building ventilation system, if adequate, or perhaps the use of several fans and building openings. Please note that floor surfacing and finishing do not occur often in a building. Because outside companies are typically hired to do such surfacing, protection systems, such as exhaust, are temporary and can therefore be portable. To prevent recirculation of exhaust air that may contain flammable vapors, the exhausted air must be discharged to the exterior of the building. Note that the code's scope excludes portable equipment and this requirement would likely be enforced by a fire code official because a mechanical code official would typically have no reason to inspect a maintenance procedure such as floor resurfacing. Section 2410 in the IFC has similar requirements.

[F] 502.8 Hazardous materials—general requirements. Exhaust ventilation systems for structures containing hazardous materials shall be provided as required in Sections 502.8.1 through 502.8.5.

❖ Chapter 50 of the IFC contains guidance for the storage, dispensing, use and handling of hazardous materials. Section 5004.3 of the IFC contains the same ventilation requirements as Sections 502.8.1 and 502.8.1.1 of the code.

[F] 502.8.1 Storage in excess of the maximum allowable quantities. Indoor storage areas and storage buildings for hazardous materials in amounts exceeding the maximum allowable quantity per control area shall be provided with mechanical exhaust ventilation or *natural ventilation* where *natural ventilation* can be shown to be acceptable for the materials as stored.

Exceptions:

1. Storage areas for flammable solids complying with Section 5904 of the *International Fire Code*.
2. Storage areas and storage buildings for fireworks and explosives complying with Chapter 56 of the *International Fire Code*.

❖ Indoor storage areas and buildings must be equipped with either mechanical exhaust ventilation or natural ventilation to maintain the level of vapors below the LFL or the PEL. Keeping the area/building at these levels provides a level of safety for the area. The first exception exempts flammable solids that meet the requirements of the IFC and the second exempts fireworks and explosives that meet the requirements of the IFC.

[F] 502.8.1.1 System requirements. Exhaust ventilation systems shall comply with all of the following:

1. The installation shall be in accordance with this code.

INTERNATIONAL CODE COUNCIL®
Copyright © 2015 ICC. ALL RIGHTS RESERVED. Accessed by David Dammon on Jun 21, 2017 12:30:52 PM pursuant to License Agreement with ICC. No further reproduction or distribution authorized. ANY UNAUTHORIZED REPRODUCTION OR DISTRIBUTION IS A VIOLATION OF THE FEDERAL COPYRIGHT ACT AND THE LICENSE AGREEMENT, AND SUBJECT TO CIVIL AND CRIMINAL PENALTIES THEREUNDER.

2. Mechanical ventilation shall be provided at a rate of not less than 1 cfm per square foot [0.00508 $m^3/(s \cdot m^2)$] of floor area over the storage area.
3. The systems shall operate continuously unless alternate designs are *approved*.
4. A manual shutoff control shall be provided outside of the room in a position adjacent to the access door to the room or in another *approved* location. The switch shall be a break-glass or other *approved* type and shall be *labeled*: VENTILATION SYSTEM EMERGENCY SHUTOFF.
5. The exhaust ventilation shall be designed to consider the density of the potential fumes or vapors released. For fumes or vapors that are heavier than air, exhaust shall be taken from a point within 12 inches (305 mm) of the floor. For fumes or vapors that are lighter than air, exhaust shall be taken from a point within 12 inches (305 mm) of the highest point of the room.
6. The location of both the exhaust and inlet air openings shall be designed to provide air movement across all portions of the floor or room to prevent the accumulation of vapors.
7. The *exhaust air* shall not be recirculated to occupied areas if the materials stored are capable of emitting hazardous vapors and contaminants have not been removed. Air contaminated with explosive or flammable vapors, fumes or dusts; flammable, highly toxic or toxic gases; or radioactive materials shall not be recirculated.

❖ The exhaust ventilation requirement must comply with all of the seven elements:

Element 1: Systems must be installed in accordance with the code.

Element 2: The minimum rate for mechanical ventilation is listed here; however, it is important to note that the Material Safety Data Sheets (MSDS) must be reviewed because the ventilation needed to maintain a safe environment could require a much higher airflow rate for certain materials.

Element 3: Unless an alternative scheme is approved, the exhaust system must provide continuous ventilation in the area.

Element 4: An emergency shutoff must be installed at the entry door into the area and can be used to disable the ventilation system in case of a fire.

Element 5: Because the density of vapor depends on the hazardous material in each case, the system must be designed to consider the vapor density of the chemicals being stored. The vapor density for the chemicals can be found in the MSDS.

Element 6: The system must move air across all of the area being protected to prevent the accumulation of vapors in isolated "dead" spots in the room.

Element 7: Hazardous vapors must not be recirculated back into the storage room or to any other portion of the building. This requirement prevents buildup of vapors over time to hazardous levels and also prevents contamination of other areas.

[F] 502.8.2 Gas rooms, exhausted enclosures and gas cabinets. The ventilation system for gas rooms, exhausted enclosures and gas cabinets for any quantity of hazardous material shall be designed to operate at a negative pressure in relation to the surrounding area. Highly toxic and toxic gases shall comply with Sections 502.9.7.1, 502.9.7.2 and 502.9.8.4.

❖ The room or enclosure containing the hazardous materials must be designed to operate at a negative pressure to prevent the vapors from escaping into other areas in the event of a leak. The sections listed also have specific ventilation requirements for highly toxic and toxic gases.

[F] 502.8.3 Indoor dispensing and use. Indoor dispensing and use areas for hazardous materials in amounts exceeding the maximum allowable quantity per control area shall be provided with exhaust ventilation in accordance with Section 502.8.1.

Exception: Ventilation is not required for dispensing and use of flammable solids other than finely divided particles.

❖ Exhaust ventilation meeting the requirements of Section 502.8.1 must be installed in indoor use and dispensing areas so that the level of vapors is maintained below the LFL or the PEL. Keeping the area/building at these levels provides a level of safety for the area (see commentary, Section 502.8.1).

[F] 502.8.4 Indoor dispensing and use—point sources. Where gases, liquids or solids in amounts exceeding the maximum allowable quantity per control area and having a hazard ranking of 3 or 4 in accordance with NFPA 704 are dispensed or used, mechanical exhaust ventilation shall be provided to capture gases, fumes, mists or vapors at the point of generation.

Exception: Where it can be demonstrated that the gases, liquids or solids do not create harmful gases, fumes, mists or vapors.

❖ The intent of this section is to ensure that hazardous vapors and fumes are captured and exhausted at the point where the materials are being dispensed or used rather than allowing them to disperse into the room where occupants could be exposed to the harmful effects. This type of system is required only where the materials have an NFPA 704 hazard rank-

INTERNATIONAL CODE COUNCIL®
Copyright © 2015 ICC. ALL RIGHTS RESERVED. Accessed by David Dammon on Jun 21, 2017 12:30:52 PM pursuant to License Agreement with ICC. No further reproduction or distribution authorized. ANY UNAUTHORIZED REPRODUCTION OR DISTRIBUTION IS A VIOLATION OF THE FEDERAL COPYRIGHT ACT AND THE LICENSE AGREEMENT, AND SUBJECT TO CIVIL AND CRIMINAL PENALTIES THEREUNDER.

ing of 3 or 4 and also exceed the maximum allowable amount for the control area.

[F] 502.8.5 Closed systems. Where closed systems for the use of hazardous materials in amounts exceeding the maximum allowable quantity per control area are designed to be opened as part of normal operations, ventilation shall be provided in accordance with Section 502.8.4.

❖ Where a closed system is designed to be opened during any part of the normal operation cycle, the criteria for designing the ventilation system are the same as for indoor dispensing and use in Section 502.8.4.

[F] 502.9 Hazardous materials—requirements for specific materials. Exhaust ventilation systems for specific hazardous materials shall be provided as required in Section 502.8 and Sections 502.9.1 through 502.9.11.

❖ This section states ventilation requirements for specific hazardous materials that are in addition to the general requirements of Section 502.8.

[F] 502.9.1 Compressed gases—medical gas systems. Rooms for the storage of compressed medical gases in amounts exceeding the permit amounts for compressed gases in the *International Fire Code*, and that do not have an exterior wall, shall be exhausted through a duct to the exterior of the building. Both separate airstreams shall be enclosed in a 1-hour-rated shaft enclosure from the room to the exterior. *Approved* mechanical ventilation shall be provided at a minimum rate of 1 cfm/ft^2 [0.00508 m^3/(s • m^2)] of the area of the room.

Gas cabinets for the storage of compressed medical gases in amounts exceeding the permit amounts for compressed gases in the *International Fire Code* shall be connected to an exhaust system. The average velocity of ventilation at the face of access ports or windows shall be not less than 200 feet per minute (1.02 m/s) with a minimum velocity of 150 feet per minute (0.76 m/s) at any point at the access port or window.

❖ Rooms used for the storage of compressed medical gases, such as oxygen, nitrogen, nitrous oxide and carbon dioxide, must have exhaust systems if the amount stored exceeds the permit amount for compressed gases as indicated in Table 105.6.9 in the 2015 IFC. The exhaust must discharge to the exterior of the building at the specified exhaust rate and, if the storage room is not on an exterior wall, a 1-hour-rated shaft enclosure must be constructed to separate the exhaust and makeup air ducts from the occupied space.

The gas cabinet exhaust does not require a 1-hour enclosure but must be connected to an exhaust system. The average velocity of the exhaust stream cannot be less than 200 feet per minute (1.02 m/s) and the minimum velocity at any access port or window cannot be less than 150 feet per minute (0.76 m/s).

[F] 502.9.2 Corrosives. Where corrosive materials in amounts exceeding the maximum allowable quantity per control area are dispensed or used, mechanical exhaust ventilation in accordance with Section 502.8.4 shall be provided.

❖ This section requires mechanical exhaust ventilation for all storage areas containing corrosive liquids with positive vapor pressures, which, if exposed under standard room temperature and atmospheric pressure, give off hazardous fumes and vapors. Adequate mechanical ventilation will reduce the chance for the accumulation of hazardous concentration levels of toxic fumes and vapors. Corrosive liquids without a positive vapor pressure do not readily give off vapors at hazardous concentration levels under normal conditions and, therefore, do not require mechanical exhaust ventilation.

[F] 502.9.3 Cryogenics. Storage areas for stationary or portable containers of cryogenic fluids in any quantity shall be ventilated in accordance with Section 502.8. Indoor areas where cryogenic fluids in any quantity are dispensed shall be ventilated in accordance with the requirements of Section 502.8.4 in a manner that captures any vapor at the point of generation.

Exception: Ventilation for indoor dispensing areas is not required where it can be demonstrated that the cryogenic fluids do not create harmful vapors.

❖ The ventilation of areas where cryogenic fluids are stored, used and dispensed is very important for a number of reasons. First, these materials might be flammable, explosive or reactive. Second, the materials are gases at normal temperature and pressure. Even if these materials are inert, they still have the potential to release large amounts of gas that can asphyxiate the building occupants. Areas where cryogenic liquids are stored must be ventilated in accordance with Section 502.8, regardless of the amount of cryogenics present. Note that these ventilation requirements appear to be for normal operation rather than emergency operation.

These requirements focus on a minimum ventilation rate, recirculation, even air movement and manual shutoff controls. Ventilation is required at a minimum rate of 1 cfm/ft^2 [0.00508 m^3/(s • m^2)] and is to operate continuously. In areas where cryogenics are used or dispensed, additional ventilation requirements that are specifically focused on the source of a leak or failure may apply. More specifically, when a cryogenic fluid has a hazard classification of 3 or 4 in accordance with NFPA 704, the ventilation system must be able to capture any gases at the point of discharge or generation. This requirement provides redundancy by addressing the more likely modes of failure.

There is an exception to the ventilation requirements for the use and dispensing of Class 3 and 4 materials that can be shown to not create harmful vapors.

For instance, some materials disperse very quickly and may become sufficiently diluted without the need for ventilation.

INTERNATIONAL CODE COUNCIL®
Copyright © 2015 ICC. ALL RIGHTS RESERVED. Accessed by David Dammon on Jun 21, 2017 12:30:52 PM pursuant to License Agreement with ICC. No further reproduction or distribution authorized. ANY UNAUTHORIZED REPRODUCTION OR DISTRIBUTION IS A VIOLATION OF THE FEDERAL COPYRIGHT ACT AND THE LICENSE AGREEMENT, AND SUBJECT TO CIVIL AND CRIMINAL PENALTIES THEREUNDER.

[F] 502.9.4 Explosives. Squirrel cage blowers shall not be used for exhausting hazardous fumes, vapors or gases in operating buildings and rooms for the manufacture, assembly or testing of explosives. Only nonferrous fan blades shall be used for fans located within the ductwork and through which hazardous materials are exhausted. Motors shall be located outside the duct.

❖ These requirements are intended to prevent exhaust systems from contributing to hazards associated with the exhaust of hazardous fumes, vapors or gases in buildings and rooms that are involved in the manufacture, assembly or testing of explosives. Squirrel cage blowers are considered unsatisfactory because the blower wheel could contact portions of the cage housing if parts are bent or otherwise improperly aligned. Ferrous metal fan blades mounted in ductwork represent a similar hazard because a loose or misaligned blade could strike its housing. In both cases, contact between ferrous metal blower or fan parts and housings could cause sparks that could lead to fires or explosions.

[F] 502.9.5 Flammable and combustible liquids. Exhaust ventilation systems shall be provided as required by Sections 502.9.5.1 through 502.9.5.5 for the storage, use, dispensing, mixing and handling of flammable and combustible liquids. Unless otherwise specified, this section shall apply to any quantity of flammable and combustible liquids.

Exception: This section shall not apply to flammable and combustible liquids that are exempt from the *International Fire Code*.

❖ Minimum requirements for mechanical exhaust ventilation for inside areas in which flammable or combustible liquids are stored are contained in Section 5004.3 of the IFC and Section 502.8.1.1 of the code. The use of natural ventilation as an alternative to mechanical ventilation is subject to approval by the code official (see commentary, Sections 502.9.5.1 through 502.9.5.5).

[F] 502.9.5.1 Vaults. Vaults that contain tanks of Class I liquids shall be provided with continuous ventilation at a rate of not less than 1 cfm/ft^2 of floor area [0.00508 m^3/(s • m^2)], but not less than 150 cfm (4 m^3/min). Failure of the exhaust airflow shall automatically shut down the dispensing system. The exhaust system shall be designed to provide air movement across all parts of the vault floor. Supply and exhaust ducts shall extend to a point not greater than 12 inches (305 mm) and not less than 3 inches (76 mm) above the floor. The exhaust system shall be installed in accordance with the provisions of NFPA 91. Means shall be provided to automatically detect any flammable vapors and to automatically shut down the dispensing system upon detection of such flammable vapors in the exhaust duct at a concentration of 25 percent of the LFL.

❖ The removal of Class I vapors from a vault requires that a ventilation system be installed according to Section 502.8.1 and the IFC. The ventilation system must have supply and exhaust ducts within 3 inches (76 mm) to 12 inches (305 mm) of the vault floor. These ducts are to provide ventilation across the entire vault floor to remove the vapors and provide breathable air. The vapor detection system is to shut off dispensing pumps when the detection system senses a vapor concentration of 25 percent or greater of the flammable or combustible LFL. NFPA 91 contains design and construction requirements for exhaust systems. The standard covers duct material, access, hangers and supports. Additional requirements for vaults can be found in Section 5704.2.8 of the IFC (see commentary, Section 502.8.1).

[F] 502.9.5.2 Storage rooms and warehouses. Liquid storage rooms and liquid storage warehouses for quantities of liquids exceeding those specified in the *International Fire Code* shall be ventilated in accordance with Section 502.8.1.

❖ Ventilation to eliminate flammable vapors may be either natural or mechanical. Although natural ventilation, which depends on many conditions including temperature and wind, has the advantage of not being dependent on either manual starting or power supply, it is not as easily controlled as mechanical ventilation. Mechanical ventilation should be used whenever there are extensive indoor operations involving flammable and combustible liquids.

[F] 502.9.5.3 Cleaning machines. Areas containing machines used for parts cleaning in accordance with the *International Fire Code* shall be adequately ventilated to prevent accumulation of vapors.

❖ The use of parts-washing machines must be restricted to areas that are ventilated in accordance with Section 502.8.1 of the code to reduce the likelihood of vapor buildup from solvent exposure and any solvent spill that might occur to concentrations above the LFL.

[F] 502.9.5.4 Use, dispensing and mixing. Continuous mechanical ventilation shall be provided for the use, dispensing and mixing of flammable and combustible liquids in open or closed systems in amounts exceeding the maximum allowable quantity per control area and for bulk transfer and process transfer operations. The ventilation rate shall be not less than 1 cfm/ft^2 [0.00508 m^3/(s • m^2)] of floor area over the design area. Provisions shall be made for the introduction of *makeup air* in a manner that will include all floor areas or pits where vapors can collect. Local or spot ventilation shall be provided where needed to prevent the accumulation of hazardous vapors.

Exception: Where *natural ventilation* can be shown to be effective for the materials used, dispensed or mixed.

❖ The requirements of this section for a mechanical ventilation system are identical to those in Section 502.8.1. The mechanical ventilation system must remove the vapors to prevent accumulation in concentrations in the flammable range for the flammable and combustible liquids being used. The ventilation system must be designed to sweep all areas involved. Exhaust and makeup air openings must be located to create the intended airflow in areas where

INTERNATIONAL CODE COUNCIL®
Copyright © 2015 ICC. ALL RIGHTS RESERVED. Accessed by David Dammon on Jun 21, 2017 12:30:52 PM pursuant to License Agreement with ICC. No further reproduction or distribution authorized. ANY UNAUTHORIZED REPRODUCTION OR DISTRIBUTION IS A VIOLATION OF THE FEDERAL COPYRIGHT ACT AND THE LICENSE AGREEMENT, AND SUBJECT TO CIVIL AND CRIMINAL PENALTIES THEREUNDER.

the vapors collect. The exception allows use of natural ventilation complying with Section 502.8.1 that can be demonstrated to be effective for the flammable and combustible liquids being used.

[F] 502.9.5.5 Bulk plants or terminals. Ventilation shall be provided for portions of properties where flammable and combustible liquids are received by tank vessels, pipelines, tank cars or tank vehicles and which are stored or blended in bulk for the purpose of distributing such liquids by tank vessels, pipelines, tank cars, tank vehicles or containers as required by Sections 502.9.5.5.1 through 502.9.5.5.3.

❖ Bulk plants and terminals are used for the blending or transfer of large volumes of flammable and combustible liquids. Besides normally involving large quantities of flammable and combustible liquids, these facilities can create numerous opportunities for leaks, spills and the escape of vapors. The safeguards and practices described in Sections 502.9.5.5.1 through 502.9.5.5.3 are intended to reduce the likelihood of flammable vapors reaching hazardous concentrations.

[F] 502.9.5.5.1 General. Ventilation shall be provided for rooms, buildings and enclosures in which Class I liquids are pumped, used or transferred. Design of ventilation systems shall consider the relatively high specific gravity of the vapors. Where *natural ventilation* is used, adequate openings in outside walls at floor level, unobstructed except by louvers or coarse screens, shall be provided. Where *natural ventilation* is inadequate, mechanical ventilation shall be provided.

❖ The low flash point for Class I liquids requires that where a Class I liquid is present the area be ventilated to prevent the accumulation of a vapor-air mixture above the LFL. Ventilation can be either mechanical or natural. Because the vapors from Class I liquids are heavier than air, the ventilation must remove the air at the floor level. Natural ventilation must be to the outdoors. It is imperative that vapors be drawn from the rooms or equipment in which they are generated and taken directly to the outside of the building.

[F] 502.9.5.5.2 Basements and pits. Class I liquids shall not be stored or used within a building having a basement or pit into which flammable vapors can travel, unless such area is provided with ventilation designed to prevent the accumulation of flammable vapors therein.

❖ The vapors from Class I liquids are heavier than air, so these vapors can settle from the upper floors and accumulate in a basement or pit. In a building with a basement or pit that has any connection between the basement or pit and upper floors, the basement or pit is not to be used for the storage or mixing of Class I liquids. The vapors from Class I liquids may settle in the basement or pit through openings for mechanical systems or that are part of an egress path, creating a hazard. Unless there is a mechanical or natural ventilation system that is adequate for removing accumulated vapors from Class I liquids from the basement or pit, the building cannot be used for the storage or mixing of Class I liquids.

[F] 502.9.5.5.3 Dispensing of Class I liquids. Containers of Class I liquids shall not be drawn from or filled within buildings unless a provision is made to prevent the accumulation of flammable vapors in hazardous concentrations. Where mechanical ventilation is required, it shall be kept in operation while flammable vapors could be present.

❖ Containers of Class I liquids cannot be dispensed or filled in a building unless ventilation is installed to remove accumulated vapors. To make certain that vapors do not accumulate, any mechanical ventilation system must operate continuously or whenever containers of Class I liquids are open.

[F] 502.9.6 Highly toxic and toxic liquids. Ventilation exhaust shall be provided for highly toxic and toxic liquids as required by Sections 502.9.6.1 and 502.9.6.2.

❖ The following two sections state the requirements for treatment systems and exhaust ventilation when highly toxic and toxic liquids are being used. Generally, the requirements for liquids are less restrictive than those for gases because a liquid is much easier to control and emits smaller amounts of hazardous vapor that could be harmful to the occupants. The following requirements apply only when the maximum allowable quantities per control area for such liquids have been exceeded.

[F] 502.9.6.1 Treatment system. This provision shall apply to indoor and outdoor storage and use of highly toxic and toxic liquids in amounts exceeding the maximum allowable quantities per control area. Exhaust scrubbers or other systems for processing vapors of highly toxic liquids shall be provided where a spill or accidental release of such liquids can be expected to release highly toxic vapors at normal temperature and pressure.

❖ Because of the dangers associated with the potential vapors created by an accidental release or spill of highly toxic liquids in amounts exceeding the maximum allowable quantities per control area, the IFC and the code require that storage and use areas, both indoors and outdoors, have an exhaust scrubber or similar system installed to process released vapors. Such systems are termed treatment systems and are to be designed, constructed and installed in accordance with the IFC, specifically Section 6004.2.2.7. This requirement is specific to highly toxic liquids and would require a treatment system to collect and process any vapors that might escape if a spill should occur at "normal temperature and pressure." In other words, if at normal temperature and pressure conditions vapors would not be highly toxic, a treatment system would not be required. The focus of this section is on the inhalation hazards associated with highly toxic materials. A material may be considered highly toxic by skin contact or ingestion, but not create an inhalation hazard because of the low volatility of the liquid.

INTERNATIONAL CODE COUNCIL®
Copyright © 2015 ICC. ALL RIGHTS RESERVED. Accessed by David Dammon on Jun 21, 2017 12:30:52 PM pursuant to License Agreement with ICC. No further reproduction or distribution authorized. ANY UNAUTHORIZED REPRODUCTION OR DISTRIBUTION IS A VIOLATION OF THE FEDERAL COPYRIGHT ACT AND THE LICENSE AGREEMENT, AND SUBJECT TO CIVIL AND CRIMINAL PENALTIES THEREUNDER.

[F] 502.9.6.2 Open and closed systems. Mechanical exhaust ventilation shall be provided for highly toxic and toxic liquids used in open systems in accordance with Section 502.8.4. Mechanical exhaust ventilation shall be provided for highly toxic and toxic liquids used in closed systems in accordance with Section 502.8.5.

Exception: Liquids or solids that do not generate highly toxic or toxic fumes, mists or vapors.

❖ When highly toxic or toxic liquids in excess of the maximum allowable quantities per control area are used in open systems, there is a higher likelihood that harmful vapors will escape to the atmosphere. This section specifically references Section 502.8.4, which requires that any gases, liquids or solids having a hazard ranking of 3 or 4 be used with a ventilation system that captures the vapors at the point of generation. The method of capturing the vapors at the point of generation or release will vary depending on the specific operation and configuration of the operation.

Closed systems are those systems not normally exposed to the atmosphere and, thus, are less hazardous than open systems. In certain instances, systems that are generally considered closed, but on a somewhat regular basis are open to the atmosphere, would require mechanical ventilation in accordance with Section 502.8.5. Section 502.8.5 requires ventilation in accordance with Section 502.8.4 if the closed system is designed to be opened during normal operations. Section 502.8.4 is for open systems using materials with a hazard ranking of 3 or 4. This section would not require mechanical ventilation where only occasional maintenance requires opening of the system. The requirements for closed systems would apply only when the maximum allowable quantities per control area have been exceeded.

This section does not require a treatment system for the vapors collected by such ventilation systems. The approach is to remove the vapors from the area and simply dilute the materials through the ventilation system. This ventilation is specifically aimed at the normal operation of the systems and not necessarily at a failure or emergency. A failure, with respect to highly toxic liquids, would be addressed by Section 502.9.6.1, which would require a treatment system. Generally, liquids are a much lower hazard because they do not readily give off dangerous concentrations of vapors to the atmosphere as a gaseous version of such material does.

The exception states that liquids that do not produce hazardous vapors, mists or fumes do not require compliance with these ventilation requirements. Much of this will depend on the volatility of the liquid, the degree of hazard of the liquid and how it is used.

[F] 502.9.7 Highly toxic and toxic compressed gases—any quantity. Ventilation exhaust shall be provided for highly toxic and toxic compressed gases in any quantity as required by Sections 502.9.7.1 and 502.9.7.2.

❖ This section describes the requirements for gas cabinets and exhausted enclosures containing toxic and highly toxic gases. Gas cabinets and exhausted enclosures are required for all amounts of highly toxic gases. Toxic gases must be stored only in such cabinets when the maximum allowable quantities have been exceeded. Section 502.9.8.5 requires that all exhaust ventilation from gas cabinets, exhausted enclosures and gas rooms be directed to a treatment system. Connection to a treatment system would be required only in cases where the maximum allowable quantities per control area have been exceeded.

[F] 502.9.7.1 Gas cabinets. Gas cabinets containing highly toxic or toxic compressed gases in any quantity shall comply with Section 502.8.2 and the following requirements:

1. The average ventilation velocity at the face of gas cabinet access ports or windows shall be not less than 200 feet per minute (1.02 m/s) with a minimum velocity of 150 feet per minute (0.76 m/s) at any point at the access port or window.
2. Gas cabinets shall be connected to an exhaust system.
3. Gas cabinets shall not be used as the sole means of exhaust for any room or area.

❖ Gas cabinets that contain toxic and highly toxic gases must comply with both the general requirements found in Chapter 50 of the IFC and the specific requirements found in this section. Chapter 50 of the IFC provides the basic construction requirements and states that the cabinet must be maintained at a negative pressure relative to the surrounding environment. Because of the hazards presented by toxic and highly toxic gases, this section includes additional requirements that are the same ventilation exhaust requirements found in Section 6004.1.2 of the IFC. These include specific velocity minimums for ventilation at the face of the cabinets, a connection to an exhaust system and prohibition of the use of gas cabinets as the sole method of ventilation in a room or area of a building. Additionally, Section 6004.1.2 of the IFC requires that gas cabinets containing toxic and highly toxic gases specifically be protected with an automatic sprinkler system complying with NFPA 13. Other types of extinguishing systems are prohibited.

[F] 502.9.7.2 Exhausted enclosures. Exhausted enclosures containing highly toxic or toxic compressed gases in any quantity shall comply with Section 502.8.2 and the following requirements:

1. The average ventilation velocity at the face of the enclosure shall be not less than 200 feet per minute (1.02 m/s) with a minimum velocity of 150 feet per minute (0.76 m/s).
2. Exhausted enclosures shall be connected to an exhaust system.

INTERNATIONAL CODE COUNCIL®
Copyright © 2015 ICC. ALL RIGHTS RESERVED. Accessed by David Dammon on Jun 21, 2017 12:30:52 PM pursuant to License Agreement with ICC. No further reproduction or distribution authorized. ANY UNAUTHORIZED REPRODUCTION OR DISTRIBUTION IS A VIOLATION OF THE FEDERAL COPYRIGHT ACT AND THE LICENSE AGREEMENT, AND SUBJECT TO CIVIL AND CRIMINAL PENALTIES THEREUNDER.

3. Exhausted enclosures shall not be used as the sole means of exhaust for any room or area.

❖ Exhausted enclosures must comply with both the general requirements found in Chapter 50 of the IFC and the specific requirements found in this section. Chapter 50 of the IFC contains the basic construction requirements, requires that the exhausted enclosure beat a negative pressure relative to the surrounding environment and requires an approved automatic extinguishing system. Because of the hazards presented by toxic and highly toxic gases, this section includes additional requirements that are the same ventilation exhaust requirements found in Section 6004.1.3 of the IFC. These include specific velocity minimums for ventilation at the face of the enclosure, a connection to an exhaust system and restrictions on the use of exhausted enclosures as the sole method of ventilation in a room or any area of a building. Additionally, Section 6004.1.3 of the IFC requires that exhausted enclosures be protected with an automatic sprinkler system complying with NFPA 13. Other types of extinguishing systems are prohibited.

[F] 502.9.8 Highly toxic and toxic compressed gases—quantities exceeding the maximum allowable quantity per control area. Ventilation exhaust shall be provided for highly toxic and toxic compressed gases in amounts exceeding the maximum allowable quantities per control area as required by Sections 502.9.8.1 through 502.9.8.6.

❖ The following sections are the ventilation requirements for areas where highly toxic and toxic gases exceed the maximum allowable quantities. More specifically, these provisions focus on both stationary and portable containers and require that the exhaust collected from these areas, whether through gas cabinets, exhausted enclosures, gas rooms or local exhaust system, be directed to a treatment system to avoid the release of harmful amounts of toxic and highly toxic gas to the atmosphere. The IFC does allow, under certain conditions, the use of containment vessels or containment systems instead of the use of gas cabinets and exhausted enclosures.

[F] 502.9.8.1 Ventilated areas. The room or area in which indoor gas cabinets or exhausted enclosures are located shall be provided with exhaust ventilation. Gas cabinets or exhausted enclosures shall not be used as the sole means of exhaust for any room or area.

❖ This section requires that rooms or spaces containing gas cabinets and exhausted enclosures must be connected to an exhaust system. Although gas cabinets and exhausted enclosures provide a mechanism to exhaust hazardous gases, they are not allowed to be the only method of exhaust for the room or area of the building in which they are located. The ventilation for the room or area should be in accordance with Section 502.8. Section 502.9.8.5 requires that gas cabinets and exhausted enclosures be directed through a treatment system when mandated by the IFC.

[F] 502.9.8.2 Local exhaust for portable tanks. A means of local exhaust shall be provided to capture leakage from indoor and outdoor portable tanks. The local exhaust shall consist of portable ducts or collection systems designed to be applied to the site of a leak in a valve or fitting on the tank. The local exhaust system shall be located in a gas room. Exhaust shall be directed to a treatment system where required by the *International Fire Code*.

❖ This section requires that portable tanks have some means available to collect gases that escape through either a valve or a fitting. These gases must be collected through either ducts or some type of collection system. Because these tanks are portable, they may require a system in which the point of collection is flexible to address the different types and configurations of tanks being used. The local exhaust system used to collect these gases must be located in a gas room connected to a treatment system. This section applies to both indoor and outdoor situations.

[F] 502.9.8.3 Piping and controls—stationary tanks. Filling or dispensing connections on indoor stationary tanks shall be provided with a means of local exhaust. Such exhaust shall be designed to capture fumes and vapors. The exhaust shall be directed to a treatment system where required by the *International Fire Code*.

❖ Stationary tanks installed indoors and containing highly toxic or toxic gases must be equipped with an exhaust system that is specifically located at the filling and dispensing portions of the tank. The most likely locations for a release of gases is at an opening to the tank where connections are made and broken. Therefore, air from those areas must be exhausted and directed to a treatment system.

[F] 502.9.8.4 Gas rooms. The ventilation system for gas rooms shall be designed to operate at a negative pressure in relation to the surrounding area. The exhaust ventilation from gas rooms shall be directed to an exhaust system.

❖ Chapter 50 of the IFC has general requirements for gas rooms. These requirements focus on construction and basic ventilation requirements. More specifically, gas rooms must be constructed so that they are separated from the remainder of the building. The separation should be based on the primary occupancy classification of the building. This section requires that the room be kept at a negative pressure relative to the surroundings and that it be connected directly to an exhaust system. Again, this exhaust system must be directed to a treatment system in accordance with Section 502.9.8.5.

[F] 502.9.8.5 Treatment system. The exhaust ventilation from gas cabinets, exhausted enclosures and gas rooms, and local exhaust systems required in Sections 502.9.8.2 and 502.9.8.3 shall be directed to a treatment system where required by the *International Fire Code*.

❖ When highly toxic and toxic gases are stored in gas cabinets, exhausted enclosures and gas rooms, the exhaust is not to be released directly to the atmo-

INTERNATIONAL CODE COUNCIL®
Copyright © 2015 ICC. ALL RIGHTS RESERVED. Accessed by David Dammon on Jun 21, 2017 12:30:52 PM pursuant to License Agreement with ICC. No further reproduction or distribution authorized. ANY UNAUTHORIZED REPRODUCTION OR DISTRIBUTION IS A VIOLATION OF THE FEDERAL COPYRIGHT ACT AND THE LICENSE AGREEMENT, AND SUBJECT TO CIVIL AND CRIMINAL PENALTIES THEREUNDER.

sphere. Instead all exhaust must go through a treatment system that complies with the code and Sections 6004.2.2.7.1 through 6004.2.2.7.5 of the IFC.

There are two exceptions to the requirements for treatment systems in the IFC that are related to highly toxic and toxic gases in storage when several specific controls have been installed. These controls include redundancy with the use of caps or plugs on valve outlets; handwheel-operated valves to prevent movement and the use of containment vessels or containment systems in accordance with the IFC. Exception 2 is specific to toxic gases in use where a gas detection system is installed that has a sensing interval not exceeding 5 minutes and also an approved fail-safe automatic-closing valve located next to the cylinder valves. The fail-safe valve is to close when gas is detected at or above the PEL.

The rest of the IFC requirements provide guidance on the intended treatment of the gases, which could be through dilution, absorption, containment, neutralization, burning or any other method as long as the largest single vessel is accounted for. Generally, the criterion is to reduce the gas to one-half of the immediate dangerous-to-life-and-health (IDLH) level. The IFC further discusses sizing of the system based on the rate of release and whether the container is stationary or portable.

[F] 502.9.8.6 Process equipment. Effluent from indoor and outdoor process *equipment* containing highly toxic or toxic compressed gases which could be discharged to the atmosphere shall be processed through an exhaust scrubber or other processing system. Such systems shall be in accordance with the *International Fire Code*.

❖ Industrial processes that use toxic or highly toxic compressed gases have the potential for accidently discharging these gases to the atmosphere. This section requires installation of a system to capture, exhaust and process the effluent through a scrubber or other approved processing system before it is exhausted to the atmosphere. The processing system should absorb, burn, neutralize, dilute or otherwise contain the toxic gases so that they are not at hazardous levels when released to the atmosphere.

Section 6004.2.2.7 of the IFC includes requirements for treatment systems.

[F] 502.9.9 Ozone gas generators. Ozone cabinets and ozone gas-generator rooms for systems having a maximum ozone-generating capacity of $^1/_2$ pound (0.23 kg) or more over a 24-hour period shall be mechanically ventilated at a rate of not less than six air changes per hour. For cabinets, the average velocity of ventilation at *makeup air* openings with cabinet doors closed shall be not less than 200 feet per minute (1.02 m/s).

❖ The primary requirements for ozone gas generators are located in Section 6005 of the IFC. Ozone is considered, among other hazards, a highly toxic gas. It is dealt with separately because it is not simply a matter of storage and use. The generation of ozone is being regulated. This section is applicable if the ozone generator system produces more than 2 pounds (0.9 kg) of ozone within a 24-hour period. Section 502.9.9 of the code discusses only the ventilation requirements. Section 6005 of the IFC has more specific construction-related requirements for generating systems. Section 502.9.9 requires that ozone cabinets and ozone-gas-generator rooms be ventilated at a rate not less than six air changes per hour. The cabinet ventilation system must produce an average velocity of 200 feet per minute (1.02 m/s) at makeup air openings with the cabinet doors closed. This criteria results in a negative pressure in the cabinet with appropriate intake air sizing.

[F] 502.9.10 LP-gas distribution facilities. LP-gas distribution facilities shall be ventilated in accordance with NFPA 58.

❖ Ventilation systems in buildings in which liquefied petroleum gas (LP-gas) products, such as propane and butane, are handled or stored must be arranged and sized in accordance with NFPA 58. LP-gases are heavier than air and, therefore, will accumulate near the floor or at the lowest level of any enclosure. Because of the danger associated with flammable gas, the building must have a means for purging any accumulated gas that may occur as a result of leakage or carelessness. NFPA 58 is referenced for the design, installation and operation of ventilation systems for these facilities.

[F] 502.9.10.1 Portable container use. Above-grade underfloor spaces or basements in which portable LP-gas containers are used or are stored awaiting use or resale shall be provided with an *approved* means of ventilation.

Exception: Department of Transportation (DOT) specification cylinders with a maximum water capacity of 2.5 pounds (1 kg) for use in completely self-contained hand torches and similar applications. The quantity of LP-gas shall not exceed 20 pounds (9 kg).

❖ This section is specific to portable LP-gas containers such as those used for gas grills or travel trailers. Enclosed spaces, such as basements or under-floor spaces, used for the storage of portable containers must be properly ventilated to prevent the buildup of gas fumes in the enclosed space. This would not apply to a garage or storage room subject to normal infiltration of outside air caused by loose construction methods. The exception exempts small storage cylinders of less than 2.5 pounds (1 kg) capacity as long as the aggregate amount stored does not exceed 20 pounds (9 kg).

[F] 502.9.11 Silane gas. Exhausted enclosures and gas cabinets for the indoor storage of silane gas in amounts exceeding the maximum allowable quantities per control area shall comply with Chapter 64 of the *International Fire Code*.

❖ Silane gas (SiH_4) is a pyrophoric material capable of spontaneous ignition when exposed to air at low, nor-

INTERNATIONAL CODE COUNCIL®
Copyright © 2015 ICC. ALL RIGHTS RESERVED. Accessed by David Dammon on Jun 21, 2017 12:30:52 PM pursuant to License Agreement with ICC. No further reproduction or distribution authorized. ANY UNAUTHORIZED REPRODUCTION OR DISTRIBUTION IS A VIOLATION OF THE FEDERAL COPYRIGHT ACT AND THE LICENSE AGREEMENT, AND SUBJECT TO CIVIL AND CRIMINAL PENALTIES THEREUNDER.

mal or slightly elevated temperatures, even in very small quantities. Silane is used in the manufacturing processes of energy-efficient glass coatings, transistors, photosensitive copier drums and photovoltaics, and in the semiconductor industry for several film manufacturing process steps. This section refers users to Chapter 64 of the IFC for the exhaust requirements when the indoor storage of silane gas exceeds the maximum allowable quantities per control area.

[F] 502.10 Hazardous production materials (HPM). Exhaust ventilation systems and materials for ducts utilized for the exhaust of HPM shall comply with this section, other applicable provisions of this code, the *International Building Code* and the *International Fire Code*.

❖ This section is a summary of the ventilation requirements for semiconductor facilities and references the IBC and IFC for further requirements. Parallel requirements may be found in Section 2703.14 of the IFC.

[F] 502.10.1 Where required. Exhaust ventilation systems shall be provided in the following locations in accordance with the requirements of this section and the *International Building Code*.

1. Fabrication areas: Exhaust ventilation for fabrication areas shall comply with the *International Building Code*. Additional manual control switches shall be provided where required by the code official.
2. Workstations: A ventilation system shall be provided to capture and exhaust gases, fumes and vapors at workstations.
3. Liquid storage rooms: Exhaust ventilation for liquid storage rooms shall comply with Section 502.8.1.1 and the *International Building Code.*
4. HPM rooms: Exhaust ventilation for HPM rooms shall comply with Section 502.8.1.1 and the *International Building Code.*
5. Gas cabinets: Exhaust ventilation for gas cabinets shall comply with Section 502.8.2. The gas cabinet ventilation system is allowed to connect to a workstation ventilation system. Exhaust ventilation for gas cabinets containing highly toxic or toxic gases shall also comply with Sections 502.9.7 and 502.9.8.
6. Exhausted enclosures: Exhaust ventilation for exhausted enclosures shall comply with Section 502.8.2. Exhaust ventilation for exhausted enclosures containing highly toxic or toxic gases shall also comply with Sections 502.9.7 and 502.9.8.
7. Gas rooms: Exhaust ventilation for gas rooms shall comply with Section 502.8.2. Exhaust ventilation for gas rooms containing highly toxic or toxic gases shall also comply with Sections 502.9.7 and 502.9.8.
8. Cabinets containing pyrophoric liquids or Class 3 water-reactive liquids: Exhaust ventilation for cabinets in fabrication areas containing pyrophoric liquids shall be as required in Section 2705.2.3.4 of the *International Fire Code.*

❖ Items 1 through 8 list the specific ventilation requirements for semiconductor facilities based on the use of the particular area. Many of these requirements are references to other sections. These are essentially the same requirements found in Section 2703.14 of the IFC.

1. Fabrication areas must be ventilated in accordance with Section 415.11.1.6 of the IBC. This section also gives the code official the authority to ask for additional manual control switches where facility arrangements make the additional switches necessary.
2. Workstations, typically found within each fabrication area, must have individual exhaust systems to collect any exhaust fumes and vapors as close to the point of generation as possible.
3. Liquid storage rooms within semiconductor facilities are to be treated the same as other liquid storage rooms and should be ventilated according to the general requirements for hazardous materials found in Section 502.8.1.1.
4. Hazardous production materials (HPM) rooms, which are essentially a Group H-2, H-3 or H-4 occupancy, must be ventilated in the same way as any another Group H-2, H-3 and H-4 occupancy would be ventilated in accordance with Section 502.8.1.1.
5. Gas cabinets used in semiconductor facilities should be treated the same as any other use of gas cabinets with hazardous materials. Gas cabinets can share the exhaust system of an individual workstation. Also, semiconductor facilities tend to make use of both toxic and highly toxic gases; therefore, additional requirements are specifically highlighted for these applications.
6. Exhausted enclosures are also regulated just as they are for other applications with hazardous materials. As with gas cabinets, semiconductor facilities tend to make use of both toxic and highly toxic gases; therefore, additional requirements are specifically highlighted for those applications.
7. Gas rooms must also be treated the same as any other gas rooms used with hazardous materials.
8. Cabinets containing pyrophoric liquids or Class 3 water-reactive liquids: Exhaust ventilation for cabinets in fabrication areas containing pyrophoric liquids or Class 3 water-reactive liquids shall be as required in Section 2705.2.3.4 of the IFC.

[F] 502.10.2 Penetrations. Exhaust ducts penetrating fire barriers constructed in accordance with Section 707 of the

INTERNATIONAL CODE COUNCIL®
Copyright © 2015 ICC. ALL RIGHTS RESERVED. Accessed by David Dammon on Jun 21, 2017 12:30:52 PM pursuant to License Agreement with ICC. No further reproduction or distribution authorized. ANY UNAUTHORIZED REPRODUCTION OR DISTRIBUTION IS A VIOLATION OF THE FEDERAL COPYRIGHT ACT AND THE LICENSE AGREEMENT, AND SUBJECT TO CIVIL AND CRIMINAL PENALTIES THEREUNDER.

International Building Code or horizontal assemblies constructed in accordance with Section 711 of the *International Building Code* shall be contained in a shaft of equivalent fire-resistance-rated construction. Exhaust ducts shall not penetrate fire walls. Fire dampers shall not be installed in exhaust ducts.

❖ Semiconductor facilities are essentially a combination of many activities involving the storage and use of hazardous materials. These facilities are large and generally complex, and exhaust systems may lead through several areas of a building before the exhaust is processed or released to the atmosphere. This section requires that the protection surrounding an exhaust system is at least equivalent to the fire-resistance rating of the fire barriers and horizontal assemblies being penetrated.

Ventilation should not be interrupted by a fire damper when a fire or other emergency occurs involving a workstation. This helps reduce the likelihood that hazardous combustion byproducts or hazardous concentrations of HPM will be forced back into the workstation or cleanroom. Continuous ventilation through a duct enclosed in a fire-resistance-rated shaft is one alternative to where a fire damper would normally be required at a duct penetration of a fire-resistance-rated assembly. Fire walls define separations between buildings. Ducts must never penetrate a barrier common to another building or occupancy. This reduces the likelihood of tampering with or interrupting the duct integrity.

[F] 502.10.3 Treatment systems. Treatment systems for highly toxic and toxic gases shall comply with the *International Fire Code.*

❖ This is simply a general reference back to the IFC for treatment systems when toxic or highly toxic gases are being used.

502.11 Motion picture projectors. Motion picture projectors shall be exhausted in accordance with Section 502.11.1 or 502.11.2.

❖ This section contains criteria for exhausting hot gases and smoke from motion picture projectors.

502.11.1 Projectors with an exhaust discharge. Projectors equipped with an exhaust discharge shall be directly connected to a mechanical exhaust system. The exhaust system shall operate at an exhaust rate as indicated by the manufacturer's installation instructions.

❖ This section requires a dedicated exhaust system for projection equipment that is designed to connect to an exhaust system. Projection equipment using an electric arc (carbon arc) as the light source produces hot gases and smoke that must be exhausted to the outdoors. Other light sources, such as incandescent and xenon lamps, produce intense heat and must be air cooled.

Projection equipment that has an exhaust connection and is intended by the manufacturer to be connected to an exhaust system depends on the external exhaust system to cool the equipment and remove waste heat and any smoke and gases produced by the light source. The projection equipment manufacturer will specify the required rate of exhaust for the specific equipment, and the exhaust system must be designed to provide that capacity. Article 540 of NFPA 70 addresses motion picture projectors.

Projectors are installed in specially constructed projection equipment rooms that contain one or more projectors and the associated hardware and controls. Projector exhaust systems may serve a single projector or multiple units if the system has the necessary capacity for all units served. Projection rooms normally have a general room exhaust system to control the room's ambient temperature.

502.11.2 Projectors without exhaust connection. Projectors without an exhaust connection shall have contaminants exhausted through a mechanical exhaust system. The exhaust rate for electric arc projectors shall be not less than 200 cubic feet per minute (cfm) (0.09 m^3/s) per lamp. The exhaust rate for xenon projectors shall be not less than 300 cfm (0.14 m^3/s) per lamp. Xenon projector exhaust shall be at a rate such that the exterior temperature of the lamp housing does not exceed 130°F (54°C). The lamp and projection room exhaust systems, whether combined or independent, shall not be interconnected with any other exhaust or return system within the building.

❖ If the projectors do not connect to an exhaust system, the projection room must have an exhaust system with the capacity specified in this section. The required system must exhaust the waste heat, smoke and gases produced by the projection equipment. The exhaust rate specified for xenon lamp projectors is intended to control the equipment surface temperatures to reduce the fire hazard and protect personnel from injury. The projector lamp and general room exhaust systems can be combined or they can be independent systems; however, these systems must be independent of all other building exhaust, ventilation and air-conditioning systems. Makeup air for these exhaust systems can be outdoor air or transfer air from adjoining spaces, such as the auditorium.

[F] 502.12 Organic coating processes. Enclosed structures involving organic coating processes in which Class I liquids are processed or handled shall be ventilated at a rate of not less than 1 cfm/ft^2 [0.00508 $m^3/(s \cdot m^2)$] of solid floor area. Ventilation shall be accomplished by exhaust fans that intake at floor levels and discharge to a safe location outside the structure. Noncontaminated intake air shall be introduced in such a manner that all portions of solid floor areas are provided with continuous uniformly distributed air movement.

❖ Ventilation systems must be designed to prevent the accumulation of vapors within the building where Class I flammable liquids are processed or handled. Uncontaminated air, such as outdoor air or transfer air, must be distributed to dilute and disperse vapors over the entire solid floor area and then discharge them to a safe location outside the building. A ventilation rate of 1 cfm/ft^2 [0.00508 $m^3/(s \cdot m^2)$] is required.

INTERNATIONAL CODE COUNCIL®
Copyright © 2015 ICC. ALL RIGHTS RESERVED. Accessed by David Dammon on Jun 21, 2017 12:30:52 PM pursuant to License Agreement with ICC. No further reproduction or distribution authorized. ANY UNAUTHORIZED REPRODUCTION OR DISTRIBUTION IS A VIOLATION OF THE FEDERAL COPYRIGHT ACT AND THE LICENSE AGREEMENT, AND SUBJECT TO CIVIL AND CRIMINAL PENALTIES THEREUNDER.

502.13 Public garages. Mechanical exhaust systems for public garages, as required in Chapter 4, shall operate continuously or in accordance with Section 404.

❖ This section applies to parking garages and does not apply to repair garages. As a means of conserving energy, ventilation systems for enclosed public parking garages are allowed to modulate between full capacity and the minimum capacity specified in Section 404.2. This modulating operation must use approved detection devices that are capable of detecting the operation of vehicles in the garage. This section is intended to apply to parking garages for vehicles such as automobiles, buses and fleet vehicles (see commentary, Section 404).

502.14 Motor vehicle operation. In areas where motor vehicles operate, mechanical ventilation shall be provided in accordance with Section 403. Additionally, areas in which stationary motor vehicles are operated shall be provided with a *source capture system* that connects directly to the motor vehicle exhaust systems. Such system shall be engineered by a registered design professional or shall be factory-built equipment designed and sized for the purpose.

Exceptions:

1. This section shall not apply where the motor vehicles being operated or repaired are electrically powered.
2. This section shall not apply to one- and two-family dwellings.
3. This section shall not apply to motor vehicle service areas where engines are operated inside the building only for the duration necessary to move the motor vehicles in and out of the building.

❖ In repair garages, parking garages, warehouses, vocational shops and similar locations where internal combustion engines are operated, engine exhaust contamination can accumulate. To prevent the accumulation of harmful contaminants, these spaces must have mechanical ventilation as prescribed in Section 403. For example, Table 403.3 specifies an exhaust rate of 0.75 cfm/ft^2 [0.00381 m^3/(s • m^2)] for repair garages. This section requires mechanical ventilation to be provided and Note b of Table 403.3 specifically requires mechanical exhaust where it is indicated for an occupancy in Table 403.3. The intent is to contain the contaminants in that occupancy, thus preventing the contaminants from migrating or being transferred to other occupancies.

It should be noted that Note b does not permit the recirculation of the minimum required amount of ventilation air to any other occupancies (see commentary, Section 403.2.1). For example, where an air-handling unit serves both a repair garage and the sales floor of a car dealership, recirculation of air from the repair garage to the sales floor is not permitted. Note that if the air-handling unit served only the repair garage, then air could be recirculated through the unit and back to the repair garage for the purpose of conditioning the space.

In addition to mechanical ventilation being required for the space, a source capture system is required where stationary motor vehicles operate. A source capture system is defined as a mechanical system designed to capture the contaminants at their source and discharge them to the outdoor atmosphere. The source capture system must connect directly to the vehicle's exhaust system. No performance criteria are given for the operation and design of a source capture system. Therefore, the system must either be designed by a registered design professional or must be a factory-built system that is designed and sized for the intended purpose. The intent is to avoid field-constructed systems that lack proper design and component selection.

A number of repair garages have large overhead doors to permit the movement of vehicles in and out of the service area. Because of the size of the overhead doors, these spaces usually meet the requirements for natural ventilation in Section 402.2 of the code. Note that this section, in conjunction with Section 401.6 of the code and Section 1203.5.2 of the IBC, requires installation of a mechanical exhaust system in spaces where motor vehicles operate. Therefore, a repair garage must be mechanically ventilated; providing natural ventilation is not an acceptable option. Note that Exception 3 would not require mechanical ventilation where the engines are operated inside the building only for the duration necessary to move the vehicles in and out (see commentary for Exception 3).

The requirement for repair garages to have mechanical exhaust also requires an approximately equal amount of makeup air to be provided (see commentary, Section 501.4). It is not uncommon for repair garages to have exhaust fans in the exterior wall of a garage. When the outdoor temperature permits, this exhaust is usually intended to provide ventilation by exhausting the air in the garage while the outdoor makeup air enters through the open overhead doors or motorized wall louvers that simultaneously operate with the exhaust fans. It should be noted that while this system might be sized to provide the required 0.75 cfm/ft^2 [0.00381 m^3/(s • m^2)] of exhaust when the outdoor temperature is moderate, this system may see little use during colder temperatures, especially in more northern climates. For this system to be acceptable, the method to heat the incoming makeup air must be indicated (i.e., the heating system must have sufficient capacity to perform such a task).

Motor vehicle operation would also include forklifts, with an internal combustion engine, in a warehouse. Note that the code does not have any specific requirements that address a method to deal with the exhaust from forklifts operating in a warehouse. Lacking any specific requirements, the mechanical exhaust system required for a public parking garage is the closest occupancy in Table 403.3.1.1. A public parking garage requires 0.75 cfm/ft^2 [0.00381 m^3/(s • m^2)] of floor area of outdoor and exhaust air, which would be a substantial amount of air in a large warehouse. In

INTERNATIONAL CODE COUNCIL®
Copyright © 2015 ICC. ALL RIGHTS RESERVED. Accessed by David Dammon on Jun 21, 2017 12:30:52 PM pursuant to License Agreement with ICC. No further reproduction or distribution authorized. ANY UNAUTHORIZED REPRODUCTION OR DISTRIBUTION IS A VIOLATION OF THE FEDERAL COPYRIGHT ACT AND THE LICENSE AGREEMENT, AND SUBJECT TO CIVIL AND CRIMINAL PENALTIES THEREUNDER.

lieu of providing 0.75 cfm/ft^2 [0.00381 m^3/(s • m^2)] of outdoor and exhaust air, the design professional must propose a system to address the exhaust from the forklifts and submit it to the code official for approval. Note that OSHA, the American Society of Heating, Refrigerating and Air-Conditioning Engineers (ASHRAE) or the American Conference on Governmental Industrial Hygienists (ACGIH) may have information that could be useful when dealing with exhaust from forklifts in a building.

As stated in Exception 3, those areas where motor vehicles operate include repair garages where the vehicle is driven into a service bay for routine maintenance and repair services that do not require running the engine. Spaces for routine maintenance work that involves the exchange of parts or fluids, such as oil, batteries and tires, and do not require the vehicles to operate as part of the maintenance work would not be required to provide mechanical ventilation or to have a source capture system. For example, quick oil-change facilities where the vehicle is pulled in and shut off while servicing would not be required to have mechanical ventilation or a source capture system. Where internal combustion engines must be run during repair and maintenance, mechanical ventilation is required based on Section 403, and an independent source capture exhaust system must be installed that will attach directly to the motor vehicle exhaust system's tailpipes and discharge directly outdoors [see Commentary Figures 502.14(1) and (2)]. This tailpipe-connected system is in addition to the mechanical ventilation exhaust system required by this section. In the previous example, if the same quick oil-change facility performed other services that require the engine to be running (e.g., radiator flushing, full transmission fluid flushing and fuel injection cleaning), mechanical ventilation is required along with a source capture exhaust system directly attached to the motor vehicle exhaust system's tailpipes.

A number of fire stations have source capture systems for the fire trucks located in the apparatus bays. These systems usually connect to the exhaust pipes of the trucks with a flexible hose that will automatically disconnect when the truck is driven out of the bay. Note that there is no specific code requirement for having a source capture system connected to the fire trucks. If the trucks are driven in and shut off and then started and driven out, a source capture system would not be required. However, if it is common practice for the fire department to run the engines while the trucks are stationary in the apparatus bay, then a source capture system would be required.

The provisions of this section do not apply to one- and two-family dwellings, and where the motor vehicles being operated, stored or repaired are electrically powered and, therefore, do not produce combustion byproducts.

[F] 502.15 Repair garages. Where Class I liquids or LP-gas are stored or used within a building having a basement or pit wherein flammable vapors could accumulate, the basement or pit shall be provided with ventilation designed to prevent the accumulation of flammable vapors therein.

❖ A ventilation system must be installed in any below-grade area where flammable and combustible vapors might accumulate. The ventilation system must be in operation any time the repair garage is open for business and any time there is a chance that vapors may accumulate in the below-grade area.



Figure 502.14(1)
OVERHEAD SOURCE CAPTURE SYSTEM

INTERNATIONAL CODE COUNCIL®
Copyright © 2015 ICC. ALL RIGHTS RESERVED. Accessed by David Dammon on Jun 21, 2017 12:30:52 PM pursuant to License Agreement with ICC. No further reproduction or distribution authorized. ANY UNAUTHORIZED REPRODUCTION OR DISTRIBUTION IS A VIOLATION OF THE FEDERAL COPYRIGHT ACT AND THE LICENSE AGREEMENT, AND SUBJECT TO CIVIL AND CRIMINAL PENALTIES THEREUNDER.

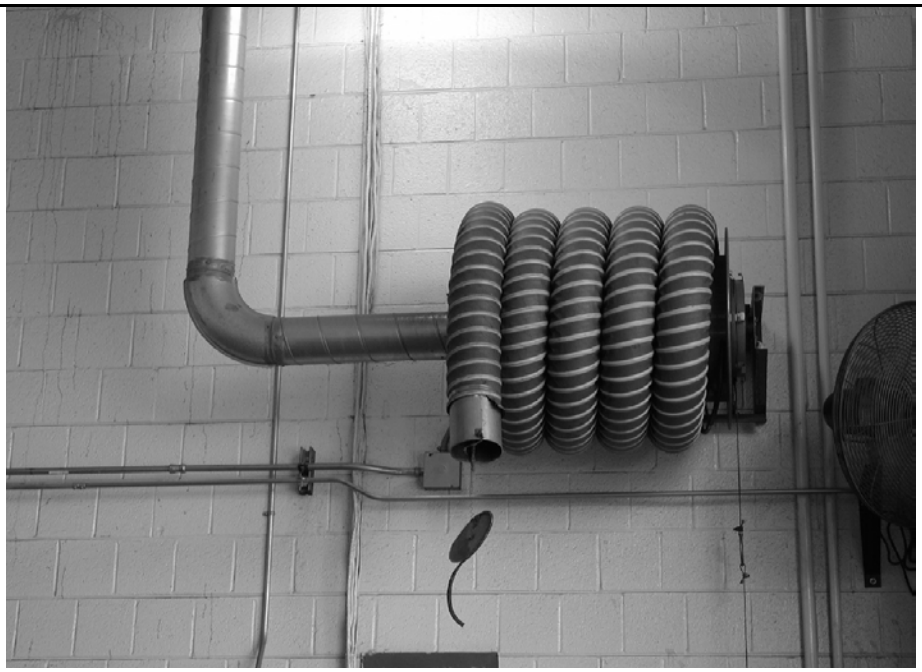

Figure 502.14(2)
WALL-MOUNTED SOURCE CAPTURE SYSTEM

[F] 502.16 Repair garages for natural gas- and hydrogen-fueled vehicles. Repair garages used for the repair of natural gas- or hydrogen-fueled vehicles shall be provided with an *approved* mechanical ventilation system. The mechanical ventilation system shall be in accordance with Sections 502.16.1 and 502.16.2.

Exception: Where *approved* by the code official, *natural ventilation* shall be permitted in lieu of mechanical ventilation.

❖ Repair garages that install and repair compressed natural gas (CNG) or hydrogen motor fuels must be equipped with ventilation and gas detection systems in accordance with Sections 502.16.1 and 502.16.2. The intent of this section is to prevent the accumulation of lighter-than-air flammable and combustible gases inside the repair garage.

An example of natural ventilation that a code official may approve at his or her discretion is a repair garage with at least two opposite sides open all the way to the ceiling. The two opposite sides would allow for cross ventilation. Having the walls open to the ceiling would prevent lighter-than-air gases from accumulating at the ceiling level. The ceiling would have to be sealed to prevent gases from entering the attic space; otherwise, mechanical ventilation would be required.

[F] 502.16.1 Design. Indoor locations shall be ventilated utilizing air supply inlets and exhaust outlets arranged to provide uniform air movement to the extent practical. Inlets shall be uniformly arranged on exterior walls near floor level. Outlets shall be located at the high point of the room in exterior walls or the roof.

Ventilation shall be by a continuous mechanical ventilation system or by a mechanical ventilation system activated by a continuously monitoring natural gas detection system, or for hydrogen, a continuously monitoring flammable gas detection system, each activating at a gas concentration of 25 percent of the lower flammable limit (LFL). In all cases, the system shall shut down the fueling system in the event of failure of the ventilation system.

The ventilation rate shall be not less than 1 cubic foot per minute per 12 cubic feet [0.00138 $m^3/(s \cdot m^3)$] of room volume.

❖ The intent of this requirement is to provide uniform ventilation throughout the garage area that will exchange at least 1 cubic foot of air for every 12 cubic feet of room volume every minute. A detection system must be able to recognize hydrogen where hydrogen-fueled vehicles are involved.

[F] 502.16.2 Operation. The mechanical ventilation system shall operate continuously.

Exceptions:

1. Mechanical ventilation systems that are interlocked with a gas detection system designed in accordance with the *International Fire Code*.
2. Mechanical ventilation systems in garages that are used only for the repair of vehicles fueled by liquid fuels or odorized gases, such as CNG, where the ventilation system is electrically interlocked with the lighting circuit.

❖ The intent of this section is to prevent the accumulation of lighter-than-air gases inside vehicle repair

INTERNATIONAL CODE COUNCIL®
Copyright © 2015 ICC. ALL RIGHTS RESERVED. Accessed by David Dammon on Jun 21, 2017 12:30:52 PM pursuant to License Agreement with ICC. No further reproduction or distribution authorized. ANY UNAUTHORIZED REPRODUCTION OR DISTRIBUTION IS A VIOLATION OF THE FEDERAL COPYRIGHT ACT AND THE LICENSE AGREEMENT, AND SUBJECT TO CIVIL AND CRIMINAL PENALTIES THEREUNDER.

garages by requiring the ventilation system to operate continuously. Exceptions allow intermittent operation of the ventilation system where it is interlocked with one of the systems specified. Exception 2 does not apply to hydrogen.

502.17 Tire rebuilding or recapping. Each room where rubber cement is used or mixed, or where flammable or combustible solvents are applied, shall be ventilated in accordance with the applicable provisions of NFPA 91.

❖ NFPA 91 requires that the exhaust flow within the duct system be maintained at a vapor concentration no greater than 25 percent of the LFL.

502.17.1 Buffing machines. Each buffing machine shall be connected to a dust-collecting system that prevents the accumulation of the dust produced by the buffing process.

❖ The dust produced by the buffing process is a potentially explosive mixture of loose rubber particles, cement, and solvent vapors and fumes. Accordingly, each buffing machine must be equipped with a dust-collecting system that will confine and evacuate both the vapor and solid particles created by the buffing process. Besides cloth and paper-type filters, other filtration devices, such as scrubbers, cyclone collectors, dust collectors and reduced transport velocity collectors, may be used in the collection process.

502.18 Specific rooms. Specific rooms, including bathrooms, locker rooms, smoking lounges and toilet rooms, shall be exhausted in accordance with the ventilation requirements of Chapter 4.

❖ This section recognizes that besides this chapter, Chapter 4 also contains provisions that mandate mechanical exhaust. This section specifies that some occupancies, such as smoking lounges, require mechanical exhaust systems to exhaust the contaminants produced by that occupancy. Note b in Table 403.3 applies to these occupancies. Where Note b appears in Table 403.3, the ventilation air, both the required air and any excess air quantities, must not be recirculated to any other occupancy. This may require 100 percent exhaust and 100 percent supply with no return air in rooms that are served by air-handling units that also serve other rooms. In these cases, the recirculation provision of Section 403.2.1 is not an option. As with all exhaust systems addressed in the code, the exhaust must extend to and terminate at the outdoors. The exhaust termination must be approved and comply with Section 501.3.

502.19 Indoor firing ranges. Ventilation shall be provided in an *approved* manner in areas utilized as indoor firing ranges. Ventilation shall be designed to protect employees and the public in accordance with DOL 29 CFR 1910.1025 where applicable.

❖ This section requires a ventilation system to be designed to protect employees and the public by referencing the DOL standard. This DOL standard covers lead and air-borne particulate matter in the workplace and is applicable to this type of facility. The use of this standard along with guidance from the National Rifle Association will provide information to the design professional to help design and the code official to help approve a ventilation system for indoor firing ranges.

502.20 Manicure and pedicure stations. Manicure and pedicure stations shall be provided with an exhaust system in accordance with Table 403.3.1.1, Note h. Manicure tables and pedicure stations not provided with factory-installed exhaust inlets shall be provided with exhaust inlets located not more than 12 inches (305 mm) horizontally and vertically from the point of chemical application.

❖ Previous editions of the code were unclear whether the code intended to regulate nail salons for hands only or salons for feet and hands, or, for that matter, salons for feet only. The text makes it clears that the code regulates both hands and feet. The code was previously silent on the design of exhaust systems for nail salons other than requiring a source capture system, which is a defined term. Commonly, systems were encountered that had exhaust intake openings located a considerable distance from the point of chemical application, and these systems could allow the chemical vapors to escape into the occupied space, evading the exhaust system. Sometimes exhaust intake openings were placed on walls next to nail stations and on ceilings above the stations. Such intakes do not meet the intent of requiring source capture systems [see Commentary Figures 502.20(1) and (2)]. By definition, a source capture system is supposed to capture contaminants at their source, meaning that the exhaust intake opening proximity to the point of application of the solvents and polishes along with the intake airflow velocities had to be carefully designed to achieve complete capture of the target contaminants. This code section requires that the nail stations for hands and feet must be designed and built with factory-installed exhaust inlets, or field-installed exhaust inlets must be provided and located not greater than 12 inches (305 mm) in any direction from the point of chemical application to the hands and feet. Note the changes made to note h of Table 403.3.1.1 that relate to this section.

SECTION 503
MOTORS AND FANS

503.1 General. Motors and fans shall be sized to provide the required air movement. Motors in areas that contain flammable vapors or dusts shall be of a type *approved* for such environments. A manually operated remote control installed at an *approved* location shall be provided to shut off fans or blowers in flammable vapor or dust systems. Electrical *equipment* and appliances used in operations that generate explosive or flammable vapors, fumes or dusts shall be interlocked with the ventilation system so that the *equipment* and appliances cannot be operated unless the ventilation fans are in operation. Motors for fans used to convey flammable vapors or

INTERNATIONAL CODE COUNCIL®
Copyright © 2015 ICC. ALL RIGHTS RESERVED. Accessed by David Dammon on Jun 21, 2017 12:30:52 PM pursuant to License Agreement with ICC. No further reproduction or distribution authorized. ANY UNAUTHORIZED REPRODUCTION OR DISTRIBUTION IS A VIOLATION OF THE FEDERAL COPYRIGHT ACT AND THE LICENSE AGREEMENT, AND SUBJECT TO CIVIL AND CRIMINAL PENALTIES THEREUNDER.



Figure 502.20(1)
PEDICURE STATION

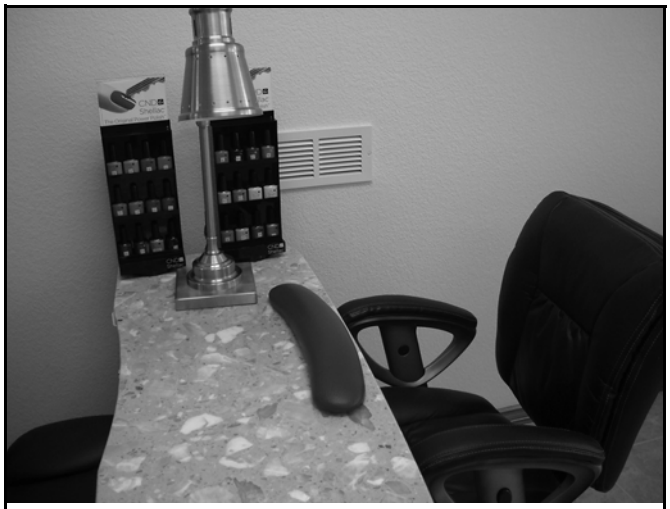

Figure 502.20(2)
MANICURE STATION

dusts shall be located outside the duct or shall be protected with *approved* shields and dustproofing. Motors and fans shall be provided with a means of access for servicing and maintenance.

❖ Exhaust fans, motors and other related prime moving components must be of adequate size. The designer must select the air volume, fan static pressure, transport velocity and pressure drop across all components in order to move the contaminant(s) of concern from the source to the point of termination. It is important to note, however, that the code does not dictate the sizing methodology for such equipment. Furthermore, exhaust fans, motors and other related prime moving components must be specifically designed for the application, be compatible with the contaminants being exhausted and be approved for installation in those environments. For example, exhaust systems handling corrosive vapors must be constructed of materials that will not be damaged by the vapors.

Components of exhaust systems conveying flammable vapors or dusts, such as fans, blowers, motors, shaft bearings, collectors, filters and volume controls, must be located out of the exhaust flow or must be constructed of materials that are impervious to the exhaust flow.

Protection from abrasion may be necessary for systems handling dusts and stock. Abrasive exhaust materials, such as those produced by cutting, grinding, milling and forming stock materials, can erode the components of an exhaust system.

The type of air-moving equipment must be carefully considered when designing an exhaust system to handle flammable or explosive substances (see commentary, Section 510). Access must be provided for servicing, maintenance and inspection of the exhaust systems prime moving equipment.

Electrical equipment involved in operations generating explosive or flammable vapors, fumes or dusts must be interlocked to the ventilating or exhaust system to achieve simultaneous operation of the equipment and the exhaust system. When ventilating or exhaust equipment is installed, it becomes an essential part of the appliance or equipment it serves.

The equipment involved in operations generating explosive or flammable vapors, fumes or dusts relies on the ventilation or exhaust equipment for proper removal of these flammable or explosive contaminants from the building. The interlocking controls will ensure that the equipment involved in operations generating explosive or flammable vapors, fumes or dusts will not function if there is insufficient ventilation or exhaust to evacuate these contaminants. Requirements for electrical installations in hazardous exhaust systems must conform to NFPA 70. Certain materials can generate a static charge when conveyed by the system. Locations where static arcing occurs must be grounded.

503.2 Fans. Parts of fans in contact with explosive or flammable vapors, fumes or dusts shall be of nonferrous or nonsparking materials, or their casing shall be lined or constructed of such material. Where the size and hardness of materials passing through a fan are capable of producing a spark, both the fan and the casing shall be of nonsparking materials. Where fans are required to be spark resistant, their bearings shall not be within the airstream, and all parts of the fan shall be grounded. Fans in systems-handling materials that are capable of clogging the blades, and fans in buffing or woodworking exhaust systems, shall be of the radial-blade or tube-axial type.

❖ Of significant concern is the possibility of mechanical exhaust equipment being an ignition source in systems handling explosive or flammable materials. Additionally, abrasive exhaust materials, such as those produced by cutting, grinding, milling and forming stock materials, can produce sparks while passing through the exhaust system. Nonferrous,

INTERNATIONAL CODE COUNCIL®
Copyright © 2015 ICC. ALL RIGHTS RESERVED. Accessed by David Dammon on Jun 21, 2017 12:30:52 PM pursuant to License Agreement with ICC. No further reproduction or distribution authorized. ANY UNAUTHORIZED REPRODUCTION OR DISTRIBUTION IS A VIOLATION OF THE FEDERAL COPYRIGHT ACT AND THE LICENSE AGREEMENT, AND SUBJECT TO CIVIL AND CRIMINAL PENALTIES THEREUNDER.

nonspark-producing fans and fan housings must be used to reduce the potential for ignition in explosive or flammable material-handling systems. Bronze and aluminum are commonly used where nonferrous parts are specified.

Fans required to be spark resistant must have all components grounded in accordance with NFPA 70. The bearings of these fans must not be located in the airstream, because these moving parts typically reach high temperatures during operation and could create a spark when hit by flying debris. For guidance, the Air Movement and Control Association (AMCA), in its standard AMCA 99-0401, outlines three types of spark-resistant construction:

1. Type A construction requires that all parts of the fan in contact with the air or gas being handled be made of nonferrous metal.
2. Type B construction requires that the fan have an entirely nonferrous wheel and a nonferrous ring about the opening through which the shaft passes.
3. Type C construction specifies that the fan must be constructed so that a shift of the wheel or shaft will not permit two ferrous parts of the fan to rub or strike.

Fans in systems-handling materials must be a type that is not subject to clogging. Forward-curved squirrel-cage centrifugal fans are a type of fan subject to clogging. Radial blade fans are less susceptible to loading with debris.

503.3 Equipment and appliance identification plate. *Equipment* and appliances used to exhaust explosive or flammable vapors, fumes or dusts shall bear an identification plate stating the ventilation rate for which the system was designed.

❖ The exhaust flow rate is critical to the proper capture, containment, dilution and transport of contaminants. Equipment is often repaired, adjusted or modified in its life span, and the flow rate identification plate will provide valuable information to help maintain the original design performance of the system. For example, if a fume hood system is to be modified or a fan is to be replaced, the original design flow rate information for the fume hoods must be known so that system performance will not be adversely affected.

503.4 Corrosion-resistant fans. Fans located in systems conveying corrosives shall be of materials that are resistant to the corrosive or shall be coated with corrosion-resistant materials.

❖ Corrosive materials conveyed in exhaust systems may exhibit a wide range of characteristics. Any mechanical equipment located in the exhaust airstream must be compatible with and unaffected by the exhausted material. For example, a laboratory fume hood exhaust system may handle corrosive materials, in which case the steel fan and housing assembly should be constructed of stainless steel or protected by a corrosion-resistant coating. The intent is to provide a particular material or coating to protect the fan from attack by corrosive contaminants. Ultimately, when corrosion does take place, two types of attack may be involved: chemical and electrochemical. Direct chemical attack is generally limited to high temperatures, highly corrosive environments or both. The rapid scaling of steel at temperatures above 900°F (482°C) and the effect of concentrated acids or alkalies are examples.

Electrochemical attack is much more common. Such a reaction requires discrete anodic and cathodic regions connected by solid material and submerged in an electrolyte. In any case, preventive maintenance in the form of frequent cleaning will remove deposits and thus extend the equipment's useful life.

In choosing a particular material or coating to protect a fan from attack by a corrosive contaminant, the design professional must consider the effects of temperature, local concentration, velocity, impurities and fabrication in terms of actual system performance. Various metals and alloys have been used to fabricate corrosion-resistant fans, such as aluminum-based alloys at room temperature for protection against most gases in the absence of moisture; copper at room temperature for protection against dry halogen gases in the absence of moisture; and copper-zinc, copper-nickel, copper-tin and copper-silicon alloys for protection against most dry gases at ordinary temperatures. In all cases, the formation of galvanic couples by joining dissimilar metals should be avoided. The protection provided by other coatings, such as lead, rubber or plastics, is primarily a result of their inert properties. The optimum thickness of inert coating varies with the corrosive medium.

In addition to corrosion resistance, protection from abrasion may be necessary for systems handling dusts and stock.

SECTION 504
CLOTHES DRYER EXHAUST

504.1 Installation. Clothes dryers shall be exhausted in accordance with the manufacturer's instructions. Dryer exhaust systems shall be independent of all other systems and shall convey the moisture and any products of *combustion* to the outside of the building.

Exception: This section shall not apply to *listed* and *labeled* condensing (ductless) clothes dryers.

❖ Clothes dryers must be exhausted in compliance with the dryer manufacturer's installation instructions. The manufacturer's installation instructions apply and where the code provisions are more strict, the code applies. Note that some of the provisions in the code are redundant with the appliance installation instructions. Dryers are designed and built to meet industry safety standards. The manufacturer's installation

INTERNATIONAL CODE COUNCIL®
Copyright © 2015 ICC. ALL RIGHTS RESERVED. Accessed by David Dammon on Jun 21, 2017 12:30:52 PM pursuant to License Agreement with ICC. No further reproduction or distribution authorized. ANY UNAUTHORIZED REPRODUCTION OR DISTRIBUTION IS A VIOLATION OF THE FEDERAL COPYRIGHT ACT AND THE LICENSE AGREEMENT, AND SUBJECT TO CIVIL AND CRIMINAL PENALTIES THEREUNDER.

instructions are evaluated by the agency responsible for testing the appliance and, therefore, those instructions will prescribe an installation that is consistent with the appliance installation that was tested. This requirement is consistent with Section 304.1, which addresses the installation of mechanical equipment.

Because clothes dryer exhaust contains high concentrations of combustible lint, debris and water vapor, dryer exhaust systems must be independent of all other systems. This requirement prevents the fire hazards associated with that exhaust system from extending into or affecting other systems or other areas in the building. Additionally, this section intends to prevent toxic products of combustion from entering the building through other systems.

Dryer exhaust ducts must be independent of other dryer exhaust ducts unless connected to an engineered exhaust system specifically designed to serve multiple dryers or where connected to a multiple-story system in accordance with Section 504.10.

Clothes dryer exhaust systems must convey the moisture and any products of combustion directly to the exterior of the building (outdoors); therefore, any devices that allow all or part of the exhaust to discharge to the indoors are in violation of the code. The requirement to convey the exhaust to the outdoors applies to both fuel-fired and nonfuel-fired (i.e., electric) appliances. Clothes dryer exhaust systems cannot terminate in or discharge to any enclosed space, such as an attic or crawl space, regardless of whether or not the space is ventilated through openings to the outdoors. The high levels of moisture in the exhaust air can cause condensation to form on exposed surfaces or in insulation materials. Water vapor condensation can cause structural damage, deterioration of building materials and contribute to the growth of mold and fungus. Clothes dryer exhausts that discharge to enclosed spaces will also cause an accumulation of combustible lint and debris, creating a significant fire hazard. An improperly installed clothes dryer exhaust system not only reduces dryer efficiency and increases running time, but can also cause a significant increase in exhaust temperature, causing the dryer to cycle on its high limit control, which is an unsafe operating condition.

Clothes dryer exhaust ducts must be installed to comply with the dryer manufacturer's installation instructions and the requirements of this section. The clothes dryer manufacturer's installation instructions control the type of exhaust duct material allowed and the method of installation. For example, typical dryer installation instructions will require metallic duct materials and will impose more stringent length limitations for corrugated ducts than for rigid ducts because of the poorer flow characteristics of corrugated duct materials.

The exception specifically excludes condensing clothes dryers from the requirement to exhaust to the outdoors. Condensing dryers are electrically heated and recirculate the same air through the clothes drum. An air-to-air heat exchanger condenses the water vapor in the clothes drum air by using room air as the condensing medium. The condensate is collected in a reservoir that is either manually emptied or automatically emptied by an integral condensate pump. These dryers do not discharge heated air to the outdoors and have very little effect on the indoor temperature; thus, they are energy efficient.

These "ductless" dryers must be listed for this application and installed to comply with the listing. They are commonly installed in applications where a conventional dryer exhaust duct cannot be used because of distance, aesthetics or problems with the penetration of rated assemblies.

504.2 Exhaust penetrations. Where a clothes dryer exhaust duct penetrates a wall or ceiling membrane, the annular space shall be sealed with noncombustible material, *approved* fire caulking or a noncombustible dryer exhaust duct wall receptacle. Ducts that exhaust clothes dryers shall not penetrate or be located within any fireblocking, draftstopping or any wall, floor/ceiling or other assembly required by the *International Building Code* to be fire-resistance rated, unless such duct is constructed of galvanized steel or aluminum of the thickness specified in Section 603.4 and the fire-resistance rating is maintained in accordance with the *International Building Code*. Fire dampers, combination fire/smoke dampers and any similar devices that will obstruct the exhaust flow shall be prohibited in clothes dryer exhaust ducts.

❖ Rigid clothes dryer exhaust ducts are permitted to penetrate assemblies that are not fire-resistance-rated and building elements not used as fireblocking or draftstopping. In such cases, the annular space around the dryer exhaust duct penetration must be protected with a noncombustible seal, fire caulking or a noncombustible dryer receptacle (see Commentary Figure 504.2). The penetrations must be properly protected to help prevent a fire that is associated with a dryer from spreading into the wall or ceiling cavity. In all other cases, ducts must be constructed of galvanized steel or aluminum of the thickness specified in Section 603.4, and the penetration must be protected to maintain the fire-resistance rating and integrity of the assembly or element being penetrated. Because of the strength and rigidity differences between steel and aluminum, aluminum ducts generally must be of a heavier (thicker) gage than steel ducts for a given application.

The metal thickness requirements of Section 603.4 practically necessitate rigid pipe and all but rule out the use of flexible duct where the duct must penetrate fireblocking, draftstopping or a fire-resistance-rated assembly. Note that Section 504.8.1 states that the duct must be constructed of metal and must have a smooth interior finish. This requires rigid duct and thereby disallows flexible duct for domestic clothes dryer exhaust. Where penetrating fireblocking or draftstopping, the exhaust duct must be constructed of galvanized steel or aluminum in accordance with

INTERNATIONAL CODE COUNCIL®
Copyright © 2015 ICC. ALL RIGHTS RESERVED. Accessed by David Dammon on Jun 21, 2017 12:30:52 PM pursuant to License Agreement with ICC. No further reproduction or distribution authorized. ANY UNAUTHORIZED REPRODUCTION OR DISTRIBUTION IS A VIOLATION OF THE FEDERAL COPYRIGHT ACT AND THE LICENSE AGREEMENT, AND SUBJECT TO CIVIL AND CRIMINAL PENALTIES THEREUNDER.

Section 603.4, and the annular space around the duct must be fireblocked in accordance with the IBC.

It is important to note that a clothes dryer is exhausted through a duct and not a vent. As such, clothes dryer exhaust ducts must follow the same requirements as any other ducts with respect to where the ducts penetrate fire-resistance-rated assemblies. Therefore, where penetrating a fire-resistance-rated assembly, the penetration must be protected in accordance with Sections 302.2 and 607 that will, in most cases, require a fire damper and, in some cases, require a smoke damper. However, this section specifically prohibits the installation of fire and smoke dampers in a clothes dryer exhaust. The moisture, heat, lint and debris could damage, impair or obstruct fire and smoke dampers and, if the dampers were to close, a hazardous condition could result from the continued operation of the dryer. These facts certainly suggest that dryer exhaust ducts cannot penetrate any fire-resistance-rated assemblies unless the installation satisfies one of the limited fire and smoke damper exceptions in the IBC.

Where penetrating fire-resistance-rated floor/ceiling or roof/ceiling assemblies, dryer exhaust duct penetrations are subject to more stringent penetration protection requirements that, in practically all cases, will necessitate a shaft enclosure for the dryer exhaust ducts. Note that where a duct penetrates a shaft, a fire and smoke damper is required to be installed. As previously stated, a fire and smoke damper cannot be installed in a dryer exhaust duct. There are, however, provisions in Section 504.10 for conveying exhaust from multiple clothes dryers through multiple stories (see commentary, Section 504.10).

Note that there is an exception in Section 607.6.1 of the code that would apply to domestic clothes dryer exhaust ducts. This exception permits a duct to penetrate three floors (i.e., connecting four stories) without a fire damper at each floor level and without using a shaft. To qualify for this exception the duct must be located within the cavity of a wall; be constructed of steel not less than 0.0187 inches (0.4712 mm); be continuous from one dwelling unit to the exterior; not exceed 4 inches (102 mm) in diameter; the total area of such ducts must not exceed 100 square inches (0.065 m^2) in any 100 square feet (9.3 m^2) of floor area and the annular space around the duct is protected with materials that prevent the passage of flame and hot gases sufficient to ignite cotton waste.

The difficulty and expense of maintaining the fire-resistance rating of assemblies penetrated by clothes dryer exhaust ducts are an obvious justification for avoiding these penetrations wherever possible. The requirements of this section, combined with Section 504.8, make a compelling case for always placing clothes dryers against outside walls to avoid long duct runs and penetrations of other than exterior walls.



Figure 504.2
NONCOMBUSTIBLE WALL RECEPTACLE FOR CLOTHES DRYER EXHAUST DUCT

504.3 Cleanout. Each vertical riser shall be provided with a means for cleanout.

❖ Lint and debris carried in the dryer exhaust will settle in the lowest point of any vertical riser in the system; therefore, an accessible means for removing accumulations in the system must be provided to prevent duct blockages and to eliminate the fire hazard of such combustible accumulations. Because of the difficulty of transporting suspended solids vertically against gravity, a vertical section of exhaust duct might eventually require maintenance. The exhaust duct connection to an individual dryer outlet is typically considered as a cleanout because the code requires a "means for cleanout" without specifying what that "means" can or cannot be. Where exhaust ducts can be accessed and readily disassembled, the intent of this section has been met. This section does not require that a tee and cap or similar arrangement be installed where ducts can otherwise be accessed for cleaning. Note that tee fittings can offer significant flow resistance in an exhaust duct.

504.4 Exhaust installation. Dryer exhaust ducts for clothes dryers shall terminate on the outside of the building and shall be equipped with a backdraft damper. Screens shall not be installed at the duct termination. Ducts shall not be connected or installed with sheet metal screws or other fasteners that will obstruct the exhaust flow. Clothes dryer exhaust ducts shall not be connected to a vent connector, vent or *chimney*. Clothes dryer exhaust ducts shall not extend into or through ducts or plenums.

❖ Exhaust ducts must connect directly to terminals that pass through the building envelope to the outdoor atmosphere. Clothes dryer exhaust must terminate outdoors because of the high levels of moisture, combustible lint and, for gas-fired dryers, combustion products in the exhaust. If discharged indoors, such exhaust could present a health and fire hazard, could

INTERNATIONAL CODE COUNCIL®
Copyright © 2015 ICC. ALL RIGHTS RESERVED. Accessed by David Dammon on Jun 21, 2017 12:30:52 PM pursuant to License Agreement with ICC. No further reproduction or distribution authorized. ANY UNAUTHORIZED REPRODUCTION OR DISTRIBUTION IS A VIOLATION OF THE FEDERAL COPYRIGHT ACT AND THE LICENSE AGREEMENT, AND SUBJECT TO CIVIL AND CRIMINAL PENALTIES THEREUNDER.

cause structural damage and deterioration of building materials, and could contribute to the growth of mold and fungus. It should be noted that clothes dryer exhaust is considered to be environmental air and, as such, has less stringent termination requirements in Section 501.3.1. Attics and crawl spaces are not considered to be outdoors, and exhaust ducts cannot terminate in those spaces (see commentary, Section 501.3). Backdraft dampers must be installed in dryer exhaust ducts to avoid outdoor air infiltration during periods when the dryer is not operating and to prevent the entry of animals. These dampers should be designed and installed to provide an adequate seal when in a closed position to minimize air leakage (infiltration). Backdraft dampers are typically of the gravity type, which are opened by the energy of the exhaust discharge. Some dryer manufacturers prohibit the use of magnetic backdraft dampers because of the extra resistance that the exhaust flow must overcome.

Exhaust terminal opening size is also governed by the dryer manufacturer's instructions. Full-opening terminals present less resistance to flow and might be mandated by the dryer manufacturer. A "full opening" is considered to be an opening having no dimension less than the diameter of the exhaust duct. Dryer exhaust flow must not be restricted by screens or fastening devices, such as sheet metal screws. Any type of screen would become completely blocked with fibers in a very short time. Consider that the filter screen integral with the appliance becomes restricted with lint in each cycle of operation. These restrictions and projections will promote the accumulation of combustible lint and debris in the exhaust duct, thereby creating a potential fire hazard and causing flow resistance. Duct tape should not be relied on as the sole means of joining dryer exhaust ducts because adhesives can deteriorate with age and when exposed to high temperatures, causing joints to separate. However, sealing joints is still desirable to limit the leakage of lint, fibers, moisture vapor and combustion products into the occupied space. Note that this section and Section 504.8.2 both address duct joint fasteners. This section prohibits fasteners from obstructing flow while Section 504.8.2 allows screws and similar fasteners to protrude into the duct a maximum of $^1/_8$ inch (3.2 mm). These two sections work in unison by allowing a maximum penetration of $^1/_8$ of an inch (3.2 mm) which, for the degree of obstruction created, is not considered to be an obstruction of flow (see commentary, Section 504.8.2).

504.5 Dryer exhaust duct power ventilators. Domestic dryer exhaust duct power ventilators shall be listed and labeled to UL 705 for use in dryer exhaust duct systems. The dryer exhaust duct power ventilator shall be installed in accordance with the manufacturer's instructions.

❖ The previous code editions did not recognize dryer exhaust duct power ventilators (DEDPVs) as an option for clothes dryer installations. DEDPVs are loosely referred to as "dryer booster fans" in the marketplace. Prior to the 2015 code, the designer's choices for exhaust duct length were to 1) limit the duct length to 35 feet (10 668 mm); 2) follow the length limits in the clothes dryer manufacturer's instructions; or, if neither of those choices work, 3) relocate the dryer. A fourth option was to get the code official to approve the installation of a DEDPV under the alternative approval provision in Section 105.2. Exhaust ducts that exceed the developed length allowed by the code are a potential fire hazard, create maintenance problems, increase drying times and cause the dryer to be inefficient and waste energy. Dryer exhaust systems are commonly installed improperly with excessive lengths, too many elbows and the wrong duct materials. Because of the high incidence of reported dryer fires, the code strictly regulates the installation. DEDPVs are listed to a revised version of UL 705 that now contains tests and construction requirements that are specific to these devices (see Commentary Figure 504.5). DEDPVs have been around for years but until recently were not listed to a national consensus standard that was specific to these devices. The UL 705 standard contains requirements for the construction, testing and installation of DEDPVs and requires them to be equipped with features such as interlocks, limit controls, monitoring controls and enunciator devices to make certain that the dryers or dryer operators are aware of the operating status of the DEDPVs.

504.6 Makeup air. Installations exhausting more than 200 cfm (0.09 m^3/s) shall be provided with *makeup air*. Where a closet is designed for the installation of a clothes dryer, an opening having an area of not less than 100 square inches (0.0645 m^2) shall be provided in the closet enclosure or *makeup air* shall be provided by other *approved* means.

❖ Makeup air must be supplied to compensate for the air exhausted by the dryer exhaust system where the amount exhausted is more than 200 cfm (0.09 m^3/s). A typical domestic clothes dryer will exhaust less than 200 cfm (0.09 m^3/s). For closet installations, an opening with a minimum area of 100 square inches (0.0645 m^2) must be cut in the closet door or in the closet enclosure. Where louvers or grilles are used, the solid portion of the louver or grille should be evaluated in accordance with Section 304.10 of the IFGC. Makeup air is necessary to prevent the room or space housing the dryer(s) from developing a negative pressure with respect to adjacent spaces or to the outdoors, which could result in the improper and dangerous operation of the dryer and other fuel-burning appliances. The required amount of makeup air should be approximately equal to the amount exhausted, and is normally supplied by the infiltration of air from outdoors or through openings to the outdoors.

The makeup air not only supplies the air that is to be exhausted from the dryer, but also supplies combustion air. Commercial dryer manufacturers' installation instructions will prescribe opening requirements

INTERNATIONAL CODE COUNCIL®
Copyright © 2015 ICC. ALL RIGHTS RESERVED. Accessed by David Dammon on Jun 21, 2017 12:30:52 PM pursuant to License Agreement with ICC. No further reproduction or distribution authorized. ANY UNAUTHORIZED REPRODUCTION OR DISTRIBUTION IS A VIOLATION OF THE FEDERAL COPYRIGHT ACT AND THE LICENSE AGREEMENT, AND SUBJECT TO CIVIL AND CRIMINAL PENALTIES THEREUNDER.



Figure 504.5
DRYER EXHAUST DUCT POWER VENTILATOR

for supplying the necessary makeup and combustion air.

To simplify the installation, commercial and multiple-dryer installations commonly have transfer or ducted openings to the outdoors that introduce outdoor air into the immediate vicinity of the appliances. Commercial units typically obtain makeup air from an enclosed accessible space (plenum) behind the units. This enclosure provides maintenance access; houses the unit's power, piping and duct connections; and isolates the makeup air from the conditioned occupiable spaces. Makeup air is rarely supplied by the building's heating, ventilating and air-conditioning (HVAC) system because if it were, the HVAC system would have to be interlocked with the dryers to avoid starving any one dryer of makeup air if the HVAC system was not operating. Also, supplying makeup air through the HVAC system would waste energy because large volumes of conditioned air would be exhausted through the dryers. Additionally, cold outdoor air will normally have low moisture content and, thus, serves well as makeup air for drying operations. (The warmed outdoor air will have low relative humidity.)

Note that clothes dryers installed in closets should be listed for that application.

504.7 Protection required. Protective shield plates shall be placed where nails or screws from finish or other work are likely to penetrate the clothes dryer exhaust duct. Shield plates shall be placed on the finished face of all framing members where there is less than $1^1/_4$ inches (32 mm) between the duct and the finished face of the framing member. Protective shield plates shall be constructed of steel, have a thickness of 0.062 inch (1.6 mm) and extend not less than 2 inches (51 mm) above sole plates and below top plates.

❖ Protection from nail and screw penetration has been required for wiring, vent systems, plumbing piping, fuel piping, hydronic piping and refrigerant piping for some time in the codes and now it is also required for dryer exhaust ducts (see Commentary Figure 504.7). Depending upon the depth of penetration, a nail or screw could create a serious obstruction problem and potential fire hazard.

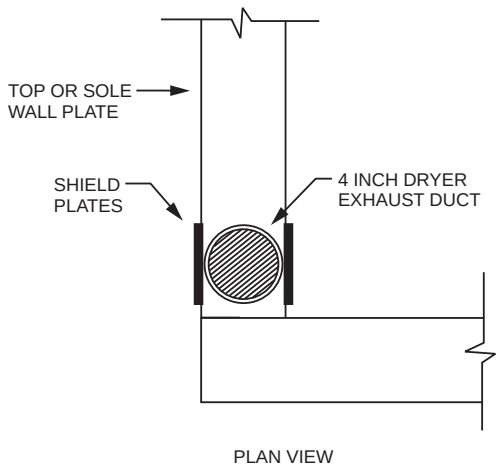

For SI: 1 foot = 304.8, 90 degrees = 1.57 rad.

Figure 504.7
DRYER EXHAUST DUCT PROTECTION

INTERNATIONAL CODE COUNCIL®
Copyright © 2015 ICC. ALL RIGHTS RESERVED. Accessed by David Dammon on Jun 21, 2017 12:30:52 PM pursuant to License Agreement with ICC. No further reproduction or distribution authorized. ANY UNAUTHORIZED REPRODUCTION OR DISTRIBUTION IS A VIOLATION OF THE FEDERAL COPYRIGHT ACT AND THE LICENSE AGREEMENT, AND SUBJECT TO CIVIL AND CRIMINAL PENALTIES THEREUNDER.

504.8 Domestic clothes dryer ducts. Exhaust ducts for domestic clothes dryers shall conform to the requirements of Sections 504.8.1 through 504.8.6.

❖ See commentary for subsequent sections.

504.8.1 Material and size. Exhaust ducts shall have a smooth interior finish and shall be constructed of metal a minimum 0.016 inch (0.4 mm) thick. The exhaust duct size shall be 4 inches (102 mm) nominal in diameter.

❖ This section requires that the diameter of the exhaust duct be 4 inches, no larger and no smaller. A 4-inch duct is the basis for the design of the appliance exhaust system. Ducts that are too small would restrict air movement and would cause the dryer to consume more energy because of the longer drying time. They could also cause appliance overheating. Ducts that are too large will cause a decrease in the flow velocity, causing lint and debris to drop out of the exhaust air stream. For example, increasing the duct size from 4 inches to 5 inches (101.6 to 127 mm) will result in a reduction of duct velocity of approximately 37 percent for the typical dryer. The exhaust duct material must be smooth-wall metal with the specified minimum wall thickness. This translates to rigid metal duct of not less than 28 gage or heavier. Plastic ducts, corrugated ducts and flexible ducts are all prohibited with the exception of listed and labeled transition ducts in accordance with Section 504.8.3.

504.8.2 Duct installation. Exhaust ducts shall be supported at 4-foot (1219 mm) intervals and secured in place. The insert end of the duct shall extend into the adjoining duct or fitting in the direction of airflow. Ducts shall not be joined with screws or similar fasteners that protrude more than $^1/_8$ inch (3.2 mm) into the inside of the duct.

❖ Clothes dryer ducts must be well supported to prevent deformation and joint separation. This is especially important where the ducts are to be concealed within the building construction and where the ducts will be mechanically cleaned by duct cleaning apparatus. The male end of the duct and fittings must point in the direction of airflow to lessen flow resistance, joint leakage and collection of lint. This is common practice for all ducts, regardless of application.

Section 504.4 states that fasteners used to join fittings and sections of dryer exhaust ducts together must not obstruct the airflow. This could be interpreted as a prohibition of screws and rivets, or it could mean that such fasteners must not penetrate too far into the duct. The revision to Section 508.8.2 now makes it clear how Section 504.4 is to be interpreted. A fastener protrusion of $^1/_8$ inch (3.2 mm) or less will collect some lint, but it is believed to be insignificant (see Commentary Figure 504.8.2). Actually, smooth duct walls collect lint also. The tradeoff for allowing tiny amounts of lint to collect is improved duct construction. If dryer exhaust ducts are not allowed to be mechanically fastened, the only method to prevent separation of joints is duct tape. Duct tape should never be depended upon as the sole means of securing duct systems because it is a sealing means, not a fastening means. Now ducts can be properly and securely fastened and then sealed with tapes or mastics. It should be noted that Section M1502.4.2 in the 2015 *International Residential Code*® (IRC®) also permits dryer exhaust ducts to be joined with screws and similar fasteners that protrude not more than $^1/_8$ inch (3.2 mm) into the inside of the duct.

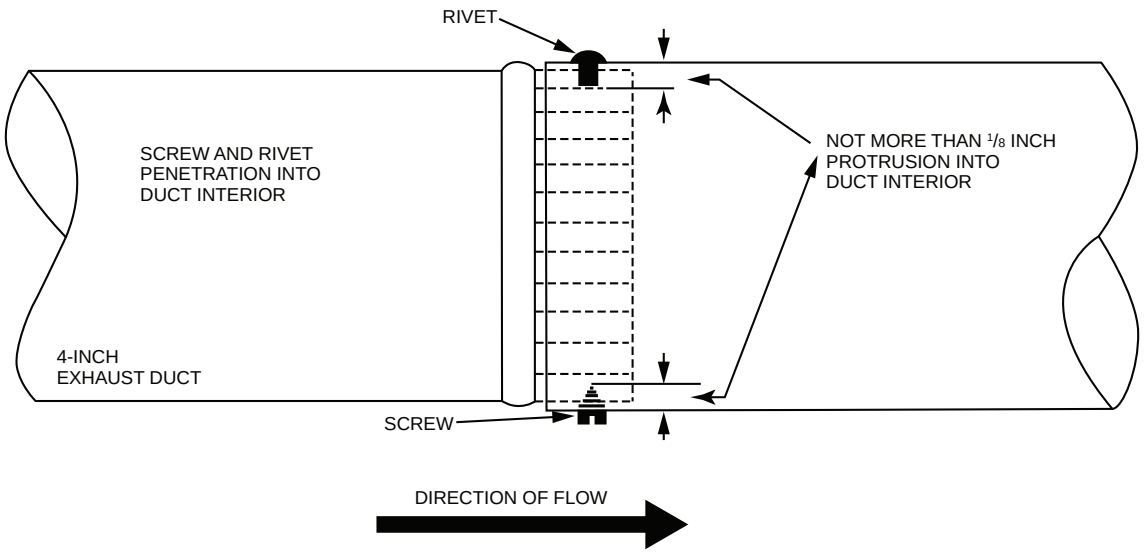

For SI: 1 foot = 304.8, 90 degrees = 1.57 rad.

Figure 504.8.2
DRYER EXHAUST DUCT INSTALLATION

INTERNATIONAL CODE COUNCIL®
Copyright © 2015 ICC. ALL RIGHTS RESERVED. Accessed by David Dammon on Jun 21, 2017 12:30:52 PM pursuant to License Agreement with ICC. No further reproduction or distribution authorized. ANY UNAUTHORIZED REPRODUCTION OR DISTRIBUTION IS A VIOLATION OF THE FEDERAL COPYRIGHT ACT AND THE LICENSE AGREEMENT, AND SUBJECT TO CIVIL AND CRIMINAL PENALTIES THEREUNDER.

504.8.3 Transition ducts. Transition ducts used to connect the dryer to the exhaust duct system shall be a single length that is *listed* and *labeled* in accordance with UL 2158A. Transition ducts shall be not greater than 8 feet (2438 mm) in length and shall not be concealed within construction.

❖ Within the context of this section, a transition duct is a flexible connector used as a transition between the dryer outlet and the connection point to the exhaust duct system. Transition duct connectors must be listed and labeled as transition ducts for clothes dryer application. Transition ducts are currently listed to comply with UL 2158A. Such transition ducts are not considered to be flexible air ducts or flexible air connectors and are not subject to the material requirements of Section 603.6.

Transition ducts are flexible ducts constructed of a metalized (foil) laminated fabric supported on a spiral wire frame. They are more fire resistant than the typical plastic spiral duct. Transition duct connectors are necessary for domestic dryers because of appliance movement, vibration and outlet location. In many cases, connecting a domestic clothes dryer directly to rigid duct would be difficult.

Transition duct connectors are limited to 8 feet (1829 mm) in length and must be installed in accordance with their listing and the manufacturer's instructions. These duct connectors must not be concealed by any portion of the structure's permanent finish materials, such as drywall, plaster, paneling, built-in furniture or cabinets, or any other similar permanently affixed building component; they must remain entirely within the room in which the appliance is installed. Transition duct connectors cannot be joined to extend beyond the 8-foot (1829 mm) maximum length limit. Transition ducts are to be cut to length as needed to avoid excess duct and unnecessary bends. Note that in the application of Section 504.8.4.1, the length of the transition duct is not counted in the overall duct system length, despite the fact that the transition duct does contribute considerable airflow resistance to the exhaust duct system.

504.8.4 Duct length. The maximum allowable exhaust duct length shall be determined by one of the methods specified in Sections 504.8.4.1 through 504.8.4.3.

❖ The duct length, the number and angle of fittings and the smoothness of the duct interior all contribute to the total friction loss of the airflow. When the friction loss is excessive, a reduction of the air velocity occurs, allowing lint and debris to accumulate in the duct and thus creating a fire hazard. Impeded airflow will also increase drying time, decrease appliance efficiency and raise system temperatures. The manufacturers' instructions and the code limitations concerning duct length, the number of elbows installed, and the type of termination fittings must be adhered to help prevent a fire hazard and allow proper appliance operation.

Note that this section introduces two distinct length choices in its two subsections.

504.8.4.1 Specified length. The maximum length of the exhaust duct shall be 35 feet (10 668 mm) from the connection to the transition duct from the dryer to the outlet terminal. Where fittings are used, the maximum length of the exhaust duct shall be reduced in accordance with Table 504.8.4.1.

❖ The maximum exhaust duct length of 35 feet (10 668 mm) is the requirement for domestic clothes dryers. The 35-foot (10 688 mm) limit is based on the worst-case scenario where the dryer is rated for a maximum duct length of 35 feet (10 688 mm). The intent was to ensure that the least capable dryer available would be compatible with a 35-foot (10 688 mm) duct system. If the exhaust duct system is designed for worst case, it should work properly in all cases. It should be noted that the code does recognize the use of booster fans with clothes dryer exhaust systems in accordance with Section 504.8.4.3.

Because the maximum length is based on equivalent length, all fittings must be accounted for in accordance with Table 504.8.4.1. The length is measured from the point where the transition duct (if used) connects to the rigid exhaust duct system to the terminal outdoors (see Commentary Figure 504.8.4.1). The transition duct is excluded from the calculation of equivalent length of the duct system.

Table 504.8.4.1 assigns an equivalent length to the various types of elbow fittings that are available. The first two rows of the table cover the traditional elbows that the code and dryer manufacturer's installation instructions have always addressed. The other rows in the table cover newer high-performance elbows that have longer turning radii and smoother walls (i.e., no mitered joints); thus, the equivalent length is substantially reduced. When an installer discovers that the length of an exhaust duct will exceed the limits of the code, he or she may find that using higher performance elbows will keep the length within the allowable limits. Note that there may be some dryers on the market that specify a duct length of less than 35 feet (10 668 mm), and the manufacturer's instructions would prevail in such case.

TABLE 504.8.4.1
DRYER EXHAUST DUCT FITTING EQUIVALENT LENGTH

DRYER EXHAUST DUCT FITTING TYPE	EQUIVALENT LENGTH
4″ radius mitered 45-degree elbow	2 feet 6 inches
4″ radius mitered 90-degree elbow	5 feet
6″ radius smooth 45-degree elbow	1 foot
6″ radius smooth 90-degree elbow	1 foot 9 inches
8″ radius smooth 45-degree elbow	1 foot
8″ radius smooth 90-degree elbow	1 foot 7 inches
10″ radius smooth 45-degree elbow	9 inches
10″ radius smooth 90-degree elbow	1 foot 6 inches

For SI: 1 inch = 25.4 mm, 1 foot = 304.8 mm, 1 degree = 0.0175 rad.

504.8.4.2 Manufacturer's instructions. The maximum length of the exhaust duct shall be determined by the dryer manufacturer's installation instructions. The code official shall be provided with a copy of the installation instructions

INTERNATIONAL CODE COUNCIL®
Copyright © 2015 ICC. ALL RIGHTS RESERVED. Accessed by David Dammon on Jun 21, 2017 12:30:52 PM pursuant to License Agreement with ICC. No further reproduction or distribution authorized. ANY UNAUTHORIZED REPRODUCTION OR DISTRIBUTION IS A VIOLATION OF THE FEDERAL COPYRIGHT ACT AND THE LICENSE AGREEMENT, AND SUBJECT TO CIVIL AND CRIMINAL PENALTIES THEREUNDER.

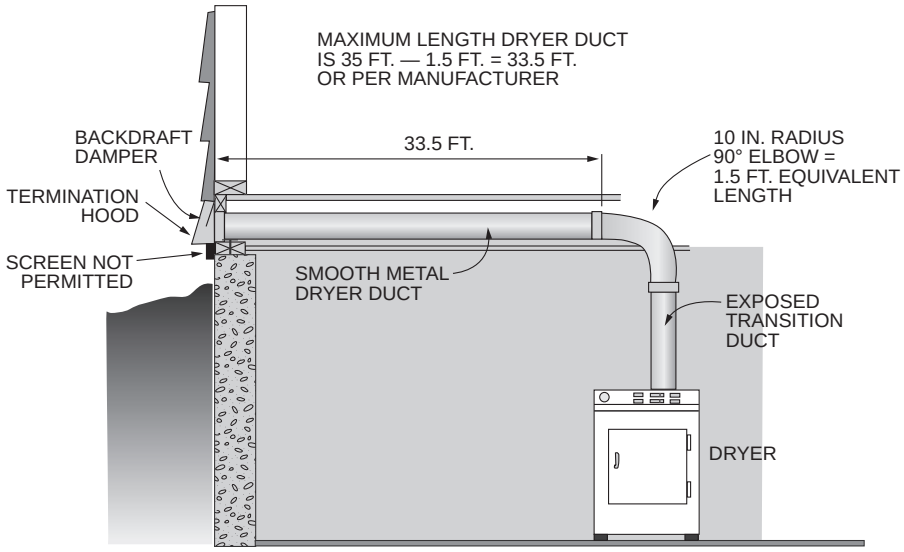

For SI: 1 foot = 304.8, 90 degrees = 1.57 rad.

Figure 504.8.4.1
CLOTHES DRYER EXHAUST DUCT LENGTH

for the make and model of the dryer. Where the exhaust duct is to be concealed, the installation instructions shall be provided to the code official prior to the concealment inspection. In the absence of fitting equivalent length calculations from the clothes dryer manufacturer, Table 504.8.4.1 shall be used.

❖ This section allows the 35-foot (10 668 mm) limit to be exceeded where longer exhaust duct lengths are allowed by the appliance manufacturer's instructions. Today's appliances often, but not always, permit longer distances, therefore this section allows the installer to take advantage of those longer distances where specified by the manufacturer. The make and model of the dryer must be provided to the code official, along with the respective installation instructions, to permit the code official to inspect the duct installation based on the manufacturer's instructions. Because the installation is specific to and dependent upon a certain appliance make and model, the code official must follow through to make sure that the appliance did get installed. Remember that the prime objective is to prevent a dangerous mismatch between a dryer and its exhaust system.

Where not otherwise specified by the dryer manufacturer, the flow resistance contributed by fittings installed in the duct system must be in accordance with Table 504.8.4.1. Each type of fitting and its angle is equated to a certain length of straight duct and this "equivalent length" is added to the actual straight duct length in the system to obtain the total length. The table recognizes newer fitting designs that have smooth bore interiors and much larger turning radii than traditionally used fittings. Such designs greatly reduce friction loss as can be seen by their much smaller equivalent lengths. If an installer is unable to stay within the allowable length on a particular job, he/she may find that substituting better fittings will correct the problem.

504.8.4.3 Dryer exhaust duct power ventilator length. The maximum length of the exhaust duct shall be determined by the dryer exhaust duct power ventilator manufacturer's installation instructions.

❖ Dryer exhaust duct power ventilators (DEDPVs) are now recognized as an option for clothes dryer installations. DEDPVs are listed to a revised version of UL 705 that now contains tests and construction requirements that are specific to these devices. The manufacturer's installation instructions will contain specific requirements for the length of the dryer exhaust duct for the specific model of DEDPVs that was tested in accordance with UL 705.

504.8.5 Length identification. Where the exhaust duct equivalent length exceeds 35 feet (10 668 mm), the equivalent length of the exhaust duct shall be identified on a permanent label or tag. The label or tag shall be located within 6 feet (1829 mm) of the exhaust duct connection.

❖ A point to consider is the situation that will exist when the original dryer is replaced or the original occupant moves out and the new occupant installs a different dryer. In either case, the replacement dryer might not be compatible with the existing duct length. If the equivalent length is 35 feet (10 668 mm) or less, the duct complies with Section 504.8.4.1 and there is no point in identifying it. If the duct system equivalent length exceeds 35 feet (10 668 mm) and is not identified in a conspicuous manner, the new resident will be unaware of the potentially hazardous situation that has been created by the dryer and exhaust mismatch

INTERNATIONAL CODE COUNCIL®
Copyright © 2015 ICC. ALL RIGHTS RESERVED. Accessed by David Dammon on Jun 21, 2017 12:30:52 PM pursuant to License Agreement with ICC. No further reproduction or distribution authorized. ANY UNAUTHORIZED REPRODUCTION OR DISTRIBUTION IS A VIOLATION OF THE FEDERAL COPYRIGHT ACT AND THE LICENSE AGREEMENT, AND SUBJECT TO CIVIL AND CRIMINAL PENALTIES THEREUNDER.

(see Commentary Figure 504.8.5). It is assumed that the installer will be aware of the equivalent length of exhaust ducts that are entirely exposed and observable. Note that the equivalent length includes the duct and fittings.

504.8.6 Exhaust duct required. Where space for a clothes dryer is provided, an exhaust duct system shall be installed. Where the clothes dryer is not installed at the time of occupancy, the exhaust duct shall be capped at the location of the future dryer.

Exception: Where a *listed* condensing clothes dryer is installed prior to occupancy of structure.

❖ Where a space is provided for the future installation of a clothes dryer, an exhaust duct system must be installed so that such system can be inspected and approved (see Commentary Figure 504.8.6). Otherwise, it is likely that the dryer and exhaust duct system will be installed later without the code official's knowledge, and it will not be inspected for proper installation. Note that Section 504.8.4.2 does not appear to be an option when an exhaust duct system is "roughed-in" for future use because the make, model and exhaust capability of the dryer will be unknown. If the equivalent length of the exhaust duct system does exceed the maximum length of 35 feet (10 668 mm) and the model and manufacturer of the dryer are unknown, then the code official could approve identifying the equivalent length in accordance with Section 504.8.5 under the alternative approval provisions of Section 105.2.

The requirement to cap the exhaust duct where a dryer is not installed at the time of occupancy is intended to keep the duct from becoming a conduit for air to travel between the inside of the structure and the outdoors. While a backdraft damper is required at the outdoor termination, capping the duct further reduces the chance of air movement. The capping will also prevent the entry of debris and foreign objects. The cap is required inside at the future dryer's location so that it will be readily apparent when the future dryer is installed. Requiring that a listed condensing dryer be installed prior to occupancy will prevent someone from taking advantage of this exception to avoid installing an exhaust duct system by indicating that a future condensing dryer will be installed.

504.9 Commercial clothes dryers. The installation of dryer exhaust ducts serving commercial clothes dryers shall comply with the *appliance* manufacturer's installation instructions. Exhaust fan motors installed in exhaust systems shall be located outside of the airstream. In multiple installations, the fan shall operate continuously or be interlocked to operate when any individual unit is operating. Ducts shall have a minimum *clearance* of 6 inches (152 mm) to combustible materials. Clothes dryer transition ducts used to connect the *appliance* to the exhaust duct system shall be limited to single lengths not to exceed 8 feet (2438 mm) in length and shall be *listed* and *labeled* for the application. Transition ducts shall not be concealed within construction.

❖ The code classifies clothes dryers into two categories: domestic and commercial. Domestic clothes dryers are primarily used in the family living environment



Figure 504.8.5
EXAMPLE OF PERMANENT LABEL OF EQUIVALENT LENGTH

INTERNATIONAL CODE COUNCIL®
Copyright © 2015 ICC. ALL RIGHTS RESERVED. Accessed by David Dammon on Jun 21, 2017 12:30:52 PM pursuant to License Agreement with ICC. No further reproduction or distribution authorized. ANY UNAUTHORIZED REPRODUCTION OR DISTRIBUTION IS A VIOLATION OF THE FEDERAL COPYRIGHT ACT AND THE LICENSE AGREEMENT, AND SUBJECT TO CIVIL AND CRIMINAL PENALTIES THEREUNDER.

and do not have the capacity to generate the amount of heat necessary to dry large volumes of clothing. The scope of this section does not regulate domestic clothes dryers.

Commercial clothes drying appliances and exhaust ducts are designed for the higher volumes, temperatures and frequency of use found in public access and commercial laundries. Commercial dryers must be installed in accordance with the manufacturer's instructions. These dryers are tested to the appropriate safety standard for the appliance, and the manufacturer's installation instructions convey the information needed to duplicate the installation configuration that was tested and found to meet the requirements of the safety standard. The manufacturer's installation instructions are evaluated by the agency responsible for testing the appliance and, therefore, the instructions will prescribe an installation that is consistent with Section 304.1, which addresses the installation of all mechanical equipment. Common exhaust systems for multiple dryers must be designed and engineered in accordance with the equipment and the appliance manufacturer's installation instructions (see Commentary Figure 504.9).

The potential fire hazards associated with commercial clothes dryers are similar to those of domestic clothes dryers (combustible lint, debris and high temperatures). However, the complex exhaust systems, intense heat and larger volume of combustible lint and combustion byproducts associated with commercial dryers call for additional safety requirements.

Commercial and multiple dryer installations can rely on a single exhaust fan to prevent backpressure, overcome duct friction and induce the proper flow within the common exhaust system. Commentary Figure 504.9 shows a four-unit installation with the exhaust fan located at the roof level. This section requires that exhaust fans for commercial clothes dryer installations be operated continuously or be interlocked to operate when any individual unit is operating.

It is possible to exhaust multiple commercial dryers through a common duct system, such as a common riser or common manifold serving groups of adjacent units. This configuration will usually require an exhaust fan to prevent backpressure and to overcome static pressure in the duct system. In such installations, the common duct system will be connected to the inlet side of an exhaust fan and the fan will be located at the duct system termination to the outdoors.

The motor of the exhaust fan must be positioned outside of the exhaust airstream so that lint, debris and condensation do not accumulate in or on the motor. This requirement is generally satisfied by belt-driven fans with externally mounted motors. Location in the exhaust stream could result in deterioration and failure of the motor, as well as a fire hazard associated with the accumulation of combustible fibers in contact with a motor that may be hot enough to cause ignition. Failure of the exhaust fan motor could result in an unsafe operating condition for the dryers served by the fan.

Where multiple dryer units vent to a common venting system using a common fan, the common exhaust fan must operate when any one or more of the individual dryer unit(s) are operating. This can be achieved in two ways.

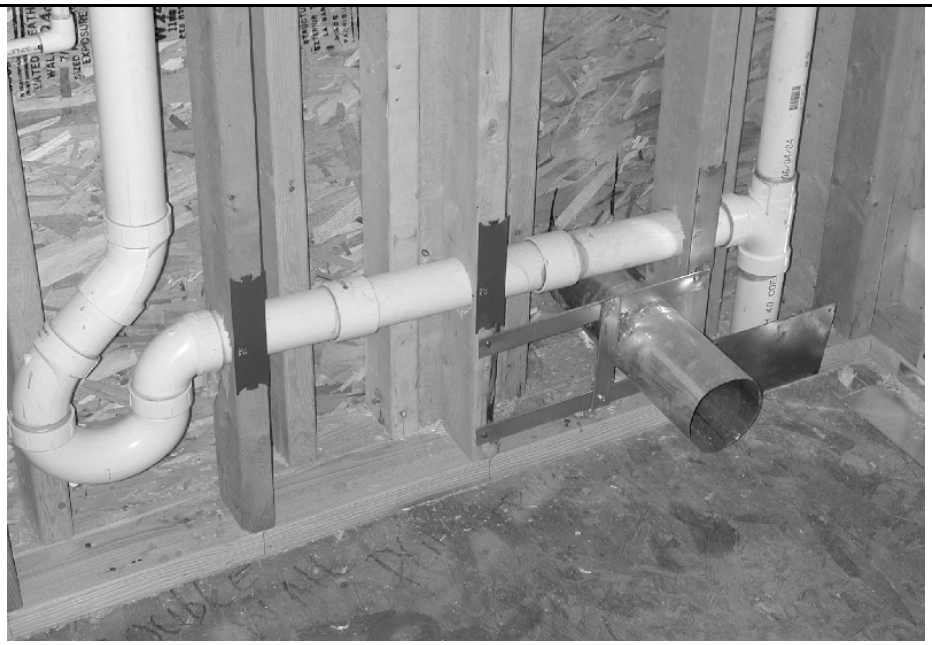

Figure 504.8.6
DOMESTIC CLOTHES DRYER ROUGH-IN

INTERNATIONAL CODE COUNCIL®
Copyright © 2015 ICC. ALL RIGHTS RESERVED. Accessed by David Dammon on Jun 21, 2017 12:30:52 PM pursuant to License Agreement with ICC. No further reproduction or distribution authorized. ANY UNAUTHORIZED REPRODUCTION OR DISTRIBUTION IS A VIOLATION OF THE FEDERAL COPYRIGHT ACT AND THE LICENSE AGREEMENT, AND SUBJECT TO CIVIL AND CRIMINAL PENALTIES THEREUNDER.

The first, continuous exhaust fan operation, is not desirable and is rarely done because of increased energy usage and the unreliability of the design. Continuous operation without interlocks (fan supervision) is not reliable because the dryer units would not respond to or be "aware" of an exhaust fan failure. Any mechanical failure of the exhaust fan or opening of an overcurrent protection device could create an unsafe condition. The second and preferred method is to install exhaust fan supervision interlocked with each dryer unit so that the dryers would be stopped or prevented from starting in the event of exhaust fan failure. The supervision/interlock design should first prove exhaust fan operation by sensing duct pressures before enabling dryer operation. The supervision/interlock logic is identical to that discussed in the commentary to Section 804.3.2.

Transition ducts are listed factory-built connectors designed to connect an appliance discharge outlet to the exhaust duct system.

504.10 Common exhaust systems for clothes dryers located in multistory structures. Where a common multistory duct system is designed and installed to convey exhaust from multiple clothes dryers, the construction of the system shall be in accordance with all of the following:

1. The shaft in which the duct is installed shall be constructed and fire-resistance rated as required by the *International Building Code*.
2. Dampers shall be prohibited in the exhaust duct. Penetrations of the shaft and ductwork shall be protected in accordance with Section 607.5.5, Exception 2.
3. Rigid metal ductwork shall be installed within the shaft to convey the exhaust. The ductwork shall be constructed of sheet steel having a minimum thickness of 0.0187 inch (0.4712 mm) (No. 26 gage) and in accordance with SMACNA *Duct Construction Standards.*
4. The ductwork within the shaft shall be designed and installed without offsets.
5. The exhaust fan motor design shall be in accordance with Section 503.2.
6. The exhaust fan motor shall be located outside of the airstream.
7. The exhaust fan shall run continuously, and shall be connected to a standby power source.
8. Exhaust fan operation shall be monitored in an *approved* location and shall initiate an audible or visual signal when the fan is not in operation.
9. Makeup air shall be provided for the exhaust system.
10. A cleanout opening shall be located at the base of the shaft to provide *access* to the duct to allow for cleaning and inspection. The finished opening shall be not less than 12 inches by 12 inches (305 mm by 305 mm).
11. Screens shall not be installed at the termination.

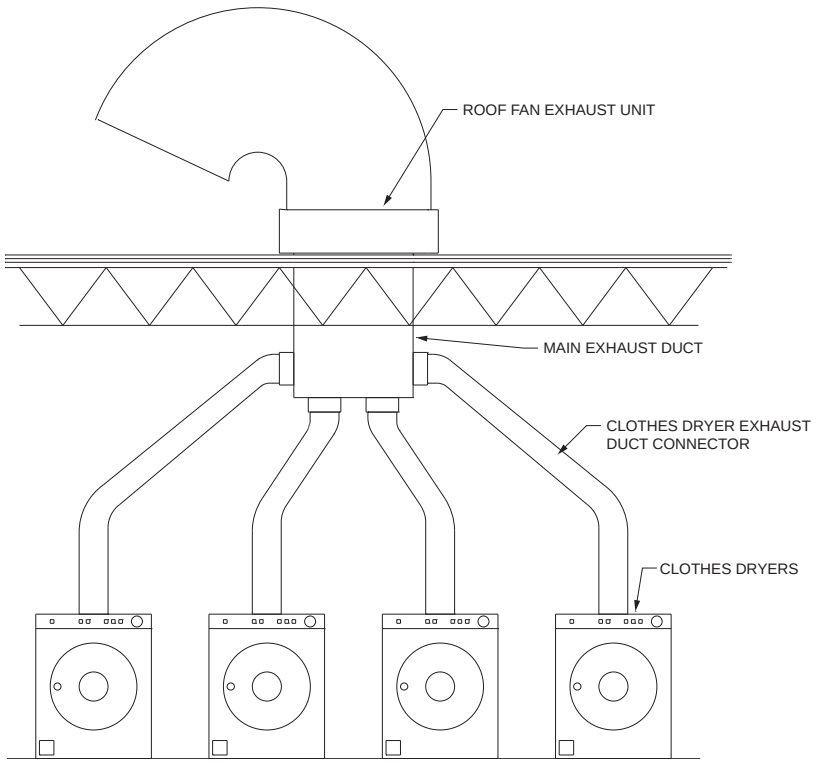

Figure 504.9
MULTIPLE DRYER EXHAUST SYSTEM

INTERNATIONAL CODE COUNCIL®
Copyright © 2015 ICC. ALL RIGHTS RESERVED. Accessed by David Dammon on Jun 21, 2017 12:30:52 PM pursuant to License Agreement with ICC. No further reproduction or distribution authorized. ANY UNAUTHORIZED REPRODUCTION OR DISTRIBUTION IS A VIOLATION OF THE FEDERAL COPYRIGHT ACT AND THE LICENSE AGREEMENT, AND SUBJECT TO CIVIL AND CRIMINAL PENALTIES THEREUNDER.

12. The common multistory duct system shall serve only clothes dryers and shall be independent of other exhaust systems.

❖ As noted in the commentary to Section 504.2, a clothes dryer exhaust duct is considered to be a duct and must follow the same requirements as any other ducts with respect to where the ducts penetrate fire-resistance-rated and nonrated floor/ceiling assemblies. Therefore, where penetrating a floor/ceiling assembly, the penetration must be protected in accordance with Sections 302.2 and 607 that will, in most cases, require a fire damper and, in some cases, require fire and smoke dampers along with a fire-resistance-rated shaft. However, Section 504.2 specifically prohibits the installation of fire and smoke dampers in a clothes dryer exhaust duct (see commentary, Section 504.2).

The intent behind this section is to provide prescriptive requirements on how to accomplish the exhausting of clothes dryers on multiple floors in a building such as a multiple-family apartment building. A common shaft to exhaust multiple clothes dryers on multiple floors has been used for years, although the code has been silent on this issue. While this practice is not new, the model codes have never contained any requirements, and there are no industry standards for this application other than recommendations by some appliance manufacturer's.

This section is based on a concept that has been in the model codes for many years, which is the use of subducts and continuous vertical airflow within the shaft in lieu of providing fire and smoke dampers where the ducts penetrate the shaft enclosure. This section expands this concept by requiring compliance with 12 different items. The first item requires the shaft to be constructed and fire rated in accordance with the IBC, and the second item requires that penetrations be protected in accordance with Section 607.5.5, Exception 2. This exception has the limitations that it is only applicable in Group B and R occupancies that are equipped throughout with an NFPA 13 automatic sprinkler system. As this exception only eliminates the requirement for the smoke damper, Section 607.5.5, Exception 1, Item 1.1 is used to eliminate the requirement for the fire damper.

Item 3 requires the shaft to be lined with rigid metal ductwork. The moisture from the dryer exhaust may be detrimental to the materials that make up the construction of the shaft. Gypsum board is commonly used to construct fire-resistance-rated shafts and requiring metal ductwork prevents the gypsum enclosure itself from serving as the exhaust passageway. Item 4 helps to reduce the effects of friction that may occur at offsets that, in turn, may reduce the airflow velocity within the shaft. Additionally, offsets could become a collection point for lint accumulation.

Because of the combustible nature of the lint produced by clothes dryers, Item 5 requires the construction of the fan to be in accordance with Section 503.2 (see commentary, Section 503.2). This is intended to ensure that the proper type of fan is utilized for this application. Item 6 requires the fan to be located outside of the airstream which is a current requirement for commercial dryers (see commentary, Section 504.9). Since the use of subducts requires continuous vertical airflow within the shaft, Item 7 requires the exhaust fan to run continuously and to be connected to a standby power source. This requirement is redundant with Section 607.5.5, Exception 2 which requires the exhaust fan to be powered continuously in accordance with the provisions of Section 909.11 of the IBC, which requires an approved standby power system.

The exhaust fan is required by Item 8 to be monitored to make sure that the fan is operating. The reason that fire and smoke dampers can be omitted with the use of subducts is because of the continuous vertical airflow within the shaft. If the fan is not running, there is no continuous airflow and excess lint will accumulate within the shaft. Additionally, without upward airflow, any flames or hot gases could make their way back down the subduct and into the occupied space. Therefore, an audible or visual signal must indicate when the fan is not in operation. The signal should be located such that it alerts building supervisory personnel so that they can take appropriate action.

Item 9 requires makeup air to be provided into the shaft for the exhaust system. Failure to provide makeup air could result in air being taken through the dryer exhaust system from the occupied spaces when the dryers are not operating. This could create an air balance problem within the occupied spaces that would have to be addressed and could also increase energy consumption in the spaces. Item 10 requires a cleanout at the base of the shaft. The current duct cleaning industry has the technology to be able to clean the shaft with a cleanout located at the base and through the top where the fan is located. Item 11 states a common requirement that screens are not permitted in clothes dryer exhaust systems because screens will become obstructed by lint. Item 12 is consistent with Section 501.2 which requires dryer exhaust to be independent of all other exhaust systems.

One item not addressed by this section is the amount of continuous upward airflow that is required. In the case of dryer exhaust and because of the difficulty of transporting suspended solids vertically against gravity, the velocity of the airflow within the shaft must be such that the clothes fibers (lint) would remain in the air stream and exit the top of the shaft. If the lint falls out of the air stream, it will collect on the interior of the shaft creating maintenance issues and a potential fire hazard. The code leaves this issue up to the design professional since the amount of airflow would have to take into account variables, such as the number of dryers, the number of stories, the fan size, the required transport velocity and the size of the shaft.

INTERNATIONAL CODE COUNCIL®
Copyright © 2015 ICC. ALL RIGHTS RESERVED. Accessed by David Dammon on Jun 21, 2017 12:30:52 PM pursuant to License Agreement with ICC. No further reproduction or distribution authorized. ANY UNAUTHORIZED REPRODUCTION OR DISTRIBUTION IS A VIOLATION OF THE FEDERAL COPYRIGHT ACT AND THE LICENSE AGREEMENT, AND SUBJECT TO CIVIL AND CRIMINAL PENALTIES THEREUNDER.

SECTION 505
DOMESTIC KITCHEN EXHAUST EQUIPMENT

505.1 Domestic systems. Where domestic range hoods and domestic appliances equipped with downdraft exhaust are provided, such hoods and appliances shall discharge to the outdoors through sheet metal ducts constructed of galvanized steel, stainless steel, aluminum or copper. Such ducts shall have smooth inner walls, shall be air tight, shall be equipped with a backdraft damper, and shall be independent of all other exhaust systems.

Exceptions:

1. In other than Group I-1 and I-2, where installed in accordance with the manufacturer's instructions and where mechanical or natural ventilation is otherwise provided in accordance with Chapter 4, listed and labeled ductless range hoods shall not be required to discharge to the outdoors.
2. Ducts for domestic kitchen cooking appliances equipped with downdraft exhaust systems shall be permitted to be constructed of Schedule 40 PVC pipe and fittings provided that the installation complies with all of the following:
   - 2.1. The duct shall be installed under a concrete slab poured on grade.
   - 2.2. The underfloor trench in which the duct is installed shall be completely backfilled with sand or gravel.
   - 2.3. The PVC duct shall extend not more than 1 inch (25 mm) above the indoor concrete floor surface.
   - 2.4. The PVC duct shall extend not more than 1 inch (25 mm) above grade outside of the building.
   - 2.5. The PVC ducts shall be solvent cemented.

❖ A domestic kitchen exhaust system is one that serves appliances typically found in residential occupancies such as within dwelling units. When compared to commercial cooking operations, residential cooking operations are far less frequent, of shorter duration, have lower heat output and produce fewer grease-laden vapors. However, air-borne contaminant control may be even more important in residential cooking operations because of the lower or nonexistent ventilation rates typical of dwelling units.

Note that domestic cooking appliances are installed in a number of occupancies that are not dwelling units. It should be noted that Section 505.4 requires domestic range hoods over domestic cooking appliances that are utilized for domestic purposes in occupancies other than Group R (see commentary to Section 505.4). In Group R occupancies, domestic range hoods are optional, but if provided, they must discharge to the outdoors or must comply with exception 1 of this section. For a discussion on where a domestic range hood versus a commercial kitchen hood is required to be installed, see the commentary to Section 507.2.

Ducts used for dwelling unit kitchen exhaust must be constructed of sheet metal to reduce the potential fire hazard associated with the collection of grease or the absorption of grease into a more porous duct material. This section requires that domestic kitchen exhaust ducts be constructed of galvanized or stainless steel, aluminum or copper. The ducts must be sealed air tight to prevent leakage of air and grease into wall and ceiling cavities. Ducts should be sealed with a material that is suitable for long-term exposure to elevated temperatures. Backdraft dampers prevent the infiltration of outdoor air when the exhaust system is not operating. The hood manufacturer's instructions may require that the ducts be installed with a minimum clearance to combustibles (see commentary, Section 304.1).

By requiring the ducts to have smooth inner walls, this section prohibits the use of flexible and semirigid corrugated ducts for range hood exhaust and for the exhausting of cooking appliances having integral downdraft exhaust fan systems. Domestic kitchen exhaust must be independent of all other exhaust systems which is consistent with Section 501.2.

Exception 1 to this section allows, in other than Group I-1 and I-2, the use of ductless (recirculating) range hoods that have no means for discharge to the outdoors. Note that exhaust to the outdoors would be required if natural or mechanical ventilation was not provided for the kitchen (see Chapter 4). If natural or mechanical ventilation is otherwise provided for a space, note that this section does not require the installation of a domestic range hood over a domestic appliance.

Exception 2 allows the use of plastic duct to exhaust the downdraft-type domestic kitchen cooking appliances when all five of the specified installation criteria are met. Plastic ducts are not allowed in above-ground applications because the plastic cannot contain a fire within the confines of the duct. This exception allows plastic for the duct material because the duct must be below a slab on grade and the trench for the duct must be completely backfilled with sand or gravel to: (1) limit the amount of combustion air available to sustain a duct fire and (2) prevent a fire within the duct from spreading to the rest of the building. Additionally, the fumes and smoke from the burning plastic will be exhausted to the outdoors, and not introduced into the occupied space. The plastic material also has the advantage of corrosion resistance. Metal ducts below a slab are susceptible to deterioration.

505.2 Makeup air required. Exhaust hood systems capable of exhausting in excess of 400 cfm (0.19 m^3/s) shall be provided with *makeup air* at a rate approximately equal to the *exhaust air* rate. Such *makeup air* systems shall be equipped with a means of closure and shall be automatically controlled to start and operate simultaneously with the exhaust system.

❖ It is becoming more common for residential kitchens to resemble commercial kitchens, both aesthetically

INTERNATIONAL CODE COUNCIL®
Copyright © 2015 ICC. ALL RIGHTS RESERVED. Accessed by David Dammon on Jun 21, 2017 12:30:52 PM pursuant to License Agreement with ICC. No further reproduction or distribution authorized. ANY UNAUTHORIZED REPRODUCTION OR DISTRIBUTION IS A VIOLATION OF THE FEDERAL COPYRIGHT ACT AND THE LICENSE AGREEMENT, AND SUBJECT TO CIVIL AND CRIMINAL PENALTIES THEREUNDER.

and functionally. As a result, much larger capacity range hoods are being installed which aggravate the already existing problem of a lack of adequate makeup air for all exhaust systems in the dwelling. Homes typically suffer multiple ills because of indoor negative pressures caused by an imbalance of exhaust air to makeup air. This section requires a makeup air supply system at the prescribed threshold and further requires it to be tied to the exhaust system controls such that both systems operate simultaneously. The intent is to not allow the homeowner the option of operating the exhaust fan without also operating the makeup air system.

While this section does not specifically state whether the makeup air system can be passive or active, it is the author's opinion that the intent of the section is for an active system with a fan to bring in the makeup air. The makeup air is supposed to be provided "at a rate approximately equal to the exhaust air rate," which implies an active makeup air system that utilizes a fan. In addition, the makeup air system must "be automatically controlled to start and operate simultaneously," which also implies an active system where a fan will operate. Certainly, opening a window or normal infiltration is not acceptable.

505.3 Common exhaust systems for domestic kitchens located in multistory structures. Where a common multistory duct system is designed and installed to convey exhaust from multiple domestic kitchen exhaust systems, the construction of the system shall be in accordance with all of the following:

1. The shaft in which the duct is installed shall be constructed and fire-resistance rated as required by the *International Building Code*.
2. Dampers shall be prohibited in the exhaust duct, except as specified in Section 505.1. Penetrations of the shaft and ductwork shall be protected in accordance with Section 607.5.5, Exception 2.
3. Rigid metal ductwork shall be installed within the shaft to convey the exhaust. The ductwork shall be constructed of sheet steel having a minimum thickness of 0.0187 inch (0.4712 mm) (No. 26 gage) and in accordance with SMACNA *Duct Construction Standards*.
4. The ductwork within the shaft shall be designed and installed without offsets.
5. The exhaust fan motor design shall be in accordance with Section 503.2.
6. The exhaust fan motor shall be located outside of the airstream.
7. The exhaust fan shall run continuously, and shall be connected to a standby power source.
8. Exhaust fan operation shall be monitored in an approved location and shall initiate an audible or visual signal when the fan is not in operation.
9. Where the exhaust rate for an individual kitchen exceeds 400 cfm (0.19 m^3/s) makeup air shall be provided in accordance with Section 505.2.
10. A cleanout opening shall be located at the base of the shaft to provide access to the duct to allow for cleanout and inspection. The finished openings shall be not less than 12 inches by 12 inches (305 mm by 305 mm).
11. Screens shall not be installed at the termination.
12. The common multistory duct system shall serve only kitchen exhaust and shall be independent of other exhaust systems.

❖ Except as noted below, Section 505.3 is duplicated from Section 504.10 for common exhaust systems for clothes dryers located in multistory structures (see commentary to Section 504.10). Note that Item No. 9 references Section 505.2 which requires hood systems that exhaust in excess of 400 cfm (0.19 m^3/s) to be provided with makeup air. This would require makeup air to be supplied within the space where the domestic kitchen exhaust hood is located. Item 9 in Section 504.10 intends to require makeup air to be provided into the shaft for the shaft exhaust system. Failure to provide makeup air could result in air being taken through the dryer exhaust system from the occupied spaces when the dryers are not operating. This could create an air balance problem within the occupied spaces that would have to be addressed and could also increase energy consumption in the spaces. This same issue exists when dealing with exhaust systems for domestic kitchens located in multistory structures. The intent of Item 9 is to provide makeup air to the shaft to balance the shaft exhaust system and to not remove air from the occupied space when the kitchen exhaust hoods are not operating. If taken literally, Item 9 would require nothing where none of the kitchens had a fan rated at over 400 cfm (0.19 m^3/s).

505.4 Other than Group R. In other than Group R occupancies, where domestic cooking appliances are utilized for domestic purposes, such appliances shall be provided with domestic range hoods. Hoods and exhaust systems shall be in accordance with Sections 505.1 and 505.2.

❖ This section is new to the 2015 IMC and requires domestic range hoods over domestic cooking appliances that are utilized for domestic purposes in all occupancies except Group R, whereas previously, range hoods were optional. As revised, Section 505.1 is no longer limited to dwelling units, and Exception 1 does not apply to occupancies of Group I-1 and I-2. In I-1 and I-2 occupancies, the exhaust hoods must discharge to the outdoors without exception. This section requires range hoods in occupancies of other than Group R, and Section 505.1 will require them to exhaust to the outdoors unless they comply with Exception 1. So, in summary: If the occupancy is Group I-1 or I-2, domestic cooking facilities must have a range hood that discharges to the outdoors; if

INTERNATIONAL CODE COUNCIL®
Copyright © 2015 ICC. ALL RIGHTS RESERVED. Accessed by David Dammon on Jun 21, 2017 12:30:52 PM pursuant to License Agreement with ICC. No further reproduction or distribution authorized. ANY UNAUTHORIZED REPRODUCTION OR DISTRIBUTION IS A VIOLATION OF THE FEDERAL COPYRIGHT ACT AND THE LICENSE AGREEMENT, AND SUBJECT TO CIVIL AND CRIMINAL PENALTIES THEREUNDER.

the occupancy is not Group R, I-1 or I-2, range hoods are required for domestic cooking facilities, and such hoods can discharge to the outdoors or recirculate the air where other ventilation is provided; if the occupancy is Group R, range hoods are optional, but if provided, they must discharge to the outdoors or must comply with Exception 1 of Section 505.1. These requirements accommodate the changing designs in today's assisted living, nursing home, hospital and rehab facilities.

SECTION 506
COMMERCIAL KITCHEN HOOD VENTILATION SYSTEM DUCTS AND EXHAUST EQUIPMENT

506.1 General. Commercial kitchen hood ventilation ducts and exhaust *equipment* shall comply with the requirements of this section. Commercial kitchen grease ducts shall be designed for the type of cooking *appliance* and hood served.

❖ Section 506 addresses ducts serving Type I and II hoods installed over commercial cooking appliances.

506.2 Corrosion protection. Ducts exposed to the outside atmosphere or subject to a corrosive environment shall be protected against corrosion in an *approved* manner.

❖ Grease ducts and other ducts can deteriorate where exposed to the outdoors or to any indoor corrosive atmosphere. For example, ducts on a building rooftop and ducts run up a building exterior wall must be protected by an approved covering or encasement. Such protection must not create a fire hazard because of clearances to combustibles.

506.3 Ducts serving Type I hoods. Type I exhaust ducts shall be independent of all other exhaust systems except as provided in Section 506.3.5. Commercial kitchen duct systems serving Type I hoods shall be designed, constructed and installed in accordance with Sections 506.3.1 through 506.3.13.3.

❖ Because of the potential for spreading smoke, grease-laden air and fire from the kitchen exhaust system to other parts of the building, exhaust ducts serving Type I hoods are prohibited from interconnecting with any other exhaust ducts other than another Type I exhaust duct and then only where all four provisions of Section 506.3.5 are met (see commentary, Section 506.3.5).

Sections 506.3.1 through 506.3.13.3 address ducts used for Type I hoods and Sections 506.4 through 506.4.2 address ducts used for Type II hoods.

506.3.1 Duct materials. Ducts serving Type I hoods shall be constructed of materials in accordance with Sections 506.3.1.1 and 506.3.1.2.

❖ This section addresses the fact that grease ducts and makeup air ducts have different material requirements, which are prescribed in Sections 506.3.1.1 and 506.3.1.2, respectively.

506.3.1.1 Grease duct materials. Grease ducts serving Type I hoods shall be constructed of steel having a minimum thickness of 0.0575 inch (1.463 mm) (No. 16 gage) or stainless steel not less than 0.0450 inch (1.14 mm) (No. 18 gage) in thickness.

Exception: Factory-built commercial kitchen grease ducts *listed* and *labeled* in accordance with UL 1978 and installed in accordance with Section 304.1.

❖ Commercial kitchen hood and duct systems are designed to resist structural failure in the event of a grease fire. Stainless steel and steel of the prescribed thicknesses are the only materials that can be used for field-fabricated, unlabeled grease ducts serving a Type I hood. The thicknesses specified for ducts are greater than those specified for hoods because the ducts are usually concealed in the building structure and because the likelihood of a fire occurring in a duct is greater than in the hood. Also, the intensity of a fire in a duct will be greater because of the concentrated fuel load and the airflow velocity created by the exhaust fan or the chimney effect of vertical ducts.

The exception allows a factory-built grease duct system that is listed and labeled in accordance with UL 1978 to serve a commercial kitchen exhaust hood instead of a shop or field-fabricated, unlabeled grease duct system. A duct conforming to the requirements in this exception must be tested and labeled by an approved testing agency in accordance with UL 1978 and installed in accordance with the manufacturer's installation instructions. This referenced standard is specifically for factory-built commercial kitchen grease ducts. Note that this standard only tests the performance of the factory-built duct with respect to serving as a grease duct and does not change the need for a grease duct enclosure required by Section 506.3.11 (see commentary, Section 506.3.11). Grease ducts are intended to withstand a grease fire within the duct; therefore, this standard requires a simulated internal fire test to show that the factory-built duct will perform as intended. This standard also determines the clearances required to combustible materials. A duct that is labeled in accordance with this standard may be installed with the clearance to combustibles that is specified in the manufacturer's installation instructions. These clearances may be less than the 18 inches (457 mm) required by Section 506.3.6. All components of the duct system, including the duct, fittings, access doors and joint materials, must be approved for use with the tested and labeled duct system. Each individual grease duct assembly or part must be marked with the following:

- The approved agency's identification;
- The manufacturer's specified minimum clearance (airspace) to combustible materials;
- The manufacturer's or private labeler's name or identifying symbol;
- The part or model number or designation; and
- The requirement to install in accordance with the manufacturer's installation instructions [see Commentary Figure 506.3.1.1(1)].

INTERNATIONAL CODE COUNCIL®
Copyright © 2015 ICC. ALL RIGHTS RESERVED. Accessed by David Dammon on Jun 21, 2017 12:30:52 PM pursuant to License Agreement with ICC. No further reproduction or distribution authorized. ANY UNAUTHORIZED REPRODUCTION OR DISTRIBUTION IS A VIOLATION OF THE FEDERAL COPYRIGHT ACT AND THE LICENSE AGREEMENT, AND SUBJECT TO CIVIL AND CRIMINAL PENALTIES THEREUNDER.

The manufacturer's installation instructions must also specify the type of exhaust hood and cooking appliance(s) that the grease duct can serve. Factory-built ducts offer installation alternatives to the requirement of Section 506.3.6 and are often used where grease ducts must pass through combustible construction assemblies. Some of these factory-built grease ducts are listed for reduced clearance to combustibles [see Commentary Figure 506.3.1.1(2)].

506.3.1.2 Makeup air ducts. Makeup air ducts connecting to or within 18 inches (457 mm) of a Type I hood shall be constructed and installed in accordance with Sections 603.1, 603.3, 603.4, 603.9, 603.10 and 603.12. Duct insulation installed within 18 inches (457 mm) of a Type I hood shall be noncombustible or shall be *listed* for the application.

❖ Makeup air ducts bring in outdoor air to the kitchen to replace the air exhausted by the hood. If they do not connect to a Type I hood or come within 18 inches (457 mm) of the hood, the ducts may be constructed of any material listed in Section 603 because there is little possibility of excess heat or fire being introduced into the duct. Where the makeup air duct is connected directly to the hood or comes within 18 inches (457 mm) of the hood, the duct materials must be noncombustible or listed for the intended application. Since flexible ducts are combustible, they are not permitted to connect to the hood or come within 18 inches (457 mm) of a Type I hood [see Commentary Figures 506.3.1.2(1) and 506.3.1.2(2)].

Where duct insulation is located within 18 inches (457 mm) of the hood, it has the potential for exposure to excessive heat that could ignite the insulation. For this reason, the insulation must be composed of a noncombustible material or must be listed for the application.



Figure 506.3.1.1(2)
FACTORY-BUILT GREASE DUCTS
(Photo courtesy of Selkirk, L.L.C.)

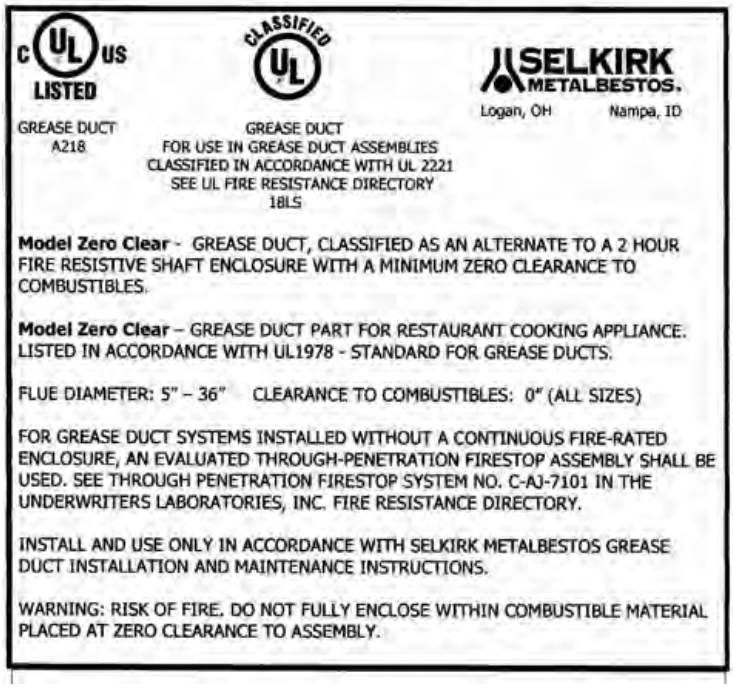
c UL us LISTED
GREASE DUCT
A218

CLASSIFIED UL

SELKIRK METALBESTOS.
Logan, OH Nampa, ID

GREASE DUCT
FOR USE IN GREASE DUCT ASSEMBLIES
CLASSIFIED IN ACCORDANCE WITH UL 2221
SEE UL FIRE RESISTANCE DIRECTORY
18LS

Model Zero Clear - GREASE DUCT, CLASSIFIED AS AN ALTERNATE TO A 2 HOUR FIRE RESISTIVE SHAFT ENCLOSURE WITH A MINIMUM ZERO CLEARANCE TO COMBUSTIBLES.

Model Zero Clear – GREASE DUCT PART FOR RESTAURANT COOKING APPLIANCE. LISTED IN ACCORDANCE WITH UL1978 - STANDARD FOR GREASE DUCTS.

FLUE DIAMETER: 5" – 36" CLEARANCE TO COMBUSTIBLES: 0" (ALL SIZES)

FOR GREASE DUCT SYSTEMS INSTALLED WITHOUT A CONTINUOUS FIRE-RATED ENCLOSURE, AN EVALUATED THROUGH-PENETRATION FIRESTOP ASSEMBLY SHALL BE USED. SEE THROUGH PENETRATION FIRESTOP SYSTEM NO. C-AJ-7101 IN THE UNDERWRITERS LABORATORIES, INC. FIRE RESISTANCE DIRECTORY.

INSTALL AND USE ONLY IN ACCORDANCE WITH SELKIRK METALBESTOS GREASE DUCT INSTALLATION AND MAINTENANCE INSTRUCTIONS.

WARNING: RISK OF FIRE. DO NOT FULLY ENCLOSE WITHIN COMBUSTIBLE MATERIAL PLACED AT ZERO CLEARANCE TO ASSEMBLY.

Figure 506.3.1.1(1)
TYPICAL FACTORY-BUILT GREASE DUCT LABEL
(Photo courtesy of Selkirk, L.L.C.)

INTERNATIONAL CODE COUNCIL®
Copyright © 2015 ICC. ALL RIGHTS RESERVED. Accessed by David Dammon on Jun 21, 2017 12:30:52 PM pursuant to License Agreement with ICC. No further reproduction or distribution authorized. ANY UNAUTHORIZED REPRODUCTION OR DISTRIBUTION IS A VIOLATION OF THE FEDERAL COPYRIGHT ACT AND THE LICENSE AGREEMENT, AND SUBJECT TO CIVIL AND CRIMINAL PENALTIES THEREUNDER.

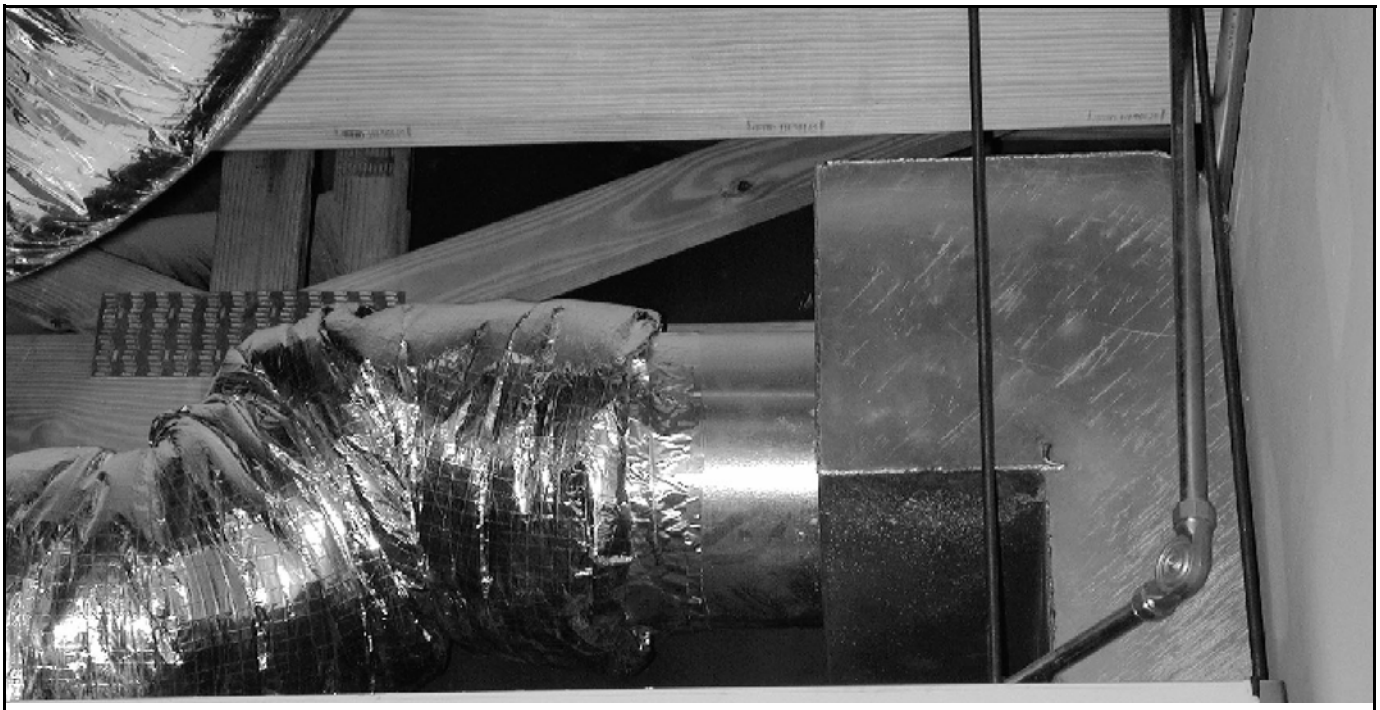

Figure 506.3.1.2(1)
PROHIBITED INSTALLATION OF FLEXIBLE AIR DUCT CONNECTING TO A MAKEUP AIR PLENUM ABOVE A TYPE I HOOD



Figure 506.3.1.2(2)
BACKWALL MAKEUP AIR PLENUM

INTERNATIONAL CODE COUNCIL®
Copyright © 2015 ICC. ALL RIGHTS RESERVED. Accessed by David Dammon on Jun 21, 2017 12:30:52 PM pursuant to License Agreement with ICC. No further reproduction or distribution authorized. ANY UNAUTHORIZED REPRODUCTION OR DISTRIBUTION IS A VIOLATION OF THE FEDERAL COPYRIGHT ACT AND THE LICENSE AGREEMENT, AND SUBJECT TO CIVIL AND CRIMINAL PENALTIES THEREUNDER.

506.3.2 Joints, seams and penetrations of grease ducts. Joints, seams and penetrations of grease ducts shall be made with a continuous liquid-tight weld or braze made on the external surface of the duct system.

Exceptions:

1. Penetrations shall not be required to be welded or brazed where sealed by devices that are *listed* for the application.
2. Internal welding or brazing shall not be prohibited provided that the joint is formed or ground smooth and is provided with ready access for inspection.
3. Factory-built commercial kitchen grease ducts *listed* and *labeled* in accordance with UL 1978 and installed in accordance with Section 304.1.

❖ The joints and connections of an exhaust duct must be welded or brazed liquid tight to prevent grease and residues from leaking from the duct interior. This would prohibit the use of sheet metal locking joints, rivets, screws or any mechanical connectors, except as stated in the exceptions to this section. Joint surfaces must be smooth to facilitate cleaning and to prevent the accumulation of grease. Penetrations of grease ducts would include fire suppression system piping and nozzles.

Exception 1 recognizes the existence of penetration sealing devices that are specifically listed for that application. These devices would have to rely on some type of noncombustible or heat-tolerant gasket or compression seal.

Exception 2 allows internal welded or brazed joints instead of external welded or brazed joints only where those joints would not promote the collection of grease and only where they are readily observable.

Exception 3 requires that factory-built grease ducts be listed and labeled in accordance with UL 1978, a consensus standard for factory-built grease ducts. The construction and assembly of factory-built grease ducts are regulated by the product listing and therefore are not subject to the provisions of this section. For example, factory-built grease duct sections are joined with proprietary mechanical joints and cannot be welded or brazed.

506.3.2.1 Duct joint types. Duct joints shall be butt joints, welded flange joints with a maximum flange depth of $^1/_2$ inch (12.7 mm) or overlapping duct joints of either the telescoping or bell type. Overlapping joints shall be installed to prevent ledges and obstructions from collecting grease or interfering with gravity drainage to the intended collection point. The difference between the inside cross-sectional dimensions of overlapping sections of duct shall not exceed $^1/_4$ inch (6.4 mm). The length of overlap for overlapping duct joints shall not exceed 2 inches (51 mm).

❖ The provisions of this section intend to achieve liquid-tight joints that will not collect grease. The provision for welded flange joints was added to the code because this type of joint had been used for years under one of the legacy codes. The use of this joint is not only faster and easier to construct, but it yields a better looking joint that is easier to make liquid tight. Use of this type of joint helps to prevent warping of the duct from welding, which can produce puddles in the duct that can lead to grease accumulation. Since a $^1/_2$-inch (12.7 mm) flange depth is the maximum permitted, only a minimal amount of grease could collect in the groove between the flanges. Telescoping overlap joints must be installed so that the grease drainage flows from the duct with the smaller internal diameter to the duct with the larger internal diameter. This will prevent the duct edge from creating a dam in the grease flow, especially in horizontal ducts [see Commentary Figures 506.3.2.1(1) and 506.3.2.1(2)].

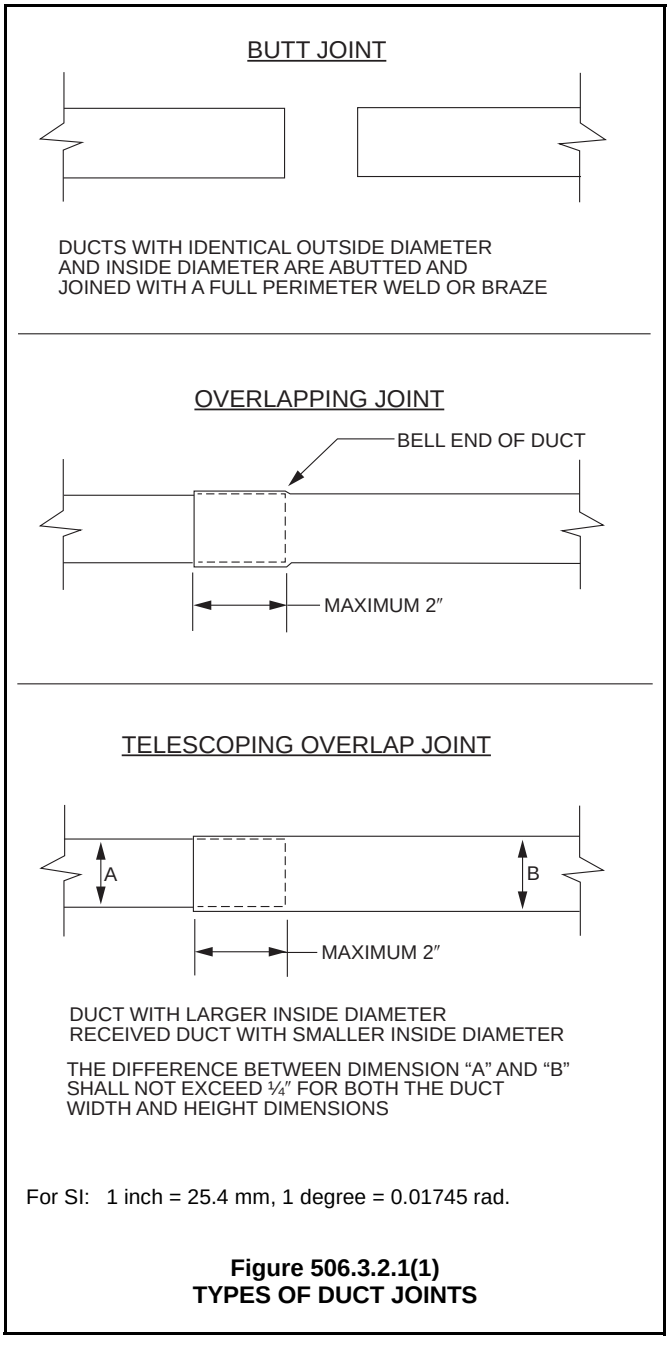

Figure 506.3.2.1(1)
TYPES OF DUCT JOINTS

INTERNATIONAL CODE COUNCIL®
Copyright © 2015 ICC. ALL RIGHTS RESERVED. Accessed by David Dammon on Jun 21, 2017 12:30:52 PM pursuant to License Agreement with ICC. No further reproduction or distribution authorized. ANY UNAUTHORIZED REPRODUCTION OR DISTRIBUTION IS A VIOLATION OF THE FEDERAL COPYRIGHT ACT AND THE LICENSE AGREEMENT, AND SUBJECT TO CIVIL AND CRIMINAL PENALTIES THEREUNDER.

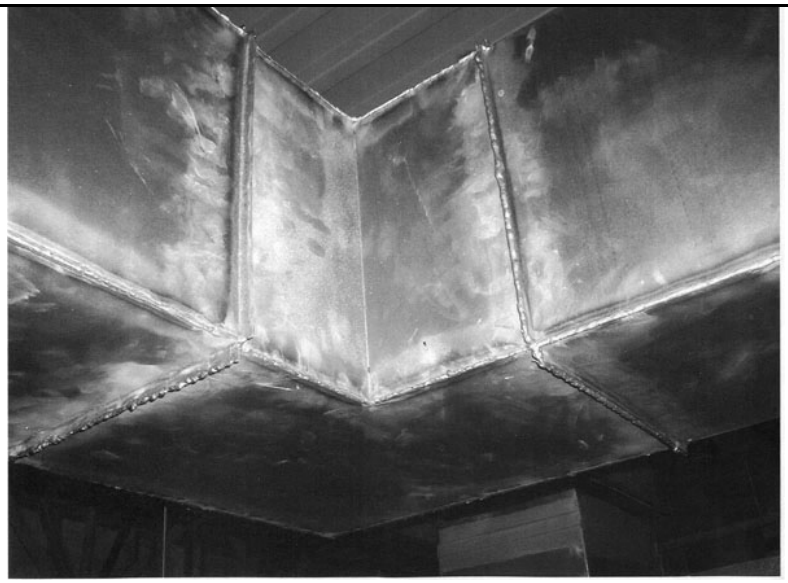

Figure 506.3.2.1(2)
WELDED FLANGE JOINT
(Photo courtesy of Guy McMann)

506.3.2.2 Duct-to-hood joints. Duct-to-hood joints shall be made with continuous internal or external liquid-tight welded or brazed joints. Such joints shall be smooth, accessible for inspection, and without grease traps.

Exceptions: This section shall not apply to:

1. A vertical duct-to-hood collar connection made in the top plane of the hood in accordance with all of the following:
   1.1. The hood duct opening shall have a 1-inch-deep (25 mm), full perimeter, welded flange turned down into the hood interior at an angle of 90 degrees (1.57 rad) from the plane of the opening.
   1.2. The duct shall have a 1-inch-deep (25 mm) flange made by a 1-inch by 1-inch (25 mm by 25 mm) angle iron welded to the full perimeter of the duct not less than 1 inch (25 mm) above the bottom end of the duct.
   1.3. A gasket rated for use at not less than 1500ºF (816ºC) is installed between the duct flange and the top of the hood.
   1.4. The duct-to-hood joint shall be secured by stud bolts not less than $^1/_4$ inch (6.4 mm) in diameter welded to the hood with a spacing not greater than 4 inches (102 mm) on center for the full perimeter of the opening. The bolts and nuts shall be secured with lock-washers.
2. *Listed* and *labeled* duct-to-hood collar connections installed in accordance with Section 304.1.

❖ This section applies to Type I hoods only. Grease ducts and hoods must be liquid tight; therefore, welded or brazed joints are required. It is often difficult to weld or braze the joint between a hood and its duct(s) because of lack of access to the juncture and space constraints caused by structural members. Either the hood or the duct is installed first and the companion element (hood or duct) is then joined to the already installed component. This typical sequence of construction is what makes it difficult to weld or braze hood-to-duct joints and is the reason for the two exceptions to this section. Both exceptions refer to mechanical joints designed to be mechanically strong and liquid tight. These kinds of joints are considered to be functionally equivalent to welded or brazed joints (see Commentary Figure 506.3.2.2).

506.3.2.3 Duct-to-exhaust fan connections. Duct-to-exhaust fan connections shall be flanged and gasketed at the base of the fan for vertical discharge fans; shall be flanged, gasketed and bolted to the inlet of the fan for side-inlet utility fans; and shall be flanged, gasketed and bolted to the inlet and outlet of the fan for in-line fans. Gasket and sealing materials shall be rated for continuous duty at a temperature of not less than 1500ºF (816ºC).

❖ Joints between grease ducts and exhaust fans must be liquid tight but need not be welded or brazed. The joints must be readily disassembled to allow for maintenance and repair or fan replacement; therefore, mechanical joints consisting of flanges, gaskets and bolts are used. Bolts are not required for flanged joints under vertical discharge (upblast) fans because fan curbs would make the bolts inaccessible. Grease ducts are supported independently of vertical discharge fans and the fan flange rests on the duct flange, relying on the flange gasket and the fan body to maintain a seal. The flange gasket must be rated for a temperature of not less than 1500°F (816°C),

INTERNATIONAL CODE COUNCIL®
Copyright © 2015 ICC. ALL RIGHTS RESERVED. Accessed by David Dammon on Jun 21, 2017 12:30:52 PM pursuant to License Agreement with ICC. No further reproduction or distribution authorized. ANY UNAUTHORIZED REPRODUCTION OR DISTRIBUTION IS A VIOLATION OF THE FEDERAL COPYRIGHT ACT AND THE LICENSE AGREEMENT, AND SUBJECT TO CIVIL AND CRIMINAL PENALTIES THEREUNDER.

which is consistent with the temperature requirements for the gasket used for the duct-to-hood joint in Section 506.3.2.2, Exception 1.

506.3.2.4 Vibration isolation. A vibration isolation connector for connecting a duct to a fan shall consist of noncombustible packing in a metal sleeve joint of *approved* design or shall be a coated-fabric flexible duct connector *listed* and *labeled* for the application. Vibration isolation connectors shall be installed only at the connection of a duct to a fan inlet or outlet.

❖ Vibration isolation is not required by the code, but is regulated if installed in an exhaust duct system. To avoid the potentially hazardous accumulation of grease and the installation of ignition-prone materials, the code prescribes the use of an approved metal sleeve joint with noncombustible packing or an approved coated-fabric flexible duct connector for vibration isolation in grease duct systems. These joints must prevent the escape of grease, exhaust flow, smoke and fire. The joints do not resemble the fabric isolation joints typically found in HVAC ductwork. The packed metal sleeve allows motion in only one plane, whereas the flexible fabric connector allows motion in multiple planes.

Vibration isolation joints are intended for use only where necessary to control noise and vibration, which means only at the point of connection to exhaust fans. Vibration isolation joints are not intended for and must not be used for joints in duct runs.

506.3.2.5 Grease duct test. Prior to the use or concealment of any portion of a grease duct system, a leakage test shall be performed. Ducts shall be considered to be concealed where installed in shafts or covered by coatings or wraps that prevent the ductwork from being visually inspected on all sides. The permit holder shall be responsible to provide the necessary *equipment* and perform the grease duct leakage test. A light test shall be performed to determine that all welded and brazed joints are liquid tight.

A light test shall be performed by passing a lamp having a power rating of not less than 100 watts through the entire section of ductwork to be tested. The lamp shall be open so as to emit light equally in all directions perpendicular to the duct walls. A test shall be performed for the entire duct system, including the hood-to-duct connection. The duct work shall

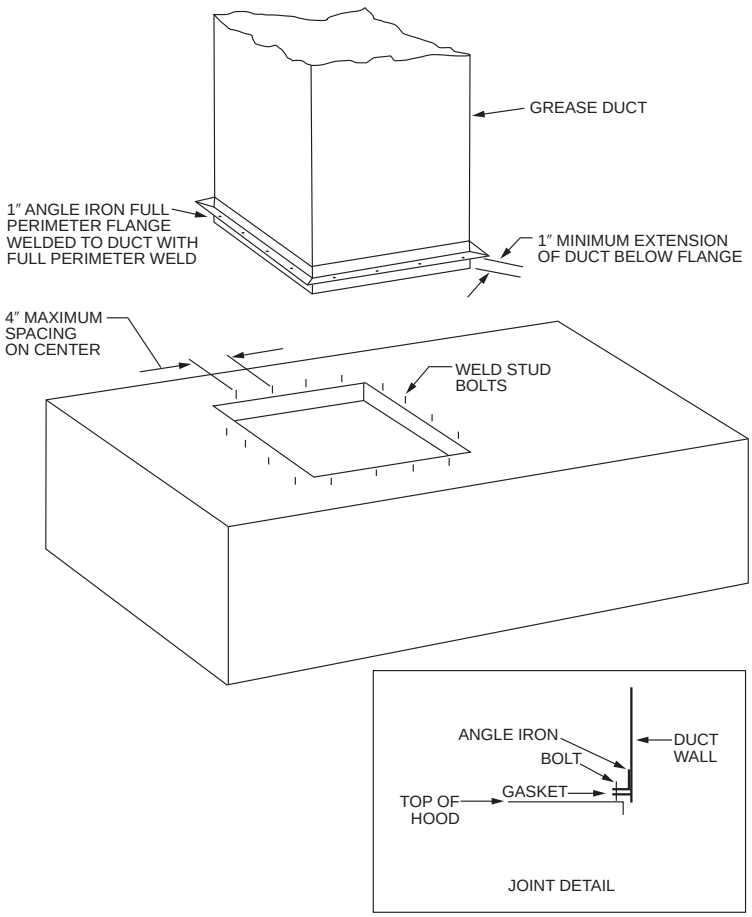

For SI: 1 inch = 25.4 mm.

Figure 506.3.2.2
DUCT-TO-HOOD JOINTS

INTERNATIONAL CODE COUNCIL®
Copyright © 2015 ICC. ALL RIGHTS RESERVED. Accessed by David Dammon on Jun 21, 2017 12:30:52 PM pursuant to License Agreement with ICC. No further reproduction or distribution authorized. ANY UNAUTHORIZED REPRODUCTION OR DISTRIBUTION IS A VIOLATION OF THE FEDERAL COPYRIGHT ACT AND THE LICENSE AGREEMENT, AND SUBJECT TO CIVIL AND CRIMINAL PENALTIES THEREUNDER.

be permitted to be tested in sections, provided that every joint is tested. For *listed* factory-built grease ducts, this test shall be limited to duct joints assembled in the field and shall exclude factory welds.

❖ The intent of this section is to prescribe a method of testing grease ducts to check that all welded and brazed joints and seams are sealed liquid tight. A light test is the most cost-efficient and effective method to locate any defects in welded or brazed grease duct installations and has been successfully used for many years. Leaks in grease ducts can lead to the passage of grease to surrounding areas of the ductwork and the building components, thus creating a potentially dangerous fire condition. This potentially dangerous condition can be eliminated by performing this simple test. Using the light test also allows for the grease duct to be tested as the sections of duct are completed. For factory-built grease ducts, only the field-assembled joints are required to undergo this test. Note that in accordance with Section 107.3, the code official will witness the required test or possibly accept reports from approved third parties.

506.3.3 Grease duct supports. Grease duct bracing and supports shall be of noncombustible material securely attached to the structure and designed to carry gravity and seismic loads within the stress limitations of the *International Building Code*. Bolts, screws, rivets and other mechanical fasteners shall not penetrate duct walls.

❖ Proper support of the duct system requires designing for the weight of the duct, as well as for dynamic loads caused by vibrations. Support is necessary for proper alignment of the duct system and avoidance of stresses that could lead to joint failure. A sagging duct will increase internal resistance to airflow, reduce the efficiency of the system and lead to the hazardous accumulation of grease. As with piping systems, ducts and ductwork systems that are improperly supported will deteriorate structurally and functionally.

Support for grease ducts must be installed in accordance with Section 603.10 and the seismic provisions of the IBC. Support spacing is limited to not more than 12 feet (3048 mm) between supports because of the inability of commonly used duct materials to resist deflection at larger intervals. This spacing criterion is primarily applicable to rigid ducts constructed of sheet metal; some duct configurations and duct materials will require shorter spacing intervals. For example, some duct materials would require support at each joint. The SMACNA HVAC *Duct Construction Standards—Metal and Flexible* contains information for choosing support systems for ducts. Additionally, the IBC could require that the duct support system be designed to resist earthquake loads, depending on the location and use of the building.

If duct hangers and supports are not used and a portion of the building structure is used to support the duct, the support system must be designed by a registered professional engineer or architect to comply with the IBC. Duct hangers must be noncombustible, approved for the application and designed for the loads to be carried. Fasteners must not penetrate ducts because of the liquid-tight design of grease ducts.

506.3.4 Air velocity. Grease duct systems serving a Type I hood shall be designed and installed to provide an air velocity within the duct system of not less than 500 feet per minute (2.5 m/s).

Exception: The velocity limitations shall not apply within duct transitions utilized to connect ducts to differently sized or shaped openings in hoods and fans, provided that such transitions do not exceed 3 feet (914 mm) in length and are designed to prevent the trapping of grease.

❖ The cross-sectional area of a grease duct system serving a Type I hood must be sized so that the exhaust air velocity is maintained at 500 feet per minute (2.5 m/s) or higher. This velocity is based on an ASHRAE research project (RP-1 033) conducted by the University of Minnesota, which found that duct velocities below 1,500 feet per minute (7.6 m/s) did not result in an increase in the rate of grease deposition on the walls of the ductwork. It should be noted that NFPA 96 also limits the minimum duct velocity to 500 feet per minute (2.5 m/s).

The exception allows the velocity of exhaust flow to fall below the specified velocity only in duct transition fittings that are necessary to connect grease ducts to hoods and fans. Because the shape of the transition fitting differs from that of the duct, the flow characteristics in the fitting will be different. This deviation in velocity is tolerable for small distances, especially at hood and fan connections.

506.3.5 Separation of grease duct system. A separate grease duct system shall be provided for each Type I hood. A separate grease duct system is not required where all of the following conditions are met:

1. All interconnected hoods are located within the same story.
2. All interconnected hoods are located within the same room or in adjoining rooms.
3. Interconnecting ducts do not penetrate assemblies required to be fire-resistance rated.
4. The grease duct system does not serve solid-fuel-fired appliances.

❖ A grease duct system serving a Type I hood may interconnect with, or share common components with, another grease duct system serving a Type I hood only as specified in this section. Grease duct systems serving Type I hoods cannot, under any circumstances, interconnect with, or share common components with, any building ventilation or exhaust system other than another grease duct system.

Although Section 506.3.11 limits a shaft to enclosing a single grease exhaust duct system, this section does not prohibit multiple grease exhaust ducts from connecting to a common trunk, riser or system if the

INTERNATIONAL CODE COUNCIL®
Copyright © 2015 ICC. ALL RIGHTS RESERVED. Accessed by David Dammon on Jun 21, 2017 12:30:52 PM pursuant to License Agreement with ICC. No further reproduction or distribution authorized. ANY UNAUTHORIZED REPRODUCTION OR DISTRIBUTION IS A VIOLATION OF THE FEDERAL COPYRIGHT ACT AND THE LICENSE AGREEMENT, AND SUBJECT TO CIVIL AND CRIMINAL PENALTIES THEREUNDER.

additional safety conditions are met. Interconnected hoods must be located within the same story and within the same room or in adjoining rooms, and the interconnecting grease ducts that join hoods to the common exhaust duct must not penetrate fire-resistance-rated assemblies. A grease duct system serving a solid-fuel-fired appliance, such as a barbecue, smoking pit or a wood-fired pizza oven, cannot be interconnected with other grease hood exhausts. The intent of this section is to prevent fire from spreading from one system to another through the common portion shared by the hood systems and to prevent fire from spreading to other stories or fire areas (see Section 507.2.2).

506.3.6 Grease duct clearances. Where enclosures are not required, grease duct systems and exhaust *equipment* serving a Type I hood shall have a *clearance* to combustible construction of not less than 18 inches (457 mm), and shall have a *clearance* to noncombustible construction and gypsum wallboard attached to noncombustible structures of not less than 3 inches (76 mm).

Exceptions:

1. Factory-built commercial kitchen grease ducts *listed* and *labeled* in accordance with UL 1978.
2. *Listed* and *labeled* exhaust *equipment* installed in accordance with Section 304.1.
3. Where commercial kitchen grease ducts are continuously covered on all sides with a *listed* and *labeled* field-applied grease duct enclosure material, system, product or method of construction specifically evaluated for such purpose in accordance with ASTM E2336, the required *clearance* shall be in accordance with the listing of such material, system, product or method.

❖ The required 18-inch (457 mm) distance from exhaust duct surfaces to combustible materials applies to exposed and concealed ducts (see Commentary Figure 506.3.6) where enclosures are not required in accordance with Section 506.3.11 (see commentary, Section 506.3.11). Although normal operating temperatures in a hood and duct system might be relatively low, especially compared to temperatures encountered in a fire, combustibles near the duct system become more susceptible to ignition because of the long-term exposure to even this moderate heat and can be ignited by the radiant or convective heat given off by the duct system surfaces during "normal" hood and duct system operation. Note that the required clearance to combustibles for a Type I hood is also 18 inches (457 mm); however, this section only applies to the grease duct. The clearance requirements for a Type I hood can be found in Section 507.2.6 (see commentary, Section 507.2.6).

The clearances from the ducts to vertical and horizontal surfaces can be reduced in accordance with the provisions of Section 308.

In the context and application of the code in general, a composite material such as gypsum wallboard (drywall, sheetrock, etc.) is considered to be combustible (see the definition of "Noncombustible materials"); however, this section treats gypsum wallboard as a limited combustible material and only requires a 3-inch (76 mm) clearance. Remember that gypsum wallboard installed on a combustible substrate or on wood studs does not cause the wall to be considered

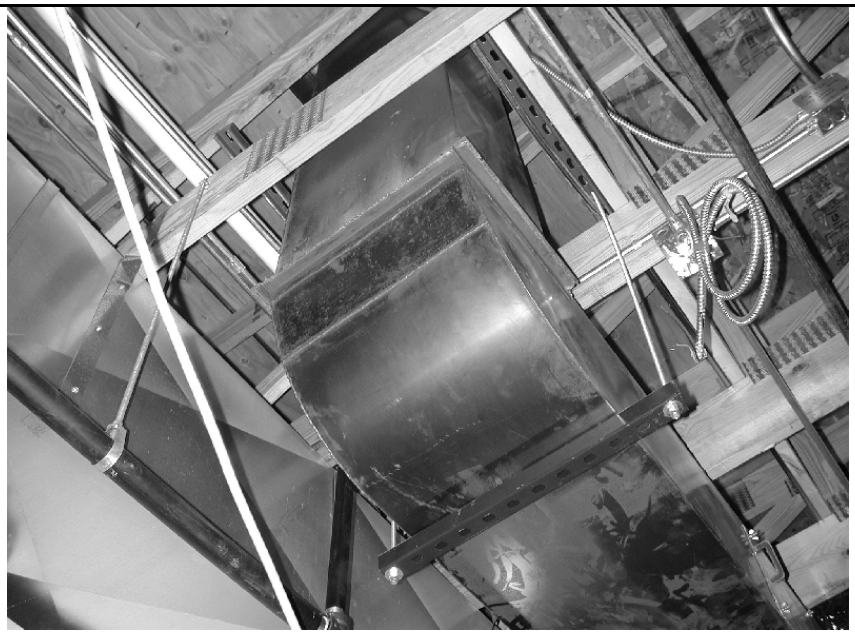

For SI: 1 inch = 25.4 mm.

Figure 506.3.6
PROHIBITED INSTALLATION OF A GREASE DUCT (Less than 18-inch clearance to combustibles)

INTERNATIONAL CODE COUNCIL®
Copyright © 2015 ICC. ALL RIGHTS RESERVED. Accessed by David Dammon on Jun 21, 2017 12:30:52 PM pursuant to License Agreement with ICC. No further reproduction or distribution authorized. ANY UNAUTHORIZED REPRODUCTION OR DISTRIBUTION IS A VIOLATION OF THE FEDERAL COPYRIGHT ACT AND THE LICENSE AGREEMENT, AND SUBJECT TO CIVIL AND CRIMINAL PENALTIES THEREUNDER.

as a noncombustible assembly, and the 18-inch (457 mm) minimum clearance still applies. A 3-inch (76 mm) clearance would be allowed for gypsum board attached to metal studs, for example. The classification of combustible and noncombustible materials is not changed by the use of fire-retardant-treated wood products or fire-rated (Type X) gypsum wallboard.

The first exception recognizes that factory-built commercial kitchen grease ducts are required to be listed and labeled in accordance with UL 1978, which tests to establish the required clearance to combustibles for the grease duct. The second exception recognizes that listed and labeled exhaust equipment that is tested and approved for a specified clearance to combustibles can be installed in accordance with the manufacturer's installation instructions. The third exception is applicable to field-applied grease duct enclosure systems (e.g., duct wrap systems) which have, as a part of their listing, a specific allowable clearance from the outside of the enclosure system to adjacent combustible materials [see Commentary Figures 506.3.1.1(1) and 506.3.1.1(2)].

506.3.7 Prevention of grease accumulation in grease ducts. Duct systems serving a Type I hood shall be constructed and installed so that grease cannot collect in any portion thereof, and the system shall slope not less than one-fourth unit vertical in 12 units horizontal (2-percent slope) toward the hood or toward a grease reservoir designed and installed in accordance with Section 506.3.7.1. Where horizontal ducts exceed 75 feet (22 860 mm) in length, the slope shall be not less than one unit vertical in 12 units horizontal (8.3-percent slope).

❖ Sections of ducts serving Type I hoods must be constructed with the code-prescribed slopes and installed without forming any dips, pockets or low points that are capable of collecting grease or residue. Sloping the duct back toward the exhaust hood or to an approved grease-collection reservoir (see commentary, Section 506.3.7.1) will minimize the retention of grease in the duct system. A greater slope is necessary for long duct runs to encourage grease to flow to the collection points. Without adequate slope, grease could congeal before reaching the collection point, thus forming dams and allowing significant buildup [see Commentary Figure 506.3.7].

506.3.7.1 Grease duct reservoirs. Grease duct reservoirs shall:

1. Be constructed as required for the grease duct they serve.
2. Be located on the bottom of the horizontal duct or the bottommost section of the duct riser.
3. Extend across the full width of the duct and have a length of not less than 12 inches (305 mm).
4. Have a depth of not less than 1 inch (25 mm).
5. Have a bottom that slopes to a drain.
6. Be provided with a cleanout opening constructed in accordance with Section 506.3.8 and installed to pro-

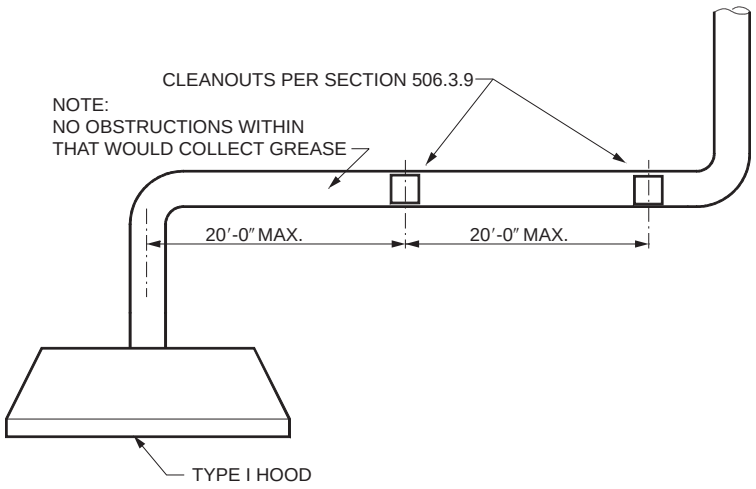

NOTE: HORIZONTAL SYSTEM ≤ 75′ IN LENGTH
SLOPED ≥ 1/4:12 (2-PERCENT SLOPE) TOWARD
HOOD OR APPROVED GREASE RESERVOIR

HORIZONTAL SYSTEM > 75′ IN LENGTH
SLOPED ≥ 1:12 (8.3-PERCENT SLOPE) TOWARD
HOOD OR APPROVED GREASE RESERVOIR

For SI: 1 foot = 304.8 mm.

Figure 506.3.7
PREVENTION OF GREASE ACCUMULATION

INTERNATIONAL CODE COUNCIL®
Copyright © 2015 ICC. ALL RIGHTS RESERVED. Accessed by David Dammon on Jun 21, 2017 12:30:52 PM pursuant to License Agreement with ICC. No further reproduction or distribution authorized. ANY UNAUTHORIZED REPRODUCTION OR DISTRIBUTION IS A VIOLATION OF THE FEDERAL COPYRIGHT ACT AND THE LICENSE AGREEMENT, AND SUBJECT TO CIVIL AND CRIMINAL PENALTIES THEREUNDER.

vide direct access to the reservoir. The cleanout opening shall be located on a side or on top of the duct so as to permit cleaning of the reservoir.

7. Be installed in accordance with the manufacturer's instructions where manufactured devices are utilized.

❖ In previous editions of the code, grease reservoirs were required to be approved with no specific guidance on how a reservoir should be constructed. The intent behind this section is to provide prescriptive requirements on how to construct a grease reservoir. The seven listed items provide a commonsense approach to the construction of a grease reservoir.

Considering that a grease duct is designed to resist structural failure in the event of a grease fire, Item 1 requires the grease reservoir to be constructed as required for the grease duct, which ensures that the grease reservoir does not compromise the integrity of the grease duct system (i.e., does not provide a weak link). In Item 2, locating the reservoir in the lowest sections of the grease duct system provides the best chance to collect the grease and retain it until it can be drained and cleaned out. The size of the reservoir with respect to the size of the duct will have an effect on how much grease will be collected. Item 3 requires the reservoir to be not less than 12 inches (305 mm) in length and as wide as the duct so that no avenue exists for grease to flow around the reservoir instead of into the reservoir [see Commentary Figure 506.3.7.1(1)].

A minimum depth of 1 inch is required for the reservoir in Item 4. It should be noted that the deeper the reservoir, the more grease that can be retained between cleanings; therefore, more time between cleanings is allowed. The reservoir is required to be sloped to a drain in Item 5. This implies that a drain opening must be provided to allow removal of captured liquids. This might be accomplished with a threaded fitting welded in place with a cap or plug [see Commentary Figure 506.3.7.1(1)].; However, the usefulness of the drain comes into question when the grease congeals such that it will not flow through the drainage opening. This is why Item 6 requires a cleanout opening to be located so that the reservoir can be reached and cleaned. In the case where a manufactured grease reservoir device is installed, it must be installed in accordance with the manufacturer's installation instructions [see Commentary Figure 506.3.7.1(2)].

506.3.8 Grease duct cleanouts and openings. Grease duct cleanouts and openings shall comply with all of the following:

1. Grease ducts shall not have openings except where required for the operation and maintenance of the system.
2. Sections of grease ducts that are inaccessible from the hood or discharge openings shall be provided with cleanout openings spaced not more than 20 feet (6096 mm) apart and not more than 10 feet (3048 mm) from changes in direction greater than 45 degrees (0.79 rad).
3. Cleanouts and openings shall be equipped with tight-fitting doors constructed of steel having a thickness not less than that required for the duct.
4. Cleanout doors shall be installed liquid tight.
5. Door assemblies including any frames and gaskets shall be approved for the application and shall not have fasteners that penetrate the duct.



Figure 506.3.7.1(1)
GREASE COLLECTION RESERVOIR
(Notice that there is no cleanout)
(Photo courtesy of Guy McMann)

INTERNATIONAL CODE COUNCIL®
Copyright © 2015 ICC. ALL RIGHTS RESERVED. Accessed by David Dammon on Jun 21, 2017 12:30:52 PM pursuant to License Agreement with ICC. No further reproduction or distribution authorized. ANY UNAUTHORIZED REPRODUCTION OR DISTRIBUTION IS A VIOLATION OF THE FEDERAL COPYRIGHT ACT AND THE LICENSE AGREEMENT, AND SUBJECT TO CIVIL AND CRIMINAL PENALTIES THEREUNDER.

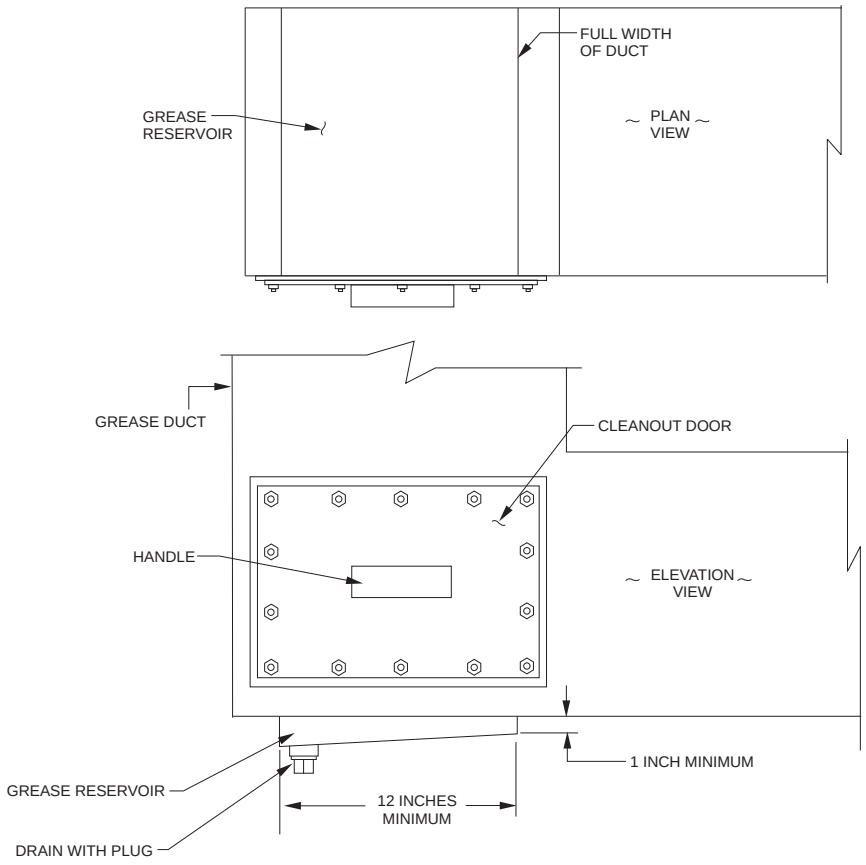

For SI: 1 inch = 25.4 mm.

Figure 506.3.7.1(2)
GREASE RESERVOIR

6. Gasket and sealing materials shall be rated for not less than 1500ºF (816ºC).
7. Listed door assemblies shall be installed in accordance with the manufacturer's instructions.

❖ To maintain the integrity of grease duct systems, openings into the systems are limited to those necessary for proper operation and maintenance. Operation and maintenance are closely related. Operation creates the need for maintenance, and maintenance allows continued operation. Because grease can and will liquefy on a duct wall, cleanouts are required in any portion of a grease duct system that cannot be reached for cleaning and inspection from the duct entry or discharge. Vertical sections of grease duct might occur between offsets in vertical duct runs or in offsets in horizontal duct runs. Such sections could be considered to be inaccessible for inspection, cleaning and maintenance. Depending upon the capabilities of the duct-cleaning equipment and visual observation equipment, this code section can be interpreted as requiring cleanouts for sections of ducts that extend beyond changes in direction in the duct run. Duct sections that extend beyond changes in direction could be viewed as inaccessible because they are out of the line of sight from the hood connection or from the duct terminal outdoors. The success or failure of duct-cleaning operations would be hard to determine without cleanouts or high-tech duct camera equipment.

Cleanout doors must be constructed to comply with Section 506.3.1.1, and must have a latching method to hold the door tightly closed. Latching devices must hold cleanout doors reasonably air tight when closed. Air leakage at cleanout openings would reduce exhaust system effectiveness and, in positive-pressure ducts, would allow exhaust leakage to the exterior of the duct. Because ducts are designed to contain a grease fire, cleanout openings must not reduce duct integrity. The code recognizes that cleanout doors may have to be opened by the use of hand tools [see Commentary Figures 506.3.8(1) and 506.3.8(2)].

The gasket and sealing materials for the cleanout must be rated for a temperature of not less than 1500°F (816°C) which is consistent with the temperature requirements for the gasket used for the duct-to-hood joint in Section 506.3.2.2, Exception 1.

INTERNATIONAL CODE COUNCIL®
Copyright © 2015 ICC. ALL RIGHTS RESERVED. Accessed by David Dammon on Jun 21, 2017 12:30:52 PM pursuant to License Agreement with ICC. No further reproduction or distribution authorized. ANY UNAUTHORIZED REPRODUCTION OR DISTRIBUTION IS A VIOLATION OF THE FEDERAL COPYRIGHT ACT AND THE LICENSE AGREEMENT, AND SUBJECT TO CIVIL AND CRIMINAL PENALTIES THEREUNDER.

506.3.8.1 Personnel entry. Where ductwork is large enough to allow entry of personnel, not less than one *approved* or *listed* opening having dimensions not less than 22 inches by 20 inches (559 mm by 508 mm) shall be provided in the horizontal sections, and in the top of vertical risers. Where such entry is provided, the duct and its supports shall be capable of supporting the additional load, and the cleanouts specified in Section 506.3.8 are not required.

❖ Large grease ducts could be designed to allow maintenance personnel to enter the duct for cleaning. This could make the cleanouts specified in Section 506.3.9 unnecessary. Where such access is intended, the access doors must be of adequate size to allow personnel to easily enter the duct. The duct must also be capable of supporting the additional weight of personnel and the dynamic loading caused by movement of personnel.



Figure 506.3.8(1)
GREASE DUCT CLEANOUT



Figure 506.3.8(2)
GREASE DUCT CLEANOUT

INTERNATIONAL CODE COUNCIL®
Copyright © 2015 ICC. ALL RIGHTS RESERVED. Accessed by David Dammon on Jun 21, 2017 12:30:52 PM pursuant to License Agreement with ICC. No further reproduction or distribution authorized. ANY UNAUTHORIZED REPRODUCTION OR DISTRIBUTION IS A VIOLATION OF THE FEDERAL COPYRIGHT ACT AND THE LICENSE AGREEMENT, AND SUBJECT TO CIVIL AND CRIMINAL PENALTIES THEREUNDER.

506.3.8.2 Cleanouts serving in-line fans. A cleanout shall be provided for both the inlet side and outlet side of an in-line fan except where a duct does not connect to the fan. Such cleanouts shall be located within 3 feet (914 mm) of the fan duct connections.

❖ In-line fans present a unique problem when it comes to maintenance and service since they are located within the building and are in-line with the grease duct attached to both the inlet and outlet side of the fan housing. In order to allow for maintenance and cleaning, a cleanout is required on the inlet and outlet sides of the fan within 3 feet (914 mm) of the fan to duct connections.

506.3.9 Grease duct horizontal cleanouts. Cleanouts serving horizontal sections of grease ducts shall:

1. Be spaced not more than 20 feet (6096 mm) apart.
2. Be located not more than 10 feet (3048 mm) from changes in direction that are greater than 45 degrees (0.79 rad).
3. Be located on the bottom only where other locations are not available and shall be provided with internal damming of the opening such that grease will flow past the opening without pooling. Bottom cleanouts and openings shall be approved for the application and installed liquid-tight.
4. Not be closer than 1 inch (25 mm) from the edges of the duct.
5. Have opening dimensions of not less than 12 inches by 12 inches (305 mm by 305 mm). Where such dimensions preclude installation, the opening shall be not less than 12 inches (305 mm) on one side and shall be large enough to provide access for cleaning and maintenance.
6. Shall be located at grease reservoirs.

❖ Given the nature of the exhaust from a Type I hood, grease will collect on the sides of the grease duct. Since this cannot be prevented from occurring, the only option is to provide access to the duct for periodic cleaning. Such access is especially important for a horizontal grease duct, where grease will tend to accumulate more and access from the hood or the fan on the roof is not available.

The 20-foot (6096 mm) interval requirement in Item 1 ensures that not more than 10 feet (3048 mm) of duct will extend beyond the access provided by any cleanout (see Commentary Figure 506.3.7). While this is implied by Item 1, Item 2 requires cleanouts to be located no farther than 10 feet (3048 mm) from any change of direction greater than 45 degrees (0.79 rad) in the duct. Cleanout openings should be located only on the vertical sides and top of a horizontal run to prevent the leakage of grease. Cleanout openings in duct sidewalls should not extend to the bottom of the duct because this would allow grease to leak from the duct. At least 1 inch (25 mm) of the duct sidewall should remain below the bottom edge of the cleanout to prevent grease from running out of the duct. Cleanouts are allowed in the top and bottom of horizontal ducts only where it is not possible to put the required size cleanout in the vertical sidewalls.

Additional cleanouts should be installed in any portion of a duct system that cannot be reached for cleaning and inspection from the required cleanouts. The cleanout openings must have a minimum dimension of 12 inches (305 mm) to permit access for cleaning of the system. If the side of the duct is not large enough to permit the required cleanout size, the cleanout must be relocated to the top of the duct, or as a last resort, the bottom of the duct. Cleanouts located on the bottom of a duct would promote leakage of grease; therefore, internal barriers (dams) must be installed around the full perimeter of the opening. These barriers/dams must not prevent grease from draining to the intended collection point. If the largest dimension of a duct is less than that necessary to accommodate the required size cleanout, the cleanout would have to be as large as the duct dimensions would permit, on the duct face allowing the largest opening and would have to meet the opening edge requirements of this section.

506.3.10 Underground grease duct installation. Underground grease duct installations shall comply with all of the following:

1. Underground grease ducts shall be constructed of steel having a minimum thickness of 0.0575 inch (1.463 mm) (No. 16 gage) and shall be coated to provide protection from corrosion or shall be constructed of stainless steel having a minimum thickness of 0.0450 inch (1.140 mm) (No. 18 gage).
2. The underground duct system shall be tested and approved in accordance with Section 506.3.2.5 prior to coating or placement in the ground.
3. The underground duct system shall be completely encased in concrete with a minimum thickness of 4 inches (102 mm).
4. Ducts shall slope toward grease reservoirs.
5. A grease reservoir with a cleanout to allow cleaning of the reservoir shall be provided at the base of each vertical duct riser.
6. Cleanouts shall be provided with access to permit cleaning and inspection of the duct in accordance with Section 506.3.
7. Cleanouts in horizontal ducts shall be installed on the topside of the duct.
8. Cleanout locations shall be legibly identified at the point of access from the interior space.

❖ Item 1 requires a steel grease duct to be the same gage as an above-ground grease duct; however, the duct must be coated to provide protection from corrosion. In lieu of using coated steel, a stainless steel grease duct can be used. Due to the underground location of the grease duct, Item 2 requires the duct system to be tested prior to being coated or placed in the ground. Since the duct will be encased in concrete as required by Item 3, testing the duct prior to it

INTERNATIONAL CODE COUNCIL®
Copyright © 2015 ICC. ALL RIGHTS RESERVED. Accessed by David Dammon on Jun 21, 2017 12:30:52 PM pursuant to License Agreement with ICC. No further reproduction or distribution authorized. ANY UNAUTHORIZED REPRODUCTION OR DISTRIBUTION IS A VIOLATION OF THE FEDERAL COPYRIGHT ACT AND THE LICENSE AGREEMENT, AND SUBJECT TO CIVIL AND CRIMINAL PENALTIES THEREUNDER.

being encased or coated is necessary so that any defects can be spotted and repaired. Encasing the duct in concrete provides added protection for the occupants who, in the event of a grease duct fire, could be sitting just above the grease duct (see Commentary Figure 506.3.10).

Running an underground grease duct from a table top cooking appliance creates a "trap" where the duct goes down into the floor, is run under the floor and then goes up through the floor and out through the roof. This trap creates a perfect place for grease to collect. Items 4 and 5 attempt to address this situation by requiring the duct to slope to a grease reservoir which must be located at the base of the vertical duct riser. A cleanout must be provided at this reservoir to facilitate cleaning. In addition to this cleanout, Item 6 requires cleanouts to be provided for this underground duct system just as they are required for above-ground grease ducts. The fact that some of these table top cooking appliances will most likely be located in open area dining rooms means that the run of the underground duct to a surrounding wall where the duct can be concealed and go through the roof could be of significant length. Section 506.3.9 requires horizontal ducts to have cleanouts every 20 feet. This may require cleanouts in the dining room floor unless careful planning is used to arrange the tables such that the duct run remains under the 20-foot maximum. Due to the nature of a horizontal underground grease duct, cleanouts must be located in the topside of the duct as indicated in Item 7. Item 8 requires that the location of all cleanouts be identified at the point of access. This would make it even more desirable to locate the tables such that a cleanout would not be required in the dining room floor. Not many restaurant owners would like to have the cleanout locations identified on the floor for the dining guests to see.

506.3.11 Grease duct enclosures. A commercial kitchen grease duct serving a Type I hood that penetrates a ceiling, wall, floor or any concealed space shall be enclosed from the point of penetration to the outlet terminal. In-line exhaust fans not located outdoors shall be enclosed as required for grease ducts. A duct shall penetrate exterior walls only at locations where unprotected openings are permitted by the *International Building Code*. The duct enclosure shall serve a single grease duct and shall not contain other ducts, piping or wiring systems. Duct enclosures shall be a shaft enclosure in accordance with Section 506.3.11.1, a field-applied enclosure assembly in accordance with Section 506.3.11.2 or a factory-built enclosure assembly in accordance with Section 506.3.11.3. Duct enclosures shall have a fire-resistance rating of not less than that of the assembly penetrated and not less than 1 hour. Fire dampers and smoke dampers shall not be installed in grease ducts.

Exception: A duct enclosure shall not be required for a grease duct that penetrates only a nonfire-resistance-rated roof/ceiling assembly.

❖ An enclosure is required where a commercial kitchen grease duct serving a Type I hood pene-trates a ceiling, wall or floor whether or not the ceiling, wall or floor is fire-resistance rated. The portion of a grease duct system that is exposed within the same room as the hood it serves would not have to be enclosed if such duct did not pass through any ceiling, wall or floor membrane. Once a duct passes through a ceiling, wall or floor membrane, it must be enclosed from that point on, all the way to the outdoor terminal. The enclosure maintains the integrity of the assembly that the grease duct is penetrating, and reduces the possibility of smoke and fire in the kitchen spreading to other parts of the building. The IBC, in some cases, requires fire-resistance-rated vertical shafts for ducts that penetrate floor/ceiling assemblies. Typically, when one thinks of ducts being in a fire-rated enclosure, it is associated with a vertical passageway through stories of a building. However, the enclosure required by this section requires both vertical and horizontal sections of the grease exhaust duct system to be in a rated enclosure. The enclosure must

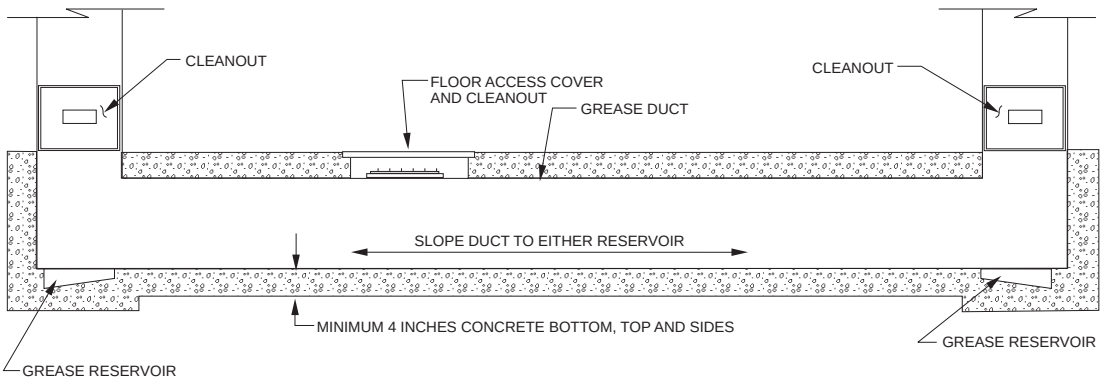

For SI: 1 inch = 25.4 mm.

Figure 506.3.10
UNDERGROUND GREASE DUCT

INTERNATIONAL CODE COUNCIL®
Copyright © 2015 ICC. ALL RIGHTS RESERVED. Accessed by David Dammon on Jun 21, 2017 12:30:52 PM pursuant to License Agreement with ICC. No further reproduction or distribution authorized. ANY UNAUTHORIZED REPRODUCTION OR DISTRIBUTION IS A VIOLATION OF THE FEDERAL COPYRIGHT ACT AND THE LICENSE AGREEMENT, AND SUBJECT TO CIVIL AND CRIMINAL PENALTIES THEREUNDER.

begin at the first point of penetration and must be continuous to the duct termination. In other words, the enclosure must originate in the room or space containing the hood and must extend to where the duct discharges to the outdoors. In the case where a grease duct runs horizontally through non-rated walls, a grease duct enclosure that is fire-resistance rated for 1 hour would be required. Panels or doors in any grease duct enclosure providing access to cleanouts must be approved opening protectives that comply with the IBC or with the listed and labeled grease duct enclo-sure system. Fire and smoke dampers are not compatible with grease ducts, and the duct enclosure requirements clearly account for the lack of such dampers where the ducts penetrate walls, floors and ceilings. Fire and smoke dampers would be made useless by the severe environment within grease ducts (e.g., high temperatures, grease, cleaning chemicals and water).

In the case where an in-line grease fan is installed in the grease duct, in other than the room of duct origin, the in-line fan would have to be enclosed as required for grease ducts. Note that the manufacturer's installation instructions may require ventilation to help cool the fan motor. Also, access doors would be required for servicing the fan.

This section permits a grease duct to penetrate an exterior wall where the wall is not required to have protected openings (see Commentary Figure 506.3.11). Depending on the building's proximity to lot lines and other buildings, the IBC might require that openings in exterior walls be protected with fire-resistance-rated opening protectives.

A grease duct enclosure must serve only a single grease duct, and it must not contain any other ducts, piping or wiring. Considering the hazards associated with a grease duct and the expectation that there could be a fire within the grease duct, the grease duct enclosure can serve only a single grease duct. Nothing else is permitted in the enclosure. Duct enclosures are required to have a fire-resistance rating not less than the assembly penetrated and not less than 1 hour. Therefore, this should be applied to any wall or floor assembly penetrated and not less than 1 hour.

This section provides three options for construction of grease duct enclosures. The first option is the traditional method of installing grease ducts in shafts in accordance with Section 506.3.11.1, the second is field-applied enclosure systems installed in accordance with Section 506.3.11.2, and the third is factory-built assemblies in accordance with Section 506.3.11.3.

The exception allows penetration of an unrated roof/ceiling assembly without a shaft enclosure. This could allow penetration of a drop-in ceiling in a one-story building or in the top story of multi-story buildings. The intent of this section is for duct enclosures to be omitted where they would have little value. The typical single-story restaurant of Type VB construction will have grease ducts penetrating only nonrated roof/ceiling assemblies. Grease ducts in such buildings do not pass through stories and are inherently protected by their inaccessible location in the above ceiling and attic spaces. Note that where the grease duct goes up through a combustible roof, there may be clearance to combustibles issues (see Commentary, Section 506.3.11.2).

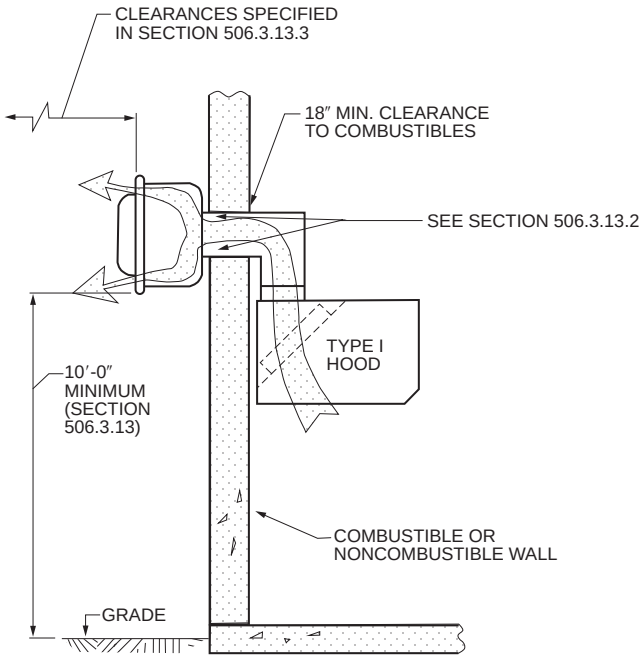

For SI: 1 inch = 25.4 mm, 1 foot = 304.8 mm.

Figure 506.3.11
TERMINATION THROUGH EXTERIOR WALLS

506.3.11.1 Shaft enclosure. Grease ducts constructed in accordance with Section 506.3.1 shall be permitted to be enclosed in accordance with the *International Building Code* requirements for shaft construction. Such grease duct systems and exhaust *equipment* shall have a *clearance* to combustible construction of not less than 18 inches (457 mm), and shall have a *clearance* to noncombustible construction and gypsum wallboard attached to noncombustible structures of not less than 6 inches (76 mm). Duct enclosures shall be sealed around the duct at the point of penetration and vented to the outside of the building through the use of weather-protected openings.

❖ One of the options for a grease duct enclosure is providing a fire-resistance-rated shaft. Commentary Figure 506.3.11.1(1) illustrates an exhaust duct enclosed by a vertical shaft. The grease duct enclosure must be constructed to comply with the shaft enclosure requirements in the IBC, including the bottom or origin of the shaft enclosure. The reference to the IBC for shaft construction means that the IBC regulates the fire-resistance rating and construction of the assemblies that form the duct enclosure (shaft), whereas this code determines when and where an

INTERNATIONAL CODE COUNCIL®
Copyright © 2015 ICC. ALL RIGHTS RESERVED. Accessed by David Dammon on Jun 21, 2017 12:30:52 PM pursuant to License Agreement with ICC. No further reproduction or distribution authorized. ANY UNAUTHORIZED REPRODUCTION OR DISTRIBUTION IS A VIOLATION OF THE FEDERAL COPYRIGHT ACT AND THE LICENSE AGREEMENT, AND SUBJECT TO CIVIL AND CRIMINAL PENALTIES THEREUNDER.

enclosure is required. Where the duct penetrates the duct enclosure, it must be sealed in accordance with the IBC at the point of penetration with noncombustible materials to prevent fire and hot gases from entering or exiting the shaft enclosure. The duct enclosure must be vented to the exterior to allow heat, hot gases and fire to escape [see Commentary Figure 506.5.3(1)]. In the context of this section, shafts can be horizontal as well as vertical.

Commentary Figure 506.3.11.1(2) illustrates an exhaust duct penetrating a wall and extending through an adjacent room before exiting the building. All segments of the duct beyond the wall penetration are protected by the enclosure. The duct termination at the exterior of the building must be protected against damage caused by precipitation, wind or other weather conditions.

The minimum clearance dimensions are required around the grease duct to protect combustibles, allow for some convection cooling and allow for uniform inspection of the outside surface of the duct. In the event that a fire has occurred in the system, the duct system must be inspected to determine whether it has been damaged or is otherwise unfit for continued service. Clearance to combustibles for ducts not enclosed in a shaft is addressed in Section 506.3.6. The 6-inch (152 mm) minimum clearance is required to allow visual inspection of the duct, especially after a fire event. The shaft is intended to isolate the grease duct from all other ducts, including other grease ducts. In other words, if there are two separate Type I kitchen hoods in the same kitchen with separate grease ducts that are routed to separate exhaust fans on the roof, the grease ducts are not permitted to be located in the same fire-resistance-rated shaft.

If the duct enclosure (shaft) construction is combustible, grease ducts must maintain a minimum clearance to combustibles of 18 inches (457 mm). Typical construction for shafts is gypsum board on metal studs and this kind of assembly is treated as noncombustible under the provisions of this section. An assembly of gypsum board on wood studs is treated as a combustible assembly and the 18-inch (457 mm) clearance would apply.

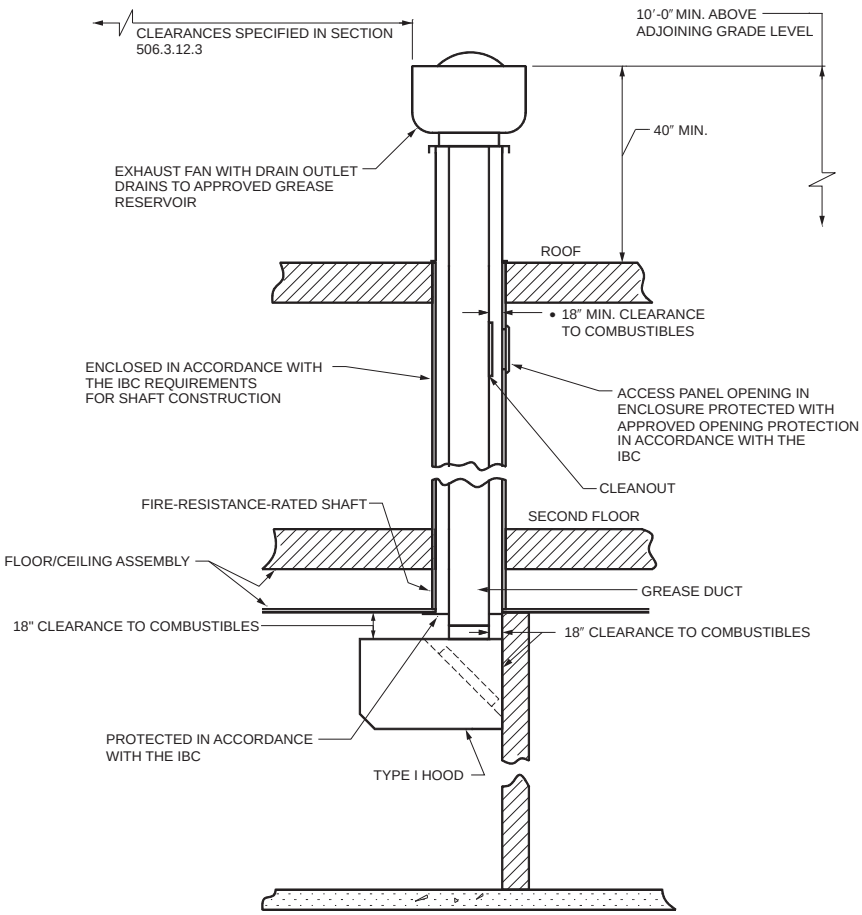

For SI: 1 inch = 25.4 mm, 1 foot = 304.8 mm.

Figure 506.3.11.1(1)
EXHAUST DUCT ENCLOSED BY A VERTICAL SHAFT

INTERNATIONAL CODE COUNCIL®
Copyright © 2015 ICC. ALL RIGHTS RESERVED. Accessed by David Dammon on Jun 21, 2017 12:30:52 PM pursuant to License Agreement with ICC. No further reproduction or distribution authorized. ANY UNAUTHORIZED REPRODUCTION OR DISTRIBUTION IS A VIOLATION OF THE FEDERAL COPYRIGHT ACT AND THE LICENSE AGREEMENT, AND SUBJECT TO CIVIL AND CRIMINAL PENALTIES THEREUNDER.

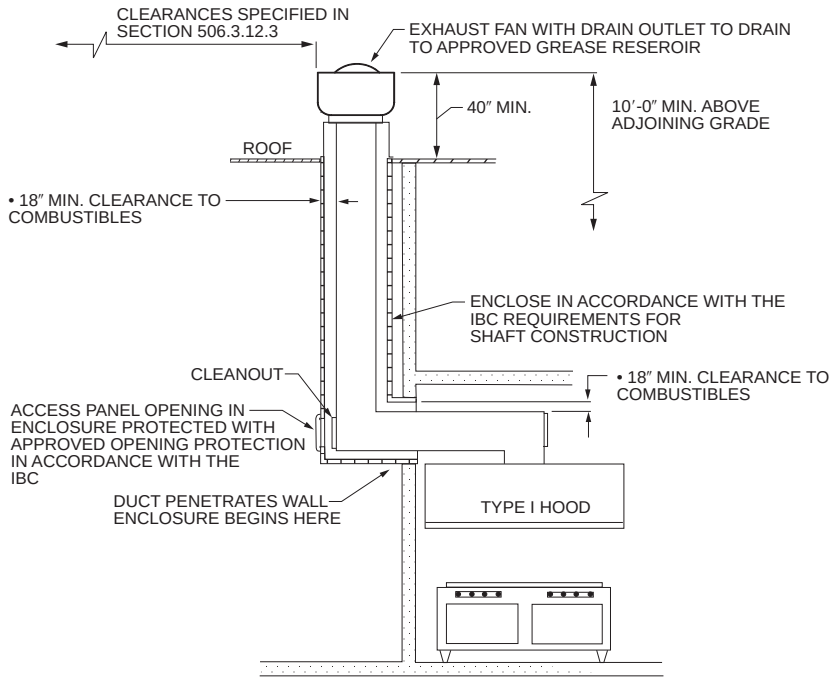

For SI: 1 inch = 25.4 mm, 1 foot = 304.8 mm.

Figure 506.3.11.1(2)
EXHAUST DUCT PENETRATING A WALL

506.3.11.2 Field-applied grease duct enclosure. Grease ducts constructed in accordance with Section 506.3.1 shall be enclosed by a *listed* and *labeled* field-applied grease duct enclosure material, systems, product, or method of construction specifically evaluated for such purpose in accordance with ASTM E2336. The surface of the duct shall be continuously covered on all sides from the point at which the duct originates to the outlet terminal. Duct penetrations shall be protected with a through-penetration firestop system tested and *listed* in accordance with ASTM E814 or UL 1479 and having a "F" and "T" rating equal to the fire-resistance rating of the assembly being penetrated. The grease duct enclosure and firestop system shall be installed in accordance with the listing and the manufacturer's instructions. Partial application of a field-applied grease duct enclosure shall not be installed for the sole purpose of reducing clearances to combustibles at isolated sections of grease duct. Exposed duct-wrap systems shall be protected where subject to physical damage.

❖ The second option for providing a duct enclosure is a field-applied grease duct enclosure [see Commentary Figure 506.3.11.2(1)]. This field-applied duct enclosure system must be evaluated for the intended purpose in accordance with ASTM E2336, *Fire Resistive Grease Duct Enclosure Systems*. Such systems include what is commonly referred to as "grease duct fire wrap." The duct covering/enclosure system is evaluated by testing for the following: noncombustibility, fire endurance, durability, internal fire and fire engulfment with a through-penetration firestop.

In addition to being tested as a grease duct enclosure system in accordance with ASTM E2336, the system is required to be tested as an approved through-penetration firestop system. An approved through-penetration firestop system is one that has been tested in accordance with ASTM E814 or UL 1479. The test method determines the performance of the protection system when exposed to a standard time-temperature fire test and hose-stream test. The performance of the protection system is dependent on the specific assembly of materials tested, including the number, type and size of penetrations and the type of floor, wall or ceiling in which it is installed. It should also be noted that tests have been conducted at various pressure differentials; however, the current criterion used is 0.01 inch (0.025 kPa) of water gauge, and only tests with this minimum pressure throughout the test period are to be accepted.

In evaluating test reports, the code official must determine that the tested assembly is truly representative of the proposed system installation. The ASTM E814 test establishes two ratings. These are the F rating, which identifies the ability of the material to resist the passage of flame, and the T rating, which identifies the thermal transmission characteristics of the material or assembly.

A field-applied grease duct enclosure must begin at the first point of penetration of a ceiling, wall or floor and must be continuous to the duct termination. Since the grease duct enclosure is required to be tested and specifically evaluated for such purpose, it is critical that the enclosure be installed in accordance with the listing and the manufacturer's installa-

INTERNATIONAL CODE COUNCIL®
Copyright © 2015 ICC. ALL RIGHTS RESERVED. Accessed by David Dammon on Jun 21, 2017 12:30:52 PM pursuant to License Agreement with ICC. No further reproduction or distribution authorized. ANY UNAUTHORIZED REPRODUCTION OR DISTRIBUTION IS A VIOLATION OF THE FEDERAL COPYRIGHT ACT AND THE LICENSE AGREEMENT, AND SUBJECT TO CIVIL AND CRIMINAL PENALTIES THEREUNDER.

tion instructions. A field-applied duct wrap is usually a foil-encapsulated proprietary insulation material that, depending on its location, could be subject to damage. For this reason, if the duct enclosure is located in an area where it would be subject to physical damage, it must be protected with some type of physical barrier.

Note that in addition to being evaluated as a grease duct enclosure, field-applied duct enclosures also offer reduced clearance to combustibles, with some offering zero clearance to combustibles. The actual clearance to combustibles will be indicated on the label for the particular product and the installation must be in accordance with the manufacturer's installation instructions. The reduced clearances that these products offer make them a possible solution to clearance problems that may be encountered when, for example, a grease duct is routed up through a roof of a building of wood-frame construction (see Commentary Figure 506.3.6). This section prohibits the practice of partially applying the duct wrap to only certain portions of a duct for the purpose of reducing clearance to combustibles. This normally occurs when the exception to Section 506.3.11 does not require a duct enclosure, and at the point where the grease duct goes up through the roof. Where the roof is of combustible construction or the insulation or roof membrane is combustible, the practice of wrapping the duct from a point 18 inches from the bottom of the roof deck and up through the roof curb has been proposed in the past [see Commentary Figure 506.3.11.2(2)]. This, however, is not how these products were intended to be used nor have they been tested and approved for this application. This is because such materials are tested and listed only as a complete system. The duct wrap materials are required to meet all five of the tests that are in ASTM E2336 including an internal fire test and the external full engulfment test. The duct wrap would never pass these tests under partial application and it has never been tested to reduce clearances in small sections of grease ducts.

Where an in-line grease fan is installed in the grease duct, a fan enclosure must be installed to maintain the integrity of the fire-resistant-rated enclosure provided by the grease duct wrap [see Commentary Figures 506.3.11.2(1) and 506.5.1(2)].

506.3.11.3 Factory-built grease duct enclosure assemblies. Factory-built grease ducts incorporating integral enclosure materials shall be *listed* and *labeled* for use as grease duct enclosure assemblies specifically evaluated for such purpose in accordance with UL 2221. Duct penetrations shall be protected with a through-penetration firestop system tested and *listed* in accordance with ASTM E814 or UL 1479 and having an "F" and "T" rating equal to the fire-resistance rating of the assembly being penetrated. The grease duct enclosure assembly and firestop system shall be installed in accordance with the listing and the manufacturer's instructions.

❖ The third option for providing a duct enclosure is a factory-built grease duct, which is tested as a through-penetration firestop system in accordance with ASTM E814 or UL 1479 (see commentary, Section 506.3.11.2), as well as being evaluated in accordance with UL 2221. The prefabricated grease duct enclosure assembly is evaluated by testing that is very similar to the testing for the grease duct fire wrap: noncombustibility, internal and external fire tests, external fire test with fire engulfment and external fire test with a firestop test.

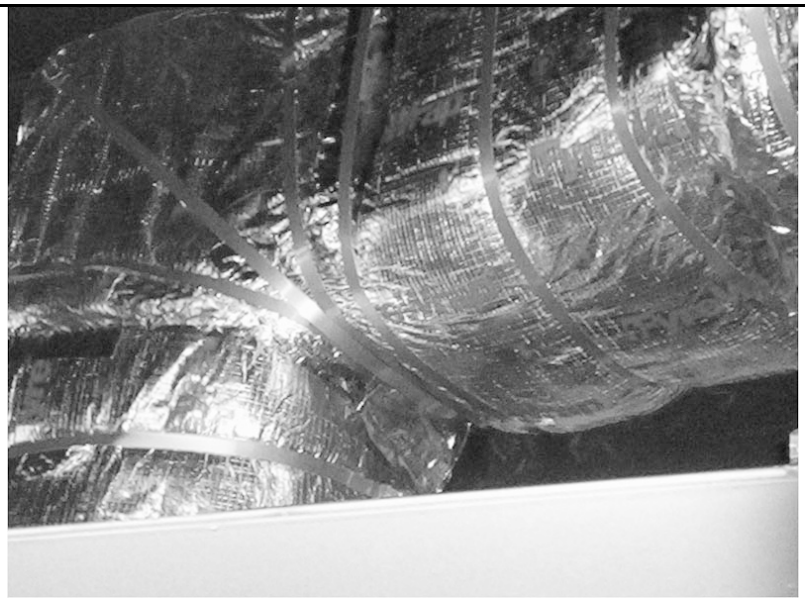

Figure 506.3.11.2(1)
FIELD-APPLIED GREASE DUCT ENCLOSURE
(Photo courtesy of Guy McMann)

INTERNATIONAL CODE COUNCIL®
Copyright © 2015 ICC. ALL RIGHTS RESERVED. Accessed by David Dammon on Jun 21, 2017 12:30:52 PM pursuant to License Agreement with ICC. No further reproduction or distribution authorized. ANY UNAUTHORIZED REPRODUCTION OR DISTRIBUTION IS A VIOLATION OF THE FEDERAL COPYRIGHT ACT AND THE LICENSE AGREEMENT, AND SUBJECT TO CIVIL AND CRIMINAL PENALTIES THEREUNDER.

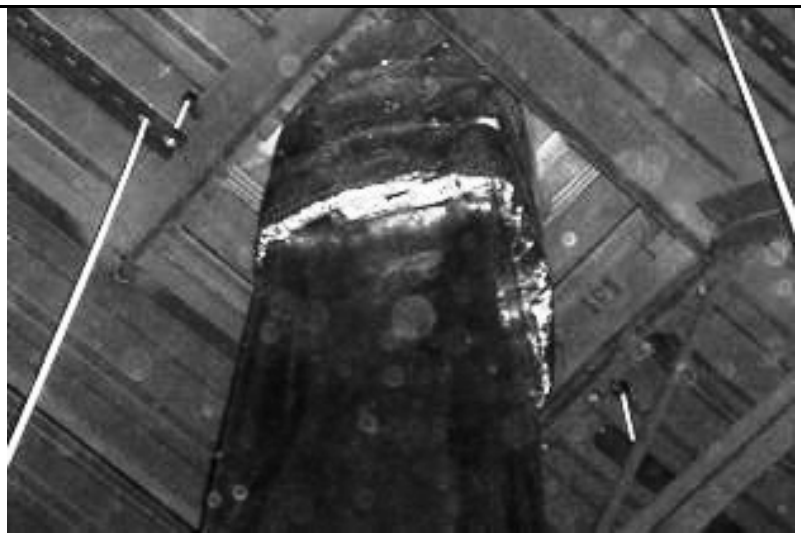

Figure 506.3.11.2(2)
PARTIAL APPLICATION OF FIELD-APPLIED GREASE DUCT ENCLOSURE (PROHIBITED)
(Photo courtesy of Guy McMann)

There are two types of factory-built grease ducts, factory-built grease ducts without an enclosure (see commentary, Section 506.3.1.1) and factory-built grease ducts that are listed and labeled with an enclosure in accordance with UL 2221. In order to comply with UL 2221, the factory-built grease duct must first comply with UL 1978. A factory-built grease duct that is in compliance with UL 1978 must then incorporate insulation materials that are above and beyond those required to meet UL 1978 in order to show compliance with UL 2221.

Note that in addition to being evaluated as a grease duct enclosure, factory-built grease ducts offer reduced clearance to combustibles, with some offering zero clearance to combustibles. The actual clearance to combustibles will be indicated on the label for the particular product, and the installation must be in accordance with the manufacturer's installation instructions. The reduced clearances that these products offer make them a possible solution to clearance problems that may be encountered when, for example, a grease duct is routed up through a roof of a building of wood-frame construction [see Commentary Figures 506.3.1.1(2) and 506.3.6].

Where an in-line grease fan is installed in a factory-built grease duct, a fan enclosure must be provided (see commentary, Section 506.3.10.2).

506.3.12 Grease duct fire-resistive access opening. Where cleanout openings are located in ducts within a fire-resistance-rated enclosure, access openings shall be provided in the enclosure at each cleanout point. Access openings shall be equipped with tight-fitting sliding or hinged doors that are equal in fire-resistive protection to that of the shaft or enclosure. An *approved* sign shall be placed on access opening panels with wording as follows: "ACCESS PANEL. DO NOT OBSTRUCT."

❖ The requirements of this section relate to the requirements of Sections 506.3.8 and 506.3.11. The construction of the duct enclosure, including opening protectives, must meet IBC requirements. Where a cleanout occurs in a grease duct system that is enclosed as required by Section 506.3.11, an opening must be placed in the enclosure to provide access to the cleanout. To maintain shaft integrity, these opening protectives must afford the same fire protection as that of the duct enclosure.

506.3.13 Exhaust outlets serving Type I hoods. Exhaust outlets for grease ducts serving Type I hoods shall conform to the requirements of Sections 506.3.13.1 through 506.3.13.3.

❖ This section regulates the termination of grease ducts that serve Type I hoods. While Section 506.5.5 references the user back to this section for the termination for exhaust equipment (i.e., exhaust fans), this section is only referring to outlets serving a Type I hood. An example of this would be where an in-line grease fan is installed and only the grease duct outlet extends to the exterior of the building.

506.3.13.1 Termination above the roof. Exhaust outlets that terminate above the roof shall have the discharge opening located not less than 40 inches (1016 mm) above the roof surface.

❖ The requirement for the discharge opening to be at least 40 inches (1016 mm) above the roof surface is intended to prevent the accumulation of grease residue on surrounding surfaces and to allow the diffusion of the exhaust into the surrounding air currents.

INTERNATIONAL CODE COUNCIL®
Copyright © 2015 ICC. ALL RIGHTS RESERVED. Accessed by David Dammon on Jun 21, 2017 12:30:52 PM pursuant to License Agreement with ICC. No further reproduction or distribution authorized. ANY UNAUTHORIZED REPRODUCTION OR DISTRIBUTION IS A VIOLATION OF THE FEDERAL COPYRIGHT ACT AND THE LICENSE AGREEMENT, AND SUBJECT TO CIVIL AND CRIMINAL PENALTIES THEREUNDER.

The intent is that the discharge be directed away from the roof.

This section addresses only grease duct exhaust outlets serving Type I hoods. Exhaust outlets for Type II hoods must comply with Sections 501.3.1 and 506.4.2.

506.3.13.2 Termination through an exterior wall. Exhaust outlets shall be permitted to terminate through exterior walls where the smoke, grease, gases, vapors and odors in the discharge from such terminations do not create a public nuisance or a fire hazard. Such terminations shall not be located where protected openings are required by the *International Building Code*. Other exterior openings shall not be located within 3 feet (914 mm) of such terminations.

❖ Exhaust outlets can terminate through a wall only if a fire hazard or public nuisance is not created. Because of the many different places the exhaust can terminate and the various types of discharge, exterior wall terminations must be evaluated on a case-by-case basis by the code official (see Commentary Figure 506.3.11). In some locations, a wall termination could create a public nuisance because of odors, smoke, grease discharge and the proximity of other buildings, walkways and other occupied areas. Terminations through the exterior wall must be located so that they do not create a fire hazard. For example, a termination through the exterior wall below a roof soffit should be avoided due to the possibility of grease collecting on the soffit.

This section prohibits wall terminations in walls required to have protected openings. Depending on the building's proximity to lot lines and other buildings, the building code might require that openings in exterior walls be protected with fire-resistance-rated opening protectives. The wall termination must be located at least 3 feet (914 mm) from all openings, including any window (fixed or openable), door, air exhaust or intake opening.

This section addresses only grease duct exhaust outlets serving Type I hoods. Exhaust outlets for Type II hoods must comply with Sections 501.3.1 and 506.4.2.

506.3.13.3 Termination location. Exhaust outlets shall be located not less than 10 feet (3048 mm) horizontally from parts of the same or contiguous buildings, adjacent buildings and adjacent property lines and shall be located not less than 10 feet (3048 mm) above the adjoining grade level. Exhaust outlets shall be located not less than 10 feet (3048 mm) horizontally from or not less than 3 feet (914 mm) above air intake openings into any building.

Exception: Exhaust outlets shall terminate not less than 5 feet (1524 mm) horizontally from parts of the same or contiguous building, an adjacent building, adjacent property line and air intake openings into a building where air from the exhaust outlet discharges away from such locations.

❖ This section addresses only grease duct exhaust outlets serving Type I hoods. Exhaust outlets for Type II hoods must comply with Sections 501.3.1 and 506.4.2.

The discharge of the exhaust system must be located to minimize accumulation of grease on parts of the same, contiguous or adjacent buildings and to prevent the entry of exhaust discharge into any fresh air intake or other opening to any building. The exhaust outlet must be located a minimum distance above grade to protect passersby and to help the dispersion of the exhaust into the atmosphere. Exhaust outlets must be a minimum of 10 feet (3048 mm) horizontally from or 3 feet (914 mm) above any air intakes which is consistent with other sections of the code.

The exception allows reduced horizontal clearance where the exhaust discharge is directed so as not to affect any property or enter any building. The intent of the exception is to grant relief from the 10-foot (3048 mm) clearance requirement where the exhaust is directed away from what the code is trying to protect. Discharging the exhaust "away" from the protected buildings can be interpreted as not directing the exhaust at any angle towards them. The outlet can discharge in a direction parallel to a building wall, for example, but cannot be directed at some angle towards such wall. Good judgment is required for securing the intent of this exception.

506.4 Ducts serving Type II hoods. Commercial kitchen exhaust systems serving Type II hoods shall comply with Sections 506.4.1 and 506.4.2.

❖ Sections 506.4.1 and 506.4.2 address ducts used for Type II hoods. Exhaust ducts serving Type II exhaust systems are prohibited from interconnecting with any other exhaust ducts other than Type II exhaust ducts in accordance with Section 501.2.

506.4.1 Ducts. Ducts and plenums serving Type II hoods shall be constructed of rigid metallic materials. Duct construction, installation, bracing and supports shall comply with Chapter 6. Ducts subject to positive pressure and ducts conveying moisture-laden or waste-heat-laden air shall be constructed, joined and sealed in an *approved* manner.

❖ Nongrease ducts and plenums serving Type II hoods are not subjected to the same hazards as grease ducts serving Type I hoods. Because nongrease duct systems control the waste heat and vapors associated with Type II hoods, they must be constructed of rigid metallic materials, and be braced and supported to comply with Section 603. SMACNA *HVAC Duct Construction Standards—Metal and Flexible* contains information on duct sealing. For positive duct pressure applications, duct joints must be sealed, including longitudinal joints, transverse joints and connections. Ducts must be sealed with approved materials (such as mastic with fibrous backing tape or pressure sensitive tape) consistent with Chapter 6. Type II hood ducts could be subjected to wetting from condensation and, therefore, must be constructed with this in mind.

INTERNATIONAL CODE COUNCIL®
Copyright © 2015 ICC. ALL RIGHTS RESERVED. Accessed by David Dammon on Jun 21, 2017 12:30:52 PM pursuant to License Agreement with ICC. No further reproduction or distribution authorized. ANY UNAUTHORIZED REPRODUCTION OR DISTRIBUTION IS A VIOLATION OF THE FEDERAL COPYRIGHT ACT AND THE LICENSE AGREEMENT, AND SUBJECT TO CIVIL AND CRIMINAL PENALTIES THEREUNDER.

506.4.2 Type II terminations. Exhaust outlets serving Type II hoods shall terminate in accordance with the hood manufacturer's installation instructions and shall comply with all of the following:

1. Exhaust outlets shall terminate not less than 3 feet (914 mm) in any direction from openings into the building.
2. Outlets shall terminate not less than 10 feet (3048 mm) from property lines or buildings on the same lot.
3. Outlets shall terminate not less than 10 feet (3048 mm) above grade.
4. Outlets that terminate above a roof shall terminate not less than 30 inches (762 mm) above the roof surface.
5. Outlets shall terminate not less than 30 inches (762 mm) from exterior vertical walls
6. Outlets shall be protected against local weather conditions.
7. Outlets shall not be directed onto walkways.
8. Outlets shall meet the provisions for exterior wall opening protectives in accordance with the *International Building Code.*

❖ This section provides prescriptive requirements for the termination of Type II exhaust systems. Listed manufactured hoods must be installed in accordance with manufacturer's installation instructions and any requirements in this section that are more restrictive. Shop-fabricated hoods that are not listed must follow these prescriptive requirements for the termination of the Type II exhaust.

Because grease is not involved, the termination requirements for Type II exhaust systems are not nearly as stringent as those for Type I exhaust systems; however, there are many similarities. Type II exhaust outlets must be a minimum of 10 feet (3048 mm) from lot lines and buildings on the same lot and must be located a minimum of 10 feet (3048 mm) above grade. Unlike Type I systems, a Type II exhaust may terminate through an exterior wall that is required by the IBC to have protected openings. In such cases, the duct termination opening would have to be protected by a closure device such as a fire damper. The 30-inch (762 mm) requirement for the exhaust outlet to be above the roof or from an exterior wall is an attempt to decrease the likelihood that any exhaust air will impinge on the exterior surfaces due.

506.5 Exhaust equipment. Exhaust *equipment*, including fans and grease reservoirs, shall comply with Sections 506.5.1 through 506.5.5 and shall be of an *approved* design or shall be *listed* for the application.

❖ Exhaust fans, motors, grease reservoirs and other related equipment can be subjected to high temperatures and severe duty; therefore, they must be tested and listed for the intended application or specifically approved.

506.5.1 Exhaust fans. Exhaust fan housings serving a Type I hood shall be constructed as required for grease ducts in accordance with Section 506.3.1.1.

Exception: Fans *listed* and *labeled* in accordance with UL 762.

❖ Commercial kitchen exhaust fan housings serving Type I hoods must be constructed of steel and must be capable of handling hot grease-laden air and smoke (see the definition of "Hood, Type I"). The fan must also be designed to collect grease and divert it to a point of collection to prevent a fire hazard and damage to the building surfaces. Fan housings constructed of steel have the integrity to withstand the operating temperatures and conditions related to a duct system fire. There are two types of exhaust fans that serve Type I hoods; the traditional exterior-mounted exhaust fan (i.e., either through the roof or exterior wall) and interior-mounted in-line fans [see Commentary Figures 506.5.1(1) and 506.5.1(2)].

The exception recognizes other fan housing materials such as aluminum alloys. Fans of materials other than steel must be specifically listed for commercial kitchen applications.



Figure 506.5.1(1)
ROOF-MOUNTED EXHAUST FAN FOR A TYPE I HOOD
(Notice that the duct does not extend 18 inches above the roof surface)

INTERNATIONAL CODE COUNCIL®
Copyright © 2015 ICC. ALL RIGHTS RESERVED. Accessed by David Dammon on Jun 21, 2017 12:30:52 PM pursuant to License Agreement with ICC. No further reproduction or distribution authorized. ANY UNAUTHORIZED REPRODUCTION OR DISTRIBUTION IS A VIOLATION OF THE FEDERAL COPYRIGHT ACT AND THE LICENSE AGREEMENT, AND SUBJECT TO CIVIL AND CRIMINAL PENALTIES THEREUNDER.

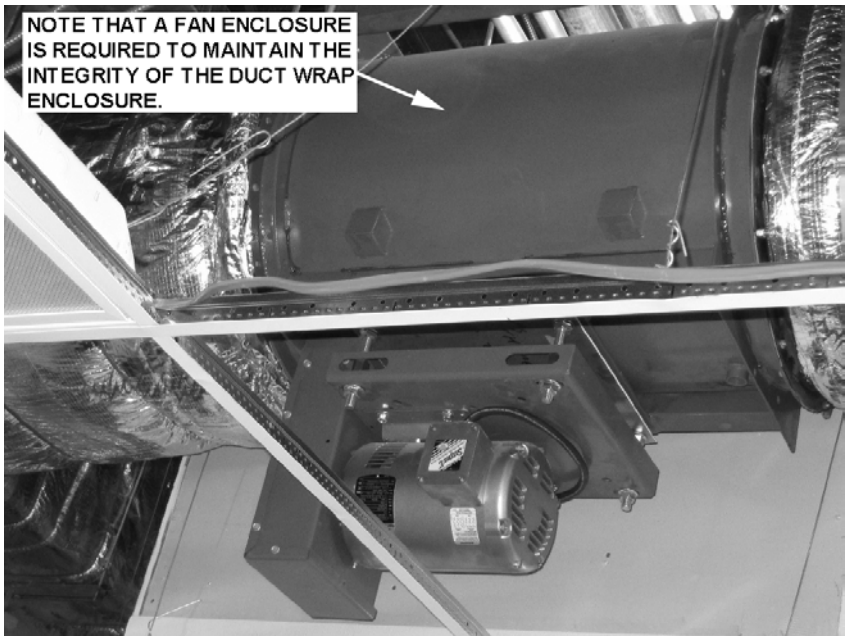

Figure 506.5.1(2)
INLINE EXHAUST FAN FOR A TYPE I HOOD

506.5.1.1 Fan motor. Exhaust fan motors shall be located outside of the exhaust airstream.

❖ An exhaust fan motor cannot be installed in locations that expose it to the exhaust airflow. Exposure to high temperatures and grease-laden vapors will shorten the life of the motor, and a malfunctioning motor can be a potential ignition source. The exhaust fan would be better located at or as close as possible to the discharge end of the duct to minimize exposure temperatures and the amount of the duct system that is exposed to positive pressures. Typical commercial kitchen exhaust fan designs, both direct drive and belt driven, place motors in shielded locations not subject to the exhaust flow.

506.5.1.2 In-line fan location. Where enclosed duct systems are connected to in-line fans not located outdoors, the fan shall be located in a room or space having the same fire-resistance rating as the duct enclosure. Access shall be provided for servicing and cleaning of fan components. Such rooms or spaces shall be ventilated in accordance with the fan manufacturer's installation instructions.

❖ In-line exhaust fans are installed indoors in the exhaust system at some point between the exhaust hoods and the exhaust terminal. If the exhaust duct is required to be enclosed in fire-resistance-rated construction or a listed integral or field-installed duct enclosure system, the in-line fan must also be so enclosed because the in-line fan is part of the duct system (See Commentary Figure 506.5.1.2). It is a link in the chain. Previous editions of the code did not address this directly, but the enclosure requirement was assumed. An in-line exhaust fan requires maintenance and ventilation to prevent overheating, and these can be complicated where the fan is enclosed as required by Section 506.3.11. Field-applied duct wrap systems would be difficult or impossible to apply to in-line fans that need to be accessed for maintenance. This section requires that the fans be enclosed in spaces that afford access for maintenance and ventilation of the fan components. See also Section 506.3.11, which now states that in-line exhaust fans must be enclosed as required for grease ducts.

506.5.2 Exhaust fan discharge. Exhaust fans shall be positioned so that the discharge will not impinge on the roof, other *equipment* or appliances or parts of the structure. A vertical discharge fan shall be manufactured with an *approved* drain outlet at the lowest point of the housing to permit drainage of grease to an *approved* grease reservoir.

❖ Exhaust must be discharged away from the roof, other equipment and other parts of the structure to eliminate damage or a fire hazard caused by the high-temperature discharge and condensable grease-laden vapor. Vertical discharge (upblast) fans must have an integral grease drainage path leading to an approved grease collection container. Commentary Figure 506.5.1(1) illustrates a grease drain to a reservoir.

506.5.3 Exhaust fan mounting. Up-blast fans serving Type I hoods and installed in a vertical or horizontal position shall be hinged, supplied with a flexible weatherproof electrical cable to permit inspection and cleaning and shall be equipped with a means of restraint to limit the swing of the fan on its

INTERNATIONAL CODE COUNCIL®
Copyright © 2015 ICC. ALL RIGHTS RESERVED. Accessed by David Dammon on Jun 21, 2017 12:30:52 PM pursuant to License Agreement with ICC. No further reproduction or distribution authorized. ANY UNAUTHORIZED REPRODUCTION OR DISTRIBUTION IS A VIOLATION OF THE FEDERAL COPYRIGHT ACT AND THE LICENSE AGREEMENT, AND SUBJECT TO CIVIL AND CRIMINAL PENALTIES THEREUNDER.

hinge. The ductwork shall extend not less than 18 inches (457 mm) above the roof surface.

❖ Up-blast fans are required to be hinged so that they can be tilted from their mounting base for purposes of cleaning, maintenance and repairs. Scheduled inspections and maintenance of upblast exhaust fans are not easily performed if a fan has to be lifted off of its roof curb. A hinged base simplifies inspection and maintenance. Such fans are heavy, and when they are tilted, they can easily escape the control of personnel and fall, causing injury to the workers and/or damage to the roof, wiring and the fan itself. Therefore, a means of restraint to limit the swing of the fan is required [see Commentary Figure 506.5.3(2)]. This requirement applies regardless of the mounting angle of the fan. The flexible electrical cable provides freedom of movement when opening the hinged fan body without damaging the electrical connection. The 18-inch (457 mm) duct extension is also required by NFPA 96 [see Commentary Figure 506.5.3(1)]. Commentary Figure 506.5.1(1) illustrates a hinged upblast fan with a flexible electrical connection and a grease drain that will pull out of the grease reservoir when the fan is tilted.

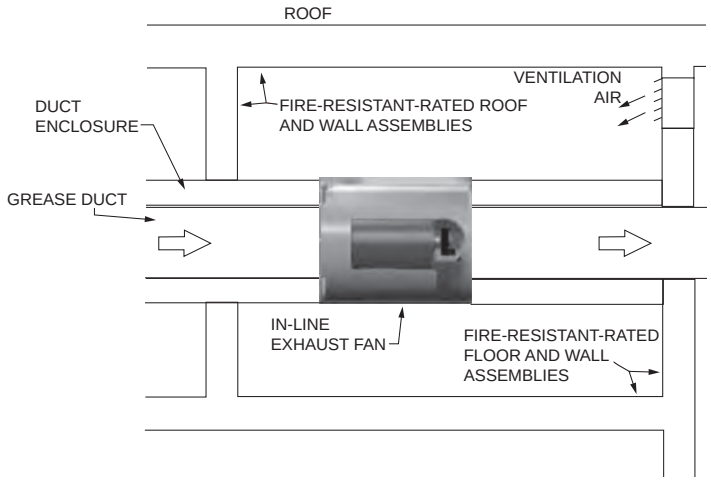

For SI: 1 inch = 25.4 mm, 1 foot = 304.8 mm.

Figure 506.5.1.2
AN INLINE FAN MUST BE LOCATED IN A ROOM OR SPACE HAVING THE SAME FIRE-RESISTANCE RATING AS THE GREASE-DUCT ENCLOSURE

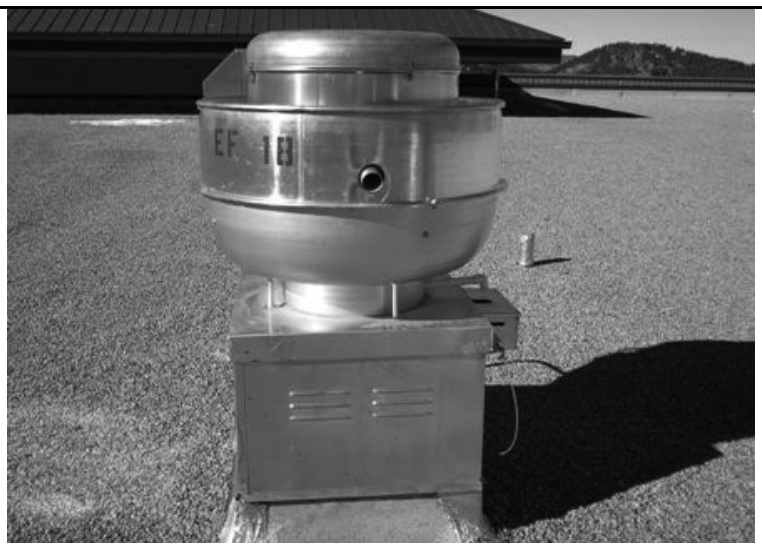

Figure 506.5.3(1)
KITCHEN EXHAUST FAN MOUNTED 18 INCHES ABOVE THE ROOF SURFACE WITH VENTS FOR THE SHAFT (Photo courtesy of Guy McMann)

INTERNATIONAL CODE COUNCIL®
Copyright © 2015 ICC. ALL RIGHTS RESERVED. Accessed by David Dammon on Jun 21, 2017 12:30:52 PM pursuant to License Agreement with ICC. No further reproduction or distribution authorized. ANY UNAUTHORIZED REPRODUCTION OR DISTRIBUTION IS A VIOLATION OF THE FEDERAL COPYRIGHT ACT AND THE LICENSE AGREEMENT, AND SUBJECT TO CIVIL AND CRIMINAL PENALTIES THEREUNDER.

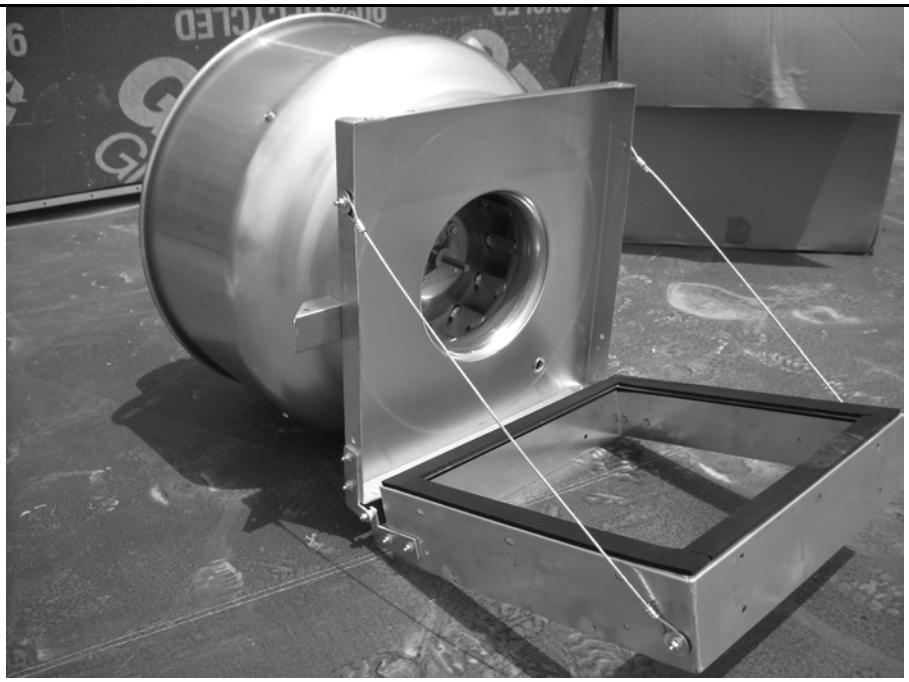

Figure 506.5.3(2)
RESTRAINT CABLE FOR HINGED UP-BLAST EXHAUST FAN
(Photo courtesy of Guy McMann)

506.5.4 Clearances. Exhaust *equipment* serving a Type I hood shall have a *clearance* to combustible construction of not less than 18 inches (457 mm).

Exception: Factory-built exhaust *equipment* installed in accordance with Section 304.1 and *listed* for a lesser *clearance*.

❖ Exhaust equipment is subject to the same exposure to grease fires as the ducts themselves. Therefore, the clearance requirements are the same as those in Section 506.3.6 (see commentary, Section 506.3.6).

506.5.5 Termination location. The outlet of exhaust *equipment* serving Type I hoods shall be in accordance with Section 506.3.13.

Exception: The minimum horizontal distance between vertical discharge fans and parapet-type building structures shall be 2 feet (610 mm) provided that such structures are not higher than the top of the fan discharge opening.

❖ Exhaust equipment must terminate in the same manner as specified for Type I duct systems in Section 506.3.13 (see commentary, Section 506.3.13). Note that Section 506.3.13 is for grease duct outlets and that exhaust equipment must terminate in accordance with Section 506.3.13 but also at a point where there is access for servicing the equipment.

The exception allows reduced horizontal clearance between vertical discharge fans and parapet walls where the fan discharge opening is as high as or higher than the parapet wall (see Commemtary Figure 506.5.5).

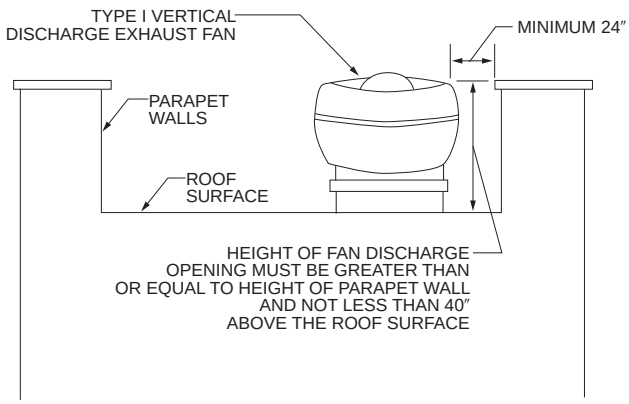

For SI: 1 inch = 25.4 mm.

Figure 506.5.5
EXHAUST OUTLET TERMINATION

SECTION 507
COMMERCIAL KITCHEN HOODS

507.1 General. Commercial kitchen exhaust hoods shall comply with the requirements of this section. Hoods shall be Type I or II and shall be designed to capture and confine cooking vapors and residues. A Type I or Type II hood shall be installed at or above all *commercial cooking appliances* in accordance with Sections 507.2 and 507.3. Where any cooking *appliance* under a single hood requires a Type I hood, a Type I hood shall be installed. Where a Type II hood is required, a Type I or Type II hood shall be installed. Where a Type I hood is installed, the installation of the entire system,

INTERNATIONAL CODE COUNCIL®
Copyright © 2015 ICC. ALL RIGHTS RESERVED. Accessed by David Dammon on Jun 21, 2017 12:30:52 PM pursuant to License Agreement with ICC. No further reproduction or distribution authorized. ANY UNAUTHORIZED REPRODUCTION OR DISTRIBUTION IS A VIOLATION OF THE FEDERAL COPYRIGHT ACT AND THE LICENSE AGREEMENT, AND SUBJECT TO CIVIL AND CRIMINAL PENALTIES THEREUNDER.

including the hood, ducts, exhaust equipment and makeup air system shall comply with the requirements of Sections 506, 507, 508 and 509.

Exceptions:

1. Factory-built commercial exhaust hoods that are listed and labeled in accordance with UL 710, and installed in accordance with Section 304.1, shall not be required to comply with Sections 507.1.5, 507.2.3, 507.2.5, 507.2.8, 507.3.1, 507.3.3, 507.4 and 507.5.
2. Factory-built commercial cooking recirculating systems that are listed and labeled in accordance with UL 710B, and installed in accordance with Section 304.1, shall not be required to comply with Sections 507.1.5, 507.2.3, 507.2.5, 507.2.8, 507.3.1, 507.3.3, 507.4 and 507.5. Spaces in which such systems are located shall be considered to be kitchens and shall be ventilated in accordance with Table 403.3.1.1. For the purpose of determining the floor area required to be ventilated, each individual *appliance* shall be considered as occupying not less than 100 square feet (9.3 m^2).
3. Where cooking appliances are equipped with integral down-draft exhaust systems and such appliances and exhaust systems are listed and labeled for the application in accordance with NFPA 96, a hood shall not be required at or above them.

❖ Type I and II commercial kitchen exhaust hoods must be listed and labeled by an approved agency or must be constructed to conform to the requirements of this chapter. Type I kitchen hoods must be installed above all cooking appliances that produce grease or smoke. Type II kitchen hoods must be installed above cooking or dishwashing appliances that produce heat and moisture and/or products of combustion.

An exhaust system is required for "Commercial cooking appliances," as defined in Chapter 2. In addition to the specific cooking appliances, which are identified in the definition, further examples of commercial cooking appliances that require a commercial kitchen exhaust system are: griddles (flat or grooved); tilting skillets or woks; braising and frying pans; roasters; pastry ovens; pizza ovens; charbroilers; salamander and upright broilers; infrared broilers; and open-burner stoves and ranges. Furthermore, the definition of "Commercial cooking appliances" defines a food service establishment as "any building or portion thereof used for the preparation and serving of food." Within the context of Section 507, the "preparation and serving of food" includes operations such as preparing, handling, cleaning, cooking and packaging foodstuffs of any sort. The obvious examples of a food service establishment are restaurants and school cafeterias. A less obvious example is a church with a fellowship hall that holds fund-raising events, such as spaghetti dinners, fish fries or pancake breakfasts. Even a child day care facility may be loosely classified as a food service establishment if a hot breakfast or lunch is served to the children as part of their care. For a discussion on where a Type I versus Type II hood is required, see the commentary to Section 507.2.

A Type I hood must always be installed above a cooking appliance that produces grease or smoke (see commentary, Section 507.2). Grease and smoke go hand-in-hand such that where one is present, the other is likely present. The last sentence of this section simply states that either a Type I or II hood may be installed above a cooking appliance that requires only a Type II hood.

Sometimes Type I hoods are installed where they are not required by code. It could be by error or because the hood is being repurposed in a new location. If such a Type I hood was connected to ductwork suitable only for Type II hood systems, a fire hazard could result. Building owners and tenants could think that they have a Type I hood system when viewing the hood, not realizing that the hood system is actually a mismatch of a Type I hood with ductwork that is not compatible with a Type I hood. The ductwork would likely lack the required clearance to combustibles, the proper metal thickness, cleanouts and fire suppression. If the Type I hood was later used with appliances requiring Type I hoods, a severe fire hazard would result, unknown to the building owner or tenants. The code intends to prohibit the installation of a system that is misleading as to its capabilities, application and purpose. Often changes are made to the line of cooking appliances in a kitchen, and there might not be an inspection or investigation performed before such changes are made.

Exception 1 states the requirements for factory-built commercial exhaust hoods and specifies which code provisions are not applicable to factory-built hoods. Shop-built and field-constructed hoods are subject to all of the design and fabrication requirements of Section 507.2.

A factory-built commercial exhaust hood that has been tested in accordance with UL 710 and listed and labeled by an approved agency must be installed in accordance with the manufacturer's instructions [see Commentary Figure 507.1(1)]. The importance of installing the system in strict compliance with the manufacturer's instructions cannot be overemphasized. These instructions contain specific installation requirements that are critical to the proper and efficient operation of the hood.

This exception states that listed and labeled hoods have demonstrated compliance with the construction and design requirements of this section and others, such as Sections 507.1.5, 507.2.3, 507.2.5, 507.2.8, 507.3.1, 507.3.3, 507.4 and 507.5. Note that hoods listed and labeled in accordance with UL 710 are not exempt from Section 507.2.6, therefore, the 18-inch (457 mm) clearance requirement applies regardless of what is stated on the hood labels. The following is a list of some of the information that must be con-

INTERNATIONAL CODE COUNCIL®
Copyright © 2015 ICC. ALL RIGHTS RESERVED. Accessed by David Dammon on Jun 21, 2017 12:30:52 PM pursuant to License Agreement with ICC. No further reproduction or distribution authorized. ANY UNAUTHORIZED REPRODUCTION OR DISTRIBUTION IS A VIOLATION OF THE FEDERAL COPYRIGHT ACT AND THE LICENSE AGREEMENT, AND SUBJECT TO CIVIL AND CRIMINAL PENALTIES THEREUNDER.

tained within the manufacturer's installation instructions or on the label:

- Minimum and maximum spacing between the front lower edge of the hood and the cooking surface;
- Minimum exhaust airflow quantity;
- Maximum supply airflow if the supply air is directed into the hood;
- Minimum overhangs of the exhaust hood over the cooking surface;
- Maximum allowable surface temperature of the cooking appliance; and
- The specific type of cooking appliance an exhaust hood is intended to serve.

It is also important to determine that all parts and subassemblies of an exhaust hood are a component of the listed and labeled exhaust hood, or that the parts and subassemblies have been evaluated under the same conditions of fire severity as the exhaust hood. Furthermore, the exhaust hood must be compatible with and intended for the type of cooking appliance it will serve. The label of a factory-built hood tested in accordance with UL 710 will indicate the duty classification (i.e., extra-, heavy-, medium- and light-duty) of the appliances the hood is intended to serve. This will make it easy for the inspector in the field to determine whether the hood that is installed is suited for the appliances that are being installed under the hood.

It is not the intent of this section to require labeling of exhaust hoods. Unlabeled factory-built hoods and shop/field-constructed hoods are permitted.

A factory-built or field-constructed commercial exhaust hood that has not been listed and labeled in accordance with UL 710 is permitted if it is designed, constructed and installed in accordance with Section 507 and all other applicable requirements of this chapter. This section addresses hood material requirements, hood construction, hood dimensions, exhaust quantities and makeup air requirements. Kitchen exhaust systems must discharge all effluent to the outdoors to comply with Sections 501.2, 506.3.13 and 506.4.

Exception 2 allows installation of factory-built commercial cooking recirculating systems if they have been listed and labeled in accordance with UL 710B. It is important that recirculating systems be installed in accordance with the manufacturer's installation instructions so that the listing requirements are met. An improper installation could result in hazardous vapors being discharged back into the kitchen.

Factory-built commercial cooking recirculating systems consist of an electric cooking appliance and an integral or matched packaged hood assembly [see Commentary Figures 507.1(2) and 507.1(3)]. The hood assembly consists of a fan, collection hood, grease filter, fire damper, fire-extinguishing system and air filter such as an electrostatic precipitator. These systems are tested for fire safety and emissions. The grease vapor (condensable particulate matter) in the effluent at the system discharge is not allowed to exceed a concentration of 5.0 mg/m^3. Recirculating systems are not used with fuel-fired appliances because the filtering systems do not remove products of combustion. This exception states that listed and labeled hoods have demonstrated compliance with the construction and design requirements of this section and others, such as Sections 507.1.5, 507.2.3, 507.2.5, 507.2.8, 507.3.1, 507.3.3, 507.4 and 507.5.

Recirculating systems are becoming more and more popular especially in smaller businesses that serve food, such as a sandwich shop, that wants to expand their menu without becoming a full kitchen. A possible concern with using such a system is that they are tested to prevent particulate matter from being redistributed into the space, but they do not completely remove all contaminants and odors. For this reason, a space where one of these appliances is installed must be considered as a kitchen for the purpose of applying Table 403.3. A space not considered to be a traditional kitchen and containing recirculating systems with no exhaust to the outdoors, would not be ventilated if not for this provision in the code. The ventilation rate for kitchens is 0.7 cfm/ft^2 of exhaust, so to apply this rate, each individual recirculating appliance is considered as occupying 100 square feet. The purpose of this requirement is to provide a minimal amount of exhaust in the area where one or more of these appliances is installed. If a recirculating appliance is installed in a typical commercial kitchen where the kitchen ventilation rate is being applied to the whole space, then the area of the kitchen would be used to determine the ventilation rate without adding the additional 100 square feet for each recirculating appliance. Note however, if the kitchen is small and the number of recirculating appliances multiplied by 100 square feet is greater than the area of the kitchen, the exhaust rate for the kitchen must be based on the area calculated in accordance with this section.

All hoods, listed and unlisted, must capture and confine cooking vapors within the hood to prevent spillage into the room (see commentary, Section 507.16).

Exception 3 recognizes the hoodless griddle-type of cooking appliance that is becoming very popular in restaurants. These types of cooking appliances are often referred to as hibachi tables where food is prepared for the customers in front of them at the table where they are dining [see Commentary Figure 507.1(4)]. These cooking tables have a built-in integral down-draft exhaust system that is designed to capture the cooking vapors by drawing the air across the table into exhaust inlets located at the edge of the cooking surface. The cooking vapors are routed to

INTERNATIONAL CODE COUNCIL®
Copyright © 2015 ICC. ALL RIGHTS RESERVED. Accessed by David Dammon on Jun 21, 2017 12:30:52 PM pursuant to License Agreement with ICC. No further reproduction or distribution authorized. ANY UNAUTHORIZED REPRODUCTION OR DISTRIBUTION IS A VIOLATION OF THE FEDERAL COPYRIGHT ACT AND THE LICENSE AGREEMENT, AND SUBJECT TO CIVIL AND CRIMINAL PENALTIES THEREUNDER.

grease filters located under the cooking surface and then to the grease duct that is under the floor [see Commentary Figure 507.1(5)]. The grease duct must be installed in accordance with Section 506.3.10 (see commentary, Section 506.3.10). These hoods must be listed and labeled for this application. Chapter 15 of NFPA 96 contains specific requirements for integral down-draft exhaust systems. It should be noted that other sections of NFPA 96 are referenced in this chapter. Section 102.8.2 of this code addresses such references.

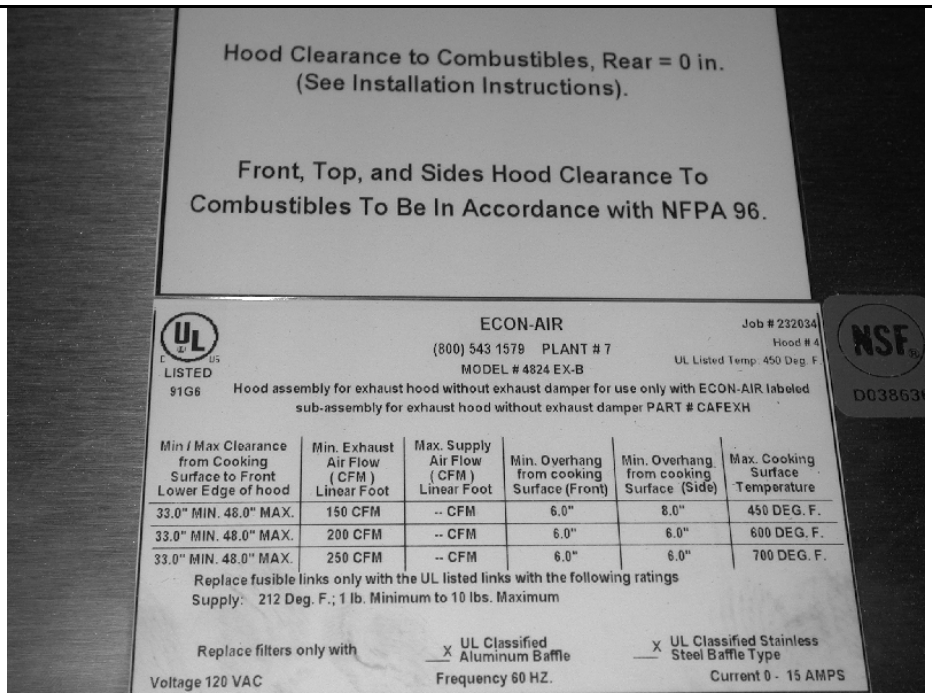

Figure 507.1(1)
TYPICAL LABEL FOR A TYPE I HOOD



Figure 507.1(2)
ELECTRIC DEEP FAT FRYER WITH RECIRCULATING HOOD



Figure 507.1(3)
ELECTRIC GRIDDLE WITH RECIRCULATING HOOD

INTERNATIONAL CODE COUNCIL®
Copyright © 2015 ICC. ALL RIGHTS RESERVED. Accessed by David Dammon on Jun 21, 2017 12:30:52 PM pursuant to License Agreement with ICC. No further reproduction or distribution authorized. ANY UNAUTHORIZED REPRODUCTION OR DISTRIBUTION IS A VIOLATION OF THE FEDERAL COPYRIGHT ACT AND THE LICENSE AGREEMENT, AND SUBJECT TO CIVIL AND CRIMINAL PENALTIES THEREUNDER.



Figure 507.1(4)
HIBACHI TABLE WITH INTEGRAL DOWN-DRAFT EXHAUST SYSTEM
(Photo courtesy of Roaster Tech, Inc.)

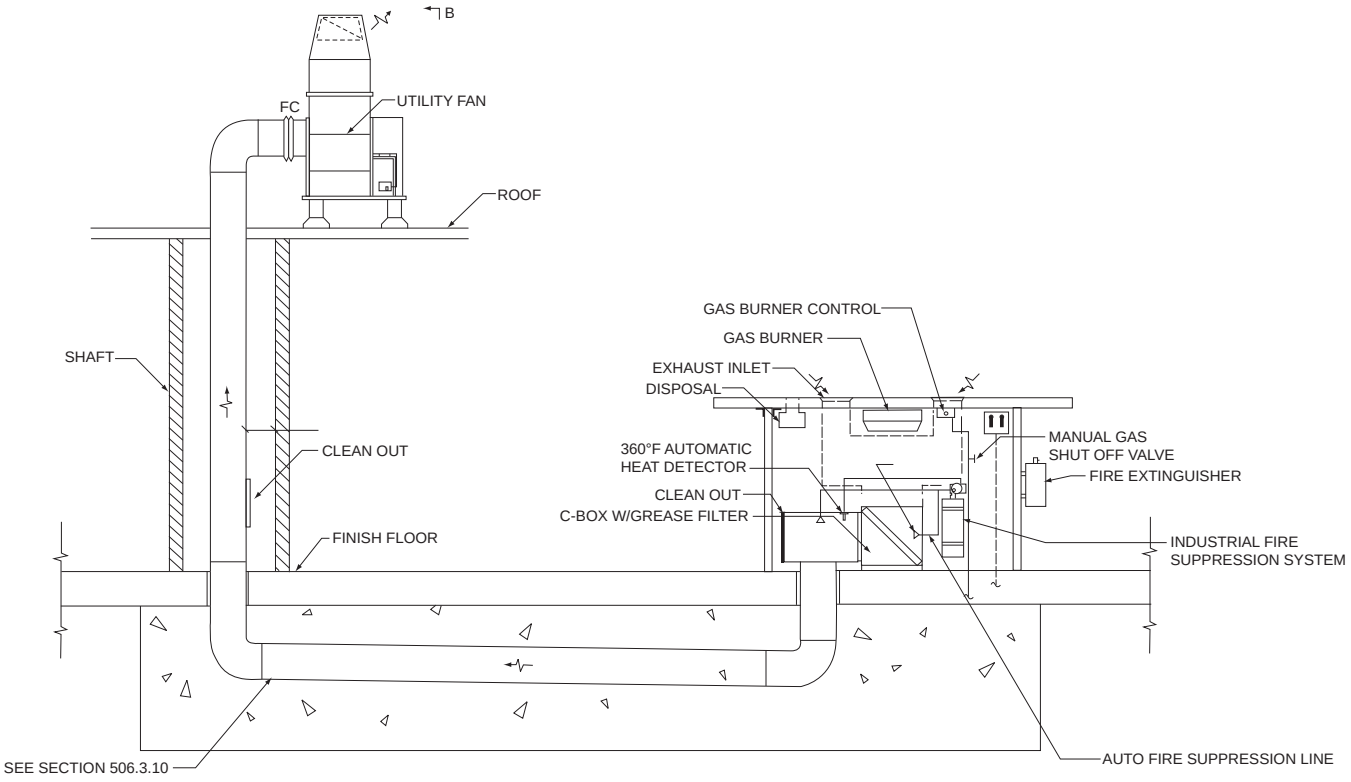

Figure 507.1(5)
DOWN-DRAFT EXHAUST SYSTEM
(Figure courtesy of Roaster Tech, Inc.)

INTERNATIONAL CODE COUNCIL®
Copyright © 2015 ICC. ALL RIGHTS RESERVED. Accessed by David Dammon on Jun 21, 2017 12:30:52 PM pursuant to License Agreement with ICC. No further reproduction or distribution authorized. ANY UNAUTHORIZED REPRODUCTION OR DISTRIBUTION IS A VIOLATION OF THE FEDERAL COPYRIGHT ACT AND THE LICENSE AGREEMENT, AND SUBJECT TO CIVIL AND CRIMINAL PENALTIES THEREUNDER.

507.1.1 Operation. Commercial kitchen exhaust hood systems shall operate during the cooking operation. The hood exhaust rate shall comply with the listing of the hood or shall comply with Section 507.5. The exhaust fan serving a Type I hood shall have automatic controls that will activate the fan when any appliance that requires such Type I Hood is turned on, or a means of interlock shall be provided that will prevent operation of such appliances when the exhaust fan is not turned on. Where one or more temperature or radiant energy sensors are used to activate a Type I hood exhaust fan, the fan shall activate not more than 15 minutes after the first appliance served by that hood has been turned on. A method of interlock between an exhaust hood system and appliances equipped with standing pilot burners shall not cause the pilot burners to be extinguished. A method of interlock between an exhaust hood system and cooking appliances shall not involve or depend upon any component of a fire-extinguishing system.

The net exhaust volumes for hoods shall be permitted to be reduced during part-load cooking conditions, where engineered or *listed* multispeed or variable speed controls automatically operate the exhaust system to maintain capture and removal of cooking effluents as required by this section. Reduced volumes shall not be below that required to maintain capture and removal of effluents from the idle cooking appliances that are operating in a standby mode.

❖ This section states that the hood system must operate whenever cooking operations are taking place. In order to perform the intended function, a Type I hood is required to automatically operate when cooking operations occur or must be activated in an arrangement that prevents cooking without hood exhaust system operation. There are several methods indicated to achieve this and it is left up to the designer/installer/owner and code official to determine what they all agree will be necessary to verify that fan operation will occur whenever cooking operations occur.

The text in previous editions of the code was not clear that automatic activation of the hood system was one of two compliance options. It should be noted that an interlock with the cooking appliances is one of the methods to accomplish this, but is not the only method. This text has been misinterpreted as meaning that all appliances must be fitted with controls that would start the hood system. This is not the case. In fact, tampering/altering with listed and labeled appliances may in itself create a code violation. However, if a cooking appliance has provisions incorporated into its listed and labeled design that included some type of interlock option, that would certainly meet the requirements of this text (see Commentary Figure 507.1.1.).

The text makes it clear that an appliance interlock that would prevent appliance operation when the hood system is not operating is an alternative to fully automatic hood system activation. The text also makes it clear that the hood system must begin operating when any appliance that requires a Type I hood is turned on. For example, one appliance out of several appliances under a hood being turned on must start the hood exhaust system. If this were not the case, cooking might be occurring with some appliance without the hood system running. The code intends for the hood system to operate when any or all of the served appliances are being used.

All this means is that something needs to activate the exhaust fan when a cooking operation takes place. This can be achieved through the use of controls such as heat sensors/infrared technology, light beam interference detection or through methods such as electric relays that control the branch circuit that the appliances are connected to or, in the case of gas appliances, a solenoid valve in the gas supply piping. This section does not prevent manual starting of the exhaust system, provided that there is a means to prevent cooking appliance operation when the exhaust system is not operating.

The code now provides the criterion for how soon the hood system must activate after the first appliance has been turned on. The code was silent on this previously. If an automatically activated (smart hood) system is used, such a system must begin operation within 15 minutes of the first cooking appliance(s) being turned on. To have the hood system activate so quickly will require sensitive and sophisticated controls.

While not stating a specific method to interlock the hood to the operation of the appliances, the code does state that the method used must not cause the pilot burners to be extinguished. For example, if the interlock method uses an electrically actuated (solenoid) main fuel valve, that valve will close when the exhaust fan system is shut down. This, in turn, will extinguish any standing pilots and necessitate the relighting of pilots each day or each time the kitchen is “off line.” Besides the obvious inconvenience, there is also a safety concern with having employees and owners routinely relighting pilots that may be difficult to access. For this reason, the code prohibits a method of interlock that would cause standing pilot burners to be extinguished. Although some attempts have been made to circumvent this problem, a practical and safe solution to the standing pilot problem is not known at this time. It should be noted that in Section 505.1.1 of the IFGC, gas piping is specifically prohibited from being installed to bypass the solenoid valve (see IFGC commentary, Section 505.1.1).

The method of interlock must not involve or depend on any component of the fire-extinguishing system. Since fire-extinguishing systems provide a shutoff device for the fuel to the appliances being protected, someone might try to utilize such valve in an effort to comply with this requirement. This could pose a potential problem for the shutoff device, since it is not listed to provide this function, which might also compromise the effectiveness of the fire-extinguishing systems in an emergency situation. This is an operational requirement to ensure that the ventilation is

INTERNATIONAL CODE COUNCIL®
Copyright © 2015 ICC. ALL RIGHTS RESERVED. Accessed by David Dammon on Jun 21, 2017 12:30:52 PM pursuant to License Agreement with ICC. No further reproduction or distribution authorized. ANY UNAUTHORIZED REPRODUCTION OR DISTRIBUTION IS A VIOLATION OF THE FEDERAL COPYRIGHT ACT AND THE LICENSE AGREEMENT, AND SUBJECT TO CIVIL AND CRIMINAL PENALTIES THEREUNDER.

operational when the cooking appliances are in use. This requirement is not part of the operations that occur when a fire occurs. The shutoff device in the extinguishing system is listed as part of the extinguishing system and is not listed to perform this additional function. Where solenoid gas valves are used to interlock cooking appliances with an exhaust system, a manual reset device should be considered for inclusion in such arrangements. In the event of a power outage, the solenoid valve will close and because the gas appliances are inoperative, the kitchen personnel might walk away from them leaving manual burner controls in the on position. When power is restored, personnel may not be aware that the solenoid has reopened allowing gas to escape from open burners. A manual reset device will prevent such reopening of the solenoid without a deliberate action by informed personnel.

The code allows reduction of the exhaust rate of commercial hoods when no cooking is taking place. Net exhaust volumes are based on the assumption that full-load cooking is taking place. In fact, part-load cooking conditions or appliances operating in standby mode represent the majority of time for most food service operations. Although the hoods should obviously be designed for maximum load, this should not prevent operating the hoods at a reduced exhaust rate when the actual load is less than maximum provided that the intent of the code is still satisfied (i.e., capture and removal of effluents). Reducing the exhaust rates during reduced cooking periods can improve system performance (fire safety, occupant health, energy efficiency and kitchen comfort).

The majority of gas-fired cooking appliance installations use the exhaust hood as a means of venting the combustion byproducts of the cooking appliances. Commercial cooking appliances are either connected to a vent or chimney or the flue outlet discharges into the exhaust hood. The exhaust hood system must be operating when appliances that depend on the exhaust system to vent combustion byproducts are in use. Gas-fired appliances must be interlocked with the hood system if combustion gases are vented by that system (see the definition of "Interlock" in Chapter 2 and Section 505.1.1 of the IFGC).

507.1.1.1 Multiple hoods utilizing a single exhaust system. Where heat or radiant energy sensors are utilized in hood systems consisting of multiple hoods served by a single exhaust system, such sensors shall be provided in each hood. Sensors shall be capable of being accessed from the hood outlet or from a cleanout location.

❖ If a single heat sensor is depended upon for the activation of the exhaust system when cooking occurs, and more than one hood is connected to a common duct system, the location of the heat sensor could cause unacceptable delay. If the sensor were in the common duct, it would be a considerable distance from each hood served by the common system. The code requires individual sensors for each hood in order to increase the reliability and decrease the operation response time of the activation system (see Commentary Figure 507.1.1.1).

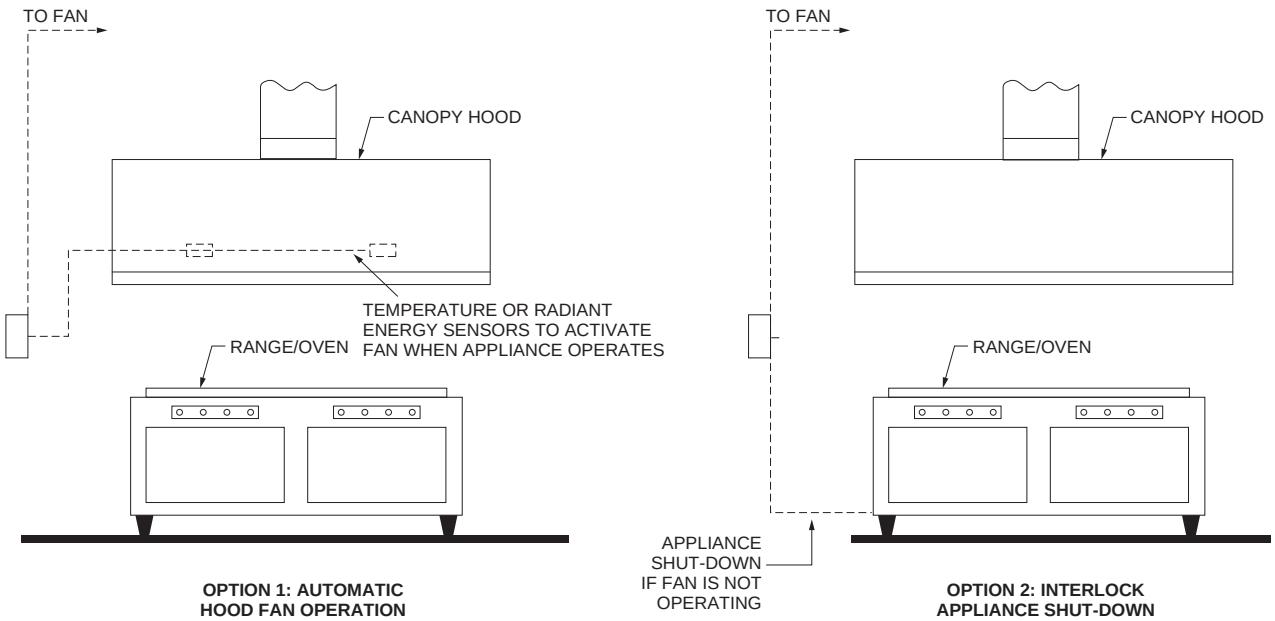

Figure 507.1.1
COMMERCIAL KITCHEN EXHAUST HOOD SYSTEMS SHALL OPERATE DURING THE COOKING OPERATION

INTERNATIONAL CODE COUNCIL®
Copyright © 2015 ICC. ALL RIGHTS RESERVED. Accessed by David Dammon on Jun 21, 2017 12:30:52 PM pursuant to License Agreement with ICC. No further reproduction or distribution authorized. ANY UNAUTHORIZED REPRODUCTION OR DISTRIBUTION IS A VIOLATION OF THE FEDERAL COPYRIGHT ACT AND THE LICENSE AGREEMENT, AND SUBJECT TO CIVIL AND CRIMINAL PENALTIES THEREUNDER.

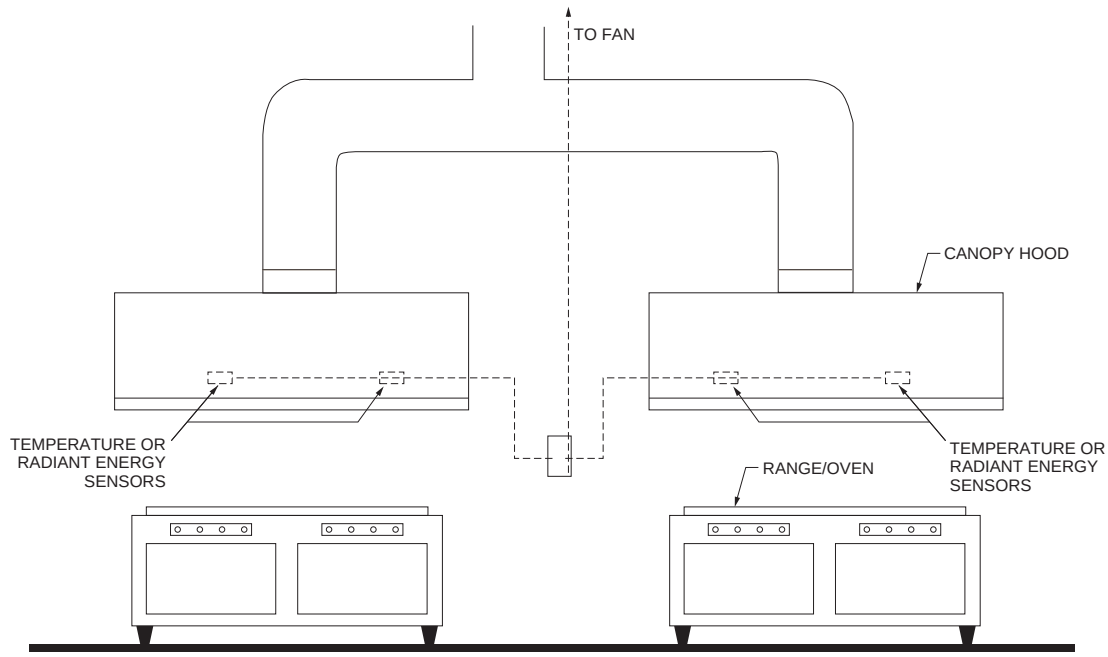

Figure 507.1.1.1
SENSORS FOR AUTOMATIC OPERATION MUST BE LOCATED IN EACH HOOD SERVED BY A COMMON EXHAUST SYSTEM

507.1.2 Domestic cooking appliances used for commercial purposes. Domestic cooking appliances utilized for commercial purposes shall be provided with Type I or Type II hoods as required for the type of appliances and processes in accordance with Sections 507.2 and 507.3. Domestic cooking appliances utilized for domestic purposes shall comply with Section 505.

❖ Domestic cooking appliances used for commercial purposes are subject to the same requirements as commercial appliances and are therefore subject to the requirements of Sections 507.1 and 507.2. For example, food catering services that work out of a residential kitchen must have Type I or II hoods. It is important for the code official to examine the nature of the cooking operation(s) before determining whether an exhaust hood is required for a particular kitchen facility. Note that just because a domestic cooking appliance is installed in a commercial building does not mean that the domestic appliance is being used for commercial purposes (see commentary, Section 507.2). It should be noted that Section 505.4 requires domestic range hoods over domestic cooking appliances that are utilized for domestic purposes in occupancies other than Group R (see commentary to Section 505.4).

507.1.3 Fuel-burning appliances. Where vented fuel-burning appliances are located in the same room or space as the hood, provisions shall be made to prevent the hood system from interfering with normal operation of the *appliance* vents.

❖ A significant reduction in building pressure could be created by hood systems, exhaust fans, ventilation systems and similar equipment, which can negatively affect appliance vents and chimneys. Fuel-burning appliances are often in competition with other mechanical equipment or systems for the available combustion air that infiltrates the building envelope or is otherwise introduced into a building, room or space. The competition between powered exhaust equipment and natural-draft fuel-fired appliances is an unfair contest; the powered equipment will starve the natural-draft appliances unless provisions are made to compensate for the effect of the powered exhaust equipment. Natural-draft appliances also compete among themselves for combustion air. The appliance that produces the strongest draft, such as a solid fuel appliance, can cause combustion air shortages for the appliances that produce a weaker draft.

Exhaust fans and similar equipment and appliances can produce significant negative building pressures that can interfere with the operation of vents and chimneys. This interference can cause reverse flow as outdoor air enters the building through the vents and chimneys as a result of the pressure difference. Any such interference with vents or chimneys would cause discharge of combustion products into the building and, therefore, must be avoided. The

INTERNATIONAL CODE COUNCIL®
Copyright © 2015 ICC. ALL RIGHTS RESERVED. Accessed by David Dammon on Jun 21, 2017 12:30:52 PM pursuant to License Agreement with ICC. No further reproduction or distribution authorized. ANY UNAUTHORIZED REPRODUCTION OR DISTRIBUTION IS A VIOLATION OF THE FEDERAL COPYRIGHT ACT AND THE LICENSE AGREEMENT, AND SUBJECT TO CIVIL AND CRIMINAL PENALTIES THEREUNDER.

amount of combustion air provided could be inadequate or nullified where there is no compensation for the effect of appliances or equipment removing air from a room or space. In many cases, additional combustion air or makeup air must be supplied to offset the deficiency. For example, in restaurants it is common to find fuel-fired appliances such as water heaters that are spilling combustion products into the kitchen area because of the negative pressure created by the kitchen exhaust fan (see Commentary Figure 507.1.3). Direct-vent appliances are a wise choice in commercial kitchens to avoid venting problems.

507.1.4 Cleaning. A hood shall be designed to provide for thorough cleaning of the entire hood.

❖ The inside surface of the exhaust hood must be free from protrusions, ridges and ledges that can accumulate grease. Joints, seams and ridges must be made smooth enough to allow cleaning and to prevent grease from collecting. The intent is to minimize the likelihood of a fire or health hazard.

507.1.5 Exhaust outlets. Exhaust outlets located within the hood shall be located so as to optimize the capture of particulate matter. Each outlet shall serve not more than a 12-foot (3658 mm) section of hood.

❖ Exhaust outlets in a hood are the openings to which exhaust ducts connect and, depending on the size of the hood, more than one outlet might be needed. The exhaust outlets are distributed in the hood to result in uniform exhaust flow rates over the entire hood opening area. The 12-foot (3568 mm) limitation is intended to prevent widely varying exhaust flow rates within the hood opening area by requiring multiple outlets on large (long) hoods.

507.2 Type I hoods. Type I hoods shall be installed where cooking *appliances* produce grease or smoke as a result of the cooking process. Type I hoods shall be installed over *medium-duty*, *heavy-duty* and *extra-heavy-duty cooking appliances*.

Exception: A Type I hood shall not be required for an electric cooking appliance where an approved testing agency provides documentation that the appliance effluent contains 5 mg/m^3 or less of grease when tested at an exhaust flow rate of 500 cfm (0.236 m^3/s) in accordance with UL 710B.

❖ This section requires Type I hoods for cooking appliances that produce grease or smoke as a result of the cooking process (see definition of "Hood, Type I"). The term "grease" refers to animal and vegetable fats and oils that are used to cook foods or that are a byproduct of cooking foods. Cooking appliances are used for commercial purposes when the appliance is primarily used for the preparation of food for compensation, trade or services rendered. When the nature of the cooking produces grease or smoke then a Type I hood is required. A Type I hood is required where smoke is produced as part of the cooking process. The intent is not to require a Type I hood where there is a possibility of food being burned and producing smoke. For example, smoke that is produced when toast is burned does not mean that a Type I hood is required over a toaster. This section makes it clear that a Type I hood is required over medium-duty, heavy-duty and extra-heavy-duty cooking appliances. If there exists a light-duty cooking appliance that produces grease or smoke, a Type I hood is required for that appliance.

Cooking appliances installed in cafeterias, restaurants, dormitory kitchens, hotels, motels, schools and



Figure 507.1.3
WATER HEATER NEXT TO A TYPE I HOOD
(Photo courtesy of Guy McMann)

INTERNATIONAL CODE COUNCIL®
Copyright © 2015 ICC. ALL RIGHTS RESERVED. Accessed by David Dammon on Jun 21, 2017 12:30:52 PM pursuant to License Agreement with ICC. No further reproduction or distribution authorized. ANY UNAUTHORIZED REPRODUCTION OR DISTRIBUTION IS A VIOLATION OF THE FEDERAL COPYRIGHT ACT AND THE LICENSE AGREEMENT, AND SUBJECT TO CIVIL AND CRIMINAL PENALTIES THEREUNDER.

institutional occupancies are examples of appliances that typically require Type I exhaust hood systems. Some examples of commercial cooking appliances that require a commercial kitchen exhaust system are: deep fat fryers; griddles (flat or grooved); tilting skillets or woks; braising and frying pans; charbroilers; salamander and upright broilers; infrared broilers; open burner stoves and ranges; and barbecue equipment.

A common question that is asked is, what type of hood is required for conveyor and deck-style pizza ovens? Conveyor-type pizza ovens are listed in the definition of "Medium-duty cooking appliances." Type I hoods are required to be installed over medium-duty cooking appliances. Deck-type ovens are listed in the definition of "Light-duty cooking appliances." There is no longer a specific reference to deck-style pizza ovens, just the reference to deck-type ovens. Considering that a deck pizza oven is an enclosed oven and that the primary byproducts given off are heat and moisture, deck pizza ovens have commonly been approved for use under a Type II hood.

Unusual circumstances sometimes arise that may warrant a close evaluation of a cooking appliance or a cooking appliance installation before determining whether a Type I hood is required. For example, cooking appliances used in a way that does not produce grease or smoke may need to be equipped only with a Type II hood or, depending on the occupancy where the cooking appliance is located, a residential hood or no hood at all. The key issues in making such determinations are the frequency of use and whether grease or smoke is produced by the cooking appliance and the cooking operation. The following are examples of kitchens serving occupancies that, depending on the nature of the cooking and the code official's interpretation of this section, might require only a Type II hood, a residential-type hood or no hood at all for the cooking appliances: church assembly halls; child care facilities; office or factory lunch rooms; employee break rooms; police and fire stations; bed-and-breakfast lodgings; VFW and similar halls; domestic-type kitchens in institutional occupancies; classrooms used to teach cooking; cooking demonstration displays and charity soup kitchens.

The code official should examine the nature of cooking operations before determining whether a Type I or II hood is required for a particular cooking appliance or a cooking appliance installation. Note that this section has been tightened up by stating that a Type I hood must be installed over medium-, heavy- and extra-heavy-duty cooking appliances. Bear in mind the primary purpose of a Type I hood is to control a potential fire hazard associated with grease and the purpose of a Type II hood is to control waste heat and moisture that burden HVAC systems and promote an unhealthy workplace. Excess moisture can deteriorate building components, promote the growth of mold and fungi, and create unhealthy and uncomfortable working conditions for employees.

Some common scenarios that come up are the type of hoods that are required in a life science classroom in a high school (i.e., a classroom used to teach, among other things, cooking to students) and the type of hood required over a cooking appliance(s) in a fire station. In both cases, the type of cooking is the deciding factor on the type of hood required.

Typically, students in a life science class are learning to prepare meals that are the same as those that are prepared for a family in a residential dwelling unit. In most cases, residential-type range/ovens are installed in the classroom. As such, the same byproducts that are produced in a kitchen in a dwelling unit would be produced in the classroom. Based on the residential style of cooking that is being taught, it would seem appropriate that the same type of hood installed in a residential dwelling could be installed over the residential range/ovens used in a classroom. Therefore, a Type I or II hood would not be required and residential kitchen hoods that are ducted to the outdoors could be installed.

Note that if the high school offers a culinary arts class and uses commercial cooking appliances to teach students how to prepare meals that are normally prepared in a restaurant, then the appropriate Type I or II hood could be required based on the type of cooking operations that are performed under the hood.

In the case of a kitchen located in a fire station, once again it depends on the type of cooking and the intended use of the facility. Meals prepared in a kitchen in a fire station that has a residential-type range/oven that is only intended to be used to prepare meals for the fire fighters on that particular shift is similar, if not the same, as those prepared in a home environment. As such, the same byproducts that are produced in a kitchen in a dwelling unit would be produced in the kitchen in the fire station. Based on the residential style of cooking that is being performed, it would seem appropriate that the same type of hood installed in a residential dwelling could be installed or, in a case where the space meets its ventilation requirements in Chapter 4 of the code, no hood at all.

It is not uncommon, however, for fire stations to have a community room with a kitchen used for preparing meals. The community room is often used to hold fund-raising events, such as spaghetti dinners, fish fries or pancake breakfasts, or used by members of the community for special events, such as parties or weddings. The kitchen may or may not have commercial cooking appliances installed. In this case, it would appear that such a situation is intended for the preparation of food for revenue generation. In this case, a Type I or II hood is required based on the cooking operations that are performed under the

INTERNATIONAL CODE COUNCIL®
Copyright © 2015 ICC. ALL RIGHTS RESERVED. Accessed by David Dammon on Jun 21, 2017 12:30:52 PM pursuant to License Agreement with ICC. No further reproduction or distribution authorized. ANY UNAUTHORIZED REPRODUCTION OR DISTRIBUTION IS A VIOLATION OF THE FEDERAL COPYRIGHT ACT AND THE LICENSE AGREEMENT, AND SUBJECT TO CIVIL AND CRIMINAL PENALTIES THEREUNDER.

hood. This would also apply to VFW and other fraternal organizations, church assembly halls and other similar halls.

It is important to note that cooking appliances installed in commercial occupancies do not necessarily require the installation of a Type I or II hood. There are a number of installations in a commercial occupancy where residential-type cooking occurs that would not require a commercial kitchen hood (see the discussion above for school classrooms and fire stations). Lunchrooms and breakrooms in commercial businesses often have residential ranges/ovens installed. In addition, many multiple-family residential buildings (e.g., condominiums and townhomes) have a clubhouse or community room that the residents can reserve for special functions. Typically these are seldom used, and when they are, it is to warm food or bake frozen food like pizza, lasagna or premade appetizers. Based on the residential style of cooking that is performed on these appliances, it would seem appropriate that the same type of hood installed in a residential dwelling could be installed or there may be no hood at all.

It should be noted that for the 2015 IMC, changes have been made to Section 505, Domestic kitchen exhaust equipment. Section 505.1 does not limit domestic range hoods to being installed over domestic cooking appliances that are only installed within a dwelling unit. Section 505.4 requires domestic range hoods in occupancies of other than Group R, and Section 505.1 will require them to exhaust to the outdoors unless they comply with Exception 1. These changes reflect the use of domestic cooking appliances in occupancies other than Group R, as discussed above.

If multiple cooking appliances are installed under a single hood and one or more of those appliances requires a Type I hood, a Type I hood would be required to serve the entire appliance line.

With the trend for larger kitchens in new dwelling units, kitchens designed with commercial-type cooking appliances have become more popular. Although these installations would generally not require commercial exhaust hoods, commercial appliances should be carefully evaluated for use in dwellings. Commercial cooking appliances are typically not listed for domestic use and might lack certain safety features that would be required for domestic cooking appliances. Note that Section 917.2 requires appliances in dwelling units to be designed and listed for domestic use (see commentary, Section 917.2).

This chapter does not require exhaust hoods for cooking equipment or appliances installed outdoors where the grease-laden vapors, etc., discharge directly to the outside atmosphere, nor does this chapter intend to regulate cooking appliances installed in vehicles or towed trailers (see definition of "Commercial cooking appliances"). Note that cooking appliances installed outdoors but located under a roof should be evaluated for installation under a Type I or II hood just as if they were located inside a building having enclosing walls.

The exception recognizes the growing use of small electrical appliances used for cooking, such as in small sandwich shops and convenience stores, where little or no grease is produced. The installation of a Type I hood in these small establishments creates the expense of the hood and the energy costs of running the fan and tempering the makeup air for the owner where grease emissions are minimal or nonexistent. The grease emission threshold requirement is consistent with NFPA 96 and the testing procedure is done in accordance with Section 17 of UL 710B. In order for an appliance to qualify for use without a Type I hood it must be tested by an approved agency and shown that the effluent contains 5 mg/m^3 or less of grease when tested at an exhaust flow rate of 500 cfm. If the appliance is below the grease emission threshold, the provisions of Section 507.3 are still applicable and a Type II hood may still be required.

507.2.1 Type I exhaust flow rate label. Type I hoods shall bear a label indicating the minimum exhaust flow rate in cfm per linear foot (1.55 L/s per linear meter) of hood that provides for capture and containment of the exhaust effluent for the cooking appliances served by the hood, based on the cooking appliance duty classifications defined in this code.

❖ The requirement for Type I hoods to bear a label is for factory-built commercial exhaust hoods that are listed and labeled in accordance with UL 710. Type I hoods that are not listed and labeled in accordance with UL 710 would have to meet the requirements of Section 507.13. The minimum exhaust flow rate and the cooking appliance duty classification is information that is necessary for the inspector in the field to determine that the hood has the minimum exhaust flow rate for the appliances that are installed beneath the hood. The exhaust hood must be compatible with and intended for the type of cooking appliance it will serve. Typically, the label of a factory-built hood tested in accordance with older editions of UL 710 will indicate the cfm per linear foot (L/s per linear meter) and the maximum temperature of cooking appliances that can be located under the hood [see Commentary Figure 507.1(1)]. However, the code references duty classifications for cooking appliances and not temperature ratings. This creates enforcement problems for the inspector in the field if he or she does not know the temperature ratings of the appliances installed beneath the hood. Requiring the cfm per linear foot and the duty classifications of the appliances will help the inspector in the field to verify that the hood system is appropriate for the appliances served.

It should be noted that UL 710 has been revised. It now requires the duty classification (i.e., extra-, heavy-, medium- and light-duty) of the appliances that the hood is intended to serve be indicated on the label.

507.2.2 Type I extra-heavy-duty. Type I hoods for use over *extra-heavy-duty cooking appliances* shall not cover *heavy-*, *medium-* or *light-duty appliances*. Such hoods shall discharge

INTERNATIONAL CODE COUNCIL®
Copyright © 2015 ICC. ALL RIGHTS RESERVED. Accessed by David Dammon on Jun 21, 2017 12:30:52 PM pursuant to License Agreement with ICC. No further reproduction or distribution authorized. ANY UNAUTHORIZED REPRODUCTION OR DISTRIBUTION IS A VIOLATION OF THE FEDERAL COPYRIGHT ACT AND THE LICENSE AGREEMENT, AND SUBJECT TO CIVIL AND CRIMINAL PENALTIES THEREUNDER.

to an exhaust system that is independent of other exhaust systems.

❖ "Extra-heavy-duty cooking appliances" are defined as appliances that utilize solid fuel for all or part of the heating source for cooking. The creation of air-borne sparks and embers is potentially hazardous and typical of a solid fuel-burning cooking operation. Oftentimes, Type I hoods serving solid fuel-burning cooking appliances require the installation of spark arrester devices ahead of the grease removal device to minimize the possibility of passing these sparks and embers into the grease removal device, and possibly into the hood and duct system. To minimize the potential for spreading fire, air-borne sources of ignition or grease-laden vapors to other exhaust systems, Type I hoods for use over solid fuel-burning cooking appliances must discharge to independent exhaust systems that do not connect to any other exhaust system.

Without complete isolation, the smoke, fire and ignition hazards of the effluent developed by solid fuel-burning kitchen exhaust systems might not be confined to the kitchen exhaust system and could jeopardize other systems and other parts of the building. The exclusion of other appliances is consistent with NFPA 96 and is intended to prevent hot embers or sparks emitted from extra-heavy-duty cooking appliances from igniting grease or oils present on or in heavy-, medium- or light-duty cooking appliances. For example, a deep fat fryer would not be permitted under the same hood since it is a medium-duty appliance. Two extra-heavy-duty cooking appliances would be permitted to be installed next to each other and under the same Type I hood. NFPA 96 addresses solid fuel-cooking operations in detail, including inspection and cleaning operations, fuel storage and handling and ash removal.

507.2.3 Type I materials. Type I hoods shall be constructed of steel having a minimum thickness of 0.0466 inch (1.181 mm) (No. 18 gage) or stainless steel not less than 0.0335 inch [0.8525 mm (No. 20 MSG)] in thickness.

❖ Steel and stainless steel are the only materials permitted for the construction of unlisted Type I hoods. The construction of listed and labeled hoods is regulated by the standard UL 710. Metal thicknesses are one gage lighter for hoods than for ducts. Compared to a hood, a duct has a greater potential for grease buildup and has greater airflow. Therefore, a fire is more likely to occur in a duct and would be more severe; hence the heavier gage requirements for ducts.

Plain steel and galvanized steel are rarely used for Type I or II hood construction because they are not as corrosion resistant or as easily cleaned as stainless steel. This section does not prohibit a hood from being sheathed for aesthetic reasons in a decorative metal, such as copper.

Stainless steel is used for construction of both Type I and II hoods. Because of its superior properties, stainless steel is used almost exclusively for hood construction. Commercial kitchen Type I hood and duct systems are designed to resist structural failure caused by a grease fire. Therefore, any alternative materials approved under the provisions of Section 105.2 must be evaluated for equivalence to steel or stainless steel.

507.2.4 Type I supports. Type I hoods shall be secured in place by noncombustible supports. Type I hood supports shall be adequate for the applied load of the hood, the unsupported ductwork, the effluent loading and the possible weight of personnel working in or on the hood.

❖ Because Type I hoods are designed to resist failure from a fire within, noncombustible supports are necessary to prevent duct displacement and stress failures. Type I hoods must have supports capable of carrying all potential loads that may reasonably be applied to the hood.

507.2.5 Type I hoods. External hood joints, seams and penetrations for Type I hoods shall be made with a continuous external liquid-tight weld or braze to the lowest outermost perimeter of the hood. Internal hood joints, seams, penetrations, filter support frames and other appendages attached inside the hood shall not be required to be welded or brazed but shall be otherwise sealed to be grease tight.

Exceptions:

1. Penetrations shall not be required to be welded or brazed where sealed by devices that are *listed* for the application.
2. Internal welding or brazing of seams, joints and penetrations of the hood shall not be prohibited provided that the joint is formed smooth or ground so as to not trap grease, and is readily cleanable.

❖ A Type I exhaust hood must be designed to contain, without leakage, all liquid residue that accumulates from the grease-laden vapors. Therefore, seams, joints, connections and penetrations within the portions of the hood that direct, capture and collect grease-laden vapors must have a liquid-tight continuous welded or brazed joint. The intent is to require welded or brazed joints for all seams that form the external shell of the hood to prevent grease from escaping the confines of the hood. Rivets, screws and sheet metal locking joints would not be acceptable means of joining parts of the hood because they cannot create a liquid-tight joint and because they provide surfaces that accumulate grease that cannot be removed without disassembly of the hood. Internal joints not affecting the grease-containment integrity of the hood need not be welded or brazed; however, they must be sealed or otherwise made grease tight. For example, a continuous external weld is not required for the grease filter support frame or appendages contained within the hood shell. Joint surfaces must be smooth to facilitate cleaning and to prevent the accumulation of grease (see commentary, Section 507.1.4).

INTERNATIONAL CODE COUNCIL®
Copyright © 2015 ICC. ALL RIGHTS RESERVED. Accessed by David Dammon on Jun 21, 2017 12:30:52 PM pursuant to License Agreement with ICC. No further reproduction or distribution authorized. ANY UNAUTHORIZED REPRODUCTION OR DISTRIBUTION IS A VIOLATION OF THE FEDERAL COPYRIGHT ACT AND THE LICENSE AGREEMENT, AND SUBJECT TO CIVIL AND CRIMINAL PENALTIES THEREUNDER.

The connection between the hood and the exhaust duct must also be welded or brazed liquid tight except as allowed by the exceptions to Section 506.3.2.2 (see commentary, Section 506.3.2.2).

Exception 1 recognizes the use of mechanical sealing devices that are specifically listed for grease duct penetration. Hoods are typically penetrated for the installation of suppression system piping and electrical conduit.

Exception 2 allows internal welds and brazing as opposed to external, if the joints will not harbor grease.

507.2.6 Clearances for Type I hood. A Type I hood shall be installed with a *clearance* to combustibles of not less than 18 inches (457 mm).

Exception: *Clearance* shall not be required from gypsum wallboard or $^1/_2$-inch (12.7 mm) or thicker cementitious wallboard attached to noncombustible structures provided that a smooth, cleanable, nonabsorbent and noncombustible material is installed between the hood and the gypsum or cementitious wallboard over an area extending not less than 18 inches (457 mm) in all directions from the hood.

❖ Type I hoods are required to maintain an 18-inch (457 mm) air space clearance to combustible materials. Although normal operating temperatures in a hood might be relatively low, especially compared to temperatures encountered in a fire, combustibles near the hood become more susceptible to ignition because of the long-term exposure to even this moderate heat and can be ignited by the radiant or convective heat given off by the hood surfaces during "normal" hood operation. The clearances to combustibles can be reduced in accordance with the provisions of Section 308.

There are some hoods that have been tested, listed and labeled for "zero clearance" to combustibles for one or more surfaces of the hood. It is important to note that Section 507.1, Exception 1, does not list Section 507.9 as a section that is not applicable when the hood is listed and labeled in accordance with UL 710; therefore, Section 507.9 still applies. It should be noted that UL 710, 1995 edition, did not contain specific requirements to test hoods for clearance reduction. Therefore, hoods that are tested in accordance with UL 710–1995 and that are listed for zero clearance have been evaluated by the testing agency for clearance reduction using criteria borrowed from various other standards. Without a specific test standard to evaluate clearance reduction for Type I hoods, the 18-inch (457 mm) clearance would be required unless the code official would approve the zero clearance hood using the provisions of Section 105.2. Such hoods must be installed in accordance with the manufacturer's installation instructions, which may contain specific installation requirements to achieve the zero clearance to combustibles such as by adding insulation. The instructions may also state the minimum clearance between the appliance and the back wall and a maximum temperature of the cooking surface [see Commentary Figure 507.1(1)].

The current edition of UL 710 now has clearance reduction criteria in the standard. Therefore, Type I hoods that are tested to UL 710 and are listed as having a clearance that is less than 18 inches (457 mm) can be installed with a clearance in accordance with the listing, where approved in accordance with Section 105.2.

The exception allows gypsum board and $^1/_2$-inch (13 mm) cementitious wallboard to be considered as noncombustible only with respect to hood installations and only where the gypsum or cement wallboard is attached to noncombustible structures (see commentary, Sections 506.3.6 and 506.3.11). Hoods can be installed without clearance to walls constructed of metal studs and gypsum or cementitious wallboard that are protected with noncombustible finish materials. This allowance is very useful in restaurant construction. In the case where a restaurant is of Type VB combustible construction, building a metal stud and gypsum wall next to or in contact with an exterior wall of combustible construction does not negate the 18-inch (457 mm) clearance that is required from the combustible exterior wall. Gypsum board or cementitious wallboard on wood studs is, of course, a combustible wall in any case and the 18-inch (457 mm) clearance of this section still applies. The code considers composite materials such as gypsum wallboard to be combustible, while the IBC considers gypsum wallboard to be noncombustible. It is common practice to install exhaust hoods on walls constructed of gypsum wallboard and metal studs as a means of avoiding the clearance required for combustible walls.

All surfaces within 18 inches (457 mm) of the cooking surface and exhaust hood opening must be smooth, readily cleanable, noncombustible and nonabsorbent, such as those surfaces finished with sheet metal or ceramic tile. In all cases, wall and ceiling surfaces close to the hood opening and cooking surfaces will accumulate grease that must be removed to minimize the fire and health hazard. The exception applies only to Type I hoods and is not applicable to grease ducts (see commentary, Sections 506.3.6 and 506.3.11).

507.2.7 Type I hoods penetrating a ceiling. Type I hoods or portions thereof penetrating a ceiling, wall or furred space shall comply with Section 506.3.11. Field-applied grease duct enclosure systems, as addressed in Section 506.3.11.2, shall not be utilized to satisfy the requirements of this section.

❖ A shaft enclosure for grease ducts is required in accordance with Section 506.3.11. Where Type I hoods or portions of them extend into a wall cavity, floor system cavity, interstitial space above a ceiling, furred space or similar space, the portion of the hood extending into that space must be contained within a shaft constructed in accordance with Section 506.3.11 (see commentary, Section 506.3.11). This section applies where any part of the "shell" of the hood structure penetrates a ceiling or wall. The intent is to treat the penetrating hood no differently than a

INTERNATIONAL CODE COUNCIL®
Copyright © 2015 ICC. ALL RIGHTS RESERVED. Accessed by David Dammon on Jun 21, 2017 12:30:52 PM pursuant to License Agreement with ICC. No further reproduction or distribution authorized. ANY UNAUTHORIZED REPRODUCTION OR DISTRIBUTION IS A VIOLATION OF THE FEDERAL COPYRIGHT ACT AND THE LICENSE AGREEMENT, AND SUBJECT TO CIVIL AND CRIMINAL PENALTIES THEREUNDER.

penetrating duct (see commentary, Section 506.3.11.2).

This section prohibits the practice of applying field-applied grease duct enclosure systems to the portion of a hood that penetrates a ceiling, wall or furred space for the purpose of complying with Section 506.3.11 (see Commentary Figure 507.2.7). Field-applied grease duct enclosure systems have not been tested nor listed for this application. The manufacturers have not had their products tested for this application and their installation instructions do not contain any provisions for installing the duct wrap on the Type I hood.

507.2.8 Type I grease filters. Type I hoods shall be equipped with grease filters listed and labeled in accordance with UL 1046. Grease filters shall be provided with access for cleaning or replacement. The lowest edge of a grease filter located above the cooking surface shall be not less than the height specified in Table 507.2.8.

❖ Grease filters are required in Type I hoods to prevent large amounts of grease from collecting in the hood, in exhaust ducts, on fan blades and at the exhaust system termination. The accumulation of grease can cause restrictions in ducts or equipment failure, and can create a fire or health hazard. The grease filters must be listed and labeled in accordance with UL 1046 for the application and must be placed inside the hood so that all air being exhausted by the hood passes through them. This standard has a comprehensive set of performance requirements that are used to evaluate and list grease filters. The most common type of grease filters, often referred to as "extractors," remove grease using baffles that cause abrupt changes in direction of airflow combined with an increase in flow velocity. New types of filters are being developed that use specialized media to trap grease particulates with greater efficiency and over a larger range of particle sizes. In lieu of using grease filters that require cleaning, disposable grease filters are available that can be used.

Through direct impingement and centrifugal force, grease is extracted from the airstream and deposited on the baffle surfaces. Grease filters must be protected from radiant heat, hot gases and direct flame impingement that can occur during normal cooking operations. At the same time, the filters have to be located to achieve the maximum extraction of grease from the cooking vapors.

Filter location should be as high above the cooking surface as the hood design will allow and must not be less than the minimum distances specified in Table 507.2.8 and by the grease filter manufacturer. The primary intent of this section is to prevent high-temperature cooking vapors and open flames from igniting the grease collected on the filters. Also, when the filter is located too close to the cooking surface, the temperature of the cooking vapors passing through it could exceed the acceptable temperature range for maximum grease collection efficiency.

A filter subjected to temperatures in excess of 200°F (93°C) could allow grease-laden vapors to pass straight through. The high temperatures can vaporize any grease accumulated on the filter and also allow that grease to pass through. Also, the high temperatures can approach the ignition temperature of animal fat and vegetable shortening, creating a potential fire hazard.



Figure 507.2.7
GREASE DUCT ENCLOSURE SYSTEM USED ON THE TOP OF A TYPE I HOOD
(Prohibited)
(Photo courtesy of Guy McMann)

INTERNATIONAL CODE COUNCIL®
Copyright © 2015 ICC. ALL RIGHTS RESERVED. Accessed by David Dammon on Jun 21, 2017 12:30:52 PM pursuant to License Agreement with ICC. No further reproduction or distribution authorized. ANY UNAUTHORIZED REPRODUCTION OR DISTRIBUTION IS A VIOLATION OF THE FEDERAL COPYRIGHT ACT AND THE LICENSE AGREEMENT, AND SUBJECT TO CIVIL AND CRIMINAL PENALTIES THEREUNDER.

Appliances must be vented in accordance with the cooking equipment manufacturer's installation instructions, Chapter 8 and the IFGC. The flue gas outlet of many cooking appliances will terminate underneath an exhaust hood, thus relying on the hood for removal of the combustion byproducts. Commentary Figure 507.2.8 illustrates a cooking appliance equipped with a flue outlet fitting that directs the flue gases into the exhaust hood for removal. Electrically heated appliances do not produce flue gases and do not have exposed flames; however, a high-temperature resistance-heating element can cause ignition or grease flame flare-ups similar to the ignition potential posed by open-flame appliances.

This section does not prohibit the installation or use of alternative methods for grease extraction or removal. Bear in mind that the components of any alternative grease removal system (other than grease filters) must establish equivalency with the requirements of this section in accordance with Section 105 and as approved by the code official. Grease removal devices range from simple designs, such as a configuration of baffles, to elaborate hot water scrubbers and electrostatic precipitators.

TABLE 507.2.8
MINIMUM DISTANCE BETWEEN THE LOWEST EDGE OF A GREASE FILTER AND THE COOKING SURFACE OR THE HEATING SURFACE

TYPE OF COOKING APPLIANCES	HEIGHT ABOVE COOKING SURFACE (feet)
Without exposed flame	0.5
Exposed flame and burners	2
Exposed charcoal and charbroil type	3.5

For SI: 1 foot = 304.8 mm.

❖ The table classifies cooking appliances into three categories based on the presence of an exposed fire and the amount of heat produced at the cooking surface. The hazards associated with an appliance without an exposed flame are significantly less than those of appliances that have exposed flames. Without exposed flames, there is no contact between the food and the heat source because they are completely separated by a heat transfer surface, thus reducing the likelihood of grease ignition.

An appliance having a cooking surface equipped with open burners is classified as an "exposed flame" appliance. This category of appliances tends to produce a consistent, predictable and moderate-temperature flame. The food is usually contained within a cooking vessel and the animal fat, vegetable shortening or other oily matter produced by cooking does not have direct contact with the flame under normal cooking operations. These appliances are usually gas fired.

An appliance having a cooking surface that has an uncontrolled exposed flame, and that will allow the food to have direct contact with the flame, is classified as a "charcoal-burning" appliance. There are different types of charcoal-type broilers, including gas- and electrically heated charbroilers. These cooking appliances might also present the same hazards associated with an open solid fuel fire. The cooking surface produces high temperatures, and food and grease have direct contact with the heat source.

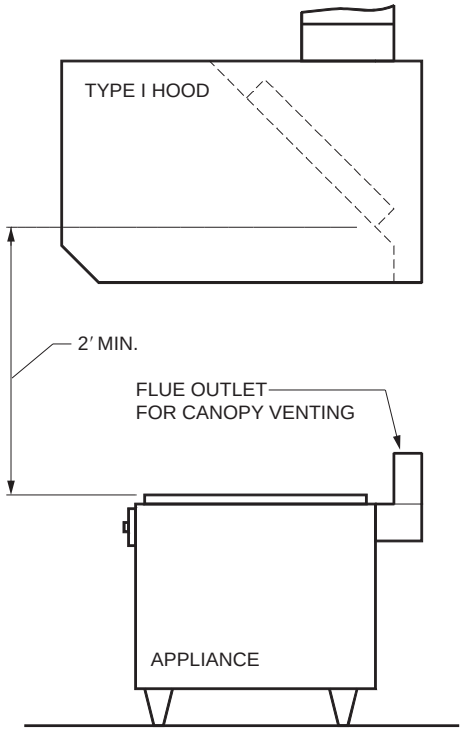

For SI: 1 foot = 304.8 mm.

Figure 507.2.8
APPLIANCE VENTING UNDERNEATH A TYPE I HOOD

The code official must evaluate the cooking equipment arrangement and determine that the location and type of grease filter used in conjunction with these appliances is in compliance with Section 507.2.8.

Note that factory-built hoods listed in accordance with UL 710 are not required to meet this section. Grease filters for UL 710 tested hoods must be installed in accordance with the manufacturer's installation instructions.

507.2.8.1 Criteria. Filters shall be of such size, type and arrangement as will permit the required quantity of air to pass through such units at rates not exceeding those for which the filter or unit was designed or *approved*. Filter units shall be installed in frames or holders so as to be readily removable without the use of separate tools, unless designed and installed to be cleaned in place and the system is equipped for such cleaning in place. Where filters are designed and required to be cleaned, removable filter units shall be of a size that will allow them to be cleaned in a dishwashing machine or pot sink. Filter units shall be arranged in place or provided

INTERNATIONAL CODE COUNCIL®
Copyright © 2015 ICC. ALL RIGHTS RESERVED. Accessed by David Dammon on Jun 21, 2017 12:30:52 PM pursuant to License Agreement with ICC. No further reproduction or distribution authorized. ANY UNAUTHORIZED REPRODUCTION OR DISTRIBUTION IS A VIOLATION OF THE FEDERAL COPYRIGHT ACT AND THE LICENSE AGREEMENT, AND SUBJECT TO CIVIL AND CRIMINAL PENALTIES THEREUNDER.

with drip-intercepting devices to prevent grease or other condensate from dripping into food or on food preparation surfaces.

❖ Grease filter surface area is a function of the volume of exhaust air that must pass through the filter. If the filter surface area is too small, it will have insufficient grease-retention capacity and the airflow velocity will exceed the filter design flow. The airflow velocity is directly related to the filter's ability to capture grease by impingement. Because a grease filter is designed to alter the flow of air in order to collect grease, it is essential that the filter be large enough to not create too much resistance and affect the capacity of the exhaust system. Approved filters sized in accordance with the filter manufacturer's specifications and this section must be capable of functioning properly with the airflow rate specified in Section 507.5.

The quantity of airflow is dictated by Section 507.5 and is a fixed quantity; therefore, if the filter area is decreased, the velocity of flow through the filter is increased. Because filters are designed for optimum operational efficiency at specified flow velocities, they must be sized to take advantage of this optimum performance in the approved design.

Filter units must be arranged to direct grease or other condensate to the troughs, gutters and receptacles of the hood, which are intentionally designed to collect and drain these effluents to an approved grease collection receptacle.

507.2.8.2 Mounting position of grease filters. Filters shall be installed at an angle of not less than 45 degrees (0.79 rad) from the horizontal and shall be equipped with a drip tray beneath the lower edge of the filters.

❖ Exhaust hoods are designed to achieve the greatest possible surface area of grease filters exposed to the airflow. Also, it is desirable to have all grease-laden vapors contact the filters before contacting any other hood surface. For these reasons, it might appear that placing filters in the horizontal plane would result in the greatest surface area and most effective location; however, filter placement at any angle less than 45 degrees (0.79 rad) from horizontal can interfere with grease retention. The minimum angle is required to prevent grease droplets from dripping back onto the cooking surfaces and to promote proper drainage. Grease filters must be designed or equipped to collect and drain off grease to a channel that drains to an approved grease collection receptacle [see Commentary Figures 507.2.8.2(1) and 507.2.8.2(2)].

507.2.9 Grease gutters for Type I hood. Grease gutters shall drain to an *approved* collection receptacle that is fabricated, designed and installed to allow access for cleaning.

❖ This section recognizes that troughs, gutters and receptacles are intentionally designed to collect and drain grease along the lower perimeter (skirt) of the hood and under the grease removal device (filter) supports. These troughs or gutters must drain to an approved grease collection receptacle that can be readily emptied and cleaned (see Commentary Figure 507.2.9).

507.3 Type II hoods. Type II hoods shall be installed above dishwashers and appliances that produce heat or moisture and do not produce grease or smoke as a result of the cooking process, except where the heat and moisture loads from such appliances are incorporated into the HVAC system design or into the design of a separate removal system. Type II hoods shall be installed above all appliances that produce products of combustion and do not produce grease or smoke as a result of the cooking process. Spaces containing cooking appliances that do not require Type II hoods shall be provided with exhaust at a rate of 0.70 cfm per square foot (0.00033 m^3/s). For the purpose of determining the floor area required to be exhausted, each individual appliance that is not required to be installed under a Type II hood shall be considered as occupy-

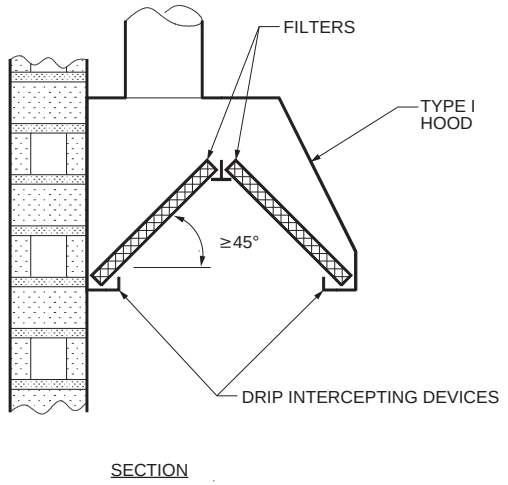

For SI: 1 degree = 0.01745 rad.

Figure 507.2.8.2(1)
MINIMUM ANGLE OF GREASE FILTERS



Figure 507.2.8.2(2)
GREASE FILTER MOUNTED AT MINIMUM ANGLE OF 45 DEGREES
(Photo courtesy of Guy McMann)

INTERNATIONAL CODE COUNCIL®
Copyright © 2015 ICC. ALL RIGHTS RESERVED. Accessed by David Dammon on Jun 21, 2017 12:30:52 PM pursuant to License Agreement with ICC. No further reproduction or distribution authorized. ANY UNAUTHORIZED REPRODUCTION OR DISTRIBUTION IS A VIOLATION OF THE FEDERAL COPYRIGHT ACT AND THE LICENSE AGREEMENT, AND SUBJECT TO CIVIL AND CRIMINAL PENALTIES THEREUNDER.



Figure 507.2.9
GREASE GUTTER WITH RESERVOIR

ing not less than 100 square feet (9.3 m^2). Such additional square footage shall be provided with exhaust at a rate of 0.70 cfm per square foot [0.00356 $m^3/(s \cdot m^2)$].

❖ Type II hoods are required above dishwashers and appliances that produce heat or moisture and do not produce grease or smoke, except where the heat or moisture loads are incorporated into the HVAC system (see Commentary Figure 507.3). Where light-duty cooking appliances produce products of combustion and do not produce grease or smoke, they must be located under a Type II hood. Where smoke is produced as part of the cooking process, a Type I hood is required. The intent is not to require a Type I hood where there is a possibility of food being burned and producing smoke. For example, smoke that is produced when toast is burned does not mean that a Type I hood is required over a toaster. Where a dishwasher or appliance has a separate removal system that is specific to that appliance, and it discharges the heat or moisture to the exterior, a Type II hood is not required. Any light-duty cooking appliance that produces grease or smoke must be located under a Type I hood (see commentary, Section 507.2).

In previous editions of the code, there were a number of exceptions that did not require a Type II hood over light-duty electric cooking appliances such as convection, bread and microwave ovens; toasters; steam tables; popcorn poppers and coffee makers, as long as the additional heat and moisture loads were accounted for in the design of the HVAC system. This laundry list of exceptions kept growing with every code change cycle until the list of appliances that did not require a hood nearly exceeded the list that required a hood. The exceptions are now gone and replaced with criteria that are twofold; (1) is heat or moisture produced? (2) are the heat and moisture loads accounted for in the design of the HVAC system? If heat and moisture are produced and the loads are incorporated into the HVAC design, then no Type II hood is required. If heat and moisture is produced and the loads are not incorporated into the HVAC design, then a Type II hood would be required. Note that if a Type II hood is not required, there is no limit to the number of electric appliances that can be installed as long as the loads from all the appliances are accounted for in the HVAC design. The designer should consider if it is more energy efficient to design the HVAC system to handle the heat and moisture loads or if it is more efficient to provide a Type II hood and makeup air. Since the code permits either option, the designer must make the decision on which design is more energy efficient. Outside weather conditions, the number of appliances, the heat and moisture loads generated and hours of operation may all be factors that help decide which option is more energy efficient.

If cooking appliances are provided and a Type II hood is not required, the space where the appliances are located must be provided with exhaust at a rate of 0.7 cfm/ft^2 [0.0036 $m^3/(s \cdot m^2)$], which is the same rate as kitchens in Table 403.3. To apply this rate, each individual appliance is considered as occupying 100 square feet (9.29 m^2). The purpose of this requirement is to provide a minimal amount of exhaust in the area where one or more of these appliances are installed. If cooking appliances are installed in a typical commercial kitchen where the kitchen ventilation rate is being applied to the whole space, then the area of the kitchen would be used to determine the ventilation rate without adding the additional 100 square feet (9.29 m^2) for each appliance. Note however, if the kitchen is small and the number of appliances multiplied by 100 square feet (9.29 m^2) is greater than the area of the kitchen, the exhaust rate for the kitchen must be based on the area calculated in accordance with this section.

INTERNATIONAL CODE COUNCIL®
Copyright © 2015 ICC. ALL RIGHTS RESERVED. Accessed by David Dammon on Jun 21, 2017 12:30:52 PM pursuant to License Agreement with ICC. No further reproduction or distribution authorized. ANY UNAUTHORIZED REPRODUCTION OR DISTRIBUTION IS A VIOLATION OF THE FEDERAL COPYRIGHT ACT AND THE LICENSE AGREEMENT, AND SUBJECT TO CIVIL AND CRIMINAL PENALTIES THEREUNDER.



Figure 507.3
TYPE II HOOD ABOVE A DISHWASHER
(Photo courtesy of Guy McMann)

507.3.1 Type II hood materials. Type II hoods shall be constructed of steel having a minimum thickness of 0.0296 inch (0.7534 mm) (No. 22 gage) or stainless steel not less than 0.0220 inch (0.5550 mm) (No. 24 gage) in thickness, copper sheets weighing not less than 24 ounces per square foot (7.3 kg/m^2) or of other *approved* material and gage.

❖ Type II hoods are not designed to withstand a fire; therefore, the metal gages are lighter than required for Type I hoods. Copper is rarely used for hood construction and is allowed only for Type II hoods.

507.3.2 Type II supports. Type II hood supports shall be adequate for the applied load of the hood, the unsupported ductwork, the effluent loading and the possible weight of personnel working in or on the hood.

❖ Type II hoods must have supports capable of carrying all potential loads that may reasonably be applied to the hood.

507.3.3 Type II hoods joint, seams and penetrations. Joints, seams and penetrations for Type II hoods shall be constructed as set forth in Chapter 6, shall be sealed on the interior of the hood and shall provide a smooth surface that is readily cleanable and water tight.

❖ This section requires that Type II hoods be constructed and sealed to comply with the duct requirements of Chapter 6. Because Type II hoods do not exhaust the grease- and smoke-laden air associated with Type I hoods, the more restrictive liquid-tight welding and brazing of joints and seams is not necessary. The interior of the hood still must be smooth to allow cleaning and to prevent the accumulation of particles in crevices, which could promote the growth of mold and bacteria. Because Type II hoods are likely to be exposed to condensed water vapor, they must be made water tight

507.4 Hood size and location. Hoods shall comply with the overhang, setback and height requirements in accordance with Sections 507.4.1 and 507.4.2, based on the type of hood.

❖ The hood overhang, set back and height must comply with Sections 507.4.1 and 507.4.2.

507.4.1 Canopy size and location. The inside lower edge of canopy-type Type I and II commercial hoods shall overhang or extend a horizontal distance of not less than 6 inches (152 mm) beyond the edge of the top horizontal surface of the *appliance* on all open sides. The vertical distance between the front lower lip of the hood and such surface shall not exceed 4 feet (1219 mm).

Exception: The hood shall be permitted to be flush with the outer edge of the cooking surface where the hood is closed to the *appliance* side by a noncombustible wall or panel.

❖ A canopy-type hood can be classified into three basic categories: wall, island and back-to-back or double island [see Commentary Figures 507.4(1-5)] and commentary for the definition of “Commercial kitchen

INTERNATIONAL CODE COUNCIL®
Copyright © 2015 ICC. ALL RIGHTS RESERVED. Accessed by David Dammon on Jun 21, 2017 12:30:52 PM pursuant to License Agreement with ICC. No further reproduction or distribution authorized. ANY UNAUTHORIZED REPRODUCTION OR DISTRIBUTION IS A VIOLATION OF THE FEDERAL COPYRIGHT ACT AND THE LICENSE AGREEMENT, AND SUBJECT TO CIVIL AND CRIMINAL PENALTIES THEREUNDER.

hoods," Section 202]. A canopy hood must be designed to cover the entire horizontal surface of the appliance. The canopy overhang must project a minimum horizontal distance of 6 inches (152 mm) beyond the edge of the horizontal surfaces of the appliance on all open sides not bounded by walls or panels. The overhang is intended to improve the vapor-capturing ability of the hood. Note that this is applicable to both Type I and II hoods. For example, a Type II canopy hood would have to extend 6 inches (152 mm) beyond the horizontal surface of a commercial dishwasher just like a Type I canopy hood would have to extend beyond the horizontal cooking surface of a commercial range. The vertical distance between the front lower edge (skirt) of the hood, and the horizontal surface of the appliance must not exceed 4 feet (1219 mm). A maximum vertical separation is specified so that the hood develops an effective capture velocity at or near the horizontal surface of the appliance. This limitation also shields the ascending cooking vapors from the influences of background air currents. The exhaust volume, cooking load, height of hood, hood design and room air currents are all factors that affect the vapor-capturing ability of the hood. It is important to note that, as indicated in Section 507.1, Exception 1, this section is not applicable to factory-built hoods that are tested, listed and labeled in accordance with UL710.

The exception allows elimination of the overhang beyond the horizontal surface of the appliance where the appliance is placed against a noncombustible sidewall or has one or more side panels (skirts) [see Commentary Figures 507.4.1(6) and 507.4.1(7)]. All open sides must have the required overhang. The wall and side panels serve as physical barriers to reduce the amount of heat radiated into the kitchen, to confine the vapor plume, to direct the upward draft into the hood and to increase the velocity of incoming air from the remaining open sides. This, in turn, reduces the effects of room cross drafts and increases the efficiency and effectiveness of the hood. Side panels/skirts are sometimes used to eliminate the required overhang because the panels/skirts serve the same purpose as the overhang.

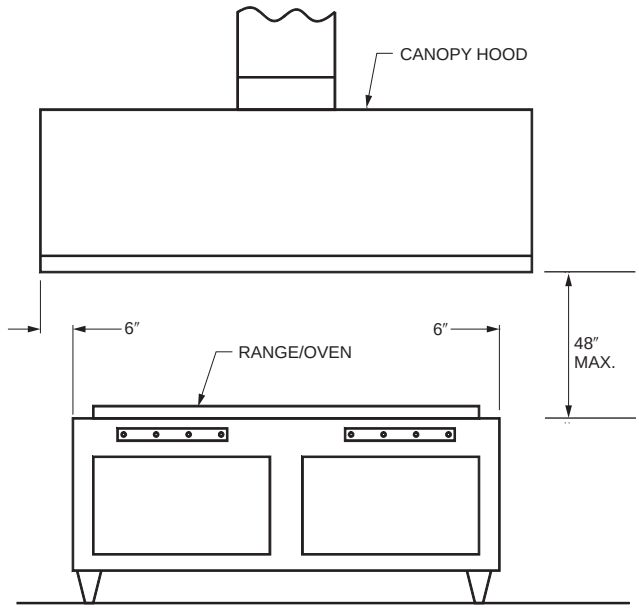

For SI: 1 inch = 25.4 mm.

Figure 507.4.1(1)
CANOPY HOOD—ELEVATION

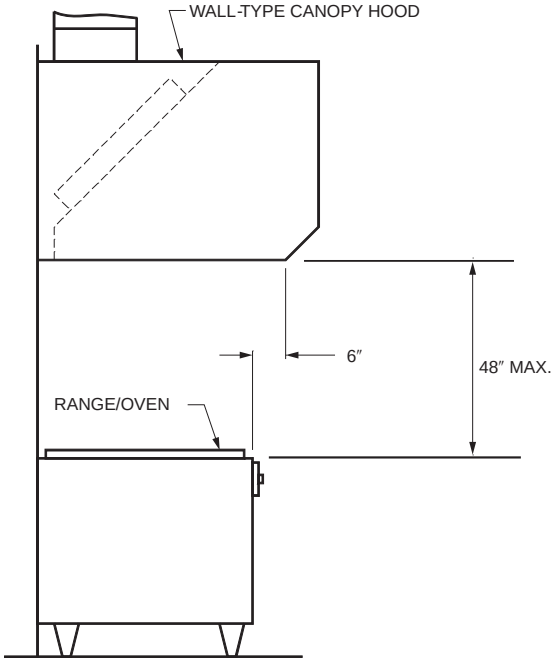

For SI: 1 inch = 25.4 mm.

Figure 507.4.1(2)
WALL-TYPE CANOPY HOOD

INTERNATIONAL CODE COUNCIL®
Copyright © 2015 ICC. ALL RIGHTS RESERVED. Accessed by David Dammon on Jun 21, 2017 12:30:52 PM pursuant to License Agreement with ICC. No further reproduction or distribution authorized. ANY UNAUTHORIZED REPRODUCTION OR DISTRIBUTION IS A VIOLATION OF THE FEDERAL COPYRIGHT ACT AND THE LICENSE AGREEMENT, AND SUBJECT TO CIVIL AND CRIMINAL PENALTIES THEREUNDER.



Figure 507.4.1(3)
WALL-TYPE CANOPY HOOD WITH MAKEUP AIR

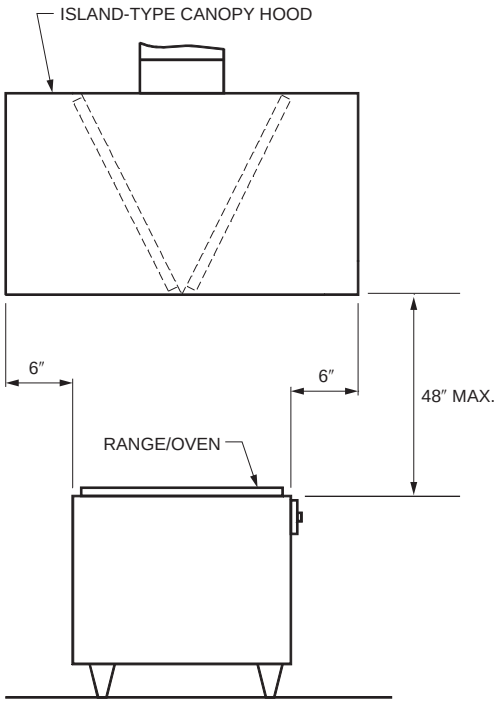

For SI: 1 inch = 25.4 mm.

Figure 507.4.1(4)
ISLAND-TYPE CANOPY HOOD

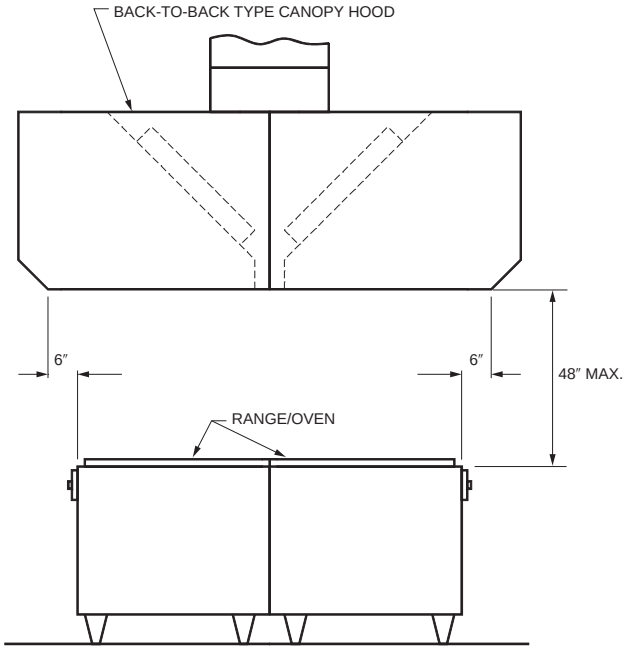

For SI: 1 inch = 25.4 mm.

Figure 507.4.1(5)
BACK-TO-BACK (DOUBLE ISLAND)-TYPE CANOPY HOOD

INTERNATIONAL CODE COUNCIL®
Copyright © 2015 ICC. ALL RIGHTS RESERVED. Accessed by David Dammon on Jun 21, 2017 12:30:52 PM pursuant to License Agreement with ICC. No further reproduction or distribution authorized. ANY UNAUTHORIZED REPRODUCTION OR DISTRIBUTION IS A VIOLATION OF THE FEDERAL COPYRIGHT ACT AND THE LICENSE AGREEMENT, AND SUBJECT TO CIVIL AND CRIMINAL PENALTIES THEREUNDER.

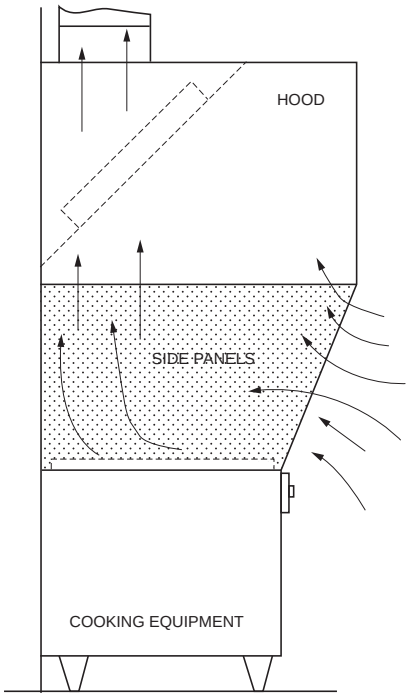

Figure 507.4.1(6)
CANOPY HOOD WITH SIDE PANELS—SIDE VIEW

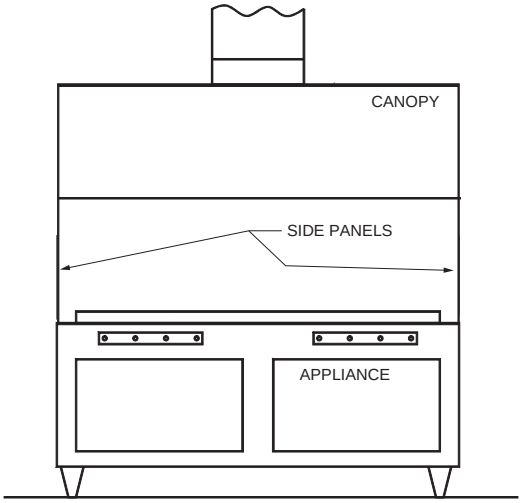

Figure 507.4.1(7)
CANOPY HOOD WITH SIDE PANELS—ELEVATION

507.4.2 Noncanopy size and location. Noncanopy-type hoods shall be located not greater than 3 feet (914 mm) above the cooking surface. The edge of the hood shall be set back not greater than 1 foot (305 mm) from the edge of the cooking surface.

❖ A kitchen exhaust hood that does not meet the minimum extension criteria listed in Section 507.4.1 is classified as a noncanopy hood [see Commentary Figures 507.4.2, 507.5(2) and 507.5(3)]. A noncanopy hood, often called a "low-wall," "proximity" or "backshelf" hood, relies on the closeness of the hood to the cooking surface for capture and containment of the cooking vapors. Therefore, a noncanopy hood must have the intake located within 3 feet (914 mm), measured vertically, of the cooking surface. Backshelf, pass-over and eyebrow hoods are examples of noncanopy hoods. This section does not apply to hoods listed in accordance with UL 710.

The front edge of the hood must be located not more than 1 foot (305 mm), measured horizontally, from the front edge of the cooking surface to facilitate movement of the cooking vapors into the hood before they can escape upward beyond the hood inlet.

The net exhaust airflow requirements for backshelf, pass-over and eyebrow hoods are prescribed in Sections 507.5.1 through 507.5.4 or are in accordance with the manufacturer's installation instructions for a factory-built hood that is tested, listed and labeled in accordance with UL 710.

Without the capture area characteristics of a canopy hood, a noncanopy hood is usually not capable of handling large surges of grease-laden vapors produced by charbroilers or similar high-heat and grease-producing appliances. To confine vapor effectively, the proper design of noncanopy hoods is especially critical (see commentary, Section 507.5).

A noncanopy hood is required to meet all the provisions specified in this chapter for hoods with the exception of Section 507.4.1.

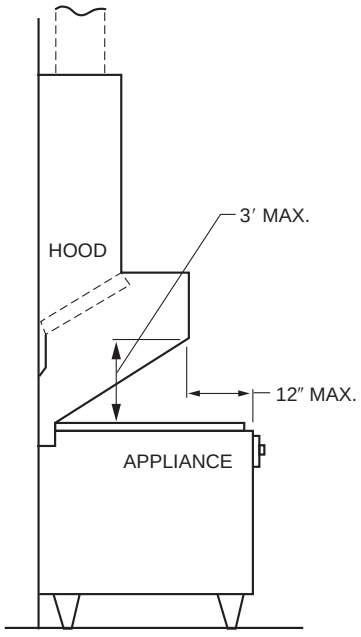

For SI: 1 inch = 25.4 mm, 1 foot = 304.8 mm.

Figure 507.4.2
NONCANOPY-TYPE HOOD
(LOW-WALL OR BACKSHELF)

INTERNATIONAL CODE COUNCIL®
Copyright © 2015 ICC. ALL RIGHTS RESERVED. Accessed by David Dammon on Jun 21, 2017 12:30:52 PM pursuant to License Agreement with ICC. No further reproduction or distribution authorized. ANY UNAUTHORIZED REPRODUCTION OR DISTRIBUTION IS A VIOLATION OF THE FEDERAL COPYRIGHT ACT AND THE LICENSE AGREEMENT, AND SUBJECT TO CIVIL AND CRIMINAL PENALTIES THEREUNDER.

507.5 Capacity of hoods. Commercial food service hoods shall exhaust a minimum net quantity of air determined in accordance with this section and Sections 507.5.1 through 507.5.5. The net quantity of *exhaust air* shall be calculated by subtracting any airflow supplied directly to a hood cavity from the total exhaust flow rate of a hood. Where any combination of *heavy-duty*, *medium-duty* and *light-duty cooking appliances* are utilized under a single hood, the exhaust rate required by this section for the heaviest duty *appliance* covered by the hood shall be used for the entire hood.

❖ The hood must be designed to adequately collect and exhaust smoke and vapors from the area over which it is installed. To accomplish this, the hood must cause an airflow pattern that will sweep and direct the smoke and vapors upward from the cooking surfaces and into the hood inlet.

Where multiple appliances are located under a single hood in any combination of heavy-, medium- and light-duty cooking appliances, the required exhaust rate for the heaviest-duty appliance applies and the highest exhaust rate required by this section must be used for the entire hood [see Commentary Figure 507.5(1)]. This is a conservative design requirement to ensure that all of the cooking effluents are captured by specifying the highest exhaust rate. Note that extra-heavy-duty cooking appliances cannot be served by a hood that also serves any other duty classification of cooking appliance (see commentary, Section 507.2.2).

Although the dimensional and location design parameters of the exhaust hood are regulated by Section 507.4, this section specifies the minimum quantity of exhaust air necessary for effective removal of cooking vapors and the approximate amount of makeup air necessary for proper operation. The quantity of required exhaust is as much a function of the operational characteristics of the cooking equipment (solid-fuel-burning; low-, medium- or high-heat) as it is a function of the size of the cooking surface or the exhaust hood opening area and the presence of any walls and side panels [see Commentary Figures 507.5(2) and 507.5(3)]. Walls and side panels serve as physical barriers that enhance the capture ability of the hood and increase the velocities of incoming air from the remaining open sides. This, in turn, reduces the effects of room cross drafts and flare-ups, and increases the efficiency and effectiveness of the hood. Island canopies, which are exposed on all four sides, lack the benefits of adjacent walls and, therefore, are required to exhaust greater quantities of air than wall-mounted canopy hoods. Note that this section does not apply to hoods listed in accordance with UL 710.

The formulas for sizing exhaust flow rates in Sections 507.5.1 through 507.5.4 are based on the linear feet of hood, the type of hood (island hood, eyebrow hood, etc.) and the duty rating of the appliance being exhausted (heavy-duty, light-duty, etc.).

The requirement for determining the exhaust rate based on the net exhaust flow is the result of testing that has shown that hood performance is dependent on "net exhaust" (total exhaust flow minus internal makeup air delivered inside the hood). Internal makeup air is also known as short-circuit air. Short-circuit hoods discharge unconditioned makeup air directly into the hood cavity to reduce the amount of conditioned air that is exhausted from the kitchen. However, this air does not assist in capturing the cooking effluents; therefore, the formulas in Sections 507.5.1 through 507.5.4 are based on net exhaust flow. In other words, any "short-circuit" air supplied directly into a hood is not counted toward satisfying



Figure 507.5(1)
CANOPY HOOD SERVING MULTIPLE APPLIANCES

INTERNATIONAL CODE COUNCIL®
Copyright © 2015 ICC. ALL RIGHTS RESERVED. Accessed by David Dammon on Jun 21, 2017 12:30:52 PM pursuant to License Agreement with ICC. No further reproduction or distribution authorized. ANY UNAUTHORIZED REPRODUCTION OR DISTRIBUTION IS A VIOLATION OF THE FEDERAL COPYRIGHT ACT AND THE LICENSE AGREEMENT, AND SUBJECT TO CIVIL AND CRIMINAL PENALTIES THEREUNDER.

the code requirement. Only the exhaust air flow taken from the kitchen can satisfy the code requirement.

Based on the requirements in Section 507.2, the first three subsections of this section specify the quantity of required exhaust for Type I hoods, and the last subsection of this section contains criteria for Type I and II hoods. The quantity of exhaust required for Type II hoods must comply with Section 507.5.4 (see commentary, Section 507.5.4). It is important to note that, as indicated in Section 507.1, Exception 1, this section is not applicable to factory-built hoods that are tested, listed and labeled in accordance with UL 710.

New energy-saving technology can allow the exhaust flow rate to modulate in response to the cooking effluent load. Such systems use heat and vapor detectors and variable or multispeed exhaust fans (see Section 507.1.1).



Figure 507.5(2)
BACKSHELF/PASS-OVER HOOD



Figure 507.5(3)
BACKSHELF HOOD WITH ONE SIDE PANEL
(Photo courtesy of Guy McMann)

INTERNATIONAL CODE COUNCIL®
Copyright © 2015 ICC. ALL RIGHTS RESERVED. Accessed by David Dammon on Jun 21, 2017 12:30:52 PM pursuant to License Agreement with ICC. No further reproduction or distribution authorized. ANY UNAUTHORIZED REPRODUCTION OR DISTRIBUTION IS A VIOLATION OF THE FEDERAL COPYRIGHT ACT AND THE LICENSE AGREEMENT, AND SUBJECT TO CIVIL AND CRIMINAL PENALTIES THEREUNDER.

507.5.1 Extra-heavy-duty cooking appliances. The minimum net airflow for hoods, as determined by Section 507.1, used for *extra-heavy-duty cooking appliances* shall be determined as follows:

Type of Hood	CFM per linear foot of hood
Backshelf/pass-over	Not allowed
Double island canopy (per side)	550
Eyebrow	Not allowed
Single island canopy	700
Wall-mounted canopy	550

For SI: 1 cfm per linear foot = 1.55 L/s per linear meter.

❖ The quantity of exhaust required for Type I hoods serving extra-heavy-duty cooking appliances must be supplied in accordance with this section. Extra-heavy-duty cooking appliances use solid fuel as all or any part of the source of heat for cooking (see commentary for the definition of "Extra-heavy-duty cooking appliances," Section 202). Some examples of extra-heavy-duty cooking appliances are barbecue pits and barbecue cooking appliances; solid fuel-burning stoves and ovens; grease-burning charbroilers and charcoal grills (see commentary, Section 507.2.2).

Based on the definition of "Extra-heavy-duty cooking appliances" in Section 202, appliances that burn wood chips to impart flavor to the food being cooked are considered to be extra-heavy-duty appliances. Various species of wood logs and chips are burned in such cooking appliances as barbecue grills, smokers and broilers. The classification of those appliances as extra heavy duty is not based on whether the consumption of solid fuel is the primary heat source for cooking. The consumption of solid fuel only for the purpose of flavoring foods, where the primary heat source for cooking is another fuel or electricity, is still viewed as solid fuel burning.

Note that the exhaust rate is based on the linear length of the face of the hood and not the area of the hood opening. The length of the hood is measured along the front side that is parallel with the front line of the cooking appliances. Laboratory testing and empirical data support this methodology, which is consistent with ASHRAE guidelines. The exhaust rates are not tied to the hood opening area; therefore, the designer can take advantage of the improved capture and containment ability of larger area hoods without having to increase the required exhaust rate because of the larger hood area (see Commentary Figure 507.5.1).

507.5.2 Heavy-duty cooking appliances. The minimum net airflow for hoods, as determined by Section 507.1, used for *heavy-duty cooking appliances* shall be determined as follows:

Type of Hood	CFM per linear foot of hood
Backshelf/pass-over	400
Double island canopy (per side)	400
Eyebrow	Not allowed
Single island canopy	600
Wall-mounted canopy	400

For SI: 1 cfm per linear foot = 1.55 L/s per linear meter.

❖ The quantity of exhaust required for Type I hoods serving heavy-duty cooking appliances, such as under-fired broilers, open-burner ranges and wok ranges, must be in accordance with this section (see commentary for the definition of "Heavy-duty cooking appliances," Section 202). Higher quantities of grease-laden vapors and smoke are associated with these appliances.

Note that the exhaust rate is based on the linear length of the face of the hood and not the area of the hood opening. The length of the hood is measured along the front side that is parallel with the front line of the cooking appliances. Laboratory testing and empirical data support this methodology, which is consistent with ASHRAE guidelines. The exhaust

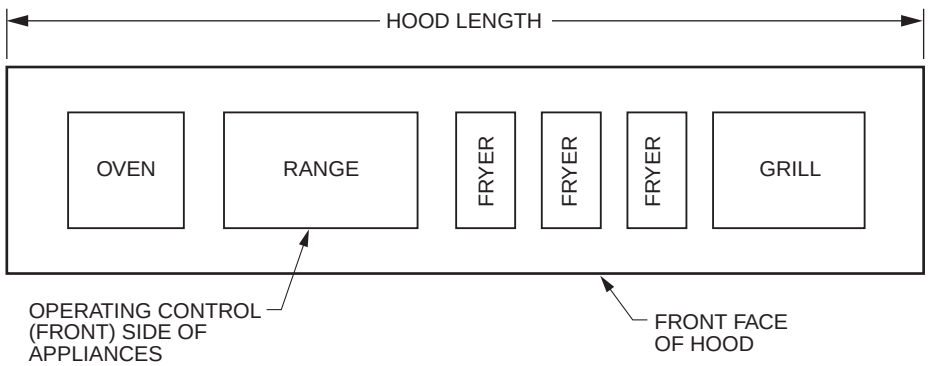

Figure 507.5.1
HOOD APPLIANCE PLAN VIEW

INTERNATIONAL CODE COUNCIL®
Copyright © 2015 ICC. ALL RIGHTS RESERVED. Accessed by David Dammon on Jun 21, 2017 12:30:52 PM pursuant to License Agreement with ICC. No further reproduction or distribution authorized. ANY UNAUTHORIZED REPRODUCTION OR DISTRIBUTION IS A VIOLATION OF THE FEDERAL COPYRIGHT ACT AND THE LICENSE AGREEMENT, AND SUBJECT TO CIVIL AND CRIMINAL PENALTIES THEREUNDER.

rates are not tied to the hood opening area; therefore, the designer can take advantage of the improved capture and containment ability of larger area hoods without having to increase the required exhaust rate because of the larger hood area (see Commentary Figure 507.13.1).

507.5.3 Medium-duty cooking appliances. The minimum net airflow for hoods, as determined by Section 507.1, used for *medium-duty cooking appliances* shall be determined as follows:

Type of Hood	CFM per linear foot of hood
Backshelf/pass-over	300
Double island canopy (per side)	300
Eyebrow	250
Single island canopy	500
Wall-mounted canopy	300

For SI: 1 cfm per linear foot = 1.55 L/s per linear meter.

❖ The quantity of exhaust required for Type I hoods serving medium-duty cooking appliances must be in accordance with this section. Some examples of medium-duty cooking appliances are rotisseries, griddles, deep fat fryers and conveyor pizza ovens (see commentary for the definition of "Medium-duty cooking appliances," Section 202).

Note that the exhaust rate is based on the linear length of the face of the hood and not the area of the hood opening. The length of the hood is measured along the front side that is parallel with the front line of the cooking appliances. Laboratory testing and empirical data support this methodology, which is consistent with ASHRAE guidelines. The exhaust rates are not tied to the hood opening area; therefore, the designer can take advantage of the improved capture and containment ability of larger area hoods without having to increase the required exhaust rate because of the larger hood area (see Commentary Figure 507.5.1).

507.5.4 Light-duty cooking appliances. The minimum net airflow for hoods, as determined by Section 507.1, used for *light-duty* cooking appliances and food service preparation shall be determined as follows:

Type of Hood	CFM per linear foot of hood
Backshelf/pass-over	250
Double island canopy (per side)	250
Eyebrow	250
Single island canopy	400
Wall-mounted canopy	200

For SI: 1 cfm per linear foot = 1.55 L/s per linear meter.

❖ The quantity of exhaust required for Type I and II hoods serving light-duty cooking appliances must be in accordance with this section. Some examples of light-duty cooking appliances are ovens, steamers and steam kettles (see commentary for the definition of "Light-duty cooking appliances," Section 202). A Type II hood serving a dishwashing appliance must be in accordance with Section 507.5.5 (see commentary, Section 507.5.5).

Note that the exhaust rate is based on the linear length of the face of the hood and not the area of the hood opening. The length of the hood is measured along the front side that is parallel with the front line of the cooking appliances. Laboratory testing and empirical data support this methodology, which is consistent with ASHRAE guidelines. The exhaust rates are not tied to the hood opening area; therefore, the designer can take advantage of the improved capture and containment ability of larger area hoods without having to increase the required exhaust rate because of the larger hood area (see Commentary Figure 507.5.1).

507.5.5 Dishwashing appliances. The minimum net airflow for Type II hoods used for dishwashing appliances shall be 100 cfm per linear foot (155 L/s per linear meter) of hood length.

Exception: Dishwashing appliances and *equipment* installed in accordance with Section 507.3.

❖ The minimum quantity of exhaust required for Type II hoods serving a dishwashing appliance is 100 cfm per linear foot of hood length. This is a specific airflow rate that is for Type II hoods serving dishwashers. The flow rates in Section 507.5.4 of the code are for Type II hoods serving light-duty cooking appliances. Dishwashers are not cooking appliances. This rate is consistent with industry practice.

507.6 Performance test. A performance test shall be conducted upon completion and before final approval of the installation of a ventilation system serving *commercial cooking appliances*. The test shall verify the rate of exhaust airflow required by Section 507.5, makeup airflow required by Section 508 and proper operation as specified in this chapter. The permit holder shall furnish the necessary test *equipment* and devices required to perform the tests.

❖ Upon completion of an installation and before final approval is given, the code official must determine that the kitchen exhaust equipment will function properly under the most severe anticipated cooking conditions. The performance test includes the determination that the code-required airflow and containment of all cooking vapors will occur. It is not the intent of this section to require a full-scale test of the automatic fire suppression system.

The performance test is very important because it will determine whether or not the system, including the hood, ducts and fans, is designed and operating properly. For example, a factory-built hood tested and listed in accordance with UL 710 will have the minimum required exhaust rate that is determined in accordance with the testing. However, because the testing occurs in an ideal laboratory setting, that

INTERNATIONAL CODE COUNCIL®
Copyright © 2015 ICC. ALL RIGHTS RESERVED. Accessed by David Dammon on Jun 21, 2017 12:30:52 PM pursuant to License Agreement with ICC. No further reproduction or distribution authorized. ANY UNAUTHORIZED REPRODUCTION OR DISTRIBUTION IS A VIOLATION OF THE FEDERAL COPYRIGHT ACT AND THE LICENSE AGREEMENT, AND SUBJECT TO CIVIL AND CRIMINAL PENALTIES THEREUNDER.

exhaust rate might be inadequate in the environment in which the hood is actually installed. The only way to determine whether the exhaust rate is adequate for capture and containment of the cooking effluents is to test the installed system on the job site. Determining the actual exhaust and makeup airflow rates requires specialized apparatus and instruments, as well as skilled technicians. Such testing should be performed by experienced third-party personnel.

The test must verify that the required exhaust rate and capture and containment of the cooking effluent is achieved. Verification of proper makeup air system operation is also part of the performance test. It is more realistic to conduct a test that actually involves the cooking operations rather than a test that uses only a steam or smoke generator. The rising thermal draft that is generated by the cooking operation will generally aid in the capture and containment of smoke and vapors. Testing procedures must be acceptable to the code official and are typically designed to simulate the actual worst-case cooking operation that is expected to take place under the hood. In accordance with Section 507.6.1, any test must involve simultaneous use of the appliances served with all of the appliances at their operating temperature.

507.6.1 Capture and containment test. The permit holder shall verify capture and containment performance of the exhaust system. This field test shall be conducted with all appliances under the hood at operating temperatures, with all sources of outdoor air providing *makeup air* for the hood operating and with all sources of recirculated air providing conditioning for the space in which the hood is located operating. Capture and containment shall be verified visually by observing smoke or steam produced by actual or simulated cooking, such as with smoke candles, smoke puffers, and similar means.

❖ This section contains requirements for performing the capture and containment test that is performed as part of the field performance test required by Section 507.6 (see commentary, Section 507.6). To make the test realistic, the appliances must all be at operating temperatures, as required for actual cooking. The heat from the appliances produces a rising thermal plume that affects the capture and containment ability of the hood. Obviously, the most realistic test would involve actual cooking, but, if that is not practical, visual aids such as smoke generators can be used to simulate cooking.

In addition to the cooking appliances being at operating temperature, the source of makeup air and the recirculated air that provides conditioning for the kitchen space must also be operating at the time of the test. It has been demonstrated that all sources of air introduced around and within the vicinity of the hood can impact the hood's ability to capture and contain. Four-way diffusers used for ventilation air to condition the kitchen space have been shown to have a negative impact on hood performance when located improperly. Transfer air introduced from adjacent spaces has been shown to create turbulence or velocities that can have a negative impact on a hood's performance. Therefore, all sources of airflow in and around the hood must be in operation to demonstrate actual operating conditions during the performance test.

SECTION 508
COMMERCIAL KITCHEN MAKEUP AIR

508.1 Makeup air. *Makeup air* shall be supplied during the operation of commercial kitchen exhaust systems that are provided for *commercial cooking appliances*. The amount of *makeup air* supplied to the building from all sources shall be approximately equal to the amount of *exhaust air* for all exhaust systems for the building. The *makeup air* shall not reduce the effectiveness of the exhaust system. *Makeup air* shall be provided by gravity or mechanical means or both. Mechanical *makeup air* systems shall be automatically controlled to start and operate simultaneously with the exhaust system. *Makeup air* intake opening locations shall comply with Section 401.4.

❖ The air exhausted from a kitchen exhaust system must be replaced with enough air to allow the required exhaust airflow and to prevent excessive negative pressure in the commercial cooking area. Kitchen exhaust systems are usually designed with the quantity of makeup air being slightly less than that exhausted, thereby creating a slight negative pressure in the kitchen to help confine cooking odors within the kitchen [see Commentary Figure 508.1(1)]. NFPA 96 and some hood manufacturers require that negative pressures not exceed 0.02 inch of water column (0.050 kPa).

The introduction of makeup air is critical to the proper operation of all kitchen exhaust systems and the fuel-burning appliances located in kitchen areas. Too little makeup air will cause excessive negative pressures to develop in the kitchen, thereby reducing the exhaust airflow. Too little makeup air can also affect nearby fuel-burning appliances and cause loss of draft in appliance vents and chimneys, or cause combustion byproducts to discharge into the building. A lack of combustion air and makeup air can result in incomplete fuel combustion, appliance malfunction and flue gas spillage.

Makeup air is not required to be provided through dedicated makeup units. Makeup air can be supplied through the HVAC system in the building that supplies outdoor air for ventilation in accordance with Section 403.2. Rather than having just a dedicated makeup system for the kitchen, makeup air can be supplied from all the sources within the building, including dedicated units, and must balance with all of the exhaust systems in the building. This would allow outdoor air supplied to provide ventilation for a dining room, for example, to be transferred to the kitchen to serve as makeup air. An air balance schedule is usually provided to show all of the sources of makeup air within the building and all of the air that is

INTERNATIONAL CODE COUNCIL®
Copyright © 2015 ICC. ALL RIGHTS RESERVED. Accessed by David Dammon on Jun 21, 2017 12:30:52 PM pursuant to License Agreement with ICC. No further reproduction or distribution authorized. ANY UNAUTHORIZED REPRODUCTION OR DISTRIBUTION IS A VIOLATION OF THE FEDERAL COPYRIGHT ACT AND THE LICENSE AGREEMENT, AND SUBJECT TO CIVIL AND CRIMINAL PENALTIES THEREUNDER.

exhausted from the building. As previously discussed, kitchen exhaust systems are commonly designed to create a slight negative pressure within the kitchen to help confine cooking odors. For this reason, the makeup air rate is allowed to be "approximately equal" to or slightly less than the exhaust air rate. The difference in quantity between the makeup air supplied and the exhaust rate is made up with transfer air from adjacent rooms or spaces.

An exhaust system can be designed to introduce makeup air through the exhaust hood [see Commentary Figures 508.1(2), 508.1(3) and 508.1(4)]. Commentary Figures 508.1(2) and 508.1(3) illustrate an exhaust hood that has makeup air registers located on the face of the hood. Such hoods are referred to as compensating hoods because they compensate for the exhaust flow by supplying makeup air to the space in which the hood is located. Compensating hoods include short-circuit hoods (see the definition of "Compensating hoods").

Commentary Figure 508.1(4) illustrates an exhaust hood that introduces air at the face of the hood and within the hood cavity. The figure shows a hood that is required by the code to exhaust 5,000 cfm (2.36 m^3/s). Because 1,500 cfm (0.71 m^3/s) of untempered air is introduced directly into the hood, only 3,500 cfm (1.65 m^3/s) of air is exhausted from the kitchen space. The additional makeup air quantity must be approximately 3,500 cfm (1.65 m^3/s).

Section 507.5 requires a "net" quantity of exhaust airflow, which is determined by subtracting from the actual flow rate of the hood any airflow supplied directly to the hood cavity. The short-circuit air shown in Commentary Figure 508.1(4) must be subtracted from the total exhaust airflow through the hood exhaust duct to determine the net exhaust flow.

This example is prohibited by the code because only 3,500 cfm (1.65 m^3/s) is being exhausted from the kitchen area instead of the required 5,000 cfm (2.36 m^3/s). A hood that introduces air directly into the hood cavity is called a short-circuit hood system (see the definition of "Compensating hoods"). A short-circuit hood was originally intended for use only where the code-required exhaust rate exceeds that which is actually necessary for a cooking operation. Using this type of hood could result in energy savings because the supply air brought into the hood does not have to be tempered. Short-circuit hoods are not addressed in the code other than indirectly by the second sentence of Section 507.5 and the third sentence of this section, which says that makeup air must not reduce the effectiveness of the exhaust system. It is important to note that, as indicated in Section 507.1, Exception 1, Section 507.5 is not applicable to factory-built hoods that are tested, listed and labeled in accordance with UL 710. Therefore, a short-circuit hood that is tested in accordance with UL 710 and passes the performance, capture and containment tests required by Section 507.6.1 would be permitted. Note that Section C403.2.8 of the IECC limits short-circuit airflow to 10 percent of the hood exhaust airflow rate.

Testing has shown that the location of makeup air discharge can negatively affect hood performance,

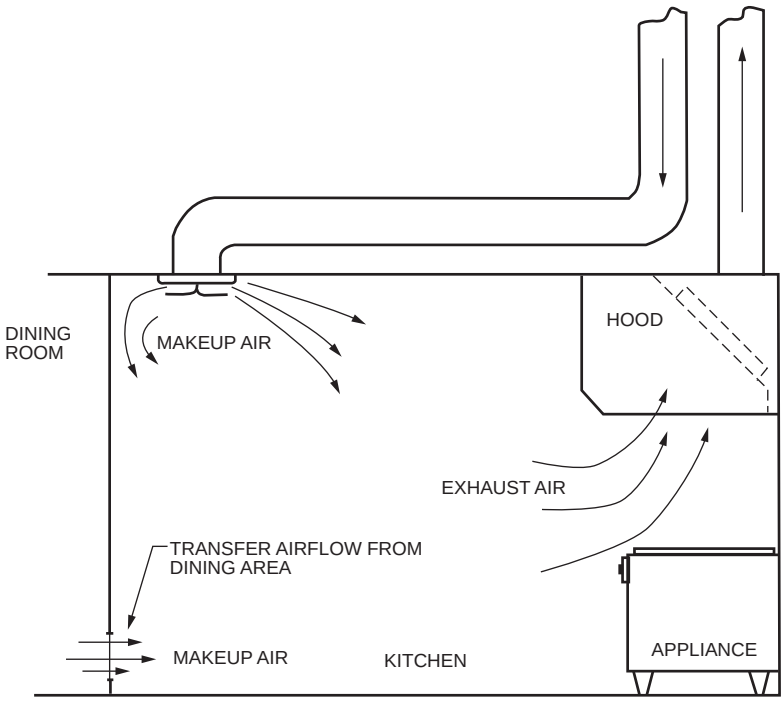

Figure 508.1(1)
MAKEUP AIR

INTERNATIONAL CODE COUNCIL®
Copyright © 2015 ICC. ALL RIGHTS RESERVED. Accessed by David Dammon on Jun 21, 2017 12:30:52 PM pursuant to License Agreement with ICC. No further reproduction or distribution authorized. ANY UNAUTHORIZED REPRODUCTION OR DISTRIBUTION IS A VIOLATION OF THE FEDERAL COPYRIGHT ACT AND THE LICENSE AGREEMENT, AND SUBJECT TO CIVIL AND CRIMINAL PENALTIES THEREUNDER.

depending on where and at what velocity the makeup air is introduced into the kitchen or hood. Makeup air introduced near or into a hood can cause air currents that will cause cooking effluent to spill from the hood or be drawn away from the hood. The full-scale test in accordance with Section 507.6 is intended to be used by the code official to determine that the exhaust hood will effectively confine and exhaust the cooking vapors. In all cases, the method of introducing makeup air to the kitchen space or hood system must not reduce the effectiveness of the exhaust system.

The mechanical makeup air system and the kitchen exhaust system must operate simultaneously through the use of automatic controls. The fans must be wired for parallel starting and operation. Supervisory controls, like those required for systems that are required to be interlocked, are not required for the operation of these fans. If the HVAC system is supplying all or part of the makeup air, then the HVAC units must be controlled to operate via the automatic controls. There must not be an option to operate the exhaust hood without operating the makeup air supply system.

Makeup air may be supplied by gravity (openings to the outdoors) or mechanical means, or both. All such mechanical systems and motorized dampers must be tied to the operation of the cooking appliances served. Kitchen hoods within and serving dwelling units are exempt from the code provisions for makeup air if the exhaust hood system does not exhaust more than 400 cfm (0.19 m^3/s) (see commentary, Section 505.2).

Makeup air is typically supplied mechanically by makeup air supply fans equipped with air filters and air-heating units comparable to duct heaters. Regional and local public health agencies might require filtration of makeup air because it discharges into food-handling and preparation areas. Makeup air distribution systems and HVAC supply terminals should not introduce air too near the exhaust hood because this has been proven to cause interference with the hood's ability to capture exhaust as a result of the turbulence created.

508.1.1 Makeup air temperature. The temperature differential between *makeup air* and the air in the conditioned space shall not exceed 10ºF (6ºC) except where the added heating and cooling loads of the *makeup air* do not exceed the capacity of the HVAC system.

❖ Makeup air that is not introduced directly into or close to the exhaust hood must be tempered to within 10ºF (6ºC) of the temperature of the conditioned air within the space. The intent is to prevent the makeup air from causing employee discomfort, which might encourage employees to shut down or restrict the makeup air supply. The temperature limitation does not apply to makeup air that is supplied through the HVAC system since that system will either heat or cool the air to the space conditions that are controlled by the thermostat within the space. If the makeup air is supplied to a compensating hood or in close proximity to any hood, it is possible that employee comfort conditions will not be affected because a major portion of the makeup air will mix with the cooking effluent and enter the hood before affecting comfort. This may permit providing makeup air that, by design, is not heated or cooled to space conditions. By providing the makeup air near the exhaust hood and directing it towards the exhaust hood the makeup air could

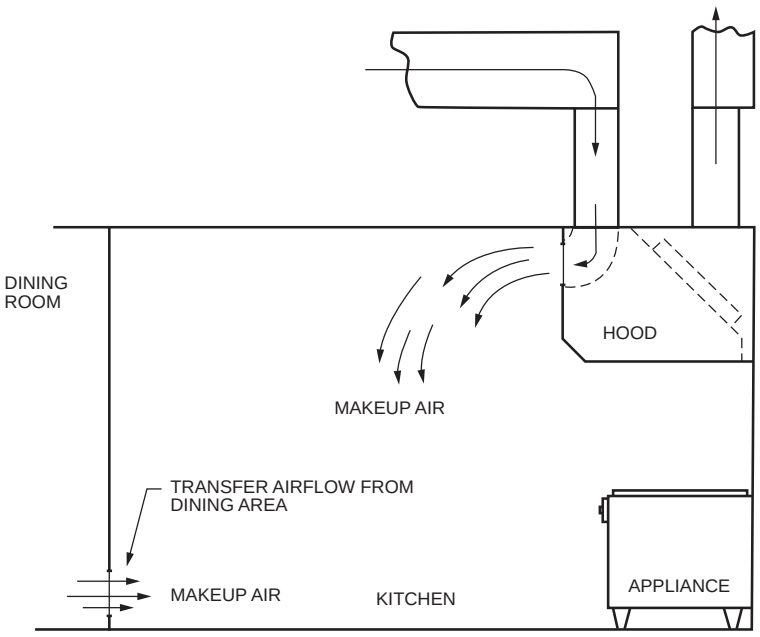

Figure 508.1(2)
MAKEUP AIR

INTERNATIONAL CODE COUNCIL®
Copyright © 2015 ICC. ALL RIGHTS RESERVED. Accessed by David Dammon on Jun 21, 2017 12:30:52 PM pursuant to License Agreement with ICC. No further reproduction or distribution authorized. ANY UNAUTHORIZED REPRODUCTION OR DISTRIBUTION IS A VIOLATION OF THE FEDERAL COPYRIGHT ACT AND THE LICENSE AGREEMENT, AND SUBJECT TO CIVIL AND CRIMINAL PENALTIES THEREUNDER.



Figure 508.1(3)
MAKEUP AIR SUPPLIED FROM FACE OF HOOD

be exhausted before imposing significant heating and cooling loads to the space. Additionally, even if the makeup air becomes a heating or cooling load to the HVAC system, comfort conditions will not be affected if the HVAC system capacity is sufficient to ensure that space heating and cooling thermostat setpoints are not exceeded. The ventilation provisions of Chapter 4 also apply to kitchen spaces (see commentary, Table 403.3.1.1).

Kitchen ventilation may be satisfied by the outdoor air supplied as makeup air to the exhaust hood system where the exhaust rate of the hood system equals or exceeds the required ventilation air rate. In that case, the makeup air also serves as ventilation air. Also, the quantity of outdoor air supplied as ventilation air may be sufficient to supply the makeup air for exhaust hoods, in which case no separate source of makeup air would be used.

The focus of this section is employee comfort and is typically satisfied by makeup air being heated to a temperature not greater than the heating/cooling balance point of the space. Because makeup air tempering controls may be separate from HVAC controls, it is important to ensure that heating and cooling do not occur simultaneously, which might happen, for example, with a makeup air heat setting higher than the balance point—a temperature that might be 50ºF (10ºC) or lower. Rarely, if ever, would the need arise to cool makeup air. Systems should be designed to avoid the use of energy to simultaneously heat and cool kitchen air supplies. For example, it is possible that makeup air is being heated while the kitchen space is being cooled.

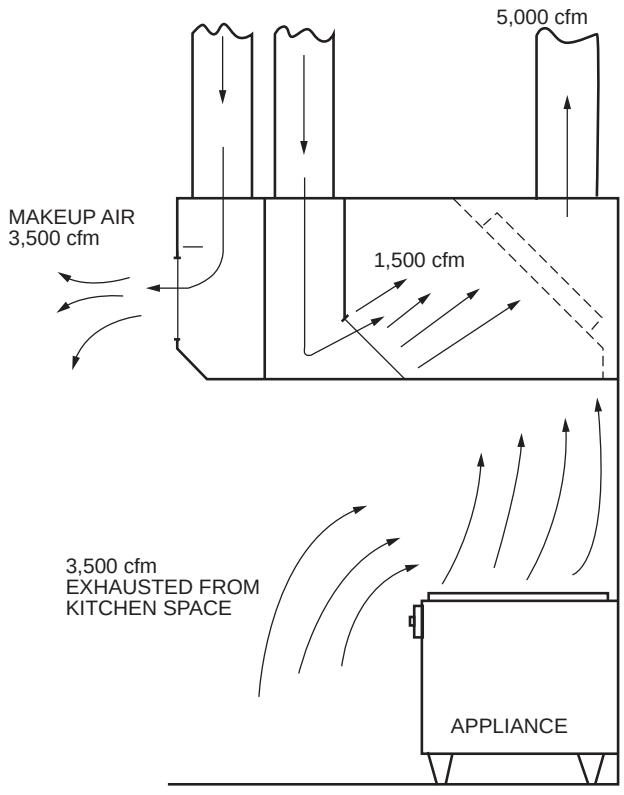

For SI: 1 cubic foot per minute = 0.0004719 m^3/s.

Figure 508.1(4)
MAKEUP AIR SUPPLIED TO HOOD
(Short-circuit hood)

INTERNATIONAL CODE COUNCIL®
Copyright © 2015 ICC. ALL RIGHTS RESERVED. Accessed by David Dammon on Jun 21, 2017 12:30:52 PM pursuant to License Agreement with ICC. No further reproduction or distribution authorized. ANY UNAUTHORIZED REPRODUCTION OR DISTRIBUTION IS A VIOLATION OF THE FEDERAL COPYRIGHT ACT AND THE LICENSE AGREEMENT, AND SUBJECT TO CIVIL AND CRIMINAL PENALTIES THEREUNDER.

508.1.2 Air balance. Design plans for a facility with a commercial kitchen ventilation system shall include a schedule or diagram indicating the design outdoor air balance. The design outdoor air balance shall indicate all exhaust and replacement air for the facility, plus the net exfiltration if applicable. The total replacement air airflow rate shall equal the total exhaust airflow rate plus the net exfiltration.

❖ This section is consistent with ASHRAE 154, Ventilation for Commercial Cooking Operations. Kitchen exhaust systems are commonly compromised by imbalances in the exhaust, makeup and HVAC air systems. Pressure imbalances and cross drafts from HVAC supply outlets can cause hoods to fail to capture and contain cooking effluent. Makeup air is outdoor air introduced to replace the air that is exhausted. Replacement air includes makeup air, transfer air and supply air. An air balance schedule typically indicates all exhaust sources and flow rates and all replacement air sources and flow rates. The intent is to achieve a balance to prevent pressure differentials and drafts that interfere with exhaust system performance. The replacement airflow rate must be equal to the total exhaust rate including the calculated exfiltration rate of the building. Exfiltration is defined in Section 202.

Kitchen exhaust systems are commonly compromised by imbalances that starve the system for replacement air. Replacement air is defined as air that replaces what an exhaust system removes from a space, and replacement air can be outdoor makeup air, infiltration air or transfer air from other spaces. Exfiltration is the uncontrolled transfer of indoor air to the outdoors through leakage paths in the building envelope; it is caused by pressure differentials resulting from wind, stack effect and building pressurization. The required air balance schedule must account for all exhaust and replacement air so that the kitchen exhaust system will function as intended. Note that slight negative pressures are desirable in kitchens to prevent odor migration (see Commentary Figure 508.1.2).

508.2 Compensating hoods. Manufacturers of compensating hoods shall provide a label indicating minimum exhaust flow and/or maximum makeup airflow that provides capture and containment of the exhaust effluent.

Exception: Compensating hoods with *makeup air* supplied only from the front face discharge and side face discharge openings shall not be required to be labeled with the maximum makeup airflow.

❖ "Compensating hoods" are defined in Section 202 as those hoods having an integral makeup air supply. The methods of providing the compensating air, include:

- From inside the hood (also called short-circuit air);
- Air curtain flow from the bottom of the front face;
- From the front face, rear or side of the hood;
- From the front, rear or sides of the cooking equipment itself; or
- From a combination of the methods above.

The primary reason for using compensating hoods is the energy savings resulting from not having to temper the makeup air. One of the major complaints from kitchen employees is the cold, drafty makeup air flowing across the kitchen during the winter. To avoid this condition, the air must be heated, adding to the energy costs of the building. Makeup air introduced



Figure 508.1.2
OUTDOOR AIR BALANCE REQUIRED
(Photo courtesy of Thinkstock)

INTERNATIONAL CODE COUNCIL®
Copyright © 2015 ICC. ALL RIGHTS RESERVED. Accessed by David Dammon on Jun 21, 2017 12:30:52 PM pursuant to License Agreement with ICC. No further reproduction or distribution authorized. ANY UNAUTHORIZED REPRODUCTION OR DISTRIBUTION IS A VIOLATION OF THE FEDERAL COPYRIGHT ACT AND THE LICENSE AGREEMENT, AND SUBJECT TO CIVIL AND CRIMINAL PENALTIES THEREUNDER.

within the boundaries of the hood or cooking equipment may not require tempering because the employees are less likely to be exposed to this air flow.

Improper exhaust and makeup airflow could negatively affect hood performance; therefore, compensating hoods must specify the parameters within which the hood will function (see commentary, Section 508.1).

This section requires the hood to have a label indicating the minimum exhaust flow rate and maximum makeup airflow required to adequately capture, contain and remove the smoke and grease-laden air. These flow rates are established through testing under ideal conditions in the manufacturer's test facilities. To verify the performance of the compensating hood under actual conditions, a full scale test must be performed as required by Section 507.6. The location of doors, windows, HVAC supply and return openings and other exhaust fans might adversely affect the hood's operation.

The exception recognizes that the requirements in UL 710 do not require the evaluation and marking of the maximum makeup air for hoods with front and side face discharge openings. Makeup air discharging from the front and side face of compensating hoods will effectively combine with room supply air to provide for the capture of cooking product effluent.

SECTION 509
FIRE SUPPRESSION SYSTEMS

509.1 Where required. *Commercial cooking appliances* required by Section 507.2 to have a Type I hood shall be provided with an *approved* automatic fire suppression system complying with the *International Building Code* and the *International Fire Code*.

❖ Fire is a well-documented problem in restaurant and commercial kitchens. This section requires an effective fire suppression system to combat fire on the cooking surfaces of grease-producing appliances, and within the hood and exhaust system of a commercial kitchen installation. Commentary Figure 509.1 illustrates a typical suppression system serving a commercial exhaust hood and cooking appliance. Automatic fire-extinguishing systems installed in commercial food heat-processing appliances must be installed in accordance with the IBC and IFC, and be approved by the code official.

In accordance with the IBC, the IFC and typical manufacturer's installation instructions, the fire-extinguishing system must protect the cooking surfaces (which are the most likely source of a fire) and must also protect all portions of the exhaust hood system, including the hood, the filters, the extractors and the duct system. The most common type of fire suppression systems used with kitchen equipment include dry-chemical, wet-chemical and water sprinkler systems.

Exhaust systems serving only commercial cooking appliances that produce no grease-laden vapor have no specific fire protection requirements in this section. However, an exhaust system that serves any grease-producing cooking appliance must be treated entirely as a grease exhaust system, even if it also serves grease-free cooking appliances.

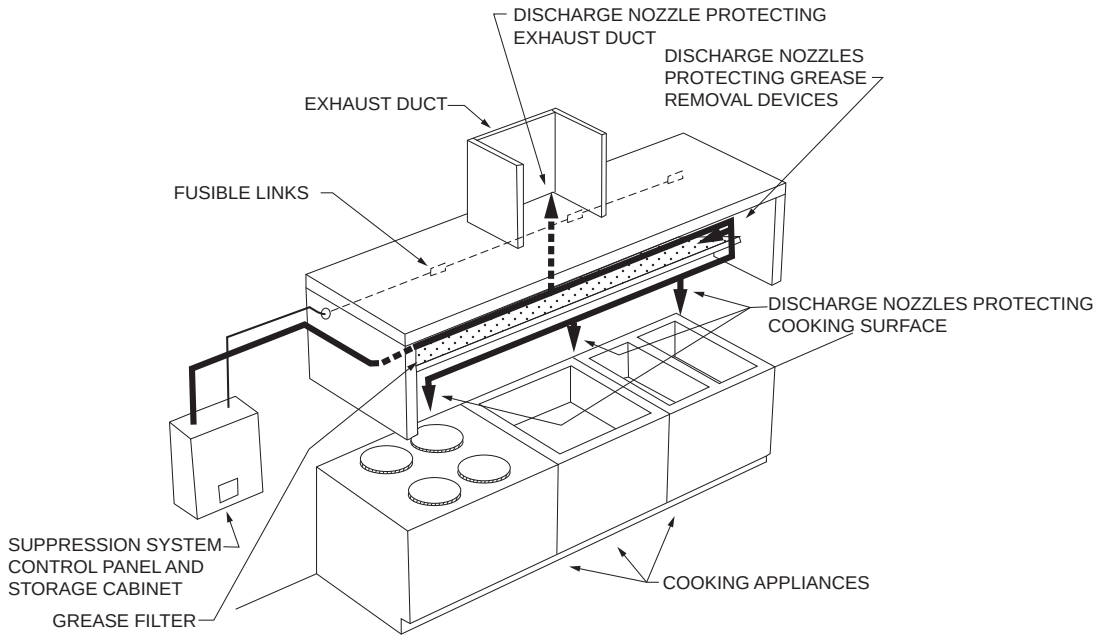

Figure 509.1
SUPPRESSION SYSTEM FOR COMMERCIAL-TYPE COOKING EQUIPMENT

INTERNATIONAL CODE COUNCIL®
Copyright © 2015 ICC. ALL RIGHTS RESERVED. Accessed by David Dammon on Jun 21, 2017 12:30:52 PM pursuant to License Agreement with ICC. No further reproduction or distribution authorized. ANY UNAUTHORIZED REPRODUCTION OR DISTRIBUTION IS A VIOLATION OF THE FEDERAL COPYRIGHT ACT AND THE LICENSE AGREEMENT, AND SUBJECT TO CIVIL AND CRIMINAL PENALTIES THEREUNDER.

SECTION 510
HAZARDOUS EXHAUST SYSTEMS

510.1 General. This section shall govern the design and construction of duct systems for hazardous exhaust and shall determine where such systems are required. Hazardous exhaust systems are systems designed to capture and control hazardous emissions generated from product handling or processes, and convey those emissions to the outdoors. Hazardous emissions include flammable vapors, gases, fumes, mists or dusts, and volatile or airborne materials posing a health hazard, such as toxic or corrosive materials. For the purposes of this section, the health-hazard rating of materials shall be as specified in NFPA 704.

For the purposes of the provisions of Section 510, a laboratory shall be defined as a facility where the use of chemicals is related to testing, analysis, teaching, research or developmental activities. Chemicals are used or synthesized on a nonproduction basis, rather than in a manufacturing process.

❖ Hazardous exhaust systems include, but are not limited to, those conveying flammable vapors, gases, paint residue, corrosive fumes, dust and particulate matter and volatile or air-borne materials posing a health hazard. The intent of this section is to reduce the hazards associated with exhaust systems that convey combustible, flammable, explosive, toxic or corrosive materials in any state (solid, liquid or gaseous). For example, laboratory exhaust hoods or booths are designed to contain and exhaust many different substances that may or may not be flammable, toxic, corrosive or pathogenic. Also, the nature of those types of exhaust systems is dependent on the quantities of materials released within the hoods or booths and the amount of dilution air introduced into the hoods or booths.

NFPA 704 describes a system for the identification of hazards to the life and health of people. The standard contains quantitative guidelines for determining the numerical health-hazard rating of a material based on the physical properties and characteristics of the material that are known or can be determined by standard methods. The provisions of Section 510 clearly point to the concern for combustibility, flammability, toxicity, corrosiveness and explosiveness, but the code does not cover microbial, pathogenic and similarly dangerous exhausts. NFPA 45 presents additional guidance for the regulation of laboratory exhaust systems.

The definition of "Laboratories" provided in this section is intended to describe those environments that, unlike manufacturing operations that may use large quantities of chemicals on a constant basis, are characterized by the use of a wide variety of chemicals in very small quantities, and often for very short periods of time or on an infrequent basis. These are operations in which standard laboratory exhaust practices provide significant "in duct" dilution, which prevent in-duct incompatible material reactions and buildup of flammable vapors. This definition is the basis for exceptions found for laboratories in Sections 510.2, 510.4 and 510.7.

510.2 Where required. A hazardous exhaust system shall be required wherever operations involving the handling or processing of hazardous materials, in the absence of such exhaust systems and under normal operating conditions, have the potential to create one of the following conditions:

1. A flammable vapor, gas, fume, mist or dust is present in concentrations exceeding 25 percent of the lower flammability limit of the substance for the expected room temperature.
2. A vapor, gas, fume, mist or dust with a health-hazard rating of 4 is present in any concentration.
3. A vapor, gas, fume, mist or dust with a health-hazard rating of 1, 2 or 3 is present in concentrations exceeding 1 percent of the median lethal concentration of the substance for acute inhalation toxicity.

Exception: Laboratories, as defined in Section 510.1, except where the concentrations listed in Item 1 are exceeded or a vapor, gas, fume, mist or dust with a health-hazard rating of 1, 2, 3 or 4 is present in concentrations exceeding 1 percent of the median lethal concentration of the substance for acute inhalation toxicity.

❖ This section specifies where the installation of an effective hazardous exhaust system is required based on the stated conditions. This section contains the criteria to determine whether a given operation requires a hazardous exhaust system. If, in the absence of an exhaust system, the normal operation would exceed the threshold concentrations indicated, a hazardous exhaust system is required. The code does not indicate how to determine if any of the criteria are triggered. It may be necessary to consult an expert in the field such as a professional toxicologist or an industrial hygienist or contact an organization, such as the Occupational Safety and Health Administration or the National Institute for Occupational Safety and Health. The hazardous exhaust system is intended to keep the threshold levels from being reached, either in the room containing the point source (for all types of hazardous materials) or in the exhaust duct system (for flammability/explosion hazards). The criteria are based on normal operating conditions, not on accident conditions. It is important to note and emphasize that the threshold concentrations are without the exhaust system operating. Section 510.3 requires the exhaust system to operate below threshold concentrations; therefore, the threshold limits are determined without the exhaust system operating.

Item 1 requires a hazardous exhaust system where flammable vapor, gas, fume, mist or dust reaches concentrations that exceed 25 percent of the lower flammability limit (LFL) of the substance for the range of anticipated space temperature(s). The limits of flammability (high and low) are the extreme concentration limits of a substance. The LFL of a substance is the lowest concentration by volume of a flammable

INTERNATIONAL CODE COUNCIL®
Copyright © 2015 ICC. ALL RIGHTS RESERVED. Accessed by David Dammon on Jun 21, 2017 12:30:52 PM pursuant to License Agreement with ICC. No further reproduction or distribution authorized. ANY UNAUTHORIZED REPRODUCTION OR DISTRIBUTION IS A VIOLATION OF THE FEDERAL COPYRIGHT ACT AND THE LICENSE AGREEMENT, AND SUBJECT TO CIVIL AND CRIMINAL PENALTIES THEREUNDER.

vapor, gas, fume, mist or dust mixed with air (or any oxidant) that will ignite and burn with a flame. For example, hydrogen-air mixtures will propagate flames in concentrations between 4 and 74 percent by volume of hydrogen at 70°F (21°C) and at atmospheric pressure. The smaller value is the lower (lean) limit, and the larger value is the upper (rich) limit of flammability. For purposes of this example, anything greater than a 1-percent concentration by volume of hydrogen in air would exceed 25 percent of hydrogen's LFL at 70°F (21°C) and atmospheric pressure. Keep in mind that when the mixture temperature is increased, the flammability range widens; when the temperature is decreased, the range narrows.

The term "lower flammability limit" describes the minimum concentration by volume of vapor to air that will propagate a flame in the presence of an ignition source. The upper flammability limit (UFL) is the maximum vapor-to-air concentration that will propagate a flame. If a vapor-to-air mixture is below the LFL, it is described as being "too lean" to burn, and if it is above the UFL, it is "too rich" to burn. When the vapor-to-air ratio is somewhere between the LFL and the UFL, fires and explosions can occur upon introduction of an ignition source. The mixture is then said to be within its flammable or explosive range. When the mixture is in the range between the LFL and UFL [synonymous with LEL (lower explosive limit) and UEL (upper explosive limit)], the ignition is more intense and violent than if the mixture were closer to either the upper or lower limits.

Item 2 requires a hazardous exhaust system where the general health hazard posed by a single exposure to a vapor, gas, fume, mist or dust is classified with a health-hazard rating of 4 in accordance with NFPA 704. Health-hazard ratings are quantified on an intensifying numerical scale from zero to 4, with zero posing no health hazard beyond that of ordinary combustible material and 4 being too dangerous to health to expose even the best trained personnel. For a material with a health hazard rating of 4, a few whiffs of the gas could cause death, or the vapor or liquid could be fatal upon penetrating the full protective clothing of a fire fighter. Exposure may vary from a few seconds up to an hour. However, the intent here is to consider hazardous vapors, gases, fumes, mists or dusts that may arise out of an inherent property of the exposed material in the presence or absence of a catalyst; for example, a material (solid, liquid or gas) that when in the presence of a catalyst (water) gives off a gas too dangerous to the health of those exposed to it, such as fire fighters. In this instance, the normal full protective clothing and self-contained breathing apparatus (standard issue to the average fire department) will not provide adequate protection against inhalation or skin contact with these materials.

Item 3 requires a hazardous exhaust system where the concentration of a particular vapor, gas, fume, mist or dust with a health-hazard rating of 1, 2 or 3 is present in excess of 1 percent of the median lethal concentration of the substance for acute inhalation toxicity. Health-hazard rankings are based primarily on criteria detailed in the United Nations (UN) publication, *Recommendations on the Transport of Dangerous Goods*. The UN criterion for inhalation toxicity is based on the LC50 (lower concentration limit fatal to 50 percent of the test population) and saturated vapor concentration of the material. Furthermore, in addition to inhalation toxicity, the UN has established criteria for oral (exposure by ingestion) and dermal (exposure by skin) toxicity, as well as corrosivity; all of which have been considered in developing NFPA 704. Consult NFPA 704 for further information.

The exception for laboratories is to recognize the occasional presence of Class 4 materials in laboratories in such small concentrations to preclude the need for a hazardous exhaust system. This exception does not change the threshold limits for Items 1 and 3. If these limits are exceeded, then a hazardous exhaust system for the laboratory is required. This exception has the affect of making the requirements of Item 2 less stringent. Instead of having the threshold for a vapor, gas, fume, mist or dust classified as health-hazard rating of 4 at any concentration, it will now be treated as hazard ratings 1, 2 or 3 in Item 3. In effect, the exception simply exempts labs that have some chemicals with a health-hazard rating of 4 if the concentrations of such chemicals do not exceed 1 percent of the medium lethal concentration. Minute quantities used in laboratories do not necessarily drive the requirement for a hazardous exhaust system. This exception addresses the need for a hazardous exhaust system when hazardous quantities of Class 1, 2, 3 or 4 materials are in use in any lab environment at concentrations exceeding the prescribed limit.

[F] 510.2.1 Lumber yards and woodworking facilities. *Equipment* or machinery located inside buildings at lumber yards and woodworking facilities which generates or emits combustible dust shall be provided with an *approved* dust-collection and exhaust system installed in accordance with this section and the *International Fire Code*. *Equipment* and systems that are used to collect, process or convey combustible dusts shall be provided with an *approved* explosion-control system.

❖ The basic wood-processing activities related to lumber yards and woodworking facilities generate large volumes of wood particles suspended in the air to create a potentially explosive form of dust. This section requires that combustible dust be controlled by an approved dust-collection and exhaust system designed and installed in accordance with Sections 510 and 511. There are two basic designs of dust collection systems. One is a single-stage system that consists of a single dust collector in the form of a cyclone separator or a combination cyclone/baghouse unit. The other is a two-stage system that consists of a cyclone separator followed by a bag-type filter house.

INTERNATIONAL CODE COUNCIL®
Copyright © 2015 ICC. ALL RIGHTS RESERVED. Accessed by David Dammon on Jun 21, 2017 12:30:52 PM pursuant to License Agreement with ICC. No further reproduction or distribution authorized. ANY UNAUTHORIZED REPRODUCTION OR DISTRIBUTION IS A VIOLATION OF THE FEDERAL COPYRIGHT ACT AND THE LICENSE AGREEMENT, AND SUBJECT TO CIVIL AND CRIMINAL PENALTIES THEREUNDER.

An approved explosion control system, installed in accordance with Section 911 of the IFC, is also required for the equipment and systems that collect and convey the combustible dust.

[F] 510.2.2 Combustible fibers. *Equipment* or machinery within a building which generates or emits combustible fibers shall be provided with an *approved* dust-collecting and exhaust system. Such systems shall comply with this code and the *International Fire Code*.

❖ Machinery that causes readily combustible fibers, such as cotton, hay or wastepaper to become airborne during operation must be equipped with a dust-collection and exhaust system designed and installed in accordance with Section 511 of this code and Chapter 37 of the IFC. There are two basic designs of dust collection systems. One is a single-stage system that consists of a single dust collector in the form of a cyclone separator or a combination cyclone/bag-house unit. The other is a two-stage system that consists of a cyclone separator followed by a bag-type filter house.

Unlike woodworking facilities, buildings housing operations that cause combustible fibers to become airborne do not need an explosion control system. Although the fibers are highly combustible, the dust created by the particles of combustible fibers does not have the potentially explosive nature of the wood dust.

510.3 Design and operation. The design and operation of the exhaust system shall be such that flammable contaminants are diluted in noncontaminated air to maintain concentrations in the exhaust flow below 25 percent of the contaminant's lower flammability limit.

❖ This section contains performance-based criteria to quantify the amount of exhaust in relation to the control of the contaminant source. In other words, a direct solution is to restrict the concentration of all known contaminants of concern to a specified and acceptable level. That "level" is below 25 percent of the LFL for a particular contaminant. Where the concentration of a flammable contaminant in air is maintained below 25 percent of the lower flammability limit for that contaminant, there is insufficient fuel vapor in the gas phase to sustain homogeneous ignition. Managing the contaminant(s) in a diluted state means there is less chance of catastrophic flame propagation, ignition or explosion. The quantity or volume of exhaust required is source specific.

Because maintaining acceptable contaminant levels is not easily or exactly determined, the services of a registered design professional should be considered. In choosing a particular quantity or rate of exhaust, the design professional must consider the effects of pressure, temperature, local concentration, impurities and background velocities in terms of actual system performance.

Section 510.3 and Item 1 of Section 510.2 appear to be in conflict; however, each addresses a distinct criterion. Item 1 of Section 510.2 establishes a concentration that triggers the requirement for the hazardous exhaust system and Section 510.3 prescribes the operating parameters of the system.

510.4 Independent system. Hazardous exhaust systems shall be independent of other types of exhaust systems.

❖ To minimize the potential for spreading hazardous exhaust to other parts of a building, hazardous exhaust systems must not connect with any other exhaust system of the building. Without complete isolation, the fire, health and explosion hazards inherent in hazardous exhaust systems cannot be confined only to the hazardous system and could jeopardize other systems and other parts of the building. The intent is to prohibit the combining of hazardous and nonhazardous exhaust systems. For example, an exhaust system conveying flammable vapors must not share ducts or exhaust equipment with a toilet room exhaust system. This does not, however, prohibit multiple hazardous exhaust ducts of the same type from connecting to a common trunk, riser or system. It also does not prohibit dissimilar hazardous systems from sharing common ducts if the dissimilar exhausts are compatible, as defined by the IFC, and the intermixing of their exhausts does not increase the overall hazard. When combined, dissimilar exhausts could react to form an exhaust mixture that is more combustible, flammable, explosive or otherwise more hazardous than the individual components.

510.5 Incompatible materials and common shafts. Incompatible materials, as defined in the *International Fire Code*, shall not be exhausted through the same hazardous exhaust system. Hazardous exhaust systems shall not share common shafts with other duct systems, except where such systems are hazardous exhaust systems originating in the same fire area.

Exception: The provisions of this section shall not apply to laboratory exhaust systems where all of the following conditions apply:

1. All of the hazardous exhaust ductwork and other laboratory exhaust within both the occupied space and the shafts are under negative pressure while in operation.
2. The hazardous exhaust ductwork manifolded together within the occupied space must originate within the same fire area.
3. Hazardous exhaust ductwork originating in different fire areas and manifolded together in a common shaft shall meet the provisions of Section 717.5.3, Exception 1, Item 1.1 of the *International Building Code*.
4. Each control branch has a flow regulating device.
5. Perchloric acid hoods and connected exhaust shall be prohibited from manifolding.
6. Radioisotope hoods are equipped with filtration, carbon beds or both where required by the *registered design professional*.
7. Biological safety cabinets are filtered.

INTERNATIONAL CODE COUNCIL®
Copyright © 2015 ICC. ALL RIGHTS RESERVED. Accessed by David Dammon on Jun 21, 2017 12:30:52 PM pursuant to License Agreement with ICC. No further reproduction or distribution authorized. ANY UNAUTHORIZED REPRODUCTION OR DISTRIBUTION IS A VIOLATION OF THE FEDERAL COPYRIGHT ACT AND THE LICENSE AGREEMENT, AND SUBJECT TO CIVIL AND CRIMINAL PENALTIES THEREUNDER.

8. Each hazardous exhaust duct system shall be served by redundant exhaust fans that comply with either of the following:

   8.1. The fans shall operate simultaneously in parallel and each fan shall be individually capable of providing the required exhaust rate.

   8.2. Each of the redundant fans is controlled so as to operate when the other fan has failed or is shut down for servicing.

❖ This section has two separate requirements, one related to connecting together (manifolding) of hazardous exhaust ducts and the other related ducts sharing common shafts up through the building. The second sentence says that HVAC ductwork and nonhazardous exhaust ducts cannot be enclosed in the same shaft enclosure with the hazardous exhaust system and ducts. The exception permits manifolding of laboratory exhaust ducts when all of the eight conditions are met and also would allow hazardous exhaust ducts serving laboratories to share common shafts with other duct systems. The exception is specific to laboratories and states that the provisions (both) of the section do not apply. Laboratories are defined in Section 510.1. Laboratories are characterized by the use of a wide variety of chemicals in very small quantities and often for very short periods of time or on an infrequent basis. These are operations in which standard laboratory exhaust practices provide significant "in-duct" dilution that prevent in-duct incompatible material reactions and buildup of flammable vapors. The benefit of manifolding laboratory exhaust ducts is that with multiple hood systems manifolded together, the duct dilution factor is increased even further. The text highlights those few conditions, referenced in laboratory ventilation standards, that should preclude manifolding. The intent is to keep materials that are incompatible from being part of the manifolded system. The hazardous exhaust ductwork in the occupied space and in the shaft is required to operate under a negative pressure so as to minimize the possibility of any leakage into the occupied space or shaft from the duct. In accordance with Item 3 of the Exception, hazardous exhaust systems originating in different fire areas are allowed to share common shaft enclosures and be manifolded together if they individually penetrate the shaft and such penetrations are protected with subducts in accordance with Section 607.5.5, Exception 1, Part 1.1 (IBC Section 717.5.3). See the commentary to Section 602.1 for a description of fire areas. Item 2 requires hazardous exhaust systems that manifold together in the occupied space to originate in the same fire area. See Commentary Figure 510.5.

Item 8 specifically addresses the need for continuous maintenance of negative static pressure in the duct. The redundant exhaust fans are intended to increase dependability. The fans run in parallel when the exhaust system is in use or the fans can alternate with automatic controls that will ensure that one fan is always in operation. Under either method (8.1 or 8.2), two fans would have to fail to cause failure of the exhaust system. This will also provide the benefit of being able to inspect and maintain the system without having to shut the system down. Having redundant fans and backup power would be the ideal situation to meet the intent of maintaining a continuous negative pressure in the duct system. Previous versions of this section stated that contaminated air cannot be recirculated to occupiable areas, which implied that if the air was decontaminated somehow, it could be recirculated, The text is now very clear that air contaminated with explosive or flammable vapors, fumes or dusts; flammable or toxic gases or radioactive material must be exhausted to the outdoors and, therefore, cannot be recirculated or transferred to any other space. Note that Section 510.1 also requires hazardous exhaust to discharge to the outdoors.

510.6 Design. Systems for removal of vapors, gases and smoke shall be designed by the constant velocity or equal friction methods. Systems conveying particulate matter shall be designed employing the constant velocity method.

❖ The primary task of the duct designer is to design duct systems that will fulfill the required exhaust system function in a practical, economical and energy-conserving manner within the prescribed limits of available space, friction loss, velocity, sound level and leakage losses or gains. Whether the duct system is designed manually or by computer, exhaust systems conveying vapors, gases and smoke must be designed using either the constant velocity or the equal friction method. In the equal friction method, ducts are sized for a constant pressure loss per unit length. In the constant velocity method, ducts are sized for a constant velocity per unit length to maintain minimum contaminant transport velocities.

Minimum transport velocity is the velocity required to transport particulates without settling. The American Conference of Governmental Industrial Hygienists' (ACGIH) *Industrial Ventilation—Manual of Recommended Practice* lists some generally accepted transport velocities as a function of the nature of the contaminant. Duct velocities can be higher than the minimum transport velocities but should never be significantly lower.

When the equal friction or constant velocity method is used manually, the time to calculate duct sizes can be shortened by using duct calculators offered by various HVAC equipment manufacturers. Round ducts are preferred because they offer a more uniform air velocity to resist settling of material and can withstand the higher static pressures normally found in exhaust systems. For additional guidance on duct sizing using one of the methods above, consult a standard design handbook such as the American Society of Heating, Refrigerating, and Air-Conditioning Engineers' (ASHRAE) *Handbook of Fundamentals* or the ACGIH *Industrial Ventilation—Manual of Recommended Practice*.

INTERNATIONAL CODE COUNCIL®
Copyright © 2015 ICC. ALL RIGHTS RESERVED. Accessed by David Dammon on Jun 21, 2017 12:30:52 PM pursuant to License Agreement with ICC. No further reproduction or distribution authorized. ANY UNAUTHORIZED REPRODUCTION OR DISTRIBUTION IS A VIOLATION OF THE FEDERAL COPYRIGHT ACT AND THE LICENSE AGREEMENT, AND SUBJECT TO CIVIL AND CRIMINAL PENALTIES THEREUNDER.

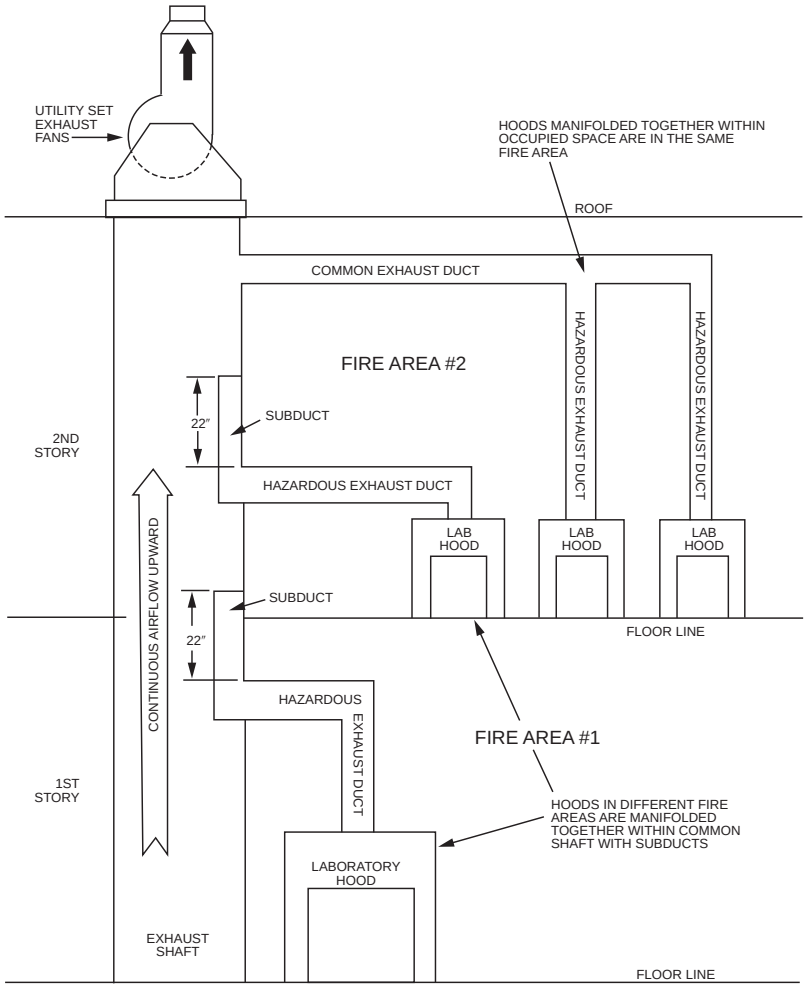

For SI: 1 inch = 25.4 mm, 1 foot = 304.8 mm.

Figure 510.5
MANIFOLDED HAZARDOUS EXHAUST DUCTS

510.6.1 Balancing. Systems conveying explosive or radioactive materials shall be prebalanced by duct sizing. Other systems shall be balanced by duct sizing with balancing devices, such as dampers. Dampers provided to balance airflow shall be provided with securely fixed minimum-position blocking devices to prevent restricting flow below the required volume or velocity.

❖ General procedures for balancing systems are described in this section. Most exhaust systems have more than one hood. If the design pressures are not the same for merging parallel airstreams, the system adjusts to equalize pressure at the common point; however, the flow rates of the two merging airstreams will not necessarily be the same as designed. As a result, the hoods can fail to control the contaminant adequately, exposing occupants to potentially hazardous contaminant concentrations.

Two design methods are used to achieve the required design flow rates at all hoods and inlets. One method uses balancing devices such as blast gates or dampers to obtain design airflow at each hood or inlet. The other approach balances systems by adding resistance to ductwork sections without external aids (that is, changing duct size, selecting different fittings and increasing airflow). This self-balancing method is preferred, especially when the system handles abrasive materials. Where potentially explosive or radioactive materials are conveyed, flow balancing is critical and the self-balancing method is mandatory because contaminants could accumulate or settle at the balancing devices and because manual balancing is subject to human error and tampering.

Where balancing devices are installed in exhaust systems, the design must include a minimum stop or means for preventing restriction of flow below the required volume or velocity. It is obvious that modulating a balancing device to its fully closed position would restrict flow, thereby creating a potentially dangerous situation.

INTERNATIONAL CODE COUNCIL®
Copyright © 2015 ICC. ALL RIGHTS RESERVED. Accessed by David Dammon on Jun 21, 2017 12:30:52 PM pursuant to License Agreement with ICC. No further reproduction or distribution authorized. ANY UNAUTHORIZED REPRODUCTION OR DISTRIBUTION IS A VIOLATION OF THE FEDERAL COPYRIGHT ACT AND THE LICENSE AGREEMENT, AND SUBJECT TO CIVIL AND CRIMINAL PENALTIES THEREUNDER.

510.6.2 Emission control. The design of the system shall be such that the emissions are confined to the area in which they are generated by air currents, hoods or enclosures and shall be exhausted by a duct system to a safe location or treated by removing contaminants.

❖ Exhaust air systems are either general systems that remove air from large spaces or local systems that capture heat, vapors, gases, fumes, mists or dust at source-specific locations within a room or space. This section requires that hazardous exhaust systems be designed to prevent the spread of contaminants beyond the area of origin. Confinement is accomplished using controlled air currents or barriers such as hoods, booths and similar enclosures. For example, the air movement through a spray-painting or dipping room must create a flow pattern that effectively sweeps the entire cross-sectional area of that room. An enclosure such as a room or booth is typically necessary to contain the paint overspray and prevent the migration of vapors and fumes from the paint application area.

Additional information concerning procedures for evaluating and controlling contaminant levels can be found in ACGIH *Industrial Ventilation—Manual of Recommended Practice* or ACGIH *Threshold Limit Values for Chemical Substances in the Work Environment*.

510.6.3 Hoods required. Hoods or enclosures shall be used where contaminants originate in a limited area of a space. The design of the hood or enclosure shall be such that air currents created by the exhaust systems will capture the contaminants and transport them directly to the exhaust duct.

❖ When sources within the building generate hazardous contaminants (see commentary, Section 510.2), direct exhaust through hoods is more effective than control by general ventilation (dilution). This section requires the installation of an exhaust hood or enclosure at the location of greatest concentration to improve the capture ability of the exhaust system. Most often, this is at the source of contamination such as a particular piece of equipment or appliance or a particular process or operation such as evaporation; plating; container filling; welding; chute loading of conveyors; crushing; cool or hot shakeout processes; grinding; blasting or tumbling. The intent is to maximize capture efficiency by preventing contaminants from spreading beyond the immediate area of the source.

510.6.4 Contaminant capture and dilution. The velocity and circulation of air in work areas shall be such that contaminants are captured by an airstream at the area where the emissions are generated and conveyed into a product-conveying duct system. Contaminated air from work areas where hazardous contaminants are generated shall be diluted below the thresholds specified in Section 510.2 with air that does not contain other hazardous contaminants.

❖ The references to "contaminated air" and "hazardous contaminants" make clear that this section is dealing with mixtures of environmental air plus hazardous contaminants. The section does not apply, for instance, to simply objectionable odor contaminants or to gaseous mixtures that are part of the processes. Rather than addressing only the flammability hazard, this section also addresses the health hazard, to be consistent with Section 510.2, because it applies to (occupied) work areas. Dilution air may contain contaminants, as long as they are not "hazardous" contaminants.

The code recognizes that the minimum transport velocity required for the capture of large particles, such as mists or dusts differs from that required for contaminants, such as vapors, gases or fumes and must be considered in the design of exhaust systems to ensure that capture and direct transport to the exhaust duct system is achieved. Capture velocities are air velocities at the point of contaminant generation upstream of the hood or inlet. The contaminant enters the airstream at the point of generation and is conducted along with the air into the hood and from there directly to the exhaust duct system.

This section also prescribes the maximum contaminant concentration allowed in occupant work areas where the contaminants are generated. At lower levels, the contaminant is considered diluted or innocuous.

510.6.5 Makeup air. *Makeup* air shall be provided at a rate approximately equal to the rate that air is exhausted by the hazardous exhaust system. Makeup air intakes shall be located in accordance with Section 401.4.

❖ Exhaust flow can occur only if air is constantly supplied to replace the air being exhausted. The air exhausted from a hazardous exhaust system must be replaced with air at the required exhaust flow rate. Hazardous exhaust systems are usually designed with the quantity of makeup air being slightly less than that exhausted, thereby creating a slight negative pressure that helps confine contaminants to the area of origin.

The introduction of makeup air is critical to the proper operation of all hazardous exhaust systems and the fuel-burning appliances that may be located in nearby areas (see commentary, Section 508.1). The mechanical makeup air source and the hazardous exhaust system should be electrically interlocked and controlled by a single start switch to make certain makeup air is supplied when the exhaust hood is in operation.

Makeup air intakes must be located at sufficient distances from exhaust outlets to prevent exhaust discharge from contaminating the makeup air.

510.6.6 Clearances. The minimum *clearance* between hoods and combustible construction shall be the *clearance* required by the duct system.

❖ Requirements for clearances between hoods and combustibles are emphasized because of the potential fire hazard posed where those clearances are not observed. Section 510.9.2 prescribes clearances for

INTERNATIONAL CODE COUNCIL®
Copyright © 2015 ICC. ALL RIGHTS RESERVED. Accessed by David Dammon on Jun 21, 2017 12:30:52 PM pursuant to License Agreement with ICC. No further reproduction or distribution authorized. ANY UNAUTHORIZED REPRODUCTION OR DISTRIBUTION IS A VIOLATION OF THE FEDERAL COPYRIGHT ACT AND THE LICENSE AGREEMENT, AND SUBJECT TO CIVIL AND CRIMINAL PENALTIES THEREUNDER.

hazardous exhaust ducts. Greater clearances are required if specified by the duct or hood manufacturer.

Reduction of the required clearances to combustibles is allowed only where the combustibles are protected by one of the methods outlined in Section 308 (see commentary, Section 308).

510.6.7 Ducts. Hazardous exhaust duct systems shall extend directly to the exterior of the building and shall not extend into or through ducts and plenums.

❖ The intent of this section is to minimize the potential for spreading hazardous exhaust to other parts of the building as a result of duct leakage or failure. In the event of a duct fire or explosion, other areas of the building could be jeopardized. The intent is to require routing of hazardous exhaust ducts to the outdoors as directly as practicable, thereby avoiding unnecessary duct lengths and travel through other spaces. In all cases, ducts conveying hazardous exhaust must not extend into or through other ducts or plenum spaces.

510.7 Penetrations. Penetrations of structural elements by a hazardous exhaust system shall conform to Sections 510.7.1 through 510.7.4.

Exception: Duct penetrations within Group H-5 occupancies as allowed by the *International Building Code*.

❖ This section contains requirements for the design of duct penetrations through structural elements of a building, including penetrations through floors and walls, and prohibitions for fire walls. The exception refers to Sections 415.11.1.4 and 415.11.1.5 of the IBC. Section 415.11.1.4 allows unprotected openings between floors of a Group H-5 fabrication if the interconnected levels consist of the fabrication area and a mechanical room used solely for mechanical equipment related to the operations on the fabrication floor. Section 415.11.1.5 allows penetrations through no more than two floors of the fabrication area by mechanical duct and piping without requiring a shaft.

510.7.1 Fire dampers and smoke dampers. Fire dampers and smoke dampers are prohibited in hazardous exhaust ducts.

❖ Fire and smoke dampers must not be installed within hazardous exhaust systems because a closed damper will prevent all or part of the exhaust system from functioning and could possibly create a dangerous condition in the room or space where the exhaust system originates. The purpose of the hazardous exhaust system is to dilute and remove the hazardous materials so that they are not a threat to the building occupants. The installation of fire or smoke dampers may adversely affect the operation of the exhaust system, thereby preventing the exhaust system from achieving its intended purpose. Additionally, the materials conveyed in hazardous exhaust ducts could damage, impair or obstruct the dampers, seriously affecting their performance. Hazardous exhaust systems are permitted to penetrate fire-resistance-rated assemblies, other than fire walls, and fire and smoke dampers are not required at those penetrations because protection is provided by the fire-resistance-rated enclosure required by Sections 510.6.2 and 510.6.3.

510.7.1.1 Shaft penetrations. Hazardous exhaust ducts that penetrate fire-resistance-rated shafts shall comply with Section 714.3.1 or 714.3.1.2 of the *International Building Code*.

❖ Penetrations of shaft walls by hazardous exhaust ducts must be protected as they were tested as part a fire-resistance-rated assembly or protected by a through-penetration firestop system. See Section 714.3.1 of the IBC.

510.7.2 Floors. Hazardous exhaust systems that penetrate a floor/ceiling assembly shall be enclosed in a fire-resistance-rated shaft constructed in accordance with the *International Building Code.*

❖ To reduce the risk of spreading fire from the hazardous exhaust system to other parts of the building, the hazardous exhaust system must be enclosed in a fire-resistance-rated shaft enclosure from the point where the system penetrates a floor level to the termination outdoors. A minimum 1-hour fire-resistance-rated shaft enclosure is required even though the floor/ceiling assembly itself may not be fire-resistance-rated. The requirements for constructing the shaft enclosure and for the minimum fire-resistance ratings are given in the IBC. In addition to reducing the risk associated with fire, the rated enclosures will also help protect the duct from physical damage and may provide some protection against the spread of hazardous exhaust in the event of an explosion or duct failure.

510.7.3 Wall assemblies. Hazardous exhaust duct systems that penetrate fire-resistance-rated wall assemblies shall be enclosed in fire-resistance-rated construction from the point of penetration to the outlet terminal, except where the interior of the duct is equipped with an approved automatic fire suppression system. Ducts shall be enclosed in accordance with the *International Building Code* requirements for shaft construction and such enclosure shall have a minimum fire-resistance rating of not less than the highest fire-resistance-rated wall assembly penetrated.

❖ Hazardous exhaust ducts that penetrate a vertical fire-resistance-rated assembly (wall) must be enclosed in fire-resistance-rated construction, unless the hazardous exhaust duct is protected internally by an approved automatic fire suppression system. The enclosure must be continuous (both horizontally and vertically) from the first fire-resistance-rated assembly penetrated to the termination point of the exhaust. The entire enclosure must have a fire-resistance rating equivalent to the greatest fire rating of any assembly penetrated by the duct. Additionally, if the enclosure also penetrates a floor/ceiling assembly, the fire-resistance rating must not be less than that required by the IBC based on the number of stories connected.

INTERNATIONAL CODE COUNCIL®
Copyright © 2015 ICC. ALL RIGHTS RESERVED. Accessed by David Dammon on Jun 21, 2017 12:30:52 PM pursuant to License Agreement with ICC. No further reproduction or distribution authorized. ANY UNAUTHORIZED REPRODUCTION OR DISTRIBUTION IS A VIOLATION OF THE FEDERAL COPYRIGHT ACT AND THE LICENSE AGREEMENT, AND SUBJECT TO CIVIL AND CRIMINAL PENALTIES THEREUNDER.

The enclosure requirements include vertical shafts and what could be viewed as "horizontal shafts" and can be summarized as follows:

- Hazardous exhaust ducts, whether protected by a fire suppression system or not, that penetrate any floor/ceiling assembly (fire-resistance rated or not), must be enclosed in a fire-resistance-rated shaft.
- Hazardous exhaust ducts without fire suppression system protection that penetrate a fire-resistance-rated wall assembly must be enclosed in fire-resistance-rated enclosures from the first penetration to the exhaust termination.
- Hazardous exhaust ducts having fire suppression system protection that penetrate a fire-resistance-rated assembly other than a floor/ceiling assembly need not be enclosed at that penetration.

One of the purposes for the horizontal enclosure of hazardous exhaust ducts is to compensate for the lack of fire dampers in such systems.

510.7.4 Fire walls. Ducts shall not penetrate a fire wall.

❖ The IBC explains the differences between fire walls, fire barriers and other fire-resistance-rated assemblies. A fire wall creates separate buildings. Hazardous exhaust ducts are not allowed to penetrate fire walls because the penetration of a fire wall by a hazardous exhaust duct would introduce a potential hazard from one building into another.

510.8 Suppression required. Ducts shall be protected with an *approved* automatic fire suppression system installed in accordance with the *International Building Code*.

Exceptions:

1. An approved automatic fire suppression system shall not be required in ducts conveying materials, fumes, mists and vapors that are nonflammable and noncombustible under all conditions and at any concentrations.
2. Automatic fire suppression systems shall not be required in metallic and noncombustible, nonmetallic exhaust ducts in semiconductor fabrication facilities.
3. An *approved* automatic fire suppression system shall not be required in ducts where the largest cross-sectional diameter of the duct is less than 10 inches (254 mm).
4. For laboratories, as defined in Section 510.1, automatic fire protection systems shall not be required in laboratory hoods or exhaust systems.

❖ To provide protection against the spread of fire within a hazardous exhaust system and to prevent a duct fire from involving the building, an automatic fire suppression system conforming to the IBC must be installed to protect the exhaust duct system. The fire suppression system need not be a sprinkler system because some materials conveyed in exhaust ducts may not be compatible with water. Other systems that may be more suitable, such as dry chemical and carbon dioxide suppression systems, are described in the IBC. The type of suppression system used is the choice of the designer; however, the design of any fire suppression system must conform to the requirements of the IBC.

Exception 1 recognizes that an automatic fire suppression system would be of little value for an exhaust system that conveys only materials, fumes, vapors and gases that are nonflammable and noncombustible under all conditions and at any concentrations. Remember that Section 510.3 requires hazardous exhaust systems to maintain an exhaust flow mixture that is well below the LFL for the flammable contaminant; thus, the exception can be applicable only to contaminants that are essentially nonflammable and noncombustible. The fire suppression requirement is intended to apply to exhaust systems having an actual fire hazard.

Exception 2 is for metallic and noncombustible, nonmetallic ducts that are located in semiconductor fabrication facilities. This exception is similar to Section 2703.10.4.1 in the IFC which does not require ducts to have a suppression system in H-5 facilities where the ducts are conveying nonflammable gases, vapors or fumes.

Exception 3 recognizes the reduced hazard associated with smaller ducts and the impracticality of installing fire suppression systems in those ducts.

Exception 4 recognizes that a fire suppression system within laboratory hood exhaust ducts increases the potential for workers to be exposed to chemicals. In addition, an uncontrolled flow of water from sprinklers in a chemical hood duct could transport the chemicals out of the hood and duct system and create a very dangerous situation, especially if the hood system contains water-reactive chemicals. The dilution that occurs in laboratory exhaust ducts, and the further dilution that occurs when exhaust ducts are manifolded together, reduce the need for suppression. This, along with the increased potential for worker exposure, provides the necessary justification to omit the automatic fire suppression system. The language used in this section for the laboratory exception is similar to the language used in NFPA 45.

510.9 Duct construction. Ducts used to convey hazardous exhaust shall be constructed of materials *approved* for installation in such an exhaust system and shall comply with one of the following:

1. Ducts shall be constructed of *approved* G90 galvanized sheet steel, with a minimum nominal thickness as specified in Table 510.9.
2. Ducts used in systems exhausting nonflammable corrosive fumes or vapors shall be constructed of nonmetallic materials that exhibit a flame spread index of 25 or less and a smoke-developed index of 50 or less when tested in accordance with ASTM E84 or UL 723 and that are *listed* and *labeled* for the application.

INTERNATIONAL CODE COUNCIL®
Copyright © 2015 ICC. ALL RIGHTS RESERVED. Accessed by David Dammon on Jun 21, 2017 12:30:52 PM pursuant to License Agreement with ICC. No further reproduction or distribution authorized. ANY UNAUTHORIZED REPRODUCTION OR DISTRIBUTION IS A VIOLATION OF THE FEDERAL COPYRIGHT ACT AND THE LICENSE AGREEMENT, AND SUBJECT TO CIVIL AND CRIMINAL PENALTIES THEREUNDER.

Where the products being exhausted are detrimental to the duct material, the ducts shall be constructed of alternative materials that are compatible with the exhaust.

❖ To provide structural strength and a degree of corrosion resistance, metallic ducts in hazardous exhaust systems must be constructed of G90 galvanized sheet steel. The amount of galvanizing (zinc or zinc-alloy coating) is expressed in terms of weight per unit area, and G90 is an ASTM inch-pound (mm-kg) designation for the weight of coating on a given area of sheet metal. Sheet steel is a noncombustible material, which provides protection against the spread of fire and smoke outside of the duct enclosure. The thickness of the exhaust duct is regulated by Table 510.9. Part of the justification for allowing the omission of fire dampers in hazardous exhaust ducts is the fact that steel ducts possess an inherent resistance to the spread of fire.

Galvanized steel is not an appropriate duct material for all substances handled in the broad category of hazardous exhaust systems. A duct material compatible with the exhaust must be selected and factors such as corrosion resistance, abrasion resistance, chemical resistance and operating temperatures must be taken into account. For example, stainless steel or steel coated with polyvinyl chloride (PVC) might be used in systems where the exhaust is corrosive to G90 galvanized steel. Nonmetallic ducts used to convey nonflammable corrosive fumes or vapors must be listed and labeled for the application. Note that this section implies that nonmetallic ducts are permitted only for conveying nonflammable corrosive contaminants.

To reduce the possible contribution to the spread of fire and smoke, these materials must be tested to ASTM E84 or UL 723. These materials are limited to a maximum flame spread index of 25 and a smoke-developed index of 50. Information on industrial exhaust systems can be obtained from NFPA 91, SMACNA's *Accepted Industry Practice for Industrial Duct Construction*, ASHRAE's *Handbook of Applications and ASHRAE's HVAC Systems and Equipment Handbook*.

TABLE 510.9
MINIMUM DUCT THICKNESS

DIAMETER OF DUCT OR MAXIMUM SIDE DIMENSION	MINIMUM NOMINAL THICKNESS		
	Nonabrasive materials	Nonabrasive/ abrasive materials	Abrasive materials
0-8 inches	0.028 inch (No. 24 gage)	0.034 inch (No. 22 gage)	0.040 inch (No. 20 gage)
9-18 inches	0.034 inch (No. 22 gage)	0.040 inch (No. 20 gage)	0.052 inch (No. 18 gage)
19-30 inches	0.040 inch (No. 20 gage)	0.052 inch (No. 18 gage)	0.064 inch (No. 16 gage)
Over 30 inches	0.052 inch (No. 18 gage)	0.064 inch (No. 16 gage)	0.079 inch (No. 14 gage)

For SI: 1 inch = 25.4 mm.

❖ Table 510.9 establishes the minimum material thickness for hazardous exhaust duct construction. The material referred to in Table 510.9 is galvanized sheet steel, as prescribed in Section 510.9. However, alternative materials can be approved for use in accordance with Section 105.2 if the code official has evaluated the alternative material for its compatibility with the exhausted material and its suitability for the application. Specifically, the alternative duct material must demonstrate its equivalence to the structural strength, fire resistance, combustibility, corrosion resistance, friction loss and vapor permeability of galvanized steel. One commonly used alternative material is stainless steel.

Table 510.9 shows the minimum duct thickness based on the size of the duct and whether the materials being exhausted are abrasive, nonabrasive or both. The column designated "nonabrasive/abrasive materials" indicates that the duct will be used to exhaust materials that are somewhat abrasive or that are mixtures of nonabrasive and abrasive components. Abrasive particles can erode the duct material; therefore, the required minimum duct thicknesses for exhaust systems handling abrasive materials are greater than required for ducts handling nonabrasive materials.

An example that demonstrates the use of Table 510.9 would be to determine the minimum thickness of a 10-inch-diameter (254 mm) round duct used to exhaust abrasive materials. The minimum thickness required for the duct is 0.052 inch (1.32 mm) (No. 18 gage).

510.9.1 Duct joints. Ducts shall be made tight with lap joints having a minimum lap of 1 inch (25 mm). Joints used in ANSI/SMACNA Round Industrial Duct Construction Standards and ANSI/SMACNA Rectangular Industrial Duct Construction Standards are also acceptable.

❖ Because of the hazardous nature of the duct contents, prevention of duct leakage is very important. Poor joints in positive-pressure ducts will cause the material being conveyed to leak from the duct. In the case of negative pressure ducts, poor joints allow infiltration, thereby reducing the level of performance of the overall system. Leakage of any kind can be a fire, explosion or health hazard. Duct joints should be lapped so that the male end points in the direction of flow (see Commentary Figure 510.9.1). This orientation will reduce turbulence and friction loss and will help prevent the accumulation of solids under the ledges created by the joints. The types of joints permitted in either of these referenced standards have been used in the industrial exhaust and conveyance systems for years and have provided acceptable alternatives to lap joints.

INTERNATIONAL CODE COUNCIL®
Copyright © 2015 ICC. ALL RIGHTS RESERVED. Accessed by David Dammon on Jun 21, 2017 12:30:52 PM pursuant to License Agreement with ICC. No further reproduction or distribution authorized. ANY UNAUTHORIZED REPRODUCTION OR DISTRIBUTION IS A VIOLATION OF THE FEDERAL COPYRIGHT ACT AND THE LICENSE AGREEMENT, AND SUBJECT TO CIVIL AND CRIMINAL PENALTIES THEREUNDER.

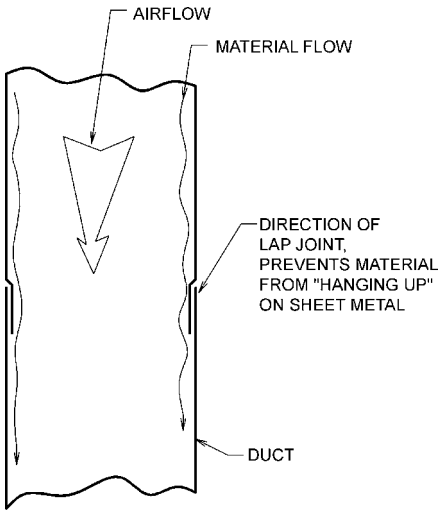

Figure 510.9.1
DUCT JOINTS

510.9.2 Clearance to combustibles. Ducts shall have a *clearance* to combustibles in accordance with Table 510.9.2. Exhaust gases having temperatures in excess of 600ºF (316ºC) shall be exhausted to a *chimney* in accordance with Section 511.2.

❖ To protect the building and any adjacent buildings from potential fire hazards, high-temperature exhaust [600ºF (316ºC)] must discharge to the atmosphere through a metal chimney (smokestack) (see commentary, Section 511.2).

TABLE 510.9.2
CLEARANCE TO COMBUSTIBLES

TYPE OF EXHAUST OR TEMPERATURE OF EXHAUST (ºF)	CLEARANCE TO COMBUSTIBLES (inches)
Less than 100	1
100-600	12
Flammable vapors	6

For SI: 1 inch = 25.4 mm, ºC = [(ºF)- 32]/1.8.

❖ Table 510.9.2 contains the minimum required clearance from the hazardous exhaust duct to combustible materials. The clearance is a function of the temperature of the exhausted material and the flammability of the material. If an exhaust falls into more than one category, the more stringent requirements apply. For example, if a hazardous exhaust system is exhausting flammable vapors at a temperature of 70ºF (21ºC), the minimum clearance to combustible materials must be 6 inches (152 mm) and not 1 inch (25 mm) as stated in the table for exhaust temperatures less than 100ºF (38ºC) (see commentary, Sections 510.3 and 510.8).

510.9.3 Explosion relief. Systems exhausting potentially explosive mixtures shall be protected with an *approved* explosion relief system or by an *approved* explosion prevention system designed and installed in accordance with NFPA 69. An explosion relief system shall be designed to minimize the structural and mechanical damage resulting from an explosion or deflagration within the exhaust system. An explosion prevention system shall be designed to prevent an explosion or deflagration from occurring.

❖ Hazardous exhaust systems that exhaust potentially explosive mixtures, such as flammable gases and combustible dusts in air, must be protected by an explosion relief system or explosion prevention system designed to comply with NFPA 69. Deflagration is defined as the propagation of a combustion zone at a velocity that is less than the speed of sound in the unreacted medium. The explosion relief system is used to automatically vent the combustion gases and pressures resulting from a deflagration within the hazardous exhaust system so that structural and mechanical damage is minimized.

During an explosion, a sudden release of high-pressure gas occurs and the energy is dissipated in the form of a shock wave. Ensuring that the exhaust system remains intact affords protection for the building and its occupants. Typical venting methods for hazardous exhaust system ducts include displaceable diaphragms, rupture discs, hinged covers and blowout panels or caps.

An explosion prevention system reduces the probability of a deflagration within the hazardous exhaust system by reducing the concentration of the oxidants or combustibles involved. Oxidant concentration is reduced by supplying enough purge gas to dilute the mixture, which creates an oxidant deficiency. Combustible concentrations are reduced by dilution or recirculation of the combustible atmosphere through a catalytic oxidation unit. Significant instrumentation and control interaction is required in explosion prevention systems to make certain that the desired concentration reductions are achieved.

An explosive mixture consists of a fuel in the proper concentration and an oxidant in sufficient quantity to support combustion of the fuel. The fuel may be combustible liquids and dusts, flammable gases, mists and vapors or mixtures of these or other flammable/combustible substances. The oxidant in a hazardous exhaust system is normally, although not always, the oxygen in the air that serves as the transport medium for the substances being exhausted. This section addresses exhaust that has a potential for explosion.

Many factors, such as fuel and oxidant concentrations, flammability limitations, particle size, the presence of moisture and inert material, determine the explosive characteristics of exhaust mixtures. This information may be obtained from a number of sources, including the manufacturer of the material, the United States Department of Transportation (USDOT) and chemical handbooks.

510.10 Supports. Ducts shall be supported at intervals not exceeding 10 feet (3048 mm). Supports shall be constructed of noncombustible material.

❖ Proper support of the duct system requires designing for the weight of the duct and its contents, as well as for dynamic loads, such as those created by exhaust

INTERNATIONAL CODE COUNCIL®
Copyright © 2015 ICC. ALL RIGHTS RESERVED. Accessed by David Dammon on Jun 21, 2017 12:30:52 PM pursuant to License Agreement with ICC. No further reproduction or distribution authorized. ANY UNAUTHORIZED REPRODUCTION OR DISTRIBUTION IS A VIOLATION OF THE FEDERAL COPYRIGHT ACT AND THE LICENSE AGREEMENT, AND SUBJECT TO CIVIL AND CRIMINAL PENALTIES THEREUNDER.

velocity and vibrations. Proper support is necessary to maintain proper alignment of the duct system and to prevent excessive stress on ducts and duct joints. A sagging duct will increase the internal resistance to airflow, reduce the efficiency of the system and cause the accumulation of exhaust products at low points. Duct support spacing is limited to not more than 10 feet (3048 mm) between supports because commonly used duct materials will sag at larger spacing intervals. Supports must be constructed of "Noncombustible materials," as defined in Chapter 2. The use of combustible supports could allow the duct system to fail in the event of a fire in the building, possibly contributing to the fire hazard. Also, combustible supports are obviously not compatible with high-temperature exhaust ducts.

Some duct configurations and duct materials require smaller spacing intervals. The SMACNA publication *HVAC Duct Construction Standards—Metal and Flexible* contains information for designing support systems for ducts. Additionally, the IBC may require designing the duct support system to be designed to resist earthquake loads, depending on the location and use of the building and the duct sizes and duct support configurations.

SECTION 511
DUST, STOCK AND REFUSE CONVEYING SYSTEMS

511.1 Dust, stock and refuse conveying systems. Dust, stock and refuse conveying systems shall comply with the provisions of Section 510 and Sections 511.1.1 through 511.2.

❖ Sections 511.1.1 through 511.2 contain specific fire safety requirements for mechanical equipment, ducts and piping used in hazardous exhaust systems. Dust, stock and refuse conveying systems are hazardous exhaust systems as addressed in Section 510. The requirements of this section are to be applied in conjunction with the provisions of Section 510.

511.1.1 Collectors and separators. Collectors and separators involving such systems as centrifugal separators, bag filter systems and similar devices, and associated supports shall be constructed of noncombustible materials and shall be located on the exterior of the building or structure. A collector or separator shall not be located nearer than 10 feet (3048 mm) to combustible construction or to an unprotected wall or floor opening, unless the collector is provided with a metal vent pipe that extends above the highest part of any roof with a distance of 30 feet (9144 mm).

Exceptions:

1. Collectors such as "Point of Use" collectors, close extraction weld fume collectors, spray finishing booths, stationary grinding tables, sanding booths, and integrated or machine-mounted collectors shall be permitted to be installed indoors provided that the installation is in accordance with the *International Fire Code* and NFPA 70.
2. Collectors in independent exhaust systems handling combustible dusts shall be permitted to be installed indoors provided that such collectors are installed in compliance with the *International Fire Code* and NFPA 70.

❖ Dust and particle collectors and separators such as centrifugal separators and bag filter systems are used to separate solids from exhaust air in dust and waste-product conveyor systems serving manufacturing processes. These accumulated solids are highly combustible materials that represent a fire and explosion hazard. Because of the risk of fire or explosion and the subsequent threat to the building(s), collection equipment must be constructed of noncombustible materials and must be located outdoors. The support structures for the equipment must also be noncombustible to help prevent the spread of fire beyond the equipment and to help maintain the ability of the equipment to contain a fire.

As an additional precaution, the equipment must be located at least 10 feet (3048 mm) from any combustible construction or any unprotected opening in a building. Opening protection for windows, doors, vents and other openings is addressed in the IBC. The 10-foot (3048 mm) separation is not required if the equipment discharge vent pipe is metallic and extends above any part of a building within a 30-foot (9144 mm) horizontal distance from the discharge vent pipe. A vertical discharge vent, as described here, would act as a chimney and direct the fire and hot gases upward away from the building.

Exception 1 recognizes that in some buildings, locating the collector or separator outdoors results in having to use larger capacity systems and motors than would ordinarily be necessary, as well as installing long runs of duct that often must pass through fire-resistance-rated construction. This can result in transporting hazardous byproducts throughout different parts of a building, sometimes through other occupancies, in order to reach the exterior of the building. These conditions are neither ideal or safe, nor are they always necessary. This exception is necessary in order to avoid conflicts with the IFC and to apply the appropriate explosion protection standards for specific types of combustible dust-producing operations.

Exception 2 allows combustible dust collectors in independent exhaust systems to be installed indoors.

The reasoning for Exception 2 is the same as the reasoning stated above for Exception 1. This is consistent with the IFC and Exception 1.

511.1.2 Discharge pipe. Discharge piping shall conform to the requirements for ducts, including clearances required for high-heat appliances, as contained in this code. A delivery pipe from a cyclone collector shall not convey refuse directly into the firebox of a boiler, furnace, dutch oven, refuse burner, incinerator or other *appliance*.

❖ This section addresses the discharge pipes or ducts that connect to blowers, fans, collectors and separa-

INTERNATIONAL CODE COUNCIL®
Copyright © 2015 ICC. ALL RIGHTS RESERVED. Accessed by David Dammon on Jun 21, 2017 12:30:52 PM pursuant to License Agreement with ICC. No further reproduction or distribution authorized. ANY UNAUTHORIZED REPRODUCTION OR DISTRIBUTION IS A VIOLATION OF THE FEDERAL COPYRIGHT ACT AND THE LICENSE AGREEMENT, AND SUBJECT TO CIVIL AND CRIMINAL PENALTIES THEREUNDER.

tors used in dust, stock and refuse conveyor systems, which are hazardous exhaust systems that must comply with the provisions of Section 510. The required clearance to combustibles for these pipes or ducts must be as specified for high-heat appliances.

The definition of a "High-heat appliance" and the provisions of Section 510.9.2 make clear that the required clearances to combustibles must be determined by the system designer and approved by the code official. Although the system's normal operating temperature may be lower than that of high-heat appliances (because the discharge pipe or duct could be subjected to an internal fire), the clearances must be based on the temperatures associated with such fires. NFPA 91 contains guidance for duct clearances to combustibles. Because of the possibility of igniting the combustibles within the exhaust system, a centrifugal (cyclone) collector is prohibited from discharging collected waste products directly into the firebox of solid-fuel-burning equipment.

511.1.3 Conveying systems exhaust discharge. An exhaust system shall discharge to the outside of the building either directly by flue or indirectly through the bin or vault into which the system discharges except where the contaminants have been removed. Exhaust system discharge shall be permitted to be recirculated provided that the solid particulate has been removed at a minimum efficiency of 99.9 percent at 10 microns (10.01 mm), vapor concentrations are less than 25 percent of the LFL, and *approved equipment* is used to monitor the vapor concentration.

❖ Because of the potential fire and explosion hazard, dust, stock and refuse conveyor systems must discharge the solids and the transport medium (air) flow to a location on the exterior of the building. Typically, these systems discharge to an outdoor separator or collector system that separates the solids from the exhaust flow and deposits them in a bin, vault or hopper.

If equipment is provided that can reduce the contaminants to an acceptable level and the vapor concentrations are monitored, the exhaust system discharge is permitted to be recirculated. This section requires a vapor monitoring system where flammable vapors are present in the exhaust discharge. Depending on the application, the exhaust could contain particulates or vapors or both.

511.1.4 Spark protection. The outlet of an open-air exhaust terminal shall be protected with an *approved* metal or other noncombustible screen to prevent the entry of sparks.

❖ The discharge termination must be protected by an approved means that will prevent the entry of sparks into the exhaust system. The intent is to help prevent a fire or explosion in the exhaust system by eliminating a possible ignition source.

511.1.5 Explosion relief vents. A safety or explosion relief vent shall be provided on all systems that convey combustible refuse or stock of an explosive nature, in accordance with the requirements of the *International Building Code*.

❖ An explosion relief vent designed in accordance with the IBC is required to prevent or minimize the structural or mechanical damage that could result from an explosion or deflagration within the exhaust system. A properly designed explosion relief system will normally require multiple vents located at various points in the exhaust system. Typical relief vents consist of blowout panels or diaphragms, rupture discs, hinged panels and closure assemblies held in position by friction, magnets, springs or special retainers. NFPA 68 contains guidance for the design of explosion-venting systems.

511.1.5.1 Screens. Where a screen is installed in a safety relief vent, the screen shall be attached so as to permit ready release under the explosion pressure.

❖ Where screens are installed to protect relief vent assemblies or the opening of a relief vent duct, the screen must not be allowed to interfere with the proper release and operation of the explosion vent. Protective screens, as required by the IBC, are used to prevent damage to a relief device or to prevent the entry of debris into a relief vent duct.

511.1.5.2 Hoods. The relief vent shall be provided with an *approved* noncombustible cowl or hood, or with a counterbalanced relief valve or cover arranged to prevent the escape of hazardous materials, gases or liquids.

❖ The intent of this section is to prevent the materials being exhausted or conveyed in the system from escaping through the required relief vent or vents. Relief vents are designed to remain closed under normal operating conditions so as not to interfere with the exhaust/conveyor system's operation. Relief vents must discharge directly to the outdoors or through a relief vent duct that terminates at the building exterior. In the event of an explosion in the exhaust system, the relief vent or vents will discharge hot gases, flames or debris that must be directed to a safe location outside of the building.

511.2 Exhaust outlets. Outlets for exhaust that exceed 600ºF (315ºC) shall be designed as a *chimney* in accordance with Table 511.2.

❖ Dust, stock and refuse conveyor systems are hazardous exhaust systems as addressed in Section 510. Although the system's normal operating temperature may be lower than that of high-heat appliances, the discharge pipe or duct could be subjected to an internal fire. For this reason, Table 511.2 includes requirements for the materials, liners, termination height and proper clearances to combustibles for the exhaust outlet.

TABLE 511.2. See page 5-110.

❖ This table establishes the requirements for a single-wall metal chimney serving a dust, stock or refuse conveyor system with exhaust exceeding 600ºF

INTERNATIONAL CODE COUNCIL®
Copyright © 2015 ICC. ALL RIGHTS RESERVED. Accessed by David Dammon on Jun 21, 2017 12:30:52 PM pursuant to License Agreement with ICC. No further reproduction or distribution authorized. ANY UNAUTHORIZED REPRODUCTION OR DISTRIBUTION IS A VIOLATION OF THE FEDERAL COPYRIGHT ACT AND THE LICENSE AGREEMENT, AND SUBJECT TO CIVIL AND CRIMINAL PENALTIES THEREUNDER.

(316ºC) and includes requirements for chimney materials, liners, termination height and proper clearances to combustibles. This table does not preclude the use of a factory-built chimney system listed and labeled for the application.

SECTION 512
SUBSLAB SOIL EXHAUST SYSTEMS

512.1 General. Where a subslab soil exhaust system is provided, the duct shall conform to the requirements of this section.

❖ A subslab soil exhaust system is often associated with radon mitigation. Yet, evidence from some studies suggests that contaminants other than radon may enter buildings from the surrounding soil, although the extent of such occurrences is unknown. For example, methane migrating away from landfills through unsaturated soils has reached explosive levels in nearby buildings. In other instances, potentially toxic and carcinogenic volatile organic compounds present in soil have been transported into buildings.

Radon is a colorless, odorless, radioactive gas found in various concentrations in all soils, ground water, stone, concrete and indeed virtually anything that comes out of the ground. Studies have shown it to be harmful when inhaled in high concentrations.

Based on early studies, the Environmental Protection Agency (EPA) estimated that radon causes between 5,000 and 20,000 lung cancer deaths each year; however, the health risk associated with the levels of radon gas typically found within buildings is the subject of scientific debate. The reduction of radon or any other contaminant transported by soil gas is not required by the code. This section is added to provide material guidance where a soil exhaust system is installed (see Appendix F of the IRC and Appendix B of the IgCC).

The concept is simply to install a vent system to serve as an alternative path (of least resistance) for any soil gases to reach the atmosphere above the roof. A recent study has found that under certain circumstances, HVAC systems and exhaust systems could create negative pressure within a structure, resulting in increased soil-gas migration into the structure. The study also found that when ceiling return air plenums are intersected by masonry block walls that penetrate the floor slab, the negative pressure in the plenum can induce soil-gas migration through the core of the block wall.

Specific guidance for proper system performance, minimum ventilation rates, floor area served per vent, sealing methods, particulate arrestors and fan selection is beyond the current scope of the code. Appendix F of the IRC contains radon control information. Additional design criteria have been developed by the EPA and others for use as guidance by the code official. Some states have radon mitigation requirements.

512.2 Materials. Subslab soil exhaust system duct material shall be air duct material *listed* and *labeled* to the requirements of UL 181 for Class 0 air ducts, or any of the following piping materials that comply with the *International Plumbing Code* as building sanitary drainage and vent pipe: cast iron; galvanized steel; brass or copper pipe; copper tube of a weight not less than that of copper drainage tube, Type DWV; and plastic piping.

❖ The subslab exhaust vent is a pipe or duct that keeps unwanted soil gases out of the structure by conducting them directly to the outdoors. The duct materials allowed include ducts that have been shown to meet the requirements of UL 181 for a Class 0 air duct and

TABLE 511.2
CONSTRUCTION, CLEARANCE AND TERMINATION REQUIREMENTS FOR SINGLE-WALL METAL CHIMNEYS

CHIMNEYS SERVING	MINIMUM THICKNESS		TERMINATION				CLEARANCE			
	Walls (inch)	Lining	Above roof opening (feet)	Above any part of building within (feet)			Combustible construction (inches)		Noncombustible construction	
				10	25	50	Interior inst.	Exterior inst.	Interior inst.	Exterior inst.
High-heat appliances (Over 2,000ºF)[a]	0.127 (No. 10 MSG)	$4^1/_2$″ laid on $4^1/_2$″ bed	20	—	—	20	See Note c			
Low-heat appliances (1,000ºF normal operation)	0.127 (No. 10 MSG)	none	3	2	—	—	18	6	Up to 18″ diameter, 2″ Over 18″ diameter, 4″	
Medium-heat appliances (2,000ºF maximum)[b]	0.127 (No. 10 MSG)	Up to 18″ dia.—$2^1/_2$″ Over 18″—$4^1/_2$″ On $4^1/_2$″ bed	10	—	10	—	36	24		

For SI: 1 inch = 25.4 mm, 1 foot = 304.8 mm, ºC = [(ºF)-32]/1.8.

a. Lining shall extend from bottom to top of outlet.

b. Lining shall extend from 24 inches below connector to 24 feet above.

c. Clearance shall be as specified by the design engineer and shall have sufficient clearance from buildings and structures to avoid overheating combustible materials (maximum 160ºF).

INTERNATIONAL CODE COUNCIL®
Copyright © 2015 ICC. ALL RIGHTS RESERVED. Accessed by David Dammon on Jun 21, 2017 12:30:52 PM pursuant to License Agreement with ICC. No further reproduction or distribution authorized. ANY UNAUTHORIZED REPRODUCTION OR DISTRIBUTION IS A VIOLATION OF THE FEDERAL COPYRIGHT ACT AND THE LICENSE AGREEMENT, AND SUBJECT TO CIVIL AND CRIMINAL PENALTIES THEREUNDER.

are so labeled. Although UL 181 is used primarily to evaluate nonmetallic duct materials, the use of the standard for evaluating metallic ductwork is not precluded by its scope. Class 0 indicates a flame spread index of zero and a smoke-developed index of zero when tested to ASTM E84. UL 181 tests samples of the duct to determine fire performance characteristics, corrosion and erosion resistance, leakage resistance, mold growth and humidity resistance and structural integrity. Air ducts that conform to the requirements of UL 181 are identified by the manufacturer's or vendor's name, the rated velocity and the rated negative and positive pressures. Additionally, most of the materials that comply with the *International Plumbing Code*® (IPC®) as building sanitary drainage and vent pipe (DWV) may be used.

A subslab exhaust system typically consists of continuous sealed piping that runs from beneath the ground cover to a point outside the building. The vent installation should provide a location for the possible future installation of an in-line fan.

512.3 Grade. Exhaust system ducts shall not be trapped and shall have a minimum slope of one-eighth unit vertical in 12 units horizontal (1-percent slope).

❖ During the summer months (typically June through September), soil gas may contain high amounts of moisture that may condense on cool pipe walls. A minimum slope is required and traps are prohibited in an effort to allow this condensation to return to the soil while maintaining an open path for the soil gas to escape above the roof.

512.4 Termination. Subslab soil exhaust system ducts shall extend through the roof and terminate not less than 6 inches (152 mm) above the roof and not less than 10 feet (3048 mm) from any operable openings or air intake.

❖ To allow for the proper dispersion of soil gases into the atmosphere and minimize the exposure of the building occupants, the subslab exhaust duct must terminate through the roof to the building exterior at a minimum distance from openings through which radon gas could enter the building.

512.5 Identification. Subslab soil exhaust ducts shall be permanently identified within each floor level by means of a tag, stencil or other *approved* marking.

❖ In an effort to avoid mistaking the subslab exhaust duct for a component of the building's plumbing or mechanical system(s), the radon duct must be permanently identified as such at each floor level. Although the means for permanent marking (tag, stencil, label, stamp, sticker, etc.) is subject to the approval of the code official, the phraseology "radon vent" is most often used to comply with the identification provisions of Section 512.5.

SECTION 513
SMOKE CONTROL SYSTEMS

[F] 513.1 Scope and purpose. This section applies to mechanical and passive smoke control systems that are required by the *International Building Code* or the *International Fire Code*. The purpose of this section is to establish minimum requirements for the design, installation and acceptance testing of smoke control systems that are intended to provide a tenable environment for the evacuation or relocation of occupants. These provisions are not intended for the preservation of contents, the timely restoration of operations, or for assistance in fire suppression or overhaul activities. Smoke control systems regulated by this section serve a different purpose than the smoke- and heat-venting provisions found in Section 910 of the *International Building Code* or the *International Fire Code*.

❖ This section is clarifying the intent of smoke control provisions, which is to provide a tenable environment to occupants during evacuation and relocation and not to protect the contents, enable timely restoration of operations or facilitate fire suppression and overhaul activities. There are provisions for high-rise buildings in Section 403.4.7 of the IBC that are focused on the removal of smoke for post fire and overhaul operations, which is very different than the smoke control provisions in Section 513. Another element addressed in this section is that smoke control systems serve a different purpose than smoke and heat vents (see Section 910 of the IBC). This eliminates any confusion that smoke and heat vents can be used as a substitution for smoke control. Additionally, a clarification is provided to note that smoke control systems are not considered to be an exhaust system in accordance with Chapter 5 of the IMC. This is because such systems are unique in their operation and are not necessarily designed to exhaust smoke but are focused on tenability for occupants during egress. It should be noted that the smoke control provisions are duplicated in Section 909 of both the IBC and IFC.

These provisions only apply when smoke control is required by various sections of the IBC. The IBC requires smoke management within atrium spaces (see Section 404.5 of the IBC) and underground buildings (see Section 405.5 of the IBC). High-rise facilities require smokeproof exit enclosures in accordance with Sections 909.20 and 1023.11 (see also Section 403.5.4) of the IBC. Also, covered mall buildings that contain atriums that connect more than two stories require smoke control (see Section 402.7.2 of the IBC). Section 513 focuses primarily on mechanical smoke control systems, but there are many instances within the code where smoke is required to be managed in a passive way through the use of concepts such as smoke compartments. Smoke compartments are formed through the use of smoke barriers in accordance with Section 709 of the IBC.

INTERNATIONAL CODE COUNCIL®
Copyright © 2015 ICC. ALL RIGHTS RESERVED. Accessed by David Dammon on Jun 21, 2017 12:30:52 PM pursuant to License Agreement with ICC. No further reproduction or distribution authorized. ANY UNAUTHORIZED REPRODUCTION OR DISTRIBUTION IS A VIOLATION OF THE FEDERAL COPYRIGHT ACT AND THE LICENSE AGREEMENT, AND SUBJECT TO CIVIL AND CRIMINAL PENALTIES THEREUNDER.

Smoke barriers can be used simply as a passive smoke management system or can be a design component of a mechanical smoke control system in accordance with Section 513. Some examples of occupancies requiring passive systems include hospitals, nursing homes and similar facilities (Group I-2 occupancies) and detention facilities (Group I-3 occupancies) (see Sections 407.5 and 408.6 of the IBC).

In some cases, mechanical smoke control in accordance with Section 513 is allowed as an option for compliance. More specifically, if a Group I-3 occupancy contains windowless areas of the facility, natural or mechanical smoke management is required (see Section 408.9 of the IBC).

In the last several years, smoke control provisions have become more complex. The reason is related to the fact that smoke is a complex problem, while a generic solution of six air changes has repeatedly and scientifically been shown to be inadequate. Six air changes per hour does not take into account factors such as buoyancy; expansion of gases; wind; the geometry of the space and of communicating spaces; the dynamics of the fire, including heat release rate; the production and distribution of smoke and the interaction of the building systems.

Smoke control systems can be either passive or active. Active systems are sometimes referred to as mechanical. Passive smoke control systems take advantage of smoke barriers surrounding the zone in which the fire event occurs or high bay areas that act as reservoirs to control the movement of smoke to other areas of the building. Active systems utilize pressure differences to contain smoke within the event zone or exhaust flow rates sufficient to slow the descent of the upper-level smoke accumulation to some predetermined position above necessary exit paths through the event zone. On rare occasions, there is also a possibility of controlling the movement of smoke horizontally by opposed airflow, but this method requires a specific architectural geometry to function properly that does not create an even greater hazard.

Essentially, there are three methods of mechanical or active smoke control that can be used separately or in combination within a design: pressurization, exhaust and, in rare and very special circumstances, opposed airflow.

Of course, all of these active approaches can be used in combination with the passive method. Typically, the mechanical pressurization method is used in high-rise buildings when pressurizing stairways and for zoned smoke control. Pressurization is not practical in large open spaces such as atriums or malls, since it is difficult to develop the required pressure differences due to the large volume of the space.

The exhaust method is typically used in large open spaces such as atriums and malls. As noted, the pressurization method would not be practical within large spaces. The opposed airflow method, which basically uses a velocity of air horizontally to slow the movement of smoke, is typically applied in combination with either a pressurization method or exhaust method within hallways or openings into atriums and malls.

The application of each of these methods will be dependent on the specifics of the building design. Smoke control within a building is fundamentally an architecturally driven problem. Different architectural geometries first dictate the need or lack thereof for smoke control, and then define the bounds of available solutions to the problem.

[F] 513.2 General design requirements. Buildings, structures, or parts thereof required by the *International Building Code* or the *International Fire Code* to have a smoke control system or systems shall have such systems designed in accordance with the applicable requirements of Section 909 of the *International Building Code* and the generally accepted and well-established principles of engineering relevant to the design. The *construction documents* shall include sufficient information and detail to describe adequately the elements of the design necessary for the proper implementation of the smoke control systems. These documents shall be accompanied with sufficient information and analysis to demonstrate compliance with these provisions.

❖ This section simply states that when smoke control systems are required by the code, the design is required to be in accordance with the provisions of this section. As noted in the commentary to Section 513.1, there are instances within the code that have smoke management systems that are purely passive in nature and do not reference Section 513.

This section stresses that designs in accordance with this section need to follow "generally accepted and well-established principles of engineering relevant to the design," essentially requiring a certain level of qualifications in the applicable areas of engineering to prepare such designs. The primary engineering disciplines tend to be fire engineering and mechanical engineering. It should be noted that each state in the U.S. typically requires minimum qualifications to undertake engineering design. Two important resources when designing smoke control systems are ICC's *A Guide to Smoke Control in the 2006 IBC®* and ASHRAE *Design of Smoke Management Systems*. Additionally, Section 513.8 requires the use of NFPA 92 for the design of smoke control systems using the exhaust method. This standard has many relevant aspects beyond the design that are beneficial. In particular, Annex B provides resources in terms of determination of fire size for design. ICC's *A Guide to Smoke Control in the 2006 IBC®* also provides guidance on design fires.

A key element covered in this section is the need for detailed and clear construction documents so that the system is installed correctly. In most complex designs, the key to success is appropriate communication to the contractors as to what needs to be installed. The more complex a design becomes, the

INTERNATIONAL CODE COUNCIL®
Copyright © 2015 ICC. ALL RIGHTS RESERVED. Accessed by David Dammon on Jun 21, 2017 12:30:52 PM pursuant to License Agreement with ICC. No further reproduction or distribution authorized. ANY UNAUTHORIZED REPRODUCTION OR DISTRIBUTION IS A VIOLATION OF THE FEDERAL COPYRIGHT ACT AND THE LICENSE AGREEMENT, AND SUBJECT TO CIVIL AND CRIMINAL PENALTIES THEREUNDER.

more likely there is to be construction errors. Most smoke control systems are complex, which is why special inspections in accordance with Section 513.3 and Chapter 17 of the IBC are critical for smoke control systems. Additionally, in order for the design to be accepted, analyses and justifications need to be provided in enough detail to evaluate for compliance. Adequate documentation is critical to the commissioning, inspection, testing and maintenance of smoke control systems and significantly contributes to the overall reliability and effectiveness of such systems.

[F] 513.3 Special inspection and test requirements. In addition to the ordinary inspection and test requirements that buildings, structures and parts thereof are required to undergo, smoke control systems subject to the provisions of Section 909 of the *International Building Code* shall undergo special inspections and tests sufficient to verify the proper commissioning of the smoke control design in its final installed condition. The design submission accompanying the *construction documents* shall clearly detail procedures and methods to be used and the items subject to such inspections and tests. Such commissioning shall be in accordance with generally accepted engineering practice and, where possible, based on published standards for the particular testing involved. The special inspections and tests required by this section shall be conducted under the same terms as found in Section 1704 of the *International Building Code.*

❖ Because of the complexity and uniqueness of each design, special inspection and testing must be conducted. The designer needs to provide specific recommendations for special inspection and testing within his or her documentation. In fact, the code specifies in Chapter 17 of the IBC that special inspection agencies for smoke control have expertise in fire protection engineering, mechanical engineering and certification as air balancers.

Since the designs are unique to each building, there probably will not be a generic approach available to inspect and test such systems. The designer can and should, however, use any available published standards or guides when developing the special inspection and testing requirements for that particular design. ICC's *A Guide to Smoke Control in the 2006 IBC*® provides some background on such inspections, Also, ASHRAE Guideline 5 is a good starting place, but only as a general outline. In addition, NFPA 92 also has extensive testing, documentation and maintenance requirements that may be a good resource. NFPA 92 is referenced in Section 513.8 for the design of smoke control systems using the exhaust method. Each system will require a unique commissioning plan that can be developed only after careful and thoughtful examination of the final design and all of its components and interrelationships. Generally, these provisions may be included in design standards or engineering guides.

[F] 513.4 Analysis. A rational analysis supporting the types of smoke control systems to be employed, their methods of operation, the systems supporting them and the methods of construction to be utilized shall accompany the submitted *construction documents* and shall include, but not be limited to, the items indicated in Sections 513.4.1 through 513.4.7.

❖ This section indicates that simply determining airflow, exhaust rates and pressures to maintain tenable conditions is not adequate. There are many factors that could alter the effectiveness of a smoke control system, including stack effect, temperature effect of fire, wind effect, heating, ventilating and air-conditioning (HVAC) system interaction and climate, as well as the placement, quantity of inlets/outlets and velocity of supply and exhaust air. These factors are addressed in the sections that follow. Additionally, the duration of operation of any smoke control system is mandated at a minimum of 20 minutes or 1.5 times the egress time, whichever is less. The code cannot reasonably anticipate every conceivable building arrangement and condition the building may be subject to over its life and must depend on such factors being addressed through a rational analysis.

[F] 513.4.1 Stack effect. The system shall be designed such that the maximum probable normal or reverse stack effects will not adversely interfere with the system's capabilities. In determining the maximum probable stack effects, altitude, elevation, weather history and interior temperatures shall be used.

❖ Stack effect is the tendency for air to rise within a heated building when the temperature is colder on the exterior of the building. Reverse stack effect is the tendency for air to flow downward within a building when the interior is cooler than the exterior of the building. This air movement can affect the intended operation of a smoke control system. If stack effect is great enough, it may overcome the pressures determined during the design analyses and allow smoke to enter areas outside the zone of origin (see Commentary Figure 513.4.1).

[F] 513.4.2 Temperature effect of fire. Buoyancy and expansion caused by the design fire in accordance with Section 513.9 shall be analyzed. The system shall be designed such that these effects do not adversely interfere with its capabilities.

❖ This section requires that the design account for the effect temperature may have on the success of the system. When air or any gases are heated they will expand. This expansion makes the gases lighter and, therefore, more buoyant. The buoyancy of hot gases is important when the design is to exhaust such gases from a location in or close to the ceiling; therefore, if sprinklers are part of the design, as required by Section 513, the gases may be significantly cooler than an unsprinklered fire, making it more difficult to remove the smoke and alter the plume dynamics.

INTERNATIONAL CODE COUNCIL®
Copyright © 2015 ICC. ALL RIGHTS RESERVED. Accessed by David Dammon on Jun 21, 2017 12:30:52 PM pursuant to License Agreement with ICC. No further reproduction or distribution authorized. ANY UNAUTHORIZED REPRODUCTION OR DISTRIBUTION IS A VIOLATION OF THE FEDERAL COPYRIGHT ACT AND THE LICENSE AGREEMENT, AND SUBJECT TO CIVIL AND CRIMINAL PENALTIES THEREUNDER.

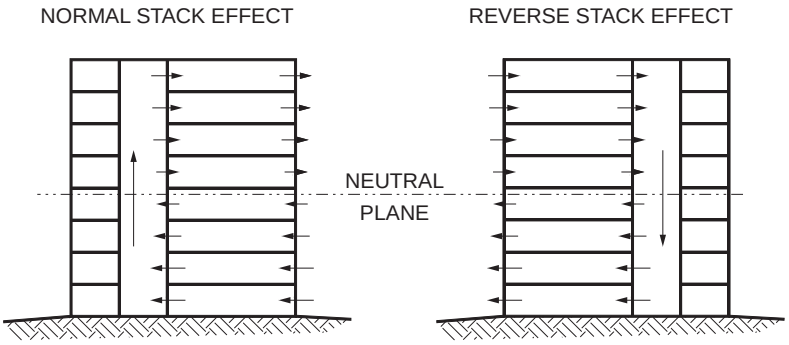

NOTE: ARROWS INDICATE DIRECTION OF AIR MOVEMENT

Figure 513.4.1
STACK EFFECT

The fact that air expands when heated needs to be accounted for in the design.

When using the pressurization method, the expansion of hot gases needs to be accounted for, since it will take a larger volume of air to create the necessary pressure differences to maintain the area of fire origin in negative pressure. The expansion of the gases has the effect of pushing the hot gases out of the area of fire origin. Since sprinklers will tend to cool the gases, the effect of expansion is lower. The pressure differences required in Section 513.6.1 are specifically based on a sprinklered building. If the building is nonsprinklered, higher pressure differences may be required. The minimum pressure difference for certain unsprinklered ceiling height buildings is as follows:

Ceiling Height (feet)	Minimum Pressure Difference (inch water gage)
9	0.10
15	0.14
21	0.18

For SI: 1 foot = 304.8 mm, 1 inch water gage = 250 pascal.

This is a very complex issue that needs to be part of the design analysis. It needs to address the type and reaction of the fire protection systems, ceiling heights and the size of the design fire.

[F] 513.4.3 Wind effect. The design shall consider the adverse effects of wind. Such consideration shall be consistent with the wind-loading provisions of the *International Building Code*.

❖ The effect of wind on a smoke control system within a building is very complex. It is generally known that wind exerts a load upon a building. The loads are looked at as windward (positive pressure) and leeward (negative pressure). The velocity of winds will vary based on the terrain and the height above grade; therefore, the height of the building and surrounding obstructions will have an effect on these velocities. These pressures alter the operation of fans, especially propeller fans, thus altering the pressure differences and airflow direction in the building. There is not an easy solution to dealing with these effects. In fact, little research has been done in this area. It should be noted that in larger buildings a wind study is normally undertaken for the structural design. The data from those studies can be used in the analysis of the effects on the pressures and airflow within the building with regard to the performance of the smoke control system.

[F] 513.4.4 HVAC systems. The design shall consider the effects of the heating, ventilating and air-conditioning (HVAC) systems on both smoke and fire transport. The analysis shall include all permutations of systems' status. The design shall consider the effects of fire on the HVAC systems.

❖ If not properly configured to shut down or included as part of the design, the HVAC system can alter the smoke control design. More specifically, if dampers are not provided between smoke zones within the HVAC system ducts, smoke could be transported from one zone to another. Additionally, if the HVAC system places more supply air than assumed for the smoke control system design, the velocity of the air may adversely affect the fire plume or a positive pressure may be created. Generally, an analysis of the smoke control design and the HVAC system in all potential modes should occur and be noted within the design documentation as well as incorporated into inspection, testing and maintenance procedures. This is critical as these systems need to be maintained and tested to help ensure that they operate and shut down systems as required.

[F] 513.4.5 Climate. The design shall consider the effects of low temperatures on systems, property and occupants. Air inlets and exhausts shall be located so as to prevent snow or ice blockage.

❖ This section is focused on properly protecting equipment from weather conditions that may affect the reli-

INTERNATIONAL CODE COUNCIL®
Copyright © 2015 ICC. ALL RIGHTS RESERVED. Accessed by David Dammon on Jun 21, 2017 12:30:52 PM pursuant to License Agreement with ICC. No further reproduction or distribution authorized. ANY UNAUTHORIZED REPRODUCTION OR DISTRIBUTION IS A VIOLATION OF THE FEDERAL COPYRIGHT ACT AND THE LICENSE AGREEMENT, AND SUBJECT TO CIVIL AND CRIMINAL PENALTIES THEREUNDER.

ability of the design. For instance, extremely cold or hot air may damage critical equipment within the system when pulled directly from the outside. Some listings of duct smoke detectors are for specific temperature ranges; therefore, placing such detectors within areas exposed to extreme temperatures may void the listing. Also, the equipment and air inlets and outlets should be designed and located so as to not collect snow and ice that could block air from entering or exiting the building.

[F] 513.4.6 Duration of operation. All portions of active or engineered smoke control systems shall be capable of continued operation after detection of the fire event for a period of not less than either 20 minutes or 1.5 times the calculated egress time, whichever is greater.

❖ The intent of the smoke control provisions is to provide a tenable environment for occupants to either evacuate or relocate to a safe place. Evacuation and relocation activities include notifying occupants, possible investigation time for occupants, decision time and the actual travel time. In order to achieve this goal, the code has established 20 minutes or 1.5 times the calculated egress time, whichever is greater, as a minimum time for evacuation or relocation. Basically this allows a designer to undertake an analysis to more closely determine the necessary time required. The code provides a safety factor of 1.5 times the egress time to account for uncertainty related to human behavior. It is stressed that the 20-minute duration as well as the calculated egress time, whichever approach is chosen, begins after the detection of the fire event and the notification to the building occupants to evacuate has occurred, since occupants need to be alerted before evacuation can occur. The calculation of evacuation time needs to include delays with notification and the start of evacuation (i.e., premovement time, etc.). It is stressed that the code states 20 minutes or 1.5 times the egress time, whichever is greater (20 minutes is a minimum). Egress of occupants can be addressed through hand calculations or through the use of computerized egress models. Some of the more advanced models can address a variety of factors, including the building layout, different sizes of people, different movement speeds and different egress paths that are available. With these types of programs, the actual time can be even more precisely calculated. Of course, it is cautioned that in many cases these models provide the optimal time for egress. The safety factor of 1.5 within the code is intended to address many of these uncertainties.

Note that this section applies to all types of smoke control designed in accordance with Section 513. Also, most smoke control systems will typically have the ability to run for much longer than 20 minutes as they are on standby power and might be able to continue to achieve the tenability goals.

System response as required in Section 513.17 needs to be accounted for when determining the ability of the smoke control system to keep the smoke layer interface at the appropriate level (see commentary, Section 513.17).

513.4.7 Smoke control system interaction. The design shall consider the interaction effects of the operation of multiple smoke control systems for all design scenarios.

❖ The focus of this section is related to the interaction of multiple mechanical smoke control systems by asking for a specific analysis of the interaction of such systems similar to that required for the interaction of HVAC systems. Where hoistway pressurization is chosen as an option for compliance with the hoistway opening protection requirements, the potential exists for a pressurized stair system to also be present. These two systems need to be able to operate at the same time without a negative impact on either system. It is also possible that an atrium with a smoke control system is located in a building containing a stair pressurization system.

[F] 513.5 Smoke barrier construction. Smoke barriers required for passive smoke control and a smoke control system using the pressurization method shall comply with Section 709 of the *International Building Code*. The maximum allowable leakage area shall be the aggregate area calculated using the following leakage area ratios:

1. Walls: $A/A_w = 0.00100$
2. Interior exit stairways and ramps and exit passageways: $A/A_w = 0.00035$
3. Enclosed exit access stairways and ramps and all other shafts: $A/A_w = 0.00150$
4. Floors and roofs: $A/A_F = 0.00050$

where:

A = Total leakage area, square feet (m^2).

A_F = Unit floor or roof area of barrier, square feet (m^2).

A_w = Unit wall area of barrier, square feet (m^2).

The leakage area ratios shown do not include openings created by gaps around doors and operable windows. The total leakage area of the smoke barrier shall be determined in accordance with Section 513.5.1 and tested in accordance with Section 513.5.2.

❖ Part of the strategy of smoke control systems, particularly smoke control systems using the pressurization method (often termed zoned smoke control) is the use of smoke barriers to divide a building into separate smoke zones (or compartments). This strategy is used in both passive and mechanical systems. It should be noted that not all walls, ceilings or floors would be considered as smoke barriers. Only walls that designate separate smoke zones within a building need to be constructed as smoke barriers. This section is simply providing requirements for walls, floors and ceilings that are used as smoke barriers. It is possible that a smoke control system utilizing the exhaust method might not need to utilize a smoke barrier to divide the building into separate smoke

INTERNATIONAL CODE COUNCIL®
Copyright © 2015 ICC. ALL RIGHTS RESERVED. Accessed by David Dammon on Jun 21, 2017 12:30:52 PM pursuant to License Agreement with ICC. No further reproduction or distribution authorized. ANY UNAUTHORIZED REPRODUCTION OR DISTRIBUTION IS A VIOLATION OF THE FEDERAL COPYRIGHT ACT AND THE LICENSE AGREEMENT, AND SUBJECT TO CIVIL AND CRIMINAL PENALTIES THEREUNDER.

zones, therefore, the evaluation of barrier construction and leakage area might not be necessary and, as noted, is primarily focused upon designs using a passive approach or the pressurization method.

In order for smoke to not travel from one smoke zone to another, specific construction requirements are necessary in accordance with the code. Within Section 513.5.3, openings such as doors and windows are dealt with separately from openings such as cracks and penetrations.

[F] 513.5.1 Total leakage area. Total leakage area of the barrier is the product of the smoke barrier gross area times the allowable leakage area ratio, plus the area of other openings such as gaps around doors and operable windows.

❖ It is impossible for walls and floors to be constructed that are completely free from openings that could allow the migration of smoke; therefore, leakage needs to be compensated for within the design by calculating the leakage area of walls, ceilings and floors. The factors provided in Section 513.5, which originated from ASHRAE's provisions on leaky buildings, are used to calculate the total leakage area. The total leakage area is then used in the design process to determine the proper amount of air to create the required pressure differences across these surfaces that form smoke zones.

Additionally, Section 513.5 provides ratios to determine the maximum allowable leakage in walls, interior exit stairways, shafts, floors and roofs. These leakage areas are critical in determining whether the proper pressure differences are provided when utilizing the pressurization method of smoke control. Pressure differences will decrease as the openings get larger.

[F] 513.5.2 Testing of leakage area. Compliance with the maximum total leakage area shall be determined by achieving the minimum air pressure difference across the barrier with the system in the smoke control mode for mechanical smoke control systems utilizing the pressurization method. Compliance with the maximum total leakage area of passive smoke control systems shall be verified through methods such as door fan testing or other methods, as *approved* by the fire code official.

❖ These leakage criteria need to be evaluated through testing. For the case of a pressurization system, pressure differences need to be verified when the system is in smoke control mode. In the case of passive smoke control systems, pressure testing through tests such as the door fan methods is necessary.

[F] 513.5.3 Opening protection. Openings in smoke barriers shall be protected by automatic-closing devices actuated by the required controls for the mechanical smoke control system. Door openings shall be protected by door assemblies complying with the requirements of the *International Building Code* for doors in smoke barriers.

Exceptions:

1. Passive smoke control systems with automatic-closing devices actuated by spot-type smoke detectors *listed* for releasing service installed in accordance with the *International Building Code*.
2. Fixed openings between smoke zones which are protected utilizing the airflow method.
3. In Group I-1 Condition 2, Group I-2 and ambulatory care facilities, where a pair of opposite-swinging doors are installed across a corridor in accordance with Section 513.5.3.1, the doors shall not be required to be protected in accordance with Section 716 of the *International Building Code*. The doors shall be close-fitting within operational tolerances and shall not have a center mullion or undercuts in excess of $^{3}/_{4}$ inch (19.1 mm), louvers or grilles. The doors shall have head and jamb stops and astragals or rabbets at meeting edges and, where permitted by the door manufacturer's listing, positive-latching devices are not required.
4. In Group I-2 and ambulatory care facilities, where such doors are special-purpose horizontal sliding, accordion or folding door assemblies installed in accordance with Section 1010.1.4.3 of the *International Building Code* and are automatic closing by smoke detection in accordance with Section 716.5.9.3 of the *International Building Code*.
5. Group I-3.
6. Openings between smoke zones with clear ceiling heights of 14 feet (4267 mm) or greater and bank down capacity of greater than 20 minutes as determined by the design fire size.

❖ Similar to concerns of smoke leakage between smoke zones, openings may compromise the necessary pressure differences between smoke zones. Openings in smoke barriers, such as doors and windows, must be either constantly or automatically closed when the smoke control system is operating. This section requires that doors be automatically closed through the activation of an automatic closing device linked to the smoke control system. Essentially, when the smoke control system is activated, all openings are automatically closed. This most likely would mean that the mechanism that activates the smoke control system would also automatically close all openings. The smoke control system will be activated by a specifically zoned smoke detection or sprinkler system as required by Sections 513.12.3 and 513.12.4.

In terms of actual opening protection, Section 513.5.2 simply refers the user to Section 716.5.3 of the IBC for specific construction requirements for doors located in smoke barriers. Note that smoke barriers are different from fire barriers since the intended measure of performance is different. One is focused on fire spread from the perspective of heat, the other from the perspective of smoke passage. Smoke barriers do require a 1-hour fire-resistance rating.

There are several exceptions to this particular section. Exception 1 is specifically for passive systems.

INTERNATIONAL CODE COUNCIL®
Copyright © 2015 ICC. ALL RIGHTS RESERVED. Accessed by David Dammon on Jun 21, 2017 12:30:52 PM pursuant to License Agreement with ICC. No further reproduction or distribution authorized. ANY UNAUTHORIZED REPRODUCTION OR DISTRIBUTION IS A VIOLATION OF THE FEDERAL COPYRIGHT ACT AND THE LICENSE AGREEMENT, AND SUBJECT TO CIVIL AND CRIMINAL PENALTIES THEREUNDER.

Passive systems, as noted, are systems in which there is no use of mechanical systems. Instead, the system operates primarily upon the configuration of barriers and layout of the building to provide smoke control. Passive systems can use spot-type detectors to close doors that constitute portions of a smoke barrier. Essentially, this means a full fire alarm system would not be required. Instead, single station detectors would be allowed to close the doors. Such doors would need to fail in the closed position if power is lost. The specifics as to approved devices are found in NFPA 72.

Exception 2 is based on the fact that some systems take advantage of the opposed airflow method such that smoke is prevented from migrating past the doors. Therefore, since the design already accounts for potential smoke migration at these openings through the use of air movement, it is unnecessary to require the barrier to be closed.

Exception 3 is specifically related to the unique requirements for Group I-1 Condition 2, I-2 and ambulatory care occupancies. Essentially, a very specific alternative, which meets the functional needs of these occupancy types is provided. Opposite swinging doors are allowed without meeting the specific requirements of Section 716 of the IBC. Note that Group I-2 and ambulatory care facilities utilize the concept of smoke compartments which is a form of a passive smoke control system. The requirements of this section are focused on openings in smoke barriers that need to close upon activation of a pressurization system.

Exception 4 provides a specific allowance for horizontal sliding doors in Group I-2 Condition 2 occupancies and ambulatory care occupancies. These doors are commonly used in such occupancies and have very specific installation requirements in Section 1010.1.4.3 of the IBC. These doors are an alternative to pivoted or side-hinged, swinging-type doors. This exception requires compliance with Section 716.5.9.3 of the IBC for automatic closing upon detection of smoke.

Exception 5 allows an exemption from the automatic-closing requirements for all Group I-3 occupancies. This is related to the fact that facilities that have occupants under restraint or with specific security restrictions have unique requirements in accordance with Section 408 of the IBC. These requirements accomplish the intent of providing reliable barriers between each smoke zone since, for the most part, such facilities will have a majority of doors closed and in a locked position because of the nature of the facility. The staff very closely controls these types of facilities.

Exception 6 relates to the behavior of smoke. The assumption is that smoke rises because of the buoyancy of hot gases, and if the ceiling is sufficiently high, the smoke layer will be contained for a longer period of time before it begins to move into the next smoke zone. Therefore, it is not as critical that the doors automatically close. This allowance is dependent on the specific design fire for a building. See Section 513.9 for more information on design fire determination. Different size design fires create different amounts of smoke that, depending on the layout of the building, can migrate in different ways throughout the building. This section mandates that smoke cannot begin to migrate into the next smoke zone for at least 20 minutes. This is consistent with the 20-minute minimum duration of operation of smoke control systems required in Section 513.4.6. It should be noted that not less than 14-foot-high (4267 mm) ceilings are required to take advantage of this exception. This exception would require an engineering analysis.

513.5.3.1 Group I-1 Condition 2; Group I-2 and ambulatory care facilities. In Group I-1 Condition 2; Group I-2 and *ambulatory care facilities*, where doors are installed across a *corridor*, the doors shall be automatic closing by smoke detection in accordance with Section 716.5.9.3 of the *International Building Code* and shall have a vision panel with fire-protection-rated glazing materials in fire-protection-rated frames, the area of which shall not exceed that tested.

❖ Part of the alternative allowed for horizontal sliding doors in Exception 3 of Section 513.5.3 for Group I-1 Condition 2, Group I-2 Condition 2 and ambulatory care facilities is the requirement that vision panels be provided. These vision panels need to be approved fire-protection-rated glazing and be within frames of a size that does not exceed the frame size that was used for testing of the glazing.

[F] 513.5.3.2 Ducts and air transfer openings. Ducts and air transfer openings are required to be protected with a minimum Class II, 250ºF (121ºC) smoke damper complying with the *International Building Code*.

❖ Another factor that adds to the reliability of smoke barriers is the protection of ducts and air transfer openings within smoke barriers. Left open, these openings may allow the transfer of smoke between smoke zones. These ducts and air transfer openings most often are part of the HVAC system. Damper operation and the reaction with the smoke control system will be evaluated during acceptance testing. It should be noted that there are duct systems used within a smoke control design that are controlled by the smoke control system and should not automatically close upon detection of smoke via a smoke damper.

It should be noted that a smoke damper works differently than a fire damper. Fire dampers react to heat via a fusible link, while smoke dampers activate upon the detection of smoke. The smoke dampers used should be rated as Class II, 250°F (121°C). The class of the smoke damper refers to its level of performance relative to leakage. The temperature rating is related to its ability to withstand the heat of smoke

INTERNATIONAL CODE COUNCIL®
Copyright © 2015 ICC. ALL RIGHTS RESERVED. Accessed by David Dammon on Jun 21, 2017 12:30:52 PM pursuant to License Agreement with ICC. No further reproduction or distribution authorized. ANY UNAUTHORIZED REPRODUCTION OR DISTRIBUTION IS A VIOLATION OF THE FEDERAL COPYRIGHT ACT AND THE LICENSE AGREEMENT, AND SUBJECT TO CIVIL AND CRIMINAL PENALTIES THEREUNDER.

resulting from a fire. It should be noted that although smoke barriers are only required to utilize smoke dampers, there may be many instances where a fire damper is also required. For instance, the smoke barrier may also be used as a fire barrier. Also, Section 717.5.3 of the IBC would require penetration of shafts to contain both a smoke and fire damper. Therefore, in some cases both a smoke damper and fire damper would be required. There are listings specific to combination smoke and fire dampers. Note that the exceptions to Section 717.5.3 of the IBC recognize that smoke and fire dampers may interfere with a smoke control design.

More specific requirements about dampers can be found in Chapter 7 of the IBC and Chapter 6 of this code.

[F] 513.6 Pressurization method. The primary mechanical means of controlling smoke shall be by pressure differences across smoke barriers. Maintenance of a tenable environment is not required in the smoke control zone of fire origin.

❖ There are several methods or strategies that may be used to control smoke movement. One of these methods is pressurization, wherein the system primarily utilizes pressure differences across smoke barriers to control the movement of smoke. Basically, if the area of fire origin maintains a negative pressure, then the smoke will be contained to that smoke zone. A typical approach used to obtain a negative pressure is to exhaust the fire floor. This is a fairly common practice in high-rise buildings. Interior exit stairways also utilize the concept of pressurization by keeping the interior exit stairways under positive pressure. The pressurization method in large open spaces, such as malls and atria, is impractical since it would take a large quantity of supply air to create the necessary pressure differences. It should be noted that pressurization is mandated as the primary method for mechanical smoke control design but this is related to the primary methods historically used for smoke control in high rise buildings. Currently, high-rise buildings do not require smoke control. Airflow and exhaust methods are only allowed when appropriate. The exhaust method is the most commonly applied method due to the use of the atrium provisions in Section 404.5 of the IBC.

The pressurization method does not require that tenable conditions be maintained in the smoke zone where the fire originates. Maintaining this area tenable would be impossible, based on the fact that pressures from the surrounding smoke zones would be placing a negative pressure within the zone of origin to keep the smoke from migrating.

Pressurization is used often with interior exit stairways. This method provides a positive pressure within the interior exit stairways to resist the passage of smoke. Stair pressurization is one method of compliance for stairways in high-rise or underground buildings where the floor surface is located more than 75 feet (22 860 mm) above the lowest level of fire-department vehicle access or more than 30 feet (9144 mm) below the floor surface of the lowest level of exit discharge. It should be noted that there are two methods found in the IBC that address smoke movement—smokeproof enclosures or pressurized stairs. A smokeproof enclosure requires a certain fire-resistance rating along with access through a ventilated vestibule or an exterior balcony. The vestibule can be ventilated in two ways: using natural ventilation or mechanical ventilation as outlined in Sections 909.20.3 and 909.20.4 of the IBC. The pressurization method requires a sprinklered building and a minimum pressure difference of 0.15 inch (37 Pa) of water and a maximum of 0.35 inch (87 Pa) of water. These pressure differences are to be available with all doors closed under maximum stack pressures (see Sections 909.20 and 1023.11 of the IBC for more details).

As noted, the pressurization method utilizes pressure differences across smoke barriers to achieve control of smoke. Sections 513.6.1 and 513.6.2 provide the criteria for smoke control design in terms of minimum and maximum pressure differences.

In summary, the pressurization method is used in two ways. The first is through the use of smoke zones where the zone of origin is exhausted, creating a negative pressure. The second is stair pressurization that creates a positive pressure within the stair to avoid the penetration of smoke. Note that the code allows the use of a smokeproof enclosure instead of pressurization.

[F] 513.6.1 Minimum pressure difference. The minimum pressure difference across a smoke barrier shall be 0.05-inch water gage (12.4 Pa) in fully sprinklered buildings.

In buildings permitted to be other than fully sprinklered, the smoke control system shall be designed to achieve pressure differences not less than two times the maximum calculated pressure difference produced by the design fire.

❖ The minimum pressure difference is established as 0.05-inch water gage (12 Pa) in fully sprinklered buildings. This particular criterion is related to the pressures needed to overcome buoyancy and the pressures generated by the fire, which include expansion. This particular criterion is based upon a sprinklered building. The pressure difference would need to be higher in a building that is not sprinklered. Additionally, the pressure difference needs to be provided based upon the possible stack and wind effects present.

[F] 513.6.2 Maximum pressure difference. The maximum air pressure difference across a smoke barrier shall be determined by required door-opening or closing forces. The actual force required to open exit doors when the system is in the smoke control mode shall be in accordance with the *International Building Code*. Opening and closing forces for other doors shall be determined by standard engineering methods

INTERNATIONAL CODE COUNCIL®
Copyright © 2015 ICC. ALL RIGHTS RESERVED. Accessed by David Dammon on Jun 21, 2017 12:30:52 PM pursuant to License Agreement with ICC. No further reproduction or distribution authorized. ANY UNAUTHORIZED REPRODUCTION OR DISTRIBUTION IS A VIOLATION OF THE FEDERAL COPYRIGHT ACT AND THE LICENSE AGREEMENT, AND SUBJECT TO CIVIL AND CRIMINAL PENALTIES THEREUNDER.

for the resolution of forces and reactions. The calculated force to set a side-hinged, swinging door in motion shall be determined by:

$$F = F_{dc} + K(WA\Delta P)/2(W\text{-}d) \quad \textbf{(Equation 5-1)}$$

where:

A = Door area, square feet (m^2).

d = Distance from door handle to latch edge of door, feet (m).

F = Total door opening force, pounds (N).

F_{dc} = Force required to overcome closing device, pounds (*N*).

K = Coefficient 5.2 (1.0).

W = Door width, feet (m).

ΔP = Design pressure difference, inches (Pa) water gage.

❖ The maximum pressure difference is based primarily upon the force needed to open and close doors. The code establishes maximum opening forces for doors. This maximum opening force cannot be exceeded, taking into account the pressure differences across a doorway in a pressurized environment. Essentially, based on the opening force requirements of Section 1010.1.3 of the IBC, the maximum pressure difference can be calculated in accordance with Equation 5-2. In accordance with Chapter 10 of the IBC, the maximum opening force of a door has three components, including:

Door latch release:	Maximum of 15 pounds (67 N)
Set door in motion:	Maximum of 30 pounds (134 N)
Swing to full open position:	Maximum of 15 pounds (67 N)

Equation 5-2 is used to calculate the total force to set the door into motion when in the smoke control mode; therefore, the limiting criteria would be 30 pounds (134 N). It should be noted that although the accessibility requirements related to door opening force are more restrictive in Section 404.2.8 of ICC A117.1, *Accessible and Usable Buildings and Facilities*, fire doors do not require compliance with these requirements.

513.6.3 Pressurized stairways and elevator hoistways. Where stairways or elevator hoistways are pressurized, such pressurization systems shall comply with Section 513 as smoke control systems, in addition to the requirements of Sections 909.20 of the *International Building Code* and 909.21 of the *International Fire Code*.

❖ The purpose of this section is to clarify that pressurized stairways and pressurized hoistways are smoke control systems and must be addressed in the same way that a pressurization system in accordance with Section 513.6 addresses such systems. This would require compliance with various sections but in particular the requirements for a rational analysis in accordance with Section 513.4.

[F] 513.7 Airflow design method. Where *approved* by the code official, smoke migration through openings fixed in a permanently open position, which are located between smoke control zones by the use of the airflow method, shall be permitted. The design airflows shall be in accordance with this section. Airflow shall be directed to limit smoke migration from the fire zone. The geometry of openings shall be considered to prevent flow reversal from turbulent effects. Smoke control systems using the airflow method shall be designed in accordance with NFPA 92.

❖ This method is allowed only where approved by the building official. As the title states, this method utilizes airflow to avoid the migration of smoke across smoke barriers. This has been referred to as opposed airflow. Specifically, this method is suited for the protection of smoke migration through doors and related openings fixed in a permanently open position. This method consists of providing a particular velocity of air based upon the temperature of the smoke and the height of the opening. The temperature of the smoke will depend on the design fire that is established for the particular building. The higher the temperature of the smoke and the larger the opening, the higher the velocity necessary to prevent the smoke from migrating into the smoke zone. It should be noted that the airflow method seldom works for large openings, since the velocity to oppose the smoke becomes too high. This method tends to work better for smaller openings, such as pass-through windows. Reference is made to NFPA 92 to determine the minimum velocity required to limit smoke spread.

[F] 513.7.1 Prohibited conditions. This method shall not be employed where either the quantity of air or the velocity of the airflow will adversely affect other portions of the smoke control system, unduly intensify the fire, disrupt plume dynamics or interfere with exiting. Airflow toward the fire shall not exceed 200 feet per minute (1.02 m/s). Where the calculated airflow exceeds this limit, the airflow method shall not be used.

❖ The airflow method has a limitation on maximum velocity. This limitation is based upon the fact that air may distort the flame and cause additional entrainment and turbulence; therefore, having a high velocity of air entering the zone of fire origin has the potential of increasing the amount of smoke produced. The velocity may also interact with other portions of the smoke control design. For instance, the pressure differences in other areas of the building may be altered, which may exceed the limitations of Sections 513.6.1 and 513.6.2. This section requires that when a velocity of over 200 feet per minute (1.02 m/sec) is calculated, the airflow method is not allowed. The solution may result in requiring a barrier such as a wall or door.

INTERNATIONAL CODE COUNCIL®
Copyright © 2015 ICC. ALL RIGHTS RESERVED. Accessed by David Dammon on Jun 21, 2017 12:30:52 PM pursuant to License Agreement with ICC. No further reproduction or distribution authorized. ANY UNAUTHORIZED REPRODUCTION OR DISTRIBUTION IS A VIOLATION OF THE FEDERAL COPYRIGHT ACT AND THE LICENSE AGREEMENT, AND SUBJECT TO CIVIL AND CRIMINAL PENALTIES THEREUNDER.

If the airflow design method is chosen to protect areas communicating with an atrium, the air added to the smoke layer needs to be accounted for in the exhaust rate.

[F] 513.8 Exhaust method. Where *approved* by the building official, mechanical smoke control for large enclosed volumes, such as in atriums or malls, shall be permitted to utilize the exhaust method. Smoke control systems using the exhaust method shall be designed in accordance with NFPA 92.

❖ This method is only allowed when approved by the building official. The primary application of the exhaust method is in large spaces, such as atriums and malls, and is the most widely used method in Section 909 of the IBC and IFC and Section 513 of this code. The strategy of this method is to keep the smoke layer at a certain level within the space. This is primarily accomplished through exhausting smoke. The amount of exhaust depends upon the design fire [see Commentary Figure 513.8(1)]. Essentially, fires produce different amounts and properties of smoke based on the material being burned, size of the fire and the placement of the fire; therefore, NFPA 92 is referenced for the design of such systems. NFPA 92 presents several ways to address the control of smoke, which includes the use of the following tools:

- Scale Modeling (Small scale testing)—Utilizes the concept of scaling to allow small scale tests to be conducted to understand the smoke movement within a space.
  - Benefits—More realistic understanding of smoke movement in spaces with unusual configurations or projections than algebraic calculations.
  - Disadvantages—Expensive and the application of results is limited to the uniqueness of the space being analyzed.
- Algebraic (Calculations)—Empirically derived (based on testing) modeling in its simplest form.
  - Benefits—Simple, cost-effective analysis.
  - Disadvantages—Limited applicability due to the range of values they were derived from, only appropriate with certain types of design fires, typically overconservative outputs that increase equipment needs, equipment costs and can impact aesthetics and architectural design.
- Computer Modeling [Computational fluid dynamics (CFD) or zone models]—Combination of theory and empirical values to determine the smoke movement and fire-induced conditions within a space and effectiveness of the smoke control system.
  - Benefits—More realistic understanding of smoke movement in spaces with unusual configurations or projections and less expensive than scale modeling. Helps significantly in designing smoke control systems tailored to spaces and achieving cost-effective designs, and can help limit the impact to architectural design.
  - Disadvantages—Computing time and cost can be longer than algebraic calculations but benefits typically outweigh this disadvantage. Early planning is important and can limit these adverse impacts.

In terms of computer modeling, there are essentially two methods that include zone models and CFD models. Zone models are based upon the unifying assumption that in any room or space where the effects of the fire are present there are distinct layers (hot upper layer, cool lower layer). In real life such distinct layers do not exist. Some examples of zone models used in such applications include Consolidated Model of Fire Growth And Smoke Transport (C-FAST) and Available Safe Egress Time (ASET) (see Section 3-7 of the *SFPE Handbook of Fire Protection Engineering* for further information). CFD models take this much further and actually divide the space into thousands or millions of interconnected "cells" or "fields." The model then evaluates the fire dynamics and heat and mass in each individual cell and how it interacts with those adjacent to it. The use of such models becomes more accurate with more numerous and smaller cells but the computing power and expertise required is much higher than for zone models. As noted the use of either types of models can be advantageous but such use must be undertaken by someone qualified. Proper review and verification of the input and output is critical. The most popular model in the area of CFD with regard to fire is the Fire Dynamics Simulator (FDS) developed by National Institute for Standards and Technology (NIST). Other models, such as Fluent (Fluent, Inc.), are sometimes used.

Depending upon the space being evaluated, some design strategies may provide a better approach than others. Past editions of the IBC smoke control provisions for the exhaust method mandated the use of the algebraic methods with a steady fire. This, of course, also mandated a mechanical system be used whereas NFPA 92B allows an overall review of smoke layer movement and whether the design goals, which in this case are mandated by the code, can be met. Therefore, if it can be shown that the smoke layer interface can be held at 6 feet (1829 mm) as mandated in Section 513.8.1 for the design operation time required by Section 513.4.6 without mechanical ventilation, then the space would comply with Section 513. NFPA 92 presents several design approaches. This allows more flexibility in design than that found in previous editions of the IBC. NFPA 92 as a standard does not set the minimum smoke layer interface height or duration for system operation. Such criteria is found within Sections 513.8.1 and 513.4.6, respectively. See the commentary for those sections.

INTERNATIONAL CODE COUNCIL®
Copyright © 2015 ICC. ALL RIGHTS RESERVED. Accessed by David Dammon on Jun 21, 2017 12:30:52 PM pursuant to License Agreement with ICC. No further reproduction or distribution authorized. ANY UNAUTHORIZED REPRODUCTION OR DISTRIBUTION IS A VIOLATION OF THE FEDERAL COPYRIGHT ACT AND THE LICENSE AGREEMENT, AND SUBJECT TO CIVIL AND CRIMINAL PENALTIES THEREUNDER.

If the algebraic approach is used, consideration of three types of fire plumes may be required to determine which one is the most demanding in terms of smoke removal needs based upon the space being assessed. They include:

- Axisymmetric plumes—Smoke rises unimpeded by walls, balconies or similar projections [see Commentary Figure 513.8(2)].
- Balcony spill plumes—Smoke flows under and around edges of a horizontal projection [see Commentary Figure 513.8(3)].
- Window plumes—Smoke flows through an opening into a large-volume space [see Commentary Figure 513.8(4)].

It should be noted that prior to the reference to NFPA 92 in the code, the balcony spill and window plume calculations had been eliminated from the smoke control requirements of the code due to concerns with the applicability of those calculations. The major difference is that NFPA 92 does not mandate the use of such equations as did previous editions of the IBC. The use of such equations will depend upon the design fires agreed upon for the particular design and whether an algebraic approach is chosen. These equations are used to determine a mass flow rate of smoke to ultimately determine the required exhaust volume for that space. If the potential for a balcony or window spill plumes are known to exist within the space, then appropriate measures need to be taken to address these, as they typically result in more onerous exhaust and supply requirements. Part of the reason for the initial deletion of these equations was the fact that such scenarios are not as likely or their impact is significantly reduced in sprinklered buildings. There is also some concern with the applicability of the balcony spill plume equation in a variety of applications. These potential fire scenarios and resulting plumes may further the need to undertake a CFD analysis to address such hazards more appropriately and effectively.

Another key aspect that NFPA 92 included within the algebraic methods is equations to determine that a minimum number of exhaust inlets are available to prevent plugholing. Plugholing occurs when air from below the smoke layer is pulled through the smoke layer into the smoke exhaust inlets. As such, if plugholing occurs, some of the fan capacity is used to exhaust air rather than smoke and thus can affect the ability to maintain the smoke layer at or above the design height. Scale modeling and computer fire modeling would demonstrate these potential problems during the testing and analysis, respectively [see Commentary Figure 513.8(5)].

It should be noted that this section specifically references NFPA 92 for the design of smoke control using the exhaust method. Therefore the requirements in NFPA 92 related to testing, documentation and maintenance would not be applicable, though they may be a good resource. Equipment and controls would be part of the design; therefore, related provisions of NFPA 92 would apply. Generally the IBC addresses equipment and controls in a similar fashion.

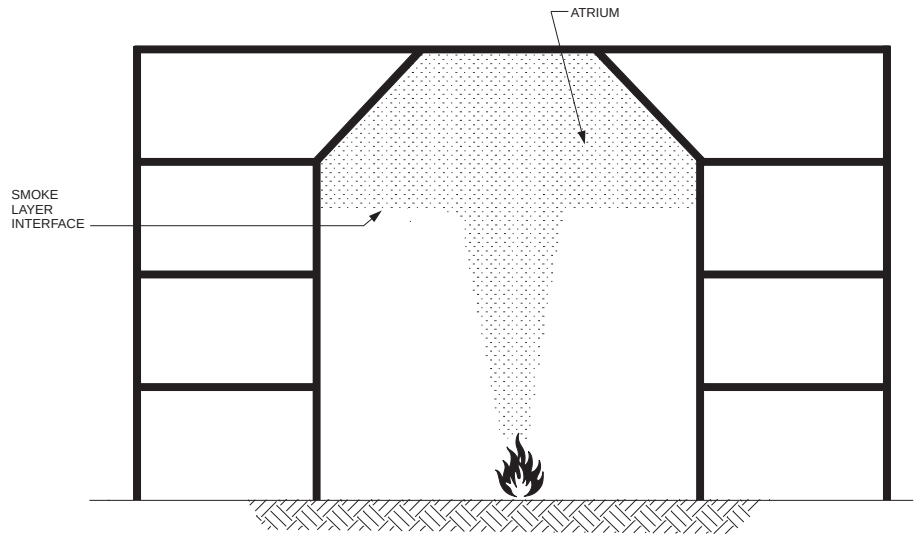

Figure 513.8(1)
SMOKE LAYER INTERFACE

INTERNATIONAL CODE COUNCIL®
Copyright © 2015 ICC. ALL RIGHTS RESERVED. Accessed by David Dammon on Jun 21, 2017 12:30:52 PM pursuant to License Agreement with ICC. No further reproduction or distribution authorized. ANY UNAUTHORIZED REPRODUCTION OR DISTRIBUTION IS A VIOLATION OF THE FEDERAL COPYRIGHT ACT AND THE LICENSE AGREEMENT, AND SUBJECT TO CIVIL AND CRIMINAL PENALTIES THEREUNDER.

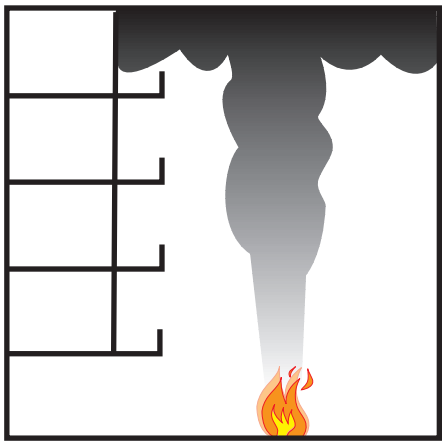

Figure 513.8(2)
AXISYMMETRICAL PLUME

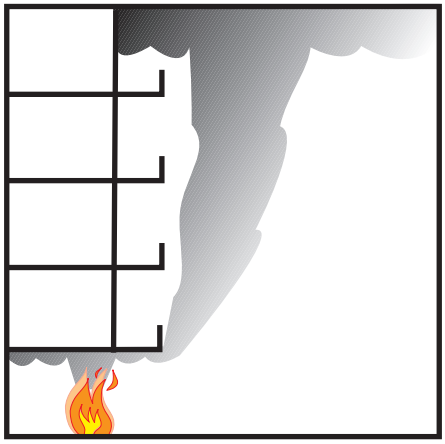

Figure 513.8(3)
BALCONY SPILL PLUME

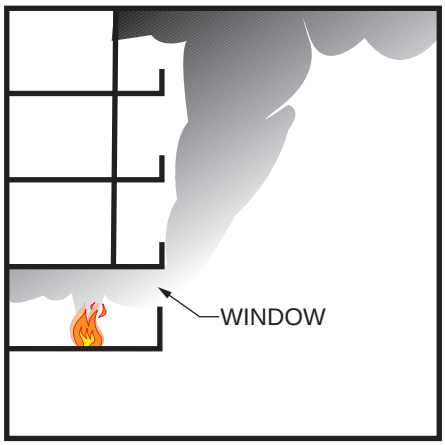

Figure 513.8(4)
WINDOW PLUME

INTERNATIONAL CODE COUNCIL®
Copyright © 2015 ICC. ALL RIGHTS RESERVED. Accessed by David Dammon on Jun 21, 2017 12:30:52 PM pursuant to License Agreement with ICC. No further reproduction or distribution authorized. ANY UNAUTHORIZED REPRODUCTION OR DISTRIBUTION IS A VIOLATION OF THE FEDERAL COPYRIGHT ACT AND THE LICENSE AGREEMENT, AND SUBJECT TO CIVIL AND CRIMINAL PENALTIES THEREUNDER.

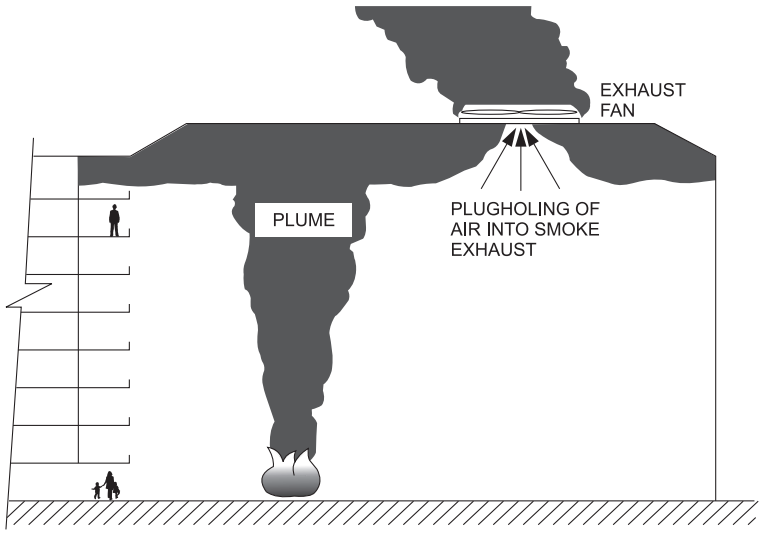

Figure 513.8(5)
PLUGHOLING

[F] 513.8.1 Exhaust rate. The height of the lowest horizontal surface of the accumulating smoke layer shall be maintained not less than 6 feet (1829 mm) above any walking surface which forms a portion of a required egress system within the smoke zone.

❖ The design criteria to be used when applying NFPA 92 is to maintain the smoke layer interface at least 6 feet (1829 mm) above any walking surface that is considered part of the required egress within the particular smoke zone, such as an atrium, for 20 minutes or 1.5 times the calculated egress time (see Section 513.4.6). Chapter 10 of the IBC considers the majority of occupiable space as part of the means of egress system. Also, keep in mind that the criteria of 6 feet (1829 mm) does not apply just to the main floor surface of the mall or atrium but to any level where occupants may be exposed (for example, balconies) see Commentary Figure 513.8.1(1).

The code uses the terminology "lowest horizontal surface of the accumulating smoke layer interface." NFPA 92 has several definitions related to smoke layer, which include the following:

Smoke layer. The accumulated thickness of smoke below a physical barrier.

Smoke layer interface. The theoretical boundary between a smoke layer and the smoke-free air. (Note: This boundary is at the beginning of the transition zone.)

First indication of smoke. The boundary between the transition zone and the smoke-free air.

Transition zone. The layer between the smoke layer interface and the first indication of smoke in which the smoke layer temperature decreases to ambient. The transition zone may be several feet thick (large open space) or may barely exist (small area with intense fire) [see Commentary Figure 513.8.1(2)].

NFPA 92 provides algebraic equations to determine the first indication of smoke but is limited to very specific conditions, such as a uniform cross section, specific aspect ratios, steady or unsteady fires and no smoke exhaust operating. When using algebraic equations for smoke layer interface looking at different types of plumes, the smoke layer interface terminology is used, and the user enters the desired smoke layer interface height. Zone models use simplifying assumptions so the layers are distinct from one another. In contrast, when CFD or scale modeling is used, the data must be analyzed to verify that the smoke layer interface is located at or above the 6 feet (1829 mm) during the event. This is not a simple analysis as CFD and scale modeling provide more detail on actual smoke behavior; therefore, the location of the smoke layer interface may not be initially clear without some level of analysis. Again, it depends on the depth of the transition layer. This may require reviewing tenability within the transition zone. Tenability limits need to be agreed upon by the stakeholders involved. Using CFD or scale modeling would likely need to occur through the alternative methods and materials (see Section 105.2) because of the need to review tenability limits. It should be noted that NFPA 92 Annex A suggests that there are methods to determine where the smoke layer interface and first indication of smoke are located when undertaking CFD and scale modeling using a limited number of point measurements.

Also, Section 513.8.1 specifies a minimum distance for the smoke layer interface from any walking surface whereas NFPA 92 has provisions that simply allow the analysis to demonstrate tenability regardless of where the layer height is located above the floor. Defining tenability can be more difficult as there

INTERNATIONAL CODE COUNCIL®
Copyright © 2015 ICC. ALL RIGHTS RESERVED. Accessed by David Dammon on Jun 21, 2017 12:30:52 PM pursuant to License Agreement with ICC. No further reproduction or distribution authorized. ANY UNAUTHORIZED REPRODUCTION OR DISTRIBUTION IS A VIOLATION OF THE FEDERAL COPYRIGHT ACT AND THE LICENSE AGREEMENT, AND SUBJECT TO CIVIL AND CRIMINAL PENALTIES THEREUNDER.

is not a standard definition. Any design using that approach would need to be addressed through Section 105.2.

Note that the response time of the system components (detection, activation, ramp up time, shutting down HVAC, opening/closing doors and dampers, etc.) needs to be accounted for when analyzing the location of the smoke layer interface in relation to the duration of operations stated in Section 513.4.6 (see commentary, Section 909.17 of the IFC).

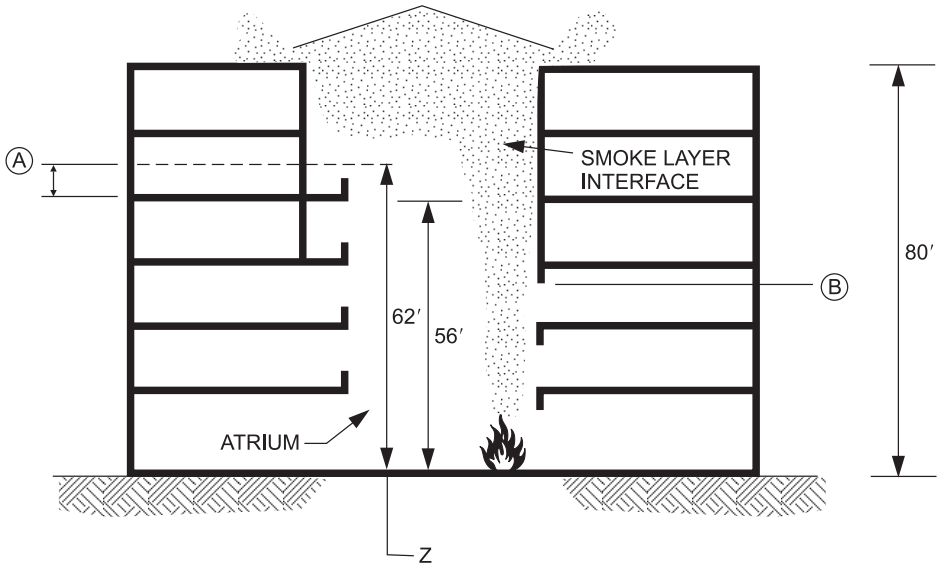

Z IS THE HEIGHT FROM ATRIUM FLOOR TO THE HIGHEST OF EITHER Ⓐ OR Ⓑ :

Ⓐ 6′ - 0″ ABOVE THE HIGHEST LEVEL OF EXIT ACCESS OPEN TO ATRIUM

Ⓑ THE HIGHEST UNPROTECTED OPENING TO ATRIUM

For SI: 1 foot = 304.8 mm.

Figure 513.8.1(1)
EXAMPLE, CRITICAL LEVEL OF SMOKE

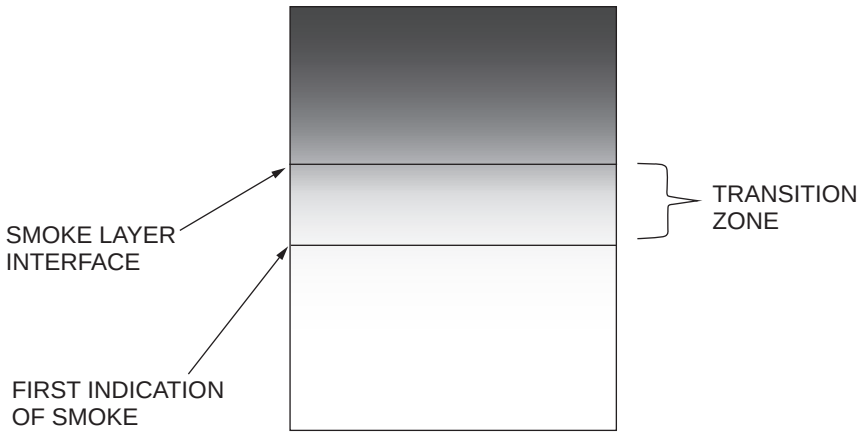

Figure 513.8.1(2)
SMOKE LAYER

INTERNATIONAL CODE COUNCIL®
Copyright © 2015 ICC. ALL RIGHTS RESERVED. Accessed by David Dammon on Jun 21, 2017 12:30:52 PM pursuant to License Agreement with ICC. No further reproduction or distribution authorized. ANY UNAUTHORIZED REPRODUCTION OR DISTRIBUTION IS A VIOLATION OF THE FEDERAL COPYRIGHT ACT AND THE LICENSE AGREEMENT, AND SUBJECT TO CIVIL AND CRIMINAL PENALTIES THEREUNDER.

[F] 513.9 Design fire. The design fire shall be based on a rational analysis performed by the *registered design professional* and *approved* by the code official. The design fire shall be based on the analysis in accordance with Section 513.4 and this section.

❖ The design fire is the most critical element in the smoke control system design. The fire is what produces the smoke to be controlled by the system; thus, the size of the fire directly impacts the quantity of smoke being produced. This section ensures that the design fire be determined through a rational analysis by a registered design professional with knowledge in this area. Such professionals should have experience in the area of fire dynamics, fire engineering and general building design, including mechanical systems. When determining the design fire the designer should work with various stakeholders to determine the types of hazards and combustible materials (fire scenarios) on a permanent as well as temporary basis (i.e., Christmas/holiday decorative materials or scenery, temporary art exhibits) that may be present throughout the use of the building once occupied. Those hazards then need to be translated to potential design fires to be used when determining the smoke layer interface height for the duration as determined by Section 513.4.6. See the commentary to Section 513.9.3 for potential sources when determining design fires.

This section also does not mandate the type of fire (i.e., steady versus unsteady). A steady fire assumes a constant heat release rate over a period of time, where unsteady fires do not. An unsteady fire includes the growth and decay phases of the fire, as well as the peak heat release rate. An unsteady fire will hit a peak heat release rate when burning in the open, like an axisymmetric fire. An unsteady fire is a more realistic view of how fires actually burn. It should be noted that fires can be a combination of unsteady and steady fires when the sufficient fuel is available. In other words, the fire initially grows (unsteady) then reaches a steady state and burns for some time at a particular heat release rate before decay occurs.

Design fire information should therefore typically include growth rate, peak heat release rate, duration and decay as well as information related to fire locations and products of combustion yield (CO, smoke, etc.) that are produced by the various design fires that are deemed credible for the space.

To provide an order of magnitude of fire sizes obtained from various combustibles, the following data from fire tests is provided. The following heat release rates, found in Section 3, Chapter 3-1 of the 2nd edition of the *SFPE Handbook of Fire Protection Engineering*, are peak heat release rates:

Plastic trash bags/ paper trash:	114-332 Btu/sec (120-350 kw)
Latex foam pillow:	114 Btu/sec approximately (120 kw)
Dry Christmas tree:	475-618 Btu/sec (500-650 kw)
Sofa:	2,852 Btu/sec approximately (3,000 kw)
Plywood wardrobe:	2,947-6,084 Btu/sec (3,100-6,400 kw)

[F] 513.9.1 Factors considered. The engineering analysis shall include the characteristics of the fuel, fuel load, effects included by the fire and whether the fire is likely to be steady or unsteady.

❖ This section simply provides more detail on the factors that should be taken under consideration when determining the design fire size. To determine the appropriate fire size, an engineering analysis is necessary that takes into account the following elements: fuel (potential burning rates), fuel load (how much), effects included by the fire (smoke particulate size and density), steady or unsteady (burn steadily or simply peak and dissipate) and likelihood of sprinkler activation (based on height and distance from the fire).

[F] 513.9.2 Design fire fuel. Determination of the design fire shall include consideration of the type of fuel, fuel spacing and configuration.

❖ The design fire size may also be affected by surrounding combustibles, which may have the effect of increasing the fire size. More specifically, there is concern that if sufficient separation is not maintained between combustibles, then a larger design fire is likely. The code does not provide extensive detail on this as such determination is left to the rational analysis undertaken by the design professional. NFPA 92 provides one method in which to determine the critical separation distance, *R*. This is based on fire size and the critical radiant heat flux for nonpiloted ignition. Nonpiloted ignition means the radiated heat from the fire without direct flame contact will ignite adjacent combustibles.

[F] 513.9.3 Heat-release assumptions. The analysis shall make use of the best available data from *approved* sources and shall not be based on excessively stringent limitations of combustible material.

❖ This section is merely stressing the fact that data obtained for use in a rational analysis need to come from relevant and appropriate sources. Data can be obtained from groups such as the NIST or from Annex B of NFPA 92. Data from fire tests are available and are a good resource for such analysis. As noted earlier, such data are not prevalent (see also Chapter 8, Analysis of Design Fires, of *A Guide to Smoke Control in the 2006 IBC®* and Section 3, Chapter 3-1 of the *SFPE Handbook of Fire Protection Engineering*).

INTERNATIONAL CODE COUNCIL®
Copyright © 2015 ICC. ALL RIGHTS RESERVED. Accessed by David Dammon on Jun 21, 2017 12:30:52 PM pursuant to License Agreement with ICC. No further reproduction or distribution authorized. ANY UNAUTHORIZED REPRODUCTION OR DISTRIBUTION IS A VIOLATION OF THE FEDERAL COPYRIGHT ACT AND THE LICENSE AGREEMENT, AND SUBJECT TO CIVIL AND CRIMINAL PENALTIES THEREUNDER.

[F] 513.9.4 Sprinkler effectiveness assumptions. A documented engineering analysis shall be provided for conditions that assume fire growth is halted at the time of sprinkler activation.

❖ This section raises a few questions regarding activation of sprinklers and their impact on a fire both in terms of their ability to "control" as well as "extinguish" a fire. The first is concerning an assumption that sprinklers will immediately control the fire as soon as they are activated (i.e., control results in limiting further growth and maintaining the heat release rate at approximately the same fire size as when the sprinklers activated). This assumption may be true in some cases, but for high ceilings the sprinkler may not activate or may be ineffective. Sprinklers may be ineffective in high spaces, since by the time they are activated the fire is too large to control. Essentially, the fire plume may push away and evaporate the water before it actually reaches the seat of the fire. In addition the fire may be shielded from sprinkler spray so that insufficient quantities of water reach the fuel. These are common problems with high-piled storage as well as other fires including retail and has been shown in actual tests. Also, if the fire becomes too large before the sprinklers are activated, the available water supply and pressure for the system may be compromised. Additionally, based on the layout of the room and the movement of the fire effluents, the wrong sprinklers could be activated, which leads to a larger fire size and depletion of the available water supply and pressure.

Another issue is whether the sprinklers "control" or "extinguish" the fire. Typical sprinklers are assumed only to control fires as opposed to extinguishing them. Sprinklers may be able to extinguish the fire but it should not automatically be assumed. A fire that is controlled will achieve steady state and maintain a certain fire size, which is very different from a fire that is actually extinguished.

Based upon these concerns, each scenario needs to be looked at individually to determine whether sprinklers would be effective in halting the growth or extinguishing the fire. More specifically, the evaluation should include droplet size, density and area of coverage and should also be based on actual test results.

[F] 513.10 Equipment. *Equipment* such as, but not limited to, fans, ducts, automatic dampers and balance dampers shall be suitable for their intended use, suitable for the probable exposure temperatures that the rational analysis indicates, and as *approved* by the code official.

❖ Section 513.10 and subsequent sections are primarily related to the reliability of the system components to provide a smoke control system that works according to the design. One of the largest concerns when using smoke control provisions is the overall reliability of the system. Such systems have many different components, such as smoke and fire dampers; fans; ducts and controls associated with such components. The more components a system has, the less reliable it becomes. In fact, one approach in providing a higher level of reliability is utilizing the normal building systems such as the HVAC to provide the smoke control system. Basically, systems used every day are more likely to be working appropriately, since they are essentially being tested daily; however, there are many components that are specific to the smoke control system, such as exhaust fans in an atrium or the smoke control panel.

Also, there is not a generic prescriptive set of requirements as to how all smoke control system elements should operate, since each design may be fairly unique. The specifics on operation of such a system need to be included within the design and construction documents. Most components used in smoke control systems are elements used in many other applications such as HVAC systems; therefore, the basic mechanisms of a fan used in a smoke control system may not be different, although they may be applied differently.

[F] 513.10.1 Exhaust fans. Components of exhaust fans shall be rated and certified by the manufacturer for the probable temperature rise to which the components will be exposed. This temperature rise shall be computed by:

$$T_s = (Q_c/mc) + (T_a) \qquad \textbf{(Equation 5-2)}$$

where:

c = Specific heat of smoke at smoke-layer temperature, Btu/lb°F (kJ/kg • K).

m = Exhaust rate, pounds per second (kg/s).

Q_c = Convective heat output of fire, Btu/s (kW).

T_a = Ambient temperature, °F (K).

T_s = Smoke temperature, °F (K).

Exception: Reduced T_s as calculated based on the assurance of adequate dilution air.

❖ Fans used for smoke control systems must be able to tolerate the possible elevated temperatures to which they will be exposed. Again, like many other factors this depends upon the specifics of the design fire. Essentially, Equation 5-4 requires the calculation of the potential temperature rise. The exhaust fans must be specifically rated and certified by the manufacturer to be able to handle these rises in temperature. There is an exception that allows reduction of the temperature if it can be shown that adequate temperature reduction will occur. In many cases, if the exhaust fans are near the ceiling, the smoke will be much cooler than the value resulting from Equation 5-4 since the smoke may cool considerably by the time it reaches the ceiling. Also, sprinkler activation will assist in cooling the smoke further.

[F] 513.10.2 Ducts. Duct materials and joints shall be capable of withstanding the probable temperatures and pressures to which they are exposed as determined in accordance with

INTERNATIONAL CODE COUNCIL®
Copyright © 2015 ICC. ALL RIGHTS RESERVED. Accessed by David Dammon on Jun 21, 2017 12:30:52 PM pursuant to License Agreement with ICC. No further reproduction or distribution authorized. ANY UNAUTHORIZED REPRODUCTION OR DISTRIBUTION IS A VIOLATION OF THE FEDERAL COPYRIGHT ACT AND THE LICENSE AGREEMENT, AND SUBJECT TO CIVIL AND CRIMINAL PENALTIES THEREUNDER.

Section 513.10.1. Ducts shall be constructed and supported in accordance with Chapter 6. Ducts shall be leak tested to 1.5 times the maximum design pressure in accordance with nationally accepted practices. Measured leakage shall not exceed 5 percent of design flow. Results of such testing shall be a part of the documentation procedure. Ducts shall be supported directly from fire-resistance-rated structural elements of the building by substantial, noncombustible supports.

Exception: Flexible connections, for the purpose of vibration isolation, that are constructed of *approved* fire-resistance-rated materials.

❖ The next essential component of a smoke control system is the integrity of the ducts to transport supply and exhaust air. The integrity of ducts is also important for an HVAC system, but is more critical in this case since it is not simply a comfort issue but one of life safety. The key concern with ducts in smoke control systems is that they can withstand elevated temperatures and that there will be minimal leakage. The concern with leakage is the potential of leaking smoke into another smoke zone or not providing the proper amount of supply air to support the system.

More specifically, all ducts need to be leak tested to 1.5 times the maximum static design pressure. The leakage resulting should be no more than 5 percent of the design flow. For example, a duct that has a design flow of 300 cubic feet per minute (cfm) (0.141 m^3/s) would be allowed 15 cfm (0.007 m^3/s) of leakage when exposed to a pressure equal to 1.5 times the design pressure for that duct. The tests should be in accordance with nationally accepted practices. This criterion will often limit ductwork for smoke control systems to lined systems, since the amount of leakage in such systems is much less.

As part of the concern for possible exposure to fire and fire products, the ducts are required to be supported by way of substantial noncombustible supports connected to the fire-resistance-rated structural elements of the building. As noted, the system needs to be able to run for 20 minutes starting from the detection of the fire. The exception to this section is really more of an acknowledgement that flexible connections for vibration isolation are acceptable when constructed of approved fire-resistance-rated materials. More specifically, it is often necessary to use such connections for connecting the duct to the fan. These connections cannot necessarily meet the requirements of the main section, but are a minimal part of the ductwork and as long as they perform adequately with regard to fire resistance, they are permitted. Note that the term “approved” is used to determine the required fire resistance, therefore, flexibility is provided. The code does not specifically address this determination but perhaps a relationship to the duration or operation and these flexible connections could be made to determine the necessary performance.

[F] 513.10.3 Equipment, inlets and outlets. *Equipment* shall be located so as to not expose uninvolved portions of the building to an additional fire hazard. Outdoor air inlets shall be located so as to minimize the potential for introducing smoke or flame into the building. Exhaust outlets shall be so located as to minimize reintroduction of smoke into the building and to limit exposure of the building or adjacent buildings to an additional fire hazard.

❖ The intent of this section is to minimize the likelihood of smoke being reintroduced into the building due to poorly placed outdoor air inlets and exhaust air outlets; therefore, placing one right next to another on the exterior of the building would be inappropriate. In addition, wind and other adverse conditions should be considered when choosing locations for these inlets and outlets. Particular attention should be paid to introducing exhausted smoke into another smoke zone. Also, smoke should be exhausted in a direction that will not introduce it into surrounding buildings or facilities. Within the building itself, the supply air and exhaust outlets should also be strategically located. The exhaust inlets and supply air should be evenly distributed to reduce the likelihood of a high velocity of air that may disrupt the fire plume and also push smoke back into occupied areas. See the commentary for Section 513.8 for discussion on avoiding plugholing.

[F] 513.10.4 Automatic dampers. Automatic dampers, regardless of the purpose for which they are installed within the smoke control system, shall be *listed* and conform to the requirements of *approved* recognized standards.

❖ This section addresses the reliability of any dampers used within a smoke control system. This particular provision requires that the dampers be listed and conform to the appropriate recognized standards. More specifically, Section 717 of the IBC and Section 607 of this code contain more detailed information on the specific requirements for smoke and fire dampers. Smoke and fire dampers should be listed in accordance with UL 555S and 555, respectively. Also, remember that each smoke control design is unique and the sequence and methods used to activate the dampers may vary from design to design. This information needs to be addressed in the construction documents.

Another factor to take into account, with regard to timing of the system, is the fact that some dampers react more quickly than others, simply due to the particular smoke damper characteristics. Additionally, during the commissioning of the system, the damper is going to be exposed to many repetitions. These repetitions need to be accounted for in the overall reliability of the system.

[F] 513.10.5 Fans. In addition to other requirements, belt-driven fans shall have 1.5 times the number of belts required for the design duty with the minimum number of belts being two. Fans shall be selected for stable performance based on

INTERNATIONAL CODE COUNCIL®
Copyright © 2015 ICC. ALL RIGHTS RESERVED. Accessed by David Dammon on Jun 21, 2017 12:30:52 PM pursuant to License Agreement with ICC. No further reproduction or distribution authorized. ANY UNAUTHORIZED REPRODUCTION OR DISTRIBUTION IS A VIOLATION OF THE FEDERAL COPYRIGHT ACT AND THE LICENSE AGREEMENT, AND SUBJECT TO CIVIL AND CRIMINAL PENALTIES THEREUNDER.

normal temperature and, where applicable, elevated temperature. Calculations and manufacturer's fan curves shall be part of the documentation procedures. Fans shall be supported and restrained by noncombustible devices in accordance with the structural design requirements of the *International Building Code*. Motors driving fans shall not be operating beyond their nameplate horsepower (kilowatts) as determined from measurement of actual current draw. Motors driving fans shall have a minimum service factor of 1.15.

❖ Part of the overall reliability requires that fans used to provide supply air and exhaust capacity will be functioning when necessary; therefore, a safety factor of 1.5 is placed upon the required belts for fans. All fans used as part of a smoke control system must provide 1.5 times the number of required belts with a minimum of two belts for all fans.

This section also points out that the fan chosen should fit the specific application. It should be able to withstand the temperature rise as calculated in Section 513.10.1 and generally be able to handle typical exposure conditions, such as location and wind. For instance, propeller fans are highly sensitive to the effects of wind. When located on the windward side of a building, wall-mounted, nonhooded propeller fans are not able to compensate for wind effects. Additionally, even hooded propeller fans located on the leeward side of the building may not adequately compensate for the decrease in pressure caused by wind effects. In general, when designing a system, it should be remembered that field conditions might vary from the calculations; therefore, flexibility should be built into the design that would account for things such as variations in wind conditions. Finally, this section stresses that fan motors not be operated beyond their rated horsepower.

[F] 513.11 Standby power. The smoke control system shall be supplied with standby power in accordance with Section 2702 of the *International Building Code*.

❖ This section is simply a reference back to Chapter 27 of the IBC for the specifics as to what is required for standby power. As with any life safety system, a level of redundancy with regard to power supply is required to enable the functioning of the system during a fire. The primary source is the building's normal power system. The secondary power system is by means of standby power. One of the key elements is that standby power systems are intended to operate within 60 seconds of loss of primary power. It should be noted that the primary difference between standby power and emergency power is that emergency power must operate within 10 seconds of loss of primary power versus 60 seconds.

[F] 513.11.1 Equipment room. The standby power source and its transfer switches shall be in a room separate from the normal power transformers and switch gear and ventilated directly to and from the exterior. The room shall be enclosed with not less than 1-hour fire-resistance-rated fire barriers constructed in accordance with Section 707 of the *International Building Code* or horizontal assemblies constructed in accordance with Section 711 of the *International Building Code*, or both.

❖ This section requires isolation from normal building power systems via a 1-hour fire barrier, 1-hour horizontal assembly, or both, depending upon the location within the building. This increases the reliability and reduces the likelihood that a single event could remove both power supplies. The intent of the ventilation is focused on the proper function of the standby power source in terms of engine-driven generators having appropriate cooling air and combustion air. The requirement that it be from the outdoors is related to the protection of such ventilation from the effects of the fire.

[F] 513.11.2 Power sources and power surges. Elements of the smoke management system relying on volatile memories or the like shall be supplied with uninterruptible power sources of sufficient duration to span 15-minute primary power interruption. Elements of the smoke management system susceptible to power surges shall be suitably protected by conditioners, suppressors or other *approved* means.

❖ Smoke control systems have many components, sometimes highly sensitive electronics, that are adversely affected by any interruption in or sudden surges of power. Therefore, this section requires that any components of a smoke control system, such as volatile memories, be supplied with an uninterruptible power system for the first 15 minutes of loss of primary power. Volatile memory components will lose memory upon any loss of power no matter how short the time period. Once the 15 minutes elapse, these elements can be transitioned to the already operating standby power supply.

With regard to components sensitive to power surges, they need to be provided with surge protection in the form of conditioners, suppressors or other approved means.

[F] 513.12 Detection and control systems. Fire detection systems providing control input or output signals to mechanical smoke control systems or elements thereof shall comply with the requirements of Section 907 of the *International Building Code*. Such systems shall be equipped with a control unit complying with UL 864 and listed as smoke control *equipment*.

❖ This section is focused on proper monitoring of the fire detection systems that activate the smoke control system through compliance with Section 907 of the IBC and UL 864. This requires a specific listing of the fire alarm control unit as smoke control equipment. UL 864 has a subcategory (UUKL) specific to fire alarm control panels for smoke control system applications.

[F] 513.12.1 Verification. Control systems for mechanical smoke control systems shall include provisions for verification. Verification shall include positive confirmation of actu-

INTERNATIONAL CODE COUNCIL®
Copyright © 2015 ICC. ALL RIGHTS RESERVED. Accessed by David Dammon on Jun 21, 2017 12:30:52 PM pursuant to License Agreement with ICC. No further reproduction or distribution authorized. ANY UNAUTHORIZED REPRODUCTION OR DISTRIBUTION IS A VIOLATION OF THE FEDERAL COPYRIGHT ACT AND THE LICENSE AGREEMENT, AND SUBJECT TO CIVIL AND CRIMINAL PENALTIES THEREUNDER.

ation, testing, manual override and the presence of power downstream of all disconnects. A preprogrammed weekly test sequence shall report abnormal conditions audibly, visually and by printed report. The preprogrammed weekly test shall operate all devices, equipment and components used for smoke control.

Exception: Where verification of individual components tested through the preprogrammed weekly testing sequence will interfere with, and produce unwanted effects to, normal building operation, such individual components are permitted to be bypassed from the preprogrammed weekly testing, where *approved* by the building official and in accordance with both of the following:

1. Where the operation of components is bypassed from the preprogrammed weekly test, presence of power downstream of all disconnects shall be verified weekly by a listed control unit.
2. Testing of all components bypassed from the preprogrammed weekly test shall be in accordance with Section 909.20.6 of the *International Fire Code*.

❖ This section addresses the function of the mechanical elements of the smoke control system once the system is activated. In particular, there is a focus upon verification of activities. Verification would include the following two aspects:

1. The system is able to verify actuations, testing, manual overrides and the presence of power downstream. This would require information reported back to the smoke control panel, which can be accomplished via the weekly test sequence or through full electronic monitoring of the system.
2. Conduct a preprogrammed weekly test that simulates an actual (smoke) event to test the components of the system. These components would include elements such as smoke dampers, fans and doors. Abnormal conditions need to be reported in three ways: audibly, visually and by printed report.

Electrical monitoring of the control components is not required (supervision). Such supervision verifies integrity of the conductors from a fire alarm control unit to the control system input. The weekly test is considered to be sufficient verification of system performance and is often termed end-to-end verification. In other words, the control system input provides the expected results. Verification can be accomplished through any sensor that is calibrated to distinguish the difference between proper operation and a fault condition. For fans, proper operation means that the fan is moving air within the intent of its design. Fault conditions include power failure, broken fan belts, adverse wind effects, a locked rotor condition and/or filters or large ducts that are blocked causing significantly reduced airflow. In addition to differential pressure transmitters and sail switches, this can be accomplished by the present state-of-the-art current sensors. More discussion on verification for elements such as ducts and fire doors is discussed in Chapter 9 of *A Guide to Smoke Control in the 2006 IBC®*.

Also, the fact that a smoke control system is nondedicated (integrated with an HVAC system) does not mean that it is automatically being tested on a daily basis. It is cautioned that simply depending on occupant discomfort, for example, is sometimes an insufficient indicator of a fully functioning smoke control system. There could be various modes in which the HVAC system could operate that might not exercise the smoke control features and the sequence in which the system should operate. An example is an air-conditioning system operating only in full recirculating mode versus exhaust mode. This failure will likely not affect occupants and will not exercise the exhaust function. Plus, doors, which might be part of the smoke barrier, might not need to be closed in normal building operations but would need to be closed during smoke control system operation. This is why this section does not necessarily differentiate between dedicated and nondedicated smoke control systems and requires the system component to be tested.

It is important to note that this weekly test sequence is not an actual smoke event and is only intended to activate the system to verify that the components are working correctly.

The exception addresses the impracticality of requiring a weekly test for many buildings. For many systems, the weekly test requires the introduction of untreated air into the smoke zone. This can be impractical in areas with cold or hot climates, and for buildings that require close control of temperature and humidity, such as art museums and similar facilities. The introduction of the untreated air can also result in wasting energy to reheat, re-cool, humidify, or dehumidify the smoke control zone.

The intent is to provide means to verify that the required systems will be available when needed. The code requires and will continue to require control units to comply with UL 864, thus all components of the control system will be supervised. The code requires verification of power downstream of all disconnects such as power breakers, power disconnects, automatic transfer switches, motor starters, and motor controls. This will provide reasonable assurance that power will be available for all smoke control components, such as fans, dampers, doors, and windows. The code requires a semi-annual complete system test by reference to the IFC Section 909.20.6. This allows the building owner to schedule complete system testing on days that will reduce the impact to the building and energy needs. The combination of additional supervision and additional testing provides a reasonable alternative to weekly testing.

INTERNATIONAL CODE COUNCIL®
Copyright © 2015 ICC. ALL RIGHTS RESERVED. Accessed by David Dammon on Jun 21, 2017 12:30:52 PM pursuant to License Agreement with ICC. No further reproduction or distribution authorized. ANY UNAUTHORIZED REPRODUCTION OR DISTRIBUTION IS A VIOLATION OF THE FEDERAL COPYRIGHT ACT AND THE LICENSE AGREEMENT, AND SUBJECT TO CIVIL AND CRIMINAL PENALTIES THEREUNDER.

[F] 513.12.2 Wiring. In addition to meeting the requirements of NFPA 70, all wiring, regardless of voltage, shall be fully enclosed within continuous raceways.

❖ Wiring is required to be placed within continuous raceways, which provides an additional level of reliability for the system. The definition of the term "Raceway" in NFPA 70 lists several acceptable types of complying raceway that can be used, however manufactured cable assemblies such as metal-clad cable (Type MC) or armored cable (Type AC) are not included.

[F] 513.12.3 Activation. Smoke control systems shall be activated in accordance with the *International Building Code* or the *International Fire Code*.

❖ The activation of a smoke control system is dependent on when such a system is required. Mechanical smoke control systems, which could include pressurization, airflow or exhaust methods, require an automatic activation mechanism. When using a passive system, which depends upon compartmentation, spot-type detectors are acceptable for the release of door closers and similar openings. Whereas with more complex mechanical systems, such activation needs to go beyond single station detectors and be part of an automatic coordinated system.

[F] 513.12.4 Automatic control. Where complete automatic control is required or used, the automatic control sequences shall be initiated from an appropriately zoned automatic sprinkler system complying with Section 903.3.1.1 of the *International Fire Code*, from manual controls that are readily accessible to the fire department, and any smoke detectors required by engineering analysis.

❖ When automatic activation is required, it must be accomplished by a properly zoned automatic sprinkler system and, if the engineering analysis requires them, smoke detectors. Manual control for the fire department needs to be provided. An important point with this particular requirement is that smoke control systems are engineered systems and a prescribed smoke detection system may not fit the needs of the specific design. Other types of detectors, such as beam detectors (within an atrium), may be used and could be more useful and more practical from a maintenance standpoint. Also, it may not be practical or appropriate for the building's fire alarm system to activate such systems, as it may alter the effectiveness of the system by pulling smoke through the building versus removing or containing the smoke. For example, a building with an atrium may have several floors below the space. If a fire occurs in one of the floors not associated with the atrium, the atrium smoke control system could possibly pull smoke throughout the building if the detection is zoned incorrectly.

[F] 513.13 Control-air tubing. Control-air tubing shall be of sufficient size to meet the required response times. Tubing shall be flushed clean and dry prior to final connections. Tubing shall be adequately supported and protected from damage. Tubing passing through concrete or masonry shall be sleeved and protected from abrasion and electrolytic action.

❖ Control tubing is a method that uses pneumatics to operate components such as the opening and closing of dampers. Due to the sophistication of electronic systems today, control tubing is becoming less common.

These particular requirements provide the criteria for properly designing and installing control tubing. Essentially, it is up to the design professional to determine the size requirements and to properly design appropriate supports. This information needs to be detailed within the construction documents. Additionally, due to the effect of moisture and other contaminants on control tubing, it must be flushed clean then dried before installation.

[F] 513.13.1 Materials. Control-air tubing shall be hard-drawn copper, Type L, ACR in accordance with ASTM B42, ASTM B43, ASTM B68, ASTM B88, ASTM B251 and ASTM B280. Fittings shall be wrought copper or brass, solder type in accordance with ASME B16.18 or ASME B16.22. Changes in direction shall be made with appropriate tool bends. Brass compression-type fittings shall be used at final connection to devices; other joints shall be brazed using a BCuP5 brazing alloy with solidus above 1,100ºF (593ºC) and liquids below 1,500ºF (816ºC). Brazing flux shall be used on copper-to-brass joints only.

Exception: Nonmetallic tubing used within control panels and at the final connection to devices provided all of the following conditions are met:

1. Tubing shall comply with the requirements of Section 602.2.1.3.
2. Tubing and connected device shall be completely enclosed within a galvanized or paint-grade steel enclosure having a minimum thickness of 0.0296 inch (0.7534 mm) (No. 22 gage). Entry to the enclosure shall be by copper tubing with a protective grommet of Neoprene or Teflon or by suitable brass compression to male barbed adapter.
3. Tubing shall be identified by appropriately documented coding.
4. Tubing shall be neatly tied and supported within the enclosure. Tubing bridging cabinets and doors or moveable devices shall be of sufficient length to avoid tension and excessive stress. Tubing shall be protected against abrasion. Tubing serving devices on doors shall be fastened along hinges.

❖ This section addresses the materials allowed for control air tubing along with approved methods of connection. All of this information needs to be documented, as it will be subject to review by the special inspector.

[F] 513.13.2 Isolation from other functions. Control tubing serving other than smoke control functions shall be isolated

INTERNATIONAL CODE COUNCIL®
Copyright © 2015 ICC. ALL RIGHTS RESERVED. Accessed by David Dammon on Jun 21, 2017 12:30:52 PM pursuant to License Agreement with ICC. No further reproduction or distribution authorized. ANY UNAUTHORIZED REPRODUCTION OR DISTRIBUTION IS A VIOLATION OF THE FEDERAL COPYRIGHT ACT AND THE LICENSE AGREEMENT, AND SUBJECT TO CIVIL AND CRIMINAL PENALTIES THEREUNDER.

by automatic isolation valves or shall be an independent system.

❖ This section requires separation of control tubing used for other functions through the use of isolation valves or a completely separate system. This is due to the difference in requirements for control tubing used in a smoke control system versus other building systems. The isolation of the control air tubing for a smoke control system needs to be specifically noted on the construction documents.

[F] 513.13.3 Testing. Control-air tubing shall be tested at three times the operating pressure for not less than 30 minutes without any noticeable loss in gauge pressure prior to final connection to devices.

❖ As part of the acceptance testing of the smoke control system, the control air tubing will be pressure tested three times the operating pressure for 30 minutes or more. The performance criteria as to whether the control tubing is considered a failure is when there is any noticeable loss in gauge pressure prior to final connection of devices during the 30-minute duration test.

[F] 513.14 Marking and identification. The detection and control systems shall be clearly marked at all junctions, accesses and terminations.

❖ This section requires that all portions of the fire detection system that activate the smoke control system be marked and identified appropriately. This includes all applicable fire alarm-initiating devices, the respective junction boxes, all data-gathering panels and fire alarm control panels. Additionally, all components of the smoke control system, which are not considered a fire detection system, are required to be properly identified and marked. This would include all applicable junction boxes, control tubing, temperature control modules, relays, damper sensors, automatic door sensors and air movement sensors.

[F] 513.15 Control diagrams. Identical control diagrams shall be provided and maintained as required by the *International Fire Code*.

❖ Control diagrams provide consistent information on the system in several key locations, including the building department, the fire department and the fire command center. If a fire command center is not required or provided the diagrams need to be located such that they can be readily accessed during an emergency. Some possible locations may be the security office, building managers' office or, if possible, within the smoke control panel. This information is intended to assist in the use and operation of the smoke control system. The format of the control diagram must be approved by the fire chief because the fire department is the agency that will be using the system during a fire as well as observing system tests in the future. The more clearly the information is communicated, the more effective the smoke control system will be.

Note that the fire department may want all smoke control systems within a jurisdiction to follow a particular protocol for control diagrams.

Generally, the control diagrams should indicate required reaction of the system in all scenarios. The status or position of every fan and damper in every scenario must be clearly identified.

[F] 513.16 Fire fighter's smoke control panel. A fire fighter's smoke control panel for fire department emergency response purposes only shall be provided in accordance with the *International Fire Code*.

❖ One of the elements that make a smoke control system effective is successful communication of system activity to the fire department. Another is giving the fire department the ability to manually operate the system. Section 909.16 of the IFC outlines requirements for a control panel specifically for smoke control systems located in the fire command center. Two components include the requirements for the display and also for the controls. When a fire command center is not required, the control panel should be located with the fire alarm panel. The specific location will depend on the needs of the fire department in a particular jurisdiction. This control panel will provide an ability to override any other controls within the building as they relate to the smoke control system, whether manual or automatic.

[F] 513.17 System response time. Smoke control system activation shall comply with the *International Fire Code*.

❖ Section 909.17 of the IFC defines when the smoke control system must begin operation. Whether the activation is manual or automatic, the system must be initiated immediately. Also, the IFC requires that components activate in a sequence that will not potentially damage the fans, dampers, ducts and other equipment. Unrealistically accounting for timing of the system has the potential of creating an unsuccessful system. Delays in the system can be seen in slow dampers, fans that ramp up or down, systems that poll slowly and intentional built-in delays. These factors can add significantly to the reaction time of the system and may prevent the system from achieving the design goals.

The key element is that the system be fully operational before the smoke conditions exceed the design parameters. The sequence of events must be justified in the design analysis and described clearly in the construction documents.

[F] 513.18 Acceptance testing. Devices, *equipment*, components and sequences shall be tested in accordance with the *International Fire Code*.

❖ In order to achieve a certain level of performance, the smoke control system needs to be thoroughly tested. Section 909.18 of the IFC requires that all devices, equipment components and sequences be individually tested. The IFC addresses components such as detection devices, smoke barriers and ductwork. In

INTERNATIONAL CODE COUNCIL®
Copyright © 2015 ICC. ALL RIGHTS RESERVED. Accessed by David Dammon on Jun 21, 2017 12:30:52 PM pursuant to License Agreement with ICC. No further reproduction or distribution authorized. ANY UNAUTHORIZED REPRODUCTION OR DISTRIBUTION IS A VIOLATION OF THE FEDERAL COPYRIGHT ACT AND THE LICENSE AGREEMENT, AND SUBJECT TO CIVIL AND CRIMINAL PENALTIES THEREUNDER.

addition, the IFC requires a qualified special inspector for acceptance testing. Acceptance testing is required to be properly documented and reports prepared for the fire code official.

[F] 513.19 System acceptance. Acceptance of the smoke control system shall be in accordance with the *International Fire Code*.

❖ The IFC and IBC stipulate that the certificate of occupancy cannot be issued unless the smoke control system has been accepted. It is essential that the system be inspected and approved since it is a life safety system. There is an exception to these requirements in Section 909.19 of the IFC for buildings that are constructed in phases where a temporary certificate of occupancy is allowed. An example would be a building where the portion that requires smoke control is not yet occupied; therefore, the performance of the smoke control system is not an issue. The exception does require that a significant hazard is not placed upon the occupants due to the unfinished portion of the building.

The IFC also requires a maintenance program for smoke control systems as the long-term success of such systems depends heavily on proper maintenance in addition to rigorous acceptance testing. The code simply provides a reference to that section of the IFC.

SECTION 514
ENERGY RECOVERY VENTILATION SYSTEMS

514.1 General. Energy recovery ventilation systems shall be installed in accordance with this section. Where required for purposes of energy conservation, energy recovery ventilation systems shall comply with the *International Energy Conservation Code*. Ducted heat recovery ventilators shall be listed and labeled in accordance with UL 1812. Nonducted heat recovery ventilators shall be listed and labeled in accordance with UL 1815.

❖ This section addresses the provisions for installing energy recovery ventilation (ERV) systems and equipment (see definition in Section 202). ERV systems have some unique features and the specific requirements and limitations given in Sections 514.2 and 514.3 are necessary to regulate installation of these systems.

There are several different types of ERV systems. ERVs have tremendous potential for energy savings because they are designed to reduce both heat energy losses in the heating season and heat energy gains in the cooling season. ERVs can also be equipped with heat exchangers that reclaim or reject latent heat by transferring water vapor from the exhaust air stream to the makeup air stream or vice versa. ERVs can significantly lower heating loads by extracting heat from exhaust air, such as toilet room and ventilation air exhaust systems, that would otherwise be lost to the outdoors. In the cooling season, ERVs can significantly reduce cooling loads by rejecting heat and water vapor that would otherwise be brought into the building with the makeup air and ventilation air.

This section works with Item 4 of Section 403.2.1, which prohibits recirculation except as required by Table 403.3.1.1 (see Note g), which allows up to 10 percent of exhaust to be recirculated in the resulting supply air stream from the ERV system. The allowance for 10-percent air from such spaces is to allow the use of technology that recovers energy from exhaust air to reduce the load on heating and cooling systems. Air from such spaces designated by Note g in Table 403.3.1.1 can be part of the supply air to other spaces as long as it does not exceed 10 percent of the supply air (10-percent exhaust air from occupancies designated with Note g from Table 403.3.1.1 plus 90-percent outdoor air). Chapter 5 of the *International Energy Conservation Code*® (IECC®) also requires the use of ERV systems consistent with ASHRAE 90.1 and this section.

The 10-percent allowance removes the absolute ban on recirculation that presented a significant barrier to the use of energy recovery technology. The lack of opportunity to recover energy from the exhaust air of toilet and locker rooms unnecessarily limited the overall effectiveness and feasibility of ERV technology (i.e., the energy in that air is lost to the atmosphere because of the absolute ban on recirculation). Medical and research sectors represented on the ASHRAE 62 committee have long affirmed that there is no health issue related to toilet room exhaust. The issue is one of odor perception. In the broadest sense, odor perception is not a health and safety issue and should therefore not be used as a basis for determining code requirements. Further, if the ventilation systems in which the air being exhausted are a mixture of air from toilet rooms and other spaces where recirculation is allowed, the problem is compounded (i.e., none of that air can be subject to energy recovery since some of the leakage would involve toilet room air). ERV technology is a highly effective and cost beneficial means of energy conservation. ASHRAE 90.1 and the IECC require the use of ERV systems within certain threshold conditions.

Most of the various types of ERV systems on the market today do not completely eliminate leakage between the exhaust and supply airstreams. Many systems on the market have been engineered to the point that actual leakage is under 5 percent. The most effective technologies have some inherent leakage and even in cases where additional measures, such as purge, could be used to reduce the leakage, the additional equipment and operating costs are hard to justify. The 10-percent allowance is consistent with ASHRAE 62 and also provides a level playing field for the entire industry. The 10-percent limitation is one that all current suppliers of ERV systems can meet and will therefore not have the effect of creating an advantage for one type of system or one manufacturer over another. Leakage is a certified

INTERNATIONAL CODE COUNCIL®
Copyright © 2015 ICC. ALL RIGHTS RESERVED. Accessed by David Dammon on Jun 21, 2017 12:30:52 PM pursuant to License Agreement with ICC. No further reproduction or distribution authorized. ANY UNAUTHORIZED REPRODUCTION OR DISTRIBUTION IS A VIOLATION OF THE FEDERAL COPYRIGHT ACT AND THE LICENSE AGREEMENT, AND SUBJECT TO CIVIL AND CRIMINAL PENALTIES THEREUNDER.

value in the *ARI Certified Products Directory for ERVs* and is supported by industry catalogs and software tools.

Exhaust and ventilation have long been at odds with energy conservation because makeup air and ventilation air have to be conditioned nearly year round in most climates. With ERV technology, the energy price tag for exhaust systems and ventilation can be reduced significantly. Some ERV technology can be up to 80-percent efficient in reclaiming or rejecting heat energy:

- Static heat exchanger;
- Rotating (wheel or drum) heat exchanger; and
- Sealed tube or coil heat exchanger containing a refrigerant.

Some static and some rotating heat exchangers use desiccants or molecular sieve technology to selectively transfer certain vapors or gases, while selectively rejecting others.

ERV systems may be voluntarily installed or they may, in certain conditions, be required for purposes of energy conservation. In either case, it is important that these systems be installed to comply with the requirements in Sections 514.2 and 514.3 [see Section 403.1 and Commentary Figure 403.1(1)].

514.2 Prohibited applications. Energy recovery ventilation systems shall not be used in the following systems:

1. Hazardous exhaust systems covered in Section 510.
2. Dust, stock and refuse systems that convey explosive or flammable vapors, fumes or dust.
3. Smoke control systems covered in Section 513.
4. Commercial kitchen exhaust systems serving Type I or Type II hoods.
5. Clothes dryer exhaust systems covered in Section 504.

   Exception: The application of ERV equipment that recovers sensible heat only utilizing coil-type heat exchangers shall not be limited by this section.

❖ All of the systems addressed by this section have the potential to foul or attack the ERV components because of the particulates and chemicals entrained in the exhaust airflow, such as dust, grease, smoke, lint, vapors, gases, etc. There is also the possibility that a portion of these hazardous contaminants could be recirculated back into the occupied areas of the building. Some ERV designs, such as those using rotating heat exchangers, will allow some amount of cross-leakage (air exchange) between the exhaust air stream and the makeup air stream. This must be avoided where the contaminants in the exhaust air are hazardous. The exception allows ERV systems to serve any application where the heat exchanger in the ERV system is a coil-type such as "runaround coils" utilizing water, antifreeze soulutions or refrigerants as the heat transfer medium. Such ERV systems are not capable of recovering latent heat, and recover only sensible heat energy. Recovering latent heat energy involves "heat wheels" and other designs that use a desiccant to capture water vapor and these designs could also capture contaminants from the exhaust stream and move them into the outdoor air intake stream, which must be avoided.

514.3 Access. A means of access shall be provided to the heat exchanger and other components of the system as required for service, maintenance, repair or replacement.

❖ Access openings must be provided to any components of the ERV system that could require periodic inspection, maintenance or repair (see commentary for the definition of "Access," Section 202). Typical designs use filters and heat exchangers that must be cleaned or replaced periodically.

514.4 Recirculated air. Air conveyed within energy recovery systems shall not be considered as recirculated air where the energy recovery ventilation system is constructed to limit cross-leakage between air streams to less than 10 percent of the total airflow design capacity.

❖ This section was created because some people were interpreting the sections that prohibit the recirculation of air as prohibiting the use of energy recovery ventilation systems. As long as the cross contamination between the supply and exhaust air streams is less than 10 percent, the air from an energy recovery ventilation system is not considered recirculated.

Bibliography

The following resource materials were used in the preparation of the commentary for this chapter of the code:

IBC-15, *International Building Code*. Washington, DC: International Code Council, 2014.

IFC-15, *International Fire Code*. Washington, DC: International Code Council, 2014.

IFGC-15, *International Fuel Gas Code*. Washington, DC: International Code Council, 2014.

Klote, J. H. and Milke, J.A., *Design of Smoke Management Systems*. Atlanta, GA: ASHRAE/SFPE, 1992.

INTERNATIONAL CODE COUNCIL®
Copyright © 2015 ICC. ALL RIGHTS RESERVED. Accessed by David Dammon on Jun 21, 2017 12:30:52 PM pursuant to License Agreement with ICC. No further reproduction or distribution authorized. ANY UNAUTHORIZED REPRODUCTION OR DISTRIBUTION IS A VIOLATION OF THE FEDERAL COPYRIGHT ACT AND THE LICENSE AGREEMENT, AND SUBJECT TO CIVIL AND CRIMINAL PENALTIES THEREUNDER.

INTERNATIONAL CODE COUNCIL®
Copyright © 2015 ICC. ALL RIGHTS RESERVED. Accessed by David Dammon on Jun 21, 2017 12:30:52 PM pursuant to License Agreement with ICC. No further reproduction or distribution authorized. ANY UNAUTHORIZED REPRODUCTION OR DISTRIBUTION IS A VIOLATION OF THE FEDERAL COPYRIGHT ACT AND THE LICENSE AGREEMENT, AND SUBJECT TO CIVIL AND CRIMINAL PENALTIES THEREUNDER.

Chapter 6:
Duct Systems

General Comments

Chapter 6 of the code addresses duct systems by instituting requirements for the protection of the occupants of the building and the building itself. This code regulates the materials and methods used for constructing and installing ducts, system controls, exhausts, fire protection systems and related components that affect the overall performance of a building's air distribution system.

Other chapters of the code contain provisions relative to Chapter 6, including Chapters 3, 4, and 5. The *International Building Code*® (IBC®) is referenced repeatedly for requirements pertaining to fire protection measures such as fireblocking, draftstopping, fire-resistance-rated assemblies, penetration protection and fire protection and suppression systems.

Purpose

Chapter 6 contains reasonable protection to life and property from the hazards associated with air-moving equipment and systems. This chapter states requirements for the installation of supply, return and exhaust air systems. Chapter 6 contains certain information on the design of these systems from the standpoint of air movement, and is concerned with the structural integrity of the systems and the overall impact of the systems on the fire-safety performance of the building. Design considerations, such as duct sizing, maximum efficiency, cost effectiveness, occupant comfort and convenience are the responsibility of the design professional.

SECTION 601
GENERAL

601.1 Scope. Duct systems used for the movement of air in air-conditioning, heating, ventilating and exhaust systems shall conform to the provisions of this chapter except as otherwise specified in Chapters 5 and 7.

> **Exception:** Ducts discharging combustible material directly into any *combustion* chamber shall conform to the requirements of NFPA 82.

❖ Chapter 6 governs the construction, installation, alteration, maintenance and repair of duct systems used for the movement of environmental air (see commentary, Sections 501.5, and 1401.5 and the definition of "Duct system"). Duct systems are addressed mostly within the context of their impact on the performance of the building during a fire.

Duct system materials and their installation are regulated to address the hazards associated with their burning characteristics and their contribution to the spread of flame and smoke within a building. This chapter also addresses the relationship between an air distribution system and other building requirements, such as floodproofing and structural integrity.

Chapter 5 contains exhaust system requirements. Additional information can be obtained from sources, such as the ASHRAE, the Sheet Metal and Air-Conditioning Contractors National Association, Inc. (SMACNA) and Air Conditioning Contractors of America (ACCA).

The requirements of Chapter 6 apply to new construction, as well as to alterations, additions, repairs and maintenance of existing air distribution systems and ducts.

The exception requires duct systems that discharge combustible materials directly to an incinerator, boiler, furnace or other combustion chamber to be designed, constructed and installed in compliance with the requirements of NFPA 82.

[BF] 601.2 Air movement in egress elements. Corridors shall not serve as supply, return, exhaust, relief or *ventilation air* ducts.

Exceptions:

1. Use of a corridor as a source of *makeup air* for exhaust systems in rooms that open directly onto such corridors, including toilet rooms, bathrooms, dressing rooms, smoking lounges and janitor closets, shall be permitted, provided that each such corridor is directly supplied with outdoor air at a rate greater than the rate of *makeup air* taken from the corridor.
2. Where located within a *dwelling unit*, the use of corridors for conveying return air shall not be prohibited.
3. Where located within tenant spaces of 1,000 square feet (93 m^2) or less in area, use of corridors for conveying return air is permitted.
4. Incidental air movement from pressurized rooms within health care facilities, provided that the corri-

INTERNATIONAL CODE COUNCIL®
Copyright © 2015 ICC. ALL RIGHTS RESERVED. Accessed by David Dammon on Jun 21, 2017 12:30:52 PM pursuant to License Agreement with ICC. No further reproduction or distribution authorized. ANY UNAUTHORIZED REPRODUCTION OR DISTRIBUTION IS A VIOLATION OF THE FEDERAL COPYRIGHT ACT AND THE LICENSE AGREEMENT, AND SUBJECT TO CIVIL AND CRIMINAL PENALTIES THEREUNDER.

dor is not the primary source of supply or return to the room.

❖ This section prohibits corridors, whether they are fire-resistance rated or not, from being used as air distribution system components because of the potential for spreading smoke and fire into elements of the building's required means of egress. Smoke could make those egress elements unusable. Note that Section 602.1 defines "Plenums" as being unoccupiable spaces and cavities; thus, a corridor is never a plenum.

Corridors are designed to protect the people using them. The intent of this section is to prohibit air movement that would introduce smoke into the corridor. This section does not prohibit the air movement necessary for ventilation and space conditioning of corridors, but does prevent them from serving as conduits for the distribution or transport of air to, or the collection of air from, spaces other than the corridor. Air movement in a corridor must be restricted to that necessary for ventilating, heating, cooling and conditioning (see Section 401.4).

Additionally, opening protectives must be installed in all openings that penetrate assemblies that are fire-resistance rated (see commentary, Section 607). This section would prohibit transfer grilles and transoms over doors that connect adjacent rooms and spaces with corridors when those openings are used to convey air to and from the adjacent rooms and spaces (see IBC Section 717.5.4.1).

At times a pressure differential across corridor doors will be required. For example, positive pressures are maintained in hospital and other institutional corridors to prevent the migration of infectious organisms and odors into the corridors, and negative pressures are often maintained in kitchens to prevent odor migration into dining rooms. This section is not intended to restrict those pressure differences; however, it does prohibit the use of the corridor as the source of supply air to, or the means of providing return air from, adjacent spaces.

Exception 1 addresses the common practice of using air from the corridor as makeup air for small exhaust fans in adjacent rooms. When the corridor is supplied directly with outdoor air at a rate greater than the makeup air rate, positive pressure will be created in the corridor with respect to the adjoining rooms and smoke would not be drawn into the corridor [see Commentary Figures 601.2(1) and 601.2(2)].

Exception 2 permits using a corridor within a dwelling unit as a return air duct. Dwelling units may have unprotected openings between floors. Exit access corridors in dwelling units serve small occupant loads, are short in length and need not be fire-resistance rated. For these reasons, the use of the corri-

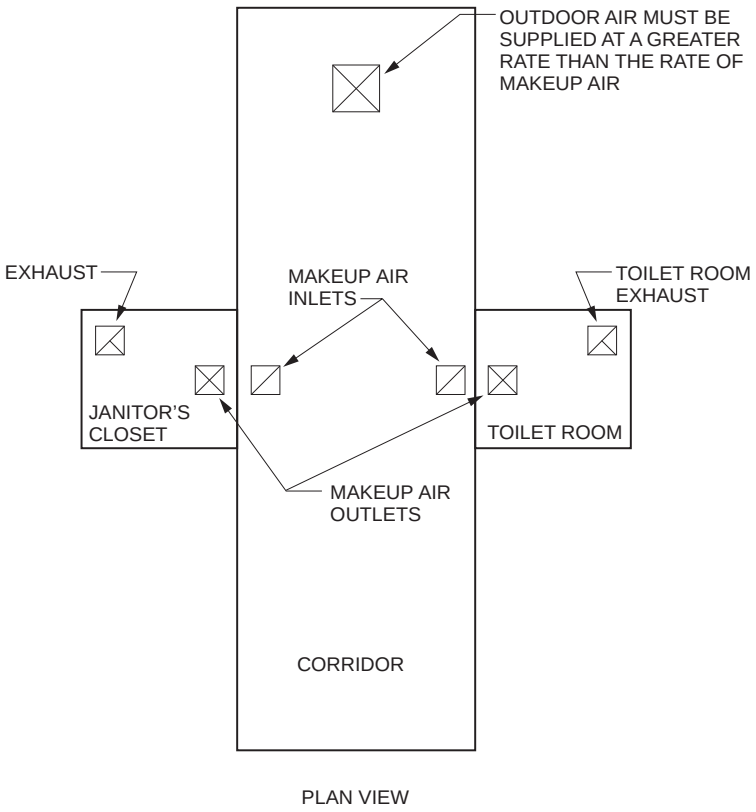

Figure 601.2(1)
POSITIVE PRESSURE IN CORRIDOR PROVIDES MAKEUP AIR FOR SMALL EXHAUST FANS IN ADJACENT ROOMS

INTERNATIONAL CODE COUNCIL®
Copyright © 2015 ICC. ALL RIGHTS RESERVED. Accessed by David Dammon on Jun 21, 2017 12:30:52 PM pursuant to License Agreement with ICC. No further reproduction or distribution authorized. ANY UNAUTHORIZED REPRODUCTION OR DISTRIBUTION IS A VIOLATION OF THE FEDERAL COPYRIGHT ACT AND THE LICENSE AGREEMENT, AND SUBJECT TO CIVIL AND CRIMINAL PENALTIES THEREUNDER.

dor or the space above a corridor ceiling for return air does not constitute an unacceptable hazard. It is a common practice to locate return air openings in the corridors of dwelling units and draw return air from adjoining spaces through the corridor.

Exception 3 permits use of corridors located in small occupancies for return air based on the small size of the tenant space, the small occupant load and the fact that the corridor length will be relatively short.

Section 602.1 limits plenums to specific uninhabited, unoccupiable spaces that do not include corridors. This is why the exceptions to this section do not refer to corridors as plenums.

Exception 4 recognizes that some rooms in health care facilities require positive pressurization to reduce significantly the spreading of germs and contaminants into the room. While the air moving from the room into the corridor is return air, and the corridor carries that air to the return air intake for the corridor, the amount of air is considered to be incidental and not considered to be a safety hazard.

[BF] 601.2.1 Corridor ceiling. Use of the space between the corridor ceiling and the floor or roof structure above as a return air *plenum* is permitted for one or more of the following conditions:

1. The corridor is not required to be of fire-resistance-rated construction.
2. The corridor is separated from the *plenum* by fire-resistance-rated construction.
3. The air-handling system serving the corridor is shut down upon activation of the air-handling unit smoke detectors required by this code.
4. The air-handling system serving the corridor is shut down upon detection of sprinkler waterflow where the building is equipped throughout with an automatic sprinkler system.
5. The space between the corridor ceiling and the floor or roof structure above the corridor is used as a component of an *approved* engineered smoke control system.

❖ This section permits use of the space between the corridor ceiling and the floor or roof above such ceiling as a return air plenum when one or more of five specified conditions are met. Using the space above a corridor ceiling as a plenum is not specifically prohibited by Section 601.2. However, this section implies that intent by limiting such use to the stated conditions. The plenum is limited to return air applications only because, in this application, the plenum space will be under a negative pressure with respect to the corridor. Thus, the pressure difference will assist in containing smoke and gases within the plenum space. In a supply plenum, however, the air in the plenum will be at a positive pressure with respect to the corridor, thereby increasing the likelihood that smoke and gases will infiltrate the corridor.

Section 1020.1 of the IBC determines where corridors are required to be fire-resistance rated. Where a corridor is not required to be fire-resistance rated, Condition 1 of this section allows for the space above the corridor ceiling to serve as a return air plenum without requiring the plenum to be separated from the corridor by fire-resistance-rated construction [see Commentary Figure 601.2.1(1)]. If the corridor was required to be fire-resistance rated, the space above

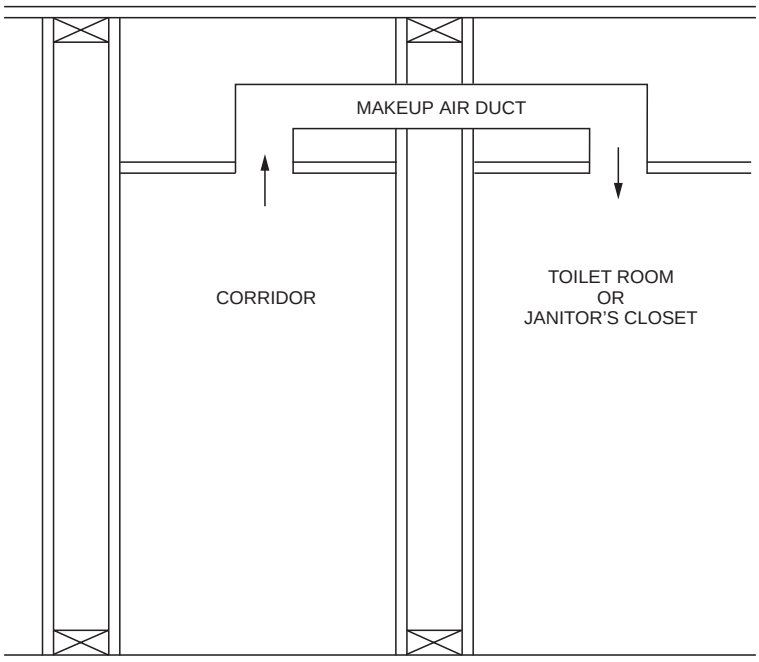

Figure 601.2(2)
ELEVATION VIEW FOR COMMENTARY FIGURE 601.2(1)

INTERNATIONAL CODE COUNCIL®
Copyright © 2015 ICC. ALL RIGHTS RESERVED. Accessed by David Dammon on Jun 21, 2017 12:30:52 PM pursuant to License Agreement with ICC. No further reproduction or distribution authorized. ANY UNAUTHORIZED REPRODUCTION OR DISTRIBUTION IS A VIOLATION OF THE FEDERAL COPYRIGHT ACT AND THE LICENSE AGREEMENT, AND SUBJECT TO CIVIL AND CRIMINAL PENALTIES THEREUNDER.

the corridor ceiling is prohibited from being used as a plenum [see Commentary Figure 601.2.1(2)].

Condition 2 is applicable to corridors that are enclosed with fire-resistance-rated construction. The plenum must be separated from the corridor by a ceiling membrane of fire-resistance-rated construction equivalent to the required rating of the corridor enclosure itself [see Commentary Figure 601.2.1(3)].

Conditions 3 and 4 recognize that the hazard associated with smoke spread through a plenum is minimized if the air movement is stopped upon receipt of a signal from the smoke detectors or the automatic sprinkler system. The intention of Conditions 3 and 4 is that any air-handling equipment that is moving air across or through a corridor in the space between the corridor ceiling and the floor or roof be shut down upon detection of smoke or fire regardless of the cubic foot per minute (cfm) rating of the air handler [see Commentary Figure 601.2.1(4)].

It is not uncommon for the space above a nonrated ceiling in a fire-resistance-rated corridor to be used as part of an approved engineered smoke removal system. In such cases, Condition 5 allows the space to serve as a plenum [see Commentary Figure 601.2.1(5)].

[BF] 601.3 Exits. *Equipment* and ductwork for exit enclosure ventilation shall comply with one of the following items:

1. Such *equipment* and ductwork shall be located exterior to the building and shall be directly connected to the exit enclosure by ductwork enclosed in construction as required by the *International Building Code* for shafts.
2. Where such *equipment* and ductwork is located within the exit enclosure, the intake air shall be taken directly from the outdoors and the *exhaust air* shall be discharged directly to the outdoors, or such air shall be conveyed through ducts enclosed in construction as required by the *International Building Code* for shafts.
3. Where located within the building, such *equipment* and ductwork shall be separated from the remainder of the building, including other mechanical *equipment*, with construction as required by the *International Building Code* for shafts.

In each case, openings into fire-resistance-rated construction shall be limited to those needed for maintenance and operation and shall be protected by self-closing fire-resistance-rated devices in accordance with the *International Building Code* for enclosure wall opening protectives. Exit enclosure ventilation systems shall be independent of other building ventilation systems.

❖ Where exit enclosures are ventilated by mechanical systems, the mechanical equipment and duct systems must be installed as required by this section. These requirements are intended to maintain a separation of exit enclosure ventilation systems from other portions of the building and other building mechanical systems, and are intended to protect the exit enclosures from the spread of smoke from other areas. The key point is that heating, ventilating and air-conditioning (HVAC) systems serving an exit enclosure must not serve any other room or space.

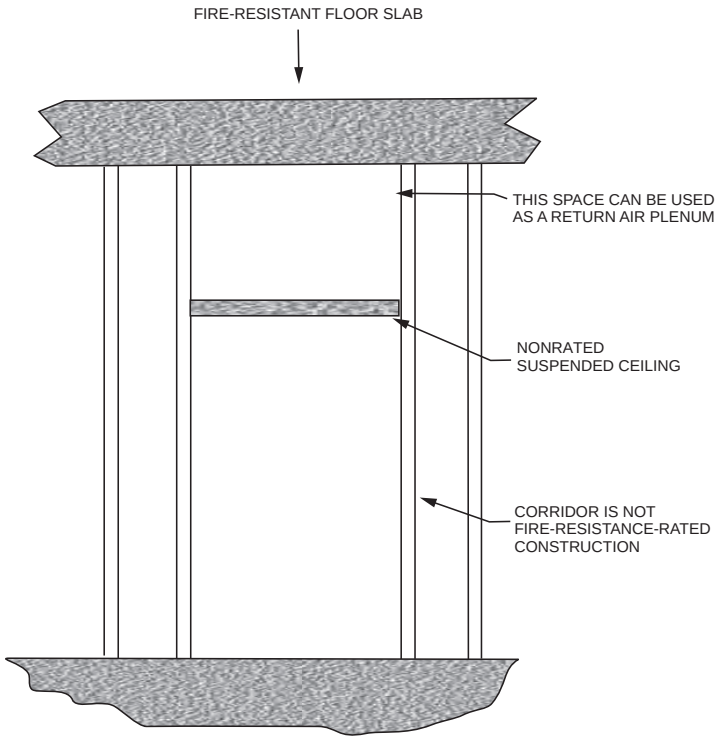

Figure 601.2.1(1)
CORRIDOR NOT FIRE-RESISTANCE RATED: SPACE ABOVE CEILING CAN BE USED AS A PLENUM

INTERNATIONAL CODE COUNCIL®
Copyright © 2015 ICC. ALL RIGHTS RESERVED. Accessed by David Dammon on Jun 21, 2017 12:30:52 PM pursuant to License Agreement with ICC. No further reproduction or distribution authorized. ANY UNAUTHORIZED REPRODUCTION OR DISTRIBUTION IS A VIOLATION OF THE FEDERAL COPYRIGHT ACT AND THE LICENSE AGREEMENT, AND SUBJECT TO CIVIL AND CRIMINAL PENALTIES THEREUNDER.

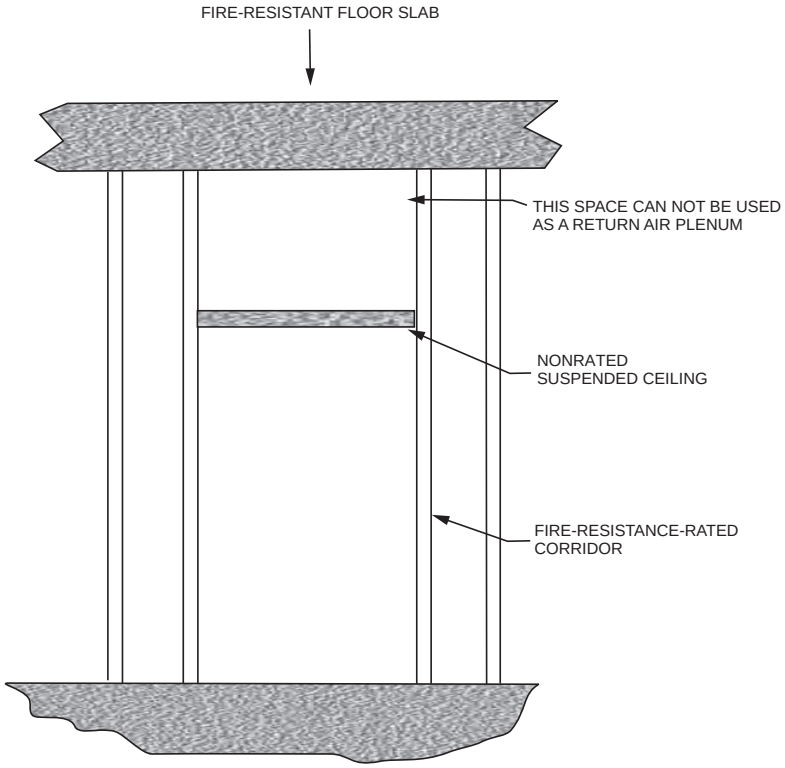

Figure 601.2.1(2)
SPACE ABOVE CEILING PROHIBITED FROM BEING USED AS A PLENUM

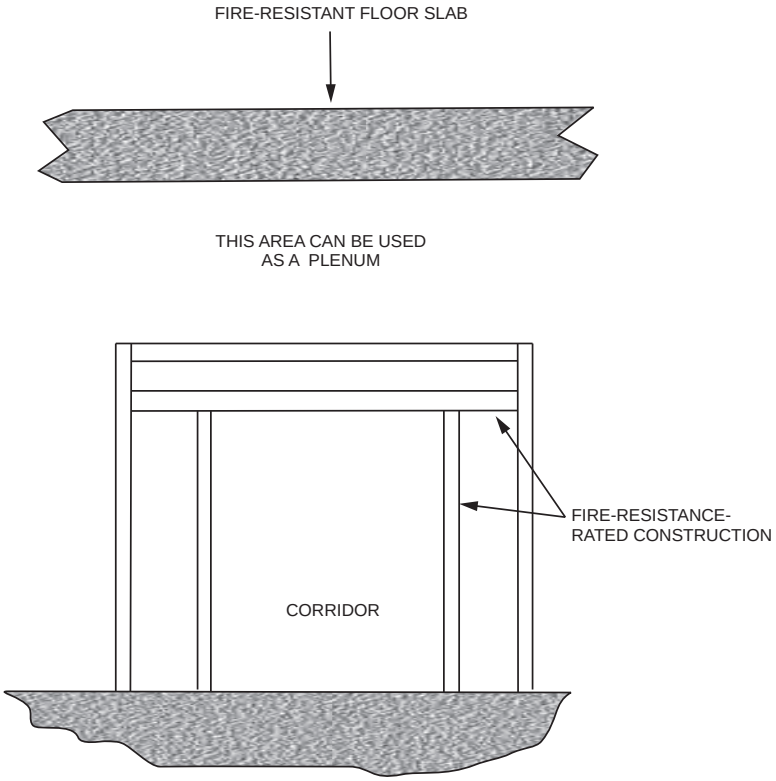

Figure 601.2.1(3)
FIRE-RESISTANCE-RATED CEILING IN CORRIDOR: SPACE ABOVE CEILING CAN BE USED AS A PLENUM

INTERNATIONAL CODE COUNCIL®
Copyright © 2015 ICC. ALL RIGHTS RESERVED. Accessed by David Dammon on Jun 21, 2017 12:30:52 PM pursuant to License Agreement with ICC. No further reproduction or distribution authorized. ANY UNAUTHORIZED REPRODUCTION OR DISTRIBUTION IS A VIOLATION OF THE FEDERAL COPYRIGHT ACT AND THE LICENSE AGREEMENT, AND SUBJECT TO CIVIL AND CRIMINAL PENALTIES THEREUNDER.

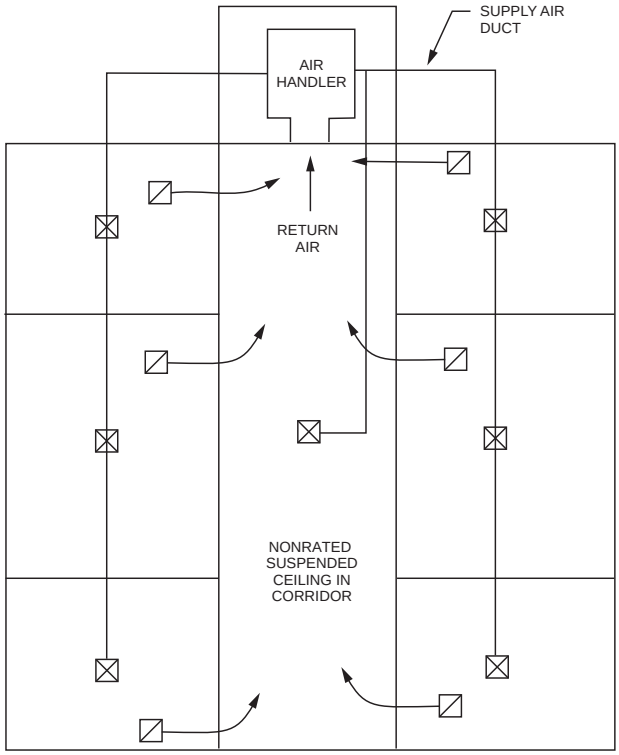

Figure 601.2.1(4)
FIRE-RESISTANCE-RATED CORRIDOR WITH SUSPENDED NONRATED CEILING
(Allowed if smoke detectors or sprinkler water flow detectors shut down the air handler)

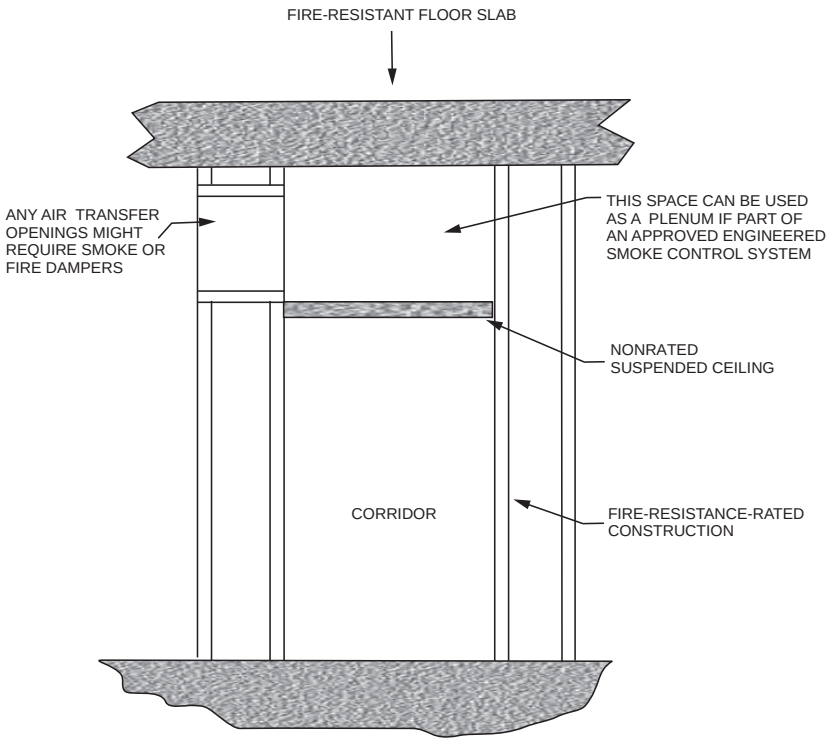

Figure 601.2.1(5)
SPACE ABOVE CEILING CAN BE USED AS A PLENUM IF PART OF AN ENGINEERED SMOKE CONTROL SYSTEM

INTERNATIONAL CODE COUNCIL®
Copyright © 2015 ICC. ALL RIGHTS RESERVED. Accessed by David Dammon on Jun 21, 2017 12:30:52 PM pursuant to License Agreement with ICC. No further reproduction or distribution authorized. ANY UNAUTHORIZED REPRODUCTION OR DISTRIBUTION IS A VIOLATION OF THE FEDERAL COPYRIGHT ACT AND THE LICENSE AGREEMENT, AND SUBJECT TO CIVIL AND CRIMINAL PENALTIES THEREUNDER.

601.4 Contamination prevention. Exhaust ducts under positive pressure, chimneys and vents shall not extend into or pass through ducts or plenums.

Exceptions:

1. Exhaust systems located in ceiling return air plenums over spaces that are permitted to have 10 percent recirculation in accordance with Section 403.2.1, Item 4. The exhaust duct joints, seams and connections shall comply with Section 603.9.
2. This section shall not apply to chimneys and vents that pass through plenums where such venting systems comply with one of the following requirements:
   2.1. The venting system shall be listed for positive pressure applications and shall be sealed in accordance with the vent manufacturer's instructions.
   2.2. The venting system shall be installed such that fittings and joints between sections are not installed in the above ceiling space.
   2.3. The venting system shall be installed in a conduit or enclosure with sealed joints separating the interior of the conduit or enclosure from the ceiling space.

❖ To prevent cross contamination, exhaust ducts under positive pressure, as well as chimneys and vents, are not permitted to extend into or pass through ducts or plenums. Any exhaust duct, vent or chimney leakage could escape into the air duct because of the pressure differential. Also, a negative duct or plenum pressure could affect draft and/or draw combustion gases from a natural draft chimney or vent (see Section 602.1).

Exception 1 applies only where the exhaust duct is conveying air taken from the space below the plenum. This exception recognizes the specific situation of an exhaust duct located in a ceiling return air plenum over a space that the air is being exhausted from. If the space is allowed to have up to 10 percent air recirculation in accordance with Section 403.2.1, any leakage from the exhaust duct to the plenum would be insignificant considering the recirculation allowance of Section 403.2.1, Item 4, for such spaces.

Exception 2 allows for specific installations of chimneys and vents to pass through a plenum. This exception is based on Section 503.3.6 of the *International Fuel Gas Code*® (IFGC®). One arrangement is where the venting system is listed for positive pressure service and the joints are sealed according to the manufacturer's instructions. A listed positive pressure vent, when installed properly, should have extremely low leakage of gases to the exterior of the vent. Another arrangement would be if the venting system had no joints or fittings within the plenum space. The absence of any joints eliminates potential leakage points and, therefore, no leakage of gases into the plenum would occur. Finally, if the venting system is installed within a sealed conduit, then any leakage from the venting system would be channeled out of the plenum (see Figure 503.3.6 of the IFGC commentary).

601.5 Return air openings. Return air openings for heating, ventilation and air-conditioning systems shall comply with all of the following:

1. Openings shall not be located less than 10 feet (3048 mm) measured in any direction from an open combustion chamber or draft hood of another appliance located in the same room or space.
2. Return air shall not be taken from a hazardous or insanitary location or a refrigeration room as defined in this code.
3. The amount of return air taken from any room or space shall be not greater than the flow rate of supply air delivered to such room or space.
4. Return and transfer openings shall be sized in accordance with the appliance or equipment manufacturer's installation instructions, ACCA Manual D or the design of the registered design professional.
5. Return air taken from one dwelling unit shall not be discharged into another dwelling unit.
6. Taking return air from a crawl space shall not be accomplished through a direct connection to the return side of a forced air furnace. Transfer openings in the crawl space enclosure shall not be prohibited.
7. Return air shall not be taken from a closet, bathroom, toilet room, kitchen, garage, boiler room, furnace room or unconditioned attic.

Exceptions:

1. Taking return air from a kitchen is not prohibited where such return air openings serve the kitchen and are located not less than 10 feet (3048 mm) from the cooking appliances.
2. Dedicated forced air systems serving only the garage shall not be prohibited from obtaining return air from the garage.

❖ This text is a revised version of what was formerly located in Section 918 under forced-air furnaces. The return air provisions from Section 918 were collected, reformatted, revised in some cases, clarified as to intent and then relocated to Chapter 6 because these provisions are broadly applicable and not solely associated with forced-air furnaces. Return air is defined and is typically partially or completely recirculated, thus it is important to control the locations from which return air is taken to prevent contamination. Item 1 expresses the concern for drawing combustion products into the return air intakes. Item 2 addresses locations where contaminants would be expected to be present. Item 3 intends to prevent the creation of negative pressures that would interfere with the function of vents, chimneys and fuel-fired appliances. Such interference can cause appliance malfunction, unsafe operation and spillage of combustion products into the space served by the return air system. Item 4

INTERNATIONAL CODE COUNCIL®
Copyright © 2015 ICC. ALL RIGHTS RESERVED. Accessed by David Dammon on Jun 21, 2017 12:30:52 PM pursuant to License Agreement with ICC. No further reproduction or distribution authorized. ANY UNAUTHORIZED REPRODUCTION OR DISTRIBUTION IS A VIOLATION OF THE FEDERAL COPYRIGHT ACT AND THE LICENSE AGREEMENT, AND SUBJECT TO CIVIL AND CRIMINAL PENALTIES THEREUNDER.

defers the sizing of return air openings and transfer openings to the design professional, the appliance manufacturer or the ACCA Manual D for residential duct systems. The aggregate area of all ducts or openings that convey return air back to the furnace must be adequate to allow the required airflow through the furnace. A furnace that is "starved" for return air will produce an abnormal temperature rise across the heat exchanger, which is a fire hazard and likely detrimental to the furnace. Item 5 prohibits a return system from serving more than one dwelling unit. Any arrangement in which dwelling units share all or part of an air distribution system would allow a communication of atmospheres in the units. This communication would spread odors, smoke, contaminants and disease-causing organisms from one dwelling unit to another and therefore must be avoided (see also Section 403.2.1). Item 6 addresses the practice of indirectly conditioning a crawl space to the extent that it is considered to be within the thermal envelope of the building. Transfer openings are allowed for this purpose, but locating a ducted return air opening in the crawl space is prohibited because of the potential for contaminants such as moisture, dust, radon, mold, etc., to be present in such space. Item 7 addresses potential sources of air contaminants, and the creation of pressure differentials that can draw combustion products and contaminants from garages, chimneys, vents and appliances. Return air openings might interfere with the ability of exhaust systems and hoods to capture the target contaminants or effluent. Taking return air from an unconditioned attic would also cause significant energy waste.

Exception 1 recognizes that return air could be necessary for conditioning a kitchen and contamination of the return air is avoided by the required minimum separation from cooking appliances. Exception 2 recognizes that return from a garage cannot be avoided where the return system is part of a space conditioning system that serves the garage.

SECTION 602
PLENUMS

602.1 General. Supply, return, exhaust, relief and ventilation air plenums shall be limited to uninhabited crawl spaces, areas above a ceiling or below the floor, attic spaces and mechanical equipment rooms. Plenums shall be limited to one fire area. Air systems shall be ducted from the boundary of the fire area served directly to the air-handling equipment. Fuel-fired appliances shall not be installed within a plenum.

❖ The definition of the term "Plenum" in Section 202 states that a plenum is not an occupiable space being conditioned. This section addresses the use of plenums as part of air distribution systems in buildings. A plenum is an unoccupiable enclosed portion (cavity) of the building structure that is utilized for the movement of air, thereby forming part of an air distribution system. Plenums can be used for supply, return, exhaust, relief and ventilation air, and can occur in ceiling, attic or under-floor spaces, mechanical equipment rooms (air handler rooms) and in stud and joist cavities. Note that Section 602.1 does not list stud and joist space plenums as a type of plenum; however, they are addressed in Section 602.3, which is under the plenum Section 602.

A mechanical equipment room is occupiable and therefore is not technically a plenum, but the code makes an exception for such. A mechanical equipment room is unique in that it is an enclosure that can be used as a ductwork plenum and can be occupied for maintenance. The plenums described in this section are commonly used to reduce construction costs by taking advantage of the existing concealed spaces created as part of the building construction. Plenums are permitted in all building construction types. Commentary Figure 602.1(1) shows a typical floor/ceiling or roof/ceiling return air plenum. A mechanical equipment room and exit access corridors within dwelling units and specific small occupancies are the only exceptions where an occupiable room or an inhabited space is permitted to serve as an air conduit [see Commentary Figure 602.1(2) and commentary, Section 601.2]. An occupied room, other than a mechanical equipment room, is never considered to be a plenum in the context of Section 602.

Limiting the location of air distribution system plenums reduces the potential for the spread of fire and smoke through the air distribution system. To prevent the rapid spread of smoke through occupied areas, plenums are restricted to concealed and uninhabited spaces within a building. Plenums are limited to one fire area to allow for the containment of fire and smoke, thereby reducing the risk of it spreading to other areas of the building. A "fire area" is a floor area that is enclosed and bounded by fire walls, fire barriers, fire-resistance-rated horizontal assemblies or exterior walls of the building. Plenums must be designed to maintain the integrity of the fire area enclosure.

Consider return air ceiling plenums over two fire areas that are linked together by transfer openings. Fire dampers are installed in the transfer openings, thereby maintaining the integrity of the fire areas. This means that the two return plenums are discrete and are each limited to a single fire area. However, this begs the question, when would a plenum not be limited to a single fire area? This presents a puzzle in that the code appears to restrict a plenum arrangement that could never exist because of other code provisions that regulate fire areas and fire barriers.

The code intends to prohibit plenums in different fire areas from being linked through protected transfer openings in fire barriers, thus requiring each fire area plenum to be individually ducted back to the air handler [see Commentary Figures 602.1(3) and 602.1(4)]. The boundary of a fire area consists of the walls, floors and ceiling that envelope the fire area. Each fire area served must be connected to the air handler system by ductwork as this is the only way to limit plenums to a single fire area.

INTERNATIONAL CODE COUNCIL®
Copyright © 2015 ICC. ALL RIGHTS RESERVED. Accessed by David Dammon on Jun 21, 2017 12:30:52 PM pursuant to License Agreement with ICC. No further reproduction or distribution authorized. ANY UNAUTHORIZED REPRODUCTION OR DISTRIBUTION IS A VIOLATION OF THE FEDERAL COPYRIGHT ACT AND THE LICENSE AGREEMENT, AND SUBJECT TO CIVIL AND CRIMINAL PENALTIES THEREUNDER.

Fuel-fired appliances must not be installed within a plenum because of the potential for toxic products of combustion to be spread throughout the building in the event that the appliance, equipment or venting system malfunctions. Also, the negative or positive pressures developed within a plenum space can seriously affect the operation of fuel-fired appliances located in it. For example, if a natural-draft fuel-fired appliance was installed in a return air plenum, the negative pressure of the plenum could overcome the draft of the appliance venting system and flue gases could be drawn into the plenum space. Also, improper operation of the appliance would greatly accelerate the deterioration of the appliance and its vent.

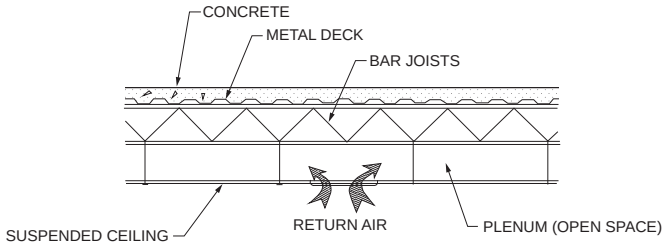

Figure 602.1(1)
TYPICAL FLOOR/CEILING OR ROOF/CEILING RETURN AIR PLENUM

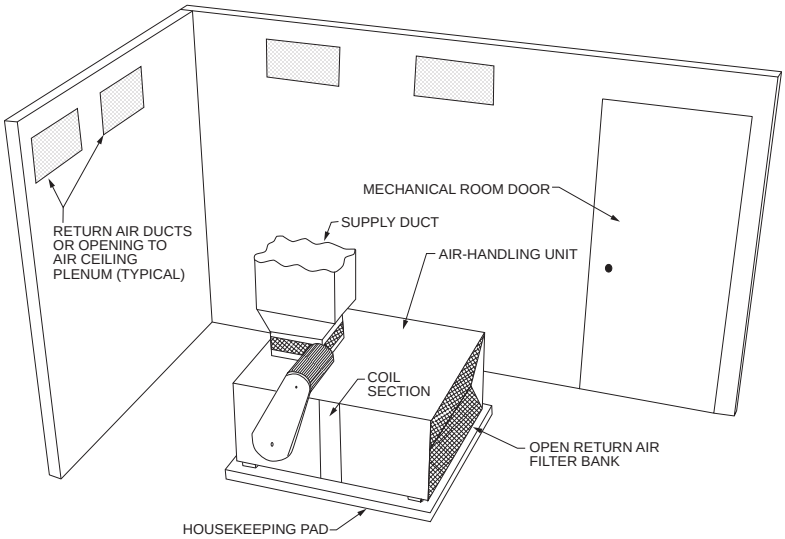

Figure 602.1(2)
MECHANICAL ROOM USED AS RETURN AIR PLENUM

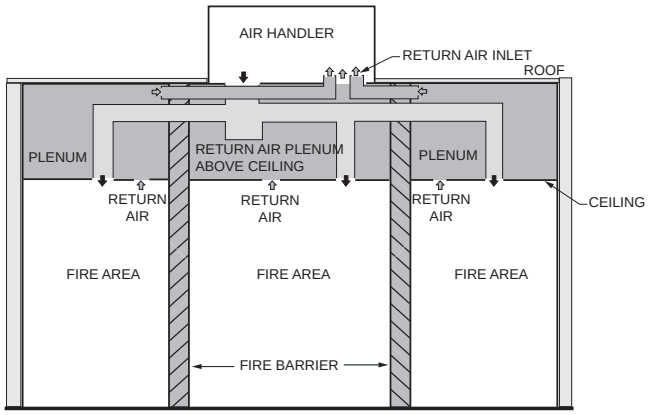

Figure 602.1(3)
MULTIPLE FIRE AREAS

INTERNATIONAL CODE COUNCIL®
Copyright © 2015 ICC. ALL RIGHTS RESERVED. Accessed by David Dammon on Jun 21, 2017 12:30:52 PM pursuant to License Agreement with ICC. No further reproduction or distribution authorized. ANY UNAUTHORIZED REPRODUCTION OR DISTRIBUTION IS A VIOLATION OF THE FEDERAL COPYRIGHT ACT AND THE LICENSE AGREEMENT, AND SUBJECT TO CIVIL AND CRIMINAL PENALTIES THEREUNDER.

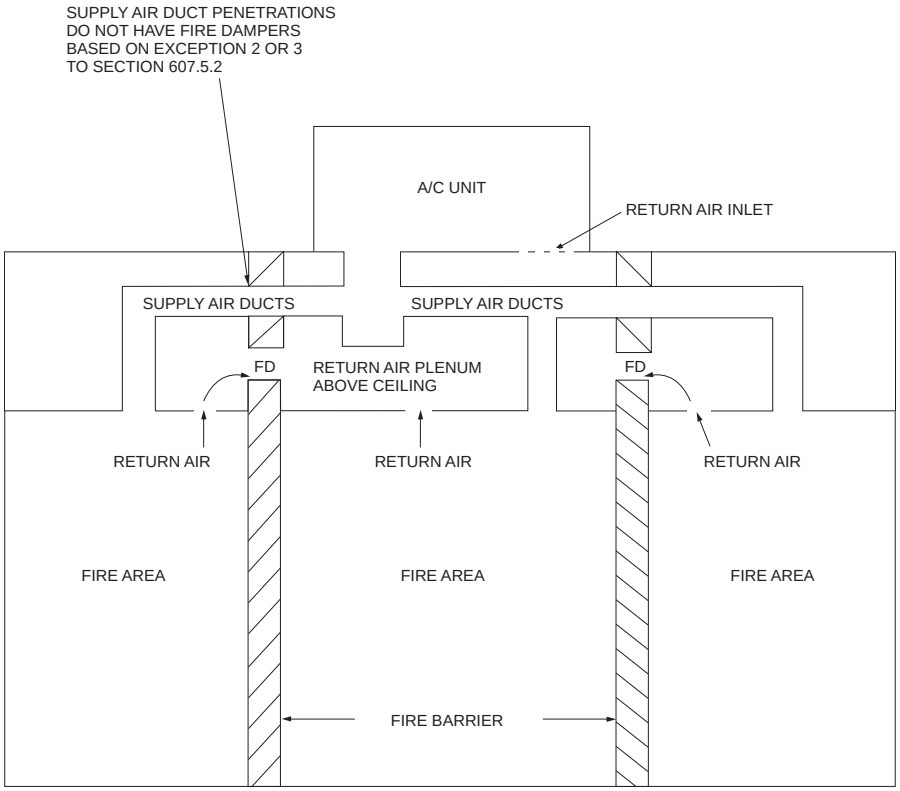

Figure 602.1(4)
PROHIBITED RETURN AIR PLENUM APPLICATION

602.2 Construction. *Plenum* enclosure construction materials that are exposed to the airflow shall comply with the requirements of Section 703.5 of the *International Building Code* or such materials shall have a flame spread index of not more than 25 and a smoke-developed index of not more than 50 when tested in accordance with ASTM E84 or UL 723.

The use of gypsum boards to form plenums shall be limited to systems where the air temperatures do not exceed 125ºF (52ºC) and the building and mechanical system design conditions are such that the gypsum board surface temperature will be maintained above the airstream dew-point temperature. Air plenums formed by gypsum boards shall not be incorporated in air-handling systems utilizing evaporative coolers.

❖ A building of noncombustible construction as defined in the IBC is permitted to have only noncombustible plenums constructed of noncombustible materials. The intent of requiring noncombustible plenums in buildings of noncombustible construction is to maintain consistency between the materials used in plenum construction and the materials used in building construction. Materials classified as noncombustible in the IBC are used to construct the plenum. These are materials that have been tested to the requirements of ASTM E136.

In general, noncombustible plenums are those formed and bounded by noncombustible materials and contain few, if any, combustible materials within the plenum space. These plenums represent a relatively low risk for fire spread and smoke generation because of the limited amount of combustible materials present. Although some combustible materials may be exposed within the plenum space, the types and amounts of these materials are strictly limited by Section 602.2.1. The area of a noncombustible plenum is limited only by the size of the fire area containing it.

A building of combustible construction is permitted by the IBC to use combustible or noncombustible building materials for specified components of the structure. In these buildings, either noncombustible plenums or combustible plenums can be used. Again, the intent is to require that the plenum be constructed of or formed by materials that are consistent with the materials allowed for building construction.

A combustible plenum may be constructed using any approved combustible or noncombustible material that is permitted for combustible construction in accordance with the IBC, however, the surfaces of the plenum enclosure that are exposed to air flow must be noncombustible or meet 25/50 flame and smoke indices. For example, in a combustible construction building, a plenum space could be bounded by wood structural components if they are covered by gypsum board, such that only the gypsum board is

INTERNATIONAL CODE COUNCIL®
Copyright © 2015 ICC. ALL RIGHTS RESERVED. Accessed by David Dammon on Jun 21, 2017 12:30:52 PM pursuant to License Agreement with ICC. No further reproduction or distribution authorized. ANY UNAUTHORIZED REPRODUCTION OR DISTRIBUTION IS A VIOLATION OF THE FEDERAL COPYRIGHT ACT AND THE LICENSE AGREEMENT, AND SUBJECT TO CIVIL AND CRIMINAL PENALTIES THEREUNDER.

exposed to the air flow in the plenum. The flame spread and smoke-developed indices of all materials within a combustible plenum must also comply with the applicable sections of the IBC. Combustible materials, such as ducts, pipe, wire, tubing and insulation coverings may be exposed within the plenum, but only in accordance with Section 602.2.1. See Commentary Figure 602.2.

Note, however, that in buildings that are not permitted to have concealed spaces, the use of a plenum is not feasible. See the IBC for definitions of the different construction types.

The airstream and surface temperature restrictions on the use of gypsum boards in plenums are intended to prevent premature deterioration of the gypsum board because of condensation on the plenum walls or excessive drying of the gypsum board (see commentary, Section 603.5.1).

602.2.1 Materials within plenums. Except as required by Sections 602.2.1.1 through 602.2.1.7, materials within plenums shall be noncombustible or shall be listed and labeled as having a flame spread index of not more than 25 and a smoke-developed index of not more than 50 when tested in accordance with ASTM E84 or UL 723.

Exceptions:

1. Rigid and flexible ducts and connectors shall conform to Section 603.
2. Duct coverings, linings, tape and connectors shall conform to Sections 603 and 604.
3. This section shall not apply to materials exposed within plenums in one- and two-family dwellings.
4. This section shall not apply to smoke detectors.
5. Combustible materials fully enclosed within one of the following:
   - 5.1. Continuous noncombustible raceways or enclosures.
   - 5.2. Approved gypsum board assemblies.
   - 5.3. Materials listed and labeled for installation within a plenum.
6. Materials in Group H, Division 5 fabrication areas and the areas above and below the fabrication area that share a common air recirculation path with the fabrication area.

❖ Materials located within a plenum, regardless of whether the plenum is constructed of or bounded by combustible or noncombustible materials, must be noncombustible or must have a flame spread index of 25 or less and a smoke-developed index of 50 or less when tested in accordance with ASTM E84. The requirement for listing and labeling provides assurance from a third-party agency that the product has been tested and found to be in compliance with the requirements of the code.

This section addresses those items that are installed within plenums, not the materials that bound and create the plenum space (see Section 602.2).

The code recognizes that the plenum space is often used to accommodate components of other building systems, such as electrical, plumbing, fire protection, communication and mechanical. For this reason, the code permits exposure of limited types of combustible materials used for these systems within the plenum. A flame spread index of 25 or less and a smoke-developed index of 50 or less are viewed as acceptable values for combustibles in a plenum because of the minimal risk associated with those materials. Any hazard associated with smoke production in a plenum is also reduced by the air handler shutdown requirements of Section 606.

Previous editions of the code used the term “exposed within plenums” when addressing this issue. However, some designers and installers used that language to install plastic pipe and other combustible material with some insulation wrapped around it, claiming that the material was no longer exposed. If the wrapping material were to become damaged, loosened or destroyed in a fire, the combustible material could be exposed to the fire and produce hazardous smoke that would be spread to other parts of the building through the plenum. The word “exposed” was deleted in the 2006 edition of the

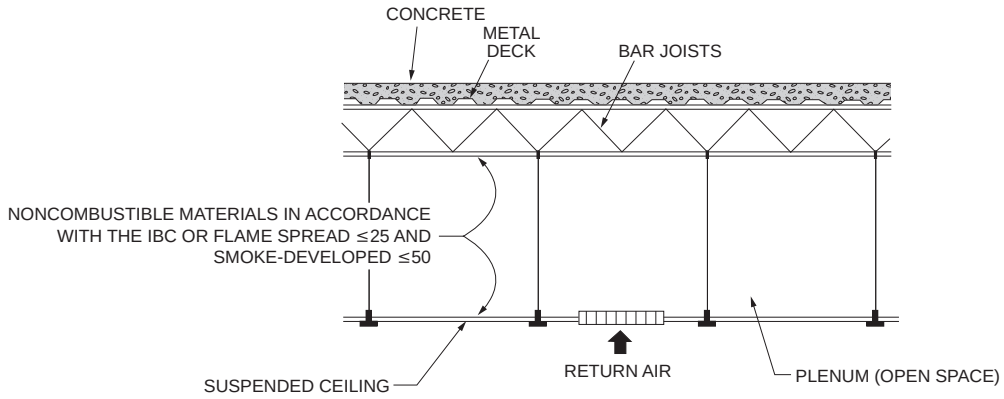

Figure 602.2
PLENUM ENCLOSURE CONSTRUCTION

INTERNATIONAL CODE COUNCIL®
Copyright © 2015 ICC. ALL RIGHTS RESERVED. Accessed by David Dammon on Jun 21, 2017 12:30:52 PM pursuant to License Agreement with ICC. No further reproduction or distribution authorized. ANY UNAUTHORIZED REPRODUCTION OR DISTRIBUTION IS A VIOLATION OF THE FEDERAL COPYRIGHT ACT AND THE LICENSE AGREEMENT, AND SUBJECT TO CIVIL AND CRIMINAL PENALTIES THEREUNDER.

code to close this loophole. Note that Exception 5 still allows electrical wiring and cable to be installed in a plenum when enclosed in noncombustible conduit.

There is no stated limit on the aggregate amount of these combustible materials that may be exposed in a plenum. For example, a test of electrical wiring using the procedures of UL 910 accounts only for the amount of wiring present within that tested assembly. Once installed in the plenum, however, additional combustible materials, such as insulated wire, pneumatic tubing and insulation, may also be present. The aggregate effect of exposing all of these materials within a plenum is usually not known.

Exception 1 permits both rigid and flexible ducts within plenums if the ducts conform to the requirements of Section 603. Metallic ducts are usually noncombustible, and nonmetallic ducts must be tested and classified in accordance with UL 181 to determine their fire and smoke characteristics. Duct materials for rigid and flexible ducts, both metallic and nonmetallic, are limited to Class 0 and Class 1 materials. Class 0 duct materials have a flame spread and a smoke-developed index of zero. Class 1 duct materials have a flame spread index of 25 or less and a smoke-developed index of 50 or less.

Exception 2 permits exposure of ductwork system materials such as vapor barriers, insulation, joint sealers, vibration connector fabrics and acoustical liners in plenums if they comply with the requirements of Sections 603 and 604, which require that all such components have a flame spread index of 25 or less and a smoke-developed index of 50 or less when tested using ASTM E84. Also, duct coverings and linings must be tested in accordance with ASTM C411 to demonstrate that they do not flame, glow, smolder or smoke when tested at their rated temperatures or to 250° F (121°C), whichever is higher.

Exception 3 exempts one- and two-family dwellings from the requirements of this section. It is important to note that the definition of a dwelling is a building or portion thereof that contains not more than two dwelling units. The intention of this exception is to exempt one and two unit dwellings from this section. If a building has more than two attached dwelling units, materials that are exposed in plenums will have to be noncombustible or have a flame spread index of not more than 25 and a smoke-developed index of not more than 50 when tested in accordance with ASTM E84. It should be noted that the construction of a plenum must comply with Section 602.2.

Exception 4 allows installation of combustible smoke detectors in plenums. This section is intended to regulate materials that can be of considerable quantity and surface area, such as ducts, piping, tubing and electrical and optical conductors; however, something as small as a plastic smoke detector housing would literally fall under the limitations of Section 602.2.1. The protection provided by a smoke detector far outweighs any risk of the detector generating additional smoke in a fire situation.

Exception 5 recognizes the practice of enclosing combustible materials, such as plastic piping, in gypsum board assemblies or in insulation materials that are listed and labeled for this specific application. It also allows for the installation of electrical wiring and cable in a noncombustible raceway that is completely enclosed and continuous throughout the plenum. If a combustible material is covered by an approved thermal barrier meeting the flame spread and smoke-developed index of this section and the covering will remain intact for the anticipated time for egress, the material would no longer be subject to fire exposure and the intent of the code would be met.

Exception 6 provides an exemption for materials in plenums that circulate air for Hazardous, Division 5 fabrication rooms (commonly referred to as a “clean rooms”). The interstitial spaces above a clean room and below the raised floor of a clean room represent a unique air movement system that uses high-velocity air to quickly sweep any contaminants from the room. Because a Hazardous, Division 5 fabrication area already contains materials that are combustible, the air moving in the plenum spaces represents no less of a hazard than a material in the plenum that is combustible or has flame spread and smoke-developed indices greater than 25 and 50, respectively. In other words, because the air in the plenum comes from an area that has combustible materials, the plenum space is already contaminated with combustible material such that requiring other materials in the plenum to comply with this section would be senseless.

602.2.1.1 Wiring. Combustible electrical wires and cables and optical fiber cables exposed within a plenum shall be listed as having a maximum peak optical density of 0.50 or less, an average optical density of 0.15 or less, and a maximum flame spread distance of 5 feet (1524 mm) or less when tested in accordance with NFPA 262 or shall be installed in metal raceways or metal sheathed cable. Combustible optical fiber and communication raceways exposed within a plenum shall be listed as having a maximum peak optical density of 0.5 or less, an average optical density of 0.15 or less, and a maximum flame spread distance of 5 feet (1524 mm) or less when tested in accordance with ANSI/UL 2024. Only plenum-rated wires and cables shall be installed in plenum-rated raceways. Electrical wires and cables, optical fiber cables and raceways addressed in this section shall be listed and labeled and shall be installed in accordance with NFPA 70.

❖ Electrical wires, cables and optical fiber cables have components that are combustible such that their installation in a plenum presents a hazard unless these materials are specially manufactured to provide for limited flame spread and low smoke optical density. These materials must be tested in accordance with NFPA 262 and must exhibit smoke and flame characteristics less than or equal to those specified in this section. Wires, cables, and optical fiber cables that exceed the limitations can be installed in ple-

INTERNATIONAL CODE COUNCIL®
Copyright © 2015 ICC. ALL RIGHTS RESERVED. Accessed by David Dammon on Jun 21, 2017 12:30:52 PM pursuant to License Agreement with ICC. No further reproduction or distribution authorized. ANY UNAUTHORIZED REPRODUCTION OR DISTRIBUTION IS A VIOLATION OF THE FEDERAL COPYRIGHT ACT AND THE LICENSE AGREEMENT, AND SUBJECT TO CIVIL AND CRIMINAL PENALTIES THEREUNDER.

nums only if they are installed in metal raceways or metal sheathed cable.

Raceways of combustible material are frequently used in plenums because they are extremely flexible and provide for an organized installation of wires, cables and optical fiber cables. These combustible raceways present the same hazard in a plenum as do wires, cables and optical fiber cables having combustible components. The raceways must be tested in accordance with UL 2024 and must meet the same criteria that wires, cables and optical fiber cables must meet. Note that wires, cables and optical fiber cables installed in these compliant combustible raceways must meet the requirements in the first sentence of this section. In other words, a combustible raceway offers no protection for the wires, cables and optical fiber cables contained in such raceways.

This section requires that the electrical wires, cables, optical fiber cables and combustible raceways be listed and labeled indicating that a third-party certification agency must verify that the criteria for such products has been met. Installation of these products must be in accordance with NFPA 70.

602.2.1.2 Fire sprinkler piping. Plastic fire sprinkler piping exposed within a *plenum* shall be used only in wet pipe systems and shall have a peak optical density not greater than 0.50, an average optical density not greater than 0.15, and a flame spread of not greater than 5 feet (1524 mm) when tested in accordance with UL 1887. Piping shall be *listed* and *labeled*.

❖ The plastic fire sprinkler piping described in Section 602.2.1.2 has been shown through testing to perform under fire conditions as well as or better than other combustible materials permitted within the plenum.

A wet pipe sprinkler system is one in which the piping is filled with water at all times. The heat sink effect of water-filled piping offers some protection for plastic fire sprinkler piping that is exposed to fire. Test data must be submitted to indicate the performance characteristics of the plastic piping when it is tested in accordance with UL 1887. Peak and average optical density values are used to quantify the amount of smoke produced after the piping is subjected to the test procedures of UL 1887. A flame spread value is a measure of the extent that the flame travels along the length of the pipe being tested. The plastic pipe must also be labeled by a third-party agency to indicate that it has been tested in accordance with the referenced standard (see commentary, Section 301.5). The criteria of this section are considered to be more stringent than the requirements of Section 602.2.1.

602.2.1.3 Pneumatic tubing. Combustible pneumatic tubing exposed within a *plenum* shall have a peak optical density not greater than 0.50, an average optical density not greater than 0.15, and a flame spread of not greater than 5 feet (1524 mm) when tested in accordance with UL 1820. Combustible pneumatic tubing shall be *listed* and *labeled*.

❖ This section contains requirements for plastic tubing used in pneumatic [heating, ventilating and air-conditioning (HVAC)] control systems. UL 1820 is the test standard used to evaluate combustible pneumatic tubing for its fire and smoke characteristics. Exposure of combustible pneumatic tubing is permitted within plenums when it is tested to UL 1820 and the flame spread, the peak optical density and the average optical density are as specified in this section. The pneumatic tubing must also be labeled by an approved agency (see commentary, Section 301.5).

Pneumatic tubing is used to carry pressurized air to and from HVAC system controls, sensors, operators and thermostats. Formerly constructed of only metal pipe and tubing, pneumatic lines are now almost exclusively constructed of plastic tubing.

602.2.1.4 Electrical equipment in plenums. Electrical *equipment* exposed within a *plenum* shall comply with Sections 602.2.1.4.1 and 602.2.1.4.2.

❖ This section refers the reader to compliance requirements in Sections 602.2.1.4.1 and 602.2.1.4.2 for plenum-located electrical equipment having metallic or combustible enclosures that are integral to the equipment.

602.2.1.4.1 Equipment in metallic enclosures. Electrical *equipment* with metallic enclosures exposed within a *plenum* shall be permitted.

❖ Because metallic enclosures are noncombustible, the electrical equipment having an integral metallic enclosure is not required to comply with Section 602.2.1 (see Item No. 5).

602.2.1.4.2 Equipment in combustible enclosures. Electrical *equipment* with combustible enclosures exposed within a *plenum* shall be *listed* and *labeled* for such use in accordance with UL 2043.

❖ This section addresses components, such as heat and smoke detectors, speakers, horns, and other similar types of equipment that have integral combustible enclosures. The enclosure along with the integral equipment must be listed and labeled in accordance with UL 2043.

602.2.1.5 Discrete plumbing and mechanical products in plenums. Where discrete plumbing and mechanical products and appurtenances are located in a plenum and have exposed combustible material, they shall be listed and labeled for such use in accordance with UL 2043.

❖ See definition of “Discrete product.” Discrete products cannot be effectively tested to ASTM E84 or UL 723 because those tests are designed for continuous products such as pipe, tube, conduit, wire, sheets, etc. UL 2043 was developed to allow effective testing of discrete products such as pipe and duct supports and straps, duct fittings, condensate pumps, etc. See Commentary Figure 602.2.1.5.

602.2.1.6 Foam plastic insulation. Foam plastic insulation used in plenums as interior wall or ceiling finish or as interior trim shall exhibit a flame spread index of 75 or less and a

INTERNATIONAL CODE COUNCIL®
Copyright © 2015 ICC. ALL RIGHTS RESERVED. Accessed by David Dammon on Jun 21, 2017 12:30:52 PM pursuant to License Agreement with ICC. No further reproduction or distribution authorized. ANY UNAUTHORIZED REPRODUCTION OR DISTRIBUTION IS A VIOLATION OF THE FEDERAL COPYRIGHT ACT AND THE LICENSE AGREEMENT, AND SUBJECT TO CIVIL AND CRIMINAL PENALTIES THEREUNDER.

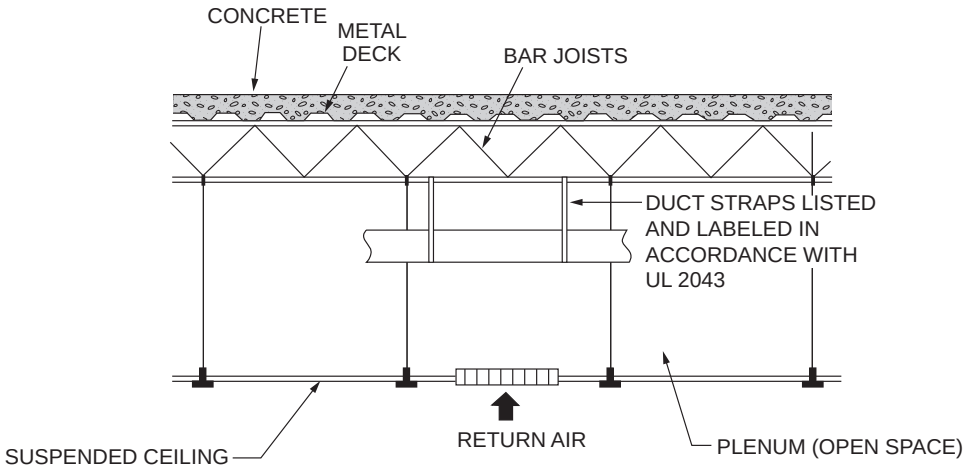

Figure 602.2.1.5
DISCRETE PRODUCTS

smoke-developed index of 450 or less when tested in accordance with ASTM E84 or UL 723 and shall also comply with one or more of Sections 602.2.1.6.1, 602.2.1.6.2 and 602.2.1.6.3.

❖ Foam plastic insulation and foam plastic trim are combustible and, if used in a plenum space, the flame and smoke of combusting foam plastic could spread to other parts of the building. If these materials are used as a component of the interior walls or ceiling of a plenum space, the materials must be specially manufactured to provide for limited flame spread and smoke-developed indices. At a minimum, all foam plastic insulation and trim must exhibit smoke and flame characteristics less than or equal to those specified in this section. This is the same requirement found in IBC Section 2603.3. Where used as an interior component of a wall or ceiling surface in a plenum, the foam plastic material must be completely covered by a noncombustible material (see Section 602.2.1.6.1 or 602.2.1.6.3) or the exposed foam plastic material must meet more stringent flame spread and smoke-developed indices and the testing requirement of Section 602.2.1.6.2.

602.2.1.6.1 Separation required. The foam plastic insulation shall be separated from the plenum by a thermal barrier complying with Section 2603.4 of the *International Building Code* and shall exhibit a flame spread index of 75 or less and a smoke-developed index of 450 or less when tested in accordance with ASTM E84 or UL 723 at the thickness and density intended for use.

❖ Section 2603.4 of the IBC requires all foam plastic to be separated from the interior of the building by a thermal barrier such as 0.5-inch-thick (12.7 mm) gypsum board or an approved equivalent material (see commentary, IBC Section 2603.4). This section is concerned only with separating the foam plastic insulation from the plenum space.

The IBC sets forth test methods and criteria by which alternative thermal barriers are to be qualified to limit the average temperature rise of the unexposed face to 250°F (121°C) for 15 minutes of fire exposure while complying with the time-temperature conditions of ASTM E119.

602.2.1.6.2 Approval. The foam plastic insulation shall exhibit a flame spread index of 25 or less and a smoke-developed index of 50 or less when tested in accordance with ASTM E84 or UL 723 at the thickness and density intended for use and shall meet the acceptance criteria of Section 803.1.2 of the *International Building Code* when tested in accordance with NFPA 286.

The foam plastic insulation shall be approved based on tests conducted in accordance with Section 2603.9 of the *International Building Code*.

❖ This section refers to Section 2603.9 of the IBC for large-scale testing criteria for approval of foam plastic insulation products. That section lists such tests as FM 4880, NFPA 286, UL 1040 and UL 1715. The intent is to require testing based on the proposed end-use configuration of the foam-plastic assembly and on an exposing fire that is appropriate in size and location for the proposed application.

602.2.1.6.3 Covering. The foam plastic insulation shall be covered by corrosion-resistant steel having a base metal thickness of not less than 0.0160 inch (0.4 mm) and shall exhibit a flame spread index of 75 or less and a smoke-developed index of 450 or less when tested in accordance with ASTM E84 or UL 723 at the thickness and density intended for use.

❖ The required metal covering is intended to act as a barrier against ignition of the foam plastic. It is not intended to serve as a thermal barrier such as is required in Section 602.2.1.6.1.

602.2.1.7 Plastic plumbing pipe and tube. Plastic piping and tubing used in plumbing systems shall be listed and shall exhibit a flame spread index of not more than 25 and a

INTERNATIONAL CODE COUNCIL®
Copyright © 2015 ICC. ALL RIGHTS RESERVED. Accessed by David Dammon on Jun 21, 2017 12:30:52 PM pursuant to License Agreement with ICC. No further reproduction or distribution authorized. ANY UNAUTHORIZED REPRODUCTION OR DISTRIBUTION IS A VIOLATION OF THE FEDERAL COPYRIGHT ACT AND THE LICENSE AGREEMENT, AND SUBJECT TO CIVIL AND CRIMINAL PENALTIES THEREUNDER.

smoke-developed index of not more than 50 when tested in accordance with ASTM E84 or UL 723.

❖ This section specifically address plastic plumbing pipe and tube similar to other material-specific sections under Section 602.2.1. The plastic pipe or tube must be listed, presumably for the application of plenum installation and having the required flame and smoke indices. Exception 5 of Section 602.2.1 is the only alternative.

602.3 Stud cavity and joist space plenums. Stud wall cavities and the spaces between solid floor joists to be utilized as air plenums shall comply with the following conditions:

1. Such cavities or spaces shall not be utilized as a *plenum* for supply air.
2. Such cavities or spaces shall not be part of a required fire-resistance-rated assembly.
3. Stud wall cavities shall not convey air from more than one floor level.
4. Stud wall cavities and joist space plenums shall comply with the floor penetration protection requirements of the *International Building Code*.
5. Stud wall cavities and joist space plenums shall be isolated from adjacent concealed spaces by *approved* fireblocking as required in the *International Building Code*.
6. Stud wall cavities in the outside walls of building envelope assemblies shall not be utilized as air plenums.

❖ Literally speaking, stud and joist cavities are not plenums because Section 602.1 does not include them, but, for the purpose of this section, they are referred to as plenums. Common in residential construction, stud and joist space cavities (plenums) may be used in buildings of any occupancy. These spaces are limited to use for return air only because the negative pressures within the return air plenum with respect to surrounding spaces will decrease the likelihood of spreading smoke to other spaces via the plenum. Also, the temperature and moisture content of heated, cooled and conditioned supply air could cause a fire hazard or deterioration of the construction materials exposed in the spaces. Although referred to as "plenums," stud cavities are actually used as ducts, whereas joist spaces are likely to be plenums because they typically join multiple stud cavity ducts into a common pathway back to an air handler.

The space must not be a part of a fire-resistance-rated assembly because the ASTM E119 test does not consider the impact of air movement within the assembly on the fire-resistance rating. This restriction is a concession to the convenience and cost-savings potential of this method of moving air. The use of stud spaces inherently means the interconnection of different floor levels by the concealed space. Because of the hazard of such an interconnection, the use of this type of plenum is limited to return air from one floor level only for each independent stud cavity. All cavities not used for air movement must be isolated from the plenum by fireblocking constructed and installed to comply with the IBC.

Commentary Figure 602.3(1) shows an example of an acceptable stud and joist space installation. The bottom plate of the wall is cut away for the plenum to function, and fireblocking is installed in the joist and stud space to limit communication of the plenum with other spaces. The stud cavity shown is being used to return air from one floor level only, conducting it to the space below where the air-handling equipment is located.

Whether viewed as a shaft or as a duct, a stud cavity plenum penetrates floor assemblies and is, therefore, subject to the floor penetration protection requirements of the IBC, which may require floor penetration protection or a fire-resistance-rated shaft enclosure for stud cavity plenums, depending on the number of floors penetrated and the fire-resistance rating of the floor/ceiling assemblies.

Commentary Figure 602.3(2) shows an unacceptable stud and joist space plenum installation. Because air is returned from more than one floor level through the same stud cavity, the use is prohibited by this section.

The intent is to prohibit arrangements that create a direct connection from one floor level to another by means of a concealed cavity. Such direct connections would act as a chase or chimney, allowing fire and smoke to spread quickly upward through the building. Thus, stud cavity return air plenums are subject to the same restrictions and requirements as floor openings and penetrations regulated by the IBC. Stud and joist space plenums must be viewed as an exception to the fireblocking provisions of the IBC because one or more fireblocks (wall plates) must be removed or relocated to construct the plenums. Note that the code does not mention the type of materials allowed for "panning" the bottom of open joists to create joist space plenums. Traditionally, sheet metal has been used; however, composite materials are also used. The code official must determine what materials are acceptable for joist panning.

Item 6 disallows the use of stud wall cavities in outside walls because of outdoor air infiltration and the obvious loss of thermal insulation value in hollow cavities. See Section R403.3.5 of the *International Energy Conservation Code*® (IECC®), which prohibits the use of all framing cavities as ducts or plenums. The IECC is more stringent in this case.

[BS] 602.4 Flood hazard. For structures located in flood hazard areas, plenum spaces shall be located above the elevation required by Section 1612 of the *International Building Code* for utilities and attendant equipment or shall be designed and constructed to prevent water from entering or accumulating within the plenum spaces during floods up to such elevation. If the plenum spaces are located below the elevation required by Section 1612 of the *International Building Code* for utilities and attendant equipment, they shall be capable of resisting hydrostatic and hydrodynamic

INTERNATIONAL CODE COUNCIL®
Copyright © 2015 ICC. ALL RIGHTS RESERVED. Accessed by David Dammon on Jun 21, 2017 12:30:52 PM pursuant to License Agreement with ICC. No further reproduction or distribution authorized. ANY UNAUTHORIZED REPRODUCTION OR DISTRIBUTION IS A VIOLATION OF THE FEDERAL COPYRIGHT ACT AND THE LICENSE AGREEMENT, AND SUBJECT TO CIVIL AND CRIMINAL PENALTIES THEREUNDER.

loads and stresses, including the effects of buoyancy, during the occurrence of flooding up to such elevation.

❖ In areas designated by the IBC as flood hazard areas, plenums must be installed above the elevation specified by the IBC or, if allowed below that elevation, plenums must be designed to be water tight. Water in plenums could damage the plenum and related equipment. If allowed below the required elevation, water-tight plenums will be exposed to hydrostatic and hydrodynamic loads and stresses, including the effects of buoyancy, which will exert a net upward force on the structure. In flood hazard areas, unless permitted to be dry floodproofed in accordance with ASCE 24, under-floor spaces and crawl spaces cannot be used as plenums because the foundation walls that form those spaces must have flood openings [see ASCE 24 and *International Residential Code*® (IRC®) Section R322.2.2]. For additional guidance, refer to FEMA 348.

SECTION 603
DUCT CONSTRUCTION AND INSTALLATION

603.1 General. An air distribution system shall be designed and installed to supply the required distribution of air. The installation of an air distribution system shall not affect the fire protection requirements specified in the *International Building Code*. Ducts shall be constructed, braced, reinforced and installed to provide structural strength and durability.

❖ The function of a duct is to convey air between specific points in an air distribution or exhaust system. Section 603 contains requirements for the construction of ducts used to transport environmental air for HVAC systems and for general exhaust purposes such as toilet, noncommercial kitchen and nonhazardous exhaust. This section is not intended to regulate the design of duct-system flow rates required to achieve space temperature control, comfort conditioning, contaminant control or space pressurization. The focus of Section 603 is on building and installing duct systems that have been designed for function by the responsible designer. This section does, however, require that duct systems be capable of handling design loads.

A duct system by its very nature penetrates floor assemblies and wall assemblies, both fire-resistance-rated and nonrated assemblies. It is therefore subject to the fire protection requirements of the IBC, which may require fire dampers, smoke dampers, floor penetration protection or a fire-resistance-rated shaft enclosure. The construction of clothes dryer exhaust systems, commercial kitchen exhaust systems, hazardous exhaust systems and conveyor systems is regulated by Sections 504, 506, 510 and 511, respectively. Section 603 addresses the performance aspects of ductwork relating to dimensional and structural stability, leakage control, pressure, temper-

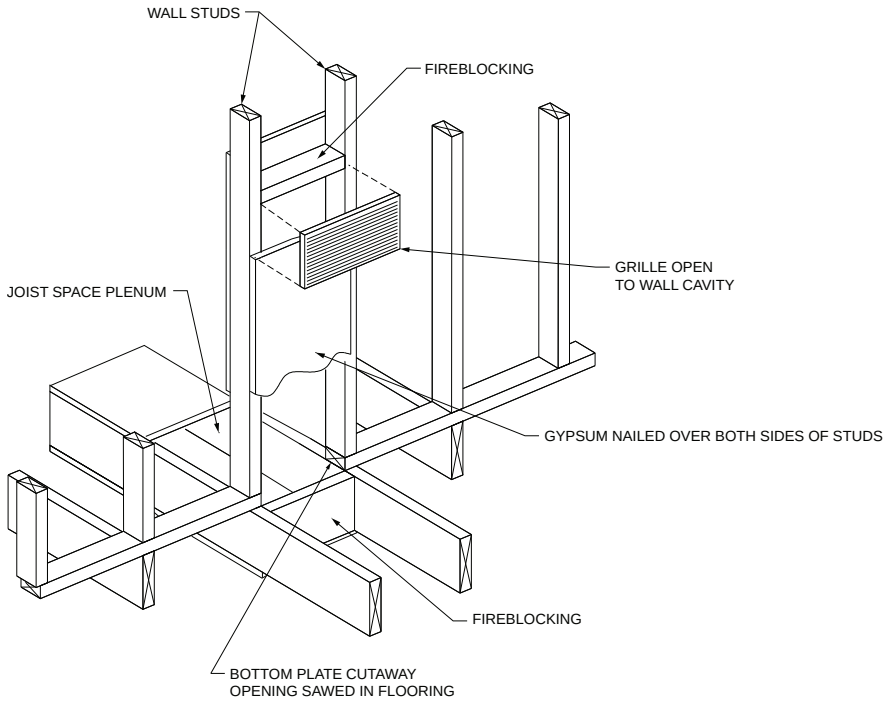

Figure 602.3(1)
ACCEPTABLE STUD AND JOIST SPACE PLENUM INSTALLATION

INTERNATIONAL CODE COUNCIL®
Copyright © 2015 ICC. ALL RIGHTS RESERVED. Accessed by David Dammon on Jun 21, 2017 12:30:52 PM pursuant to License Agreement with ICC. No further reproduction or distribution authorized. ANY UNAUTHORIZED REPRODUCTION OR DISTRIBUTION IS A VIOLATION OF THE FEDERAL COPYRIGHT ACT AND THE LICENSE AGREEMENT, AND SUBJECT TO CIVIL AND CRIMINAL PENALTIES THEREUNDER.

ature durability, support, vapor permeance and airflow resistance.

603.2 Duct sizing. Ducts installed within a single dwelling unit shall be sized in accordance with ACCA Manual D, the appliance manufacturer's installation instructions or other approved methods. Ducts installed within all other buildings shall be sized in accordance with the ASHRAE *Handbook of Fundamentals* or other equivalent computation procedure.

❖ Properly sized ducts are essential to the safe operation of heating appliances and to ensure the distribution of the prescribed amount of ventilation air required by Chapter 4. Improper duct sizing can cause inadequate cooling or heating, inadequate dehumidification, excess energy losses and appliance stresses. This section does not include prescriptive sizing requirements, but directs the user to the applicable industry standard, depending on whether the system to be sized is residential or commercial. It is important to note that the design objectives and criteria are significantly different for residential and commercial duct systems, making it critical to choose the proper industry standard for duct sizing. For example, ACCA Manual D limits the velocity in a residential duct system to 900 feet per minute (4.6 m/s). The velocity in a commercial duct system can be much higher. The designer must sub-

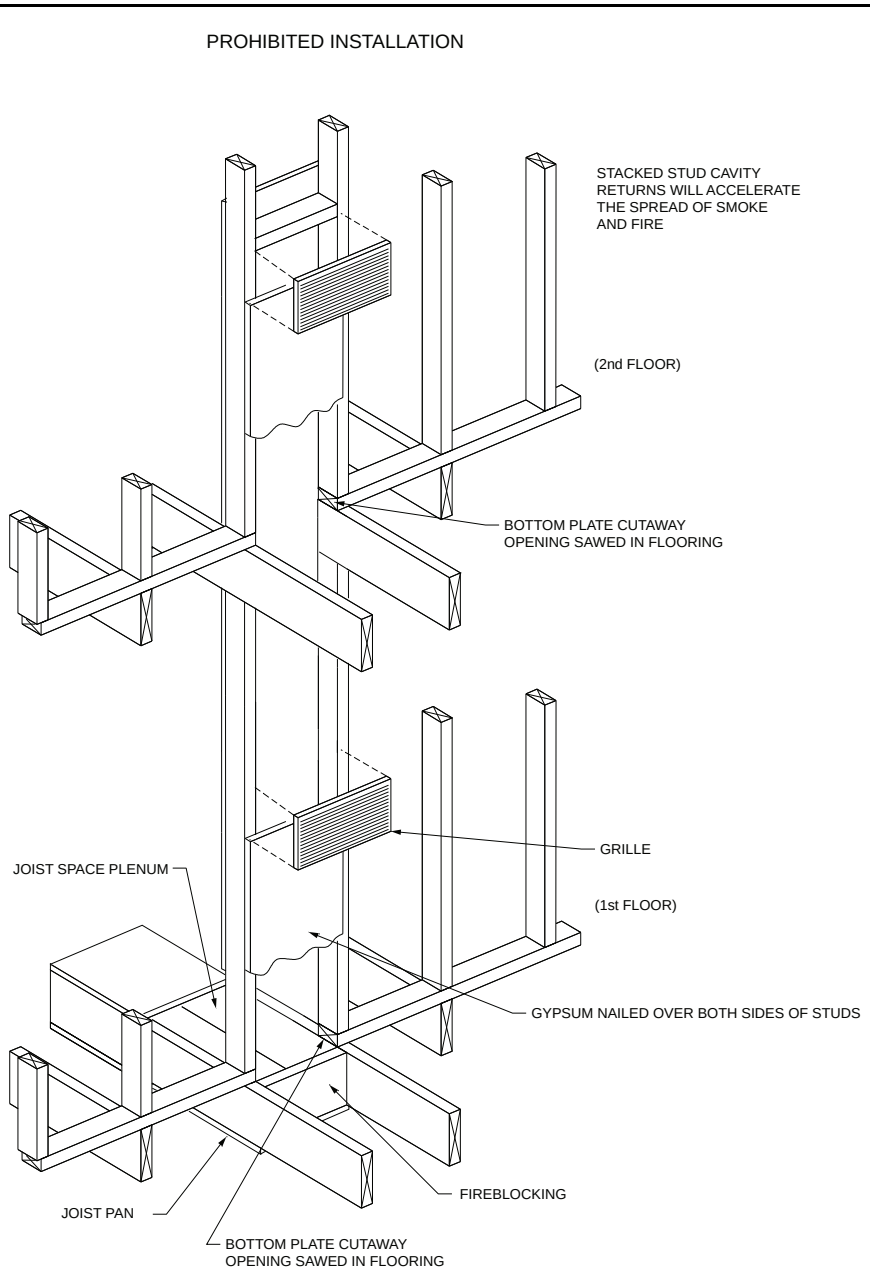

Figure 602.3(2)
PROHIBITED STUD AND JOIST SPACE PLENUM INSTALLATION

INTERNATIONAL CODE COUNCIL®
Copyright © 2015 ICC. ALL RIGHTS RESERVED. Accessed by David Dammon on Jun 21, 2017 12:30:52 PM pursuant to License Agreement with ICC. No further reproduction or distribution authorized. ANY UNAUTHORIZED REPRODUCTION OR DISTRIBUTION IS A VIOLATION OF THE FEDERAL COPYRIGHT ACT AND THE LICENSE AGREEMENT, AND SUBJECT TO CIVIL AND CRIMINAL PENALTIES THEREUNDER.

mit documentation that a system has been sized in an approved manner. In some cases, the appliance manufacturer may specify duct sizing, in which case, such specification is an acceptable alternative.

603.3 Duct classification. Ducts shall be classified based on the maximum operating pressure of the duct at pressures of positive or negative 0.5, 1.0, 2.0, 3.0, 4.0, 6.0 or 10.0 inches (1 inch w.c. = 248.7 Pa) of water column. The pressure classification of ducts shall equal or exceed the design pressure of the air distribution in which the ducts are utilized.

❖ The pressure classification of ducts must equal or exceed the static pressure of the air distribution system in which the ducts will be installed to reduce air leakage and the possibility of developing a structural failure in the air distribution ductwork. The classification is based on the maximum positive or negative operating pressure the duct is designed to withstand, ranging from 0.5 to 10 inches of water column (0.12 to 63 kPa). Excessive positive or negative pressures can cause a duct or plenum to rupture, deform or collapse.

The static pressure is established by the designer of the air distribution system and should be stated on the plans and specifications. Ducts that are identified as complying with UL 181 will be marked to indicate their positive or negative pressure classification and velocity rating. Ducts that are fabricated in the field may not be so marked.

Duct construction must conform to the requirements of SMACNA *HVAC Duct Construction Standards—Metal and Flexible*, or SMACNA *Fibrous Glass Duct Construction Standards*, which state duct thicknesses and bracing requirements based on static pressure requirements of the system and include pressure and velocity limits.

603.4 Metallic ducts. Metallic ducts shall be constructed as specified in the SMACNA *HVAC Duct Construction Standards—Metal and Flexible*.

Exception: Ducts installed within single *dwelling units* shall have a minimum thickness as specified in Table 603.4.

❖ Metallic ducts are usually constructed using galvanized sheet steel. Duct size is based on required airflow, system pressure, flow velocity and pressure losses caused by friction. Duct material thickness is determined by duct size, static pressure of the system, distance between supports and whether the duct is reinforced. Metallic ducts must be constructed with the minimum thicknesses specified in the SMACNA *HVAC Duct Construction Standards—Metal and Flexible*, which bases the minimum required duct thickness on the geometry of the duct, the material used and the major dimension of the duct (the diameter for round ducts, and the widest side for rectangular ducts). In addition to those parameters, the SMACNA standard also includes such necessary information as the design static pressure of the air distribution system and whether reinforcement is required for duct support.

Metallic rigid air ducts could be approved by the code official in accordance with Section 105.2 if the ducts have been shown to meet the requirements of UL 181 for a Class 0 or Class 1 rigid air duct (see commentary, Section 603.5). Although UL 181 is used primarily to evaluate nonmetallic duct materials, the use of the standard for evaluating metallic ductwork is not precluded by its scope. UL 181 tests samples of the duct to determine fire performance characteristics; corrosion and erosion resistance; leakage resistance; mold growth and humidity resistance; and structural integrity. Air ducts that conform to the requirements of UL 181 are identified by the manufacturer's or vendor's name, rated velocity and rated negative and positive pressures.

Metallic ducts must be constructed to comply with the requirements contained in SMACNA *HVAC Duct Construction Standards—Metal and Flexible*. Besides the minimum thicknesses of duct materials required, this standard contains information on duct reinforcement, joints, fittings, hangers and supports and other pertinent design information needed to achieve a stable, efficient and durable installation of ductwork.

The exception to this section allows ducts that are installed within a single dwelling unit to be constructed with the minimum thickness specified in Table 603.4. The required minimum thickness of the duct materials is less than the required thickness in SMACNA *HVAC Duct Construction Standards—Metal and Flexible* because airflow volume, system pressure, flow velocity and pressure losses caused by friction are lower in a typical dwelling unit because of the small size of the system.

The metal thicknesses allowed by Table 603.4 have been used in dwelling unit construction without evidence of failure. Therefore, the lighter gages are justified in this limited application.

603.4.1 Minimum fasteners. Round metallic ducts shall be mechanically fastened by means of not less than three sheet metal screws or rivets spaced equally around the joint.

Exception: Where a duct connection is made that is partially inaccessible, three screws or rivets shall be equally spaced on the exposed portion so as to prevent a hinge effect.

❖ The code specifies a minimum number of fasteners when joining sections of round metal ducts. A minimum of three sheet metal screws is what is specified in the SMACNA Duct Construction Standards to accomplish this. Three screws located in close proximity to each other are not compliant. The screws must be spaced equidistant from one another around the duct to make a rigid connection. Although not a requirement of the code, a commonly used general rule of thumb for the number of screws to make a rigid round duct joint is the duct diameter in inches divided by two. For example, a 16-inch (406 mm) duct should have at least eight screws equally spaced around the duct.

INTERNATIONAL CODE COUNCIL®
Copyright © 2015 ICC. ALL RIGHTS RESERVED. Accessed by David Dammon on Jun 21, 2017 12:30:52 PM pursuant to License Agreement with ICC. No further reproduction or distribution authorized. ANY UNAUTHORIZED REPRODUCTION OR DISTRIBUTION IS A VIOLATION OF THE FEDERAL COPYRIGHT ACT AND THE LICENSE AGREEMENT, AND SUBJECT TO CIVIL AND CRIMINAL PENALTIES THEREUNDER.

Equally spacing the screws around a duct is not always possible to achieve where ducts are located in chases or against walls or ceilings. The exception allows for some deviation when it is not possible to comply with the strict letter of the code. A "hinge effect" results from fasteners not being properly spaced along the circumference of the duct thus allowing the joint to sag, flex or move like a hinged joint.

603.4.2 Duct lap. Crimp joints for round and oval metal ducts shall be lapped not less than 1 inch (25 mm) and the male end of the duct shall extend into the adjoining duct in the direction of airflow.

❖ This section requires an overlap and orientation that mitigates flow resistance and turbulence, aids in sealing joints air tight and provides structural stability, while providing ample space for applying fasteners. The male end of the overlapping joint points in the direction of air flow.

603.5 Nonmetallic ducts. Nonmetallic ducts shall be constructed with Class 0 or Class 1 duct material and shall comply with UL 181. Fibrous duct construction shall conform to the SMACNA *Fibrous Glass Duct Construction Standards* or NAIMA *Fibrous Glass Duct Construction Standards.* The air temperature within nonmetallic ducts shall not exceed 250ºF (121ºC).

❖ Nonmetallic ducts and duct materials must be tested and classified in accordance with the provisions of UL 181. Only Class 0 and Class 1 ducts may be used. Class 0 indicates flame spread and smoke-developed indices of zero; Class 1 indicates a flame spread index not greater than 25 and a smoke-developed index of not greater than 50 when tested to ASTM E84.

UL 181 requires that a nonmetallic duct be tested to determine its fire performance characteristics, corrosion resistance, mold growth resistance, humidity resistance, leakage resistance, temperature resistance, erosion resistance and structural performance. Air ducts that conform to the requirements of UL 181 are identified by the manufacturer's or vendor's name, rated velocity, negative and positive pressure classification and duct material class.

Fibrous ducts are constructed of a composite material of rigid (high density) fiberglass board and a factory-applied facing (typically reinforced aluminum). The surface of the fibrous duct that is exposed to the airflow is sealed with a fiber-bonding adhesive that prevents erosion of the fiberglass material. The factory-applied exterior duct board facing contributes to the strength and rigidity of the composite material, acts as a heat reflector, serves as a vapor barrier and is an integral component of the joining method used to construct fibrous ducts. The material is available in board form for shop or field fabrication into rectangular sections, or in "10-sided duct" form, which approximates a circular cross section.

Fibrous ducts take advantage of the inherent insulating qualities of the glass fiber material. The air friction factors for fibrous ducts are greater than those for sheet metal because of the relatively rough surface finish.

Construction of fibrous glass ducts must conform to the requirements of SMACNA *Fibrous Glass Duct Construction Standards*, which contains details for

TABLE 603.4
DUCT CONSTRUCTION MINIMUM SHEET METAL THICKNESS FOR SINGLE DWELLING UNITS[a]

ROUND DUCT DIAMETER (inches)	STATIC PRESSURE			
	$^1/_2$-inch water gage		1-inch water gage	
	Thickness (inches)		Thickness (inches)	
	Galvanized	Aluminum	Galvanized	Aluminum
< 12	0.013	0.018	0.013	0.018
12 to14	0.013	0.018	0.016	0.023
15 to 17	0.016	0.023	0.019	0.027
18	0.016	0.023	0.024	0.034
19 to 20	0.019	0.027	0.024	0.034
RECTANGULAR DUCT DIMENSION (inches)	**STATIC PRESSURE**			
	$^1/_2$-inch water gage		1-inch water gage	
	Thickness (inches)		Thickness (inches)	
	Galvanized	Aluminum	Galvanized	Aluminum
≤ 8	0.013	0.018	0.013	0.018
9 to10	0.013	0.018	0.016	0.023
11 to 12	0.016	0.023	0.019	0.027
13 to16	0.019	0.027	0.019	0.027
17 to 18	0.019	0.027	0.024	0.034
19 to 20	0.024	0.034	0.024	0.034

For SI: 1 inch = 25.4 mm, 1-inch water gage = 249 Pa.

a. Ductwork that exceeds 20 inches by dimension or exceeds a pressure of 1-inch water gage shall be constructed in accordance with SMACNA *HVAC Duct Construction Standards—Metal and Flexible*.

INTERNATIONAL CODE COUNCIL®
Copyright © 2015 ICC. ALL RIGHTS RESERVED. Accessed by David Dammon on Jun 21, 2017 12:30:52 PM pursuant to License Agreement with ICC. No further reproduction or distribution authorized. ANY UNAUTHORIZED REPRODUCTION OR DISTRIBUTION IS A VIOLATION OF THE FEDERAL COPYRIGHT ACT AND THE LICENSE AGREEMENT, AND SUBJECT TO CIVIL AND CRIMINAL PENALTIES THEREUNDER.

the design and fabrication of air distribution systems using fibrous glass ducts. The SMACNA standards referenced in this section and the previous section are enforceable extensions of the code.

The maximum discharge temperature permitted by industry standards for warm air-heating systems is 250°F (121°C). This section prohibits nonmetallic ducts from being used in applications in which the air temperature would exceed 250°F (121°C) because the material has not been tested to withstand higher temperatures and high temperatures will cause accelerated aging of the duct material.

603.5.1 Gypsum ducts. The use of gypsum boards to form air shafts (ducts) shall be limited to return air systems where the air temperatures do not exceed 125ºF (52ºC) and the gypsum board surface temperature is maintained above the airstream dew-point temperature. Air ducts formed by gypsum boards shall not be incorporated in air-handling systems utilizing evaporative coolers.

❖ Gypsum board is a composite material commonly used for the construction of air plenums and shafts which can reduce construction costs because gypsum board is a common component of building construction assemblies. By serving a dual purpose, gypsum board eliminates the need for independent duct construction. The use of gypsum board to form ducts and plenums is specifically regulated to prevent deterioration of the gypsum board material. Air temperatures that exceed 125°F (52°C) will, over time, dry both the paper facing and the gypsum of the gypsum board, leading to deterioration of the panel.

Gypsum board can also deteriorate when exposed to moisture, which will happen if the surface temperature of the gypsum board is lower than the airstream dew point temperature, causing water to condense on the surface of the gypsum board. For these reasons, gypsum board may not be used for air distribution systems using evaporative cooling equipment. It is further restricted to return air system applications only, a maximum airstream temperature of 125°F (52°C) and an airstream dew point temperature continuously below the temperature of the gypsum board surface. Evaporative cooling equipment such as "swamp coolers" uses water as a refrigerant. The resulting addition of moisture to the airstream could cause deterioration of the gypsum board.

603.6 Flexible air ducts and flexible air connectors. Flexible air ducts, both metallic and nonmetallic, shall comply with Sections 603.6.1, 603.6.1.1, 603.6.3 and 603.6.4. Flexible air connectors, both metallic and nonmetallic, shall comply with Sections 603.6.2 through 603.6.4.

❖ Flexible air ducts and connectors are typically factory-made assemblies consisting of an inner duct with or without a thermal insulation covering and an outer vapor barrier jacket. The inner duct may be a synthetic membrane supported by a spiral wire frame or a corrugated flexible metal pipe. The duct covering is commonly composed of an insulation blanket covered by an outer plastic or metal foil vapor barrier. Nonmetallic flexible connectors terminate in sheet metal collars.

Flexible air ducts and connectors are usually used in air distribution systems for relatively short runs of duct because they are easy to install and they can be used in areas of tight construction that may require frequent changes of direction for the duct material. Ceiling supply and return grilles, diffusers and registers connect easily after the final ceiling plan has been determined [see Commentary Figure 603.6(1)]. Exact air duct termination locations are often unknown when the main ductwork is being installed.

One drawback of using flexible air ducts and connectors is the higher pressure losses caused by the friction of the irregular inside duct surface that could result in the need for larger ducts or air-handling equipment.

Flexible air ducts and flexible air connectors can look exactly alike. However, the markings on the material will identify it as either a flexible air duct or a flexible air connector. Even though flexible air ducts and connectors may appear to be identical and may be used in the same applications, there can be a difference in the material properties. Commentary Figure 603.6 was taken from UL 181, which is the standard used to investigate the performance of flexible air ducts and air connectors. Flexible air ducts require more extensive testing (the flame penetration test, puncture test and impact test) than flexible air connectors. This difference in testing is what determines the markings on the material and whether it is classified as a flexible air duct or a flexible air connector [see Commentary Figures 603.6(2) and 603.6(3) for example markings of each].

Commentary Figure 603.6(4) provides guidelines for installing flexible ducts and connectors.

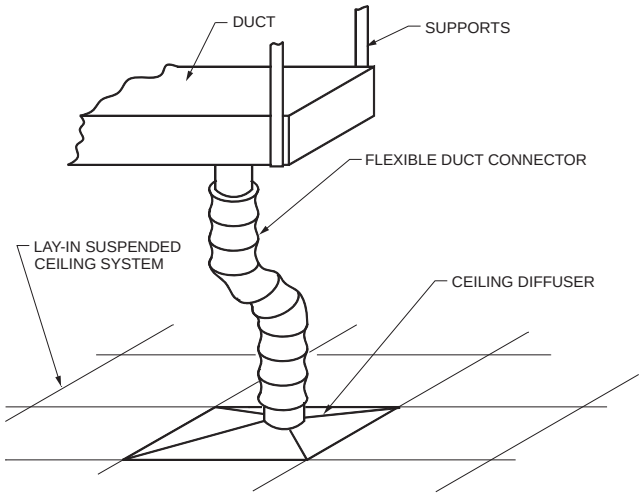

Figure 603.6(1)
FLEXIBLE CONNECTOR

INTERNATIONAL CODE COUNCIL®
Copyright © 2015 ICC. ALL RIGHTS RESERVED. Accessed by David Dammon on Jun 21, 2017 12:30:52 PM pursuant to License Agreement with ICC. No further reproduction or distribution authorized. ANY UNAUTHORIZED REPRODUCTION OR DISTRIBUTION IS A VIOLATION OF THE FEDERAL COPYRIGHT ACT AND THE LICENSE AGREEMENT, AND SUBJECT TO CIVIL AND CRIMINAL PENALTIES THEREUNDER.

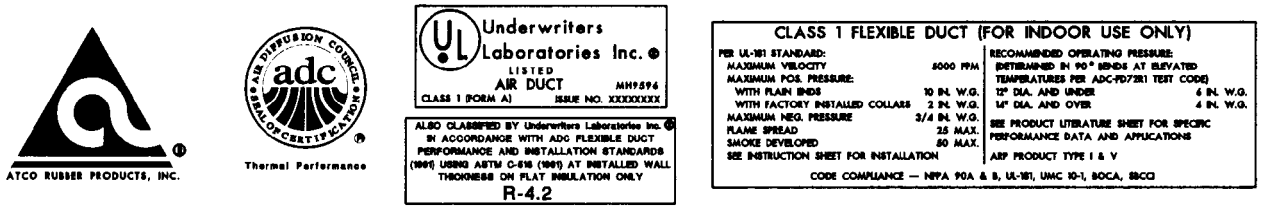

Figure 603.6(2)
SAMPLE LABELS
(Courtesy of ATCO Rubber Products, Inc.)

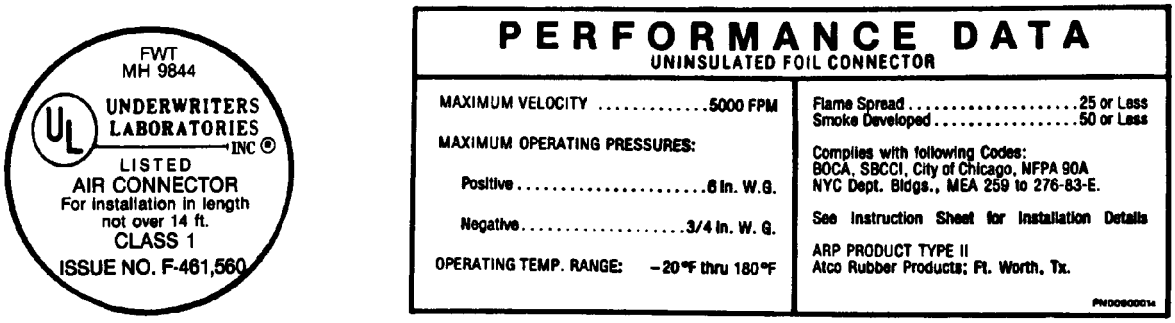

Figure 603.6(3)
SAMPLE LABELS
(Courtesy of ATCO Rubber Products, Inc.)

Test	Flexible Air Ducts	Flexible Connectors
Surface-burning Characteristics	Yes	Yes
Flame Penetration	Yes	No
Burning	Yes	Yes
Corrosion	Yes	Yes
Mold Growth and Humidity	Yes	Yes
Temperature	Yes	Yes
Puncture	Yes	No
Impact	Yes	No
Erosion	Yes	Yes
Pressure	Yes	Yes
Collapse	Yes	Yes
Tension	Yes	Yes
Torsion	Yes	Yes
Bending	Yes	Yes
Leakage	Yes	Yes

Figure 603.6
TESTING OF FLEXIBLE AIR DUCTS AND CONNECTORS
(Source: UL 181)

INTERNATIONAL CODE COUNCIL®
Copyright © 2015 ICC. ALL RIGHTS RESERVED. Accessed by David Dammon on Jun 21, 2017 12:30:52 PM pursuant to License Agreement with ICC. No further reproduction or distribution authorized. ANY UNAUTHORIZED REPRODUCTION OR DISTRIBUTION IS A VIOLATION OF THE FEDERAL COPYRIGHT ACT AND THE LICENSE AGREEMENT, AND SUBJECT TO CIVIL AND CRIMINAL PENALTIES THEREUNDER.

4

Installation Guidelines

4.1 Code Reference

The "authority having jurisdiction" should be referenced to determine what law, ordinance or code shall apply in the use of flexible duct.

Ducts conforming to NFPA 90A or 90B shall meet the following requirements:

a. Shall be tested in accordance with Sections 5-21 of Underwriters Laboratories Standard for Factory-Made Air Ducts and Air Connectors, UL 181.
b. Shall be installed in accordance with the conditions of their listing.
c. Shall be installed within the limitations of the applicable NFPA 90A or 90B Standard.

4.2 General

The routing of flexible duct, the number of bends, the number or degrees in each bend and the amount of sag allowed between support joints will have serious effects on system performance due to the increased resistance each introduces. Use the minimum length of flexible duct to make connections. It is not recommended that excess length of ducts be installed to allow for possible future relocations of air terminal devices.

Avoid installations where exposure to direct sunlight can occur, e.g. turbine vents, sky lights, canopy windows, etc. Prolonged exposure to sunlight will cause degradation of the vapor barrier. Direct exposure to UV light from a source lamp installed within the HVAC system will cause degradation of some inner core/liner materials.

Terminal devices shall be supported independently of the flexible duct.

Repair torn or damaged vapor barrier/jacket with duct tape listed and labeled to Standard UL 181B. If internal core is penetrated, replace flexible duct or treat as a connection.

4.3 Installation and Usage

Install duct fully extended, do not install in the compressed state or use excess lengths. This will noticeably increase friction losses.

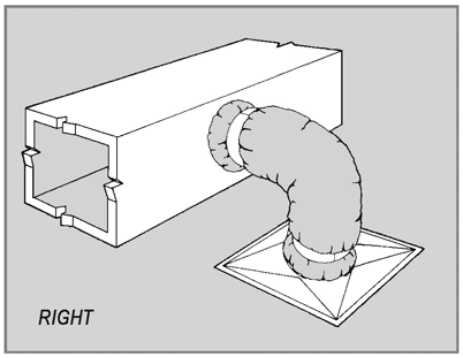

Figure 6

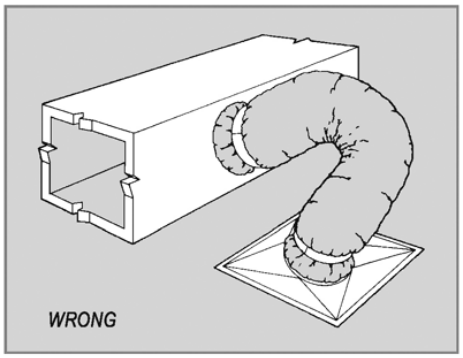

Figure 7

12

ADC Flexible Duct Performance & Installation Standards, 4th Edition

Figure 603.6(4)
INSTALLATION INSTRUCTIONS FOR FLEXIBLE AIR DUCTS AND AIR CONNECTORS
(Courtesy of Air Diffusion Council)
(*continued*)

INTERNATIONAL CODE COUNCIL®
Copyright © 2015 ICC. ALL RIGHTS RESERVED. Accessed by David Dammon on Jun 21, 2017 12:30:52 PM pursuant to License Agreement with ICC. No further reproduction or distribution authorized. ANY UNAUTHORIZED REPRODUCTION OR DISTRIBUTION IS A VIOLATION OF THE FEDERAL COPYRIGHT ACT AND THE LICENSE AGREEMENT, AND SUBJECT TO CIVIL AND CRIMINAL PENALTIES THEREUNDER.

Installation Guidelines . . . continued

Avoid bending ducts across sharp corners or incidental contact with metal fixtures, pipes or conduits. Radius at center line shall not be less than one duct diameter.

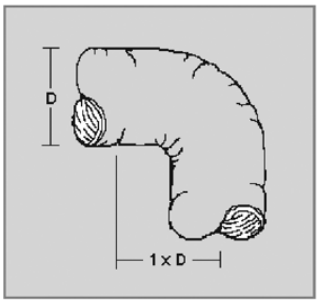

Figure 8

Do not install near hot equipment (e.g. furnaces, boilers, steam pipes, etc.) that is above the recommended flexible duct use temperature.

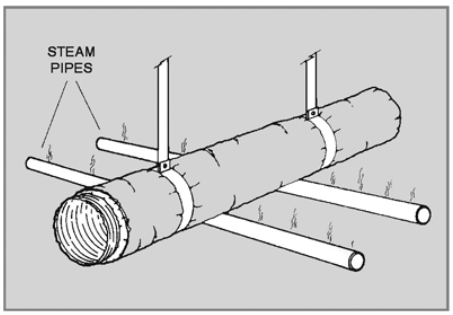

Figure 9

4.4 Connecting, Joining and Splicing Flexible Ducts

All connections, joints and splices shall be made in accordance with the manufacturer's installation instructions.

For flexible ducts with plain ends, standardized installation instructions conforming to this standard are shown in Sections 4.5 "Nonmetallic With Plain Ends" (uses tape and clamp to seal/secure the core to the fitting), 4.6 "Alternate Nonmetallic With Plain Ends" (uses mastic and clamp to seal/secure the core to the fitting), and 4.7 "Metallic With Plain Ends (optional use of tape or mastic and metal screws to seal/secure the core to the fitting).

Due to the wide variety of ducts and duct assemblies with special end treatments, e.g. factory installed fittings, taped ends, crimped metal ends, etc., no standardized installation instructions are shown. Reference manufacturer's installation instructions.

All tapes, mastics, and nonmetallic clamps used for field installation of flexible ducts shall be listed and labeled to Standard UL 181B - Closure Systems for Use With Flexible Air Ducts and Air Connectors.

Sheet metal fittings to which flexible ducts with plain ends are attached shall be beaded and have a minimum of 2 inches [50 mm] collar length. Beads are optional for fittings when attaching *metallic* flexible ducts.

Sheet metal sleeves used for joining two sections of flexible duct with plain ends shall be a minimum of 4 inches [100 mm] in length and beaded on each end. Beads are optional for sleeves when joining *metallic* flexible ducts.

Flexible ducts secured with nonmetallic clamps shall be limited to 6 inches w.g. [1500 Pa] positive pressure.

Figure 603.6(4)—continued
INSTALLATION INSTRUCTIONS FOR FLEXIBLE AIR DUCTS AND AIR CONNECTORS
(Courtesy of Air Diffusion Council)
(*continued*)

INTERNATIONAL CODE COUNCIL®
Copyright © 2015 ICC. ALL RIGHTS RESERVED. Accessed by David Dammon on Jun 21, 2017 12:30:52 PM pursuant to License Agreement with ICC. No further reproduction or distribution authorized. ANY UNAUTHORIZED REPRODUCTION OR DISTRIBUTION IS A VIOLATION OF THE FEDERAL COPYRIGHT ACT AND THE LICENSE AGREEMENT, AND SUBJECT TO CIVIL AND CRIMINAL PENALTIES THEREUNDER.

Installation Guidelines . . . continued

4.5 Installation Instructions for Air Ducts and Air Connectors - Nonmetallic with Plain Ends

Connections

1. After desired length is determined, cut completely around and through duct with knife or scissors. Cut wire with wire cutters. Fold back jacket and insulation.

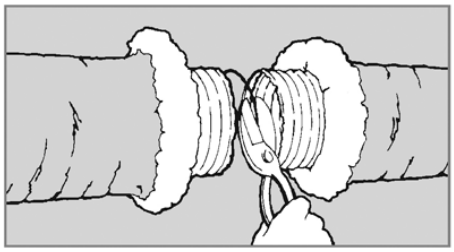

2. Slide at least 1" [25 mm] of core over fitting and past the bead. Seal core to collar with at least 2 wraps of duct tape. Secure connection with clamp placed over the core and tape and past the bead.

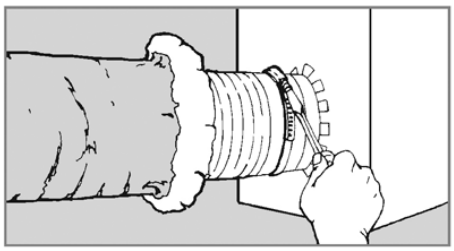

3. Pull jacket and insulation back over core. Tape jacket with at least 2 wraps of duct tape. A clamp may be used in place of or in combination with the duct tape.

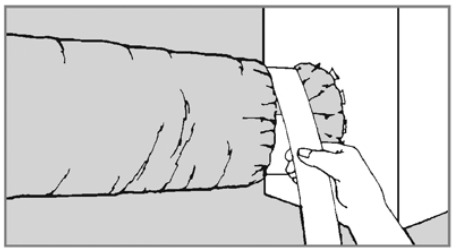

Splices

1. Fold back jacket and insulation from core. Butt two cores together on a 4" [100 mm] length metal sleeve.

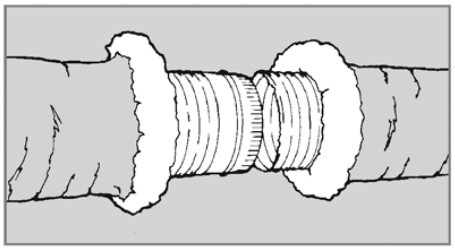

2. Tape cores together with at least 2 wraps of duct tape. Secure connection with 2 clamps placed over the taped core ends and past the beads.

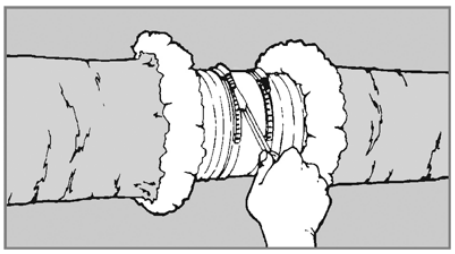

3. Pull jacket and insulation back over cores. Tape jackets together with at least 2 wraps of duct tape.

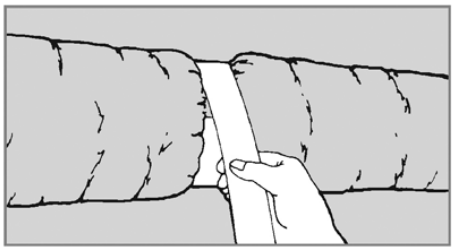

NOTES:
1. For uninsulated air ducts and air connectors, disregard references to insulation and jacket.
2. Use beaded sheet metal fittings and sleeves.
3. Use tapes listed and labeled in accordance with Standard UL 181B and marked "181B-FX".
4. Nonmetallic clamps shall be listed and labeled in accordance with Standard UL 181B and marked "181B-C". Use of nonmetallic clamps shall be limited to 6 in. w.g. [1500 Pa] positive pressure.

14 | ADC Flexible Duct Performance & Installation Standards, 4th Edition

Figure 603.6(4)—continued
INSTALLATION INSTRUCTIONS FOR FLEXIBLE AIR DUCTS AND AIR CONNECTORS
(Courtesy of Air Diffusion Council)
(*continued*)

INTERNATIONAL CODE COUNCIL®
Copyright © 2015 ICC. ALL RIGHTS RESERVED. Accessed by David Dammon on Jun 21, 2017 12:30:52 PM pursuant to License Agreement with ICC. No further reproduction or distribution authorized. ANY UNAUTHORIZED REPRODUCTION OR DISTRIBUTION IS A VIOLATION OF THE FEDERAL COPYRIGHT ACT AND THE LICENSE AGREEMENT, AND SUBJECT TO CIVIL AND CRIMINAL PENALTIES THEREUNDER.

Installation Guidelines . . . continued

4.6 Alternate Installation Instructions for Air Ducts and Air Connectors - Nonmetallic with Plain Ends

Connections and Splices

Step 1
After desired length is determined, cut completely around and through duct with knife or scissors. Cut wire with wire cutters. Pull back jacket and insulation from core.

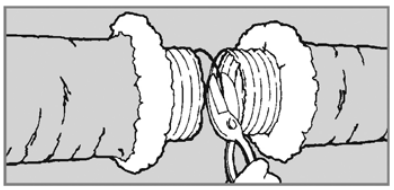

Step 2
Apply mastic approximately 2" [50 mm] wide uniformly around the collar of the metal fitting or over the ends of a 4" [100 mm] metal sleeve. Reference data on mastic container for application rate, application thickness, cure times and handling information.

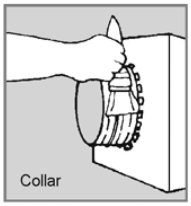

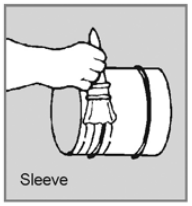

Step 3
Slide at least 2" [50 mm] of core over the fitting or sleeve ends and past the bead.

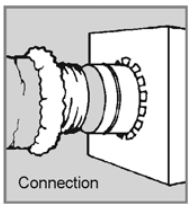

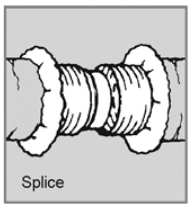

Step 4
Secure core to collar with a clamp applied past the bead. Secure cores to sleeve ends with 2 clamps applied past the beads.

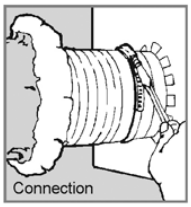

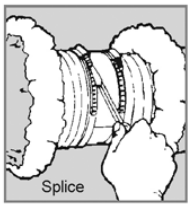

Step 5
Pull jacket and insulation back over core ends. Tape jacket(s) with at least 2 wraps of duct tape. A clamp may be used in place of or in combination with the duct tape.

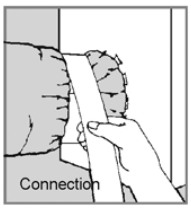

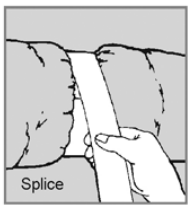

NOTES:
1. For uninsulated air ducts and air connectors, disregard references to insulation and jacket.
2. Use beaded sheet metal fittings and sleeves.
3. Use mastics listed and labeled in accordance with Standard UL 181B and marked "181B-M" on container.
4. Use tapes listed and labeled in accordance with Standard UL 181B and marked "181B-FX".
5. Nonmetallic clamps shall be listed and labeled in accordance with standard UL 181B and marked "181B-C". Use of nonmetallic clamps shall be limited to 6 in. w.g. [1500 Pa] positive pressure.

15

ADC Flexible Duct Performance & Installation Standards, 4th Edition

Figure 603.6(4)—continued
INSTALLATION INSTRUCTIONS FOR FLEXIBLE AIR DUCTS AND AIR CONNECTORS
(Courtesy of Air Diffusion Council)
(*continued*)

INTERNATIONAL CODE COUNCIL®
Copyright © 2015 ICC. ALL RIGHTS RESERVED. Accessed by David Dammon on Jun 21, 2017 12:30:52 PM pursuant to License Agreement with ICC. No further reproduction or distribution authorized. ANY UNAUTHORIZED REPRODUCTION OR DISTRIBUTION IS A VIOLATION OF THE FEDERAL COPYRIGHT ACT AND THE LICENSE AGREEMENT, AND SUBJECT TO CIVIL AND CRIMINAL PENALTIES THEREUNDER.

Installation Guidelines . . . continued

4.7 Installation Instruction for Air Ducts and Air Connectors - Metallic with Plain Ends

Connections and Splices

1. After cutting duct to desired length, fold back jacket and insulation exposing core. Trim core ends squarely using suitable metal shears. Determine optional sealing method (Steps 2 or 5) before proceeding.

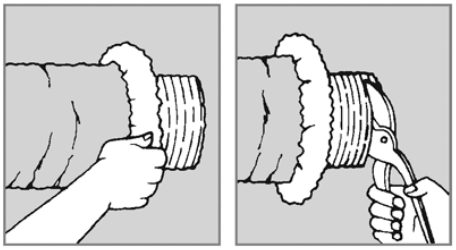

2. When mastics are required and for pressures 4" w.g. [1000 Pa] and over, seal joint with mastic applied uniformly to the outside surface of collar/sleeve. (Disregard this step when not using mastics and proceed to Step 3).

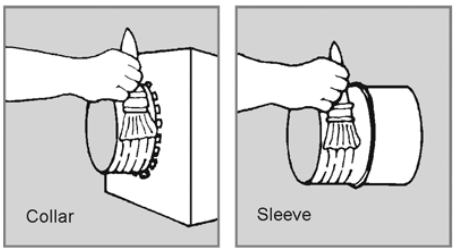

3. Slide at least 1" [25 mm] of core over metal collar for attaching duct to take off or over ends of a 4" [100 mm] metal sleeve for splicing 2 lengths of duct.

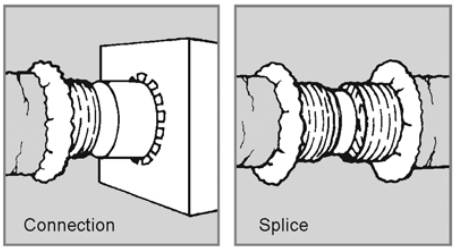

4. Secure to collar/sleeve using #8 sheet metal screws spaced equally around circumference. Use 3 screws for diameters under 12" [300 mm] and 5 screws for diameters 12" [300 mm] and over.

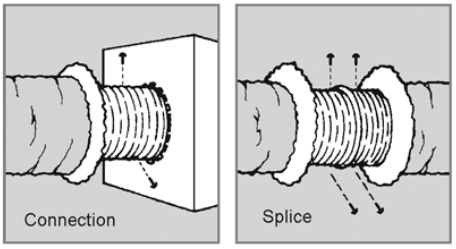

5. For pressures under 4" w.g. [1000 Pa] seal joint using 2 wraps of duct tape applied over screw heads and spirally lapping tape to collar/sleeve. (Disregard this step when using mastics per Step 2).

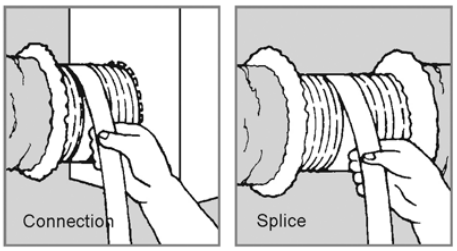

6. Pull jacket and insulation back over core. Tape jacket with 2 wraps of duct tape. A clamp may be used in place of or in combination with the duct tape.

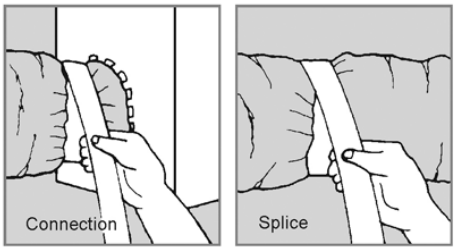

NOTES:
1. For uninsulated air ducts and air connectors, disregard references to insulation and jacket.
2. Use mastics listed and labeled to Standard UL 181B and marked"181B-M" on container.
3. Use tapes listed and labeled to Standard UL 181B and marked "181B-FX".
4. Nonmetallic clamps shall be listed and labeled in accordance with Standard UL 181B and marked "181B-C".

Figure 603.6(4)—continued
INSTALLATION INSTRUCTIONS FOR FLEXIBLE AIR DUCTS AND AIR CONNECTORS
(Courtesy of Air Diffusion Council)
(*continued*)

INTERNATIONAL CODE COUNCIL®
Copyright © 2015 ICC. ALL RIGHTS RESERVED. Accessed by David Dammon on Jun 21, 2017 12:30:52 PM pursuant to License Agreement with ICC. No further reproduction or distribution authorized. ANY UNAUTHORIZED REPRODUCTION OR DISTRIBUTION IS A VIOLATION OF THE FEDERAL COPYRIGHT ACT AND THE LICENSE AGREEMENT, AND SUBJECT TO CIVIL AND CRIMINAL PENALTIES THEREUNDER.

Installation Guidelines . . . continued

4.8 Supporting Flexible Duct

Flexible duct shall be supported at manufacturer's recommended intervals, but at no greater distance than 5' [1.5 m]. Maximum permissible sag is ½" per foot [42 mm per meter] of spacing between supports.

A connection to rigid duct or equipment shall be considered a support joint. Long horizontal duct runs with sharp bends shall have additional supports before and after the bend approximately one duct diameter from the center line of the bend.

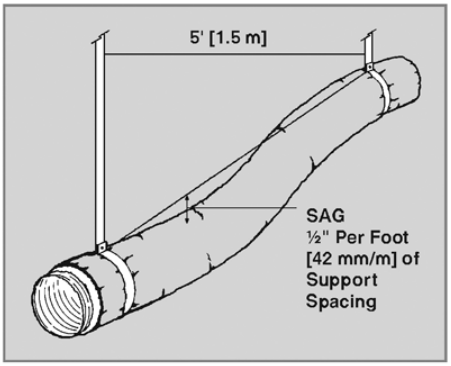

Figure 10

Hanger or saddle material in contact with the flexible duct shall be of sufficient width to prevent any restriction of the internal diameter of the duct when the weight of the supported section rests on the hanger or saddle material. In no case will the material contacting the flexible duct be less than 1½" [38 mm] wide.

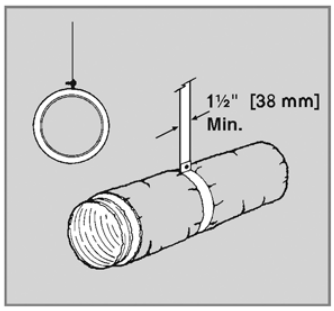

Figure 11

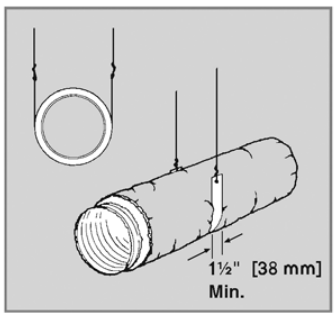

Figure 12

Figure 603.6(4)—continued
INSTALLATION INSTRUCTIONS FOR FLEXIBLE AIR DUCTS AND AIR CONNECTORS
(Courtesy of Air Diffusion Council)
(*continued*)

INTERNATIONAL CODE COUNCIL®
Copyright © 2015 ICC. ALL RIGHTS RESERVED. Accessed by David Dammon on Jun 21, 2017 12:30:52 PM pursuant to License Agreement with ICC. No further reproduction or distribution authorized. ANY UNAUTHORIZED REPRODUCTION OR DISTRIBUTION IS A VIOLATION OF THE FEDERAL COPYRIGHT ACT AND THE LICENSE AGREEMENT, AND SUBJECT TO CIVIL AND CRIMINAL PENALTIES THEREUNDER.

Installation Guidelines . . . continued

Factory installed suspension systems integral to the flexible duct are an acceptable alternative hanging method when manufacturer's recommended procedures are followed.

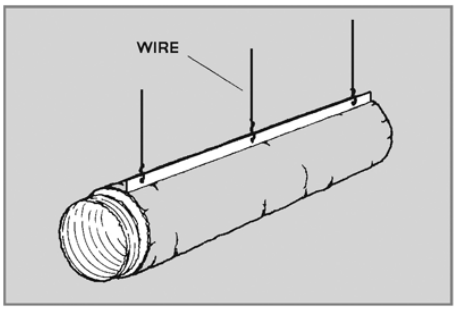

Figure 13

Flexible ducts may rest on ceiling joists or truss supports. Maximum spacing between supports shall not exceed the maximum spacing per manufacturer's installation instruction.

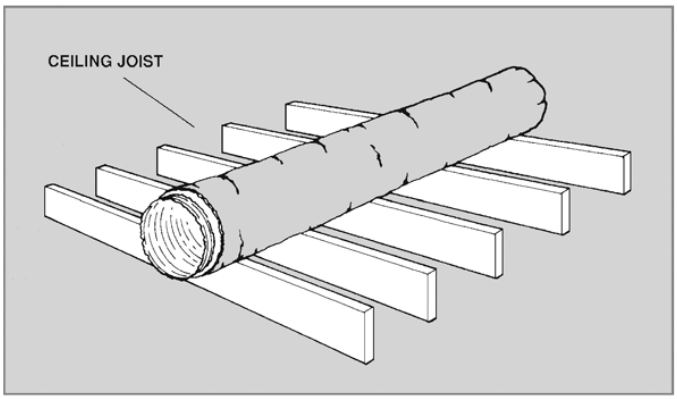

Figure 14

Support the duct between a metal connection and bend by allowing the duct to extend straight for a few Inches before making the bend. This will avoid possible damage of the flexible duct by the edge of the metal collar.

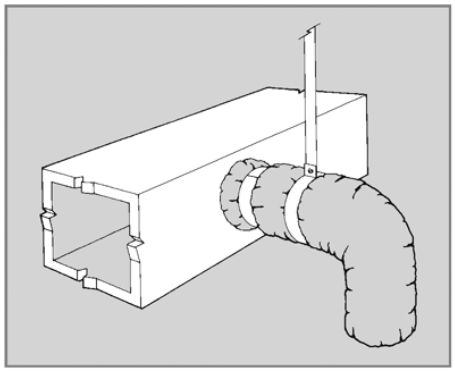

Figure 15

Vertically installed duct shall be stabilized by support straps at a max. of 6' [1.8 m] on center.

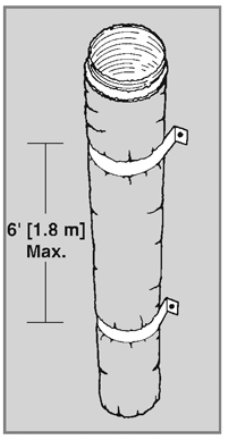

Figure 16

Note:
Factory-made air ducts may not be used for vertical risers in air duct systems serving more than two stories.

Figure 603.6(4)—continued
INSTALLATION INSTRUCTIONS FOR FLEXIBLE AIR DUCTS AND AIR CONNECTORS
(Courtesy of Air Diffusion Council)

INTERNATIONAL CODE COUNCIL®
Copyright © 2015 ICC. ALL RIGHTS RESERVED. Accessed by David Dammon on Jun 21, 2017 12:30:52 PM pursuant to License Agreement with ICC. No further reproduction or distribution authorized. ANY UNAUTHORIZED REPRODUCTION OR DISTRIBUTION IS A VIOLATION OF THE FEDERAL COPYRIGHT ACT AND THE LICENSE AGREEMENT, AND SUBJECT TO CIVIL AND CRIMINAL PENALTIES THEREUNDER.

603.6.1 Flexible air ducts. Flexible air ducts, both metallic and nonmetallic, shall be tested in accordance with UL 181. Such ducts shall be *listed* and *labeled* as Class 0 or Class 1 flexible air ducts and shall be installed in accordance with Section 304.1.

❖ Flexible air ducts must comply with the requirements of UL 181 for Class 0 or Class 1 flexible air ducts. Commentary Figure 603.6 was taken from UL 181, which is the standard used to investigate the performance of flexible air ducts and connectors. The table indicates the testing protocol for flexible air ducts and whether or not the duct has undergone that particular test. A Class 0 air duct has flame spread and smoke-developed indices of zero. A Class 1 air duct has a flame spread index not greater than 25 and a smoke-developed index not greater than 50 when tested to ASTM E84. Air ducts that conform to the requirements of UL 181 are identified with the manufacturer's or vendors' name, the rated velocity, rated negative and positive pressures and the information related to fabrication and joining of materials. Commentary Figure 603.6(2) shows a sample marking of a Class 1 flexible air duct. Note that the manufacturer's name does not appear, but the number in the upper left corner is the third-party inspection agency's file number of the manufacturer. Also note that air duct labels are rectangular (see Section 607.7).

603.6.1.1 Duct length. Flexible air ducts shall not be limited in length.

❖ The length of flexible air ducts is not limited, unlike flexible air connectors, which are limited to 14 feet (4267 mm) (see commentary, Section 603.6.2.1).

603.6.2 Flexible air connectors. Flexible air connectors, both metallic and nonmetallic, shall be tested in accordance with UL 181. Such connectors shall be *listed* and *labeled* as Class 0 or Class 1 flexible air connectors and shall be installed in accordance with Section 304.1.

❖ Flexible air connectors must comply with the requirements of UL 181 for Class 0 or Class 1 flexible air connectors. Commentary Figure 603.6 indicates the testing protocol used for flexible air connectors. A Class 0 connector has flame spread and smoke-developed indices of zero. A Class 1 connector has a flame spread index not greater than 25 and a smoke-developed index not greater than 50 when tested to ASTM E84. Connectors that conform to the requirements of UL 181 are identified by the manufacturer's or vendor's name, rated velocity, negative and positive pressure classification and information related to fabrication and joining of materials. Commentary Figure 603.6(3) shows a sample marking of a Class 1 flexible air connector. See the commentary to Section 603.6 for a general discussion on flexible air ducts and connectors. Current air connector labels are round or oval, making them readily distinguishable from rectangular air duct labels. See the commentary to Section 603.6 for additional information on flexible air ducts and flexible air connectors (see Section 607.7).

603.6.2.1 Connector length. Flexible air connectors shall be limited in length to 14 feet (4267 mm).

❖ Because the testing protocol for flexible air connector material is less stringent than it is for flexible air duct material, the length of flexible air connectors is limited [see commentary, Section 603.6 and Commentary Figure 603.6(2)]. Commentary Figure 603.6(3) shows that the 14-foot (4267 mm) length limitation will be included on the material identification markings. The length is limited to 14 feet (4267 mm) to reduce the probability of the material being ruptured by impact or puncture, and to control the amount of the material that could be exposed to fire.

603.6.2.2 Connector penetration limitations. Flexible air connectors shall not pass through any wall, floor or ceiling.

❖ Flexible air connectors must not pass through any wall, floor or ceiling, whether the assembly is fire-resistance rated or not. An inadequate seal at the assembly penetration could allow smoke or flame to penetrate the assembly. Flexible air connectors can be constructed of both combustible and noncombustible components; therefore, the duct's resistance to the passage of fire could be less than the resistance of the penetrated assembly. All construction assemblies, whether fire-resistance rated or not, have some inherent resistance to the spread of fire; duct penetrations can significantly affect that fire resistance (see Section 607.7).

603.6.3 Air temperature. The design temperature of air to be conveyed in flexible air ducts and flexible air connectors shall be less than 250ºF (121ºC).

❖ The maximum discharge temperature permitted by industry standards for warm air heating systems is 250°F (121°C). This section prohibits use of flexible air duct and connector materials in applications in which the design air temperature is 250°F (121°C) or higher because the material has not been tested or designed for higher temperatures.

603.6.4 Flexible air duct and air connector clearance. Flexible air ducts and air connectors shall be installed with a minimum *clearance* to an *appliance* as specified in the *appliance* manufacturer's installation instructions.

❖ Flexible air ducts and connectors could contain combustible materials; therefore, they must be installed with adequate clearance from heat-producing appliances in accordance with the appliance manufacturer's installation instructions. The manufacturer's instructions for heating equipment will specify minimum distances between the equipment duct connections and flexible air ducts and connectors.

603.7 Rigid duct penetrations. Duct system penetrations of walls, floors, ceilings and roofs and air transfer openings in such building components shall be protected as required by Section 607. Ducts in a private garage that penetrate a wall or ceiling that separates a dwelling from a private garage shall be continuous, shall be constructed of sheet steel having a thickness of not less than 0.0187 inch (0.4712 mm) (No. 26 gage) and shall not have openings into the garage. Fire and

INTERNATIONAL CODE COUNCIL®
Copyright © 2015 ICC. ALL RIGHTS RESERVED. Accessed by David Dammon on Jun 21, 2017 12:30:52 PM pursuant to License Agreement with ICC. No further reproduction or distribution authorized. ANY UNAUTHORIZED REPRODUCTION OR DISTRIBUTION IS A VIOLATION OF THE FEDERAL COPYRIGHT ACT AND THE LICENSE AGREEMENT, AND SUBJECT TO CIVIL AND CRIMINAL PENALTIES THEREUNDER.

smoke dampers are not required in such ducts passing through the wall or ceiling separating a dwelling from a private garage except where required by Chapter 7 of the *International Building Code*.

❖ All construction assemblies, whether fire-resistance rated or not, have some inherent resistance to the spread of fire, and duct penetrations can significantly affect that fire resistance. To maintain the integrity of the construction assemblies, penetrations must be properly protected. Acceptable protection methods for various penetrations of fire-resistance-rated and unrated assemblies are identified in Section 607 (see commentary, Section 607).

The term "penetration" typically describes an object such as a duct passing through an assembly, whereas the term "opening" typically describes a hole in an assembly or a termination opening such as an outlet or diffuser.

This section has an exception that allows ducts to penetrate the wall or ceiling separating a dwelling and a private garage without installing fire and smoke dampers. This exception only applies if the ducts are continuous, are a minimum of 26 gage galvanized sheet metal (0.0187 inches) (0.048 mm), and there are no openings in the ducts into the garage. It should be noted that this exception only applies to private garages. Based on Section 406.1 in the IBC, a private garage is a Group U occupancy. Therefore this exception would not apply if the garage were an S-2 occupancy (see Commentary Figure 603.7).

This section does not prohibit duct openings into the garage where the ducts serve only the garage and do not pass through any walls, floors or ceiling of the garage.

603.8 Underground ducts. Ducts shall be *approved* for underground installation. Metallic ducts not having an *approved* protective coating shall be completely encased in not less than 2 inches (51 mm) of concrete.

❖ Ducts installed underground must be able to resist the forces imposed on them by the materials that encase them, the forces created by floodwaters in and around them and corrosion. The ASHRAE *Handbook of HVAC Systems and Equipment* recommends that underground ducts and fittings be round for optimum structural performance. Unlike round ducts, square or rectangular ducts offer little resistance to deformation or collapse caused by the structural loads associated with burial.

Metal ducts must either have a protective coating to resist corrosion or be completely encased in concrete, a minimum of 2 inches (51 mm) thick all around. Concrete-encased ducts may eventually corrode; however, the air passageway will be maintained because of the remaining concrete enclosure. Nonmetallic ducts and metallic ducts with factory-applied protective coatings must be approved and installed to comply with the manufacturer's installation instructions. Application of any field-applied protective coating must be approved. Great care must be taken to protect underground ducts from damage prior to plac-

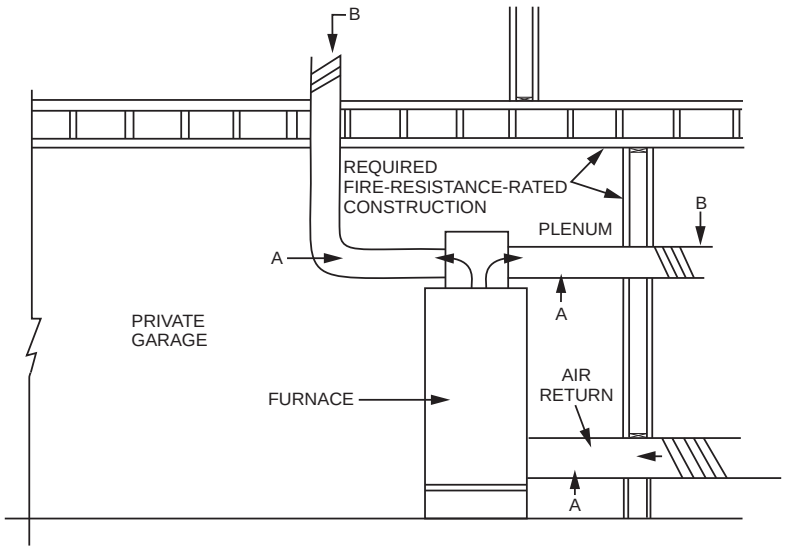

"A" DUCTS—MATERIAL REQUIRED TO BE AT LEAST NO. 26 GAGE GALVANIZED STEEL. DUCTS MUST NOT HAVE OPENINGS INTO GARAGE.

"B" DUCTS—ANY DUCT MATERIAL IN COMPLIANCE WITH THE CODE.

Figure 603.7
FURNACE DUCTS IN PRIVATE GARAGE

INTERNATIONAL CODE COUNCIL®
Copyright © 2015 ICC. ALL RIGHTS RESERVED. Accessed by David Dammon on Jun 21, 2017 12:30:52 PM pursuant to License Agreement with ICC. No further reproduction or distribution authorized. ANY UNAUTHORIZED REPRODUCTION OR DISTRIBUTION IS A VIOLATION OF THE FEDERAL COPYRIGHT ACT AND THE LICENSE AGREEMENT, AND SUBJECT TO CIVIL AND CRIMINAL PENALTIES THEREUNDER.

ing the concrete or installing the permanent structure above them. Plastic duct and fitting systems designed for underground applications are available that allow corrosion-resistant and waterproof installations.

UL 181 applies to flexible nonmetallic underground ducts. Section 603.6 requires nonmetallic flexible air duct to conform to the material requirements of UL 181, but the standard does not provide assurance that flexible ducts are rated for underground installation. Suitability must be evaluated based on the manufacturer's installation instructions for the intended underground application and the corresponding supporting evidence.

603.8.1 Slope. Ducts shall have a minimum slope of $^1/_8$ inch per foot (10.4 mm/m) to allow drainage to a point provided with access.

❖ Underground ducts must be sloped to drain to an accessible point in the event that water enters the duct through duct openings or from the surrounding soil. Water can cause corrosion, deterioration of duct materials and duct blockages. Sloping the duct to drain to a collection point will allow removal of water. Specifying minimum slope provides the inspector with a criterion for enforcement. Note that the code does not state that ducts must be water tight.

603.8.2 Sealing. Ducts shall be sealed and secured prior to pouring the concrete encasement.

❖ Underground ducts need not be water tight. This section requires sealing of the duct before the concrete is poured to prevent concrete from entering the duct.

603.8.3 Plastic ducts and fittings. Plastic ducts shall be constructed of PVC having a minimum pipe stiffness of 8 psi (55 kPa) at 5-percent deflection when tested in accordance with ASTM D2412. Plastic duct fittings shall be constructed of either PVC or high-density polyethylene. Plastic duct and fittings shall be utilized in underground installations only. The maximum design temperature for systems utilizing plastic duct and fittings shall be 150°F (66°C).

❖ Plastic ducts have the advantage of being corrosion resistant. The pipe stiffness criterion gives the pipe the ability to resist deformation from the loads associated with direct burial. Plastic ducts rapidly lose strength as their temperature approaches their maximum service temperature. At temperatures above 150°F (66°C), PVC pipe is substantially weakened, and deformation and/or collapse is possible.

603.9 Joints, seams and connections. All longitudinal and transverse joints, seams and connections in metallic and nonmetallic ducts shall be constructed as specified in SMACNA *HVAC Duct Construction Standards—Metal and Flexible* and NAIMA *Fibrous Glass Duct Construction Standards*. All joints, longitudinal and transverse seams and connections in ductwork shall be securely fastened and sealed with welds, gaskets, mastics (adhesives), mastic-plus-embedded-fabric systems, liquid sealants or tapes. Tapes and mastics used to seal fibrous glass ductwork shall be listed and labeled in accordance with UL 181A and shall be marked "181 A-P" for pressure-sensitive tape, "181 A-M" for mastic or "181 A-H" for heat-sensitive tape. Tapes and mastics used to seal metallic and flexible air ducts and flexible air connectors shall comply with UL 181B and shall be marked "181 B-FX" for pressure-sensitive tape or "181 B-M" for mastic. Duct connections to flanges of air distribution system equipment shall be sealed and mechanically fastened. Mechanical fasteners for use with flexible nonmetallic air ducts shall comply with UL 181B and shall be marked "181 B-C." Closure systems used to seal all ductwork shall be installed in accordance with the manufacturer's instructions.

Exception: For ducts having a static pressure classification of less than 2 inches of water column (500 Pa), additional closure systems shall not be required for continuously welded joints and seams and locking-type joints and seams of other than the snap-lock and button-lock types.

❖ Duct sealing is commonly overlooked or poorly performed. The U.S. Environmental Protection Agency (EPA) estimates that 20 percent of the energy efficiency of heating and cooling systems can be lost because of duct air leaks located outside of the conditioned space. With the increased focus on lowering energy use in all types of buildings, substantial gains in energy efficiency can be obtained by making sure that ducts are "substantially" air tight. While approved duct materials have low permeability, the joints in these materials, as well as the joints in the connections of these materials to fittings/equipment, must be carefully sealed to achieve a "substantially" air-tight condition.

In general, joints must be sealed using tapes, mastics, liquid sealants, gasketing or other approved closure systems. A "closure system" consists of the materials and an installation method used to make the joint substantially air tight. This section specifically addresses three types of duct material and requires the sealing to be accomplished as follows:

- Rigid fibrous glass ductwork listed in accordance with UL 181A. Where pressure-sensitive tape is used, the exterior of the tape must be factory marked with the designation "181 A-P." Where mastic is used, the container label must indicate "181 A-M." Where heat-sensitive tape is used, the exterior of the tape must be factory marked with the designation "181 A-H."
- Flexible air ducts and flexible air connectors listed in accordance with UL 181B. Where pressure-sensitive tape is used, the exterior of the tape must be factory marked with the designation "181 B-FX." Where mastic is used, the container label must indicate "181 B-M."
- As with all duct material types, metal ducts must be sealed in accordance with the closure system manufacturer's installation instructions. Tapes and mastics used with metal ducts must comply with the same requirements for tapes and mastics used with flexible ducts and connectors. Many in the HVAC industry have long

INTERNATIONAL CODE COUNCIL®
Copyright © 2015 ICC. ALL RIGHTS RESERVED. Accessed by David Dammon on Jun 21, 2017 12:30:52 PM pursuant to License Agreement with ICC. No further reproduction or distribution authorized. ANY UNAUTHORIZED REPRODUCTION OR DISTRIBUTION IS A VIOLATION OF THE FEDERAL COPYRIGHT ACT AND THE LICENSE AGREEMENT, AND SUBJECT TO CIVIL AND CRIMINAL PENALTIES THEREUNDER.

considered general-purpose duct tapes to be unsuitable for the intended service conditions and required length of service. Requiring that metal ducts be sealed with a product listed to UL 181B will result in joints having the required longevity.

In addition to sealing, joints must also be mechanically fastened. In other words, sealing by itself is not a substitute for the mechanical fastening of a duct joint. Two examples are (1) taping a flexible air duct to a fitting and (2) "gluing" a round metal duct joint with mastic or caulking. Both practices are not acceptable fastening methods. Mechanical fasteners must be used. This section specifically addresses the mechanical fastening of three types of duct material as follows:

- Rigid fibrous glass ductwork must be mechanically attached to flanges of air distribution equipment or sheet metal fittings. For example, where a rigid fibrous glass duct connects to a sheet metal flange of an air handler, sheet metal screws (with flat washers) can be used to attach the duct board to the metal flange. Where fittings for other ducts must attach to the duct, a "spin in," "twist lock" or "tabbed" collar provides for the required mechanical fastening of the joint.
- Flexible air ducts and flexible air connectors are fastened to collar stubs or duct connector sleeves using a "cable tie" that complies with UL 181B and is marked "181-C" or a worm-gear clamp. These fittings should have a convex bead formed on the circumference of the fitting to prevent the flexible duct from being pulled off of the connector. Commentary Figure 603.6(4) shows installation guidelines for flexible air ducts and flexible air connectors.
- Round metal duct with crimp joints must have an overlap of at least $1^1/_2$ inches (38.1 mm). At least three sheet metal screws or rivets must be installed, equally spaced around the duct, for mechanical fastening of the joint.

The exception allows for longitudinal welded joints and locking-type joints (including spiral type) and seams to be considered as sealed. A welded or locking-type (e.g., Pittsburgh lock) joint is sufficiently air tight at low pressures such that joint sealing would be of limited value. Snap-lock and button-lock type joints are not included under this exception because they are not sufficiently air-tight. S-slip and drive joints and lap joints must always be sealed (see Commentary Figure 603.9). Some duct manufacturers place a factory-applied sealant in the grooves of snap- and button-lock duct joints and these joints could be approved by the code official as meeting the intent of the code (see Commentary Figure 603.9).

603.10 Supports. Ducts shall be supported in accordance with SMACNA *HVAC Duct Construction Standards—Metal and Flexible.* Flexible and other factory-made ducts shall be supported in accordance with the manufacturer's instructions.

❖ Proper support of the duct system requires designing for the weight of the duct as well as for dynamic loads caused by vibrations, and is necessary to maintain proper alignment of the duct system and to prevent stresses that could lead to joint failures. A sagging duct will increase the internal resistance to airflow and reduce the efficiency of the system. As with piping systems, ducts and ductwork systems that are

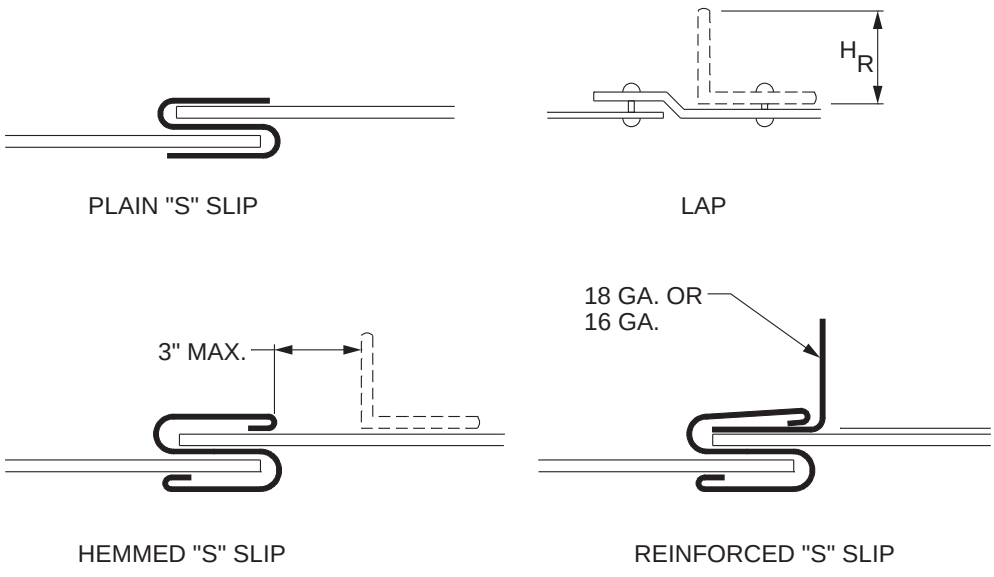

For SI: 1 inch = 25.4 mm.

Figure 603.9
TYPICAL HVAC METAL DUCT JOINTS REQUIRING SEALING

INTERNATIONAL CODE COUNCIL®
Copyright © 2015 ICC. ALL RIGHTS RESERVED. Accessed by David Dammon on Jun 21, 2017 12:30:52 PM pursuant to License Agreement with ICC. No further reproduction or distribution authorized. ANY UNAUTHORIZED REPRODUCTION OR DISTRIBUTION IS A VIOLATION OF THE FEDERAL COPYRIGHT ACT AND THE LICENSE AGREEMENT, AND SUBJECT TO CIVIL AND CRIMINAL PENALTIES THEREUNDER.

improperly supported will deteriorate structurally and functionally.

Duct support spacing is limited to not more than 12 feet (3658 mm) between supports because of the inability of commonly used duct materials to resist deflection at larger spacing intervals. This spacing criterion is primarily applicable to rigid ducts constructed of sheet metal; some duct configurations and duct materials will require smaller spacing intervals. For example, a 12-foot (3658 mm) support spacing would be inadequate for flexible ducts, and some duct materials would require support at each joint.

SMACNA *HVAC Duct Construction Standards—Metal and Flexible* contains information for choosing support systems for ducts. Additionally, the IBC could require designing the duct support system to resist earthquake loads, depending on the location and use of the building.

If duct hangers are not used and a portion of the building structure is used to support the duct, the support system must be designed by a registered professional engineer or architect to comply with the IBC. Duct hangers are to be approved for the application and must be designed for the loads to be carried. For example, hangers for nonmetallic ducts and flexible ducts must be of proper width or must have saddles to prevent damage to the ducts.

Improper support of rigid and flexible ducts is a common problem and a primary cause of failed ducts and duct connections.

603.11 Furnace connections. Ducts connecting to a furnace shall have a *clearance* to combustibles in accordance with the furnace manufacturer's installation instructions.

❖ Where air ducts connect to a furnace, the minimum required clearance from the duct to combustible material must be maintained as specified in the manufacturer's installation instructions. This, of course, requires constructing the duct of a noncombustible material for the length of duct required to have a clearance to combustibles. Because of the high air temperatures and radiant heat from furnace surfaces, proper clearance between duct connections to furnaces and combustible materials must be maintained to reduce the potential for ignition of the duct material. Typically, duct clearances must be maintained from the point of connection to the furnace to a specified distance or length of duct run from the furnace. As an example, this requirement may prohibit the direct connection of a Class I flexible duct to a furnace return or supply connection and could require noncombustible ductwork to extend from the furnace for a specified distance (see Section 603.6.4).

603.12 Condensation. Provisions shall be made to prevent the formation of condensation on the exterior of any duct.

❖ Condensation can form on a duct when the temperature of the air in the duct is near the dewpoint of the air around the duct. The application of insulation with a vapor barrier covering prevents the duct from "sweating" by preventing moisture vapor from penetrating the insulation and reaching the duct surface. Duct sweating (condensation formation) is typically a problem for cooling ducts that pass through unconditioned areas where the humidity is not controlled. Condensation can cause insulation damage, corrosion or duct failure, and the accumulated water can cause damage to the building. Condensation can also occur inside of ducts, such as when ducts conveying warm, moist air from a bathroom exhaust pass through an attic space or similar unconditioned area. Condensation in duct interiors can degrade the duct, promote mold and fungus growth and cause structural damage; however, this section does not address the protection of ducts from condensation forming on the interior of the duct.

[BS] 603.13 Flood hazard areas. For structures in flood hazard areas, ducts shall be located above the elevation required by Section 1612 of the *International Building Code* for utilities and attendant equipment or shall be designed and constructed to prevent water from entering or accumulating within the ducts during floods up to such elevation. If the ducts are located below the elevation required by Section 1612 of the *International Building Code* for utilities and attendant equipment, the ducts shall be capable of resisting hydrostatic and hydrodynamic loads and stresses, including the effects of buoyancy, during the occurrence of flooding up to such elevation.

❖ In areas designated by the IBC as flood hazard areas, ducts must be installed above the elevation specified by the IBC or, if allowed below that elevation, ducts must be designed to be water tight. Water in ducts could damage the ducts, cause corrosion and deterioration of the duct materials and affect related equipment. If allowed below the required elevation, water-tight ducts will be exposed to hydrostatic and hydrodynamic loads and stresses, including the effects of buoyancy, which will exert a net upward force on the structure. If ducts must be installed under a floor system and if the ducts are not water-tight, then the lowest floor must be placed high enough so that the ducts are at or above the elevation specified by the IBC. For additional guidance, refer to FEMA 348.

603.14 Location. Ducts shall not be installed in or within 4 inches (102 mm) of the earth, except where such ducts comply with Section 603.8.

❖ Unless a duct is approved for underground installation, it must not be located in or within 4 inches (102 mm) of the ground. The 4-inch (102 mm) clearance is considered adequate to keep the duct from contacting the ground and possible moisture, which can cause duct deterioration.

603.15 Mechanical protection. Ducts installed in locations where they are exposed to mechanical damage by vehicles or from other causes shall be protected by *approved* barriers.

❖ This section is applicable to all duct locations, outdoors and indoors, and includes ducts in crawl spaces. For example, ducts in garages, in ware-

INTERNATIONAL CODE COUNCIL®
Copyright © 2015 ICC. ALL RIGHTS RESERVED. Accessed by David Dammon on Jun 21, 2017 12:30:52 PM pursuant to License Agreement with ICC. No further reproduction or distribution authorized. ANY UNAUTHORIZED REPRODUCTION OR DISTRIBUTION IS A VIOLATION OF THE FEDERAL COPYRIGHT ACT AND THE LICENSE AGREEMENT, AND SUBJECT TO CIVIL AND CRIMINAL PENALTIES THEREUNDER.

houses and on building exteriors can be subject to impact by vehicles and machinery. Where ducts cannot be protected by their location, barriers are required.

603.16 Weather protection. Ducts including linings, coverings and vibration isolation connectors installed on the exterior of the building shall be protected against the elements.

❖ Although most ducts are constructed of galvanized steel or aluminum that will resist corrosion, these materials may not withstand long-term exposure to weather. Ducts and their associated materials (duct liners, coverings, insulation and vibration isolation connectors) must be protected from exposure to moisture, sunlight, wind and contaminants. A weatherproof covering installed to completely cover the duct system is typically used to protect outdoor ductwork.

603.17 Air dispersion systems. Air dispersion systems shall:

1. Be installed entirely in exposed locations.
2. Be utilized in systems under positive pressure.
3. Not pass through or penetrate fire-resistant-rated construction.
4. Be listed and labeled in compliance with UL 2518.

❖ Essentially, an air dispersion system is a tubular-shaped exposed supply air register/diffuser that is made of air-impermeable fabric material. The tube is fitted with air holes or nozzles to direct air into the area served. The requirements for using air dispersion systems are that they not be installed in concealed locations, be supplied with positive air pressure, not penetrate fire-resistance-rated construction and be listed and labeled to UL 2518. Commentary Figures 603.17(1) and 603.17(2) show a typical system. Note that air dispersion systems are not ducts.

603.18 Registers, grilles and diffusers. Duct registers, grilles and diffusers shall be installed in accordance with the manufacturer's instructions. Volume dampers or other means of supply air adjustment shall be provided in the branch ducts or at each individual duct register, grille or diffuser. Each volume damper or other means of supply air adjustment used in balancing shall be provided with access.

❖ Air is supplied and returned to an air distribution system through registers, grilles and diffusers. From the definitions contained in the ASHRAE *Handbook of*



603.17(1)
AIR DISPERSION SYSTEM
(Photo courtesy of DuctSox, Inc.)

INTERNATIONAL CODE COUNCIL®
Copyright © 2015 ICC. ALL RIGHTS RESERVED. Accessed by David Dammon on Jun 21, 2017 12:30:52 PM pursuant to License Agreement with ICC. No further reproduction or distribution authorized. ANY UNAUTHORIZED REPRODUCTION OR DISTRIBUTION IS A VIOLATION OF THE FEDERAL COPYRIGHT ACT AND THE LICENSE AGREEMENT, AND SUBJECT TO CIVIL AND CRIMINAL PENALTIES THEREUNDER.

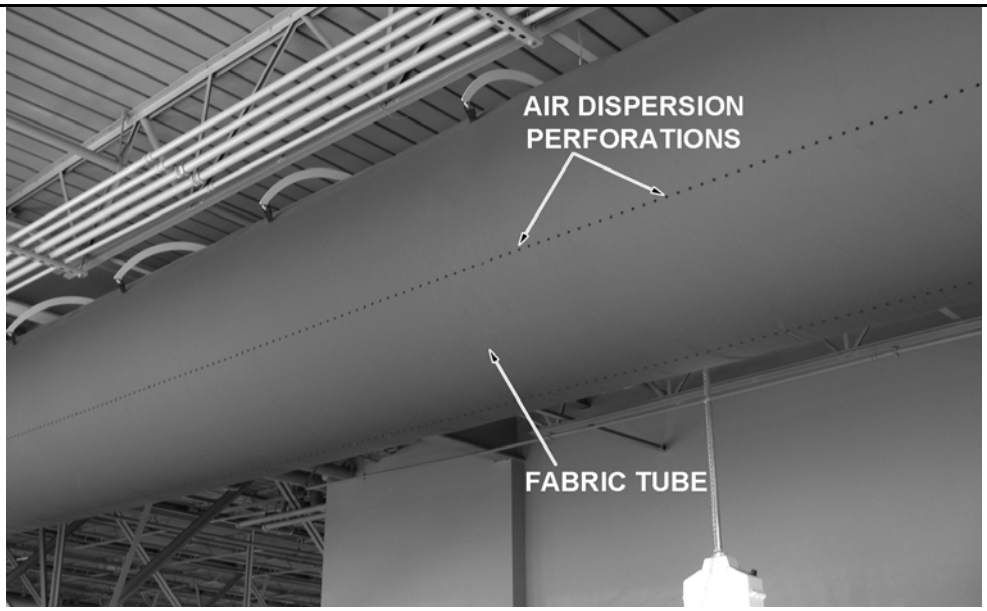

603.17(2)
AIR DISPERSION SYSTEM
(Photo courtesy of DuctSox, Inc.)

Fundamentals, a "grille" is a covering over any opening through which air passes; a "diffuser" is an outlet through which air discharges into a room in various directions and planes; and a "register" is a grille equipped with a damper or volume control. The code requires that these devices be installed in accordance with the manufacturer's installation instructions so that they operate properly and do not adversely affect the performance of the air distribution system.

To be able to control the conditions within a room or space, the code requires that air supply terminals (outlets) or branch supply ducts have controls to regulate the volume of air supplied to the room. The means of control can be located anywhere between the beginning of the supply branch duct and the branch outlet. In order to adjust the settings of the volume dampers, they must be provided with access to allow the occupants to easily make the adjustments. This requirement is intended to allow the air distribution system to be properly balanced. In some cases where the system has controls that are designed to balance the air distribution system, such as variable air volume units, the dampers and controls required by this section would not be necessary.

603.18.1 Floor registers. Floor registers shall resist, without structural failure, a 200-pound (90.8 kg) concentrated load on a 2-inch-diameter (51 mm) disc applied to the most critical area of the exposed face.

❖ Registers installed in a floor must be capable of supporting a 200-pound (890 N) load distributed over a 2-inch-diameter (51 mm) circular area. The test must be conducted with the register installed in accordance with the manufacturer's installation instructions with the circular disk placed at the most structurally critical location on the register. This test simulates a person stepping on the floor register or a furniture leg placed on the floor register.

603.18.2 Prohibited locations. Diffusers, registers and grilles shall be prohibited in the floor or its upward extension within toilet and bathing rooms required by the *International Building Code* to have smooth, hard, nonabsorbent surfaces.

Exception: *Dwelling units*.

❖ The IBC requires nonabsorbent floor surfaces in toilet and bathing rooms, other than in private dwellings, including extending the surface of the wall at least 6 inches (152 mm). This is required to facilitate cleaning of the floor surface. Placing an HVAC register or grille in the floor or the upturned extension will allow water to accumulate in the duct during normal cleaning. This moisture can promote the growth of mold and bacteria in the ducts, creating a health hazard for the occupants.

SECTION 604
INSULATION

604.1 General. Duct insulation shall conform to the requirements of Sections 604.2 through 604.13 and the *International Energy Conservation Code*.

❖ To conserve nonrenewable energy resources, the code requires that air ducts be thermally insulated in accordance with the *International Energy Conservation Code*® (IECC®), which determines where insulation is required and what minimum thermal resistance (*R*-value) is required. Other installation requirements for insulation are specified in Sections 604.2 through 604.13.

INTERNATIONAL CODE COUNCIL®
Copyright © 2015 ICC. ALL RIGHTS RESERVED. Accessed by David Dammon on Jun 21, 2017 12:30:52 PM pursuant to License Agreement with ICC. No further reproduction or distribution authorized. ANY UNAUTHORIZED REPRODUCTION OR DISTRIBUTION IS A VIOLATION OF THE FEDERAL COPYRIGHT ACT AND THE LICENSE AGREEMENT, AND SUBJECT TO CIVIL AND CRIMINAL PENALTIES THEREUNDER.

The insulating value (*R*) of insulation is typically expressed as thermal resistance (resistance to heat transfer), which is expressed in units of (h × ft^2 × °F)/Btu [(m^2 × K)/W]. As the number of Btus transferred decreases (the denominator), the quotient (*R*) increases. An *R*-value (thermal resistance) is the reciprocal of thermal transmittance (*U*). Thermal transmittance is the time rate of heat flow [Btu/h × (*W*)] per unit area [square feet (m^2)] and unit temperature difference [°F × (K)] between the warm-side and cold-side air films. The thermal resistance required for the insulation is a function of the design temperature difference between the air in the duct and the air in the space surrounding the duct. The IECC specifies insulation *R*-values based on the location of the duct (conditioned space, unconditioned space, outdoors). Note that in many cases, the *R*-values required by the IECC have increased from the traditionally installed insulation *R*-values.

604.2 Surface temperature. Ducts that operate at temperatures exceeding 120°F (49°C) shall have sufficient thermal insulation to limit the exposed surface temperature to 120°F (49°C).

❖ The intent of this section is to protect occupants from burn injury and to prevent a fire hazard where combustibles could be close to high-temperature duct surfaces.

604.3 Coverings and linings. Coverings and linings, including adhesives where used, shall have a flame spread index not more than 25 and a smoke-developed index not more than 50, when tested in accordance with ASTM E84 or UL 723, using the specimen preparation and mounting procedures of ASTM E2231. Duct coverings and linings shall not flame, glow, smolder or smoke when tested in accordance with ASTM C411 at the temperature to which they are exposed in service. The test temperature shall not fall below 250°F (121°C). Coverings and linings shall be listed and labeled.

❖ Air distribution systems connect most rooms and spaces within a building, thereby providing a path for fire and smoke to spread quickly throughout the structure. Duct coverings, linings, tape and vibration isolation connectors are exposed to the surrounding environment or to the airstream in the duct and could contribute to the spread of fire and development of smoke (see Commentary Figure 604.3). To reduce the possible contribution to the spread of fire and smoke, these materials are limited to a maximum flame spread index of 25 and a smoke-developed index of 50 when tested to ASTM E84 or UL 723, which corresponds to a Class 1 material as defined in the IBC. ASTM E84 and UL 723 provide the test methods required for duct coverings and linings, including a requirement for testing of systems representative of the actual field installation. ASTM E2231 is included in this code section because it provides the specimen preparation and mounting procedures necessary to ensure that the specimen tested in the laboratory is as close as possible to the actual field installation. This will result in a safer field installation where the actual performance of the material can be more accurately predicted.

Duct coverings and linings must be rated for the design temperatures of the air distribution system to avoid degradation of the materials. To verify that duct coverings and linings will not present a fire hazard, they must be tested at their rated temperatures or to 250°F (121°C), whichever is higher, in accordance with the procedures of ASTM C411. The minimum of 250°F (121°C) for testing represents the maximum temperature that industry standards will permit in the airstream of a warm air heating appliance.

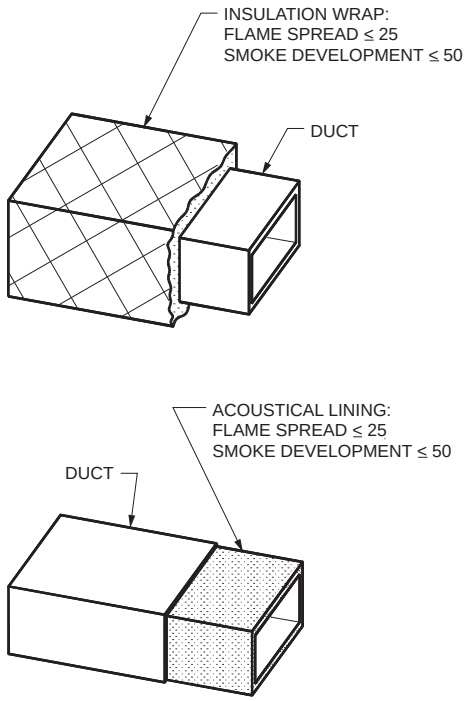

Figure 604.3
DUCT COVERINGS AND LININGS

604.4 Foam plastic insulation. Foam plastic used as duct coverings and linings shall conform to the requirements of Section 604.

❖ Foam plastic is a general term given to insulating products that have been manufactured by injecting a gas into a raw plastic product. Extruded polystyrene, expanded polyurethane (also called EPS or beadboard), isocyanurate, open-cell isocyanurate, phenolic foam and polyurethane are among the many types of foam-insulating products. Foam plastic insulation must meet the requirements of Section 604 (see commentary, Section 604.3).

604.5 Appliance insulation. *Listed* and *labeled* appliances that are internally insulated shall be considered as conforming to the requirements of Section 604.

❖ Factory-built appliances must be listed and labeled in accordance with Section 301.7. Insulation that is part of mechanical appliances that are factory built and

INTERNATIONAL CODE COUNCIL®
Copyright © 2015 ICC. ALL RIGHTS RESERVED. Accessed by David Dammon on Jun 21, 2017 12:30:52 PM pursuant to License Agreement with ICC. No further reproduction or distribution authorized. ANY UNAUTHORIZED REPRODUCTION OR DISTRIBUTION IS A VIOLATION OF THE FEDERAL COPYRIGHT ACT AND THE LICENSE AGREEMENT, AND SUBJECT TO CIVIL AND CRIMINAL PENALTIES THEREUNDER.

listed and labeled is considered to be in compliance with the requirements of Section 604 (see commentary, Sections 301.7 and 301.8).

604.6 Penetration of assemblies. Duct coverings shall not penetrate a wall or floor required to have a fire-resistance rating or required to be fireblocked.

❖ Because duct coverings do not comply with the IBC for fireblocking materials or opening protectives, these materials must not penetrate wall, roof/ceiling or floor/ceiling assemblies that must be fire-resistance-rated or fireblocked. Note that the IBC could also require penetration protection for unrated floor/ceiling assemblies. The nature of duct coverings would make it difficult, if not impossible, to properly protect the annular space around a duct penetration; therefore, duct coverings must terminate at the penetration to allow installation of the annular space treatment.

604.7 Identification. External duct insulation, except spray polyurethane foam, and factory-insulated flexible duct shall be legibly printed or identified at intervals not greater than 36 inches (914 mm) with the name of the manufacturer, the thermal resistance *R*-value at the specified installed thickness and the flame spread and smoke-developed indexes of the composite materials. Duct insulation product *R*-values shall be based on insulation only, excluding air films, vapor retarders or other duct components, and shall be based on tested *C*-values at 75ºF (24ºC) mean temperature at the installed thickness, in accordance with recognized industry procedures. The installed thickness of duct insulation used to determine its *R*-value shall be determined as follows:

1. For duct board, duct liner and factory-made rigid ducts not normally subjected to compression, the nominal insulation thickness shall be used.
2. For duct wrap, the installed thickness shall be assumed to be 75 percent (25 percent compression) of nominal thickness.
3. For factory-made flexible air ducts, the installed thickness shall be determined by dividing the difference between the actual outside diameter and nominal inside diameter by two.
4. For spray polyurethane foam, the aged *R*-value per inch, measured in accordance with recognized industry standards, shall be provided to the customer in writing at the time of foam application.

❖ To aid the inspection process, duct insulation must have a label affixed to it by the manufacturer with the manufacturer's name, the thermal resistance (*R*) at the specified installation thickness and the flame spread and smoke-developed indices. A third-party agency must do quality control inspections at the manufacturer's facility in accordance with the requirements for labeling contained in Sections 301.7 and 301.8. Testing by an independent agency must determine the insulating *R*-value, the flame spread index and the smoke-developed index. The 36-inch (914 mm) label intervals are intended to increase the likelihood that every cut piece of insulation and flexible duct will have a label.

The thermal performance of duct insulation depends on its "installed" condition, including the compression that is the case for duct wrap insulations. This section is intended to provide manufacturers, installers and inspectors with specific guidance for meeting the intent of the code. For example, installed duct wrap is assumed to have a thickness of 75 percent of the nominal uninstalled thickness. The *R*-value on the product will account for the decreased thermal resistance caused by compression of the product.

Because labeling of the exterior of spray polyurethane insulation is not feasible, the code requires that the same information be given, in writing, to the customer at the time of application.

604.8 Lining installation. Linings shall be interrupted at the area of operation of a fire damper and at not less than 6 inches (152 mm) upstream of and 6 inches (152 mm) downstream of electric-resistance and fuel-burning heaters in a duct system. Metal nosings or sleeves shall be installed over exposed duct liner edges that face opposite the direction of airflow.

❖ Duct lining materials must not be located where they could interfere with the operation of fire dampers. Duct liners must terminate on both sides of a fire damper to ensure clearance to any moving components. Linings within a duct must be interrupted a minimum of 6 inches (152 mm) upstream and downstream of a heat-producing appliance. The 6-inch (152 mm) clearance is considered to be adequate because linings must have a Class 0 or Class 1 rating (see commentary, Section 604.3). Metal nosings or sleeves are used to cover exposed duct liner edges that face into the flow of air because airflow can erode the insulation fibers and can lift the edge, causing liner displacement and duct blockage or disruption of airflow.

604.9 Thermal continuity. Where a duct liner has been interrupted, a duct covering of equal thermal performance shall be installed.

❖ To maintain energy efficiency, a covering of equal thermal resistance must be installed where a duct liner has been interrupted. This is intended to prevent gaps or weak links in the required thermal performance of ducts.

604.10 Service openings. Service openings shall not be concealed by duct coverings unless the exact location of the opening is properly identified.

❖ Duct coverings must not impede recognition of or access to service openings for components of the air distribution system; therefore, duct coverings must be interrupted at those locations or the service opening locations must be clearly identified to allow access by removing the covering.

604.11 Vapor retarders. Where ducts used for cooling are externally insulated, the insulation shall be covered with a vapor retarder having a maximum permeance of 0.05 perm

INTERNATIONAL CODE COUNCIL®
Copyright © 2015 ICC. ALL RIGHTS RESERVED. Accessed by David Dammon on Jun 21, 2017 12:30:52 PM pursuant to License Agreement with ICC. No further reproduction or distribution authorized. ANY UNAUTHORIZED REPRODUCTION OR DISTRIBUTION IS A VIOLATION OF THE FEDERAL COPYRIGHT ACT AND THE LICENSE AGREEMENT, AND SUBJECT TO CIVIL AND CRIMINAL PENALTIES THEREUNDER.

[2.87 ng/(Pa • s • m^2)] or aluminum foil having a minimum thickness of 2 mils (0.051 mm). Insulations having a permeance of 0.05 perm [2.87 ng/(Pa • s • m^2)] or less shall not be required to be covered. All joints and seams shall be sealed to maintain the continuity of the vapor retarder.

❖ Vapor retarders are required to prevent moisture from deteriorating the insulating material and duct. Insulation alone will not prevent condensation unless the insulation is impervious (impermeable) to moisture. Insulations having a permeance of 0.05 perm or less do not have to be covered because they serve as their own vapor barrier.

The continuity of the vapor barrier cannot be maintained if the joints and seams are not properly sealed against moisture vapor penetration.

604.12 Weatherproof barriers. Insulated exterior ducts shall be protected with an *approved* weatherproof barrier.

❖ Insulated exterior ducts must have a weatherproof covering to prevent the outdoor elements from deteriorating the materials (see commentary, Section 603.16).

604.13 Internal insulation. Materials used as internal insulation and exposed to the airstream in ducts shall be shown to be durable when tested in accordance with UL 181. Exposed internal insulation that is not impermeable to water shall not be used to line ducts or plenums from the exit of a cooling coil to the downstream end of the drain pan.

❖ Insulation that is not durable can eventually erode, causing increased energy use, condensation and associated water damage. Insulation that is not impermeable to water must not be used to line ducts or plenums at the exit of a cooling coil because there is a potential for wetting the duct insulation. This can cause insulation degradation, loss of insulating thermal properties and the growth of mold or fungus, which can cause adverse health effects. Depending on air velocity and turbulence, water droplets can be carried from the coil surfaces well downstream of the coil drain pan.

SECTION 605
AIR FILTERS

605.1 General. Heating and air-conditioning systems shall be provided with *approved* air filters. Filters shall be installed such that all return air, outdoor air and makeup air is filtered upstream from any heat exchanger or coil. Filters shall be installed in an *approved* convenient location. Liquid adhesive coatings used on filters shall have a flash point not lower than 325ºF (163ºC).

❖ All air circulated in an HVAC system needs to be filtered, including makeup air and outdoor air. Filtering protects ducts, motors, fans and heat exchangers from the accumulation of dust and debris which can be detrimental, cause efficiency losses, overheating higher friction losses. The accumulation of combustible dust and debris in and around air filters can create a potential hazard. The combustibility of the filter medium and any adhesive coatings used to improve filter efficiency may also create a hazard. Approval of filters, except those installed within dwelling units, must be based on listing and testing in accordance with Section 605.2.

Air filters must be made accessible for inspection, cleaning and replacement. Typically, air filters will be located behind doors, panels, cover plates or return air grilles. Filters are supported in frames, tracks or cabinets and may be located within air-handling equipment, return air ducts or return grille assemblies. Filters should be installed in convenient locations to encourage frequent inspection and maintenance.

Chapter 2 defines “Access” as “that which enables a device, appliance or equipment to be reached by ready access or by a means that first requires the removal or movement of a panel, door or similar obstruction.” As filters become loaded with dust and debris, the resistance to airflow through them increases, which will reduce system airflow, causing a loss in heating and cooling system efficiency and causing excessive temperature rise across a heat exchanger (such as in a forced air furnace). The resultant rise in discharge air temperature and elevated equipment operating temperature can cause a fire hazard. For example, a forced air furnace with poorly maintained air filters can cause the furnace to cycle its high-limit control, resulting in excessively high operating temperatures and an unsafe condition.

As an air filter becomes loaded, air pathways are blocked, which illustrates the need for more frequent filter inspections as the filter nears the time for replacement or cleaning. Poorly maintained air filters are a common problem and also create a fire hazard because of the accumulation of combustible dust and debris on the filters and within the mechanical equipment.

605.2 Approval. Media-type and electrostatic-type air filters shall be *listed* and *labeled*. Media-type air filters shall comply with UL 900. High efficiency particulate air filters shall comply with UL 586. Electrostatic-type air filters shall comply with UL 867. Air filters utilized within *dwelling units* shall be designed for the intended application and shall not be required to be *listed* and *labeled*.

❖ This section specifies specific standards for testing of various types of filters. UL 900 is the recognized standard for evaluating media-type filters, UL 586 is the recognized standard for evaluating high-efficiency particulate air filters and UL 867 is the recognized standard for evaluating electrostatic air filters.

UL 900 contains tests to establish the flammability characteristics of air filter units while the filters are clean. Class 1 units are those filters that, when clean, do not contribute fuel when attacked by flame and give off only negligible amounts of smoke. Class 2 units are those that, when clean, burn moderately when attacked by flame or create moderate amounts of smoke, or both.

INTERNATIONAL CODE COUNCIL®
Copyright © 2015 ICC. ALL RIGHTS RESERVED. Accessed by David Dammon on Jun 21, 2017 12:30:52 PM pursuant to License Agreement with ICC. No further reproduction or distribution authorized. ANY UNAUTHORIZED REPRODUCTION OR DISTRIBUTION IS A VIOLATION OF THE FEDERAL COPYRIGHT ACT AND THE LICENSE AGREEMENT, AND SUBJECT TO CIVIL AND CRIMINAL PENALTIES THEREUNDER.

UL 586 addresses high-efficiency particulate air filter units (HEPA), which are intended for the removal of very fine particulate matter (retaining not less than 99.97 percent of particles 0.3 micron in diameter and larger).

UL 867 addresses electrostatic filters rated at 600 volts or less, intended to remove dust and other nonhazardous particles from the air by electrostatic precipitation. Electricity is used to charge particles and capture the particles on oppositely charged wire grids.

For residential occupancies, filter units must be suitable for the application and designed to serve the air-handling equipment under the expected conditions of operation. Air filters for air-handling systems in dwelling units are generally small, low-efficiency, media-type filters that are located within individual dwelling units. They need not be listed and labeled.

605.3 Airflow over the filter. Ducts shall be constructed to allow an even distribution of air over the entire filter.

❖ Air ducts must be constructed to allow an even distribution of air over the entire face of a filter. This will extend the life of the filter because of the increase in its capacity to trap and retain particulates over more of its surface area. Also, maximizing the useable surface area of the filter minimizes the pressure drop across it. Equipment manufacturers' instructions and duct design handbooks provide information on proper filter placement and location in duct systems. For example, filters are ideally located where there is little or no airflow turbulence and filter enclosures are commonly enlarged or the filters are placed at angles other than perpendicular to the airflow to expose more filter surface area to the airstream.

SECTION 606
SMOKE DETECTION SYSTEMS CONTROL

606.1 Controls required. Air distribution systems shall be equipped with smoke detectors *listed* and *labeled* for installation in air distribution systems, as required by this section. Duct smoke detectors shall comply with UL 268A. Other smoke detectors shall comply with UL 268.

❖ Section 606 contains requirements for protection against the spread of smoke throughout a building through an air distribution system. Generally, smoke spreads through the air distribution system when the return air system conducts smoke from a fire in a room or space back to the air-handling equipment where the smoke is fed into the supply distribution system. The smoke may be diluted by mixing it with return air from other parts of the building and by the introduction of outdoor air; however, smoke will still be routed through the supply air distribution system to other parts of the building that may not be involved with the fire.

The intent of these provisions is to prevent ducted air distribution systems from distributing smoke from the area of origin to other areas or spaces in a building. An air distribution system can distribute smoke throughout a building much faster than the smoke would have traveled naturally and, of course, ducts can carry smoke across boundaries that otherwise would have stopped the natural migration of smoke. For these reasons, duct system smoke detectors are used to shut down a ducted air distribution system before it can threaten the building occupants by spreading smoke.

This section applies to ducted air distribution systems (see the definition of "Air distribution system") and, therefore, does not apply to installations of air handlers and HVAC equipment that do not involve ductwork and extensive plenums. For example, rooftop HVAC units, suspended unit heaters, suspended horizontal furnaces and blower/coil combination units are commonly installed without distribution ductwork. In these examples, the extent of what might be considered as ductwork is typically limited to short supply and return box plenums (drops) extending from the roof unit, or simple supply and return plenum extensions of the suspended equipment cabinets that are used only to accommodate return grilles, filter racks, flow splitters and similar directional discharge fittings and devices. Because no distribution ductwork extends to areas and spaces beyond the immediate location of the HVAC equipment, the HVAC equipment cannot contribute significantly to the spread of smoke in the building; therefore, a duct-mounted smoke detector would be of little value.

Also, it is not the intent of Section 606 to require duct smoke detectors in systems that function only as exhaust systems or only as makeup air supply systems. A makeup air supply system that discharges 100-percent outdoor air into a building does not withdraw air from the building and, therefore, cannot contribute to the movement of smoke. Likewise, an exhaust-only system discharges all air to the outdoors and, therefore, in most circumstances will not contribute to the movement of smoke into other areas of the building. In fact, the operation of an exhaust system in the area of fire origin could be considered beneficial because it provides some smoke removal capacity. Note that exhaust fans can create negative pressures within a building, thereby causing smoke migration.

It is more important to keep in mind the intended application of Section 606, which is to address the potential hazard caused by ducted air distribution systems that link together rooms and spaces within a building, thereby providing the pathway to distribute smoke to the linked rooms and spaces. Air-handling systems of any type that cannot transport smoke beyond the area of fire origin are exempt from the provisions of this section.

Smoke detectors installed in air distribution systems must be labeled for that application. Because the moving-air environment within the duct differs from a still-air environment, a duct smoke detector must be specially designed and tested to sense

INTERNATIONAL CODE COUNCIL®
Copyright © 2015 ICC. ALL RIGHTS RESERVED. Accessed by David Dammon on Jun 21, 2017 12:30:52 PM pursuant to License Agreement with ICC. No further reproduction or distribution authorized. ANY UNAUTHORIZED REPRODUCTION OR DISTRIBUTION IS A VIOLATION OF THE FEDERAL COPYRIGHT ACT AND THE LICENSE AGREEMENT, AND SUBJECT TO CIVIL AND CRIMINAL PENALTIES THEREUNDER.

smoke within the air ducts at the design airflow rates. UL 268A is used to evaluate duct smoke detectors. The UL *Fire Protection Equipment Directory* contains listings of smoke detectors that have been evaluated for use in air duct systems. Some smoke detectors are mounted within the duct and sense smoke in the airstream; other designs incorporate air-sampling tubes that supply an air sample to smoke detectors mounted in a chamber attached to the exterior of the duct. It is important to observe the airstream velocity limitations in the detector's installation instructions to maintain acceptable detector sensitivity. For detectors that use air-sampling tubes, a maximum pressure differential between tubes will also be given.

606.2 Where required. Smoke detectors shall be installed where indicated in Sections 606.2.1 through 606.2.3.

Exception: Smoke detectors shall not be required where air distribution systems are incapable of spreading smoke beyond the enclosing walls, floors and ceilings of the room or space in which the smoke is generated.

❖ Sections 606.2.1 through 606.2.3 state where and under what conditions duct smoke detectors are required in air distribution systems.

The design capacity of an air-handling system consisting of two or more air handlers paralleled to function as a unit would be the sum of the capacities of the individual air handlers. On the other hand, a building may have multiple air handlers, with each air handler serving entirely independent duct systems. In this case, the capacities of the individual independent air handlers would not be summed. Each system would be evaluated separately. If multiple air-handling units share any ductwork or plenum space, which occurs in a multiple-zone variable air volume system having individual zone air handler units that draw air from a common return air plenum, the capacities of all of the zone air handlers would be summed because the common return air plenum creates a single air distribution system. In such a system, the main air handler serving the return plenum would be evaluated as another distinct air distribution system (see commentary, Section 606.2.2).

The exception clarifies the intent of this section to prevent air distribution systems from distributing smoke to other rooms and spaces where the occupants might not be aware of the fire. Air distribution systems that serve only a single room or space would not require smoke detectors. The typical warehouse-type retail store served by rooftop units that serve a single open space would be an example. In such spaces, the occupants would be aware of a fire anywhere in the space and could determine the safest egress path. Commentary Figure 606.2(1) shows an air distribution system that is greater than 2,000 cfm (0.9 m^3/s) but is not capable of moving smoke beyond the walls, floors or ceilings of the space. In this installation a smoke detector would not be required in the return air duct or plenum. Commentary Figure 606.2(2) shows the same air distribution system that is greater than 2,000 cfm (0.9 m^3/s) and is serving two separate spaces. In this installation smoke that might be generated in one space could be circulated through the air distribution system to another space. This system would require a smoke detector in the return air plenum.

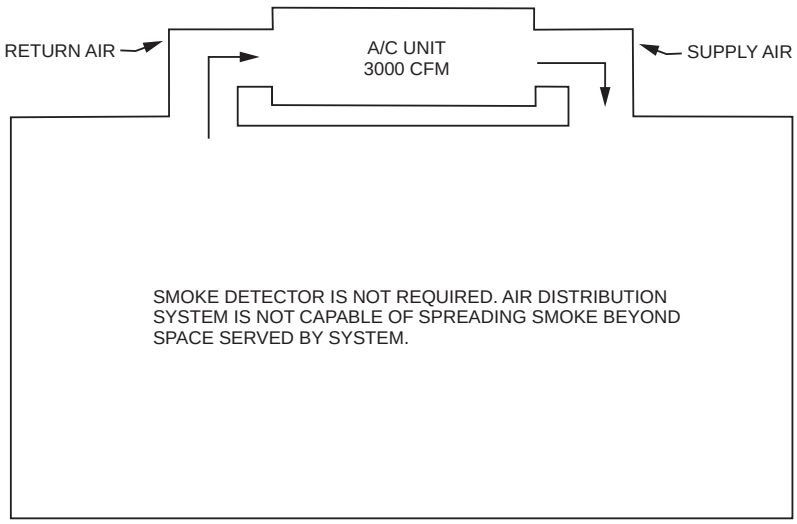

For SI: 1 cubic foot per minute = 0.0004719 m^3/s.

Figure 606.2(1)
AIR DISTRIBUTION SYSTEM SERVING NOT MORE THAN ONE SPACE

INTERNATIONAL CODE COUNCIL®
Copyright © 2015 ICC. ALL RIGHTS RESERVED. Accessed by David Dammon on Jun 21, 2017 12:30:52 PM pursuant to License Agreement with ICC. No further reproduction or distribution authorized. ANY UNAUTHORIZED REPRODUCTION OR DISTRIBUTION IS A VIOLATION OF THE FEDERAL COPYRIGHT ACT AND THE LICENSE AGREEMENT, AND SUBJECT TO CIVIL AND CRIMINAL PENALTIES THEREUNDER.

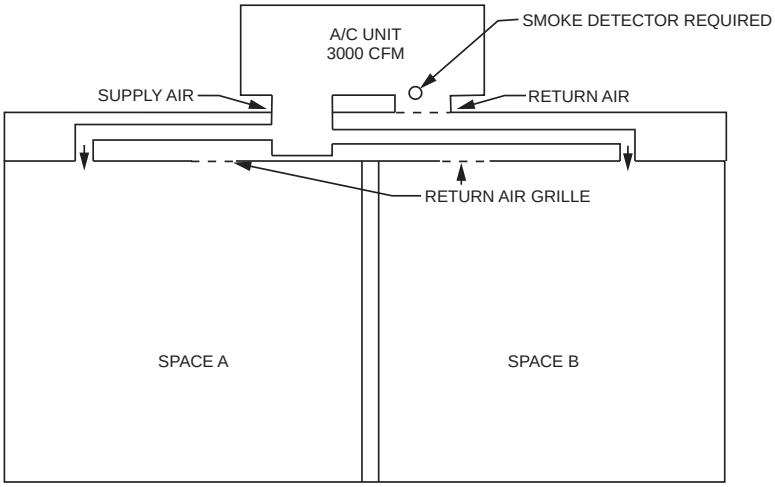

For SI: 1 cubic foot per minute = 0.0004719 m^3/s.

Figure 606.2(2)
AIR DISTRIBUTION SYSTEM SERVING MORE THAN ONE SPACE

606.2.1 Return air systems. Smoke detectors shall be installed in return air systems with a design capacity greater than 2,000 cfm (0.9 m^3/s), in the return air duct or *plenum* upstream of any filters, *exhaust air* connections, outdoor air connections, or decontamination *equipment* and appliances.

Exception: Smoke detectors are not required in the return air system where all portions of the building served by the air distribution system are protected by area smoke detectors connected to a fire alarm system in accordance with the *International Fire Code*. The area smoke detection system shall comply with Section 606.4.

❖ Smoke detectors must be installed in return air systems having design capacities exceeding 2,000 cubic feet per minute (0.9 m^3/s) (see Commentary Figure 606.2.1). Return air systems with design capacities equal to or less than 2,000 cfm (0.9 m^3/s) are exempt from this requirement because their small size limits their capacity for spreading smoke to parts of the building not already involved with fire. The area that could be served by a 2,000 cfm (0.9 m^3/s) system (approximately 5 tons of cooling capacity) is comparatively small. Therefore, the distribution of smoke in a system of that size would be minimal.

To maximize the effectiveness of smoke detectors in the return air duct, the detectors must be installed in the area of the highest concentration of smoke in the system. Therefore, the detectors must be installed in the path of airflow upstream of any filters, exhaust air connections, outdoor air connections or decontamination equipment in the system.

Filters and decontamination (air cleaning) equipment can remove some of the smoke from the air stream, and exhaust air and outdoor air connections can bleed off or dilute smoke in the air stream, all of which can delay the response time of the detector. Where a single detector would be unable to sample the total airflow at all times, detectors would be required for both the return and the exhaust ducts or plenums. If a return air system has a takeoff for exhausting a portion of the return air, and the takeoff is located upstream of the duct smoke detector, smoke detectors should be installed in both the return air and the exhaust air ducts or plenums. In this configuration, the detector is sampling only a fraction of the total airflow, because some of the total return air is exhausted before passing by the smoke detector (see commentary, Section 606.3). It is not uncommon for the exhaust (relief) duct to be independent of the return air system. In this case, airflow through the exhaust duct would not be sampled by the detector. This limited sampling by a smoke detector would delay the detector's response because of the reduced concentration of smoke.

An exception to the requirements of this section occurs where a system of area smoke detectors is used to protect all spaces served by the air distribution system. The smoke detectors must be installed as required by the *International Fire Code*® (IFC®). The logic of the exception is that a fire in the space served by the air distribution system will be detected by the area smoke detectors and the alarm will be processed as required by the IFC, thereby eliminating the need for smoke detectors in the return air system.

It is also important to note that installing duct smoke detectors does not waive any other requirements for smoke detectors within a room or space because duct smoke detectors are effective only if the air distribution system is operating. Additionally, duct detectors cannot respond until the concentration of smoke in a duct is detectable, whereas an area detector can respond before smoke even reaches the air distribution system. This exception still requires the air handler to shut down when smoke is detected (see commentary, Section 606.4).

INTERNATIONAL CODE COUNCIL®
Copyright © 2015 ICC. ALL RIGHTS RESERVED. Accessed by David Dammon on Jun 21, 2017 12:30:52 PM pursuant to License Agreement with ICC. No further reproduction or distribution authorized. ANY UNAUTHORIZED REPRODUCTION OR DISTRIBUTION IS A VIOLATION OF THE FEDERAL COPYRIGHT ACT AND THE LICENSE AGREEMENT, AND SUBJECT TO CIVIL AND CRIMINAL PENALTIES THEREUNDER.

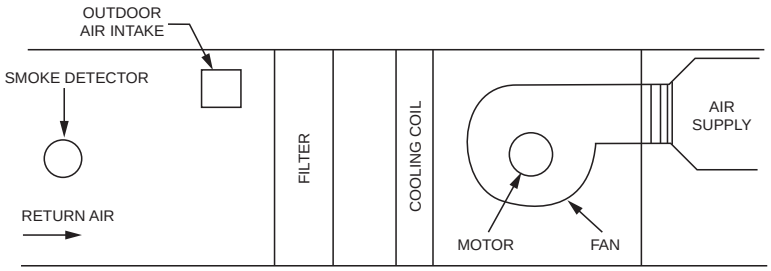

For SI: 1 cubic foot per minute = 0.0004719 m^3/s.

Figure 606.2.1
SMOKE DETECTOR REQUIRED IN RETURN AIR SYSTEMS WITH FLOW GREATER THAN 2000 CFM

606.2.2 Common supply and return air systems. Where multiple air-handling systems share common supply or return air ducts or plenums with a combined design capacity greater than 2,000 cfm (0.9 m^3/s), the return air system shall be provided with smoke detectors in accordance with Section 606.2.1.

Exception: Individual smoke detectors shall not be required for each fan-powered terminal unit, provided that such units do not have an individual design capacity greater than 2,000 cfm (0.9 m^3/s) and will be shut down by activation of one of the following:

1. Smoke detectors required by Sections 606.2.1 and 606.2.3.
2. An *approved* area smoke detector system located in the return air *plenum* serving such units.
3. An area smoke detector system as prescribed in the exception to Section 606.2.1.

In all cases, the smoke detectors shall comply with Sections 606.4 and 606.4.1.

❖ It is not uncommon to have multiple air-handling systems of less than 2,000 cfm (0.9 m^3/s) each share a common return or supply air duct or plenum. When the combined capacity of all air-handling systems sharing a common duct or plenum is greater than 2,000 cfm (0.9 m^3/s), a smoke detector must be installed as required by Section 606.2.1 (see commentary, Section 606.2.1). Because multiple air-handling units are involved, a smoke detector installed in accordance with Section 606.2.1 at each air-handling unit may be required. For instance, if multiple air-handling units are located in different parts of a building, a single detector located at some point in a common return air duct might not be able to sample all of the airflow. A detector at each unit could be required. In this case, upon activation the smoke detector would shut down only the air-handling unit it serves [see Commentary Figure 606.2.2(1)].

If multiple air-handling units are located in a common area and are served by a common return air duct that allows a single detector to sample all of the airflow, multiple smoke detectors at each unit would not be required. In this case, upon activation, the smoke detector must shut down all of the air-handling units served by the detector (see commentary, Section 606.2). Where multiple air-handling systems serve a common space but do not share common ducts or plenums, the systems are treated as independent (stand-alone) systems, even though the combined capacity might exceed 2,000 cfm (0.9 m^3/s).

The exception states that individual smoke detectors are not required for fan-powered terminal units that are part of a larger air distribution system that has a method of smoke shutdown installed. The individual capacity of these units cannot exceed 2,000 cfm (0.9 m^3/s) and they must be shut down by one of the three means listed in the exception. In all cases, the fan-powered terminal units must be shut down, but not necessarily by their own dedicated smoke detectors. If the terminal unit design capacity exceeds 2,000 cfm (0.9 m^3/s), the unit is treated as an independent system and an individual smoke detector would be required. The air distribution system shown in Commentary Figure 606.2.2(2) has a supply air fan and a return air fan along with two fan-powered terminal units. The return air fan is 3,000 cfm (1.42 m^3/s) and has a smoke detector ahead of the fan and filter. The two fan-powered terminal units are 500 cfm (0.24 m^3/s) each. The smoke detector in this system would have to be connected to the two fan-powered terminal units or the fan-powered terminal units would have to be shut down by a smoke detector that complies with one of the three items in the exception to Section 606.2.2. Commentary Figure 606.2.2(3) shows a typical fan-powered terminal unit.

606.2.3 Return air risers. Where return air risers serve two or more stories and serve any portion of a return air system having a design capacity greater than 15,000 cfm (7.1 m^3/s), smoke detectors shall be installed at each story. Such smoke detectors shall be located upstream of the connection between the return air riser and any air ducts or plenums.

❖ Where a return air system with a design capacity greater than 15,000 cfm (7.1 m^3/s) serves more than one story, the return air from each story must be monitored before intermixing the return in the common riser. This results in early smoke detection and is a means for determining on which story a fire has occurred.

INTERNATIONAL CODE COUNCIL®
Copyright © 2015 ICC. ALL RIGHTS RESERVED. Accessed by David Dammon on Jun 21, 2017 12:30:52 PM pursuant to License Agreement with ICC. No further reproduction or distribution authorized. ANY UNAUTHORIZED REPRODUCTION OR DISTRIBUTION IS A VIOLATION OF THE FEDERAL COPYRIGHT ACT AND THE LICENSE AGREEMENT, AND SUBJECT TO CIVIL AND CRIMINAL PENALTIES THEREUNDER.

NOTE EXCEPTION TO SECTION 606.2.2

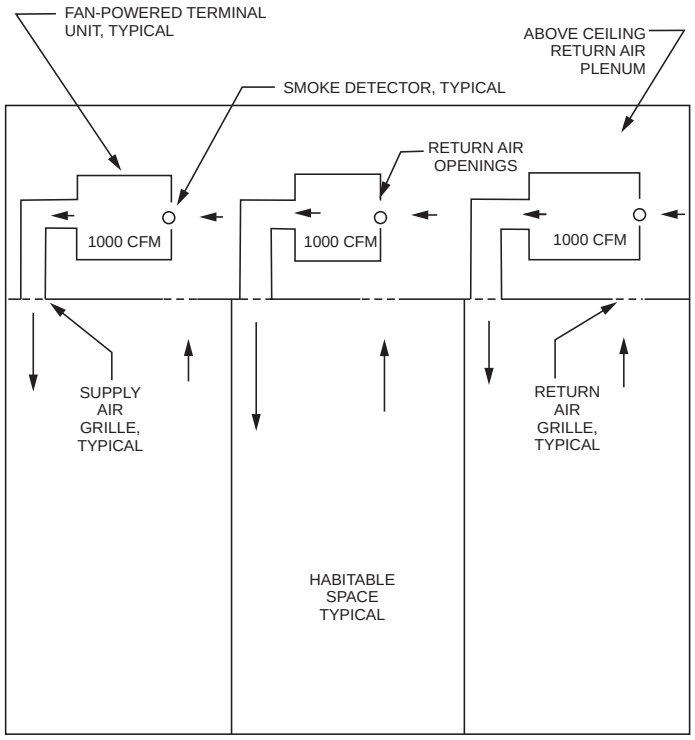

For SI: 1 cubic foot per minute = 0.0004719 m^3/s.

Figure 606.2.2(1)
LOCATION OF SMOKE DETECTORS IN COMMON RETURN AIR PLENUM

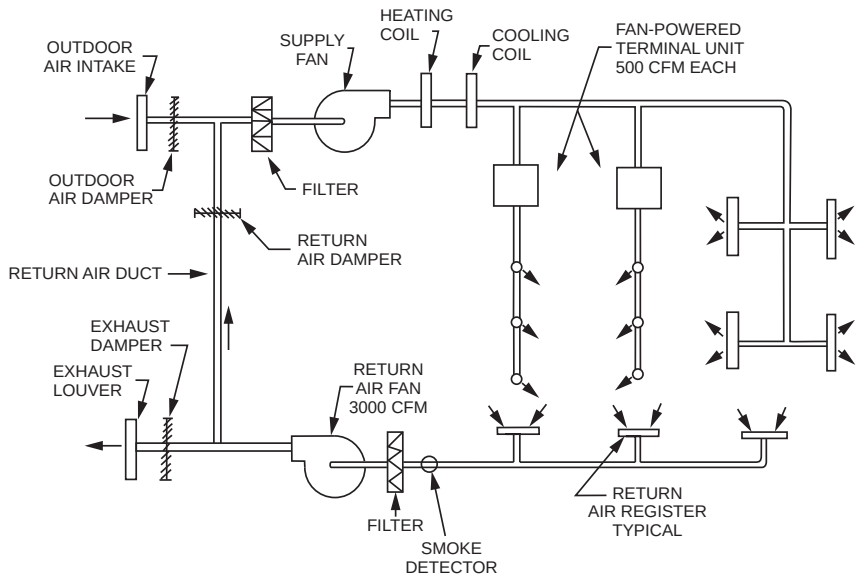

Figure 606.2.2(2)
LOCATION OF SMOKE DETECTOR, EXCEPTION ITEM 1

Determining the story of fire origin provides valuable information to fire-fighting personnel and to smoke control systems. For example, if a smoke control system is installed in a building, detection of smoke in a particular story may cause the HVAC system to switch to a smoke control mode that could supply 100-percent exhaust in that story while the adjacent stories are supplied with 100-percent out-

INTERNATIONAL CODE COUNCIL®
Copyright © 2015 ICC. ALL RIGHTS RESERVED. Accessed by David Dammon on Jun 21, 2017 12:30:52 PM pursuant to License Agreement with ICC. No further reproduction or distribution authorized. ANY UNAUTHORIZED REPRODUCTION OR DISTRIBUTION IS A VIOLATION OF THE FEDERAL COPYRIGHT ACT AND THE LICENSE AGREEMENT, AND SUBJECT TO CIVIL AND CRIMINAL PENALTIES THEREUNDER.

door air and no return or exhaust, thereby creating a positive pressure on those stories.

To monitor each story accurately and to prevent detection delays, the duct smoke detectors must be installed within the return air duct or plenum of the story served upstream of its connection to the return air riser. This location ensures that the detectors will be sampling return air from the story they serve before the air is mixed with return air from other stories, thus resulting in early detection (see Commentary Figure 606.2.3).

If smoke detection occurred only in the main return (common) duct riser in a multiple-story building, it is obvious that a fire could progress for quite some time before the diluted smoke in the common return duct reached a detectable concentration. This section applies to return air risers that convey any portion or all of the design capacity of the system.

[F] 606.3 Installation. Smoke detectors required by this section shall be installed in accordance with NFPA 72. The required smoke detectors shall be installed to monitor the entire airflow conveyed by the system including return air and exhaust or relief air. Access shall be provided to smoke detectors for inspection and maintenance.

❖ Smoke detectors required by Section 606.2 must be installed in accordance with the requirements of NFPA 72. This standard specifies performance requirements and characteristics for smoke detectors for duct installation as well as location and installation requirements for those detectors. Smoke detectors must be installed to monitor the entire airflow within the system (see commentary, Section 606.2.1). Typical air distribution systems may have a number of branches for return air, exhaust or relief air. Where a single detector would be unable to sample the total airflow at all times, multiple detectors would be required.

Chapter 2 defines "Access" as "that which enables a device, appliance or equipment to be reached by ready access or by a means that first requires the removal or movement of a panel, door or similar obstruction." Duct smoke detectors must be made accessible for maintenance and inspection. Many failures and false alarms are caused by a lack of maintenance and cleaning of the smoke detectors. Smoke detectors must be maintained in accordance with the manufacturer's installation instructions and inspected in accordance with the IFC.

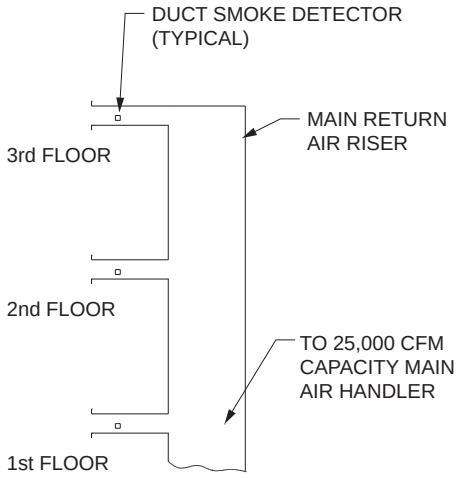

For SI: 1 cubic foot per minute = 0.0004719 m^3/s.

Figure 606.2.3
RETURN RISER

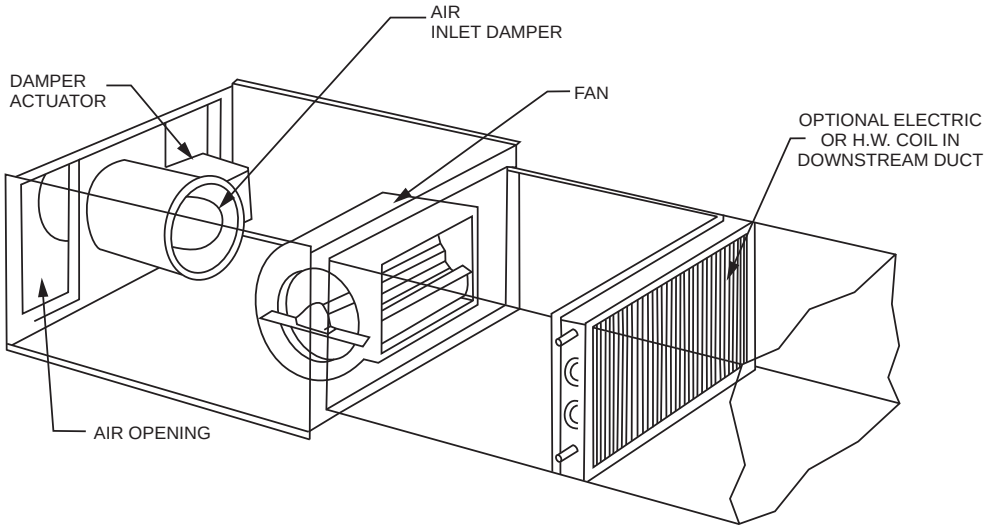

Figure 606.2.2(3)
TYPICAL FAN-POWERED TERMINAL UNIT

INTERNATIONAL CODE COUNCIL®
Copyright © 2015 ICC. ALL RIGHTS RESERVED. Accessed by David Dammon on Jun 21, 2017 12:30:52 PM pursuant to License Agreement with ICC. No further reproduction or distribution authorized. ANY UNAUTHORIZED REPRODUCTION OR DISTRIBUTION IS A VIOLATION OF THE FEDERAL COPYRIGHT ACT AND THE LICENSE AGREEMENT, AND SUBJECT TO CIVIL AND CRIMINAL PENALTIES THEREUNDER.

[F] 606.4 Controls operation. Upon activation, the smoke detectors shall shut down all operational capabilities of the air distribution system in accordance with the listing and labeling of appliances used in the system. Air distribution systems that are part of a smoke control system shall switch to the smoke control mode upon activation of a detector.

❖ Smoke detectors are required within the air distribution system as required by Section 606 to prevent the air distribution system from contributing to the spread of smoke within a building by stopping (shutting down) the air handlers (blowers and fans) upon detection of smoke. Smoke is spread through an air distribution system when smoke enters the duct system and is transported to other areas of the building through the ducts. Therefore, upon activation of a smoke detector in the duct, the air distribution system must be shut down or, if the air distribution system is part of a smoke control system, it must switch to the smoke control mode of operation. The IBC contains requirements for the installation of smoke control systems in buildings. The smoke detectors required by Section 606 are relied upon to automatically initiate air distribution system shutdown or smoke control system operation.

This section has been open to interpretation as to how to shut down the air distribution system. Many inspectors, contractors and system designers require rewiring an appliance to only shut down the blower. This practice can nullify the listing of the appliance as well as promote unsafe operation in cases where the appliance is being fired at the time the blower is shut down. Another practice has been to break the 24-volt wire to the thermostat, which may not in some cases shut down the appliance. An example of this would be if the high-limit switch were to trip, the fan would still run. The only way of ensuring that the air distribution system is shut down is to interrupt the power supply to the appliance. There is still the potential of shutting down the appliance in the middle of a firing cycle, creating the potential for overheating in the appliance.

[F] 606.4.1 Supervision. The duct smoke detectors shall be connected to a fire alarm system where a fire alarm system is required by Section 907.2 of the *International Fire Code*. The actuation of a duct smoke detector shall activate a visible and audible supervisory signal at a constantly attended location. In facilities that are required to be monitored by a supervising station, duct smoke detectors shall report only as a supervisory signal, not as a fire alarm.

Exceptions:

1. The supervisory signal at a constantly attended location is not required where the duct smoke detector activates the building's alarm-indicating appliances.
2. In occupancies not required to be equipped with a fire alarm system, actuation of a smoke detector shall activate a visible and audible signal in an *approved* location. Duct smoke detector trouble conditions shall activate a visible or audible signal in an *approved* location and shall be identified as air duct detector trouble.

❖ This section does not require sending a signal to the fire department or activating the alarm notification devices within a building. Instead, this section requires that a supervisory signal be sent to a constantly attended location. Where a building is required to have a fire alarm system, duct smoke detectors must be connected to the fire alarm system. Fire alarm systems required by the IBC must be installed in accordance with the provisions of NFPA 72. A supervisory signal is defined by NFPA 72, as "a signal indicating the need of action in connection with the supervision of guard tours, fire suppression systems or equipment, or maintenance features of related systems." Connection to the fire alarm system will activate a visible and audible supervisory signal at a constantly attended location to alert building supervisory personnel that a smoke alarm has activated, and also to provide electronic supervision of the duct detectors, thereby indicating any problems that may develop in the detector system circuitry or power supply. The signal must be sent to a location that is constantly attended by supervisory personnel while the building is occupied. This section does not allow duct smoke detectors to report a fire alarm to a supervising station.

Exception 1 allows activation of the building's alarm-indicating appliances in place of a supervisory signal. Causing the building's fire alarm system to sound and indicate an alarm would alert the occupants of the building that an alarm condition existed within the air distribution system, thereby performing the same function as a supervisory signal sent to a constantly attended location.

Exception 2 recognizes that a fire alarm is not required in all buildings. A visible and an audible signal must be activated at an approved location that will alert building supervisory personnel to take appropriate action. Additionally, the duct smoke detectors must be electronically supervised to indicate trouble (system fault) in the detector system circuitry or power supply. A trouble condition must activate a distinct visible or audible signal at a location that will alert the responsible personnel.

SECTION 607
DUCT AND TRANSFER OPENINGS

[BF] 607.1 General. The provisions of this section shall govern the protection of duct penetrations and air transfer openings in assemblies required to be protected.

❖ The term "assemblies" in this section refers to floor, wall, ceiling and shaft assemblies that are designed to have a fire-resistance rating or to limit the passage of smoke from one area to another. An assembly can also be a floor that is not required to have a fire-resistance rating (see Section 607.6.3). The design of most buildings necessitates that these assemblies be

INTERNATIONAL CODE COUNCIL®
Copyright © 2015 ICC. ALL RIGHTS RESERVED. Accessed by David Dammon on Jun 21, 2017 12:30:52 PM pursuant to License Agreement with ICC. No further reproduction or distribution authorized. ANY UNAUTHORIZED REPRODUCTION OR DISTRIBUTION IS A VIOLATION OF THE FEDERAL COPYRIGHT ACT AND THE LICENSE AGREEMENT, AND SUBJECT TO CIVIL AND CRIMINAL PENALTIES THEREUNDER.

penetrated by ducts and air transfer openings that serve the ventilating systems for the building spaces. These penetrations are potential points where fire and smoke can pass through the assembly and quickly move to other parts of the building that are intended to otherwise be protected by the assembly.

Fire dampers, smoke dampers, combination fire/smoke dampers and ceiling radiation dampers are devices that are installed in air transfer openings and ducts to provide protection against fire or smoke passing across the assembly at the penetration points in the assembly. This section concerns the location, design, testing and installation of these devices. Commentary Figures 607.1(1), 607.1(2), 607.1(3) and 607.1(4) show typical fire, smoke, combination fire/smoke and ceiling radiation dampers. Commentary Figure 607.1(5) shows a fire damper installed in a frame that is intended to be attached to the face of a fire-resistance-rated wall assembly. Note the required access panel on the bottom of the frame for inspection and servicing of the damper (see Section 607.4).

607.1.1 Ducts between shafts. Ducts transitioning horizontally between shafts shall not require a shaft enclosure provided that the duct penetration into each associated shaft is protected with dampers complying with this section.

❖ This section addresses a typical condition where the design requires HVAC ductwork to jog horizontally then continue vertically within the building. This is allowed without a continuous (horizontal) shaft enclosure as long as the penetrations through the vertical shafts are protected with the appropriate dampers. See Commentary Figure 607.1.1.

[BF] 607.1.2 Ducts that penetrate fire-resistance-rated assemblies without dampers. Ducts that penetrate fire-resistance-rated assemblies and are not required by this section to have dampers shall comply with the requirements of Sections 714.2 through 714.3.3 of the *International Building Code*. Ducts that penetrate horizontal assemblies not required to be contained within a shaft and not required by this section to have dampers shall comply with the requirements of Sections 714.4 of the *International Building Code*.

❖ In some situations, horizontal ducts that penetrate fire-resistance-rated wall assemblies are not required to have or are prohibited from having fire dampers at the point of penetration (see exception conditions for Sections 607.5.2, 607.5.3, 607.5.4 and 607.5.5). The annular space between the outside of the duct and the inside of the opening in the assembly could be a path where fire and smoke could pass from one side of the assembly to the other. Blocking off this annular space is required in accordance with Sections 714.2 through 714.3.3 of the IBC, in order to provide continuity of the fire-resistance-rated assembly at these duct penetration points.

In some situations, vertical ducts that are not contained in fire-resistance-rated shaft enclosures and that penetrate fire-resistance-rated horizontal assemblies are not required to have or are prohibited from having fire dampers at the point of penetration of the assembly (see Section 607.6.1 and Section 607.2.1). The annular space between the outside of the duct and the inside of the opening in the assembly could be a path where fire and smoke could pass from one side of the assembly to the other. Blocking off this annular space is required in accordance with Sections 714.4 through 714.4.2.2 of the IBC, in order to provide continuity of the fire-resistance-rated assembly at these duct penetration points.



Figure 607.1(1)
FIRE DAMPER
(Courtesy of Ruskin Air and Sound Control)

INTERNATIONAL CODE COUNCIL®
Copyright © 2015 ICC. ALL RIGHTS RESERVED. Accessed by David Dammon on Jun 21, 2017 12:30:52 PM pursuant to License Agreement with ICC. No further reproduction or distribution authorized. ANY UNAUTHORIZED REPRODUCTION OR DISTRIBUTION IS A VIOLATION OF THE FEDERAL COPYRIGHT ACT AND THE LICENSE AGREEMENT, AND SUBJECT TO CIVIL AND CRIMINAL PENALTIES THEREUNDER.



Figure 607.1(2)
SMOKE DAMPER
(Courtesy of Ruskin Air and Sound Control)



Figure 607.1(3)
COMBINATION FIRE/SMOKE DAMPER
(Courtesy of Ruskin Air and Sound Control)

[BF] 607.1.2.1 Ducts that penetrate nonfire-resistance-rated assemblies. The space around a duct penetrating a nonfire-resistance-rated floor assembly shall comply with Section 717.6.3 of the *International Building Code*.

❖ There are situations where a floor assembly is not required to have a fire-resistance rating. Even though a floor assembly design is not intended to withstand fire exposure for a specified period of time, a nonfire-resistance-rated floor will provide some resistance to the passage of heat, smoke and flame from one floor to the next. Therefore, where a duct penetrates a nonfire-resistance-rated floor assembly, the annular space between the duct and the opening in the assembly needs to be blocked off to provide some resistance to the passage of heat, smoke and flame. Section 717.6.3 only requires the annular space to be "plugged" with a noncombustible material. There are no requirements for the material to be in accordance with any standard or for the material to be listed or labeled. However, the material to be used must be

INTERNATIONAL CODE COUNCIL®
Copyright © 2015 ICC. ALL RIGHTS RESERVED. Accessed by David Dammon on Jun 21, 2017 12:30:52 PM pursuant to License Agreement with ICC. No further reproduction or distribution authorized. ANY UNAUTHORIZED REPRODUCTION OR DISTRIBUTION IS A VIOLATION OF THE FEDERAL COPYRIGHT ACT AND THE LICENSE AGREEMENT, AND SUBJECT TO CIVIL AND CRIMINAL PENALTIES THEREUNDER.

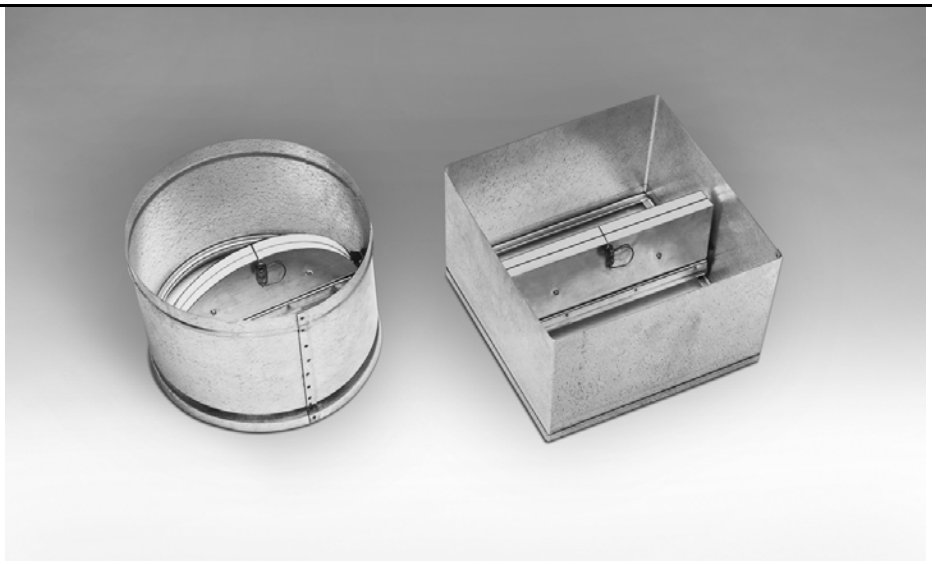

Figure 607.1(4)
CEILING DAMPERS
(Courtesy of Ruskin Air and Sound Control)

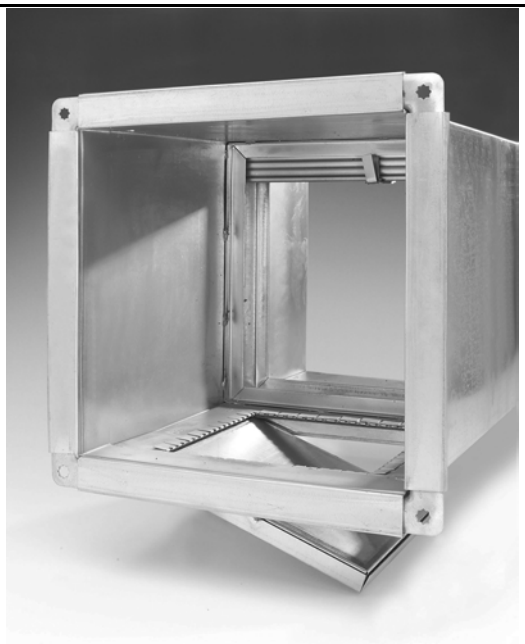

Figure 607.1(5)
FIRE DAMPER IN WALL FRAME
(Courtesy of Ruskin Air and Sound Control)

approved by the code official. Because Section 607.6.3 is controlled by the IBC, Section 717.6.3 of the IBC is identical to Section 607.6.3. Take special note of Item 3 in the referenced section that requires a fire damper at each floor line. This item essentially reads as follows: "Where the duct connects more than two stories but not more than three stories (i.e., two floors are penetrated), a fire damper is required at each floor line" (see commentary, Section 607.6.3).

If more than two nonfire-resistance-rated floors are penetrated by a duct, a shaft is required for the duct even though the floor assemblies being penetrated by the shaft are not required to have a fire-resistance rating.

INTERNATIONAL CODE COUNCIL®
Copyright © 2015 ICC. ALL RIGHTS RESERVED. Accessed by David Dammon on Jun 21, 2017 12:30:52 PM pursuant to License Agreement with ICC. No further reproduction or distribution authorized. ANY UNAUTHORIZED REPRODUCTION OR DISTRIBUTION IS A VIOLATION OF THE FEDERAL COPYRIGHT ACT AND THE LICENSE AGREEMENT, AND SUBJECT TO CIVIL AND CRIMINAL PENALTIES THEREUNDER.

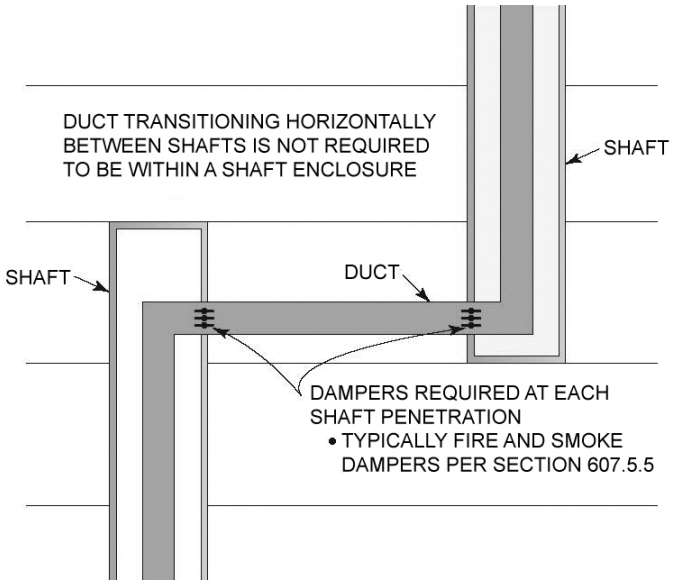

Figure 607.1.1
HORIZONTAL DUCT BETWEEN TWO SHAFTS

[BF] 607.2 Installation. Fire dampers, smoke dampers, combination fire/smoke dampers and ceiling radiation dampers located within air distribution and smoke control systems shall be installed in accordance with the requirements of this section, and the manufacturer's instructions and listing.

❖ Dampers must be installed in accordance with the manufacturer's installation instructions and listing (see commentary, Section 304.1). Those instructions will result in an installation that not only protects the penetration when the damper is actuated but will also result in a protected opening should the duct fail.

The fire damper's installation instructions include requirements, such as application, expansion clearances, mounting, fastening means, duct attachment, damper sleeve and frame construction and damper placement/orientation. Ductwork connected to fire dampers must be designed to prevent damper displacement if duct failure occurs. This is intended to keep the fire damper in place so that the opening in the fire-resistance-rated assembly is not left unprotected.

[BF] 607.2.1 Smoke control system. Where the installation of a fire damper will interfere with the operation of a required smoke control system in accordance with Section 909 of the *International Building Code*, *approved* alternative protection shall be used. Where mechanical systems including ducts and dampers used for normal building ventilation serve as part of the smoke control system, the expected performance of these systems in smoke control mode shall be addressed in the rational analysis required by Section 909.4 of the *International Building Code*.

❖ Fire dampers are prohibited where they will interfere with, obstruct or inhibit the proper operation of a required smoke control system. Fire dampers interfering with smoke control could do more harm than good. However, the absence of a fire damper at a location where it is normally required does not relieve the designer of providing protection against the travel of heat and fire through the duct or transfer opening. An alternative means of protection must be approved by the code official. Typically, the alternative means of protection could involve vertical subducts, shaft or horizontal enclosure assemblies, listed through-penetration protection assemblies or special duct materials.

A required smoke control system is an important life safety system. The intent is to make it as reliable as possible by eliminating devices or system designs that could lead to system failure. If a smoke control system not required by the code is installed by designer choice, the system is still subject to the same fire damper requirements as if the system was required by the code. However, the unrequired system could use fire dampers instead of the mandatory alternative protection prescribed in this section for required smoke control systems.

Of course, it is logical and desirable to design and install all life safety protection systems as though they were required because their presence gives building occupants a sense of security. Regardless of the reasons for installing the system, it is expected to function as intended.

Note that this section does more than simply allow omission of fire dampers in required smoke control systems. This section actually mandates the omission of fire dampers where the operation of a required smoke control system could be jeopardized by the presence of fire dampers in the system.

INTERNATIONAL CODE COUNCIL®
Copyright © 2015 ICC. ALL RIGHTS RESERVED. Accessed by David Dammon on Jun 21, 2017 12:30:52 PM pursuant to License Agreement with ICC. No further reproduction or distribution authorized. ANY UNAUTHORIZED REPRODUCTION OR DISTRIBUTION IS A VIOLATION OF THE FEDERAL COPYRIGHT ACT AND THE LICENSE AGREEMENT, AND SUBJECT TO CIVIL AND CRIMINAL PENALTIES THEREUNDER.

607.2.2 Hazardous exhaust ducts. Fire dampers for hazardous exhaust duct systems shall comply with Section 510.

❖ See the commentary to Sections 510.6 through 510.6.3.

[BF] 607.3 Damper testing, ratings and actuation. Damper testing, ratings and actuation shall be in accordance with Sections 607.3.1 through 607.3.3.

❖ See the commentary to Sections 607.3.1 through 607.3.3.

[BF] 607.3.1 Damper testing. *Dampers* shall be listed and labeled in accordance with the standards in this section. *Fire dampers* shall comply with the requirements of UL 555. Only *fire dampers* and ceiling radiation dampers labeled for use in dynamic systems shall be installed in heating, ventilating and air-conditioning systems designed to operate with fans on during a fire. *Smoke dampers* shall comply with the requirements of UL 555S. *Combination fire/smoke dampers* shall comply with the requirements of both UL 555 and UL 555S. *Ceiling radiation dampers* shall comply with the requirements of UL 555C or shall be tested as part of a fire-resistance-rated floor/ceiling or roof/ceiling assembly in accordance with ASTM E119 or UL 263. Corridor dampers shall comply with requirements of both UL 555 and UL 555S. Corridor dampers shall demonstrate acceptable closure performance when subjected to 150 feet per minute (0.76 mps) velocity across the face of the damper using the UL 555 fire exposure test.

❖ A fire damper is a device designed to close automatically upon the detection of a specific level of heat within the air-handling system at the damper location. While some fire dampers are designed with a heat-sensing element integral to the damper (e.g., a fusible link), others are triggered to close by remote heat-sensing devices or systems. The purpose of a fire damper is to close to restrict the flow of heat and prevent the passage of flame past the damper location. Once closed, a fire damper can only be opened by manually moving the shutter device and installing a new fusible link. Fire dampers are rated for either $1^1/_2$ hours or 3 hours (see Table 607.3.2.1).

Fire dampers are located within the plane of the fire-resistance-rated floor, ceiling or wall assembly that is penetrated by the duct or transfer opening. Although the code prescribes the required locations for fire dampers (see Section 607.5), the exact positioning of the damper assembly in relation to the faces of specific fire-resistance-rated assemblies is detailed in the manufacturer's installation instructions for each damper. This is critical as the installed position of the damper in relation to the faces of the fire-resistance-rated assembly must duplicate the conditions under which the damper was tested in order for

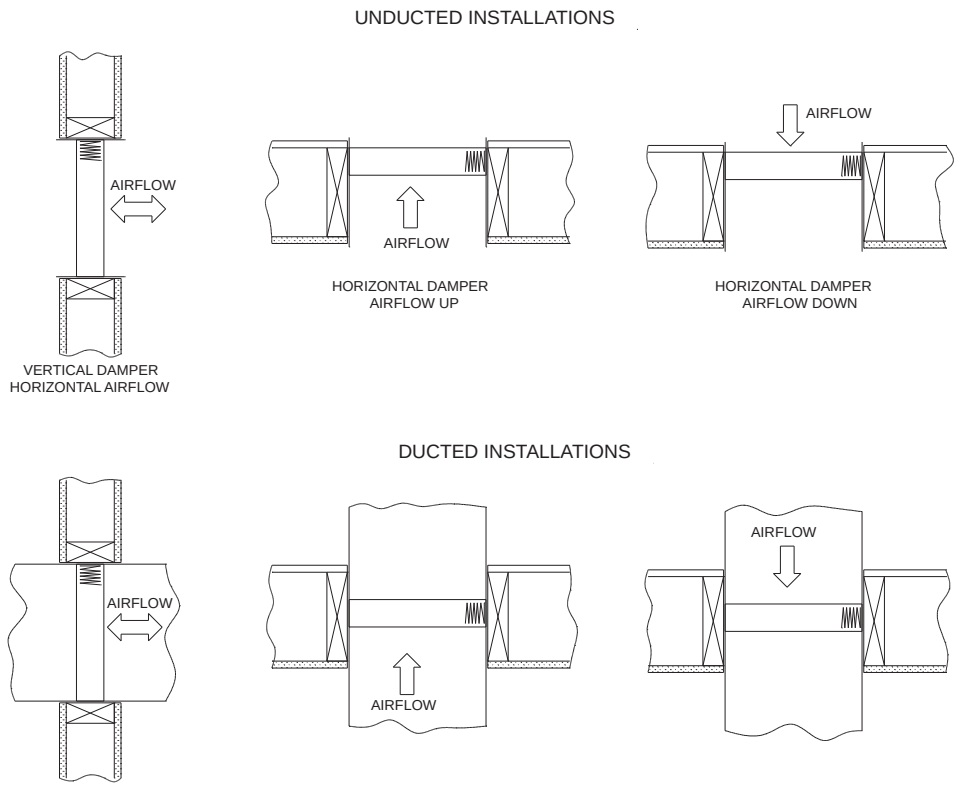

Figure 607.3
DYNAMIC RATED FIRE DAMPERS

INTERNATIONAL CODE COUNCIL®
Copyright © 2015 ICC. ALL RIGHTS RESERVED. Accessed by David Dammon on Jun 21, 2017 12:30:52 PM pursuant to License Agreement with ICC. No further reproduction or distribution authorized. ANY UNAUTHORIZED REPRODUCTION OR DISTRIBUTION IS A VIOLATION OF THE FEDERAL COPYRIGHT ACT AND THE LICENSE AGREEMENT, AND SUBJECT TO CIVIL AND CRIMINAL PENALTIES THEREUNDER.

the damper to be listed and labeled for the application.

Fire dampers must be designed and tested in accordance with UL 555. The UL 555 acceptance criteria for fire dampers are that they (1) remain in the duct or transfer opening for the fire exposure period for period of time for which they are rated; (2) close and latch automatically within 60 seconds of being triggered to close; and (3) remain in position without warping beyond prescribed limitations.

UL 555 also requires that fire dampers be labeled with specific information regarding the damper's capacity to operate under static or dynamic conditions, installation orientation, fire-resistance rating, airflow rating and closure pressure rating. Fire dampers designed for static service are only intended to be able to close when the flow in the system has been stopped by some other means, such as fan shut down, a balance of pressure in the system or the closure of another damper. Fire dampers designed for dynamic conditions must be able to close while maximum airflow is occurring in the system. Closure under airflow conditions requires significantly more actuating effort from the mechanism that closes the damper. Therefore, it is very important to never install a fire damper designed for closure under static conditions in a location that requires a fire damper designed to operate under dynamic conditions as the damper might fail to operate as intended (see Commentary Figure 607.3). However, fire dampers labeled for use under dynamic conditions can be installed where a fire damper is required to operate only under static conditions.

As some fire dampers close using only gravity as the means of closure power, proper installation orientation of the damper is critical. Where a fire damper label indicates that the damper orientation is only for vertical (V) or only for horizontal (H), the damper must be installed in the vertical or horizontal orientation, respectively. Fire dampers having both "H" and "V" on the label can be installed in either orientation. Dampers are also marked with an indication as to the top of the damper as the proper operation of the damper often depends on a specific face or side of the damper being in the "up" position.

A smoke damper is a device installed in a duct or an air transfer opening to resist the passage of smoke past the location of the damper. Generally, smoke dampers are located immediately adjacent to or within the plane of the floor, ceiling or wall assembly that acts as a smoke barrier. However, smoke dampers might also be located in other parts of an air distribution system as part of a system used to purposely direct smoke flow during fire-fighting efforts. Smoke dampers are designed and tested in accordance with the requirements of UL 555S to provide for a low level of air leakage past the closed damper. Smoke damper operation is controlled by a signal from an adjacent smoke detector in the duct, a smoke detector in the area served by the duct or a remote (fire fighter) command station that allows for manual override of automatic control of the smoke dampers in the building. Electric or pneumatic actuators are used to move the damper blade(s). Smoke dampers are always designed to operate under conditions of maximum duct airflow condition when the damper is open and maximum differential pressure developed when the damper is closed. Note that a fire damper tested to UL 555 cannot serve as a smoke control damper as it will not have the required low level leakage characteristics required of a smoke damper. Labeling requirements for smoke dampers are the same as for fire dampers.

A combination fire/smoke damper is a device installed in a duct or an air transfer opening to resist the passage of smoke, restrict the flow of heat and prevent the passage of flame past the damper location. This type of damper must located within the plane of the fire-resistance-rated floor, ceiling or wall assembly that is penetrated by the duct or transfer opening. A combination fire/smoke damper must comply with both UL 555 and UL 555S. Fire/smoke damper operation is controlled by a signal from an adjacent heat and smoke detector in the duct, a heat and smoke detector in the area served by the duct or a remote (fire fighter) command station that allows for manual override of automatic control of the fire/smoke dampers in the building. Electric or pneumatic actuators are used to move the damper blade(s). Combination fire/smoke dampers are always designed to operate under conditions of maximum duct airflow condition when the damper is open and maximum differential pressure developed when the damper is closed. Labeling requirements for combination fire/smoke dampers are the same as for fire dampers.

A ceiling radiation damper (or ceiling damper) is a device installed in an air inlet/outlet opening in a fire-resistance-rated floor/ceiling or roof/ceiling assembly. The purpose of a ceiling radiation damper is to close to restrict the flow of heat and prevent the passage of flame past the damper location and maintain continuity of the fire-resistance rating of the floor/ceiling or roof/ceiling assembly at the opening. A heat sensing element integral to the damper (e.g., a fusible link) causes the damper to close using gravity force. Ceiling radiation dampers are designed and tested in accordance with the requirements of UL 555C. Although the purpose of a ceiling radiation damper is the same as a fire damper, the ceiling radiation damper is specifically designed and tested to also resist heat radiating from a fire below the damper location. Because a UL 555 fire damper is not designed and tested to resist this type of radiant heat exposure, a fire damper must not be used in place of a ceiling radiation damper. However, it is possible that fire damper could be designed and tested in accordance with UL 555C in order to be used in a ceiling radiation damper application. Labeling requirements for ceiling radiation dampers are the same as for fire dampers.

INTERNATIONAL CODE COUNCIL®
Copyright © 2015 ICC. ALL RIGHTS RESERVED. Accessed by David Dammon on Jun 21, 2017 12:30:52 PM pursuant to License Agreement with ICC. No further reproduction or distribution authorized. ANY UNAUTHORIZED REPRODUCTION OR DISTRIBUTION IS A VIOLATION OF THE FEDERAL COPYRIGHT ACT AND THE LICENSE AGREEMENT, AND SUBJECT TO CIVIL AND CRIMINAL PENALTIES THEREUNDER.

[BF] 607.3.2 Damper rating. Damper ratings shall be in accordance with Sections 607.3.2.1 through 607.3.2.4.

❖ See the commentary to Sections 607.3.2.1 through 607.3.2.3.

[BF] 607.3.2.1 Fire damper ratings. Fire dampers shall have the minimum fire protection rating specified in Table 607.3.2.1 for the type of penetration.

❖ See the commentary to Table 607.3.2.1.

[BF] TABLE 607.3.2.1
FIRE DAMPER RATING

TYPE OF PENETRATION	MINIMUM DAMPER RATING (hour)
Less than 3-hour fire-resistance-rated assemblies	$1^1/_2$
3-hour or greater fire-resistance-rated assemblies	3

❖ This table summarizes the required hourly ratings for fire dampers based on the fire-resistance-rated assembly that is being penetrated by the air distribution system. The left-hand column lists the associated hourly ratings of either vertical or horizontal assemblies and the right-hand column lists the applicable damper rating. These fire damper ratings, obtained from the UL 555 test standard, represent the ratings necessary to maintain the integrity of the rated wall, floor/ceiling or roof/ceiling assembly.

[BF] 607.3.2.2 Smoke damper ratings. Smoke damper leakage ratings shall be Class I or II. Elevated temperature ratings shall be not less than 250°F (121°C).

❖ The standard for smoke dampers, UL 555S (see Section 607.3.1), requires smoke dampers to be marked with a temperature rating and a leakage rating. The range of temperature ratings for smoke dampers starts at 250°F (121°C) and rises in increments of 100°F (38°C). Leakage ratings range from Classes I (lowest leakage rate) through IV (highest leakage rate) at an indicated test pressure that ranges from 1.0 to 12 inches of water column (0.25 to 3.0 kPa).

[BF] 607.3.2.3 Combination fire/smoke damper ratings. Combination fire/smoke dampers shall have the minimum fire protection rating specified for fire dampers in Table 607.3.2.1 for the type of penetration and shall have a minimum smoke damper rating as specified in Section 607.3.2.2.

❖ As the name implies, combination fire/smoke dampers provide protection against flame spread, as well as the passage of smoke past a point in the duct or air transfer opening. The fire protection rating of a combination fire/smoke damper must be in accordance with Section 607.3.2.1, which requires a 1.5-hour rating for fire-resistance-rated assemblies of less than 3 hours and a 3-hour rating for fire-resistance-rated assemblies of 3 hours or greater. The leakage rating of a combination fire/smoke damper must be in accordance with Section 607.3.2.2, which requires a leakage rating of either Class I or II.

[BF] 607.3.2.4 Corridor damper ratings. Corridor dampers shall have the following minimum ratings.

1. One-hour fire-resistance rating.
2. Class I or II leakage rating as specified in Section 607.3.2.2.

❖ Corridor dampers are listed for both a fire-resistance rating of 1 hour, and a Class I or II leakage rating as defined by the Standard UL 555S. Leakage ratings of corridor dampers are determined at an elevated temperature of 250°F (121°C) or 350°F (177°C). Corridor dampers are intended to be used only to protect duct and air transfer openings in corridor ceilings, where the ceilings are constructed as required for the corridor walls as permitted in Section 708.4, Exception 3 of the IBC.

[BF] 607.3.3 Damper actuation. Damper actuation shall be in accordance with Sections 607.3.3.1 through 607.3.3.4 as applicable.

❖ See the commentary to Sections 607.3.3.1 through 607.3.3.4.

[BF] 607.3.3.1 Fire damper actuation device. The fire damper actuation device shall meet one of the following requirements:

1. The operating temperature shall be approximately 50°F (28°C) above the normal temperature within the duct system, but not less than 160°F (71°C).
2. The operating temperature shall be not more than 350°F (177°C) where located in a smoke control system complying with Section 909 of the *International Building Code.*

❖ Item 1 of this section establishes the minimum temperature at which the heat sensor for a fire damper can cause the fire damper to close. The minimum "trigger" temperature must not be less than 160°F (71°C). If the normal air temperature in the duct is greater than 110°F (43.3°C), then the minimum trigger temperature must not be less than 50°F (27.8°C) greater than the normal air temperature in the duct. In accordance with UL 555, where the fire damper is designed to close only under static conditions, the maximum trigger temperature is limited to 215°F (102°C). Establishing a minimum trigger temperature prevents fire dampers from inadvertently closing when fire conditions do not exist. The maximum trigger temperature for a fire damper designed to operate under static conditions ensures that the fire damper will reliably close long before excessively high-heat conditions occur at the damper location.

Item 2 of this section concerns fire dampers located within a required smoke control system and establishes the maximum temperature at which a heat sensor can cause closure of fire dampers in this application. A fire damper located in a required smoke control system must be designed to close under dynamic conditions. In accordance with UL 555, fire dampers designed for operation under dynamic conditions must close at a temperature not

INTERNATIONAL CODE COUNCIL®
Copyright © 2015 ICC. ALL RIGHTS RESERVED. Accessed by David Dammon on Jun 21, 2017 12:30:52 PM pursuant to License Agreement with ICC. No further reproduction or distribution authorized. ANY UNAUTHORIZED REPRODUCTION OR DISTRIBUTION IS A VIOLATION OF THE FEDERAL COPYRIGHT ACT AND THE LICENSE AGREEMENT, AND SUBJECT TO CIVIL AND CRIMINAL PENALTIES THEREUNDER.

greater than 350°F (177°C). The operation of a smoke control system will cause hot smoke and air to be conveyed through the ductwork. Fire dampers in these systems must have a higher limit for the trigger temperature so that the smoke control system can remain operational until such time that the temperature of the hot smoke and air becomes so high that the conveyed heat could begin to adversely affect other parts of the system or building beyond the area where the fire is located.

[BF] 607.3.3.2 Smoke damper actuation. The smoke damper shall close upon actuation of a *listed* smoke detector or detectors installed in accordance with Section 907.3 of the *International Building Code* and one of the following methods, as applicable:

1. Where a smoke damper is installed within a duct, a smoke detector shall be installed inside the duct or outside the duct with sampling tubes protruding into the duct. The detector or tubes within the duct shall be within 5 feet (1524 mm) of the damper. Air outlets and inlets shall not be located between the detector or tubes and the damper. The detector shall be *listed* for the air velocity, temperature and humidity anticipated at the point where it is installed. Other than in mechanical smoke control systems, dampers shall be closed upon fan shutdown where local smoke detectors require a minimum velocity to operate.
2. Where a smoke damper is installed above smoke barrier doors in a smoke barrier, a spot-type detector shall be installed on either side of the smoke barrier door opening. The detector shall be listed for releasing service if used for direct interface with the damper.
3. Where a smoke damper is installed within an unducted opening in a wall, a spot-type detector shall be installed within 5 feet (1524 mm) horizontally of the damper. The detector shall be listed for releasing service if used for direct interface with the damper.
4. Where a smoke damper is installed in a corridor wall or ceiling, the damper shall be permitted to be controlled by a smoke detection system installed in the corridor.
5. Where a smoke detection system is installed in all areas served by the duct in which the damper will be located, the smoke dampers shall be permitted to be controlled by the smoke detection system.

❖ This section presents specific information for proper placement of a smoke detector to ensure that it will most efficiently detect smoke (see Item 1). Where there are multiple smoke dampers in a duct system, Item 1 would require locating a smoke detector within 5 feet (1524 mm) of each damper, as opposed to one detector operating multiple dampers. Additionally, for passive systems (not part of a smoke control system), detector location is critical to their performance. Smoke dampers are installed in transfer openings as well as duct penetrations [see Commentary Figure 607.3.3.2(1)].

Item 2 requires a spot detector on one side of the smoke barrier door opening, not one on each side of the door opening.

Item 3 specifies a spot-type detector within 5 feet (1524 mm) of a smoke damper, installed in a wall, without any ducts attached to the damper. This type of installation usually occurs in return air transfer openings in walls that require a smoke damper. The spot-type detector that operates the smoke damper has to comply with Sections 907.3 and 907.3.1 in the IBC. These two sections in the IBC require the smoke detector to be connected to the fire alarm control panel where a fire alarm system is required by Section 907.2 in the IBC. The location of the smoke detector shall be in accordance with NFPA 72 [see Commentary Figure 607.3.3.2(2)].

Items 4 and 5 allow for a smoke damper to be activated by a smoke detection system installed in a corridor or where a total coverage system is installed in a building. Both of these systems would have to comply with Section 907 in the IBC or IFC.

Smoke dampers may also be operated remotely, especially when used as fire dampers and as part of a smoke removal system. Combination fire and smoke dampers can be activated by either the heat sensor or the smoke sensor. Once the primary heat-sensing device has been activated, a remote control system can be used to open the damper to permit its use as a smoke damper in the smoke removal system. Then, if the temperature rises to the damper's maximum degradation test temperature, a secondary heat sensor closes the damper again.

[BF] 607.3.3.3 Combination fire/smoke damper actuation. Combination fire/smoke damper actuation shall be in accordance with Sections 607.3.3.1 and 607.3.3.2. Combination fire/smoke dampers installed in smoke control system shaft penetrations shall not be activated by local area smoke detection unless it is secondary to the smoke management system controls.

❖ This section primarily serves the purpose of requiring the actuation of combination fire/smoke dampers to comply with the requirements for both fire and smoke dampers, including the requirements in Sections 607.3.3.1 and 607.3.3.2. Further, when these dampers are used as part of a smoke control system, this section prohibits their activation by local area smoke detectors because this could render the smoke control system inoperable.

[BF] 607.3.3.4 Ceiling radiation damper actuation. The operating temperature of a ceiling radiation damper actuation device shall be 50°F (28°C) above the normal temperature within the duct system, but not less than 160°F (71°C).

❖ This section establishes the minimum temperature at which the heat sensor for a ceiling radiation damper can cause the ceiling radiation damper to close. The minimum "trigger" temperature must not be less than 160°F (71°C). If the normal air temperature in the duct is greater than 110°F (43.3°C), then the minimum trigger temperature must not be less than 50°F (27.8°C) greater than the normal air temperature in the duct.

INTERNATIONAL CODE COUNCIL®
Copyright © 2015 ICC. ALL RIGHTS RESERVED. Accessed by David Dammon on Jun 21, 2017 12:30:52 PM pursuant to License Agreement with ICC. No further reproduction or distribution authorized. ANY UNAUTHORIZED REPRODUCTION OR DISTRIBUTION IS A VIOLATION OF THE FEDERAL COPYRIGHT ACT AND THE LICENSE AGREEMENT, AND SUBJECT TO CIVIL AND CRIMINAL PENALTIES THEREUNDER.

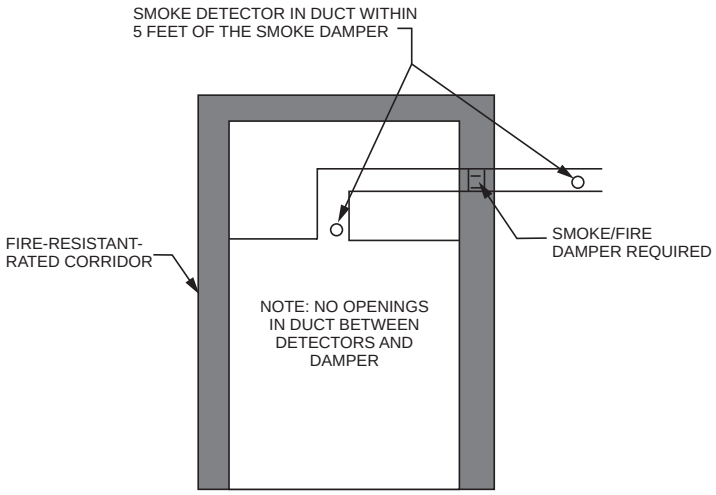

For SI: 1 foot = 304.8 mm.

Figure 607.3.3.2(1)
LOCATION OF SMOKE DETECTORS IN DUCTS NEAR SMOKE/FIRE DAMPERS

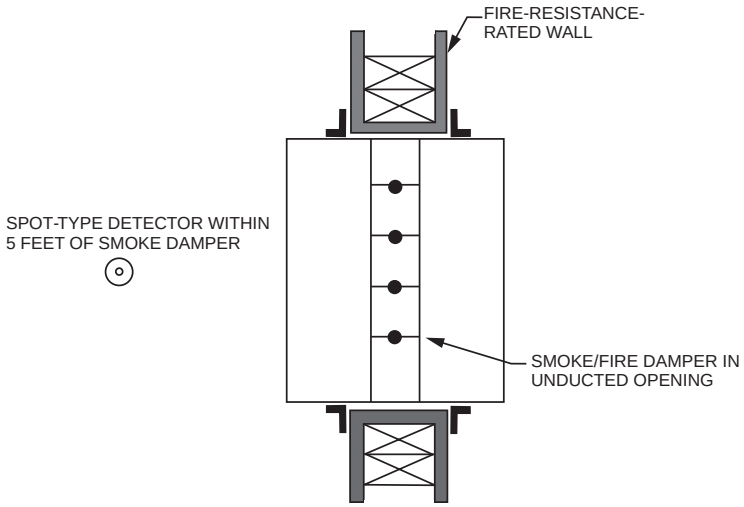

For SI: 1 foot = 304.8 mm.

Figure 607.3.3.2(2)
LOCATION OF SMOKE DETECTORS NEAR SMOKE/FIRE DAMPERS IN AIR TRANSFER OPENING

[BF] 607.3.3.5 Corridor damper actuation. Corridor damper actuation shall be in accordance with Sections 607.3.3.1 and 607.3.3.2.

❖ Corridor dampers are fire/smoke dampers having the attributes of both smoke and fire dampers. They are not the same as ceiling radiation dampers and are basically fire partition wall dampers designed for horizontal rather than vertical installation. They are installed to protect ceiling penetrations of corridor enclosures where the ceiling assembly is built like the wall assemblies, creating a "tunnel" type corridor within a building. See Sections 607.3.3.1 and 607.3.3.2.

[BF] 607.4 Access and identification. Fire and smoke dampers shall be provided with an *approved* means of access, large enough to permit inspection and maintenance of the damper and its operating parts. The access shall not affect the integrity of fire-resistance-rated assemblies. The access openings shall not reduce the fire-resistance rating of the assembly. Access points shall be permanently identified on the exterior by a label having letters not less than 0.5 inch (12.7 mm) in height reading: FIRE/SMOKE DAMPER, SMOKE DAMPER or FIRE DAMPER. Access doors in ducts shall be tight fitting and suitable for the required duct construction.

❖ Fire and smoke dampers must be maintained to ensure that they will operate as intended. The need

INTERNATIONAL CODE COUNCIL®
Copyright © 2015 ICC. ALL RIGHTS RESERVED. Accessed by David Dammon on Jun 21, 2017 12:30:52 PM pursuant to License Agreement with ICC. No further reproduction or distribution authorized. ANY UNAUTHORIZED REPRODUCTION OR DISTRIBUTION IS A VIOLATION OF THE FEDERAL COPYRIGHT ACT AND THE LICENSE AGREEMENT, AND SUBJECT TO CIVIL AND CRIMINAL PENALTIES THEREUNDER.

to maintain dampers, as well as reset dampers and replace fusible links after operation requires that dampers be accessible. To maintain a fire-resistance rating, access doors may need to be fire doors in accordance with Section 714 of the IBC, depending on the location of the door. Access doors in the duct itself need not have a fire-resistance rating.

Where installed at duct openings, such as intakes, supply outlets and transfer openings, fire dampers can be accessed by the removal of grilles, louvers, diffusers or registers. Access doors in ducts must be made reasonably air tight to allow the air distribution system to function as intended and to maintain energy efficiency by controlling the infiltration of unconditioned air into the ducts and the exfiltration of conditioned air out of the ducts.

To make access points readily apparent, a label meeting the requirements of this section must be mounted at the point of access (see commentary, Section 604.10).

[BF] 607.5 Where required. Fire dampers, smoke dampers, combination fire/smoke dampers, ceiling radiation dampers and corridor dampers shall be provided at the locations prescribed in Sections 607.5.1 through 607.5.7. Where an assembly is required to have both fire dampers and smoke dampers, combination fire/smoke dampers or a fire damper and smoke damper shall be provided.

❖ To maintain the fire-resistance rating of fire walls, fire barriers, fire partitions and floor/ceiling and roof/ceiling assemblies, fire dampers and smoke dampers must be installed for all duct penetrations as dictated by Sections 607.5.1 through 607.5.7. The requirements for fire dampers and ceiling radiation dampers in floor/ceiling assemblies and the ceiling membrane of fire-resistance-rated roof/ceiling assemblies are found in Sections 607.6 through 607.6.3. The manufacturer's installation instructions must be followed so that the operation and functioning of the installed device will be consistent with that required by the code.

Commentary Figure 607.5 shows the difference between where a fire damper is required and where one is not. In this example, the designer has chosen to separate the mixed occupancies in accordance with the option of Section 508.4.4 of the IBC. The occupancy separation wall (fire barrier) that must be fire-resistance rated must have the duct penetration protected by a fire damper, while the unrated wall requires no protection.

Duct penetrations and transfer openings in certain assemblies can require protection with both fire and smoke dampers (see Sections 607.5.4 and 607.5.5). Section 607.2.1 requires alternative protection where fire dampers will interfere with the operation of a smoke control system.

[BF] 607.5.1 Fire walls. Ducts and air transfer openings permitted in fire walls in accordance with Section 706.11 of the *International Building Code* shall be protected with *listed* fire dampers installed in accordance with their listing.

❖ Fire walls create separate buildings that might be on a single parcel of land or, in the case of "zero lot line" construction, the fire wall would be located on the property (lot) line. In the case where the fire wall separates different buildings on different lots, the code does not permit openings (see Sections 706.1.1 and 706.11 of the IBC). In such instances, a duct penetration is not permitted, whether protected or not. Where the fire wall is not located on a lot line, the wall may be penetrated by a duct or transfer opening if the opening is protected with a fire damper listed for that application (see IBC Section 706.8).

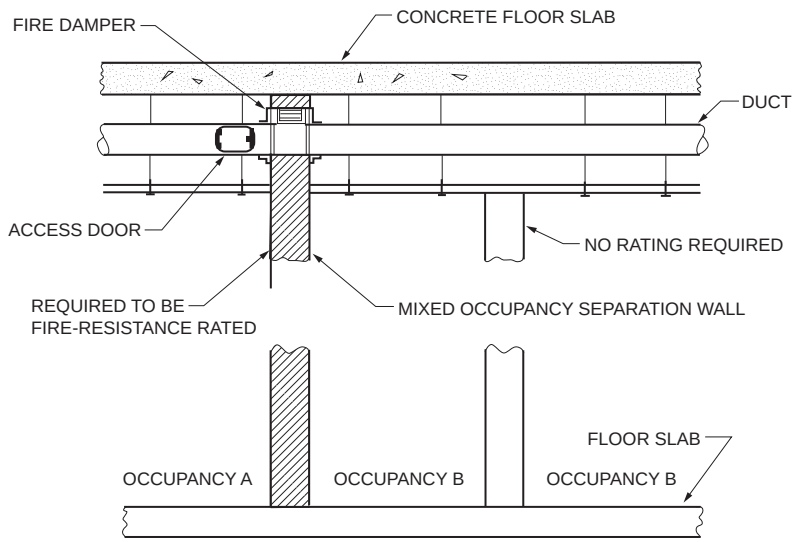

Figure 607.5
FIRE DAMPERS IN RATED WALL

INTERNATIONAL CODE COUNCIL®
Copyright © 2015 ICC. ALL RIGHTS RESERVED. Accessed by David Dammon on Jun 21, 2017 12:30:52 PM pursuant to License Agreement with ICC. No further reproduction or distribution authorized. ANY UNAUTHORIZED REPRODUCTION OR DISTRIBUTION IS A VIOLATION OF THE FEDERAL COPYRIGHT ACT AND THE LICENSE AGREEMENT, AND SUBJECT TO CIVIL AND CRIMINAL PENALTIES THEREUNDER.

[BF] 607.5.1.1 Horizontal exits. A *listed smoke damper* designed to resist the passage of smoke shall be provided at each point that a duct or air transfer opening penetrates a *fire wall* that serves as a horizontal *exit*.

❖ The purpose of this section is to recognize that horizontal exits are required to resist the passage of smoke, as well as fire. This section, therefore, requires that smoke dampers be installed at ducts or transfer openings that penetrate a fire wall.

[BF] 607.5.2 Fire barriers. Ducts and air transfer openings that penetrate fire barriers shall be protected with *listed* fire dampers installed in accordance with their listing. Ducts and air transfer openings shall not penetrate enclosures for interior exit stairways and ramps and exit passageways except as permitted by Sections 1023.5 and 1024.6, respectively, of the *International Building Code*.

Exception: Fire dampers are not required at penetrations of fire barriers where any of the following apply:

1. Penetrations are tested in accordance with ASTM E119 or UL 263 as part of the fire-resistance-rated assembly.
2. Ducts are used as part of an *approved* smoke control system in accordance with Section 513 and where the fire damper would interfere with the operation of the smoke control system.
3. Such walls are penetrated by ducted HVAC systems, have a required fire-resistance rating of 1 hour or less, are in areas of other than Group H and are in buildings equipped throughout with an automatic sprinkler system in accordance with Section 903.3.1.1 or 903.3.1.2 of the *International Building Code*. For the purposes of this exception, a ducted HVAC system shall be a duct system for the structure's HVAC system. Such a duct system shall be constructed of sheet steel not less than 26 gage [0.0217 inch (0.55 mm)] thickness and shall be continuous from the air-handling *appliance* or *equipment* to the air outlet and inlet terminals.

❖ It is important that the fire dampers installed where a duct or air transfer opening penetrates a fire barrier are listed for the fire rating of the barrier wall. Penetrations of exit enclosures and exit passageways by ducts and air transfer openings are prohibited to maintain the integrity of the exit path. Such penetrations have the potential to allow smoke or flames to be introduced into the enclosure from other parts of the building, effectively blocking the exit path. This prohibition mirrors the requirements of Sections 707.7.1 and 713.7.1 of the IBC. Sections 1023.5 and 1023.6 of the IBC provide a list of acceptable penetrations into the exit enclosure.

This section also includes three exceptions to the general requirement.

Exception 1 addresses penetrations that were tested as part of the entire tested assembly. Any penetrations will be specified in the design detail for the tested assembly.

Exception 2 reinforces the provisions of Section 607.2.1 (see commentary for Section 607.2.1). A fire damper could interfere with the operation of a smoke control system; however, some form of alternative protection must be installed.

Exception 3 states that, in occupancies other than Group H, fire dampers may be omitted in duct penetrations of walls having a fire-resistance rating of 1 hour or less when penetration is part of a ducted HVAC system in a building protected throughout by an automatic sprinkler system meeting the requirements of NFPA 13 or 13R. Fire dampers would still be required for penetrations of walls requiring a rating greater than 1 hour and for fire-resistance-rated floor/ceiling assemblies. Fire dampers would also be required for transfer openings (openings without ducts) through fire barriers. This section defines "ducted HVAC system" to emphasize that the duct system must be constructed of sheet steel not less than 26 gage thickness and must be continuous from the air-handling appliance or equipment to the air outlet and inlet terminals. This is to ensure that the integrity of the fire separation will not be compromised by discontinuous ducts or the failure of thin-walled metal ducts, nonmetallic ducts or flexible ducts [see Commentary Figure 607.5.2]. A "ducted HVAC system" in this context does not contain flexible ducts, except where a steel duct passes through a fire barrier and then converts to flexible duct to only serve an air terminal device. In such case, the steel duct could have terminated at an air terminal device on the wall, thus, extending the duct run further into the room to a ceiling air terminal device using flexible duct has no effect on the integrity of the fire barrier penetration.

[BF] 607.5.2.1 Horizontal exits. A *listed smoke damper* designed to resist the passage of smoke shall be provided at each point that a duct or air transfer opening penetrates a *fire barrier* that serves as a horizontal *exit*.

❖ The purpose of this section is to recognize that horizontal exits are required to resist the passage of smoke, as well as fire. This section, therefore, requires that smoke dampers be installed at duct penetrations and transfer openings in a fire barrier.

[BF] 607.5.3 Fire partitions. Ducts and air transfer openings that penetrate fire partitions shall be protected with *listed* fire dampers installed in accordance with their listing.

Exception: In occupancies other than Group H, fire dampers are not required where any of the following apply:

1. Corridor walls in buildings equipped throughout with an automatic sprinkler system in accordance with Section 903.3.1.1 or 903.3.1.2 of the *International Building Code* and the duct is protected as a through penetration in accordance with Section 714 of the *International Building Code*.
2. The partitions are tenant partitions in covered and open mall buildings where the walls are not required by provisions elsewhere in the *International Build-*

INTERNATIONAL CODE COUNCIL®
Copyright © 2015 ICC. ALL RIGHTS RESERVED. Accessed by David Dammon on Jun 21, 2017 12:30:52 PM pursuant to License Agreement with ICC. No further reproduction or distribution authorized. ANY UNAUTHORIZED REPRODUCTION OR DISTRIBUTION IS A VIOLATION OF THE FEDERAL COPYRIGHT ACT AND THE LICENSE AGREEMENT, AND SUBJECT TO CIVIL AND CRIMINAL PENALTIES THEREUNDER.

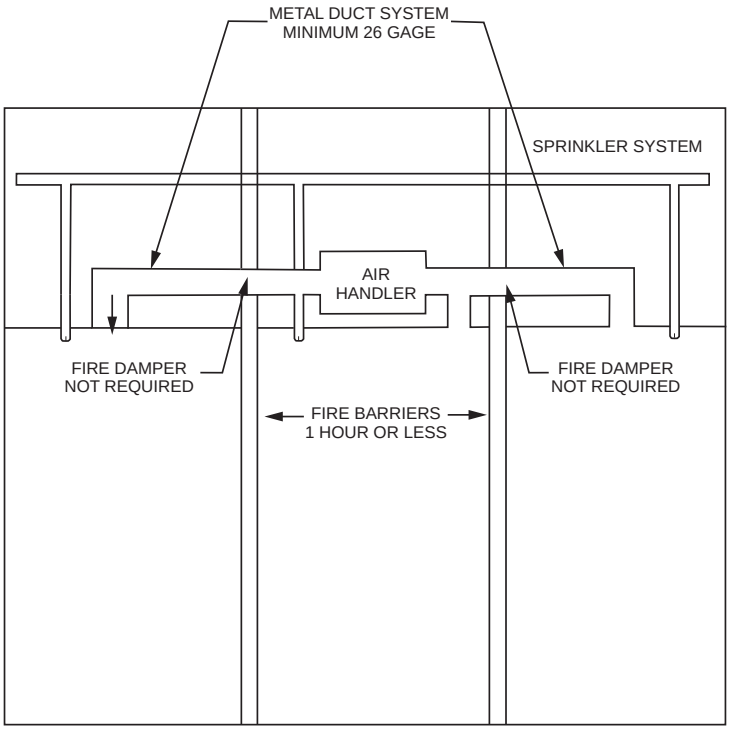

Figure 607.5.2
EXCEPTION 3: FIRE DAMPERS NOT REQUIRED WHERE DUCT IS 26-GAGE METAL AND CONTINUOUS

ing Code to extend to the underside of the floor or roof sheathing, slab or deck above.

3. The duct system is constructed of *approved* materials in accordance with Section 603 and the duct penetrating the wall complies with all of the following requirements:
   - 3.1. The duct shall not exceed 100 square inches (0.06 m^2).
   - 3.2. The duct shall be constructed of steel not less than 0.0217 inch (0.55 mm) in thickness.
   - 3.3. The duct shall not have openings that communicate the corridor with adjacent spaces or rooms.
   - 3.4. The duct shall be installed above a ceiling.
   - 3.5. The duct shall not terminate at a wall register in the fire-resistance-rated wall.
   - 3.6. A minimum 12-inch-long (305 mm) by 0.060-inch-thick (1.52 mm) steel sleeve shall be centered in each duct opening. The sleeve shall be secured to both sides of the wall and all four sides of the sleeve with minimum $1^1/_2$-inch by $1^1/_2$-inch by 0.060-inch (38 mm by 38 mm by 1.52 mm) steel retaining angles. The retaining angles shall be secured to the sleeve and the wall with No. 10 (M5) screws. The annular space between the steel sleeve and the wall opening shall be filled with rock (mineral) wool batting on all sides.
4. Such walls are penetrated by ducted HVAC systems, have a required fire-resistance rating of 1 hour or less, and are in areas of other than Group H and are in buildings equipped throughout with an automatic sprinkler system in accordance with Section 903.3.1.1 or 903.3.1.2 of the *International Building Code*. For the purposes of this exception, a ducted HVAC system shall be a duct system for conveying supply, return or exhaust air as part of the structure's HVAC system. Such a duct system shall be constructed of sheet steel not less than 26 gage in thickness and shall be continuous from the air-handling appliance or equipment to the air outlet and inlet terminals.

❖ Fire dampers installed where a duct or air transfer opening penetrates a fire partition or corridor wall must be listed for the fire rating of the partition and installed in accordance with the listing. It should be noted that based on Section 708.1 in the IBC only the corridor walls are fire partitions. The corridor ceiling or floor is not a fire partition. This section includes three exceptions to the general requirement for occupancies other than Group H.

Because an automatic fire sprinkler system reduces the potential for duct failure by controlling the fire, Exception 1 states that dampers are not required to protect duct penetrations of corridor walls in buildings protected throughout with an automatic sprinkler system [see Commentary Figure 607.5.3(1)]. The reference to Sections 903.3.1.1 and 903.3.1.2 of the

INTERNATIONAL CODE COUNCIL®
Copyright © 2015 ICC. ALL RIGHTS RESERVED. Accessed by David Dammon on Jun 21, 2017 12:30:52 PM pursuant to License Agreement with ICC. No further reproduction or distribution authorized. ANY UNAUTHORIZED REPRODUCTION OR DISTRIBUTION IS A VIOLATION OF THE FEDERAL COPYRIGHT ACT AND THE LICENSE AGREEMENT, AND SUBJECT TO CIVIL AND CRIMINAL PENALTIES THEREUNDER.

IBC establishes that the exception applies only to buildings equipped throughout with an automatic sprinkler system designed and installed in accordance with either NFPA 13 or 13R. This exception further requires protecting the duct as a through penetration in accordance with Section 714 of the IBC.

Exception 2 recognizes that walls separating tenants in a covered mall are required to be rated but are allowed to stop at unrated ceilings and unrated storefronts, providing no true separation. Therefore, dampers in penetrating ducts or air transfer openings are not necessary. If the tenant separation wall is required to be continuous to a roof sheathing, slab, deck or rated floor assembly for another purpose, the fire dampers would obviously be required.

Exception 3 states that fire dampers are not required where a steel duct of 26 gage minimum thickness penetrates a wall, the duct does not have openings that would allow smoke or fire to enter the corridor, the duct is secured in the opening by a steel sleeve and the annular space is filled with mineral wool batts to maintain the thermal barrier. Duct openings would be allowed in the corridor or in adjacent rooms but not in both locations [see Commentary Figure 607.5.3(2)]. These ducts are limited in size, must be protected by a ceiling and must not terminate at the wall.

See the commentary to Exception 3 of Section 607.5.2.

[BF] 607.5.4 Corridors/smoke barriers. A *listed* smoke damper designed to resist the passage of smoke shall be provided at each point a duct or air transfer opening penetrates a smoke barrier wall or a corridor enclosure required to have smoke and draft control doors in accordance with the *International Building Code*.

A corridor damper shall be provided where corridor ceilings, constructed as required for the corridor walls as permitted in Section 708.4, Exception 3, of the *International Building Code*, are penetrated.

A ceiling radiation damper shall be provided where the ceiling membrane of a fire-resistance-rated floor/ceiling or roof/ceiling assembly, constructed as permitted in Section 708.4, Exception 2, of the *International Building Code*, is penetrated.

Smoke dampers and smoke damper actuation methods shall comply with Section 607.5.4.1.

Exceptions:

1. Smoke dampers are not required in corridor penetrations where the building is equipped throughout with an *approved* smoke control system in accordance with Section 513 and smoke dampers are not necessary for the operation and control of the system.
2. Smoke dampers are not required in smoke barrier penetrations where the openings in ducts are limited to a single smoke compartment and the ducts are constructed of steel.
3. Smoke dampers are not required in corridor penetrations where the duct is constructed of steel not less than 0.019 inch (0.48 mm) in thickness and there are no openings serving the corridor.
4. Smoke dampers are not required in smoke barriers required by Section 407.5 of the *International Building Code* for Group I-2 Condition 2 where the HVAC system is fully ducted in accordance with Section 603 and where buildings are equipped throughout with an automatic sprinkler system in accordance with Section 903.3.1.1 of the *Interna-*

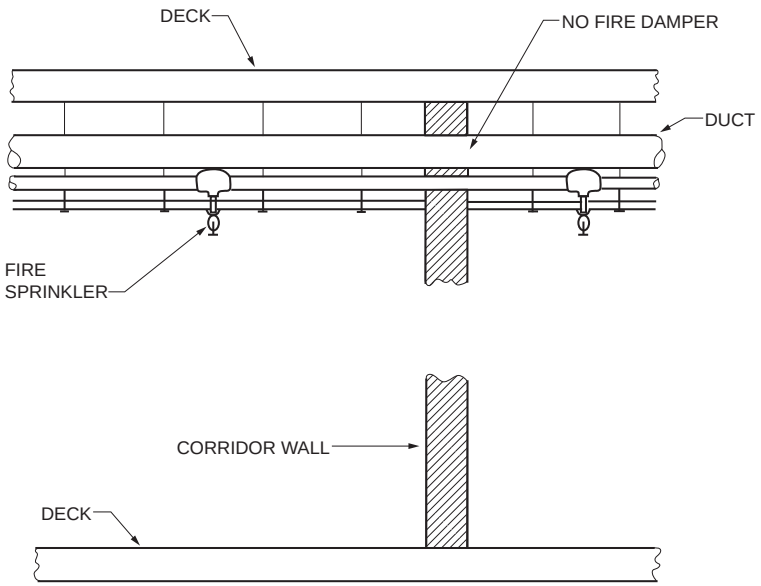

Figure 607.5.3(1)
FIRE DAMPERS NOT REQUIRED—EXCEPTION 1

INTERNATIONAL CODE COUNCIL®
Copyright © 2015 ICC. ALL RIGHTS RESERVED. Accessed by David Dammon on Jun 21, 2017 12:30:52 PM pursuant to License Agreement with ICC. No further reproduction or distribution authorized. ANY UNAUTHORIZED REPRODUCTION OR DISTRIBUTION IS A VIOLATION OF THE FEDERAL COPYRIGHT ACT AND THE LICENSE AGREEMENT, AND SUBJECT TO CIVIL AND CRIMINAL PENALTIES THEREUNDER.

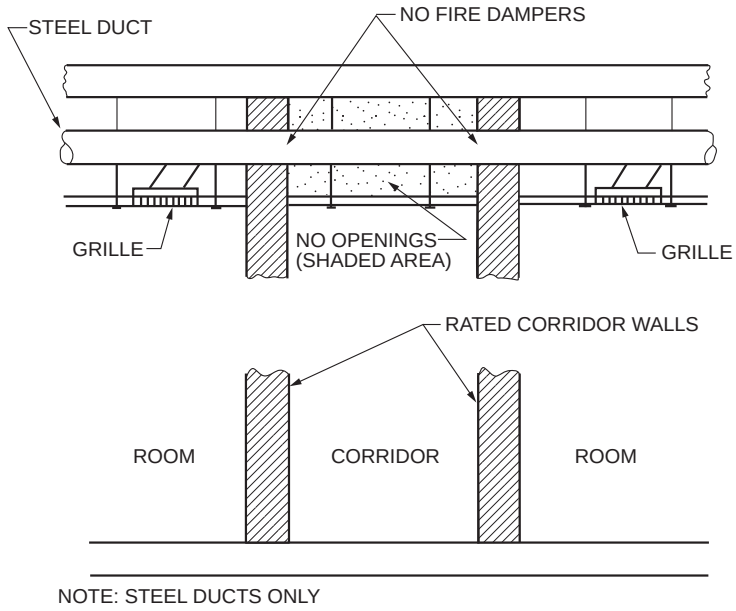

Figure 607.5.3(2)
FIRE DAMPERS NOT REQUIRED—EXCEPTION 3

tional Building Code and equipped with quick-response sprinklers in accordance with Section 903.3.2 of the *International Building Code*.

❖ To prevent smoke migration across corridor walls and smoke barriers through duct penetrations and transfer openings, a damper designed to resist the passage of smoke must be installed. The damper must close upon detection of smoke by an approved smoke detector (see Section 607.5.4.1). Where smoke barriers and corridor wall fire partitions must be fire-resistance rated, a fire damper is also required, except as allowed by applicable exceptions. Where a fire damper is required, a combination fire and smoke damper or separate fire and smoke dampers must be installed.

Section 716.5.3 of the IBC requires that fire doors in corridor walls and smoke barriers also be tested for smoke and draft control. Similarly, this section requires that duct and air transfer openings be protected with smoke dampers. Unless the exceptions of Section 607.5.3 are applicable, this type of opening would also require a fire damper.

Exception 1 recognizes the protection afforded by a smoke control system and allows omission of smoke dampers only in corridor wall penetrations, if the smoke control system does not, in any way, depend on dampers.

In accordance with Exception 2, smoke dampers are not required in a fully ducted (steel ducts) system that has no openings that would allow the spread of smoke across the smoke barrier.

Exception 3 allows the omission of smoke dampers in corridor wall penetrations where the ducts do not communicate with the corridor through openings in the ducts and the ducts are constructed of 26 gage or heavier sheet steel. It should be noted that Section 607.5.4 requires a smoke damper at each point a duct or air transfer opening penetrates a corridor enclosure. Unlike Section 607.5.3 that requires a fire damper at duct and air transfer openings in the fire partitions, Section 607.5.4 includes the ceiling and floor of the corridor.

Exception 4 acknowledges that the first 30 minutes of a fire incident are a critical time. In these moments, decisions are made by fire professionals and the safety staff of hospitals (in terms of status of the patients). Quick-response sprinklers are more often noted as the most important feature of the overall building fire protection system, and are demonstrated to be more effective in limiting the spread of fire than dampers in duct penetrations.

[BF] 607.5.4.1 Smoke damper. Smoke dampers shall close as required by Section 607.3.3.2.

❖ This section states specific requirements for the control of smoke dampers. Any one of the five methods, as applicable, can be used. The location of smoke detectors is critical to their performance. Smoke dampers are installed not only in duct penetrations, but also in transfer openings. Item 3 describes a method for controlling dampers in transfer openings. Where smoke detection is installed throughout a corridor or the entire area is served by the duct system (Items 4 and 5, respectively), the detection system is allowed to operate the dampers.

[BF] 607.5.5 Shaft enclosures. Shaft enclosures that are permitted to be penetrated by ducts and air transfer openings

INTERNATIONAL CODE COUNCIL®
Copyright © 2015 ICC. ALL RIGHTS RESERVED. Accessed by David Dammon on Jun 21, 2017 12:30:52 PM pursuant to License Agreement with ICC. No further reproduction or distribution authorized. ANY UNAUTHORIZED REPRODUCTION OR DISTRIBUTION IS A VIOLATION OF THE FEDERAL COPYRIGHT ACT AND THE LICENSE AGREEMENT, AND SUBJECT TO CIVIL AND CRIMINAL PENALTIES THEREUNDER.

shall be protected with *approved* fire and smoke dampers installed in accordance with their listing.

Exceptions:

1. Fire dampers are not required at penetrations of shafts where any of the following apply:
   1.1. Steel exhaust subducts extend not less than 22 inches (559 mm) vertically in exhaust shafts provided that there is a continuous airflow upward to the outdoors.
   1.2. Penetrations are tested in accordance with ASTM E119 or UL 263 as part of the fire-resistance-rated assembly.
   1.3. Ducts are used as part of an *approved* smoke control system in accordance with Section 909 of the *International Building Code*, and where the fire damper will interfere with the operation of the smoke control system.
   1.4. The penetrations are in parking garage exhaust or supply shafts that are separated from other building shafts by not less than 2-hour fire-resistance-rated construction.
2. In Group B and R occupancies equipped throughout with an automatic sprinkler system in accordance with Section 903.3.1.1 of the *International Building Code*, smoke dampers are not required at penetrations of shafts where kitchen, clothes dryer, bathroom and toilet room exhaust openings with steel exhaust subducts, having a minimum thickness of 0.0187 inch (0.4712 mm) (No. 26 gage), extend not less than 22 inches (559 mm) vertically and the exhaust fan at the upper terminus is powered continuously in accordance with the provisions of Section 909.11 of the *International Building Code*, and maintains airflow upward to the outdoors.
3. Smoke dampers are not required at penetrations of exhaust or supply shafts in parking garages that are separated from other building shafts by not less than 2-hour fire-resistance-rated construction.
4. Smoke dampers are not required at penetrations of shafts where ducts are used as part of an *approved* mechanical smoke control system designed in accordance with Section 909 of the *International Building Code* and where the smoke damper will interfere with the operation of the smoke control system.
5. Fire dampers and combination fire/smoke dampers are not required in kitchen and clothes dryer exhaust systems installed in accordance with this code.

❖ This section requires both fire and smoke dampers at duct and air transfer openings in the shaft wall. The fire damper is required because of the penetration of a fire-resistance-rated wall. The smoke damper is required to limit the migration of smoke to other parts of the building through the shaft and the chimney effect. Exception 1 allows omission of the fire damper only; the smoke damper is still required. Exceptions 2, 3 and 4 allow omission of smoke dampers only; the fire dampers are still required.

Exception 1, Part 1.1 recognizes that the presence of a vertical subduct in a shaft will also offer some degree of fire resistance should the duct outside of the shaft collapse. Steel exhaust ducts that consist of a 22-inch (559 mm) vertical upturn in the shaft need not be protected with a fire damper if there is a continuous upward airflow to the outside. The continuous airflow will create a negative pressure in the shaft compared to adjacent spaces, thereby minimizing the spread of hot gases from the shaft.

Exception 1, Part 1.2 states fire dampers are not required for duct penetrations of fire barriers when the assembly has been tested in accordance with ASTM E119 or UL 263 without fire dampers and the required fire-resistance rating is obtained. In this case, the penetration assembly has been shown to preserve the fire-resistance rating of the wall assembly.

Exception 1, Part 1.3 reinforces the provisions of Section 717.2.1 of the IBC. A fire damper might interfere with the operation of the smoke control system; however, some form of alternative protection must be installed because the duct penetrates the fire barrier.

Exception 1, Part 1.4 states that fire dampers may also be omitted in exhaust and supply shafts that serve a garage and are separated from all other shafts in the building by a 2-hour fire separation assembly. Requiring fire dampers in garage exhaust and supply shafts would not significantly reduce the spread of smoke and fire within the garage because the vehicle ramp from floor to floor is a much greater conduit for smoke and fire in a garage.

Exception 2 recognizes the advantages of automatic sprinkler protection in Group B and R buildings and that requiring smoke dampers in steel exhaust subducts extended at least 22 inches (559 mm) vertically in the exhaust shafts would not significantly increase safety to the building occupants. There must be a continuously powered upward airflow to the outside, similar to Exception 1, Part 1.1, above. In business and residential occupancies only, this exception combined with Exception 1, Part 1.1, above allows the omission of both the fire and smoke dampers because both exceptions rely on the subduct methodology [see Commentary Figure 607.5.5(1)]. Commentary Figure 607.5.5(2) illustrates an unacceptable method of subducting. The penetrations of the shafts by the fan manifold ducts would require fire and smoke dampers. The closure of a fire/smoke damper would cease the continuous upward flow of air in the shaft and pressure differentials in the shaft could cause flow from the lower subducts in the shaft to enter the higher subducts in the shaft resulting in heat and smoke being transferred to upper floors through the subducts.

Exception 3 recognizes that requiring smoke dampers in parking garage exhaust and supply shafts would not significantly prevent the spread of smoke within the garage because the unenclosed vehicle

INTERNATIONAL CODE COUNCIL®
Copyright © 2015 ICC. ALL RIGHTS RESERVED. Accessed by David Dammon on Jun 21, 2017 12:30:52 PM pursuant to License Agreement with ICC. No further reproduction or distribution authorized. ANY UNAUTHORIZED REPRODUCTION OR DISTRIBUTION IS A VIOLATION OF THE FEDERAL COPYRIGHT ACT AND THE LICENSE AGREEMENT, AND SUBJECT TO CIVIL AND CRIMINAL PENALTIES THEREUNDER.

ramp between floors is a much greater conduit for smoke between floors (see Exception 1, Part 1.4).

Exception 4 recognizes that smoke dampers are not required where the ducts are used as part of a smoke control system and where smoke dampers are not required for or would impede the operation of the smoke control system. Requiring smoke dampers in all ducts that are used as part of a smoke control system would not significantly increase safety to the building occupants.

Exception 5 is referring to commercial kitchen exhaust systems and all dryer exhaust systems. The intention of this exception is to not require fire dampers or combination smoke/fire dampers in commercial kitchen exhaust ducts when they comply with Section 506.3.11. It is also intended that dryer exhaust systems that comply with Section 504.2 will not require fire dampers or combination smoke/fire dampers.

[BF] 607.5.5.1 Enclosure at the bottom. Shaft enclosures that do not extend to the bottom of the building or structure shall be protected in accordance with Section 713.11 of the *International Building Code*.

❖ Proper shaft enclosures must include all sides, as well as the top and bottom, unless the bottom of the shaft is at the bottom of the structure. Where the bottom of the shaft is not at the bottom of the structure, the fire-resistance rating for the bottom of the shaft must be the same as that rating required for the shaft enclosure [see Commentary Figure 607.5.5.1(1)]. The bottom of the shaft must be constructed using a horizontal assembly (IBC Section 713) with the proper fire-resistance rating. It is not permissible to simply take a fire barrier, such as the assembly used for the shaft wall, and turn it horizontally. If a duct extends through the bottom of the shaft, a fire damper is required at the penetration (see Item 3, IBC Section 713.11). Although the fire damper at the floor line will not limit the temperature transmission to the level above, the fire-resistance-rated walls of the shaft will provide the protection from any increased temperature. This section also recognizes that the purpose of some shafts cannot be accomplished if the bottom must be enclosed; therefore, a room is permitted at the bottom of the shaft (see Item 2, IBC Section 713.11), but it must relate to the shaft's purpose and have the same enclosure as the shaft [see Commentary Figure 607.5.5.1(2)]. Two common examples of this situation are either mechanical rooms, which need vents from the equipment to the exterior, or a rubbish or laundry chute, which terminates into a room at the lower level where it is collected. Two of the three exceptions enlarge the "open-shaft-bottom" concept to include two other traditional shaft systems.

Exception 1 provides for an open shaft bottom where the shaft is to be utilized for a purpose on the bottom floor, such as an exhaust system. The shaft walls are not to be interrupted with protected or unprotected openings or penetrations. Bottom closure by draftstopping is required around items entering the base of the shaft [see Commentary Figure 607.5.5.1(3)], or the room that contains the shaft bottom is to be equipped throughout with an automatic

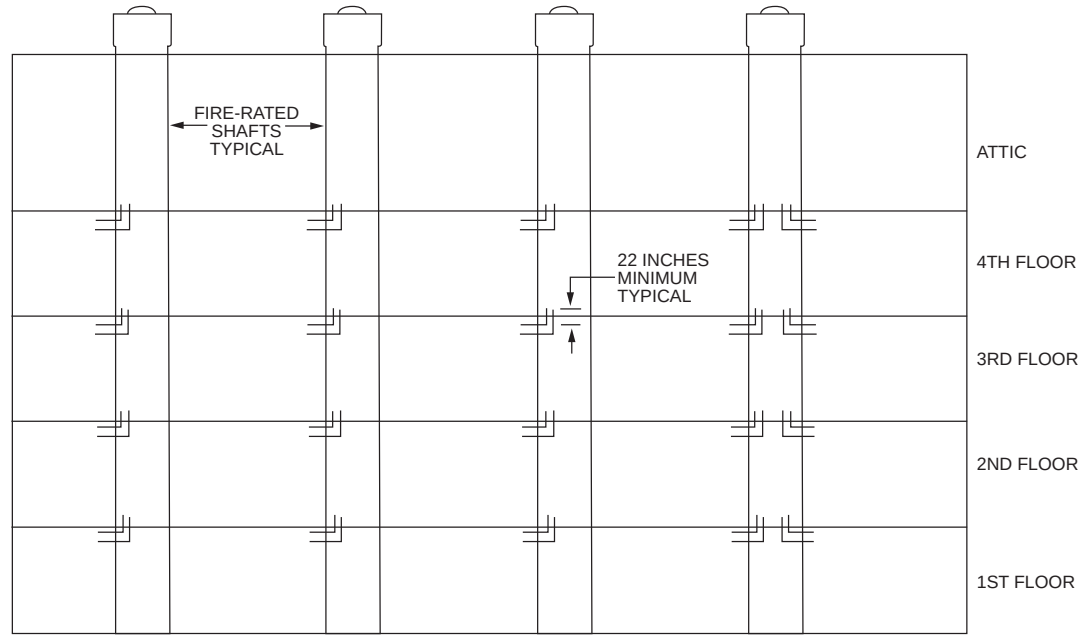

For SI: 1 inch = 25.4 mm.

Figure 607.5.5(1)
ACCEPTABLE METHOD OF SUBDUCTING

INTERNATIONAL CODE COUNCIL®
Copyright © 2015 ICC. ALL RIGHTS RESERVED. Accessed by David Dammon on Jun 21, 2017 12:30:52 PM pursuant to License Agreement with ICC. No further reproduction or distribution authorized. ANY UNAUTHORIZED REPRODUCTION OR DISTRIBUTION IS A VIOLATION OF THE FEDERAL COPYRIGHT ACT AND THE LICENSE AGREEMENT, AND SUBJECT TO CIVIL AND CRIMINAL PENALTIES THEREUNDER.

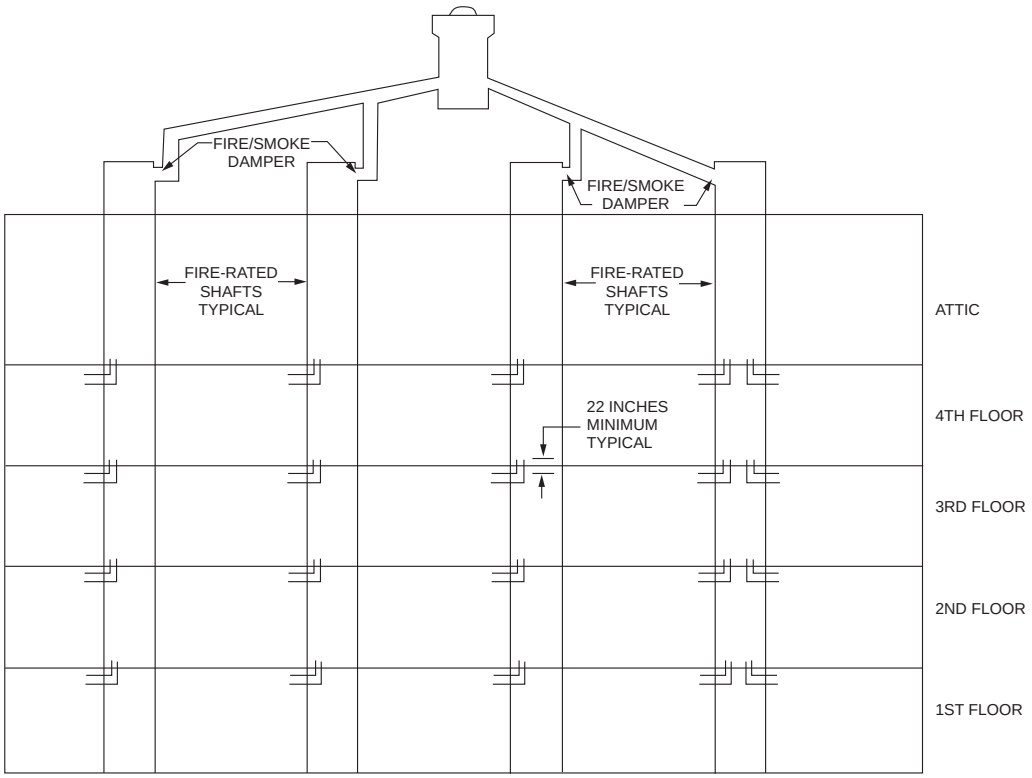

For SI: 1 inch = 25.4 mm.

Figure 607.5.5(2)
PROHIBITED METHOD OF SUBDUCTING

fire suppression system complying with the requirements of Chapter 9 of the IBC [see Commentary Figure 607.5.5.1(4)]. Either protection method will reduce the migration of products of combustion into the shaft. The exception differs from the main text of the section in that the room use is not required to be related to the purpose of the shaft. For example, a toilet room at the bottom of an air shaft would be permitted by this exception, even though the use of the toilet room does not relate to the purpose of the shaft to the same extent as an HVAC room. The exception also differs from the requirement found in Item 2, Section 713.11 of the IBC because the room is not required to have a fire-resistance rating equal to that of the shaft.

Exception 2. Section 713.11 of the IBC is unique to refuse or laundry chute shafts and prohibits the options afforded in this section. This exception mandates compliance with Section 713.13.4 of the IBC. The purpose of this exception is to limit the use of the shaft to the specific purpose of serving a refuse or laundry chute. Therefore, the shaft enclosure around these chutes cannot be used to permit duct work or items such as electrical cables to be run within the shaft.

Exception 3. Section 713.11 of the IBC is intended to address a shaft, such as a light well, where the shaft volume can be considered as part of the story in which the bottom of the shaft terminates. The conditions for the exception are based on the fact that the shaft contents will not contribute to the fuel load and that the shaft serves and connects to only one story—the story in which it terminates [see Commentary Figure 607.5.5.1(5)].

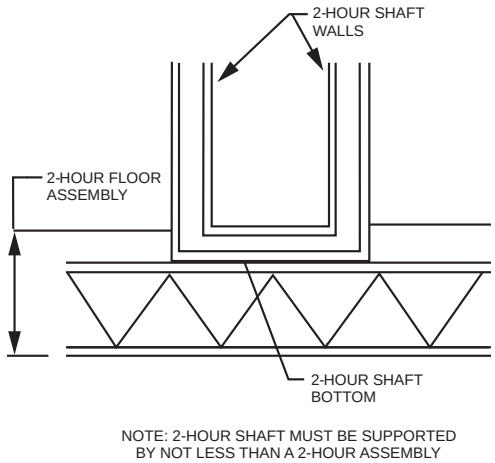

Figure 607.5.5.1(1)
VERTICAL SHAFT—BOTTOM ENCLOSURE

INTERNATIONAL CODE COUNCIL®
Copyright © 2015 ICC. ALL RIGHTS RESERVED. Accessed by David Dammon on Jun 21, 2017 12:30:52 PM pursuant to License Agreement with ICC. No further reproduction or distribution authorized. ANY UNAUTHORIZED REPRODUCTION OR DISTRIBUTION IS A VIOLATION OF THE FEDERAL COPYRIGHT ACT AND THE LICENSE AGREEMENT, AND SUBJECT TO CIVIL AND CRIMINAL PENALTIES THEREUNDER.

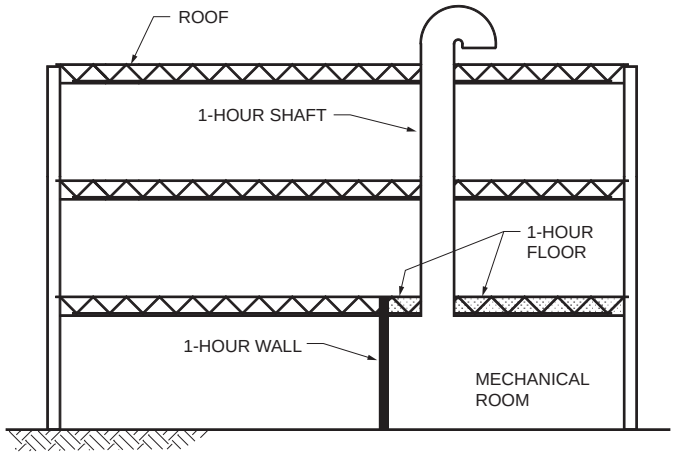

Figure 607.5.5.1(2)
VERTICAL SHAFTS—BOTTOM ENCLOSURES ROOM

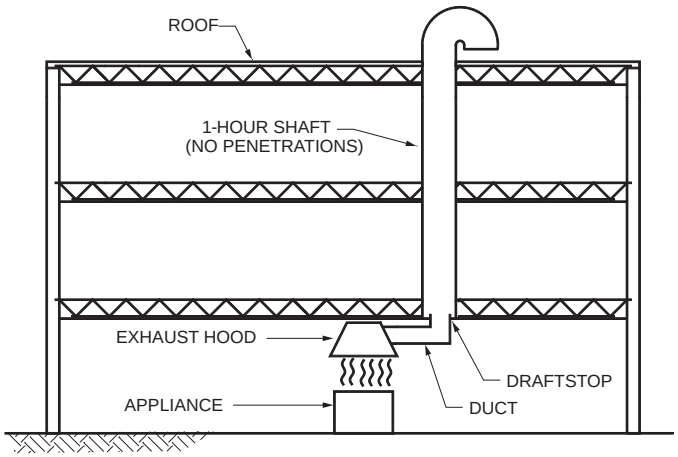

Figure 607.5.5.1(3)
VERTICAL SHAFTS—BOTTOM ENCLOSURES WITH DRAFTSTOPPING

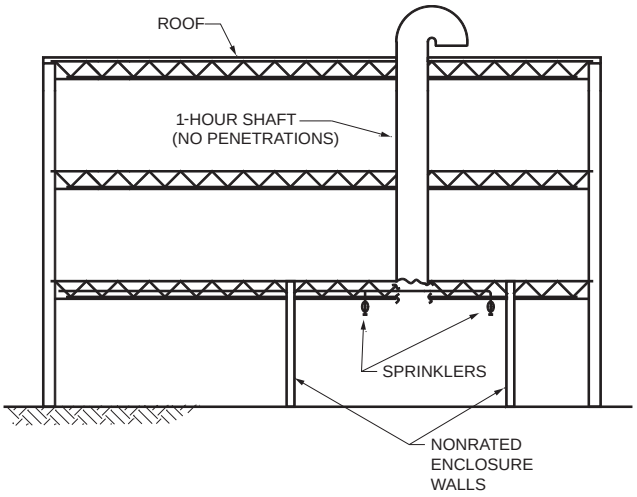

Figure 607.5.5.1(4)
VERTICAL SHAFTS—BOTTOM ENCLOSURES WITH FIRE SPRINKLERS

INTERNATIONAL CODE COUNCIL®
Copyright © 2015 ICC. ALL RIGHTS RESERVED. Accessed by David Dammon on Jun 21, 2017 12:30:52 PM pursuant to License Agreement with ICC. No further reproduction or distribution authorized. ANY UNAUTHORIZED REPRODUCTION OR DISTRIBUTION IS A VIOLATION OF THE FEDERAL COPYRIGHT ACT AND THE LICENSE AGREEMENT, AND SUBJECT TO CIVIL AND CRIMINAL PENALTIES THEREUNDER.

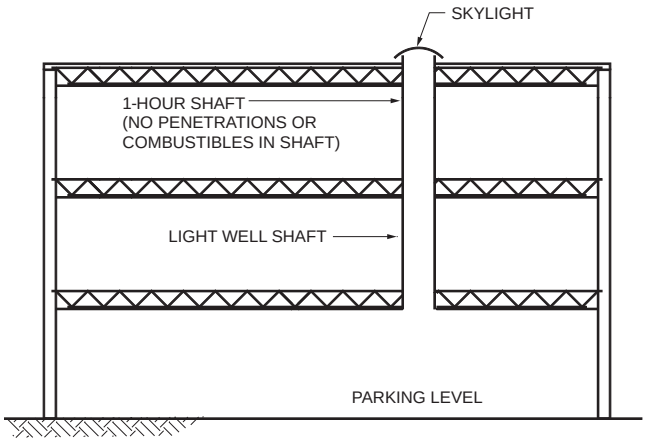

Figure 607.5.5.1(5)
VERTICAL SHAFTS—BOTTOM ENCLOSURES

[BF] 607.5.6 Exterior walls. Ducts and air transfer openings in fire-resistance-rated exterior walls required to have protected openings in accordance with Section 705.10 of the *International Building Code* shall be protected with *listed* fire dampers installed in accordance with their listing.

❖ Fire dampers are required in ducts and air transfer openings in fire-resistance-rated exterior walls. The requirement for this can be found in Section 705.10 in the IBC. The fire resistance rating of the exterior wall can be found in Section 602.1 in the IBC.

[BF] 607.5.7 Smoke partitions. A *listed* smoke damper designed to resist the passage of smoke shall be provided at each point where an air transfer opening penetrates a smoke partition. Smoke dampers and smoke damper actuation methods shall comply with Section 607.3.3.2.

Exception: Where the installation of a smoke damper will interfere with the operation of a required smoke control system in accordance with Section 513, *approved* alternate protection shall be used.

❖ Smoke dampers are required in air transfer openings that penetrate smoke partitions. It is important to know that there is not a definition of an air transfer opening in the code. The intention of this code section is to provide a smoke damper in an unducted opening that is designed to move or transfer air from one area of a building to another [see Commentary Figure 607.5.7(1)]. If the opening has ducts attached to one or both sides of the smoke partition, a smoke damper is not required [see Commentary Figures 607.5.7(2) and 607.5.7(3)]. Where an opening in a smoke partition has ducts attached to it, the ducted opening will have to be protected as required in Section 710.8 of the IBC. Note that smoke partitions are not always required to have a fire-resistance rating and therefore do not always require fire dampers in a duct or air transfer penetration.

The exception to this section would allow for the smoke damper to be eliminated when it would interfere with the operation of a required smoke control system that complies with Section 513. If the smoke damper is eliminated, an approved alternate protection would have to be utilized.

[BF] 607.6 Horizontal assemblies. Penetrations by air ducts of a floor, floor/ceiling assembly or the ceiling membrane of a roof/ceiling assembly shall be protected by a shaft enclosure that complies with Section 713 and Sections 717.6.1 through 717.6.3 of the *International Building Code* or shall comply with Sections 607.6.1 through 607.6.3.

❖ In general, floor openings and floor penetrations that connect two or more stories must be enclosed in shafts constructed in accordance with the IBC. Sections 607.6.1 through 607.6.3 identify those installations where a shaft is not required if the prescribed alternative protection is installed. Horizontal assemblies include both fire-resistance-rated and unrated assemblies. This section applies to penetrations of floor membranes, ceiling membranes and floor/ceiling assemblies. Penetration of a single floor/ceiling assembly connects two stories; penetration of two floor/ceiling assemblies connects three stories, etc.

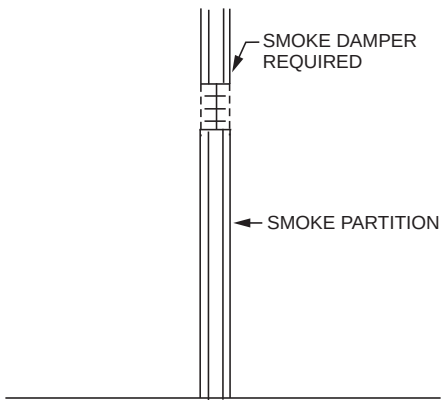

Figure 607.5.7(1)
SMOKE DAMPER REQUIRED IN AIR TRANSFER OPENING IN A SMOKE PARTITION

INTERNATIONAL CODE COUNCIL®
Copyright © 2015 ICC. ALL RIGHTS RESERVED. Accessed by David Dammon on Jun 21, 2017 12:30:52 PM pursuant to License Agreement with ICC. No further reproduction or distribution authorized. ANY UNAUTHORIZED REPRODUCTION OR DISTRIBUTION IS A VIOLATION OF THE FEDERAL COPYRIGHT ACT AND THE LICENSE AGREEMENT, AND SUBJECT TO CIVIL AND CRIMINAL PENALTIES THEREUNDER.

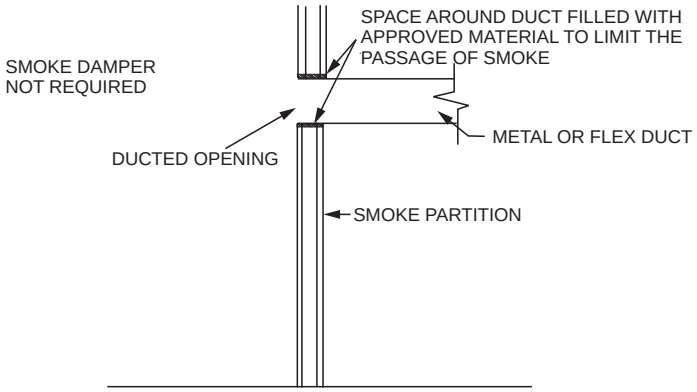

Figure 607.5.7(2)
SMOKE DAMPER NOT REQUIRED WHERE AIR TRANSFER OPENING IS DUCTED

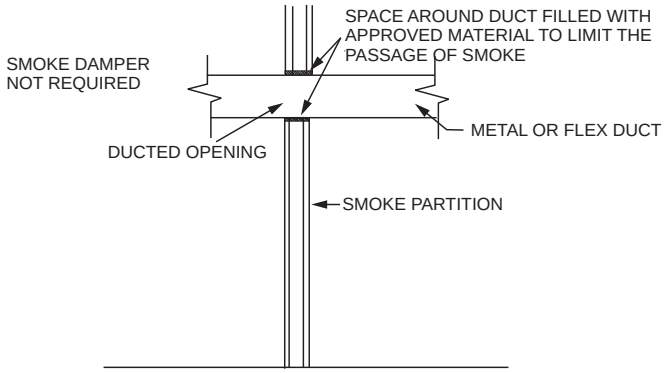

Figure 607.5.7(3)
SMOKE DAMPER NOT REQUIRED WHERE AIR TRANSFER OPENING IS DUCTED

[BF] 607.6.1 Through penetrations. In occupancies other than Groups I-2 and I-3, a duct constructed of *approved* materials in accordance with Section 603 that penetrates a fire-resistance-rated floor/ceiling assembly that connects not more than two stories is permitted without shaft enclosure protection provided that a *listed* fire damper is installed at the floor line or the duct is protected in accordance with Section 714.4 of the *International Building Code.* For air transfer openings, see Item 6, Section 712.1.9 of the *International Building Code*.

Exception: A duct is permitted to penetrate three floors or less without a fire damper at each floor provided it meets all of the following requirements.

1. The duct shall be contained and located within the cavity of a wall and shall be constructed of steel having a minimum thickness of 0.0187 inch (0.4712 mm) (No. 26 gage).
2. The duct shall open into only one *dwelling unit* or *sleeping unit* and the duct system shall be continuous from the unit to the exterior of the building.
3. The duct shall not exceed a 4-inch (102 mm) nominal diameter and the total area of such ducts shall not exceed 100 square inches for any 100 square feet (64 516 mm^2 per 9.3 m^2) of the floor area.
4. The annular space around the duct is protected with materials that prevent the passage of flame and hot gases sufficient to ignite cotton waste when subjected to ASTM E119 or UL 263 time-temperature conditions under a minimum positive pressure differential of 0.01 inch (2.49 Pa) of water at the location of the penetration for the time period equivalent to the fire-resistance rating of the construction penetrated.
5. Grille openings located in a ceiling of a fire-resistance-rated floor/ceiling or roof/ceiling assembly shall be protected with a *listed* ceiling radiation damper installed in accordance with Section 607.6.2.1.

❖ A fire-resistance-rated floor/ceiling assembly may be penetrated by air ducts where not more than two stories are connected (that is, the duct or opening penetrates a single floor) and a fire damper is installed at the floor line [see Commentary Figure 607.6.1(1)]. Because only two adjacent stories are involved, a fire damper is considered sufficient protection.

INTERNATIONAL CODE COUNCIL®
Copyright © 2015 ICC. ALL RIGHTS RESERVED. Accessed by David Dammon on Jun 21, 2017 12:30:52 PM pursuant to License Agreement with ICC. No further reproduction or distribution authorized. ANY UNAUTHORIZED REPRODUCTION OR DISTRIBUTION IS A VIOLATION OF THE FEDERAL COPYRIGHT ACT AND THE LICENSE AGREEMENT, AND SUBJECT TO CIVIL AND CRIMINAL PENALTIES THEREUNDER.

An air transfer opening that connects two floors is no different than any other opening in the floor as described in Section 712.1.9 of the IBC. A fire damper is not required to be installed if all seven of the criteria of that section of the IBC are satisfied.

The exception allows duct penetration of not more than three floors (four stories connected) without fire dampers at each floor penetration if all five requirements are satisfied. Item 1 specifies steel ducts and limits their location to wall cavities where they are protected by wall membranes and thus are less likely to be damaged and develop leaks. Item 2 limits the duct to serving only one dwelling or sleeping unit to lessen the potential for spreading fire and smoke from one unit to another. The duct must extend to the outdoors. Item 3 limits the size of the duct to 4 inches (102 mm) and a maximum area that is more restrictive than the requirements for pipes, vents and tubes in Section 714.4.1 of the IBC. Items 4 and 5 describe a method of maintaining the fire separation at the ceiling membrane by sealing the annular space around the duct with approved sealant material and protecting grille/register openings with a ceiling radiation damper. Note that a dryer exhaust duct is not exiting the space through the ceiling membrane and, therefore, does not require a ceiling damper [see Commentary Figure 607.6.1(2)].

[BF] 607.6.2 Membrane penetrations. Ducts and air transfer openings constructed of *approved* materials, in accordance with Section 603, that penetrate the ceiling membrane of a fire-resistance-rated floor/ceiling or roof/ceiling assembly shall be protected with one of the following:

1. A shaft enclosure in accordance with Section 713 of the *International Building Code*.
2. A *listed* ceiling radiation damper installed at the ceiling line where a duct penetrates the ceiling of a fire-resistance-rated floor/ceiling or roof/ceiling assembly.
3. A *listed* ceiling radiation damper installed at the ceiling line where a diffuser with no duct attached penetrates the ceiling of a fire-resistance-rated floor/ceiling or roof/ceiling assembly.

❖ Unless the duct system is protected with a shaft enclosure in accordance with Sections 713 and 714.4, a ceiling radiation damper, tested in accordance with UL 555C, must be installed at the point where the ceiling membrane is penetrated by an air duct or air transfer opening if the ceiling is an integral component of a fire-resistance-rated assembly. This requirement applies to membranes of both floor/ceiling and roof/ceiling assemblies. The requirement for a ceiling radiation damper applies to ductwork that penetrates a ceiling membrane from above, or where a diffuser with no ductwork attached penetrates a ceiling membrane. Section 607.6.1 contains the requirements for penetrations through the entire floor/ceiling assembly [see Commentary Figure 607.6.1(1)].

Ceiling radiation dampers are designed to limit radiant heat transfer through an air inlet or outlet opening in the lower membrane of a fire-resistance-rated floor/ceiling or roof/ceiling assembly. The description of the tested assembly will include a description of the ceiling radiation damper. On the other hand, a fire damper is a device designed to close automatically on detection of heat, to interrupt airflow and to restrict the passage of flame through duct penetrations of rated assemblies.

[BF] 607.6.2.1 Ceiling radiation dampers. *Ceiling radiation dampers* shall be tested in accordance with Section 607.3.1. *Ceiling radiation dampers* shall be installed in accordance with the details listed in the fire-resistance-rated assembly and the manufacturer's installation instructions and the listing. *Ceiling radiation dampers* are not required where any of the following apply:

1. Tests in accordance with ASTM E119 or UL 263 have shown that ceiling radiation dampers are not necessary to maintain the fire-resistance rating of the assembly.
2. Where exhaust duct penetrations are protected in accordance with Section 714.4.1.2 of the *International Building Code*, are located within the cavity of a wall, and do not pass through another dwelling unit or tenant space.

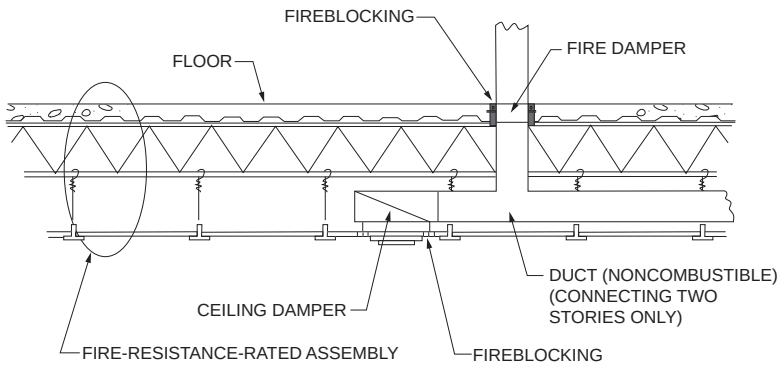

Figure 607.6.1(1)
AIR DUCT PENETRATION OF A FIRE-RESISTANCE-RATED FLOOR/CEILING ASSEMBLY

INTERNATIONAL CODE COUNCIL®
Copyright © 2015 ICC. ALL RIGHTS RESERVED. Accessed by David Dammon on Jun 21, 2017 12:30:52 PM pursuant to License Agreement with ICC. No further reproduction or distribution authorized. ANY UNAUTHORIZED REPRODUCTION OR DISTRIBUTION IS A VIOLATION OF THE FEDERAL COPYRIGHT ACT AND THE LICENSE AGREEMENT, AND SUBJECT TO CIVIL AND CRIMINAL PENALTIES THEREUNDER.

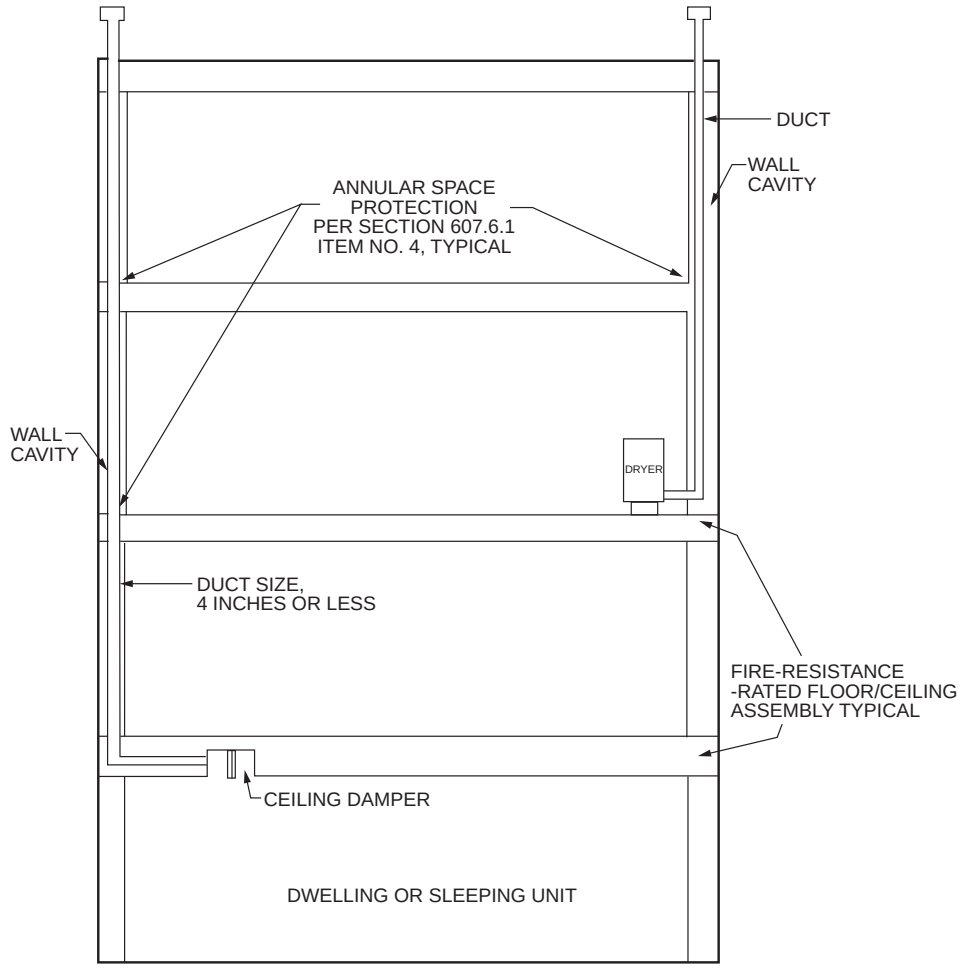

For SI: 1 inch = 25.4 mm.

Figure 607.6.1(2)
EXCEPTION: FIRE DAMPERS NOT REQUIRED AT EVERY FLOOR

3. Where duct and air transfer openings are protected with a duct outlet protection system tested as part of a fire-resistance-rated assembly in accordance with ASTM E119 or UL 263.

❖ Ceiling radiation dampers, formerly known as "ceiling dampers," are evaluated either in accordance with UL 555C (see commentary, Section 607.3) or as part of the floor/ceiling or roof/ceiling assembly tested in accordance with ASTM E119 or UL 263. Ceiling radiation dampers evaluated in accordance with UL 555C are investigated for use in lieu of hinged-door-type dampers commonly specified in the listing of fire-resistance-rated floor/ceiling or roof/ceiling assemblies. UL 555C also provides criteria for the construction of the ceiling radiation dampers. If the fire-resistance-rated floor/ceiling or roof/ceiling assembly does not incorporate a hinged-door-type damper, a ceiling radiation damper may not be utilized in the assembly. Ceiling radiation dampers investigated as part of the fire-resistance-rated floor/ceiling or roof/ceiling assembly are specified in the listing of the floor/ceiling or roof/ceiling assembly. The description of the tested assembly will include a description of the ceiling radiation damper and its installation. Both types of ceiling radiation dampers must be installed in accordance with the details listed in the fire-resistance-rated assembly and the manufacturer's installation instructions and listing.

The "Design Information Section" of the UL Fire Resistance Directory also includes two duct outlet protection systems. Duct Outlet Protection System A may be used where specified in the fire-resistance-rated floor/ceiling or roof/ceiling assembly. Duct Outlet Protection System B may be used in lieu of hinged-door-type dampers commonly specified in the listing of fire-resistance-rated floor/ceiling or roof/ceiling assemblies.

Ceiling radiation dampers need not be installed if a fire-resistance-rated assembly is tested in accordance with ASTM E119 and meets the performance required for the assembly without ceiling dampers.

INTERNATIONAL CODE COUNCIL®
Copyright © 2015 ICC. ALL RIGHTS RESERVED. Accessed by David Dammon on Jun 21, 2017 12:30:52 PM pursuant to License Agreement with ICC. No further reproduction or distribution authorized. ANY UNAUTHORIZED REPRODUCTION OR DISTRIBUTION IS A VIOLATION OF THE FEDERAL COPYRIGHT ACT AND THE LICENSE AGREEMENT, AND SUBJECT TO CIVIL AND CRIMINAL PENALTIES THEREUNDER.

Ceiling radiation dampers are not required to be installed if the exhaust ducts comply with Section 714.4.1.2 of the IBC, are limited to a single dwelling unit or tenant spaces and are contained within a wall.

There are through-penetration firestop systems that could be approved in accordance with Section 714.4.1.2 of the IBC. Such systems are tested as alternatives to ceiling dampers.

Item 3 permits the use of duct protection methods other than ceiling radiation dampers for protecting ducts and air transfer openings through the ceiling membrane of a fire-resistance-rated floor/ceiling or roof/ceiling assembly. The acceptance of the alternate duct protection systems is based on testing conducted in accordance with ASTM E119 or UL 263.

[BF] 607.6.3 Nonfire-resistance-rated floor assemblies. Duct systems constructed of approved materials in accordance with Section 603 that penetrate nonfire-resistance-rated floor assemblies shall be protected by any of the following methods:

1. A shaft enclosure in accordance with Section 713 of the *International Building Code*.
2. The duct connects not more than two stories, and the annular space around the penetrating duct is protected with an *approved* noncombustible material that resists the free passage of flame and the products of *combustion*.
3. In floor assemblies composed of noncombustible materials, a shaft shall not be required where the duct connects not more than three stories, and the annular space around the penetrating duct is protected with an approved noncombustible material that resists the free passage of flame and the products of combustion and a fire damper is installed at each floor line.

Exception: Fire dampers are not required in ducts within individual residential *dwelling units*.

❖ This section applies to duct systems that penetrate floor assemblies which are not required to have a fire-resistance rating. Even though a floor assembly is not designed and tested to withstand fire exposure for a specified period of time, the floor will provide for some resistance to the passage of heat, smoke and flame from one floor to the next. If a shaft enclosure is built for the duct to pass through the floors, then the shaft construction and floor opening construction details will eliminate any annular space outside of the shaft exterior to the floor opening.

Where only one or two floors are penetrated by a duct, this section allows elimination of the shaft enclosure.

Where only one floor is penetrated by the duct, the annular space between the outside of the duct and the opening in the floor, the space is required to be "plugged" with a noncombustible material. There are

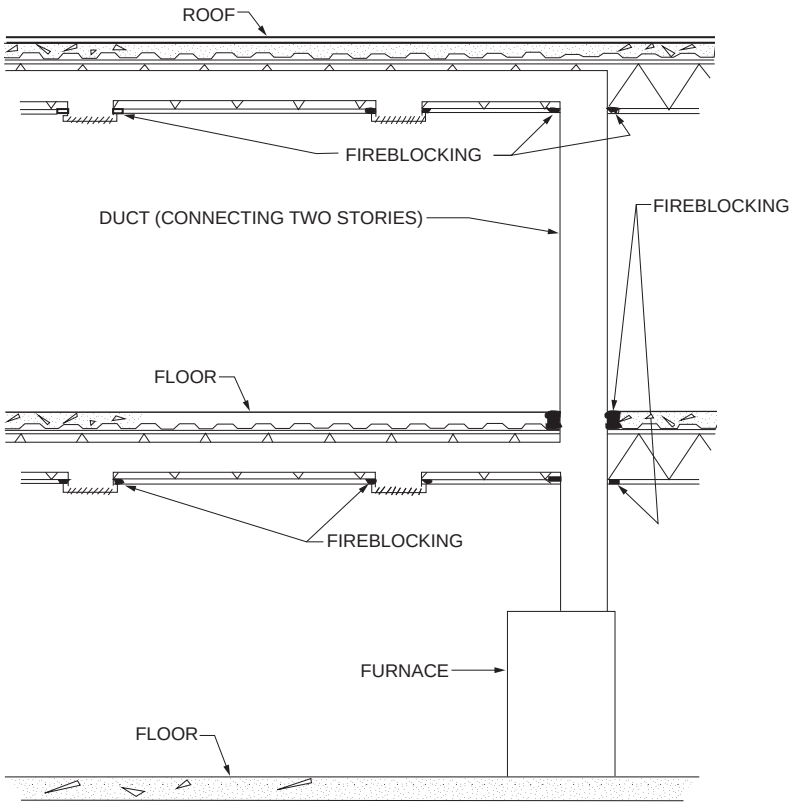

Figure 607.6.3(1)
DUCT PENETRATION OF NONFIRE-RESISTANCE-RATED ASSEMBLIES

INTERNATIONAL CODE COUNCIL®
Copyright © 2015 ICC. ALL RIGHTS RESERVED. Accessed by David Dammon on Jun 21, 2017 12:30:52 PM pursuant to License Agreement with ICC. No further reproduction or distribution authorized. ANY UNAUTHORIZED REPRODUCTION OR DISTRIBUTION IS A VIOLATION OF THE FEDERAL COPYRIGHT ACT AND THE LICENSE AGREEMENT, AND SUBJECT TO CIVIL AND CRIMINAL PENALTIES THEREUNDER.

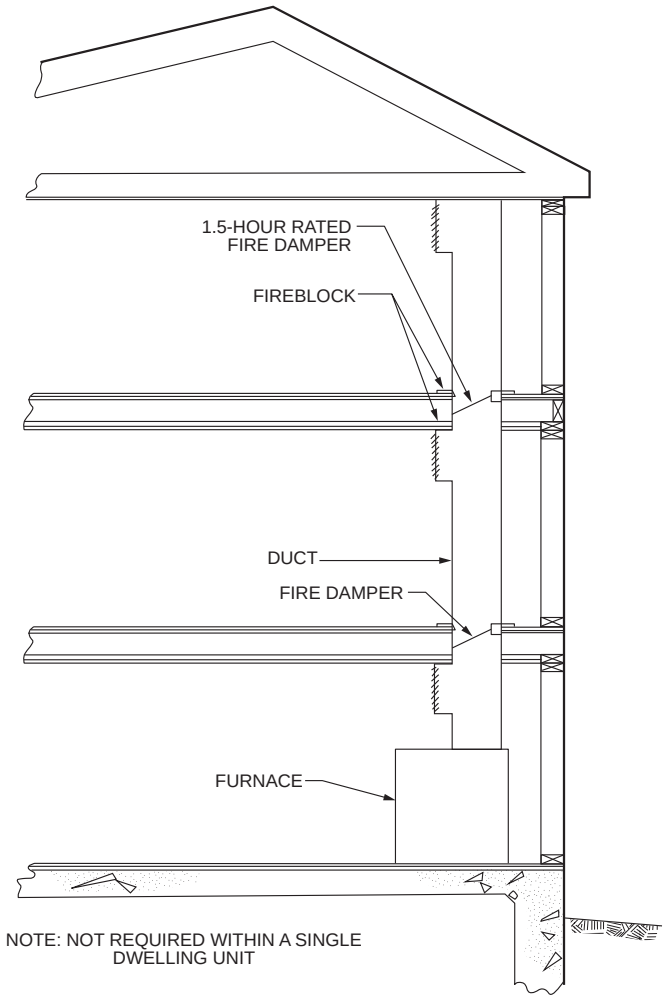

Figure 607.6.3(2)
FIRE DAMPERS IN DUCTS PENETRATING NONFIRE-RESISTANCE-RATED ASSEMBLIES

no requirements for the material to be in accordance with any standard or be listed or labeled. However, the material to be used must be approved by the code official [see Commentary Figure 607.6.3(1)].

Where only two floors are penetrated by the duct, the annular space between the outside of the duct and the opening in the floor, is required to be "plugged" with an approved noncombustible material AND a fire damper is required at each floor line [see Commentary Figure 607.6.3(2)]. It should be noted that the only fire damper listed to be installed in a floor is a horizontal fire damper. Horizontal fire dampers have only been tested and listed for masonry and concrete floor assemblies.

This section does not apply to transfer openings or transfer openings with a sleeve because plugging of the annular space between an assembly and the perimeter of the opening in the floor assembly would be pointless.

[BF] 607.7 Flexible ducts and air connectors. Flexible ducts and air connectors shall not pass through any fire-resistance-rated assembly.

❖ Flexible air ducts are prohibited from penetrating fire-resistance-rated assemblies. Flexible air connectors are not permitted to pass through any wall, floor or ceiling whether the assembly is fire-resistance rated or not (see Section 603.6.2.2). An inadequate seal at the assembly penetration could allow smoke or flame to penetrate the assembly. Flexible air ducts and connectors can be constructed of both combustible and noncombustible components; therefore, the duct's resistance to the passage of fire could be less than the resistance of the penetrated assembly. All construction assemblies, whether fire-resistance rated or not, have some inherent resistance to the spread of fire; duct penetrations can significantly affect that fire resistance. Also, the surface contour of the duct or the presence of insulation and vapor barrier materials on the duct exterior make it difficult to effectively seal (fireblock) the annular spaces around flexible air duct

INTERNATIONAL CODE COUNCIL®
Copyright © 2015 ICC. ALL RIGHTS RESERVED. Accessed by David Dammon on Jun 21, 2017 12:30:52 PM pursuant to License Agreement with ICC. No further reproduction or distribution authorized. ANY UNAUTHORIZED REPRODUCTION OR DISTRIBUTION IS A VIOLATION OF THE FEDERAL COPYRIGHT ACT AND THE LICENSE AGREEMENT, AND SUBJECT TO CIVIL AND CRIMINAL PENALTIES THEREUNDER.

and connector penetrations. Sections 714.3.3 and 714.4.3 of the IBC are interpreted to prevent combustible flexible ducts from converting to a noncombustible duct for the sole purpose of penetrating a rated assembly and circumventing the prohibition of Section 607.7.

Bibliography

The following resource material was used in the preparation of the commentary for this chapter of the code:

IBC-15, *International Building Code*. Washington, DC: International Code Council, 2014.

INTERNATIONAL CODE COUNCIL®

Copyright © 2015 ICC. ALL RIGHTS RESERVED. Accessed by David Dammon on Jun 21, 2017 12:30:52 PM pursuant to License Agreement with ICC. No further reproduction or distribution authorized. ANY UNAUTHORIZED REPRODUCTION OR DISTRIBUTION IS A VIOLATION OF THE FEDERAL COPYRIGHT ACT AND THE LICENSE AGREEMENT, AND SUBJECT TO CIVIL AND CRIMINAL PENALTIES THEREUNDER.

Chapter 7: Combustion Air

General Comments

Complete combustion of fuel is essential for the proper operation of appliances, for control of harmful emissions and for achieving maximum fuel efficiency. Combustion air supplies, among other things, the oxygen necessary for the complete and efficient burning of fuel. If insufficient quantities of oxygen are supplied, the combustion process will be incomplete, creating dangerous byproducts and wasting energy in the form of unburned fuel (hydrocarbons). The byproducts of incomplete combustion are poisonous, corrosive and combustible and can cause serious appliance or equipment malfunctions that pose fire or explosion hazards.

Combustion air also serves other purposes in addition to supplying oxygen. It ventilates and cools appliances and the rooms or spaces that enclose them, and it plays an important role in producing and controlling draft in vents and chimneys. An insufficient combustion air supply could cause an appliance to overheat and discharge combustion byproducts into the building.

A combustion air supply is also necessary to prevent oxygen depletion, which threatens the safety of the building occupants. Both building-occupant respiration and the combustion process of fuel-burning appliances consume the available oxygen in a room or space. The depletion of available oxygen promotes incomplete fuel combustion.

Adequate combustion air supply is extremely important, but it is one aspect of mechanical installation that is often overlooked, ignored or compromised. Depending on the appliance type, location and building construction, supplying combustion air can be easy, or it can involve complex designs and extraordinary methods. In any case, the importance of a proper combustion air supply cannot be overemphasized.

The combustion air requirements in this chapter were completely revised in the 2009 edition of the code. It was recognized that the requirements in this chapter were based upon dated combustion air requirements for fuel-gas-burning appliances. Liquid and solid fuel-burning appliances do not have the same requirements for combustion air. Therefore, all of the requirements in this chapter were deleted and replaced with instructions on where to find fuel specific combustion air requirements for solid, liquid and fuel gas-fired appliances.

Purpose

This chapter directs the reader to appropriate combustion air requirements provided in other publications or chapters of the code.

SECTION 701 GENERAL

701.1 Scope. Solid fuel-burning *appliances* shall be provided with *combustion air* in accordance with the appliance manufacturer's installation instructions. Oil-fired *appliances* shall be provided with *combustion air* in accordance with NFPA 31. The methods of providing *combustion air* in this chapter do not apply to fireplaces, fireplace stoves and direct-vent *appliances*. The requirements for combustion and dilution air for gas-fired *appliances* shall be in accordance with the *International Fuel Gas Code*.

❖ Combustion is necessary for complete fuel combustion. Air is also required for draft hood dilution (if the appliance is equipped with a draft hood) and in some situations, air necessary for ventilation of the appliance enclosure. A lack of combustion air results in incomplete fuel combustion, which causes soot production, increased carbon monoxide production, serious appliance malfunction and the risk of fire or explosion. Lack of draft-hood dilution air can result in improper draft and appliance venting. Incomplete fuel combustion and improper draft and venting compound each other and greatly increase the risk of the release of carbon monoxide, thereby endangering the occupants of the space or building. Lack of the air necessary for ventilation of the appliance enclosure can result in excessive temperatures in the enclosure, thus introducing the risks of overheating the appliance and fire.

Potential sources of combustion air are (1) the indoor atmosphere in which the appliance is located, (2) outdoor openings and ducts, (3) a combination of the two and (4) any other approved arrangement for the dependable introduction of outdoor air into the building or directly to the fuel-burning appliance.

Combustion air requirements for a fuel-burning appliance are dependent on the type of fuel burned by the appliance. As such, this section directs the reader to other publications for the requirements specific to the type of fuel that the appliance burns.

INTERNATIONAL CODE COUNCIL®
Copyright © 2015 ICC. ALL RIGHTS RESERVED. Accessed by David Dammon on Jun 21, 2017 12:30:52 PM pursuant to License Agreement with ICC. No further reproduction or distribution authorized. ANY UNAUTHORIZED REPRODUCTION OR DISTRIBUTION IS A VIOLATION OF THE FEDERAL COPYRIGHT ACT AND THE LICENSE AGREEMENT, AND SUBJECT TO CIVIL AND CRIMINAL PENALTIES THEREUNDER.

As stated in the general comments at the beginning of this chapter, previous editions of the code did not properly address the combustion air requirements for solid and liquid fuel-burning appliances as this chapter was originally developed based upon the combustion air requirements for fuel gas-fired appliances. Up until the 2000 edition of the code, this chapter was applicable to liquid, solid and fuel gas-fired appliances. In the 2000 edition of the code, language that was specific to fuel gas-fired appliances was removed as a new fuel gas code had been developed [the *International Fuel Gas Code*® (IFGC®)] and introduced to cover requirements specific to fuel gas-fired appliances, including combustion air requirements. With the introduction of the IFGC, it was intended that this chapter be applicable only to liquid and solid fuel-fired appliances. Even though the first section of Chapter 7 (from the 2000 edition of the code forward) attempted to redefine the scope of the chapter to be for liquid and solid fuel-fired appliances only, many users of this code continued to apply this chapter to fuel gas-fired appliance installations. Replacing all of the combustion air requirements in Chapter 7 with instructions on where to find combustion air requirements for the specific type of fuel-burning appliance eliminates the confusion about fuel gas-fired appliance combustion air requirements and provides the location for appropriate combustion air requirements for solid and liquid fuel-fired appliances.

Because of the unique configurations and variety of solid fuel-burning appliances (e.g., wood, pellet, biomass-fired), no one set of combustion air requirements could adequately cover all solid fuel-fired appliance installations. Therefore, the best information must be obtained from the manufacturer's installation instructions for the specific appliance. NFPA 31 has long been recognized for many aspects of oil-fired appliance installations that were not covered by this code. Because NFPA 31 has combustion air requirements, the standard is the appropriate source for this information. For the benefit of code users who are curious to know the major differences between the combustion air requirements that were in this chapter and those required by NFPA 31, the following information is provided.

NFPA 31 has different requirements for installations in commercial/industrial buildings versus installations in residential buildings. Oil-burning appliances in commercial/industrial buildings must receive combustion air directly from the outdoors and not from building infiltration. Oil-burning appliances in residential and "similar" installations can receive combustion air from building infiltration or if the building is of "tight construction," receive air directly from the outdoors. The definition of "Confined space" is the same as before (50 cubic feet per 1,000 Btu/h input rating).

Commercial and Industrial Buildings

- Where the installation of oil-burning appliances is in a furnace or boiler room adjacent to an exterior wall, the appliance must receive ventilation and combustion air directly from the outdoors. Although the free area of the opening in the exterior wall is the same as before (1 square inch per 4,000 Btu/h input rating of all of the oil-burning appliances in the room), the opening is required to have at least 35 square inches (3.25 m^2) of free area.
- Where the installation of oil-burning appliances in commercial and industrial buildings is in a furnace or boiler room that is not adjacent to an exterior wall, the method of supplying combustion air (from the outdoors) to the appliances must be approved by the code official.

Residential and "Similar" Buildings

- Where oil-burning appliances are installed in an unconfined space but in a building of "tight" construction, the free area of the opening (or the total of all openings) direct to the outdoors (or to spaces that communicate freely with the outdoors) must be at least 1 square inch per 5000 Btu/hour input rating of the all of the oil-burning appliances in the unconfined space. (Chapter 7 previously required 1 square inch per 4,000 Btu/h input rating.)
- Where oil-burning appliances are installed in a confined space and air is being taken from inside of a building having "adequate" air infiltration, there is not a minimum size required for the two openings to the adjacent space (Chapter 7 previously required a minimum free area of 100 square inches for each opening).
- Where oil-burning appliances are installed in a confined space and in a building of "tight" construction, and where air is to be supplied only through one opening (direct or ducted) to the outdoors (or to a space that freely communicates with the outdoors), the opening must have a free area at least 1 square inch per 5,000 Btu/h input rating of all of the oil-burning appliances in the confined space. The confined space must also have two openings (one near the top of the space, one near the bottom of the space) to provide ventilation air from an adjacent inside space. The openings must each have a free area of 1 square inch per 1000 Btu per hour input rating of the all of the oil-burning appliances in the confined space.

INTERNATIONAL CODE COUNCIL®
Copyright © 2015 ICC. ALL RIGHTS RESERVED. Accessed by David Dammon on Jun 21, 2017 12:30:52 PM pursuant to License Agreement with ICC. No further reproduction or distribution authorized. ANY UNAUTHORIZED REPRODUCTION OR DISTRIBUTION IS A VIOLATION OF THE FEDERAL COPYRIGHT ACT AND THE LICENSE AGREEMENT, AND SUBJECT TO CIVIL AND CRIMINAL PENALTIES THEREUNDER.

701.2 Dampered openings. Where combustion air openings are provided with volume, smoke or fire dampers, the dampers shall be interlocked with the firing cycle of the appliances served, so as to prevent operation of any appliance that draws combustion air from the room or space when any of the dampers are closed. Manual dampers shall not be installed in combustion air ducts. Ducts not provided with dampers and that pass through rated construction shall be enclosed in a shaft in accordance with the *International Building Code*.

❖ This section addresses any and all damper types that could be put in combustion air ducts. All such dampers would have to be equipped with position sensing controls such as end- or travel- switches that monitor the position of the damper blades. This includes fire and smoke dampers where installed in combustion air ducts or openings that penetrate fire-resistance-rated assemblies.

To prevent freezing of pipes, to save energy and maintain comfortable temperatures in appliance rooms, outdoor openings often have motorized dampers that close during the appliance(s) off cycle. The damper motors and/or damper blades must be supervised so that an interlock can be established between the dampers and the appliances, thereby preventing appliance operation when the dampers are closed.

Combustion air openings must not be closable unless they open and close automatically using a mechanism that is interlocked with the appliances (see Commentary Figure 701.2). Damper supervision is easily accomplished by damper motor end switches or blade position travel switches that monitor the position of the drive motor shaft, the damper/motor linkage hardware or the damper blades. These switches provide feedback to the appliance control circuitry to allow firing only when the dampers are proven to be fully open.

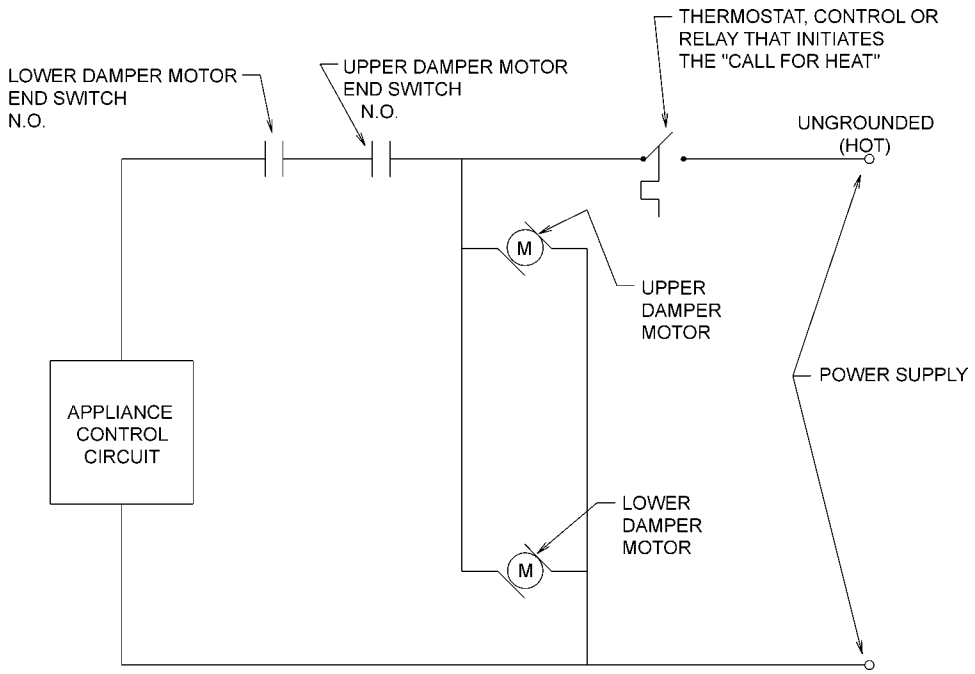

Figure 701.2
SIMPLIFIED EXAMPLE SCHEMATIC OF COMBUSTION AIR DAMPER/APPLIANCE INTERLOCK
(Shown for Illustrative Purpose Only)

INTERNATIONAL CODE COUNCIL®
Copyright © 2015 ICC. ALL RIGHTS RESERVED. Accessed by David Dammon on Jun 21, 2017 12:30:52 PM pursuant to License Agreement with ICC. No further reproduction or distribution authorized. ANY UNAUTHORIZED REPRODUCTION OR DISTRIBUTION IS A VIOLATION OF THE FEDERAL COPYRIGHT ACT AND THE LICENSE AGREEMENT, AND SUBJECT TO CIVIL AND CRIMINAL PENALTIES THEREUNDER.

INTERNATIONAL CODE COUNCIL®
Copyright © 2015 ICC. ALL RIGHTS RESERVED. Accessed by David Dammon on Jun 21, 2017 12:30:52 PM pursuant to License Agreement with ICC. No further reproduction or distribution authorized. ANY UNAUTHORIZED REPRODUCTION OR DISTRIBUTION IS A VIOLATION OF THE FEDERAL COPYRIGHT ACT AND THE LICENSE AGREEMENT, AND SUBJECT TO CIVIL AND CRIMINAL PENALTIES THEREUNDER.

Chapter 8:
Chimneys and Vents

General Comments

This chapter is intended to regulate the design, construction, installation, maintenance, repair and approval of chimneys, vents and their connections to fuel-burning appliances. A properly designed chimney or vent system is needed to conduct the flue gases produced by a fuel-burning appliance to the outdoors. In the case of natural draft appliances, the chimney or vent system serving the appliance is expected to produce a draft at the appliance connection.

Draft refers to a phenomenon created by the buoyancy of lighter (less dense) gases in the presence of heavier (more dense) gases. Draft is measured as pressure in inches of water column (kPa) and is a negative pressure—meaning that it is less than the atmospheric pressure at the point of measurement. Draft is produced by the temperature difference between the combustion gases (flue gases) and the ambient atmosphere. Because hotter gases are less dense, they are buoyant and will rise in the chimney, causing negative pressures to develop that are directly proportional to the height of the chimney or vent and directly proportional to the temperature difference between the flue gases and the ambient air. Draft produced by a chimney or vent is the motivating force that conveys combustion products from natural draft appliances to the outside atmosphere through the chimney or vent passageway.

The type of vent or chimney used in a given installation is generally based on the type of fuel burned by the appliance, the temperature of the flue gases produced by the combustion process and the appliance category.

Because the code classifies appliances into three temperature categories (low, medium and high heat), the fuel type and characteristics of the flue gas must be analyzed for the design of a chimney or vent system. The development of higher efficiency appliances continues to produce lower flue gas temperatures, and the diversity of mechanical venting systems continues to expand. See the definition of “Appliance type” in Chapter 2.

With the advent of new technology and higher efficiency appliances/equipment, venting means are becoming increasingly diversified and complex. Many of today’s appliances are designed to be vented by more than one type of venting system.

Purpose

The requirements of this chapter are intended to achieve the complete removal of the products of combustion from fuel-burning appliances and equipment. This chapter includes regulations for the proper selection, design, construction and installation of a chimney or vent, along with appropriate measures to minimize the related potential fire hazards. A chimney or vent must be designed for the type of appliance or equipment it serves. Chimneys and vents are designed for specific applications depending on the flue gas temperatures and the type of fuel being burned in the appliance.

The primary hazards associated with chimneys and vents are high temperatures and the toxic and corrosive nature of combustion byproducts.

SECTION 801
GENERAL

801.1 Scope. This chapter shall govern the installation, maintenance, repair and approval of factory-built chimneys, *chimney* liners, vents and connectors. This chapter shall govern the utilization of masonry chimneys. Gas-fired *appliances* shall be vented in accordance with the *International Fuel Gas Code.*

❖ Chapter 8 contains provisions for the installation, maintenance, repair and approval of residential and commercial chimney and venting systems that convey the products of combustion from fuel-burning appliances regulated by the code to the outside atmosphere. This chapter also addresses metal chimneys, also known as smoke stacks, used in factory/industrial-type facilities. Even though factory-built chimneys (see Section 805) are constructed of metal, they are not considered to be metal chimneys (smoke stacks) (see Section 806).

Venting requirements for fuel gas-fired appliances are regulated by the *International Fuel Gas Code*® (IFGC®).

801.2 General. Every fuel-burning *appliance* shall discharge the products of *combustion* to a vent, factory-built *chimney* or masonry *chimney,* except for *appliances* vented in accor-

INTERNATIONAL CODE COUNCIL®
Copyright © 2015 ICC. ALL RIGHTS RESERVED. Accessed by David Dammon on Jun 21, 2017 12:30:52 PM pursuant to License Agreement with ICC. No further reproduction or distribution authorized. ANY UNAUTHORIZED REPRODUCTION OR DISTRIBUTION IS A VIOLATION OF THE FEDERAL COPYRIGHT ACT AND THE LICENSE AGREEMENT, AND SUBJECT TO CIVIL AND CRIMINAL PENALTIES THEREUNDER.

dance with Section 804. The *chimney* or vent shall be designed for the type of *appliance* being vented.

Exception: Commercial cooking *appliances* vented by a Type I hood installed in accordance with Section 507.

❖ Every fuel-burning appliance must be vented to a chimney or vent unless it is direct-vented, integrally vented, mechanically vented in accordance with Section 804 or vented by means of a commercial kitchen exhaust hood in accordance with Section 507. Although chimneys and vents have the same basic purpose, they are different creatures with differing code requirements. Some code sections pertain to chimneys only, some to vents only and some to both. Commonly, the code is misapplied because people refer to vents as chimneys and vice versa.

The combustion byproducts produced from the burning of fuels consist primarily of carbon dioxide, nitrogen, water vapor and small amounts of carbon monoxide, nitrous oxide and other compounds that vary with the type and purity of the fuel and the purity of the combustion air. Some of the compounds, especially carbon monoxide, are poisonous and some are corrosive. The amount of carbon monoxide in combustion gases varies with the type of fuel, the type of burner and the condition and adjustment of the burner. See the commentary to Chapter 7 for a further discussion of fuel combustion.

Many fatalities have resulted from carbon monoxide poisoning caused by malfunctioning fuel-burning appliances or malfunctioning or the lack of a chimney or vent. Because of the potential danger of asphyxiation, the products of combustion must be conducted to the outdoors so that operation of the appliance does not pose a threat to the building occupants. Fuel-burning appliances have widely varying operating characteristics, which means that the method of venting the combustion products must be designed for the particular type of appliance served. The flue gases (combustion byproducts) produced by appliances differ primarily in temperature and chemical composition. The methods of venting differ in the temperature and pressure ranges over which they operate and whether or not they can accommodate condensation.

A mismatch between an appliance and a vent or chimney can result in a hazardous operating condition. For example, an appliance that produces high-temperature flue gas could cause a vent material to degrade or melt or cause excessively high temperatures on the outer surface of the vent. An appliance that produces low-temperature flue gas can cause condensation to occur in the venting system that could corrode and deteriorate the vent material.

801.2.1 Oil-fired appliances. Oil-fired *appliances* shall be vented in accordance with this code and NFPA 31.

❖ Vents for oil-fired appliances must comply with NFPA 31 and the requirements of this chapter. NFPA 31 references NFPA 211 and contains, among other provisions, requirements for draft regulators, Type L vents, vent and chimney terminations, chimneys and connectors.

801.3 Masonry chimneys. Masonry *chimneys* shall be constructed in accordance with the *International Building Code*.

❖ Masonry construction is more appropriately addressed in the *International Building Code*® (IBC®) (see commentary, Section 902.1). The IBC contains requirements for the construction of masonry chimneys, whereas this code contains the requirements for the sizing and use of masonry chimneys.

A masonry chimney is a field-constructed assembly that can consist of solid masonry units, reinforced concrete, rubble stone, fire-clay liners and mortars. A masonry chimney can serve low-, medium- and high-heat appliances. The IBC outlines the general code requirements regarding the construction details for all masonry chimneys, including those serving masonry fireplaces (see IBC Chapter 21).

801.4 Positive flow. Venting systems shall be designed and constructed so as to develop a positive flow adequate to convey all *combustion* products to the outside atmosphere.

❖ This section requires that chimneys and vents be designed to develop the required draft or allow the required positive pressure flow to prevent combustion byproducts from spilling into the building's interior.

801.5 Design. Venting systems shall be designed in accordance with this chapter or shall be *approved* engineered systems.

❖ An engineered chimney or vent system refers to a system designed in accordance with the formulas, data and tables found in design manuals and standards such as ASHRAE handbooks and chimney and vent manufacturers' design guides. Engineered systems should be designed in accordance with standard engineering practices and must be approved by the code official.

801.6 Minimum size of chimney or vent. Except as otherwise provided for in this chapter, the size of the *chimney* or vent, serving a single *appliance*, except engineered systems, shall have a minimum area equal to the area of the *appliance* connection.

❖ This section requires a chimney or vent serving a single appliance to have a minimum cross-sectional area equal to the cross-sectional area of the appliance outlet connection. Although not regulated by this section, the maximum size of a chimney or vent is also an important design consideration. Oversized chimneys and vents can fail to produce sufficient draft and can cause condensation of the flue gases. Existing chimneys and vents might become oversized as a result of the removal of an appliance that was previously connected (see commentary, Section 801.18). In excessively large chimneys and vents, the flue gases are cooled by expansion and the increased heat loss through the larger flue passage surface area. The cooling effect reduces the temperature differences necessary to produce draft and can cause

INTERNATIONAL CODE COUNCIL®
Copyright © 2015 ICC. ALL RIGHTS RESERVED. Accessed by David Dammon on Jun 21, 2017 12:30:52 PM pursuant to License Agreement with ICC. No further reproduction or distribution authorized. ANY UNAUTHORIZED REPRODUCTION OR DISTRIBUTION IS A VIOLATION OF THE FEDERAL COPYRIGHT ACT AND THE LICENSE AGREEMENT, AND SUBJECT TO CIVIL AND CRIMINAL PENALTIES THEREUNDER.

the flue gases to reach the dew point temperature. The resulting condensation is highly corrosive and can cause deterioration of the chimney, vent, connected appliances and the building.

This section does not apply to the sizing of engineered systems and multiple appliance connections. The sizing requirements for vents serving appliances/equipment that require special vent systems are specified in the manufacturer's instructions. See the commentary to Sections 801.5 and 802.3 for a further discussion of special vent systems. Any design conflicting with the sizing criteria of this section must be considered as an engineered system.

801.7 Solid fuel appliance flues. The cross-sectional area of a flue serving a solid fuel-burning *appliance* shall be not greater than three times the cross-sectional area of the *appliance* flue collar or flue outlet.

❖ Oversized chimneys can fail to produce sufficient draft and can encourage the production of water vapor condensation and creosote. The 3:1 ratio limitation is intended to prevent chimneys and chimney flues from being too large for the appliance served.

801.8 Abandoned inlet openings. Abandoned inlet openings in chimneys and vents shall be closed by an *approved* method.

❖ Abandoned inlet openings result from appliances being disconnected or connected at different elevations. Unused openings in chimneys and vents can allow combustion gases to enter the building; can cause loss of draft at other appliances connected to the chimney or vent; can allow conditioned air to escape, resulting in energy losses; and can allow the entry of birds and rodents. For example, an appliance that was connected to a chimney has been replaced with an appliance that vents through an exterior wall. The opening in the chimney left by the disconnection of the appliance must be properly closed to prevent a hazardous condition (see commentary, Section 801.18).

The method used to close an unused opening must not create a protrusion in the flue passageway that could restrict flue gas flow or provide a surface for the accumulation of creosote or soot.

801.9 Positive pressure. Where an *appliance* equipped with a forced or induced draft system creates a positive pressure in the venting system, the venting system shall be designed and *listed* for positive pressure applications.

❖ Commonly used chimney and vent systems are not designed for positive pressure (above atmospheric). These chimneys and vents are intended to produce a draft and thus operate with negative internal pressures. Specialized vents and chimneys are available that are designed for positive pressure applications. It is important that such vents and chimneys are listed for positive-pressure applications to prevent the misapplication of materials, which can result in leakage of combustion gases and can cause chimney or vent deterioration from condensate corrosion (see Sections 801.14, 804.3.1 and 804.3.6).

801.10 Connection to fireplace. Connection of *appliances* to *chimney* flues serving fireplaces shall be in accordance with Sections 801.10.1 through 801.10.3.

❖ This section regulates installations where fireplace chimneys are used to vent appliances, such as room heaters and fireplace-insert heaters.

801.10.1 Closure and access. A noncombustible seal shall be provided below the point of connection to prevent entry of room air into the flue. Means shall be provided for *access* to the flue for inspection and cleaning.

❖ Without an air-tight connection between the chimney flue and the appliance chimney connector, chimney draft will draw room air into the flue, thus weakening the draft drawn through the appliance. The chimney connection must be designed for access to allow inspection and cleaning of the chimney because the chimney flue is no longer open to the fireplace firebox.

801.10.2 Connection to factory-built fireplace flue. An *appliance* shall not be connected to a flue serving a factory-built fireplace unless the *appliance* is specifically *listed* for such installation. The connection shall be made in accordance with the *appliance* manufacturer's installation instructions.

❖ Factory-built fireplaces may or may not be tested for any use other than as a traditional fireplace. Connecting an appliance or fireplace-insert heater could result in abnormally high fireplace or chimney temperatures, component deterioration and hazardous operation. The fireplace manufacturer will provide specific details stating what appliance connections are allowed. Typically, the manufacturer's instructions will prohibit any modifications and any use of the fireplace other than what it was designed for.

801.10.3 Connection to masonry fireplace flue. A connector shall extend from the *appliance* to the flue serving a masonry fireplace such that the flue gases are exhausted directly into the flue. The connector shall be provided with access or shall be removable for inspection and cleaning of both the connector and the flue. *Listed* direct connection devices shall be installed in accordance with their listing.

❖ The appliance chimney connector must extend up through the fireplace damper and smoke chamber and terminate in the chimney flue. This helps produce an adequate draft and reduces the possibility of forming combustible creosote deposits within the fireplace throat and smoke chamber.

801.11 Multiple solid fuel prohibited. A solid fuel-burning *appliance* or fireplace shall not connect to a *chimney* passageway venting another *appliance*.

❖ Each solid fuel-burning appliance or fireplace must have a dedicated independent chimney, or a dedicated independent flue in multiple-flue chimney constructions. Solid fuel appliances and fireplaces cannot share a common chimney or flueway with any

INTERNATIONAL CODE COUNCIL®
Copyright © 2015 ICC. ALL RIGHTS RESERVED. Accessed by David Dammon on Jun 21, 2017 12:30:52 PM pursuant to License Agreement with ICC. No further reproduction or distribution authorized. ANY UNAUTHORIZED REPRODUCTION OR DISTRIBUTION IS A VIOLATION OF THE FEDERAL COPYRIGHT ACT AND THE LICENSE AGREEMENT, AND SUBJECT TO CIVIL AND CRIMINAL PENALTIES THEREUNDER.

other appliance or fireplace. For example, a solid fuel appliance cannot be connected to an existing masonry chimney that serves other appliances or a fireplace.

Solid fuel-burning appliances produce creosote deposits on the interior walls of chimney liners. The creosote formation is highly combustible and creates a potential fire hazard. Because of the potential for a chimney fire, other connections to the chimney could allow fire to break out of the chimney into the building. Also, chimney passageways could become blocked by the creosote formations. If other appliances were vented to those chimneys, combustion products would be discharged into the building. This section is also intended to prevent the possibility of creosote leaking out of the chimney through appliance connectors.

Combination (dual fuel) gas- or oil- and solid fuel-burning appliances are designed to be connected to a single chimney passageway. Dual-fuel appliances must be listed, labeled and installed in compliance with the manufacturer's instructions.

801.12 Chimney entrance. Connectors shall connect to a *chimney* flue at a point not less than 12 inches (305 mm) above the lowest portion of the interior of the *chimney* flue.

❖ This provision is intended to prevent blockage of the connector opening by debris that has collected at the bottom of the flue passage. The 12-inch (305 mm) deep space below the connector functions as a trap (dirt leg) for debris, such as dead animals, leaves, flaking tile, mortar and soot. This section is not intended to apply to factory-built chimneys because such chimneys are protected from the entry of debris by the required cap.

801.13 Cleanouts. Masonry *chimney* flues shall be provided with a cleanout opening having a minimum height of 6 inches (152 mm). The upper edge of the opening shall be located not less than 6 inches (152 mm) below the lowest *chimney* inlet opening. The cleanout shall be provided with a tight-fitting, noncombustible cover.

Exception: Cleanouts shall not be required for *chimney* flues serving masonry fireplaces, if such flues are provided with access through the fireplace opening.

❖ This section requires installation of a cleanout in a chimney to facilitate cleaning and inspection. A fireplace inherently provides access to its chimney through the firebox, throat and smoke chamber. The cleanout cover and opening frame must be of an approved material, such as cast iron, precast cement or other noncombustible material, and must be arranged to remain tightly closed. A loose-fitting or unsecured cleanout can allow air to flow into the chimney, affecting draft at the appliance or fireplace, and can result in an energy loss in the building. Under certain conditions, combustion products could escape into the building through an ill-fitting cleanout door or cover. The requirement for placing the cleanout at least 6 inches (152 mm) below the lowest connection to the chimney is intended to minimize the possibility of combustion products exiting the chimney through the cleanout.

801.14 Connections to exhauster. *Appliance* connections to a *chimney* or vent equipped with a power exhauster shall be made on the inlet side of the exhauster. Joints and piping on the positive pressure side of the exhauster shall be *listed* for positive pressure applications as specified by the manufacturer's installation instructions for the exhauster.

❖ It is important that any piping on the positive-pressure (discharge) side of the exhauster be designed and listed for such an application to prevent the misapplication of materials, which can result in leakage of combustion gases and can cause chimney or vent deterioration from condensate corrosion (see Sections 801.9, 804.3.1 and 804.3.6) (see commentary, Section 804.3.6).

801.15 Fuel-fired appliances. Masonry chimneys utilized to vent fuel-fired *appliances* shall be located, constructed and sized as specified in the manufacturer's installation instructions for the *appliances* being vented.

❖ Manufacturers' instructions for today's fuel-fired appliances specify the conditions under which the appliance is allowed to vent to a masonry chimney. The conditions include chimney size, condition, location and construction. Because of being oversized, unlined, in poor structural condition or partially exposed to the outdoors, masonry chimneys might not be suitable for some applications. Once common for appliances operating at 75-percent efficiency or less, masonry chimneys used to vent modern fuel-fired appliances are becoming more rare, and in many cases a masonry chimney will have to be relined with a retrofit metal liner or a refractory lining (see commentary, Section 801.18).

801.16 Flue lining. Masonry chimneys shall be lined. The lining material shall be compatible with the type of *appliance* connected, in accordance with the *appliance* listing and manufacturer's installation instructions. *Listed* materials used as flue linings shall be installed in accordance with their listings and the manufacturer's instructions.

❖ The liner forms the flue passageway and is the actual conductor of combustion products. The chimney liner must be able to withstand exposure to high temperatures and corrosive chemicals. The chimney lining protects the masonry construction of the chimney walls and allows the chimney to be constructed gas tight. The IBC regulates chimney construction. This section regulates liners and relining systems. Liners are often used to reline an existing chimney, to salvage a masonry chimney or allow connection of higher-efficiency appliances (see Section 801.18.4).

801.16.1 Residential and low-heat appliances (general). Flue lining systems for use with residential-type and low-heat appliances shall be limited to the following:

1. Clay flue lining complying with the requirements of ASTM C315 or equivalent. Clay flue lining shall be

INTERNATIONAL CODE COUNCIL®
Copyright © 2015 ICC. ALL RIGHTS RESERVED. Accessed by David Dammon on Jun 21, 2017 12:30:52 PM pursuant to License Agreement with ICC. No further reproduction or distribution authorized. ANY UNAUTHORIZED REPRODUCTION OR DISTRIBUTION IS A VIOLATION OF THE FEDERAL COPYRIGHT ACT AND THE LICENSE AGREEMENT, AND SUBJECT TO CIVIL AND CRIMINAL PENALTIES THEREUNDER.

installed in accordance with the *International Building Code.*

2. *Listed* and *labeled* chimney lining systems complying with UL 1777.
3. Other *approved* materials that will resist, without cracking, softening or corrosion, flue gases and condensate at temperatures up to 1,800°F (982°C).

❖ Flue lining systems for masonry chimneys include clay tile, poured-in-place refractory materials and stainless steel pipe.

801.17 Space around lining. The space surrounding a flue lining system or other vent installed within a masonry *chimney* shall not be used to vent any other *appliance*. This shall not prevent the installation of a separate flue lining in accordance with the manufacturer's installation instructions and this code.

❖ If a chimney lining system, such as flexible metallic pipe is installed within a chimney flueway, an annular space will exist between the pipe and the interior wall surfaces of the chimney. This annular space has an irregular shape that is not conducive to the flow of combustion gases; therefore, the space cannot be used to vent an additional appliance. Also, venting into the annular space could have a detrimental effect on the lining of the flueway.

801.18 Existing chimneys and vents. Where an *appliance* is permanently disconnected from an existing *chimney* or vent, or where an *appliance* is connected to an existing *chimney* or vent during the process of a new installation, the *chimney* or vent shall comply with Sections 801.18.1 through 801.18.4.

❖ Existing chimneys and vents should be reevaluated for continued suitability whenever the conditions of use change. Size, which is covered in Section 801.18.1, is of primary importance. Other considerations are the presence of liner obstructions, combustible deposits in the liner, the structural condition of the liner, the provision of a cleanout and clearances to combustibles, which are addressed in Sections 801.18.2 through 801.18.4. Whenever a new appliance is connected or an existing appliance is disconnected from a chimney or vent, the chimney or vent is subject to the requirements in Sections 801.18.1 through 801.18.4, which include requirements for inspection, cleaning, possible repair, the installation of a cleanout if one is not already there and the establishment of clearances to combustibles required for new chimneys or vent installations.

Bear in mind that chimneys, vents and the appliances served are all designed to function together as a system. Any change to an existing chimney or vent system will have an impact on the performance of that system. Something as simple as disconnecting an appliance from a chimney can upset the system's balance and cause the venting system to fail to produce a draft for the remaining appliances and could cause the venting system to produce harmful condensation.

801.18.1 Size. The *chimney* or vent shall be resized as necessary to control flue gas condensation in the interior of the *chimney* or vent and to provide the *appliance* or *appliances* served with the required draft. For the venting of oil-fired *appliances* to masonry chimneys, the resizing shall be in accordance with NFPA 31.

❖ The combined input from multiple appliances, especially older lower-efficiency appliances, can maintain chimney or vent temperatures that are high enough to provide the necessary draft and avoid condensation. Changing an existing configuration by disconnecting and eliminating an appliance or by substituting a higher-efficiency appliance can cause a decrease in flue gas temperature, resulting in poor draft or condensation. Also, the elimination of one or more draft-hood-equipped appliances will reduce the amount of dilution air in a venting system, increasing the likelihood of condensation. Often, a chimney or vent must be replaced with a smaller-size chimney or vent or be resized by installation of a liner system (see Commentary Figure 801.18.1). The requirements of NFPA 31 must be followed when resizing a masonry chimney that vents an oil-fired appliance.

A common scenario involves removing chimney-vented furnaces or boilers and leaving a water heater as the only appliance vented to the chimney. In this case, the chimney would typically be grossly oversized for the water heater, could fail to produce adequate draft and could be subject to continuous condensation. This scenario has received much attention and has created the phrase "orphaned water heaters."

801.18.2 Flue passageways. The flue gas passageway shall be free of obstructions and combustible deposits and shall be cleaned if previously used for venting a solid or liquid fuel-burning *appliance* or fireplace. The flue liner, *chimney* inner wall or vent inner wall shall be continuous and shall be free of cracks, gaps, perforations or other damage or deterioration which would allow the escape of *combustion* products, including gases, moisture and creosote. Where an oil-fired *appliance* is connected to an existing masonry *chimney*, such *chimney* flue shall be repaired or relined in accordance with NFPA 31.

❖ Cleaning of the chimney or flue is necessary to allow examination of the flue liner surface, to eliminate fuel for a possible chimney fire, to reduce frictional resistance to flow and to prevent any residual deposits from falling into lower parts of the venting system. Installation or removal of an appliance without an inspection of the existing flue is prohibited. If the flue served a solid or liquid fuel-burning appliance or fireplace, cleaning is required before the required inspection to remove any combustible deposits. In that case, the addition or removal of an appliance without both cleaning and inspection of the existing flue would be a code violation. If inspection shows that the flueway of the vent or chimney is incapable of preventing the leakage of combustion gases and liquids, the chimney or vent would have to be repaired

INTERNATIONAL CODE COUNCIL®
Copyright © 2015 ICC. ALL RIGHTS RESERVED. Accessed by David Dammon on Jun 21, 2017 12:30:52 PM pursuant to License Agreement with ICC. No further reproduction or distribution authorized. ANY UNAUTHORIZED REPRODUCTION OR DISTRIBUTION IS A VIOLATION OF THE FEDERAL COPYRIGHT ACT AND THE LICENSE AGREEMENT, AND SUBJECT TO CIVIL AND CRIMINAL PENALTIES THEREUNDER.

or relined. Repair would have to adhere to the requirements of NFPA 31 where an oil-fired appliance is vented through the chimney flue.

801.18.3 Cleanout. Masonry chimneys shall be provided with a cleanout opening complying with Section 801.13.

❖ A cleanout opening must be installed, if one is not already there, for existing masonry chimney flues whenever another appliance is installed or removed (see commentary, Section 801.13).

801.18.4 Clearances. Chimneys and vents shall have airspace *clearance* to combustibles in accordance with the *International Building Code* and the *chimney* or vent manufacturer's installation instructions.

Exception: Masonry chimneys without the required airspace *clearances* shall be permitted to be used if lined or relined with a *chimney* lining system *listed* for use in chimneys with reduced *clearances* in accordance with UL 1777. The *chimney clearance* shall be not less than permitted by the terms of the *chimney* liner listing and the manufacturer's instructions.

❖ Because it is usually not cost effective to increase clearances to combustibles around an existing chimney, the section provides an exception to allow existing chimneys to be lined or relined with a system complying with UL 1777 that enables the chimney to be used with reduced clearances to combustibles. The listing of the liner system, as well as the manufacturer's installation instructions specify the allowable clearances to combustibles for the masonry chimney lined or relined with a UL 1777 system.

801.18.4.1 Fireblocking. Noncombustible fireblocking shall be provided in accordance with the *International Building Code*.

❖ Prior to the 2009 edition of the code, this language was included as part of the exception for what is currently Section 801.18.4. Thus, unless the exception of Section 801.18.4 was invoked, the requirement for fireblocking was not obvious. The requirement was moved to this new section to clarify that the fireblocking requirements are applicable, irrespective of whether the masonry chimney is lined or relined according to the exception or not. Fireblocking of any annular spaces, where the chimney passes through ceilings or floors, is essential for controlling the passage of hot gases generated from a fire on a level below the annular space. Fireblocking must be installed to comply with Chapters 7 and 21 of the IBC.

801.19 Multistory prohibited. Common venting systems for appliances located on more than one floor level shall be prohibited, except where all of the appliances served by the common vent are located in rooms or spaces that are accessed only from the outdoors. The *appliance* enclosures shall not communicate with the occupiable areas of the building.

❖ This section addresses chimneys or vents that serve multiple appliances located on different floor levels. For example, a common vent may be designed to serve one or more appliances per floor of a multistory building, or a vent that rises up through the furnace rooms of single-story apartments in a multistory apartment building would be a common vent for the "stacked" apartments. At each level there may be a single appliance or several appliances entering into

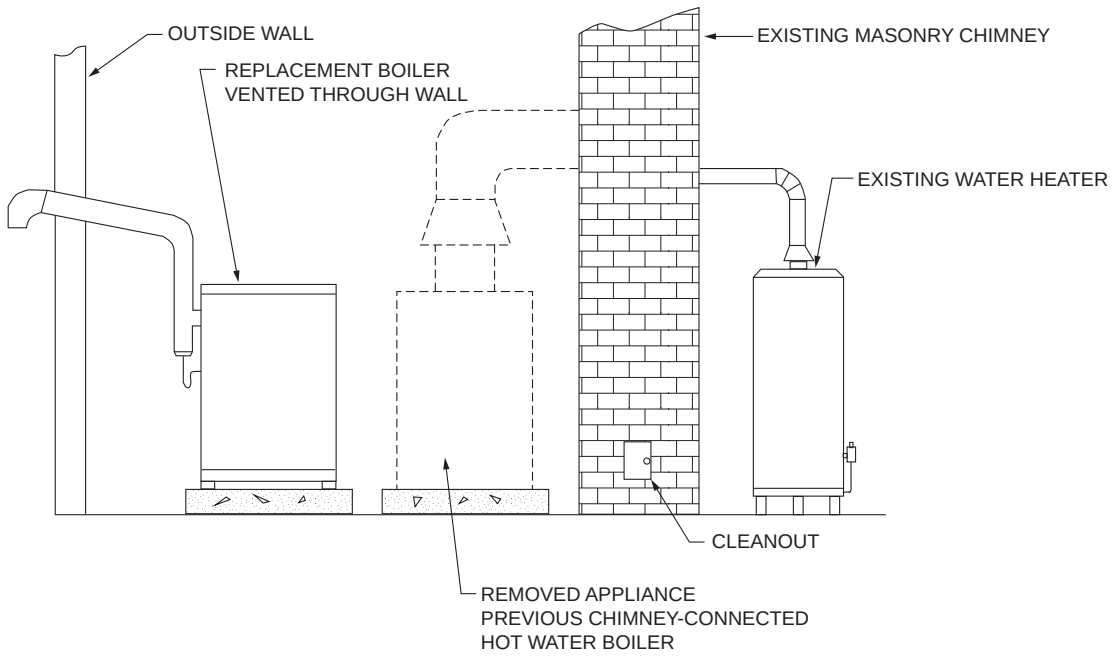

Figure 801.18.1
APPLIANCE REPLACEMENTS AFFECTING EXISTING APPLIANCES

INTERNATIONAL CODE COUNCIL®
Copyright © 2015 ICC. ALL RIGHTS RESERVED. Accessed by David Dammon on Jun 21, 2017 12:30:52 PM pursuant to License Agreement with ICC. No further reproduction or distribution authorized. ANY UNAUTHORIZED REPRODUCTION OR DISTRIBUTION IS A VIOLATION OF THE FEDERAL COPYRIGHT ACT AND THE LICENSE AGREEMENT, AND SUBJECT TO CIVIL AND CRIMINAL PENALTIES THEREUNDER.

the passageway. Multistory venting involves special design criteria and poses a unique hazard. When a vent is overloaded, blocked or otherwise producing insufficient draft, the flue gases from lower-story appliances could discharge into upper stories through the upper-story appliance connections. The lower-story vent could appear to be functioning normally while the upper-story occupants are exposed to a life-threatening hazard.

To avoid this potential hazard, multistory vent systems are designed to isolate the vent system and the appliances from the occupied portions of the building. This isolation is commonly accomplished by locating the common vent and all of the appliances served in mechanical rooms that are accessed from the outdoors only. These rooms are usually on outside walls and accessible only from a balcony. Multistory common chimney and vent systems must be designed in accordance with the vent or chimney manufacturer's installation and design instructions.

801.20 Plastic vent joints. Plastic pipe and fittings used to vent appliances shall be installed in accordance with the *appliance* manufacturer's installation instructions.

❖ Manufacturers of fuel-fired appliances are required to include installation instructions for the venting systems that the appliance is listed to use for venting. Where the vent system is required to be made of plastic pipe and fittings, the joints are required to be sealed because of the carbon monoxide, condensate and other products of combustion that could leak into the occupied space. The joints must also be joined in a manner that will prevent separation. Plastic pipe, such as PVC, CPVC and ABS are typically used to vent high efficiency appliances and the manufacturer's instruction will require the joints to be solvent welded (see Section 503.4.1.1 of the IFGC). The appliance manufacturer's installation instructions are part of the appliance listing and must be followed for the appliance installation.

SECTION 802
VENTS

802.1 General. Vent systems shall be *listed* and *labeled*. Type L vents and pellet vents shall be tested in accordance with UL 641.

❖ Vents and chimneys are distinct systems. The provisions of this section apply only to vents. The vents addressed in this section are natural-draft venting systems that produce a draft using the same principles that produce draft in chimneys (see the "General Comments" to this chapter).

Vents regulated by this section are factory fabricated and must be listed and labeled. The labeling requirement applies to all components of the system, including the sections of pipe, fittings, terminal caps, supports and spacers.

A vent system can be used only with oil-burning and pellet-burning appliances that are listed and labeled for use with a vent. Solid fuel-burning appliances must not be connected to a vent system because those appliances produce flue-gas temperatures that are much higher than the temperatures for which vents are designed. The burning of solid fuels also produces creosote. Creosote formation leaves a combustible deposit on the surface of the flue passageway that, if ignited, can produce a fire with temperatures exceeding 2,000°F (1093°C), far exceeding the maximum safe temperature of a vent system.

Type L vents and pellet vents must be tested in accordance with UL 641 and are designed to vent oil-burning and pellet fuel-burning appliances, respectively. Oil-burning appliances produce a higher flue gas temperature than gas-fired appliances. Type L vents are typically double-wall, air-insulated vent piping systems constructed of galvanized and stainless steel.

Type L vents are designed for natural-draft applications only and must not be used to convey combustion gases under a positive pressure. For example, a Type L vent must not be used with Category III or IV gas-fired appliances and must not be used on the discharge side of an exhauster or power-vented appliance. Positive pressures will cause a Type L vent to leak combustion gases into the building and the leakage can cause condensation to form within the vent system pipe, fittings and joints, resulting in corrosion damage to the vent and eventual vent failure.

802.2 Vent application. The application of vents shall be in accordance with Table 802.2.

❖ Table 802.2 matches vent types to appliance types. The table lists types of vents and the corresponding types of appliances that can be served by the vents. The vent system must be tested and specifically approved for use with the approved appliance. If the vent system is not a tested and labeled component of the appliance, the material must be approved for use with the appliance and installed in accordance with the manufacturer's installation instructions.

Some high-efficiency oil-fired appliances might require special vent systems that are specific to the type of appliance. Special vent systems are associated with high-efficiency appliances, and could include vent materials such as PVC, CPVC and special alloys of stainless steel. There are high-efficiency (90 percent plus) condensing oil-fired appliances on the market that vent with plastic pipe.

Special vent systems must be designed and installed in compliance with the manufacturer's instructions. The manufacturer's instructions for appliances requiring special vent systems will specify installation requirements that are specific to that type of vent and appliance.

Only gas-burning, oil-burning and pellet-burning appliances can be used with a vent system if the appliance is labeled and approved for use with vent systems. The type and size of the vent must be as dictated by the manufacturer's installation instructions for the appliance. The design and installation

INTERNATIONAL CODE COUNCIL®
Copyright © 2015 ICC. ALL RIGHTS RESERVED. Accessed by David Dammon on Jun 21, 2017 12:30:52 PM pursuant to License Agreement with ICC. No further reproduction or distribution authorized. ANY UNAUTHORIZED REPRODUCTION OR DISTRIBUTION IS A VIOLATION OF THE FEDERAL COPYRIGHT ACT AND THE LICENSE AGREEMENT, AND SUBJECT TO CIVIL AND CRIMINAL PENALTIES THEREUNDER.

instructions provided by the vent manufacturer must also be consulted when designing a vent system for any particular application.

TABLE 802.2
VENT APPLICATION

VENT TYPES	APPLIANCE TYPES
Type L oil vents	Oil-burning appliances listed and labeled for venting with Type L vents; gas appliances listed and labeled for venting with Type B vents.
Pellet vents	Pellet fuel-burning appliances listed and labeled for venting with pellet vents.

802.3 Installation. Vent systems shall be sized, installed and terminated in accordance with the vent and *appliance* manufacturer's installation instructions.

❖ The standards for vents and appliances require that venting instructions be supplied by the manufacturer of the appliance and the manufacturer of the vent system. These instructions are part of the labeling requirements. Any deviation from them is a violation of the code.

The clearance to combustibles for a vent system is determined by the testing agency and stated on the component labels and in the manufacturer's instructions. Not all vents have the same required clearances to combustibles. The clearances are determined by vent performance during testing in accordance with the applicable standard. Different vent materials and designs impact the vent's ability to control the amount of heat transmitted to surrounding combustibles. Installation of the vent system to comply with the clearances listed on the vent's label and in the manufacturer's installation instructions is critical.

The termination of a natural-draft vent must comply with the requirements of the manufacturer's installation instructions and Sections 802.4, 802.5 and 802.6. A vent used in conjunction with a mechanical exhauster must meet the termination requirements established in Section 804.3.

Physical protection of the vent system is required to prevent damage to the vent and to prevent combustibles from coming into contact with or being placed too close to the vents. This protection is typically achieved by enclosing the vent in chases, shafts or cavities in the building construction. Physical protection is not required in the room or space where the vent originates (at the appliance connection) and would not be required in such locations as attics that are not occupied or used for storage. For example, assume that a vent is installed in an existing building and that it extends from the basement, through a first-floor closet, through the attic and through the roof. The portion of the vent passing through the closet must be protected from damage. The means of physical damage protection should also be designed to maintain separation between the vent and any combustible storage. To prevent the passage of fire and smoke through the annular space around a vent penetration through a floor or ceiling, the vent must be fireblocked with a noncombustible material in accordance with the IBC. Vent manufacturers provide installation instructions and factory-built components for fireblocking penetrations.

802.4 Vent termination caps required. Type L vents shall terminate with a *listed* and *labeled* cap in accordance with the vent manufacturer's installation instructions.

❖ This section is redundant with typical vent manufacturers' instructions and emphasizes that a vent is a system of components that is necessary for proper functioning. The cap must be as specified by the vent manufacturer and is a listed component. A vent cap not only keeps out moisture, debris and animals, it also serves to prevent wind interference that could negatively affect the vent's ability to produce the required draft. Vent caps are tested for flow resistance and performance in wind.

802.5 Type L vent terminations. Type L vents shall terminate not less than 2 feet (610 mm) above the highest point of the roof penetration and not less than 2 feet (610 mm) higher than any portion of a building within 10 feet (3048 mm).

❖ The termination heights are consistent with the requirements of NFPA 31.

Consideration should be given to vent location in a building in the design/installation phase so that the vent termination will not be difficult or require long extensions of vent pipe exposed to the outdoors. Vent piping exposed to the outdoors encourages condensation in cold weather, could require guy wires or braces, depending on height, and is considered aesthetically unattractive. Another good reason to plan for vent location during the design phase of a building is to allow straight vertical runs of vent to avoid problematic offsets. Good planning can also prevent vents from passing through the roof on the street side of the building. Quite often, problematic vent offsets in attics are installed for the sole purpose of penetrating the roof on the back side of a building.

802.6 Minimum vent heights. Vents shall terminate not less than 5 feet (1524 mm) in vertical height above the highest connected *appliance* flue collar.

Exceptions:

1. Venting systems of direct vent *appliances* shall be installed in accordance with the *appliance* and the vent manufacturer's instructions.
2. Appliances *listed* for outdoor installations incorporating integral venting means shall be installed in accordance with their listings and the manufacturer's installation instructions.
3. Pellet vents shall be installed in accordance with the *appliance* and the vent manufacturer's installation instructions.

❖ The amount of draft produced by a vent is directly proportional to the height of the vent. A minimum height must be established to produce the minimum draft necessary for the appliance served. Generally speaking, vent capacity increases as the vent height

INTERNATIONAL CODE COUNCIL®
Copyright © 2015 ICC. ALL RIGHTS RESERVED. Accessed by David Dammon on Jun 21, 2017 12:30:52 PM pursuant to License Agreement with ICC. No further reproduction or distribution authorized. ANY UNAUTHORIZED REPRODUCTION OR DISTRIBUTION IS A VIOLATION OF THE FEDERAL COPYRIGHT ACT AND THE LICENSE AGREEMENT, AND SUBJECT TO CIVIL AND CRIMINAL PENALTIES THEREUNDER.

increases because of the increase in draft and vent flow velocity.

Exception 1 recognizes that direct-vent appliances use a vent system that is integral with the appliance or supplied by the appliance manufacturer for field assembly.

Exception 2 recognizes that rooftop units and outdoor appliances such as swimming pool heaters use integral venting means for which minimum heights are irrelevant.

Exception 3 recognizes that pellet vents are unique systems subject to the requirements of the appliance and vent listings.

802.7 Support of vents. All portions of vents shall be adequately supported for the design and weight of the materials employed.

❖ Vent manufacturers supply support parts and manufacturers' instructions contain detailed requirements for support of vent systems. Improper support can cause strain on vent components, appliance connectors and fittings, resulting in vent, appliance or connector damage that could cause loss of required clearance to combustibles and proper pitch. Frequently, venting installations suffer from lack of or improperly installed supports, brackets and hangers.

802.8 Insulation shield. Where vents pass through insulated assemblies, an insulation shield constructed of not less than No. 26 gage sheet metal shall be installed to provide *clearance* between the vent and the insulation material. The *clearance* shall be not less than the *clearance* to combustibles specified by the vent manufacturer's installation instructions. Where vents pass through attic space, the shield shall terminate not less than 2 inches (51 mm) above the insulation materials and shall be secured in place to prevent displacement. Insulation shields provided as part of a *listed* vent system shall be installed in accordance with the manufacturer's installation instructions.

❖ Loose insulation in attic floor assemblies or roof assemblies can fall against vents and create a fire hazard and can also cause abnormally high vent temperatures. Even though clearances to combustible construction such as wood framing are maintained, the continued heating of combustible insulation materials that have fallen against a vent could be a source of ignition. This section applies regardless of the combustibility of the insulation. Shields constructed in the field must be sufficient to serve their purpose, and must be securely attached to building construction because shields that are merely wedged into place could be accidentally dislodged or removed during maintenance activities.

802.9 Door swing. Appliance and equipment vent terminals shall be located such that doors cannot swing within 12 inches (305 mm) horizontally of the vent terminals. Doorstops or closers shall not be installed to obtain this clearance.

❖ Vent terminals for sidewall-vented appliances (such as direct-vent gas fireplaces and fireplace heaters, direct-vent room heaters, direct-vent water heaters, furnaces and boilers and also non-direct-vent appliances) are sometimes located where a side-swinging door can impact the vent terminal or swing close to the terminal. The results can be: damage to the vent terminal, creation of a fire hazard and interference with the appliance venting and combustion air intake. Also, if the door blocks or deflects the vent discharge such that the combustion products are pulled back into the combustion air intake, the result would be excessive carbon monoxide production and serious appliance malfunction and sooting. A damaged vent terminal could cause appliance malfunction and carbon monoxide poisoning. It could also cause damage to nearby combustible surfaces and create a fire hazard. Door stops and closer devices cannot be depended on because they are easily defeated or removed (see Commentary Figure 802.9).



Figure 802.9
SIDEWALL VENT TERMINAL

INTERNATIONAL CODE COUNCIL®
Copyright © 2015 ICC. ALL RIGHTS RESERVED. Accessed by David Dammon on Jun 21, 2017 12:30:52 PM pursuant to License Agreement with ICC. No further reproduction or distribution authorized. ANY UNAUTHORIZED REPRODUCTION OR DISTRIBUTION IS A VIOLATION OF THE FEDERAL COPYRIGHT ACT AND THE LICENSE AGREEMENT, AND SUBJECT TO CIVIL AND CRIMINAL PENALTIES THEREUNDER.

SECTION 803
CONNECTORS

803.1 Connectors required. Connectors shall be used to connect *appliances* to the vertical *chimney* or vent, except where the *chimney* or vent is attached directly to the *appliance*.

❖ This section establishes the minimum requirements for the design, construction and installation of chimney and vent connectors. Unless the chimney or vent is connected directly to the appliance, a connector is necessary to connect the appliance to its chimney or vent. A "Connector" is defined in Chapter 2 as a pipe used to connect an approved fuel-burning appliance to a chimney or vent. This includes the necessary fittings to make a connection or change in direction. The connector is usually a single-wall metal pipe, but it is also common practice to use listed and labeled chimney and vent pipe or listed factory-built single-wall connectors.

Many factors can affect the design and configuration of a connector. The most important of these is the appliance location with respect to the chimney or vent system. This impacts connector size, length and rise. Another important factor is the number of appliances being vented.

The appliance manufacturer's installation instructions may prohibit the use of single-wall connectors. For example, a single-wall vent connector may not be appropriate because of the possibility of condensation, corrosion and leakage. They are also not permitted in attic or crawl space installations subject to cold temperatures, which increase the possibility of condensation that could lead to accelerated material failure.

Connectors designed, constructed and installed in accordance with Section 803 are required except where a chimney or vent serves a single appliance and connects directly to that appliance. In such cases, a connector does not exist.

803.2 Location. Connectors shall be located entirely within the room in which the connecting *appliance* is located, except as provided for in Section 803.10.4. Where passing through an unheated space, a connector shall not be constructed of single-wall pipe.

❖ A single-wall connector has more than double the heat loss of a listed metal vent or chimney system, producing high temperatures on the outside surface and cooling of the flue gases on the inside of the connector. The cooling of flue gases produces condensation that can cause connector deterioration; the excessive surface temperatures pose a potential fire hazard. For these reasons, a connector can be located only within the room or space in which the appliance is located. A connector is prohibited from passing through any wall, ceiling or roof.

This section does not intend to prohibit the penetration of a combustible enclosure of a masonry chimney as permitted in Section 803.10.4 (see commentary, Section 803.10.4). Connectors that pass through walls, floors or ceilings might not be readily observable, and a potential fire hazard or connector deterioration could go undetected. Also, such pass-throughs increase the likelihood that the connector will be excessively long, exposed to low ambient temperatures or subject to contact with combustibles. Unlike double-wall pipe, single-wall pipe has a high heat loss and when installed in an unconditioned space, condensation can occur, deteriorating the pipe. This section effectively prohibits the use of single-wall connectors in garages, attics and crawl spaces where the spaces are unheated and occur in all but extremely moderate climates.

803.3 Size. The connector shall not be smaller than the size of the flue collar supplied by the manufacturer of the *appliance*. Where the *appliance* has more than one flue outlet, and in the absence of the manufacturer's specific instructions, the connector area shall be not less than the combined area of the flue outlets for which it acts as a common connector.

❖ Some appliances are designed with more than one venting (flue) outlet. For example, some large furnaces have dual heat exchangers and burner sections and thus have two flue-collar outlets. The manufacturer's instructions must be followed. However, in the event that manufacturer's instructions are not provided, this section specifies required sizing criteria.

803.4 Branch connections. Branch connections to the vent connector shall be made in accordance with the vent manufacturer's instructions.

❖ Joints, connections and manifold-type connections in venting systems are addressed in detail in the chimney or vent manufacturer's instructions, which include fitting usage, joint fastening, sizing and connector rise requirements.

803.5 Manual dampers. Manual dampers shall not be installed in connectors except in *chimney* connectors serving solid fuel-burning *appliances*.

❖ Manual dampers are intended for installation in a chimney system downstream of a solid fuel-burning appliance. The damper is intended to control the rate of combustion by regulating the amount of draft and allows closing the flue-gas passageways when the appliance is not operating to reduce the loss of conditioned air through the chimney. The installation of a manual flue damper in conjunction with an oil-burning appliance is strictly prohibited (see commentary, Section 803.6). Manual dampers can be used only with solid fuel-burning appliances.

Fireplaces require a method of closing off the chimney, usually a manual damper that will be opened during the process of manually starting a fire in a solid fuel-burning appliance. If the damper is not opened, the user will be aware of that fact because of the smoking and improper combustion. In the case of liquid fuel-fired appliances, however, the user may not be aware of a partially or completely closed damper and a hazardous condition could develop.

INTERNATIONAL CODE COUNCIL®
Copyright © 2015 ICC. ALL RIGHTS RESERVED. Accessed by David Dammon on Jun 21, 2017 12:30:52 PM pursuant to License Agreement with ICC. No further reproduction or distribution authorized. ANY UNAUTHORIZED REPRODUCTION OR DISTRIBUTION IS A VIOLATION OF THE FEDERAL COPYRIGHT ACT AND THE LICENSE AGREEMENT, AND SUBJECT TO CIVIL AND CRIMINAL PENALTIES THEREUNDER.

This section does not prohibit the use of fixed baffles that are components of listed appliances.

803.6 Automatic dampers. Automatic dampers shall be *listed* and *labeled* in accordance with UL 17 for oil-fired heating appliances. The dampers shall be installed in accordance with the manufacturer's instructions. An automatic vent damper device shall not be installed on an existing *appliance* unless the *appliance* is *listed* and *labeled* and the device is installed in accordance with the terms of its listing. The name of the installer and date of installation shall be marked on a label affixed to the damper device.

❖ Automatic dampers are intended for use only with liquid fuel-fired natural-draft appliances. Automatic dampers must be installed in strict accordance with the manufacturer's installation instructions. Because automatic damper failure could result in a hazardous condition, automatic dampers must be listed and labeled and must not serve more than one appliance.

The manufacturer's installation instructions require that the damper be installed by a qualified installer in accordance with the terms of the listing and the manufacturer's instructions. Because the purpose of a flue damper is to close or restrict the flue passageway of an appliance, the device must be properly installed to minimize the possibility of failure. A malfunctioning or improperly installed flue damper could cause the appliance to malfunction and discharge combustion products directly into the building interior.

Automatic flue dampers are energy-saving devices designed to close off or restrict an appliance flue passageway when the appliance is not operating or is in its "off" cycle. These devices save energy by trapping residual heat in a heat exchanger after the burners shut off and by preventing the escape of conditioned room air up the chimney or vent. Thus, appliance efficiency can be boosted and building air infiltration can be reduced.

Automatic fire dampers can be field-installed additions to existing equipment or can be a factory-supplied component of an appliance. The most common type of flue damper uses an electric motor to rotate a damper blade. The device uses switches that prove the damper position and allow the appliance to start only after the damper is opened and verified. The sequence of operation is the same as that described in the commentary to Section 804.3.2.

803.7 Connectors serving two or more appliances. Where two or more connectors enter a common vent or *chimney*, the smaller connector shall enter at the highest level consistent with available headroom or *clearance* to combustible material.

❖ A common vent is somewhat oversized when only a single appliance is operating; therefore, every effort is made to achieve proper vent/chimney operation during all possible operating circumstances. Placing the smallest appliance connection at the highest elevation in the common vent/chimney will allow the greatest connector rise for the smaller appliance connector and will take advantage of any draft priming effect caused by the lower connector. For example, it has been common practice to connect a domestic water heater connector above the furnace or boiler connector in a chimney or vent system.

803.8 Vent connector construction. Vent connectors shall be constructed of metal. The minimum thickness of the connector shall be 0.0136 inch (0.345 mm) (No. 28 gage) for galvanized steel, 0.022 inch (0.6 mm) (No. 26 B & S gage) for copper, and 0.020 inch (0.5 mm) (No. 24 B & S gage) for aluminum.

❖ The vent connector must be constructed of noncombustible, corrosion-resistant material capable of withstanding the flue-gas temperatures produced by the appliance it is serving. Specifically, vent connectors must be constructed of galvanized steel, copper or aluminum with minimum thicknesses as specified. The connector material must be as specified by the appliance manufacturer. The thickness for galvanized sheet steel was revised to reflect the low end of the thickness tolerance range for No. 28 gage. This allows for all possible thicknesses of No. 28 gage to be acceptable as such.

This section does not apply to chimney or vent connectors that are components of a listed and labeled vent or chimney. Those chimney and vent pipe and fittings are regulated by the manufacturer's installation instructions. The requirements found in this section are intended to regulate only untested and unlabeled materials connecting the appliance to an appropriate chimney or vent. Factory-constructed listed and labeled single-wall and double-wall connectors are available. These connectors are not subject to the construction requirements of Sections 803.8 and 803.9.

803.9 Chimney connector construction. *Chimney* connectors for low-heat *appliances* shall be of sheet steel pipe having resistance to corrosion and heat not less than that of galvanized steel specified in Table 803.9(1). Connectors for medium-heat *appliances* and high-heat appliances shall be of sheet steel not less than the thickness specified in Table 803.9(2).

❖ The requirements for chimney connectors are more stringent than those for vent connectors because they are subjected to higher flue-gas temperatures and corrosive flue gases from solid fuels. Chimney connectors must be constructed of sheet steel conforming to the thickness requirements of Table 803.9(1) for connectors serving low-heat appliances and Table 803.9(2) for connectors serving medium- and high-heat appliances.

Connector wall thickness increases as the connector's cross-sectional area increases to maintain structural integrity and rigidity. Sheet metal thicknesses are expressed in fractions of an inch (mm) and in industry standard gage designations. Medium- and high-heat appliance connectors are often rectangular; therefore, both areas and round pipe diameters are given in the table.

INTERNATIONAL CODE COUNCIL®
Copyright © 2015 ICC. ALL RIGHTS RESERVED. Accessed by David Dammon on Jun 21, 2017 12:30:52 PM pursuant to License Agreement with ICC. No further reproduction or distribution authorized. ANY UNAUTHORIZED REPRODUCTION OR DISTRIBUTION IS A VIOLATION OF THE FEDERAL COPYRIGHT ACT AND THE LICENSE AGREEMENT, AND SUBJECT TO CIVIL AND CRIMINAL PENALTIES THEREUNDER.

TABLE 803.9(1)
MINIMUM CHIMNEY CONNECTOR THICKNESS FOR LOW-HEAT APPLIANCES

DIAMETER OF CONNECTOR (inches)	MINIMUM NOMINAL THICKNESS (galvanized) (inches)
5 and smaller	0.022 (No. 26 gage)
Larger than 5 and up to 10	0.028 (No. 24 gage)
Larger than 10 and up to 16	0.034 (No. 22 gage)
Larger than 16	0.064 (No. 16 gage)

For SI: 1 inch = 25.4 mm.

TABLE 803.9(2)
MINIMUM CHIMNEY CONNECTOR THICKNESS FOR MEDIUM- AND HIGH-HEAT APPLIANCES

AREA (square inches)	EQUIVALENT ROUND DIAMETER (inches)	MINIMUM THICKNESS (inches)
0-154	0-14	0.0575 (No. 16 gage)
155-201	15-16	0.075 (No. 14 gage)
202-254	17-18	0.0994 (No. 12 gage)
Greater than 254	Greater than 18	0.1292 (No. 10 gage)

For SI: 1 inch = 25.4 mm, 1 square inch = 645.16 mm^2.

❖ The thicknesses for Nos. 16, 14 and 10 gage were revised to reflect the low end of the thickness tolerance range for those gages. This allows for all possible thicknesses of those gages to be acceptable.

803.10 Installation. Connectors shall be installed in accordance with Sections 803.10.1 through 803.10.6.

❖ Sections 803.10.1 through 803.10.6 contain the installation requirements for vent and chimney connectors. If the requirements of this section conflict with those of the manufacturer's installation instructions, the more stringent requirements apply.

803.10.1 Supports and joints. Connectors shall be supported in an *approved* manner, and joints shall be fastened with sheet metal screws, rivets or other *approved* means.

❖ A connector must be supported for the design and weight of the material used. Proper support is necessary to maintain the clearances required by Section 803.10.6, to maintain the required pitch and to prevent physical damage and separation of joints. The joints between connectors and appliance draft hood outlets and flue collars must be secured with screws, rivets or other approved means. The joints between pipe sections must also be secured with screws, rivets or other approved means. Some connectors are available with a proprietary fastening method. The special proprietary joints do not require screws, rivets or other fasteners if they provide equivalent resistance to disengagement or displacement. This section addresses connectors, not chimneys and vents. Most chimney and vent manufacturers do not require or might even prohibit the use of screws or rivets to secure joints for chimney and vent pipe sections and fittings.

803.10.2 Length. The maximum horizontal length of a single-wall connector shall be 75 percent of the height of the *chimney* or vent.

❖ The appliance and chimney or vent must be located to keep the connector length as short as practicable. This section establishes the maximum allowable length for uninsulated chimney and vent connectors. These requirements are based on the heat loss of the connector and the ability of the vent or chimney system to produce a draft. An insulated connector (double wall) reduces the amount of heat transfer through the connector pipe, thus keeping the flue gas at a higher temperature. The amount of draft is directly proportional to the chimney or vent height and the difference in temperature between the flue gases and the ambient air. An uninsulated connector is a run of single-wall pipe.

The length limitations of this section are based on the total vertical rise of the chimney or vent and on the developed length of horizontal connectors within the chimney or vent system. The connector length limitation of 75 percent of the height of the vent or chimney is based on field experience and laboratory testing.

Connector lengths are limited because of the flow resistance of the connector pipe and because heat loss through the connector is directly proportional to its length. For a venting system to work, the draft produced by the vertical vent or chimney must be able to overcome the resistance to flow created by the connector. The longer the connector, the longer it takes to prime a cold venting system and develop draft. Connectors should always be as short as the installation conditions will permit.

803.10.3 Connection. The connector shall extend to the inner face of the *chimney* or vent liner, but not beyond. A connector entering a masonry *chimney* shall be cemented to masonry in an *approved* manner. Where thimbles are installed to facilitate removal of the connector from the masonry *chimney*, the thimble shall be permanently cemented in place with high-temperature cement.

❖ All of the precautions taken to ensure adequate chimney or vent design may be ineffective if the appliance and the chimney or vent are not properly connected. Improper connections can lead to appliance or connector failure and the leakage of harmful flue gases into the building. This section contains requirements for the connection between a chimney or vent and the appliance connector. The connection to a vent is properly accomplished by vent fittings and likewise for factory-built chimneys.

Chimney connectors must pass through a masonry chimney wall to the inner face of the liner but not beyond. A connector that extends into a chimney passageway can restrict the flow of flue gases and provide a ledge for creosote, soot and debris to accumulate. The joint between the connector and the

INTERNATIONAL CODE COUNCIL®
Copyright © 2015 ICC. ALL RIGHTS RESERVED. Accessed by David Dammon on Jun 21, 2017 12:30:52 PM pursuant to License Agreement with ICC. No further reproduction or distribution authorized. ANY UNAUTHORIZED REPRODUCTION OR DISTRIBUTION IS A VIOLATION OF THE FEDERAL COPYRIGHT ACT AND THE LICENSE AGREEMENT, AND SUBJECT TO CIVIL AND CRIMINAL PENALTIES THEREUNDER.

chimney must meet the requirements of Section 803.10.1. If the connector enters a masonry chimney, it must be cemented in place with an approved material such as refractory mortar or another heat-resistant cement [see Commentary Figure 803.10.3(1)].

This section also permits the use of thimbles at a masonry chimney opening to provide for easy removal of the connector to facilitate cleaning. When a thimble is installed, it is to be permanently cemented in place with an approved high-temperature cement [see Commentary Figure 803.10.3(2)]. A connector must be attached to a thimble in an approved manner to prevent displacement.

803.10.4 Connector pass-through. *Chimney* connectors shall not pass through any floor or ceiling, nor through a fire-resistance-rated wall assembly. *Chimney* connectors for domestic-type *appliances* shall not pass through walls or partitions constructed of combustible material to reach a masonry *chimney* except where one of the following apply:

1. The connector is *labeled* for wall pass-through and is installed in accordance with the manufacturer's instructions.
2. The connector is put through a device *labeled* for wall pass-through.
3. The connector has a diameter not larger than 10 inches (254 mm) and is installed in accordance with one of the methods in Table 803.10.4. Concealed metal parts of the pass-through system in contact with flue gases shall be of stainless steel or equivalent material that resists corrosion, softening or cracking up to 1,800ºF (980ºC).

❖ The requirements contained in this section address the fire hazards associated with chimney connectors that serve domestic-type appliances and that penetrate combustible walls or partitions. A domestic-type appliance, as defined by NFPA 211, is a fuel-burning heating appliance for heating building spaces having a volume of not more than 25,000 cubic feet (708 m^3) or other heat-producing appliances of the type mainly used in residences, but which may also be used in other buildings.

Evidence has shown that many house fires have been caused by chimney connectors that serve solid fuel-burning appliances and that penetrate a combustible wall or partition. Commonly, chimneys are enclosed by walls of combustible construction and a wall must be penetrated by a chimney connector in order to connect to the chimney.

The following penetration methods have been tested and have been shown to adequately control temperature rise on adjacent combustible surfaces. These methods are prescriptive and must not be altered or modified in any way.

The method found in Item 1 permits installation of a connector labeled for combustible wall pass-through to be installed in accordance with the manufacturer's installation instructions.

Item 2 permits a connector to penetrate a combustible wall or partition by passing through a device that is labeled for pass-through.

Item 3 permits a connector to penetrate a combustible wall or partition if installed in accordance with System A, B, C or D in Table 803.10.4.

It is important to note that these provisions do not conflict with the requirements found in Section 803.2. Chimney and vent connectors are not permitted to leave the room in which the appliance served is located. The provisions of this section are applicable only to combustible walls or partitions that enclose a masonry chimney (see commentary, Section 803.2).

TABLE 803.10.4. See page 8-14.

❖ Table 803.10.4 contains specifications for four different methods of constructing a chimney connector wall penetration assembly (pass-through). The methods are designed to protect the combustible wall assembly from the high temperatures associated with single-wall chimney connectors serving domestic-type solid fuel appliances. These connectors have a

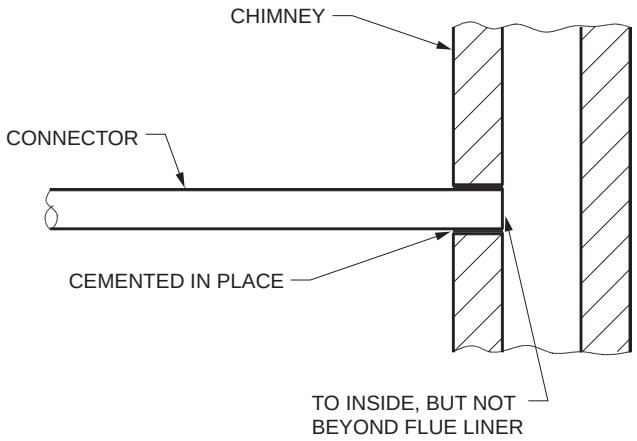

Figure 803.10.3(1)
CHIMNEY CONNECTOR INSTALLATION

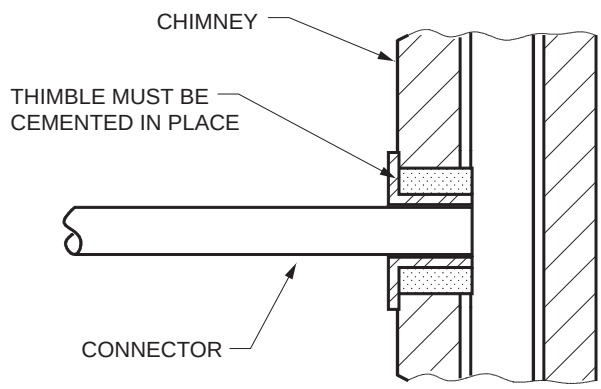

Figure 803.10.3(2)
CHIMNEY CONNECTOR
INSTALLATION WITH THIMBLE

INTERNATIONAL CODE COUNCIL®
Copyright © 2015 ICC. ALL RIGHTS RESERVED. Accessed by David Dammon on Jun 21, 2017 12:30:52 PM pursuant to License Agreement with ICC. No further reproduction or distribution authorized. ANY UNAUTHORIZED REPRODUCTION OR DISTRIBUTION IS A VIOLATION OF THE FEDERAL COPYRIGHT ACT AND THE LICENSE AGREEMENT, AND SUBJECT TO CIVIL AND CRIMINAL PENALTIES THEREUNDER.

required airspace clearance to combustibles of 18 inches (457 mm). Commentary Figure 803.10.4 helps explain the complex specifications of Table 803.10.4. The thickness for galvanized sheet steel was revised to reflect the low end of the thickness tolerance range for No. 24 gage. This allows for all possible thicknesses of No. 24 gage to be acceptable as such.

803.10.5 Pitch. Connectors shall rise vertically to the *chimney* or vent with a minimum pitch equal to one-fourth unit vertical in 12 units horizontal (2-percent slope).

❖ The ideal chimney or vent configuration is a totally vertical system, even though it is not always practical.

TABLE 803.10.4
CHIMNEY CONNECTOR SYSTEMS AND CLEARANCES TO COMBUSTIBLE WALL MATERIALS FOR DOMESTIC HEATING APPLIANCES[a, b, c, d]

System A (12-inch clearance)	A 3.5-inch-thick brick wall shall be framed into the combustible wall. An 0.625-inch-thick fire-clay liner (ASTM C315 or equivalent)[e] shall be firmly cemented in the center of the brick wall maintaining a 12-inch clearance to combustibles. The clay liner shall run from the outer surface of the bricks to the inner surface of the chimney liner.
System B (9-inch clearance)	A labeled solid-insulated factory-built chimney section (1-inch insulation) the same inside diameter as the connector shall be utilized. Sheet steel supports cut to maintain a 9-inch clearance to combustibles shall be fastened to the wall surface and to the chimney section. Fasteners shall not penetrate the chimney flue liner. The chimney length shall be flush with the masonry chimney liner and sealed to the masonry with water-insoluble refractory cement. Chimney manufacturers' parts shall be utilized to securely fasten the chimney connector to the chimney section.
System C (6-inch clearance)	A steel ventilated thimble having a minimum thickness of 0.0236 inch (No. 24 gage) having two 1-inch air channels shall be installed with a steel chimney connector. Steel supports shall be cut to maintain a 6-inch clearance between the thimble and combustibles. The chimney connector and steel supports shall have a minimum thickness of 0.0236 inch (No. 24 gage). One side of the support shall be fastened to the wall on all sides. Glass-fiber insulation shall fill the 6-inch space between the thimble and the supports.
System D (2-inch clearance)	A labeled solid-insulated factory-built chimney section (1-inch insulation) with a diameter 2 inches larger than the chimney connector shall be installed with a steel chimney connector having a minimum thickness of 0.0236 inch (24 gage). Sheet steel supports shall be positioned to maintain a 2-inch clearance to combustibles and to hold the chimney connector to ensure that a 1-inch airspace surrounds the chimney connector through the chimney section. The steel support shall be fastened to the wall on all sides and the chimney section shall be fastened to the supports. Fasteners shall not penetrate the liner of the chimney section.

For SI: 1 inch = 25.4 mm, 1.0 Btu x in/ft^2 • h • ºF = 0.144 W/m^2 • K.

a. Insulation material that is part of the wall pass-through system shall be noncombustible and shall have a thermal conductivity of 1.0 Btu x in/ft^2 • h • ºF or less.

b. All clearances and thicknesses are minimums.

c. Materials utilized to seal penetrations for the connector shall be noncombustible.

d. Connectors for all systems except System B shall extend through the wall pass-through system to the inner face of the flue liner.

e. ASTM C315.

This section requires all portions of a chimney or vent connector to rise vertically a minimum of $^1/_4$ inch per foot (21 mm/m) of its horizontal length. The connector slope is intended to induce the flow of flue gases by using the natural buoyancy of the hot gases. Connector slope can promote the priming of a cold venting system and can partially compensate for short connector vertical rise.

803.10.6 Clearances. Connectors shall have a minimum *clearance* to combustibles in accordance with Table 803.10.6. The clearances specified in Table 803.10.6 apply, except where the listing and labeling of an *appliance* specifies a different *clearance*, in which case the *labeled clearance* shall apply. The *clearance* to combustibles for connectors shall be reduced only in accordance with Section 308.

❖ Flue-gas passageways must have minimum clearances to ignitable materials. The clearance requirements in Table 803.10.6 apply to unlabeled single-wall connectors serving a listed appliance. Connectors that are listed and labeled must maintain a clearance to combustibles as required by the connector manufacturer's installation instructions. If the appliance or connector manufacturer's installation instructions specify larger clearances than those prescribed by this section, the manufacturer's installation instructions govern.

Section 308 contains methods to allow the reduction of the required clearances. It is important to remember that all required clearances are airspace clearances measured from the chimney or vent connector to the combustible surface.

TABLE 803.10.6
CONNECTOR CLEARANCES TO COMBUSTIBLES

TYPE OF APPLIANCE	MINIMUM CLEARANCE (inches)
Domestic-type appliances	
Chimney and vent connectors	
Electric and oil incinerators	18
Oil and solid-fuel appliances	18
Oil appliances labeled for venting with Type L vents	9
Commercial, industrial-type appliances	
Low-heat appliances	
Chimney connectors	
Oil and solid-fuel boilers, furnace and water heaters	18
Oil unit heaters	18
Other low-heat industrial appliances	18
Medium-heat appliances	
Chimney connectors	
All oil and solid-fuel appliances	36
High-heat appliances	
Masonry or metal connectors	(As determined by the code official)
All oil and solid-fuel appliances	

For SI: 1 inch = 25.4 mm.

❖ Table 803.10.6 prescribes connector clearances to combustibles based on the type of appliance.

INTERNATIONAL CODE COUNCIL®
Copyright © 2015 ICC. ALL RIGHTS RESERVED. Accessed by David Dammon on Jun 21, 2017 12:30:52 PM pursuant to License Agreement with ICC. No further reproduction or distribution authorized. ANY UNAUTHORIZED REPRODUCTION OR DISTRIBUTION IS A VIOLATION OF THE FEDERAL COPYRIGHT ACT AND THE LICENSE AGREEMENT, AND SUBJECT TO CIVIL AND CRIMINAL PENALTIES THEREUNDER.

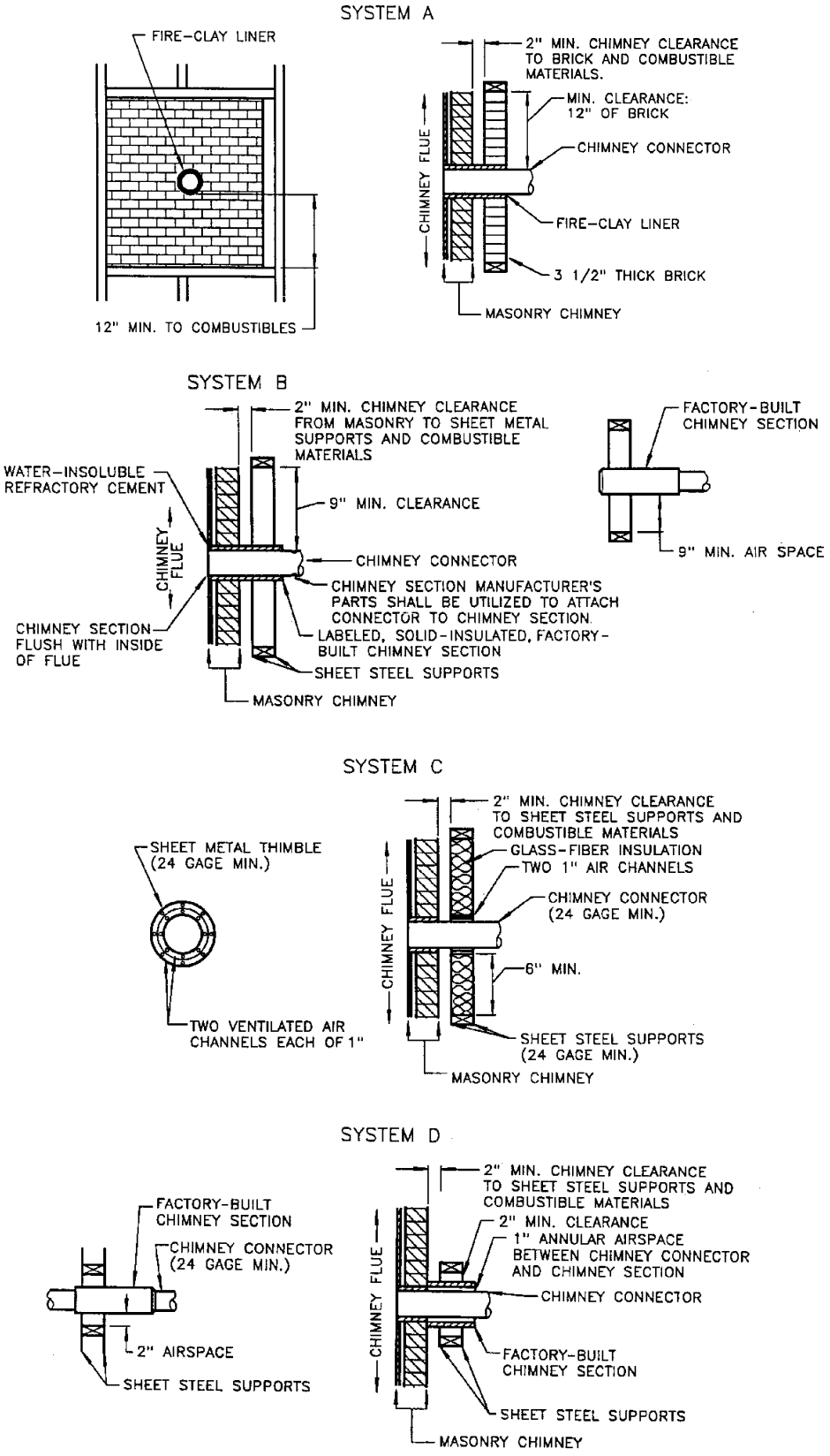

Figure 803.10.4
CHIMNEY CONNECTOR SYSTEMS

INTERNATIONAL CODE COUNCIL®
Copyright © 2015 ICC. ALL RIGHTS RESERVED. Accessed by David Dammon on Jun 21, 2017 12:30:52 PM pursuant to License Agreement with ICC. No further reproduction or distribution authorized. ANY UNAUTHORIZED REPRODUCTION OR DISTRIBUTION IS A VIOLATION OF THE FEDERAL COPYRIGHT ACT AND THE LICENSE AGREEMENT, AND SUBJECT TO CIVIL AND CRIMINAL PENALTIES THEREUNDER.

SECTION 804
DIRECT-VENT, INTEGRAL VENT AND MECHANICAL DRAFT SYSTEMS

804.1 Direct-vent terminations. Vent terminals for *direct-vent appliances* shall be installed in accordance with the manufacturer's instructions.

❖ Direct-vent appliances include those appliances having a closed combustion chamber and a conduit for bringing all combustion air directly from the outdoors (see the definition of "Direct-vent appliance") (see Commentary Figure 804.1). Direct-vent appliances are often referred to as "sealed combustion" or "separated combustion" appliances.

The code states prescriptive termination requirements for these appliances and refers to the manufacturer's installation instructions.

804.2 Appliances with integral vents. *Appliances* incorporating integral venting means shall be installed in accordance with their listings and the manufacturer's installation instructions.

❖ This section refers to appliances such as rooftop heating ventilating and air-conditioning (HVAC) units, outdoor furnaces, through-the-wall space conditioning units and outdoor swimming pool heaters, all of which have built-in gravity or power venting means and must be installed to comply with their listings and the manufacturer's installation instructions.

804.2.1 Terminal clearances. *Appliances* designed for natural draft venting and incorporating integral venting means shall be located so that a minimum *clearance* of 9 inches (229 mm) is maintained between vent terminals and from any openings through which *combustion* products enter the building. *Appliances* using forced draft venting shall be located so that a minimum clearance of 12 inches (305 mm) is maintained between vent terminals and from any openings through which *combustion* products enter the building.

❖ Discharge terminal dispersion determines the required distance to openings such as openable windows, doors, intake louvers and ducts. This section is not intended to apply to the distance between an integral vent terminal on a rooftop HVAC unit and the outdoor air intake on the same unit. This distance has been evaluated as part of the rooftop unit's design and listing.

804.3 Mechanical draft systems. Mechanical draft systems of either forced or induced draft design shall be listed and labeled in accordance with UL 378 and shall comply with Sections 804.3.1 through 804.3.7.

❖ The appliance installations addressed in this section use listed and labeled auxiliary or integral fans and blowers to force the flow of combustion products to the outdoors. This section applies to externally installed power exhausters, integrally power-exhausted appliances and venting systems equipped with draft inducers. This section does not address direct-vent appliances.

Power exhausters are field-installed pieces of equipment that are independent of, but used in conjunction with, appliances [see Commentary Figures 804.3(1) through 804.3(4)].

804.3.1 Forced draft systems. Forced draft systems and all portions of induced draft systems under positive pressure during operation shall be designed and installed so as to be gas tight to prevent leakage of *combustion* products into a building.

❖ Power exhausters are typically used where other means of venting are impractical, impossible or

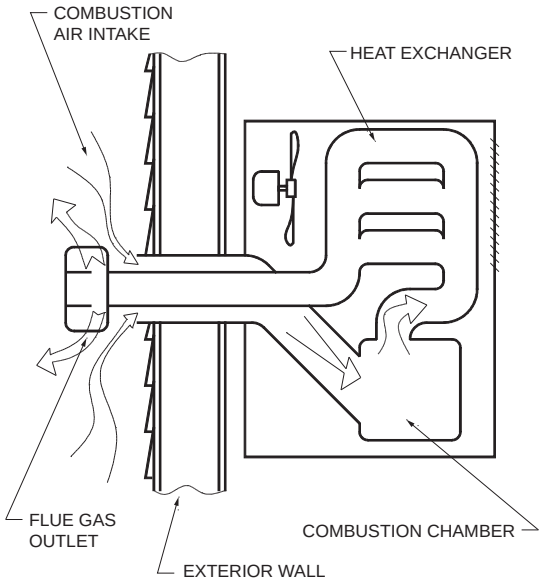

Figure 804.1
DIRECT VENT APPLIANCE

INTERNATIONAL CODE COUNCIL®
Copyright © 2015 ICC. ALL RIGHTS RESERVED. Accessed by David Dammon on Jun 21, 2017 12:30:52 PM pursuant to License Agreement with ICC. No further reproduction or distribution authorized. ANY UNAUTHORIZED REPRODUCTION OR DISTRIBUTION IS A VIOLATION OF THE FEDERAL COPYRIGHT ACT AND THE LICENSE AGREEMENT, AND SUBJECT TO CIVIL AND CRIMINAL PENALTIES THEREUNDER.

uneconomical. Power exhausters are typically designed for use with gas-fired and oil-fired natural-draft appliances (see the IFGC for gas-fired appliances). Power exhausters produce negative pressures at their inlet connection and produce positive pressures at their outlet (discharge connection). The most common installation locates the exhauster at the point of termination of the vent or chimney. In such installations, the vent or chimney between the appliance and the exhauster operates under negative pressure.

Induced draft systems use separate field-installed units designed to boost draft in a natural (gravity) draft chimney or vent. Draft inducers may or may not produce positive pressures in the vent or chimney system [see Commentary Figure 804.3(4)].

Power-vented (self-venting) appliances are equipped with factory-installed integral blowers that force the combustion products through special venting systems. Power-vented appliances include some integral-vent rooftop units and some direct-vent appliances. Appliances for outdoor installation, addressed in Section 804.2, are typically power vented and discharge directly to the atmosphere. Solid fuel-burning appliances are not vented by power exhausters because of the high temperatures and corrosive nature of the combustion products and because solid fuel appliances cannot be immediately shut off in the event of exhauster failure; however, specialized solid fuel chimney exhausters are available for mounting on the tops of existing chimneys that produce insufficient draft. These solid fuel chimney exhausters are

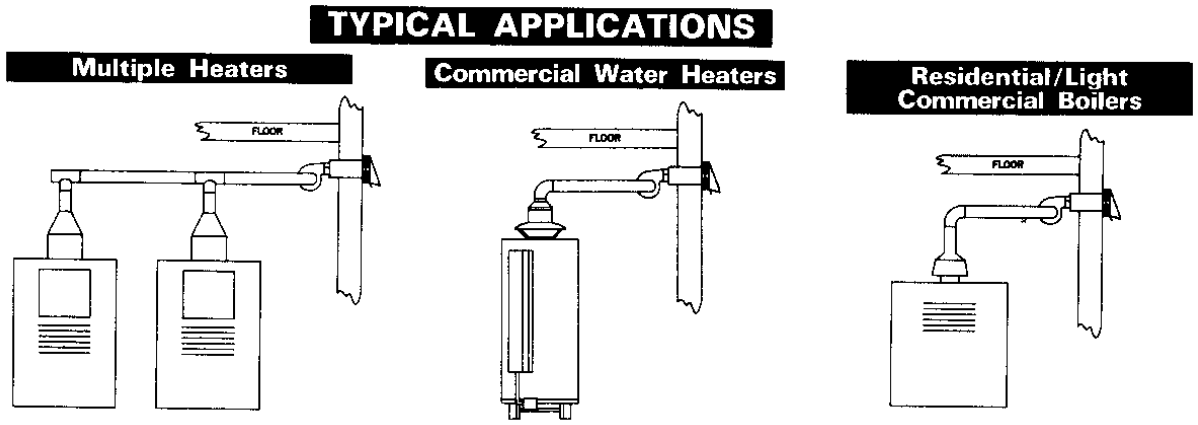

Figure 804.3(1)
TYPICAL EXHAUSTER APPLICATIONS
(Courtesy of Tjernlund Products, Inc.)

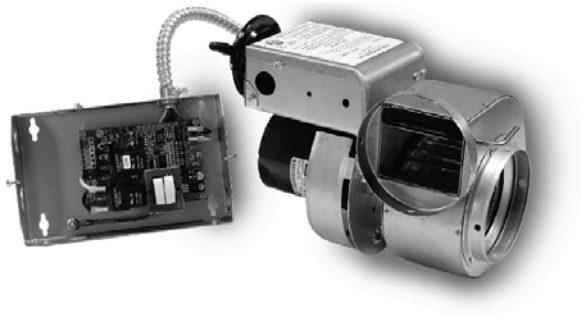

Figure 804.3(2)
TYPICAL POWER EXHAUSTER
(Courtesy of Tjernlund Products, Inc.)

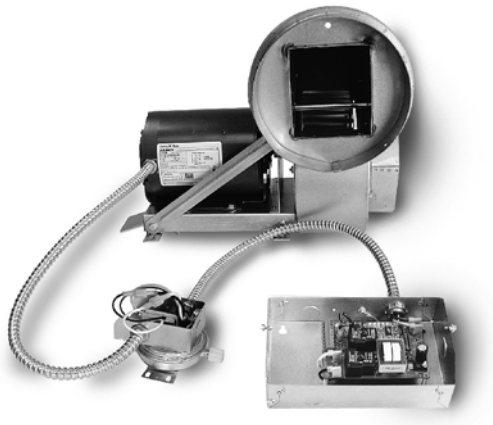

Figure 804.3(3)
EXHAUSTER AND CONTROL PACKAGE
(Courtesy of Tjernlund Products, Inc.)

INTERNATIONAL CODE COUNCIL®
Copyright © 2015 ICC. ALL RIGHTS RESERVED. Accessed by David Dammon on Jun 21, 2017 12:30:52 PM pursuant to License Agreement with ICC. No further reproduction or distribution authorized. ANY UNAUTHORIZED REPRODUCTION OR DISTRIBUTION IS A VIOLATION OF THE FEDERAL COPYRIGHT ACT AND THE LICENSE AGREEMENT, AND SUBJECT TO CIVIL AND CRIMINAL PENALTIES THEREUNDER.

intended for remedial application on existing chimneys; they are not intended to substitute for proper chimney design. Although not specifically referred to as an appliance, a power exhauster is considered a mechanical appliance attachment and, therefore, should bear the label of an approved agency in accordance with Section 301.7 (see the definition of "Appliance"). A power exhauster is an essential component of the appliance installation it serves and must be installed in accordance with the manufacturer's installation instructions. Mechanical-draft devices that are an integral part of an appliance are covered by the appliance listing.

Vent or chimney systems installed downstream (discharge side) of a power exhauster must be designed and approved for positive-pressure applications. For example, Type L vent cannot be used on the discharge side of an exhauster because the pipe is not designed for positive-pressure applications. The application and installation of exhausters (power venters) must comply with the manufacturer's installation instructions for the exhauster and the appliance(s) served by the exhauster (see commentary, Section 801.9).

Three distinct variations of power exhaust blowers at the combustion chamber inlet working in conjunction with the fuel burner are in use:

1. *Blowers that supply turbulent combustion air to aid fuel-air mixing in a combustion chamber that is under negative pressure*. Residential pressure-atomizing oil burners are examples. Obtaining proper negative overfire draft (which optimizes combustion) also requires steady negative (below atmospheric) pressure at the flue outlet. This negative pressure will be produced by a natural-draft chimney and may be controlled by a barometric draft regulator. This is tabulated on line "A" in Commentary Figure 804.3.1.
2. *Blowers that supply sufficient combustion air and pressure to produce flow through the combustion chamber, but the combustion process does not need additional vent or chimney draft*. This permits use of gravity or neutral-draft venting products, such as chimneys, for equipment burning oil, coal, or a draft regulator may be used for such equipment to prevent excess draft from affecting combustion efficiency. This is tabulated on line "B" in Commentary Figure 804.3.1.
3. *Blowers with enough power to overcome internal flue passage pressure losses (that is, in fire-tube boilers) that also produce positive pressure at the outlet*. This outlet pressure must be added to gravity draft as the motive force for flow in a chimney. If positive outlet pressure exists, a sealed pressure-tight chimney is required. This is tabulated on line "C" in Commentary Figure 804.3.1.

The above types of equipment usually have integral blower/burner systems and all could be considered as forced combustion systems. Only those described in Item 3 truly produce forced chimney draft.

804.3.2 Automatic shutoff. Power exhausters serving automatically fired *appliances* shall be electrically connected to each *appliance* to prevent operation of the *appliance* when the power exhauster is not in operation.

❖ When power-venting equipment is installed, it becomes an essential part of the appliance it serves. The appliance relies on the power-venting equipment (exhauster) to provide sufficient draft for proper appli-



Figure 804.3(4)
DRAFT INDUCER
(Courtesy of Tjernlund Products, Inc.)

PRESSURES		DRAFT STATUS
FLUES	OUTLET	
A. NEGATIVE	NEGATIVE	GRAVITY
B. POSITIVE	NEGATIVE OR NEUTRAL	GRAVITY
C. POSITIVE	POSITIVE	FORCED

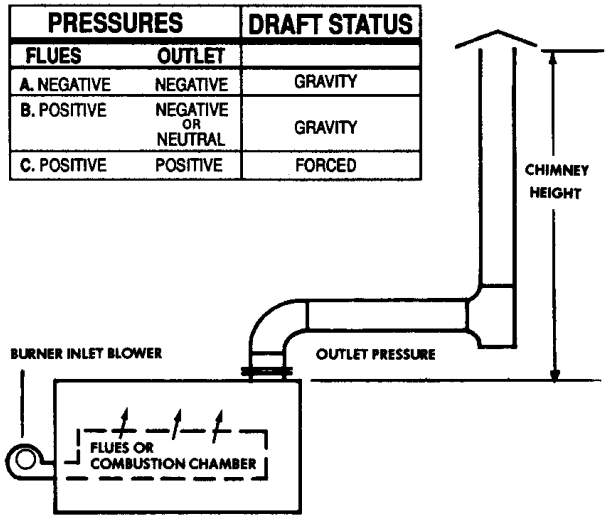

Figure 804.3.1
DRAFT CONDITIONS WITH EQUIPMENT BURNER-INLET BLOWER
(Courtesy of Selkirk Metalbestos)

INTERNATIONAL CODE COUNCIL®
Copyright © 2015 ICC. ALL RIGHTS RESERVED. Accessed by David Dammon on Jun 21, 2017 12:30:52 PM pursuant to License Agreement with ICC. No further reproduction or distribution authorized. ANY UNAUTHORIZED REPRODUCTION OR DISTRIBUTION IS A VIOLATION OF THE FEDERAL COPYRIGHT ACT AND THE LICENSE AGREEMENT, AND SUBJECT TO CIVIL AND CRIMINAL PENALTIES THEREUNDER.

ance operation and for venting of the combustion products. Power exhausters are electrically interlocked with the appliance or appliances they serve to ensure that the appliances will not operate if there is insufficient draft to vent the products of combustion. If an exhauster fails, the appliances served by the exhauster could discharge the products of combustion into the building and/or operate dangerously. An improper or lacking interlock can cause the appliance(s) to malfunction and spill harmful flue gases into the building space.

The electrical interlock (interconnection) is typically accomplished with controls supplied by the exhauster manufacturer [see Commentary Figure 804.3(3)]. The usual sequence of operation is as follows: the call for heat from the appliance operating control starts the exhauster, and pressure controls start the appliance only after adequate draft has been proven to exist. In some cases, temperature sensors are used in addition to pressure controls (see Commentary Figure 804.3.2).

804.3.3 Termination. The termination of *chimneys* or vents equipped with power exhausters shall be located not less than 10 feet (3048 mm) from the lot line or from adjacent buildings. The exhaust shall be directed away from the building.

❖ The terminations of chimney and vent systems equipped with power exhausters must be located a minimum of 10 feet (3048 mm) from a lot line and from any adjacent buildings to allow for the dilution of noxious and toxic flue gases that might otherwise affect occupants of other buildings. The exhaust discharge can also be harmful to building surfaces, vehicles and vegetation.

804.3.4 Horizontal terminations. Horizontal terminations shall comply with the following requirements:

1. Where located adjacent to walkways, the termination of mechanical draft systems shall be not less than 7 feet (2134 mm) above the level of the walkway.
2. Vents shall terminate at least 3 feet (914 mm) above any forced air inlet located within 10 feet (3048 mm).
3. The vent system shall terminate at least 4 feet (1219 mm) below, 4 feet (1219 mm) horizontally from or 1 foot (305 mm) above any door, window or gravity air inlet into the building.
4. The vent termination point shall not be located closer than 3 feet (914 mm) to an interior corner formed by two walls perpendicular to each other.
5. The vent termination shall not be mounted directly above or within 3 feet (914 mm) horizontally from an oil tank vent or gas meter.
6. The bottom of the vent termination shall be located at least 12 inches (305 mm) above finished grade.

❖ This section establishes the requirements for exhaust pipes and power exhausters that terminate horizontally or through a side wall; thus the name “horizontal” vent. Horizontal vents are typically used for appliance installations in existing buildings or in new construction where a long vertical vent runs or terminating above the roof is impractical.

Commentary Figures 804.3.4(1) and 804.3.4(2) illustrate some of the termination requirements for a horizontal vent. To prevent combustion products from entering the building, the vent terminal must be located a minimum distance from any gravity air inlet such as a louver, door or window. A more restrictive

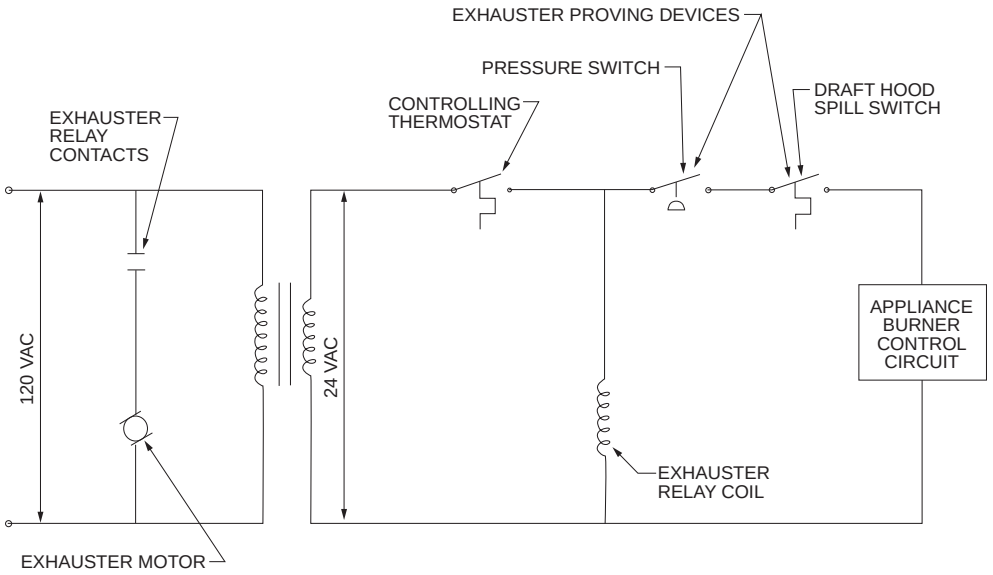

Figure 804.3.2
SIMPLIFIED SAMPLE INTERLOCK CIRCUIT DIAGRAM FOR APPLIANCE SERVED BY POWER EXHAUSTER
(Shown for illustrative purpose only)

INTERNATIONAL CODE COUNCIL®
Copyright © 2015 ICC. ALL RIGHTS RESERVED. Accessed by David Dammon on Jun 21, 2017 12:30:52 PM pursuant to License Agreement with ICC. No further reproduction or distribution authorized. ANY UNAUTHORIZED REPRODUCTION OR DISTRIBUTION IS A VIOLATION OF THE FEDERAL COPYRIGHT ACT AND THE LICENSE AGREEMENT, AND SUBJECT TO CIVIL AND CRIMINAL PENALTIES THEREUNDER.

clearance requirement is required for forced-air inlets because of the increased chance that flue gases will reenter the building through a powered intake. These requirements apply to the specific applications of this section and supersede the general requirements of Section 401.4. The general provisions of Section 401.4 are applicable to chimneys and vents that are not equipped with power exhausters and that are not components of power-vented appliances as addressed in this section.

The vent terminal must be located at least 1 foot (305 mm) above grade to prevent the vent terminal from being blocked by snow and vegetation, and to eliminate a potential fire hazard from igniting plants and debris. When a walkway is present, the vent has to be located at least 7 feet (2134 mm) above the walking surface to protect any passersby from harmful flue gases. A walkway may be present even though a paved or other prepared walking surface does not exist. Any area that is normally expected to serve as a path of travel is considered a walkway for the purposes of protecting individuals from exposure to the vent's discharge. The code does not specify a minimum horizontal separation distance between a walkway and the termination of a horizontal or vertical vent equipped with a power exhauster before the 7-foot (2134 mm) vertical separation takes effect. The code official must evaluate the manufacturer's installation instructions, as well as each installation to determine an appropriate distance to minimize the hazards.

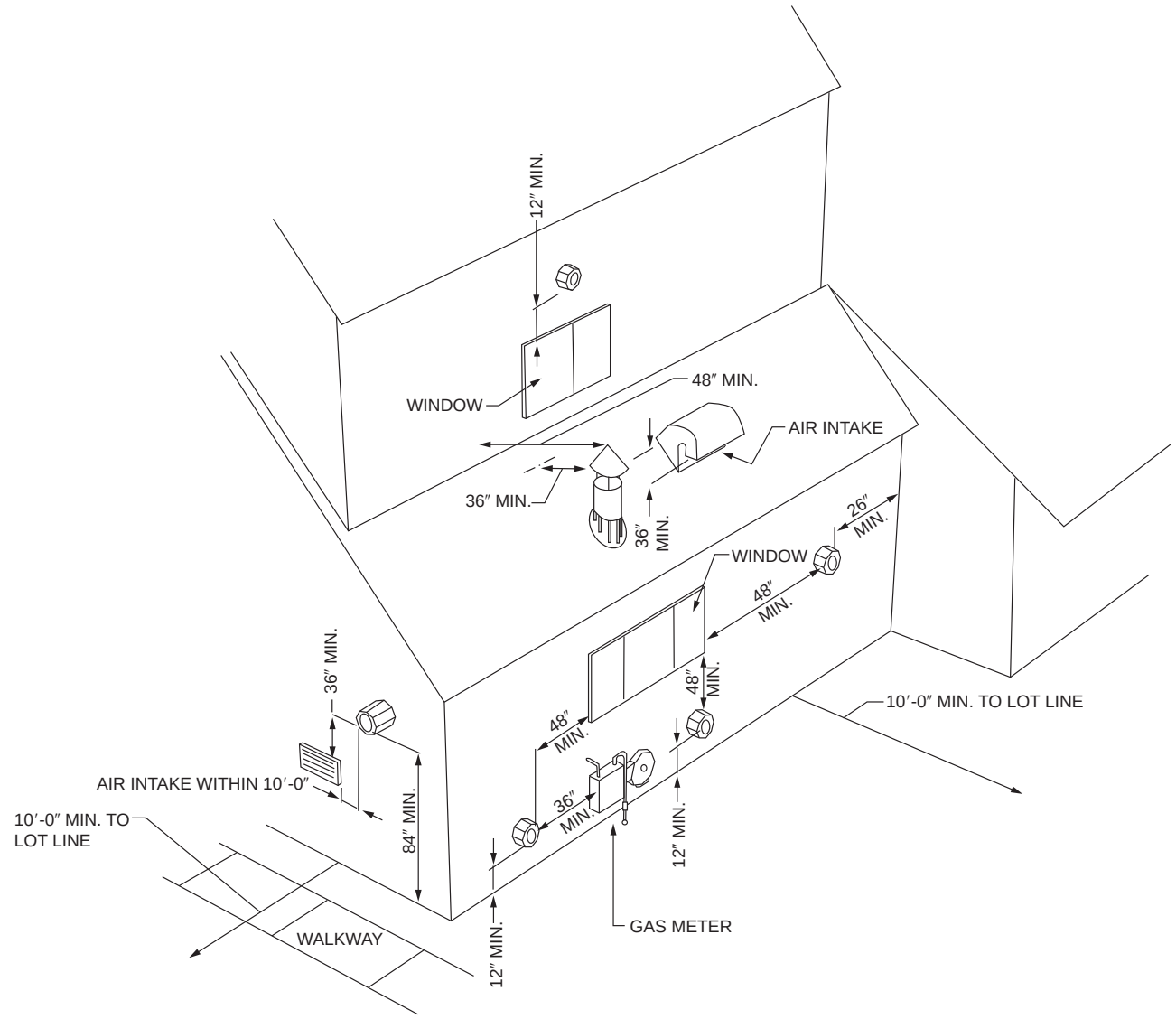

For SI: 1 inch = 25.4 mm, 1 foot = 304.8 mm.

Figure 804.3.4(1)
EXHAUSTER TERMINATIONS

INTERNATIONAL CODE COUNCIL®
Copyright © 2015 ICC. ALL RIGHTS RESERVED. Accessed by David Dammon on Jun 21, 2017 12:30:52 PM pursuant to License Agreement with ICC. No further reproduction or distribution authorized. ANY UNAUTHORIZED REPRODUCTION OR DISTRIBUTION IS A VIOLATION OF THE FEDERAL COPYRIGHT ACT AND THE LICENSE AGREEMENT, AND SUBJECT TO CIVIL AND CRIMINAL PENALTIES THEREUNDER.

The high-temperature discharge of the horizontal vent is a potential source of ignition for any flammable gases that may leak out of the gas meter, service pressure regulator vent or fuel oil tank vent. Dripping condensate could cause corrosion or ice damage to such components. Commentary Figure 804.3.4(2) illustrates the area around the gas meter and service pressure regulator where the horizontal vent terminal is prohibited.

Lastly, this section requires locating the vent terminal a minimum of 3 feet (914 mm) away from an interior corner of the building created by two intersecting walls. This prevents the vent terminal from being located in an area of stagnation where the flue gases cannot be properly diluted, protects adjacent walls from the heat and corrosive effects of flue gases and helps protect the vent terminal from wind-induced pressure zones.

804.3.5 Vertical terminations. Vertical terminations shall comply with the following requirements:

1. Where located adjacent to walkways, the termination of mechanical draft systems shall be not less than 7 feet (2134 mm) above the level of the walkway.
2. Vents shall terminate not less than 3 feet (914 mm) above any forced air inlet located within 10 feet (3048 mm) horizontally.
3. Where the vent termination is located below an adjacent roof structure, the termination point shall be located not less than 3 feet (914 mm) from such structure.
4. The vent shall terminate not less than 4 feet (1219 mm) below, 4 feet (1219 mm) horizontally from or 1 foot (305 mm) above any door, window or gravity air inlet for the building.
5. A vent cap shall be installed to prevent rain from entering the vent system.
6. The vent termination shall be located not less than 3 feet (914 mm) horizontally from any portion of the roof structure.

❖ This section establishes the requirements for exhaust pipes and power exhausters that terminate vertically; thus the name "vertical" vent. Although most vents and chimneys terminate vertically, this section is applicable only to mechanical (power) venting systems that do not rely on natural draft to vent flue gases. The requirements of this section are similar to those of Section 804.3.4. See the commentary to Section 804.3.4 for a discussion of the vent termination requirements. It should be noted that the 10-foot (3048 mm) distance between the exhauster outlet and any forced-air inlet must be measured horizontally rather than parallel to the sloped roof or around a

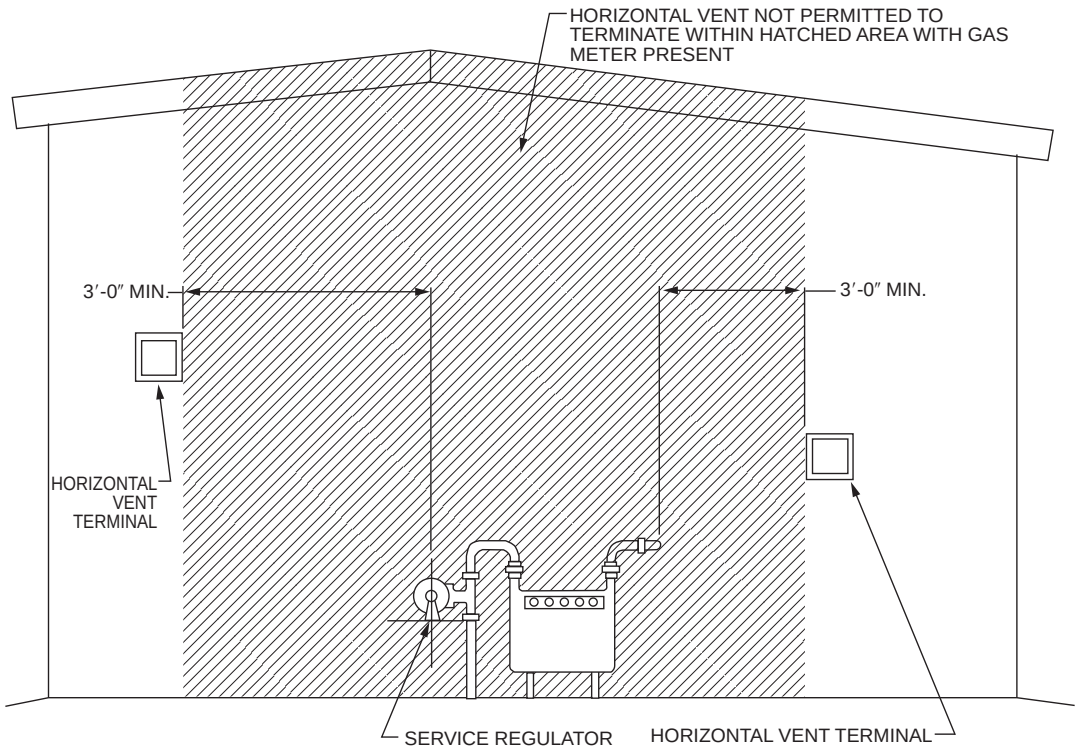

For SI: 1 foot = 304.8 mm.

Figure 804.3.4(2)
HORIZONTAL EXHAUSTER TERMINATION

INTERNATIONAL CODE COUNCIL®
Copyright © 2015 ICC. ALL RIGHTS RESERVED. Accessed by David Dammon on Jun 21, 2017 12:30:52 PM pursuant to License Agreement with ICC. No further reproduction or distribution authorized. ANY UNAUTHORIZED REPRODUCTION OR DISTRIBUTION IS A VIOLATION OF THE FEDERAL COPYRIGHT ACT AND THE LICENSE AGREEMENT, AND SUBJECT TO CIVIL AND CRIMINAL PENALTIES THEREUNDER.

corner. This provides a consistent measurement for the designer and the code official to avoid misunderstandings.

The vertical vent has additional location requirements with respect to adjacent roof structures. Commentary Figure 804.3.4(1) depicts a vertical vent termination. When the vent terminal is located below an adjacent roof structure, the vent must terminate a minimum of 3 feet (914 mm) from the roof structure to protect the structure from the hot flue gases and to protect the vent from wind-induced pressure zones. When the roof is subjected to human traffic, as in the case of a sun deck, the vent must terminate a minimum of 7 feet (2134 mm) above the deck surface. The vent terminal must have a cap to protect it from the entry of precipitation and animals (see commentary, Section 802.4).

804.3.6 Exhauster connections. An *appliance* vented by natural draft shall not be connected into a vent, *chimney* or vent connector on the discharge side of a mechanical flue exhauster.

❖ When a mechanical draft device or power exhauster is installed, the resulting "forced draft" creates a positive pressure inside the chimney or vent on the discharge or outlet side of the fan. A hazardous condition will result if an appliance is connected on the outlet or discharge side of a power exhauster. Commentary Figure 804.3.6 shows an improper appliance connection to an exhauster vented system. The appliance connector provides an alternative path for the flue gases to travel back into the building. Also, the appliance connected on the discharge side (outlet) of the exhauster will not have draft; its combustion products will spill into the building interior (see Section 801.14).

A hazardous condition can also occur when a vent connector serving an appliance vented by natural draft is connected to the vent of an appliance equipped with integral power-venting means.

Any vent, chimney or connector piping into which an exhauster discharges must be rated and approved for positive pressure and properly installed to prevent leakage of combustion gases.

804.3.7 Exhauster sizing. Mechanical flue exhausters and the vent system served shall be sized and installed in accordance with the manufacturer's installation instructions.

❖ Exhauster manufacturer's instructions include design and sizing criteria that must be used for those systems. The general vent sizing information in this chapter does not apply to power-vented systems. Some exhausters are listed for use with specific types and models of appliances. In some cases, the exhauster installation instructions will require the installation of a draft regulator control in the appliance vent connector.

804.3.8 Mechanical draft systems for manually fired appliances and fireplaces. A mechanical draft system shall be permitted to be used with manually fired appliances and fireplaces where such system complies with all of the following requirements:

1. The mechanical draft device shall be listed and labeled in accordance with UL 378, and shall be installed in accordance with the manufacturer's instructions.
2. A device shall be installed that produces visible and audible warning upon failure of the mechanical draft device or loss of electrical power, at any time that the mechanical draft device is turned on. This device shall be equipped with a battery backup if it receives power from the building wiring.
3. A smoke detector shall be installed in the room with the *appliance* or fireplace. This device shall be equipped with a battery backup if it receives power from the building wiring.

❖ This section contains a remedy for existing chimneys that do not produce sufficient draft. Some chimneys fail to produce sufficient draft intermittently because of wind speed and direction or outdoor temperatures.

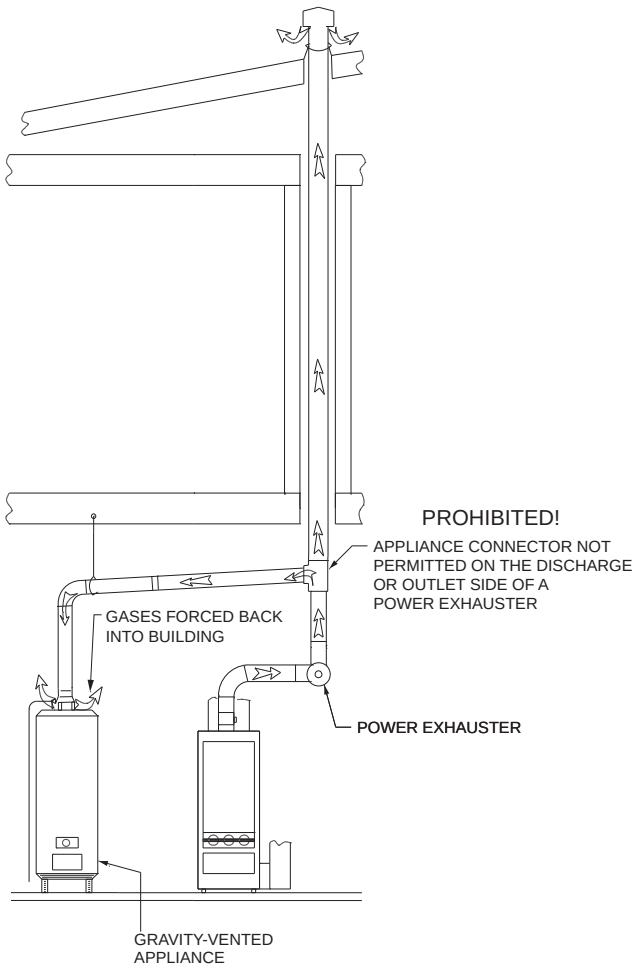

Figure 804.3.6
PROHIBITED APPLIANCE CONNECTION ON DISCHARGE SIDE OF POWER EXHAUSTER

INTERNATIONAL CODE COUNCIL®
Copyright © 2015 ICC. ALL RIGHTS RESERVED. Accessed by David Dammon on Jun 21, 2017 12:30:52 PM pursuant to License Agreement with ICC. No further reproduction or distribution authorized. ANY UNAUTHORIZED REPRODUCTION OR DISTRIBUTION IS A VIOLATION OF THE FEDERAL COPYRIGHT ACT AND THE LICENSE AGREEMENT, AND SUBJECT TO CIVIL AND CRIMINAL PENALTIES THEREUNDER.

Gas-fired and oil-fired appliances can be interlocked to the exhauster to immediately shut off the flow of fuel if there is a power failure or malfunction of the exhauster. Obviously, the same interlock cannot be used in a wood-burning fireplace or stove. This section allows the use of mechanical draft systems with solid fuel appliances and fireplaces if certain requirements are met.

The first requirement is that the draft device must be listed and labeled in accordance with UL 378 for this application and installed in compliance with the manufacturer's installation instructions. This will ensure that the draft system is installed in the same way it was tested in the laboratory of the listing agency.

The second requirement is that a visible and audible alarm be installed to warn occupants upon failure of the mechanical-draft device or loss of electrical power. If the exhauster fails to operate, the solid fuel will continue to burn and produce smoke and other products of combustion. The occupants of the building must be warned that the potentially deadly products of combustion might be spilling into the living space. This is especially important in residential occupancies where the occupants may have gone to sleep with the fireplace or appliance still burning.

The third requirement is that a smoke detector must be installed in the room with the appliance to provide further warning should the exhauster fail to operate properly. This section is not intended to allow mechanical draft systems (chimney exhausters) as a substitute for proper chimney design and construction. It is intended to apply to existing chimneys that fail to produce the required draft.

SECTION 805
FACTORY-BUILT CHIMNEYS

805.1 Listing. Factory-built *chimneys* shall be *listed* and *labeled* and shall be installed and terminated in accordance with the manufacturer's installation instructions.

❖ Chimneys and vents are distinct venting systems. This section applies only to chimneys. Prefabricated chimney systems must bear the label of an approved agency. Commentary Figure 805.1(1) shows sample labels for factory-built chimney systems. A label is required on all components of the chimney system, such as the pipe sections, shields, fireblocks, fittings, termination caps and supports. The label states information such as the type of appliance the chimney was tested for use with, a reference to the manufacturer's installation instructions and the minimum required clearances to combustibles.

Most factory-built chimneys are either of the double-wall fiber-insulated design or the triple-wall air-cooled design. Factory-built chimneys are constructed of stainless steel inner liners with stainless or galvanized steel outer walls. Factory-built chimneys, like vent systems, are composed of components that must be installed as a complete system. Components from different manufacturers are not designed to be mixed and installed together [see Commentary Figure 805.1(2)].

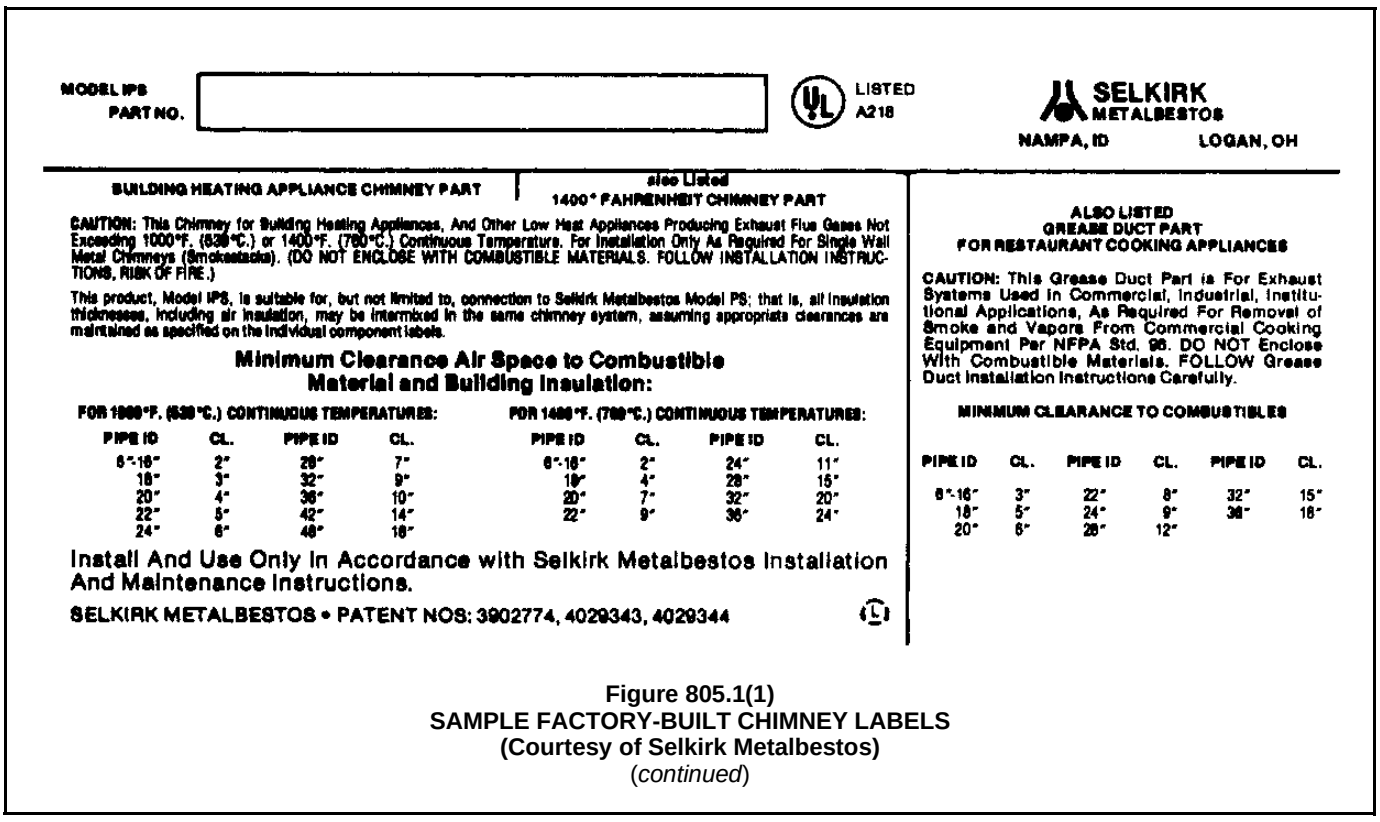

MODEL IPS
PART NO.

LISTED
A218

SELKIRK
METALBESTOS
NAMPA, ID LOGAN, OH

BUILDING HEATING APPLIANCE CHIMNEY PART

also Listed
1400° FAHRENHEIT CHIMNEY PART

CAUTION: This Chimney for Building Heating Appliances, And Other Low Heat Appliances Producing Exhaust Flue Gases Not Exceeding 1000°F. (538°C.) or 1400°F. (760°C.) Continuous Temperature. For Installation Only As Required For Single Wall Metal Chimneys (Smokestacks). (DO NOT ENCLOSE WITH COMBUSTIBLE MATERIALS. FOLLOW INSTALLATION INSTRUCTIONS, RISK OF FIRE.)

This product, Model IPS, is suitable for, but not limited to, connection to Selkirk Metalbestos Model PS; that is, all insulation thicknesses, including air insulation, may be intermixed in the same chimney system, assuming appropriate clearances are maintained as specified on the individual component labels.

Minimum Clearance Air Space to Combustible Material and Building Insulation:

FOR 1000°F. (538°C.) CONTINUOUS TEMPERATURES:

PIPE ID	CL.	PIPE ID	CL.
6"-16"	2"	28"	7"
18"	3"	32"	9"
20"	4"	36"	10"
22"	5"	42"	14"
24"	6"	48"	18"

FOR 1400°F. (760°C.) CONTINUOUS TEMPERATURES:

PIPE ID	CL.	PIPE ID	CL.
6"-16"	2"	24"	11"
18"	4"	28"	15"
20"	7"	32"	20"
22"	9"	36"	24"

Install And Use Only In Accordance with Selkirk Metalbestos Installation And Maintenance Instructions.

SELKIRK METALBESTOS • PATENT NOS: 3902774, 4029343, 4029344

ALSO LISTED
GREASE DUCT PART
FOR RESTAURANT COOKING APPLIANCES

CAUTION: This Grease Duct Part is For Exhaust Systems Used In Commercial, Industrial, Institutional Applications, As Required For Removal of Smoke and Vapors From Commercial Cooking Equipment Per NFPA Std. 96. DO NOT Enclose With Combustible Materials. FOLLOW Grease Duct Installation Instructions Carefully.

MINIMUM CLEARANCE TO COMBUSTIBLES

PIPE ID	CL.	PIPE ID	CL.	PIPE ID	CL.
6"-16"	3"	22"	8"	32"	15"
18"	5"	24"	9"	36"	18"
20"	6"	28"	12"		

Figure 805.1(1)
SAMPLE FACTORY-BUILT CHIMNEY LABELS
(Courtesy of Selkirk Metalbestos)
(*continued*)

INTERNATIONAL CODE COUNCIL®
Copyright © 2015 ICC. ALL RIGHTS RESERVED. Accessed by David Dammon on Jun 21, 2017 12:30:52 PM pursuant to License Agreement with ICC. No further reproduction or distribution authorized. ANY UNAUTHORIZED REPRODUCTION OR DISTRIBUTION IS A VIOLATION OF THE FEDERAL COPYRIGHT ACT AND THE LICENSE AGREEMENT, AND SUBJECT TO CIVIL AND CRIMINAL PENALTIES THEREUNDER.

The manufacturer's instructions contain sizing criteria and the requirements for every aspect of a factory-built chimney installation. The requirements include component assembly, clearances to combustibles, support, terminations, connections, protection from damage and fireblocking.

Where a chimney for a residential or building heating appliance penetrates a floor and ceiling assembly, the IBC requires fireblocking around the opening in compliance with UL 103. The fireblock assembly is required to establish and maintain the required minimum clearances between the chimney and combustible construction.

Additionally, an insulation shield is required in attics to prevent batt or loose-fill insulation from contacting the chimney. The attic shield maintains the airspace clearance between the chimney and the insulation material. Some insulation materials are combustible and all insulation materials placed in contact with a chimney can cause excessive chimney temperatures by retarding radiant heat transmission from the chimney surfaces. The shield must extend a

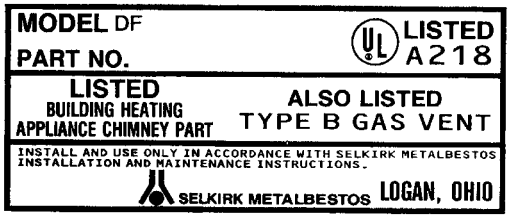

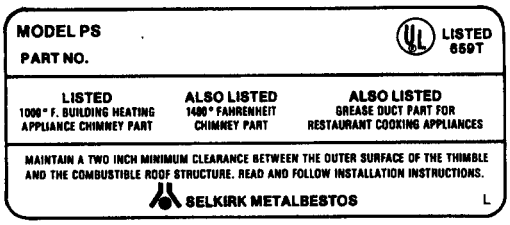

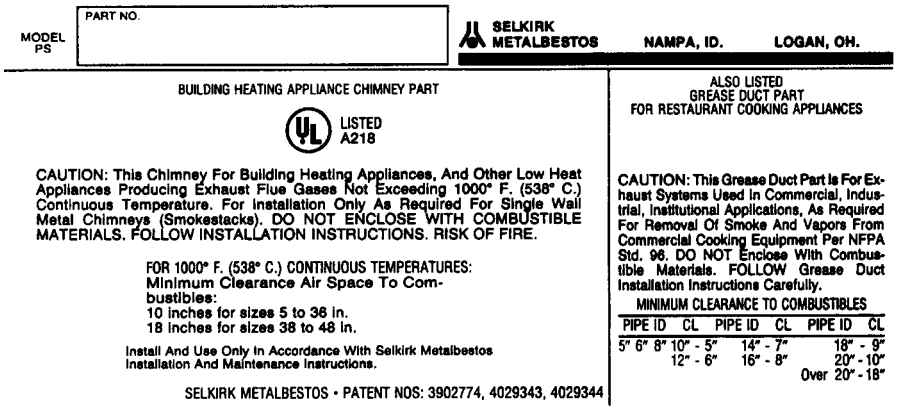

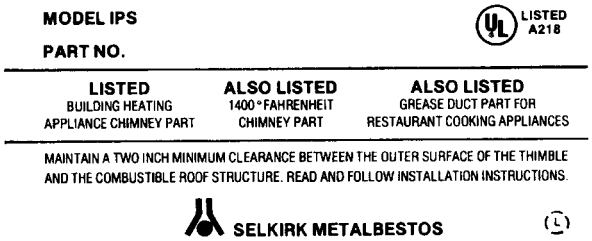

Figure 805.1(1)—continued
SAMPLE FACTORY-BUILT CHIMNEY LABELS
(Courtesy of Selkirk Metalbestos)

INTERNATIONAL CODE COUNCIL®
Copyright © 2015 ICC. ALL RIGHTS RESERVED. Accessed by David Dammon on Jun 21, 2017 12:30:52 PM pursuant to License Agreement with ICC. No further reproduction or distribution authorized. ANY UNAUTHORIZED REPRODUCTION OR DISTRIBUTION IS A VIOLATION OF THE FEDERAL COPYRIGHT ACT AND THE LICENSE AGREEMENT, AND SUBJECT TO CIVIL AND CRIMINAL PENALTIES THEREUNDER.

minimum distance above the attic floor to accommodate the maximum anticipated insulation depth.

The IBC requires fireblocking of chimneys serving factory-built fireplaces in accordance with UL 127. The assembly must provide fireblocking and establish and maintain clearances to combustibles determined as required by the manufacturer's installation instructions.

Factory-built chimneys must extend at least 3 feet (914 mm) above the roof measured from the highest point of the roof penetration on pitched roofs. They must also be at least 2 feet (610 mm) higher than any portion of the roof within a 10-foot (3048 mm) horizontal distance [see Commentary Figure 805.1(3)].

The 3-foot (914 mm) termination height has long been recognized as the minimum height necessary to allow small burning embers and sparks emitted by the chimney to extinguish before landing on a combustible roof surface. The 2-foot (610 mm) termination requirement is intended to prevent wind and pressure zones from reducing the amount of draft produced by the chimney.



Figure 805.1(2)
FACTORY-BUILT CHIMNEY COMPONENTS
(Courtesy of Selkirk Metalbestos)

INTERNATIONAL CODE COUNCIL®
Copyright © 2015 ICC. ALL RIGHTS RESERVED. Accessed by David Dammon on Jun 21, 2017 12:30:52 PM pursuant to License Agreement with ICC. No further reproduction or distribution authorized. ANY UNAUTHORIZED REPRODUCTION OR DISTRIBUTION IS A VIOLATION OF THE FEDERAL COPYRIGHT ACT AND THE LICENSE AGREEMENT, AND SUBJECT TO CIVIL AND CRIMINAL PENALTIES THEREUNDER.

Wind and wind-induced eddy currents can react with building structural surfaces, thereby creating air pressure zones that can diminish chimney draft and cause reverse flow (backdraft) in places served by the chimney to discharge combustion products into the building interior. Locating the chimney outlet well into the undisturbed wind stream and away from the cavity and wake (eddy) zones around the building can counteract the adverse effects and also prevent the reentry of flue gases into the building through openings and fresh air intakes. Commentary Figure 805.1(4) shows a chimney improperly located in the eddy current area above the roof surface. Terminating a chimney in the eddy current area recirculates the combustion products and allows them to enter the building via infiltration, wall openings and air intakes. A chimney terminal properly located above the eddy current area allows the wind to carry the combustion products away from the building.

Factory-built chimneys are equipped with termination caps that are part of the labeled chimney system and that must be installed. Like vent systems, the chimney cap is designed to keep out precipitation and animals and minimize the negative effects of wind.

805.2 Solid fuel appliances. Factory-built *chimneys* installed in *dwelling units* with solid fuel-burning appliances shall comply with the Type HT requirements of UL 103 and shall be marked "Type HT" and "Residential Type and Building Heating *Appliance Chimney.*"

Exception: *Chimneys* for use with open *combustion* chamber fireplaces shall comply with the requirements of UL 103 and shall be marked "Residential Type and Building Heating *Appliance Chimney.*"

Chimneys for use with open *combustion* chamber appliances installed in buildings other than *dwelling units* shall comply with the requirements of UL 103 and shall be marked "Building Heating *Appliance Chimney"* or "Residential Type and Building Heating *Appliance Chimney.*"

❖ Factory-built chimneys designed to vent solid fuel-burning residential or building heating appliances having continuous flue-gas outlet temperatures not exceeding 1,000°F (538°C) must be tested in accordance with UL 103.

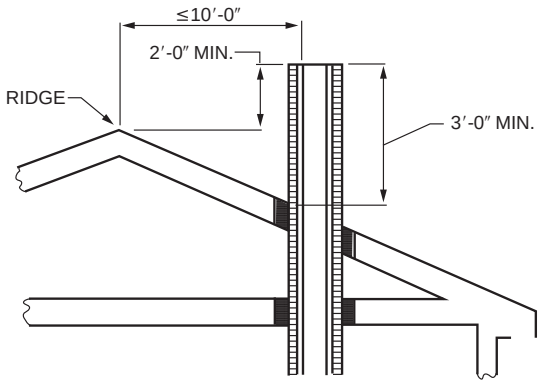

CROSS SECTION - WHEN 10′-0″ LESS FROM RIDGE

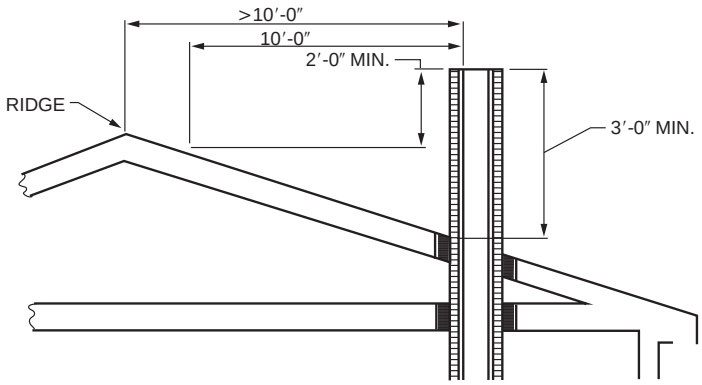

CROSS SECTION - WHEN MORE THAN 10′-0″ FROM RIDGE

For SI: 1 foot = 304.8 mm.

Figure 805.1(3)
LOW-HEAT CHIMNEY TERMINATION

INTERNATIONAL CODE COUNCIL®
Copyright © 2015 ICC. ALL RIGHTS RESERVED. Accessed by David Dammon on Jun 21, 2017 12:30:52 PM pursuant to License Agreement with ICC. No further reproduction or distribution authorized. ANY UNAUTHORIZED REPRODUCTION OR DISTRIBUTION IS A VIOLATION OF THE FEDERAL COPYRIGHT ACT AND THE LICENSE AGREEMENT, AND SUBJECT TO CIVIL AND CRIMINAL PENALTIES THEREUNDER.

In some cases, chimneys may serve appliances that are designed for use with vents but the reverse is not true. Vents can never be used to vent appliances that require connection to a chimney.

When a wood- or solid fuel-burning appliance is in operation, it produces tar and organic compounds that combine with moisture to form creosote. The creosote vapors can condense and form a deposit in the relatively cool chimney of a slow-burning fire. When a very hot fire is burning in the appliance, accumulated creosote can ignite, causing a chimney fire. A creosote fire burns very hot [in excess of 1,700°F (927°C)], which can cause accelerated deterioration of the chimney. The chimney should be inspected periodically during the heating season to determine whether creosote has accumulated. If there is a buildup of creosote, the chimney should be cleaned.

The requirements found in this section address specific solid fuel-burning appliances served by factory-built chimneys. Closed-combustion chamber wood-burning appliances for residential or building heating applications, such as wood stoves and room heaters, are capable of producing very hot fires by precisely controlling and directing the flow of combustion air into the combustion chamber. These appliances are equipped with tight-fitting doors that are closed when the appliance is operating. Adjustable shutters admit combustion air.

Because closed-combustion appliances are designed for precise control of combustion air, they can be adjusted for long, slow burning to make the fuel last longer. The disadvantage of a slow-burning, less-intense fire is that creosote formation will be greatly accelerated as a result of incomplete combustion of the fuel and lower flue-gas temperatures. Creosote fires can result in chimney buckling, distortion and seam splitting, which would make the chimney unsafe for continued use. The increased likelihood of creosote fires is another reason that high-temperature-rated chimneys are required for closed-combustion appliances.

The test described in UL 103 added an optional temperature test consisting of three 10-minute cycles at 2,030°F (1128°C) above room temperature that allows the manufacturer to designate the chimney as Type HT. Factory-built chimneys used with closed-combustion wood-burning appliances must comply with the Type HT requirements of UL 103 and be marked “Type HT” and “Residential Type and Building Heating Appliance Chimney.”

The Type HT requirement does not pertain to a chimney used with a factory-built fireplace because the fireplace has an open combustion chamber. A chimney serving a factory-built fireplace has to be tested in accordance with UL 127. This standard contains the requirements for all factory-built fireplaces and components, including the chimney. Factory-built fireplaces must be served by the chimney supplied or required by the fireplace manufacturer.

Additionally, the Type HT requirement does not apply to a free-standing fireplace stove with an open combustion chamber and conforming to UL 737.

The two exceptions provide marking requirements for open-combustion chamber fireplace stoves and fireplaces that operate without tight-fitting doors. This allows much greater quantities of combustion air and dilution air to be drawn into the combustion chamber and into the chimney. Because of the excess air and the fact that the combustion air is not directed into the fuel bed, open chamber appliances and fireplaces do not produce fires as hot as those produced by the closed appliance and, therefore, do not require the “Type HT” marking. This is one reason why a Type HT (high-temperature rated) chimney is required for closed, solid-fuel appliances.

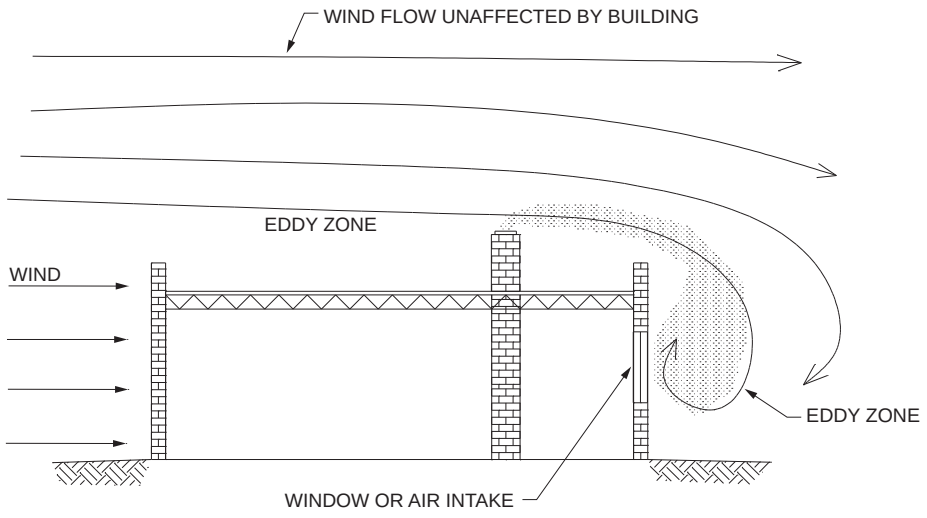

Figure 805.1(4)
WIND EFFECT ON CHIMNEY TERMINATION

INTERNATIONAL CODE COUNCIL®
Copyright © 2015 ICC. ALL RIGHTS RESERVED. Accessed by David Dammon on Jun 21, 2017 12:30:52 PM pursuant to License Agreement with ICC. No further reproduction or distribution authorized. ANY UNAUTHORIZED REPRODUCTION OR DISTRIBUTION IS A VIOLATION OF THE FEDERAL COPYRIGHT ACT AND THE LICENSE AGREEMENT, AND SUBJECT TO CIVIL AND CRIMINAL PENALTIES THEREUNDER.

805.3 Factory-built chimney offsets. Where a factory-built chimney assembly incorporates offsets, no part of the chimney shall be at an angle of more than 30 degrees (0.52 rad) from vertical at any point in the assembly and the chimney assembly shall not include more than four elbows.

❖ These requirements are part of the requirements of UL 103 as referenced in Section 805.2. Limiting the angle of elbows and the number of elbows helps maintain draft in the chimney and allows for ease of cleaning (see Commentary Figure 805.3). Also, angles greater than 30 degrees are more difficult to support as the center of gravity shifts.

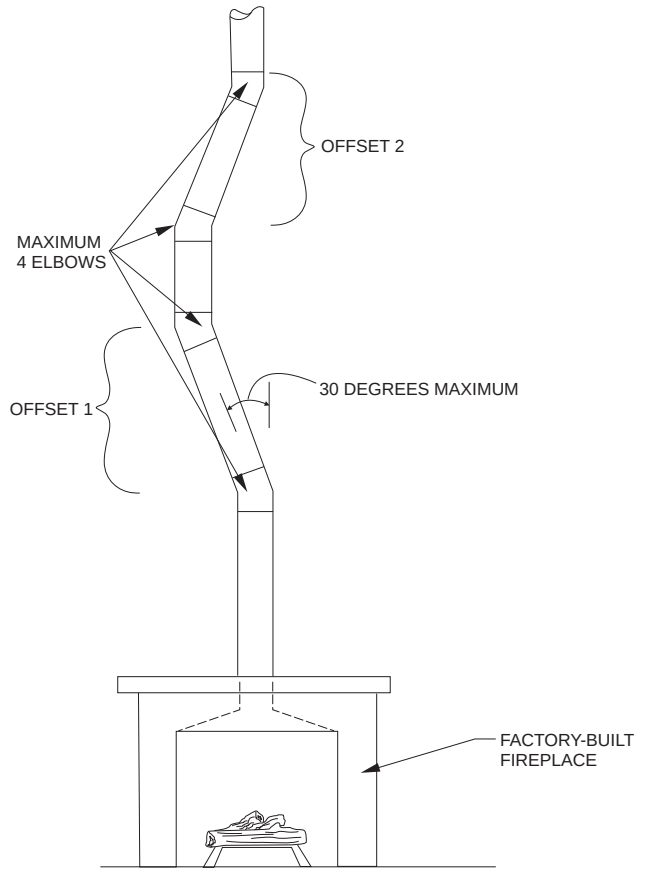

For SI: 1 degree = 0.017 rad.

Figure 805.3
CHIMNEY OFFSET LIMITATION

805.4 Factory-built fireplaces. Chimneys for use with factory-built fireplaces shall comply with the requirements of UL 127.

❖ See Section 903. Chimneys for factory-built fireplaces are a component of the fireplace and fall under the fireplace standard UL 127.

805.5 Support. Where factory-built *chimneys* are supported by structural members, such as joists and rafters, such members shall be designed to support the additional load.

❖ Factory-built chimneys are supported by the building structure and can impose considerable weight on structural components. Joists, rafters and other structural members must be designed to support the additional loading. Structural evaluation may be necessary, especially where framing for a chimney requires cutting and heading of joists and rafters.

805.6 Medium-heat appliances. Factory-built *chimneys* for medium-heat appliances producing flue gases having a temperature above 1,000ºF (538ºC) measured at the entrance to the *chimney* shall comply with UL 959.

❖ Factory-built chimneys serving medium-heat appliances in which the maximum continuous flue-gas temperature does not exceed 2,000°F (1093°C) must be tested in accordance with UL 959. Such chimneys are associated with factory and industrial equipment and incinerators.

Chimneys serving medium-heat appliances may require greater termination heights and clearances to combustibles.

805.7 Decorative shrouds. Decorative shrouds shall not be installed at the termination of factory-built *chimneys* except where such shrouds are *listed* and *labeled* for use with the specific factory-built *chimney* system and are installed in accordance with Section 304.1.

❖ Decorative shrouds (see Commentary Figure 805.7) have become a popular architectural feature that, in some cases, have proven to be a fire hazard. They are designed to be aesthetically pleasing and to hide chimney and vent terminations. These shrouds have caused fires resulting from overheated combustible construction and the accumulation of debris and animal nesting. Shrouds can also interfere with the functioning of a chimney or vent system. Shrouds are allowed only where they are listed and labeled for use with the specific factory-built chimney system. Unlisted, field-constructed shrouds are prohibited.

INTERNATIONAL CODE COUNCIL®
Copyright © 2015 ICC. ALL RIGHTS RESERVED. Accessed by David Dammon on Jun 21, 2017 12:30:52 PM pursuant to License Agreement with ICC. No further reproduction or distribution authorized. ANY UNAUTHORIZED REPRODUCTION OR DISTRIBUTION IS A VIOLATION OF THE FEDERAL COPYRIGHT ACT AND THE LICENSE AGREEMENT, AND SUBJECT TO CIVIL AND CRIMINAL PENALTIES THEREUNDER.



Figure 805.7
DECORATIVE SHROUDS

SECTION 806
METAL CHIMNEYS

806.1 General. Metal *chimneys* shall be constructed and installed in accordance with NFPA 211.

❖ Metal chimneys, or smokestacks, should not be confused with vents and factory-built chimneys, even though they are constructed of metal. Metal chimneys are field constructed and are not listed products. They are found almost exclusively in industrial buildings.

Installation and construction requirements for metal chimneys are covered in NFPA 211.

Bibliography

The following resource material was used in the preparation of the commentary for this chapter of the code:

IBC-15, *International Building Code*. Washington, DC: International Code Council, 2014.

INTERNATIONAL CODE COUNCIL®
Copyright © 2015 ICC. ALL RIGHTS RESERVED. Accessed by David Dammon on Jun 21, 2017 12:30:52 PM pursuant to License Agreement with ICC. No further reproduction or distribution authorized. ANY UNAUTHORIZED REPRODUCTION OR DISTRIBUTION IS A VIOLATION OF THE FEDERAL COPYRIGHT ACT AND THE LICENSE AGREEMENT, AND SUBJECT TO CIVIL AND CRIMINAL PENALTIES THEREUNDER.

INTERNATIONAL CODE COUNCIL®
Copyright © 2015 ICC. ALL RIGHTS RESERVED. Accessed by David Dammon on Jun 21, 2017 12:30:52 PM pursuant to License Agreement with ICC. No further reproduction or distribution authorized. ANY UNAUTHORIZED REPRODUCTION OR DISTRIBUTION IS A VIOLATION OF THE FEDERAL COPYRIGHT ACT AND THE LICENSE AGREEMENT, AND SUBJECT TO CIVIL AND CRIMINAL PENALTIES THEREUNDER.

Chapter 9: Specific Appliances, Fireplaces and Solid Fuel-Burning Equipment

General Comments

Chapter 9 regulates the design and construction of fireplaces, solid fuel-burning appliances, barbecue appliances and the host of specifically named appliances. It reflects the code's intent to specifically address all of the types of appliances that the code intends to regulate (see the definition of "Appliance" and Section 101.2). Incinerators and crematories are considered to be solid fuel-burning appliances and are also addressed. Other regulations affecting the installation of solid fuel-burning fireplaces, appliances and accessory appliances are found in Chapters 3, 5, 6, 7, 8, 10, 11, 12, 13 and 14.

Solid fuel-burning fireplaces and appliances are the oldest form of space heating still in use today. In earlier times, the fireplace was the central focus of residential living as a means for cooking meals and as a main or sole source of heat and light.

Today, in this country, the fireplace is used principally as a decorative feature of residential construction, although energy-efficient fireplaces and solid fuel-burning stoves and heaters are often used to supplement the primary heating system in dwelling units. It is also not uncommon in some parts of the world to rely on solid fuel as the sole heating fuel for dwelling units. Before the widespread use of oil, gas and electricity for home heating, coal-fired furnaces, boilers, stoves and room heaters were common.

For application of this chapter, the term "fireplace" refers to solid fuel-burning equipment and does not refer to gas-fired appliances that are marketed as gas fireplaces. Solid fuels include wood, coal and manufactured (formed) wood composite products, such as wood pellets and artificial logs.

Solid fuel-burning appliances include wood and coal stoves, room heaters, fireplace inserts, wood and coal furnaces, wood and coal boilers and dual-fuel furnaces and boilers that are equipped to burn a solid fuel and a gaseous or liquid fuel. Dual-fuel appliances are not designed to burn more than one type of fuel at a time and must be changed over to operate with the chosen fuel type.

The chapters of the code, with the exception of Chapter 3 and this chapter, are dedicated to single subjects. This chapter, however, is a collection of requirements for various appliances, equipment, solid fuel-burning equipment and fireplaces. The only commonality in this chapter is that all subjects use energy to perform some task or function. Because none of the subjects in this chapter have the volume of text to warrant an individual chapter, they have been combined into a single chapter.

Purpose

This chapter sets minimum construction and performance criteria for fireplaces, appliances and equipment and provides for the safe installation of these items.

SECTION 901 GENERAL

901.1 Scope. This chapter shall govern the approval, design, installation, construction, maintenance, *alteration* and repair of the appliances and *equipment* specifically identified herein and factory-built fireplaces. The approval, design, installation, construction, maintenance, *alteration* and repair of gas-fired appliances shall be regulated by the *International Fuel Gas Code*.

❖ This chapter regulates all aspects of appliances, equipment and fireplaces to the extent found in each of Sections 902 through 925. It also directs the user to the *International Fuel Gas Code*® (IFGC®) for the regulation of gas-fired appliances and equipment. This chapter covers solid fuel-burning, liquid fuel-burning and electrically heated appliances.

901.2 General. The requirements of this chapter shall apply to the mechanical *equipment* and appliances regulated by this chapter, in addition to the other requirements of this code.

❖ This section states that other chapters of the code contain requirements applicable to the subjects of this chapter. The other chapters include Chapters 3, 5, 6, 7, 8, 10, 11, 12, 13 and 14.

901.3 Hazardous locations. Fireplaces and solid fuel-burning appliances shall not be installed in hazardous locations.

❖ This section prohibits the installation of fireplaces and solid fuel-burning appliances in hazardous locations. A hazardous location is defined as any location considered to be a fire hazard because of the presence of flammable vapors, dust, combustible fibers or other highly combustible substances. Repair garages, painting shops and similar occupancies that

INTERNATIONAL CODE COUNCIL®
Copyright © 2015 ICC. ALL RIGHTS RESERVED. Accessed by David Dammon on Jun 21, 2017 12:30:52 PM pursuant to License Agreement with ICC. No further reproduction or distribution authorized. ANY UNAUTHORIZED REPRODUCTION OR DISTRIBUTION IS A VIOLATION OF THE FEDERAL COPYRIGHT ACT AND THE LICENSE AGREEMENT, AND SUBJECT TO CIVIL AND CRIMINAL PENALTIES THEREUNDER.

house special processes and operations that involve flammable or combustible liquids, vapors or dusts are considered hazardous locations and are subject to the provisions of this section.

Solid fuel-burning appliances and fireplaces must not be installed in hazardous locations because the combustion process in this kind of equipment is hard to control and contain. Both gas- and oil-burning appliances are equipped with control devices that can shut off the supply of fuel to the appliance and stop combustion almost immediately. With solid fuel-burning equipment, however, the combustion process can be stopped only by eliminating the combustion air supply, and combustion would stop slowly. Should flammable or combustible vapors be detected in a room or space, there would be no quick means to eliminate the potential of the equipment/appliance being a source of ignition.

Additionally, the openings of the combustion chamber and the nature of solid fuels make it difficult to contain the burning fuel and hot ashes or cinders. Even if the combustion chamber is properly elevated above the floor, sparks, embers or burning fuel can fall from an open combustion chamber (firebox) or from an enclosed combustion chamber during lighting, refueling and ash removal. Also, the strong draft created by solid fuel appliances and fireplaces can draw flammable vapors into the combustion chamber.

For these reasons, it is obvious that fireplaces and solid fuel-burning appliances can create an unsafe condition when installed in hazardous locations.

SECTION 902
MASONRY FIREPLACES

902.1 General. Masonry fireplaces shall be constructed in accordance with the *International Building Code*.

❖ Masonry construction is regulated by the *International Building Code*® (IBC®) and typically inspected by the building official; therefore, the code refers to the IBC for the construction of masonry fireplaces. The IBC contains construction and chimney sizing requirements for masonry fireplaces. Factory-built fireplaces are regulated in Section 903.

902.2 Fireplace accessories. Listed and labeled fireplace accessories shall be installed in accordance with the conditions of the listing and the manufacturer's instructions. Fireplace accessories shall comply with UL 907.

❖ This section addresses fireplace doors, screens, heat exchangers, blower units and similar items not classified as appliances. Such accessories must be listed and labeled in accordance with UL 907. Installation must be performed in accordance with the listing and the manufacturer's instructions as improper installation could result in abnormal operation of the fireplace and a resultant fire hazard.

SECTION 903
FACTORY-BUILT FIREPLACES

903.1 General. Factory-built fireplaces shall be *listed* and *labeled* and shall be installed in accordance with the conditions of the listing. Factory-built fireplaces shall be tested in accordance with UL 127.

❖ This section addresses factory-constructed fireplace units that are served by factory-constructed chimneys. Factory-built fireplaces are solid fuel-burning units having a fire chamber that is intended to be either open to the room or, if equipped with doors, operated with the doors either open or closed. Commentary Figures 903.1(1) and 903.1(2) show two common styles of factory-built fireplaces: the recessed wall fireplace and the free-standing fireplace stove. Note that fireplaces are not referred to as appliances. The term "fireplace" describes a complete assembly that includes the hearth, a fire chamber and a chimney. A factory-built fireplace is composed of factory-built components representative of the prototypes tested, and is installed in accordance with the manufacturer's instructions to form the completed fireplace.

Factory-built fireplaces have an integral chimney as part of the total system package. Interchanging or substituting different types of chimneys is not permitted and could create an unsafe installation. Therefore, factory-built fireplaces must be installed with compatible components as identified and supplied by the fireplace manufacturer in strict accordance with its installation instructions.

Factory-built chimneys, designed for use with factory-built fireplaces, are tested and evaluated under the same standard as fireplaces (UL 127) and are not addressed in Chapter 8. A chimney intended for a specific factory-built fireplace is integral with the fireplace and is not considered as a separate or distinct system. Chimneys for factory-built fireplaces are either air insulated, air cooled or mineral-fiber insulated, and have either two or three walls. The inner flue wall is stainless steel; the outer wall(s) may be stainless or galvanized steel. The manufacturer's installation instructions contain detailed requirements for the chimney installation, including maximum offset angles, firestopping, support, clearances, section assembly and termination (see Section 805.6).

Factory-built fireplaces are constructed of corrosion-resistant sheet metal and refractory materials designed to withstand the high temperatures and corrosive effects of combustion byproducts. Some fireplaces may be equipped with air-circulating components that pass room air through a heat exchanger that partially surrounds the firebox. Fireplace stoves are free-standing assemblies having fire chambers intended to be open to the room or, if equipped with doors, to be operated with the doors

INTERNATIONAL CODE COUNCIL®
Copyright © 2015 ICC. ALL RIGHTS RESERVED. Accessed by David Dammon on Jun 21, 2017 12:30:52 PM pursuant to License Agreement with ICC. No further reproduction or distribution authorized. ANY UNAUTHORIZED REPRODUCTION OR DISTRIBUTION IS A VIOLATION OF THE FEDERAL COPYRIGHT ACT AND THE LICENSE AGREEMENT, AND SUBJECT TO CIVIL AND CRIMINAL PENALTIES THEREUNDER.

either open or closed. Fireplace stoves differ from room heaters in that fireplace stoves need not be operated with the fire chamber (doors) closed.

Both UL 127 and UL 737 address wood-burning and coal-burning units. Both standards address construction, durability, containment of fuel, corrosion resistance, mechanical strength, heat conductance/transfer, thermal radiation, clearances to combustibles, protection of electrical components (blowers, fans and controls), electrical grounding/bonding, current leakage, voltage-withstand (dielectric), control function, operator protection and other safety aspects. The standards also contain requirements for the installation instructions and for marking and identifying the units. All units are tested under abnormal firing conditions and temperature rise is monitored at several locations on and around the unit and test structure.

For fireplaces tested in accordance with UL 127, all of the components necessary for the installation of the fireplace and chimney must be supplied by the manufacturer.

In addition to testing requirements, fireplaces and fireplace stoves must be labeled by an approved agency. Sections 301.7 and 301.8 state the requirements for approved agencies and provide details for the information that must appear on a label. Factory-built fireplaces must be installed in accordance with the manufacturer's installation instructions. This is important because the manufacturer's installation instructions are used by the testing agency when the test installation is constructed. Therefore, a unit with its compatible components, that is designed, constructed and tested in accordance with the applicable standard and installed in accordance with the manufacturer's instructions, is expected to perform the same as the representative sample unit tested.

A factory-built fireplace is a complete package that includes its chimney and all of the related parts necessary for a complete installation. Fireplace stoves are not supplied with a chimney, factory-built chimney or a masonry chimney as specified by the manufacturer. Section 805.2 requires use of fireplace stoves with low-heat chimneys that are designed, constructed and tested in accordance with UL 103 (see commentary, Section 805).

The term "zero clearance," when describing factory-built fireplace units, refers to the fact that zero clearance is required between the bottom surface of the unit and a combustible floor. Zero clearance also refers to the clearance to combustibles from shields, standoff brackets, spacers and other factory-supplied components that have been designed and tested for contact with combustibles. In other words, a so-called "zero clearance" factory-built fireplace unit actually has a required clearance distance to combustibles from any of its surfaces and components except the bottom, and the term "zero clearance" simply refers to the allowed clearance from factory-applied spacers and brackets that maintain a fixed distance between heat-producing surfaces and any combustible building material.

Many surfaces of factory-built fireplace units are marked or labeled with minimum clearance to combustible dimensions that must be observed. Note that gypsum wallboard is considered to be a combustible material in the code. Gypsum wallboard, often referred to as "drywall" or "sheetrock," will degrade and increase in combustibility when exposed to continuous heat from appliances and fireplaces.

All clearances to combustibles, as specified in the unit and its label, refer to airspace clearances. An airspace clearance cannot be filled with insulation materials or any other material regardless of its

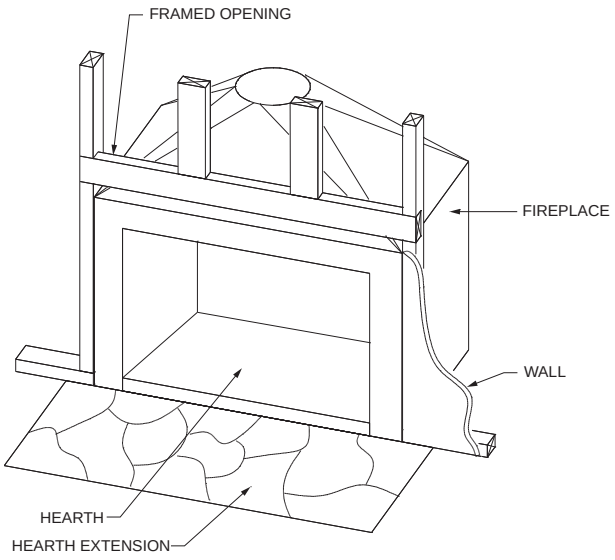

Figure 903.1(1)
RECESSED WALL FACTORY-BUILT FIREPLACE

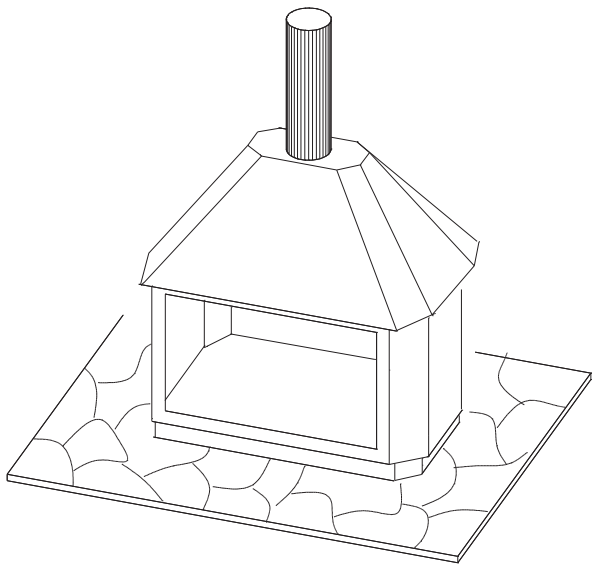

Figure 903.1(2)
FREE-STANDING FACTORY-BUILT FIREPLACE

INTERNATIONAL CODE COUNCIL®
Copyright © 2015 ICC. ALL RIGHTS RESERVED. Accessed by David Dammon on Jun 21, 2017 12:30:52 PM pursuant to License Agreement with ICC. No further reproduction or distribution authorized. ANY UNAUTHORIZED REPRODUCTION OR DISTRIBUTION IS A VIOLATION OF THE FEDERAL COPYRIGHT ACT AND THE LICENSE AGREEMENT, AND SUBJECT TO CIVIL AND CRIMINAL PENALTIES THEREUNDER.

combustibility or noncombustibility. An airspace clearance relies on the high insulating value of free air coupled with convection currents that serve to control the temperature rise on adjacent material surfaces.

Factory-built fireplaces come with detailed installation instructions that must be followed to achieve a code-complying installation. Some commonly overlooked requirements in the manufacturer's installation instructions include firestop installation; shield and joint treatment between the hearth and hearth extension; hearth elevation requirements and limitations; combustion air supplies; ductwork installations when so equipped; hearth extension materials; chimney supports and construction and framing member clearances.

Factory-built fireplaces cannot be fitted or equipped with fireplace inserts or otherwise converted or altered, except where specifically permitted by the fireplace manufacturer (based on test results) and where installed in accordance with the manufacturer's instructions (see Sections 903.3 and 805.6).

903.2 Hearth extensions. Hearth extensions of approved factory-built fireplaces shall be installed in accordance with the listing of the fireplace. The hearth extension shall be readily distinguishable from the surrounding floor area. Listed and labeled hearth extensions shall comply with UL 1618.

❖ As discussed in Section 903.1, factory-built fireplaces must be installed in strict accordance with the manufacturer's installation instructions. Those instructions will include specifications for the materials, dimensions and installation of hearth extensions. As shown in Commentary Figure 903.1(1), the fireplace hearth consists of two parts. The hearth, commonly called the inner hearth, is the floor of the combustion chamber (firebox) and is constructed of masonry or concrete and masonry. The outer hearth, referred to as the hearth extension, projects beyond the face of the fireplace opening into the room and is constructed of masonry, concrete or factory-specified elements.

Hearth extensions are commonly decorated with cut stone, ceramic tile and other similar noncombustible, aesthetically pleasing materials.

The hearth extension protects the floor structure in front of the fireplace from radiant heat from the fire and from sparks, embers, coals or burning solid fuel that may escape from the firebox. The nature of solid fuel can cause burning material to be expelled from the combustion chamber and large pieces of the fuel can fall from a grate and roll out of the firebox. In addition to the required hearth extensions, screens should be used as the initial and primary protection against sparks and embers from the fire.

The hearth extension is typically at the same elevation as the hearth and is simply constructed as a horizontal extension of the firebox floor. The code does not prohibit a hearth extension from being at a lower elevation than the hearth; however, this configuration could cause burning fuel, embers or coals to bounce or travel beyond the hearth extension because of the energy gained from the vertical drop. The required minimum dimensions of the hearth extension are intended to protect the floor structure where burning fuel, embers or coals would most likely fall and where the radiant heat energy could be great enough to risk ignition of the floor structure.

Factory-built fireplaces must have hearth extensions as prescribed in the manufacturer's installation instructions. If the hearth extension is distinguishable from the surrounding floor surface, the hearth extension will likely be recognized for its importance, will be readily observable by the occupants and will probably not be covered by rugs, carpeting or other floor-covering materials. Note that the typical fireplace instructions will require some insulating value or minimum thermal mass for hearth extension assemblies. Although commonly used, the fireplace instructions generally do not allow ceramic tile or stone slabs to be placed directly on wood supports as a form of hearth extension construction.

Factory-built hearth extensions are available and have to be listed and labeled and installed in accordance with the manufacturer's instructions.

903.3 Unvented gas log heaters. An unvented gas log heater shall not be installed in a factory-built fireplace unless the fireplace system has been specifically tested, *listed* and *labeled* for such use in accordance with UL 127.

❖ Unvented gas-log heaters are not gas logs in the traditional sense. They are considered to be room heaters. The key difference between a solid fuel fire and use of an unvented gas log unit is that the fireplace chimney damper is typically closed during operation of the unvented gas log heater. Because there is no draft, dilution air movement or combustion gas venting, the firebox can reach higher temperatures than with a solid fuel fire.

Not all factory-built fireplaces can be converted for use with unvented gas logs. Wood-burning factory-built fireplaces must be tested and listed in accordance with the requirements of UL 127, which requires the fireplace system to be fired in an overfired condition during testing until the temperatures of the combustible framing surrounding the firebox have reached a stable maximum. Unvented gas log heaters are tested and listed in accordance with the requirements of ANSI Z21.11.2, which allows a less severe test in which the heater is cycled on and off on a set schedule that results in lower temperatures in the surrounding combustible framing. However, tests have shown that unvented gas log heaters that are not cycled on and off and are operated with the fireplace chimney damper closed can cause higher temperatures in the surrounding combustible materials than the limits allowed by UL 127.

The latest edition of UL 127 contains provisions for testing factory-built fireplaces for use with unvented gas log heaters that take into account the higher operating temperatures in the firebox. Unvented gas log heaters must not be installed in either existing or new factory-built fireplaces without proof that the fire-

INTERNATIONAL CODE COUNCIL®
Copyright © 2015 ICC. ALL RIGHTS RESERVED. Accessed by David Dammon on Jun 21, 2017 12:30:52 PM pursuant to License Agreement with ICC. No further reproduction or distribution authorized. ANY UNAUTHORIZED REPRODUCTION OR DISTRIBUTION IS A VIOLATION OF THE FEDERAL COPYRIGHT ACT AND THE LICENSE AGREEMENT, AND SUBJECT TO CIVIL AND CRIMINAL PENALTIES THEREUNDER.

place system has been tested as required by the latest edition of UL 127. The fireplace manufacturer must state in the installation instructions whether or not the unit is listed for use with an unvented gas log heater. Traditionally, fireplace manufacturers have referred only to vented gas logs tested to ANSI Z21.60. If the fireplace installation instructions do not state that the fireplace has been tested for use with unvented gas logs, the unvented gas logs must not be installed in that fireplace.

903.4 Gasketed fireplace doors. A gasketed fireplace door shall not be installed on a factory-built fireplace except where the fireplace system has been specifically tested, listed and labeled for such use in accordance with UL 127.

❖ The *International Energy Conservation Code*® (IECC®) has stated in the past that fireplaces must be provided with doors that prevent air from escaping up the fireplace chimney when the fireplace is not in use. The IECC recognizes that factory-built fireplaces must be listed for use with gasketed glass doors. A substantial energy loss is attributed to such air loss. The intent of the energy code was to prevent air loss by using sealed (gasketed) glass doors on the face of the fireplace. The IECC did not intend for glass doors to be installed where such installation violates the listing of a factory-built fireplace. It is not known what effect glass doors would have on masonry fireplaces, but it highly suspected that factory-built fireplaces would be affected by the restriction of cooling and dilution air flow, thus producing abnormally high temperatures in and on the fireplace components. UL 127 tests factory-built fireplaces for this situation. Most factory-built fireplaces are not tested for use with tight-fitting (gasketed) doors, but some have been. Tight-fitting doors are considered to be a potential fire hazard if installed on fireplaces that have not been specifically tested and listed to UL127 and found to be safe for use with such doors. The intent to prevent the constant loss of conditioned air up a chimney can be accomplished with tight-fitting dampers which are likely to be far more effective than glass doors.

SECTION 904
PELLET FUEL-BURNING APPLIANCES

904.1 General. Pellet fuel-burning appliances shall be *listed* and *labeled* in accordance with ASTM E1509 and shall be installed in accordance with the terms of the listing.

❖ Pellet fuel-burning appliances, as defined in Chapter 2, use relatively new technology that allows the use of waste products that have been converted to a usable fuel. Although considered solid fuel-burning appliances, pellet appliances connect to vents instead of chimneys (see commentary, Section 802.2).

SECTION 905
FIREPLACE STOVES AND ROOM HEATERS

905.1 General. Fireplace stoves and solid-fuel-type room heaters shall be *listed* and *labeled* and shall be installed in accordance with the conditions of the listing. Fireplace stoves shall be tested in accordance with UL 737. Solid-fuel-type room heaters shall be tested in accordance with UL 1482. Fireplace inserts intended for installation in fireplaces shall be *listed* and *labeled* in accordance with the requirements of UL 1482 and shall be installed in accordance with the manufacturer's instructions.

❖ This section requires testing of solid-fuel-burning room heaters in accordance with UL 1482, which addresses solid fuel-burning, free-standing fire chamber assemblies that heat space by direct radiation, circulated heated air or a combination of both. Solid-fuel room heaters are chimney connected, and are designed for operation with the fire chamber (firebox) closed.

Commentary Figure 905.1(1) shows a typical room heater. The standard addresses the construction and performance of room heaters from the standpoint of fire and life safety, and includes the performance of electrical components for units equipped with fans, blowers and controls. The standard also has requirements for marking and identifying the units, and requirements for the content of installation and operating instructions. The testing procedures for wood-burning units differ from those for coal-burning units. Therefore, a label (plate) must be attached to the unit that indicates the permitted type of fuel.

All units are installed in a test structure that simulates an actual room installation in accordance with the manufacturer's installation instructions. The units undergo several fire tests intended to produce extreme operating conditions. Temperature-rise measurements are taken at multiple locations throughout the test installation to determine whether the clearances to combustibles are sufficient to prevent the temperature rise of combustibles from exceeding the maximum specified in the standard. Commentary Figure 905.1(2) shows the typical specifications included on appliance labels. In addition to meeting testing requirements, room heaters must be labeled by an approved agency.

Mechanical appliances and equipment must be installed in accordance with the manufacturer's installation instructions. This is important because the manufacturer's installation instructions are used by the testing agency when the test installation is constructed. Therefore, a unit tested in compliance with UL 1482 and installed in accordance with the manufacturer's installation instructions is expected to perform the same as the representative sample unit that was tested.

In addition to being the standard for testing room heaters, UL 1482 sets guidelines for the testing of fireplace inserts. Fireplace inserts are basically wood stoves that fit into a fireplace opening and use the fireplace chimney, converting the fireplace into a

INTERNATIONAL CODE COUNCIL®
Copyright © 2015 ICC. ALL RIGHTS RESERVED. Accessed by David Dammon on Jun 21, 2017 12:30:52 PM pursuant to License Agreement with ICC. No further reproduction or distribution authorized. ANY UNAUTHORIZED REPRODUCTION OR DISTRIBUTION IS A VIOLATION OF THE FEDERAL COPYRIGHT ACT AND THE LICENSE AGREEMENT, AND SUBJECT TO CIVIL AND CRIMINAL PENALTIES THEREUNDER.

room heater (see commentary, Section 801.10). Fireplace inserts must not be installed in a factory-built fireplace unless the fireplace listing specifically allows such an installation (see commentary, Section 903). Fireplace inserts must also be listed and labeled in accordance with the requirements of UL 1482 and installed in accordance with the manufacturer's installation instructions.

UL 127 includes an optional test procedure for fireplace units that can accommodate the installation of unvented room heaters (unvented gas logs). Fireplace units may or may not be tested for use with the chimney damper closed, such as is the case where an unvented room heater is installed in the firebox. Section 903.3 contains text that requires a fireplace in which an unvented gas log is installed to be listed and labeled for that use (see commentary, Section 903.3).

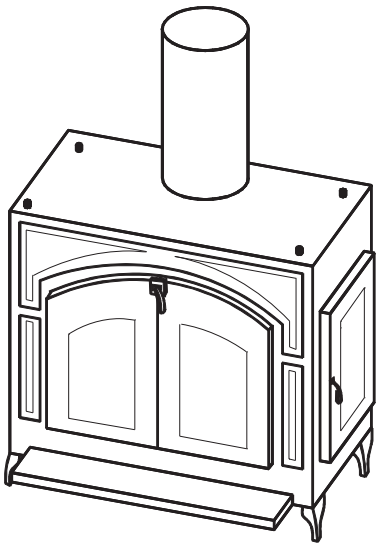

Figure 905.1(1)
TYPICAL ROOM HEATER

905.2 Connection to fireplace. The connection of solid fuel appliances to *chimney* flues serving fireplaces shall comply with Sections 801.7 and 801.10.

❖ Sections 801.7 and 801.10 contain chimney sizing limitations and installation requirements for appliances connected to fireplace chimneys (see commentary, Sections 801.7 and 801.10).

905.3 Hearth extensions. Hearth extensions for fireplace stoves shall be installed in accordance with the listing of the fireplace stove. The hearth extension shall be readily distinguishable from the surrounding floor area. Listed and labeled hearth extensions shall comply with UL 1618.

❖ The listing of fireplace stoves requires a hearth extension to be installed. The hearth extension protects the floor structure in front of the fireplace stove from radiant heat from the fire and from sparks, embers, coals or burning solid fuel that may escape from the firebox. The nature of solid fuel can cause burning material to be expelled from the combustion chamber and large pieces of the fuel can fall from a grate and roll out of the firebox.

Factory-built hearth extensions are available and have to be listed and labeled and installed in accordance with the manufacturer's instructions.

SECTION 906
FACTORY-BUILT BARBECUE APPLIANCES

906.1 General. Factory-built barbecue appliances shall be of an *approved* type and shall be installed in accordance with the manufacturer's instructions, this chapter and Chapters 3, 5, 7 and 8, and the *International Fuel Gas Code*.

❖ This section addresses factory-constructed appliances designed to burn wood or charcoal with or without an auxiliary fuel. Some appliances use solid fuel only and some use a supplemental fuel such as gas to create heat for cooking and/or to start the solid-fuel fire. It is becoming more common to find factory-built solid fuel-fired appliances and equipment in restaurants. Such equipment would require a Type I hood and fire suppression system in accordance with Chapter 5 and could also involve a chimney or an auxiliary fuel supply.

SECTION 907
INCINERATORS AND CREMATORIES

907.1 General. Incinerators and crematories shall be *listed* and *labeled* in accordance with UL 791 and shall be installed in accordance with the manufacturer's instructions.

❖ This section addresses solid fuel-burning appliances and equipment designed to consume waste and organic tissue. Incinerators used today are installed in hospitals, universities and other relatively large institutions that must dispose of medical wastes, toxic and contaminated substances, pathological waste and human and animal tissues. To achieve a more complete incineration and thereby reduce the amount of pollutants released into the atmosphere, multiple-chamber incinerators are used rather than single-chamber incinerators. There are two basic designs of multiple-chamber incinerators: the in-line type and the retort type. The in-line type is characterized by the flow of combustion gases always traveling straight through the incinerator, with 90-degree (1.57 rad) turns only in the vertical direction. The retort-type incinerator is characterized by a design that causes the combustion gases to flow through 90-degree (1.57 rad) turns in both lateral and vertical directions. Modern incinerator installations take advantage of the heat produced by incineration by passing the flue gases through boilers or other heat exchangers for space heating, cooling or processing operations. The reclamation of heat produced by incinerators can substantially reduce the energy costs of the facility served by the incinerator.

INTERNATIONAL CODE COUNCIL®
Copyright © 2015 ICC. ALL RIGHTS RESERVED. Accessed by David Dammon on Jun 21, 2017 12:30:52 PM pursuant to License Agreement with ICC. No further reproduction or distribution authorized. ANY UNAUTHORIZED REPRODUCTION OR DISTRIBUTION IS A VIOLATION OF THE FEDERAL COPYRIGHT ACT AND THE LICENSE AGREEMENT, AND SUBJECT TO CIVIL AND CRIMINAL PENALTIES THEREUNDER.



W/N 04441

WH-

LISTED SOLID FUEL BURNING FIREPLACE STOVE
HOMOLOGUE POELE A COMBUSTIBLE SOLIDES
TESTED TO/TESTE AUX NORMES
UL 1482, UL 737, ULC S627/CSA B366.2

THIS STOVE MEETS UL 737, STANDARD FOR FIREPLACE STOVES, WHEN A FIRESCREEN IS PROVIDED. APPROVED FOR USE IN MOBILE HOMES IN THE U.S. ONLY.

MODEL/MODELE
Encore 2550

CFM Corporation
Mississauga, Ontario

Patents: US : 4646712; 4683868; Canada: 60986, 60987, 1235969; other design and mechanical patents pending.

Install and use only in accordance with manufacturer's installation and operation instructions. Contact local building or fire officials about restrictions and installation inspection in your area. Install only with legs provided in accordance with installation instructions.
Fuel: Use with solid wood fuel only. Do not burn other fuels.
Build fire directly on grate. Keep doors fully closed or fully open while operating.
Chimney: Use a minimum 6"or 8" diameter factory built high temperature (H.T.) chimney which is listed to UL-103-1985 (2100ºF) or 8"X 8" nominal or larger approved masonry chimney with flue liner.
Do not connect this unit to a chimney flue serving another appliance.
Chimney Connector: Use a minimum 6" or 8" diameter 24 gauge chimney connector. Install chimney connector at least 18" from ceiling.
Refer to local building codes and Vermont Castings Owner's Guide for special precautions for passing a chimney or chimney connector through a combustible wall or ceiling.
Floor Protection U.S.: With Vermont Castings Bottom Heat Shield Kit (Part No. 0164), use a non-combustible floor protector such as 1/4"non-asbestos mineral board or equivalent or 24 gauge sheet metal. The floor protector is required under the stove and must extend 16" from the front, 6"from the sides and rear. It must extend under the chimney connector and 2"to either side. The floor protector may be covered with a non-combustible decorative material if desired. Without Vermont Castings Bottom Heat Shield Kit, only installations over a totally non-combustible floor such as unpainted concrete over earth are acceptable.
Floor Protection Canada: Operate only with Vermont Castings Bottom Heat Shield Kit (Part No. 0164) in place. When installed on a combustible floor, a non-combustible floor protector is required under the heater. The floor protector must extend 460mm (18 in.) to the front and 200mm (8 in.) to the sides and rear. Do not obstruct the space under the heater.
Optional Components, U.S: Rear Heat Shield Part No. 0173, Bottom Heat Shield Part No. 0164, Spark Screen Part No. 0127 (only for use with 8"diameter connector and chimney), Flue Collar/ 6"dia. Part No. 130-5042, Mobile Home Kit Part No. 3251.
Optional Components, Canada: Rear Heat Shield No. 0173, Spark Screen Part No. 0127(only for use with 8"dia connector and chimney), Flue Collar/ 6"dia. Part No. 130-5042.
Catalytic Combustor Part No. 160-2505.

Replace glass only with Vermont Castings ceramic glass.
Do not remove or cover this label.
Caution: Burning of metal foils, coal, plastic and garbage, sulphur and diesel oil will make the catalyst in the combustor inactive. The combustor is fragile- handle carefully. The performance or durability of the combustor have not been evaluated as part of the listing.
Veillez a n'installer votre poele et a n'utiliser que conformement aux directives d'installation et de fonctionnement du fabricant.

Installer seulement avec les pattes fournies, en conformite avec les instructions du fabricant.
Combustible: S'emploie du bois seulement. Ne brulez pas d'autres combustibles.
Remplacer les vitres de ceramique du Vermont Castings seulement.
Protege Plancher Canada: Utilise seulement avec le kit du deflecteur de chaleur de bas du Vermont Castings (No. de pièce 0164). Lorsqu'installe sur un plancher combustible, une protection non-combustible est requise sous l'appareil. Cette protection devra couvrir une surface allant a 460mm a l'avant et 200mm a l'arriere et sur les cotes. Ne pas encombre l'espace sous le poele.
Canada- Composantes Optionnelles: Ecran Pare-Chaleur (Arrière) Pièce No. 0173, Pare Etincelles Pièce No. 0127 (pour utilisation, avec conduit d'évacuation et cheminée de 8"diam., seulement), Collier d'Evacuation / 6"diam. Pièce No. 130-5042.
Catalyseur de Combustion No. de pièce 160-2505.
Attention: Le brulage de papier metallique, charbon, soufre de dechets et plastique ou de diesel provoquera la panne du catalyseur dans le convertisseur. Le convertisseur est fragile. Veillez a le traiter avec soin l'homologation n'inclut me l'evaluation du rendement du systeme catalyseur, ni l'estimation de la durabilite.

MINIMUM CLEARANCES TO COMBUSTIBLE CONSTRUCTION
MINIMUM DE DEGAGEMENT JUSQU'A LA CONSTRUCTION COMBUSTIBLE

TOP VIEW
TOP VIEW
MINIMUM FLOOR PROTECTION
HEARTH INSTALLATION

A. _____	31 in.	(790 mm)
B. _____	24 in.	(610 mm)
C. _____	24 in.	(610 mm)
D. _____	33 in.	(810 mm)
E. _____	24 in.	(610 mm)
F. U.S.	6 in.	(150 mm)
F. Canada	8 in	(200mm)
G. U.S.	16 in.	
G. Canada	18 in.	(460 mm)
H. Side Trim*	10 in.	(250 mm)
I. Mantle	39 in.	(990 mm)
J. Top Trim	39 in.	(990 mm)
K. Side Wall	24 in.	(610 mm)

* less than 2" (50 mm) protrusion. For additional types of installations and clearances consult your Owner's Manual. Pour autres modes d'installation et degagements supplementaires, consultez votres manuel du proprietaire.

U.S. Environmental Protection Agency
Certified to comply with July, 1990 particulate emission standards. This wood heater contains a catalytic combustor, which needs periodic inspection and replacement for proper operation. Consult Owner's Manual for further information. It is against the law to operate this wood heater in a manner inconsistent with operating instructions in the Owner's Manual, or if the catalytic element is deactivated or removed.

Mfg. Date Code
Code daté de fabrication

1601256 REV 4

VERMONT CASTINGS 160-1256 REV. 4 4-23-04 Etched black copy and lines. Aluminum background. 15.74" x 3.755" F-162

Figure 905.1(2)
SAMPLE APPLIANCE LABEL
(Courtesy of Vermont Casting, Inc.)

Copyright © 2015 ICC. ALL RIGHTS RESERVED. Accessed by David Dammon on Jun 21, 2017 12:30:52 PM pursuant to License Agreement with ICC. No further reproduction or distribution authorized. ANY UNAUTHORIZED REPRODUCTION OR DISTRIBUTION IS A VIOLATION OF THE FEDERAL COPYRIGHT ACT AND THE LICENSE AGREEMENT, AND SUBJECT TO CIVIL AND CRIMINAL PENALTIES THEREUNDER.

A crematory is a furnace that is used exclusively to reduce human and animal cadavers to ashes. Factory-built incinerators and crematories must conform to the requirements of Chapter 3 for equipment approval and installation. The incinerator or crematory must be tested to the standard that governs its use, and evidence must be submitted indicating that the manufacturer has made provisions for a third-party inspection of the manufacturer's facility to determine that the units being produced are the same as those that were tested.

When tested in the laboratory, the equipment is installed in accordance with the manufacturer's installation instructions. For the equipment to perform as designed and tested, the field installation of the equipment must follow the same instructions. Therefore, the manufacturer's installation instructions become an integral part of the approval process.

SECTION 908
COOLING TOWERS, EVAPORATIVE CONDENSERS AND FLUID COOLERS

908.1 General. A cooling tower used in conjunction with an air-conditioning *appliance* shall be installed in accordance with the manufacturer's instructions. Factory-built cooling towers shall be listed in accordance with UL 1995.

❖ This section addresses outdoor heat exchangers that expose a heat transfer fluid (usually water) directly to the ambient air. Cooling towers are the heat rejection portion of a condenser circuit. They operate by creating a large surface area over which the condenser cooling water flows. Air is passed through the cooling tower, by gravity or fan power, and by heat transfer and some evaporative cooling the condenser water is cooled and recirculated back to the condenser.

Factory-built cooling towers must be listed in accordance with UL 1995.

908.2 Access. Cooling towers, evaporative condensers and fluid coolers shall be provided with ready access.

❖ Typically installed on roof tops and outdoors on grade-level pads, these heat exchangers require routine cleaning and maintenance and therefore must be easily accessed by personnel (see the definition of "Ready access").

908.3 Location. Cooling towers, evaporative condensers and fluid coolers shall be located to prevent the discharge vapor plumes from entering occupied spaces. Plume discharges shall be not less than 5 feet (1524 mm) above or 20 feet (6096 mm) away from any ventilation inlet to a building. Location on the property shall be as required for buildings in accordance with the *International Building Code*.

❖ Liquid-to-air heat exchangers often produce vapors that must be prevented from entering the building through windows, doors and air intake openings. The moisture concentration and possible presence of water treatment chemicals or disease-causing bacteria could create a health hazard for building occupants. The IBC regulates the location of these structures on a lot and the distance of the structures from lot lines and other structures.

908.4 Support and anchorage. Supports for cooling towers, evaporative condensers and fluid coolers shall be designed in accordance with the *International Building Code*. Seismic restraints shall be as required by the *International Building Code*.

❖ The IBC regulates the construction of supporting elements for cooling equipment. These heat exchangers, which can be quite large, are subject to wind and seismic forces and can impose significant dead and dynamic loads on roof structures where so installed.

908.5 Water supply. Cooling towers, evaporative coolers and fluid coolers shall be provided with an approved water supply, sized for peak demand. The quality of water shall be provided in accordance with the equipment manufacturer's recommendations. The piping system and protection of the potable water supply system shall be installed as required by the *International Plumbing Code*.

❖ Liquid-to-air heat exchangers use makeup water to replace evaporation, drift and blow-down losses. The makeup water connection could be a source of contamination to the potable water supply and therefore must be installed in accordance with the *International Plumbing Code*® (IPC®). Water-conditioning chemicals are typically used to control the growth of algae and other organisms that would lessen efficiency and lead to system cleaning and flushing. Also, cooling towers and similar equipment produce an ideal environment for the growth of disease-causing organisms such as Legionella pneumophila (Legionnaires' disease). Because of water conservation efforts, nonpotable water supplies might be used for cooling towers, and the quality of alternate water sources must be controlled to protect the equipment and public health.

908.6 Drainage. Drains, overflows and blowdown provisions shall be indirectly connected to an *approved* disposal location. Discharge of chemical waste shall be *approved* by the appropriate regulatory authority.

❖ Liquid-to-air heat exchangers have drains for excess, waste and flushing water that must discharge to an approved location, such as the sanitary sewer system. Because chemicals can be involved, drainage should not be allowed to discharge to grade or to a storm sewer.

908.7 Refrigerants and hazardous fluids. Heat exchange *equipment* that contains a refrigerant and that is part of a closed refrigeration system shall comply with Chapter 11. Heat exhange *equipment* containing heat transfer fluids which are flammable, combustible or hazardous shall comply with the *International Fire Code*.

❖ This section states that any refrigerant contained in a closed refrigerant system governed by Section 908 must meet the same requirements as refrigerants

INTERNATIONAL CODE COUNCIL®
Copyright © 2015 ICC. ALL RIGHTS RESERVED. Accessed by David Dammon on Jun 21, 2017 12:30:52 PM pursuant to License Agreement with ICC. No further reproduction or distribution authorized. ANY UNAUTHORIZED REPRODUCTION OR DISTRIBUTION IS A VIOLATION OF THE FEDERAL COPYRIGHT ACT AND THE LICENSE AGREEMENT, AND SUBJECT TO CIVIL AND CRIMINAL PENALTIES THEREUNDER.

governed by Chapter 11 of this code. If the heat transfer fluids are flammable, combustible or hazardous, they must meet the requirements of various sections of the *International Fire Code*® (IFC®) for storage, handling and fire prevention.

908.8 Cooling towers. Cooling towers, both open circuit and closed circuit type, and evaporative condensers shall comply with Sections 908.8.1 and 908.8.2.

❖ Cooling towers remove heat from cooling system condensers and process coolers. This is accomplished by flowing water over inclined surfaces and pulling air through the water fall. The water is flowed in a manner to maximize surface area exposed to the air. Some of the water evaporates and it is the latent heat of evaporation that causes the tower water to be reduced in temperature. The cooled water is returned to a condenser or process cooler and the cycle repeats. The water supplied to cooling towers contains dissolved minerals such as calcium, magnesium, iron, silica and manganese. As the water evaporates, the minerals are left behind (distillation) and the dissolved mineral concentration in the remaining water in the tower sump is continuously increasing. Makeup water is added to replace the water lost to evaporation which also contains the same dissolved minerals. The dissolved minerals can cause fouling, scaling and restriction of flow and efficiency losses. The deposited minerals can be quite difficult and expensive to remove. The amount of makeup water is equal to the sum of water lost by evaporation, blowdown (bleed) and drift. The concentration of dissolved solids is controlled by blowdown which is the intentional discharge of tower sump water and introduction of makeup water. Carefully monitoring and controlling the quantity of blowdown provides the most significant opportunity to conserve water in cooling tower operations.

Water can also be lost from sump leakage and failed makeup water controls. Cooling towers can operate year round in many applications and the volume of water used can be enormous. It has been estimated that a typical 500-ton (6,000,000 Btu) cooling tower that operates 24 hours a day, year round, can consume 3.9 million gallons (14,761,500 L) of water per year (approximately 10,000 gallons of makeup water per day). This is why the code intends for cooling towers to be controlled and managed to limit the waste of water. A key parameter used to evaluate cooling tower operation is "cycles of concentration." This is calculated as the ratio of the concentration of dissolved solids (or conductivity) in the blowdown water compared to the makeup water. Because dissolved solids enter the system in the makeup water and exit the system in the blowdown water, the cycles of concentration are also approximately equal to the ratio of volume of makeup water to the volume of blowdown plus drift water. Drift is defined as the small quantity of water that is carried away from the tower as mist or small droplets. Drift loss is small compared to evaporation and blowdown, and is controlled with baffles and drift eliminators.

The code intends to maximize water efficiency by maximizing the cycles of concentration, which will minimize blowdown water quantity and reduce makeup water demand. Dissolved solids increase as cycles of concentration increase, which can cause scale and corrosion problems in the cooling tower system and heat exchangers unless carefully controlled.

908.8.1 Conductivity or flow-based control of cycles of concentration. Cooling towers and evaporative condensers shall include controls that automate system bleed based on conductivity, fraction of metered makeup volume, metered bleed volume, recirculating pump run time or bleed time.

❖ See commentary, Section 908.8.

908.8.2 Drift eliminators. Cooling towers and evaporative condensers shall be equipped with drift eliminators that have a maximum drift rate of 0.005 percent of the circulated water flow rate as established in the equipment's design specifications.

❖ See commentary, Section 908.8.

SECTION 909
VENTED WALL FURNACES

909.1 General. Vented wall furnaces shall be installed in accordance with their listing and the manufacturer's instructions. Oil-fired furnaces shall be tested in accordance with UL 730.

❖ Vented wall furnaces are a type of room heater typically designed to be installed within a 2 x 4 stud cavity in frame construction. Wall furnaces are typically used in cottages, room additions and homes in mild climates. Some units are designed to serve a single room and others are designed as through-the-wall units to serve adjacent rooms. Wall furnaces are ductless; however, some units are listed for use with a surface-mounted supply outlet extension. Wall furnaces can be either gravity or forced-air type.

909.2 Location. Vented wall furnaces shall be located so as not to cause a fire hazard to walls, floors, combustible furnishings or doors. Vented wall furnaces installed between bathrooms and adjoining rooms shall not circulate air from bathrooms to other parts of the building.

❖ Wall furnaces, like all room heaters, can present a fire hazard if improperly located. The heat discharged or directly radiated from such units can ignite nearby wall or floor surfaces, furniture, trim items, window treatments and doors (see commentary, Section 909.3). A through-the-wall unit serving both a bathroom and an adjacent room must not recirculate air between the two spaces (see commentary, Section 303.3).

909.3 Door swing. Vented wall furnaces shall be located so that a door cannot swing within 12 inches (305 mm) of an air

INTERNATIONAL CODE COUNCIL®
Copyright © 2015 ICC. ALL RIGHTS RESERVED. Accessed by David Dammon on Jun 21, 2017 12:30:52 PM pursuant to License Agreement with ICC. No further reproduction or distribution authorized. ANY UNAUTHORIZED REPRODUCTION OR DISTRIBUTION IS A VIOLATION OF THE FEDERAL COPYRIGHT ACT AND THE LICENSE AGREEMENT, AND SUBJECT TO CIVIL AND CRIMINAL PENALTIES THEREUNDER.

inlet or air outlet of such furnace measured at right angles to the opening. Doorstops or door closers shall not be installed to obtain this *clearance*.

❖ A combustible door that swings close to a wall furnace could be a fire hazard if at some position the door would be within 12 inches (305 mm) of an air inlet or outlet. A door could also interfere with airflow through the furnace, thereby causing appliance overheating. Because door closures and door stops are easily defeated, they must not be depended upon to secure the required clearance. If the door swing cannot comply with this section, the door would have to be removed or rehung to change its swing direction.

909.4 Ducts prohibited. Ducts shall not be attached to wall furnaces. Casing extension boots shall not be installed unless *listed* as part of the *appliance*.

❖ Most wall furnaces are not designed to force air through ducts, especially those gravity types that do not use fans. Attachment of ducts would add resistance to the flow of air through the furnace, thereby causing abnormally high temperature rise across the heat exchanger and abnormally high temperatures on furnace surfaces. Some wall furnaces are listed and designed for use with supply duct extensions intended for wall mounting and intended to improve heat distribution. These duct extensions are factory-built and supplied only by the furnace manufacturer.

909.5 Manual shutoff valve. A manual shutoff valve shall be installed ahead of all controls.

❖ The fuel line connection to every appliance must be equipped with an individual shutoff valve to permit maintenance, repair or replacement of the appliance or its components. The shutoff valve must be located in accordance with Section 409 of the IFGC.

909.6 Access. Vented wall furnaces shall be provided with access for cleaning of heating surfaces, removal of burners, replacement of sections, motors, controls, filters and other working parts, and for adjustments and lubrication of parts requiring such attention. Panels, grilles and access doors that must be removed for normal servicing operations shall not be attached to the building construction.

❖ This section contains the same provisions found in Section 306.1 (see commentary, Section 306.1). Access panels and doors must be removable as intended by the manufacturer of the furnace.

SECTION 910
FLOOR FURNACES

910.1 General. Floor furnaces shall be installed in accordance with their listing and the manufacturer's instructions. Oil-fired furnaces shall be tested in accordance with UL 729.

❖ Floor furnaces are vented appliances that are installed in an opening in the floor. These units supply heat to the room by gravity convection and direct radiation and typically serve as the sole source of space heating. Such furnaces are common in cottages, small homes, seasonally occupied structures and rural homes. Because the floor grille can become very hot, extreme care must be exercised to prevent occupants, especially children, from contacting the grille by walking or falling on it. Also, care must be taken to avoid a fire hazard caused by placement of materials or furnishings on or near the furnace floor grille.

910.2 Placement. Floor furnaces shall not be installed in the floor of any aisle or passageway of any auditorium, public hall, place of assembly, or in any egress element from any such room or space.

With the exception of wall register models, a floor furnace shall not be placed closer than 6 inches (152 mm) to the nearest wall, and wall register models shall not be placed closer than 6 inches (152 mm) to a corner.

The furnace shall be placed such that a drapery or similar combustible object will not be nearer than 12 inches (305 mm) to any portion of the register of the furnace. Floor furnaces shall not be installed in concrete floor construction built on grade. The controlling thermostat for a floor furnace shall be located within the same room or space as the floor furnace or shall be located in an adjacent room or space that is permanently open to the room or space containing the floor furnace.

❖ Floor furnaces must not interfere with or impede egress. In an emergency egress situation, a floor furnace could be a tripping hazard and could collapse under the live load of many occupants. As stated in Section 909.2, the furnace location must not create a fire hazard by being too close to wall surfaces, trim items, furnishings and window treatments.

A floor furnace installed in a slab on grade would have to be in a pit, would be subject to flooding and corrosion and would be inaccessible for service and inspection. If the controlling thermostat does not sense the air temperature in the room in which the furnace is installed, dangerous overheating could result. A thermostat isolated from the source of heat it controls would not respond to the condition in the space served by the furnace.

910.3 Bracing. The floor around the furnace shall be braced and headed with a support framework design in accordance with the *International Building Code*.

❖ The framing around the floor opening must be capable of supporting the floor system, the anticipated floor loads and the weight of the furnace. The structural requirements of the IBC must be complied with.

910.4 Clearance. The lowest portion of the floor furnace shall have not less than a 6-inch (152 mm) clearance from the grade level; except where the lower 6-inch (152 mm) portion of the floor furnace is sealed by the manufacturer to prevent entrance of water, the minimum clearance shall be reduced to not less than 2 inches (51 mm). Where these clearances are not present, the ground below and to the sides shall be excavated to form a pit under the furnace so that the required clearance is provided beneath the lowest portion of the furnace. A 12-inch (305 mm) minimum clearance shall be pro-

INTERNATIONAL CODE COUNCIL®
Copyright © 2015 ICC. ALL RIGHTS RESERVED. Accessed by David Dammon on Jun 21, 2017 12:30:52 PM pursuant to License Agreement with ICC. No further reproduction or distribution authorized. ANY UNAUTHORIZED REPRODUCTION OR DISTRIBUTION IS A VIOLATION OF THE FEDERAL COPYRIGHT ACT AND THE LICENSE AGREEMENT, AND SUBJECT TO CIVIL AND CRIMINAL PENALTIES THEREUNDER.

vided on all sides except the control side, which shall have an 18-inch (457 mm) minimum clearance.

❖ This section specifies clearances between the ground and the furnace that apply to crawl space installations. The clearances allow access for service and inspection and help prevent corrosion of the furnace assembly.

SECTION 911
DUCT FURNACES

911.1 General. Duct furnaces shall be installed in accordance with the manufacturer's instructions. Electric duct furnaces shall comply with UL 1996.

❖ Duct furnaces are designed for "in-line" installation in an air duct served by an external blower. Such units are basically a heat exchanger and burner assembly in a cabinet that rely on an independent air handler.

SECTION 912
INFRARED RADIANT HEATERS

912.1 General. Electric infrared radiant heaters shall comply with UL 499.

❖ Infrared heaters function by creating a very hot surface area from which heat energy is directly radiated. Infrared radiant heaters are usually suspended from ceilings or roofs. Such heaters are typically used for "spot" heating in spaces that are otherwise unconditioned or that are not conditioned to human comfort levels. Radiant heaters have the advantage of being able to heat objects and personnel without having to heat the surrounding air. Supports must prevent the heaters from falling, losing the required clearance to combustibles, putting tension or pressure on electrical connections and dislocating so as to redirect the radiant output to where a fire hazard would result.

912.2 Support. Infrared radiant heaters shall be fixed in a position independent of fuel and electric supply lines. Hangers and brackets shall be noncombustible material.

❖ This section addresses radiant heaters including ceramic-element and steel-tube-type designs.

Infrared heaters are produced in both vented and unvented types and function by creating a very hot surface area from which heat energy is directly radiated. Infrared radiant heaters are usually suspended from ceilings or roofs. Such heaters are typically used for "spot" heating in spaces that are otherwise unconditioned or that are not conditioned to human comfort levels. Radiant heaters have the advantage of being able to heat objects and personnel without having to heat the surrounding air. Supports must prevent the heaters from falling, losing the required clearance to combustibles, putting tension or pressure on electrical, fuel and vent connections and dislocating so as to redirect the radiant output to where a fire hazard would result.

912.3 Clearances. Heaters shall be installed with clearances from combustible material in accordance with the manufacturer's installation instructions.

❖ This section is redundant with Section 304.9 and serves to remind the installer and code official of the paramount importance of maintaining the clearance to combustibles for radiant heaters. Direct radiation is a very effective method of transferring heat energy. Improperly located combustible materials can be readily ignited.

SECTION 913
CLOTHES DRYERS

913.1 General. Clothes dryers shall be installed in accordance with the manufacturer's instructions. Electric residential clothes dryers shall be tested in accordance with UL 2158. Electric coin-operated clothes dryers shall be tested in accordance with UL 2158. Electric commercial clothes dryers shall be tested in accordance with UL 1240.

❖ This section addresses clothes dryer appliances, both Types 1 and 2 (see the definition of "Clothes dryer"). Clothes dryers must be exhausted in accordance with the manufacturer's installation instructions. Dryers are tested to the safety standard appropriate for the appliance. The manufacturer's installation instructions include the information needed to duplicate the installation configuration that was tested and found to meet the requirements of the safety standard. The manufacturer's installation instructions are evaluated by the agency responsible for testing, listing and labeling the appliance. Following these instructions will result in safe and satisfactory installation. Residential dryers are required to be tested in accordance with UL 2158.

913.2 Exhaust required. Clothes dryers shall be exhausted in accordance with Section 504.

❖ Clothes dryer exhaust systems must convey moisture directly to the exterior of the building (outdoors). Note that the code does not use the term "dryer vent." Clothes dryers are not "vented" (see IFGC, Section 501.8) as are other appliances, but are exhausted.

Clothes dryer exhaust systems cannot terminate in or discharge to an enclosed space, such as an attic or crawl space, regardless of whether or not the space is ventilated through openings to the outdoors. The high levels of moisture in the exhaust air can cause condensation to form on exposed surfaces or in insulation materials. Water vapor condensation can cause structural damage, deterioration of building materials and mold and fungus growth. Clothes dryer exhausts that discharge to enclosed spaces will also cause an accumulation of highly combustible lint and debris, creating a significant fire hazard. An improperly installed clothes dryer exhaust system cannot only reduce dryer efficiency and increase running time, but it can also cause a significant increase in exhaust temperature, causing the dryer to cycle on its

INTERNATIONAL CODE COUNCIL®
Copyright © 2015 ICC. ALL RIGHTS RESERVED. Accessed by David Dammon on Jun 21, 2017 12:30:52 PM pursuant to License Agreement with ICC. No further reproduction or distribution authorized. ANY UNAUTHORIZED REPRODUCTION OR DISTRIBUTION IS A VIOLATION OF THE FEDERAL COPYRIGHT ACT AND THE LICENSE AGREEMENT, AND SUBJECT TO CIVIL AND CRIMINAL PENALTIES THEREUNDER.

high limit control, which is an unsafe operating condition (see commentary, Section 504).

913.3 Clearances. Clothes dryers shall be installed with *clearance* to combustibles in accordance with the manufacturer's instructions.

❖ This section contains the same provisions found in Sections 304.1 and 304.9 (see commentary, Sections 304.1 and 304.9).

SECTION 914
SAUNA HEATERS

914.1 Location and protection. Sauna heaters shall be located so as to minimize the possibility of accidental contact by a person in the room.

❖ Sauna heaters produce very high heat. The choice of locations must consider the fact that a heat-producing appliance will be exposed within a small room with unclothed occupants.

914.1.1 Guards. Sauna heaters shall be protected from accidental contact by an *approved* guard or barrier of material having a low coefficient of thermal conductivity. The guard shall not substantially affect the transfer of heat from the heater to the room.

❖ Guards are required to protect the occupants from being burned. The guards must be constructed of a material that is a poor conductor of heat, such as wood, so that the guard itself will not present a burn hazard.

914.2 Installation. Sauna heaters shall be *listed* and *labeled* in accordance with UL 875 and shall be installed in accordance with their listing and the manufacturer's instructions.

❖ This section references UL 875 as the standard for listing and labeling of sauna heaters. The scope of UL 875 covers electric dry-bath heating equipment and other equipment rated at 600 volts or less, intended to be installed in accordance with NFPA 70. The relative humidity in the heated environment is in the range of 10 to 25 percent, and the purpose of the heated environment is to promote perspiration in a short time by means of a relatively warm and dry atmosphere. Sauna heaters must have an automatic temperature-regulating control that is either integral with the heater or wall-mounted along with an integral manual-reset limit control and a timer. Because the listing and labeling requires that the sauna heater be installed in the same conditions under which the heater was tested, the manufacturer's installation instructions must be followed when the heater is installed at the job site.

914.3 Access. Panels, grilles and access doors that are required to be removed for normal servicing operations shall not be attached to the building.

❖ Access panels, covers and doors must not be made unusable by trim, woodwork or room enclosures that prevent or interfere with access (see commentary, Sections 306.1 and 909.6).

914.4 Heat and time controls. Sauna heaters shall be equipped with a thermostat that will limit room temperature to 194°F (90°C). If the thermostat is not an integral part of the sauna heater, the heat-sensing element shall be located within 6 inches (152 mm) of the ceiling. If the heat-sensing element is a capillary tube and bulb, the assembly shall be attached to the wall or other support, and shall be protected against physical damage.

❖ A thermostat is required to limit the temperature in the sauna for fire safety. The control must sense the warmest air near the ceiling and must be protected from physical damage.

914.4.1 Timers. A timer, if provided to control main burner operation, shall have a maximum operating time of 1 hour. The control for the timer shall be located outside the sauna room.

❖ To protect both the occupants and the building, timers must limit the heater operating time to 1 hour. Resetting the timer would require the occupant to exit the sauna, thus lessening the chances of overexposure.

914.5 Sauna room. A ventilation opening into the sauna room shall be provided. The opening shall be not less than 4 inches by 8 inches (102 mm by 203 mm) located near the top of the door into the sauna room.

❖ A ventilation opening is required to allow the escape of heat and to provide ventilation for the occupants.

914.5.1 Warning notice. The following permanent notice, constructed of *approved* material, shall be mechanically attached to the sauna room on the outside:

> WARNING: DO NOT EXCEED 30 MINUTES IN SAUNA. EXCESSIVE EXPOSURE CAN BE HARMFUL TO HEALTH. ANY PERSON WITH POOR HEALTH SHOULD CONSULT A PHYSICIAN BEFORE USING SAUNA.

The words shall contrast with the background and the wording shall be in letters not less than $^1/_4$-inch (6.4 mm) high.

Exception: This section shall not apply to one- and two-family dwellings.

❖ A warning sign is required to alert users of the potential hazard associated with prolonged exposure to high temperature levels.

SECTION 915
ENGINE AND GAS TURBINE-POWERED EQUIPMENT AND APPLIANCES

915.1 General. The installation of liquid-fueled stationary internal *combustion* engines and gas turbines, including exhaust, fuel storage and piping, shall meet the requirements of NFPA 37. Stationary engine generator assemblies shall meet the requirements of UL 2200.

❖ This section addresses liquid-fueled internal combustion engines and turbines. Engine-driven electrical generators for private use are becoming more popu-

INTERNATIONAL CODE COUNCIL®
Copyright © 2015 ICC. ALL RIGHTS RESERVED. Accessed by David Dammon on Jun 21, 2017 12:30:52 PM pursuant to License Agreement with ICC. No further reproduction or distribution authorized. ANY UNAUTHORIZED REPRODUCTION OR DISTRIBUTION IS A VIOLATION OF THE FEDERAL COPYRIGHT ACT AND THE LICENSE AGREEMENT, AND SUBJECT TO CIVIL AND CRIMINAL PENALTIES THEREUNDER.

lar as are engine-driven cooling appliances and heat pumps. Such equipment is used to power fire pumps, generators, water pumps, refrigeration machines and other stationary equipment. NFPA 37 addresses the fire safety for this kind of equipment including requirements for enclosures, controls, fuel supplies, exhaust systems, cooling systems and combustion air. Engine generator units must be listed and labeled to UL 2200.

915.2 Powered equipment and appliances. Permanently installed *equipment* and appliances powered by internal *combustion* engines and turbines shall be installed in accordance with the manufacturer's instructions and NFPA 37.

❖ This section contains the same provisions found in Section 915.1 (see commentary, Section 915.1).

SECTION 916
POOL AND SPA HEATERS

916.1 General. Pool and spa heaters shall be installed in accordance with the manufacturer's instructions. Oil-fired pool and spa heaters shall be tested in accordance with UL 726. Electric pool and spa heaters shall be tested in accordance with UL 1261.

❖ This section addresses specialized types of water heaters used with swimming pools, recreational or therapeutic spas and hot tubs. Pool and spa heaters are specialized water heaters similar in design to hot water boilers. Typically, these heaters are of the water-tube type and are designed for either indoor or outdoor installation. This section contains test standards to be used as acceptance criteria for oil-fired and electric pool and spa heaters. The IFGC references ANSI Z21.56 as the test standard for gas-fired heaters.

SECTION 917
COOKING APPLIANCES

917.1 Cooking appliances. Cooking appliances that are designed for permanent installation, including ranges, ovens, stoves, broilers, grills, fryers, griddles and barbecues, shall be *listed*, *labeled* and installed in accordance with the manufacturer's instructions. Commercial electric cooking appliances shall be *listed* and *labeled* in accordance with UL 197. Household electric ranges shall be *listed* and *labeled* in accordance with UL 858. Microwave cooking appliances shall be *listed* and *labeled* in accordance with UL 923. Oil-burning stoves shall be *listed* and *labeled* in accordance with UL 896. Solid-fuel-fired ovens shall be *listed* and *labeled* in accordance with UL 2162.

❖ The code intends to regulate the design, construction and installation of cooking appliances that are designed for permanent installation in all occupancies. The code does not regulate portable appliances such as electrically heated countertop appliances. Appliances that are not readily movable to another location because of an electric-power or liquid-fuel supply connection would be considered as permanently installed even if on casters. Line equipment under a Type I hood, for example, is typically on casters and connected with cord and plug supply lines to allow movement for routine cleaning. Such equipment would be considered permanently installed.

917.2 Domestic appliances. Cooking appliances installed within *dwelling units* and within areas where domestic cooking operations occur shall be *listed* and *labeled* as household-type appliances for domestic use.

❖ Cooking appliances used in dwelling units or in areas where domestic cooking operations occur require a greater degree of user protection and must be listed and labeled as household-type appliances for domestic use. To satisfy consumer demand for commercial appliances in the home, some manufacturers are producing listed household-type appliances that have the appearance and some features of commercial cooking appliances.

Commercial cooking appliances are tested and labeled to different standards than those listed for domestic use. Commercial cooking appliances generally are not insulated to the same level as domestic cooking appliances, have higher surface operating temperatures than domestic appliances and require a much greater clearance to combustible material. The safety measures inherent to household cooking appliances, such as child-safe push-to-turn knobs and insulated oven doors, are not usually installed in commercial cooking appliances.

Commercial cooking appliances also have a greater ventilation air requirement for safe operation than household-type cooking appliances. For this reason, installation of commercial-type cooking appliances in dwellings is prohibited. Note that the code would not prohibit an appliance that is dual listed for both commercial and domestic use, as this would meet the intent of the code.

SECTION 918
FORCED-AIR WARM-AIR FURNACES

918.1 Forced-air furnaces. Oil-fired furnaces shall be tested in accordance with UL 727. Electric furnaces shall be tested in accordance with UL 1995. Solid fuel furnaces shall be tested in accordance with UL 391. Forced-air furnaces shall be installed in accordance with the listings and the manufacturer's instructions.

❖ Forced-air warm-air furnaces are considered to be central heating units. They consist of burners or heating elements, heat exchangers, blowers and associated controls. Forced-air furnaces are made in many different configurations, including upflow, counterflow (down flow), horizontal flow and indoor and out-

INTERNATIONAL CODE COUNCIL®
Copyright © 2015 ICC. ALL RIGHTS RESERVED. Accessed by David Dammon on Jun 21, 2017 12:30:52 PM pursuant to License Agreement with ICC. No further reproduction or distribution authorized. ANY UNAUTHORIZED REPRODUCTION OR DISTRIBUTION IS A VIOLATION OF THE FEDERAL COPYRIGHT ACT AND THE LICENSE AGREEMENT, AND SUBJECT TO CIVIL AND CRIMINAL PENALTIES THEREUNDER.

door units. This section defines test standards to be used as acceptance criteria for oil-fired, solid-fuel and electric furnaces. The IFGC references ANSI Z21.47 and UL 795 as the test standards for gas-fired forced-air warm-air furnaces.

918.2 Heat pumps. Electric heat pumps shall be tested in accordance with UL 1995.

❖ Heat pumps are central heating units that use the condenser of a refrigeration circuit as the heat source, often "backed up" by auxiliary electric resistance heating elements. Heat pumps require greater airflow through the unit because of the significant difference in intensity of the heat source compared to fuel-fired and electrical-resistance heat sources.

918.3 Dampers. Volume dampers shall not be placed in the air inlet to a furnace in a manner that will reduce the required air to the furnace.

❖ Dampers are usually avoided in return air ducts and openings because of the risk of starving the furnace for return air. If dampers are installed, the total unrestricted return air duct or opening area must be as required by the code with all of the dampers in the fully closed position. Dampered openings cannot count toward the required duct area.

918.4 Circulating air ducts for forced-air warm-air furnaces. Circulating air for fuel-burning, forced-air-type, warm-air furnaces shall be conducted into the blower housing from outside the furnace enclosure by continuous air-tight ducts.

❖ This section parallels the manufacturer's installation instructions, which require return air ducts to extend from the furnace cabinet to the exterior of any closet, alcove or furnace room that encloses a furnace. If return air was drawn from within a furnace enclosure, negative pressures could be produced in that room. Negative pressure could cause combustion byproducts to be drawn from the combustion chamber or venting system into the circulating airflow.

Negative pressure differentials between the interior and exterior of a furnace enclosure could also cause hazardous burner and venting system malfunctions. This is a common scenario where designers or installers put a forced-air furnace in a closet and, to save installations costs, do not install ductwork for return air to the furnace. Instead, the return air enters the closet through a grille or filter grille and is then pulled into the open side or bottom of the furnace. Strong negative pressure is developed in the closet and combustion products could be pulled from water heaters and furnaces, even the direct-vent types, which are not immune to negative pressures.

918.5 Outdoor and return air openings. Outdoor intake openings shall be located in accordance with Section 401.4. Return air openings shall be located in accordance with Section 601.5.

❖ See commentary, Sections 401.4 and 601.5.

918.6 Outdoor opening protection. Outdoor air intake openings shall be protected in accordance with Section 401.5.

❖ Outside air intake openings must be protected as prescribed in Section 401.5 (see commentary, Section 401.5).

SECTION 919
CONVERSION BURNERS

919.1 Conversion burners. The installation of conversion burners shall conform to ANSI Z21.8.

❖ The referenced standard is an installation standard that, in addition to the manufacturer's instructions, governs the installation of conversion burners. Conversion burners are an assembly of components including burners, gas controls, blowers, safety devices and supporting structures. The units are designed to convert an existing appliance from another fuel, commonly from fuel oil or coal, to gas (see commentary, Section 301.12). Conversion of an existing appliance to a different fuel can involve much more than installation of a conversion burner, such as the addition of safety controls and limits; combustion air and secondary air provisions; fuel gas piping installation; chimney or vent alterations; and other modifications to the existing appliance and its control system.

SECTION 920
UNIT HEATERS

920.1 General. Unit heaters shall be installed in accordance with the listing and the manufacturer's instructions. Oil-fired unit heaters shall be tested in accordance with UL 731.

❖ This section addresses self-contained space-heating appliances, including forced-air types. Unit heaters are ductless warm-air space heaters that are self-contained and usually suspended from a ceiling or roof structure. Garages, workshops, warehouses, factories, gymnasiums, mercantile spaces and similar large open buildings are the most common locations for unit heaters.

920.2 Support. Suspended-type unit heaters shall be supported by elements that are designed and constructed to accommodate the weight and dynamic loads. Hangers and brackets shall be of noncombustible material. Suspended-type oil-fired unit heaters shall be installed in accordance with NFPA 31.

❖ As with all suspended fuel-fired appliances, a support failure could result in a fire, explosion or injury to building occupants. The supports themselves must be properly designed. Equally important are the structural members to which the supports are attached, such as rafters, beams, joists and purlins. Brackets, pipes, rods, angle irons, structural members and fasteners must be designed for the dead and dynamic loads of the suspended appliance.

INTERNATIONAL CODE COUNCIL®
Copyright © 2015 ICC. ALL RIGHTS RESERVED. Accessed by David Dammon on Jun 21, 2017 12:30:52 PM pursuant to License Agreement with ICC. No further reproduction or distribution authorized. ANY UNAUTHORIZED REPRODUCTION OR DISTRIBUTION IS A VIOLATION OF THE FEDERAL COPYRIGHT ACT AND THE LICENSE AGREEMENT, AND SUBJECT TO CIVIL AND CRIMINAL PENALTIES THEREUNDER.

920.3 Ductwork. A unit heater shall not be attached to a warm-air duct system unless *listed* for such installation.

❖ Unit heaters are usually not designed to move air through ductwork. Unless specifically listed for the application, the fans or blowers on unit heaters are designed only for moving air across the heat exchanger without the added friction of ductwork. The addition of ductwork could create a hazard by restricting airflow through the heater.

SECTION 921
VENTED ROOM HEATERS

921.1 General. Vented room heaters shall be *listed* and *labeled* and shall be installed in accordance with the conditions of the listing and the manufacturer's instructions.

❖ This section addresses vented space/room heaters, including direct-vent and vent- or chimney-connected appliances. As required by the appliance standard, such appliances are equipped with safety controls that will prevent fuel flow to the burners in the event of ignition system failure.

SECTION 922
KEROSENE AND OIL-FIRED STOVES

922.1 General. Kerosene and oil-fired stoves shall be listed and labeled and shall be installed in accordance with the conditions of the listing and the manufacturer's instructions. Kerosene and oil-fired stoves shall comply with NFPA 31 and UL 896.

❖ This section addresses permanently installed kerosene- and oil-fired appliances such as furnaces and room heaters. NFPA 31 contains installation requirements for such appliances. These appliances must be tested in accordance with UL 896.

SECTION 923
SMALL CERAMIC KILNS

923.1 General. Kilns shall be listed and labeled unless otherwise approved in accordance with Section 105.2. Electric kilns shall comply with UL 499. The approval of unlisted appliances in accordance with Section 105.2 shall be based on approved engineering evaluation.

❖ Ceramic kilns used for hobby, commercial and noncommercial purposes operate at high temperatures and, therefore, should be regulated by the code as are other heat-producing appliances. Electric kilns must comply with UL 499. Gas-fired kilns must be listed to some standard or testing agency criteria unless approved under Section 105.2. The code does not specify a standard for gas-fired kilns. Where approved under Section 105.2, the approval must be based on an analysis prepared by an engineering professional who has evaluated the kiln for safety.

923.1.1 Installation. Kilns shall be installed in accordance with the manufacturer's instructions and the provisions of this code.

❖ See commentary, Section 304.1.

SECTION 924
STATIONARY FUEL CELL POWER SYSTEMS

924.1 General. Stationary fuel cell power systems having a power output not exceeding 10 MW shall be tested in accordance with ANSI/CSA America FC 1 and shall be installed in accordance with the manufacturer's instructions, NFPA 853, the *International Building Code* and the *International Fire Code*.

❖ The private generation of electricity for commercial and residential use is an emerging technology that is expected to gain widespread acceptance as future technological improvements result in lower costs. Fuel cells have been included in this code to provide guidance to the building community for those future installations.

The code requires fuel cell power plants with an output of 10 MW or less to be listed in accordance with ANSI/CSA America FC1 and requires installation of the units in accordance with the manufacturer's instructions and NFPA 853. NFPA 853 contains guidance on location of the power plants, fuel system supplies, ventilation and exhaust for the space containing the unit and fire protection requirements. Although fuel cell technology has been available since the 1800s, its first practical use was by NASA to generate electricity and water for the Gemini and Apollo spacecraft and today's space shuttle. Because the installation of fuel cells in privately owned buildings is relatively new, the following discussion of the fuel cell process is included to provide a basic understanding of the technology.

A fuel cell is an electrochemical device that converts the chemical energy of a hydrocarbon fuel (hydrogen, natural gas, coal-bed methane, methanol, gasoline, etc.) and an oxidant (air or oxygen) into useable electricity. The fuel cell consists of a fuel electrode (anode) and an oxidant electrode (cathode) separated by an ion-conducting membrane (electrolyte). When a hydrocarbon fuel is introduced into the fuel cell, the catalyst surface of the membrane converts the hydrogen gas molecules into hydrogen ions and electrons. The hydrogen ions pass through the membrane to react with oxygen and electrons to form water as a reaction byproduct. The electrons, which cannot pass through the membrane, must travel around it through an external circuit, thereby creating direct current (dc) electricity [see Commentary Figure 924.1(1)].

When fueled by pure hydrogen, the only byproducts of the fuel cell process are heat and water. Low levels of CO_2 are produced when other fuels are used. Unlike traditional fossil-fuel electric generating stations that burn the fuels, the electrochemical fuel

INTERNATIONAL CODE COUNCIL®
Copyright © 2015 ICC. ALL RIGHTS RESERVED. Accessed by David Dammon on Jun 21, 2017 12:30:52 PM pursuant to License Agreement with ICC. No further reproduction or distribution authorized. ANY UNAUTHORIZED REPRODUCTION OR DISTRIBUTION IS A VIOLATION OF THE FEDERAL COPYRIGHT ACT AND THE LICENSE AGREEMENT, AND SUBJECT TO CIVIL AND CRIMINAL PENALTIES THEREUNDER.

cell process produces no particulate matter, nitrogen oxides or sulfur oxides.

When the waste heat is captured for use in heating water or a cogeneration process, fuel cell efficiency can reach 80 percent.

A typical fuel cell consists of three sections: a fuel processor, a fuel stack (power generator) and a power conditioner [see Commentary Figure 924.1(2)].

The fuel processor section has two components: the fuel reformer, which processes a hydrocarbon fuel, such as methane, into a hydrogen-rich formate gas, and a carbon monoxide cleanup system to reduce CO concentrations to acceptable levels.

The fuel cell stack consists of many individual fuel cells that operate as previously described to generate electricity and usable heat. The power output of the unit increases based on the number and arrangement of individual cells stacked in series and/or in parallel in the unit. There are several types of fuel cell technologies, including phosphoric acid (PA), molten carbonate (MC), solid oxide (SO) and proton exchange membrane (PEM), which are named based on the type of electrolyte employed in the membrane section of the cell.

The power conditioner (inverter) section converts the direct current (dc) produced in the fuel cell stack into alternating current (ac). Batteries are used to smooth out power surge demands, such as heating, ventilating and air-conditioning (HVAC) startups, and to provide additional power when demand exceeds the peak output of the cell stack.

Although currently available fuel cell units are not cost competitive with established electrical suppliers, the initial and operating costs are expected to decrease as more manufacturers enter the market. Where expansion, in remote locations or in areas where reduced emission of pollutants is critical, fuel cells could be seriously considered as an energy source. Fuel cells can also be attractive where the quality and dependability of commercial power is a concern.

SECTION 925
MASONRY HEATERS

925.1 General. Masonry heaters shall be constructed in accordance with the *International Building Code*.

❖ Masonry heaters are appliances designed to absorb and store heat from a relatively small fire and to radiate that heat into the building interior. They are thermally more efficient than traditional fireplaces because of their design. Interior passageways through the heater allow hot exhaust gases from the fire to transfer heat into the masonry, which then radiates into the building. Section 2112 of the IBC requires listing and installation of masonry heaters in accordance with ASTM E1602. Guidance for seismic reinforcing and clearance to combustibles is also provided.

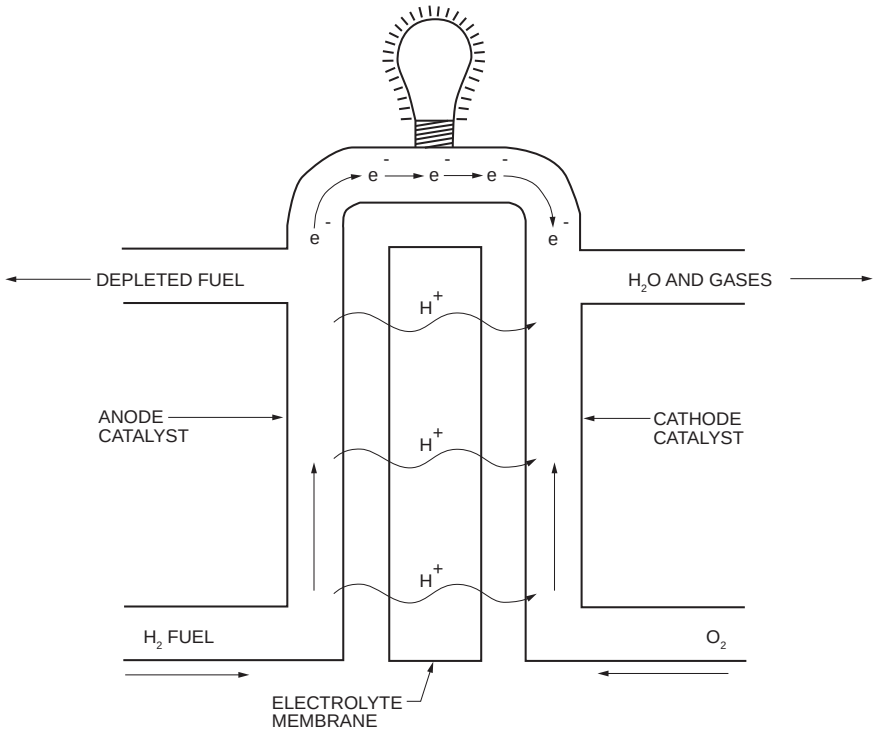

Figure 924.1(1)
TYPICAL FUEL CELL COMPONENTS

INTERNATIONAL CODE COUNCIL®
Copyright © 2015 ICC. ALL RIGHTS RESERVED. Accessed by David Dammon on Jun 21, 2017 12:30:52 PM pursuant to License Agreement with ICC. No further reproduction or distribution authorized. ANY UNAUTHORIZED REPRODUCTION OR DISTRIBUTION IS A VIOLATION OF THE FEDERAL COPYRIGHT ACT AND THE LICENSE AGREEMENT, AND SUBJECT TO CIVIL AND CRIMINAL PENALTIES THEREUNDER.

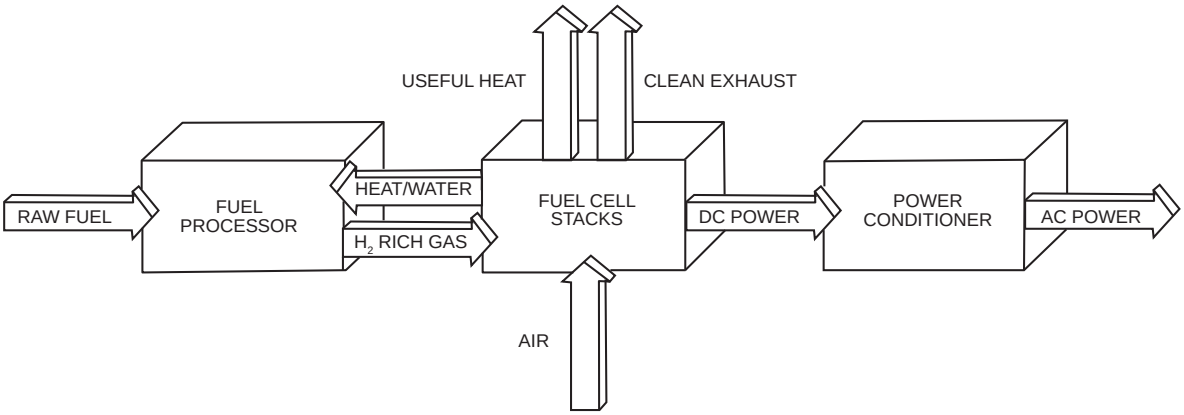

Figure 924.1(2)
GENERIC FUEL CELL SYSTEM

SECTION 926
GASEOUS HYDROGEN SYSTEMS

926.1 Installation. The installation of gaseous hydrogen systems shall be in accordance with the applicable requirements of this code, the *International Fire Code*, the *International Fuel Gas Code* and the *International Building Code*.

❖ Systems that use or produce hydrogen gas can create potentially explosive conditions where installation and ventilation instructions are not adhered to strictly. Chapter 7 of the IFGC is the primary source of regulations related to gaseous hydrogen systems, but the IBC, the IFC and Section 304.4 of this code also provide code requirements. Chapters 4 and 5 of the IBC provide requirements for hydrogen cutoff rooms and Chapter 23 of the IFC provides requirements for hydrogen fueling stations.

SECTION 927
RADIANT HEATING SYSTEMS

927.1 General. Electric radiant heating systems shall be installed in accordance with the manufacturer's instructions and shall be listed for the application.

❖ Radiant heating systems contain electrical elements that create heat when an electric current passes through them. Radiant heating systems consist of heating cables and radiant heating panels that have been evaluated for contact with specific surfaces. If the system is not installed properly, electricity and the heat emitted could create hazards for the occupants of the dwelling. The manufacturer's installation instructions will have details on the different type of surfaces and the temperature limits for each surface. These requirements are in addition to the requirements found in Sections 927.2 through 927.5.

927.2 Clearances. Clearances for radiant heating panels or elements to any wiring, outlet boxes and junction boxes used for installing electrical devices or mounting luminaires shall be in accordance with the *International Building Code* and NFPA 70.

❖ This section references certain minimum clearances so that the heating elements are not damaged or the electrical circuit continuity is not interrupted, thus rendering portions or all of the radiant heating systems inoperable. This section is also intended to protect the electrical systems, equipment, and components from damage from the heating elements.

927.3 Installation on wood or steel framing. Radiant panels installed on wood or steel framing shall conform to the following requirements:

1. Heating panels shall be installed parallel to framing members and secured to the surface of framing members or shall be mounted between framing members.
2. Mechanical fasteners shall penetrate only the unheated portions provided for this purpose. Panels shall not be fastened at any point closer than $^1/_4$ inch (6.4 mm) to an element. Other methods of attachment of the panels shall be in accordance with the panel installation instructions.
3. Unless listed and labeled for field cutting, heating panels shall be installed as complete units.

❖ Radiant heat panels mounted on wood framing may act as an ignition source if improperly installed. Because these systems generate heat, they must be mounted to wood framing by fastening through the unheated portions of each panel. Metallic fasteners, such as nails or screws, are excellent conductors of heat as well as electricity; therefore, they must not be driven through any portion of a panel closer than $^1/_4$ inch (6.4 mm) to a heating element. The manufacturer's installation instructions may contain additional methods that can be used to attach the panels.

INTERNATIONAL CODE COUNCIL®
Copyright © 2015 ICC. ALL RIGHTS RESERVED. Accessed by David Dammon on Jun 21, 2017 12:30:52 PM pursuant to License Agreement with ICC. No further reproduction or distribution authorized. ANY UNAUTHORIZED REPRODUCTION OR DISTRIBUTION IS A VIOLATION OF THE FEDERAL COPYRIGHT ACT AND THE LICENSE AGREEMENT, AND SUBJECT TO CIVIL AND CRIMINAL PENALTIES THEREUNDER.

927.4 Installation in concrete or masonry. Radiant heating systems installed in concrete or masonry shall conform to the following requirements:

1. Radiant heating systems shall be identified as being suitable for the installation, and shall be secured in place as specified in the manufacturer's instructions.
2. Radiant heating panels and radiant heating panel sets shall not be installed where they bridge expansion joints unless they are protected from expansion and contraction.

❖ Fire hazards created by electric radiant heating systems installed in masonry construction are minimal, but these installations require special mounting hardware and must be installed in accordance with the manufacturer's installation instructions. Radiant panels must be protected from expansion and contraction when mounted over masonry expansion joints to avoid structural damage.

927.5 Finish surfaces. Finish materials installed over radiant heating panels and systems shall be installed in accordance with the manufacturer's instructions. Surfaces shall be secured so that fasteners do not pierce the radiant heating elements.

❖ Finish materials must be carefully installed over electric radiant heating systems so that nails or screws do not penetrate the heating elements. Fasteners that are accidentally driven through these elements could cause short circuits, ground faults, destroy the elements or cause the surfaces to overheat and start a fire. The finish surfaces must be installed in accordance with the instructions supplied by the manufacturer of the radiant heating system.

SECTION 928
EVAPORATIVE COOLING EQUIPMENT

928.1 General. Evaporative cooling equipment shall:

1. Be installed in accordance with the manufacturer's instructions.
2. Be installed on level platforms in accordance with Section 304.10.
3. Have openings in exterior walls or roofs flashed in accordance with the *International Building Code*.
4. Be provided with an approved water supply, sized for peak demand. The quality of water shall be provided in accordance with the equipment manufacturer's recommendations. The piping system and protection of the potable water supply system shall be installed as required by the *International Plumbing Code*.
5. Have air intake opening locations in accordance with Section 401.4.

❖ Evaporative coolers are commonly known as "swamp coolers." This type of air cooling equipment is used in climates where the relative humidity is low. Outdoor air is drawn in through water-wetted pads and discharged inside the building. The evaporation of water into the dry air reduces the temperature of the air. Where the outdoor air is very dry (very low relative humidity), the relative humidity of the air discharged to the building is well within a pleasant range. However, where the outdoor air has moderate relative humidity, the indoor air relative humidity can become high enough such that the air feels muggy or "swamp like," hence the term "swamp cooler."

Evaporative coolers must be installed in accordance with the manufacturer's instructions and must be installed on a level platform. The discharge duct going into the building must be properly flashed so that rainwater does not enter the building. Evaporative coolers require a potable water connection and as such, the connection must be protected by a backflow protection device. The location of air intake openings of evaporative coolers must consider the restrictions listed in Section 401.4. The water supply to the cooling equipment must be of the necessary quality to prevent damage to the equipment and to avoid health hazards associated with water-borne contaminants and pathogens.

INTERNATIONAL CODE COUNCIL®
Copyright © 2015 ICC. ALL RIGHTS RESERVED. Accessed by David Dammon on Jun 21, 2017 12:30:52 PM pursuant to License Agreement with ICC. No further reproduction or distribution authorized. ANY UNAUTHORIZED REPRODUCTION OR DISTRIBUTION IS A VIOLATION OF THE FEDERAL COPYRIGHT ACT AND THE LICENSE AGREEMENT, AND SUBJECT TO CIVIL AND CRIMINAL PENALTIES THEREUNDER.

Chapter 10:
Boilers, Water Heaters and Pressure Vessels

General Comments

Chapter 10 applies to all types of boilers and pressure vessels, regardless of size, heat input, operating pressure or operating temperature [note that gas-fired boilers and pressure vessels are regulated by the *International Fuel Gas Code*® (IFGC®) as stated in Section 101.2]. When a water heater is considered a boiler and vice versa, it has been confusing. Traditionally, the definitions of "Boiler" and "Water heater" have been linked to specific operating parameters, including maximum temperature, pressure, heat input and storage volume. The thresholds for determining boiler categories or for deciding whether the equipment is a boiler or a water heater have been determined by the appliance/equipment standards. The application of a water boiler and the end use of the hot water produced create additional categories. For example, a hot water boiler recirculates hot water used for space heating or processing (closed system), and a hot water supply boiler heats water to be used without recirculation, thus requiring complete makeup (open system).

In the context of this code, the definitions are simple, and make the distinction between boilers and water heaters clear. A water heater is any appliance that heats potable water and then supplies it to the plumbing hot water distribution system. Note, however, that some water heaters may also be used for space heating, depending on the appliance listing and label. A boiler either heats water or generates steam for space heating, processing or developing power, and is generally a closed system. A hot water supply boiler, however, serves an open system in which the hot water is not returned to the boiler. In all cases, the appliance/equipment label always describes the unit accurately, and references the applicable standard, in which the title also indicates the appliance/equipment category.

Because pressure vessels are closed containers designed to contain liquids, gases or both under pressure, the addition of heat to, or improper installation of, these pieces of mechanical equipment can cause expansion beyond the pressure limitation of the vessel. Certain safety features are therefore required to reduce the potential for explosion hazards.

Within the context of this code, pressure vessels are containers having internal pressures greater than atmospheric pressure and include tanks, accumulators and vessels containing liquids, gases or both. Although boilers and water heaters are considered pressure vessels, this section is not intended to be redundant. It is intended to place in the scope of this code pressure equipment such as: air compressor tanks, expansion tanks, hydro-pneumatic tanks, accumulators, steam generators and containment vessels associated with mechanical systems. Again, the code intends to avert the loss of human life and damage to property associated with the potential explosion of such vessels.

Purpose

This chapter presents regulations for the proper installation of boilers, water heaters and pressure vessels to protect life and property from the hazards associated with those appliances and vessels.

SECTION 1001
GENERAL

1001.1 Scope. This chapter shall govern the installation, *alteration* and repair of boilers, water heaters and pressure vessels.

Exceptions:

1. Pressure vessels used for unheated water supply.
2. Portable unfired pressure vessels and Interstate Commerce Commission containers.
3. Containers for bulk oxygen and medical gas.
4. Unfired pressure vessels having a volume of 5 cubic feet (0.14 m^3) or less operating at pressures not exceeding 250 pounds per square inch (psi) (1724 kPa) and located within occupancies of Groups B, F, H, M, R, S and U.
5. Pressure vessels used in refrigeration systems that are regulated by Chapter 11 of this code.
6. Pressure tanks used in conjunction with coaxial cables, telephone cables, power cables and other similar humidity control systems.
7. Any boiler or pressure vessel subject to inspection by federal or state inspectors.

❖ Chapter 10 contains code text that is specific to boilers and water heaters. All other related sections, such as those found in Chapters 3, 7, 8, 12 and 13 must also be applied. The provisions of this chapter are applicable to new installations, replacements and

INTERNATIONAL CODE COUNCIL®
Copyright © 2015 ICC. ALL RIGHTS RESERVED. Accessed by David Dammon on Jun 21, 2017 12:30:52 PM pursuant to License Agreement with ICC. No further reproduction or distribution authorized. ANY UNAUTHORIZED REPRODUCTION OR DISTRIBUTION IS A VIOLATION OF THE FEDERAL COPYRIGHT ACT AND THE LICENSE AGREEMENT, AND SUBJECT TO CIVIL AND CRIMINAL PENALTIES THEREUNDER.

all repair and alteration work involving any of the components regulated by the code. Throughout the code, the common intent is for all repairs and alterations to be performed in the same manner as the code prescribes for new installations (see commentary, Section 102.4). For example, if repair work involves the replacement of a safety device, such as a pressure relief valve, the replacement device must comply with the requirements of this chapter.

The exceptions recognize a variety of situations in which containers, pressure tanks, boilers and pressure vessels are regulated by a federal, state or utility-run agency. Furthermore, the exceptions address circumstances in which the equipment or appliance is either unfired, unheated or otherwise not subject to explosion. Therefore, regulation of these items in the code would be considered as unnecessary for equipment or appliances that pose little to no risk to human life or property.

SECTION 1002
WATER HEATERS

1002.1 General. Potable water heaters and hot water storage tanks shall be listed and labeled and installed in accordance with the manufacturer's instructions, the *International Plumbing Code* and this code. All water heaters shall be capable of being removed without first removing a permanent portion of the building structure. The potable water connections and relief valves for all water heaters shall conform to the requirements of the *International Plumbing Code*. Domestic electric water heaters shall comply with UL 174 or UL 1453. Commercial electric water heaters shall comply with UL 1453. Oil-fired water heaters shall comply with UL 732. Solid-fuel-fired water heaters shall comply with UL 2523. Thermal solar water heaters shall comply with Chapter 14 and UL 174 or UL 1453.

❖ This is the only section in Chapter 10 specifically addressing water heaters and hot water storage tanks. In the context of this section, hot water storage tanks are used in conjunction with circulating-type water heaters or other exterior heat sources.

Because all water heaters have a far shorter working life than the building in which they are located, they will have to be replaced one or more times during the lifetime of the building. This future need has often been overlooked, and water heaters have been installed in locations that would require the dismantling or destruction of a permanent portion of the structure for replacement. For this reason, any room, space or alcove in which a water heater is to be installed must have an entry or doorway through which the water heater will pass. Additionally, other equipment or appliances installed in the same space as the water heater must be arranged to allow removal of the water heater without removal of other equipment or appliances.

This section recognizes that water heaters and hot water storage tanks must be considered as both mechanical appliances (equipment) and plumbing appliances and, therefore, must comply with both this code and the *International Plumbing Code*® (IPC®).

When a water heater is tested to obtain a listing and label, the approved agency installs the water heater in accordance with the manufacturer's installation instructions. The water heater is then tested under these conditions; thus, the installation instructions become an integral part of the listing and labeling process. Manufacturer's installation instructions are thoroughly evaluated by the listing and labeling agency to establish that a safe installation is prescribed. The listing and labeling agency can require the manufacturer to alter, delete or add information in the installation instructions as necessary to achieve compliance with the applicable standards and code requirements.

The manufacturer's installation instructions must be available to the code official because they are an enforceable extension of the code and are necessary for determining that the water heater has been properly installed. Simply put, the listing and labeling process indicates that the water heater and its installation instructions are in compliance with applicable standards. Therefore, an installation in accordance with the manufacturer's installation instructions is required, except where the code requirements are more stringent. The inspector must carefully and completely read and comprehend the manufacturer's instructions to properly perform an installation inspection.

In some cases, the code will specifically address an installation requirement that is also addressed in the manufacturer's installation instructions. The code requirement may be the same or may exceed the requirement in the manufacturer's installation instructions. The manufacturer's installation instructions could contain requirements that exceed those in the code. In all such cases, the more restrictive requirements must apply (see commentary, Section 304.2).

Even if an installation appears to be in compliance with the manufacturer's instructions, the installation cannot be completed or approved until all associated components, connections and systems that serve the water heater are also in compliance with the applicable code provisions.

A water heater installation is complex in that it has a fuel or power supply; a chimney or vent connection, if fuel fired; a combustion air supply, if fuel fired; connections to the plumbing potable water distribution system; and controls and devices to prevent a multitude of potential hazards from conditions such as excessively high temperatures, pressures and ignition failure. Applicable sections are found in this code, the IPC and the IFGC.

It is not uncommon for jurisdictions to issue both plumbing and mechanical permits for water heater installations, or to require that the installer be licensed in both the plumbing and mechanical trades when performing installations.

INTERNATIONAL CODE COUNCIL®
Copyright © 2015 ICC. ALL RIGHTS RESERVED. Accessed by David Dammon on Jun 21, 2017 12:30:52 PM pursuant to License Agreement with ICC. No further reproduction or distribution authorized. ANY UNAUTHORIZED REPRODUCTION OR DISTRIBUTION IS A VIOLATION OF THE FEDERAL COPYRIGHT ACT AND THE LICENSE AGREEMENT, AND SUBJECT TO CIVIL AND CRIMINAL PENALTIES THEREUNDER.

1002.2 Water heaters utilized for space heating. Water heaters utilized both to supply potable hot water and provide hot water for space-heating applications shall be *listed* and *labeled* for such applications by the manufacturer and shall be installed in accordance with the manufacturer's instructions and the *International Plumbing Code*.

❖ Water heaters serving the dual purpose of supplying potable hot water and serving as a heat source for a hot water space-heating system must be listed and labeled for that dual application. This section does not address water heaters used solely for space-heating applications, but rather addresses water heaters that serve a secondary purpose of space heating. Water heater labels indicate whether or not the appliance is suitable for space heating.

Chapter 5 of the IPC contains additional requirements for the proper installation of this kind of water heater.

1002.2.1 Sizing. Water heaters utilized for both potable water heating and space-heating applications shall be sized to prevent the space-heating load from diminishing the required potable water-heating capacity.

❖ In the United States, the average person uses 20 gallons (75.7 L) of hot water per day. Thus, the ability of a hot water supply system to meet this demand without necessitating dangerously high water temperatures is essential to our lifestyle and the interior environments in which we live and work. In designing a potable water heating system used also for space-heating purposes, the registered design professional must recognize that space comfort conditions should not be achieved at the expense of potable hot water capacity.

A typical installation of a water heater used for space heating might be an underfloor radiant-heating system, a fan/coil unit or a baseboard convector system. The water heater must be sized or the system functions prioritized to prevent the space-heating load from compromising the potable water-heating capacity of the heater. The first priority is the potable water supply. Also, where the design water temperature is inadequate to supply sufficient hot water for domestic purposes and heating, separate heating systems or tempering equipment must be installed.

However, the code does not regulate the calculations or methods necessary for sizing such equipment or appliances. Although methods for sizing water heaters vary, the specific requirements generally differ in total volume, demand flow rate, duration of peak load period and temperature. Water heaters and systems should be selected based on these requirements and the anticipated space-heating loads. Whichever method is chosen to size these types of systems, the system must supply adequate potable hot water.

1002.2.2 Temperature limitation. Where a combination potable water-heating and space-heating system requires water for space heating at temperatures higher than 140ºF (60ºC), a temperature-actuated mixing valve that conforms to ASSE 1017 shall be provided to temper the water supplied to the potable hot water distribution system to a temperature of 140ºF (60ºC) or less.

❖ Chapter 5 of the IPC regulates the outlet water temperature from a water heater that supplies both potable hot water and hot water for space heating. Scalding accidents can easily occur when the potable hot water exceeds a temperature of 140°F (60°C). A temperature-actuated mixing valve is required to limit the temperature of hot water to be used for bathing and other domestic purposes to 140°F (60°C) or less when the water heater is used for both potable hot water and hot water for space heating.

Regardless of the water supply demand downstream from the valve or supply pressure fluctuations upstream from the valve, the user will be provided some protection from scalding injury because the temperature of the water supplied will not exceed 140°F (60°C). Sections 424.3, 424.4 and 424.5 of the IPC requires further reduction of water temperature for bathtubs and showers to 120°F (49°C).

1002.3 Supplemental water-heating devices. Potable water-heating devices that utilize refrigerant-to-water heat exchangers shall be *approved* and installed in accordance with the *International Plumbing Code* and the manufacturer's instructions.

❖ Waste heat from refrigeration systems can be used to heat potable water and can result in substantial energy savings over time. This section allows the use of supplemental systems if the equipment is approved and installed in accordance with the manufacturer's installation instructions and the requirements of the IPC. A serious concern for these systems is the possibility of contamination of the potable water.

SECTION 1003
PRESSURE VESSELS

1003.1 General. All pressure vessels, unless otherwise approved, shall be constructed and certified in accordance with the ASME *Boiler and Pressure Vessel Code*, and shall be installed in accordance with the manufacturer's instructions and nationally recognized standards. Directly fired pressure vessels shall meet the requirements of Section 1004.

❖ Regulatory requirements for the approval and installation of pressure vessels are the same as for the approval of all other mechanical equipment and appliances, and are therefore subject to the provisions of Chapter 3 and this section. All pressure vessels must be designed and constructed in accordance with the ASME *Boiler and Pressure Vessel Code* (BPVC) (see commentary, Sections 301.7 and 304.1). The code official could approve unfired vessels that are not constructed and certified in accordance with ASME BPVC. Section 1004.1 addresses pressure vessels that are boilers (i.e., directly fired).

INTERNATIONAL CODE COUNCIL®
Copyright © 2015 ICC. ALL RIGHTS RESERVED. Accessed by David Dammon on Jun 21, 2017 12:30:52 PM pursuant to License Agreement with ICC. No further reproduction or distribution authorized. ANY UNAUTHORIZED REPRODUCTION OR DISTRIBUTION IS A VIOLATION OF THE FEDERAL COPYRIGHT ACT AND THE LICENSE AGREEMENT, AND SUBJECT TO CIVIL AND CRIMINAL PENALTIES THEREUNDER.

1003.2 Piping. All piping materials, fittings, joints, connections and devices associated with systems utilized in conjunction with pressure vessels shall be designed for the specific application and shall be *approved*.

❖ This section addresses the requirements for the types of piping materials, joints, fittings, connections and devices associated with pressure vessels and their ancillary systems.

Compatibility between the pressure vessel system equipment and the medium (gas, liquid or both) contained within the system is essential because the medium under containment or the processes involved can be corrosive. Additionally, the piping, joints, fittings, connections and devices must be capable of withstanding the full range of operating pressures, temperatures and vibrations commonly associated with the pressure vessel and its system(s), bearing in mind that operating conditions range from the normal (intended) to the abnormal (unintended). Improperly rated system components could cause catastrophic failure of the system.

Pipe joints and connections represent a potential weak link in the piping of a system under high internal pressure. For this reason, the piping materials, joints, fittings, connections and devices associated with pressure vessels must be of an approved type suitable for the system's characteristics.

1003.3 Welding. Welding on pressure vessels shall be performed by an R-Stamp holder in accordance with the *National Board Inspection Code, Part 3* or in accordance with an *approved* standard.

❖ The applicable sections of ASME B31 and the ASME *Boiler and Pressure Vessel Code* specify proper welding methods. ASME B31 requires that all welders and welding procedure specifications be qualified. Separate welding procedure specifications are needed for different welding methods and materials. Qualifying tests and the variables requiring separate procedure specifications are set forth in Section IX of the ASME *Boiler and Pressure Vessel Code*. The manufacturer, fabricator or contractor is responsible for the welding procedure and the welders. ASME B31 requires visual examination of welds and outlines limitations of acceptability.

The American Society of Mechanical Engineers (ASME) has established a series of symbols for the marking of boilers, pressure vessels and certain appurtenances that are constructed and inspected in accordance with the ASME *Boiler and Pressure Vessel Code*. Welding procedures, welders and all types of manual and machine arc and gas welding operations must comply with the rules of Section IX of the ASME *Boiler and Pressure Vessel Code* if they are to be used in the fabrication of boilers and pressure vessels in compliance with that code. For more information on welding, refer to AWS D1.1. The National Board R-Stamp program is the nationally recognized standard for weld repairs and alterations to boilers and pressure vessels.

SECTION 1004
BOILERS

1004.1 Standards. Boilers shall be designed, constructed and certified in accordance with the ASME *Boiler and Pressure Vessel Code*, Section I or IV. Controls and safety devices for boilers with fuel input ratings of 12,500,000 Btu/hr (3,662,500 W) or less shall meet the requirements of ASME CSD-1. Controls and safety devices for boilers with inputs greater than 12,500,000 Btu/hr (3,662,500 W) shall meet the requirements of NFPA 85. Packaged oil-fired boilers shall be listed and labeled in accordance with UL 726. Packaged electric boilers shall be listed and labeled in accordance with UL 834. Solid-fuel-fired boilers shall be listed and labeled in accordance with UL 2523.

❖ The history of boilers shows that they are potentially dangerous if not properly designed and constructed.

Along with the code, several industry standards are referenced for the design and construction of boilers. Equipment manufacturers produce boilers in accordance with the referenced standards (see Commentary Figure 1004.1). Only the design and construction of boilers are regulated by these references. ASME CSD-1 is not a boiler construction standard, rather it specifies the safety controls that must be installed on boilers.

1004.2 Installation. In addition to the requirements of this code, the installation of boilers shall conform to the manufacturer's instructions. Operating instructions of a permanent type shall be attached to the boiler. Boilers shall have all controls set, adjusted and tested by the installer. The manufacturer's rating data and the nameplate shall be attached to the boiler.

❖ Section 1004.2 governs the installation and commissioning of boilers and their control systems. The mechanical equipment requirements for approval, labeling, installation, maintenance, repair and alteration are regulated by Chapters 1 and 3. Applicable installation requirements are also located in Chapters 7, 8, 12 and 13.

Complete operating instructions must be permanently affixed to the boiler upon completion of installation by the contractor. Boiler systems can be complex and generally require coordination among several pieces of equipment. The proper operating procedures, set points, etc., must be specified and included in these instructions. This is usually done in the control system design documentation, including such things as diagrams, system schematics and control sequence descriptions.

Typically an operating and maintenance (O&M) manual is given to the building owner/operator upon completion of the project. Along with operating and control procedures, the O&M manual will clearly identify routine maintenance and calibration information. It is also typical for operation sequences and instructions to be placed under glass in a conspicuous place in the boiler room for use by operating and service personnel. Furthermore, the installing contractor must commission the boiler upon installation by cali-

INTERNATIONAL CODE COUNCIL®
Copyright © 2015 ICC. ALL RIGHTS RESERVED. Accessed by David Dammon on Jun 21, 2017 12:30:52 PM pursuant to License Agreement with ICC. No further reproduction or distribution authorized. ANY UNAUTHORIZED REPRODUCTION OR DISTRIBUTION IS A VIOLATION OF THE FEDERAL COPYRIGHT ACT AND THE LICENSE AGREEMENT, AND SUBJECT TO CIVIL AND CRIMINAL PENALTIES THEREUNDER.

brating, setting, adjusting and testing all operating and control functions (see commentary, Section 1004.7). The intent is to give the owner/operator all of the information necessary to properly operate the boiler and its associated controls and equipment.

1004.3 Working clearance. Clearances shall be maintained around boilers, generators, heaters, tanks and related *equipment* and appliances so as to permit inspection, servicing, repair, replacement and visibility of all gauges. When boilers are installed or replaced, clearance shall be provided to allow access for inspection, maintenance and repair. Passageways around all sides of boilers shall have an unobstructed width of not less than 18 inches (457 mm), unless otherwise *approved*.

❖ Because boilers, related appliances and mechanical equipment require inspection, observation, routine maintenance, repairs and possible replacement, working clearance is required around the equipment and appliances. Access recommendations or requirements are usually stated in the manufacturer's installation instructions. As a result, the provisions stated here are intended to supplement the manufacturer's installation instructions and are in addition to the requirements of the manufacturer. The manufacturer's installation instructions could contain requirements that exceed those in the code. Where differences or conflicts occur, the more restrictive requirements apply.

Addressed specifically is access to specific equipment and appliances, such as boilers, generators, heaters and tanks and specific components such as gauges. The intent is to provide access to all components that require observation, inspection, adjustment, servicing, repair and replacement. Access is also necessary to conduct operating procedures such as startup or shutdown.

The code defines "Access" as being the ability to reach an item with or without removal of a panel, door or similar obstruction. An appliance or piece of equipment is not accessible if any portion of the structure's permanent finish materials such as drywall, plaster, paneling, built-in furniture or cabinets or any other similar permanently affixed building component must be removed.

WEIL-McLAIN
MODEL LGB SERIES 2 BOILER

TO DETERMINE BOILER SIZE, COUNT THE NUMBER OF SECTIONS OR MEASURE THE JACKET LENGTH. CHECK BOX NEXT TO BOILER SIZE INSTALLED.

MODEL NUMBER	NUMBER OF SECTIONS	JACKET LENGTH INCHES	MIN. RELIEF VALVE CAP. LBS/HR OR MBH	INPUT BTU/HR	MINIMUM INPUT BTU/HR	CSA GROSS OUTPUT BTU/HR	NET I=B=R OUTPUT		
							Steam Sq. Ft.	Steam MBH	Water MBH
☐ LGB-4	4	21	325	400,000	---	324,000	1013	243	282
☐ LGB-5	5	26	422	520,000	---	421,200	1317	316	366
☐ LGB-6	6	31	527	650,000	325,000	526,500	1646	395	458
☐ LGB-7	7	36	632	780,000	390,000	631,800	1975	474	549
☐ LGB-8	8	41	738	910,000	455,000	737,100	2304	553	641
☐ LGB-9	9	46	843	1,040,000	520,000	842,400	2633	632	733
☐ LGB-10	10	51	948	1,170,000	585,000	947,700	2965	711	824
☐ LGB-11	11	56	1053	1,300,000	650,000	1,053,000	3292	790	916
☐ LGB-12	12	61	1159	1,430,000	715,000	1,158,300	3621	869	1007
☐ LGB-13	13	66	1264	1,560,000	780,000	1,263,600	3954	949	1099
☐ LGB-14	14	71	1369	1,690,000	845,000	1,368,900	4313	1035	1190
☐ LGB-15	15	76	1475	1,820,000	910,000	1,474,200	4679	1123	1282
☐ LGB-16	16	81	1580	1,950,000	975,000	1,579,500	5046	1211	1373
☐ LGB-17	17	86	1685	2,080,000	1,040,000	1,684,800	5408	1298	1465
☐ LGB-18	18	91	1791	2,210,000	1,105,000	1,790,100	5775	1386	1557
☐ LGB-19	19	96	1896	2,340,000	1,170,000	1,895,400	6125	1470	1648
☐ LGB-20	20	101	2001	2,470,000	1,235,000	2,000,700	6471	1553	1740
☐ LGB-21	21	106	2106	2,600,000	1,300,000	2,106,000	6813	1635	1831
☐ LGB-22	22	111	2212	2,730,000	1,365,000	2,211,300	7155	1717	1923
☐ LGB-23	23	116	2317	2,860,000	1,430,000	2,316,600	7496	1799	2014

CERTIFIED BY
WEIL-McLAIN
523 S New Street
Eden, North Carolina
27288-3623

MAWP, WATER 50 PSI
MAWP, STEAM 15 PSI
MAX. WATER TEMP. 250°F

Electrical Input Less Than
12 Amperes, 120 Volts, & 60 Hertz.
Canadian Registration No. H7268.51234679T
MEA Number: 333-85-E
Design Certified Under ANSI Z21.13a 2005• CSA 4.9a 2005
Low Pressure Boiler

IMPORTANT
Installation not complete unless gas information label attached here.
Labels are attached to gas train in gas control carton.

- For installation on noncombustible flooring.
- Provide service clearances and minimum 24" between jacket and any combustible wall(s) and ceiling. Install in space large in comparison to size of boiler.
- Vent Category I.

550-223-880 (0606)

Figure 1004.1
STEAM AND HOT WATER BOILER LABEL
(Courtesy of Weil-McLain)

INTERNATIONAL CODE COUNCIL®
Copyright © 2015 ICC. ALL RIGHTS RESERVED. Accessed by David Dammon on Jun 21, 2017 12:30:52 PM pursuant to License Agreement with ICC. No further reproduction or distribution authorized. ANY UNAUTHORIZED REPRODUCTION OR DISTRIBUTION IS A VIOLATION OF THE FEDERAL COPYRIGHT ACT AND THE LICENSE AGREEMENT, AND SUBJECT TO CIVIL AND CRIMINAL PENALTIES THEREUNDER.

1004.3.1 Top clearance. Clearances from the tops of boilers to the ceiling or other overhead obstruction shall be in accordance with Table 1004.3.1.

❖ Boilers are manufactured with manholes, handholes, washouts or other openings for examination, cleaning, maintenance and repair. Top clearances are required because the shell top is typically where access is provided if the head or shell is more than 40 inches (1016 mm) in diameter. Where such openings are not needed or used, such as when the boiler is too small to make entrance practicable, manholes are, of course, omitted. For extremely large boilers, ancillary equipment in the form of a block and tackle, hoist or crane may be integral to facilitate maintenance, adjustment, servicing, repair or replacement processes further justifying the code's provisions for top clearance. Table 1004.3.1 summarizes the top clearance requirements.

The location of manholes, handholes and washout plug openings shall comply with the ASME *Boiler and Pressure Vessel Code*.

TABLE 1004.3.1
BOILER TOP CLEARANCES

BOILER TYPE	MINIMUM CLEARANCES FROM TOP OF BOILER TO CEILING OR OTHER OVERHEAD OBSTRUCTION (feet)
All boilers with manholes on top of the boiler except where a greater clearance is required in this table.	3
All boilers without manholes on top of the boiler except high-pressure steam boilers and where a greater clearance is required in this table.	2
High-pressure steam boilers with steam generating capacity not exceeding 5,000 pounds per hour.	3
High-pressure steam boilers with steam generating capacity exceeding 5,000 pounds per hour.	7
High-pressure steam boilers having heating surface not exceeding 1,000 square feet.	3
High-pressure steam boilers having heating surface in excess of 1,000 square feet.	7
High-pressure steam boilers with input not exceeding 5,000,000 Btu/h.	3
High-pressure steam boilers with input in excess of 5,000,000 Btu/h.	7
Steam-heating boilers and hot water-heating boilers with input exceeding 5,000,000 Btu/h.	3
Steam-heating boilers exceeding 5,000 pounds of steam per hour.	3
Steam-heating boilers and hot water-heating boilers having heating surface exceeding 1,000 square feet.	3

For SI: 1 foot = 304.8 mm, 1 square foot = 0.0929 m^2, 1 pound per hour = 0.4536 kg/h, 1 Btu/hr = 0.293 W.

1004.4 Mounting. *Equipment* shall be set or mounted on a level base capable of supporting and distributing the weight contained thereon. Boilers, tanks and *equipment* shall be secured in accordance with the manufacturer's installation instructions.

❖ The provisions of Section 1004.4 are intended to control the design and construction of the structural elements that support and distribute the weight and vibratory energy of boilers, their related appliances and mechanical equipment. Because boilers and other pressure vessels are usually quite heavy, the support structure must be strong enough to carry all superimposed loads. These structural elements must be designed to comply with the *International Building Code*® (IBC®).

Typically, boilers will not be anchored to the structure because of their weight. The manufacturer's installation instructions will dictate whether or not the appliance or equipment must be secured to the structure. Equipment, such as boilers, chillers, pumps, blowers, cooling towers, ducts, piping and rigid electrical conduits that are rigidly bolted to a structure, transmits 100 percent of its vibratory energy. The introduction of properly selected vibration isolators will reduce this transmitted energy to a level that is no longer annoying to the occupants, or structurally destructive or detrimental to connected systems. As with the anchoring requirements, the manufacturer will mandate whether or not vibration isolation is required. Because loads caused by vibration are not easily or exactly determined, the services of a registered design professional may be required to design job-specific vibration isolation.

1004.5 Floors. Boilers shall be mounted on floors of noncombustible construction, unless *listed* for mounting on combustible flooring.

❖ As part of the labeling requirement, the manufacturer's installation instructions will specify the type of flooring on which the boiler may be installed. Some types of boilers must be installed on special subbases designed to protect combustible floors and provide clearance from heat-radiating components. Depending on the design, some types of boilers must be installed on a noncombustible floor to eliminate a fire hazard caused by the heat radiated from the unit. The manufacturer's installation instructions will specify the minimum distance that a noncombustible floor must extend beyond the boiler housing, combustion chamber access, access openings or combustion air inlets. The risk of fire is greater at these locations because of heat radiation and the potential for flame roll-out, sparks, embers or burning debris. Unless expressly listed otherwise in the manufacturer's installation instructions, all boilers must be mounted on floors of noncombustible construction.

1004.6 Boiler rooms and enclosures. Boiler rooms and enclosures and access thereto shall comply with the *International Building Code* and Chapter 3 of this code. Boiler

INTERNATIONAL CODE COUNCIL®
Copyright © 2015 ICC. ALL RIGHTS RESERVED. Accessed by David Dammon on Jun 21, 2017 12:30:52 PM pursuant to License Agreement with ICC. No further reproduction or distribution authorized. ANY UNAUTHORIZED REPRODUCTION OR DISTRIBUTION IS A VIOLATION OF THE FEDERAL COPYRIGHT ACT AND THE LICENSE AGREEMENT, AND SUBJECT TO CIVIL AND CRIMINAL PENALTIES THEREUNDER.

rooms shall be equipped with a floor drain or other *approved* means for disposing of liquid waste.

❖ This section addresses the enclosures that house or contain boilers and their related mechanical equipment.

A "Boiler room" is defined as a room primarily used for the installation of a boiler. Although the code defines this term, it is not the intent to require installation of boilers in rooms used primarily for that purpose. A room housing a boiler does not necessarily constitute a boiler room. See the commentary on boiler rooms in Chapter 2.

When a boiler is installed in a room that is used primarily for housing the boiler, the resulting boiler room might have to be separated or protected in accordance with the IBC. See the IBC for specific details on boiler room enclosures and fire suppression systems.

Either a fire-resistance-rated enclosure or fire suppression could be required because a boiler installed in an enclosed space is considered to be a greater hazard than if the appliance were out in the open and not enclosed. This is based on experience that such rooms are often used for unapproved storage and a fire hazard is created where combustible materials are stored near the fuel-fired appliances. It is not uncommon to find highly combustible materials such as paper, cardboard, cleaning chemicals and similar materials placed directly against appliances, vent or chimney connectors, draft hoods and other components having a required minimum clearance to combustibles.

Furthermore, the boiler room must have a floor drain or other means to dispose of waste water. The floor drain requirement is intended for floor systems, such as concrete, that can be made to slope to the drain. Floor drains are typically installed as an emergency fixture, preventing flooding of a room or space. For boiler rooms in particular, a floor drain conveniently permits the disposal of standing water or the liquid waste that can be expected from the operation and maintenance of boilers (blow-downs, skimmers and relief valves). Uncontained and idle liquids on the boiler room floor may represent a hazard or cause damage to the building's finish or structure. Any other means for disposing of liquid wastes from boiler rooms would have to be approved as an alternative in accordance with Section 105.2. Material standards and trap and strainer requirements, along with sizing provisions for floor drains, are in the IPC.

1004.7 Operating adjustments and instructions. Hot water and steam boilers shall have all operating and safety controls set and operationally tested by the installing contractor. A complete control diagram and boiler operating instructions shall be furnished by the installer for each installation.

❖ As part of the final approval process, this section requires careful calibration and testing of the operating and safety control systems for hot water and steam boilers by the installing contractor. Startup can be the most critical period in the life of the boiler. The manufacturer's instructions must be consulted and the contents thoroughly understood by all parties involved during initial startup and eventual operation of the boiler (see commentary, Section 1004.2). It is critical that the operating and safety controls be tested operationally to verify the proper functioning of the control system. Owners and operating and maintenance personnel should be present during these procedures. Boiler operation instructions and control system design documentation, including such things as diagrams, system schematics and control sequence descriptions, must be furnished by the installing contractor for use by operating and maintenance personnel. Typically, an O&M manual is given to the building owner/operator upon completion of the project. Along with operating and control procedures, the O&M manual will clearly identify routine maintenance and calibration procedures. It is also typical for operation sequences and instructions to be placed under glass in a conspicuous place in the boiler room for use by operating and service personnel. The intent is to give the owner/operator all of the information necessary to properly operate the boiler and its associated controls and equipment.

SECTION 1005
BOILER CONNECTIONS

1005.1 Valves. Every boiler or modular boiler shall have a shutoff valve in the supply and return piping. For multiple boiler or multiple modular boiler installations, each boiler or modular boiler shall have individual shutoff valves in the supply and return piping.

Exception: Shutoff valves are not required in a system having a single low-pressure steam boiler.

❖ Shutoff valves are required to facilitate maintenance and repairs by isolating a boiler from the system that it serves. Without isolation valves, the entire system of piping and components would have to be taken out of service, drained and relieved of pressure before a boiler or water-side/steam-side component could be removed for servicing, repair or replacement. Where systems have multiple boilers, isolation valves permit removal of one or more boilers from service without affecting the remaining units, thus preserving partial system operation [see Commentary Figure 1005.1(1)]. A modular boiler unit refers to a field-assembled boiler composed of multiple interdependent modules. Modular units are designed to permit close matching of boiler capacity to building loads and to allow for future expansion of capacity by the addition of modules to a boiler "package." Each independent boiler or modular boiler, whether single or in groups, must be valved individually [see Commentary Figure 1005.1(2)].

The exception states that shutoff valves are not required for systems with a single low-pressure steam boiler. Shutoff valves would not be of value for

INTERNATIONAL CODE COUNCIL®
Copyright © 2015 ICC. ALL RIGHTS RESERVED. Accessed by David Dammon on Jun 21, 2017 12:30:52 PM pursuant to License Agreement with ICC. No further reproduction or distribution authorized. ANY UNAUTHORIZED REPRODUCTION OR DISTRIBUTION IS A VIOLATION OF THE FEDERAL COPYRIGHT ACT AND THE LICENSE AGREEMENT, AND SUBJECT TO CIVIL AND CRIMINAL PENALTIES THEREUNDER.

a single low-pressure steam boiler installation because of a negligible amount of heat transfer medium that needs to be relieved from the system. Also, maintaining a partial capacity system operation is impossible with only a single unit.

1005.2 Potable water supply. The water supply to all boilers shall be connected in accordance with the *International Plumbing Code*.

❖ The fill and makeup water supply to both steam and hot water boilers is generally taken directly from the potable water supply of the building. Water supply connections to boilers are referred to as "makeup water supplies," and are installed to replace, either manually or automatically, boiler water that is lost from boiler blowdown, relief/safety valve discharge, evaporation, control flushing, air purging or leakage. This arrangement causes the potable water supply to be highly susceptible to contamination by backflow. Where any direct connection is made between two pressurized systems, the direction of flow through that connection or interface is dependent on the pressure differential between the systems. If the boiler pressure is higher than the potable water supply pressure, which it often is, boiler water will flow into the potable water distribution system. Boiler water is not potable and it often contains conditioning and cleaning chemicals; therefore, any backflow into the

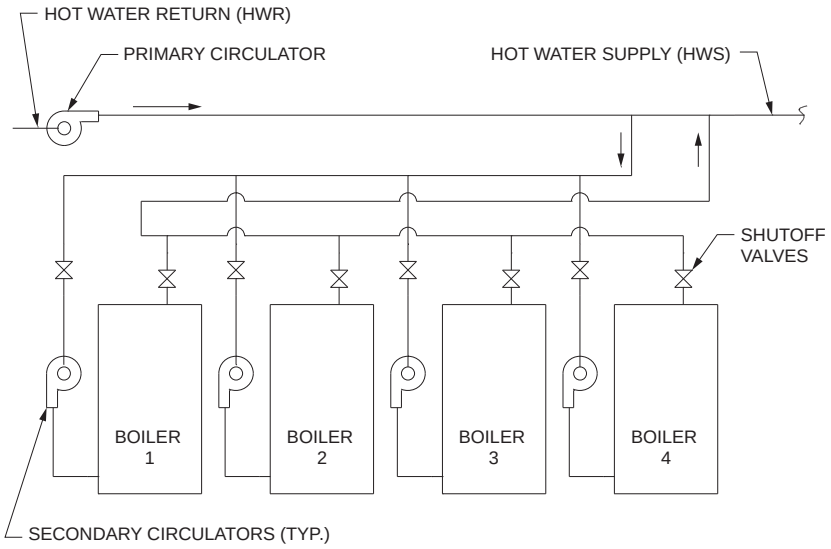

Figure 1005.1(1)
MULTIPLE INDEPENDENT HOT WATER BOILER INSTALLATION (STAGED OPERATION)

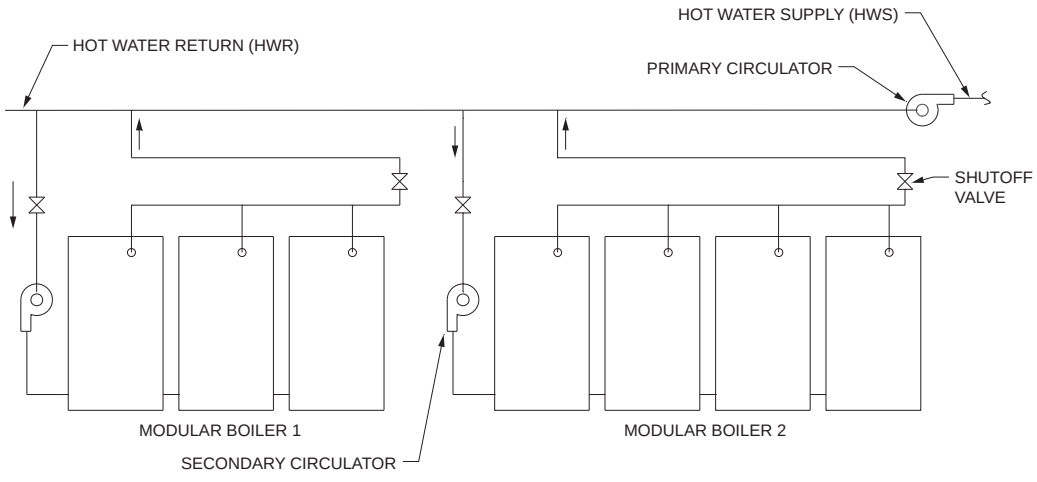

Figure 1005.1(2)
MULTIPLE MODULAR UNITS

INTERNATIONAL CODE COUNCIL®
Copyright © 2015 ICC. ALL RIGHTS RESERVED. Accessed by David Dammon on Jun 21, 2017 12:30:52 PM pursuant to License Agreement with ICC. No further reproduction or distribution authorized. ANY UNAUTHORIZED REPRODUCTION OR DISTRIBUTION IS A VIOLATION OF THE FEDERAL COPYRIGHT ACT AND THE LICENSE AGREEMENT, AND SUBJECT TO CIVIL AND CRIMINAL PENALTIES THEREUNDER.

potable water supply system could produce a health hazard. As a result, the potable water supply must be fitted with backflow prevention devices as prescribed in the IPC. Three examples of makeup water connections are shown in Commentary Figure 1005.2.

SECTION 1006
SAFETY AND PRESSURE RELIEF VALVES AND CONTROLS

1006.1 Safety valves for steam boilers. Steam boilers shall be protected with a safety valve.

❖ A steam boiler is a pressure vessel designed to generate steam by heating water above its boiling point. The developed steam pressure is directly proportional to both the amount of heat input and the temperature of the boiling water. The desired steam pressure is achieved and maintained by controlling the rate of energy input. If the boiler controls malfunction, it is possible for the steam pressure to exceed the maximum pressure for which the boiler and piping distribution system was designed. The result could be a violent rupture or an explosion accompanied by the instantaneous release of the tremendous thermal energy stored in the superheated water. To prevent such a result, steam boilers must be protected by one or more safety valves designed to relieve pressure at a selected setpoint, thus preventing the buildup of dangerously high pressures. A safety valve is designed to open fully whenever its opening pressure (setpoint) is reached and to close after a predetermined reduction in pressure. The differential between the opening and closing pressure of a safety valve is known as its "blowdown" (see Commentary Figure 1006.1).

1006.2 Safety relief valves for hot water boilers. Hot water boilers shall be protected with a safety relief valve.

❖ Although hot water boilers are not designed to generate steam, hydrostatic pressures proportional to the water temperature will develop. For the same reasons as stated in the commentary to Section 1006.1, hot water boilers must be protected from overpressure by one or more relief valves. Relief valves perform the same function as safety valves, but they do not operate identically. A relief valve is designed to open in direct proportion to the water pressure force acting on its closure disk. The higher the pressure, the greater the force, and the more the valve opens (see Commentary Figure 1006.2).

1006.3 Pressure relief for pressure vessels. Pressure vessels shall be protected with a pressure relief valve or pressure-limiting device as required by the manufacturer's installation instructions for the pressure vessel.

❖ Installed in accordance with the manufacturer's installation instructions, a pressure relief valve or a

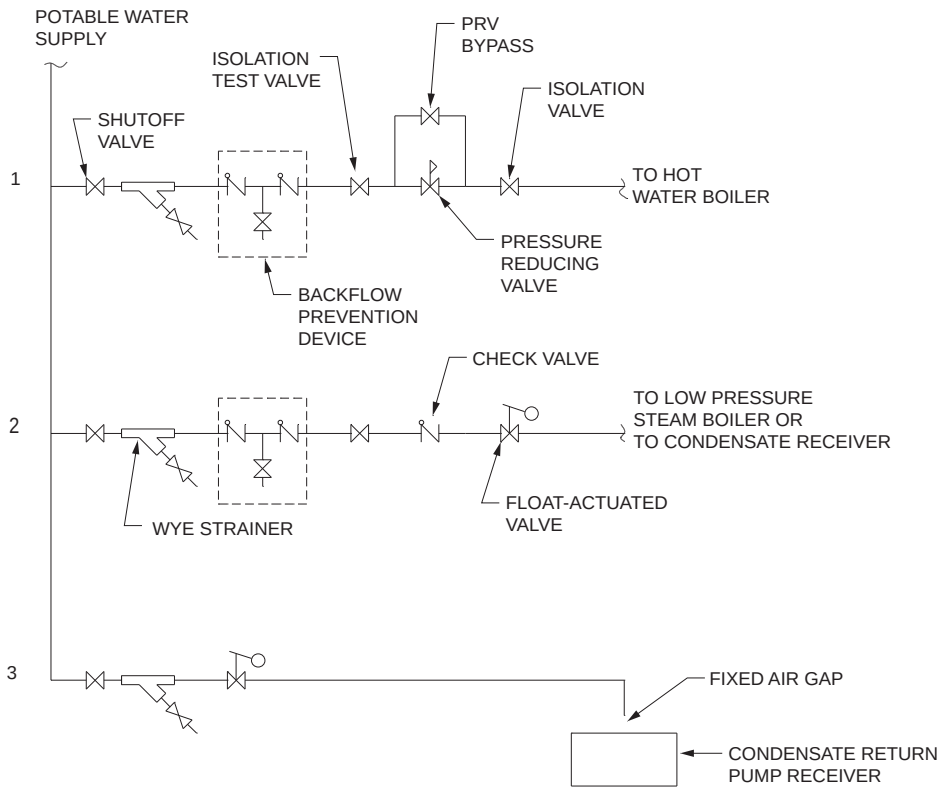

Figure 1005.2
TYPICAL REPLACEMENT (MAKEUP) WATER CONNECTIONS TO VARIOUS TYPES OF SYSTEMS

INTERNATIONAL CODE COUNCIL®
Copyright © 2015 ICC. ALL RIGHTS RESERVED. Accessed by David Dammon on Jun 21, 2017 12:30:52 PM pursuant to License Agreement with ICC. No further reproduction or distribution authorized. ANY UNAUTHORIZED REPRODUCTION OR DISTRIBUTION IS A VIOLATION OF THE FEDERAL COPYRIGHT ACT AND THE LICENSE AGREEMENT, AND SUBJECT TO CIVIL AND CRIMINAL PENALTIES THEREUNDER.

pressure limiting device protects the pressure vessel against possible explosion. Pressure vessels installed without one of these protection devices can produce devastating explosions and have been responsible for loss of life and damage to property. Relief valves also play an important role in protecting aging equipment that may have deteriorated or weakened as a result of exposure and use. Furthermore, in the event of control system malfunction or improper adjustments, these devices are a safe and effective means of preventing a violent rupture of the system.

1006.4 Approval of safety and safety relief valves. Safety and safety relief valves shall be *listed* and *labeled*, and shall have a minimum rated capacity for the *equipment* or appliances served. Safety and safety relief valves shall be set at not greater than the nameplate pressure rating of the boiler or pressure vessel.

❖ Because of their importance, safety and relief valves must be tested and certified by an approved agency to determine that each device complies with the applicable standard, is dependable and functions within its specifications. Safety and relief valves for steam and hot water boilers have a rated relief capacity and a fixed or adjustable opening pressure. All boiler labels will specify the boiler's maximum working pressure. The safety and relief valve must be set to open at or below this pressure.

The labels on boilers will also specify the minimum required safety and relief valve capacity. A safety and relief valve must be able to dissipate energy at a rate equal to or greater than the rate of energy input to the boiler. An undersized (insufficient capacity) valve would be unable to prevent the boiler pressure from exceeding the maximum capacity, resulting in a dangerous vessel failure. Safety and relief valve capacity is expressed in terms of pounds of steam per hour or British thermal units per hour [Btu/h] (W) of boiler input rating.

1006.5 Installation. Safety or relief valves shall be installed directly into the safety or relief valve opening on the boiler or pressure vessel. Valves shall not be located on either side of a safety or relief valve connection. The relief valve shall discharge by gravity.

❖ Boilers are manufactured with either factory-installed safety or relief valves or with the provisions for the field installation of such valves. In all cases, the safety or relief valves must be installed directly into the opening provided for that purpose by the boiler manufacturer. The intent is to eliminate any possibility of blockage or restriction between the source of the pressure (boiler) and the safety or relief valve. Where safety and relief valves are located any distance from the boiler, the possibility exists for blockages or restrictions to develop in stagnant lines, increasing the risk of creating a piping arrangement in which the safety or relief valve could be isolated (valved off) from the boiler by control valves.

Additionally, any length of piping and fittings would cause a pressure drop between the boiler and the safety or relief valve, allowing the boiler pressure to rise above the opening pressure of the safety and relief valve. A shutoff or control valve of any type located upstream (inlet side) or downstream (discharge side) of a safety or relief valve could prevent or impede the operation of the device, creating an extremely hazardous condition.

The requirement to drain by gravity is intended to prevent water from standing in the discharge pipe and causing corrosion damage to the device and/or creating a blockage or restriction. Water or condensate trapped in a discharge pipe would also act as an obstruction by creating a backpressure that would



Figure 1006.1
SAFETY VALVE FOR STEAM APPLICATIONS
(Courtesy of Watts Regulator Co.)



Figure 1006.2
PRESSURE RELIEF VALVE FOR HOT WATER APPLICATIONS
(Courtesy of Watts Regulator Co.)

INTERNATIONAL CODE COUNCIL®
Copyright © 2015 ICC. ALL RIGHTS RESERVED. Accessed by David Dammon on Jun 21, 2017 12:30:52 PM pursuant to License Agreement with ICC. No further reproduction or distribution authorized. ANY UNAUTHORIZED REPRODUCTION OR DISTRIBUTION IS A VIOLATION OF THE FEDERAL COPYRIGHT ACT AND THE LICENSE AGREEMENT, AND SUBJECT TO CIVIL AND CRIMINAL PENALTIES THEREUNDER.

affect the capacity and operation of the relief valve. In the case of a steam safety valve, any standing water in the discharge pipe could cause severe water hammer and damage because of the velocity of the steam and the rapid expansion of the standing water.

1006.6 Safety and relief valve discharge. Safety and relief valve discharge pipes shall be of rigid pipe that is *approved* for the temperature of the system. The discharge pipe shall be the same diameter as the safety or relief valve outlet. Safety and relief valves shall not discharge so as to be a hazard, a potential cause of damage or otherwise a nuisance. High-pressure-steam safety valves shall be vented to the outside of the structure. Where a low-pressure safety valve or a relief valve discharges to the drainage system, the installation shall conform to the *International Plumbing Code*.

❖ Safety or relief valve discharge pipe is designed to direct the discharge to a location where it cannot cause injury or property damage. A discharge pipe could be conducting high-temperature or high-pressure water or steam; therefore, the material from which the discharge pipe is constructed must be able to withstand such pressures and temperatures, as well as be able to resist the forces developed during discharge that would tend to dislocate the discharge pipe.

If a discharge pipe were smaller in its internal cross-sectional area than the safety or relief valve outlet, the resulting restriction would reduce the relieving capacity, adversely affecting the operation of the device.

Because the discharge from any safety or relief valve is a threat to both the building and its occupants, each installation must be individually evaluated to prevent the potential discharge from being hazardous.

Because a high-pressure steam safety valve discharge into a building interior would be especially dangerous, the discharge must be directed to the outdoors. Discharge pipes must be as short as possible to prevent friction losses affecting the device's operation and capacity. Discharge piping must be sized and arranged so the relieving capacity of the device is not affected.

Safety and relief valve discharge pipes must never be located where they are subject to freezing because ice could cause a complete or partial blockage. Where discharge pipes must extend to the outdoors, as in the case of high-pressure steam safety valves, the discharge pipe must be connected indirectly through a special air-gap-type fitting or other arrangement that will not cause the safety valve outlet to be blocked in the event of a discharge pipe blockage.

This section does not require any safety or relief valve to discharge to a building's drainage system; however, an installation that does must conform to the IPC.

Because safety and relief discharge is a symptom of a boiler or system abnormality or malfunction, the discharge pipe should be installed so any discharge will be noticeable, serving as a warning to begin remedial action.

1006.7 Boiler safety devices. Boilers shall be equipped with controls and limit devices as required by the manufacturer's installation instructions and the conditions of the listing.

❖ The boiler manufacturer's installation instructions, the standard to which the boiler is listed and the conditions of listing will determine what controls and safety devices are required for any boiler. These include high pressure limits, high temperature limits, low-water cutoffs, fuel pressure limits, flame safeguard controls, purge and ignition sequence controllers and combustion airflow sensors. Devices used to protect and control heating appliances are mandated by national standards such as those of ASME, the International Accreditation Service (IAS), Underwriters Laboratories (UL) and the National Fire Protection Association (NFPA). Standards may also be mandated by insurance carriers and state and local authorities (see commentary, Section 1004.1).

Probably the most important safety device on a boiler (besides pressure relief valves) is the flame-safeguard (flame-supervision) control. Its function is to monitor the pilot burner or main burner flames and open or close the fuel valves, depending on the presence or absence of flame, respectively (see commentary, IFGC Section 602.2).

A flame-safeguard control establishes safe conditions for initiating and sustaining combustion. Often, the flame-safeguard control function is provided by a package called the "primary control." The primary control starts the burner events in the proper sequence, proves that combustion air is available, purges the combustion chambers, proves that an ignition source is present, proves that the burner flame is established and supervises the flame during burner operation. It triggers safety shutdown after a set time interval, identified as the equipment's safety control timing, when the pilot or main burner fails to ignite or upon loss of flame. In addition, the primary control checks its own circuitry for proper function. Typically, a check for simulated flame failure and a continuity check of safety-switch circuitry are made. The most sophisticated self-checking feature is a dynamic self-check system that checks internal circuitry roughly one to four times each second during operation.

On larger-size boilers, additional timing functions are required; the package is called a "flame-safeguard programming control." Added functions include purging with a minimum combustion airflow rate before lightoff, sequencing of ignition and pilot lightoff, proof of pilot before main valve opening and, sometimes, interrupting the pilot to prove the main flame before commencing normal operation.

The function of proving the existence of flame is common to all safeguard controllers. Methods of detecting the presence of a pilot flame have included thermocouples, liquid-filled capillary tubes, bimetal mechanisms, power pile generators, infrared and

INTERNATIONAL CODE COUNCIL®
Copyright © 2015 ICC. ALL RIGHTS RESERVED. Accessed by David Dammon on Jun 21, 2017 12:30:52 PM pursuant to License Agreement with ICC. No further reproduction or distribution authorized. ANY UNAUTHORIZED REPRODUCTION OR DISTRIBUTION IS A VIOLATION OF THE FEDERAL COPYRIGHT ACT AND THE LICENSE AGREEMENT, AND SUBJECT TO CIVIL AND CRIMINAL PENALTIES THEREUNDER.

ultraviolet radiation detectors and flame rectification circuits. Three general approaches are found in most flame-sensing devices: thermal sensing, flame-rod sensing and optical detection. The most commonly used type of flame-safeguard device uses a thermocouple and an electromechanical device that function together to supervise a standing pilot flame. Thermal sensing, as it is called, is typical for small-input burners. If the pilot flame is extinguished, the drop in thermocouple output voltage will cause the control valve to "lock out" in the closed position, thereby preventing the flow of fuel to the main burner and the pilot burner.

Modern energy-efficient domestic equipment and appliances seldom use standing pilots any more, and instead use electric-spark-ignited intermittent pilots or direct ignition devices such as hot surface igniters and glow coils. Flame-rod sensing (flame rectification) relies on the ability of a flame to conduct current through the ionized combustion gases in the flame. The flame rod and its associated opposite polarity electrode function together to rectify a weak alternating current to create a detectable direct current, measured in microamperes. The presence of the dc current proves the existence of a flame at the electrodes. Flame-rod authentication that passes current in only one direction is used because it provides protection against the high-resistance leakage to ground giving a false indication that flame is present. This method of sensing is suitable for gas, but not typically used for oil-fired boilers because carbon and ash deposits tend to form on the rod. Optical sensing is implemented in three methods that sense visible, infrared (IR) or ultraviolet (UV) light. The visible-light optical method uses a rectifying photocell, typically cadmium sulfide, and is suitable only for oil-fired boilers because gas flames generally do not provide sufficient visible light. Infrared optical detection is accomplished by use of a lead sulfide cell and is suitable for gas- or oil-fired boilers. The sensor package reacts to flickering detection as opposed to a steady signal from a hot refractory surface. Ultraviolet detectors must be positioned so that the detector is not subject to oil vapor that absorbs UV light and does not see ignition spark or hot refractory over 2,500°F (1371°C). See Figure 1006.7 for characteristics of flame rod and optical- or IR/UV-sensing methods.

The application of a flame-safeguard control depends on boiler and burner design. The system therefore is normally supplied as a complete package by the boiler-burner manufacturer. Only main burner (as opposed to pilot burner) monitoring is necessary where the ignition is pilotless (direct electric or hot surface), where the pilot is dropped out (interrupted) after main burner ignition.

Safety shutoff fuel valves are typically motorized and are usually installed in series with another automatic fuel valve. Oil-fired boilers must use more than one fuel valve, installed in series, to control the flow of oil to the burner where pressures greater than 10 pounds per square inch (psi) (69 kPa) are possible. Motorized fuel valves may also be used to achieve certain lightoff characteristics or to allow the installation of valve-closure-proving devices. Generally, hand-operated valves (such as lubricated plug cocks) are also installed so that the fuel supply to the burner can be shut off manually.

Safety shutoff valves must have temperature and pressure ratings compatible with the type of fuel being burned and must be interlocked with the required limit devices and controllers. Typically, this interlocking control arrangement is done through the primary or programming control provided as a package by the burner manufacturer.

Gas-fired boilers have safety shutoff valves that respond to the action of the required limit controls and combustion safeguards. It is important to reinforce the point that fuel-burning appliances must never be operated outside of the safe limits for those appliances. Operation cannot be tolerated at fuel pressures that are excessively high or low, ultimately resulting in burner malfunction or overfiring. If fuel pressure were allowed to go above the normal operating range, control damage could result or the boiler could be overfired. If the fuel pressure is too low, combustion could be affected and efficiency and flame properties would be adversely affected, possibly causing flame roll-out or flashback within burners. Pressure-sensitive switches monitor fuel input pressure and close the fuel valve(s) if an abnormally high or low fuel pressure is detected. Once the high or low fuel pressure limit control activates, it locks out and the limit control must be manually reset (nonrecycling) before the burner will fire.

Oil-fired boilers have safety shutoff valves that respond to the action of the required limit controls and combustion safeguards. As with the gas-fired boilers above, it is important to reinforce the point that fuel-burning appliances must not be operated outside of their safe limits. Oil-fired boilers incorporate metering valves, orifices and/or air-pressurized systems to atomize the fuel into an acceptable air-fuel mixture for combustion.

Oil is sometimes preheated to lower its viscosity and improve atomization. In such burner systems, proper combustion is dependent on oil preheating; therefore, lower-than-required oil temperature must trigger a burner shutdown.

When the pressure of the steam or air supply used for fuel atomization is inadequate, a fuel supply shutdown and lockout must occur. Controls for this pressure monitoring must be of the manual reset type that require service personnel to rectify the problem before the burner is restarted.

Forced- or induced-draft systems and forced-combustion-air systems must use one or more control devices to shut down the burner in the event of fan failure, inadequate draft or inadequate combustion air supply. For other than natural draft, atmospheric-burner-type boilers, draft monitoring is required to

INTERNATIONAL CODE COUNCIL®
Copyright © 2015 ICC. ALL RIGHTS RESERVED. Accessed by David Dammon on Jun 21, 2017 12:30:52 PM pursuant to License Agreement with ICC. No further reproduction or distribution authorized. ANY UNAUTHORIZED REPRODUCTION OR DISTRIBUTION IS A VIOLATION OF THE FEDERAL COPYRIGHT ACT AND THE LICENSE AGREEMENT, AND SUBJECT TO CIVIL AND CRIMINAL PENALTIES THEREUNDER.

verify the function of blowers or fans used to produce draft in the boiler and/or in the chimney or vent. Power burners are equipped with blowers that force combustion air into the burner where it is mixed with the fuel. Generally, an air-proving switch is wired to the burner flame-safeguard interlock circuit. The device monitors airflow and, in the event of inadequate flow, closes the fuel valve(s), resulting in burner shutdown. A time-delay relay device wired into the automatic shutdown circuit is often used to prevent the nuisance of frequent burner shutdowns caused by improper draft conditions. The installation of an air-proving switch or similar control device is not necessary for combustion airflow monitoring for an oil burner when a single dual-shaft motor directly drives both the fan and the oil pump. In this case, failure of the fan will also cause loss of oil supply and result in a shutdown.

A low-fire start prevents burner ignition at full input capacity of the boiler. There are three major firing rate control methods: on/off, off/low/high and modulating. In the on/off method, the burner is either off or firing at its full rated capacity. This type of control is used primarily on smaller boilers when control of output temperature or pressure is not critical. The off/low/high method allows the boiler to more closely match the load. Given a demand for heat, the boiler begins firing at approximately 30- to 50-percent capacity (low fire). Upon a further increase in demand, the burner fires at maximum capacity (high fire).

The modulating firing rate control method provides the greatest flexibility in matching the boiler output to load. On call for heat, the boiler is brought to low fire, and as a greater load is imposed on the boiler, an increasing amount of fuel and air is introduced to the

	FLAME ROD	RECTIFYING PHOTOCELL	INFRARED (lead sulfide) DETECTOR	ULTRAVIOLET DETECTOR
Will supervise oil	no	yes	yes	yes
Will supervise gas	yes	no	yes	yes
Will detect ignition spark	no	no	no	yes
Type of signal	dc	dc	ac	dc
Light responsive	none	visible	infrared	ultraviolet
Max. ambient temperature at the sensor or cell	500°F (260°C)[a]	165°F (74°C)	125°F (52°C)	125-250°F (52-121°C)[b]
False flame signals by:				
Inductive pickup	no	no	no[c]	no[d]
Capacitive pickup	no	no	no[e]	no[d]
Refractory glow	no	yes	no[f]	no[g]
Checkout tests required:				
Hot refractory saturation	no	no	yes	no
Hot refractory hold-in	no	yes	yes	no
Ignition interference test	yes	no	no	yes[h]
Pilot turndown test	yes	yes	yes	yes

For SI: 1 foot = 304.8 mm, °C = (°F -32)/1.8.

a. Maximum insulator temperature is 500°F. Maximum rod temperatures are 2,000°F for Jellit Alloy "K," 2,462°F for Kanthal A-1 and 2,600°F for Globar.

b. C7012E and F - 135°F; C7012A and C - 135°F; C7044A - 212°F; C7027A - 215°F; C7035A - 250°F.

c. Leads must be run alone in grounded conduit all the way to the wiring subbase.

d. C7027 and C7035 should use number 14TW leadwire when running long distances of up to 1,100 feet. C7012E should use coaxial cable; RG62U will provide satisfactory performance with lengths of the order of 500 feet.

e. Leads must be BX cable, shielded cable or twisted pair. Conduit must be rigid or fastened securely to minimize vibration.

f. Will not sense the hot refractory alone, but turbulent hot air, steam, smoke or oil spray may cause the radiation to fluctuate, stimulating flame.

g. An ultraviolet detector will respond to hot refractory at different temperatures: C7076 maximum hot refractory at 2,200°F; C7012 maximum hot refractory at 2,300°F; and C7027, C7035 and C7044 maximum hot refractory at 2,800°F.

h. An ultraviolet detector will sense ignition spark; ignition spark response test is required.

Figure 1006.7
COMPARISON OF FLAME DETECTION METHODS
(Source – Handbook of HVAC Design)

INTERNATIONAL CODE COUNCIL®
Copyright © 2015 ICC. ALL RIGHTS RESERVED. Accessed by David Dammon on Jun 21, 2017 12:30:52 PM pursuant to License Agreement with ICC. No further reproduction or distribution authorized. ANY UNAUTHORIZED REPRODUCTION OR DISTRIBUTION IS A VIOLATION OF THE FEDERAL COPYRIGHT ACT AND THE LICENSE AGREEMENT, AND SUBJECT TO CIVIL AND CRIMINAL PENALTIES THEREUNDER.

burner. The output of the boiler varies continuously between low and high fire, matching any load between 30- and 100-percent of boiler capacity.

Some boilers are required to incorporate a purging cycle prior to burner ignition. The purging cycle removes any unburned fuel/air mixture. During the purging cycle, a forced- or induced-draft fan, a combustion-air fan or natural draft sweeps the unburned fuel/air mixture from the boiler combustion chamber and heat exchanger passes. Even though this type of cycling takes energy out of the system, it permits smooth light-off and prevents internal explosions.

If burners have closable secondary air openings, the closing mechanism must be designed to open and hold open the secondary air openings for a period of not less than 4 minutes prior to burner ignition.

Dual high-temperature limit controls provide redundant protection in the event of control device failure. A manual reset on the high limit control is intended to alert the maintenance or service personnel to an extreme condition in which the lower setting device has failed to shut down the heat input to the boiler. Low-water cutoffs are not typically installed with isolation valves between them and the boiler because closed isolation valves would prevent the device from acting. Forced-circulation (water coil and water tube) boilers use flow switches to prove circulation. These devices would detect a low-water condition, because that condition would result in circulation failure.

Steam boilers also use dual low-water limit controls and dual high-pressure limit controls. Dual low-water limit (low-water cutoff) controls are installed to achieve backup (redundant) protection (see commentary, Section 1007). Dual high-pressure limit controls are installed to achieve redundant (backup) protection. These control devices are set at some value below that of the steam safety valve so that the burner shuts down before the safety valve opens. The high limit control with the higher setting of the two controllers must be equipped with a manual reset that requires remedial action before the boiler can be restarted. Once this high limit control locks out, it must be manually reset (nonrecycling) before the burner will fire again.

1006.8 Electrical requirements. The power supply to the electrical control system shall be from a two-wire branch circuit that has a grounded conductor, or from an isolation transformer with a two-wire secondary. Where an isolation transformer is provided, one conductor of the secondary winding shall be grounded. Control voltage shall not exceed 150 volts nominal, line to line. Control and limit devices shall interrupt the ungrounded side of the circuit. A means of manually disconnecting the control circuit shall be provided and controls shall be arranged so that when deenergized, the burner shall be inoperative. Such disconnecting means shall be capable of being locked in the off position and shall be provided with ready access.

❖ Field-installed control wiring for appliances and equipment must be installed in accordance with NFPA 70 and this code. NFPA 70 is referenced in Section 301.10 (see commentary, Section 301.10) and governs all electrical power and control wiring for mechanical equipment and appliances regulated in the code. Although field-installed power wiring is not included within the scope of this section, wiring, disconnects, overcurrent protection devices, starters and related hardware used to supply electrical power to the appliance or equipment must comply with Section 301.10.

Control wiring includes the wiring, devices and related hardware that connect the main unit to external controls and accessories, such as temperature and pressure sensors, water level controls and safety shutoff valves. The internal factory wiring of appliances and equipment is not covered by this section unless it is specifically addressed in NFPA 70, however, this wiring is covered by the testing and review performed by an approved agency as part of the labeling process.

The code official responsible for the inspection of appliances and equipment must be familiar with the applicable sections of NFPA 70.

The intent of this section is to require wiring and a grounding arrangement that will not allow control devices to be bypassed as a result of a conductor that has faulted to ground. In circuits up to 150 volts, one conductor will be ungrounded (hot) and the other will be grounded. By grounding all devices and raceways and by switching (breaking) only ungrounded (hot) conductors, unintended fault current paths can be avoided. A fault to ground would open an overcurrent protective device, indicating a fault and preventing boiler operation. Such unintended paths can effectively bypass a safety control, resulting in a dangerous condition.

The disconnect switch is a safety device that allows the service technician to shut off and lock out the power to the unit and its controls during service, maintenance and repair operations to protect the technician and to comply with the requirements of the Occupational Safety and Health Association (OSHA) for isolation of equipment. The disconnect switch must be readily accessible.

SECTION 1007
BOILER LOW-WATER CUTOFF

1007.1 General. Steam and hot water boilers shall be protected with a low-water cutoff control.

Exception: A low-water cutoff is not required for coil-type and water-tube-type boilers that require forced circulation of water through the boiler and that are protected with a flow-sensing control.

❖ If a steam or hot water boiler is operated (fired) without water or with water below the minimum level, overheating and severe boiler damage can occur. In addition to damage or destruction of the boiler, a severe fire or explosion hazard can result from the

INTERNATIONAL CODE COUNCIL®
Copyright © 2015 ICC. ALL RIGHTS RESERVED. Accessed by David Dammon on Jun 21, 2017 12:30:52 PM pursuant to License Agreement with ICC. No further reproduction or distribution authorized. ANY UNAUTHORIZED REPRODUCTION OR DISTRIBUTION IS A VIOLATION OF THE FEDERAL COPYRIGHT ACT AND THE LICENSE AGREEMENT, AND SUBJECT TO CIVIL AND CRIMINAL PENALTIES THEREUNDER.

overheating or failure of the combustion chamber enclosure. Burner malfunction can also occur as a result of leakage and destruction of the boiler heat exchange surfaces. The heat exchange surfaces of fuel-fired boilers absorb radiated heat from the flames and heat from the combustion gases produced by the combustion of fuel. This heat is conducted to the water at a rate that prevents the temperature of the heat exchanger material from exceeding the maximum for which it was designed. As the water level drops in a boiler, a greater area of heat exchange surface becomes dry and thus subjected to overheating. All boiler manufacturers specify and mark on the unit the minimum water level to be maintained in the boiler, below which damage would be possible. All boilers are subject to a loss of water. This is especially true for steam boilers because they are dependent on the timely return of condensate water and the proper operation and sequencing of controls for the return and makeup water feed systems.

A low-water cutoff is an essential control device designed to prevent boiler operation when the water level is too low. Because steam boilers, as opposed to hot water boilers, which are completely filled, maintain a water level, a low-water condition is much more likely to occur in a steam system. However, the hazards resulting from low-water levels are the same for both boilers. Also, a flash steam explosion can occur if makeup water is introduced into an over-heated steam or hot water boiler. For these reasons, hot water boilers must be protected by a low-water cutoff control. This section requires low-water cutoffs without regard to heat energy input. Some low-water cutoff controls are intended to be field installed as part of the boiler "trim" (appurtenances) and others are factory installed directly into tapped openings on the boiler.

Traditional low-water cutoff controls use float-actuated mechanisms. Electronic probe-type controls, which are commonly used for hot water boiler protection, detect the water level with an electrode that relies on the slight conductivity of the boiler water to complete a relay circuit. In the case of coil-type (water-tube) boilers requiring forced circulation to prevent coil or tube overheating, a flow-sensing device, which detects flow and verifies that the boiler and system are full of water, is required. Low-water cutoff controls do not sense flow and, therefore, cannot protect a forced circulation coil-type/water-tube boiler from overheating as a result of loss of circulation. The exception recognizes that flow-sensing controls are an alternative to low-water cutoff controls for boilers that require forced circulation of water through coil or water-tube-type heat exchangers. Low-water cutoff controls are not designed to sense water flow, rather, they sense water levels.

Electric boilers are generally protected with factory-installed water-level sensing devices to prevent heating element failure, which could occur if the elements were not submerged [see Commentary Figures 1007.1(1) through (3)].

1007.2 Operation. Low-water cutoff controls and flow-sensing controls required by Section 1007.1 shall automatically stop the *combustion* operation of the *appliance* when the water level drops below the lowest safe water level as estab-

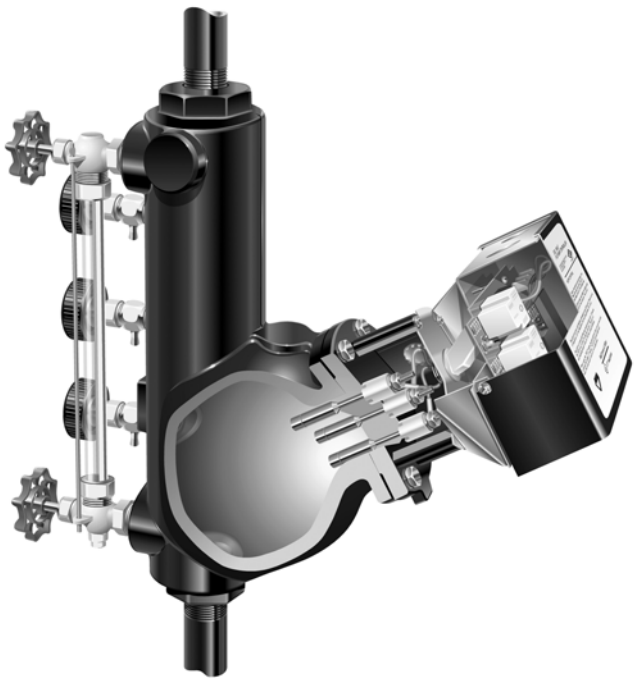

Figure 1007.1(1)
ELECTRONIC PROBE-TYPE LOW-WATER CUTOFF CONTROL WITH GAUGE GLASS AND TRI-COCKS FOR STEAM BOILER APPLICATION
(Photo courtesy of McDonnell & Miller)



Figure 1007.1(2)
ELECTRONIC PROBE-TYPE LOW-WATER CUTOFF CONTROL FOR HOT WATER BOILER APPLICATION
(Photo courtesy of McDonnell & Miller)

INTERNATIONAL CODE COUNCIL®
Copyright © 2015 ICC. ALL RIGHTS RESERVED. Accessed by David Dammon on Jun 21, 2017 12:30:52 PM pursuant to License Agreement with ICC. No further reproduction or distribution authorized. ANY UNAUTHORIZED REPRODUCTION OR DISTRIBUTION IS A VIOLATION OF THE FEDERAL COPYRIGHT ACT AND THE LICENSE AGREEMENT, AND SUBJECT TO CIVIL AND CRIMINAL PENALTIES THEREUNDER.



Figure 1007.1(3)
ELECTRONIC PROBE-TYPE LOW-WATER CUTOFF CONTROL FOR HOT WATER BOILER APPLICATION
(Photo courtesy of McDonnell & Miller)

lished by the manufacturer or when water circulation stops, respectively.

❖ The sole purpose of a low-water cutoff control is to stop (cut off) the heat input to the boiler whenever the water level is dangerously low. These devices automatically interrupt the power supply to the burner controls or heating elements to cause boiler shutdown. Flow-sensing controls addressed in the exception to Section 1007.1 must stop the heat input to boilers when the circulation flow through the boiler stops or is less than that required for safe operation of the boiler, as specified by the boiler manufacturer. Commentary Figure 1007.2 shows a sample boiler safety control schematic.

SECTION 1008
BOTTOM BLOWOFF VALVE

1008.1 General. Steam boilers shall be equipped with bottom blowoff valve(s). The valve(s) shall be installed in the opening provided on the boiler. The minimum size of the valve(s) and associated piping shall be the size specified by the boiler manufacturer or the size of the boiler blowoff-valve opening. Where the maximum allowable working pressure of the boiler exceeds 100 psig (689 kPa), two bottom blowoff valves shall be provided consisting of either two slow-opening valves in series or one quick-opening valve and one slow-opening valve in series, with the quick-opening valve installed closest to the boiler.

❖ Steam boilers collect sediment from the water, system piping and equipment. If allowed to build up, this sediment causes boiler overheating, control fouling, loss of efficiency and premature boiler failure.

The sediment consists of minerals from makeup water, piping scale, chemical cleaner and conditioner precipitate, rust and similar materials. Blowoff valves are required to allow the periodic elimination or purging of harmful sediment. The quick-opening feature permits an almost instantaneous full opening of the valve to induce a sudden sweeping flow in the lowest part of the boiler where sediment collects. The fast opening and closing feature also prevents the waste of steam and heated water, which would occur with a slow-acting shutoff or gate valve. The operation must be fast enough to prevent significant reduction of the water level and to allow sediment to be flushed out before steam is relieved through the blowoff valve. The blowoff valve is sized to comply with the manu-

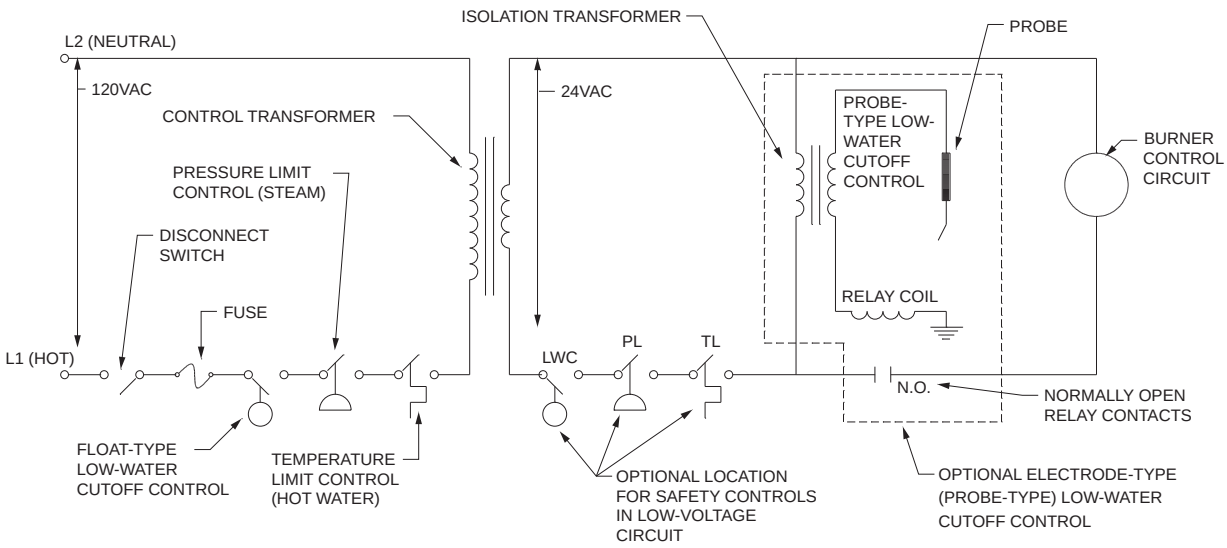

Figure 1007.2
SIMPLIFIED SAMPLE WIRING SCHEMATIC FOR BASIC GAS-FIRED BOILER
(Intended for illustrative purpose only to depict function of low-water cutoff controls)

INTERNATIONAL CODE COUNCIL®
Copyright © 2015 ICC. ALL RIGHTS RESERVED. Accessed by David Dammon on Jun 21, 2017 12:30:52 PM pursuant to License Agreement with ICC. No further reproduction or distribution authorized. ANY UNAUTHORIZED REPRODUCTION OR DISTRIBUTION IS A VIOLATION OF THE FEDERAL COPYRIGHT ACT AND THE LICENSE AGREEMENT, AND SUBJECT TO CIVIL AND CRIMINAL PENALTIES THEREUNDER.

facturer's recommendations or, in the absence of a recommendation, it must not be less than the size of the blowoff valve opening on the boiler. Undersized valves do not allow the necessary flow volume and velocity to entrain and discharge the sediment. For higher pressure boilers (>100 psig) the blowoff valves must consist of two valves in series to ensure shutoff in the event of failure of one of the valves.

1008.2 Discharge. Blowoff valves shall discharge to a safe place of disposal. Where discharging to the drainage system, the installation shall conform to the *International Plumbing Code*.

❖ The discharge from a blowoff valve can consist of high-temperature water and steam. Therefore, the discharge must be directed to a place of disposal in a manner that does not threaten people or property. Blowoff discharge is generally drained to the sanitary sewer system of the building or premises. Those installations must comply with the IPC.

SECTION 1009
HOT WATER BOILER EXPANSION TANK

1009.1 Where required. An expansion tank shall be installed in every hot water system. For multiple boiler installations, not less than one expansion tank is required. Expansion tanks shall be of the closed or open type. Tanks shall be rated for the pressure of the hot water system.

❖ Hot water heating systems are closed systems that are completely filled with water and purged of entrapped and dissolved gases to the greatest extent possible. When the water in such a system is heated, it will expand and, because it is a closed system, quickly cause hydrostatic pressure that can be relieved only by system failure or the opening of the safety relief valve. Obviously, system failure must be avoided. Because relief valves are intended to open only in the event of an emergency, the continuous opening of a relief valve to accommodate expansion is not acceptable.

Expansion tanks are used to absorb harmlessly the additional system water volume caused by expansion, thus avoiding relief valve opening and preventing wide variations in system pressure. Expansion tanks are either sealed vessels or open tank reservoirs. Open tank reservoirs are, of course, not pressurized except for the static elevation head they impose on the boiler. Closed expansion tanks, however, are pressurized vessels. Because they are subjected to the same pressures as the boiler system, closed expansion tanks must have a pressure rating greater than or equal to the maximum boiler system operating pressure.

Closed expansion tanks contain a cushion of air that compresses as water expands into the tank. The pressure in a hot water system will increase several pounds per square inch as the temperature increases. However, the compression of the air in a properly sized expansion tank will prevent the pressure from exceeding the maximum system operating pressure. An undersized expansion tank would not prevent the system pressure from reaching the relief valve opening pressure.

Rarely used today, open expansion tanks are nothing more than elevated reservoirs holding the expanded hot water at atmospheric pressure.

Multiple boiler installations serving a single common piping system can use either a single expansion tank of the proper size or multiple tanks with the proper aggregate capacity. Any arrangement of one or more tanks capable of controlling system pressure by compensating for expansion is acceptable.

1009.2 Closed-type expansion tanks. Closed-type expansion tanks shall be installed in accordance with the manufacturer's instructions. Expansion tanks for systems designed to have an operating pressure in excess of 30 psi (207 kPa) shall be constructed and certified in accordance with the ASME *Boiler and Pressure Vessel Code*. The size of the tank shall be based on the capacity of the hot-water-heating system. The minimum size of the tank shall be determined in accordance with the following equation where all necessary information is known:

$$V_t = \frac{(0.00041T - 0.0466)V_s}{\left(\frac{P_a}{P_f}\right) - \left(\frac{P_a}{P_o}\right)} \qquad \textbf{(Equation 10-1)}$$

For SI:

$$V_t = \frac{(0.000738T - 0.03348)V_s}{\left(\frac{P_a}{P_f}\right) - \left(\frac{P_a}{P_o}\right)}$$

where:

V_t = Minimum volume of tanks (gallons) (L).

V_s = Volume of system, not including expansion tanks (gallons) (L).

T = Average operating temperature (ºF) (ºC).

P_a = Atmospheric pressure (psi) (kPa).

P_f = Fill pressure (psi) (kPa).

P_o = Maximum operating pressure (psi) (kPa).

Where all necessary information is not known, the minimum size of the tank shall be determined from Table 1009.2.

❖ Closed-type expansion tanks can be subdivided into two categories: simple air/water interface compression tanks and air-charged diaphragm (bladder) tanks [see Commentary Figures 1009.2(1) and 1009.2(2)]. Diaphragm-type tanks have become the choice for most residential hydronic systems because they have the advantage of being maintenance free. Unlike the simple compression tank, a diaphragm-type tank does not have air and water in contact and, therefore, the air cushion cannot be absorbed by the water and cause a loss of capacity.

Traditional compression tanks allowing the air and water to interface directly will slowly become "water logged" as the air is absorbed into the water. For this

INTERNATIONAL CODE COUNCIL®
Copyright © 2015 ICC. ALL RIGHTS RESERVED. Accessed by David Dammon on Jun 21, 2017 12:30:52 PM pursuant to License Agreement with ICC. No further reproduction or distribution authorized. ANY UNAUTHORIZED REPRODUCTION OR DISTRIBUTION IS A VIOLATION OF THE FEDERAL COPYRIGHT ACT AND THE LICENSE AGREEMENT, AND SUBJECT TO CIVIL AND CRIMINAL PENALTIES THEREUNDER.

reason, such tanks require maintenance and special valve and drain fittings to permit the restoration of the air. Compression tanks are often equipped with a sight glass used to observe the water level in the tank, and to determine the need for maintenance. A diaphragm-type tank will not contain water when the system is at its normal fill pressure [typically 12 to 15 psi (83 to 103 kPa) for residential systems] because the air charge on the air side of the diaphragm is intended to be equal to the system pressure. Nondiaphragm-type compression tanks will always have some water below the trapped air cushion.

The amount of expansion in any hot water system is directly proportional to the temperature rise and volume of the water in the system. For example, an old gravity circulation system with cast-iron radiators will contain a large volume of water, requiring a much larger expansion capacity than a modern forced-circulation fin-tube system with the same design operating temperature. Likewise, hydronic systems with a design water temperature of 140°F (60°C) will require less expansion capacity than a system with the same water volume and a design water temperature of 200°F (93°C).

Compression tanks must have a minimum volume equal to or greater than the volume determined using Equation 10-1. This equation does not apply to diaphragm-type expansion tanks. The required volume is a function of the system's total water volume, average design operating temperature, cold fill pressure, maximum operating pressure at the tank, and the atmospheric pressure at the system's location (altitude).

Example:

Determine the minimum required volume of a compression tank with:

V_s = 42 gallons

T = 200°F

P_a = 14.7 psi

P_f = 12 psig + 14.7 psi = 26.7 psia P_o = 25 psig + 14.7 psi = 39.7 psia

where:

V_s = Total volume of boiler(s), system piping and heating elements.

T = Average design operating temperature.

P_a = Atmospheric pressure at system altitude.

P_f = Required system (cold) fill pressure (absolute).

P_o = Maximum system operating pressure (absolute) at the tank location.

V_t = Minimum volume of expansion tank in gallons.

[For SI: 1 gallon = 3.785 L, 1 pound per square inch = 6.895 kPa, °C = (°F-32)/1.8, 1 pound per square inch gauge = 6.895 kPa.]

$$V_t = \frac{(0.00041T - 0.0466)V_s}{(P_a/P_f) - (P_a/P_o)}$$

$$= \frac{[(0.00041 \times 200) - (0.0466)] \times 42}{(14.7/26.7) - (14.7/39.7)} = (8.26 \text{ gallons})$$

Note that this formula is not to be used for diaphragm-type expansion tanks. Diaphragm-type expansion tanks are pre-engineered units with a factory-charged compressed air cushion on the air side of the diaphragm. These tanks are sized by the tank manufacturer or are specified by the boiler manufacturer.

The sizing methodology is consistent with that of ASME BPVC, Section IV. Table 1009.2 is to be used where the values for the variables in Equation 10-1 are not known.

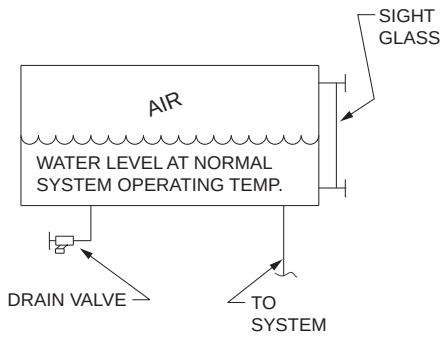

Figure 1009.2(1)
CLOSED-TYPE EXPANSION (COMPRESSION) TANK

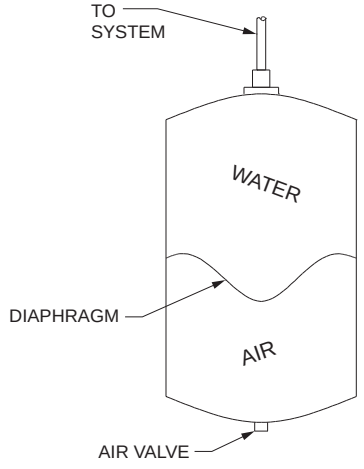

Figure 1009.2(2)
CLOSED-DIAPHRAGM-TYPE EXPANSION TANK

INTERNATIONAL CODE COUNCIL®
Copyright © 2015 ICC. ALL RIGHTS RESERVED. Accessed by David Dammon on Jun 21, 2017 12:30:52 PM pursuant to License Agreement with ICC. No further reproduction or distribution authorized. ANY UNAUTHORIZED REPRODUCTION OR DISTRIBUTION IS A VIOLATION OF THE FEDERAL COPYRIGHT ACT AND THE LICENSE AGREEMENT, AND SUBJECT TO CIVIL AND CRIMINAL PENALTIES THEREUNDER.

TABLE 1009.2
CLOSED-TYPE EXPANSION TANK SIZING

SYSTEM VOLUME IN GALLONS	TANK CAPACITIES IN GALLONS	
	Pressurized Diaphragm Type	Nonpressurized Type
100	9	15
200	17	30
300	25	45
400	33	60
500	42	75
1,000	83	150
2,000	165	300

For SI: 1 gallon = 3.795 L.

1009.3 Open-type expansion tanks. Open-type expansion tanks shall be located not less than 4 feet (1219 mm) above the highest heating element. The tank shall be adequately sized for the hot water system. An overflow with a minimum diameter of 1 inch (25 mm) shall be installed at the top of the tank. The overflow shall discharge to the drainage system in accordance with the *International Plumbing Code*.

❖ Open-type expansion tanks were once common for old gravity circulation systems but are rarely encountered in modern system designs (see Commentary Figure 1009.3). An adequately sized open-type tank would have the capacity to hold, without overflowing and admitting air into the system, the maximum volume of water that would expand from the system at the maximum operating temperature. Because this type of expansion tank is open to the atmosphere, it must be located at an elevation above the highest radiator or other water-filled system component. The 4-foot (1219 mm) minimum height will produce a slight head pressure in the top-most radiators, which assists in the purging of air from them. Tank overflow could cause property damage or personal injury. An overflow pipe is necessary, therefore, to prevent tank overflow. The tank's overflow pipe is intended to conduct water only during system fill and purging operations, and any other overflow should be recognized as an indicator of a system problem in need of immediate correction. Under normal operating conditions, the water level in an open expansion tank should not rise to the overflow pipe or drop below the bottom of the tank. Loss of water from any hot water heating system is unacceptable because it will result in the introduction of oxygen and mineral-bearing makeup water. The result should be avoided to prolong the life of the system and maintain heat transfer efficiency. The overflow pipe must not be subjected to freezing and is required to discharge to the building drainage system in accordance with the IPC.

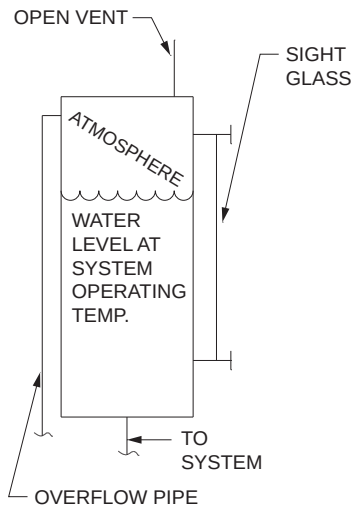

Figure 1009.3
OPEN-TYPE EXPANSION TANK

SECTION 1010
GAUGES

1010.1 Hot water boiler gauges. Every hot water boiler shall have a pressure gauge and a temperature gauge, or a combination pressure and temperature gauge. The gauges shall indicate the temperature and pressure within the normal range of the system's operation.

❖ All hot water boilers operate within certain pressure and temperature limits. Problems and hazards can develop when these limits are exceeded. Pressure and temperature gauges are necessary to allow boiler owners, operators and service technicians to monitor system operating conditions. Gauges not only indicate hazardous conditions and causes of problems or malfunctions, but also help predict future developing hazards or problems by indicating the need for system repairs and service. Pressure and temperature gauges are essential boiler components that demonstrate both normal and abnormal operating conditions. They are typically supplied by the boiler manufacturer as part of the factory- or field-installed "trim" (appurtenances).

Gauges must have a range and scale of values that are proportional to the boiler's normal operating range to allow reasonably accurate readings. For example, a pressure gauge with a range of 0 to 250 psi (0 to 1724 kPa) would barely deflect the needle when installed on a 12-psi (83 kPa) system and pressure readings would be grossly inaccurate. Typical gauges are inherently less accurate at the extreme low and high end of their range. The intent of the code is to require temperature and pressure gauges to be suitably matched to the operating ranges of the boiler for legible and accurate readings.

A good rule-of-thumb would be that the highest reading on the pressure gauge scale should not be more than three times nor less than one and one-half times the opening pressure setting of the safety relief valve.

Hot water boiler gauges are often combination pressure and temperature gauges and may also include an inactive "altitude" needle, recording the

INTERNATIONAL CODE COUNCIL®
Copyright © 2015 ICC. ALL RIGHTS RESERVED. Accessed by David Dammon on Jun 21, 2017 12:30:52 PM pursuant to License Agreement with ICC. No further reproduction or distribution authorized. ANY UNAUTHORIZED REPRODUCTION OR DISTRIBUTION IS A VIOLATION OF THE FEDERAL COPYRIGHT ACT AND THE LICENSE AGREEMENT, AND SUBJECT TO CIVIL AND CRIMINAL PENALTIES THEREUNDER.

pressure necessary to maintain desired minimum pressure at the highest elevation heating element.

An altitude scale, on pressure gauges so equipped, indicates pressure head of water in feet (mm).

1010.2 Steam boiler gauges. Every steam boiler shall have a water-gauge glass and a pressure gauge. The pressure gauge shall indicate the pressure within the normal range of the system's operation.

❖ All steam boilers operate within certain pressure and water level limits that must be observed. However, unlike hot water boilers, water temperature is not a concern for steam systems. Whenever steam is present, the water temperature in a steam boiler will be a function of steam pressure and is easily determined when the steam pressure is known. A steam pressure gauge indicates both normal and abnormal operating conditions and the presence of a hazardous condition, and is necessary to observe and monitor boiler operation. The water level in a boiler fluctuates within a narrow margin between too low and too high. Because proper boiler operation is dependent on maintaining the water level within the high and low parameters, a water-gauge glass is necessary to indicate visually the actual water level in the boiler.

A water-gauge glass, commonly referred to as a "sight glass," indicates the following: boiler flooding, low-water conditions, condensate return operation, unstable water levels resulting from foaming and surging, boiler water condition and the amount of automatic or manual makeup water feed (see Commentary Figure 1010.2). If either or both of the gauge-glass cocks are closed, the water-level reading will be erroneous and the boiler could be empty, even though the gauge glass reads "normal."

Ideally, a steam boiler pressure gauge should indicate the normal system operating pressure at approximately the first quarter to midpoint of the scale. For example, a 0 to 100 psi (0 to 690 kPa) pressure gauge would be a very poor indicator for a low-pressure [15 psi (103 kPa) or less] steam heating boiler. It would also be a substandard option for a boiler whose normal operating pressure is at or near 100 psi (690 kPa) because there would be no headroom on the scale to indicate abnormally high pressures (see commentary, Section 1010.1). Low-pressure

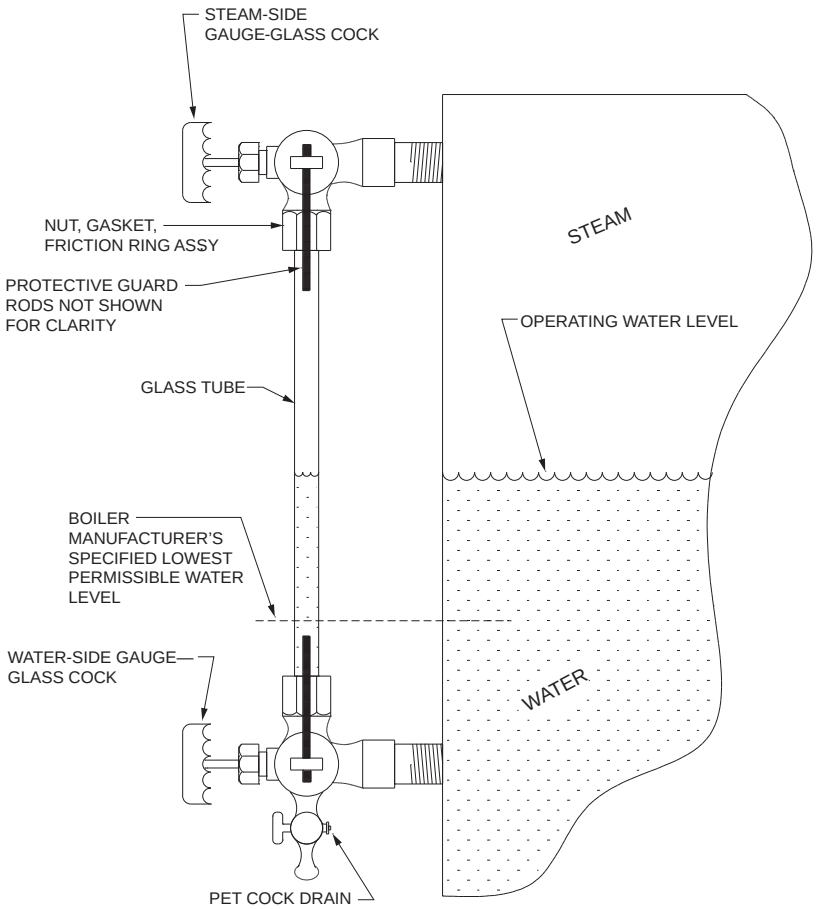

Figure 1010.2
STEAM BOILER SIGHT GLASS

INTERNATIONAL CODE COUNCIL®
Copyright © 2015 ICC. ALL RIGHTS RESERVED. Accessed by David Dammon on Jun 21, 2017 12:30:52 PM pursuant to License Agreement with ICC. No further reproduction or distribution authorized. ANY UNAUTHORIZED REPRODUCTION OR DISTRIBUTION IS A VIOLATION OF THE FEDERAL COPYRIGHT ACT AND THE LICENSE AGREEMENT, AND SUBJECT TO CIVIL AND CRIMINAL PENALTIES THEREUNDER.

steam gauges are often designed to read both pressure and vacuum because some steam systems will develop a partial vacuum as steam condenses in the distribution system.

1010.2.1 Water-gauge glass. The gauge glass shall be installed so that the midpoint is at the normal boiler water level.

❖ A water-gauge glass is always installed on a boiler with the bottom of the glass connected below the normal water level and the top of the glass connected above the normal water level. When connected in this manner, the boiler water level will be accurately represented in the column of water in the gauge glass. It has been an industry tradition to equate the midpoint of a gauge glass with the "normal" water level in a boiler. The coincidence of the gauge-glass midpoint and normal water level also allows the greatest amount of indicator range above and below normal, thus allowing clear indication of abnormal water levels.

SECTION 1011
TESTS

1011.1 Tests. Upon completion of the assembly and installation of boilers and pressure vessels, acceptance tests shall be conducted in accordance with the requirements of the ASME *Boiler and Pressure Vessel Code* or the manufacturer's requirements, and such tests shall be approved. A copy of all test documents along with all manufacturer's data reports required by the ASME *Boiler and Pressure Vessel Code* shall be submitted to the code official.

❖ The history of boilers and pressure vessels shows that such equipment is potentially dangerous if not properly designed, installed, protected, tested, maintained and monitored. Such equipment must be equipped with various safety controls and safeguards. However, safety devices cannot prevent failures that result from improper installation. Testing verifies the structural integrity of the vessel and the proper operation of all controls, safety devices, burners, venting systems and appurtenances. Some boilers, such as large sectional cast-iron boilers, are shipped in sections and assembled on site. Therefore, as part of the building commissioning process, Section 1011 requires that boilers and pressure vessels be properly inspected, tested and verified upon installation.

The ASME *Boiler and Pressure Vessel Code* and the manufacturer's instructions are referenced for the testing of boilers and pressure vessels. Testing procedures for specific types of boilers and pressure vessels are found in the respective sections of the referenced standard and manufacturer's instructions. These testing procedures may require the use of test formulas or other calculation methods. Calculations for the testing procedures should be performed by qualified people. Error in certifying test procedures could result in the hazardous operation of equipment.

1011.2 Test gauges. An indicating test gauge shall be connected directly to the boiler or pressure vessel where it is visible to the operator throughout the duration of the test. The pressure gauge scale shall be graduated over a range of not less than one and one-half times and not greater than four times the maximum test pressure. Gauges utilized for testing shall be calibrated and certified by the test operator.

❖ Pressure gauges used for testing must be accurate and therefore must be calibrated to a known reference pressure (see commentary, Section 1010.2).

Bibliography

The following resource materials were used in the preparation of the commentary for this chapter of the code:

IBC-15, *International Building Code*. Washington, DC: International Code Council, 2014.

IFGC-15, *International Fuel Gas Code*. Washington, DC: International Code Council, 2014.

IPC-15, *International Plumbing Code*. Washington, DC: International Code Council, 2014.

NFPA 70-14, *National Electrical Code*. Quincy, MA: National Fire Protection Association, 2013.

INTERNATIONAL CODE COUNCIL®
Copyright © 2015 ICC. ALL RIGHTS RESERVED. Accessed by David Dammon on Jun 21, 2017 12:30:52 PM pursuant to License Agreement with ICC. No further reproduction or distribution authorized. ANY UNAUTHORIZED REPRODUCTION OR DISTRIBUTION IS A VIOLATION OF THE FEDERAL COPYRIGHT ACT AND THE LICENSE AGREEMENT, AND SUBJECT TO CIVIL AND CRIMINAL PENALTIES THEREUNDER.

INTERNATIONAL CODE COUNCIL®
Copyright © 2015 ICC. ALL RIGHTS RESERVED. Accessed by David Dammon on Jun 21, 2017 12:30:52 PM pursuant to License Agreement with ICC. No further reproduction or distribution authorized. ANY UNAUTHORIZED REPRODUCTION OR DISTRIBUTION IS A VIOLATION OF THE FEDERAL COPYRIGHT ACT AND THE LICENSE AGREEMENT, AND SUBJECT TO CIVIL AND CRIMINAL PENALTIES THEREUNDER.

Chapter 11: Refrigeration

General Comments

The purpose of this chapter is to regulate the use of refrigerants and protect refrigeration systems, property and life from the hazards associated with the refrigerants and their related equipment. The hazards include, but are not limited to, the physical impacts, toxic effects and the combustible, flammable and decomposing effects of refrigerants.

Refrigerants create a hazard because they are liquified gas under pressure in a mechanical system and many refrigerant vapors cannot be seen, tasted or smelled, so there is no natural warning of a hazard occurring. Refrigerants and refrigeration systems that are not maintained or are improperly used or installed could result in a release of pressurized refrigerant resulting in physical injuries, damage to the building and an impact on the environment.

Physical injuries include, but are not limited to, exposure that can cause frostbite and asphyxiation. Building damage includes, but is not limited to, fires, explosions and loss of property. Environmental impacts include, but are not limited to, the potential depletion of the ozone layer, global warming and increase in exposure to ultraviolet radiation levels [see Commentary Figure 11(1)].

Typically, refrigerants used with mechanical systems, that are regulated via the code, undergo toxicity testing before being released for use with the data usually indicated on Material Safety Data Sheets (MSDS). The testing involves a range of exposure levels that are indicated as valves to establish how much of a specific refrigerant a person can regularly be exposed to without adverse effects.

Some refrigerants burn with oxygen, but only at higher pressures or temperatures and never in air at atmospheric conditions (combustible). Some refrigerants, when combined with air at atmospheric pressure, ignite causing a flame and possibly an explosion (flammable).

In addition to the immediate safety concern related to refrigeration equipment and the physical and chemical characteristics of refrigerants, there has been a serious concern over the effect of chlorofluorocarbon (CFC) refrigerants and their contribution to the depletion of the ozone layer in the earth's atmosphere. This concern has resulted in rapid changes in the refrigeration industry as alternatives to CFC refrigerants are developed.

The Montreal Protocol, the U.S. Clean Air Act, Department of Energy (DOE) and environmental issues have been the driving forces behind the regulation and evolution in the chemicals used as refrigerants and the design and use of refrigeration systems. For example, new alternative refrigerants continue to appear in the marketplace, and there has been renewed interest in the rules by which all refrigerants are classified and safely applied; therefore, refrigeration systems continue to be improved for the use of refrigerants. Thus, the user of this code will find many new elements, and should expect that the list of refrigerants will continue to grow with time.

It is worth noting that the Montreal Protocol, the U.S. Clean Air Act, Department of Energy and environmental issues have been focused on hydrofluorocarbons (HFCs) and hydrochlorofluorocarbons (HCFCs). In these compounds, hydrogen atoms are substituted for halogen atoms (that is, flourine, chlorine, bromine, astatine and iodine). HFCs are considered "ozone friendly" in that they are dechlorinated (there is no chlorine present to be released into the stratosphere). These compounds appear to be the best alternative refrigerants that have been developed to date. R-134a is an HFC refrigerant that is already in use and is permitted by the code. HCFCs are compounds that are still ozone depleting, but much less so than CFCs. These are transitional refrigerants and have been undergoing a gradual phaseout. Alternative refrigerants are being developed continuously. HCFCs will bridge the gap for the industry until permanent replacements are developed. R-22 and R-123 are HCFC refrigerants that are currently permitted by the code.

The U.S. Clean Air Act also makes venting of CFCs and HCFCs into the atmosphere unlawful. This means that the common practice of discharging halogenated refrigerants into the air is not allowed in the United States and that all used CFC refrigerants must be reclaimed, recycled or destroyed. The termination of CFC production and the prohibition of venting to the atmosphere have been based on the examination of data concluding the effect of CFCs on the ozone layer.

CFC molecules deplete the ozone layer when they reach the stratosphere, the second of four layers that make up the earth's atmosphere. The ozone layer is located at the top of the stratosphere and protects the earth by blocking most of the sun's harmful ultraviolet radiation. This ozone layer consists of molecules made up of three oxygen atoms, or O_3. CFC molecules remain stable in the first layer, but once they reach the stratosphere, solar energy in the form of ultraviolet radiation causes the chlorine atoms to break free and attach themselves to the ozone molecules. The resulting compounds break down into chlorine monoxide (ClO) and O_2, with destruction of the ozone molecule. The ultraviolet radiation further breaks down O_2 which then reacts with the chlorine monoxide to produce O_2 + Cl. The reliberated chlorine molecules are now free to attach themselves to another ozone molecule. It has been esti-

INTERNATIONAL CODE COUNCIL®
Copyright © 2015 ICC. ALL RIGHTS RESERVED. Accessed by David Dammon on Jun 21, 2017 12:30:52 PM pursuant to License Agreement with ICC. No further reproduction or distribution authorized. ANY UNAUTHORIZED REPRODUCTION OR DISTRIBUTION IS A VIOLATION OF THE FEDERAL COPYRIGHT ACT AND THE LICENSE AGREEMENT, AND SUBJECT TO CIVIL AND CRIMINAL PENALTIES THEREUNDER.

mated that each chlorine atom can destroy up to 100,000 molecules of ozone. Therefore, even if the total ban of CFC refrigerants were to happen today, their ozone-destroying effects are presumed to continue for years [see Commentary Figure 11(1)].

Some of the consequences of the depletion of the ozone layer include an increase in skin cancer; autoimmune deficiencies; increase in cataracts; and an impact on world food production based on the potential for ultraviolet radiation to impede plant-life photosynthesis and protein formation.

As new refrigerants are developed and ozone-depleting ones are phased out, changes to this chapter to keep pace with the industry are inevitable. For example, the formerly used safety group classifications are not adequate to classify the new refrigerants being developed. ASHRAE 34 has been increasing safety group classifications intended to adequately cover current refrigerants and those yet to be developed.

As defined in ASHRAE 15, refrigeration systems are a combination of interconnected components and piping assembled to form a closed circuit in which a refrigerant is circulated. The system's function is to extract heat from a location or medium, and to reject that heat to a different location or medium. The term "heat pump" is an appropriate description of a refrigeration system. Heat is a form of energy that can be measured; "cold" is not. The terms "cool" and "cold" are used to describe the relative quantity of heat in a substance or space [see Commentary Figures 11(2) and 11(3)].

Purpose

Chapter 11 contains regulations pertaining to the life safety of building occupants. These regulations establish minimum requirements to achieve the proper design, construction, installation and operation of refrigerating systems. This chapter establishes reasonable safeguards for the occupants by defining and mandating practices that are consistent with the practices and experience of the industry.

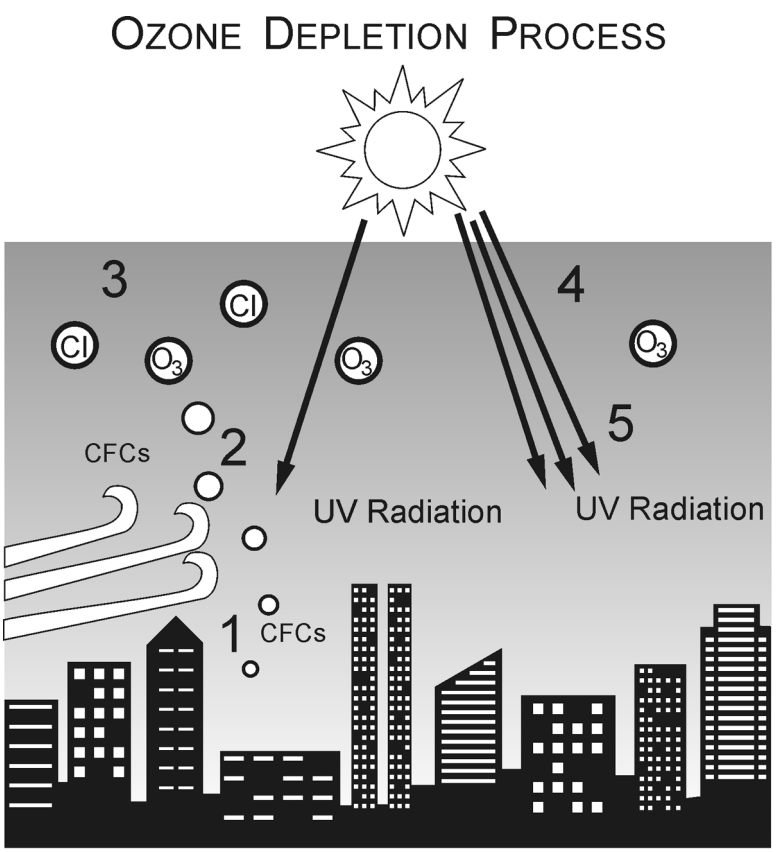

Figure 11(1)
OZONE DEPLETION PROCESS

INTERNATIONAL CODE COUNCIL®
Copyright © 2015 ICC. ALL RIGHTS RESERVED. Accessed by David Dammon on Jun 21, 2017 12:30:52 PM pursuant to License Agreement with ICC. No further reproduction or distribution authorized. ANY UNAUTHORIZED REPRODUCTION OR DISTRIBUTION IS A VIOLATION OF THE FEDERAL COPYRIGHT ACT AND THE LICENSE AGREEMENT, AND SUBJECT TO CIVIL AND CRIMINAL PENALTIES THEREUNDER.

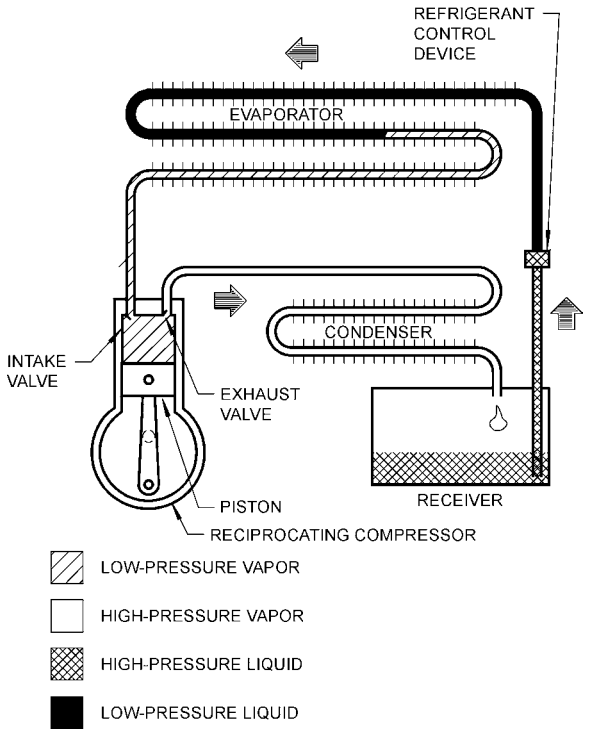

Figure 11(2)
COMPRESSION CYCLE

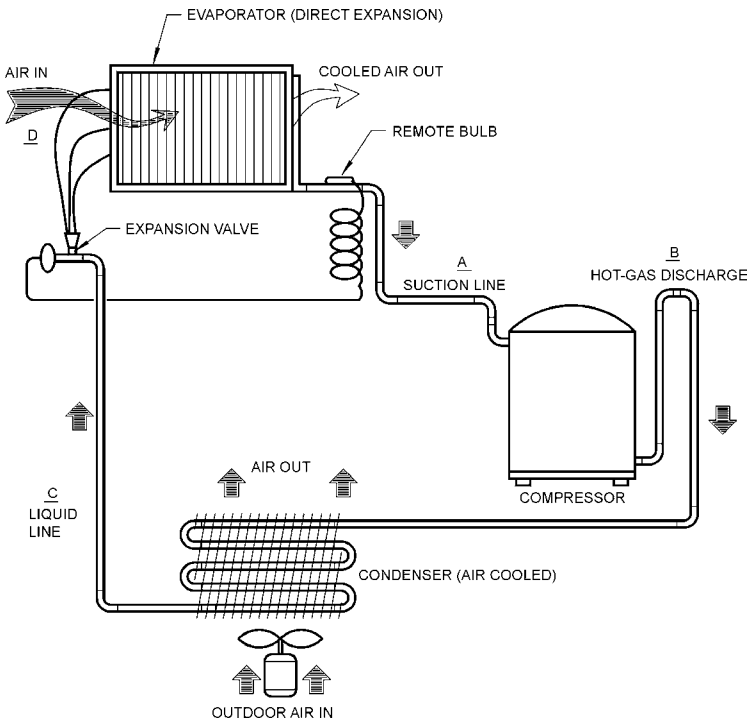

Figure 11(3)
REFRIGERATION SYSTEM EXAMPLE

INTERNATIONAL CODE COUNCIL®
Copyright © 2015 ICC. ALL RIGHTS RESERVED. Accessed by David Dammon on Jun 21, 2017 12:30:52 PM pursuant to License Agreement with ICC. No further reproduction or distribution authorized. ANY UNAUTHORIZED REPRODUCTION OR DISTRIBUTION IS A VIOLATION OF THE FEDERAL COPYRIGHT ACT AND THE LICENSE AGREEMENT, AND SUBJECT TO CIVIL AND CRIMINAL PENALTIES THEREUNDER.

SECTION 1101
GENERAL

1101.1 Scope. This chapter shall govern the design, installation, construction and repair of refrigeration systems that vaporize and liquefy a fluid during the refrigerating cycle. Refrigerant piping design and installation, including pressure vessels and pressure relief devices, shall conform to this code. Permanently installed refrigerant storage systems and other components shall be considered as part of the refrigeration system to which they are attached.

❖ While federal regulations for a safer environment have influenced the development of many provisions in this chapter, the hazards associated with the use of refrigerants still include, but are not limited to, frostbite, fire, inhalation hazards, chemical burns, long-term health problems and death. Chapter 11 is intended to minimize the hazards to the building occupants and the environment by requiring that all refrigeration systems be designed, constructed and installed in compliance with the provisions of this chapter.

1101.2 Factory-built equipment and appliances. *Listed* and *labeled* self-contained, factory-built *equipment* and appliances shall be tested in accordance with UL 207, 412, 471 or 1995. Such *equipment* and appliances are deemed to meet the design, manufacture and factory test requirements of this code if installed in accordance with their listing and the manufacturer's instructions.

❖ Self-contained, factory-built mechanical refrigeration equipment and appliances can be defined as factory-made and tested equipment that is fabricated and shipped in one or more sections, and in which the refrigerant-containing parts are not connected in the field other than by companion or block valves.

Section 301.7 requires mechanical equipment to bear the label of an approved agency unless otherwise approved in accordance with Section 105. Therefore, the label that appears on self-contained, factory-built equipment or appliances demonstrates that the equipment or appliances have been tested and evaluated by an approved agency in accordance with specific standards and test methods. While there are other standards for testing self-contained, factory-built equipment and appliances, the code specifically requires testing in accordance with UL 207, 412, 471 or 1995. It is worth noting that UL 207 is for nonelectric refrigerant-containing components and accessories, UL 412 is for refrigeration unit coolers, UL 471 is for commercial refrigerators and coolers and UL 1995 is for heating and cooling equipment. The information on the label and the standards to which the equipment was evaluated and tested enables the code official to determine conformance to Sections 1104, 1107 and 1108.

1101.3 Protection. Any portion of a refrigeration system that is subject to physical damage shall be protected in an *approved* manner.

❖ Dents, scratches, rust, exposure to excessive heat or other physical abuses can reduce the strength of refrigeration system materials. Damage or weakened materials may fail at typical refrigerant pressures lower than originally constructed, designed and specified to handle. Some refrigeration system materials are designed with encasements that provide protection from physical abuses. Other system materials such as refrigerant piping and cylinders must be protected from damage. A common-sense approach will indicate when and where physical protection is needed to prevent damage from vehicular impact, occupant activities and similar causes. The same common-sense approach must be relied upon to determine the type of protection that is warranted.

1101.4 Water connection. Water supply and discharge connections associated with refrigeration systems shall be made in accordance with this code and the *International Plumbing Code*.

❖ Some types of refrigeration equipment use potable water as a cooling medium and therefore connect to the potable water distribution system and discharge the waste water to the drainage system. Water chillers, cooling towers and thermal storage systems may have potable makeup water connections, while ice-making machines may have potable water supply connections and drainage system connections. All such connections must be protected against contamination as directed by the *International Plumbing Code*® (IPC®).

1101.5 Fuel gas connection. Fuel gas devices, *equipment* and appliances used with refrigeration systems shall be installed in accordance with the *International Fuel Gas Code.*

❖ Many refrigeration machines are driven by internal combustion engines or are powered by the heat of combustion. Examples include absorption equipment and natural gas engine-driven condensing units. As with all fuel-gas-fired equipment and appliances, the provisions of the *International Fuel Gas Code*® (IFGC®) apply as expressed within the scope of the code.

1101.6 General. Refrigeration systems shall comply with the requirements of this code and, except as modified by this code, ASHRAE 15. Ammonia-refrigerating systems shall comply with this code and, except as modified by this code, ASHRAE 15 and IIAR 2.

❖ This section requires full compliance with ASHRAE 15 and IIAR 2, except for any instances where the code has intentionally modified or exceeded the requirements of the standards. Chapter 11 is based on ASHRAE 15; however, there are requirements that are unique to both documents and the code offi-

INTERNATIONAL CODE COUNCIL®
Copyright © 2015 ICC. ALL RIGHTS RESERVED. Accessed by David Dammon on Jun 21, 2017 12:30:52 PM pursuant to License Agreement with ICC. No further reproduction or distribution authorized. ANY UNAUTHORIZED REPRODUCTION OR DISTRIBUTION IS A VIOLATION OF THE FEDERAL COPYRIGHT ACT AND THE LICENSE AGREEMENT, AND SUBJECT TO CIVIL AND CRIMINAL PENALTIES THEREUNDER.

cial and designer must be familiar with both documents. Therefore, while the exception to Section 1106.5.1 conflicts with ASHRAE 15, the provisions of this code shall apply pursuant to Section 102.8. Furthermore, many provisions in ASHRAE 15 are not contained in the code, including general system and component location restrictions, general installation requirements, material usage restrictions, system design pressure specifications, pressure vessel requirements, pressure relief protection, pressure vessel protection, relief valve discharge provisions, pressure limiting controls, system service provisions, factory testing requirements and general requirements for system signage and identification, refrigerant handling/storage and emergency procedures. IIAR 2 is similar in format and content to ASHRAE 15, but it is ammonia (R-717) specific.

1101.7 Maintenance. Mechanical refrigeration systems shall be maintained in proper operating condition, free from accumulations of oil, dirt, waste, excessive corrosion, other debris and leaks.

❖ Periodic maintenance is essential for the proper operation of mechanical refrigeration equipment. Typically, routine maintenance inspections occur when periodic testing is performed in accordance with Section 1109.1. However, maintenance should be performed any time damaged or weakened refrigeration systems are observed. Damaged refrigeration systems cannot be relied upon for protection since improperly maintained mechanical equipment will operate below peak efficiency, waste energy and eventually fail prematurely, adding unnecessary costs to the owner. The build up of oil, dirt and corrosion can adversely affect the heat exchange function of heat exchangers, and can contribute to motor failure and component overheating. The refrigeration systems must be kept clean in accordance with the manufacturer's recommendations, and any damaged or weakened component or device must be repaired or replaced and discarded. In essence, if the refrigerant stays contained in the refrigeration system, the hazards to occupants and the environment are greatly reduced; the hazards increase when the refrigerant becomes exposed outside of the system, often quickly and unexpectedly.

1101.8 Change in refrigerant type. The type of refrigerant in refrigeration systems having a refrigerant circuit containing more than 220 pounds (99.8 kg) of Group A1 or 30 pounds (13.6 kg) of any other group refrigerant shall not be changed without prior notification to the code official and compliance with the applicable code provisions for the new refrigerant type.

❖ The intent of this section is to keep the local fire code official or code official up to date on the status of large refrigeration systems and systems containing toxic and/or flammable refrigerants. Section 606 of the *International Fire Code*® (IFC®) contains several related requirements, including maintaining fire department access, posting emergency signs and labels, storage requirements and periodic system testing and maintenance of the test records (see commentary, Sections 1101.9 and 1106.6).

[F] 1101.9 Refrigerant discharge. Notification of refrigerant discharge shall be provided in accordance with the *International Fire Code*.

❖ Section 606 of the IFC requires notification of the fire department of any time there is a refrigerant discharge, either accidental or planned, from a refrigerant circuit containing more than 220 pounds (100 kg) of Group A1 or 30 pounds (14 kg) of refrigerant from any other group. Exceptions are stated for minor discharges associated with automatic pressure relief valves, service operations after system pump-down and systems operating below atmospheric pressure, which include an automatic purge system.

1101.10 Locking access port caps. Refrigerant circuit access ports located outdoors shall be fitted with locking-type tamper-resistant caps or shall be otherwise secured to prevent unauthorized access.

Exception: This section shall not apply to refrigerant circuit access ports on equipment installed in controlled areas such as on roofs with locked access hatches or doors.

❖ This provision intends to address a relatively new type and method of substance abuse where people intentionally inhale refrigerant gases for the intoxicating effect. In some cases, this inhalant abuse has resulted in the death of the individual. The typical condensing unit or heat pump unit is located outdoors and is equipped with access ports on the vapor and liquid refrigerant lines. These access ports are necessary for several purposes, such as to allow the connection of diagnostic gauges and to allow refrigerant to be added to or taken from the unit during servicing of the unit. Some of these access ports require backseated valves to be opened with a wrench to allow refrigerant to escape and many of these access ports are equipped with simple "Schraeder" valves that are similar to the valve cores used on car and truck tires. All access ports are provided with threaded caps to keep out debris and moisture and to also guard against valve leakage. Individuals intent on inhaling refrigerants have found that they can withdraw refrigerant from these units by using simple hand tools or their bare hands to remove the caps and open the valves.

The purpose of this section is to prevent this dangerous form of substance abuse by making it difficult if not impossible to gain access to the access ports. Special locking-type caps are available such that wrenches, pliers and fingers cannot be used to remove the caps without a special tool/key [see Commentary Figures 1101.10(1) through 1101.10(4)]. Methods other than special locking caps can be used such as installing the equipment in a chain link fence "cage" that is locked to prevent access to the equipment. Equipment installed on roofs that cannot be accessed except through a locked access hatch is

INTERNATIONAL CODE COUNCIL®
Copyright © 2015 ICC. ALL RIGHTS RESERVED. Accessed by David Dammon on Jun 21, 2017 12:30:52 PM pursuant to License Agreement with ICC. No further reproduction or distribution authorized. ANY UNAUTHORIZED REPRODUCTION OR DISTRIBUTION IS A VIOLATION OF THE FEDERAL COPYRIGHT ACT AND THE LICENSE AGREEMENT, AND SUBJECT TO CIVIL AND CRIMINAL PENALTIES THEREUNDER.

yet another way to prevent access. All newly installed equipment, including replacement equipment, must be provided with a method of protection as part of such installations. The exception recognizes that locking-type caps are not necessary where the refrigerant access ports are located in areas having controlled access, such as where the equipment is installed on roofs or in caged enclosures. If the equipment is made inaccessible by virtue of its location, the intent of the code is met because unauthorized access to the refrigerant ports is denied. See Commentary, Section 1102.3.



Figure 1101.10(1)
INSTALLATION OF LOCKING CAPS FOR REFRIGERANT ACCESS PORT
(Photo Courtesy of Novent LLC. & Airtec Products Corporation, Inc.)



Figure 1101.10(2)
REFRIGERANT LOCKING CAPS AND TOOLS
(Photo Courtesy of Novent LLC. & Airtec Products Corporation, Inc.)

INTERNATIONAL CODE COUNCIL®
Copyright © 2015 ICC. ALL RIGHTS RESERVED. Accessed by David Dammon on Jun 21, 2017 12:30:52 PM pursuant to License Agreement with ICC. No further reproduction or distribution authorized. ANY UNAUTHORIZED REPRODUCTION OR DISTRIBUTION IS A VIOLATION OF THE FEDERAL COPYRIGHT ACT AND THE LICENSE AGREEMENT, AND SUBJECT TO CIVIL AND CRIMINAL PENALTIES THEREUNDER.



Figure 1101.10(3)
REFRIGERANT LABELS FOR LOCKING CAPS
(Photo Courtesy of Novent LLC. & Airtec Products Corporation, Inc.)



Figure 1101.10(4)
SPECIAL REMOVAL TOOLS FOR REFRIGERANT LOCKING CAPS
(Photo Courtesy of Novent LLC. & Airtec Products Corporation, Inc.)

INTERNATIONAL CODE COUNCIL®
Copyright © 2015 ICC. ALL RIGHTS RESERVED. Accessed by David Dammon on Jun 21, 2017 12:30:52 PM pursuant to License Agreement with ICC. No further reproduction or distribution authorized. ANY UNAUTHORIZED REPRODUCTION OR DISTRIBUTION IS A VIOLATION OF THE FEDERAL COPYRIGHT ACT AND THE LICENSE AGREEMENT, AND SUBJECT TO CIVIL AND CRIMINAL PENALTIES THEREUNDER.

SECTION 1102
SYSTEM REQUIREMENTS

1102.1 General. The system classification, allowable refrigerants, maximum quantity, enclosure requirements, location limitations, and field pressure test requirements shall be determined as follows:

1. Determine the refrigeration system's classification, in accordance with Section 1103.3.
2. Determine the refrigerant classification in accordance with Section 1103.1.
3. Determine the maximum allowable quantity of refrigerant in accordance with Section 1104, based on type of refrigerant, system classification and *occupancy*.
4. Determine the system enclosure requirements in accordance with Section 1104.
5. Refrigeration *equipment* and *appliance* location and installation shall be subject to the limitations of Chapter 3.
6. Nonfactory-tested, field-erected *equipment* and appliances shall be pressure tested in accordance with Section 1108.

❖ This section contains general requirements regarding the purity and compatibility of refrigerants, serves to coordinate the provisions of Chapter 11 and includes basic user guidance for the application of those provisions. Items 1 through 4 provide logically ordered instruction on the application of the interdependent Sections 1103, 1104, 1105 and 1106 (see commentary, Sections 301, 1103, 1104 and 1108). These requirements apply to all systems, regardless of classification.

1102.2 Refrigerants. The refrigerant shall be that which the *equipment* or *appliance* was designed to utilize or converted to utilize. Refrigerants not identified in Table 1103.1 shall be *approved* before use.

❖ Refrigeration equipment is designed to operate with a specific type or types of refrigerant. Using the wrong type of refrigerant or a contaminated refrigerant could cause equipment damage or loss of operating efficiency. Refrigerant types differ in how they react with system lubricants, seals, gaskets and other components.

Existing equipment may have to be converted to a different type of refrigerant or charged with refrigerant recovered from it or another system; however, it would be an unnecessary risk to charge new equipment with any refrigerant other than that specified by the equipment manufacturer.

Refrigerants not listed in Table 1103.1 are prohibited unless approved in accordance with Section 105. Because of constantly evolving technology and a never-ending search for better and safer refrigerants, new types of refrigerants will likely be entering the market place regularly. Once these new products are classified in accordance with ASHRAE 34, the code official can evaluate them based on their properties and comparisons to those refrigerants listed in Table 1103.1.

1102.2.1 Mixing. Refrigerants, including refrigerant blends, with different designations in ASHRAE 34 shall not be mixed in a system.

Exception: Addition of a second refrigerant is allowed where permitted by the *equipment* or *appliance* manufacturer to improve oil return at low temperatures. The refrigerant and amount added shall be in accordance with the manufacturer's instructions.

❖ Refrigerants of different designations must not be mixed together in a system because the chemical combinations would have different and unpredictable or possibly hazardous properties. A mixture of refrigerants could cause equipment damage and loss of system performance. Also combinations would trigger the requirements of Section 1104 applicable to each separate type of refrigerant in a mixture.

Another significant problem with mixing refrigerant types is that recovery and reclamation of the refrigerants would be difficult or impossible. There might not be any practical process for separating refrigerant mixtures into their component parts. In some cases, destruction of the refrigerant mixture is the only practical solution for handling cross-contaminated (mixed) refrigerants.

1102.2.2 Purity. Refrigerants used in refrigeration systems shall be new, recovered or *reclaimed refrigerants* in accordance with Section 1102.2.2.1, 1102.2.2.2 or 1102.2.2.3. Where required by the *equipment* or *appliance* owner or the code official, the installer shall furnish a signed declaration that the refrigerant used meets the requirements of Section 1102.2.2.1, 1102.2.2.2 or 1102.2.2.3.

Exception: The refrigerant used shall meet the purity specifications set by the manufacturer of the *equipment* or *appliance* in which such refrigerant is used where such specifications are different from that specified in Sections 1102.2.2.1, 1102.2.2.2 and 1102.2.2.3.

❖ Oils, waxes, moisture, acids and residues in refrigerants taken from burned-out or retired refrigeration machines can damage the seals and motor parts of new refrigeration equipment. Refrigerants containing these impurities can cause equipment damage or poor performance, and may lead to equipment leaks. Equipment leaks can endanger the health of occupants and contribute to the amount of refrigerant escaping into the atmosphere, causing environmental problems.

Because contaminated refrigerant is not easily detected by the equipment owner or the code official, the signed declaration serves as some assurance that clean refrigerant, whether recovered (temporarily removed from a system with the intent of putting it back in) or reclaimed (reprocessed for use in compatible equipment), is being used. Unethical installers or service personnel might take shortcuts by not filtering recovered refrigerant or processing reclaimed refrigerant in accordance with ARI 700 (referenced in Sec-

INTERNATIONAL CODE COUNCIL®
Copyright © 2015 ICC. ALL RIGHTS RESERVED. Accessed by David Dammon on Jun 21, 2017 12:30:52 PM pursuant to License Agreement with ICC. No further reproduction or distribution authorized. ANY UNAUTHORIZED REPRODUCTION OR DISTRIBUTION IS A VIOLATION OF THE FEDERAL COPYRIGHT ACT AND THE LICENSE AGREEMENT, AND SUBJECT TO CIVIL AND CRIMINAL PENALTIES THEREUNDER.

tion 1102.2.2.3). Because contaminated refrigerant could go undetected for some time, the written declaration is a safeguard that can serve to make the installer liable if the equipment eventually fails because of contaminated refrigerant.

1102.2.2.1 New refrigerants. Refrigerants shall be of a purity level specified by the *equipment* or *appliance* manufacturer.

❖ It is unlikely that virgin refrigerants would be produced that do not meet most manufacturers' purity specifications. However, it is quite possible that recovered and reclaimed refrigerants would not meet purity standards (see commentary, Sections 1102.2.2.2 and 1102.2.2.3). Equally important is verifying that the refrigerant specified by the manufacturer of the equipment is used. In other words, there is a greater possibility that the wrong refrigerant could be used than that new refrigerant would somehow not meet purity standards.

1102.2.2.2 Recovered refrigerants. Refrigerants that are recovered from refrigeration and air-conditioning systems shall not be reused in other than the system from which they were recovered and in other systems of the same owner. *Recovered refrigerants* shall be filtered and dried before reuse. *Recovered refrigerants* that show clear signs of contamination shall not be reused unless reclaimed in accordance with Section 1102.2.2.3.

❖ Recovered refrigerants are withdrawn from existing systems that are being retired or repaired. Recovering the refrigerant prevents its escape into the atmosphere and allows it to be recycled. This is economically and environmentally sound and required by federal law.

Transferring refrigerant to other equipment could cause system contamination in much the same way as a blood transfusion could introduce disease into another creature. This section prohibits the reuse of recovered refrigerant in systems of different ownership than the equipment from which it was withdrawn, unless reprocessed in accordance with the requirements for reclaimed refrigerants (see Section 1102.2.2.3). In all cases, recovered refrigerants must not be reused until filtered and treated for moisture removal. Any recovered refrigerant suspected of being or shown to be contaminated (such as in the case of a compressor motor burnout) must be processed as necessary to meet the specified purity standard. Kits are often used in the field to test for contaminants, such as acids and moisture.

1102.2.2.3 Reclaimed refrigerants. Used refrigerants shall not be reused in a different owner's *equipment* or appliances unless tested and found to meet the purity requirements of ARI 700. Contaminated refrigerants shall not be used unless reclaimed and found to meet the purity requirements of ARI 700.

❖ This section relates to Section 1102.2.2.2 and requires testing of used refrigerants for purity before they are introduced into someone else's equipment. While many refrigerants meet the purity requirements of ARI 700, contaminated refrigerant is sometimes reused, marketed and sold as new. The reuse of the contaminated refrigerant has resulted in equipment failure and subsequent venting of toxic, combustible, decomposing, pressurized and ozone-depleting refrigerants. If the test indicates that it does not meet the purity standards of ARI 700, it must be reprocessed in accordance with that standard before it is reused. Note that purification required to meet ARI 700 could involve much more processing than the simple filtering and drying required by Section 1102.2.2.2. Contaminated refrigerants must not be introduced into any equipment, regardless of ownership.

1102.3 Access port protection. Refrigerant access ports shall be protected in accordance with Section 1101.10 whenever refrigerant is added to or recovered from refrigeration or air-conditioning systems.

❖ This section will retroactively require protection of refrigerant access ports on existing equipment by linking the requirement for such to the servicing of the equipment. Specifically, when refrigerant is added to or removed (recovered) from a system, the protection required by Section 1101.10 is required. Of course, for existing equipment this will likely mean the installation of locking type caps because the location of the equipment cannot be changed at this point. See commentary for Section 1101.10. The philosophy is simple; if the system is opened and gauge sets are connected in the process of charging or recovering refrigerant, then it is quite convenient at that time to install the locking caps.

SECTION 1103
REFRIGERATION SYSTEM CLASSIFICATION

1103.1 Refrigerant classification. Refrigerants shall be classified in accordance with ASHRAE 34 as listed in Table 1103.1.

❖ Because the classification of refrigeration systems is a necessary step in the application of Section 1104, the code addresses the hazards of refrigeration systems to building occupants by considering three things: the type of refrigerant, the type of system (Section 1103.3) and the type of building occupancy (Section 1103.2). Certain systems are more hazardous in terms of possible exposure to escaping refrigerants (see commentary, Section 1103.3). Certain occupancies are more hazardous in terms of the number of people who could be exposed or who are, for various reasons, particularly susceptible to injury because of disability, detention or incapacity (see commentary, Section 1103.2).

The classification of refrigerants is based on ASHRAE 34, which numbers and classifies refrigerants in accordance with their potential hazards (see Commentary Figure 1103.1). In the code, refrigerants are identified by their number, which is preceded by

INTERNATIONAL CODE COUNCIL®
Copyright © 2015 ICC. ALL RIGHTS RESERVED. Accessed by David Dammon on Jun 21, 2017 12:30:52 PM pursuant to License Agreement with ICC. No further reproduction or distribution authorized. ANY UNAUTHORIZED REPRODUCTION OR DISTRIBUTION IS A VIOLATION OF THE FEDERAL COPYRIGHT ACT AND THE LICENSE AGREEMENT, AND SUBJECT TO CIVIL AND CRIMINAL PENALTIES THEREUNDER.

the letter "R," for example, R-22. Trademark names of manufacturers, such as "Freon," are not used in the code. The refrigerant number, name and chemical formula can be found in Table 1103.1.

Each refrigerant is classified into a safety group that is based on two factors: flammability and toxicity. The safety group in which an individual refrigerant is classified relates to the potential hazard to the building occupants and is one of the factors used to determine the maximum quantities of refrigerants allowed by the code.

The new safety classification designations of ASHRAE 34 are necessary to provide for regulations applicable to the newly developed and implemented "ozone-friendly" refrigerants intended to replace the ozone-depleting refrigerants such as R-11 and R-12 now used in many existing refrigeration systems. Note d to Table 1103.1 identifies refrigerants that have been designated as "Class I ozone-depleting substances" and are banned by federal law for use in new installations.

Table 1103.1. See page 11-11.

❖ Table 1103.1 indicates the TLV-TWA (threshold limit value-time weighted average), which is the amount of refrigerant a person can be exposed to for 8 hours a day, 40 hours a week, without adverse effects unless noted "C" for "ceiling." Ceiling is an exposure level (as in PEL-C, REL-C or TLV-C) that should not be exceeded during any part of the day and assessed as a 15-minute TWA unless otherwise specified. Note that Table 1103.1 establishes the maximum value for any refrigerant chemical as 1,000 parts per million (ppm). Furthermore, there is also the short-term exposure limit (STEL), which is a term used in the refrigeration industry. STEL is based on a 15-minute exposure time in any given day in addition to the value Immediately Dangerous to Life or Health (IDLH). The IDLH is referenced in Note c of Table 1103.1 and is used to provide guidance for the machinery room requirements of Sections 1104, 1105 and 1106. IDLH is set by the U.S. National Institute of Occupational Safety and Health (NIOSH) to establish the maximum concentration of air-borne contaminants, normally expressed as ppm, from which one could escape within 30 minutes without a respirator and without experiencing any escape impairing (e.g., severe eye irritation) or irreversible health effects.

As a point of information, the American Conference of Government and Industrial Hygienists (ACGIH) sets the TLV-TWA for chemicals, while the permissible exposure limit (PEL), which is referenced in Note e of Table 1103.1, is set by the Occupational Safety and Health Association (OSHA). Refrigerants not classified in ASHRAE 34 should be reviewed with suppliers to make sure enough is known about their toxicity properties. Some blends may not be classified, but contain classified components. Therefore, it is worth noting that other refrigerant chemical producers and organizations have similar exposure level indices based on similar criteria as PEL and TWA. For example, workplace environmental exposure limit (WEEL), acceptable exposure limit (AEL), industrial exposure limit (IEL), occupational exposure limit (OEL) and Programme for Alternative Fluorocarbon Toxicity Testing (PAFT) are generally used for substances for which a PEL has not been established. Note that a separate MSDS produced by the manufacturer of the chemical refrigerant will often clearly indicate the toxicity of refrigerants used in conjunction with the mechanical systems.

Note that Section 1103.1 indicates that ASHRAE 34 must be used to classify the combustible, flammable and decomposing effects of refrigerants.

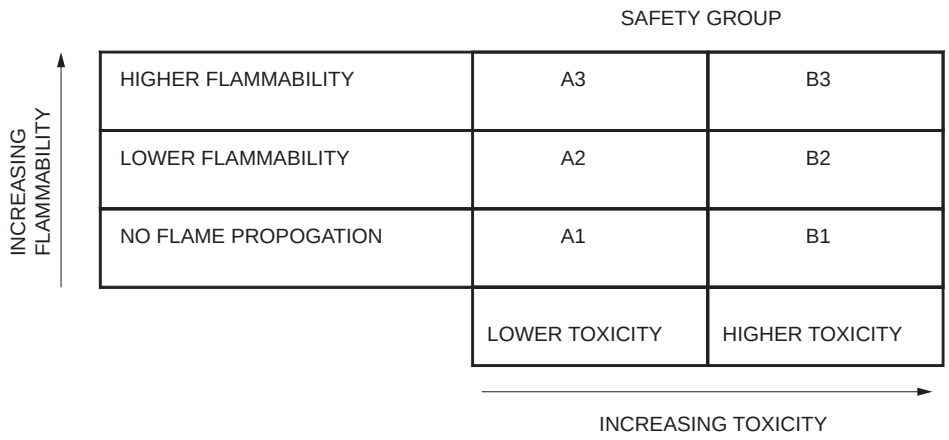

Figure 1103.1
CLASSIFICATION OF REFRIGERANTS
(Source: ASHRAE 15-94)

INTERNATIONAL CODE COUNCIL®
Copyright © 2015 ICC. ALL RIGHTS RESERVED. Accessed by David Dammon on Jun 21, 2017 12:30:52 PM pursuant to License Agreement with ICC. No further reproduction or distribution authorized. ANY UNAUTHORIZED REPRODUCTION OR DISTRIBUTION IS A VIOLATION OF THE FEDERAL COPYRIGHT ACT AND THE LICENSE AGREEMENT, AND SUBJECT TO CIVIL AND CRIMINAL PENALTIES THEREUNDER.

TABLE 1103.1
REFRIGERANT CLASSIFICATION, AMOUNT AND OEL

CHEMICAL REFRIGERANT	FORMULA	CHEMICAL NAME OF BLEND	REFRIGERANT CLASSIFICATION	AMOUNT OF REFRIGERANT PER OCCUPIED SPACE				[F] DEGREES OF HAZARD[a]
				Pounds per 1,000 cubic feet	ppm	g/m³	OEL[e]	
R-11[d]	CCl_3F	trichlorofluoromethane	A1	0.39	1,100	6.2	C1,000	2-0-0[b]
R-12[d]	CCl_2F_2	dichlorodifluoromethane	A1	5.6	18,000	90	1,000	2-0-0[b]
R-13[d]	$CClF_3$	chlorotrifluoromethane	A1	—	—	—	1,000	2-0-0[b]
R-13B1[d]	$CBrF_3$	bromotrifluoromethane	A1	—	—	—	1,000	2-0-0[b]
R-14	CF_4	tetrafluoromethane (carbon tetrafluoride)	A1	25	110,000	400	1,000	2-0-0[b]
R-22	$CHClF_2$	chlorodifluoromethane	A1	13	59,000	210	1,000	2-0-0[b]
R-23	CHF_3	trifluoromethane (fluoroform)	A1	7.3	41,000	120	1,000	2-0-0[b]
R-32	CH_2F_2	difluoromethane (methylene fluoride)	A2[f]	4.8	36,000	77	1,000	1-4-0
R-113[d]	CCl_2FCClF_2	1,1,2-trichloro-1,2,2-trifluoroethane	A1	1.2	2,600	20	1,000	2-0-0[b]
R-114[d]	$CClF_2CClF_2$	1,2-dichloro-1,1,2,2-tetrafluoroethane	A1	8.7	20,000	140	1,000	2-0-0[b]
R-115	$CClF_2CF_3$	chloropentafluoroethane	A1	47	120,000	760	1,000	—
R-116	CF_3CF_3	hexafluoroethane	A1	34	97,000	550	1,000	1-0-0
R-123	$CHCl_2CF_3$	2,2-dichloro-1,1,1-trifluoroethane	B1	3.5	9,100	57	50	2-0-0[b]
R-124	$CHClFCF_3$	2-chloro-1,1,1,2-tetrafluoroethane	A1	3.5	10,000	56	1,000	2-0-0[b]
R-125	CHF_2CF_3	pentafluoroethane	A1	23	75,000	370	1,000	2-0-0[b]
R-134a	CH_2FCF_3	1,1,1,2-tetrafluoroethane	A1	13	50,000	210	1,000	2-0-0[b]
R-141b	CH_3CCl_2F	1,1-dichloro-1-fluoroethane	—	0.78	2,600	12	500	2-1-0
R-142b	CH_3CClF_2	1-chloro-1,1-difluoroethane	A2	5.1	20,000	83	1,000	2-4-0
R-143a	CH_3CF_3	1,1,1-trifluoroethane	A2[f]	4.5	21,000	70	1,000	2-0-0[b]
R-152a	CH_3CHF_2	1,1-difluoroethane	A2	2.0	12,000	32	1,000	1-4-0
R-170	CH_3CH_3	ethane	A3	0.54	7,000	8.7	1,000	2-4-0
R-E170	CH_3OCH_3	Methoxymethane (dimethyl ether)	A3	1.0	8,500	16	1,000	—
R-218	$CF_3CF_2CF_3$	octafluoropropane	A1	43	90,000	690	1,000	2-0-0[b]
R-227ea	CF_3CHFCF_3	1,1,1,2,3,3,3-heptafluoropropane	A1	36	84,000	580	1,000	—
R-236fa	$CF_3CH_2CF_3$	1,1,1,3,3,3-hexafluoropropane	A1	21	55,000	340	1,000	2-0-0[b]
R-245fa	$CHF_2CH_2CF_3$	1,1,1,3,3-pentafluoropropane	B1	12	34,000	190	300	2-0-0[b]
R-290	$CH_3CH_2CH_3$	propane	A3	0.56	5,300	9.5	1,000	2-4-0
R-C318	$-(CF_2)_4-$	octafluorocyclobutane	A1	41	80,000	660	1,000	—
R-400[d]	zeotrope	R-12/114 (50.0/50.0)	A1	10	28,000	160	1,000	2-0-0[b]
R-400[d]	zeotrope	R-12/114 (60.0/40.0)	A1	11	30,000	170	1,000	
R-401A	zeotrope	R-22/152a/124 (53.0/13.0/34.0)	A1	6.6	27,000	110	1,000	2-0-0[b]

(continued)

INTERNATIONAL CODE COUNCIL®
Copyright © 2015 ICC. ALL RIGHTS RESERVED. Accessed by David Dammon on Jun 21, 2017 12:30:52 PM pursuant to License Agreement with ICC. No further reproduction or distribution authorized. ANY UNAUTHORIZED REPRODUCTION OR DISTRIBUTION IS A VIOLATION OF THE FEDERAL COPYRIGHT ACT AND THE LICENSE AGREEMENT, AND SUBJECT TO CIVIL AND CRIMINAL PENALTIES THEREUNDER.

TABLE 1103.1—continued
REFRIGERANT CLASSIFICATION, AMOUNT AND OEL

CHEMICAL REFRIGERANT	FORMULA	CHEMICAL NAME OF BLEND	REFRIGERANT CLASSIFICATION	AMOUNT OF REFRIGERANT PER OCCUPIED SPACE				[F] DEGREES OF HAZARD[a]
				Pounds per 1,000 cubic feet	ppm	g/m^3	OEL[e]	
R-401B	zeotrope	R-22/152a/124 (61.0/11.0/28.0)	A1	7.2	30,000	120	1,000	2-0-0[b]
R-401C	zeotrope	R-22/152a/124 (33.0/15.0/52.0)	A1	5.2	20,000	84	1,000	2-0-0[b]
R-402A	zeotrope	R-125/290/22 (60.0/2.0/38.0)	A1	17	66,000	270	1,000	2-0-0[b]
R-402B	zeotrope	R-125/290/22 (38.0/2.0/60.0)	A1	15	63,000	240	1,000	2-0-0[b]
R-403A	zeotrope	R-290/22/218 (5.0/75.0/20.0)	A2	7.6	33,000	120	1,000	2-0-0[b]
R-403B	zeotrope	R-290/22/218 (5.0/56.0/39.0)	A1	18	70,000	290	1,000	2-0-0[b]
R-404A	zeotrope	R-125/143a/134a (44.0/52.0/4.0)	A1	31	130,000	500	1,000	2-0-0[b]
R-405A	zeotrope	R-22/152a/142b/C318 (45.0/7.0/5.5/2.5)	—	16	57,000	260	1,000	—
R-406A	zeotrope	R-22/600a/142b (55.0/4.0/41.0)	A2	4.7	21,000	25	1,000	—
R-407A	zeotrope	R-32/125/134a (20.0/40.0/40.0)	A1	19	83,000	300	1,000	2-0-0[b]
R-407B	zeotrope	R-32/125/134a (10.0/70.0/20.0)	A1	21	79,000	330	1,000	2-0-0[b]
R-407C	zeotrope	R-32/125/134a (23.0/25.0/52.0)	A1	18	81,000	290	1,000	2-0-0[b]
R-407D	zeotrope	R-32/125/134a (15.0/15.0/70.0)	A1	16	68,000	250	1,000	2-0-0[b]
R-407E	zeotrope	R-32/125/134a (25.0/15.0/60.0)	A1	17	80,000	280	1,000	2-0-0[b]
R-407F	zeotrope	R-32/125/134a (30.0/30.0/40.0)	A1	20	95,000	320	1,000	—
R-408A	zeotrope	R-125/143a/22 (7.0/46.0/47.0)	A1	21	95,000	340	1,000	2-0-0[b]
R-409A	zeotrope	R-22/124/142b (60.0/25.0/15.0)	A1	7.1	29,000	110	1,000	2-0-0[b]
R-409B	zeotrope	R-22/124/142b (65.0/25.0/10.0)	A1	7.3	30,000	120	1,000	2-0-0[b]
R-410A	zeotrope	R-32/125 (50.0/50.0)	A1	26	140,000	420	1,000	2-0-0[b]
R-410B	zeotrope	R-32/125 (45.0/55.0)	A1	27	140,000	430	1,000	2-0-0[b]
R-411A	zeotrope	R-127/22/152a (1.5/87.5/11.0)	A2	2.9	14,000	46	990	—
R-411B	zeotrope	R-1270/22/152a (3.0/94.0/3.0)	A2	2.8	13,000	45	980	—
R-412A	zeotrope	R-22/218/142b (70.0/5.0/25.0)	A2	5.1	22,000	82	1,000	—
R-413A	zeotrope	R-218/134a/600a (9.0/88.0/3.0)	A2	5.8	22,000	94	1,000	—
R-414A	zeotrope	R-22/124/600a/142b (51.0/28.5/4.0/16.5)	A1	6.4	26,000	100	1,000	—
R-414B	zeotrope	R-22/124/600a/142b (50.0/39.0/1.5/9.5)	A1	6.0	23,000	95	1,000	—
R-415A	zeotrope	R-22/152a (82.0/18.0)	A2	2.9	14,000	47	1,000	—
R-415B	zeotrope	R-22/152a (25.0/75.0)	A2	2.1	12,000	34	1,000	—
R-416A	zeotrope	R-134a/124/600 (59.0/39.5/1.5)	A1	3.9	14,000	62	1,000	2-0-0[b]
R-417A	zeotrope	R-125/134a/600 (46.6/50.0/3.4)	A1	3.5	13,000	56	1,000	2-0-0[b]
R-417B	zeotrope	R-125/134a/600 (79.0/18.3/2.7)	A1	4.3	15,000	70	1,000	—
R-418A	zeotrope	R-290/22/152a (1.5/96.0/2.5)	A2	4.8	22,000	77	1,000	—

(continued)

Copyright © 2015 ICC. ALL RIGHTS RESERVED. Accessed by David Dammon on Jun 21, 2017 12:30:52 PM pursuant to License Agreement with ICC. No further reproduction or distribution authorized. ANY UNAUTHORIZED REPRODUCTION OR DISTRIBUTION IS A VIOLATION OF THE FEDERAL COPYRIGHT ACT AND THE LICENSE AGREEMENT, AND SUBJECT TO CIVIL AND CRIMINAL PENALTIES THEREUNDER.

TABLE 1103.1—continued
REFRIGERANT CLASSIFICATION, AMOUNT AND OEL

CHEMICAL REFRIGERANT	FORMULA	CHEMICAL NAME OF BLEND	REFRIGERANT CLASSIFICATION	AMOUNT OF REFRIGERANT PER OCCUPIED SPACE				[F] DEGREES OF HAZARD[a]
				Pounds per 1,000 cubic feet	ppm	g/m^3	OEL[e]	
R-419A	zeotrope	R-125/134a/E170 (77.0/19.0/4.0)	A2	4.2	15,000	67	1,000	—
R-420A	zeotrope	R-134a/142b (88.0/12.0)	A1	12	45,000	190	1,000	2-0-0[b]
R-421A	zeotrope	R-125/134a (58.0/42.0)	A1	17	61,000	280	1,000	2-0-0[b]
R-421B	zeotrope	R-125/134a (85.0/15.0)	A1	21	69,000	330	1,000	2-0-0[b]
R-422A	zeotrope	R-125/134a/600a (85.1/11.5/3.4)	A1	18	63,000	290	1,000	2-0-0[b]
R-422B	zeotrope	R-125/134a/600a (55.0/42.0/3.0)	A1	16	56,000	250	1,000	2-0-0[b]
R-422C	zeotrope	R-125/134a/600a (82.0/15.0/3.0)	A1	18	62,000	290	1,000	2-0-0[b]
R-422D	zeotrope	R-125/134a/600a (65.1/31.5/3.4)	A1	16	58,000	260	1,000	2-0-0[b]
R-423A	zeotrope	R-134a/227ea (52.5/47.5)	A1	19	59,000	310	1,000	2-0-0[c]
R-424A	zeotrope	R-125/134a/600a/600/601a (50.5/47.0/0.9/1.0/0.6)	A1	6.2	23,000	100	970	2-0-0[b]
R-425A	zoetrope	R-32/134a/227ea (18.5/69.5/12.0)	A1	16	72,000	260	1,000	2-0-0[b]
R-426A	zeotrope	R-125/134a/600a/601a (5.1/93.0/1.3/0.6)	A1	5.2	20,000	83	990	—
R-427A	zeotrope	R-32/125/143a/134a (15.0/25.0/10.0/50.0)	A1	18	79,000	290	1,000	2-1-0
R-428A	zeotrope	R-125/143a/290/600a (77.5/20.0/0.6/1.9)	A1	23	83,000	370	1,000	—
R-429A	zeotrope	R-E170/152a/600a (60.0/10.0/30.0)	A3	0.81	6,300	13	1,000	—
R-430A	zeotrope	R-152a/600a (76.0/24.0)	A3	1.3	8,000	21	1,000	—
R-431A	zeotrope	R-290/152a (71.0/29.0)	A3	0.69	5,500	11	1,000	—
R-432A	zeotrope	R-1270/E170 (80.0/20.0)	A3	0.13	1,200	2.1	700	—
R-433A	zeotrope	R-1270/290 (30.0/70.0)	A3	0.34	3,100	5.5	880	—
R-433B	zeotrope	R-1270/290 (5.0-95.0)	A3	0.51	4,500	8.1	950	—
R-433C	zeotrope	R-1270/290 (25.0-75.0)	A3	0.41	3,600	6.6	790	—
R-434A	zeotrope	R-125/143a/600a (63.2/18.0/16.0/2.8)	A1	20	73,000	320	1,000	—
R-435A	zeotrope	R-E170/152a (80.0/20.0)	A3	1.1	8,500	17	1,000	—
R-436A	zeotrope	R-290/600a (56.0/44.0)	A3	0.50	4,000	8.1	1,000	—
R-436B	zeotrope	R-290/600a (52.0/48.0)	A3	0.51	4,000	8.1	1,000	—
R-437A	zeotrope	R-125/134a/600/601 (19.5/78.5/1.4/0.6)	A1	5.0	19,000	82	990	—
R-438A	zeotrope	R-32/125/134a/600/601a (8.5/45.0/44.2/1.7/0.6)	A1	4.9	20,000	79	990	—
R-439A	zeotrope	R-32/125/600a (50.0/47.0/3.0)	A2	4.7	26,000	76	990	—
R-440A	zeotrope	R-290/134a/152a (0.6/1.6/97.8)	A2	1.9	12,000	31	1,000	—
R-441A	zeotrope	R-170/290/600a/600 (3.1/54.8/6.0/36.1)	A3	0.39	3,200	6.3	1,000	—
R-442A	zeotrope	R-32/125/134a/152a/227ea (31.0/31.0/30.0/3.0/5.0)	A1	21	100,000	330	1,000	—

(continued)

INTERNATIONAL CODE COUNCIL®
Copyright © 2015 ICC. ALL RIGHTS RESERVED. Accessed by David Dammon on Jun 21, 2017 12:30:52 PM pursuant to License Agreement with ICC. No further reproduction or distribution authorized. ANY UNAUTHORIZED REPRODUCTION OR DISTRIBUTION IS A VIOLATION OF THE FEDERAL COPYRIGHT ACT AND THE LICENSE AGREEMENT, AND SUBJECT TO CIVIL AND CRIMINAL PENALTIES THEREUNDER.

TABLE 1103.1—continued
REFRIGERANT CLASSIFICATION, AMOUNT AND OEL

CHEMICAL REFRIGERANT	FORMULA	CHEMICAL NAME OF BLEND	REFRIGERANT CLASSIFICATION	AMOUNT OF REFRIGERANT PER OCCUPIED SPACE				[F] DEGREES OF HAZARD[a]
				Pounds per 1,000 cubic feet	ppm	g/m³	OEL[e]	
R-500[e]	azeotrope	R-12/152a (73.8/26.2)	A1	7.6	30,000	120	1,000	2-0-0[b]
R-501[d]	azeotrope	R-22/12 (75.0/25.0)	A1	13	54,000	210	1,000	—
R-502[e]	azeotrope	R-22/115 (48.8/51.2)	A1	21	73,000	330	1,000	2-0-0[b]
R-503[e]	azeotrope	R-23/13 (40.1/59.9)	—	—	—	—	1,000	2-0-0[b]
R-504[d]	azeotrope	R-32/115 (48.2/51.8)	—	28	140,000	450	1,000	—
R-507A	azeotrope	R-125/143a (50.0/50.0)	A1	32	130,000	520	1,000	2-0-0[b]
R-508A	azeotrope	R-23/116 (39.0/61.0)	A1	14	55,000	220	1,000	2-0-0[b]
R-508B	azeotrope	R-23/116 (46.0/54.0)	A1	13	52,000	200	1,000	2-0-0[b]
R-509A	azeotrope	R-22/218 (44.0/56.0)	A1	24	75,000	390	1,000	2-0-0[b]
R-510A	azeotrope	R-E170/600a (88.0/12.0)	A3	0.87	7,300	14	1,000	—
R-511A	azeotrope	R-290/E170 (95.0/5.0)	A3	0.59	5,300	9.5	1,000	—
R-512A	azeotrope	R-134a/152a (5.0/95.0)	A2	1.9	11,000	31	1,000	—
R-600	$CH_3CH_2CH_2CH_3$	butane	A3	0.15	1,000	2.4	1,000	1-4-0
R-600a	$CH(CH_3)_2CH_3$	2-methylpropane (isobutane)	A3	0.59	4,000	9.6	1,000	2-4-0
R-601	$CH_3CH_2CH_2\ CH_2\ CH_3$	pentane	A3	0.18	1,000	2.9	600	—
R-601a	$(CH_3)_2CHCH_2CH_3$	2-methylbutane (isopentane)	A3	0.18	1,000	2.9	600	—
R-717	NH_3	ammonia	B2[f]	0.014	320	0.22	25	3-3-0[c]
R-718	H_2O	water	A1	—	—	—	—	0-0-0
R-744	CO_2	carbon dioxide	A1	4.5	40,000	72	5,000	2-0-0[b]
R-1150	$CH_2=CH_2$	ethene (ethylene)	A3	—	—	—	200	1-4-2
R-1234yf	$CF_3CF=CH_2$	2,3,3,3-tetrafluoro-1 propene	A2[f]	4.7	16,000	75	500	—
R-1234ze(E)	CF3CH=CHF	trans-1,3,3,3-tetrafluoro-1-propene	A2[f]	4.7	16,000	75	800	—
R-1270	$CH_3CH=CH_2$	Propene (propylene)	A3	0.1	1,000	1.7	500	1-4-1

For SI: 1 pound = 0.454 kg, 1 cubic foot = 0.0283 m^3.

a. Degrees of hazard are for health, fire, and reactivity, respectively, in accordance with NFPA 704.

b. Reduction to 1-0-0 is allowed if analysis satisfactory to the code official shows that the maximum concentration for a rupture or full loss of refrigerant charge would not exceed the IDLH, considering both the refrigerant quantity and room volume.

c. For installations that are entirely outdoors, use 3-1-0.

d. Class I ozone depleting substance; prohibited for new installations.

e. Occupational Exposure Limit based on the OSHA PEL, ACGIH TLV-TWA, the AIHA WEEL or consistent value on a time-weighted average (TWA) basis (unless noted C for ceiling) for an 8 hr/d and 40 hr/wk.

f. The ASHRAE Standard 34 flammability classification for this refrigerant is 2L, which is a subclass of Class 2.

INTERNATIONAL CODE COUNCIL®

Copyright © 2015 ICC. ALL RIGHTS RESERVED. Accessed by David Dammon on Jun 21, 2017 12:30:52 PM pursuant to License Agreement with ICC. No further reproduction or distribution authorized. ANY UNAUTHORIZED REPRODUCTION OR DISTRIBUTION IS A VIOLATION OF THE FEDERAL COPYRIGHT ACT AND THE LICENSE AGREEMENT, AND SUBJECT TO CIVIL AND CRIMINAL PENALTIES THEREUNDER.

1103.2 Occupancy classification. Locations of refrigerating systems are described by *occupancy* classifications that consider the ability of people to respond to potential exposure to refrigerants. Where *equipment* or appliances, other than piping, are located outside a building and within 20 feet (6096 mm) of any building opening, such *equipment* or appliances shall be governed by the *occupancy* classification of the building. *Occupancy* classifications shall be defined as follows:

1. Institutional *occupancy* is that portion of premises from which occupants cannot readily leave without the assistance of others because they are disabled, debilitated or confined. Institutional occupancies include, among others, hospitals, nursing homes, asylums and spaces containing locked cells.
2. Public assembly *occupancy* is that portion of premises where large numbers of people congregate and from which occupants cannot quickly vacate the space. Public assembly occupancies include, among others, auditoriums, ballrooms, classrooms, passenger depots, restaurants and theaters.
3. Residential *occupancy* is that portion of premises that provides the occupants with complete independent living facilities, including permanent provisions for living, sleeping, eating, cooking and sanitation. Residential occupancies include, among others, dormitories, hotels, multiunit apartments and private residences.
4. Commercial *occupancy* is that portion of premises where people transact business, receive personal service or purchase food and other goods. Commercial occupancies include, among others, office and professional buildings, markets (but not large mercantile occupancies) and work or storage areas that do not qualify as industrial occupancies.
5. Large mercantile *occupancy* is that portion of premises where more than 100 persons congregate on levels above or below street level to purchase personal merchandise.
6. Industrial *occupancy* is that portion of premises that is not open to the public, where access by authorized persons is controlled, and that is used to manufacture, process or store goods such as chemicals, food, ice, meat or petroleum.
7. Mixed *occupancy* occurs where two or more occupancies are located within the same building. Where each *occupancy* is isolated from the rest of the building by tight walls, floors and ceilings and by self-closing doors, the requirements for each *occupancy* shall apply to its portion of the building. Where the various occupancies are not so isolated, the *occupancy* having the most stringent requirements shall be the governing *occupancy*.

❖ These occupancy definitions are unique to the code and may or may not coincide with the occupancy definitions in Chapter 3 of the *International Building Code*® (IBC®). Building occupancy classification is one of the three main factors that determine the quantity and application limits for refrigerants. If outdoor refrigeration equipment is placed within 20 feet (6096 mm) of a door, window, air intake or any other opening through which refrigerant could enter the building, that equipment is treated as if it were installed inside the building. This section recognizes the inherent safety of equipment located outdoors and offers exemption from limitations for such equipment; however, location within 20 feet (6096 mm) of a building opening voids those exemptions. Note that ASHRAE 15 exempts building openings connecting to a machine room.

1103.3 System classification. Refrigeration systems shall be classified according to the degree of probability that refrigerant leaked from a failed connection, seal or component could enter an occupied area. The distinction is based on the basic design or location of the components.

❖ The method of cooling or heating determines the probability of the material leaking into the occupied space. Direct systems have coils containing primary refrigerant over which the room air passes. A leak in the heat exchanger could place refrigerant directly in the occupied space. Such systems are high-probability systems. Other systems cool an intermediate fluid that is piped to various parts of the building. A leak in the refrigerant heat exchanger might result in refrigerant leaking into the cooling fluid, but not into the occupied space. These systems are most often low-probability systems.

There are two basic types of refrigeration systems: direct and indirect. A direct system is one in which the air supplied to the occupied space passes over the evaporator or condenser that contains the refrigerant. An indirect system is one in which a secondary heat transfer medium, such as brine or water, is heated or cooled by the refrigeration system and the cooled or heated brine or water is circulated to another heat exchanger to cool or heat the air within the space. Therefore, an indirect system is one in which the refrigeration system does not extract heat directly from or add heat directly to the air within the occupied space, whereas a direct system extracts heat directly from or adds heat directly to the air within the occupied space. One characteristic of a direct system that represents a higher potential hazard than an indirect system is that a leak will cause the refrigerant to be dispersed throughout the space served by the system. Refrigeration systems, although thought of primarily as cooling or freezing systems, can also be designed for the purpose of heating an occupied space or a commodity. In many systems, heat is extracted from a location for the purpose of cooling, and the extracted heat is delivered to another location.

Grocery stores commonly use such systems to cool food products and simultaneously heat the building. Heat pump loop systems pick up heat from zones cooling and reject that heat to zones calling for heating.

INTERNATIONAL CODE COUNCIL®
Copyright © 2015 ICC. ALL RIGHTS RESERVED. Accessed by David Dammon on Jun 21, 2017 12:30:52 PM pursuant to License Agreement with ICC. No further reproduction or distribution authorized. ANY UNAUTHORIZED REPRODUCTION OR DISTRIBUTION IS A VIOLATION OF THE FEDERAL COPYRIGHT ACT AND THE LICENSE AGREEMENT, AND SUBJECT TO CIVIL AND CRIMINAL PENALTIES THEREUNDER.

1103.3.1 Low-probability systems. Double-indirect open-spray systems, indirect closed systems and indirect-vented closed systems shall be classified as low-probability systems, provided that all refrigerant-containing piping and fittings are isolated when the quantities in Table 1103.1 are exceeded.

❖ The nature of low-probability systems makes refrigerant leakage into occupied areas unlikely. In an indirect system, the refrigerant-containing components, evaporators, piping, heat exchangers, etc., are isolated from the occupied areas of a building and only a heat-transfer fluid, often called "brine," is circulated within the occupied area (see Commentary Figure 1103.3.1). The term "brine" does not imply that the heat transfer fluid is necessarily a salt solution. If a system's refrigerant quantity exceeds the limits of Table 1103.1, the refrigerant-containing portions of the systems will be located in a machinery room of some type. Where the quantity of refrigerant in a system is within the limits of Table 1103.1, the system could be located entirely within the occupied building areas and the distinction between low-probability systems and high-probability systems would be meaningless. In other words, the low-probability system exists only if the refrigerant-containing portions of the overall system are isolated from all areas of a building except machinery rooms.

1103.3.2 High-probability systems. Direct systems and indirect open-spray systems shall be classified as high-probability systems.

Exception: An indirect open-spray system shall not be required to be classified as a high-probability system if the pressure of the secondary coolant is at all times (operating and standby) greater than the pressure of the refrigerant.

❖ The probability classifications are simply a means of assessing the potential hazard posed by refrigeration systems. In a high-probability system, chances are good that system leakage would expose building occupants to a refrigerant (see the definitions of "Direct refrigeration system," "Indirect refrigeration system" and "High-probability systems").

The exception recognizes a type of system that substantially reduces the likelihood of refrigerant leakage into the occupied space. The typical split system heat pump; DX coil in an air handler, furnace or split system air conditioner; package terminal units and window air-conditioning units are all high-probability systems. In these units, the room air passes directly over coils containing refrigerant.

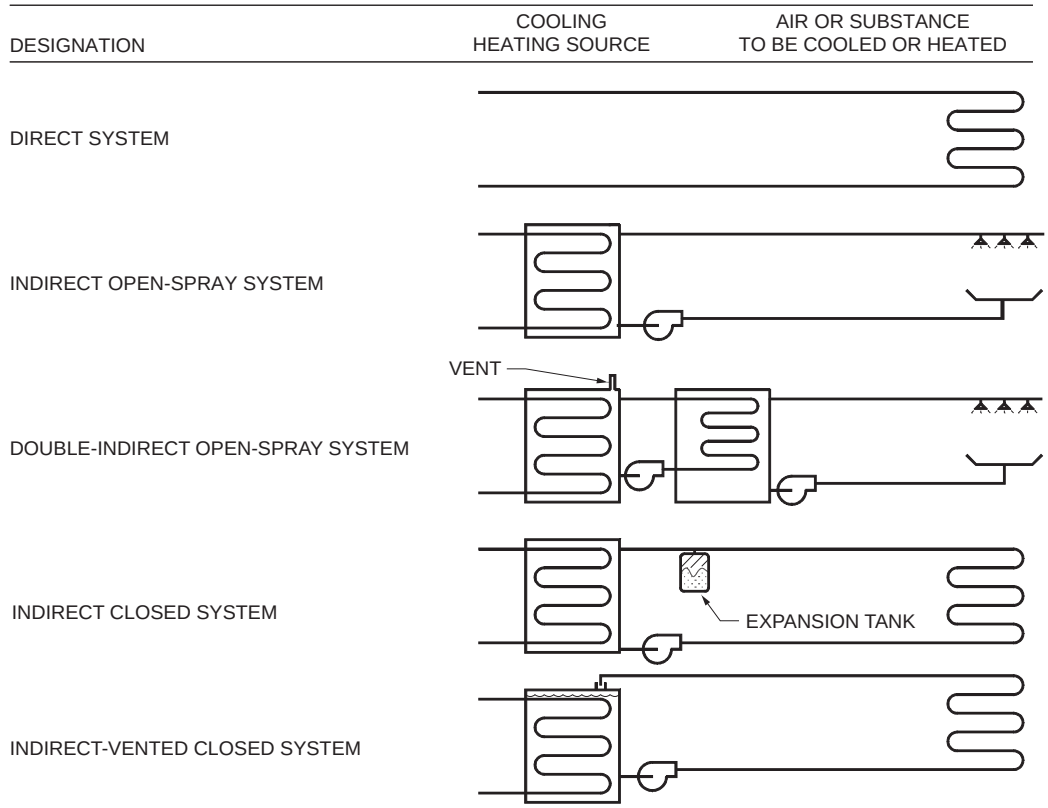

Figure 1103.3.1
REFRIGERATION SYSTEM CLASSIFICATION
(Source: ASHRAE 15-89)

INTERNATIONAL CODE COUNCIL®
Copyright © 2015 ICC. ALL RIGHTS RESERVED. Accessed by David Dammon on Jun 21, 2017 12:30:52 PM pursuant to License Agreement with ICC. No further reproduction or distribution authorized. ANY UNAUTHORIZED REPRODUCTION OR DISTRIBUTION IS A VIOLATION OF THE FEDERAL COPYRIGHT ACT AND THE LICENSE AGREEMENT, AND SUBJECT TO CIVIL AND CRIMINAL PENALTIES THEREUNDER.

SECTION 1104
SYSTEM APPLICATION REQUIREMENTS

1104.1 General. The refrigerant, occupancy and system classification cited in this section shall be determined in accordance with Sections 1103.1, 1103.2 and 1103.3, respectively.

❖ Whereas Section 1103 deals with classification of systems, Section 1104 deals with specific requirements based on these classifications. These include when a machinery room is required to house refrigeration equipment (Section 1104.2) and when equipment can be located outside of machinery rooms (Section 1104.2.2). The requirements in Section 1104 parallel ASHRAE 15, referenced in Section 1101.6, and have become a part of the code for ease of reference.

Before the specific application requirements of Section 1104 can be applied, the system must be classified in accordance with Section 1103. "Fractionation" is the chemical separation of blended refrigerants into various ratios of the components that compose the blend. Fractionation results in compounds of different flammability or toxicity than the original blend. Fractionation of, for example, zeotropic blends (R-400 series refrigerants) can occur if a leak develops in the system. For refrigerant blends, a classification is given to the composition based on its formulated ratio of components. The blend is also given a classification based on the ratio of components at the worst case of fractionation. The worst-case classification must be used because the refrigerant blend can change properties as its composition changes and the most hazardous composition could exist under certain conditions, such as system leakage. A refrigerant blend with the classification A1/A2, for example, would be subject to the code requirements for A2 refrigerants. For more information on fractionation, see the appendix to ASHRAE 15.

1104.2 Machinery room. Except as provided in Sections 1104.2.1 and 1104.2.2, all components containing the refrigerant shall be located either outdoors or in a *machinery room* where the quantity of refrigerant in an independent circuit of a system exceeds the amounts shown in Table 1103.1. For refrigerant blends not listed in Table 1103.1, the same requirement shall apply when the amount for any blend component exceeds that indicated in Table 1103.1 for that component. This requirement shall also apply when the combined amount of the blend components exceeds a limit of 69,100 parts per million (ppm) by volume. Machinery rooms required by this section shall be constructed and maintained in accordance with Section 1105 for Group A1 and B1 refrigerants and in accordance with Sections 1105 and 1106 for Group A2, B2, A3 and B3 refrigerants.

Exceptions:

1. Machinery rooms are not required for *listed equipment* and appliances containing not more than 6.6 pounds (3 kg) of refrigerant, regardless of the refrigerant's safety classification, where installed in accordance with the equipment's or appliance's listing and the *equipment* or *appliance* manufacturer's installation instructions.
2. Piping in conformance with Section 1107 is allowed in other locations to connect components installed in a *machinery room* with those installed outdoors.

❖ This section establishes when a machinery room is required to house refrigeration systems if the amount of refrigerant in the system exceeds the amount indicated in Table 1103.1. Sections 1105 and 1106 contain the construction requirements for the machinery rooms.

A machinery room provides a buffer between building occupants and the system, so that if something goes wrong, the hazard will be isolated from normally occupied areas. Section 1105 requires protected openings, refrigerant detectors and special ventilation for the room.

Exception 1 provides relief from the requirement for a machinery room when a system contains only 6.6 pounds (3 kg) of refrigerant because the quantity is insignificant and the machine is tested, listed and labeled. Exception 2 allows the piping connecting components in a machinery room to components on the exterior of the building to pass through spaces that do not meet the requirements for a machinery room.

Where Table 1103.1 shows a dash instead of a refrigerant amount, that information had not been determined at the date of printing.

1104.2.1 Institutional occupancies. The amounts shown in Table 1103.1 shall be reduced by 50 percent for all areas of institutional occupancies except kitchens, laboratories and mortuaries. The total of all Group A2, B2, A3 and B3 refrigerants shall not exceed 550 pounds (250 kg) in occupied areas or machinery rooms.

❖ Because of the danger to people who may be incapable of self-preservation, the table limits are cut in half for institutional occupancies. The cumulative amount of the more hazardous refrigerants, even for systems located in machinery rooms, is also limited by this section. Systems that require greater amounts of refrigerants than would be allowed by this section would have to be located outdoors.

1104.2.2 Industrial occupancies and refrigerated rooms. This section applies only to industrial occupancies and refrigerated rooms for manufacturing, food and beverage preparation, meat cutting, other processes and storage. Machinery rooms are not required where all of the following conditions are met:

1. The space containing the machinery is separated from other occupancies by tight construction with tight-fitting doors.
2. Access is restricted to authorized personnel.
3. The floor area per occupant is not less than 100 square feet (9.3 m^2) where machinery is located on floor levels with exits more than 6.6 feet (2012 mm) above the ground. Where provided with egress directly to the out-

INTERNATIONAL CODE COUNCIL®
Copyright © 2015 ICC. ALL RIGHTS RESERVED. Accessed by David Dammon on Jun 21, 2017 12:30:52 PM pursuant to License Agreement with ICC. No further reproduction or distribution authorized. ANY UNAUTHORIZED REPRODUCTION OR DISTRIBUTION IS A VIOLATION OF THE FEDERAL COPYRIGHT ACT AND THE LICENSE AGREEMENT, AND SUBJECT TO CIVIL AND CRIMINAL PENALTIES THEREUNDER.

doors or into *approved* building exits, the minimum floor area shall not apply.

4. Refrigerant detectors are installed as required for machinery rooms in accordance with Section 1105.3.
5. Surfaces having temperatures exceeding 800°F (427°C) and open flames are not present where any Group A2, B2, A3 or B3 refrigerant is used (see Section 1104.3.4).
6. All electrical *equipment* and appliances conform to Class 1, Division 2, *hazardous location* classification requirements of NFPA 70 where the quantity of any Group A2, B2, A3 or B3 refrigerant, other than ammonia, in a single independent circuit would exceed 25 percent of the lower flammability limit (LFL) upon release to the space.
7. All refrigerant-containing parts in systems exceeding 100 horsepower (hp) (74.6 kW) drive power, except evaporators used for refrigeration or dehumidification; condensers used for heating; control and pressure relief valves for either; and connecting piping, shall be located either outdoors or in a *machinery room*.

❖ This section contains provisions for industrialized food processing plants, manufacturing plants and refrigerated storage. Refrigeration systems in these spaces need not be contained in a machinery room as long as all of the seven items of this section are met. "Industrial occupancy" is defined in Section 1103.2 and does not necessarily coincide with the description in Section 306 of the IBC for a Group F occupancy. Because these occupancies are restricted to employees who are familiar with their surroundings and contain low occupant loads, the hazard is perceived to be reduced.

Item 3 specifically limits the occupant density when occupants would have to travel down open interior stairs to leave the building. This restriction does not apply if the required exit doors from the space lead directly to exterior stairs or to stairs enclosed with fire-resistance-rated construction and protected openings in accordance with the IBC for interior exit stairs.

The "lower flammability limit" mentioned in Item 6 is defined in Chapter 2 of the code as "the minimum concentration of refrigerant that is capable of propagating a flame through a homogeneous mixture of refrigerant and air" [see definition of "Lower flammability limit (LFL)"]. If a refrigerant were released into the air, thus mixing with the air (to create a homogeneous mixture), a certain concentration would eventually be reached that would make the air/refrigerant mixture flammable/explosive. The lowest concentration at which this could occur is the LFL. Item 6 limits the amount in a single circuit to 25 percent of the amount needed to attain the LFL, unless all electrical equipment and appliances in the space conform to the Class 1, Division 2 hazardous location requirements found in NFPA 70.

The flammability classification of the refrigerants used can be obtained from the manufacturer or the MSDS for the refrigerant. See also the definition of "Flammability classification" in Chapter 2.

1104.3 Refrigerant restrictions. Refrigerant applications, maximum quantities and use shall be restricted in accordance with Sections 1104.3.1 through 1104.3.4.

❖ Along with the type of refrigeration system, the physical and chemical characteristics of the refrigerant used in the system play an important role in determining the maximum permissible refrigerant quantities. Quantities of refrigerants are limited or special design requirements must be followed because of the risks refrigerants present to the building occupants, including the risk from explosion, fire or the rupture of high-pressure components or piping. Of equal concern are the health risks that result from the accidental release of refrigerant into the occupied space. These risks include the following:

- Oxygen-displacing refrigerants (that is, refrigerants that are heavier than air will displace the air near the floor level) pose the potential threat of suffocation in unventilated or poorly ventilated spaces;
- Corrosive refrigerants attack skin, eyes and other tissue;
- Body contact with liquid refrigerants can cause freezing of skin and other body tissue;
- Narcotic and cardiac sensitization effects; and
- Toxic effects from refrigerant gas or from the decomposition products resulting from refrigerant contact with flames or hot surfaces.

The maximum permissible quantities of refrigerants are based on the safety group classifications in ASHRAE 34 and Table 1103.1, the characteristics and risks associated with each individual refrigerant, the occupancy classification and the type of refrigeration system. The permissible quantities allowed by the code are based on ASHRAE 15.

1104.3.1 Air-conditioning for human comfort. In other than industrial occupancies where the quantity in a single independent circuit does not exceed the amount in Table 1103.1, Group B1, B2 and B3 refrigerants shall not be used in high-probability systems for air-conditioning for human comfort.

❖ The reasons for these restrictions are the higher toxicity levels of Group B1, B2 and B3 refrigerants and the higher exposure potential of high-probability systems. High-probability systems are described in Section 1103.3.2 (see commentary, Section 1103.3.2). Industrial occupancies are described in Section 1103.2 and the description does not necessarily correspond to the Group F classification in Chapter 3 of the IBC. Industrial occupancies typically have lower occupant loads, and are occupied only by employees who are familiar with their surroundings. Note that the restrictions for Group B1, B2 and B3 refrigerants for human comfort space conditioning would also apply

INTERNATIONAL CODE COUNCIL®
Copyright © 2015 ICC. ALL RIGHTS RESERVED. Accessed by David Dammon on Jun 21, 2017 12:30:52 PM pursuant to License Agreement with ICC. No further reproduction or distribution authorized. ANY UNAUTHORIZED REPRODUCTION OR DISTRIBUTION IS A VIOLATION OF THE FEDERAL COPYRIGHT ACT AND THE LICENSE AGREEMENT, AND SUBJECT TO CIVIL AND CRIMINAL PENALTIES THEREUNDER.

to industrial occupancies if the quantity of refrigerant in any circuit exceeds the limits of Table 1103.1.

1104.3.2 Nonindustrial occupancies. Group A2 and B2 refrigerants shall not be used in high-probability systems where the quantity of refrigerant in any independent refrigerant circuit exceeds the amount shown in Table 1104.3.2. Group A3 and B3 refrigerants shall not be used except where *approved*.

Exception: This section does not apply to laboratories where the floor area per occupant is not less than 100 square feet (9.3 m^2).

❖ This section applies to all occupancies other than industrial occupancies. Table 1104.3.2 limits the amounts of Group A2 and B2 refrigerants in high-probability systems because of the properties of these refrigerants and the potential for release of refrigerant in high-probability systems (see commentary, Section 1103.3.2.). Group A3 and B3 refrigerants are the most flammable and therefore can be used only in industrial occupancies and where specifically approved by the code official. The exception exempts laboratories because of the specialized tasks and safety procedures typically found in laboratories.

Table 1104.3.2. See below.

❖ These table limits apply (1) in all occupancies other than industrial occupancies as described in Section 1103.2, and (2) only to Group A2 and B2 refrigerants in high-probability systems (see Section 1103.3.2).

The term "exit access" as used in the table means any area that occupants would have to pass through on their way to an exit (see the IBC definitions of "Exit access" and "Exit").

1104.3.3 All occupancies. The total of all Group A2, B2, A3 and B3 refrigerants other than R-717, ammonia, shall not exceed 1,100 pounds (499 kg) except where *approved*.

❖ Group A2, B2, A3 and B3 refrigerants in amounts exceeding 1,100 pounds (500 kg) represent a significant hazard to occupants and therefore require special approval by the code official. This section acts as a cap for all occupancies and all types of systems. The criteria for approval would come from safety specialists in the refrigeration industry.

Ammonia systems are exempt from this limitation because ammonia is difficult to ignite, is very stable, is self-alarming (a strong odor is easily detected) and is lighter than air so normal ventilation will, in most cases, prevent its accumulation. Ammonia systems must conform to standard IIAR 2 referenced in Section 1101.6.

1104.3.4 Protection from refrigerant decomposition. Where any device having an open flame or surface temperature greater than 800°F (427°C) is used in a room containing more than 6.6 pounds (3 kg) of refrigerant in a single independent circuit, a hood and exhaust system shall be provided in accordance with Section 510. Such exhaust system shall exhaust *combustion* products to the outdoors.

Exception: A hood and exhaust system shall not be required where any of the following apply:

1. The refrigerant is R-717, R-718 or R-744.
2. The *combustion* air is ducted from the outdoors in a manner that prevents leaked refrigerant from being combusted.
3. A refrigerant detector is used to stop the *combustion* in the event of a refrigerant leak (see Sections 1105.3 and 1105.5).

❖ When most refrigerants are exposed to high temperatures, they break down chemically and can form toxic and/or corrosive byproducts. Some of these chemical byproducts are extremely toxic to humans and can cause serious problems in fuel-fired appliances. The required hood and exhaust system is intended to capture and exhaust any hazardous chemicals. The exceptions recognize that the hazard would be reduced where the refrigerant is not halogen based or where provisions are made to prevent refrigerants from coming into contact with flames or hot surfaces.

1104.4 Volume calculations. Volume calculations shall be in accordance with Sections 1104.4.1 through 1104.4.3.

❖ To apply the refrigerant-per-volume requirements of Table 1103.1, the method of determining occupied space volume must be known. The amount of refrigerant per occupied space is intended for high-probability systems. In this case, human occupants could be directly exposed to refrigerant if the refrigerant circuit leaks. The amounts given [pounds per 1,000 cubic feet (kg/28 m), volume percent or grams/cubic meter] are the maximum allowed in the largest single circuit in a given space, assuming that only one circuit is likely to leak refrigerant at a given time.

TABLE 1104.3.2
MAXIMUM PERMISSIBLE QUANTITIES OF REFRIGERANTS

TYPE OF REFRIGERATION SYSTEM	MAXIMUM POUNDS FOR VARIOUS OCCUPANCIES			
	Institutional	Assembly	Residential	All other occupancies
Sealed absorption system				
In exit access	0	0	3.3	3.3
In adjacent outdoor locations	0	0	22	22
In other than exit access	0	6.6	6.6	6.6
Unit systems				
In other than exit access	0	0	6.6	6.6

For SI: 1 pound = 0.454 kg.

INTERNATIONAL CODE COUNCIL®
Copyright © 2015 ICC. ALL RIGHTS RESERVED. Accessed by David Dammon on Jun 21, 2017 12:30:52 PM pursuant to License Agreement with ICC. No further reproduction or distribution authorized. ANY UNAUTHORIZED REPRODUCTION OR DISTRIBUTION IS A VIOLATION OF THE FEDERAL COPYRIGHT ACT AND THE LICENSE AGREEMENT, AND SUBJECT TO CIVIL AND CRIMINAL PENALTIES THEREUNDER.

1104.4.1 Noncommunicating spaces. Where the refrigerant-containing parts of a system are located in one or more spaces that do not communicate through permanent openings or HVAC ducts, the volume of the smallest, enclosed occupied space shall be used to determine the permissible quantity of refrigerant in the system.

❖ A noncommunicating space is a space that is not connected to other spaces through permanent openings or HVAC ducts. Leaked refrigerant would be retained in the space in which the leakage occurred because permanent openings and ducts are not present to allow dispersion of refrigerant. This section considers a machinery room to be a space because, in the case of self-contained machines such as chillers, the only room volume to consider is the volume of the space that encloses the machines. Thus, the refrigerant quantity limits and machinery room requirements would be based on the volume of the room containing the chillers.

This section applies to direct systems and any other system having components located within occupied space.

This section intends to account for the worst-case condition that would exist if a refrigerant leak were to occur in the smallest enclosed space that contains refrigerant-containing parts of a system (see commentary, Section 1105.5).

1104.4.2 Communicating spaces. Where an evaporator or condenser is located in an air duct system, the volume of the smallest, enclosed occupied space served by the duct system shall be used to determine the maximum allowable quantity of refrigerant in the system.

Exception: If airflow to any enclosed space cannot be reduced below one-quarter of its maximum, the entire space served by the air duct system shall be used to determine the maximum allowable quantity of refrigerant in the system.

❖ This section addresses direct (high-probability) systems that are part of a ducted air distribution system that serves one or more spaces (see commentary, Section 1104.4.1). As used in this section, the term "communicating" means that the spaces connect (communicate) through a system of HVAC ducts. The duct system would be capable of spreading leaked refrigerant to all spaces served by the system.

A DX coil in an air handler connected to an air distribution duct system is the typical scenario addressed by this section. The exception allows the volumes of enclosed spaces served by the air distribution system to be summed if the spaces cannot be isolated from the air distribution system. The logic of this exception is that refrigerant leakage would be distributed throughout all spaces served by the duct system rather than concentrating in any one enclosed space. In air duct systems with multiple dampers, the volume is dependent on the isolation ability of the dampers. Commentary Figure 1104.4.2 shows such a system. The intent is to determine the worst possible case of distribution of refrigerant in the airstream in case of leakage.

Example 1: See Commentary Figure 1104.4.2:

Question 1: Which volume is used if both dampers have mechanical stops to prevent airflow from being reduced below one-quarter of its maximum?

Answer 1: The entire space—Room A, plus Room B—can be used to determine the maximum quantity of refrigerant.

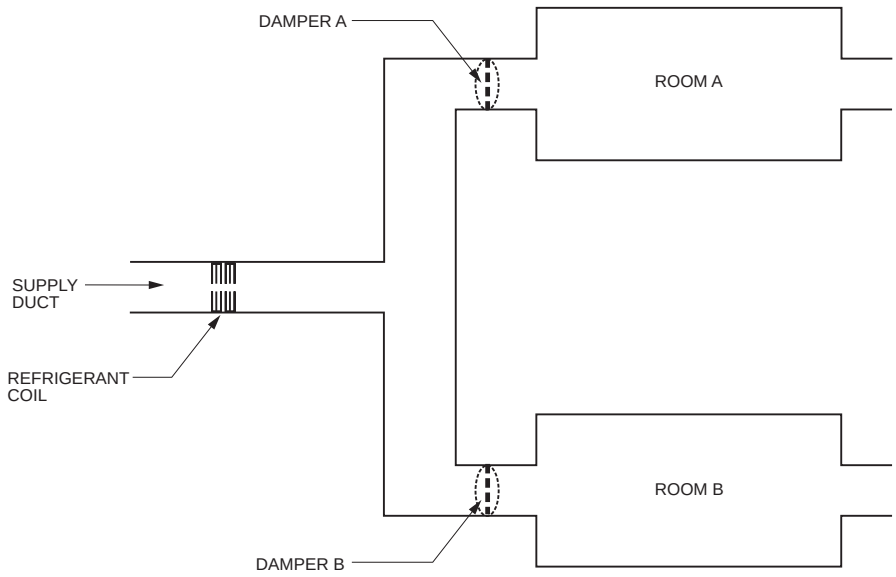

Figure 1104.4.2
VOLUME CALCULATION WITH ZONE DAMPERS

INTERNATIONAL CODE COUNCIL®
Copyright © 2015 ICC. ALL RIGHTS RESERVED. Accessed by David Dammon on Jun 21, 2017 12:30:52 PM pursuant to License Agreement with ICC. No further reproduction or distribution authorized. ANY UNAUTHORIZED REPRODUCTION OR DISTRIBUTION IS A VIOLATION OF THE FEDERAL COPYRIGHT ACT AND THE LICENSE AGREEMENT, AND SUBJECT TO CIVIL AND CRIMINAL PENALTIES THEREUNDER.

Question 2: Which volume is used if one damper (either A or B) can be completely closed?

Answer 2: The volume must be based only on the smaller of the two rooms because in the event of a leak, one of the dampers could be closed and concentrate all of the refrigerant to the other room.

The pertinent dampers are the operating dampers in the system, not the dampers that are intended to function only in an emergency that would require evacuation of the building. Therefore, fire and smoke dampers are excluded from this analysis.

Example 2:

Question: What volume is used with a typical ducted split system serving a single-family dwelling?

Answer: The volume of the conditioned space in the whole house is used, assuming that the registers at the end of duct runs cannot be adjusted to reduce the flow below 25 percent of the maximum.

When the space being considered is served by an air distribution system, the evaporator of the direct system is usually located in the supply air system for the space. If the supply airflow to the smallest enclosed space cannot be reduced to less than one-fourth of the maximum design airflow for that space, and the same supply air system also serves another space or spaces where the supply airflow also cannot be reduced to less than one quarter of the maximum design flow for the space or spaces, the total volume of all spaces served by the supply air system is used to determine the maximum permissible quantity of refrigerant allowed in the system. Because the enclosed spaces are interconnected by an air distribution system and the airflow cannot be completely shut down, the spaces served by the supply air system can be considered as one communicating space for the purpose of applying this section. If there is a leak, the refrigerant will be distributed to all spaces served by the air supply system and, therefore, the combined volume of all the spaces will allow the refrigerant to be sufficiently diluted to minimize the hazard to the occupants. For example, the entire volume of a business occupancy with both an open-plan floor area and enclosed offices can be used when the supply airflow to the enclosed offices and the open floor area cannot be reduced to less than one-quarter of the maximum design flow and all spaces are served by a common supply air system. Additionally, the volume of a continuous air plenum used for return air located above a suspended ceiling can be included in the volume of the enclosed space.

When the space is not served by an air distribution system, the volume of the smallest enclosed occupied space in which the refrigerant-containing parts are located must be used to determine the permissible quantity of refrigerant.

1104.4.3 Plenums. Where the space above a suspended ceiling is continuous and part of the supply or return air *plenum* system, this space shall be included in calculating the volume of the enclosed space.

❖ This section addresses plenums as described in Section 602 and allows inclusion of the plenums in the volume determined by Section 1104.4.2.

SECTION 1105
MACHINERY ROOM, GENERAL REQUIREMENTS

[BF] 1105.1 Design and construction. Machinery rooms shall be designed and constructed in accordance with the *International Building Code* and this section.

❖ Section 1104.2 dictates when a machinery room is required. The requirements of this section apply to all machinery rooms, whereas the requirements of Section 1106 apply only to special machinery rooms. Machinery rooms are required where refrigerant quantities exceed the limits of Table 1103.1. Machinery rooms enclose all refrigerant-containing system components except piping and components located outdoors and serve to protect building occupants from exposure to refrigerants. Section 509.4 of the IBC addresses machinery room enclosure and fire suppression, and Section 1006.2.2.2 addresses machinery room egress.

1105.2 Openings. Ducts and air handlers in the *machinery room* that operate at a lower pressure than the room shall be sealed to prevent any refrigerant leakage from entering the airstream.

❖ Return air ducts and the intake of air handlers typically operate at less than the ambient room pressures. Unless they are adequately sealed, refrigerant could enter these ducts and be spread throughout the building. Section 603.9 requires sealing of ducts to conform to the requirements of the *International Energy Conservation Code*® (IECC®).

[F] 1105.3 Refrigerant detector. Refrigerant detectors in machinery rooms shall be provided as required by Section 606.8 of the *International Fire Code*.

❖ A refrigerant-specific detector is required for leak detection, early warning and actuation of emergency exhaust systems. Detector requirements are found in Section 606 of the IFC. Depending on the density of the refrigerants, leakage may collect near the floor, near the ceiling or disperse equally throughout the space.

Refrigerant detector locations must be carefully considered. Most refrigerants are heavier than air, making floor depressions and pits natural areas for accumulation. The code does not specify the location of sensors because of the endless variety of equipment room designs. The key to properly locating a

INTERNATIONAL CODE COUNCIL®
Copyright © 2015 ICC. ALL RIGHTS RESERVED. Accessed by David Dammon on Jun 21, 2017 12:30:52 PM pursuant to License Agreement with ICC. No further reproduction or distribution authorized. ANY UNAUTHORIZED REPRODUCTION OR DISTRIBUTION IS A VIOLATION OF THE FEDERAL COPYRIGHT ACT AND THE LICENSE AGREEMENT, AND SUBJECT TO CIVIL AND CRIMINAL PENALTIES THEREUNDER.

detector in the machinery room is to remember that occupant safety is the primary objective, and the danger is in breathing refrigerant. Placing the sensor below the common breathing height of 5 feet (1525 mm) results in an additional safety margin because all commonly used halocarbon refrigerants are three to five times heavier than air. When undistributed by airflow, escaping refrigerant will flow to the floor, seeking the lowest levels and filling the room from the bottom up. Because pits, stairwells or trenches are likely to fill with refrigerant first, detectors should also be placed in any of these areas that may be occupied. The alarm actuation threshold is dictated by the last column of Table 1103.1.

Manufacturers' instructions for detectors will provide installation guidance for the location of detectors and the required number of detectors for any given room size.

Because most general machinery rooms are unoccupied for long periods, a refrigeration leak may go undetected, allowing a buildup of refrigerant that can pose a threat to the building occupants and the maintenance personnel who will be required to enter the machinery room. Also, the refrigerants may or may not be detectable by the senses of smell, sight and taste, depending on the chemical nature and concentration of the refrigerant in air. This can be especially critical when a toxic refrigerant is used in the refrigeration system.

The ACGIH defines three levels of refrigerant exposure: Level 1 is the AEL, which is the level at which a person can be exposed for 8 hours per day for 40 hours per week without having an adverse effect on health. Level 2 is the STEL, which is defined as three times the AEL. At this level a person should not be exposed for more than 30 minutes at a time. Persons working in a machinery room having this concentration of refrigerant should be equipped with respiratory protection. Level 3 is the emergency exposure limit (EEL). At this level, persons should not be in the room at all without a self-contained breathing apparatus.

Early detection of leaking refrigerant depends on the location of the refrigerant detectors. If they are improperly located, a refrigerant leak could go undetected for an undesirable length of time, thus allowing a significant amount of refrigerant to escape.

Items to be considered when choosing locations for detectors are the airflow patterns of the room, the particular refrigerant density and the fact that the primary hazard to the occupants is inhalation. The detectors should be located to prevent the normal ventilation system from interfering with detection. Placing detectors between the refrigeration system and exhaust fan inlets should help to ensure that the presence of refrigerant will be detected.

Depending on the size of the machinery room and the number and type of refrigeration systems, more than one detector may be necessary. Manufacturers' installation instructions for the refrigeration detection system should be followed when choosing the location and the number of sensors for a particular machinery room application. For example, many refrigerant detection systems are capable of activating a warning system with a warning light, alarm or similar device if refrigerant exceeds a preset concentration or level due to a leak. Typically, the warning systems have the capability to alert people inside and outside the machinery room so that the leak can be quickly located and repaired.

1105.4 Tests. Periodic tests of the mechanical ventilating system shall be performed in accordance with manufacturer's specifications and as required by the code official.

❖ Detector manufacturers specify testing frequency to monitor the detector's condition, sensitivity and performance. The audible and visual alarms must also be tested periodically. The detector also functions to start the emergency ventilation system, which must be tested for proper operation.

1105.5 Fuel-burning appliances. Fuel-burning appliances and *equipment* having open flames and that use *combustion* air from the *machinery room* shall not be installed in a *machinery room*.

Exceptions:

1. Where the refrigerant is carbon dioxide or water.
2. Fuel-burning appliances shall not be prohibited in the same *machinery room* with refrigerant-containing *equipment* or appliances where *combustion* air is ducted from outside the *machinery room* and sealed in such a manner as to prevent any refrigerant leakage from entering the *combustion* chamber, or where a refrigerant vapor detector is employed to automatically shut off the *combustion* process in the event of refrigerant leakage.

❖ Refrigerant likely to be present in a machinery room could contaminate the combustion air for fuel-fired appliances. When refrigerants, especially halogenated, are subjected to the high temperatures of fuel combustion, they break down into compounds that are highly corrosive or toxic. The corrosive chemicals can cause severe damage to appliances, vents and chimneys, resulting in a hazardous condition. Also, toxic byproducts that could be produced present a health hazard to building occupants and fire-fighting personnel.

Exception 1 recognizes that carbon dioxide (CO_2) and water vapor are normally present in all combustion air.

Exception 2 allows two options, one of which prevents refrigerant from entering the combustion chamber of the appliance. The other option would prevent combustion in the event of refrigerant leakage.

1105.6 Ventilation. Machinery rooms shall be mechanically ventilated to the outdoors.

Exception: Where a refrigerating system is located outdoors more than 20 feet (6096 mm) from any building opening and is enclosed by a penthouse, lean-to or other

INTERNATIONAL CODE COUNCIL®
Copyright © 2015 ICC. ALL RIGHTS RESERVED. Accessed by David Dammon on Jun 21, 2017 12:30:52 PM pursuant to License Agreement with ICC. No further reproduction or distribution authorized. ANY UNAUTHORIZED REPRODUCTION OR DISTRIBUTION IS A VIOLATION OF THE FEDERAL COPYRIGHT ACT AND THE LICENSE AGREEMENT, AND SUBJECT TO CIVIL AND CRIMINAL PENALTIES THEREUNDER.

open structure, natural or mechanical ventilation shall be provided. Location of the openings shall be based on the relative density of the refrigerant to air. The free-aperture cross section for the ventilation of the *machinery room* shall be not less than:

$$F = \sqrt{G} \qquad \textbf{(Equation 11-1)}$$

For SI: $F = 0.138\sqrt{G}$

where:

F = The free opening area in square feet (m^2).

G = The mass of refrigerant in pounds (kg) in the largest system, any part of which is located in the *machinery room*.

❖ Mechanical ventilation of the machinery room to the outdoors is required, and is specified at two levels. The lowest level (normal ventilation) is required any time the equipment room is occupied (see commentary, Section 1105.6.3). The highest level (emergency) is required when the refrigerant concentration reaches the alarm level (TLV-TWA) (see commentary, Section 1105.6.4).

The distribution of mechanical ventilation through the equipment room deserves special consideration to avoid creating areas in which refrigerant could accumulate. Supply and discharge air should be positioned with consideration that most refrigerants are heavier than air.

To qualify for the natural ventilation system exception, the structure must not connect to the occupied building by doorways, pipe tunnels, transfer grilles, electrical conduit raceways, ducts or other such openings.

The required ventilation system must be capable of functioning as required by Sections 1105.6.3 and 1105.6.4. This section does not limit the design choices for the ventilation system as long as the detector required by Section 1105.3 controls the exhaust rate and the exhaust system design creates a uniform air movement through the room to "sweep" the entire area and to avoid stagnant spots.

The exception allows natural (gravity) ventilation of the machinery room if the room is located outdoors and not closer than 20 feet (6096 mm) in any direction to any building opening through which refrigerant could enter. These machinery rooms could be separate structures or could be attached to or placed on the roof of the building served.

The formula is used to calculate the minimum net free area of required openings but does not specify how the opening area is to be distributed. As with all naturally ventilated spaces, the location and distribution of openings is critical to creating air movement through the ventilated space.

The ventilation system must operate whenever the refrigeration system is operational, including periods when the equipment is in its "off" cycle. This means that the ventilation system must operate continuously except when the refrigeration system is shut down for servicing or during periods when it is not in use.

The air within the room must be exhausted to the outdoors, with an approximately equal amount of makeup air being introduced into the room. Ventilation systems are typically designed to maintain a slight negative pressure in the room to help prevent the migration of air within the room into adjacent areas through cracks and openings in the room enclosure.

The ventilation system must be independent of all other building ventilation systems to prevent contamination of adjacent areas of the building.

Typically, the ventilation system will consist of an exhaust fan or fans that draw air through the machinery room to create a sweeping effect across the refrigeration system. Makeup air openings must be placed to induce a cross-sectional flow that will purge the entire machinery room.

1105.6.1 Discharge location. The discharge of the air shall be to the outdoors in accordance with Chapter 5. Exhaust from mechanical ventilation systems shall be discharged not less than 20 feet (6096 mm) from a property line or openings into buildings.

❖ To prevent contaminated air from reentering a building, air must be exhausted in accordance with the provisions of Chapter 5. For example, Sections 501.3, 503 and 510, among others, address discharge location, duct construction, motors and fans and hazardous exhaust.

1105.6.2 Makeup air. Provisions shall be made for *makeup air* to replace that being exhausted. Openings for *makeup air* shall be located to avoid intake of *exhaust air*. Supply and exhaust ducts to the *machinery room* shall not serve any other area, shall be constructed in accordance with Chapter 5 and shall be covered with corrosion-resistant screen of not less than $^1/_4$-inch (6.4 mm) mesh.

❖ No exhaust system can function without makeup air (see commentary, Section 501.4). To reach the required exhaust rate, an approximately equal amount of makeup air must be supplied by openings to the outdoors, makeup air supply units, calculated infiltration or a combination of these. Because machinery rooms must be sealed off from all other spaces, transfer grilles cannot be used to supply makeup air from other areas. To prevent the possibility of refrigerant escape to other areas, machinery room exhaust and makeup air supply systems must be completely independent and dedicated to serving only the machinery room.

1105.6.3 Ventilation rate. For other than ammonia systems, the mechanical ventilation systems shall be capable of exhausting the minimum quantity of air both at normal operating and emergency conditions, as required by Sections 1105.6.3.1 and 1105.6.3.2. The minimum required ventilation

INTERNATIONAL CODE COUNCIL®
Copyright © 2015 ICC. ALL RIGHTS RESERVED. Accessed by David Dammon on Jun 21, 2017 12:30:52 PM pursuant to License Agreement with ICC. No further reproduction or distribution authorized. ANY UNAUTHORIZED REPRODUCTION OR DISTRIBUTION IS A VIOLATION OF THE FEDERAL COPYRIGHT ACT AND THE LICENSE AGREEMENT, AND SUBJECT TO CIVIL AND CRIMINAL PENALTIES THEREUNDER.

rate for ammonia shall be 30 air changes per hour in accordance with IIAR2. Multiple fans or multispeed fans shall be allowed to produce the emergency ventilation rate and to obtain a reduced airflow for normal ventilation.

❖ The minimum ventilation rate for ammonia systems must be in accordance with IIAR-2 and at least 30 air changes per hour. For all other refrigerants, the ventilation system must be capable of exhausting the minimum quantity of air under normal conditions and under emergency conditions in accordance with Sections 1105.6.3.1 and 1105.6.3.2, respectively.

1105.6.3.1 Quantity—normal ventilation. During occupied conditions, the mechanical ventilation system shall exhaust the larger of the following:

1. Not less than 0.5 cfm per square foot (0.0025 $m^3/s \cdot m^2$) of *machinery room* area or 20 cfm (0.009 m^3/s) per person.
2. A volume required to limit the room temperature rise to 18°F (10°C) taking into account the ambient heating effect of all machinery in the room.

❖ Normal ventilation is required only when the room is occupied. If the equipment room is not normally occupied, normal ventilation should be interlocked with the room lighting. If the equipment room is constantly occupied, the normal ventilation must be continuous. The flow rate for both Items 1 and 2 must be calculated to determine which is the larger rate. Note that Item 1 does not specify an estimated occupant load for machinery rooms. Basing the exhaust rate on the number of occupants could result in grossly inadequate ventilation. For example, a 2,000-square-foot (186 m^2) machinery room might be assumed to have only one occupant. Based on occupancy, 20 cubic feet per minute (cfm) (0.009 m^3/s) would be required but if based on square footage, 1,000 cfm (0.4719 m^3/s) would be required. Clearly, much consideration must be given to the use of occupant loads in determining the required exhaust rate. Item 2 would be very difficult to determine prior to construction of the machinery room and may have to be determined after the machinery room is in operation. Continuous ventilation (occupied or unoccupied) would provide the greatest level of personnel protection, and interlocking the exhaust system with the room lighting should be the minimum level of personnel protection (1 cfm = 0.0004719 m^3/s).

1105.6.3.2 Quantity—emergency conditions. Upon actuation of the refrigerant detector required in Section 1105.3, the mechanical ventilation system shall *exhaust air* from the *machinery room* in the following quantity:

$$Q = 100 \times \sqrt{G} \qquad \textbf{(Equation 11-2)}$$

For SI: $Q = 0.07 \times \sqrt{G}$

where:

Q = The airflow in cubic feet per minute (m^3/s).

G = The design mass of refrigerant in pounds (kg) in the largest system, any part of which is located in the *machinery room.*

❖ This section specifies the emergency exhaust rate to be initiated by the refrigerant detector upon detection of refrigerant leakage. The emergency exhaust rate is intended to maintain an atmosphere in the machinery room that would allow service personnel to escape and take emergency action to control leakage. The exhaust rate is based on the largest refrigerant charge in any one system. The emergency system can be a separate system or it can be an operating mode of the normal system.

1105.7 Termination of relief devices. Pressure relief devices, fusible plugs and purge systems located within the *machinery room* shall terminate outside of the structure at a location not less than 15 feet (4572 mm) above the adjoining grade level and not less than 20 feet (6096 mm) from any window, ventilation opening or exit.

❖ All devices and system outlets that are capable of discharging refrigerant to the atmosphere must be shut down to avoid affecting building occupants and people outdoors.

Discharge piping must be located to pose no undue hazard to people outside of the building or in an adjacent building. To protect people outside the building, the discharge end of the pipe must be located at least 15 feet (4572 mm) above the adjoining ground level. To protect the occupants of a building, the discharge must not be less than 20 feet (6096 mm) in any direction from any window, ventilation opening or exit in any building in the vicinity of the discharge pipe outlet. The 20-foot (6096 mm) minimum requirement is considered adequate to allow for the dissipation and dilution of the refrigerant into the atmosphere and pertains to all building openings, including those in buildings that are located across lot lines on adjacent lots.

The material used for the discharge piping must be compatible with the refrigerant in the system.

Discharge piping that is connected to a fusible plug or rupture-member relief device must be designed to prevent the piping from becoming obstructed and thereby impeding its relief capacity. A fusible plug is a temperature-sensitive device in which the orifice closure member is designed to melt at a specified temperature. An upturn member is a device in which the orifice closure member is a diaphragm-type seal that will burst at a specified pressure. In the process of operating and releasing the pressure, the closure member in the device is forced outward and into the discharge piping by the pressure of the refrigerant. The discharge piping must be designed to prevent debris from lodging in the discharge piping and thus interfering with the release of the refrigerant.

The size of discharge piping must be not less than the size of the pressure relief device outlet. Although not addressed in this section, all relief device discharge piping is subject to maximum lengths because

INTERNATIONAL CODE COUNCIL®
Copyright © 2015 ICC. ALL RIGHTS RESERVED. Accessed by David Dammon on Jun 21, 2017 12:30:52 PM pursuant to License Agreement with ICC. No further reproduction or distribution authorized. ANY UNAUTHORIZED REPRODUCTION OR DISTRIBUTION IS A VIOLATION OF THE FEDERAL COPYRIGHT ACT AND THE LICENSE AGREEMENT, AND SUBJECT TO CIVIL AND CRIMINAL PENALTIES THEREUNDER.

of friction losses in the piping. When there are multiple pressure relief devices in a system and these devices discharge to a common header or manifold, the common discharge piping must be designed for the simultaneous discharge of all relief devices and must be sized to handle the total discharge capacity of all connected relief devices at the lowest pressure setting of any one device. Sizing of the discharge piping must take into account the backpressure that could develop when one or more relief devices discharge into common piping. These provisions are intended to prevent backpressure and friction loss from reducing the required capacity of the relief devices. The discharge piping must be sized so that all connected relief devices are capable of discharging refrigerant at their design capacity.

Designs must also account for the fact that the discharge of any relief device into common discharge piping will create a backpressure that will affect the opening pressure of all other relief devices connected to the common piping.

In some installations, it may be reasonable to expect two or more systems to discharge simultaneously. For example, two or more machines located in close proximity could discharge simultaneously if exposed to a fire in that room or space. In this example, the designer should consider sizing the common discharge piping to accommodate the simultaneous discharge of all systems located in close proximity.

To prevent possibly hazardous chemical reactions between different refrigerants, only refrigeration systems using refrigerants from the same group classification may be interconnected.

ASHRAE 15 contains information on determining the required capacity of pressure relief devices and for determining the maximum length of discharge piping. Section 606.12 of the IFC also regulates refrigerant discharge.

1105.8 Ammonia discharge. Pressure relief valves for ammonia systems shall discharge in accordance with ASHRAE 15.

❖ The ASHRAE 15 standard permits pressure relief valves for ammonia systems to discharge into the atmosphere. However, it also contains an alternative for discharge into tanks containing water and other treatment systems approved by the authority having jurisdiction. Section 606 of the IFC also addresses ammonia discharge.

[F] 1105.9 Emergency pressure control system. Permanently installed refrigeration systems containing more than 6.6 pounds (3 kg) of flammable, toxic or highly toxic refrigerant or ammonia shall be provided with an emergency pressure control system in accordance with Section 606.10 of the *International Fire Code*.

❖ To aid emergency responders and untrained refrigeration personnel and mitigate an overpressure condition prior to operation of emergency pressure relief valves, this section establishes a requirement for a fully redundant, automatic safety control system in lieu of a manual system. This automatic safety control system ensures that lower pressure zones will be capable of handling additional pressure added by a crossover condition without overpressurizing or opening the emergency relief vents on the lower zone. Section 606 of the IFC establishes provisions for automatic crossover valves, overpressure limit set point, manual operation, system design pressure, automatic emergency stop, operation of an automatic crossover valve and overpressure in low pressure zones. The 6.6-pound (3.3 kg) threshold parallels existing provisions in Section 606 of the IFC.

SECTION 1106
MACHINERY ROOM, SPECIAL REQUIREMENTS

1106.1 General. Where required by Section 1104.2, the *machinery room* shall meet the requirements of this section in addition to the requirements of Section 1105.

❖ A special machinery room must comply with both Section 1105 and this section when using the higher risk refrigerant Groups A2, A3, B2 and B3.

1106.2 Elevated temperature. There shall not be an open flame-producing device or continuously operating hot surface over 800°F (427°C) permanently installed in the room.

❖ The presence of any open flame or a hot surface could create a fire or explosion hazard where refrigerants are flammable. Also, as discussed in Section 1105.5, exposing refrigerant to high temperatures can produce dangerously toxic and corrosive chemicals.

1106.3 Ammonia room ventilation. Ventilation systems in ammonia machinery rooms shall be operated continuously at the ventilation rate specified in Section 1105.6.3.

Exceptions:

1. Machinery rooms equipped with a vapor detector that will automatically start the ventilation system at the ventilation rate specified in Section 1105.6.3, and that will actuate an alarm at a detection level not to exceed 1,000 ppm.
2. Machinery rooms conforming to the Class 1, Division 2, *hazardous location* classification requirements of NFPA 70.

❖ Requirements for ventilation specified in Section 1106.3 are exclusively concerned with preventing ignition of ammonia (R717) vapors that might be unintentionally released because of equipment failure or improper maintenance procedures. Although ammonia is classified as Refrigerant Safety Group B, which indicates increased toxicity as compared to Safety Group A refrigerants, that is clearly not a consideration of this section because Exception 2 permits no special ventilation when electrical ignition sources have been addressed. Section 1105.6.3 establishes a minimum ventilation rate of 30 air changes per hour for ammonia machinery rooms, which was based on calculations and full-scale testing associated with a goal of maintaining the ammo-

INTERNATIONAL CODE COUNCIL®
Copyright © 2015 ICC. ALL RIGHTS RESERVED. Accessed by David Dammon on Jun 21, 2017 12:30:52 PM pursuant to License Agreement with ICC. No further reproduction or distribution authorized. ANY UNAUTHORIZED REPRODUCTION OR DISTRIBUTION IS A VIOLATION OF THE FEDERAL COPYRIGHT ACT AND THE LICENSE AGREEMENT, AND SUBJECT TO CIVIL AND CRIMINAL PENALTIES THEREUNDER.

nia-air concentration below 25-percent of ammonia's lower flammable limit (LFL) in the event of a catastrophic failure of a $^1/_2$-inch (12.7 mm) ammonia liquid line. This scenario was determined to be a reasonable worst-case for expecting room ventilation to mitigate the fire or explosion risk associated with a refrigeration equipment failure.

Because emergency ventilation is only necessary in the event of a release, Exception 1 permits the use of ammonia vapor detection as a means of identifying that a release has occurred and activating emergency ventilation, as opposed to running ventilation at all times. Continuous ventilation is very inefficient from an energy conservation perspective, not only because of energy used by fan motors, but also because air must be conditioned in some climates to avoid extreme temperatures in the equipment space. In that regard, a 1,000 parts per million (ppm) threshold has been specified to ensure that emergency ventilation using unconditioned air will not trigger in the event of a small release, potentially damaging equipment. Although 1,000 ppm exceeds exposure limits associated with health concerns for occupants, the intent of this section, as noted above, is to deal exclusively with flammability concerns, and ammonia is not flammable in air until concentrations get into the range of 160,000 ppm.

Exception 2 is provided to permit emergency ventilation to be entirely omitted where all electrical equipment in the machinery room, including but not limited to electrical system components, devices, fixtures, wiring, motors and controls, is inherently suitable for use in explosive atmospheres, as provided for in NFPA 70, the *National Electrical Code*, for Class I, Division 2 applications. As defined in Article 500 of NFPA 70, a Class I location is one in which flammable gases or vapors are or could be present in the air in quantities sufficient to produce explosive or ignitable mixtures. A Class I, Division 2 location includes those in which flammable gases are handled and used, but in which the gases will normally be confined within closed containers or closed systems from which they can escape only in case of system or container failure or abnormal operation. Omission of the ventilation is permitted because Section 1106 applies to special machinery rooms and modifies the general machinery room requirements in Section 1105. Accordingly, the specific requirement in Section 1106.3 supersedes the general ventilation requirement in Section 1105.6 and no ventilation is required, other than that required by the IBC for human occupancy, where electrical ignition sources have been addressed. This is consistent with the provisions of the industry standard for ammonia refrigeration, IIAR 2.

1106.4 Flammable refrigerants. Where refrigerants of Groups A2, A3, B2 and B3 are used, the *machinery room* shall conform to the Class 1, Division 2, *hazardous location* classification requirements of NFPA 70.

Exception: Ammonia machinery rooms that are provided with ventilation in accordance with Section 1106.3.

❖ The intent of this section is to reduce the number of potential ignition sources in machinery rooms involving flammable refrigerants (see commentary, Section 1106.3). The exception exempts ammonia machinery rooms; however, this exception would be negated if the room was not ventilated in accordance with Section 1106.3 or its first exception.

[F] 1106.5 Remote controls. Remote control of the mechanical equipment and appliances located in the machinery room shall comply with Sections 1106.5.1 and 1106.5.2.

❖ The remote controls required by Sections 1106.5.1 and 1106.5.2 are intended to allow personnel to initiate emergency procedures without having to enter a room in which the atmosphere could be hazardous. Section 606 of the IFC also addresses remote controls.

[F] 1106.5.1 Refrigeration system emergency shutoff. A clearly identified switch of the break-glass type or with an approved tamper-resistant cover shall provide off-only control of refrigerant compressors, refrigerant pumps, and normally closed, automatic refrigerant valves located in the machinery room. Additionally, this equipment shall be automatically shut off whenever the refrigerant vapor concentration in the machinery room exceeds the vapor detector's upper detection limit or 25 percent of the LEL, whichever is lower.

❖ Shutting down compressors and related refrigeration equipment could be necessary to prevent a hazardous condition from worsening and to allow the room to be occupied. The emergency "kill" switch must be a tamper-resistant type (similar to fire alarm pull stations) that requires more than one action to actuate the switch. To prevent an accidental startup, the switch must be capable of stopping only the controlled machinery. The switch must not affect the operation of life safety systems such as detectors and exhaust equipment and should not affect room and egress lighting. Emergency shutdown controls located outside the machinery room enclosure will allow the compressors and related equipment to be shut down without requiring someone to enter the room and risk being exposed to refrigerant or fire. This arrangement would also permit equipment shutdown by fire-fighting personnel without the risk of fire spreading into or out of the fire-resistance-rated enclosure. The controls must be located near the entrance to the machinery room so that their location is conspicuous. The controls should be labeled and color coded so that their purpose is obvious. Such controls are customarily painted red to make them readily identifiable as emergency devices.

In addition to the manual emergency shutoff switch, the machinery room must have an automatic shutoff device for the machinery. The automatic shutoff device shall activate when the vapor concentration in the machinery room reaches the lower of 25 percent of the lower explosive limit (LEL) or the maximum detection level of the vapor detector. The automatic shutoff device is necessary to prevent a

INTERNATIONAL CODE COUNCIL®
Copyright © 2015 ICC. ALL RIGHTS RESERVED. Accessed by David Dammon on Jun 21, 2017 12:30:52 PM pursuant to License Agreement with ICC. No further reproduction or distribution authorized. ANY UNAUTHORIZED REPRODUCTION OR DISTRIBUTION IS A VIOLATION OF THE FEDERAL COPYRIGHT ACT AND THE LICENSE AGREEMENT, AND SUBJECT TO CIVIL AND CRIMINAL PENALTIES THEREUNDER.

hazardous condition from going unnoticed and building up to an explosion condition.

Where refrigerants are nonflammable, electrically energized equipment will not cause safety concerns since the lower flammable limit is not an issue. The intent of this section is to provide a safe environment for emergency response personnel when responding to an incident in a refrigeration room. Because flammability is not an issue with nonflammable refrigerants, shutdown of area equipment and electrical devices does not factor into safety for emergency response personnel. Shutdown does, however, induce a very significant risk of unnecessary damage to business operations and infrastructure with potential losses of data and production.

While Chapter 11 is based on ASHRAE 15, there are requirements that are unique to both documents and the code official and designer must be familiar with them.

[F] 1106.5.2 Ventilation system. A clearly identified switch of the break-glass type or with an approved tamper-resistant cover shall provide on-only control of the *machinery room* ventilation fans.

❖ For the same reasoning as Section 1106.5.1, a remote switch is required and must not be capable of stopping the exhaust system. Although not specifically stated, the logical intent is that the remote control activates the emergency mode of operation (see commentary, Section 1105.6.3). To maximize the dependability of the exhaust systems, ASHRAE 15 requires powering such systems from independent, dedicated electrical branch circuits.

[F] 1106.6 Emergency signs and labels. Refrigeration units and systems shall be provided with *approved* emergency signs, charts, and labels in accordance with the *International Fire Code*.

❖ Section 606 of the IFC requires emergency signs and labels in accordance with NFPA 704 on refrigeration units or systems containing more than 220 pounds (100 kg) of Group A1 or more than 30 pounds (13.6 kg) of any other refrigerant group. These signs must be prominently displayed at each entrance to the machinery room and should show, at a minimum, the hazard classification of the refrigerant in accordance with Section 1103.

SECTION 1107
REFRIGERANT PIPING

1107.1 General. The design of refrigerant piping shall be in accordance with ASME B31.5. Refrigerant piping shall be installed, tested and placed in operation in accordance with this chapter.

❖ Sections 1107.1 through 1107.8.3 and 1108.1 through 1108.4 cover piping materials, pipe joining methods, piping installation requirements and field testing of piping. ASME B31.5 is specifically written for refrigerant piping systems and provides the appropriate design requirements.

1107.2 Piping location. Refrigerant piping that crosses an open space that affords passageway in any building shall be not less than 7 feet 3 inches (2210 mm) above the floor unless the piping is located against the ceiling of such space. Refrigerant piping shall not be placed in any elevator, dumbwaiter or other shaft containing a moving object or in any shaft that has openings to living quarters or to means of egress. Refrigerant piping shall not be installed in an enclosed public stairway, stairway landing or means of egress.

❖ The requirements of Sections 1107.2, 1107.2.1 and 1107.2.2 are consistent with ASHRAE 15 standard. As Section 1101.6 has long required that refrigeration systems comply with ASHRAE 15, these are not new requirements. The information is repeated here to help prevent plan reviewers and installers from overlooking a few of the more important details contained within the standard.

1107.2.1 Piping in concrete floors. Refrigerant piping installed in concrete floors shall be encased in pipe ducts. The piping shall be isolated and supported to prevent damaging vibration, stress and corrosion.

❖ See commentary for Section 1107.2.

1107.2.2 Refrigerant penetrations. Refrigerant piping shall not penetrate floors, ceilings or roofs.

Exceptions:

1. Penetrations connecting the basement and the first floor.
2. Penetrations connecting the top floor and a machinery penthouse or roof installation.
3. Penetrations connecting adjacent floors served by the refrigeration system.
4. Penetrations by piping in a direct system where the refrigerant quantity does not exceed Table 1103.1 for the smallest occupied space through which the piping passes.
5. In other than industrial occupancies and where the refrigerant quantity exceeds Table 1103.1 for the smallest space, penetrations for piping that connects separate pieces of *equipment* that are either:
   - 5.1. Enclosed by an *approved* gas-tight, fire-resistive duct or shaft with openings to those floors served by the refrigeration system.
   - 5.2. Located on the exterior of the building where vented to the outdoors or to the space served by the system and not used as an air shaft, closed court or similar space.

❖ See commentary for Section 1107.2.

1107.3 Pipe enclosures. Rigid or flexible metal enclosures or pipe ducts shall be provided for soft, annealed copper tubing and used for refrigerant piping erected on the premises and containing other than Group A1 or B1 refrigerants. Enclosures shall not be required for connections between condens-

INTERNATIONAL CODE COUNCIL®
Copyright © 2015 ICC. ALL RIGHTS RESERVED. Accessed by David Dammon on Jun 21, 2017 12:30:52 PM pursuant to License Agreement with ICC. No further reproduction or distribution authorized. ANY UNAUTHORIZED REPRODUCTION OR DISTRIBUTION IS A VIOLATION OF THE FEDERAL COPYRIGHT ACT AND THE LICENSE AGREEMENT, AND SUBJECT TO CIVIL AND CRIMINAL PENALTIES THEREUNDER.

ing units and the nearest riser box(es), provided such connections do not exceed 6 feet (1829 mm) in length.

❖ The intent of this section is to protect refrigerant piping from physical damage that could result in leakage and a hazardous condition. The protection is required for soft (coiled) bending-tempered copper tubing conveying refrigerants in Groups A2, A3, B2 and B3. Because this type of tubing is more susceptible to damage and these refrigerant groups are flammable and/or toxic, the extra protection is warranted.

Tubing runs of 6 feet (1829 mm) or less that connect to condensing units are exempt because the tubing and the units are typically located outdoors or in a machinery room.

1107.4 Condensation. Refrigerating piping and fittings, brine piping and fittings that, during normal operation, will reach a surface temperature below the dew point of the surrounding air, and are located in spaces or areas where condensation will cause a safety hazard to the building occupants, structure, electrical *equipment* or any other *equipment* or appliances, shall be protected in an *approved* manner to prevent such damage.

❖ Refrigerant suction lines and chilled water piping, for example, will produce water vapor condensation in most environments. Condensation will deteriorate some piping and insulation materials and can also cause serious moisture damage to other parts of the building. A combination of insulation and vapor barriers is used to retard condensation on piping. Note that IIAR 2 prohibits ammonia piping capable of producing condensation from passing over electrical equipment.

Condensing unit suction lines are also insulated to reduce the pickup of additional superheat after the evaporator to improve system efficiency and provide compressor cooling.

1107.5 Materials for refrigerant pipe and tubing. Piping materials shall be as set forth in Sections 1107.5.1 through 1107.5.5.

❖ Sections 1107.5.1 through 1107.5.5 specify the allowable piping materials for conveying refrigerants. All piping materials must be compatible with the type of refrigerant. For example, copper and brass pipe, tube and fittings cannot be used with ammonia refrigerant (see commentary, Sections 1107.5.2 and 1107.5.3).

1107.5.1 Steel pipe. Carbon steel pipe with a wall thickness not less than Schedule 80 shall be used for Group A2, A3, B2 or B3 refrigerant liquid lines for sizes 1.5 inches (38 mm) and smaller. Carbon steel pipe with a wall thickness not less than Schedule 40 shall be used for Group A1 or B1 refrigerant liquid lines 6 inches (152 mm) and smaller, Group A2, A3, B2 or B3 refrigerant liquid lines sizes 2 inches (51 mm) through 6 inches (152 mm) and all refrigerant suction and discharge lines 6 inches (152 mm) and smaller. Type F steel pipe shall not be used for refrigerant lines having an operating temperature less than -20°F (-29°C).

❖ This section requires a heavier wall pipe for liquid lines conveying the more hazardous refrigerant groups. The smaller a pipe is, the more susceptible it is to physical damage. Type F steel pipe is defined in ASTM A53 as furnace butt-welded pipe. Type F steel pipe is not intended for flanging and could be susceptible to stress failures at low temperatures.

1107.5.2 Copper and brass pipe. Standard iron-pipe size, copper and red brass (not less than 80-percent copper) pipe shall conform to ASTM B42 and ASTM B43.

❖ Copper and brass pipe (not tubing) is expensive, rarely used and incompatible with ammonia.

1107.5.3 Copper tube. Copper tube used for refrigerant piping erected on the premises shall be seamless copper tube of Type ACR (hard or annealed) complying with ASTM B280. Where *approved*, copper tube for refrigerant piping erected on the premises shall be seamless copper tube of Type K, L or M (drawn or annealed) in accordance with ASTM B88. Annealed temper copper tube shall not be used in sizes larger than a 2-inch (51 mm) nominal size. Mechanical joints shall not be used on annealed temper copper tube in sizes larger than $^{7}/_{8}$-inch (22.2 mm) OD size.

❖ Type ACR tube is designed for air-conditioning and refrigeration applications and is factory cleaned, dehydrated and shipped with end caps or plugs to prevent internal contamination. It is available in rigid or bending temper. If approved by the code official, Type K, L or M copper water tube can be used; however, this is rarely done because water tube is not protected from contamination in shipping and storage as is Type ACR. Also, Type M tube has less wall thickness than the almost exclusively used Type L tube. Note that ASHRAE 15 prohibits the use of copper and its alloys in systems with ammonia refrigerant.

The larger a soft (annealed temper) tube is in diameter, the more difficult it is to work with, form and join. Also, larger sizes tend to be "out of round," making it difficult to achieve a good seal with mechanical joints.

1107.5.4 Copper tubing joints. Copper tubing joints used in refrigerating systems containing Group A2, A3, B2 or B3 refrigerants shall be brazed. Soldered joints shall not be used in such refrigerating systems.

❖ Because of the higher risk associated with Group A2, A3, B2 and B3 refrigerants, the only type of copper joint allowed is a brazed joint (see the definition of "Brazed joint"). Because commonly used solders melt at temperatures less than 500°F (260°C), soldered joints will fail early in a fire and release refrigerant into the building, endangering occupants and fire fighters.

1107.5.5 Aluminum tube. Type 3003-0 aluminum tubing with high-pressure fittings shall not be used with methyl chloride and other refrigerants known to attack aluminum.

❖ Type 3003-0 alloy of aluminum is susceptible to chemical corrosion when used with refrigerant R-40. Piping, tubing, fittings and refrigerant-containing components must be compatible with and unaffected by

INTERNATIONAL CODE COUNCIL®
Copyright © 2015 ICC. ALL RIGHTS RESERVED. Accessed by David Dammon on Jun 21, 2017 12:30:52 PM pursuant to License Agreement with ICC. No further reproduction or distribution authorized. ANY UNAUTHORIZED REPRODUCTION OR DISTRIBUTION IS A VIOLATION OF THE FEDERAL COPYRIGHT ACT AND THE LICENSE AGREEMENT, AND SUBJECT TO CIVIL AND CRIMINAL PENALTIES THEREUNDER.

the refrigerant used. ASHRAE 15 prohibits the use of aluminum, zinc, magnesium and any alloys of these metals in systems with methyl chloride refrigerant. ASHRAE 15 also states that magnesium alloy materials must not be used with any of the halogenated refrigerants.

1107.6 Joints and refrigerant-containing parts in air ducts. Joints and all refrigerant-containing parts of a refrigerating system located in an air duct of an air-conditioning system carrying conditioned air to and from human-occupied space shall be constructed to withstand, without leakage, a pressure of 150 percent of the higher of the design pressure or pressure relief device setting.

❖ Leakage of refrigerant into a duct would cause refrigerants to be spread throughout the areas served by the duct system; therefore, the integrity of pipes, tubes, coils and devices within ducts must be exceptional. The design pressure for the components must be not less than one- and one-half times the system design pressure or one- and one-half times the system relief device setting, whichever is higher.

1107.7 Exposure of refrigerant pipe joints. Refrigerant pipe joints erected on the premises shall be exposed for visual inspection prior to being covered or enclosed.

❖ This section is redundant with Section 107.1. Like all piping regulated by the code, refrigerant piping must be inspected prior to being concealed.

1107.8 Stop valves. Systems containing more than 6.6 pounds (3 kg) of a refrigerant in systems using positive-displacement compressors shall have stop valves installed as follows:

1. At the inlet of each compressor, compressor unit or condensing unit.
2. At the discharge outlet of each compressor, compressor unit or condensing unit and of each liquid receiver.

   Exceptions:

   1. Systems that have a refrigerant pumpout function capable of storing the entire refrigerant charge in a receiver or heat exchanger.
   2. Systems that are equipped with provisions for pumpout of the refrigerant using either portable or permanently installed recovery *equipment*.
   3. Self-contained systems.

❖ A compressor is the heart of a mechanical refrigeration system. It is used in the vapor refrigeration cycle to raise the pressure and enthalpy of the refrigerant into the superheated vapor state, at which point the refrigerant vapor enters the condenser and transfers heat energy to a cooler medium. There are two basic types of compressors: positive displacement and dynamic. Positive-displacement compressors increase the pressure of the refrigerant vapor by reducing the volume of the compressor chamber such as in a reciprocating, screw or rotary compressor. Dynamic compressors, such as centrifugal compressors, increase the pressure of the refrigerant vapor by a continuous transfer of angular momentum from the rotating member to the vapor.

Stop valves are gas-tight shutoff valves used to isolate portions of a refrigeration system circuit. Stop valves in the inlet (suction side) and discharge side of compressors and condensing units allow components and portions of piping to be isolated for repair and component replacement. Isolation reduces the potential for accidental discharge of refrigerant to the atmosphere, reduces the amount of refrigerant that would have to be recovered and reduces the volume of the system to be evacuated. This section does not apply to small [6 pounds (3 kg)] systems because the limited quantity of refrigerant can be recovered easily and does not apply to systems in which pressures will equalize across the compressor in the off cycle.

Exceptions 1 and 2 would allow omission of stop valves for systems in which the refrigerant charge can be isolated or extracted and stored, thus allowing the system to be opened for service or alteration. Exception 3 applies to completely self-contained systems such as factory-built unitary equipment having no piping to external refrigerant-containing components.

1107.8.1 Liquid receivers. Systems containing 100 pounds (45 kg) or more of a refrigerant, other than systems utilizing nonpositive displacement compressors, shall have stop valves, in addition to those required by Section 1107.8, on each inlet of each liquid receiver. Stop valves shall not be required on the inlet of a receiver in a condensing unit, nor on the inlet of a receiver which is an integral part of the condenser.

❖ Systems containing 100 pounds (45 kg) or more of a refrigerant, other than systems using compressors that are not positive displacement, must have stop valves, in addition to those required by Section 1107.8, on each inlet of each liquid receiver. Stop valves are neither required on the inlet of a receiver in a condensing unit, nor on the inlet of a receiver that is an integral part of the condenser.

Receivers are pressure vessels designed to receive and store liquid refrigerant downstream of the condenser. For large systems, complete isolation of the receiver (valved inlet and outlet) would allow the majority of the refrigerant charge to be "pumped down" and held in the receiver for maintenance operations.

1107.8.2 Copper tubing. Stop valves used with soft annealed copper tubing or hard-drawn copper tubing $^{7}/_{8}$-inch (22.2 mm) OD standard size or smaller shall be securely mounted, independent of tubing fastenings or supports.

❖ The forces involved in rotating a stop valve handle will be transferred to the tubing that is connected to the valve, creating the possibility in small-diameter tubing for movement and eventual failure. On larger

INTERNATIONAL CODE COUNCIL®
Copyright © 2015 ICC. ALL RIGHTS RESERVED. Accessed by David Dammon on Jun 21, 2017 12:30:52 PM pursuant to License Agreement with ICC. No further reproduction or distribution authorized. ANY UNAUTHORIZED REPRODUCTION OR DISTRIBUTION IS A VIOLATION OF THE FEDERAL COPYRIGHT ACT AND THE LICENSE AGREEMENT, AND SUBJECT TO CIVIL AND CRIMINAL PENALTIES THEREUNDER.

tubing, the strength of the material can be adequate to resist the forces applied to the valves. Valves that are independently supported will not cause stress in the tubing.

1107.8.3 Identification. Stop valves shall be identified where their intended purpose is not obvious. Numbers shall not be used to label the valves, unless a key to the numbers is located near the valves.

❖ Unless located where their purpose is obvious, valves must be identified with some means that describe their function. Because valves are used in emergency situations and during service work, their purpose must be known to the user.

SECTION 1108
FIELD TEST

1108.1 General. Every refrigerant-containing part of every system that is erected on the premises, except compressors, condensers, vessels, evaporators, safety devices, pressure gauges and control mechanisms that are *listed* and factory tested, shall be tested and proved tight after complete installation, and before operation. Tests shall include both the high- and low-pressure sides of each system at not less than the lower of the design pressures or the setting of the pressure relief device(s). The design pressures for testing shall be those listed on the condensing unit, compressor or compressor unit nameplate, as required by ASHRAE 15.

Exceptions:

1. Gas bulk storage tanks that are not permanently connected to a refrigeration system.
2. Systems erected on the premises with copper tubing not exceeding $^{5}/_{8}$-inch (15.8 mm) OD, with wall thickness as required by ASHRAE 15, shall be tested in accordance with Section 1108.1, or by means of refrigerant charged into the system at the saturated vapor pressure of the refrigerant at 70°F (21°C) or higher.
3. Limited-charge systems equipped with a pressure relief device, erected on the premises, shall be tested at a pressure not less than one and one-half times the pressure setting of the relief device. If the *equipment* or *appliance* has been tested by the manufacturer at one and one-half times the design pressure, the test after erection on the premises shall be conducted at the design pressure.

❖ Mechanical refrigeration systems that are field constructed must be pressure tested. Factory-assembled components that have been factory tested can be excluded from this testing requirement. Self-contained, factory-built equipment that bears the label of an approved agency does not require field testing because the code official can determine from information provided on the label that the equipment has been tested at the factory.

After a refrigeration system is assembled, a pressure test using air or an inert gas is required to determine whether the system leaks. Refrigerant cannot be used for testing because the purpose of testing is to find and repair any leaks before the system is charged with refrigerant, thereby preventing exposure of anyone to the refrigerant. Also, testing with refrigerant introduces the additional and unnecessary risk of environmental damage from release of refrigerant to the atmosphere.

Dry nitrogen and carbon dioxide are suitable for testing of refrigeration equipment. Gases such as nitrogen and carbon dioxide are readily available, relatively inexpensive, noncorrosive, nontoxic and can be easily removed from the system. Even though air is listed as acceptable for testing refrigeration systems, it is generally not used because moisture in the air can contaminate the system. Although inert gases are acceptable for testing, most are very expensive, making them impractical to use.

ASHRAE 15 determines the required design pressure for all refrigeration systems. The design pressure for equipment such as condensing units will be marked on the equipment. The design pressure is intended to represent the worst-case condition for systems when operating, idle or in shipment prior to installation.

This section does not require field testing of factory-tested components. Factory-tested components typically include pressure vessels, coils, condensing units and control devices. Field-connected piping can be tested only on the job site and is more likely to have defects than any factory-assembled system component. In systems having positive displacement compressors, the low side and high side of the system are typically designed for different design pressures.

Exception 1 exempts refrigerant storage containers because they are not part of the refrigeration system.

Exception 2 describes an optional test for small field-assembled systems that are constructed with small diameter copper tubing. The vapor pressure of a refrigerant varies with the temperature and the type of chemical. The test pressure must not be less than the vapor pressure at 70°F (21°C) of the refrigerant for which the system is designed. The saturated vapor pressure is the pressure exerted by a refrigerant when liquid and gaseous refrigerant are in equilibrium in a container.

Exception 3 is actually a distinct requirement in itself and applies to limited charge systems that are field assembled and equipped with a pressure relief device. In contrast, Section 1108.1 would allow testing at design pressures or relief device setting, whichever is less. The refrigerant charge in this type of system is small enough for all of the liquid refrigerant in the system to be vaporized (depending on the ambient temperature) and the system pressure must not exceed the design pressure.

1108.1.1 Booster compressor. Where a compressor is used as a booster to obtain an intermediate pressure and discharges into the suction side of another compressor, the booster com-

INTERNATIONAL CODE COUNCIL®
Copyright © 2015 ICC. ALL RIGHTS RESERVED. Accessed by David Dammon on Jun 21, 2017 12:30:52 PM pursuant to License Agreement with ICC. No further reproduction or distribution authorized. ANY UNAUTHORIZED REPRODUCTION OR DISTRIBUTION IS A VIOLATION OF THE FEDERAL COPYRIGHT ACT AND THE LICENSE AGREEMENT, AND SUBJECT TO CIVIL AND CRIMINAL PENALTIES THEREUNDER.

pressor shall be considered a part of the low side, provided that it is protected by a pressure relief device.

❖ For field testing in accordance with Section 1108.1, the booster compressor is considered as part of the low-pressure side and the main compressor and piping on the discharge side of the main compressor are considered as part of the high-pressure side.

1108.1.2 Centrifugal/nonpositive displacement compressors. In field-testing systems using centrifugal or other nonpositive displacement compressors, the entire system shall be considered as the low-side pressure for field test purposes.

❖ The entire system is field tested as a low-pressure side where any nonpositive displacement compressor serves as the only compressor. The high-pressure side test is not necessary.

1108.2 Test gases. Tests shall be performed with an inert dried gas including, but not limited to, nitrogen and carbon dioxide. Oxygen, air, combustible gases and mixtures containing such gases shall not be used.

Exception: The use of air is allowed to test R-717, ammonia, systems provided that they are subsequently evacuated before charging with refrigerant.

❖ Dry nitrogen is the most commonly used test medium. Refrigerant should not be used. If there is a system defect, refrigerant would escape and the refrigerant would have to be recovered. The system would have to be swept with an inert gas to allow repair of the defects. Test gases must be dried to prevent the introduction of harmful moisture into a system. Oxygen, air, toxic gases and flammable gases can create an explosion, fire or health hazard. Combining flammable refrigerant with oxygen or air can create an explosive/flammable mixture.

1108.3 Test apparatus. The means used to build up the test pressure shall have either a pressure-limiting device or a pressure-reducing device and a gauge on the outlet side.

❖ The method of introducing the test pressure into a system must be controlled to prevent overpressure that could damage the system. The pressure gauge allows monitoring and a pressure relief or reducing device acts as a backup to manual control. Containers (cylinders) of test gases such as nitrogen are normally pressurized far in excess of the system test pressures; therefore, there is the potential for damage to the system under test.

1108.4 Declaration. A certificate of test shall be provided for all systems containing 55 pounds (25 kg) or more of refrigerant. The certificate shall give the name of the refrigerant and the field test pressure applied to the high side and the low side of the system. The certification of test shall be signed by the installer and shall be made part of the public record.

❖ The test certificate can be in whatever form is acceptable to the code official. This documentation must be filed with the permit and inspection records.

[F] SECTION 1109
PERIODIC TESTING

[F] 1109.1 Testing required. The following emergency devices and systems shall be periodically tested in accordance with the manufacturer's instructions and as required by the code official:

1. Treatment and flaring systems.
2. Valves and appurtenances necessary to the operation of emergency refrigeration control boxes.
3. Fans and associated *equipment* intended to operate emergency ventilation systems.
4. Detection and alarm systems.

❖ The devices and systems listed in this section are critical life safety and fire protection elements; therefore, it is imperative that they be tested periodically to assess their condition and dependability. The same requirements are in Section 606 of the IFC, indicating the importance to the fire department of testing these devices and systems. Failure of the safety systems could lead to deadly consequences for the building occupants and the fire personnel entering the building in an emergency situation.

INTERNATIONAL CODE COUNCIL®
Copyright © 2015 ICC. ALL RIGHTS RESERVED. Accessed by David Dammon on Jun 21, 2017 12:30:52 PM pursuant to License Agreement with ICC. No further reproduction or distribution authorized. ANY UNAUTHORIZED REPRODUCTION OR DISTRIBUTION IS A VIOLATION OF THE FEDERAL COPYRIGHT ACT AND THE LICENSE AGREEMENT, AND SUBJECT TO CIVIL AND CRIMINAL PENALTIES THEREUNDER.

INTERNATIONAL CODE COUNCIL®
Copyright © 2015 ICC. ALL RIGHTS RESERVED. Accessed by David Dammon on Jun 21, 2017 12:30:52 PM pursuant to License Agreement with ICC. No further reproduction or distribution authorized. ANY UNAUTHORIZED REPRODUCTION OR DISTRIBUTION IS A VIOLATION OF THE FEDERAL COPYRIGHT ACT AND THE LICENSE AGREEMENT, AND SUBJECT TO CIVIL AND CRIMINAL PENALTIES THEREUNDER.

Chapter 12: Hydronic Piping

General Comments

Hydronic piping includes piping, fittings and valves used in building space conditioning systems. Applications include hot water, chilled water, steam, steam condensate, brines and water/antifreeze mixtures. Chapter 12 contains the provisions that govern the construction, installation, alteration and repair of all hydronic piping systems.

Purpose

Chapter 12 regulates hydronic systems by stating requirements that affect reliability, serviceability, energy efficiency and safety.

SECTION 1201 GENERAL

1201.1 Scope. The provisions of this chapter shall govern the construction, installation, *alteration* and repair of hydronic piping systems. This chapter shall apply to hydronic piping systems that are part of heating, ventilation and air-conditioning systems. Such piping systems shall include steam, hot water, chilled water, steam condensate and ground-source heat pump loop systems. Potable cold and hot water distribution systems shall be installed in accordance with the *International Plumbing Code*.

❖ This chapter regulates piping, fittings, valves, insulation and the heat transfer fluids used in building heating, cooling and air-conditioning systems. The regulations include material quality and properties and installation requirements. This chapter does not regulate hot and cold potable water distribution piping, which is regulated by the *International Plumbing Code*® (IPC®).

Hydronic systems that are regulated by this chapter include, but are not limited to, the following:

- Low-, medium- and high-temperature hot water heating systems;
- Chilled water cooling systems;
- Dual-temperature water systems;
- Condenser and cooling tower water systems;
- Steam and steam condensate piping systems; and
- Solar heating systems.
- Ground-source heat pump systems

1201.2 Sizing. Piping and piping system components for hydronic systems shall be sized for the demand of the system.

❖ This section requires that the piping network for a hydronic system be sized for the flow volume it must conduct. System design is normally based on maximum flow velocity or pressure drop and the control of noise and erosion. When piping is undersized, velocity and pressure drop are excessive, and the system can be subjected to unacceptable amounts of stress and erosion. Noise in the piping system is dependent on velocity and is a result of turbulence, cavitation, release of entrained air and water hammer. Erosion is the gradual wearing away of the piping inner walls as a result of flow friction, turbulence and entrained air bubbles or debris in the heat transfer medium. Erosion increases as the temperature of the fluid increases. Improperly sized piping can also cause inefficient system operation, loss of system capacity and poor or unsafe operation of boilers, heat exchangers, chillers, circulators and other system components.

1201.3 Standards. As an alternative to the provisions of Sections 1202 and 1203, piping shall be designed, installed, inspected and tested in accordance with ASME B31.9.

❖ ASME B31.9 was developed in 1982 as a simplified standard for the piping systems normally encountered in commercial and multiple-family residential buildings. While the long-established ASME B31.1 and ASME B31.3 standards cover everything in ASME B31.9 and more, those standards were deemed too complex for the relatively low pressures/temperatures and comparatively benign fluids conveyed by piping in buildings of commercial and residential nature. ASME B31.9 is intended to be applied to piping for water and antifreeze solutions for heating and cooling, steam and steam condensate, air, liquids and other nontoxic, nonflammable fluids contained in piping that does not exceed the following limitations:

- Dimensional limits

  Carbon steel: 30 inches (762 mm) and 0.500 inch (12.7 mm) wall

INTERNATIONAL CODE COUNCIL®
Copyright © 2015 ICC. ALL RIGHTS RESERVED. Accessed by David Dammon on Jun 21, 2017 12:30:52 PM pursuant to License Agreement with ICC. No further reproduction or distribution authorized. ANY UNAUTHORIZED REPRODUCTION OR DISTRIBUTION IS A VIOLATION OF THE FEDERAL COPYRIGHT ACT AND THE LICENSE AGREEMENT, AND SUBJECT TO CIVIL AND CRIMINAL PENALTIES THEREUNDER.

Stainless steel: 12 inches (305 mm) and 0.500 inch (12.7 mm) wall
Aluminum: 12 inches (305 mm)
Brass and copper: 12 inches (305 mm) and 12.125 inches (308 mm) for copper tube
Thermoplastics: 24 inches (610 mm)
Ductile iron: 18 inches (457 mm)
Reinforced thermosetting resin: 24 inches (610 mm)

- Pressure and temperature limits

Compressed air, steam and steam condensate to 150 psi (1035 kPa) gauge
Steam and steam condensate from ambient to 366°F (186°C)
Other gases from ambient to 0°F to 200°F (-18 to 93°C)
Liquids to 350 psi (2415 kPa) gauge and from 0°F to 250°F (-18 to 121°C)
Vacuum to 14.7 psi (101 kPa).

SECTION 1202
MATERIAL

1202.1 Piping. Piping material shall conform to the standards cited in this section.

Exception: Embedded piping regulated by Section 1209.

❖ The piping materials that may be used in hydronic systems are listed in Section 1202.4 along with the applicable referenced standards. This section does not prohibit the use of other materials that provide equivalent performance and that have been approved in accordance with Section 105. Conformance to the applicable standards results in a degree of assurance that the materials will adequately perform their intended function. Section 1209 specifies pipe materials for radiant panel installations.

1202.2 Used materials. Reused pipe, fittings, valves or other materials shall be clean and free of foreign materials and shall be *approved* by the code official for reuse.

❖ Used materials must meet the same requirements as new materials. Because materials that have been previously used for other than hydronic applications could contain residual contaminants that are harmful to the hydronic system, before pipe, fittings, valves or other materials can be reinstalled, they must be, at the very minimum, visually examined to determine that the material is at least equivalent to that required for new materials for the intended application. The inspection is intended to determine that the materials are free from physical defects, such as pitting, kinks, damaged threads, pipe wall thinning, corrosion and deposits of solids on the inner wall of the pipe.

1202.3 Material rating. Materials shall be rated for the operating temperature and pressure of the hydronic system. Materials shall be suitable for the type of fluid in the hydronic system.

❖ Heat transfer fluids and system operating and standby pressures and temperatures all vary widely depending on the application. All portions of a hydronic system must be compatible with the working fluid and rated for the operating temperatures and pressures of the system. The lowest rating of any of the components establishes the operating limitations of the system. Note also that pressure and temperature can vary significantly within a system, and different materials may be needed at different locations in the system. For example, in a high-rise building, the static pressure of hydronic piping is greater in the lower floors than in the upper floors, which means that the piping and components at the lower elevations must be rated for the higher pressures.

1202.4 Piping materials standards. Hydronic pipe shall conform to the standards listed in Table 1202.4. The exterior of the pipe shall be protected from corrosion and degradation.

❖ Table 1202.4 identifies the standards for piping materials used in hydronic piping systems. Pipe manufacturers stencil the number of the standard to which the pipe conforms at specified intervals on each length of pipe, allowing for ease of field identification.

This section also requires that piping be protected from corrosion damage or other forms of degradation. When piping is buried or embedded in concrete, the surrounding conditions may cause the pipe to degrade or corrode. Where this can occur, protective measures, such as wrapping or coating the piping, or installing a material that is inherently resistant to degradation are required to shield the piping. For example, steel chilled-water piping is susceptible to rusting caused by continued exposure to condensation that can form on the pipe exterior.

TABLE 1202.4
HYDRONIC PIPE

MATERIAL	STANDARD (see Chapter 15)
Acrylonitrile butadiene styrene (ABS) plastic pipe	ASTM D1527; ASTM F2806
Chlorinated polyvinyl chloride (CPVC) plastic pipe	ASTM D2846; ASTM F441; ASTM F442
Copper or copper-alloy pipe	ASTM B42; ASTM B43; ASTM B302
Copper or copper-alloy tube (Type K, L or M)	ASTM B75; ASTM B88; ASTM B135; ASTM B251
Cross-linked polyethylene/ aluminum/cross-linked polyethylene (PEX-AL-PEX) pressure pipe	ASTM F1281; CSA CAN/CSA-B-137.10

(continued)

INTERNATIONAL CODE COUNCIL®
Copyright © 2015 ICC. ALL RIGHTS RESERVED. Accessed by David Dammon on Jun 21, 2017 12:30:52 PM pursuant to License Agreement with ICC. No further reproduction or distribution authorized. ANY UNAUTHORIZED REPRODUCTION OR DISTRIBUTION IS A VIOLATION OF THE FEDERAL COPYRIGHT ACT AND THE LICENSE AGREEMENT, AND SUBJECT TO CIVIL AND CRIMINAL PENALTIES THEREUNDER.

TABLE 1202.4—continued
HYDRONIC PIPE

MATERIAL	STANDARD (see Chapter 15)
Cross-linked polyethylene (PEX) tubing	ASTM F876; ASTM F877
Ductile iron pipe	AWWA C115/A21.15; AWWA C151/A21.51
Lead pipe	FS WW-P-325B
Polyethylene/aluminum/polyethylene (PE-AL-PE) pressure pipe	ASTM F1282; CSA B137.9
Polypropylene (PP) plastic pipe	ASTM F2389
Polyvinyl chloride (PVC) plastic pipe	ASTM D1785; ASTM D2241
Raised temperature polyethylene (PE-RT)	ASTM F2623; ASTM F2769
Steel pipe	ASTM A53; ASTM A106
Steel tubing	ASTM A254

❖ Ductile iron, polyethylene/aluminum/polyethylene, polypropylene and raised temperature polyethylene piping materials are recent additions to the table. The following outlines the basic descriptions of the pipe materials identified in Table 1202.4.

Acrylonitrile butadiene styrene (ABS) plastic pipe: ASTM D1527 covers Schedules 40 and 80 ABS pipe. The schedule number indicates the wall thickness; the higher the schedule number, the thicker the pipe wall. ASTM D2282 is for SDR-PR pipe. "SDR" is an abbreviation for "standard dimension ratio," the ratio of average outside pipe diameter to minimum wall thickness. The "PR" designation indicates that the pipe is pressure rated.

Brass pipe (copper-alloy pipe): The piping material is red brass, which is composed of approximately 85-percent copper and 15-percent zinc. The pipe is available in standard weight, extra-strong weight and double-extra-strong wall thicknesses. Extra-strong weight has the same outside diameter as standard weight pipe but has a greater pipe wall thickness.

The standard-weight pipe is commonly referred to as "Schedule 40" and extra-strong is called "Schedule 80" in the vernacular of the trade. The brass pipe dimensions are similar to the steel pipe dimensions.

Brass tubing (copper-alloy tubing): The brass industry no longer distinguishes between pipe and tubing; the two designations now mean the same thing.

Copper or copper-alloy pipe: There are two types of copper pipe: threaded and threadless. Both pipes are seamless and have a chemical composition of 99.9-percent copper.

Threadless copper has the same outside diameter as threaded copper pipe, steel pipe and brass pipe. The wall thickness of threadless pipe is less than that of threaded pipe, making the inside diameter greater. Threadless copper pipe is normally joined by brazing, and is continuously marked in gray, including the designation "TP" for "threadless pipe."

Threaded copper pipe is available in both standard and extra-strong weights. The pipe dimensions are similar to those of brass pipe and steel pipe.

Copper or copper-alloy tubing: Tubing is manufactured in two different tempers. The tempers are identified as drawn (also called "hard copper" having the designation "H") and annealed (called "soft copper" having the designation "O"). Hard (drawn) copper tubing comes in straight lengths. Soft (annealed) copper tubing comes in both straight lengths and coils.

Annealed copper and tempered drawn copper may be formed by bending. Tempered copper that can be bent (bending-tempered) is identified on the pipe with the designation "BT." Of the hard (drawn) copper, only bending-tempered copper tubing may be joined by flared connections.

Copper water tubing is available in Type K, L or M. The tubing type indicates the wall thickness. Type K has the greatest wall thickness followed by Types L and M, respectively. The outside diameter of the tubing is the same for all three types; only the inside diameter varies with wall thickness.

Copper tubing is joined by soldering or brazing with wrought- or cast-copper capillary socket-end fittings. Small-diameter copper tubing is also joined by flared or compression-type fittings.

The types of copper tubing are identified with a continuous, colored marking for ease of identification.

The colored markings are green for Type K, blue for Type L and red for Type M.

Chlorinated polyvinyl chloride (CPVC) plastic pipe: CPVC raw material used to produce pipe is a polyvinyl chloride that has been chlorinated to improve the material characteristics. The resulting pipe is more resistant to temperature extremes than PVC pipe. CPVC plastic pipe is typically white or milky white (cream) in color. The pipe is marked at close intervals with the manufacturer's name, the ASTM standard and "CPVC 4120" or "CPVC 41" followed by two additional numbers.

The designation "CPVC 4120" identifies the quality of the material used to produce the pipe. The pipe is made with Grade 23447 plastic material. The number 23447 is a code for the quality of the pipe. The first digit indicates the base resin is CPVC. The remaining four digits determine the impact strength, tensile strength, modulus of elasticity and deflection temperature.

Class 23447 was previously designated Type IV Grade 1, which was shortened to CPVC 41. The last two digits in CPVC 4120 indicate the hydrostatic design stress in hundreds of pounds per square inch (psi). CPVC 4120 has a hydrostatic design stress of 2,000 psi (13 790 kPa).

The hydrostatic design stress, which is the pressure exerted on the walls of the pipe by the fluid

INTERNATIONAL CODE COUNCIL®
Copyright © 2015 ICC. ALL RIGHTS RESERVED. Accessed by David Dammon on Jun 21, 2017 12:30:52 PM pursuant to License Agreement with ICC. No further reproduction or distribution authorized. ANY UNAUTHORIZED REPRODUCTION OR DISTRIBUTION IS A VIOLATION OF THE FEDERAL COPYRIGHT ACT AND THE LICENSE AGREEMENT, AND SUBJECT TO CIVIL AND CRIMINAL PENALTIES THEREUNDER.

inside the pipe under no-flow conditions, is not an indication of the pressure rating of the pipe. However, the pressure rating of the pipe at 73°F (23°C) may be computed using the hydrostatic design stress by the following:

$$P = \frac{2S}{(OD/t) - 1} = \frac{2S}{R - 1}$$

where:

P = Pressure rating.

S = Hydrostatic design stress (psi).

OD = Average outside diameter (inches).

t = Minimum wall thickness (inches).

R = Standard dimension ratio (SDR) (based on outside diameter).

ASTM D2846 is for SDR 11 CPVC plastic pipe and CPVC socket fittings.

ASTM F441 is for Schedules 40 and 80 plastic pipe. Dimensions of the pipe are the same as Schedules 40 and 80 steel pipe.

ASTM F442 is for SDR 13.5, 17, 21, 26 and 32.5 CPVC pipe. The pipe is designated PR.

Cross-linked PEX-AL-PEX pipe: PEX-AL-PEX is a composite pipe made of an aluminum tube laminated to interior and exterior layers of cross-linked polyethylene. The layers are bonded together with an adhesive. The cross-linked molecular structuring gives the pipe additional resistance to rupture than that of polyethylene (see the commentary for cross-linked polyethylene tubing in this section). Therefore, the pipe is suitable for hot and cold water distribution and is pressure rated for 125 psi at 180°F (862 kPa at 82°C).

Although it is partially plastic, the PEX-AL-PEX pipe resembles metal tubing in that it can be bent by hand or with a suitable bending device while maintaining its shape without fittings or supports, In other words, the pipe is referred to as "form stable." The minimum bending radius specified by manufacturers is five times the outside diameter.

Mechanical joints are the only methods currently available to join PEX-AL-PEX pipe. A number of proprietary mechanical-compression-type connectors have been developed for use with the composite pipe to perform transition to other pipes and fittings. The installation of such fittings must be done in accordance with the manufacturers' instructions (see commentary, Section 1203.3.2).

Cross-linked polyethylene (PEX) tubing: Cross-linked polyethylene (designated as PEX by ASTM) has been used extensively in Europe as an undersurface (wall, floor and ceiling) radiant heating system. PEX pipe is rated for use at 160 psi at 73.4°F (1103 kPa at 23°C), 100 psi at 180°F (689 kPa at 82°C) and 80 psi at 200°F (552 kPa at 93°C).

A specially controlled chemical reaction takes place during the manufacturing of polyethylene pipe to form cross-linked polyethylene. The cross-linked molecular structure gives the pipe additional resistance to rupture over a wider range of temperatures and pressures than that of other polyolefin plastics (PE, PB and PP). Because of PEX pipe's unique molecular structure and resistance to heat, it cannot be joined by heat fusion. Because PEX is a member of the polyolefin plastic family, it is resistant to solvents and cannot be joined by solvent cementing.

Because all plastic is gas permeable to some extent, it can allow oxygen to diffuse through the pipe wall and enter the working fluid of the hydronic system, causing corrosion of metallic components such as boilers, circulators and pressure vessels. To minimize the amount of dissolved oxygen in the heating system, some manufacturers of PEX add an oxygen-impermeable polymer coating to the exterior of the pipe. PEX pipe is somewhat flexible, allowing it to be bent.

Mechanical connectors and fittings for PEX pipe are proprietary and should be used only with the pipe for which they have been designed. A number of mechanical fastening techniques have been developed for joining PEX pipe. The manufacturer's installation instructions must be consulted to identify authorized fittings for use with PEX piping (see Section 1203.11).

Ductile iron pipe: Ductile iron pipe has the characteristic that when a specimen of ductile iron is loaded in tension, the material will exhibit elongation before pulling apart (rupture). This is opposed to cast iron which under the same tension loading, does not appreciably elongate before pulling apart (rupture). Because of this property, cast iron is said to be "brittle" (not ductile). AWWA C151/A21.51 pipe is centrifugally cast, ductile iron pipe intended to be connected with push-on joints or mechanical joints. This standard covers 3-inch (76 mm) to 64-inch (1626 mm) sizes. AWWA C115/A21.15 covers the same sizes, but the pipe is made with threaded ends to accept threaded flanges for flange-type gasketed and bolted joints.

Lead pipe: Lead pipe is supplied in straight lengths, coils or reels; in sizes $^3/_8$-inch (9.5 mm) through $1^3/_4$-inch (44 mm) internal diameter (ID) and in numerous wall thicknesses. Lead tubing sizes are $^1/_{16}$-inch (1.6 mm) through $^7/_{16}$-inch (11.1 mm) ID.

Polyethylene (PE) pipe, tubing and fittings: Like polybutylene, polyethylene is an inert polyolefin material. It is resistant to chemical action and cannot be solvent welded. PE pipe must be heat fused or mechanically joined.

Polyethylene pipe is well suited and commonly used for ground-source heat pump loop systems (see commentary, Sections 1203.15 and 1208.1.1). Polyethylene piping is corrosion resistant, compatible with

INTERNATIONAL CODE COUNCIL®
Copyright © 2015 ICC. ALL RIGHTS RESERVED. Accessed by David Dammon on Jun 21, 2017 12:30:52 PM pursuant to License Agreement with ICC. No further reproduction or distribution authorized. ANY UNAUTHORIZED REPRODUCTION OR DISTRIBUTION IS A VIOLATION OF THE FEDERAL COPYRIGHT ACT AND THE LICENSE AGREEMENT, AND SUBJECT TO CIVIL AND CRIMINAL PENALTIES THEREUNDER.

heat exchange fluids used in such systems and is suitable for the pressures and temperatures associated with the application.

PE piping is available in very long coiled lengths and is relatively inexpensive, making it an ideal choice for underground loop systems that may be several hundred feet in length, often consisting of multiple loops.

Polyethylene of raised temperature (PE-RT) plastic tubing: Polyethylene of raised temperature is an inert polyolefin material. It is resistant to chemical action and cannot be solvent welded. PE-RT pipe must be heat fused or mechanically joined. Cold bending radius must not be less than six times the outside diameter of the tubing. PE-RT must not be stored in locations or used in applications where there will be exposure to sunlight (UV light).

Polyethylene/aluminum/polyethylene pipe (PE/AL/PE): PE-AL-PE is a composite pipe made of an aluminum tube laminated to interior and exterior layers of polyethylene. The layers are bonded together with an adhesive. The pipe is suitable for hot and cold water distribution and is pressure rated for 100 psi at 180°F (689 kPa at 82° C).

Although it is partially plastic, the PE-AL-PE pipe resembles metal tubing in that it can be bent by hand or with a suitable bending device while maintaining its shape without fittings or supports. In other words, it is "form stable." The minimum bending radius specified by manufacturers is five times the outside diameter.

Mechanical joints are the only method currently available to join PE-AL-PE pipe. A number of proprietary mechanical-compression-type connectors have been developed for use with the composite pipe to permit transition to other pipes and fittings. Such fittings must be installed in accordance with the manufacturer's instructions.

Raised temperature polyethylene pipe (PE-RT): ASTM F2623 covers polyethylene, SDR 9 tubing that is outside diameter controlled, and pressure rated for water at 100 psi at 180°F (689 kPa at 82.2°C).

Polypropylene pipe (PP): Polypropylene pipe is excellent for corrosive media. It has good resistance to strong acids except highly active oxidizers, such as nitric acid. It also has excellent resistance to weak and strong alkalies and to most organic solvents. Polypropylene can be used at temperatures up to 150°F (66°C), in continuous pressure service.

Polyvinyl chloride (PVC) plastic pipe: PVC used for hydronic purposes is the same material rated for use as water service pipe in the IPC. The pipe is white and it must be continuously marked with the manufacturer's name, the ASTM standard and the grade of the PVC material.

A number of grades of PVC material are used to produce pipe. The compounds are identified as PVC 12454-B, 12454-C and 14333-D. The first digit indicates the base resin. The following four digits identify the impact strength, tensile strength, modulus of elasticity and deflection temperature. The letter suffix indicates the material's resistance to chemicals.

The compounds were previously identified by type and grade; 12454-B is Type 1, Grade 1; 12454-C is Type 1, Grade 2 and 14333-D is Type 2, Grade 1. The marking on the pipe lists the material grade by the term "PVC" followed by four digits. The first two digits use the previous type and grade numbers to identify the compound. The last two digits indicate the hydrostatic design stress in hundreds of pounds per square inch.

The hydrostatic design stress, which is the pressure exerted on the walls of the pipe by the fluid in the pipe under no-flow conditions, is not an indication of the pressure rating of the pipe. However, the pressure rating of the pipe at 73°F (23°C) may be computed by using the hydrostatic design stress:

$$P = \frac{2S}{(OD/t) - 1} = \frac{2S}{R - 1}$$

where:

P = Pressure rating.

S = Hydrostatic design stress (psi).

OD = Average outside diameter (inches).

t = Minimum wall thickness (inches).

R = Standard dimension ratio (SDR) (based on outside diameter).

ASTM D1785 is for Schedules 40, 80 and 160 PVC plastic pipe. The dimensions of the pipe are the same as Schedules 40, 80 and 160 steel pipe.

ASTM D2241 is for SDR-PR PVC plastic pipe. The SDR means standard dimension ratio, the ratio of average outside pipe diameter to minimum wall thickness. The PR means the pipe is pressure rated. The SDRs of the pipe are 13.5, 17, 21, 26, 32.5, 41 and 64.

Steel pipe: Steel pipe is manufactured by several processes. Seamless pipe, made by piercing or extruding, has no longitudinal seam. Other manufacturing methods roll sheet steel into a cylinder and weld a longitudinal seam. A continuous-weld (CW) furnace-buttwelding process forces and joins the edges together at high temperatures. Continuous weld is used for pipe sizes $^1/_4$ inch (6.4 mm) through 4 inches (102 mm). An electric current welds the seam of electric-resistance-welded (ERW) pipe, and is used for pipe sizes 6 inches (152 mm) and larger. ASTM A106 and A53 cover steel pipe. Both designate A and B grades. The A grade has a lower tensile strength and is not widely used.

Steel pipe is manufactured with wall thicknesses identified by schedule and weight. Although schedule numbers and weight designations are related, they are not constant for all pipe sizes. Standard weight (STD) and Schedule 40 pipe have the same wall

INTERNATIONAL CODE COUNCIL®
Copyright © 2015 ICC. ALL RIGHTS RESERVED. Accessed by David Dammon on Jun 21, 2017 12:30:52 PM pursuant to License Agreement with ICC. No further reproduction or distribution authorized. ANY UNAUTHORIZED REPRODUCTION OR DISTRIBUTION IS A VIOLATION OF THE FEDERAL COPYRIGHT ACT AND THE LICENSE AGREEMENT, AND SUBJECT TO CIVIL AND CRIMINAL PENALTIES THEREUNDER.

thickness through 10-inch (254 mm) nominal pipe size (NPS). For 12-inch (305 mm) and larger standard-weight pipe, wall thicknesses increase with each size. A similar equality exists between extra-strong (XS) and Schedule 80 pipe up through 8 inches (203 mm); after which XS pipe has a 0.500-inch (12.7 mm) wall, while Schedule 80 increases in wall thickness.

Because the pipe wall thickness of threaded standard weight pipe is so small after deducting the allowance (A), the mechanical strength of the pipe is low. It is a good practice to limit standard-weight threaded pipe pressures to 90 pounds per square inch gauge (psig) (621 kPa) for steam and 125 psig (862 kPa) for water.

Steel tubing: ASTM A254 covers double-walled, copper-brazed steel tubing. This tubing is manufactured by rolling steel strip into the form of a double thickness tube and copper brazing along the longitudinal seam(s). The tubing is also available with a copper coating on the inside and outside surfaces or a hot-dipped, lead-in alloy on the outside surface.

1202.5 Pipe fittings. Hydronic pipe fittings shall be *approved* for installation with the piping materials to be installed, and shall conform to the respective pipe standards or to the standards listed in Table 1202.5.

❖ To avoid chemical or corrosive action in a hydronic system that could cause premature failure, fittings must be of the same material as the pipe being used or of a compatible material.

Many of the pipe standards also apply to the pipe fittings. However, there are a number of other standards that establish criteria primarily for pipe fittings as identified in Table 1202.5. Fittings include ells [90 degrees and 45 degrees (1.57 rad and 0.79 rad)], tees, wyes, flow inducers, caps, plugs, couplings and increasers/reducers (concentric and eccentric). Fittings must be rated for the pressures and temperatures of the intended application.

1202.6 Valves. Valves shall be constructed of materials that are compatible with the type of piping material and fluids in the system. Valves shall be rated for the temperatures and pressures of the systems in which the valves are installed.

❖ Valves are constructed to withstand a specific range of temperature, pressure and mechanical stress. The pressure ratings of valves vary with the kind of fluid or gas being conducted (steam, water, oil or gas). Valve types include gates, stops, lubricated plug cocks, ball valves, butterfly valves and variations of each of these types. The code official must evaluate the various valves for their acceptability in hydronic systems based on the many standards that regulate the rating of valves and the application limitations placed on the valve by the manufacturer. The valves should operate easily, be as liquid or gas tight as the application requires, have a reasonable service life, be accessible, be approved and be installed in the application for which they were designed and approved.

Valves must be of the same material as the pipe or of a compatible material to avoid chemical or corrosive action. Additionally, valves must be rated for the pressures and temperatures to which they are subjected.

1202.7 Flexible connectors, expansion and vibration compensators. Flexible connectors, expansion and vibration control devices and fittings shall be of an *approved* type.

❖ This section contains the requirements for devices designed to protect the components of the hydronic system from damage caused by expansion, contraction, transverse movement, angular deflection and vibration. The devices are designed to absorb pipe movement and stress, reduce system noise, isolate mechanical vibration and compensate for slight misalignment of pipes. Piping movements are produced by temperature and pressure variations in the surrounding atmosphere and working fluid causing dimensional changes. Vibrations are produced by mechanical equipment such as pumps.

Flexible connectors and expansion joints are used where the potential movements are too large to be accommodated by pipe bends or loops, or where insufficient room exists to construct a loop of adequate size.

TABLE 1202.5
HYDRONIC PIPE FITTINGS

MATERIAL	STANDARD (see Chapter 15)
Copper and copper alloys	ASME B16.15; ASME B16.18; ASME B16.22; ASME B16.26; ASTM F1974; ASTM B16.24; ASME B16.51
Ductile iron and gray iron	ANSI/AWWA C110/A21.10; AWWA C153/A21.53; ASTM A395; ASTM A536; ASTM F1476; ASTM F1548
Ductile iron	ANSI/AWWA C153/A21.53
Gray iron	ASTM A126
Malleable iron	ASME B16.3
PE-RT fittings	ASTM F1807; ASTM F2098; ASTM F2159; ASTM F2735; ASTM F2769
PEX fittings	ASTM F877; ASTM F1807; ASTM F2159
Plastic	ASTM D2466; ASTM D2467; ASTM F438; ASTM F439; ASTM F877; ASTM F2389; ASTM F2735
Steel	ASME B16.5; ASME B16.9; ASME B16.11; ASME B16.28; ASTM A53; ASTM A106; ASTM A234; ASTM A420; ASTM A536; ASTM A395; ASTM F1476; ASTM F1548

❖ This table contains pipe fitting standards with the corresponding pipe fitting material.

INTERNATIONAL CODE COUNCIL®
Copyright © 2015 ICC. ALL RIGHTS RESERVED. Accessed by David Dammon on Jun 21, 2017 12:30:52 PM pursuant to License Agreement with ICC. No further reproduction or distribution authorized. ANY UNAUTHORIZED REPRODUCTION OR DISTRIBUTION IS A VIOLATION OF THE FEDERAL COPYRIGHT ACT AND THE LICENSE AGREEMENT, AND SUBJECT TO CIVIL AND CRIMINAL PENALTIES THEREUNDER.

Examples of expansion compensators are:

- Packed slip expansion joint [see Commentary Figure 1202.7(1)];
- Flexible ball joint [see Commentary Figure 1202.7(2)];
- Metal bellows expansion joint [see Commentary Figure 1202.7(3)];
- Rubber expansion joint [see Commentary Figure 1202.7(4)]; and
- Flexible hose [see Commentary Figure 1202.7(5)].

Because these devices are available in a wide variety of sizes, materials and temperature/pressure ratings, it is imperative that they be rated for the system operating temperature and pressure and be compatible with the fluid in the system.

SECTION 1203
JOINTS AND CONNECTIONS

1203.1 Approval. Joints and connections shall be of an *approved* type. Joints and connections shall be tight for the pressure of the hydronic system.

❖ Joints and connections must be fabricated using a method described in this section or must be specifically approved by the code official. This section does not prohibit the use of joints and connections that are not regulated here. Many joints and connections are proprietary and are not regulated by standards; however, a type of joint or connection other than those addressed in this section may be used only after the code official has determined the proposed joint or connection is satisfactory and complies with the intent of the code. Approval of joints and connections must consider the compatibility of the joint or connection with the working fluid of the system and the pipe materials being joined. Joints and connections must be able to withstand the maximum operating conditions of the system.

1203.1.1 Joints between different piping materials. Joints between different piping materials shall be made with *approved* adapter fittings.

❖ Numerous adapter fittings are available that are designed to join different pipe materials. When adapter fittings are used, they must be evaluated and shown to be compatible with the pipe material and working fluid (see commentary, Section 1203.1). The fittings must also be rated for the maximum operating conditions of the hydronic system.

When joining dissimilar metals, a method of protecting against galvanic corrosion is required. Galvanic corrosion occurs when two different metals are in contact in the presence of an electrolyte, such as water. Galvanic corrosion accelerates the natural corrosion process that occurs in all metals and, because certain metals corrode faster than others, they have been placed in a hierarchy in order of rate of corrosion.

The more reactive metal at a juncture is called the "anode" and the less reactive metal is called the "cathode." When metals of different reactivity are coupled, the more reactive metal (anode) will develop a surface layer of corrosion (such as rust on steel) or tend to dissolve in an electrolyte (such as water), thereby generating an electric current flow between the dissimilar metals.

The rate of galvanic corrosion is strongly influenced by the difference in activity between dissimilar metals. The greater the difference in metals in the hierarchy of resistance to corrosion, the greater the reactivity between them and, therefore, the faster the anodic metal will corrode.

This section prescribes two methods of protection against galvanic corrosion: dielectric fittings and brass converter fittings. These fittings are designed to provide a barrier or buffer between dissimilar metals in the waterway system or are designed to electrically isolate the metals from each other. Dielectric fittings include insulated couplings, insulated nipples and insulated unions. Cast brass male and female threaded adapters are examples of converter fittings.

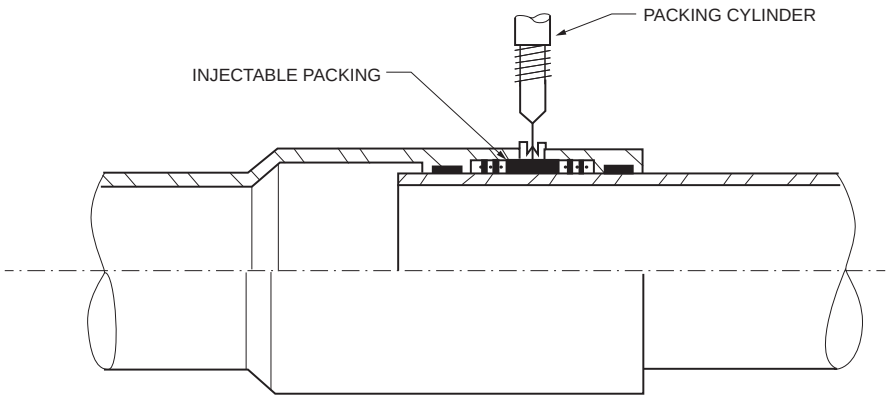

Figure 1202.7(1)
PACKED SLIP EXPANSION JOINT

INTERNATIONAL CODE COUNCIL®
Copyright © 2015 ICC. ALL RIGHTS RESERVED. Accessed by David Dammon on Jun 21, 2017 12:30:52 PM pursuant to License Agreement with ICC. No further reproduction or distribution authorized. ANY UNAUTHORIZED REPRODUCTION OR DISTRIBUTION IS A VIOLATION OF THE FEDERAL COPYRIGHT ACT AND THE LICENSE AGREEMENT, AND SUBJECT TO CIVIL AND CRIMINAL PENALTIES THEREUNDER.

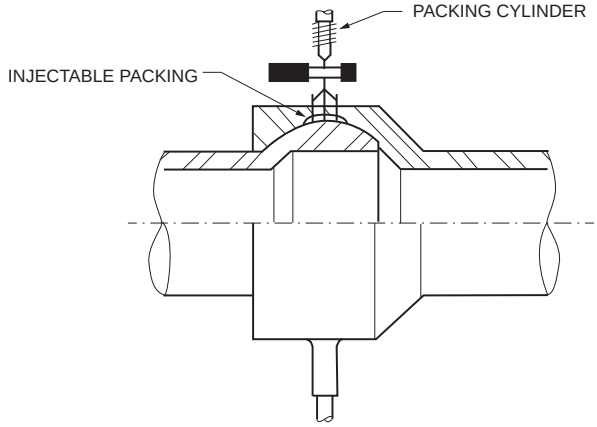

Figure 1202.7(2)
FLEXIBLE BALL JOINT

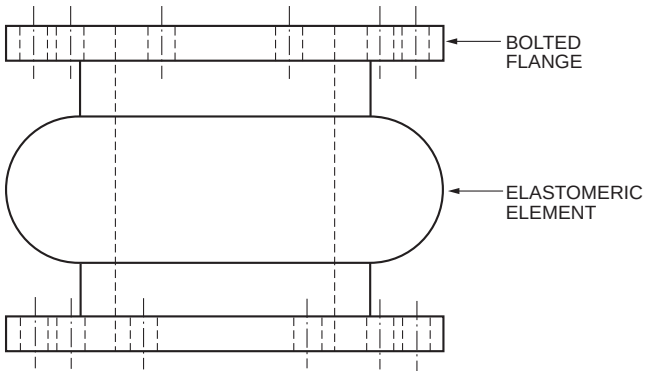

Figure 1202.7(4)
RUBBER EXPANSION JOINT

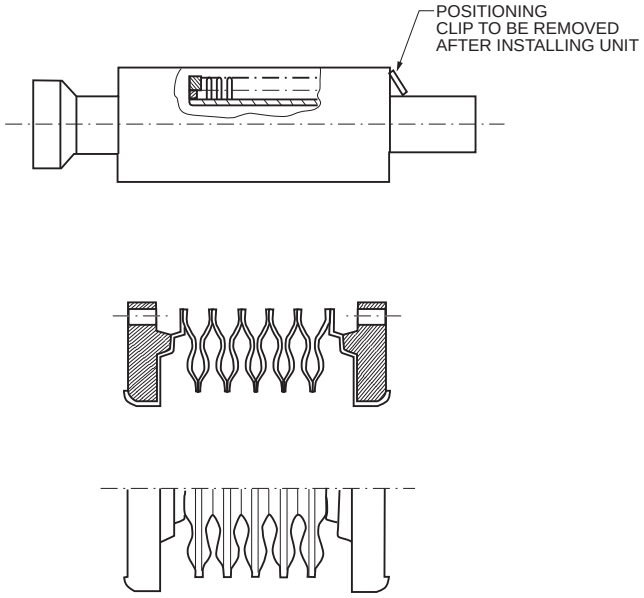

Figure 1202.7(3)
METAL BELLOWS EXPANSION JOINT

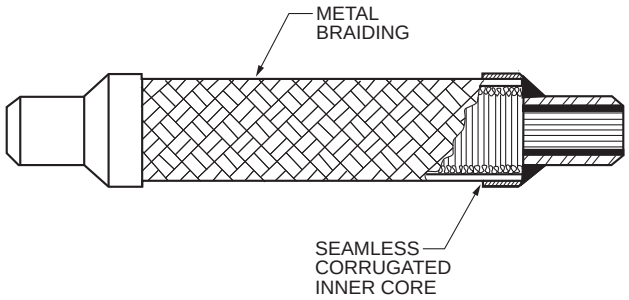

Figure 1202.7(5)
FLEXIBLE HOSE

1203.2 Preparation of pipe ends. Pipe shall be cut square, reamed and chamfered, and shall be free of burrs and obstructions. Pipe ends shall have full-bore openings and shall not be undercut.

❖ If pipe ends are not cut at right angles to the pipe barrel, the result can be the misalignment of the piping and insufficient insertion depth into the fitting. This can lead to joint failure.

Shoulders and burrs produced by cutting must be removed to eliminate obstruction of fluid flow. The pipe must be reamed internally and prepared externally to remove burrs, shoulders and protruding edges. Undercutting or reducing the pipe wall thickness during this process must be avoided. Undercutting of the pipe structurally weakens the pipe wall and can also weaken threads or other joints (see Commentary Figure 1203.2).

1203.3 Joint preparation and installation. Where required by Sections 1203.4 through 1203.14, the preparation and installation of brazed, mechanical, soldered, solvent-cemented, threaded and welded joints shall comply with Sections 1203.3.1 through 1203.3.8.

❖ Sections 1203.3.1 through 1203.3.8 regulate the allowed joints and connections for the pipe materials listed in Sections 1203.4 through 1203.18. Joining methods that are unique to a specific pipe material are listed in the sections that apply to that pipe material. For example, Section 1203.15.1 is a subsection of Section 1203.15 because electrofusion joints apply only to polypropylene pipe and tubing.

1203.3.1 Brazed joints. Joint surfaces shall be cleaned. An *approved* flux shall be applied where required. The joint shall be brazed with a filler metal conforming to AWS A5.8.

❖ Brass tubing and pipe, and copper or copper-alloy tubing and pipe, can be joined by brazing. Brazed joints are similar to soldered joints; however, they are joined at temperatures in excess of 1,000°F (538°C). A brazed joint is much stronger than a soldered joint because of the higher temperatures.

INTERNATIONAL CODE COUNCIL®
Copyright © 2015 ICC. ALL RIGHTS RESERVED. Accessed by David Dammon on Jun 21, 2017 12:30:52 PM pursuant to License Agreement with ICC. No further reproduction or distribution authorized. ANY UNAUTHORIZED REPRODUCTION OR DISTRIBUTION IS A VIOLATION OF THE FEDERAL COPYRIGHT ACT AND THE LICENSE AGREEMENT, AND SUBJECT TO CIVIL AND CRIMINAL PENALTIES THEREUNDER.

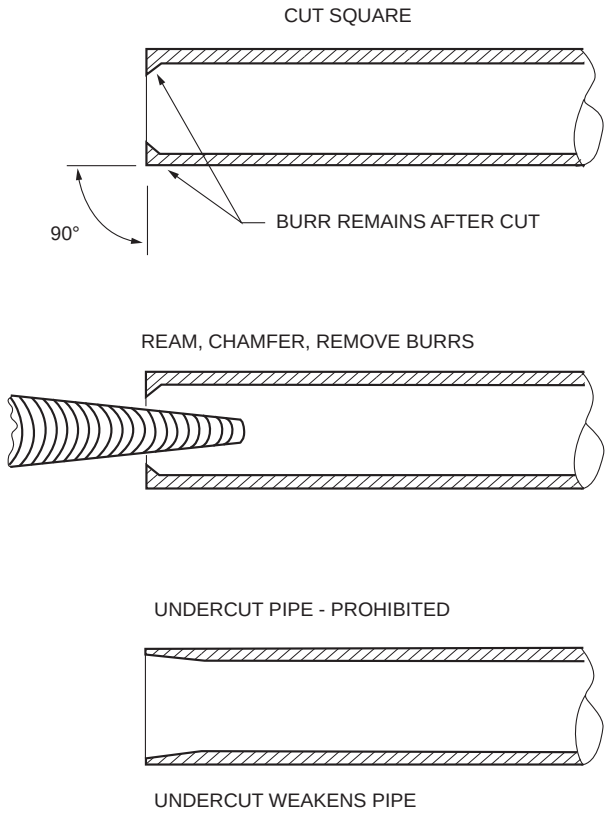

Figure 1203.2
PREPARATION OF PIPE END

Joint surfaces to be brazed are typically cleaned with an emery cloth and specially designed brushes. Surface oxides and other substances can interfere with filler metal flow and adhesion.

Some types of filler metals do not require flux for certain types of joints. Manufacturer's instructions must be consulted to determine whether and what type of flux is needed.

Common filler metals used for brazing contain copper alloys and phosphorus or contain 30 to 60 percent silver with zinc and copper alloys. Some of the filler metal alloys also contain cadmium, which is highly toxic.

1203.3.2 Mechanical joints. Mechanical joints shall be installed in accordance with the manufacturer's instructions.

❖ Many mechanical joints use an elastomeric material to form a seal. Because mechanical joints are typically proprietary, they must be made in accordance with the manufacturer's installation instructions.

Mechanical joints for metallic tubing include a large array of fittings, the most common of which is the compression fitting. This type of fitting uses a metallic compression ring to form the seal. The ring compresses around the pipe outside wall as the fitting is tightened. Pipe-joint compound is not required but is often used to act as a lubricant for the threads and mating metal surfaces.

Mechanical joints for plastic pipe include insert-type fittings, metallic lock ring fittings, compression fittings and crimp-type fittings.

Although an insert-type fitting can reduce the inside diameter of the pipe, the reduction may be accounted for as part of the design considerations of the hydronic system.

Mechanical joints for steel pipe include compression gasket, grooved and mechanically deformed (pressed) joints. Grooved joint systems require cutting or forming a shallow groove in the pipe wall. A segmented clamp engages the grooves, and the seal is a special gasket designed so that internal pressure expands and tightens the seal. Some clamps are designed with clearance between the tongue and groove to accommodate misalignment and thermal movements, while others are designed to limit movement and provide a nearly rigid joint. Manufacturer's data specify temperature and pressure limitations for the proper application of mechanical joints.

Another form of a mechanical joint consists of a coupling slightly larger than the outside diameter of the pipe. The pipe ends are inserted into the sleeve, and gaskets are packed into the annular space between pipe and coupling and held in place by retainer rings. This type of joint can accommodate some axial misalignment, but must be anchored or otherwise restrained to prevent axial pullout or lateral movement. Manufacturers provide pressure/temperature data for the proper application of mechanical joints.

A relatively new type of joint requires a special power tool that compresses a copper socket fitting onto the copper pipe and seals with an O-ring.

1203.3.3 Soldered joints. Joint surfaces shall be cleaned. A flux conforming to ASTM B813 shall be applied. The joint shall be soldered with a solder conforming to ASTM B32.

❖ Soldered joints are commonly used with brass tubing, copper or copper-alloy pipe and copper or copper-alloy tubing. ASTM B32 covers many grades of solder. Solders are metal alloys of tin and lead, tin and antimony, tin and silver and other more complex alloys of tin, silver, copper and other metals.

The joint surfaces for a soldered joint must be cleaned using emery cloth and specially designed brushes to remove oxides and impurities. Flux is required to prevent oxidation from forming and to promote proper solder flow into the joint.

1203.3.4 Solvent-cemented joints. Joint surfaces shall be clean and free of moisture. An *approved* primer shall be applied to CPVC and PVC pipe-joint surfaces. Joints shall be made while the cement is wet. Solvent cement conforming to the following standards shall be applied to all joint surfaces:

1. ASTM D2235 for ABS joints.
2. ASTM F493 for CPVC joints.
3. ASTM D2564 for PVC joints.

INTERNATIONAL CODE COUNCIL®
Copyright © 2015 ICC. ALL RIGHTS RESERVED. Accessed by David Dammon on Jun 21, 2017 12:30:52 PM pursuant to License Agreement with ICC. No further reproduction or distribution authorized. ANY UNAUTHORIZED REPRODUCTION OR DISTRIBUTION IS A VIOLATION OF THE FEDERAL COPYRIGHT ACT AND THE LICENSE AGREEMENT, AND SUBJECT TO CIVIL AND CRIMINAL PENALTIES THEREUNDER.

CPVC joints shall be made in accordance with ASTM D2846.

Exception: For CPVC pipe joint connections, a primer is not required where all of the following conditions apply:

1. The solvent cement used is third-party certified as conforming to ASTM F493.
2. The solvent cement is yellow in color.
3. The solvent cement is used only for joining $^1/_2$-inch (12.7 mm) through 2-inch (51 mm) diameter CPVC pipe and fittings.
4. The CPVC pipe and fittings are manufactured in accordance with ASTM D2846.

❖ Solvent cementing is a common method of joining plastic pipe and fittings and is often referred to as "solvent welding." The referenced ASTM standards contain recommended procedures for handling solvent cement and making joints.

The pipe and fitting should be at approximately the same temperature when solvent cementing is done. The pipe end and socket fitting must be clean, dry and free from grease, oil and foreign substances. CPVC and PVC joints must first be primed. A primer is applied to all joint surfaces before the solvent cement is applied. The primer is a solvent for the pipe and fitting material that conditions the joint surfaces for the subsequent application of solvent cement.

Failure to apply a primer to a solvent-cemented joint could result in inferior joint strength. If a clear primer is used, close examination is required to determine that primer has been applied. Primers remove the shiny finish on the surface of pipe and fittings, leaving a dull surface. Solvent cement must be applied while the primer is still active (wet).

Solvent-cemented joints must cure (set up) for the time period specified by the manufacturer of the solvent cement. Curing time is affected by relative humidity, ambient temperature and the formulation of the cement.

All-purpose solvent cement or universal solvent cement cannot be used unless it conforms to the standard for solvent cement applicable to the pipe and fitting materials being joined. Each type of solvent cement is specifically designed for a given piping material. All-purpose solvent cement may or may not conform to the applicable ASTM standards for solvent cements for each of the plastic materials. Solvent cement is identified on the container by the appropriate ASTM standard number. ABS solvent cement must conform to ASTM D2235. The solvent cement for CPVC must conform to ASTM F493, and the solvent cement for PVC must conform to ASTM D2564.

The exception allows for CPVC pipe to be joined without the use of a primer. The size of the pipe must be in the range of $^1/_2$ inch (12.7 mm) to 2 inches (51 mm), the solvent cement must be yellow in color and third-party certified, and the pipe and fittings must be manufactured in accordance with ASTM D2846. Using primers, especially colored primers, can be messy and can leave indelible stains on finished surfaces. The priming step also takes time. Eliminating primer by using the "one step" cement makes the job go faster and can make it look more professional.

1203.3.5 Threaded joints. Threads shall conform to ASME B1.20.1. Schedule 80 or heavier plastic pipe shall be threaded with dies specifically designed for plastic pipe. Thread lubricant, pipe-joint compound or tape shall be applied on the male threads only and shall be *approved* for application on the piping material.

❖ ASME B1.20.1 identifies pipe thread dimensions as "NPT." NPT is not an abbreviation for terms such as "national pipe thread," "nominal pipe thread" or "national pipe tapered thread"; rather, NPT is a coded designation. "N" stands for USA standard, "P" indicates pipe, and "T" means the threads are tapered.

Plastic pipe with a wall thickness less than that of Schedule 80 pipe may not be threaded because of the reduced wall thickness and strength at the thread location. Plastic pipe must be threaded with threading dies that are specially designed to cut plastic pipe threads to avoid damaging the pipe and the threads.

Pipe-joint compounds (dope) and tape are used to lubricate the threads and seal minute imperfections on the thread surfaces. The primary function of pipe-joint compound is to lubricate the surfaces to allow the joint to be tightened enough to obtain a tight metal-to-metal or plastic-to-plastic seal. Pipe-joint compounds must be compatible with the piping material and the fluid or gas passing through the piping. Some plastic piping materials can be damaged by various pipe-joint compound formulations.

If pipe-joint compound or tape is applied to female threads, the compound or tape will be pushed into the piping system where it could contaminate the system.

1203.3.6 Welded joints. Joint surfaces shall be cleaned by an *approved* procedure. Joints shall be welded with an *approved* filler metal.

❖ A welded joint is similar to a brazed joint. The differences between the two types of joints are the temperature at which the joint is made and the type of filler metals (see commentary, Section 1203.3.1). Welded joint uses filler metals of the same material as the pipe or fitting being welded and the welding temperatures reach the melting point of the workpiece. Welding results in a homogeneous fusion of the materials being joined.

The applicable sections of ASME B31 and the ASME *Boiler and Pressure Vessel Code* specify proper welding methods. ASME B31 requires that welders and welding procedure specifications be qualified. Separate welding procedure specifications are needed for different welding methods and materials. Qualifying tests and the variables requiring separate procedure specifications are set forth in Section IX of the ASME *Boiler and Pressure Vessel Code.* The manufacturer, fabricator or contractor is responsible for the welding procedure and welders. ASME

INTERNATIONAL CODE COUNCIL®
Copyright © 2015 ICC. ALL RIGHTS RESERVED. Accessed by David Dammon on Jun 21, 2017 12:30:52 PM pursuant to License Agreement with ICC. No further reproduction or distribution authorized. ANY UNAUTHORIZED REPRODUCTION OR DISTRIBUTION IS A VIOLATION OF THE FEDERAL COPYRIGHT ACT AND THE LICENSE AGREEMENT, AND SUBJECT TO CIVIL AND CRIMINAL PENALTIES THEREUNDER.

B31 requires visual examination of welds and outlines limitations of acceptability.

Shielded metal arc welding (stick welding) is most often used for hydronic piping because of its availability and ease of operation. The molten weld metal is shielded by vaporizing the electrode flux coating while the electrode melts to add material to the weld zone.

1203.3.7 Grooved and shouldered mechanical joints. Grooved and shouldered mechanical joints shall conform to the requirements of ASTM F1476 and shall be installed in accordance with the manufacturer's instructions.

❖ This method of joining pipes uses an elastomeric gasket and a bolted clamping ring assembly that interlocks with grooves or shoulders formed on the pipe ends. ASTM F1476 covers this joining method. This joining method is commonly used in fire sprinkler systems and the fittings are often referred to as "Victaulic" fittings because this is the name of a well-known manufacturer of this type of fitting/coupling.

1203.3.8 Mechanically formed tee fittings. Mechanically extracted outlets shall have a height not less than three times the thickness of the branch tube wall.

❖ Mechanically formed tee fittings are formed in a continuous operation consisting of drilling a pilot hole and drawing out the tube surface to form a collar having a height not less than three times the thickness of the tube wall. Specialized tools are required for this operation. Tees formed in accordance with this section lack the quality control that is imposed in a manufacturer's plant to meet applicable standards. When tees are mechanically formed in the field, tolerances do not always conform to standards. Because of the shape and size of the collars produced by this method, soft soldering is deemed inadequate to ensure the required joint strength.

1203.3.8.1 Full flow assurance. Branch tubes shall not restrict the flow in the run tube. A dimple/depth stop shall be formed in the branch tube to ensure that penetration into the outlet is of the correct depth. For inspection purposes, a second dimple shall be placed $^1/_4$ inch (6.4 mm) above the first dimple. Dimples shall be aligned with the tube run.

❖ Notching and dimpling of the branch tube is required to ensure that the branch tube is not inserted too far into the formed collar, allowing it to obstruct flow through the fitting or increase friction loss beyond what can normally be expected for a tee fitting. The notching and dimpling are done in one operation to ensure that the dimples are located properly with respect to the end of the notch. The branch tube is inserted into the collar until the first dimple touches the collar. The first dimple will be covered by the brazing filler. The second dimple, located $^1/_4$-inch (6.4 mm) above the first dimple, serves as a visual inspection point above the area to be brazed [see Commentary Figures 1203.3.8.1(1) and (2)].



Figure 1203.3.8.1(1)
MECHANICALLY FORMED JOINT
(Courtesy of T-DRILL Industries, Inc.)

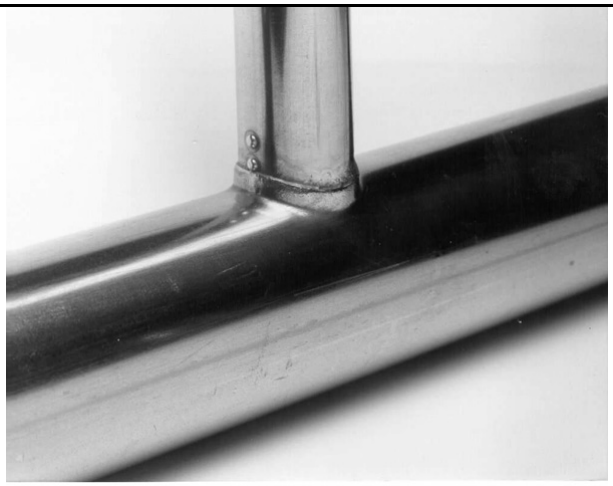

Figure 1203.3.8.1(2)
MECHANICALLY FORMED JOINT—DIMPLE LOCATION
(Courtesy of T-DRILL Industries, Inc.)

1203.3.8.2 Brazed joints. Mechanically formed tee fittings shall be brazed in accordance with Section 1203.3.1.

❖ See the commentary to Section 1203.3.1.

1203.4 ABS plastic pipe. Joints between ABS plastic pipe or fittings shall be solvent-cemented or threaded joints conforming to Section 1203.3.

❖ Sections 1203.4 and 1203.3.5 describe the joining methods allowed for ABS plastic pipe.

1203.5 Brass pipe. Joints between brass pipe or fittings shall be brazed, mechanical, threaded or welded joints conforming to Section 1203.3.

❖ Sections 1203.3.1, 1203.3.2, 1203.3.5 and 1203.3.6 describe the joining methods allowed for brass pipe.

INTERNATIONAL CODE COUNCIL®
Copyright © 2015 ICC. ALL RIGHTS RESERVED. Accessed by David Dammon on Jun 21, 2017 12:30:52 PM pursuant to License Agreement with ICC. No further reproduction or distribution authorized. ANY UNAUTHORIZED REPRODUCTION OR DISTRIBUTION IS A VIOLATION OF THE FEDERAL COPYRIGHT ACT AND THE LICENSE AGREEMENT, AND SUBJECT TO CIVIL AND CRIMINAL PENALTIES THEREUNDER.

1203.6 Brass tubing. Joints between brass tubing or fittings shall be brazed, mechanical or soldered joints conforming to Section 1203.3.

❖ Sections 1203.3.1, 1203.3.2 and 1203.3.3 describe the joining methods allowed for brass tubing.

1203.7 Copper or copper-alloy pipe. Joints between copper or copper-alloy pipe or fittings shall be brazed, mechanical, soldered, threaded or welded joints conforming to Section 1203.3.

❖ Sections 1203.3.1, 1203.3.2, 1203.3.3, 1203.3.5 and 1203.3.6 describe the methods allowed for joining copper and copper-alloy pipe.

1203.8 Copper or copper-alloy tubing. Joints between copper or copper-alloy tubing or fittings shall be brazed, mechanical or soldered joints conforming to Section 1203.3, flared joints conforming to Section 1203.8.1, push-fit joints conforming to Section 1203.8.2 or press-type joints conforming to Section 1203.8.3.

❖ Sections 1203.3.1, 1203.3.2, 1203.3.3, 1203.8.1, 1203.8.2 and 1203.8.3 describe the joining methods allowed for copper or copper-alloy tubing.

1203.8.1 Flared joints. Flared joints shall be made by a tool designed for that operation.

❖ Because the pipe end is expanded in a flared joint, only annealed and bending-tempered (drawn) copper tubing may be flared. Commonly used flaring tools use a screw yoke and block assembly or an expander tool that is driven into the tube with a hammer. The flared tubing end is compressed between a fitting seat and a threaded nut to form a metal-to-metal seal.

1203.8.2 Push-fit joints. Push-fit joints shall be installed in accordance with the manufacturer's instructions.

❖ Push-to-connect fittings are becoming more commonplace as they do not require soldering, special tightening procedures or extensive personnel training to ensure a leak free joint. These fittings are typically intended for connecting only hard drawn copper tube and not soft temper copper tubing. The specific manufacturer's installation instructions provide information as to the piping application in which the fitting can be used.

1203.8.3 Press joints. *Press joints* shall be installed in accordance with the manufacturer's instructions.

❖ Press joint fittings are becoming commonplace as they do not require soldering or extensive personnel training to ensure a leak free joint. A special tool is needed to properly crimp the fittings onto the piping. Once installed, the fittings cannot be removed. These fittings are typically intended for connecting only hard drawn copper tube and not soft temper copper tubing. The specific manufacturer's installation instructions provide information as to the piping application in which the fitting can be used.

1203.9 CPVC plastic pipe. Joints between CPVC plastic pipe or fittings shall be solvent-cemented or threaded joints conforming to Section 1203.3.

❖ Sections 1203.3.4 and 1203.3.5 describe the joining methods allowed for CPVC plastic pipe.

1203.10 Polybutylene plastic pipe and tubing. Joints between polybutylene plastic pipe and tubing or fittings shall be mechanical joints conforming to Section 1203.3 or heat-fusion joints conforming to Section 1203.10.1.

❖ Sections 1203.3.2 and 1203.10.1 describe the methods allowed for joining polybutylene plastic pipe and tubing.

1203.10.1 Heat-fusion joints. Joints shall be of the socket-fusion or butt-fusion type. Joint surfaces shall be clean and free of moisture. Joint surfaces shall be heated to melt temperatures and joined. The joint shall be undisturbed until cool. Joints shall be made in accordance with ASTM D3309.

❖ Heat fusion is analogous to welding of metals. Specially designed tools, typically electrically heated, are used to heat the pipe ends and fitting sockets to the melting temperature and the materials are fused together. Certain butt-fusion tools also properly align the pipe and make the connection (see Commentary Figure 1203.10.1).

1203.11 Cross-linked polyethylene (PEX) plastic tubing. Joints between cross-linked polyethylene plastic tubing and fittings shall conform to Sections 1203.11.1 and 1203.11.2. Mechanical joints shall conform to Section 1203.3.

❖ Sections 1203.3.2, 1203.11.1 and 1203.11.2 address joining methods for PEX tubing. All joining methods for PEX tubing are considered mechanical joints that must be installed in accordance with the manufacturer's installation instructions.

1203.11.1 Compression-type fittings. Where compression-type fittings include inserts and ferrules or O-rings, the fittings shall be installed without omitting the inserts and ferrules or O-rings.

❖ 'A number of fittings have been developed that can be described as mechanical compression fittings. Compression fittings are likely to include inserts, ferrules and O-rings that form an essential part of the fitting assembly and, therefore, cannot be omitted (see Commentary Figure 1203.11.1). Inserts act as stiffeners to resist the compression forces on the tubing wall. Ferrules and O-rings form the seal around the tube.

Some fittings use an insert that is forced into the expanded end of the tube with a compression sleeve forced over the tubing to compress the tube against the insert fitting. A specific technique requires the flaring or expanding of the pipe before the fitting is inserted. In all cases, the fittings connecting PEX pipe must be assembled and installed in accordance with the manufacturer's installation instructions.

INTERNATIONAL CODE COUNCIL®
Copyright © 2015 ICC. ALL RIGHTS RESERVED. Accessed by David Dammon on Jun 21, 2017 12:30:52 PM pursuant to License Agreement with ICC. No further reproduction or distribution authorized. ANY UNAUTHORIZED REPRODUCTION OR DISTRIBUTION IS A VIOLATION OF THE FEDERAL COPYRIGHT ACT AND THE LICENSE AGREEMENT, AND SUBJECT TO CIVIL AND CRIMINAL PENALTIES THEREUNDER.

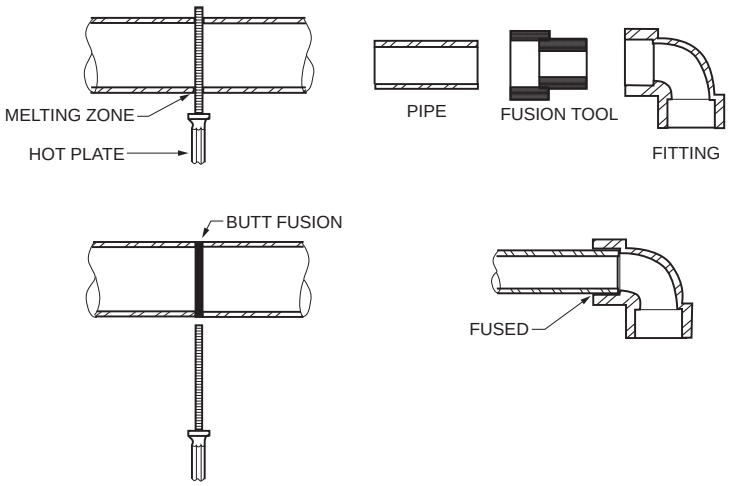

Figure 1203.10.1
PLASTIC HEAT-FUSED JOINT

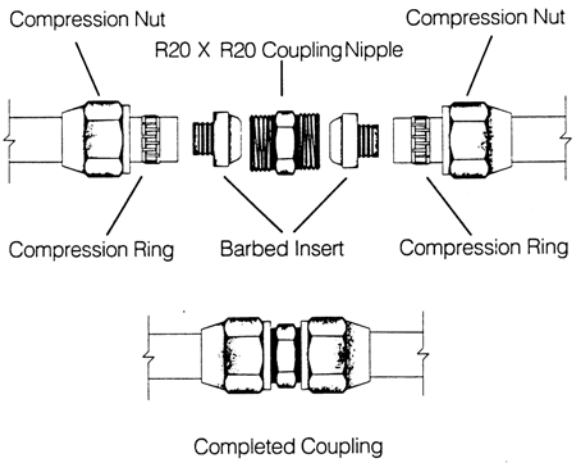

Figure 1203.11.1
COMPRESSION-TYPE MECHANICAL JOINT
(Courtesy of Wirsbo Co.)

1203.11.2 Plastic-to-metal connections. Soldering on the metal portion of the system shall be performed not less than 18 inches (457 mm) from a plastic-to-metal adapter in the same water line.

❖ As is the case with all plastic pipe, special care must be taken when soldering or brazing any metallic pipe that is connected to plastic pipe. To avoid subjecting the plastic pipe to high temperatures, any soldering must be done at a minimum distance from the point of connection to the plastic pipe. Temperatures exceeding 338°F (170°C) can cause irreversible damage to the PEX piping.

1203.12 PVC plastic pipe. Joints between PVC plastic pipe and fittings shall be solvent-cemented or threaded joints conforming to Section 1203.3.

❖ Sections 1203.3.4 and 1203.3.5 describe the joining methods allowed for PVC plastic pipe.

1203.13 Steel pipe. Joints between steel pipe or fittings shall be mechanical joints that are made with an *approved* elastomeric seal, or shall be threaded or welded joints conforming to Section 1203.3.

❖ Sections 1203.3.2, 1203.3.5, 1203.3.6 and 1203.3.7 describe the joining methods allowed for steel pipe.

1203.14 Steel tubing. Joints between steel tubing or fittings shall be mechanical or welded joints conforming to Section 1203.3.

❖ Sections 1203.3.2 and 1203.3.6 describe the joining methods allowed for steel tubing.

1203.15 Polypropylene (PP) plastic. Joints between PP plastic pipe and fittings shall comply with Sections 1203.15.1 and 1203.15.2.

❖ The fitting manufacturer's installation instructions must be followed when making connections for polypropylene (PP) pipe.

1203.15.1 Heat-fusion joints. Heat-fusion joints for polypropylene (PP) pipe and tubing joints shall be installed with socket-type heat-fused polypropylene fittings, electrofusion polypropylene fittings or by butt fusion. Joint surfaces shall be clean and free from moisture. The joint shall be undisturbed until cool. Joints shall be made in accordance with ASTM F2389.

❖ Heat fusion is analogous to welding of metals. Specially designed tools, typically electrically heated, are used to heat the pipe ends and fitting sockets to the melting temperature, and the materials are fused together. Certain butt-fusion tools also properly align the pipe and make the connection (see Commentary Figure 1203.10.1).

INTERNATIONAL CODE COUNCIL®
Copyright © 2015 ICC. ALL RIGHTS RESERVED. Accessed by David Dammon on Jun 21, 2017 12:30:52 PM pursuant to License Agreement with ICC. No further reproduction or distribution authorized. ANY UNAUTHORIZED REPRODUCTION OR DISTRIBUTION IS A VIOLATION OF THE FEDERAL COPYRIGHT ACT AND THE LICENSE AGREEMENT, AND SUBJECT TO CIVIL AND CRIMINAL PENALTIES THEREUNDER.

1203.15.2 Mechanical and compression sleeve joints. Mechanical and compression sleeve joints shall be installed in accordance with the manufacturer's instructions.

❖ The fitting manufacturer's installation instructions must be followed when making mechanical and compression sleeve joints for polypropylene (PP) pipe.

1203.16 Raised temperature polyethylene (PE-RT) plastic tubing. Joints between raised temperature polyethylene tubing and fittings shall conform to Sections 1203.16.1 and 1203.16.2. Mechanical joints shall conform to Section 1203.3.

❖ The fitting manufacturer's installation instructions must be followed when making connections for raised temperature polyethylene (PE-RT) tubing.

1203.16.1 Compression-type fittings. Where compression-type fittings include inserts and ferrules or O-rings, the fittings shall be installed without omitting the inserts and ferrules or O-rings.

❖ All components necessary for a particular style of compression-type connection of PE-RT tubing must be used.

1203.16.2 PE-RT-to-metal connections. Solder joints in a metal pipe shall not occur within 18 inches (457 mm) of a transition from such metal pipe to PE-RT pipe.

❖ The required heat for soldering fittings to copper pipe could melt the PE-RT pipe and cause a leak if the soldering operation was too close to an existing PE-RT pipe to copper transition. This section is not intended to prohibit a completed, cooled soldered connection from being located adjacent to where a PE-RT pipe is to be connected.

1203.17 Polyethylene/aluminum/polyethylene (PE-AL-PE) pressure pipe. Joints between polyethylene/aluminum/polyethylene pressure pipe and fittings shall conform to Sections 1203.17.1 and 1203.17.2. Mechanical joints shall comply with Section 1203.3.

❖ The fitting manufacturer's installation instructions must be followed when making connections of polyethylene/aluminum/polyethylene (PE-AL-PE) pipe.

1203.17.1 Compression-type fittings. Where compression-type fittings include inserts and ferrules or O-rings, the fittings shall be installed without omitting the inserts and ferrules or O-rings.

❖ All components necessary for a particular style of compression-type connection of PE-AL-PE must be used.

1203.17.2 PE-AL-PE-to-metal connections. Solder joints in a metal pipe shall not occur within 18 inches (457 mm) of a transition from such metal pipe to PE-AL-PE pipe.

❖ The required heat for soldering fittings to copper pipe could melt the PE-AL-PE pipe and cause a leak if the soldering operation was too close to an existing PE-AL-PE to copper transition. This section is not intended to prohibit a completed, cooled soldered connection from being located adjacent to where a PE-AL-PE pipe is to be connected.

1203.18 Cross-linked polyethylene/aluminum/cross-linked polyethylene (PEX-AL-PEX) pressure pipe. Joints between cross-linked polyethylene/aluminum/cross-linked polyethylene pressure pipe and fittings shall conform to Sections 1203.18.1 and 1203.18.2. Mechanical joints shall comply with Section 1203.3.

❖ The fitting manufacturer's installation instructions must be followed when making connections for polyethylene/aluminum/polyethylene (PEX-AL-PEX) pipe.

1203.18.1 Compression-type fittings. Where compression-type fittings include inserts and ferrules or O-rings, the fittings shall be installed without omitting the inserts and ferrules or O-rings.

❖ All components necessary for a particular style of compression-type connection of PEX-AL-PEX pipe must be used.

1203.18.2 PEX-AL-PEX-to-metal connections. Solder joints in a metal pipe shall not occur within 18 inches (457 mm) of a transition from such metal pipe to PEX-AL-PEX pipe.

❖ The required heat for soldering fittings to copper pipe could melt the PEX-AL-PEX pipe and cause a leak if the soldering operation was too close to an existing PEX-AL-PEX to copper transition. This section is not intended to prohibit a completed, cooled soldered connection from being located adjacent to where a PEX-AL-PEX pipe is to be connected.

SECTION 1204
PIPE INSULATION

1204.1 Insulation characteristics. Pipe insulation installed in buildings shall conform to the requirements of the *International Energy Conservation Code*; shall be tested in accordance with ASTM E84 or UL 723, using the specimen preparation and mounting procedures of ASTM E2231; and shall have a maximum flame spread index of 25 and a smoke-developed index not exceeding 450. Insulation installed in an air *plenum* shall comply with Section 602.2.1.

Exception: The maximum flame spread index and smoke-developed index shall not apply to one- and two-family dwellings.

❖ The intent of this section is to conserve energy by controlling heat gain and loss in hydronic piping systems.

Insulation is not required on piping installed within mechanical equipment that is tested, labeled and meets the energy conservation performance requirements of the *International Energy Conservation Code*® (IECC®). The intent is to exempt piping within equipment that has been tested, and for which the piping heat losses or gains have been accounted for in the equipment ratings. Also, heat losses or gains occurring inside the equipment are assumed to add to its desired effect.

INTERNATIONAL CODE COUNCIL®
Copyright © 2015 ICC. ALL RIGHTS RESERVED. Accessed by David Dammon on Jun 21, 2017 12:30:52 PM pursuant to License Agreement with ICC. No further reproduction or distribution authorized. ANY UNAUTHORIZED REPRODUCTION OR DISTRIBUTION IS A VIOLATION OF THE FEDERAL COPYRIGHT ACT AND THE LICENSE AGREEMENT, AND SUBJECT TO CIVIL AND CRIMINAL PENALTIES THEREUNDER.

The IECC specifies piping insulation in Table 403.2.8 based on pipe size and pipe application.

The flame spread index and smoke-developed index are limited for all insulation types in all locations in all types of construction. Section 602.2.1 requires pipe insulation located in a plenum to have a flame spread index of 25 or less and a smoke-developed index of 50 or less.

ASTM E84 and UL 723 provide the test methods required for pipe with insulation, including a requirement for testing of systems representative of the actual field installation. ASTM E2231 provides the specimen preparation and mounting procedures necessary to ensure that the specimen tested in the laboratory is as close as possible to the actual field installation with respect to orientation and other factors of field installation. ASTM E2231 is also required to be used in the testing of duct insulation systems in Chapter 6.

Note that the exception to this section exempts only one- and two-family dwellings from the flame spread and smoke-developed limitations for piping insulation. The requirements of the IECC for piping insulation in one- and two-family dwellings are not affected by the exception.

1204.2 Required thickness. Hydronic piping shall be insulated to the thickness required by the *International Energy Conservation Code.*

❖ See the commentary to Section 1204.1.

SECTION 1205
VALVES

1205.1 Where required. Shutoff valves shall be installed in hydronic piping systems in the locations indicated in Sections 1205.1.1 through 1205.1.6.

❖ Valves in a hydronic system have several uses. Valves are a fluid-controlling element in a hydronic system. Valves are required to isolate system components to facilitate repair, maintenance or replacement of system devices, components or piping. Valves are also used to take system components out of service temporarily.

This section addresses isolation valves only, and does not address pressure-reducing valves, relief valves (other than Section 1205.2), purge and vent valves, zone valves or flow control valves such as check valves, modulating valves, balancing valves, thermostatic control valves and similar devices. Sections 1205.1.1 through 1205.1.6 describe locations where valves are required to isolate the hydronic system components. The valves allow the isolation of system components without the need to shut down or drain the entire system.

Draining a water hydronic system causes air to enter the system, and will require that fresh water be introduced to refill the system. The time-consuming process of purging and bleeding air from the system and the corrosion problems associated with new water make it desirable to avoid system draining whenever possible.

1205.1.1 Heat exchangers. Shutoff valves shall be installed on the supply and return side of a heat exchanger.

Exception: Shutoff valves shall not be required where heat exchangers are integral with a boiler; or are a component of a manufacturer's boiler and heat exchanger packaged unit and are capable of being isolated from the hydronic system by the supply and return valves required by Section 1005.1.

❖ Shutoff valves must be installed at each connection to a heat exchanger. In a hydronic system, four valves will typically be required: one on the inlet and the outlet of the primary (supply) side of the heat exchanger, and one on the inlet and the outlet of the secondary (load) side of the heat exchanger. Heat exchangers include water-to-air, steam-to-air, water-to-water, steam-to-water and refrigerant-to-water types. Most heat exchangers will require cleaning, repair or other maintenance procedures at some time. Isolation valves facilitate these procedures (see Commentary Figure 1205.1.1).

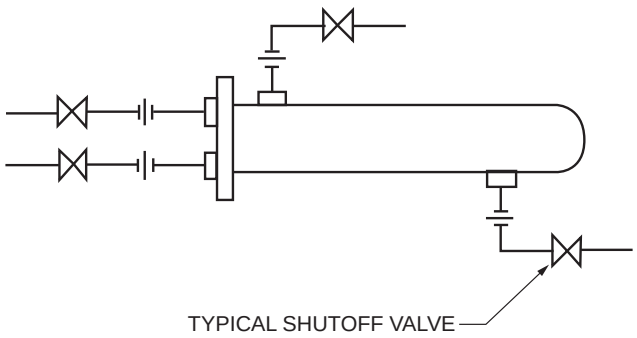

Figure 1205.1.1
HEAT EXCHANGERS

1205.1.2 Central systems. Shutoff valves shall be installed on the building supply and return of a central utility system.

❖ Shutoff valves must be installed at each building on a multiple-building central utility system. A typical application of this requirement is a factory complex or large university campus consisting of buildings that are served by a central boiler/chiller (physical plant). Central systems typically use an underground system of distribution piping to supply steam or hot or chilled water to the buildings served. Utility-company-operated central systems were once common in the central business districts of cities (see Commentary Figure 1205.1.2).

1205.1.3 Pressure vessels. Shutoff valves shall be installed on the connection to any pressure vessel.

❖ Shutoff valves must be installed at every connection to pressure vessel, including storage tanks, expansion tanks, compression tanks, flash tanks, makeup

INTERNATIONAL CODE COUNCIL®
Copyright © 2015 ICC. ALL RIGHTS RESERVED. Accessed by David Dammon on Jun 21, 2017 12:30:52 PM pursuant to License Agreement with ICC. No further reproduction or distribution authorized. ANY UNAUTHORIZED REPRODUCTION OR DISTRIBUTION IS A VIOLATION OF THE FEDERAL COPYRIGHT ACT AND THE LICENSE AGREEMENT, AND SUBJECT TO CIVIL AND CRIMINAL PENALTIES THEREUNDER.

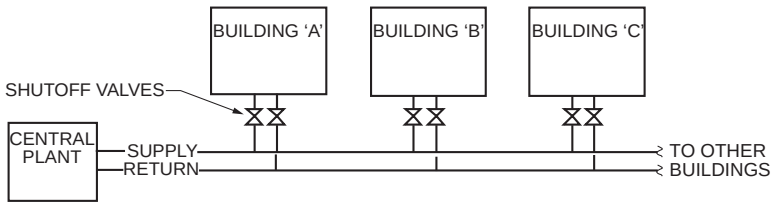

Figure 1205.1.2
CENTRAL SYSTEMS

water tanks, condensate tanks and similar tanks and receivers.

1205.1.4 Pressure-reducing valves. Shutoff valves shall be installed on both sides of a pressure-reducing valve.

❖ Shutoff valves must be used on both the inlet and the outlet side of pressure-reducing valves as shown in Commentary Figure 1205.1.4.

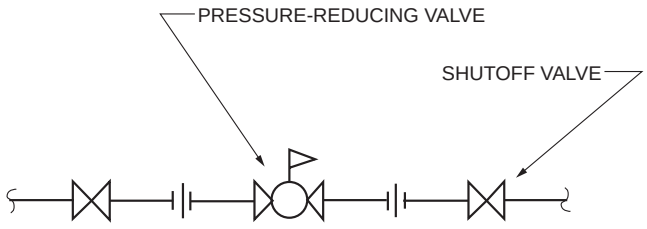

Figure 1205.1.4
PRESSURE-REDUCING VALVES

1205.1.5 Equipment and appliances. Shutoff valves shall be installed on connections to mechanical *equipment* and appliances. This requirement does not apply to components of a hydronic system such as pumps, air separators, metering devices and similar *equipment*.

❖ Shutoff valves must be installed at every connection to equipment in a hydronic system including boilers, chillers, condensate return systems, water conditioning equipment and cooling towers. Although pumps, circulators, air separators and metering devices are exempted from the requirement for isolation valves, these valves should be installed to allow the isolation of any device or component that will require servicing, repair or replacement at regular intervals. For example, pumps and circulators should be isolated by valves to allow repair or replacement without having to drain all or part of the entire hydronic system.

1205.1.6 Expansion tanks. Shutoff valves shall be installed at connections to nondiaphragm-type expansion tanks.

❖ A shutoff valve is required on the connection to any nondiaphragm expansion tank, as shown in Commentary Figure 1205.1.6.

An isolation valve is not required for connections to diaphragm-type expansion tanks because those tanks do not normally require service; however, in the event of tank failure, an isolation valve would simplify replacement.

1205.2 Reduced pressure. A pressure relief valve shall be installed on the low-pressure side of a hydronic piping system that has been reduced in pressure. The relief valve shall be set at the maximum pressure of the system design. The valve shall be installed in accordance with Section 1006.

❖ System costs can be reduced if equipment is designed for lower working pressures. For example, in high-rise buildings, hydronic coils on lower floors would have to be constructed to withstand much higher pressures than coils on upper floors because of water column pressure (gravity). Reducing water pressure at given intervals allows use of coils constructed for lower pressure ratings, thereby reducing costs. The same would be true for the associated branch piping, fittings and valves.

Steam systems are commonly designed to supply steam at different pressures to various equipment, processes and distribution systems. A single boiler may supply high-pressure steam to process heat exchangers and may also supply reduced-pressure steam to a space-heating system.

Pressure-reducing valves can fail because of age and wear, or can be improperly adjusted and could cause the system downstream of the valve to experience higher or full supply (inlet) pressure. Excessive pressure could cause a hazardous failure of low-pressure components or piping. Installation of a pressure relief valve protects the system by relieving excess pressure before system failure could occur.

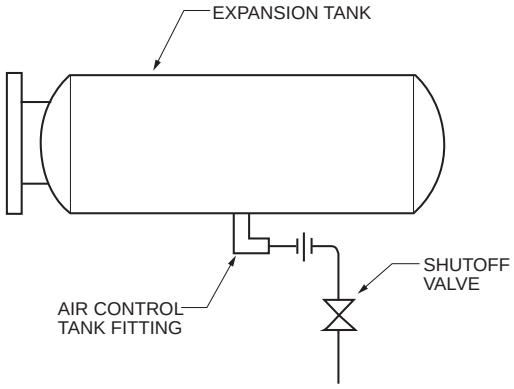

Figure 1205.1.6
EXPANSION TANKS

INTERNATIONAL CODE COUNCIL®
Copyright © 2015 ICC. ALL RIGHTS RESERVED. Accessed by David Dammon on Jun 21, 2017 12:30:52 PM pursuant to License Agreement with ICC. No further reproduction or distribution authorized. ANY UNAUTHORIZED REPRODUCTION OR DISTRIBUTION IS A VIOLATION OF THE FEDERAL COPYRIGHT ACT AND THE LICENSE AGREEMENT, AND SUBJECT TO CIVIL AND CRIMINAL PENALTIES THEREUNDER.

SECTION 1206
PIPING INSTALLATION

1206.1 General. Piping, valves, fittings and connections shall be installed in accordance with the conditions of approval.

❖ Conditions of approval include the manufacturer's installation instructions for labeled materials and approval granted by the code official where materials have been specifically approved for an application. Deviations from prescribed installation procedures may void the approval and be a basis for rejecting the installation.

1206.2 System drain down. Hydronic piping systems shall be designed and installed to permit the system to be drained. Where the system drains to the plumbing drainage system, the installation shall conform to the requirements of the *International Plumbing Code*.

Exception: The buried portions of systems embedded underground or under floors.

❖ To facilitate system repairs and maintenance, hydronic piping systems must be sloped and arranged to allow the transfer-medium fluids or condensate to be drained from the system. Each trapped section of the system piping must have drain cocks, unions or some other means of opening the system to drain it. Drainage discharge to the plumbing system must be by indirect connection in accordance with the IPC. The exception allows for underground or under slab portions of a hydronic system to not have a drain as this would be nearly impossible to accomplish.

1206.3 Protection of potable water. The potable water system shall be protected from backflow in accordance with the *International Plumbing Code*.

❖ Hydronic systems normally require a means of supplying fill and makeup water to replace any water lost to evaporation leakage or intentional draining. Where the system is connected directly to the potable water supply, the connections must to be isolated from the potable water source in accordance with the IPC. This provision is intended to protect the potable water system from contamination when a direct connection is made to a hydronic system.

Hydronic systems are normally pressurized, contain nonpotable water and fluids and can contain conditioning chemicals, cleaning chemicals or antifreeze solutions. Low-temperature hydronic fluids and cooling towers have also been associated with disease-causing organisms such as the Legionnaires' disease bacteria. The potable water system must be protected from potential contamination resulting from connection to hydronic systems.

1206.4 Pipe penetrations. Openings for pipe penetrations in walls, floors or ceilings shall be larger than the penetrating pipe. Openings through concrete or masonry building elements shall be sleeved. The annular space surrounding pipe penetrations shall be protected in accordance with the *International Building Code*.

❖ Openings for pipe penetrations must be larger than the penetrating pipe to prevent stress and physical damage to the pipe caused by expansion and contraction of the pipe and the building structure, and by the transmission of structural loads to the pipe. The annular space prevents abrasion and friction and allows some clearance to accommodate pipe and building movements. Fireblocking or annular space sealant must provide some degree of flexibility to accommodate expansion and contraction or other movement. Concrete and masonry penetrations must be sleeved to maintain the integrity of the material penetrated and to protect the pipe from the rough surfaces. Where required by the *International Building Code*® (IBC®), fireblocking must fill the annular space at the penetration of floors, walls and ceilings to prevent the passage of smoke and fire. When combustible piping penetrates a construction assembly, other forms of penetration protection could be required in accordance with the IBC.

1206.5 Clearance to combustibles. A pipe in a hydronic piping system in which the exterior temperature exceeds 250°F (121°C) shall have a minimum *clearance* of 1 inch (25 mm) to combustible materials.

❖ Maintaining a 1-inch (25 mm) airspace clearance allows some of the heat energy from the hydronic pipe to dissipate before reaching adjacent combustible materials. Continuous exposure to the heat produced by hydronic piping can chemically alter adjacent combustible materials, thereby lowering the ignition temperature and creating a potential fire hazard. Except for steam applications, temperatures near 250°F (121°C) are not typically found in hydronic systems. Even if the design temperature is less than 250°F (121°C), a clearance to combustibles should be maintained when higher temperatures are possible or when the maximum setpoint of system limit controls exceeds 250°F (121°C).

1206.6 Contact with building material. A hydronic piping system shall not be in direct contact with building materials that cause the piping material to degrade or corrode, or that interfere with the operation of the system.

❖ Piping must be protected to avoid external degradation resulting from corrosion, abrasion and chemical reactions. Allowing pipe to come in contact with certain construction materials can cause corrosion or degradation. For example, some plastic pipe materials are adversely affected by petroleum-based materials, and concrete can be corrosive to some metals.

Consideration must also be given to the placement of hydronic piping in contaminated or corrosive soils or environments. A protective coating is usually applied to pipe material that is sensitive to the surrounding conditions. The coating usually consists of coal tar, an epoxy or a plastic wrap or coating.

INTERNATIONAL CODE COUNCIL®
Copyright © 2015 ICC. ALL RIGHTS RESERVED. Accessed by David Dammon on Jun 21, 2017 12:30:52 PM pursuant to License Agreement with ICC. No further reproduction or distribution authorized. ANY UNAUTHORIZED REPRODUCTION OR DISTRIBUTION IS A VIOLATION OF THE FEDERAL COPYRIGHT ACT AND THE LICENSE AGREEMENT, AND SUBJECT TO CIVIL AND CRIMINAL PENALTIES THEREUNDER.

1206.7 Water hammer. The flow velocity of the hydronic piping system shall be controlled to reduce the possibility of water hammer. Where a quick-closing valve creates water hammer, an *approved* water-hammer arrestor shall be installed. The arrestor shall be located within a range as specified by the manufacturer of the quick-closing valve.

❖ Water hammer is a phenomenon that occurs when the kinetic energy of flowing fluids is dissipated in the form of shock waves.

The intensity of water hammer is directly proportional to the velocity of the flowing fluid and, therefore, the flow velocity must be controlled to reduce the intensity of water hammer.

The intent of this section is to protect the system and its components from the possible destructive forces that result from the rapid deceleration of fluid flow. The rule-of-thumb is that the force (shock wave) of water hammer is approximately equal to 60 times the change in velocity of the fluid. For example, a quick-closing valve can cause instantaneous pressures of 600 psi (4137 kPa) in a pipe with a flow velocity of 10 feet per second (3048 mm/s). The code requires that the system be designed for flow velocities that minimize the occurrence and magnitude of water hammer and, furthermore, requires installation of shock-arrestor devices where quick-closing valves are to be used.

A quick-closing valve would be any type of solenoid-actuated valve, spring-loaded self-closing valve or any other device capable of instantaneously reducing flow from full flow to no flow.

Mechanical water-hammer arresters help alleviate water hammer intensity by absorbing energy. When installed in system locations where velocity cannot be adequately controlled, mechanical arresters should be located where they have the maximum effect, which is usually achieved by locating the arrester close to the source of water hammer. Manufacturers typically supply guidelines for arrestor location.

1206.8 Steam piping pitch. Steam piping shall be installed to drain to the boiler or the steam trap. Steam systems shall not have drip pockets that reduce the capacity of the steam piping.

❖ As steam moves through piping, it loses some of its heat energy, and some of the steam will condense into liquid. The presence of liquid condensate in the steam lines interferes with proper steam flow and can cause noise, water hammer and accelerated pipe deterioration. Steam piping must drain to the boiler or to a steam trap.

A steam trap is an automatic valve that permits the passage of condensate while preventing the passage of steam through the valve. A typical steam trap design senses the presence of condensate by using a float or a thermostatic element to detect liquid accumulation or the lower temperature of the condensate. The float or thermostatic element opens and closes the valve to drain the collected condensate to the return system.

1206.9 Strains and stresses. Piping shall be installed so as to prevent detrimental strains and stresses in the pipe. Provisions shall be made to protect piping from damage resulting from expansion, contraction and structural settlement. Piping shall be installed so as to avoid structural stresses or strains within building components.

❖ Changes in temperature cause dimensional changes in all materials. The absorption of heat energy causes the atoms of a material to move apart, expanding the material in all directions with the greatest amount of expansion and contraction in piping occurring along the axial plane (its length). For systems operating at high temperatures, such as steam and hot water, the amount of expansion is high and significant movements can occur in short runs of piping.

Even though the amount of expansion per unit of length may be low for applications such as chilled and condenser water systems, which operate in the range of approximately 40°F to 100°F (4°C to 38°C), large movements can occur in long lengths of piping. Large forces can develop in restrained piping that increases or decreases in temperature. Note that the forces developed from contraction are just as large as those from expansion. See Commentary Figure 1206.9(1) for a comparison of the amount of expansion for various piping materials.

In addition to other design requirements, piping systems must be capable of accommodating the forces resulting from thermal expansion and contraction. This section also intends to protect the structure from damage resulting from the forces of expanding and contracting piping.

Inadequate provisions to accommodate expansion and contraction can result in failure of pipe and supports, joint damage and leakage and the transmission of detrimental forces and stresses to connected equipment and building components.

Forces transmitted to rotating equipment, such as pumps or turbines, may deform the equipment case and cause bearing misalignment. Forces transmitted to the structure can cause excessive loading and damage to the members to which piping is anchored.

General practice is to never anchor or restrain a straight run of pipe at both ends. Ample movement allowance is attained by designing pipe bends and loops or supplemental devices, such as expansion joints, into the system.

Several means, such as “L,” “Z” and “U” bends; packed and packless expansion joints; and flexible connectors [see Commentary Figures 1206.9(2), 1206.9(3) and 1206.9(4)] exist for accommodating expansion and contraction.

1206.9.1 Flood hazard. Piping located in a flood hazard area shall be capable of resisting hydrostatic and hydrodynamic loads and stresses, including the effects of buoyancy, during the occurrence of flooding to the *design flood elevation.*

❖ The requirements for floodproofing complement those contained in the IBC. Floodwaters can damage hydronic systems if the systems are not properly anchored and supported.

INTERNATIONAL CODE COUNCIL®
Copyright © 2015 ICC. ALL RIGHTS RESERVED. Accessed by David Dammon on Jun 21, 2017 12:30:52 PM pursuant to License Agreement with ICC. No further reproduction or distribution authorized. ANY UNAUTHORIZED REPRODUCTION OR DISTRIBUTION IS A VIOLATION OF THE FEDERAL COPYRIGHT ACT AND THE LICENSE AGREEMENT, AND SUBJECT TO CIVIL AND CRIMINAL PENALTIES THEREUNDER.

MATERIAL	COEFFICIENT OF LINEAR EXPANSION	EXPANSION OF 100 FEET Δ 100°F (IN.)
Cast iron	0.00000595	0.714
Steel	0.0000065	0.780
Copper	0.0000095	1.140
ABS	0.0000560	6.720
PVC Type 1	0.0000280	3.360
PVC Type II	0.0000555	6.600
Polyethylene	0.0001000	12.000
Polybutylene	0.0000710	8.520
Cross-linked polyethylene	0.0000788	9.336

For SI: 1 inch = 25.4 mm, 1 foot = 304.8 m, °C = [(°F)-32]/1.8.

$C \times L \times \Delta T$ = Expansion

where:

C = Coefficient of linear expansion.

L = Length of pipe in feet.

ΔT = Temperature difference.

Figure 1206.9(1)
PIPE EXPANSION

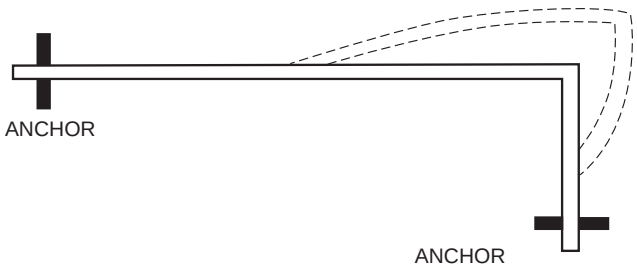

Figure 1206.9(2)
"L" BEND

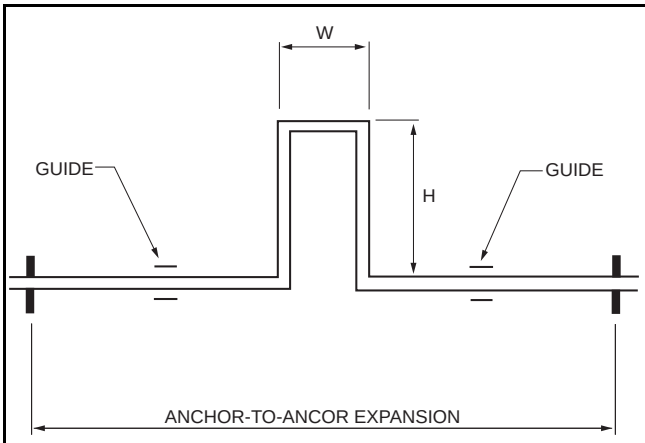

Figure 1206.9(4)
"U" BEND

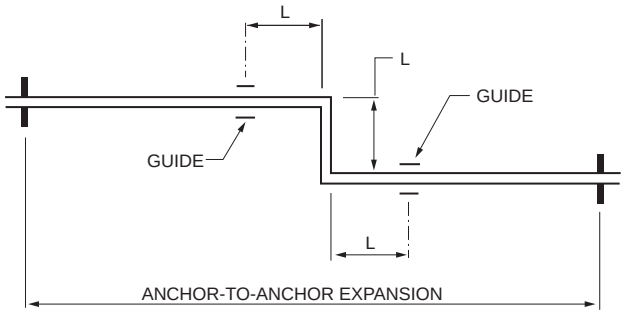

OFFSET PIPING MUST BE SUPPORTED WITH HANGERS, SLIDE PLATES, AND SPRING HANGERS.

Figure 1206.9(3)
"Z" BEND

INTERNATIONAL CODE COUNCIL®
Copyright © 2015 ICC. ALL RIGHTS RESERVED. Accessed by David Dammon on Jun 21, 2017 12:30:52 PM pursuant to License Agreement with ICC. No further reproduction or distribution authorized. ANY UNAUTHORIZED REPRODUCTION OR DISTRIBUTION IS A VIOLATION OF THE FEDERAL COPYRIGHT ACT AND THE LICENSE AGREEMENT, AND SUBJECT TO CIVIL AND CRIMINAL PENALTIES THEREUNDER.

Submersion in water can result in a buoyancy force being exerted on the various components of the hydronic piping system.

A flood hazard area may also be subject to wave action or high-velocity waters. In these areas, components must be protected from the dynamic forces of moving water. For additional guidance, refer to FEMA 348.

1206.10 Pipe support. Pipe shall be supported in accordance with Section 305.

❖ This section contains piping support requirements. Hanger spacing intervals are given for the types of pipe presented in Section 1202.4. Cross-linked polyethylene pipe must be supported in compliance with the manufacturer's installation instructions because specialized support methods are needed to address the unique characteristics of the material. Piping supports must be installed to prevent damage to the piping caused by thermal expansion (see commentary, Section 1206.9).

As with all piping systems, support of the system is as important as any other part of the overall design. Proper supports are necessary to maintain piping alignment and slope, to support the weight of the piping and its contents, to control movement and to resist hydrodynamic loads, such as thrust.

Building design must take into consideration the structural loads created by hydronic piping systems.

Hangers or supports must not react with or be detrimental to the pipe they support. Hangers or supports for metallic pipe must be of a material that is compatible with the pipe to prevent corrosion. For example, copper, copper-clad or specially coated hangers are required if the hydronic distribution system is constructed of copper tubing (see commentary, Section 305).

1206.11 Condensation. Provisions shall be made to prevent the formation of condensation on the exterior of piping.

❖ Condensation on piping can cause corrosion to the piping as well as deterioration of pipe insulation and building materials exposed to the condensation (see commentary, Section 1206.6).

SECTION 1207
TRANSFER FLUID

1207.1 Flash point. The flash point of transfer fluid in a hydronic piping system shall be not less than 50°F (28°C) above the maximum system operating temperature.

❖ The "Flash point" of a fluid is defined in Chapter 2. If a heat transfer fluid with a low flash point is used in a hydronic system, a pressure relief valve discharge or a system leak could create a potential hazard. To avoid this possibility, the code requires that the flash point of the transfer fluid be at least 50°F (28°C) higher than the maximum possible temperature at which the system can operate.

1207.2 Makeup water. The transfer fluid shall be compatible with the makeup water supplied to the system.

❖ The transfer fluid used in a hydronic system must be compatible with the makeup water source for the system. Reactions causing excessive acidity, alkalinity or precipitation of compounds creating surface films that would impede heat transfer or which would otherwise interfere with system operation must be prevented.

SECTION 1208
TESTS

1208.1 General. Hydronic piping systems shall be tested hydrostatically at one and one-half times the maximum system design pressure, but not less than 100 psi (689 kPa). The duration of each test shall be not less than 15 minutes.

❖ Hydronic piping systems must be tested to determine that the system is leak free and capable of withstanding system operating pressures. This pressure will typically coincide with the setpoint pressure of the system's pressure relief devices. The code official will normally observe all required tests. Maintaining the test pressure for at least 15 minutes allows time for any leaks to be detected during the test.

Because of the way in which ground-source heat pump loop systems are installed, a unique testing method is justified (see commentary, Section 1210.10).

SECTION 1209
EMBEDDED PIPING

1209.1 Materials. Piping for heating panels shall be standard-weight steel pipe, Type L copper tubing, polybutylene or other *approved* plastic pipe or tubing rated at 100 psi (689 kPa) at 180°F (82°C).

❖ This section is more limiting than Section 1202.4 because it specifies only three material choices for hydronic piping intended for embedment in concrete or plaster.

1209.2 Pressurizing during installation. Piping to be embedded in concrete shall be pressure tested prior to pouring concrete. During pouring, the pipe shall be maintained at the proposed operating pressure.

❖ Testing of piping is necessary to disclose any defects in the system. This testing is especially important where the piping is to be encased and thereby made inaccessible.

1209.3 Embedded joints. Joints of pipe or tubing that are embedded in a portion of the building, such as concrete or plaster, shall be in accordance with the requirements of Sections 1209.3.1 through 1209.3.4.

❖ Sections 1209.3.1 through 1209.3.4 address joining means for the materials specified in Section 1209.1.

INTERNATIONAL CODE COUNCIL®
Copyright © 2015 ICC. ALL RIGHTS RESERVED. Accessed by David Dammon on Jun 21, 2017 12:30:52 PM pursuant to License Agreement with ICC. No further reproduction or distribution authorized. ANY UNAUTHORIZED REPRODUCTION OR DISTRIBUTION IS A VIOLATION OF THE FEDERAL COPYRIGHT ACT AND THE LICENSE AGREEMENT, AND SUBJECT TO CIVIL AND CRIMINAL PENALTIES THEREUNDER.

1209.3.1 Steel pipe joints. Steel pipe shall be welded by electrical arc or oxygen/acetylene method.

❖ See the commentary to Section 1203.3.6.

1209.3.2 Copper tubing joints. Copper tubing shall be joined by brazing complying with Section 1203.3.1.

❖ See the commentary to Section 1203.3.1.

1209.3.3 Polybutylene joints. Polybutylene pipe and tubing shall be installed in continuous lengths or shall be joined by heat fusion in accordance with Section 1203.10.1.

❖ See the commentary to Section 1203.10.1.

1209.3.4 Polyethylene of raised temperature (PE-RT) joints. PE-RT tubing shall be installed in continuous lengths or shall be joined by hydronic fittings listed in Table 1202.5.

❖ See the commentary to Section 1203.16.

1209.4 Not embedded related piping. Joints of other piping in cavities or running exposed shall be joined by *approved* methods in accordance with manufacturer's installation instructions and related sections of this code.

❖ See the commentary to Section 1203.3.

1209.5 Thermal barrier required. Radiant floor heating systems shall be provided with a thermal barrier in accordance with Sections 1209.5.1 through 1209.5.4.

Exception: Insulation shall not be required in engineered systems where it can be demonstrated that the insulation will decrease the efficiency or have a negative effect on the installation.

❖ In order for the maximum amount of heat to be transferred to the space intended to be heated, the hydronic piping system must be insulated to limit the amount of heat transferred to spaces or materials that are not intended to be heated. Sections 1209.5.1 and 1209.5.2 describe two applications where this is a concern and provides the insulation requirements.

1209.5.1 Slab-on-grade installation. Radiant piping utilized in slab-on-grade applications shall be provided with insulating materials installed beneath the piping having a minimum *R*-value of 5.

❖ Typically, rigid foam board insulation is used for insulating slabs on grade that will be heated by hydronic systems. For most manufacturers of this product, an *R*-value of 5 equates to a 1-inch (25 mm) material thickness. Other types of insulation products that are suitable for under slab installation are also available and can be used if marked in accordance with Section 1209.5.4.

1209.5.2 Suspended floor installation. In suspended floor applications, insulation shall be installed in the joist bay cavity serving the heating space above and shall consist of materials having a minimum *R*-value of 11.

❖ Typically, fiberglass insulation is used for insulating hydronically heated floors that are suspended above an unheated space such as a crawl space or basement. Insulation is placed between the joists (or floor trusses) and should be held in place by an approved means.

1209.5.3 Thermal break required. A thermal break shall be provided consisting of asphalt expansion joint materials or similar insulating materials at a point where a heated slab meets a foundation wall or other conductive slab.

❖ The exterior edges of heated concrete slabs must be protected against heat loss. Placement of a thermal barrier (break) at the edge of the slab where it would contact the foundation wall breaks the heat conduction path to the exterior.

1209.5.4 Thermal barrier material marking. Insulating materials utilized in thermal barriers shall be installed such that the manufacturer's *R*-value mark is readily observable upon inspection.

❖ Insulation materials must be marked so that the inspector can verify that the correct *R*-value is being used for the application. Readily observable means that the inspector must not be required to remove insulation in order to see the marking. The *R*-value marking requirement might be a problem where unfaced fiberglass insulation is used or where the facing of the fiberglass insulation is required to be located such that the marking is not observable without removal of the insulation.

SECTION 1210
PLASTIC PIPE GROUND-SOURCE HEAT PUMP LOOP SYSTEMS

1210.1 Ground-source heat pump loop water piping. Ground-source heat pump ground-loop piping and tubing material for water-based systems shall conform to the standards cited in this section.

❖ This section is dedicated to ground-source heat pump loop systems which are commonly but erroneously referred to as "geothermal systems." Geothermal systems extract heat energy directly from hot springs, geysers and volcanic "hot spots" in the earth's crust. Ground-source heat pumps are sometimes referred to as geo-exchange, earth-coupled, ground-source, or water-source heat pumps. These systems take advantage of the relatively constant temperature of the earth's crust as opposed to the highly variable outdoor air temperature. Such systems can achieve high efficiencies (300% to 600%) (typically rated in COP, coefficient of performance), compared to 175% to 250% for air-source heat pumps. The earth is the source of heat energy in the heating mode and is considerably more rich in energy than the atmosphere. In the cooling mode, the earth is used as a heat sink to absorb the rejected heat from the space being cooled.

Unlike the seasonal temperature extremes experienced in the atmosphere, the underground temperatures remain relatively constant. Ground temperatures range from 45°F (7°C) to 75°F (21°C), depending on the latitude. Ground-source heat

INTERNATIONAL CODE COUNCIL®
Copyright © 2015 ICC. ALL RIGHTS RESERVED. Accessed by David Dammon on Jun 21, 2017 12:30:52 PM pursuant to License Agreement with ICC. No further reproduction or distribution authorized. ANY UNAUTHORIZED REPRODUCTION OR DISTRIBUTION IS A VIOLATION OF THE FEDERAL COPYRIGHT ACT AND THE LICENSE AGREEMENT, AND SUBJECT TO CIVIL AND CRIMINAL PENALTIES THEREUNDER.

pumps take heat energy from or put heat energy into the ground, depending on the operational mode.

Most ground-source systems utilize closed-loop heat exchange piping loops buried in the earth or submerged in bodies of water. Such piping loops use water or water and antifreeze solutions as the heat exchange medium and the medium is circulated by pumps. The loop piping can be horizontal loops laid flat in trenches or in ponds and lakes, it can be vertical loops in trenches and it can be long vertical "hair pin" loops placed in bored holes. Some open-type systems (less common) pump water from wells and then return the water to the ground through a separate return well.

This section is specific to plastic piping systems which are used almost exclusively because of the dependability of such corrosion-resistant materials, ease of installation and cost relative to metallic piping.

1210.2 Used materials. Reused pipe, fittings, valves, and other materials shall not be permitted in ground-source heat pump loop systems.

❖ Ground-source heat pump loop systems (GSHPLS) must be constructed entirely of new (previously unused) materials because buried systems have to be absolutely dependable for the life of the system, which is typically expected to be 50 years plus.

1210.3 Material rating. Pipe and tubing shall be rated for the operating temperature and pressure of the ground-source heat pump loop system. Fittings shall be suitable for the pressure applications and recommended by the manufacturer for installation with the pipe and tubing material installed. Where used underground, materials shall be suitable for burial.

❖ System materials must be recommended for the application by the material manufacturers, or if not specifically recommended for the application, not recommended against.

1210.4 Piping and tubing materials standards. Ground-source heat pump ground-loop pipe and tubing shall conform to the standards listed in Table 1210.4.

❖ Table 1210.4 lists the plastic piping materials (and their associated product standards) that are suitable for GSHPLS application. PE pipe is the most commonly used, but each material has it own unique advantages for particular applications and configurations.

1210.5 Fittings. Ground-source heat pump pipe fittings shall be approved for installation with the piping materials to be installed, shall conform to the standards listed in Table 1210.5 and, if installed underground, shall be suitable for burial.

❖ Table 1210.5 lists the plastic piping fitting materials (and their associated product standards) that are suitable for GSHPLS application.

1210.6 Joints. Joints and connections shall be of an approved type. Joints and connections shall be tight for the pressure of the ground-source loop system. Joints used underground shall be approved for buried applications.

❖ All joint types are subject to code official approval, but, obviously the fitting listing and manufacturer's recommendations will be the basis for such approvals.

1210.6.1 Joints between different piping materials. Joints between different piping materials shall be made with approved transition fittings.

❖ Because of different ODs and IDs and material properties, special transtions fittings are needed for joining different piping materials.

1210.6.2 Preparation of pipe ends. Pipe shall be cut square, be reamed, and be free of burrs and obstructions. CPVC, PE, and PVC pipe shall be chamfered. Pipe ends shall have full-bore openings and shall not be undercut.

❖ Workmanship is important for system reliability. The requirements of this section are normal practice that should be performed for all piping for all applications, above or below ground or otherwise. These workmanship requirements are part of manufacturer's installation instructions also, but are commonly ignored. Workmanship should be enforced.

1210.6.3 Joint preparation and installation. Where required by Sections 1210.6.4 through 1210.6.6, the preparation and installation of mechanical and thermoplastic-welded joints shall comply with Sections 1210.6.3.1 and 1210.6.3.2.

❖ Specialized tools are needed for plastic welding. Plastic welding is the same as metal welding in princi-

TABLE 1210.4
GROUND-SOURCE LOOP PIPE

MATERIAL	STANDARD (see Chapter 15)
Chlorinated polyvinyl chloride (CPVC)	ASTM D2846; ASTM F441; ASTM F442
Cross-linked polyethylene (PEX)	ASTM F876; ASTM F877; CSA B137.5
Polyethylene/aluminum/polyethylene (PE-AL-PE) pressure pipe	ASTM F1282; CSA B137.9
High-density polyethylene (HDPE)	ASTM D2737; ASTM D3035; ASTM F714; AWWA C901; CSA B137.1; CSA C448; NSF 358-1
Polypropylene (PP-R)	ASTM F2389; CSA B137.11
Polyvinyl chloride (PVC)	ASTM D1785; ASTM D2241
Raised temperature polyethylene (PE-RT)	ASTM F2623

INTERNATIONAL CODE COUNCIL®
Copyright © 2015 ICC. ALL RIGHTS RESERVED. Accessed by David Dammon on Jun 21, 2017 12:30:52 PM pursuant to License Agreement with ICC. No further reproduction or distribution authorized. ANY UNAUTHORIZED REPRODUCTION OR DISTRIBUTION IS A VIOLATION OF THE FEDERAL COPYRIGHT ACT AND THE LICENSE AGREEMENT, AND SUBJECT TO CIVIL AND CRIMINAL PENALTIES THEREUNDER.

TABLE 1210.5
GROUND-SOURCE LOOP PIPE FITTINGS

PIPE MATERIAL	STANDARD (see Chapter 15)
Chlorinated polyvinyl chloride (CPVC)	ASTM D2846; ASTM F437; ASTM F438; ASTM F439; CSA B137.6
Cross-linked polyethylene (PEX)	ASTM F877; ASTM F1807; ASTM F1960; ASTM F2080; ASTM F2159; ASTM F2434; CSA B137.5
Polyethylene/aluminum/polyethylene (PE-AL-PE)	ASTM F1282; ASTM F2434; CSA B137.9
High Density Polyethylene (HDPE)	ASTM D2683; ASTM D3261; ASTM F1055; CSA B137.1; CSA C448; NSF 358-1
Polypropylene (PP-R)	ASTM F2389; CSA B137.11
Polyvinyl chloride (PVC)	ASTM D2464; ASTM D2466; ASTM D2467; CSA B137.2; CSA B137.3
Raised temperature polyethylene (PE-RT)	ASTM D3261; ASTM F1807; ASTM F2159; CSA B137.1

ple. Only like materials should be welded and with rods of the same material. The proper temperature and procedure must be used for the type of material.

1210.6.3.1 Mechanical joints. Mechanical joints shall be installed in accordance with the manufacturer's instructions.

❖ See commentary for Section 1203.3.

1210.6.3.2 Thermoplastic-welded joints. Joint surfaces for thermoplastic-welded joints shall be cleaned by an approved procedure. Joints shall be welded in accordance with the manufacturer's instructions.

❖ See commentary for Section 1203.11.

1210.6.4 CPVC plastic pipe. Joints between CPVC plastic pipe or fittings shall be solvent-cemented or threaded joints complying with Section 1203.3.

❖ See commentary for Section 1203.11.

1210.6.5 Cross-linked polyethylene (PEX) plastic tubing. Joints between cross-linked polyethylene plastic tubing and fittings shall comply with Sections 1210.6.5.1 and 1210.6.5.2. Mechanical joints shall comply with Section 1210.6.3.

❖ See commentary for Section 1203.11.

1210.6.5.1 Compression-type fittings. Where compression-type fittings include inserts and ferrules or O-rings, the fittings shall be installed without omitting the inserts and ferrules or O-rings.

❖ See commentary for Section 1203.11.

1210.6.5.2 Plastic-to-metal connections. Soldering on the metal portion of the system shall be performed not less than 18 inches (457 mm) from a plastic-to-metal adapter in the same water line.

❖ See commentary for Section 1203.11.

1210.6.6 Polyethylene plastic pipe and tubing for ground-source heat pump loop systems. Joints between polyethylene plastic pipe and tubing or fittings for ground-source heat pump loop systems shall be heat fusion joints complying with Section 1210.6.6.1, electrofusion joints complying with Section 1210.6.6.2, or stab-type insertion joints complying with Section 1210.6.6.3.

❖ See commentary for Sections 1210.6.6.1 through 1210.6.6.3.

1210.6.6.1 Heat-fusion joints. Joints shall be of the socket-fusion, saddle-fusion or butt-fusion type, joined in accordance with ASTM D2657. Joint surfaces shall be clean and free from moisture. Joint surfaces shall be heated to melt temperatures and joined. The joint shall be undisturbed until cool. Fittings shall be manufactured in accordance with ASTM D2683 or ASTM D3261.

❖ Heat fusion involves specialized heating tools to soften the pipe and fitting. The pipe and fitting partially melt and fuse together as if they were manufactured as one piece. The process is a form of welding. The parts to be joined must be clean.

1210.6.6.2 Electrofusion joints. Joints shall be of the electrofusion type. Joint surfaces shall be clean and free from moisture, and scoured to expose virgin resin. Joint surfaces shall be heated to melt temperatures for the period of time specified by the manufacturer. The joint shall be undisturbed until cool. Fittings shall be manufactured in accordance with ASTM F1055.

❖ Electrofusion is the same as heat fusion except that the fittings and an external power supply provide the source of heat. The built in heater coils in the fitting melt the inside of the fitting and outside of the pipe wall, which weld together producing a homogeneous joint. The assembly must be allowed to cool for a specified time.

1210.6.6.3 Stab-type insert fittings. Joint surfaces shall be clean and free from moisture. Pipe ends shall be chamfered and inserted into the fittings to full depth. Fittings shall be manufactured in accordance with ASTM F1924.

❖ Stab-type fittings are so named because the pipe is "stabbed" into the fitting, although this is an exaggeration of the procedure. Insert fittings rely on clamps, O-rings and/or compression nut assemblies. Stab fittings utilize a "gripper" element that bites into the outside pipe wall and prevents pullout.

1210.6.7 Polypropylene (PP) plastic. Joints between PP plastic pipe and fittings shall comply with Sections 1210.6.7.1 and 1210.6.7.2.

❖ See commentary for Section 1203.15.

1210.6.7.1 Heat-fusion joints. Heat-fusion joints for polypropylene (PP) pipe and tubing joints shall be installed with

INTERNATIONAL CODE COUNCIL®
Copyright © 2015 ICC. ALL RIGHTS RESERVED. Accessed by David Dammon on Jun 21, 2017 12:30:52 PM pursuant to License Agreement with ICC. No further reproduction or distribution authorized. ANY UNAUTHORIZED REPRODUCTION OR DISTRIBUTION IS A VIOLATION OF THE FEDERAL COPYRIGHT ACT AND THE LICENSE AGREEMENT, AND SUBJECT TO CIVIL AND CRIMINAL PENALTIES THEREUNDER.

socket-type heat-fused polypropylene fittings, electrofusion polypropylene fittings or by butt fusion. Joint surfaces shall be clean and free from moisture. The joint shall be undisturbed until cool. Joints shall be made in accordance with ASTM F2389.

❖ See commentary for Section 1203.15.

1210.6.7.2 Mechanical and compression sleeve joints. Mechanical and compression sleeve joints shall be installed in accordance with the manufacturer's instructions.

❖ See commentary for Section 1203.15.

1210.6.8 Raised temperature polyethylene (PE-RT) plastic tubing. Joints between raised temperature polyethylene tubing and fittings shall comply with Sections 1210.6.8.1 and 1210.6.8.2. Mechanical joints shall comply with Section 1210.6.3.

❖ See commentary for Section 1203.16.

1210.6.8.1 Compression-type fittings. Where compression-type fittings include inserts and ferrules or O-rings, the fittings shall be installed without omitting the inserts and ferrules or O-rings.

❖ See commentary for Section 1203.16.

1210.6.8.2 PE-RT-to-metal connections. Solder joints in a metal pipe shall not occur within 18 inches (457 mm) of a transition from such metal pipe to PE-RT pipe.

❖ See commentary for Section 1203.16.

1210.6.9 PVC plastic pipe. Joints between PVC plastic pipe and fittings shall be solvent-cemented or threaded joints comply with Section 1203.3.

❖ See commentary for Section 1203.12.

1210.7 Shutoff valves. Shutoff valves shall be installed in ground-source loop piping systems in the locations indicated in Sections 1210.7.1 through 1210.7.7.

❖ See commentary for Section 1205.1.

1210.7.1 Heat exchangers. Shutoff valves shall be installed on the supply and return side of a heat exchanger.

> **Exception:** Shutoff valves shall not be required where heat exchangers are integral with a boiler or are a component of a manufacturer's boiler and heat exchanger packaged unit and are capable of being isolated from the hydronic system by the supply and return valves required by Section 1005.1.

❖ See commentary for Section 1205.1.

1210.7.2 Central systems. Shutoff valves shall be installed on the building supply and return of a central utility system.

❖ See commentary for Section 1205.1.

1210.7.3 Pressure vessels. Shutoff valves shall be installed on the connection to any pressure vessel.

❖ See commentary for Section 1205.1.

1210.7.4 Pressure-reducing valves. Shutoff valves shall be installed on both sides of a pressure-reducing valve.

❖ See commentary for Section 1205.1.

1210.7.5 Equipment and appliances. Shutoff valves shall be installed on connections to mechanical *equipment* and appliances. This requirement does not apply to components of a ground-source loop system such as pumps, air separators, metering devices, and similar *equipment*.

❖ See commentary for Section 1205.1.

1210.7.6 Expansion tanks. Shutoff valves shall be installed at connections to nondiaphragm-type expansion tanks.

❖ See commentary for Section 1205.1.

1210.7.7 Reduced pressure. A pressure relief valve shall be installed on the low-pressure side of a hydronic piping system that has been reduced in pressure. The relief valve shall be set at the maximum pressure of the system design. The valve shall be installed in accordance with Section 1006.

❖ See commentary for Section 1205.1.

1210.8 Installation. Piping, valves, fittings, and connections shall be installed in accordance with the conditions of approval.

❖ See commentary for Section 1206.1.

1210.8.1 Protection of potable water. Where ground-source heat pump ground-loop systems have a connection to a potable water supply, the potable water system shall be protected from backflow in accordance with the *International Plumbing Code*.

❖ See commentary for Section 1206.3.

1210.8.2 Pipe penetrations. Openings for pipe penetrations in walls, floors and ceilings shall be larger than the penetrating pipe. Openings through concrete or masonry building elements shall be sleeved. The annular space surrounding pipe penetrations shall be protected in accordance with the *International Building Code*.

❖ See commentary for Section 1206.4.

1210.8.3 Clearance from combustibles. A pipe in a ground-source heat pump piping system having an exterior surface temperature exceeding 250°F (121°C) shall have a minimum *clearance* of 1 inch (25 mm) from combustible materials.

❖ See commentary for Section 1206.5.

1210.8.4 Contact with building material. A ground-source heat pump ground-loop piping system shall not be in direct contact with building materials that cause the piping or fitting material to degrade or corrode, or that interfere with the operation of the system.

❖ See commentary for Section 1206.6.

1210.8.5 Strains and stresses. Piping shall be installed so as to prevent detrimental strains and stresses in the pipe. Provisions shall be made to protect piping from damage resulting from expansion, contraction and structural settlement. Piping shall be installed so as to avoid structural stresses or strains within building components.

❖ See commentary for Section 1206.9.

1210.8.6 Flood hazard. Piping located in a flood hazard area shall be capable of resisting hydrostatic and hydrodynamic

INTERNATIONAL CODE COUNCIL®
Copyright © 2015 ICC. ALL RIGHTS RESERVED. Accessed by David Dammon on Jun 21, 2017 12:30:52 PM pursuant to License Agreement with ICC. No further reproduction or distribution authorized. ANY UNAUTHORIZED REPRODUCTION OR DISTRIBUTION IS A VIOLATION OF THE FEDERAL COPYRIGHT ACT AND THE LICENSE AGREEMENT, AND SUBJECT TO CIVIL AND CRIMINAL PENALTIES THEREUNDER.

loads and stresses, including the effects of buoyancy, during the occurrence of flooding to the *design flood elevation*.

❖ See commentary for Section 1206.9.1.

1210.8.7 Pipe support. Pipe shall be supported in accordance with Section 305.

❖ See commentary for Section 305.

1210.8.8 Velocities. Ground-source heat pump ground-loop systems shall be designed so that the flow velocities do not exceed the maximum flow velocity recommended by the pipe and fittings manufacturer and shall be controlled to reduce the possibility of water hammer.

❖ See commentary for Section 1206.7.

1210.8.9 Labeling and marking. Ground-source heat pump ground-loop system piping shall be marked with tape, metal tags or other method where it enters a building indicating "GROUND-SOURCE HEAT PUMP LOOP SYSTEM." The marking shall indicate any antifreeze used in the system by name and concentration.

❖ Some method, other than duct tape and a magic marker, must be used to identify indoor GSHPLS piping near the point where the piping enters the building to help prevent damage or improper alterations as the result of mistaken identity.

1210.8.10 Chemical compatibility. Antifreeze and other materials used in the system shall be chemically compatible with the pipe, tubing, fittings, and mechanical systems.

❖ Some antifreeze solutions can attack or degrade certain piping materials and system components. Piping manufacturers can provide chemical compatibility data for their products.

1210.9 Makeup water. The transfer fluid shall be compatible with the makeup water supplied to the system.

❖ Closed loop systems do not take makeup water unless there is a system leak or the system has been opened for servicing a component. Any makeup water added must be chemically compatible with the heat transfer medium used in the system to prevent chemical reactions that could damage system components.

1210.10 Tests. Before connection header trenches are backfilled, the assembled loop system shall be pressure tested with water at 100 psi (689 kPa) for 15 minutes, in which time there shall not be observed leaks. Flow and pressure loss testing shall be performed and the actual flow rates and pressure drops shall be compared to the calculated design values. If actual flow rate or pressure drop values differ from calculated design values by more than 10 percent, the cause shall be identified and corrective action taken.

❖ Ground-source heat pump systems are either closed loop or open loop. Closed-loop systems circulate water or an antifreeze solution through plastic pipes buried in the ground. Some loop systems, although not as common, use surface water bodies or underground water as the source of heat energy. The heat transfer fluid absorbs heat from the ground (earth) and transfers it to the building in the heating season, then, operating in reverse, absorbs heat from the building and transfers it to the ground in the cooling season.

As the name implies, ground-source heat pumps use the mass of the soil (earth) as a source of thermal energy and as a heat sink. Below the frost line, the ground temperature remains fairly constant at average temperatures near 50°F (10°C). For a heat pump, this is a rich source of heat and an excellent sink for rejection of heat. The heat pump is similar to the air-source type except that it is coupled to the soil instead of to the ambient outdoor air.

Ground-source loop systems use significant lengths of piping installed in multiple circuits (loops) to achieve the required area of heat exchange surface. Also, multiple loops have the advantage over a single-loop system because a single piping failure will not cause failure of the entire heat pump system.

Heat transfer through plastic piping is relatively slow compared to transfer through metallic piping. Larger surface areas are therefore necessary to transfer the heat into or out of the loop-system heat transfer fluid.

In the heating season, the ground-source heat pump uses a refrigeration cycle machine to extract heat from the loop-system fluid, concentrates the heat to usable temperatures and transfers the heat to the air or domestic water to be heated in the building.

In the cooling season, the machine reverses the evaporator and condenser elements of the refrigeration system to extract heat from the environmental air and reject this heat to the ground loop fluid.

Ground-source heat pump systems supply conditioned air and/or domestic water heating. Because the earth temperature is stable, these systems are not affected by changes in the ambient air temperatures and can, therefore, maintain a high coefficient of performance year round.

The significant difference between testing ground source loop systems and other hydronic systems is that ground-source loops may be buried prior to testing. The connection headers (manifolds) that connect the loops (circuits) of piping must remain exposed until completion of testing. Because loops (circuits) are typically installed without joints, all of the potential sources of leaks will be located at the point of connection between the ends of the loops and the header. For this reason, the loops can be covered during testing while the headers remain exposed. Also, it is difficult to dig trenches for large loop fields without backfilling each trench before digging the adjacent trenches.

Depending on the lot, it may be necessary to backfill "as you go" to allow room for the excavator machine. Requiring that each loop be inspected prior to covering could require time-consuming multiple inspections at the same property if the excavator had to backfill each trench before digging the next.

INTERNATIONAL CODE COUNCIL®
Copyright © 2015 ICC. ALL RIGHTS RESERVED. Accessed by David Dammon on Jun 21, 2017 12:30:52 PM pursuant to License Agreement with ICC. No further reproduction or distribution authorized. ANY UNAUTHORIZED REPRODUCTION OR DISTRIBUTION IS A VIOLATION OF THE FEDERAL COPYRIGHT ACT AND THE LICENSE AGREEMENT, AND SUBJECT TO CIVIL AND CRIMINAL PENALTIES THEREUNDER.

1210.11 Embedded piping. Ground-source heat pump ground-loop piping to be embedded in concrete shall be pressure tested prior to pouring concrete. During pouring, the pipe shall be maintained at the proposed operating pressure.

❖ Flow rate and pressure drop testing will determine if the loop pipe has been kinked, pinched, flattened or otherwise deformed and will also determine if foreign objects or debris have entered the piping.

Bibliography

The following resource materials were used in the preparation of the commentary for this chapter of the code:

IBC-15, *International Building Code*. Washington, DC: International Code Council, 2014.

IECC-15, *International Energy Conservation Code*. Washington, DC: International Code Council, 2014.

IPC-15, *International Plumbing Code*. Washington, DC: International Code Council, 2014.

INTERNATIONAL CODE COUNCIL®

Copyright © 2015 ICC. ALL RIGHTS RESERVED. Accessed by David Dammon on Jun 21, 2017 12:30:52 PM pursuant to License Agreement with ICC. No further reproduction or distribution authorized. ANY UNAUTHORIZED REPRODUCTION OR DISTRIBUTION IS A VIOLATION OF THE FEDERAL COPYRIGHT ACT AND THE LICENSE AGREEMENT, AND SUBJECT TO CIVIL AND CRIMINAL PENALTIES THEREUNDER.

Chapter 13: Fuel Oil Piping and Storage

General Comments

Chapter 13 regulates the design and installation of fuel oil storage and piping systems. The regulations include reference to construction standards for above-ground and underground storage tanks, material standards for piping systems (both above ground and underground) and extensive requirements for the proper assembly of system piping and components. The *International Fire Code*® (IFC®) covers items not addressed in detail here.

The importance of adequate regulations for the storage, handling and use of combustible liquid fuel cannot be overstated. A fuel-oil piping system includes the piping, valves and fittings. Also included in the fuel-oil piping system, if they are installed, are pumps, reservoirs, regulators, strainers, filters, relief valves, oil preheaters, controls and gauges. The piping materials and the method of joining sections of pipe must be approved, and all other components included in the piping system should be labeled and installed in accordance with the manufacturer's instructions. Over the past 10 years, public scrutiny of flammable and combustible liquid storage installations has increased with the public's awareness of the consequences of release of these liquids into the environment. Improper installation of these storage systems has been shown by environmental studies to be a major contributing factor in system failure. Improper use of such systems also accounts for many fire losses. Although the hazards of combustible liquids are well known, accidents involving them remain one of the most common fire scenarios in the United States.

Fuel oil is considered a Class II combustible liquid, having a flash point of 100°F (38°C) or higher. Though the classification boundaries are somewhat arbitrary, flammable and combustible liquids are distinguished by their flash points. The flash point is that temperature at which the liquid produces sufficient vapor to form an ignitable vapor-air mixture above its surface. Because Class I flammable liquids all have a flash point below 100°F (38°C), it is prudent to assume that those liquids may be capable of igniting when unconfined under normal environmental conditions. On the other hand, combustible liquids, including fuel oil, are materials with flash points above 100°F (38°C) and must usually be heated above their flash points or, in the case of extremely high flashpoint liquids, above their boiling points before they will ignite.

Combustible liquids possess other characteristics besides their flash points. Significant characteristics when evaluating relative fire hazards include ignition temperature, auto-ignition temperature, flammable (explosive) range, viscosity, vapor density, vapor pressure, boiling point, evaporation rate, specific gravity and water solubility. Once the liquid is ignited, these variables have little influence over the material's heat release rate. Factors such as evaporation rate, viscosity and water solubility may profoundly affect how these fires are extinguished.

Generally, combustible liquids have low specific gravities, high vapor densities and narrow flammable ranges. These characteristics mean that liquids usually float on water, vapors will typically hug the ground and ignitable vapor-air mixtures are generally confined to a range between 6 and 15 percent in air. Thus, smothering is difficult and ignition sources near the ground are more likely to pose a hazard.

Purpose

The provisions in this chapter are intended to prevent fires, leaks and spills involving fuel oil storage and piping systems whether inside or outside of structures and above or underground.

SECTION 1301 GENERAL

1301.1 Scope. This chapter shall govern the design, installation, construction and repair of fuel-oil storage and piping systems. The storage of fuel oil and flammable and combustible liquids shall be in accordance with Chapters 6 and 57 of the *International Fire Code*.

❖ Regulations governing the design, installation and repair of combustible liquid storage and piping systems are contained in both this code and the IFC. This chapter covers only fuel-oil storage and piping systems and only within the quantity limits of the IFC.

In the context of this chapter, fuel oil is a combustible liquid used as fuel for applications, including space heating, water heating, processing and generation of electricity.

1301.2 Storage and piping systems. Fuel-oil storage systems shall comply with Section 603.3 of the *International*

INTERNATIONAL CODE COUNCIL®
Copyright © 2015 ICC. ALL RIGHTS RESERVED. Accessed by David Dammon on Jun 21, 2017 12:30:52 PM pursuant to License Agreement with ICC. No further reproduction or distribution authorized. ANY UNAUTHORIZED REPRODUCTION OR DISTRIBUTION IS A VIOLATION OF THE FEDERAL COPYRIGHT ACT AND THE LICENSE AGREEMENT, AND SUBJECT TO CIVIL AND CRIMINAL PENALTIES THEREUNDER.

Fire Code. Fuel-oil piping systems shall comply with the requirements of this code.

❖ Combustible liquids have had a variety of uses for centuries. They can also present problems in the form of fires or environmental pollution if they are not safely contained within proper storage and distribution facilities. In addition to this chapter, the provisions contained in the IFC apply to combustible liquid storage and piping systems. Also included are provisions for containers and portable tanks and storage requirements for a variety of occupancies. The IFC provides for the installation and venting of most oil-fired stationary equipment, including residential, industrial and commercial oil-fired appliances. The IFC also regulates the design and installation of above-ground tanks and piping for fuel oils, both inside and outside of structures.

1301.3 Fuel type. An *appliance* shall be designed for use with the type of fuel to which it will be connected. Such *appliance* shall not be converted from the fuel specified on the rating plate for use with a different fuel without securing reapproval from the code official.

❖ This section contains the same provisions found in Section 301.12 (see commentary, Section 301.12).

1301.4 Fuel tanks, piping and valves. The tank, piping and valves for appliances burning oil shall be installed in accordance with the requirements of this chapter. Where an oil burner is served by a tank, any part of which is above the level of the burner inlet connection and where the fuel supply line is taken from the top of the tank, an *approved* antisiphon valve or other siphon-breaking device shall be installed in lieu of the shutoff valve.

❖ Section 1307.1 requires that a shutoff valve be installed in the fuel-oil supply line. This section is essentially an exception to that requirement in cases where a burner fuel pump draws from the top of the tank and when the tank (or any part of it) is above the level of the burner fuel inlet connection. In such systems, an antisiphon device must be installed to break the siphon action in the pipe in the event of a piping failure to the burner. Using the antisiphon, the amount of fuel oil subject to spillage in the event of a piping failure is limited to the contents of the piping only, not the entire tank contents.

1301.5 Tanks abandoned or removed. All exterior above-grade fill piping shall be removed when tanks are abandoned or removed. Tank abandonment and removal shall be in accordance with Section 5704.2.13 of the *International Fire Code*.

❖ Section 5704.2.13 of the IFC provides the requirements for abandoning or removing fuel oil tanks. It does not, however, require the removal of the above-grade fill piping associated with the tanks. Although the code does not specifically address vent pipes, they should also be removed because they appear to be fill pipes.

Exterior fill piping has to be removed due to the potential danger that hundreds of gallons of fuel oil could be accidentally delivered to a facility that did not request it. There have been instances of accidental filling where tanks have been removed but the fill pipe has remained. Oil delivery service personnel only see the exterior connection and may not be aware that the tank has been removed or disconnected. Piping must be removed, not just capped off; accidental filling has occurred when piping systems have been capped off. When fuel oil contamination occurs, the cost of repairs and cleanup is extremely high and, in some cases, has led to condemnation of such structures.

Commentary Figure 1301.5(1) shows a typical oil tank installation in a basement with the oil filler pipe and the vent pipe extending above ground outside the building. If the tank is removed and the fill pipe is left in place [see Commentary Figure 1301.5(2)], oil pumped through one of these pipes will fill the basement.

SECTION 1302
MATERIAL

1302.1 General. Piping materials shall conform to the standards cited in this section.

❖ This section regulates the materials that are permitted for use in combustible liquid piping systems.

1302.2 Rated for system. All materials shall be rated for the operating temperatures and pressures of the system, and shall be compatible with the type of liquid.

❖ System operating and standby pressures and temperatures all vary widely depending on the application. All portions of a combustible liquid piping and storage system must be compatible with the liquid and rated for its operating temperatures and pressures. The lowest rating of any of the components establishes the operating limitations of the system. It should also be noted that pressure and temperature can vary significantly within a system, and the specification of different materials within the system may be necessary.

1302.3 Pipe standards. Fuel oil pipe shall comply with one of the standards listed in Table 1302.3.

❖ Table 1302.3 lists the materials that are allowed for fuel oil piping. The referenced standards regulate the physical and mechanical properties of the materials used to fabricate such pipe and regulate the quality and dimensioning of the pipe.

Table 1302.3 lists the product standards for the piping materials permitted for use with fuel oil. When selecting or approving piping materials for a given application, the material must be suitable for the temperatures and pressures generated within the system and must be compatible with the combustible liquid it will carry. In above-ground installations, additional consideration should be given to the potential fire exposure to the pipe. Brass, copper and nonmetallic pipe materials that have low melting points should be

INTERNATIONAL CODE COUNCIL®
Copyright © 2015 ICC. ALL RIGHTS RESERVED. Accessed by David Dammon on Jun 21, 2017 12:30:52 PM pursuant to License Agreement with ICC. No further reproduction or distribution authorized. ANY UNAUTHORIZED REPRODUCTION OR DISTRIBUTION IS A VIOLATION OF THE FEDERAL COPYRIGHT ACT AND THE LICENSE AGREEMENT, AND SUBJECT TO CIVIL AND CRIMINAL PENALTIES THEREUNDER.

protected from failure caused by fire exposure. Installations should also take into account leak management in the event of a pipe failure caused by fire exposure (see commentary, Section 1302.4).

TABLE 1302.3
FUEL OIL PIPING

MATERIAL	STANDARD (see Chapter 15)
Copper or copper-alloy pipe	ASTM B42; ASTM B43; ASTM B302
Copper or copper-alloy tubing (Type K, L or M)	ASTM B75; ASTM B88; ASTM B280; ASME B16.51
Labeled pipe	(See Section 1302.4)
Nonmetallic pipe	ASTM D2996
Steel pipe	ASTM A53; ASTM A106
Steel tubing	ASTM A254; ASTM A539

1302.4 Nonmetallic pipe. Nonmetallic pipe shall be *listed* and *labeled* as being acceptable for the intended application for flammable and combustible liquids. Nonmetallic pipe shall be installed only outside, underground.

❖ Not all nonmetallic piping materials are suitable for use with fuel oil. The labeling process takes compatibility issues into account and provides the code official with a sound basis for approving proposed piping. Nonmetallic pipe may be used to carry liquids or to provide secondary containment protection for metallic or nonmetallic liquid-carrying piping. Whatever its actual use or product compatibility, the agency label will specify the pipe's suitability for use in a given application. Because of its susceptibility to softening and failure if exposed to a fire, nonmetallic piping may be used only underground. To avoid piping failure caused by loads and stresses encountered within the perimeter of a structure, the underground use of nonmetallic pipe is further limited to outdoor areas (outside of structures).

1302.5 Fittings and valves. Fittings and valves shall be *approved* for the piping systems, and shall be compatible with, or shall be of the same material as, the pipe or tubing.

❖ Fittings include couplings, ells, tees, unions, caps, plugs, adapters and mechanical connectors. Fittings are used to join flammable or combustible liquid piping segments to each other or to other mechanical devices and equipment. Some fittings and couplings are proprietary and must be approved only where their use is consistent with the fitting manufacturer's instructions. Fittings must be designed for the application and the type of piping used. To avoid galvanic corrosion between dissimilar metals, fittings must be of the same material as the pipe or must be compatible with the piping material.

1302.6 Bending of pipe. Pipe shall be *approved* for bending. Pipe bends shall be made with *approved equipment*. The bend shall not exceed the structural limitations of the pipe.

❖ Pipe bending is done to accomplish changes in direction without the use of fittings. Pipe bending must be done with the appropriate bending tools and materials. Bending tools are designed to make bends without damaging the pipe. Pipe intended to be bent has a minimum bend radius that must be observed to

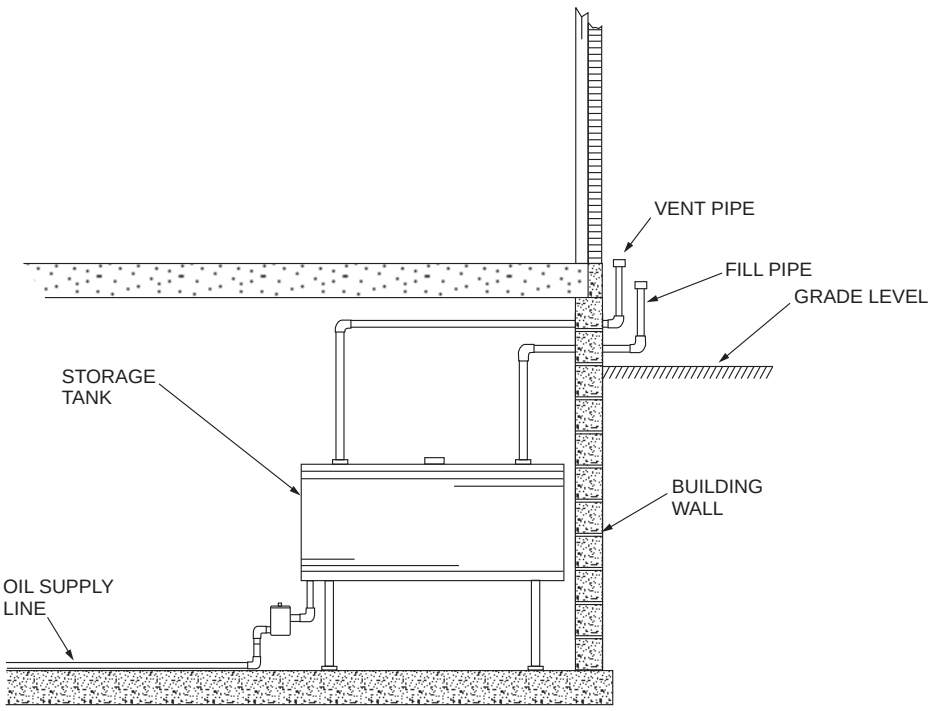

Figure 1301.5(1)
TYPICAL OIL STORAGE TANK BASEMENT INSTALLATION

INTERNATIONAL CODE COUNCIL®
Copyright © 2015 ICC. ALL RIGHTS RESERVED. Accessed by David Dammon on Jun 21, 2017 12:30:52 PM pursuant to License Agreement with ICC. No further reproduction or distribution authorized. ANY UNAUTHORIZED REPRODUCTION OR DISTRIBUTION IS A VIOLATION OF THE FEDERAL COPYRIGHT ACT AND THE LICENSE AGREEMENT, AND SUBJECT TO CIVIL AND CRIMINAL PENALTIES THEREUNDER.

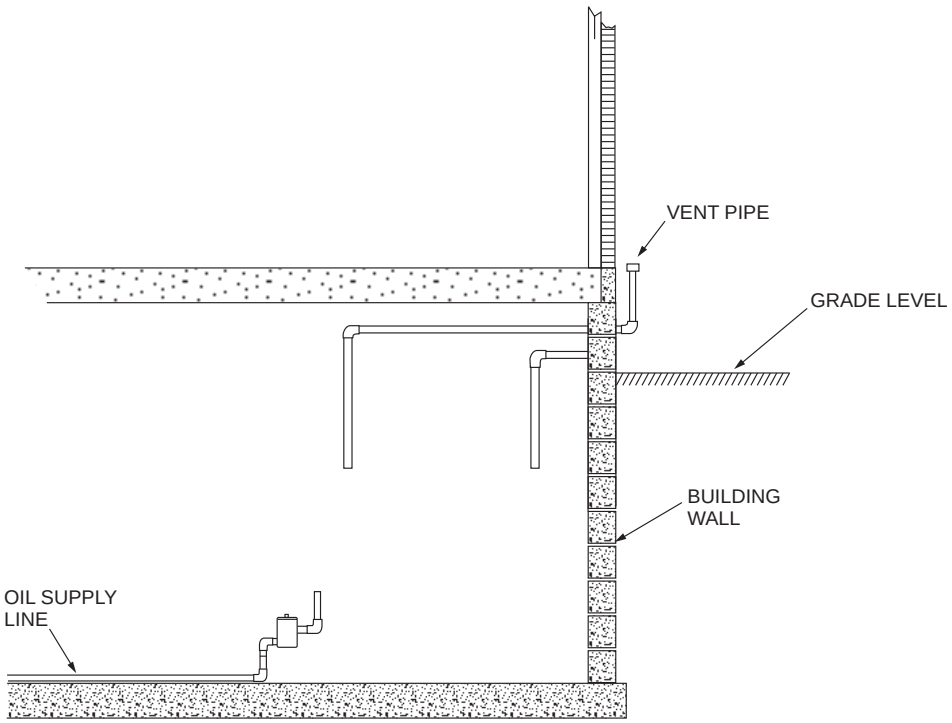

Figure 1301.5(2)
BASEMENT INSTALLATION WITH TANK REMOVED

avoid damage to the pipe. For example, bending welded seam pipe with the seam located outside of the neutral axis of the bend may result in a split seam because of the stresses induced by the bend. If pipe is to be bent, it must be confirmed in the pipe specifications that the pipe is suitable for bending. Rigid combustible liquid piping is not commonly bent because of the perceived risk of pipe stress failures at the bend.

1302.7 Pumps. Pumps that are not part of an *appliance* shall be of a positive-displacement type. The pump shall automatically shut off the supply when not in operation. Pumps shall be *listed* and *labeled* in accordance with UL 343.

❖ Unless they are part of a labeled appliance, pumps must be of the positive-displacement type, which will act similarly to a valve by not allowing gravity or siphon delivery of the liquid when the pump is not running. As with any mechanical appliance, pumps must be listed and labeled and must be installed in accordance with the manufacturer's instructions.

1302.8 Flexible connectors and hoses. Flexible connectors and hoses shall be *listed* and *labeled* in accordance with UL 536.

❖ Flexible connectors (either metallic or nonmetallic), flexible metal hose and hose-type pipe connectors are used in combustible liquid piping systems where flexibility is needed, such as at points where a piping system connects to a pump, tank or dispensing device. Hose-type pipe connectors for fuel oil service and flexible connectors for motor fuel service are limited to 8 feet (2438 mm) in length and are intended for use in underground applications. Metallic flexible connectors may be obtained with integral corrosion protection in the form of preengineered sacrificial anodes. Labeling by an approved agency provides the code official with evidence that the devices comply with UL 536 and liquid compatibility criteria.

SECTION 1303
JOINTS AND CONNECTIONS

1303.1 Approval. Joints and connections shall be *approved* and of a type *approved* for fuel-oil piping systems. Threaded joints and connections shall be made tight with suitable lubricant or pipe compound. Unions requiring gaskets or packings, right or left couplings, and sweat fittings employing solder having a melting point of less than 1,000°F (538°C) shall not be used in oil lines. Cast-iron fittings shall not be used. Joints and connections shall be tight for the pressure required by test.

❖ Joining and connecting methods and materials must be compatible with the piping used and must be approved for use in fuel-oil system applications. Acceptable joining methods for each piping material are listed under each piping material category. Thread lubricants (pipe-joint compounds) and tape are designed to lubricate the threaded joint for proper thread mating and also to fill in small imperfections on the surfaces of the threads. In choosing thread lubri-

INTERNATIONAL CODE COUNCIL®
Copyright © 2015 ICC. ALL RIGHTS RESERVED. Accessed by David Dammon on Jun 21, 2017 12:30:52 PM pursuant to License Agreement with ICC. No further reproduction or distribution authorized. ANY UNAUTHORIZED REPRODUCTION OR DISTRIBUTION IS A VIOLATION OF THE FEDERAL COPYRIGHT ACT AND THE LICENSE AGREEMENT, AND SUBJECT TO CIVIL AND CRIMINAL PENALTIES THEREUNDER.

cants, care must be taken that the lubricant is suitable for use with the type of piping material being joined. Lubricant manufacturers' instructions are a good source for this information. Prohibition of certain types of pipe-joining methods, materials and components is intended to enhance the integrity of the piping system, especially where piping is installed indoors where it may be exposed to a fire, or to reduce potential maintenance problems.

Gaskets and packing materials in unions can lose their resiliency and deteriorate over time, which can lead to fuel oil leaks. Use of right or left couplings can also lead to piping leaks as a result of their tendency to be inadvertently loosened. Solder with a melting point of less than 1,000°F (538°C) used in sweat fittings could quickly fail in a fire, allowing fuel oil to leak and contribute to the intensity of the fire. Cast-iron fittings are prohibited because of the brittleness of the material, susceptibility to impact damage and inability to withstand imposed stresses without damage. NFPA 31 contains the testing requirements for fuel oil tank and piping systems.

1303.1.1 Joints between different piping materials. Joints between different piping materials shall be made with *approved* adapter fittings. Joints between different metallic piping materials shall be made with *approved* dielectric fittings or brass converter fittings.

❖ Galvanic corrosion results from electrical currents induced by the juncture of certain metals in the presence of an electrolyte such as water or soil. To avoid the corrosion problems with joining piping of dissimilar metals, dielectric fittings or approved adapter fittings must be used to interrupt the electrical continuity or substantially reduce galvanic currents. Dielectric unions typically use elastomeric gaskets and are therefore prohibited by Section 1303.1.

1303.2 Preparation of pipe ends. Pipe shall be cut square, reamed and chamfered and be free from all burrs and obstructions. Pipe ends shall have full-bore openings and shall not be undercut.

❖ This section prescribes what is considered to be good workmanship for the installation of piping systems. Burrs and obstructions must be removed to minimize flow resistance and to prevent interference with the method of joining the pipe (see commentary, Section 1203.2).

1303.3 Joint preparation and installation. Where required by Sections 1303.4 through 1303.10, the preparation and installation of brazed, mechanical, threaded and welded joints shall comply with Sections 1303.3.1 through 1303.3.4.

❖ The following sections regulate the installation of pipe joints.

1303.3.1 Brazed joints. All joint surfaces shall be cleaned. An *approved* flux shall be applied where required. The joints shall be brazed with a filler metal conforming to AWS A5.8.

❖ Brazing should be performed in accordance with AWS B2.2.

1303.3.2 Mechanical joints. Mechanical joints shall be installed in accordance with the manufacturer's instructions. Press connect joints shall conform to one of the standards listed in Table 1302.3.

❖ Mechanical joints are usually proprietary joints that are developed and marketed by individual manufacturers. Many types of mechanical joints use a sleeve or ferrule that is compressed around the circumference of the pipe or tube. Mechanical joints must be specifically designed for and compatible with the type of pipe or tube being joined. Press connect joints use special fittings that are permanently deformed by a specialized power tool such that the joint cannot be disassembled. Press connect fittings achieve a seal with O-rings that are compressed around the outside circumference of the pipe or tube.

1303.3.3 Threaded joints. Threads shall conform to ASME B1.20.1. Pipe-joint compound or tape shall be applied on the male threads only.

❖ The referenced standard addresses tapered pipe threads that, when made up, form a metal-to-metal (interference fit) seal. Pipe-joint compound or tape is limited to application on the male threads only to decrease the possibility of tape fragments or compound entering the piping system. Such debris in piping systems can block orifices, restrict flow or interfere with the operation of controls. The primary purpose of pipe-joint compounds is to act as a lubricant to allow proper tightening and to achieve a metal-to-metal seal. They also fill in small imperfections on the threaded surfaces. Pipe-joint compounds and tapes must be compatible with both the piping material and the contents of the piping.

1303.3.4 Welded joints. All joint surfaces shall be cleaned by an *approved* procedure. The joint shall be welded with an *approved* filler metal.

❖ Welding should be done in accordance with AWS B2.1. Welding is usually performed on larger diameter, high-pressure piping systems.

1303.4 Brass pipe. Joints between brass pipe or fittings shall be brazed, mechanical, threaded or welded joints complying with Section 1303.3.

❖ Brass pipe has a high enough melting point and walls of sufficient thickness to permit threaded, welded, brazed and mechanical joints.

1303.5 Brass tubing. Joints between brass tubing or fittings shall be brazed or mechanical joints complying with Section 1303.3.

❖ Sections 1303.3.1 and 1303.3.2 describe the allowable joining methods for brass tubing.

1303.6 Copper or copper-alloy pipe. Joints between copper or copper-alloy pipe or fittings shall be brazed, mechanical, threaded or welded joints complying with Section 1303.3.

❖ Copper pipe can be joined by the same methods as brass pipe. Note that there is a distinction between copper pipe and copper tubing.

INTERNATIONAL CODE COUNCIL®
Copyright © 2015 ICC. ALL RIGHTS RESERVED. Accessed by David Dammon on Jun 21, 2017 12:30:52 PM pursuant to License Agreement with ICC. No further reproduction or distribution authorized. ANY UNAUTHORIZED REPRODUCTION OR DISTRIBUTION IS A VIOLATION OF THE FEDERAL COPYRIGHT ACT AND THE LICENSE AGREEMENT, AND SUBJECT TO CIVIL AND CRIMINAL PENALTIES THEREUNDER.

1303.7 Copper or copper-alloy tubing. Joints between copper or copper-alloy tubing or fittings shall be brazed, mechanical joints complying with Section 1303.3, press connect joints that conform to one of the standards in Table 1302.3 or flared joints. Flared joints shall be made by a tool designed for that operation.

❖ Because tubing has a thinner wall than piping, welded joints and threaded joints are not feasible. Tubing can be flared only if it is tempered as suitable for bending. Soldered joints are not permitted. See commentary for Section 1303.3.2.

1303.8 Nonmetallic pipe. Joints between nonmetallic pipe or fittings shall be installed in accordance with the manufacturer's instructions for the *labeled* pipe and fittings.

❖ To avoid leakage, nonmetallic piping materials and fittings must be joined in strict accordance with the manufacturer's instructions. Nonmetallic pipe and fittings are intended to be field assembled using an adhesive supplied by the pipe manufacturer. The joining methods, adhesives and instructions are all evaluated as part of the approved agency listing and labeling process.

1303.9 Steel pipe. Joints between steel pipe or fittings shall be threaded or welded joints complying with Section 1303.3 or mechanical joints complying with Section 1303.9.1.

❖ Joints for steel pipe must be threaded, welded or mechanical. The choice of a joint type is usually dictated by the application. For example, it is not practical to thread larger diameter steel pipe; therefore, a welded joint is used.

1303.9.1 Mechanical joints. Joints shall be made with an *approved* elastomeric seal. Mechanical joints shall be installed in accordance with the manufacturer's instructions. Mechanical joints shall be installed outside, underground, unless otherwise *approved*.

❖ Mechanical joints for steel pipe are usually proprietary joints using an elastomeric seal that is compressed around the circumference of the pipe. Because elastomeric seals are susceptible to failure from heat and aging, and because the joints must be restrained, mechanical joints for steel pipe must be limited to outdoor, underground applications.

1303.10 Steel tubing. Joints between steel tubing or fittings shall be mechanical or welded joints complying with Section 1303.3.

❖ Mechanical joints for steel tubing are typically made with compression fittings. A metallic ferrule is placed around the outside of the pipe and is compressed between the pipe and the fitting by the tightening of a nut.

1303.11 Piping protection. Proper allowance shall be made for expansion, contraction, jarring and vibration. Piping other than tubing, connected to underground tanks, except straight fill lines and test wells, shall be provided with flexible connectors, or otherwise arranged to permit the tanks to settle without impairing the tightness of the piping connections.

❖ Changes in temperature cause dimensional changes in all materials. The absorption of heat energy causes the atoms of a material to move apart, thus expanding the material in all directions. The greatest amount of thermal expansion and contraction in piping will occur along its length. For systems operating at high temperatures, the amount of expansion is high and significant movements can occur in short runs of piping. Even though the amount of expansion per unit of length may be low for applications that operate in the range of 40°F to 100°F (4°C to 38°C), large movements can occur in long pipe runs. Large forces can develop in restrained piping that has increased or decreased in temperature. Note that the forces developed from contraction are identical to those from expansion. In addition to other design requirements, piping systems must withstand the forces resulting from thermal expansion and contraction.

This section also intends to protect the connected tank itself from damage resulting from the forces of expanding and contracting piping. Inadequate provisions for expansion and contraction can result in failure of pipe and supports, joint damage and leakage and the transmission of harmful forces and stresses to connected equipment. Forces transmitted to rotating equipment, such as pumps or turbines, may deform the equipment case and cause bearing misalignment. Forces transmitted to the structure can cause excessive loading and damage to the members to which piping is anchored. General practice is to never anchor or restrain a straight run of pipe at both ends. Ample movement allowance is attained by designing pipe bends and loops or supplemental devices, such as expansion joints, into the system. Several means exist for accommodating expansion and contraction, such as "L," "Z" and "U" bends, specially designed expansion joints and flexible connectors. Underground piping must be protected from the stress loading effects that result from settlement of tanks. Frost heave and differential movements among underground piping, structure foundations and tanks can subject piping to bending, tension, compression and shear forces.

SECTION 1304
PIPING SUPPORT

1304.1 General. Pipe supports shall be in accordance with Section 305.

❖ Piping supports are intended to reduce sag and stress in the piping system. The maximum amount of sag occurs at a point halfway between supports (see commentary, Section 305).

INTERNATIONAL CODE COUNCIL®
Copyright © 2015 ICC. ALL RIGHTS RESERVED. Accessed by David Dammon on Jun 21, 2017 12:30:52 PM pursuant to License Agreement with ICC. No further reproduction or distribution authorized. ANY UNAUTHORIZED REPRODUCTION OR DISTRIBUTION IS A VIOLATION OF THE FEDERAL COPYRIGHT ACT AND THE LICENSE AGREEMENT, AND SUBJECT TO CIVIL AND CRIMINAL PENALTIES THEREUNDER.

SECTION 1305
FUEL OIL SYSTEM INSTALLATION

1305.1 Size. The fuel oil system shall be sized for the maximum capacity of fuel oil required. The minimum size of a supply line shall be $^3/_8$-inch (9.5 mm) inside diameter nominal pipe or $^3/_8$-inch (9.5 mm) od tubing. The minimum size of a return line shall be $^1/_4$-inch (6.4 mm) inside diameter nominal pipe or $^5/_{16}$-inch (7.9 mm) outside diameter tubing. Copper tubing shall have 0.035-inch (0.9 mm) nominal and 0.032-inch (0.8 mm) minimum wall thickness.

❖ This section requires that the fuel-oil supply piping be of a size capable of delivering the maximum fuel demand of the appliance it supplies at the recommended working pressure of the appliance burner. For purposes of flow volume and pressure control, pumps may supply more fuel oil than an appliance consumes and the excess oil must be routed back to the tank through a return line. Because the amount returning to the tank is less than what was supplied, the return line pipe diameter may be smaller than that of the supply pipe.

1305.2 Protection of pipe, equipment and appliances. Fuel oil pipe, *equipment* and appliances shall be protected from physical damage.

❖ To minimize the possibility of a hazardous fuel oil spill, fuel system piping and the equipment and appliances it supplies must be protected from physical damage. Piping, equipment and appliances should not be located where they can be contacted by occupants or vehicles, such as cars or lawn mowers. Piping must not be located where it will be stepped on or create a tripping hazard.

1305.2.1 Flood hazard. Fuel oil pipe, equipment and appliances located in flood hazard areas shall be located above the elevation required by Section 1612 of the *International Building Code* for utilities and attendant equipment or shall be capable of resisting hydrostatic and hydrodynamic loads and stresses, including the effects of buoyancy, during the occurrence of flooding up to such elevation.

❖ See commentary for Section 301.16 and Section 1206.9.1. For additional guidance, refer to FEMA 348.

1305.3 Supply piping. Supply piping shall connect to the top of the fuel oil tank. Fuel oil shall be supplied by a transfer pump or automatic pump or by other *approved* means.

Exception: This section shall not apply to inside or aboveground fuel oil tanks.

❖ This section applies to underground tanks located outside buildings or structures. Tanks installed above ground either inside or outside a structure may supply fuel oil by gravity through approved fittings in the tank below the liquid level. Underground tanks, however, must have all piping connections made to approved fittings in the top of the tank above liquid level and must supply the appliance using a pump or other transfer device. The reasons for these differences are that above-ground tanks are limited in size by the IFC and an exposed gravity connection that might leak will be readily observable. Underground tanks, on the other hand, are not limited in size and a leak would not be readily discovered underground.

1305.4 Return piping. Return piping shall connect to the top of the fuel oil tank. Valves shall not be installed on return piping.

❖ Return piping is installed in systems fed by a supply pump taking suction from a tank. Because underground leaks are difficult to discover and repair, such connections must be made above the liquid level. Also, a failure in a return line would not allow gravity leakage if connected to the top of a tank. A valve in a return line could inadvertently be closed causing abnormally high pressures in the piping and appliance.

1305.5 System pressure. The system shall be designed for the maximum pressure required by the fuel-oil-burning *appliance*. Air or other gases shall not be used to pressurize tanks.

❖ As with the system sizing requirements of Section 1305.1, the system must be capable of withstanding the maximum operating pressure of the equipment and appliance(s) it supplies.

1305.6 Fill piping. A fill pipe shall terminate outside of a building at a point not less than 2 feet (610 mm) from any building opening at the same or lower level. A fill pipe shall terminate in a manner designed to minimize spilling when the filling hose is disconnected. Fill opening shall be equipped with a tight metal cover designed to discourage tampering.

❖ Requiring fill-pipe terminations to be outside buildings and at least 2 feet (610 mm) from building openings that are at the same level or lower than the fill pipe reduces the possibility that liquid or vapor spillage during delivery will enter the building and allow vapors to come into contact with a source of ignition. Likewise, fill pipes must be arranged in a way that will reduce the possibility of liquid spillage on the ground or pavement upon completion of the filling operation that could result in the liberation of vapors that could travel to an ignition source. One method of managing such spills is to install a spill containment device at the end of the fill pipe. These devices are typically equipped with a water-tight cover and are essentially a reservoir designed to catch any spilled fuel oil and retain it for proper disposal. Some models of these devices have a manual drain valve that allows the captured liquid to drain through the fill pipe and into the tank, while other models have a liquid level alarm to warn responsible parties on the premises that the reservoir needs to be emptied.

It is required to remove abandoned (retired) fill piping to prevent fuel oil from being mistakenly put into a basement or an out-of-service (retired) storage tank (see Section 1301.5).

1305.7 Vent piping. Liquid fuel vent pipes shall terminate outside of buildings at a point not less than 2 feet (610 mm) measured vertically or horizontally from any building opening. Outer ends of vent pipes shall terminate in a weather-

INTERNATIONAL CODE COUNCIL®
Copyright © 2015 ICC. ALL RIGHTS RESERVED. Accessed by David Dammon on Jun 21, 2017 12:30:52 PM pursuant to License Agreement with ICC. No further reproduction or distribution authorized. ANY UNAUTHORIZED REPRODUCTION OR DISTRIBUTION IS A VIOLATION OF THE FEDERAL COPYRIGHT ACT AND THE LICENSE AGREEMENT, AND SUBJECT TO CIVIL AND CRIMINAL PENALTIES THEREUNDER.

proof vent cap or fitting or be provided with a weatherproof hood. Vent caps shall have a minimum free open area equal to the cross-sectional area of the vent pipe and shall not employ screens finer than No. 4 mesh. Vent pipes shall terminate sufficiently above the ground to avoid being obstructed with snow or ice. Vent pipes from tanks containing heaters shall be extended to a location where oil vapors discharging from the vent will be readily diffused. If the static head with a vent pipe filled with oil exceeds 10 pounds per square inch (psi) (69 kPa), the tank shall be designed for the maximum static head that will be imposed.

Liquid fuel vent pipes shall not be cross connected with fill pipes, lines from burners or overflow lines from auxiliary tanks.

❖ Vent pipe terminations must be located to allow complete and ready disposal of fuel oil vapors that may issue from the vent during fuel delivery, by normal expansion of the fuel in the tank caused by temperature change or the installation of an oil-heating device used to keep the oil at the proper burner atomization temperature. Similar to the fill pipe clearances to building openings (see commentary, Section 1305.6), the intent of the 2-foot (610 mm) minimum clearance is to reduce the possibility of fuel-oil vapors entering the building and reaching an ignition source, and is based on an estimate of the distance that an ignitable concentration of vapors may extend from the end of the vent pipe.

Protection of the open end of the vent pipe with an approved vent cap or fitting or weatherproof hood is necessary to prevent rainwater from getting into the tank through the vent line. However, protection of the open end of the vent pipe must not be allowed to reduce the net free vent area required for the tank to less than the cross-sectional area of the vent pipe opening. Because the purpose of the vent is to allow the tank to "breathe" as liquid is drawn from it or added to it, or as the liquid volume responds to temperature fluctuations, blockage of the vent pipe or reduction of its net clear area could result in damage to the tank or cause overpressure or creation of a vacuum. Likewise, the vent pipe must terminate above grade at a level that will reduce the possibility that the opening could be obstructed by snow accumulation or an ice plug.

Although vent pipes normally convey only vapors, the code recognizes that the potential exists for the vent pipe to become filled with fuel oil during a tank filling operation. Depending on the height of the vent pipe, it is possible for such an occurrence to create sufficient static head pressure on the bottom of the full tank to damage the tank.

To reduce the potential for tank damage from excessive static head pressure, the vent pipe height must be limited to 20 feet (6096 mm) from the bottom of the tank, which would create a maximum of 10 pounds per square inch (psi) (69 kPa) static head pressure at the bottom of the tank. The hydraulic rule of thumb states that head pressure is approximately equal to 0.5 psi per foot (3.4 kPa) of elevation [10 psi ÷ 0.5 psi/ft = 20 feet (6096 mm)]. Alternatively, the tank could be specifically designed to withstand the maximum static head pressure that could be generated by vent height.

Vent lines must be free of obstructions or anything else that would interfere with their full functioning. It is critically important to the integrity of the tank they serve that the vent lines be functional at all times. Therefore, the code prohibits vent lines from being used for any other purpose, including interconnection with any liquid-carrying piping.

SECTION 1306
OIL GAUGING

1306.1 Level indication. Tanks in which a constant oil level is not maintained by an automatic pump shall be equipped with a method of determining the oil level.

❖ In systems where an appliance supply tank or auxiliary tank is not arranged to be kept full automatically in order to maintain uniform delivery of oil to the burner, an oil-level indicating device must be installed to permit verification of tank level.

1306.2 Test wells. Test wells shall not be installed inside buildings. For outside service, test wells shall be equipped with a tight metal cover designed to discourage tampering.

❖ Test wells, also known as monitoring wells or observation wells, are installed in conjunction with underground fuel-oil storage tanks (when required by local codes) for the purpose of monitoring or sampling liquids from the tank excavation. In the event of a tank leak, a check of the test well will quickly discover the leak so that repair and cleaning can begin. Test wells installed inside buildings could permit fuel oil vapors to collect inside the building if a tank leak develops. Test wells are best installed outside the building as close as possible to the tank and must be protected in an approved manner against vandalism, tampering or accidental introduction of petroleum product into the well.

1306.3 Inside tanks. The gauging of inside tanks by means of measuring sticks shall not be permitted. An inside tank provided with fill and vent pipes shall be provided with a device to indicate either visually or audibly at the fill point when the oil in the tank has reached a predetermined safe level.

❖ This section prohibits the manual gauging of tank liquid levels on tanks installed inside buildings. Openings for manual gauging can allow fuel oil vapors to escape inside the building, creating a hazard the code intends to prevent. Because this chapter requires that fill and vent pipes terminate outside the building, the person delivering fuel has no way of seeing the inside tank and its liquid level gauging device, no way of knowing when the tank is approaching being full and no way of judging when to reduce the delivery flow rate to reduce the likelihood

INTERNATIONAL CODE COUNCIL®
Copyright © 2015 ICC. ALL RIGHTS RESERVED. Accessed by David Dammon on Jun 21, 2017 12:30:52 PM pursuant to License Agreement with ICC. No further reproduction or distribution authorized. ANY UNAUTHORIZED REPRODUCTION OR DISTRIBUTION IS A VIOLATION OF THE FEDERAL COPYRIGHT ACT AND THE LICENSE AGREEMENT, AND SUBJECT TO CIVIL AND CRIMINAL PENALTIES THEREUNDER.

of a tank overfill and resultant fuel spill. To provide fuel delivery personnel with this vital information, this section requires that a means be installed at the fill pipe for determining when the tank is approaching full. This may be a liquid level gauge, an audible signal device that activates at a predetermined level of fuel in the tank (typically 90-percent full) or any approved equivalent device. Additional features of some overfill prevention devices include delivery flow-rate reduction when the tank reaches the predetermined level and shutting off the delivery flow at a predetermined tank level (such as 95-percent full).

1306.4 Gauging devices. Gauging devices such as liquid level indicators or signals shall be designed and installed so that oil vapor will not be discharged into a building from the liquid fuel supply system. Liquid-level indicating gauges shall comply with UL 180.

❖ This section requires that any gauging device used on a fuel oil tank be a closed system or device that is designed to prevent the accidental escape of fuel oil vapors inside the building.

1306.5 Gauge glass. A tank used in connection with any oil burner shall not be equipped with a glass gauge or any gauge that, when broken, will permit the escape of oil from the tank.

❖ This section prohibits the use of any gauging device, including sight glasses, that would allow the release of the tank contents in the event that the gauging device were broken, thus creating a hazardous material spill with the possibility of fuel oil vapor ignition.

SECTION 1307
FUEL OIL VALVES

1307.1 Building shutoff. A shutoff valve shall be installed on the fuel-oil supply line at the entrance to the building. Inside or above-ground tanks are permitted to have valves installed at the tank. The valve shall be capable of stopping the flow of fuel oil to the building or to the *appliance* served where the valve is installed at a tank inside the building. Valves shall comply with UL 842.

❖ A shutoff valve allows emergency or service personnel to isolate the fuel oil supply from equipment or appliances to reduce the hazard in an equipment/appliance fire or to enable equipment/appliance repair without a fuel spill. Valves for fuel oil service must comply with UL 842.

1307.2 Appliance shutoff. A shutoff valve shall be installed at the connection to each *appliance* where more than one fuel-oil-burning *appliance* is installed.

❖ Appliance shutoff valves enable authorized persons to isolate one (or more) appliances for service or replacement without having to use the building shutoff valves to secure all oil-fired appliances in the building.

1307.3 Pump relief valve. A relief valve shall be installed on the pump discharge line where a valve is located downstream of the pump and the pump is capable of exceeding the pressure limitations of the fuel oil system.

❖ When a shutoff valve is installed downstream of a pump, the possibility exists that the pump may be capable of overpressuring the piping system when it pumps against a closed valve. If the pump has no built-in internal bypass to prevent this from happening, a pressure relief valve must be installed in the piping between the discharge side of the pump and the shutoff valve. The pressure setting of the relief valve must be based on the operating pressure of the system and the fuel oil discharged by the relief valve must be routed back to the tank to prevent a spill.

1307.4 Fuel-oil heater relief valve. A relief valve shall be installed on the discharge line of fuel-oil-heating appliances.

❖ Fuel oil systems may incorporate a heater to increase the temperature of the fuel oil to enhance its flow within the piping system and to improve atomization in the burner. Oil heated by such a heater will expand and can rupture the system piping if the pressure exceeds the design operating pressure of the system and cannot be relieved. A relief valve installed in accordance with Section 1307.5 will relieve high pressures and limit the potential fire hazard of a fuel oil spill.

1307.5 Relief valve operation. The relief valve shall discharge fuel oil when the pressure exceeds the limitations of the system. The discharge line shall connect to the fuel oil tank.

❖ The relief valve required by Section 1307.4 must be set to operate at a pressure below the design pressure of the fuel-oil piping system. The pressure setting should be as recommended by the valve manufacturer and the fuel-oil system designer. Proper disposal of the heated fuel oil discharged from the relief valve is essential because heating of the oil will not only have lowered its viscosity but will also have increased the volatility of the oil so that it has some of the fire-hazard characteristics of a flammable, rather than a combustible, liquid. To avoid the hazards of a spill, the liquid discharged from the relief valve must be routed back to the tank, either directly or through the oil return line.

SECTION 1308
TESTING

1308.1 Testing required. Fuel oil piping shall be tested in accordance with NFPA 31.

❖ A leak test is required for all installations of fuel-oil piping systems, including alterations and additions. If a leak is discovered, the leaking component must be repaired or replaced before the system is concealed or put into operation. Section 3-10 of NFPA 31 specifies test methods and test pressures for testing fuel oil piping. Fuel oil tanks that are not designed as pressure vessels are intended to be used at atmospheric pressure and cannot be subjected to high

INTERNATIONAL CODE COUNCIL®
Copyright © 2015 ICC. ALL RIGHTS RESERVED. Accessed by David Dammon on Jun 21, 2017 12:30:52 PM pursuant to License Agreement with ICC. No further reproduction or distribution authorized. ANY UNAUTHORIZED REPRODUCTION OR DISTRIBUTION IS A VIOLATION OF THE FEDERAL COPYRIGHT ACT AND THE LICENSE AGREEMENT, AND SUBJECT TO CIVIL AND CRIMINAL PENALTIES THEREUNDER.

internal pressures when testing the piping. Hydrostatic testing and air pressure testing methods are allowed. In addition to air pressure leak testing and hydrostatic leak testing, NFPA 31 allows testing suction lines under a vacuum and specifies a minimum value and test duration. Suction lines tested in this way should be separated from the fuel oil tanks because the tanks cannot be subjected to a vacuum.

Bibliography

The following resource material was used in the preparation of the commentary for this chapter of the code:

IFC-15, *International Fire Code*. Washington, DC: International Code Council, 2014.

INTERNATIONAL CODE COUNCIL®

Copyright © 2015 ICC. ALL RIGHTS RESERVED. Accessed by David Dammon on Jun 21, 2017 12:30:52 PM pursuant to License Agreement with ICC. No further reproduction or distribution authorized. ANY UNAUTHORIZED REPRODUCTION OR DISTRIBUTION IS A VIOLATION OF THE FEDERAL COPYRIGHT ACT AND THE LICENSE AGREEMENT, AND SUBJECT TO CIVIL AND CRIMINAL PENALTIES THEREUNDER.

Chapter 14:
Solar Systems

General Comments

Chapter 14 contains requirements for the construction, alteration and repair of all systems and components of solar energy systems used for space heating or cooling, domestic hot water heating or processing. The provisions of this chapter are limited to those necessary to achieve safe installations that are relatively hazard free.

A solar energy system can be designed to handle 100 percent of the energy load of a building, although this is rarely accomplished. Because solar energy is a low-intensity energy source and not always available because of the weather, it is usually necessary to supplement a solar energy system with other traditional energy sources.

Solar heating and cooling systems are classified as either passive or active systems. A passive solar energy system uses solar collectors, a gas or liquid heat-transfer medium and distribution piping or ductwork. This system does not use circulators or fans but relies on natural (gravity) flow. The flow of energy (heat) is by natural convection, conduction and radiation. Commentary Figures 14(1) and 14(2) show typical passive solar heating applications.

A complete active solar energy system includes solar collectors, a gas or liquid heat transfer medium, piping, ducts, circulators, fans and controls to move the medium to the load or to an energy storage system. Commentary Figure 14(3) shows a typical active solar system used for space and domestic water heating supplemented by an auxiliary furnace and water heater.

Many design variations exist, such as hybrid systems, with components of both active and passive systems. Solar systems can either be very complex or as simple as glazing, and can act in harmony with the architectural features of the building [see Commentary Figure 14(4)]. Solar designs can be used to improve the performance of conventional space heating systems and work in conjunction with other such systems. For example, a simple passive collection system can greatly improve the performance of an air-to-air or water-to-air heat pump system.

The energy collected by a solar system can be used as it is collected or transferred to some form of thermal storage system. Typical thermal storage systems consist of large quantities of a dense mass, including stone,

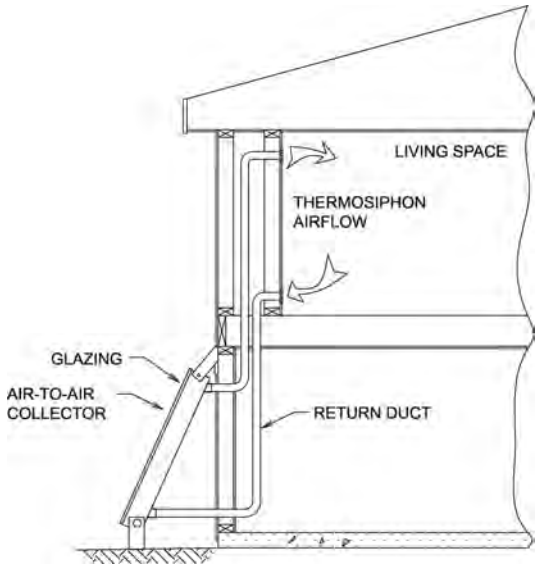

Figure 14(1)
PASSIVE SOLAR SPACE HEATING

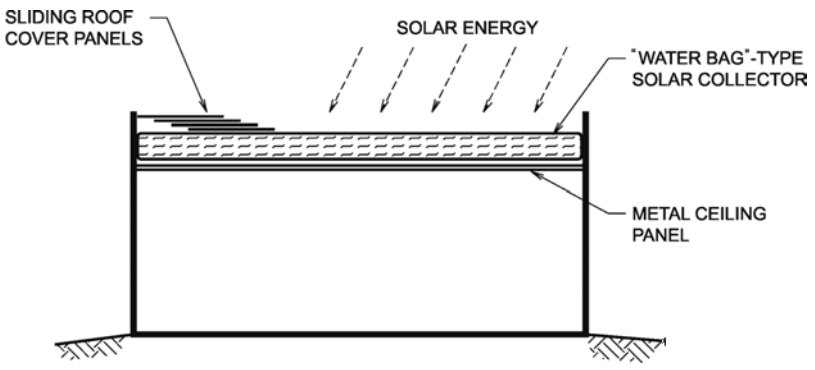

Figure 14(2)
PASSIVE SOLAR HEATING AND COOLING APPLICATION

INTERNATIONAL CODE COUNCIL®
Copyright © 2015 ICC. ALL RIGHTS RESERVED. Accessed by David Dammon on Jun 21, 2017 12:30:52 PM pursuant to License Agreement with ICC. No further reproduction or distribution authorized. ANY UNAUTHORIZED REPRODUCTION OR DISTRIBUTION IS A VIOLATION OF THE FEDERAL COPYRIGHT ACT AND THE LICENSE AGREEMENT, AND SUBJECT TO CIVIL AND CRIMINAL PENALTIES THEREUNDER.

masonry or water. Storage mass can also consist of materials in which a phase change occurs, such as chemical compounds that store the latent heat required to liquefy the compounds that are solid at room temperature.

If the energy collected by a solar system is not used or stored for later use, the collection system must either stop collecting or dump the energy to the building exterior unless the collection system is designed to withstand the higher temperatures and pressures resulting from the static (no-flow) mode of operation.

Another aspect of solar system installations that must be considered is the structural loading effect that the collectors and supports have on the building's roof system. Collectors can add considerable weight, affect snow accumulation and increase wind loads and uplift forces. As with any roof-mounted equipment or appliances, the installation must also comply with the applicable provisions of the *International Building Code*® (IBC®).

Purpose

This chapter establishes provisions for the safe installation, operation and repair of solar energy systems. Although such systems use components similar to those of conventional mechanical equipment, many of these provisions are unique to solar energy systems.

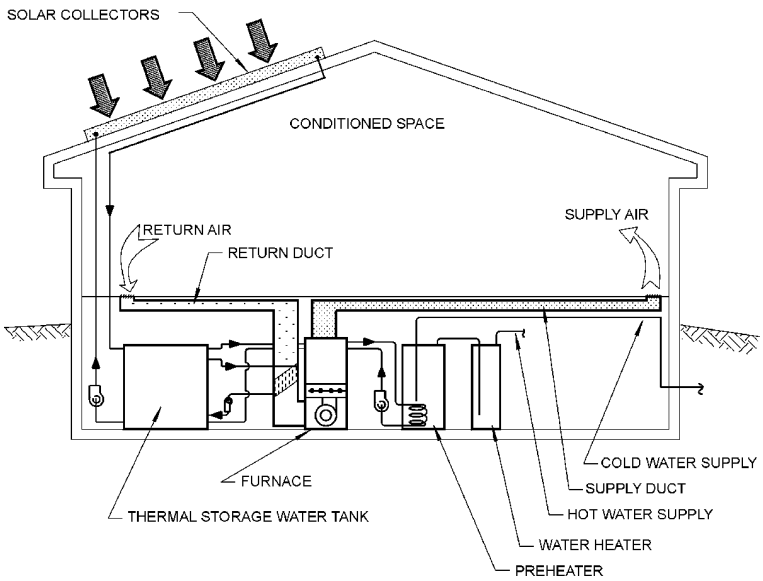

Figure 14(3)
ACTIVE SPACE AND DOMESTIC WATER HEATING SYSTEM

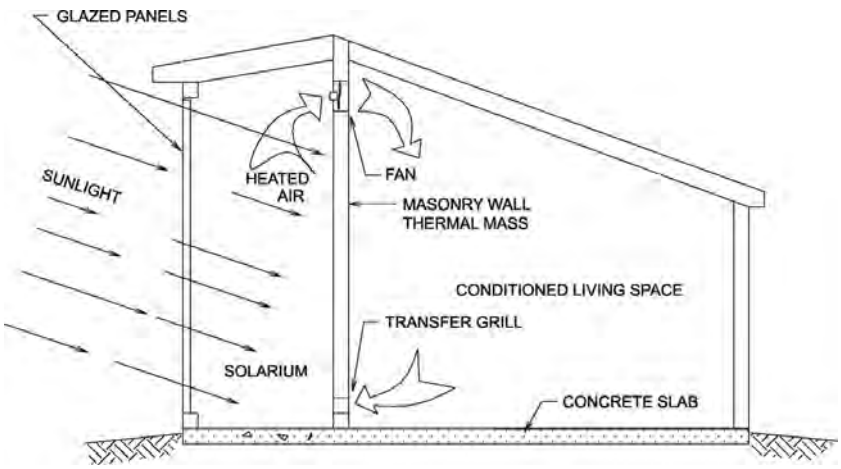

Figure 14(4)
PASSIVE COLLECTION WITH MECHANICAL DISTRIBUTION

INTERNATIONAL CODE COUNCIL®
Copyright © 2015 ICC. ALL RIGHTS RESERVED. Accessed by David Dammon on Jun 21, 2017 12:30:52 PM pursuant to License Agreement with ICC. No further reproduction or distribution authorized. ANY UNAUTHORIZED REPRODUCTION OR DISTRIBUTION IS A VIOLATION OF THE FEDERAL COPYRIGHT ACT AND THE LICENSE AGREEMENT, AND SUBJECT TO CIVIL AND CRIMINAL PENALTIES THEREUNDER.

SECTION 1401
GENERAL

1401.1 Scope. This chapter shall govern the design, construction, installation, *alteration* and repair of systems, *equipment* and appliances intended to utilize solar energy for space heating or cooling, domestic hot water heating, swimming pool heating or process heating.

❖ Solar energy can be used for a variety of purposes, including space heating, space cooling, domestic water heating, swimming pool heating and processing. Therefore, the scope encompasses all of these potential solar energy applications, and includes the design, construction, installation, alteration and repair of all systems and equipment.

1401.2 Potable water supply. Potable water supplies to solar systems shall be protected against contamination in accordance with the *International Plumbing Code*.

Exception: Where all solar system piping is a part of the potable water distribution system, in accordance with the requirements of the *International Plumbing Code*, and all components of the piping system are *listed* for potable water use, cross-connection protection measures shall not be required.

❖ Solar systems may contain conditioning chemicals, antifreeze or heat transfer fluids other than water. The fill and makeup water supply to solar hydronic systems is generally taken directly from the potable water supply of the building. Water supply connections are provided to manually or automatically replace water that is lost from relief/safety valve discharge, evaporation, draindown, control flushing, air purging or leakage. This arrangement causes the potable water supply to be highly susceptible to contamination by backflow. Where any direct connection is made between two pressurized systems, the direction of flow through the connection or interface is dependent on the pressure differential between the systems. If the solar system pressure is higher than the potable water supply pressure, boiler water will flow into the potable water distribution system. The exception allows backflow protection to be omitted where potable water flows through the solar system and all components of the solar system are listed for potable water applications.

1401.3 Heat exchangers. Heat exchangers used in domestic water-heating systems shall be *approved* for the intended use. The system shall have adequate protection to ensure that the potability of the water supply and distribution system is properly safeguarded.

❖ In accordance with the *International Plumbing Code*® (IPC®), heat exchangers using an essentially toxic transfer fluid must be double-wall construction. An air gap open to the atmosphere must be provided between the two walls. Heat exchangers using an essentially nontoxic transfer fluid may be of single-wall construction.

The extent of isolation required for a heat exchanger depends on the type of fluid used on the nonpotable side of the heat exchanger. From the definition of "Essentially nontoxic transfer fluid," the Gosselin rating of the nonpotable fluid must be evaluated. If the fluid has a Gosselin rating of 1, a single-wall heat exchanger is permitted.

The Gosselin rating is a measure of the toxicity of a substance. The name originates from one of the prime developers of the rating system, Dr. Robert E. Gosselin, Professor of Pharmacology at Dartmouth Medical School in New Hampshire.

Gosselin toxicity ratings are the values used by medical personnel to analyze poison victims. The ratings are based on the probable lethal dose for a human. The six levels of Gosselin ratings are outlined in Commentary Figure 1401.3(1).

Some of the commercially available transfer fluids with a Gosselin rating of 1 are identified in Commentary Figure 1401.3(2).

If the heat transfer fluid has a Gosselin rating of 2 or more, a double-wall heat exchanger is required. The double-wall heat exchanger must have an intermediate space between the walls that is open to the atmosphere. This type of construction would allow any leakage of fluid through the walls of the heat exchanger to discharge externally to the heat exchanger where it would be observable (see Commentary Figure 1401.3).

TOXICITY RATING OF CLASS	PROBABLE ORAL LETHAL DOSE (HUMAN)	
	Dose	For a 70-kg person (150 pounds)
6 Super toxic	Less than 5 mg/kg	A taste (less than 7 drops)
5 Extremely toxic	5-50 mg/kg	Between 7 drops and 1 teaspoon
4 Very toxic	50-500 mg/kg	Between 1 teaspoon and 1 ounce
3 Moderately toxic	0.5-5 gm/kg	Between 1 ounce and 1 pint (pound)
2 Slightly toxic	5-15 gm/kg	Between 1 pint and 1 quart
1 Practically nontoxic	Above 15 gm/kg	More than 1 quart (2.2 pounds)

Figure 1401.3(1)
GOSSELIN RATINGS

INTERNATIONAL CODE COUNCIL®
Copyright © 2015 ICC. ALL RIGHTS RESERVED. Accessed by David Dammon on Jun 21, 2017 12:30:52 PM pursuant to License Agreement with ICC. No further reproduction or distribution authorized. ANY UNAUTHORIZED REPRODUCTION OR DISTRIBUTION IS A VIOLATION OF THE FEDERAL COPYRIGHT ACT AND THE LICENSE AGREEMENT, AND SUBJECT TO CIVIL AND CRIMINAL PENALTIES THEREUNDER.

TRADE NAME	MANUFACTURER
Caloria Ht-43	Exxon Co.
DowFrost	Dow
Drewsol	Drew Chemical
Freeze Proof	Commonwealth
Mobiltherm 603	Mobil Oil Co.
Mobiltherm Light	Mobil Oil Co.
Nutek 835	Nuclear Technology
Nutek 876	Nuclear Technology
Process Oil 3029	Exxon Co.
Propylene Glycol U.S.P.	Union Carbide
Solargard G.	Daystar Corp.
Solar Winter Ban	Solar Alternative Inc.
Sunsol 60	Sunworks
Suntemp	Resource Technology Corp.
Syltherm 444	Dow Corning Corp.
Therminol 66	Monsanto Co.
UCAR Food Freeze 35	Union Carbide
FDA Approved Boiler Additives	
Freon 12	
Freon 22	
Freon 112	
Freon 114	

Figure 1401.3(2)
HEAT TRANSFER FLUIDS (ESSENTIALLY NONTOXIC) GOSSELIN RATING OF 1

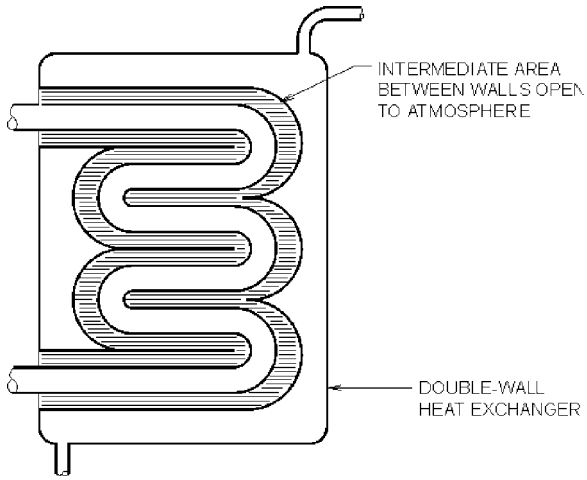

Figure 1401.3
DOUBLE-WALL HEAT EXCHANGER

1401.4 Solar energy equipment and appliances. Solar energy *equipment* and appliances shall conform to the requirements of this chapter and shall be installed in accordance with the manufacturer's instructions.

❖ All solar energy system components, including collectors, heat transfer fluids and thermal storage units, are regulated by this chapter. The requirements of this chapter address only the potential hazards to life and property associated with solar installations. The system must be installed in accordance with the manufacturer's installation instructions. Components of the solar system are also required to conform to other applicable sections of the code, such as those found in Chapter 3, General Regulations; Chapter 6, Duct Systems; Chapter 10, Boilers, Water Heaters and Pressure Vessels; Chapter 11, Refrigeration; and Chapter 12, Hydronic Piping. Solar installations could also be subject to provisions in the IPC and the IBC. Included are indirect waste piping and special waste; water supply and distribution; inspection; tests and maintenance; fire-resistant and roof structures; structural loads; glass and glazing and plastic.

1401.5 Ducts. Ducts utilized in solar heating and cooling systems shall be constructed and installed in accordance with Chapter 6 of this code.

❖ Solar systems can involve hot-air-type collectors, thermal storage systems, fan-coil units and air handlers, all of which may be connected to ductwork.

SECTION 1402
INSTALLATION

1402.1 Access. Access shall be provided to solar energy *equipment* and appliances for maintenance. Solar systems and appurtenances shall not obstruct or interfere with the operation of any doors, windows or other building components requiring operation or access.

❖ In accordance with the definition of "Access" found in Chapter 2, access to solar energy equipment may be through an access panel, door or similar construction. The installation of solar equipment must also comply with the access-related installation requirements found in Section 306. The installation of solar equipment and piping must not interfere with door swings, operability of windows and access to other equipment and appliances.

1402.2 Protection of equipment. Solar *equipment* exposed to vehicular traffic shall be installed not less than 6 feet (1829 mm) above the finished floor.

Exception: This section shall not apply where the *equipment* is protected from motor vehicle impact.

❖ The same requirement exists in Sections 304.6 and 304.7 (see commentary, Sections 304.6 and 304.7).

1402.3 Controlling condensation. Where attics or structural spaces are part of a passive solar system, ventilation of such spaces, as required by Section 406, is not required where other *approved* means of controlling condensation are provided.

❖ As shown in Commentary Figure 1402.3, some passive solar energy systems use structural cavities, such as attics, crawl spaces and wall and floor spaces, to convey heated air from the collector to or around the conditioned space.

INTERNATIONAL CODE COUNCIL®
Copyright © 2015 ICC. ALL RIGHTS RESERVED. Accessed by David Dammon on Jun 21, 2017 12:30:52 PM pursuant to License Agreement with ICC. No further reproduction or distribution authorized. ANY UNAUTHORIZED REPRODUCTION OR DISTRIBUTION IS A VIOLATION OF THE FEDERAL COPYRIGHT ACT AND THE LICENSE AGREEMENT, AND SUBJECT TO CIVIL AND CRIMINAL PENALTIES THEREUNDER.

Attics, crawl spaces, rafter cavities and similar spaces in a building must be ventilated to control moisture and prevent structural damage that can result from high humidity and condensation. Such ventilation could interfere with or reduce the effectiveness of a solar energy system if the spaces being ventilated are also used as air plenums or ducts as part of the solar energy system. This section simply allows omitting the required ventilation of such spaces where the ventilation would affect the operation of the passive solar system and where an effective method of moisture control is substituted for the otherwise required ventilation.

Moisture in attics and structural spaces could possibly be controlled by the air currents of a passive solar system, or the space could be mechanically ventilated in accordance with Section 406 of the code. Possibly, moisture control will not be necessary where such spaces are sufficiently heated by the operation of the solar energy system. The intent is to permit any method or combination of methods that will prevent moisture accumulation and resulting damage to the structure and allow the structural space to serve as part of the solar system.

1402.4 Roof-mounted collectors. Roof-mounted solar collectors that also serve as a roof covering shall conform to the requirements for roof coverings in accordance with the *International Building Code*.

Exception: The use of plastic solar collector covers shall be limited to those *approved* plastics meeting the requirements for plastic roof panels in the *International Building Code*.

❖ Solar collectors that are an integral part of a roof covering are required to comply with the provisions for roofs and roof structures in the IBC because they function as a solar collector, as well as providing weather protection. These requirements include fire classification, weather protection, wind resistance and durability. Typical collector designs are shown in Commentary Figure 1402.4.

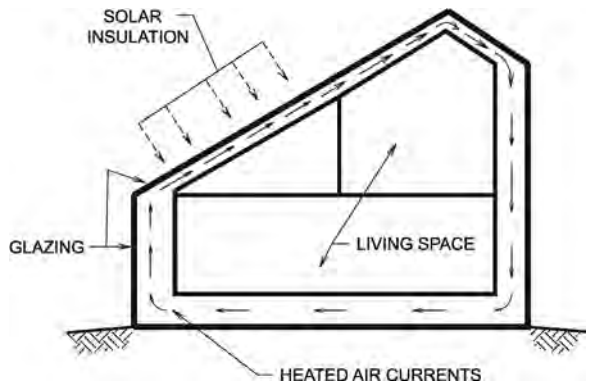

Figure 1402.3
DOUBLE ENVELOPE PASSIVE SOLAR HEATING

Solar collectors can be independent assemblies that mount directly on the roof surface or they can be built in as an integral part of the roof covering system.

The exception to this section recognizes that the IBC permits the limited use of plastic roof panels as part of a roof-covering system. Therefore, solar collectors with plastic glazing (covers) comprising part of the roof-covering system should be permitted with the same limitations as plastic roof panels.

1402.4.1 Collectors mounted above the roof. Where mounted on or above the roof covering, the collector array and supporting construction shall be constructed of noncombustible materials or fire-retardant-treated wood conforming to the *International Building Code* to the extent required for the type of roof construction of the building to which the collectors are accessory.

Exception: The use of plastic solar collector covers shall be limited to those *approved* plastics meeting the require-

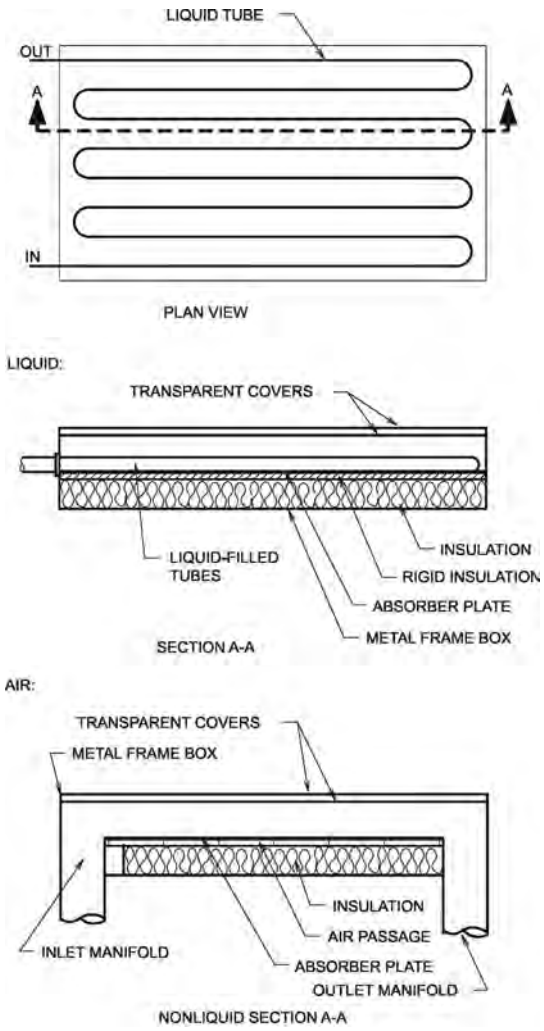

Figure 1402.4
FLAT-PLATE SOLAR COLLECTORS

INTERNATIONAL CODE COUNCIL®
Copyright © 2015 ICC. ALL RIGHTS RESERVED. Accessed by David Dammon on Jun 21, 2017 12:30:52 PM pursuant to License Agreement with ICC. No further reproduction or distribution authorized. ANY UNAUTHORIZED REPRODUCTION OR DISTRIBUTION IS A VIOLATION OF THE FEDERAL COPYRIGHT ACT AND THE LICENSE AGREEMENT, AND SUBJECT TO CIVIL AND CRIMINAL PENALTIES THEREUNDER.

ments for plastic roof panels in the *International Building Code*.

❖ Solar collectors and any supporting construction mounted on or above the roof covering must be constructed of materials consistent with the building's construction classification.

Rarely does the existing roof structure face the correct direction or have the desired angle of inclination for solar applications. Therefore, solar collectors or collector arrays are often mounted on support structures on or above a roof to allow the orientation of the collectors for optimum solar exposure. The collectors and any support structure must be constructed of materials permitted for the roof structure on which they are mounted.

The exception allows the use of approved plastic glazing (covers) on solar collectors, if their use falls within the parameters of the IBC. Plastic is combustible, and the intent of this exception is to allow the limited use of combustible collector covers where noncombustible or limited combustible collectors and supports would otherwise be required by the IBC. Plastic collector covers are subject to the same regulations as those for plastic-glazed skylight assemblies.

1402.5 Equipment. The solar energy system shall be equipped in accordance with the requirements of Sections 1402.5.1 through 1402.5.4.

❖ Solar energy systems must be designed and properly equipped to protect the system, the building and its occupants from damage and the potential hazards associated with such systems.

1402.5.1 Pressure and temperature. Solar energy system components containing pressurized fluids shall be protected against pressures and temperatures exceeding design limitations with a pressure and temperature relief valve. Each section of the system in which excessive pressures are capable of developing shall have a relief device located so that a section cannot be valved off or otherwise isolated from a relief device. Relief valves shall comply with the requirements of Section 1006.4 and discharge in accordance with Section 1006.6.

❖ Any heated, closed system is capable of developing pressures that exceed its design working pressure. Closed liquid-filled systems can develop high hydrostatic pressures with even slight temperature increases. Because solar energy varies in intensity, the collector system is subject to greater temperature and pressure variations than other heating systems having precisely controlled energy inputs. Additionally, the solar energy input cannot be turned off by limit controls as can other energy sources. Therefore, a solar energy system is more likely to be subjected to extreme temperatures and pressures that could cause system failures and the associated hazards. Pressure and temperature relief valves are necessary to prevent injury and property damage that could result from the failure of pressurized vessels and piping. Typical liquid solar energy systems involve large complex piping circuits with valve arrangements that greatly increase the likelihood of portions of the piping system being isolated from the overpressure or overtemperature safety devices. Any portion of a system isolated from the relief valve or valves is unprotected from the danger of excessive pressures and temperatures. To ensure complete protection to all portions of a system, multiple relief valves at different locations in the system may be necessary.

Solar heating and cooling systems are similar in nature to hydronic heating systems; therefore, the requirements for relief valves are the same for both types of systems (see Commentary Figure 1402.5.1).

Temperature and pressure relief valves must comply with the provisions of Section 1006.4 for labeling, capacity rating and pressure setting. The discharge of relief valves must meet the requirements of Section 1006.6.

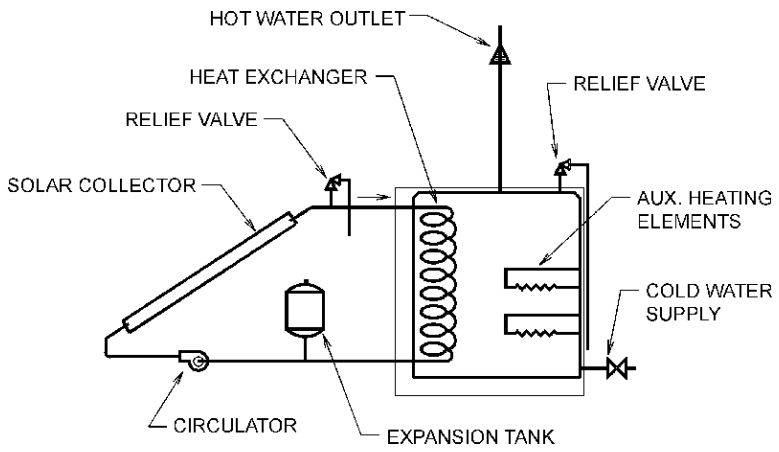

Figure 1402.5.1
SIMPLIFIED SCHEMATIC OF SOLAR WATER HEATING SYSTEM

INTERNATIONAL CODE COUNCIL®
Copyright © 2015 ICC. ALL RIGHTS RESERVED. Accessed by David Dammon on Jun 21, 2017 12:30:52 PM pursuant to License Agreement with ICC. No further reproduction or distribution authorized. ANY UNAUTHORIZED REPRODUCTION OR DISTRIBUTION IS A VIOLATION OF THE FEDERAL COPYRIGHT ACT AND THE LICENSE AGREEMENT, AND SUBJECT TO CIVIL AND CRIMINAL PENALTIES THEREUNDER.

1402.5.2 Vacuum. The solar energy system components that are subjected to a vacuum while in operation or during shutdown shall be designed to withstand such vacuum or shall be protected with vacuum relief valves.

❖ Some solar system designs using a heat transfer fluid capable of freezing employ a method of freeze protection that drains the fluid from the portions of the system exposed to freezing temperatures. Under certain conditions, this draindown function can produce significant partial vacuums in the system. Some solar system designs depend on the vaporization of a liquid heat transfer medium, possibly producing a partial vacuum that is caused by condensation of the transfer medium. These systems can also rely on a constant partial vacuum to lower the boiling point of the liquid transfer medium. Systems subject to pressures below atmospheric pressures must be able to withstand the pressure without damage; otherwise, vacuum relief devices are required where systems cannot tolerate the negative pressures that could develop in the system.

1402.5.3 Protection from freezing. System components shall be protected from damage by freezing of heat transfer liquids at the lowest ambient temperatures that will be encountered during the operation of the system.

❖ In liquid solar energy systems, freezing is a common cause of system failure. Because solar collectors can reradiate heat into the cold night sky, it is possible for systems to cool faster than the ambient air, thus freezing a water-filled system when the ambient air temperature is above 32°F (0°C). This section requires protection in areas where freezing of the heat transfer fluid can occur.

One of the most frequently used and dependable freeze protection methods is the use of an antifreeze heat transfer fluid. The most commonly used nonfreezing heat transfer fluids are water with ethylene glycol and water with propylene glycol antifreeze solutions. Other nonfreezing heat transfer fluids that can be used are silicone oils, hydrocarbon oils or refrigerants. Some antifreeze solutions are toxic, and the use of toxic heat transfer fluids would require special precautionary means to protect the potable water system from contamination.

Other common freeze protection methods include draindown and recirculation. Draindown is a method that automatically or manually drains the heat transfer fluid from the collectors and piping where a potential freezing condition exists (see Commentary Figure 1402.5.3). In areas where freezing temperatures are rare, freeze protection might be accomplished by recirculation of the water from the heat storage system through collectors, as often or at a rate necessary to keep the exposed portions of the system above freezing. Both the draindown and recirculation means of freeze protection rely on electrical and mechanical devices and components or on human action and, therefore, are less dependable than freezeproof heat transfer fluids.

1402.5.4 Expansion tanks. Liquid single-phase solar energy systems shall be equipped with expansion tanks sized in accordance with Section 1009.

❖ In a liquid, single-phase solar energy system that uses a heat transfer fluid that does not change into a gaseous or solid phase, the heat transfer liquid expands as the temperature increases. An expansion (compression) tank is necessary to receive the expanded liquid, thus preventing excessive pressure increases that would cause system damage or opening of a pressure relief valve. The tank must be sized as required for hydronic systems.

1402.6 Penetrations. Roof and wall penetrations shall be flashed and sealed to prevent entry of water, rodents and insects.

❖ Typical solar collector arrays will involve one or more roof or wall penetrations to accommodate piping and ducts. The collector arrays could also involve roof covering penetrations caused by support framework members or fasteners. Any penetrations through the

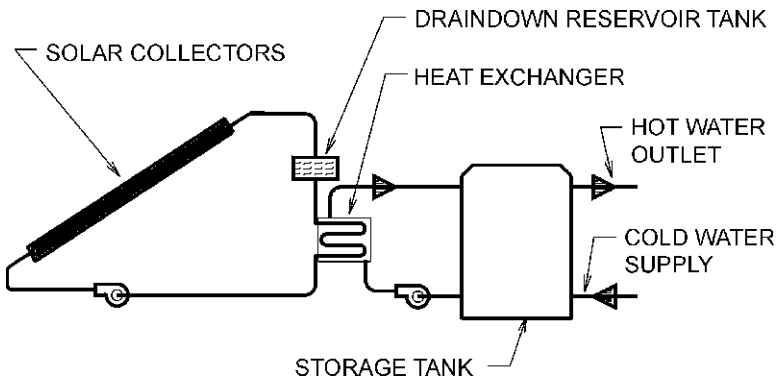

Figure 1402.5.3
SIMPLIFIED SCHEMATIC OF DRAINDOWN FREEZE PROTECTION SYSTEM

INTERNATIONAL CODE COUNCIL®
Copyright © 2015 ICC. ALL RIGHTS RESERVED. Accessed by David Dammon on Jun 21, 2017 12:30:52 PM pursuant to License Agreement with ICC. No further reproduction or distribution authorized. ANY UNAUTHORIZED REPRODUCTION OR DISTRIBUTION IS A VIOLATION OF THE FEDERAL COPYRIGHT ACT AND THE LICENSE AGREEMENT, AND SUBJECT TO CIVIL AND CRIMINAL PENALTIES THEREUNDER.

walls, roof and roof coverings must be sealed by a waterproof material or flashing that will withstand the temperatures produced by the solar energy equipment to which it is exposed and provide weather protection against water penetration.

1402.7 Filtering. Air transported to occupied spaces through rock or dust-producing materials by means other than natural convection shall be filtered at the outlet from the heat storage system.

❖ This section requires filtering to remove dust and particulates from mechanically forced air that has passed through a thermal storage unit containing pebbles, rock or other thermal mass material producing air-borne particles. In passive systems, a filter is not required because the velocity of the air is generally not sufficient to carry particulates or keep larger particles in suspension. Additionally, the resistance offered by an air filter medium would greatly impede natural convective airflow.

SECTION 1403
HEAT TRANSFER FLUIDS

1403.1 Flash point. The flash point of the actual heat transfer fluid utilized in a solar system shall be not less than 50°F (28°C) above the design maximum nonoperating (no-flow) temperature of the fluid attained in the collector.

❖ Heat transfer liquid is the "working fluid" in the solar heating or cooling system. The liquid is pumped from the thermal energy collector where heat is absorbed by the liquid, to the heat exchanger where the liquid releases the heat energy to another fluid, airstream or some form of thermal storage mass. Some of the commonly used heat transfer fluids are water, water/ethylene glycol, water/propylene glycol, silicone oils, paraffinic oils and aromatic oils. The term "flash point" applies only to flammable and combustible liquids, and is defined as the minimum temperature at which the liquid gives off enough vapor to form an ignitable mixture with air near the surface of the liquid or within the test vessel used. This section regulates the use of combustible heat transfer liquids and does not apply to flammable liquids because they are prohibited by Section 1403.2. The design parameters of the solar energy system determine the minimum allowable flash point temperature of the heat transfer fluid. See the definitions of "Combustible liquids" and "Flammable liquids" in Chapter 2. The heat transfer fluid's flash point must be at least 50°F (28°C) above the maximum design temperature that the fluid could reach in the collector during the nonoperating (no-flow) phase of the solar energy system operating cycle. This requirement establishes a safety margin by setting the flash point temperature at least 50°F (28°C) above the worst-case temperature that could be reached in the system, which is the no-flow temperature of the fluid in the solar collector at the peak radiation period.

1403.2 Flammable gases and liquids. A flammable liquid or gas shall not be utilized as a heat transfer fluid. The flash point of liquids used in occupancies classified in Group H or F shall not be lower unless *approved*.

❖ This section prohibits the use of any heat transfer fluid defined as a "flammable liquid" or a "flammable gas." Liquids that have a flash point at or above 100°F (38°C) are classified as combustible and can be used in solar energy systems within the limitations of Section 1403.1. The relatively high flash points of combustible liquids allow them to be used within the parameters of Section 1403.1. However, flammable liquids have lower flash points and could create a hazard at the temperatures associated with solar energy systems.

Because flammable liquids are not allowed, the lowest permissible flash point would be that of a combustible liquid. The flash point of heat transfer liquids used in factories or in high-hazard occupancies could be lower than the flash points of those liquids classified as combustible when specifically approved by the code official, based on the safety features incorporated into those spaces in recognition of the increased threat of fire. The code allows certain operations and systems to exist in factory, industrial and high-hazard occupancies. It is assumed that such occupancies are periodically inspected for conformance to the fire prevention code, activities are supervised by trained individuals and safety precautions are exercised or incorporated commensurate with the fire hazard. Certain materials and operations could also be necessary as part of a manufacturing process.

SECTION 1404
MATERIALS

1404.1 Collectors. Factory-built collectors shall be *listed* and *labeled*, and bear a label showing the manufacturer's name and address, model number, collector dry weight, collector maximum allowable operating and nonoperating temperatures and pressures, minimum allowable temperatures and the types of heat transfer fluids that are compatible with the collector. The label shall clarify that these specifications apply only to the collector.

❖ Solar collectors can be subjected to high temperatures and pressures, possibly leading to a hazardous condition. As a result, the quality, design and application limitations of the collector must be known to the designer, the installer, the owner and the code official. This section requires that solar collectors be labeled, indicating all maximum and minimum operating and nonoperating pressure and temperature parameters, as well as the manufacturer's name, address, model number and the collector weight, when empty. The label is not only a form of quality assurance but provides the specifications that apply only to the collector and necessary information for its use. Only fluids compatible with the collector are to

INTERNATIONAL CODE COUNCIL®
Copyright © 2015 ICC. ALL RIGHTS RESERVED. Accessed by David Dammon on Jun 21, 2017 12:30:52 PM pursuant to License Agreement with ICC. No further reproduction or distribution authorized. ANY UNAUTHORIZED REPRODUCTION OR DISTRIBUTION IS A VIOLATION OF THE FEDERAL COPYRIGHT ACT AND THE LICENSE AGREEMENT, AND SUBJECT TO CIVIL AND CRIMINAL PENALTIES THEREUNDER.

be used. The misapplication of a collector could result in collector failure, injury to occupants and damage to the property or the structure.

1404.2 Thermal storage units. Pressurized thermal storage units shall be *listed* and *labeled*, and bear a label showing the manufacturer's name and address, model number, serial number, storage unit maximum and minimum allowable operating temperatures, storage unit maximum and minimum allowable operating pressures and the types of heat transfer fluids compatible with the storage unit. The label shall clarify that these specifications apply only to the thermal storage unit.

❖ Pressurized thermal storage units are containers, tanks or vessels containing some form of thermal mass used to store heat energy collected by the solar system. Thermal storage has two purposes. First, it allows the collector system to continue collecting energy when the energy cannot be transferred directly to a load. Second, thermal storage provides useful energy during periods of low or nonexistent insulation (solar radiation). Without thermal storage, any energy that is not simultaneously collected and used would have to be rejected. Thermal storage is often compared to a flywheel because of its ability to store energy temporarily. As with any pressure vessel, the storage unit must be able to withstand safely the pressures and temperatures to which it is exposed. The storage unit must also be compatible with the type of heat transfer fluid used in the system (see commentary, Section 1404.1).

Bibliography

The following resource materials were used in the preparation of the commentary for this chapter of the code:

IBC-15, *International Building Code*. Washington, DC: International Code Council, 2014.

IPC-15, *International Plumbing Code*. Washington, DC: International Code Council, 2014.

INTERNATIONAL CODE COUNCIL®
Copyright © 2015 ICC. ALL RIGHTS RESERVED. Accessed by David Dammon on Jun 21, 2017 12:30:52 PM pursuant to License Agreement with ICC. No further reproduction or distribution authorized. ANY UNAUTHORIZED REPRODUCTION OR DISTRIBUTION IS A VIOLATION OF THE FEDERAL COPYRIGHT ACT AND THE LICENSE AGREEMENT, AND SUBJECT TO CIVIL AND CRIMINAL PENALTIES THEREUNDER.

INTERNATIONAL CODE COUNCIL®
Copyright © 2015 ICC. ALL RIGHTS RESERVED. Accessed by David Dammon on Jun 21, 2017 12:30:52 PM pursuant to License Agreement with ICC. No further reproduction or distribution authorized. ANY UNAUTHORIZED REPRODUCTION OR DISTRIBUTION IS A VIOLATION OF THE FEDERAL COPYRIGHT ACT AND THE LICENSE AGREEMENT, AND SUBJECT TO CIVIL AND CRIMINAL PENALTIES THEREUNDER.

Chapter 15: Referenced Standards

General Comments

Chapter 15 contains a comprehensive list of standards that are referenced in the code. It is organized to make locating specific document references easy.

It is important to understand that not every document related to mechanical system design, installation and construction is qualified to be a "referenced standard." The International Code Council® (ICC®) has adopted a criterion that standards referenced in the *International Codes*® (I-Codes®) and standards intended for adoption into the I-Codes must meet to qualify as a referenced standard. The policy is summarized as follows:

- Code references: The scope and application of the standard must be clearly identified in the code text.
- Standard content: The standard must be written in mandatory language and be appropriate for the subject covered. The standard cannot have the effect of requiring proprietary materials or prescribing a proprietary testing agency.
- Standard promulgation: The standard must be readily available and developed and maintained in a consensus process such as those used by ASTM or ANSI.

The ICC Code Development Procedures, of which the standards policy is a part, are updated periodically. A copy of the latest version can be obtained from the ICC offices or from the ICC web site, http://www.iccsafe.org.

Once a standard is incorporated into the code through the code development process, it becomes an enforceable part of the code. When the code is adopted by a jurisdiction, the standard is also part of that jurisdiction's adopted code. It is for this reason that the criteria were developed. Compliance with this policy means that documents incorporated into the code are developed through the use of a consensus process, are written in mandatory language and do not mandate the use of proprietary materials or agencies. The requirement that a standard be developed through a consensus process means that the standard is representative of the most current body of available knowledge on the subject as determined by a broad range of interested or affected parties without dominance by any single interest group. A true consensus process has many attributes, including but not limited to:

- An open process that has formal (published) procedures that allow for the consideration of all viewpoints;
- A definitive review period that allows for the standard to be updated and/or revised;
- A process of notification to all interested parties; and
- An appeals process.

Many available documents related to mechanical system design, installation and construction, though useful, are not "standards" and are not appropriate for reference in the code. Often, these documents are not developed or written with the intention of being used for regulatory purposes and are unsuitable for use as a standard because of extensive use of recommendations, advisory comments and nonmandatory terms. Typical examples include design guidelines and practices.

The objective of ICC's standards policy is to provide regulations that are clear, concise and enforceable; thus the requirement that standards be written in mandatory language. This requirement is not intended to mean that a standard cannot contain informational or explanatory material that will aid the user of the standard in its application. When the standard's promulgating agency wants such material to be included, however, the information must appear in a nonmandatory location, such as an annex or appendix, and be clearly identified as not being part of the standard.

Overall, standards referenced by the code must be authoritative, relevant, up to date and, most important, reasonable and enforceable. Standards that comply with ICC's standards policy fulfill these expectations.

Purpose

As a performance-based code, this code contains numerous references to documents that are used to regulate materials and methods of construction. The references to these documents within the code text consist of the promulgating agency's acronym and its publication designation (for example, AWS A5.8) and a further indication that the document being referenced is the one that is listed in Chapter 15. Chapter 15 contains all of the information that is necessary to identify the specific referenced document. Included is the following information on a document's promulgating agency (see Figure 15):

- The promulgating agency (the agency's title);
- The promulgating agency's acronym; and
- The promulgating agency's address.

For example, a reference to an ASME standard within the code indicates that the document is promulgated by the American Society of Mechanical Engineers (ASME), which is located in New York, New York. Chapter 15

INTERNATIONAL CODE COUNCIL®
Copyright © 2015 ICC. ALL RIGHTS RESERVED. Accessed by David Dammon on Jun 21, 2017 12:30:52 PM pursuant to License Agreement with ICC. No further reproduction or distribution authorized. ANY UNAUTHORIZED REPRODUCTION OR DISTRIBUTION IS A VIOLATION OF THE FEDERAL COPYRIGHT ACT AND THE LICENSE AGREEMENT, AND SUBJECT TO CIVIL AND CRIMINAL PENALTIES THEREUNDER.

lists the standards agencies alphabetically for ease of identification.

Chapter 15 also includes the following information on the referenced document itself (see Figure 15):

- The document's publication designation;
- The document's edition year;
- The document's title;
- Any addenda or revisions to the document known at the time of the code's publication; and
- Every section of the code in which the document is referenced.

For example, a reference to ASME B1.20.1 indicates that this document can be found in Chapter 15 under the heading ASME. The specific standard's designation is B1.20.1. For convenience, these designations are listed in alphanumeric order. Chapter 15 identifies that: ASME B1.20.1 is titled *Pipe Threads, General Purpose (Inch)*; the applicable edition (that is, its year of publication) is 1983; and it is referenced in two specifically identified sections of the code (see Figure 15 for an example).

Chapter 15 also indicates when a document has been discontinued or replaced by its promulgating agency. When a document is replaced by a different one, a note appears to tell the user the designation and title of the new document.

This chapter lists the standards that are referenced in various sections of this document. The standards are listed herein by the promulgating agency of the standard, the standard identification, the effective date and title and the section or sections of this document that reference the standard. The application of the referenced standards shall be as specified in Section 102.8.

The key aspect of the manner in which standards are referenced by the code is that a specific edition of a specific standard is clearly identified. The requirements for compliance can be readily determined. The basis for code compliance is, therefore, established and available to the code official, the mechanical contractor, the designer and the owner.

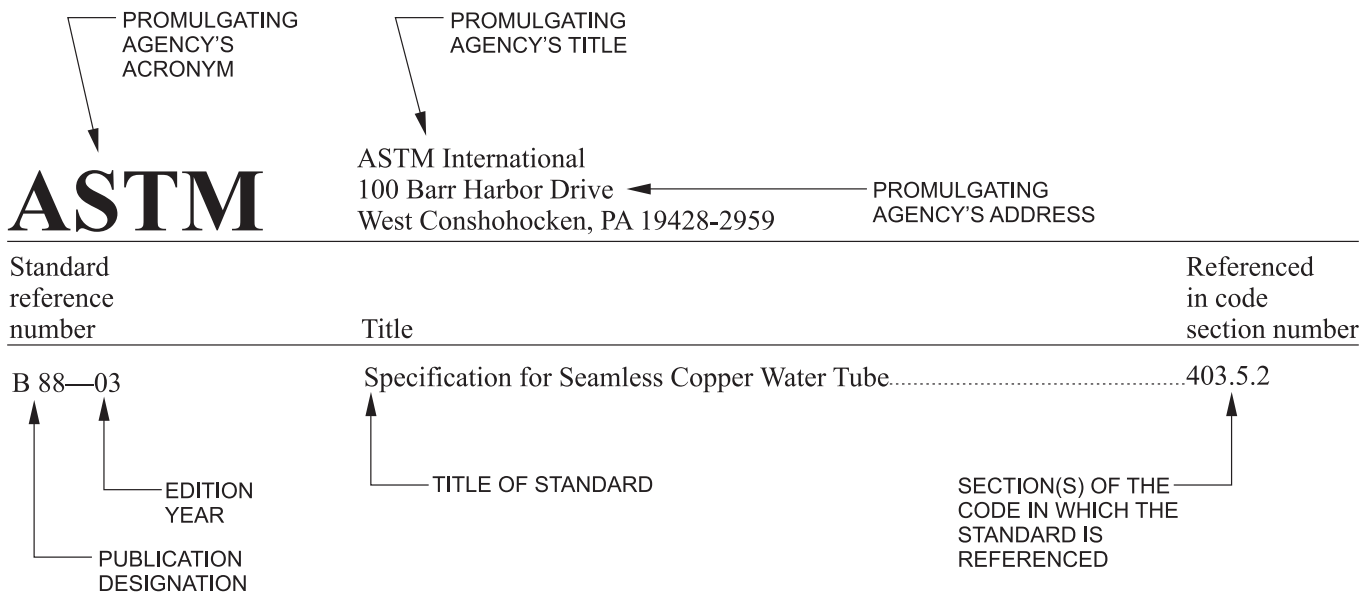

Figure 15
REFERENCED STANDARDS

INTERNATIONAL CODE COUNCIL®
Copyright © 2015 ICC. ALL RIGHTS RESERVED. Accessed by David Dammon on Jun 21, 2017 12:30:52 PM pursuant to License Agreement with ICC. No further reproduction or distribution authorized. ANY UNAUTHORIZED REPRODUCTION OR DISTRIBUTION IS A VIOLATION OF THE FEDERAL COPYRIGHT ACT AND THE LICENSE AGREEMENT, AND SUBJECT TO CIVIL AND CRIMINAL PENALTIES THEREUNDER.

This chapter lists the standards that are referenced in various sections of this document. The standards are listed herein by the promulgating agency of the standard, the standard identification, the effective date and title, and the section or sections of this document that reference the standard. The application of the referenced standards shall be as specified in Section 102.8.

ACCA

Air Conditioning Contractors of America
2800 Shirlington Road, Suite 300
Arlington, VA 22206

Standard reference number	Title	Referenced in code section number
Manual D—2011	Residential Duct Systems	601.4, 603.2
183—2007 (reaffirmed 2011)	Peak Cooling and Heating Load Calculations in Buildings Except Low-rise Residential Buildings	312.1

AHRI

Air-Conditioning, Heating and Refrigeration Institute
4100 North Fairfax Drive, Suite 200
Arlington, VA 22203

Standard reference number	Title	Referenced in code section number
700—2011 with Addendum 1	Purity Specifications for Fluorocarbon and Other Refrigerants	1102.2.2.3

AMCA

Air Movement and Control Association International
30 West University Drive
Arlington Heights, IL 60004

Standard reference number	Title	Referenced in code section number
550—08	Test Method for High Velocity Wind Driven Rain Resistant Louvers	401.5, 501.3.2

ANSI

American National Standards Institute
11 West 42nd Street
New York, NY 10036

Standard reference number	Title	Referenced in code section number
Z21.8—1994 (R2002)	Installation of Domestic Gas Conversion Burners	919.1

INTERNATIONAL CODE COUNCIL®
Copyright © 2015 ICC. ALL RIGHTS RESERVED. Accessed by David Dammon on Jun 21, 2017 12:30:52 PM pursuant to License Agreement with ICC. No further reproduction or distribution authorized. ANY UNAUTHORIZED REPRODUCTION OR DISTRIBUTION IS A VIOLATION OF THE FEDERAL COPYRIGHT ACT AND THE LICENSE AGREEMENT, AND SUBJECT TO CIVIL AND CRIMINAL PENALTIES THEREUNDER.

ASHRAE

ASHRAE
1791 Tullie Circle, NE
Atlanta, GA 30329

Standard reference number	Title	Referenced in code section number
ASHRAE—2013	ASHRAE Fundamentals Handbook	603.2
15—2013	Safety Standard for Refrigeration Systems	1101.6, 1105.8, 1108.1
34—2013	Designation and Safety Classification of Refrigerants	202, 1102.2.1, 1103.1
62.1—2013	Ventilation for Acceptable Indoor Air Quality	403.3.1.1.2.3.2
170—2008	Ventilation of Health Care Facilities	407
180—2012	Standard Practice for Inspection and Maintenance of Commercial Building HVAC Systems	102.3

ASME

American Society of Mechanical Engineers
Three Park Avenue
New York, NY 10016-5990

Standard reference number	Title	Referenced in code section number
B1.20.1—1983 (R2006)	Pipe Threads, General Purpose (Inch)	1203.3.5, 1303.3.3
B16.3—2011	Malleable Iron Threaded Fittings, Classes 150 & 300	Table 1202.5
B16.5—2009	Pipe Flanges and Flanged Fittings NPS $^{1}/_{2}$ through NPS 24	Table 1202.5
B16.9—2007	Factory Made Wrought Steel Buttwelding Fittings	Table 1202.5
B16.11—2011	Forged Fittings, Socket-welding and Threaded	Table 1202.5
B16.15—2011	Cast Bronze Threaded Fittings	Table 1202.5
B16.18—2012	Cast Copper Alloy Solder Joint Pressure Fittings	513.13.1, Table 1202.5
B16.22—(R2010)	Wrought Copper and Copper Alloy Solder Joint Pressure Fittings	513.13.1, Table 1202.5
B16.24—2011	Cast Copper Alloy Pipe Flanges and Flanged Fittings: Class 150, 300, 400, 600, 900, 1500 and 2500	Table 1202.5
B16.26—2011	Cast Copper Alloy Fittings for Flared Copper Tubes	Table 1202.5
B16.28—1994	Wrought Steel Buttwelding Short Radius Elbows and Returns	Table 1202.5
B16.51—2011	Copper and Copper Alloy Press-Connect Pressure Fittings	Table 1202.5, Table 1302.3
B31.5—2010	Refrigeration Piping and Heat Transfer Components	1107.1
B31.9—2011	Building Services Piping	1201.3
BPVC—2010/ 2011 addenda	ASME Boiler & Pressure Vessel Code–07 Edition	1009.2, 1003.1, 1004.1, 1011.1
CSD-1—2011	Controls and Safety Devices for Automatically Fired Boilers	1004.1

ASSE

American Society of Safety Engineers
1800 East Oakton Street
Des Plaines, IL 60018

Standard reference number	Title	Referenced in code section number
ANSI/ASSE Z359.1-2007	Safety Requirements for Personal Fall Arrest Systems, Subsystems and Components, Part of the Fall Protection Code	304.11

ASSE

American Society of Sanitary Engineering
901 Canterbury, Suite A
Westlake, OH 44145

Standard reference number	Title	Referenced in code section number
1017—2010	Performance Requirements for Temperature Actuated Mixing Values for Hot Water Distribution Systems	1002.2.2

INTERNATIONAL CODE COUNCIL®
Copyright © 2015 ICC. ALL RIGHTS RESERVED. Accessed by David Dammon on Jun 21, 2017 12:30:52 PM pursuant to License Agreement with ICC. No further reproduction or distribution authorized. ANY UNAUTHORIZED REPRODUCTION OR DISTRIBUTION IS A VIOLATION OF THE FEDERAL COPYRIGHT ACT AND THE LICENSE AGREEMENT, AND SUBJECT TO CIVIL AND CRIMINAL PENALTIES THEREUNDER.

ASTM

ASTM International
100 Barr Harbor Drive
West Conshohocken, PA 19428

Standard reference number	Title	Referenced in code section number
A53/A53M—12	Specification for Pipe, Steel, Black and Hot-dipped, Zinc-coated Welded and Seamless	Table 1202.4, Table 1202.5, Table 1302.3
A106/A106M—11	Specification for Seamless Carbon Steel Pipe for High-Temperature Service	Table 1302.3, Table 1202.5 Table 1202.4 Table 1302.3
A126—09	Specification for Gray Iron Castings for Valves, Flanges and Pipe Fittings	Table 1202.5
A234/A234M—11a	Standard Specification for Piping Fittings of Wrought Carbon Steel And Alloy Steel For Moderate and High Temperature Service	Table 1202.5
A254—97 (2007)	Specification for Copper Brazed Steel Tubing	Table 1202.4, Table 1302.3
A395/A395M-99(2009)	Standard Specification for Ferritic Ductile Iron Pressure-Retaining Castings for Use at Elevated Temperatures	Table 1202.5, Table 1302.3
A420/A420M—10A	Specification for Piping Fittings of Wrought Carbon Steel and Alloy Steel for Low-Temperature Service	Table 1202.5
A536-84(2009)	Standard Specification for Ductile Iron Castings	Table 1202.5
A539—99	Specification for Electric-resistance-welded Coiled Steel Tubing for Gas and Fuel Oil Lines	Table 1302.3
B32—08	Specification for Solder Metal	1203.3.3
B42—10	Specification for Seamless Copper Pipe, Standard Sizes	513.13.1, 1107.5.2, Table 1302.3 Table 1202.4, Table 1302.3
B43—09	Specification for Seamless Red Brass Pipe, Standard Sizes	513.13.1, 1107.5.2, Table 1302.3 Table 1202.4, Table 1302.3
B68—11	Specification for Seamless Copper Tube, Bright Annealed	513.13.1
B75—11	Specification for Seamless Copper Tube	Table 1302.3
B88—09	Specification for Seamless Copper Water Tube	513.13.1, 1107.5.3, Table 1202.4, Table 1302.3
B135—10	Specification for Seamless Brass Tube	Table 1202.4
B251—10	Specification for General Requirements for Wrought Seamless Copper and Copper-alloy Tube	513.13.1, Table 1202.4
B280—08	Specification for Seamless Copper Tube for Air Conditioning and Refrigeration Field Service	513.13.1, 1107.5.3, Table 1302.3
B302—12	Specification for Threadless Copper Pipe, Standard Sizes	Table 1202.4, Table 1302.3
B813—10	Specification for Liquid and Paste Fluxes for Soldering of Copper and Copper Alloy Tube	1203.3.3
C315—07(2011)	Specification for Clay Flue Liners and Chimney Pots	801.16.1, Table 803.10.4
C411—11	Test Method for Hot-surface Performance of High-temperature Thermal Insulation	604.3
D56—05(2010)	Test Method for Flash Point by Tag Closed Tester	202
D93—12	Test Method for Flash Point of Pensky-Martens Closed Cup Tester	202
D1527—99(2005)	Specification for Acrylonitrile-Butadiene-Styrene (ABS) Plastic Pipe, Schedules 40 and 80	Table 1202.4
D1693—13	Test Method for Environmental Stress-Cracking of Ethylene Plastics	Table 1202.4
D1785—12	Specification for Poly (Vinyl Chloride)(PVC) Plastic Pipe, Schedules 40, 80 and 120	Table 1202.4, Table 1210.4
D2235—04(2011)	Specifications for Solvent Cement for Acrylonitrile-Butadiene-Styrene (ABS) Plastic Pipe and Fittings	1203.3.4
D2241—09	Specification for Poly (Vinyl Chloride)(PVC) Pressure-rated Pipe (SDR-Series)	Table 1202.4, Table 1210.4
D2282—99(2005)	Specification for Acrylonitrile-Butadiene-Styrene (ABS) Plastic Pipe (SDR-PR)	Table 1202.4
D2412—11	Test Method for Determination of External Loading Characteristics of Plastic Pipe by Parallel-plate Loading	603.8.3
D2464—13	Standard Specification for Threaded Poly(Vinyl Chloride) (PVC) Plastic Pipe Fittings, Schedule 80	Table 1210.5
D2466—06	Specification for Poly (Vinyl Chloride)(PVC) Plastic Pipe Fittings, Schedule 40	Table 1202.5, Table 1210.5
D2467—06	Specification for Poly (Vinyl Chloride)(PVC) Plastic Pipe Fittings, Schedule 80	Table 1202.5, Table 1210.5
D2564—12	Specification for Solvent Cements for Poly (Vinyl Chloride) (PVC) Plastic Piping Systems	1203.3.4
D2657—07	Standard Practice for Heat Fusion Joining of Polyolefin Pipe and Fittings	Table 1210.5
D2683—2010E1	Specification for Socket-type Polyethylene Fittings for Outside Diameter-controlled Polyethylene Pipe and Tubing	Table 1210.5, 1210.6.6.1
D2737—12A	Standard Specification for Polyethylene (PE) Plastic Tubing	Table 1210.4
D2846/D2846M—09BE1	Specification for Chlorinated Poly (Vinyl Chloride) (CPVC) Plastic Hot and Cold Water Distribution Systems	Table 1210.4, Table 1202.4, 1203.3.4

INTERNATIONAL CODE COUNCIL®
Copyright © 2015 ICC. ALL RIGHTS RESERVED. Accessed by David Dammon on Jun 21, 2017 12:30:52 PM pursuant to License Agreement with ICC. No further reproduction or distribution authorized. ANY UNAUTHORIZED REPRODUCTION OR DISTRIBUTION IS A VIOLATION OF THE FEDERAL COPYRIGHT ACT AND THE LICENSE AGREEMENT, AND SUBJECT TO CIVIL AND CRIMINAL PENALTIES THEREUNDER.

ASTM—continued

D2996—01(2007)e01	Specification for Filament-wound Fiberglass (Glass Fiber Reinforced Thermosetting Resin) Pipe . . . . . Table 1302.3
D3035—2012E1	Specification for Polyethylene (PE) Plastic Pipe (DR-PR) Based on Controlled Outside Diameter . . . . . Table 1210.4
D3261—12	Specification for Butt Heat Fusion Polyethylene (PE) Plastic Fittings for Polyethylene (PE) Plastic Pipe and Tubing . . . . . Table 1210.5, 1210.6.6.1
D3278—1996(2011)	Test Methods for Flash Point of Liquids by Small Scale Closed-cup Apparatus. 202
D3309—96a(2002)	Specification for Polybutylene (PB) Plastic Hot and Cold Water Distribution Systems . . . . . Table 1202.4, 1203.10.1
E84—2013A	Test Method for Surface Burning Characteristics of Building Materials. 202, 510.9, 602.2, 602.2.1, 602.2.1.6, 602.2.1.6.1, 602.2.1.6.2, 602.2.1.6.3, 602.2.1.7, 604.3, 1204.1
E119—2012a	Test Method for Fire Tests of Building Construction and Materials 607.5.2, 607.5.5, 607.6.1, 607.2.1
E136—2012	Test Method for Behavior of Materials in a Vertical Tube Furnace at 750 Degrees C 202
E814—2013	Test Method for Fire Tests of Through-penetration Fire Stops 506.3.11.2, 506.3.11.3
E1509—12	Specification for Room Heaters, Pellet Fuel-burning Type 904.1
E2231—09	Standard Practice For Specimen Preparation and Mounting of Pipe and Duct Insulation Materials to Assess Surface Burning Characteristics 604.3, 1204.1
E2336—04(2013)	Standard Test Methods for Fire Resistive Grease Duct Enclosure Systems. 506.3.6, 506.3.11.2
F437—09	Specification for Threaded Chlorinated Poly (Vinyl Chloride) (CPVC) Plastic Pipe Fittings, Schedule 80. . . . . Table 1210.5
F438—09	Specification for Socket Type Chlorinated Poly (Vinyl Chloride) (CPVC) Plastic Pipe Fittings, Schedule 40. . . . . Table 1202.5, Table 1210.5
F439—12	Specification for Socket Type Chlorinated Poly (Vinyl Chloride) (CPVC) Plastic Pipe Fittings, Schedule 80. . . . . Table 1202.5, Table 1210.5
F441/F441M—13	Specification for Chlorinated Poly (Vinyl Chloride) (CPVC) Plastic Pipe, Schedules 40 and 80 . . . . . Table 1202.4, Table 1210.4
F442/F442M—13	Specification for Chlorinated Poly (Vinyl Chloride) (CPVC) Plastic Pipe (SDR-PR) . . . . . Table 1202.4, Table 1210.4
F493—10	Specification for Solvent Cements for Chlorinated Poly (Vinyl Chloride) (CPVC) Plastic Pipe and Fittings 1203.3.4
F714—13	Standard Specification for Polyethylene (PE) Plastic Pipe (SDR-PR) based on Outside Diameter . . . . . Table 1210.4
F876—13	Specification for Cross-linked Polyethylene (PEX) Tubing. . . . . Table 1202.4, Table 1210.4
F877—2011A	Specification for Cross-linked Polyethylene (PEX) Plastic Hot and Cold Water Distribution Systems . . . . . Table 1202.4, Table 1202.5, Table 1210.4
F1055—13	Specification for Electrofusion Type Polyethylene Fittings for Outside Diameter Controlled Polyethylene and Cross-linked Polyethylene Pipe and Tubing. . . . . Table 1210.5, 1210.6.6.2
F1281—11	Specification for Cross-linked Polyethylene/Aluminum/Crosslinked Polyethylene (PEX-AL-PEX) Pressure Pipe . . . . . Table 1202.4
F1282—10	Standard Specification for Polyethylene/Aluminum/ Polyethylene (PE-AL-PE) Composite Pressure Pipe . . . . . Table 1202.4. Table 1210.4, Table 1210.5
F1476—07	Specification for Performance of Gasketed Mechanical Couplings for Use in Piping Applications. . . . . Table 1202.5, 1203.3.7
F1548—01(2006)	Standard Specification for the Performance of Fittings for Use with Gasketed Mechanical Couplings Used in Piping Applications . . . . . Table 1202.5
F1807—13	Standard Specification for Metal Insert Fittings Utilizing a Copper Crimp Ring for SDR 9 Cross-linked Polyethylene (PEX) Tubing and SDR9 Polethylene of Raised Temperature (PE-RT) Tubing. . . . . ,Table 1202.5, Table 1210.5
F1924—12	Standard Specification for Plastic Mechanical Fittings for Use on Outside Diameter Controlled Polyethylene Gas Distribution Pipe and Tubing. 1210.6.6.3
F1960—12	Specification for Cold-Expansion Fittings with PEX Reinforcing Rings for Use with Cross-linked Polyethylene (PEX) Tubing. . . . . Table 1202.5
F1974—09	Standard Specification for Metal Insert Fittings for Polyethylene/Aluminum/Polyethylene and Cross-linked Polyethylene/Aluminum/Cross-linked Polyethylene Composite Pressure Pipe . . . . Table 1202.5
F2080—12	Specification for Cold-Expansion Fittings with Metal Compression-Sleeves for Cross-linked Polyethylene (PEX) Pipe. . . . . Table 1202.5
F2098—08	Standard Specification for Stainless Steel Clamps for SDR9 Cross-linked Polyethylene (PEX) Tubing to Metal and Plastic Insert Fittings. . . . . Table 1202.5
F2159—11	Standard Specification for Plastic Insert Fittings Utilizing a Copper Crimp Ring for SDR 9 Cross-linked Polyethylene (PEX) Tubing and SDR9 Polyethylene of Raised Temperature (PE-RT) Tubing. . . . . Table 1210.5, Table 1202.5
F2389—10	Specification for Pressure-rated Polypropylene Piping Systems . . . . . Table 1210.4, 1203.15.1, 1210.6.7.1, Table 1210.5, Table 1202.4, Table 1202.5

INTERNATIONAL CODE COUNCIL®
Copyright © 2015 ICC. ALL RIGHTS RESERVED. Accessed by David Dammon on Jun 21, 2017 12:30:52 PM pursuant to License Agreement with ICC. No further reproduction or distribution authorized. ANY UNAUTHORIZED REPRODUCTION OR DISTRIBUTION IS A VIOLATION OF THE FEDERAL COPYRIGHT ACT AND THE LICENSE AGREEMENT, AND SUBJECT TO CIVIL AND CRIMINAL PENALTIES THEREUNDER.

ASTM—continued

F2434—09	Standard Specification for Metal Insert Fittings Utilizing a Copper Crimp ring for SDR9 Cross-linked Polyethylene (PEX) Tubing and SDR9 Cross-linked Polyethylene/Aluminum/ Cross-linked Polyethylene (PEX-AL-PEX) Tubing	Table 1210.5
F2623—08	Standard Specification for Polyethylene of Raised Temperature (PE-RT) SDR 9 Tubing1	Table 1202.4, Table 1210.4
F2735—09	Standard Specification for Plastic Insert Fittings for SDR 9 Cross-linked Polyethylene (PEX) and Polyethylene of Raised Temperature (PE-RT) Tubing	Table 1202.5
F2769—10	Polyethylene of Raised Temperature (PE-RT) Plastic Hot- and Cold-water Tubing and Distribution Systems	Table 1210.5, Table 1202.4
F2806—10	Standard Specification for Acrylonitrile-Butadiene-Styrene (ABS) Plastic Pipe (Metric SDR-PR)	Table 1202.4

AWS

American Welding Society
8669 NW 36 Street, #130
Doral, FL 33166

Standard reference number	Title	Referenced in code section number
A5.8M/A5.8—2011	Specifications for Filler Metals for Brazing and Braze Welding	1203.3.1, 1303.3.1

AWWA

American Water Work Association
6666 West Quincy Avenue
Denver, CO 80235

Standard reference number	Title	Referenced in code section number
C901—08	Polyethylene (PE) Pressure Pipe and Tubing, $^1/_2$ in. (13mm) through 3 in. (76mm) for Water Service	Table 1210.4
C110/A21.10—12	Standard for Ductile Iron & Gray Iron Fittings	Table 1202.5
C115/A21.15—11	Standard for Flanged Ductile-Iron Pipe with Ductile Iron or Grey-Iron Threaded Flanges	Table 1202.4
C151/A21.51—09	Standard for Ductile-Iron Pipe, Centrifugally Cast for Water	Table 1202.4
C153/A21.53—11	Standard for Ductile-Iron Compact Fittings for Water Service	Table 1202.5

CSA

CSA Group
8501 East Pleasant Valley Road
Cleveland, OH 44131-5516

Standard reference number	Title	Referenced in code section number
B137.2—13	Polyvinylchloride (PVC) Injection-moulded Gasketed Fittings for Pressure Applications	Table 1210.5
B137.3—13	Rigid Poly (Vinyl Chloride) (PVC) Pipe for Pressure Applications	Table 1210.5
B137.6—13	Chlorinated Polyvinylchloride (CPVC) Pipe, Tubing and Fittings for Hot- and Cold-water Distribution Systems	Table 1210.5
B137.9—13	Polyethylene/Aluminum/Polyethylene (PE-AL-PE) Composite Pressure-Pipe Systems	Table 1210.4, Table 1210.5, Table 1202.4
B137.10—13	Cross-linked Polyethylene/Aluminum/Cross-linked Polyethylene (PEX-AL-PEX) Composite Pressure-Pipe Systems	Table 1202.4
CSA C448 Series—02 CAN/CSA 2002	Design and Installation of Earth Energy Systems—First Edition; Update 2: October 2009; Consolidated Reprint 10/2009	Table 1210.5
CSA B137.1—13	Polyethylene (PE) Pipe, Tubing and Fittings for Cold Water Pressure Services	Table 1210.4, Table 1210.5
CSA B137.5—13	Cross-linked Polyethylene (PEX) Tubing Systems for Pressure Applications	Table 1210.4, Table 1210.5
CSA B137.11—13	Polypropylene (PP-R) Pipe and Fittings for Pressure Applications	Table 1210.4, Table 1210.5
ANSI CSA America FC1—2012	Stationary Fuel Cell Power Systems	924.1

INTERNATIONAL CODE COUNCIL®
Copyright © 2015 ICC. ALL RIGHTS RESERVED. Accessed by David Dammon on Jun 21, 2017 12:30:52 PM pursuant to License Agreement with ICC. No further reproduction or distribution authorized. ANY UNAUTHORIZED REPRODUCTION OR DISTRIBUTION IS A VIOLATION OF THE FEDERAL COPYRIGHT ACT AND THE LICENSE AGREEMENT, AND SUBJECT TO CIVIL AND CRIMINAL PENALTIES THEREUNDER.

DOL

Department of Labor
Occupational Safety and Health Administration
c/o Superintendent of Documents
US Government Printing Office
Washington, DC 20402-9325

Standard reference number	Title	Referenced in code section number
29 CFR Part 1910.1000 (2009)	Air Contaminants	502.6
29 CFR Part 1910.1025 (2009)	Toxic and Hazardous Substances	502.19

FS

Federal Specifications*
General Services Administration
7th & D Streets
Specification Section, Room 6039
Washington, DC 20407

Standard reference number	Title	Referenced in code section number
WW-P-325B (1976)	Pipe, Bends, Traps, Caps and Plugs; Lead (for Industrial Pressure and Soil and Waste Applications)	Table 1202.4

*Standards are available from the Supt. of Documents, U.S. Government Printing Office, Washington, DC 20402-9325

ICC

International Code Council, Inc.
500 New Jersey Ave, NW
6th Floor
Washington, DC 20001

Standard reference number	Title	Referenced in code section number
IBC—15	International Building Code®	201.3, 202, 301.15, 301.16, 301.17, 301.18, 302.1, 302.2, 304.8, 304.11, 308.4.2.2, 308.4.2.4, 401.4, 401.5, 406.1, 501.3.1, 501.3.2, 501.10.2, 502.10, 502.10.1, 504.2, 504.10, 505.3, 506.3.3, 506.3.10, 506.3.12.2, 506.4.1, 509.1, 510.6, 510.6.3, 510.6.2, 510.7, 510.7.1.1, 510.7.2, 510.7.3, 510.8, 511.1.5, 513.1, 513.2, 513.3, 513.4.3, 513.5, 513.5.2, 513.5.2.1, 513.5.3, 513.5.3.2, 513.6.2, 513.10.5, 513.11.1, 513.12, 513.12.2, 513.20, 601.3, 602.2, 602.2.1.5.1, 602.2.1.5.2, 602.2.1.6.1, 602.2.1.6.2, 602.3, 602.4, 603.1, 603.10, 603.13, 603.18.2, 604.5.4, 607.1.1, 607.1.2, 607.3.2.1, 607.5.1, 607.5.2, 607.5.3, 607.5.4, 607.5.4.1, 607.5.5, 607.5.5.1, 607.5.6, 607.6, 607.6.1, 607.6.2, 607.6.2.1, 607.6.3, 701.2, 701.4.1, 701.4.2, 801.3, 801.16.1, 801.18.4, 801.18.4.1, 902.1, 908.3, 908.4, 910.3, 924.1, 925.1, 926.1, 927.2, 928.1, 1004.6, 1105.1, 1206.4, 1210.8.2, 1305.2.1, 1402.4, 1402.4.1
IECC—15	International Energy Conservation Code®	301.2, 303.3, 312.1, 401.2, 514.1, 604.1, 1204.1, 1204.2
IFC—15	International Fire Code®	201.3, 310.1, 311.1, 502.4, 502.5, 502.7.2, 502.8.1, 502.9.1, 502.9.5, 502.9.5.2, 502.9.5.3, 502.9.8.2, 502.9.8.3, 502.9.8.5, 502.9.8.6, 502.9.11, 502.10, 502.10.3, 502.16.2, 509.1, 510.2.1, 510.2.2, 510.5, 511.1.1, 513.1, 513.2, 513.6.3, 513.12.1, 513.12.3, 513.12.4, 513.15, 513.16, 513.17, 513.18, 513.19, 606.2.1, 606.4.1, 908.7, 924.1, 926.1, 1101.9, 1105.3, 1105.9, 1106.5, 1106.6, 1301.1, 1301.2, 1301.5
IFGC—15	International Fuel Gas Code®	101.2, 201.3, 301.6, 701.1, 801.1, 901.1, 906.1, 926.1, 1101.5
IPC—15	International Plumbing Code®	201.3, 301.11, 307.2.2, 512.2, 908.5, 928.1, 1002.1, 1002.2, 1002.3, 1005.2, 1006.6, 1008.2, 1009.3, 1101.4, 1201.1, 1206.2, 1206.3, 1210.8.1, 1401.2
IRC—15	International Residential Code®	101.2

INTERNATIONAL CODE COUNCIL®
Copyright © 2015 ICC. ALL RIGHTS RESERVED. Accessed by David Dammon on Jun 21, 2017 12:30:52 PM pursuant to License Agreement with ICC. No further reproduction or distribution authorized. ANY UNAUTHORIZED REPRODUCTION OR DISTRIBUTION IS A VIOLATION OF THE FEDERAL COPYRIGHT ACT AND THE LICENSE AGREEMENT, AND SUBJECT TO CIVIL AND CRIMINAL PENALTIES THEREUNDER.

IIAR

International Institute of Ammonia Refrigeration
1110 North Glebe Road
Arlington, VA 22201

Standard reference number	Title	Referenced in code section number
2—2014	Addendum A to Equipment, Design, and Installation of Ammonia Mechanical Refrigerating Systems	1101.6, 1105.6.3

MSS

Manufacturers Standardization Society of the Valve & Fittings Industry, Inc.
127 Park Street, N.E.
Vienna, VA 22180

Standard reference number	Title	Referenced in code section number
SP 58—2009	Pipe Hangers and Supports—Materials Design and Manufacture, Selection, Application and Installation	305.4

NAIMA

North American Insulation Manufacturers Association
44 Canal Center Plaza, Suite 310
Alexandria, VA 22314

Standard reference number	Title	Referenced in code section number
AH116—09	Fibrous Glass Duct Construction Standards	603.5, 603.9

NBBI

National Board of Boiler and Pressure Vessel Inspectors
1055 Crupper Avenue
Columbus, OH 43229-1183

Standard reference number	Title	Referenced in code section number
NBIC—2011	National Board Inspection Code, Part 3	1003.3

NFPA

National Fire Protection Association
1 Batterymarch Park
Quincy, MA 02169-7471

Standard reference number	Title	Referenced in code section number
30A—15	Code for Motor Fuel-dispensing Facilities and Repair Garages	304.6
31—11	Standard for the Installation of Oil-burning Equipment	701.1, 801.2.1, 801.18.1, 801.18.2, 920.2, 922.1, 1308.1
37—14	Standard for the Installation and Use of Stationary Combustion Engines and Gas Turbines	915.1, 915.2
58—14	Liquefied Petroleum Gas Code	502.9.10
69—14	Standard on Explosion Prevention Systems	510.9.3
70—14	National Electrical Code	301.7, 306.3.1, 306.4.1, 511.1.1, 513.11, 513.12.2, 602.2.1.1, 927.2, 1104.2.2, 1106.3, 1106.4
72—13	National Fire Alarm and Signaling Code	606.3
82—14	Standard on Incinerators and Waste and Linen Handling Systems and Equipment	601.1
85—15	Boiler and Combustion Systems Hazards Code	1004.1
91—15	Standard for Exhaust Systems for Air Conveying of Vapors, Gases, Mists, and Noncombustible Particulate Solids	502.9.5.1, 502.17
92—15	Standard for Smoke Control Systems	513.7, 513.8

INTERNATIONAL CODE COUNCIL®
Copyright © 2015 ICC. ALL RIGHTS RESERVED. Accessed by David Dammon on Jun 21, 2017 12:30:52 PM pursuant to License Agreement with ICC. No further reproduction or distribution authorized. ANY UNAUTHORIZED REPRODUCTION OR DISTRIBUTION IS A VIOLATION OF THE FEDERAL COPYRIGHT ACT AND THE LICENSE AGREEMENT, AND SUBJECT TO CIVIL AND CRIMINAL PENALTIES THEREUNDER.

NFPA—continued

96—14	Standard for Ventilation Control and Fire Protection of Commercial Cooking Operations	507.1
211—13	Standard for Chimneys, Fireplaces, Vents and Solid Fuel-burning Appliances	806.1
262—15	Standard Method of Test for Flame Travel and Smoke of Wires and Cables for Use in Air-handling Spaces	602.2.1.1
286—15	Standard Methods of Fire Tests for Evaluating Contribution of Wall and Ceiling Interior Finish to Room Fire Growth	602.2.1.6.2
704—12	Standard System for Identification of the Hazards of Materials for Emergency Response	502.8.4, Table 1103.1, 510.1
853—15	Standard on Installation of Stationary Fuel Power Plants	924.1

NSF

NSF International
789 Dixboro Road, P. O. Box 130140
Ann Arbor, MI 48113-0140

Standard reference number	Title	Referenced in code section number
NSF 358-1-2011	Polyethylene Pipe and Fittings for Water Based Ground Source "Geothermal" Heat Pump Systems	Table 1210.4, Table 1210.5
NSF 14	Plastic Piping System Components and Related Materials	301.4

SMACNA

Sheet Metal & Air-Conditioning Contractors National Assoc., Inc.
4201 Lafayette Center Drive
Chantilly, VA 20151-1209

Standard reference number	Title	Referenced in code section number
SMACNA/ANSI—2015	HVAC Duct Construction Standards-Metal and Flexible 4th Edition (ANSI)	603.4, Table 603.4, 603.9, 603.10
SMACNA—10	Fibrous Glass Duct Construction Standards	603.5, 603.9

UL

UL LLC
333 Pfingsten Road
Northbrook, IL 60062-2096

Standard reference number	Title	Referenced in code section number
17—2008	Vent or Chimney Connector Dampers for Oil-fired Appliances—with revisions Through January 2010	803.6
103—2010	Factory-built Chimneys, Residential Type and Building Heating Appliance—with revisions through July 2012	805.2
127—2011	Factory-built Fireplaces	903.1, 903.3, 903.4
174—04	Household Electric Storage Tank Water Heaters—with revisions through September 2012	1002.1
180—2012	Liquid-level Indicating Gauges for Oil Burner Fuels and Other Combustible Liquids	1306.4
181—05	Factory-made Air Ducts and Air Connectors—with revisions through October 2008	512.2, 603.5, 603.6.1, 603.6.2, 603.9, 604.13
181A—2013	Closure Systems for Use with Rigid Air Ducts and Air Connectors	603.9
181B—2013	Closure Systems for Use with Flexible Air Ducts and Air Connectors	603.9
197—10	Commercial Electric Cooking Appliances—with revisions through June 2011	917.1
207—2009	Refrigerant-containing Components and Accessories, Nonelectrical	1101.2
263—2011	Standard for Fire Test of Building Construction and Materials	607.5.2, 607.5.5, 607.6.1, 607.6.2.1
268—2009	Smoke Detectors for Fire Alarm Systems	606.1
268A—2008	Smoke Detectors for Duct Application—with revisions through September 2009	606.1
343—2008	Pumps for Oil-Burning Appliances—with revisions through June 2013	1302.7
378—06	Draft Equipment—with revisions through January 2010	804.3, 804.3.8
391—2010	Solid-fuel and Combination-fuel Central and Supplementary Furnaces—with revisions through March 2010	918.1
412—2011	Refrigeration Unit Coolers—with revisions through August 2012	1101.2

INTERNATIONAL CODE COUNCIL®
Copyright © 2015 ICC. ALL RIGHTS RESERVED. Accessed by David Dammon on Jun 21, 2017 12:30:52 PM pursuant to License Agreement with ICC. No further reproduction or distribution authorized. ANY UNAUTHORIZED REPRODUCTION OR DISTRIBUTION IS A VIOLATION OF THE FEDERAL COPYRIGHT ACT AND THE LICENSE AGREEMENT, AND SUBJECT TO CIVIL AND CRIMINAL PENALTIES THEREUNDER.

UL—continued

471—2010	Commercial Refrigerators and Freezers—with revisions through December 2012	1101.2
499—05	Electric Heating Appliances—with revisions through February 2013	912.1, 923.1
508—99	Industrial Control Equipment—with revisions through March 2013	307.2.3
536—97	Flexible Metallic Hose—with revisions through June 2003	1302.8
555—06	Fire Dampers—with revisions through May 2012	607.3.1
555C—06	Ceiling Dampers—with revisions through May 2010	607.3.1
555S—99	Smoke Dampers—with revisions through May 2012	607.3.1
586—2009	High-Efficiency, Particulate, Air Filter Units	605.2
641—2010	Type L Low-temperature Venting Systems—with revisions through May 2013	802.1
705—2004	Standard for Power Ventilators—with revisions through March 2012	504.5
710—2012	Exhaust Hoods for Commercial Cooking Equipment	507.1
710B—2011	Recirculating Systems	507.1, 507.2
723—2008	Standard for Test for Surface Burning Characteristics of Building Materials	510.9, 602.2, 602.2.1, 602.2.1.6, 602.2.1.6.2, 602.2.1.6.3, 602.2.1.7, 604.3, 1204.1
726—95	Oil-fired Boiler Assemblies—with revisions through April 2011	916.1, 1004.1
727—06	Oil-fired Central Furnace—with revisions through April 2010	918.1
729—03	Oil-fired Floor Furnaces—with revisions through August 2012	910.1
730—03	Oil-fired Wall Furnaces—with revisions through August 2012	909.1
731—95	Oil-fired Unit Heaters—with revisions through August 2012	920.1
732—95	Oil-fired Storage Tank Water Heaters—with revisions through April 2010	1002.1
737—2011	Fireplace Stoves	905.1
762—2010	Outline of Investigation for Power Ventilators for Restaurant Exhaust Appliances	506.5.1
791—06	Residential Incinerators—with revisions through April 2010	907.1
834—04	Heating, Water Supply and Power Boilers Electric—with revisions through January 2013	1004.1
842—07	Valves for Flammable Fluids—with revisions through October 2012	1307.1
858—05	Household Electric Ranges—with revisions through April 2012	917.1
867—2011	Electrostatic Air Cleaners—with revisions through February 2013	605.2
875—09	Electric Dry Bath Heater—with revisions through November 2011	914.2
896—93	Oil-burning Stoves—with revisions through August 2012	917.1, 922.1
900—04	Air Filter Units—with revisions through February 2012	605.2
907—94	Fireplace Accessories—with revisions through April 2010	902.2
923—2013	Microwave Cooking Appliances	917.1
959—2010	Medium Heat Appliance Factory-built Chimneys	805.5
1046—2010	Grease Filters for Exhaust Ducts—with revisions through January 2012	507.2.8
1240—2012	Electric Commercial Clothes—Drying Equipment—with revisions through October 2012	913.1
1261—01	Electric Water Heaters for Pools and Tubs—with revisions through July 2012	916.1
1453—04	Electric Booster and Commercial Storage Tank Water Heaters—with revisions through July 2011	1002.1
1479—03	Fire Tests of Through-penetration Firestops—with revisions through October 2012	506.3.11.2, 506.3.11.3
1482—2011	Solid-fuel Type Room Heaters	905.1
1618—09	Wall Protectors, Floor Protectors and Hearth Extensions—with revisions through May 2013	308.4.1, 903.2, 905.3
1777—2007	Chimney Liners—with revisions through July 2009	801.16.1, 801.18.4
1812—2013	Standard for Ducted Heat Recovery Ventilators	514.1
1815—2012	Standard for Nonducted Heat Recovery	514.1
1820—04	Fire Test of Pneumatic Tubing for Flame and Smoke Characteristics—with revisions through May 2013	602.2.1.3
1887—04	Fire Tests of Plastic Sprinkler Pipe for Visible Flame and Smoke Characteristics—with revisions through May 2013	602.2.1.2
1978—2010	Grease Ducts	506.3.2, 506.3.6
1995—2011	Heating and Cooling Equipment	908.1, 911.1, 918.1, 918.2, 1101.2
1996—2009	Electric Duct Heaters—with revisions through November 2011	911.1
2024—2011	Standard for Safety Optical-Fiber and Communications Cable Raceway—with revisions through April 2011	602.2.1.1
2043—2008	Fire Test for Heat and Visible Smoke Release for Discrete Products and their Accessories Installed in Air-handling Spaces	602.2.1.4.2
2158—97	Electric Clothes Dryers—with revisions through March 2009	913.1
2158A—2010	Outline of Investigation for Clothes Dryer Transition Duct	504.8.3
2162—01	Outline of Investigation for Commercial Wood-fired Baking Ovens-Refractory Type	917.1
2200—2012	Stationery Engine Generator Assemblies—with revisions through June 2013	915.1
2221—2010	Tests of Fire Resistive Grease Duct Enclosure Assemblies	506.3.11.3
2518—05	Air Dispersion System Materials	603.17
2523—09	Solid Fuel-fired Hydronic Heating Appliances—with revisions through February 2013	1002.1, 1004.1

INTERNATIONAL CODE COUNCIL®
Copyright © 2015 ICC. ALL RIGHTS RESERVED. Accessed by David Dammon on Jun 21, 2017 12:30:52 PM pursuant to License Agreement with ICC. No further reproduction or distribution authorized. ANY UNAUTHORIZED REPRODUCTION OR DISTRIBUTION IS A VIOLATION OF THE FEDERAL COPYRIGHT ACT AND THE LICENSE AGREEMENT, AND SUBJECT TO CIVIL AND CRIMINAL PENALTIES THEREUNDER.

INTERNATIONAL CODE COUNCIL®
Copyright © 2015 ICC. ALL RIGHTS RESERVED. Accessed by David Dammon on Jun 21, 2017 12:30:52 PM pursuant to License Agreement with ICC. No further reproduction or distribution authorized. ANY UNAUTHORIZED REPRODUCTION OR DISTRIBUTION IS A VIOLATION OF THE FEDERAL COPYRIGHT ACT AND THE LICENSE AGREEMENT, AND SUBJECT TO CIVIL AND CRIMINAL PENALTIES THEREUNDER.

Appendix A:
Chimney Connector Pass-Throughs

(This appendix is informative and is not part of the code.)

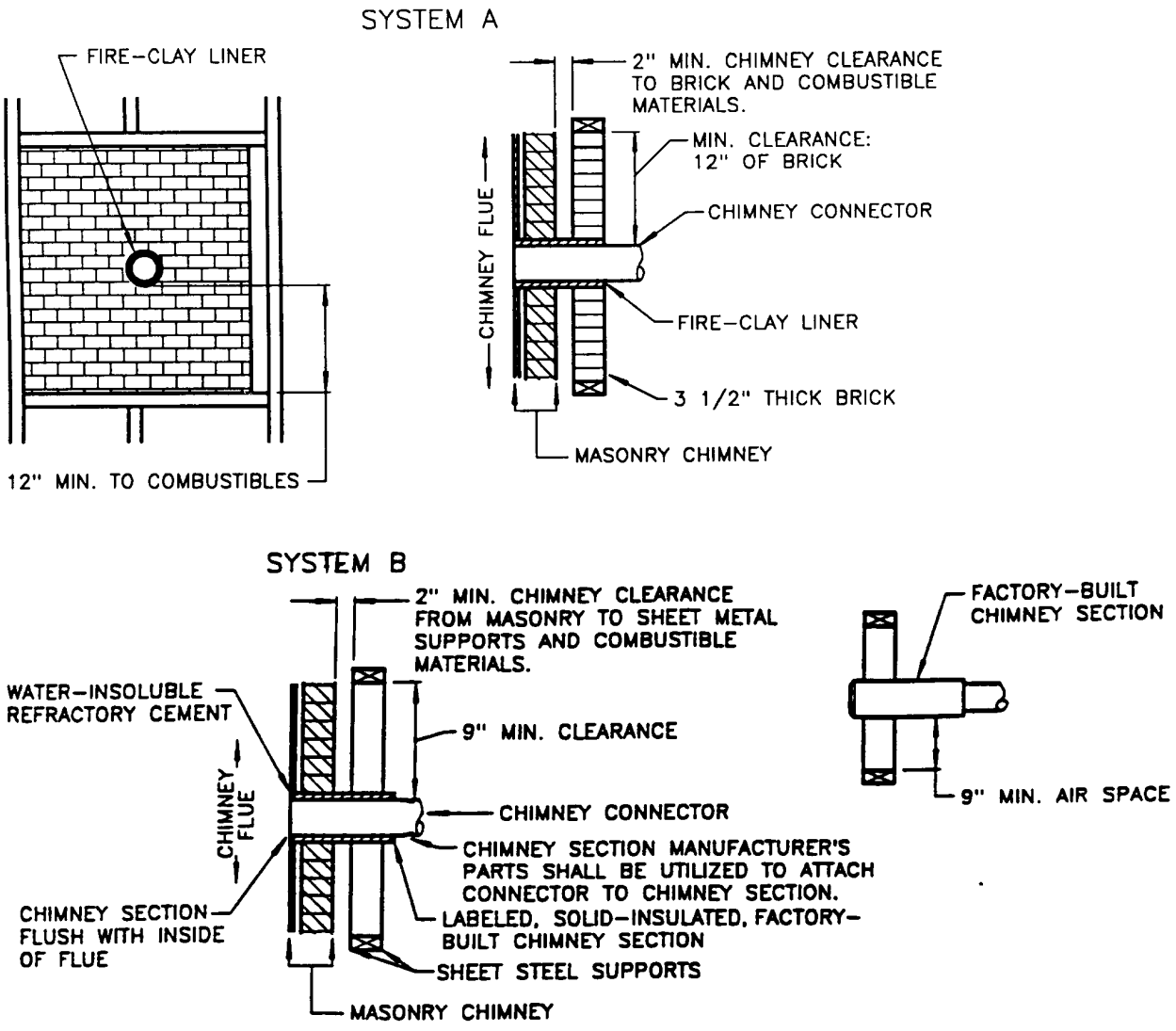

For SI: 1 inch = 25.4 mm.

FIGURE A-1
CHIMNEY CONNECTOR SYSTEMS

(continued)

INTERNATIONAL CODE COUNCIL®
Copyright © 2015 ICC. ALL RIGHTS RESERVED. Accessed by David Dammon on Jun 21, 2017 12:30:52 PM pursuant to License Agreement with ICC. No further reproduction or distribution authorized. ANY UNAUTHORIZED REPRODUCTION OR DISTRIBUTION IS A VIOLATION OF THE FEDERAL COPYRIGHT ACT AND THE LICENSE AGREEMENT, AND SUBJECT TO CIVIL AND CRIMINAL PENALTIES THEREUNDER.

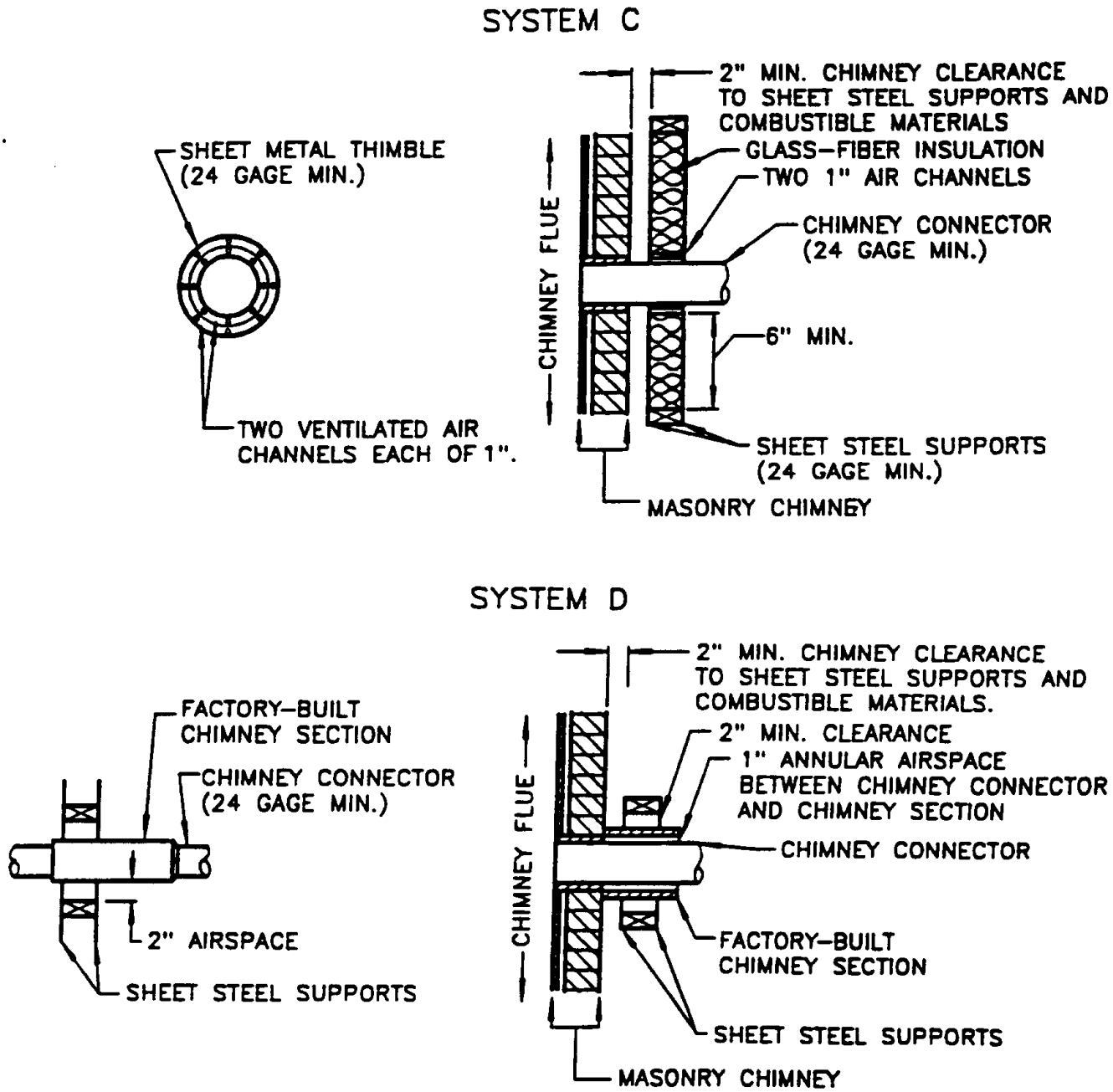

For SI: 1 inch = 25.4 mm.

FIGURE A-1—continued
CHIMNEY CONNECTOR SYSTEMS

INTERNATIONAL CODE COUNCIL®
Copyright © 2015 ICC. ALL RIGHTS RESERVED. Accessed by David Dammon on Jun 21, 2017 12:30:52 PM pursuant to License Agreement with ICC. No further reproduction or distribution authorized. ANY UNAUTHORIZED REPRODUCTION OR DISTRIBUTION IS A VIOLATION OF THE FEDERAL COPYRIGHT ACT AND THE LICENSE AGREEMENT, AND SUBJECT TO CIVIL AND CRIMINAL PENALTIES THEREUNDER.

Appendix B:
Recommended Permit Fee Schedule

(This appendix is informative and is not part of the code.)

B101
MECHANICAL WORK, OTHER THAN GAS PIPING SYSTEMS

B101.1 Initial Fee

For issuing each permit $___

B101.2 Additional Fees

B101.2.1 Fee for inspecting heating, ventilating, ductwork, air-conditioning, exhaust, venting, *combustion* air, pressure vessel, solar, fuel oil and refrigeration systems and *appliance* installations shall be $___ for the first $1,000.00, or fraction thereof, of valuation of the installation plus $___ for each additional $1,000.00 or fraction thereof.

B101.2.2 Fee for inspecting repairs, alterations and additions to an existing system shall be $___ plus $___ for each $1,000.00 or fraction thereof.

B101.2.3 Fee for inspecting boilers (based upon Btu input):

33,000 Btu (1 bhp) to 165,000 (5 bhp)	$ ___
165,001 Btu (5 bhp) to 330,000 (10 bhp)	$ ___
330,001 Btu (10 bhp) to 1,165,000 (52 bhp)	$ ___
1,165,001 Btu (52 bhp) to 3,300,000 (98 bhp)	$ ___
Over 3,300,000 Btu (98 bhp)	$ ___

For SI:1 British thermal unit = 0.2931 W, 1 bhp = 33,475 Btu/hr

B102
FEE FOR REINSPECTION

If it becomes necessary to make a reinspection of a heating, ventilation, air-conditioning or refrigeration system, or boiler installation, the installer of such *equipment* shall pay a reinspection fee of $___.

B103
TEMPORARY OPERATION INSPECTION FEE

When preliminary inspection is requested for purposes of permitting temporary operation of a heating, ventilating, refrigeration, or air-conditioning system, or portion thereof, a fee of $___ shall be paid by the contractor requesting such preliminary inspection. If the system is not *approved* for temporary operation on the first preliminary inspection, the usual reinspection fee shall be charged for each subsequent preliminary inspection for such purpose.

B104
SELF-CONTAINED UNITS LESS THAN 2 TONS

In all buildings, except one- and two-family dwellings, where self-contained air-conditioning units of less than 2 tons (7.034 kW) are to be installed, the fee charged shall be that for the total cost of all units combined (see B101.2.1 for rate).

INTERNATIONAL CODE COUNCIL®
Copyright © 2015 ICC. ALL RIGHTS RESERVED. Accessed by David Dammon on Jun 21, 2017 12:30:52 PM pursuant to License Agreement with ICC. No further reproduction or distribution authorized. ANY UNAUTHORIZED REPRODUCTION OR DISTRIBUTION IS A VIOLATION OF THE FEDERAL COPYRIGHT ACT AND THE LICENSE AGREEMENT, AND SUBJECT TO CIVIL AND CRIMINAL PENALTIES THEREUNDER.

INTERNATIONAL CODE COUNCIL®
Copyright © 2015 ICC. ALL RIGHTS RESERVED. Accessed by David Dammon on Jun 21, 2017 12:30:52 PM pursuant to License Agreement with ICC. No further reproduction or distribution authorized. ANY UNAUTHORIZED REPRODUCTION OR DISTRIBUTION IS A VIOLATION OF THE FEDERAL COPYRIGHT ACT AND THE LICENSE AGREEMENT, AND SUBJECT TO CIVIL AND CRIMINAL PENALTIES THEREUNDER.

INDEX

A

ADMINISTRATION AND ENFORCEMENT . . . . . Chapter 1
AIR
Combustion . . . . . Chapter 7
Dispersion systems 603.17
Distribution systems . . . . . Chapter 6
Filters 605
Recirculation 403.2.1
Supply . . . . . Chapter 4
Transfer 403.2.2
Ventilation . . . . . Chapter 4
ALTERNATIVE MATERIALS AND METHODS 105.2
AMMONIA 1105.8, 1106.3, 1106.4
APPEAL 109
APPLIANCES
Access 306
Cooking 917
Hazardous location 303.2
Installation . . . . . Chapters 3, 9
Outdoors 303.6
Prohibited locations 303.3
APPLICABILITY OF CODE 102
APPROVAL 105
ATTIC VENTILATION 406
AUTOMATIC FIRE SUPPRESSION, KITCHEN EXHAUST 509
AUTOMATIC VENT DAMPERS 803.6

B

BALANCING, VENTILATION SYSTEM 403.7
BARBECUE APPLIANCES 906
BATHROOM VENTILATION 402, 403
BLOWOFF VALVE, STEAM 1008
BOILERS
Approval 1004.1
Controls 1006
Gauges 1010
General 1001
Low-water cutoff 1007
Rooms 304.7, 1004.6
Tests 1011
BURNER, CONVERSION 919

C

CANOPY HOODS 507.12, 507.13
CEILING DAMPERS 607
CHILLED WATER PIPING . . . . . Chapter 12
CHIMNEYS AND VENTS
Connectors 803
Dampers 803.5, 803.6
Direct vents 804.1
Exhausters 804.3
Existing 801.18
Factory built 802, 805
General 801
Liners 801.16, 801.17, 801.18
Masonry, general 801
Offsets 805.3
Vents 802
CLEANOUTS
Clothes dryer exhaust 504.3
Kitchen exhaust 506.3.8, 506.3.9, 506.3.12
Masonry chimneys 801.13
CLEARANCES
Appliance in garages 304.3, 304.6, 304.7
Chimney and vent 801.18.4
Connectors 803.10.6
Kitchen exhaust 506.3.6, 507.9
Reduction 308
Specific appliances . . . . . Chapter 9
CLOTHES DRYER
Appliance 913
Exhaust 504
COAL-BURNING APPLIANCES . . . . . Chapter 9
CODE OFFICIAL 103, 104, 202
COLLECTORS, SOLAR 1402.4, 1404.1
COMBUSTIBLE LIQUID STORAGE TANK 1301
COMBUSTIBLES, REDUCED CLEARANCE 308
COMBUSTION AIR . . . . . Chapter 7
COMMERCIAL KITCHEN EXHAUST 506
Hoods 507
CONDENSATE DISPOSAL 307
CONDENSATION
Ducts 603.12
Piping 1107.4
CONFLICTS 102.8.1, 102.8.2
CONNECTORS, CHIMNEY OR VENT 803
CONTAMINANTS, VENTILATION AIR 401.4, 401.6

INTERNATIONAL CODE COUNCIL®
Copyright © 2015 ICC. ALL RIGHTS RESERVED. Accessed by David Dammon on Jun 21, 2017 12:30:52 PM pursuant to License Agreement with ICC. No further reproduction or distribution authorized. ANY UNAUTHORIZED REPRODUCTION OR DISTRIBUTION IS A VIOLATION OF THE FEDERAL COPYRIGHT ACT AND THE LICENSE AGREEMENT, AND SUBJECT TO CIVIL AND CRIMINAL PENALTIES THEREUNDER.

CONVERSION BURNERS 919
CONVEYOR SYSTEMS 511
COOKING APPLIANCES 917
COOLING TOWERS 908
COOLING WATER PIPING . . . . . Chapter 12
COVERING, DUCT 604.3
CRAWL SPACE PLENUMS 602
CRAWL SPACE, VENTILATION 406
CREMATORIES 907
CUTTING, NOTCHING, BORING 302

D

DAMPERS
Chimney or vent 803.5, 803.6
Fire 607
Smoke 607
DEFINITIONS . . . . . Chapter 2
DETECTORS, DUCT SMOKE 606
DOCUMENTS 106.3.1
DRYER, CLOTHES
Exhaust 504
General 913
DUCT
Clothes dryer exhaust 504
Construction 603
Covering 604.3
Detectors, smoke 606
Diffusers 603.18
Enclosure 506.3.11, 510.4
Exhaust 501.5
Fire damper 607
Flexible 603.6
Furnace 918.2
Hangers and supports 603.10
Hazardous exhaust 510
Installation 603
Insulation 604
Joints, seams and connections 603.9
Kitchen exhaust 506
Lining 604.3
Penetrations 607
Plastic 603.8.3
Private garage 603.7
Sizing 603.2
Smoke damper 607
Systems . . . . . Chapter 6
Underground 603.8
Underground grease 506.3.10
DUST, STOCK AND REFUSE CONVEYOR SYSTEMS 511

E

ELECTRIC INSTALLATION 301.10
ENERGY EFFICIENCY 301.2
ENERGY RECOVERY SYSTEMS 514
ENGINE/TURBINE EQUIPMENT 915
EQUIPMENT ACCESS 306
EQUIPMENT IDENTIFICATION 304.12, 504.6.5
EVAPORATIVE COOLING 928
EXHAUST, DOMESTIC 505
EXHAUST, DOWNDRAFT 507.2
EXHAUST, REQUIRED SYSTEMS 502
Clothes dryer 504
Discharge 501.3
Ducts 501.4
Independence 501.2
Outlets 501.3, 501.3.1
Kitchen 506, 507
Machinery room 1105, 1106
Mechanical . . . . . 403, Chapter 5
Ventilator openings 401.4, 401.5
System, hazardous 510
EXHAUSTER, MECHANICAL FLUE 804
EXISTING SYSTEMS 102.2
EXPLOSION VENTING 310

F

FACTORY BUILT
Barbecue appliance 906
Chimneys 805
Commercial exhaust hoods 507.1
Ducts (kitchen exhaust) 506.3.1.1, 506.3.2, 506.3.2.5, 506.3.6, 506.3.11.3
Fireplaces 903
FANS, EXHAUST 503, 506.5.1
FILTERS, AIR 605
FILTERS, GREASE 507.11
FIRE DAMPERS 607
FIRE SUPPRESSION
Hazardous exhaust 510.7
Kitchen exhaust 509
FIREPLACES
Accessories 901.4
Factory built 903
Masonry 902.1
FIREPLACE STOVE 905
FLEXIBLE CONNECTORS (DUCT) 603.6, 607.7
FLEXIBLE CONNECTORS, HYDRONIC 1202.7
FLEXIBLE DUCTS 603.6, 607.7
FLOOD HAZARD 301.16, 401.4, 501.3.2, 602.4, 603.13

INTERNATIONAL CODE COUNCIL®
Copyright © 2015 ICC. ALL RIGHTS RESERVED. Accessed by David Dammon on Jun 21, 2017 12:30:52 PM pursuant to License Agreement with ICC. No further reproduction or distribution authorized. ANY UNAUTHORIZED REPRODUCTION OR DISTRIBUTION IS A VIOLATION OF THE FEDERAL COPYRIGHT ACT AND THE LICENSE AGREEMENT, AND SUBJECT TO CIVIL AND CRIMINAL PENALTIES THEREUNDER.

FLOOR FURNACE 910
FLUE LINERS 801.16, 801.18.2
FUEL CELLS 924
FUEL, CONVERSION 301.12
FUEL OIL
Piping . . . . . Chapter 13
Piping installation 1305
Piping material 1302
FURNACE, FORCED-AIR 918
FURNACE ROOM 304.8

G

GAUGES, BOILERS 1010
GREASE 506, 507
GREASE FILTERS 507.11
GREASE RESERVOIRS 506.3.7.1
GRILLES 603.18
GUARDS 304.11, 306.5.1

H

HANGERS, DUCT 603.10
HANGERS, PIPE 305
HAZARDOUS EXHAUST SYSTEM 510
HAZARDOUS LOCATION, EQUIPMENT 304.3, 901.3
HAZARDOUS LOCATION, INSTALLATION . . . 304.3
HEARTH EXTENSIONS 905.3
HEATER . . . . . Chapter 9
HEAT RECOVERY VENTILATORS 927
HEAT PUMP 918.3
HOOD DESIGN (KITCHEN) 507
HOOD, EXHAUST 505, 506, 507, 510.5.3
HOOD LABEL 507.2.1.2
HOT WATER BOILERS . . . . . Chapter 10
HOT WATER PIPING . . . . . Chapter 12
HYDROGEN GENERATION AND REFUELING 304.5, 926
HYDRONIC PIPING . . . . . Chapter 12

I

IGNITION SOURCE 202, 304.3
INCINERATORS 907
INFRARED HEATERS 912
INSPECTION 107
INSULATION
Duct 604
Pipe 1204
INTAKE OPENINGS 401.4

J

JOINTS
Connectors 803.10.1
Duct 506.3.2, 510.8.1, 603.9
Piping 1003.2, 1107.6, 1107.7, 1203, 1303

K

KEROSENE STOVE 922
KILNS 923
KITCHEN EXHAUST EQUIPMENT . . . . . Chapter 5

L

LABELING
Criteria for 301.4, 301.5, 301.6
LINER, FLUE 801.16
LINING, DUCT 604.3
LISTING 301.7
LOAD CALCULATIONS, HEATING AND COOLING 312
LOCATION, EQUIPMENT AND APPLIANCE 303
LOW-WATER CUTOFF, BOILER 1007

M

MACHINERY ROOMS 1104.2, 1105, 1106
MAINTENANCE 102.3
MAKEUP AIR, EXHAUST 508, 510.5.5
MAKEUP WATER 908.5, 1005.2, 1206.3, 1207.2, 1401.2
MASONRY CHIMNEYS . . . . . Chapter 8
MASONRY FIREPLACE 902
MECHANICAL EXHAUST/DRAFT 804
MECHANICAL OFFICIAL (see CODE OFFICIAL)
MECHANICAL REFRIGERATION . . . . . Chapter 11
MECHANICAL VENTILATION 304.5.2, 403
MOTORS, FAN 503, 506.5.1.1
MOVED STRUCTURE 102.7

N

NATURAL VENTILATION 304.4.1, 402
NONCANOPY HOODS 507.14

O

OIL, FUEL PIPING . . . . . Chapter 13
OPENINGS
Outside 401.4, 401.5, 501.3.2
Transfer 607
OUTDOOR APPLIANCE INSTALLATION 303.6

INTERNATIONAL CODE COUNCIL®
Copyright © 2015 ICC. ALL RIGHTS RESERVED. Accessed by David Dammon on Jun 21, 2017 12:30:52 PM pursuant to License Agreement with ICC. No further reproduction or distribution authorized. ANY UNAUTHORIZED REPRODUCTION OR DISTRIBUTION IS A VIOLATION OF THE FEDERAL COPYRIGHT ACT AND THE LICENSE AGREEMENT, AND SUBJECT TO CIVIL AND CRIMINAL PENALTIES THEREUNDER.

OUTSIDE AIR, MINIMUM 403

P

PELLET FUEL-BURNING APPLIANCES 904
PENETRATIONS 302.2, 607
PERMITS 106
PIPE
Insulation 1107.3, 1204
Support 305
PIPING
Fuel oil . . . . . Chapter 13
Material, fuel oil 1302
Material, hydronic 1202
Refrigerant 1107
Support 305
PLENUMS 601.4, 602
PLUMBING CONNECTIONS 301.8
POOL/SPA HEATER 916
POWER EXHAUSTER 804
PRESSURE GAUGE 1010
PRESSURE VESSEL 1003

R

RADIANT HEATER 912
RADIANT HEATING SYSTEMS 927
RANGE HOODS . . . . . Chapter 5
REDUCED, CLEARANCE 308
REFRIGERANT . . . . . Chapter 11
Locking access caps 1101.10
Piping 1107
Quantity 1104
REFRIGERANT PIPING 1107
REGISTERS 603.18
RELIEF VALVES, FUEL OIL 1307
RELIEF VALVES, PRESSURE VESSELS 1006
RELIEF VALVES, SOLAR 1402.5.1
REPAIRS 102.4
ROOM HEATERS, SOLID FUEL 904, 905, 921

S

SAFETY VALVE 1006
SAUNA HEATER 914
SCOPE OF CODE 101.2
SEISMIC 301.15
SIGHT GLASS 1010
SMOKE AND HEAT VENTS 311
SMOKE CONTROL 513
SMOKE DAMPERS 607
SMOKE DETECTORS 606
SOLAR . . . . . Chapter 14
SOLID FUEL-BURNING APPLIANCES . . . . Chapter 9
STANDARDS, REFERENCED . . . . . 102.8, Chapter 15
STEAM
Blowoff 1008
Boilers . . . . . Chapter 10
Gauge 1010
Piping . . . . . Chapters 10, 12
SUBSLAB SOIL EXHAUST SYSTEM 512
SUPPORTS, DUCT 603.10
SUPPORTS, PIPING 305
SUPPRESSION
Hazardous exhaust 510.7
Kitchen exhaust 509

T

TANKS, EXPANSION 1009, 1402.5.4
TANKS, FLAMMABLE AND COMBUSTIBLE LIQUIDS . . . . . Chapter 13
TEMPERATURE CONTROL 309.1
TEMPERATURE GAUGE 1010
TEMPERATURE RELIEF, SOLAR 1402.4
TESTS
Boiler/pressure vessel 1011
Fuel oil piping 1308
Hydronic piping 1208, 1209.2
Kitchen exhaust 507.16
Refrigeration 1108, 1109
THERMAL STORAGE, SOLAR 1404.2
THIRD-PARTY CERTIFICATION 301.4, 301.5
TOILET ROOM VENTILATION . . . 402.1, Table 403.3
TRANSFER FLUID
Hydronic piping 1207
Solar 1403

U

UNDERGROUND STORAGE TANKS . . . . Chapter 13
UNIT HEATER 920
UNSAFE CONDITIONS 108.7
UNVENTED GAS LOG HEATERS 903.3

V

VALVES
Boilers 1005, 1008
Fuel oil 1307
Hydronic 1205
Safety and relief 1006
Stop 1107.7
VAPOR RETARDER 604.11

INTERNATIONAL CODE COUNCIL®
Copyright © 2015 ICC. ALL RIGHTS RESERVED. Accessed by David Dammon on Jun 21, 2017 12:30:52 PM pursuant to License Agreement with ICC. No further reproduction or distribution authorized. ANY UNAUTHORIZED REPRODUCTION OR DISTRIBUTION IS A VIOLATION OF THE FEDERAL COPYRIGHT ACT AND THE LICENSE AGREEMENT, AND SUBJECT TO CIVIL AND CRIMINAL PENALTIES THEREUNDER.

VENTILATION
Air . . . . . Chapter 4
Enclosed parking garages 404
Energy recovery systems 514
Machinery room 1105, 1106
Mechanical 304.5.2, 403
Natural 304.4.1, 402
Openings 401.4, 401.5
Rate 403.3
Recirculation 403.2.1
Transfer 403.2.2
Uninhabited spaces 406
VENTILATORS, HEAT RECOVERY 514
VENTS
Connectors 803
Direct 804
Explosion 310
General . . . . . 802, Chapter 8
Height 802.6
Smoke and Heat 311
Termination 802
VIBRATION CONTROL DEVICES 301.13
VIOLATIONS 108

W

WALL FURNACE 909
WATER HEATERS 1002
WATER PIPING . . . . . Chapter 12
WIND RESISTANCE 301.15
WOOD-BURNING APPLIANCES . . . . . Chapter 9

INTERNATIONAL CODE COUNCIL®
Copyright © 2015 ICC. ALL RIGHTS RESERVED. Accessed by David Dammon on Jun 21, 2017 12:30:52 PM pursuant to License Agreement with ICC. No further reproduction or distribution authorized. ANY UNAUTHORIZED REPRODUCTION OR DISTRIBUTION IS A VIOLATION OF THE FEDERAL COPYRIGHT ACT AND THE LICENSE AGREEMENT, AND SUBJECT TO CIVIL AND CRIMINAL PENALTIES THEREUNDER.

INTERNATIONAL CODE COUNCIL®
Copyright © 2015 ICC. ALL RIGHTS RESERVED. Accessed by David Dammon on Jun 21, 2017 12:30:52 PM pursuant to License Agreement with ICC. No further reproduction or distribution authorized. ANY UNAUTHORIZED REPRODUCTION OR DISTRIBUTION IS A VIOLATION OF THE FEDERAL COPYRIGHT ACT AND THE LICENSE AGREEMENT, AND SUBJECT TO CIVIL AND CRIMINAL PENALTIES THEREUNDER.

ICC INTERNATIONAL CODE COUNCIL®

People Helping People Build a Safer World®

Valuable Guides to Changes in the 2015 I-Codes®

NEW!

FULL COLOR! HUNDREDS OF PHOTOS AND ILLUSTRATIONS!

SIGNIFICANT CHANGES TO THE 2015 INTERNATIONAL CODES®

Practical resources that offer a comprehensive analysis of the critical changes made between the 2012 and 2015 editions of the codes. Authored by ICC code experts, these useful tools are "must-have" guides to the many important changes in the 2015 International Codes.



SIGNIFICANT CHANGES TO THE IBC, 2015 EDITION
#7024S15

SIGNIFICANT CHANGES TO THE IRC, 2015 EDITION
#7101S15

SIGNIFICANT CHANGES TO THE IFC, 2015 EDITION
#7404S15

SIGNIFICANT CHANGES TO THE IPC/IMC/IFGC, 2015 EDITION
#7202S15

Changes are identified then followed by in-depth discussion of how the change affects real world application. Photos, tables and illustrations further clarify application.

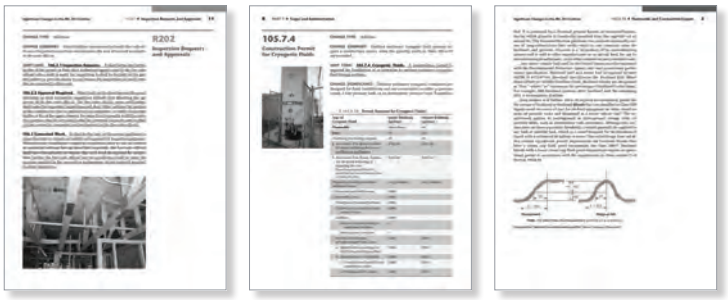

ORDER YOUR HELPFUL GUIDES TODAY!
1-800-786-4452 | www.iccsafe.org/books

HIRE ICC TO TEACH

Want your group to learn the Significant Changes to the I-Codes from an ICC expert instructor? Schedule a seminar today!
email: **ICCTraining@iccsafe.org** | phone: **1-888-422-7233 ext. 33818**

14-09379

INTERNATIONAL CODE COUNCIL®

Copyright © 2015 ICC. ALL RIGHTS RESERVED. Accessed by David Dammon on Jun 21, 2017 12:30:52 PM pursuant to License Agreement with ICC. No further reproduction or distribution authorized. ANY UNAUTHORIZED REPRODUCTION OR DISTRIBUTION IS A VIOLATION OF THE FEDERAL COPYRIGHT ACT AND THE LICENSE AGREEMENT, AND SUBJECT TO CIVIL AND CRIMINAL PENALTIES THEREUNDER.

ICC EVALUATION SERVICE







APPROVE WITH CONFIDENCE

- ICC-ES® Evaluation Reports are the most widely accepted and trusted in the nation.
- ICC-ES is dedicated to providing evaluation reports, PMG and Building Product Listings to the highest quality and technical excellence.
- ICC-ES is a subsidiary of ICC®, the publisher of the IBC®, IRC®, IPC® and other I-Codes®.

We do thorough evaluations. You approve with confidence.

ICC ES · ICC ES PMG · ICC ES LISTED

Look for the ICC-ES marks of conformity before approving for installation

Code Officials — Contact Us With Your Questions About ICC-ES Reports at:
800-423-6587 ext. ES help (374357) or email EShelp@icc-es.org
www.icc-es.org

14-09329

Subsidiary of ICC INTERNATIONAL CODE COUNCIL®

INTERNATIONAL CODE COUNCIL®

Copyright © 2015 ICC. ALL RIGHTS RESERVED. Accessed by David Dammon on Jun 21, 2017 12:30:52 PM pursuant to License Agreement with ICC. No further reproduction or distribution authorized. ANY UNAUTHORIZED REPRODUCTION OR DISTRIBUTION IS A VIOLATION OF THE FEDERAL COPYRIGHT ACT AND THE LICENSE AGREEMENT, AND SUBJECT TO CIVIL AND CRIMINAL PENALTIES THEREUNDER.

INTERNATIONAL CODE COUNCIL®

People Helping People Build a Safer World®

The International Code Council's Training and Education Department

Industry professionals look to ICC to provide the critical knowledge and experiences necessary to excel in today's challenging world. ICC's educational programs cover a broad spectrum of code and construction related topics, offering some of the highest quality instruction direct from the source.

INSTITUTES

Acquire Skills, Share Experiences, Earn CEUs

ICC's training institutes offer a comprehensive education experience and a great way to earn much needed CEUs. Learn best practices from the leading experts in the field, build your network of professional contacts and share experiences. Institutes are held across the country throughout the year. To see the full schedule go to www.iccsafe.org/training.

HIRE ICC TO TEACH

Bring ICC On-Site and Earn CEUs

Give your group the confidence they need to meet tough challenges head-on so they can reach their full potential. ICC's course catalog contains a wide variety of educational topics that are available for contract at a location of your choice. Customized training is also available to fit your needs. For our full course catalogue go to www.iccsafe.org/hireicc.

ICC ONLINE CAMPUS

Earn CEUs at Your Own Pace

Online courses offer access to a comprehensive training and education portal, providing you with an effective and convenient tool to enhance your professional skills. Courses are available anytime for 99 days following registration. For a quick and easy way to earn CEUs towards your certification, try our Online Certifications Renewal section. Go to www.iccsafe.org/onlinecampus for our full offerings.

For more information about ICC's Training please contact us at **888-ICC-SAFE (422-7233) ext. 33818** or email us at **icctraining@iccsafe.org.**

14-09372

INTERNATIONAL CODE COUNCIL®

Copyright © 2015 ICC. ALL RIGHTS RESERVED. Accessed by David Dammon on Jun 21, 2017 12:30:52 PM pursuant to License Agreement with ICC. No further reproduction or distribution authorized. ANY UNAUTHORIZED REPRODUCTION OR DISTRIBUTION IS A VIOLATION OF THE FEDERAL COPYRIGHT ACT AND THE LICENSE AGREEMENT, AND SUBJECT TO CIVIL AND CRIMINAL PENALTIES THEREUNDER.

INTERNATIONAL CODE COUNCIL®

People Helping People Build a Safer World®

GET IMMEDIATE DOWNLOADS OF THE STANDARDS YOU NEED

Browse hundreds of industry standards adopted by reference. Available to you 24/7!

Count on ICC for standards from a variety of publishers, including:

ACI	CPSC	GYPSUM
AISC	CSA	HUD
ANSI	DOC	ICC
APA	DOJ	ISO
APSP	DOL	NSF
ASHRAE	DOTn	SMACNA
ASTM	FEMA	USC
AWC	GBI	



DOWNLOAD YOUR STANDARDS TODAY!
WWW.ICCSAFE.ORG/BOOKS

14-09376

INTERNATIONAL CODE COUNCIL®

Copyright © 2015 ICC. ALL RIGHTS RESERVED. Accessed by David Dammon on Jun 21, 2017 12:30:52 PM pursuant to License Agreement with ICC. No further reproduction or distribution authorized. ANY UNAUTHORIZED REPRODUCTION OR DISTRIBUTION IS A VIOLATION OF THE FEDERAL COPYRIGHT ACT AND THE LICENSE AGREEMENT, AND SUBJECT TO CIVIL AND CRIMINAL PENALTIES THEREUNDER.

IECC®

2015 CODE AND COMMENTARY

The complete IECC with commentary after each section



INTERNATIONAL CODE COUNCIL®

Copyright © 2015 ICC. ALL RIGHTS RESERVED. Accessed by David Dammon on Jun 21, 2017 12:30:52 PM pursuant to License Agreement with ICC. No further reproduction or distribution authorized. ANY UNAUTHORIZED REPRODUCTION OR DISTRIBUTION IS A VIOLATION OF THE FEDERAL COPYRIGHT ACT AND THE LICENSE AGREEMENT, AND SUBJECT TO CIVIL AND CRIMINAL PENALTIES THEREUNDER.

2015 IECC®

CODE AND COMMENTARY

The complete IECC with commentary after each section

INTERNATIONAL CODE COUNCIL®

Copyright © 2015 ICC. ALL RIGHTS RESERVED. Accessed by David Dammon on Jun 21, 2017 12:30:52 PM pursuant to License Agreement with ICC. No further reproduction or distribution authorized. ANY UNAUTHORIZED REPRODUCTION OR DISTRIBUTION IS A VIOLATION OF THE FEDERAL COPYRIGHT ACT AND THE LICENSE AGREEMENT, AND SUBJECT TO CIVIL AND CRIMINAL PENALTIES THEREUNDER.

2015 International Energy Conservation Code® and Commentary

First Printing: October 2015

ISBN: 978-1-60983-287-2 (soft-cover edition)

COPYRIGHT © 2015
by
INTERNATIONAL CODE COUNCIL, INC.

With the cooperation of:
Jack Bailey
Jim Edelson
Steve Ferguson
Mark Heizer
Amanda Hickman
Duane Jonlin
Erick Makala

ALL RIGHTS RESERVED. This 2015 *International Energy Conservation Code® and Commentary* is a copyrighted work owned by the International Code Council, Inc. Without advance written permission from the copyright owner, no part of this book may be reproduced, distributed or transmitted in any form or by any means, including, without limitation, electronic, optical or mechanical means (by way of example, and not limitation, photocopying, or recording by or in an information storage retrieval system). For information on permission to copy material exceeding fair use, please contact: Publications, 4051 Flossmoor Road, Country Club Hills, IL 60478. Phone 1-888-ICC-SAFE (422-7233).

Trademarks: "International Code Council," the "International Code Council" logo and the "International Energy Conservation Code" are trademarks of the International Code Council, Inc.

PRINTED IN THE U.S.A.

INTERNATIONAL CODE COUNCIL®

Copyright © 2015 ICC. ALL RIGHTS RESERVED. Accessed by David Dammon on Jun 21, 2017 12:30:52 PM pursuant to License Agreement with ICC. No further reproduction or distribution authorized. ANY UNAUTHORIZED REPRODUCTION OR DISTRIBUTION IS A VIOLATION OF THE FEDERAL COPYRIGHT ACT AND THE LICENSE AGREEMENT, AND SUBJECT TO CIVIL AND CRIMINAL PENALTIES THEREUNDER.

PREFACE

The principal purpose of the Commentary is to provide a basic volume of knowledge and facts relating to building construction as it pertains to the regulations set forth in the 2015 *International Energy Conservation Code*®. The person who is serious about effectively designing, constructing and regulating buildings and structures will find the Commentary to be a reliable data source and reference to almost all components of the built environment.

As a follow-up to the *International Energy Conservation Code*, we offer a companion document, the *International Energy Conservation Code Commentary*. The basic appeal of the Commentary is thus: it provides in a small package and at reasonable cost thorough coverage of many issues likely to be dealt with when using the *International Energy Conservation Code*—and then supplements that coverage with historical and technical background. Reference lists, information sources and bibliographies are also included.

Throughout all of this, strenuous effort has been made to keep the vast quantity of material accessible and its method of presentation useful. With a comprehensive yet concise summary of each section, the Commentary provides a convenient reference for regulations applicable to the construction of buildings and structures. In the chapters that follow, discussions focus on the full meaning and implications of the code text. Guidelines suggest the most effective method of application and the consequences of not adhering to the code text. Illustrations are provided to aid understanding; they do not necessarily illustrate the only methods of achieving code compliance.

The format of the Commentary includes the full text of each section, table and figure in the code, followed immediately by the commentary applicable to that text. At the time of printing, the Commentary reflects the most up-to-date text of the 2015 *International Energy Conservation Code*. Each section's narrative includes a statement of its objective and intent and usually includes a discussion about why the requirement commands the conditions set forth. Code text and commentary text are easily distinguished from each other. All code text is shown as it appears in the *International Energy Conservation Code*, and all commentary is indented below the code text and begins with the symbol ❖.

Readers should note that the Commentary is to be used in conjunction with the *International Energy Conservation Code* and not as a substitute for the code. **The Commentary is advisory only;** the code official alone possesses the authority and responsibility for interpreting the code.

Comments and recommendations are encouraged, for through your input, we can improve future editions. Please direct your comments to the Codes and Standards Development Department at the Central Regional Office.

INTERNATIONAL CODE COUNCIL®
Copyright © 2015 ICC. ALL RIGHTS RESERVED. Accessed by David Dammon on Jun 21, 2017 12:30:52 PM pursuant to License Agreement with ICC. No further reproduction or distribution authorized. ANY UNAUTHORIZED REPRODUCTION OR DISTRIBUTION IS A VIOLATION OF THE FEDERAL COPYRIGHT ACT AND THE LICENSE AGREEMENT, AND SUBJECT TO CIVIL AND CRIMINAL PENALTIES THEREUNDER.

INTERNATIONAL CODE COUNCIL®
Copyright © 2015 ICC. ALL RIGHTS RESERVED. Accessed by David Dammon on Jun 21, 2017 12:30:52 PM pursuant to License Agreement with ICC. No further reproduction or distribution authorized. ANY UNAUTHORIZED REPRODUCTION OR DISTRIBUTION IS A VIOLATION OF THE FEDERAL COPYRIGHT ACT AND THE LICENSE AGREEMENT, AND SUBJECT TO CIVIL AND CRIMINAL PENALTIES THEREUNDER.

TABLE OF CONTENTS

IECC—COMMERCIAL PROVISIONS

CHAPTER 1 SCOPE AND ADMINISTRATION ..... C1-1 – C1-10

CHAPTER 2 DEFINITIONS ..... C2-1 – C2-18

CHAPTER 3 GENERAL REQUIREMENTS..... C3-1 – C3-26

CHAPTER 4 COMMERCIAL ENERGY EFFICIENCY ..... C4-1 – C4-138

CHAPTER 5 EXISTING BUILDINGS ..... C5-1 – C5-6

CHAPTER 6 REFERENCED STANDARDS ..... C6-1 – C6-10

INDEX ..... INDEX C-1 – INDEX C-10

IECC—RESIDENTIAL PROVISIONS

CHAPTER 1 SCOPE AND ADMINISTRATION ..... R1-1 – R1-12

CHAPTER 2 DEFINITIONS ..... R2-1 – R2-14

CHAPTER 3 GENERAL REQUIREMENTS..... R3-1 – R3-26

CHAPTER 4 RESIDENTIAL ENERGY EFFICIENCY..... R4-1 – R4-46

CHAPTER 5 EXISTING BUILDINGS ..... R5-1 – R5-8

CHAPTER 6 REFERENCED STANDARDS ..... R6-1 – R6-6

APPENDIX RA RECOMMENDED PROCEDURE FOR WORST-CASE TESTING OF ATMOSPHERIC VENTING SYSTEMS UNDER R402.4 OR R405 CONDITIONS ≤ 5ACH$_{50}$ .....APPENDIX RA-1 – APPENDIX RA-4

APPENDIX RB SOLAR-READY PROVISIONS— DETACHED ONE- AND TWO-FAMILY DWELLINGS, MULTIPLE SINGLE-FAMILY DWELLINGS (TOWNHOUSES) .....APPENDIX RB-1 – APPENDIX RB-2

INDEX ..... INDEX R-1 – INDEX R-6

INTERNATIONAL CODE COUNCIL®

Copyright © 2015 ICC. ALL RIGHTS RESERVED. Accessed by David Dammon on Jun 21, 2017 12:30:52 PM pursuant to License Agreement with ICC. No further reproduction or distribution authorized. ANY UNAUTHORIZED REPRODUCTION OR DISTRIBUTION IS A VIOLATION OF THE FEDERAL COPYRIGHT ACT AND THE LICENSE AGREEMENT, AND SUBJECT TO CIVIL AND CRIMINAL PENALTIES THEREUNDER.

INTERNATIONAL CODE COUNCIL®
Copyright © 2015 ICC. ALL RIGHTS RESERVED. Accessed by David Dammon on Jun 21, 2017 12:30:52 PM pursuant to License Agreement with ICC. No further reproduction or distribution authorized. ANY UNAUTHORIZED REPRODUCTION OR DISTRIBUTION IS A VIOLATION OF THE FEDERAL COPYRIGHT ACT AND THE LICENSE AGREEMENT, AND SUBJECT TO CIVIL AND CRIMINAL PENALTIES THEREUNDER.

IECC—COMMERCIAL PROVISIONS

TABLE OF CONTENTS

CHAPTER 1 SCOPE AND ADMINISTRATION C1-1

PART 1—SCOPE AND APPLICATION. C1-1

Section

C101 Scope and General Requirements. C1-1

C102 Alternate Materials—Method of Construction, Design or Insulating Systems C1-3

PART 2—ADMINISTRATION AND ENFORCEMENT C1-4

C103 Construction Documents C1-4

C104 Inspections C1-6

C105 Validity. C1-8

C106 Referenced Standards C1-8

C107 Fees. C1-9

C108 Stop Work Order C1-9

C109 Board of Appeals C1-10

CHAPTER 2 DEFINITIONS C2-1

Section

C201 General C2-1

C202 General Definitions C2-1

CHAPTER 3 GENERAL REQUIREMENTS. C3-1

Section

C301 Climate Zones. C3-2

C302 Design Conditions C3-20

C303 Materials, Systems and Equipment C3-20

CHAPTER 4 COMMERCIAL ENERGY EFFICIENCY C4-1

Section

C401 General C4-2

C402 Building Envelope Requirements. C4-3

C403 Building Mechanical Systems C4-29

C404 Service Water Heating (Mandatory) C4-85

C405 Electrical Power and Lighting Systems C4-94

C406 Additional Efficiency Package Options C4-118

C407 Total Building Performance C4-123

C408 System Commissioning C4-133

INTERNATIONAL CODE COUNCIL®

Copyright © 2015 ICC. ALL RIGHTS RESERVED. Accessed by David Dammon on Jun 21, 2017 12:30:52 PM pursuant to License Agreement with ICC. No further reproduction or distribution authorized. ANY UNAUTHORIZED REPRODUCTION OR DISTRIBUTION IS A VIOLATION OF THE FEDERAL COPYRIGHT ACT AND THE LICENSE AGREEMENT, AND SUBJECT TO CIVIL AND CRIMINAL PENALTIES THEREUNDER.

CHAPTER 5 EXISTING BUILDINGS C5-1

Section

C501 General C5-1

C502 Additions C5-2

C503 Alterations C5-4

C504 Repairs C5-6

C505 Change of Occupancy or Use C5-6

CHAPTER 6 REFERENCED STANDARDS C6-1

INDEX . . . . . INDEX C-1

INTERNATIONAL CODE COUNCIL®

Copyright © 2015 ICC. ALL RIGHTS RESERVED. Accessed by David Dammon on Jun 21, 2017 12:30:52 PM pursuant to License Agreement with ICC. No further reproduction or distribution authorized. ANY UNAUTHORIZED REPRODUCTION OR DISTRIBUTION IS A VIOLATION OF THE FEDERAL COPYRIGHT ACT AND THE LICENSE AGREEMENT, AND SUBJECT TO CIVIL AND CRIMINAL PENALTIES THEREUNDER.

Chapter 1 [CE]: Scope and Administration

General Comments

The 2015 edition of the *International Energy Conservation Code*® (IECC®) is the result of aggressive efforts to increase commercial and residential energy efficiency requirements. Construction enhancements include required energy savings for windows, doors and skylights; thermal envelope efficiency; and increased efficiencies for installed heating, ventilating and air-conditioning (HVAC) equipment for commercial buildings three stories or greater in height. The 2015 edition represents a modest increase in required energy-efficient equipment and design over that of the 2012 edition. The code provides efficiency requirements for many systems not previously in the code. The 2012 edition provided a significant increase in energy efficiency levels over the 2009 edition of the code, which represented a significant increase over 2006 levels. The aggressive code change proposals are reflective of a national focus on reduction in energy consumption that stems not only from concerns about our oil reserves, but also from growing concerns over global warming.

Purpose

Though not stated specifically, the code is applicable to all buildings and structures, and their components and systems that use energy primarily for human comfort. The requirements are specified individually for commercial buildings and residential buildings. This portion of the code addresses commercial buildings. The code does not regulate the energy for industrial equipment for manufacturing or for items such as computers or coffeepots. The code addresses the design of energy-efficient building envelopes, and the selection and installation of energy-efficient mechanical, service water-heating, electrical distribution and illumination systems and equipment in residential and commercial buildings alike.

PART 1—SCOPE AND APPLICATION

SECTION C101
SCOPE AND GENERAL REQUIREMENTS

C101.1 Title. This code shall be known as the *International Energy Conservation Code* of **[NAME OF JURISDICTION]**, and shall be cited as such. It is referred to herein as "this code."

❖ This section directs the adopting jurisdiction to insert the name of the jurisdiction into the code. Because the IECC is a "model" code, it is not an enforceable document until it is adopted by a jurisdiction or agency that has enforcement powers.

C101.2 Scope. This code applies to *commercial buildings* and the buildings' sites and associated systems and equipment.

❖ This portion of the code applies to commercial buildings, commercial building sites and associated systems and equipment. The definitions for "Residential building," "Commercial building," and "Building site" will be important in correctly applying the provisions of the code. See the commentary related to the definitions in Chapter 2 [CE]. Additional discussion can be found in the commentary to Chapter 4 [CE].

C101.3 Intent. This code shall regulate the design and construction of buildings for the use and conservation of energy over the life of each building. This code is intended to provide flexibility to permit the use of innovative approaches and techniques to achieve this objective. This code is not intended to abridge safety, health or environmental requirements contained in other applicable codes or ordinances.

❖ The code is broad in its application, yet specific to regulating the use of energy in buildings where that energy is used primarily for human comfort, or heating and cooling of a building to protect the contents. Thus, energy used for commercial or industrial processing is to be considered exempt from the code because that energy is not used for human comfort or conditioning the space. The code also addresses efficiency of other systems that relate to the use of the space for human "habitation." In general, the requirements of the code address the design of all building systems that affect the comfort of the occupants and their use of the building, including:

- Lighting systems and controls.
- Wall, roof and floor insulation.
- Windows and skylights.

INTERNATIONAL CODE COUNCIL®
Copyright © 2015 ICC. ALL RIGHTS RESERVED. Accessed by David Dammon on Jun 21, 2017 12:30:52 PM pursuant to License Agreement with ICC. No further reproduction or distribution authorized. ANY UNAUTHORIZED REPRODUCTION OR DISTRIBUTION IS A VIOLATION OF THE FEDERAL COPYRIGHT ACT AND THE LICENSE AGREEMENT, AND SUBJECT TO CIVIL AND CRIMINAL PENALTIES THEREUNDER.

- Cooling equipment (air conditioners, chillers and cooling towers).
- Heating equipment (boilers, furnaces and heat pumps).
- Pumps, piping and liquid circulation systems.
- Supply and return fans.
- Service hot water systems (kitchens and lavatories).
- Kitchen exhaust systems.
- Refrigeration systems and refrigerated spaces.
- Permanent electric motors (e.g., elevators and escalators).

It does not address the energy used by office equipment such as personal computers, copy machines, printers, fax machines and coffee makers. Nor does it address kitchen equipment in restaurants, commercial kitchens and cafeterias, although water heating, lighting and HVAC energy uses in these types of spaces are covered.

The code is intended to define requirements for the portions of a building and building systems that affect energy use in new construction and to promote the effective use of energy. Where code application for a specific situation is in question, the code official should favor the action that will promote effective energy use. The code official may also consider the cost of the required action compared to the energy that will be saved over the life of that action.

This statement supports flexibility in applying code requirements. Although many of the requirements are given in a prescriptive format for ease of use, the code is not intended to stifle innovation—especially techniques that conserve energy. Innovative approaches that lead to energy efficiency should be encouraged, even if the approach is not specifically listed in the code or does not meet the strict letter of the code. This principle should be applied to building construction techniques used to meet the code and the methods used to approve them.

Any design should first be evaluated to see whether it meets the code requirements directly. Where the literal code requirements have not been satisfied but the applicant claims an innovative approach meets the intent, the code official will likely have to exercise professional judgment to determine the accuracy of that claim (see commentary, Section C103).

C101.4 Applicability. Where, in any specific case, different sections of this code specify different materials, methods of construction or other requirements, the most restrictive shall govern. Where there is a conflict between a general requirement and a specific requirement, the specific requirement shall govern.

❖ In cases where the code establishes a specific requirement for a certain condition, that requirement is applicable even if it is less restrictive than a general requirement elsewhere in the code. The most restrictive requirement is to apply where there may be different requirements in the code for a specific issue.

C101.4.1 Mixed occupancy. Where a building includes both *residential* and *commercial* occupancies, each occupancy shall be separately considered and meet the applicable provisions of IECC—Commercial Provisions or IECC—Residential Provisions.

❖ A mixed-occupancy building is one that contains both residential and commercial uses (see definitions, Chapter 2 [CE]). When residential and commercial uses coexist in a building and a portion of the building otherwise meets the definition of "Residential building," each occupancy must be evaluated separately.

Commentary Figure C101.4.1 provides an example of a mixed-occupancy building. The figure shows a three-story building with the first story occupied by a convenience store (a commercial use). The top two stories are shown as apartments that are classified as Group R-2 occupancy by the *International Building Code*® (IBC®). As the total building is not over three stories, its dwelling units meet the definition of "Residential building." The first story must be evaluated under the commercial provisions and the upper two stories under the residential provisions of the code. The treatment of each segment of the building by the appropriate portion of the code applies regardless of how much of the building meets the commercial versus residential definitions.

However, confusion sometimes arises when considering buildings taller than three stories. If, for example, the building in Commentary Figure C101.4.1 were four stories and the Group R-2 apartments occupied the top three floors, would it be a commercial building because it is over three stories high or is it a residential building because it has three stories of dwelling units? In such an example, the definition of "Residential building" dictates that the entire building would be considered as commercial and be subject to the requirements of Chapter 4 [CE]. That approach is based on the fact that the patterns of energy use generally change in buildings four stories or greater in height, and that the code limits residential buildings to a maximum height of three stories above grade. Any structure over three stories is considered a commercial building for purposes of apply-



Figure C101.4.1
MIXED OCCUPANCY

INTERNATIONAL CODE COUNCIL®
Copyright © 2015 ICC. ALL RIGHTS RESERVED. Accessed by David Dammon on Jun 21, 2017 12:30:52 PM pursuant to License Agreement with ICC. No further reproduction or distribution authorized. ANY UNAUTHORIZED REPRODUCTION OR DISTRIBUTION IS A VIOLATION OF THE FEDERAL COPYRIGHT ACT AND THE LICENSE AGREEMENT, AND SUBJECT TO CIVIL AND CRIMINAL PENALTIES THEREUNDER.

ing the code, regardless of the occupancy classification of the structure. The only exception to this distinction would be single-family or duplex detached residences and townhouses four stories or greater in height. See also the definitions and commentary for "Commercial building" and "Residential building" to help clarify the application of the code to mixed-occupancy buildings.

C101.5 Compliance. *Residential buildings* shall meet the provisions of IECC—Residential Provisions. *Commercial buildings* shall meet the provisions of IECC—Commercial Provisions.

❖ For commercial buildings, the technical provisions of Chapter 4 [CE] offer three options for compliance. Two of the options are in Chapter 4 [CE]. The third option is to comply with the requirements of ANSI/ASHRAE/IESNA 90.1. The compliance approach is at the discretion of the building owner and the owner's designer.

C101.5.1 Compliance materials. The *code official* shall be permitted to approve specific computer software, worksheets, compliance manuals and other similar materials that meet the intent of this code.

❖ As mentioned in Section C101.3, the code is intended to allow the use of innovative approaches and techniques, provided that they result in the effective use of energy. This section recognizes that there are many federal, state and local programs, as well as computer software, that deal with energy efficiency. Therefore, the code simply states that the code official has the authority to accept those methods of compliance, provided that they meet the intent of the code. Some of the easiest examples to illustrate this provision are the REScheck™ and COMcheck™ software that are put out by the U.S. Department of Energy (DOE).

SECTION C102
ALTERNATE MATERIALS—METHOD OF CONSTRUCTION, DESIGN OR INSULATING SYSTEMS

C102.1 General. This code is not intended to prevent the use of any material, method of construction, design or insulating system not specifically prescribed herein, provided that such construction, design or insulating system has been *approved* by the *code official* as meeting the intent of this code.

❖ This section reinforces Section C101.3, which states that the code is meant to be flexible, as long as the intent of the proposed alternative is to promote the effective use of energy. The code is not intended to inhibit innovative ideas or technological advances. A comprehensive regulatory document, such as an energy code, cannot envision and then address all future innovations in the industry. As a result, a performance code must be applicable to and provide a basis for the approval of an increasing number of newly developed, innovative materials, systems and methods for which no code text or referenced standards yet exist. The fact that a material, product or method of construction is not addressed in the code is not an indication that the material, product or method is prohibited.

The code official is expected to apply sound technical judgment in accepting materials, systems or methods that, while not anticipated by the drafters of the current code text, can be demonstrated to offer equivalent or better performance. By virtue of its text, the code regulates new and innovative construction practices while addressing the relative safety of building occupants. The code official is responsible for determining whether a requested alternative protects the public health, safety and welfare in a manner consistent with code requirements.

C102.1.1 Above code programs. The *code official* or other authority having jurisdiction shall be permitted to deem a national, state or local energy efficiency program to exceed the energy efficiency required by this code. Buildings *approved* in writing by such an energy efficiency program shall be considered in compliance with this code. The requirements identified as "mandatory" in Chapter 4 shall be met.

❖ The purpose of this section is to specifically state that the code official has the authority to review and accept compliance with another energy program that may exceed code requirements, as long as the minimum "mandatory" requirements of the code are met. This provision is really a continuation of those stated in Sections C101.3 and C103.1, and the fact that the code is intended to allow alternatives, as long as the end result is an energy-efficient building comparable to or better than that required by the code.

This also is a good section to help reinforce the fact that the IECC as a model code is a "minimum" code. Therefore, it establishes the minimum requirement that must be met. Anything that exceeds that level is permitted.

While "above code programs" are acceptable because they do exceed the "minimum" requirements of the code, it would not be proper to require compliance with such "above code" programs. Besides the code being the minimum level of acceptable energy efficiency, it is also the maximum efficiency that the code official can require. A building built to the absolute minimum requirement is also the maximum that the code official can demand. It is perfectly acceptable for a designer or builder to exceed the code requirements, but it is not proper for the code official to demand such higher performance. Since the International Code Council (ICC)® has deemed that the mandatory requirements should apply to all buildings, it is reasonable that "above code programs" not be allowed to bypass these requirements.

INTERNATIONAL CODE COUNCIL®
Copyright © 2015 ICC. ALL RIGHTS RESERVED. Accessed by David Dammon on Jun 21, 2017 12:30:52 PM pursuant to License Agreement with ICC. No further reproduction or distribution authorized. ANY UNAUTHORIZED REPRODUCTION OR DISTRIBUTION IS A VIOLATION OF THE FEDERAL COPYRIGHT ACT AND THE LICENSE AGREEMENT, AND SUBJECT TO CIVIL AND CRIMINAL PENALTIES THEREUNDER.

PART 2—ADMINISTRATION AND ENFORCEMENT

SECTION C103
CONSTRUCTION DOCUMENTS

C103.1 General. Construction documents and other supporting data shall be submitted in one or more sets with each application for a permit. The construction documents shall be prepared by a registered design professional where required by the statutes of the jurisdiction in which the project is to be constructed. Where special conditions exist, the *code official* is authorized to require necessary construction documents to be prepared by a registered design professional.

Exception: The *code official* is authorized to waive the requirements for construction documents or other supporting data if the *code official* determines they are not necessary to confirm compliance with this code.

❖ In most jurisdictions, the permit application must be accompanied by not less than two sets of construction documents. The code official can waive the requirements for filing construction documents when the scope of the work is minor and compliance can be verified through other means. When the quality of the materials is essential for conformity to the code, specific information must be given to establish that quality.

The code must not be cited, or the term "legal" or its equivalent used as a substitute for specific information. For example, it would be improper for the plans to simply state "windows in accordance with IECC requirements."

A detailed description of the work covered by the application must be submitted. When the work is "minor," either in scope or needed description, the code official may use judgment in determining the need for a detailed description. An example of "minor" work that may not involve a detailed description is the replacement of an existing 60-amp electrical service in a single-family residence with a 100-amp service.

The exception permits the code official to determine that construction documents are not necessary when the code official determines that compliance can be obtained and verified without the documents.

C103.2 Information on construction documents. Construction documents shall be drawn to scale upon suitable material. Electronic media documents are permitted to be submitted where *approved* by the *code official*. Construction documents shall be of sufficient clarity to indicate the location, nature and extent of the work proposed, and show in sufficient detail pertinent data and features of the building, systems and equipment as herein governed. Details shall include, but are not limited to, the following as applicable:

1. Insulation materials and their *R*-values.
2. Fenestration *U*-factors and solar heat gain coefficients (SHGCs).
3. Area-weighted *U*-factor and solar heat gain coefficient (SHGC) calculations.
4. Mechanical system design criteria.
5. Mechanical and service water heating system and equipment types, sizes and efficiencies.
6. Economizer description.
7. Equipment and system controls.
8. Fan motor horsepower (hp) and controls.
9. Duct sealing, duct and pipe insulation and location.
10. Lighting fixture schedule with wattage and control narrative.
11. Location of *daylight* zones on floor plans.
12. Air sealing details.

❖ For a comprehensive plan review that will enable verification of compliance with the code, all code requirements need to be incorporated in the construction documents. Adequate details must be included to allow the code official to verify compliance. A statement on the construction documents, such as, "All insulation levels shall comply with the 2015 edition of the IECC," is not an acceptable substitute for showing the required information. Note also that the code official is authorized to require additional code-related information as necessary.

For example, insulation *R*-values and glazing and door *U*-factors must be clearly marked on the building plans, specifications or forms used to show compliance. Where two or more different insulation levels exist for the same component (two insulation levels are used in ceilings), record each level separately on the plans or specifications and clarify where in the building each level of insulation will be installed.

In addition to the 12 items listed above, Section C103.2.1 specifically requires that the thermal envelope of the building be clearly shown on the construction drawings submitted for permit.

The following discussion is presented for the benefit of both the applicant and the plans examiner.

Permit Applicant's Responsibilities. At permit application, the goal of the applicant is to provide all necessary information to show compliance with the code. If the plans examiner is able to verify compliance in a single review, the permit can be issued and construction may be started without delay.

Depending on whether the prescriptive or performance methods of compliance are used, the amount and detail of the required information may vary. For example, if using the prescriptive method of compliance, the *U*-factor and SHGC may be the only information needed to verify fenestration compliance. If the assembly *U*-factor method (see Section C402.1.4) or the total building performance method (TBP) (see Section C407) is used, then additional information, such as the fenestration sizes and orientation, may be needed to demonstrate compliance.

Plans Examiner's Responsibilities. The plans examiner must review each application for code compliance before a permit is issued. By the owner, designer and contractor knowing what is expected of

INTERNATIONAL CODE COUNCIL®
Copyright © 2015 ICC. ALL RIGHTS RESERVED. Accessed by David Dammon on Jun 21, 2017 12:30:52 PM pursuant to License Agreement with ICC. No further reproduction or distribution authorized. ANY UNAUTHORIZED REPRODUCTION OR DISTRIBUTION IS A VIOLATION OF THE FEDERAL COPYRIGHT ACT AND THE LICENSE AGREEMENT, AND SUBJECT TO CIVIL AND CRIMINAL PENALTIES THEREUNDER.

them early in the process, the building department can increase the likelihood that the approved drawings will comply with the code. This helps the inspector of the construction work.

Often the biggest challenges for the plans examiner are determining where the necessary information is and whether the drawings are complete.

A good plan review is essential to ensure code compliance and a successful project. Construction documents are graphic depictions of a legal contract. The more precise and code compliant the documents are, the less room for dispute or conflict. The design professional can then be confident that the intent of the design is communicated. The owner can understand what is to be built. The contractor can scope the contract appropriate to the project—without unexpected changes or additions. The building department can know what is being approved and what to look for during inspections.

C103.2.1 Building thermal envelope depiction. The *building's thermal envelope* shall be represented on the construction drawings.

❖ The building's thermal envelope is the key design feature in efficient use of energy to condition the indoor environments of a building. Without a clear indication of the location of the thermal envelope, the plans examiner may not be able to quickly review the building's assemblies for compliance with Section C402.

C103.3 Examination of documents. The *code official* shall examine or cause to be examined the accompanying construction documents and shall ascertain whether the construction indicated and described is in accordance with the requirements of this code and other pertinent laws or ordinances. The *code official* is authorized to utilize a registered design professional, or other *approved* entity not affiliated with the building design or construction, in conducting the review of the plans and specifications for compliance with the code.

❖ This section describes the required action of the code official in response to a permit application. The code official can delegate review of the construction documents to subordinates as well as third-party reviewers.

C103.3.1 Approval of construction documents. When the *code official* issues a permit where construction documents are required, the construction documents shall be endorsed in writing and stamped "Reviewed for Code Compliance." Such *approved* construction documents shall not be changed, modified or altered without authorization from the *code official*. Work shall be done in accordance with the *approved* construction documents.

One set of construction documents so reviewed shall be retained by the *code official*. The other set shall be returned to the applicant, kept at the site of work and shall be open to inspection by the *code official* or a duly authorized representative.

❖ The code official must stamp or otherwise endorse as "Reviewed for Code Compliance" the construction documents on which the permit is based. One set of approved construction documents must be kept on the construction site to serve as the basis for all subsequent inspections. To avoid confusion, the construction documents on the site must be the documents that were approved and stamped. This is because inspections are to be performed with regard to the approved documents, not the code itself. Additionally, the contractor cannot determine compliance with the approved construction documents unless they are readily available. If the approved construction documents are not available, the inspection should be postponed and work on the project halted.

C103.3.2 Previous approvals. This code shall not require changes in the construction documents, construction or designated occupancy of a structure for which a lawful permit has been heretofore issued or otherwise lawfully authorized, and the construction of which has been pursued in good faith within 180 days after the effective date of this code and has not been abandoned.

❖ If a permit is issued and construction proceeds at a normal pace and a new edition of the code is adopted by the legislative body, requiring that the building be constructed to conform to the new code is unreasonable. This section provides for the continuity of permits issued under previous codes, as long as such permits are being "actively prosecuted" subsequent to the effective date of the ordinance adopting this edition of the code.

C103.3.3 Phased approval. The *code official* shall have the authority to issue a permit for the construction of part of an energy conservation system before the construction documents for the entire system have been submitted or *approved*, provided adequate information and detailed statements have been filed complying with all pertinent requirements of this code. The holders of such permit shall proceed at their own risk without assurance that the permit for the entire energy conservation system will be granted.

❖ The code official has the authority to issue a partial permit to allow for the practice of "fast-tracking" a job. Any construction under a partial permit is "at the holder's own risk" and "without assurance that a permit for the entire structure will be granted." The code official is under no obligation to accept work or issue a complete permit in violation of the code, ordinances or statutes simply because a partial permit had been issued. Fast-tracking puts unusual administrative and technical burdens on the code official. The purpose is to proceed with construction while the design continues for other aspects of the work. Coordinating and correlating the code aspects into the project in

INTERNATIONAL CODE COUNCIL®
Copyright © 2015 ICC. ALL RIGHTS RESERVED. Accessed by David Dammon on Jun 21, 2017 12:30:52 PM pursuant to License Agreement with ICC. No further reproduction or distribution authorized. ANY UNAUTHORIZED REPRODUCTION OR DISTRIBUTION IS A VIOLATION OF THE FEDERAL COPYRIGHT ACT AND THE LICENSE AGREEMENT, AND SUBJECT TO CIVIL AND CRIMINAL PENALTIES THEREUNDER.

phases requires attention to detail and project tracking so that all code issues are addressed. The coordination of these submittals is the responsibility of the registered design professional in responsible charge.

C103.4 Amended construction documents. Changes made during construction that are not in compliance with the *approved* construction documents shall be resubmitted for approval as an amended set of construction documents.

❖ The code requires that all work be done in accordance with the approved plans and other construction documents. Where the construction will not conform to the approved construction documents, the documents must be revised and resubmitted to the code official for review and approval. Code officials should maintain a policy that all amendments be submitted for review. Otherwise, a significant change that is not approved could result in an activity that is not in compliance with the code, and therefore cause needless delay and extra expense. The code official must retain one set of the amended and approved plans. The other set is to be kept at the construction site, ready for use by the jurisdiction's inspection staff.

C103.5 Retention of construction documents. One set of *approved* construction documents shall be retained by the *code official* for a period of not less than 180 days from date of completion of the permitted work, or as required by state or local laws.

❖ Construction documents must be retained in case a question or dispute arises after completion of the project. Unless modified because of state or local statutes, the retention period for the approved construction documents is a minimum of 180 days following the completion of the work, typically the date the certificate of occupancy is issued. Any further retention of plans by the jurisdiction as an archival record of construction activity in the community is not required by the code.

SECTION C104
INSPECTIONS

C104.1 General. Construction or work for which a permit is required shall be subject to inspection by the *code official* or his or her designated agent, and such construction or work shall remain accessible and exposed for inspection purposes until *approved*. It shall be the duty of the permit applicant to cause the work to remain accessible and exposed for inspection purposes. Neither the *code official* nor the jurisdiction shall be liable for expense entailed in the removal or replacement of any material, product, system or building component required to allow inspection to validate compliance with this code.

❖ Where a permit is required by state or local law, the building is subject to an inspection. The code official must determine whether appropriate energy-efficient features and equipment are installed in accordance with the approved construction documents and applicable code requirements.

The contractor, builder, owner or owner's authorized agent is responsible for arranging and coordinating required inspections to prevent work from being concealed prior to inspection. For example:

- Insulation must be inspected prior to concealment. Where the insulation is concealed prior to inspection and approval, the code official has the authority to require removal of the concealing components.
- Basement wall insulation may be installed on the exterior of a below-grade basement wall. Where the insulation application is not confirmed prior to backfilling, reinspection is necessary.
- Glazing assembly *U*-factor labels are to be left on until after the building has been inspected for compliance. The applicant is responsible for giving the inspector adequate information on site to verify code-related features, such as window *U*-factor and equipment efficiencies.

C104.2 Required inspections. The *code official* or his or her designated agent, upon notification, shall make the inspections set forth in Sections C104.2.1 through C104.2.6.

❖ This section lists six specific inspections: five during the progressive stages of construction, followed by a final inspection. Because the majority of energy-efficient construction occurs in steps or phases, periodic inspections are often necessary before portions of these systems are covered by further construction. Depending on the size of the building project, the listed inspections may actually require multiple inspection visits. The exact number of required inspections cannot always be specified. Reinspection may be necessary if violations are noted and corrections are required (see commentary, Section C104.3). Where time permits, frequent inspections of some job sites, especially where the work is complex, can be beneficial to detect potential problems before they become too difficult to correct.

An inspector's ongoing challenge is responding to change orders during construction. In any construction project there will be field changes. The call may be easy where a more efficient piece of equipment is being substituted for a less efficient one; where more insulation is provided, or where fenestration with a lower *U*-factor is installed. Section C103.4 requires that field changes be reflected on revised and approved construction drawings. Compliance with the energy conservation requirements of the code often require a specific "package" of installations; changing one, even where it appears to improve energy efficiency, may upset the balance of the approved design. The amount of information and the ease of confirming compliance will depend on whether the prescriptive or performance approach was used initially. In these cases, compliance is based on a combination of the fenestration area, *U*-factor, SHGC, the projection factor, and (if a performance-based analy-

INTERNATIONAL CODE COUNCIL®
Copyright © 2015 ICC. ALL RIGHTS RESERVED. Accessed by David Dammon on Jun 21, 2017 12:30:52 PM pursuant to License Agreement with ICC. No further reproduction or distribution authorized. ANY UNAUTHORIZED REPRODUCTION OR DISTRIBUTION IS A VIOLATION OF THE FEDERAL COPYRIGHT ACT AND THE LICENSE AGREEMENT, AND SUBJECT TO CIVIL AND CRIMINAL PENALTIES THEREUNDER.

sis has been used) even the opaque wall characteristics. Although there may be enough latitude to decrease the efficiency somewhat, it is not possible to make such a determination without reviewing all the elements and how compliance was initially demonstrated. Whenever there are significant changes such as described in this paragraph, the inspector is expected to request that the applicant submit revised plans, so the plans examiner can verify compliance and ensure there is a correct record on file in the building department.

C104.2.1 Footing and foundation inspection. Inspections associated with footings and foundations shall verify compliance with the code as to *R*-value, location, thickness, depth of burial and protection of insulation as required by the code and *approved* plans and specifications.

❖ See the commentary to Section C104.2.

C104.2.2 Framing and rough-in inspection. Inspections at framing and rough-in shall be made before application of interior finish and shall verify compliance with the code as to types of insulation and corresponding *R*-values and their correct location and proper installation; fenestration properties (*U*-factor, SHGC and VT) and proper installation; and air leakage controls as required by the code and approved plans and specifications.

❖ See the commentary to Section C104.2.

C104.2.3 Plumbing rough-in inspection. Inspections at plumbing rough-in shall verify compliance as required by the code and *approved* plans and specifications as to types of insulation and corresponding *R*-values and protection; required controls; and required heat traps.

❖ See the commentary to Section C104.2.

C104.2.4 Mechanical rough-in inspection. Inspections at mechanical rough-in shall verify compliance as required by the code and *approved* plans and specifications as to installed HVAC equipment type and size; required controls, system insulation and corresponding *R*-value; system and damper air leakage; and required energy recovery and economizers.

❖ See the commentary to Section C104.2.

C104.2.5 Electrical rough-in inspection. Inspections at electrical rough-in shall verify compliance as required by the code and *approved* plans and specifications as to installed lighting systems, components and controls; and installation of an electric meter for each dwelling unit.

❖ See the commentary to Section C104.2.

C104.2.6 Final inspection. The building shall have a final inspection and shall not be occupied until *approved*. The final inspection shall include verification of the installation and proper operation of all required building controls, and documentation verifying activities associated with required *building commissioning* have been conducted and findings of noncompliance corrected. Buildings, or portions thereof, shall not be considered for a final inspection until the *code official* has received a letter of transmittal from the building owner acknowledging that the building owner has received the Preliminary Commissioning Report as required in Section C408.2.4.

❖ To establish compliance with all previously issued correction orders and to determine whether subsequent violations exist, a final inspection is required. The final inspection is conducted after all work is completed. Typically, the final inspection includes all items installed after the rough-in inspection and not concealed in the building construction. Subsequent reinspection is necessary if the final inspection generates a notice of violation (see commentary, Section C104.3). All violations observed during the final inspection must be noted and the permit holder must be advised of them.

Final approval is required prior to issuing the certificate of occupancy and, therefore, before the building may be occupied.

C104.3 Reinspection. A building shall be reinspected when determined necessary by the *code official*.

❖ The provisions for reinspection could affect the entire structure or a portion of the structure. As an example, under the circumstance where no approval was given to apply interior finish that conceals ducts in an exterior wall, the code official must require removal of the interior finish to verify the ducts are insulated to code.

Reinspections generally occur when some type of violation or correction notice was issued during one of the previous inspections or where the work was not ready for the inspection. For example, if the inspector went to the project to conduct an insulation inspection and not all of the insulation was installed at that point, the inspector would need to go back to the project and "reinspect" the insulation to verify that it had been completed.

C104.4 Approved inspection agencies. The *code official* is authorized to accept reports of third-party inspection agencies not affiliated with the building design or construction, provided such agencies are *approved* as to qualifications and reliability relevant to the building components and systems they are inspecting.

❖ As an alternative to building department staff conducting the inspections, the code official is permitted to accept inspections of and reports by approved inspection agencies. The code provides general guidance under which the code official can review and approve such agencies. More extensive criteria can be found in IBC Section 1703.

C104.5 Inspection requests. It shall be the duty of the holder of the permit or their duly authorized agent to notify the *code official* when work is ready for inspection. It shall be the duty of the permit holder to provide access to and means for inspections of such work that are required by this code.

❖ It is the responsibility of the permit holder or other authorized person, such as the contractor performing the work, to arrange for the required inspections when completed work is ready and to allow for sufficient time for the code official to schedule a visit to

INTERNATIONAL CODE COUNCIL®
Copyright © 2015 ICC. ALL RIGHTS RESERVED. Accessed by David Dammon on Jun 21, 2017 12:30:52 PM pursuant to License Agreement with ICC. No further reproduction or distribution authorized. ANY UNAUTHORIZED REPRODUCTION OR DISTRIBUTION IS A VIOLATION OF THE FEDERAL COPYRIGHT ACT AND THE LICENSE AGREEMENT, AND SUBJECT TO CIVIL AND CRIMINAL PENALTIES THEREUNDER.

the site to prevent work from being concealed prior to being inspected. Access to the work to be inspected must be provided, including any special means such as a ladder.

C104.6 Reinspection and testing. Where any work or installation does not pass an initial test or inspection, the necessary corrections shall be made to achieve compliance with this code. The work or installation shall then be resubmitted to the *code official* for inspection and testing.

❖ This section provides for necessary actions in the event that a tested or inspected item is not originally in compliance with the code.

C104.7 Approval. After the prescribed tests and inspections indicate that the work complies in all respects with this code, a notice of approval shall be issued by the *code official*.

❖ This section provides a needed administrative tool in the form of a notice of approval that the code official issues to indicate completion of an energy conservation installation. While certificates of occupancy for construction are traditionally under the purview of one of the construction codes, the notice of approval will fill a need with regard to application and enforcement of nonbuilding codes.

C104.7.1 Revocation. The *code official* is authorized to, in writing, suspend or revoke a notice of approval issued under the provisions of this code wherever the certificate is issued in error, or on the basis of incorrect information supplied, or where it is determined that the *building* or structure, premise, or portion thereof is in violation of any ordinance or regulation or any of the provisions of this code.

❖ This section provides an important administrative tool by giving the code official the authority to revoke a certificate of completion for the reasons indicated in the text. The code official also may suspend the certificate until any code violations are corrected.

SECTION C105
VALIDITY

C105.1 General. If a portion of this code is held to be illegal or void, such a decision shall not affect the validity of the remainder of this code.

❖ This section is applicable when a court of law rules that a portion of the code is invalid. Only invalid sections of the code (as established by the court of jurisdiction) can be set aside. This is essential to safeguard the application of the code text to situations in which a provision of the code is declared illegal or unconstitutional. This section preserves the original legislative action that put the legal requirements (the code) in place.

All sections of the code not judged invalid must remain in effect. Although a dispute over a particular issue may have precipitated the litigation causing the requirement to be found invalid, the remainder of the code must still be considered as being applicable. This is sometimes called the "severability clause" and simply means that the invalid section can be removed from the code without affecting the entire document.

SECTION C106
REFERENCED STANDARDS

C106.1 Referenced codes and standards. The codes and standards referenced in this code shall be those listed in Chapter 6, and such codes and standards shall be considered as part of the requirements of this code to the prescribed extent of each such reference and as further regulated in Sections C106.1.1 and C106.1.2.

❖ The code references many standards promulgated and published by other organizations. A complete list of these standards appears in Chapter 6 [CE]. The wording of this section was carefully chosen to establish the edition of the standard that is enforceable under the code.

Although a standard is referenced, its full scope and content are not necessarily applicable. The standard is applicable only to the extent indicated in the text in which the standard is specifically referenced. A referenced standard or the portion cited in the text is an enforceable extension of the code as if the content of the standard was included in the body of the code. The use and applicability of referenced standards are limited to those portions of the standards that are specifically identified.

C106.1.1 Conflicts. Where conflicts occur between provisions of this code and referenced codes and standards, the provisions of this code shall apply.

❖ The use of referenced codes and standards to cover certain aspects of various occupancies and operations rather than write parallel or competing requirements into the code is a long-standing code development principle. In general, the code takes precedence when the requirements of a standard conflict with, or are less stringent than, those of the code. Although the code is intended to be in harmony with referenced standards, the code text generally governs should a conflict occur. This section establishes that, where questions and potential conflicts in the use of referenced codes and standards arise, the provisions of the code prevail regardless of the level of stringency.

C106.1.2 Provisions in referenced codes and standards. Where the extent of the reference to a referenced code or standard includes subject matter that is within the scope of this code, the provisions of this code, as applicable, shall take precedence over the provisions in the referenced code or standard.

❖ This section expands on the provisions of Section C106.1.1 by making it clear that even if a referenced standard contains requirements that parallel the code (or the other referenced sections), the provisions of the code [or the other referenced *International Codes*® (I-Codes®)] will always take precedence. This section is not intended to take the place of carefully

INTERNATIONAL CODE COUNCIL®
Copyright © 2015 ICC. ALL RIGHTS RESERVED. Accessed by David Dammon on Jun 21, 2017 12:30:52 PM pursuant to License Agreement with ICC. No further reproduction or distribution authorized. ANY UNAUTHORIZED REPRODUCTION OR DISTRIBUTION IS A VIOLATION OF THE FEDERAL COPYRIGHT ACT AND THE LICENSE AGREEMENT, AND SUBJECT TO CIVIL AND CRIMINAL PENALTIES THEREUNDER.

scoped and referenced text for written standards for the I-Codes but, rather, provides the policy underpinnings on which sound code change proposals can be based.

C106.2 Application of references. References to chapter or section numbers, or to provisions not specifically identified by number, shall be construed to refer to such chapter, section or provision of this code.

❖ This section outlines the conventions used in making references to other portions of the code. By implication then, references to other codes would be required to specify those codes.

C106.3 Other laws. The provisions of this code shall not be deemed to nullify any provisions of local, state or federal law.

❖ This provision is intended to assist the code official in dealing with situations where other laws enacted by the jurisdiction or the state or federal government may be applicable to a condition also governed by a requirement in the code. In such circumstances, the requirements of the code would be in addition to that other law, although the code official may not be responsible for its enforcement.

SECTION C107
FEES

C107.1 Fees. A permit shall not be issued until the fees prescribed in Section C107.2 have been paid, nor shall an amendment to a permit be released until the additional fee, if any, has been paid.

❖ This section requires that all fees be paid prior to permit issuance or release of an amendment to a permit. Since department operations are usually intended to be supported by fees paid by the user of department activities, it is important that these fees are received before incurring any expense.

C107.2 Schedule of permit fees. A fee for each permit shall be paid as required, in accordance with the schedule as established by the applicable governing authority.

❖ This section authorizes the establishment of a schedule of fees by the jurisdiction. The fees are usually established by law, such as in an ordinance adopting the code, a separate ordinance or legally promulgated regulation, as required by state or local law and are often based on a valuation of the work to be performed.

C107.3 Work commencing before permit issuance. Any person who commences any work before obtaining the necessary permits shall be subject to an additional fee established by the *code official* that shall be in addition to the required permit fees.

❖ The department will incur certain costs (i.e., inspection time and administrative) when investigating and citing a person who has commenced work without obtaining a permit. This section authorizes the code official to recover those costs by establishing a fee, in addition to that collected when the required permit is issued, to be imposed on the responsible party.

C107.4 Related fees. The payment of the fee for the construction, *alteration*, removal or demolition of work done in connection to or concurrently with the work or activity authorized by a permit shall not relieve the applicant or holder of the permit from the payment of other fees that are prescribed by law.

❖ This provision gives the code official a useful administrative tool that makes it clear that all applicable fees of the jurisdiction for regulated work collateral to the work being done under the code's permit, such as sewer connections, water taps, driveways or signs, must be paid.

C107.5 Refunds. The *code official* is authorized to establish a refund policy.

❖ This section authorizes the code official to establish a policy to regulate the refund of fees, which may be full or partial, typically resulting from the revocation, abandonment or discontinuance of a building project for which a permit has been issued and fees have been collected.

SECTION C108
STOP WORK ORDER

C108.1 Authority. Where the *code official* finds any work regulated by this code being performed in a manner either contrary to the provisions of this code or dangerous or unsafe, the *code official* is authorized to issue a stop work order.

❖ This section provides for the suspension of work for which a permit was issued, pending the removal or correction of a severe violation or unsafe condition identified by the code official. Stop work orders are issued when enforcement can be accomplished no other way or when a dangerous condition exists.

C108.2 Issuance. The stop work order shall be in writing and shall be given to the owner of the property involved, the owner's authorized agent, or to the person doing the work. Upon issuance of a stop work order, the cited work shall immediately cease. The stop work order shall state the reason for the order and the conditions under which the cited work will be permitted to resume.

❖ This section makes it clear that, upon receipt of a violation notice from the code official, all construction activities identified in the notice must immediately cease, except as expressly permitted to correct the violation.

C108.3 Emergencies. Where an emergency exists, the *code official* shall not be required to give a written notice prior to stopping the work.

❖ This section gives the code official the authority to stop the work in dispute immediately when, in his or her opinion, there is an unsafe emergency condition that has been created by the work. The need for the written notice is suspended for this situation so that the work can be stopped immediately.

INTERNATIONAL CODE COUNCIL®
Copyright © 2015 ICC. ALL RIGHTS RESERVED. Accessed by David Dammon on Jun 21, 2017 12:30:52 PM pursuant to License Agreement with ICC. No further reproduction or distribution authorized. ANY UNAUTHORIZED REPRODUCTION OR DISTRIBUTION IS A VIOLATION OF THE FEDERAL COPYRIGHT ACT AND THE LICENSE AGREEMENT, AND SUBJECT TO CIVIL AND CRIMINAL PENALTIES THEREUNDER.

C108.4 Failure to comply. Any person who shall continue any work after having been served with a stop work order, except such work as that person is directed to perform to remove a violation or unsafe condition, shall be liable to a fine as set by the applicable governing authority.

❖ This section establishes consequences for when the stop work order is disregarded and the person responsible continues the work at issue, other than abatement work. The dollar amounts for the minimum and maximum fines are to be specified by the adopting jurisdiction.

SECTION C109
BOARD OF APPEALS

C109.1 General. In order to hear and decide appeals of orders, decisions or determinations made by the *code official* relative to the application and interpretation of this code, there shall be and is hereby created a board of appeals. The *code official* shall be an ex officio member of said board but shall not have a vote on any matter before the board. The board of appeals shall be appointed by the governing body and shall hold office at its pleasure. The board shall adopt rules of procedure for conducting its business, and shall render all decisions and findings in writing to the appellant with a duplicate copy to the *code official*.

❖ This section provides an aggrieved party having a material interest in the decision of the code official with an appeals process. This provides a forum, other than the court of jurisdiction, in which to review the code official's actions. The intent of the appeal process is not to waive or set aside a code requirement; rather, it is intended to provide a means of reviewing a code official's decision on an interpretation or application of the code.

C109.2 Limitations on authority. An application for appeal shall be based on a claim that the true intent of this code or the rules legally adopted thereunder have been incorrectly interpreted, the provisions of this code do not fully apply or an equally good or better form of construction is proposed. The board shall not have authority to waive requirements of this code.

❖ This section establishes the grounds for an appeal that claims that the code official has misinterpreted or misapplied a code provision. The board is not allowed to set aside any of the technical requirements of the code; however, it is allowed to consider alternative methods of compliance with the technical requirements.

C109.3 Qualifications. The board of appeals shall consist of members who are qualified by experience and training and are not employees of the jurisdiction.

❖ This section requires that the members of the appeals board are to have experience in building construction and system matters because the decisions of the appeals board are to be based purely on the technical merits involved in an appeal.

Bibliography

The following resource materials were used in the preparation of the commentary for this chapter of the code.

ASHRAE-97, *Handbook of Fundamentals*. Atlanta, GA: American Society of Heating, Refrigerating and Air-Conditioning Engineers, Inc.,1997.

ANSI/ASHRAE/IESNA 90.1-13, *Energy Code for Commercial and High-rise Residential Buildings*—Atlanta, GA: American Society of Heating, Refrigerating and Air-Conditioning Engineers, Inc., 2013.

INTERNATIONAL CODE COUNCIL®

Copyright © 2015 ICC. ALL RIGHTS RESERVED. Accessed by David Dammon on Jun 21, 2017 12:30:52 PM pursuant to License Agreement with ICC. No further reproduction or distribution authorized. ANY UNAUTHORIZED REPRODUCTION OR DISTRIBUTION IS A VIOLATION OF THE FEDERAL COPYRIGHT ACT AND THE LICENSE AGREEMENT, AND SUBJECT TO CIVIL AND CRIMINAL PENALTIES THEREUNDER.

Chapter 2 [CE]: Definitions

General Comments

All terms defined in the code are listed alphabetically in Chapter 2 [CE]. The words or terms defined in this chapter are considered to be of prime importance in either specifying the subject matter of code provisions or in giving meaning to certain terms used throughout the code for administrative or enforcement purposes. The code user should be familiar with the terms found in this chapter because the definitions are essential to the correct interpretation of the code and because the user might not be aware of the fact that a particular term found in the text is defined.

Purpose

Codes, by their nature, are technical documents. Every word, term and punctuation mark can alter a sentence's meaning and, if misused, muddy its intent. Further, the code, with its broad scope of applicability, includes terms inherent in a variety of construction disciplines. These terms can often have multiple meanings, depending on the context or discipline in which they are being used.

For these reasons, maintaining a consensus on the specific meaning of terms contained in the code is essential. Chapter 2 [CE] performs this function by stating clearly what specific terms mean for the purpose of the code.

SECTION C201 GENERAL

C201.1 Scope. Unless stated otherwise, the following words and terms in this code shall have the meanings indicated in this chapter.

❖ For the purposes of the code, certain abbreviations, terms, phrases, words and their derivatives have the meanings given in Chapter 2 [CE]. The code, with its broad scope of applicability, includes terms used in a variety of construction and energy-related disciplines. These terms can often have multiple meanings, depending on their context or discipline. Therefore, Chapter 2 [CE] establishes specific meanings for these terms.

C201.2 Interchangeability. Words used in the present tense include the future; words in the masculine gender include the feminine and neuter; the singular number includes the plural and the plural includes the singular.

❖ Although the definitions contained in Chapter 2 [CE] are to be taken literally, gender, number and tense are considered to be interchangeable.

C201.3 Terms defined in other codes. Terms that are not defined in this code but are defined in the *International Building Code*, *International Fire Code*, *International Fuel Gas Code*, *International Mechanical Code*, *International Plumbing Code* or the *International Residential Code* shall have the meanings ascribed to them in those codes.

❖ When a word or term that is not defined in this chapter appears in the code, other references may be used to find its definition, such as other *International Codes*® (I-Codes®). Definitions that are applicable in other I-Codes are applicable everywhere the term is used in the code. As stated in both the "Purpose" section above and in the commentary to Section C201.1, a bit of caution is needed when looking at definitions from other codes. Because the context and discipline can vary, it is important to determine that the term does fit within the code context. As an example, the term "accessible" would have a different meaning in the *International Plumbing Code*® (IPC®) and the *International Mechanical Code*® (IMC®) versus that of the *International Building Code*® (IBC®).

C201.4 Terms not defined. Terms not defined by this chapter shall have ordinarily accepted meanings such as the context implies.

❖ Another option for defining words or terms not defined here or in other codes is their "ordinarily accepted meanings." The intent of this statement is that a dictionary definition may suffice if the definition is in context. Often, construction terms used throughout the code may not be defined in Chapter 2 [CE] or a dictionary. In such a case, the definitions contained in the referenced standards (see Chapter 6 [CE]) and published textbooks on the subject in question are good resources.

SECTION C202 GENERAL DEFINITIONS

ABOVE-GRADE WALL. See "Wall, above-grade."

INTERNATIONAL CODE COUNCIL®
Copyright © 2015 ICC. ALL RIGHTS RESERVED. Accessed by David Dammon on Jun 21, 2017 12:30:52 PM pursuant to License Agreement with ICC. No further reproduction or distribution authorized. ANY UNAUTHORIZED REPRODUCTION OR DISTRIBUTION IS A VIOLATION OF THE FEDERAL COPYRIGHT ACT AND THE LICENSE AGREEMENT, AND SUBJECT TO CIVIL AND CRIMINAL PENALTIES THEREUNDER.

ACCESSIBLE. Admitting close approach as a result of not being guarded by locked doors, elevation or other effective means (see "Readily *accessible*").

❖ Providing access to mechanical equipment and appliances is necessary to facilitate inspection, observation, maintenance, adjustment, repair or replacement. Access to equipment means the equipment can be physically reached without having to remove a permanent portion of the structure. It is acceptable, for example, to install equipment in an interstitial space that would require removal of lay-in suspended ceiling panels to gain access. Equipment would not be considered accessible if it were necessary to remove or open any portion of a structure other than panels, doors, covers or similar obstructions intended to be removed or opened (see the definition of "Readily accessible"). Access can be described as the capability of being reached or approached for the purpose of inspection, observation, maintenance, adjustment, repair or replacement. Achieving access may first require the removal or opening of a panel, door or similar obstruction, and may require the overcoming of an obstacle such as elevation.

ADDITION. An extension or increase in the *conditioned space* floor area or height of a building or structure.

❖ The code uses this term to reflect new construction that is being added to an existing building. This definition is important when determining the applicability of the code provisions (see Section C502).

AIR BARRIER. Materials assembled and joined together to provide a barrier to air leakage through the building envelope. An air barrier may be a single material or a combination of materials.

❖ Building tightness against air infiltration is an important aspect of energy conservation. The term "air barrier" is defined to support the provisions of Section C402.5 regarding air leakage and building tightness. Note that an air barrier is not a single membrane, but rather the system of sealants, seals, insulation and wall sheathing that prevent air infiltration.

AIR CURTAIN. A device, installed at the building entrance, that generates and discharges a laminar air stream intended to prevent the infiltration of external, unconditioned air into the conditioned spaces, or the loss of interior, conditioned air to the outside.

❖ Air curtains are specifically allowed as an alternative to providing a lobby at a door between conditioned and nonconditioned space or the outside of a building. An air curtain installed on the interior of a building provides a coherent sheet of air created by an air stream and the surrounding entrained air. This sheet of air is able to bend and resist thermal exchange over an opening by way of support from the building's interior pressure and the stability created as the air stream meets a return grill or splits when it meets a surface such as a floor or another air stream.

ALTERATION. Any construction, retrofit or renovation to an existing structure other than repair or addition that requires a permit. Also, a change in a building, electrical, gas, mechanical or plumbing system that involves an extension, addition or change to the arrangement, type or purpose of the original installation that requires a permit.

❖ This definition actually includes two separate definitions: one that applies to building construction and the other to building systems. An alteration is any modification or change made to an existing installation. For example, changing refrigerant types or heat transfer fluids in a system would be considered an alteration. This definition specifically excludes additions or repairs, and also ties the term to situations where a permit is required. See Chapter 1 of the IBC, IMC, IPC and the *International Fuel Gas Code*® (IFGC®) for the information regarding when a permit is required.

APPROVED. Approval by the *code official* as a result of investigation and tests conducted by him or her, or by reason of accepted principles or tests by nationally recognized organizations.

❖ As related to the process of accepting envelope, mechanical, service water heating, lighting and electrical power installations, including materials, equipment and construction systems, this definition identifies where ultimate authority rests. Whenever this term is used, it intends that only the enforcing authority can accept a specific installation or component as complying with the code.

The definition does not force the code official to accept any third-party test. It merely permits the acceptance of the test so that the code official does not have to personally test the item. One example that demonstrates this process is an ICC Evaluation Report. An evaluation report prepared and published by the International Code Council (ICC)® is permitted to be used by a code official to aid in the review and approval of the material or method described in the report. Although the evaluation and report are prepared by the ICC, the code official is not obligated to accept or approve the product based on the evaluation report. The term "approved" is always tied to the code official's approval of the product or project. That the ICC published an evaluation report does not supersede the fact that the approval of the code official is still needed for the material or method described in the report.

APPROVED AGENCY. An established and recognized agency regularly engaged in conducting tests or furnishing inspection services, when such agency has been approved by the *code official*.

❖ In order to identify basic criteria or understand what agencies are being referred to in the code, there is a need to define approved agency. The word "approved" means "acceptable to the code official" (see definition of "Approved"). The basis for the code

INTERNATIONAL CODE COUNCIL®
Copyright © 2015 ICC. ALL RIGHTS RESERVED. Accessed by David Dammon on Jun 21, 2017 12:30:52 PM pursuant to License Agreement with ICC. No further reproduction or distribution authorized. ANY UNAUTHORIZED REPRODUCTION OR DISTRIBUTION IS A VIOLATION OF THE FEDERAL COPYRIGHT ACT AND THE LICENSE AGREEMENT, AND SUBJECT TO CIVIL AND CRIMINAL PENALTIES THEREUNDER.

official's approval of any agency for a particular activity may include, but is not necessarily limited to, the capacity of the agency to perform the work in accordance with the code. This is typically done through a review of resumés and references of the agency and its personnel.

AUTOMATIC. Self-acting, operating by its own mechanism when actuated by some impersonal influence, as, for example, a change in current strength, pressure, temperature or mechanical configuration (see "Manual").

❖ Operation or control devices, or systems operating automatically as opposed to manually, are designed to operate safely with only periodic human intervention or supervision. A thermostat would be an example of something that is automatic. While a person would set the thermostat to the desired temperature, the thermostat would cycle the heating or cooling system on or off on its own once the temperature hits the established setpoints.

BELOW-GRADE WALL. See "Wall, below-grade."

BOILER, MODULATING. A boiler that is capable of more than a single firing rate in response to a varying temperature or heating load.

❖ Modulating boilers are one type of boiler. The minimum efficiency of individual boilers is specified in the various tables in Section C403.2. In addition, the controls of boilers and boiler systems are required to provide efficiencies in the operation of this equipment. Modulating boilers are called out in Section C403.4.2.5 as a method of compliance for the requirement of boiler system turndown.

BOILER SYSTEM. One or more boilers, their piping and controls that work together to supply steam or hot water to heat output devices remote from the boiler.

❖ Boilers are defined in the IMC as "a closed heating appliance intended to supply hot water or steam for space heating, processing or power purposes." The boilers regulated in the code are those used for space heating. The minimum efficiency of individual boilers is specified in the various tables in Section C403.2. Boiler systems are required by Section C403.4.2.5 to provide a turndown function. Additional controls of boilers and boiler systems are specified in Sections C403.2.5, C403.4.2 and C403.4.2.6.

BUBBLE POINT. The refrigerant liquid saturation temperature at a specified pressure.

❖ One of two temperatures used to determine the saturated condensing temperature in a refrigeration system.

BUILDING. Any structure used or intended for supporting or sheltering any use or occupancy, including any mechanical systems, service water heating systems and electric power and lighting systems located on the building site and supporting the building.

❖ This definition indicates that where this term is used in the code, it means a structure intended to provide shelter or support for some activity or occupancy. Though not addressed in the code, it is important to note that the IBC does permit that a fire wall forms a demarcation between two separate, structurally independent buildings. Therefore, the code provisions could be applied to each building separately or to the structure as a whole. This would be a designer's decision to make.

BUILDING COMMISSIONING. A process that verifies and documents that the selected building systems have been designed, installed, and function according to the owner's project requirements and construction documents, and to minimum code requirements.

❖ Building commissioning verifies that building systems are operating as designed. This is important for energy conversation; a system not operating correctly can waste energy.

BUILDING ENTRANCE. Any door, set of doors, doorway, or other form of portal that is used to gain access to the building from the outside by the public.

❖ A building entrance is used to gain access to the building from the outside by the public.

BUILDING SITE. A continguous area of land that is under the ownership or control of one entity.

❖ "Building site" is a key term used throughout the code. It is the area of land that is under the ownership or control of one entity. A building site may be a combination of many parcels of land but is treated as a single unit for the purposes of compliance with this code.

BUILDING THERMAL ENVELOPE. The basement walls, exterior walls, floor, roof and any other building elements that enclose *conditioned space* or provide a boundary between *conditioned space* and exempt or unconditioned space.

❖ "Building thermal envelope" is a key term and resounding theme used throughout the code. It defines what portions of the building form a structurally bound conditioned space, and, thereby, are covered by the insulation and infiltration (air leakage) requirements of the code. The building thermal envelope includes all building components separating conditioned spaces (see commentary, "Conditioned space") from unconditioned spaces or outside ambient conditions and through which heat is transferred. For example, the walls and doors separating an unheated garage (unconditioned space) from an office or living area (conditioned space) are part of the building thermal envelope. The walls and doors separating an unheated garage from the outdoors are not part of the building thermal envelope. Walls, floors and other building components separating two conditioned spaces are not part of the building thermal envelope. For example, interior partition walls, the common or party walls separating dwelling units in multiple-family buildings and the wall between a new conditioned addition and the existing conditioned space are not considered part of the building thermal

INTERNATIONAL CODE COUNCIL®
Copyright © 2015 ICC. ALL RIGHTS RESERVED. Accessed by David Dammon on Jun 21, 2017 12:30:52 PM pursuant to License Agreement with ICC. No further reproduction or distribution authorized. ANY UNAUTHORIZED REPRODUCTION OR DISTRIBUTION IS A VIOLATION OF THE FEDERAL COPYRIGHT ACT AND THE LICENSE AGREEMENT, AND SUBJECT TO CIVIL AND CRIMINAL PENALTIES THEREUNDER.

envelope. Unconditioned spaces (areas having no heating or cooling sources) are placed outside the building envelope. A space is conditioned if it is heated or cooled directly or where a space is indirectly supplied with heating or cooling through uninsulated walls, floors or uninsulated ducts or heating, ventilating and air-conditioning (HVAC) piping. Boundaries that define the building envelope include the following:

- Building assemblies separating a conditioned space from outdoor ambient weather conditions.
- Building assemblies separating a conditioned space from the ground under or around that space, such as the ground around the perimeter of a slab or the soil at the exterior of a conditioned basement wall. Note that the code does not specify requirements for insulating basement floors or underneath slab floors (except at the perimeter edges).
- Building assemblies separating a conditioned space from an unconditioned garage, unconditioned sunroom or similar unheated/cooled area.

The code specifies requirements for ceiling, wall, floor, basement wall, slab-edge and crawl space wall components of the building envelope. In some cases, it may be unclear how to classify a particular part of a building. For example, skylight shafts have properties of a wall assembly but are located in the ceiling assembly. Because many of these items are not addressed specifically in the code, the code official should make the determination as to the appropriate classification and construction. When no distinction exists between roof and wall, such as in an A-frame structure, the code official should determine the appropriate classification. Historically, some codes have designated a wall as having a slope of 60 degrees or greater from the horizontal plane. In such situations, if the wall slope is less than 60 degrees, then classification as a "roof" is appropriate. Because the code is silent on this issue, other options, such as stating that the roof could be considered to begin at a point 8 feet (2439 mm) above the floor surface of the uppermost story, could be used. The phrase "exempted spaces" in the definition of "Building thermal envelope" refers to spaces identified as exempt from this scope of the code or exempted from the thermal envelope requirements of the code (see commentary, Chapter 5 [CE] and Sections C402.1.1 and C402.1.2).

***C*-FACTOR (THERMAL CONDUCTANCE).** The coefficient of heat transmission (surface to surface) through a building component or assembly, equal to the time rate of heat flow per unit area and the unit temperature difference between the warm side and cold side surfaces (Btu/h · ft^2 · °F) [W/(m^2 · K)].

❖ This definition addresses a term needed in the provisions of the code for the *U*-factor method given in Section C402.1.4. The term appears in Table C402.1.4.

CIRCULATING HOT WATER SYSTEM. A specifically designed water distribution system where one or more pumps are operated in the service hot water piping to circulate heated water from the water-heating equipment to the fixture supply and back to the water-heating equipment.

❖ The definition specifies how a circulating hot water system should be designed and operated. These systems are not to be confused with those hot water systems used for space conditioning. The definition is consistent with industry standards.

CLIMATE ZONE. A geographical region based on climatic criteria as specified in this code.

❖ Climate zones are used throughout the code to provide regionally appropriate design standards. The climate zones are specified in Chapter 3 [CE] of the code.

CODE OFFICIAL. The officer or other designated authority charged with the administration and enforcement of this code, or a duly authorized representative.

❖ The statutory power to enforce the code is usually vested in a building department of a state, county or municipality with a designated enforcement officer who is termed the "code official."

COEFFICENT OF PERFORMANCE (COP) – COOLING. The ratio of the rate of heat input, in consistent units, for a complete refrigerating system or some specific portion of that system under designated operating conditions.

❖ This term is from ANSI/ASHRAE/IESNA 90.1 as listed in Chapter 6 [CE]. It is a measure of performance used in the code for refrigeration systems.

COEFFICIENT OF PERFORMANCE (COP) – HEATING. The ratio of the rate of heat delivered to the rate of energy input, in consistent units, for a complete heat pump system, including the compressor and, if applicable, auxiliary heat, under designated operating conditions.

❖ This term is from ANSI/ASHRAE/IESNA 90.1 as listed in Chapter 6 [CE]. It is a measure of performance used in the code for heat pump systems.

COMMERCIAL BUILDING. For this code, all buildings that are not included in the definition of "Residential building."

❖ Commercial buildings include, among others, occupancies for assembly, educational, business, institutional, mercantile, factory/industrial, hazardous storage and utility occupancies (see definition and commentary, "Residential building").

One item that may easily be overlooked is that a Group R-1 occupancy building (a hotel or motel) would be classified as a "commercial building" because it is not included in the definition of "Residential building." Although classified as a residential occupancy by the IBC, hotels and motels tend to be more closely associated with commercial buildings as far as energy usage and operation. In addition, Group

INTERNATIONAL CODE COUNCIL®
Copyright © 2015 ICC. ALL RIGHTS RESERVED. Accessed by David Dammon on Jun 21, 2017 12:30:52 PM pursuant to License Agreement with ICC. No further reproduction or distribution authorized. ANY UNAUTHORIZED REPRODUCTION OR DISTRIBUTION IS A VIOLATION OF THE FEDERAL COPYRIGHT ACT AND THE LICENSE AGREEMENT, AND SUBJECT TO CIVIL AND CRIMINAL PENALTIES THEREUNDER.

R-2, R-3 and R-4 occupancies that are four or more stories in height (other than one- and two family-dwelling structures and townhouses) are also classified as commercial buildings for the purposes of the code.

COMPUTER ROOM. A room whose primary function is to house equipment for the processing and storage of electronic data and that has a design electronic data equipment power density exceeding 20 watts per square foot of conditioned floor area.

❖ Computer rooms, due to the unique nature of the space, have a significant level of internal heat generation that must be addressed to ensure the equipment therein functions properly. This is not intended to apply to office spaces where a computer may be in use at each employee's desk, but is aimed at rooms that are dedicated to operating computer equipment. Table C403.2.3(9) provides minimum efficiency standards for air conditioners used to cool these rooms.

CONDENSING UNIT. A factory-made assembly of refrigeration components designed to compress and liquefy a specific refrigerant. The unit consists of one or more refrigerant compressors, refrigerant condensers (air-cooled, evaporatively cooled, or water-cooled), condenser fans and motors (where used) and factory-supplied accessories.

❖ Condensing units are one type of equipment installed for air-conditioning and refrigeration purposes. The minimum efficiency of condensing units is established in Section C403.2. Condensers serving refrigeration systems must also comply with Section C403.5.1.

CONDITIONED FLOOR AREA. The horizontal projection of the floors associated with the *conditioned space*.

❖ The conditioned floor area is the total area of all floors in the conditioned space of the building.

CONDITIONED SPACE. An area, room or space that is enclosed within the building thermal envelope and is directly or indirectly heated or cooled. Spaces are indirectly heated or cooled where they communicate through openings with conditioned spaces, where they are separated from conditioned spaces by uninsulated walls, floors or ceilings, or where they contain uninsulated ducts, piping or other sources of heating or cooling.

❖ A conditioned space typically is any space that does not communicate directly to the outside; that is, a space not directly ventilated to the outdoors and meets one of the following criteria:

1. The space has a heating or cooling supply register.
2. The space has heating or cooling equipment designed to heat or cool the space, or both, such as a radiant heater built into the ceiling, a baseboard heater or a wall-mounted gas heater.
3. The space contains uninsulated ducts or uninsulated hydronic heating surfaces.
4. The space is inside the building thermal envelope. For example:
   - A basement with insulated walls but without insulation on the basement ceiling.
   - A space adjacent to and not physically separated from a conditioned space (such as a room adjacent to another room with a heating duct, but without a door that can be closed between the rooms).
   - A room completely surrounded by conditioned spaces.

The builder/designer has some flexibility in defining the bounds of the conditioned space as long as the building envelope requirements are met. Spaces that are not conditioned directly but have uninsulated surfaces separating them from conditioned spaces are included within the insulated envelope of the building. For example, an unventilated crawl space below an uninsulated floor is considered part of the conditioned space, even where no heat is directly supplied to the crawl space area. Where the crawl space is included as a conditioned space, the builder must insulate the exterior crawl space walls instead of the floor above. The task of defining the building thermal envelope is left to the permit applicant and must be depicted on the construction documents in accordance with Section C103.2.1.

Examples of unconditioned spaces include parking garages and penthouses that are neither heated nor cooled if all duct surfaces running through these spaces are insulated. Note that the boundary between the conditioned and unconditioned space is subject to the infiltration control requirements of the code (see commentary, Section C402.5).

Historically, the code tied this definition to "conditioning for human comfort" or by specifying that the conditioning fall within a specific range. Starting with the 2006 edition, the code considers any type of conditioning as creating a "conditioned space." Therefore, providing heating within a storage building to keep the stock from freezing would still be considered as creating a conditioned space.

CONTINUOUS AIR BARRIER. A combination of materials and assemblies that restrict or prevent the passage of air through the building thermal envelope.

❖ This definition is necessary to clarify the options for meeting continuous air barrier requirements.

CONTINUOUS INSULATION (ci). Insulating material that is continuous across all structural members without thermal bridges other than fasteners and service openings. It is installed on the interior or exterior or is integral to any opaque surface of the building envelope.

❖ Continuous insulation is essential to building envelope assemblies in nearly all climate zones and most types of construction. The definition is generic in the sense that the type of insulating material is not limited. Provided the

INTERNATIONAL CODE COUNCIL®
Copyright © 2015 ICC. ALL RIGHTS RESERVED. Accessed by David Dammon on Jun 21, 2017 12:30:52 PM pursuant to License Agreement with ICC. No further reproduction or distribution authorized. ANY UNAUTHORIZED REPRODUCTION OR DISTRIBUTION IS A VIOLATION OF THE FEDERAL COPYRIGHT ACT AND THE LICENSE AGREEMENT, AND SUBJECT TO CIVIL AND CRIMINAL PENALTIES THEREUNDER.

material used as insulation provides the required insulation value, it can meet the criteria of being continuous insulation. The requirement can be met with the insulation in any location of the wall, on the exterior of the wall, on the interior side of the wall adjoining the conditioned space or an element in the wall assembly located between other elements of the wall.

CRAWL SPACE WALL. The opaque portion of a wall that encloses a crawl space and is partially or totally below grade.

❖ Crawl spaces are more common in residential construction than in commercial buildings. The residential portion of the code addresses insulation of crawl space walls. Insulation on crawl space walls must be protected in accordance with Section C303.2.1.

CURTAIN WALL. Fenestration products used to create an external nonload-bearing wall that is designed to separate the exterior and interior environments.

❖ This definition is included to help classify and properly apply the code requirements to these products. The industry uses the term to help establish the requirements and separate the products into different groupings. Without defining the curtain wall as a fenestration product, it would be difficult to determine how to properly apply the building envelope requirements.

DAYLIGHT RESPONSIVE CONTROL. A device or system that provides automatic control of electric light levels based on the amount of daylight in a space.

❖ The definition clarifies that these controls must be designed to control the level of electric illumination as a response to the amount of daylight being received.

DAYLIGHT ZONE. That portion of a building's interior floor area that is illuminated by natural light.

❖ Daylight zones are areas that are often able to receive adequate natural light without any artificial lighting. Daylight zones are specifically described in Sections C405.2.3.2 and C405.2.3.3. Section C405.2.3 provides criteria for lighting control in daylight zones to allow occupants to take advantage of this natural light.

DEMAND CONTROL VENTILATION (DCV). A ventilation system capability that provides for the automatic reduction of outdoor air intake below design rates when the actual occupancy of spaces served by the system is less than design occupancy.

❖ This definition is included to support the requirements of Section C403.2.6.1, which requires automatic ventilation controls based on occupancy loads in spaces larger than 500 square feet (46.5 m^2) and with an average occupant load of 25 people per 1,000 square feet (93 m^2).

DEMAND RECIRCULATION WATER SYSTEM. A water distribution system where pumps prime the service hot water piping with heated water upon demand for hot water.

❖ Demand recirculation water systems are more energy efficient than other recirculation systems. Section C404.7 specifies that the water returning to the heating source return via the cold water piping.

DUCT. A tube or conduit utilized for conveying air. The air passages of self-contained systems are not to be construed as air ducts.

❖ Ducts can be factory manufactured or field constructed of sheet metal, gypsum board, fibrous glass board or other approved materials. Ducts are used in air distribution systems, exhaust systems, smoke control systems and combustion air-supply systems. Air passageways that are integral parts of an air handler, packaged air-conditioning unit or similar piece of self-contained, factory-built equipment are not considered ducts in the context of the code.

DUCT SYSTEM. A continuous passageway for the transmission of air that, in addition to ducts, includes duct fittings, dampers, plenums, fans and accessory air-handling equipment and appliances.

❖ Duct systems are part of an air distribution system and include supply, return, transfer and relief/exhaust air systems.

[B] DWELLING UNIT. A single unit providing complete independent living facilities for one or more persons, including permanent provisions for living, sleeping, eating, cooking and sanitation.

❖ A dwelling unit, as stated, is a residential unit that contains all of the necessary facilities for independent living. This provides a single, independent unit that serves a single family or single group of individuals. Dwelling units can be found in Group R-2 and R-3 occupancies as established in the IBC. Where such occupancies are more than three stories, they are considered commercial buildings under this part of the code. The code requirements are applied consistently to all dwelling units whether owner occupied, rented or leased. A dwelling unit is distinguished from a sleeping unit, which does not have all the features of a dwelling unit.

DYNAMIC GLAZING. Any fenestration product that has the fully reversible ability to change its performance properties, including *U*-factor, solar heat gain coefficient (SHGC), or visible transmittance (VT).

❖ Dynamic glazing allows the user to change the performance of the window, such as SHGC ratings to allow additional light in when it is desired or less light. This permits adjustments from season to season, or even daily (see Section C402.4.3.3).

INTERNATIONAL CODE COUNCIL®
Copyright © 2015 ICC. ALL RIGHTS RESERVED. Accessed by David Dammon on Jun 21, 2017 12:30:52 PM pursuant to License Agreement with ICC. No further reproduction or distribution authorized. ANY UNAUTHORIZED REPRODUCTION OR DISTRIBUTION IS A VIOLATION OF THE FEDERAL COPYRIGHT ACT AND THE LICENSE AGREEMENT, AND SUBJECT TO CIVIL AND CRIMINAL PENALTIES THEREUNDER.

ECONOMIZER, AIR. A duct and damper arrangement and automatic control system that allows a cooling system to supply outside air to reduce or eliminate the need for mechanical cooling during mild or cold weather.

❖ Also called air-side economizers, air economizers use controllable dampers to increase the amount of outside air drawn into the building when the outside air is cool or cold and the system requires cooling. To meet the code, economizer systems must be able to supply up to 100 percent of the design supply-air quantity as outside air. The economizer (such as outside air dampers) need only be designed for this flow rate (see commentary, Sections C403.3 and C403.3.3).

As the outside air warms up, there will be a point where outside air intake will increase energy usage. At this point, the economizer must be shut off and the system operated at the minimum outside air volume required for ventilation. The controller that causes this to occur is called the "economizer high-limit shutoff control" or "changeover limit switch."

ECONOMIZER, WATER. A system where the supply air of a cooling system is cooled indirectly with water that is itself cooled by heat or mass transfer to the environment without the use of mechanical cooling.

❖ Although air-side economizers use cool air directly to reduce the cooling load, a water economizer (also called a water-side economizer) uses cool outside air indirectly first to cool water that then cools supply air through a cooling coil, thus reducing the mechanical cooling load. The water economizer is essentially an indirect evaporative cooler. Water is circulated through a cooling tower where it is evaporatively cooled before being circulated through cooling coils to cool supply air indirectly.

To meet the code requirements, water economizers must be able to satisfy the system's entire expected cooling load when outside air temperatures are 50°F (10°C) dry bulb and 45°F (7°C) wet bulb, and below. This design criterion is specified because, unlike air economizers that use cold outside air directly for cooling, the performance of water economizers depends greatly on the selection of components such as cooling towers and heat exchangers (see commentary, Section C403.3.4.1).

ENCLOSED SPACE. A volume surrounded by solid surfaces such as walls, floors, roofs, and openable devices such as doors and operable windows.

❖ This definition supports the requirements of the code regarding daylighting.

ENERGY ANALYSIS. A method for estimating the annual energy use of the *proposed design* and *standard reference design* based on estimates of energy use.

❖ Designs founded on total building performance (see Section C407) use energy analysis when the proposed building cannot satisfy the prescriptive criteria in Section C402, C403, C404 or C405 or when the design professional requires more flexibility for a sophisticated or innovative design. Using the total-building-performance design methodology, the proposed design is evaluated based on the cost of various types of energy used rather than the units of energy used (Btu, kWh). That cost must be established using an hour-by-hour, full-year (8,760 hours) simulation tool capable of simulating the performance of both the proposed and standard designs (see commentary, "Energy simulation tool"). The simulation must be capable of converting calculated energy demand and consumption into utility costs using the actual utility rate schedules rather than the average cost of electricity or gas.

ENERGY COST. The total estimated annual cost for purchased energy for the building functions regulated by this code, including applicable demand charges.

❖ The total annual cost for purchased energy includes demand, power and fuel adjustment charges and the impact of special rate programs for large volume customers. A thorough evaluation of existing tariffs and fee schedules may uncover substantial savings opportunities. In some states, for example, manufacturing customers are exempt from sales taxes for energy. In other states, utilities may have multiple tariff options.

[M] ENERGY RECOVERY VENTILATION SYSTEM. Systems that employ air-to-air heat exchangers to recover energy from exhaust air for the purpose of preheating, precooling, humidifying or dehumidifying outdoor ventilation air prior to supplying the air to a space, either directly or as part of an HVAC system.

❖ Energy recovery systems allow for the exchange of heat from air that is already in the building and near the desired temperature to the outside supply air that is coming into the building. Using the existing conditioned air to help condition or partially condition the outside supply air helps reduce the temperature difference in the supply air so that there is not as great of a demand for mechanical conditioning of the air. As an example, a building that keeps the indoor air at 68°F (20°C) during the winter may be bringing in an outdoor air supply where the outdoor temperature is 20°F (-7°C). Under these conditions, the supply air normally would have to be conditioned to bring it up to the indoor conditions. By using an energy recovery system to exchange some of the heat from the return air that is in the building to the incoming supply air, the outside supply air is partially conditioned so that there is less of a demand for mechanically conditioning the air to the desired temperature (see commentary, Section C403.2.7).

The definition is based on and consistent with the definition in AHRI 1060, which is the standard under which energy recovery ventilation systems are rated and certified for performance.

INTERNATIONAL CODE COUNCIL®
Copyright © 2015 ICC. ALL RIGHTS RESERVED. Accessed by David Dammon on Jun 21, 2017 12:30:52 PM pursuant to License Agreement with ICC. No further reproduction or distribution authorized. ANY UNAUTHORIZED REPRODUCTION OR DISTRIBUTION IS A VIOLATION OF THE FEDERAL COPYRIGHT ACT AND THE LICENSE AGREEMENT, AND SUBJECT TO CIVIL AND CRIMINAL PENALTIES THEREUNDER.

ENERGY SIMULATION TOOL. An *approved* software program or calculation-based methodology that projects the annual energy use of a building.

❖ An energy simulation tool typically is a software package incorporating, among other features, an hour-by-hour, full-year (8,760 hours), multiple-zone program to simulate the performance of both proposed and standard design buildings. It is possible to use other types of simulation tools to approximate the dynamics of hourly energy programs and that can be shown to produce equivalent results for the type of building and HVAC systems under consideration. However, the simulation must be capable of converting calculated energy demand and consumption into utility costs using the actual utility rate schedules (rather than average cost of electricity or gas). Some examples of when an hour-by-hour, full-year type of program is required are:

- When the features intended to reduce energy consumption require time-of-day interactions between weather, loads and operating criteria. Examples include: night ventilation or building thermal storage; chilled water or ice storage; heat recovery; daylighting; and water economizer cooling.
- When utility rates are time-of-day sensitive, and the proposed design uses time-of-day load shifting between different types of mechanical plant components.

ENTRANCE DOOR. Fenestration products used for ingress, egress and access in nonresidential buildings, including, but not limited to, exterior entrances that utilize latching hardware and automatic closers and contain over 50-percent glass specifically designed to withstand heavy use and possibly abuse.

❖ This definition is included to help classify and properly apply the code requirements to these products. The commercial fenestration requirements vary depending on the specific type of product (see Table C402.4). The industry uses the various terms shown in the table (fixed fenestration, operable fenestration, entrance door) to help establish the requirements and separate the products into different groupings.

EQUIPMENT ROOM. A space that contains either electrical equipment, mechanical equipment, machinery, water pumps or hydraulic pumps that are a function of the building's services.

❖ A space where electrical equipment, mechanical equipment, machinery, water pumps or hydraulic pumps are located to support the building's services.

EXTERIOR WALL. Walls including both above-grade walls and basement walls.

❖ Wall insulation requirements defined in the code include almost all opaque exterior construction bounding conditioned space. Depending on the compliance method, the wall type, glazing percentage and whether the wall is on the exterior or just separating conditioned from unconditioned space can affect the wall insulation requirement. Note also that doors (both glazed and opaque) are considered fenestration (see commentary, "Fenestration").

In earlier editions, the code included the limitation that an exterior wall is vertical or sloped at an angle of 60 degrees (1.1 rad) or greater from the horizontal. This limitation may still be helpful to consider if dealing with unusual situations, such as an A-frame building. Where a determination is needed to decide whether the roof or wall provisions are appropriate, this limitation could be helpful. This angle is still included in the definition of vertical fenestration.

FAN BRAKE HORSEPOWER (BHP). The horsepower delivered to the fan's shaft. Brake horsepower does not include the mechanical drive losses (belts, gears, etc.).

❖ This definition supports code requirements for the design of HVAC fan systems that regulate the motor energy use for these systems (see Section C403.2.12.1).

FAN EFFICIENCY GRADE (FEG). A numerical rating identifying the fan's aerodynamic ability to convert shaft power, or impeller power in the case of a direct-driven fan, to air power.

❖ Fan efficiency grade (FEG) is one of two efficiency measures for fans. FEG's are based on fan peak (optimum) energy efficiency that indicates the quality of fan energy usage and the potential for minimizing the fan's energy usage. This second minimum for fan efficiency allows for improved efficiency in the whole HVAC design. It counters temptations to use inexpensive fans over the more efficient.

FAN SYSTEM BHP. The sum of the fan brake horsepower of all fans that are required to operate at fan system design conditions to supply air from the heating or cooling source to the *conditioned spaces* and return it to the source or exhaust it to the outdoors.

❖ This definition supports code requirements for the design of HVAC fan systems that regulate the motor energy use for these systems (see Section C403.2.12.1).

FAN SYSTEM DESIGN CONDITIONS. Operating conditions that can be expected to occur during normal system operation that result in the highest supply fan airflow rate to conditioned spaces served by the system.

❖ See the commentary to "Fan system BHP."

FAN SYSTEM MOTOR NAMEPLATE HP. The sum of the motor nameplate horsepower of all fans that are required to operate at design conditions to supply air from the heating or cooling source to the *conditioned spaces* and return it to the source or exhaust it to the outdoors.

❖ See the commentary to "Fan system BHP."

FENESTRATION. Products classified as either vertical fenestration or skylights.

❖ The term "fenestration" refers both to opaque and glazed doors and the light-transmitting areas of a wall or roof, but primarily windows and skylights. The code

INTERNATIONAL CODE COUNCIL®
Copyright © 2015 ICC. ALL RIGHTS RESERVED. Accessed by David Dammon on Jun 21, 2017 12:30:52 PM pursuant to License Agreement with ICC. No further reproduction or distribution authorized. ANY UNAUTHORIZED REPRODUCTION OR DISTRIBUTION IS A VIOLATION OF THE FEDERAL COPYRIGHT ACT AND THE LICENSE AGREEMENT, AND SUBJECT TO CIVIL AND CRIMINAL PENALTIES THEREUNDER.

sets performance requirements for fenestration by establishing requirements that differ from the wall and roof requirements based on the type of fenestration and, in the case of the prescriptive commercial requirements, by limiting the fenestration area. In some of the compliance options the fenestration type and area allowed depend on the shading coefficient, the size of overhangs, the thermal performance (*U*-factor) and whether daylight responsive controls are installed.

Skylight. Glass or other transparent or translucent glazing material installed at a slope of less than 60 degrees (1.05 rad) from horizontal.

❖ Fenestration falls into two categories: Vertical fenestration and skylights. A skylight is a glazed opening in a roof to admit daylight. Section C402.4 sets limits on the amount of skylights permitted as well as minimum energy efficiency for skylights installed in various climate zones.

Vertical fenestration. Windows (fixed or moveable), opaque doors, glazed doors, glazed block and combination opaque/glazed doors composed of glass or other transparent or translucent glazing materials and installed at a slope of at least 60 degrees (1.05 rad) from horizontal.

❖ Vertical fenestration is that which is typically installed on exterior walls. The required thermal efficiency of fenestration varies by climate zone (see Section C402.4).

FENESTRATION PRODUCT, FIELD-FABRICATED. A fenestration product whose frame is made at the construction site of standard dimensional lumber or other materials that were not previously cut, or otherwise formed with the specific intention of being used to fabricate a fenestration product or exterior door. Field fabricated does not include site-built fenestration.

❖ Field-fabricated fenestration products are not required to be tested to determine their rate of air leakage but must be sealed as required for all assemblies (see Section C402.5.2).

FENESTRATION PRODUCT, SITE-BUILT. A fenestration designed to be made up of field-glazed or field-assembled units using specific factory cut or otherwise factory-formed framing and glazing units. Examples of site-built fenestration include storefront systems, curtain walls, and atrium roof systems.

❖ Fenestration products can be site built, not to be confused with field-fabricated fenestration products. This definition is installed to make that distinction.

***F*-FACTOR.** The perimeter heat loss factor for slab-on-grade floors (Btu/h · ft · °F) [W/(m · K)].

❖ As defined, *F*-factor is needed in the provisions of the code for the assembly *U*-factor method of determining the energy conservation of a building's thermal envelope given in Section C402.1.4. The term appears in Table C402.1.4.

FLOOR AREA, NET. The actual occupied area not including unoccupied accessory areas such as corridors, stairways, toilet rooms, mechanical rooms and closets.

❖ This area is intended to be only the room areas that are used for specific occupancy purposes and does not include circulation areas such as corridors, ramps or stairways, or service and utility spaces such as toilet rooms and mechanical and electrical equipment rooms. Net floor area is typically measured between inside faces of walls in a room.

GENERAL LIGHTING. Lighting that provides a substantially uniform level of illumination throughout an area. General lighting shall not include decorative lighting or lighting that provides a dissimilar level of illumination to serve a specialized application or feature within such area.

❖ The energy requirements for lighting apply in large part to general lighting. Therefore, this definition is needed to clarify code applications.

GENERAL PURPOSE ELECTRIC MOTOR (SUBTYPE I). A motor that is designed in standard ratings with either of the following:

1. Standard operating characteristics and standard mechanical construction for use under usual service conditions, such as those specified in NEMA MG1, paragraph 14.02, "Usual Service Conditions," and without restriction to a particular application or type of application.
2. Standard operating characteristics or standard mechanical construction for use under unusual service conditions, such as those specified in NEMA MG1, paragraph 14.03, "Unusual Service Conditions," or for a particular type of application, and that can be used in most general purpose applications.

General purpose electric motors (Subtype I) are constructed in NEMA T-frame sizes or IEC metric equivalent, starting at 143T.

❖ The code regulates the efficiency of electric motors. The efficiency is established based on three categories of motors as defined in this chapter: General purpose electric motor (Subtype I); General purpose electric motor (Subtype II); and Small electric motor.

GENERAL PURPOSE ELECTRIC MOTOR (SUBTYPE II). A motor incorporating the design elements of a general purpose electric motor (Subtype I) that is configured as one of the following:

1. A U-frame motor.
2. A Design C motor.
3. A close-coupled pump motor.
4. A footless motor.
5. A vertical, solid-shaft, normal-thrust motor (as tested in a horizontal configuration).
6. An 8-pole motor (900 rpm).

INTERNATIONAL CODE COUNCIL®
Copyright © 2015 ICC. ALL RIGHTS RESERVED. Accessed by David Dammon on Jun 21, 2017 12:30:52 PM pursuant to License Agreement with ICC. No further reproduction or distribution authorized. ANY UNAUTHORIZED REPRODUCTION OR DISTRIBUTION IS A VIOLATION OF THE FEDERAL COPYRIGHT ACT AND THE LICENSE AGREEMENT, AND SUBJECT TO CIVIL AND CRIMINAL PENALTIES THEREUNDER.

7. A polyphase motor with voltage of not more than 600 volts (other than 230 or 460 volts).

❖ See the commentary to "General purpose electric motor (Subtype I)."

GREENHOUSE. A structure or a thermally isolated area of a building that maintains a specialized sunlit environment exclusively used for, and essential to, the cultivation, protection or maintenance of plants.

❖ This term is used to apply to a variety of buildings or parts of buildings, however for the purposes of the code, a definition is provided to clarify application of Section C402.1.1. Greenhouses meeting the definition are exempt from the thermal envelope requirements of the code. Greenhouses used for other purposes such as habitation, a sunroom or for retail business would not meet the definition.

HEAT TRAP. An arrangement of piping and fittings, such as elbows, or a commercially available heat trap that prevents thermosyphoning of hot water during standby periods.

❖ Storage hot water tanks with vertical risers in noncirculating systems are required to have either integral heat traps or external heat traps on both the inlet and outlet piping located as close as practicable to the water heater (see commentary, Section C404.3). A heat trap is a device or an arrangement of piping that keeps the buoyant hot water from circulating through a piping distribution system through natural convection (or thermal-siphoning effects). Heat traps can be made by offsetting the device or piping vertically 24 inches (610 mm) down from the cold water inlet on the tank, then horizontally about 6 inches (152 mm), then back up to the cold water supply to the tank [see Commentary Figure C404.4(2)]. The same design can be applied to the hot water outlet side of the tank. Integral heat traps are designed into the water heater by the manufacturer. Heat traps are not required on tanks without vertical risers; however, systems without heat traps, regardless of whether they have circulation pumps, must meet the insulation requirements for circulating systems (see commentary, Section C404.4). There are effective heat trap fittings that use either a teflon/polypropylene ball and seat arrangement or a flexible polypropylene flapper. When water is drawn, the ball checks are moved from their standby position or the flapper is disengaged for proper water flow to and from the tank.

HEATED SLAB. Slab-on-grade construction in which the heating elements, hydronic tubing, or hot air distribution system is in contact with, or placed within or under, the slab.

❖ The space above a heated slab is always conditioned (heated). The definition clarifies that certain slabs are the heating source and, as covered in the code, may require more insulation than unheated slabs. The installation of a radiant heat source in a space does not, in and of itself, qualify a slab as heated.

HIGH SPEED DOOR. A nonswinging door used primarily to facilitate vehicular access or material transportation, with a minimum opening rate of 32 inches (813 mm) per second, a minimum closing rate of 24 inches (610 mm) per second and that includes an automatic-closing device.

❖ High speed doors are afforded a higher air leakage (infiltration) rate than other doors. The nature of the door design to achieve quick opening and closing makes it difficult to limit air leakage. These doors are used where maintaining a specific indoor environment is essential to the use, yet a doorway through which materials can be moved is also critical.

HISTORIC BUILDING. Any building or structure that is one or more of the following:

1. Listed, or certified as eligible for listing by the State Historic Preservation Officer or the Keeper of the National Register of Historic Places, in the National Register of Historic Places.
2. Designated as historic under an applicable state or local law.
3. Certified as a contributing resource within a National Register-listed, state-designated or locally designated historic district.

❖ This definition serves as the baseline to determine whether a building is considered historic. The code in Section C501.6 waives application of the code requirements where such action would harm the historic nature of the building.

HUMIDISTAT. A regulatory device, actuated by changes in humidity, used for automatic control of relative humidity.

❖ A humidistat is a sensing device that measures the amount of moisture vapor in the air. Humidistats are used to control humidifying and dehumidifying equipment.

INFILTRATION. The uncontrolled inward air leakage into a building caused by the pressure effects of wind or the effect of differences in the indoor and outdoor air density or both.

❖ Air leakage is random movement of air into and out of a building through cracks and holes in the building envelope. In technical terms, air leakage is called "infiltration" (air moving into a building) or "exfiltration" (air moving out of a building). In nontechnical terms, air leaks are often referred to as "drafts." Infiltration may be reduced by either reducing the sources of air leakage (joints, penetrations and holes in the building envelope) or by reducing the pressures driving the airflow.

INTEGRATED PART LOAD VALUE (IPLV). A single-number figure of merit based on part-load EER, COP or kW/ton expressing part-load efficiency for air-conditioning and heat pump equipment on the basis of weighted operation at various load capacities for equipment.

❖ This is an efficiency measure for electrically operated condensing units, chillers and other cooling equipment used throughout the code.

LABELED. Equipment, materials or products to which have been affixed a label, seal, symbol or other identifying mark of a

INTERNATIONAL CODE COUNCIL®
Copyright © 2015 ICC. ALL RIGHTS RESERVED. Accessed by David Dammon on Jun 21, 2017 12:30:52 PM pursuant to License Agreement with ICC. No further reproduction or distribution authorized. ANY UNAUTHORIZED REPRODUCTION OR DISTRIBUTION IS A VIOLATION OF THE FEDERAL COPYRIGHT ACT AND THE LICENSE AGREEMENT, AND SUBJECT TO CIVIL AND CRIMINAL PENALTIES THEREUNDER.

nationally recognized testing laboratory, inspection agency or other organization concerned with product evaluation that maintains periodic inspection of the production of the above-labeled items and whose labeling indicates either that the equipment, material or product meets identified standards or has been tested and found suitable for a specified purpose.

❖ When a product is labeled, the label indicates that the equipment or material has been tested for conformance to an applicable standard and that the component is subject to third-party inspection, which verifies that the minimum level of quality required by the applicable standard is maintained. Labeling is a readily available source of information that is useful for field inspection of installed products. The label identifies the product or material and provides other information that can be further investigated if there is a question concerning the suitability of the product or material for the specific installation. The labeling agency performing the third-party inspection must be approved by the code official and the basis for this approval may include, but is not necessarily limited to, the capacity and capability of the agency to perform the specific testing and inspection. The applicable referenced standard often states the minimum identifying information that must be on a label. The data contained on a label typically includes, but is not necessarily limited to, the name of the manufacturer, the product name or serial number, installation specifications, applicable tests and standards, the testing approved and the labeling agency.

LINER SYSTEM (Ls). A system that includes the following:

1. A continuous vapor barrier liner membrane that is installed below the purlins and that is uninterrupted by framing members.
2. An uncompressed, unfaced insulation resting on top of the liner membrane and located between the purlins.

For multilayer installations, the last rated *R-value* of insulation is for unfaced insulation draped over purlins and then compressed when the metal roof panels are attached.

❖ A liner system is a method of insulation installation used in metal buildings. The method is specified in Table C402.1.3.

LISTED. Equipment, materials, products or services included in a list published by an organization acceptable to the *code official* and concerned with evaluation of products or services that maintains periodic inspection of production of *listed* equipment or materials or periodic evaluation of services and whose listing states either that the equipment, material, product or service meets identified standards or has been tested and found suitable for a specified purpose.

❖ When a product is listed and labeled, it indicates that it has been tested for conformance to an applicable standard and is subject to a third-party inspection quality assurance (QA) program. The QA verifies that the minimum level of quality required by the appropriate standard is maintained. The listing states either that the equipment or material meets nationally recognized standards or it has been found suitable for use in a specified manner. The listing becomes part of the documentation that the code official can use to approve or disapprove the equipment or appliance.

LOW-SLOPED ROOF. A roof having a slope less than 2 units vertical in 12 units horizontal.

❖ Solar reflectance and thermal emittance requirements of Section C402.3 apply only to low-sloped roofs in specified climate zones.

LOW-VOLTAGE DRY-TYPE DISTRIBUTION TRANSFORMER. A transformer that is air-cooled, does not use oil as a coolant, has an input voltage less than or equal to 600 volts and is rated for operation at a frequency of 60 hertz.

❖ The code sets minimum efficiency requirements for transformers in Section C405.7.

LOW-VOLTAGE LIGHTING. Lighting equipment powered through a transformer such as a cable conductor, a rail conductor and track lighting.

❖ The wattage of the transformer supplying power to low-voltage lighting is included in the equation determining the total connected lighting power of a building.

MANUAL. Capable of being operated by personal intervention (see "Automatic").

❖ Devices, systems or equipment having manual controls or overrides are designed to operate safely with only human intervention instead of having an automatic operation or control system (see commentary, "Automatic").

Manual switch controls stay either off or on until a person flips the switch to a different position.

NAMEPLATE HORSEPOWER. The nominal motor horsepower rating stamped on the motor nameplate.

❖ This definition supports code requirements for the design of HVAC fan systems that regulate the motor energy use for these systems (see Section C403.2.12.1).

NONSTANDARD PART LOAD VALUE (NPLV). A single-number part-load efficiency figure of merit calculated and referenced to conditions other than IPLV conditions, for units that are not designed to operate at ARI standard rating conditions.

❖ This is an efficiency measure for electrically operated condensing units, chillers and other cooling equipment used throughout the code.

OCCUPANT SENSOR CONTROL. An automatic control device or system that detects the presence or absence of people within an area and causes lighting, equipment or appliances to be regulated accordingly.

❖ Occupant sensor controls are one type of lighting control required in Sections C405.2 and C405.2.1. The controls allow lights to be automatically turned off

INTERNATIONAL CODE COUNCIL®
Copyright © 2015 ICC. ALL RIGHTS RESERVED. Accessed by David Dammon on Jun 21, 2017 12:30:52 PM pursuant to License Agreement with ICC. No further reproduction or distribution authorized. ANY UNAUTHORIZED REPRODUCTION OR DISTRIBUTION IS A VIOLATION OF THE FEDERAL COPYRIGHT ACT AND THE LICENSE AGREEMENT, AND SUBJECT TO CIVIL AND CRIMINAL PENALTIES THEREUNDER.

when people are not in an area, thus reducing energy use for lighting in such rooms.

ON-SITE RENEWABLE ENERGY. Energy derived from solar radiation, wind, waves, tides, landfill gas, biomass or the internal heat of the earth. The energy system providing on-site renewable energy shall be located on the project site.

❖ The code requires one of six additional energy efficiency packages in Section C406, one of which is on-site renewable energy. This definition attempts to clarify what that is.

OPAQUE DOOR. A door that is not less than 50-percent opaque in surface area.

❖ Opaque doors are included in the definition of fenestration but are regulated as part of the opaque envelope assemblies, not like other fenestration in a building's thermal envelope. Specific insulation and thermal resistances standards are provided in Tables C402.1.3 and C402.1.4.

POWERED ROOF/WALL VENTILATORS. A fan consisting of a centrifugal or axial impeller with an integral driver in a weather-resistant housing and with a base designed to fit, usually by means of a curb, over a wall or roof opening.

❖ Powered roof and wall ventilators are exempt from the minimum fan efficiency requirements specified in Section C403.2.12.3.

PROPOSED DESIGN. A description of the proposed building used to estimate annual energy use for determining compliance based on total building performance.

❖ The proposed design is simply a description of the proposed building, used to estimate annual energy costs for determining compliance based on total building performance. The proposed design is effectively the subject building intended to be built. The performance of the proposed design (the building exactly as it is anticipated to be constructed) is then compared to the standard reference design (a similar building that is assumed to be built to a prescriptive set of minimum code requirements).

RADIANT HEATING SYSTEM. A heating system that transfers heat to objects and surfaces within a conditioned space, primarily by infrared radiation.

❖ Radiant heating systems are most commonly installed in floors, but radiant heating panels can also be installed in walls and ceilings. There are three types used in floors: radiant air floors; electric radiant floors; and hot water (hydronic radiant) floors. The systems are installed between layers of other materials comprising the floor assembly. Radiant panels in walls and ceilings are usually either electric or hydronic. The code specifies minimum insulation standards where these heating systems are installed in a building's thermal envelope (see Section C402.2.6).

READILY ACCESSIBLE. Capable of being reached quickly for operation, renewal or inspection without requiring those to whom ready access is requisite to climb over or remove obstacles or to resort to portable ladders or access equipment (see "*Accessible*").

❖ Readily accessible can be described as able to be quickly reached or approached for operation, inspection, observation or emergency action. Ready access does not require the removal or movement of any door panel or similar obstruction, or overcoming physical obstructions or obstacles, including differential elevation.

REFRIGERANT DEW POINT. The refrigerant vapor saturation temperature at a specified pressure.

❖ One of two temperatures used to determine the saturated condensing temperature in a refrigeration system.

REFRIGERATED WAREHOUSE COOLER. An enclosed storage space capable of being refrigerated to temperatures above 32°F (0°C), that can be walked into and has a total chilled storage area of not less than 3,000 square feet (279 m^2).

❖ There are four related cooled spaces regulated by the code: Refrigerated warehouse cooler; Refrigerated warehouse freezer; Walk-in cooler and Walk-in freezer. The "walk-in spaces" are distinguished by being less than 3,000 square feet (279 m^2). The freezer spaces are distinguished from the coolers by having temperatures maintained at or below 32°F (0°C). The regulations for these four items are fairly consistent.

REFRIGERATED WAREHOUSE FREEZER. An enclosed storage space capable of being refrigerated to temperatures at or below 32°F (0°C), that can be walked into and has a total chilled storage area of not less than 3,000 square feet (279 m^2).

❖ See the commentary to "Refrigerated warehouse cooler."

REFRIGERATION SYSTEM, LOW TEMPERATURE. Systems for maintaining food product in a frozen state in refrigeration applications.

❖ One of two refrigeration systems for which the code sets standards for fan-powered condensers remotely located from the condensing unit or the feature being served.

REFRIGERATION SYSTEM, MEDIUM TEMPERATURE. Systems for maintaining food product above freezing in refrigeration applications.

❖ One of two refrigeration systems for which the code sets standards for fan-powered condensers remotely located from the condensing unit or the feature being served.

INTERNATIONAL CODE COUNCIL®
Copyright © 2015 ICC. ALL RIGHTS RESERVED. Accessed by David Dammon on Jun 21, 2017 12:30:52 PM pursuant to License Agreement with ICC. No further reproduction or distribution authorized. ANY UNAUTHORIZED REPRODUCTION OR DISTRIBUTION IS A VIOLATION OF THE FEDERAL COPYRIGHT ACT AND THE LICENSE AGREEMENT, AND SUBJECT TO CIVIL AND CRIMINAL PENALTIES THEREUNDER.

REGISTERED DESIGN PROFESSIONAL. An individual who is registered or licensed to practice their respective design profession as defined by the statutory requirements of the professional registration laws of the state or jurisdiction in which the project is to be constructed.

❖ Legal qualifications for engineers and architects are established by the state having jurisdiction. Licensing and registration of engineers and architects are accomplished by written or oral examinations offered by states, or by reciprocity (licensing in other states).

REPAIR. The reconstruction or renewal of any part of an existing building for the purpose of its maintenance or to correct damage.

❖ The repair of an appliance, energy-using subsystem or other piece of equipment typically does not require a permit. This definition makes it clear that a repair is limited to work on the item and does not include complete or substantial replacement or other new work.

This definition is important when applying the provisions of Chapter 5 [CE] and determining how the code will apply to existing buildings and installations.

REROOFING. The process of recovering or replacing an existing roof covering. See "Roof recover" and "Roof replacement."

❖ Reroofing is the general term that includes both subcategories of roof recovering and roof replacement. The subcategories are separately defined. This term refers to the process of covering an existing roof system or replacing an existing roof system with a new roofing system. See definitions of "Roof recover," "Roof replacement" and "Roof repair."

RESIDENTIAL BUILDING. For this code, includes detached one- and two-family dwellings and multiple single-family dwellings (townhouses) as well as Group R-2, R-3 and R-4 buildings three stories or less in height above grade plane.

❖ The definition of a residential building is important not only for what it does include, but also for what it does not. One of the primary limitations of this definition is the fact that this term will only include the Group R-2 and R-4 occupancies when they are three stories or less in height. Therefore, if a Group R-2 or R-4 occupancy is over three stories in height, it would be defined as a "Commercial building" (see definition, "Commercial building") and be required to comply with the requirements of Chapter 4[CE] instead of the residential provisions of Chapter 4 [RE]. Detached one- and two-family dwellings as well as townhouses are considered residential buildings regardless of the number of stories. However, the Group R-3 category as outlined in IBC Section 310.5 includes uses in addition to those containing only one or two dwelling units and townhouses. These other R-3 uses [e.g., boarding houses, congregate living facilities, lodging houses and small care facilities (five or fewer care recipients)] if over three stories would fall into the commercial building category.

Group R-1 buildings are not included in this definition. Therefore, any hotel, motel or similar use classified as a Group R-1 occupancy would need to comply with the commercial building requirements. This would apply even if the hotel or motel was three stories or less in height.

Though not specifically addressed in this definition, any building built under the provisions of the *International Residential Code*® (IRC®) would also be considered a "Residential building."

The Group R-2 classification of residential buildings includes apartments and condominiums where three or more units are physically attached. In addition, it includes certain boarding houses, convents, dormitories, fraternities or other such facilities. The code defines a dwelling unit as a single housekeeping unit of one or more rooms providing complete independent living facilities, including permanent provisions for living, sleeping, cooking and sanitation (see commentary, "Dwelling unit"). Many of the code provisions address dwelling units specifically. All of the elements listed in the definition must be present for a dwelling unit to exist. Guest rooms (sleeping units) in hotels and motels, patient care rooms in nursing homes and larger group care facilities do not meet these criteria. Therefore, these buildings are considered commercial uses, even if they are three stories or less in height (see the IBC for additional information on dwelling units). Although this definition closely follows the Group R-2 occupancy classification of the IBC, it is important to note there are differences. The main distinction is the three-story limitation, which is found only in the code.

The Group R-4 classification is included in order to coordinate the provisions of the code with the IBC. Group R-4 includes facilities where between six and 16 people reside in a supervised residential environment and receive custodial care. This distinction is important because larger facilities are classified by the IBC as Group I occupancies and, therefore, would be considered commercial buildings by the code (see definition, "Commercial building").

As mentioned earlier, it is important to note the application of the three-story limitation, which is found only in the code. This issue of defining a residential building over three stories in height as a commercial building coordinates the code with ANSI/ASHRAE/IESNA 90.1.

ROOF ASSEMBLY. A system designed to provide weather protection and resistance to design loads. The system consists of a roof covering and roof deck or a single component serving as both the roof covering and the roof deck. A roof assembly includes the roof covering, underlayment, roof deck, insulation, vapor retarder and interior finish.

❖ This section basically defines the cover or protection over a building, but it will be important to the energy requirements in several sections. The roof assembly generally serves as the building thermal envelope for the top of the building. By defining the various elements that are included in the definition, the phrase

INTERNATIONAL CODE COUNCIL®
Copyright © 2015 ICC. ALL RIGHTS RESERVED. Accessed by David Dammon on Jun 21, 2017 12:30:52 PM pursuant to License Agreement with ICC. No further reproduction or distribution authorized. ANY UNAUTHORIZED REPRODUCTION OR DISTRIBUTION IS A VIOLATION OF THE FEDERAL COPYRIGHT ACT AND THE LICENSE AGREEMENT, AND SUBJECT TO CIVIL AND CRIMINAL PENALTIES THEREUNDER.

can be applied to situations where the insulation is installed above the roof deck, beneath the roof deck or above a ceiling that occurs below.

This definition will be important not only when applying the prescriptive insulation requirements of the building thermal envelope, but also when applying the performance requirements where the type of roof covering and ventilation can affect the energy efficiency.

Numerous horizontal and sloped surfaces may be associated with the roof or roof/ceiling assembly, including flat and cathedral ceilings, dormer roofs, bay-window roofs, overhead portions of an interior stairway to an attic, or other unconditioned space, attic hatches and skylights. When determining the area of the assembly under the performance options, ceiling assembly areas should be measured on the slope of the finished interior surface.

In earlier editions, the code included the limitation that a roof is generally horizontal or sloped at an angle of less than 60 degrees (1.1 rad) from the horizontal. This limitation still may be helpful to consider if dealing with unusual situations, such as an A-frame building. Where a determination is needed to decide whether the roof or wall provisions are appropriate, this limitation could be helpful (see commentary, "Skylights," "Fenestration" and "Exterior wall").

ROOF RECOVER. The process of installing an additional roof covering over an existing roof covering without removing the existing roof covering.

❖ This term refers to the process of adding a new roof covering on top of the existing roof system without removing the existing roofing system. See definitions of "Roof replacement" and "Roof repair." See Chapter 5 [CE] for requirements for roof recovers.

ROOF REPAIR. Reconstruction or renewal of any part of an existing roof for the purpose of its maintenance.

❖ Roof repair is distinguished from roof recovering and roof replacement. It is limited to actions aimed at maintaining an existing roof and restoring portions that have been damaged. Roof repairs are typically exempt from permit. See definitions of "Roof recover" and "Roof replacement." See Chapter 5 [CE] for requirements for roof repairs.

ROOF REPLACMENT. The process of removing the existing roof covering, repairing any damaged substrate and installing a new roof covering.

❖ This term refers to the process of removing an existing roof covering and replacing it with a new covering. This is distinguished from roof recovering, where the new cover is added on top of the existing roof cover. See definitions of "Roof recover" and "Roof repair." See Chapter 5 [CE] for requirements for roof replacements.

ROOFTOP MONITOR. A raised section of a roof containing vertical fenestration along one or more sides.

❖ Where rooftop monitors are present, they help establish the daylight zone in a space. Where there is sufficient daylight zone area provided under rooftop monitors, skylights are not required (see Section C402.4.2).

***R*-VALUE (THERMAL RESISTANCE).** The inverse of the time rate of heat flow through a body from one of its bounding surfaces to the other surface for a unit temperature difference between the two surfaces, under steady state conditions, per unit area ($h \cdot ft^2 \cdot °F/Btu$) [$(m^2 \cdot K)/W$].

❖ Thermal resistance measures how well a material or series of materials retards heat flow. Insulation thermal resistance is rated using *R*-values. As the *R*-value of an element or assembly increases, the heat loss or gain through that element or assembly decreases. Thus, a higher *R*-value is considered better than a lower *R*-value.

SATURATED CONDENSING TEMPERATURE. The saturation temperature corresponding to the measured refrigerant pressure at the condenser inlet for single component and azeotropic refrigerants, and the arithmetic average of the dew point and *bubble point* temperatures corresponding to the refrigerant pressure at the condenser entrance for zeotropic refrigerants.

❖ Fan-powered condensers in refrigeration systems must comply with various standards set in Section C403.5. One of these standards is a maximum saturated condensing temperature in both low- and medium-temperature refrigeration systems.

SCREW LAMP HOLDERS. A lamp base that requires a screw-in-type lamp, such as a compact-fluorescent, incandescent or tungsten-halogen bulb.

❖ Holders come in various sizes, including candelabra base, intermediate base and medium base. The definition is specific to screw-in-type lamps. The type of bulb used in the holder does not make a difference. It is simply the type of base on the bulb that is important under this definition.

SERVICE WATER HEATING. Supply of hot water for purposes other than comfort heating.

❖ Although the definition makes it clear that the code requirement applies to equipment used to produce and distribute hot water for purposes other than comfort heating, the definition also applies to energy-efficient process water-heating systems and equipment. Equipment providing or distributing hot water for uses such as restrooms, showers, laundries, kitchens, pools and spas, defrosting of sidewalks and driveways, carwashes, beauty salons and other commercial enterprises are included. Space-conditioning boilers and distribution systems are not considered service water-heating components.

INTERNATIONAL CODE COUNCIL®

Copyright © 2015 ICC. ALL RIGHTS RESERVED. Accessed by David Dammon on Jun 21, 2017 12:30:52 PM pursuant to License Agreement with ICC. No further reproduction or distribution authorized. ANY UNAUTHORIZED REPRODUCTION OR DISTRIBUTION IS A VIOLATION OF THE FEDERAL COPYRIGHT ACT AND THE LICENSE AGREEMENT, AND SUBJECT TO CIVIL AND CRIMINAL PENALTIES THEREUNDER.

[B] SLEEPING UNIT. A room or space in which people sleep, which can also include permanent provisions for living, eating, and either sanitation or kitchen facilities but not both. Such rooms and spaces that are also part of a dwelling unit are not *sleeping units*.

❖ This definition is provided as a distinction between these types of spaces and dwelling units.

In general, sleeping units will be found in commercial buildings such as hotels and motels that are classified by the IBC as a Group R-1 occupancy and Group I-2 patient care facilities (e.g., hospitals and nursing homes). However, they can be found in dormitories, fraternities and other uses that would be classified as Group R-2 occupancies and, therefore, could be considered a "residential building," depending on the building's height.

SMALL ELECTRIC MOTOR. A general purpose, alternating current, single speed induction motor.

❖ See the commentary to "General purpose electric motor (Subtype I)."

SOLAR HEAT GAIN COEFFICIENT (SHGC). The ratio of the solar heat gain entering the space through the fenestration assembly to the incident solar radiation. Solar heat gain includes directly transmitted solar heat and absorbed solar radiation which is then reradiated, conducted or convected into the space.

❖ The SHGC is the fraction of incident solar radiation admitted through a window or skylight. This includes the solar radiation that is directly transmitted, and that which is absorbed and subsequently released inward. Therefore, the SHGC measures how well a window blocks the heat from sunlight. The SHGC is the fraction of the heat from the sun that enters through a window. SHGC is expressed as a number between 0 and 1. The lower a window's SHGC, the less solar heat it transmits.

In the warmer climate zones, where cooling is the dominant requirement, the code generally will impose a limitation on the amount of solar heat gain permitted. In colder climate zones (7 and 8), the code generally will not place any SHGC requirements on the fenestration. Thus, it will depend on the climate zone as to whether a higher or lower SHGC is best. While windows with lower SHGC values reduce summer cooling and overheating, they also reduce free winter solar heat gain.

STANDARD REFERENCE DESIGN. A version of the *proposed design* that meets the minimum requirements of this code and is used to determine the maximum annual energy use requirement for compliance based on total building performance.

❖ The standard reference design is simply the same building design as that intended to be built (see commentary, "Proposed design"), except the energy conservation features required by the code (insulation, windows, infiltration, mechanical, lighting and service water-heating systems) are modified to meet the minimum prescriptive requirements, as applicable. Note that the standard reference design is not truly a separate building, and it is never actually built. It is the baseline against which the proposed design is measured.

The performance of the proposed design (the building exactly as it is anticipated to be constructed) is then compared to the standard reference design (a similar building that is assumed to be built to a prescriptive set of minimum code requirements). Under the performance paths, if the energy efficiency of the proposed design is equal to or better than that of the standard reference design, then the proposed design is acceptable and in compliance with the code requirements.

STOREFRONT. A nonresidential system of doors and windows mulled as a composite fenestration structure that has been designed to resist heavy use. *Storefront* systems include, but are not limited to, exterior fenestration systems that span from the floor level or above to the ceiling of the same story on commercial buildings, with or without mulled windows and doors.

❖ This definition provides the description for this specific type of commercial glazing system. Storefront systems, due to their size and required structural requirements, are treated differently than other commercial fenestration systems.

THERMOSTAT. An automatic control device used to maintain temperature at a fixed or adjustable set point.

❖ Thermostats combine control and sensing functions in a single device. Thermostats may signal other control devices to trigger an action when certain temperatures are reached or surpassed. Because thermostats are so prevalent, the various types and their operating characteristics are described here.

The occupied/unoccupied or dual-temperature room thermostat reduces temperature at night. It may be indexed (changed from occupied to unoccupied operation or vice versa) individually from a remote point or in a group by a manual or time switch. Some types have an individual clock and switch built in.

The pneumatic day-night thermostat uses a two-pressure air supply system, where changing the pressure at a central point from one value to the other actuates switching devices in the thermostat and indexes it.

The heating/cooling or summer/winter thermostat can have its action reversed and its setpoint changed in response to outdoor and comfort conditions. It is used to actuate controlled devices, such as valves or dampers, that regulate a heating source at one time and a cooling source at another. The pneumatic heating/cooling thermostat uses a two-pressure air supply similar to that described for occupied/unoccupied thermostats.

Multistage thermostats are arranged to operate two or more successive steps in sequence.

A submaster thermostat has its setpoint raised or lowered over a predetermined range, in accordance

INTERNATIONAL CODE COUNCIL®
Copyright © 2015 ICC. ALL RIGHTS RESERVED. Accessed by David Dammon on Jun 21, 2017 12:30:52 PM pursuant to License Agreement with ICC. No further reproduction or distribution authorized. ANY UNAUTHORIZED REPRODUCTION OR DISTRIBUTION IS A VIOLATION OF THE FEDERAL COPYRIGHT ACT AND THE LICENSE AGREEMENT, AND SUBJECT TO CIVIL AND CRIMINAL PENALTIES THEREUNDER.

with variations in output from a master controller. The master controller can be a thermostat, manual switch, pressure controller or similar device. For example, a master thermostat measuring outdoor air temperature can be used to readjust the setpoint of a submaster thermostat that controls the water temperature in a heating system.

A wet-bulb thermostat is often used (in combination with a dry-bulb thermostat) for humidity control. Using a wick or another means of keeping the bulb wet with pure (distilled) water and rapid air motion to ensure a true wet-bulb measurement is essential. Wet-bulb thermostats are seldom used.

A dew-point thermostat is designed to control dew-point temperatures.

A dead-band thermostat has a wide differential over which the thermostat remains neutral, requiring neither heating nor cooling. This differential may be adjustable up to 10°F (-12°C) (see Section C403.2.4.2).

TIME SWITCH CONTROL. An automatic control device or system that controls lighting or other loads, including switching off, based on time schedules.

❖ Time switch controls are one type of lighting controls required in Sections C405.2 and C405.2.2. In areas of the building where the code doesn't require occupant sensor controls, time switch controls are required. The controls allow lights to be automatically turned off when people are not in an area, thus reducing energy use for lighting in such rooms. Occupant sensor controls, by comparison, trigger based on the presence of people in a space. Time switch controls allow lights to be turned on and off based on a programmed schedule.

***U*-FACTOR (THERMAL TRANSMITTANCE).** The coefficient of heat transmission (air to air) through a building component or assembly, equal to the time rate of heat flow per unit area and unit temperature difference between the warm side and cold side air films (Btu/h · ft^2 · °F) [W/(m^2 · K)].

❖ Thermal transmittance (*U*-factor) is a measure of how well a material or series of materials conducts heat. *U*-factors for window and door assemblies are the reciprocal of the assembly *R*-value:

$$U\text{-factor} = \frac{1}{R\text{-value}}$$

For other building assemblies, such as a wall or roof/ceiling, the *R*-value used in the above equation is the *R*-value of the entire assembly, not just the insulation. This distinction is important and reflects the provisions of Section C402.1.1. It also explains why there are differences between the comparable values of Tables C402.1.3 and C402.1.4.

VARIABLE REFRIGERANT FLOW SYSTEM. An engineered direct-expansion (DX) refrigerant system that incorporates a common condensing unit, at least one variable-capacity compressor, a distributed refrigerant piping network to multiple indoor fan heating and cooling units each capable of individual zone temperature control, through integral zone temperature control devices and a common communications network. Variable refrigerant flow utilizes three or more steps of control on common interconnecting piping.

❖ The code requires increased efficiency for variable refrigerant flow systems where the designer chooses compliance with Section C406.2 as the method to increase energy efficiency in a building design.

[M] VENTILATION. The natural or mechanical process of supplying conditioned or unconditioned air to, or removing such air from, any space.

❖ Ventilation is provided by the wind, naturally occurring pressure and temperature differences or mechanical systems typically consisting of fans and blowers.

[M] VENTILATION AIR. That portion of supply air that comes from outside (outdoors) plus any recirculated air that has been treated to maintain the desired quality of air within a designated space.

❖ Ventilation air can be used for comfort cooling, control of air contaminants, equipment cooling and replenishing oxygen levels (see commentary, "Ventilation").

VISIBLE TRANSMITTANCE [VT]. The ratio of visible light entering the space through the fenestration product assembly to the incident visible light. Visible transmittance includes the effects of glazing material and frame and is expressed as a number between 0 and 1.

❖ Use of daylight for energy conservation is now a fundamental part of the code. However, requirements for lower SHGC values for glazing can work against this, because glazing with lower SHGC values generally will allow less visible light through the glazing. Therefore, the code now must include a limit on VT.

WALK-IN COOLER. An enclosed storage space capable of being refrigerated to temperatures above 32°F (0°C) and less than 55°F (12.8°C) that can be walked into, has a ceiling height of not less than 7 feet (2134 mm) and has a total chilled storage area of less than 3,000 square feet (279 m^2).

❖ There are four related cooled spaces regulated by the code: Refrigerated warehouse cooler; Refrigerated warehouse freezer; Walk-in cooler and Walk-in freezer. The "walk-in spaces" are distinguished by being less than 3,000 square feet (279 m^2). The freezer spaces are distinguished from the coolers by having temperatures maintained at or below 32°F (0°C). The regulations for these four items are fairly consistent.

INTERNATIONAL CODE COUNCIL®
Copyright © 2015 ICC. ALL RIGHTS RESERVED. Accessed by David Dammon on Jun 21, 2017 12:30:52 PM pursuant to License Agreement with ICC. No further reproduction or distribution authorized. ANY UNAUTHORIZED REPRODUCTION OR DISTRIBUTION IS A VIOLATION OF THE FEDERAL COPYRIGHT ACT AND THE LICENSE AGREEMENT, AND SUBJECT TO CIVIL AND CRIMINAL PENALTIES THEREUNDER.

WALK-IN FREEZER. An enclosed storage space capable of being refrigerated to temperatures at or below 32°F (0°C) that can be walked into, has a ceiling height of not less than 7 feet (2134 mm) and has a total chilled storage area of less than 3,000 square feet (279 m^2).

❖ There are four related cooled spaces regulated by the code: Refrigerated warehouse cooler; Refrigerated warehouse freezer; Walk-in cooler and Walk-in freezer. The "walk-in spaces" are distinguished by being less than 3,000 square feet (279 m^2). The freezer spaces are distinguished from the coolers by having temperatures maintained at or below 32°F (0°C). The regulations for these four items are fairly consistent.

WALL, ABOVE-GRADE. A wall associated with the *building thermal envelope* that is more than 15 percent above grade and is on the exterior of the building or any wall that is associated with the *building thermal envelope* that is not on the exterior of the building.

❖ Walls are either above grade or below grade. The code is concerned with those walls that are part of the thermal envelop of a building—those separating conditioned spaces from unconditioned spaces and from the exterior. Walls that are not below grade are considered to be above-grade walls. Most of the walls covered by this definition are on the exterior of a building. In addition, the definition includes walls in the building that form part of the thermal envelope. Examples of such "interior" walls would be those separating conditioned space from an unconditioned parking garage and walls separating conditioned from unconditioned attic spaces. The location of grade has no impact on classification of an interior wall as an above-grade wall.

WALL, BELOW-GRADE. A wall associated with the basement or first story of the building that is part of the *building thermal envelope*, is not less than 85 percent below grade and is on the exterior of the building.

❖ Because below-grade walls are in contact with the ground and ground temperatures differ from air temperatures, the amount of energy transferred through a below-grade wall is different than the energy transferred through a wall predominantly above grade. Therefore, the code provides different thermal requirements for below-grade walls and above-grade walls. An individual wall enclosing conditioned space is classified as a below-grade wall where the gross wall area is 85 percent or more below grade and is bounded by soil; otherwise, the wall is classified as an above-grade wall (the residential provisions of the code define basement wall as 50 percent below grade). This definition is limited to walls on the exterior of the building, separating conditioned from nonconditioned space. This wall classification applies to the whole wall area, even if a portion of the individual wall is not below grade. Therefore, the above-grade portion of the wall is considered as part of the below-grade wall where the total wall is 85 percent or more below grade. Both sections of the wall (above grade and below grade) are then insulated as a "below-grade wall." Likewise, where an exterior wall is less than 15 percent below grade, the whole wall area is classified as an above-grade wall, including the portion underground.

The intent of this definition is to apply the provision to each wall enclosing the space. It is not intended to be applied to the aggregate of all of the walls of the basement or story. Therefore, this classification is done for each individual wall segment and not on an aggregate basis. The wall requirements apply only to the opaque basement wall area, excluding windows and doors. For purposes of meeting the code requirements, windows and doors in a below-grade wall are regulated as any other fenestration opening.

WATER HEATER. Any heating appliance or equipment that heats potable water and supplies such water to the potable hot water distribution system.

❖ A water heater is a closed pressure vessel or heat exchanger that is provided with a heat source and that supplies potable (drinkable) water to a building's hot water distribution system. Large commercial water heaters are sometimes referred to as "hot water supply boilers." Water heaters can be of the storage type with an integral storage vessel, circulating type for use with an external storage vessel, tankless instantaneous type without storage capacity and point-of-use type with or without storage capacity.

ZONE. A space or group of spaces within a building with heating or cooling requirements that are sufficiently similar so that desired conditions can be maintained throughout using a single controlling device.

❖ The simplest all-air system is a supply unit serving a single-temperature control zone. Ideally, this system responds completely to the space needs and well-designed control systems maintain temperature and humidity closely and efficiently. Single-zone systems can be shut down when not required without affecting the operation of adjacent areas. Thus, in a thorough discussion of the term "zone," the concept of "zoning" for temperature control requires consideration.

Exterior Zoning. Exterior zones are affected by varying weather conditions—wind, temperature and sun—and, depending on the geographic area and season, require both heating and cooling. This variation gives the designer considerable flexibility in choosing a system and results in the greatest advantages. The need for separate perimeter zone heating is determined by:

- Severity of the heating load (i.e., geographic location).
- Nature and orientation of the building envelope.
- Effects of downdraft at windows and the radiant effect of the cold glass surface (type of glass, area, height and *U*-factor).
- Type of occupancy (sedentary versus transient).

INTERNATIONAL CODE COUNCIL®
Copyright © 2015 ICC. ALL RIGHTS RESERVED. Accessed by David Dammon on Jun 21, 2017 12:30:52 PM pursuant to License Agreement with ICC. No further reproduction or distribution authorized. ANY UNAUTHORIZED REPRODUCTION OR DISTRIBUTION IS A VIOLATION OF THE FEDERAL COPYRIGHT ACT AND THE LICENSE AGREEMENT, AND SUBJECT TO CIVIL AND CRIMINAL PENALTIES THEREUNDER.

- Operating costs (in buildings such as offices and schools that are occupied for considerable periods). Fan operating costs can be reduced by heating with perimeter radiation during unoccupied periods rather than operating the main supply fans or local unit fans.

Interior Zoning. Conditions in interior spaces are relatively constant because they are isolated from external influences. Usually, interior spaces require cooling throughout the year. Interior spaces with a roof exposure, however, may require similar treatment to perimeter spaces requiring heat. To summarize, zone control is required when the conditions at the thermostat are not representative of all the rooms or the entire exposure. This situation will almost certainly occur if any of the following conditions exist:

- The building has more than one level.
- One or more spaces are used for entertaining large groups.
- One or more spaces have large glass areas.
- The building has an indoor swimming pool or hot tub.
- The building has a solarium or atrium. In addition, zoning may be required when several rooms or spaces are isolated from each other and from the thermostat.
- The building spreads out in many directions (wings).
- Some spaces are distinctly isolated from the rest of the building.
- The envelope only has one or two exposures.
- The building has a room or rooms in a basement.
- The building has a room or rooms in an attic space.
- The building has one or more rooms with a slab or exposed floor.
- Zone control can be achieved by insulation.
- There are discrete heating/cooling duct systems for each zone requiring control.

There are automatic zone damper systems in a single heating/cooling duct system.

INTERNATIONAL CODE COUNCIL®
Copyright © 2015 ICC. ALL RIGHTS RESERVED. Accessed by David Dammon on Jun 21, 2017 12:30:52 PM pursuant to License Agreement with ICC. No further reproduction or distribution authorized. ANY UNAUTHORIZED REPRODUCTION OR DISTRIBUTION IS A VIOLATION OF THE FEDERAL COPYRIGHT ACT AND THE LICENSE AGREEMENT, AND SUBJECT TO CIVIL AND CRIMINAL PENALTIES THEREUNDER.

Chapter 3 [CE]: General Requirements

General Comments

Chapter 3 [CE] specifies the climate zones that establish exterior design conditions and provides general requirements for interior design conditions, and materials, systems and equipment. In general, the climate zone provisions are determined simply by referring to the map (see Figure C301.1) or by looking at the tables [see Tables C301.1, C301.3(1) and C301.3(2)]. In addition, Section C302 provides the interior design conditions that are used for heating and cooling load calculations. Section C303 provides requirements for fenestration, identification of insulation and other basic general requirements for insulation materials.

Purpose

Climate has a major impact on the energy use of most commercial and residential buildings. The code establishes many requirements such as wall and roof insulation *R*-values, window and door thermal transmittance requirements (*U*-factors) and provisions that affect the mechanical systems based on the climate where the building is located. This chapter contains the information that will be used to properly assign the building location into the correct climate zone, which will then be used as the basis for establishing or eliminating requirements.

Materials and systems used to provide insulation and fenestration values, including *U*-factor and solar heat gain coefficient (SHGC) ratings, must be based on data used by appropriate tests. This establishes a level playing field for manufacturers of products.

Discussion and Development of the Climate Zone Map

The 2006 code made a dramatic shift in the classification of climate zones. While this change in the climate zone map was a part of the major revision to help simplify the code and make both compliance and enforcement easier, the climate zone revisions were a lengthy, very detailed and complicated process. Much of the new climate zone development was based on a paper titled "Climate Classification for Building Energy Codes and Standards." This paper was written by Robert S. Briggs, Robert G. Lucas and Z. Todd Taylor of the U.S. Department of Energy's Pacific Northwest National Laboratory (PNNL). Some aspects of this paper may help users better understand climate zones and also feel comfortable with these new classifications.

Climate zones were developed based on the following criteria:

1. Offer consistent climate materials for all compliance methods and code sections (including both commercial and residential).
2. Enable the code to be self-contained with respect to climate data.
3. Be technically sound.
4. Map to political boundaries.
5. Provide a long-term climate classification solution.
6. Be generic and neutral (i.e., not overly tailored to current code requirements).
7. Be useful in beyond-code and future-code contexts.
8. Offer a more concise set of climate zones and presentation formats.
9. Be acceptable to the American Society of Heating, Refrigerating and Air-Conditioning Engineers (ASHRAE), and usable in ASHRAE standards and guidelines.
10. Provide a basis for use outside of the United States.

The reasons that the authors cited for some of the less-obvious items include:

Item 4 – Mapping climate zones to easily recognizable political boundaries instead of to abstract climatic parameters facilitates code implementation. Users and jurisdictions are able to easily tell what requirements apply, which is not the case in some locations when climate parameters are used.

Item 7 – "Useful in future-code and beyond-code contexts" reflects the view that minimum acceptable practice codes and standards can provide an effective platform on which to build other efficiency programs. Beyond-code programs are likely to encourage features and technologies not included in current codes, many of which are likely to be more climate-sensitive than current requirements.

Item 9 – "Usable in ASHRAE standards and guidelines" is important because effective coordination of both content and formats used in the code and ASHRAE standards offers the potential to facilitate rapid migration of ASHRAE standards into model codes. Previous efforts to translate ASHRAE criteria into the simpler and more prescriptive forms most desired by the code enforcement

INTERNATIONAL CODE COUNCIL®
Copyright © 2015 ICC. ALL RIGHTS RESERVED. Accessed by David Dammon on Jun 21, 2017 12:30:52 PM pursuant to License Agreement with ICC. No further reproduction or distribution authorized. ANY UNAUTHORIZED REPRODUCTION OR DISTRIBUTION IS A VIOLATION OF THE FEDERAL COPYRIGHT ACT AND THE LICENSE AGREEMENT, AND SUBJECT TO CIVIL AND CRIMINAL PENALTIES THEREUNDER.

community has, in some cases, added years to the process of getting updated criteria adopted and into widespread use.

The belief in developing the climate zones was that any new system needed to show substantial improvement over previous systems. In addition, any new classification must be at least roughly compatible with the previous climate-dependent requirements in order to allow for the conversion and inclusion of existing, generally accepted requirements. The intent was to develop a set of climate classifications that could support simple, approximate ways of prescribing energy-efficiency measures for buildings. It was not intending to develop a set of categories that could be used for all purposes.

The new climate zones were developed in an open process involving several standards committees of ASHRAE, the U.S. Department of Energy (DOE) staff and other interested parties.

Given the interest of the International Code Council (ICC)® and ASHRAE in producing documents that are capable of being used internationally, an effort was made to develop a system of climate zones that could work outside of the United States. The new climate definitions were developed using SI (The International System of Units, abbreviated SI from the French Le Systéme International d'Unités). By using the SI units and climate indices, which are widely available internationally, the climate zones and the development of building energy-efficiency provisions can be applied anywhere in the world. The boundaries between the various climate zones in Table C301.3(2) occur in multiples of 900 degree days Fahrenheit, which converts to 500 degree days Celsius. Distinguishing the climate zones at these numbers results in a clean and understandable division between the climate zones in either system of temperature measurement.

The developers of the climate zone map selected bands of 1,000 Heating Degree Days (HDD) 18°C (1800 HDD65°F) because they resulted in boundaries that align with boundaries established in ANSI/ASHRAE/IESNA 90.1-2001, plus they facilitate the use of both SI and inch-pound units, and were able to affect a significant reduction in the number of climate zones.

An objective for any effective classification is to maximize the differences between the selected criteria for each climate zone, while minimizing the variations that occur within the group. A large variation between the groups enables generalizations embodied in the code requirements to be better tailored to each climate zone. A small variation within each climate zone will ensure that the generalizations better fit the climate zones. It was the developers' feeling that the new classification better represents the climatic diversity, while defining more coherent climate zones than what the code previously used. It should be noted that mountainous regions defy clean geographic separation of clusters.

SECTION C301
CLIMATE ZONES

C301.1 General. Climate zones from Figure C301.1 or Table C301.1 shall be used in determining the applicable requirements from Chapter 4. Locations not in Table C301.1 (outside the United States) shall be assigned a climate zone based on Section C301.3.

❖ Climate involves temperature, moisture, wind and sun, and also includes both daily and seasonal patterns of variation of the parameters. To account for these variations, the code establishes climate zones that serve as the basis for the code provisions.

This section serves as the starting point for determining virtually all of the code requirements, especially under the prescriptive compliance paths. Because of their easy-to-understand graphic nature, maps have proven useful over the years as an effective way to enable code users to determine climate-dependent requirements. Therefore, for the United States, the climate zones are shown in the map in Figure C301.1. Because of the limited size of the map, the code also includes a listing of the climate zones by states and counties in Table C301.1. Table C301.1 will allow users to positively identify climate zone assignments in those few locations for which the map interpretation may be difficult. Whether the map or the county list is used, the climate classification for each area will be the same.

When dealing with the prescriptive compliance paths, the code user would simply look at the map or listing and select the proper climate zone based on the location of the building. When using a performance approach, additional climatic data may be needed.

Virtually every building energy code that has been developed for use in the United States has included a performance-based compliance path, which allows users to perform an energy analysis and demonstrate compliance based on equivalence with the prescriptive requirements. To perform these analyses, users must select appropriate weather data for their given project's location. The selection of appropriate weather data is straightforward for any project located in or around one of the various weather stations within the United States. For other locations, selecting the most appropriate weather site can be problematic. The codes themselves provide little guidance to help with this selection process. During the development of the new climate zones, the developers mapped every county in the United States to the most appropriate National Climatic Data Center "Solar and Meteorological Surface Observation Network" (SAMSON) station for each county as a whole.

INTERNATIONAL CODE COUNCIL®
Copyright © 2015 ICC. ALL RIGHTS RESERVED. Accessed by David Dammon on Jun 21, 2017 12:30:52 PM pursuant to License Agreement with ICC. No further reproduction or distribution authorized. ANY UNAUTHORIZED REPRODUCTION OR DISTRIBUTION IS A VIOLATION OF THE FEDERAL COPYRIGHT ACT AND THE LICENSE AGREEMENT, AND SUBJECT TO CIVIL AND CRIMINAL PENALTIES THEREUNDER.

This mapping is not included in the code but may be used in some compliance software. Designating an appropriate SAMSON station should not be considered to be the only climate data permitted for a given county. It could, however, be used in the absence of better information. Where local data better reflects regional or microclimatic conditions of an area, they would be appropriate to use. For example, elevation has a large impact on climate, and elevation can vary dramatically within individual counties, especially in the western United States. Where elevation differences are significant, code officials may require the use of sites that differ from the sites designated as being the most appropriate for the county. For additional information on this topic, review the paper "Climate Classification for Building Energy Codes and Standards," which is referenced in the commentary text that precedes Section C301.

The new climate classifications do not attempt to resolve the issue of what the appropriate treatment for elevation differences is. This aspect is left in the hands of the local code official.

C301.2 Warm humid counties. Warm humid counties are identified in Table C301.1 by an asterisk.

❖ Table C301.1 provides a listing of the counties within the southeastern United States that fall south and east of the white dashed line that appears in the map in Figure C301.1. The warm-humid climate designation includes parts of eight states and also covers all of Florida, Hawaii and the U.S. territories. Table C301.3(1) provides the details that were used to determine the classification of the warm-humid designation for the counties.

There currently are very few requirements in the code that are specifically tied to the warm-humid climate criteria. Although not tied directly to the warm-humid designation, many other code sections, such as those addressing moisture control and energy recovery ventilation systems, do take these climatic features into account.

C301.3 International climate zones. The climate zone for any location outside the United States shall be determined by applying Table C301.3(1) and then Table C301.3(2).

❖ Although the code and the climate zone classifications are predominantly used within the United States, they can be used in any location. Because the mapping and decisions that were made during the development of the new climate zones focused primarily on the United States, this section provides the details of how to properly classify the climate zones based on the thermal criteria [see Table C301.3(2)], the major climate types [see Table C301.3(1)] and warm-humid criteria (see Commentary Figure C301.3) for locations outside of the United States.

In developing the new climate zone designations, two climate zones were defined in the classification, but not thoroughly evaluated or actively applied because no sites in the United States or its territories required their use. The two climate zones are 1B [dry and > 5000 CDD10°C (9000 CDD50°F)], characterized as "very hot-dry," and 5°C [marine and 3000 < HDD18°C = 400 (5400, HDD65°F = 7200)], characterized as "cool marine." The marine (C) designation was not used for climate zones colder than Climate Zone 5 or hotter than Climate Zone 3, as marine climates are inherently neither very cold nor very hot. In addition, the humid (A) and dry (B) divisions were dropped for climate zones colder than Climate Zone 6 because they did not appear to be warranted based on differences in appropriate building design requirements. Reevaluation of these decisions might be warranted before applying the new climate classifications to locations outside of the United States.

C301.4 Tropical climate zone. The tropical climate zone shall be defined as:

1. Hawaii, Puerto Rico, Guam, American Samoa, U.S. Virgin Islands, Commonwealth of Northern Mariana Islands; and
2. Islands in the area between the Tropic of Cancer and the Tropic of Capricorn.

❖ The tropical climate zone was established as a subset of Climate Zone 1. The climate of tropical islands is uniquely constant, with moderate temperatures throughout the year. Similar to the development of the balance of the climate zones for the 2006 code, the tropical climate zone is also based on Koppen's classification of climates. Koppen divided the earth's climates into five major types, one of those being "tropical." According to Koppen, tropical climates are characterized by constant high temperature (at sea level and lower elevations) all 12 months of the year. Because of the constant nature of the climate, traditional construction methods and traditional HVAC installation found in buildings outside of the tropical environment may not be needed. For commercial buildings, the code does not provide different design or construction standards than provided for other Climate Zone 1 locations. Standards applicable to residential construction are provided in the residential provisions of the code.

INTERNATIONAL CODE COUNCIL®
Copyright © 2015 ICC. ALL RIGHTS RESERVED. Accessed by David Dammon on Jun 21, 2017 12:30:52 PM pursuant to License Agreement with ICC. No further reproduction or distribution authorized. ANY UNAUTHORIZED REPRODUCTION OR DISTRIBUTION IS A VIOLATION OF THE FEDERAL COPYRIGHT ACT AND THE LICENSE AGREEMENT, AND SUBJECT TO CIVIL AND CRIMINAL PENALTIES THEREUNDER.

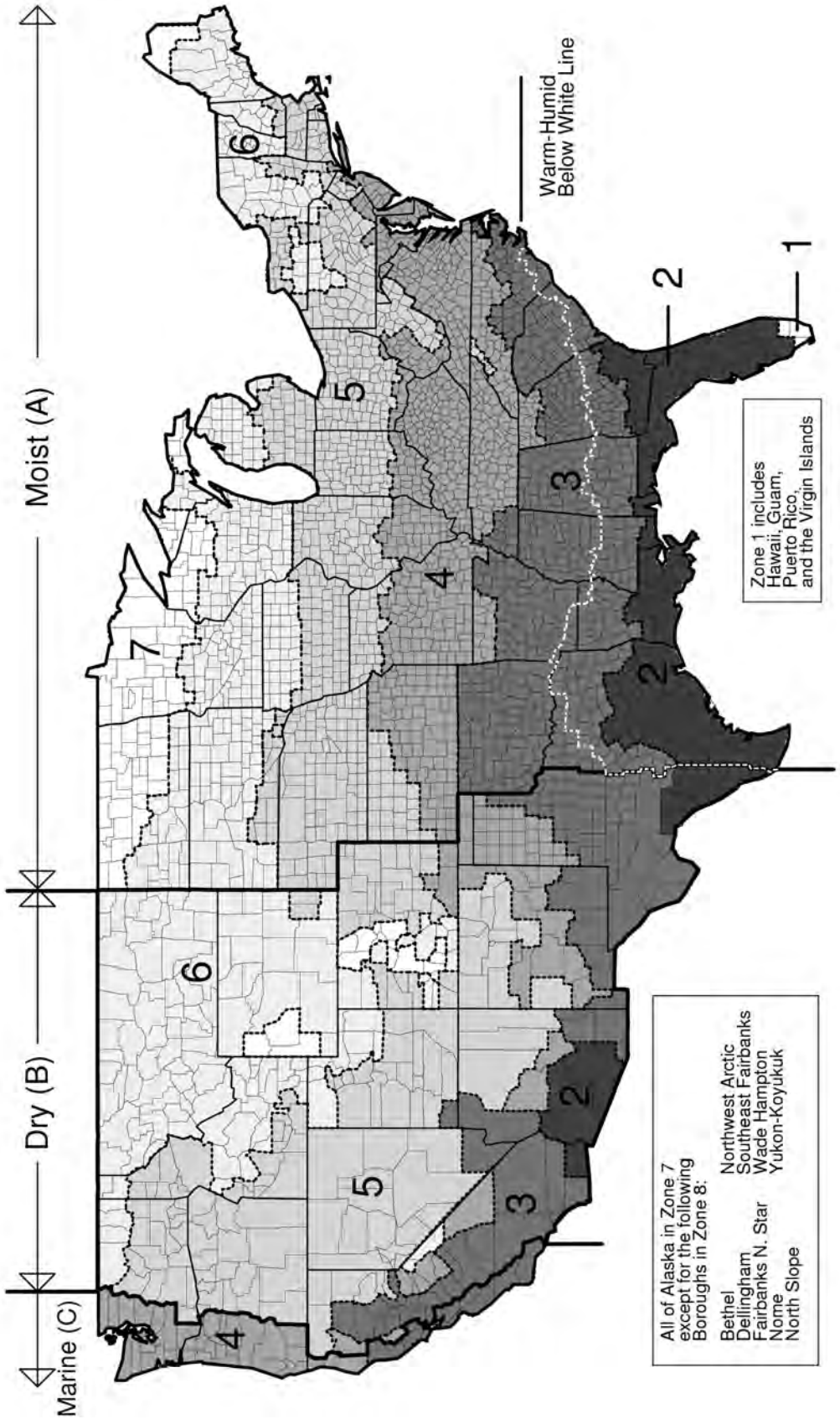

FIGURE C301.1
CLIMATE ZONES

INTERNATIONAL CODE COUNCIL®
Copyright © 2015 ICC. ALL RIGHTS RESERVED. Accessed by David Dammon on Jun 21, 2017 12:30:52 PM pursuant to License Agreement with ICC. No further reproduction or distribution authorized. ANY UNAUTHORIZED REPRODUCTION OR DISTRIBUTION IS A VIOLATION OF THE FEDERAL COPYRIGHT ACT AND THE LICENSE AGREEMENT, AND SUBJECT TO CIVIL AND CRIMINAL PENALTIES THEREUNDER.

ZONE NUMBER	CLIMATE ZONE NAME AND TYPE[2]	THERMAL CRITERIA [1, 3, 6]	REPRESENTATIVE U.S. CITY[4]
1A	Very Hot-Humid	9000 < CDD50°F	Miami, FL
1B[5]	Very Hot-Dry	9000 < CDD50°F	—
2A	Hot-Humid	6300 < CDD50°F ≤ 9000	Houston, TX
2B	Hot-Dry	6300 < CDD50°F ≤ 9000	Phoenix, AZ
3A	Warm-Humid	4500 < CDD50°F ≤ 6300	Memphis, TN
3B	Warm-Dry	4500 < CDD50°F ≤ 6300	El Paso, TX
3C	Warm-Marine	HDD65°F ≤ 3600	San Francisco, CA
4A	Mixed-Humid	CDD50°F ≤ 4500 AND HDD65°F ≤ 5400	Baltimore, MD
4B	Mixed-Dry	CDD50°F ≤ 4500 AND HDD65°F ≤ 5400	Albuquerque, NM
4C	Mixed-Marine	3600 < HDD65°F ≤ 5400	Salem, OR
5A	Cool-Humid	5400 < HDD65°F ≤ 7200	Chicago, IL
5B	Cool-Dry	5400 < HDD65°F ≤ 7200	Boise, ID
5C[5]	Cool-Marine	5400 < HDD65°F ≤ 7200	—
6A	Cool-Humid	7200 < HDD65°F ≤ 9000	Burlington, VT
6B	Cool-Dry	7200 < HDD65°F ≤ 9000	Helena, MT
7	Very Cold	9000 < HDD65°F ≤ 12600	Duluth, MN
8	Sub Arctic	12600 < HDD65°F	Fairbanks, AK

Notes:

1. Column 1 contains alphanumeric designations for each zone. These designations are intended for use when the climate zones are referenced in the code. The numeric part of the designation relates to the thermal properties of the zone. The letter part indicates the major climatic group to which the zone belongs; A indicates humid, B indicates dry, and C indicates marine. The climatic group designation was dropped for Zones 7 and 8 because the developers of the new climate zone classifications did not anticipate any building design criteria sensitive to the humid/dry/marine distinction in very cold climates. Zones 1B and 5C have been defined but are not used for the United States. Zone 6C (Marine and HDD18ºC > 4000 (HDD65ºF > 7200) might appear to be necessary for consistency. However, very few locations in the world are both as mild as is required by the marine zone definition and as cold as necessary to accumulate that many heating degree days. In addition, such sites do not appear climatically very different from sites in Zone 6A, which is where they are assigned in the absence of a Zone 6C.
2. Column 2 contains a descriptive name for each climate zone and the major climate type. The names can be used in place of the alphanumeric designations wherever a more descriptive designation is appropriate.
3. Column 3 contains definitions for the zone divisions based on degree day cooling and/or heating criteria. The humid/dry/marine divisions must be determined first before these criteria are applied. The definitions in Tables C301.3(1) and C301.3(2) contain logic capable of assigning a zone designation to any location with the necessary climate data anywhere in the world. However, the work to develop this classification focused on the 50 United States. Application of the classification to locations outside of the United States is untested.
4. Column 4 contains the name of a SAMSON station (National Climatic Data Center “Solar and Meteorological Surface Observation Network” station) found to best represent the climate zone as a whole. See the discussions at the beginning of this chapter regarding the development of the new climate zones for an explanation of how the representative cities were selected.
5. Zones 1B and 5C do not occur in the United States, and no representative cities were selected for these climate zones due to data limitations. Climates meeting the listed criteria do exist in such locations as Saudi Arabia; British Columbia, Canada; and Northern Europe.
6. SI to I-P Conversions:
   2500 CDD10ºC = 4500 CDD50ºF
   3000 HDD18ºC = 5400 HDD65ºF
   3500 CDD10ºC = 6300 CDD50ºF
   4000 HDD18ºC = 7200 HDD65ºF
   5000 CDD10ºC = 9000 CDD50ºF
   5000 HDD18ºC = 9000 HDD65ºF
   2000 HDD18ºC = 3600 HDD65ºF
   7000 HDD18ºC = 12600 HDD65ºF

Figure C301.3
CLIMATE ZONE DEFINITIONS

INTERNATIONAL CODE COUNCIL®
Copyright © 2015 ICC. ALL RIGHTS RESERVED. Accessed by David Dammon on Jun 21, 2017 12:30:52 PM pursuant to License Agreement with ICC. No further reproduction or distribution authorized. ANY UNAUTHORIZED REPRODUCTION OR DISTRIBUTION IS A VIOLATION OF THE FEDERAL COPYRIGHT ACT AND THE LICENSE AGREEMENT, AND SUBJECT TO CIVIL AND CRIMINAL PENALTIES THEREUNDER.

TABLE C301.3(1)
INTERNATIONAL CLIMATE ZONE DEFINITIONS

MAJOR CLIMATE TYPE DEFINITIONS
Marine (C) Definition—Locations meeting all four criteria: 1. Mean temperature of coldest month between -3°C (27°F) and 18°C (65°F). 2. Warmest month mean < 22°C (72°F). 3. At least four months with mean temperatures over 10°C (50°F). 4. Dry season in summer. The month with the heaviest precipitation in the cold season has at least three times as much precipitation as the month with the least precipitation in the rest of the year. The cold season is October through March in the Northern Hemisphere and April through September in the Southern Hemisphere.
Dry (B) Definition—Locations meeting the following criteria: Not marine and $P_{in} < 0.44 \times (TF - 19.5)$ [$P_{cm} < 2.0 \times (TC + 7)$ in SI units] where: P_{in} = Annual precipitation in inches (cm) T = Annual mean temperature in °F (°C)
Moist (A) Definition—Locations that are not marine and not dry.
Warm-humid Definition—Moist (A) locations where either of the following wet-bulb temperature conditions shall occur during the warmest six consecutive months of the year: 1. 67°F (19.4°C) or higher for 3,000 or more hours; or 2. 73°F (22.8°C) or higher for 1,500 or more hours.

For SI: °C = [(°F)-32]/1.8, 1 inch = 2.54 cm.

TABLE C301.3(2)
INTERNATIONAL CLIMATE ZONE DEFINITIONS

ZONE NUMBER	THERMAL CRITERIA	
	IP Units	SI Units
1	9000 < CDD50°F	5000 < CDD10°C
2	6300 < CDD50°F ≤ 9000	3500 < CDD10°C ≤ 5000
3A and 3B	4500 < CDD50°F ≤ 6300 AND HDD65°F ≤ 5400	2500 < CDD10°C ≤ 3500 AND HDD18°C ≤ 3000
4A and 4B	CDD50°F ≤ 4500 AND HDD65°F ≤ 5400	CDD10°C ≤ 2500 AND HDD18°C ≤ 3000
3C	HDD65°F ≤ 3600	HDD18°C ≤ 2000
4C	3600 < HDD65°F ≤ 5400	2000 < HDD18°C ≤ 3000
5	5400 < HDD65°F ≤ 7200	3000 < HDD18°C ≤ 4000
6	7200 < HDD65°F ≤ 9000	4000 < HDD18°C ≤ 5000
7	9000 < HDD65°F ≤ 12600	5000 < HDD18°C ≤ 7000
8	12600 < HDD65°F	7000 < HDD18°C

For SI: °C = [(°F)-32]/1.8.

INTERNATIONAL CODE COUNCIL®
Copyright © 2015 ICC. ALL RIGHTS RESERVED. Accessed by David Dammon on Jun 21, 2017 12:30:52 PM pursuant to License Agreement with ICC. No further reproduction or distribution authorized. ANY UNAUTHORIZED REPRODUCTION OR DISTRIBUTION IS A VIOLATION OF THE FEDERAL COPYRIGHT ACT AND THE LICENSE AGREEMENT, AND SUBJECT TO CIVIL AND CRIMINAL PENALTIES THEREUNDER.

TABLE C301.1
CLIMATE ZONES, MOISTURE REGIMES, AND WARM-HUMID DESIGNATIONS BY STATE, COUNTY AND TERRITORY

Key: A – Moist, B – Dry, C – Marine. Absence of moisture designation indicates moisture regime is irrelevant. Asterisk (*) indicates a warm-humid location.

US STATES

ALABAMA

3A Autauga*
2A Baldwin*
3A Barbour*
3A Bibb
3A Blount
3A Bullock*
3A Butler*
3A Calhoun
3A Chambers
3A Cherokee
3A Chilton
3A Choctaw*
3A Clarke*
3A Clay
3A Cleburne
3A Coffee*
3A Colbert
3A Conecuh*
3A Coosa
3A Covington*
3A Crenshaw*
3A Cullman
3A Dale*
3A Dallas*
3A DeKalb
3A Elmore*
3A Escambia*
3A Etowah
3A Fayette
3A Franklin
3A Geneva*
3A Greene
3A Hale
3A Henry*
3A Houston*
3A Jackson
3A Jefferson
3A Lamar
3A Lauderdale
3A Lawrence
3A Lee
3A Limestone
3A Lowndes*
3A Macon*
3A Madison
3A Marengo*
3A Marion
3A Marshall
2A Mobile*
3A Monroe*
3A Montgomery*
3A Morgan
3A Perry*
3A Pickens
3A Pike*
3A Randolph
3A Russell*
3A Shelby
3A St. Clair
3A Sumter
3A Talladega
3A Tallapoosa
3A Tuscaloosa
3A Walker
3A Washington*
3A Wilcox*
3A Winston

ALASKA

7 Aleutians East
7 Aleutians West
7 Anchorage
8 Bethel
7 Bristol Bay
7 Denali
8 Dillingham
8 Fairbanks North Star
7 Haines
7 Juneau
7 Kenai Peninsula
7 Ketchikan Gateway
7 Kodiak Island
7 Lake and Peninsula
7 Matanuska-Susitna
8 Nome
8 North Slope
8 Northwest Arctic
7 Prince of Wales Outer Ketchikan
7 Sitka
7 Skagway-Hoonah-Angoon
8 Southeast Fairbanks
7 Valdez-Cordova
8 Wade Hampton
7 Wrangell-Petersburg
7 Yakutat
8 Yukon-Koyukuk

ARIZONA

5B Apache
3B Cochise
5B Coconino
4B Gila
3B Graham
3B Greenlee
2B La Paz
2B Maricopa
3B Mohave
5B Navajo
2B Pima
2B Pinal
3B Santa Cruz
4B Yavapai
2B Yuma

ARKANSAS

3A Arkansas
3A Ashley
4A Baxter
4A Benton
4A Boone
3A Bradley
3A Calhoun
4A Carroll
3A Chicot
3A Clark
3A Clay
3A Cleburne
3A Cleveland
3A Columbia*
3A Conway
3A Craighead
3A Crawford
3A Crittenden
3A Cross
3A Dallas
3A Desha
3A Drew
3A Faulkner
3A Franklin
4A Fulton
3A Garland
3A Grant
3A Greene
3A Hempstead*
3A Hot Spring
3A Howard
3A Independence
4A Izard
3A Jackson
3A Jefferson
3A Johnson
3A Lafayette*
3A Lawrence
3A Lee
3A Lincoln
3A Little River*
3A Logan
3A Lonoke
4A Madison
4A Marion
3A Miller*
3A Mississippi
3A Monroe
3A Montgomery
3A Nevada
4A Newton
3A Ouachita
3A Perry
3A Phillips
3A Pike
3A Poinsett
3A Polk
3A Pope
3A Prairie
3A Pulaski
3A Randolph
3A Saline
3A Scott
4A Searcy
3A Sebastian
3A Sevier*
3A Sharp
3A St. Francis
4A Stone
3A Union*
3A Van Buren
4A Washington
3A White
3A Woodruff
3A Yell

CALIFORNIA

3C Alameda
6B Alpine
4B Amador
3B Butte
4B Calaveras
3B Colusa
3B Contra Costa
4C Del Norte
4B El Dorado
3B Fresno
3B Glenn
4C Humboldt
2B Imperial

(continued)

INTERNATIONAL CODE COUNCIL®
Copyright © 2015 ICC. ALL RIGHTS RESERVED. Accessed by David Dammon on Jun 21, 2017 12:30:52 PM pursuant to License Agreement with ICC. No further reproduction or distribution authorized. ANY UNAUTHORIZED REPRODUCTION OR DISTRIBUTION IS A VIOLATION OF THE FEDERAL COPYRIGHT ACT AND THE LICENSE AGREEMENT, AND SUBJECT TO CIVIL AND CRIMINAL PENALTIES THEREUNDER.

TABLE C301.1—continued
CLIMATE ZONES, MOISTURE REGIMES, AND WARM-HUMID DESIGNATIONS BY STATE, COUNTY AND TERRITORY

4B Inyo
3B Kern
3B Kings
4B Lake
5B Lassen
3B Los Angeles
3B Madera
3C Marin
4B Mariposa
3C Mendocino
3B Merced
5B Modoc
6B Mono
3C Monterey
3C Napa
5B Nevada
3B Orange
3B Placer
5B Plumas
3B Riverside
3B Sacramento
3C San Benito
3B San Bernardino
3B San Diego
3C San Francisco
3B San Joaquin
3C San Luis Obispo
3C San Mateo
3C Santa Barbara
3C Santa Clara
3C Santa Cruz
3B Shasta
5B Sierra
5B Siskiyou
3B Solano
3C Sonoma
3B Stanislaus
3B Sutter
3B Tehama
4B Trinity
3B Tulare
4B Tuolumne
3C Ventura
3B Yolo
3B Yuba

COLORADO

5B Adams
6B Alamosa
5B Arapahoe
6B Archuleta
4B Baca
5B Bent
5B Boulder
6B Chaffee
5B Cheyenne
7 Clear Creek
6B Conejos
6B Costilla
5B Crowley
6B Custer
5B Delta
5B Denver
6B Dolores
5B Douglas
6B Eagle
5B Elbert
5B El Paso
5B Fremont
5B Garfield
5B Gilpin
7 Grand
7 Gunnison
7 Hinsdale
5B Huerfano
7 Jackson
5B Jefferson
5B Kiowa
5B Kit Carson
7 Lake
5B La Plata
5B Larimer
4B Las Animas
5B Lincoln
5B Logan
5B Mesa
7 Mineral
6B Moffat
5B Montezuma
5B Montrose
5B Morgan
4B Otero
6B Ouray
7 Park
5B Phillips
7 Pitkin
5B Prowers
5B Pueblo
6B Rio Blanco
7 Rio Grande
7 Routt
6B Saguache
7 San Juan
6B San Miguel
5B Sedgwick
7 Summit
5B Teller
5B Washington
5B Weld
5B Yuma

CONNECTICUT

5A (all)

DELAWARE

4A (all)

DISTRICT OF COLUMBIA

4A (all)

FLORIDA

2A Alachua*
2A Baker*
2A Bay*
2A Bradford*
2A Brevard*
1A Broward*
2A Calhoun*
2A Charlotte*
2A Citrus*
2A Clay*
2A Collier*
2A Columbia*
2A DeSoto*
2A Dixie*
2A Duval*
2A Escambia*
2A Flagler*
2A Franklin*
2A Gadsden*
2A Gilchrist*
2A Glades*
2A Gulf*
2A Hamilton*
2A Hardee*
2A Hendry*
2A Hernando*
2A Highlands*
2A Hillsborough*
2A Holmes*
2A Indian River*
2A Jackson*
2A Jefferson*
2A Lafayette*
2A Lake*
2A Lee*
2A Leon*
2A Levy*
2A Liberty*
2A Madison*
2A Manatee*
2A Marion*
2A Martin*
1A Miami-Dade*
1A Monroe*
2A Nassau*
2A Okaloosa*
2A Okeechobee*
2A Orange*
2A Osceola*
2A Palm Beach*
2A Pasco*
2A Pinellas*
2A Polk*
2A Putnam*
2A Santa Rosa*
2A Sarasota*
2A Seminole*
2A St. Johns*
2A St. Lucie*
2A Sumter*
2A Suwannee*
2A Taylor*
2A Union*
2A Volusia*
2A Wakulla*
2A Walton*
2A Washington*

GEORGIA

2A Appling*
2A Atkinson*
2A Bacon*
2A Baker*
3A Baldwin
4A Banks
3A Barrow
3A Bartow
3A Ben Hill*
2A Berrien*
3A Bibb
3A Bleckley*
2A Brantley*
2A Brooks*
2A Bryan*
3A Bulloch*
3A Burke
3A Butts
3A Calhoun*
2A Camden*
3A Candler*
3A Carroll
4A Catoosa
2A Charlton*
2A Chatham*
3A Chattahoochee*
4A Chattooga
3A Cherokee
3A Clarke
3A Clay*
3A Clayton
2A Clinch*
3A Cobb
3A Coffee*
2A Colquitt*
3A Columbia
2A Cook*
3A Coweta

(continued)

INTERNATIONAL CODE COUNCIL®
Copyright © 2015 ICC. ALL RIGHTS RESERVED. Accessed by David Dammon on Jun 21, 2017 12:30:52 PM pursuant to License Agreement with ICC. No further reproduction or distribution authorized. ANY UNAUTHORIZED REPRODUCTION OR DISTRIBUTION IS A VIOLATION OF THE FEDERAL COPYRIGHT ACT AND THE LICENSE AGREEMENT, AND SUBJECT TO CIVIL AND CRIMINAL PENALTIES THEREUNDER.

TABLE C301.1—continued
CLIMATE ZONES, MOISTURE REGIMES, AND WARM-HUMID DESIGNATIONS BY STATE, COUNTY AND TERRITORY

3A Crawford
3A Crisp*
4A Dade
4A Dawson
2A Decatur*
3A DeKalb
3A Dodge*
3A Dooly*
3A Dougherty*
3A Douglas
3A Early*
2A Echols*
2A Effingham*
3A Elbert
3A Emanuel*
2A Evans*
4A Fannin
3A Fayette
4A Floyd
3A Forsyth
4A Franklin
3A Fulton
4A Gilmer
3A Glascock
2A Glynn*
4A Gordon
2A Grady*
3A Greene
3A Gwinnett
4A Habersham
4A Hall
3A Hancock
3A Haralson
3A Harris
3A Hart
3A Heard
3A Henry
3A Houston*
3A Irwin*
3A Jackson
3A Jasper
2A Jeff Davis*
3A Jefferson
3A Jenkins*
3A Johnson*
3A Jones
3A Lamar
2A Lanier*
3A Laurens*
3A Lee*
2A Liberty*
3A Lincoln
2A Long*
2A Lowndes*
4A Lumpkin
3A Macon*
3A Madison
3A Marion*
3A McDuffie
2A McIntosh*
3A Meriwether
2A Miller*
2A Mitchell*
3A Monroe
3A Montgomery*
3A Morgan
4A Murray
3A Muscogee
3A Newton
3A Oconee
3A Oglethorpe
3A Paulding
3A Peach*
4A Pickens
2A Pierce*
3A Pike
3A Polk
3A Pulaski*
3A Putnam
3A Quitman*
4A Rabun
3A Randolph*
3A Richmond
3A Rockdale
3A Schley*
3A Screven*
2A Seminole*
3A Spalding
4A Stephens
3A Stewart*
3A Sumter*
3A Talbot
3A Taliaferro
2A Tattnall*
3A Taylor*
3A Telfair*
3A Terrell*
2A Thomas*
3A Tift*
2A Toombs*
4A Towns
3A Treutlen*
3A Troup
3A Turner*
3A Twiggs*
4A Union
3A Upson
4A Walker
3A Walton
2A Ware*
3A Warren
3A Washington
2A Wayne*
3A Webster*
3A Wheeler*
4A White
4A Whitfield
3A Wilcox*
3A Wilkes
3A Wilkinson
3A Worth*

HAWAII

1A (all)*

IDAHO

5B Ada
6B Adams
6B Bannock
6B Bear Lake
5B Benewah
6B Bingham
6B Blaine
6B Boise
6B Bonner
6B Bonneville
6B Boundary
6B Butte
6B Camas
5B Canyon
6B Caribou
5B Cassia
6B Clark
5B Clearwater
6B Custer
5B Elmore
6B Franklin
6B Fremont
5B Gem
5B Gooding
5B Idaho
6B Jefferson
5B Jerome
5B Kootenai
5B Latah
6B Lemhi
5B Lewis
5B Lincoln
6B Madison
5B Minidoka
5B Nez Perce
6B Oneida
5B Owyhee
5B Payette
5B Power
5B Shoshone
6B Teton
5B Twin Falls
6B Valley
5B Washington

ILLINOIS

5A Adams
4A Alexander
4A Bond
5A Boone
5A Brown
5A Bureau
5A Calhoun
5A Carroll
5A Cass
5A Champaign
4A Christian
5A Clark
4A Clay
4A Clinton
5A Coles
5A Cook
4A Crawford
5A Cumberland
5A DeKalb
5A De Witt
5A Douglas
5A DuPage
5A Edgar
4A Edwards
4A Effingham
4A Fayette
5A Ford
4A Franklin
5A Fulton
4A Gallatin
5A Greene
5A Grundy
4A Hamilton
5A Hancock
4A Hardin
5A Henderson
5A Henry
5A Iroquois
4A Jackson
4A Jasper
4A Jefferson
5A Jersey
5A Jo Daviess
4A Johnson
5A Kane
5A Kankakee
5A Kendall
5A Knox
5A Lake
5A La Salle
4A Lawrence
5A Lee
5A Livingston
5A Logan
5A Macon
4A Macoupin
4A Madison
4A Marion
5A Marshall
5A Mason
4A Massac
5A McDonough
5A McHenry

(continued)

INTERNATIONAL CODE COUNCIL®
Copyright © 2015 ICC. ALL RIGHTS RESERVED. Accessed by David Dammon on Jun 21, 2017 12:30:52 PM pursuant to License Agreement with ICC. No further reproduction or distribution authorized. ANY UNAUTHORIZED REPRODUCTION OR DISTRIBUTION IS A VIOLATION OF THE FEDERAL COPYRIGHT ACT AND THE LICENSE AGREEMENT, AND SUBJECT TO CIVIL AND CRIMINAL PENALTIES THEREUNDER.

TABLE C301.1—continued
CLIMATE ZONES, MOISTURE REGIMES, AND WARM-HUMID DESIGNATIONS BY STATE, COUNTY AND TERRITORY

5A McLean
5A Menard
5A Mercer
4A Monroe
4A Montgomery
5A Morgan
5A Moultrie
5A Ogle
5A Peoria
4A Perry
5A Piatt
5A Pike
4A Pope
4A Pulaski
5A Putnam
4A Randolph
4A Richland
5A Rock Island
4A Saline
5A Sangamon
5A Schuyler
5A Scott
4A Shelby
5A Stark
4A St. Clair
5A Stephenson
5A Tazewell
4A Union
5A Vermilion
4A Wabash
5A Warren
4A Washington
4A Wayne
4A White
5A Whiteside
5A Will
4A Williamson
5A Winnebago
5A Woodford

INDIANA

5A Adams
5A Allen
5A Bartholomew
5A Benton
5A Blackford
5A Boone
4A Brown
5A Carroll
5A Cass
4A Clark
5A Clay
5A Clinton
4A Crawford
4A Daviess
4A Dearborn
5A Decatur
5A De Kalb
5A Delaware
4A Dubois
5A Elkhart
5A Fayette
4A Floyd
5A Fountain
5A Franklin
5A Fulton
4A Gibson
5A Grant
4A Greene
5A Hamilton
5A Hancock
4A Harrison
5A Hendricks
5A Henry
5A Howard
5A Huntington
4A Jackson
5A Jasper
5A Jay
4A Jefferson
4A Jennings
5A Johnson
4A Knox
5A Kosciusko
5A Lagrange
5A Lake
5A La Porte
4A Lawrence
5A Madison
5A Marion
5A Marshall
4A Martin
5A Miami
4A Monroe
5A Montgomery
5A Morgan
5A Newton
5A Noble
4A Ohio
4A Orange
5A Owen
5A Parke
4A Perry
4A Pike
5A Porter
4A Posey
5A Pulaski
5A Putnam
5A Randolph
4A Ripley
5A Rush
4A Scott
5A Shelby
4A Spencer
5A Starke
5A Steuben
5A St. Joseph
4A Sullivan
4A Switzerland
5A Tippecanoe
5A Tipton
5A Union
4A Vanderburgh
5A Vermillion
5A Vigo
5A Wabash
5A Warren
4A Warrick
4A Washington
5A Wayne
5A Wells
5A White
5A Whitley

IOWA

5A Adair
5A Adams
6A Allamakee
5A Appanoose
5A Audubon
5A Benton
6A Black Hawk
5A Boone
6A Bremer
6A Buchanan
6A Buena Vista
6A Butler
6A Calhoun
5A Carroll
5A Cass
5A Cedar
6A Cerro Gordo
6A Cherokee
6A Chickasaw
5A Clarke
6A Clay
6A Clayton
5A Clinton
5A Crawford
5A Dallas
5A Davis
5A Decatur
6A Delaware
5A Des Moines
6A Dickinson
5A Dubuque
6A Emmet
6A Fayette
6A Floyd
6A Franklin
5A Fremont
5A Greene
6A Grundy
5A Guthrie
6A Hamilton
6A Hancock
6A Hardin
5A Harrison
5A Henry
6A Howard
6A Humboldt
6A Ida
5A Iowa
5A Jackson
5A Jasper
5A Jefferson
5A Johnson
5A Jones
5A Keokuk
6A Kossuth
5A Lee
5A Linn
5A Louisa
5A Lucas
6A Lyon
5A Madison
5A Mahaska
5A Marion
5A Marshall
5A Mills
6A Mitchell
5A Monona
5A Monroe
5A Montgomery
5A Muscatine
6A O'Brien
6A Osceola
5A Page
6A Palo Alto
6A Plymouth
6A Pocahontas
5A Polk
5A Pottawattamie
5A Poweshiek
5A Ringgold
6A Sac
5A Scott
5A Shelby
6A Sioux
5A Story
5A Tama
5A Taylor
5A Union
5A Van Buren
5A Wapello
5A Warren
5A Washington
5A Wayne
6A Webster
6A Winnebago

(continued)

INTERNATIONAL CODE COUNCIL®
Copyright © 2015 ICC. ALL RIGHTS RESERVED. Accessed by David Dammon on Jun 21, 2017 12:30:52 PM pursuant to License Agreement with ICC. No further reproduction or distribution authorized. ANY UNAUTHORIZED REPRODUCTION OR DISTRIBUTION IS A VIOLATION OF THE FEDERAL COPYRIGHT ACT AND THE LICENSE AGREEMENT, AND SUBJECT TO CIVIL AND CRIMINAL PENALTIES THEREUNDER.

TABLE C301.1—continued
CLIMATE ZONES, MOISTURE REGIMES, AND WARM-HUMID DESIGNATIONS BY STATE, COUNTY AND TERRITORY

6A Winneshiek
5A Woodbury
6A Worth
6A Wright

KANSAS

4A Allen
4A Anderson
4A Atchison
4A Barber
4A Barton
4A Bourbon
4A Brown
4A Butler
4A Chase
4A Chautauqua
4A Cherokee
5A Cheyenne
4A Clark
4A Clay
5A Cloud
4A Coffey
4A Comanche
4A Cowley
4A Crawford
5A Decatur
4A Dickinson
4A Doniphan
4A Douglas
4A Edwards
4A Elk
5A Ellis
4A Ellsworth
4A Finney
4A Ford
4A Franklin
4A Geary
5A Gove
5A Graham
4A Grant
4A Gray
5A Greeley
4A Greenwood
5A Hamilton
4A Harper
4A Harvey
4A Haskell
4A Hodgeman
4A Jackson
4A Jefferson
5A Jewell
4A Johnson
4A Kearny
4A Kingman
4A Kiowa
4A Labette
5A Lane
4A Leavenworth
4A Lincoln
4A Linn
5A Logan
4A Lyon
4A Marion
4A Marshall
4A McPherson
4A Meade
4A Miami
5A Mitchell
4A Montgomery
4A Morris
4A Morton
4A Nemaha
4A Neosho
5A Ness
5A Norton
4A Osage
5A Osborne
4A Ottawa
4A Pawnee
5A Phillips
4A Pottawatomie
4A Pratt
5A Rawlins
4A Reno
5A Republic
4A Rice
4A Riley
5A Rooks
4A Rush
4A Russell
4A Saline
5A Scott
4A Sedgwick
4A Seward
4A Shawnee
5A Sheridan
5A Sherman
5A Smith
4A Stafford
4A Stanton
4A Stevens
4A Sumner
5A Thomas
5A Trego
4A Wabaunsee
5A Wallace
4A Washington
5A Wichita
4A Wilson
4A Woodson
4A Wyandotte

KENTUCKY

4A (all)

LOUISIANA

2A Acadia*
2A Allen*
2A Ascension*
2A Assumption*
2A Avoyelles*
2A Beauregard*
3A Bienville*
3A Bossier*
3A Caddo*
2A Calcasieu*
3A Caldwell*
2A Cameron*
3A Catahoula*
3A Claiborne*
3A Concordia*
3A De Soto*
2A East Baton Rouge*
3A East Carroll
2A East Feliciana*
2A Evangeline*
3A Franklin*
3A Grant*
2A Iberia*
2A Iberville*
3A Jackson*
2A Jefferson*
2A Jefferson Davis*
2A Lafayette*
2A Lafourche*
3A La Salle*
3A Lincoln*
2A Livingston*
3A Madison*
3A Morehouse
3A Natchitoches*
2A Orleans*
3A Ouachita*
2A Plaquemines*
2A Pointe Coupee*
2A Rapides*
3A Red River*
3A Richland*
3A Sabine*
2A St. Bernard*
2A St. Charles*
2A St. Helena*
2A St. James*
2A St. John the Baptist*
2A St. Landry*
2A St. Martin*
2A St. Mary*
2A St. Tammany*
2A Tangipahoa*
3A Tensas*
2A Terrebonne*
3A Union*
2A Vermilion*
3A Vernon*
2A Washington*
3A Webster*
2A West Baton Rouge*
3A West Carroll
2A West Feliciana*
3A Winn*

MAINE

6A Androscoggin
7 Aroostook
6A Cumberland
6A Franklin
6A Hancock
6A Kennebec
6A Knox
6A Lincoln
6A Oxford
6A Penobscot
6A Piscataquis
6A Sagadahoc
6A Somerset
6A Waldo
6A Washington
6A York

MARYLAND

4A Allegany
4A Anne Arundel
4A Baltimore
4A Baltimore (city)
4A Calvert
4A Caroline
4A Carroll
4A Cecil
4A Charles
4A Dorchester
4A Frederick
5A Garrett
4A Harford
4A Howard
4A Kent
4A Montgomery
4A Prince George's
4A Queen Anne's
4A Somerset
4A St. Mary's
4A Talbot
4A Washington
4A Wicomico
4A Worcester

MASSACHSETTS

5A (all)

MICHIGAN

6A Alcona
6A Alger

(continued)

INTERNATIONAL CODE COUNCIL®
Copyright © 2015 ICC. ALL RIGHTS RESERVED. Accessed by David Dammon on Jun 21, 2017 12:30:52 PM pursuant to License Agreement with ICC. No further reproduction or distribution authorized. ANY UNAUTHORIZED REPRODUCTION OR DISTRIBUTION IS A VIOLATION OF THE FEDERAL COPYRIGHT ACT AND THE LICENSE AGREEMENT, AND SUBJECT TO CIVIL AND CRIMINAL PENALTIES THEREUNDER.

TABLE C301.1—continued
CLIMATE ZONES, MOISTURE REGIMES, AND WARM-HUMID DESIGNATIONS BY STATE, COUNTY AND TERRITORY

5A Allegan
6A Alpena
6A Antrim
6A Arenac
7 Baraga
5A Barry
5A Bay
6A Benzie
5A Berrien
5A Branch
5A Calhoun
5A Cass
6A Charlevoix
6A Cheboygan
7 Chippewa
6A Clare
5A Clinton
6A Crawford
6A Delta
6A Dickinson
5A Eaton
6A Emmet
5A Genesee
6A Gladwin
7 Gogebic
6A Grand Traverse
5A Gratiot
5A Hillsdale
7 Houghton
6A Huron
5A Ingham
5A Ionia
6A Iosco
7 Iron
6A Isabella
5A Jackson
5A Kalamazoo
6A Kalkaska
5A Kent
7 Keweenaw
6A Lake
5A Lapeer
6A Leelanau
5A Lenawee
5A Livingston
7 Luce
7 Mackinac
5A Macomb
6A Manistee
6A Marquette
6A Mason
6A Mecosta
6A Menominee
5A Midland
6A Missaukee
5A Monroe
5A Montcalm
6A Montmorency
5A Muskegon
6A Newaygo
5A Oakland
6A Oceana
6A Ogemaw
7 Ontonagon
6A Osceola
6A Oscoda
6A Otsego
5A Ottawa
6A Presque Isle
6A Roscommon
5A Saginaw
6A Sanilac
7 Schoolcraft
5A Shiawassee
5A St. Clair
5A St. Joseph
5A Tuscola
5A Van Buren
5A Washtenaw
5A Wayne
6A Wexford

MINNESOTA

7 Aitkin
6A Anoka
7 Becker
7 Beltrami
6A Benton
6A Big Stone
6A Blue Earth
6A Brown
7 Carlton
6A Carver
7 Cass
6A Chippewa
6A Chisago
7 Clay
7 Clearwater
7 Cook
6A Cottonwood
7 Crow Wing
6A Dakota
6A Dodge
6A Douglas
6A Faribault
6A Fillmore
6A Freeborn
6A Goodhue
7 Grant
6A Hennepin
6A Houston
7 Hubbard
6A Isanti
7 Itasca
6A Jackson
7 Kanabec
6A Kandiyohi
7 Kittson
7 Koochiching
6A Lac qui Parle
7 Lake
7 Lake of the Woods
6A Le Sueur
6A Lincoln
6A Lyon
7 Mahnomen
7 Marshall
6A Martin
6A McLeod
6A Meeker
7 Mille Lacs
6A Morrison
6A Mower
6A Murray
6A Nicollet
6A Nobles
7 Norman
6A Olmsted
7 Otter Tail
7 Pennington
7 Pine
6A Pipestone
7 Polk
6A Pope
6A Ramsey
7 Red Lake
6A Redwood
6A Renville
6A Rice
6A Rock
7 Roseau
6A Scott
6A Sherburne
6A Sibley
6A Stearns
6A Steele
6A Stevens
7 St. Louis
6A Swift
6A Todd
6A Traverse
6A Wabasha
7 Wadena
6A Waseca
6A Washington
6A Watonwan
7 Wilkin
6A Winona
6A Wright
6A Yellow Medicine

MISSISSIPPI

3A Adams*
3A Alcorn
3A Amite*
3A Attala
3A Benton
3A Bolivar
3A Calhoun
3A Carroll
3A Chickasaw
3A Choctaw
3A Claiborne*
3A Clarke
3A Clay
3A Coahoma
3A Copiah*
3A Covington*
3A DeSoto
3A Forrest*
3A Franklin*
3A George*
3A Greene*
3A Grenada
2A Hancock*
2A Harrison*
3A Hinds*
3A Holmes
3A Humphreys
3A Issaquena
3A Itawamba
2A Jackson*
3A Jasper
3A Jefferson*
3A Jefferson Davis*
3A Jones*
3A Kemper
3A Lafayette
3A Lamar*
3A Lauderdale
3A Lawrence*
3A Leake
3A Lee
3A Leflore
3A Lincoln*
3A Lowndes
3A Madison
3A Marion*
3A Marshall
3A Monroe
3A Montgomery
3A Neshoba
3A Newton
3A Noxubee
3A Oktibbeha
3A Panola
2A Pearl River*
3A Perry*
3A Pike*
3A Pontotoc

(continued)

INTERNATIONAL CODE COUNCIL®
Copyright © 2015 ICC. ALL RIGHTS RESERVED. Accessed by David Dammon on Jun 21, 2017 12:30:52 PM pursuant to License Agreement with ICC. No further reproduction or distribution authorized. ANY UNAUTHORIZED REPRODUCTION OR DISTRIBUTION IS A VIOLATION OF THE FEDERAL COPYRIGHT ACT AND THE LICENSE AGREEMENT, AND SUBJECT TO CIVIL AND CRIMINAL PENALTIES THEREUNDER.

TABLE C301.1—continued
CLIMATE ZONES, MOISTURE REGIMES, AND WARM-HUMID DESIGNATIONS BY STATE, COUNTY AND TERRITORY

3A Prentiss
3A Quitman
3A Rankin*
3A Scott
3A Sharkey
3A Simpson*
3A Smith*
2A Stone*
3A Sunflower
3A Tallahatchie
3A Tate
3A Tippah
3A Tishomingo
3A Tunica
3A Union
3A Walthall*
3A Warren*
3A Washington
3A Wayne*
3A Webster
3A Wilkinson*
3A Winston
3A Yalobusha
3A Yazoo

MISSOURI

5A Adair
5A Andrew
5A Atchison
4A Audrain
4A Barry
4A Barton
4A Bates
4A Benton
4A Bollinger
4A Boone
5A Buchanan
4A Butler
5A Caldwell
4A Callaway
4A Camden
4A Cape Girardeau
4A Carroll
4A Carter
4A Cass
4A Cedar
5A Chariton
4A Christian
5A Clark
4A Clay
5A Clinton
4A Cole
4A Cooper
4A Crawford
4A Dade
4A Dallas
5A Daviess
5A DeKalb
4A Dent
4A Douglas
4A Dunklin
4A Franklin
4A Gasconade
5A Gentry
4A Greene
5A Grundy
5A Harrison
4A Henry
4A Hickory
5A Holt
4A Howard
4A Howell
4A Iron
4A Jackson
4A Jasper
4A Jefferson
4A Johnson
5A Knox
4A Laclede
4A Lafayette
4A Lawrence
5A Lewis
4A Lincoln
5A Linn
5A Livingston
5A Macon
4A Madison
4A Maries
5A Marion
4A McDonald
5A Mercer
4A Miller
4A Mississippi
4A Moniteau
4A Monroe
4A Montgomery
4A Morgan
4A New Madrid
4A Newton
5A Nodaway
4A Oregon
4A Osage
4A Ozark
4A Pemiscot
4A Perry
4A Pettis
4A Phelps
5A Pike
4A Platte
4A Polk
4A Pulaski
5A Putnam
5A Ralls
4A Randolph
4A Ray
4A Reynolds
4A Ripley
4A Saline
5A Schuyler
5A Scotland
4A Scott
4A Shannon
5A Shelby
4A St. Charles
4A St. Clair
4A Ste. Genevieve
4A St. Francois
4A St. Louis
4A St. Louis (city)
4A Stoddard
4A Stone
5A Sullivan
4A Taney
4A Texas
4A Vernon
4A Warren
4A Washington
4A Wayne
4A Webster
5A Worth
4A Wright

MONTANA

6B (all)

NEBRASKA

5A (all)

NEVADA

5B Carson City (city)
5B Churchill
3B Clark
5B Douglas
5B Elko
5B Esmeralda
5B Eureka
5B Humboldt
5B Lander
5B Lincoln
5B Lyon
5B Mineral
5B Nye
5B Pershing
5B Storey
5B Washoe
5B White Pine

NEW HAMPSHIRE

6A Belknap
6A Carroll
5A Cheshire
6A Coos
6A Grafton
5A Hillsborough
6A Merrimack
5A Rockingham
5A Strafford
6A Sullivan

NEW JERSEY

4A Atlantic
5A Bergen
4A Burlington
4A Camden
4A Cape May
4A Cumberland
4A Essex
4A Gloucester
4A Hudson
5A Hunterdon
5A Mercer
4A Middlesex
4A Monmouth
5A Morris
4A Ocean
5A Passaic
4A Salem
5A Somerset
5A Sussex
4A Union
5A Warren

NEW MEXICO

4B Bernalillo
5B Catron
3B Chaves
4B Cibola
5B Colfax
4B Curry
4B DeBaca
3B Dona Ana
3B Eddy
4B Grant
4B Guadalupe
5B Harding
3B Hidalgo
3B Lea
4B Lincoln
5B Los Alamos
3B Luna
5B McKinley
5B Mora
3B Otero
4B Quay
5B Rio Arriba
4B Roosevelt
5B Sandoval
5B San Juan
5B San Miguel
5B Santa Fe
4B Sierra
4B Socorro
5B Taos

(continued)

INTERNATIONAL CODE COUNCIL®
Copyright © 2015 ICC. ALL RIGHTS RESERVED. Accessed by David Dammon on Jun 21, 2017 12:30:52 PM pursuant to License Agreement with ICC. No further reproduction or distribution authorized. ANY UNAUTHORIZED REPRODUCTION OR DISTRIBUTION IS A VIOLATION OF THE FEDERAL COPYRIGHT ACT AND THE LICENSE AGREEMENT, AND SUBJECT TO CIVIL AND CRIMINAL PENALTIES THEREUNDER.

TABLE C301.1—continued
CLIMATE ZONES, MOISTURE REGIMES, AND WARM-HUMID DESIGNATIONS BY STATE, COUNTY AND TERRITORY

5B Torrance
4B Union
4B Valencia

NEW YORK

5A Albany
6A Allegany
4A Bronx
6A Broome
6A Cattaraugus
5A Cayuga
5A Chautauqua
5A Chemung
6A Chenango
6A Clinton
5A Columbia
5A Cortland
6A Delaware
5A Dutchess
5A Erie
6A Essex
6A Franklin
6A Fulton
5A Genesee
5A Greene
6A Hamilton
6A Herkimer
6A Jefferson
4A Kings
6A Lewis
5A Livingston
6A Madison
5A Monroe
6A Montgomery
4A Nassau
4A New York
5A Niagara
6A Oneida
5A Onondaga
5A Ontario
5A Orange
5A Orleans
5A Oswego
6A Otsego
5A Putnam
4A Queens
5A Rensselaer
4A Richmond
5A Rockland
5A Saratoga
5A Schenectady
6A Schoharie
6A Schuyler
5A Seneca
6A Steuben
6A St. Lawrence
4A Suffolk
6A Sullivan
5A Tioga
6A Tompkins
6A Ulster
6A Warren
5A Washington
5A Wayne
4A Westchester
6A Wyoming
5A Yates

NORTH CAROLINA

4A Alamance
4A Alexander
5A Alleghany
3A Anson
5A Ashe
5A Avery
3A Beaufort
4A Bertie
3A Bladen
3A Brunswick*
4A Buncombe
4A Burke
3A Cabarrus
4A Caldwell
3A Camden
3A Carteret*
4A Caswell
4A Catawba
4A Chatham
4A Cherokee
3A Chowan
4A Clay
4A Cleveland
3A Columbus*
3A Craven
3A Cumberland
3A Currituck
3A Dare
3A Davidson
4A Davie
3A Duplin
4A Durham
3A Edgecombe
4A Forsyth
4A Franklin
3A Gaston
4A Gates
4A Graham
4A Granville
3A Greene
4A Guilford
4A Halifax
4A Harnett
4A Haywood
4A Henderson
4A Hertford
3A Hok
3A Hyde
4A Iredell
4A Jackson
3A Johnston
3A Jones
4A Lee
3A Lenoir
4A Lincoln
4A Macon
4A Madison
3A Martin
4A McDowell
3A Mecklenburg
5A Mitchell
3A Montgomery
3A Moore
4A Nash
3A New Hanover*
4A Northampton
3A Onslow*
4A Orange
3A Pamlico
3A Pasquotank
3A Pender*
3A Perquimans
4A Person
3A Pitt
4A Polk
3A Randolph
3A Richmond
3A Robeson
4A Rockingham
3A Rowan
4A Rutherford
3A Sampson
3A Scotland
3A Stanly
4A Stokes
4A Surry
4A Swain
4A Transylvania
3A Tyrrell
3A Union
4A Vance
4A Wake
4A Warren
3A Washington
5A Watauga
3A Wayne
4A Wilkes
3A Wilson
4A Yadkin
5A Yancey

NORTH DAKOTA

6A Adams
7 Barnes
7 Benson
6A Billings
7 Bottineau
6A Bowman
7 Burke
6A Burleigh
7 Cass
7 Cavalier
6A Dickey
7 Divide
6A Dunn
7 Eddy
6A Emmons
7 Foster
6A Golden Valley
7 Grand Forks
6A Grant
7 Griggs
6A Hettinger
7 Kidder
6A LaMoure
6A Logan
7 McHenry
6A McIntosh
6A McKenzie
7 McLean
6A Mercer
6A Morton
7 Mountrail
7 Nelson
6A Oliver
7 Pembina
7 Pierce
7 Ramsey
6A Ransom
7 Renville
6A Richland
7 Rolette
6A Sargent
7 Sheridan
6A Sioux
6A Slope
6A Stark
7 Steele
7 Stutsman
7 Towner
7 Traill
7 Walsh
7 Ward
7 Wells
7 Williams

OHIO

4A Adams
5A Allen
5A Ashland

(continued)

INTERNATIONAL CODE COUNCIL®
Copyright © 2015 ICC. ALL RIGHTS RESERVED. Accessed by David Dammon on Jun 21, 2017 12:30:52 PM pursuant to License Agreement with ICC. No further reproduction or distribution authorized. ANY UNAUTHORIZED REPRODUCTION OR DISTRIBUTION IS A VIOLATION OF THE FEDERAL COPYRIGHT ACT AND THE LICENSE AGREEMENT, AND SUBJECT TO CIVIL AND CRIMINAL PENALTIES THEREUNDER.

TABLE C301.1—continued
CLIMATE ZONES, MOISTURE REGIMES, AND WARM-HUMID DESIGNATIONS BY STATE, COUNTY AND TERRITORY

5A Ashtabula
5A Athens
5A Auglaize
5A Belmont
4A Brown
5A Butler
5A Carroll
5A Champaign
5A Clark
4A Clermont
5A Clinton
5A Columbiana
5A Coshocton
5A Crawford
5A Cuyahoga
5A Darke
5A Defiance
5A Delaware
5A Erie
5A Fairfield
5A Fayette
5A Franklin
5A Fulton
4A Gallia
5A Geauga
5A Greene
5A Guernsey
4A Hamilton
5A Hancock
5A Hardin
5A Harrison
5A Henry
5A Highland
5A Hocking
5A Holmes
5A Huron
5A Jackson
5A Jefferson
5A Knox
5A Lake
4A Lawrence
5A Licking
5A Logan
5A Lorain
5A Lucas
5A Madison
5A Mahoning
5A Marion
5A Medina
5A Meigs
5A Mercer
5A Miami
5A Monroe
5A Montgomery
5A Morgan
5A Morrow
5A Muskingum
5A Noble
5A Ottawa
5A Paulding
5A Perry
5A Pickaway
4A Pike
5A Portage
5A Preble
5A Putnam
5A Richland
5A Ross
5A Sandusky
4A Scioto
5A Seneca
5A Shelby
5A Stark
5A Summit
5A Trumbull
5A Tuscarawas
5A Union
5A Van Wert
5A Vinton
5A Warren
4A Washington
5A Wayne
5A Williams
5A Wood
5A Wyandot

OKLAHOMA

3A Adair
3A Alfalfa
3A Atoka
4B Beaver
3A Beckham
3A Blaine
3A Bryan
3A Caddo
3A Canadian
3A Carter
3A Cherokee
3A Choctaw
4B Cimarron
3A Cleveland
3A Coal
3A Comanche
3A Cotton
3A Craig
3A Creek
3A Custer
3A Delaware
3A Dewey
3A Ellis
3A Garfield
3A Garvin
3A Grady
3A Grant
3A Greer
3A Harmon
3A Harper
3A Haskell
3A Hughes
3A Jackson
3A Jefferson
3A Johnston
3A Kay
3A Kingfisher
3A Kiowa
3A Latimer
3A Le Flore
3A Lincoln
3A Logan
3A Love
3A Major
3A Marshall
3A Mayes
3A McClain
3A McCurtain
3A McIntosh
3A Murray
3A Muskogee
3A Noble
3A Nowata
3A Okfuske
3A Oklahoma
3A Okmulgee
3A Osage
3A Ottawa
3A Pawnee
3A Payne
3A Pittsburg
3A Pontotoc
3A Pottawatomie
3A Pushmataha
3A Roger Mills
3A Rogers
3A Seminole
3A Sequoyah
3A Stephens
4B Texas
3A Tillman
3A Tulsa
3A Wagoner
3A Washington
3A Washita
3A Woods
3A Woodward

OREGON

5B Baker
4C Benton
4C Clackamas
4C Clatsop
4C Columbia
4C Coos
5B Crook
4C Curry
5B Deschutes
4C Douglas
5B Gilliam
5B Grant
5B Harney
5B Hood River
4C Jackson
5B Jefferson
4C Josephine
5B Klamath
5B Lake
4C Lane
4C Lincoln
4C Linn
5B Malheur
4C Marion
5B Morrow
4C Multnomah
4C Polk
5B Sherman
4C Tillamook
5B Umatilla
5B Union
5B Wallowa
5B Wasco
4C Washington
5B Wheeler
4C Yamhill

PENNSYLVANIA

5A Adams
5A Allegheny
5A Armstrong
5A Beaver
5A Bedford
5A Berks
5A Blair
5A Bradford
4A Bucks
5A Butler
5A Cambria
6A Cameron
5A Carbon
5A Centre
4A Chester
5A Clarion
6A Clearfield
5A Clinton
5A Columbia
5A Crawford
5A Cumberland
5A Dauphin
4A Delaware
6A Elk
5A Erie
5A Fayette
5A Forest
5A Franklin
5A Fulton
5A Greene
5A Huntingdon

(continued)

INTERNATIONAL CODE COUNCIL®
Copyright © 2015 ICC. ALL RIGHTS RESERVED. Accessed by David Dammon on Jun 21, 2017 12:30:52 PM pursuant to License Agreement with ICC. No further reproduction or distribution authorized. ANY UNAUTHORIZED REPRODUCTION OR DISTRIBUTION IS A VIOLATION OF THE FEDERAL COPYRIGHT ACT AND THE LICENSE AGREEMENT, AND SUBJECT TO CIVIL AND CRIMINAL PENALTIES THEREUNDER.

TABLE C301.1—continued
CLIMATE ZONES, MOISTURE REGIMES, AND WARM-HUMID DESIGNATIONS BY STATE, COUNTY AND TERRITORY

5A Indiana
5A Jefferson
5A Juniata
5A Lackawanna
5A Lancaster
5A Lawrence
5A Lebanon
5A Lehigh
5A Luzerne
5A Lycoming
6A McKean
5A Mercer
5A Mifflin
5A Monroe
4A Montgomery
5A Montour
5A Northampton
5A Northumberland
5A Perry
4A Philadelphia
5A Pike
6A Potter
5A Schuylkill
5A Snyder
5A Somerset
5A Sullivan
6A Susquehanna
6A Tioga
5A Union
5A Venango
5A Warren
5A Washington
6A Wayne
5A Westmoreland
5A Wyoming
4A York

RHODE ISLAND

5A (all)

SOUTH CAROLINA

3A Abbeville
3A Aiken
3A Allendale*
3A Anderson
3A Bamberg*
3A Barnwell*
3A Beaufort*
3A Berkeley*
3A Calhoun
3A Charleston*
3A Cherokee
3A Chester
3A Chesterfield
3A Clarendon
3A Colleton*
3A Darlington
3A Dillon
3A Dorchester*
3A Edgefield
3A Fairfield
3A Florence
3A Georgetown*
3A Greenville
3A Greenwood
3A Hampton*
3A Horry*
3A Jasper*
3A Kershaw
3A Lancaster
3A Laurens
3A Lee
3A Lexington
3A Marion
3A Marlboro
3A McCormick
3A Newberry
3A Oconee
3A Orangeburg
3A Pickens
3A Richland
3A Saluda
3A Spartanburg
3A Sumter
3A Union
3A Williamsburg
3A York

SOUTH DAKOTA

6A Aurora
6A Beadle
5A Bennett
5A Bon Homme
6A Brookings
6A Brown
6A Brule
6A Buffalo
6A Butte
6A Campbell
5A Charles Mix
6A Clark
5A Clay
6A Codington
6A Corson
6A Custer
6A Davison
6A Day
6A Deuel
6A Dewey
5A Douglas
6A Edmunds
6A Fall River
6A Faulk
6A Grant
5A Gregory
6A Haakon
6A Hamlin
6A Hand
6A Hanson
6A Harding
6A Hughes
5A Hutchinson
6A Hyde
5A Jackson
6A Jerauld
6A Jones
6A Kingsbury
6A Lake
6A Lawrence
6A Lincoln
6A Lyman
6A Marshall
6A McCook
6A McPherson
6A Meade
5A Mellette
6A Miner
6A Minnehaha
6A Moody
6A Pennington
6A Perkins
6A Potter
6A Roberts
6A Sanborn
6A Shannon
6A Spink
6A Stanley
6A Sully
5A Todd
5A Tripp
6A Turner
5A Union
6A Walworth
5A Yankton
6A Ziebach

TENNESSEE

4A Anderson
4A Bedford
4A Benton
4A Bledsoe
4A Blount
4A Bradley
4A Campbell
4A Cannon
4A Carroll
4A Carter
4A Cheatham
3A Chester
4A Claiborne
4A Clay
4A Cocke
4A Coffee
3A Crockett
4A Cumberland
4A Davidson
4A Decatur
4A DeKalb
4A Dickson
3A Dyer
3A Fayette
4A Fentress
4A Franklin
4A Gibson
4A Giles
4A Grainger
4A Greene
4A Grundy
4A Hamblen
4A Hamilton
4A Hancock
3A Hardeman
3A Hardin
4A Hawkins
3A Haywood
3A Henderson
4A Henry
4A Hickman
4A Houston
4A Humphreys
4A Jackson
4A Jefferson
4A Johnson
4A Knox
3A Lake
3A Lauderdale
4A Lawrence
4A Lewis
4A Lincoln
4A Loudon
4A Macon
3A Madison
4A Marion
4A Marshall
4A Maury
4A McMinn
3A McNairy
4A Meigs
4A Monroe
4A Montgomery
4A Moore
4A Morgan
4A Obion
4A Overton
4A Perry
4A Pickett
4A Polk
4A Putnam
4A Rhea
4A Roane

(continued)

INTERNATIONAL CODE COUNCIL®
Copyright © 2015 ICC. ALL RIGHTS RESERVED. Accessed by David Dammon on Jun 21, 2017 12:30:52 PM pursuant to License Agreement with ICC. No further reproduction or distribution authorized. ANY UNAUTHORIZED REPRODUCTION OR DISTRIBUTION IS A VIOLATION OF THE FEDERAL COPYRIGHT ACT AND THE LICENSE AGREEMENT, AND SUBJECT TO CIVIL AND CRIMINAL PENALTIES THEREUNDER.

TABLE C301.1—continued
CLIMATE ZONES, MOISTURE REGIMES, AND WARM-HUMID DESIGNATIONS BY STATE, COUNTY AND TERRITORY

4A Robertson
4A Rutherford
4A Scott
4A Sequatchie
4A Sevier
3A Shelby
4A Smith
4A Stewart
4A Sullivan
4A Sumner
3A Tipton
4A Trousdale
4A Unicoi
4A Union
4A Van Buren
4A Warren
4A Washington
4A Wayne
4A Weakley
4A White
4A Williamson
4A Wilson

TEXAS

2A Anderson*
3B Andrews
2A Angelina*
2A Aransas*
3A Archer
4B Armstrong
2A Atascosa*
2A Austin*
4B Bailey
2B Bandera*
2A Bastrop*
3B Baylor
2A Bee*
2A Bell*
2A Bexar*
3A Blanco*
3B Borden
2A Bosque*
3A Bowie*
2A Brazoria*
2A Brazos*
3B Brewster
4B Briscoe
2A Brooks*
3A Brown*
2A Burleson*
3A Burnet*
2A Caldwell*
2A Calhoun*
3B Callahan
2A Cameron*
3A Camp*
4B Carson
3A Cass*
4B Castro
2A Chambers*
2A Cherokee*
3B Childress
3A Clay
4B Cochran
3B Coke
3B Coleman
3A Collin*
3B Collingsworth
2A Colorado*
2A Comal*
3A Comanche*
3B Concho
3A Cooke
2A Coryell*
3B Cottle
3B Crane
3B Crockett
3B Crosby
3B Culberson
4B Dallam
3A Dallas*
3B Dawson
4B Deaf Smith
3A Delta
3A Denton*
2A DeWitt*
3B Dickens
2B Dimmit*
4B Donley
2A Duval*
3A Eastland
3B Ector
2B Edwards*
3A Ellis*
3B El Paso
3A Erath*
2A Falls*
3A Fannin
2A Fayette*
3B Fisher
4B Floyd
3B Foard
2A Fort Bend*
3A Franklin*
2A Freestone*
2B Frio*
3B Gaines
2A Galveston*
3B Garza
3A Gillespie*
3B Glasscock
2A Goliad*
2A Gonzales*
4B Gray
3A Grayson
3A Gregg*
2A Grimes*
2A Guadalupe*
4B Hale
3B Hall
3A Hamilton*
4B Hansford
3B Hardeman
2A Hardin*
2A Harris*
3A Harrison*
4B Hartley
3B Haskell
2A Hays*
3B Hemphill
3A Henderson*
2A Hidalgo*
2A Hill*
4B Hockley
3A Hood*
3A Hopkins*
2A Houston*
3B Howard
3B Hudspeth
3A Hunt*
4B Hutchinson
3B Irion
3A Jack
2A Jackson*
2A Jasper*
3B Jeff Davis
2A Jefferson*
2A Jim Hogg*
2A Jim Wells*
3A Johnson*
3B Jones
2A Karnes*
3A Kaufman*
3A Kendall*
2A Kenedy*
3B Kent
3B Kerr
3B Kimble
3B King
2B Kinney*
2A Kleberg*
3B Knox
3A Lamar*
4B Lamb
3A Lampasas*
2B La Salle*
2A Lavaca*
2A Lee*
2A Leon*
2A Liberty*
2A Limestone*
4B Lipscomb
2A Live Oak*
3A Llano*
3B Loving
3B Lubbock
3B Lynn
2A Madison*
3A Marion*
3B Martin
3B Mason
2A Matagorda*
2B Maverick*
3B McCulloch
2A McLennan*
2A McMullen*
2B Medina*
3B Menard
3B Midland
2A Milam*
3A Mills*
3B Mitchell
3A Montague
2A Montgomery*
4B Moore
3A Morris*
3B Motley
3A Nacogdoches*
3A Navarro*
2A Newton*
3B Nolan
2A Nueces*
4B Ochiltree
4B Oldham
2A Orange*
3A Palo Pinto*
3A Panola*
3A Parker*
4B Parmer
3B Pecos
2A Polk*
4B Potter
3B Presidio
3A Rains*
4B Randall
3B Reagan
2B Real*
3A Red River*
3B Reeves
2A Refugio*
4B Roberts
2A Robertson*
3A Rockwall*
3B Runnels
3A Rusk*
3A Sabine*
3A San Augustine*
2A San Jacinto*
2A San Patricio*
3A San Saba*

(continued)

INTERNATIONAL CODE COUNCIL®
Copyright © 2015 ICC. ALL RIGHTS RESERVED. Accessed by David Dammon on Jun 21, 2017 12:30:52 PM pursuant to License Agreement with ICC. No further reproduction or distribution authorized. ANY UNAUTHORIZED REPRODUCTION OR DISTRIBUTION IS A VIOLATION OF THE FEDERAL COPYRIGHT ACT AND THE LICENSE AGREEMENT, AND SUBJECT TO CIVIL AND CRIMINAL PENALTIES THEREUNDER.

TABLE C301.1—continued
CLIMATE ZONES, MOISTURE REGIMES, AND WARM-HUMID DESIGNATIONS BY STATE, COUNTY AND TERRITORY

3B Schleicher
3B Scurry
3B Shackelford
3A Shelby*
4B Sherman
3A Smith*
3A Somervell*
2A Starr*
3A Stephens
3B Sterling
3B Stonewall
3B Sutton
4B Swisher
3A Tarrant*
3B Taylor
3B Terrell
3B Terry
3B Throckmorton
3A Titus*
3B Tom Green
2A Travis*
2A Trinity*
2A Tyler*
3A Upshur*
3B Upton
2B Uvalde*
2B Val Verde*
3A Van Zandt*
2A Victoria*
2A Walker*
2A Waller*
3B Ward
2A Washington*
2B Webb*
2A Wharton*
3B Wheeler
3A Wichita
3B Wilbarger
2A Willacy*
2A Williamson*
2A Wilson*
3B Winkler
3A Wise
3A Wood*
4B Yoakum
3A Young

2B Zapata*
2B Zavala*

UTAH

5B Beaver
6B Box Elder
6B Cache
6B Carbon
6B Daggett
5B Davis
6B Duchesne
5B Emery
5B Garfield
5B Grand
5B Iron
5B Juab
5B Kane
5B Millard
6B Morgan
5B Piute
6B Rich
5B Salt Lake
5B San Juan
5B Sanpete
5B Sevier
6B Summit
5B Tooele
6B Uintah
5B Utah
6B Wasatch
3B Washington
5B Wayne
5B Weber

VERMONT

6A (all)

VIRGINIA

4A (all)

WASHINGTON

5B Adams
5B Asotin
5B Benton
5B Chelan
4C Clallam
4C Clark
5B Columbia
4C Cowlitz
5B Douglas
6B Ferry
5B Franklin
5B Garfield
5B Grant
4C Grays Harbor
4C Island
4C Jefferson
4C King
4C Kitsap
5B Kittitas
5B Klickitat
4C Lewis
5B Lincoln
4C Mason
6B Okanogan
4C Pacific
6B Pend Oreille
4C Pierce
4C San Juan
4C Skagit
5B Skamania
4C Snohomish
5B Spokane
6B Stevens
4C Thurston
4C Wahkiakum
5B Walla Walla
4C Whatcom
5B Whitman
5B Yakima

WEST VIRGINIA

5A Barbour
4A Berkeley
4A Boone
4A Braxton
5A Brooke
4A Cabell
4A Calhoun
4A Clay
5A Doddridge
5A Fayette
4A Gilmer
5A Grant
5A Greenbrier
5A Hampshire
5A Hancock
5A Hardy
5A Harrison
4A Jackson
4A Jefferson
4A Kanawha
5A Lewis
4A Lincoln
4A Logan
5A Marion
5A Marshall
4A Mason
4A McDowell
4A Mercer
5A Mineral
4A Mingo
5A Monongalia
4A Monroe
4A Morgan
5A Nicholas
5A Ohio
5A Pendleton
4A Pleasants
5A Pocahontas
5A Preston
4A Putnam
5A Raleigh
5A Randolph
4A Ritchie
4A Roane
5A Summers
5A Taylor
5A Tucker
4A Tyler
5A Upshur
4A Wayne
5A Webster
5A Wetzel
4A Wirt
4A Wood
4A Wyoming

WISCONSIN

6A Adams
7 Ashland
6A Barron
7 Bayfield
6A Brown
6A Buffalo
7 Burnett
6A Calumet
6A Chippewa
6A Clark
6A Columbia
6A Crawford
6A Dane
6A Dodge
6A Door
7 Douglas
6A Dunn
6A Eau Claire
7 Florence
6A Fond du Lac
7 Forest
6A Grant
6A Green
6A Green Lake
6A Iowa
7 Iron
6A Jackson
6A Jefferson
6A Juneau
6A Kenosha
6A Kewaunee
6A La Crosse
6A Lafayette
7 Langlade
7 Lincoln
6A Manitowoc
6A Marathon
6A Marinette
6A Marquette
6A Menominee
6A Milwaukee
6A Monroe
6A Oconto
7 Oneida
6A Outagamie
6A Ozaukee
6A Pepin
6A Pierce
6A Polk

(continued)

INTERNATIONAL CODE COUNCIL®
Copyright © 2015 ICC. ALL RIGHTS RESERVED. Accessed by David Dammon on Jun 21, 2017 12:30:52 PM pursuant to License Agreement with ICC. No further reproduction or distribution authorized. ANY UNAUTHORIZED REPRODUCTION OR DISTRIBUTION IS A VIOLATION OF THE FEDERAL COPYRIGHT ACT AND THE LICENSE AGREEMENT, AND SUBJECT TO CIVIL AND CRIMINAL PENALTIES THEREUNDER.

TABLE C301.1—continued
CLIMATE ZONES, MOISTURE REGIMES, AND WARM-HUMID DESIGNATIONS BY STATE, COUNTY AND TERRITORY

6A Portage
7 Price
6A Racine
6A Richland
6A Rock
6A Rusk
6A Sauk
7 Sawyer
6A Shawano
6A Sheboygan
6A St. Croix
7 Taylor
6A Trempealeau
6A Vernon
7 Vilas
6A Walworth
7 Washburn
6A Washington
6A Waukesha
6A Waupaca
6A Waushara
6A Winnebago
6A Wood

WYOMING

6B Albany
6B Big Horn
6B Campbell
6B Carbon
6B Converse
6B Crook
6B Fremont
5B Goshen
6B Hot Springs
6B Johnson
6B Laramie
7 Lincoln
6B Natrona
6B Niobrara
6B Park
5B Platte
6B Sheridan
7 Sublette
6B Sweetwater
7 Teton
6B Uinta
6B Washakie
6B Weston

US TERRITORIES

AMERICAN SAMOA

1A (all)*

GUAM

1A (all)*

NORTHERN MARIANA ISLANDS

1A (all)*

PUERTO RICO

1A (all)*

VIRGIN ISLANDS

1A (all)*

INTERNATIONAL CODE COUNCIL®
Copyright © 2015 ICC. ALL RIGHTS RESERVED. Accessed by David Dammon on Jun 21, 2017 12:30:52 PM pursuant to License Agreement with ICC. No further reproduction or distribution authorized. ANY UNAUTHORIZED REPRODUCTION OR DISTRIBUTION IS A VIOLATION OF THE FEDERAL COPYRIGHT ACT AND THE LICENSE AGREEMENT, AND SUBJECT TO CIVIL AND CRIMINAL PENALTIES THEREUNDER.

SECTION C302
DESIGN CONDITIONS

C302.1 Interior design conditions. The interior design temperatures used for heating and cooling load calculations shall be a maximum of 72°F (22°C) for heating and minimum of 75°F (24°C) for cooling.

❖ While the previous sections of Chapter 3 [CE] address outdoor design conditions, this section provides the interior conditions that will be used for properly sizing the mechanical equipment and the complete HVAC system. The proper sizing of mechanical equipment (see Sections C403.2.1 and C403.2.2) can vary depending on the selected design conditions. While the code does address oversizing equipment, it is not enforceable without establishing the exact design parameters. This section is included in the code only for system sizing, and it does not affect the interior design temperatures required by other codes such as Section 1204 of the *International Building Code*® (IBC®) or Section 602.2 of the *International Property Maintenance Code*® (IPMC®).

SECTION C303
MATERIALS, SYSTEMS AND EQUIPMENT

C303.1 Identification. Materials, systems and equipment shall be identified in a manner that will allow a determination of compliance with the applicable provisions of this code.

❖ The intent of this section is to make certain that sufficient information exists to determine compliance with the code during the plan review and field inspection phases. The permit applicant can submit the required equipment and materials information on the building plans, specification sheets or schedules; or in any other way that allows the code official to clearly identify which specifications apply to which portions of the building (i.e., which parts of the building are insulated to the levels listed). Materials information includes envelope insulation levels, glazing assembly *U*-factors and duct and piping insulation levels. Equipment information includes heating and cooling equipment and appliance efficiencies where high-efficiency equipment is claimed to meet code requirements.

This section contains specific material, equipment and system identification requirements for the approval and installation of the items required by the code. Although the means for permanent marking (tag, stencil, label, stamp, sticker, bar code, etc.) is often determined and applied by the manufacturer, if there is any uncertainty about the product, the mark is subject to the approval of the code official.

C303.1.1 Building thermal envelope insulation. An *R*-value identification mark shall be applied by the manufacturer to each piece of *building thermal envelope* insulation 12 inches (305 mm) or greater in width. Alternately, the insulation installers shall provide a certification listing the type, manufacturer and *R*-value of insulation installed in each element of the *building thermal envelope*. For blown or sprayed insulation (fiberglass and cellulose), the initial installed thickness, settled thickness, settled *R*-value, installed density, coverage area and number of bags installed shall be *listed* on the certification. For sprayed polyurethane foam (SPF) insulation, the installed thickness of the areas covered and *R*-value of installed thickness shall be *listed* on the certification. For insulated siding, the *R*-value shall be labeled on thew product's package and shall be *listed* on the certification. The insulation installer shall sign, date and post the certification in a conspicuous location on the job site.

❖ The thermal performance of insulation is rated in terms of *R*-value. For products lacking an *R*-value identification, the installer (or builder) must provide the insulation performance data. For example, some insulation materials, such as foamed-in-place urethane, can be installed in wall, floor and cathedral ceiling cavities. These products are not labeled, as is batt insulation, nor is it appropriate for them to be evaluated as required in the code for blown or sprayed insulation. However, the installer must certify the type, thickness and *R*-value of these materials.

The *R*-value of loose-fill insulation (blown or sprayed) is dependent on both the installed thickness and the installed density (number of bags used). Therefore, loose-fill insulation cannot be directly labeled by the manufacturer. Many blown insulation products carry a manufacturer's *R*-value guarantee when installed to a designated thickness, "inches = *R*-value." Blown insulation products lacking this manufacturer's guarantee can be subjected to special inspection and testing, what is referred to as "cookie cutting." Cookie cutting involves extracting a column of insulation with a cylinder to determine its density. The insulation depth and density must yield the specified *R*-value according to the manufacturer's bag label specification.

The code and Federal Trade Commission (FTC) Rule 460 require that installers of insulation in homes, apartments and manufactured housing units report this information to the authority having jurisdiction in the form of a certification posted in a conspicuous location (see Commentary Figure C303.1.1).

C303.1.1.1 Blown or sprayed roof/ceiling insulation. The thickness of blown-in or sprayed roof/ceiling insulation (fiberglass or cellulose) shall be written in inches (mm) on markers that are installed at least one for every 300 square feet (28 m^2) throughout the attic space. The markers shall be affixed to the trusses or joists and marked with the minimum initial installed thickness with numbers a minimum of 1 inch (25 mm) in height. Each marker shall face the attic access opening. Spray polyurethane foam thickness and installed *R*-value shall be *listed* on certification provided by the insulation installer.

❖ To help verify the installed *R*-value of blown-in or spray-applied insulation, the installer must certify the following information in a signed statement posted in a conspicuous place (see Section C303.1.1):

- The type of insulation used and manufacturer.

INTERNATIONAL CODE COUNCIL®
Copyright © 2015 ICC. ALL RIGHTS RESERVED. Accessed by David Dammon on Jun 21, 2017 12:30:52 PM pursuant to License Agreement with ICC. No further reproduction or distribution authorized. ANY UNAUTHORIZED REPRODUCTION OR DISTRIBUTION IS A VIOLATION OF THE FEDERAL COPYRIGHT ACT AND THE LICENSE AGREEMENT, AND SUBJECT TO CIVIL AND CRIMINAL PENALTIES THEREUNDER.

- The insulation's coverage per bag (the number of bags required to result in a given *R*-value for a given area), as well as the settled *R*-value.
- The initial and settled thickness.
- The number of bags installed.

Under circumstances where the insulation *R*-value is guaranteed, only the initial thickness is required on the certification.

This section helps demonstrate compliance and enforcement of the provisions found in Section C303.1.1. To assist with application and enforcement, loose-fill ceiling insulation also requires thickness markers that are attached to the framing and face the attic access. In a large space, markers placed evenly about every 17 feet (5182 mm) (with some markers at the edge of the space) will meet this requirement. For sprayed polyurethane, such markers are not effective. When using this product, the code requires that the measured thickness and *R*-value be recorded on the certificate.

C303.1.2 Insulation mark installation. Insulating materials shall be installed such that the manufacturer's *R*-value mark is readily observable upon inspection.

❖ For batt insulation, manufacturers' *R*-value designations and stripe codes are often printed directly on the insulation. Where possible, the insulation must be installed so these designations are readable. Backed floor batts can be installed with the designation against the underfloor, which means it would not be visible. In those cases, the *R*-value must be certified by the installer or be validated by some other means (see commentary, Section C303.1.1).

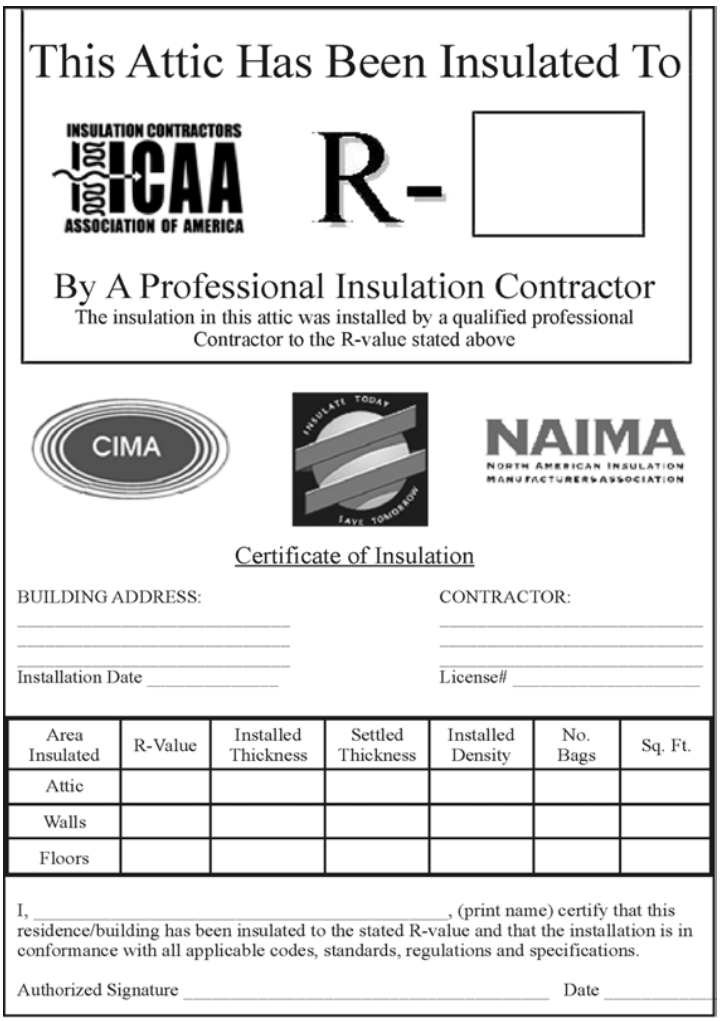

This Attic Has Been Insulated To

INSULATION CONTRACTORS ICAA ASSOCIATION OF AMERICA

R- ☐

By A Professional Insulation Contractor

The insulation in this attic was installed by a qualified professional Contractor to the R-value stated above

CIMA

INSULATE TODAY SAVE TOMORROW

NAIMA NORTH AMERICAN INSULATION MANUFACTURERS ASSOCIATION

Certificate of Insulation

BUILDING ADDRESS: _____

_____

_____

Installation Date _____

CONTRACTOR: _____

_____

_____

License# _____

Area Insulated	R-Value	Installed Thickness	Settled Thickness	Installed Density	No. Bags	Sq. Ft.
Attic						
Walls						
Floors						

I, _____, (print name) certify that this residence/building has been insulated to the stated R-value and that the installation is in conformance with all applicable codes, standards, regulations and specifications.

Authorized Signature _____ Date _____

Figure C303.1.1
SAMPLE CERTIFICATE OF INSULATION

(Logos courtesy of Cellulose Insulation Manufacturers Association, http:/cellulose.org, Insulation Contractors Association of America, www.insulate.org, and North American Insulation Manufacturers Association, www.NAIMA.org)

INTERNATIONAL CODE COUNCIL®
Copyright © 2015 ICC. ALL RIGHTS RESERVED. Accessed by David Dammon on Jun 21, 2017 12:30:52 PM pursuant to License Agreement with ICC. No further reproduction or distribution authorized. ANY UNAUTHORIZED REPRODUCTION OR DISTRIBUTION IS A VIOLATION OF THE FEDERAL COPYRIGHT ACT AND THE LICENSE AGREEMENT, AND SUBJECT TO CIVIL AND CRIMINAL PENALTIES THEREUNDER.

C303.1.3 Fenestration product rating. *U*-factors of fenestration products (windows, doors and skylights) shall be determined in accordance with NFRC 100.

Exception: Where required, garage door *U*-factors shall be determined in accordance with either NFRC 100 or ANSI/DASMA 105.

U-factors shall be determined by an accredited, independent laboratory, and labeled and certified by the manufacturer.

Products lacking such a labeled *U*-factor shall be assigned a default *U*-factor from Table C303.1.3(1) or C303.1.3(2). The solar heat gain coefficient (SHGC) and *visible transmittance* (VT) of glazed fenestration products (windows, glazed doors and skylights) shall be determined in accordance with NFRC 200 by an accredited, independent laboratory, and labeled and certified by the manufacturer. Products lacking such a labeled SHGC or VT shall be assigned a default SHGC or VT from Table C303.1.3(3).

❖ Historically, the buyers of fenestration products received energy performance information in a variety of ways. Some manufacturers described performance by showing *R*-values of the glass. While the glass might have been a good performer, the rating did not include the effects of the frame. Other manufacturers touted the insulating value of different window components, but these, too, did not reflect the total window system performance. When manufacturers rated the entire product, some used test laboratory measurements and others used computer calculations. Even among those using test laboratory reports, the test laboratories often tested the products under different procedures, making an "apples-to-apples" comparison difficult. The different rating methods confused builders and consumers. They also created headaches for manufacturers trying to differentiate the performance of their products from the performance of their competitors' products.

The National Fenestration Rating Council, (NFRC) has developed a fenestration energy rating system based on whole-product performance. This accurately accounts for the energy-related effects of all the product's component parts and prevents information about a single component from being compared in a misleading way to other whole-product properties. With energy ratings based on whole-product performance, NFRC helps builders, designers and consumers directly compare products with different construction details and attributes.

The Door and Access Systems Manufacturers Association (DASMA) has developed a testing standard that provides equivalent test results with the NFRC 100 standard. DASMA 105 allows for testing of door assemblies in sizes not testable under NFRC 100.

Products that have been rated by NFRC-approved testing laboratories and certified by NFRC-accredited independent certification and inspection agencies carry a temporary and permanent label featuring the "NFRC-certified" mark. With this mark, the manufacturer stipulates that the energy performance of the product was determined according to NFRC rules and procedures.

By certifying and labeling their products, manufacturers are demonstrating their commitment to providing accurate energy and energy-related performance information. The code purposely sets the default values fairly high. This helps to encourage the use of products that have been tested and also ensures that products that have little energy savings value are not used inappropriately in the various climate zones. By setting the default value so high, it also will prevent someone from considering removing the label from a tested window and then using the default values. Therefore, the default values are most representative of the lower end of the energy-efficient products.

Products that are not NFRC or DASMA certified and do not exactly match the specifications in Tables C303.1.3(1) and C303.1.3(2) must use the tabular specification for the products they most closely resemble. In the absence of tested *U*-factors, the default *U*-factor for doors containing glazing can be a combination of the glazing and door *U*-factor as described in the definition for "*U*-factor" (see commentary, Section 202, "*U*-factor"). The NFRC procedures determine *U*-factor and SHGC ratings based on the whole fenestration assembly [untested fenestration products have default *U*-factors and SHGCs assigned in accordance with Tables C303.1.3(1) through C303.1.3(3)]. During construction inspection, the label on each glazing assembly should be checked for conformance to the *U*-factor specified on the approved plans. These labels must be left on the glazing until after the building has been inspected for compliance. A sample NFRC label is shown in Commentary Figure C303.1.3(1).

Products certified according to NFRC procedures are listed in the Certified Products Directory. The directory is published annually and contains energy performance information for over 1.4 million fenestration product options listed by over 450 manufacturers. When using the directory or shopping for NFRC-certified products, it is important to note:

1. A product is considered to be NFRC certified only if it carries the NFRC label. Simply being listed in this directory is not enough.
2. The NFRC-certified mark does not signify that the product meets any energy-efficiency standards or criteria.
3. NFRC sets no minimum performance standards nor does it mandate specific performance levels. Rather, NFRC ratings can be used to determine whether a product meets a state or local code, or other performance requirement, and to compare the energy performance of different products during plan review. For questions about NFRC and its rating and labeling system, more information is available on the organization's web site at www.nfrc.org. NFRC

INTERNATIONAL CODE COUNCIL®
Copyright © 2015 ICC. ALL RIGHTS RESERVED. Accessed by David Dammon on Jun 21, 2017 12:30:52 PM pursuant to License Agreement with ICC. No further reproduction or distribution authorized. ANY UNAUTHORIZED REPRODUCTION OR DISTRIBUTION IS A VIOLATION OF THE FEDERAL COPYRIGHT ACT AND THE LICENSE AGREEMENT, AND SUBJECT TO CIVIL AND CRIMINAL PENALTIES THEREUNDER.

adopted a new energy performance label in 2005. It lists the manufacturer, describes the product, provides a source for additional information and includes ratings for one or more energy performance characteristics.

The code offers an alternative to NFRC-certified glazed fenestration product *U*-factor ratings. In the absence of *U*-factors based on NFRC test procedures, the default *U*-factors in Table C303.1.3(1) must be used. When a composite of materials from two different product types is used, the code official should be consulted regarding how the product will be rated. Generally, the product must be assigned the higher *U*-factor, although an average based on the *U*-factors and areas may be acceptable in some cases.

The product cannot receive credit for a feature that cannot be seen. Because performance features such as argon fill and low-emissivity (low-E) coatings for glass are not visually verifiable, they do not receive credit in the default tables. Tested *U*-factors for these windows are often lower, so using tested *U*-factors is to the applicant's advantage. Commentary Figure C303.1.3(2) illustrates visually verifiable window characteristics, among other various window performance, function and cost considerations.

A single-glazed window with an installed storm window may be considered a double-glazed assembly and use the corresponding *U*-factor from the default table. For example, the *U*-factor 0.80 in Table C303.1.3(1) applies to a double-glazed, metal window without a thermal break (but with an installed storm window). If the storm window was not installed, the *U*-factor would be 1.20.





U-Factor

U-factor measures how well a product prevents heat from escaping. *U*-factor ratings generally fall between 0.20 and 1.20. The lower the *U*-factor, the better. *U*-factor is particularly important in northern climates.

Solar Heat Gain Coefficient

Solar heat gain coefficient (SHGC) measures how well a product blocks heat caused by sunlight. SHGC is expressed as a number between 0 and 1. A lower SHGC means less heat gain. SHGC is particularly important in southern climates.

Visible Transmittance

Visible transmittance (VT) measures how much light comes through a product. VT is expressed as a number between 0 and 1. Heavily tinted products have a relatively low VT.

Air Leakage

Air leakage (AL) heat loss and gain occur by infiltration through cracks in the window assembly. It is indicated by an air leakage rating (AL) expressed as the equivalent cubic feet of air passing through a square foot of window area. The lower the AL, the less air will pass through cracks in the window assembly. At this time, AL is optional but required by code only for manufactured windows and doors.

Figure C303.1.3(1)
SAMPLE NATIONAL FENESTRATION RATING COUNCIL (NFRC) LABEL

INTERNATIONAL CODE COUNCIL®
Copyright © 2015 ICC. ALL RIGHTS RESERVED. Accessed by David Dammon on Jun 21, 2017 12:30:52 PM pursuant to License Agreement with ICC. No further reproduction or distribution authorized. ANY UNAUTHORIZED REPRODUCTION OR DISTRIBUTION IS A VIOLATION OF THE FEDERAL COPYRIGHT ACT AND THE LICENSE AGREEMENT, AND SUBJECT TO CIVIL AND CRIMINAL PENALTIES THEREUNDER.

TABLE C303.1.3(1)
DEFAULT GLAZED FENESTRATION *U*-FACTORS

FRAME TYPE	SINGLE PANE	DOUBLE PANE	SKYLIGHT	
			Single	Double
Metal	1.20	0.80	2.00	1.30
Metal with Thermal Break	1.10	0.65	1.90	1.10
Nonmetal or Metal Clad	0.95	0.55	1.75	1.05
Glazed Block	0.60			

TABLE C303.1.3(2)
DEFAULT DOOR *U*-FACTORS

DOOR TYPE	*U*-FACTOR
Uninsulated Metal	1.20
Insulated Metal	0.60
Wood	0.50
Insulated, nonmetal edge, max 45% glazing, any glazing double pane	0.35

❖ Door *U*-factors in Table C303.1.3(2) should be used wherever NFRC-certified ratings are not available. There are a few other aspects to note about doors. Opaque door *U*-factors must include the effects of the door edge and the frame. Calculating *U*-factors based on a cross section through the insulated portion is not acceptable. To take credit for a thermal break, the door must have a thermal break in both the door slab and in the frame. The values in the table are founded on principles established in the 1997 ASHRAE *Handbook of Fundamentals*.

TABLE C303.1.3(3)
DEFAULT GLAZED FENESTRATION SHGC AND VT

	SINGLE GLAZED		DOUBLE GLAZED		GLAZED BLOCK
	Clear	Tinted	Clear	Tinted	
SHGC	0.8	0.7	0.7	0.6	0.6
VT	0.6	0.3	0.6	0.3	0.6

❖ This table offers an alternative to NFRC-certified SHGC and visible transmittance (VT) values based on visually verifiable characteristics of the fenestration product. The SHGC is the fraction of incident solar radiation absorbed and directly transmitted by the window area, then subsequently reradiated, conducted or convected inward. SHGC is a ratio, expressed as a number between 0 and 1. The lower a window's SHGC, the less solar heat it transmits. The VT is the ratio of visible light entering the space through the fenestration product assembly to the incident visible light. VT includes the effects of glazing material and frame, and is expressed as a number between 0 and 1.

An SHGC of 0.40 or less is recommended in cooling-dominated climates (Climate Zones 1–3). In heating-dominated climates, a high SHGC increases passive solar gain for the heating but reduces cooling-season performance. A low SHGC improves cooling-season performance but reduces passive solar gains for heating.

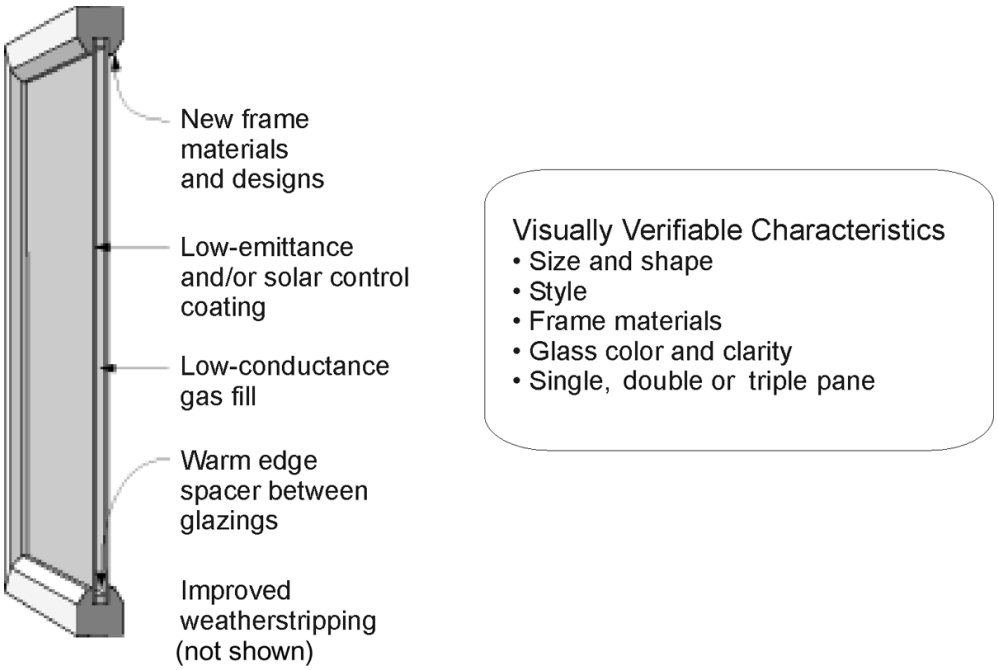

Figure C303.1.3(2)
VISUALLY VERIFIABLE WINDOW CHARACTERISTICS

INTERNATIONAL CODE COUNCIL®
Copyright © 2015 ICC. ALL RIGHTS RESERVED. Accessed by David Dammon on Jun 21, 2017 12:30:52 PM pursuant to License Agreement with ICC. No further reproduction or distribution authorized. ANY UNAUTHORIZED REPRODUCTION OR DISTRIBUTION IS A VIOLATION OF THE FEDERAL COPYRIGHT ACT AND THE LICENSE AGREEMENT, AND SUBJECT TO CIVIL AND CRIMINAL PENALTIES THEREUNDER.

C303.1.4 Insulation product rating. The thermal resistance (*R*-value) of insulation shall be determined in accordance with the U.S. Federal Trade Commission *R*-value rule (CFR Title 16, Part 460) in units of h × ft^2 × °F/Btu at a mean temperature of 75°F (24°C).

❖ This section brings two important requirements to the code.

First, the FTC *R*-value rule details specific test standards for insulation. The test standards are specific to the type of insulation and intended use. This clarifies any questions on the rating conditions to be used for insulation materials.

Second, the text above specifies the rating temperature to be used when evaluating the *R*-value of the product. Insulation products sometimes list several *R*-values based on different test temperatures. This eliminates any question as to which *R*-value to use. The temperature selected is a standard rating condition.

C303.1.4.1 Insulated siding. The thermal resistance (*R*-value) of insulated siding shall be determined in accordance with ASTM C 1363. Installation for testing shall be in accordance with the manufacturer's installation instructions.

❖ The ASTM C 1363 standard is the appropriate test method for determining the thermal resistance for insulated siding products. This standard, new to the 2015 edition of the code, will promote consistent compliance of this class of products.

C303.2 Installation. All materials, systems and equipment shall be installed in accordance with the manufacturer's installation instructions and the *International Building Code*.

❖ Manufacturers' installation instructions are thoroughly evaluated by the listing agency verifying that a safe installation is prescribed. When an appliance is tested to obtain a listing and label, the approval agency installs the appliance in accordance with the manufacturer's instructions. The appliance is tested under these conditions; thus, the installation instructions become an integral part of the labeling process. The listing agency can require that the manufacturer alter, delete or add information to the instructions as necessary to achieve compliance with applicable standards and code requirements.

Manufacturers' installation instructions are an enforceable extension of the code and must be in the hands of the code official when an inspection takes place. Inspectors must carefully and completely read and comprehend the manufacturer's instructions in order to properly perform an installation inspection. In some cases, the code will specifically address an installation requirement that is also addressed in the manufacturer's installation instructions. The code requirement may be the same or may exceed the requirement in the manufacturer's installation instructions. The manufacturer's installation instructions could contain requirements that exceed those in the code. In such cases, the more restrictive requirements would apply (see commentary, Section C106).

Even if an installation appears to be in compliance with the manufacturer's instructions, the installation cannot be completed or approved until all associated components, connections and systems that serve the appliance or equipment are also in compliance with the requirements of the applicable *International Codes*® (I-Codes®) of reference. For example, a gas-fired boiler installation must not be approved if the boiler is connected to a deteriorated, undersized or otherwise unsafe chimney or vent. Likewise, the same installation must not be approved if the existing gas piping has insufficient capacity to supply the boiler load or if the electrical supply circuit is inadequate or unsafe.

Manufacturers' installation instructions are often updated and changed for various reasons, such as changes in the appliance, equipment or material design; revisions to the product standards and as a result of field experiences related to existing installations. The code official should stay abreast of any changes by reviewing the manufacturer's instructions for every installation.

C303.2.1 Protection of exposed foundation insulation. Insulation applied to the exterior of basement walls, crawlspace walls and the perimeter of slab-on-grade floors shall have a rigid, opaque and weather-resistant protective covering to prevent the degradation of the insulation's thermal performance. The protective covering shall cover the exposed exterior insulation and extend a minimum of 6 inches (153 mm) below grade.

❖ The ultimate performance of insulation material is directly proportional to the workmanship involved in the material's initial installation, as well as the materials' integrity over the life of the structure. Accordingly, foundation wall and slab-edge insulation materials installed in the vicinity of the exterior grade line require protection from damage that could occur from contact by lawn-mowing and maintenance equipment, garden hoses, garden tools, perimeter landscape materials, etc. In addition, the long-term thermal performance of foam-plastic insulation materials is adversely affected by direct exposure to the sun. To protect the insulation from sunlight and physical damage, it must have a protective covering that is inflexible, puncture resistant, opaque and weather resistant.

C303.3 Maintenance information. Maintenance instructions shall be furnished for equipment and systems that require preventive maintenance. Required regular maintenance actions shall be clearly stated and incorporated on a readily accessible label. The label shall include the title or publication number for the operation and maintenance manual for that particular model and type of product.

❖ This section establishes an owner's responsibility for maintaining the building in accordance with the requirements of the code and other referenced standards. This section requires, among others, that mechanical and service water heating equipment and appliance maintenance information be made avail-

INTERNATIONAL CODE COUNCIL®
Copyright © 2015 ICC. ALL RIGHTS RESERVED. Accessed by David Dammon on Jun 21, 2017 12:30:52 PM pursuant to License Agreement with ICC. No further reproduction or distribution authorized. ANY UNAUTHORIZED REPRODUCTION OR DISTRIBUTION IS A VIOLATION OF THE FEDERAL COPYRIGHT ACT AND THE LICENSE AGREEMENT, AND SUBJECT TO CIVIL AND CRIMINAL PENALTIES THEREUNDER.

able to the owner/operator. This section does not require that labels be added to existing equipment; having the manufacturer's maintenance literature is usually sufficient to meet this requirement. During final occupancy inspection, the mechanical equipment and water heater should be inspected to verify that the information is taped to each unit or referenced on a label mounted in a conspicuous location on the units.

The code official has the authority to rule on the performance of maintenance work when equipment functions would be affected by such work. He or she also has the authority to require a building and its energy-using systems to be maintained in compliance with the public health and safety provisions required by other I-Codes.

Bibliography

The following resource materials were used in the preparation of the commentary for this chapter of the code.

ASHRAE-09, *Handbook of Fundamentals*. Atlanta, GA: American Society of Heating, Refrigerating and Air-conditioning Engineers, Inc., 2009.

Robert S. Briggs, Robert G. Lucas, and Z. Todd Taylor. *Climate Classification for Building Energy Codes and Standards*. Richland, WA: U.S. Department of Energy, Pacific Northwest National Laboratory (PNNL), 2002.

FTC 16 CFR, Part 460-05, *Labeling and Advertising of of Home Insulation*. Washington, DC: Federal Trade Commission, 2005.

INTERNATIONAL CODE COUNCIL®

Copyright © 2015 ICC. ALL RIGHTS RESERVED. Accessed by David Dammon on Jun 21, 2017 12:30:52 PM pursuant to License Agreement with ICC. No further reproduction or distribution authorized. ANY UNAUTHORIZED REPRODUCTION OR DISTRIBUTION IS A VIOLATION OF THE FEDERAL COPYRIGHT ACT AND THE LICENSE AGREEMENT, AND SUBJECT TO CIVIL AND CRIMINAL PENALTIES THEREUNDER.

Chapter 4 [CE]: Commercial Energy Efficiency

General Comments

Chapter 4 [CE] is used to demonstrate compliance for the design and construction of most types of commercial buildings. The definitions of residential and commercial buildings result in buildings of residential use that are greater than three stories in height above grade being classified as commercial buildings and regulated under this half of the code [see Commentary Figure 4C(1)]. Residential buildings including single-family homes, duplexes, townhouses and apartments three stories or less in height are covered in Chapter 4 [CE]. Commercial buildings will include Group R-1 occupancies (hotels and motels) of any height. Institutional occupancies such as hospitals and nursing homes are also considered to be commercial buildings.

In accordance with Sections C402.1.1 and C402.1.2, the thermal envelope requirements of the code do not apply to:

- Very low energy use buildings (less than 3.4 Btu per hour per square foot or 1 watt per square foot of floor area).
- Buildings or portions of buildings that are neither heated nor cooled.
- Greenhouses.
- Small equipment buildings not intended for human occupancy.

Some or all provisions of the code are exempted or modified for the following buildings or uses (see Chapter 5 [CE]):

- Continued use of existing buildings.
- Historic buildings.
- Additions, alterations, renovations or repairs.

Purpose

Chapter 4 [CE] contains several options to address the energy efficiency of commercial buildings. The three options are most clearly shown in Section C401.2, where compliance is required with either ANSI/ASHRAE/IESNA 90.1 or the remaining provisions of this chapter.

Besides adopting ANSI/ASHRAE/IESNA 90.1 by reference, Chapter 4 [CE] contains a set of requirements for the energy-efficient design of commercial buildings that provides an alternative way to show compliance for structures or systems based on ANSI/ASHRAE/IESNA

Airports	Indoor sporting facilities
Apartment buildings and condominiums (more than three stories)	Industrial work buildings
Assembly and conference areas	Laboratories
Banks	Libraries
Barber shops and beauty parlors	Museums and galleries
Bowling alleys	Nursing homes
Churches, synagogues and chapels	Offices
Commercial or industrial warehouses	Police and fire houses
Convention centers	Restaurants
Dormitories (more than three stories)	Retail, grocery and wholesale stores
Exhibit halls	Schools
Gymnasiums	Shopping malls
Health clubs	Shops
High-rise residential	Sporting arenas
Hospitals	Theaters and auditoriums
Hotels and motels	Warehouses and storage facilities

Note: This table includes only examples of building types covered by the code. It is not intended to be an exhaustive list. Other building types may be covered, even though they are not listed.

Figure 4C(1)
EXAMPLES OF BUILDING TYPES COVERED BY CHAPTER 4 [CE]

INTERNATIONAL CODE COUNCIL®
Copyright © 2015 ICC. ALL RIGHTS RESERVED. Accessed by David Dammon on Jun 21, 2017 12:30:52 PM pursuant to License Agreement with ICC. No further reproduction or distribution authorized. ANY UNAUTHORIZED REPRODUCTION OR DISTRIBUTION IS A VIOLATION OF THE FEDERAL COPYRIGHT ACT AND THE LICENSE AGREEMENT, AND SUBJECT TO CIVIL AND CRIMINAL PENALTIES THEREUNDER.

90.1 (see commentary, Section C401.2). The requirements specified in Sections C402 through C406 are reasonably equivalent to ANSI/ASHRAE/IESNA 90.1. Moreover, those portions of Chapter 4 [CE] are written in code language. The advice and recommendations contained in ANSI/ASHRAE/IESNA 90.1 are not found in the code.

The alternative methodology and prescriptive requirements in Chapter 4 [CE] were initially approved by the *International Energy Conservation Code*® (IECC®) Code Development Committee during the 1997 code development cycle to meet the needs of designers, builders and regulatory officials involved in the construction of commercial buildings who had requested a more easily understandable, usable and enforceable commercial energy conservation code.

This chapter is intended to promote the application of cost-effective design practices and technologies that minimize energy consumption without sacrificing either the comfort or productivity of occupants.

SECTION C401
GENERAL

C401.1 Scope. The provisions in this chapter are applicable to commercial *buildings* and their *building sites*.

❖ This chapter's requirements address the design of all building systems that affect the visual and thermal comfort of the occupants as well as building equipment that supports human use of a building, including:

- Wall, roof and floor insulation.
- Windows and skylights.
- Cooling equipment (air conditioners, chillers and cooling towers).
- Heating equipment (boilers, furnaces and heat pumps).
- Pumps, piping and liquid circulation systems.
- Heat rejection equipment (fan cooling towers, air-cooled condensers).
- Service water heating (kitchens, lavatories and pools).
- Electrical power and lighting systems (lighting types, densities, zones, and controls).
- Energy-using equipment (walk-in coolers and freezers, electric transformers and motors, elevators and escalators).

This chapter applies to new commercial buildings, including Group R occupancies, that contain residential uses but are outside of the code's definition of residential building. Chapter 4 [CE] does not apply to low-rise residential buildings such as single-family homes, duplexes and apartments three stories or less in height; however, these building types are covered by comparable provisions in this chapter.

Just as the code does not regulate or control the energy used by things such as office equipment and computers, the code does not limit or regulate the energy use intended primarily for manufacturing, or for commercial or industrial processing. Although the energy for manufacturing and processing is excluded, the envelope, mechanical systems, service water heating, and electrical power and lighting systems of these buildings are regulated. Chapter 4 [CE] includes a total building performance compliance evaluation, documentation and listing of software tools to determine the total building performance.

C401.2 Application. Commercial buildings shall comply with one of the following:

1. The requirements of ANSI/ASHRAE/IESNA 90.1.
2. The requirements of Sections C402 through C405. In addition, commercial buildings shall comply with Section C406 and tenant spaces shall comply with Section C406.1.1.
3. The requirements of Sections C402.5, C403.2, C404, C405.2, C405.3, C405.5, C405.6 and C407. The building energy cost shall be equal to or less than 85 percent of the standard reference design building.

❖ Because Chapter 4 [CE] applies to such a wide variety of buildings in various climate zones (see Tables C402.1.3 and C402.1.4), there must be flexibility in its application. The goal is to achieve energy-efficient building performance. When possible, this goal is achieved without requiring specific measures or products. Flexibility is offered at the prescriptive and systems levels, and at the whole-building level based on total building performance (TBP). The building designer must select the commercial building compliance path to be used to design the entire building from among the following:

1. ANSI/ASHRAE/IESNA 90.1.
2. IECC Chapter 4 [CE] prescriptive provisions (Sections C402, C403, C404, C405 and one of the six options in Section C406).
3. Total building performance provisions (Section C407).

Flexibility is achieved at the prescriptive level by specifying criteria in terms of component performance. The criterion for the roof component, for instance, is stated in terms of the *R*-value. Any construction assembly or method may be used as long as its *R*-value meets this criterion. For the overall building envelope, flexibility is offered through the component performance method of Section C402.1.5 through a *U*-factor-based method addressing each element of the building envelope including fenestration. The total building performance compliance path in Section C407 provides trade-offs among the envelope, lighting, mechanical and other systems.

INTERNATIONAL CODE COUNCIL®
Copyright © 2015 ICC. ALL RIGHTS RESERVED. Accessed by David Dammon on Jun 21, 2017 12:30:52 PM pursuant to License Agreement with ICC. No further reproduction or distribution authorized. ANY UNAUTHORIZED REPRODUCTION OR DISTRIBUTION IS A VIOLATION OF THE FEDERAL COPYRIGHT ACT AND THE LICENSE AGREEMENT, AND SUBJECT TO CIVIL AND CRIMINAL PENALTIES THEREUNDER.

Lighting control requirements can be satisfied with multiple occupant-sensor controls, time-switch controls, light reduction controls and daylight responsive controls but must be satisfied on a space-by-space basis. Lighting power requirements can be satisfied by any combination of equipment as long as the total connected interior lighting power is less than the total permitted lighting power from Section C405.4.1. The total exterior lighting power allowance for all exterior building applications is determined using the lighting zones information in Table C405.5.2(1) and the lighting power allowances in Table C405.5.2(2).

HVAC equipment and water heaters can be manufactured in a variety of ways as long as each piece of equipment meets the applicable overall criterion of energy efficiency: the energy efficiency ratio (EER). Averaging equipment efficiencies is not acceptable.

For the building envelope, Chapter 4 [CE] has prescriptive tables that give wall, floor and roof *R*-values; window *U*-factors; solar heat gain coefficient (SHGC); and opaque door values that satisfy the requirements for the specific climate zone. This is the easiest approach to meet the building envelope criteria. Where the prescriptive tables do not offer enough flexibility, the component performance method (Section C402.1.5) or an alternative method approved by the code official may be used. Generally, such approved alternatives allow consideration of window area and orientation; thermal mass; insulation position (on the inside or outside of the wall); daylighting; and internal gains from lights, equipment and people. Evaluation of such an alternative can be obtained by using a calculation software tool as listed in Section C407.6, work sheets and compliance manuals where approved by the code official (see commentary, Sections C101.3 and C101.5 or C103.1).

The greatest flexibility is achieved at the whole-building level under the total building performance approach of Section C407 or similar provisions in ANSI/ASHRAE/IESNA 90.1. Section C407 permits the comparative evaluation of annual energy costs to assess total building performance compliance. As long as the estimated annual energy cost of the proposed design is less than or equal to 85 percent of the estimated annual energy cost of the standard design, the proposed design meets the code. More information to determine the total building performance is in the commentary for Section C407. When this evaluation is complete, the code official may require that the results of the compliance calculations be certified by a registered design professional such as an architect or engineer.

C401.2.1 Application to replacement fenestration products. Where some or all of an existing *fenestration* unit is replaced with a new *fenestration* product, including sash and glazing, the replacement *fenestration* unit shall meet the applicable requirements for *U-factor* and *SHGC* in Table C402.4.

Exception: An area-weighted average of the *U-factor* of replacement fenestration products being installed in the building for each fenestration product category listed in Table C402.4 shall be permitted to satisfy the *U-factor* requirements for each fenestration product category listed in Table C402.4. Individual fenestration products from different product categories listed in Table C402.4 shall not be combined in calculating the area-weighted average *U-factor*.

❖ For existing buildings where an existing fenestration unit is being replaced, the code requires that the new fenestration unit comply with the requirements for new construction found in Table 402.4. Many existing buildings were constructed under less stringent, or prior to, any energy conservation requirements. Upgrading windows at the time of replacement is an easy way to improve a building's efficiency. Chapter 5 [CE] provides additional requirements for existing buildings. The exceptions for windows in Chapter 5 address situations other than the replacement of a fenestration unit. The exception in this section provides flexibility for installing windows of each category. For example, while Table C402.4 would require operable fenestration products in a building in Climate Zone 3 to have a maximum *U*-factor of 0.60, windows of higher *U*-factors could be installed in some window openings provided other operable windows had a lower *U*-factor. The key is that the area of all the fenestration of that category (fixed vs. operable vs. entrance doors) average at or below the maximum *U*-factor for that zone.

SECTION C402
BUILDING ENVELOPE REQUIREMENTS

C402.1 General (Prescriptive). Building thermal envelope assemblies for buildings that are intended to comply with the code on a prescriptive basis, in accordance with the compliance path described in Item 2 of Section C401.2, shall comply with the following:

1. The opaque portions of the building thermal envelope shall comply with the specific insulation requirements of Section C402.2 and the thermal requirements of either the *R*-value-based method of Section C402.1.3; the *U*-, *C*- and *F*-factor-based method of Section C402.1.4; or the component performance alternative of Section C402.1.5.
2. Roof solar reflectance and thermal emittance shall comply with Section C402.3.

INTERNATIONAL CODE COUNCIL®
Copyright © 2015 ICC. ALL RIGHTS RESERVED. Accessed by David Dammon on Jun 21, 2017 12:30:52 PM pursuant to License Agreement with ICC. No further reproduction or distribution authorized. ANY UNAUTHORIZED REPRODUCTION OR DISTRIBUTION IS A VIOLATION OF THE FEDERAL COPYRIGHT ACT AND THE LICENSE AGREEMENT, AND SUBJECT TO CIVIL AND CRIMINAL PENALTIES THEREUNDER.

3. Fenestration in building envelope assemblies shall comply with Section C402.4.
4. Air leakage of building envelope assemblies shall comply with Section C402.5.

Alternatively, where buildings have a vertical fenestration area or skylight area exceeding that allowed in Section C402.4, the building and building thermal envelope shall comply with Section C401.2, Item 1 or Section C401.2, Item 3.

Walk-in coolers, walk-in freezers, refrigerated warehouse coolers and refrigerated warehouse freezers shall comply with Section C403.2.15 or C403.2.16.

❖ The building envelope is important to building energy efficiency. When it is cold outside, heat loss and air leakages through the building envelope add to the heating load. On hot days, solar gains through windows and infiltration of hot or humid air contribute to the air-conditioning (cooling) load. The building envelope requirements of Section C402 are intended to reduce heat gains and losses through the building envelope.

This section of the code provides acceptable methods for compliance evaluation for the insulation building envelope components including fenestration in that envelope [see Commentary Figure C402.1].

Determining the right amount and type of fenestration, and optimizing the levels of insulation are components of a delicate process that depends on climate, occupancy, schedules of operation, internal gains and other factors. The code sets minimum levels of thermal performance for all components of the building envelope and limits fenestration solar gain. While these limits ensure a minimum level of performance, they do not necessarily result in an optimum design. The designer is encouraged to use the code as a starting point; minimum compliance may not be the optimum solution.

The prescriptive building envelope requirements apply only to buildings that are conditioned (heating or cooling). Understanding the occupancy requirements for the commercial building is necessary in using the correct values for the *U*-factor, *C*-factor or *F*-factor of the building envelope requirements listed

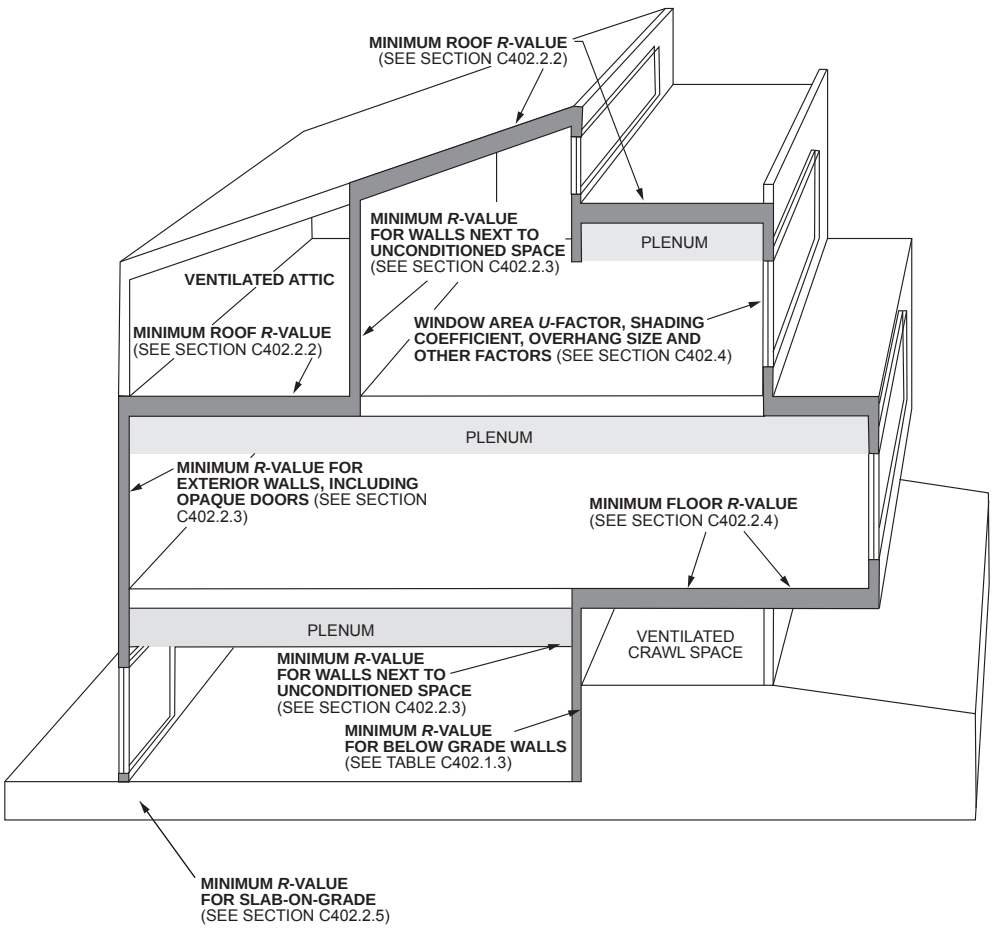

Figure C402.1
GRAPHIC SUMMARY OF ENVELOPE REQUIREMENTS
(Courtesy of U.S. Department of Energy, Office of Building Technology State and Community Programs, www.energycodes.gov)

INTERNATIONAL CODE COUNCIL®
Copyright © 2015 ICC. ALL RIGHTS RESERVED. Accessed by David Dammon on Jun 21, 2017 12:30:52 PM pursuant to License Agreement with ICC. No further reproduction or distribution authorized. ANY UNAUTHORIZED REPRODUCTION OR DISTRIBUTION IS A VIOLATION OF THE FEDERAL COPYRIGHT ACT AND THE LICENSE AGREEMENT, AND SUBJECT TO CIVIL AND CRIMINAL PENALTIES THEREUNDER.

in Tables C402.1.3 and C402.1.4. The definition of "Conditioned space" is important (see Chapter 2 [CE]). Notice that, based on Sections C402.1.1 and C402.1.2, certain buildings where there is no, or limited, energy used for space conditioning are exempt from the building envelope requirements.

Because the thermal envelope requirements do not apply to buildings that are neither heated nor cooled (Section C402.1.1), shell buildings may appear to be a special problem. Developers may try to obtain construction permits for a building before it is known how they will be used or even whether they will be heated or cooled. Although the code official has discretion in dealing with shell buildings, a common approach has been to postpone compliance until a subsequent permit application is filed where a use is established. For conditioned spaces, the envelope tables offer only two compliance options—Group R and all other. It is rare that a shell building is later made into a Group R occupancy; and since few buildings qualify as unconditioned, the prudent approach to shell buildings would be the installation of appropriate insulation. Further, it must be noted that Section C503.2 specifies that when a building is changed from nonconditioned to conditioned it must be brought into full compliance with the code. Again this suggests that the prudent course of action on a shell building is to assume it will be conditioned and therefore should be designed and built accordingly.

The section calls out the four key elements of successful building envelope design and construction: insulation, roofing, fenestration and air leakage (infiltration).

This section notes that if the designer wishes to exceed the fenestration limits of Section C402.4, then one of the other compliance paths identified in Section C401.2 must be used. Although not specifically stated, this is essentially the case where a designer wishes to exceed any limits of Section C402 beyond the alternatives provided in Section C402.

The final paragraph provides the code user a reference to the unique envelope provisions that apply to walk-in coolers, walk-in freezers, refrigerated warehouse coolers and refrigerated warehouse freezers.

C402.1.1 Low-energy buildings. The following low-energy buildings, or portions thereof separated from the remainder of the building by *building thermal envelope* assemblies complying with this section, shall be exempt from the *building thermal envelope* provisions of Section C402.

1. Those with a peak design rate of energy usage less than 3.4 Btu/h · ft^2 (10.7 W/m^2) or 1.0 watt per square foot (10.7 W/m^2) of floor area for space conditioning purposes.
2. Those that do not contain *conditioned space*.
3. Greenhouses.

❖ This section stipulates three conditions that permit a building or structure or portion of a building or structure to be exempt from the building envelope provisions of the code based on the marginal energy savings potential of such low-energy-use structures. These buildings are only exempted from the envelope provisions and must still be in compliance with the HVAC, service water heating, electrical and lighting systems provisions found in the balance of Chapter 4 [CE]. Section C402.1.2 provides another exception.

Item 1 exempts buildings and portions of buildings with peak rates of energy use below 3.4 Btu/h·ft^2 or 1.0 W/ft^2 (10.7 W/m^2). The phraseology, "a peak design rate of energy usage for space conditioning purposes," refers to the total peak primary energy used for space conditioning. There is no distinction in the code regarding where the energy is derived from, just a limit on usage. The usage is for space heating or cooling. There are no limits placed in such buildings for the energy used for lighting or service water heating other than those found in the balance of the chapter.

Few buildings designed for human occupancy will qualify for this exemption. If an exemption is claimed for a building, the permittee should provide enough supporting documentation to validate the claim. The peak rating of an appliance or piece of equipment can be determined by its nameplate rating or the manufacturer's literature.

A potential problem can exist when claiming this exemption. It is easy to modify the use of a structure after occupancy without obtaining an additional permit, thereby producing a noncomplying structure. Section C503.2 specifically requires where a "low-energy" building is changed to a fully conditioned building that the building must be brought into compliance. Although Section C503.2 will help regulate this problem, some building departments require a signed statement indicating that the permittee has claimed the exemption and that the structure will be brought into compliance with the code if its peak rate of energy use is raised above the maximum at any time thereafter.

Portions of buildings can also qualify for this exemption. Where a portion of a building meets the criteria for this exemption, that portion of the building is not required to comply with the envelope requirements. Other portions of the building, including the construction assemblies separating conditioned and unconditioned portions, define the limits of the building envelope that must meet the code requirements.

Item 2 indicates that the thermal envelope requirements of the code do not apply to buildings or portions of buildings that are neither heated nor cooled to create a "conditioned space." For a room or portion of a building to be considered neither heated nor cooled, the space must not contain any of the following:

1. A space-conditioning system designed to serve that space.

INTERNATIONAL CODE COUNCIL®
Copyright © 2015 ICC. ALL RIGHTS RESERVED. Accessed by David Dammon on Jun 21, 2017 12:30:52 PM pursuant to License Agreement with ICC. No further reproduction or distribution authorized. ANY UNAUTHORIZED REPRODUCTION OR DISTRIBUTION IS A VIOLATION OF THE FEDERAL COPYRIGHT ACT AND THE LICENSE AGREEMENT, AND SUBJECT TO CIVIL AND CRIMINAL PENALTIES THEREUNDER.

2. A space-conditioning register/diffuser or hydronic terminal unit serving the space.
3. An uninsulated duct or pipe where those items are normally required to be insulated.

In the past, the code only considered a space as being "conditioned" when it was being heated or cooled to keep the temperature within the human comfort range; however, based on the definition for "Conditioned space," even a space that is heated only to a level to prevent the freezing of the contents would still be considered a conditioned space and therefore unable to use Item 2. The space must also be physically separated from conditioned spaces by the building's thermal envelope.

Item 3 exempts greenhouses from the thermal envelope provisions of Chapter 4 [CE]. Greenhouses are specifically defined in Chapter 2 as structures or thermally isolated portions of a structure that maintain a specialized, sunlit environment exclusively used for, and essential to, the cultivation, protection and maintenance of plants. These buildings are not intended for human occupancy, but clearly people will be in such structures for "support" of the plants. Greenhouses are distinct from Items 1 and 2 in that there will be space conditioning, but that conditioning is aimed at the plants. The energy input of a greenhouse will likely exceed the limits of Item 1. Greenhouses are found in many areas for the cultivation of plants, including food plants. Greenhouses can be found at universities and other research facilities. Greenhouses are often found at botanical gardens where a controlled environment is needed to support plants that would not survive in the environment of the greenhouse's location. A greenhouse is not intended to be a sunroom in which you place a few potted plants.

C402.1.2 Equipment buildings. Buildings that comply with the following shall be exempt from the *building thermal envelope* provisions of this code:

1. Are separate buildings with floor area not more than 500 square feet (50 m^2).
2. Are intended to house electronic equipment with installed equipment power totaling not less than 7 watts per square foot (75 W/m^2) and not intended for human occupancy.
3. Have a heating system capacity not greater than (17,000 Btu/hr) (5 kW) and a heating thermostat set point that is restricted to not more than 50°F (10°C).
4. Have an average wall and roof *U*-factor less than 0.200 in *Climate Zones* 1 through 5 and less than 0.120 in *Climate Zones* 6 through 8.
5. Comply with the roof solar reflectance and thermal emittance provisions for *Climate Zone* 1.

❖ Section C402.1.2 is similar to Section C402.1.1 in that it allows buildings to be exempt from the standard envelope provisions of the code provided they meet the five criteria found here. Equipment buildings, shelters, or sheds are installed to protect electronic equipment from the weather and primarily provide cooling conditioning. Heating is installed for emergency backup operation and must be limited to 50°F or less by a setpoint. Due to the high density of electronic equipment installed, heat is rarely needed. The heat generated by the equipment results in cooling being the key issue; therefore, providing less insulation is actually desirable from an annual energy use standpoint.

This exemption is limited to stand-alone-equipment buildings no more than 500 square feet in area. Simplified insulation requirements that apply to an average of the roof and wall insulation are provided. This type of building is often made with 3 inches of concrete, internal foam insulation, and a plywood interior with similar construction for roof and walls. To reduce insulation requirements, the ASHRAE 90.1 option may be pursued as the building would qualify as a semiheated space. At around 7 watts per square foot of equipment load, the heat loss is offset by the equipment load, with the proposed insulation resulting in very little heating load.

It is important to note that this exemption applies only to the building thermal envelope provisions. Any HVAC, service water-heating or lighting systems in such buildings would still be required to meet the provisions of the code.

C402.1.3 Insulation component *R*-value-based method. *Building thermal envelope* opaque assemblies shall meet the requirements of Sections C402.2 and C402.4 based on the *climate zone* specified in Chapter 3. For opaque portions of the *building thermal envelope* intended to comply on an insulation component *R-value* basis, the *R*-values for insulation in framing cavities, where required, and for continuous insulation, where required, shall be not less than that specified in Table C402.1.3, based on the *climate zone* specified in Chapter 3. Commercial buildings or portions of commercial buildings enclosing Group R occupancies shall use the *R*-values from the "Group R" column of Table C402.1.3. Commercial buildings or portions of commercial buildings enclosing occupancies other than Group R shall use the *R*-values from the "All other" column of Table C402.1.3. The thermal resistance or *R*-value of the insulating material installed continuously within or on the below-grade exterior walls of the building envelope required in accordance with Table C402.1.3 shall extend to a depth of not less than 10 feet (3048 mm) below the outside finished ground level, or to the level of the lowest floor of the conditioned space enclosed by the below grade wall, whichever is less. Opaque swinging doors shall comply with Table C402.1.4 and opaque nonswinging doors shall comply with Table C402.1.3.

❖ The code provides three methods to determine compliance of the building thermal envelope. This section outlines the compliance method based on the provision of insulation with *R*-values not less than that specified in Table C402.1.3. The opaque portions of the envelope (walls, roofs, floors and opaque roll-up or sliding doors) must comply with the requirements of Section 402.2 and Table C402.1.3, while the fen-

INTERNATIONAL CODE COUNCIL®
Copyright © 2015 ICC. ALL RIGHTS RESERVED. Accessed by David Dammon on Jun 21, 2017 12:30:52 PM pursuant to License Agreement with ICC. No further reproduction or distribution authorized. ANY UNAUTHORIZED REPRODUCTION OR DISTRIBUTION IS A VIOLATION OF THE FEDERAL COPYRIGHT ACT AND THE LICENSE AGREEMENT, AND SUBJECT TO CIVIL AND CRIMINAL PENALTIES THEREUNDER.

estration (windows, glazed wall systems and skylights) must comply with Table C402.4. Commercial buildings or portions of commercial buildings enclosing Group R occupancies must use the *R*-values from the "Group R" column. Otherwise the "All other" column must be used for the *R*-values to determine the correct building thermal envelope. According to the *International Building Code*® (IBC®), Residential Group R includes the use of a building or structure, or a portion thereof, for sleeping purposes when not classified as an Institutional Group I or when not regulated by the *International Residential Code*® (IRC®). Group R includes the use of a building or structure, or a portion thereof, including Groups R-1, R-2, R-3 and R-4 as defined in the IBC.

Some of the envelope requirements are based on surface area. For instance, glazing area is limited to a percentage of the gross exterior wall area above grade and skylight area is limited to a percentage of the gross roof area. The rules for measuring surface areas are summarized in Commentary Figure C402.1.3. See Section C402.4 for additional information regarding fenestration.

The *R*-value of below-grade wall insulation must be equal to or greater than the criteria from Table C402.1.3, and must extend from the top of the foundation wall to a depth 10 feet (3048 mm) below the outside finished ground level or to the level of the basement floor, whichever is less [see Commentary Figure C402.1.3(1)]. This minimum level of insulation is required for the entire wall, including any portions that may be above grade. When the insulation is provided on the exterior side of the wall, the provisions of Section C303.2.1 should be reviewed.

C402.1.4 Assembly *U*-factor, *C*-factor or *F*-factor-based method. Building thermal envelope opaque assemblies intended to comply on an assembly *U*-, *C*- or *F*-factor basis shall have a *U*-, *C*- or *F*-factor not greater than that specified in Table C402.1.4. Commercial buildings or portions of commercial buildings enclosing Group R occupancies shall use the *U*-, *C*- or *F*-factor from the "Group R" column of Table C402.1.4. Commercial buildings or portions of commercial buildings enclosing occupancies other than Group R shall use the *U*-, *C*- or *F*-factor from the "All other" column of Table C402.1.4. The *C*-factor for the below-grade exterior walls of the building envelope, as required in accordance with Table C402.1.4, shall extend to a depth of 10 feet (3048 mm) below the outside finished ground level, or to the level of the lowest

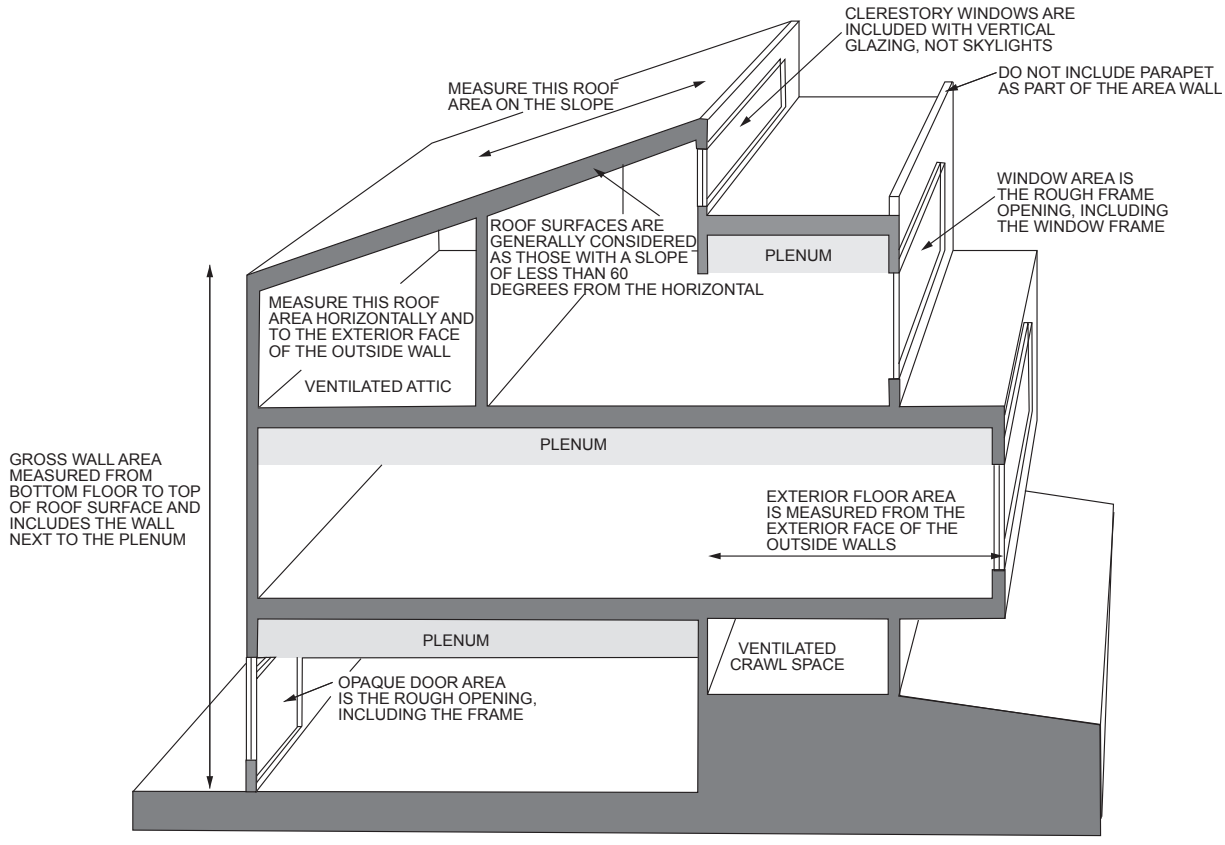

Figure C402.1.3
HOW TO MEASURE SURFACE AREAS [SEE COMMENTARY FIGURE C402.1]
(Courtesy of U.S. Department of Energy, Office of Building Technology State and Community Programs, www.energycodes.gov)

INTERNATIONAL CODE COUNCIL®
Copyright © 2015 ICC. ALL RIGHTS RESERVED. Accessed by David Dammon on Jun 21, 2017 12:30:52 PM pursuant to License Agreement with ICC. No further reproduction or distribution authorized. ANY UNAUTHORIZED REPRODUCTION OR DISTRIBUTION IS A VIOLATION OF THE FEDERAL COPYRIGHT ACT AND THE LICENSE AGREEMENT, AND SUBJECT TO CIVIL AND CRIMINAL PENALTIES THEREUNDER.

floor, whichever is less. Opaque swinging doors shall comply with Table C402.1.4 and opaque nonswinging doors shall comply with Table C402.1.3.

❖ This section allows an assembly with a *U*-factor, *C*-factor or *F*-factor equal to or less than that specified in Table C402.1.4 to be used in the design and construction instead of the *R*-values in Table C402.1.3. However, commercial buildings or portions of commercial buildings containing a Group R occupancy must use the *U*-factor, *C*-factor or *F*-factor from the "Group R" column. Group R includes the use of a building or structure, or a portion thereof, including Groups R-1, R-2, R-3 and R-4 as defined in the IBC. This will ensure the correct building thermal envelope will be determined.

Whereas the *R*-value table values refer to the *R*-values of the insulation materials alone, the *U*-factor table values refer to the *U*-values for the entire assembly, including air films and finish materials. Lower *U*-values are better in that they indicate reduced heat flow, while higher *R*-values are better in that they indicate reduced *resistance* to heat flow. Similarly, lower *C*-factors and *F*-factors indicate reduced heat flow through basement walls and the edges of slabs on grade, respectively.

Commentary Figure C402.1.4 provides an example of *U*-factor method. Shown in the figure are the *R*-values for the cavity and framing. The *U*-factor is 1/*R*-value. To calculate the *U*-factor for the combination of the cavity and framing combined, calculate the *U*-factor of the assembly based on the framing composing 15 percent of the assembly. An assembly with a *U*-factor equal to or less than that calculated in Table C402.1.4 is permitted in this method. The estimated framing is 15 percent of the wall area. The *U*-value may be calculated as follows:

$$U = \frac{0.15}{5.01} + \frac{1 - 0.15}{14.54} = 0.088$$

Section C402.1 also requires compliance with Section C402.2. Not every section of Section C402.2 directly addresses the *U*-factor approach to envelope compliance.

	CAVITY	FRAMING
	***R*-value**	***R*-value**
Outside air film	0.17	0.17
$^{7}/_{8}$-inch stucco	0.18	0.18
Building paper	0.06	0.06
Cavity insulation	13.00	
Framing		3.47
$^{5}/_{8}$-inch gypsum board	0.45	0.45
Inside air film	0.68	0.68
Sum of thermal resistance	14.54	5.01

Figure C402.1.4
EXAMPLE OF *U*-FACTOR METHOD

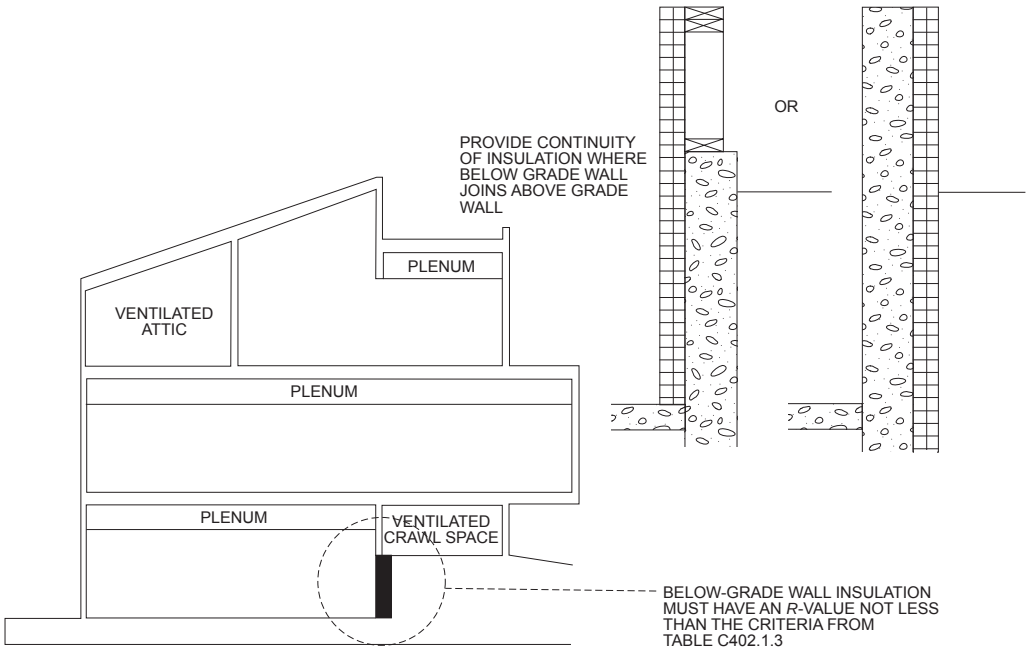

Figure C402.1.3(1)
***R*-VALUE REQUIREMENTS FOR BELOW-GRADE WALLS**
(Courtesy of U.S. Department of Energy, Office of Building Technology State and Community Programs, www.energycodes.gov)

INTERNATIONAL CODE COUNCIL®
Copyright © 2015 ICC. ALL RIGHTS RESERVED. Accessed by David Dammon on Jun 21, 2017 12:30:52 PM pursuant to License Agreement with ICC. No further reproduction or distribution authorized. ANY UNAUTHORIZED REPRODUCTION OR DISTRIBUTION IS A VIOLATION OF THE FEDERAL COPYRIGHT ACT AND THE LICENSE AGREEMENT, AND SUBJECT TO CIVIL AND CRIMINAL PENALTIES THEREUNDER.

TABLE C402.1.3
OPAQUE THERMAL ENVELOPE INSULATION COMPONENT MINIMUM REQUIREMENTS, *R*-VALUE METHOD[a]

CLIMATE ZONE	1		2		3		4 EXCEPT MARINE		5 AND MARINE 4		6		7		8	
	All other	Group R	All other	Group R	All other	Group R	All other	Group R	All other	Group R	All other	Group R	All other	Group R	All other	Group R
Roofs																
Insulation entirely above roof deck	R-20ci	R-25ci	R-25ci	R-25ci	R-25ci	R-25ci	R-30ci	R-30ci	R-30ci	R-30ci	R-30ci	R-30ci	R-35ci	R-35ci	R-35ci	R-35ci
Metal buildings[b]	R-19 + R-11 LS	R-19 + R-11 LS	R-19 + R11 LS	R-19 + R-11 LS	R-19 + R-11 LS	R-19 + R-11 LS	R-19 + R-11 LS	R-19 + R-11 LS	R-19 + R-11 LS	R-19 + R-11 LS	R-25 + R-11 LS	R-25 + R-11 LS	R-30 + R-11 LS	R-30 + R-11 LS	R-30 + R-11 LS	R-30 + R-11 LS
Attic and other	R-38	R-38	R-38	R-38	R-38	R-38	R-38	R-38	R-38	R-49	R-49	R-49	R-49	R-49	R-49	R-49
Walls, above grade																
Mass	R-5.7ci[c]	R-5.7ci[c]	R-5.7ci[c]	R-7.6ci	R-7.6ci	R-9.5ci	R-9.5ci	R-11.4ci	R-11.4ci	R-13.3ci	R-13.3ci	R-15.2ci	R-15.2ci	R-15.2ci	R-25ci	R-25ci
Metal building	R-13+ R-6.5ci	R-13 + R-6.5ci	R13 + R-6.5ci	R-13 + R-13ci	R-13 + R-6.5ci	R-13 + R-13ci	R-13 + R-13ci	R-13 + R-13ci	R-13 + R-13ci	R-13 + R-13ci	R-13 + R-13ci	R-13 + R-13ci	R-13 + R-13ci	R-13+ R-19.5ci	R-13 + R-13ci	R-13+ R-19.5ci
Metal framed	R-13 + R-5ci	R-13 + R-5ci	R-13 + R-5ci	R-13 + R-7.5ci	R-13 + R-7.5ci	R-13 + R-7.5ci	R-13 + R-7.5ci	R-13 + R-7.5ci	R-13 + R-7.5ci	R-13 + R-7.5ci	R-13 + R-7.5ci	R-13 + R-7.5ci	R-13 + R-7.5ci	R-13 + R-15.6ci	R-13 + R-7.5ci	R-13+ R17.5ci
Wood framed and other	R-13 + R-3.8ci or R-20	R-13 + R-3.8ci or R-20	R-13 + R-3.8ci or R-20	R-13 + R-3.8ci or R-20	R-13 + R-3.8ci or R-20	R-13 + R-3.8ci or R-20	R-13 + R-3.8ci or R-20	R-13 + R-3.8ci or R-20	R-13 + R-3.8ci or R-20	R-13 + R-7.5ci or R-20 + R-3.8ci	R-13 + R-7.5ci or R-20 + R-3.8ci	R-13 + R-7.5ci or R-20 + R-3.8ci	R-13 + R-7.5ci or R-20 + R-3.8ci	R-13 + R-7.5ci or R-20 + R-3.8ci	R13 + R-15.6ci or R-20 + R-10ci	R13 + R-15.6ci or R-20 + R-10ci
Walls, below grade																
Below-grade wall[d]	NR	NR	NR	NR	NR	NR	R-7.5ci	R-7.5ci	R-7.5ci	R-7.5ci	R-7.5ci	R-7.5ci	R-10ci	R-10ci	R-10ci	R-12.5ci
Floors																
Mass[e]	NR	NR	R-6.3ci	R-8.3ci	R-10ci	R-10ci	R-10ci	R-10.4ci	R-10ci	R-12.5ci	R-12.5ci	R-12.5ci	R-15ci	R-16.7ci	R-15ci	R-16.7ci
Joist/framing	NR	NR	R-30	R-30	R-30	R-30	R-30	R-30	R-30	R-30	R-30	R-30[f]	R-30[f]	R-30[f]	R-30[f]	R-30[f]
Slab-on-grade floors																
Unheated slabs	NR	NR	NR	NR	NR	NR	R-10 for 24″ below	R-10 for 24″ below	R-10 for 24″ below	R-10 for 24″ below	R-10 for 24″ below	R-15 for 24″ below	R-15 for 24″ below	R-15 for 24″ below	R-15 for 24″ below	R-20 for 24″ below
Heated slabs	R-7.5 for 12″ below	R-7.5 for 12″ below	R-7.5 for 12″ below	R-7.5 for 12″ below	R-10 for 24″ below	R-10 for 24″ below	R-15 for 24″ below	R-15 for 24″ below	R-15 for 36″ below	R-15 for 36″ below	R-15 for 36″ below	R-20 for 48″ below	R-20 for 24″ below	R-20 for 48″ below	R-20 for 48″ below	R-20 for 48″ below
Opaque doors																
Nonswinging	R-4.75	R-4.75	R-4.75	R-4.75	R-4.75	R-4.75	R-4.75	R-4.75	R-4.75	R-4.75	R-4.75	R-4.75	R-4.75	R-4.75	R-4.75	R-4.75

For SI: 1 inch = 25.4 mm, 1 pound per square foot = 4.88 kg/m^2, 1 pound per cubic foot = 16 kg/m^3.

ci = Continuous insulation, NR = No requirement, LS = Liner system.

a. Assembly descriptions can be found in ANSI/ASHRAE/IESNA Appendix A.

b. Where using *R*-value compliance method, a thermal spacer block shall be provided, otherwise use the *U*-factor compliance method in Table C402.1.4.

c. R-5.7ci is allowed to be substituted with concrete block walls complying with ASTM C 90, ungrouted or partially grouted at 32 inches or less on center vertically and 48 inches or less on center horizontally, with ungrouted cores filled with materials having a maximum thermal conductivity of 0.44 Btu-in/h-f^2 °F.

d. Where heated slabs are below grade, below-grade walls shall comply with the exterior insulation requirements for heated slabs.

e. "Mass floors" shall include floors weighing not less than:
   1. 35 pounds per square foot of floor surface area; or
   2. 25 pounds per square foot of floor surface area where the material weight is not more than 120 pounds per cubic foot.

f. Steel floor joist systems shall be insulated to R-38.

Copyright © 2015 ICC. ALL RIGHTS RESERVED. Accessed by David Dammon on Jun 21, 2017 12:30:52 PM pursuant to License Agreement with ICC. No further reproduction or distribution authorized. ANY UNAUTHORIZED REPRODUCTION OR DISTRIBUTION IS A VIOLATION OF THE FEDERAL COPYRIGHT ACT AND THE LICENSE AGREEMENT, AND SUBJECT TO CIVIL AND CRIMINAL PENALTIES THEREUNDER.

TABLE C402.1.4
OPAQUE THERMAL ENVELOPE ASSEMBLY MAXIMUM REQUIREMENTS, *U*-FACTOR METHOD[a, b]

CLIMATE ZONE	1		2		3		4 EXCEPT MARINE		5 AND MARINE 4		6		7		8	
	All other	Group R	All other	Group R	All other	Group R	All other	Group R	All other	Group R	All other	Group R	All other	Group R	All other	Group R
Roofs																
Insulation entirely above roof deck	U-0.048	U-0.039	U-0.039	U-0.039	U-0.039	U-0.039	U-0.032	U-0.032	U-0.032	U-0.032	U-0.032	U-0.032	U-0.028	U-0.028	U-0.028	U-0.028
Metal buildings	U-0.044	U-0.035	U-0.035	U-0.035	U-0.035	U-0.035	U-0.035	U-0.035	U-0.035	U-0.035	U-0.031	U-0.031	U-0.029	U-0.029	U-0.029	U-0.029
Attic and other	U-0.027	U-0.027	U-0.027	U-0.027	U-0.027	U-0.027	U-0.027	U-0.027	U-0.027	U-0.021	U-0.021	U-0.021	U-0.021	U-0.021	U-0.021	U-0.021
Walls, above grade																
Mass	U-0.151	U-0.151	U-0.151	U-0.123	U-0.123	U-0.104	U-0.104	U-0.090	U-0.090	U-0.080	U-0.080	U-0.071	U-0.071	U-0.061	U-0.061	U-0.061
Metal building	U-0.079	U-0.079	U-0.079	U-0.079	U-0.079	U-0.052	U-0.052	U-0.052	U-0.052	U-0.052	U-0.052	U-0.052	U-0.052	U-0.039	U-0.052	U-0.039
Metal framed	U-0.077	U-0.077	U-0.077	U-0.064	U-0.064	U-0.064	U-0.064	U-0.064	U-0.064	U-0.064	U-0.064	U-0.057	U-0.064	U-0.052	U-0.045	U-0.045
Wood framed and other[c]	U-0.064	U-0.064	U-0.064	U-0.064	U-0.064	U-0.064	U-0.064	U-0.064	U-0.064	U-0.064	U-0.051	U-0.051	U-0.051	U-0.051	U-0.036	U-0.036
Walls, below grade																
Below-grade wall[c]	C-1.140[e]	C-1.140[e]	C-1.140[e]	C-1.140[e]	C-1.140[e]	C-1.140[e]	C-0.119	C-0.119	C-0.119	C-0.119	C-0.119	C-0.119	C-0.092	C-0.092	C-0.092	C-0.092
Floors																
Mass[d]	U-0.322[e]	U-0.322[e]	U-0.107	U-0.087	U-0.076	U-0.076	U-0.076	U-0.074	U-0.074	U-0.064	U-0.064	U-0.057	U-0.055	U-0.051	U-0.055	U-0.051
Joist/framing	U-0.066[e]	U-0.066[e]	U-0.033	U-0.033	U-0.033	U-0.033	U-0.033	U-0.033	U-0.033	U-0.033	U-0.033	U-0.033	U-0.033	U-0.033	U-0.033	U-0.033
Slab-on-grade floors																
Unheated slabs	F-0.73[e]	F-0.73[e]	F-0.73[e]	F-0.73[e]	F-0.73[e]	F-0.73[e]	F-0.54	F-0.54	F-0.54	F-0.54	F-0.54	F-0.52	F-0.40	F-0.40	F-0.40	F-0.40
Heated slabs[f]	F-0.70	F-0.70	F-0.70	F-0.70	F-0.70	F-0.70	F-0.65	F-0.65	F-0.65	F-0.65	F-0.58	F-0.58	F-0.55	F-0.55	F-0.55	F-0.55
Opaque doors																
Swinging	U-0.61	U-0.61	U-0.61	U-0.61	U-0.61	U-0.61	U-0.61	U-0.61	U-0.37	U-0.37	U-0.37	U-0.37	U-0.37	U-0.37	U-0.37	U-0.37

For SI: 1 pound per square foot = 4.88 kg/m^2, 1 pound per cubic foot = 16 kg/m^3.

ci = Continuous insulation, NR = No requirement, LS = Liner system.

a. Use of Opaque assembly *U*-factors, *C*-factors, and *F*-factors from ANSI/ASHRAE/IESNA 90.1 Appendix A shall be permitted, provided the construction, excluding the cladding system on walls, complies with the appropriate construction details from ANSI/ASHRAE/ISNEA 90.1 Appendix A.

b. Opaque assembly *U*-factors based on designs tested in accordance with ASTM C 1363 shall be permitted. The *R*-value of continuous insulation shall be permitted to be added to or subtracted from the original tested design.

c. Where heated slabs are below grade, below-grade walls shall comply with the *F*-factor requirements for heated slabs.

d. "Mass floors" shall include floors weighing not less than:
   1. 35 pounds per square foot of floor surface area; or
   2. 25 pounds per square foot of floor surface area where the material weight is not more than 120 pounds per cubic foot.

e. These *C*-, *F*- and *U*-factors are based on assemblies that are not required to contain insulation.

f. Evidence of compliance with the *F*-factors indicated in the table for heated slabs shall be demonstrated by the application of the unheated slab *F*-factors and *R-values* derived from ASHRAE 90.1 Appendix A.

Copyright © 2015 ICC. ALL RIGHTS RESERVED. Accessed by David Dammon on Jun 21, 2017 12:30:52 PM pursuant to License Agreement with ICC. No further reproduction or distribution authorized. ANY UNAUTHORIZED REPRODUCTION OR DISTRIBUTION IS A VIOLATION OF THE FEDERAL COPYRIGHT ACT AND THE LICENSE AGREEMENT, AND SUBJECT TO CIVIL AND CRIMINAL PENALTIES THEREUNDER.

C402.1.4.1 Thermal resistance of cold-formed steel walls. *U*-factors of walls with cold-formed steel studs shall be permitted to be determined in accordance with Equation 4-1:

$$U = 1/[R_s + (ER)] \quad \textbf{(Equation 4-1)}$$

where:

R_s = The cumulative *R*-value of the wall components along the path of heat transfer, excluding the cavity insulation and steel studs.

ER = The effective *R*-value of the cavity insulation with steel studs.

❖ This section provides the calculation methodology as well as appropriate correction factors for determining the *U*-factors for steel-framed walls.

TABLE C402.1.4.1
EFFECTIVE *R*-VALUES FOR STEEL STUD WALL ASSEMBLIES

NOMINAL STUD DEPTH (inches)	SPACING OF FRAMING (inches)	CAVITY *R*-VALUE (insulation)	CORRECTION FACTOR (F_c)	EFFECTIVE *R*-VALUE (ER) (Cavity *R*-Value × F_c)
$3^1/_2$	16	13	0.46	5.98
		15	0.43	6.45
$3^1/_2$	24	13	0.55	7.15
		15	0.52	7.80
6	16	19	0.37	7.03
		21	0.35	7.35
6	24	19	0.45	8.55
		21	0.43	9.03
8	16	25	0.31	7.75
	24	25	0.38	9.50

❖ Table C402.1.4.1 provides a convenient means of estimating the "effective *R*-value" of steel studs combined with cavity insulation (the effective *R*-value would replace the "wood framing" and "cavity insulation" rows in the example *U*-value calculation above). This recognizes the fact that steel studs conduct a significant amount of heat energy through the insulation. As an example from the table, 6-inch steel studs spaced at 16 inches on center with R-21 insulation would result in an effective *R*-value of 7.35, a 65 percent reduction.

C402.1.5 Component performance alternative. Building envelope values and fenestration areas determined in accordance with Equation 4-2 shall be permitted in lieu of compliance with the *U*-, *F*- and *C*-factors in Tables C402.1.3 and C402.1.4 and the maximum allowable fenestration areas in Section C402.4.1.

$$A + B + C + D + E \le \text{Zero} \quad \textbf{(Equation 4-2)}$$

where:

A = Sum of the (UA Dif) values for each distinct assembly type of the building thermal envelope, other than slabs on grade and below-grade walls.
- UA Dif = UA Proposed - UA Table.
- UA Proposed = Proposed *U*-value · Area.
- UA Table = (*U*-factor from Table C402.1.3 or Table C402.1.4) · Area.

B = Sum of the (FL Dif) values for each distinct slab-on-grade perimeter condition of the building thermal envelope.
- FL Dif = FL Proposed - FL Table.
- FL Proposed = Proposed *F*-value · Perimeter length.
- FL Table = (*F*-factor specified in Table C402.1.4) · Perimeter length.

C = Sum of the (CA Dif) values for each distinct below-grade wall assembly type of the building thermal envelope.
- CA Dif = CA Proposed - CA Table
- CA Proposed = Proposed *C*-value · Area.
- CA Table = (Maximum allowable *C*-factor specified in Table C402.1.4) · Area.

Where the proposed vertical glazing area is less than or equal to the maximum vertical glazing area allowed by Section C402.4.1, the value of D (Excess Vertical Glazing Value) shall be zero. Otherwise:

D = (DA · UV) - (DA · U Wall), but not less than zero.
- DA = (Proposed Vertical Glazing Area) - (Vertical Glazing Area allowed by Section C402.4.1).
- UA Wall = Sum of the (UA Proposed) values for each opaque assembly of the exterior wall.
- U Wall = Area-weighted average *U*-value of all above-grade wall assemblies.
- UAV = Sum of the (UA Proposed) values for each vertical glazing assembly.
- UV = UAV/total vertical glazing area.

Where the proposed skylight area is less than or equal to the skylight area allowed by Section C402.4.1, the value of E (Excess Skylight Value) shall be zero. Otherwise:

E = (EA · US) - (EA · U Roof), but not less than zero.
- EA = (Proposed Skylight Area) - (Allowable Skylight Area as specified in Section C402.4.1).
- U Roof = Area-weighted average *U*-value of all roof assemblies.
- UAS = Sum of the (UA Proposed) values for each skylight assembly.
- US = UAS/total skylight area.

❖ The component performance alternative provides an envelope *U*-value trade-off methodology for commercial buildings. It is similar to the "Total UA Alternative" for residential buildings but accounts for slab edge *F*-factors, basement wall *C*-factors, and any fenestration areas in excess of the code limits. It allows envelope heat loss to be calculated using a simple spreadsheet (see Commentary Figure C402.1.5) for projects that are not using COMcheck or a full-blown total building performance analysis.

For each envelope component (roof, mass wall,

INTERNATIONAL CODE COUNCIL®
Copyright © 2015 ICC. ALL RIGHTS RESERVED. Accessed by David Dammon on Jun 21, 2017 12:30:52 PM pursuant to License Agreement with ICC. No further reproduction or distribution authorized. ANY UNAUTHORIZED REPRODUCTION OR DISTRIBUTION IS A VIOLATION OF THE FEDERAL COPYRIGHT ACT AND THE LICENSE AGREEMENT, AND SUBJECT TO CIVIL AND CRIMINAL PENALTIES THEREUNDER.

framed wall, window, etc.), the user first multiplies the area by the proposed *U*-value, then multiplies the area by the table *U*-value, and finally subtracts the second value from the first. If the sum of all those "UA Dif" values is less than zero, the heat loss through the envelope will be no greater than the heat loss through a "code minimum" envelope. This provides design flexibility while maintaining limits on heat loss. For instance, larger window areas can be traded off against better roof insulation, or thinner slab edge insulation can be traded against thicker frame wall insulation.

Of the five factors in the formula—A, B, C, D and E—all projects will use factor A, which includes the *U*-values of most above-grade envelope components. They will likely also use either factor B or C, depending on whether they use slabs on grade or basement walls. Factors D and E will only be necessary for projects that have greater vertical glazing area or skylight area than allowed by code. Commentary Figure C402.1.5 demonstrates the calculations under the component performance alternative for an example building.

C402.2 Specific building thermal envelope insulation requirements (Prescriptive). Insulation in building thermal envelope opaque assemblies shall comply with Sections C402.2.1 through C402.2.6 and Table C402.1.3.

❖ Item 1 of Section C401.2 requires that all three building envelope compliance methods must include compliance with the requirements of Section C402.2. Many of the subsections to Section C402.2 speak specifically to the *R*-value method and therefore are not readily applicable to either the *U*-factor or component performance methods. Clearly for the *U*-factor approach (Section C402.1.4) or the component performance approach (Section C402.1.5) the use of the *R*-value (Table C402.1.3) would not be appropriate.

C402.2.1 Multiple layers of continuous insulation board. Where two or more layers of continuous insulation board are used in a construction assembly, the continuous insulation boards shall be installed in accordance with Section C303.2. Where the continuous insulation board manufacturer's instructions do not address installation of two or more layers, the edge joints between each layer of continuous insulation boards shall be staggered.

❖ Whether continuous insulation is used in specific compliance with Table C402.1.3 or in order to achieve the *U*-factors specified in Table C402.1.4 or the component performance alternative, this section applies to all multiple layer installations. Staggering helps the assembly resist air leakage.

C402.2.2 Roof assembly. The minimum thermal resistance (*R*-value) of the insulating material installed either between the roof framing or continuously on the roof assembly shall be as specified in Table C402.1.3, based on construction materials used in the roof assembly. Skylight curbs shall be insulated to the level of roofs with insulation entirely above deck or R-5, whichever is less.

Exceptions:

1. Continuously insulated roof assemblies where the thickness of insulation varies 1 inch (25 mm) or less and where the area-weighted *U*-factor is equivalent to the same assembly with the *R*-value specified in Table C402.1.3.
2. Where tapered insulation is used with insulation entirely above deck, the *R*-value where the insulation thickness varies 1 inch (25 mm) or less from the minimum thickness of tapered insulation shall comply with the *R*-value specified in Table C402.1.3.
3. Unit skylight curbs included as a component of a skylight listed and labeled in accordance with NFRC 100 shall not be required to be insulated.

Insulation installed on a suspended ceiling with removable ceiling tiles shall not be considered part of the minimum thermal resistance of the roof insulation.

❖ As discussed in the definition for "Roof assembly," roof surfaces are generally viewed as having an angle less than 60 degrees (1.1 rad) from the horizontal. The gross area of the roof includes all roof surfaces exposed to outside air or unconditioned (ventilated) space. Roof surfaces are measured from the exterior faces of exterior walls and the centerline of walls separating buildings, and should include all roof or ceiling components through which heat can flow, with the exception of service openings (see Commentary Figure C402.1.3). Service openings include roof hatches, duct penetrations and pipe penetrations. Skylights are not considered service openings and are addressed as a part of the fenestration items in Section C402.4.

The roof *R*-value must be greater than or equal to the value specified in Table C402.1.3 based on the insulation position and the construction materials. If the building has more than one type of roof construction, the *R*-value for each type of construction must be determined individually for comparison to the tabular criteria (see Commentary Figure C402.2.2). With the exception of skylights (see commentary, Section C402.4.1), service openings and roof penetrations need not be considered.

Because of the likelihood that the insulation would be displaced or not reinstalled correctly, the code prohibits considering the insulation on the upper side of removable ceiling tiles as a portion of the required insulation. Therefore, on suspended ceiling systems with removable tiles, any insulation installed at this location is not considered as contributing to the minimum required building thermal envelope provisions. This provision does not prohibit such insulation from being installed but simply does not give any credit for the insulation.

Exception 1 permits a roof that is "continuously

INTERNATIONAL CODE COUNCIL®
Copyright © 2015 ICC. ALL RIGHTS RESERVED. Accessed by David Dammon on Jun 21, 2017 12:30:52 PM pursuant to License Agreement with ICC. No further reproduction or distribution authorized. ANY UNAUTHORIZED REPRODUCTION OR DISTRIBUTION IS A VIOLATION OF THE FEDERAL COPYRIGHT ACT AND THE LICENSE AGREEMENT, AND SUBJECT TO CIVIL AND CRIMINAL PENALTIES THEREUNDER.

insulated" to have areas that do not meet the required *R*-values, provided that the area-weighted values are equivalent to the specified insulation values. Therefore, while one section may have less insulation due to this slope, other portions of the roof would be above the values required. Therefore, in this situation the weighted average of the insulation would meet the required values even though some portions may be less than that specified in Table C402.1.3. When applying the exception, it is important to notice that

	Example building: 2-story building with 10,000 SF each floor, 10,000 exterior wall area, 5,000 SF floor over parking, no basement walls, and 40% vertical glazing (instead of code max 30%). In this case, the extra glazing area is accommodated in the design by use of a triple-glazed curtain wall with a very low *U*-value.							
	Formula: (A + B + C + D + E ≤ Zero)							
		Area	**Proposed *U*-value**	**Proposed UA (U x Area)**	**Table *U*-factor**	**Table UA (U x Area)**	**UA Dif (Proposed UA - Table UA)**	**Totals**
	roof - insul above deck	10000	0.03	300	0.034	340	-40	
	wall 1 - mass wall	6000	0.09	540	0.078	468	72	
	wall 2 - steel stud	4000	0.055	220	0.055	220	0	
	floor - framed	5000	0.029	145	0.029	145	0	
	skylight	100	0.5	50	0.5	50	0	
	VG 1 - alum curtain wall	3000	0.22	660	0.38	1140	-480	
	VG 2 - wood framed	1000	0.3	300	0.3	300	0	
A	**Sum of the (UA Dif) values for envelope assemblies**						-448	**-448**
		Length of slab edge	**Proposed *F*-value**	**Proposed F x Length**	**Table *F*-factor**	**Table F x Length**	**FL Dif**	
	slab edge - perimeter	200	0.54	108	0.528	105.6	2.4	
	slab edge - at garage	100	0.62	62	0.528	52.8	9.2	
B	**Sum of the (FL Dif) values for both slab-on-grade perimeter conditions**						11.6	**11.6**
C	**(no basement walls in this design)**							**0**
	Uwall	0.076	= Area-weighted avg *U*-value of above-grade wall assemblies					
	UAV	960	= Sum of the (UA Proposed) values for each vertical glazing assembly					
	UV	0.24	= UAV / total vertical glazing area					
	DA	1000	= (Proposed VG Area) – (VG Area allowed by Section C402.3.1)					
	VGA	4000	= Proposed Vertical Glazing Area					
	Allow VG Area	3000	= 30% max from Section C402.3.1					
	Wall Area	10000	= Gross wall area					
	UA Wall	760	= Uwall x Wall Area)					
D	**Excess vert glazing area**	164	(DA x UVG) – (DA x UWall) - Zero if ≤ zero					**164**
E	**Excess skylight area**	(Proposed skylight area is less than allowable area, so value is zero)						**0**
Component Performance: (A + B + C + D + E) - OK since less than zero.								**-272**

Figure C402.1.5
COMPONENT PERFORMANCE EXAMPLE

INTERNATIONAL CODE COUNCIL®
Copyright © 2015 ICC. ALL RIGHTS RESERVED. Accessed by David Dammon on Jun 21, 2017 12:30:52 PM pursuant to License Agreement with ICC. No further reproduction or distribution authorized. ANY UNAUTHORIZED REPRODUCTION OR DISTRIBUTION IS A VIOLATION OF THE FEDERAL COPYRIGHT ACT AND THE LICENSE AGREEMENT, AND SUBJECT TO CIVIL AND CRIMINAL PENALTIES THEREUNDER.

the variation in insulation thickness is limited to 1 inch (25 mm). This limitation on the thickness variation will help ensure more consistent insulation coverage and also reduce the number of roofs that qualify to use this exception. This 1-inch (25 mm) limitation does not prevent the provisions from being applied to roofs that have a greater variation; it simply does not allow additional thickness to be factored into the average insulation values. Where the variation exceeds 1 inch (25 mm), it would be permissible to go to the thinnest spot and measure the *R*-value at that point (for the example, call this Point "a"). Then go to a point that is 1 inch (25 mm) thicker than Point "a" and measure the *R*-value there (for the example, call this Point "b"). The remaining portions of the roof that are thicker than that additional 1-inch (25 mm) portion (Point "b") would simply be assumed to have the same *R*-value that Point "b" had. All portions of the roof that meet or exceed the Point "b" *R*-value would simply use the Point "b" *R*-value when determining the area-weighted *U*-factor for the roof.

Exception 2 addresses another common design where the insulation is tapered in order to provide a slope for drainage. In the case of this exception, the taper is limited to a maximum of 1 inch and the required *R*-value is determined at the minimum thickness of the insulation.

Exception 3 exempts the curbs of unit skylights from the insulation requirements of this section provided the skylight is listed and labeled under the NFRC 100 standard.

C402.2.3 Thermal resistance of above-grade walls. The minimum thermal resistance (*R*-value) of materials installed in the wall cavity between framing members and continuously on the walls shall be as specified in Table C402.1.3, based on framing type and construction materials used in the wall assembly. The *R*-value of integral insulation installed in concrete masonry units shall not be used in determining compliance with Table C402.1.3.

"Mass walls" shall include walls:

1. Weighing not less than 35 psf (170 kg/m^2) of wall surface area.
2. Weighing not less than 25 psf (120 kg/m^2) of wall surface area where the material weight is not more than 120 pcf (1900 kg/m^3).
3. Having a heat capacity exceeding 7 Btu/ft^2 · °F (144 kJ/m^2 · K).
4. Having a heat capacity exceeding 5 Btu/ft^2 · °F (103 kJ/m^2 · K), where the material weight is not more than 120 pcf (1900 kg/m^3).

❖ Table C402.1.3 contains the prescriptive criteria for walls based on framing type, insulation position and construction materials used in the wall assembly.

Above-grade walls, as defined in Chapter 2, include all opaque walls exposed to the outside air or forming the building thermal envelope (see Commentary Figure C402.2.3). Walls adjacent to attic spaces and crawl spaces need to be evaluated.

This section also provides two other requirements that play an important part in determining the appropriate insulation requirements for the walls forming

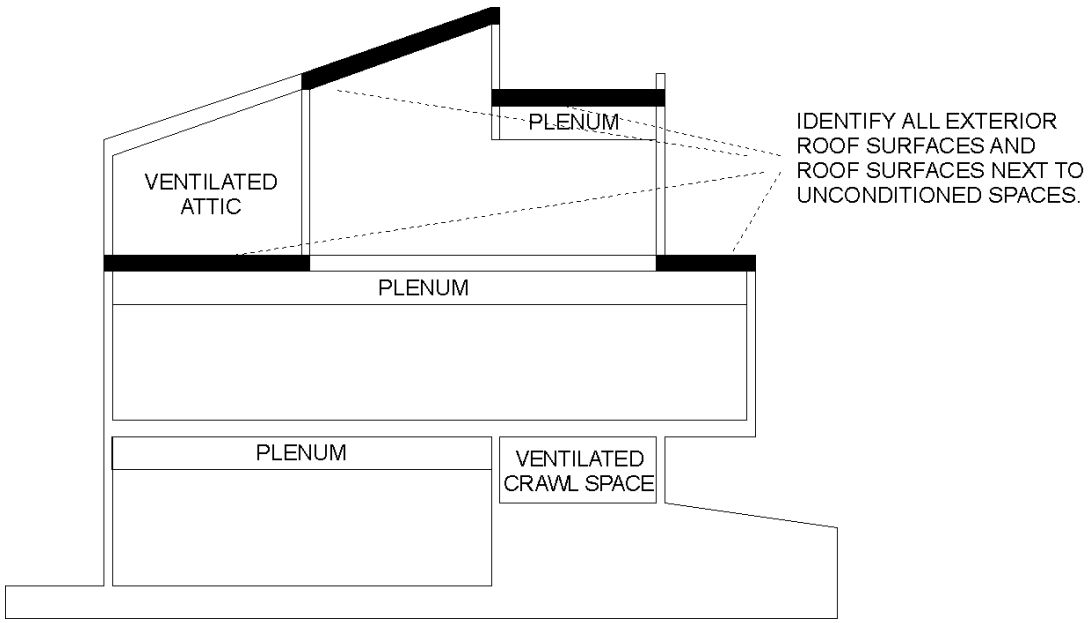

Figure C402.2.2
REQUIREMENT FOR ROOFS
(Courtesy of U.S. Department of Energy, Office of Building Technology State and Community Programs, www.energycodes.gov)

INTERNATIONAL CODE COUNCIL®
Copyright © 2015 ICC. ALL RIGHTS RESERVED. Accessed by David Dammon on Jun 21, 2017 12:30:52 PM pursuant to License Agreement with ICC. No further reproduction or distribution authorized. ANY UNAUTHORIZED REPRODUCTION OR DISTRIBUTION IS A VIOLATION OF THE FEDERAL COPYRIGHT ACT AND THE LICENSE AGREEMENT, AND SUBJECT TO CIVIL AND CRIMINAL PENALTIES THEREUNDER.

the thermal barrier envelope. The first is the requirement that insulation within the cells of concrete masonry units (CMUs) are not permitted to be considered when applying the prescriptive insulation requirements of Table C402.1.3. Therefore, a CMU wall would either need to have the level of insulation required in the "wood framed and other" row of the table, or it would need to meet the "mass" wall provisions if appropriate. This requirement essentially mandates that the insulation be provided either on the exterior or interior side of the CMU wall or, in the case of a multiwythe wall, between the wythes of masonry material. The second issue is that the provisions designate what is considered a "mass" wall. Because of the thermal lag that exists with a mass wall and the fact that the code requires continuous insulation (ci), the insulation level of a mass wall generally will be reduced from the level of insulation required for other above-grade walls in moderate climate zones.

The area of the above-grade wall is used when applying the fenestration limits of Section C402.4.1 and Table C402.4. The gross area of above-grade walls is measured on the exterior and includes between-floor spandrels, peripheral edges of flooring, window areas (including sash) and doors.

C402.2.4 Floors. The thermal properties (component *R*-values or assembly *U*-, *C*- or *F*-factors) of floor assemblies over outdoor air or unconditioned space shall be as specified in Table C402.1.3 or C402.1.4 based on the construction materials used in the floor assembly. Floor framing cavity insulation or structural slab insulation shall be installed to maintain permanent contact with the underside of the subfloor decking or structural slabs.

Exceptions:

1. The floor framing cavity insulation or structural slab insulation shall be permitted to be in contact with the top side of sheathing or continuous insulation installed on the bottom side of floor assemblies where combined with insulation that meets or exceeds the minimum *R*-value in Table C402.1.3 for "Metal framed" or "Wood framed and other" values for "Walls, Above Grade" and extends from the bottom to the top of all perimeter floor framing or floor assembly members.
2. Insulation applied to the underside of concrete floor slabs shall be permitted an airspace of not more than 1 inch (25 mm) where it turns up and is in contact with the underside of the floor under walls associated with the *building thermal envelope*.

❖ This section requires floor insulation to meet the *R*-value or *U*-value requirements of the respective tables. Floor insulation is required to be in contact with the floor slab or subfloor decking above unless it meets the requirements of one of the exceptions noted. The exceptions were added to accommodate an airspace between the insulation and the floor above, which results in a warmer floor. The first exception applies to framed floors. It allows a gap above cavity insulation, provided that the bottom of the cavity insulation is in contact with continuous insulation or some form of "sheathing," often gypsum board. At the perimeter walls, the gap above the cav-

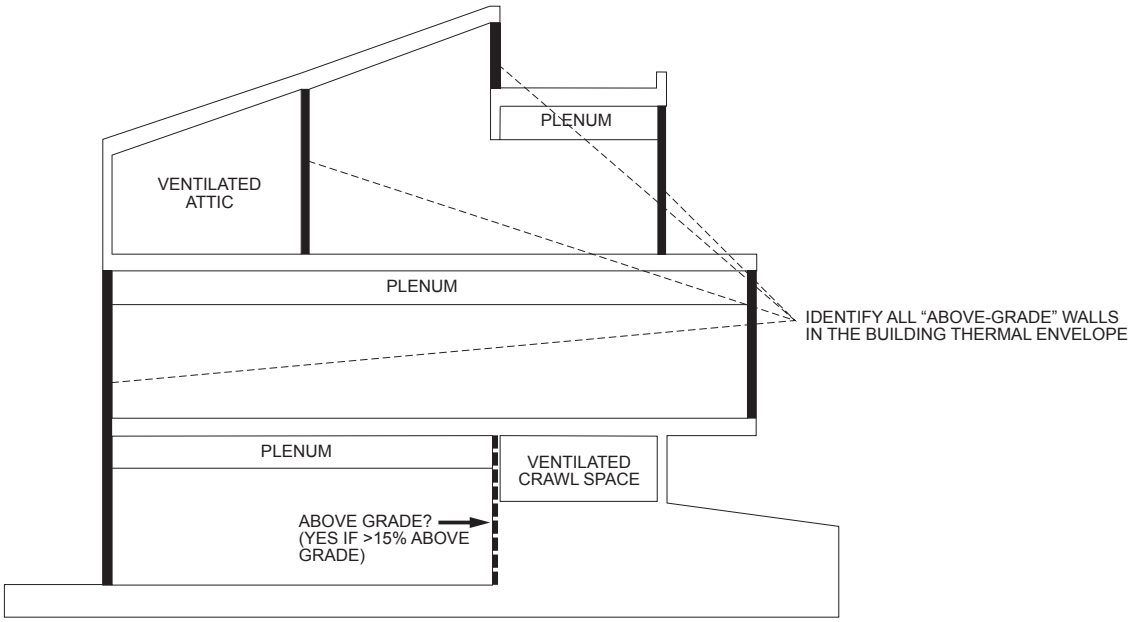

Figure C402.2.3
REQUIREMENTS FOR EXTERIOR ABOVE-GRADE WALLS
(Courtesy of U.S. Department of Energy, Office of Building Technology State and Community Programs, www.energycodes.gov)

INTERNATIONAL CODE COUNCIL®
Copyright © 2015 ICC. ALL RIGHTS RESERVED. Accessed by David Dammon on Jun 21, 2017 12:30:52 PM pursuant to License Agreement with ICC. No further reproduction or distribution authorized. ANY UNAUTHORIZED REPRODUCTION OR DISTRIBUTION IS A VIOLATION OF THE FEDERAL COPYRIGHT ACT AND THE LICENSE AGREEMENT, AND SUBJECT TO CIVIL AND CRIMINAL PENALTIES THEREUNDER.

ity insulation must be insulated as required for exterior walls. The second exception applies to concrete slab floors and similarly allows an air gap above the floor insulation, provided that the gap is insulated at the perimeter as required for exterior walls.

Tables C402.1.3 and C402.1.4 differentiate for the climate zones "All other" and "Group R" categories. As a result, the *U*-factor, *F*-factor and *R*-values differ in the tables and should be used accordingly to determine the correct building thermal envelope.

The *R*-value for floors over outdoor air and unconditioned space must be greater than or equal to the criteria in Table C402.1.3. The criterion applies to all floors over unconditioned spaces, including floors over unconditioned garages and crawl spaces (see Commentary Figure C402.2.4).

The footnotes to Tables C402.1.3 and C402.1.4 designate what is considered a "mass" floor so that the application of the tables is clear. Because of the thermal lag that exists with a mass floor and the fact that the code requires continuous insulation, the insulation level of a mass floor generally will be reduced from the level of insulation required for other floor assemblies.

The gross floor area over outdoor air or unconditioned space typically is measured from the exterior face of exterior walls and the centerline of walls separating buildings. The floor area must include all floor components through which heat may flow.

The exceptions provide alternate designs and installation criteria for floor insulation.

C402.2.5 Slabs-on-grade perimeter insulation. Where the slab on grade is in contact with the ground, the minimum thermal resistance (*R*-value) of the insulation around the perimeter of unheated or heated slab-on-grade floors designed in accordance with the *R*-value method of Section C402.1.3 shall be as specified in Table C402.1.3. The insulation shall be placed on the outside of the foundation or on the inside of the foundation wall. The insulation shall extend downward from the top of the slab for a minimum distance as shown in the table or to the top of the footing, whichever is less, or downward to at least the bottom of the slab and then horizontally to the interior or exterior for the total distance shown in the table. Insulation extending away from the building shall be protected by pavement or by not less than of 10 inches (254 mm) of soil.

> **Exception:** Where the slab-on-grade floor is greater than 24 inches (61 mm) below the finished exterior grade, perimeter insulation is not required.

❖ Section C402.2.5 and Table C402.1.3 give the criteria for insulating slabs on grade serving a conditioned space. The installed *R*-value must be equal to or greater than the value specified in Table C402.1.3, which shows values for both unheated and heated slabs. Unheated slabs will only require insulation in the most severe climate zone. Commentary Figure C402.2.5 illustrates the requirements and shows acceptable installation methods.

When the insulation is installed inside the foundation slab wall, both horizontal and vertical dimensions may be added to achieve the total developed length required by the code. Critical to the installation is the thermal break required by the code, evidenced by installing the insulation from the top of the slab downward. The thermal break minimizes conductive losses through edge effects. The protection of exposed foundation insulation is required by Section C303.2.1.

C402.2.6 Insulation of radiant heating systems. *Radiant heating system* panels, and their associated components that are installed in interior or exterior assemblies shall be insulated with a minimum of R-3.5 (0.62 $m^2/K \cdot W$) on all sur-

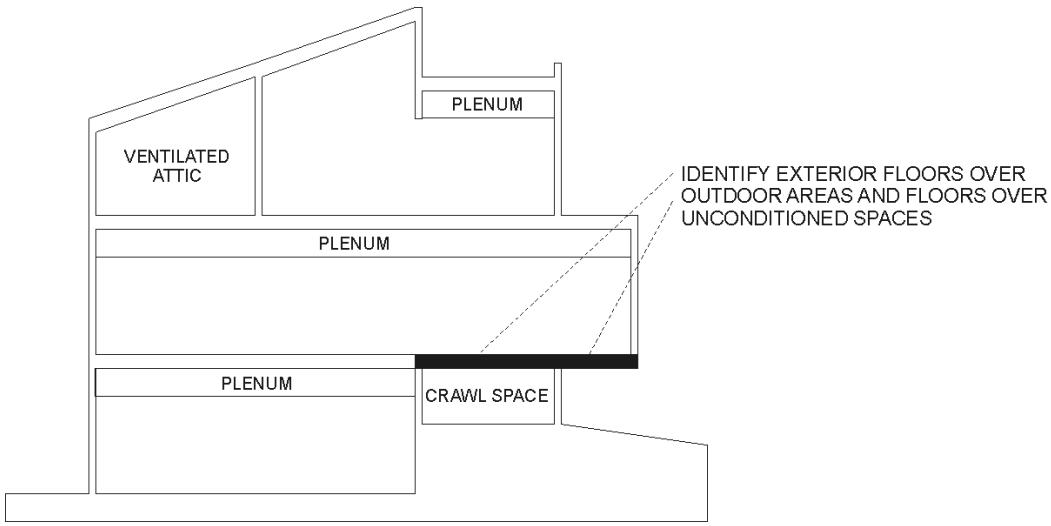

Figure C402.2.4
***R*-VALUE REQUIREMENTS FOR FLOORS**
(Courtesy of U.S. Department of Energy, Office of Building Technology State and Community Programs, www.energycodes.gov)

INTERNATIONAL CODE COUNCIL®
Copyright © 2015 ICC. ALL RIGHTS RESERVED. Accessed by David Dammon on Jun 21, 2017 12:30:52 PM pursuant to License Agreement with ICC. No further reproduction or distribution authorized. ANY UNAUTHORIZED REPRODUCTION OR DISTRIBUTION IS A VIOLATION OF THE FEDERAL COPYRIGHT ACT AND THE LICENSE AGREEMENT, AND SUBJECT TO CIVIL AND CRIMINAL PENALTIES THEREUNDER.

faces not facing the space being heated. *Radiant heating system* panels that are installed in the *building thermal envelope* shall be separated from the exterior of the building or unconditioned or exempt spaces by not less than the *R*-value of insulation installed in the opaque assembly in which they are installed or the assembly shall comply with Section C402.1.4.

Exception: Heated slabs on grade insulated in accordance with Section C402.2.5.

❖ This section requires radiant panels, and associated U-bends and headers, designed for heating an indoor space to be insulated with a minimum of R-3.5 (0.62 $m^2/K \cdot W$). Radiant panels should direct the heat where it is needed. For example, radiant panels in unconditioned warehouses are used to provide spot heating for workers below; however, any heat that radiates from the top of the panel toward the ceiling above is wasted. The code now clarifies that where such panels are installed within an assembly that is part of the building's thermal envelope, there must be insulation meeting the thermal envelope requirements behind the radiant panel.

C402.3 Roof solar reflectance and thermal emittance. Low-sloped roofs directly above cooled conditioned spaces in *Climate Zones* 1, 2 and 3 shall comply with one or more of the options in Table C402.3.

Exceptions: The following roofs and portions of roofs are exempt from the requirements of Table C402.3:

1. Portions of the roof that include or are covered by the following:
   - 1.1. Photovoltaic systems or components.
   - 1.2. Solar air or water-heating systems or components.
   - 1.3. Roof gardens or landscaped roofs.
   - 1.4. Above-roof decks or walkways.
   - 1.5. Skylights.
   - 1.6. HVAC systems and components, and other opaque objects mounted above the roof.
2. Portions of the roof shaded during the peak sun angle on the summer solstice by permanent features of the building or by permanent features of adjacent buildings.
3. Portions of roofs that are ballasted with a minimum stone ballast of 17 pounds per square foot [74 kg/m^2] or 23 psf [117 kg/m^2] pavers.

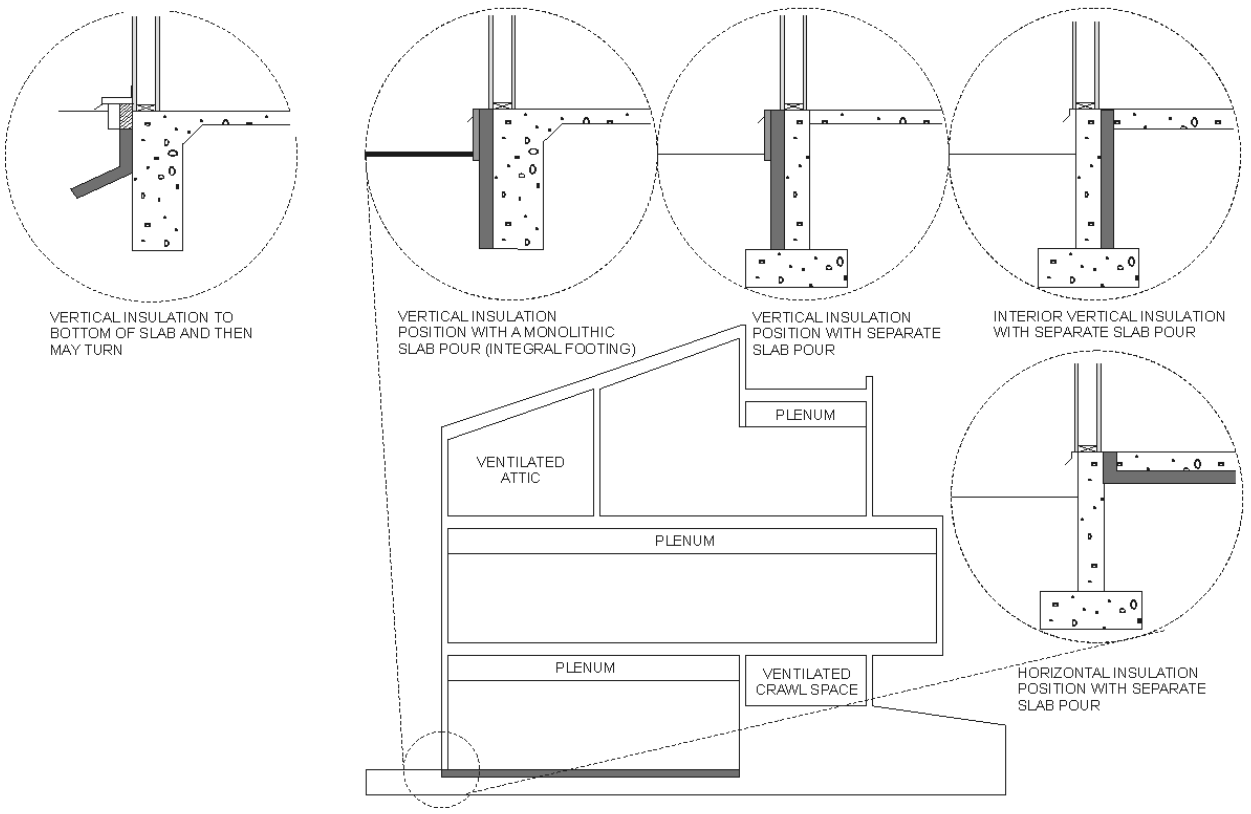

Figure C402.2.5
REQUIREMENT FOR INSULATING SLABS-ON-GRADE
(Courtesy of U.S. Department of Energy, Office of Building Technology State and Community Programs, www.energycodes.gov)

INTERNATIONAL CODE COUNCIL®
Copyright © 2015 ICC. ALL RIGHTS RESERVED. Accessed by David Dammon on Jun 21, 2017 12:30:52 PM pursuant to License Agreement with ICC. No further reproduction or distribution authorized. ANY UNAUTHORIZED REPRODUCTION OR DISTRIBUTION IS A VIOLATION OF THE FEDERAL COPYRIGHT ACT AND THE LICENSE AGREEMENT, AND SUBJECT TO CIVIL AND CRIMINAL PENALTIES THEREUNDER.

4. Roofs where not less than 75 percent of the roof area complies with one or more of the exceptions to this section.

❖ Cool roofs are important in reducing the cooling load in a building with low-slope roofs in Climate Zones 1, 2 and 3, where temperatures are often hot. A cool roof is a roofing system that can deliver high solar reflectance (the ability to reflect the visible, infrared and ultraviolet wavelengths of the sun, reducing the heat transfer to the building) and high thermal emittance (the ability to radiate absorbed or nonreflected solar energy). Cool roofs can reduce the building heat gain and cooling loads. They can help reduce the urban heat island effect. Cool roofs offer both immediate and long-term savings in building energy costs by enhancing the life expectancy of the roof membrane and building's cooling equipment by reducing the building's heat gain.

This section requires low-sloped roofs that are located directly above cooled, conditioned spaces in Climate Zones 1, 2 and 3 to meet one or more of the roof reflectance and emittance options in Table C402.3. See the definition of "Low-sloped roof" in Chapter 2 [CE]. This section provides exceptions to the requirement of solar reflectant materials. Exception 1 exempts those portions of roofs that have photovoltaic systems or components, solar air or water-heating systems, gardens or landscaping, skylights, HVAC system components and walkways and decks mounted on the roof. Exception 2 exempts portions of the roof shaded during the peak sun angle on the summer solstice by permanent features of the building, or by permanent features of adjacent buildings. Exception 3 exempts portions of roofs that are ballasted or have pavers of minimum densities. These materials have a similar impact on the building as do low-reflectance roofing materials. Exception 4 looks at the total roof area and exempts the total roof if 75 percent of the roof area is covered by the materials and/or installations found in Exceptions 1 through 3.

TABLE C402.3. See below.

❖ Section C402.3 requires roofs to comply with one of the options of Table C402.3. The options are either in compliance with the first line of the table or with the second line of the table. Each option specifies through the appropriate footnotes how products need to be tested to demonstrate the solar reflectance, thermal emittance and solar reflectance index, respectively. The footnotes provide options with respect to the testing standard. Footnote a provides default values if roofing products have not been tested for 3 years. Roofing products are to be labeled with the results of their testing.

C402.3.1 Aged roof solar reflectance. Where an aged solar reflectance required by Section C402.3 is not available, it shall be determined in accordance with Equation 4-3.

$$R_{aged} = [0.2+0.7(R_{initial}-0.2)] \quad \textbf{(Equation 4-3)}$$

where:

R_{aged} = The aged solar reflectance.

$R_{initial}$ = The initial solar reflectance determined in accordance with CRRC-1 Standard.

❖ Previous editions of the code allowed compliance to be based on either the initial product or an aged product. The code now requires compliance based on a 3-year-aged analysis of the products. As the testing process is obviously time consuming—not all products have had a completed 3-year evaluation—this section provides a formula to provide a default 3-year aged, factor-based testing of the initial product. Experience with testing products for the 3-year time period indicates Equation 4-3 provides a conservative value for products that have not been fully tested.

C402.4 Fenestration (Prescriptive). Fenestration shall comply with Sections C402.4 through C402.4.4 and Table C402.4. Daylight responsive controls shall comply with this section and Section C405.2.3.1.

❖ "Fenestration" basically includes all of the items in the building thermal envelope that are not regulated under Section C402.2. In general, windows, doors and skylights are considered fenestration (see definition and commentary for "Fenestration" in Chapter 2 [CE]). It is important to notice when applying the fenestration provisions to commercial structures that "opaque doors" (Section C402.4.4) are not regulated by Section C402.4 (see commentary, Sections C402.4.4, C402.1.3 and C402.1.4). Therefore, if a door has less than 50-percent glass area, it is not required to comply with Section C402.4 or Table C402.4. All other types of fenestration, such as skylights, windows, doors with 50 percent or more glass area and glazed block, are regulated by this section.

The amount of vertical fenestration in walls and skylights in roofs is dependent on the provision of

TABLE C402.3
MINIMUM ROOF REFLECTANCE AND EMITTANCE OPTIONS[a]

Three-year aged solar reflectance[b] of 0.55 and 3-year aged thermal emittance[c] of 0.75
Three-year-aged solar reflectance index[d] of 64

a. The use of area-weighted averages to comply with these requirements shall be permitted. Materials lacking 3-year-aged tested values for either solar reflectance or thermal emittance shall be assigned both a 3-year-aged solar reflectance in accordance with Section C402.3.1 and a 3-year-aged thermal emittance of 0.90.

b. Aged solar reflectance tested in accordance with ASTM C 1549, ASTM E 903 or ASTM E 1918 or CRRC-1 Standard.

c. Aged thermal emittance tested in accordance with ASTM C 1371 or ASTM E 408 or CRRC-1 Standard.

d. Solar reflectance index (SRI) shall be determined in accordance with ASTM E 1980 using a convection coefficient of 2.1 Btu/h · ft^2 ·°F (12W/m^2 · K). Calculation of aged SRI shall be based on aged tested values of solar reflectance and thermal emittance.

INTERNATIONAL CODE COUNCIL®
Copyright © 2015 ICC. ALL RIGHTS RESERVED. Accessed by David Dammon on Jun 21, 2017 12:30:52 PM pursuant to License Agreement with ICC. No further reproduction or distribution authorized. ANY UNAUTHORIZED REPRODUCTION OR DISTRIBUTION IS A VIOLATION OF THE FEDERAL COPYRIGHT ACT AND THE LICENSE AGREEMENT, AND SUBJECT TO CIVIL AND CRIMINAL PENALTIES THEREUNDER.

daylight responsive controls. The details for such controls are found in the lighting section of the code.

C402.4.1 Maximum area. The vertical fenestration area (not including opaque doors and opaque spandrel panels) shall not be greater than 30 percent of the gross above-grade wall area. The skylight area shall not be greater than 3 percent of the gross roof area.

❖ This section establishes that a maximum of 30 percent of the gross above-grade wall area of a building can be vertical fenestration and that a maximum of 3 percent of the gross roof area can be skylights. Because the thermal performance of fenestrations is lower than that required for the wall and roof under Sections C402.1 and C402.2, the code limits the amount of wall and roof that may be fenestration in order to minimize the overall reduced performance of the wall.

Daylight responsive controls are not required for the daylight areas associated with either the vertical fenestration or the skylights allowed under this section. Subsequent sections that allow for increases in these maximum areas do require daylight responsive controls. In addition, Section C402.4.2 sets a minimum amount of skylights above certain uses. Section C402.4.1.1 provides a method to allow a greater amount of vertical fenestration in some climate zones. Section C402.4.1.2 provides a method to allow a greater amount of skylights. Sections C402.4.3.1 and C402.4.3.2 allow increased SHGC and *U*-factors, respectively, in skylights. To use any of these greater allowances in a design, the code requires the installation of daylight responsive controls complying with Section 405.2.

Even with the expanded limits found in Sections C402.4.1.1 and C402.4.1.2, a designer may wish to provide larger areas of fenestration. Under the component performance alternative found in Section C402.1.5, an evaluation of the building envelope elements can be provided to see whether increased efficiency in other elements can be used to balance the greater window/skylight area. But where Section C402.1.5 doesn't provide a solution and the building design exceeds these area limitations, the prescriptive provisions cannot be used. The designer will not need to pursue either the total-building-performance requirements of Section C407 or the ANSI/ASHRAE/IESNA 90.1 to demonstrate compliance with the building envelope requirements (see Sections C401.2 and C402.1).

The gross area of exterior walls is the normal projection of all exterior walls, including the area of all windows and doors installed therein. The gross wall area is the area of the wall measured on the exterior face from the top of the lowest floor to the bottom of the roof. The gross wall area does not include semi-exterior walls or interior partitions. Generally, the gross wall area is based on the area of above-grade walls; therefore, the above-grade portion of below-grade walls and the area of fenestration in those portions typically are excluded when calculating the percentage of openings.

When determining the gross wall area, it is important to remember that the area should include not only the exterior exposed walls but also the areas of gable and dormer walls, band joists between floors, between-floor spandrels, peripheral edges of floors, roof and attic knee walls, skylight shafts and any other wall that forms the boundary of conditioned spaces (the building's thermal envelope). The wall between an unconditioned garage and a conditioned interior space should not be overlooked in calculating the gross wall area as it would also be part of the thermal envelope.

It is also important to remember that opaque doors (doors having less than 50 percent glass area) are regulated by Section C402.4.4. Opaque doors would not be included within the 30-percent limitation for fenestration.

TABLE C402.4
BUILDING ENVELOPE FENESTRATION MAXIMUM *U*-FACTOR AND SHGC REQUIREMENTS

CLIMATE ZONE	1		2		3		4 EXCEPT MARINE		5 AND MARINE 4		6		7		8	
Vertical fenestration																
***U*-factor**																
Fixed fenestration	0.50		0.50		0.46		0.38		0.38		0.36		0.29		0.29	
Operable fenestration	0.65		0.65		0.60		0.45		0.45		0.43		0.37		0.37	
Entrance doors	1.10		0.83		0.77		0.77		0.77		0.77		0.77		0.77	
SHGC																
Orientation[a]	SEW	N	SEW	N	SEW	N	SEW	N	SEW	N	SEW	N	SEW	N	SEW	N
PF < 0.2	0.25	0.33	0.25	0.33	0.25	0.33	0.40	0.53	0.40	0.53	0.40	0.53	0.45	NR	0.45	NR
0.2 ≤ PF < 0.5	0.30	0.37	0.30	0.37	0.30	0.37	0.48	0.58	0.48	0.58	0.48	0.58	NR	NR	NR	NR
PF ≥ 0.5	0.40	0.40	0.40	0.40	0.40	0.40	0.64	0.64	0.64	0.64	0.64	0.64	NR	NR	NR	NR
Skylights																
U-factor	0.75		0.65		0.55		0.50		0.50		0.50		0.50		0.50	
SHGC	0.35		0.35		0.35		0.40		0.40		0.40		NR		NR	

NR = No requirement, PF = Projection factor.

a. "N" indicates vertical fenestration oriented within 45 degrees of true north. "SEW" indicates orientations other than "N." For buildings in the southern hemisphere, reverse south and north. Buildings located at less than 23.5 degrees latitude shall use SEW for all orientations.

INTERNATIONAL CODE COUNCIL®
Copyright © 2015 ICC. ALL RIGHTS RESERVED. Accessed by David Dammon on Jun 21, 2017 12:30:52 PM pursuant to License Agreement with ICC. No further reproduction or distribution authorized. ANY UNAUTHORIZED REPRODUCTION OR DISTRIBUTION IS A VIOLATION OF THE FEDERAL COPYRIGHT ACT AND THE LICENSE AGREEMENT, AND SUBJECT TO CIVIL AND CRIMINAL PENALTIES THEREUNDER.

The fenestration area is the entire window and glazed door area, including the frame. For premanufactured windows and doors, this area must be considered as the rough frame opening.

Windows located in interior walls adjacent to unconditioned space would need to be included when determining the percentage of fenestration. Although these openings do not have a solar heat gain coefficient (SHGC) concern, they would still need to comply with the appropriate *U*-factor from Table C402.4 and would represent a reduction from the wall insulation levels required in Tables C402.1.3 and C402.1.4. Therefore, it is appropriate that their size be included in the 30-percent limit on the amount of fenestration openings.

C402.4.1.1 Increased vertical fenestration area with daylight responsive controls. In *Climate Zones* 1 through 6, not more than 40 percent of the gross above-grade wall area shall be permitted to be vertical fenestration, provided all of the following requirements are met:

1. In buildings not greater than two stories above grade, not less than 50 percent of the net floor area is within a *daylight zone*.
2. In buildings three or more stories above grade, not less than 25 percent of the net floor area is within a *daylight zone*.
3. *Daylight responsive controls* complying with Section C405.2.3.1 are installed in *daylight zones*.
4. Visible transmittance (VT) of vertical fenestration is not less than 1.1 times solar heat gain coefficient (SHGC).

Exception: Fenestration that is outside the scope of NFRC 200 is not required to comply with Item 4.

❖ This section establishes that a maximum of 40 percent of the gross wall area of a building can be vertical fenestration. Because the thermal performance of fenestrations is lower than that required for the wall and roof under Sections C402.1 and C402.2, the code limits the amount of wall and roof that may be fenestration in order to minimize the reduced efficiency. This section allows the increase where a minimum portion of the net floor area is in daylight zones. See the definition of "Floor area, net" in Chapter 2 [CE]. See the commentary to Section C402.4.1 regarding calculation of wall and fenestration area. Also see the same commentary for designs that would exceed even the 40 percent allowed by this section.

Section 405.2.3 provides the requirements for daylight responsive controls and lays out the method by which daylight areas are determined.

Table C402.4 provides both the *U*-factor and SHGC requirements for all types of fenestration and skylights.

C402.4.1.2 Increased skylight area with daylight responsive controls. The skylight area shall be permitted to be not more than 5 percent of the roof area provided *daylight responsive controls* complying with Section C405.2.3.1 are installed in *daylight zones* under skylights.

❖ Daylight responsive controls can save substantial energy. With daylighting, a larger window/skylight area actually can become an energy-saving measure as it reduces both the need for electric lighting and cooling loads, more than making up for thermal losses through the increased fenestration areas. Daylight responsive control system requirements are specified in Section C405.2.3.1.

C402.4.2 Minimum skylight fenestration area. In an enclosed space greater than 2,500 square feet (232 m^2) in floor area, directly under a roof with not less than 75 percent of the ceiling area with a ceiling height greater than 15 feet (4572 mm), and used as an office, lobby, atrium, concourse, corridor, storage space, gymnasium/exercise center, convention center, automotive service area, space where manufacturing occurs, nonrefrigerated warehouse, retail store, distribution/sorting area, transportation depot or workshop, the total *daylight zone* under skylights shall be not less than half the floor area and shall provide one of the following:

1. A minimum skylight area to *daylight zone* under skylights of not less than 3 percent where all skylights have a VT of at least 0.40 as determined in accordance with Section C303.1.3.
2. A minimum skylight effective aperture of at least 1 percent, determined in accordance with Equation 4-4.

$$\text{Skylight Effective Aperture} = \frac{0.85 \cdot \text{Skylight Area} \cdot \text{Skylight VT} \cdot \text{WF}}{\text{Daylight zone under skylight}} \quad \textbf{(Equation 4-4)}$$

where:

Skylight area	=	Total fenestration area of skylights.
Skylight VT	=	Area weighted average visible transmittance of skylights.
WF	=	Area weighted average well factor, where well factor is 0.9 if light well depth is less than 2 feet (610 mm), or 0.7 if light well depth is 2 feet (610 mm) or greater.
Light well depth	=	Measure vertically from the underside of the lowest point of the skylight glazing to the ceiling plane under the skylight.

Exception: Skylights above *daylight zones* of enclosed spaces are not required in:

1. Buildings in *Climate Zones* 6 through 8.
2. Spaces where the designed *general lighting* power densities are less than 0.5 W/ft^2 (5.4 W/m^2).
3. Areas where it is documented that existing structures or natural objects block direct beam sunlight

INTERNATIONAL CODE COUNCIL®
Copyright © 2015 ICC. ALL RIGHTS RESERVED. Accessed by David Dammon on Jun 21, 2017 12:30:52 PM pursuant to License Agreement with ICC. No further reproduction or distribution authorized. ANY UNAUTHORIZED REPRODUCTION OR DISTRIBUTION IS A VIOLATION OF THE FEDERAL COPYRIGHT ACT AND THE LICENSE AGREEMENT, AND SUBJECT TO CIVIL AND CRIMINAL PENALTIES THEREUNDER.

on at least half of the roof over the enclosed area for more than 1,500 daytime hours per year between 8 a.m. and 4 p.m.

4. Spaces where the *daylight zone* under rooftop monitors is greater than 50 percent of the enclosed space floor area.

5. Spaces where the total area minus the area of *daylight zones* adjacent to vertical fenestration is less than 2,500 square feet (232 m^2), and where the lighting is controlled according to Section C405.2.3.

❖ Daylighting can be a major energy-efficiency asset, provided electric lighting is reduced when daylight is available. Skylight area was adjusted based on substantial energy savings available from correctly utilized top lighting. With higher daylight transmittance, more electric lighting can be displaced and result in a greater net energy savings.

The intent of this section is to recognize the significant energy savings that can be achieved through natural lighting of a space by combining light transmitting fenestration with automatic lighting controls. The benefit of this combination has been demonstrated through modeling studies by the American Architectural Manufacturers Association (AAMA) Skylight Council and research conducted by other parties, including http://www.h-m-g.com/ASHRAE_Daylighting, as a reference. This section is based on studies done regarding lowering the *U*-factor for vertical fenestration in a number of different climate zones and product categories, permitting skylights to constitute a greater percentage of the roof when combined with daylight responsive controls and allowing skylights to have a higher SHGC in combination with higher VT.

This section applies to individual spaces that meet the three key thresholds (minimum area 2,500 square feet; minimum ceiling height 15 feet; located directly under the roof) and contain one of the listed uses. If the space is divided by walls to areas less than 2,500 square feet, this section does not apply. For example, a top floor under a roof could be occupied by a series of offices. An open office floor plan with a space exceeding 2,500 square feet would need to be designed to comply; however, were that space divided into multiple separate offices with floor-to-ceiling partitions, each office being less than 2,500 square feet, then this section doesn't apply.

There are five additional exceptions where a minimum of skylights would not be required. Exception 1 exempts buildings in the most northerly climate zones (in the Northern Hemisphere) based on lower light levels and greater need for the roof portion of the thermal envelope to be a significant barrier to heat loss. Exceptions 2, 3 and 4 apply to situations in the building design where the gains in energy savings from daylighting would not outweigh the added losses from heating or cooling. Exception 2 exempts spaces where the lighting levels are already low and additional daylight does not result in an overall energy savings. Exception 3 addresses buildings where adjacent buildings or natural features limit the amount of available light on the roof. The designer must submit appropriate documentation demonstrating the extent of shading of the roof area in order to justify the exception. Exception 4 exempts areas that already will have significant daylighting from rooftop monitors (see definition, "Rooftop monitor," Chapter 2 [CE]. Finally, Exception 5 exempts spaces where the area of daylight zones next to vertical fenestration already play a significant role in the space.

C402.4.2.1 Lighting controls in daylight zones under skylights. *Daylight responsive controls* complying with Section C405.2.3.1 shall be provided to control all electric lights with *daylight zones* under skylights.

❖ In order to achieve energy savings in daylight zones, the code requires daylight responsive controls in these areas. This section is a subsection to Section C402.4.2, which requires skylights over some spaces that contain specific uses. The requirement applies to those spaces and does not require daylight responsive controls for all areas beneath skylights. For example, where a building doesn't have any spaces that qualify under Section C402.4.2 and skylights are limited to 3 percent of the roof, no daylight responsive controls are necessary.

C402.4.2.2 Haze factor. Skylights in office, storage, automotive service, manufacturing, nonrefrigerated warehouse, retail store and distribution/sorting area spaces shall have a glazing material or diffuser with a haze factor greater than 90 percent when tested in accordance with ASTM D 1003.

Exception: Skylights designed and installed to exclude direct sunlight entering the occupied space by the use of fixed or automated baffles or the geometry of skylight and light well.

❖ In order to not limit the design of the building, the haze factor for skylights has been limited to certain uses where more of a diffuse skylight is shown to be more effective and where glare from direct sunlight can be an issue. The exception provides a skylight shading option for these spaces. The uses listed in this section do not include all of the uses specified in Section C402.4.2 where a minimum amount of skylight area is required. Again this section is a subsection of Section C402.4.2, which requires a minimum amount of skylights above certain spaces. Where Section C402.4.2 applies to a building, this section also applies.

C402.4.3 Maximum *U*-factor and SHGC. The maximum *U*-factor and solar heat gain coefficient (SHGC) for fenestration shall be as specified in Table C402.4.

The window projection factor shall be determined in accordance with Equation 4-5.

$$PF = A/B \qquad \textbf{(Equation 4-5)}$$

where:

PF = Projection factor (decimal).

INTERNATIONAL CODE COUNCIL®
Copyright © 2015 ICC. ALL RIGHTS RESERVED. Accessed by David Dammon on Jun 21, 2017 12:30:52 PM pursuant to License Agreement with ICC. No further reproduction or distribution authorized. ANY UNAUTHORIZED REPRODUCTION OR DISTRIBUTION IS A VIOLATION OF THE FEDERAL COPYRIGHT ACT AND THE LICENSE AGREEMENT, AND SUBJECT TO CIVIL AND CRIMINAL PENALTIES THEREUNDER.

A = Distance measured horizontally from the furthest continuous extremity of any overhang, eave or permanently attached shading device to the vertical surface of the glazing.

B = Distance measured vertically from the bottom of the glazing to the underside of the overhang, eave or permanently attached shading device.

Where different windows or glass doors have different *PF* values, they shall each be evaluated separately.

❖ Fenestration performance includes not only the *U*-factor or thermal transmittance, but also information about its light- and heat-transmitting capabilities. SHGC is a measure of all solar radiation, both transmitted and absorbed, that contributes to the cooling load (or offsets the heating load) in buildings. It is expressed as a number between 0 and 1. The lower a window's SHGC, the less solar heat it transmits, and the greater its shading ability. SHGC is affected by the composition of the glass; coatings that may be applied to the surfaces of glass; and internal shading devices, such as draperies or blinds. Solar heat gain and daylighting are also affected by permanently mounted overhangs and other shading technologies, such as electrochromic windows. Default values for *U*-factor and SHGC can be obtained from the tables in Section C303.1.3.

Table C402.4 provides both the *U*-factor and SHGC requirements for all types of fenestration and skylights. Adjustment factors, which in previous codes had to be mathematically applied, are not built into the values in Table C402.4.

The PF is determined by Equation 4-5. Commentary Figure C402.4.3 shows how the projection factor is determined.

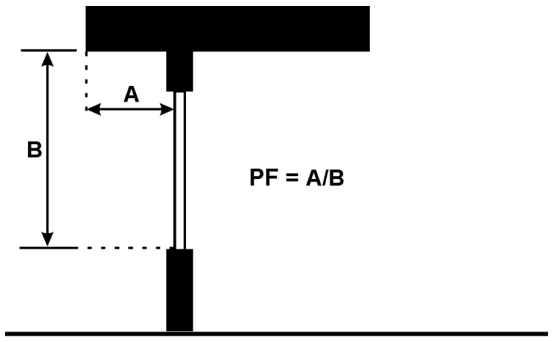

Figure C402.4.3
WINDOW PROJECTION FACTOR

C402.4.3.1 Increased skylight SHGC. In *Climate Zones* 1 through 6, skylights shall be permitted a maximum SHGC of 0.60 where located above *daylight zones* provided with *daylight responsive controls*.

❖ The key to this section is that the increased SHGC is only permitted where daylight areas are provided with daylight responsive controls that will reduce the overall lighting draw in correspondence with adequate lighting being provided by daylighting.

This section allows skylights in Climate Zones 1 through 6 a maximum SHGC of 0.60 where located above daylight zones provided with daylight responsive controls. This section and Section C402.4.3.2 allow for a broader range of skylights, including plastic dome skylights, used for daylighting purposes. Energy analyses have shown that the daylighting savings when used with automatic daylight responsive controls outweigh any energy impacts from these changes in the *U*-factor and SHGC for the noted climate zones.

C402.4.3.2 Increased skylight *U*-factor. Where skylights are installed above *daylight zones* provided with *daylight responsive controls*, a maximum *U*-factor of 0.9 shall be permitted in *Climate Zones* 1 through 3 and a maximum *U*-factor of 0.75 shall be permitted in *Climate Zones* 4 through 8.

❖ This is to allow more use of daylighting in lieu of electric lighting. There is a better likelihood that this will take place due to the requirement for daylight responsive controls (see commentary, Section C402.4.3.1).

C402.4.3.3 Dynamic glazing. Where *dynamic glazing* is intended to satisfy the SHGC and VT requirements of Table C402.4, the ratio of the higher to lower labeled SHGC shall be greater than or equal to 2.4, and the *dynamic glazing* shall be automatically controlled to modulate the amount of solar gain into the space in multiple steps. Dynamic glazing shall be considered separately from other fenestration, and area-weighted averaging with other fenestration that is not dynamic glazing shall not be permitted.

Exception: Dynamic glazing is not required to comply with this section where both the lower and higher labeled SHGC already comply with the requirements of Table C402.4.

❖ When calculated in accordance with National Fenestration Rating Council (NFRC) procedures, dynamic glazing has two values each listed for *U*-factor, SHGC and VT based on the range over which the product can modify its properties. This section clarifies which values to use for the determination of compliance with the code and that the upper and lower SHGC values must not exceed a ratio of 2.4.

For virtually all fenestration products, the NFRC ratings specify a single SHGC and a single VT, all determined at a standard rating condition. However, dynamic glazing has the ability to change properties based on sunlight or electric charges and so the NFRC provides two ratings for SHGC and VT: one rating is for the maximum value, and the other is for the minimum value. This section specifies which rating is to be used for code compliance.

C402.4.3.4 Area-weighted *U*-factor. An area-weighted average shall be permitted to satisfy the *U*-factor requirements for each fenestration product category listed in Table C402.4. Individual fenestration products from different fen-

INTERNATIONAL CODE COUNCIL®
Copyright © 2015 ICC. ALL RIGHTS RESERVED. Accessed by David Dammon on Jun 21, 2017 12:30:52 PM pursuant to License Agreement with ICC. No further reproduction or distribution authorized. ANY UNAUTHORIZED REPRODUCTION OR DISTRIBUTION IS A VIOLATION OF THE FEDERAL COPYRIGHT ACT AND THE LICENSE AGREEMENT, AND SUBJECT TO CIVIL AND CRIMINAL PENALTIES THEREUNDER.

estration product categories listed in Table C402.4 shall not be combined in calculating area-weighted average *U*-factor.

❖ Area-weighted *U*-factor averages may be used to comply with the *U*-factor requirements in Table C402.4, which is similar to what is allowed in Chapter 4 [CE] and ANSI/ASHRAE/IESNA 90.1. There is a large diversity of fenestration products in commercial construction, and enforcement issues can arise where there are a small number of products that do not meet the prescriptive requirements, yet the overall performance of all fenestration assemblies is well below the requirement. Area-weighted averaging would allow the use of these products. Enforcement by the code official should not be a problem in that Section C103.2 already requires area-weighted *U*-factor calculations to be provided on construction documents.

Using the *U*-factor requirement of 0.36 for Climate Zone 6 for fixed fenestration, this section provides two options for compliance. The simpler option is to ensure that all of the windows and doors have labeled NFRC values of 0.36 or less. This approach also is more likely to ensure adequate performance and comfort throughout the home. Alternatively, a weighted average may be taken of the values from all windows and doors to see if the "weighted average" is less than or equal to 0.36. Another option is the following example. Assume 100 square feet (9.3 m^2) of 0.32 windows, 100 square feet (9.3 m^2) of 0.36 windows and one 20-square-foot (1.8 m^2) door with a *U*-factor of 0.40: [(100 x 0.32) + (100 x 0.36) + (20 x 0.40)]/(100 + 100 + 20) = 0.345 (weighted average *U*-factor). Therefore, because the weighted average *U*-factor is less than the required 0.36, the fenestration in this example would be in compliance with the code.

C402.4.4 Doors. *Opaque doors* shall comply with the applicable requirements for doors as specified in Tables C402.1.3 and C402.1.4 and be considered part of the gross area of above-grade walls that are part of the building *thermal envelope*. Other doors shall comply with the provisions of Section C402.4.3 for vertical fenestration.

❖ All doors, whether glazed, opaque or partially glazed, must meet the applicable requirements as either an opaque assembly (Section C402.1.3 or C402.1.4) or as fenestration (Section C402.4 and Table C402.4). "Opaque" doors are defined in Chapter 2 [CE] as doors that have less than 50 percent of their area as glass. This distinction is important because opaque doors are regulated under the building envelope insulation requirements of Sections C402.1.3 and C402.1.4 and, therefore, must comply with the provisions in the respective tables. Doors with a greater amount of glass must comply with the "fenestration" provisions of Section C402.4. This section merely emphasizes certain requirements for doors in the building thermal envelope.

C402.5 Air leakage—thermal envelope (Mandatory). The *thermal envelope* of buildings shall comply with Sections C402.5.1 through C402.5.8, or the building *thermal envelope* shall be tested in accordance with ASTM E 779 at a pressure differential of 0.3 inch water gauge (75 Pa) or an equivalent method approved by the code official and deemed to comply with the provisions of this section when the tested air leakage rate of the building thermal envelope is not greater than 0.40 cfm/ft^2 (0.2 L/s · m^2). Where compliance is based on such testing, the building shall also comply with Sections C402.5.5, C402.5.6 and C402.5.7.

❖ Key to the success of any building thermal envelope is keeping the conditioned air inside the building and the nonconditioned air outside. The assessment of that success is tied to limiting air leakage through the envelope (infiltration from the outside and exfiltration to the outside). This section provides two main options to provide limited air leakage in a building's thermal envelope. The first avenue of compliance is to design and construct the building in compliance with the prescriptive standards of Sections C402.5.1 through C402.5.8. The second avenue of compliance is to have the "tightness" of the envelope tested in accordance with ASTM E 779 standard. The second avenue also requires prescriptive compliance with three of the envelope construction requirements.

This testing option for thermal envelope compliance requires the completed building to be tested in accordance with ASTM E 779 or an equivalent method approved by the code official. ASTM E 779 has a test method consisting of mechanical pressurization or depressurization of a building and measurements of the resulting airflow rates at given indoor-outdoor static pressure differences. From the relationship between the airflow rates and pressure differences, the air leakage characteristics of a building envelope are determined. For the purpose of this test method, many multizone buildings can be treated as single-zone buildings by opening interior doors or by inducing equal pressures in adjacent zones. The test in ASTM E 779 must be done to the completed building to ensure the airtightness of the air barriers.

Window, door and service openings in the building thermal envelope can be sources of considerable infiltration unless the requirements for air leakage in Section C402.5 are addressed.

C402.5.1 Air barriers. A continuous air barrier shall be provided throughout the building thermal envelope. The air barriers shall be permitted to be located on the inside or outside of the building envelope, located within the assemblies composing the envelope, or any combination thereof. The air barrier shall comply with Sections C402.5.1.1 and C402.5.1.2.

Exception: Air barriers are not required in buildings located in *Climate Zone* 2B.

❖ Air barriers are well-known technologies for achieving airtightness for the building envelope. According to

INTERNATIONAL CODE COUNCIL®
Copyright © 2015 ICC. ALL RIGHTS RESERVED. Accessed by David Dammon on Jun 21, 2017 12:30:52 PM pursuant to License Agreement with ICC. No further reproduction or distribution authorized. ANY UNAUTHORIZED REPRODUCTION OR DISTRIBUTION IS A VIOLATION OF THE FEDERAL COPYRIGHT ACT AND THE LICENSE AGREEMENT, AND SUBJECT TO CIVIL AND CRIMINAL PENALTIES THEREUNDER.

the Department of Energy (DOE) and National Response Coordination Center (NRCC), uncontrolled air movement through the building envelope (infiltration and exfiltration) can account for up to 50 percent of heating loads and a significant part of cooling loads, representing as much as 30 percent of a building's annual HVAC costs.

Air barriers are not required in buildings located in Climate Zone 2B because they are not needed for the insulating value to reduce the HVAC energy costs. In the United States, Climate Zone 2B is limited to five counties in southern Arizona, one county in southern California and 14 counties in southern Texas. The exception is only to the air barrier requirement. The requirements found in Sections C402.5.2, C402.5.4, C402.5.5, C402.5.6 and C402.5.8 will still apply in these areas. Sections C402.5.3 and C402.5.7 also provide exceptions for Climate Zone 2.

C402.5.1.1 Air barrier construction. The *continuous air barrier* shall be constructed to comply with the following:

1. The air barrier shall be continuous for all assemblies that are the thermal envelope of the building and across the joints and assemblies.
2. Air barrier joints and seams shall be sealed, including sealing transitions in places and changes in materials. The joints and seals shall be securely installed in or on the joint for its entire length so as not to dislodge, loosen or otherwise impair its ability to resist positive and negative pressure from wind, stack effect and mechanical ventilation.
3. Penetrations of the air barrier shall be caulked, gasketed or otherwise sealed in a manner compatible with the construction materials and location. Joints and seals associated with penetrations shall be sealed in the same manner or taped or covered with moisture vapor-permeable wrapping material. Sealing materials shall be appropriate to the construction materials being sealed and shall be securely installed around the penetration so as not to dislodge, loosen or otherwise impair the penetrations' ability to resist positive and negative pressure from wind, stack effect and mechanical ventilation. Sealing of concealed fire sprinklers, where required, shall be in a manner that is recommended by the manufacturer. Caulking or other adhesive sealants shall not be used to fill voids between fire sprinkler cover plates and walls or ceilings.
4. Recessed lighting fixtures shall comply with Section C402.5.8. Where similar objects are installed that penetrate the air barrier, provisions shall be made to maintain the integrity of the air barrier.

❖ This section prescribes the construction of continuous air barriers. The air barrier shall be continuous for all assemblies that are the thermal envelope of the building. Air barrier joints and seams shall be sealed. Sealing the building envelope is critical to obtain good thermal performance for the building. The seal will prevent warm, conditioned air from leaking out around doors, windows and other cracks during the heating season, thereby reducing the cost of heating the building. During the hot summer months, a proper seal will stop hot air from entering the building, helping to reduce the air-conditioning load on the building. Any penetration in the building envelope must be completely sealed during the construction process, including holes made for the installation of plumbing, electrical, lighting and heating and cooling systems (see Commentary Figure C402.5.1.1).

C402.5.1.2 Air barrier compliance options. A continuous air barrier for the opaque building envelope shall comply with Section C402.5.1.2.1 or C402.5.1.2.2.

❖ A continuous air barrier for the opaque building envelope must comply with one of the two options regarding the assemblies of materials and components. This section is not required if under Section C402.5 the option to test the air barrier was selected.

C402.5.1.2.1 Materials. Materials with an air permeability not greater than 0.004 cfm/ft^2 (0.02 L/s · m^2) under a pressure differential of 0.3 inch water gauge (75 Pa) when tested in accordance with ASTM E 2178 shall comply with this section. Materials in Items 1 through 16 shall be deemed to comply with this section, provided joints are sealed and materials are installed as air barriers in accordance with the manufacturer's instructions.

1. Plywood with a thickness of not less than $^3/_8$ inch (10 mm).
2. Oriented strand board having a thickness of not less than $^3/_8$ inch (10 mm).
3. Extruded polystyrene insulation board having a thickness of not less than $^1/_2$ inch (12.7 mm).
4. Foil-back polyisocyanurate insulation board having a thickness of not less than $^1/_2$ inch (12.7 mm).
5. Closed-cell spray foam a minimum density of 1.5 pcf (2.4 kg/m^3) having a thickness of not less than $1^1/_2$ inches (38 mm).
6. Open-cell spray foam with a density between 0.4 and 1.5 pcf (0.6 and 2.4 kg/m^3) and having a thickness of not less than 4.5 inches (113 mm).
7. Exterior or interior gypsum board having a thickness of not less than $^1/_2$ inch (12.7 mm).
8. Cement board having a thickness of not less than $^1/_2$ inch (12.7 mm).
9. Built-up roofing membrane.
10. Modified bituminous roof membrane.
11. Fully adhered single-ply roof membrane.
12. A Portland cement/sand parge, or gypsum plaster having a thickness of not less than $^5/_8$ inch (15.9 mm).
13. Cast-in-place and precast concrete.

INTERNATIONAL CODE COUNCIL®
Copyright © 2015 ICC. ALL RIGHTS RESERVED. Accessed by David Dammon on Jun 21, 2017 12:30:52 PM pursuant to License Agreement with ICC. No further reproduction or distribution authorized. ANY UNAUTHORIZED REPRODUCTION OR DISTRIBUTION IS A VIOLATION OF THE FEDERAL COPYRIGHT ACT AND THE LICENSE AGREEMENT, AND SUBJECT TO CIVIL AND CRIMINAL PENALTIES THEREUNDER.

14. Fully grouted concrete block masonry.
15. Sheet steel or aluminum.
16. Solid or hollow masonry constructed of clay or shale masonry units.

❖ The air barrier materials must have a very low air-leakage rate according to the leakage criteria in the code. The *National Building Code of Canada* and the *Massachusetts Building Code* consider 0.004 cfm/ft^2 (0.02 L/s × m^2) under a pressure differential of 0.3-inch w.g. (75 Pa) [the air permeance of $^1/_2$-inch (12 mm) unpainted gypsum board] as the maximum air-leakage rate for the air barrier material as part of the opaque envelope. In order to achieve a reasonable whole-building airtightness, the basic materials selected for the air barrier must be resistant to air leakage. The 16 materials specified in this section are materials that have been tested and meet the criteria or are presumed to pass the test.

C402.5.1.2.2 Assemblies. Assemblies of materials and components with an average air leakage not greater than 0.04 cfm/ft^2 (0.2 L/s · m^2) under a pressure differential of 0.3 inch of water gauge (w.g.)(75 Pa) when tested in accordance with ASTM E 2357, ASTM E 1677 or ASTM E 283 shall comply with this section. Assemblies listed in Items 1 through 3 shall be deemed to comply, provided joints are sealed and the requirements of Section C402.5.1.1 are met.

1. Concrete masonry walls coated with either one application of block filler or two applications of a paint or sealer coating.
2. Masonry walls constructed of clay or shale masonry units with a nominal width of 4 inches (102 mm) or more.
3. A Portland cement/sand parge, stucco or plaster not less than $^1/_2$ inch (12.7 mm) in thickness.

❖ Assemblies are materials and components that are listed in Tables C402.1.3 and C402.1.4. When essentially air-tight materials are assembled together by appropriately including sealing and taping, the assembly will have a higher leakage than the original air barrier material, primarily due to higher leakage at the joints.

C402.5.2 Air leakage of fenestration. The air leakage of fenestration assemblies shall meet the provisions of Table C402.5.2. Testing shall be in accordance with the applicable reference test standard in Table C402.5.2 by an accredited,

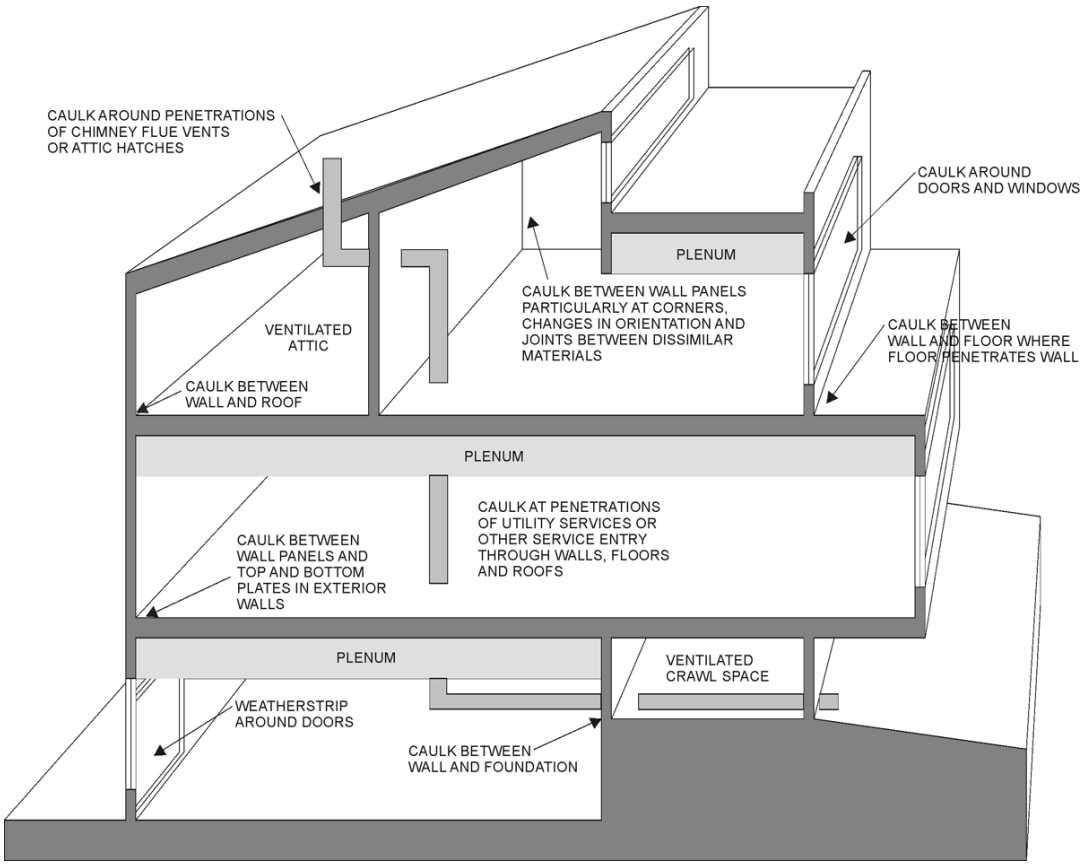

Figure C402.5.1.1
REQUIREMENTS FOR SEALING THE BUILDING ENVELOPE
(Courtesy of U.S. Department of Energy, Office of Building Technology State and Community Programs, www.energycodes.gov)

INTERNATIONAL CODE COUNCIL®
Copyright © 2015 ICC. ALL RIGHTS RESERVED. Accessed by David Dammon on Jun 21, 2017 12:30:52 PM pursuant to License Agreement with ICC. No further reproduction or distribution authorized. ANY UNAUTHORIZED REPRODUCTION OR DISTRIBUTION IS A VIOLATION OF THE FEDERAL COPYRIGHT ACT AND THE LICENSE AGREEMENT, AND SUBJECT TO CIVIL AND CRIMINAL PENALTIES THEREUNDER.

independent testing laboratory and *labeled* by the manufacturer.

Exceptions:

1. Field-fabricated fenestration assemblies that are sealed in accordance with Section C402.5.1.
2. Fenestration in buildings that comply with the testing alternative of Section C402.5 are not required to meet the air leakage requirements in Table C402.5.2.

❖ Manufactured door and window assemblies must meet requirements for air leakage in AAMA/WDMA/CSA 101/I.S.2/A440. Manufacturers typically will have an independent laboratory or testing agency perform the necessary testing to verify compliance with the requirements and provide documentation to their customers. To ensure that complying products are installed, designers should include notes on the plans or language in the construction specifications. Window and door schedules on the drawings are the appropriate places to reference the standards and test procedures of AAMA/WDMA/CSA 101/I.S.2/A440. The code also will accept testing to NFRC 400 since that standard also uses ASTM E 283 as a basis and provides comparable results. These requirements do not apply to site-constructed windows and doors sealed in accordance with this section. Where the designer chooses to have the whole building tested in accordance with the option provided in Section C402.5, then individual fenestration products do not have to meet the requirements of the table.

TABLE C402.5.2
MAXIMUM AIR LEAKAGE RATE FOR FENESTRATION ASSEMBLIES

FENESTRATION ASSEMBLY	MAXIMUM RATE (CFM/FT^2)	TEST PROCEDURE
Windows	0.20 [a]	AAMA/WDMA/CSA101/I.S.2/A440 or NFRC 400
Sliding doors	0.20 [a]	
Swinging doors	0.20 [a]	
Skylights – with condensation weepage openings	0.30	
Skylights – all other	0.20 [a]	
Curtain walls	0.06	NFRC 400 or ASTM E 283 at 1.57 psf (75 Pa)
Storefront glazing	0.06	
Commercial glazed swinging entrance doors	1.00	
Revolving doors	1.00	
Garage doors	0.40	ANSI/DASMA 105, NFRC 400, or ASTM E 283 at 1.57 psf (75 Pa)
Rolling doors	1.00	
High-speed doors	1.30	

For SI: 1 cubic foot per minute = 0.47 L/s, 1 square foot = 0.093 m^2.

a. The maximum rate for windows, sliding and swinging doors, and skylights is permitted to be 0.3 cfm per square foot of fenestration or door area when tested in accordance with AAMA/WDMA/CSA101/I.S.2/A440 at 6.24 psf (300 Pa).

C402.5.3 Rooms containing fuel-burning appliances. In *Climate Zones* 3 through 8, where open combustion air ducts provide combustion air to open combustion space conditioning fuel-burning appliances, the appliances and combustion air openings shall be located outside of the *building thermal envelope* or enclosed in a room isolated from inside the thermal envelope. Such rooms shall be sealed and insulated in accordance with the envelope requirements of Table C402.1.3 or C402.1.4, where the walls, floors and ceilings shall meet the minimum of the below-grade wall *R*-value requirement. The door into the room shall be fully gasketed, and any water lines and ducts in the room insulated in accordance with Section C403. The combustion air duct shall be insulated, where it passes through conditioned space, to a minimum of R-8.

Exceptions:

1. Direct vent appliances with both intake and exhaust pipes installed continuous to the outside.
2. Fireplaces and stoves complying with Sections 901 through 905 of the *International Mechanical Code*, and Section 2111.13 of the *International Building Code*.

❖ Space conditioning fuel-burning appliances require a supply of air for combustion. If that air is being supplied from outside of the building, the result can be a hole in a building's thermal envelope. Such is not the case for direct vent appliances (Exception 1) where the combustion air is piped from the outside and delivered into the appliance. But where the air is "supplied" by an opening in the envelope, this section provides two options.

The first option is simply to put the appliance outside the building envelope. Such an installation would deliver conditioned air into the conditioned space through ductwork. Where such ductwork penetrated the envelope, the code requires appropriate sealing.

The second option is to create an enclosed room within the thermal envelope, but isolated from the balance of the conditioned space through insulated and sealed assemblies. The walls, floor and ceiling of the enclosed room must be insulated to the equivalent level of that required for below-grade walls appropriate to the climate zone. It should be noted that for Climate Zone 3 there is no insulation required. Other measures must be included to isolate this room from the balance of the fully conditioned space, including gasketing the door and insulating water lines and ducts passing through the room. If there is a duct bringing outside air into this room, it too needs to be insulated where it passes through any conditioned space.

C402.5.4 Doors and access openings to shafts, chutes, stairways and elevator lobbies. Doors and access openings

INTERNATIONAL CODE COUNCIL®
Copyright © 2015 ICC. ALL RIGHTS RESERVED. Accessed by David Dammon on Jun 21, 2017 12:30:52 PM pursuant to License Agreement with ICC. No further reproduction or distribution authorized. ANY UNAUTHORIZED REPRODUCTION OR DISTRIBUTION IS A VIOLATION OF THE FEDERAL COPYRIGHT ACT AND THE LICENSE AGREEMENT, AND SUBJECT TO CIVIL AND CRIMINAL PENALTIES THEREUNDER.

from conditioned space to shafts, chutes stairways and elevator lobbies not within the scope of the fenestration assemblies covered by Section C402.5.2 shall be gasketed, weatherstripped or sealed.

Exceptions:

1. Door openings required to comply with Section 716 or 716.5 of the *International Building Code.*
2. Doors and door openings required to comply with UL 1784 by the *International Building Code*.

❖ This section requires doors and access openings to shafts, chutes, stairways and elevator lobbies to meet the requirements of Section C402.4.3; or to be gasketed, weatherstripped or sealed to minimize warm, conditioned air from leaking out around doors and access openings to shafts, chutes, stairways and elevator lobbies. This will lower the HVAC load and reduce the energy usage for the building. The exceptions are for door openings required to comply with Section 716 or 716.5 of the IBC; or doors and door openings required by the IBC to comply with UL 1784.

Sections 716 and 716.5 of the IBC contain requirements for fire protective openings. The seals and gaskets necessary to reduce air leakage in doors are not compatible with the fire-protected doors; therefore, given that these doors are usually of tight construction, the code exempts them from the air-leakage requirements. Similarly, the code exempts any door that is required to meet the tightness criteria of UL 1784. Again, the air leakage on these doors is expected to be low.

C402.5.5 Air intakes, exhaust openings, stairways and shafts. Stairway enclosures, elevator shaft vents and other outdoor air intakes and exhaust openings integral to the building envelope shall be provided with dampers in accordance with Section C403.2.4.3.

❖ Air intakes, exhaust openings, stairways and shafts have been recognized as uncontrolled sources of building air leakage that can create a stack effect in large buildings and significantly depressurize lower floors in the building. This can cause unintended air and moisture migration into the building and waste energy.

C402.5.6 Loading dock weatherseals. Cargo doors and loading dock doors shall be equipped with weatherseals to restrict infiltration when vehicles are parked in the doorway.

❖ Weather seals help to reduce the amount of infiltration that occurs when a trailer pulls up to unload at an open loading dock door.

C402.5.7 Vestibules. Building entrances shall be protected with an enclosed vestibule, with all doors opening into and out of the vestibule equipped with self-closing devices. Vestibules shall be designed so that in passing through the vestibule it is not necessary for the interior and exterior doors to open at the same time. The installation of one or more revolving doors in the building entrance shall not eliminate the requirement that a vestibule be provided on any doors adjacent to revolving doors.

Exceptions: Vestibules are not required for the following:

1. Buildings in *Climate Zones* 1 and 2.
2. Doors not intended to be used by the public, such as doors to mechanical or electrical equipment rooms, or intended solely for employee use.
3. Doors opening directly from a *sleeping unit* or dwelling unit.
4. Doors that open directly from a space less than 3,000 square feet (298 m^2) in area.
5. Revolving doors.
6. Doors used primarily to facilitate vehicular movement or material handling and adjacent personnel doors
7. Doors that have an air curtain with a minimum velocity of 6.56 feet per second (2 m/s) at the floor that have been tested in accordance with ANSI/AMCA 220, and installed in accordance with the manufacturer's instructions. Manual or automatic controls shall be provided that will operate the air curtain with the opening and closing of the door. Air curtains and their controls shall comply with Section C408.2.3.

❖ The use of vestibules helps to reduce the loss of conditioned air (either heated or cooled) when exterior doors are open. Exception 1 waives the requirement for some of the milder climate zones.

Although the code does not include any minimum dimensions for the vestibule, it does specify that they should be sized "so that in passing through the vestibule it is not necessary for the interior and exterior doors to open at the same time." Although not required by the code, the IBC and ICC A117.1 do contain requirements that would affect the vestibules and the doors, especially doors into buildings that are required to be accessible. Section 1203.5.1.1 of the IBC establishes the size and area of openings that must exist to allow one space to be ventilated through another. Therefore, a code official may determine that where the openings are less than that required by Section 1203.5.1 of the IBC, the spaces may be considered as separate. ICC A117.1 requires that "two doors in series," such as those in a vestibule, must have a minimum of 48 inches (1219 mm) plus the width of any door swinging into the space. In addition, ICC A117.1 requires the space to permit a minimum 60-inch (1524 mm) turning circle within it. Commentary Figure C402.5.7 shows examples of the vestibule requirements in ICC A117.1.

Vestibules are not required in buildings in Climate Zones 1 and 2, and doors not intended to be used as a building entrance door, such as: doors to mechani-

INTERNATIONAL CODE COUNCIL®
Copyright © 2015 ICC. ALL RIGHTS RESERVED. Accessed by David Dammon on Jun 21, 2017 12:30:52 PM pursuant to License Agreement with ICC. No further reproduction or distribution authorized. ANY UNAUTHORIZED REPRODUCTION OR DISTRIBUTION IS A VIOLATION OF THE FEDERAL COPYRIGHT ACT AND THE LICENSE AGREEMENT, AND SUBJECT TO CIVIL AND CRIMINAL PENALTIES THEREUNDER.

cal or electrical equipment rooms; doors opening directly from a sleeping unit or dwelling unit; doors that open directly from a space less than 3,000 square feet (298 m^2) in area; and revolving doors where there is a minimal heating and cooling load change from conditioned space from the exterior. Doors used for vehicular movement or material handling in the dock area of a warehouse or a manufacturing plant do not require vestibules, as the heating and cooling load are minimal to none.

Finally the code allows an air curtain tested in accordance with the AMCA 220 standard. An air curtain with a minimum velocity of 6.56 feet per second provides an effective barrier at a door to minimize the loss of conditioned air to the outside or the intrusion of unconditioned air into the building.

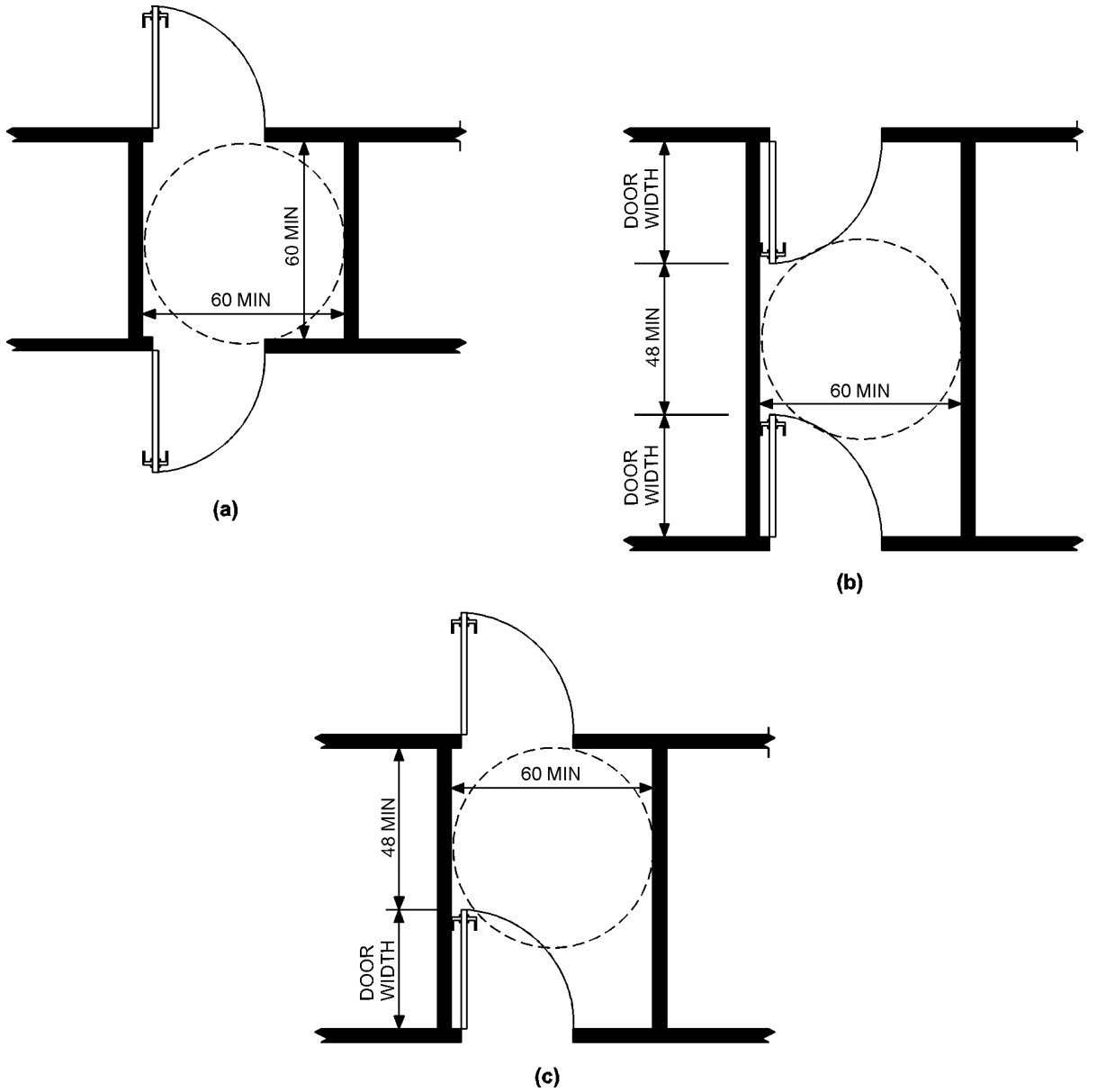

For SI: 1 inch = 25.4 mm.

Figure C402.5.7
VESTIBULES

INTERNATIONAL CODE COUNCIL®
Copyright © 2015 ICC. ALL RIGHTS RESERVED. Accessed by David Dammon on Jun 21, 2017 12:30:52 PM pursuant to License Agreement with ICC. No further reproduction or distribution authorized. ANY UNAUTHORIZED REPRODUCTION OR DISTRIBUTION IS A VIOLATION OF THE FEDERAL COPYRIGHT ACT AND THE LICENSE AGREEMENT, AND SUBJECT TO CIVIL AND CRIMINAL PENALTIES THEREUNDER.

C402.5.8 Recessed lighting. Recessed luminaires installed in the *building thermal envelope* shall be all of the following:

1. IC-rated.
2. Labeled as having an air leakage rate of not more 2.0 cfm (0.944 L/s) when tested in accordance with ASTM E 283 at a 1.57 psf (75 Pa) pressure differential.
3. Sealed with a gasket or caulk between the housing and interior wall or ceiling covering.

❖ The installation of recessed lighting fixtures in the building envelope can not only lead to an increased loss of energy through the envelope, but also may create a fire hazard if incorrectly covered with insulation. These fixtures also act as chimneys, transferring heat loss and moisture through the building envelope into attic spaces. The heat loss resulting from improperly insulated recessed lighting fixtures can be significant. The prescriptive requirements found here make the commercial structures consistent with the requirement for residential uses found in Chapter 4 [RE] (see commentary, Section R402.4.5).

Recessed lighting fixtures must be insulation contact (IC) rated. IC-rated lights are typically double-can fixtures, with one can inside another (see Commentary Figure C402.5.8). The outer can (in contact with insulation) is tested to make sure it remains cool enough to avoid a fire hazard. An IC-rated fixture should have the IC rating stamped on the fixture or printed on an attached label.

All recessed lights must be tightly sealed or gasketed to prevent air leakage through the fixture into the ceiling cavity.

SECTION C403
BUILDING MECHANICAL SYSTEMS

C403.1 General. Mechanical systems and equipment serving the building heating, cooling or ventilating needs shall comply with Section C403.2 and shall comply with Sections C403.3 and C403.4 based on the equipment and systems provided.

Walk-in coolers, walk-in freezers, refrigerated warehouse coolers and refrigerated warehouse freezers shall comply with Section C403.2.15 or C403.2.16.

❖ Section C403 is divided into five parts. Sections C403.1 and C403.2 address general issues that are applicable to all systems. Section C403.3 addresses where economizers are required and the applicable design standards. Section C403.4 is applicable to hydronic and multizone HVAC systems controls and equipment. The provisions of Section C403.4 apply only when the equipment regulated by the section is included in the design of an HVAC system. Section C403.5 covers refrigeration equipment.

Section C403.3 applies to buildings served by unitary or packaged HVAC equipment as listed in Tables C403.2.3(1) through C403.2.3(5), economizers as listed in Table C403.3(1) and hydronic system controls. Section C403.4 applies to buildings served by HVAC equipment, including economizers, meeting the minimum efficiency requirements of Table C403.2.3(1) or C403.2.3(2) and having variable air volume (VAV) fan controls, hydronic system controls, hydronic heat pump systems, heat rejection equipment and fan speed controls. Unitary equipment is self-contained, packaged equipment from a single manufacturer, while hydronic systems consist of separate components, such as chillers, cooling towers and air handlers. Single-zone systems are those that serve just one zone and are controlled by a single thermostat. Multiple-zone systems are capable of simultaneously satisfying the comfort needs of a number of zones.

C403.2 Provisions applicable to all mechanical systems (Mandatory). Mechanical systems and equipment serving the building heating, cooling or ventilating needs shall comply with Sections C403.2.1 through C403.2.16.

❖ As stated in Section C403.1, the provisions of this section apply to all HVAC systems regardless of the

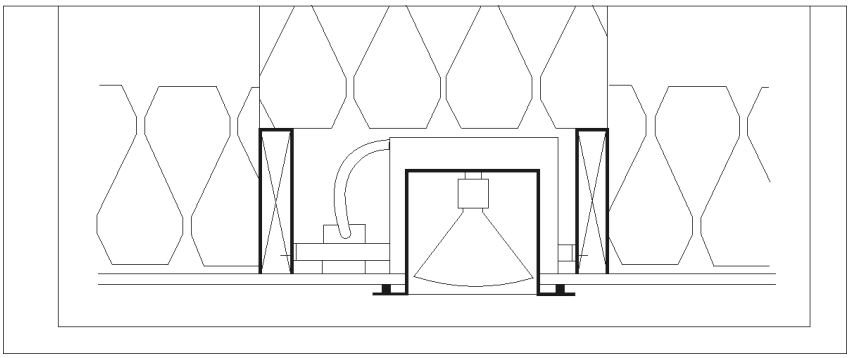

Figure C402.5.8
IC-RATED RECESSED LIGHT

INTERNATIONAL CODE COUNCIL®
Copyright © 2015 ICC. ALL RIGHTS RESERVED. Accessed by David Dammon on Jun 21, 2017 12:30:52 PM pursuant to License Agreement with ICC. No further reproduction or distribution authorized. ANY UNAUTHORIZED REPRODUCTION OR DISTRIBUTION IS A VIOLATION OF THE FEDERAL COPYRIGHT ACT AND THE LICENSE AGREEMENT, AND SUBJECT TO CIVIL AND CRIMINAL PENALTIES THEREUNDER.

complexity of the system and apply to the equipment specified herein. In general, the requirements of Section C403.2 deal with equipment efficiencies, proper system design/sizing, controls and installation. These elements provide for effective energy performance regardless of the type of systems used.

C403.2.1 Calculation of heating and cooling loads. Design loads associated with heating, ventilating and air conditioning of the building shall be determined in accordance with ANSI/ASHRAE/ACCA Standard 183 or by an *approved* equivalent computational procedure using the design parameters specified in Chapter 3. Heating and cooling loads shall be adjusted to account for load reductions that are achieved where energy recovery systems are utilized in the HVAC system in accordance with the ASHRAE *HVAC Systems and Equipment Handbook* by an approved equivalent computational procedure.

❖ The heating and cooling loads must be determined in accordance with the procedures described in ANSI/ASHRAE/ACCA 183. The designer must calculate the heating and cooling loads before selecting or sizing the HVAC equipment. This requirement should lead to the selection of equipment that is neither oversized nor undersized for the intended application. Oversized equipment not only increases owner cost, but usually operates less efficiently than properly sized equipment. It also can result in reduced comfort because of, for example, a lack of humidity control in cooling systems and fluctuating temperatures from short cycling. Undersizing obviously will result in poor temperature control in extreme weather, but also can increase energy usage at other times. For example, an undersized heating system may have to be operated 24 hours a day because it has an insufficient capacity to warm up the building each morning in a timely manner.

Accurate calculations of expected heating and cooling loads begin with a reliable simulation tool. The code requires that calculation procedures be in accordance with the methods espoused in ANSI/ASHRAE/ACCA 183, which standardize the methodology in the ASHRAE *Handbook of Fundamentals*. ANSI/ASHRAE/ACCA 183 sets the minimum requirements for the methods and procedures used to perform peak cooling and heating load calculations. Energy recovery systems can recover substantial amounts of energy and significantly reduce the heating and cooling loads that the system actually sees. If these heating and cooling load reductions are not factored into sizing the system, it will be oversized, less efficient and less able to control humidity in the cooling mode. This would defeat the purpose and value of the energy recovery system.

The code does not specify the limit design parameters. For instance, there is no "correct" inside space temperature for all applications; what is appropriate for a nursing home may not be appropriate for a detention center. Likewise, there are no "absolute" or "correct" equipment loads; one office space may have personal computers and printers on every desk in a 10-foot by 10-foot (3048-mm by 3048-mm) cubicle, while another may have many private offices with only small office equipment loads. The sheer number of variables and the wide range of reasonable values for each of them makes regulation of the details of load calculations impractical. The proper selection of design parameters is left up to the professional judgment of the designer, but requires prudent cross-examination by the code official.

While there is no one "correct" inside temperature for all applications, the code does specify a heating and cooling temperature that must be met in the design process. Section C302.1 provides interior design conditions that are used when sizing equipment. By providing these design conditions, it helps designers select the HVAC equipment and controls that will be energy efficient and best serve the needs of the building's owner and/or occupants.

C403.2.2 Equipment sizing. The output capacity of heating and cooling equipment shall be not greater than the loads calculated in accordance with Section C403.2.1. A single piece of equipment providing both heating and cooling shall satisfy this provision for one function with the capacity for the other function as small as possible, within available equipment options.

Exceptions:

1. Required standby equipment and systems provided with controls and devices that allow such systems or equipment to operate automatically only when the primary equipment is not operating.
2. Multiple units of the same equipment type with combined capacities exceeding the design load and provided with controls that have the capability to sequence the operation of each unit based on load.

❖ Once load calculations have been completed, using them for selecting equipment is nearly self-regulating because of market-driven incentives. For example, it is unlikely that the designer would select a 12-ton (10 886.2 kg) unit to do the job of a 6-ton (5443.1 kg) unit because of the additional first costs. Nevertheless, a sizing restriction remains in the code to ensure that each major piece of equipment is properly sized.

Most HVAC system components are less efficient at part load than they are at full load. Section C403.2.2, therefore, requires that HVAC systems and equipment be sized to provide not more than the cooling and heating design loads calculated in accordance with Section C403.2.1.

The intent of this restriction is often misunderstood because the term "oversizing" is commonly used in two different ways. As it applies here, "oversizing" means selecting equipment that has a higher output capability than required by the design load. But the term also is used to describe the sizing of equipment using design parameters that are more conservative than is typical for the industry, such as sizing a duct for a 0.05 inch/100-foot pressure drop, using a 49-inch (1245 mm) fan when a 44-inch (1118 mm) fan

INTERNATIONAL CODE COUNCIL®
Copyright © 2015 ICC. ALL RIGHTS RESERVED. Accessed by David Dammon on Jun 21, 2017 12:30:52 PM pursuant to License Agreement with ICC. No further reproduction or distribution authorized. ANY UNAUTHORIZED REPRODUCTION OR DISTRIBUTION IS A VIOLATION OF THE FEDERAL COPYRIGHT ACT AND THE LICENSE AGREEMENT, AND SUBJECT TO CIVIL AND CRIMINAL PENALTIES THEREUNDER.

would work; sizing a coil or filter bank for 300 feet per minute (fpm) versus 450 fpm; or selecting a cooling tower to deliver 75°F (24°C) condenser water. These designs are not intended to increase the capacity of the system and are not considered "oversizing" in the context of this code. On the other hand, sizing a chiller for 200 tons (181 437 kg) when the load is 150 tons (136 078 kg), or sizing a fan for 10,000 cfm (5 m^3/s) when the load requires only 8,000 cfm (4 m^3/s) is considered oversizing. This type of oversizing will almost always result in reduced energy efficiency. The important distinction between the two is that "oversizing" in this context means specifying equipment having a design capacity exceeding the required design load.

For a single piece of equipment that has both heating and cooling capability, only one function, either the heating or the cooling, need meet the oversizing restriction. Capacity for the other function must be the smallest size, within the available equipment options, that meets the load requirement. This primarily is intended to apply to unitary equipment, such as heat pumps or gas/electric units. Such equipment generally is selected to meet the space-cooling load, which often leaves them oversized for heating because of the nature of the equipment (such as heat pumps where their capacity in the heating mode will be determined by their capacity in the cooling mode because the same compressor and heat exchangers are used) or by limited heating options (such as gas/electric units for which there typically are only one or two gas furnace options, the smallest of which may be larger than needed). Another example is direct gas-fired absorption chillers/heaters that have both heating and cooling capability.

Section C403.2.1 gives designers flexibility in the calculation of heating and cooling loads. This prevents the strict enforcement of the sizing restriction in this section. The designer may simply adjust the design parameters in load calculations until an oversized piece of equipment is justified by the calculation. Nevertheless, a sizing restriction remains in the code to ensure that load calculations are done for each major piece of equipment (chiller, boiler, air-conditioning unit, etc.) and that they are used to help in the selection of that equipment. The accuracy of the calculations and the extent to which they are used in the equipment selection process is left up to the aptitude and professionalism of the designer.

There are two exceptions to the system-sizing equipment. First, equipment capacity may exceed design loads if the equipment is intended for standby use only, and controls are installed that allow its operation only when the primary equipment is not in operation. Second, multiple pieces of the same equipment type, such as multiple chillers or boilers, may have a total capacity exceeding the design load if controls are installed to sequence or otherwise optimally control the equipment as a function of the operating load. This is an ideal design technique to allow for additional load for future expansion, without reducing energy efficiency. It also provides redundancy to reduce the impact of equipment failure.

C403.2.3 HVAC equipment performance requirements. Equipment shall meet the minimum efficiency requirements of Tables C403.2.3(1), C403.2.3(2), C403.2.3(3), C403.2.3(4), C403.2.3(5), C403.2.3(6), C403.2.3(7), C403.2.3(8) and C403.2.3(9) when tested and rated in accordance with the applicable test procedure. Plate-type liquid-to-liquid heat exchangers shall meet the minimum requirements of Table C403.2.3(10). The efficiency shall be verified through certification under an *approved* certification program or, where a certification program does not exist, the equipment efficiency ratings shall be supported by data furnished by the manufacturer. Where multiple rating conditions or performance requirements are provided, the equipment shall satisfy all stated requirements. Where components, such as indoor or outdoor coils, from different manufacturers are used, calculations and supporting data shall be furnished by the designer that demonstrates that the combined efficiency of the specified components meets the requirements herein.

❖ HVAC equipment must meet or exceed the energy efficiencies shown in Tables C403.2.3(1) through C403.2.3(10) if the equipment is to be used in a building or an HVAC system falling within the scope of the code. Each table has reference notes that must be adhered to. Efficiencies must be measured in accordance with the rating procedures specified in the tables. Equipment ratings may be self-certified by the manufacturer or rated under a nationally recognized certification program. Field tests are not required. Where more than one requirement applies to a given piece of equipment, all must be met. Please note that Tables C403.2.3(1), (2) and (7) have different efficiency requirements based on the date on which the system is approved for permit. Installations of new equipment in existing buildings must also comply with these efficiency standards.

Tables C403.2.3(1) through C403.2.3(10) cover the majority of equipment used in the design of contemporary HVAC systems; however, there are equipment types that are not covered. Although these pieces of equipment are not required to meet any particular efficiency level to comply with the code, omission from the tables does not imply such equipment cannot be used.

Some of the equipment efficiency requirements of this section are also requirements of the National Appliance Energy Conservation Act (NAECA). The NAECA requirements apply to new equipment installed in existing buildings, as well as new buildings, and are established by the federal government. This is referenced in Tables C403.2.3(1), C403.2.3(2) and C403.2.3(4).

Product development for water-cooled chillers in recent years has focused largely on improving off-design and part load performance. In particular, variable speed drives (VSDs) have gone through significant technology advancements and are now finding

INTERNATIONAL CODE COUNCIL®
Copyright © 2015 ICC. ALL RIGHTS RESERVED. Accessed by David Dammon on Jun 21, 2017 12:30:52 PM pursuant to License Agreement with ICC. No further reproduction or distribution authorized. ANY UNAUTHORIZED REPRODUCTION OR DISTRIBUTION IS A VIOLATION OF THE FEDERAL COPYRIGHT ACT AND THE LICENSE AGREEMENT, AND SUBJECT TO CIVIL AND CRIMINAL PENALTIES THEREUNDER.

widespread application in water-cooled chillers. The use of VSDs has resulted in a significant improvement in the off-design and part-load improvement of the chiller's performance. Improvements of not greater than 30 percent in integrated part load value (IPLV) are possible. Partially offsetting the part-load performance improvement is a small decrease in full-load efficiency at design conditions, nominally not greater than 4 percent. The decrease in full-load efficiency is due to inherent electronic drive losses and power line filters.

The code updates the current minimum efficiency requirements for water chilling and reflects new AHRI 550/590 fouling factors and IPLV equations. IPLV is defined in the commentary to Tables C403.2.3(1) through C403.2.3(7). Second, effective January 1, 2010, an additional path of compliance for water-cooled chillers was required. Both paths have been maintained in the current edition of the code. Path A is intended for applications where significant operating time is expected at full-load conditions. Path B is an alternative set of efficiency levels for water-cooled chillers intended for applications where significant time is expected at part load. All Path B chillers are required to be equipped with demand-limiting controls. Compliance with the code can be achieved by meeting the requirements of either Path A or B. However, both full-load and IPLV levels must be met to fulfill the requirements of Path A or B.

Also, the code combines all water-cooled positive displacement chillers into one category and adds a new size category for centrifugal chillers greater than or equal to 600 tons (544 metric tons). The air-cooled chiller without the condenser equipment-type category has been eliminated. All air-cooled chillers without the condensers must now be rated with matching condensers. The minimum efficiencies of air-cooled chillers have been updated with the code change. Efficiencies are now expressed in energy efficiency ratios (EER) for air-cooled chillers, kW/ton for water-cooled chillers and coefficient of performance (COP) for absorption chillers to reflect current industry practices.

The user should exercise discretion when applying the standard efficiency ratings established in this section to compare different types of HVAC equipment. The performance efficiency ratings are sometimes established using different standardized rating conditions, such as ground-water-source heat pumps, which are rated at 70°F (21°C) compared to water-source heat pumps, which are rated at 85°F (29°C). More importantly, the ratings may not include the energy used to operate auxiliary systems that may be required for the primary equipment to function as a complete system. For example:

- The efficiency ratings for water-cooled equipment cannot be directly compared to those for air-cooled equipment. Water-cooled equipment ratings do not include the energy used by the condenser water pumps and cooling tower fans, while air-cooled package ratings include condenser fan energy.
- The ratings for condensing units cannot be directly compared to ratings for packaged or split-system air conditioners. Condensing unit ratings do not include the energy used by indoor air-handling fans.
- Efficiency ratings for different types of furnaces account only for gas usage, but do not include the energy used by combustion air fans and indoor air-handler fans that vary between product categories.
- The efficiency of a chilled-water system cannot be compared to a unitary direct-expansion system using standard ratings. Chilled-water-system efficiency does not include the energy used by chilled-water pumps and air-handler fans.

Different types of equipment may be applied in many different ways, and the manufacturer can test the performance of equipment as it exists only when it leaves the factory. A fair comparison between different types of equipment, such as water- versus air-cooled equipment, requires knowledge of the auxiliary equipment needed for the application as a complete system and the energy they use at both full and part load. Often an energy analysis using a simulation tool [see Table C407.5.1(1)] is the only way to make the best possible comparison.

Example of Multiple Requirements—Unitary Heat Pump

What are the efficiency requirements for a 10-ton (9072 kg) unitary air conditioner and condensing unit? (Hint: 10 tons is equal to 120,000 Btu/h.)

Table C403.2.3(2) contains the requirements for unitary conditioner and condensing units. The heat pump must meet the high temperature COP requirements for heating (COP of 3.3). It also must meet the full-load EER requirements for cooling (11.0 EER).

Example of Multifunction Equipment Requirements—Space- and Water-heating Boiler

A 2,600,000-Btu/h (754 kw/h) input gas-fired water-tube boiler is to provide domestic water heating in the form of an external storage tank and also will provide space heating. The boiler has two-stage gas valves. What efficiency requirements must be met?

The boiler serves as a "nonstorage" (instantaneous) water heater and, therefore, must meet the Table C404.2 requirement for a full-load thermal efficiency, E_t, of not less than 80 percent. Because it provides space heating as well, the boiler also must meet Table C403.2.3(5) requirements for a thermal efficiency, E_t, of not less than 82 percent at its minimum firing rate (low fire). In this case, the Table C403.2.3(5) requirement is more stringent.

INTERNATIONAL CODE COUNCIL®
Copyright © 2015 ICC. ALL RIGHTS RESERVED. Accessed by David Dammon on Jun 21, 2017 12:30:52 PM pursuant to License Agreement with ICC. No further reproduction or distribution authorized. ANY UNAUTHORIZED REPRODUCTION OR DISTRIBUTION IS A VIOLATION OF THE FEDERAL COPYRIGHT ACT AND THE LICENSE AGREEMENT, AND SUBJECT TO CIVIL AND CRIMINAL PENALTIES THEREUNDER.

TABLES C403.2.3(1) through C403.2.3(10). See pages C4-34 through C4-43

❖ These tables provide the minimum efficiencies and appropriate test standards for the various types of mechanical equipment used to condition a building. Many of the minimum efficiency standards were increased in the 2015 code. Because the equipment generally is tested and labeled, the inspector will not need to be greatly aware of the standards but would only need to confirm the equipment's labeled efficiency meets the appropriate minimum requirements. Designers would need to be aware of these minimum efficiencies in order to specify equipment that is able to meet the energy conservation requirements of the code.

Historically, energy codes limited only the full-load equipment efficiency (i.e., the efficiency of the equipment at standard rating conditions representative of typical peak design or full-load conditions). Even though equipment full-load efficiency is important, particularly in areas with high utility demand charges, performance at part load is usually more relevant in determining annual equipment energy costs. In recognition of this issue, the code requires that most equipment be tested and meet efficiency limits at part-load as well as full-load conditions.

New for the 2015 edition of the code is Table C403.2.3(9), which provides minimum efficiency requirements for equipment serving the unique environment of computer equipment rooms. Computer rooms are defined in Section C202 to be rooms with a primary function of housing equipment for processing and storage of electronic data. This type of equipment generates a significant level of internal heat. The HVAC system must address this heat (remove it) in order to maintain the functionality of the computer equipment. The cooling equipment for these spaces operates differently than equipment where the heating load is related to the human occupants of the space. The test procedure for this equipment is found in ASHRAE Standard 127.

Actual equipment-load profiles will vary by system type, building architecture, occupancy patterns and climate. Therefore, it is possible to determine performance only at representative part-load conditions. Although the results will not predict actual performance precisely, they can be used to compare different manufacturers and different equipment types in much the same way that the Environmental Protection Agency's (EPA) mileage ratings allow comparison of different cars, even though actual mileage will vary. Three types of part-load descriptors are used in Tables C403.2.3(1) through C403.2.3(7).

1. Heating seasonal performance factor (HSPF), annual fuel utilization efficiency (AFUE), seasonal energy efficiency ratio (SEER). These are seasonal performance descriptors for gas furnaces and air conditioners, respectively, determined in accordance with the corresponding test procedures listed. These ratings are based on a typical weather profile and include the effects of equipment cycling. All products covered by the NAECA must be rated using these descriptors.
2. IPLV. IPLV is a measure of part-load performance for some Air Conditioning, Heating and Refrigeration Institute (AHRI)-rated equipment with unloading capability. The units of IPLV are the same as those for the corresponding full-load descriptor; for instance, an IPLV for an air conditioner has the same units as the EER. IPLV is a weighted average of the steady state equipment performance at several load conditions. An IPLV may contain up to three part-load efficiencies, in addition to the full-load efficiency. Because measurements are steady-state, IPLV does not include the effects of equipment cycling; equipment is rated only at the part loading allowed by the equipment and its controls.
3. Low- or High-temperature ratings and COP. Some equipment is rated at an off-design condition, in addition to the standard full-load condition. Although not actually a part-load condition, because the equipment is tested at full capacity, the off-design rating can give an indication of equipment performance at different temperature conditions. Examples include high [47°F (8°C)] and low [17°F (-8°C)] outside air temperature COP ratings for heat pumps, and high- [85°F (29°C)] and low- [75°F (24°C)] temperature ratings for hydronic heat pumps. The ratings are steady state and do not include the effect of equipment cycling.

For additional commentary related to the tables, see the commentary to Section C403.2.3.

INTERNATIONAL CODE COUNCIL®
Copyright © 2015 ICC. ALL RIGHTS RESERVED. Accessed by David Dammon on Jun 21, 2017 12:30:52 PM pursuant to License Agreement with ICC. No further reproduction or distribution authorized. ANY UNAUTHORIZED REPRODUCTION OR DISTRIBUTION IS A VIOLATION OF THE FEDERAL COPYRIGHT ACT AND THE LICENSE AGREEMENT, AND SUBJECT TO CIVIL AND CRIMINAL PENALTIES THEREUNDER.

TABLE C403.2.3(1)
MINIMUM EFFICIENCY REQUIREMENTS:
ELECTRICALLY OPERATED UNITARY AIR CONDITIONERS AND CONDENSING UNITS

EQUIPMENT TYPE	SIZE CATEGORY	HEATING SECTION TYPE	SUBCATEGORY OR RATING CONDITION	MINIMUM EFFICIENCY		TEST PROCEDURE[a]
				Before 1/1/2016	As of 1/1/2016	
Air conditioners, air cooled	< 65,000 Btu/h[b]	All	Split System	13.0 SEER	13.0 SEER	AHRI 210/240
			Single Package	13.0 SEER	14.0 SEER[c]	
Through-the-wall (air cooled)	≤ 30,000 Btu/h[b]	All	Split system	12.0 SEER	12.0 SEER	
			Single Package	12.0 SEER	12.0 SEER	
Small-duct high-velocity (air cooled)	< 65,000 Btu/h[b]	All	Split System	11.0 SEER	11.0 SEER	
Air conditioners, air cooled	≥ 65,000 Btu/h and < 135,000 Btu/h	Electric Resistance (or None)	Split System and Single Package	11.2 EER 11.4 IEER	11.2 EER 12.8 IEER	AHRI 340/360
		All other	Split System and Single Package	11.0 EER 11.2 IEER	11.0 EER 12.6 IEER	
	≥ 135,000 Btu/h and < 240,000 Btu/h	Electric Resistance (or None)	Split System and Single Package	11.0 EER 11.2 IEER	11.0 EER 12.4 IEER	
		All other	Split System and Single Package	10.8 EER 11.0 IEER	10.8 EER 12.2 IEER	
	≥ 240,000 Btu/h and < 760,000 Btu/h	Electric Resistance (or None)	Split System and Single Package	10.0 EER 10.1 IEER	10.0 EER 11.6 IEER	
		All other	Split System and Single Package	9.8 EER 9.9 IEER	9.8 EER 11.4 IEER	
	≥ 760,000 Btu/h	Electric Resistance (or None)	Split System and Single Package	9.7 EER 9.8 IEER	9.7 EER 11.2 IEER	
		All other	Split System and Single Package	9.5 EER 9.6 IEER	9.5 EER 11.0 IEER	
Air conditioners, water cooled	< 65,000 Btu/h[b]	All	Split System and Single Package	12.1 EER 12.3 IEER	12.1 EER 12.3 IEER	AHRI 210/240
	≥ 65,000 Btu/h and < 135,000 Btu/h	Electric Resistance (or None)	Split System and Single Package	12.1 EER 12.3 IEER	12.1 EER 13.9 IEER	AHRI 340/360
		All other	Split System and Single Package	11.9 EER 12.1 IEER	11.9 EER 13.7 IEER	
	≥ 135,000 Btu/h and < 240,000 Btu/h	Electric Resistance (or None)	Split System and Single Package	12.5 EER 12.5 IEER	12.5 EER 13.9 IEER	
		All other	Split System and Single Package	12.3 EER 12.5 IEER	12.3 EER 13.7 IEER	
	≥ 240,000 Btu/h and < 760,000 Btu/h	Electric Resistance (or None)	Split System and Single Package	12.4 EER 12.6 IEER	12.4 EER 13.6 IEER	
		All other	Split System and Single Package	12.2 EER 12.4 IEER	12.2 EER 13.4 IEER	
	≥ 760,000 Btu/h	Electric Resistance (or None)	Split System and Single Package	12.2 EER 12.4 IEER	12.2 EER 13.5 IEER	
		All other	Split System and Single Package	12.0 EER 12.2 IEER	12.0 EER 13.3 IEER	

(continued)

INTERNATIONAL CODE COUNCIL®
Copyright © 2015 ICC. ALL RIGHTS RESERVED. Accessed by David Dammon on Jun 21, 2017 12:30:52 PM pursuant to License Agreement with ICC. No further reproduction or distribution authorized. ANY UNAUTHORIZED REPRODUCTION OR DISTRIBUTION IS A VIOLATION OF THE FEDERAL COPYRIGHT ACT AND THE LICENSE AGREEMENT, AND SUBJECT TO CIVIL AND CRIMINAL PENALTIES THEREUNDER.

TABLE C403.2.3(1)—continued
MINIMUM EFFICIENCY REQUIREMENTS:
ELECTRICALLY OPERATED UNITARY AIR CONDITIONERS AND CONDENSING UNITS

EQUIPMENT TYPE	SIZE CATEGORY	HEATING SECTION TYPE	SUB-CATEGORY OR RATING CONDITION	MINIMUM EFFICIENCY		TEST PROCEDURE[a]
				Before 1/1/2016	As of 1/1/2016	
Air conditioners, evaporatively cooled	< 65,000 Btu/h[b]	All	Split System and Single Package	12.1 EER 12.3 IEER	12.1 EER 12.3 IEER	AHRI 210/240
	≥ 65,000 Btu/h and < 135,000 Btu/h	Electric Resistance (or None)	Split System and Single Package	12.1 EER 12.3 IEER	12.1 EER 12.3 IEER	AHRI 340/360
		All other	Split System and Single Package	11.9 EER 12.1 IEER	11.9 EER 12.1 IEER	
	≥ 135,000 Btu/h and < 240,000 Btu/h	Electric Resistance (or None)	Split System and Single Package	12.0 EER 12.2 IEER	12.0 EER 12.2 IEER	
		All other	Split System and Single Package	11.8 EER 12.0 IEER	11.8 EER 12.0 IEER	
	≥ 240,000 Btu/h and < 760,000 Btu/h	Electric Resistance (or None)	Split System and Single Package	11.9 EER 12.1 IEER	11.9 EER 12.1 IEER	
		All other	Split System and Single Package	11.7 EER 11.9 IEER	11.7 EER 11.9 IEER	
	≥ 760,000 Btu/h	Electric Resistance (or None)	Split System and Single Package	11.7 EER 11.9 IEER	11.7 EER 11.9 IEER	
		All other	Split System and Single Package	11.5 EER 11.7 IEER	11.5 EER 11.7 IEER	
Condensing units, air cooled	≥ 135,000 Btu/h			10.5 EER 11.8 IEER	10.5 EER 11.8 IEER	AHRI 365
Condensing units, water cooled	≥ 135,000 Btu/h			13.5 EER 14.0 IEER	13.5 EER 14.0 IEER	
Condensing units, evaporatively cooled	≥ 135,000 Btu/h			13.5 EER 14.0 IEER	13.5 EER 14.0 IEER	

For SI: 1 British thermal unit per hour = 0.2931 W.

a. Chapter 6 contains a complete specification of the referenced test procedure, including the reference year version of the test procedure.

b. Single-phase, air-cooled air conditioners less than 65,000 Btu/h are regulated by NAECA. SEER values are those set by NAECA.

c. Minimum efficiency as of January 1, 2015.

INTERNATIONAL CODE COUNCIL®
Copyright © 2015 ICC. ALL RIGHTS RESERVED. Accessed by David Dammon on Jun 21, 2017 12:30:52 PM pursuant to License Agreement with ICC. No further reproduction or distribution authorized. ANY UNAUTHORIZED REPRODUCTION OR DISTRIBUTION IS A VIOLATION OF THE FEDERAL COPYRIGHT ACT AND THE LICENSE AGREEMENT, AND SUBJECT TO CIVIL AND CRIMINAL PENALTIES THEREUNDER.

TABLE C403.2.3(2)
MINIMUM EFFICIENCY REQUIREMENTS:
ELECTRICALLY OPERATED UNITARY AND APPLIED HEAT PUMPS

EQUIPMENT TYPE	SIZE CATEGORY	HEATING SECTION TYPE	SUBCATEGORY OR RATING CONDITION	MINIMUM EFFICIENCY		TEST PROCEDURE[a]
				Before 1/1/2016	As of 1/1/2016	
Air cooled (cooling mode)	< 65,000 Btu/h[b]	All	Split System	13.0 SEER[c]	14.0 SEER[c]	AHRI 210/240
			Single Package	13.0 SEER[c]	14.0 SEER[c]	
Through-the-wall, air cooled	≤ 30,000 Btu/h[b]	All	Split System	12.0 SEER	12.0 SEER	
			Single Package	12.0 SEER	12.0 SEER	
Single-duct high-velocity air cooled	< 65,000 Btu/h[b]	All	Split System	11.0 SEER	11.0 SEER	
Air cooled (cooling mode)	≥ 65,000 Btu/h and < 135,000 Btu/h	Electric Resistance (or None)	Split System and Single Package	11.0 EER 11.2 IEER	11.0 EER 12.0 IEER	AHRI 340/360
		All other	Split System and Single Package	10.8 EER 11.0 IEER	10.8 EER 11.8 IEER	
	≥ 135,000 Btu/h and < 240,000 Btu/h	Electric Resistance (or None)	Split System and Single Package	10.6 EER 10.7 IEER	10.6 EER 11.6 IEER	
		All other	Split System and Single Package	10.4 EER 10.5 IEER	10.4 EER 11.4 IEER	
	≥ 240,000 Btu/h	Electric Resistance (or None)	Split System and Single Package	9.5 EER 9.6 IEER	9.5 EER 10.6 IEER	
		All other	Split System and Single Package	9.3 EER 9.4 IEER	9.3 EER 9.4 IEER	
Water to Air: Water Loop (cooling mode)	< 17,000 Btu/h	All	86°F entering water	12.2 EER	12.2 EER	ISO 13256-1
	≥ 17,000 Btu/h and < 65,000 Btu/h	All	86°F entering water	13.0 EER	13.0 EER	
	≥ 65,000 Btu/h and < 135,000 Btu/h	All	86°F entering water	13.0 EER	13.0 EER	
Water to Air: Ground Water (cooling mode)	< 135,000 Btu/h	All	59°F entering water	18.0 EER	18.0 EER	ISO 13256-1
Brine to Air: Ground Loop (cooling mode)	< 135,000 Btu/h	All	77°F entering water	14.1 EER	14.1 EER	ISO 13256-1
Water to Water: Water Loop (cooling mode)	< 135,000 Btu/h	All	86°F entering water	10.6 EER	10.6 EER	ISO 13256-2
Water to Water: Ground Water (cooling mode)	< 135,000 Btu/h	All	59°F entering water	16.3 EER	16.3 EER	
Brine to Water: Ground Loop (cooling mode)	< 135,000 Btu/h	All	77°F entering fluid	12.1 EER	12.1 EER	

(continued)

INTERNATIONAL CODE COUNCIL®
Copyright © 2015 ICC. ALL RIGHTS RESERVED. Accessed by David Dammon on Jun 21, 2017 12:30:52 PM pursuant to License Agreement with ICC. No further reproduction or distribution authorized. ANY UNAUTHORIZED REPRODUCTION OR DISTRIBUTION IS A VIOLATION OF THE FEDERAL COPYRIGHT ACT AND THE LICENSE AGREEMENT, AND SUBJECT TO CIVIL AND CRIMINAL PENALTIES THEREUNDER.

TABLE C403.2.3(2)—continued
MINIMUM EFFICIENCY REQUIREMENTS:
ELECTRICALLY OPERATED UNITARY AND APPLIED HEAT PUMPS

EQUIPMENT TYPE	SIZE CATEGORY	HEATING SECTION TYPE	SUBCATEGORY OR RATING CONDITION	MINIMUM EFFICIENCY		TEST PROCEDURE[a]
				Before 1/1/2016	As of 1/1/2016	
Air cooled (heating mode)	< 65,000 Btu/h[b]	—	Split System	7.7 HSPF[c]	8.2 HSPF[c]	AHRI 210/240
		—	Single Package	7.7 HSPF[c]	8.0 HSPF[c]	
Through-the-wall, (air cooled, heating mode)	≤ 30,000 Btu/h[b] (cooling capacity)	—	Split System	7.4 HSPF	7.4 HSPF	
		—	Single Package	7.4 HSPF	7.4 HSPF	
Small-duct high velocity (air cooled, heating mode)	< 65,000 Btu/h[b]	—	Split System	6.8 HSPF	6.8 HSPF	
Air cooled (heating mode)	≥ 65,000 Btu/h and < 135,000 Btu/h (cooling capacity)	—	47ºF db/43ºF wb outdoor air	3.3 COP	3.3 COP	AHRI 340/360
			17ºF db/15ºF wb outdoor air	2.25 COP	2.25 COP	
	≥ 135,000 Btu/h (cooling capacity)	—	47ºF db/43ºF wb outdoor air	3.2 COP	3.2 COP	
			17ºF db/15ºF wb outdoor air	2.05 COP	2.05 COP	
Water to Air: Water Loop (heating mode)	< 135,000 Btu/h (cooling capacity)	—	68°F entering water	4.3 COP	4.3 COP	ISO 13256-1
Water to Air: Ground Water (heating mode)	< 135,000 Btu/h (cooling capacity)	—	50°F entering water	3.7 COP	3.7 COP	
Brine to Air: Ground Loop (heating mode)	< 135,000 Btu/h (cooling capacity)	—	32°F entering fluid	3.2 COP	3.2 COP	
Water to Water: Water Loop (heating mode)	< 135,000 Btu/h (cooling capacity)	—	68°F entering water	3.7 COP	3.7 COP	ISO 13256-2
Water to Water: Ground Water (heating mode)	< 135,000 Btu/h (cooling capacity)	—	50°F entering water	3.1 COP	3.1 COP	
Brine to Water: Ground Loop (heating mode)	< 135,000 Btu/h (cooling capacity)	—	32°F entering fluid	2.5 COP	2.5 COP	

For SI: 1 British thermal unit per hour = 0.2931 W, °C = [(°F) - 32]/1.8.

a. Chapter 6 contains a complete specification of the referenced test procedure, including the reference year version of the test procedure.

b. Single-phase, air-cooled air conditioners less than 65,000 Btu/h are regulated by NAECA. SEER values are those set by NAECA.

c. Minimum efficiency as of January 1, 2015.

INTERNATIONAL CODE COUNCIL®
Copyright © 2015 ICC. ALL RIGHTS RESERVED. Accessed by David Dammon on Jun 21, 2017 12:30:52 PM pursuant to License Agreement with ICC. No further reproduction or distribution authorized. ANY UNAUTHORIZED REPRODUCTION OR DISTRIBUTION IS A VIOLATION OF THE FEDERAL COPYRIGHT ACT AND THE LICENSE AGREEMENT, AND SUBJECT TO CIVIL AND CRIMINAL PENALTIES THEREUNDER.

TABLE C403.2.3(3)
MINIMUM EFFICIENCY REQUIREMENTS:
ELECTRICALLY OPERATED PACKAGED TERMINAL AIR CONDITIONERS,
PACKAGED TERMINAL HEAT PUMPS, SINGLE-PACKAGE VERTICAL AIR CONDITIONERS,
SINGLE VERTICAL HEAT PUMPS, ROOM AIR CONDITIONERS AND ROOM AIR-CONDITIONER HEAT PUMPS

EQUIPMENT TYPE	SIZE CATEGORY (INPUT)	SUBCATEGORY OR RATING CONDITION	MINIMUM EFFICIENCY	TEST PROCEDURE[a]
PTAC (cooling mode) new construction	All Capacities	95°F db outdoor air	14.0 – (0.300 × Cap/1000) EER[c]	AHRI 310/380
PTAC (cooling mode) replacements[b]	All Capacities	95°F db outdoor air	10.9 - (0.213 × Cap/1000) EER	
PTHP (cooling mode) new construction	All Capacities	95°F db outdoor air	14.0 - (0.300 × Cap/1000) EER	
PTHP (cooling mode) replacements[b]	All Capacities	95°F db outdoor air	10.8 - (0.213 × Cap/1000) EER	
PTHP (heating mode) new construction	All Capacities	—	3.2 - (0.026 × Cap/1000) COP	
PTHP (heating mode) replacements[b]	All Capacities	—	2.9 - (0.026 × Cap/1000) COP	
SPVAC (cooling mode)	< 65,000 Btu/h	95°F db/ 75°F wb outdoor air	9.0 EER	AHRI 390
	≥ 65,000 Btu/h and < 135,000 Btu/h	95°F db/ 75°F wb outdoor air	8.9 EER	
	≥ 135,000 Btu/h and < 240,000 Btu/h	95°F db/ 75°F wb outdoor air	8.6 EER	
SPVHP (cooling mode)	< 65,000 Btu/h	95°F db/ 75°F wb outdoor air	9.0 EER	
	≥ 65,000 Btu/h and < 135,000 Btu/h	95°F db/ 75°F wb outdoor air	8.9 EER	
	≥ 135,000 Btu/h and < 240,000 Btu/h	95°F db/ 75°F wb outdoor air	8.6 EER	
SPVHP (heating mode)	< 65,000 Btu/h	47°F db/ 43°F wb outdoor air	3.0 COP	AHRI 390
	≥ 65,000 Btu/h and < 135,000 Btu/h	47°F db/ 43°F wb outdoor air	3.0 COP	
	≥ 135,000 Btu/h and < 240,000 Btu/h	47°F db/ 75°F wb outdoor air	2.9 COP	
Room air conditioners, with louvered sides	< 6,000 Btu/h	—	9.7 SEER	ANSI/ AHAM RAC-1
	≥ 6,000 Btu/h and < 8,000 Btu/h	—	9.7 EER	
	≥ 8,000 Btu/h and < 14,000 Btu/h	—	9.8 EER	
	≥ 14,000 Btu/h and < 20,000 Btu/h	—	9.7 SEER	
	≥ 20,000 Btu/h	—	8.5 EER	
Room air conditioners, without louvered sides	< 8,000 Btu/h	—	9.0 EER	
	≥ 8,000 Btu/h and < 20,000 Btu/h	—	8.5 EER	
	≥ 20,000 Btu/h	—	8.5 EER	
Room air-conditioner heat pumps with louvered sides	< 20,000 Btu/h	—	9.0 EER	
	≥ 20,000 Btu/h	—	8.5 EER	
Room air-conditioner heat pumps without louvered sides	< 14,000 Btu/h	—	8.5 EER	
	≥ 14,000 Btu/h	—	8.0 EER	

(continued)

INTERNATIONAL CODE COUNCIL®
Copyright © 2015 ICC. ALL RIGHTS RESERVED. Accessed by David Dammon on Jun 21, 2017 12:30:52 PM pursuant to License Agreement with ICC. No further reproduction or distribution authorized. ANY UNAUTHORIZED REPRODUCTION OR DISTRIBUTION IS A VIOLATION OF THE FEDERAL COPYRIGHT ACT AND THE LICENSE AGREEMENT, AND SUBJECT TO CIVIL AND CRIMINAL PENALTIES THEREUNDER.

TABLE C403.2.3(3)—continued
MINIMUM EFFICIENCY REQUIREMENTS:
ELECTRICALLY OPERATED PACKAGED TERMINAL AIR CONDITIONERS, PACKAGED TERMINAL HEAT PUMPS, SINGLE-PACKAGE VERTICAL AIR CONDITIONERS, SINGLE VERTICAL HEAT PUMPS, ROOM AIR CONDITIONERS AND ROOM AIR-CONDITIONER HEAT PUMPS

EQUIPMENT TYPE	SIZE CATEGORY (INPUT)	SUBCATEGORY OR RATING CONDITION	MINIMUM EFFICIENCY	TEST PROCEDURE[a]
Room air conditioner casement only	All capacities	—	8.7 EER	ANSI/ AHAM RAC-1
Room air conditioner casement-slider	All capacities	—	9.5 EER	

For SI: 1 British thermal unit per hour = 0.2931 W, °C = [(°F) - 32]/1.8, wb = wet bulb, db = dry bulb.

"Cap" = The rated cooling capacity of the project in Btu/h. Where the unit's capacity is less than 7000 Btu/h, use 7000 Btu/h in the calculation. Where the unit's capacity is greater than 15,000 Btu/h, use 15,000 Btu/h in the calculations.

a. Chapter 6 contains a complete specification of the referenced test procedure, including the referenced year version of the test procedure.

b. Replacement unit shall be factory labeled as follows: "MANUFACTURED FOR REPLACEMENT APPLICATIONS ONLY: NOT TO BE INSTALLED IN NEW CONSTRUCTION PROJECTS." Replacement efficiencies apply only to units with existing sleeves less than 16 inches (406 mm) in height and less than 42 inches (1067 mm) in width.

c. Before January 1, 2015 the minimum efficiency shall be 13.8 - (0.300 x Cap/1000) EER.

TABLE 403.2.3(4)
WARM-AIR FURNACES AND COMBINATION WARM-AIR FURNACES/AIR-CONDITIONING UNITS, WARM-AIR DUCT FURNACES AND UNIT HEATERS, MINIMUM EFFICIENCY REQUIREMENTS

EQUIPMENT TYPE	SIZE CATEGORY (INPUT)	SUBCATEGORY OR RATING CONDITION	MINIMUM EFFICIENCY[d, e]	TEST PROCEDURE[a]
Warm-air furnaces, gas fired	< 225,000 Btu/h	—	78% AFUE or 80%E_t[c]	DOE 10 CFR Part 430 or ANSI Z21.47
	≥ 225,000 Btu/h	Maximum capacity[c]	80%E_t[f]	ANSI Z21.47
Warm-air furnaces, oil fired	< 225,000 Btu/h	—	78% AFUE or 80%E_t[c]	DOE 10 CFR Part 430 or UL 727
	≥ 225,000 Btu/h	Maximum capacity[b]	81%E_t[g]	UL 727
Warm-air duct furnaces, gas fired	All capacities	Maximum capacity[b]	80%E_c	ANSI Z83.8
Warm-air unit heaters, gas fired	All capacities	Maximum capacity[b]	80%E_c	ANSI Z83.8
Warm-air unit heaters, oil fired	All capacities	Maximum capacity[b]	80%E_c	UL 731

For SI: 1 British thermal unit per hour = 0.2931 W.

a. Chapter 6 contains a complete specification of the referenced test procedure, including the referenced year version of the test procedure.

b. Minimum and maximum ratings as provided for and allowed by the unit's controls.

c. Combination units not covered by the National Appliance Energy Conservation Act of 1987 (NAECA) (3-phase power or cooling capacity greater than or equal to 65,000 Btu/h [19 kW]) shall comply with either rating.

d. E_t = Thermal efficiency. See test procedure for detailed discussion.

e. E_c = Combustion efficiency (100% less flue losses). See test procedure for detailed discussion.

f. E_c = Combustion efficiency. Units shall also include an IID, have jackets not exceeding 0.75 percent of the input rating, and have either power venting or a flue damper. A vent damper is an acceptable alternative to a flue damper for those furnaces where combustion air is drawn from the conditioned space.

g. E_t = Thermal efficiency. Units shall also include an IID, have jacket losses not exceeding 0.75 percent of the input rating, and have either power venting or a flue damper. A vent damper is an acceptable alternative to a flue damper for those furnaces where combustion air is drawn from the conditioned space.

INTERNATIONAL CODE COUNCIL®
Copyright © 2015 ICC. ALL RIGHTS RESERVED. Accessed by David Dammon on Jun 21, 2017 12:30:52 PM pursuant to License Agreement with ICC. No further reproduction or distribution authorized. ANY UNAUTHORIZED REPRODUCTION OR DISTRIBUTION IS A VIOLATION OF THE FEDERAL COPYRIGHT ACT AND THE LICENSE AGREEMENT, AND SUBJECT TO CIVIL AND CRIMINAL PENALTIES THEREUNDER.

TABLE C403.2.3(5)
MINIMUM EFFICIENCY REQUIREMENTS: GAS- AND OIL-FIRED BOILERS

EQUIPMENT TYPE[a]	SUBCATEGORY OR RATING CONDITION	SIZE CATEGORY (INPUT)	MINIMUM EFFICIENCY[d, e]	TEST PROCEDURE
Boilers, hot water	Gas-fired	< 300,000 Btu/h	80% AFUE	10 CFR Part 430
		≥ 300,000 Btu/h and ≤ 2,500,000 Btu/h[b]	80% E_t	10 CFR Part 431
		> 2,500,000 Btu/h[a]	82% E_c	
	Oil-fired[c]	< 300,000 Btu/h	80% AFUE	10 CFR Part 430
		≥ 300,000 Btu/h and ≤ 2,500,000 Btu/h[b]	82% E_t	10 CFR Part 431
		> 2,500,000 Btu/h[a]	84% E_c	
Boilers, steam	Gas-fired	< 300,000 Btu/h	75% AFUE	10 CFR Part 430
	Gas-fired- all, except natural draft	≥ 300,000 Btu/h and ≤ 2,500,000 Btu/h[b]	79% E_t	10 CFR Part 431
		> 2,500,000 Btu/h[a]	79% E_t	
	Gas-fired-natural draft	≥ 300,000 Btu/h and ≤ 2,500,000 Btu/h[b]	77% E_t	
		> 2,500,000 Btu/h[a]	77% E_t	
	Oil-fired[c]	< 300,000 Btu/h	80% AFUE	10 CFR Part 430
		≥ 300,000 Btu/h and ≤ 2,500,000 Btu/h[b]	81% E_t	10 CFR Part 431
		> 2,500,000 Btu/h[a]	81% E_t	

For SI: 1 British thermal unit per hour = 0.2931 W.

a. These requirements apply to boilers with rated input of 8,000,000 Btu/h or less that are not packaged boilers and to all packaged boilers. Minimum efficiency requirements for boilers cover all capacities of packaged boilers.

b. Maximum capacity – minimum and maximum ratings as provided for and allowed by the unit's controls.

c. Includes oil-fired (residual).

d. E_c = Combustion efficiency (100 percent less flue losses).

e. E_t = Thermal efficiency. See referenced standard for detailed information.

TABLE C403.2.3(6)
MINIMUM EFFICIENCY REQUIREMENTS:
CONDENSING UNITS, ELECTRICALLY OPERATED

EQUIPMENT TYPE	SIZE CATEGORY	MINIMUM EFFICIENCY[b]	TEST PROCEDURE[a]
Condensing units, air cooled	≥ 135,000 Btu/h	10.1 EER 11.2 IPLV	AHRI 365
Condensing units, water or evaporatively cooled	≥ 135,000 Btu/h	13.1 EER 13.1 IPLV	

For SI: 1 British thermal unit per hour = 0.2931 W.

a. Chapter 6 contains a complete specification of the referenced test procedure, including the referenced year version of the test procedure.

b. IPLVs are only applicable to equipment with capacity modulation.

INTERNATIONAL CODE COUNCIL®
Copyright © 2015 ICC. ALL RIGHTS RESERVED. Accessed by David Dammon on Jun 21, 2017 12:30:52 PM pursuant to License Agreement with ICC. No further reproduction or distribution authorized. ANY UNAUTHORIZED REPRODUCTION OR DISTRIBUTION IS A VIOLATION OF THE FEDERAL COPYRIGHT ACT AND THE LICENSE AGREEMENT, AND SUBJECT TO CIVIL AND CRIMINAL PENALTIES THEREUNDER.

TABLE C403.2.3(7)
WATER CHILLING PACKAGES – EFFICIENCY REQUIREMENTS[a, b, d]

EQUIPMENT TYPE	SIZE CATEGORY	UNITS	BEFORE 1/1/2015		AS OF 1/1/2015		TEST PROCEDURE[c]
			Path A	Path B	Path A	Path B	
Air-cooled chillers	< 150 Tons	EER (Btu/W)	≥ 9.562 FL	NAc	≥ 10.100 FL	≥ 9.700 FL	AHRI 550/ 590
			≥ 12.500 IPLV		≥ 13.700 IPLV	≥ 15,800 IPLV	
	≥ 150 Tons		≥ 9.562 FL	NAc	≥ 10.100 FL	≥ 9.700 FL	
			≥ 12.500 IPLV		≥ 14.000 IPLV	≥ 16.100 IPLV	
Air cooled without condenser, electrically operated	All capacities	EER (Btu/W)	Air-cooled chillers without condenser shall be rated with matching condensers and complying with air-cooled chiller efficiency requirements.				
Water cooled, electrically operated positive displacement	< 75 Tons	kW/ton	≤ 0.780 FL	≤ 0.800 FL	≤ 0.750 FL	≤ 0.780 FL	
			≤ 0.630 IPLV	≤ 0.600 IPLV	≤ 0.600 IPLV	≤ 0.500 IPLV	
	≥ 75 tons and < 150 tons		≤ 0.775 FL	≤ 0.790 FL	≤ 0.720 FL	≤ 0.750 FL	
			≤ 0.615 IPLV	≤ 0.586 IPLV	≤ 0.560 IPLV	≤ 0.490 IPLV	
	≥ 150 tons and < 300 tons		≤ 0.680 FL	≤ 0.718 FL	≤ 0.660 FL	≤ 0.680 FL	
			≤ 0.580 IPLV	≤ 0.540 IPLV	≤ 0.540 IPLV	≤ 0.440 IPLV	
	≥ 300 tons and < 600 tons		≤ 0.620 FL	≤ 0.639 FL	≤ 0.610 FL	≤ 0.625 FL	
			≤ 0.540 IPLV	≤ 0.490 IPLV	≤ 0.520 IPLV	≤ 0.410 IPLV	
	≥ 600 tons		≤ 0.620 FL	≤ 0.639 FL	≤ 0.560 FL	≤ 0.585 FL	
			≤ 0.540 IPLV	≤ 0.490 IPLV	≤ 0.500 IPLV	≤ 0.380 IPLV	
Water cooled, electrically operated centrifugal	< 150 Tons	kW/ton	≤ 0.634 FL	≤ 0.639 FL	≤ 0.610 FL	≤ 0.695 FL	
			≤ 0.596 IPLV	≤ 0.450 IPLV	≤ 0.550 IPLV	≤ 0.440 IPLV	
	≥ 150 tons and < 300 tons		≤ 0.634 FL	≤ 0.639 FL	≤ 0.610 FL	≤ 0.635 FL	
			≤ 0.596 IPLV	≤ 0.450 IPLV	≤ 0.550 IPLV	≤ 0.400 IPLV	
	≥ 300 tons and < 400 tons		≤ 0.576 FL	≤ 0.600 FL	≤ 0.560 FL	≤ 0.595 FL	
			≤ 0.549 IPLV	≤ 0.400 IPLV	≤ 0.520 IPLV	≤ 0.390 IPLV	
	≥ 400 tons and < 600 tons		≤ 0.576 FL	≤ 0.600 FL	≤ 0.560 FL	≤ 0.585 FL	
			≤ 0.549 IPLV	≤ 0.400 IPLV	≤ 0.500 IPLV	≤ 0.380 IPLV	
	≥ 600 Tons		≤ 0.570 FL	≤ 0.590 FL	≤ 0.560 FL	≤ 0.585 FL	
			≤ 0.539 IPLV	≤ 0.400 IPLV	≤ 0.500 IPLV	≤ 0.380 IPLV	
Air cooled, absorption, single effect	All capacities	COP	≥ 0.600 FL	NA[c]	≥ 0.600 FL	NA[c]	AHRI 560
Water cooled absorption, single effect	All capacities	COP	≥ 0.700 FL	NA[c]	≥ 0.700 FL	NA[c]	
Absorption, double effect, indirect fired	All capacities	COP	≥ 1.000 FL	NA[c]	≥ 1.000 FL	NA[c]	
			≥ 1.050 IPLV		≥ 1.050 IPLV		
Absorption double effect direct fired	All capacities	COP	≥ 1.000 FL	NA[c]	≥ 1.000 FL	NA[c]	
			≥ 1.000 IPLV		≥ 1.050 IPLV		

a. The requirements for centrifugal chiller shall be adjusted for nonstandard rating conditions in accordance with Section C403.2.3.1 and are only applicable for the range of conditions listed in Section C403.2.3.1. The requirements for air-cooled, water-cooled positive displacement and absorption chillers are at standard rating conditions defined in the reference test procedure.

b. Both the full-load and IPLV requirements shall be met or exceeded to comply with this standard. Where there is a Path B, compliance can be with either Path A or Path B for any application.

c. NA means the requirements are not applicable for Path B and only Path A can be used for compliance.

d. FL represents the full-load performance requirements and IPLV the part-load performance requirements.

INTERNATIONAL CODE COUNCIL®
Copyright © 2015 ICC. ALL RIGHTS RESERVED. Accessed by David Dammon on Jun 21, 2017 12:30:52 PM pursuant to License Agreement with ICC. No further reproduction or distribution authorized. ANY UNAUTHORIZED REPRODUCTION OR DISTRIBUTION IS A VIOLATION OF THE FEDERAL COPYRIGHT ACT AND THE LICENSE AGREEMENT, AND SUBJECT TO CIVIL AND CRIMINAL PENALTIES THEREUNDER.

TABLE C403.2.3(8)
MINIMUM EFFICIENCY REQUIREMENTS:
HEAT REJECTION EQUIPMENT

EQUIPMENT TYPE[a]	TOTAL SYSTEM HEAT REJECTION CAPACITY AT RATED CONDITIONS	SUBCATEGORY OR RATING CONDITION[i]	PERFORMANCE REQUIRED[b, c, d, g, h]	TEST PROCEDURE[e, f]
Propeller or axial fan open-circuit cooling towers	All	95°F entering water 85°F leaving water 75°F entering wb	≥ 40.2 gpm/hp	CTI ATC-105 and CTI STD-201
Centrifugal fan open-circuit cooling towers	All	95°F entering water 85°F leaving water 75°F entering wb	≥ 20.0 gpm/hp	CTI ATC-105 and CTI STD-201
Propeller or axial fan closed-circuit cooling towers	All	102°F entering water 90°F leaving water 75°F entering wb	≥ 14.0 gpm/hp	CTI ATC-105S and CTI STD-201
Centrifugal fan closed-circuit cooling towers	All	102°F entering water 90°F leaving water 75°F entering wb	≥ 7.0 gpm/hp	CTI ATC-105S and CTI STD-201
Propeller or axial fan evaporative condensers	All	Ammonia Test Fluid 140°F entering gas temperature 96.3°F condensing temperature 75°F entering wb	≥ 134,000 Btu/h·hp	CTI ATC-106
Centrifugal fan evaporative condensers	All	Ammonia Test Fluid 140°F entering gas temperature 96.3°F condensing temperature 75°F entering wb	≥ 110,000 Btu/h·hp	CTI ATC-106
Propeller or axial fan evaporative condensers	All	R-507A Test Fluid 165°F entering gas temperature 105°F condensing temperature 75°F entering wb	≥ 157,000 Btu/h·hp	CTI ATC-106
Centrifugal fan evaporative condensers	All	R-507A Test Fluid 165°F entering gas temperature 105°F condensing temperature 75°F entering wb	≥ 135,000 Btu/h·hp	CTI ATC-106
Air-cooled condensers	All	125°F Condensing Temperature 190°F Entering Gas Temperature 15°F subcooling 95°F entering db	≥ 176,000 Btu/h·hp	AHRI 460

For SI: °C = [(°F)-32]/1.8, L/s · kW = (gpm/hp)/(11.83), COP = (Btu/h · hp)/(2550.7),
db = dry bulb temperature, °F, wb = wet bulb temperature, °F.

a. The efficiencies and test procedures for both open- and closed-circuit cooling towers are not applicable to hybrid cooling towers that contain a combination of wet and dry heat exchange sections.
b. For purposes of this table, open circuit cooling tower performance is defined as the water flow rating of the tower at the thermal rating condition listed in Table 403.2.3(8) divided by the fan nameplate-rated motor power.
c. For purposes of this table, closed-circuit cooling tower performance is defined as the water flow rating of the tower at the thermal rating condition listed in Table 403.2.3(8) divided by the sum of the fan nameplate-rated motor power and the spray pump nameplate-rated motor power.
d. For purposes of this table, air-cooled condenser performance is defined as the heat rejected from the refrigerant divided by the fan nameplate-rated motor power.
e. Chapter 6 contains a complete specification of the referenced test procedure, including the referenced year version of the test procedure. The certification requirements do not apply to field-erected cooling towers.
f. Where a certification program exists for a covered product and it includes provisions for verification and challenge of equipment efficiency ratings, then the product shall be listed in the certification program; or, where a certification program exists for a covered product, and it includes provisions for verification and challenge of equipment efficiency ratings, but the product is not listed in the existing certification program, the ratings shall be verified by an independent laboratory test report.
g. Cooling towers shall comply with the minimum efficiency listed in the table for that specific type of tower with the capacity effect of any project-specific accessories and/or options included in the capacity of the cooling tower
h. For purposes of this table, evaporative condenser performance is defined as the heat rejected at the specified rating condition in the table divided by the sum of the fan motor nameplate power and the integral spray pump nameplate power
i. Requirements for evaporative condensers are listed with ammonia (R-717) and R-507A as test fluids in the table. Evaporative condensers intended for use with halocarbon refrigerants other than R-507A shall meet the minimum efficiency requirements listed in this table with R-507A as the test fluid.

INTERNATIONAL CODE COUNCIL®
Copyright © 2015 ICC. ALL RIGHTS RESERVED. Accessed by David Dammon on Jun 21, 2017 12:30:52 PM pursuant to License Agreement with ICC. No further reproduction or distribution authorized. ANY UNAUTHORIZED REPRODUCTION OR DISTRIBUTION IS A VIOLATION OF THE FEDERAL COPYRIGHT ACT AND THE LICENSE AGREEMENT, AND SUBJECT TO CIVIL AND CRIMINAL PENALTIES THEREUNDER.

TABLE C403.2.3(9)
MINIMUM EFFICIENCY AIR CONDITIONERS AND CONDENSING UNITS SERVING COMPUTER ROOMS

EQUIPMENT TYPE	NET SENSIBLE COOLING CAPACITY[a]	MINIMUM SCOP-127[b] EFFICIENCY DOWNFLOW UNITS / UPFLOW UNITS	TEST PROCEDURE
Air conditioners, air cooled	< 65,000 Btu/h	2.20 / 2.09	ANSI/ASHRAE 127
	≥ 65,000 Btu/h and < 240,000 Btu/h	2.10 / 1.99	
	≥ 240,000 Btu/h	1.90 / 1.79	
Air conditioners, water cooled	< 65,000 Btu/h	2.60 / 2.49	
	≥ 65,000 Btu/h and < 240,000 Btu/h	2.50 / 2.39	
	≥ 240,000 Btu/h	2.40 /2.29	
Air conditioners, water cooled with fluid economizer	< 65,000 Btu/h	2.55 /2.44	
	≥ 65,000 Btu/h and < 240,000 Btu/h	2.45 / 2.34	
	≥ 240,000 Btu/h	2.35 / 2.24	
Air conditioners, glycol cooled (rated at 40% propylene glycol)	< 65,000 Btu/h	2.50 / 2.39	
	≥ 65,000 Btu/h and < 240,000 Btu/h	2.15 / 2.04	
	≥ 240,000 Btu/h	2.10 / 1.99	
Air conditioners, glycol cooled (rated at 40% propylene glycol) with fluid economizer	< 65,000 Btu/h	2.45 / 2.34	
	≥ 65,000 Btu/h and < 240,000 Btu/h	2.10 / 1.99	
	≥ 240,000 Btu/h	2.05 / 1.94	

For SI: 1 British thermal unit per hour = 0.2931 W.

a. Net sensible cooling capacity: the total gross cooling capacity less the latent cooling less the energy to the air movement system. (Total Gross – latent – Fan Power).

b. Sensible coefficient of performance (SCOP-127): a ratio calculated by dividing the net sensible cooling capacity in watts by the total power input in watts (excluding reheaters and humidifiers) at conditions defined in ASHRAE Standard 127. The net sensible cooling capacity is the gross sensible capacity minus the energy dissipated into the cooled space by the fan system.

TABLE C403.2.3(10)
HEAT TRANSFER EQUIPMENT

EQUIPMENT TYPE	SUBCATEGORY	MINIMUM EFFICIENCY	TEST PROCEDURE[a]
Liquid-to-liquid heat exchangers	Plate type	NR	AHRI 400

NR = No Requirement.

a. Chapter 6 contains a complete specification of the referenced test procedure, including the referenced year version of the test procedure.

C403.2.3.1 Water-cooled centrifugal chilling packages. Equipment not designed for operation at AHRI Standard 550/590 test conditions of 44°F (7°C) leaving chilled-water temperature and 2.4 gpm/ton evaporator fluid flow and 85°F (29°C) entering condenser water temperature with 3 gpm/ton (0.054 I/s · kW) condenser water flow shall have maximum full-load kW/ton (FL) and part-load ratings requirements adjusted using Equations 4-6 and 4-7.

$$FL_{adj} = FL/K_{adj} \quad \textbf{(Equation 4-6)}$$

$$PL_{Vadj} = IPLV/K_{adj} \quad \textbf{(Equation 4-7)}$$

where:

K_{adj} = $A \times B$

FL = Full-load kW/ton value as specified in Table C403.2.3(7).

FL_{adj} = Maximum full-load kW/ton rating, adjusted for nonstandard conditions.

$IPLV$ = Value as specified in Table C403.2.3(7).

PLV_{adj} = Maximum $NPLV$ rating, adjusted for nonstandard conditions.

A = $0.00000014592 \cdot (LIFT)^4 - 0.0000346496 \cdot (LIFT)^3 + 0.00314196 \cdot (LIFT)^2 - 0.147199 \cdot (LIFT) + 3.9302$

B = $0.0015 \cdot L_{vg}E_{vap} + 0.934$

$LIFT$ = $L_{vg}Cond - L_{vg}E_{vap}$

$L_{vg}C_{ond}$ = Full-load condenser leaving fluid temperature (°F).

$L_{vg}E_{vap}$ = Full-load evaporator leaving temperature (°F).

The FL_{adj} and PLV_{adj} values are only applicable for centrifugal chillers meeting all of the following full-load design ranges:

1. Minimum evaporator leaving temperature: 36°F.
2. Maximum condenser leaving temperature: 115°F.
3. 20°F ≤ $LIFT$ ≤ 80°F.

❖ This section is somewhat self-explanatory. The equipment list in Table C403.2.3(7) is limited to equipment that is designed in the range of AHRI 550/590 test conditions. The code, however, intends that equipment outside of those test conditions also meet

INTERNATIONAL CODE COUNCIL®
Copyright © 2015 ICC. ALL RIGHTS RESERVED. Accessed by David Dammon on Jun 21, 2017 12:30:52 PM pursuant to License Agreement with ICC. No further reproduction or distribution authorized. ANY UNAUTHORIZED REPRODUCTION OR DISTRIBUTION IS A VIOLATION OF THE FEDERAL COPYRIGHT ACT AND THE LICENSE AGREEMENT, AND SUBJECT TO CIVIL AND CRIMINAL PENALTIES THEREUNDER.

the operational criteria. This section provides requirements for that equipment.

The intent of this section is that water-cooled centrifugal chilling packages would comply with water as the tested fluid at covered temperature and flow combinations. AHRI 550/590 does not allow for testing with secondary coolants and it is impractical to require it in manufacturer's test facilities used for certification and performance testing.

C403.2.3.2 Positive displacement (air- and water-cooled) chilling packages. Equipment with a leaving fluid temperature higher than 32°F (0°C) and water-cooled positive displacement chilling packages with a condenser leaving fluid temperature below 115°F (46°C) shall meet the requirements of Table C403.2.3(7) when tested or certified with water at standard rating conditions, in accordance with the referenced test procedure.

❖ Positive displacement (both air- and water-cooled) chillers, with glycol added for freeze protection when the unit is off or for winter operation, would likely have used a secondary coolant with a freeze point below 27°F (-0.8°C). However, if the positive displacement chiller was designed to create a cooling temperature greater than 32°F (0°C), machine changes might hinder its ability to meet the requirements. Table C403.2.3(7) addresses positive displacement (air- and water-cooled) chilling packages with a leaving fluid temperature greater than 32°F (0°C) and water-cooled positive displacement chilling packages with a condenser leaving fluid temperature below 115°F (46°C) when tested or certified with water at standard rating conditions, in accordance with the referenced test procedure (see commentary, Section C403.2.3.1).

C403.2.4 HVAC system controls. Each heating and cooling system shall be provided with thermostatic controls as specified in Section C403.2.4.1, C403.2.4.1.3, C403.2.4.2, C403.2.4.3, C403.3.1, C403.4, C403.4.1 or C403.4.4.

❖ Thermostatic controls are required for each heating and cooling system. Sections C403.2.4.1 through C403.2.4.4 cover the related requirements.

C403.2.4.1 Thermostatic controls. The supply of heating and cooling energy to each *zone* shall be controlled by individual thermostatic controls capable of responding to temperature within the *zone*. Where humidification or dehumidification or both is provided, at least one humidity control device shall be provided for each humidity control system.

Exception: Independent perimeter systems that are designed to offset only building envelope heat losses, gains or both serving one or more perimeter *zone*s also served by an interior system provided:

1. The perimeter system includes at least one thermostatic control *zone* for each building exposure having exterior walls facing only one orientation (within +/-45 degrees) (0.8 rad) for more than 50 contiguous feet (15 240 mm); and
2. The perimeter system heating and cooling supply is controlled by thermostats located within the *zones* served by the system.

❖ A thermostat is required to control heating or cooling in each zone (see Commentary Figure C403.2.4.1). Thermostats must have the capability to automatically set back or shut down heating and cooling systems when appropriate. Thermostats also must have an accessible override so occupants can operate the system during off hours. Heat pumps with supplementary electric-resistance heaters must have thermostats specifically designed for heat pump operation (see commentary, Section C403.2.4.1.1).

A programmable thermostat must be used to meet these requirements. These thermostats are available for heating only, cooling only, heating and cooling, and heat pump systems. These thermostats can set back or shut down the system during nights and weekends. In addition, occupants can temporarily override the thermostat and it will return to the original schedule without reprogramming.

Thermostats that control the temperature in areas where heating or cooling systems must operate continuously, or areas with a small load demand and manual shutoff switch, do not require a setback or shutoff control (see Section C403.2.4.2).

An HVAC thermostatic control "zone" is defined as a space or group of spaces with load characteristics sufficiently similar such that the desired space conditions can be maintained throughout with a single controlling device. This section requires that the supply of heating and cooling to each such zone be controlled by an individual temperature controller that responds to the temperature within the zone.

To meet this requirement, spaces must be grouped into proper control zones. For instance, spaces with exterior wall and glass exposures typically cannot be zoned with interior spaces. Similarly, spaces with

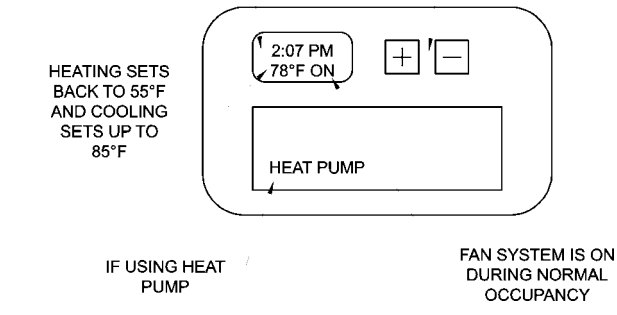

For SI: °C = [(°F) – 32]/1.8.

Figure C403.2.4.1
THERMOSTAT TEMPERATURE CONTROL

INTERNATIONAL CODE COUNCIL®
Copyright © 2015 ICC. ALL RIGHTS RESERVED. Accessed by David Dammon on Jun 21, 2017 12:30:52 PM pursuant to License Agreement with ICC. No further reproduction or distribution authorized. ANY UNAUTHORIZED REPRODUCTION OR DISTRIBUTION IS A VIOLATION OF THE FEDERAL COPYRIGHT ACT AND THE LICENSE AGREEMENT, AND SUBJECT TO CIVIL AND CRIMINAL PENALTIES THEREUNDER.

windows facing one direction should not be zoned with spaces having windows facing another orientation, unless the spaces are sufficiently open to one another and have reasonably uniform temperatures. Zoning in this manner generally does not apply to dwelling units or sleeping rooms (guest rooms), such as in high-rise apartment or hotel occupancies, since these types of uses are normally considered a single control zone or grouped together in a control zone with similar exposure characteristics.

The independent perimeter system exception is mandatory only as it applies to zones that are served by two independent HVAC systems: the perimeter system and the interior system. The perimeter system is designed to offset only skin loads—those loads that result from energy transfer through the building envelope. Typically, these systems are designed for heating only. The interior system is designed to handle cooling loads from light, equipment and people. This system also may be designed to handle skin-cooling loads if the perimeter system is heating only.

Commentary Figure C403.2.4.1(1) shows an example of this HVAC system design. The perimeter system consists of a heating-only fan coil, one for each building exposure. The interior system consists of a cooling-only VAV system serving the entire floor, including all exposures, as well as interior zones. If the perimeter system is capable of supplying heating to several zones at once, this design would not strictly meet the thermostatic control requirements of this section.

The heating fan coil shown in Commentary Figure C403.2.4.1(2) serves four zones of the VAV system. Therefore, heating energy from the fan coil is capable of being controlled by individual thermostats in each zone as required. For this reason, the interior system and the perimeter system will likely fight each other, with the perimeter system overheating some spaces and the interior system overcooling them to compensate. This is obviously energy wasteful. But the system can be designed to address this inefficiency, and the exception requires this to be the case as follows:

- The perimeter system must have not less than one zone for each major exposure, defined as an exterior wall that faces 50 contiguous feet (15 240 mm) or more in one direction. For example,

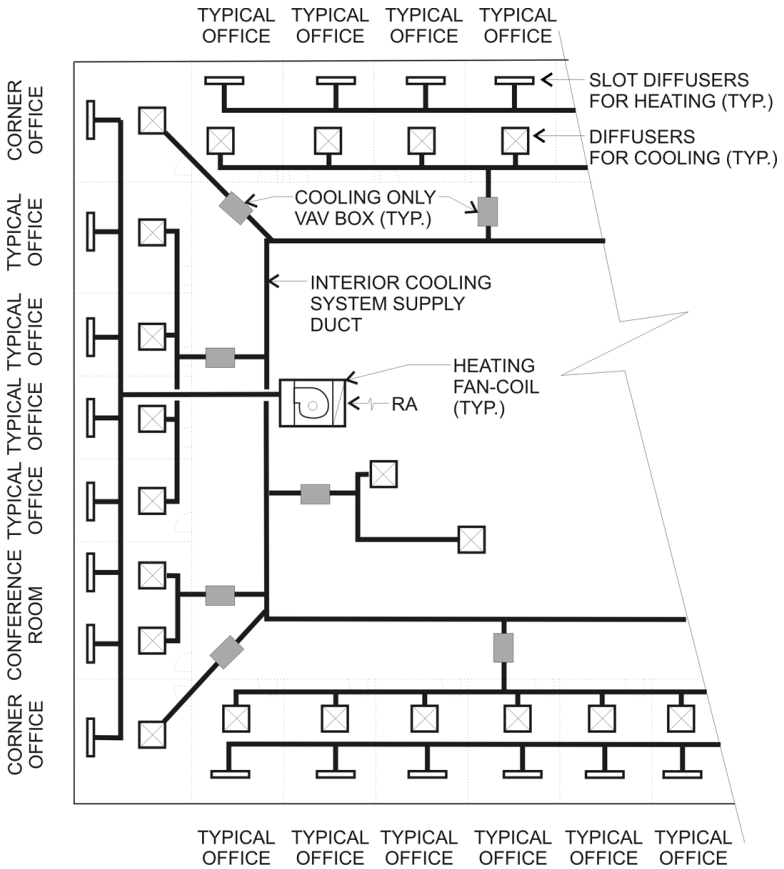

Figure C403.2.4.1(1)
SEPARATE COOLING AND HEATING SYSTEMS WITHIN A GROUP OF ZONES
(Courtesy of U.S. Department of Energy, Office of Building Technology State and Community Programs, www.energycodes.gov)

INTERNATIONAL CODE COUNCIL®
Copyright © 2015 ICC. ALL RIGHTS RESERVED. Accessed by David Dammon on Jun 21, 2017 12:30:52 PM pursuant to License Agreement with ICC. No further reproduction or distribution authorized. ANY UNAUTHORIZED REPRODUCTION OR DISTRIBUTION IS A VIOLATION OF THE FEDERAL COPYRIGHT ACT AND THE LICENSE AGREEMENT, AND SUBJECT TO CIVIL AND CRIMINAL PENALTIES THEREUNDER.

in Commentary Figure C403.2.4.1(2), a zone must be designated for each of the exposures that exceed 50 feet (15 240 mm) in length, but the shorter exposures on the serrated side of the building need not have individual zones. The shorter exposures could be served by a nearby zone with a reasonably similar load or exposure profile.

- Each perimeter system zone must be controlled by one or more thermostats located in the zones served. In the past, perimeter systems often were controlled by outside air sensors that would reset the output of the system proportional to the outside air temperature. But since solar loads can offset some of the heat loss from a space, this type of control inevitably causes overheating by the perimeter system when the sun is shining and subsequently fighting with the cooling system. Even when this control is improved by solar compensation, it still can result in wasteful fighting between interior and perimeter systems as a result of varying internal loads. Therefore, only controls that respond to the temperature within the zones served are allowed.

In Commentary Figure C403.2.4.1(2), this requirement might be met by controlling the perimeter fan coil off one of the thermostats controlling one of the four interior system VAV zones on the exposure. Alternatively, all four thermostat signals could be monitored along with the one requiring the most heat used to control the fan coil. Finally, a completely independent thermostat could be installed in one of the rooms on the exposure to control the fan coil, set to a setpoint that was below those controlling the VAV boxes and interlocked to other control points accordingly. A control schematic and narrative, as required for complex systems by Section C403.4.4, could be used as a basis for evaluating compliance (see commentary, Section C403.4.4).

As with thermostats, the code requires that humidity control systems be connected to humidistats or other such devices that would be capable of controlling and regulating their operation.

C403.2.4.1.1 Heat pump supplementary heat. Heat pumps having supplementary electric resistance heat shall have controls

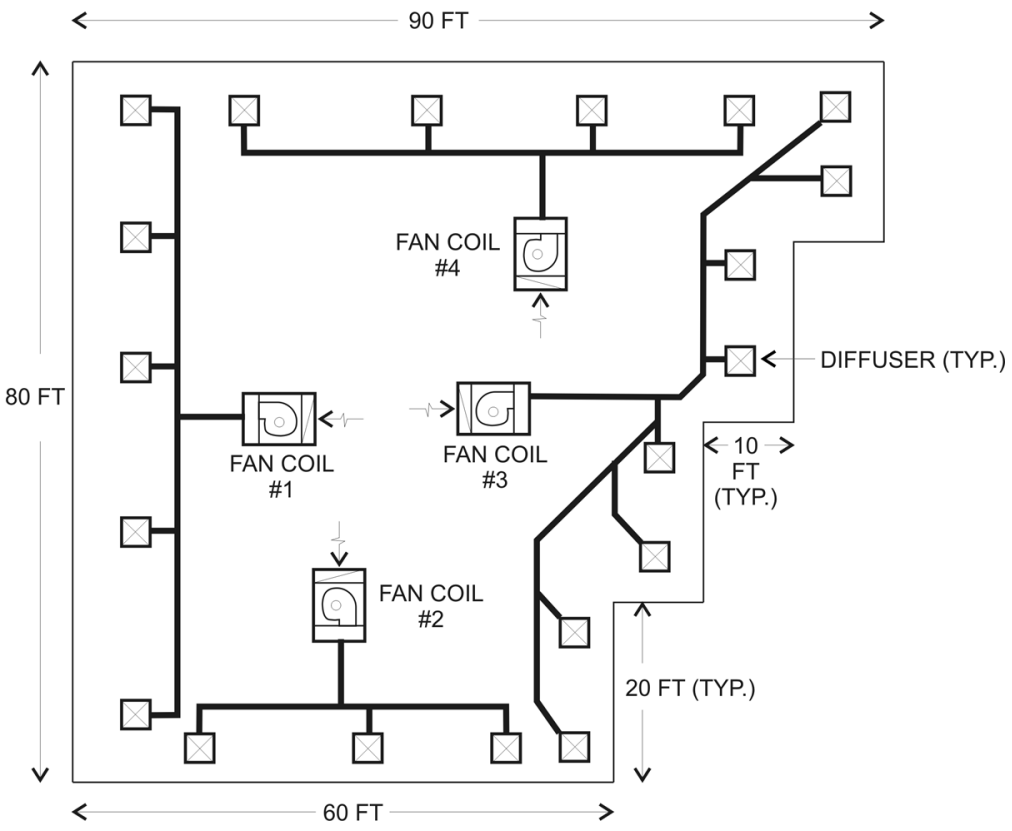

For SI: 1 foot = 304.8 mm.

Figure C403.2.4.1(2)
INDEPENDENT PERIMETER ZONE HEATING SYSTEM
(Courtesy of U.S. Department of Energy, Office of Building Technology State and Community Programs, www.energycodes.gov)

INTERNATIONAL CODE COUNCIL®
Copyright © 2015 ICC. ALL RIGHTS RESERVED. Accessed by David Dammon on Jun 21, 2017 12:30:52 PM pursuant to License Agreement with ICC. No further reproduction or distribution authorized. ANY UNAUTHORIZED REPRODUCTION OR DISTRIBUTION IS A VIOLATION OF THE FEDERAL COPYRIGHT ACT AND THE LICENSE AGREEMENT, AND SUBJECT TO CIVIL AND CRIMINAL PENALTIES THEREUNDER.

that, except during defrost, prevent supplementary heat operation where the heat pump can provide the heating load.

❖ Heat pumps with supplementary electric-resistance heaters must have thermostats designed specifically for heat pump operation.

Heat pump installations must include a thermostat that prevents supplementary heat from coming on when the heating requirements can be met by the heat pump alone. The intent is to use only the higher efficiency heat source in most conditions.

A two-stage thermostat with setpoints that control supplementary heating on the second stage (lower setpoint) and compression heating on the first stage (higher setpoint) meets this requirement. An optional energy conservation measure is to install an outside thermostat wired in series with the second stage. The outside thermostat can lock out the supplemental heat source while the outside temperature is high enough for the heat pump to meet the load.

The heat pump control system must be designed and adjusted so that under normal operating conditions, the refrigeration cycle (compression heating) will start first (before the supplementary heating) and shut off last (after the supplementary heating). This control requirement is intended to maximize energy savings by minimizing the use of the less efficient, electric-resistance supplementary heater. Standard heat pump thermostats supplied by heat pump manufacturers meet this requirement.

The heating capacity of air-source heat pumps will decrease as outside air temperatures fall. To make up for this deficiency, auxiliary heaters often are installed to augment the heat output for the heat pump. For heat pumps equipped with electric-resistance auxiliary heaters (with a COP of 1), the efficiency of the system is significantly reduced compared to the heat pump operating alone (with a COP typically greater than 2). The code, therefore, requires that controls be installed to prevent the auxiliary electric heater operation when the heating load can be met by the heat pump alone [at temperatures above 40°F (4°C)].

Of primary concern is the morning warm-up when the space may be well below the setpoint, even during relatively mild weather. The heat pump could warm the space sufficiently and quickly by itself, but typical thermostatic controls would cause the auxiliary heater to operate as well, wasting energy.

The best way to resolve this problem is to use an electronic thermostat designed specifically for use with heat pumps. This thermostat can sense whether the heat pump is raising space temperature during warm-up at a sufficient rate, or maintaining space temperature during normal operation and energizing the auxiliary heat only as required. More traditional electric controls also can be used, as demonstrated by the following two examples on two-stage thermostats.

Example of Heat Pump Auxiliary Heat Control—Two-stage Thermostat

Will a simple, two-stage thermostat, wired to bring on the auxiliary heat as the second stage, meet the requirements of this section?

No, because it will still cause auxiliary heat to be brought on during warm-up even when outdoor temperatures are mild and the heat pump has adequate capacity by itself. It can be used in conjunction with an outside air thermostat.

Example of Heat Pump Auxiliary Heat Control—Two-stage Thermostat with Outside Air Lock Out

Will an outdoor thermostat, wired to lock out auxiliary heat operation during mild weather, meet the requirements of this section?

Yes, but only when used in conjunction with a two-stage thermostat and only if wired properly. Occasionally, manufacturers' installation diagrams show outdoor thermostats wired to provide an additional thermostat stage while using only a single-stage thermostat. It is wired so that electric heat operates with the heat pump when outdoor temperatures are cold (below the outdoor thermostat setpoint). This may cause the auxiliary heat to operate when it is not required because the heat pump may be able to meet the load even during cold weather. The suggested system using conventional controls includes both of the following:

- A two-stage thermostat with the first stage wired to energize the heat pump and the second stage wired to bring on the auxiliary heat.
- An outdoor thermostat wired in series with the second stage so that the auxiliary heat will operate only if both the second stage of heat is required and the outdoor air is cold.

The outdoor thermostat setpoint must be set to the temperature at which the heat pump capacity will be insufficient to warm up the space in a reasonable time during warm-up [e.g., 40°F (4°C)].

C403.2.4.1.2 Deadband. Where used to control both heating and cooling, *zone* thermostatic controls shall be capable of providing a temperature range or deadband of at least 5°F (2.8°C) within which the supply of heating and cooling energy to the *zone* is capable of being shut off or reduced to a minimum.

Exceptions:

1. Thermostats requiring manual changeover between heating and cooling modes.
2. Occupancies or applications requiring precision in indoor temperature control as *approved* by the *code official*.

❖ Zone thermostatic controls that control both space heating and cooling must have a temperature differential range, or deadband, of not less than 5°F

INTERNATIONAL CODE COUNCIL®
Copyright © 2015 ICC. ALL RIGHTS RESERVED. Accessed by David Dammon on Jun 21, 2017 12:30:52 PM pursuant to License Agreement with ICC. No further reproduction or distribution authorized. ANY UNAUTHORIZED REPRODUCTION OR DISTRIBUTION IS A VIOLATION OF THE FEDERAL COPYRIGHT ACT AND THE LICENSE AGREEMENT, AND SUBJECT TO CIVIL AND CRIMINAL PENALTIES THEREUNDER.

(2.8°C) within which the supply of heating and cooling to the space is shut off or reduced to a minimum.

Commentary Figure C403.2.4.1.2 shows a proportional control scheme that meets this requirement. This might apply to a VAV zone where the cooling source is cold supply air and heating is provided by reheat or perhaps an independent perimeter heating system. The point from which the cooling supply is shut off or reduced to its minimum position to where the heating is turned on is called the deadband and must be not less than 5°F (2.8°C).

The deadband requirement typically is met using dual setpoint thermostats, which essentially are two thermostats built into the same enclosure. One thermostat controls heating and one controls cooling. The deadband can be achieved by setting the two setpoints not less than 5°F (2.8°C) apart. For proportional controls, such as pneumatic controls, that are calibrated so that the thermostat setpoint is at the midpoint of the control band, the setpoints would have to be set apart by at least 5°F (2.8°C) plus one throttling range. For instance, in Commentary Figure C403.2.4.1.2, the throttling range indicated is 2°F (1.1°C), so the deadband would be maintained by a heating setpoint of 69°F (21°C) and a cooling setpoint of 76°F (24°C).] Where two thermostats are used, Section C403.2.4.1.3 requires a mechanism and/or programming to make sure that the deadband setpoints are maintained.

Another type of thermostat that would meet the requirement is a deadband or hesitation thermostat. This thermostat is designed to have a temperature range within which its output signal is neutral, calling for neither heating nor cooling.

There are two exceptions. Under Exception 1, deadband controls are not necessary for thermostats that require a manual changeover between heating and cooling. This is typical of many residential thermostats. Occupants generally will allow the space temperature to swing considerably before changing the heating/cooling mode, thereby causing an effective deadband.

Exception 2 addresses thermostats in spaces that have special occupancies where precise space temperature control is required and therefore do not need deadband control. Examples include areas housing temperature-sensitive equipment or processes, such as specialty manufacturing areas and hospital operating rooms; or sensitive materials, such as a museum or art gallery. Generally, the temperature deadband will not be a problem for people, but it could affect certain processes or materials. Other examples where deadband control may not be appropriate include patient care areas for people who may be sensitive to wide temperature swings. Consult with the code official because many jurisdictions may already have an established policy regarding deadband control.

Buildings where deadband controls are appropriate include office buildings, retail stores, schools and hotels.

Example of Deadband Requirement—DDC Systems

A direct digital control (DDC) system using a space sensor and a "smart" controller is to be used to control a VAV box with hot water reheat. Does it have to meet the deadband requirement?

Yes. This system qualifies as a "zone thermostat," although it uses a space sensor and computer rather than a conventional thermostat to control space temperature. The software in the "smart" controller would have to support two separate control loops with individual setpoints, one for heating and one for cooling, each with separate output signals connecting

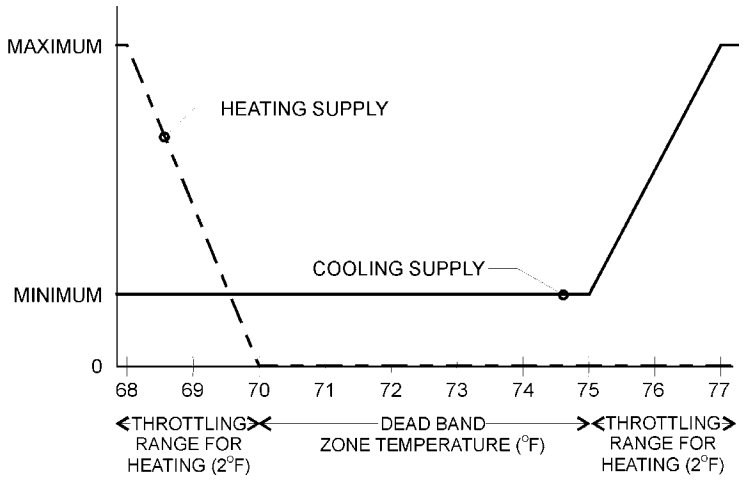

For SI: °C = [(°F) – 32]/1.8.

Figure C403.2.4.1.2
DEAD BAND THERMOSTAT CONTROL

INTERNATIONAL CODE COUNCIL®
Copyright © 2015 ICC. ALL RIGHTS RESERVED. Accessed by David Dammon on Jun 21, 2017 12:30:52 PM pursuant to License Agreement with ICC. No further reproduction or distribution authorized. ANY UNAUTHORIZED REPRODUCTION OR DISTRIBUTION IS A VIOLATION OF THE FEDERAL COPYRIGHT ACT AND THE LICENSE AGREEMENT, AND SUBJECT TO CIVIL AND CRIMINAL PENALTIES THEREUNDER.

to the VAV damper and reheat control valve, respectively.

Example of Deadband Requirements—Single-setpoint Thermostat

A single-setpoint thermostat is proposed to control a VAV box with hot water reheat. Because the thermostat can be adjusted in the winter to setpoints appropriate for heating, then changed in the summer to a setpoint 5°F (2.8°C) degrees higher, does it meet the deadband requirement?

No. This does not meet the intent of this section. The deadband must be continuous and automatic, unless the changeover requires a manual operation to move from heating to cooling mode. The system, as proposed, would only have a single setpoint that would allow the system to cycle from heating to cooling within a single degree during either winter or summer operation.

C403.2.4.1.3 Set point overlap restriction. Where a *zone* has a separate heating and a separate cooling thermostatic control located within the *zone*, a limit switch, mechanical stop or direct digital control system with software programming shall be provided with the capability to prevent the heating set point from exceeding the cooling set point and to maintain a deadband in accordance with Section C403.2.4.1.2.

❖ This section is new to the 2015 code and makes explicit what should have been understood in previous editions of the code. The deadband is intended to prevent simultaneous operation of the heating and cooling system within a zone. Where two different thermostats are provided for the heating and cooling systems, they must be linked in a manner of the designer's choosing to prevent overlap.

C403.2.4.2 Off-hour controls. Each *zone* shall be provided with thermostatic setback controls that are controlled by either an automatic time clock or programmable control system.

Exceptions:

1. *Zones* that will be operated continuously.
2. *Zones* with a full HVAC load demand not exceeding 6,800 Btu/h (2 kW) and having a readily accessible manual shutoff switch.

❖ Most HVAC unitary systems serve spaces that are occupied intermittently but in a fairly predictable cycle. To reduce system energy use during off hours, the code requires that zones and the HVAC systems that serve them be equipped with automatic controls that will shut off the system or setback setpoints. Examples of acceptable automatic controls are time clocks, programmable time switches, energy management systems, DDC systems, wind-up bypass timers and occupant sensors.

Because the term "HVAC system" applies to all equipment that provides any or all of the heating, ventilation or cooling functions serving a zone, this section requires time controls on systems ranging from simple ventilation fans to large chiller plants.

Exception 1 recognizes that under certain circumstances, setback or shutdown controls may not be necessary. For instance, time controls are not practical for systems serving spaces that are expected to be in continuous operation. Examples include hospitals, police stations and detention facilities, central computer rooms and some 24-hour retail establishments. Consult with the code official because many jurisdictions may already have an established policy regarding setback and shutdown controls for spaces expected to be in continuous operation.

Exception 2 acknowledges that small equipment, having a full-load demand of 2 kW (6,800 Btu/h) or less, may have readily accessible manual on-off controls instead of automatic controls. This exception is intended to apply to small, independent systems, such as conference room exhaust fans or small toilet room exhaust fans. The intent is that all energy associated with the operation of the equipment be at 2 kW (6,800 Btu/h) or less. For instance, a fan coil that would use chilled or hot water, requiring the operation of a remote chiller or boiler, may use in excess of 2 kW (6,800 Btu/h) of energy when it operates, even though the fan of the fan coil unit itself may use less than 2 kW (6,800 Btu/h). In this case, the fan coil would have to be automatically controlled, although many fan coils may be interlocked to the same time clock.

Historically, heat pump systems with electric-resistance heat were considered to be less efficient when operated intermittently because of the increased use of the resistance heat during warm-up. But this increase is reduced by the use of proper controls that lock out the auxiliary heat when the heat pump can handle the load (controls that are required by Section C403.2.4.1.1), and in most cases, the savings resulting from reduced fan energy use and reduced heat gains and losses during setback will offset the increased costs from the resistance heater.

Example of Time Controls—Hotel Guest Rooms

Does a hotel sleeping unit (guest room) fan coil require individual time-clock controls?

No. Hotel guest rooms, although not actually continuously occupied, are continuously available for occupancy and, thus, fall under Exception 1. It should be noted that systems that automatically setback or setup thermostat setpoints when rooms are not rented may be cost effective. Because the code does not specifically list the types of uses that are covered by Exception 1, it is always a good idea to discuss this issue with the code official during the design and permit application stages rather than wait until after a noncomplying system is installed.

INTERNATIONAL CODE COUNCIL®
Copyright © 2015 ICC. ALL RIGHTS RESERVED. Accessed by David Dammon on Jun 21, 2017 12:30:52 PM pursuant to License Agreement with ICC. No further reproduction or distribution authorized. ANY UNAUTHORIZED REPRODUCTION OR DISTRIBUTION IS A VIOLATION OF THE FEDERAL COPYRIGHT ACT AND THE LICENSE AGREEMENT, AND SUBJECT TO CIVIL AND CRIMINAL PENALTIES THEREUNDER.

Example of Time Controls—Equipment Room Cooling Unit

An air conditioner serves an elevator equipment room in an office building, and is controlled by a thermostat that cycles the indoor supply fan and the compressor when there is no need for cooling. Does this unit need time controls so that it shuts off when the building is unoccupied at night?

No. The equipment must be maintained at a given temperature at all times, and thus, this unit qualifies for Exception 1. Furthermore, when the elevators are inactive at night, the air conditioner will automatically shut off because there is no load in the space.

C403.2.4.2.1 Thermostatic setback capabilities. Thermostatic setback controls shall have the capability to set back or temporarily operate the system to maintain *zone* temperatures down to 55°F (13°C) or up to 85°F (29°C).

❖ Zone thermostatic controls used to control space heating must be capable of being set to 55°F (13°C) or lower. Those controlling space cooling must be capable of being set to 85°F (29°C) or higher. A single thermostat controlling both heating and cooling must meet both requirements.

Note that the code does not require that a single thermostat be used to meet the entire range of setpoints. For instance, one thermostat with a range from 65°F (18°C) to 80°F (27°C) may be used to control heating and cooling during normal hours, while one or two other thermostats that can be set down to 55°F (13°C) and up to 85°F (29°C) can be installed for night setback and setup.

Thermostatic controls may be set either locally (with adjustment buttons, switches, knobs, etc.) or remotely (such as by a building automation system). Setpoints also may be changed by replacing elements for thermostats whose setpoints are functions of their sensing elements.

It is important to note that the code does not mandate that the setback features are used. It strictly requires that the installed thermostat has the capability to set back or temporarily operate the system at the alternative temperatures. The code also does not require or restrict the use of locking thermostat covers or other means to restrict adjustment by occupants. The decision to limit or restrict occupant access to the thermostat or their ability to make adjustments to it is up to the building owner.

C403.2.4.2.2 Automatic setback and shutdown capabilities. Automatic time clock or programmable controls shall be capable of starting and stopping the system for seven different daily schedules per week and retaining their programming and time setting during a loss of power for at least 10 hours. Additionally, the controls shall have a manual override that allows temporary operation of the system for up to 2 hours; a manually operated timer capable of being adjusted to operate the system for up to 2 hours; or an occupancy sensor.

❖ Off-hour controls of the automatic time clock and programmable types must be able to control system starts and stops over seven different daily schedules per week, and must retain that programming for not less than 10 hours if power is lost. The true 7-day-programmable thermostat is not your typical weekday/weekend or weekday/Saturday/Sunday thermostat most often used in residential applications. The 7-day-programmable controls also must be equipped with a manual override, such as a windup timer or factory push-button presets that will control comfort heating or cooling for periods not greater than 2 hours. The standard sharing capabilities of most energy management systems generally will meet this criterion. An occupant-sensor-based strategy for off-hour HVAC control can be used instead of the 2-hour temporary operation limitation because this control methodology responds directly to the presence or absence of building occupants.

C403.2.4.2.3 Automatic start capabilities. Automatic start controls shall be provided for each HVAC system. The controls shall be capable of automatically adjusting the daily start time of the HVAC system in order to bring each space to the desired occupied temperature immediately prior to scheduled occupancy.

❖ This section requires each HVAC system to have automatic start controls. Automatic start controls are simply another available option on HVAC systems for off-hour controls. Allowing the occupants to set a time for the HVAC system to operate based on the normal occupancy times of the building saves energy by enabling complete shut down during off hours.

C403.2.4.3 Shutoff dampers. Outdoor air intake and exhaust openings and stairway and shaft vents shall be provided with Class I motorized dampers. The dampers shall have an air leakage rate not greater than 4 cfm/ft^2 (20.3 L/s · m^2) of damper surface area at 1.0 inch water gauge (249 Pa) and shall be labeled by an approved agency when tested in accordance with AMCA 500D for such purpose.

Outdoor air intake and exhaust dampers shall be installed with automatic controls configured to close when the systems or spaces served are not in use or during unoccupied period warm-up and setback operation, unless the systems served require outdoor or exhaust air in accordance with the *International Mechanical Code* or the dampers are opened to provide intentional economizer cooling.

Stairway and shaft vent dampers shall be installed with automatic controls configured to open upon the activation of any fire alarm initiating device of the building's fire alarm system or the interruption of power to the damper.

Exception: Gravity (nonmotorized) dampers shall be permitted to be used as follows:

1. In buildings less than three stories in height above grade plane.
2. In buildings of any height located in *Climate Zones* 1, 2 or 3.
3. Where the design exhaust capacity is not greater than 300 cfm (142 L/s).

INTERNATIONAL CODE COUNCIL®
Copyright © 2015 ICC. ALL RIGHTS RESERVED. Accessed by David Dammon on Jun 21, 2017 12:30:52 PM pursuant to License Agreement with ICC. No further reproduction or distribution authorized. ANY UNAUTHORIZED REPRODUCTION OR DISTRIBUTION IS A VIOLATION OF THE FEDERAL COPYRIGHT ACT AND THE LICENSE AGREEMENT, AND SUBJECT TO CIVIL AND CRIMINAL PENALTIES THEREUNDER.

Gravity (nonmotorized) dampers shall have an air leakage rate not greater than 20 cfm/ft^2 (101.6 L/s · m^2) where not less than 24 inches (610 mm) in either dimension and 40 cfm/ft^2 (203.2 L/s · m^2) where less than 24 inches (610 mm) in either dimension. The rate of air leakage shall be determined at 1.0 inch water gauge (249 Pa) when tested in accordance with AMCA 500D for such purpose. The dampers shall be labeled by an approved agency.

❖ Regardless of system size, fans that either bring outside air into the building or exhaust air to the outside must have dampers that automatically close when the fan is shut off. These dampers are required to be motorized unless one of three exceptions applies.

This requirement is intended to reduce infiltration into the building when ventilation systems are off. Infiltration will speed up the natural cooling or warming of the space during off hours, thereby increasing the energy required to maintain setback temperatures and possibly increasing the energy used to bring the space back to normal occupied temperatures.

The three exceptions provide options where gravity dampers may be used in lieu of the generally required motorized dampers. These exceptions address situations where the level of energy loss and, therefore, the cost effectiveness of the motorized dampers is not as great.

The exceptions allow the use of less-expensive gravity dampers in buildings where stack effects are less pronounced (less than three stories in height), in buildings in warm climates (Climate Zones 1, 2 and 3) where temperature differences between indoor and outdoor are not as pronounced, and on small exhaust systems where motorized dampers may be cost prohibitive.

Damper performance is specified for both mechanical and gravity dampers. Maximum air leakages is set for both categories. The dampers must be tested in accordance with the AMCA 500D standard.

C403.2.4.4 Zone isolation. HVAC systems serving *zones* that are over 25,000 square feet (2323 m^2) in floor area or that span more than one floor and are designed to operate or be occupied nonsimultaneously shall be divided into isolation areas. Each isolation area shall be equipped with isolation devices and controls configured to automatically shut off the supply of conditioned air and outdoor air to and exhaust air from the isolation area. Each isolation area shall be controlled independently by a device meeting the requirements of Section C403.2.4.2.2. Central systems and plants shall be provided with controls and devices that will allow system and equipment operation for any length of time while serving only the smallest isolation area served by the system or plant.

Exceptions:

1. Exhaust air and outdoor air connections to isolation areas where the fan system to which they connect is not greater than 5,000 cfm (2360 L/s).
2. Exhaust airflow from a single isolation area of less than 10 percent of the design airflow of the exhaust system to which it connects.
3. Isolation areas intended to operate continuously or intended to be inoperative only when all other isolation areas in a *zone* are inoperative.

❖ In large buildings it is often the case that portions of those buildings operate on different schedules, particularly where there are distinct tenant spaces in a building. This section requires that, where a large central system is designed to serve a large floor area having portions operating on different schedules, the system include mechanisms by which distinctly operating areas can be isolated. The purpose should be obvious: if portions of the building are unoccupied, it is a waste of energy that they be conditioned simply because another portion of the zone is occupied. Isolation areas can be as small as one zone, but more practically zones will be grouped together in a single isolation area. Each distinct area so isolated needs to have isolation devices and controls that allow each zone to be shut off or set back individually. Essentially each isolation area must have individual automatic shutdown controls meeting the requirements of Section C403.2.4.2 as if each area were a separate HVAC system. This allows each isolation area to automatically operate on different time schedules.

Isolation devices and controls are not required for the following areas: In Exception 1, where the fan system to the area is 5,000 cfm (2360 L/s) or smaller. In other words, for exhaust fans or outdoor air ventilation fans 5,000 cfm (2360 L/s) or smaller, no isolation devices (such as dampers) or controls need be installed at the fan or at any exhaust or outdoor air supply to any isolation area served by the system. Exception 2 exempts providing a distinct exhaust system to an isolation area where the exhaust airflow is less than 10 pecent of the flow of the total exhaust system. Exception 3 reemphasizes the intent of the requirement of isolation areas. If the whole zone is expected to be operated continuously—or on the same schedule as the balance of the area—no isolation is needed.

C403.2.4.5 Snow- and ice-melt system controls. Snow- and ice-melting systems shall include automatic controls capable of shutting off the system when the pavement temperature is above 50°F (10°C) and no precipitation is falling and an automatic or manual control that will allow shutoff when the outdoor temperature is above 40°F (4°C).

❖ Snow- and ice-melting systems, regardless of the source of the energy for the system, are required to include automatic controls capable of shutting off the system when the pavement temperature is greater than 50°F (10°C), no precipitation is falling and the outdoor temperature is greater than 40°F (4°C). The automatic shutoff prevents loss of energy often occurring when building occupants simply forget to turn the system off.

INTERNATIONAL CODE COUNCIL®
Copyright © 2015 ICC. ALL RIGHTS RESERVED. Accessed by David Dammon on Jun 21, 2017 12:30:52 PM pursuant to License Agreement with ICC. No further reproduction or distribution authorized. ANY UNAUTHORIZED REPRODUCTION OR DISTRIBUTION IS A VIOLATION OF THE FEDERAL COPYRIGHT ACT AND THE LICENSE AGREEMENT, AND SUBJECT TO CIVIL AND CRIMINAL PENALTIES THEREUNDER.

C403.2.4.6 Freeze protection system controls. Freeze protection systems, such as heat tracing of outdoor piping and heat exchangers, including self-regulating heat tracing, shall include automatic controls configured to shut off the systems when outdoor air temperatures are above 40°F (4°C) or when the conditions of the protected fluid will prevent freezing.

❖ Where piping and equipment are located outdoors or in unconditioned spaces, freeze protection heating systems are often installed to prevent freezing in the winter. A common type of such systems is electric-resistance heat tracing wound around piping through which a current is run. This action heats the piping in order to keep it about above 32°F (0°C). Clearly, when outdoor temperatures reach a level where the liquid in the system will no longer freeze, putting any energy into such a freeze protection system is wasteful. The code simply requires automatic controls be provided to shut off the system as prescribed.

C403.2.4.7 Economizer fault detection and diagnostics (FDD). Air-cooled unitary direct-expansion units listed in Tables C403.2.3(1) through C403.2.3(3) and variable refrigerant flow (VRF) units that are equipped with an economizer in accordance with Section C403.3 shall include a fault detection and diagnostics (FDD) system complying with the following:

1. The following temperature sensors shall be permanently installed to monitor system operation:
   - 1.1. Outside air.
   - 1.2. Supply air.
   - 1.3. Return air.
2. Temperature sensors shall have an accuracy of ±2°F (1.1°C) over the range of 40°F to 80°F (4°C to 26.7°C).
3. Refrigerant pressure sensors, where used, shall have an accuracy of ±3 percent of full scale.
4. The unit controller shall be capable of providing system status by indicating the following:
   - 4.1. Free cooling available.
   - 4.2. Economizer enabled.
   - 4.3. Compressor enabled.
   - 4.4. Heating enabled.
   - 4.5. Mixed air low limit cycle active.
   - 4.6. The current value of each sensor.
5. The unit controller shall be capable of manually initiating each operating mode so that the operation of compressors, economizers, fans and the heating system can be independently tested and verified.
6. The unit shall be capable of reporting faults to a fault management application accessible by day-to-day operating or service personnel, or annunciated locally on zone thermostats.
7. The FDD system shall be capable of detecting the following faults:
   - 7.1. Air temperature sensor failure/fault.
   - 7.2. Not economizing when the unit should be economizing.
   - 7.3. Economizing when the unit should not be economizing.
   - 7.4. Damper not modulating.
   - 7.5. Excess outdoor air.

❖ Commercial HVAC systems have been shown to have problems with economizer function, control, and performance in field studies and utility-sponsored maintenance programs. This results in reduced energy efficiency and potential energy savings from the economizer with fan-only operation. These fault detection and diagnostics (FDD) specifications have been standardized in California Title 24. Manufacturers were involved in the development of these criteria and are already manufacturing to these standards. Adding such systems will provide building owners key information regarding the operation of their HVAC systems.

C403.2.5 Hot water boiler outdoor temperature setback control. Hot water boilers that supply heat to the building through one- or two-pipe heating systems shall have an outdoor setback control that lowers the boiler water temperature based on the outdoor temperature.

❖ This additional control provides a simple method of further energy savings.

C403.2.6 Ventilation. Ventilation, either natural or mechanical, shall be provided in accordance with Chapter 4 of the *International Mechanical Code*. Where mechanical ventilation is provided, the system shall provide the capability to reduce the outdoor air supply to the minimum required by Chapter 4 of the *International Mechanical Code.*

❖ HVAC systems must be capable of supplying outside air at the minimum rate required by Chapter 4 of the IMC. The minimum volume of outside air required may be higher to make up for process exhaust or other special requirements, or if energy costs are subsequently reduced, as occurs with economizer controls.

Note that the IMC does not limit outside air intake to the minimum levels prescribed; rather, it requires systems to be designed for those levels and have the capability to operate at those levels. This results from many experts feeling that higher rates are required for adequate indoor air quality.

Even though adequate indoor air quality should take precedence over energy conservation, the energy consequence of achieving this goal by dilution with outdoor air must not be overlooked. Conditioning

INTERNATIONAL CODE COUNCIL®
Copyright © 2015 ICC. ALL RIGHTS RESERVED. Accessed by David Dammon on Jun 21, 2017 12:30:52 PM pursuant to License Agreement with ICC. No further reproduction or distribution authorized. ANY UNAUTHORIZED REPRODUCTION OR DISTRIBUTION IS A VIOLATION OF THE FEDERAL COPYRIGHT ACT AND THE LICENSE AGREEMENT, AND SUBJECT TO CIVIL AND CRIMINAL PENALTIES THEREUNDER.

outside air is extremely energy intensive in many climates and the designer will ideally economize outside air intake for ventilation.

A detailed discussion of ways to achieve acceptable indoor air quality at minimal energy usage is beyond the scope of this commentary. The amount of ouside air required can be minimized by use of any of the following:

- Source control (eliminate or minimize internal pollutant sources).
- Source containment (use of local exhaust systems or isolation of contaminants into special rooms or areas).
- Demand controls (use of sensors to adjust outside air intake as a function of indoor contaminant levels.
- Use of transfer air (diluting pollutants in one room by transferring abundant ventilation air from a less polluted or overventilated space rather than using outside air).
- Proper design and selection of air distribution systems to improve ventilation effectiveness.

Where outside air rates must be high, the use of heat recovery systems, such as plane heat exchangers, run-around loops, sensible and total energy wheels, and heat pipe heat exchangers, can reduce the energy impact.

C403.2.6.1 Demand controlled ventilation. Demand control ventilation (DCV) shall be provided for spaces larger than 500 square feet (46.5 m^2) and with an average occupant load of 25 people per 1,000 square feet (93 m^2) of floor area (as established in Table 403.3.1.1 of the *International Mechanical Code*) and served by systems with one or more of the following:

1. An air-side economizer.
2. Automatic modulating control of the outdoor air damper.
3. A design outdoor airflow greater than 3,000 cfm (1416 L/s).

Exception: Demand control ventilation is not required for systems and spaces as follows:

1. Systems with energy recovery complying with Section C403.2.7.
2. Multiple-*zone* systems without direct digital control of individual *zones* communicating with a central control panel.
3. Systems with a design outdoor airflow less than 1,200 cfm (566 L/s).
4. Spaces where the supply airflow rate minus any makeup or outgoing transfer air requirement is less than 1,200 cfm (566 L/s).
5. Ventilation provided for process loads only.

❖ Demand control ventilation (DCV) is a control method that links the amount of fresh air in the ventilation at occupancy of a building. DCV optimizes the volume of fresh air introduced into a building by resetting the minimum economizer damper opening based on the actual occupancy as determined by the level of carbon dioxide (CO_2) in the space. Energy consumption is reduced because less outside air needs to be heated or cooled. This was added to the code for spaces greater than 500 square feet (46 m^2) with an occupant load of 25 occupants per 1,000 square feet (93 m^2). While the code states an absolute occupant load average of 25 per 1,000 square feet, in practice the provision is applied where the average occupant load is 25 per 1,000 square feet or greater. DCV is required where served by one or more of the following systems: an air-side economizer, automatic modulating control of outdoor air damper or outdoor design airflow of greater than 3,000 cfm (1400 m^3/s). Exceptions are for energy recovery ventilation (ERV) systems complying with Section C403.2.7. Also exempt are multiple-zone systems without direct digital control (DDC) of individual zones, communicating with a central control panel. Systems with a design outdoor airflow less than 1,200 cfm (600 m^3/s) and spaces where the supply airflow rate minus any makeup or outgoing transfer air requirement is less than 1,200 cfm (600 m^3/s) are exempt. Another exception is ventilation provided for process loads, for example, on a conveyor in a manufacturing facility. These do not need fresh air.

C403.2.6.2 Enclosed parking garage ventilation controls. Enclosed parking garages used for storing or handling automobiles operating under their own power shall employ contamination-sensing devices and automatic controls configured to stage fans or modulate fan average airflow rates to 50 percent or less of design capacity, or intermittently operate fans less than 20 percent of the occupied time or as required to maintain acceptable contaminant levels in accordance with *International Mechanical Code* provisions. Failure of contamination sensing devices shall cause the exhaust fans to operate continuously at design airflow.

Exceptions:

1. Garages with a total exhaust capacity less than 22,500 cfm (10 620 L/s) with ventilation systems that do not utilize heating or mechanical cooling.
2. Garages that have a garage area to ventilation system motor nameplate power ratio that exceeds 1125 cfm/hp (710 L/s/kW) and do not utilize heating or mechanical cooling.

❖ This new provision allows reduction of garage ventilation rates, but the systems must result in compliance with the IMC. They must have sensors trigger system operation when contaminant levels exceed allowed values. The system must fail in the operating mode if the contamination sensors fail.

C403.2.7 Energy recovery ventilation systems. Where the supply airflow rate of a fan system exceeds the values specified in Tables C403.2.7(1) and C403.2.7(2), the system shall include an energy recovery system. The energy recovery system shall have the capability to provide a change in the enthalpy of the outdoor air supply of not less than 50 percent of the difference between the outdoor air and return air

INTERNATIONAL CODE COUNCIL®
Copyright © 2015 ICC. ALL RIGHTS RESERVED. Accessed by David Dammon on Jun 21, 2017 12:30:52 PM pursuant to License Agreement with ICC. No further reproduction or distribution authorized. ANY UNAUTHORIZED REPRODUCTION OR DISTRIBUTION IS A VIOLATION OF THE FEDERAL COPYRIGHT ACT AND THE LICENSE AGREEMENT, AND SUBJECT TO CIVIL AND CRIMINAL PENALTIES THEREUNDER.

enthalpies, at design conditions. Where an air economizer is required, the energy recovery system shall include a bypass or controls which permit operation of the economizer as required by Section C403.3.

Exception: An energy recovery ventilation system shall not be required in any of the following conditions:

1. Where energy recovery systems are prohibited by the *International Mechanical Code*.
2. Laboratory fume hood systems that include at least one of the following features:
   - 2.1. Variable-air-volume hood exhaust and room supply systems capable of reducing exhaust and makeup air volume to 50 percent or less of design values.
   - 2.2. Direct makeup (auxiliary) air supply equal to at least 75 percent of the exhaust rate, heated not warmer than 2°F (1.1°C) above room setpoint, cooled to not cooler than 3°F (1.7°C) below room setpoint, no humidification added, and no simultaneous heating and cooling used for dehumidification control.
3. Systems serving spaces that are heated to less than 60°F (15.5°C) and are not cooled.
4. Where more than 60 percent of the outdoor heating energy is provided from site-recovered or site solar energy.
5. Heating energy recovery in *Climate Zones* 1 and 2.
6. Cooling energy recovery in *Climate Zones* 3C, 4C, 5B, 5C, 6B, 7 and 8.
7. Systems requiring dehumidification that employ energy recovery in series with the cooling coil.
8. Where the largest source of air exhausted at a single location at the building exterior is less than 75 percent of the design *outdoor air* flow rate.
9. Systems expected to operate less than 20 hours per week at the *outdoor air* percentage covered by Table C403.2.7(1).
10. Systems exhausting toxic, flammable, paint or corrosive fumes or dust.
11. Commercial kitchen hoods used for collecting and removing grease vapors and smoke.

❖ This section provides a threshold requirement for the mandatory use of ERV systems. The code requires the energy recovery system to have the capability to provide a change in the enthalpy of the outdoor air supply of not less than 50 percent of the difference between the outdoor-air and return-air enthalpies, at design conditions. Permeable and nonpermeable plate-type heat exchangers, heat pipes, run-around loops and enthalpy wheels are used to meet this requirement. In the 2015 edition of the standard, the requirement was expanded to cover buildings where systems are run on a more continuous basis [see Table C403.2.7(2)] and to buildings in specified climate zones that are operating with ventilation rates less than 30 percent. There are a number of exceptions to this requirement.

TABLE C403.2.7(1)
ENERGY RECOVERY REQUIREMENT
(Ventilation systems operating less than 8,000 hours per year)

CLIMATE ZONE	PERCENT (%) OUTDOOR AIR AT FULL DESIGN AIRFLOW RATE							
	≥ 10% and < 20%	≥ 20% and < 30%	≥ 30% and < 40%	≥ 40% and < 50%	≥ 50% and < 60%	≥ 60% and < 70%	≥ 70% and < 80%	≥ 80%
	DESIGN SUPPLY FAN AIRFLOW RATE (cfm)							
3B, 3C, 4B, 4C, 5B	NR	NR	NR	NR	NR	NR	NR	NR
1B, 2B, 5C	NR	NR	NR	NR	≥ 26,000	≥ 12,000	≥ 5,000	≥ 4,000
6B	≥ 28,000	≥ 26,5000	≥ 11,000	≥ 5,500	≥ 4,500	≥ 3,500	≥ 2,500	≥ 1,500
1A, 2A, 3A, 4A, 5A, 6A	≥ 26,000	≥ 16,000	≥ 5,500	≥ 4,500	≥ 3,500	≥ 2,000	≥ 1,000	> 0
7, 8	≥ 4,500	≥ 4,000	≥ 2,500	≥ 1,000	> 0	> 0	> 0	> 0

For SI: 1 cfm = 0.4719 L/s.
NR = Not Required.

TABLE C403.2.7(2)
ENERGY RECOVERY REQUIREMENT
(Ventilation systems operating not less than 8,000 hours per year)

CLIMATE ZONE	PERCENT (%) OUTDOOR AIR AT FULL DESIGN AIRFLOW RATE							
	≥ 10% and < 20%	≥ 20% and < 30%	≥ 30% and < 40%	≥ 40% and < 50%	≥ 50% and < 60%	≥ 60% and < 70%	≥ 70% and < 80%	≥ 80%
	Design Supply Fan Airflow Rate (cfm)							
3C	NR	NR	NR	NR	NR	NR	NR	NR
1B, 2B, 3B, 4C, 5C	NR	≥ 19,500	≥ 9,000	≥ 5,000	≥ 4,000	≥ 3,000	≥ 1,500	> 0
1A, 2A, 3A, 4B, 5B	≥ 2,500	≥ 2,000	≥ 1,000	≥ 500	> 0	> 0	> 0	> 0
4A, 5A, 6A, 6B, 7, 8	> 0	> 0	> 0	> 0	> 0	> 0	> 0	> 0

For SI: 1 cfm = 0.4719 L/s.
NR = Not required

INTERNATIONAL CODE COUNCIL®
Copyright © 2015 ICC. ALL RIGHTS RESERVED. Accessed by David Dammon on Jun 21, 2017 12:30:52 PM pursuant to License Agreement with ICC. No further reproduction or distribution authorized. ANY UNAUTHORIZED REPRODUCTION OR DISTRIBUTION IS A VIOLATION OF THE FEDERAL COPYRIGHT ACT AND THE LICENSE AGREEMENT, AND SUBJECT TO CIVIL AND CRIMINAL PENALTIES THEREUNDER.

Requirements for outdoor ventilation air rates in ASHRAE 62.1, and subsequently the model codes, have increased over recent years. This has placed new demands on HVAC equipment and operating budgets for buildings. New ozone-friendly refrigerants also have reduced equipment capacity. These conditions have increased the value of energy recovery in ventilation systems. ERV reduces the load on the system caused by outdoor air by taking advantage of the work that has been done to heat, cool, humidify or dehumidify a space. Instead of losing that energy to the atmosphere when air is exhausted, a portion of the energy is recovered and used to pretreat incoming outdoor air, thus reducing the loads on the HVAC system. ERV systems are particularly effective in this application. Studies indicate this would result in a 15-percent reduction of the total energy used in commercial heating, refrigeration, ventilation and air conditioning.

The provisions and the exceptions define the boundary conditions within which mandatory requirements for the application of ERV technology are justified. There are several different types of ERV systems that are provided by a variety of manufacturers and suppliers. The provisions, however, are generic in that they treat all ERV systems the same without being specific or limiting as to type. Not all ERV system types are equally efficient, but under the conditions and limitations in the code, all system types will accomplish the objective of substantial energy efficiency.

Exception 1, referencing the IMC, correlates with prohibitions found in IMC Section 514. This will prohibit the use of ERV systems in hazardous exhaust systems and commercial kitchen hoods. The code must not require ERV in those exhaust systems in order to avoid a conflict between the IMC and the code. Not all laboratory fume hoods are hazardous exhaust systems. Exception 2 for laboratory fume hoods is, therefore, appropriate and does not pose any conflict with Exception 1 since any laboratory fume hood that is a hazardous exhaust system would be prohibited by Exception 1 and the IMC from having an ERV system.

Many of the exceptions address conditions where the input of energy is limited and where the installation of a system to recover ventilation energy would be of limited benefit. Exceptions 3 through 8 each exemplify where the benefit is limited. Exception 9 similarly exempts systems that are expected to operate less than 20 hours per week at the outdoor ventilation percentage covered by Table C403.2.7(1).

Exceptions 10 and 11 are provided for consistency with the IMC, which prohibits heat recovery ventilation systems in such installations.

C403.2.8 Kitchen exhaust systems. Replacement air introduced directly into the exhaust hood cavity shall not be greater than 10 percent of the hood exhaust airflow rate. Conditioned supply air delivered to any space shall not exceed the greater of the following:

1. The ventilation rate required to meet the space heating or cooling load.
2. The hood exhaust flow minus the available transfer air from adjacent space where available transfer air is considered that portion of outdoor ventilation air not required to satisfy other exhaust needs, such as restrooms, and not required to maintain pressurization of adjacent spaces.

Where total kitchen hood exhaust airflow rate is greater than 5,000 cfm (2360 L/s), each hood shall be a factory-built commercial exhaust hood listed by a nationally recognized testing laboratory in compliance with UL 710. Each hood shall have a maximum exhaust rate as specified in Table C403.2.8 and shall comply with one of the following:

1. Not less than 50 percent of all replacement air shall be transfer air that would otherwise be exhausted.
2. Demand ventilation systems on not less than 75 percent of the exhaust air that are capable of not less than a 50-percent reduction in exhaust and replacement air system airflow rates, including controls necessary to modulate airflow in response to appliance operation and to maintain full capture and containment of smoke, effluent and combustion products during cooking and idle.
3. Listed energy recovery devices with a sensible heat recovery effectiveness of not less than 40 percent on not less than 50 percent of the total exhaust airflow.

TABLE C403.2.8
MAXIMUM NET EXHAUST FLOW RATE,
CFM PER LINEAR FOOT OF HOOD LENGTH

TYPE OF HOOD	LIGHT-DUTY EQUIPMENT	MEDIUM-DUTY EQUIPMENT	HEAVY-DUTY EQUIPMENT	EXTRA-HEAVY-DUTY EQUIPMENT
Wall-mounted canopy	140	210	280	385
Single island	280	350	420	490
Double island (per side)	175	210	280	385
Eyebrow	175	175	NA	NA
Backshelf/Pass-over	210	210	280	NA

For SI:1 cfm = 0.4719 L/s; 1 foot = 305 mm.
NA = Not Allowed.

INTERNATIONAL CODE COUNCIL®
Copyright © 2015 ICC. ALL RIGHTS RESERVED. Accessed by David Dammon on Jun 21, 2017 12:30:52 PM pursuant to License Agreement with ICC. No further reproduction or distribution authorized. ANY UNAUTHORIZED REPRODUCTION OR DISTRIBUTION IS A VIOLATION OF THE FEDERAL COPYRIGHT ACT AND THE LICENSE AGREEMENT, AND SUBJECT TO CIVIL AND CRIMINAL PENALTIES THEREUNDER.

Where a single hood, or hood section, is installed over appliances with different duty ratings, the maximum allowable flow rate for the hood or hood section shall be based on the requirements for the highest appliance duty rating under the hood or hood section.

Exception: Where not less than 75 percent of all the replacement air is transfer air that would otherwise be exhausted.

❖ The intent is to conserve energy through the use of engineered hoods or performance-based hoods that have been validated based on consensus standard test methods. It should be noted that ASHRAE research has not demonstrated that exhaust rate reductions substantially beyond 30 percent can or should be recommended at this time. These new provisions basically outlaw "short-circuit" hoods. Research and the California Energy Commission have shown that direct supply of makeup air, in excess of 10 percent of hood exhaust airflow, into the hood cavity significantly deteriorates the Capture and Containment (C&C) performance of hoods. This research has also demonstrated that short-circuit hoods waste energy and degrade kitchen environment and hygiene. Engineers are often in the habit of simply providing makeup air units in kitchens to provide makeup air equal to the exhaust flow rate even when "free" transfer air is available from adjacent spaces. Adding makeup air when transfer air is available is a wasteful design practice and should be prohibited. Using available transfer air saves energy and reduces the first cost of the makeup unit and exhaust system in the adjacent spaces. It simply requires some engineering and coordination to provide a path for the transfer air.

C403.2.9 Duct and plenum insulation and sealing. Supply and return air ducts and plenums shall be insulated with a minimum of R-6 insulation where located in unconditioned spaces and where located outside the building with a minimum of R-8 insulation in *Climate Zones* 1 through 4 and a minimum of R-12 insulation in *Climate Zones* 5 through 8. Where located within a building envelope assembly, the duct or plenum shall be separated from the building exterior or unconditioned or exempt spaces by a minimum of R-8 insulation in *Climate Zones* 1 through 4 and a minimum of R-12 insulation in *Climate Zones* 5 through 8.

Exceptions:

1. Where located within equipment.
2. Where the design temperature difference between the interior and exterior of the duct or plenum is not greater than 15°F (8°C).

Ducts, air handlers and filter boxes shall be sealed. Joints and seams shall comply with Section 603.9 of the *International Mechanical Code*.

❖ "Duct systems" are defined as a continuous passageway for the transmission of air that includes ducts, duct fittings, dampers, plenums, fans, and accessory air-handling equipment and appliances. Ducts and plenums must be constructed to meet the construction standards established in the IMC or equivalent. In addition to the requirements of the IMC, duct systems also must be insulated for compliance with the code. When the duct is in the thermal envelope, the code requires a minimum of R-8 insulation in Climate Zones 1 through 4 and a minimum of R-12 in Climate Zones 5 through 8. Ducts are not required by the code to be insulated when located in the conditioned space. The exception with the temperature differential is an exception to the required insulation of ducts in unconditioned spaces. There still may be a need for some lesser amount of insulation on the ducts to prevent condensation problems. Section 603.12 of the IMC states that "provisions shall be made to prevent the formation of condensation on the exterior of any duct."

All supply and return ductwork and air plenums must be thermally insulated as required by this section. Insulation requirements are divided into primary categories, one for ducts that are outdoors and exposed to weather and one for ducts that are either in unconditioned spaces (enclosed but not in the building envelope) or a building envelope assembly.

This section is for the insulation material as installed, excluding air film resistance, but including the effect of the compression of duct wraps as they are typically installed. Duct wraps are generally assumed to be compressed not greater than 75 percent of their nominal thickness when they are installed. Material conductivity is often tested as measured in accordance with ASTM C 518 at 75°F (24°C) mean temperature.

Common duct insulation materials that meet the *R*-value levels in this section are shown in Commentary Figure C403.2.9.

The following duct and plenum applications need not meet the insulation requirements of this section:

1. Ducts, plenums and casings that are factory installed and an integral part of equipment rated in accordance with Section C403.2.3. As for factory-installed piping insulation, this exception is intended to apply to casings around tested equipment. The energy losses through these casings are accounted for in the energy performance tests and ratings. Although they are not always included in performance testing, optional casings such as economizer sections also should be exempted from insulation requirements if they are insulated to the same extent as the equipment to which they are attached. This is a practical requirement because designers seldom have the option to specify casing insulation levels.
2. Exhaust air ducts, and ducts or plenums located anywhere the design temperature difference between the air in the duct and the air surrounding the duct is less than 15°F (8.3°C). Simply stated, this includes ducts or plenums located in the conditioned space they serve. The designer should keep in mind that certain

INTERNATIONAL CODE COUNCIL®
Copyright © 2015 ICC. ALL RIGHTS RESERVED. Accessed by David Dammon on Jun 21, 2017 12:30:52 PM pursuant to License Agreement with ICC. No further reproduction or distribution authorized. ANY UNAUTHORIZED REPRODUCTION OR DISTRIBUTION IS A VIOLATION OF THE FEDERAL COPYRIGHT ACT AND THE LICENSE AGREEMENT, AND SUBJECT TO CIVIL AND CRIMINAL PENALTIES THEREUNDER.

minimum insulation levels still may be required to prevent condensation.

The following discussion is provided for the benefit of the user in identifying specific duct insulation applications. Commentary Figure C403.2.9 identifies the primary duct configurations that have requirements from this section. The insulation requirements for each duct location identified in Commentary Figure C403.2.9 are described in the following and numbered as shown in the figure. In each section, the default insulation requirement is identified.

1. Unit Casings and plenums—not required (N/R). Factory-installed insulation that is part of the HVAC equipment is covered through the minimum equipment efficiencies of Section C403.2.3 and does not have requirements in this section (see Exception 1). This includes equipment casings and plenums. This exception does not apply to built-up systems with field-fabricated plenums. These systems must be insulated in accordance with the requirements for ductwork in this section. Perimeter mechanical rooms that are used as mixing plenums must be insulated as if they are on the exterior of the building or to the requirements of Section C403.2.3, whichever is more stringent.
2. Exhaust ductwork—N/R. Except to prevent condensation, exhaust ductwork also does not need to meet the requirements of this section because it applies only to supply and return ductwork.
3. Supply and return ducts in vented attic—R-6. These ducts are located in an attic, which is vented to the outside. Crawl spaces and attics,

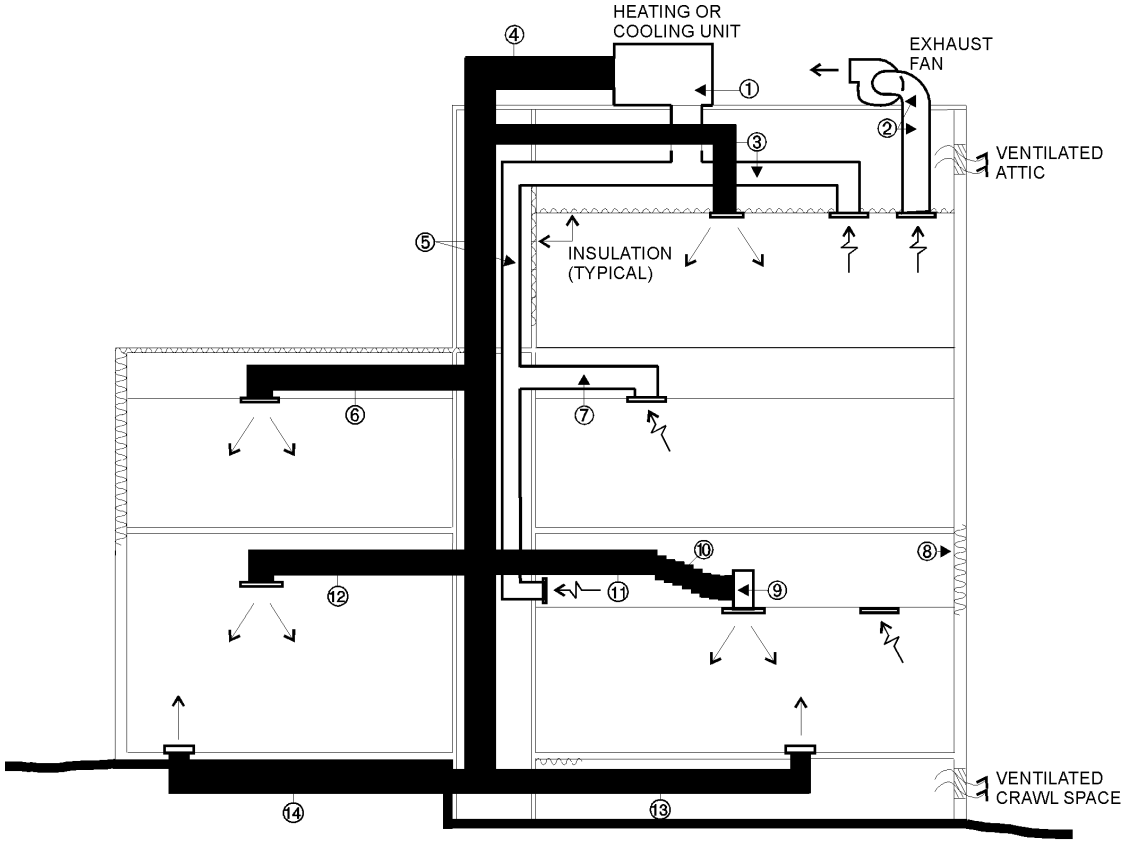

KEY

1. INSULATION OF UNIT CASING
2. EXHAUST
3. SUPPLY & RETURN IN VENTED ATTIC
4. SUPPLY & RETURN IN EXTERIOR OF BUILDING
5. SUPPLY & RETURN IN SHAFT
6. SUPPLY & RETURN IN UNVENTED ATTIC
7. RETURN IN INDIRECTLY CONDITIONED CEILING SPACE
8. EXTERIOR WALL OF RETURN PLENUM
9. SUPPLY OUTLET IN PLENUM
10. SUPPLY RUNOUT IN RETURN PLENUM
11. SUPPLY IN RETURN PLENUM
12. SUPPLY & RETURN IN CONDITIONED SPACE
13. SUPPLY & RETURN IN VENTED CRAWL SPACE
14. BURIED SUPPLY

Figure C403.2.9
DUCT INSULATION
(Courtesy of U.S. Department of Energy, Office of Building Technology State and Community Programs, www.energycodes.gov)

INTERNATIONAL CODE COUNCIL®
Copyright © 2015 ICC. ALL RIGHTS RESERVED. Accessed by David Dammon on Jun 21, 2017 12:30:52 PM pursuant to License Agreement with ICC. No further reproduction or distribution authorized. ANY UNAUTHORIZED REPRODUCTION OR DISTRIBUTION IS A VIOLATION OF THE FEDERAL COPYRIGHT ACT AND THE LICENSE AGREEMENT, AND SUBJECT TO CIVIL AND CRIMINAL PENALTIES THEREUNDER.

vented or otherwise open to the outdoors, are considered unconditioned spaces for the purpose of determining duct insulation requirements. A vented attic generally will run 5°F to 20°F (2.8°C to 11.1°C) warmer than the outside air temperature during peak cooling, and be close to the outside air temperature during peak heating.

4. Supply and return on exterior of the building—R-8 or R-12. Exposed ductwork must have minimum insulation installed. The minimum in Climate Zones 1 through 4 is R-8; the minimum in Climate Zones 5 through 8 is R-12.
5. Supply and return ducts in exposed shaft—R-6. These ducts are located in unconditioned space similar to Item 3. However, this wall cavity should not experience the extreme temperatures of the attic because the space is not vented to the outdoors and has minimal roof exposure. Where design temperatures for the shaft space are not available from load calculations, assume that at design conditions the shaft temperature is near outside conditions at both cooling and heating peaks.
6. Supply (and return) ducts in unvented attic—R-6. Here the ducts are located in an unventilated attic. The temperature in the attic typically is determined through load calculations. The attic temperature often will be higher than space temperatures because of solar gains on the roof and heat from recessed light fixtures. An unvented attic generally will run 15°F to 30°F (8.3°C to 16.7°C) warmer than the outside air temperature during peak cooling, and be close to the outside air temperature during peak heating.

   Therefore, in most cases, supply ducts in unventilated attics must be insulated to a minimum of R-6 as a result of exceeding the 15°F (8.3°C) design temperature difference.
7. Return ducts in indirectly conditioned ceiling spaces—N/R. This requirement is similar to Item 6, but the ceiling-space temperatures will be essentially equal to space temperatures for heating and slightly higher than space temperatures for cooling because of heat gains from recessed light fixtures. In general, no insulation will be required on return ducts. See Item 11 for supply ducts in indirectly conditioned spaces.
8. Exterior wall of return plenum—(see the following discussion). In this case, the ceiling space is being used as a return plenum. The exterior walls of the space are effectively return duct walls exposed to the outside air. This wall may be insulated to the requirements of either Section C402.2.3 for above-grade exterior walls or the requirements for ducts located in the exterior of the building from this section. Where the wall is insulated to the lesser requirement (often the duct insulation requirement), a performance-based path to envelope compliance must be pursued (such as that found in Section C407), or an approved simulation tool must be used.
9. Supply outlet in return plenum—N/R. The sheet metal plenum surrounding the air outlet is part of the supply duct system and, therefore, must be insulated the same as the supply ducts (see Item 11).
10. Supply runout in return plenum—N/R. Typically, runouts of up to 10 feet (3048 mm) to a terminal device (supply outlet or VAV box) are constructed using flexible duct having up to 1 inch (25 mm) of insulation to address sound attenuation and air-sealing issues. However, the duct remains part of the supply duct system and, therefore, must be insulated the same as supply ducts (see Item 11).
11. Supply ducts in return plenum—N/R. For supply ducts located within a return plenum, the ΔT is the difference between the supply and return temperatures. In general, the temperature in a return plenum will be 2°F to 5°F (1.1°C to 2.8°C) warmer than the space temperature because of heat from the lights. Unless the supply is that serving a hybrid or cold-air distribution system, from Exception 2, supply ducts in indirectly conditioned spaces, such as ceiling plenums, do not require insulation.
12. Supply and return ducts in conditioned space—N/R. In accordance with Exception 2, supply and return ducts, or plenums, located in the conditioned space they serve do not require insulation. From a practical standpoint, insulation may be desirable for cooling ducts to prevent condensation if the duct passes near local areas of high humidity, as might occur in a kitchen or natatorium. For typical spaces, condensation generally will not occur, even at very low supply temperatures, because the space's relative humidity will be lowered correspondingly by the dry air being supplied.
13. Supply and return ducts in vented crawl space—R-6. This is similar to the case of ducts in a vented attic (see Item 3). Because the space is vented and unlikely to experience strong solar loads, crawl space temperatures will be very close to the outdoor temperature.
14. Supply and return ducts below grade—R-6. The amount of insulation required for ducts located below grade depends on the local ground temperature. Although the ground temperature does not track the temperature extremes of an unconditioned space and is technically located outside

INTERNATIONAL CODE COUNCIL®
Copyright © 2015 ICC. ALL RIGHTS RESERVED. Accessed by David Dammon on Jun 21, 2017 12:30:52 PM pursuant to License Agreement with ICC. No further reproduction or distribution authorized. ANY UNAUTHORIZED REPRODUCTION OR DISTRIBUTION IS A VIOLATION OF THE FEDERAL COPYRIGHT ACT AND THE LICENSE AGREEMENT, AND SUBJECT TO CIVIL AND CRIMINAL PENALTIES THEREUNDER.

the building envelope, the ductwork is not exposed to the same solar and temperature loads as exposed ductwork. Practically speaking, this situation is much closer to ductwork in an unconditioned space than ductwork on the roof.

Sealing Requirements for Ductwork. All ducts, air handlers and filter boxes must be sealed. Although ducts in conditioned spaces do not need to be insulated, they must be sealed. Sealing helps control the infiltration of unconditioned air into the ducts and the exfiltration of conditioned air from the ducts.

Longitudinal seams are those parallel to the direction of airflow; spiral joints do not require sealing in any seal class. All other duct connections are considered transverse joints.

The code accepts a variety of methods and materials that may be used for sealing. However, the code does prohibit the use of unlisted pressure-sensitive tapes, which generally tend to peel with time and are, therefore, not a reliable sealant in the long run. The type of sealing material used must be appropriate for the ductwork materials and the anticipated operating pressures, and not simply be a short-term solution that does not remain capable of sealing the joints.

It should be noted that the code's requirements for sealing apply to "ductwork" and not to the insulation that surrounds the ductwork. The purpose for this sealing is to limit the amount of air leakage from the duct. Although it is not a code requirement, the sealing of the insulation materials would be a good item to consider. Depending on the location and environment of the duct, it would be possible for joints in the insulation to permit the movement of air and moisture into the insulation and, therefore, permit condensation to form and possibly reduce the effectiveness of the insulation. The insulation manufacturer's instructions should be reviewed to determine its recommendations and appropriate materials for effectively sealing the insulation.

C403.2.9.1 Duct construction. Ductwork shall be constructed and erected in accordance with the *International Mechanical Code*.

❖ The provisions and standards listed in this section apply primarily to duct construction rather than energy-conservation issues. Although they are general issues, they do also contribute to energy conservation. Ductwork must be constructed and erected in accordance with the IMC.

C403.2.9.1.1 Low-pressure duct systems. Longitudinal and transverse joints, seams and connections of supply and return ducts operating at a static pressure less than or equal to 2 inches water gauge (w.g.) (498 Pa) shall be securely fastened and sealed with welds, gaskets, mastics (adhesives), mastic-plus-embedded-fabric systems or tapes installed in accordance with the manufacturer's instructions. Pressure classifications specific to the duct system shall be clearly indicated on the construction documents in accordance with the *International Mechanical Code*.

Exception: Locking-type longitudinal joints and seams, other than the snap-lock and button-lock types, need not be sealed as specified in this section.

❖ Supply and return ducts must be made air tight by sealing longitudinal and transverse joints and connections. Sealing helps control the infiltration of unconditioned air into the ducts and the exfiltration of conditioned air from the ducts. Leaky ductwork allows the conditioned air to escape into wall and floor cavities or attic areas where the duct is located instead of being distributed to the registers and spaces where it is needed.

If not sealed with welds or gaskets, ducts must be sealed using mastic with fibrous backing tape or an equivalent approved by the code official as a long-term seal, and installed according to the manufacturer's instructions. For fibrous ducts, listed pressure-sensitive tape may be used when it is installed in accordance with NAIMA AH 116. Determining the appropriate requirements and enforcing them is made easier by requiring the duct system pressures to be indicated on the construction documents.

C403.2.9.1.2 Medium-pressure duct systems. Ducts and plenums designed to operate at a static pressure greater than 2 inches water gauge (w.g.) (498 Pa) but less than 3 inches w.g. (747 Pa) shall be insulated and sealed in accordance with Section C403.2.9. Pressure classifications specific to the duct system shall be clearly indicated on the construction documents in accordance with the *International Mechanical Code*.

❖ As discussed in the commentary to Section C403.2.9.1.1, ductwork must be properly constructed and sealed. This section provides the operating pressures that classify a duct as a medium-pressure duct and make the connection to the requirements of the IMC. Sealing of the ducts is done with the proper materials as designated in Section C403.2.9.

C403.2.9.1.3 High-pressure duct systems. Ducts and plenums designed to operate at static pressures greater than 3 inches water gauge (747 Pa) shall be insulated and sealed in accordance with Section C403.2.9. In addition, ducts and plenums shall be leak tested in accordance with the SMACNA *HVAC Air Duct Leakage Test Manual* and shown to have a rate of air leakage (CL) less than or equal to 4.0 as determined in accordance with Equation 4-8.

$$CL = F/P^{0.65} \qquad \textbf{(Equation 4-8)}$$

where:

F = The measured leakage rate in cfm per 100 square feet of duct surface.

P = The static pressure of the test.

Documentation shall be furnished by the designer demonstrating that representative sections totaling at least 25 percent

INTERNATIONAL CODE COUNCIL®
Copyright © 2015 ICC. ALL RIGHTS RESERVED. Accessed by David Dammon on Jun 21, 2017 12:30:52 PM pursuant to License Agreement with ICC. No further reproduction or distribution authorized. ANY UNAUTHORIZED REPRODUCTION OR DISTRIBUTION IS A VIOLATION OF THE FEDERAL COPYRIGHT ACT AND THE LICENSE AGREEMENT, AND SUBJECT TO CIVIL AND CRIMINAL PENALTIES THEREUNDER.

of the duct area have been tested and that all tested sections comply with the requirements of this section.

❖ As discussed in the commentary to Section C403.2.9.1.1, ductwork must be properly constructed and sealed. This section provides the operating pressures that classify a duct as a high-pressure duct (3 inches water gauge and greater) and make the connection to the requirements of the IMC. Sealing of the ducts is done with the proper materials as designated in Section C403.2.9.

In addition to the requirements of the IMC and Section C403.2.9, leak testing is required when evaluating high-pressure commercial duct systems for compliance with the code (see commentary, Section C403.2.9).

Commercial ductwork designed to operate at static pressures in excess of 3-inch w.g. (747 kPa) must meet leakage limitations as follows:

- Ducts must be tested in accordance with the procedures outlined in Section 5 of the Sheet Metal and Air Conditioning Contractors National Association's (SMACNA) *HVAC Duct Leakage Test Manual* with tests reported using forms equivalent to those outlined in Section 6 of that manual.
- To reduce costs, the entire duct system need not be tested. Representative sections can be tested if these sections represent not less than 25 percent of the total installed duct area for the tested pressure class.
- Duct leakage at a test pressure equal to the design duct pressure must result in a rate of air leakage not greater than 4.0 as determined in accordance with Equation 4-8. The rate of air leakage according to this formula must be less than 4.0 when the test pressure is equal to the design duct pressure class. The pressure classification of ducts must be shown on the construction documents, and be equal to or exceed the design pressure of the system required by the IMC.

C403.2.10 Piping insulation. Piping serving as part of a heating or cooling system shall be thermally insulated in accordance with Table C403.2.10.

Exceptions:

1. Factory-installed piping within HVAC equipment tested and rated in accordance with a test procedure referenced by this code.
2. Factory-installed piping within room fan-coils and unit ventilators tested and rated according to AHRI 440 (except that the sampling and variation provisions of Section 6.5 shall not apply) and AHRI 840, respectively.
3. Piping that conveys fluids that have a design operating temperature range between 60°F (15°C) and 105°F (41°C).
4. Piping that conveys fluids that have not been heated or cooled through the use of fossil fuels or electric power.
5. Strainers, control valves, and balancing valves associated with piping 1 inch (25 mm) or less in diameter.
6. Direct buried piping that conveys fluids at or below 60°F (15°C).

❖ The values in Table C403.2.10 are minimum thicknesses of insulation having a conductivity of 0.27 Btu/in/(h x ft^2 x °F) (0.00008 kw) (R-3.7 per inch) for each fluid category. This conductivity is typical of fiberglass and most cellular and phenolic foam insulations. The thermal insulation conductivity increases with temperature. For insulation with a thermal conductivity not equal to 0.27 Btu/in/(h x ft^2 x °F) (0.00008 kw) at a mean temperature of 75°F (25°C), the minimum required pipe thickness is adjusted using this equation.

Insulation is not regulated in the following cases:

1. Piping that is factory installed in equipment that is tested and rated in accordance with Section C403.2.3. The intent here is to exempt piping in equipment where the energy performance is tested and piping losses are ostensibly accounted for in the ratings.
2. The code exempts room fan coils and unit ventilators that are tested and rated according to AHRI 440 and AHRI 840 from the piping insulation requirements. The code did not accept the sampling and variation provisions in Section 6.5 of AHRI 440 because the standard's language was ambiguous and permissive as to testing a representative sample by the manufacturer. This representative sample would have been the standard model of this particular size having the lowest air delivery and, therefore, was not accepted by the code.
3. Piping conveying fluids that have design operating temperatures between 60°F and 105°F (15°C and 41°C), such as in typical condenser water piping.
4. Piping that conveys fluids that have not been heated or cooled using fossil fuels or electricity. This exception is intended to cover gas piping, cold domestic water piping, waste and vent piping, rain water piping, solar-heated water piping, etc., that may carry fluids with operating temperatures outside the 55°F to 105°F (13°C to 41°C) range but for which no energy was consumed to bring the fluids to these temperatures. Even though insulating such piping will have no energy impact and is not required, it may be desirable in some cases, and possibly required by some municipalities, to prevent condensation.

INTERNATIONAL CODE COUNCIL®
Copyright © 2015 ICC. ALL RIGHTS RESERVED. Accessed by David Dammon on Jun 21, 2017 12:30:52 PM pursuant to License Agreement with ICC. No further reproduction or distribution authorized. ANY UNAUTHORIZED REPRODUCTION OR DISTRIBUTION IS A VIOLATION OF THE FEDERAL COPYRIGHT ACT AND THE LICENSE AGREEMENT, AND SUBJECT TO CIVIL AND CRIMINAL PENALTIES THEREUNDER.

5. Insulation for strainers and valves associated with small pipe, simply because this represents a negligible energy savings.
6. Direct buried piping that conveys fluids of less than 60°F (15°C), because this is fluid for which little energy was consumed to bring it to that temperature.

Insulation also is not required where heat gain or heat loss from the piping will not increase building energy costs. An example of piping falling into this exception might be condensate drains.

TABLE C403.2.10. See below.

❖ All piping associated with HVAC systems must be thermally insulated in accordance with this table.

C403.2.10.1 Protection of piping insulation. Piping insulation exposed to weather shall be protected from damage, including that due to sunlight, moisture, equipment maintenance and wind, and shall provide shielding from solar radiation that can cause degradation of the material. Adhesive tape shall not be permitted.

❖ This section requires protection for piping insulation exposed in exterior installations. The piping insulation should be protected from sunlight, moisture, wind and solar radiation, but also from personnel who may step on it, run into it with equipment, etc., and cause it to be damaged. Adhesive tape is not permitted to be used because it will limit maintenance and damage the insulation's permeability characteristics. Removing the adhesive tape can damage the integrity of the original insulation, especially if the insulation has reached thermoset state. Protection also can keep silted pipe insulation from commonly separating, thus saving additional energy cost. Repair torn or damaged insulation with duct tape listed and labeled to UL 181B.

C403.2.11 Mechanical systems commissioning and completion requirements. Mechanical systems shall be commissioned and completed in accordance with Section C408.2.

❖ Further examination of the reference to the IMC in Section C408.2 reveals that it requires proper test and balancing procedures to promote stable temperature control without wide fluctuations in occupant comfort. The supply system balancing requirements in the code are limited to providing a means for balancing. For air systems, this requirement can be met by installing manual dampers at each branch of ductwork or by installing adjustable registers, grilles or diffusers that can be used to regulate airflow to the space.

The IMC as an extension of the code requires initial and supplementary balancing for commissioning of the building's ventilation system. Because many systems function differently with seasonal change and after construction, this preparatory work is intended to confirm code compliance with required outdoor airflow rates.

Effective testing, adjusting and balancing of air systems requires a planned procedure by first adjusting the fan speed to meet the design flow conditions and then modulating dampers to minimize the throttling losses. Damper throttling is discouraged as the sole means for balancing fans.

Air and hydronic system balancing procedures may be obtained in the National Environmental Balancing Bureau's (NEBB) Procedural Standards or the Asso-

TABLE C403.2.10
MINIMUM PIPE INSULATION THICKNESS (in inches)[a, c]

FLUID OPERATING TEMPERATURE RANGE AND USAGE (°F)	INSULATION CONDUCTIVITY		NOMINAL PIPE OR TUBE SIZE (inches)				
	Conductivity Btu · in./(h · ft² · °F)[b]	Mean Rating Temperature, °F	< 1	1 to < 1 1/2	1 1/2 to < 4	4 to < 8	≥ 8
> 350	0.32 – 0.34	250	4.5	5.0	5.0	5.0	5.0
251 – 350	0.29 – 0.32	200	3.0	4.0	4.5	4.5	4.5
201 – 250	0.27 – 0.30	150	2.5	2.5	2.5	3.0	3.0
141 – 200	0.25 – 0.29	125	1.5	1.5	2.0	2.0	2.0
105 – 140	0.21 – 0.28	100	1.0	1.0	1.5	1.5	1.5
40 – 60	0.21 – 0.27	75	0.5	0.5	1.0	1.0	1.0
< 40	0.20 – 0.26	50	0.5	1.0	1.0	1.0	1.5

For SI: 1 inch = 25.4 mm, °C = [(°F) - 32]/1.8.

a. For piping smaller than 1 1/2 inches and located in partitions within conditioned spaces, reduction of these thicknesses by 1 inch shall be permitted (before thickness adjustment required in footnote b) but not to a thickness less than 1 inch.

b. For insulation outside the stated conductivity range, the minimum thickness (T) shall be determined as follows:

$T = r\{(1 + t/r)K/k - 1\}$

where:

T = minimum insulation thickness,
r = actual outside radius of pipe,
t = insulation thickness listed in the table for applicable fluid temperature and pipe size,
K = conductivity of alternate material at mean rating temperature indicated for the applicable fluid temperature (Btu · in/h · ft² · °F) and
k = the upper value of the conductivity range listed in the table for the applicable fluid temperature.

c. For direct-buried heating and hot water system piping, reduction of these thicknesses by 1 1/2 inches (38 mm) shall be permitted (before thickness adjustment required in footnote b but not to thicknesses less than 1 inch (25 mm).

INTERNATIONAL CODE COUNCIL®
Copyright © 2015 ICC. ALL RIGHTS RESERVED. Accessed by David Dammon on Jun 21, 2017 12:30:52 PM pursuant to License Agreement with ICC. No further reproduction or distribution authorized. ANY UNAUTHORIZED REPRODUCTION OR DISTRIBUTION IS A VIOLATION OF THE FEDERAL COPYRIGHT ACT AND THE LICENSE AGREEMENT, AND SUBJECT TO CIVIL AND CRIMINAL PENALTIES THEREUNDER.

ciated Air Balance Council's (AABC) National Standards (see commentary, Section C408.2.2).

Overflow in hydronic systems increases pumping cost, and any decrease in flow reduces effective heating and cooling at design conditions. Although a variety of techniques exist for balancing hydronic systems, the code neither requires hydronic systems to actually be balanced nor specifies any particular procedure to achieve that balance.

The procedure most often used is based on a water-temperature measurement between the supply and the return at the terminal unit. This method, as well as others, requires attention to detail and keeping accurate field measurements to successfully balance the system.

This requires water systems to have a means for balancing and pressure test connections to achieve hydronic balance for terminal units, branch lines, zones, risers and mains. The means for balancing is intentionally left unspecified, but often incorporates balancing valves, proportional flow circuits, variable speed pumping, trimming of pump impellers and combinations of these items.

C403.2.12 Air system design and control. Each HVAC system having a total fan system motor nameplate horsepower (hp) exceeding 5 hp (3.7 kW) shall comply with the provisions of Sections C403.2.12.1 through C403.2.12.3.

❖ This section adds the requirements of Sections C403.2.12.1 through C403.2.12.3 for the design of HVAC fan systems and regulates the energy use for these systems.

C403.2.12.1 Allowable fan motor horsepower. Each HVAC system at fan system design conditions shall not exceed the allowable *fan system motor nameplate hp* (Option 1) or *fan system bhp* (Option 2) as shown in Table C403.2.12.1(1). This includes supply fans, exhaust fans, return/relief fans, and fan-powered terminal units associated with systems providing heating or cooling capability. Single-*zone* variable air volume systems shall comply with the constant volume fan power limitation.

Exceptions:

1. Hospital, vivarium and laboratory systems that utilize flow control devices on exhaust or return to maintain space pressure relationships necessary for occupant health and safety or environmental control shall be permitted to use variable volume fan power limitation.
2. Individual exhaust fans with motor nameplate horsepower of 1 hp (0.746 kW) or less are exempt from the allowable fan horsepower requirement.

❖ This section specifies requirements for the design of HVAC fan systems and regulates the motor energy use for these systems. Option 1 provides a simple option based on nameplate motor horsepower (hp) and can be used by most projects. Option 2 is a more complex option based on brake horsepower (bhp) for more complex systems that might require additional fan power allowances to overcome the pressure drop of certain required components, such as specialized filtration, heat recovery devices and sound attenuators.

TABLE C403.2.12.1(2). See page C4-63.

❖ NC35 specified in the sound attenuation section refers to Noise Criterion (NC) rating. Noise criteria are established to address the rating of indoor noise including noise from air-conditioning equipment.

C403.2.12.2 Motor nameplate horsepower. For each fan, the fan brake horsepower shall be indicated on the construction documents and the selected motor shall be not larger than the first available motor size greater than the following:

1. For fans less than 6 bhp (4413 W), 1.5 times the fan brake horsepower.
2. For fans 6 bhp (4413 W) and larger, 1.3 times the fan brake horsepower.
3. Systems complying with Section C403.2.12.1 *fan system motor nameplate hp* (Option 1).

❖ The purpose of this section is to limit the size of the fan selected for the design requirements to prevent using oversized equipment, which would waste energy.

C403.2.12.3 Fan efficiency. Fans shall have a fan efficiency grade (FEG) of not less than 67 when determined in accordance with AMCA 205 by an *approved*, independent testing laboratory and labeled by the manufacturer. The total efficiency of the fan at the design point of operation shall be

TABLE C403.2.12.1(1)
FAN POWER LIMITATION

	LIMIT	CONSTANT VOLUME	VARIABLE VOLUME
Option 1: Fan system motor nameplate hp	Allowable nameplate motor hp	$hp \le CFM_S \cdot 0.0011$	$hp \le CFM_S \cdot 0.0015$
Option 2: Fan system bhp	Allowable fan system bhp	$bhp \le CFM_S \cdot 0.00094 + A$	$bhp \le CFM_S \cdot 0.0013 + A$

For SI: 1 bhp = 735.5 W, 1 hp = 745.5 W, 1 cfm = 0.4719 L/s.

where:

CFM_S = The maximum design supply airflow rate to conditioned spaces served by the system in cubic feet per minute.
hp = The maximum combined motor nameplate horsepower.
Bhp = The maximum combined fan brake horsepower.
A = Sum of $[PD \times CFM_D / 4131]$

where:

PD = Each applicable pressure drop adjustment from Table C403.2.12.1(2) in. w.c.
CFM_D = The design airflow through each applicable device from Table C403.2.12.1(2) in cubic feet per minute.

INTERNATIONAL CODE COUNCIL®
Copyright © 2015 ICC. ALL RIGHTS RESERVED. Accessed by David Dammon on Jun 21, 2017 12:30:52 PM pursuant to License Agreement with ICC. No further reproduction or distribution authorized. ANY UNAUTHORIZED REPRODUCTION OR DISTRIBUTION IS A VIOLATION OF THE FEDERAL COPYRIGHT ACT AND THE LICENSE AGREEMENT, AND SUBJECT TO CIVIL AND CRIMINAL PENALTIES THEREUNDER.

within 15 percentage points of the maximum total efficiency of the fan.

Exception: The following fans are not required to have a fan efficiency grade:

1. Fans of 5 hp (3.7 kW) or less as follows:
   1.1. Single fan with a motor nameplate horsepower of 5 hp (3.7 kW) or less, unless Exception 1.2 applies.
   1.2. Multiple fans in series or parallel that have a combined motor nameplate horsepower of 5 hp (3.7 kW) or less and are operated as the functional equivalent of a single fan.
2. Fans that are part of equipment covered under Section C403.2.3.
3. Fans included in an equipment package certified by an *approved agency* for air or energy performance.
4. Powered wall/roof ventilators.
5. Fans outside the scope of AMCA 205.
6. Fans that are intended to operate only during emergency conditions.

❖ This section adds requirements for minimum fan efficiency by means of a Fan Efficiency Grade (FEG) when tested to AMCA 205 by an independent third-party laboratory. The code provisions also require that fans be labeled as such by the manufacturer. AMCA 205 defines the FEG metric and how it is to be calculated by manufacturers when rating their fans.

Regulating the FEG level of the fan alone is inadequate for reducing fan energy consumption; right-sizing fans is also important. As such, both AMCA 205 and the code require a "right-sizing" provision that stipulates fans be sized/selected to operate within 15 percentage points of the fan's rated peak total efficiency. That the "right-sized" fan is used must be verified during plan review. Engineers/specifiers will have to indicate compliance by documenting the fan's peak total efficiency, which is provided by the manufacturer as part of the fan data. Because the code requires an *approved*, independent laboratory to test fans to AMCA 205, thereby confirming the rated peak total efficiency, this data will be easily available. The engineer/designer needs to "sign off" or "affirm" that the selected fan's operating total efficiency will be less than the rated peak total efficiency. It might also be checked by commissioning providers and/or test and balance contractors.

C403.2.13 Heating outside a building. Systems installed to provide heat outside a building shall be radiant systems.

TABLE C403.2.12.1(2)
FAN POWER LIMITATION PRESSURE DROP ADJUSTMENT

DEVICE	ADJUSTMENT
Credits	
Fully ducted return and/or exhaust air systems	0.5 inch w.c. (2.15 in w.c. for laboratory and vivarium systems)
Return and/or exhaust airflow control devices	0.5 inch w.c.
Exhaust filters, scrubbers or other exhaust treatment	The pressure drop of device calculated at fan system design condition
Particulate filtration credit: MERV 9 thru 12	0.5 inch w.c.
Particulate filtration credit: MERV 13 thru 15	0.9 inch. w.c.
Particulate filtration credit: MERV 16 and greater and electronically enhanced filters	Pressure drop calculated at 2x clean filter pressure drop at fan system design condition.
Carbon and other gas-phase air cleaners	Clean filter pressure drop at fan system design condition.
Biosafety cabinet	Pressure drop of device at fan system design condition.
Energy recovery device, other than coil runaround loop	(2.2 × energy recovery effectiveness) – 0.5 inch w.c. for each airstream.
Coil runaround loop	0.6 inch w.c. for each airstream.
Evaporative humidifier/cooler in series with another cooling coil	Pressure drop of device at fan system design conditions.
Sound attenuation section (fans serving spaces with design background noise goals below NC35)	0.15 inch w.c.
Exhaust system serving fume hoods	0.35 inch w.c.
Laboratory and vivarium exhaust systems in high-rise buildings	0.25 inch w.c./100 feet of vertical duct exceeding 75 feet.
Deductions	
Systems without central cooling device	- 0.6 in. w.c.
Systems without central heating device	- 0.3 in. w.c.
Systems with central electric resistance heat	- 0.2 in. w.c.

For SI: 1 inch w.c. = 249 Pa, 1 inch = 25.4 mm.

w.c. = water column, NC = Noise criterion.

INTERNATIONAL CODE COUNCIL®
Copyright © 2015 ICC. ALL RIGHTS RESERVED. Accessed by David Dammon on Jun 21, 2017 12:30:52 PM pursuant to License Agreement with ICC. No further reproduction or distribution authorized. ANY UNAUTHORIZED REPRODUCTION OR DISTRIBUTION IS A VIOLATION OF THE FEDERAL COPYRIGHT ACT AND THE LICENSE AGREEMENT, AND SUBJECT TO CIVIL AND CRIMINAL PENALTIES THEREUNDER.

Such heating systems shall be controlled by an occupancy sensing device or a timer switch, so that the system is automatically deenergized when no occupants are present.

❖ This section requires occupant sensors or a time-switch control to limit a radiant system installed to provide heat outside a building. It easily can double as an HVAC off-hour control by adding an interlock wired as an input to the DDC zone controller. This avoids wasting energy during unoccupied hours, while still allowing a system that is shut off during off-hours to automatically restart and temporarily operate in order to maintain the space at a setback or setup temperature setpoint.

C403.2.14 Refrigeration equipment performance. Refrigeration equipment shall have an energy use in kWh/day not greater than the values of Tables C403.2.14(1) and C403.2.14(2) when tested and rated in accordance with AHRI Standard 1200. The energy use shall be verified through certification under an approved certification program or, where a certification program does not exist, the energy use shall be supported by data furnished by the equipment manufacturer.

❖ Manufactured refrigeration equipment can be a significant user of energy. With the development of AHRI Standard 1200, there is now a method by which efficiency of this equipment can be measured. The equipment should be labeled with its tested efficiency. Where equipment hasn't been tested, the designer must be able to supply energy-use data. Such data will most likely come from the manufacturer. Sections C403.2.15 and C403.2.16 separately address larger equipment often described as walk-in. Section C403.2.17 specifically addresses refrigerated display cases.

C403.2.15 Walk-in coolers, walk-in freezers, refrigerated warehouse coolers and refrigerated warehouse freezers. *Refrigerated warehouse coolers* and *refrigerated warehouse freezers* shall comply with this section. *Walk-in coolers* and *walk-in freezers* that are not either site assembled or site constructed shall comply with the following:

1. Be equipped with automatic door-closers that firmly close walk-in doors that have been closed to within 1 inch (25 mm) of full closure.

   Exception: Automatic closers are not required for doors more than 45 inches (1143 mm) in width or more than 7 feet (2134 mm) in height.

2. Doorways shall have strip doors, curtains, spring-hinged doors or other method of minimizing infiltration when doors are open.
3. *Walk-in coolers* and *refrigerated warehouse coolers* shall contain wall, ceiling, and door insulation of not less than R-25 and *walk-in freezers* and *refrigerated warehouse freezers* shall contain wall, ceiling and door insulation of not less than R-32.

   Exception: Glazed portions of doors or structural members need not be insulated.

4. *Walk-in freezers* shall contain floor insulation of not less than R-28.
5. Transparent reach-in doors for *walk-in freezers* and windows in *walk-in freezer* doors shall be of triple-pane glass, either filled with inert gas or with heat-reflective treated glass.
6. Windows and transparent reach-in doors for *walk-in coolers* doors shall be of double-pane or triple-pane, inert gas-filled, heat-reflective treated glass.
7. Evaporator fan motors that are less than 1 hp (0.746 kW) and less than 460 volts shall use electronically commutated motors, brushless direct- current motors, or 3-phase motors.
8. Condenser fan motors that are less than 1 hp (0.746 kW) shall use electronically commutated motors, permanent split capacitor-type motors or 3-phase motors.
9. Where antisweat heaters without antisweat heater controls are provided, they shall have a total door rail, glass and frame heater power draw of not more than 7.1 W/ft^2 (76 W/m^2) of door opening for *walk-in freezers* and 3.0 W/ft^2 (32 W/m^2) of door opening for *walk-in coolers*.
10. Where antisweat heater controls are provided, they shall reduce the energy use of the antisweat heater as a function of the relative humidity in the air outside the door or to the condensation on the inner glass pane.
11. Lights in *walk-in coolers*, *walk-in freezers*, *refrigerated warehouse coolers* and *refrigerated warehouse freezers* shall either use light sources with an efficacy of not less than 40 lumens per watt, including ballast losses, or shall use light sources with an efficacy of not less than 40 lumens per watt, including ballast losses, in conjunction with a device that turns off the lights within 15 minutes when the space is not occupied.

❖ Sections C403.2.15 and C403.2.16 address walk-in coolers, walk-in freezers, refrigerated warehouse coolers and refrigerated warehouse freezers. The criteria for these features are nearly identical. Section C403.2.16 addresses walk-in coolers and walk-in freezers that are site assembled or site constructed. All other coolers and freezers must comply with Section C403.2.15. Definitions of these four categories are found in Chapter 2 [CE]. A key difference is the walk-in coolers and freezers are under 3,000 square feet. Where they are 3,000 square feet or larger, they fall into the warehouse categories. In this section, Item 11 addresses lights in these spaces. Two options appear to both address where efficacy is not less than 40 lumens per watt and allow an option with or without automatic shut-off controls. Under Section C403.2.16, the option is high-efficacy lighting or an automated sensor shut-off.

INTERNATIONAL CODE COUNCIL®
Copyright © 2015 ICC. ALL RIGHTS RESERVED. Accessed by David Dammon on Jun 21, 2017 12:30:52 PM pursuant to License Agreement with ICC. No further reproduction or distribution authorized. ANY UNAUTHORIZED REPRODUCTION OR DISTRIBUTION IS A VIOLATION OF THE FEDERAL COPYRIGHT ACT AND THE LICENSE AGREEMENT, AND SUBJECT TO CIVIL AND CRIMINAL PENALTIES THEREUNDER.

TABLE C403.2.14(1)
MINIMUM EFFICIENCY REQUIREMENTS: COMMERCIAL REFRIGERATION

EQUIPMENT TYPE	APPLICATION	ENERGY USE LIMITS (kWh per day)[a]	TEST PROCEDURE
Refrigerator with solid doors	Holding Temperature	0.10 · V + 2.04	AHRI 1200
Refrigerator with transparent doors		0.12 · V + 3.34	
Freezers with solid doors		0.40 · V + 1.38	
Freezers with transparent doors		0.75 · V + 4.10	
Refrigerators/freezers with solid doors		the greater of 0.12 · V + 3.34 or 0.70	
Commercial refrigerators	Pulldown	0.126 · V + 3.51	

a. V = volume of the chiller or frozen compartment as defined in AHAM-HRF-1.

TABLE C403.2.14(2)
MINIMUM EFFICIENCY REQUIREMENTS: COMMERCIAL REFRIGERATORS AND FREEZERS

EQUIPMENT TYPE				ENERGY USE LIMITS (kWh/day)[a, b]	TEST PROCEDURE
Equipment Class[c]	Family Code	Operating Mode	Rating Temperature		
VOP.RC.M	Vertical open	Remote condensing	Medium	0.82 · TDA + 4.07	AHRI 1200
SVO.RC.M	Semivertical open	Remote condensing	Medium	0.83 · TDA + 3.18	
HZO.RC.M	Horizontal open	Remote condensing	Medium	0.35 · TDA + 2.88	
VOP.RC.L	Vertical open	Remote condensing	Low	2.27 · TDA + 6.85	
HZO.RC.L	Horizontal open	Remote condensing	Low	0.57 · TDA + 6.88	
VCT.RC.M	Vertical transparent door	Remote condensing	Medium	0.22 TDA + 1.95	
VCT.RC.L	Vertical transparent door	Remote condensing	Low	0.56 · TDA + 2.61	
SOC.RC.M	Service over counter	Remote condensing	Medium	0.51 · TDA + 0.11	
VOP.SC.M	Vertical open	Self-contained	Medium	1.74 · TDA + 4.71	
SVO.SC.M	Semivertical open	Self-contained	Medium	1.73 · TDA + 4.59	
HZO.SC.M	Horizontal open	Self-contained	Medium	0.77 · TDA + 5.55	
HZO.SC.L	Horizontal open	Self-contained	Low	1.92 · TDA + 7.08	
VCT.SC.I	Vertical transparent door	Self-contained	Ice cream	0.67 · TDA + 3.29	
VCS.SC.I	Vertical solid door	Self-contained	Ice cream	0.38 · V + 0.88	
HCT.SC.I	Horizontal transparent door	Self-contained	Ice cream	0.56 · TDA + 0.43	
SVO.RC.L	Semivertical open	Remote condensing	Low	2.27 · TDA + 6.85	
VOP.RC.I	Vertical open	Remote condensing	Ice cream	2.89 · TDA + 8.7	
SVO.RC.I	Semivertical open	Remote condensing	Ice cream	2.89 · TDA + 8.7	
HZO.RC.I	Horizontal open	Remote condensing	Ice cream	0.72 · TDA + 8.74	
VCT.RC.I	Vertical transparent door	Remote condensing	Ice cream	0.66 · TDA + 3.05	
HCT.RC.M	Horizontal transparent door	Remote condensing	Medium	0.16 · TDA + 0.13	

(continued)

INTERNATIONAL CODE COUNCIL®
Copyright © 2015 ICC. ALL RIGHTS RESERVED. Accessed by David Dammon on Jun 21, 2017 12:30:52 PM pursuant to License Agreement with ICC. No further reproduction or distribution authorized. ANY UNAUTHORIZED REPRODUCTION OR DISTRIBUTION IS A VIOLATION OF THE FEDERAL COPYRIGHT ACT AND THE LICENSE AGREEMENT, AND SUBJECT TO CIVIL AND CRIMINAL PENALTIES THEREUNDER.

TABLE C403.2.14(2)—continued
MINIMUM EFFICIENCY REQUIREMENTS: COMMERCIAL REFRIGERATORS AND FREEZERS

EQUIPMENT TYPE				ENERGY USE LIMITS (kWh/day)[a, b]	TEST PROCEDURE
Equipment Class[c]	Family Code	Operating Mode	Rating Temperature		
HCT.RC.L	Horizontal transparent door	Remote condensing	Low	0.34 · TDA + 0.26	AHRI 1200
HCT.RC.I	Horizontal transparent door	Remote condensing	Ice cream	0.4 · TDA + 0.31	
VCS.RC.M	Vertical solid door	Remote condensing	Medium	0.11 · V + 0.26	
VCS.RC.L	Vertical solid door	Remote condensing	Low	0.23 · V + 0.54	
VCS.RC.I	Vertical solid door	Remote condensing	Ice cream	0.27 · V + 0.63	
HCS.RC.M	Horizontal solid door	Remote condensing	Medium	0.11 · V + 0.26	
HCS.RC.L	Horizontal solid door	Remote condensing	Low	0.23 · V + 0.54	
HCS.RC.I	Horizontal solid door	Remote condensing	Ice cream	0.27 · V + 0.63	
HCS.RC.I	Horizontal solid door	Remote condensing	Ice cream	0.27 · V + 0.63	
SOC.RC.L	Service over counter	Remote condensing	Low	1.08 · TDA + 0.22	
SOC.RC.I	Service over counter	Remote condensing	Ice cream	1.26 · TDA + 0.26	
VOP.SC.L	Vertical open	Self-contained	Low	4.37 · TDA + 11.82	
VOP.SC.I	Vertical open	Self-contained	Ice cream	5.55 · TDA + 15.02	
SVO.SC.L	Semivertical open	Self-contained	Low	4.34 · TDA + 11.51	
SVO.SC.I	Semivertical open	Self-contained	Ice cream	5.52 · TDA + 14.63	
HZO.SC.I	Horizontal open	Self-contained	Ice cream	2.44 · TDA + 9.0	
SOC.SC.I	Service over counter	Self-contained	Ice cream	1.76 · TDA + 0.36	
HCS.SC.I	Horizontal solid door	Self-contained	Ice cream	0.38 · V + 0.88	

a. V = Volume of the case, as measured in accordance with Appendix C of AHRI 1200.
b. TDA = Total display area of the case, as measured in accordance with Appendix D of AHRI 1200.
c. Equipment class designations consist of a combination [(in sequential order separated by periods (AAA).(BB).(C))] of:

(AAA) An equipment family code where:
VOP = vertical open
SVO = semivertical open
HZO = horizontal open
VCT = vertical transparent doors
VCS = vertical solid doors
HCT = horizontal transparent doors
HCS = horizontal solid doors
SOC = service over counter

(BB) An operating mode code:
RC = remote condensing
SC = self-contained

(C) A rating temperature code:
M = medium temperature (38°F)
L = low temperature (0°F)
I = ice-cream temperature (15°F)

For example, ''VOP.RC.M'' refers to the "vertical-open, remote-condensing, medium-temperature" equipment class.

INTERNATIONAL CODE COUNCIL®
Copyright © 2015 ICC. ALL RIGHTS RESERVED. Accessed by David Dammon on Jun 21, 2017 12:30:52 PM pursuant to License Agreement with ICC. No further reproduction or distribution authorized. ANY UNAUTHORIZED REPRODUCTION OR DISTRIBUTION IS A VIOLATION OF THE FEDERAL COPYRIGHT ACT AND THE LICENSE AGREEMENT, AND SUBJECT TO CIVIL AND CRIMINAL PENALTIES THEREUNDER.

C403.2.16 Walk-in coolers and walk-in freezers. Site-assembled or site-constructed *walk-in coolers* and *walk-in freezers* shall comply with the following:

1. Automatic door closers shall be provided that fully close walk-in doors that have been closed to within 1 inch (25 mm) of full closure.

   Exception: Closers are not required for doors more than 45 inches (1143 mm) in width or more than 7 feet (2134 mm) in height.

2. Doorways shall be provided with strip doors, curtains, spring-hinged doors or other method of minimizing infiltration when the doors are open.
3. Walls shall be provided with insulation having a thermal resistance of not less than R-25, ceilings shall be provided with insulation having a thermal resistance of not less than R-25 and doors of *walk-in coolers* and *walk-in freezers* shall be provided with insulation having a thermal resistance of not less than R-32.

   Exception: Insulation is not required for glazed portions of doors or at structural members associated with the walls, ceiling or door frame.

4. The floor of *walk-in freezers* shall be provided with insulation having a thermal resistance of not less than R-28.
5. Transparent reach-in doors for and windows in opaque *walk-in freezer* doors shall be provided with triple-pane glass having the interstitial spaces filled with inert gas or provided with heat-reflective treated glass.
6. Transparent reach-in doors for and windows in opaque *walk-in cooler* doors shall be double-pane heat-reflective treated glass having the interstitial space gas filled.
7. Evaporator fan motors that are less than 1 hp (0.746 kW) and less than 460 volts shall be electronically commutated motors or 3-phase motors.
8. Condenser fan motors that are less than 1 hp (0.746 kW) in capacity shall be of the electronically commutated or permanent split capacitor-type or shall be 3-phase motors.

   Exception: Fan motors in *walk-in coolers* and *walk-in freezers* combined in a single enclosure greater than 3,000 square feet (279 m^2) in floor area are exempt.

9. Antisweat heaters that are not provided with antisweat heater controls shall have a total door rail, glass and frame heater power draw not greater than 7.1 W/ft2 (76 W/m^2) of door opening for *walk-in freezers*, and not greater than 3.0 W/ft^2 (32 W/m^2) of door opening for *walk-in coolers*.
10. Antisweat heater controls shall be capable of reducing the energy use of the antisweat heater as a function of the relative humidity in the air outside the door or to the condensation on the inner glass pane.
11. Light sources shall have an efficacy of not less than 40 lumens per Watt, including any ballast losses, or shall be provided with a device that automatically turns off the lights within 15 minutes of when the *walk-in cooler* or *walk-in freezer* was last occupied.

❖ See the commentary to Section C403.2.15.

C403.2.17 Refrigerated display cases. Site-assembled or site-constructed refrigerated display cases shall comply with the following:

1. Lighting and glass doors in refrigerated display cases shall be controlled by one of the following:
   1.1. Time switch controls to turn off lights during nonbusiness hours. Timed overrides for display cases shall turn the lights on for up to 1 hour and shall automatically time out to turn the lights off.
   1.2. Motion sensor controls on each display case section that reduce lighting power by at least 50 percent within 3 minutes after the area within the sensor range is vacated.
2. Low-temperature display cases shall incorporate temperature-based defrost termination control with a time-limit default. The defrost cycle shall terminate first on an upper temperature limit breach and second upon a time limit breach.
3. Antisweat heater controls shall reduce the energy use of the antisweat heater as a function of the relative humidity in the air outside the door or to the condensation on the inner glass pane.

❖ Refrigerated display cases are used to display products that must be refrigerated. Compared to the features addressed in Sections C403.2.15 and C403.2.16, these units are factory assembled rather than site assembled. Many energy-efficiency requirements are similar to walk-in units.

C403.3 Economizers (Prescriptive). Each cooling system shall include either an air or water economizer complying with Sections C403.3.1 through C403.3.4.

Exceptions: Economizers are not required for the systems listed below.

1. In cooling systems for buildings located in *Climate Zones* 1A and 1B.
2. In *climate zones* other than 1A and 1B, where individual fan cooling units have a capacity of less than 54,000 Btu/h (15.8 kW) and meet one of the following:
   2.1. Have direct expansion cooling coils.
   2.2. The total chilled water system capacity less the capacity of fan units with air economizers is less than the minimum specified in Table C403.3(1).

   The total supply capacity of all fan-cooling units not provided with economizers

INTERNATIONAL CODE COUNCIL®
Copyright © 2015 ICC. ALL RIGHTS RESERVED. Accessed by David Dammon on Jun 21, 2017 12:30:52 PM pursuant to License Agreement with ICC. No further reproduction or distribution authorized. ANY UNAUTHORIZED REPRODUCTION OR DISTRIBUTION IS A VIOLATION OF THE FEDERAL COPYRIGHT ACT AND THE LICENSE AGREEMENT, AND SUBJECT TO CIVIL AND CRIMINAL PENALTIES THEREUNDER.

shall not exceed 20 percent of the total supply capacity of all fan-cooling units in the building or 300,000 Btu/h (88 kW), whichever is greater.

3. Where more than 25 percent of the air designed to be supplied by the system is to spaces that are designed to be humidified above 35°F (1.7°C) dewpoint temperature to satisfy process needs.
4. Systems that serve *residential* spaces where the system capacity is less than five times the requirement listed in Table C403.3(1).
5. Systems expected to operate less than 20 hours per week.
6. Where the use of *outdoor air* for cooling will affect supermarket open refrigerated casework systems.
7. Where the cooling *efficiency* meets or exceeds the *efficiency* requirements in Table C403.3(2).
8. Chilled-water cooling systems that are passive (without a fan) or use induction where the total chilled water system capacity less the capacity of fan units with air economizers is less than the minimum specified in Table C403.3(1).
9. Systems that include a heat recovery system in accordance with Section C403.4.5.

❖ Section C403.3 covers economizer requirements for all cooling systems, not by building or by complex/simple system designation. Cooling systems shall have either an air- or water-side economizer unless covered by exceptions. Section C403.3 covers the general triggers for where an economizer is required and exceptions from requiring an economizer. Section 403.3.1 covers integrated controls; Section 403.3.2 covers heating system impacts; Section 403.3.3 covers specific requirements for systems with air-side economizers; Section 403.3.4 covers specific requirements for systems with water-side economizers.

To take advantage of locations having favorable weather conditions that permit free cooling (without mechanical refrigeration), the code requires that mechanical systems of certain capacities be equipped with either an air-side economizer or water-side economizer.

The cost effectiveness of economizers depends on the load characteristics of the building, internal heat generation, the type and size of the HVAC system, and the local climate. For instance, certain climates do experience significant periods where the outdoor temperature is cool, but heavily laden with moisture [i.e., wet-bulb temperatures greater than 69°F (21°C)]. Still, other climates do not experience enough hours during a typical meteorological year where cool-dry conditions conductive to economizer operation prevail. That is, the number of hours between 8:00 a.m. and 4:00 p.m. where the outside dry-bulb temperature is between 55°F (13°C) and 69°F (21°C) is insignificant. Therefore, the potential for energy savings, when compared to the assessed cost, is unjustified. Because there are many cases where economizers will not be cost effective, this section includes exceptions to the economizer requirement.

Exceptions 1 and 2: Climate Zones 1A and 1B are exempt from the requirement for economizers, except for large chilled-water systems in Climate Zone 1B covered under Table C403.3(1). Small cooling units that have a cooling capacity of less than 54,000 Btu/h (15.8 kW) at design conditions are exempt. For such small systems, the added cost of economizers will be significantly higher than the annual energy savings, even in mild climates.

Exception 3 covers systems where over 25 percent of the supply airflow is to spaces that require humidification to over 35°F (1.7°C) dew point temperature. This is intended for spaces that require humidification for process loads, not comfort conditioning. In winter, economizer air can overdry the air; excess energy would be expended to rehumidify the outdoor economizer air, defeating the cooling energy savings.

Exception 4 was intended to apply to systems that have a capacity less than five times the capacity listed in Exception 2 (54,00 Btu/h). The reference in this exception to Table C403.3(1) was to the table by that number in the 2012 edition of the code. While the current referral to Table C403.3(1) would permit a significant exception, Exception 4 is intended to only exempt systems serving residential spaces up to 270,00 Btu/h.

An economizer is unlikely to have effective payback of installed cost for systems that operate less than 20 hours per week. And refrigerated cases in supermarkets expend large amounts of energy defrosting the refrigerated cases. While an economizer may provide cooling energy savings, the additional latent (moisture) loads introduced by economizer operation can result in excessive con-

TABLE C403.3(1)
MINIMUM CHILLED-WATER SYSTEM COOLING CAPACITY FOR DETERMINING ECONOMIZER COOLING REQUIREMENTS

CLIMATE ZONES (COOLING)	TOTAL CHILLED-WATER SYSTEM CAPACITY LESS CAPACITY OF COOLING UNITS WITH AIR ECONOMIZERS	
	Local Water-cooled Chilled-water Systems	Air-cooled Chilled-water Systems or District Chilled-Water Systems
1a	No economizer requirement	No economizer requirement
1b, 2a, 2b	960,000 Btu/h	1,250,000 Btu/h
3a, 3b, 3c, 4a, 4b, 4c	720,000 Btu/h	940,000 Btu/h
5a, 5b, 5c, 6a, 6b, 7, 8	1,320,000 Btu/h	1,720,000 Btu/h

For SI: 1 British thermal unit per hour = 0.2931 W.

INTERNATIONAL CODE COUNCIL®
Copyright © 2015 ICC. ALL RIGHTS RESERVED. Accessed by David Dammon on Jun 21, 2017 12:30:52 PM pursuant to License Agreement with ICC. No further reproduction or distribution authorized. ANY UNAUTHORIZED REPRODUCTION OR DISTRIBUTION IS A VIOLATION OF THE FEDERAL COPYRIGHT ACT AND THE LICENSE AGREEMENT, AND SUBJECT TO CIVIL AND CRIMINAL PENALTIES THEREUNDER.

densation in the refrigerated cases. The extra energy expended condensing and defrosting cases can exceed the economizer savings. So Exception 6 exempts systems that serve supermarkets with open refrigerated cases.

Minimum mechanical cooling system efficiencies are set in the tables in Section C403.2.3 for various equipment types. If the system efficiency is improved to the extent in Table C403.3(2) for the listed climate zones, then an economizer is not required. If a system requires 13 SEER minimum efficiency with an economizer, the economizer is exempted in Climate Zone 4 where the system is 20 percent better than code minimum. A SEER 15.6 or higher unit can be provided without an economizer.

Where a chilled-water system either does not utilize a fan for cooling (e.g., radiant system) or uses induction air (e.g., active chilled beams), the system is not required to have an economizer (water or air) if the total system capacity is less than that listed in Table C403.3(1). The table has values based both on climate zone and whether the system is air cooled or water/evaporatively cooled.

Where the cooling equipment exceeds the efficiency requirement of Table C403.2.3(1) or C403.2.3(2) by the percentage shown in Table C403.3(2), economizer controls are not required. The economizer trade-off stems from the development of the economizer trade-off tables from prior editions of ANSI/ASHRAE/IESNA 90.1 and remain unchanged. Results were based on simulations of energy cost savings for economizers in 16 different locations in the United States.

TABLE C403.3(2)
EQUIPMENT EFFICIENCY PERFORMANCE EXCEPTION FOR ECONOMIZERS

CLIMATE ZONES	COOLING EQUIPMENT PERFORMANCE IMPROVEMENT (EER OR IPLV)
2B	10% efficiency improvement
3B	15% efficiency improvement
4B	20% efficiency improvement

❖ A simple performance path for compliance appears in the economizer trade-off Table C403.3(2) and is applied under Exception 7. Economizers provide a way to improve system efficiency by using outdoor air for building cooling when appropriate. Their use is required in specific climates and where systems greater than a specified cooling capacity are used. However, although the cost for a building economizer for a given system size is essentially fixed for all regions of the country, the efficiency benefits vary significantly. Therefore, the cost effectiveness of the economizer will vary across the country. The economizer trade-off allows building HVAC designers to trade off the use of a required economizer in exchange for the installation of higher-efficiency air-conditioning equipment. This table shows the cooling efficiency required for an air conditioner or heat pump when the design forgoes the installation of an air-side economizer in a climate where the code requires one. The cooling efficiencies shown in the economizer trade-off table result in a level of energy efficiency that is somewhat greater than that from using minimum-efficiency-level cooling equipment as defined by EPAct or NAECA (Public Law 100-12) in conjunction with an air-side economizer in the climate zones identified.

C403.3.1 Integrated economizer control. Economizer systems shall be integrated with the mechanical cooling system and be capable of providing partial cooling even where additional mechanical cooling is required to provide the remainder of the cooling load. Controls shall not be capable of creating a false load in the mechanical cooling systems by limiting or disabling the economizer or any other means, such as hot gas bypass, except at the lowest stage of mechanical cooling.

Units that include an air economizer shall comply with the following:

1. Unit controls shall have the mechanical cooling capacity control interlocked with the air economizer controls such that the outdoor air damper is at the 100-percent open position when mechanical cooling is on and the outdoor air damper does not begin to close to prevent coil freezing due to minimum compressor run time until the leaving air temperature is less than 45°F (7°C).
2. Direct expansion (DX) units that control 75,000 Btu/h (22 kW) or greater of rated capacity of the capacity of the mechanical cooling directly based on occupied space temperature shall have not fewer than two stages of mechanical cooling capacity
3. Other DX units, including those that control space temperature by modulating the airflow to the space, shall be in accordance with Table C403.3.1.

❖ To meet the code, economizers must be able to supply not greater than 100 percent of the design supply air as outside air. The code also requires that economizers be integrated. Integrated economizers can reduce the cooling load with the remainder of the load being met by mechanical cooling. Economizers that cannot operate simultaneously with the mechanical cooling system are called “nonintegrated” economizers. Integration can greatly extend economizer operation in mild climates, which reduces the cooling energy cost. Examples of nonintegrated water economizers are shown in Commentary Figure C403.3.1(2). Those shown in Commentary Figures C403.3.1(3) and C403.3.1(4) are integrated economizers because the economizer and mechanical cooling may operate concurrently.

A nonintegrated air economizer will be able to reduce cooling energy when outside air temperatures are between 55°F (13°C) and 60°F (15°C), depending on the required supply air temperatures. Above those temperatures, mechanical cooling is required, so the economizer is shut off. If the economizer were integrated, it could continue to operate, reducing

INTERNATIONAL CODE COUNCIL®
Copyright © 2015 ICC. ALL RIGHTS RESERVED. Accessed by David Dammon on Jun 21, 2017 12:30:52 PM pursuant to License Agreement with ICC. No further reproduction or distribution authorized. ANY UNAUTHORIZED REPRODUCTION OR DISTRIBUTION IS A VIOLATION OF THE FEDERAL COPYRIGHT ACT AND THE LICENSE AGREEMENT, AND SUBJECT TO CIVIL AND CRIMINAL PENALTIES THEREUNDER.

mechanical cooling energy usage even though it cannot provide the entire cooling load until the high-limit setpoint is reached, around 65°F (18°C) to 75°F (24°C), depending on the climate. In some climates, there are hundreds or even thousands of operating hours when the outside air temperature is in that range. Factory-supplied or factory-installed economizers supplied by equipment manufacturers include integrated controls that also prevent ice formation when outside temperatures are near 50°F (10°C); however, because integrated economizer control strategies that also prevent ice formation are the most commonly available for packaged air-conditioning systems, they are assumed as standard by the code. The controls are wired so the compressor cannot operate until the economizer has been locked out by its high-limit switch, or the economizer is interlocked to shut off when the compressor comes on.

C403.3.2 Economizer heating system impact. HVAC system design and economizer controls shall be such that economizer operation does not increase building heating energy use during normal operation.

Exception: Economizers on variable air volume (VAV) systems that cause *zone* level heating to increase due to a reduction in supply air temperature.

❖ This section is an obvious energy-saving measure. When the outdoor conditions are colder than necessary for building loads, air- or water-side economizing may provide air or water to the building that is colder than necessary. This section requires that the economizer have system controls and capacity to prevent overcooling that triggers activation of heating systems for zones that would need heating.

Variable air volume systems are exempted when *zone*-level heating is activated due to a reduction in supply-air temperature. Heating at the system-wide supply-air-handling system is not exempted. The economizer shall not trigger heating at the air handling unit; the outside air intake must be at the minimum ventilation setting (see Section C403.4.4).

C403.3.3 Air economizers. Air economizers shall comply with Sections C403.3.3.1 through C403.3.3.5.

❖ Air economizers provide free cooling when the outdoor air temperature is cooler than the return air temperature. Through a combination of return, exhaust, outdoor air, and/or mixing dampers, the system exhausts the warmer return air and uses the cooler outdoor air to satisfy some or all of the system cooling needs. An example of air economizer operation is in Commentary Figure 403.3.3(1). This section determines the requirements for economizers using air for the free cooling.

C403.3.3.1 Design capacity. Air economizer systems shall be capable of modulating *outdoor air* and return air dampers to provide up to 100 percent of the design supply air quantity as *outdoor air* for cooling.

❖ This section requires air economizer systems to provide up to 100 percent of the design supply air quantity as outdoor air for cooling. This allows the HVAC system design to be optimized; during cool weather, when the economizer is in operation, the system will be at peak load.

TABLE C403.3.1
DX COOLING STAGE REQUIREMENTS FOR MODULATING AIRFLOW UNITS

RATING CAPACITY	MINIMUM NUMBER OF MECHANICAL COOLING STAGES	MINIMUM COMPRESSOR DISPLACEMENT[a]
≥ 65,000 Btu/h and < 240,000 Btu/h	3 stages	≤ 35% of full load
≥ 240,000 Btu/h	4 stages	≤ 25% full load

For SI: 1 British thermal unit per hour = 0.2931 W.

a. For *mechanical cooling* stage control that does not use variable compressor displacement, the percent displacement shall be equivalent to the mechanical cooling capacity reduction evaluated at the full load rating conditions for the compressor.

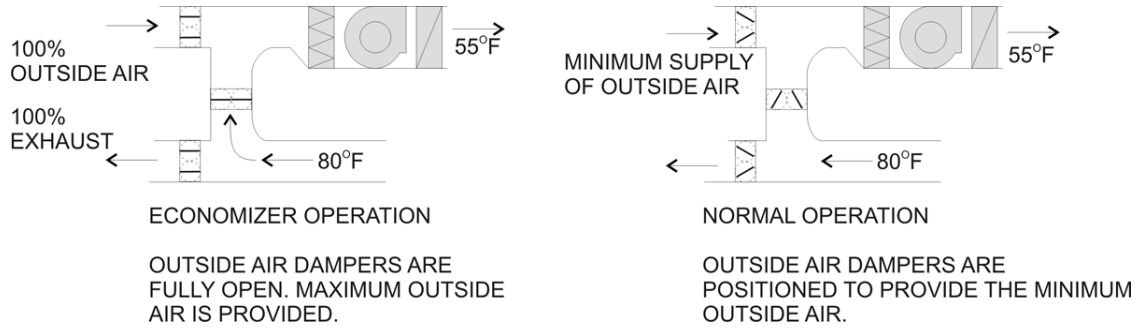

For SI: °C = [(°F) – 32]/1.8.

Figure C403.3.3(1)
AIR ECONOMIZER OPERATION

INTERNATIONAL CODE COUNCIL®
Copyright © 2015 ICC. ALL RIGHTS RESERVED. Accessed by David Dammon on Jun 21, 2017 12:30:52 PM pursuant to License Agreement with ICC. No further reproduction or distribution authorized. ANY UNAUTHORIZED REPRODUCTION OR DISTRIBUTION IS A VIOLATION OF THE FEDERAL COPYRIGHT ACT AND THE LICENSE AGREEMENT, AND SUBJECT TO CIVIL AND CRIMINAL PENALTIES THEREUNDER.

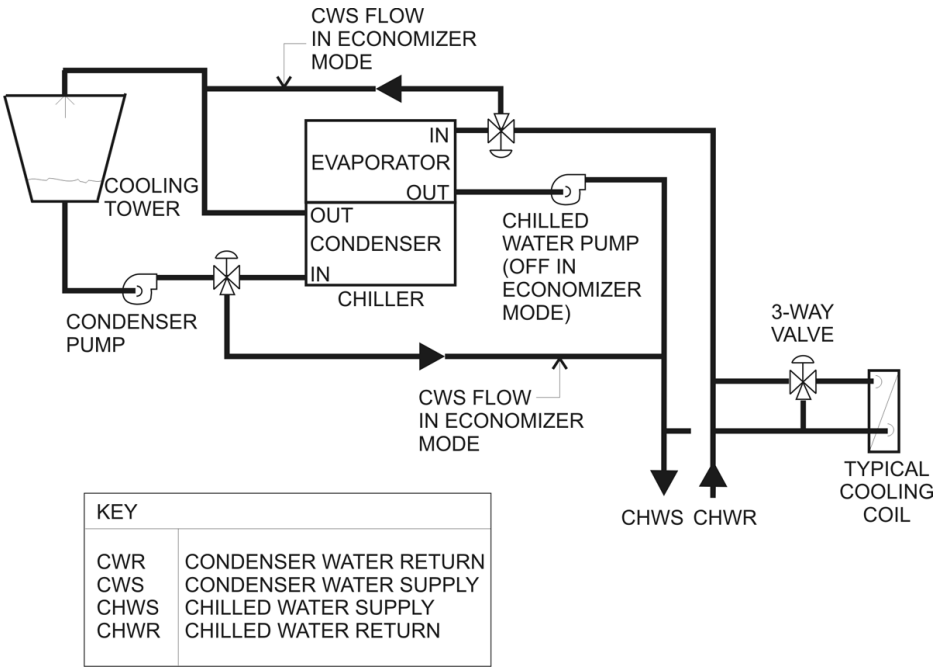

Figure C403.3.1(2)
"STRAINER-CYCLE" WATER ECONOMIZER
(Courtesy of U.S. Department of Energy, Office of Building Technology State and Community Programs, www.energycodes.gov)

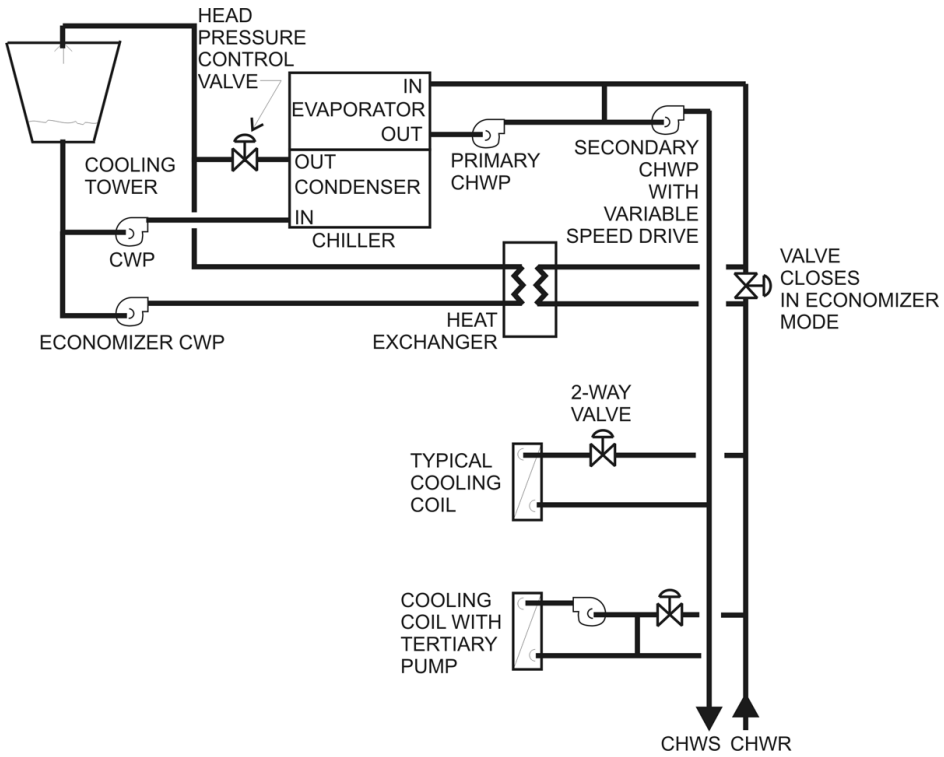

Figure C403.3.1(3)
WATER PRECOOLING ECONOMIZER WITH TWO-WAY VALVES
(Courtesy of U.S. Department of Energy, Office of Building Technology State and Community Programs, www.energycodes.gov)

INTERNATIONAL CODE COUNCIL®
Copyright © 2015 ICC. ALL RIGHTS RESERVED. Accessed by David Dammon on Jun 21, 2017 12:30:52 PM pursuant to License Agreement with ICC. No further reproduction or distribution authorized. ANY UNAUTHORIZED REPRODUCTION OR DISTRIBUTION IS A VIOLATION OF THE FEDERAL COPYRIGHT ACT AND THE LICENSE AGREEMENT, AND SUBJECT TO CIVIL AND CRIMINAL PENALTIES THEREUNDER.

C403.3.3.2 Control signal. Economizer dampers shall be capable of being sequenced with the mechanical cooling equipment and shall not be controlled by only mixed-air temperature.

Exception: The use of mixed-air temperature limit control shall be permitted for systems controlled from space temperature (such as single-*zone* systems).

❖ This section requires economizer dampers to be sequenced with the mechanical cooling equipment. They are not to be controlled only by mixed air temperature, unless the system controlled is from a single-zone system. It is common for outside air dampers to be specified as low leakage dampers (those with blade and jamb seals). For an economizer, leakage through the return damper can be more important because any leakage of return air when the system is in the 100-percent outside air mode [when outside air temperatures are between about 55°F (12.7°C) until the high-limit setpoint is reached, which can be a majority of the economizer operating hours] will increase supply-air temperatures and force the mechanical cooling system to operate at colder outside air temperatures and increase the cooling load once the mechanical cooling is on. Both dampers should be the low-leakage type.

C403.3.3.3 High-limit shutoff. Air economizers shall be capable of automatically reducing *outdoor air* intake to the design minimum *outdoor air* quantity when *outdoor air* intake will no longer reduce cooling energy usage. High-limit shutoff control types for specific climates shall be chosen from Table C403.3.3.3. High-limit shutoff control settings for these control types shall be those specified in Table C403.3.3.3.

❖ This section requires the air economizers to be capable of automatically reducing outdoor air intake to the design minimum outdoor air quantity when outdoor air intake will no longer reduce cooling energy usage. Otherwise this would increase cooling energy by increasing the latent load. Common enthalpy controllers include a high-limit switch, which enables the economizer to operate when outside air enthalpy is

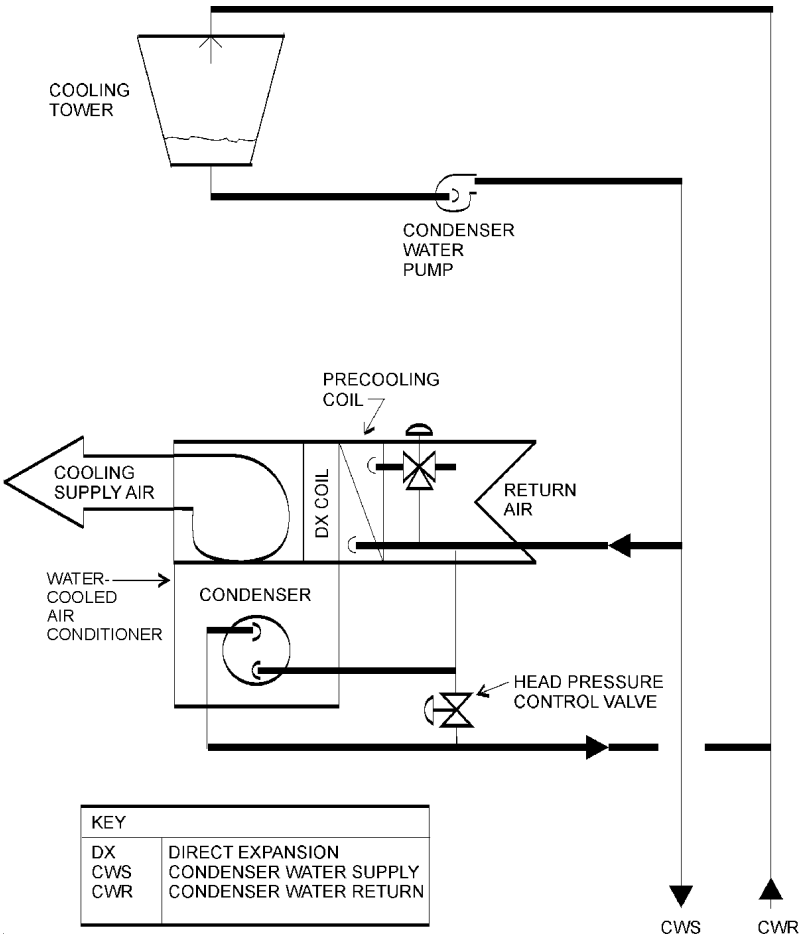

Figure C403.3.1(4)
AIR PRECOOLING WATER ECONOMIZER
(Courtesy of U.S. Department of Energy, Office of Building Technology State and Community Programs, www.energycodes.gov)

INTERNATIONAL CODE COUNCIL®
Copyright © 2015 ICC. ALL RIGHTS RESERVED. Accessed by David Dammon on Jun 21, 2017 12:30:52 PM pursuant to License Agreement with ICC. No further reproduction or distribution authorized. ANY UNAUTHORIZED REPRODUCTION OR DISTRIBUTION IS A VIOLATION OF THE FEDERAL COPYRIGHT ACT AND THE LICENSE AGREEMENT, AND SUBJECT TO CIVIL AND CRIMINAL PENALTIES THEREUNDER.

below a fixed setpoint, and differential enthalpy controls that enable the economizer to operate whenever outside air enthalpy is less than return air enthalpy. A high-limit shutoff that measures enthalpy and dry bulb should be used. In dry climates, the dry-bulb controllers will be the least expensive and most reliable. In humid climates, the added cost and complication of the enthalpy controller will be justified by the resulting energy savings.

C403.3.3.4 Relief of excess outdoor air. Systems shall be capable of relieving excess *outdoor air* during air economizer operation to prevent overpressurizing the building. The relief air outlet shall be located to avoid recirculation into the building.

❖ This section requires systems to be capable of relieving excess outdoor air during an air economizer operation to prevent overpressurizing the building. When a building is overpressurized, the doors do not open. In the economizer mode, the relief fans can save energy only by operating to maintain a slightly positive building pressure; if exfiltration paths have low-pressure drops, the fans will operate at lower volumes than return fans, which are generally controlled by airflow differentials. To maximize efficiency, relief fans should be axial or propeller fans, which are the most efficient for the low-pressure drops typical of return air paths, such as those using the ceiling attic as return air plenums.

C403.3.3.5 Economizer dampers. Return, exhaust/relief and outdoor air dampers used in economizers shall comply with Section C403.2.4.3.

❖ Section C403.2.4.3 sets maximum leakage rates for outdoor air intake and exhaust dampers, as well as requirements for automatic operation. There are limited exceptions for the use of gravity and motorized dampers in some climate zones.

C403.3.4 Water-side economizers. Water-side economizers shall comply with Sections C403.3.4.1 and C403.3.4.2.

❖ Just as air-side economizers use cool air directly to reduce cooling load, a water economizer (also called a "water-side" economizer) uses outside air to cool water that then cools supply air through a coil, thus reducing the mechanical cooling load. Water economizers are essentially indirect or direct evaporative coolers. In large commercial projects they are usually indirect coolers, using condenser water and cooling towers to chill water during cool, dry weather. Water is circulated through a tower where it is evaporatively cooled, then circulated through coils to cool supply air indirectly. This system has an advantage over air economizers in climates where wintertime humidification is required; the large amounts of dry air introduced with air economizers often increase humidification loads. However, in most climates, water economizers are generally are not as energy efficient as air economizers because they require the operation of cooling tower fans and condenser pumps. Air economizers also have the advantage of introducing large amounts of outdoor air for a majority of the building operating hours, which can improve indoor air quality.

There are three common types of water economizers:

"Strainer-cycle" or Chiller-bypass water economizer: This type of economizer, shown in Commentary Figure C403.3.1(2), has control valves that can divert condenser water from the cooling tower and run it directly into the normal chilled-water piping loop, bypassing the chiller. This bypass configuration will occur as long as the tower can cool the condenser water sufficiently to handle the cooling load, usually around 45°F (7°C) to 50°F (10°C). The

TABLE C403.3.3.3
HIGH-LIMIT SHUTOFF CONTROL SETTING FOR AIR ECONOMIZERS[b]

DEVICE TYPE	CLIMATE ZONE	REQUIRED HIGH LIMIT (ECONOMIZER OFF WHEN):	
		Equation	Description
Fixed dry bulb	1B, 2B, 3B, 3C, 4B, 4C, 5B, 5C, 6B, 7, 8	$T_{OA} > 75°F$	Outdoor air temperature exceeds 75°F
	5A, 6A	$T_{OA} > 70°F$	Outdoor air temperature exceeds 70°F
	1A, 2A, 3A, 4A	$T_{OA} > 65°F$	Outdoor air temperature exceeds 65°F
Differential dry bulb	1B, 2B, 3B, 3C, 4B, 4C, 5A, 5B, 5C, 6A, 6B, 7, 8	$T_{OA} > T_{RA}$	Outdoor air temperature exceeds return air temperature
Fixed enthalpy with fixed dry-bulb temperatures	All	$h_{OA} > 28$ Btu/lba or $T_{OA} > 75°F$	Outdoor air enthalpy exceeds 28 Btu/lb of dry air[a] or Outdoor air temperature exceeds 75°F
Differential enthalpy with fixed dry-bulb temperature	All	$h_{OA} > h_{RA}$ or $T_{OA} > 75°F$	Outdoor air enthalpy exceeds return air enthalpy or Outdoor air temperature exceeds 75°F

For SI: 1 foot = 305 mm, °C = (°F - 32)/1.8, 1 Btu/lb = 2.33 kJ/kg.

a. At altitudes substantially different than sea level, the fixed enthalpy limit shall be set to the enthalpy value at 75°F and 50-percent relative humidity. As an example, at approximately 6,000 feet elevation, the fixed enthalpy limit is approximately 30.7 Btu/lb.

b. Devices with selectable setpoints shall be capable of being set to within 2°F and 2 Btu/lb of the setpoint listed.

INTERNATIONAL CODE COUNCIL®
Copyright © 2015 ICC. ALL RIGHTS RESERVED. Accessed by David Dammon on Jun 21, 2017 12:30:52 PM pursuant to License Agreement with ICC. No further reproduction or distribution authorized. ANY UNAUTHORIZED REPRODUCTION OR DISTRIBUTION IS A VIOLATION OF THE FEDERAL COPYRIGHT ACT AND THE LICENSE AGREEMENT, AND SUBJECT TO CIVIL AND CRIMINAL PENALTIES THEREUNDER.

term “strainer-cycle,” as this type of economizer is commonly called, started as a trade name of a type of inline water filter intended to clean the dirty open-circuit tower water before it flowed into the clean (normally closed circuit) chilled-water circuit. Because chilled-water control valves and coils easily can become clogged, it is essential to install good water-treatment systems with this type of economizer. To resolve the clogging problem, a heat exchanger can be used to isolate the tower and chilled water circuits, at both considerable first-cost expense as well as reduced energy savings due to higher pump heads and a nonzero heat exchanger approach. Note that the chiller-bypass water economizer is “nonintegrated,” meaning the chiller provides 100 percent of the expected system cooling load and cannot operate when the condenser water is in the bypass arrangement; thus the economizer must provide all of the cooling load or it can provide none of it. Because of this characteristic, this economizer design may not meet the integration requirement of this section.

Water precooling water economizer: This type of economizer, shown in Commentary Figure C403.3.1(3), uses cold tower water when it is available to precool chilled water return (through a heat exchanger) before it enters the chiller. One advantage of this type of economizer over the strainer cycle is that it is integrated, meaning it can provide “free” cooling even when the chillers are operating by reducing chilled-water return temperatures.

It also isolates the open-circuit tower system from the chilled-water system with the heat exchanger, reducing fouling problems caused by the poor water quality of the open circuit. But the heat exchanger reduces the cooling energy savings because the water leaving the heat exchanger cannot be as cold as the tower water, and it increases pump energy during economizer operation because of the pressure drop of the heat exchanger.

Air precooling water economizer: This type of water economizer requires an additional cooling coil upstream of the normal, mechanical cooling coil, as shown in Commentary Figure C403.3.1(4). Condenser water is run through the tower and cooled as much as possible [typically to a minimum of about 50°F (10°C)]. The water then is run through the economizer coil, precooling the air before it enters the mechanical system cooling coil. This is an integrated economizer because mechanical cooling can be provided simultaneously with the economizer cooling.

Water from the cooling tower first passes through the economizer coil, precooling or fully cooling supply air, then goes on to remove condenser heat from the mechanical cooling system, with water flow modulated or bypassed to maintain head pressures, a control required because of the low water temperatures. The three-way control valve shown in Commentary Figure C403.3.1(4) operates so that, if the tower water is warmer than the return air, the water bypasses the coil to avoid warming the air and increasing the cooling load. This is similar to the high-limit control used with air economizers. Because the economizer and mechanical cooling can operate concurrently with this type of economizer, it is integrated and must meet the integration requirements of Section C403.3.1. This scheme is very popular when water-cooled air conditioners are used because the condenser water must be piped to the units anyway, so the only expense of the water economizer is the added coil and controls.

Although either air or water economizers will meet the requirements of this section, air economizers will outperform water economizers except in very dry climates (such as Nevada or Arizona) or very cold climates where humidification must be added to offset the dryness caused by the introduction of cold, dry air. Water economizers require cooling tower fans and tower pumps to operate during economizer operation, plus added fan and pump pressure drops for economizers like that shown in Commentary Figure C403.3.1(4) that will increase fan and pump energy even when the economizer is not operating. Air economizers do not have such parasitic loads, except where supplemental humidification is required in cold climates. Air economizers also can improve indoor air quality because of the many hours when outside air intake exceeds minimum levels. Thus, air economizers are preferred over water economizers for most applications if the architecture of the building and the HVAC system type are suitable.

Exceptions 2 and 3 provide economizer tradeoffs similar to that found in Section C403.3.1, Exception 1 (see commentary, Section C403.3.1). These trade-offs are provided in terms of percentages above the minimum EER or, in the case of chiller systems, the IPLV cooling requirements. The reference to Table C403.3.1 and the stated efficiency improvement simplifies the application to a broad category of cooling equipment. This provides a simple calculation to get the allowed EER or IPLV levels for the tradeoffs, and is not allowed for the chiller equipment or condenser systems.

C403.3.4.1 Design capacity. Water economizer systems shall be capable of cooling supply air by indirect evaporation and providing up to 100 percent of the expected system cooling load at *outdoor air* temperatures of not greater than 50°F (10°C) dry bulb/45°F (7°C) wet bulb.

Exceptions:

1. Systems primarily serving computer rooms in which 100 percent of the expected system cooling load at 40°F (4°C) dry bulb/35°F (1.7°C) wet bulb is met with evaporative water economizers.
2. Systems primarily serving computer rooms with dry cooler water economizers which satisfy 100 percent of the expected system cooling load at 35°F (1.7°C) dry bulb.

INTERNATIONAL CODE COUNCIL®
Copyright © 2015 ICC. ALL RIGHTS RESERVED. Accessed by David Dammon on Jun 21, 2017 12:30:52 PM pursuant to License Agreement with ICC. No further reproduction or distribution authorized. ANY UNAUTHORIZED REPRODUCTION OR DISTRIBUTION IS A VIOLATION OF THE FEDERAL COPYRIGHT ACT AND THE LICENSE AGREEMENT, AND SUBJECT TO CIVIL AND CRIMINAL PENALTIES THEREUNDER.

3. Systems where dehumidification requirements cannot be met using outdoor air temperatures of 50°F (10°C) dry bulb/45°F (7°C) wet bulb and where 100 percent of the expected system cooling load at 45°F (7°C) dry bulb/40°F (4°C) wet bulb is met with evaporative water economizers.

❖ This section is for water economizer systems. This design is specified because, unlike air economizers, which use cold outside air directly for cooling, the performance of water economizers depends greatly on the selection of components, such as cooling towers and heat exchangers. The system sizing is based on the building design load at an outdoor temperature of 50°F dry bulb temperature and 47°F wet bulb temperature.

Exceptions 1 and 2: Computer rooms and data centers require precision temperature control and may require greater energy use when using air-side economizers. Less restrictive design temperatures to meet 100 percent of the design cooling load are allowed for systems serving primarily computer rooms. Separate design conditions are set for evaporative systems and dry-cooler type systems.

Some buildings/spaces generate excessive quantities of interior moisture (latent load). Some high-occupancy spaces or spaces with similar vapor generation will not be satisfied by water-side economizing at 50°F dry bulb/47°F wet bulb. The cooling coil temperature will not be cold enough to condense moisture in the supply air. When interior space design conditions cannot be adequately dehumidified, Exception 3 allows the economizer design condition to be reduced to 45°F dry bulb/40°F wet bulb.

C403.3.4.2 Maximum pressure drop. Precooling coils and water-to-water heat exchangers used as part of a water economizer system shall either have a water-side pressure drop of less than 15 feet (45 kPa) of water or a secondary loop shall be created so that the coil or heat exchanger pressure drop is not seen by the circulating pumps when the system is in the normal cooling (noneconomizer) mode.

❖ This section is for precooling coils and water-to-water heat exchangers used as part of a water economizer system. If the water-side pressure drop is less than 15 feet (4572 mm) of water or a secondary loop so that the coil or heat exchanger pressure drop is not seen by the circulating pumps, there will be energy wasted as the circulating pumps continue to operate as if the system is in the normal cooling mode.

C403.4 Hydronic and multiple-zone HVAC systems controls and equipment. (Prescriptive). Hydronic and multiple-zone HVAC system controls and equipment shall comply with this section.

❖ The equipment, systems and controls found in the various subsections of Section C403.4 are not required, per se, but are commonly found in larger buildings with multiple zones for space conditioning and the need for more-sophisticated controls. Where a designer includes these systems in the building, the requirements of these sections must be met.

C403.4.1 Fan control. Controls shall be provided for fans in accordance with Sections C403.4.1.1 through C403.4.1.3.

❖ Fan control must address the control of airflow, the placement of static pressure sensors and the set-points for direct digital control.

C403.4.1.1 Fan airflow control. Each cooling system listed in Table C403.4.1.1 shall be designed to vary the indoor fan airflow as a function of load and shall comply with the following requirements:

1. Direct expansion (DX) and chilled water cooling units that control the capacity of the mechanical cooling directly based on space temperature shall have not fewer than two stages of fan control. Low or minimum speed shall not be greater than 66 percent of full speed. At low or minimum speed, the fan system shall draw not more than 40 percent of the fan power at full fan speed. Low or minimum speed shall be used during periods of low cooling load and ventilation-only operation.
2. Other units including DX cooling units and chilled water units that control the space temperature by modulating the airflow to the space shall have modulating fan control. Minimum speed shall be not greater than 50 percent of full speed. At minimum speed the fan system shall draw not more than 30 percent of the power at full fan speed. Low or minimum speed shall be used during periods of low cooling load and ventilation- only operation.
3. Units that include an airside economizer in accordance with Section C403.3 shall have not fewer than two speeds of fan control during economizer operation

Exceptions:

1. Modulating fan control is not required for chilled water and evaporative cooling units with fan motors of less than 1 hp (0.746 kW) where the units are not used to provide *ventilation* air and the indoor fan cycles with the load.
2. Where the volume of outdoor air required to comply with the *ventilation* requirements of the *International Mechanical Code* at low speed exceeds the air that would be delivered at the speed defined in Section C403.4.1, the minimum speed shall be selected to provide the required *ventilation air*.

❖ Fans generally are the largest energy-using components of HVAC systems. Most HVAC systems spend most of their operating hours at part loads, where little or no cooling is required. Few systems require full cooling capacity at all operating hours. For cooling systems, multiple stages of cooling at part-load conditions allows lower fan speed and higher efficiency for DX cooling. Significant energy savings can be

INTERNATIONAL CODE COUNCIL®
Copyright © 2015 ICC. ALL RIGHTS RESERVED. Accessed by David Dammon on Jun 21, 2017 12:30:52 PM pursuant to License Agreement with ICC. No further reproduction or distribution authorized. ANY UNAUTHORIZED REPRODUCTION OR DISTRIBUTION IS A VIOLATION OF THE FEDERAL COPYRIGHT ACT AND THE LICENSE AGREEMENT, AND SUBJECT TO CIVIL AND CRIMINAL PENALTIES THEREUNDER.

realized. This section sets limits for multiple-stage cooling that align with requirements found in ASHRAE 90.1.

Under Item 1, when a call for cooling by the space thermostat cycles (increases or decreases) the stages of DX cooling or control of chilled water supply, the fan shall have a minimum of two speeds. The minimum fan speed shall be no more than 66 percent of the peak fan speed. Under these systems, the fan reacts to the amount of cooling generated.

Under Item 2, when a call for cooling by the space thermostat modulates (increases/decreases) the supply fan speed, the fan minimum speed at the lowest call for cooling shall be no more than 50 percent of the maximum fan speed at peak cooling. Under these systems, the cooling capacity modulates to keep track of the fan speed.

Exception 1 is for fan speed modulation for units not used for providing ventilation air. The fan must cycle on-off with a call for cooling or heating. With no call for heating/cooling, the fan is off.

Exception 2 is relative to spaces requiring high outdoor air ventilation rates, such as an assembly occupancy. The fan minimum speed shall not be required to operate at a speed lower than required to deliver code minimum ventilation air. Section C403.4.1.1 may be exceeded to meet ventilation.

Note that after January 1, 2016, the limit for DX cooling systems requiring fan control decreases from 75,000 Btu/h to 65,000 Btu/h.

TABLE C403.4.1.1
EFFECTIVE DATES FOR FAN CONTROL

COOLING SYSTEM TYPE	FAN MOTOR SIZE	MECHANICAL COOLING CAPACITY
DX cooling	Any	≥ 75,000 Btu/h (before 1/1/2016)
		≥ 65,000 Btu/h (after 1/1/2016)
Chilled water and evaporative cooling	≥ 5 hp	Any
	≥ 1/4 hp	Any

For SI: 1 British thermal unit per hour = 0.2931 W; 1 hp = 0.746 kW.

C403.4.1.2 Static pressure sensor location. Static pressure sensors used to control VAV fans shall be located such that the controller set point is not greater than 1.2 inches w.c. (299 Pa). Where this results in one or more sensors being located downstream of major duct splits, not less than one sensor shall be located on each major branch to ensure that static pressure can be maintained in each branch.

❖ This section describes where the static pressure sensors should be located. Their location was determined by studies conducted by the New Buildings Institute (NBI), the American Institute of Architects (AIA) and the U.S. Department of Energy (DOE) to ensure the static pressure sensor can be maintained and functional for a long time. Accurate control of VAV fan systems increases energy savings. The sensor location for control of VAV fan speed is required to be where the duct system static pressure is no greater than 1.2 inches w.c. (299 Pa). This locates the sensor where it will see greater changes in duct pressure and will result in fan speed reduction over greater ranges of operation. It is also more flexible than prior code cycles, which may have set the controller position where it would not sense flow variations in the duct.

This section describes where the static pressure sensors should be located. Their location was determined by NBI, AIA and U.S. DOE studies to ensure the static pressure sensor can be maintained and functional for a long time.

C403.4.1.3 Set points for direct digital control. For systems with direct digital control of individual zones reporting to the central control panel, the static pressure set point shall be reset based on the *zone* requiring the most pressure. In such case, the set point is reset lower until one *zone* damper is nearly wide open. The direct digital controls shall be capable of monitoring *zone* damper positions or shall have an alternative method of indicating the need for static pressure that is capable of all of the following:

1. Automatically detecting any *zone* that excessively drives the reset logic.
2. Generating an alarm to the system operational location.
3. Allowing an operator to readily remove one or more *zones* from the reset algorithm.

❖ This section notes that the static pressure setpoints must be reset. This is potentially a major energy saver in buildings with VAV systems. Most VAV systems already have DDC systems and adding this capability to a DDC system requires minimal cost for the additional programming. This requirement only applies for systems with DDC.

The control system shall be capable of identifying problematic VAV zones. An example may be a zone that is calling for full cooling (100 percent open) for too many hours of operation relative to the remaining VAV zones. This activity may cause the static pressure to be reset higher than it should be set; this results in excess fan energy to be expended based upon an "outlier" zone. The control sequence and required alarms alert the system operator, who can address the issue.

C403.4.2 Hydronic systems controls. The heating of fluids that have been previously mechanically cooled and the cooling of fluids that have been previously mechanically heated shall be limited in accordance with Sections C403.4.2.1 through C403.4.2.3. Hydronic heating systems comprised of multiple-packaged boilers and designed to deliver conditioned water or steam into a common distribution system shall include automatic controls capable of sequencing operation of the boilers. Hydronic heating systems comprised of a single boiler and greater than 500,000 Btu/h (146.5 kW) input design capacity shall include either a multistaged or modulating burner.

❖ Most simultaneous heating and cooling in contemporary mechanical systems occurs on the air side. How-

INTERNATIONAL CODE COUNCIL®
Copyright © 2015 ICC. ALL RIGHTS RESERVED. Accessed by David Dammon on Jun 21, 2017 12:30:52 PM pursuant to License Agreement with ICC. No further reproduction or distribution authorized. ANY UNAUTHORIZED REPRODUCTION OR DISTRIBUTION IS A VIOLATION OF THE FEDERAL COPYRIGHT ACT AND THE LICENSE AGREEMENT, AND SUBJECT TO CIVIL AND CRIMINAL PENALTIES THEREUNDER.

ever, some wasted energy also can result from poor design practices in hydronic systems. This requirement, in effect, prohibits the so-called three-pipe systems that use a common return where the heated water and cooled water are mixed. It is evident that both heating and cooling energy usage is needlessly wasted to bring this tempered mixture back to a useful state (thermally).

The provisions addressing either multiple packaged boilers or a single boiler greater than 500,000 Btu/h (146 550 W) input capacity are simply intended to ensure that the boilers are only operated in an efficient manner regardless of the heating-load demand.

C403.4.2.1 Three-pipe system. Hydronic systems that use a common return system for both hot water and chilled water are prohibited.

❖ This section explicitly prohibits the use of a three-pipe system. As stated previously, three-pipe systems use a common return where the heated and cooled water are mixed. It is evident that both heating and cooling energy are needlessly wasted to either reheat or recool this tempered mixture back to a useful state (thermally).

C403.4.2.2 Two-pipe changeover system. Systems that use a common distribution system to supply both heated and chilled water shall be designed to allow a dead band between changeover from one mode to the other of not less than 15°F (8.3°C) outside air temperatures; be designed to and provided with controls that will allow operation in one mode for not less than 4 hours before changing over to the other mode; and be provided with controls that allow heating and cooling supply temperatures at the changeover point to be not more than 30°F (16.7°C) apart.

❖ A common distribution system is used in two-pipe changeover systems to supply heated or chilled water to fan coils or air handlers. No energy is wasted by this design so long as the system operates in one mode (heating or cooling) for a long period. Energy is wasted, however, during the changeover period (heating to cooling and cooling to heating) where the mass of water in the system is thermally reversed and brought to temperature.

The control measures described are established to operate the changeover cycle more efficiently such that the system is not rapidly switching over and fighting itself. Two-pipe systems can be efficient when the proper controls, such as those listed, are used.

C403.4.2.3 Hydronic (water loop) heat pump systems. Hydronic heat pump systems shall comply with Sections C403.4.2.3.1 through C403.4.2.3.2.

❖ Hydronic heat pumps typically are connected to a common condenser water loop. Also, connected to the loop are boilers and chillers to either add heat or cool the water, depending on the demand. The intent of this section is to reduce the energy usage

C403.4.2.3.1 Temperature dead band. Hydronic heat pumps connected to a common heat pump water loop with central devices for heat rejection and heat addition shall have controls that are capable of providing a heat pump water supply temperature dead band of not less than 20°F (11°C) between initiation of heat rejection and heat addition by the central devices.

Exception: Where a system loop temperature optimization controller is installed and can determine the most efficient operating temperature based on realtime conditions of demand and capacity, dead bands of less than 20°F (11°C) shall be permitted.

❖ This section requires hydronic heat pumps that are connected to a common heat pump water loop to have controls capable of providing a temperature dead band of not less than 20°F (11.1°C) between heat rejection and heat addition by the central devices. The dead band may be reduced by system loop temperature-optimization controllers that determine the most efficient operating temperature based on real-time demand and capacity conditions. The purpose of this section is to include a closed-circuit cooling tower for shutting down the pumps when a heat exchanger is to be used to control heat loss.

C403.4.2.3.2 Heat rejection. Heat rejection equipment shall comply with Sections C403.4.2.3.2.1 and C403.4.2.3.2.2.

Exception: Where it can be demonstrated that a heat pump system will be required to reject heat throughout the year.

❖ The purpose of this section is to provide additional energy requirements in Sections C403.4.3.3.2.1 and C403.4.3.3.2.2 for heat rejection equipment.

C403.4.2.3.2.1 Climate Zones 3 and 4. For *Climate Zones* 3 and 4:

1. Where a closed-circuit cooling tower is used directly in the heat pump loop, either an automatic valve shall be installed to bypass all but a minimal flow of water around the tower, or lower leakage positive closure dampers shall be provided.
2. Where an open-circuit tower is used directly in the heat pump loop, an automatic valve shall be installed to bypass all heat pump water flow around the tower.
3. Where an open- or closed-circuit cooling tower is used in conjunction with a separate heat exchanger to isolate the cooling tower from the heat pump loop, then heat loss shall be controlled by shutting down the circulation pump on the cooling tower loop.

❖ This section addresses both closed- and open-circuit cooling towers used in hydronic (water loop) heat pump systems. When used directly in the heat pump loop or with a heat exchanger in Climate Zones 3 and 4, requirements for controlling heat loss are provided. This ensures the elimination of flow in the cooling tower loop when heat rejection is not required. By just requiring the shut experience, a temperature differential of 4°F to 7°F (2.2°C to 3.9°C) has been observed through a heat exchanger on a heat pump loop due to the fluid flow from convection with the tower pumps shut down. The boiler must compensate for the additional heat rejection, which is not energy efficient and

INTERNATIONAL CODE COUNCIL®
Copyright © 2015 ICC. ALL RIGHTS RESERVED. Accessed by David Dammon on Jun 21, 2017 12:30:52 PM pursuant to License Agreement with ICC. No further reproduction or distribution authorized. ANY UNAUTHORIZED REPRODUCTION OR DISTRIBUTION IS A VIOLATION OF THE FEDERAL COPYRIGHT ACT AND THE LICENSE AGREEMENT, AND SUBJECT TO CIVIL AND CRIMINAL PENALTIES THEREUNDER.

could be considerable depending on the system size. The requirement that the valve, when used with the heat exchanger, bypass the tower is no different than the requirement for the valve, when the tower is installed within the heat pump loop. This will ensure an energy-efficient system.

C403.4.2.3.2.2 Climate Zones 5 through 8. For *Climate Zones* 5 through 8, where an open- or closed-circuit cooling tower is used, a separate heat exchanger shall be provided to isolate the cooling tower from the heat pump loop, and heat loss shall be controlled by shutting down the circulation pump on the cooling tower loop and providing an automatic valve to stop the flow of fluid.

❖ This section describes both closed- and open-circuit cooling towers used in hydronic (water loop) heat pump systems. When used directly in the heat pump loop or with a heat exchanger in Climate Zones 3 and 4, requirements for controlling heat loss are provided. If a closed-circuit cooling tower is proposed in Climate Zones 5 to 8, a heat exchanger is required along with the requirements to control heat loss. This ensures the elimination of flow in the cooling tower loop when heat rejection is not required. By just requiring the shut experience, a temperature differential of 4°F to 7°F (2.2°C to 3.9°C) has been observed through a heat exchanger on a heat pump loop due to the fluid flow from convection with the tower pumps shut down. The boiler must compensate for the additional heat rejection, which is not energy efficient and could be considerable depending on the system size. The requirement that the valve, when used with the heat exchanger, bypass the tower is no different than the requirement for the valve when the tower is installed within the heat pump loop. This will ensure an energy-efficient system.

C403.4.2.3.3 Two-position valve. Each hydronic heat pump on the hydronic system having a total pump system power exceeding 10 hp (7.5 kW) shall have a two-position valve.

❖ The variable flow requirements of Section C403.4.2.4, Item 2, are to be consulted where individual heat pumps served by the common condenser loop exceed 10 hp (7.5 kW). This section requires each hydronic heat pump on the hydronic system having a total pump system power exceeding 10 hp (7.5 kW) to have a two-position valve that must be interlocked to shut off flow to the heat pump when the compressor is off. This two-position valve is required to isolate the system components to facilitate their repair, maintenance or replacement.

C403.4.2.4 Part-load controls. Hydronic systems greater than or equal to 500,000 Btu/h (146.5 kW) in design output capacity supplying heated or chilled water to comfort conditioning systems shall include controls that have the capability to do all of the following:

1. Automatically reset the supply-water temperatures in response to varying building heating and cooling demand using coil valve position, zone-return water temperature, building-return water temperature or outside air temperature. The temperature shall be capable of being reset by not less than 25 percent of the design supply-to-return water temperature difference.
2. Automatically vary fluid flow for hydronic systems with a combined motor capacity of 10 hp (7.5 kW) or larger with three or more control valves or other devices by reducing the system design flow rate by not less than 50 percent by designed valves that modulate or step open and close, or pumps that modulate or turn on and off as a function of load.
3. Automatically vary pump flow on chilled-water systems and heat rejection loops serving water- cooled unitary air conditioners with a combined motor capacity of 10 hp (7.5 kW) or larger by reducing pump design flow by not less than 50 percent, utilizing adjustable speed drives on pumps, or multiple-staged pumps where not less than one-half of the total pump horsepower is capable of being automatically turned off. Pump flow shall be controlled to maintain one control valve nearly wide open or to satisfy the minimum differential pressure.

Exceptions:

1. Supply-water temperature reset for chilled-water systems supplied by off-site district chilled water or chilled water from ice storage systems.
2. Minimum flow rates other than 50 percent as required by the equipment manufacturer for proper operation of equipment where using flow bypass or end-of-line 3-way valves.
3. Variable pump flow on dedicated equipment circulation pumps where configured in primary/secondary design to provide the minimum flow requirements of the equipment manufacturer for proper operation of equipment.

❖ The code requires that hydronic systems with a design output capacity greater than or equal to 500,000 Btu/h (146.5 kW) be designed for variable flow. All three requirements outlined must be met. The requirements don't exclude one another but are additive. As written all three of the following control requirements must be addressed:

- Supply Water Temperature Reset.
- Variable Flow Control.
- Variable or Stepped Pumping.

Variable flow control (Item 2) in hydronic systems is needed in order to implement variable or stepped pumping (Item 3). Therefore, Item 2 is described prior to the requirements in Item 3. Item 2 applies to all other hydronic systems since two-way valve control is less expensive than three-way valve control. This requirement also aligns with Section C403.4.2.3.3, which requires two-way valve control on heat pump hydronic systems.

Cooling systems with pump capacity 10 hp or greater should have variable flow using variable speed drives or stepped pumping. Allowing cooling

INTERNATIONAL CODE COUNCIL®
Copyright © 2015 ICC. ALL RIGHTS RESERVED. Accessed by David Dammon on Jun 21, 2017 12:30:52 PM pursuant to License Agreement with ICC. No further reproduction or distribution authorized. ANY UNAUTHORIZED REPRODUCTION OR DISTRIBUTION IS A VIOLATION OF THE FEDERAL COPYRIGHT ACT AND THE LICENSE AGREEMENT, AND SUBJECT TO CIVIL AND CRIMINAL PENALTIES THEREUNDER.

pumps to vary flow and ride the pump curve should not be allowed on larger pumping systems. Heating-only hydronic systems of any size are excluded from this requirement since pump inefficiencies are recaptured as a heat source in the hydronic heating system. A cost-effective analysis, as shown in the table below, indicates cooling systems with a pump capacity of 10 hp to be cost effective. The analysis assumes an average pump run time of 2,000 hours. This analysis only accounts for pump motor energy savings and doesn't account for the reduced heat rejected from the cooling pump into the chilled water system.

C403.4.2.5 Boiler turndown. *Boiler systems* with design input of greater than 1,000,000 Btu/h (293 kW) shall comply with the turndown ratio specified in Table C403.4.2.5.

The system turndown requirement shall be met through the use of multiple single input boilers, one or more *modulating boilers* or a combination of single input and *modulating boilers*.

❖ A boiler system is any combination of one or more boilers and their piping and controls that work together to supply heating water or steam for delivery to remote heating devices. Where a boiler is only able to operate at a single rate (single-input boiler) it is either off or on. If the needs of the building are less than what that single-input boiler is providing, energy is being wasted. Therefore, where the boiler has an input rating of 1,000,000 Btu/h or greater, it must be provided with a turndown mechanism to allow operation at a reduced level. Even with the turndown capacity, the demand for heat may be less than the turndown level, in which case the boiler will cycle between the turndown capacity and being off (not firing). The code specifies boiler system options that can be used to comply with this section. The list is not intended to be exclusive.

TABLE C403.4.2.5
BOILER TURNDOWN

BOILER SYSTEM DESIGN INPUT (Btu/h)	MINIMUM TURN-DOWN RATIO
≥ 1,000,000 and less than or equal to 5,000,000	3 to 1
> 5,000,000 and less than or equal to 10,000,000	4 to 1
> 10,000,000	5 to 1

For SI: 1 British thermal unit per hour = 0.2931 W.

C403.4.2.6 Pump isolation. Chilled water plants including more than one chiller shall have the capability to reduce flow automatically through the chiller plant when a chiller is shut down. Chillers piped in series for the purpose of increased temperature differential shall be considered as one chiller.

Boiler plants including more than one boiler shall have the capability to reduce flow automatically through the boiler plant when a boiler is shut down.

❖ These requirements apply to chilled water plants (more than one chiller) and hot water plants (more than one boiler). In the case of a chiller plant, the purpose is to provide for a reduction in the cooling flow rate, thereby minimizing pumping energy when full plant-chilled water flow is not necessary (i.e., a chiller piped in series is shut down). This section essentially requires flow through chillers (or boilers) piped in parallel to be shut off when the chillers (or boilers) are inactive.

C403.4.3 Heat rejection equipment. Each fan powered by a motor of 7.5 hp (5.6 kW) or larger shall have the capability to operate that fan at two-thirds of full speed or less, and shall have controls that automatically change the fan speed to control the leaving fluid temperature or condensing temperature/pressure of the heat rejection device.

Exception: Factory-installed heat rejection devices within HVAC equipment tested and rated in accordance with Tables C403.2.3(6) and C403.2.3(7).

❖ Since fans are one of the major energy-using components of an HVAC system, this section provides one or more methods for improving the efficiency where the savings benefit can be justified. Heat rejection equipment covered by this section would include cooling systems, such as air-cooled condensers, cooling towers (open and closed circuit) and evaporative condensers. In each circumstance, the fans powered by motors of 7.5 hp (5.6 kW) or larger require controls to automatically change fan speed in response to part-load conditions. The exception excludes the "factory-installed" devices that are indicated because the fan energy is included in the efficiency ratings for that equipment.

C403.4.3.1 General. Heat rejection equipment such as air-cooled condensers, dry coolers, open-circuit cooling towers, closed-circuit cooling towers and evaporative condensers used for comfort cooling applications shall comply with this section.

Exception: Heat rejection devices where energy usage is included in the equipment efficiency ratings listed in Tables C403.2.3(6) and C403.2.3(7).

❖ See the commentary to Section C403.4.3.

C403.4.3.2 Fan speed control. The fan speed shall be controlled as provided in Sections C403.4.3.2.1 and C403.4.3.2.2.

❖ Fan speed must be controlled in accordance with the requirements of Sections C403.4.3.2.1 and C403.4.3.2.2.

C403.4.3.2.1 Fan motors not less than 7.5 hp. Each fan powered by a motor of 7.5 hp (5.6 kW) or larger shall have the capability to operate that fan at two-thirds of full speed or less, and shall have controls that automatically change the fan speed to control the leaving fluid temperature or condensing temperature/pressure of the heat rejection device.

Exception: The following fan motors over 7.5 hp (5.6 kW) are exempt:

1. Condenser fans serving multiple refrigerant circuits.

INTERNATIONAL CODE COUNCIL®
Copyright © 2015 ICC. ALL RIGHTS RESERVED. Accessed by David Dammon on Jun 21, 2017 12:30:52 PM pursuant to License Agreement with ICC. No further reproduction or distribution authorized. ANY UNAUTHORIZED REPRODUCTION OR DISTRIBUTION IS A VIOLATION OF THE FEDERAL COPYRIGHT ACT AND THE LICENSE AGREEMENT, AND SUBJECT TO CIVIL AND CRIMINAL PENALTIES THEREUNDER.

2. Condenser fans serving flooded condensers.
3. Installations located in *Climate Zones* 1 and 2.

❖ Multispeed fans provide another method by which energy is saved. Systems are designed for heating on the coldest day and cooling on the warmest day, therefore lower settings in the system will allow savings on days where extremes are not occurring.

C403.4.3.2.2 Multiple-cell heat rejection equipment. Multiple-cell heat rejection equipment with variable speed fan drives shall be controlled in both of the following manners:

1. To operate the maximum number of fans allowed that comply with the manufacturer's requirements for all system components.
2. So all fans can operate at the same fan speed required for the instantaneous cooling duty, as opposed to staged (on/off) operation.

Minimum fan speed shall be the minimum allowable speed of the fan drive system in accordance with the manufacturer's recommendations.

❖ Optimal airflow must be maintained across the whole heat rejection surface area regardless of load. Heat rejection equipment that is composed of multiple cells typically has at least one fan per cell. The cells must be linked to operate as a unit so that increases and decreases of airflow are consistent. The minimum controlled fan speed can not be set lower than the minimum speed recommended by the heat rejection equipment manufacturer for the fan drive system. Finally, staging the fans will not satisfy this requirement as this does not maintain uniform airflow across the heat rejection surfaces.

C403.4.3.3 Limitation on centrifugal fan open-circuit cooling towers. Centrifugal fan open-circuit cooling towers with a combined rated capacity of 1,100 gpm (4164 L/m) or greater at 95°F (35°C) condenser water return, 85°F (29°C) condenser water supply, and 75°F (24°C) outdoor air wet-bulb temperature shall meet the energy efficiency requirement for axial fan open-circuit cooling towers listed in Table C403.2.3(8).

Exception: Centrifugal open-circuit cooling towers that are designed with inlet or discharge ducts or require external sound attenuation.

❖ Centrifugal fans with the rated capacities set in this section must be at least as efficient as specified in Table C403.2.3(8). For the same types of installations, centrifugal fan cooling towers will use about twice the energy as axial (or propeller) fan towers. In general, designers should use axial fan cooling towers when possible.

C403.4.3.4 Tower flow turndown. Open-circuit cooling towers used on water-cooled chiller systems that are configured with multiple- or variable-speed condenser water pumps shall be designed so that all open- circuit cooling tower cells can be run in parallel with the larger of the flow that is produced by the smallest pump at its minimum expected flow rate or at 50 percent of the design flow for the cell.

❖ This requirement applies only to open-circuit cooling towers and does not apply to any closed-loop systems. The provision requires multiple pump installations to be linked so they run in parallel. The flow from the smallest pump dictates the flow from the connected system. Where the flow rate is below that recommended by a manufacturer, the design may require use of towers with gravity-flow water distribution systems, weir dams or other mechanisms to allow the pumps to balance. There is no exception for any category of this equipment.

C403.4.4 Requirements for complex mechanical systems serving multiple zones. Sections C403.4.4.1 through C403.4.6.4 shall apply to complex mechanical systems serving multiple zones. Supply air systems serving multiple zones shall be variable air volume (VAV) systems that, during periods of occupancy, are designed and capable of being controlled to reduce primary air supply to each *zone* to one of the following before reheating, recooling or mixing takes place:

1. Thirty percent of the maximum supply air to each *zone*.
2. Three hundred cfm (142 L/s) or less where the maximum flow rate is less than 10 percent of the total fan system supply airflow rate.
3. The minimum ventilation requirements of Chapter 4 of the *International Mechanical Code.*
4. Any higher rate that can be demonstrated to reduce overall system annual energy use by offsetting reheat/recool energy losses through a reduction in *outdoor air* intake for the system, as *approved* by the *code official*.
5. The airflow rate required to comply with applicable codes or accreditation standards, such as pressure relationships or minimum air change rates.

Exception: The following individual *zones* or entire air distribution systems are exempted from the requirement for VAV control:

1. Zones or supply air systems where not less than 75 percent of the energy for reheating or for providing warm air in mixing systems is provided from a site-recovered or site-solar energy source.
2. *Zones* where special humidity levels are required to satisfy process needs.
3. *Zones* with a peak supply air quantity of 300 cfm (142 L/s) or less and where the flow rate is less than 10 percent of the total fan system supply airflow rate.
4. *Zones* where the volume of air to be reheated, recooled or mixed is not greater than the volume of outside air required to provide the minimum ventilation requirements of Chapter 4 of the *International Mechanical Code*.
5. *Zones* or supply air systems with thermostatic and humidistatic controls capable of operating in

INTERNATIONAL CODE COUNCIL®
Copyright © 2015 ICC. ALL RIGHTS RESERVED. Accessed by David Dammon on Jun 21, 2017 12:30:52 PM pursuant to License Agreement with ICC. No further reproduction or distribution authorized. ANY UNAUTHORIZED REPRODUCTION OR DISTRIBUTION IS A VIOLATION OF THE FEDERAL COPYRIGHT ACT AND THE LICENSE AGREEMENT, AND SUBJECT TO CIVIL AND CRIMINAL PENALTIES THEREUNDER.

sequence the supply of heating and cooling energy to the *zones* and which are capable of preventing reheating, recooling, mixing or simultaneous supply of air that has been previously cooled, either mechanically or through the use of economizer systems, and air that has been previously mechanically heated.

❖ When air-conditioning system designs were developed in the late 1950s and early l960s, energy costs were a minor concern. The systems were designed primarily for precise temperature control with little regard for energy costs. Zone temperature control was achieved by reheating cold supply air (constant volume reheat system), recooling warm supply air (such as perimeter induction systems), or mixing hot and cold air (constant volume dual-duct and multizone system). Although these systems provided fine temperature control, they did so at great expense of energy.

To curb the use of these wasteful energy design practices, this section requires systems serving multiple zones to be VAV systems equipped with zone thermostatic and humidistat controls designed and specifically capable of sequencing the supply of heating and cooling energy to each zone to a minimum before reheating, recooling or mixing takes place. The requisite controls must thereby minimize:

- Reheating.
- Recooling.
- Mixing or simultaneous supply of air that has been previously mechanically heated and air that has been previously cooled, either mechanically or by economizer systems.

The five items listed in this section establish what level of air supply must be reached before it is permissible for the system to either reheat, recool or mix heated and cooled air. The first three are straightforward specifications, easily determined for each building for each zone. Item 4 allows the designer to demonstrate a greater rate of supplying air where a system reduces overall energy use. This alternative threshold design must be approved by the code official. Item 5 allows special spaces to be addressed where there are other standards at play. Examples of such spaces include areas of hospitals (operating rooms, patient rooms and laboratories) where pressures need to be maintained to prevent contaminants from entering or leaving the areas. The potential from release of contaminants, or in other cases dangerous chemicals, must be allowed to be balanced with the energy saving needs for the HVAC system.

There are five exceptions that address where either individual zones or the entire air distribution system is exempt from the VAV requirement or controls affecting the simultaneous heating and cooling requirements.

Exception 1 covers zones or systems where not less than 75 percent of the energy for reheating or producing warm air supply in mixing systems is supplied by heat recovered from some process or equipment in the building (such as chiller condenser heat) or from a solar-heating system installed on site.

Exception 2 acknowledges zones where specific humidity levels must be maintained for purposes other than personal comfort, such as some areas of museums or archives where sensitive materials are displayed or stored, or some computer rooms where equipment must be maintained in precise humidity ranges to function properly. Note that much of the computer equipment manufactured today, such as common personal computers and most minicomputers, does not require this precise humidity control, so this exception would not apply.

For typical multiple-zone systems, Exception 3 can be applied to, at best, a limited number of zones served by the system. The exception applies to zones with a peak supply air quantity of 300 cfm (142 L/s) or less, and also where the flow rate is less than 10 percent of the total fan system supply airflow rate.

This criterion was included specifically to address reheat systems and heating problems that can occur in small zones or subzones that have low peak supply air volumes, but a larger zone requires additional heat, such as spaces with large glass areas facing north, areas shaded by overhangs and fins, or entry vestibules. These spaces often can require higher heating volumes than allowed by Exception 4 using reasonable supply air temperatures. In most cases, 300 cfm (142 L/s) will be sufficient for heating. If not, a fan-powered VAV box could be used to improve the circulation rate.

The exception allows reheat to be used for small subzones of a larger zone. For instance, an air conditioner might serve an office space in which more heat is needed at the front entry area to offset infiltration when exterior doors are opened. If the supply to the entry is less than 300 cfm (142 L/s), a reheat coil may be installed to meet this special heating requirement.

Exception 4 is most common for multiple-zone systems. In this case, the VAV control strategy also could reduce the airflow to each zone that is being reheated, recooled or mixed to a minimum rate not exceeding the volume meeting the minimum ventilation requirements of Chapter 4 of the IMC. A conservative interpretation of this IMC chapter might lead to very high minimum flow rates to guarantee each zone receives minimum outside air, regardless of the percentage of outside air brought in at the system level. Instead, to reduce energy costs and first costs, the designer could take advantage of the direct transfer of air from adjacent overventilated zones.

Simultaneous heating and cooling is allowed by Exception 5 if it is minimized by the use of VAV controls.

Although there is little empirical evidence and no code-related requirement, many designers feel that a minimum supply air circulation rate of 0.4 cfm/ft^3

INTERNATIONAL CODE COUNCIL®
Copyright © 2015 ICC. ALL RIGHTS RESERVED. Accessed by David Dammon on Jun 21, 2017 12:30:52 PM pursuant to License Agreement with ICC. No further reproduction or distribution authorized. ANY UNAUTHORIZED REPRODUCTION OR DISTRIBUTION IS A VIOLATION OF THE FEDERAL COPYRIGHT ACT AND THE LICENSE AGREEMENT, AND SUBJECT TO CIVIL AND CRIMINAL PENALTIES THEREUNDER.

[0.002032 $m^3/(s \times m^2)$] of the zone-conditioned floor area must be maintained for comfort. In fact, ASHRAE 55 (a standard for thermal environmental conditions for human occupancy) states there is no minimum air velocity required for comfort. Nevertheless, with little or no air movement, some designers feel occupants will complain of stuffiness. Moreover, typical air outlet performance drops off at low flows, reducing its ability to effectively mix supply air with room air. This is a particular problem with reheat boxes because the supply air temperature at the minimum volume will be warm and the buoyancy of the supply air will further decrease mixing, unless the outlet velocities are maintained.

As in Exception 5, single-zone (simple) systems, with controls interlocked or otherwise capable of sequencing typical heating and cooling, will inherently meet these requirements. But most common multiple-zone (complex) systems require the use of simultaneous heating and cooling for zone temperature control.

C403.4.4.1 Single-duct VAV systems, terminal devices. Single-duct VAV systems shall use terminal devices capable of reducing the supply of primary supply air before reheating or recooling takes place.

❖ VAV systems control temperatures by varying the quantity (cfm) of supply air rather than varying supply air temperature. The VAV terminal device, therefore, varies that quantity of air supplied to the space at the zone level. Although this basic principle is typical of the VAV terminal device, VAV terminal devices are available in a variety of configurations. There is, however, one prevailing theme found in Sections C403.4.4.1 through C403.4.4.3: all VAV terminal devices equipped with a reheating, recooling or mixing function must permit the reduction of primary airflow (cfm) to a minimum as the first step in control; heating, cooling or mixing of air previously heated or cooled mechanically is the second step. Some typical VAV terminal unit configurations include:

Reheat. In a reheat terminal, heating (electric, hot water) is integrated at the unit. A predetermined throttling ratio establishes the lowest air quantity needed as required ventilation air to meet air movement and maximum humidity constraints before reheat is engaged.

Induction. VAV induction terminals reduce the primary (cooled) air supply with load while simultaneously inducing room or ceiling air to maintain relatively constant air movement. The ceiling air enhanced by these induction boxes generally is tempered by heat recovered from lights.

Fan powered. Fan-powered terminal units generally are selected to maintain higher circulation rates (cfm) at low loads; these VAV boxes often accommodate minimum (near zero) flow conditions while still maintaining constant airflow to the space. The energy savings is realized in that, as the primary (core) air closes to a minimum position (as necessary for minimum ventilation), the unit recirculates more plenum air. Both parallel (intermittent fan operation) and series (constant fan induction) arrangements are offered primarily for perimeter and interior/perimeter zone applications, respectively.

C403.4.4.2 Dual-duct and mixing VAV systems, terminal devices. Systems that have one warm air duct and one cool air duct shall use terminal devices that are capable of reducing the flow from one duct to a minimum before mixing of air from the other duct takes place.

❖ Dual-duct systems condition all air at a central air-handling unit via a hot deck and cold deck, and then distribute that air to the conditioned space(s) using two main duct trunk lines, one carrying cold air and the other carrying warm air. The dual-duct and mixing VAV systems blend these two air systems in various combinations at the terminal units. Accordingly, dual-duct and mixing VAV terminal devices must be capable of reducing flow from not less than one of the two ducts to a minimum, before reheating or recooling takes place (see commentary, Section C403.4.4.1).

C403.4.4.3 Single-fan dual-duct and mixing VAV systems, economizers. Individual dual-duct or mixing heating and cooling systems with a single fan and with total capacities greater than 90,000 Btu/h [(26.4 kW) 7.5 tons] shall not be equipped with air economizers.

❖ In dual-duct, single-fan systems a single primary air fan is sized for the total coincident peak of the hot and cold decks (see commentary, Section C403.4.4.2). Generally, the cold deck is maintained at a constant temperature, but during periods of high humidity, the hot deck temperature often is adjusted higher to increase airflow through the cold deck for dehumidification. This function, occurring at the primary air-handler level, can be energy wasteful if controls are not used to prevent the introduction of large amounts of outdoor air, such as may be admitted by an economizer, when the outdoor air is more humid than the return air. Therefore, the code structures an acceptable economizer trade-off around this particular scenario.

C403.4.4.4 Fractional hp fan motors. Motors for fans that are not less than $^1/_{12}$ hp (0.082 kW) and less than 1 hp (0.746 kW) shall be electronically commutated motors or shall have a minimum motor efficiency of 70 percent, rated in accordance with DOE 10 CFR 431. These motors shall also have the means to adjust motor speed for either balancing or remote control. The use of belt-driven fans to sheave adjustments for airflow balancing instead of a varying motor speed shall be permitted.

Exceptions: The following motors are not required to comply with this section:

1. Motors in the airstream within fan coils and terminal units that only provide heating to the space served.

INTERNATIONAL CODE COUNCIL®
Copyright © 2015 ICC. ALL RIGHTS RESERVED. Accessed by David Dammon on Jun 21, 2017 12:30:52 PM pursuant to License Agreement with ICC. No further reproduction or distribution authorized. ANY UNAUTHORIZED REPRODUCTION OR DISTRIBUTION IS A VIOLATION OF THE FEDERAL COPYRIGHT ACT AND THE LICENSE AGREEMENT, AND SUBJECT TO CIVIL AND CRIMINAL PENALTIES THEREUNDER.

2. Motors in space-conditioning equipment that comply with Section 403.2.3 or C403.2.12.
3. Motors that comply with Section C405.8.

❖ The efficiency of motors used in fan applications that are $^1/_{12}$ hp (62.1 W) or greater but less than 1 hp (0.75 kW) is addressed in this section. Motors in this range of horsepower must either be electronically commutated motors (ECMs) or be at least 70-percent efficient where rated in accordance with DOE 10 CFR 431.

C403.4.4.5 Supply-air temperature reset controls. Multiple-*zone* HVAC systems shall include controls that automatically reset the supply-air temperature in response to representative building loads, or to outdoor air temperature. The controls shall be capable of resetting the supply air temperature not less than 25 percent of the difference between the design supply-air temperature and the design room air temperature.

Exceptions:

1. Systems that prevent reheating, recooling or mixing of heated and cooled supply air.
2. Seventy-five percent of the energy for reheating is from site-recovered or site-solar energy sources.
3. *Zones* with peak supply air quantities of 300 cfm (142 L/s) or less.

❖ The purpose of this section is to require supply-air temperature reset controls on multiple-zone systems. Multiple-zone HVAC systems typically deliver supply air at a constant temperature necessary to provide cooling for a zone with the worst-case peak-cooling load. Any zone requiring less cooling than this must reduce the amount of cool air to that zone (if a VAV system) and eventually reheat that cool air if necessary to prevent zone overcooling. This is known as simultaneous heating and cooling. Building control systems can easily incorporate logic and controls that continually poll the various zones and raise the supply air temperature as high as possible while still satisfying the cooling demand. This reduces the necessity for simultaneous heating and cooling and saves energy. Systems that prevent reheating, recooling or mixing of heated and cooled supply air are exempt, as they cannot benefit by the addition of supply-air temperature reset controls. Seventy-five percent of the energy from site-recovered or site solar energy sources for reheating would be exempt, as the controls installed should be capable of resetting the supply-air temperature to not less than 25 percent of the difference between the design supply-air temperature and the design room-air temperature, and that would be marginal. For zones with peak supply air quantities of 300 cfm (142 L/s) or less, it would not be cost effective to install supply-air temperature reset controls, as the supply air is a small quantity compared to the building load.

C403.4.4.6 Multiple-zone VAV system ventilation optimization control. Multiple-zone VAV systems with direct digital control of individual zone boxes reporting to a central control panel shall have automatic controls configured to reduce outdoor air intake flow below design rates in response to changes in system *ventilation* efficiency (E_v) as defined by the *International Mechanical Code*.

Exceptions:

1. VAV systems with zonal transfer fans that recirculate air from other zones without directly mixing it with outdoor air, dual-duct dual-fan VAV systems, and VAV systems with fan-powered terminal units.
2. Systems having exhaust air energy recovery complying with Section C403.2.7.
3. Systems where total design exhaust airflow is more than 70 percent of total design outdoor air intake flow requirements.

❖ Multiple-zone VAV systems with direct digital control (DDC) to the zone level are required to provide an automated means to reduce outdoor air intake flows below design rates in response to changes in system ventilation efficiency as defined by the IMC. Essentially, this requires each VAV system to communicate with a central system to determine what is the optimal intake of air needed at a given time and adjust the intake mechanism accordingly. Each VAV box controller senses the current primary airflow (V_{pz}) and calculates the current zone outdoor-air fraction (Z_d). The building automation system totals the primary airflows and required outdoor airflows (V_{oz}) from all VAV boxes and determines the highest outdoor-air fraction reported.

C403.4.5 Heat recovery for service water heating. Condenser heat recovery shall be installed for heating or reheating of service hot water provided that the facility operates 24 hours a day, the total installed heat capacity of water-cooled systems exceeds 6,000,000 Btu/hr (1 758 kW) of heat rejection, and the design service water heating load exceeds 1,000,000 Btu/h (293 kW).

The required heat recovery system shall have the capacity to provide the smaller of the following:

1. Sixty percent of the peak heat rejection load at design conditions.
2. The preheating required to raise the peak service hot water draw to 85°F (29°C).

Exceptions:

1. Facilities that employ condenser heat recovery for space heating or reheat purposes with a heat recovery design exceeding 30 percent of the peak water-cooled condenser load at design conditions.
2. Facilities that provide 60 percent of their service water heating from site solar or site recovered energy or from other sources.

❖ The code requires heat recovery from the condenser side of water-cooled systems for preheating service hot water in large 24-hour facilities. Typical applications are homes; dormitories; mixed-use residential

INTERNATIONAL CODE COUNCIL®
Copyright © 2015 ICC. ALL RIGHTS RESERVED. Accessed by David Dammon on Jun 21, 2017 12:30:52 PM pursuant to License Agreement with ICC. No further reproduction or distribution authorized. ANY UNAUTHORIZED REPRODUCTION OR DISTRIBUTION IS A VIOLATION OF THE FEDERAL COPYRIGHT ACT AND THE LICENSE AGREEMENT, AND SUBJECT TO CIVIL AND CRIMINAL PENALTIES THEREUNDER.

projects; commercial kitchens; and institutions, such as prisons and hospitals. Note that a facility must comply with the requirement if all the following are true:

- The facility operates 24 hours a day.
- The total installed heat rejection capacity of the water-cooled system exceeds 6,000,000 Btu/h (1759 kW). This equates to roughly 400 tons (362 874 kg) of electrical chiller capacity or 250 tons to 300 tons (226 796 kg to 272 155 kg) of gas- or thermally fired chiller capacity.
- The design service water-heating load exceeds 1,000,000 Btu/h (293 kW). An example of this would be a 1,000-bed nursing home [at 1.5 gallons per hour per bed (0.001577 L/s)].

Exception 1 would accept systems that use the recovered heat for space-heating purposes instead of the normally required water heating. Exception 2 simply excludes locations where not less than 60 percent of the energy for service water heating comes from either a solar-heating system that is installed on site or is recovered from some process or equipment within the building.

C403.4.6 Hot gas bypass limitation. Cooling systems shall not use hot gas bypass or other evaporator pressure control systems unless the system is designed with multiple steps of unloading or continuous capacity modulation. The capacity of the hot gas bypass shall be limited as indicated in Table C403.4.6, as limited by Section C403.3.1.

❖ This section was added to the code to restrict hot gas bypass and evaporator control systems, which will, in turn, save energy. Hot gas bypass is a control strategy used in commercial cooling and refrigeration equipment that allows cooling compressors to remain online at low load and in colder weather by raising the condenser pressure. Many new commercial cooling units have hot gas bypass systems, and have the capacity to modulate or unload capacity, which saves energy.

TABLE C403.4.6
MAXIMUM HOT GAS BYPASS CAPACITY

RATED CAPACITY	MAXIMUM HOT GAS BYPASS CAPACITY (% of total capacity)
≤ 240,000 Btu/h	50
> 240,000 Btu/h	25

For SI: 1 British thermal unit per hour = 0.2931 W.

C403.5 Refrigeration systems. Refrigerated display cases, *walk-in coolers* or *walk-in freezers* that are served by remote compressors and remote condensers not located in a *condensing unit*, shall comply with Sections C403.5.1 and C403.5.2.

Exception: Systems where the working fluid in the refrigeration cycle goes through both subcritical and supercritical states (transcritical) or that use ammonia refrigerant are exempt.

❖ Where the condenser serving one of the refrigeration systems addressed in this section is a separate piece of equipment, it is essential for energy savings to select the condenser that is optimal for both the refrigeration equipment being cooled and the installation location's climate. Sections C403.5.1 and C403.5.2 provide the tools by which the project designer can select the appropriate equipment.

C403.5.1 Condensers serving refrigeration systems. Fan-powered condensers shall comply with the following:

1. The design *saturated condensing temperatures* for air-cooled condensers shall not exceed the design dry-bulb temperature plus 10°F (5.6°C) for low-*temperature refrigeration systems*, and the design dry- bulb temperature plus 15°F (8°C) for *medium temperature refrigeration systems* where the *saturated condensing temperature* for blend refrigerants shall be determined using the average of liquid and vapor temperatures as converted from the condenser drain pressure.
2. Condenser fan motors that are less than 1 hp (0.75 kW) shall use electronically commutated motors, permanent split-capacitor-type motors or 3-phase motors.
3. Condenser fans for air-cooled condensers, evaporatively cooled condensers, air- or water-cooled fluid coolers or cooling towers shall reduce fan motor demand to not more than 30 percent of design wattage at 50 percent of design air volume, and incorporate one of the following continuous variable speed fan control approaches:
   3.1. Refrigeration system condenser control for air-cooled condensers shall use variable setpoint control logic to reset the condensing temperature setpoint in response to ambient dry-bulb temperature.
   3.2. Refrigeration system condenser control for evaporatively cooled condensers shall use variable setpoint control logic to reset the condensing temperature setpoint in response to ambient wet-bulb temperature.
4. Multiple fan condensers shall be controlled in unison.
5. The minimum condensing temperature setpoint shall be not greater than 70°F (21°C).

❖ See the commentary to Section C403.5.

C403.5.2 Compressor systems. Refrigeration compressor systems shall comply with the following:

1. Compressors and multiple-compressor system suction groups shall include control systems that use floating suction pressure control logic to reset the target suction pressure temperature based on the temperature requirements of the attached refrigeration display cases or walk-ins.

   Exception: Controls are not required for the following:

   1. Single-compressor systems that do not have variable capacity capability.
   2. Suction groups that have a design saturated suction temperature of 30°F (-1.1°C) or

INTERNATIONAL CODE COUNCIL®
Copyright © 2015 ICC. ALL RIGHTS RESERVED. Accessed by David Dammon on Jun 21, 2017 12:30:52 PM pursuant to License Agreement with ICC. No further reproduction or distribution authorized. ANY UNAUTHORIZED REPRODUCTION OR DISTRIBUTION IS A VIOLATION OF THE FEDERAL COPYRIGHT ACT AND THE LICENSE AGREEMENT, AND SUBJECT TO CIVIL AND CRIMINAL PENALTIES THEREUNDER.

higher, suction groups that comprise the high stage of a two-stage or cascade system, or suction groups that primarily serve chillers for secondary cooling fluids.

2. Liquid subcooling shall be provided for all low-temperature compressor systems with a design cooling capacity equal to or greater than 100,000 Btu/hr (29.3 kW) with a design-saturated suction temperature of -10°F (-23°C) or lower. The sub-cooled liquid temperature shall be controlled at a maximum temperature setpoint of 50°F (10°C) at the exit of the subcooler using either compressor economizer (interstage) ports or a separate compressor suction group operating at a saturated suction temperature of 18°F (-7.8°C) or higher.

   2.1. Insulation for liquid lines with a fluid operating temperature less than 60°F (15.6°C) shall comply with Table C403.2.10.

3. Compressors that incorporate internal or external crankcase heaters shall provide a means to cycle the heaters off during compressor operation.

❖ See the commentary to Section C403.

SECTION C404
SERVICE WATER HEATING (MANDATORY)

C404.1 General. This section covers the minimum efficiency of, and controls for, service water-heating equipment and insulation of service hot water piping.

❖ This section restates the general purpose of the requirements for service water-heating equipment (see Commentary Figure C404.1). "Service water heating" is defined as the supply of hot water for purposes other than comfort heating. Therefore, this section applies to equipment and piping used to produce and distribute hot water for the following:

- Restrooms.
- Showers.
- Laundries.
- Kitchens.
- Pools and spas.
- Defrosting of sidewalks and driveways.
- Car washes, beauty salons and other commercial enterprises.

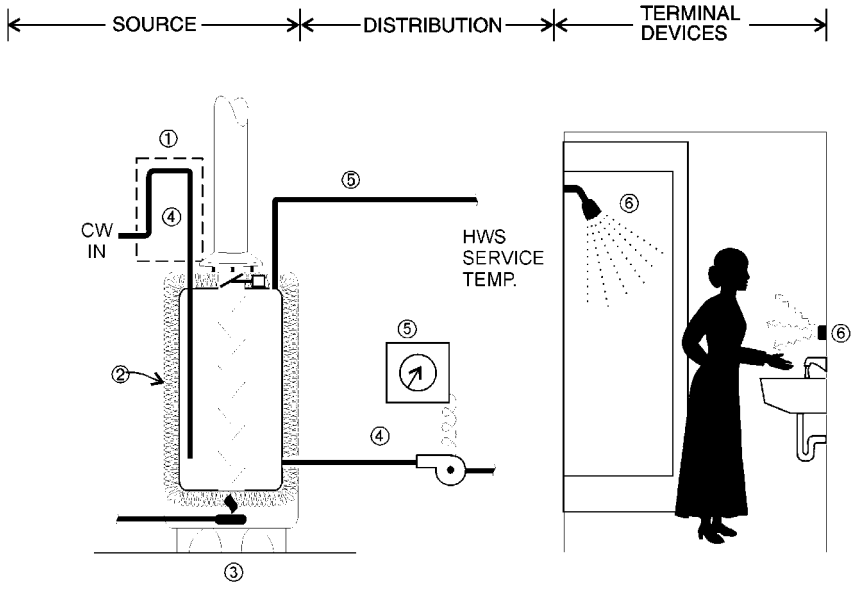

① HEAT TRAPS TO REDUCE STANDBY LOSSES
② INSULATED TANKS TO REDUCE STANDBY LOSSES
③ HIGH EFFICIENCY SOURCES
④ PIPE INSULATION TO REDUCE DISTRIBUTION AND STANDBY LOSSES
⑤ CIRCULATION LOOP TEMPERATURE CONTROLS TO REDUCE DISTRIBUTION LOSSES
⑥ FLOW LIMITING DEVICES SUCH AS LOW FLOW SHOWER HEADS AND OCCUPANT SENSORS TO REDUCE WASTE ARE ENCOURAGED BUT NOT REQUIRED BY THE IECC (FOR FURTHER DISCUSSION OF WATER CONSERVATION MEASURES, SEE COMMENTARY TO SECTION 604.4 OF THE INTERNATIONAL PLUMBING CODE)

Figure C404.1
ELEMENTS COVERED BY SECTION C404
(Courtesy of U.S. Department of Energy, Office of Building Technology State and Community Programs, www.energycodes.gov)

INTERNATIONAL CODE COUNCIL®
Copyright © 2015 ICC. ALL RIGHTS RESERVED. Accessed by David Dammon on Jun 21, 2017 12:30:52 PM pursuant to License Agreement with ICC. No further reproduction or distribution authorized. ANY UNAUTHORIZED REPRODUCTION OR DISTRIBUTION IS A VIOLATION OF THE FEDERAL COPYRIGHT ACT AND THE LICENSE AGREEMENT, AND SUBJECT TO CIVIL AND CRIMINAL PENALTIES THEREUNDER.

- Dwelling units and lowest rooms in high-rise residential buildings and hotels, respectively.

The requirements of this section are for service water-heating equipment and systems only; however, the principles presented could apply to energy-efficient process water-heating systems and equipment, as well. Space-conditioning boilers and distribution systems for human comfort are covered under the requirements of Section C403. The service water-heating portion of combined space-conditioning and water-heating systems must meet the requirements of this chapter as well.

Compliance with this section is based on the application of some basic, cost-effective design practices:

- Minimize standby losses with heat traps, thermal insulation and temperature controls.
- Reduce distribution losses with thermal insulation and system temperature controls, or eliminate through point-of-use heaters.
- Reduce hot water waste with flow-limiting or metering terminal devices.
- Increase overall system performance by utilizing high-efficiency sources.
- Increase efficiency of supply piping by limiting flow rate, and limiting pipe length or pipe volume.

Although compliance with the code ensures a minimum level of water-heating system performance, the designer is encouraged to view the code as a minimum standard of care and investigate designs that exceed these requirements. Application of heat recovery, solar energy or high-efficiency equipment can create a system that is more efficient than the code requires and one that exhibits an excellent return on investment. Examples of measures that exceed code requirements include:

- Specifying low-flow shower heads that exceed the conservation requirements specified in Chapter 6 of the *International Plumbing Code*® (IPC®).
- Extending the public restroom low-flow requirements found in the IPC to all restrooms.
- Recovering heat from gray water.
- Specifying low-water usage or low-temperature appliances, including residential and commercial clothes washers and dishwashers.

For instance, Energy Star®-labeled dishwashers save energy by using both improved technology for the primary wash cycle and by using less hot water to clean. Federal law also requires all new dishwashers to be equipped with a no-heat drying option to save even more energy. A typical household does nearly 400 loads of laundry per year, using about 40 to 47 gallons (151 to 178 L) of water per full load with a conventional washer. In contrast, commercial laundries equipped with a full-sized Energy Star-qualified clothes washer use 10 to 25 gallons (68 to 95 L) per load, and many newer residential washers use only 11 to 32 gallons (42 to 121 L) per load.

C404.2 Service water-heating equipment performance efficiency. Water-heating equipment and hot water storage tanks shall meet the requirements of Table C404.2. The efficiency shall be verified through data furnished by the manufacturer of the equipment or through certification under an *approved* certification program. Water-heating equipment also intended to be used to provide space heating shall meet the applicable provisions of Table C404.2.

❖ Table C404.2 presents the minimum required efficiencies for water-heating equipment used for hot water supply and space heating. Equipment must meet the requirement for a minimum heater efficiency [energy factor (EF)], thermal efficiency (E_t) or a maximum standby loss (SL). Smaller equipment, which falls under NAECA, must satisfy the federal energy factor requirements before it can be sold. This minimum energy factor is a combined measure of thermal efficiency and standby loss. NAECA-covered water-heating equipment includes:

- Electric heaters of all types with input ratings less than 12 kW.
- Fuel-fired storage heaters at or below 75,000 Btu/h (21 983 W) input for gas, or 105,000 Btu/h (30 776 W) input for oil.
- Fuel-fired instantaneous heaters at or below 200,000 Btu/h (58 620 W) input for gas, or 210,000 Btu/h (61 551 W) for oil.
- All fuel-fired pool and spa heaters.

The efficiency requirements for equipment not covered by NAECA are summarized throughout the remaining rows of Table C404.2. Equipment in the table is classified by type (instantaneous gas, storage electric, etc.) capacity (input rating) and subcategory or rating condition. Data from nationally recognized testing and certification programs using standard DOE/ANSI test procedures often are preferred or used to demonstrate compliance with these requirements.

Pool heaters must meet the efficiency requirements for service water-heating in Table C404.2. Electric pool heaters and pumps must be installed with time switches so that they can be shut down during periods of limited use or inactivity (see Section C404.9.2).

TABLE C404.2. See page C4-87.

❖ This table provides the water heater efficiency requirements in Chapter 4 [CE]. The minimum equipment performance requirements in this table will meet the requirements found in ANSI/ASHRAE/IESNA 90.1 with a few limited exceptions. The efficiency equation for electric-resistance water heaters in the code is intended to meet the existing federal minimum manufacturing standard, and, therefore, differs from the ASHRAE level.

INTERNATIONAL CODE COUNCIL®
Copyright © 2015 ICC. ALL RIGHTS RESERVED. Accessed by David Dammon on Jun 21, 2017 12:30:52 PM pursuant to License Agreement with ICC. No further reproduction or distribution authorized. ANY UNAUTHORIZED REPRODUCTION OR DISTRIBUTION IS A VIOLATION OF THE FEDERAL COPYRIGHT ACT AND THE LICENSE AGREEMENT, AND SUBJECT TO CIVIL AND CRIMINAL PENALTIES THEREUNDER.

TABLE C404.2
MINIMUM PERFORMANCE OF WATER-HEATING EQUIPMENT

EQUIPMENT TYPE	SIZE CATEGORY (input)	SUBCATEGORY OR RATING CONDITION	PERFORMANCE REQUIRED[a, b]	TEST PROCEDURE
Water heaters, electric	≤ 12 kW[d]	Resistance	0.97 - 0.00 132V, EF	DOE 10 CFR Part 430
	> 12 kW	Resistance	$(0.3 + 27/V_m)$, %/h	ANSI Z21.10.3
	≤ 24 amps and ≤ 250 volts	Heat pump	0.93 - 0.00 132V, EF	DOE 10 CFR Part 430
Storage water heaters, gas	≤ 75,000 Btu/h	≥ 20 gal	0.67 - 0.0019V, EF	DOE 10 CFR Part 430
	> 75,000 Btu/h and ≤ 155,000 Btu/h	< 4,000 Btu/h/gal	80% E_t (Q/800 + 110 $\sqrt{V}$)SL, Btu/h	ANSI Z21.10.3
	> 155,000 Btu/h	< 4,000 Btu/h/gal	80% E_t (Q/800 + 110 $\sqrt{V}$)SL, Btu/h	
Instantaneous water heaters, gas	> 50,000 Btu/h and < 200,000 Btu/h[c]	≥ 4,000 (Btu/h)/gal and < 2 gal	0.62 - 0.00 19V, EF	DOE 10 CFR Part 430
	≥ 200,000 Btu/h	≥ 4,000 Btu/h/gal and < 10 gal	80% E_t	ANSI Z21.10.3
	≥ 200,000 Btu/h	≥ 4,000 Btu/h/gal and ≥ 10 gal	80% E_t (Q/800 + 110 $\sqrt{V}$)SL, Btu/h	
Storage water heaters, oil	≤ 105,000 Btu/h	≥ 20 gal	0.59 - 0.0019V, EF	DOE 10 CFR Part 430
	≥ 105,000 Btu/h	< 4,000 Btu/h/gal	80% E_t (Q/800 + 110 $\sqrt{V}$)SL, Btu/h	ANSI Z21.10.3
Instantaneous water heaters, oil	≤ 210,000 Btu/h	≥ 4,000 Btu/h/gal and < 2 gal	0.59 - 0.0019V, EF	DOE 10 CFR Part 430
	> 210,000 Btu/h	≥ 4,000 Btu/h/gal and < 10 gal	80% E_t	ANSI Z21.10.3
	> 210,000 Btu/h	≥ 4,000 Btu/h/gal and ≥ 10 gal	78% E_t (Q/800 + 110 $\sqrt{V}$)SL, Btu/h	
Hot water supply boilers, gas and oil	≥ 300,000 Btu/h and < 12,500,000 Btu/h	≥ 4,000 Btu/h/gal and < 10 gal	80% E_t	ANSI Z21.10.3
Hot water supply boilers, gas	≥ 300,000 Btu/h and < 12,500,000 Btu/h	≥ 4,000 Btu/h/gal and ≥ 10 gal	80% E_t (Q/800 + 110 $\sqrt{V}$)SL, Btu/h	
Hot water supply boilers, oil	> 300,000 Btu/h and < 12,500,000 Btu/h	> 4,000 Btu/h/gal and > 10 gal	78% E_t (Q/800 + 110 $\sqrt{V}$)SL, Btu/h	
Pool heaters, gas and oil	All	—	82% E_t	ASHRAE 146
Heat pump pool heaters	All	—	4.0 COP	AHRI 1160
Unfired storage tanks	All	—	Minimum insulation requirement R-12.5 (h · ft^2 · °F)/Btu	(none)

For SI: °C = [(°F) - 32]/1.8, 1 British thermal unit per hour = 0.2931 W, 1 gallon = 3.785 L, 1 British thermal unit per hour per gallon = 0.078 W/L.

a. Energy factor (EF) and thermal efficiency (E_t) are minimum requirements. In the EF equation, V is the rated volume in gallons.

b. Standby loss (SL) is the maximum Btu/h based on a nominal 70°F temperature difference between stored water and ambient requirements. In the SL equation, Q is the nameplate input rate in Btu/h. In the equations for electric water heaters, V is the rated volume in gallons and V_m is the measured volume in gallons. In the SL equation for oil and gas water heaters and boilers, V is the rated volume in gallons.

c. Instantaneous water heaters with input rates below 200,000 Btu/h shall comply with these requirements where the water heater is designed to heat water to temperatures 180°F or higher.

d. Electric water heaters with an input rating of 12 kW (40,950 Btu/hr) or less that are designed to heat water to temperatures of 180°F or greater shall comply with the requirements for electric water heaters that have an input rating greater than 12 kW (40,950 Btu/h).

INTERNATIONAL CODE COUNCIL®
Copyright © 2015 ICC. ALL RIGHTS RESERVED. Accessed by David Dammon on Jun 21, 2017 12:30:52 PM pursuant to License Agreement with ICC. No further reproduction or distribution authorized. ANY UNAUTHORIZED REPRODUCTION OR DISTRIBUTION IS A VIOLATION OF THE FEDERAL COPYRIGHT ACT AND THE LICENSE AGREEMENT, AND SUBJECT TO CIVIL AND CRIMINAL PENALTIES THEREUNDER.

C404.2.1 High input-rated service water-heating systems. Gas-fired water-heating equipment installed in new buildings shall be in compliance with this section. Where a singular piece of water-heating equipment serves the entire building and the input rating of the equipment is 1,000,000 Btu/h (293 kW) or greater, such equipment shall have a thermal efficiency, E_t, of not less than 90 percent. Where multiple pieces of water-heating equipment serve the building and the combined input rating of the water-heating equipment is 1,000,000 Btu/h (293 kW) or greater, the combined input-capacity-weighted-average thermal efficiency, E_t, shall be not less than 90 percent.

Exceptions:

1. Where 25 percent of the annual *service water-heating* requirement is provided by site-solar or site-recovered energy, the minimum thermal efficiency requirements of this section shall not apply.
2. The input rating of water heaters installed in individual dwelling units shall not be required to be included in the total input rating of *service water-heating* equipment for a building.
3. The input rating of water heaters with an input rating of not greater than 100,000 Btu/h (29.3 kW) shall not be required to be included in the total input rating of *service water-heating* equipment for a building.

❖ Where the total input rating of water-heating equipment installed in a new building is 1,000,000 Btu/h or greater, the thermal efficiency of the equipment (E_t) must be not less than 90 percent. Where multiple pieces of equipment are used, this can be a combined input capacity weighted average. The requirement only applies to gas-fired water-heating equipment. In determining the total input rating of the service water-heating equipment, the code exempts water heaters installed for individual dwelling units and water heaters with an individual rating less than 100,000 Btu/h. Where 25 percent of the annual service water-heating requirements of the building are supplied by site-solar or site-recovered energy systems, the minimum thermal efficiency for the remaining gas-fired equipment is waived.

C404.3 Heat traps. Water-heating equipment not supplied with integral heat traps and serving noncirculating systems shall be provided with heat traps on the supply and discharge piping associated with the equipment.

❖ A "heat trap" is a means to counteract the natural convection of heated water in a vertical pipe run. The means is either a device specifically designed for the purpose or an arrangement of tubing that forms a 360-degree (6.3 rad) loop of piping that forms the point of connection to the water heater (inlet or outlet), which includes a length of piping directed downward before the connection to the vertical piping of the supply water or hot water distribution system.

Storage hot water tanks in noncirculating systems are required to have either integral heat traps or external heat traps [which may be a separate device, a 360-degree (6.3 rad) loop of plumbers' flex or simply an inverted pipe trap] on both the inlet and outlet piping located as close as practical to the water heater [see Commentary Figures C404.4(1) through C404.4(3)]. A heat trap is an inexpensive, one-way

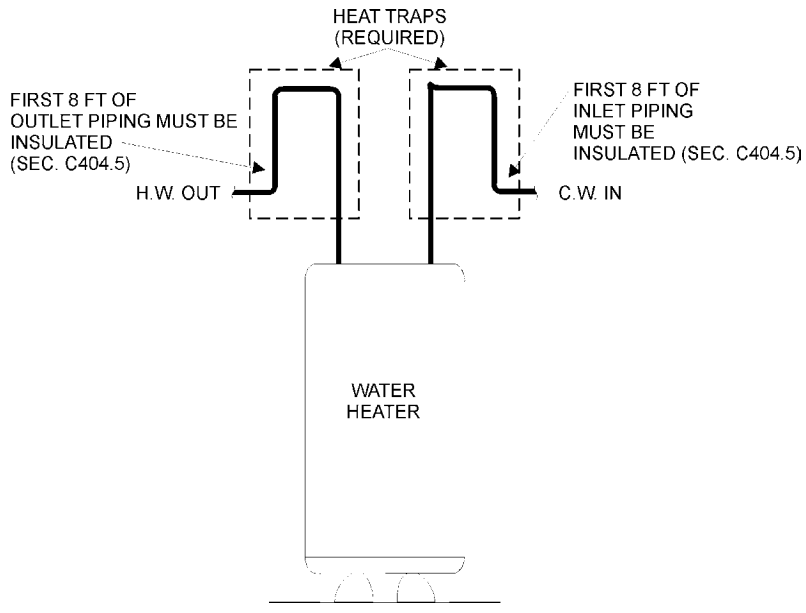

For SI: 1 foot = 304.8 mm.

Figure C404.4(1)
HEAT TRAP AND INSULATION REQUIREMENTS FOR NONCIRCULATING SYSTEMS
(Courtesy of U.S. Department of Energy, Office of Building Technology State and Community Programs, www.energycodes.gov)

INTERNATIONAL CODE COUNCIL®
Copyright © 2015 ICC. ALL RIGHTS RESERVED. Accessed by David Dammon on Jun 21, 2017 12:30:52 PM pursuant to License Agreement with ICC. No further reproduction or distribution authorized. ANY UNAUTHORIZED REPRODUCTION OR DISTRIBUTION IS A VIOLATION OF THE FEDERAL COPYRIGHT ACT AND THE LICENSE AGREEMENT, AND SUBJECT TO CIVIL AND CRIMINAL PENALTIES THEREUNDER.

check valve fitting [see Commentary Figure C404.4(1)] or an arrangement of piping [see Commentary Figures C404.4(2) and C404.4(3)] to keep buoyant hot water from circulating through a piping distribution system by natural convection. Integral heat traps are sometimes designed into the water heater by the manufacturer.

C404.4 Insulation of piping. Piping from a water heater to the termination of the heated water fixture supply pipe shall be insulated in accordance with Table C403.2.10. On both the inlet and outlet piping of a storage water heater or heated water storage tank, the piping to a heat trap or the first 8 feet (2438 mm) of piping, whichever is less, shall be insulated. Piping that is heat traced shall be insulated in accordance with Table C403.2.10 or the heat trace manufacturer's instructions. Tubular pipe insulation shall be installed in accordance with the insulation manufacturer's instructions. Pipe insulation shall be continuous except where the piping passes through a framing member. The minimum insulation thickness requirements of this section shall not supersede any greater insulation thickness requirements necessary for the protection of piping from freezing temperatures or the protection of personnel against external surface temperatures on the insulation.

Exception: Tubular pipe insulation shall not be required on the following:

1. The tubing from the connection at the termination of the fixture supply piping to a plumbing fixture or plumbing appliance.

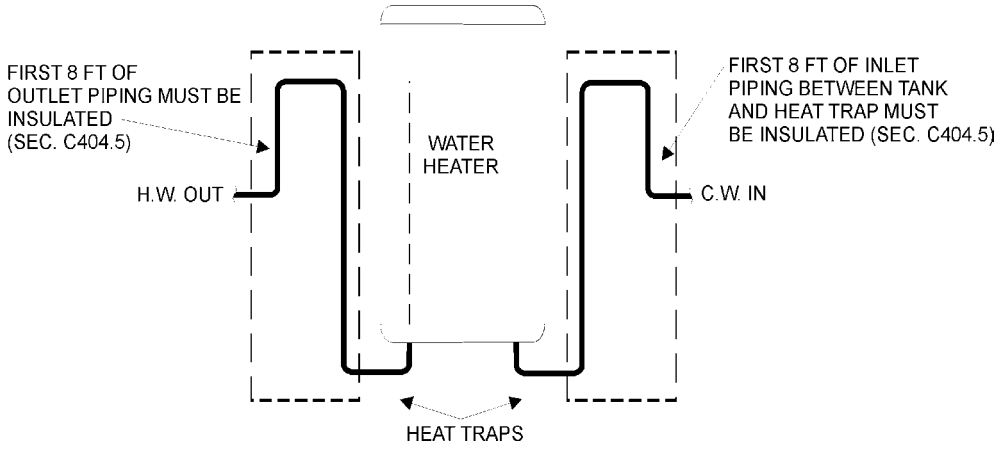

For SI: 1 foot = 304.8 mm.

Figure C404.4(2)
HEAT TRAPS ON A TANK WITH CONNECTIONS ON THE BOTTOM
(Courtesy of U.S. Department of Energy, Office of Building Technology State and Community Programs, www.energycodes.gov)

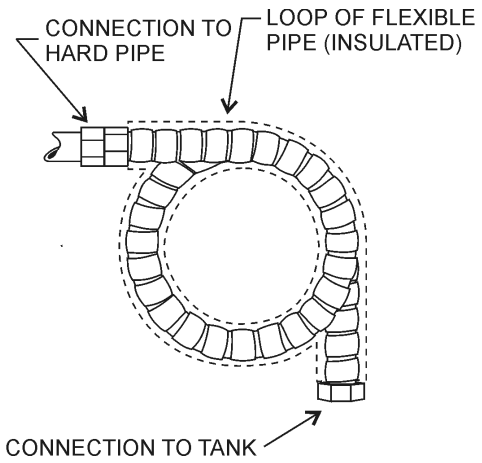

Figure C404.4(3)
HEAT TRAP THROUGH A FLEXIBLE PIPE LOOP
(Courtesy of U.S. Department of Energy, Office of Building Technology State and Community Programs, www.energycodes.gov)

INTERNATIONAL CODE COUNCIL®
Copyright © 2015 ICC. ALL RIGHTS RESERVED. Accessed by David Dammon on Jun 21, 2017 12:30:52 PM pursuant to License Agreement with ICC. No further reproduction or distribution authorized. ANY UNAUTHORIZED REPRODUCTION OR DISTRIBUTION IS A VIOLATION OF THE FEDERAL COPYRIGHT ACT AND THE LICENSE AGREEMENT, AND SUBJECT TO CIVIL AND CRIMINAL PENALTIES THEREUNDER.

2. Valves, pumps, strainers and threaded unions in piping that is 1 inch (25 mm) or less in nominal diameter.
3. Piping from user-controlled shower and bath mixing valves to the water outlets.
4. Cold-water piping of a demand recirculation water system.
5. Tubing from a hot drinking-water heating unit to the water outlet.
6. Piping at locations where a vertical support of the piping is installed.
7. Piping surrounded by building insulation with a thermal resistance (*R*-value) of not less than R-3.

❖ Distribution losses impact building energy use both in the energy required to make up for the lost heat and in the additional load that can be placed on the space-cooling system if the heat is released to air-conditioned space. These losses can be limited by insulating the hot water storage vessel and pipes. The required amount of insulation is given in Table C403.2.10, which specifies different thicknesses of insulation depending on the size of the pipe or tube, the operating temperature range of the fluid, in this case water, and the conductivity of the insulation. For typical hot water supply, the operating temperature range in the table to consult is 140°F to 200°F.

The list of items where pipe insulation is not required is almost common sense but still, these items need to be stated to avoid confusion and possible misinterpretations by the code officials. Insulating valves is time consuming and, if the right type of valve is not used, nearly impossible (think ball valve without a raised handle). A few uninsulated valves in the system are not going to lose a lot of heat. Pumps are also difficult to insulate and in some cases insulation might cause overheating of the pump motor. Threaded unions usually only occur in smaller diameter piping systems and are time consuming to insulate. Such unions represent a small amount of heat loss compared to the entire system. Piping or tubing from a small tankless water heater serving one sink is too small to easily insulate. The heat loss is negligible [see Commentary Figure C404.4(4)].

C404.5 Efficient heated water supply piping. Heated water supply piping shall be in accordance with Section C404.5.1 or C404.5.2. The flow rate through $^{1}/_{4}$-inch (6.4 mm) piping shall be not greater than 0.5 gpm (1.9 L/m). The flow rate through $^{5}/_{16}$-inch (7.9 mm) piping shall be not greater than 1 gpm (3.8 L/m). The flow rate through $^{3}/_{8}$-inch (9.5 mm) piping shall be not greater than 1.5 gpm (5.7 L/m).

❖ The provisions of this section are simply to limit the volume of water in a hot water supply pipe and therefore reduce the amount of time it takes to get hot water to the faucet. The volume is limited by the method in either Section C404.5.1, which simply limits the length of pipe between the source and the outlet, or Section C404.5.2, which requires a calculation of the volume of water in the specific piping system. The flow rate limitations reflect federal limitations on flow rate based on water conservation measures. Higher flow rates will obviously reduce the time-to-tap performance; however, the maximum volumes in Sections C404.5.1 and C404.5.2 are based on the maximum flow rates listed.

C404.5.1 Maximum allowable pipe length method. The maximum allowable piping length from the nearest source of heated water to the termination of the fixture supply pipe shall be in accordance with the following. Where the piping contains more than one size of pipe, the largest size of pipe within the piping shall be used for determining the maximum allowable length of the piping in Table C404.5.1.

1. For a public lavatory faucet, use the "Public lavatory faucets" column in Table C404.5.1.

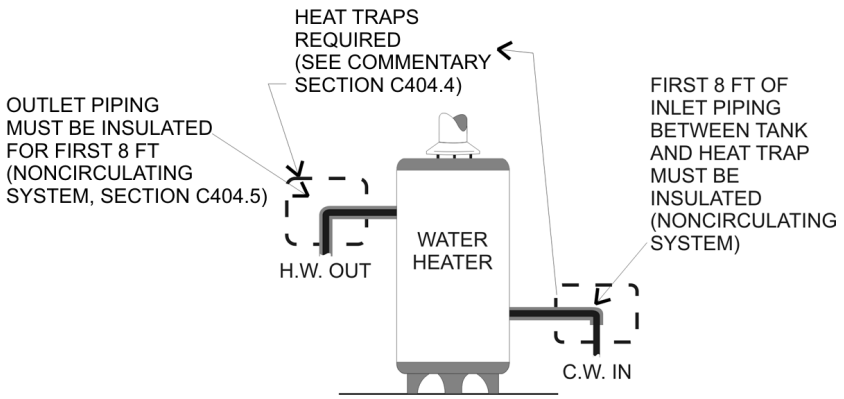

For SI: 1 foot = 304.8 mm.

Figure C404.4(4)
HEAT TRAPS ON A TANK WITH CONNECTIONS ON SIDES
(Courtesy of U.S. Department of Energy, Office of Building Technology State and Community Programs, www.energycodes.gov)

INTERNATIONAL CODE COUNCIL®
Copyright © 2015 ICC. ALL RIGHTS RESERVED. Accessed by David Dammon on Jun 21, 2017 12:30:52 PM pursuant to License Agreement with ICC. No further reproduction or distribution authorized. ANY UNAUTHORIZED REPRODUCTION OR DISTRIBUTION IS A VIOLATION OF THE FEDERAL COPYRIGHT ACT AND THE LICENSE AGREEMENT, AND SUBJECT TO CIVIL AND CRIMINAL PENALTIES THEREUNDER.

2. For all other plumbing fixtures and plumbing appliances, use the "Other fixtures and appliances" column in Table C404.5.1.

❖ This section provides one of the two methods called out in Section 404.5 to limit the volume of water in the portion of the hot water supply pipe from the source of the hot water to the outlet, or faucet. Quite simply, this limits the volume by limiting the length of pipe, based on the size of the pipe. Therefore, a smaller pipe diameter has less volume per foot and is allowed to have more length. Although not stated in this section, the source of hot water supply can be a water heater, a circulating water system or a heat trace maintenance system, as stated in Section C404.5.2. The maximum allowable lengths of pipe from a source to a public lavatory system are restrictive. In most designs, this will certainly require use of a circulating water system or a heat trace system.

C404.5.2 Maximum allowable pipe volume method. The water volume in the piping shall be calculated in accordance with Section C404.5.2.1. Water heaters, circulating water systems and heat trace temperature maintenance systems shall be considered sources of heated water.

The volume from the nearest source of heated water to the termination of the fixture supply pipe shall be as follows:

1. For a public lavatory faucet: not more than 2 ounces (0.06 L).
2. For other plumbing fixtures or plumbing appliances; not more than 0.5 gallon (1.89 L).

❖ This section provides one of the two methods called out in Section 404.5 to limit the volume of water in the portion of the hot water supply pipe from the source of the hot water to the outlet, or faucet. For calculation of a system where there is merely a run of pipe involved, the method in Section C404.5.1 is easier, and, for larger pipe diameters, somewhat less restrictive. For instance, if a $^1/_2$-inch supply pipe were to be used, Section C404.5.1 would allow 2 feet of pipe from the hot water source to a public faucet. Using this method, only $1^1/_3$ feet of pipe would be allowed. Where the piping system contains a number of valves, fittings, meters or manifolds, this method is needed (see Section 404.5.2.1). This section contains a provision that also applies to Section 404.5.1: the source of hot water can be the water heater, a circulating water system or a heat trace system. Given the very small volume of water allowed for the supply from the source to a public lavatory faucet, this section would, in most cases, require the use of a circulating water system or a heat trace system.

C404.5.2.1 Water volume determination. The volume shall be the sum of the internal volumes of pipe, fittings, valves, meters and manifolds between the nearest source of heated water and the termination of the fixture supply pipe. The volume in the piping shall be determined from the "Volume" column in Table C404.5.1. The volume contained within fixture shutoff valves, within flexible water supply connectors to a fixture fitting and within a fixture fitting shall not be included in the water volume determination. Where heated water is supplied by a recirculating system or heat-traced piping, the volume shall include the portion of the fitting on the branch pipe that supplies water to the fixture.

❖ This section provides information regarding what needs to be included in calculating the volume of water when using Section 404.5.2 as the design option for limiting the volume of water for the piping and system connecting the hot water source to the faucet or other outlet.

C404.6 Heated-water circulating and temperature maintenance systems. Heated-water circulation systems shall be in accordance with Section C404.6.1. Heat trace temperature maintenance systems shall be in accordance with Section C404.6.2. Controls for hot water storage shall be in accor-

TABLE C404.5.1
PIPING VOLUME AND MAXIMUM PIPING LENGTHS

NOMINAL PIPE SIZE (inches)	VOLUME (liquid ounces per foot length)	MAXIMUM PIPING LENGTH (feet)	
		Public lavatory faucets	Other fixtures and appliances
$^1/_4$	0.33	6	50
$^5/_{16}$	0.5	4	50
$^3/_8$	0.75	3	50
$^1/_2$	1.5	2	43
$^5/_8$	2	1	32
$^3/_4$	3	0.5	21
$^7/_8$	4	0.5	16
1	5	0.5	13
$1^1/_4$	8	0.5	8
$1^1/_2$	11	0.5	6
2 or larger	18	0.5	4

For SI: 1 inch = 25.4 mm, 1 foot = 304.8 mm, 1 liquid ounce = 0.030 L, 1 gallon = 128 ounces.

INTERNATIONAL CODE COUNCIL®
Copyright © 2015 ICC. ALL RIGHTS RESERVED. Accessed by David Dammon on Jun 21, 2017 12:30:52 PM pursuant to License Agreement with ICC. No further reproduction or distribution authorized. ANY UNAUTHORIZED REPRODUCTION OR DISTRIBUTION IS A VIOLATION OF THE FEDERAL COPYRIGHT ACT AND THE LICENSE AGREEMENT, AND SUBJECT TO CIVIL AND CRIMINAL PENALTIES THEREUNDER.

dance with Section C404.6.3. Automatic controls, temperature sensors and pumps shall be *accessible*. Manual controls shall be *readily accessible*.

❖ When the distribution piping is heated to maintain usage temperatures, such as in circulating hot water systems, the system pump or heat-trace cable must have conveniently located manual or automatic switches, or other controls, that can be set to optimize system operation or turn off the system during periods of reduced demand.

Most automatic time clocks allow the operator or building engineer to enter different operating schedules for each of the seven days of the week. Thus, pipes are not heated during hours of inactivity. More sophisticated devices, such as a combination time and temperature and demand controls, also comply with the requirements of this section.

C404.6.1 Circulation systems. Heated-water circulation systems shall be provided with a circulation pump. The system return pipe shall be a dedicated return pipe or a cold water supply pipe. Gravity and thermo-syphon circulation systems shall be prohibited. Controls for circulating hot water system pumps shall start the pump based on the identification of a demand for hot water within the occupancy. The controls shall automatically turn off the pump when the water in the circulation loop is at the desired temperature and when there is no demand for hot water.

❖ Circulation systems for heated water must be demand activated. Demand-activated systems provide significantly more energy efficiency than any other type of circulation system. Given that the piping is required to be insulated, the water in the recirculation loop will stay hot for a long time, thus making continuous circulation of the water unnecessary.

C404.6.2 Heat trace systems. Electric heat trace systems shall comply with IEEE 515.1. Controls for such systems shall be able to automatically adjust the energy input to the heat tracing to maintain the desired water temperature in the piping in accordance with the times when heated water is used in the occupancy. Heat trace shall be arranged to be turned off automatically when there is no hot water demand.

❖ Automatic controls are necessary to adjust water temperature based on use of hot water and to turn off the heat trace system when there is no demand. These automatic controls are intended to make the heat trace system as energy efficient as possible when it is used.

C404.6.3 Controls for hot water storage. The controls on pumps that circulate water between a water heater and a heated-water storage tank shall limit operation of the pump from heating cycle startup to not greater than 5 minutes after the end of the cycle.

❖ This provision is the same as in the IPC. This section addresses water-heating systems that utilize a separate water-heating unit to generate hot water for storage in tanks. These systems have a circulating pump to move hot water into the storage tank (and cooler water back to the heating unit). This section requires that the circulation pump not continue to operate after the hot water storage tank is at the desired temperature. The run time of up to 5 minutes after the end of the heating cycle is to allow for the heating unit's heat exchanger to cool down and equalize temperature with the stored hot water.

C404.7 Demand recirculation controls. A water distribution system having one or more recirculation pumps that pump water from a heated-water supply pipe back to the heated-water source through a cold-water supply pipe shall be a *demand recirculation water system*. Pumps shall have controls that comply with both of the following:

1. The control shall start the pump upon receiving a signal from the action of a user of a fixture or appliance, sensing the presence of a user of a fixture or sensing the flow of hot or tempered water to a fixture fitting or appliance.
2. The control shall limit the temperature of the water entering the cold-water piping to 104°F (40°C).

❖ This section applies only to heated water (hot or tempered water) recirculation systems that pump water back to the heated water source through a cold-water supply pipe. Specialized equipment for recirculating hot water to remote fixture systems and back to the heated water source through a cold-water supply pipe has been used for several decades. They were most often used as a retrofit for buildings where routing of dedicated return piping was too costly or impossible. See the commentary to IPC Section 604.2 for additional understanding of "no dedicated return line" recirculation systems.

Extensive research by many organizations, including the Oak Ridge National Laboratory and the California Energy Commission, has determined that having hot water "ready and waiting" at fixtures is a significant energy waste. On the other hand, where a hot (or tempered) water circulation system is not provided, there is a significant waste of energy of heating water that never arrives at the intended point of use except where a large volume of cooler water is flushed down the drain in order to have the heated water arrive at the point of use. Certainly, such water waste is of concern (because of rising water and sewer charges), but the waste of "embedded energy" (utility treatment and pumping energy) in that water is of equal or greater concern. The focus of the research was to determine how to best install and operate hot-water (or tempered-water) recirculation systems for the lowest possible cost.

C404.8 Drain water heat recovery units. Drain water heat recovery units shall comply with CSA B55.2. Potable water-side pressure loss shall be less than 10 psi (69 kPa) at maximum design flow. For Group R occupancies, the efficiency of

INTERNATIONAL CODE COUNCIL®
Copyright © 2015 ICC. ALL RIGHTS RESERVED. Accessed by David Dammon on Jun 21, 2017 12:30:52 PM pursuant to License Agreement with ICC. No further reproduction or distribution authorized. ANY UNAUTHORIZED REPRODUCTION OR DISTRIBUTION IS A VIOLATION OF THE FEDERAL COPYRIGHT ACT AND THE LICENSE AGREEMENT, AND SUBJECT TO CIVIL AND CRIMINAL PENALTIES THEREUNDER.

drain water heat recovery unit efficiency shall be in accordance with CSA B55.1.

❖ Drain water heat recovery is often a cost-effective way to add to energy efficiency by recapturing hot water energy that is literally "going down the drain." While it is not required for hot-water heating systems in this code, it can be used in the performance design of a system, as provided by Section C407 and Table C407.5.1(1). Drain water heat recovery (DWHR) works particularly well where heated water flows down the drain at the same time as water that needs to be heated flows in. This "coincident flow" occurs in occupancies with showering and lavatory use. Performance of a DWHR unit is characterized by both efficiency and pressure loss. It is important to ensure that DWHR devices do not impose large pressure losses in the piping in order to minimize the impact on water flow in the building. Given the available DWHR efficiencies, savings are typically 10 to 35 percent of the energy used for heating water. Two standards, CSA 55.1 and CSA 55.2, provide criteria for these units. CSA B55.2 is for fabrication and material quality of DWHR units. CSA B55.1 is for testing and labeling of DWHR units efficiency and pressure loss at 2.5 gpm.

C404.9 Energy consumption of pools and permanent spas. (Mandatory). The energy consumption of pools and permanent spas shall be controlled by the requirements in Sections C404.9.1 through C404.9.3.

❖ Because of the heating and filtering operations involved in pools and inground, permanently installed spas, they provide a good opportunity to save energy by limiting heat loss or pump operation. This section provides the scoping requirements for the pool heaters, time switches and pool covers that make operation of the pool and permanently installed spas more energy efficient. These requirements also can be found in ANSI/ASHRAE/IESNA 90.1, and can help reduce the energy used by pools and permanently installed spas.

C404.9.1 Heaters. The electric power to all heaters shall be controlled by a readily accessible on-off switch that is an integral part of the heater, mounted on the exterior of the heater, or external to and within 3 feet (914 mm) of the heater. Operation of such switch shall not change the setting of the heater thermostat. Such switches shall be in addition to a circuit breaker for the power to the heater. Gas-fired heaters shall not be equipped with continuously burning ignition pilots.

❖ All heaters must have an accessible on-off switch that shuts off the heater without adjusting the thermostat setting because the thermostat may be broken and the wrong temperature could cause injury to personnel. Heaters fired by natural gas or liquefied petroleum gas (LP-gas) must not have continuously burning pilot lights because pilot lights are an energy-wasting technology. The accessible on-off switch allows the heater to be completely turned off where there are periods when the heat is not needed or when the pool and spa may not be used.

C404.9.2 Time switches. Time switches or other control methods that can automatically turn off and on heaters and pump motors according to a preset schedule shall be installed for heaters and pump motors. Heaters and pump motors that have built-in time switches shall be in compliance with this section.

Exceptions:

1. Where public health standards require 24-hour pump operation.
2. Pumps that operate solar- and waste-heat-recovery pool heating systems.

❖ Time switches or other control methods provide an easy system for pool operations and energy savings. The application of Exception 1 is dependent on the requirements of the local health department in the jurisdiction. Because the pools are often in public areas, the health department may require continuous filtering or circulation. Exception 2 grants a credit for using other systems that help the pool and the inground, permanently installed spa operate more efficiently. Therefore, when solar- and waste-heat recovery systems are used to heat the pool and spa, the exception eliminates the time-switch requirement.

C404.9.3 Covers. Outdoor heated pools and outdoor permanent spas shall be provided with a vapor-retardant cover or other *approved* vapor-retardant means.

Exception: Where more than 70 percent of the energy for heating, computed over an operating season, is from site-recovered energy such as from a heat pump or solar energy source, covers or other vapor-retardant means shall not be required.

❖ This section states outdoor heated pools and permanently installed spas are required to have a vapor-retardant cover or other means to retard evaporation from the pool or spa. Covers are not required to provide any minimum level of insulation value. The cover or other system simply will help hold some of the heat in, much like placing a lid on a pot, by not letting it dissipate into the air. An exception is provided to waive the cover or other vapor-retardant means where more than 70 percent of the heating energy for the operating season is derived from site-recovered energy, such as a heat pump or solar-energy source.

C404.10 Energy consumption of portable spas (Mandatory). The energy consumption of electric-powered portable spas shall be controlled by the requirements of APSP 14.

❖ APSP 14, *American National Standard for Portable Electric Spa Energy Efficiency,* is a standard promulgated by the Association of Pool and Spa Professionals. The standard addresses water heating equipment, pump motors, and covers.

C404.11 Service water-heating system commissioning and completion requirements. *Service water-heating systems*, swimming pool water-heating systems, spa water-heating

INTERNATIONAL CODE COUNCIL®
Copyright © 2015 ICC. ALL RIGHTS RESERVED. Accessed by David Dammon on Jun 21, 2017 12:30:52 PM pursuant to License Agreement with ICC. No further reproduction or distribution authorized. ANY UNAUTHORIZED REPRODUCTION OR DISTRIBUTION IS A VIOLATION OF THE FEDERAL COPYRIGHT ACT AND THE LICENSE AGREEMENT, AND SUBJECT TO CIVIL AND CRIMINAL PENALTIES THEREUNDER.

systems and the controls for those systems shall be commissioned and completed in accordance with Section C408.2.

❖ These provisions are intended to ensure that the building has been "tuned" prior to occupancy to make sure it is properly operating and capable of continuing to operate properly. Many hot water systems have recirculation or heat trace systems that need to be checked to verify that time or other controls are in place to avoid excessive unoccupied piping heat loss. This extends the value and validity of the code provisions because there is little value in requiring something to be provided in a building if it is not properly installed and ready to perform its intended function.

SECTION C405
ELECTRICAL POWER AND LIGHTING SYSTEMS

C405.1 General (Mandatory). This section covers lighting system controls, the maximum lighting power for interior and exterior applications and electrical energy consumption.

Exception: Dwelling units within commercial buildings shall not be required to comply with Sections C405.2 through C405.5, provided that they comply with Section R404.1.

❖ Section C405 contains requirements for electric power and lighting systems. Most of this section addresses electric lighting systems; however, it is worth noting that this section also contains significant new requirements that apply to electrical distribution systems, motors, and vertical and horizontal transportation systems. Section C405 is organized as follows:

- Section C405.2 addresses minimum requirements for both interior and exterior lighting controls.
- Section C405.3 describes minimum efficiency requirements for exit signs.
- Sections C405.4 and C405.5 contain requirements for interior and exterior lighting power.
- Section C405.6 requires individual submetering of most dwelling units located in commercial buildings.
- Section C405.7 describes minimum efficiency standards for transformers.
- Section C405.8 describes minimum efficiency standards for motors.
- Section C405.9 includes a number of requirements related to vertical and horizontal transportation systems.

If the energy-cost-budget method is used (see commentary, Section C407), the interior lighting power requirements of Sections C404.4 and C404.5 do not apply, but all other requirements of Section C405 must still be satisfied as applicable (see commentary, Section C401.2).

Electric lighting accounts for approximately 20 percent of all commercial building electricity consumption, accounting for about 7 percent of total electricity consumption in the United States. Electric lighting also adds heat to building spaces that must be removed by the cooling system. As a rule of thumb, an air conditioner will use an additional 15 to 20 kW (51 193 to 68 257 Btu/h) to remove the heat produced by each 100 kW (341 287.4 Btu/h) of installed lighting power during the cooling season.

The code utilizes two strategies to encourage energy-efficient lighting systems: first, limit the total overall wattage of lighting that can be installed, and second, reduce the utilization of that lighting with automatic control systems. Both strategies are equally important, as a 30-percent reduction in lighting power saves exactly as much energy as a 30-percent reduction in operating hours.

Significant improvement in lighting source efficacy (lumens per watt) is resulting in much lower installed lighting power (watts) to achieve the same light levels. Light-emitting diodes (LEDs) are responsible for much of this improvement, and LED lamps that will use 80 percent less energy than the incandescent lamps they are intended to replace are widely available. LED sources have also achieved significant market penetration in replacing compact fluorescent, and are on the cusp of replacing most linear fluorescent and high intensity discharge (metal halide and high pressure sodium) sources as well.

Automatic controls required by this code fall into three general categories. Occupant sensors are intended to automatically detect room occupancy, and turn lights off when rooms are unoccupied. Time-switch systems are not capable of detecting whether occupants are present, but will automatically turn lights off at times when occupants are not expected to be present. Occupant sensors save more energy than time-switch systems, and when properly configured should be less of an inconvenience for building occupants. Daylight responsive controls automatically turn off or dim lights near windows and skylights when sufficient daylight is present so that the electric lights are not needed.

A primary goal in most building designs is to minimize initial construction costs. Consequently, without codes or incentives, inefficient and ineffective lighting systems are often installed to lower first costs. This approach is short sighted as the long-term operational costs of bad lighting systems are greater than the initial construction cost. To cite just one example, a 100W incandescent light fixture operated 12 hours a day, 5 days a week in a commercial building will use $600 of electricity over 20 years (at 10 cents per kWh), and cost $600 to maintain (at $10 per re-lamping). Even more important are the indirect costs of bad lighting: occupant complaints, reduced sales, increased absenteeism, slower performance, poor work accuracy, and decreased safety.

INTERNATIONAL CODE COUNCIL®
Copyright © 2015 ICC. ALL RIGHTS RESERVED. Accessed by David Dammon on Jun 21, 2017 12:30:52 PM pursuant to License Agreement with ICC. No further reproduction or distribution authorized. ANY UNAUTHORIZED REPRODUCTION OR DISTRIBUTION IS A VIOLATION OF THE FEDERAL COPYRIGHT ACT AND THE LICENSE AGREEMENT, AND SUBJECT TO CIVIL AND CRIMINAL PENALTIES THEREUNDER.

The code encourages the use of energy-efficient lighting equipment in design practice by assigning lighting power allowances for interior and exterior lighting systems. The project complies with the code when the total installed power (watts) of new lighting is less than the interior lighting power allowance, and the total installed power (watts) of exterior lighting is less than the exterior lighting power allowance. This approach promotes design flexibility while ensuring a minimum level of efficiency.

As previously noted, lighting accounts for about 20 percent of all commercial building electricity consumption in the United States. Lighting also is expensive, particularly in areas where utilities assess peak demand charges for afternoon electricity use. For example, the cost of lighting a 10,000-square-foot (929 m^2) office building with connected lighting power of 10,000 watts (1 W/ft^2) ranges from $1,000 to more than $4,000 per year (you would rarely get much above 1 W/sf in an office building complying with the this code, and operating hours would be reduced to 8-10 per day by automatic controls), not including air-conditioning and environmental costs. When cost analysis is used to assess equipment options in new buildings, lighting measures usually exceed all other types of building improvements, showing rapid (often less than 1 year) payback and impressive life-cycle cost savings.

The cost of lighting may be loosely defined as:

Lighting Cost = Lighting Power (kW) × Time of Use (hour) × Average Cost of Electricity ($/kWh).

In many locations the utility will also apply a demand charge ($ per kW).

In addition to saving energy, compliance with the lighting requirements in the code encourages reduced lighting costs in commercial buildings.

The lighting system requirements in this code apply to almost all new lighting installations regardless of whether the project is new construction or an alteration to an existing building. The only exception is where less than 50 percent of the luminaires in a space are being replaced (see Section C503.1, Exception 7), or where the entire energy code is not applicable (see Chapter 1 [CE]). For existing buildings, where luminaires are being replaced or added, Sections C405.4 and C405.5 must be complied with, and where lighting controls are being altered in existing buildings, Section C405.2 must be complied with. Alteration of lighting control systems is not a trigger for applicability of Sections C405.4 and C405.5, just as luminaire replacement does not trigger applicability of Section C405.2.

For the most part, applying Section C405 is relatively straightforward. However, there are a number of specific cases pertaining to lighting systems where additional information may be helpful in interpreting code requirements.

- **Exterior and interior lighting.** The code contains separate requirements for exterior and interior lighting systems. Exterior and interior lighting must comply separately with their respective requirements. Trade-offs between the two are not allowed.
- **Interior lighting power.** The code includes two different approaches to determine compliance with the interior lighting power requirement: the Building Area Method, and the Space-By-Space Method. One method must be chosen for each project and used to show compliance for the entire project; a project cannot use different methods for different components. However, different projects in the same building that are filed separately can use different compliance paths.
- **Dwelling Units.** There are two different ways of determining compliance for lighting in dwelling units in commercial buildings. Dwelling units that comply with the provisions of Section R404.1 are exempt from the requirements of Sections C405.2 through C405.5. These dwelling units would not be counted in the area used to determine the allowed interior and exterior lighting power for the rest of the building, and the lighting in these units would not be included in the calculation of total installed lighting power for the rest of the building. Dwelling units that do not comply with Section R404.1 must be included in the lighting power calculations required by Sections C405.4 and C405.5. Since there is no space-type category for dwelling units in Table C405.4.2(2), these projects must use the Building Area Method.
- **Lighting in multiple-building facilities or campuses.** Each building in campus-like facilities must comply separately with the interior lighting power requirements, even if they are covered under a single building permit. The exterior lighting power requirement, however, applies for the entire site.
- **Lighting in speculative buildings.** Speculative buildings often are built before the tenants are known. The initial building permit application usually includes just the shell and core with lighting installed only for common areas of the building, such as corridors, toilets, stairwells and lobbies. Lighting for tenant spaces is installed as part of the tenant improvements and often is customized for each tenant. Lighting systems included in each permit application must comply independently with all provisions of the code that is in effect at the time the permit is issued, and cannot rely on tradeoffs with systems that are not included in the same permit. For example, if lighting in core toilet rooms is

INTERNATIONAL CODE COUNCIL®
Copyright © 2015 ICC. ALL RIGHTS RESERVED. Accessed by David Dammon on Jun 21, 2017 12:30:52 PM pursuant to License Agreement with ICC. No further reproduction or distribution authorized. ANY UNAUTHORIZED REPRODUCTION OR DISTRIBUTION IS A VIOLATION OF THE FEDERAL COPYRIGHT ACT AND THE LICENSE AGREEMENT, AND SUBJECT TO CIVIL AND CRIMINAL PENALTIES THEREUNDER.

included in the base building permit, those toilet rooms must be provided with code-compliant lighting controls at the time they are built; they cannot rely on future tenants to install lighting control systems that will "bring them up to code."

- **Lighting in shell buildings.** Shell buildings are built before the building's use is known. The space could become light manufacturing, office, warehouse or any other use depending on the requirements of the tenant. In shell buildings, the lighting system rarely is installed before the space is leased. Leasing a building to a tenant effectively defines its use and allows for a determination of the interior lighting power allowance. When a developer wants to install a lighting system before the use is known, the interior lighting power allowance must be set based on discussions between the code official and the designer. In these situations it may be prudent to use a minimal lighting power density or that of the lowest anticipated possible uses.
- **Garages and parking areas.** A covered parking garage is treated as interior space and is included as part of the interior lighting power [for parking garages, see Table C405.4.2(1) in the row "Parking garage," or Table C405.4.2(2) in the row "Parking area, interior")]. Interior lighting power also would include covered areas of open parking garages. Uncovered areas (including rooftop parking) and outdoor parking areas, however, are treated as exterior lighting and would use Table C405.5.2(2).

Example of Application to First Tenant Spaces

The core and shell of a high-rise office was completed prior to the effective date of the code. The construction included the building envelope, the base HVAC system and lighting improvements for the common areas only. Lighting improvements for each tenant space will be made on a tenant-by-tenant basis when each space is leased.

Tenant spaces on two floors of the building remain empty and unimproved until they are leased a year later, after the code takes effect. At this time, the tenant files a permit application for the construction of a lighting system along with other tenant improvements. Does the code apply to the design of the lighting system?

Yes. The first tenant improvements in a building are considered new construction, and the lighting requirements of the code apply. In Section C405.2, the phrase "all areas in the building covered in this permit" would support this requirement.

Glossary of Lighting Terms used in Section C405.

A glossary of terms is provided for the benefit of the user of this commentary.

Floor area or building area. (As used to determine interior lighting power for Section C405.) These terms describe the area of the building measured to inside wall surfaces. This area is used to calculate the interior lighting power allowed for the building.

Lamp. The term "lamp" is used to describe a device that creates light. The most common term for this is the "light bulb." Common lamp types include:

- Light Emitting Diode (LED).
- Incandescent (including halogen, krypton, and xenon).
- Fluorescent (including compact fluorescent).
- Metal halide.
- High-pressure sodium.
- Low-pressure sodium.
- Specialty sources, such as neon, carbon, arc, xenon strobe, etc.

Lighting power density (LPD). LPD is the maximum watts per square foot of lighting for a general building type or a specific building space, function or activity as found in Tables C405.4.2(1) and C405.4.2(2).

Luminaire. The luminaire is the entire light fixture, including the lamp, the ballast (if any) and the housing, designed to distribute the light and protect the lamps. A luminaire will typically bear a label from a testing agency such as UL indicating that it meets electrical safety requirements.

C405.2 Lighting controls (Mandatory). Lighting systems shall be provided with controls as specified in Sections C405.2.1, C405.2.2, C405.2.3, C405.2.4 and C405.2.5.

Exceptions: Lighting controls are not required for the following:

1. Areas designated as security or emergency areas that are required to be continuously lighted.
2. Interior exit stairways, interior exit ramps and exit passageways.
3. Emergency egress lighting that is normally off.

❖ Lighting systems, must have controls that comply with this section. Acceptable control devices include manual switches and dimmers, occupant sensor controls, timeswitch controls, daylight responsive controls, and preset dimming systems. Circuit breakers, fuses and other devices not intended or suited for lighting control do not satisfy this requirement. The exceptions are worth considering individually.

Exception 1 refers to "areas" of the building that require continuous lighting for security or emergencies, not to specific light fixtures. This exception is not terribly specific, but should certainly be considered to be applicable where a building code, zoning requirement, or other life safety ordinance such as a health code, banking code, etc., specifically states that lighting cannot be turned off for safety reasons. It would also be applicable where a lighting control system malfunction could reasonably be considered to pose a risk of immediate harm to building occupants if the

INTERNATIONAL CODE COUNCIL®
Copyright © 2015 ICC. ALL RIGHTS RESERVED. Accessed by David Dammon on Jun 21, 2017 12:30:52 PM pursuant to License Agreement with ICC. No further reproduction or distribution authorized. ANY UNAUTHORIZED REPRODUCTION OR DISTRIBUTION IS A VIOLATION OF THE FEDERAL COPYRIGHT ACT AND THE LICENSE AGREEMENT, AND SUBJECT TO CIVIL AND CRIMINAL PENALTIES THEREUNDER.

lighting were suddenly shut off: a hospital operating room during surgery, for example, or certain areas of prisons. Finally, there are certain spaces such as 911 call centers, hospital emergency rooms and certain transportation facilities that are continuously occupied and where lights should never be turned off.

Exception 2 uses language that has a very specific meaning in most building codes. In jurisdictions that have adopted the IBC, Chapter 10 defines different elements of the means of egress.

Exception 3 refers to emergency lighting equipment that is normally off, but incorporates an integral transfer switch that automatically turns the light "on" (usually from an integral battery pack) when the power feed to the fixture is lost.

Lighting control requirements are established to reduce energy use by automatically turning lights off when they are not needed, and by allowing building occupants to turn off lights when occupants are present but do not require that the lights be turned on.

Although there are many unique approaches to lighting controls, including task tuning, lumen maintenance, demand response load shedding, and others, the code primarily relies on occupant sensors, time-switch controls, and daylight responsive controls as the most proven and robust strategies for achieving energy savings.

C405.2.1 Occupant sensor controls. Occupant *sensor controls* shall be installed to control lights in the following space types:

1. Classrooms/lecture/training rooms.
2. Conference/meeting/multipurpose rooms.
3. Copy/print rooms.
4. Lounges.
5. Employee lunch and break rooms.
6. Private offices.
7. Restrooms.
8. Storage rooms.
9. Janitorial closets.
10. Locker rooms.
11. Other spaces 300 square feet (28 m^2) or less that are enclosed by floor-to-ceiling height partitions.
12. Warehouses.

❖ Occupant sensors (more commonly referred to as "occupancy" or "motion" sensors) are automatic control devices that detect occupancy and adjust lights in response to the presence or absence of people in the space. The vast majority of these devices work by sensing motion, but some utilize "microphonic" technology that listens for occupant noises rather than motion. The most common technologies are:

- Passive infrared (PIR) sensors, which perceive and respond to the heat patterns of motion. The body-heat patterns of humans in the infrared range can be detected fairly easily relative to other forms of heat. This same technology is used in most residential and commercial security systems. PIR sensors often use a dual-element sensing device so that when one element senses infrared energy before the other, the sensor assumes occupancy and is turned to the occupied state. The chief advantage of PIR sensors is that they are relatively inexpensive and reliable. They very rarely false trigger by responding to nonoccupant motion in a space. The major limitation to PIR sensors is that they are strictly line-of-sight devices. They cannot "see" around corners or over partitions. The sensitivity of these devices also drops significantly with distance so that they may be good at detecting "large" motion (such as walking) at greater distances, and "small" motion (such as typing) at close distances. Because of this, they are best in smaller spaces without partitions, or in large spaces where major motion is common (like warehouses and gymnasiums). Two important advantages of PIR technology are that it can be used outdoors and in cold spaces like walk-in freezers, and the "coverage pattern" can be limited by covering part of the lens, so that it does not detect motion in adjacent areas outside the intended coverage pattern.
- Ultrasonic sensors (US), which radiate ultrasonic waves into a space, then read the frequency of the reflected waves. Motion causes a slight shift in frequency, which the detector interprets as occupancy. US use a quartz crystal oscillator to generate an inaudible signal. The ultrasonic signal is broadcast into a space, bounces off surfaces and returns to the sensor's receiver. Changes in the signal's return time indicate occupancy, US are typically more expensive than PIR but offer greater coverage and have the ability to "see" behind partitions, which is both an advantage and a disadvantage. However, the increased sensitivity means that they are more susceptible to false triggering from such things as HVAC systems, open windows and people walking by open doors to controlled spaces. They often are used effectively in partitioned spaces, but are more prone to false triggering because of their sensitivity to air movement. Proper design and installation minimizes this potential problem. US are best used in bathrooms, office spaces with partitions, larger open areas, etc.
- Dual-technology (DT) sensors, which integrate both PIR and US technology into one package. Typically, these are designed to avoid false triggering by holding the lights off unless both detectors sense motion in the space. DT sensors typically use both a passive infrared and an ultrasonic technology. They offer the combined strengths of both technologies without

INTERNATIONAL CODE COUNCIL®
Copyright © 2015 ICC. ALL RIGHTS RESERVED. Accessed by David Dammon on Jun 21, 2017 12:30:52 PM pursuant to License Agreement with ICC. No further reproduction or distribution authorized. ANY UNAUTHORIZED REPRODUCTION OR DISTRIBUTION IS A VIOLATION OF THE FEDERAL COPYRIGHT ACT AND THE LICENSE AGREEMENT, AND SUBJECT TO CIVIL AND CRIMINAL PENALTIES THEREUNDER.

the weaknesses of either. In addition, the control options usually are configurable by the user. For example, the unit may be set so that both technologies are required to trigger "occupied" and then either technology would be required to trigger "hold on." DT sensors are especially well suited for classrooms or spaces that are difficult to cover with a single technology.

- Microwave sensors, which are similar to ultrasonic in that a signal is generated and moving objects will cause a shift in the frequency of the return signal. Microwave sensors primarily are limited to the security and alarm industries.

The code does not specify which technologies are acceptable.

Most devices can be calibrated for length-of-time delay between the last detected occupancy and extinguishing of the lights. The code specifically requires that this time delay cannot be longer than 30 minutes, and to comply with this requirement it is recommended that all installed sensors have a maximum 30-minute time delay. The shorter the time delay setting, the greater the energy savings, as the lights will spend more time "off." If occupants complain about the lights shutting off in occupied spaces with a 30-minute time delay, then the occupant sensor is not working properly and must be reconfigured, relocated, or replaced. Some devices include a "sensitivity" setting, but most now incorporate some sort of automatic self-calibration mechanism instead of a manual sensitivity setting.

Occupant sensors save energy by turning lights off automatically. Turning lights on automatically never saves energy, because there are many instances where a user would not choose to turn lights on. For this reason, full automatic-on is only permitted in

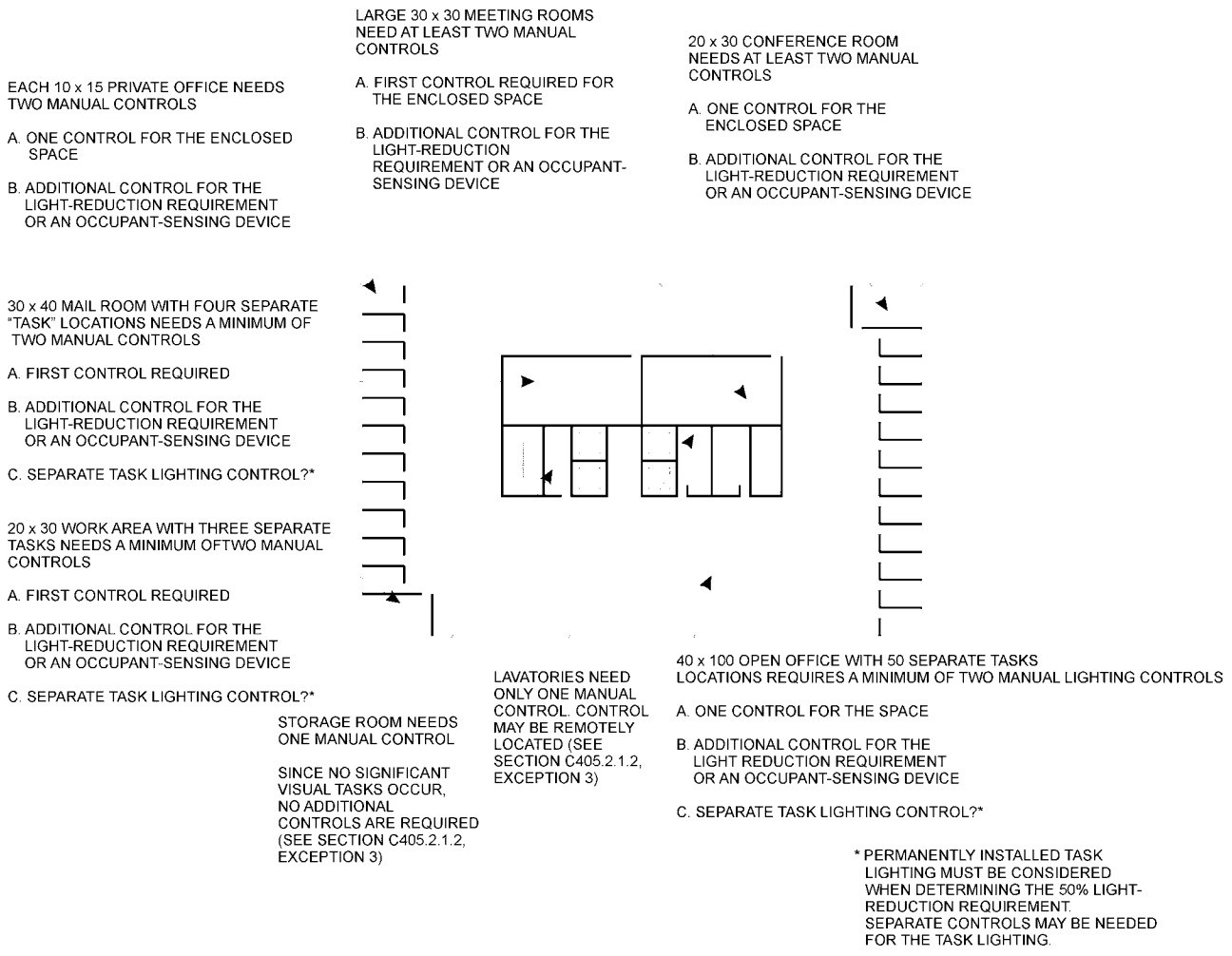

For SI: 1 foot = 304.8 mm.

Figure C405.2.1
REQUIRED LIGHTING CONTROLS
(Courtesy of U.S. Department of Energy, Office of Building Technology State and Community Programs, www.energycodes.gov)

INTERNATIONAL CODE COUNCIL®
Copyright © 2015 ICC. ALL RIGHTS RESERVED. Accessed by David Dammon on Jun 21, 2017 12:30:52 PM pursuant to License Agreement with ICC. No further reproduction or distribution authorized. ANY UNAUTHORIZED REPRODUCTION OR DISTRIBUTION IS A VIOLATION OF THE FEDERAL COPYRIGHT ACT AND THE LICENSE AGREEMENT, AND SUBJECT TO CIVIL AND CRIMINAL PENALTIES THEREUNDER.

"public corridors, stairways, restrooms, primary building entrance areas and lobbies, and areas where manual-on operation would endanger the safety or security of the room or building occupants" (see the exception to Section C405.2.1.1). Remember that even in these spaces, an accessible manual switch must still be provided to allow occupants to turn lights off if they choose to.

In all other spaces, occupant sensors must be configured to turn on automatically to no more than 50-percent power, and an accessible switch must be provided to bring lights to full output. The simplest way to achieve this is with a "combination" occupant sensor/wall switch that controls all lights in "manual-on, automatic-off mode." This is also sometimes referred to as a "vacancy sensor." However, in some larger rooms the wall switch may need to be located separately from the occupant sensing device, or several occupant sensing devices may need to be connected together to provide coverage for the entire room. Occupant sensor systems typically consist of a motion detector, a control unit and a relay. Usually, two or more of the components are integrated into one package. Many systems also require a power supply in the form of a transformer that steps down the building voltage to 24 volts. The detector collects information and sends it to the controller, where it is processed. Output from the controller activates the relay, which in turn switches the light circuit.

It is difficult to generalize about the amount of lighting savings that is attributable to the use of occupant sensors. Applications differ widely, and actual savings depend on occupancy patterns, lighting schedules, employee habits and many other factors. Sensors are most effective in building spaces where occupancy is sporadic or unpredictable and in spaces, such as storage areas, where the lights are likely to be left on inadvertently. Typical savings range from 10 percent in large open offices to 60 percent in some warehouse applications.

In fact, a pilot study was done at a federal site in Boulder, Colorado, involving occupant sensors and desktop dimmers. Offices with just occupant sensors averaged a 50-percent reduction in lighting energy used during normal operating hours. Offices that also had manual dimmers averaged a 75-percent reduction.

Despite the unpredictability of the savings obtained with occupant-sensor lighting control, it is a control strategy that consistently pays off in terms of its cost reduction. In many cases, occupant sensors pay for themselves in less than a year (see Commentary Figure C405.2.1).

C405.2.1.1 Occupant sensor control function. Occupant sensor controls in spaces other than warehouses specified in Section C405.2.1 shall comply with the following:

1. Automatically turn off lights within 30 minutes of all occupants leaving the space.
2. Be manual on or controlled to automatically turn the lighting on to not more than 50 percent power.

   Exception: Full automatic-on controls shall be permitted to control lighting in public corridors, stairways, restrooms, primary building entrance areas and lobbies, and areas where manual-on operation would endanger the safety or security of the room or building occupants.
3. Shall incorporate a *manual control* to allow occupants to turn lights off.

❖ See the commentary to Section C405.2.1.

C405.2.1.2 Occupant sensor control function in warehouses. In warehouses, the lighting in aisleways and open areas shall be controlled with occupant sensors that automatically reduce lighting power by not less than 50 percent when the areas are unoccupied. The occupant sensors shall control lighting in each aisleway independently and shall not control lighting beyond the aisleway being controlled by the sensor.

❖ See the commentary to Section C405.2.1.

C405.2.2 Time-switch controls. Each area of the building that is not provided with *occupant sensor controls* complying with Section C405.2.1.1 shall be provided with *time switch controls* complying with Section C405.2.2.1.

Exception: Where a *manual control* provides light reduction in accordance with Section C405.2.2.2, automatic controls shall not be required for the following:

1. *Sleeping units*.
2. Spaces where patient care is directly provided.
3. Spaces where an automatic shutoff would endanger occupant safety or security.
4. Lighting intended for continuous operation.
5. Shop and laboratory classrooms.

❖ Time-switch controls use a time-scheduling device to switch lighting systems on or off according to predetermined schedules. This is the oldest form of automatic lighting control, and in most cases the least efficient. For this reason, time-switch control systems are only required in spaces where occupant sensors are not provided. In many smaller projects, the simplest, most efficient, and lowest-cost approach to compliance with this code will simply be to provide manual-on, automatic-off occupant sensors in all spaces. However, time-switch controls can make sense in spaces with tightly controlled occupancy schedules (like circulation areas in schools), or where occupant sensor controls would be prohibitively expensive (like "big box" retailers, airports, or shopping mall arcades). Time scheduling of interior lighting systems is, for the most part, based on occupancy schedules. In some cases, time-switch controls are used to energize additional lighting control systems, such as daylighting responsive controls, which are held off during unoccupied periods. It is worth remembering that time-switch controls save energy when they turn lights off automatically, not

INTERNATIONAL CODE COUNCIL®
Copyright © 2015 ICC. ALL RIGHTS RESERVED. Accessed by David Dammon on Jun 21, 2017 12:30:52 PM pursuant to License Agreement with ICC. No further reproduction or distribution authorized. ANY UNAUTHORIZED REPRODUCTION OR DISTRIBUTION IS A VIOLATION OF THE FEDERAL COPYRIGHT ACT AND THE LICENSE AGREEMENT, AND SUBJECT TO CIVIL AND CRIMINAL PENALTIES THEREUNDER.

when they turn lights on automatically. The code requires shutoff, but does not require turn-on. In fact, it is best in most cases to let space occupants turn lights on when they arrive in the morning, and allowing the time-switch system to be used to provide only automatic-off in the evening.

Time-switch controls include the following components:

- A central processor, usually capable of controlling several output channels, each of which may be assigned to one or more lighting circuits.
- Relays, series wired to lighting control zones and controlled by the central processor.
- Override switches that are required to accommodate individuals who use the space during scheduled off hours. Individuals who use the space during scheduled off hours can activate manual switches or telephone overrides to regain temporary control of the lights in a given space.

In most cases, Class II (low-voltage) wiring links all the components in the system, and the system uses a flashing or "quick flicker" warning system to let individuals know that the lights are going off. This allows occupants to either vacate the space or activate an override to keep the lights on.

The crucial component in any time-scheduling system is the programmable central processor, which is essentially a multiple-circuit controller. The central processor can be programmed by building maintenance personnel to schedule on and off loads on each of its output channels. If desired, several different on-off sequences may be programmed on each channel.

A central processor typically consists of the following components:

- A programmable microprocessor with an electronic clock that is capable of separately scheduling weekday, weekend and holiday operations. Astronomical time-keeping ability means the processor is able to make seasonal and daylight savings adjustments. Typically, the processor has a built-in battery backup so that the programmed schedule remains in memory during power outages. The processor usually is able to "sweep" at regular intervals during its off hours. The processor remembers when overrides have been used to keep lights on in any particular area and then will repeat the operation to turn off the lights.
- Switch inputs allow occupants to override the shutoff function of the processor. Usually the switches and wiring to the controller are low voltage. Inputs also may be wired to photocells or occupancy sensors for additional flexibility.
- Output channels are required for each lighting control zone. Sophisticated designs sometimes include two or more outputs for each control zone to allow for stepped control of the zone. In some systems, output channels can be designed to provide a variable signal, allowing for dimming applications. These are a considerable expense, however, because each dimming channel requires a digital-to-analog signal converter.

Generally, time scheduling is most effective when occupancy patterns are relatively regular or when lighting operating hours are easy to predict.

C405.2.2.1 Time-switch control function. Each space provided with *time-switch controls* shall also be provided with a *manual control* for light reduction in accordance with Section C405.2.2.2. Time-switch *controls* shall include an override switching device that complies with the following:

1. Have a minimum 7-day clock.
2. Be capable of being set for seven different day types per week.
3. Incorporate an automatic holiday "shutoff" feature, which turns off all controlled lighting loads for at least 24 hours and then resumes normally scheduled operations.
4. Have program backup capabilities, which prevent the loss of program and time settings for at least 10 hours, if power is interrupted.
5. Include an override switch that complies with the following:
   - 5.1. The override switch shall be a manual control.
   - 5.2. The override switch, when initiated, shall permit the controlled lighting to remain on for not more than 2 hours.
   - 5.3. Any individual override switch shall control the lighting for an area not larger than 5,000 square feet (465 m^2).

Exceptions:

1. Within malls, arcades, auditoriums, single-tenant retail spaces, industrial facilities and arenas:
   - 1.1. The time limit shall be permitted to be greater than 2 hours, provided that the override switch is a captive key device.
   - 1.2. The area controlled by the override switch is permitted to be greater than 5,000 square feet (465 m^2), but shall not be greater than 20,000 square feet (1860 m^2).
2. Where provided with *manual control*, the following areas are not required to have light reduction control:
   - 2.1. Spaces that have only one luminaire with a rated power of less than 100 watts.

INTERNATIONAL CODE COUNCIL®
Copyright © 2015 ICC. ALL RIGHTS RESERVED. Accessed by David Dammon on Jun 21, 2017 12:30:52 PM pursuant to License Agreement with ICC. No further reproduction or distribution authorized. ANY UNAUTHORIZED REPRODUCTION OR DISTRIBUTION IS A VIOLATION OF THE FEDERAL COPYRIGHT ACT AND THE LICENSE AGREEMENT, AND SUBJECT TO CIVIL AND CRIMINAL PENALTIES THEREUNDER.

2.2. Spaces that use less than 0.6 watts per square foot (6.5 W/m^2).

2.3. Corridors, equipment rooms, public lobbies, electrical or mechanical rooms.

❖ See the commentary to Section 405.2.2.

C405.2.2.2 Light-reduction controls. Spaces required to have light-reduction controls shall have a *manual control* that allows the occupant to reduce the connected lighting load in a reasonably uniform illumination pattern by at least 50 percent. Lighting reduction shall be achieved by one of the following or another *approved* method:

1. Controlling all lamps or luminaires.
2. Dual switching of alternate rows of luminaires, alternate luminaires or alternate lamps.
3. Switching the middle lamp luminaires independently of the outer lamps.
4. Switching each luminaire or each lamp.

Exception: Light reduction controls are not required in *daylight zones* with *daylight responsive controls* complying with Section C405.2.3.

❖ Light-reduction controls, also known as "two-level switching" or "bi-level switching", save energy by allowing occupants to reduce light levels. Light reduction controls are required in most spaces where lights are controlled by a time-switch system, but are never required in spaces with occupant sensors, or for lights connected to daylight responsive controls. The exceptions to the light-reduction control requirement are found in Section C405.2.2.1 (Exceptions 2.1, 2.2, and 2.3).

For the most part, the exceptions are self-evident in that they recognize the rather modest opportunity to save lighting energy in spaces used as a whole and other unique, infrequently used spaces. Section C405.4.2 and the table that goes with it establish that parking garages or other spaces with a low power density would be exempt from the lighting-reduction requirement. These types of areas would have little energy conservation benefit from the lighting-reduction controls because of the low amount of illumination in use.

The more uniform the reduced light levels are, the more likely it is that these controls will actually be used to reduce light levels and save energy. Therefore, Method 1, "Controlling all lamps or luminaires," is the best choice, and merits a little further consideration, as there are two ways of accomplishing this:

1. Make all lights dimmable, and connect them to a dimmer. Note that dimming is not universally available for all light sources, but is available for most LED and fluorescent sources, at different cost points and performance levels. The lowest cost option will often be 0- to 10-volt dimming, and this will often dim the light source to 10 to 20 percent of full light output. More expensive dimming options will usually reduce light levels to 1 percent or lower of full light output. Some LED products are now available that will dim to 0.1 percent of full light output, which effectively matches the dimming range of incandescent, but at a higher cost. For the purposes of this code, dimming to 50 percent of maximum power is required.
2. Utilize bi-level switching ballasts or drivers. Most linear fluorescent luminaires can be provided with ballasts that switch to 50 percent of maximum power. Most LED luminaires that are intended to compete with linear fluorescent are also available with drivers that offer the same performance. These products are often less expensive than dimming, and work using a simpler protocol, where each luminaire receives one neutral wire and two switched hot legs. When both legs are hot, the luminaire operates at 100 percent power. When one leg is hot, the luminaire operates at 50 percent power. And when both leg are not hot, the luminaire is off (see Commentary Figure C405.2.2.2).

C405.2.2.3 Manual controls. *Manual controls* for lights shall comply with the following:

1. Shall be readily accessible to occupants.
2. Shall be located where the controlled lights are visible, or shall identify the area served by the lights and indicate their status.

❖ This section provides requirements for location of manual controls for lighting. It does not create any requirements for the location of occupant sensing devices, the central microprocessor in a time-switch system, or any other automatic lighting control devices; rather, it creates a requirement for the location of any manual controls that must be accessed by occupants for proper operation of these systems. For example, consider a multipurpose room with four ceiling-mounted occupant sensors and two manual switches, all wired to a switchpack. The ceiling-mounted occupant sensors and the switchpack can be located wherever is most appropriate, but the location of the two manual switches is specified by this section of the code.

Proper location of manual controls is critical to their success in saving energy. If controls are all banked together in one central location, unlabeled, and where the lights being controlled cannot be seen, then frustrated users will simply turn all of the lights on, even when they only need some of the lights.

The code addresses this with a simple set of requirements. When using this section, it is important to remember that the term "readily accessible" is defined in the code and has a very specific meaning.

INTERNATIONAL CODE COUNCIL®
Copyright © 2015 ICC. ALL RIGHTS RESERVED. Accessed by David Dammon on Jun 21, 2017 12:30:52 PM pursuant to License Agreement with ICC. No further reproduction or distribution authorized. ANY UNAUTHORIZED REPRODUCTION OR DISTRIBUTION IS A VIOLATION OF THE FEDERAL COPYRIGHT ACT AND THE LICENSE AGREEMENT, AND SUBJECT TO CIVIL AND CRIMINAL PENALTIES THEREUNDER.

C405.2.3 Daylight-responsive controls. *Daylight-responsive controls* complying with Section C405.2.3.1 shall be provided to control the electric lights within *daylight zones* in the following spaces:

1. Spaces with a total of more than 150 watts of *general lighting* within sidelight *daylight zones* complying with Section C405.2.3.2. *General lighting* does not include lighting that is required to have specific application control in accordance with Section C405.2.4.
2. Spaces with a total of more than 150 watts of *general lighting* within toplight *daylight zones* complying with Section C405.2.3.3.

Exceptions: Daylight responsive controls are not required for the following:

1. Spaces in health care facilities where patient care is directly provided.
2. Dwelling units and sleeping units.
3. Lighting that is required to have specific application control in accordance with Section C405.2.4.
4. Sidelight daylight zones on the first floor above grade in Group A-2 and Group M occupancies.

❖ The code includes an expanded requirement that most lights installed in areas with regular access to daylight be provided with automatic controls to dim or switch those lights off when sufficient daylight is present. The actual potential for energy savings from daylight responsive controls will vary dramatically based on the building. Some buildings receive ample daylight in most interior spaces, and other buildings have very limited access to daylight. However, on average, buildings that incorporate daylighting strategies are estimated to see a 28-percent lighting energy savings.

This section has been crafted to require daylight responsive controls based on where they will achieve the most meaningful energy savings. Hence, the code has the following requirements to ensure sufficient energy savings where automatic controls are required:

1. Daylight responsive control are required only for lights located in daylight zones, and the description of these daylight zones only includes areas that receive ample daylight.
2. Daylight responsive controls are required only where there is at least 150 watts of lighting to be controlled in the daylight zone.

When interpreting this section it is important to remember that “general lighting” is a defined term in the code with a specific meaning, and does not include decorative or accent lighting. The exceptions to these requirements are worth considering in more detail:

1. Light has a direct biological impact on human beings, through regulation of melatonin production and other pathways. However, the biological effects of light only become apparent at light levels that are much higher than those required for visual acuity so healthcare facilities are excluded.

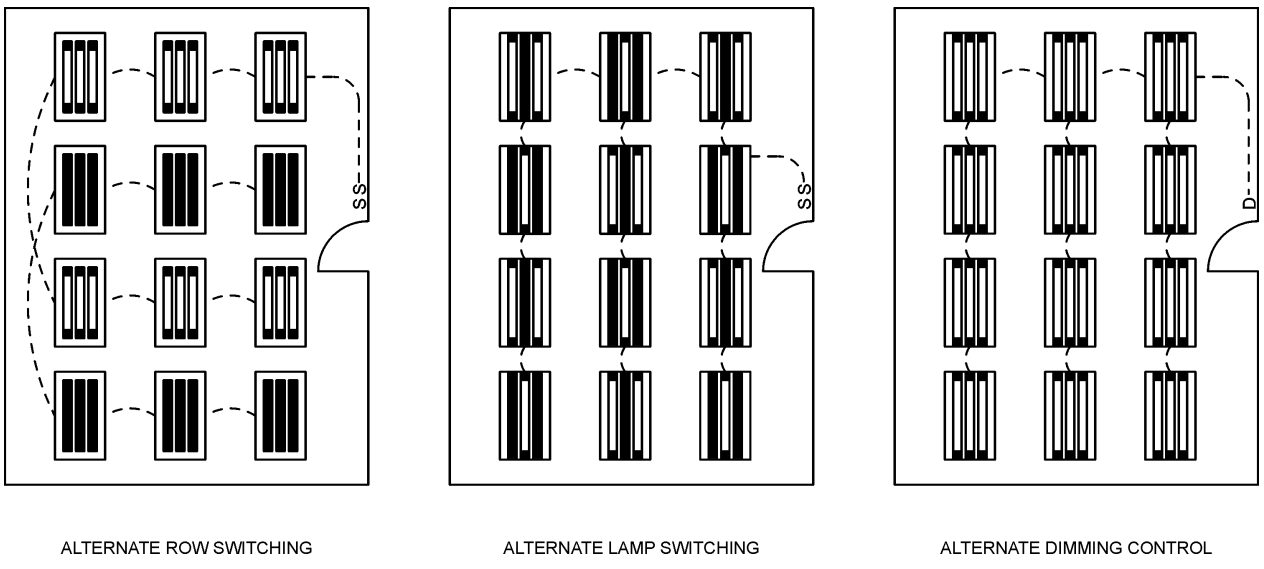

Figure C405.2.2.2
LIGHT-REDUCTION CONTROLS
(Courtesy of U.S. Department of Energy, Office of Building Technology State and Community Programs, www.energycodes.gov)

INTERNATIONAL CODE COUNCIL®
Copyright © 2015 ICC. ALL RIGHTS RESERVED. Accessed by David Dammon on Jun 21, 2017 12:30:52 PM pursuant to License Agreement with ICC. No further reproduction or distribution authorized. ANY UNAUTHORIZED REPRODUCTION OR DISTRIBUTION IS A VIOLATION OF THE FEDERAL COPYRIGHT ACT AND THE LICENSE AGREEMENT, AND SUBJECT TO CIVIL AND CRIMINAL PENALTIES THEREUNDER.

2. Dwelling units and sleeping units conventionally are provided with manual lighting controls, and residents in these settings are likely to use those controls to turn lights off when they are not needed.
3. Certain specific lighting applications are already provided with separate controls. Connecting these lights to daylight responsive controls in addition to the special application controls would be difficult, and in some cases (e.g., plant survival lighting) would be contrary to the purpose and function of the special application lighting.
4. Per the 2015 IBC, Occupancy Group A-2 includes restaurants, and Occupancy Group M includes retail stores. Both of these building types often use lighting in windows to signify that they are "open for business," and switching these lights off during the day would defeat their primary purpose.

C405.2.3.1 Daylight-responsive control function. Where required, *daylight-responsive controls* shall be provided within each space for control of lights in that space and shall comply with all of the following:

1. Lights in toplight *daylight zones* in accordance with Section C405.2.3.3 shall be controlled independently of lights in sidelight *daylight zones* in accordance with Section C405.2.3.2.
2. *Daylight responsive controls* within each space shall be configured so that they can be calibrated from within that space by authorized personnel.
3. Calibration mechanisms shall be r*eadily accessible*.
4. Where located in offices, classrooms, laboratories and library reading rooms, *daylight responsive controls* shall dim lights continuously from full light output to 15 percent of full light output or lower.
5. *Daylight responsive controls* shall be capable of a complete shutoff of all controlled lights.
6. Lights in sidelight *daylight zones* in accordance with Section C405.2.3.2 facing different cardinal orientations [i.e., within 45 degrees (0.79 rad) of due north, east, south, west] shall be controlled independently of each other.

   Exception: Up to 150 watts of lighting in each space is permitted to be controlled together with lighting in a daylight zone facing a different cardinal orientation.

❖ This section describes how daylight responsive controls required by the code must function. Other daylight responsive controls that are installed in the project, but not required by code (i.e., "above code controls") do not need to comply with this section.

The goal of this section is to establish minimum standards for the required daylight controls, and avoid a lack of functionality that would result in the installed control system not working properly. This is not a design guide or a specification. For example, there is no mention in the code of important issues such as sensor location, setpoints, dead bands or response times, all of which are important considerations when designing and specifying daylight responsive controls. Further, there are many instances where it might make sense to exceed these requirements to achieve a system that functions better for the intended use (e.g., dimming to 5 percent instead of 15 percent). These requirements are worth considering in more detail:

1. The intensity and direction of daylight coming through skylights (i.e., "toplighting") is different than the intensity and direction of daylight coming through window (i.e., "sidelighting"). It would not be at all surprising if spaces adjacent to an east-facing window received the most daylight at 9:00 AM, while spaces underneath a rooftop skylight received the most daylight at 1:00 PM. Because of this lack of synchronicity, the lights in these two daylight zones must be separately controlled.
2. Calibration of daylight responsive controls always requires that light level readings be taken in the space with the controlled lights at the time that the calibration is done. Systems without this capability are highly unlikely to be properly commissioned.
3. The term "readily accessible" is defined in the code and has a very specific meaning. However, the readily accessible controls can be in the form of a hand-held remote control that is pointed at the photosensor on the ceiling to make adjustments. Other systems can be programmed from a hand-held smart phone or wifi-enabled laptop. These are examples of calibration mechanisms that would be permitted.
4. Occupants are more likely to accept daylight responsive controls if they are not conscious of lights abruptly being turned on and off. This is not a problem in transient spaces like corridors, lobbies, warehouses, or parking garages, but it is a problem in any space with fixed task locations. Therefore, continuous dimming is required in "offices, classrooms, laboratories, and library reading rooms." Dimming systems are more costly but they always provide superior performance to switching systems.
5. Research has shown that the energy savings of daylight responsive controls that dim lights is dramatically improved if those systems also switch the lights completely off when sufficient daylight is present. In other words, the electric lights would dim to 15 percent of full light output (or whatever their lowest setting is), and would switch off completely when sufficient daylight is present. A lower bound on the dimming range is

INTERNATIONAL CODE COUNCIL®
Copyright © 2015 ICC. ALL RIGHTS RESERVED. Accessed by David Dammon on Jun 21, 2017 12:30:52 PM pursuant to License Agreement with ICC. No further reproduction or distribution authorized. ANY UNAUTHORIZED REPRODUCTION OR DISTRIBUTION IS A VIOLATION OF THE FEDERAL COPYRIGHT ACT AND THE LICENSE AGREEMENT, AND SUBJECT TO CIVIL AND CRIMINAL PENALTIES THEREUNDER.

less likely to lead occupants to object to the lights being switched completely off.

6. This item is best explained by an example. In a room with windows facing east and west, the east side of the room will be brightest in the morning, and the west side will be brightest in the afternoon. In order for the daylight responsive controls to function properly, the lights in the east side of the room must be controlled separately from those in the west side of the room.

   An exception allows up to 150 watts of lighting in each space to be controlled together with lighting in a daylight zone facing a different cardinal orientation. The intention of this exception is to allow for lights in a corner room with less than 300 watts of lighting in daylight zones to be controlled by one (sensor) system. While the code is not specific that this applies to a corner, if this exception were applied to the space in the example cited above, with east- and west-facing fenestration, the results would not be satisfactory.

C405.2.3.2 Sidelight daylight zone. The sidelight *daylight zone* is the floor area adjacent to vertical *fenestration* which complies with all of the following:

1. Where the fenestration is located in a wall, the daylight zone shall extend laterally to the nearest full-height wall, or up to 1.0 times the height from the floor to the top of the fenestration, and longitudinally from the edge of the fenestration to the nearest full-height wall, or up to 2 feet (610 mm), whichever is less, as indicated in Figure C405.2.3.2(1).
2. Where the *fenestration* is located in a rooftop monitor, the *daylight zone* shall extend laterally to the nearest obstruction that is taller than 0.7 times the ceiling height, or up to 1.0 times the height from the floor to the bottom of the *fenestration*, whichever is less, and longitudinally from the edge of the *fenestration* to the nearest obstruction that is taller than 0.7 times the ceiling height, or up to 0.25 times the height from the floor to the bottom of the *fenestration*, whichever is less, as indicated in Figures C405.2.3.2(2) and C405.2.3.2(3).
3. The area of the *fenestration* is not less than 24 square feet (2.23 m^2).
4. The distance from the *fenestration* to any building or geological formation which would block access to daylight is greater than the height from the bottom of the *fenestration* to the top of the building or geologic formation.
5. Where located in existing buildings, the *visible transmittance* of the *fenestration* is not less than 0.20.

❖ There are several reasons why a user of the code might use this section:

1. Section C103.2 requires that the construction documents submitted for filing show the "location of daylight zones on floor plans." This is a very broad requirement that is intended to be applicable to all projects, assist in the layout of lighting controls to comply with the code, and make enforcement of the code easier for plan reviewers.
2. Section C402.4.1.1 allows certain prescriptive path envelope requirements to be relaxed if a specified minimum percentage of the floor area is in a daylight zone. In this case, designers would refer to this section to understand the criteria that must be satisfied to establish a daylight zone.
3. Section C405.2.3 requires that daylight responsive controls be provided for some electric lights installed in daylight zones. This exercise becomes quite simple once the daylight zones have been overlaid on the floor plans, as required by Section C103.2.

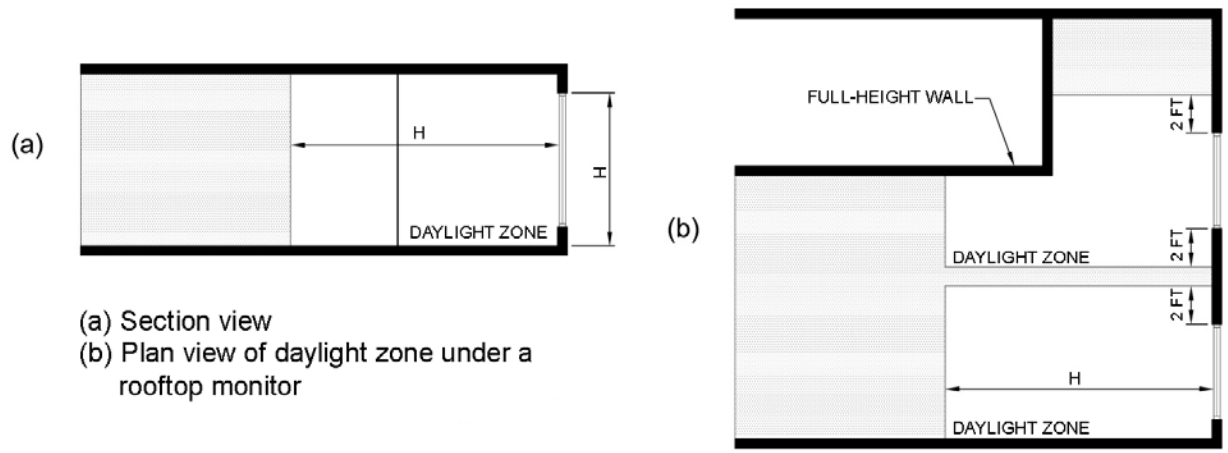

(a) Section view
(b) Plan view of daylight zone under a rooftop monitor

FIGURE C405.2.3.2(1)
DAYLIGHT ZONE ADJACENT TO FENESTRATION IN A WALL

INTERNATIONAL CODE COUNCIL®
Copyright © 2015 ICC. ALL RIGHTS RESERVED. Accessed by David Dammon on Jun 21, 2017 12:30:52 PM pursuant to License Agreement with ICC. No further reproduction or distribution authorized. ANY UNAUTHORIZED REPRODUCTION OR DISTRIBUTION IS A VIOLATION OF THE FEDERAL COPYRIGHT ACT AND THE LICENSE AGREEMENT, AND SUBJECT TO CIVIL AND CRIMINAL PENALTIES THEREUNDER.

The concept of "daylight zones" has existed in architecture since people first started designing buildings. A geometric relationship exists between the building floor area and the fenestration assembly. This relationship describes the potential for daylight to enter the building, and is most easily understood by looking at Figures C405.2.3.2(1), C405.2.3.2(2), C405.2.3.2(3) and C405.2.3.3. This concept is generalized for the code and is not intended as a design guide for good daylighting. The generalizations fail to consider:

1. The latitude of the building.
2. The orientation of the fenestration.
3. The climate at the building site.
4. How interior window treatments (e.g., blinds, shades, drapes, etc.) modify daylight penetration into a building.
5. The impact of daylight shading devices such as light shelves and screens.
6. The control of glare, which is critical to any successful daylighting installation.
7. The type of interior space, which often determines the quantity of light that is needed, and the tolerance for glare.

Nevertheless, this concept is quite robust and, once it has been used a few times, relatively easy to use and understand. It is worth remembering that "fenestration" consists of more than just windows: movable storefront systems, glass doors and curtain walls are other examples of fenestration systems that can transmit daylight and establish a daylight zone.

The daylight zone criteria described in the code include several important provisions intended to ensure that all daylight zones complying with the code actually have sufficient access to daylight.

1. The code establishes a minimum area for the fenestration of 24 square feet (2.23 m^2). All things being equal, there is a direct relationship between the size of a window and the amount

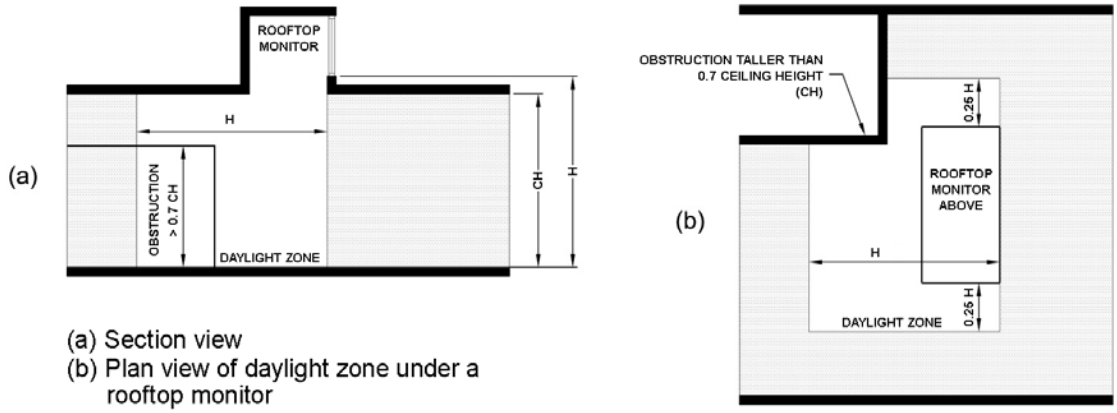

(a) Section view
(b) Plan view of daylight zone under a rooftop monitor

FIGURE C405.2.3.2(2)
DAYLIGHT ZONE UNDER A ROOFTOP MONITOR

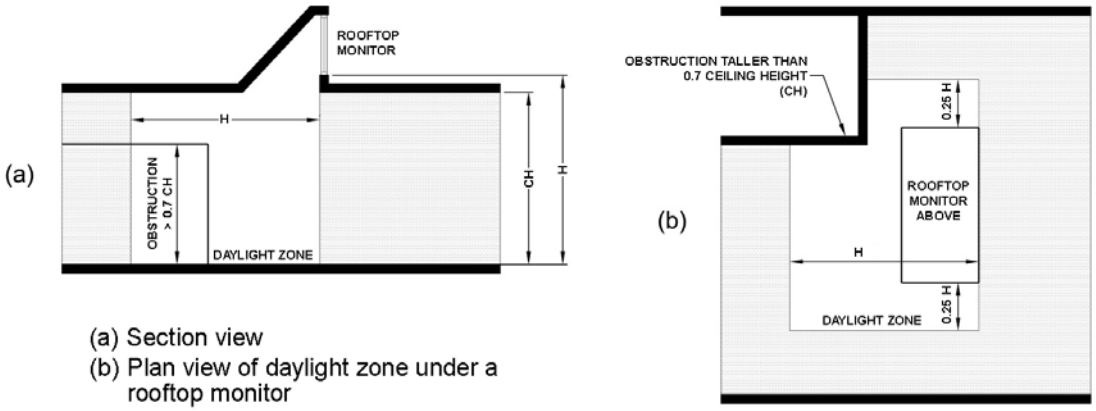

(a) Section view
(b) Plan view of daylight zone under a rooftop monitor

FIGURE C405.2.3.2(3)
DAYLIGHT ZONE UNDER A SLOPED ROOFTOP MONITOR

INTERNATIONAL CODE COUNCIL®
Copyright © 2015 ICC. ALL RIGHTS RESERVED. Accessed by David Dammon on Jun 21, 2017 12:30:52 PM pursuant to License Agreement with ICC. No further reproduction or distribution authorized. ANY UNAUTHORIZED REPRODUCTION OR DISTRIBUTION IS A VIOLATION OF THE FEDERAL COPYRIGHT ACT AND THE LICENSE AGREEMENT, AND SUBJECT TO CIVIL AND CRIMINAL PENALTIES THEREUNDER.

of daylight that will enter the building, and the window must be large enough to allow sufficient daylight to enter.

2. Per Item 4, "The distance from the fenestration to any building or geological formation that would block access to daylight is greater than the height from the bottom of the fenestration to the top of the building or geologic formation." In urban areas there can be significant overshadowing from adjacent buildings and structures that prevents windows from receiving enough daylight to effectively illuminate the building interior. Often these windows are provided for other reasons, such as view or ventilation, but do not provide abundant daylight.
3. Per Item 5, "Where located in existing buildings, the visible transmittance of the fenestration is not less than 0.20." Many older buildings have been constructed with extremely low-transmittance fenestration, which does not deliver sufficient daylight.

Once these criteria have been considered, projecting the daylight zones on the building plans is very straightforward.

C405.2.3.3 Toplight daylight zone. The toplight *daylight zone* is the floor area underneath a roof fenestration assembly which complies with all of the following:

1. The *daylight zone* shall extend laterally and longitudinally beyond the edge of the roof *fenestration* assembly to the nearest obstruction that is taller than 0.7 times the ceiling height, or up to 0.7 times the ceiling height, whichever is less, as indicated in Figure C405.2.3.3.
2. No building or geological formation blocks direct sunlight from hitting the roof *fenestration* assembly at the peak solar angle on the summer solstice.
3. Where located in existing buildings, the product of the *visible transmittance* of the roof *fenestration* assembly and the area of the rough opening of the roof *fenestration* assembly divided by the area of the *daylight zone* is not less than 0.008.

❖ The fenestration criteria for "toplight daylight zones" differ from those for "sidelight daylight zones." In addition to the general geometric criteria, the code requires:

1. "No building or geological formation blocks direct sunlight from hitting the roof fenestration assembly at the peak solar angle on the summer solstice." Outside of the tropics, the "peak solar angle on the summer solstice" would be the highest solar angle at any time throughout the year. In the continental United States this usually occurs on average at 1:00 PM on June 21 (daylight savings time shifts clock time one hour ahead of the sun in most jurisdictions). The exact time is dependent on several factors, including the location of the building within its time zone. This determination can be made by 3D modeling software used by many architects, or it can be done by hand, after consulting a solar angle calculator (these are easily found on the internet).
2. Per Item 3, "Where located in existing buildings, the product of the visible transmittance of the roof fenestration assembly and the area of the rough opening of the roof fenestration assembly divided by the area of the daylight zone is not less than 0.008." This calculation is straightforward and derives a value known as "effective aperture" that combines the area of the skylight with the transmittance of the skylight glazing to determine the potential of the skylight to deliver light to the building interior.

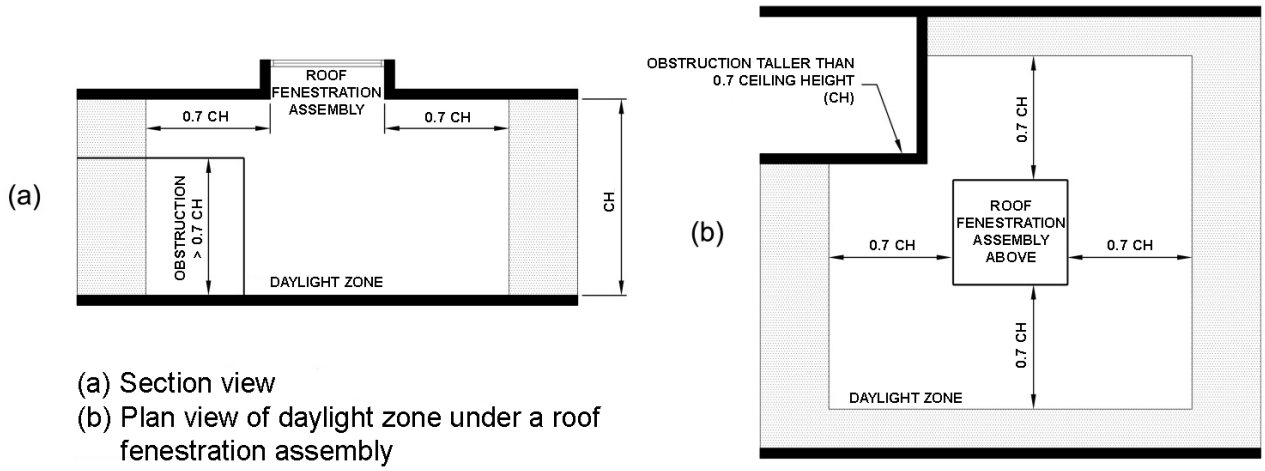

(a) Section view
(b) Plan view of daylight zone under a roof fenestration assembly

FIGURE C405.2.3.3
DAYLIGHT ZONE UNDER A ROOF FENESTRATION ASSEMBLY

INTERNATIONAL CODE COUNCIL®
Copyright © 2015 ICC. ALL RIGHTS RESERVED. Accessed by David Dammon on Jun 21, 2017 12:30:52 PM pursuant to License Agreement with ICC. No further reproduction or distribution authorized. ANY UNAUTHORIZED REPRODUCTION OR DISTRIBUTION IS A VIOLATION OF THE FEDERAL COPYRIGHT ACT AND THE LICENSE AGREEMENT, AND SUBJECT TO CIVIL AND CRIMINAL PENALTIES THEREUNDER.

C405.2.4 Specific application controls. Specific application controls shall be provided for the following:

1. Display and accent light shall be controlled by a dedicated control that is independent of the controls for other lighting within the room or space.
2. Lighting in cases used for display case purposes shall be controlled by a dedicated control that is independent of the controls for other lighting within the room or space.
3. Hotel and motel sleeping units and guest suites shall have a master control device that is capable of automatically switching off all installed luminaires and switched receptacles within 20 minutes after all occupants leave the room.

Exception: Lighting and switched receptacles controlled by captive key systems.

4. Supplemental task lighting, including permanently installed under-shelf or under-cabinet lighting, shall have a control device integral to the luminaires or be controlled by a wall-mounted control device provided that the control device is readily accessible.
5. Lighting for nonvisual applications, such as plant growth and food warming, shall be controlled by a dedicated control that is independent of the controls for other lighting within the room or space.
6. Lighting equipment that is for sale or for demonstrations in lighting education shall be controlled by a dedicated control that is independent of the controls for other lighting within the room or space.

❖ The "specific application controls" requirements listed here are almost always applicable. The only exceptions would be found in Section C405.2. However, we should keep in mind that occupant sensor and time-switch control requirements are generally applicable to lights receiving specific application control, while daylight responsive control would not be required for these lights. A more detailed discussion follows:

1. Display and accent lighting are not clearly defined by the code. However, these would certainly include lighting installed in retail sales areas to highlight merchandise as described in Item 1 of Section C405.4.2.2.1, and "display lighting for exhibits" as described in Exception 2.2 to Section C405.4.1. These lights must be connected to occupant sensors or time-switch control systems as applicable and must be zoned separately from other lights in the space for separate control.
2. This includes any lighting installed in a display case, regardless of how the case is configured, what it displays, or the type of space in which it is located. These lights must be connected to occupant sensors or time-switch control systems as applicable and must be zoned separately from other lights in the space for separate control.
3. This section provides a complete description of all lighting control requirements for sleeping units. Occupant sensor controls, time-switch controls and daylight responsive controls are not specifically required here. However, this section does allow that an occupant sensor or similar system could be provided to comply with the code, if a captive key control is not used. The term "captive key control" is not defined in the code, but is understood to mean a control device where the room key must be deposited in order for lighting circuits in the room to be energized. The idea is that the room key must be taken when the occupant exits the room (to be used to regain access), and thus the lights will be de-energized when the occupant leaves the room.
4. The scope of the code does not include portable lights that are plugged in after occupancy. Rather, it includes only lights that are permanently installed using mechanical or electrical connections. The provisions of this section therefore apply to permanently installed "under cabinet" or "under shelf" lights that provide higher light levels in a limited portion of the space, but not general lighting or portable lamps. These lights must be connected to occupant sensors or time-switch control systems as applicable and must be zoned separately from other lights in the space for separate control.
5. These lights must be connected to occupant sensors or time-switch control systems as applicable and must be zoned separately from other lights in the space for separate control.
6. These lights must be connected to occupant sensors or time-switch control systems as applicable and must be zoned separately from other lights in the space for separate control.

C405.2.5 Exterior lighting controls. Lighting for exterior applications other than emergency lighting that is intended to be automatically off during building operation, lighting specifically required to meet health and life safety requirements or decorative gas lighting systems shall:

1. Be provided with a control that automatically turns off the lighting as a function of available daylight.
2. Where lighting the building façade or landscape, the lighting shall have controls that automatically shut off the lighting as a function of dawn/dusk and a set opening and closing time.
3. Where not covered in Item 2, the lighting shall have controls configured to automatically reduce the connected lighting power by not less than 30 percent from not later than midnight to 6 a.m., from one hour after business closing to one hour before business opening or during any period when activity has not been detected for a time of longer than 15 minutes.

INTERNATIONAL CODE COUNCIL®
Copyright © 2015 ICC. ALL RIGHTS RESERVED. Accessed by David Dammon on Jun 21, 2017 12:30:52 PM pursuant to License Agreement with ICC. No further reproduction or distribution authorized. ANY UNAUTHORIZED REPRODUCTION OR DISTRIBUTION IS A VIOLATION OF THE FEDERAL COPYRIGHT ACT AND THE LICENSE AGREEMENT, AND SUBJECT TO CIVIL AND CRIMINAL PENALTIES THEREUNDER.

All time switches shall be able to retain programming and the time setting during loss of power for a period of at least 10 hours.

Exception: Lighting for covered vehicle entrances or exits from buildings or parking structures where required for safety, security or eye adaptation.

❖ Exterior lighting must be automatically switched by photocells, time switches or a combination of the two. The type of controls required will depend on whether the lights are intended to be on during the full dusk-to-dawn period or turned off during some of the nighttime hours. Where timers are used, they must have some means of seasonal daylight adjustment. Timers must be equipped with power back-up provisions to allow accurate timekeeping and prevent the loss of lighting programming through a minimum 10-hour power loss.

Traditionally, exterior lights have been controlled by electro-mechanical clocks with mechanical trippers that toggle circuit switches. These devices typically are equipped with a manual override. Many of these traditional devices have neither seasonal correction nor 10-hour backup. They, therefore, do not meet the requirements of this section. The following devices will meet the requirements:

1. Directional photocells.
2. Electrically driven mechanical clocks with trippers, astronomical dial and 10-hour spring-wound storage.
3. Electronic programmable time switches with astronomic correction and 10-hour battery backup.
4. Either of the times above with a directional photocell (in places of astronomical correction).

Of these devices, a photocell/time clock combination is the most effective because its integral photocell automatically and continuously compensates for changes in the seasons. In addition, the redundancy of the time clock allows for continued operation if the photocell fails.

C405.3 Exit signs (Mandatory). Internally illuminated exit signs shall not be more than 5 watts per side.

❖ The amount of power presecribed is adequate to properly illuminate the exit signs and conserve energy from older signs.

Note that the annual energy savings for light-emitting diode (LED) exit signs is about $32.50 per year compared to incandescent signs and $5.25 per year compared to fluorescent signs. In addition, the average incremental cost of maintenance for incandescent signs compared to LEDs was about $30. The average incremental maintainance cost for the fluorescent signs was about $15. Another advantage of these newer technologies, such as LEDs, is that the signs tend to have a much higher eventual light output than the technologies that were being used earlier than the mid-1990s. They can often provide nearly 80 percent of the original output after about 10 years compared with 50 percent after the same amount of time for the older systems.

C405.4 Interior lighting power requirements (Prescriptive). A building complies with this section where its total connected lighting power calculated under Section C405.4.1 is not greater than the interior lighting power calculated under Section C405.4.2.

❖ This section identifies the lighting equipment that must be included in the calculations for interior lighting power and describes lighting equipment that is exempt. It describes the method used to calculate the maximum total interior lighting power allowed. It also explains how to calculate the interior connected lighting power.

Interior lighting power complies with the requirements of the code when the total connected interior lighting power of all nonexempt interior lighting is less than or equal to the maximum interior lighting power allowed. Determining compliance with the interior lighting power requirements is a two-step calculation procedure (see commentary, Section C405.4.2).

Example Applying the Lighting Requirements to a Private Office

A 13-foot, 4-inch by 18-foot (4064 mm by 5486 mm) private office (see Commentary Figure C405.4) has two recessed, three-lamp parabolic luminaires for general and task lighting, as well as two recessed, low-voltage down lights that accent artwork on the wall. Each parabolic fixture has a two-lamp rapid-start electronically ballasted F40T5 twin-tube (40 W), low-wattage, reduced output fluorescent lamp. The parabolic fixtures are controlled by a manual wall-box dimmer. Does this space comply with the lighting requirements?

Yes. This space complies with all applicable requirements for lighting power, controls and ballasts.

Using Section C405.4.2, the most appropriate LPD for this space is 1.0 W/ft^2, based on the "building-area type" listing for "office" in Table C405.4.2(2). Based on the room area of 240 square feet (22 m^2), a total of 240 watts is permitted (1.0 W/ft^2 × 240 ft^2 = 240 W). Therefore, this is the maximum interior lighting power allowed for this space. The two low-voltage down lights use 50W MR 16 lamps, and the input wattage of the parabolic fixtures is 60 watts per lamp. The total connected lighting power, therefore, is only 220 watts. The 20 watts not used may be used elsewhere in the building, if needed.

This room is required to have multiple controls. Because the main lights are connected to the occupant sensor, they do not require an additional control (see Section C405.2.2). The down lights in this space must have an additional control and can use the dimmer to satisfy the light reduction control requirement of Section C405.2.2.2.

Because two two-lamp ballasts are used to control

INTERNATIONAL CODE COUNCIL®
Copyright © 2015 ICC. ALL RIGHTS RESERVED. Accessed by David Dammon on Jun 21, 2017 12:30:52 PM pursuant to License Agreement with ICC. No further reproduction or distribution authorized. ANY UNAUTHORIZED REPRODUCTION OR DISTRIBUTION IS A VIOLATION OF THE FEDERAL COPYRIGHT ACT AND THE LICENSE AGREEMENT, AND SUBJECT TO CIVIL AND CRIMINAL PENALTIES THEREUNDER.

the parabolic luminaires, the requirement for tandem wiring does not apply.

C405.4.1 Total connected interior lighting power. The total connected interior lighting power shall be determined in accordance with Equation 4-9.

$$TCLP = [SL + LV + LTPB + \text{Other}] \quad \textbf{(Equation 4-9)}$$

where:

TCLP = Total connected lighting power (watts).

SL = Labeled wattage of luminaires for screw-in lamps.

LV = Wattage of the transformer supplying low-voltage lighting.

LTPB = Wattage of line-voltage lighting tracks and plug-in busways as the specified wattage of the luminaires, but at least 30 W/lin. ft. (100 W/lin m), or the wattage limit of the system's circuit breaker, or the wattage limit of other permanent current-limiting devices on the system.

Other = The wattage of all other luminaires and lighting sources not covered previously and associated with interior lighting verified by data supplied by the manufacturer or other *approved* sources.

Exceptions:

1. The connected power associated with the following lighting equipment is not included in calculating total connected lighting power.
   - 1.1. Professional sports arena playing field lighting.
   - 1.2. Lighting in sleeping units, provided that the lighting complies with Section R404.1.
   - 1.3. Emergency lighting automatically off during normal building operation.
   - 1.4. Lighting in spaces specifically designed for use by occupants with special lighting needs, including those with visual impairment and other medical and age-related issues.
   - 1.5. Lighting in interior spaces that have been specifically designated as a registered interior historic landmark.
   - 1.6. Casino gaming areas.
   - 1.7. Mirror lighting in dressing rooms.
2. Lighting equipment used for the following shall be exempt provided that it is in addition to general lighting and is controlled by an independent control device:
   - 2.1. Task lighting for medical and dental purposes.
   - 2.2. Display lighting for exhibits in galleries, museums and monuments.
3. Lighting for theatrical purposes, including performance, stage, film production and video production.
4. Lighting for photographic processes.
5. Lighting integral to equipment or instrumentation and installed by the manufacturer.
6. Task lighting for plant growth or maintenance.
7. Advertising signage or directional signage.
8. In restaurant buildings and areas, lighting for food warming or integral to food preparation equipment.
9. Lighting equipment that is for sale.
10. Lighting demonstration equipment in lighting education facilities.

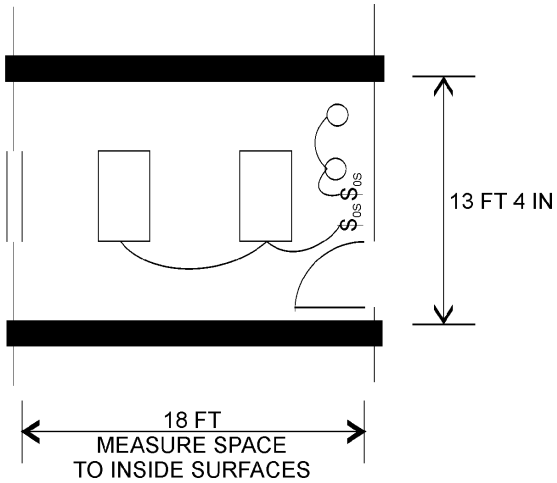

For SI: 1 inch = 25.4, 1 foot = 304.8 mm.

Figure C405.4
APPLYING THE LIGHTING REQUIREMENTS TO A PRIVATE OFFICE
(Courtesy of U.S. Department of Energy, Office of Building Technology State and Community Programs, www.energycodes.gov)

INTERNATIONAL CODE COUNCIL®
Copyright © 2015 ICC. ALL RIGHTS RESERVED. Accessed by David Dammon on Jun 21, 2017 12:30:52 PM pursuant to License Agreement with ICC. No further reproduction or distribution authorized. ANY UNAUTHORIZED REPRODUCTION OR DISTRIBUTION IS A VIOLATION OF THE FEDERAL COPYRIGHT ACT AND THE LICENSE AGREEMENT, AND SUBJECT TO CIVIL AND CRIMINAL PENALTIES THEREUNDER.

11. Lighting *approved* because of safety or emergency considerations, inclusive of exit lights.
12. Lighting integral to both open and glass-enclosed refrigerator and freezer cases.
13. Lighting in retail display windows, provided the display area is enclosed by ceiling-height partitions.
14. Furniture-mounted supplemental task lighting that is controlled by automatic shutoff.
15. Exit signs.

❖ Most interior lighting, including both permanent and portable luminaires, must be included in the calculation of the total connected interior lighting power. However, certain specialized lighting is exempt as referenced above. Exempt lighting can be ignored when determining the installed lighting power for comparison against the lighting power allowance. The building area method is the easiest way of determining the lighting power allowance. This method must be used for an entire building or a separate occupancy in the building. It may not be used, for instance, for large offices where the lighting is installed in phases. The allowance is appropriate for the entire building, but not for subareas. The LPD is multiplied by the gross lighted area of the building to determine the interior lighting power allowance.

Exempt lighting must be independently controlled. Interior lighting required for safety, security or special commercial needs is exempt from this section as listed in Exceptions 1 through 15. The code is relatively clear about what must be included in the calculations for interior lighting power. Nevertheless, the following examples describe common situations that can be confusing:

Covered or enclosed parking garages. Although the exterior lighting power requirement (see commentary, Section C405.5) applies to rooftop decks of parking garages and surface parking areas outdoors, covered or enclosed parking garages, including "open" parking garages, are included in the requirements for interior lighting.

Portable equipment. Although the designer cannot prevent users from plugging in portable lighting of their own choosing, the designer must account for portable lighting intended to serve a specific space function, such as furniture-mounted task lights and lighting equipment specifically designed, directed and installed to highlight merchandise. Even if the designer of the project is not responsible for specifying portable lighting, in some instances, the code permits an accommodation for the expected use of this equipment.

Example of Exempt Interior Lighting—Laboratory Test Lights

A laboratory is studying the effects of lighting on the treatment of a new chemical process. Ordinary fluorescent luminaires are arranged over the test areas and connected to timers. In addition, general lighting is used throughout the laboratory. What lighting is exempt?

The lighting arranged for the test is exempt. However, the lighting should be installed in a manner consistent with the permeance of the experiments. If only temporary, the lighting should not be recessed or otherwise installed in a relatively permanent fashion.

The total connected interior lighting power is the sum of the input wattages of all nonexempt interior luminaires in a building. The building complies with the requirement for interior power if the total connected interior lighting power is less than or equal to the maximum interior lighting power allowed (see Section C405.4.2). If the total connected interior lighting power

TABLE C405.4.2(1)
INTERIOR LIGHTING POWER ALLOWANCES: BUILDING AREA METHOD

BUILDING AREA TYPE	LPD (w/ft^2)
Automotive facility	0.80
Convention center	1.01
Courthouse	1.01
Dining: bar lounge/leisure	1.01
Dining: cafeteria/fast food	0.9
Dining: family	0.95
Dormitory	0.57
Exercise center	0.84
Fire station	0.67
Gymnasium	0.94
Health care clinic	0.90
Hospital	1.05
Hotel/Motel	0.87
Library	1.19
Manufacturing facility	1.17
Motion picture theater	0.76
Multifamily	0.51
Museum	1.02
Office	0.82
Parking garage	0.21
Penitentiary	0.81
Performing arts theater	1.39
Police station	0.87
Post office	0.87
Religious building	1.0
Retail	1.26
School/university	0.87
Sports arena	0.91
Town hall	0.89
Transportation	0.70
Warehouse	0.66
Workshop	1.19

INTERNATIONAL CODE COUNCIL®
Copyright © 2015 ICC. ALL RIGHTS RESERVED. Accessed by David Dammon on Jun 21, 2017 12:30:52 PM pursuant to License Agreement with ICC. No further reproduction or distribution authorized. ANY UNAUTHORIZED REPRODUCTION OR DISTRIBUTION IS A VIOLATION OF THE FEDERAL COPYRIGHT ACT AND THE LICENSE AGREEMENT, AND SUBJECT TO CIVIL AND CRIMINAL PENALTIES THEREUNDER.

exceeds the maximum interior lighting power allowed, the total connected interior lighting power may be adjusted by eliminating some luminaires, using more efficient lighting systems or demonstrating compliance in accordance with Section C407.

TABLE C405.4.2(2)
INTERIOR LIGHTING POWER ALLOWANCES: SPACE-BY-SPACE METHOD

COMMON SPACE TYPES[a]	LPD (watts/sq.ft)
Atrium	
Less than 40 feet in height	0.03 per foot in total height
Greater than 40 feet in height	0.40 + 0.02 per foot in total height
Audience seating area	
In an auditorium	0.63
In a convention center	0.82
In a gymnasium	0.65
In a motion picture theater	1.14
In a penitentiary	0.28
In a performing arts theater	2.43
In a religious building	1.53
In a sports arena	0.43
Otherwise	0.43
Banking activity area	1.01
Breakroom (See Lounge/Breakroom)	
Classroom/lecture hall/training room	
In a penitentiary	1.34
Otherwise	1.24
Conference/meeting/multipurpose room	1.23
Copy/print room	0.72
Corridor	
In a facility for the visually impaired (and not used primarily by the staff)b	0.92
In a hospital	0.79
In a manufacturing facility	0.41
Otherwise	0.66
Courtroom	1.72
Computer room	1.71
Dining area	
In a penitentiary	0.96
In a facility for the visually impaired (and not used primarily by the staff)[b]	1.9
In bar/lounge or leisure dining	1.07
In cafeteria or fast food dining	0.65
In family dining	0.89
Otherwise	0.65
Electrical/mechanical room	0.95
Emergency vehicle garage	0.56

(continued)

TABLE C405.4.2(2)—continued
INTERIOR LIGHTING POWER ALLOWANCES: SPACE-BY-SPACE METHOD

COMMON SPACE TYPES[a]	LPD (watts/sq.ft)
Food preparation area	1.21
Guest room	0.47
Laboratory	
In or as a classroom	1.43
Otherwise	1.81
Laundry/washing area	0.6
Loading dock, interior	0.47
Lobby	
In a facility for the visually impaired (and not used primarily by the staff)[b]	1.8
For an elevator	0.64
In a hotel	1.06
In a motion picture theater	0.59
In a performing arts theater	2.0
Otherwise	0.9
Locker room	0.75
Lounge/breakroom	
In a healthcare facility	0.92
Otherwise	0.73
Office	
Enclosed	1.11
Open plan	0.98
Parking area, interior	0.19
Pharmacy area	1.68
Restroom	
In a facility for the visually impaired (an not used primarily by the staff[b])	1.21
Otherwise	0.98
Sales area	1.59
Seating area, general	0.54
Stairway (See space containing stairway)	
Stairwell	0.69
Storage room	0.63
Vehicular maintenance area	0.67
Workshop	1.59
BUILDING TYPE SPECIFIC SPACE TYPES[a]	**LPD (watts/sq.ft)**
Facility for the visually impaired[b]	
In a chapel (and not used primarily by the staff)	2.21
In a recreation room (and not used primarily by the staff)	2.41
Automotive (See Vehicular Maintenance Area above)	
Convention Center—exhibit space	1.45
Dormitory—living quarters	0.38
Fire Station—sleeping quarters	0.22
Gymnasium/fitness center	
In an exercise area	0.72
In a playing area	1.2

(continued)

INTERNATIONAL CODE COUNCIL®
Copyright © 2015 ICC. ALL RIGHTS RESERVED. Accessed by David Dammon on Jun 21, 2017 12:30:52 PM pursuant to License Agreement with ICC. No further reproduction or distribution authorized. ANY UNAUTHORIZED REPRODUCTION OR DISTRIBUTION IS A VIOLATION OF THE FEDERAL COPYRIGHT ACT AND THE LICENSE AGREEMENT, AND SUBJECT TO CIVIL AND CRIMINAL PENALTIES THEREUNDER.

TABLE C405.4.2(2)—continued
INTERIOR LIGHTING POWER ALLOWANCES: SPACE-BY-SPACE METHOD

BUILDING TYPE SPECIFIC SPACE TYPESa	LPD (watts/sq.ft)
Healthcare facility	
In an exam/treatment room	1.66
In an imaging room	1.51
In a medical supply room	0.74
In a nursery	0.88
In a nurse's station	0.71
In an operating room	2.48
In a patient room	0.62
In a physical therapy room	0.91
In a recovery room	1.15
Library	
In a reading area	1.06
In the stacks	1.71
Manufacturing facility	
In a detailed manufacturing area	1.29
In an equipment room	0.74
In an extra high bay area (greater than 50′ floor-to-ceiling height)	1.05
In a high bay area (25-50′ floor-to-ceiling height)	1.23
In a low bay area (less than 25' floor-to-ceiling height)	1.19
Museum	
In a general exhibition area	1.05
In a restoration room	1.02
Performing arts theater—dressing room	0.61
Post Office—Sorting Area	0.94
Religious buildings	
In a fellowship hall	0.64
In a worship/pulpit/choir area	1.53
Retail facilities	
In a dressing/fitting room	0.71
In a mall concourse	1.1
Sports arena—playing area	
For a Class I facility	3.68
For a Class II facility	2.4
For a Class III facility	1.8
For a Class IV facility	1.2
Transportation facility	
In a baggage/carousel area	0.53
In an airport concourse	0.36
At a terminal ticket counter	0.8
Warehouse—storage area	
For medium to bulky, palletized items	0.58
For smaller, hand-carried items	0.95

a. In cases where both a common space type and a building area specific space type are listed, the building area specific space type shall apply

b. A 'Facility for the Visually Impaired' is a facility that is licensed or will be licensed by local or state authorities for senior long-term care, adult daycare, senior support or people with special visual needs.

C405.4.2 Interior lighting power. The total interior lighting power allowance (watts) is determined according to Table C405.4.2(1) using the Building Area Method, or Table C405.4.2(2) using the Space-by-Space Method, for all areas of the building covered in this permit.

❖ The interior lighting power allowed is the yardstick by which the total connected interior lighting power is measured to determine whether a building complies with the requirements for interior lighting power. Two methods for determining the interior lighting power allowance are provided—the Building Area Method and the Space-by-Space Method.

C405.4.2.1 Building Area Method. For the Building Area Method, the interior lighting power allowance is the floor area for each building area type listed in Table C405.4.2(1) times the value from Table C405.4.2(1) for that area. For the purposes of this method, an "area" shall be defined as all contiguous spaces that accommodate or are associated with a single building area type, as listed in Table C405.4.2(1). Where this method is used to calculate the total interior lighting power for an entire building, each building area type shall be treated as a separate area.

❖ LPD allowances in W/ft^2 are listed for 33 common space functions or activities in Table C405.4.2(1). For a given activity type, for example "Convention Center," the Interior Lighting Power (ILP) allowed is equal to the LPD multiplied by the "area" of the specific space or "building area type." The result is a lighting power budget for the respective room or group of rooms. Thus:

$$ILP = A \times LPD$$

The total ILP allowed for the building is the sum of the ILPs for each building area type or group of related building spaces.

Applying the LPD values to different specific spaces to determine the lighting power budget is relatively straightforward. Nevertheless, some of the terms used can be confusing to the occasional user. The following explanations address some of the more troublesome terms and issues.

Floor area or areas. The floor area of each specific building area type, tenant area or building space is measured to the surface of the perimeter walls or partitions, and does not include interior or exterior wall thickness. Note that area of the space is not the same thing as gross conditioned floor area previously discussed.

Total ILP Allowance Multiuse Facility. The total interior ILP allowance for a multiuse facility as shown in Commentary Figure C405.4.2 can be determined by the building-area method using Table C405.4.2(1). Commentary Figure C405.4.2(1) shows these calculations.

C405.4.2.2 Space-by-Space Method. For the Space-by-Space Method, the interior lighting power allowance is determined by multiplying the floor area of each space times the value for the space type in Table C405.4.2(2) that most

INTERNATIONAL CODE COUNCIL®
Copyright © 2015 ICC. ALL RIGHTS RESERVED. Accessed by David Dammon on Jun 21, 2017 12:30:52 PM pursuant to License Agreement with ICC. No further reproduction or distribution authorized. ANY UNAUTHORIZED REPRODUCTION OR DISTRIBUTION IS A VIOLATION OF THE FEDERAL COPYRIGHT ACT AND THE LICENSE AGREEMENT, AND SUBJECT TO CIVIL AND CRIMINAL PENALTIES THEREUNDER.

closely represents the proposed use of the space, and then summing the lighting power allowances for all spaces. Trade-offs among spaces are permitted.

❖ The space-by-space method utilizes the specific space types in buildings as shown in Table C405.4.2(2).

Example of Total ILP Allowance Multiuse Facility

The total interior ILP allowance for a multiuse facility as shown in Commentary Figure C405.4.2 can be determined by the space-by-space method using Table C405.4.2(2). Commentary Figure C405.4.2(2) shows these calculations.

This table lists the ILP allowances using the space-by-space method. Note that under "Warehouse," the fine material storage typically is referring to spaces that function like a "pick" warehouse operation where small parts commonly in bins are picked to fill orders

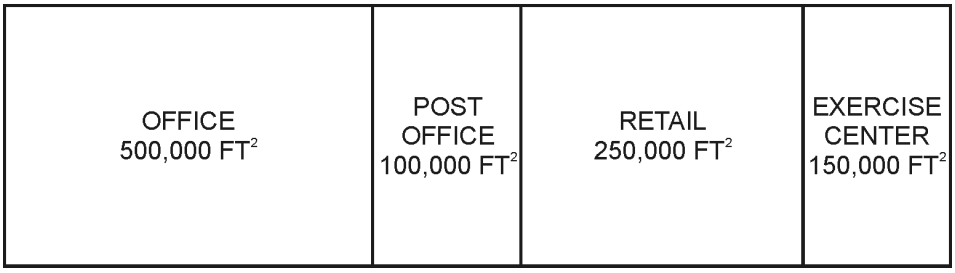

For SI: 1 square foot = 0.0929 m^2.

Figure C405.4.2
MULTIUSE FACILITY

Figure C405.4.2(1)
TOTAL LIGHTING POWER ALLOWANCE CALCULATION USING THE BUILDING AREA METHOD

USAGE CATEGORY	GROSS CONDITIONED (LIGHTED) FLOOR AREA (SQUARE FEET)		LIGHTING POWER DENSITY (WATTS PER SQUARE FEET)		LIGHTING POWER ALLOWANCE (WATTS)
Office	500,000	X	0.82	=	410,000
Post office	100,000	X	0.87	=	87,000
Department store—sales and dressing areas	221,000	X	1.26	=	278,460
Department store: warehouse	29,000	X	0.66	=	19,140
Exercise center	150,000	X	0.84	=	126,000
Total for building	1,000,000	X	—	—	920,600

For SI: 1 square foot = 0.0929 m^2, 1 watt per square foot = 11 W/m^2.

Figure C405.4.2(2)
TOTAL LIGHTING POWER ALLOWANCE CALCULATION USING THE SPACE-BY-SPACE METHOD

USAGE CATEGORY	GROSS CONDITIONED (LIGHTED) FLOOR AREA (SQUARE FEET)		LIGHTING POWER DENSITY (WATTS PER SQUARE FEET)		LIGHTING POWER ALLOWANCE (WATTS)
Office—enclosed	100,000	X	1.11	=	111,000
Office—open plan	400,000	X	0.98	=	392,000
Post office	100,000	X	0.94	=	94,000
Retail—sales area	220,000	X	1.59	=	349,800
Retail—warehouse	29,000	X	0.58	=	16,820
Retail—dressing area	1,000	X	0.71	=	710
Exercise center—fitness	150,000	X	0.72	=	108,000
Total for building	1,000,000	—	—	—	922,330

For SI: 1 square foot = 0.0929 m^2, 1 watt per square foot = 11 W/m^2.

INTERNATIONAL CODE COUNCIL®
Copyright © 2015 ICC. ALL RIGHTS RESERVED. Accessed by David Dammon on Jun 21, 2017 12:30:52 PM pursuant to License Agreement with ICC. No further reproduction or distribution authorized. ANY UNAUTHORIZED REPRODUCTION OR DISTRIBUTION IS A VIOLATION OF THE FEDERAL COPYRIGHT ACT AND THE LICENSE AGREEMENT, AND SUBJECT TO CIVIL AND CRIMINAL PENALTIES THEREUNDER.

and, therefore, more lighting is needed to discern small items and specific labels. The medium/bulky material is considered the more typical warehouse/ storage where boxes or larger items are stored on the floor or racks.

C405.4.2.2.1 Additional interior lighting power. Where using the Space-by-Space Method, an increase in the interior lighting power allowance is permitted for specific lighting functions. Additional power shall be permitted only where the specified lighting is installed and automatically controlled separately from the general lighting, to be turned off during nonbusiness hours. This additional power shall be used only for the specified luminaires and shall not be used for any other purpose. An increase in the interior lighting power allowance is permitted in the following cases:

1. For lighting equipment to be installed in sales areas specifically to highlight merchandise, the additional lighting power shall be determined in accordance with Equation 4-10.

   Additional interior lighting power allowance = 500 watts + (Retail Area 1 · 0.6 W/ft^2) + (Retail Area 2 · 0.6 W/ft2) + (Retail Area 3 · 1.4 W/ft2) + (Retail Area 4 · 2.5 W/ft^2)

   (Equation 4-10)

   where:

   Retail Area 1 = The floor area for all products not listed in Retail Area 2, 3 or 4.

   Retail Area 2 = The floor area used for the sale of vehicles, sporting goods and small electronics.

   Retail Area 3 = The floor area used for the sale of furniture, clothing, cosmetics and artwork.

   Retail Area 4 = The floor area used for the sale of jewelry, crystal and china.

   Exception: Other merchandise categories are permitted to be included in Retail Areas 2 through 4, provided that justification documenting the need for additional lighting power based on visual inspection, contrast, or other critical display is *approved* by the code official.

2. For spaces in which lighting is specified to be installed in addition to the general lighting for the purpose of decorative appearance or for highlighting art or exhibits, provided that the additional lighting power shall be not more than 1.0 w/ft^2 (10.7 w/m^2) of such spaces.

❖ This section provides allowances for increasing in the total lighting power budget for sales areas or for exhibits such as art or museum exhibits. This is only allowed for these spaces when the space-by-space method in Section 405.4.2 is employed in calculation of allowable lighting.

C405.5 Exterior lighting (Mandatory). Where the power for exterior lighting is supplied through the energy service to the building, all exterior lighting shall comply with Section C405.5.1.

Exception: Where *approved* because of historical, safety, signage or emergency considerations.

❖ The code separates requirements for exterior and interior lighting systems. Commentary Figure C405.5.1 illustrates the basic efficacy requirements for exterior lighting and shows the performances of typical luminaires. A building or facility complies with the exterior lighting power requirement where the total amount of lighting power is limited in accordance with Section C405.5.1. The section only applies to exterior lighting that is "supplied through the energy service to the building," which means that lighting not powered by the building electrical system, such as municipal street lights, is exempt.

C405.5.1 Exterior building lighting power. The total exterior lighting power allowance for all exterior building applications is the sum of the base site allowance plus the individual allowances for areas that are to be illuminated and are permitted in Table C405.5.2(2) for the applicable lighting zone. Trade-offs are allowed only among exterior lighting applications listed in Table C405.5.2(2), in the Tradable Surfaces section. The lighting zone for the building exterior is determined from Table C405.5.2(1) unless otherwise specified by the local jurisdiction.

Exception: Lighting used for the following exterior applications is exempt where equipped with a control device independent of the control of the nonexempt lighting:

1. Specialized signal, directional and marker lighting associated with transportation.
2. Advertising signage or directional signage.
3. Integral to equipment or instrumentation and is installed by its manufacturer.
4. Theatrical purposes, including performance, stage, film production and video production.
5. Athletic playing areas.
6. Temporary lighting.
7. Industrial production, material handling, transportation sites and associated storage areas.
8. Theme elements in theme/amusement parks.
9. Used to highlight features of public monuments and registered historic landmark structures or buildings.

❖ This section was added to conserve energy in outdoor lighting. All outdoor light that is misdirected to areas outside the intended area for illumination is wasted energy. When calculating exterior building lighting power, the designer may use Tables C405.5.2(1) and C405.5.2(2). The advantage of using both of these tables together is that it allows the designer to adjust the lighting levels of tradable surfaces based on the lighting zone as defined in Table C405.5.2(1). This typically will allow the designer, in some instances, to reduce the lighting wattage that is used and thus save energy.

INTERNATIONAL CODE COUNCIL®
Copyright © 2015 ICC. ALL RIGHTS RESERVED. Accessed by David Dammon on Jun 21, 2017 12:30:52 PM pursuant to License Agreement with ICC. No further reproduction or distribution authorized. ANY UNAUTHORIZED REPRODUCTION OR DISTRIBUTION IS A VIOLATION OF THE FEDERAL COPYRIGHT ACT AND THE LICENSE AGREEMENT, AND SUBJECT TO CIVIL AND CRIMINAL PENALTIES THEREUNDER.

Building-mounted exterior lighting. Lighting mounted on the building, less specific exceptions as noted, is governed. This means that all lanterns, soffit lights, floodlights, step lights, wall packs and additional decorative lighting, such as neon outlining, ornamental pendants and globes, are subject to both the lighting power allowance and the source efficacy requirement.

Grounds, roads, parking lots and other exterior lighting. All lighting on the building site, less specific exceptions as noted, is governed. This generally includes pole-mounted lighting, landscape lighting, bollards, step lights, wall packs and all other lighting for the roads, walks, parking lots, gardens, trees and other portions of the site. Note that lighting not powered by the building electrical system, such as municipal street lights, is exempt. Lighting for the playing area of outdoor athletic facilities is covered by Exception 5.

Parking areas. Open-air parking lots, rooftop parking and drives are included in the exterior lighting requirements. Covered or enclosed parking areas, such as enclosed parking garages or carports, are part of the interior lighting requirements and are not subject to the exterior lighting efficacy or LPD requirements.

The exterior spaces regulated by this section are divided into two classifications: "tradable surfaces" and "nontradable surfaces." The items included in each can clearly be seen in Table C405.5.2(2). The total exterior lighting allowed is simply the sum of all of the various items plus the code and will allow an additional 5 percent to be used for any purpose. The 5-percent additional power allowance can be used in any way for any of the various surfaces that are being illuminated, including those in the "nontradable surfaces" section.

When applying the provisions, the tradable surface power allowance can be used for any of the items listed (uncovered parking areas, building grounds, building entrances and exits, canopies and overhangs or outdoor sales). As an example, the lighting level of the parking lot could be reduced slightly to allow additional lighting on a walkway or at a building entrance as long as the total power level did not exceed what was originally calculated. The tradable section, therefore, establishes a maximum power allowance but it provides flexibility to the designer to use that power for a variety of locations. When dealing with the "nontradable surfaces," the power allowance that is determined may only be used for the specific application listed. Therefore, the "building façade" allowance could not be reduced in order to permit the automated teller machine or drive-up windows at fast food restaurants to be increased.

The purposes of the 5-percent unrestricted increase are to provide the designer with some flexibility and to limit the uncontrolled use of exterior lights that was permitted when the code only regulated the efficacy of the exterior lighting.

The exceptions to both Sections C405.5 and C405.5.1 are important to the proper application of the code when addressing exterior lighting. The code does not regulate lighting used for historical, safety, security, emergency, exterior manufacturing, or similar commercial or industrial process needs. In addition, the provisions of the last sentence of this section are important because they also eliminate the efficacy requirements of Section C405.5.1 for the lighting covered by the exceptions.

The following are specific exceptions to the exterior lighting power requirements:

Exception 2: Both self-contained and exterior illumination integral to advertising signage is exempt.

Exception 5: Lighting for outdoor athletic activity areas of all types is exempt.

Exception 7: This includes items such as lighting for outdoor manufacturing, commercial greenhouses and processing facilities. This exemption, while intuitive, is rooted primarily in the historical scoping requirements of the code, where it applied only to "those portions of factory and industrial occupancies designed primarily for human occupancy (comfort)." Thus, this section does not apply to exterior lighting systems for outdoor commercial, agricultural and industrial work areas, such as refineries.

Exception 9: Exterior lighting intended primarily for the display of public monuments, statues or other items of historical interest or importance are exempt.

TABLE C405.5.2(1)
EXTERIOR LIGHTING ZONES

LIGHTING ZONE	DESCRIPTION
1	Developed areas of national parks, state parks, forest land, and rural areas
2	Areas predominantly consisting of residential zoning, neighborhood business districts, light industrial with limited nighttime use and residential mixed-use areas
3	All other areas not classified as lighting zone 1, 2 or 4
4	High-activity commercial districts in major metropolitan areas as designated by the local land use planning authority

C405.6 Electrical energy consumption (Mandatory). Each dwelling unit located in a Group R-2 building shall have a separate electrical meter.

❖ People are more likely to conserve energy when provided with the means to track how much they are using. This requirement does not mandate that the units be billed separately for the electrical service; it simply helps people to understand how their use of the service and selection of equipment can affect energy consumption.

INTERNATIONAL CODE COUNCIL®
Copyright © 2015 ICC. ALL RIGHTS RESERVED. Accessed by David Dammon on Jun 21, 2017 12:30:52 PM pursuant to License Agreement with ICC. No further reproduction or distribution authorized. ANY UNAUTHORIZED REPRODUCTION OR DISTRIBUTION IS A VIOLATION OF THE FEDERAL COPYRIGHT ACT AND THE LICENSE AGREEMENT, AND SUBJECT TO CIVIL AND CRIMINAL PENALTIES THEREUNDER.

TABLE C405.5.2(2)
INDIVIDUAL LIGHTING POWER ALLOWANCES FOR BUILDING EXTERIORS

		LIGHTING ZONES			
		Zone 1	Zone 2	Zone 3	Zone 4
Base Site Allowance (Base allowance is usable in tradable or nontradable surfaces.)		500 W	600 W	750 W	1300 W
Tradable Surfaces (Lighting power densities for uncovered parking areas, building grounds, building entrances and exits, canopies and overhangs and outdoor sales areas are tradable.)	**Uncovered Parking Areas**				
	Parking areas and drives	0.04 W/ft^2	0.06 W/ft^2	0.10 W/ft^2	0.13 W/ft^2
	Building Grounds				
	Walkways less than 10 feet wide	0.7 W/linear foot	0.7 W/linear foot	0.8 W/linear foot	1.0 W/linear foot
	Walkways 10 feet wide or greater, plaza areas special feature areas	0.14 W/ft^2	0.14 W/ft^2	0.16 W/ft^2	0.2 W/ft^2
	Stairways	0.75 W/ft^2	1.0 W/ft^2	1.0 W/ft^2	1.0 W/ft^2
	Pedestrian tunnels	0.15 W/ft^2	0.15 W/ft^2	0.2 W/ft^2	0.3 W/ft^2
	Building Entrances and Exits				
	Main entries	20 W/linear foot of door width	20 W/linear foot of door width	30 W/linear foot of door width	30 W/linear foot of door width
	Other doors	20 W/linear foot of door width	20 W/linear foot of door width	20 W/linear foot of door width	20 W/linear foot of door width
	Entry canopies	0.25 W/ft^2	0.25 W/ft^2	0.4 W/ft^2	0.4 W/ft^2
	Sales Canopies				
	Free-standing and attached	0.6 W/ft^2	0.6 W/ft^2	0.8 W/ft^2	1.0 W/ft^2
	Outdoor Sales				
	Open areas (including vehicle sales lots)	0.25 W/ft^2	0.25 W/ft^2	0.5 W/ft^2	0.7 W/ft^2
	Street frontage for vehicle sales lots in addition to "open area" allowance	No allowance	10 W/linear foot	10 W/linear foot	30 W/linear foot
Nontradable Surfaces (Lighting power density calculations for the following applications can be used only for the specific application and cannot be traded between surfaces or with other exterior lighting. The following allowances are in addition to any allowance otherwise permitted in the "Tradable Surfaces" section of this table.)	Building facades	No allowance	0.075 W/ft2 of gross above-grade wall area	0.113 W/ft^2 of gross above-grade wall area	0.15 W/ft^2 of gross above-grade wall area
	Automated teller machines (ATM) and night depositories	270 W per location plus 90 W per additional ATM per location	270 W per location plus 90 W per additional ATM per location	270 W per location plus 90 W per additional ATM per location	270 W per location plus 90 W per additional ATM per location
	Entrances and gatehouse inspection stations at guarded facilities	0.75 W/ft^2 of covered and uncovered area	0.75 W/ft^2 of covered and uncovered area	0.75 W/ft^2 of covered and uncovered area	0.75 W/ft^2 of covered and uncovered area
	Loading areas for law enforcement, fire, ambulance and other emergency service vehicles	0.5 W/ft^2 of covered and uncovered area	0.5 W/ft^2 of covered and uncovered area	0.5 W/ft^2 of covered and uncovered area	0.5 W/ft^2 of covered and uncovered area
	Drive-up windows/doors	400 W per drive-through	400 W per drive-through	400 W per drive-through	400 W per drive-through
	Parking near 24-hour retail entrances	800 W per main entry	800 W per main entry	800 W per main entry	800 W per main entry

For SI: 1 foot = 304.8 mm, 1 watt per square foot = W/0.0929 m^2.
W = watts.

INTERNATIONAL CODE COUNCIL®
Copyright © 2015 ICC. ALL RIGHTS RESERVED. Accessed by David Dammon on Jun 21, 2017 12:30:52 PM pursuant to License Agreement with ICC. No further reproduction or distribution authorized. ANY UNAUTHORIZED REPRODUCTION OR DISTRIBUTION IS A VIOLATION OF THE FEDERAL COPYRIGHT ACT AND THE LICENSE AGREEMENT, AND SUBJECT TO CIVIL AND CRIMINAL PENALTIES THEREUNDER.

C405.7 Electrical transformers (Mandatory). Electric transformers shall meet the minimum efficiency requirements of Table C405.7 as tested and rated in accordance with the test procedure listed in DOE 10 CFR 431. The efficiency shall be verified through certification under an approved certification program or, where a certification program does not exist, the equipment efficiency ratings shall be supported by data furnished by the transformer manufacturer.

Exceptions: The following transformers are exempt:

1. Transformers that meet the *Energy Policy Act of 2005* exclusions based on the DOE 10 CFR 431 definition of special purpose applications.
2. Transformers that meet the *Energy Policy Act of 2005* exclusions that are not to be used in general purpose applications based on information provided in DOE 10 CFR 431.
3. Transformers that meet the *Energy Policy Act of 2005* exclusions with multiple voltage taps where the highest tap is at least 20 percent more than the lowest tap.
4. Drive transformers.
5. Rectifier transformers.
6. Auto-transformers.
7. Uninterruptible power system transformers.
8. Impendance transformers.
9. Regulating transformers.
10. Sealed and nonventilating transformers.
11. Machine tool transformers.
12. Welding transformers.
13. Grounding transformers.
14. Testing transformers.

❖ New to the 2015 code is regulation of energy efficiency for electric low-voltage dry-type transformers. This is an important component of electrical energy consumption. The provisions are consistent with ASHRAE Standard 90.1-2013.

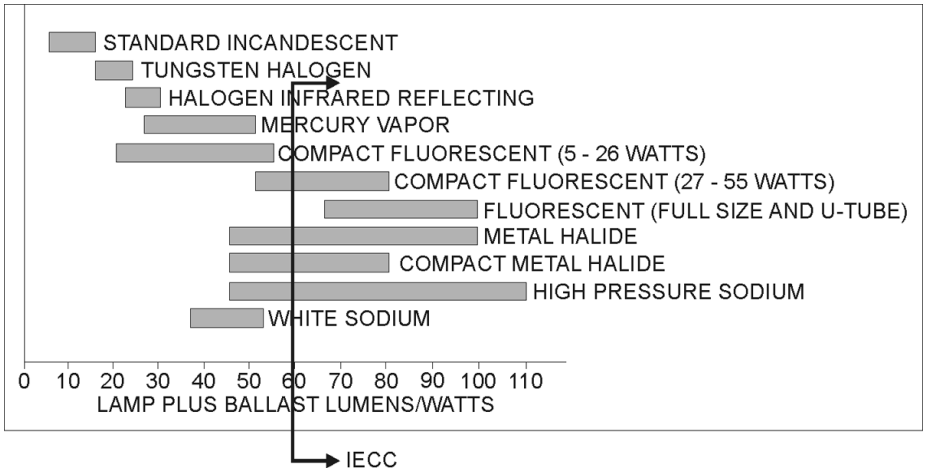

Figure C405.5.1
ENERGY-EFFICIENT LIGHTING SOURCE

TABLE C405.7
MINIMUM NOMINAL EFFICIENCY LEVELS FOR 10 CFR 431 LOW-VOLTAGE DRY-TYPE DISTRIBUTION TRANSFORMERS

SINGLE-PHASE TRANSFORMERS		THREE-PHASE TRANSFORMERS	
kVA[a]	Efficiency (%)[b]	kVA[a]	Efficiency (%)[b]
15	97.7	15	97.0
25	98.0	30	97.5
37.5	98.2	45	97.7
50	98.3	75	98.0
75	98.5	112.5	98.2
100	98.6	150	98.3
167	98.7	225	98.5
250	98.8	300	98.6
333	98.9	500	98.7
		750	98.8
		1000	98.9

a. kiloVolt-Amp rating.
b. Nominal efficiencies shall be established in accordance with the DOE 10 CFR 431 test procedure for low-voltage dry-type transformers.

INTERNATIONAL CODE COUNCIL®
Copyright © 2015 ICC. ALL RIGHTS RESERVED. Accessed by David Dammon on Jun 21, 2017 12:30:52 PM pursuant to License Agreement with ICC. No further reproduction or distribution authorized. ANY UNAUTHORIZED REPRODUCTION OR DISTRIBUTION IS A VIOLATION OF THE FEDERAL COPYRIGHT ACT AND THE LICENSE AGREEMENT, AND SUBJECT TO CIVIL AND CRIMINAL PENALTIES THEREUNDER.

C405.8 Electrical motors (Mandatory). Electric motors shall meet the minimum efficiency requirements of Tables C405.8(1) through C405.8(4) when tested and rated in accordance with the DOE 10 CFR 431. The efficiency shall be verified through certification under an approved certification program or, where a certification program does not exist, the equipment efficiency ratings shall be supported by data furnished by the motor manufacturer.

❖ New to the 2015 code is regulation of energy efficiency for electrical motors. This is an important component of electrical energy consumption. The provisions are consistent with ASHRAE Standard 90.1-2013.

C405.9 Vertical and horizontal transportation systems and equipment. Vertical and horizontal transportation systems and equipment shall comply with this section.

❖ This section provides energy reduction measures for the operation of elevators and escalators. The provisions are new to the 2015 code. They are consistent with provisions of ASHRAE Standard 90.1.

C405.9.1 Elevator cabs. For the luminaires in each elevator cab, not including signals and displays, the sum of the lumens divided by the sum of the watts shall be not less than 35 lumens per watt. Ventilation fans in elevators that do not have their own air-conditioning system shall not consume more than 0.33 watts/cfm at the maximum rated speed of the fan. Controls shall be provided that will de-energize ventilation fans and lighting systems when the elevator is stopped, unoccupied and with its doors closed for over 15 minutes.

❖ This section provides requirements for energy reduction on the two components in an elevator where the opportunity exists to make reductions: lighting of the cab and operation of ventilating equipment.

C405.9.2 Escalators and moving walks. Escalators and moving walks shall comply with ASME A17.1/CSA B44 and shall have automatic controls configured to reduce speed to the minimum permitted speed in accordance with ASME A17.1/CSA B44 or applicable local code when not conveying passengers.

❖ This section is intended to provide for reduced energy use and longer equipment life due to reduced wear and tear during the hours on standby mode or light loading conditions of escalators. These escalator controls have been standard in Canada, Europe and most of Asia for many years. The 2010 ANSI/ASME A17.1 safety standard for elevators and escalators now allows use of escalators and moving walks with "sleep mode" for reducing speed during unoccupied periods and provides for their safe operation. Sensors detect approaching passengers and bring the escalator or walk to full speed before the passenger steps on.

The energy consumed by a typical pair of escalators is approximately 24,000–36,000 kWh per year, and the predicted energy savings ranges from 25 to 60 percent. The higher figure applies to escalators that have bursts of usage at wide intervals, as occurs with performing arts or transportation facilities. The lower figure would apply where usage is scattered throughout the day, as in shopping malls or office buildings.

C405.9.2.1 Regenerative drive. An escalator designed either for one-way down operation only or for reversible operation shall have a variable frequency regenerative drive that supplies electrical energy to the building electrical system when the escalator is loaded with passengers whose combined weight exceeds 750 pounds (340 kg).

❖ By using regenerative technology, the escalator utilizes surplus energy, which is the energy needed to accelerate the escalator when a load comes aboard and decelerate the escalator when the load transfers off, and transfers it back to the building's electrical system for use in other areas or to further power the lift at later intervals. This represents a significant saving both financially and environmentally. The 750-pound threshold for activation of the regenerative drive is derived from the 5-passenger threshold mentioned in typical manufacturers' literature (5 passengers x 150 pounds = 750 pounds).

SECTION C406
ADDITIONAL EFFICIENCY PACKAGE OPTIONS

C406.1 Requirements. Buildings shall comply with at least one of the following:

1. More efficient HVAC performance in accordance with Section C406.2.
2. Reduced lighting power density system in accordance with Section C406.3.
3. Enhanced lighting controls in accordance with Section C406.4.
4. On-site supply of renewable energy in accordance with Section C406.5.
5. Provision of a dedicated outdoor air system for certain HVAC equipment in accordance with Section C406.6.
6. High-efficiency service water heating in accordance with Section C406.7.

❖ Section C406 requires that additional energy savings measures be incorporated in the design and construction of each commercial building. Section C406 is in addition to the provisions found in Sections C402, C403, C404 and C405. The section provides six methods for compliance. Only one of the six needs to be included in the design and construction of a building. The purpose of this section is to provide flexibility to achieve the energy savings needed to meet the overall energy savings goal.

Section 406 only comes into play in a design where the designer has chosen in Section C401.2 to comply with Item 2. Where a designer pursues compliance via meeting ANSI/ASHRAE/IESNA 90.1 (Item 1 of Section C401.2) or is using the total building performance approach (Item 3 of Section C401.2), then Section C406 does not need to be addressed.

INTERNATIONAL CODE COUNCIL®
Copyright © 2015 ICC. ALL RIGHTS RESERVED. Accessed by David Dammon on Jun 21, 2017 12:30:52 PM pursuant to License Agreement with ICC. No further reproduction or distribution authorized. ANY UNAUTHORIZED REPRODUCTION OR DISTRIBUTION IS A VIOLATION OF THE FEDERAL COPYRIGHT ACT AND THE LICENSE AGREEMENT, AND SUBJECT TO CIVIL AND CRIMINAL PENALTIES THEREUNDER.

TABLE C405.8(1)
MINIMUM NOMINAL FULL-LOAD EFFICIENCY FOR 60 HZ NEMA GENERAL PURPOSE ELECTRIC MOTORS (SUBTYPE I) RATED 600 VOLTS OR LESS (Random Wound)[a]

MOTOR HORSEPOWER	NUMBER OF POLES	OPEN DRIP-PROOF MOTORS			TOTALLY ENCLOSED FAN-COOLED MOTORS		
		2	4	6	2	4	6
	Synchronous Speed (RPM)	3600	1800	1200	3600	1800	1200
1		77.0	85.5	82.5	77.0	85.5	82.5
1.5		84.0	86.5	86.5	84.0	86.5	87.5
2		85.5	86.5	87.5	85.5	86.5	88.5
3		85.5	89.5	88.5	86.5	89.5	89.5
5		86.5	89.5	89.5	88.5	89.5	89.5
7.5		88.5	91.0	90.2	89.5	91.7	91.0
10		89.5	91.7	91.7	90.2	91.7	91.0
15		90.2	93.0	91.7	91.0	92.4	91.7
20		91.0	93.0	92.4	91.0	93.0	91.7
25		91.7	93.6	93.0	91.7	93.6	93.0
30		91.7	94.1	93.6	91.7	93.6	93.0
40		92.4	94.1	94.1	92.4	94.1	94.1
50		93.0	94.5	94.1	93.0	94.5	94.1
60		93.6	95.0	94.5	93.6	95.0	94.5
75		93.6	95.0	94.5	93.6	95.4	94.5
100		93.6	95.4	95.0	94.1	95.4	95.0
125		94.1	95.4	95.0	95.0	95.4	95.0
150		94.1	95.8	95.4	95.0	95.8	95.8
200		95.0	95.8	95.4	95.4	96.2	95.8
250		95.0	95.8	95.4	95.8	96.2	95.8
300		95.4	95.8	95.4	95.8	96.2	95.8
350		95.4	95.8	95.4	95.8	96.2	95.8
400		95.8	95.8	95.8	95.8	96.2	95.8
450		95.8	96.2	96.2	95.8	96.2	95.8
500		95.8	96.2	96.2	95.8	96.2	95.8

a. Nominal efficiencies shall be established in accordance with DOE 10 CFR 431.

INTERNATIONAL CODE COUNCIL®
Copyright © 2015 ICC. ALL RIGHTS RESERVED. Accessed by David Dammon on Jun 21, 2017 12:30:52 PM pursuant to License Agreement with ICC. No further reproduction or distribution authorized. ANY UNAUTHORIZED REPRODUCTION OR DISTRIBUTION IS A VIOLATION OF THE FEDERAL COPYRIGHT ACT AND THE LICENSE AGREEMENT, AND SUBJECT TO CIVIL AND CRIMINAL PENALTIES THEREUNDER.

TABLE C405.8(2)
MINIMUM NOMINAL FULL-LOAD EFFICIENCY OF
GENERAL PURPOSE ELECTRIC MOTORS (SUBTYPE II) AND ALL DESIGN B MOTORS GREATER THAN 200 HORSEPOWER[a]

MOTOR HORSEPOWER	NUMBER OF POLES	OPEN DRIP-PROOF MOTORS				TOTALLY ENCLOSED FAN-COOLED MOTORS			
		2	4	6	8	2	4	6	8
	Synchronous Speed (RPM)	3600	1800	1200	900	3600	1800	1200	900
1		NR	82.5	80.0	74.0	75.5	82.5	80.0	74.0
1.5		82.5	84.0	84.0	75.5	82.5	84.0	85.5	77.0
2		84.0	84.0	85.5	85.5	84.0	84.0	86.5	82.5
3		84.0	86.5	86.5	86.5	85.5	87.5	87.5	84.0
5		85.5	87.5	87.5	87.5	87.5	87.5	87.5	84.0
7.5		87.5	88.5	88.5	88.5	88.5	89.5	89.5	85.5
10		88.5	89.5	90.2	89.5	89.5	89.5	89.5	88.5
15		89.5	91.0	90.2	89.5	90.2	91.0	90.2	88.5
20		90.2	91.0	91.0	90.2	90.2	91.0	90.2	89.5
25		91.0	91.7	91.7	90.2	91.0	92.4	91.7	89.5
30		91.0	92.4	92.4	91.0	91.0	92.4	91.7	91.0
40		91.7	93.0	93.0	91.0	91.7	93.0	93.0	91.0
50		92.4	93.0	93.0	91.7	92.4	93.0	93.0	91.7
60		93.0	93.6	93.6	92.4	93.0	93.6	93.6	91.7
75		93.0	94.1	93.6	93.6	93.0	94.1	93.6	93.0
100		93.0	94.1	94.1	93.6	93.6	94.5	94.1	93.0
125		93.6	94.5	94.1	93.6	94.5	94.5	94.1	93.6
150		93.6	95.0	94.5	93.6	94.5	95.0	95.0	93.6
200		94.5	95.0	94.5	93.6	95.0	95.0	95.0	94.1
250		94.5	95.4	95.4	94.5	95.4	95.0	95.0	94.5
300		95.0	95.4	95.4	NR	95.4	95.4	95.0	NR
350		95.0	95.4	95.4	NR	95.4	95.4	95.0	NR
400		95.4	95.4	NR	NR	95.4	95.4	NR	NR
450		95.8	95.8	NR	NR	95.4	95.4	NR	NR
500		95.8	95.8	NR	NR	95.4	95.8	NR	NR

NR = No requirement.

a. Nominal efficiencies shall be established in accordance with DOE 10 CFR 431.

INTERNATIONAL CODE COUNCIL®
Copyright © 2015 ICC. ALL RIGHTS RESERVED. Accessed by David Dammon on Jun 21, 2017 12:30:52 PM pursuant to License Agreement with ICC. No further reproduction or distribution authorized. ANY UNAUTHORIZED REPRODUCTION OR DISTRIBUTION IS A VIOLATION OF THE FEDERAL COPYRIGHT ACT AND THE LICENSE AGREEMENT, AND SUBJECT TO CIVIL AND CRIMINAL PENALTIES THEREUNDER.

TABLE C405.8(3)
MINIMUM AVERAGE FULL-LOAD EFFICIENCY FOR POLYPHASE SMALL ELECTRIC MOTORS[a]

MOTOR HORSEPOWER	OPEN MOTORS			
	Number of Poles	2	4	6
	Synchronous Speed (RPM)	3600	1800	1200
0.25		65.6	69.5	67.5
0.33		69.5	73.4	71.4
0.50		73.4	78.2	75.3
0.75		76.8	81.1	81.7
1		77.0	83.5	82.5
1.5		84.0	86.5	83.8
2		85.5	86.5	N/A
3		85.5	86.9	N/A

a. Average full load efficiencies shall be established in accordance with 10 CFR 431.

TABLE C405.8(4)
MINIMUM AVERAGE FULL LOAD EFFICIENCY FOR CAPACITOR-START CAPACITOR-RUN AND CAPACITOR-START INDUCTION-RUN SMALL ELECTRIC MOTORS[a]

MOTOR HORSEPOWER	OPEN MOTORS			
	Number of Poles	2	4	6
	Synchronous Speed (RPM)	3600	1800	1200
0.25		66.6	68.5	62.2
0.33		70.5	72.4	66.6
0.50		72.4	76.2	76.2
0.75		76.2	81.8	80.2
1		80.4	82.6	81.1
1.5		81.5	83.8	N/A
2		82.9	84.5	N/A
3		84.1	N/A	N/A

a. Average full load efficiencies shall be established in accordance with 10 CFR 431.

INTERNATIONAL CODE COUNCIL®
Copyright © 2015 ICC. ALL RIGHTS RESERVED. Accessed by David Dammon on Jun 21, 2017 12:30:52 PM pursuant to License Agreement with ICC. No further reproduction or distribution authorized. ANY UNAUTHORIZED REPRODUCTION OR DISTRIBUTION IS A VIOLATION OF THE FEDERAL COPYRIGHT ACT AND THE LICENSE AGREEMENT, AND SUBJECT TO CIVIL AND CRIMINAL PENALTIES THEREUNDER.

C406.1.1 Tenant spaces. Tenant spaces shall comply with Section C406.2, C406.3, C406.4, C406.6 or C406.7. Alternatively, tenant spaces shall comply with Section C406.5 where the entire building is in compliance.

❖ Separately permitted tenant spaces are allowed to choose any of the paths that are applicable to the space being improved, but are able to choose the on-site renewable energy path only if the entire building meets the minimum renewable energy capacity requirements described in Section 406.5.

C406.2 More efficient HVAC equipment performance. Equipment shall exceed the minimum efficiency requirements listed in Tables C403.2.3(1) through C403.2.3(7) by 10 percent, in addition to the requirements of Section C403. Where multiple performance requirements are provided, the equipment shall exceed all requirements by 10 percent. *Variable refrigerant flow systems* shall exceed the energy efficiency provisions of ANSI/ASHRAE/IES 90.1 by 10 percent. Equipment not listed in Tables C403.2.3(1) through C403.2.3(7) shall be limited to 10 percent of the total building system capacity.

❖ The HVAC equipment requirements in this compliance path option call for a 10-percent increase in efficiency over the base requirements provided in Section C403. The HVAC equipment efficiency levels contained in this compliance path directly reference, and then replace, equipment efficiencies contained in Section C403, or in ASHRAE 90.1 for the case of VRF systems, with a value that is 10 percent more efficient. This path cannot be used where the use of heating and cooling equipment not listed in this section exceeds 10 percent of the total building capacity. This would allow some systems, such as electric resistance heat, to be used in a limited capacity for the proposed project and still allow the code user to use this option.

C406.3 Reduced lighting power density. The total interior lighting power (watts) of the building shall be determined by using 90 percent of the lighting power values specified in Table C405.4.2(1) times the floor area for the building types, or by using 90 percent of the interior lighting power allowance calculated by the Space-by-Space Method in Section C405.4.2.

❖ The LPD requirements in this compliance path option call for a 10-percent increase in efficiency over the base requirements found in Section C405. This will ensure that the LPD levels contained in this section provide the necessary energy savings over the LPDs contained in Section C405. This section allows the use of space-by-space LPDs or whole building LPDs to provide more flexibility in this compliance option. The values contained in this section are similar to those included as part of ASHRAE Standard 189.1.

C406.4 Enhanced digital lighting controls. Interior lighting in the building shall have the following enhanced lighting controls that shall be located, scheduled and operated in accordance with Section C405.2.2.

1. Luminaires shall be capable of continuous dimming.
2. Luminaires shall be capable of being addressed individually. Where individual addressability is not available for the luminaire class type, a controlled group of not more than four luminaries shall be allowed.
3. Not more than eight luminaires shall be controlled together in a *daylight zone*.
4. Fixtures shall be controlled through a digital control system that includes the following function:
   - 4.1. Control reconfiguration based on digital addressability.
   - 4.2. Load shedding.
   - 4.3. Individual user control of overhead general illumination in open offices.
   - 4.4. Occupancy sensors shall be capable of being reconfigured through the digital control system.
5. Construction documents shall include submittal of a Sequence of Operations, including a specification outlining each of the functions in Item 4 of this section.
6. Functional testing of lighting controls shall comply with Section C408.

❖ Many new buildings are incorporating central control systems for lighting that include direct digital control over lighting sensors and luminaires. These lighting systems usually offer many degrees of controllability and opportunities for saving lighting energy through reducing power or shutting off fixtures. Such systems will likely satisfy the requirements of this compliance option. The enhanced lighting controls package requires a digital control system to allow continuous dimming and a significant level of controllability on individual luminaires. If individual addressability is not possible, up to four or eight luminaires can be grouped together for control purposes, depending on the type of control.

C406.5 On-site renewable energy. Total minimum ratings of on-site renewable energy systems shall comply with one of the following:

1. Provide not less than 0.50 watts per square foot (5.4 W/m^2) of conditioned floor area.
2. Provide not less than 3 percent of the energy used within the building for building mechanical and service water heating equipment and lighting regulated in Chapter 4.

❖ The on-site renewable energy option provides three straightforward compliance approaches: electricity generation, thermal collection and a calculation method for any type or combination of energy production. A path to include the purchase of renewable power or credits was carefully considered, but not included based on concerns regarding the verification and permanence of the transaction after the certificate of occupancy has been issued. If sufficient renewable energy is not available to the site, the project now has five alternative compliance options to choose from.

INTERNATIONAL CODE COUNCIL®
Copyright © 2015 ICC. ALL RIGHTS RESERVED. Accessed by David Dammon on Jun 21, 2017 12:30:52 PM pursuant to License Agreement with ICC. No further reproduction or distribution authorized. ANY UNAUTHORIZED REPRODUCTION OR DISTRIBUTION IS A VIOLATION OF THE FEDERAL COPYRIGHT ACT AND THE LICENSE AGREEMENT, AND SUBJECT TO CIVIL AND CRIMINAL PENALTIES THEREUNDER.

C406.6 Dedicated outdoor air system. Buildings covered by Section C403.4 shall be equipped with an independent ventilation system designed to provide not less than the minimum 100-percent outdoor air to each individual occupied space, as specified by the *International Mechanical Code*. The ventilation system shall be capable of total energy recovery. The HVAC system shall include supply-air temperature controls that automatically reset the supply-air temperature in response to representative building loads, or to outdoor air temperatures. The controls shall reset the supply-air temperature at least 25 percent of the difference between the design supply-air temperature and the design room-air temperature.

❖ The Dedicated Outdoor Air System (DOAS) package is based on technical specifications from the Pacific Northwest National Laboratory's *50% Advanced Energy Design Guides* series of technical documents. The DOAS compliance path option requires that an adequate quantity of outside air is delivered separately to spaces in the buildings while employing energy recovery. A DOAS design for ventilation requirements reduces the need for excess outdoor air or supply air to run the mechanical system, and it uses less energy for terminal reheating.

C406.7 Reduced energy use in service water heating. Buildings shall be of the following types to use this compliance method:

1. Group R-1: Boarding houses, hotels or motels.
2. Group I-2: Hospitals, psychiatric hospitals and nursing homes.
3. Group A-2: Restaurants and banquet halls or buildings containing food preparation areas.
4. Group F: Laundries.
5. Group R-2: Buildings with residential occupancies.
6. Group A-3: Health clubs and spas.
7. Buildings showing a service hot water load of 10 percent or more of total building energy loads, as shown with an energy analysis as described in Section C407.

❖ The service water heating compliance option is modified from similar language in the *International Green Construction Code*® (IgCC®) and the 2012 *North Carolina Energy Conservation Code*. The section identifies which building types have internal processes and hot water uses that in combination may provide enough recoverable thermal energy to qualify for this compliance path.

C406.7.1 Load fraction. The building service water-heating system shall have one or more of the following that are sized to provide not less than 60 percent of hot water requirements, or sized to provide 100 percent of hot water requirements if the building shall otherwise comply with Section C403.4.7:

1. Waste heat recovery from service hot water, heat-recovery chillers, building equipment, process equipment, or a combined heat and power system.
2. Solar water-heating systems.

❖ The buildings identified in Section C406.7.1 were found to be building types having internal processes and hot water uses that in combination may provide enough recoverable thermal energy to qualify for this compliance path. Because Section C403.4.5 already requires some heat recovery in certain circumstances, this section requires heat recovery sizing for 100 percent of the hot water used in the building instead of the 60-percent minimum required for buildings not subject to Section 403.4.5. Solar thermal water heating systems may also be used independently for this section, or in combination with a heat recovery system. This package is independent of the compliance path offered in Section C406.5. Only one package is required for compliance with Section 406, but either Section 406.5 or Section 406.7, if applicable, can be used to calculate the minimum capacity required for a solar thermal system.

SECTION C407
TOTAL BUILDING PERFORMANCE

C407.1 Scope. This section establishes criteria for compliance using total building performance. The following systems and loads shall be included in determining the total building performance: heating systems, cooling systems, service water heating, fan systems, lighting power, receptacle loads and process loads.

❖ This section establishes criteria for compliance using total building performance. This section only comes into play when the designer chooses to comply with Item 3 of Section C401.2. If either of the other two compliance options are selected in Section C401.2, then this section would not apply. When compliance with Section C407 is chosen, Section C401.2 requires that the building's energy costs be 85 percent or less of the costs of the standard reference design building. Section C407 provides the methodology to make the determination of compliance with the 85-percent requirement.

The following systems and loads must be included to determine the total building performance: heating systems, cooling systems, service water heating, fan systems, lighting power, receptacle loads and process loads. This section is based on the mandatory and prescriptive provisions of this chapter. Provisions of ANSI/ASHRAE/IESNA 90.1 are not applicable.

Section C407 offers maximum design flexibility by using the annual energy cost as the performance metric when evaluating the total performance of a building in its entirety. Using this approach, a building design is evaluated based on the cost of various types of energy used, rather than the units (Btu, kW) of energy used. The general procedure is to show that the annual energy cost for the proposed building

INTERNATIONAL CODE COUNCIL®
Copyright © 2015 ICC. ALL RIGHTS RESERVED. Accessed by David Dammon on Jun 21, 2017 12:30:52 PM pursuant to License Agreement with ICC. No further reproduction or distribution authorized. ANY UNAUTHORIZED REPRODUCTION OR DISTRIBUTION IS A VIOLATION OF THE FEDERAL COPYRIGHT ACT AND THE LICENSE AGREEMENT, AND SUBJECT TO CIVIL AND CRIMINAL PENALTIES THEREUNDER.

is less than the annual energy cost of a standard design building that meets the minimum prescriptive requirements of the code. The designer has to estimate the annual energy costs for two buildings: the one the designer wants to build and the standard design. The two are compared on the basis of annual energy cost. Designs that have lower demand changes or use energy when rates are lower are favored. This allows for the calculation of energy use of different fuel sources at different times.

One of the advantages of the total-building-performance method is that it gives credit for innovative energy-efficient designs not accounted for in the prescriptive paths in this chapter, such as passive solar heating and daylighting. Another advantage in using the total-building-performance approach is that it allows the designer to make trade-offs among the various energy-using systems of the building because the prescriptive methods in Sections C402, C403, C404 and C405 set minimum performance levels for building components or systems, while the total-building-performance method takes into account how various building components interact. For instance, a particular designer may want to deliberately incorporate lower efficiency levels (when compared to prescriptive requirements) to achieve specific design objectives; for example, aesthetics in selecting a construction assembly, larger glass areas for special views or extra lighting power for visual effect.

The total-building-performance method allows the designer to not only trade off within each section (e.g., wall insulation for ceiling insulation) but also permits trading between the various sections (e.g., reduced insulation for increased mechanical system efficiency). The code does, however, contain certain requirements that may not be reduced or eliminated. These include requirements for air leakage, moisture control, mechanical systems, service water heating, lighting controls, tandem wiring, exit signs, exterior lighting and separate metering. These sections are marked as “mandatory” in the code in order to distinguish that these sections must be complied with regardless of whether the performance or prescriptive method of compliance is used.

When using this section and other performance options, the terms “standard design” and “proposed design” are used extensively. These terms can create confusion for some users, but really are very easy to understand. The “proposed design” is exactly that. It is the building as it is proposed to be built, including building size and room configurations, window and wall assemblies, mechanical equipment, orientation, lighting systems, etc. It is essentially the building as it is shown on the construction documents (plans and specifications). The “standard design” is the same building configuration and orientation as the proposed design but instead of matching the plans for the building as it actually will be built, the standard design is shown only to meet the minimum requirements of the code. For example, the standard design building in Climate Zone 4 would require that the walls and roof be insulated to a level of R-13 (+ continuous insulation) and R-30, respectively, based on the requirements in Table C402.1.3. On the other hand, the proposed design may show that the intent is to install R-19 insulation in the walls and R-38 in the roof. Therefore, if everything else in the two buildings was identical, it would be easy to see in this example that the proposed design does exceed what is required by the code in the standard design.

Total-building-performance criteria

Section C407 references the total-building-performance criteria, which offer more flexibility than the prescriptive criteria of this chapter, especially with regard to making trade-offs between building envelope components.

Section C407 allows a designer to make trade-offs between heating and cooling requirements for the building envelope. All components of the building envelope may be considered, including fenestration, floors, ceilings, below-grade walls, opaque walls, and opaque doors. For instance, SHGC can be traded for better wall *R*-values or vice versa. Often, the analysis is performed by a simulation tool considering the overall performance of the building envelope and taking account of the following factors:

1. Orientation.
2. Fenestration area.
3. Fenestration SHGC.
4. PF (size of overhangs).
5. Fenestration *U*-factor.
6. Visible light transmittance, if automatic daylighting controls are installed.
7. Daylighting control fraction, if automatic daylighting controls are installed.
8. *U*-factors of building envelope components.
9. Heat capacity; for example, credit for mass walls.
10. Insulation position, for mass walls only.

Some more-sophisticated building-energy simulation tools can even be used to make trade-offs against the lighting or mechanical requirements. All lighting must comply with the requirements of Section C405, regardless of the values entered under any performance-based analysis. The switching, wiring and exterior efficacy in the total-building-performance method is the only way to make envelope trade-offs against lighting or HVAC improvements.

To summarize, design by total-building performance may be used either when the proposed building cannot meet the prescriptive criteria of this chapter or when more flexibility is desired for an innovative design.

INTERNATIONAL CODE COUNCIL®
Copyright © 2015 ICC. ALL RIGHTS RESERVED. Accessed by David Dammon on Jun 21, 2017 12:30:52 PM pursuant to License Agreement with ICC. No further reproduction or distribution authorized. ANY UNAUTHORIZED REPRODUCTION OR DISTRIBUTION IS A VIOLATION OF THE FEDERAL COPYRIGHT ACT AND THE LICENSE AGREEMENT, AND SUBJECT TO CIVIL AND CRIMINAL PENALTIES THEREUNDER.

Another important advantage of designing by total-building performance is that the evaluation is based not only on compliance but also on the margin by which a project complies. This margin is used by some utilities as a basis for energy-efficiency rebates.

The primary disadvantage of designing by total-building performance is its complexity. The designer must be familiar with building-energy simulation programs, some of which are difficult to master. The commentary and discussion that follow provide an explanation and some guidelines for modeling a building and for determining compliance, including instructions for using these building-energy simulation programs.

C407.2 Mandatory requirements. Compliance with this section requires that the criteria of Sections C402.5, C403.2, C404 and C405 be met.

❖ Although design by total building performance permits trade-offs in energy use between different building systems, the proposed design still must comply with the mandatory requirements. Sections C402.5, C403.2, C404 and C405 must be met for several reasons:

- Many requirements cannot be accurately modeled.
- Many requirements are inherently cost effective.
- Some requirements are calculation methodologies that establish a fair basis for comparing component performance (such as *U*-factor calculations).
- Some requirements are not intended for trade-offs (such as exterior lighting).

C407.3 Performance-based compliance. Compliance based on total building performance requires that a proposed building (*proposed design)* be shown to have an annual energy cost that is less than or equal to the annual energy cost of the *standard reference design*. Energy prices shall be taken from a source *approved* by the *code official,* such as the Department of Energy, Energy Information Administration's *State Energy Price and Expenditure Report. Code officials* shall be permitted to require time-of-use pricing in energy cost calculations. Nondepletable energy collected off site shall be treated and priced the same as purchased energy. Energy from nondepletable energy sources collected on site shall be omitted from the annual energy cost of the *proposed design.*

Exception: Jurisdictions that require site energy (1 kWh = 3413 Btu) rather than energy cost as the metric of comparison.

❖ The intent of this section is there are a variety of programs and systems that can be used for reviewing the energy performance of a proposed building design with an annual energy cost that is less than or equal to the annual energy cost of the standard reference design. Energy prices should be taken from an approved source by the code official. The code official can determine what programs are acceptable. One program that can be used is the COMcheck™ program (which is based on ANSI/ASHRAE/IESNA 90.1). COMcheck™ can demonstrate compliance with commercial building energy codes. Nondepletable energy collected off site shall be treated and priced the same as purchased energy. Energy from nondepletable energy sources collected on site shall be omitted from the annual energy cost of the proposed design.

C407.4 Documentation. Documentation verifying that the methods and accuracy of compliance software tools conform to the provisions of this section shall be provided to the *code official.*

❖ The construction documents must contain the data necessary to confirm that the results of the design have been incorporated into the construction documents and also to allow assessment of compliance. This is of particular importance when coupled with performing a comprehensive plan review, given the lengthy and sophisticated submittals required by the total-building-performance method (see commentary, Section C104).

Sections C407.4.1 through C407.6.2 contain specific requirements for construction documents in support of a total-building-performance analysis. These requirements are intended to reflect the minimum scope of information needed to determine code compliance. The documentation that is required to support the analysis must provide the following information:

- Annual energy use and cost.
- List of building features.
- Output files showing energy use totals.
- Energy use by source and end use.
- Total hours that the space-conditioning loads were not met.
- Software error messages or warnings.
- Written explanations of any error messages or warnings.

C407.4.1 Compliance report. Permit submittals shall include a report documenting that the proposed design has annual energy costs less than or equal to the annual energy costs of the *standard reference design*. The compliance documentation shall include the following information:

1. Address of the building.
2. An inspection checklist documenting the building component characteristics of the *proposed design* as specified in Table C407.5.1(1). The inspection checklist shall show the estimated annual energy cost for both the *standard reference design* and the *proposed design*.

INTERNATIONAL CODE COUNCIL®
Copyright © 2015 ICC. ALL RIGHTS RESERVED. Accessed by David Dammon on Jun 21, 2017 12:30:52 PM pursuant to License Agreement with ICC. No further reproduction or distribution authorized. ANY UNAUTHORIZED REPRODUCTION OR DISTRIBUTION IS A VIOLATION OF THE FEDERAL COPYRIGHT ACT AND THE LICENSE AGREEMENT, AND SUBJECT TO CIVIL AND CRIMINAL PENALTIES THEREUNDER.

3. Name of individual completing the compliance report.
4. Name and version of the compliance software tool.

❖ Compliance software tools, for example the COMcheck program, can generate a report documenting that the proposed design has annual energy costs less than or equal to the annual energy costs of the standard reference design. State laws in certain locations require that the design of building construction and the development of a comparative building-energy analysis be done by a registered design professional in accordance with the licensing laws of the state where the work will take place.

C407.4.2 Additional documentation. The *code official* shall be permitted to require the following documents:

1. Documentation of the building component characteristics of the *standard reference design*.
2. Thermal zoning diagrams consisting of floor plans showing the thermal zoning scheme for *standard reference design* and *proposed design*.
3. Input and output reports from the energy analysis simulation program containing the complete input and output files, as applicable. The output file shall include energy use totals and energy use by energy source and end-use served, total hours that space conditioning loads are not met and any errors or warning messages generated by the simulation tool as applicable.
4. An explanation of any error or warning messages appearing in the simulation tool output.
5. A certification signed by the builder providing the building component characteristics of the *proposed design* as given in Table C407.5.1(1).

❖ Additional documentation may be requested by the code official to ensure the building component characteristics of the proposed design are complete and correct for that location. Various simulation tools often use jargon or code language that may not be readily understood. Error messages or warning messages often occur during the course of normal user interface with nearly all building-energy simulation tools. Nevertheless, it is up to the applicant to confirm to the code official that such errors or warnings have no substantial or material effect on the validity of the simulation results.

C407.5 Calculation procedure. Except as specified by this section, the *standard reference design* and *proposed design* shall be configured and analyzed using identical methods and techniques.

❖ Calculation procedures used to comply with this section must be software tools capable of calculating the annual energy consumption of all building elements between the standard reference design and the proposed design using identical methods and techniques. The calculation procedure will not allow the user to modify the building component characteristics that would help reduce the energy costs of the standard design.

C407.5.1 Building specifications. The *standard reference design* and *proposed design* shall be configured and analyzed as specified by Table C407.5.1(1). Table C407.5.1(1) shall include by reference all notes contained in Table C402.1.4.

❖ This section provides a performance approach for designers in meeting energy code requirements. The standard reference design and proposed design must be configured and analyzed using the specifications for the standard reference and proposed designs as listed in Table C407.5.1(1) and the building envelope requirements for opaque assemblies in Table C402.1.3. The column labeled "Standard Reference Design" in Table C407.5.1(1) provides the details used as the basis for determining the annual energy cost representing the maximum energy cost that the proposed design could use. This column simply states how the standard design building is to be configured and treated in the simulations comparing it to the proposed design. Further, this column ensures that comparisons between the two designs truly are based on a plan that meets the intended performance of the code. The "Proposed Design" column simply represents the building for which compliance is being evaluated. As indicated, most of the items in the proposed design will be "as proposed." There are a few entries in this column where the proposed design uses the same values as the standard design. These items are restricted so that a fair comparison is provided and the design parameters may not simply be changed in an attempt to show improved efficiency.

C407.5.2 Thermal blocks. The *standard reference design* and *proposed design* shall be analyzed using identical thermal blocks as specified in Section C407.5.2.1, C407.5.2.2 or C407.5.2.3.

❖ The standard reference design and the proposed design are analyzed using the same thermal blocks as specified in Section C407.5.2.1, C407.5.2.2 or C407.5.2.3, as follows. This section requires that the heating and cooling equipment in the standard reference design meet the minimum efficiency requirements that are currently required at the time of the evaluation. A thermal block is a simulation program term. It is similar to an HVAC zone, except that often in simulation practice a number of zones, which are similar in loads and are served by similar systems, are combined into a single thermal block for modeling purposes.

INTERNATIONAL CODE COUNCIL®
Copyright © 2015 ICC. ALL RIGHTS RESERVED. Accessed by David Dammon on Jun 21, 2017 12:30:52 PM pursuant to License Agreement with ICC. No further reproduction or distribution authorized. ANY UNAUTHORIZED REPRODUCTION OR DISTRIBUTION IS A VIOLATION OF THE FEDERAL COPYRIGHT ACT AND THE LICENSE AGREEMENT, AND SUBJECT TO CIVIL AND CRIMINAL PENALTIES THEREUNDER.

TABLE C407.5.1(1)
SPECIFICATIONS FOR THE STANDARD REFERENCE AND PROPOSED DESIGNS

BUILDING COMPONENT CHARACTERISTICS	STANDARD REFERENCE DESIGN	PROPOSED DESIGN
Space use classification	Same as proposed	The space use classification shall be chosen in accordance with Table C405.5.2 for all areas of the building covered by this permit. Where the space use classification for a building is not known, the building shall be categorized as an office building.
Roofs	Type: Insulation entirely above deck	As proposed
	Gross area: same as proposed	As proposed
	U-factor: as specified in Table C402.1.4	As proposed
	Solar absorptance: 0.75	As proposed
	Emittance: 0.90	As proposed
Walls, above-grade	Type: Mass wall where proposed wall is mass; otherwise steel-framed wall	As proposed
	Gross area: same as proposed	As proposed
	U-factor: as specified in Table C402.1.4	As proposed
	Solar absorptance: 0.75	As proposed
	Emittance: 0.90	As proposed
Walls, below-grade	Type: Mass wall	As proposed
	Gross area: same as proposed	As proposed
	U-Factor: as specified in Table C402.1.4 with insulation layer on interior side of walls	As proposed
Floors, above-grade	Type: joist/framed floor	As proposed
	Gross area: same as proposed	As proposed
	U-factor: as specified in Table C402.1.4	As proposed
Floors, slab-on-grade	Type: Unheated	As proposed
	F-factor: as specified in Table C402.1.4	As proposed
Opaque doors	Type: Swinging	As proposed
	Area: Same as proposed	As proposed
	U-factor: as specified in Table C402.1.4	As proposed
Vertical fenestration other than opaque doors	Area 1. The proposed glazing area; where the proposed glazing area is less than 40 percent of above-grade wall area. 2. 40 percent of above-grade wall area; where the proposed glazing area is 40 percent or more of the above-grade wall area.	As proposed
	U-factor: as specified in Table C402.4	As proposed
	SHGC: as specified in Table C402.4 except that for climates with no requirement (NR) SHGC = 0.40 shall be used	As proposed
	External shading and PF: None	As proposed
Skylights	Area 1. The proposed skylight area; where the proposed skylight area is less than 3 percent of gross area of roof assembly. 2. 3 percent of gross area of roof assembly; where the proposed skylight area is 3 percent or more of gross area of roof assembly	As proposed
	U-factor: as specified in Table C402.4	As proposed
	SHGC: as specified in Table C402.4 except that for climates with no requirement (NR) SHGC = 0.40 shall be used.	As proposed
Lighting, interior	The interior lighting power shall be determined in accordance with Section C405.4.2. Where the occupancy of the building is not known, the lighting power density shall be 1.0 Watt per square foot (10.7 W/m^2) based on the categorization of buildings with unknown space classification as offices.	As proposed
Lighting, exterior	The lighting power shall be determined in accordance with Table C405.5.2(2). Areas and dimensions of tradable and nontradable surfaces shall be the same as proposed.	As proposed

(continued)

INTERNATIONAL CODE COUNCIL®
Copyright © 2015 ICC. ALL RIGHTS RESERVED. Accessed by David Dammon on Jun 21, 2017 12:30:52 PM pursuant to License Agreement with ICC. No further reproduction or distribution authorized. ANY UNAUTHORIZED REPRODUCTION OR DISTRIBUTION IS A VIOLATION OF THE FEDERAL COPYRIGHT ACT AND THE LICENSE AGREEMENT, AND SUBJECT TO CIVIL AND CRIMINAL PENALTIES THEREUNDER.

TABLE C407.5.1(1)—continued
SPECIFICATIONS FOR THE STANDARD REFERENCE AND PROPOSED DESIGNS

BUILDING COMPONENT CHARACTERISTICS	STANDARD REFERENCE DESIGN	PROPOSED DESIGN
Internal gains	Same as proposed	Receptacle, motor and process loads shall be modeled and estimated based on the space use classification. All end-use load components within and associated with the building shall be modeled to include, but not be limited to, the following: exhaust fans, parking garage ventilation fans, exterior building lighting, swimming pool heaters and pumps, elevators, escalators, refrigeration equipment and cooking equipment.
Schedules	Same as proposed	Operating schedules shall include hourly profiles for daily operation and shall account for variations between weekdays, weekends, holidays and any seasonal operation. Schedules shall model the time-dependent variations in occupancy, illumination, receptacle loads, thermostat settings, mechanical ventilation, HVAC equipment availability, service hot water usage and any process loads. The schedules shall be typical of the proposed building type as determined by the designer and approved by the jurisdiction.
Mechanical ventilation	Same as proposed	As proposed, in accordance with Section C403.2.6.
Heating systems	Fuel type: same as proposed design	As proposed
	Equipment type[a]: as specified in Tables C407.5.1(2) and C407.5.1(3)	As proposed
	Efficiency: as specified in Tables C403.2.3(4) and C403.2.3(5)	As proposed
	Capacity[b]: sized proportionally to the capacities in the proposed design based on sizing runs, and shall be established such that no smaller number of unmet heating load hours and no larger heating capacity safety factors are provided than in the proposed design.	As proposed
Cooling systems	Fuel type: same as proposed design	As proposed
	Equipment type[c]: as specified in Tables C407.5.1(2) and C407.5.1(3)	As proposed
	Efficiency: as specified in Tables C403.2.3(1), C403.2.3(2) and C403.2.3(3)	As proposed
	Capacity[b]: sized proportionally to the capacities in the proposed design based on sizing runs, and shall be established such that no smaller number of unmet cooling load hours and no larger cooling capacity safety factors are provided than in the proposed design.	As proposed
	Economizer[d]: same as proposed, in accordance with Section C403.3.	As proposed
Service water heating[e]	Fuel type: same as proposed	As proposed
	Efficiency: as specified in Table C404.2	For Group R, as proposed multiplied by SWHF. For other than Group R, as proposed multiplied by efficiency as provided by the manufacturer of the DWHR unit.
	Capacity: same as proposed	As proposed
	Where no service water hot water system exists or is specified in the proposed design, no service hot water heating shall be modeled.	

SWHF = Service water heat recovery factor, DWHR = Drain water heat recovery.

a. Where no heating system exists or has been specified, the heating system shall be modeled as fossil fuel. The system characteristics shall be identical in both the standard reference design and proposed design.

b. The ratio between the capacities used in the annual simulations and the capacities determined by sizing runs shall be the same for both the standard reference design and proposed design.

c. Where no cooling system exists or no cooling system has been specified, the cooling system shall be modeled as an air-cooled single-zone system, one unit per thermal zone. The system characteristics shall be identical in both the standard reference design and proposed design.

d. If an economizer is required in accordance with Table C403.3 and where no economizer exists or is specified in the proposed design, then a supply-air economizer shall be provided in the standard reference design in accordance with Section C403.3.

e. The SWHF shall be applied as follows:
   1. Where potable water from the DWHR unit supplies not less than one shower and not greater than two showers, of which the drain water from the same showers flows through the DWHR unit then SWHF = [1 – (DWHR unit efficiency · 0.36)].
   2. Where potable water from the DWHR unit supplies not less than three showers and not greater than four showers, of which the drain water from the same showers flows through the DWHR unit then SWHF = [1 – (DWHR unit efficiency · 0.33)].
   3. Where potable water from the DWHR unit supplies not less than five showers and not greater than six showers, of which the drain water from the same showers flows through the DWHR unit, then SWHF = [1 – (DWHR unit efficiency · 0.26)].
   4. Where Items 1 through 3 are not met, SWHF = 1.0.

INTERNATIONAL CODE COUNCIL®
Copyright © 2015 ICC. ALL RIGHTS RESERVED. Accessed by David Dammon on Jun 21, 2017 12:30:52 PM pursuant to License Agreement with ICC. No further reproduction or distribution authorized. ANY UNAUTHORIZED REPRODUCTION OR DISTRIBUTION IS A VIOLATION OF THE FEDERAL COPYRIGHT ACT AND THE LICENSE AGREEMENT, AND SUBJECT TO CIVIL AND CRIMINAL PENALTIES THEREUNDER.

TABLE C407.5.1(2)
HVAC SYSTEMS MAP

CONDENSER COOLING SOURCE[a]	HEATING SYSTEM CLASSIFICATION[b]	STANDARD REFERENCE DESIGN HVC SYSTEM TYPE[c]		
		Single-zone Residential System	Single-zone Nonresidential System	All Other
Water/ground	Electric resistance	System 5	System 5	System 1
	Heat pump	System 6	System 6	System 6
	Fossil fuel	System 7	System 7	System 2
Air/none	Electric resistance	System 8	System 9	System 3
	Heat pump	System 8	System 9	System 3
	Fossil fuel	System 10	System 11	System 4

a. Select "water/ground" where the proposed design system condenser is water or evaporatively cooled; select "air/none" where the condenser is air cooled. Closed-circuit dry coolers shall be considered air cooled. Systems utilizing district cooling shall be treated as if the condenser water type were "water." Where no mechanical cooling is specified or the mechanical cooling system in the proposed design does not require heat rejection, the system shall be treated as if the condenser water type were "Air." For proposed designs with ground-source or groundwater-source heat pumps, the standard reference design HVAC system shall be water-source heat pump (System 6).

b. Select the path that corresponds to the proposed design heat source: electric resistance, heat pump (including air source and water source), or fuel fired. Systems utilizing district heating (steam or hot water) and systems with no heating capability shall be treated as if the heating system type were "fossil fuel." For systems with mixed fuel heating sources, the system or systems that use the secondary heating source type (the one with the smallest total installed output capacity for the spaces served by the system) shall be modeled identically in the standard reference design and the primary heating source type shall be used to determine *standard* reference design HVAC system type.

c. Select the standard reference design HVAC system category: The system under "single-zone residential system" shall be selected where the HVAC system in the proposed design is a single-zone system and serves a residential space. The system under "single-zone nonresidential system" shall be selected where the HVAC system in the proposed design is a single-zone system and serves other than residential spaces. The system under "all other" shall be selected for all other cases.

INTERNATIONAL CODE COUNCIL®
Copyright © 2015 ICC. ALL RIGHTS RESERVED. Accessed by David Dammon on Jun 21, 2017 12:30:52 PM pursuant to License Agreement with ICC. No further reproduction or distribution authorized. ANY UNAUTHORIZED REPRODUCTION OR DISTRIBUTION IS A VIOLATION OF THE FEDERAL COPYRIGHT ACT AND THE LICENSE AGREEMENT, AND SUBJECT TO CIVIL AND CRIMINAL PENALTIES THEREUNDER.

TABLE C407.5.1(3)
SPECIFICATIONS FOR THE STANDARD REFERENCE DESIGN HVAC SYSTEM DESCRIPTIONS

SYSTEM NO.	SYSTEM TYPE	FAN CONTROL	COOLING TYPE	HEATING TYPE
1	Variable air volume with parallel fan-powered boxes[a]	VAV[d]	Chilled water[e]	Electric resistance
2	Variable air volume with reheat[b]	VAV[d]	Chilled water[e]	Hot water fossil fuel boiler[f]
3	Packaged variable air volume with parallel fan-powered boxes[a]	VAV[d]	Direct expansion[c]	Electric resistance
4	Packaged variable air volume with reheat[b]	VAV[d]	Direct expansion[c]	Hot water fossil fuel boiler[f]
5	Two-pipe fan coil	Constant volume[i]	Chilled water[e]	Electric resistance
6	Water-source heat pump	Constant volume[i]	Direct expansion[c]	Electric heat pump and boiler[g]
7	Four-pipe fan coil	Constant volume[i]	Chilled water[e]	Hot water fossil fuel boiler[f]
8	Packaged terminal heat pump	Constant volume[i]	Direct expansion[c]	Electric heat pump[h]
9	Packaged rooftop heat pump	Constant volume[i]	Direct expansion[c]	Electric heat pump[h]
10	Packaged terminal air conditioner	Constant volume[i]	Direct expansion	Hot water fossil fuel boiler[f]
11	Packaged rooftop air conditioner	Constant volume[i]	Direct expansion	Fossil fuel furnace

For SI: 1 foot = 304.8 mm, 1 cfm/ft^2 = 0.4719 L/s, 1 Btu/h = 0.293/W, °C = [(°F) -32/1.8].

a. **VAV with parallel boxes:** Fans in parallel VAV fan-powered boxes shall be sized for 50 percent of the peak design flow rate and shall be modeled with 0.35 W/cfm fan power. Minimum volume setpoints for fan-powered boxes shall be equal to the minimum rate for the space required for ventilation consistent with Section C403.4.4, Exception 4. Supply air temperature setpoint shall be constant at the design condition.

b. **VAV with reheat:** Minimum volume setpoints for VAV reheat boxes shall be 0.4 cfm/ft^2 of floor area. Supply air temperature shall be reset based on zone demand from the design temperature difference to a 10°F temperature difference under minimum load conditions. Design airflow rates shall be sized for the reset supply air temperature, i.e., a 10°F temperature difference.

c. **Direct expansion:** The fuel type for the cooling system shall match that of the cooling system in the proposed design.

d. VAV: Where the proposed design system has a supply, return or relief fan motor 25 hp or larger, the corresponding fan in the VAV system of the standard reference design shall be modeled assuming a variable-speed drive. For smaller fans, a forward-curved centrifugal fan with inlet vanes shall be modeled. Where the proposed design's system has a direct digital control system at the zone level, static pressure setpoint reset based on zone requirements in accordance with Section C403.4.1 shall be modeled.

e. **Chilled water:** For systems using purchased chilled water, the chillers are not explicitly modeled and chilled water costs shall be based as determined in Sections C407.3 and C407.5.2. Otherwise, the standard reference design's chiller plant shall be modeled with chillers having the number as indicated in Table C407.5.1(4) as a function of standard reference building chiller plant load and type as indicated in Table C407.5.1(5) as a function of individual chiller load. Where chiller fuel source is mixed, the system in the standard reference design shall have chillers with the same fuel types and with capacities having the same proportional capacity as the proposed design's chillers for each fuel type. Chilled water supply temperature shall be modeled at 44°F design supply temperature and 56°F return temperature. Piping losses shall not be modeled in either building model. Chilled water supply water temperature shall be reset in accordance with Section C403.4.3.3. Pump system power for each pumping system shall be the same as the proposed design; where the proposed design has no chilled water pumps, the standard reference design pump power shall be 22 W/gpm (equal to a pump operating against a 75-foot head, 65-percent combined impeller and motor efficiency). The chilled water system shall be modeled as primary-only variable flow with flow maintained at the design rate through each chiller using a bypass. Chilled water pumps shall be modeled as riding the pump curve or with variable-speed drives when required in Section C403.4.3.3. The heat rejection device shall be an axial fan cooling tower with two-speed fans where required in Section C403.4.3. Condenser water design supply temperature shall be 85°F or 10°F approach to design wet-bulb temperature, whichever is lower, with a design temperature rise of 10°F. The tower shall be controlled to maintain a 70°F leaving water temperature where weather permits, floating up to leaving water temperature at design conditions. Pump system power for each pumping system shall be the same as the proposed design; where the proposed design has no condenser water pumps, the standard reference design pump power shall be 19 W/gpm (equal to a pump operating against a 60-foot head, 60-percent combined impeller and motor efficiency). Each chiller shall be modeled with separate condenser water and chilled water pumps interlocked to operate with the associated chiller.

f. **Fossil fuel boiler:** For systems using purchased hot water or steam, the boilers are not explicitly modeled and hot water or steam costs shall be based on actual utility rates. Otherwise, the boiler plant shall use the same fuel as the proposed design and shall be natural draft. The standard reference design boiler plant shall be modeled with a single boiler where the standard reference design plant load is 600,000 Btu/h and less and with two equally sized boilers for plant capacities exceeding 600,000 Btu/h. Boilers shall be staged as required by the load. Hot water supply temperature shall be modeled at 180°F design supply temperature and 130°F return temperature. Piping losses shall not be modeled in either building model. Hot water supply water temperature shall be reset in accordance with Section C403.4.3.3. Pump system power for each pumping system shall be the same as the proposed design; where the proposed design has no hot water pumps, the standard reference design pump power shall be 19 W/gpm (equal to a pump operating against a 60-foot head, 60-percent combined impeller and motor efficiency). The hot water system shall be modeled as primary only with continuous variable flow. Hot water pumps shall be modeled as riding the pump curve or with variable speed drives when required by Section C403.4.3.3.

g. **Electric heat pump and boiler:** Water-source heat pumps shall be connected to a common heat pump water loop controlled to maintain temperatures between 60°F and 90°F. Heat rejection from the loop shall be provided by an axial fan closed-circuit evaporative fluid cooler with two-speed fans where required in Section C403.4.1. Heat addition to the loop shall be provided by a boiler that uses the same fuel as the proposed design and shall be natural draft. Where no boilers exist in the proposed design, the standard reference building boilers shall be fossil fuel. The standard reference design boiler plant shall be modeled with a single boiler where the standard reference design plant load is 600,000 Btu/h or less and with two equally sized boilers for plant capacities exceeding 600,000 Btu/h. Boilers shall be staged as required by the load. Piping losses shall not be modeled in either building model. Pump system power shall be the same as the proposed design; where the proposed design has no pumps, the standard reference design pump power shall be 22 W/gpm, which is equal to a pump operating against a 75-foot head, with a 65-percent combined impeller and motor efficiency. Loop flow shall be variable with flow shutoff at each heat pump when its compressor cycles off as required by Section C403.4.3.3. Loop pumps shall be modeled as riding the pump curve or with variable speed drives when required by Section C403.4.3.3.

h. **Electric heat pump:** Electric air-source heat pumps shall be modeled with electric auxiliary heat. The system shall be controlled with a multistage space thermostat and an outdoor air thermostat wired to energize auxiliary heat only on the last thermostat stage and when outdoor air temperature is less than 40°F.

i. **Constant volume:** Fans shall be controlled in the same manner as in the proposed design; i.e., fan operation whenever the space is occupied or fan operation cycled on calls for heating and cooling. Where the fan is modeled as cycling and the fan energy is included in the energy efficiency rating of the equipment, fan energy shall not be modeled explicitly.

INTERNATIONAL CODE COUNCIL®
Copyright © 2015 ICC. ALL RIGHTS RESERVED. Accessed by David Dammon on Jun 21, 2017 12:30:52 PM pursuant to License Agreement with ICC. No further reproduction or distribution authorized. ANY UNAUTHORIZED REPRODUCTION OR DISTRIBUTION IS A VIOLATION OF THE FEDERAL COPYRIGHT ACT AND THE LICENSE AGREEMENT, AND SUBJECT TO CIVIL AND CRIMINAL PENALTIES THEREUNDER.

TABLE C407.5.1(4)
NUMBER OF CHILLERS

TOTAL CHILLER PLANT CAPACITY	NUMBER OF CHILLERS
≤ 300 tons	1
> 300 tons, < 600 tons	2, sized equally
≥ 600 tons	2 minimum, with chillers added so that no chiller is larger than 800 tons, all sized equally

For SI: 1 ton = 3517 W.

TABLE C407.5.1(5)
WATER CHILLER TYPES

INDIVIDUAL CHILLER PLANT CAPACITY	ELECTRIC CHILLER TYPE	FOSSIL FUEL CHILLER TYPE
≤ 100 tons	Reciprocating	Single-effect absorption, direct fired
> 100 tons, < 300 tons	Screw	Double-effect absorption, direct fired
≥ 300 tons	Centrifugal	Double-effect absorption, direct fired

For SI: 1 ton = 3517 W.

C407.5.2.1 HVAC zones designed. Where HVAC *zones* are defined on HVAC design drawings, each HVAC *zone* shall be modeled as a separate thermal block.

Exception: Different HVAC *zones* shall be allowed to be combined to create a single thermal block or identical thermal blocks to which multipliers are applied provided:

1. The space use classification is the same throughout the thermal block.
2. All HVAC *zones* in the thermal block that are adjacent to glazed exterior walls face the same orientation or their orientations are within 45 degrees (0.79 rad) of each other.
3. All of the *zones* are served by the same HVAC system or by the same kind of HVAC system.

❖ Each HVAC zone must be designed according to Section C403 and must be modeled as a separate thermal block. An HVAC zone is physically determined by the design of the HVAC system. It includes some number of thermodynamically similar spaces, whose loads can be satisfied through the use of a single thermostat or other type of temperature control. The duct outlets or other terminal units controlled by a single thermostat serve the zone.

For example, the interior HVAC zones of a multistory building may be physically separate zones on each floor, but they often may be combined into a single thermal block in the simulation model of the building because they have similar loads and are served by similar systems. However, a cafeteria or computer room in an office building would need to be modeled separately, as would lower-floor retail uses.

Zones may be combined, or multipliers may be used, if all the following conditions are met:

1. All of the space use classifications must be the same throughout the thermal block. This ensures that they have the same load and schedule characteristics.
2. For exterior HVAC zones with glazing, the glazing for all zones included in the thermal block must have the same orientation, or their orientations must be within 45 degrees (0.79 rad) of each other. This ensures that they have the same solar heat gain characteristics. This is not to say that the zones may not have two or more glazing orientations—a corner office could easily have two—but that the zones must have similar orientations. It would be acceptable, for example, to group all of the northeast corner offices on the intermediate floors of an office tower into a single thermal block.

All of the HVAC zones in the thermal block must be served either by the same HVAC system or by the same kind of HVAC system. This is so the simulation program can accurately model the performance of the system(s) serving the block.

C407.5.2.2 HVAC zones not designed. Where HVAC *zones* have not yet been designed, thermal blocks shall be defined based on similar internal load densities, occupancy, lighting, thermal and temperature schedules, and in combination with the following guidelines:

1. Separate thermal blocks shall be assumed for interior and perimeter spaces. Interior spaces shall be those located more than 15 feet (4572 mm) from an exterior wall. Perimeter spaces shall be those located closer than 15 feet (4572 mm) from an *exterior wall*.
2. Separate thermal blocks shall be assumed for spaces adjacent to glazed exterior walls: a separate *zone* shall be provided for each orientation, except orientations that differ by not more than 45 degrees (0.79 rad) shall be permitted to be considered to be the same orientation. Each *zone* shall include floor area that is 15 feet (4572 mm) or less from a glazed perimeter wall, except that floor area within 15 feet (4572 mm) of glazed perimeter walls having more than one orientation shall be divided proportionately between *zones*.

INTERNATIONAL CODE COUNCIL®
Copyright © 2015 ICC. ALL RIGHTS RESERVED. Accessed by David Dammon on Jun 21, 2017 12:30:52 PM pursuant to License Agreement with ICC. No further reproduction or distribution authorized. ANY UNAUTHORIZED REPRODUCTION OR DISTRIBUTION IS A VIOLATION OF THE FEDERAL COPYRIGHT ACT AND THE LICENSE AGREEMENT, AND SUBJECT TO CIVIL AND CRIMINAL PENALTIES THEREUNDER.

3. Separate thermal blocks shall be assumed for spaces having floors that are in contact with the ground or exposed to ambient conditions from *zones* that do not share these features.
4. Separate thermal blocks shall be assumed for spaces having exterior ceiling or roof assemblies from *zones* that do not share these features.

❖ When HVAC zones are not designed at the time of the permit application for which the total-building-performance method is being used, then the configuration of the thermal blocks must be assumed. This is quite common in commercial buildings where the future tenants will determine the zoning of spaces in the building. A default heating system consisting of thermal blocks must be assumed and modeled on similar internal load densities, occupancy, lighting, and thermal and temperature schedules; and in combination with the previously listed guidelines. This default heating system should be a simple, fossil-fuel heating system with sufficient capacity to meet the design heating loads for the building as follows:

- When the HVAC zones are not yet designed, assign separate thermal blocks to the interior spaces located more than 15 feet (4572 mm) from an exterior wall and to the perimeter spaces within 15 feet (4572 mm) of the exterior.
- Glazed exterior walls should be assigned to different perimeter thermal blocks for each major orientation. Orientations within 45 degrees (0.79 rad) of each other may be combined. Spaces with two or more glazed orientations, such as corner offices, should be divided proportionately between zones having different orientations.
- Spaces exposed to ambient conditions, such as the top floor or an overhanging floor, and spaces in contact with the ground, such as the ground floor, must be zoned separately from zones that are not exposed to ambient conditions, such as intermediate floors in a multistory building.

C407.5.2.3 Multifamily residential buildings. Residential spaces shall be modeled using one thermal block per space except that those facing the same orientations are permitted to be combined into one thermal block. Corner units and units with roof or floor loads shall only be combined with units sharing these features.

❖ In multifamily residential buildings, the residential spaces must be treated as separate thermal blocks, except that some combinations are allowed. Units all facing the same orientation, and having similar conditions at the top, bottom and sides, may be combined. Similar corner units may be combined, and units with similar roof or floor loads may be combined.

C407.6 Calculation software tools. Calculation procedures used to comply with this section shall be software tools capable of calculating the annual energy consumption of all building elements that differ between the *standard reference design* and the *proposed design* and shall include the following capabilities.

1. Building operation for a full calendar year (8,760 hours).
2. Climate data for a full calendar year (8,760 hours) and shall reflect approved coincident hourly data for temperature, solar radiation, humidity and wind speed for the building location.
3. Ten or more thermal zones.
4. Thermal mass effects.
5. Hourly variations in occupancy, illumination, receptacle loads, thermostat settings, mechanical ventilation, HVAC equipment availability, service hot water usage and any process loads.
6. Part-load performance curves for mechanical equipment.
7. Capacity and efficiency correction curves for mechanical heating and cooling equipment.
8. Printed code official inspection checklist listing each of the proposed design component characteristics from Table C407.5.1(1) determined by the analysis to provide compliance, along with their respective performance ratings including, but not limited to, *R*-value, *U*-factor, SHGC, HSPF, AFUE, SEER, EF.

❖ Software tools, such as DOE-2, BLAST, COMcheck or Energy/Plus, capable of calculating the annual energy consumption of all building elements can be used to differentiate between the standard reference design and the proposed design. The calculation software tool must have the ability to model all of the following:

- Building operation and climate data for 8,760 hours per year.
- Ten or more thermal zones.
- Thermal mass effects.
- Part-load performance curves for mechanical heating and cooling equipment.
- Capacity and efficiency correction curves for mechanical heating and cooling equipment.
- Printed code official inspection checklist with each of the proposed design component's characteristics.

C407.6.1 Specific approval. Performance analysis tools complying with the applicable subsections of Section C407 and tested according to ASHRAE Standard 140 shall be permitted to be *approved.* Tools are permitted to be *approved* based on meeting a specified threshold for a jurisdiction. The *code official* shall be permitted to approve tools for a specified application or limited scope.

❖ Performance analysis tools complying with Section C407 and tested according to ASHRAE 140 must be permitted to be approved if they meet the specific

INTERNATIONAL CODE COUNCIL®
Copyright © 2015 ICC. ALL RIGHTS RESERVED. Accessed by David Dammon on Jun 21, 2017 12:30:52 PM pursuant to License Agreement with ICC. No further reproduction or distribution authorized. ANY UNAUTHORIZED REPRODUCTION OR DISTRIBUTION IS A VIOLATION OF THE FEDERAL COPYRIGHT ACT AND THE LICENSE AGREEMENT, AND SUBJECT TO CIVIL AND CRIMINAL PENALTIES THEREUNDER.

requirements of the jurisdiction. The code official must be permitted to approve tools for a specific application or limited scope for total building performance.

C407.6.2 Input values. Where calculations require input values not specified by Sections C402, C403, C404 and C405, those input values shall be taken from an *approved* source.

❖ Input values must be taken from an approved source. This section was intended to prevent the unscrupulous gaming of sizing discrepancies between the proposed design and the standard design. The requirement has the effect of preventing the systems proposed for the standard design from being conveniently oversized to make the proposed building systems result in a more favorable net energy cost credit.

C407.6.3 Exceptional calculation methods. Where the simulation program does not model a design, material or device of the *proposed design*, an exceptional calculation method shall be used where approved by the *code official*. Where there are multiple designs, materials or devices that the simulation program does not model, each shall be calculated separately and exceptional savings determined for each. The total exceptional savings shall not constitute more than half of the difference between the baseline building performance and the proposed building performance. Applications for approval of an exceptional method shall include all of the following:

1. Step-by-step documentation of the exceptional calculation method performed, detailed enough to reproduce the results.
2. Copies of all spreadsheets used to perform the calculations.
3. A sensitivity analysis of energy consumption where each of the input parameters is varied from half to double the value assumed.
4. The calculations shall be performed on a time step basis consistent with the simulation program used.
5. The performance rating calculated with and without the exceptional calculation method.

❖ This section provides both guidance and limitation on the use of exceptional calculation methods. While the analysis programs continue to grow in sophistication, not every design concept can be modeled. Therefore, it is sometimes necessary to go outside established simulation programs to use other calculation methods. While this provides flexibility of review and guidance to the code official, it limits the extent to which such calculations are used in any one design. ANSI/ASHRAE/IESNA 90.1 also addresses exceptional calculation methods that can be used as an example of this approach.

SECTION C408
SYSTEM COMMISSIONING

C408.1 General. This section covers the commissioning of the building mechanical systems in Section C403 and electrical power and lighting systems in Section C405.

❖ Commissioning as provided in this section ensures that the mechanical systems and electrical systems (lighting controls) perform as designed for the intended purpose. Commissioning is a systematic process of verification and documentation that ensures the selected building systems have been designed, installed and function properly and can be maintained in accordance with the contract documents in order to satisfy the building owner's design intent and operational requirements. This section of the code details the commissioning plan that must be developed by a registered design professional or an approved agency, and checks that the completed work complies with the design documents and also details what documentation needs to be provided to the code official. The code requirements for commissioning are: a preliminary commissioning report; drawings and manuals; a system balancing report; a final commissioning report; and verification of HVAC, lighting and electrical systems. Functional performance testing of equipment, controls, economizers and lighting control systems is necessary to ensure such systems function as designed and operate in the intended manner. The code requires the owner to receive documentation of the mechanical and lighting systems commissioning and completion requirements. The code official can obtain a copy of this documentation on request. Manuals must be provided for the overall building system so the building operator can understand the operation, maintain it as designed, and troubleshoot any future problems to keep it operating as intended.

C408.2 Mechanical systems and service water-heating systems commissioning and completion requirements. Prior to the final mechanical and plumbing inspections, the *registered design professional* or *approved agency* shall provide evidence of mechanical systems *commissioning* and completion in accordance with the provisions of this section.

Construction document notes shall clearly indicate provisions for *commissioning* and completion requirements in accordance with this section and are permitted to refer to specifications for further requirements. Copies of all documentation shall be given to the owner or owner's authorized agent and made available to the *code official* upon request in accordance with Sections C408.2.4 and C408.2.5.

Exceptions: The following systems are exempt:

1. Mechanical systems and service water heater systems in buildings where the total mechanical equip-

INTERNATIONAL CODE COUNCIL®
Copyright © 2015 ICC. ALL RIGHTS RESERVED. Accessed by David Dammon on Jun 21, 2017 12:30:52 PM pursuant to License Agreement with ICC. No further reproduction or distribution authorized. ANY UNAUTHORIZED REPRODUCTION OR DISTRIBUTION IS A VIOLATION OF THE FEDERAL COPYRIGHT ACT AND THE LICENSE AGREEMENT, AND SUBJECT TO CIVIL AND CRIMINAL PENALTIES THEREUNDER.

ment capacity is less than 480,000 Btu/h (140.7 kW) cooling capacity and 600,000 Btu/h (175.8 kW) combined service water-heating and space-heating capacity.

2. Systems included in Section C403.3 that serve individual *dwelling units* and *sleeping units*.

❖ See the commentary to Section C408.1.

C408.2.1 Commissioning plan. A *commissioning plan* shall be developed by a *registered design professiona*l or *approved agency* and shall include the following items:

1. A narrative description of the activities that will be accomplished during each phase of *commissioning,* including the personnel intended to accomplish each of the activities.
2. A listing of the specific equipment, appliances or systems to be tested and a description of the tests to be performed.
3. Functions to be tested including, but not limited to, calibrations and economizer controls.
4. Conditions under which the test will be performed. Testing shall affirm winter and summer design conditions and full outside air conditions.
5. Measurable criteria for performance.

❖ See the commentary to Section C408.1.

C408.2.2 Systems adjusting and balancing. HVAC systems shall be balanced in accordance with generally accepted engineering standards. Air and water flow rates shall be measured and adjusted to deliver final flow rates within the tolerances provided in the product specifications. Test and balance activities shall include air system and hydronic system balancing.

❖ See the commentary to Section C408.1.

C408.2.2.1 Air systems balancing. Each supply air outlet and *zone* terminal device shall be equipped with means for air balancing in accordance with the requirements of Chapter 6 of the *International Mechanical Code*. Discharge dampers used for air-system balancing are prohibited on constant-volume fans and variable- volume fans with motors 10 hp (18.6 kW) and larger. Air systems shall be balanced in a manner to first minimize throttling losses then, for fans with system power of greater than 1 hp (0.746 kW), fan speed shall be adjusted to meet design flow conditions.

Exception: Fans with fan motors of 1 hp (0.74 kW) or less are not required to be provided with a means for air balancing.

❖ See the commentary to Section C408.1.

C408.2.2.2 Hydronic systems balancing. Individual hydronic heating and cooling coils shall be equipped with means for balancing and measuring flow. Hydronic systems shall be proportionately balanced in a manner to first minimize throttling losses, then the pump impeller shall be trimmed or pump speed shall be adjusted to meet design flow conditions. Each hydronic system shall have either the capability to measure pressure across the pump, or test ports at each side of each pump.

Exceptions: The following equipment is not required to be equipped with a means for balancing or measuring flow:

1. Pumps with pump motors of 5 hp (3.7 kW) or less.
2. Where throttling results in no greater than 5 percent of the nameplate horsepower draw above that required if the impeller were trimmed.

❖ See the commentary to Section C408.1.

C408.2.3 Functional performance testing. Functional performance testing specified in Sections C408.2.3.1 through C408.2.3.3 shall be conducted.

❖ See the commentary to Section C408.1.

C408.2.3.1 Equipment. Equipment functional performance testing shall demonstrate the installation and operation of components, systems, and system-to-system interfacing relationships in accordance with approved plans and specifications such that operation, function, and maintenance serviceability for each of the commissioned systems is confirmed. Testing shall include all modes and *sequence of operation*, including under full-load, part-load and the following emergency conditions:

1. All modes as described in the *sequence* of *operation*.
2. Redundant or *automatic* back-up mode.
3. Performance of alarms.
4. Mode of operation upon a loss of power and restoration of power.

Exception: Unitary or packaged HVAC equipment listed in Tables C403.2.3(1) through C403.2.3(3) that do not require supply air economizers.

❖ See the commentary to Section C408.1.

C408.2.3.2 Controls. HVAC and service water-heating control systems shall be tested to document that control devices, components, equipment and systems are calibrated and adjusted and operate in accordance with approved plans and specifications. Sequences of operation shall be functionally tested to document they operate in accordance with *approved* plans and specifications.

❖ See the commentary to Section C408.1.

C408.2.3.3 Economizers. Air economizers shall undergo a functional test to determine that they operate in accordance with manufacturer's specifications.

❖ See the commentary to Section C408.1.

C408.2.4 Preliminary commissioning report. A preliminary report of *commissioning* test procedures and results shall be completed and certified by the *registered design professional* or *approved agency* and provided to the building owner or owner's authorized agent. The report shall be organized with mechanical and service hot water findings in sepa-

INTERNATIONAL CODE COUNCIL®
Copyright © 2015 ICC. ALL RIGHTS RESERVED. Accessed by David Dammon on Jun 21, 2017 12:30:52 PM pursuant to License Agreement with ICC. No further reproduction or distribution authorized. ANY UNAUTHORIZED REPRODUCTION OR DISTRIBUTION IS A VIOLATION OF THE FEDERAL COPYRIGHT ACT AND THE LICENSE AGREEMENT, AND SUBJECT TO CIVIL AND CRIMINAL PENALTIES THEREUNDER.

rate sections to allow independent review. The report shall be identified as "Preliminary Commissioning Report" and shall identify:

1. Itemization of deficiencies found during testing required by this section that have not been corrected at the time of report preparation.
2. Deferred tests that cannot be performed at the time of report preparation because of climatic conditions.
3. Climatic conditions required for performance of the deferred tests.

❖ See the commentary to Section C408.1.

C408.2.4.1 Acceptance of report. Buildings, or portions thereof, shall not be considered acceptable for a final inspection pursuant to Section C104.3 until the *code official* has received a letter of transmittal from the building owner acknowledging that the building owner or owner's authorized agent has received the Preliminary Commissioning Report.

❖ See the commentary to Section C408.1.

C408.2.4.2 Copy of report. The *code official* shall be permitted to require that a copy of the Preliminary Commissioning Report be made available for review by the *code official*.

❖ See the commentary to Section C408.1.

C408.2.5 Documentation requirements. The *construction documents* shall specify that the documents described in this section be provided to the building owner or owner's authorized agent within 90 days of the date of receipt of the *certificate of occupancy*.

❖ See the commentary to Section C408.1.

C408.2.5.1 Drawings. *Construction documents* shall include the location and performance data on each piece of equipment.

❖ See the commentary to Section C408.1.

C408.2.5.2 Manuals. An operating and maintenance manual shall be provided and include all of the following:

1. Submittal data stating equipment size and selected options for each piece of equipment requiring maintenance.
2. Manufacturer's operation manuals and maintenance manuals for each piece of equipment requiring maintenance, except equipment not furnished as part of the project. Required routine maintenance actions shall be clearly identified.
3. Name and address of at least one service agency.
4. HVAC and service hot water controls system maintenance and calibration information, including wiring diagrams, schematics and control sequence descriptions. Desired or field-determined set points shall be permanently recorded on control drawings at control devices or, for digital control systems, in system programming instructions.
5. Submittal data indicating all selected options for each piece of lighting equipment and lighting controls.
6. Operation and maintenance manuals for each piece of lighting equipment. Required routine maintenance actions, cleaning and recommended relamping shall be clearly identified.
7. A schedule for inspecting and recalibrating all lighting controls.
8. A narrative of how each system is intended to operate, including recommended set points.

❖ See the commentary to Section C408.1.

C408.2.5.3 System balancing report. A written report describing the activities and measurements completed in accordance with Section C408.2.2.

❖ See the commentary to Section C408.1.

C408.2.5.4 Final commissioning report. A report of test procedures and results identified as "Final Commissioning Report" shall be delivered to the building owner or owner's authorized agent. The report shall be organized with mechanical system and service hot water system findings in separate sections to allow independent review. The report shall include the following:

1. Results of functional performance tests.
2. Disposition of deficiencies found during testing, including details of corrective measures used or proposed.
3. Functional performance test procedures used during the commissioning process including measurable criteria for test acceptance, provided herein for repeatability.

Exception: Deferred tests that cannot be performed at the time of report preparation due to climatic conditions.

❖ See the commentary to Section C408.1.

C408.3 Lighting system functional testing. Controls for automatic lighting systems shall comply with this section.

❖ See the commentary to Section C408.1.

C408.3.1 Functional testing. Prior to passing final inspection, the *registered design professional* shall provide evidence that the lighting control systems have been tested to ensure that control hardware and software are calibrated, adjusted, programmed and in proper working condition in accordance with the *construction documents* and manufacturer's instructions. Functional testing shall be in accordance with Sections C408.3.1.1 and C408.3.1.2 for the applicable control type.

❖ See the commentary to Section C408.1.

C408.3.1.1 Occupant sensor controls. Where *occupant sensor controls* are provided, the following procedures shall be performed:

1. Certify that the *occupant sensor* has been located and aimed in accordance with manufacturer recommendations.
2. For projects with seven or fewer *occupant sensors,* each sensor shall be tested.
3. For projects with more than seven *occupant sensors*, testing shall be done for each unique combination of

INTERNATIONAL CODE COUNCIL®
Copyright © 2015 ICC. ALL RIGHTS RESERVED. Accessed by David Dammon on Jun 21, 2017 12:30:52 PM pursuant to License Agreement with ICC. No further reproduction or distribution authorized. ANY UNAUTHORIZED REPRODUCTION OR DISTRIBUTION IS A VIOLATION OF THE FEDERAL COPYRIGHT ACT AND THE LICENSE AGREEMENT, AND SUBJECT TO CIVIL AND CRIMINAL PENALTIES THEREUNDER.

sensor type and space geometry. Where multiples of each unique combination of sensor type and space geometry are provided, not less than 10 percent, but in no case less than one, of each combination shall be tested unless the *code official* or design professional requires a higher percentage to be tested. Where 30 percent or more of the tested controls fail, all remaining identical combinations shall be tested.

For *occupant sensor controls* to be tested, verify the following:

3.1. Where *occupant sensor controls* include status indicators, verify correct operation.

3.2. The controlled lights turn off or down to the permitted level within the required time.

3.3. For auto-on *occupant sensor controls*, the lights turn on to the permitted level when an occupant enters the space.

3.4. For manual-on *occupant sensor controls*, the lights turn on only when manually activated.

3.5. The lights are not incorrectly turned on by movement in adjacent areas or by HVAC operation.

❖ See the commentary to Section C408.1.

C408.3.1.2 Time-switch controls. Where t*ime-switch controls* are provided, the following procedures shall be performed:

1. Confirm that the *time-switch control* is programmed with accurate weekday, weekend and holiday schedules.
2. Provide documentation to the owner of *time- switch controls* programming including weekday, weekend, holiday schedules, and set-up and preference program settings.
3. Verify the correct time and date in the time switch.
4. Verify that any battery back-up is installed and energized.
5. Verify that the override time limit is set to not more than 2 hours.
6. Simulate occupied condition. Verify and document the following:

   6.1. All lights can be turned on and off by their respective area control switch.

   6.2. The switch only operates lighting in the enclosed space in which the switch is located.
7. Simulate unoccupied condition. Verify and document the following:

   7.1. Nonexempt lighting turns off.

   7.2. Manual override switch allows only the lights in the enclosed space where the override switch is located to turn on or remain on until the next scheduled shutoff occurs.
8. Additional testing as specified by the *registered design professional*.

❖ See the commentary to Section C408.1.

C408.3.1.3 Daylight responsive controls. Where *daylight responsive controls* are provided, the following shall be verified:

1. Control devices have been properly located, field calibrated and set for accurate setpoints and threshold light levels.
2. Daylight controlled lighting loads adjust to light level set points in response to available daylight.
3. The locations of calibration adjustment equipment are readily accessible only to authorized personnel.

❖ See the commentary to Section C408.1.

C408.3.2 Documentation requirements. The *construction documents* shall specify that documents certifying that the installed lighting controls meet documented performance criteria of Section C405 are to be provided to the building owner within 90 days from the date of receipt of the *certificate of occupancy*.

❖ See the commentary to Section C408.1.

Bibliography

The following resource materials were used in the preparation of the commentary for this chapter of the code.

AABC-02, *National Standards for Total System Balance*. Washington, DC: Associated Air Balance Council, 2002.

Advanced Lighting Guidelines. Sacramento, CA: California Energy Commission, 1993.

ASHRAE-07 *Handbook—HVAC Applications*. Atlanta, GA: American Society of Heating, Refrigerating and Air-Conditioning Engineers, Inc., 2007

ASHRAE-08 *Handbook—HVAC Systems and Equipment*. Atlanta, GA: American Society of Heating, Refrigerating and Air-Conditioning Engineers, Inc., 2008.

ASHRAE-09, *Handbook of Fundamentals*. Atlanta, GA: American Society of Heating, Refrigerating and Air-Conditioning Engineers, Inc., 2009.

ASHRAE/IES 93, *Energy Code for Commercial and High Rise Residential Buildings—Codification of ASHRAE/IES Standard 90.1-89, Energy-efficient Design of New Buildings Except Low-rise Residential Buildings*. Atlanta, GA: American Society of Heating, Refrigerating and Air-Conditioning Engineers, Inc., 1993.

ASHRAE 55-10, *Thermal Environmental Conditions for Human Occupancy*. Atlanta, GA: American Society of Heating, Refrigeration and Air-Conditioning Engineers, Inc., 2010.

INTERNATIONAL CODE COUNCIL®

Copyright © 2015 ICC. ALL RIGHTS RESERVED. Accessed by David Dammon on Jun 21, 2017 12:30:52 PM pursuant to License Agreement with ICC. No further reproduction or distribution authorized. ANY UNAUTHORIZED REPRODUCTION OR DISTRIBUTION IS A VIOLATION OF THE FEDERAL COPYRIGHT ACT AND THE LICENSE AGREEMENT, AND SUBJECT TO CIVIL AND CRIMINAL PENALTIES THEREUNDER.

ASHRAE 62.1-10, *Ventilation for Acceptable Indoor Air Quality*. Atlanta, GA: American Society of Heating, Refrigerating and Air-Conditioning Engineers, Inc., 2010.

ASHRAE 189.1-11, *Standard for the Design of High-performance, Green Buildings, Except Low-rise Residential Buildings*. Atlanta, GA: American Society of Heating, Refrigerating and Air-Conditioning Engineers, Inc., 2011.

ASTM C 518-10, *Standard Test Method for Steady-state Thermal Transmission Properties by Means of the Heat Flow Meter Apparatus*. West Conshohocken, PA: ASTM International, 2010.

Baylon, D. and J. Heller. *Super Good Cents Heat Loss Reference* Volumes I through IV. Portland, OR: Ecotope for the Bonneville Power Administration, 1998.

Certified Products Directory, 5th Edition. Silver Spring, MD: National Fenestration Rating Council, 1995.

Clean Air Act 1992.

Collier, R.K., Jr. *Desiccant Dehumidification and Cooling Systems: Assessment and Analysis*. Richland, WA: Pacific Northwest National Laboratory, 1997; PNNL-11694.

COMcheck™ Manual, Version 3.4. Richland, WA: Building Energy Codes Program, Pacific Northwest National Laboratory, U.S. Department of Energy, 2007.

COMcheck™ Prescriptive Package. Richland, WA: Building Energy Codes Program, Pacific Northwest National Laboratory, U.S. Department of Energy, 2007.

COMcheck™ Software User's Guide. Richland, WA: Building Energy Codes Program, Pacific Northwest National Laboratory, U.S. Department of Energy, 2005.

Commercial Buildings Characteristics 1992: Energy Consumption Survey, DOE/EIA-0246 (92). Washington, DC: Energy Information Administration, U.S. Department of Energy, 1994.

County and City Data Book—1988—Places. Washington DC: Census Bureau, U.S. Department of Commerce, 1988.

Crawley, D.B., P.K. Riesen and R.S. Briggs. *User's Guide for EN VS TD Program Version 2.0 and LTGSTD Program Version 2.0*, PNL-6839 (includes software). Richland, WA: Pacific Northwest National Laboratory, U.S. Department of Energy, 1989.

DOE 2.1E Simulation Tool, Computerized Program. Washington, DC: U.S. Department of Energy.

Elegant Lighting for Elegant Dining. Seattle, WA: Design Lighting Laboratory, Bonneville Power Administration, 1991.

Energy Efficiency Standards for Residential and Nonresidential Buildings. Sacramento, CA: California Energy Commission, 1995.

Energy Policy Act of 1992 (EPAct). Public Law 102-486, 106 Stat 2776, 16 USC, Part 1531 et seq., as amended. Washington, DC: U.S. Department of Energy, 1992.

Federal User's Manual—Performance Standards for New Commercial and Multi-family High-rise Residential Buildings. Washington, DC: Office of Codes and Standards, U.S. Department of Energy, 1994.

Hogan, J.F. "Code Compliance Considerations in the Development of the Building Envelope Requirements for ANSI/ASHRAE/IESNA 90.1-89R." *Thermal VI Thermal Performance of the Exterior Envelopes of Buildings VI*. Clearwater Beach, FL, Office of Building Technologies, U.S. Department of Energy, Oak Ridge National Laboratory; American Society of Heating, Refrigerating and Air-Conditioning Engineers, Inc.; and Building Environment and Thermal Envelope Council, 1996.

ICC A117.1-09, *Accessible and Usable Buildings and Facilities*. Washington, DC: International Code Council, 2009.

IRC-15, *International Residential Code*. Washington, DC: International Code Council, 2014.

Jones, J.W. "Special Project 41: Development of Recommendations to Upgrade ASHRAE 90A-80, *Energy Conservation in New Building Design." ASHRAE Journal*, October 1983.

Model Energy Code, 1993 Edition. Falls Church, VA: Council of American Building Officials, 1993.

NAECA-87, National Appliance Energy Conservation Act of 1987. Public Law 100-12, 42 USC, Part 6291 et seq., as amended. Washington, DC: U.S. Department of Energy, 1987.

NAIMA AH 116-09, *Fibrous Glass Duct Construction Standards, Fifth Edition*. Alexandria, VA: North American Insulation Manufacturers Association, 2009.

NEBB-05, *Procedural Standards*. Gaithersburg, MD: National Environmental Balancing Bureau, 2005.

NFPA 70-14, *National Electrical Code*. Quincy, MA: National Fire Prevention Association, 2014.

Owenby, J.R., D.S. Ezell and R.R. Heim, Jr. *Annual Degree Days to Selected Bases Derived from the 1961 to 1990 Normals*. Climatography of the United States No. 81—Supplement No. 2. Asheville, NC: U.S. Department of Commerce; National Oceanic and Atmospheric Administration; and National Climatic Data Center, 1992.

"Prescriptive Requirements for Lighting—Calculation of Allowed Lighting Power Density—Area Category Method." *California Code of Regulations*. Subchapter 5, Section 146(b)2. Sacramento, CA: 1995.

INTERNATIONAL CODE COUNCIL®
Copyright © 2015 ICC. ALL RIGHTS RESERVED. Accessed by David Dammon on Jun 21, 2017 12:30:52 PM pursuant to License Agreement with ICC. No further reproduction or distribution authorized. ANY UNAUTHORIZED REPRODUCTION OR DISTRIBUTION IS A VIOLATION OF THE FEDERAL COPYRIGHT ACT AND THE LICENSE AGREEMENT, AND SUBJECT TO CIVIL AND CRIMINAL PENALTIES THEREUNDER.

SMACNA-05, *HVAC Duct Construction Standards: Metal and Flexible*. Chantilly, VA: Sheet Metal and Air Conditioning Contractors National Association, Inc., 2005.

Stucky, D.S., R.X. Shankle, R.X. Schultz, E.E. Richman and J. Dirks. "Pacific Northwest Laboratory's Lighting Technology Screening Matrix: Let There Be Energy-Efficient Light." *Energy Engineering*. Richland, WA: Pacific Northwest National Laboratory, 1994.

Technical Support Document for COMcheck-EZ Version 1.0. Letter Report prepared for the U.S. Department of Energy under contact NE-AC06-76RLO 1830. Richland, WA: Pacific Northwest National Laboratory, 1997.

The Basics of Efficient Lighting. Conyers, GA: Lithonia Lighting and U.S. Department of Energy, 2000.

UL 1784-01, *Standard for Air Leakage Test of Door Assemblies*. Northbrook, IL: Underwriter's Laboratories, Inc., 2001.

UL 181B-05, *Standard for Closure Systems for use with Flexible Air Ducts and Air Connectors*. Northbrook, IL: Underwriter's Laboratories, Inc., 2005.

Unitary and Applied Certification Directories (Online report). Arlington, VA: Air-Conditioning Heating and Refrigeration Institute, 1996. Available URL: http// www.ahridirectory.org/ahridirectury.

INTERNATIONAL CODE COUNCIL®

Copyright © 2015 ICC. ALL RIGHTS RESERVED. Accessed by David Dammon on Jun 21, 2017 12:30:52 PM pursuant to License Agreement with ICC. No further reproduction or distribution authorized. ANY UNAUTHORIZED REPRODUCTION OR DISTRIBUTION IS A VIOLATION OF THE FEDERAL COPYRIGHT ACT AND THE LICENSE AGREEMENT, AND SUBJECT TO CIVIL AND CRIMINAL PENALTIES THEREUNDER.

Chapter 5[CE]: Existing Buildings

General Comments

New for the 2015 IECC Commercial Provisions is a separate chapter dealing with alterations, repairs, additions and change of occupancy of existing buildings. These provisions for the most part, originated in Chapter 1 of the 2012 Commercial Provisions; however, this 2015 edition now contains options to deal with situations where compliance with the code for additions is difficult. Very simply, the provisions now allow an energy-neutral method for demonstrating compliance by basically saying that the building with the addition uses no more energy than the existing building. This will allow projects to take advantage of energy-efficient alterations on the existing building to offset difficult to comply with features on the addition. Requirements for alterations are provided, giving specific details and exceptions for the building envelope, heating and cooling systems, hot water systems, and lighting. Finally, the code allows that repairs be done without consideration of compliance with this code.

Purpose

The purpose of this chapter is to provide requirements for the unique circumstances involved with existing building additions, alterations, and repairs.

SECTION C501 GENERAL

C501.1 Scope. The provisions of this chapter shall control the *alteration*, *repair*, *addition* and change of occupancy of existing buildings and structures.

❖ The scope of this chapter encompasses specific circumstances related to changes to existing buildings. This chapter provides a roadmap when dealing with different types of projects—alterations, repairs, additions, and changes of occupancy.

C501.2 Existing buildings. Except as specified in this chapter, this code shall not be used to require the removal, *alteration* or abandonment of, nor prevent the continued use and maintenance of, an existing building or building system lawfully in existence at the time of adoption of this code.

❖ This section addresses the fact that, in general, the code does not affect existing buildings. It will permit an addition to be made to an existing building without requiring the existing building to conform to the code. In such a case, the addition is expected to comply with the current code, but the code will not require changes for the existing portion. Therefore, the code does not apply retroactively to existing buildings. When an existing building is modified by an addition, alteration, renovation or repair, Section C502, C503, or C504 will provide the guidance and requirements for such changes.

C501.3 Maintenance. Buildings and structures, and parts thereof, shall be maintained in a safe and sanitary condition. Devices and systems that are required by this code shall be maintained in conformance to the code edition under which installed. The owner or the owner's authorized agent shall be responsible for the maintenance of buildings and structures. The requirements of this chapter shall not provide the basis for removal or abrogation of energy conservation, fire protection and safety systems and devices in existing structures.

❖ The code is designed to regulate new construction and new work and is not intended to be applied retroactively to existing buildings except where existing envelope, lighting, mechanical or service water heating systems are specifically affected by Section C502, C503 or C504. Maintenance of building systems and components is required, but the code is not intended to require upgrade or modification to meet the code when maintenance is dealt with.

C501.4 Compliance. *Alterations*, *repairs*, *additions* and changes of occupancy to, or relocation of, existing buildings and structures shall comply with the provisions for *alterations*, *repairs*, *additions* and changes of occupancy or relocation, respectively, in the *International Building Code*, *International Fire Code*, *International Fuel Gas Code*, *International Mechanical Code*, *International Plumbing Code*, *International Property Maintenance Code*, *International Private Sewage Disposal Code* and NFPA 70.

❖ The code is not intended to suggest that compliance with the provisions of other *International Codes*® (I-Codes®), such as the IBC, be ignored. The I-Codes are intended to be a coordinated set of construction codes. This section clarifies the relationship between this chapter of the code and the *International Residential Code*® (IRC®), *International Building Code*® (IBC®), *International Fire Code*® (IFC®), *International Fuel Gas Code*® (IFGC®), *International Mechanical Code*® (IMC®), *International Plumbing Code*® (IPC®), *International Property Maintenance Code*® (IPMC®),

INTERNATIONAL CODE COUNCIL®
Copyright © 2015 ICC. ALL RIGHTS RESERVED. Accessed by David Dammon on Jun 21, 2017 12:30:52 PM pursuant to License Agreement with ICC. No further reproduction or distribution authorized. ANY UNAUTHORIZED REPRODUCTION OR DISTRIBUTION IS A VIOLATION OF THE FEDERAL COPYRIGHT ACT AND THE LICENSE AGREEMENT, AND SUBJECT TO CIVIL AND CRIMINAL PENALTIES THEREUNDER.

International Private Sewage Disposal Code® (IPSDC®) and NFPA 70. When alterations and repairs are made to existing mechanical and plumbing systems, the provisions of the I-Codes and NFPA 70 for alterations and repairs must be followed. Those codes indicate the extent to which existing systems must comply with the stated requirements. Where portions of existing building systems, such as plumbing, mechanical and electrical systems, are not being altered or repaired, those systems may continue to exist without being upgraded as long as they are not hazardous or unsafe to the building occupants.

C501.5 New and replacement materials. Except as otherwise required or permitted by this code, materials permitted by the applicable code for new construction shall be used. Like materials shall be permitted for *repairs*, provided hazards to life, health or property are not created. Hazardous materials shall not be used where the code for new construction would not permit use of these materials in buildings of similar occupancy, purpose and location.

❖ There are two options for materials used in repairs to an existing building. Generally, the materials used for repairs should be those that are presently required or permitted for new construction under the I-Codes. It is also acceptable to use materials consistent with those that are already present, except where those materials pose a hazard. This allowance follows the general concept that any repair should not make a building more hazardous than it was prior to the repair. It is generally possible to repair a structure, its components and its systems with materials consistent with those materials that were used previously. However, where materials that are now deemed hazardous are involved in the repair work, they may no longer be used. For example, the code identifies asbestos and lead-based paint as two common hazardous building materials that cannot be used in the repair process. Certain materials previously considered acceptable for building construction are now a threat to the health of the occupants.

C501.6 Historic buildings. No provisions of this code relating to the construction, *repair, alteration*, restoration and movement of structures, and *change of occupancy* shall be mandatory for *historic buildings* provided a report has been submitted to the *code official* and signed by a *registered design professional*, or a representative of the State Historic Preservation Office or the historic preservation authority having jurisdiction, demonstrating that compliance with that provision would threaten, degrade or destroy the historic form, fabric or function of the building.

❖ In some aspects, this is a bit of a continuation of the "existing building" provisions, but it goes even further in that historic buildings are exempt. In earlier editions of the code, this exemption applied only to the exterior envelope of such buildings, and to the interior only in those cases where the ordinance explicitly designated elements of the interior. With the current text, historic buildings are exempt from all aspects of the code. This exemption, however, is not without conditions. The most important criterion for application of this section is that the building must be specifically classified as being of historic significance by a qualified party or agency. Usually this is done by a state or local authority after considerable scrutiny of the historical value of the building. Most, if not all, states have authorities, such as a landmark commission, as do many local jurisdictions.

Because of the unique issues involved, historic buildings are exempt from the requirements of the code. This exemption could be extended to include all parts that are "historic," including additions, alterations and repairs, that would normally be addressed by Section C502 or C503. If the addition, alteration or renovation is not "historic," then the provisions of Section C502 or C503 should be applied. Consideration of energy conservation and compliance with the code is still of value in historic buildings. In exempting historic buildings, the code is simply recognizing that energy efficiency may be difficult to accomplish while maintaining the "historic" nature of the building.

SECTION C502
ADDITIONS

C502.1 General. *Additions* to an existing building, building system or portion thereof shall conform to the provisions of this code as those provisions relate to new construction without requiring the unaltered portion of the existing building or building system to comply with this code. *Additions* shall not create an unsafe or hazardous condition or overload existing building systems. An *addition* shall be deemed to comply with this code if the *addition* alone complies or if the existing building and *addition* comply with this code as a single building. *Additions* shall comply with Section C502.2.

Additions complying with ANSI/ASHRAE/IESNA 90.1. need not comply with Sections C402, C403, C404 and C405.

❖ When an addition is added to an existing building, only the addition must comply with the requirements of the code, as outlined in Section C502.2.

Simply stated, new work must comply with the current requirements for new work. Any addition to an existing system involving new work is subject to the requirements of the code. Additions can place additional loads or different demands on an existing system, and those loads or demands could necessitate changing all or part of the existing system. Additions and alterations must not cause an existing system to be any less in compliance with the code than it was before the changes.

Additions to existing buildings must comply with the code when the addition is within the scope of the code and would not otherwise be exempted (see code text and commentary, Sections C101.4 and C101.5.2). Additions include new construction, such as a conditioned bedroom, sun space or enclosed porch added to an existing building. Additions also include existing spaces converted from uncondi-

INTERNATIONAL CODE COUNCIL®
Copyright © 2015 ICC. ALL RIGHTS RESERVED. Accessed by David Dammon on Jun 21, 2017 12:30:52 PM pursuant to License Agreement with ICC. No further reproduction or distribution authorized. ANY UNAUTHORIZED REPRODUCTION OR DISTRIBUTION IS A VIOLATION OF THE FEDERAL COPYRIGHT ACT AND THE LICENSE AGREEMENT, AND SUBJECT TO CIVIL AND CRIMINAL PENALTIES THEREUNDER.

tioned or exempt spaces to conditioned spaces. For example, a finished basement, an attic converted to a bedroom or a carport converted to a den are additions. The addition of an unconditioned garage would not be considered within the scope of the code because the code applies to heated or cooled (conditioned) spaces.

Although not specifically defined in the code, building codes typically define an "Addition" as any increase in a building's habitable floor area (which can be interpreted as any increase in the conditioned floor area). For example, an unconditioned garage converted to a bedroom is an addition. If a conditioned floor area is expanded, such as a room made larger by moving out a wall, only the newly conditioned space must meet the code. A flat window added to a room does not increase the conditioned space and thus is not an addition by this definition. If several changes are made to a building at the same time, only the changes that expand the conditioned floor area are required to meet the code. The addition (the newly conditioned floor space) complies with the code if it complies with all of the applicable requirements in Chapter 4[CE]. For example, requirements applicable to the addition of a new room would most likely include insulating the exterior walls, ceiling and floor to the levels specified in the code; sealing all joints and penetrations; installing a vapor retarder in unventilated frame walls, floors and ceilings; identifying installed insulation *R*-values and window *U*-factors; and insulating and sealing any ducts passing through unconditioned portions or within exterior envelope components (walls, ceilings or floors) of the new space. Compliance approaches for additions include:

1. The entire building (the existing building plus the addition) complies with the code. If the building inclusive of the addition complies with the code, the addition will also comply, regardless of whether the addition complies alone. For example, a sunroom that does not comply with the code is added to a house. If the entire house (with the sunroom) complies, the addition also complies.
2. Where approved by the code official, the addition, including possible concurrent renovation, does not result in any increase in the building's overall area-weighted thermal transmittance (UA), or otherwise any increase in annual demand for either fossil fuel or electrical energy supply. The change in UA or energy use can be quantified using any of the commonly used hourly, full-year simulation tools. For example, additions that add rooms while simultaneously upgrading existing HVAC systems, windows and insulation often reduce the annual energy use or UA of the existing part of the home, more than offsetting the energy use attributed to the added space in the home.
3. The addition itself can comply with the prescriptive methods found in Chapter 4[CE]. These provisions provide a simple, prescriptive specification menu for each climate zone that, if followed, will yield a building envelope meeting the requirements of Table C402.1.3. The components of the building addition must meet the insulation *R*-values, fenestration *U*-factors and solar heat gain coefficient (SHGC) requirements shown in Tables C402.1.3 and C402.1.4.

An existing energy-using system (envelope, mechanical, service water heating, electrical distribution or lighting) is generally considered to be "grandfathered" with code adoption if the criteria for this level are the regulations (or code) under which the existing building was originally constructed. It should be noted that a specific level of safety is dictated by provisions dealing with hazard abatement in existing buildings and maintenance provisions, as contained in the code, the IPMC and the IFC.

Additions complying with ANSI/ASHRAE/IESNA 90.1 need not comply with Sections C402, C403, C404 and C405.

C502.2 Prescriptive compliance. *Additions* shall comply with Sections C502.2.1 through C502.2.6.2.

❖ This section simply provides guidance as to how compliance with the code is met for specific systems or building components included in an addition. Section C502.1 states:

> "An addition shall be deemed to comply with this code if the addition alone complies or if the existing building and addition comply with this code as a single building."

The ensuing sections state how, specifically, to accomplish this for different systems and building components.

C502.2.1 Vertical fenestration. New *vertical fenestration* area that results in a total building *fenestration* area less than or equal to that specified in Section C402.4.1 shall comply with Section C402.4. *Additions* with *vertical fenestration* that result in a total building *fenestration* area greater than Section C402.4.1 or *additions* that exceed the fenestration area greater than Section C402.4.1 shall comply with Section C402.4.1.1 for the *addition* only. *Additions* that result in a total building vertical glass area exceeding that specified in Section C402.4.1.1 shall comply with Section C407.

❖ This section provides specific requirements for compliance with the code for vertical fenestration when there is an addition. Basically, these provisions are consistent with the fundamental requirement stated in Section C502.1 that an addition can comply with the code if the addition alone complies, or if the existing building and addition comply as a single building. However, this section gives some guidance regarding the need for daylight controls as called out in Section C402.3.2.1 when the area of fenestration exceeds the maximum area of 30 percent of the total gross wall area of the addition or the addition plus the existing building. Essentially, the daylight controls would

INTERNATIONAL CODE COUNCIL®
Copyright © 2015 ICC. ALL RIGHTS RESERVED. Accessed by David Dammon on Jun 21, 2017 12:30:52 PM pursuant to License Agreement with ICC. No further reproduction or distribution authorized. ANY UNAUTHORIZED REPRODUCTION OR DISTRIBUTION IS A VIOLATION OF THE FEDERAL COPYRIGHT ACT AND THE LICENSE AGREEMENT, AND SUBJECT TO CIVIL AND CRIMINAL PENALTIES THEREUNDER.

be applicable to the addition alone (see the commentary, Section C402.3.2.1). Finally, if the total fenestration area of the total building exceeds 40 percent of the gross wall area of the total building, the performance design in Section C407 must be utilized for the addition.

C502.2.2 Skylight area. New *skylight* area that results in a total building *fenestration* area less than or equal to that specified in Section C402.4.1 shall comply with Section C402.4. *Additions* with *skylight* area that result in a total building *skylight* area greater than C402.4.1 or additions that exceed the *skylight* area shall comply with Section C402.4.1.2 for the *addition* only. *Additions* that result in a total building *skylight* area exceeding that specified in Section C402.4.1.2 shall comply with Section C407.

❖ This section deals with the issue of skylights on additions, similar to the requirements for vertical fenestration (see the commentary to Section C502.2.1).

C502.2.3 Building mechanical systems. New mechanical systems and equipment that are part of the *addition* and serve the building heating, cooling and ventilation needs shall comply with Section C403.

❖ Consistent with the requirements in Section C502.1 that an addition must comply with the code for new construction without having the entire building comply, this section simply points to the requirements for new construction given in Section C403 for mechanical HVAC system.

C502.2.4 Service water-heating systems. New service water-heating equipment, controls and service water heating piping shall comply with Section C404.

❖ Consistent with the requirements in Section C502.1 that an addition must comply with the code for new construction without having the entire building comply, this section simply points to the requirements for new construction given in Section C404 for service water-heating systems.

C502.2.5 Pools and inground permanently installed spas. New pools and inground permanently installed spas shall comply with Section C404.9.

❖ Consistent with the requirements in Section C502.1 that an addition must comply with the code for new construction without having the entire building comply, this section simply points to the requirements for new construction given in Section C404.9 for pools or spas that are part of an addition.

C502.2.6 Lighting power and systems. New lighting systems that are installed as part of the addition shall comply with Section C405.

❖ Consistent with the requirements in Section C502.1 that an addition must comply with the code for new construction without having the entire building comply, this section simply points to the requirements for new construction given in Section C405 for the new lighting systems installed in an addition.

C502.2.6.1 Interior lighting power. The total interior lighting power for the *addition* shall comply with Section C405.4.2 for the *addition* alone, or the existing building and the *addition* shall comply as a single building.

❖ These provisions are consistent with the fundamental requirement stated in Section 502.1 that an addition can comply with the code if the addition alone complies, or if the existing building and addition comply as a single building.

C502.2.6.2 Exterior lighting power. The total exterior lighting power for the *addition* shall comply with Section C405.5.1 for the *addition* alone, or the existing building and the *addition* shall comply as a single building.

❖ These provisions are consistent with the fundamental requirement stated in Section C502.1 that an addition can comply with the code if the addition alone complies, or if the existing building and addition comply as a single building.

SECTION C503
ALTERATIONS

C503.1 General. *Alterations* to any building or structure shall comply with the requirements of the code for new construction. *Alterations* shall be such that the existing building or structure is no less conforming to the provisions of this code than the existing building or structure was prior to the *alteration*. *Alterations* to an existing building, building system or portion thereof shall conform to the provisions of this code as those provisions relate to new construction without requiring the unaltered portions of the existing building or building system to comply with this code. *Alterations* shall not create an unsafe or hazardous condition or overload existing building systems.

Alterations complying with ANSI/ASHRAE/IESNA 90.1. need not comply with Sections C402, C403, C404 and C405.

Exception: The following *alterations* need not comply with the requirements for new construction, provided the energy use of the building is not increased:

1. Storm windows installed over existing *fenestration*.
2. Surface-applied window film installed on existing single-pane *fenestration* assemblies reducing solar heat gain, provided the code does not require the glazing or *fenestration* to be replaced.
3. Existing ceiling, wall or floor cavities exposed during construction, provided that these cavities are filled with insulation.
4. Construction where the existing roof, wall or floor cavity is not exposed.
5. *Roof recover*.
6. *Air barriers* shall not be required for *roof recover* and roof replacement where the *alterations* or renovations to the building do not include *alterations*, renovations or *repairs* to the remainder of the building envelope.

INTERNATIONAL CODE COUNCIL®
Copyright © 2015 ICC. ALL RIGHTS RESERVED. Accessed by David Dammon on Jun 21, 2017 12:30:52 PM pursuant to License Agreement with ICC. No further reproduction or distribution authorized. ANY UNAUTHORIZED REPRODUCTION OR DISTRIBUTION IS A VIOLATION OF THE FEDERAL COPYRIGHT ACT AND THE LICENSE AGREEMENT, AND SUBJECT TO CIVIL AND CRIMINAL PENALTIES THEREUNDER.

7. *Alterations* that replace less than 50 percent of the luminaires in a space, provided that such *alterations* do not increase the installed interior lighting power.

❖ As stated for additions, new work must comply with the current requirements for new work. Any alteration to an existing system involving new work is subject to the requirements of the code. Just like additions, an alteration could place additional loads or different demands on an existing system and those loads or demands could necessitate changing all or part of the existing system. Alterations must not cause an existing building or system to be any less in compliance with the code than it was before the changes. The exceptions address common types of alterations where the need for upgrading to new code requirements is not warranted.

C503.2 Change in space conditioning. Any nonconditioned or low-energy space that is altered to become conditioned space shall be required to be brought into full compliance with this code.

❖ The type of alteration where nonconditioned space becomes conditioned space is really more of an addition than an alteration. This section does not obviate the need to check the total building to ensure that this alteration does not cause the existing building to be noncomplying, as required in Section C503.1.

C503.3 Building envelope. New building envelope assemblies that are part of the *alteration* shall comply with Sections C402.1 through C402.5.

❖ See the commentary to Sections C402.1 through C402.5.

C503.3.1 Roof replacement. *Roof replacements* shall comply with Table C402.1.3 or C402.1.4 where the existing roof assembly is part of the *building thermal envelope* and contains insulation entirely above the roof deck.

❖ "Roof replacement" is defined in the code in Chapter 2[CE]. Roof replacement involves removal of the roof covering and replacing or repairing parts of the roof deck. Consistent with Exceptions 3 and 4, the insulation in the roof assembly does not need to be upgraded to meet current code insulation requirements where there is already insulation in the roof cavity and it is also the ceiling cavity or when the insulation is not exposed. However, as is the case in many commercial roofing applications, insulation that is entirely above deck must be brought into compliance with current code roof-insulation requirements.

C503.3.2 Vertical fenestration. The addition of *vertical fenestration* that results in a total building *fenestration* area less than or equal to that specified in Section C402.4.1 shall comply with Section C402.4. The addition of *vertical fenestration* that results in a total building *fenestration* area greater than Section C402.4.1 shall comply with Section C402.4.1.1 for the space adjacent to the new fenestration only. *Alterations* that result in a total building vertical glass area exceeding that specified in Section C402.4.1.1 shall comply with Section C407.

❖ These provisions are the same as the provisions for vertical fenestration in an addition. (see the commentary to Section C502.2.1).

C503.3.3 Skylight area. The addition of *skylight* area that results in a total building *skylight* area less than or equal to that specified in Section C402.4.1 shall comply with Section C402.4. The addition of *skylight* area that results in a total building skylight area greater than Section C402.4.1 shall comply with Section C402.4.1.2 for the space adjacent to the new skylights. *Alterations* that result in a total building skylight area exceeding that specified in Section C402.4.1.2 shall comply with Section C407.

❖ These provisions are the same as the provisions for skylights in an addition (see the commentary to Section C502.2.2).

C503.4 Heating and cooling systems. New heating, cooling and duct systems that are part of the *alteration* shall comply with Sections C403.

❖ Consistent with the requirements in Section C502.1 that an alteration must comply with the code for new construction without having the entire building comply, this section simply points to the requirements for new construction given in Section C403 for mechanical HVAC systems.

C503.4.1 Economizers. New cooling systems that are part of *alteration* shall comply with Section C403.3.

❖ Consistent with the requirements in Section C502.1 that an alteration must comply with the code for new construction without having the entire building comply, this section simply points to the requirements for new construction given in Section C403.3 for economizer systems.

C503.5 Service hot water systems. New service hot water systems that are part of the *alteration* shall comply with Section C404.

❖ Consistent with the requirements in Section C502.1 that an alteration must comply with the code for new construction without having the entire building comply, this section simply points to the requirements for new construction given in Section C404 for service water-heating systems.

C503.6 Lighting systems. New lighting systems that are part of the *alteration* shall comply with Section C405.

Exception. *Alterations* that replace less than 10 percent of the luminaires in a space, provided that such *alterations* do not increase the installed interior lighting power.

❖ Consistent with the requirements in Section C502.1 that an alteration must comply with the code for new construction without having the entire building comply, this section simply points to the requirements for new construction given in Section C405 for the new

INTERNATIONAL CODE COUNCIL®
Copyright © 2015 ICC. ALL RIGHTS RESERVED. Accessed by David Dammon on Jun 21, 2017 12:30:52 PM pursuant to License Agreement with ICC. No further reproduction or distribution authorized. ANY UNAUTHORIZED REPRODUCTION OR DISTRIBUTION IS A VIOLATION OF THE FEDERAL COPYRIGHT ACT AND THE LICENSE AGREEMENT, AND SUBJECT TO CIVIL AND CRIMINAL PENALTIES THEREUNDER.

lighting systems installed in an addition. However, the exception gives a break in situations where the portion of luminaires being replaced is relatively small (10 percent) and there is no increase in lighting power.

SECTION C504
REPAIRS

C504.1 General. Buildings and structures, and parts thereof, shall be repaired in compliance with Section C501.3 and this section. Work on nondamaged components that is necessary for the required *repair* of damaged components shall be considered part of the *repair* and shall not be subject to the requirements for *alterations* in this chapter. Routine maintenance required by Section C501.3, ordinary *repairs* exempt from *permit* and abatement of wear due to normal service conditions shall not be subject to the requirements for *repairs* in this section.

Where a building was constructed to comply with ANSI/ASHRAE/IESNA 90.1, repairs shall comply with the standard and need not comply with Sections C402, C403, C404 and C405.

❖ Repairs do not require that the item being repaired be upgraded to meet the requirements for a new code. For instance, replacement of the glass in an existing sash and frame would not require making the window or door meet the fenestration requirements of the code for new construction.

C504.2 Application. For the purposes of this code, the following shall be considered repairs:

1. Glass-only replacements in an existing sash and frame.
2. *Roof repairs*.
3. Air barriers shall not be required for *roof repair* where the repairs to the building do not include *alterations*, renovations or *repairs* to the remainder of the building envelope.
4. Replacement of existing doors that separate conditioned space from the exterior shall not require the installation of a vestibule or revolving door, provided that an existing vestibule that separates a conditioned space from the exterior shall not be removed.
5. *Repairs* where only the bulb, the ballast or both within the existing luminaires in a space are replaced, provided that the replacement does not increase the installed interior lighting power.

❖ This section is intended to list items that have historically been a source of confusion as to whether they were a repair or an alteration. The list is not intended to consist of the only items that constitute a repair. For instance, a damaged door can be replaced by a door of equivalent characteristic to the damaged door.

SECTION C505
CHANGE OF OCCUPANCY OR USE

C505.1 General. Spaces undergoing a change in occupancy that would result in an increase in demand for either fossil fuel or electrical energy shall comply with this code. Where the use in a space changes from one use in Table C405.4.2(1) or C405.4.2(2) to another use in Table C405.4.2(1) or C405.4.2(2), the installed lighting wattage shall comply with Section **C405.4**.

❖ The application of this section is straightforward. However, note that a change in occupancy or use is not necessarily a change in occupancy classification. For instance, if a grocery store was changed to a drugstore, this would constitute a change in occupancy or use, but not a change in occupancy classification, because both a grocery store and a drugstore are mercantile occupancies. This section makes a specific reference to lighting power allowance requirements as these are driven by the use of the space.

INTERNATIONAL CODE COUNCIL®
Copyright © 2015 ICC. ALL RIGHTS RESERVED. Accessed by David Dammon on Jun 21, 2017 12:30:52 PM pursuant to License Agreement with ICC. No further reproduction or distribution authorized. ANY UNAUTHORIZED REPRODUCTION OR DISTRIBUTION IS A VIOLATION OF THE FEDERAL COPYRIGHT ACT AND THE LICENSE AGREEMENT, AND SUBJECT TO CIVIL AND CRIMINAL PENALTIES THEREUNDER.

Chapter 6[CE]: Referenced Standards

General Comments

Chapter 6[CE] contains a comprehensive list of standards that are referenced in the Commercial Provisions of the code. It is organized to make locating specific document references easy.

It is important to understand that not every document related to energy conservation is qualified to be a "referenced standard." The International Code Council (ICC)® has adopted a criterion that referenced standards in the *International Codes*® (I-Codes®) and standards intended for adoption into the I-Codes must meet to qualify as a referenced standard. The policy is summarized as follows:

- Code references: The scope and application of the standard must be clearly identified in the code text.
- Standard content: The standard must be written in mandatory language and be appropriate for the subject covered. The standard cannot have the effect of requiring proprietary materials or prescribing a proprietary testing agency.
- Standard promulgation: The standard must be readily available and developed and maintained in a consensus process such as those used by ASTM or ANSI.

The ICC Code Development Procedures, CDP 28, of which the standards policy is a part, are updated periodically. A copy of the latest version can be obtained from the ICC offices.

Once a standard is incorporated into the code through the code development process, it becomes an enforceable part of the code. When the code is adopted by a jurisdiction, the standard also is part of that jurisdiction's adopted code. It is for this reason that the criteria were developed. Compliance with this policy means that documents incorporated into the code are developed through the use of a consensus process, are written in mandatory language and do not mandate the use of proprietary materials or agencies. The requirement for a standard to be developed through a consensus process means that the standard is representative of the most current body of available knowledge on the subject as determined by a broad range of interested or affected parties without dominance by any single interest group. A true consensus process has many attributes, including but not limited to:

- An open process that has formal (published) procedures allowing for the consideration of all viewpoints.
- A definitive review period that allows for the standard to be updated and/or revised.
- A process of notification to all interested parties.
- An appeals process.

Many available documents related to mechanical system design and installation and construction, though useful, are not "standards" and are not appropriate for reference in the code. Often, these documents are developed or written with the intention of being used for regulatory purposes and are unsuitable for use as a standard because of extensive use of recommendations, advisory comments and nonmandatory terms. Typical examples include installation instructions, guidelines and practices.

The objective of ICC's standards policy is to provide regulations that are clear, concise and enforceable; thus the requirement for standards to be written in mandatory language. This requirement is not intended to mean that a standard cannot contain informational or explanatory material that will aid the user of the standard in its application. When the standard's promulgating agency wants such material to be included, however, the information must appear in a nonmandatory location, such as an annex or appendix, and be clearly identified as not being part of the standard.

Overall, standards referenced by the code must be authoritative, relevant, up to date and, most important, reasonable and enforceable. Standards that comply with the ICC's standards policy fulfill these expectations.

Purpose

As a performance-based code, the *International Energy Conservation Code*® (IECC®) contains numerous references to documents that are used to regulate materials and methods of construction. The references to these documents within the code text consist of the promulgating agency's acronym and its publication designation (for example, ASTM C 90) and a further indication that the document being referenced is the one that is listed in this chapter. This chapter contains all of the information that is necessary to identify the specific referenced document. Included is the following information on a document's promulgating agency (see Commentary Figure 6[CE]):

- The promulgating agency (the agency's title).
- The promulgating agency's acronym.
- The promulgating agency's address.

INTERNATIONAL CODE COUNCIL®
Copyright © 2015 ICC. ALL RIGHTS RESERVED. Accessed by David Dammon on Jun 21, 2017 12:30:52 PM pursuant to License Agreement with ICC. No further reproduction or distribution authorized. ANY UNAUTHORIZED REPRODUCTION OR DISTRIBUTION IS A VIOLATION OF THE FEDERAL COPYRIGHT ACT AND THE LICENSE AGREEMENT, AND SUBJECT TO CIVIL AND CRIMINAL PENALTIES THEREUNDER.

For example, a reference to ASTM E 283 indicates that this document can be found in Chapter 6[CE] under the heading ASTM. The specific standards designation is E 283. For convenience, these designations are listed in alphanumeric order. This chapter identifies that ASTM E 283 is titled *Test Method for Determining the Rate of Air Leakage Through Exterior Windows, Curtain Walls and Doors Under Specified Pressure Differences Across the Specimen*, the applicable edition (i.e., its year of publication) is 2004 and it is referenced in numerous sections of the code.

This chapter will also indicate when a document has been discontinued or replaced by its promulgating agency. When a document is replaced by a different one, a note will appear to tell the user the designation and title of the new document.

The key aspect of the manner in which standards are referenced by the code is that a specific edition of a specific standard is clearly identified. In this manner, the requirements necessary for compliance can be readily determined. The basis for code compliance is, therefore, established and available on an equal basis to the building official, contractor, designer and owner.

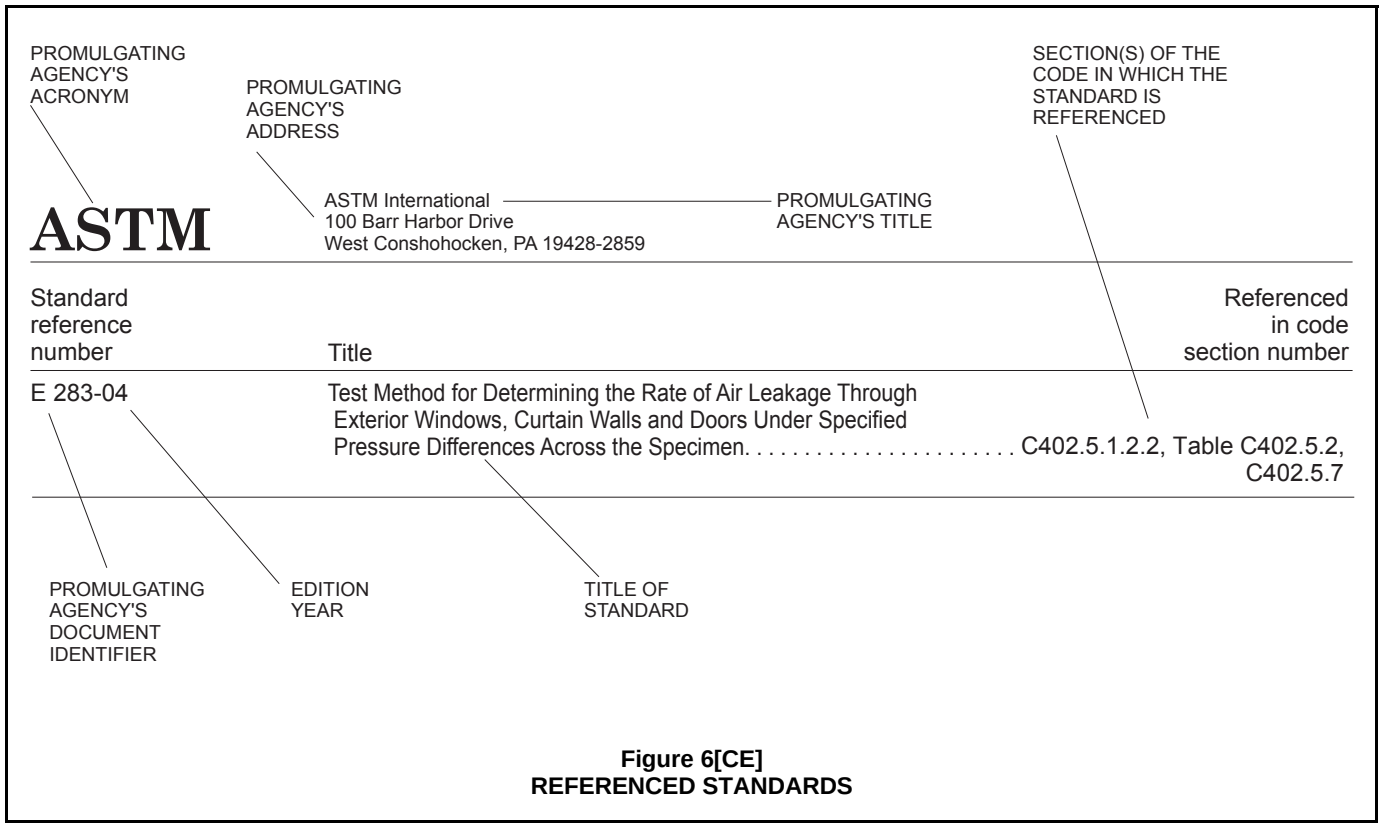

Figure 6[CE]
REFERENCED STANDARDS

INTERNATIONAL CODE COUNCIL®
Copyright © 2015 ICC. ALL RIGHTS RESERVED. Accessed by David Dammon on Jun 21, 2017 12:30:52 PM pursuant to License Agreement with ICC. No further reproduction or distribution authorized. ANY UNAUTHORIZED REPRODUCTION OR DISTRIBUTION IS A VIOLATION OF THE FEDERAL COPYRIGHT ACT AND THE LICENSE AGREEMENT, AND SUBJECT TO CIVIL AND CRIMINAL PENALTIES THEREUNDER.

This chapter lists the standards that are referenced in various sections of this document. The standards are listed herein by the promulgating agency of the standard, the standard identification, the effective date and title, and the section or sections of this document that reference the standard. The application of the referenced standards shall be as specified in Section 106.

AAMA

American Architectural Manufacturers Association
1827 Walden Office Square
Suite 550
Schaumburg, IL 60173-4268

Standard reference number	Title	Referenced in code section number
AAMA/WDMA/CSA 101/I.S.2/A C440—11	North American Fenestration Standard/ Specifications for Windows, Doors and Unit Skylights	Table C402.5.2

AHAM

Association of Home Appliance Manufacturers
1111 19th Street, NW, Suite 402
Washington, DC 20036

Standard reference number	Title	Referenced in code section number
ANSI/ AHAM RAC-1—2008	Room Air Conditioners	Table C403.2.3(3)
AHAM HRF-1—2007	Energy, Performance and Capacity of Household Refrigerators, Refrigerator-Freezers and Freezers	Table C403.2.14.1

AHRI

Air-Conditioning, Heating, and Refrigeration Institute
2111 Wilson Blvd, Suite 500
Arlington, VA 22201

Standard reference number	Title	Referenced in code section number
ISO/AHRI/ASHRAE 13256-1 (2011)	Water-to-Air and Brine-to-Air Heat Pumps—Testing and Rating for Performance	Table C403.2.3(2)
ISO/AHRI/ASHRAE 13256-2 (2011)	Water-to-Water and Brine-to-Water Heat Pumps —Testing and Rating for Performance	Table C403.2.3(2)
210/240—08 with Addenda 1 and 2	Performance Rating of Unitary Air-Conditioning and Air-Source Heat Pump Equipment	Table C403.2.3(1), Table C403.2.3(2)
310/380—04 (CSA-C744-04)	Standard for Packaged Terminal Air Conditioners and Heat Pumps	Table C403.2.3(3)
340/360—2007 with Addendum 2	Performance Rating of Commercial and Industrial Unitary Air-Conditioning and Heat Pump Equipment	Table C403.2.3(1), Table C403.2.3(2)
365(I-P)—09	Commercial and Industrial Unitary Air-Conditioning Condensing Units	Table C403.2.3(1), Table C403.2.3(6)
390—03	Performance Rating of Single Package Vertical Air-Conditioners and Heat Pumps	Table C403.2.3(3)
400—2001	Liquid to Liquid Heat Exchangers with Addendum 1 and 2	Table C403.2.3(10)
440—2008	Performance Rating of Room Fan Coils	C403.2.10
460—2005	Performance Rating of Remote Mechanical-Draft Air-Cooled Refrigerant Condensers	Table C403.2.3(8)
550/590—2011 With Addendum 1	Performance Rating of Water-Chilling and Heat Pump Water-Heating Packages Using the Vapor Compression Cycle	C403.2.3.1, Table C403.2.3(7)
560—00	Absorption Water Chilling and Water Heating Packages	Table C403.2.3(7)

INTERNATIONAL CODE COUNCIL®
Copyright © 2015 ICC. ALL RIGHTS RESERVED. Accessed by David Dammon on Jun 21, 2017 12:30:52 PM pursuant to License Agreement with ICC. No further reproduction or distribution authorized. ANY UNAUTHORIZED REPRODUCTION OR DISTRIBUTION IS A VIOLATION OF THE FEDERAL COPYRIGHT ACT AND THE LICENSE AGREEMENT, AND SUBJECT TO CIVIL AND CRIMINAL PENALTIES THEREUNDER.

AHRI—continued

1160 (I-P) —09	Performance Rating of Heat Pump Pool Heaters	Table C404.2
1200-2010	Performance Rating of Commercial Refrigerated Display Merchandisers and Storage Cabinets	C403.2.14, Table C403.2.14(1), Table C403.2.14(2)

AMCA

Air Movement and Control Association International
30 West University Drive
Arlington Heights, IL 60004-1806

Standard reference number	Title	Referenced in code section number
205—12	Energy Efficiency Classification for Fans	C403.2.12.3
220—08 (R2012)	Laboratory Methods of Testing Air Curtain Units for Aerodynamic Performance Rating	C402.5.6
500D—12	Laboratory Methods for Testing Dampers for Rating	C403.2.4.3

ANSI

American National Standards Institute
25 West 43rd Street
Fourth Floor
New York, NY 10036

Standard reference number	Title	Referenced in code section number
Z21.10.3/CSA 4.3—11	Gas Water Heaters, Volume III—Storage Water Heaters with Input Ratings Above 75,000 Btu per Hour, Circulating Tank and Instantaneous	Table C404.2
Z21.47/CSA 2.3—12	Gas-fired Central Furnaces	Table C403.2.3(4)
Z83.8/CSA 2.6—09	Gas Unit Heaters, Gas Packaged Heaters, Gas Utility Heaters and Gas-fired Duct Furnaces	Table C403.2.3(4)

APSP

The Association of Pool & Spa Professionals
2111 Eisenhower Avenue
Alexandria, VA 22314

Standard reference number	Title	Referenced in code section number
14—11	American National Standard for Portable Electric Spa Efficiency	C404.8

ASHRAE

American Society of Heating, Refrigerating and Air-Conditioning Engineers, Inc.
1791 Tullie Circle, NE
Atlanta, GA 30329-2305

Standard reference number	Title	Referenced in code section number
ASHRAE 127-2007	Method of Testing for Rating Computer	Table C403.2.3(9)
ANSI/ASHRAE/ACCA Standard 183—2007 (RA2011)	Peak Cooling and Heating Load Calculations in Buildings, Except Low-rise Residential Buildings	C403.2.1
ASHRAE—2012	ASHRAE HVAC Systems and Equipment Handbook	C403.2.1
ISO/AHRI/ASHRAE 13256-1 (2011)	Water-to-Air and Brine-to-Air Heat Pumps—Testing and Rating for Performance	Table C403.2.3(2)
ISO/AHRI/ASHRAE 13256-2 (2011)	Water-to-Water and Brine-to-Water Heat Pumps—Testing and Rating for Performance	Table C403.2.3(2)

INTERNATIONAL CODE COUNCIL®
Copyright © 2015 ICC. ALL RIGHTS RESERVED. Accessed by David Dammon on Jun 21, 2017 12:30:52 PM pursuant to License Agreement with ICC. No further reproduction or distribution authorized. ANY UNAUTHORIZED REPRODUCTION OR DISTRIBUTION IS A VIOLATION OF THE FEDERAL COPYRIGHT ACT AND THE LICENSE AGREEMENT, AND SUBJECT TO CIVIL AND CRIMINAL PENALTIES THEREUNDER.

ASHRAE—continued

90.1—2013	Energy Standard for Buildings Except Low-rise Residential Buildings	C401.2, Table C402.1.3, Table C402.1.4, C406.2, Table C407.6.1, C502.1, C503.1, C504.1
140—2011	Standard Method of Test for the Evaluation of Building Energy Analysis Computer Programs	C407.6.1
146—2011	Testing and Rating Pool Heaters	Table C404.2

ASME

American Society Mechanical Engineers
Two Park Avenue
New York, NY 10016-5990

Standard reference number	Title	Referenced in code section number
ASME A17.1/ CSA B44—2013	Safety Code for Elevators and Escalators	C405.9.2

ASTM

ASTM International
100 Barr Harbor Drive
West Conshohocken, PA 19428-2859

Standard reference number	Title	Referenced in code section number
C 90—13	Specification for Load-bearing Concrete Masonry Units	Table C401.3
C 1363—11	Standard Test Method for Thermal Performance of Building Materials and Envelope Assemblies by Means of a Hot Box Apparatus.	C303.1.4.1, Table C402.1.4
C 1371—04a(2010)e1	Standard Test Method for Determination of Emittance of Materials Near Room Temperature Using Portable Emissometers	Table C402.3
C 1549—09	Standard Test Method for Determination of Solar Reflectance Near Ambient Temperature Using A Portable Solar Reflectometer	Table C402.3
D 1003—11e1	Standard Test Method for Haze and Luminous Transmittance of Transparent Plastics	C402.4.2.2
E 283—04	Test Method for Determining the Rate of Air Leakage Through Exterior Windows, Curtain Walls and Doors Under Specified Pressure Differences Across the Specimen	C402.5.1.2.2, Table C402.5.2, C402.5.7
E 408—71(2008)	Test Methods for Total Normal Emittance of Surfaces Using Inspection-meter Techniques	Table C402.3
E 779—10	Standard Test Method for Determining Air Leakage Rate by Fan Pressurization	C402.5
E 903—96	Standard Test Method Solar Absorptance, Reflectance and Transmittance of Materials Using Integrating Spheres (Withdrawn 2005)	Table C402.3
E 1677—11	Standard Specification for an Air-retarder (AR) Material or System for Low-rise Framed Building Walls	C402.5.1.2.2
E 1918—06	Standard Test Method for Measuring Solar Reflectance of Horizontal or Low-sloped Surfaces in the Field	Table C402.3
E 1980—11	Standard Practice for Calculating Solar Reflectance Index of Horizontal and Low-sloped Opaque Surfaces	Table C402.3, C402.3.2
E 2178—13	Standard Test Method for Air Permanence of Building Materials	C402.5.1.2.1
E 2357—11	Standard Test Method for Determining Air Leakage of Air Barriers Assemblies	C402.5.1.2.2

CRRC

Cool Roof Rating Council
449 15th Street, Suite 200
Oakland, CA 94612

Standard reference number	Title	Referenced in code section number
ANSI/CRRC-1—2012	CRRC-1 Standard.	Table C402.3, C402.3.2, C402.3.2.1, Table C407.5.1(1)

INTERNATIONAL CODE COUNCIL®
Copyright © 2015 ICC. ALL RIGHTS RESERVED. Accessed by David Dammon on Jun 21, 2017 12:30:52 PM pursuant to License Agreement with ICC. No further reproduction or distribution authorized. ANY UNAUTHORIZED REPRODUCTION OR DISTRIBUTION IS A VIOLATION OF THE FEDERAL COPYRIGHT ACT AND THE LICENSE AGREEMENT, AND SUBJECT TO CIVIL AND CRIMINAL PENALTIES THEREUNDER.

CSA

CSA Group
8501 East Pleasant Valley
Cleveland, OH 44131-5516

Standard reference number	Title	Referenced in code section number
AAMA/WDMA/CSA 101/I.S.2/A440—11	North American Fenestration Standard/Specification for Windows, Doors and Unit Skylights	Table C402.5.2
CSA B55.1—2012	Test Method for Measuring Efficiency and Pressure Loss of Drain Water Heat Recovery Units	C404.8
CSA B55.2—2012	Drain Water Heat Recover Units	C404.8

CTI

Cooling Technology Institute
P. O. Box 73383
Houston, TX 77273-3383

Standard reference number	Title	Referenced in code section number
ATC 105 (00)	Acceptance Test Code for Water Cooling Tower	Table C403.2.3(8)
ATC 105S—11	Acceptance Test Code for Closed Circuit Cooling Towers	Table C403.2.3(8)
ATC 106—11	Acceptance Test For Mechanical Draft Evaporative Vapor Condensers	Table C403.2.3(8)
STD 201—11	Standard for Certification of Water Cooling Towers Thermal Performances	Table C403.2.3(8)

DASMA

Door and Access Systems Manufacturers Association
1300 Sumner Avenue
Cleveland, OH 44115-2851

Standard reference number	Title	Referenced in code section number
105—92 (R2004)—13	Test Method for Thermal Transmittance and Air Infiltration of Garage Doors	C303.1.3, Table C402.5.2

DOE

U.S. Department of Energy
c/o Superintendent of Documents
1000 Independence Avenue SW
Washington, DC 20585

Standard reference number	Title	Referenced in code section number
10 CFR, Part 430—1998	Energy Conservation Program for Consumer Products: Test Procedures and Certification and Enforcement Requirement for Plumbing Products; and Certification and Enforcement Requirements for Residential Appliances; Final Rule	Table C403.2.3(4), Table C403.2.3(5), Table C404.2
10 CFR, Part 430, Subpart B, Appendix N—1998	Uniform Test Method for Measuring the Energy Consumption of Furnaces and Boilers	C202
10 CFR, Part 431—2004	Energy Efficiency Program for Certain Commercial and Industrial Equipment: Test Procedures and Efficiency Standards; Final Rules	Table C403.2.3(5), C405.7, C405.8, Table C405.8
10 CFR 431 Subpart B App B	Uniform Test Method for Measuring Nominal Full Load Efficiency of Electric Motors	C403.4.4.4, Table C405.8(1), Table C405.8(2), Table C405.8(3), C405.8(4)
NAECA 87—(88)	National Appliance Energy Conservation Act 1987 [(Public Law 100-12 (with Amendments of 1988-P.L. 100-357)]	Tables C403.2.3(1), C403.2.3(2), C403.2.3(4)

INTERNATIONAL CODE COUNCIL®
Copyright © 2015 ICC. ALL RIGHTS RESERVED. Accessed by David Dammon on Jun 21, 2017 12:30:52 PM pursuant to License Agreement with ICC. No further reproduction or distribution authorized. ANY UNAUTHORIZED REPRODUCTION OR DISTRIBUTION IS A VIOLATION OF THE FEDERAL COPYRIGHT ACT AND THE LICENSE AGREEMENT, AND SUBJECT TO CIVIL AND CRIMINAL PENALTIES THEREUNDER.

ICC

International Code Council, Inc.
500 New Jersey Avenue, NW
6th Floor
Washington, DC 20001

Standard reference number	Title	Referenced in code section number
IBC—15	International Building Code®	C201.3, C303.2, C402.5.3, C501.4
IFC—15	International Fire Code®	C201.3, C501.4
IFGC—15	International Fuel Gas Code®	C201.3, C501.4
IMC—15	International Mechanical Code®	C403.2.4.3, C403.2.6, C403.2.6.1, C403.2.6.2, C403.2.7, C403.2.8, C403.2.8.1, C403.2.8.2, C403.2.9, C403.4.4, C403.4.4.6, C406.6, C501.4
IPC—15	International Plumbing Code®	C201.3, C501.4
IMPC—15	International Property Maintenance Code®	C501.4
IPSDC—15	International Private Sewage Disposal Code®	C501.4

IEEE

The Institute of Electrical and Electronic Engineers Inc.
3 Park Avenue
New York, NY 10016

Standard reference number	Title	Referenced in code section number
IEEE 515.1—2012	IEE Standard for the Testing, Design, Installation, and Maintenance of Electrical Resistance Trace Heating for Commercial Applications	C404.6.2

IES

Illuminating Engineering Society
120 Wall Street, 17th Floor
New York, NY 10005-4001

Standard reference number	Title	Referenced in code section number
ANSI/ASHRAE/IESNA 90.1—2013	Energy Standard for Buildings, Except Low-rise Residential Buildings	C401.2, Table C402.1.3, Table C402.1.4, C406.2, C502.1, C503.1, C504.1

ISO

International Organization for Standardization
1, rue de Varembe, Case postale 56, CH-1211
Geneva, Switzerland

Standard reference number	Title	Referenced in code section number
ISO/AHRI/ASHRAE 13256-1 (2011)	Water-to-Air and Brine-to-air Heat Pumps -Testing and Rating for Performance	Table C403.2.3(2)
ISO/AHRI/ASHRAE 13256-2(2011)	Water-to-Water and Brine-to-Water Heat Pumps -Testing and Rating for Performance	C403.2.3(2)

INTERNATIONAL CODE COUNCIL®
Copyright © 2015 ICC. ALL RIGHTS RESERVED. Accessed by David Dammon on Jun 21, 2017 12:30:52 PM pursuant to License Agreement with ICC. No further reproduction or distribution authorized. ANY UNAUTHORIZED REPRODUCTION OR DISTRIBUTION IS A VIOLATION OF THE FEDERAL COPYRIGHT ACT AND THE LICENSE AGREEMENT, AND SUBJECT TO CIVIL AND CRIMINAL PENALTIES THEREUNDER.

NEMA

National Electrical Manufacturers Association
1300 North 17th Street, Suite 1752
Rosslyn, VA 22209

Standard reference number	Title	Referenced in code section number
MG1—1993	Motors and Generators	C202

NFPA

National Fire Protection Association
1 Batterymarch Park
Quincy, MA 02169-7471

Standard reference number	Title	Referenced in code section number
70—14	National Electrical Code	C501.4

NFRC

National Fenestration Rating Council, Inc.
6305 Ivy Lane, Suite 140
Greenbelt, MD 20770

Standard reference number	Title	Referenced in code section number
100—2009	Procedure for Determining Fenestration Products *U*-factors—Second Edition	C303.1.3, C402.2.2
200—2009	Procedure for Determining Fenestration Product Solar Heat Gain Coefficients and Visible Transmittance at Normal Incidence—Second Edition	C303.1.3, C402.4.1.1
400—2009	Procedure for Determining Fenestration Product Air Leakage—Second Edition	Table C402.5.2

SMACNA

Sheet Metal and Air Conditioning Contractors National Association, Inc.
4021 Lafayette Center Drive
Chantilly, VA 20151-1209

Standard reference number	Title	Referenced in code section number
SMACNA—2012	HVAC Air Duct Leakage Test Manual 2nd Edition	C403.2.8.1.3

UL

UL LLC
333 Pfingsten Road
Northbrook, IL 60062-2096

Standard reference number	Title	Referenced in code section number
710—12	Exhaust Hoods for Commercial Cooking Equipment	C403.2.8
727—06	Oil-fired Central Furnaces—with Revisions through April 2010	Table C403.2.3(4)
731—95	Oil-fired Unit Heaters—with Revisions through August 2012	Table C403.2.3(4)
1784—01	Air Leakage Tests of Door Assemblies—with Revisions through July 2009	C402.5.3

INTERNATIONAL CODE COUNCIL®
Copyright © 2015 ICC. ALL RIGHTS RESERVED. Accessed by David Dammon on Jun 21, 2017 12:30:52 PM pursuant to License Agreement with ICC. No further reproduction or distribution authorized. ANY UNAUTHORIZED REPRODUCTION OR DISTRIBUTION IS A VIOLATION OF THE FEDERAL COPYRIGHT ACT AND THE LICENSE AGREEMENT, AND SUBJECT TO CIVIL AND CRIMINAL PENALTIES THEREUNDER.

US-FTC

United States-Federal Trade Commission
600 Pennsylvania Avenue NW
Washington, DC 20580

Standard reference number	Title	Referenced in code section number
CFR Title 16 (May 31, 2005)	*R*-value Rule	C303.1.4

WDMA

Window and Door Manufacturers Association
2025 M Street, NW, Suite 800
Washington, DC 20036-3309

Standard reference number	Title	Referenced in code section number
AAMA/WDMA/CSA 101/I.S.2/A440—11	North American Fenestration Standard/Specification for Windows, Doors and Unit Skylights	Table C402.5.2

INTERNATIONAL CODE COUNCIL®
Copyright © 2015 ICC. ALL RIGHTS RESERVED. Accessed by David Dammon on Jun 21, 2017 12:30:52 PM pursuant to License Agreement with ICC. No further reproduction or distribution authorized. ANY UNAUTHORIZED REPRODUCTION OR DISTRIBUTION IS A VIOLATION OF THE FEDERAL COPYRIGHT ACT AND THE LICENSE AGREEMENT, AND SUBJECT TO CIVIL AND CRIMINAL PENALTIES THEREUNDER.

INTERNATIONAL CODE COUNCIL®
Copyright © 2015 ICC. ALL RIGHTS RESERVED. Accessed by David Dammon on Jun 21, 2017 12:30:52 PM pursuant to License Agreement with ICC. No further reproduction or distribution authorized. ANY UNAUTHORIZED REPRODUCTION OR DISTRIBUTION IS A VIOLATION OF THE FEDERAL COPYRIGHT ACT AND THE LICENSE AGREEMENT, AND SUBJECT TO CIVIL AND CRIMINAL PENALTIES THEREUNDER.

INDEX

A

ACCESSIBLE
Controls C402.2.4, C404.6, C404.9.1, C405.2.2.3, C405.2.3.1
Defined C202
ADDITIONAL EFFICIENCY PACKAGE C406
ADDITIONS
Defined C202
Historic buildings C501.6
Requirements C502
ADMINISTRATION . . . . . Chapter 1
AIR BARRIER C402.5
Access openings C402.5.4
Assemblies C402.5.1.2.2
Compliance options C402.5.1.2
Construction C402.5.1.1
Dampers C402.5.5, C403.2.4.3
Doors other than fenestration C402.5.4
Fenestration . . . . . C402.5.2, Table C402.5.2
Materials C402.5.1.2.1
Penetrations C402.5.1.1
Recessed lighting C402.5.8
Rooms with fuel burning appliances C402.5.3
Testing C402.5
Vestibules C402.5.7
AIR CONDITIONERS
Efficiency requirements . . . . . Tables C403.2.3(1, 3)
AIR CURTAIN
Defined C202
Vestibules C402.5.7
AIR ECONOMIZERS
Defined C202
Requirements C403.3, C403.3.1, C403.3.2, C403.3.3, C403.3.4
AIR INFILTRATION (see AIR BARRIER)
Defined C202
AIR INTAKES AND EXHAUSTS C402.5.5, C403.2.4.3
AIR LEAKAGE—THERMAL ENVELOPE (see AIR BARRIER)
AIR SYSTEM BALANCING C408.2.2.1, C408.2.2.2, C408.2.5.3
ALTERATIONS
Defined C202
Historic buildings C501.6
Replacement fenestration C401.2.1
Requirements C503
ALTERNATE MATERIALS C102
APPROVED
Defined C202
APPROVED AGENCY
Defined C202
Inspections C104.4
AREA-WEIGHTED *U*-FACTOR C402.4.3.4
AUTOMATIC
Defined C202

B

BASEMENT WALLS (see WALL, BELOW GRADE)
Requirements C303.2.1
BELOW-GRADE WALLS (see WALL, BELOW GRADE)
BOARD OF APPEALS C109
Limitations on authority C109.2
Qualifications of members C109.3
BOILERS
Defined C202
Requirements . . . . . Table C403.2.3(5), C403.4.2, C403.4.2.5, C404.2, Table C404.2
Setback controls C403.2.5
Turndown controls C403.4.2.5
BUILDING
Defined C202
Multifamily residential C407.5.2.3
BUILDING COMMISSIONING
Defined C202
Requirements C408
BUILDING ENTRANCE
Defined C202
Exterior lighting . . . . . Table C405.5.2(2)
Lighting controls C405.2.1.1
Vestibules C402.5.7
BUILDING ENVELOPE
Compliance documentation C103.2, C103.2.1
Defined C202
Exemptions C402.1.1, C402.1.2
Insulation C303.1.1
Insulation and fenestration criteria . . . . C402.1.3, Table C402.1.3, C402.1.4, Table C402.1.4
Requirements C402
Performance method C407.3
BUILDING THERMAL ENVELOPE
Air leakage and barriers C402.5

INTERNATIONAL CODE COUNCIL®
Copyright © 2015 ICC. ALL RIGHTS RESERVED. Accessed by David Dammon on Jun 21, 2017 12:30:52 PM pursuant to License Agreement with ICC. No further reproduction or distribution authorized. ANY UNAUTHORIZED REPRODUCTION OR DISTRIBUTION IS A VIOLATION OF THE FEDERAL COPYRIGHT ACT AND THE LICENSE AGREEMENT, AND SUBJECT TO CIVIL AND CRIMINAL PENALTIES THEREUNDER.

Defined C202
Doors C402.4.4
Low-energy buildings C402.1.1
Performance C402.1, C402.1.3, C402.1.4, C402.1.5
Rooms with fuel-burning appliances C402.5.3
Specific insulation C402.2

C

C-FACTOR
Defined C202
Assembly U-, C- or F-factor method . . . . . C402.1.4, Table C402.1.4
CAULKING AND WEATHERSTRIPPING . . . C402.5.1.1, C402.5.1.2.1, C402.5.1.2.2, C402.5.3, C402.5.4, C402.5.6, C402.5.8
CHANGE OF OCCUPANCY C501.4, C505
CHILLERS . . . . Table C403.2.3(7), Table C407.5.1(4)
Positive displacement chilling packages C403.2.3.2
Water-cooled centrifugal chiller packages . . . . . C403.2.3.1, Table C403.2.3(7), Table C407.5.1(5)
CIRCULATING HOT WATER SYSTEM
Defined C202
Requirements C404.6.1, C404.6.3
CIRCULATING PUMPS C403.4.2.3
CIRCULATING SYSTEMS C403.4.2.3, C404.6
CLIMATE TYPES
Defined . . . . . Table C301.3(1)
CLIMATE ZONES
Defined C202
Established . . . . . C301, Figure C301.1, Table C301.1
By state or territory . . . Figure C301.1, Table C301.1
International climate zones . . . . . C301.3, Table C301.3(1), Table C301.3(2)
Warm humid . . . . . C301.2, Table C301.2, C301.3.1
Tropical C301.4
CODE OFFICIAL
Approval of alternate methods C102
Defined C202
Examination of construction documents C103.3
Inspections C104
COEFFICIENT OF PERFORMANCE (COP)
Defined C202
Requirements . . . . . Table C403.2.3(2), Table C403.2.3(7)
COMMERCIAL BUILDINGS
Compliance . . . . . C101.2, C101.4.1, C101.5, C401.1, C401.2, Chapter 5
Defined C202
Total building performance C407
COMMISSIONING C408
COMPLIANCE AND ENFORCEMENT
General C101.5
Existing buildings C501.4
COMPRESSOR (REFRIGERATION) SYSTEMS C403.5.2
COMPONENT PERFORMANCE APPROACH C402.1.5
COMPUTER ROOM
Air conditioning . . . . . Table C403.2.3(9)
Defined C202
CONDENSING UNITS
Defined C202
Efficiency requirements . . . . . Tables C403.2.3(1, 6)
CONDITIONED FLOOR AREA
Defined C202
Renewable energy C406.5
CONDITIONED SPACE
Defined C202
Change from nonconditioned or low energy C503.2
Roof solar reflectance C402.3
Rooms containing fuel-burning appliances C402.5.3
CONSTRUCTION DOCUMENTS C103
Amended C103.4
Approval C103.3.1
Examination C103.3
Information required C103.2
Phased approvals C103.3.3
Previous approvals C103.3.2
Retention C103.5
Revocation C104.7.1
CONTINUOUS AIR BARRIER
Defined C202
Required C402.5.1
CONTINUOUS INSULATION
Defined C202
Requirements . . . . . C402.1.3, Table C402.1.3, C402.2.1, C402.2.3, C402.2.4
CONTROLS
Capabilities . . . C403.2.2, C403.2.4.1, C403.2.4.1.2, C403.2.4.2.1, C403.2.4.2.2, C403.2.6.1, C403.4.2.3.1, C403.4.2.6, C403.4.3, C404.6, 404.7
Chilled water plants C403.4.2.6
Economizers . . . . . C403.3, C403.3.1, C403.3.3.2, C403.3.3.3, Table C403.3.3.3

INTERNATIONAL CODE COUNCIL®
Copyright © 2015 ICC. ALL RIGHTS RESERVED. Accessed by David Dammon on Jun 21, 2017 12:30:52 PM pursuant to License Agreement with ICC. No further reproduction or distribution authorized. ANY UNAUTHORIZED REPRODUCTION OR DISTRIBUTION IS A VIOLATION OF THE FEDERAL COPYRIGHT ACT AND THE LICENSE AGREEMENT, AND SUBJECT TO CIVIL AND CRIMINAL PENALTIES THEREUNDER.

Energy recovery systems C403.2.7
Fan speed. C403.4.1, C403.4.1.1, C403.4.3, C403.2.12, C403.2.12.1
Freeze protection system C403.2.4.6
Glazing C402.4.3.3
Heat pump C403.2.4.1.1, C403.4.2.3
Heating and cooling C403.2.2, C403.2.4, C403.3.1, C403.4
Hot water system C404.6
Humidity C403.2.4.1, C403.2.7, C403.3.1
HVAC C403.2.4, C403.2.12, C408.2.3.2
Hydronic systems C403.4.2
Lighting C402.4, C402.4.1.1, C402.4.1.2, C402.4.2.1, C402.4.3.1, C405.2, C405.5.1
Lighting, digital C406.4
Off hour. C403.2.4.2
Service water heating C403.4.6, C404.5, C404.6
Shutoff dampers . . . . . C403.2.4.3, C 403.4.4
Snow melt system C403.2.4.5
Temperature C403.2.4.1, C403.2.4.2, C403.2.4.2.1, C403.2.4.2.2, C403.2.4.2.3, C403.2.4.3 C403.4.2
Three-pipe system C403.4.2.1
Two-pipe changeover system. C403.4.2.2
Variable air volume systems. . . . C403.4.4, C403.5.5
Ventilation C403.2.6

COOLING SYSTEMS
Hot gas bypass limitation C403.4.6

COOLING TOWER C403.4.3.3, C403.4.3.4

COOLING WITH OUTDOOR AIR C403.3.1

CRAWL SPACE WALLS
Defined C202
Requirements C303.2.1

CURTAIN WALL
Defined C202
Air leakage of fenestration . . . . . Table C402.5.2

D

DAMPERS C402.5.5, C403.2.4.3

DAYLIGHT RESPONSIVE CONTROL
Defined C202
Required C402.4.1.1, C402.4.1.2, C402.4.2.1, C402.4.3.1, C402.4.3.2, C405.2.3.1

DAYLIGHT ZONE C405.2.3.2, C405.2.3.3
Defined C202
Under skylights . . . C402.4.1.2, C402.4.2, C405.2.2.3

DAYLIGHT ZONE CONTROL. C405.2.3

DEADBAND C403.2.4.1.2, C403.2.4.1.3, C403.4.2.3.1

DEFINITIONS . . . . . Chapter 2

DEGREE DAY COOLING (CDD) . . . . Table C301.3(2)

DEGREE DAY HEATING (HDD). . . . . Table C301.3(2)

DEMAND CONTROL VENTILATION (DCV)
Defined C202
Requirements C403.2.5.1

DEMAND RECIRCULATION WATER SYSTEM
Defined C202
Requirements C404.7

DESIGN CONDITIONS C302

DIRECT EXPANSION (DX) C403.4.1.1

DOORS
Default *U*-factors . . . . . Table C303.1.3(2)
Garage doors C303.1.3
Loading docks. C402.5.6
Opaque C402.2.7
Performance requirements . . . . . Table C402.1.3, Table C402.1.4, C402.4, C402.4.4, 402.5.4
Vestibules C402.5.7

DRAIN WATER HEAT RECOVERY C404.8

DUAL DUCT VAV C403.4.4.2, C403.4.4.3

DUCTS
Defined C202
Insulation. C103.2, C403.2.9, C403.2.9.1, C403.2.9.1.1, C403.2.9.1.2, C403.2.9.1.3
Sealing C103.2, C403.2.9, C403.2.9.1.1, C403.2.9.1.2, C403.2.9.1.3

DUCT SYSTEM
Defined C202
Requirements C403.2.9.1

DWELLING UNIT
Defined C202
Electrical Meter C405.6
Lighting C405.1
Vestibules C402.5.7

DYNAMIC GLAZING
Defined C202
Requirements C402.4.3.3

E

ECONOMIZER
Air . . . . . C403.3.3, Table C403.3(1)
Controls. C403.3.1, C403.4.1.2, C403.4.1.3
Defined C202
Fault detection and diagnostics (FDD) . . . C403.2.4.7
High-limit shutoff control . . . . . C403.3.3.3, Table C403.3.3.3
Requirements C403.3.3, C403.3.4
Water C403.3.4

EFFICIENCY, ADDITIONAL C406

ELECTRICAL METERS C405.6

INTERNATIONAL CODE COUNCIL®
Copyright © 2015 ICC. ALL RIGHTS RESERVED. Accessed by David Dammon on Jun 21, 2017 12:30:52 PM pursuant to License Agreement with ICC. No further reproduction or distribution authorized. ANY UNAUTHORIZED REPRODUCTION OR DISTRIBUTION IS A VIOLATION OF THE FEDERAL COPYRIGHT ACT AND THE LICENSE AGREEMENT, AND SUBJECT TO CIVIL AND CRIMINAL PENALTIES THEREUNDER.

ELECTRICAL MOTORS. C405.8
ELECTRICAL POWER AND LIGHTING C405
ELECTRICAL TRANSFORMERS C405.7
ELEVATOR POWER C405.9.1, C405.9.2
ELEVATOR SHAFTS. C402.5.4, C402.5.5
ENCLOSED SPACE
Defined C202
Under skylights C402.4.2
ENERGY ANALYSIS, ANNUAL
Defined C202
Documentation. C407
Requirements C407
ENERGY COST
Compliance performance. C401.2
Defined C202
Performance basis. C407.3
ENERGY EFFICIENCY RATIO (EER). . . . . .C403.2.3, Tables C403.2.3(1, 2, 3, 6, 7)
ENERGY RECOVERY VENTILATION SYSTEMS
Defined C202
Requirements C403.2.1, C403.2.7
ENERGY SIMULATION TOOL
Defined C202
Requirements/use C101.5.1, C407, C407.2, C407.5
ENTRANCE DOOR
Air leakage. . . . . Table C402.5.2
Defined C202
Thermal performance . . . . . .Table C402.4
ENVELOPE, BUILDING THERMAL
Defined C202
ENVELOPE DESIGN METHODS. C402.1.3, C402.1.4, C402.1.5
EQUIPMENT BUILDINGS C402.1.2
EQUIPMENT EFFICIENCIES. C103.2, C403.2.3, C403.3.1, C403.4.1, C404.2
EQUIPMENT PERFORMANCE REQUIREMENTS C403.2.3
Boilers . . . . . .Table C403.2.3(5)
Condensing units. . . . . .Table C403.2.3(6)
Economizer exception . . . . . Tables C403.3.1(1-6)
Heat rejection equipment. . . . . .Table C403.2.3(8)
Packaged terminal air conditioners and heat pump. . . . . .Table C403.2.3(3)
Unitary air conditioners and condensing units. . . . . .Table C403.2.3(1)
Unitary and applied heat pumps . .Table C403.2.3(2)
Warm air duct furnaces and unit heaters. . . . . .Table C403.2.3(4)
Warm air furnaces . . . . . .Table C403.2.3(4)
Warm air furnaces/air-conditioning units . . . . . .Table C403.2.3(4)
Water chilling packages, standard . . . . . .Table C403.2.3(7)
Water heating. . . . . Table C404.2, C404.2.1
EQUIPMENT ROOM
Defined. C202
Lower power allowance . . . . . .Table C405.5.2(2)
ESCALATORS C405.9.2
EXEMPT BUILDINGS. C401.1.1, C402.1.2
EXHAUSTS. C402.5.5
EXIT SIGNS C405.2, C405.3, C405.4.1
EXISTING BUILDINGS. . . . . Chapter 5
EXTERIOR LIGHTING C405.2.5, C405.5
EXTERNAL SHADING . . . . . .Table C407.5.1(1)
EXTERIOR WALLS
Defined. C202
Thermal performance. C402, C402.2.3

F

F–FACTOR
Defined. C202
Assembly U-, C- or F-factor method . . . . . .C402.1.4, Table C402.1.4
FAN BRAKE HORSEPOWER (BHP)
Allowable C403.2.12
Defined. C202
FAN EFFICIENCY GRADE (FEG)
Defined. C202
Requirements. C403.2.12.3
FAN FLOOR HORSEPOWER C403.2.12.1
FAN POWER LIMITATION. . . . . Tables C403.2.12.1(1, 2)
FAN SYSTEM BHP
Allowable C403.2.12.1
Defined. C202
FAN SYSTEM DESIGN CONDITIONS
Allowable C403.2.12.2
Defined. C202
FAN SYSTEM MOTOR NAMEPLATE HP
Defined. C202
Requirements. C403.2.12
FAULT DETECTION & DIAGNOSTICS (FDD)
Economizers C403.2.4.7
FEES. C107
Refunds C107.5
Related fees. C107.4
Schedule of permit fees C107.2
FENESTRATION (see also Doors). C303.1.3, C402.4
Air leakage (infiltration) rate . . . . . C402.5.2, Table C402.5.2
Defined. C202

INTERNATIONAL CODE COUNCIL®
Copyright © 2015 ICC. ALL RIGHTS RESERVED. Accessed by David Dammon on Jun 21, 2017 12:30:52 PM pursuant to License Agreement with ICC. No further reproduction or distribution authorized. ANY UNAUTHORIZED REPRODUCTION OR DISTRIBUTION IS A VIOLATION OF THE FEDERAL COPYRIGHT ACT AND THE LICENSE AGREEMENT, AND SUBJECT TO CIVIL AND CRIMINAL PENALTIES THEREUNDER.

Maximum area C402.4.1, C402.4.1.2
Rating and labeling C303.1.3, C402.1.3
Skylights C402.4.1.2, C402.4.2, C402.4.2.1, C402.4.2.2, C402.4.3, C502.2.2, C503.3.3
Solar heat gain (SHGC) . . . . C402.4.3, Table C402.4
Vertical . . . . . .C402.1, C402.4.1.1, C402.4.3, Table C402.4, C502.2.1, C503.3.2
FENESTRATION PRODUCT, FIELD-FABRICATED
Defined C202
Air leakage C402.5.2
FENESTRATION PRODUCT, SITE-BUILT
Defined C202
FLOOR AREA, NET
Defined C202
Fenestration increase C402.4.1.1
FLOORS
Slab on grade C402.2.5
Thermal properties C402.2.4
FREEZE PROTECTION SYSTEMS C403.2.4.6
FURNACE EFFICIENCY . . . . . Table C403.2.3(4)

G

GENERAL LIGHTING
Additional lighting C405.4.2.1.1
Daylight controls C405.2.3
Defined C202
Interior lighting power C405.4.1
GENERAL PURPOSE ELECTRIC MOTORS
Defined C202
GREENHOUSE
Defined C202
Building envelope C402.1.1
GUESTROOMS (see SLEEPING UNIT)
GLAZING AREA
Default fenestration *U*-factors . . . . Table C303.1.3(1)
Dynamic C402.4.3.3

H

HAZE FACTOR C402.4.2.2
HEAT PUMP . . . .Tables C403.2.3(2, 3), C403.2.4.1.1, C403.4.2.3
HEAT RECOVERY
Drain water C404.8, C406.7.1
Economizer exemption C403.3
Kitchen exhaust C403.2.8
Service water C403.4.5
HEAT REJECTION EQUIPMENT . . . . . C403.4.3, Table C403.2.3(8)
HEAT TRACE SYSTEMS C404.6.2
HEAT TRANSFER EQUIPMENT . . . . . Table C403.2.3(9)
HEAT TRAPS
Defined C202
Required C404.3, C404.4
HEATED SLAB
Defined C202
Insulation . . . . . Table C402.1.3, Table C402.1.4, C402.2.6
HEATING AND COOLING LOADS C302.1, C403.2.1, C403.2.2, C403.2.3, C403.2.4.1.1, C403.3
HEATING OUTSIDE A BUILDING C403.2.13
HIGH-SPEED DOOR
Air leakage . . . . . Table C402.5.2
Defined C202
HISTORIC BUILDINGS
Defined C202
Compliance C501.6
HOT GAS BYPASS . . . . . C403.4.6, Table C403.4.6
HOT WATER C404.2, C404.6
Efficient delivery C404.5
Piping insulation C403.2.10, C404.4
System controls C403.4.5, C404.6
HUMIDISTAT
Defined C202
Requirements C403.2.4.1, C403.2.7
HVAC EQUIPMENT
Automatic setback and shutdown C403.2.4.2.2
Automatic start capabilities C403.2.4.2.3
Increased efficiency C406.2
Performance requirements C403.2.3
Supply-air temperature reset C403.4.4.5
System map zones . . . . . .Table C407.5.1(2), C407.5.2.1
HVAC SYSTEMS C403.2.11, C408.2
Manuals C408.2.5.2
Plan C408.2.1
Report C408.2.4, C408.2.4.1, C408.2.4.2, C408.2.5.4
HYDRONIC HEAT PUMP SYSTEMS C403.4.2.3

I

ICE MELT SYSTEMS C403.2.4.5
IDENTIFICATION (MATERIALS, EQUIPMENT AND SYSTEM) C303.1

INTERNATIONAL CODE COUNCIL®
Copyright © 2015 ICC. ALL RIGHTS RESERVED. Accessed by David Dammon on Jun 21, 2017 12:30:52 PM pursuant to License Agreement with ICC. No further reproduction or distribution authorized. ANY UNAUTHORIZED REPRODUCTION OR DISTRIBUTION IS A VIOLATION OF THE FEDERAL COPYRIGHT ACT AND THE LICENSE AGREEMENT, AND SUBJECT TO CIVIL AND CRIMINAL PENALTIES THEREUNDER.

INDIRECTLY CONDITIONED SPACE (see CONDITIONED SPACE)
INFILTRATION (air leakage) (see AIR BARRIER)
Defined C202
INSPECTIONS C104
Inspection agencies C104.4
INSULATED SIDING C303.1.4.1
INSULATION
Continuous insulation . . . C402.1.3, Table C402.1.3, C402.2.1, C402.2.2
Duct C403.2.9
Identification. C303.1, C303.1.2
Installation C303.1.1, C303.1.1.1, C303.1.2, C303.2
Mechanical system piping C403.2.10
Piping. C404.4
Plenum. C403.2.9
Product rating C303.1.4
Protection of exposed foundation C303.2.1
Protection of piping insulation C403.2.10.1
Radiant heating systems C402.2.6
Requirements . . . . . C402.1.3, Table C402.1.3, C402.2 through C402.2.6
INTEGRATED PART LOAD VALUE (IPLV)
Defined C202
Requirements . . . . . Tables C403.2.3(6, 7), C403.2.3.1, Table 403.3(2)
INTERIOR LIGHTING POWER C405.4, C405.4.2

K

KITCHEN EXHAUST . . . . . .C403.2.8, Table C403.2.8

L

LABELED
Dampers C403.2.4.3
Defined C202
Fans. C403.2.12.3
Glazing, skylights. C402.2.2, C402.4.2.4, C402.5.2
HVAC equipment. . . . . .Table C403.2.3(3)
Lighting C402.5.8, C405.4.1
Requirements . . . . . .C303.1.3, C303.3, Table C403.2.3(3)
LIGHTING POWER
Additional lighting. C405.4.2.2.1, C405.5.1
Design procedures. C405.4.2, C405.4.2.1, C405.4.2.2
Exterior connected. . . . . .C405.5, C405.5.1, Tables C405.5.1(1, 2)
Interior connected . . . . C405.4, C405.4.1, C405.4.2, Tables C405.4.2(1, 2), C406.3
Reduced lighting power density C406.3
LIGHTING SYSTEMS. C405, C406.3
Controls, exterior . . . . . C405.2.5, Tables C405.5.1(1, 2), C405.5.1
Controls, interior. . . C405.2.2, Tables C405.4.2(1, 2), C405.4, C405.4.1, C405.4.2, C406.4
Daylight responsive C405.2.3, C405.2.3.1
Dwelling and sleeping units C405.1, C405.2.2, C405.2.3, C405.2.4, C405.4.1
Existing buildings C502.1, C502.2.6, C503.1, C503.6, 504.1
Light reduction C405.2.2.2
Occupant sensor controls C405.2.1, C405.2.1.1, C405,2.1.2
Recessed C402.5.8
Retail display C405.4.2.2.1
Specific applications. C405.2.4
Time switch controls. C405.2.2, C405.2.2.1
LINER SYSTEM (Ls)
Defined. C202
Insulation . . . . . Table C402.1.3
LISTED
Defined. C202
Kitchen exhaust hoods. C403.2.8
Skylights. C402.2.2
LOADING DOCK WEATHERSEALS C402.5.6
LOW-ENERGY BUILDINGS. C402.1.1
LOW-SLOPED ROOF
Defined. C202
Roof solar reflectance C402.3
LUMINAIRE
Controls C405.2, C405.2.1, C405.2.2, C405.2.3, C405.2.4
Sealed C402.5.8
Wattage C405.4.1, C405.5.1

M

MAINTENANCE
General C501.2, C501.3
Instructions for equipment and systems. C303.3
Owner responsibility. C501.3
MANUALS C101.5.1
Defined. C202
MASS
Floor. . . . . .Table C402.1.3, Table C402.1.4
Wall C402.2.3
MATERIALS AND EQUIPMENT C303

INTERNATIONAL CODE COUNCIL®
Copyright © 2015 ICC. ALL RIGHTS RESERVED. Accessed by David Dammon on Jun 21, 2017 12:30:52 PM pursuant to License Agreement with ICC. No further reproduction or distribution authorized. ANY UNAUTHORIZED REPRODUCTION OR DISTRIBUTION IS A VIOLATION OF THE FEDERAL COPYRIGHT ACT AND THE LICENSE AGREEMENT, AND SUBJECT TO CIVIL AND CRIMINAL PENALTIES THEREUNDER.

MECHANICAL SYSTEMS AND EQUIPMENT C403
Existing buildings C501.5, C502.1, C502.2.3, C503.4, C504
MECHANICAL VENTILATION C403.1, C403.2.6
METERS, ELECTRICAL C405.6
MOTOR NAMEPLATE HORSEPOWER C403.2.12.2
Efficiency C405.8
MOVING WALKWAYS C405.9.2, C405.9.3
MULTIFAMILY RESIDENTIAL BUILDINGS C407.5.2.3
MULTIPLE ZONE SYSTEMS C403.4, C403.4.4, C403.4.4.5

N

NAMEPLATE HORSEPOWER
Allowable C403.2.12
Defined C202
NET FLOOR AREA (see FLOOR AREA, NET)
NONCONDITIONED SPACE
Alterations C503.2
NONSTANDARD PART LOAD VALUE
Defined C202

O

OCCUPANCY
Complex HVAC systems C403.4.4
Compliance C101.4, C101.5
Lighting power allowances . . . . . C405.4.2, C405.4.2.1, C405.2.2, Tables C405.4.2(1, 2)
Mixed occupancies C101.4.1
OCCUPANT SENSOR CONTROL
Commissioning C408.3.1.1
Defined C202
Lighting C406.4
Outdoor heating C403.2.13
Required C405.2.1, C405.2.1.1, C405.2.1.2
OFF-HOUR, CONTROLS C403.2.4.3, C405.2.2.1
ON-SITE RENEWABLE ENERGY
Defined C202
Efficiency package C406.5
OPAQUE AREAS . . . . . C402.1, Table C402.1.3, Table C402.1.4
OPAQUE DOORS
Defined C202
Regulated . . . . . Table C402.1.3, C402.1.4, C402.4.4
OPERATING & MAINTENANCE MANUAL C408.2.5.2
ORIENTATION
Daylight Responsive controls C405.2.3.1
Fenestration . . . . . Table C402.4
Thermostatic controls C403.2.4.1, C407.5.2.2

P

PACKAGED TERMINAL AIR CONDITIONER (PTAC)
Requirements . . . . . Table C403.2.3(3)
PACKAGED TERMINAL HEAT PUMP
Requirements . . . . . Table C403.2.3(3)
PARKING GARAGE VENTILATION C403.2.6.2
PERFORMANCE ANALYSIS C407
PERMIT (see FEES)
Work commencing before permit C107.3
PIPE INSULATION . . . . . C403.2.10, Table C403.2.10, C404.4
PLANS AND SPECIFICATIONS C103
PLENUMS
Insulation and sealing C403.2.9
POOLS C404.9
Controls C404.9.1, 404.9.2
Covers C404.9.3
Existing buildings C502.2.5
POWER DENSITY C406.3
POWERED ROOF/WALL VENTILATORS
Defined C202
Fan efficiency exemption C403.2.12.3
PROPOSED DESIGN
Defined C202
Requirements C407
PUBLIC LAVATORY C404.5
PUMPING SYSTEMS C403.4.2.3, C404.6, C408.2.2.2

R

***R*-VALUE**
Above-grade walls C402.2.3
Defined C202
Insulation component method . . . . . C402.1.3, Table C402.1.3
Roof assemblies C402.2.2
Slabs on grade C402.2.5
Steel stud walls . . . . . C402.1.4.1, Table C402.1.4.1
RADIANT HEATING SYSTEM
Defined C202
Insulation C403.3.6

INTERNATIONAL CODE COUNCIL®
Copyright © 2015 ICC. ALL RIGHTS RESERVED. Accessed by David Dammon on Jun 21, 2017 12:30:52 PM pursuant to License Agreement with ICC. No further reproduction or distribution authorized. ANY UNAUTHORIZED REPRODUCTION OR DISTRIBUTION IS A VIOLATION OF THE FEDERAL COPYRIGHT ACT AND THE LICENSE AGREEMENT, AND SUBJECT TO CIVIL AND CRIMINAL PENALTIES THEREUNDER.

READILY ACCESSIBLE
Defined C202
Lighting controls. C405.2.2.3, C405.2.3.1
RECOOLING C403.4.4
REFERENCED STANDARDS . . . . . C106, Chapter 6
REFRIGERATED WAREHOUSE COOLER
Defined C202
Requirements C403.2.15
REFRIGERATED WAREHOUSE FREEZER
Defined C202
Requirements C403.2.15
REFRIGERATION EQUIPMENT
Performance . . . .C403.2.14, Tables C403.2.14(1, 2)
REGISTERED DESIGN PROFESSIONAL
Commissioning C408
Defined C202
REHEATING. C403.4.5, C403.4.4.5, C403.4.5
RENEWABLE/NONDEPLETABLE ENERGY SOURCES. C406.5
REPAIR
Defined C202
Historic buildings C501.6
Requirements C501.5, C504
REPLACEMENT MATERIALS. C501.5
Replacement fenestration C401.2.1
REROOFING
Defined C202
RESET CONTROL C403.4.4.5
RESIDENTIAL BUILDINGS
Compliance C101.2, C101.4.1, C101.5
Defined C202
ROOF ASSEMBLY
Air barriers C402.5.1.2.1
Defined C202
Fenestration. C402.4.1, C402.4.1.2, C402.4.2, C405.2.3.3
Recover C503.1
Reflectance and emittance options . . . . . .Table C402.3
Repairs C504.1
Replacement C503.3.1
Requirements C303.1.1.1, C402.2.2
Solar reflectance and thermal emittance. C402.3
ROOF RECOVER
Defined C202
Exemption C503.1
ROOF REPAIR
Defined C202
Exemption C504.1
ROOF REPLACEMENT
Defined. C202
Requirements. C503.3.1
ROOFTOP MONITOR
Daylight zones C405.2.3.2
Defined. C202
Skylights required. C402.4.2
ROOF VENTILATORS (see POWERED ROOF/ WALL VENTILATORS)
ROOMS WITH FUEL-BURNING APPLIANCES C402.5.3

S

SATURATED CONDENSING TEMPERATURE
Defined. C202
Refrigeration systems C403.5.1
SCOPE OF CODE C101.2
SCREW LAMP HOLDERS
Defined. C202
Requirements. C405.4.1
SEASONAL ENERGY EFFICIENCY RATIO (SEER). . . . . Tables C403.2.3(1, 2, 3)
SERVICE WATER HEATING
Commissioning. C404.11
Defined. C202
Drain water heat recovery C404.8
Efficiency C404.2.1, 404.5
Existing buildings C502.2.4, C503.5, C504.1
Reduced use C406.7
Requirements. C403.4.5, C404, C404.2, C404.2.1, 404.5, 404.6, 404.7
SETBACK THERMOSTAT C403.2.4.2, C403.2.4.2.1, C403.2.4.2.2
SHADING C402.3, C402.4.3
SHGC (see SOLAR HEAT GAIN COEFFICIENT)
SHUTOFF DAMPERS C402.5.5, C403.2.4.3
SIMULATED PERFORMANCE ALTERNATIVE C407
SIMULATION TOOL (see ENERGY SIMULATION TOOL)
SINGLE ZONE C403.3
SIZING
Equipment and system. C403.2.2
SKYLIGHTS . . . . . .C402.1.5, C402.3, Table C402.4, C402.4.3.1, C402.4.3.2
Additions C502.2.2
Air leakage (infiltration) . . . . . Table C402.5.2
Alterations C503.3.3
Curb insulation C402.2.2
Defined (see Fenestration). C202

INTERNATIONAL CODE COUNCIL®
Copyright © 2015 ICC. ALL RIGHTS RESERVED. Accessed by David Dammon on Jun 21, 2017 12:30:52 PM pursuant to License Agreement with ICC. No further reproduction or distribution authorized. ANY UNAUTHORIZED REPRODUCTION OR DISTRIBUTION IS A VIOLATION OF THE FEDERAL COPYRIGHT ACT AND THE LICENSE AGREEMENT, AND SUBJECT TO CIVIL AND CRIMINAL PENALTIES THEREUNDER.

Haze factor C402.4.2.2
Lighting controls C402.4.2.1
Maximum area C402.4.1, C402.4.1.2
Minimum area C402.4.2
SLAB-EDGE INSULATION C303.2.1, C402.2.5
SLEEPING UNIT
Defined C202
Lighting C405.1, C405.2.2, C405.2.4, C405.2.3
SMALL ELECTRIC MOTOR
Defined C202
Minimum efficiency C405.8
SNOW MELT AND ICE SYSTEM CONTROLS C403.2.4.5
SOLAR HEAT GAIN COEFFICIENT (SHGC) . . . . C103.2, Table C303.1.3(3), C402.4.1.1, C402.4.3, Table C402.4, C402.4.3.1
Defined C202
Dynamic glazing C402.4.3.3
Replacement products C401.2.1
SPAS C404.9, C404.10
STAIRWAYS . . . . . C402.5.4, C402.5.5, C403.2.4.3, C405.2, C405.2.1.1, Table C405.4.2(2)
STANDARD REFERENCE DESIGN
Defined C202
Requirements . . . . . C407, Tables C407.5.1(1, 3)
STANDARDS, REFERENCED . . . . . C106, Chapter 6
STEEL FRAMING . . . . . Table C402.1.3, Table C402.1.4, C402.1.4.1
STOP WORK ORDER C108
Authority C108.1
Emergencies C108.3
Failure to comply C108.4
Issuance C108.2
STOREFRONT
Defined C202
Glazing . . . . . Table C402.5.2
SUPPLY AIR TEMPERATURE RESET CONTROLS C403.4.5.5
SUSPENDED CEILINGS C402.2.2
SWIMMING POOLS C404.9

T

TEMPERATURE DEAD BAND C403.4.3.3.1
TENANT SPACES C406.1.1
THERMAL CONDUCTANCE (see C-Factor)
THERMAL MASS (see MASS)
THERMAL RESISTANCE (see *R*-VALUE)
THERMAL TRANSMITTANCE (see *U*-FACTOR)
THERMOSTAT
Defined C202
Pools and spa heaters C404.9.1
Requirements C403.2.4, C403.2.4.1, C403.2.4.1.2, C403.2.4.1.3, C403.2.4.2, C403.4.4
Setback capabilities C403.2.4.2
TIME SWITCH CONTROL
Defined C202
Requirements C405.2.2, C405.2.2.1
TOTAL BUILDING PERFORMANCE C407
TOWNHOUSE (see RESIDENTIAL BUILDINGS)
TRANSFORMERS, ELECTRIC C405.7

U

***U*-FACTOR**
Area-weighted *U*-factor fenestration C402.4.3.4
Assembly U-, C- or F-factor method . . . . . C402.1.4, Table C402.1.4
Component performance alternative C402.1.5
Default door . . . . . Table C303.1.3(2)
Default glazed fenestration . . . . . Table C303.1.3(1)
Defined C202
Fenestration . . . . C401.2.1, C402.4.3, Table C402.4
Skylights . . . . . Table C402.4, C402.4.3.2
Steel framing C402.1.4.1

V

VARIABLE AIR VOLUME SYSTEMS (VAV) . . . . . C403.3.2, C403.4.1.2, C403.4.5, C403.4.4.1, C403.4.4.2, C403.4.5.4, C403.4.5.6, Table C407.5.1(3)
VARIABLE REFRIGERANT FLOW SYSTEM
Defined C202
Increased efficiencies C406.2
VENTILATION C403.2.6
Defined C202
Demand controlled ventilation (DCV) C403.2.6.1
Energy recovery system C403.2.7, C406.6
Parking garages C403.2.6.2
VENTILATION AIR
Defined C202
Energy recovery C403.2.7
Fan controls C403.4.1.1
Kitchen exhaust C403.2.8
VERTICAL FENESTRATION (see FENESTRATION)
VESTIBULES C402.5.7
VISIBLE TRANSMITTANCE (VT)
Default glazed fenestration . . . . . Table C303.1.3(3)
Defined C202
Dynamic glazing C402.4.3.3
Increased fenestration C402.4.1.1
Skylights C402.4.2, C405.2.3.3

INTERNATIONAL CODE COUNCIL®
Copyright © 2015 ICC. ALL RIGHTS RESERVED. Accessed by David Dammon on Jun 21, 2017 12:30:52 PM pursuant to License Agreement with ICC. No further reproduction or distribution authorized. ANY UNAUTHORIZED REPRODUCTION OR DISTRIBUTION IS A VIOLATION OF THE FEDERAL COPYRIGHT ACT AND THE LICENSE AGREEMENT, AND SUBJECT TO CIVIL AND CRIMINAL PENALTIES THEREUNDER.

W

WALK-IN COOLER
Defined C202
Requirements C403.2.15, C403.2.16
WALK-IN FREEZER
Defined C202
Requirements C403.2.15, C403.2.16
WALL
Above-grade wall, defined C202
Thermal resistance . . . . . C402.2.3, Table C402.1.3, Table C402.1.4
Below-grade wall, defined C202
Thermal resistance . . . . . Table C402.1.3, Table C402.1.4, C402.1.5
Crawlspace wall, defined C202
Exterior wall, defined C202
Steel framed . . . . . C402.1.4.1, Table C402.1.4.1
WALLS (see EXTERIOR WALLS AND ENVELOPE, BUILDING THERMAL)
WALLS ADJACENT TO UNCONDITIONED SPACE (see BUILDING THERMAL ENVELOPE)
WALL VENTILATORS (see POWERED ROOF/ WALL VENTILATORS)
WATER ECONOMIZER C403.3, C403.3.4, C403.3.4.1, C403.3.4.2
WATER HEATER
Defined C202
Efficiency . . . . . Table C404.2, C404.2.1
WATER HEATING . . . . . C404, Table C404.2
WINDOW AREA (see FENESTRATION and GLAZING AREA)

Z

ZONE (see also CLIMATE ZONES)
Defined C202
Requirements C403.2.4, C403.3, C403.4, C407.5.2.1, C407.5.2.2

INTERNATIONAL CODE COUNCIL®
Copyright © 2015 ICC. ALL RIGHTS RESERVED. Accessed by David Dammon on Jun 21, 2017 12:30:52 PM pursuant to License Agreement with ICC. No further reproduction or distribution authorized. ANY UNAUTHORIZED REPRODUCTION OR DISTRIBUTION IS A VIOLATION OF THE FEDERAL COPYRIGHT ACT AND THE LICENSE AGREEMENT, AND SUBJECT TO CIVIL AND CRIMINAL PENALTIES THEREUNDER.

IECC—RESIDENTIAL PROVISIONS

TABLE OF CONTENTS

CHAPTER 1 SCOPE AND ADMINISTRATION R1-1

PART 1—SCOPE AND APPLICATION. R1-1

Section

R101 Scope and General Requirements. R1-1

R102 Alternate Materials, Design and Methods of Construction and Equipment. R1-4

PART 2—ADMINISTRATION AND ENFORCEMENT R1-5

R103 Construction Documents R1-5

R104 Inspections R1-7

R105 Validity. R1-10

R106 Referenced Standards R1-10

R107 Fees. R1-11

R108 Stop Work Order R1-11

R109 Board of Appeals R1-12

CHAPTER 2 DEFINITIONS R2-1

Section

R201 General R2-1

R202 General Definitions R2-1

CHAPTER 3 GENERAL REQUIREMENTS. R3-1

Section

R301 Climate Zones. R3-2

R302 Design Conditions R3-20

R303 Materials, Systems and Equipment R3-20

CHAPTER 4 RESIDENTIAL ENERGY EFFICIENCY. R4-1

Section

R401 General R4-1

R402 Building Thermal Envelope R4-4

R403 Systems. R4-26

R404 Electrical Power and Lighting Systems R4-31

R405 Simulated Performance Alternative (Performance) R4-31

R406 Energy Rating Index Compliance Alternative R4-43

INTERNATIONAL CODE COUNCIL®

Copyright © 2015 ICC. ALL RIGHTS RESERVED. Accessed by David Dammon on Jun 21, 2017 12:30:52 PM pursuant to License Agreement with ICC. No further reproduction or distribution authorized. ANY UNAUTHORIZED REPRODUCTION OR DISTRIBUTION IS A VIOLATION OF THE FEDERAL COPYRIGHT ACT AND THE LICENSE AGREEMENT, AND SUBJECT TO CIVIL AND CRIMINAL PENALTIES THEREUNDER.

CHAPTER 5 EXISITING BUILDINGS R5-1

Section

R501 General R5-1

R502 Additions R5-2

R503 Alterations R5-4

R504 Repairs R5-6

R505 Change of Occupancy or Use R5-6

CHAPTER 6 REFERENCED STANDARDS R6-1

APPENDIX RA RECOMMENDED PROCEDURE FOR WORST-CASE TESTING OF ATMOSPHERIC VENTING SYSTEMS UNDER R402.4 OR R405 CONDITIONS ≤ 5ACH$_{50}$ RA-1

APPENDIX RB SOLAR-READY PROVISIONS— DETACHED ONE- AND TWO-FAMILY DWELLINGS, MULTIPLE SINGLE-FAMILY DWELLINGS (TOWNHOUSES) RB-1

INDEX . . . . . INDEX R-1

INTERNATIONAL CODE COUNCIL®

Copyright © 2015 ICC. ALL RIGHTS RESERVED. Accessed by David Dammon on Jun 21, 2017 12:30:52 PM pursuant to License Agreement with ICC. No further reproduction or distribution authorized. ANY UNAUTHORIZED REPRODUCTION OR DISTRIBUTION IS A VIOLATION OF THE FEDERAL COPYRIGHT ACT AND THE LICENSE AGREEMENT, AND SUBJECT TO CIVIL AND CRIMINAL PENALTIES THEREUNDER.

Chapter 1 [RE]: Scope and Administration

General Comments

The 2015 edition of the *International Energy Conservation Code*®—Residential Provisions will regulate the design and construction of low-rise residential buildings for efficient energy consumption over their useful life. It includes measures for the thermal envelope, heating, ventilating and air-conditioning (HVAC) systems, and electrical systems of residential buildings up to three stories in height.

Purpose

Though not stated specifically, the code is applicable to all buildings and structures and their components and systems that use energy primarily for human comfort and needs. The code does not regulate the energy for items such as computers or coffee pots. This portion of the code addresses the design of energy-efficient building envelopes and the selection and installation of energy-efficient mechanical, service water heating, electrical distribution and illumination systems and equipment in residential buildings.

PART 1—SCOPE AND APPLICATION

SECTION R101
SCOPE AND GENERAL REQUIREMENTS

R101.1 Title. This code shall be known as the *International Energy Conservation Code* of **[NAME OF JURISDICTION]**, and shall be cited as such. It is referred to herein as "this code."

❖ This section directs the adopting jurisdiction to insert the name of the jurisdiction into the code. Because the IECC is a "model" code, it is not an enforceable document until it is adopted by a jurisdiction or agency that has enforcement powers.

R101.2 Scope. This code applies to *residential buildings* and the building sites and associated systems and equipment.

❖ The code applies to portions of the building thermal envelope that enclose conditioned space, as shown in Commentary Figure R101.2(1). Conditioned space is the area provided with heating or cooling either directly, through a positive heating/cooling supply system (such as registers located in the space), or indirectly through an opening that allows heated or cooled air to communicate directly with the space. For example, a walk-in closet connected to a master bedroom suite may not contain a positive heating supply through a register, but it would be conditioned indirectly by the free passage of heated or cooled air into the space from the bedroom.

A good example of the exception would be an unconditioned garage or attic space. In the case of a garage, if the unconditioned garage area is separated from the conditioned portions of the residence by an assembly that meets the "building envelope" criteria (meaning that the wall between them is insulated), the exterior walls of the garage would not need to be insulated to separate the garage from the exterior climate.

The building thermal envelope consists of the wall, roof/ceiling and floor assemblies that surround the conditioned space. Raised floors over a crawl space or garage, or directly exposed to the outside air are considered to be part of the floor assembly. Walls surrounding a conditioned basement (in addition to surrounding conditioned spaces above grade) are part of the building envelope. The code defines above-grade walls surrounding conditioned spaces as exterior walls. This definition includes walls between the conditioned space and unconditioned garage; roof and basement knee, dormer and gable-end walls; walls enclosing a mansard roof; and basement walls with an average below-grade area that is less than 50 percent of the total basement gross wall area. This definition would not include walls separating an unconditioned garage from the outdoors. The roof/ceiling assembly is the surface where insulation will be installed, typically on top of the gypsum board [see Commentary Figure R101.2(2)].

R101.3 Intent. This code shall regulate the design and construction of buildings for the effective use and conservation of energy over the useful life of each building. This code is intended to provide flexibility to permit the use of innovative approaches and techniques to achieve this objective. This code is not intended to abridge safety, health or environmental requirements contained in other applicable codes or ordinances.

❖ This chapter is broad in its application, yet specific to regulating the use of energy in buildings where that energy is used primarily for human comfort or heating and cooling to protect the contents. In general, the requirements of the code address the design of all

INTERNATIONAL CODE COUNCIL®
Copyright © 2015 ICC. ALL RIGHTS RESERVED. Accessed by David Dammon on Jun 21, 2017 12:30:52 PM pursuant to License Agreement with ICC. No further reproduction or distribution authorized. ANY UNAUTHORIZED REPRODUCTION OR DISTRIBUTION IS A VIOLATION OF THE FEDERAL COPYRIGHT ACT AND THE LICENSE AGREEMENT, AND SUBJECT TO CIVIL AND CRIMINAL PENALTIES THEREUNDER.

building systems that affect the visual and thermal comfort of the occupants, including:

- Lighting systems and controls.
- Wall, roof and floor insulation.
- Windows and skylights.
- Cooling equipment (air conditioners, chillers and cooling towers).
- Heating equipment (boilers, furnaces and heat pumps).
- Pumps, piping and liquid circulation systems.
- Supply and return fans.
- Service hot water systems (kitchens and lavatories).

The chapter is intended to define requirements for the portions of a building and building systems that affect energy use in new construction and to promote the effective use of energy. Where a code application for a specific situation is in question, the authority having jurisdiction for the building should favor the action that will promote the effective use of energy. The code official may also consider the cost of the required action compared to the energy that will be saved over the life of that action.

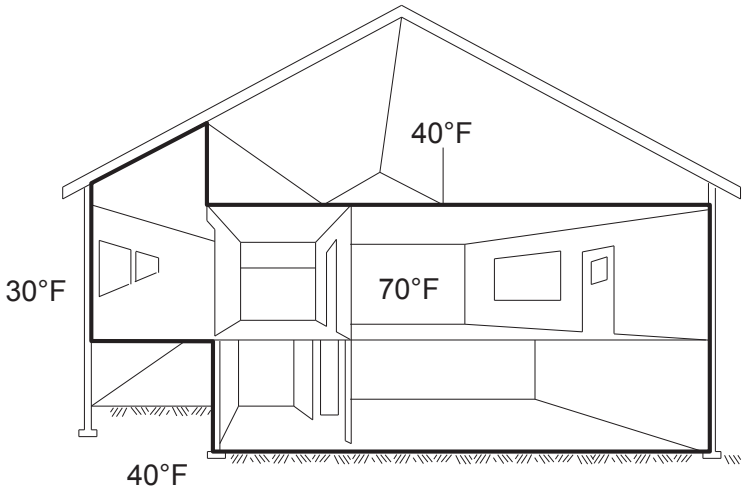

For SI: °C = [(°F) - 32]/1.8.

Figure R101.2(1)
CONDITIONED ENVELOPE

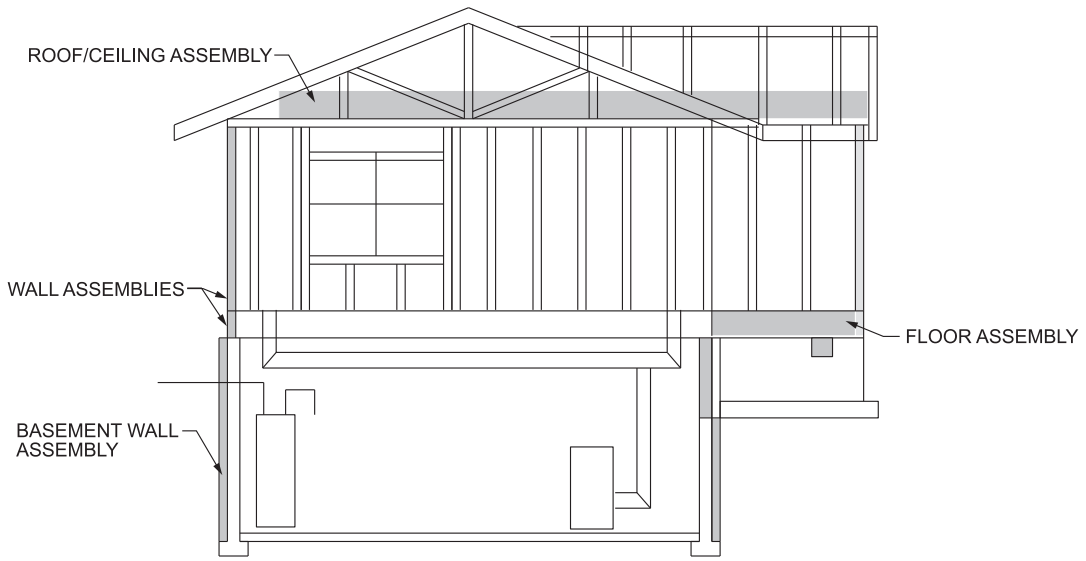

Figure R101.2(2)
BUILDING ENVELOPE

INTERNATIONAL CODE COUNCIL®
Copyright © 2015 ICC. ALL RIGHTS RESERVED. Accessed by David Dammon on Jun 21, 2017 12:30:52 PM pursuant to License Agreement with ICC. No further reproduction or distribution authorized. ANY UNAUTHORIZED REPRODUCTION OR DISTRIBUTION IS A VIOLATION OF THE FEDERAL COPYRIGHT ACT AND THE LICENSE AGREEMENT, AND SUBJECT TO CIVIL AND CRIMINAL PENALTIES THEREUNDER.

This section of the code supports flexibility in application of the code requirements. Although many of the requirements are given in a prescriptive format for ease of use, the code is not intended to stifle innovation—especially innovative techniques that conserve energy. Innovative approaches that lead to energy efficiency should be encouraged, even if the approach is not specifically listed in the code or does not meet the strict letter of the code. This principle should be applied to methods for determining compliance with the code and the building construction techniques used to meet the code.

Any design should first be evaluated to see whether it meets the code requirements directly. If an innovative approach is preferred, the applicant is responsible for demonstrating that the innovative concept promotes energy efficiency. Where the literal code requirements have not been satisfied but the applicant claims to meet the intent, the code official will likely have to exercise professional judgment to determine whether the proposed design meets the intent of the code in the interest of energy efficiency (see commentary, Section R103).

R101.4 Applicability. Where, in any specific case, different sections of this code specify different materials, methods of construction or other requirements, the most restrictive shall govern. Where there is a conflict between a general requirement and a specific requirement, the specific requirement shall govern.

❖ In general, the most restrictive requirement is to apply where there may be different requirements in the code for a specific issue. However, in cases where the code establishes a specific requirement for a certain condition, that requirement is applicable even if it is less restrictive than a general requirement elsewhere in the code.

R101.4.1 Mixed occupancy. Where a building includes both *residential* and *commercial* occupancies, each occupancy shall be separately considered and meet the applicable provisions of the IECC—Commercial Provisions or IECC—Residential Provisions.

❖ A mixed-occupancy building is one that contains both residential and commercial uses (see definitions in Chapter 2 [RE]). Where residential and commercial uses coexist in a building, each occupancy must be evaluated separately. In situations where the majority of the space is one occupancy and only a small portion of the floor is different, such evaluation is sometimes aided by the accessory area requirements found in the IBC. For example, the residential portions of that story must meet the residential requirements of the code unless 90 percent or more of the floor level is commercial, in which case the story in question (inclusive of the 10-percent residential) may, with the code official's approval, be considered commercial.

For example, consider the three-story apartment building in Commentary Figure R101.4.1, with a portion of the first story leased out to a convenience store (a commercial use). The top two stories are clearly residential because they are devoted solely to residential use and the building is not over three stories high. Though not found in the code, the first story could generally be considered all residential if 10 percent or less of the total floor area is occupied by the store. In this case, the entire first floor is subject to the residential portions of the code. When more than 10 percent of the first story is occupied by the store, the first story is considered a mixed occupancy; the portion of the first story occupied by the store is considered commercial and is subject to the applicable commercial requirements in Chapter 4[CE]. The remainder of the first story is considered residential and must meet the residential requirements found in Chapter 4 [RE].

Consider another conceivable situation in which the first story of a four-story building may be one or more retail establishments (or other commercial use). Consider that the remaining stories of this four-story building consist entirely of dwelling units and are classified as residential. This and similar situations can cause confusion over how to apply the code. Is this a commercial building because it is over three stories high, or is it a residential building because it has three stories of dwelling units?

For our current example, the definition of "Residential" makes it clear that the entire building would be considered commercial and be subject to the requirements of Chapter 4[CE]. The approach is based on the fact that the patterns of energy use generally change in buildings four stories or greater in height, and that the code, as well as its predecessor MEC versions, limit residential buildings to a maximum height of three stories above grade. Any structure over three stories is considered a commercial building for purposes of applying the code, regardless of the occupancy classification of the structure. The only exception to this distinction would be single-family or duplex detached residences four stories or greater in height, which is considered rare. See also the definitions and commentary for "Commercial building" and "Residential building" to help clarify the application of the code to mixed-occupancy buildings.

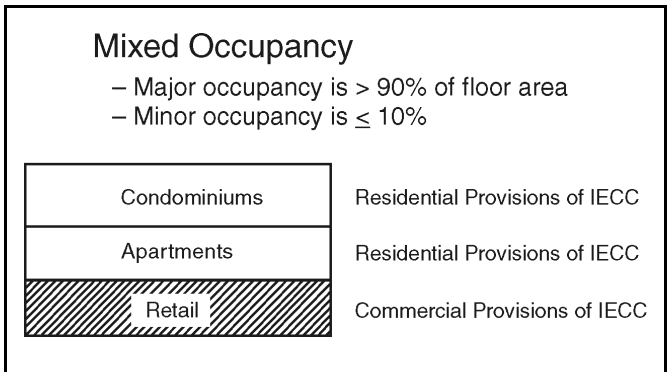

Figure R101.4.1
MIXED OCCUPANCY

INTERNATIONAL CODE COUNCIL®
Copyright © 2015 ICC. ALL RIGHTS RESERVED. Accessed by David Dammon on Jun 21, 2017 12:30:52 PM pursuant to License Agreement with ICC. No further reproduction or distribution authorized. ANY UNAUTHORIZED REPRODUCTION OR DISTRIBUTION IS A VIOLATION OF THE FEDERAL COPYRIGHT ACT AND THE LICENSE AGREEMENT, AND SUBJECT TO CIVIL AND CRIMINAL PENALTIES THEREUNDER.

R101.5 Compliance. *Residential buildings* shall meet the provisions of IECC—Residential Provisions. *Commercial buildings* shall meet the provisions of IECC—Commercial Provisions.

❖ The code contains three alternative design procedures for detached one- and two-family dwellings and residential buildings three stories or less in height. This section provides the scoping to the various sections and methods of compliance in the code.

R101.5.1 Compliance materials. The *code official* shall be permitted to approve specific computer software, worksheets, compliance manuals and other similar materials that meet the intent of this code.

❖ The code is intended to permit the use of innovative approaches and techniques, provided that they result in the effective use of energy. This section simply recognizes that there are many federal, state and local programs as well as computer software that deal with energy efficiency. Therefore, the code simply states that the code official has the authority to accept those methods of compliance, provided that they meet the intent of the code. Some of the easiest examples to illustrate this provision are the REScheck™ and COMcheck™ software put out by the U.S. Department of Energy (DOE). Another example is the ENERGY STAR program.

SECTION R102
ALTERNATIVE MATERIALS, DESIGN AND METHODS OF CONSTRUCTION AND EQUIPMENT

R102.1 General. The provisions of this code are not intended to prevent the installation of any material or to prohibit any design or method of construction not specifically prescribed by this code, provided that any such alternative has been approved. The code official shall be permitted to approve an alternative material, design or method of construction where the *code official* finds that the proposed design is satisfactory and complies with the intent of the provisions of this code, and that the material, method or work offered is, for the purpose intended, at least the equivalent of that prescribed in this code.

❖ This section reinforces Section R101.3, which states that the code is meant to be flexible, as long as the intent of the proposed alternative is to promote the effective use of energy. The code is not intended to inhibit innovative ideas or technological advances. A comprehensive regulatory document such as an energy code cannot envision and then address all future innovations in the industry. As a result, a performance code must be applicable to and provide a basis for the approval of an increasing number of newly developed, innovative materials, systems and methods for which no code text or referenced standards yet exist. The fact that a material, product or method of construction is not addressed in the code is not an indication that the material, product or method is prohibited.

The code official is expected to apply sound technical judgment in accepting materials, systems or methods that, while not anticipated by the drafters of the current code text, can be demonstrated to offer equivalent or better performance. The code regulates new and innovative construction practices while addressing the relative safety of building occupants. The code official is responsible for determining whether a requested alternative provides a level of protection of the public health, safety and welfare equal to that required by the code.

R102.1.1 Above code programs. The *code official* or other authority having jurisdiction shall be permitted to deem a national, state or local energy-efficiency program to exceed the energy efficiency required by this code. Buildings *approved* in writing by such an energy-efficiency program shall be considered in compliance with this code. The requirements identified as "mandatory" in Chapter 4 shall be met.

❖ The purpose of this section is to specifically state that the code official has the authority to review and accept compliance with another energy program that may exceed that required by the code, as long as the minimum "mandatory" requirements of the code are met. This provision is really a continuation of the provision stated in Section R101.2 and the fact that the code is intended to accept alternatives as long as the end result is an energy-efficient building that is comparable to or better than that required by the code.

This is also a good section to help reinforce the fact that the code, as a model code, is a "minimum" code. Therefore, it establishes the minimum requirement that must be met and that anything exceeding the level is permitted.

While "above code programs" are acceptable because they do exceed the "minimum" requirements of the code, it would not be proper to require compliance with such "above code programs." Besides the code being the minimum level of acceptable energy efficiency, it is also the maximum efficiency that the code official can require. A building built to the absolute minimum requirement is also the maximum that the code official can demand. It is perfectly acceptable for a designer or builder to exceed the code requirements, but it is not proper for the code official to demand such higher performance.

This section also contains language to ensure that the "mandatory" requirements of the code, such as sealing the building envelope (Section R402.4) and sealing ducts (Section R403.3.2), are complied with for all buildings. Since the code has deemed that the mandatory requirements should apply to all buildings, it is reasonable that "above code programs" not be allowed to bypass these requirements.

INTERNATIONAL CODE COUNCIL®
Copyright © 2015 ICC. ALL RIGHTS RESERVED. Accessed by David Dammon on Jun 21, 2017 12:30:52 PM pursuant to License Agreement with ICC. No further reproduction or distribution authorized. ANY UNAUTHORIZED REPRODUCTION OR DISTRIBUTION IS A VIOLATION OF THE FEDERAL COPYRIGHT ACT AND THE LICENSE AGREEMENT, AND SUBJECT TO CIVIL AND CRIMINAL PENALTIES THEREUNDER.

PART 2—ADMINISTRATION AND ENFORCEMENT

SECTION R103
CONSTRUCTION DOCUMENTS

R103.1 General. Construction documents, technical reports and other supporting data shall be submitted in one or more sets with each application for a permit. The construction documents and technical reports shall be prepared by a registered design professional where required by the statutes of the jurisdiction in which the project is to be constructed. Where special conditions exist, the *code official* is authorized to require necessary construction documents to be prepared by a registered design professional.

Exception: The *code official* is authorized to waive the requirements for construction documents or other supporting data if the *code official* determines they are not necessary to confirm compliance with this code.

❖ In most jurisdictions, the permit application must be accompanied by not less than two sets of construction documents. The code official can waive the requirements for filing construction documents when the scope of the work is minor and compliance can be verified through other means. When the quality of the materials is essential for conformity to the code, specific information must be given to establish that quality.

The code must not be cited, or the term "legal" or its equivalent used as a substitute for specific information. For example, it would be improper for the plans to simply state "windows per IECC requirements."

A detailed description of the work covered by the application must be submitted. When the work is "minor," either in scope or needed description, the code official may use judgment in determining the need for a detailed description. An example of "minor" work that may not involve a detailed description is the replacement of an existing 60-amp electrical service in a single-family residence with a 100-amp service.

The exception permits the code official to determine construction documents are not necessary when compliance can be obtained and verified without the documents.

R103.2 Information on construction documents. Construction documents shall be drawn to scale upon suitable material. Electronic media documents are permitted to be submitted where *approved* by the *code official*. Construction documents shall be of sufficient clarity to indicate the location, nature and extent of the work proposed, and show in sufficient detail pertinent data and features of the *building*, systems and equipment as herein governed. Details shall include, but are not limited to, the following as applicable:

1. Insulation materials and their *R*-values.
2. Fenestration *U*-factors and solar heat gain coefficients (SHGC).
3. Area-weighted *U*-factor and solar heat gain coefficients (SHGC) calculations.
4. Mechanical system design criteria.
5. Mechanical and service water-heating system and equipment types, sizes and efficiencies.
6. Equipment and system controls.
7. Duct sealing, duct and pipe insulation and location.
8. Air sealing details.

❖ For a comprehensive plan review, all code requirements should be incorporated in the design and construction documents. All of the project information, including specifications, scope, calculations, and detailed drawings, should be submitted to the code official so that code compliance can be verified. All parties should clearly understand what the project entails. A good plan review is essential to ensure code compliance and a successful project. A statement on the construction documents, such as "All insulation levels shall comply with the 2015 edition of the *International Energy Conservation Code*® (IECC®)," is not an acceptable substitute for showing the required information. Note also that the code official is authorized to require additional project and code-related information as necessary.

For example, insulation *R*-values and glazing and door *U*-factors must be clearly marked on the building plans, specifications or forms used to show compliance. Where two or more insulation levels exist for the same component (two insulation levels are used in ceilings), the permit applicant must record each level separately on the plans or specifications and clarify where in the building each level of insulation will be installed.

The following discussion is presented for the benefit of both the applicant and the plans examiner. This is not an all-inclusive list but rather is intended to reflect the minimum scope of information needed to determine energy code compliance:

Permit Applicant's Responsibilities. At permit application, the goal of the applicant is to provide all necessary information to show compliance with the code. If the plans examiner is able to verify compliance in a single review, the permit can be issued and construction may be started without delay.

Depending on whether the prescriptive or performance methods of compliance are used, the amount and detail of the required information may vary. For example, if using the prescriptive method of compliance, the *U*-factor and SHGC may be the only information needed to verify fenestration compliance. If the "total UA alternative" (Section R402.1.4) or the performance option (Section R405) is used, then additional information, such as the fenestration sizes and orientation, may be needed to demonstrate compliance. The envelope information that needs to be on the plans can be presented in a number of ways:

- *On the drawings.* Include elevations that indicate window, door and skylight areas and sec-

INTERNATIONAL CODE COUNCIL®
Copyright © 2015 ICC. ALL RIGHTS RESERVED. Accessed by David Dammon on Jun 21, 2017 12:30:52 PM pursuant to License Agreement with ICC. No further reproduction or distribution authorized. ANY UNAUTHORIZED REPRODUCTION OR DISTRIBUTION IS A VIOLATION OF THE FEDERAL COPYRIGHT ACT AND THE LICENSE AGREEMENT, AND SUBJECT TO CIVIL AND CRIMINAL PENALTIES THEREUNDER.

tions that show insulation position and thickness.

- *On sections and in schedules.* For instance, list *R*-values of insulation on sections and include *U*-factors, shading coefficient, visible light transmittance and air infiltration on fenestration and opaque door schedules.
- *Through notes and callouts.* Note that all exterior joints are to be caulked, gasketed, weatherstripped or otherwise sealed.
- *Through supplementary worksheets or calculations.* Provide area-weighted calculations where required, such as for projection factors and heat capacity. The permit applicant may include these calculations on the drawings, incorporate them as additional columns in the schedule or submit completed code compliance worksheets provided by the jurisdiction.

Incorrect information may be caused by a lack of understanding of the code. More likely, it indicates that the code has changed since the last project. The applicant can use a correction list to update office specifications to avoid receiving this same correction again in the future.

Plans Examiner's Responsibilities. The plans examiner must review each permit application for code compliance before a permit is issued. By letting the designer and contractor know what is expected of them early in the process, the building department can increase the likelihood that the approved drawings will comply with the code. This helps the inspector avoid the headache of correcting a contractor who is following drawings that do not meet code requirements.

The biggest challenge for the plans examiner is often determining where the necessary information is and whether the drawings are complete. The plans examiner should make sure the applicant includes a summary or checklist as part of the submittal package. When building envelope information is provided on the construction documents, it makes the job of the plans examiner easier, generally making for a more thorough review and reducing turnaround time.

A complete building envelope plan review covers all the requirements specific to the architectural building shell, but the electrical drawings may also need to be included and reviewed if the applicant seeks credit for automatic daylighting control for skylights or fenestration. A plan review should:

- Check that duct insulation thickness and conductivity (*k*-value) are on the drawings and comply with the code.
- Check that the duct insulation *R*-value is on the drawings and complies with the code.
- Check that there is a note indicating that ducts are to be constructed and sealed in accordance with the *International Mechanical Code*® (IMC®).
- Check that there is a note indicating that operating and equipment maintenance manuals will be supplied to the owner, that air and hydronic systems will be balanced and that the control system will be tested and calibrated.

R103.2.1 Building thermal envelope depiction. The *building's thermal envelope* shall be represented on the construction documents.

❖ The most important energy and performance aspects of the home are the building's thermal envelope and the alignment of the air barrier and thermal barrier systems. It is crucial that the design professional demonstrate an understanding of location of the thermal envelope and that the effort is made to draw its location so that construction personnel can successfully construct the building in accordance with the code and the specifications that have been drawn. Air sealing details help make this possible, but understanding where the details will be implemented helps ensure better implementation and enforcement.

R103.3 Examination of documents. The *code official* shall examine or cause to be examined the accompanying construction documents and shall ascertain whether the construction indicated and described is in accordance with the requirements of this code and other pertinent laws or ordinances. The *code official* is authorized to utilize a registered design professional, or other *approved* entity not affiliated with the building design or construction, in conducting the review of the plans and specifications for compliance with the code.

❖ This section describes the required action of the code official in response to a permit application. The code official can delegate review of the construction documents to subordinates. In addition, the code official can retain the services of an outside entity, such as a registered design professional, to examine the plans.

R103.3.1 Approval of construction documents. When the *code official* issues a permit where construction documents are required, the construction documents shall be endorsed in writing and stamped "Reviewed for Code Compliance." Such *approved* construction documents shall not be changed, modified or altered without authorization from the *code official*. Work shall be done in accordance with the *approved* construction documents.

One set of construction documents so reviewed shall be retained by the *code official*. The other set shall be returned to the applicant, kept at the site of work and shall be open to inspection by the *code official* or a duly authorized representative.

❖ The code official must stamp or otherwise endorse as "Reviewed for Code Compliance" the construction documents on which the permit is based. One set of approved construction documents must be kept on the construction site to serve as the basis for all subsequent inspections. To avoid confusion, the con-

INTERNATIONAL CODE COUNCIL®
Copyright © 2015 ICC. ALL RIGHTS RESERVED. Accessed by David Dammon on Jun 21, 2017 12:30:52 PM pursuant to License Agreement with ICC. No further reproduction or distribution authorized. ANY UNAUTHORIZED REPRODUCTION OR DISTRIBUTION IS A VIOLATION OF THE FEDERAL COPYRIGHT ACT AND THE LICENSE AGREEMENT, AND SUBJECT TO CIVIL AND CRIMINAL PENALTIES THEREUNDER.

struction documents on the site must be the documents that were approved and stamped. This is because inspections are to be performed with regard to the approved documents, not the code itself. Additionally, the contractor cannot determine compliance with the approved construction documents unless they are readily available. If the approved construction documents are not available, the inspection should be postponed and work on the project halted.

R103.3.2 Previous approvals. This code shall not require changes in the construction documents, construction or designated occupancy of a structure for which a lawful permit has been heretofore issued or otherwise lawfully authorized, and the construction of which has been pursued in good faith within 180 days after the effective date of this code and has not been abandoned.

❖ If a permit is issued and construction proceeds at a normal pace and a new edition of the code is adopted by the legislative body, requiring that the building be constructed to conform to the new code is unreasonable. This section provides for the continuity of permits issued under previous codes, as long as such permits are being "actively prosecuted" subsequent to the effective date of the ordinance adopting this edition of the code.

R103.3.3 Phased approval. The *code official* shall have the authority to issue a permit for the construction of part of an energy conservation system before the construction documents for the entire system have been submitted or *approved*, provided adequate information and detailed statements have been filed complying with all pertinent requirements of this code. The holders of such permit shall proceed at their own risk without assurance that the permit for the entire energy conservation system will be granted.

❖ The code official has the authority to issue a partial permit to allow for the practice of "fast-tracking" a job. Any construction under a partial permit is "at the holder's own risk" and "without assurance that a permit for the entire structure will be granted." The code official is under no obligation to accept work or issue a complete permit in violation of the code, ordinances or statutes simply because a partial permit had been issued. Fast-tracking puts unusual administrative and technical burdens on the code official. The purpose is to proceed with construction while the design continues for other aspects of the work. Coordinating and correlating the code aspects into the project in phases requires attention to detail and project tracking so that all code issues are addressed. The coordination of these submittals is the responsibility of the registered design professional in responsible charge.

R103.4 Amended construction documents. Work shall be installed in accordance with the approved construction documents, and any changes made during construction that are not in compliance with the *approved* construction documents shall be resubmitted for approval as an amended set of construction documents.

❖ The code requires that all work be done in accordance with the approved plans and other construction documents. Where the construction will not conform to the approved construction documents, the documents must be revised and resubmitted to the code official for review and approval. Code officials should maintain a policy that all amendments be submitted for review. Otherwise, a significant change that is not approved could result in an activity that is not in compliance with the code and, therefore, cause needless delay and extra expense. The code official must retain one set of the amended and approved plans. The other set is to be kept at the construction site, ready for use by the jurisdiction's inspection staff.

R103.5 Retention of construction documents. One set of *approved* construction documents shall be retained by the *code official* for a period of not less than 180 days from date of completion of the permitted work, or as required by state or local laws.

❖ Construction documents must be retained in case a question or dispute arises after completion of the project. Unless modified because of state or local statutes, the retention period for the approved construction documents is a minimum of 180 days following the completion of the work, typically the date the certificate of occupancy is issued. Any further retention of plans by the jurisdiction as an archival record of construction activity in the community is not required by the code.

SECTION R104
INSPECTIONS

R104.1 General. Construction or work for which a permit is required shall be subject to inspection by the *code official* or his or her designated agent, and such construction or work shall remain accessible and exposed for inspection purposes until *approved*. It shall be the duty of the permit applicant to cause the work to remain accessible and exposed for inspection purposes. Neither the *code official* nor the jurisdiction shall be liable for expense entailed in the removal or replacement of any material, product, system or building component required to allow inspection to validate compliance with this code.

❖ Where a permit is required by state or local law, the building is subject to an inspection. The code official must determine whether appropriate energy-efficient features and equipment are installed in accordance with the approved construction documents and applicable code requirements.

Generally, a department's administrative rules will list required periodic inspections. Because the majority of energy-efficient construction occurs in steps or

INTERNATIONAL CODE COUNCIL®
Copyright © 2015 ICC. ALL RIGHTS RESERVED. Accessed by David Dammon on Jun 21, 2017 12:30:52 PM pursuant to License Agreement with ICC. No further reproduction or distribution authorized. ANY UNAUTHORIZED REPRODUCTION OR DISTRIBUTION IS A VIOLATION OF THE FEDERAL COPYRIGHT ACT AND THE LICENSE AGREEMENT, AND SUBJECT TO CIVIL AND CRIMINAL PENALTIES THEREUNDER.

phases, periodic inspections are often necessary before portions of these systems are covered by further construction. The exact number of required inspections cannot always be specified. A reinspection may be necessary if violations are noted and corrections are required (see commentary, Section R104.4). If time permits, frequent inspections of some job sites, especially where the work is complex, can be beneficial to detect potential problems before they become too difficult to correct.

An inspector's ongoing challenge is responding to change orders during construction. In any construction project there will be field changes. The call is easy if a more efficient piece of equipment is being substituted for a less efficient one. For the opaque elements, more insulation is generally better. For fenestration, a lower *U*-factor and SHGC is generally better. Unfortunately, changing the glass almost always changes more than one characteristic, and it is not always clear whether energy efficiency is being improved. If there is any doubt concerning the impact, the inspector should confer with the plans examiner for the project.

A more difficult change order is one that reduces efficiency. For example, if the proposed substitute fenestration has a higher *U*-factor and SHGC, or if the window area is to be increased, the inspector must check with the plans examiner. The amount of information and the ease of confirming compliance will depend on whether the prescriptive or performance approach was used initially. In these cases, compliance is based on a combination of the fenestration area, *U*-factor, SHGC, projection factor, and (if a performance-based analysis has been used) opaque wall characteristics. Although there may be enough latitude to decrease the efficiency somewhat, it is not possible to make such a determination without reviewing all the elements and how compliance was initially demonstrated. Whenever there are significant changes such as described above, the inspector is expected to request that the applicant submit revised plans, so the plans examiner can verify compliance and ensure there is a correct record on file in the building department.

An even tougher case is when the contractor has already installed noncomplying equipment without checking with the inspector. For instance, ordinary double glazing may have been installed instead of double glazing with a low-emissivity coating. The inspector should be quite strict for several reasons. First, because most contracts are awarded on a cost-competitive basis, the low-bid company might win the job and then make its profit by installing noncomplying equipment. This would be unfair to the high-bid contractors.

Second, a lenient inspector's job will be more difficult in the future. If a noncomplying contractor skates by this time, that contractor will most likely have additional requests for future projects. In addition, other contractors will also begin to ask for special treatment. Self-policing, which works well if everyone is being treated fairly, will begin to decline.

Finally, there is the situation in which the approved plans do not contain all of the code requirements. If information or notes are missing from the plans, the inspector can, for instance, simply direct the contractor to make the necessary changes in the field (for example, caulk and seal joints).

The inspector's job is more difficult, however, if drawings contain information that is wrong. Perhaps the inspector in a cold climate notices the metal stud wall is not covered with insulating sheathing, as is required in that climate, and informs the contractor. The contractor responds saying that he or she is following the approved plans, and indeed he or she is. The inspector, as the representative of the code official, is clearly authorized to require the contractor to build the project to code. (If necessary, the inspector can show the contractor the building department note, which says, "Approved subject to errors and omissions." See also IBC Section 104.4.) In this case, it would be appropriate for the inspector to inform the plans examiner of the problem and ask the plans examiner to help solve the problem. The plans examiner may be able to suggest improvements in other areas that would compensate for this shortfall. It is important that the plans examiner and inspector appreciate the challenges of each other's work and the benefits of a team effort.

R104.2 Required inspections. The *code official* or his or her designated agent, upon notification, shall make the inspections set forth in Sections R104.2.1 through R104.2.5.

❖ The contractor, builder, owner or other authorized party is responsible for arranging and coordinating required inspections to prevent work from being concealed prior to inspection. For example:

- Insulation must be inspected prior to concealment. Where the insulation is concealed prior to inspection and approval, the code official has the authority to require removal of the concealing components.
- Basement wall insulation may be installed on the exterior of a below-grade basement wall. Where the insulation application is not confirmed prior to backfilling, reinspection is necessary.
- Glazing assembly *U*-factor labels are to be left on until after the building has been inspected for compliance. The applicant is responsible for giving the inspector adequate information on site to verify code-related features, such as window *U*-factor and equipment efficiencies.

After the field inspector has performed the required inspections and observed any required equipment and system tests (or has received written reports of the results of such tests), the code official must determine whether the installation or work is in compliance with all applicable sections of the code. The code offi-

INTERNATIONAL CODE COUNCIL®
Copyright © 2015 ICC. ALL RIGHTS RESERVED. Accessed by David Dammon on Jun 21, 2017 12:30:52 PM pursuant to License Agreement with ICC. No further reproduction or distribution authorized. ANY UNAUTHORIZED REPRODUCTION OR DISTRIBUTION IS A VIOLATION OF THE FEDERAL COPYRIGHT ACT AND THE LICENSE AGREEMENT, AND SUBJECT TO CIVIL AND CRIMINAL PENALTIES THEREUNDER.

cial must issue a written notice of approval if the subject work or installation is in apparent compliance with the code. The notice of approval is given to the permit holder and a copy of the notice is retained on file by the code official.

R104.2.1 Footing and foundation inspection. Inspections associated with footings and foundations shall verify compliance with the code as to *R*-value, location, thickness, depth of burial and protection of insulation as required by the code and *approved* plans and specifications.

❖ Specific inspection details are called out in this section to ensure code requirements are met. In the case of footings and foundations, proper installation of the insulation is key to the performance of the building thermal envelope.

R104.2.2 Framing and rough-in inspection. Inspections at framing and rough-in shall be made before application of interior finish and shall verify compliance with the code as to types of insulation and corresponding *R*-values and their correct location and proper installation; fenestration properties (*U*-factor and SHGC) and proper installation; and air leakage controls as required by the code and approved plans and specifications.

❖ Specific inspection details are called out in this section to ensure code requirements are met. It is important to conduct inspections at the time of framing rough-in to be able to verify that the required insulation *R*-value is installed and that the installation details are followed. The code also provides detailed requirements for air barrier installation (see Section R402.4.1.1).

R104.2.3 Plumbing rough-in inspection. Inspections at plumbing rough-in shall verify compliance as required by the code and *approved* plans and specifications as to types of insulation and corresponding *R*-values and protection, and required control.

❖ Specific inspection details are called out in this section to ensure code requirements are met. In this case the integrity of the hot water supply insulation is important for meeting the energy efficiency requirements of the code.

R104.2.4 Mechanical rough-in inspection. Inspections at mechanical rough-in shall verify compliance as required by the code and *approved* plans and specifications as to installed HVAC equipment type and size, required controls, system insulation and corresponding *R*-value, system air leakage control, programmable thermostats, dampers, whole-house ventilation, and minimum fan efficiency.

Exception: Systems serving multiple dwelling units shall be inspected in accordance with Section C104.2.4.

❖ Specific inspection details are called out in this section to ensure code requirements are met. In this case the HVAC system equipment type and installation, the duct insulation, and the system controls all have requirements in the code that must be met to ensure that the building is meeting the minimum energy efficiency requirements. The exception simply points to the Commercial Provisions for a situation in which the Commercial Provisions are more appropriate than these provisions.

R104.2.5 Final inspection. The *building* shall have a final inspection and shall not be occupied until *approved*. The final inspection shall include verification of the installation of all required *building* systems, equipment and controls and their proper operation and the required number of high-efficacy lamps and fixtures.

❖ To establish compliance with all previously issued correction orders and to determine whether subsequent violations exist, a final inspection is required. The final inspection is conducted after all work is completed. Typically, the final inspection includes all items installed after the rough-in inspection and not concealed in the building construction. Subsequent reinspection is necessary if the final inspection generates a notice of violation (see commentary, Section R104.4). All violations observed during the final inspection must be noted and the permit holder must be advised of them.

R104.3 Reinspection. A *building* shall be reinspected when determined necessary by the *code official*.

❖ The provisions for reinspection could affect the entire structure or a portion thereof. For example, if no approval was given to apply interior finish that conceals ducts in an exterior wall, the code official must require removal of the interior finish to verify the ducts are insulated to code.

Reinspections generally occur when some type of violation or correction notice was issued during one of the previous inspections or where the work was not ready for the inspection. For example, if the inspector went to the project to conduct an insulation inspection and not all of the insulation was installed at that point, the inspector would need to go back to the project and "reinspect" the insulation to verify that it had been completed. After the reinspection, the inspector would issue the approval (see Section R104.2) to permit the wall or ceiling cavities to be enclosed and therefore conceal the insulation.

R104.4 Approved inspection agencies. The *code official* is authorized to accept reports of third-party inspection agencies not affiliated with the building design or construction, provided such agencies are *approved* as to qualifications and reliability relevant to the building components and systems they are inspecting.

❖ As an alternative to the code official conducting the inspection, he or she is permitted to accept inspections of and reports by approved inspection agencies. Appropriate criteria on which to base approval of inspection agencies can be found in IBC Section 1703.

INTERNATIONAL CODE COUNCIL®
Copyright © 2015 ICC. ALL RIGHTS RESERVED. Accessed by David Dammon on Jun 21, 2017 12:30:52 PM pursuant to License Agreement with ICC. No further reproduction or distribution authorized. ANY UNAUTHORIZED REPRODUCTION OR DISTRIBUTION IS A VIOLATION OF THE FEDERAL COPYRIGHT ACT AND THE LICENSE AGREEMENT, AND SUBJECT TO CIVIL AND CRIMINAL PENALTIES THEREUNDER.

R104.5 Inspection requests. It shall be the duty of the holder of the permit or their duly authorized agent to notify the *code official* when work is ready for inspection. It shall be the duty of the permit holder to provide access to and means for inspections of such work that are required by this code.

❖ It is the responsibility of the permit holder or other authorized person, such as the contractor performing the work, to arrange for the required inspections when completed work is ready and to allow for sufficient time for the code official to schedule a visit to the site to prevent work from being concealed prior to being inspected. Access to the work to be inspected must be provided, including any special means such as a ladder.

R104.6 Reinspection and testing. Where any work or installation does not pass an initial test or inspection, the necessary corrections shall be made to achieve compliance with this code. The work or installation shall then be resubmitted to the *code official* for inspection and testing.

❖ This section provides for necessary actions in the event that a tested or inspected item is not originally in compliance with the code.

R104.7 Approval. After the prescribed tests and inspections indicate that the work complies in all respects with this code, a notice of approval shall be issued by the *code official*.

❖ This section mandates that a notice of approval be issued by the code official to indicate completion of an energy conservation installation. While certificates of occupancy for construction are traditionally under the purview of one of the construction codes, the notice of approval will fill a need with regard to application and enforcement of nonbuilding codes.

R104.7.1 Revocation. The *code official* is authorized to, in writing, suspend or revoke a notice of approval issued under the provisions of this code wherever the certificate is issued in error, or on the basis of incorrect information supplied, or where it is determined that the *building* or structure, premise, or portion thereof is in violation of any ordinance or regulation or any of the provisions of this code.

❖ This section provides an important administrative tool by giving the code official the authority to revoke a certificate of completion for the reasons indicated in the text. The code official may also suspend the certificate until any code violations are corrected.

SECTION R105
VALIDITY

R105.1 General. If a portion of this code is held to be illegal or void, such a decision shall not affect the validity of the remainder of this code.

❖ This section is applicable when a court of law rules that a portion of the code (or the jurisdiction's energy code) is invalid. Only invalid sections of the code (as established by the court of jurisdiction) can be set aside. This is essential to safeguard the application of the code text to situations in which a provision of the code is declared illegal or unconstitutional. This section preserves the original legislative action that put the legal requirements (energy code) in place.

All sections of the code not judged invalid must remain in effect. Although a dispute over a particular issue (such as an appliance efficiency requirement) may have precipitated the litigation causing the requirement to be found invalid, the remainder of the code must still be considered applicable. This is sometimes called the "severability clause" and simply means that the invalid section can be removed from the code without affecting the entire document.

SECTION R106
REFERENCED STANDARDS

R106.1 Referenced codes and standards. The codes and standards referenced in this code shall be those listed in Chapter 5, and such codes and standards shall be considered as part of the requirements of this code to the prescribed extent of each such reference and as further regulated in Sections R106.1.1 and R106.1.2.

❖ The code references many standards promulgated and published by other organizations. A complete list of these standards appears in Chapter 6 [RE]. The wording of this section was carefully chosen to establish the edition of the standard that is enforceable under the code.

Although a standard is referenced, its full scope and content are not necessarily applicable. The standard is applicable only to the extent indicated in the text in which the standard is specifically referenced. A referenced standard or the portion cited in the text is an enforceable extension of the code as if the content of the standard was included in the body of the code. The use and applicability of referenced standards are limited to those portions of the standards that are specifically identified.

R106.1.1 Conflicts. Where conflicts occur between provisions of this code and referenced codes and standards, the provisions of this code shall apply.

❖ The use of referenced codes and standards to cover certain aspects of various occupancies and operations rather than write parallel or competing requirements into the code is a longstanding code development principle. Often, however, questions and potential conflicts in the use of referenced codes and standards can arise, leading to inconsistent enforcement of the code. This section of the code is intended to establish that the provisions of the code would prevail in such a conflict, regardless of the level of stringency.

R106.1.2 Provisions in referenced codes and standards. Where the extent of the reference to a referenced code or standard includes subject matter that is within the scope of

INTERNATIONAL CODE COUNCIL®
Copyright © 2015 ICC. ALL RIGHTS RESERVED. Accessed by David Dammon on Jun 21, 2017 12:30:52 PM pursuant to License Agreement with ICC. No further reproduction or distribution authorized. ANY UNAUTHORIZED REPRODUCTION OR DISTRIBUTION IS A VIOLATION OF THE FEDERAL COPYRIGHT ACT AND THE LICENSE AGREEMENT, AND SUBJECT TO CIVIL AND CRIMINAL PENALTIES THEREUNDER.

this code, the provisions of this code, as applicable, shall take precedence over the provisions in the referenced code or standard.

❖ Section R106.1.2 expands on the provisions of Section R106.1.1 by making it clear that even if a referenced standard contains requirements that parallel the code [or the other referenced section(s)], the provisions of the code will always take precedence.

R106.2 Application of references. References to chapter or section numbers, or to provisions not specifically identified by number, shall be construed to refer to such chapter, section or provision of this code.

❖ This section provides some information on the use of the code and the conventions used in making references to other portions of the code. By implication then, a reference that is intended to provide information from another code would be required to state what code the reference is from.

R106.3 Other laws. The provisions of this code shall not be deemed to nullify any provisions of local, state or federal law.

❖ This provision is intended to assist the code official in dealing with situations where other laws enacted by the jurisdiction or the state or federal government may be applicable to a condition that is also governed by a requirement in the code. In such circumstances, the requirements of the code would be in addition to that other law that is still in effect, although the code official may not be responsible for its enforcement.

SECTION R107
FEES

R107.1 Fees. A permit shall not be issued until the fees prescribed in Section R107.2 have been paid, nor shall an amendment to a permit be released until the additional fee, if any, has been paid.

❖ This section requires that all fees be paid prior to permit issuance or release of an amendment to a permit. Since department operations are usually intended to be supported by fees paid by the user of department activities, it is important that these fees are received before incurring any expense.

R107.2 Schedule of permit fees. A fee for each permit shall be paid as required, in accordance with the schedule as established by the applicable governing authority.

❖ This section authorizes the establishment of a schedule of fees by the jurisdiction. The fees are usually established by law, such as in an ordinance adopting the code, a separate ordinance or legally promulgated regulation as required by state or local law, and are often based on a valuation of the work to be performed.

R107.3 Work commencing before permit issuance. Any person who commences any work before obtaining the necessary permits shall be subject to an additional fee established by the *code official* that shall be in addition to the required permit fees.

❖ The department will incur certain costs (i.e., inspection time and administrative) when investigating and citing a person who has commenced work without having obtained a permit. This section authorizes the code official to recover those costs by establishing a fee, in addition to that collected when the required permit is issued, to be imposed on the responsible party.

R107.4 Related fees. The payment of the fee for the construction, *alteration*, removal or demolition of work done in connection to or concurrently with the work or activity authorized by a permit shall not relieve the applicant or holder of the permit from the payment of other fees that are prescribed by law.

❖ This section provides the code official with a useful administrative tool establishing that all applicable fees of the jurisdiction for regulated work collateral to the work being done under the code's permit, such as sewer connections, water taps, driveways, signs, etc., must be paid.

R107.5 Refunds. The *code official* is authorized to establish a refund policy.

❖ This section authorizes the code official to establish a policy to regulate the refund of fees, which may be full or partial, typically resulting from the revocation, abandonment or discontinuance of a building project for which a permit has been issued and fees have been collected.

SECTION R108
STOP WORK ORDER

R108.1 Authority. Where the *code official* finds any work regulated by this code being performed in a manner either contrary to the provisions of this code or dangerous or unsafe, the *code official* is authorized to issue a stop work order.

❖ This section provides for the suspension of work for which a permit was issued, pending the removal or correction of a severe violation or unsafe condition identified by the code official. Stop work orders are issued when enforcement can be accomplished no other way or when a dangerous condition exists.

R108.2 Issuance. The stop work order shall be in writing and shall be given to the owner of the property involved, to the owner's authorized agent, or to the person doing the work. Upon issuance of a stop work order, the cited work shall immediately cease. The stop work order shall state the reason for the order and the conditions under which the cited work will be permitted to resume.

❖ This section makes it clear that, upon receipt of a violation notice from the code official, all construction activities identified in the notice must immediately cease, except as expressly permitted to correct the violation.

INTERNATIONAL CODE COUNCIL®
Copyright © 2015 ICC. ALL RIGHTS RESERVED. Accessed by David Dammon on Jun 21, 2017 12:30:52 PM pursuant to License Agreement with ICC. No further reproduction or distribution authorized. ANY UNAUTHORIZED REPRODUCTION OR DISTRIBUTION IS A VIOLATION OF THE FEDERAL COPYRIGHT ACT AND THE LICENSE AGREEMENT, AND SUBJECT TO CIVIL AND CRIMINAL PENALTIES THEREUNDER.

R108.3 Emergencies. Where an emergency exists, the *code official* shall not be required to give a written notice prior to stopping the work.

❖ This section gives the code official the authority to stop the work in dispute immediately when, in his or her opinion, there is an unsafe emergency condition that has been created by the work. The need for the written notice is suspended for this situation so that the work can be stopped immediately.

R108.4 Failure to comply. Any person who shall continue any work after having been served with a stop work order, except such work as that person is directed to perform to remove a violation or unsafe condition, shall be subject to a fine as set by the applicable governing authority.

❖ This section establishes consequences for disregarding a stop work order and continuing the work that is at issue, other than abatement work. The dollar amounts for the minimum and maximum fines are to be specified in the adopting ordinance.

SECTION R109
BOARD OF APPEALS

R109.1 General. In order to hear and decide appeals of orders, decisions or determinations made by the *code official* relative to the application and interpretation of this code, there shall be and is hereby created a board of appeals. The *code official* shall be an ex officio member of said board but shall not have a vote on any matter before the board. The board of appeals shall be appointed by the governing body and shall hold office at its pleasure. The board shall adopt rules of procedure for conducting its business, and shall render all decisions and findings in writing to the appellant with a duplicate copy to the *code official*.

❖ This section provides an aggrieved party that has a material interest in the decision of the code official a process to appeal such a decision before a board of appeals. This provides a forum, other than the court of jurisdiction, in which to review the code official's actions. The intent of the appeal process is not to waive or set aside a code requirement; rather it is intended to provide a means of reviewing a code official's decision on an interpretation or application of the code.

R109.2 Limitations on authority. An application for appeal shall be based on a claim that the true intent of this code or the rules legally adopted thereunder have been incorrectly interpreted, the provisions of this code do not fully apply or an equally good or better form of construction is proposed. The board shall not have authority to waive requirements of this code.

❖ This section establishes the grounds for an appeal that claims that the code official has misinterpreted or misapplied a code provision. The board is not allowed to set aside any of the technical requirements of the code; however, it is allowed to consider alternative methods of compliance with the technical requirements.

R109.3 Qualifications. The board of appeals shall consist of members who are qualified by experience and training and are not employees of the jurisdiction.

❖ This section requires that the members of the appeals board are to have experience in building construction and system matters because the decisions of the appeals board are to be based purely on the technical merits involved in an appeal.

Bibliography

The following resource materials were used in the preparation of the commentary for this chapter of the code.

ASHRAE 90A-80, *Energy Conservation in New Building Design* with Addendum 90A-2-87. Atlanta, GA: American Society of Heating, Refrigerating and Air-Conditioning Engineers, Inc., 1987.

ASHRAE 90B-75, *Energy Conservation in New Building Design*. Atlanta, GA: American Society of Heating, Refrigerating and Air-Conditioning Engineers, Inc., 1975.

ASHRAE 90C-77, *Energy Conservation in New Building Design*. Atlanta, GA: American Society of Heating, Refrigerating and Air-Conditioning Engineers, Inc., 1977.

ANSI/ASHRAE/IESNA 90.1-10, *Energy Standard for Buildings, Except Low-rise Residential Buildings*. Atlanta, GA: American Society of Heating, Refrigerating and Air-Conditioning Engineers, Inc., 2010.

ASHRAE/IESNA-93, *Energy Code for Commercial and High-rise Residential Buildings—Based on ASHRAE/IES 90.1-1989*. Atlanta, GA: American Society of Heating, Refrigerating and Air-Conditioning Engineers, Inc., 1993.

DOE-97, *Technical Support Document for COMCheck-EZTM, V1.0*. Washington, DC: U.S. Department of Energy, 1997.

DOE-09, *Methodology for Developing the REScheck*™. Software Through Version 4.2, Washington, DC: U.S. Department of Energy, August, 2009.

NFRC, *Certified Products Directory 2009*. Silver Spring, MD: National Fenestration Rating Council, Inc., 2009.

PNNL-97, *Assessment of the 1995 Model Energy Code for Adoption*. Richland, WA: Prepared for U.S. Department of Housing and Urban Development Office of Policy Development and Research by Pacific Northwest National Laboratory, 1997.

INTERNATIONAL CODE COUNCIL®

Copyright © 2015 ICC. ALL RIGHTS RESERVED. Accessed by David Dammon on Jun 21, 2017 12:30:52 PM pursuant to License Agreement with ICC. No further reproduction or distribution authorized. ANY UNAUTHORIZED REPRODUCTION OR DISTRIBUTION IS A VIOLATION OF THE FEDERAL COPYRIGHT ACT AND THE LICENSE AGREEMENT, AND SUBJECT TO CIVIL AND CRIMINAL PENALTIES THEREUNDER.

Chapter 2 [RE]: Definitions

General Comments

All terms defined in the code are listed alphabetically in Chapter 2 [RE]. The words or terms defined in this chapter are considered to be of prime importance in either specifying the subject matter of code provisions or in giving meaning to certain terms used throughout the code for administrative or enforcement purposes. The code user should be familiar with what terms are found in this chapter because the definitions are essential to the correct interpretation of the code and because the user might not be aware of the fact that a particular term found in the text is defined.

Purpose

Codes, by their nature, are technical documents. Every word, term and punctuation mark can alter a sentence's meaning and, if misused, muddy its intent. Further, the code, with its broad scope of applicability, includes terms inherent in a variety of construction disciplines. These terms can often have multiple meanings, depending on the context or discipline in which they are being used. For these reasons, maintaining a consensus on the specific meaning of terms contained in the code is essential. Chapter 2 [RE] performs this function by stating clearly what specific terms mean for the purpose of the code.

SECTION R201
GENERAL

R201.1 Scope. Unless stated otherwise, the following words and terms in this code shall have the meanings indicated in this chapter.

❖ For the purposes of the code, certain abbreviations, terms, phrases, words and their derivatives have the meanings given in Chapter 2 [RE]. The code, with its broad scope of applicability, includes terms used in a variety of construction and energy-related disciplines. These terms can often have multiple meanings, depending on their context or discipline. Therefore, Chapter 2 [RE] establishes specific meanings for these terms.

R201.2 Interchangeability. Words used in the present tense include the future; words in the masculine gender include the feminine and neuter; the singular number includes the plural and the plural includes the singular.

❖ Although the definitions contained in Chapter 2 [RE] are to be taken literally, gender, number and tense are considered to be interchangeable.

R201.3 Terms defined in other codes. Terms that are not defined in this code but are defined in the *International Building Code*, *International Fire Code*, *International Fuel Gas Code*, *International Mechanical Code*, *International Plumbing Code* or the *International Residential Code* shall have the meanings ascribed to them in those codes.

❖ When a word or term that is not defined in this chapter appears in the code, other references may be used to find its definition, such as other *International Codes*® (I-Codes®). Definitions that are applicable in other I-Codes are applicable everywhere the term is used in the code. As stated in both the "Purpose" section above and in the commentary to Section R201.1, a bit of caution is needed when looking at definitions from other codes. Because the context and discipline can vary, it is important to determine that the term does fit within the code context. As an example, the term "accessible" would have a different meaning in the *International Mechanical Code*® (IMC®) and the *International Plumbing Code*® (IPC®) versus that of the *International Building Code*® (IBC®).

R201.4 Terms not defined. Terms not defined by this chapter shall have ordinarily accepted meanings such as the context implies.

❖ Another option for defining words or terms not defined here or in other codes is their "ordinarily accepted meanings." The intent of this statement is that a dictionary definition may suffice if the definition is in context. Often, construction terms used throughout the code may not be defined in Chapter 2 [RE] or in a dictionary. In such a case, the definitions contained in the referenced standards (see Chapter 5 [RE]) and in published textbooks on the subject in question are good resources.

SECTION R202
GENERAL DEFINITIONS

ABOVE-GRADE WALL. A wall more than 50 percent above grade and enclosing *conditioned space*. This includes between-floor spandrels, peripheral edges of floors, roof and

INTERNATIONAL CODE COUNCIL®
Copyright © 2015 ICC. ALL RIGHTS RESERVED. Accessed by David Dammon on Jun 21, 2017 12:30:52 PM pursuant to License Agreement with ICC. No further reproduction or distribution authorized. ANY UNAUTHORIZED REPRODUCTION OR DISTRIBUTION IS A VIOLATION OF THE FEDERAL COPYRIGHT ACT AND THE LICENSE AGREEMENT, AND SUBJECT TO CIVIL AND CRIMINAL PENALTIES THEREUNDER.

basement knee walls, dormer walls, gable end walls, walls enclosing a mansard roof and skylight shafts.

❖ This definition details which walls must be treated as above-grade walls. This will help to make the distinction between these walls and basement walls (see definition and commentary, "Basement wall"). These two wall types face a different amount of energy transfer and therefore have different insulation requirements. In order to determine the proper insulation requirements for the various walls, both definitions should be reviewed. The definition includes any wall that is a part of the building thermal envelope ("enclosing conditioned space") and meets the area requirements. For example, the wall between a dwelling and an unconditioned garage would be included in this definition (see commentary, "Building thermal envelope").

ACCESSIBLE. Admitting close approach as a result of not being guarded by locked doors, elevation or other effective means (see "Readily *accessible*").

❖ Providing access to mechanical equipment and appliances is necessary to facilitate inspection, observation, maintenance, adjustment, repair or replacement. Access to equipment means the equipment can be physically reached without having to remove a permanent portion of the structure. It is acceptable, for example, to install equipment in an interstitial space that would require removal of lay-in suspended ceiling panels to gain access. Equipment would not be considered accessible if it were necessary to remove or open any portion of a structure other than panels, doors, covers or similar obstructions intended to be removed or opened (see the definition of "Readily accessible"). Access can be described as the capability of being reached or approached for the purpose of inspection, observation, maintenance, adjustment, repair or replacement. Achieving access may first require the removal or opening of a panel, door or similar obstruction, and may require the overcoming of an obstacle such as elevation.

ADDITION. An extension or increase in the *conditioned space* floor area or height of a building or structure.

❖ The code uses this term to reflect new construction that is being added to an existing building. This definition is important when determining the applicability of the code provisions (see Section R502).

AIR BARRIER. Material(s) assembled and joined together to provide a barrier to air leakage through the building envelope. An air barrier may be a single material or a combination of materials.

❖ Building tightness against air infiltration is an important aspect of energy conservation. The term "air barrier" is defined to support the provisions of Section R402.4 regarding air leakage and building tightness. Note that an air barrier is not a single membrane but rather the system of sealants, seals, insulation and wall sheathing that prevents air infiltration.

ALTERATION. Any construction, retrofit or renovation to an existing structure other than repair or addition that requires a permit. Also, a change in a building, electrical, gas, mechanical or plumbing system that involves an extension, addition or change to the arrangement, type or purpose of the original installation that requires a permit.

❖ This definition actually includes two separate definitions: one that applies to building construction and the other to mechanical systems. An alteration is any modification or change made to an existing installation. For example, changing refrigerant types or heat transfer fluids in a system would be considered an alteration. This definition specifically excludes additions or repairs and also ties the term to situations where a permit is required. See Chapter 1 of the IBC and IMC for the information regarding when a permit is required.

APPROVED. Approval by the *code official* as a result of investigation and tests conducted by him or her, or by reason of accepted principles or tests by nationally recognized organizations.

❖ As related to the process of accepting envelope, mechanical, service water heating, lighting and electrical power installations, including materials, equipment and construction systems, this definition identifies where ultimate authority rests. Whenever this term is used, it intends that only the enforcing authority can accept a specific installation or component as complying with the code.

The definition does not force the code official to accept any third-party test. It merely permits the acceptance of the test so that the code official does not have to personally test the item. One example that demonstrates this process is an ICC Evaluation Report. An evaluation report prepared and published by the International Code Council (ICC)® is permitted to be used by a code official to aid in his or her review and approval of the material or method described in the report. Although the evaluation and report are prepared by the ICC, the code official is not obligated to accept or approve the product based on the evaluation report. The term "approved" is always tied to the code official's approval of the product or project. That the ICC published an evaluation report does not supersede the fact that the approval of the code official is still needed for the material or method described in the report.

APPROVED AGENCY. An established and recognized agency regularly engaged in conducting tests or furnishing inspection services, when such agency has been approved by the *code official*.

❖ This definition is added to the code to parallel the remaining I-Codes. It is quite often misunderstood that an authoritative agency cannot provide any services in the building construction or testing without the approval of the code official.

AUTOMATIC. Self-acting, operating by its own mechanism when actuated by some impersonal influence, as, for exam-

INTERNATIONAL CODE COUNCIL®
Copyright © 2015 ICC. ALL RIGHTS RESERVED. Accessed by David Dammon on Jun 21, 2017 12:30:52 PM pursuant to License Agreement with ICC. No further reproduction or distribution authorized. ANY UNAUTHORIZED REPRODUCTION OR DISTRIBUTION IS A VIOLATION OF THE FEDERAL COPYRIGHT ACT AND THE LICENSE AGREEMENT, AND SUBJECT TO CIVIL AND CRIMINAL PENALTIES THEREUNDER.

ple, a change in current strength, pressure, temperature or mechanical configuration (see "Manual").

❖ Operation or control devices or systems operating automatically, as opposed to manually, are designed to operate safely with only periodic human intervention or supervision. A thermostat would be an example of something that is automatic. While a person would set the thermostat to the desired temperature, the thermostat would cycle the heating or cooling system on or off on its own once the temperature hits the established setpoints.

BASEMENT WALL. A wall 50 percent or more below grade and enclosing *conditioned space*.

❖ Because basement walls are in contact with the ground and ground temperatures differ from air temperatures, the amount of energy transferred through a basement wall is different than the energy transfered through a wall predominantly above grade. Therefore, the code provides different thermal requirements for basement walls and above-grade walls. An individual wall enclosing conditioned space is classified as a basement wall where the gross wall area is 50 percent or more below grade and is bounded by soil; otherwise, the wall is classified as an above-grade wall. This definition includes a below-grade interior wall separating a basement from a crawl space that meets the percentage requirement. This basement wall classification applies to the whole wall area, even if a portion of the individual wall is not below grade. Therefore, the above-grade portion of the wall is considered as part of the basement wall where the total wall is 50 percent or more below grade. Both sections of the wall (above grade and below grade) are then insulated as a "basement wall." Likewise, where an exterior wall is less than 50 percent below grade, the whole wall area is classified as an above-grade wall, including the portion underground [see Commentary Figure R202(1)]. For example, the wall of a walk-out basement that is entirely above grade is not considered a basement wall. The wall area of the walk-out wall must be considered as an above-grade wall and compared to the code requirements for above-grade walls. Thus, where the average below-grade depth of the sidewalls is 50 percent or greater, they are basement walls. If not, they are above-grade walls. The intent of this definition is to apply the provision to each wall enclosing the space. It is not intended to be applied to the aggregate of all of the walls of the basement. Therefore, this classification is done for each individual wall segment and not on an aggregate basis. The basement wall requirements apply only to the opaque basement wall area, excluding windows and doors. For purposes of meeting the code requirements, windows and doors in a basement wall are regulated as any other fenestration opening.

BUILDING. Any structure used or intended for supporting or sheltering any use or occupancy, including any mechanical systems, service water heating systems and electric power and lighting systems located on the building site and supporting the building.

❖ This definition indicates that where this term is used in the code, it means a structure intended to provide shelter or support for some activity or occupancy. Though not addressed in the code, it is important to note that the IBC does permit that a fire wall forms a demarcation in between two separate, structurally independent buildings. Therefore, the code provisions could be applied to each building separately or to the structure as a whole. This would be a designer's decision.

BUILDING SITE. A continguous area of land that is under the ownership or control of one entity.

❖ "Building site" is a key term used throughout the code. It is the area of land that is under the ownership of one entity.

BUILDING THERMAL ENVELOPE. The basement walls, exterior walls, floor, roof and any other building elements that enclose conditioned space or provide a boundary between conditioned space and *exempt* or unconditioned *space*.

❖ "Building thermal envelope" is a key term and resounding theme used throughout the code. It

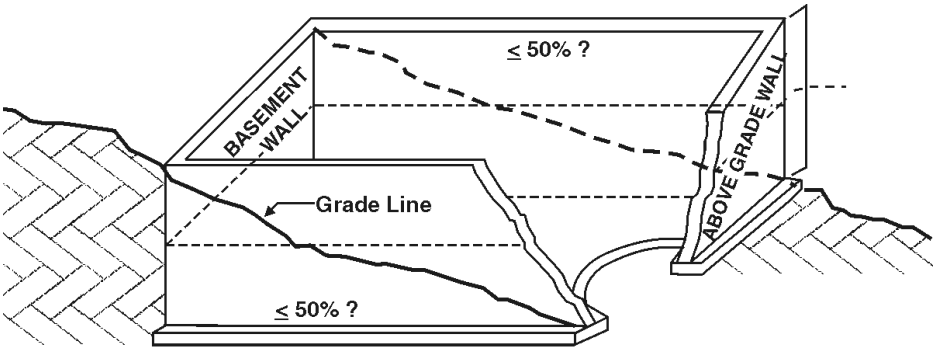

Figure R202(1)
BASEMENT WALLS

INTERNATIONAL CODE COUNCIL®
Copyright © 2015 ICC. ALL RIGHTS RESERVED. Accessed by David Dammon on Jun 21, 2017 12:30:52 PM pursuant to License Agreement with ICC. No further reproduction or distribution authorized. ANY UNAUTHORIZED REPRODUCTION OR DISTRIBUTION IS A VIOLATION OF THE FEDERAL COPYRIGHT ACT AND THE LICENSE AGREEMENT, AND SUBJECT TO CIVIL AND CRIMINAL PENALTIES THEREUNDER.

defines what portions of the building form a structurally bound conditioned space and are thereby covered by the insulation and infiltration (air leakage) requirements of the code. The building thermal envelope includes all building components separating conditioned spaces (see commentary, "Conditioned space") from unconditioned spaces or outside ambient conditions and through which heat is transferred. For example, the walls and doors separating an unheated garage (unconditioned space) from a living area (conditioned space) are part of the building thermal envelope. The walls and doors separating an unheated garage from the outdoors are not part of the building thermal envelope. Walls, floors and other building components separating two conditioned spaces are not part of the building thermal envelope. For example, interior partition walls, the common or party walls separating dwelling units in multiple-family buildings and the wall between a new conditioned addition and the existing conditioned space are not considered part of the building thermal envelope. Unconditioned spaces (areas having no heating or cooling sources) are placed outside the building envelope. A space is conditioned if it is heated or cooled directly or where a space is indirectly supplied with heating or cooling through uninsulated walls, floors or uninsulated ducts or heating, ventilating and air-conditioning (HVAC) piping. Boundaries that define the building envelope include the following:

- Building assemblies separating a conditioned space from outdoor ambient weather conditions.
- Building assemblies separating a conditioned space from the ground under or around that space, such as the ground around the perimeter of a slab or the soil at the exterior of a conditioned basement wall. Note that the code does not specify requirements for insulating basement floors or underneath slab floors (except at the perimeter edges).
- Building assemblies separating a conditioned space from an unconditioned garage, unconditioned sunroom or similar unheated/cooled area.

The code specifies requirements for ceiling, wall, floor, basement wall, slab-edge and crawl space wall components of the building envelope. In some cases, it may be unclear how to classify a particular part of a building. For example, skylight shafts have properties of a wall assembly but are located in the ceiling assembly. Because many of these items are not addressed specifically in the code, the code official should make the determination as to the appropriate classification and construction. When no distinction exists between roof and wall, such as in an A-frame structure, the code official should determine the appropriate classification. Historically, some codes have designated a wall as having a slope of 60 degrees or greater from the horizontal plane. In such situations, if the wall slope is less than 60 degrees, then classification as a "roof" is appropriate. Because the code is silent on this issue, other options such as stating that the roof could be considered to begin at a point 8 feet (2439 mm) above the floor surface of the uppermost story could be used. The phrase "exempt space" in the definition of "Building thermal envelope" refers to spaces identified as exempt from this scope of the code (see commentary, Section R101.4).

***C*-FACTOR (THERMAL CONDUCTANCE).** The coefficient of heat transmission (surface to surface) through a building component or assembly, equal to the time rate of heat flow per unit area and the unit temperature difference between the warm side and cold side surfaces ($Btu/h \cdot ft^2 \cdot °F$) [$W/(m^2 \cdot K)$].

❖ This definition addresses a term needed in the provisions of the code for the *U*-factor alternative given in Section R402.1.4.

CIRCULATING HOT WATER SYSTEM. A specifically designed water distribution system where one or more pumps are operated in the service hot water piping to circulate heated water from the water-heating equipment to fixtures and back to the water-heating equipment.

❖ In order to ensure hot water is available immediately at a faucet, circulating hot water systems can be installed to circulate hot water when the hot water supply system is not in use.

CLIMATE ZONE. A geographical region based on climatic criteria as specified in this code.

❖ See the commentary to Section R301.1.

CODE OFFICIAL. The officer or other designated authority charged with the administration and enforcement of this code, or a duly authorized representative.

❖ The statutory power to enforce the code is usually vested in a building department of a state, county or municipality with a designated enforcement officer who is termed the "code official."

COMMERCIAL BUILDING. For this code, all buildings that are not included in the definition of "Residential building."

❖ Commercial buildings include, among others, occupancies for assembly, educational, business, institutional, mercantile, factory/industrial, hazardous storage and utility occupancies (see definition and commentary, "Residential building").

One item that may easily be overlooked is that a Group R-1 occupancy building (a hotel or motel) would be classified as a "commercial building" because it is not included in the definition of "Residential building." Although classified as a residential occupancy by the IBC, hotels and motels tend to be more closely associated with commercial buildings as far as energy usage and operation.

CONDITIONED FLOOR AREA. The horizontal projection of the floors associated with the *conditioned space*.

❖ The conditioned floor area is the total area of all floors in the conditioned space of the building.

INTERNATIONAL CODE COUNCIL®
Copyright © 2015 ICC. ALL RIGHTS RESERVED. Accessed by David Dammon on Jun 21, 2017 12:30:52 PM pursuant to License Agreement with ICC. No further reproduction or distribution authorized. ANY UNAUTHORIZED REPRODUCTION OR DISTRIBUTION IS A VIOLATION OF THE FEDERAL COPYRIGHT ACT AND THE LICENSE AGREEMENT, AND SUBJECT TO CIVIL AND CRIMINAL PENALTIES THEREUNDER.

CONDITIONED SPACE. An area, room or space that is enclosed within the building thermal envelope and that is directly or indirectly heated or cooled. Spaces are indirectly heated or cooled where they communicate through openings with conditioned spaces, where they are separated from conditioned spaces by uninsulated walls, floors or ceilings, or where they contain uninsulated ducts, piping or other sources of heating or cooling.

❖ A conditioned space is typically any space that does not communicate directly to the outside; that is, a space not directly ventilated to the outdoors and meets one of the following criteria:

1. The space has a heating or cooling supply register.
2. The space has heating or cooling equipment designed to heat or cool the space, or both, such as a radiant heater built into the ceiling, a baseboard heater or a wall-mounted gas heater.
3. The space contains uninsulated ducts or uninsulated hydronic heating surfaces.
4. The space is inside the building thermal envelope. For example:
   - A basement with insulated walls but without insulation on the basement ceiling.
   - A closet on a home's exterior wall that is insulated on the exterior surface of the closet wall.
   - A space adjacent to and not physically separated from a conditioned space (such as a room adjacent to another room with a heating duct but without a door that can be closed between the rooms).
   - A room completely surrounded by conditioned spaces.

The builder/designer has some flexibility in defining the bounds of the conditioned space as long as the building envelope requirements are met. Spaces that are not conditioned directly but have uninsulated surfaces separating them from conditioned spaces are included within the insulated envelope of the building. For example, an unventilated crawl space below an uninsulated floor is considered part of the conditioned space, even where no heat is directly supplied to the crawl space area. Where the crawl space is included as a conditioned space, the builder must insulate the exterior crawl space walls instead of the floor above. The task of defining the building envelope is left to the permit applicant.

Examples of unconditioned spaces include garages and basements that are neither heated nor cooled if all duct surfaces running through these spaces are insulated; attached sunrooms that are neither heated nor cooled and have insulated/weatherstripped doors to separate the sun space from the conditioned space; attics; and ventilated crawl spaces. Note that the boundary between the conditioned and unconditioned space is subject to the infiltration control requirements of the code (see commentary, Section R402.4).

Historically, the code tied this definition to "conditioning for human comfort" or by specifying that the conditioning fall within a specific range. Starting with the 2006 edition, the code considers any type of conditioning as creating a "conditioned space." Therefore, providing heating within a storage building to keep the stock from freezing would still be considered as creating a conditioned space.

CONTINUOUS AIR BARRIER. A combination of materials and assemblies that restrict or prevent the passage of air through the building thermal envelope.

❖ This term is used throughout the code. This definition is necessary to clarify the options for meeting continuous air barrier requirements.

CONTINUOUS INSULATION (ci). Insulating material that is continuous across all structural members without thermal bridges other than fasteners and service openings. It is installed on the interior or exterior, or is integral to any opaque surface, of the building envelope.

❖ The need for more insulation on exterior walls has created the need to specify continuous insulation on the exterior side of the wall for certain climate zones in Chapter 4. Thus the need for this definition.

CRAWL SPACE WALL. The opaque portion of a wall that encloses a crawl space and is partially or totally below grade.

❖ Because exterior crawl space walls may be in contact with the ground, they exhibit different heat transfer properties than those of exterior above-grade walls or even basement walls. Thus, the code includes different thermal requirements for exterior crawl space walls.

This definition and distinction is also to help coordinate with Section R402.2.11. While a basement is defined as a "conditioned space," crawl spaces may be designed to be either conditioned or unconditioned spaces.

CURTAIN WALL. Fenestration products used to create an external nonload-bearing wall that is designed to separate the exterior and interior environments.

❖ This definition is included to help classify and properly apply the code requirements to these products. The industry uses the term to help establish the requirements and separate the products into different groupings. Without defining the curtain wall as a fenestration product, it would be difficult to determine how to properly apply the building envelope requirements.

DEMAND RECIRCULATION WATER SYSTEM. A water distribution system where pump(s) prime the service

INTERNATIONAL CODE COUNCIL®
Copyright © 2015 ICC. ALL RIGHTS RESERVED. Accessed by David Dammon on Jun 21, 2017 12:30:52 PM pursuant to License Agreement with ICC. No further reproduction or distribution authorized. ANY UNAUTHORIZED REPRODUCTION OR DISTRIBUTION IS A VIOLATION OF THE FEDERAL COPYRIGHT ACT AND THE LICENSE AGREEMENT, AND SUBJECT TO CIVIL AND CRIMINAL PENALTIES THEREUNDER.

hot water piping with heated water upon demand for hot water.

❖ This is essential in the code to define a water distribution system in order to establish requirements for insulation to retain the heated water upon demand for hot water and conserve energy usage.

DUCT. A tube or conduit utilized for conveying air. The air passages of self-contained systems are not to be construed as air ducts.

❖ Ducts can be factory manufactured or field constructed of sheet metal, gypsum board, fibrous glass board or other approved materials. Ducts are used in air distribution systems, exhaust systems, smoke control systems and combustion air-supply systems. Air passageways that are integral parts of an air handler, packaged air-conditioning unit or similar piece of self-contained, factory-built equipment are not considered ducts in the context of the code.

DUCT SYSTEM. A continuous passageway for the transmission of air that, in addition to ducts, includes duct fittings, dampers, plenums, fans and accessory air-handling equipment and appliances.

❖ Duct systems are part of an air distribution system and include supply, return, transfer and relief/exhaust air systems.

DWELLING UNIT. A single unit providing complete independent living facilities for one or more persons, including permanent provisions for living, sleeping, eating, cooking and sanitation.

❖ A dwelling unit contains elements necessary for independent living (living spaces such as family rooms, dining rooms, living rooms, dens, etc.; sleeping quarters; food preparation and eating spaces; and personal hygiene, cleanliness and sanitation facilities). A dwelling unit is typically owner occupied, rented or leased. The code requirements are applied consistently to all dwellings whether owner occupied, rented or leased. A dwelling unit can exist singularly as a one-family dwelling or in combination with other dwelling units. When two dwelling units are grouped together in the same structure, the structure is considered a two-family dwelling. Three or more dwelling units in the same structure are considered a multiple-family dwelling. Note that under this definition, rooms in hotels and motels are not considered dwelling units but rather guestrooms or a sleeping unit, because they usually lack complete living, sanitation and eating facilities and are generally characterized as having transient occupancy patterns.

ENERGY ANALYSIS. A method for estimating the annual energy use of the *proposed design* and *standard reference design* based on estimates of energy use.

❖ Designs founded on simulated performance alternative (performance) (see Section R405) use energy analysis when the design professional requires more flexibility for a sophisticated or innovative design. Using the total-building-performance design methodology, the proposed design is evaluated based on the cost of various types of energy used rather than the units of energy used (Btu, kWh). That cost must be established using an hour-by-hour, full-year (8,760 hours) simulation tool capable of simulating the performance of both the proposed and standard designs (see commentary, "Energy simulation tool"). The simulation must be capable of converting calculated energy demand and consumption into utility costs using the actual utility rate schedules rather than the average cost of electricity or gas.

ENERGY COST. The total estimated annual cost for purchased energy for the building functions regulated by this code, including applicable demand charges.

❖ The total annual cost for purchased energy includes demand, power and fuel adjustment charges and the impact of special rate programs for large volume customers. A thorough evaluation of existing tariffs and fee schedules may uncover substantial savings opportunities. In some states, for example, manufacturing customers are exempt from sales taxes for energy. In other states, utilities may have multiple tariff options.

ENERGY SIMULATION TOOL. An *approved* software program or calculation-based methodology that projects the annual energy use of a building.

❖ An energy simulation tool is typically a software package incorporating, among other features, an hour-by-hour, full-year (8,760 hours), multiple-zone program to simulate the performance of both proposed and standard design buildings. It is possible to use other types of simulation tools to approximate the dynamics of hourly energy programs and that can be shown to produce equivalent results for the type of building and HVAC systems under consideration. However, the simulation must be capable of converting calculated energy demand and consumption into utility costs using the actual utility rate schedules (rather than average cost of electricity or gas). Some examples of when an hour-by-hour, full-year type of program is required are:

- When the features intended to reduce energy consumption require time-of-day interactions between weather, loads and operating criteria. Examples include: night ventilation or building thermal storage; chilled water or ice storage; heat recovery; daylighting; and water economizer cooling.
- When utility rates are time-of-day sensitive, and the proposed design uses time-of-day load shifting between different types of mechanical plant components.

Another distinguishing feature among simulation tools is their sophistication in modeling HVAC systems and plant equipment. Basically, three levels of complexity are used: constant efficiency models; models with simple part-load efficiency adjustment; and models with complex part-load efficiency adjust-

INTERNATIONAL CODE COUNCIL®
Copyright © 2015 ICC. ALL RIGHTS RESERVED. Accessed by David Dammon on Jun 21, 2017 12:30:52 PM pursuant to License Agreement with ICC. No further reproduction or distribution authorized. ANY UNAUTHORIZED REPRODUCTION OR DISTRIBUTION IS A VIOLATION OF THE FEDERAL COPYRIGHT ACT AND THE LICENSE AGREEMENT, AND SUBJECT TO CIVIL AND CRIMINAL PENALTIES THEREUNDER.

ment. Simulation tools in the first category simply calculate hourly equipment input power requirements at part load by applying the full-load efficiency at any given hour. These programs should be avoided for all but constant load applications. Simulated tools with simple part-load efficiency adjustments use a profile of percent-rated input power versus percent-rated load. At each hour, these programs calculate input power to each piece of equipment. These tools are far more accurate than the constant-efficiency models, but still lack accurate compensation for environmental variables.

Building energy simulation tools, available for analyzing daylighting, passive solar design and solar systems, are described in more detail at www.eere.energy.gov/buildings/tools_directory/. This is a portion of the U.S. Department of Energy's Energy Efficiency and Renewable Energy website.

The information includes program uses, computer hardware required, price and contact information. The most sophisticated simulation tools incorporate a number of profiles for each and every piece of equipment. For variable flow fans, this might be as simple as a single profile of percent-rated input power versus percent-rated airflow. For more complex equipment, such as a cooling tower, the program considers such variables as the wet-bulb temperature, the approach (difference between the condenser water supply temperature and the wet-bulb temperature) and the range (difference between the condenser water entering and leaving temperatures). Each of these variables is used to adjust both the hourly capacity of the tower and the hourly operation (one fan, two fans, no fans). For all but the simplest systems, programs of this category must be used to obtain accurate results. Questions regarding a particular tool's ability to model the building on an hour-by-hour, full-year basis should be addressed to the proprietor or distributor.

ERI REFERENCE DESIGN. A version of the rated design that meets the minimum requirements of the 2006 *International Energy Conservation Code.*

❖ The Energy Rating Index compliance alternative utilizes the ERI Reference Design (see Section R406).

EXTERIOR WALL. Walls including both above-grade walls and basement walls.

❖ Wall insulation requirements defined in the code include almost all opaque exterior construction bounding conditioned space. Depending on the compliance method, the wall type, glazing percentage and whether the wall is on the exterior or just separating conditioned from unconditioned space can affect the wall insulation requirement. Note also that doors (both glazed and opaque) are considered fenestration (see commentary, "Fenestration").

In earlier editions, the code included the limitation that an exterior wall is vertical or sloped at an angle of 60 degrees (1.1 rad) or greater from the horizontal. This limitation may still be helpful to consider if dealing with unusual situations such as an A-frame building. Where a determination is needed to decide whether the roof or wall provisions are appropriate, this limitation could be helpful.

FENESTRATION. Products classified as either *vertical fenestration* or *skylights*.

❖ The term "fenestration" refers both to opaque and glazed doors and the light-transmitting areas of a wall or roof, but primarily windows and skylights. The code sets performance requirements for fenestration by establishing requirements that differ from the wall and roof requirements based on the type of fenestration and in the case of the prescriptive commercial requirements by limiting the fenestration area. In some of the compliance options the fenestration type and area allowed depend on the shading coefficient, the size of overhangs, the thermal performance (*U*-factor) and whether daylighting controls are installed.

FENESTRATION PRODUCT, SITE-BUILT. A fenestration designed to be made up of field-glazed or field-assembled units using specific factory cut or otherwise factory-formed framing and glazing units. Examples of site-built fenestration include storefront systems, curtain walls and atrium roof systems.

❖ Fenestration products can be site-built, not to be confused with field-fabricated fenestration products. This definition is installed to make that distinction.

***F*-FACTOR.** The perimeter heat loss factor for slab-on-grade floors (Btu/h · ft · °F) [W/(m · K)].

❖ As defined, *F*-factor is needed in the provisions of the code for the *U*-factor alternative given in Section R402.1.4.

HEATED SLAB. Slab-on-grade construction in which the heating elements, hydronic tubing, or hot air distribution system is in contact with, or placed within or under, the slab.

❖ The space above a heated slab is always conditioned (heated). The definition clarifies that certain slabs are the heating source and, as covered in the code, may require more insulation than unheated slabs. The installation of a radiant heat source in a space does not, in and of itself, qualify a slab as heated.

HIGH-EFFICACY LAMPS. Compact fluorescent lamps, T-8 or smaller diameter linear fluorescent lamps, or lamps with a minimum efficacy of:

1. 60 lumens per watt for lamps over 40 watts;
2. 50 lumens per watt for lamps over 15 watts to 40 watts; and
3. 40 lumens per watt for lamps 15 watts or less.

❖ The code requires that a percentage of permanent lighting fixtures have high-efficacy lamps. Therefore, this definition is necessary to specify the required performance to qualify as a high-efficacy lamp.

INTERNATIONAL CODE COUNCIL®
Copyright © 2015 ICC. ALL RIGHTS RESERVED. Accessed by David Dammon on Jun 21, 2017 12:30:52 PM pursuant to License Agreement with ICC. No further reproduction or distribution authorized. ANY UNAUTHORIZED REPRODUCTION OR DISTRIBUTION IS A VIOLATION OF THE FEDERAL COPYRIGHT ACT AND THE LICENSE AGREEMENT, AND SUBJECT TO CIVIL AND CRIMINAL PENALTIES THEREUNDER.

HISTORIC BUILDING. Buildings that are listed in or eligible for listing in the National Register of Historic Places, or designated as historic under an appropriate state or local law.

❖ Historic buildings are given some relief from the requirements of the code (see Section R501.6).

INFILTRATION. The uncontrolled inward air leakage into a building caused by the pressure effects of wind or the effect of differences in the indoor and outdoor air density or both.

❖ Air leakage is random movement of air into and out of a building through cracks and holes in the building envelope. In technical terms, air leakage is called "infiltration" (air moving into a building) or "exfiltration" (air moving out of a building). In nontechnical terms, air leaks are often referred to as "drafts." Infiltration may be reduced by either reducing the sources of air leakage (joints, penetrations and holes in the building envelope) or by reducing the pressures driving the airflow.

INSULATED SIDING. A type of continuous insulation with manufacturer-installed insulating material as an integral part of the cladding product having a minimum *R*-value of R-2.

INSULATING SHEATHING. An insulating board with a core material having a minimum *R*-value of R-2.

❖ Some exterior hardboard and vinyl siding products are not recommended for use in direct contact with aluminum-foil-faced sheathing products (check with the product manufacturer). Other sheathing products are uniquely designed for use in direct contact with wood, brick, vinyl, aluminum and hardboard-based sidings. To be considered insulating sheathing the product must have an *R*-value no less than R-2.

LABELED. Equipment, materials or products to which have been affixed a label, seal, symbol or other identifying mark of a nationally recognized testing laboratory, inspection agency or other organization concerned with product evaluation that maintains periodic inspection of the production of the above-labeled items and where labeling indicates either that the equipment, material or product meets identified standards or has been tested and found suitable for a specified purpose.

❖ When a product is labeled, the label indicates that the equipment or material has been tested for conformance to an applicable standard and that the component is subject to third-party inspection, which verifies that the minimum level of quality required by the applicable standard is maintained. Labeling is a readily available source of information that is useful for field inspection of installed products. The label identifies the product or material and provides other information that can be further investigated if there is a question concerning the suitability of the product or material for the specific installation. The labeling agency performing the third-party inspection must be approved by the code official and the basis for this approval may include, but is not necessarily limited to, the capacity and capability of the agency to perform the specific testing and inspection. The applicable referenced standard often states the minimum identifying information that must be on a label. The data contained on a label typically includes, but is not necessarily limited to, the name of the manufacturer, the product name or serial number, installation specifications, applicable tests and standards, the testing approved and the labeling agency.

LISTED. Equipment, materials, products or services included in a list published by an organization acceptable to the *code official* and concerned with evaluation of products or services that maintains periodic inspection of production of *listed* equipment or materials or periodic evaluation of services and where the listing states either that the equipment, material, product or service meets identified standards or has been tested and found suitable for a specified purpose.

❖ Not all testing laboratories, inspection agencies and other organizations concerned with product evaluation use the same means for identifying listed equipment, appliances or materials. Some do not recognize equipment, appliances or materials as listed unless they are also labeled. The authority having jurisdiction must use the same system used by the listing organization to identify a listed product. In general, all equipment and appliances regulated by the I-Codes are to be listed and labeled unless otherwise approved in accordance with Section R102.1, which allows use of alternative materials, methods and equipment. As stated in the definition, the listing states either that the equipment or material meets nationally recognized standards or it has been found suitable for use in a specified manner. The listing becomes part of the documentation that the code official can use to approve or disapprove the equipment or appliance.

LOW-VOLTAGE LIGHTING. Lighting equipment powered through a transformer such as a cable conductor, a rail conductor and track lighting.

❖ Track lighting is a form of low-voltage lighting featuring a continuous-powered track that accepts fixtures (called heads) anywhere along its length. The heads and the wide variety of lamps (bulbs) they accept suit virtually every lighting situation, and most heads are also adjustable. One-, two-, three- and four-circuit tracks let the lighting design professional mix standard and low-voltage heads or have multiple switching options. Track systems are easily modified or added to as lighting needs change. Although tracks can be recessed flush with a ceiling surface or suspended from posts, they are typically fastened to the surface either directly or with mounting clips. Controls ranging from a simple on/off switch to elaborate programmable dimming devices are widely available, making the system extremely flexible.

MANUAL. Capable of being operated by personal intervention (see "Automatic").

❖ Devices, systems or equipment having manual controls or overrides are designed to operate safely with

INTERNATIONAL CODE COUNCIL®
Copyright © 2015 ICC. ALL RIGHTS RESERVED. Accessed by David Dammon on Jun 21, 2017 12:30:52 PM pursuant to License Agreement with ICC. No further reproduction or distribution authorized. ANY UNAUTHORIZED REPRODUCTION OR DISTRIBUTION IS A VIOLATION OF THE FEDERAL COPYRIGHT ACT AND THE LICENSE AGREEMENT, AND SUBJECT TO CIVIL AND CRIMINAL PENALTIES THEREUNDER.

only human intervention instead of having an automatic operation or control system (see commentary, "Automatic").

A typical light switch would be an example of a manual device. The lights that the switch controls stay either off or on until a person flips the switch to the appropriate position.

PROPOSED DESIGN. A description of the proposed *building* used to estimate annual energy use for determining compliance based on total building performance.

❖ The proposed design is simply a description of the proposed building, used to estimate annual energy costs for determining compliance based on total building performance. The proposed design is effectively the subject building intended to be built. The performance of the proposed design (the building exactly as it is anticipated to be constructed) is then compared to the standard reference design (a similar building that is assumed to be built to a prescriptive set of minimum code requirements). Although the method permits trade-offs in energy use between different systems, the proposed design must still comply with the general requirements. General "mandatory" requirements are separately specified in Chapter 4 [RE]. For instance, the air-leakage requirements are general requirements that apply, even if the project uses any one of the two performance methods referenced above. The general requirements still apply for several reasons, including:

- Many basic requirements cannot be accurately modeled (such as subdivision of feeders).
- Many requirements are inherently cost effective (such as variable speed drives or large motors and minimizing air leakage).
- Some basic requirements are calculation methodologies that establish a fair basis for comparing component performance (such as *U*-factor calculations).
- Some basic requirements are not intended for trade-offs (such as exterior lighting).

RATED DESIGN. A description of the proposed *building* used to determine the energy rating index.

❖ See Section 406 for application.

READILY ACCESSIBLE. Capable of being reached quickly for operation, renewal or inspection without requiring those to whom ready access is requisite to climb over or remove obstacles or to resort to portable ladders or access equipment (see "*Accessible*").

❖ Readily accessible can be described as able to be quickly reached or approached for operation, inspection, observation or emergency action. Ready access does not require the removal or movement of any door panel or similar obstruction, or overcoming physical obstructions or obstacles, including differential elevation.

REPAIR. The reconstruction or renewal of any part of an existing building for the purpose of its maintenance or to correct damage.

❖ The repair of an item, appliance, energy-using subsystem or other piece of equipment typically does not require a permit. This definition makes it clear that a repair is limited to work on the item, and does not include its replacement or other new work.

This definition is important when applying the provisions of Section R504 and determining how the code will apply to existing buildings and installations.

REROOFING. The process of recovering or replacing an existing *roof covering*. See "Roof recover" and "Roof replacement."

RESIDENTIAL BUILDING. For this code, includes detached one- and two-family dwellings and multiple single-family dwellings (townhouses) as well as Group R-2, R-3 and R-4 buildings three stories or less in height above grade plane.

❖ The definition of a residential building is important not only for what it does include, but also for what it does not. One of the primary limitations of this definition is the fact that this term will only include Group R-2 and R-4 occupancies when they are three stories or less in height. Therefore, if a Group R-2 or R-4 occupancy is over three stories in height, it would be defined as a "Commercial building" (see definition, "Commercial building") and be required to comply with the requirements of Chapter 4[CE] instead of the residential provisions of Chapter 4 [RE]. Buildings that are classified as an R-3 are not affected by the three-story limitation. Because of this, a one- or two-family dwelling would always be considered as a residential building regardless of the number of stories.

It should be noted that a Group R-1 building is not included in this definition. Therefore, any hotel, motel or similar use that is classified as an R-1 must comply with commercial building requirements. This applies even if the hotel or motel is three stories or less in height.

Though not specifically addressed within this definition, any building built under the provisions of the *International Residential Code*® (IRC®) would also be considered a "residential building."

The Group R-2 classification of residential buildings includes apartments and condominiums where three or more units are physically attached. In addition, it includes certain boarding houses, convents, dormitories, fraternities or other such facilities. The code defines a dwelling unit as a single housekeeping unit of one or more rooms providing complete independent living facilities, including permanent provisions for living, sleeping, cooking and sanitation (see commentary, "Dwelling unit"). Many of the code provisions address dwelling units specifically. All of the elements listed in the definition must be present for a dwelling

INTERNATIONAL CODE COUNCIL®
Copyright © 2015 ICC. ALL RIGHTS RESERVED. Accessed by David Dammon on Jun 21, 2017 12:30:52 PM pursuant to License Agreement with ICC. No further reproduction or distribution authorized. ANY UNAUTHORIZED REPRODUCTION OR DISTRIBUTION IS A VIOLATION OF THE FEDERAL COPYRIGHT ACT AND THE LICENSE AGREEMENT, AND SUBJECT TO CIVIL AND CRIMINAL PENALTIES THEREUNDER.

unit to exist. Guestrooms (sleeping units) in hotels, motels, nursing homes and larger group care facilities do not meet this criteria. Therefore, these buildings are considered as commercial uses, even if they are three stories or less in height (see the IBC for additional information on dwelling units). Although this definition closely follows the Group R-2 occupancy classification of the IBC, it is important to note there are differences. The main distinction is the three-story limitation, which is found only in the code. It is also important to note that townhouses are not considered as being a part of this definition.

The R-4 classification is included in order to coordinate the provisions of the code with the IBC. These small residential care/assisted-living facilities are considered residential buildings based on Sections 310.1 and 310.2 of the IBC. This distinction is important because larger facilities are classified by the IBC as institutional occupancies and, therefore, would be considered commercial buildings by the code (see "Commercial building").

As mentioned earlier, it is important to note the application of the three-story limitation, which is found only in the code. This issue of defining a residential building over three stories in height as a commercial building coordinates the code with ANSI/ASHRAE/IESNA 90.1.

ROOF ASSEMBLY. A system designed to provide weather protection and resistance to design loads. The system consists of a roof covering and roof deck or a single component serving as both the roof covering and the roof deck. A roof assembly includes the roof covering, underlayment, roof deck, insulation, vapor retarder and interior finish.

❖ This section basically defines the cover or protection over a building but it will be important to the energy requirements in several sections. The roof assembly generally serves as the building thermal envelope for the top of the building. By defining the various elements that are included in the definition, the phrase can be applied to situations where the insulation is installed above the roof deck, beneath the roof deck or above a ceiling that occurs below.

The "Roof assembly" definition will be important not only when applying the prescriptive insulation requirements of the building thermal envelope but also when applying the performance requirements where the type of roof covering and ventilation can affect the energy efficiency.

Numerous horizontal and sloped surfaces may be associated with the roof or roof/ceiling assembly, including flat and cathedral ceilings, dormer roofs, bay-window roofs, overhead portions of an interior stairway to an attic, or other unconditioned space, attic hatches and skylights. When determining the area of the assembly under the performance options, ceiling assembly areas should be measured on the slope of the finished interior surface.

In earlier editions, the code included the limitation that a roof is generally horizontal or sloped at an angle of less than 60 degrees (1.1 rad) from the horizontal. This limitation may still be helpful to consider if dealing with unusual situations such as an A-frame building. Where a determination is needed to decide whether the roof or wall provisions are appropriate, this limitation could be helpful (see commentary, "Exterior wall" and "Skylight," as well as the definition in IBC Section 202).

ROOF RECOVER. The process of installing an additional *roof covering* over a prepared existing *roof covering* without removing the existing *roof covering*.

❖ Roof recover is considered an alteration to the building. In the application of Section R503, roof recover is exempt from the code requirements.

ROOF REPAIR. Reconstruction or renewal of any part of an existing roof for the purposes of its maintenance.

❖ See Section R504 for application.

ROOF REPLACEMENT. The process of removing the existing *roof covering*, repairing any damaged substrate and installing a new *roof covering*.

❖ This is a form of alteration to a building and may or may not require additional energy conservation measures, such as insulation in the roof cavity, depending upon the extent of work (see Section R503).

***R*-VALUE (THERMAL RESISTANCE).** The inverse of the time rate of heat flow through a body from one of its bounding surfaces to the other surface for a unit temperature difference between the two surfaces, under steady state conditions, per unit area ($h \cdot ft^2 \cdot °F/Btu$) [$(m^2 \cdot K)/W$].

❖ Thermal resistance measures how well a material or series of materials retards heat flow. Insulation thermal resistance is rated using *R*-values. As the *R*-value of an element or assembly increases, the heat loss or gain through that element or assembly decreases. Thus, a higher *R*-value is considered better than a lower *R*-value.

SERVICE WATER HEATING. Supply of hot water for purposes other than comfort heating.

❖ Although the definition makes it clear that the code requirement applies to equipment used to produce and distribute hot water for purposes other than comfort heating, the definition also applies to energy-efficient process water heating systems and equipment. Equipment providing or distributing hot water for uses such as restrooms, showers, laundries, kitchens, pools and spas, defrosting of sidewalks and driveways, carwashes, beauty salons and other commercial enterprises are included. Space-conditioning boilers and distribution systems are not considered service water heating components.

SKYLIGHT. Glass or other transparent or translucent glazing material installed at a slope of less than 60 degrees (1.05 rad) from horizontal.

❖ A skylight is a glazed opening in a roof to admit daylight. Skylights are often the only method of bringing

INTERNATIONAL CODE COUNCIL®
Copyright © 2015 ICC. ALL RIGHTS RESERVED. Accessed by David Dammon on Jun 21, 2017 12:30:52 PM pursuant to License Agreement with ICC. No further reproduction or distribution authorized. ANY UNAUTHORIZED REPRODUCTION OR DISTRIBUTION IS A VIOLATION OF THE FEDERAL COPYRIGHT ACT AND THE LICENSE AGREEMENT, AND SUBJECT TO CIVIL AND CRIMINAL PENALTIES THEREUNDER.

natural light into an interior, enclosed area. Unfortunately, these fixtures often do their job too well. Installing too many skylights or ones too large for the room can lead to overheating during warm-weather months. Also, choosing the most energy-efficient models can compromise light transmission—the reason people buy skylights in the first place.

Skylights are available in a variety of sizes and shapes, though rectangular units are the most common. Although most skylights are fixed or inoperable, others can be opened and shut like a window or have hidden ventilating systems. Large operable skylights designed for the sloping ceilings of attic rooms are even marketed as "roof windows." These approaches help cool the room in warm weather by venting hot air. The IBC requires either tempered or laminated glass in skylights. Both types are designed to stand up to snow loads and provide protection against falling objects. Tempered glass breaks into small pieces, rather than large shards, if damaged. Laminated glass, which is fused with a thin layer of plastic, stays in place for added safety if broken. Laminated glass is also better at keeping out sound and is slightly more energy efficient, though also slightly more expensive. Skylights are not energy efficient. They collect little heat during the winter, which is when it is needed most, when the sun is low in the sky. Worse yet, because they're located where the pressure difference between the inside and outside of the house is greatest, skylights are an easy escape route for heated air. Also, in the summer they can heat up the home quickly—when it is not needed.

Like windows, skylights offer a variety of energy-efficient glazing options, including low-e and tinted glass. Green tints are better than bronze tints for reducing solar heat gain while letting in plenty of visible light. And because skylights usually are not visible from the street, tinted glazings are less likely to affect aesthetics.

It is important to note that the term "skylight" can also include glazed roofs and sloped walls. This distinction can affect the proper application of the code requirements. To help determine the appropriate *U*-factor, this definition includes the slope limitation, which is shown. If the slope of the roof or sloped wall is 15 degrees (0.26 rad) or more from the vertical, then the skylight *U*-factor is appropriate. If the slope is less than 15 degrees (0.26 rad), then the glazing would be considered a fenestration in a wall. As an example using the requirements of Table R402.1.2 for Climate Zone 1, a skylight would require a *U*-factor of 0.75, while the fenestration in a wall would require a *U*-factor of 1.20. Both the skylight and the more vertical wall fenestration would require a solar heat gain coefficient (SHGC) of 0.30 (see Table R402.1.2, Note b).

SOLAR HEAT GAIN COEFFICIENT (SHGC). The ratio of the solar heat gain entering the space through the fenestration assembly to the incident solar radiation. Solar heat gain includes directly transmitted solar heat and absorbed solar radiation that is then reradiated, conducted or convected into the space.

❖ The SHGC is the fraction of incident solar radiation admitted through a window or skylight. This includes the solar radiation that is directly transmitted, and that which is absorbed and subsequently released inward. Therefore, the SHGC measures how well a window blocks the heat from sunlight. The SHGC is the fraction of the heat from the sun that enters through a window. SHGC is expressed as a number between 0 and 1. The lower a window's SHGC, the less solar heat it transmits.

In the warmer climate zones, where cooling is the dominant requirement, the code will generally impose a limitation on the amount of solar heat gain permitted. In colder climate zones, the code will generally not place any SHGC requirement on the fenestration. Thus, it will depend on the climate zone as to whether a higher or lower SHGC is best. While windows with lower SHGC values reduce summer cooling and overheating, they also reduce free winter solar heat gain.

STANDARD REFERENCE DESIGN. A version of the *proposed design* that meets the minimum requirements of this code and is used to determine the maximum annual energy use requirement for compliance based on total building performance.

❖ The standard reference design is simply the same building design as that intended to be built (see commentary, "Proposed design"), except the energy conservation features required by the code (insulation, windows, infiltration, mechanical, lighting and service water-heating systems) are modified to meet the minimum prescriptive requirements, as applicable. Note that the standard reference design is not truly a separate building, and it is never actually built. It is the baseline against which the proposed design is measured.

The performance of the proposed design (the building exactly as it is anticipated to be constructed) is then compared to the standard reference design (a similar building that is assumed to be built to a prescriptive set of minimum code requirements). Under the performance paths, if the energy efficiency of the proposed design is equal to or better than that of the standard reference design, then the proposed design is acceptable and in compliance with the code requirements.

SUNROOM. A one-story structure attached to a dwelling with a glazing area in excess of 40 percent of the gross area of the structure's exterior walls and roof.

❖ Sunrooms are unique rooms that create a space differing in character from that provided by conventional portions of a dwelling. Sunrooms and other highly glazed structures are sometimes called conservatories or solariums. These sunrooms are often added onto an existing building but there is nothing in the

INTERNATIONAL CODE COUNCIL®
Copyright © 2015 ICC. ALL RIGHTS RESERVED. Accessed by David Dammon on Jun 21, 2017 12:30:52 PM pursuant to License Agreement with ICC. No further reproduction or distribution authorized. ANY UNAUTHORIZED REPRODUCTION OR DISTRIBUTION IS A VIOLATION OF THE FEDERAL COPYRIGHT ACT AND THE LICENSE AGREEMENT, AND SUBJECT TO CIVIL AND CRIMINAL PENALTIES THEREUNDER.

code that would prohibit them from being constructed as a part of a new dwelling.

This definition distinguishes sunrooms from other conventional spaces because they are limited to one story in height and the total glazing area needs to be at least 40 percent of the exterior wall and roof area of the sunroom. This definition and its use in Sections R402.2.2 and R402.3.5 are important since most dwellings do not have such large amounts of glazing.

Many of these sunrooms are constructed to be unconditioned spaces and will not have any type of heating or cooling. Other sunrooms may be conditioned indirectly by openings from the adjacent conditioned space of the dwelling, provided with a separate space conditioning system or designed as a separate zone from the dwelling's space conditioning system. Due to the large amount of glazing and, therefore, the probability that the sunroom will either be hot in the summer or cold in the winter and may be unused during such times, the code provisions address the thermal isolation of these spaces (see definition, "Thermal isolation"). When addressing the thermal isolation of sunrooms, the provisions of Sections R402.2.13 and R402.3.5 need to be reviewed and code users need to realize how those sections cordinate with Section R501.1.1. Section R402.3.5 requires that "new" walls separating a sunroom from a conditioned space must comply with the building thermal envelope requirements. Therefore, if a sunroom is built as an addition to an existing dwelling, the existing wall between the sunroom and any conditioned space is not regulated.

THERMAL ISOLATION. Physical and space conditioning separation from *conditioned space(s)*. The *conditioned space*(s) shall be controlled as separate zones for heating and cooling or conditioned by separate equipment.

❖ This term is conceptually similar to the separation provided by the building envelope, but instead of being between conditioned space and the exterior or conditioned space and unconditioned space, this separation occurs between two conditioned spaces. In this situation it is the separation between the dwelling and the sunroom. Therefore, where the sunroom is an addition, the existing exterior wall of the dwelling will generally provide the thermal isolation between the dwelling and the sunroom at the point where the sunroom addition is attached. If a new door or window opening is added to permit passage between or to provide a connection with the dwelling and the sunroom, that new door or window is required to comply with the fenestration *U*-factor specified in Table R402.1.2. By requiring the maximum *U*-factor, it ensures a reasonable level of energy conservation between the dwelling and the sunroom, so they would not need to be brought into compliance with the *U*-factor specified in the table.

This exemption for the existing doors and windows is based not only on the language in this definition, but also on the scoping requirements found in Section R402.3.5. Since these existing doors and windows would serve as a part of the building envelope for the dwelling prior to the addition of the sunroom, they may be accepted as a part of the thermal isolation between the dwelling and any new sunroom addition (see commentary, "Sunroom" and Section R402.3.5).

This definition is also important due to the restriction that it places on the heating and cooling system for the various spaces. In order to be thermally isolated, the two spaces are either served by separate systems or as separate zones on a common system.

THERMOSTAT. An automatic control device used to maintain temperature at a fixed or adjustable set point.

❖ Thermostats combine control and sensing functions in a single device. Thermostats may signal other control devices to trigger an action when certain temperatures are reached or surpassed. Because thermostats are so prevalent, the various types and their operating characteristics are described here.

The occupied-unoccupied or dual-temperature room thermostat reduces temperature at night. It may be indexed (changed from occupied to unoccupied operation or vice versa) individually from a remote point or in a group by a manual or time switch. Some types have an individual clock and switch built in.

The pneumatic day-night thermostat uses a two-pressure air supply system, where changing the pressure at a central point from one value to the other actuates switching devices in the thermostat and indexes it.

The heating-cooling or summer-winter thermostat can have its action reversed and its set point changed in response to outdoor and comfort conditions. It is used to actuate controlled devices, such as valves or dampers that regulate a heating source at one time and a cooling source at another. The pneumatic heating-cooling thermostat uses a two-pressure air supply similar to that described for occupied-unoccupied thermostats.

Multistage thermostats are arranged to operate two or more successive steps in sequence.

A submaster thermostat has its set point raised or lowered over a predetermined range, in accordance with variations in output from a master controller. The master controller can be a thermostat, manual switch, pressure controller or similar device. For example, a master thermostat measuring outdoor air temperature can be used to readjust the set point of a submaster thermostat that controls the water temperature in a heating system.

A wet-bulb thermostat is often used (in combination with a dry-bulb thermostat) for humidity control. Using a wick or another means of keeping the bulb wet with pure (distilled) water and rapid air motion to ensure a true wet-bulb measurement is essential. Wet-bulb thermostats are seldom used.

A dew-point thermostat is designed to control dew-point temperatures.

A dead-band thermostat has a wide differential over which the thermostat remains neutral, requiring

INTERNATIONAL CODE COUNCIL®
Copyright © 2015 ICC. ALL RIGHTS RESERVED. Accessed by David Dammon on Jun 21, 2017 12:30:52 PM pursuant to License Agreement with ICC. No further reproduction or distribution authorized. ANY UNAUTHORIZED REPRODUCTION OR DISTRIBUTION IS A VIOLATION OF THE FEDERAL COPYRIGHT ACT AND THE LICENSE AGREEMENT, AND SUBJECT TO CIVIL AND CRIMINAL PENALTIES THEREUNDER.

neither heating nor cooling. This differential may be adjustable up to 10°F (-12°C) (see Section C403.2.4.1.2).

***U*-FACTOR (THERMAL TRANSMITTANCE).** The coefficient of heat transmission (air to air) through a building component or assembly, equal to the time rate of heat flow per unit area and unit temperature difference between the warm side and cold side air films (Btu/h · ft^2 · °F) [W/(m^2 · K)].

❖ Thermal transmittance (*U*-factor) is a measure of how well a material or series of materials conducts heat. *U*-factors for window and door assemblies are the reciprocal of the assembly *R*-value:

$$U\text{-factor} = \frac{1}{R\text{-value}}$$

For other building assemblies, such as a wall or roof/ceiling, the *R*-value used in the above equation is the *R*-value of the entire assembly, not just the insulation. This distinction is important and reflects the provisions of Sections R402.1.4 and R402.1.5. It also explains why there are differences between the comparable values of Tables R402.1.2 and R402.1.4.

The *U*-factors will be used in a number of locations of the code. When using the performance options or the "total UA alternative" (see Section R402.1.5), the individual thermal transmittance (*U*-factor) of each element is multiplied by the area of each envelope component (walls, floors, and ceilings) and the area of each fenestration element (doors, windows and skylights). Therefore, the UA is simply the *U*-factor times the area. For example, a 400-square-foot (37 m^2) wall with a *U*-factor of 0.082 would result in a UA of 32.8 (400 × 0.082 = 32.8). The total UA would simply be the sum of all of the individual UAs for each building element (walls, floors, ceilings, doors, windows and skylights).

VENTILATION. The natural or mechanical process of supplying conditioned or unconditioned air to, or removing such air from, any space.

❖ Ventilation is provided by the wind, naturally occurring pressure and temperature differences or mechanical systems typically consisting of fans and blowers.

VENTILATION AIR. That portion of supply air that comes from outside (outdoors) plus any recirculated air that has been treated to maintain the desired quality of air within a designated space.

❖ Ventilation air can be used for comfort cooling, control of air contaminants, equipment cooling and replenishing oxygen levels (see commentary, "Ventilation").

VERTICAL FENESTRATION. Windows (fixed or moveable), opaque doors, glazed doors, glazed block and combination opaque/glazed doors composed of glass or other transparent or translucent glazing materials and installed at a slope of a least 60 degrees (1.05 rad) from horizontal.

❖ Vertical fenestration is that which is typically installed on exterior walls. The required thermal efficiency of fenestration varies by climate zone (see Section R402.3).

VISIBLE TRANSMITTANCE [VT]. The ratio of visible light entering the space through the fenestration product assembly to the incident visible light, Visible Transmittance, includes the effects of glazing material and frame and is expressed as a number between 0 and 1.

❖ Use of daylight for energy conservation is now a fundamental part of the code. However, requirements for lower SHGC values for glazing can work against this because glazing with lower SHGC values generally will allow less visible light through the glazing. Therefore, the code now must include a limit on VT.

WHOLE HOUSE MECHANICAL VENTILATION SYSTEM. An exhaust system, supply system, or combination thereof that is designed to mechanically exchange indoor air with outdoor air when operating continuously or through a programmed intermittent schedule to satisfy the whole house ventilation rates.

❖ It is beneficial to have "Whole house mechanical ventilation system" defined in the code, as findings from a recent study commissioned by the DOE and the California Energy Commission identified that energy consumption of whole house mechanical ventilation systems is significant. Further, the study revealed that large disparities exist in the energy consumption and associated operating costs of whole house mechanical ventilation systems in cold, mild and hot, dry climates. Within the study, exhaust only systems balanced heat recovery systems, supply only systems, and central fan integrated systems were all modeled to assess resultant energy use and associated costs.

ZONE. A space or group of spaces within a building with heating or cooling requirements that are sufficiently similar so that desired conditions can be maintained throughout using a single controlling device.

❖ The simplest all-air system is a supply unit serving a single-temperature control zone. Ideally, this system responds completely to the space needs, and well-designed control systems maintain temperature and humidity closely and efficiently. Single-zone systems can be shut down when not required without affecting the operation of adjacent areas. Thus, in a thorough discussion of the term "zone," the concept of "zoning" for temperature control requires consideration.

Exterior zoning. Exterior zones are affected by varying weather conditions—wind, temperature and sun—and, depending on the geographic area and season, require both heating and cooling. This

INTERNATIONAL CODE COUNCIL®
Copyright © 2015 ICC. ALL RIGHTS RESERVED. Accessed by David Dammon on Jun 21, 2017 12:30:52 PM pursuant to License Agreement with ICC. No further reproduction or distribution authorized. ANY UNAUTHORIZED REPRODUCTION OR DISTRIBUTION IS A VIOLATION OF THE FEDERAL COPYRIGHT ACT AND THE LICENSE AGREEMENT, AND SUBJECT TO CIVIL AND CRIMINAL PENALTIES THEREUNDER.

variation gives the designer considerable flexibility in choosing a system and results in the greatest advantages. The need for separate perimeter zone heating is determined by:

- Severity of the heating load (i.e., geographic location).
- Nature and orientation of the building envelope.
- Effects of downdraft at windows and the radiant effect of the cold glass surface (type of glass, area, height and *U*-factor).
- Type of occupancy (sedentary versus transient).
- Operating costs (in buildings such as offices and schools that are occupied for considerable periods). Fan operating costs can be reduced by heating with perimeter radiation during unoccupied periods rather than operating the main supply fans or local unit fans.

Interior zoning. Conditions in interior spaces are relatively constant because they are isolated from external influences. Usually, interior spaces require cooling throughout the year. Interior spaces with a roof exposure, however, may require similar treatment to perimeter spaces requiring heat. To summarize, zone control is required when the conditions at the thermostat are not representative of all the rooms or the entire exposure. This situation will almost certainly occur if any of the following conditions exist:

- The building has more than one level.
- One or more spaces are used for entertaining large groups.
- One or more spaces have large glass areas.
- The building has an indoor swimming pool or hot tub.
- The building has a solarium or atrium. In addition, zoning may be required when several rooms or spaces are isolated from each other and from the thermostat.
- The building spreads out in many directions (wings).
- Some spaces are distinctly isolated from the rest of the building.
- The envelope only has one or two exposures.
- The building has a room or rooms in a basement.
- The building has a room or rooms in an attic space.
- The building has one or more rooms with slab or exposed floor.
- Zone control can be achieved by insulation.
- There are discrete heating/cooling duct systems for each zone requiring control.
- There are automatic zone damper systems in a single heating/cooling duct system.

INTERNATIONAL CODE COUNCIL®
Copyright © 2015 ICC. ALL RIGHTS RESERVED. Accessed by David Dammon on Jun 21, 2017 12:30:52 PM pursuant to License Agreement with ICC. No further reproduction or distribution authorized. ANY UNAUTHORIZED REPRODUCTION OR DISTRIBUTION IS A VIOLATION OF THE FEDERAL COPYRIGHT ACT AND THE LICENSE AGREEMENT, AND SUBJECT TO CIVIL AND CRIMINAL PENALTIES THEREUNDER.

Chapter 3 [RE]: General Requirements

General Comments

Chapter 3 [RE] specifies the climate zones establishing exterior design conditions and provides general requirements for interior design conditions, and materials, systems and equipment. In general, the climate zone provisions are determined simply by referring to the map (see Figure R301.1) or by looking at the tables [see Tables R301.1, R301.3(1) and R301.3(2)]. In addition, Section R302 details the interior design conditions that are used for heating and cooling load calculations. Section R303 provides requirements for fenestration, identification of insulation and other basic general requirements for insulation materials.

Purpose

Climate has a major impact on the energy use of most commercial and residential buildings. The code establishes many requirements, such as wall and roof insulation *R*-values, window and door thermal transmittance requirements (*U*-factors), as well as provisions that affect the mechanical systems based on the climate where the building is located. This chapter contains the information used to properly assign the building location into the correct climate zone, which will then be used as the basis for establishing or eliminating requirements.

Materials and systems used to provide insulation and fenestration values, including *U*-factor and solar heat gain coefficient (SHGC) ratings, must be based on data used by appropriate tests. This establishes a level playing field for manufacturers of products.

Discussion and Development of the Climate Zone Map

The 2006 code made a dramatic shift in the classification of climate zones. While this change in the climate zone map was a part of the major revision to help simplify the code and make both compliance and enforcement easier, the climate zone revisions were a lengthy, very detailed and complicated process. Much of the new climate zone development was based on a paper titled "Climate Classification for Building Energy Codes and Standards." This paper was written by Robert S. Briggs, Robert G. Lucas and Z. Todd Taylor of the U.S. Department of Energy's Pacific Northwest National Laboratory (PNNL). Some aspects of this paper may help users better understand the climate zones and also help people feel comfortable with these new classifications.

Climate zones were developed based on the following criteria:

1. Offer consistent climate materials for all compliance methods and code sections (including both commercial and residential).
2. Enable the code to be self-contained with respect to climate data.
3. Be technically sound.
4. Map to political boundaries.
5. Provide a long-term climate classification solution.
6. Be generic and neutral (i.e., not overly tailored to current code requirements).
7. Be useful in beyond-code and future-code contexts.
8. Offer a more concise set of climate zones and presentation formats.
9. Be acceptable to the American Society of Heating, Refrigerating and Air-Conditioning Engineers (ASHRAE), and usable in ASHRAE standards and guidelines.
10. Provide a basis for use outside of the United States.

The reasons that the authors cited for some of the less obvious items include:

Item 4 – Mapping climate zones to easily recognizable political boundaries instead of to abstract climatic parameters facilitates code implementation. Users and jurisdictions are able to easily tell what requirements apply, which is not the case in some locations when climate parameters are used.

Item 7 – "Useful in future-code and beyond-code contexts" reflects the view that minimum acceptable practice codes and standards can provide an effective platform on which to build other efficiency programs. Beyond-code programs are likely to encourage features and technologies not included in current codes, many of which are likely to be more climate-sensitive than current requirements.

Item 9 – "Usable in ASHRAE standards and guidelines" is important because effective coordination of both content and formats used in the code and ASHRAE standards offers the potential to facilitate rapid migration of ASHRAE standards into model codes. Previous efforts

INTERNATIONAL CODE COUNCIL®
Copyright © 2015 ICC. ALL RIGHTS RESERVED. Accessed by David Dammon on Jun 21, 2017 12:30:52 PM pursuant to License Agreement with ICC. No further reproduction or distribution authorized. ANY UNAUTHORIZED REPRODUCTION OR DISTRIBUTION IS A VIOLATION OF THE FEDERAL COPYRIGHT ACT AND THE LICENSE AGREEMENT, AND SUBJECT TO CIVIL AND CRIMINAL PENALTIES THEREUNDER.

to translate ASHRAE criteria into the simpler and more prescriptive forms most desired by the code enforcement community has, in some cases, added years to the adoption process and widespread implementation of updated criteria.

The belief in developing the climate zones was that any new system needed to show substantial improvement over the previously existing systems. In addition, any new classification must be at least roughly compatible with the previous climate-dependent requirements in order to allow for the conversion and inclusion of existing, generally accepted requirements. The intent was to develop a set of climate classifications that could support simple, approximate ways of prescribing energy-efficiency measures for buildings. It was not intended to develop a set of categories that could be used for all purposes.

The new climate zones were developed in an open process involving several standards committees of ASHRAE, the U.S. Department of Energy (DOE) staff and other interested parties.

Given the interest of the International Code Council (ICC®) and ASHRAE in producing documents that are capable of being used internationally, an effort was made to develop a system and climate zones that could work outside of the United States. The new climate definitions were developed using the International System of Units, abbreviated SI, from the French Le Systéme International d'Unités. By using the SI units and climate indices, which are widely available internationally, the climate zones and the development of building energy-efficiency provisions can be applied anywhere in the world. The boundaries between the various climate zones in Table R301.3(2) occur in multiples of 900°F days, which converts to 500°C days. Distinguishing the climate zones with these numbers results in a clean and understandable division between the climate zones in either system of temperature measurement.

The developers of the climate zone map selected bands of 1000 HDD18°C (1800 HDD65°F) because they resulted in boundaries that align with boundaries established in ANSI/ASHRAE/IESNA 90.1, plus they facilitate the use of both SI and inch-pound (I-P) units and were able to affect a significant reduction in the number of climate zones.

An objective for any effective classification is to maximize the differences between the selected criteria for each climate zone, while minimizing the variations that occur within the group. A large variation between the groups enables generalizations embodied in the code requirements to be better tailored to each climate zone. A small variation in each climate zone will ensure that the generalizations better fit the climate zone. It was the developers' feeling that the new classification better represents the climatic diversity, while defining more coherent climate zones than what the code previously used. It should be noted that mountainous regions defy clean geographic separation of clusters.

SECTION R301
CLIMATE ZONES

R301.1 General. *Climate zones* from Figure R301.1 or Table R301.1 shall be used in determining the applicable requirements from Chapter 4. Locations not in Table R301.1 (outside the United States) shall be assigned a *climate zone* based on Section R301.3.

❖ Climate involves temperature, moisture, wind and sun and also includes both daily and seasonal patterns of variation of the parameters. To account for these variations, the code establishes climate zones that serve as the basis for code provisions.

This section serves as the starting point for determining virtually all of the code requirements, especially under the prescriptive compliance paths. Because of their easy-to-understand graphic nature, maps have proven useful over the years as an effective way to help code users determine climate-dependent requirements. Therefore, for the United States, the climate zones are shown in the map in Figure R301.1. Because of the limited size of the map, the code also includes a listing of the climate zones by states and counties in Table R301.1. Table R301.1 will allow users to positively identify climate-zone assignments in those few locations for which the map interpretation may be difficult. Whether the map or the county list is used, the climate classification for each area will be the same.

When dealing with prescriptive compliance paths, the code user would simply look at the map or listing and select the proper climate zone based on the location of the building. When using a performance approach, additional climatic data may be needed.

Virtually every building energy code that has been developed for use in the United States has included a performance-based compliance path, which allows users to perform an energy analysis and demonstrate compliance based on equivalence with the prescriptive requirements. To perform these analyses, users must select appropriate weather data for their given project's location. The selection of appropriate weather data is straightforward for any project located in or around one of the various weather stations in the United States. For other locations, selecting the most appropriate weather site can be problematic. The codes themselves provide little help with this selection process. During the development of the new climate zones, the developers mapped every county in the United States to the most appropriate SAMSON station (National Climatic Data Center "Solar and Meteorological Surface Observation Network" station) for each county as a whole. This mapping is not included in the code but may be used

INTERNATIONAL CODE COUNCIL®
Copyright © 2015 ICC. ALL RIGHTS RESERVED. Accessed by David Dammon on Jun 21, 2017 12:30:52 PM pursuant to License Agreement with ICC. No further reproduction or distribution authorized. ANY UNAUTHORIZED REPRODUCTION OR DISTRIBUTION IS A VIOLATION OF THE FEDERAL COPYRIGHT ACT AND THE LICENSE AGREEMENT, AND SUBJECT TO CIVIL AND CRIMINAL PENALTIES THEREUNDER.

in some compliance software. Designating an appropriate SAMSON station should not be considered to be the only climate data permitted for a given county. It could, however, be used in the absence of better information. Where local data better reflects regional or microclimatic conditions of an area, they would be appropriate to use. For example, elevation has a large impact on climate and can vary dramatically within individual counties, especially in the western United States. Where elevation differences are significant, code officials may require use of sites that differ from the sites designated as being the most appropriate for the county. For additional information on this topic, review the paper "Climate Classification for Building Energy Codes and Standards," which is referenced in the commentary text that precedes Section R301.

The new climate classifications do not attempt to resolve the issue of what the appropriate treatment for elevation differences is. This aspect is left in the hands of the local code official.

R301.2 Warm humid counties. Warm humid counties are identified in Table R301.1 by an asterisk.

❖ Table R301.1 lists the counties in the southeastern United States that fall below the white-dashed line appearing on the map in Figure R301.1. The warm-humid climate designation includes parts of eight states and also covers all of Florida, Hawaii and the U.S. territories. Table R301.3(1) provides the details that were used to determine the classification of the warm-humid designation for the counties.

There currently are very few requirements in the code specifically tied to the warm-humid climate criteria. Although not tied directly to the warm-humid designation, many other code sections, such as those addressing moisture control and energy recovery ventilation systems, do take these climatic features into account.

R301.3 International climate zones. The *climate zone* for any location outside the United States shall be determined by applying Table R301.3(1) and then Table R301.3(2).

❖ Although the code and the climate zone classifications it includes are predominately used in the United States, they can be used in any location. Because the mapping and decisions that were made during the development of the climate zones focused primarily on the United States, this section details how to properly classify the climate zones based on thermal criteria [Table R301.3(2)], the major climate types [Table R301.3(1)] and the warm-humid criteria for locations outside of the United States (see Commentary Figure R301.3).

In developing the climate zone designations, two climate zones were defined in the classification, but not thoroughly evaluated or actively applied because no sites in the United States or its territories required their use. The two climate zones are 1B [dry and greater than 5,000 CDD10°C (9,000 CDD50°F)], characterized as "very hot-dry," and 5C [marine and 3,000 < HDD18°C ≤ 400 (5,400, HDD65°F ≤ 7,200)], characterized as "cool marine." The marine (C) designation was not used for climate zones colder than Climate Zone 5 or hotter than Cimate Zone 3, as marine climates are inherently neither very cold nor very hot. In addition, the humid (A) and dry (B) divisions were dropped for climate zones colder than Climate Zone 6 because they did not appear to be warranted based on differences in appropriate building design requirements. Reevaluation of these decisions might be warranted before applying the new climate classifications to locations outside of the United States.

R301.4 Tropical climate zone. The tropical *climate zone* shall be defined as:

1. Hawaii, Puerto Rico, Guam, American Samoa, U.S. Virgin Islands, Commonwealth of Northern Mariana Islands; and
2. Islands in the area between the Tropic of Cancer and the Tropic of Capricorn.

❖ Tropical areas are quite different from the U.S. mainland in climate, construction techniques, traditional construction and energy prices. Prior to the installation of these new provisions, the IECC treated tropical climates as if they were simply a southern extension of the U.S. mainland. Traditional residences, especially less-expensive residences, have evolved inexpensive ways to work with the tropical climates to provide comfortable interior spaces without the need for substantial space conditioning. Tropical electrical prices, usually over 20 cents per kwh, provide a substantial incentive for energy conservation. Solar water heating works particularly well in tropical climates.

This section provides a simple option for a newly defined climate zone, the "tropical zone." The area between the Tropic of Cancer and the Tropic of Capricorn is the area between 23.5 degrees northern and southern latitude of the equator.

Traditional construction, especially with solar water heating, is usually more energy efficient than the construction style typically assumed in the IECC, as is shown by an analysis done for Puerto Rico. Using energy-efficient versions of traditional construction saves more energy and is much more cost-effective than pushing those in tropical climates to adopt mainland construction practices. Traditional tropical construction focuses on greatly reducing or eliminating the need for space conditioning by making a living space that is comfortable without space conditioning.

These requirements are based on informal conversations with those who live in tropical regions.

INTERNATIONAL CODE COUNCIL®
Copyright © 2015 ICC. ALL RIGHTS RESERVED. Accessed by David Dammon on Jun 21, 2017 12:30:52 PM pursuant to License Agreement with ICC. No further reproduction or distribution authorized. ANY UNAUTHORIZED REPRODUCTION OR DISTRIBUTION IS A VIOLATION OF THE FEDERAL COPYRIGHT ACT AND THE LICENSE AGREEMENT, AND SUBJECT TO CIVIL AND CRIMINAL PENALTIES THEREUNDER.

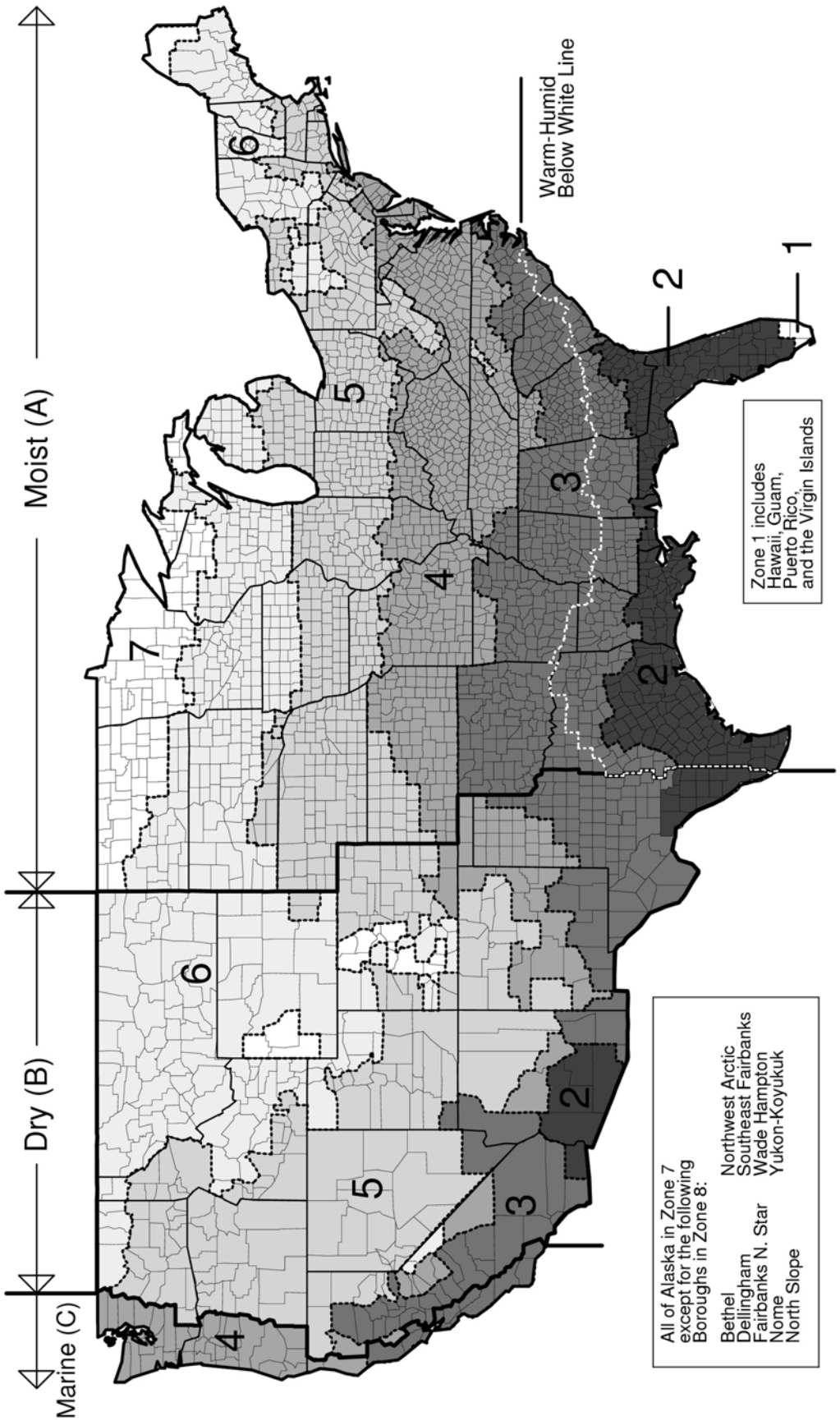

FIGURE R301.1
CLIMATE ZONES

INTERNATIONAL CODE COUNCIL®
Copyright © 2015 ICC. ALL RIGHTS RESERVED. Accessed by David Dammon on Jun 21, 2017 12:30:52 PM pursuant to License Agreement with ICC. No further reproduction or distribution authorized. ANY UNAUTHORIZED REPRODUCTION OR DISTRIBUTION IS A VIOLATION OF THE FEDERAL COPYRIGHT ACT AND THE LICENSE AGREEMENT, AND SUBJECT TO CIVIL AND CRIMINAL PENALTIES THEREUNDER.

ZONE NUMBER	CLIMATE ZONE NAME AND TYPE[2]	THERMAL CRITERIA [1, 3, 6]	REPRESENTATIVE U.S. CITY[4]
1A	Very Hot-Humid	9000 < CDD50°F	Miami, FL
1B[5]	Very Hot-Dry	9000 < CDD50°F	—
2A	Hot-Humid	6300 < CDD50°F ≤ 9000	Houston, TX
2B	Hot-Dry	6300 < CDD50°F ≤ 9000	Phoenix, AZ
3A	Warm-Humid	4500 < CDD50°F ≤ 6300	Memphis, TN
3B	Warm-Dry	4500 < CDD50°F ≤ 6300	El Paso, TX
3C	Warm-Marine	HDD65°F ≤ 3600	San Francisco, CA
4A	Mixed-Humid	CDD50°F ≤ 4500 AND HDD65°F ≤ 5400	Baltimore, MD
4B	Mixed-Dry	CDD50°F ≤ 4500 AND HDD65°F ≤ 5400	Albuquerque, NM
4C	Mixed-Marine	3600 < HDD65°F ≤ 5400	Salem, OR
5A	Cool-Humid	5400 < HDD65°F ≤ 7200	Chicago, IL
5B	Cool-Dry	5400 < HDD65°F ≤ 7200	Boise, ID
5C[5]	Cool-Marine	5400 < HDD65°F ≤ 7200	—
6A	Cool-Humid	7200 < HDD65°F ≤ 9000	Burlington, VT
6B	Cool-Dry	7200 < HDD65°F ≤ 9000	Helena, MT
7	Very Cold	9000 < HDD65°F ≤ 12600	Duluth, MN
8	Sub Arctic	12600 < HDD65°F	Fairbanks, AK

Notes:

1. Column 1 contains alphanumeric designations for each climate zone. These designations are intended for use when the climate zones are referenced in the code. The numeric part of the designation relates to the thermal properties of the climate zone. The letter part indicates the major climatic group to which the climate zone belongs; A indicates humid, B indicates dry, and C indicates marine. The climatic group designation was dropped for Climate Zones 7 and 8 because the developers of the new climate zone classifications did not anticipate any building design criteria sensitive to the humid/dry/marine distinction in very cold climates. Climate Zones 1B and 5C have been defined but are not used for the United States. Zone 6C [Marine and HDD18ºC > 4000 (HDD65ºF > 7200)] might appear to be necessary for consistency. However, very few locations in the world are both as mild as is required by the marine zone definition and as cold as necessary to accumulate that many heating degree days. In addition, such sites do not appear climatically very different from sites in Zone 6A, which is where they are assigned in the absence of a Zone 6C.
2. Column 2 contains a descriptive name for each climate zone and the major climate type. The names can be used in place of the alphanumeric designations wherever a more descriptive designation is appropriate.
3. Column 3 contains definitions for the climate zone divisions based on degree day cooling and/or heating criteria. The humid/dry/marine divisions must be determined first before these criteria are applied. The definitions in Tables R301.3(1) and R301.3(2) contain logic capable of assigning a climate zone designation to any location with the necessary climate data anywhere in the world. However, the work to develop this classification focused on the 50 United States. Application of the classification to locations outside of the United States is untested.
4. Column 4 contains the name of a SAMSON station (National Climatic Data Center “Solar and Meteorological Surface Observation Network” station) found to best represent the climate zone as a whole. See the discussions at the beginning of this chapter regarding the development of the new climate zones for an explanation of how the representative cities were selected.
5. Climate Zones 1B and 5C do not occur in the United States, and no representative cities were selected for these climate zones due to data limitations. Climates meeting the listed criteria do exist in such locations as Saudi Arabia; British Columbia, Canada; and Northern Europe.
6. SI to I-P Conversions:
   2500 CDD10ºC = 4500 CDD50ºF
   3000 HDD18ºC = 5400 HDD65ºF
   3500 CDD10ºC = 6300 CDD50ºF
   4000 HDD18ºC = 7200 HDD65ºF
   5000 CDD10ºC = 9000 CDD50ºF
   5000 HDD18ºC = 9000 HDD65ºF
   2000 HDD18ºC = 3600 HDD65ºF
   7000 HDD18ºC = 12600 HDD65ºF

Figure R301.3
CLIMATE ZONE DEFINITIONS

INTERNATIONAL CODE COUNCIL®
Copyright © 2015 ICC. ALL RIGHTS RESERVED. Accessed by David Dammon on Jun 21, 2017 12:30:52 PM pursuant to License Agreement with ICC. No further reproduction or distribution authorized. ANY UNAUTHORIZED REPRODUCTION OR DISTRIBUTION IS A VIOLATION OF THE FEDERAL COPYRIGHT ACT AND THE LICENSE AGREEMENT, AND SUBJECT TO CIVIL AND CRIMINAL PENALTIES THEREUNDER.

TABLE R301.3(1)
INTERNATIONAL CLIMATE ZONE DEFINITIONS

MAJOR CLIMATE TYPE DEFINITIONS
Marine (C) Definition—Locations meeting all four criteria: 1. Mean temperature of coldest month between -3°C (27°F) and 18°C (65°F). 2. Warmest month mean < 22°C (72°F). 3. At least four months with mean temperatures over 10°C (50°F). 4. Dry season in summer. The month with the heaviest precipitation in the cold season has at least three times as much precipitation as the month with the least precipitation in the rest of the year. The cold season is October through March in the Northern Hemisphere and April through September in the Southern Hemisphere.
Dry (B) Definition—Locations meeting the following criteria: Not marine and $P_{in} < 0.44 \times (TF - 19.5)$ [$P_{cm} < 2.0 \times (TC + 7)$ in SI units] where: P_{in} = Annual precipitation in inches (cm) T = Annual mean temperature in °F (°C)
Moist (A) Definition—Locations that are not marine and not dry.
Warm-humid Definition—Moist (A) locations where either of the following wet-bulb temperature conditions shall occur during the warmest six consecutive months of the year: 1. 67°F (19.4°C) or higher for 3,000 or more hours; or 2. 73°F (22.8°C) or higher for 1,500 or more hours.

For SI: °C = [(°F)-32]/1.8, 1 inch = 2.54 cm.

TABLE R301.3(2)
INTERNATIONAL CLIMATE ZONE DEFINITIONS

ZONE NUMBER	THERMAL CRITERIA	
	IP Units	SI Units
1	9000 < CDD50°F	5000 < CDD10°C
2	6300 < CDD50°F ≤ 9000	3500 < CDD10°C ≤ 5000
3A and 3B	4500 < CDD50°F ≤ 6300 AND HDD65°F ≤ 5400	2500 < CDD10°C ≤ 3500 AND HDD18°C ≤ 3000
4A and 4B	CDD50°F ≤ 4500 AND HDD65°F ≤ 5400	CDD10°C ≤ 2500 AND HDD18°C ≤ 3000
3C	HDD65°F ≤ 3600	HDD18°C ≤ 2000
4C	3600 < HDD65°F ≤ 5400	2000 < HDD18°C ≤ 3000
5	5400 < HDD65°F ≤ 7200	3000 < HDD18°C ≤ 4000
6	7200 < HDD65°F ≤ 9000	4000 < HDD18°C ≤ 5000
7	9000 < HDD65°F ≤ 12600	5000 < HDD18°C ≤ 7000
8	12600 < HDD65°F	7000 < HDD18°C

For SI: °C = [(°F)-32]/1.8.

INTERNATIONAL CODE COUNCIL®
Copyright © 2015 ICC. ALL RIGHTS RESERVED. Accessed by David Dammon on Jun 21, 2017 12:30:52 PM pursuant to License Agreement with ICC. No further reproduction or distribution authorized. ANY UNAUTHORIZED REPRODUCTION OR DISTRIBUTION IS A VIOLATION OF THE FEDERAL COPYRIGHT ACT AND THE LICENSE AGREEMENT, AND SUBJECT TO CIVIL AND CRIMINAL PENALTIES THEREUNDER.

TABLE R301.1
CLIMATE ZONES, MOISTURE REGIMES, AND WARM-HUMID DESIGNATIONS BY STATE, COUNTY AND TERRITORY

Key: A – Moist, B – Dry, C – Marine. Absence of moisture designation indicates moisture regime is irrelevant. Asterisk (*) indicates a warm-humid location.

US STATES

ALABAMA

3A Autauga*
2A Baldwin*
3A Barbour*
3A Bibb
3A Blount
3A Bullock*
3A Butler*
3A Calhoun
3A Chambers
3A Cherokee
3A Chilton
3A Choctaw*
3A Clarke*
3A Clay
3A Cleburne
3A Coffee*
3A Colbert
3A Conecuh*
3A Coosa
3A Covington*
3A Crenshaw*
3A Cullman
3A Dale*
3A Dallas*
3A DeKalb
3A Elmore*
3A Escambia*
3A Etowah
3A Fayette
3A Franklin
3A Geneva*
3A Greene
3A Hale
3A Henry*
3A Houston*
3A Jackson
3A Jefferson
3A Lamar
3A Lauderdale
3A Lawrence
3A Lee
3A Limestone
3A Lowndes*
3A Macon*
3A Madison
3A Marengo*
3A Marion
3A Marshall
2A Mobile*
3A Monroe*
3A Montgomery*
3A Morgan
3A Perry*
3A Pickens
3A Pike*
3A Randolph
3A Russell*
3A Shelby
3A St. Clair
3A Sumter
3A Talladega
3A Tallapoosa
3A Tuscaloosa
3A Walker
3A Washington*
3A Wilcox*
3A Winston

ALASKA

7 Aleutians East
7 Aleutians West
7 Anchorage
8 Bethel
7 Bristol Bay
7 Denali
8 Dillingham
8 Fairbanks North Star
7 Haines
7 Juneau
7 Kenai Peninsula
7 Ketchikan Gateway
7 Kodiak Island
7 Lake and Peninsula
7 Matanuska-Susitna
8 Nome
8 North Slope
8 Northwest Arctic
7 Prince of Wales-Outer Ketchikan
7 Sitka
7 Skagway-Hoonah-Angoon
8 Southeast Fairbanks
7 Valdez-Cordova
8 Wade Hampton
7 Wrangell-Petersburg
7 Yakutat
8 Yukon-Koyukuk

ARIZONA

5B Apache
3B Cochise
5B Coconino
4B Gila
3B Graham
3B Greenlee
2B La Paz
2B Maricopa
3B Mohave
5B Navajo
2B Pima
2B Pinal
3B Santa Cruz
4B Yavapai
2B Yuma

ARKANSAS

3A Arkansas
3A Ashley
4A Baxter
4A Benton
4A Boone
3A Bradley
3A Calhoun
4A Carroll
3A Chicot
3A Clark
3A Clay
3A Cleburne
3A Cleveland
3A Columbia*
3A Conway
3A Craighead
3A Crawford
3A Crittenden
3A Cross
3A Dallas
3A Desha
3A Drew
3A Faulkner
3A Franklin
4A Fulton
3A Garland
3A Grant
3A Greene
3A Hempstead*
3A Hot Spring
3A Howard
3A Independence
4A Izard
3A Jackson
3A Jefferson
3A Johnson
3A Lafayette*
3A Lawrence
3A Lee
3A Lincoln
3A Little River*
3A Logan
3A Lonoke
4A Madison
4A Marion
3A Miller*
3A Mississippi
3A Monroe
3A Montgomery
3A Nevada
4A Newton
3A Ouachita
3A Perry
3A Phillips
3A Pike
3A Poinsett
3A Polk
3A Pope
3A Prairie
3A Pulaski
3A Randolph
3A Saline
3A Scott
4A Searcy
3A Sebastian
3A Sevier*
3A Sharp
3A St. Francis
4A Stone
3A Union*
3A Van Buren
4A Washington
3A White
3A Woodruff
3A Yell

CALIFORNIA

3C Alameda
6B Alpine
4B Amador
3B Butte
4B Calaveras
3B Colusa
3B Contra Costa
4C Del Norte
4B El Dorado
3B Fresno
3B Glenn

(continued)

INTERNATIONAL CODE COUNCIL®
Copyright © 2015 ICC. ALL RIGHTS RESERVED. Accessed by David Dammon on Jun 21, 2017 12:30:52 PM pursuant to License Agreement with ICC. No further reproduction or distribution authorized. ANY UNAUTHORIZED REPRODUCTION OR DISTRIBUTION IS A VIOLATION OF THE FEDERAL COPYRIGHT ACT AND THE LICENSE AGREEMENT, AND SUBJECT TO CIVIL AND CRIMINAL PENALTIES THEREUNDER.

TABLE R301.1—continued
CLIMATE ZONES, MOISTURE REGIMES, AND WARM-HUMID DESIGNATIONS BY STATE, COUNTY AND TERRITORY

4C Humboldt
2B Imperial
4B Inyo
3B Kern
3B Kings
4B Lake
5B Lassen
3B Los Angeles
3B Madera
3C Marin
4B Mariposa
3C Mendocino
3B Merced
5B Modoc
6B Mono
3C Monterey
3C Napa
5B Nevada
3B Orange
3B Placer
5B Plumas
3B Riverside
3B Sacramento
3C San Benito
3B San Bernardino
3B San Diego
3C San Francisco
3B San Joaquin
3C San Luis Obispo
3C San Mateo
3C Santa Barbara
3C Santa Clara
3C Santa Cruz
3B Shasta
5B Sierra
5B Siskiyou
3B Solano
3C Sonoma
3B Stanislaus
3B Sutter
3B Tehama
4B Trinity
3B Tulare
4B Tuolumne
3C Ventura
3B Yolo
3B Yuba

COLORADO

5B Adams
6B Alamosa
5B Arapahoe
6B Archuleta
4B Baca
5B Bent
5B Boulder
5B Broomfield
6B Chaffee
5B Cheyenne
7 Clear Creek
6B Conejos
6B Costilla
5B Crowley
6B Custer
5B Delta
5B Denver
6B Dolores
5B Douglas
6B Eagle
5B Elbert
5B El Paso
5B Fremont
5B Garfield
5B Gilpin
7 Grand
7 Gunnison
7 Hinsdale
5B Huerfano
7 Jackson
5B Jefferson
5B Kiowa
5B Kit Carson
7 Lake
5B La Plata
5B Larimer
4B Las Animas
5B Lincoln
5B Logan
5B Mesa
7 Mineral
6B Moffat
5B Montezuma
5B Montrose
5B Morgan
4B Otero
6B Ouray
7 Park
5B Phillips
7 Pitkin
5B Prowers
5B Pueblo
6B Rio Blanco
7 Rio Grande
7 Routt
6B Saguache
7 San Juan
6B San Miguel
5B Sedgwick
7 Summit
5B Teller
5B Washington
5B Weld
5B Yuma

CONNECTICUT

5A (all)

DELAWARE

4A (all)

DISTRICT OF COLUMBIA

4A (all)

FLORIDA

2A Alachua*
2A Baker*
2A Bay*
2A Bradford*
2A Brevard*
1A Broward*
2A Calhoun*
2A Charlotte*
2A Citrus*
2A Clay*
2A Collier*
2A Columbia*
2A DeSoto*
2A Dixie*
2A Duval*
2A Escambia*
2A Flagler*
2A Franklin*
2A Gadsden*
2A Gilchrist*
2A Glades*
2A Gulf*
2A Hamilton*
2A Hardee*
2A Hendry*
2A Hernando*
2A Highlands*
2A Hillsborough*
2A Holmes*
2A Indian River*
2A Jackson*
2A Jefferson*
2A Lafayette*
2A Lake*
2A Lee*
2A Leon*
2A Levy*
2A Liberty*
2A Madison*
2A Manatee*
2A Marion*
2A Martin*
1A Miami-Dade*
1A Monroe*
2A Nassau*
2A Okaloosa*
2A Okeechobee*
2A Orange*
2A Osceola*
2A Palm Beach*
2A Pasco*
2A Pinellas*
2A Polk*
2A Putnam*
2A Santa Rosa*
2A Sarasota*
2A Seminole*
2A St. Johns*
2A St. Lucie*
2A Sumter*
2A Suwannee*
2A Taylor*
2A Union*
2A Volusia*
2A Wakulla*
2A Walton*
2A Washington*

GEORGIA

2A Appling*
2A Atkinson*
2A Bacon*
2A Baker*
3A Baldwin
4A Banks
3A Barrow
3A Bartow
3A Ben Hill*
2A Berrien*
3A Bibb
3A Bleckley*
2A Brantley*
2A Brooks*
2A Bryan*
3A Bulloch*
3A Burke
3A Butts
3A Calhoun*
2A Camden*
3A Candler*
3A Carroll
4A Catoosa
2A Charlton*
2A Chatham*
3A Chattahoochee*
4A Chattooga
3A Cherokee
3A Clarke
3A Clay*
3A Clayton
2A Clinch*
3A Cobb
3A Coffee*
2A Colquitt*
3A Columbia
2A Cook*
3A Coweta

(continued)

INTERNATIONAL CODE COUNCIL®
Copyright © 2015 ICC. ALL RIGHTS RESERVED. Accessed by David Dammon on Jun 21, 2017 12:30:52 PM pursuant to License Agreement with ICC. No further reproduction or distribution authorized. ANY UNAUTHORIZED REPRODUCTION OR DISTRIBUTION IS A VIOLATION OF THE FEDERAL COPYRIGHT ACT AND THE LICENSE AGREEMENT, AND SUBJECT TO CIVIL AND CRIMINAL PENALTIES THEREUNDER.

TABLE R301.1—continued
CLIMATE ZONES, MOISTURE REGIMES, AND WARM-HUMID DESIGNATIONS BY STATE, COUNTY AND TERRITORY

3A Crawford
3A Crisp*
4A Dade
4A Dawson
2A Decatur*
3A DeKalb
3A Dodge*
3A Dooly*
3A Dougherty*
3A Douglas
3A Early*
2A Echols*
2A Effingham*
3A Elbert
3A Emanuel*
2A Evans*
4A Fannin
3A Fayette
4A Floyd
3A Forsyth
4A Franklin
3A Fulton
4A Gilmer
3A Glascock
2A Glynn*
4A Gordon
2A Grady*
3A Greene
3A Gwinnett
4A Habersham
4A Hall
3A Hancock
3A Haralson
3A Harris
3A Hart
3A Heard
3A Henry
3A Houston*
3A Irwin*
3A Jackson
3A Jasper
2A Jeff Davis*
3A Jefferson
3A Jenkins*
3A Johnson*
3A Jones
3A Lamar
2A Lanier*
3A Laurens*
3A Lee*
2A Liberty*
3A Lincoln
2A Long*
2A Lowndes*
4A Lumpkin
3A Macon*
3A Madison
3A Marion*
3A McDuffie
2A McIntosh*
3A Meriwether
2A Miller*
2A Mitchell*
3A Monroe
3A Montgomery*
3A Morgan
4A Murray
3A Muscogee
3A Newton
3A Oconee
3A Oglethorpe
3A Paulding
3A Peach*
4A Pickens
2A Pierce*
3A Pike
3A Polk
3A Pulaski*
3A Putnam
3A Quitman*
4A Rabun
3A Randolph*
3A Richmond
3A Rockdale
3A Schley*
3A Screven*
2A Seminole*
3A Spalding
4A Stephens
3A Stewart*
3A Sumter*
3A Talbot
3A Taliaferro
2A Tattnall*
3A Taylor*
3A Telfair*
3A Terrell*
2A Thomas*
3A Tift*
2A Toombs*
4A Towns
3A Treutlen*
3A Troup
3A Turner*
3A Twiggs*
4A Union
3A Upson
4A Walker
3A Walton
2A Ware*
3A Warren
3A Washington
2A Wayne*
3A Webster*
3A Wheeler*
4A White
4A Whitfield
3A Wilcox*
3A Wilkes
3A Wilkinson
3A Worth*

HAWAII

1A (all)*

IDAHO

5B Ada
6B Adams
6B Bannock
6B Bear Lake
5B Benewah
6B Bingham
6B Blaine
6B Boise
6B Bonner
6B Bonneville
6B Boundary
6B Butte
6B Camas
5B Canyon
6B Caribou
5B Cassia
6B Clark
5B Clearwater
6B Custer
5B Elmore
6B Franklin
6B Fremont
5B Gem
5B Gooding
5B Idaho
6B Jefferson
5B Jerome
5B Kootenai
5B Latah
6B Lemhi
5B Lewis
5B Lincoln
6B Madison
5B Minidoka
5B Nez Perce
6B Oneida
5B Owyhee
5B Payette
5B Power
5B Shoshone
6B Teton
5B Twin Falls
6B Valley
5B Washington

ILLINOIS

5A Adams
4A Alexander
4A Bond
5A Boone
5A Brown
5A Bureau
5A Calhoun
5A Carroll
5A Cass
5A Champaign
4A Christian
5A Clark
4A Clay
4A Clinton
5A Coles
5A Cook
4A Crawford
5A Cumberland
5A DeKalb
5A De Witt
5A Douglas
5A DuPage
5A Edgar
4A Edwards
4A Effingham
4A Fayette
5A Ford
4A Franklin
5A Fulton
4A Gallatin
5A Greene
5A Grundy
4A Hamilton
5A Hancock
4A Hardin
5A Henderson
5A Henry
5A Iroquois
4A Jackson
4A Jasper
4A Jefferson
5A Jersey
5A Jo Daviess
4A Johnson
5A Kane
5A Kankakee
5A Kendall
5A Knox
5A Lake
5A La Salle
4A Lawrence
5A Lee
5A Livingston
5A Logan
5A Macon
4A Macoupin
4A Madison
4A Marion
5A Marshall
5A Mason
4A Massac
5A McDonough
5A McHenry

(continued)

INTERNATIONAL CODE COUNCIL®
Copyright © 2015 ICC. ALL RIGHTS RESERVED. Accessed by David Dammon on Jun 21, 2017 12:30:52 PM pursuant to License Agreement with ICC. No further reproduction or distribution authorized. ANY UNAUTHORIZED REPRODUCTION OR DISTRIBUTION IS A VIOLATION OF THE FEDERAL COPYRIGHT ACT AND THE LICENSE AGREEMENT, AND SUBJECT TO CIVIL AND CRIMINAL PENALTIES THEREUNDER.

TABLE R301.1—continued
CLIMATE ZONES, MOISTURE REGIMES, AND WARM-HUMID DESIGNATIONS BY STATE, COUNTY AND TERRITORY

5A McLean
5A Menard
5A Mercer
4A Monroe
4A Montgomery
5A Morgan
5A Moultrie
5A Ogle
5A Peoria
4A Perry
5A Piatt
5A Pike
4A Pope
4A Pulaski
5A Putnam
4A Randolph
4A Richland
5A Rock Island
4A Saline
5A Sangamon
5A Schuyler
5A Scott
4A Shelby
5A Stark
4A St. Clair
5A Stephenson
5A Tazewell
4A Union
5A Vermilion
4A Wabash
5A Warren
4A Washington
4A Wayne
4A White
5A Whiteside
5A Will
4A Williamson
5A Winnebago
5A Woodford

INDIANA

5A Adams
5A Allen
5A Bartholomew
5A Benton
5A Blackford
5A Boone
4A Brown
5A Carroll
5A Cass
4A Clark
5A Clay
5A Clinton
4A Crawford
4A Daviess
4A Dearborn
5A Decatur
5A De Kalb
5A Delaware
4A Dubois
5A Elkhart
5A Fayette
4A Floyd
5A Fountain
5A Franklin
5A Fulton
4A Gibson
5A Grant
4A Greene
5A Hamilton
5A Hancock
4A Harrison
5A Hendricks
5A Henry
5A Howard
5A Huntington
4A Jackson
5A Jasper
5A Jay
4A Jefferson
4A Jennings
5A Johnson
4A Knox
5A Kosciusko
5A LaGrange
5A Lake
5A LaPorte
4A Lawrence
5A Madison
5A Marion
5A Marshall
4A Martin
5A Miami
4A Monroe
5A Montgomery
5A Morgan
5A Newton
5A Noble
4A Ohio
4A Orange
5A Owen
5A Parke
4A Perry
4A Pike
5A Porter
4A Posey
5A Pulaski
5A Putnam
5A Randolph
4A Ripley
5A Rush
4A Scott
5A Shelby
4A Spencer
5A Starke
5A Steuben
5A St. Joseph
4A Sullivan
4A Switzerland
5A Tippecanoe
5A Tipton
5A Union
4A Vanderburgh
5A Vermillion
5A Vigo
5A Wabash
5A Warren
4A Warrick
4A Washington
5A Wayne
5A Wells
5A White
5A Whitley

IOWA

5A Adair
5A Adams
6A Allamakee
5A Appanoose
5A Audubon
5A Benton
6A Black Hawk
5A Boone
6A Bremer
6A Buchanan
6A Buena Vista
6A Butler
6A Calhoun
5A Carroll
5A Cass
5A Cedar
6A Cerro Gordo
6A Cherokee
6A Chickasaw
5A Clarke
6A Clay
6A Clayton
5A Clinton
5A Crawford
5A Dallas
5A Davis
5A Decatur
6A Delaware
5A Des Moines
6A Dickinson
5A Dubuque
6A Emmet
6A Fayette
6A Floyd
6A Franklin
5A Fremont
5A Greene
6A Grundy
5A Guthrie
6A Hamilton
6A Hancock
6A Hardin
5A Harrison
5A Henry
6A Howard
6A Humboldt
6A Ida
5A Iowa
5A Jackson
5A Jasper
5A Jefferson
5A Johnson
5A Jones
5A Keokuk
6A Kossuth
5A Lee
5A Linn
5A Louisa
5A Lucas
6A Lyon
5A Madison
5A Mahaska
5A Marion
5A Marshall
5A Mills
6A Mitchell
5A Monona
5A Monroe
5A Montgomery
5A Muscatine
6A O'Brien
6A Osceola
5A Page
6A Palo Alto
6A Plymouth
6A Pocahontas
5A Polk
5A Pottawattamie
5A Poweshiek
5A Ringgold
6A Sac
5A Scott
5A Shelby
6A Sioux
5A Story
5A Tama
5A Taylor
5A Union
5A Van Buren
5A Wapello
5A Warren
5A Washington
5A Wayne
6A Webster
6A Winnebago

(continued)

INTERNATIONAL CODE COUNCIL®
Copyright © 2015 ICC. ALL RIGHTS RESERVED. Accessed by David Dammon on Jun 21, 2017 12:30:52 PM pursuant to License Agreement with ICC. No further reproduction or distribution authorized. ANY UNAUTHORIZED REPRODUCTION OR DISTRIBUTION IS A VIOLATION OF THE FEDERAL COPYRIGHT ACT AND THE LICENSE AGREEMENT, AND SUBJECT TO CIVIL AND CRIMINAL PENALTIES THEREUNDER.

TABLE R301.1—continued
CLIMATE ZONES, MOISTURE REGIMES, AND WARM-HUMID DESIGNATIONS BY STATE, COUNTY AND TERRITORY

6A Winneshiek
5A Woodbury
6A Worth
6A Wright

KANSAS

4A Allen
4A Anderson
4A Atchison
4A Barber
4A Barton
4A Bourbon
4A Brown
4A Butler
4A Chase
4A Chautauqua
4A Cherokee
5A Cheyenne
4A Clark
4A Clay
5A Cloud
4A Coffey
4A Comanche
4A Cowley
4A Crawford
5A Decatur
4A Dickinson
4A Doniphan
4A Douglas
4A Edwards
4A Elk
5A Ellis
4A Ellsworth
4A Finney
4A Ford
4A Franklin
4A Geary
5A Gove
5A Graham
4A Grant
4A Gray
5A Greeley
4A Greenwood
5A Hamilton
4A Harper
4A Harvey
4A Haskell
4A Hodgeman
4A Jackson
4A Jefferson
5A Jewell
4A Johnson
4A Kearny
4A Kingman
4A Kiowa
4A Labette
5A Lane
4A Leavenworth
4A Lincoln
4A Linn
5A Logan
4A Lyon
4A Marion
4A Marshall
4A McPherson
4A Meade
4A Miami
5A Mitchell
4A Montgomery
4A Morris
4A Morton
4A Nemaha
4A Neosho
5A Ness
5A Norton
4A Osage
5A Osborne
4A Ottawa
4A Pawnee
5A Phillips
4A Pottawatomie
4A Pratt
5A Rawlins
4A Reno
5A Republic
4A Rice
4A Riley
5A Rooks
4A Rush
4A Russell
4A Saline
5A Scott
4A Sedgwick
4A Seward
4A Shawnee
5A Sheridan
5A Sherman
5A Smith
4A Stafford
4A Stanton
4A Stevens
4A Sumner
5A Thomas
5A Trego
4A Wabaunsee
5A Wallace
4A Washington
5A Wichita
4A Wilson
4A Woodson
4A Wyandotte

KENTUCKY

4A (all)

LOUISIANA

2A Acadia*
2A Allen*
2A Ascension*
2A Assumption*
2A Avoyelles*
2A Beauregard*
3A Bienville*
3A Bossier*
3A Caddo*
2A Calcasieu*
3A Caldwell*
2A Cameron*
3A Catahoula*
3A Claiborne*
3A Concordia*
3A De Soto*
2A East Baton Rouge*
3A East Carroll
2A East Feliciana*
2A Evangeline*
3A Franklin*
3A Grant*
2A Iberia*
2A Iberville*
3A Jackson*
2A Jefferson*
2A Jefferson Davis*
2A Lafayette*
2A Lafourche*
3A La Salle*
3A Lincoln*
2A Livingston*
3A Madison*
3A Morehouse
3A Natchitoches*
2A Orleans*
3A Ouachita*
2A Plaquemines*
2A Pointe Coupee*
2A Rapides*
3A Red River*
3A Richland*
3A Sabine*
2A St. Bernard*
2A St. Charles*
2A St. Helena*
2A St. James*
2A St. John the Baptist*
2A St. Landry*
2A St. Martin*
2A St. Mary*
2A St. Tammany*
2A Tangipahoa*
3A Tensas*
2A Terrebonne*
3A Union*
2A Vermilion*
3A Vernon*
2A Washington*
3A Webster*
2A West Baton Rouge*
3A West Carroll
2A West Feliciana*
3A Winn*

MAINE

6A Androscoggin
7 Aroostook
6A Cumberland
6A Franklin
6A Hancock
6A Kennebec
6A Knox
6A Lincoln
6A Oxford
6A Penobscot
6A Piscataquis
6A Sagadahoc
6A Somerset
6A Waldo
6A Washington
6A York

MARYLAND

4A Allegany
4A Anne Arundel
4A Baltimore
4A Baltimore (city)
4A Calvert
4A Caroline
4A Carroll
4A Cecil
4A Charles
4A Dorchester
4A Frederick
5A Garrett
4A Harford
4A Howard
4A Kent
4A Montgomery
4A Prince George's
4A Queen Anne's
4A Somerset
4A St. Mary's
4A Talbot
4A Washington
4A Wicomico
4A Worcester

MASSACHSETTS

5A (all)

MICHIGAN

6A Alcona
6A Alger

(continued)

INTERNATIONAL CODE COUNCIL®
Copyright © 2015 ICC. ALL RIGHTS RESERVED. Accessed by David Dammon on Jun 21, 2017 12:30:52 PM pursuant to License Agreement with ICC. No further reproduction or distribution authorized. ANY UNAUTHORIZED REPRODUCTION OR DISTRIBUTION IS A VIOLATION OF THE FEDERAL COPYRIGHT ACT AND THE LICENSE AGREEMENT, AND SUBJECT TO CIVIL AND CRIMINAL PENALTIES THEREUNDER.

TABLE R301.1—continued
CLIMATE ZONES, MOISTURE REGIMES, AND WARM-HUMID DESIGNATIONS BY STATE, COUNTY AND TERRITORY

5A Allegan
6A Alpena
6A Antrim
6A Arenac
7 Baraga
5A Barry
5A Bay
6A Benzie
5A Berrien
5A Branch
5A Calhoun
5A Cass
6A Charlevoix
6A Cheboygan
7 Chippewa
6A Clare
5A Clinton
6A Crawford
6A Delta
6A Dickinson
5A Eaton
6A Emmet
5A Genesee
6A Gladwin
7 Gogebic
6A Grand Traverse
5A Gratiot
5A Hillsdale
7 Houghton
6A Huron
5A Ingham
5A Ionia
6A Iosco
7 Iron
6A Isabella
5A Jackson
5A Kalamazoo
6A Kalkaska
5A Kent
7 Keweenaw
6A Lake
5A Lapeer
6A Leelanau
5A Lenawee
5A Livingston
7 Luce
7 Mackinac
5A Macomb
6A Manistee
6A Marquette
6A Mason
6A Mecosta
6A Menominee
5A Midland
6A Missaukee
5A Monroe
5A Montcalm
6A Montmorency
5A Muskegon
6A Newaygo
5A Oakland
6A Oceana
6A Ogemaw
7 Ontonagon
6A Osceola
6A Oscoda
6A Otsego
5A Ottawa
6A Presque Isle
6A Roscommon
5A Saginaw
6A Sanilac
7 Schoolcraft
5A Shiawassee
5A St. Clair
5A St. Joseph
5A Tuscola
5A Van Buren
5A Washtenaw
5A Wayne
6A Wexford

MINNESOTA

7 Aitkin
6A Anoka
7 Becker
7 Beltrami
6A Benton
6A Big Stone
6A Blue Earth
6A Brown
7 Carlton
6A Carver
7 Cass
6A Chippewa
6A Chisago
7 Clay
7 Clearwater
7 Cook
6A Cottonwood
7 Crow Wing
6A Dakota
6A Dodge
6A Douglas
6A Faribault
6A Fillmore
6A Freeborn
6A Goodhue
7 Grant
6A Hennepin
6A Houston
7 Hubbard
6A Isanti
7 Itasca
6A Jackson
7 Kanabec
6A Kandiyohi
7 Kittson
7 Koochiching
6A Lac qui Parle
7 Lake
7 Lake of the Woods
6A Le Sueur
6A Lincoln
6A Lyon
7 Mahnomen
7 Marshall
6A Martin
6A McLeod
6A Meeker
7 Mille Lacs
6A Morrison
6A Mower
6A Murray
6A Nicollet
6A Nobles
7 Norman
6A Olmsted
7 Otter Tail
7 Pennington
7 Pine
6A Pipestone
7 Polk
6A Pope
6A Ramsey
7 Red Lake
6A Redwood
6A Renville
6A Rice
6A Rock
7 Roseau
6A Scott
6A Sherburne
6A Sibley
6A Stearns
6A Steele
6A Stevens
7 St. Louis
6A Swift
6A Todd
6A Traverse
6A Wabasha
7 Wadena
6A Waseca
6A Washington
6A Watonwan
7 Wilkin
6A Winona
6A Wright
6A Yellow Medicine

MISSISSIPPI

3A Adams*
3A Alcorn
3A Amite*
3A Attala
3A Benton
3A Bolivar
3A Calhoun
3A Carroll
3A Chickasaw
3A Choctaw
3A Claiborne*
3A Clarke
3A Clay
3A Coahoma
3A Copiah*
3A Covington*
3A DeSoto
3A Forrest*
3A Franklin*
3A George*
3A Greene*
3A Grenada
2A Hancock*
2A Harrison*
3A Hinds*
3A Holmes
3A Humphreys
3A Issaquena
3A Itawamba
2A Jackson*
3A Jasper
3A Jefferson*
3A Jefferson Davis*
3A Jones*
3A Kemper
3A Lafayette
3A Lamar*
3A Lauderdale
3A Lawrence*
3A Leake
3A Lee
3A Leflore
3A Lincoln*
3A Lowndes
3A Madison
3A Marion*
3A Marshall
3A Monroe
3A Montgomery
3A Neshoba
3A Newton
3A Noxubee
3A Oktibbeha
3A Panola
2A Pearl River*
3A Perry*
3A Pike*

(continued)

INTERNATIONAL CODE COUNCIL®
Copyright © 2015 ICC. ALL RIGHTS RESERVED. Accessed by David Dammon on Jun 21, 2017 12:30:52 PM pursuant to License Agreement with ICC. No further reproduction or distribution authorized. ANY UNAUTHORIZED REPRODUCTION OR DISTRIBUTION IS A VIOLATION OF THE FEDERAL COPYRIGHT ACT AND THE LICENSE AGREEMENT, AND SUBJECT TO CIVIL AND CRIMINAL PENALTIES THEREUNDER.

TABLE R301.1—continued
CLIMATE ZONES, MOISTURE REGIMES, AND WARM-HUMID DESIGNATIONS BY STATE, COUNTY AND TERRITORY

3A Pontotoc
3A Prentiss
3A Quitman
3A Rankin*
3A Scott
3A Sharkey
3A Simpson*
3A Smith*
2A Stone*
3A Sunflower
3A Tallahatchie
3A Tate
3A Tippah
3A Tishomingo
3A Tunica
3A Union
3A Walthall*
3A Warren*
3A Washington
3A Wayne*
3A Webster
3A Wilkinson*
3A Winston
3A Yalobusha
3A Yazoo

MISSOURI

5A Adair
5A Andrew
5A Atchison
4A Audrain
4A Barry
4A Barton
4A Bates
4A Benton
4A Bollinger
4A Boone
5A Buchanan
4A Butler
5A Caldwell
4A Callaway
4A Camden
4A Cape Girardeau
4A Carroll
4A Carter
4A Cass
4A Cedar
5A Chariton
4A Christian
5A Clark
4A Clay
5A Clinton
4A Cole
4A Cooper
4A Crawford
4A Dade
4A Dallas
5A Daviess
5A DeKalb
4A Dent
4A Douglas
4A Dunklin
4A Franklin
4A Gasconade
5A Gentry
4A Greene
5A Grundy
5A Harrison
4A Henry
4A Hickory
5A Holt
4A Howard
4A Howell
4A Iron
4A Jackson
4A Jasper
4A Jefferson
4A Johnson
5A Knox
4A Laclede
4A Lafayette
4A Lawrence
5A Lewis
4A Lincoln
5A Linn
5A Livingston
5A Macon
4A Madison
4A Maries
5A Marion
4A McDonald
5A Mercer
4A Miller
4A Mississippi
4A Moniteau
4A Monroe
4A Montgomery
4A Morgan
4A New Madrid
4A Newton
5A Nodaway
4A Oregon
4A Osage
4A Ozark
4A Pemiscot
4A Perry
4A Pettis
4A Phelps
5A Pike
4A Platte
4A Polk
4A Pulaski
5A Putnam
5A Ralls
4A Randolph
4A Ray
4A Reynolds
4A Ripley
4A Saline
5A Schuyler
5A Scotland
4A Scott
4A Shannon
5A Shelby
4A St. Charles
4A St. Clair
4A St. Francois
4A St. Louis
4A St. Louis (city)
4A Ste. Genevieve
4A Stoddard
4A Stone
5A Sullivan
4A Taney
4A Texas
4A Vernon
4A Warren
4A Washington
4A Wayne
4A Webster
5A Worth
4A Wright

MONTANA

6B (all)

NEBRASKA

5A (all)

NEVADA

5B Carson City (city)
5B Churchill
3B Clark
5B Douglas
5B Elko
5B Esmeralda
5B Eureka
5B Humboldt
5B Lander
5B Lincoln
5B Lyon
5B Mineral
5B Nye
5B Pershing
5B Storey
5B Washoe
5B White Pine

NEW HAMPSHIRE

6A Belknap
6A Carroll
5A Cheshire
6A Coos
6A Grafton
5A Hillsborough
6A Merrimack
5A Rockingham
5A Strafford
6A Sullivan

NEW JERSEY

4A Atlantic
5A Bergen
4A Burlington
4A Camden
4A Cape May
4A Cumberland
4A Essex
4A Gloucester
4A Hudson
5A Hunterdon
5A Mercer
4A Middlesex
4A Monmouth
5A Morris
4A Ocean
5A Passaic
4A Salem
5A Somerset
5A Sussex
4A Union
5A Warren

NEW MEXICO

4B Bernalillo
5B Catron
3B Chaves
4B Cibola
5B Colfax
4B Curry
4B DeBaca
3B Dona Ana
3B Eddy
4B Grant
4B Guadalupe
5B Harding
3B Hidalgo
3B Lea
4B Lincoln
5B Los Alamos
3B Luna
5B McKinley
5B Mora
3B Otero
4B Quay
5B Rio Arriba
4B Roosevelt
5B Sandoval
5B San Juan
5B San Miguel
5B Santa Fe
4B Sierra
4B Socorro

(continued)

INTERNATIONAL CODE COUNCIL®
Copyright © 2015 ICC. ALL RIGHTS RESERVED. Accessed by David Dammon on Jun 21, 2017 12:30:52 PM pursuant to License Agreement with ICC. No further reproduction or distribution authorized. ANY UNAUTHORIZED REPRODUCTION OR DISTRIBUTION IS A VIOLATION OF THE FEDERAL COPYRIGHT ACT AND THE LICENSE AGREEMENT, AND SUBJECT TO CIVIL AND CRIMINAL PENALTIES THEREUNDER.

TABLE R301.1—continued
CLIMATE ZONES, MOISTURE REGIMES, AND WARM-HUMID DESIGNATIONS BY STATE, COUNTY AND TERRITORY

5B Taos
5B Torrance
4B Union
4B Valencia

NEW YORK

5A Albany
6A Allegany
4A Bronx
6A Broome
6A Cattaraugus
5A Cayuga
5A Chautauqua
5A Chemung
6A Chenango
6A Clinton
5A Columbia
5A Cortland
6A Delaware
5A Dutchess
5A Erie
6A Essex
6A Franklin
6A Fulton
5A Genesee
5A Greene
6A Hamilton
6A Herkimer
6A Jefferson
4A Kings
6A Lewis
5A Livingston
6A Madison
5A Monroe
6A Montgomery
4A Nassau
4A New York
5A Niagara
6A Oneida
5A Onondaga
5A Ontario
5A Orange
5A Orleans
5A Oswego
6A Otsego
5A Putnam
4A Queens
5A Rensselaer
4A Richmond
5A Rockland
5A Saratoga
5A Schenectady
6A Schoharie
6A Schuyler
5A Seneca
6A Steuben
6A St. Lawrence
4A Suffolk
6A Sullivan
5A Tioga
6A Tompkins
6A Ulster
6A Warren
5A Washington
5A Wayne
4A Westchester
6A Wyoming
5A Yates

NORTH CAROLINA

4A Alamance
4A Alexander
5A Alleghany
3A Anson
5A Ashe
5A Avery
3A Beaufort
4A Bertie
3A Bladen
3A Brunswick*
4A Buncombe
4A Burke
3A Cabarrus
4A Caldwell
3A Camden
3A Carteret*
4A Caswell
4A Catawba
4A Chatham
4A Cherokee
3A Chowan
4A Clay
4A Cleveland
3A Columbus*
3A Craven
3A Cumberland
3A Currituck
3A Dare
3A Davidson
4A Davie
3A Duplin
4A Durham
3A Edgecombe
4A Forsyth
4A Franklin
3A Gaston
4A Gates
4A Graham
4A Granville
3A Greene
4A Guilford
4A Halifax
4A Harnett
4A Haywood
4A Henderson
4A Hertford
3A Hoke
3A Hyde
4A Iredell
4A Jackson
3A Johnston
3A Jones
4A Lee
3A Lenoir
4A Lincoln
4A Macon
4A Madison
3A Martin
4A McDowell
3A Mecklenburg
5A Mitchell
3A Montgomery
3A Moore
4A Nash
3A New Hanover*
4A Northampton
3A Onslow*
4A Orange
3A Pamlico
3A Pasquotank
3A Pender*
3A Perquimans
4A Person
3A Pitt
4A Polk
3A Randolph
3A Richmond
3A Robeson
4A Rockingham
3A Rowan
4A Rutherford
3A Sampson
3A Scotland
3A Stanly
4A Stokes
4A Surry
4A Swain
4A Transylvania
3A Tyrrell
3A Union
4A Vance
4A Wake
4A Warren
3A Washington
5A Watauga
3A Wayne
4A Wilkes
3A Wilson
4A Yadkin
5A Yancey

NORTH DAKOTA

6A Adams
7 Barnes
7 Benson
6A Billings
7 Bottineau
6A Bowman
7 Burke
6A Burleigh
7 Cass
7 Cavalier
6A Dickey
7 Divide
6A Dunn
7 Eddy
6A Emmons
7 Foster
6A Golden Valley
7 Grand Forks
6A Grant
7 Griggs
6A Hettinger
7 Kidder
6A LaMoure
6A Logan
7 McHenry
6A McIntosh
6A McKenzie
7 McLean
6A Mercer
6A Morton
7 Mountrail
7 Nelson
6A Oliver
7 Pembina
7 Pierce
7 Ramsey
6A Ransom
7 Renville
6A Richland
7 Rolette
6A Sargent
7 Sheridan
6A Sioux
6A Slope
6A Stark
7 Steele
7 Stutsman
7 Towner
7 Traill
7 Walsh
7 Ward
7 Wells
7 Williams

OHIO

4A Adams
5A Allen

(continued)

INTERNATIONAL CODE COUNCIL®
Copyright © 2015 ICC. ALL RIGHTS RESERVED. Accessed by David Dammon on Jun 21, 2017 12:30:52 PM pursuant to License Agreement with ICC. No further reproduction or distribution authorized. ANY UNAUTHORIZED REPRODUCTION OR DISTRIBUTION IS A VIOLATION OF THE FEDERAL COPYRIGHT ACT AND THE LICENSE AGREEMENT, AND SUBJECT TO CIVIL AND CRIMINAL PENALTIES THEREUNDER.

TABLE R301.1—continued
CLIMATE ZONES, MOISTURE REGIMES, AND WARM-HUMID DESIGNATIONS BY STATE, COUNTY AND TERRITORY

5A Ashland
5A Ashtabula
5A Athens
5A Auglaize
5A Belmont
4A Brown
5A Butler
5A Carroll
5A Champaign
5A Clark
4A Clermont
5A Clinton
5A Columbiana
5A Coshocton
5A Crawford
5A Cuyahoga
5A Darke
5A Defiance
5A Delaware
5A Erie
5A Fairfield
5A Fayette
5A Franklin
5A Fulton
4A Gallia
5A Geauga
5A Greene
5A Guernsey
4A Hamilton
5A Hancock
5A Hardin
5A Harrison
5A Henry
5A Highland
5A Hocking
5A Holmes
5A Huron
5A Jackson
5A Jefferson
5A Knox
5A Lake
4A Lawrence
5A Licking
5A Logan
5A Lorain
5A Lucas
5A Madison
5A Mahoning
5A Marion
5A Medina
5A Meigs
5A Mercer
5A Miami
5A Monroe
5A Montgomery
5A Morgan
5A Morrow
5A Muskingum
5A Noble
5A Ottawa
5A Paulding
5A Perry
5A Pickaway
4A Pike
5A Portage
5A Preble
5A Putnam
5A Richland
5A Ross
5A Sandusky
4A Scioto
5A Seneca
5A Shelby
5A Stark
5A Summit
5A Trumbull
5A Tuscarawas
5A Union
5A Van Wert
5A Vinton
5A Warren
4A Washington
5A Wayne
5A Williams
5A Wood
5A Wyandot

OKLAHOMA

3A Adair
3A Alfalfa
3A Atoka
4B Beaver
3A Beckham
3A Blaine
3A Bryan
3A Caddo
3A Canadian
3A Carter
3A Cherokee
3A Choctaw
4B Cimarron
3A Cleveland
3A Coal
3A Comanche
3A Cotton
3A Craig
3A Creek
3A Custer
3A Delaware
3A Dewey
3A Ellis
3A Garfield
3A Garvin
3A Grady
3A Grant
3A Greer
3A Harmon
3A Harper
3A Haskell
3A Hughes
3A Jackson
3A Jefferson
3A Johnston
3A Kay
3A Kingfisher
3A Kiowa
3A Latimer
3A Le Flore
3A Lincoln
3A Logan
3A Love
3A Major
3A Marshall
3A Mayes
3A McClain
3A McCurtain
3A McIntosh
3A Murray
3A Muskogee
3A Noble
3A Nowata
3A Okfuskee
3A Oklahoma
3A Okmulgee
3A Osage
3A Ottawa
3A Pawnee
3A Payne
3A Pittsburg
3A Pontotoc
3A Pottawatomie
3A Pushmataha
3A Roger Mills
3A Rogers
3A Seminole
3A Sequoyah
3A Stephens
4B Texas
3A Tillman
3A Tulsa
3A Wagoner
3A Washington
3A Washita
3A Woods
3A Woodward

OREGON

5B Baker
4C Benton
4C Clackamas
4C Clatsop
4C Columbia
4C Coos
5B Crook
4C Curry
5B Deschutes
4C Douglas
5B Gilliam
5B Grant
5B Harney
5B Hood River
4C Jackson
5B Jefferson
4C Josephine
5B Klamath
5B Lake
4C Lane
4C Lincoln
4C Linn
5B Malheur
4C Marion
5B Morrow
4C Multnomah
4C Polk
5B Sherman
4C Tillamook
5B Umatilla
5B Union
5B Wallowa
5B Wasco
4C Washington
5B Wheeler
4C Yamhill

PENNSYLVANIA

5A Adams
5A Allegheny
5A Armstrong
5A Beaver
5A Bedford
5A Berks
5A Blair
5A Bradford
4A Bucks
5A Butler
5A Cambria
6A Cameron
5A Carbon
5A Centre
4A Chester
5A Clarion
6A Clearfield
5A Clinton
5A Columbia
5A Crawford
5A Cumberland
5A Dauphin
4A Delaware
6A Elk
5A Erie
5A Fayette
5A Forest
5A Franklin
5A Fulton
5A Greene

(continued)

INTERNATIONAL CODE COUNCIL®
Copyright © 2015 ICC. ALL RIGHTS RESERVED. Accessed by David Dammon on Jun 21, 2017 12:30:52 PM pursuant to License Agreement with ICC. No further reproduction or distribution authorized. ANY UNAUTHORIZED REPRODUCTION OR DISTRIBUTION IS A VIOLATION OF THE FEDERAL COPYRIGHT ACT AND THE LICENSE AGREEMENT, AND SUBJECT TO CIVIL AND CRIMINAL PENALTIES THEREUNDER.

TABLE R301.1—continued
CLIMATE ZONES, MOISTURE REGIMES, AND WARM-HUMID DESIGNATIONS BY STATE, COUNTY AND TERRITORY

5A Huntingdon
5A Indiana
5A Jefferson
5A Juniata
5A Lackawanna
5A Lancaster
5A Lawrence
5A Lebanon
5A Lehigh
5A Luzerne
5A Lycoming
6A McKean
5A Mercer
5A Mifflin
5A Monroe
4A Montgomery
5A Montour
5A Northampton
5A Northumberland
5A Perry
4A Philadelphia
5A Pike
6A Potter
5A Schuylkill
5A Snyder
5A Somerset
5A Sullivan
6A Susquehanna
6A Tioga
5A Union
5A Venango
5A Warren
5A Washington
6A Wayne
5A Westmoreland
5A Wyoming
4A York

RHODE ISLAND

5A (all)

SOUTH CAROLINA

3A Abbeville
3A Aiken
3A Allendale*
3A Anderson
3A Bamberg*
3A Barnwell*
3A Beaufort*
3A Berkeley*
3A Calhoun
3A Charleston*
3A Cherokee
3A Chester
3A Chesterfield
3A Clarendon
3A Colleton*
3A Darlington
3A Dillon
3A Dorchester*
3A Edgefield
3A Fairfield
3A Florence
3A Georgetown*
3A Greenville
3A Greenwood
3A Hampton*
3A Horry*
3A Jasper*
3A Kershaw
3A Lancaster
3A Laurens
3A Lee
3A Lexington
3A Marion
3A Marlboro
3A McCormick
3A Newberry
3A Oconee
3A Orangeburg
3A Pickens
3A Richland
3A Saluda
3A Spartanburg
3A Sumter
3A Union
3A Williamsburg
3A York

SOUTH DAKOTA

6A Aurora
6A Beadle
5A Bennett
5A Bon Homme
6A Brookings
6A Brown
6A Brule
6A Buffalo
6A Butte
6A Campbell
5A Charles Mix
6A Clark
5A Clay
6A Codington
6A Corson
6A Custer
6A Davison
6A Day
6A Deuel
6A Dewey
5A Douglas
6A Edmunds
6A Fall River
6A Faulk
6A Grant
5A Gregory
6A Haakon
6A Hamlin
6A Hand
6A Hanson
6A Harding
6A Hughes
5A Hutchinson
6A Hyde
5A Jackson
6A Jerauld
6A Jones
6A Kingsbury
6A Lake
6A Lawrence
6A Lincoln
6A Lyman
6A Marshall
6A McCook
6A McPherson
6A Meade
5A Mellette
6A Miner
6A Minnehaha
6A Moody
6A Pennington
6A Perkins
6A Potter
6A Roberts
6A Sanborn
6A Shannon
6A Spink
6A Stanley
6A Sully
5A Todd
5A Tripp
6A Turner
5A Union
6A Walworth
5A Yankton
6A Ziebach

TENNESSEE

4A Anderson
4A Bedford
4A Benton
4A Bledsoe
4A Blount
4A Bradley
4A Campbell
4A Cannon
4A Carroll
4A Carter
4A Cheatham
3A Chester
4A Claiborne
4A Clay
4A Cocke
4A Coffee
3A Crockett
4A Cumberland
4A Davidson
4A Decatur
4A DeKalb
4A Dickson
3A Dyer
3A Fayette
4A Fentress
4A Franklin
4A Gibson
4A Giles
4A Grainger
4A Greene
4A Grundy
4A Hamblen
4A Hamilton
4A Hancock
3A Hardeman
3A Hardin
4A Hawkins
3A Haywood
3A Henderson
4A Henry
4A Hickman
4A Houston
4A Humphreys
4A Jackson
4A Jefferson
4A Johnson
4A Knox
3A Lake
3A Lauderdale
4A Lawrence
4A Lewis
4A Lincoln
4A Loudon
4A Macon
3A Madison
4A Marion
4A Marshall
4A Maury
4A McMinn
3A McNairy
4A Meigs
4A Monroe
4A Montgomery
4A Moore
4A Morgan
4A Obion
4A Overton
4A Perry
4A Pickett
4A Polk
4A Putnam
4A Rhea

(continued)

INTERNATIONAL CODE COUNCIL®
Copyright © 2015 ICC. ALL RIGHTS RESERVED. Accessed by David Dammon on Jun 21, 2017 12:30:52 PM pursuant to License Agreement with ICC. No further reproduction or distribution authorized. ANY UNAUTHORIZED REPRODUCTION OR DISTRIBUTION IS A VIOLATION OF THE FEDERAL COPYRIGHT ACT AND THE LICENSE AGREEMENT, AND SUBJECT TO CIVIL AND CRIMINAL PENALTIES THEREUNDER.

TABLE R301.1—continued
CLIMATE ZONES, MOISTURE REGIMES, AND WARM-HUMID DESIGNATIONS BY STATE, COUNTY AND TERRITORY

4A Roane
4A Robertson
4A Rutherford
4A Scott
4A Sequatchie
4A Sevier
3A Shelby
4A Smith
4A Stewart
4A Sullivan
4A Sumner
3A Tipton
4A Trousdale
4A Unicoi
4A Union
4A Van Buren
4A Warren
4A Washington
4A Wayne
4A Weakley
4A White
4A Williamson
4A Wilson

TEXAS

2A Anderson*
3B Andrews
2A Angelina*
2A Aransas*
3A Archer
4B Armstrong
2A Atascosa*
2A Austin*
4B Bailey
2B Bandera
2A Bastrop*
3B Baylor
2A Bee*
2A Bell*
2A Bexar*
3A Blanco*
3B Borden
2A Bosque*
3A Bowie*
2A Brazoria*
2A Brazos*
3B Brewster
4B Briscoe
2A Brooks*
3A Brown*
2A Burleson*
3A Burnet*
2A Caldwell*
2A Calhoun*
3B Callahan
2A Cameron*
3A Camp*
4B Carson
3A Cass*
4B Castro
2A Chambers*
2A Cherokee*
3B Childress
3A Clay
4B Cochran
3B Coke
3B Coleman
3A Collin*
3B Collingsworth
2A Colorado*
2A Comal*
3A Comanche*
3B Concho
3A Cooke
2A Coryell*
3B Cottle
3B Crane
3B Crockett
3B Crosby
3B Culberson
4B Dallam
3A Dallas*
3B Dawson
4B Deaf Smith
3A Delta
3A Denton*
2A DeWitt*
3B Dickens
2B Dimmit
4B Donley
2A Duval*
3A Eastland
3B Ector
2B Edwards
3A Ellis*
3B El Paso
3A Erath*
2A Falls*
3A Fannin
2A Fayette*
3B Fisher
4B Floyd
3B Foard
2A Fort Bend*
3A Franklin*
2A Freestone*
2B Frio
3B Gaines
2A Galveston*
3B Garza
3A Gillespie*
3B Glasscock
2A Goliad*
2A Gonzales*
4B Gray
3A Grayson
3A Gregg*
2A Grimes*
2A Guadalupe*
4B Hale
3B Hall
3A Hamilton*
4B Hansford
3B Hardeman
2A Hardin*
2A Harris*
3A Harrison*
4B Hartley
3B Haskell
2A Hays*
3B Hemphill
3A Henderson*
2A Hidalgo*
2A Hill*
4B Hockley
3A Hood*
3A Hopkins*
2A Houston*
3B Howard
3B Hudspeth
3A Hunt*
4B Hutchinson
3B Irion
3A Jack
2A Jackson*
2A Jasper*
3B Jeff Davis
2A Jefferson*
2A Jim Hogg*
2A Jim Wells*
3A Johnson*
3B Jones
2A Karnes*
3A Kaufman*
3A Kendall*
2A Kenedy*
3B Kent
3B Kerr
3B Kimble
3B King
2B Kinney
2A Kleberg*
3B Knox
3A Lamar*
4B Lamb
3A Lampasas*
2B La Salle
2A Lavaca*
2A Lee*
2A Leon*
2A Liberty*
2A Limestone*
4B Lipscomb
2A Live Oak*
3A Llano*
3B Loving
3B Lubbock
3B Lynn
2A Madison*
3A Marion*
3B Martin
3B Mason
2A Matagorda*
2B Maverick
3B McCulloch
2A McLennan*
2A McMullen*
2B Medina
3B Menard
3B Midland
2A Milam*
3A Mills*
3B Mitchell
3A Montague
2A Montgomery*
4B Moore
3A Morris*
3B Motley
3A Nacogdoches*
3A Navarro*
2A Newton*
3B Nolan
2A Nueces*
4B Ochiltree
4B Oldham
2A Orange*
3A Palo Pinto*
3A Panola*
3A Parker*
4B Parmer
3B Pecos
2A Polk*
4B Potter
3B Presidio
3A Rains*
4B Randall
3B Reagan
2B Real
3A Red River*
3B Reeves
2A Refugio*
4B Roberts
2A Robertson*
3A Rockwall*
3B Runnels
3A Rusk*
3A Sabine*
3A San Augustine*
2A San Jacinto*
2A San Patricio*

(continued)

INTERNATIONAL CODE COUNCIL®
Copyright © 2015 ICC. ALL RIGHTS RESERVED. Accessed by David Dammon on Jun 21, 2017 12:30:52 PM pursuant to License Agreement with ICC. No further reproduction or distribution authorized. ANY UNAUTHORIZED REPRODUCTION OR DISTRIBUTION IS A VIOLATION OF THE FEDERAL COPYRIGHT ACT AND THE LICENSE AGREEMENT, AND SUBJECT TO CIVIL AND CRIMINAL PENALTIES THEREUNDER.

TABLE R301.1—continued
CLIMATE ZONES, MOISTURE REGIMES, AND WARM-HUMID DESIGNATIONS BY STATE, COUNTY AND TERRITORY

3A San Saba*
3B Schleicher
3B Scurry
3B Shackelford
3A Shelby*
4B Sherman
3A Smith*
3A Somervell*
2A Starr*
3A Stephens
3B Sterling
3B Stonewall
3B Sutton
4B Swisher
3A Tarrant*
3B Taylor
3B Terrell
3B Terry
3B Throckmorton
3A Titus*
3B Tom Green
2A Travis*
2A Trinity*
2A Tyler*
3A Upshur*
3B Upton
2B Uvalde
2B Val Verde
3A Van Zandt*
2A Victoria*
2A Walker*
2A Waller*
3B Ward
2A Washington*
2B Webb
2A Wharton*
3B Wheeler
3A Wichita
3B Wilbarger
2A Willacy*
2A Williamson*
2A Wilson*
3B Winkler
3A Wise
3A Wood*
4B Yoakum
3A Young
2B Zapata
2B Zavala

UTAH

5B Beaver
6B Box Elder
6B Cache
6B Carbon
6B Daggett
5B Davis
6B Duchesne
5B Emery
5B Garfield
5B Grand
5B Iron
5B Juab
5B Kane
5B Millard
6B Morgan
5B Piute
6B Rich
5B Salt Lake
5B San Juan
5B Sanpete
5B Sevier
6B Summit
5B Tooele
6B Uintah
5B Utah
6B Wasatch
3B Washington
5B Wayne
5B Weber

VERMONT

6A (all)

VIRGINIA

4A (all)

WASHINGTON

5B Adams
5B Asotin
5B Benton
5B Chelan
4C Clallam
4C Clark
5B Columbia
4C Cowlitz
5B Douglas
6B Ferry
5B Franklin
5B Garfield
5B Grant
4C Grays Harbor
4C Island
4C Jefferson
4C King
4C Kitsap
5B Kittitas
5B Klickitat
4C Lewis
5B Lincoln
4C Mason
6B Okanogan
4C Pacific
6B Pend Oreille
4C Pierce
4C San Juan
4C Skagit
5B Skamania
4C Snohomish
5B Spokane
6B Stevens
4C Thurston
4C Wahkiakum
5B Walla Walla
4C Whatcom
5B Whitman
5B Yakima

WEST VIRGINIA

5A Barbour
4A Berkeley
4A Boone
4A Braxton
5A Brooke
4A Cabell
4A Calhoun
4A Clay
5A Doddridge
5A Fayette
4A Gilmer
5A Grant
5A Greenbrier
5A Hampshire
5A Hancock
5A Hardy
5A Harrison
4A Jackson
4A Jefferson
4A Kanawha
5A Lewis
4A Lincoln
4A Logan
5A Marion
5A Marshall
4A Mason
4A McDowell
4A Mercer
5A Mineral
4A Mingo
5A Monongalia
4A Monroe
4A Morgan
5A Nicholas
5A Ohio
5A Pendleton
4A Pleasants
5A Pocahontas
5A Preston
4A Putnam
5A Raleigh
5A Randolph
4A Ritchie
4A Roane
5A Summers
5A Taylor
5A Tucker
4A Tyler
5A Upshur
4A Wayne
5A Webster
5A Wetzel
4A Wirt
4A Wood
4A Wyoming

WISCONSIN

6A Adams
7 Ashland
6A Barron
7 Bayfield
6A Brown
6A Buffalo
7 Burnett
6A Calumet
6A Chippewa
6A Clark
6A Columbia
6A Crawford
6A Dane
6A Dodge
6A Door
7 Douglas
6A Dunn
6A Eau Claire
7 Florence
6A Fond du Lac
7 Forest
6A Grant
6A Green
6A Green Lake
6A Iowa
7 Iron
6A Jackson
6A Jefferson
6A Juneau
6A Kenosha
6A Kewaunee
6A La Crosse
6A Lafayette
7 Langlade
7 Lincoln
6A Manitowoc
6A Marathon
6A Marinette
6A Marquette
6A Menominee
6A Milwaukee
6A Monroe
6A Oconto
7 Oneida
6A Outagamie

(continued)

INTERNATIONAL CODE COUNCIL®
Copyright © 2015 ICC. ALL RIGHTS RESERVED. Accessed by David Dammon on Jun 21, 2017 12:30:52 PM pursuant to License Agreement with ICC. No further reproduction or distribution authorized. ANY UNAUTHORIZED REPRODUCTION OR DISTRIBUTION IS A VIOLATION OF THE FEDERAL COPYRIGHT ACT AND THE LICENSE AGREEMENT, AND SUBJECT TO CIVIL AND CRIMINAL PENALTIES THEREUNDER.

TABLE R301.1—continued
CLIMATE ZONES, MOISTURE REGIMES, AND WARM-HUMID DESIGNATIONS BY STATE, COUNTY AND TERRITORY

6A Ozaukee
6A Pepin
6A Pierce
6A Polk
6A Portage
7 Price
6A Racine
6A Richland
6A Rock
6A Rusk
6A Sauk
7 Sawyer
6A Shawano
6A Sheboygan
6A St. Croix
7 Taylor
6A Trempealeau
6A Vernon
7 Vilas
6A Walworth
7 Washburn
6A Washington
6A Waukesha
6A Waupaca
6A Waushara
6A Winnebago
6A Wood

WYOMING

6B Albany
6B Big Horn
6B Campbell
6B Carbon
6B Converse
6B Crook
6B Fremont
5B Goshen
6B Hot Springs
6B Johnson
6B Laramie
7 Lincoln
6B Natrona
6B Niobrara
6B Park
5B Platte
6B Sheridan
7 Sublette
6B Sweetwater
7 Teton
6B Uinta
6B Washakie
6B Weston

US TERRITORIES

AMERICAN SAMOA

1A (all)*

GUAM

1A (all)*

NORTHERN MARIANA ISLANDS

1A (all)*

PUERTO RICO

1A (all)*

VIRGIN ISLANDS

1A (all)*

INTERNATIONAL CODE COUNCIL®
Copyright © 2015 ICC. ALL RIGHTS RESERVED. Accessed by David Dammon on Jun 21, 2017 12:30:52 PM pursuant to License Agreement with ICC. No further reproduction or distribution authorized. ANY UNAUTHORIZED REPRODUCTION OR DISTRIBUTION IS A VIOLATION OF THE FEDERAL COPYRIGHT ACT AND THE LICENSE AGREEMENT, AND SUBJECT TO CIVIL AND CRIMINAL PENALTIES THEREUNDER.

SECTION R302
DESIGN CONDITIONS

R302.1 Interior design conditions. The interior design temperatures used for heating and cooling load calculations shall be a maximum of 72°F (22°C) for heating and minimum of 75°F (24°C) for cooling.

❖ While the previous sections of IECC Chapter 3 address outdoor design conditions, this section provides the interior conditions that will be used for properly sizing the mechanical equipment. The proper sizing of mechanical equipment (see Section R403.7) can vary depending on the selected design conditions. While the code does address oversizing equipment, it is not enforceable without establishing the exact design parameters. This section is included in the code only for system sizing. It does not affect the interior design temperatures required by other codes such as Section 1204 of the IBC or Section 602.2 of the *International Property Maintenance Code*® (IPMC®).

The 75°F (24°C) design temperature for cooling was used in the code so that it coordinated with both the ASHRAE *Handbook of Fundamentals* and the Air Conditioning Contractors of America (ACCA) Manuals S and J, established standards that deal with equipment sizing.

SECTION R303
MATERIALS, SYSTEMS AND EQUIPMENT

R303.1 Identification. Materials, systems and equipment shall be identified in a manner that will allow a determination of compliance with the applicable provisions of this code.

❖ This section is intended to make certain that sufficient information exists to determine compliance with the code during the plan review and field inspection phases. The permittee can submit the required equipment and materials information on the building plans, specification sheets or schedules, or in any other way that allows the code official to clearly identify which specifications apply to which portions of the building (i.e., which parts of the building are insulated to the levels listed). Materials information includes envelope insulation levels, glazing assembly *U*-factors and duct and piping insulation levels. Equipment information includes heating and cooling equipment and appliance efficiencies where high-efficiency equipment is claimed to meet code requirements.

This section contains specific material, equipment and system identification requirements for the approval and installation of the items required by the code. Although the means for permanent marking (tag, stencil, label, stamp, sticker, bar code, etc.) is often determined and applied by the manufacturer, if there is any uncertainty about the product, the mark is subject to the approval of the code official.

R303.1.1 Building thermal envelope insulation. An *R*-value identification mark shall be applied by the manufacturer to each piece of *building thermal envelope* insulation 12 inches (305 mm) or greater in width. Alternately, the insulation installers shall provide a certification listing the type, manufacturer and *R*-value of insulation installed in each element of the *building thermal envelope*. For blown or sprayed insulation (fiberglass and cellulose), the initial installed thickness, settled thickness, settled *R*-value, installed density, coverage area and number of bags installed shall be *listed* on the certification. For sprayed polyurethane foam (SPF) insulation, the installed thickness of the areas covered and *R*-value of installed thickness shall be *listed* on the certification. For insulated siding, the *R*-value shall be labeled on the product's package and shall be *listed* on the certification. The insulation installer shall sign, date and post the certification in a conspicuous location on the job site.

❖ The thermal performance of insulation is rated in terms of *R*-value. For products lacking an *R*-value identification, the installer (or builder) must provide the insulation performance data. For example, some insulation materials, such as foamed-in-place urethane, can be installed in wall, floor and cathedral ceiling cavities. These products are not labeled, as is batt insulation, nor is it appropriate for them to be evaluated as required in the code for blown or sprayed insulation; however, the installer must certify the type, thickness and *R*-value of these materials.

The *R*-value of loose-fill insulation (blown or sprayed) is dependent on both the installed thickness and density (number of bags used). Therefore, loose-fill insulation cannot be directly labeled by the manufacturer. Many blown insulation products carry a manufacturer's *R*-value guarantee when installed to a designated thickness, "inches = *R*-value." Blown insulation products lacking this manufacturer's guarantee can be subjected to special inspection and testing; what is referred to as "cookie cutting." Cookie cutting involves extracting a column of insulation with a cylinder to determine its density. The insulation depth and density must yield the specified *R*-value according to the manufacturer's bag label specification.

The code and Federal Trade Commission Rule 460 require that installers of insulation in homes, apartments and manufactured housing units report this information to the authority having jurisdiction in the form of a certification posted in a conspicuous location (see Commentary Figure R303.1.1).

R303.1.1.1 Blown or sprayed roof/ceiling insulation. The thickness of blown-in or sprayed roof/ceiling insulation (fiberglass or cellulose) shall be written in inches (mm) on markers that are installed at least one for every 300 square feet (28 m^2) throughout the attic space. The markers shall be affixed to the trusses or joists and marked with the minimum initial installed thickness with numbers not less than 1 inch (25 mm) in height. Each marker shall face the attic access opening. Spray polyurethane foam thickness and installed *R*-value shall be *listed* on certification provided by the insulation installer.

❖ To help verify the installed *R*-value of blown-in or spray-applied insulation, the installer must certify the

INTERNATIONAL CODE COUNCIL®
Copyright © 2015 ICC. ALL RIGHTS RESERVED. Accessed by David Dammon on Jun 21, 2017 12:30:52 PM pursuant to License Agreement with ICC. No further reproduction or distribution authorized. ANY UNAUTHORIZED REPRODUCTION OR DISTRIBUTION IS A VIOLATION OF THE FEDERAL COPYRIGHT ACT AND THE LICENSE AGREEMENT, AND SUBJECT TO CIVIL AND CRIMINAL PENALTIES THEREUNDER.

following information in a signed statement posted in a conspicuous place (see Section R303.1.1):

- The type of insulation used and manufacturer.
- The insulation's coverage per bag (the number of bags required to result in a given *R*-value for a given area), as well as the settled *R*-value.
- The initial and settled thickness.
- The number of bags installed.

Under circumstances where the insulation *R*-value is guaranteed, only the initial thickness is required on the certification.

This section helps demonstrate compliance and enforcement of the provisions found in Section R303.1.1. To assist with application and enforcement, loose-fill ceiling insulation also requires thickness markers that are attached to the framing and face the attic access. In a large space, markers placed evenly about every 17 feet (5182 mm) (with some markers at the edge of the space) will meet this requirement. For sprayed polyurethane, such markers are not effective. When using this product, the code requires that the measured thickness and *R*-value be recorded on the certificate.

R303.1.2 Insulation mark installation. Insulating materials shall be installed such that the manufacturer's *R*-value mark is readily observable upon inspection.

❖ For batt insulation, manufacturers' *R*-value designations and stripe codes are often printed directly on the insulation. Where possible, the insulation must be installed so these designations are readable. Backed floor batts can be installed with the designation

This Attic Has Been Insulated To

INSULATION CONTRACTORS ASSOCIATION OF AMERICA ICAA

R-

By A Professional Insulation Contractor

The insulation in this attic was installed by a qualified professional Contractor to the R-value stated above

CIMA

INSULATE TODAY SAVE TOMORROW

NAIMA NORTH AMERICAN INSULATION MANUFACTURERS ASSOCIATION

Certificate of Insulation

BUILDING ADDRESS: _____

CONTRACTOR: _____

Installation Date _____

License# _____

Area Insulated	R-Value	Installed Thickness	Settled Thickness	Installed Density	No. Bags	Sq. Ft.
Attic						
Walls						
Floors						

I, _____, (print name) certify that this residence/building has been insulated to the stated R-value and that the installation is in conformance with all applicable codes, standards, regulations and specifications.

Authorized Signature _____ Date _____

Figure R303.1.1
SAMPLE CERTIFICATE OF INSULATION

(Logos courtesy of Cellulose Insulation Manufacturers Association, http://cellulose.org, Insulation Contractors Association of America, www.insulate.org, and North American Insulation Manufacturers Association, www.NAIMA.org)

INTERNATIONAL CODE COUNCIL®
Copyright © 2015 ICC. ALL RIGHTS RESERVED. Accessed by David Dammon on Jun 21, 2017 12:30:52 PM pursuant to License Agreement with ICC. No further reproduction or distribution authorized. ANY UNAUTHORIZED REPRODUCTION OR DISTRIBUTION IS A VIOLATION OF THE FEDERAL COPYRIGHT ACT AND THE LICENSE AGREEMENT, AND SUBJECT TO CIVIL AND CRIMINAL PENALTIES THEREUNDER.

against the underfloor, which means it would not be visible. In those cases, the *R*-value must be certified by the installer or be validated by some other means (see commentary, Section R303.1.1).

R303.1.3 Fenestration product rating. *U*-factors of fenestration products (windows, doors and skylights) shall be determined in accordance with NFRC 100.

Exception: Where required, garage door *U*-factors shall be determined in accordance with either NFRC 100 or ANSI/DASMA 105.

U-factors shall be determined by an accredited, independent laboratory, and *labeled* and certified by the manufacturer.

Products lacking such a *labeled U*-factor shall be assigned a default *U*-factor from Table R303.1.3(1) or R303.1.3(2). The solar heat gain coefficient (SHGC) and *visible transmittance* (VT) of glazed fenestration products (windows, glazed doors and skylights) shall be determined in accordance with NFRC 200 by an accredited, independent laboratory, and *labeled* and certified by the manufacturer. Products lacking such a *labeled* SHGC or VT shall be assigned a default SHGC or VT from Table R303.1.3(3).

❖ Until recently, the buyers of fenestration products received energy performance information in a variety of ways. Some manufacturers described performance by showing *R*-values of the glass. While the glass might have been a good performer, the rating did not include the effects of the frame. Other manufacturers touted the insulating value of different window components, but these, too, did not reflect the total window system performance. When manufacturers rated the entire product, some used test laboratory measurements and others used computer calculations. Even among those using test laboratory reports, the test laboratories often tested the products under different procedures, making an "apples-to-apples" comparison difficult. The different rating methods confused builders and consumers. They also created headaches for manufacturers trying to differentiate the performance of their products from the performance of their competitors' products.

The National Fenestration Rating Council (NFRC) has developed a fenestration energy rating system based on whole-product performance. This accurately accounts for the energy-related effects of all the product's component parts and prevents information about a single component from being compared in a misleading way to other whole-product properties. With energy ratings based on whole-product performance, the NFRC helps builders, designers and consumers directly compare products with different construction details and attributes.

Products that have been rated by NFRC-approved testing laboratories and certified by NFRC-accredited independent certification and inspection agencies carry a temporary and permanent label featuring the "NFRC-certified" mark. With this mark, the manufacturer stipulates that the energy performance of the product was determined according to NFRC rules and procedures.

By certifying and labeling their products, manufacturers are demonstrating their commitment to providing accurate energy and energy-related performance information. The code purposely sets the default values fairly high. This helps to encourage the use of products that have been tested and also ensures that products that have little energy-saving values are not used inappropriately in the various climate zones. By setting the default value so high, it will also prevent someone from removing the label from a tested window and then using the default values. Therefore, the default values are most representative of the lower end of the energy-efficient products.

A product that is not NFRC certified and does not exactly match the specifications in Tables R303.1.3(1) and R303.1.3(2) must use the tabular specification for the product it most closely resembles. In the absence of tested *U*-factors, the default *U*-factor for doors containing glazing can be a combination of the glazing and door *U*-factor as described in the definition for "*U*-factor" (see commentary, Section R202, "*U*-factor"). NFRC procedures determine *U*-factor and SHGC ratings based on the whole fenestration assembly [untested fenestration products have default *U*-factors and SHGCs assigned as described in the commentary to Tables R303.1.3(1) through R303.1.3(3)]. During construction inspection, the label on each glazing assembly should be checked for conformance to the *U*-factor specified on the approved plans. These labels must be left on the glazing until after the building has been inspected for compliance. A sample NFRC label is shown in Commentary Figure R303.1.3(1).

Products certified according to NFRC procedures are listed in the *Certified Products Directory*. The directory is published annually and contains energy performance information for over 1.4 million fenestration product options listed by over 450 manufacturers. When using the directory or shopping for NFRC-certified products, it is important to note:

1. A product is considered to be NFRC certified only if it carries the NFRC label. Simply being listed in this directory is not enough.
2. The NFRC-certified mark does not signify that the product meets any energy-efficiency standards or criteria.
3. The NFRC neither sets minimum performance standards nor mandates specific performance levels. Rather, NFRC ratings can be used to determine whether a product meets a state or local code or other performance requirement and to compare the energy performance of different products during plan review. For questions about the NFRC and its rating and labeling system, more information is available on the organization's website at www.nfrc.org. The NFRC adopted a new energy performance

INTERNATIONAL CODE COUNCIL®
Copyright © 2015 ICC. ALL RIGHTS RESERVED. Accessed by David Dammon on Jun 21, 2017 12:30:52 PM pursuant to License Agreement with ICC. No further reproduction or distribution authorized. ANY UNAUTHORIZED REPRODUCTION OR DISTRIBUTION IS A VIOLATION OF THE FEDERAL COPYRIGHT ACT AND THE LICENSE AGREEMENT, AND SUBJECT TO CIVIL AND CRIMINAL PENALTIES THEREUNDER.

label in 2005. It lists the manufacturer, describes the product, provides a source for additional information and includes ratings for one or more energy performance characteristics.

The IECC offers an alternative to NFRC-certified glazed fenestration product *U*-factor ratings. In the absence of *U*-factors based on NFRC test procedures, the default *U*-factors in Table R303.1.3(1) must be used. When a composite of materials from two different product types is used, the code official should be consulted regarding how the product will be rated. Generally, the product must be assigned the higher *U*-factor, although an average based on the *U*-factors and areas may be acceptable in some cases.

The product cannot receive credit for a feature that cannot be seen. Because performance features such as argon fill and low-emissivity coatings for glass are not visually verifiable, they do not receive credit in the default tables. Tested *U*-factors for these windows are often lower, so using tested *U*-factors is to the applicant's advantage. Commentary Figure R303.1.3(2) illustrates visually verifiable window characteristics, among other various window performance, function and cost considerations.

A single-glazed window with an installed storm window may be considered a double-glazed assembly and use the corresponding *U*-factor from the default table. For example, the *U*-factor 0.80 in Table R303.1.3(1) applies to a single-glazed, metal window without a thermal break (but with an installed storm window). If the storm window was not installed, the *U*-factor would be 1.20.



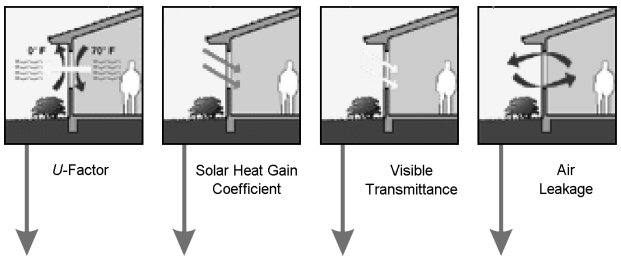

U-Factor

U-factor measures how well a product prevents heat from escaping. *U*-factor ratings generally fall between 0.20 and 1.20. The lower the *U*-factor, the better. *U*-factor is particularly important in northern climates.

Solar Heat Gain Coefficient

Solar heat gain coefficient (SHGC) measures how well a product blocks heat caused by sunlight. SHGC is expressed as a number between 0 and 1. A lower SHGC means less heat gain. SHGC is particularly important in southern climates.

Visible Transmittance

Visible transmittance (VT) measures how much light comes through a product. VT is expressed as a number between 0 and 1. Heavily tinted products have a relatively low VT.

Air Leakage

Air leakage (AL) heat loss and gain occur by infiltration through cracks in the window assembly. It is indicated by an air leakage rating (AL) expressed as the equivalent cubic feet of air passing through a square foot of window area. The lower the AL, the less air will pass through cracks in the window assembly. At this time, AL is optional but required by code only for manufactured windows and doors.

Figure R303.1.3(1)
SAMPLE NATIONAL FENESTRATION RATING COUNCIL (NFRC) LABEL

INTERNATIONAL CODE COUNCIL®
Copyright © 2015 ICC. ALL RIGHTS RESERVED. Accessed by David Dammon on Jun 21, 2017 12:30:52 PM pursuant to License Agreement with ICC. No further reproduction or distribution authorized. ANY UNAUTHORIZED REPRODUCTION OR DISTRIBUTION IS A VIOLATION OF THE FEDERAL COPYRIGHT ACT AND THE LICENSE AGREEMENT, AND SUBJECT TO CIVIL AND CRIMINAL PENALTIES THEREUNDER.

TABLE R303.1.3(1)
DEFAULT GLAZED FENESTRATION *U*-FACTORS

FRAME TYPE	SINGLE PANE	DOUBLE PANE	SKYLIGHT	
			Single	Double
Metal	1.20	0.80	2.00	1.30
Metal with Thermal Break	1.10	0.65	1.90	1.10
Nonmetal or Metal Clad	0.95	0.55	1.75	1.05
Glazed Block	0.60			

TABLE R303.1.3(2)
DEFAULT DOOR *U*-FACTORS

DOOR TYPE	*U*-FACTOR
Uninsulated Metal	1.20
Insulated Metal	0.60
Wood	0.50
Insulated, nonmetal edge, max 45% glazing, any glazing double pane	0.35

❖ Door *U*-factors in Table R303.1.3(2) should be used wherever NFRC-certified ratings are not available. There are a few other aspects to note about doors. Opaque door *U*-factors must include the effects of the door edge and the frame. Calculating *U*-factors based on a cross section through the insulated portion is not acceptable. To take credit for a thermal break, the door must have a thermal break in both the door slab and in the frame. The values in the table are founded on principles established in the ASHRAE *Handbook of Fundamentals*.

TABLE R303.1.3(3)
DEFAULT GLAZED FENESTRATION SHGC AND VT

	SINGLE GLAZED		DOUBLE GLAZED		GLAZED BLOCK
	Clear	Tinted	Clear	Tinted	
SHGC	0.8	0.7	0.7	0.6	0.6
VT	0.6	0.3	0.6	0.3	0.6

❖ This table offers an alternative to NFRC-certified SHGC and visible transmittance (VT) values based on visually verifiable characteristics of the fenestration product. The SHGC is the fraction of incident solar radiation absorbed and directly transmitted by the window area, then subsequently reradiated, conducted or convected inward. SHGC is a ratio, expressed as a number between 0 and 1. The lower a window's SHGC, the less solar heat it transmits. The VT is the ratio of visible light entering the space through the fenestration product assembly to the incident visible light. VT includes the effects of glazing material and frame and is expressed as a number between 0 and 1.

An SHGC of 0.40 or less is recommended in cooling-dominated climates (Climate Zones 1–3). In heating-dominated climates, a high SHGC increases passive solar gain for the heating but reduces cooling season performance. A low SHGC improves cooling season performance but reduces passive solar gains for heating.

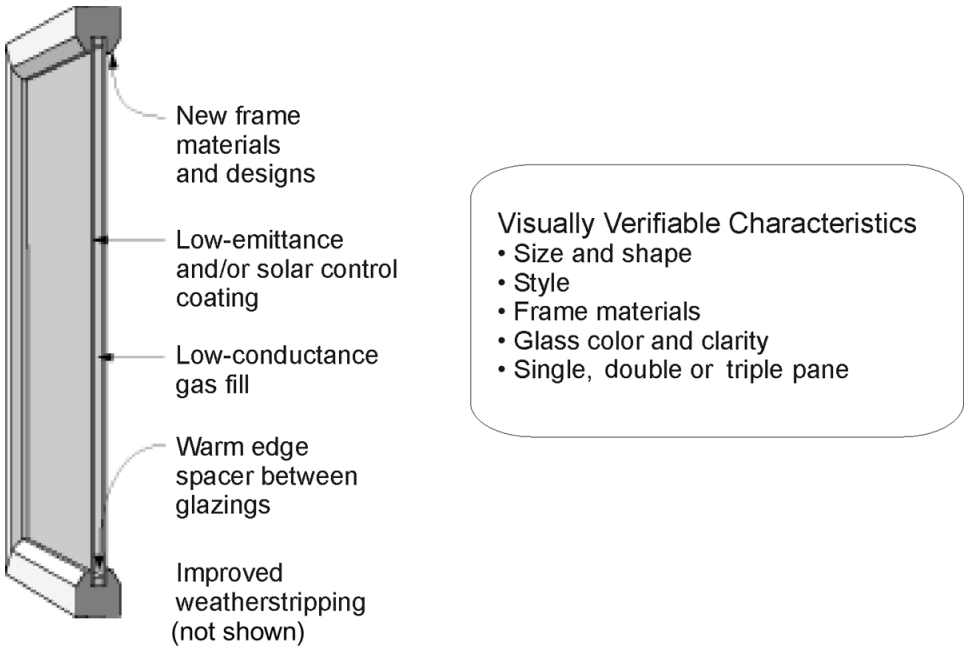

Figure R303.1.3(2)
VISUALLY VERIFIABLE WINDOW CHARACTERISTICS

INTERNATIONAL CODE COUNCIL®
Copyright © 2015 ICC. ALL RIGHTS RESERVED. Accessed by David Dammon on Jun 21, 2017 12:30:52 PM pursuant to License Agreement with ICC. No further reproduction or distribution authorized. ANY UNAUTHORIZED REPRODUCTION OR DISTRIBUTION IS A VIOLATION OF THE FEDERAL COPYRIGHT ACT AND THE LICENSE AGREEMENT, AND SUBJECT TO CIVIL AND CRIMINAL PENALTIES THEREUNDER.

R303.1.4 Insulation product rating. The thermal resistance (*R*-value) of insulation shall be determined in accordance with the U.S. Federal Trade Commission *R*-value rule (CFR Title 16, Part 460) in units of h · ft^2 · °F/Btu at a mean temperature of 75°F (24°C).

❖ This section brings two important requirements to the code.

First, the Federal Trade Commission *R*-value rule details test standards for insulation. The test standards are specific to the type of insulation and intended use. This clarifies any questions on the rating conditions to be used for insulation materials.

Second, the text above specifies the rating temperature to be used when evaluating the *R*-value of the product, providing consistency not currently in the code. Insulation products sometimes list several *R*-values based on different test temperatures. This eliminates any question as to which *R*-value to use. The temperature selected is a standard rating condition.

R303.1.4.1 Insulated siding. The thermal resistance (*R*-value) of insulated siding shall be determined in accordance with ASTM C 1363. Installation for testing shall be in accordance with the manufacturer's instructions.

❖ Insulated siding is a unique product that requires a special test method for determination of *R*-value. This test method is ASTM C 1363, *Standard Test Method for Thermal Performance of Building Materials and Envelope Assemblies by Means of a Hot Box Apparatus*.

R303.2 Installation. Materials, systems and equipment shall be installed in accordance with the manufacturer's instructions and the *International Building Code* or *International Residential Code*, as applicable.

❖ Manufacturers' installation instructions are thoroughly evaluated by the listing agency, verifying that a safe installation is prescribed. When an appliance is tested to obtain a listing and label, the approval agency installs the appliance in accordance with the manufacturer's instructions. The appliance is tested under these conditions; thus, the installation instructions become an integral part of the labeling process. The listing agency can require that the manufacturer alter, delete or add information to the instructions as necessary to achieve compliance with applicable standards and code requirements.

Manufacturers' installation instructions are enforceable extensions of the code and must be in the hands of the code official when an inspection takes place. Inspectors must carefully and completely read and comprehend the manufacturer's instructions in order to properly perform an installation inspection. In some cases, the code will specifically address an installation requirement that is also addressed in the manufacturer's installation instructions. The code requirement may be the same or may exceed the requirement in the manufacturer's installation instructions. The manufacturer's installation instructions could contain requirements that exceed those in the code. In such cases, the more restrictive requirements would apply (see commentary, Section 106).

Even if an installation appears to be in compliance with the manufacturer's instructions, the installation cannot be completed or approved until all associated components, connections and systems that serve the appliance or equipment are also in compliance with the requirements of the applicable *International Codes*® (I-Codes®) of reference. For example, a gas-fired boiler installation must not be approved if the boiler is connected to a deteriorated, undersized or otherwise unsafe chimney or vent. Likewise, the same installation must not be approved if the existing gas piping has insufficient capacity to supply the boiler load or if the electrical supply circuit is inadequate or unsafe.

Manufacturers' installation instructions are often updated and changed for various reasons, such as changes in the appliance, equipment or material design; revisions to the product standards; or as a result of field experiences related to existing installations. The code official should stay abreast of any changes by reviewing the manufacturer's instructions for every installation.

R303.2.1 Protection of exposed foundation insulation. Insulation applied to the exterior of basement walls, crawlspace walls and the perimeter of slab-on-grade floors shall have a rigid, opaque and weather-resistant protective covering to prevent the degradation of the insulation's thermal performance. The protective covering shall cover the exposed exterior insulation and extend not less than 6 inches (153 mm) below grade.

❖ The ultimate performance of insulation material is directly proportional to the workmanship involved in the material's initial installation, as well as the material's integrity over the life of the structure. Accordingly, foundation wall and slab-edge insulation materials installed in the vicinity of the exterior grade line require protection from damage that could occur from contact by lawn-mowing and maintenance equipment, garden hoses, garden tools, perimeter landscape materials, etc. In addition, the long-term thermal performance of foam-plastic insulation materials is adversely affected by direct exposure to the sun. To protect the insulation from sunlight and physical damage, it must have a protective covering that is inflexible, puncture resistant, opaque and weather resistant.

R303.3 Maintenance information. Maintenance instructions shall be furnished for equipment and systems that require preventive maintenance. Required regular maintenance actions shall be clearly stated and incorporated on a readily accessible label. The label shall include the title or publication number for the operation and maintenance manual for that particular model and type of product.

❖ This section establishes an owner's responsibility for maintaining the building in accordance with the requirements of the code and other referenced standards. This section requires, among others, that

INTERNATIONAL CODE COUNCIL®
Copyright © 2015 ICC. ALL RIGHTS RESERVED. Accessed by David Dammon on Jun 21, 2017 12:30:52 PM pursuant to License Agreement with ICC. No further reproduction or distribution authorized. ANY UNAUTHORIZED REPRODUCTION OR DISTRIBUTION IS A VIOLATION OF THE FEDERAL COPYRIGHT ACT AND THE LICENSE AGREEMENT, AND SUBJECT TO CIVIL AND CRIMINAL PENALTIES THEREUNDER.

mechanical and service water heating equipment and appliance maintenance information be made available to the owner/operator. This section does not require that labels be added to existing equipment; having the manufacturer's maintenance literature is usually sufficient to meet this requirement. During final occupancy inspection, the mechanical equipment and water heater should be inspected to verify that the information is taped to each unit or referenced on a label mounted in a conspicuous location on the units.

The code official has the authority to rule on the performance of maintenance work when equipment functions would be affected by such work. He or she also has the authority to require a building and its energy-using systems to be maintained in compliance with the public health and safety provisions required by other I-Codes.

Bibliography

The following resource materials were used in the preparation of the commentary for this chapter of the code.

Morales, C.G.; and A. J. Malavé, A.J. *Energy Modeling of Low Income Residencies*. http://library.witpress.com/pages/PapeInfo.asp?PaperID=22547.
(The paper above is not free. The proponents will send a Puerto Rico Energy Center presentation done for DOE that summarizes that work to anyone who requests this by email.)

INTERNATIONAL CODE COUNCIL®
Copyright © 2015 ICC. ALL RIGHTS RESERVED. Accessed by David Dammon on Jun 21, 2017 12:30:52 PM pursuant to License Agreement with ICC. No further reproduction or distribution authorized. ANY UNAUTHORIZED REPRODUCTION OR DISTRIBUTION IS A VIOLATION OF THE FEDERAL COPYRIGHT ACT AND THE LICENSE AGREEMENT, AND SUBJECT TO CIVIL AND CRIMINAL PENALTIES THEREUNDER.

Chapter 4 [RE]: Residential Energy Efficiency

General Comments

Chapter 4 [RE] contains the energy-efficiency-related requirements for the design and construction of residential buildings regulated under the code. The applicable portions of the building must comply with the provisions within this chapter for energy efficiency.

Section R401 contains the scope and application of the chapter and also regulates a certificate that must be left with the building. In addition, Section R401 provides an alternative for residential buildings in the Tropical Zone. Section R402 contains the insulation *R*-value requirements for the building envelope, which includes the roof/ceiling assembly, wall assembly and floor assembly, as well as fenestration requirements. Section R403 contains the requirements for heating and cooling systems and includes requirements for equipment sizing, duct installation, piping insulation and the requirements for controls. Section R404 contains electrical power and lighting systems information. Section R405 provides a performance option that will not only provide an additional means of demonstrating compliance with the code but also allows trade-offs between the various systems.

Purpose

This chapter details requirements for the portions of the building and building systems that impact energy use in new residential construction and promotes the effective use of energy. The provisions in the chapter promote energy efficiency in the building envelope, the heating and cooling system, the service water-heating system, and the electrical power and lighting system of the building. Compliance with this chapter will provide a minimum level of energy efficiency for new construction. Greater levels of efficiency can be installed to decrease the energy use of new construction.

SECTION R401 GENERAL

R401.1 Scope. This chapter applies to residential buildings.

❖ This chapter covers "residential" buildings as they are defined in Chapter 2 [RE]. A review of the definition is important because it does not include all buildings that are classified as "residential" by the *International Building Code*® (IBC®). Hotels, motels and other transient occupancies that are classified as a Group R-1 occupancy by the IBC are not included in the definition of "Residential" and would, therefore, need to comply with the "Commercial" provisions that are found in Chapter 4[CE].

Chapter 4 [RE] applies to portions of the building thermal envelope that enclose conditioned space as shown in Commentary Figure R401.1(1). Conditioned space is the area provided with heating and/or cooling either directly through a positive heating/cooling supply system, such as registers located in the space, or indirectly through an opening that allows heated or cooled air to communicate directly with the space. For example, a walk-in closet connected to a master bedroom suite may not contain a positive heating supply through a register, but it would be conditioned indirectly by the free passage of heated or cooled air into the spaces from the bedroom.

The code through Section R402.1 exempts areas that do not contain conditioned space and are separated from the conditioned spaces of the building by the building envelope from the building thermal envelope requirements. A good example of this would be an unconditioned garage or attic space. In the case of a garage, if the unconditioned garage area is separated from the conditioned portions of the residence by an assembly that meets the building thermal envelope criteria (meaning that the wall between them is insulated), the exterior walls of the garage would not need to be insulated to separate the garage from the exterior climate.

The building thermal envelope consists of the wall, roof/ceiling and floor assemblies that surround the conditioned space. Raised floors over a crawl space or garage or directly exposed to the outside air are considered to be part of the floor assembly. Walls surrounding a conditioned basement (in addition to surrounding conditioned spaces above grade) are part of the building envelope. The code defines "Above-grade walls" surrounding conditioned spaces as exterior walls. This definition includes walls between the conditioned space and unconditioned garage, roof and basement knee walls, dormer walls, gable end walls, walls enclosing a mansard roof and basement walls with an average below-grade wall area that is less than 50 percent of the total basement gross wall area. This definition would not include walls separating an unconditioned garage from the outdoors. The code's definition of "Exterior walls" would also include basement walls. The roof/ceiling assembly is the surface where insulation will be

INTERNATIONAL CODE COUNCIL®
Copyright © 2015 ICC. ALL RIGHTS RESERVED. Accessed by David Dammon on Jun 21, 2017 12:30:52 PM pursuant to License Agreement with ICC. No further reproduction or distribution authorized. ANY UNAUTHORIZED REPRODUCTION OR DISTRIBUTION IS A VIOLATION OF THE FEDERAL COPYRIGHT ACT AND THE LICENSE AGREEMENT, AND SUBJECT TO CIVIL AND CRIMINAL PENALTIES THEREUNDER.

installed, typically on top of the gypsum board [see Commentary Figure R401.1(2)].

R401.2 Compliance. Projects shall comply with one of the following:

1. Sections R401 through R404.
2. Section R405 and the provisions of Sections R401 through R404 labeled "Mandatory."
3. An energy rating index (ERI) approach in Section R406.

❖ This section allows residential buildings to comply with either the prescriptive requirements of Sections R402 through R404, the performance options that are provided in Section R405, or the energy rating index option in Section R406. Under all options, the building must comply with the mandatory requirements that are found in Sections R402.4, R402.5, R403.1, R403.1.2, R403.3.2, R403.3.3, R403.3.5, R403.4, R403.6, R403.7, R403.8, R403.9, R404 and R406.3. A code user may evaluate both options and use the one that fits the project best, as these two differing methods can result in different requirements. Most requirements are given prescriptively. Alternative trade-offs are specified for many requirements, such as for the building thermal envelope requirements. For requirements specified by *U*-factors, an overall

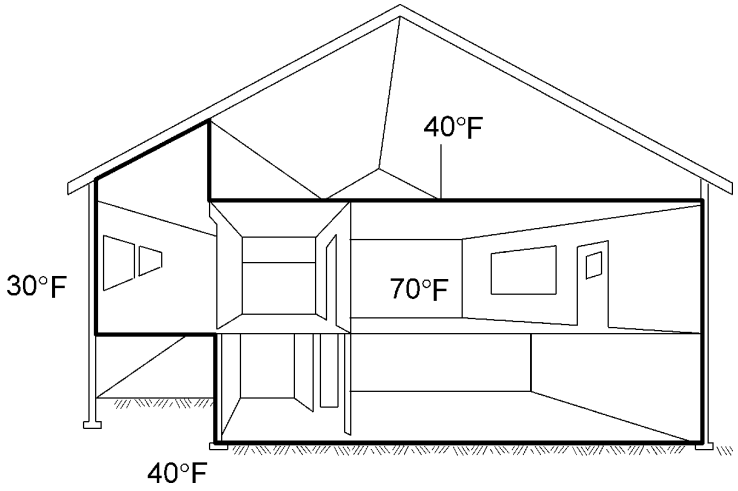

For SI: °C = [(°F) - 32]/1.8.

Figure R401.1(1)
CONDITIONED ENVELOPE

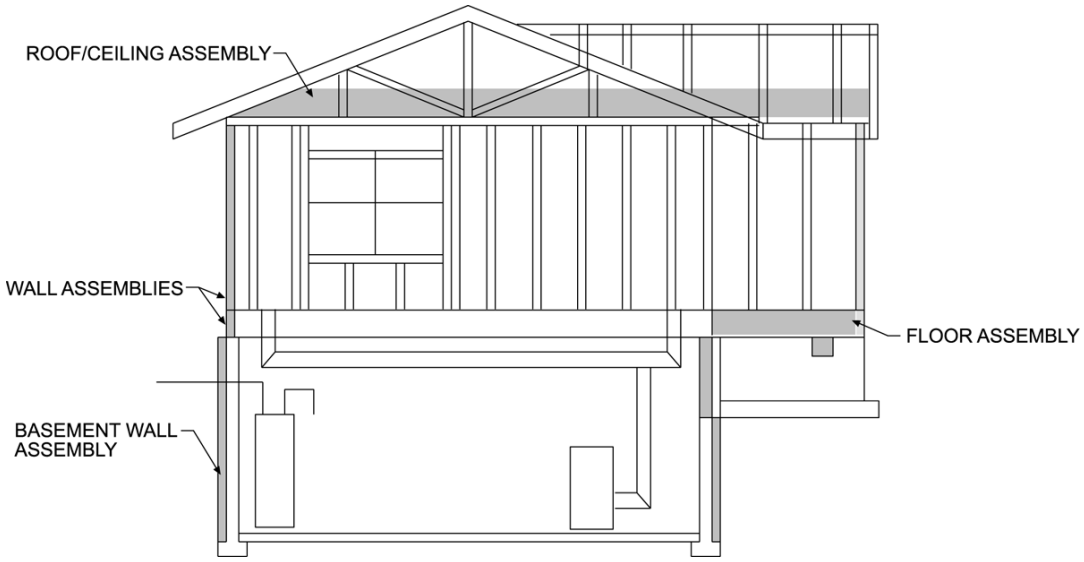

Figure R401.1(2)
BUILDING ENVELOPE

INTERNATIONAL CODE COUNCIL®
Copyright © 2015 ICC. ALL RIGHTS RESERVED. Accessed by David Dammon on Jun 21, 2017 12:30:52 PM pursuant to License Agreement with ICC. No further reproduction or distribution authorized. ANY UNAUTHORIZED REPRODUCTION OR DISTRIBUTION IS A VIOLATION OF THE FEDERAL COPYRIGHT ACT AND THE LICENSE AGREEMENT, AND SUBJECT TO CIVIL AND CRIMINAL PENALTIES THEREUNDER.

UA (*U*-factor times the area) can be used to show equivalence. A performance-based annual energy calculation also can be met by showing overall energy equivalence.

The majority of the requirements of this chapter are based on the climate zone where the project is being built. The appropriate climate zone can be found in Section R301.1 of the code. Climate Zones 1 through 7 apply to various parts of the continental United States and are defined by county lines. Climate Zones 7 and 8 apply to various parts of Alaska, and Hawaii is classified as Climate Zone 1. The climate zones have been divided into marine, dry and moist to deal with levels of humidity. For more details and background on the development of the new climate zones, see the commentary to Section R301.1.

R401.2.1 Tropical zone. *Residential buildings* in the tropical zone at elevations below 2,400 feet (731.5 m) above sea level shall be deemed to comply with this chapter where the following conditions are met:

1. Not more than one-half of the *occupied* space is air conditioned.
2. The *occupied* space is not heated.
3. Solar, wind or other renewable energy source supplies not less than 80 percent of the energy for service water heating.
4. Glazing in *conditioned* space has a *solar heat gain coefficient* of less than or equal to 0.40, or has an overhang with a projection factor equal to or greater than 0.30.
5. Permanently installed lighting is in accordance with Section R404.
6. The exterior roof surface complies with one of the options in Table C402.3 or the roof/ceiling has insulation with an *R-value* of R-15 or greater. If present, attics above the insulation are vented and attics below the insulation are unvented.
7. Roof surfaces have a minimum slope of $^1/_4$ inch per foot of run. The finished roof does not have water accumulation areas.
8. Operable fenestration provides ventilation area equal to not less than 14 percent of the floor area in each room. Alternatively, equivalent ventilation is provided by a ventilation fan.
9. Bedrooms with exterior walls facing two different directions have operable fenestration.
10. Interior doors to bedrooms are capable of being secured in the open position.
11. A ceiling fan or ceiling fan rough-in is provided for bedrooms and the largest space that is not used as a bedroom.

❖ This section provides an alternative for residences in the tropical climates, a simple option for a newly defined climate zone, the "tropical zone." The area between the Tropic of Cancer and the Tropic of Capricorn is the area between 23.5 degrees northern and southern latitude of the equator. A zone that recognizes the unusually constant and unique climate of this region would help make the *International Codes*® (I-Codes®) more of an "international code."

Tropical areas are quite different from the US mainland in climate, construction techniques, traditional construction and energy prices. This chapter, and the IECC heretofore, has treated tropical climates as if they were simply a southern extension of the US mainland. Traditional residences, especially the less expensive residences, have evolved inexpensive ways to work with the tropical climates to provide comfortable interior spaces without the need for substantial space conditioning. Tropical electrical prices, usually over 20 cents per hWh, provide a substantial incentive for energy conservation. Solar water heating works particularly well in tropical climates.

Traditional construction, especially with solar water heating, is usually more energy efficient than the construction style assumed in the IECC, as is shown by an analysis done for Puerto Rico. Using energy efficient versions of traditional construction saves more energy and is much more cost-effective than pushing those in tropical climates to adopt mainland construction practices. Traditional tropical construction focuses on greatly reducing or eliminating the need for space conditioning by making a living space that is comfortable without space conditioning.

The following are explanations, by item:

1. Air conditioning only a portion of the residence is common in some residences and saves energy compared to air conditioning the whole occupied space.
2. Heating is seldom needed.
3. Consistently warm temperatures and high power costs make solar water heating very attractive. Solar water heating is widely used. Water heating is often 35 percent or more of the residential energy use. Substantial energy savings come from solar water heating.
4. Limiting solar gains and providing ventilation is the energy focus for windows. Window *U*-factor has little impact. Window air tightness is of little value when the important feature of the windows is their ability to be operable and provide ventilation.
5. High efficiency lighting makes sense with tropical energy prices.
6. This references the "cool roof" provisions. This is similar to an option in Hawaii's code and the Puerto Rico Energy Center's analysis. Insulation is less valuable in mild climates where the outside temperature is often comfortable as an inside temperature.
7. Even flat roofs need to drain.

INTERNATIONAL CODE COUNCIL®
Copyright © 2015 ICC. ALL RIGHTS RESERVED. Accessed by David Dammon on Jun 21, 2017 12:30:52 PM pursuant to License Agreement with ICC. No further reproduction or distribution authorized. ANY UNAUTHORIZED REPRODUCTION OR DISTRIBUTION IS A VIOLATION OF THE FEDERAL COPYRIGHT ACT AND THE LICENSE AGREEMENT, AND SUBJECT TO CIVIL AND CRIMINAL PENALTIES THEREUNDER.

8. Ventilation provided by tropical winds makes occupied spaces more comfortable. 14 percent of the floor area of the room is an option for unconditioned residences in Hawaii's new energy code.
9. When bedroom walls facing two directions are available, ventilation on both walls will be more effective.
10. Interior doors should not block bedroom ventilation. This is similar to Hawaii's new energy code and recommended by the Puerto Rico Energy Center.
11. Ceiling fans increase comfort without conditioning the air. This is similar to Hawaii's new energy code and recommended by the Puerto Rico Energy Center.

R401.3 Certificate (Mandatory). A permanent certificate shall be completed by the builder or registered design professional and posted on a wall in the space where the furnace is located, a utility room or an approved location inside the building. Where located on an electrical panel, the certificate shall not cover or obstruct the visibility of the circuit directory label, service disconnect label or other required labels. The certificate shall list the predominant *R*-values of insulation installed in or on ceiling/roof, walls, foundation (slab, basement wall, crawlspace wall and floor) and ducts outside conditioned spaces; *U*-factors for fenestration and the solar heat gain coefficient (SHGC) of fenestration, and the results from any required duct system and building envelope air leakage testing done on the building. Where there is more than one value for each component, the certificate shall list the value covering the largest area. The certificate shall list the types and efficiencies of heating, cooling and service water heating equipment. Where a gas-fired unvented room heater, electric furnace or baseboard electric heater is installed in the residence, the certificate shall list "gas-fired unvented room heater," "electric furnace" or "baseboard electric heater," as appropriate. An efficiency shall not be *listed* for gas-fired unvented room heaters, electric furnaces or electric baseboard heaters.

❖ This section is intended to increase consumer awareness of the energy-efficiency ratings for various building elements in the home. The builder or registered design professional has to complete the certificate and place it on or inside the electrical panel (see Commentary Figure R401.3). The permanent certificate shall not cover or obstruct the visibility of the circuit directory label, service disconnect label or other required labels.

The certificate must disclose the building's *R*-values, fenestration *U*-factors and fenestration SHGC, HVAC equipment types and efficiencies. The energy efficiency of a building as a system is a function of many elements considered as separate parts of the whole. It is difficult to have a proper identification and analysis of a building's energy efficiency once the building is completed because many of the elements may not be readily accessible.

This information is also valuable for existing structures undergoing alterations and additions to help determine the appropriate sizing for the mechanical systems. This is meant to be a simple certificate that is easy to read. The certificate does not contain all the information required for compliance and cannot be substituted for information on the required construction documents. Instead, the certificate is meant to provide the housing owner, occupant or buyer with a simple-to-understand overview of the home's energy efficiency. Where there is a mixture of insulation and fenestration values, the value applying to the largest area is specified. For example, if most of the wall insulation was R-19, but a limited area bordering the garage was R-13, the certificate would specify R-19 for the walls. (In contrast, plans and overall compliance would need to account for both *R*-values.)

The code specifies the minimum information on the certificate, but does not prohibit additional information being added so long as the required information is clearly visible. For example, a builder might choose to list energy-efficiency features beyond those required by the code.

SECTION R402
BUILDING THERMAL ENVELOPE

R402.1 General (Prescriptive). The *building thermal envelope* shall meet the requirements of Sections R402.1.1 through R402.1.5.

Exception: The following low-energy buildings, or portions thereof, separated from the remainder of the building by *building thermal envelope* assemblies complying with

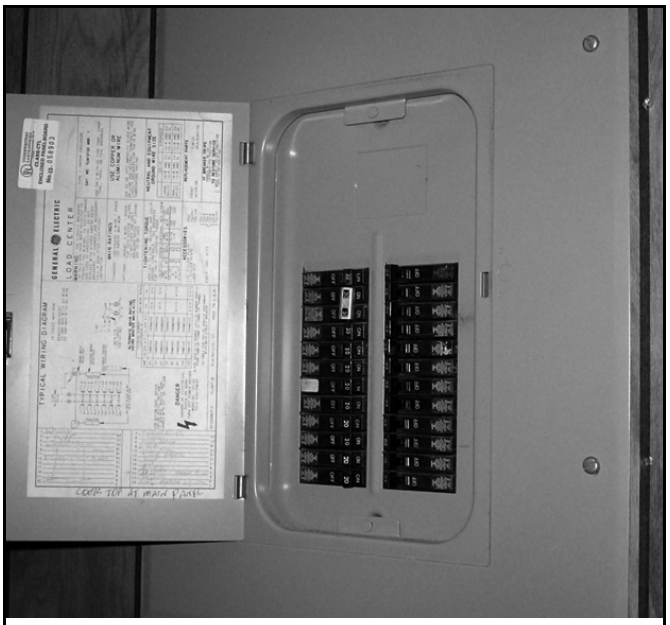

Figure R401.3
CERTIFICATE

INTERNATIONAL CODE COUNCIL®
Copyright © 2015 ICC. ALL RIGHTS RESERVED. Accessed by David Dammon on Jun 21, 2017 12:30:52 PM pursuant to License Agreement with ICC. No further reproduction or distribution authorized. ANY UNAUTHORIZED REPRODUCTION OR DISTRIBUTION IS A VIOLATION OF THE FEDERAL COPYRIGHT ACT AND THE LICENSE AGREEMENT, AND SUBJECT TO CIVIL AND CRIMINAL PENALTIES THEREUNDER.

this section shall be exempt from the *building thermal envelope* provisions of Section R402.

1. Those with a peak design rate of energy usage less than 3.4 Btu/h · ft^2 (10.7 W/m^2) or 1.0 watt/ft^2 of floor area for space-conditioning purposes.
2. Those that do not contain *conditioned space*.

❖ The provisions of Section R402 are detailed requirements of insulation levels, the performance of openings (fenestrations) and air-leakage and moisture-control provisions that serve to establish the building's energy efficiency. When combined with the "systems" requirements (Section R403) and the electrical power requirements (Section R404), these three sections provide the total package of energy conservation that the code requires.

The term "building thermal envelope" is defined in Section R202 as being "the basement walls, exterior walls, floor, roof and any other building elements that enclose conditioned spaces." This boundary also includes the boundary between conditioned space or provides a boundary between conditioned space and exempt or unconditioned space. Therefore, when combined with the definition of "Conditioned space," the code has defined the boundaries of the building that will be regulated by this section. The building thermal envelope is a key term and resounding theme used throughout the energy requirements. It defines what portions of the building structure bound conditioned space and are thereby covered by the insulation and infiltration (air leakage) requirements of the code. The building thermal envelope includes all building components separating conditioned spaces (see commentary, "Conditioned space") from unconditioned spaces or outside ambient conditions and through which heat is transferred. For example, the walls and doors separating an unheated garage (unconditioned space) from a living area (conditioned space) are part of the building envelope. The walls and doors separating an unheated garage from the outdoors are not part of the building thermal envelope. Walls, floors and other building components separating two conditioned spaces are not part of the building envelope. For example, interior partition walls, the common or party walls separating dwelling units in multiple-family buildings and the wall between a new conditioned addition and the existing conditioned space are not considered part of the building envelope.

Unconditioned spaces (areas having no heating or cooling sources) are considered outside the building thermal envelope and are exempt from these requirements (see Section R202). A space is conditioned if it is heated or cooled directly; communicates directly with a conditioned space; or is indirectly supplied with heating, cooling or both through uninsulated walls, floors, uninsulated ducts or HVAC piping. Boundaries that define the building envelope include the following:

- Building assemblies separating a conditioned space from outdoor ambient weather conditions.
- Building assemblies separating a conditioned space from the ground under or around that space, such as the ground around the perimeter of a slab or the soil at the exterior of a conditioned basement wall. Note that the code does not specify requirements for insulating basement floors or underneath slab floors (except at the perimeter edges).
- Building assemblies separating a conditioned space from an unconditioned garage, unconditioned sunroom or similar unheated/cooled area.

The code specifies requirements for ceiling, wall, floor, basement wall, slab-edge and crawl space wall components of the building envelope. In some cases, it may be unclear how to classify a particular part of a building. For example, skylight shafts have properties of a wall assembly but are located in the ceiling assembly. In these situations, a determination needs to be made and approved by the code official prior to construction so that the proper level of insulation can be installed to complete the building thermal envelope. Generally, skylight shafts and other items that are vertical or at an angle of greater than 60 degrees (1.1 rad) from the horizontal would typically use the wall insulation value.

The exception exempts certain buildings from the thermal envelope requirements of Section R402. The obvious one is any building that does not contain a conditioned space. The other type of building is a low-energy building (design rate of energy usage less than 1 watt/ft^2). For these spaces, insulation and rated fenestration are not cost effective.

R402.1.2 Insulation and fenestration criteria. The *building thermal envelope* shall meet the requirements of Table R402.1.2, based on the climate zone specified in Chapter 3.

❖ This section serves as the basis for the code's general insulation and fenestration requirements. Therefore, this is the first place to determine what the requirements for the building thermal envelope will be. There are specific requirements for certain assemblies and locations that are addressed in Sections R402.2 and R402.3. First, this section mandates compliance with the proper component insulation and fenestration requirements of Table R402.1.2. However, once that general requirement is established, Sections R402.1.3, R402.1.4 and R402.1.5 provide three possible means of showing that the building thermal envelope will comply. Any of the three methods may be used at the discretion of the designer. The three options and their advantages are discussed in the commentary with the subsections. In general,

INTERNATIONAL CODE COUNCIL®
Copyright © 2015 ICC. ALL RIGHTS RESERVED. Accessed by David Dammon on Jun 21, 2017 12:30:52 PM pursuant to License Agreement with ICC. No further reproduction or distribution authorized. ANY UNAUTHORIZED REPRODUCTION OR DISTRIBUTION IS A VIOLATION OF THE FEDERAL COPYRIGHT ACT AND THE LICENSE AGREEMENT, AND SUBJECT TO CIVIL AND CRIMINAL PENALTIES THEREUNDER.

the later subsections will provide the designer with more options and flexibility, but they are also more complex than using Table R402.1.2 on an individual component basis.

Table R402.1.2 lists the minimum *R*-value and maximum *U*-factor and SHGC requirements for different portions of the building thermal envelope, including basement and exterior walls, floor, ceiling and any other building elements that enclose conditioned space. Using the table begins with determining the climate zone for the proposed location from Table R301.1 or Figure R301.1. Once the climate zone has been determined, each of the *R*-value, *U*-factor or SHGC requirements must be met for the applicable component (e.g., ceilings, walls, floors, etc.).

Maximum fenestration *U*-factor is the first column in Table R402.1.2 that must be complied with (see definition for "Fenestration" in Chapter 2). Except as modified or exempted by Section R402.3, each fenestration product in the proposed building must not exceed the maximum *U*-factor requirement presented in the table for a particular climate zone. For example, a single-family residence located in Climate Zone 5 would require installation of glazed fenestration products with a maximum *U*-factor of 0.32. This would include all glazing in the walls of the building thermal envelope (e.g., vertical windows); skylights in the roof would be limited to a maximum *U*-factor of 0.55. The proposed glazing *U*-factor should be called out in the building plans either on the floor plan or in a window schedule. This will provide the necessary information to the field inspector, who will then need to verify that what is on the plans is installed in the field.

Fenestration products that do not have labels on them must use the default *U*-factors contained in Table R303.1.3(1) or R303.1.3(3) (see commentary, Section R303.1.3). Note that the lowest default *U*-factor included in the table for glazed fenestration is listed at 0.55 for a "nonmetal or metal-clad double-pane window." This *U*-factor will not meet the requirements of the code in Climate Zones 2 and higher.

TABLE R402.1.2. See below.

❖ Table R402.1.2 serves as the basis for establishing the building thermal envelope requirements based on the text of Section R402.1.2 and sets the performance level for each of the individual components listed. See the commentary for Sections R402.1.2, R402.2 and R402.3 for additional discussion related to the components in the table. The simplest compliance approach is to meet these requirements directly. Note that the requirements do not change based on the area of the components of the residence. These same requirements apply to changes in existing buildings; for example, additions.

A few specifics of Table R402.1.2 may benefit from clarification.

When applying the fenestration requirements of this table, it is important to remember the definition of

TABLE R402.1.2
INSULATION AND FENESTRATION REQUIREMENTS BY COMPONENT[a]

CLIMATE ZONE	FENESTRATION *U*-FACTOR[b]	SKYLIGHT[b] *U*-FACTOR	GLAZED FENESTRATION SHGC[b, e]	CEILING *R*-VALUE	WOOD FRAME WALL *R*-VALUE	MASS WALL *R*-VALUE[i]	FLOOR *R*-VALUE	BASEMENT[c] WALL *R*-VALUE	SLAB[d] *R*-VALUE & DEPTH	CRAWL SPACE[c] WALL *R*-VALUE
1	NR	0.75	0.25	30	13	3/4	13	0	0	0
2	0.40	0.65	0.25	38	13	4/6	13	0	0	0
3	0.35	0.55	0.25	38	20 or 13+5[h]	8/13	19	5/13[f]	0	5/13
4 except Marine	0.35	0.55	0.40	49	20 or 13+5[h]	8/13	19	10 /13	10, 2 ft	10/13
5 and Marine 4	0.32	0.55	NR	49	20 or 13+5[h]	13/17	30[g]	15/19	10, 2 ft	15/19
6	0.32	0.55	NR	49	20+5 or 13+10[h]	15/20	30[g]	15/19	10, 4 ft	15/19
7 and 8	0.32	0.55	NR	49	20+5 or 13+10[h]	19/21	38[g]	15/19	10, 4 ft	15/19

For SI: 1 foot = 304.8 mm.

a. R-values are minimums. *U*-factors and SHGC are maximums. When insulation is installed in a cavity which is less than the label or design thickness of the insulation, the installed *R*-value of the insulation shall not be less than the *R*-value specified in the table.

b. The fenestration *U*-factor column excludes skylights. The SHGC column applies to all glazed fenestration. Exception: Skylights may be excluded from glazed fenestration SHGC requirements in climate zones 1 through 3 where the SHGC for such skylights does not exceed 0.30.

c. "15/19" means R-15 continuous insulation on the interior or exterior of the home or R-19 cavity insulation at the interior of the basement wall. "15/19" shall be permitted to be met with R-13 cavity insulation on the interior of the basement wall plus R-5 continuous insulation on the interior or exterior of the home. "10/13" means R-10 continuous insulation on the interior or exterior of the home or R-13 cavity insulation at the interior of the basement wall.

d. R-5 shall be added to the required slab edge *R*-values for heated slabs. Insulation depth shall be the depth of the footing or 2 feet, whichever is less in Climate Zones 1 through 3 for heated slabs.

e. There are no SHGC requirements in the Marine Zone.

f. Basement wall insulation is not required in warm-humid locations as defined by Figure R301.1 and Table R301.1.

g. Or insulation sufficient to fill the framing cavity, R-19 minimum.

h. The first value is cavity insulation, the second value is continuous insulation, so "13+5" means R-13 cavity insulation plus R-5 continuous insulation.

i. The second *R*-value applies when more than half the insulation is on the interior of the mass wall.

INTERNATIONAL CODE COUNCIL®
Copyright © 2015 ICC. ALL RIGHTS RESERVED. Accessed by David Dammon on Jun 21, 2017 12:30:52 PM pursuant to License Agreement with ICC. No further reproduction or distribution authorized. ANY UNAUTHORIZED REPRODUCTION OR DISTRIBUTION IS A VIOLATION OF THE FEDERAL COPYRIGHT ACT AND THE LICENSE AGREEMENT, AND SUBJECT TO CIVIL AND CRIMINAL PENALTIES THEREUNDER.

"Fenestration" and that it includes items such as doors, glass blocks and other items as well as windows. Therefore, any door located in the building thermal envelope would still be subject to these limitations. Although vertical fenestration (vertical windows and doors) and skylights have a separate column for *U*-factor, the SHGC applies to both. This is reinforced by the provisions of Note b.

The ceiling *R*-value requirements are precalculated for insulation only and already assume a credible *R*-value for other building materials such as air films, interior sheathing and exterior sheathing. The only *R*-value for ceiling insulation that may be used to meet the requirements is that installed between the conditioned space and the vented airspace in the roof/ceiling assembly. This is typically not an issue because most insulation is installed directly on top of the gypsum board ceiling and the ceiling location represents the building thermal envelope. Insulation installed in the ceiling must meet or exceed the required insulation level. The "conditioned attic" requirements of the code may be viewed as an acceptable alternative if approved by the code official. These minimum ceiling *R*-values would still be applicable where the provisions of Section R806.4 of the IRC were used to create a conditioned attic assembly. In those cases, the location of the insulation and air barrier (building thermal envelope) are simply located at the roof instead of at the ceiling line. See the commentary to Sections R402.2.1 and R402.2.2 for additional information regarding ceiling insulation requirements.

The *R*-values presented under the "wall" columns represent the sum of the insulation materials installed between the framing cavity and, if used, the insulating sheathing. See Section R402.1.2 regarding how to compute the *R*-value. Insulating sheathing must have an *R*-value of at least R-2 to be considered. The R-2 limitation comes from the definition of "Insulating sheathing." The *R*-value of noninsulative interior finishes, such as sheet rock, or exterior coverings (e.g., wood structural panel siding) is not considered when determining whether the proposed wall assembly meets the requirements. For example, in Commentary Figure R402.1.2, the *R*-value of the cavity insulation installed between framing (R-13) is added to the insulating sheathing installed on the outside of the studs (R-6) resulting in an R-19 wall. The R-19 total insulation value can then be compared to the *R*-value requirement for the specific climate zone in Table R402.1.2 to determine compliance.

The insulation *R*-value requirement for exterior walls assumes wood framing. Walls framed using steel studs or constructed of materials such as a concrete masonry unit (CMU) are addressed in Sections R402.2.5 and R402.2.6. In residences with more than one type of wall (frame or mass) or more than one type of below-grade wall (conditioned basement or crawl space), the requirement for each component is taken from the appropriate column in Table R402.1.2.

Mass walls are defined and have additional requirements in Section R402.2.5. Mass walls are intended to be above-grade walls and do not include basement walls, which have a separate entry in the table.

Note a reminds the code user which level of performance is required. Therefore, when dealing with *R*-values, a higher number would be better. When dealing with *U*-factors, the lower the number, the better the performance.

In accordance with Note c, for basement walls and crawl space walls, the two numbers separated by a "/" represent the values for continuous and cavity insulation; either will meet the code's requirements. For example, in Climate Zone 6, the wall can either be covered with continuous insulation to a minimum level of R-15 or, if some type of framing is used (such as a wood-frame wall used to finish out a basement), R-19 insulation must be installed in the cavity. This higher level of cavity insulation adjusts for the bridging or reduction in energy efficiency that the framing elements would create.

In accordance with Note d, heated slabs require R-5 insulation in Climate Zones 1, 2 and 3 and R-15 slab edge insulation in Climate Zones 4 and above. This R-15 insulation is the result of R-5 being "added" to the R-10 insulation level specified in the table for Climate Zones 4 through 8.

In accordance with Note g, where R-30 under-floor insulation is required, less insulation may be used if the framing cavity is filled, down to a minimum of R-19. This recognizes that extending the framing solely to hold more insulation can cost more than it is worth.

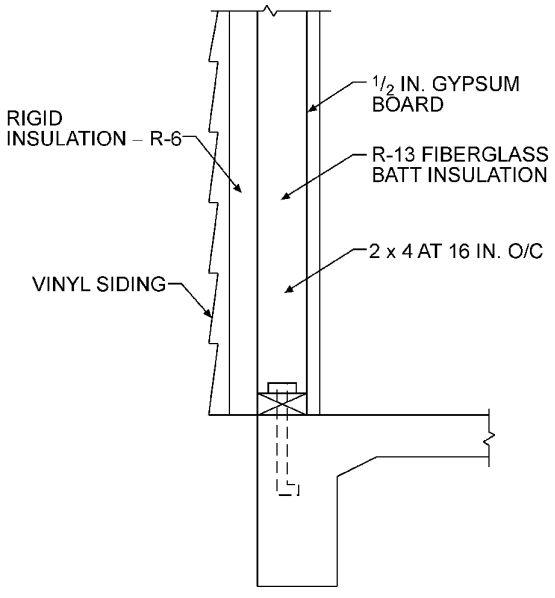

For SI: 1 inch = 25.4 mm.

Figure R402.1.2
EXTERIOR *R*-VALUES

INTERNATIONAL CODE COUNCIL®
Copyright © 2015 ICC. ALL RIGHTS RESERVED. Accessed by David Dammon on Jun 21, 2017 12:30:52 PM pursuant to License Agreement with ICC. No further reproduction or distribution authorized. ANY UNAUTHORIZED REPRODUCTION OR DISTRIBUTION IS A VIOLATION OF THE FEDERAL COPYRIGHT ACT AND THE LICENSE AGREEMENT, AND SUBJECT TO CIVIL AND CRIMINAL PENALTIES THEREUNDER.

R402.1.3 *R*-value computation. Insulation material used in layers, such as framing cavity insulation, or continuous insulation shall be summed to compute the corresponding component *R*-value. The manufacturer's settled *R*-value shall be used for blown insulation. Computed *R*-values shall not include an *R*-value for other building materials or air films. Where insulated siding is used for the purpose of complying with the continuous insulation requirements of Table R402.1.2, the manufacturer's labeled *R*-value for insulated siding shall be reduced by R-0.6.

❖ This section indicates how the *R*-value in Table R402.1.2 is to be determined. Table R402.1.2 specifies the required *R*-values for the insulation products, the nominal *R*-value. This is the *R*-value of the insulation products only. Although other products and features such as finish materials, air films and airspaces may contribute to overall energy efficiency, when determining the *R*-value in the code, these additional items are not considered and do not contribute to the nominal *R*-value. For example, if a wall had R-13 cavity insulation, gypsum board with an *R*-value of almost R-1 and exterior siding that has an *R*-value of R-1, the overall wall *R*-value is simply R-13 because the gypsum board and the exterior siding do not contribute to the *R*-value for purposes of determining code compliance. Where there is more than one layer of insulation, the *R*-values for the layers are summed. For example, a wall with R-13 batts within the framing cavity and R-4 insulated sheathing would be treated as an R-17 wall (13 + 4 = 17). It is only insulation materials that may be summed to determine the component's *R*-value.

R402.1.4 *U*-factor alternative. An assembly with a *U*-factor equal to or less than that specified in Table R402.1.4 shall be permitted as an alternative to the *R*-value in Table R402.1.2.

❖ For residences built with common insulation products, the most direct method of compliance is often via the *R*-values in Table R402.1.2. As an alternative, compliance can be demonstrated by calculating the *U*-factor for a component. Table R402.1.4 gives *U*-factors that are deemed to be equivalent to the *R*-values in the prescriptive tables. Unlike the *R*-values in Table R402.1.2, which consider only the insulation, *U*-factors consider all the parts of the construction. *U*-factors for a wall might include exterior siding, gypsum board and air films, all of which would be excluded from the *R*-value computation by Section R402.1.2; for example, whether wall framing is 16 or 24 inches (406 or 610 mm) on center matters in computing the *U*-factor. Whether framing is metal or wood can also have a significant impact on *U*-factor.

U-factors are well suited to several applications. Construction types that limit the amount of framing or include thermal breaks as part of their design may benefit from *U*-factor calculations. Components with complex or nonuniform geometries can use testing to establish *U*-factors. Compliance with the "total UA alternative" or tradeoff approach in Section R402.1.4 requires the use of the *U*-factor tables.

Example of *U*-factor calculation in Table R402.1.4:

WALL COMPONENT	CAVITY	STUDS, PLATES	HEADERS
	R-value	*R*-value	*R*-value
Outside air film	0.25	0.25	0.25
Plywood siding	0.59	0.59	0.59
Continuous insulation	5	5	5
Plywood sheathing	0.83	0.83	0.83
Wood studs	—	4.38	4.38
Cavity insulation	13	—	—
$^1/_2$″ Gypsum board	0.45	0.45	0.45
Inside air film	0.68	0.68	0.68
Sum of thermal resistance	20.8	12.18	12.18

The above table includes the *R*-values for the cavity and framing (studs, plates and headers). The *U*-factor is 1/*R*-value. To calculate the *U*-factor for the combination of the cavity and framing at 16 inches on-center spacing, calculate the *U*-factor based on the weighting factors of 75-percent cavity, 21-percent studs and plates, and 4-percent headers (78-percent cavity, 18-percent studs and plates and 4-percent headers for 24 inches on-center spacing). An assembly with a *U*-factor equal to or less than that calculated in this table must be permitted as an alternative to an assembly in Table R402.1.2.

The *U*-factor for the above assembly may be calculated as shown below:

$$U = \frac{0.75}{20.8} + \frac{0.21}{12.18} + \frac{0.04}{12.18} = 0.057$$

Example of *U*-factor alternative:

WALL COMPONENT	CAVITY	STUDS, PLATES	HEADERS
	R-value	*R*-value	*R*-value
Outside air film	0.25	0.25	0.25
Plywood siding	0.59	0.59	0.59
Continuous insulation	13.1	13.1	31.1
Plywood sheathing	0.83	0.83	0.83
Wood studs	—	4.38	4.38
Cavity insulation	0.91	—	—
$^1/_2$″ Gypsum board	0.45	0.45	0.45
Inside air film	0.68	0.68	0.68
Sum of thermal resistance	16.81	20.28	20.28

In the above assembly, the R-13 cavity insulation is removed and a value of 0.91 is assumed for the airspace in the stud cavity. The continuous insulation is increased to 13.1. The framing spacing is increased to 24 inches (610 mm) on center.

INTERNATIONAL CODE COUNCIL®
Copyright © 2015 ICC. ALL RIGHTS RESERVED. Accessed by David Dammon on Jun 21, 2017 12:30:52 PM pursuant to License Agreement with ICC. No further reproduction or distribution authorized. ANY UNAUTHORIZED REPRODUCTION OR DISTRIBUTION IS A VIOLATION OF THE FEDERAL COPYRIGHT ACT AND THE LICENSE AGREEMENT, AND SUBJECT TO CIVIL AND CRIMINAL PENALTIES THEREUNDER.

The *U*-factor for the above assembly may be calculated as shown below:

$$U = \frac{0.78}{16.81} + \frac{0.18}{20.28} + \frac{0.04}{20.28} = 0.057$$

The *U*-factor from the above assembly is equal to or less than that specified in Table R402.1.4.

It should be noted that the *U*-factor alternative could be used for all or part of a wall. Thus, the prescriptive *R*-values in Section R402.1.2 can be applied to one segment of the wall, and the *U*-factors in this section can be used to determine the construction of another segment of the wall. One possible combination would be to apply the prescriptive requirements of Table R402.1.2 for the portion of the exterior wall thermal envelope with structural sheathing, and the *U*-factor alternative (Table R402.1.4) for the portion of the exterior wall thermal envelope that does not have structural sheathing. Note h of Table R402.1.2 could be applied to 40 percent of the wall when structural sheathing is present, allowing a reduction in the *R*-value of R-3 for this segment.

Where approved by the code official in accordance with Section R102, alternative methods of construction, materials and insulation systems may also be used instead of the prescriptive *R*-values of Table R402.1.2. For example, designers may substitute greater stud spacing, insulated plates and insulated headers in walls as an alternative to the prescribed cavity or continuous insulation.

R402.1.5 Total UA alternative. If the total *building thermal envelope* UA (sum of *U*-factor times assembly area) is less than or equal to the total UA resulting from using the *U*-factors in Table R402.1.4 (multiplied by the same assembly area as in the proposed building), the building shall be considered in compliance with Table R402.1.2. The UA calculation shall be done using a method consistent with the ASHRAE *Handbook of Fundamentals* and shall include the thermal bridging effects of framing materials. The SHGC requirements shall be met in addition to UA compliance.

❖ This alternative allows one portion of the building to make up for another. It recognizes that there may be reasons for less insulation in some parts of the building, which can be compensated for by more insulation in other parts of the residence. The key concept is that the overall building thermal flow (UA) meets the code. This concept could allow a ceiling to make up for a wall or vice versa. As a practical matter, whether a building will comply by this method can sometimes be estimated quickly. A large area that is significantly over the required *R*-value will make up for a small area only mildly under the required *R*-value. Likewise, it will sometimes be obvious that a small area that mildly exceeds the requirement will not make up for a large area well below the requirement.

This section allows for such tradeoffs but only if the total UA for the proposed building is below the aggregate UA calculation using the required values in Table R402.1.4 and the same assembly areas as the actual building. In other words, under this alternative, components with varying insulating values can be "traded off" with one another as the builder sees fit, as long as the total UA calculation for the entire building equals or is less than a calculation for that same house using the same assembly areas and the maximum UA values from Table R402.1.4.

The UA is the sum of the component *U*-factors times each assembly area. The maximum allowable UA is the UA for a proposed design as if it was insulated to meet exactly the individual component *U*-factor requirements. This tradeoff provision allows the type of insulation and installed fenestration to vary, which permits significant design flexibility. The desire for tradeoffs in construction is common because of unexpected problems or design conflicts, and a UA trade-off analysis is usually calculated with the assistance of electronic compliance tools, depending on

TABLE R402.1.4
EQUIVALENT *U*-FACTORS[a]

CLIMATE ZONE	FENESTRATION *U*-FACTOR	SKYLIGHT *U*-FACTOR	CEILING *U*-FACTOR	FRAME WALL *U*-FACTOR	MASS WALL *U*-FACTOR[b]	FLOOR *U*-FACTOR	BASEMENT WALL *U*-FACTOR	CRAWL SPACE WALL *U*-FACTOR
1	0.50	0.75	0.035	0.084	0.197	0.064	0.360	0.477
2	0.40	0.65	0.030	0.084	0.165	0.064	0.360	0.477
3	0.35	0.55	0.030	0.060	0.098	0.047	0.091[c]	0.136
4 except Marine	0.35	0.55	0.026	0.060	0.098	0.047	0.059	0.065
5 and Marine 4	0.32	0.55	0.026	0.060	0.082	0.033	0.050	0.055
6	0.32	0.55	0.026	0.045	0.060	0.033	0.050	0.055
7 and 8	0.32	0.55	0.026	0.045	0.057	0.028	0.050	0.055

a. Nonfenestration *U*-factors shall be obtained from measurement, calculation or an approved source.

b. When more than half the insulation is on the interior, the mass wall U-factors shall be a maximum of 0.17 in Climate Zone 1, 0.14 in Climate Zone 2, 0.12 in Climate Zone 3, 0.087 in Climate Zone 4 except Marine, 0.065 in Climate Zone 5 and Marine 4, and 0.057 in Climate Zones 6 through 8.

c. Basement wall *U*-factor of 0.360 in warm-humid locations as defined by Figure R301.1 and Table R301.1.

INTERNATIONAL CODE COUNCIL®
Copyright © 2015 ICC. ALL RIGHTS RESERVED. Accessed by David Dammon on Jun 21, 2017 12:30:52 PM pursuant to License Agreement with ICC. No further reproduction or distribution authorized. ANY UNAUTHORIZED REPRODUCTION OR DISTRIBUTION IS A VIOLATION OF THE FEDERAL COPYRIGHT ACT AND THE LICENSE AGREEMENT, AND SUBJECT TO CIVIL AND CRIMINAL PENALTIES THEREUNDER.

the jurisdiction. For example, the Department of Energy (DOE) has online compliance software for the code called REScheck, which can be downloaded from the DOE website at www.energycodes.gov. REScheck, if approved by the jurisdiction as compliant with the code, can be used to perform a UA tradeoff analysis.

This section explicitly prohibits the tradeoff of SHGC requirements, requiring that the "SHGC requirements be met in addition to UA compliance." As a result, glazed fenestration must comply with the SHGC values shown in Table R402.1.2 even if the *U*-factor is modified by trading off against some other component.

The requirements of this section establish specific additional requirements for any tradeoff. First, the baseline house must have the same assembly areas as the proposed house (e.g., the same area of each assembly—fenestration, skylights, ceiling, wall and floor). Second, the calculation should be done consistent with the *ASHRAE Handbook of Fundamentals*. Third, the calculation must include the thermal bridging effects of framing materials. To meet these requirements, the calculation method must either specifically combine the actual framing and insulation paths (with their specific areas and *U*-values) or use framing factors such as those found in the *ASHRAE Handbook of Fundamentals* for all framed building components (Note: this is not necessary for fenestration, which is a whole product value). To illustrate this approach, assume 1,000 square feet (93 m^2) of wall, of which 250 square feet (23 m^2) is framing (assuming 0.81 *U*-factor) and 750 square feet (70 m^2) is cavity (R-13 insulation). The baseline (general code requirement) and proposed opaque wall UAs are computed as follows:

- Baseline Opaque Wall for Climate Zone 2 = (0.082 x 1000) = 82. (The 0.082 value used in the calculation is taken from Table R402.1.4.)
- Proposed Opaque Wall UA = (0.81 x 250) + (0.077 x 750) = 78. (The 0.81 value used in the calculation was given above as an assumption. The 0.077 value is determined based on the *R*-value of 13; that is, 1 ÷ 13 = 0.077.)

Similar computations would be done for each assembly (such as fenestration or ceilings) and the baseline and proposed values then totaled and compared. If the baseline is greater than or equal to the proposed values, the house satisfies the UA alternative. The home still must meet all other prescriptive requirements, including the fenestration SHGC in Table R402.1.2, the air leakage requirements of Section R402.4 and the moisture-control requirements of Section R402.5.

It also should be noted that this alternative is limited to UA tradeoffs for the building's thermal envelope. The 2015 code does not authorize or establish any basis for HVAC tradeoffs associated with its UA tradeoff option. HVAC performance is simply not addressed under the code prescriptive or UA tradeoff paths. It is addressed only in Section R405 under the "Simulated Performance Alternative." As a result, the code limits these simplified tradeoffs to UA envelope tradeoffs and defers any more complex tradeoffs exclusively to the "Simulated Performance Alternative" in Section R405. If the builder wishes to factor in HVAC performance for tradeoffs, Section R405 can be used and is permitted based on Section R101.3, accepting Section R405 as a compliance option.

Documentation acceptable to the local building department generally must be submitted to the appropriate authority to certify acceptable component UA tradeoffs.

UA alternative example (for calculating standard and proposed designs):

Building areas and *U*-factors (for single-family, Zone 5 from Table R402.1.4)

Standard (Code) Design	**Proposed Design**
Exterior Wall 1050 ft^2 U_w = -0.057	Exterior Wall 1050 ft^2 *U* = 0.0451
Glazed doors and windows 192 ft^2 U_g = 0.32	Glazed doors and windows 192 ft^2 *U* = 0.40
Opaque exterior door 38 ft^2 U_g = 0.32	Opaque exterior door 38 ft^2 *U* = 0.35
Roof 1500 ft^2 U_r = 0.026	Roof 1500 ft^2 U_r = 0.026
Floor (slab) 1500 ft^2 *U* = 0.033	Floor (slab) 1500 ft^2 U_{fe} = 0.033

UA Standard = (0.057 × 1050) + (0.32 × 192) + (0.32 × 38) + (0.026 × 1500) + (0.033 × 1500) = 222

UA Proposed = (0.0451 × 1050) + (0.40 × 192) + (0.35 × 38) + (0.026 × 1500) + (0.033 × 1500) = 225

UA Proposed > UA Standard; therefore design fails to meet code requirements.

R402.2 Specific insulation requirements (Prescriptive). In addition to the requirements of Section R402.1, insulation shall meet the specific requirements of Sections R402.2.1 through R402.2.13.

❖ This section contains specific requirements to be followed for the individual items listed in the subsections. Although Section R402.1 and Tables R402.1.2 and R402.1.4 provide the general basis for complying with the energy requirements of this chapter, Section R402.2 provides additional details regarding the actual construction of the assemblies or modifications

INTERNATIONAL CODE COUNCIL®
Copyright © 2015 ICC. ALL RIGHTS RESERVED. Accessed by David Dammon on Jun 21, 2017 12:30:52 PM pursuant to License Agreement with ICC. No further reproduction or distribution authorized. ANY UNAUTHORIZED REPRODUCTION OR DISTRIBUTION IS A VIOLATION OF THE FEDERAL COPYRIGHT ACT AND THE LICENSE AGREEMENT, AND SUBJECT TO CIVIL AND CRIMINAL PENALTIES THEREUNDER.

that may affect the general requirements. Relying on the principle that specific requirements apply over general requirements will help ensure that these specific provisions are properly followed.

R402.2.1 Ceilings with attic spaces. Where Section R402.1.2 would require R-38 insulation in the ceiling, installing R-30 over 100 percent of the ceiling area requiring insulation shall be deemed to satisfy the requirement for R-38 wherever the full height of uncompressed R-30 insulation extends over the wall top plate at the eaves. Similarly, where Section R402.1.2 would require R-49 insulation in the ceiling, installing R-38 over 100 percent of the ceiling area requiring insulation shall be deemed to satisfy the requirement for R-49 insulation wherever the full height of uncompressed R-38 insulation extends over the wall top plate at the eaves. This reduction shall not apply to the *U*-factor alternative approach in Section R402.1.4 and the total UA alternative in Section R402.1.5.

❖ The required ceiling *R*-value found in the code is based on the assumption that standard truss or rafter construction was being used. Where raised-heel trusses or other methods of framing that do not permit the ceiling insulation to be installed to its full depth over the entire area are used, the code permits the installation of a lower *R*-value insulation. The general assumption is that ceiling insulation will be compressed at the edges and, if special construction techniques are used, the level of insulation required can be reduced.

Insulation installed in a typical roof assembly will be full height throughout the center portions of the assembly and will taper (be compressed) at the edges as the roof nears the top plate of the exterior wall system [see Commentary Figure R402.2.1(1)]. The slope of the roof causes this tapering, which is further amplified by any baffling installed to direct ventilation air from the eave vents up and over the insulation. Because of this tapering, the installed *R*-value near the plate lines will be less than the rated *R*-value for the insulation. This is caused by compression (compressed insulation has a lower *R*-value than insulation installed to its full thickness) and the limited space between the floor of the attic and the roof sheathing near the exterior plate line. Thus, a typical installation, on average, will have a lower *R*-value than that of the rated insulation. Because of this, the code will allow installation of a lower insulation value if it can be installed full thickness, to its rated *R*-value, over the plate line of the exterior wall. This allowance recognizes that a partial thermal "bypass" has been made more efficient by using insulation with the full *R*-value at the eaves. The full insulation *R*-value is sometimes achieved by what is termed an "energy truss" or "advanced framing." This can be achieved by using an oversized truss or raised-heel truss as shown in Commentary Figure R402.2.1(2). Another way to achieve the full *R*-value would be by use of insulation with a higher *R*-value per inch at the eaves. The use of the options permitted by this section allows substituting R-30 for R-38 insulation, and R-38 may be substituted for R-49 insulation to meet the requirements of the code. When using the conditioned attic requirements of the code, the same option of using a reduced *R*-value would apply if the insulation was installed directly under the roof deck, rather than on the attic floor. The insulation would be permitted to meet the lesser *R*-value, presuming the full *R*-value was met over the eaves. Of course, this situation would also presume that the attic space beneath the insulation was not vented.

Note that this text applies only to the *R*-value portion of the code; there is no reduction in requirements if the *U*-factor alternative or the total UA alternative is used. In those cases, the reduced thickness must be

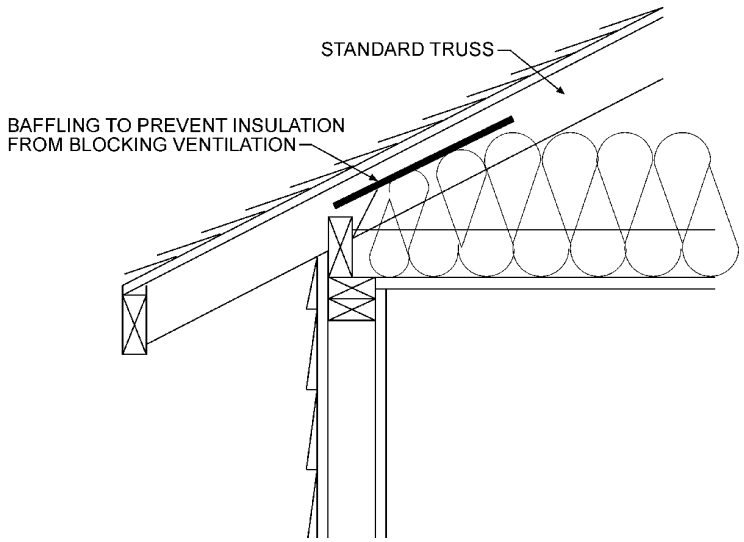

Figure R402.2.1(1)
TYPICAL ROOF ASSEMBLY

INTERNATIONAL CODE COUNCIL®
Copyright © 2015 ICC. ALL RIGHTS RESERVED. Accessed by David Dammon on Jun 21, 2017 12:30:52 PM pursuant to License Agreement with ICC. No further reproduction or distribution authorized. ANY UNAUTHORIZED REPRODUCTION OR DISTRIBUTION IS A VIOLATION OF THE FEDERAL COPYRIGHT ACT AND THE LICENSE AGREEMENT, AND SUBJECT TO CIVIL AND CRIMINAL PENALTIES THEREUNDER.

accounted for in the calculations. In addition, if the residence had more than one separate attic space, it is possible this section could apply to one attic space, but not another.

R402.2.2 Ceilings without attic spaces. Where Section R402.1.2 would require insulation levels above R-30 and the design of the roof/ceiling assembly does not allow sufficient space for the required insulation, the minimum required insulation for such roof/ceiling assemblies shall be R-30. This reduction of insulation from the requirements of Section R402.1.2 shall be limited to 500 square feet (46 m^2) or 20 percent of the total insulated ceiling area, whichever is less. This reduction shall not apply to the *U*-factor alternative approach in Section R402.1.4 and the total UA alternative in Section R402.1.5.

❖ In situations where the ceiling is installed directly onto the roof rafters and no attic space is created, this section will allow a reduced level of ceiling insulation for a limited area. This section addresses the construction of what are typically called "cathedral" or "vaulted" ceilings, which result in that portion of the home not having an attic area above the ceiling. See the definition of "Attic" in Chapter 2 of the code. Based on the use of solid sawn lumber (2 × 8, 2 × 10 or 2 × 12) in conventional construction, as the ceiling *R*-value requirement increases, it may be impossible to install the required ceiling insulation from Table R402.1.2 in the available cavity depth. In addition, the ventilation requirements of Section R806.3 of the IRC or Section 1203.2 of the IBC further reduce the available space by requiring a minimum space of 1 inch (25 mm) between the insulation and the roof sheathing. Therefore, when the depth of the cavity will not permit the required insulation level, this section permits a reduction to R-30 ceiling insulation instead of the normally required R-38 or R-49 requirement from Table R402.1.2. This will generally result in reducing the required insulation level instead of having to increase the depth of the framing members. This section in the code recognizes that increases in framing size done only to accommodate higher *R*-values are an expensive way to achieve a limited increase in *R*-value.

It is important to note that this section applies only to areas that have a required insulation level above R-30 (Climate Zones 4 through 8). Further, the reduction is limited to portions of ceiling assemblies that do not exceed 500 square feet (46 m^2) or 20 percent of the ceiling area. The intent is that the 500-square-foot (46 m^2) or 20-percent limitation be the total aggregate exempted amount of the building's thermal envelope (ceiling) that can use this reduction. It is not the intent that a home could have multiple areas that were each under the 500-square-foot (46 m^2) or 20-percent limit but would aggregate to more than that amount. In situations that cannot meet these limitations [homes in Climate Zones 1 through 3 or homes needing more than 500 square feet (46 m^2) of reduced ceiling insulation], the depth of the rafters would have to be increased to meet the table's required insulation level, or other design changes or means of compliance would be necessary. This provision does not apply if the *U*-factor alternative or the total UA alternative is being used. In those cases, the reduced insulation level might be accomplished, but it would be accounted for with additional insulating components in the case of the *U*-factor alternative or with added insulation elsewhere in the case of the total UA alternative.

R402.2.3 Eave baffle. For air-permeable insulations in vented attics, a baffle shall be installed adjacent to soffit and eave vents. Baffles shall maintain an opening equal or greater than the size of the vent. The baffle shall extend over

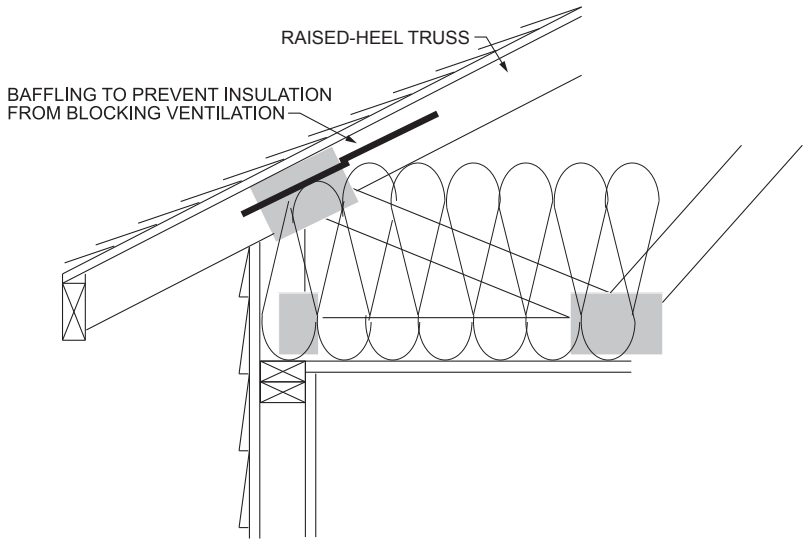

Figure R402.2.1(2)
RAISED-HEEL TRUSS

INTERNATIONAL CODE COUNCIL®
Copyright © 2015 ICC. ALL RIGHTS RESERVED. Accessed by David Dammon on Jun 21, 2017 12:30:52 PM pursuant to License Agreement with ICC. No further reproduction or distribution authorized. ANY UNAUTHORIZED REPRODUCTION OR DISTRIBUTION IS A VIOLATION OF THE FEDERAL COPYRIGHT ACT AND THE LICENSE AGREEMENT, AND SUBJECT TO CIVIL AND CRIMINAL PENALTIES THEREUNDER.

the top of the attic insulation. The baffle shall be permitted to be any solid material.

❖ For air-permeable insulations in vented attics, a baffle shall be installed adjacent to soffit and eave vents. This will help prevent wind from degrading the attic insulation performance. Baffles serve to keep vents open, insulation in place and keep the wind from blowing through the insulation and reducing its effectiveness.

R402.2.4 Access hatches and doors. Access doors from conditioned spaces to unconditioned spaces such as attics and crawl spaces shall be weatherstripped and insulated to a level equivalent to the insulation on the surrounding surfaces. Access shall be provided to all equipment that prevents damaging or compressing the insulation. A wood- framed or equivalent baffle or retainer is required to be provided when loose-fill insulation is installed, the purpose of which is to prevent the loose-fill insulation from spilling into the living space when the attic access is opened, and to provide a permanent means of maintaining the installed *R*-value of the loose-fill insulation.

Exception: Vertical doors that provide access from conditioned to unconditioned spaces shall be permitted to meet the fenestration requirements of Table R402.1.2 based on the applicable climate zone specified in Chapter 3.

❖ The portion of a ceiling used for an attic access door is a weak part of the building thermal envelope. The purpose of this provision is to ensure that measures are taken to prevent large loss of energy through this opening.

R402.2.5 Mass walls. Mass walls for the purposes of this chapter shall be considered above-grade walls of concrete block, concrete, insulated concrete form (ICF), masonry cavity, brick (other than brick veneer), earth (adobe, compressed earth block, rammed earth) and solid timber/logs, or any other walls having a heat capacity greater than or equal to 6 Btu/ft^2 × °F (123 kJ/m^2 × K).

❖ The code uses a simple definition for mass walls. Walls made of the specified materials and mass are mass walls. Mass walls may meet the lower mass wall *R*-value (as compared to frame wall values) specified in their respective climate zones because of the energy-conserving characteristics of mass walls. Note that the difference between the wood-frame *R*-value is greatest in southern climates. This recognizes that the thermal "averaging" provided by mass walls is most effective in warmer climates. In the very northern climates where there is almost continual heating during parts of the year, the thermal mass is of limited value. The code simply lists the types of walls that are considered as being "mass" walls. There is no additional limitation or characteristic specified for the walls that would be applicable when using the code.

In general terms, the heat capacity is a measure of how well a material stores heat. The higher the heat capacity, the greater the amount of heat stored in the material. For example, a 6-inch (152 mm) heavyweight concrete wall has a heat capacity of 14 Btu/ft^2 × °F (620 J/m^2 × K) compared to a conventional 2-inch by 4-inch wood-framed wall with a heat capacity of approximately 3 Btu/ft^2 × °F (138 J/m^2 × K). Tables R402.1.2 and R402.1.4 are used to determine the insulation or equivalent *U*-factor requirements for mass walls. To use the tables, first consult either Table R301.1 or Figure R301.1 to determine the climate zone of the proposed project. The *R*-value for the assembly is then given for the mass wall in Table R402.1.2 or the *U*-factor is given in Table R402.1.4.

When dealing with the mass walls, the insulation location is important. Note i of Table R402.1.2 indicates that the second *R*-value, which is the higher *R*-value for mass walls in each climate zone, is applicable when more than half of the insulation is on the interior of the mass wall. The first values listed in Table R402.1.2 are, therefore, based on the installation of the majority of the insulation ("at least 50 percent") being located on the exterior side of the wall or being integral to the wall. Likewise, Note b of Table R402.1.4 provides lower maximum *U*-factors for mass walls with more than 50 percent of the insulation on the interior of the wall.

For an example of a wall assembly that has insulation on the exterior of the wall (between the mass wall and the exterior), see Commentary Figure R402.2.5(1). Concrete masonry units with insulated cores or masonry cavity walls are examples of integral insulation. For mass walls with the insulation installed on the interior (an insulated furred wall located between the conditioned space and the mass wall), see Commentary Figure R402.2.5(2). As shown, these two figures would be examples of mass walls that meet or exceed the general requirements of this section and Table R402.1.2 for Climate Zones 1 through 4, except for those in Marine Zone 4.

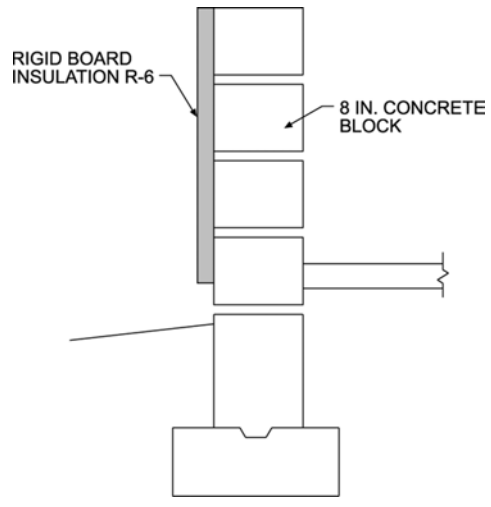

For SI: 1 inch = 25.4 mm.

Figure R402.2.5(1)
EXTERIOR INSULATION

INTERNATIONAL CODE COUNCIL®
Copyright © 2015 ICC. ALL RIGHTS RESERVED. Accessed by David Dammon on Jun 21, 2017 12:30:52 PM pursuant to License Agreement with ICC. No further reproduction or distribution authorized. ANY UNAUTHORIZED REPRODUCTION OR DISTRIBUTION IS A VIOLATION OF THE FEDERAL COPYRIGHT ACT AND THE LICENSE AGREEMENT, AND SUBJECT TO CIVIL AND CRIMINAL PENALTIES THEREUNDER.

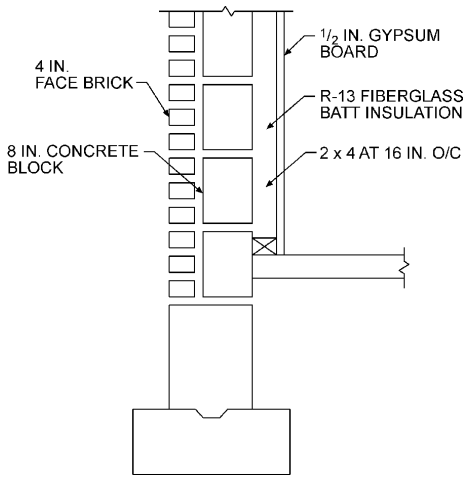

For SI: 1 inch = 25.4 mm.

Figure R402.2.5(2)
INTERIOR INSULATION

R402.2.6 Steel-frame ceilings, walls and floors. Steel-frame ceilings, walls, and floors shall meet the insulation requirements of Table R402.2.6 or shall meet the *U*-factor requirements of Table R402.1.4. The calculation of the *U*-factor for a steel-frame envelope assembly shall use a series-parallel path calculation method.

❖ The insulation requirements of Table R402.1.2 are based on conventional wood-frame construction methods. Because the code also includes provisions applicable to steel-framing methods, this chapter has been written to include this material. Table R402.2.6 specifies combinations of cavity and continuous insulation for steel framing that are equivalent to the specified wood-frame component *R*-values in Table R402.1.2.

Table R402.1.2 cannot be used directly for steel-frame components. When using Table R402.2.6, all listed options comply; the code user can choose any option on the list that corresponds to the correct *R*-value in the left-hand column. Steel has a much higher thermal conductivity (ability to transfer heat) than wood. Therefore, steel-frame cavities require a higher *R*-value or include a requirement for insulated sheathing that acts as a thermal break or both.

Instead of using this table, the code user could choose to calculate or measure a *U*-factor for a building component and show compliance based on meeting the *U*-factor requirement in Table R402.1.4. The code user could use the total UA tradeoff in Section R402.1.4 or even the performance-based approach in Section R405 to show compliance based on the overall building, even if the steel-frame wall did not meet the code requirements directly. Other combinations of cavity insulation and continuous insulation not shown in Table R402.2.6 would also be allowed; however, if a combination from the table is used, no additional calculation is necessary.

R402.2.7 Walls with partial structural sheathing. Where Section R402.1.2 would require continuous insulation on exterior walls and structural sheathing covers 40 percent or less of the gross area of all exterior walls, the continuous insulation *R*-value shall be permitted to be reduced by an amount necessary to result in a consistent total sheathing thickness, but not more than R-3, on areas of the walls covered by structural sheathing. This reduction shall not apply to the *U*-factor alternative approach in Section R402.1.4 and the total UA alternative in Section R402.1.5.

❖ The provisions of this section are intended to deal with a practical situation that occurs when structural sheathing is used over a portion of the outside wall, such as at the corners for horizontal bracing. In those

TABLE R402.2.6
STEEL-FRAME CEILING, WALL AND FLOOR INSULATION (*R*-VALUE)

WOOD FRAME *R*-VALUE REQUIREMENT	COLD-FORMED STEEL EQUIVALENT *R*-VALUE[a]
Steel Truss Ceilings[b]	
R-30	R-38 or R-30 + 3 or R-26 + 5
R-38	R-49 or R-38 + 3
R-49	R-38 + 5
Steel Joist Ceilings[b]	
R-30	R-38 in 2 × 4 or 2 × 6 or 2 × 8 R-49 in any framing
R-38	R-49 in 2 × 4 or 2 × 6 or 2 × 8 or 2 × 10
Steel-framed Wall, 16″ on center	
R-13	R-13 + 4.2 or R-19 + 2.1 or R-21 + 2.8 or R-0 + 9.3 or R-15 + 3.8 or R-21 + 3.1
R-13 + 3	R-0 + 11.2 or R-13 + 6.1 or R-15 + 5.7 or R-19 + 5.0 or R-21 + 4.7
R-20	R-0 + 14.0 or R-13 + 8.9 or R-15 + 8.5 or R-19 + 7.8 or R-19 + 6.2 or R-21 + 7.5
R-20 + 5	R-13 + 12.7 or R-15 + 12.3 or R-19 + 11.6 or R-21 + 11.3 or R-25 + 10.9
R-21	R-0 + 14.6 or R-13 + 9.5 or R-15 + 9.1 or R-19 + 8.4 or R-21 + 8.1 or R-25 + 7.7
Steel-framed Wall, 24″ on center	
R-13	R-0 + 9.3 or R-13 + 3.0 or R-15 + 2.4
R-13 + 3	R-0 + 11.2 or R-13 + 4.9 or R-15 + 4.3 or R-19 + 3.5 or R-21 + 3.1
R-20	R-0 + 14.0 or R-13 + 7.7 or R-15 + 7.1 or R-19 + 6.3 or R-21 + 5.9
R-20 + 5	R-13 + 11.5 or R-15 + 10.9 or R-19 + 10.1 or R-21 + 9.7 or R-25 + 9.1
R-21	R-0 + 14.6 or R-13 + 8.3 or R-15 + 7.7 or R-19 + 6.9 or R-21 + 6.5 or R-25 + 5.9
Steel Joist Floor	
R-13	R-19 in 2 × 6, or R-19 + 6 in 2 × 8 or 2 × 10
R-19	R-19 + 6 in 2 × 6, or R-19 + 12 in 2 × 8 or 2 × 10

a Cavity insulation *R*-value is listed first, followed by continuous insulation *R*-value.

b. Insulation exceeding the height of the framing shall cover the framing.

INTERNATIONAL CODE COUNCIL®
Copyright © 2015 ICC. ALL RIGHTS RESERVED. Accessed by David Dammon on Jun 21, 2017 12:30:52 PM pursuant to License Agreement with ICC. No further reproduction or distribution authorized. ANY UNAUTHORIZED REPRODUCTION OR DISTRIBUTION IS A VIOLATION OF THE FEDERAL COPYRIGHT ACT AND THE LICENSE AGREEMENT, AND SUBJECT TO CIVIL AND CRIMINAL PENALTIES THEREUNDER.

cases, the thickness of the portion of the wall with structural sheathing could be different than the portion of the wall without sheathing. The code therefore allows a reduction of R-3 in the required insulation of the sheathed portion to facilitate some flexibility in the choice of insulation. This option is only allowed in the application of the prescriptive table, Table R402.1.2, and not when utilizing the *U*-factor alternative or the UA alternative.

R402.2.8 Floors. Floor framing-cavity insulation shall be installed to maintain permanent contact with the underside of the subfloor decking.

Exception: The floor framing-cavity insulation shall be permitted to be in contact with the topside of sheathing or continuous insulation installed on the bottom side of floor framing where combined with insulation that meets or exceeds the minimum wood frame wall *R*-value in Table 402.1.2 and that extends from the bottom to the top of all perimeter floor framing members.

❖ Floors that are a part of the building thermal envelope, such as those over a crawl space or an unconditioned garage, are required to meet or exceed the floor *R*-value requirements listed in Table R402.1.2. The insulation *R*-value requirements range from R-13 in warm climates to R-38 in extremely cold climates. Insulation must be installed between the floor joists and must be well supported with netting, wire, wood strips or another method of support so that the insulation does not droop or fall out of the joist cavities over time. Some floor insulation has a tendency to sag or drop with time. This sag or drop exposes the subfloor directly to the temperature beneath the floor. Sagging also has a tendency to open airflow paths to parts of the floor, producing cold spots and negating the value of the floor insulation in the effected section of the floor. Even small areas that lack insulation or allow air circulation between the floor insulation and the subfloor can have a marked effect on the energy efficiency of the floor. This section specifies that floor insulation must be installed so it will maintain "permanent contact" with the subfloor (meaning over the useful life of the residence).

If a floor of a building extends over outside air, such as over an open carport, the floor is still insulated to the "floor" requirement of Table R402.1.2 rather than being treated as part of the exterior envelope card meeting the same *R*-value as for ceilings.

The exception provides a specific configuration for insulating a floor. Requiring insulation in floors to be in direct contact with the underside of subfloor decking is one insulating option. Another option is to have an airspace between the floor sheathing and the top-of-cavity insulation where this cavity insulation is in direct contact with the top side of sheathing or continuous insulation installed on the underside of the floor framing and is combined with perimeter insulation that meets or exceeds the *R*-value requirements for walls. This second option leads to fewer cold spots yet does not change the heat loss as long as the cavity insulation is in direct contact with sheathing or continuous insulation below it. It also facilitates services to be enclosed in the thermal envelope. An example of this configuration is illustrated in Commentary Figure R402.2.8.

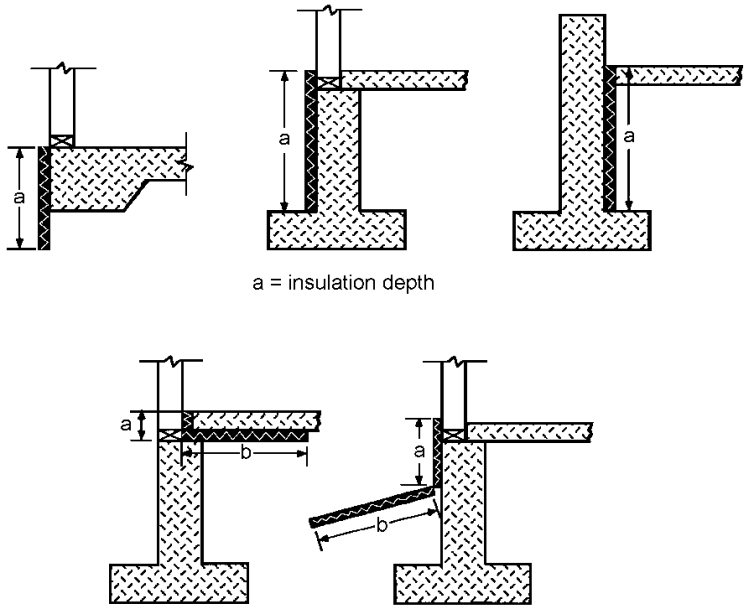

Figure R402.2.8
SLAB INSULATION METHODS

INTERNATIONAL CODE COUNCIL®
Copyright © 2015 ICC. ALL RIGHTS RESERVED. Accessed by David Dammon on Jun 21, 2017 12:30:52 PM pursuant to License Agreement with ICC. No further reproduction or distribution authorized. ANY UNAUTHORIZED REPRODUCTION OR DISTRIBUTION IS A VIOLATION OF THE FEDERAL COPYRIGHT ACT AND THE LICENSE AGREEMENT, AND SUBJECT TO CIVIL AND CRIMINAL PENALTIES THEREUNDER.

R402.2.9 Basement walls. Walls associated with conditioned basements shall be insulated from the top of the *basement wall* down to 10 feet (3048 mm) below grade or to the basement floor, whichever is less. Walls associated with unconditioned basements shall meet this requirement unless the floor overhead is insulated in accordance with Sections R402.1.2 and R402.2.8.

❖ The walls of conditioned basements must be insulated to meet the requirements of Table R402.1.2. Each wall of a basement must be considered separately to determine whether it is a basement wall or an exterior wall. It is a basement wall if it has an average below-grade wall area of 50 percent or more. A wall that is less than 50 percent below grade is an exterior wall and must meet the insulation requirements for walls. Most walls associated with basements will be at least 50 percent below grade and, therefore, must meet basement wall requirements.

Walkout basements offer a challenge in determining compliance with the code. A walkout basement [see Commentary Figures R402.2.9(1) and (2)] may have a back wall that is entirely below grade, a front wall or the walkout portion that is entirely above grade and two sidewalls with a grade line running diagonally. In this case, the back wall must meet the requirements for basement walls, the front wall would need to meet the requirements for walls (either framed wall or mass wall, as applicable) and the side walls would need to be evaluated to determine whether they were 50 percent or more below grade and, therefore, basement walls.

Basement insulation must extend up to 10 feet (3048 mm) under the ground, or at least as far as the basement wall extends under the ground. Heat flow into the ground occurs all along the buried portion of the wall, as well as along the above-ground portion of

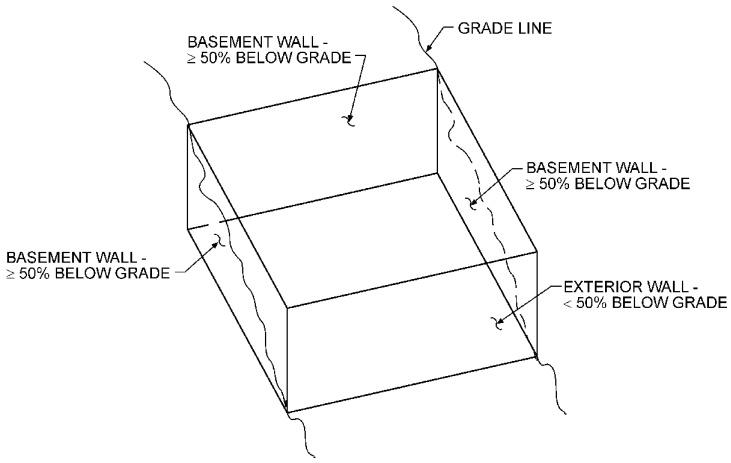

Figure R402.2.9(1)
WALKOUT BASEMENT



Figure R402.2.9(2)
EXTERIOR BASEMENT INSULATION

INTERNATIONAL CODE COUNCIL®
Copyright © 2015 ICC. ALL RIGHTS RESERVED. Accessed by David Dammon on Jun 21, 2017 12:30:52 PM pursuant to License Agreement with ICC. No further reproduction or distribution authorized. ANY UNAUTHORIZED REPRODUCTION OR DISTRIBUTION IS A VIOLATION OF THE FEDERAL COPYRIGHT ACT AND THE LICENSE AGREEMENT, AND SUBJECT TO CIVIL AND CRIMINAL PENALTIES THEREUNDER.

the wall. Heat flow below 10 feet (3048 mm) is greatly diminished so the code requires basement insulation only down to 10 feet (3048 mm), or the depth of the basement wall.

The code does not specify whether the insulation is to be placed on the inside or outside of a basement wall. In some localities moisture considerations may suggest the type and location for insulation.

The last part of this section allows insulating unconditioned basement walls as an alternative to insulating the floor above the unconditioned basement. Therefore, it essentially shifts the location of the building thermal envelope from the floor to the basement walls. Although not required, insulating the unconditioned basement walls makes a good deal of sense if a basement is likely to be conditioned at some time after construction.

Because the rim joist between floors is a part of the building envelope, this must be insulated also if the basement is conditioned.

When applying the provisions of this section, it is important to review the definitions for both "Above grade wall" and "Basement wall" in Section R202. For code users who also deal with commercial buildings, remember that the rule for residential buildings is 50 percent above or below grade and not the 85-percent minimum below grade with 15-percent maximum above-grade area that is applicable under Section C402.2.2 for commercial construction.

R402.2.10 Slab-on-grade floors. Slab-on-grade floors with a floor surface less than 12 inches (305 mm) below grade shall be insulated in accordance with Table R402.1.2. The insulation shall extend downward from the top of the slab on the outside or inside of the foundation wall. Insulation located below grade shall be extended the distance provided in Table R402.1.2 by any combination of vertical insulation, insulation extending under the slab or insulation extending out from the building. Insulation extending away from the building shall be protected by pavement or by not less than 10 inches (254 mm) of soil. The top edge of the insulation installed between the *exterior wall* and the edge of the interior slab shall be permitted to be cut at a 45-degree (0.79 rad) angle away from the *exterior wall.* Slab-edge insulation is not required in jurisdictions designated by the *code official* as having a very heavy termite infestation.

❖ The perimeter edges of slab-on-grade floors must be insulated to the *R*-values listed in Table R402.1.2. These requirements apply only to slabs 12 inches (305 mm) or less below grade. The listed *R*-value requirements in the table are for unheated slabs. A heated slab must add another R-5 to the required insulation levels based on Note d of Table R402.1.2.

The insulation must extend downward from the top of the slab or downward to the bottom of the slab and then horizontally in either direction until the distance listed in Table R402.1.2 is reached. See Commentary Figure R402.2.10 for examples on how the distance is measured. Most of the heat loss from a slab will occur in the edge that is exposed directly to the outside air. The insulation must be installed to the top of the slab edge to prevent this heat loss. Slab insulation may be installed on the exterior of the slab edge or between the interior wall and the edge of the interior slab as in a nonmonolithic slab. In this type of installation, the exposed insulation could cause problems with tack strips for carpeting. Therefore, the

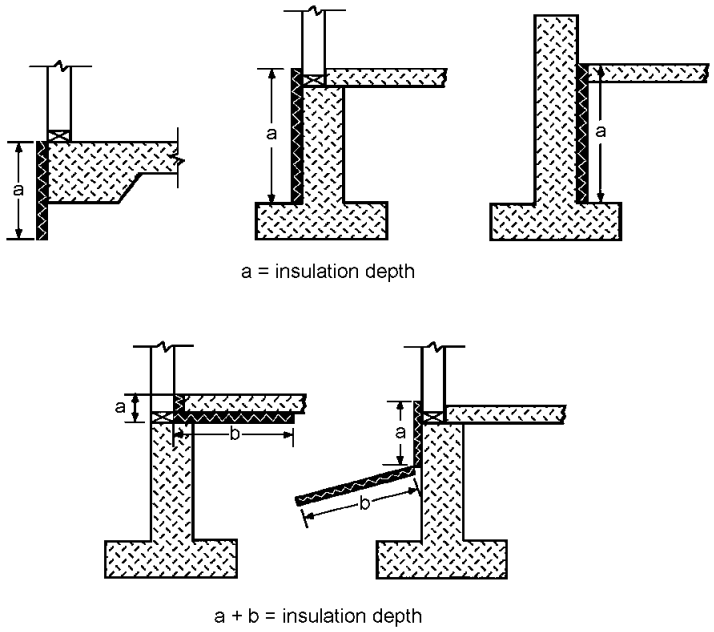

Figure R402.2.10
SLAB INSULATION METHODS

INTERNATIONAL CODE COUNCIL®
Copyright © 2015 ICC. ALL RIGHTS RESERVED. Accessed by David Dammon on Jun 21, 2017 12:30:52 PM pursuant to License Agreement with ICC. No further reproduction or distribution authorized. ANY UNAUTHORIZED REPRODUCTION OR DISTRIBUTION IS A VIOLATION OF THE FEDERAL COPYRIGHT ACT AND THE LICENSE AGREEMENT, AND SUBJECT TO CIVIL AND CRIMINAL PENALTIES THEREUNDER.

insulation is allowed to be cut at a 45-degree angle away from the exterior of the wall. If a monolithic slab and foundation is being used, the required insulation would obviously need to be installed on the exterior and then either extended to the required depth or turned out to the exterior and protected by either some type of pavement or a minimum of 10 inches (254 mm) of soil. Insulation that is exposed on or near the surface is easily damaged. This protection method ensures that the insulation remains in place and provides the intended energy savings.

In areas with very heavy termite infestation, slab perimeter insulation need not be installed in accordance with Table R402.1.2. These areas are identified in Figure 301.2(6) of the IRC or Figure 2603.9 of the IBC or by the jurisdiction, based on the local history and situation. It is important to understand that this exemption from the slab insulation provisions are for any area with heavy termite infestations. The fact that this is an exemption and does not contain any requirement for a compensating increase of insulation at other locations is important.

The requirements of Section R402.1.4 could still be used in areas that do not have a heavy termite infestation to eliminate the slab edge insulation if desired. Typically, slab perimeter insulation can be traded off entirely in these climates by increasing the ceiling or wall insulation *R*-values or by using glazing with a lower *U*-factor.

R402.2.11 Crawl space walls. As an alternative to insulating floors over crawl spaces, crawl space walls shall be permitted to be insulated when the crawl space is not vented to the outside. Crawl space wall insulation shall be permanently fastened to the wall and extend downward from the floor to the finished grade level and then vertically and/or horizontally for at least an additional 24 inches (610 mm). Exposed earth in unvented crawl space foundations shall be covered with a continuous Class I vapor retarder in accordance with the *International Building Code* or *International Residential Code*, as applicable. All joints of the vapor retarder shall overlap by 6 inches (153 mm) and be sealed or taped. The edges of the vapor retarder shall extend not less than 6 inches (153 mm) up the stem wall and shall be attached to the stem wall.

❖ The code allows for the insulation of crawl space walls instead of insulating the floor between the crawl space and the conditioned space. In essence, the code user is defining the thermal boundary as either the floor or the crawl space wall. Because the ground under the crawl space is tempered by the thermal mass of the dirt, the temperature of the crawl space is usually more favorable than the outside temperature. This is a popular practice for freeze protection of plumbing pipes in colder climates because it is common to install plumbing in the crawl space. The heat transferred through the uninsulated floor to the crawl space helps keep the crawl space temperature above freezing when the outside air temperature drops below freezing. To comply with this provision, the crawl space must be mechanically vented or supplied with conditioned air from the living space. IBC Section 1203.3 and its subsections address this crawl space ventilation requirement.

The code also requires installation of insulation from the sill plate downward to the exterior finished grade level and then an additional 24 inches (610 mm) either vertically or horizontally (see Commentary Figure R402.2.11). Under this insulation scenario, the rim joist is considered part of the conditioned envelope and must be insulated to the same level as the exterior wall. The insulation must be attached securely to the crawl space wall so that it does not fall off. The code also requires installing a continuous Class I vapor retarder on the floor of the crawl space

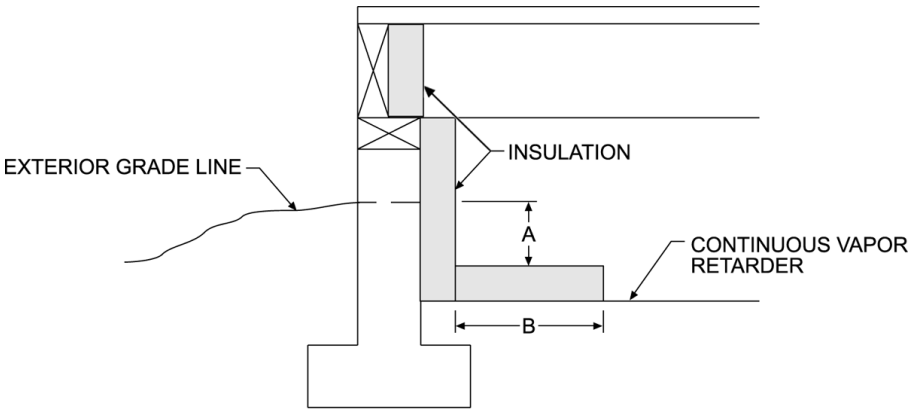

For SI: 1 inch = 25.4 mm.

Figure R402.2.11
CRAWL SPACE WALL INSULATION

INTERNATIONAL CODE COUNCIL®
Copyright © 2015 ICC. ALL RIGHTS RESERVED. Accessed by David Dammon on Jun 21, 2017 12:30:52 PM pursuant to License Agreement with ICC. No further reproduction or distribution authorized. ANY UNAUTHORIZED REPRODUCTION OR DISTRIBUTION IS A VIOLATION OF THE FEDERAL COPYRIGHT ACT AND THE LICENSE AGREEMENT, AND SUBJECT TO CIVIL AND CRIMINAL PENALTIES THEREUNDER.

to prevent ground-water vapor from entering the crawl space. A Class I vapor retarder is defined in the IBC as a material with a permeance of 0.1 perm or less (see the definition of "Vapor retarder class" in the IBC). The vapor retarder is to be installed with all joints overlapped and sealed or taped to provide continuity. Also, the vapor retarder must extend up the crawl space wall and be secured to the wall with an appropriate attachment, such as an approved mastic or a treated wood nailer.

R402.2.12 Masonry veneer. Insulation shall not be required on the horizontal portion of the foundation that supports a masonry veneer.

❖ For exterior foundation insulation, the horizontal portion of the foundation that supports a masonry veneer need not be insulated. For slab-edge insulation installed on the exterior of the slab, the code allows the insulation to start at the bottom of the masonry veneer and extend downward. This is essentially a matter of practicality and accommodates the construction of a "brick ledge" without the need for insulating the foundation at the point where the masonry would bear on that foundation.

R402.2.13 Sunroom insulation. *Sunrooms* enclosing conditioned space shall meet the insulation requirements of this code.

Exception: For *sunrooms* with *thermal isolation*, and enclosing conditioned space, the following exceptions to the insulation requirements of this code shall apply:

1. The minimum ceiling insulation *R*-values shall be R-19 in *Climate Zones* 1 through 4 and R-24 in *Climate Zones* 5 through 8.
2. The minimum wall *R*-value shall be R-13 in all *climate zones*. Walls separating a *sunroom* with a *thermal isolation* from *conditioned space* shall meet the *building thermal envelope* requirements of this code.

❖ With the amount of glass in sunrooms, it is imperative the insulation requirements of the code be complied with to ensure minimal current requirements. The exceptions also tighten the requirements per zone to minimize energy usage.

R402.3 Fenestration (Prescriptive). In addition to the requirements of Section R402, fenestration shall comply with Sections R402.3.1 through R402.3.6.

❖ This section contains specific requirements that affect the requirements for individual items listed in the subsections. Although Section R402.1 and Tables R402.1.2 and R402.1.4 provide the general basis for complying with the energy requirements of this chapter, Section R402.3 provides additional details regarding the application of the provisions or modifications that may affect the general fenestration requirements. Relying on the general code policy that specific requirements apply over general requirements will help ensure that these specific provisions are properly applied.

The term "fenestration" in this section refers to opaque doors and the light-transmitting areas of a residential building's wall, floor or roof, generally window, skylight and nonopaque door products (see the definition of "Fenestration" in Chapter 2). Prior to the 2006 edition, the residential energy provisions of the code applied only to buildings with 15 percent or less of glazing areas (fenestration). The code's prescriptive requirements varied depending on the type of residential occupancy, but did include limitations on the amount of fenestration (maximum of 25 percent for one- and two-family dwellings and 30 percent for R-2, R-4 or townhouses). These earlier versions of the code established whole building performance requirements, with fenestration performance requirements as a derivative value dependent on window area, overall envelope area and the performance of other assemblies (e.g., walls, ceilings, floors). The code establishes specific simplified prescriptive requirements (without area considerations) for fenestration products in Table R402.1.2—specifically, fenestration *U*-factors, skylight *U*-factors and glazed fenestration SHGCs. The elimination of these fenestration area limitations helped to greatly simplify the application of the code's envelope requirements.

The fenestration requirements of the code are critical to the overall energy efficiency of the residence. First, unlike opaque assemblies, glazed fenestration can transmit a substantial amount of heat through the glazing into the living space in both the summer and winter, resulting in a unique concern about solar heat gain (and, as a result, necessitating SHGC requirements). Second, the insulating value (*U*-factor) of typical fenestration is much higher than that of a typical wall. For example, a good low emissivity (low-E), insulated glass wood or vinyl fenestration product will have less than one-fourth the insulating value of an equivalent area of R-13 insulated opaque wall. These issues have an effect not only on energy use, but overall occupant comfort, condensation and other issues.

In accordance with Section R303.1.3, the *U*-factor and SHGC for each fenestration product must be obtained from a label attached to the product certifying that the values were determined in accordance with NFRC procedures by an accredited, independent lab or from a limited default table.

R402.3.1 *U*-factor. An area-weighted average of fenestration products shall be permitted to satisfy the *U*-factor requirements.

❖ Section R402.3.1 permits using the calculated area-weighted average *U*-factor of all fenestration products in the building to satisfy the fenestration *U*-factor requirements set by Table R402.1.2 or R402.1.4. As a result, if all fenestration products (window, door or skylight) do not meet the specific value, the user can still achieve compliance if the weighted average of all products is equal to or less than the specified value.

This option permits the use of some windows that have values lower than the prescriptive general requirement, as long as these poorly performing win-

INTERNATIONAL CODE COUNCIL®
Copyright © 2015 ICC. ALL RIGHTS RESERVED. Accessed by David Dammon on Jun 21, 2017 12:30:52 PM pursuant to License Agreement with ICC. No further reproduction or distribution authorized. ANY UNAUTHORIZED REPRODUCTION OR DISTRIBUTION IS A VIOLATION OF THE FEDERAL COPYRIGHT ACT AND THE LICENSE AGREEMENT, AND SUBJECT TO CIVIL AND CRIMINAL PENALTIES THEREUNDER.

dows are offset by windows with values better than the requirement.

When applying this area-weighted option, it is important to remember that the term "fenestration" includes windows, skylights, doors with glazing and opaque doors, all of which would be included in the average calculation.

Using the *U*-factor requirement of 0.35 for Climate Zone 6 as an illustration, this section provides two options for compliance. The simplest option is to ensure that all windows and doors have labeled NFRC values of 0.35 or less. This approach is also more likely to ensure adequate performance and comfort throughout the home. Alternatively, a weighted average may be taken of the values from all windows and doors to see if the weighted average is less than or equal to 0.35.

As a simple example, assume 100 square feet (9.3 m^2) of 0.32 windows, 100 square feet (9.3 m^2) of 0.36 windows and one 20-square-foot (1.8 m^2) 0.40 *U*-factor door [(100 $\times$ 0.32) + (100 $\times$ 0.36) + (20 $\times$ 0.40)]/(100 + 100 + 20) = 0.345 (weighted average *U*-factor). Therefore, because the weighted average *U*-factor is less than the required 0.35, the fenestration in this example would be in compliance with the code.

In accordance with Section R303.1.2, the *U*-factor for each fenestration product must be obtained from a label attached to the product certifying that the *U*-factor was determined in accordance with NFRC procedures by an accredited, independent lab. In the absence of an NFRC-labeled *U*-factor, a value from the limited default tables [Tables R303.1.3(1) and R303.1.3(2)] must be used. The provisions of Section R402.4.5 should be reviewed when using the area-weighted average in the tradeoff options (see commentary, Section R402.5).

R402.3.2 Glazed fenestration SHGC. An area-weighted average of fenestration products more than 50-percent glazed shall be permitted to satisfy the SHGC requirements.

Dynamic glazing shall be permitted to satisfy the SHGC requirements of Table R402.1.2 provided the ratio of the higher to lower labeled SHGC is greater than or equal to 2.4, and the *dynamic glazing* is automatically controlled to modulate the amount of solar gain into the space in multiple steps. *Dynamic glazing* shall be considered separately from other fenestration, and area-weighted averaging with other fenestration that is not dynamic glazing shall not be permitted.

Exception: *Dynamic glazing* is not required to comply with this section when both the lower and higher labeled SHGC already comply with the requirements of Table R402.1.2.

❖ Under Table R402.1.2, all glazed fenestration products in Climate Zones 1 through 3 must have an SHGC equal to or less than 0.30 (there is no requirement in Climate Zones 4 through 8). This requirement is intended to control unwanted solar gain in cooling-dominated climates to increase comfort, reduce air-conditioning energy and peaks, reduce HVAC sizing and reduce energy costs.

Similar to Section R402.3.1, Section R402.3.2 allows some latitude for individual product variability by permitting this performance requirement to be met using an area-weighted average of all of the fenestration products that are more than 50-percent glazed. The 50-percent glazing threshold is established to exclude doors or other fenestration products that are either completely or largely opaque from the equation. The reason for this exclusion is that opaque elements do not allow solar heat gain as glazing does. The area-weighted calculation approach is explained in an example with Section R402.3.1. An additional example for SHGC is as follows:

Window 1	SHGC - 0.24	200 ft^2
Window 2	SHGC - 0.32	100 ft^2
Window 3	SHGC - 0.30	100 ft^2
Sliding glass door	SHGC - 0.40	40 ft^2

[(200 ft^2 $\times$ 0.24) + (100 ft^2 $\times$ 0.32) + (100 ft^2 $\times$ 0.30) + (40 ft^2 $\times$ 0.40)]/440 ft^2

440 ft^2 = SHGC - 0.29 Average

Using the figures in the example, even though Window 2 and the sliding glass door both have SHGC values that exceed the 0.25 limitation of Table R402.1.2 for Climate Zones 1 through 3, this design will comply because the weighted average is 0.34.

In accordance with Section R303.1.3, the SHGC for each glazed fenestration product must be obtained from a label attached to the product certifying that the SHGC was determined in accordance with NFRC procedures by an accredited, independent lab. In the absence of an NFRC-labeled SHGC, a value from the limited default table [Table R303.1.3(1)] must be used.

It is important to note that the SHGC requirement must be met by the fenestration product on a stand-alone basis. The code does not permit the alternative of a "permanent solar shading device" such as eave overhangs or awnings, as was permitted by other energy codes and previous versions of the code, to assist in code compliance.

R402.3.3 Glazed fenestration exemption. Up to 15 square feet (1.4 m^2) of glazed fenestration per dwelling unit shall be permitted to be exempt from *U*-factor and SHGC requirements in Section R402.1.2. This exemption shall not apply to the *U*-factor alternative approach in Section R402.1.4 and the Total UA alternative in Section R402.1.5.

❖ In addition to using the area-weighted average approach (Sections R402.3.1 and R402.3.2) to allow maximum compliance flexibility for builders, the code allows up to 15 square feet (1.4 m^2) of the building's total glazed fenestration area to be exempt from the *U*-factor and SHGC requirements listed in Table

INTERNATIONAL CODE COUNCIL®
Copyright © 2015 ICC. ALL RIGHTS RESERVED. Accessed by David Dammon on Jun 21, 2017 12:30:52 PM pursuant to License Agreement with ICC. No further reproduction or distribution authorized. ANY UNAUTHORIZED REPRODUCTION OR DISTRIBUTION IS A VIOLATION OF THE FEDERAL COPYRIGHT ACT AND THE LICENSE AGREEMENT, AND SUBJECT TO CIVIL AND CRIMINAL PENALTIES THEREUNDER.

R402.1.2. All other glazing must meet or exceed the designated *U*-factor and SHGC requirements. The exempted glazing area should be designated on the building plan, either on the floor plan or in a window schedule. This will give the necessary information to the field inspector who will then need to verify that what is on the plans is installed in the field. This exemption allows the use of ornate or unique window, skylight or glazed door assemblies in a building without going to another compliance approach. The area, the *U*-factor and SHGC of the exempt product(s) should be excluded from the area-weighted calculations that may be performed under Sections R402.3.1 and R402.3.2. In addition, the exception provided by this section would also allow this 15 square feet (1.4 m^2) of glazing to be excluded from the limits of Section R402.5. Note that this exemption does not apply where the basis for the thermal envelope was the *U*-factor alternative in Section R402.1.4 or the total UA alternative in Section R402.1.4. In these cases, the amount of insulation does not need to be exempted.

R402.3.4 Opaque door exemption. One side-hinged opaque door assembly up to 24 square feet (2.22 m^2) in area is exempted from the *U*-factor requirement in Section R402.1.4. This exemption shall not apply to the *U*-factor alternative approach in Section R402.1.4 and the total UA alternative in Section R402.1.5.

❖ Similar to the exemption provided in Section R402.3.3 to enhance design flexibility, the code allows one side-hinged opaque door to be exempt from fenestration *U*-factor requirements as contained in Table R402.1.2, as well as the limitations of Section R402.5. Although the code does not define it, an opaque door is generally considered to be a fenestration product with an overall glazing area of less than 50 percent. The opaque door exemption allows builders to use an ornate or otherwise *U*-factor noncompliant entrance door assembly in a building without going to another compliance approach. The area and the *U*-factor of the exempt product should be excluded from the area-weighted calculations under Section R402.4.1.

R402.3.5 Sunroom fenestration. *Sunrooms* enclosing *conditioned space* shall meet the fenestration requirements of this code.

Exception: For *sunrooms* with *thermal isolation* and enclosing *conditioned space* in *Climate Zones* 2 through 8, the maximum fenestration *U*-factor shall be 0.45 and the maximum skylight *U*-factor shall be 0.70.

New fenestration separating the *sunroom* with *thermal isolation* from *conditioned space* shall meet the *building thermal envelope* requirements of this code.

❖ This section simply reminds the user that sunrooms enclosing conditioned spaces are subject to code requirements. The exception tightens the maximum fenestration *U*-factor for Climate Zones 4 through 8. The maximum skylight *U*-factor shall be 0.70. Given the amount of glass in a sunroom, this section of the code tightens up the fenestration requirements and minimizes energy usage.

R402.4 Air leakage (Mandatory). The *building thermal envelope* shall be constructed to limit air leakage in accordance with the requirements of Sections R402.4.1 through R402.4.4.

❖ Sealing the building envelope is critical to good thermal performance of the building. The seal will prevent warm, conditioned air from leaking out around doors, windows and other cracks during the heating season, thereby reducing the cost of heating the residence. During hot summer months, a proper seal will stop hot air from entering the residence, helping to reduce the air-conditioning load on the building. Any penetration in the building envelope must be thoroughly sealed during the construction process, including holes made for the installation of plumbing, electrical and heating and cooling systems (see Commentary Figure R402.4). The code lists several areas that must be caulked, gasketed, weatherstripped, wrapped or otherwise sealed to limit uncontrolled air movement. Most of the air sealing will be done prior to the installation of an interior wall covering because any penetration will be noticeable and accessible at this time. The code allows the use of airflow retarders (house wraps) or other solid materials as an acceptable method to meet this requirement. To be effective, the building thermal envelope seal must be:

- Impermeable to airflow.
- Continuous over the entire building envelope.
- Able to withstand the forces that may act on it during and after construction.
- Durable over the expected lifetime of the building.

It is unlikely that the same type of barrier will be used on all portions of the building's thermal envelope. Therefore, joints between the various elements, as well as joints or splices within products (such as the overlap in separate pieces of house wrap), must be effectively addressed to provide the continuity needed to perform as desired.

R402.4.1 Building thermal envelope. The *building thermal envelope* shall comply with Sections R402.4.1.1 and R402.4.1.2. The sealing methods between dissimilar materials shall allow for differential expansion and contraction.

❖ Air infiltration is a major source of energy use because the incoming air usually requires conditioning. The uncontrolled introduction of outside air (infiltration) creates a load that varies with time. Ventilation, the controlled introduction of fresh air, is more manageable and provides a more controlled air

INTERNATIONAL CODE COUNCIL®
Copyright © 2015 ICC. ALL RIGHTS RESERVED. Accessed by David Dammon on Jun 21, 2017 12:30:52 PM pursuant to License Agreement with ICC. No further reproduction or distribution authorized. ANY UNAUTHORIZED REPRODUCTION OR DISTRIBUTION IS A VIOLATION OF THE FEDERAL COPYRIGHT ACT AND THE LICENSE AGREEMENT, AND SUBJECT TO CIVIL AND CRIMINAL PENALTIES THEREUNDER.

quality. Uncontrolled infiltration also has a tendency to create or aggravate moisture problems, providing an additional reason to limit infiltration.

R402.4.1.1 Installation. The components of the *building thermal envelope* as listed in Table R402.4.1.1 shall be installed in accordance with the manufacturer's instructions and the criteria listed in Table R402.4.1.1, as applicable to the method of construction. Where required by the *code official*, an *approved* third party shall inspect all components and verify compliance.

❖ The provisions of this section are intended to reduce the energy loss to infiltration and to improve insulation installation.

The code allows all materials that are commonly used as sheathing to be part of the thermal envelope, including interior drywall. By the definition of an air barrier, gypsum board should be considered, as should exterior sheathing. The solid sheathing is not enough; for the air barrier to be effective the joints and openings must be sealed. The code does not require the air barrier on the inside of the air-permeable insulation.

In some cases, inspection of the air barrier is better performed by individuals with more expertise than the staff of the authority having jurisdiction might have. Therefore, the code gives the code official authority to require third-party inspectors.

Note that the line item in the table regarding fireplaces requires gaskets on fireplace doors. All wood-burning fireplaces are a source of air leakage. Loss of energy through these units can be reduced with gasketed doors and a requirement that combustion air be brought directly from the outdoors to the firebox. Gaskets on the fireplace doors will help to minimize air leakage into the firebox. Air that leaks past a poorly gasketed fireplace door, or a door that is simply left open, will flow up the chimney aided by the chimney draft. During the majority of the year the fireplace will not be operating. The combination of well-gasketed doors and a well-sealed flue damper will prevent air leakage through what is effectively an enormous hole in the thermal envelope of the building.

However, it should be noted that the difficulty with this requirement is that most factory-built fireplaces tested in accordance with the code-required test standard for factory-built fireplaces, UL127, are not tested and listed with doors. Therefore, there is a significant safety hazard in adding gasketed doors to a factory-built fireplace tested and manufactured in accordance with UL127, without doors. That hazard would be overheating of the unit and high likelihood of causing fires. This provision in Table R402.4.1.1 for gasketed fireplace doors is a general provision to prevent air leakage and was not intended to prohibit the use of factory-built fireplaces listed for use without doors, in violation of that listing. The specific requirements of the test standard UL127, the product listing and the manufacturer's instructions would prevail for factory-built fireplaces. Keep in mind that Section R402.4.3 requires tight fitting dampers for all fireplaces as well, which will prevent air leakage.

TABLE R402.4.1.1. See page R4-23.

❖ This table contains the list of items that are required to be inspected if the visual inspection option for demonstrating building air tightness given in Section R402.4.1.1 is chosen.

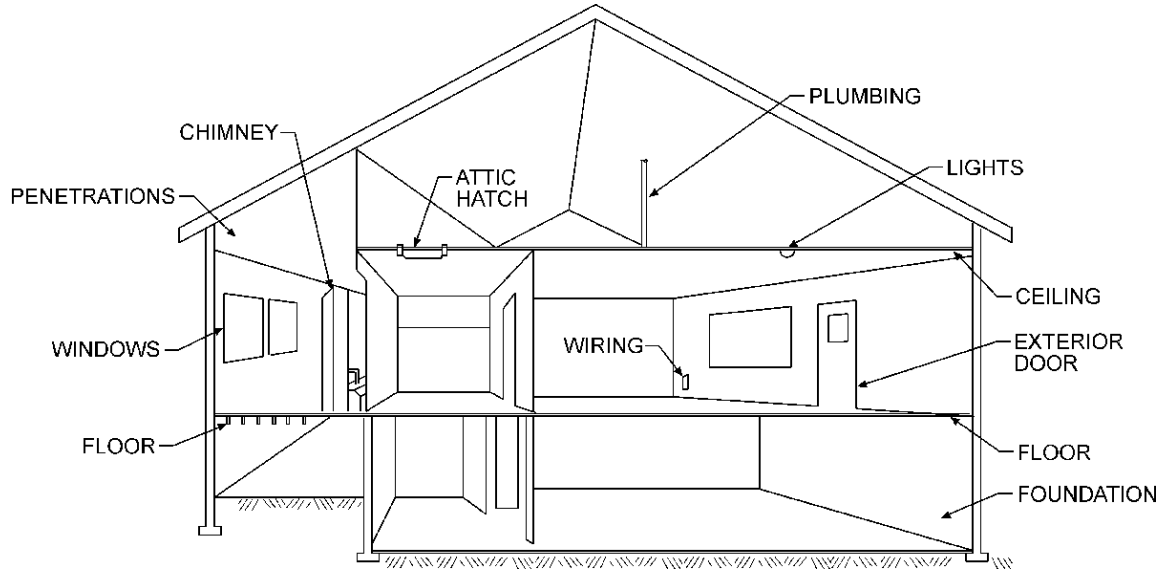

Figure R402.4
TYPICAL SOURCES OF AIR LEAKAGE IN THE HOME

INTERNATIONAL CODE COUNCIL®
Copyright © 2015 ICC. ALL RIGHTS RESERVED. Accessed by David Dammon on Jun 21, 2017 12:30:52 PM pursuant to License Agreement with ICC. No further reproduction or distribution authorized. ANY UNAUTHORIZED REPRODUCTION OR DISTRIBUTION IS A VIOLATION OF THE FEDERAL COPYRIGHT ACT AND THE LICENSE AGREEMENT, AND SUBJECT TO CIVIL AND CRIMINAL PENALTIES THEREUNDER.

TABLE R402.4.1.1
AIR BARRIER AND INSULATION INSTALLATION

COMPONENT	AIR BARRIER CRITERIA[a]	INSULATION INSTALLATION CRITERIA
General requirements	A continuous air barrier shall be installed in the building envelope. The exterior thermal envelope contains a continuous air barrier. Breaks or joints in the air barrier shall be sealed.	Air-permeable insulation shall not be used as a sealing material.
Ceiling/attic	The air barrier in any dropped ceiling/soffit shall be aligned with the insulation and any gaps in the air barrier shall be sealed. Access openings, drop down stairs or knee wall doors to unconditioned attic spaces shall be sealed.	The insulation in any dropped ceiling/soffit shall be aligned with the air barrier.
Walls	The junction of the foundation and sill plate shall be sealed. The junction of the top plate and the top of exterior walls shall be sealed. Knee walls shall be sealed.	Cavities within corners and headers of frame walls shall be insulated by completely filling the cavity with a material having a thermal resistance of R-3 per inch minimum. Exterior thermal envelope insulation for framed walls shall be installed in substantial contact and continuous alignment with the air barrier.
Windows, skylights and doors	The space between window/door jambs and framing, and skylights and framing shall be sealed.	
Rim joists	Rim joists shall include the air barrier.	Rim joists shall be insulated.
Floors (including above garage and cantilevered floors)	The air barrier shall be installed at any exposed edge of insulation.	Floor framing cavity insulation shall be installed to maintain permanent contact with the underside of subfloor decking, or floor framing cavity insulation shall be permitted to be in contact with the top side of sheathing, or continuous insulation installed on the underside of floor framing and extends from the bottom to the top of all perimeter floor framing members.
Crawl space walls	Exposed earth in unvented crawl spaces shall be covered with a Class I vapor retarder with overlapping joints taped.	Where provided instead of floor insulation, insulation shall be permanently attached to the crawlspace walls.
Shafts, penetrations	Duct shafts, utility penetrations, and flue shafts opening to exterior or unconditioned space shall be sealed.	
Narrow cavities		Batts in narrow cavities shall be cut to fit, or narrow cavities shall be filled by insulation that on installation readily conforms to the available cavity space.
Garage separation	Air sealing shall be provided between the garage and conditioned spaces.	
Recessed lighting	Recessed light fixtures installed in the building thermal envelope shall be sealed to the drywall.	Recessed light fixtures installed in the building thermal envelope shall be air tight and IC rated.
Plumbing and wiring		Batt insulation shall be cut neatly to fit around wiring and plumbing in exterior walls, or insulation that on installation readily conforms to available space shall extend behind piping and wiring.
Shower/tub on exterior wall	The air barrier installed at exterior walls adjacent to showers and tubs shall separate them from the showers and tubs.	Exterior walls adjacent to showers and tubs shall be insulated.
Electrical/phone box on exterior walls	The air barrier shall be installed behind electrical or communication boxes or air-sealed boxes shall be installed.	
HVAC register boots	HVAC register boots that penetrate building thermal envelope shall be sealed to the subfloor or drywall.	
Concealed sprinklers	When required to be sealed, concealed fire sprinklers shall only be sealed in a manner that is recommended by the manufacturer. Caulking or other adhesive sealants shall not be used to fill voids between fire sprinkler cover plates and walls or ceilings.	

a. In addition, inspection of log walls shall be in accordance with the provisions of ICC-400.

INTERNATIONAL CODE COUNCIL®
Copyright © 2015 ICC. ALL RIGHTS RESERVED. Accessed by David Dammon on Jun 21, 2017 12:30:52 PM pursuant to License Agreement with ICC. No further reproduction or distribution authorized. ANY UNAUTHORIZED REPRODUCTION OR DISTRIBUTION IS A VIOLATION OF THE FEDERAL COPYRIGHT ACT AND THE LICENSE AGREEMENT, AND SUBJECT TO CIVIL AND CRIMINAL PENALTIES THEREUNDER.

R402.4.1.2 Testing. The building or dwelling unit shall be tested and verified as having an air leakage rate not exceeding five air changes per hour in Climate Zones 1 and 2, and three air changes per hour in Climate Zones 3 through 8. Testing shall be conducted in accordance with ASTM E 779 or ASTM E 1827 and reported at a pressure of 0.2 inch w.g. (50 Pascals). Where required by the *code official*, testing shall be conducted by an *approved* third party. A written report of the results of the test shall be signed by the party conducting the test and provided to the *code official*. Testing shall be performed at any time after creation of all penetrations of the *building thermal envelope*.

During testing:

1. Exterior windows and doors, fireplace and stove doors shall be closed, but not sealed, beyond the intended weatherstripping or other infiltration control measures.
2. Dampers including exhaust, intake, makeup air, backdraft and flue dampers shall be closed, but not sealed beyond intended infiltration control measures.
3. Interior doors, if installed at the time of the test, shall be open.
4. Exterior doors for continuous ventilation systems and heat recovery ventilators shall be closed and sealed.
5. Heating and cooling systems, if installed at the time of the test, shall be turned off.
6. Supply and return registers, if installed at the time of the test, shall be fully open.

❖ The purpose of this code section is to test the building or dwelling unit to demonstrate the building's air tightness. A blower door test, which is a house pressurization test, should be done with a blower door at a pressure of 0.2 inches water gauge [50 Pascals (1psf)]. The building or dwelling unit shall be tested and verified as having an air leakage rate of not exceeding 5 ACH50, or five air changes per hour at 50 Pascals (1 psf) in Climate Zones 1 and 2, and 3 ACH50, or three air changes per hour at 50 Pascals (1 psf), in Climate Zones 3 through 8. The ACH50 is a common measurement made when doing air infiltration tests and, therefore, a reasonable metric for use in the code. Testing can be conducted by an approved third party, if allowed by the code official. This requires that HVAC ducts not be sealed during the test. In this context, "sealed" is intended to mean sealed off from the interior of the house. The maximum is 5ACH50, or five air changes per hour at 50 Pascals (1 psf).

R402.4.2 Fireplaces. New wood-burning fireplaces shall have tight-fitting flue dampers or doors, and outdoor combustion air. Where using tight-fitting doors on factory-built fireplaces listed and labeled in accordance with UL 127, the doors shall be tested and listed for the fireplace. Where using tight-fitting doors on masonry fireplaces, the doors shall be listed and labeled in accordance with UL 907.

❖ All wood-burning fireplaces are a source of air leakage. Loss of energy through these units can be reduced with gasketed doors and a requirement that combustion air be brought directly from the outdoors to the firebox. Gaskets on the fireplace doors will help to minimize air leakage into the firebox. Air that leaks past a poorly fitted fireplace door, or a door that is simply left open, will flow up the chimney aided by the chimney draft. Throughout the majority of the year, the fireplace will not be in use. The combination of tight-fitting doors and a tight flue damper will prevent air leakage through what is effectively an enormous hole in the thermal envelope of the building. However, not all factory-built fireplaces are tested for use with doors; therefore, in some cases installing doors on the fireplace would violate the unit's listing and could create a fire hazard. Doors on factory-built fireplaces are required to be tested and listed for the fireplace in accordance with UL 127. The manufacturers' instructions for factory-built fireplaces should be followed and such instructions could prohibit the installation of doors. Doors on masonry fireplaces are required to be listed and labeled in accordance with UL 907. The code also allows tight-fitting flue dampers for fireplaces to deal with the issue of air loss.

Lastly, this section and Section R1006 of the IRC require factory-built and masonry fireplaces to be equipped with a direct outdoor combustion supply. The provisions of Section R1006.2 of the IRC would prevent the installation of a fireplace with the firebox floor below finished grade.

R402.4.3 Fenestration air leakage. Windows, skylights and sliding glass doors shall have an air infiltration rate of no more than 0.3 cfm per square foot (1.5 L/s/m^2), and swinging doors no more than 0.5 cfm per square foot (2.6 L/s/m^2), when tested according to NFRC 400 or AAMA/WDMA/CSA 101/I.S.2/A440 by an accredited, independent laboratory and *listed* and *labeled* by the manufacturer.

Exception: Site-built windows, skylights and doors.

❖ Windows, skylights and doors should be tested and labeled by the manufacturer as meeting the air infiltration requirements. The intent of this section is to effectively complete the sealing of the building's thermal envelope by providing specific testing and performance criteria for windows, skylights and doors. This testing and labeling requirement provides an easy method for both the builder and the inspector to demonstrate compliance with the code. While "site built" fenestration is exempted from these requirements, units would have to be "durably sealed" to limit infiltration according to the requirements in Section R402.4.1.

R402.4.4 Rooms containing fuel-burning appliances. In Climate Zones 3 through 8, where open combustion air ducts provide combustion air to open combustion fuel burning appliances, the appliances and combustion air opening shall be located outside the building thermal envelope or enclosed in a room, isolated from inside the thermal envelope. Such rooms shall be sealed and insulated in accordance with the envelope requirements of Table R402.1.2, where the walls, floors and ceilings shall meet not less than the basement wall *R*-value requirement. The door into the room shall be fully

INTERNATIONAL CODE COUNCIL®
Copyright © 2015 ICC. ALL RIGHTS RESERVED. Accessed by David Dammon on Jun 21, 2017 12:30:52 PM pursuant to License Agreement with ICC. No further reproduction or distribution authorized. ANY UNAUTHORIZED REPRODUCTION OR DISTRIBUTION IS A VIOLATION OF THE FEDERAL COPYRIGHT ACT AND THE LICENSE AGREEMENT, AND SUBJECT TO CIVIL AND CRIMINAL PENALTIES THEREUNDER.

gasketed and any water lines and ducts in the room insulated in accordance with Section R403. The combustion air duct shall be insulated where it passes through conditioned space to a minimum of R-8.

Exceptions:

1. Direct vent appliances with both intake and exhaust pipes installed continuous to the outside.
2. Fireplaces and stoves complying with Section R402.4.2 and Section R1006 of the *International Residential Code*.

❖ The entire set of provisions in the code for air leakage is of little value when a combustion air duct is installed, open to the conditioned space, virtually placing a large hole through the thermal envelope. Blower door testing as now required by the code cannot be accomplished with a combustion air opening inside the thermal envelope. Testers regularly block such openings as this is the only way they can pressurize the home; only to be opened after the test is completed. Ideally, direct vent, sealed combustion appliances solve the problem. Where less efficient, open combustion fuel burning appliances are used, it is reasonable and proper to isolate the appliances and the required combustion air from inside the thermal envelope.

R402.4.5 Recessed lighting. Recessed luminaires installed in the *building thermal envelope* shall be sealed to limit air leakage between conditioned and unconditioned spaces. All recessed luminaires shall be IC-rated and *labeled* as having an air leakage rate not more than 2.0 cfm (0.944 L/s) when tested in accordance with ASTM E 283 at a 1.57 psf (75 Pa) pressure differential. All recessed luminaires shall be sealed with a gasket or caulk between the housing and the interior wall or ceiling covering.

❖ To correctly apply this provision, it is important to realize that it deals only with recessed lights that are installed in the building thermal envelope. Therefore, lights that are located so that all sides of the luminaire are surrounded by conditioned space would not fall under this section's requirements. For example, a light located in a soffit would not be regulated if the soffit was below a ceiling that served as the building's thermal envelope. Additionally, a light installed in the floor/ceiling assembly between a first-floor living room and a bedroom above it would be exempted.

Because of their typical location of installation, recessed lighting fixtures pose a potential fire hazard if incorrectly covered with insulation. In addition, the ceiling or a barrier directly above it often serves as the air leakage or moisture barrier for the home.

Therefore, holes cut through the ceiling to install these fixtures also act as chimneys that transfer heat loss and moisture through the building envelope into attic spaces. The heat loss resulting from improperly insulated recessed lighting fixtures can be significant.

Recessed lighting fixtures must be insulation contact (IC) rated lights, which are typically double-can fixtures, with one can inside another (see Commentary Figure R402.4.5). The outer can (in contact with the insulation) is tested to make sure it remains cool enough to avoid a fire hazard. An IC-rated fixture should have the IC rating stamped on the fixture or printed on an attached label.

Recessed lights must also be tightly sealed or gasketed to prevent air leakage through the fixture into the ceiling cavity.

R402.5 Maximum fenestration *U*-factor and SHGC (Mandatory). The area-weighted average maximum fenestration *U*-factor permitted using tradeoffs from Section R402.1.5 or R405 shall be 0.48 in Climate Zones 4 and 5 and 0.40 in Climate Zones 6 through 8 for vertical fenestration, and 0.75 in Climate Zones 4 through 8 for skylights. The area-weighted average maximum fenestration SHGC permitted using tradeoffs from Section R405 in Climate Zones 1 through 3 shall be 0.50.

❖ This section is intended to clarify the application of the fenestration performance maximums and to set reasonable performance levels for these products when using the tradeoffs of Section R402.1.5 or R405.

This section does not define the minimum code requirements for fenestration *U*-factors that are set in Table R402.1.2. Rather, this section sets limits on the tradeoffs allowed based on the total UA calculations

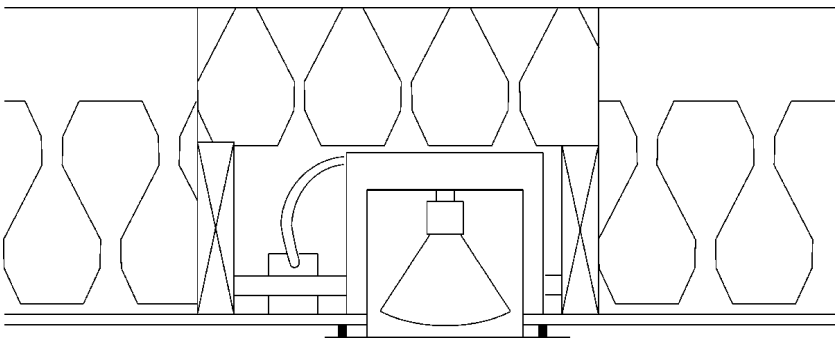

Figure R402.4.5
IC-RATED RECESSED LIGHT

INTERNATIONAL CODE COUNCIL®
Copyright © 2015 ICC. ALL RIGHTS RESERVED. Accessed by David Dammon on Jun 21, 2017 12:30:52 PM pursuant to License Agreement with ICC. No further reproduction or distribution authorized. ANY UNAUTHORIZED REPRODUCTION OR DISTRIBUTION IS A VIOLATION OF THE FEDERAL COPYRIGHT ACT AND THE LICENSE AGREEMENT, AND SUBJECT TO CIVIL AND CRIMINAL PENALTIES THEREUNDER.

(see Section R402.1.4) or the simulated performance option found in Section R405. This section is in contrast to the basic principle used in Section R402.1.5. Although that section allows a *U*-factor that does not meet the general code requirements to be offset by the increased efficiency of another part of the residence, this section establishes a limitation on the level of efficiency that can be compensated for.

Note that this section does not set a limit on individual products because Sections R402.3.1 and R402.3.2 are not affected. Rather, this section sets an overall limit on the weighted average of those products. These limits are often called "hard limits" or "maximum tradeoff" limits.

In situations where the code is applied to only a portion of the residence, such as only to the addition but not the existing residence, the weighted average could be calculated for just the addition (see commentary, Sections R402.3.1 and R402.3.2).

The thermal properties (*U*-factor) of skylights are different than those of window products. After installation, they perform differently than windows and are, therefore, rated differently. As a result, even the highest rated skylights cannot achieve the same level of *U*-factor performance as windows and glass doors. Therefore, the code provides different values for these "maximum" limits in the tradeoff.

The SHGC provisions are limited in the cooling-dominated climate zones. Therefore, where solar heat gain through the fenestration can affect the cooling load, comfort and efficiency, a "hard limit" of 0.5 would be applied when using Section R405.

SECTION R403
SYSTEMS

R403.1 Controls (Mandatory). At least one thermostat shall be provided for each separate heating and cooling system.

❖ This provision ensures that a separate thermostat is installed for each system. As an example, if separate systems are installed so that one serves the downstairs and one serves the upstairs of a two-story residence, two separate thermostats would be required, one regulating each level. This allows for greater flexibility, control and energy savings than would be possible if both systems were controlled by a single thermostat.

R403.1.1 Programmable thermostat. The thermostat controlling the primary heating or cooling system of the dwelling unit shall be capable of controlling the heating and cooling system on a daily schedule to maintain different temperature set points at different times of the day. This thermostat shall include the capability to set back or temporarily operate the system to maintain *zone* temperatures down to 55°F (13°C) or up to 85°F (29°C). The thermostat shall initially be programmed by the manufacturer with a heating temperature set point no higher than 70°F (21°C) and a cooling temperature set point no lower than 78°F (26°C).

❖ This code section provides each household an opportunity for energy savings by requiring a programmable thermostat that allows changing the temperature setpoints automatically throughout the day.

R403.1.2 Heat pump supplementary heat (Mandatory). Heat pumps having supplementary electric-resistance heat shall have controls that, except during defrost, prevent supplemental heat operation when the heat pump compressor can meet the heating load.

❖ Heat pump systems must have controls that prevent supplementary electric resistance heater operation when the heating load can be met by the heat pump alone. Typically, these controls will be thermostats that will have a "heat pump" designation on them. The make and model of the thermostat should be called out on the building plans so the inspector can verify that what is installed in the field matches the plans. Because change-outs in the field are common, the instructions that come with the thermostat can also be checked to verify that the thermostat is designed for use with a particular heat pump. To limit the hours of use of the electric-resistance heating unit and provide the most cost-efficient operation of the equipment, the specific control language is included in this section.

R403.2 Hot water boiler outdoor temperature setback. Hot water boilers that supply heat to the building through one- or two-pipe heating systems shall have an outdoor setback control that lowers the boiler water temperature based on the outdoor temperature.

❖ This section provides a requirement that gives each household with a hot water boiler an opportunity for energy savings by requiring a setback that will lower the temperature of the water based on ambient conditions.

R403.3 Ducts. Ducts and air handlers shall be in accordance with Sections R403.3.1 through R403.3.5.

❖ The five subsections of Section R403.3 provide the requirements of this chapter, which apply to the ducts and air handlers used in residential buildings.

R403.3.1 Insulation (Prescriptive). Supply and return ducts in attics shall be insulated to a minimum of R-8 where 3 inches (76 mm) in diameter and greater and R-6 where less than 3 inches (76 mm) in diameter. Supply and return ducts in other portions of the building shall be insulated to a minimum of R-6 where 3 inches (76 mm) in diameter or greater and R-4.2 where less than 3 inches (76 mm) in diameter.

Exception: Ducts or portions thereof located completely inside the *building thermal envelope.*

❖ HVAC ductwork located outside of the conditioned space must have insulation with minimum *R*-values of R-8 or R-6, depending on the size of the duct. This

INTERNATIONAL CODE COUNCIL®
Copyright © 2015 ICC. ALL RIGHTS RESERVED. Accessed by David Dammon on Jun 21, 2017 12:30:52 PM pursuant to License Agreement with ICC. No further reproduction or distribution authorized. ANY UNAUTHORIZED REPRODUCTION OR DISTRIBUTION IS A VIOLATION OF THE FEDERAL COPYRIGHT ACT AND THE LICENSE AGREEMENT, AND SUBJECT TO CIVIL AND CRIMINAL PENALTIES THEREUNDER.

includes both supply and return ducts. For areas other than attics, the values are R-6 and R-4.2. Energy losses are less in smaller ducts, therefore the *R*-value of the insulation is lower for ducts less than 3 inches in diameter.

The exception addresses the fact that ductwork in the thermal envelope is already protected from energy loss by virtue of being in the thermal envelope.

R403.3.2 Sealing (Mandatory). Ducts, air handlers and filter boxes shall be sealed. Joints and seams shall comply with either the *International Mechanical Code* or *International Residential Code*, as applicable.

Exceptions:

1. Air-impermeable spray foam products shall be permitted to be applied without additional joint seals.
2. For ducts having a static pressure classification of less than 2 inches of water column (500 Pa), additional closure systems shall not be required for continuously welded joints and seams, and locking-type joints and seams of other than the snap-lock and button-lock types.

❖ Ducts must be sealed in accordance with the duct sealing requirements of either the IMC or the code. Joints and seams that fail in a duct system can result in increased energy use because the conditioned air will be delivered to an unconditioned space or to a building space where it is not needed, such as a wall or floor assembly, crawl space or attic, instead of to a room or area inside the conditioned envelope. Return-air ductwork installed in basements or concealed building spaces may conduct chemicals or other products that produce potentially harmful fumes. Because the return air operates under negative pressure, any leaks could draw fumes, moisture, soil gases or odors from the surrounding area and direct them into the house. Therefore, sealing of return-air ductwork is also a requirement.

Duct tightness must be checked by leakage testing of the ducts at the end of construction or at the time of rough in. The pass/fail criteria for leakage rate is more stringent if the rough-in test time is chosen. This is simply because it is probably that some of the ductwork will be disturbed during subsequent construction and, therefore, have a higher leakage rate than what was tested.

R403.3.2.1 Sealed air handler. Air handlers shall have a manufacturer's designation for an air leakage of no more than 2 percent of the design air flow rate when tested in accordance with ASHRAE 193.

❖ This section of the code requires that air handlers have a manufacturer's designation for an air leakage of not more than 2 percent of the design flow rate when tested in accordance with ASHRAE 193. Energy conservation measures in the air-conditioning industry have driven the manufacturers of systems and components to establish compliance with leakage limits in ducts and air-handling units. The standards set by the American Society of Heating, Refrigerating and Air-conditioning Engineers (ASHRAE) form the basis for testing. Establishing an air-handler leakage rate, given the availability of a uniform test procedure, is prudent since any leakage in the air-handling unit contributes to waste of energy. The magnitude of leakage has a direct bearing on energy use and indoor air quality.

R403.3.3 Duct testing (Mandatory). Ducts shall be pressure tested to determine air leakage by one of the following methods:

1. Rough-in test: Total leakage shall be measured with a pressure differential of 0.1 inch w.g. (25 Pa) across the system, including the manufacturer's air handler enclosure if installed at the time of the test. All registers shall be taped or otherwise sealed during the test.
2. Postconstruction test: Total leakage shall be measured with a pressure differential of 0.1 inch w.g. (25 Pa) across the entire system, including the manufacturer's air handler enclosure. Registers shall be taped or otherwise sealed during the test.

   Exception: A duct air leakage test shall not be required where the ducts and air handlers are located entirely within the building thermal envelope.

A written report of the results of the test shall be signed by the party conducting the test and provided to the *code official*.

❖ Duct tightness must be checked by leakage testing at the end of construction or at the time of rough-in. This affords some flexibility to the builder. The test at the end of construction, if failed, could be more difficult to correct. However, the test after rough-in is more stringent as noted in the commentary to Section R403.3.4.

R403.3.4 Duct leakage (Prescriptive). The total leakage of the ducts, where measured in accordance with Section R403.3.3, shall be as follows:

1. Rough-in test: The total leakage shall be less than or equal to 4 cubic feet per minute (113.3 L/min) per 100 square feet (9.29 m^2) of conditioned floor area where the air handler is installed at the time of the test. Where the air handler is not installed at the time of the test, the total leakage shall be less than or equal to 3 cubic feet per minute (85 L/min) per 100 square feet (9.29 m^2) of conditioned floor area.
2. Postconstruction test: Total leakage shall be less than or equal to 4 cubic feet per minute (113.3 L/min) per 100 square feet (9.29 m^2) of conditioned floor area.

❖ The pass/fail criteria for the tested duct leakage rate is more stringent if the rough-in test time is chosen. This is simply because it is probable that some of the ductwork will be disturbed during subsequent construction and, therefore, have a higher leakage rate than what was tested.

INTERNATIONAL CODE COUNCIL®
Copyright © 2015 ICC. ALL RIGHTS RESERVED. Accessed by David Dammon on Jun 21, 2017 12:30:52 PM pursuant to License Agreement with ICC. No further reproduction or distribution authorized. ANY UNAUTHORIZED REPRODUCTION OR DISTRIBUTION IS A VIOLATION OF THE FEDERAL COPYRIGHT ACT AND THE LICENSE AGREEMENT, AND SUBJECT TO CIVIL AND CRIMINAL PENALTIES THEREUNDER.

R403.3.5 Building cavities (Mandatory). Building framing cavities shall not be used as ducts or plenums.

❖ Building framing cavities shall not be used as ducts or plenums. Stud bays and other building cavities that are exposed to the differing outside temperatures cannot be used as supply air ducts. In addition, these spaces are limited to use for return air only because the negative pressures in the return air plenum with respect to surrounding spaces will decrease the likelihood of spreading smoke to other spaces via the plenum. In addition, for many of the same reasons that sealing (Section R403.2.2) is required, building cavities are a very inefficient means of distributing air.

R403.4 Mechanical system piping insulation (Mandatory). Mechanical system piping capable of carrying fluids above 105°F (41°C) or below 55°F (13°C) shall be insulated to a minimum of R-3.

❖ Heat losses during mechanical fluid distribution impact building energy use both in the energy required to make up for the lost heat and in the additional load that can be placed on the space-cooling system if the heat is released to air-conditioned space. These losses can be effectively limited by insulating the mechanical system piping that conveys fluids at extreme temperatures.

R403.4.1 Protection of piping insulation. Piping insulation exposed to weather shall be protected from damage, including that caused by sunlight, moisture, equipment maintenance and wind, and shall provide shielding from solar radiation that can cause degradation of the material. Adhesive tape shall not be permitted.

❖ Proper protection of piping insulation exposed to the weather elements is necessary to prevent damage, including that due to sunlight, moisture, equipment maintenance and wind.

R403.5 Service hot water systems. Energy conservation measures for service hot water systems shall be in accordance with Sections R403.5.1 and R403.5.4.

❖ A review of the definition of "Service water heating" in Chapter 2 is appropriate before applying these requirements. Any time the system is set up to circulate the water through it, the piping is required to be insulated as listed in Section R403.5.2.

R403.5.1 Heated water circulation and temperature maintenance systems (Mandatory). Heated water circulation systems shall be in accordance with Section R403.5.1.1. Heat trace temperature maintenance systems shall be in accordance with Section R403.5.1.2. Automatic controls, temperature sensors and pumps shall be accessible. Manual controls shall be readily accessible.

❖ When the distribution piping is heated to maintain usage temperatures, such as in circulating hot water systems or systems using pipe heating cable, the system pump or heat trace cable must have conveniently located manual or automatic switches or other controls that can be set to optimize system operation or turn off the system during periods of reduced demand. The simplest of these devices is an automatic time clock. Notice, however, that the code will accept either a readily accessible manual switch or an automatic means to turn off the circulating pump.

R403.5.1.1 Circulation systems. Heated water circulation systems shall be provided with a circulation pump. The system return pipe shall be a dedicated return pipe or a cold water supply pipe. Gravity and thermo-syphon circulation systems shall be prohibited. Controls for circulating hot water system pumps shall start the pump based on the identification of a demand for hot water within the occupancy. The controls shall automatically turn off the pump when the water in the circulation loop is at the desired temperature and when there is no demand for hot water.

❖ Demand-activated circulation is an efficient energy conservation strategy, given that the code, the *International Plumbing Code*® (IPC®) and the IRC require that the hot water piping in automatic temperature maintenance systems in new buildings be insulated with pipe insulation. This means the water in the circulation loop will stay hot for a very long time—up to 45 minutes for $^3/_4$-inch nominal pipe and up to 2 hours for 2-inch nominal pipe—even if the circulating pump is shut off. If this is the case, there is no reason to run the pump when the water is still hot and no reason to run the pump when no one is in the building or when no one is demanding hot water. The only time it makes sense to run the pump is shortly before hot water is needed, hence the requirement that the pump be controlled on-demand.

R403.5.1.2 Heat trace systems. Electric heat trace systems shall comply with IEEE 515.1 or UL 515. Controls for such systems shall automatically adjust the energy input to the heat tracing to maintain the desired water temperature in the piping in accordance with the times when heated water is used in the occupancy.

❖ The requirements for heat trace are partly to ensure that the systems can be operated in the most energy-

TABLE R403.6.1
MECHANICAL VENTILATION SYSTEM FAN EFFICACY

FAN LOCATION	AIR FLOW RATE MINIMUM (CFM)	MINIMUM EFFICACY (CFM/WATT)	AIR FLOW RATE MAXIMUM (CFM)
Range hoods	Any	2.8 cfm/watt	Any
In-line fan	Any	2.8 cfm/watt	Any
Bathroom, utility room	10	1.4 cfm/watt	< 90
Bathroom, utility room	90	2.8 cfm/watt	Any

For SI: 1 cfm = 28.3 L/min.

INTERNATIONAL CODE COUNCIL®
Copyright © 2015 ICC. ALL RIGHTS RESERVED. Accessed by David Dammon on Jun 21, 2017 12:30:52 PM pursuant to License Agreement with ICC. No further reproduction or distribution authorized. ANY UNAUTHORIZED REPRODUCTION OR DISTRIBUTION IS A VIOLATION OF THE FEDERAL COPYRIGHT ACT AND THE LICENSE AGREEMENT, AND SUBJECT TO CIVIL AND CRIMINAL PENALTIES THEREUNDER.

efficient manner consistent with providing heated water to the occupancy. The referenced standards are included to ensure that installed systems are safe for the intended application. The energy consequences of using heat trace are very reasonable. An example is an analysis of a small (100-foot-long) loop. The energy requirements of keeping the trunk line hot, which is the same as keeping the supply portion of the loop hot in a circulating system, are 701 kWh per year, assuming 12 hours at high temp (115°F) and 12 hours at economy temp (105°F). This is equivalent to operating the loop about 3 hours per day, but with hot water available 24 hours a day/7 days a week in the supply trunk. This is a significant savings when water heating is done electrically or with a similarly expensive fuel. If the branches are also traced, heated water can be delivered even more quickly to the fixtures using only 1,682 kWh per year, which is the same energy as running the loop a little more than 6 hours a day.

R403.5.2 Demand recirculation systems. A water distribution system having one or more recirculation pumps that pump water from a heated water supply pipe back to the heated water source through a cold water supply pipe shall be a *demand recirculation water system*. Pumps shall have controls that comply with both of the following:

1. The control shall start the pump upon receiving a signal from the action of a user of a fixture or appliance, sensing the presence of a user of a fixture or sensing the flow of hot or tempered water to a fixture fitting or appliance.
2. The control shall limit the temperature of the water entering the cold water piping to 104ºF (40ºC).

❖ The purpose of this section is to clarify the requirements for installing circulation pumps in applications that use a cold water supply pipe to circulate the water back to the water heater. Demand recirculation water systems are significantly more energy efficient than other recirculation systems and are inherently safer when the cold water supply is used as the return. The greater safety comes from the fact that the controls specified for demand recirculation water systems limit the flow of water from the hot water supply into the cold water supply to only minutes a day and because they limit the temperature of the water that is allowed to go into the cold water supply.

R403.5.3 Hot water pipe insulation (Prescriptive). Insulation for hot water pipe with a minimum thermal resistance (*R*-value) of R-3 shall be applied to the following:

1. Piping $^{3}/_{4}$ inch (19.1 mm) and larger in nominal diameter.
2. Piping serving more than one dwelling unit.
3. Piping located outside the conditioned space.
4. Piping from the water heater to a distribution manifold.
5. Piping located under a floor slab.
6. Buried in piping.
7. Supply and return piping in recirculation systems other than demand recirculation systems.

❖ This section simply prescribes conditions where hot water piping needs to be provided with a minimum R-3 insulation.

R403.5.4 Drain water heat recovery units. Drain water heat recovery units shall comply with CSA B55.2. Drain water heat recovery units shall be tested in accordance with CSA B55.1. Potable water-side pressure loss of drain water heat recovery units shall be less than 3 psi (20.7 kPa) for individual units connected to one or two showers. Potable water-side pressure loss of drain water heat recovery units shall be less than 2 psi (13.8 kPa) for individual units connected to three or more showers.

❖ Drain water heat recovery is often a cost-effective way to add to energy efficiency by recapturing hot water energy that is literally "going down the drain." The proposed standards have already been in use by designers for 10 years and the resulting ratings are in use by a variety of energy efficiency programs. Commercial (i.e., nonmultiunit residential) applications are engineered systems while multiunit residential applications are nonengineered and straightforward.

CSA B55.2 standard is for fabrication and material quality of DWHR units. The CSA B55.1 standard is for testing and labeling of DWHR unit efficiency and pressure loss at 2.5 gpm (9.5 lpm).

R403.6 Mechanical ventilation (Mandatory). The building shall be provided with ventilation that meets the requirements of the *International Residential Code* or *International Mechanical Code*, as applicable, or with other approved means of ventilation. Outdoor air intakes and exhausts shall have automatic or gravity dampers that close when the ventilation system is not operating.

❖ Mechanical ventilation is the alternative to having natural ventilation. Both natural and mechanical ventilation can be provided to a space. Unlike natural ventilation, mechanical ventilation does not depend on unpredictable air pressure differentials between the indoors and outdoors to create airflow. The volume of air supplied to a space must be approximately equal to the volume of the air removed from the space. Otherwise, the space will be either positively or negatively pressurized and the actual ventilation flow rate will be equivalent to the lower rate of either the air supply or air exhaust.

The requirements of this section are intended to reduce infiltration into the building when ventilation systems are off. Infiltration speeds up natural cooling or warming of the space during off hours and can increase the energy use required to maintain normal temperatures.

Any outdoor air inlets or outlets serving fans, boilers and other HVAC systems equipped with an on/off switch that either introduces outside air into a building or exhaust air outside of a building must have dampers that automatically close when the fan is shut off. These dampers may be either gravity type or motor-

INTERNATIONAL CODE COUNCIL®
Copyright © 2015 ICC. ALL RIGHTS RESERVED. Accessed by David Dammon on Jun 21, 2017 12:30:52 PM pursuant to License Agreement with ICC. No further reproduction or distribution authorized. ANY UNAUTHORIZED REPRODUCTION OR DISTRIBUTION IS A VIOLATION OF THE FEDERAL COPYRIGHT ACT AND THE LICENSE AGREEMENT, AND SUBJECT TO CIVIL AND CRIMINAL PENALTIES THEREUNDER.

ized, regardless of whether the fan is supplying or exhausting air. One of the most common such dampers that is seen on homes is the gravity-type backdraft damper on a clothes dryer exhaust duct.

R403.6.1 Whole-house mechanical ventilation system fan efficacy. Mechanical ventilation system fans shall meet the efficacy requirements of Table R403.6.1.

Exception: Where mechanical ventilation fans are integral to tested and listed HVAC equipment, they shall be powered by an electronically commutated motor.

❖ This section of the code is applicable to whole-house mechanical ventilation systems that meet the efficacy requirements of Table R403.6.1. To reduce the amount of energy consumed by residential mechanical ventilation systems is to address the power consumption of the fans that are powering the system. This is important because these fans will operate many hours per day. The table offers energy efficacy levels for exhaust fans that are the same levels as current ENERGY STAR ventilation fan specifications.

R403.7 Equipment sizing and efficiency rating (Mandatory). Heating and cooling equipment shall be sized in accordance with ACCA Manual S based on building loads calculated in accordance with ACCA Manual J or other *approved* heating and cooling calculation methodologies. New or replacement heating and cooling equipment shall have an efficiency rating equal to or greater than the minimum required by federal law for the geographic location where the equipment is installed.

❖ Once the building's thermal envelope is properly insulated and sealed, it will often allow for the reduction of equipment size from what has typically been installed using a "rule-of-thumb" method or other means of estimating. A properly sized system will operate more efficiently, help improve occupant comfort and extend the equipment's service life. Section M1401.3 of the IRC stipulates that the heating and cooling equipment must be sized based on the building loads calculated in accordance with the ACCA Manual J. This manual contains a simplified method of calculating heating and cooling loads. It includes a room-by-room calculation method that allows the designer to determine the required capacities of the heating and cooling equipment. In addition, it provides a means to estimate the airflow requirements for each of the areas in the house. This estimate can be used in sizing the duct system for the types of heating and cooling units that use air as the medium for heat transfer. Other approved methods may be used with the code official's approval.

Though not required by the code, the calculated airflows would provide a means to evaluate the installation of the mechanical system. By providing the proper airflow to the various portions of the building, the system can operate more efficiently and can help prevent spaces from being too hot or too cold.

R403.8 Systems serving multiple dwelling units (Mandatory). Systems serving multiple dwelling units shall comply with Sections C403 and C404 of the IECC—Commercial Provisions in lieu of Section R403.

❖ The criteria in Section R403 primarily address standalone mechanical systems in single-family houses. However, for buildings, many residential building projects such as townhouses will have more complicated mechanical systems that may consist of a single system serving multiple dwelling units.

R403.9 Snow melt and ice system controls (Mandatory). Snow- and ice-melting systems, supplied through energy service to the building, shall include automatic controls capable of shutting off the system when the pavement temperature is above 50°F (10°C), and no precipitation is falling and an automatic or manual control that will allow shutoff when the outdoor temperature is above 40°F (4.8°C).

❖ Snow melt equipment is being installed at a greater frequency in residential projects in communities with high snow accumulation. Previously, the code only required that the building be built to a certain level of efficiency; however, there was no limit placed on the energy use for snow melt, which can be twice the energy use per square foot of the building.

This section does not restrict the use or sizing of snow melt, but it does require that controls be installed on the equipment so that the system will operate more efficiently. The automatic controls provide efficient operation by keeping the system in an idle mode until light snow begins to fall and allowing adequate warm-up before a heavy snowfall. Systems that only use manual controls require the building owner to manually turn on the system when it starts to snow or to leave the system running in the snow-melting mode, using significantly more energy. Chapter 50, Snow Melting and Freeze Protection, of the 2003 *ASHRAE Applications Handbook* states that using a manual switch to operate snow melt equipment may not melt snow effectively; thus, snow will accumulate. This requirement is also referenced in ANSI/ASHRAE/IESNA Standard 90.1, Section 6.4.3.8, Freeze protection and Snow/Ice Melting Systems.

R403.10 Pools and permanent spa energy consumption (Mandatory). The energy consumption of pools and permanent spas shall be in accordance with Sections R403.10.1 through R403.10.3.

❖ Because of the heating and filtering operations involved with pools and inground permanently installed spas, they provide a good opportunity to save energy by limiting heat loss or pump operation. This section provides the scoping requirements for the pool and spa heaters, time switches and pool covers that can make the operation more energy efficient. These features would provide energy savings for residential pools if their owners use them. The requirements of this section were added to the code in order to help coordinate with requirements found in ASHRAE 90.1 and to help reduce the energy used by these pools and inground permanently installed spa systems.

INTERNATIONAL CODE COUNCIL®
Copyright © 2015 ICC. ALL RIGHTS RESERVED. Accessed by David Dammon on Jun 21, 2017 12:30:52 PM pursuant to License Agreement with ICC. No further reproduction or distribution authorized. ANY UNAUTHORIZED REPRODUCTION OR DISTRIBUTION IS A VIOLATION OF THE FEDERAL COPYRIGHT ACT AND THE LICENSE AGREEMENT, AND SUBJECT TO CIVIL AND CRIMINAL PENALTIES THEREUNDER.

R403.10.1 Heaters. The electric power to heaters shall be controlled by a readily *accessible* on-off switch that is an integral part of the heater mounted on the exterior of the heater, or external to and within 3 feet (914 mm) of the heater. Operation of such switch shall not change the setting of the heater thermostat. Such switches shall be in addition to a circuit breaker for the power to the heater. Gas-fired heaters shall not be equipped with continuously burning ignition pilots.

❖ An accessible on-off switch allows heaters to be turned off when heat is not needed or when the pool or spa may not be used for a period of time.

R403.10.2 Time switches. Time switches or other control methods that can automatically turn off and on according to a preset schedule shall be installed for heaters and pump motors. Heaters and pump motors that have built-in time switches shall be in compliance with this section.

Exceptions:

1. Where public health standards require 24-hour pump operation.
2. Pumps that operate solar- and waste-heat-recovery pool heating systems.

❖ The use of a time switch or other control method to control the heater and pumps provides an easy system for pool and spa operations and energy savings. The application of Exception 1 is dependent on the requirements of the health department in the jurisdiction. Because these are often public pools and spas, the health department may require continuous filtering or circulation. Exception 2 grants a credit for using other systems that help the pool and spa operate more efficiently. Therefore, when solar- and waste-heat-recovery systems are used to heat the pool, the exception eliminates the time-switch requirement.

R403.10.3 Covers. Outdoor heated pools and outdoor permanent spas shall be provided with a vapor-retardant cover or other *approved* vapor-retardant means.

Exception: Where more than 70 percent of the energy for heating, computed over an operation season, is from site-recovered energy, such as from a heat pump or solar energy source, covers or other vapor-retardant means shall not be required.

❖ Where energy is used to heat a pool or a spa, a cover is required to help hold in the heat and keep it from being lost to the surrounding air. The level of protection or insulation that the cover must provide depends on the temperature to which the pool is heated. Any time a pool or spa is heated, the code will require a vapor-retardant pool cover. This type of cover is not required to provide any minimum level of insulation value. It simply will help hold some of the heat in, much like placing a lid on a pot. In situations where the pool is heated above 90°F (32°C), the cover must be insulated to the specified R-12 level. The exception is similar to that found in Section R403.10.2.

R403.11 Portable spas (Mandatory). The energy consumption of electric-powered portable spas shall be controlled by the requirements of APSP-14.

❖ This section coordinates the code with the *International Swimming Pool and Spa Code*® (ISPSC®). Both codes rely on APSP-14 for energy conservation requirements for portable spas. The standard addresses efficiency requirements for water heating equipment and water circulation pumps.

R403.12 Residential pools and permanent residential spas. Residential swimming pools and permanent residential spas that are accessory to detached one- and two-family dwellings and townhouses three stories or less in height above grade plane and that are available only to the household and its guests shall be in accordance with APSP-15.

❖ This section coordinates the code with the ISPSC. Both codes rely on APSP-15 for energy conservation requirements for residential pools and permanent residential spas. The standard addresses efficiency requirements for water heating equipment and water circulation pumps.

SECTION R404
ELECTRICAL POWER AND LIGHTING SYSTEMS

R404.1 Lighting equipment (Mandatory). Not less than 75 percent of the lamps in permanently installed lighting fixtures shall be high-efficacy lamps or not less than 75 percent of the permanently installed lighting fixtures shall contain only high-efficacy lamps.

Exception: Low-voltage lighting.

❖ Lighting accounts for roughly 12 percent of the energy used in residences relying on incandescent bulbs. Thus, this requirement is a substantial energy saver. Incandescent lighting—still used in the vast majority of residences—is the least energy efficient of all light types.

One more efficient lighting option is the compact fluorescent light (CFL). CFLs use about 80 percent less energy than standard incandescent lighting. Limiting this requirement to 75 percent of the lamps in a residence ensures there will be plenty of exceptions for situations where a CFL might not work as well, such as dimmable fixtures.

R404.1.1 Lighting equipment (Mandatory). Fuel gas lighting systems shall not have continuously burning pilot lights.

❖ Continuously burning pilots waste energy; therefore, the code does not use them.

SECTION R405
SIMULATED PERFORMANCE ALTERNATIVE (PERFORMANCE)

❖ Section R405 describes an alternative way to meet the code's goal of effective energy use based on

INTERNATIONAL CODE COUNCIL®
Copyright © 2015 ICC. ALL RIGHTS RESERVED. Accessed by David Dammon on Jun 21, 2017 12:30:52 PM pursuant to License Agreement with ICC. No further reproduction or distribution authorized. ANY UNAUTHORIZED REPRODUCTION OR DISTRIBUTION IS A VIOLATION OF THE FEDERAL COPYRIGHT ACT AND THE LICENSE AGREEMENT, AND SUBJECT TO CIVIL AND CRIMINAL PENALTIES THEREUNDER.

showing that the predicted annual energy use of a proposed design is less than or equal to that of the same home if it had been built to meet the prescriptive criteria in Sections R402 and R403. Section R406 does not prescribe a single set of requirements; rather, it provides a process to reach the energy-efficiency goal based on establishing equivalence with the intent of the code. Because of the level of detail required in the analysis, this method of design is not often used for residential buildings; however, with the changes that have been made in Section R402 and in newer editions of the DOE's REScheck software, Section R405 may become a more popular means of demonstrating code compliance. This section may allow designers to show that many of their current plans meet the overall code requirements even though individual components of the home fall below required code compliance levels.

When using this section and other performance options, the terms "standard reference design" and "proposed design" are used extensively. These terms can create confusion for some users, but they really are very easy to understand. The "proposed design" is exactly that. It is the building as it is proposed to be built, including building size and room configurations, window and wall assemblies, mechanical equipment, orientation, etc. It is essentially the building as it is shown on the construction documents (plans and specifications). The "standard reference design" is the same building configuration and orientation as the proposed design, but instead of matching the plans for the building as it will actually be built, the standard design is shown to only meet the minimum requirements of the code. For example, the standard reference design building in Climate Zone 4 would require that the walls and roof be insulated to a level of R-13 and R-38, respectively, based on the requirements in Table R402.1.2 (*U*-factors of 0.082 and 0.030 in accordance with Table R402.1.4). On the other hand, the proposed design may show that the intent is to install R-19 insulation in the walls and R-49 in the roof. Therefore, if everything else in the two buildings was identical, it would be easy to see in this example that the proposed design does exceed what is required by the code in the standard reference design.

There are two fundamental requirements for using the code. First, Section R405 compliance is based on total estimated annual energy usage across the major energy-using systems in a residential building: envelope, mechanical and service water heating. Note that Section R405 does not include lighting in the analysis process. Second, Section R405 compares the energy use of the proposed design to that of a standard reference design. As mentioned above, the standard reference design is the same building design as that proposed, except that the energy features required by the code (insulation, windows, HVAC, infiltration) are modified to meet the minimum prescriptive requirements in Sections R402 and R403. The standard reference design is used only for comparison and is never actually built.

Section R405 sets both general principles and specific guidelines for use in computing the estimated annual energy cost of the proposed and standard reference designs.

These guidelines constitute a large portion of Section R405 and are easily seen in Table R405.5.2(1). They are necessary to maintain fairness and consistency between the proposed and standard designs. Although the simulated performance alternative method is the most complex method, it gives the design professional the flexibility to introduce exterior walls, roof/ceiling components, etc., that do not meet the requirements of the prescriptive performance approach in Sections R402 and R403 but are considered acceptable where the annual energy use of the proposed building is equal to or less than that of the standard reference design building. Envelope features that lower energy consumption (window orientation, passive-solar features or the use of "cool" reflective roofing products in cooling-dominated climates) and mechanical and service water-heating systems that are more efficient than those required by the minimum prescriptive requirements in Sections R402 and R403 are used to offset the potentially high thermal transmittance of an innovative exterior envelope design in this instance.

The simulated performance alternative also allows energy supplied by renewable energy sources on the building site to be discounted from the total energy consumption of the proposed design building. Because renewable energy obtained on the site comes from nondepletable sources such as solar radiation, wind, plant byproducts and geothermal sources, its use is not counted as part of the proposed building's energy use. The definition of "Energy cost" in Section R202 and the provisions of Section R405.3 should be reviewed when dealing with renewable energy. Renewable energy that is purchased from an off-site source cannot be excluded and would be included within the definition of "energy cost."

R405.1 Scope. This section establishes criteria for compliance using simulated energy performance analysis. Such analysis shall include heating, cooling and service water heating energy only.

❖ This section simply indicates that the performance analysis can include not only building envelope performance (as is limited in Section R402.1.4) but that the tradeoffs can also include the energy used for heating, cooling and service water heating. The provisions of this section do not include an allowance for lighting energy to be included. If a designer wished to include lighting, it would be done under the alternative materials and methods provisions of Section R102 (see commentary, Section R102).

Section R405.1 establishes the terms of performance-based comparison for residential buildings. Under the Section R405 Simulated Performance

INTERNATIONAL CODE COUNCIL®
Copyright © 2015 ICC. ALL RIGHTS RESERVED. Accessed by David Dammon on Jun 21, 2017 12:30:52 PM pursuant to License Agreement with ICC. No further reproduction or distribution authorized. ANY UNAUTHORIZED REPRODUCTION OR DISTRIBUTION IS A VIOLATION OF THE FEDERAL COPYRIGHT ACT AND THE LICENSE AGREEMENT, AND SUBJECT TO CIVIL AND CRIMINAL PENALTIES THEREUNDER.

approach, the candidate building (proposed design) is evaluated based on the cost of energy used. In simple terms, Section R406 states: build the residence any way as long as it is designed to use no more energy than a home built exactly to the minimum requirements in Sections R402 and R403.

This performance option can also be used to take advantage of energy-efficiency improvements that are only partly reflected in the total UA (sum of *U*-factor times the assembly area) of the residence, which is found in Section R402.1.4. For example, in a cooling climate, reduction in ceiling UA will save more energy than an equal reduction in slab UA. This energy savings occurs because cooling climates have ground temperatures that approach comfortable indoor temperatures, diminishing the value of slab insulation for such climates. In contrast, the ceiling insulation in cooling climates usually receives higher solar loads during the warmest part of the day, increasing the value of ceiling insulation. Therefore, in cooling climates, a change in ceiling UA (perhaps adding more ceiling insulation) may have a substantially greater impact on energy use than the same UA change in slab-edge insulation.

A variety of calculation methods can be used to show compliance under the simulated performance alternative approach. The calculations can be complex; for example, a detailed building energy simulation tool covering all aspects of building energy use. Much of Section R405 deals with establishing guidelines for defining aspects of the various sophisticated calculations that form the basis of the annual energy-use comparison. Alternatively, the analysis can be a simple calculation or correlation focused on one aspect of energy use. Where a method of analysis does not calculate, model or estimate a specific energy-using feature, it cannot be used for tradeoffs based on that specific feature. For example, software using degree-day-based climate and building envelope calculations does not specifically account for water heater energy use. Therefore, this type of software cannot be used to take credit for a high-efficiency water heater. Note, however, that software using degree-day-based climate and building envelope calculations accounts for changes in insulation levels; therefore, it could be used for an insulation tradeoff under the simulated performance approach.

The use of Section R405 to show compliance is not required by all homes with special features designed to save energy. Very energy-efficient designs may not give credit for all of the design's features to show compliance. For example, a highly energy-efficient, passive solar home may be so well insulated and have such low glazing *U*-factors that those items alone may be sufficient to show compliance with the energy-related requirements in the code by using only UA computations or by meeting the prescriptive requirements of Sections R402 and R403. Because of these very efficient elements, compliance may be shown by using the prescriptive provisions or the easier UA computations instead of a more complex evaluation, which would include the other energy-using subsystems in the building.

R405.2 Mandatory requirements. Compliance with this section requires that the mandatory provisions identified in Section R401.2 be met. All supply and return ducts not completely inside the *building thermal envelope* shall be insulated to a minimum of R-6.

❖ This section serves as a reminder of the requirements found in Section R101.3. When using Section R405, compliance with the various mandatory provisions in this chapter is still required. The sections that must be complied with separately include items that often cannot be effectively modeled. When using Section R405, it is important to review the provisions of Section R402.5, which place "hard limits" on the fenestration *U*-factors and SHGC that may be used for tradeoffs (see commentary, Section R402.5).

R405.3 Performance-based compliance. Compliance based on simulated energy performance requires that a proposed residence (*proposed design)* be shown to have an annual energy cost that is less than or equal to the annual energy cost of the *standard reference design.* Energy prices shall be taken from a source *approved* by the *code official,* such as the Department of Energy, Energy Information Administration's *State Energy Price and Expenditure Report. Code officials* shall be permitted to require time-of-use pricing in energy cost calculations.

> **Exception:** The energy use based on source energy expressed in Btu or Btu per square foot of *conditioned floor area* shall be permitted to be substituted for the energy cost. The source energy multiplier for electricity shall be 3.16. The source energy multiplier for fuels other than electricity shall be 1.1.

❖ The general procedure is to show that the annual energy cost for the building is less than the annual energy cost of a building that just meets the prescriptive requirements. The applicant must estimate the annual energy cost for two buildings: the one to be built and the standard reference design building. Because the two are compared on the basis of annual energy costs, designs that have lower demand charges or use energy when rates are lower may be able to gain an advantage using Section R405. It is also common to equate energy sources on the basis of cost because energy bills are the principal motivator for energy efficiency. An annual energy analysis could be used to compare a wide variety of energy-using features and conservation opportunities for the candidate building. The annual energy use can be used to trade off insulation; window/door areas; *U*-factors; HVAC equipment efficiency; water heating efficiency; infiltration control measures; duct insulation and sealing; pipe insulation and renewable energy technologies; or new energy technologies. Appliances not regulated by the code (refrigerators, dishwashers, clothes-washing machines, residential lighting) are not eligible for tradeoffs under this chapter.

INTERNATIONAL CODE COUNCIL®
Copyright © 2015 ICC. ALL RIGHTS RESERVED. Accessed by David Dammon on Jun 21, 2017 12:30:52 PM pursuant to License Agreement with ICC. No further reproduction or distribution authorized. ANY UNAUTHORIZED REPRODUCTION OR DISTRIBUTION IS A VIOLATION OF THE FEDERAL COPYRIGHT ACT AND THE LICENSE AGREEMENT, AND SUBJECT TO CIVIL AND CRIMINAL PENALTIES THEREUNDER.

The approach in this section is targeted for use in residences with energy-saving features that are not reflected in the UA or overall U-factor. Examples of features that lower energy consumption but not U-factor include high-efficiency HVAC systems; windows predominantly oriented toward the south; passive solar features; highly reflective ("cool") roofing products in cooling-dominated climates; and renewable energy sources such as photovoltaic, geothermal heat pumps and wind farms.

A building will comply with the requirements of the code and be acceptable when the annual energy cost of the proposed design is less than or equal to the annual energy cost of the standard design. The following sections will provide additional information and guidance related to the standard reference design and the design to which it is compared.

The purpose of the exception is to allow the use of source energy as an alternative metric to energy cost for compliance with the performance provisions.

Adding source energy as an alternative to energy cost offers many benefits to compliance, as follows:

- Using cost will be a liability to the home builder if home buyers do not achieve the savings listed in the compliance documentation.
- Energy cost changes frequently. This means that a home that complies today may not comply a few months from now if costs change.
- Energy cost focuses attention on first-year energy costs, which misses the point of an energy code where features that are generally life-cycle cost effective to the homeowner are added to save energy and make homes more comfortable over the life of the home, not to reduce first cost.

The source multipliers of 3.16 and 1.1 are from the 2002 *DOE Core Databook*. One way to think of this is that electric energy utilized at the site requires 3.16 times the source energy to produce the electricity at power plants and distribute via power lines to homes. This is because the efficiency of power plants is much less than 100 percent and there are losses in transmission and distribution as well. Other fuels, such as natural gas and fuel oil, have less source energy losses and a lower source energy multiplier.

Standard Reference Design

This section reiterates the simulated performance approach's strong reliance on principles established in Sections R402 and R403 as the foundation for the baseline level of energy efficiency established in the code. Therefore, all tradeoffs are judged against the prescriptive requirements of the standard reference design. Accordingly, insulation levels for the standard design building are set by the prescriptive requirements in Section R402 and are generally based on the values in Table R402.1.4. To discourage designers from picking a combination for the standard design that results in an inflated energy budget, thus permitting easy compliance by the proposed design (i.e., gaming), general principles and specific guidelines are given for various energy-using systems of the building [see Table R405.5.2(1)].

The entries in Table R405.5.2(1) for the envelope and fenestration requirements assist the code user in defining the standard reference design without bias. This is especially true in southern climates, where air-conditioning requirements are significant. In these cooling-dominated climates, where *U*-factor requirements are relatively high, residences with very large window areas and virtually no wall insulation can comply with the code through the use of windows with very low *U*-factors. This results in excessive air-conditioning costs in these climates because unshaded windows, dominated by solar heat gain, are required to meet only the code thermal-resistance and solar heat gain requirements. As a result, it is possible to construct residences in these climates with limited wall insulation, as long as windows with high thermal resistance and low SHGC are used.

The Table R405.5.2(1) entries for the building's thermal envelope components and fenestration are necessary to pin down the overall energy consumption of the standard design as described in Section R402. Without the guidance provided by these entries, the areas and *U*-factors of the windows and building thermal envelope could assume a multitude of different values and still satisfy Section R402 requirements. Furthermore, different values for these components would result in different overall energy cost levels for the standard design. The annual energy cost of the standard design represents the maximum "budget" the proposed design must meet. Without specific details of the standard reference design's features and components, this budget becomes a moving target and will allow a designer to pick a combination for the standard design that results in a very large energy budget, thus permitting the proposed design to easily comply with Section R405 but not meet the energy conservation levels intended in the code.

Proposed Design

In general, the proposed design is the building that will be constructed exactly as it is shown in the plans and construction documents. Therefore, most of the entries for Table R405.5.2(1) will be "as proposed." There are, however, some sections that must match what is required or used for the standard reference design. The proposed design must be similar in many characteristics to the standard design. Otherwise, it may not provide an "apples-to-apples" comparison, thereby limiting the value of this method in demonstrating that the proposed design truly is more effi-

INTERNATIONAL CODE COUNCIL®
Copyright © 2015 ICC. ALL RIGHTS RESERVED. Accessed by David Dammon on Jun 21, 2017 12:30:52 PM pursuant to License Agreement with ICC. No further reproduction or distribution authorized. ANY UNAUTHORIZED REPRODUCTION OR DISTRIBUTION IS A VIOLATION OF THE FEDERAL COPYRIGHT ACT AND THE LICENSE AGREEMENT, AND SUBJECT TO CIVIL AND CRIMINAL PENALTIES THEREUNDER.

cient. Some of the items that must be comparable include:

1. The standard and proposed designs must use the same energy sources (fuels) for the same function. For example, a gas-heated standard design cannot be compared to an electrically heated proposed design.
2. The areas of the building components (ceiling, wall and floor), including the building's shape, configuration and orientation, must all remain the same in both the standard and proposed designs.
3. Both the standard and proposed designs must assume the same outdoor and comfort indoor climate conditions.
4. Both the standard and proposed designs must assume the same occupant diversity and usage patterns; for example, the same thermostat set points, water usage, internal gains, etc.

The exception in Section R405.3 is important to understand because some jurisdictions may require the comparison to be done on the basis of "site energy" versus "annual energy cost." Because of the fact that utility charges for various types of energy can change over time, some code officials may prefer that the comparison be made based on the amount of energy delivered to the home instead of the cost of that energy.

The code establishes the effective use of site energy as opposed to primary (a.k.a., source) energy as a goal and then delineates specific criteria, both prescriptive and performance based, for meeting that goal. Primary energy is defined as the amount of energy delivered to a sector adjusted to account for the energy sources used to produce the energy (e.g., energy used to generate electricity). Included also is the energy lost in delivering the fuel to a customer; for instance, the electricity lost in the transmission and distribution of electricity. Site (delivered) energy is the amount of energy delivered to a household. Energy generation, transmission and distribution losses are not included. Primary energy is useful to show the ultimate resource impact of sectoral energy demand with respect to global particulate contributions of carbon dioxide, for example. Site energy is necessary if one wants to know what is going on inside the building. In this case, fuel choice does matter; oil-heated homes may consume more site energy than electrically heated homes, for instance.

From an economist's perspective, using energy cost instead of primary or site energy is preferable. Deregulation will affect the choice of fuels and households will decide what to consume. This view assumes that competitive pressures will ultimately equalize prices. This primary-versus-site debate centers on electricity, but losses are also associated with other energy sources. For example, one could take distillate fuel oil all the way back to the refinery, even factoring in energy losses in the fuel delivery trucks. So while Section R405 will generally require the comparison to be based on the annual energy cost for the homeowner, some jurisdictions prefer to know the amount of energy delivered and not the cost. Regardless of which comparison basis is used, it is clearly the intent of Section R405 to require the effective use of energy.

This exception permits equating different energy sources on the basis of the site energy. Site energy is energy use measured at the building boundary. For designs under Section R405, site energy is input to the heating, cooling-service and water-heating equipment.

As mentioned earlier, it is common to equate energy sources on the basis of cost because energy bills are the principal motivator for energy efficiency and, over time, the market will move to the more economical energy source. The results of using either energy cost or delivered "site energy" tend to be similar. The use of tradeoffs based on energy costs may be preferable in cooling-dominated climates. The cost of a unit of gas is commonly much less than the same unit of electricity; therefore, equating fossil fuels and electricity in terms of heat content may not reflect the interest of the building owner based primarily on the applicable utility rate structures and tariffs. In southern climates, the use of site-energy-based tradeoffs tends to overcredit changes in heating energy use and undercredit changes in cooling energy use. The intent of the code to "achieve the effective use of energy" (see Section R101.3) can be preserved through the use of an annual energy cost or site-energy-based comparison. The use of site energy, or delivered energy, as the basis for the comparison under Section R405 requires the approval of the code official.

R405.4 Documentation. Documentation of the software used for the performance design and the parameters for the building shall be in accordance with Sections R405.4.1 through R405.4.3.

❖ This section provides a list of the minimum information needed to demonstrate compliance with code requirements. The three subsections in Section R405.4 list the minimum level of information needed for this purpose. Because much of the information and software used for the performance option must be approved by the code official, the jurisdiction should be consulted to see if any additional information may be required (see commentary, Section R405.6.2).

A review of the code requirements of Section R104 should also be included when looking at Section R405.4. The construction documents must contain the data necessary to confirm that the results of the design have been incorporated into the construction documents and also to allow assessment of compliance. This is of particular importance when coupled with performing a comprehensive plan review given the sometimes very lengthy and sophisticated sub-

INTERNATIONAL CODE COUNCIL®
Copyright © 2015 ICC. ALL RIGHTS RESERVED. Accessed by David Dammon on Jun 21, 2017 12:30:52 PM pursuant to License Agreement with ICC. No further reproduction or distribution authorized. ANY UNAUTHORIZED REPRODUCTION OR DISTRIBUTION IS A VIOLATION OF THE FEDERAL COPYRIGHT ACT AND THE LICENSE AGREEMENT, AND SUBJECT TO CIVIL AND CRIMINAL PENALTIES THEREUNDER.

mittals required by the energy-efficiency method (see commentary, Section R104). Though not listed in the code, some state laws may require that the design of the building construction and, in this case, the development of a comparative building-energy analysis be done by a registered design professional in accordance with the licensing laws of the state where the work takes place.

In such states, the code official should consider and enforce the requirement to coordinate with state licensing laws that often establish thresholds for when the services of a registered design professional are required.

R405.4.1 Compliance software tools. Documentation verifying that the methods and accuracy of the compliance software tools conform to the provisions of this section shall be provided to the *code official*.

❖ This section is essentially a general requirement that where software is used to demonstrate compliance under Section R405, the software be shown to provide accurate comparisons and results. Many of the software systems that may be used will be familiar and readily acceptable to the code official. Where a less commonly used software is proposed for use, the code official will need to be shown that the software performs its intended function and is accurately comparing the standard reference and proposed designs.

R405.4.2 Compliance report. Compliance software tools shall generate a report that documents that the *proposed design* complies with Section R405.3. A compliance report on the *proposed design* shall be submitted with the application for the building permit. Upon completion of the building, a compliance report based on the as-built condition of the building shall be submitted to the *code official* before a certificate of occupancy is issued. Batch sampling of buildings to determine energy code compliance for all buildings in the batch shall be prohibited.

Compliance reports shall include information in accordance with Sections R405.4.2.1 and R405.4.2.2. Where the *proposed design* of a building could be built on different sites where the cardinal orientation of the building on each site is different, compliance of the *proposed design* for the purposes of the application for the building permit shall be based on the worst-case orientation, worst-case configuration, worst-case building air leakage and worst- case duct leakage. Such worst-case parameters shall be used as inputs to the compliance software for energy analysis.

❖ The approved software should be able to demonstrate that the proposed design has an annual energy cost that is either less than or equal to that of the standard reference design. The code requires that a compliance report be submitted on two occasions: at the time of permit application, to verify that the proposed design complies with the code; and at the end of the project before the certificate of occupancy is issued, to verify that the "as-built" building complies with the code.

R405.4.2.1 Compliance report for permit application. A compliance report submitted with the application for building permit shall include the following:

1. Building street address, or other building site identification.
2. A statement indicating that the *proposed design* complies with Section R405.3.
3. An inspection checklist documenting the building component characteristics of the *proposed design* as indicated in Table R405.5.2(1). The inspection checklist shall show results for both the *standard reference design* and the *proposed design* with user inputs to the compliance software to generate the results.
4. A site-specific energy analysis report that is in compliance with Section R405.3.
5. The name of the individual performing the analysis and generating the report.
6. The name and version of the compliance software tool.

❖ Providing the address of the project will not only help in the tracking of the project and various permits, but it also ensures that the calculations run were for the intended project and not based on a project that may not be applicable. While it may be possible to run a calculation based on a stock set of plans [see orientation provisions in Table R405.5.2(1)], the best way to provide a truly accurate comparison is to provide a site-specific evaluation, as required in Item 4.

Item 2 provides the primary information from which approval will be granted. A summary must be submitted showing how the annual energy cost of the proposed design compares to the annual energy cost of the standard design. The comparison summary must include, as a minimum, annual energy cost by design (standard versus proposed) and could include the fuel type (electric versus gas versus renewable sources) if it was a part of a trade-off.

Besides showing the actual comparison between the two designs, Item 3 requires an inspection checklist that can be used by the inspector to ensure that the proposed design matches what is actually constructed in the field. This checklist addresses the details of construction on which the comparison was conducted. See Section R405.4.3, Item 1, for the equivalent requirement for the standard reference design. These two sections not only ensure that the comparison is accurate but also provide information so that the comparison can be run again and verified if needed. While it would be best if the checklist included information for all of the items listed in Table R405.5.2(1), it is only necessary that the information is provided for items that are compared or for which trade-offs are based or taken.

Because various versions of software can include different inputs or evaluations, it is important that both the name and version of the software be provided. Changes to new or an updated version of existing software could often provide different results. Listing

INTERNATIONAL CODE COUNCIL®
Copyright © 2015 ICC. ALL RIGHTS RESERVED. Accessed by David Dammon on Jun 21, 2017 12:30:52 PM pursuant to License Agreement with ICC. No further reproduction or distribution authorized. ANY UNAUTHORIZED REPRODUCTION OR DISTRIBUTION IS A VIOLATION OF THE FEDERAL COPYRIGHT ACT AND THE LICENSE AGREEMENT, AND SUBJECT TO CIVIL AND CRIMINAL PENALTIES THEREUNDER.

the software edition helps the code official evaluate the report and also provides the information to conduct a verification review if necessary.

R405.4.2.2 Compliance report for certificate of occupancy. A compliance report submitted for obtaining the certificate of occupancy shall include the following:

1. Building street address, or other building site identification.
2. A statement indicating that the as-built building complies with Section R405.3.
3. A certificate indicating that the building passes the performance matrix for code compliance and listing the energy saving features of the buildings.
4. A site-specific energy analysis report that is in compliance with Section R405.3.
5. The name of the individual performing the analysis and generating the report.
6. The name and version of the compliance software tool.

❖ The items required for the compliance report for obtaining the certificate of occupancy are basically the same as those required for the permit application, except that the report is based on the "as-built" condition of the building. During the course of construction, changes in the windows, type of insulation, equipment or building dimensions are all required to be documented and approved. The changes must be approved based on compliance with the code and the original design. At the end of the day, however, one must verify that the changes made did not have a negative impact on the performance of the building, as analyzed before the permit application.

R405.4.3 Additional documentation. The *code official* shall be permitted to require the following documents:

1. Documentation of the building component characteristics of the *standard reference design.*
2. A certification signed by the builder providing the building component characteristics of the *proposed design* as given in Table R405.5.2(1).
3. Documentation of the actual values used in the software calculations for the *proposed design.*

❖ The items in this section are not automatically required as those of Sections R405.4.1 and R405.4.2 but are instead only required when the code official wishes them to be. Item 1 provides information related to the standard reference design similar to what Section R405.4.2.2, Item 2, provides for the proposed design. Having this information allows the code official or designer to easily replicate the calculations if additional verification reviews or changes are needed.

Item 2 can be useful in a couple of ways. It can be used not only by the inspector, similar to the checklist in Section R405.4.3, Item 2, but it helps to ensure that items that may not be seen by or visible to the inspector have been installed as proposed. This certification can essentially be considered the same as the builder stating the as-built structure complies with the proposed and originally approved design plans.

Item 3 provides for a possible need to check input values for computer programs utilized. This enables the plan checker to readily verify compliance with the basic requirements of the code.

R405.5 Calculation procedure. Calculations of the performance design shall be in accordance with Sections R405.5.1 and R405.5.2.

❖ The provisions of this section simply ensure that comparisons between the standard reference design and the proposed design are accurate and reflect an "apples-to-apples" comparison.

R405.5.1 General. Except as specified by this section, the *standard reference design* and *proposed design* shall be configured and analyzed using identical methods and techniques.

❖ Items that are not involved in the tradeoffs must be comparable between the standard reference design and the proposed design. This helps to ensure that the energy savings are truly based on the differences from Table R405.5.2(1) that are being evaluated. Though it should go without saying, the same calculation method or software must be used to estimate the annual energy usage for space heating and cooling of the standard design and the proposed design. The calculation tool must be approved by the code official. A jurisdiction may want to make known the methods it prefers for comparing annual energy use. The code official retains the authority to determine whether a specific set of computations for a particular residence is acceptable. The use of Section R405 is optional; therefore, the applicant is free to choose the method for achieving compliance (see commentary, Sections R101.3 and R401.2). Regardless, the calculation procedure used to evaluate the standard design must also be used to evaluate the proposed design.

R405.5.2 Residence specifications. The *standard reference design* and *proposed design* shall be configured and analyzed as specified by Table R405.5.2(1). Table R405.5.2(1) shall include, by reference, all notes contained in Table R402.1.2.

❖ While the majority of Section R405 addresses the process to evaluate the standard design and proposed design, this section serves as the backbone of Section R405 and the information on which the comparisons are conducted. Tables R405.5.2(1) and R405.5.2(2) provide the list of items that are compared and establish not only the requirements for the standard design but also give a good view of what items may be included and evaluated for tradeoffs. The determination of requirements and application of the various items is fairly easy to follow due to the way the components are listed in separate rows of the table. Under Section R405, only these items may differ between the proposed and standard reference

INTERNATIONAL CODE COUNCIL®
Copyright © 2015 ICC. ALL RIGHTS RESERVED. Accessed by David Dammon on Jun 21, 2017 12:30:52 PM pursuant to License Agreement with ICC. No further reproduction or distribution authorized. ANY UNAUTHORIZED REPRODUCTION OR DISTRIBUTION IS A VIOLATION OF THE FEDERAL COPYRIGHT ACT AND THE LICENSE AGREEMENT, AND SUBJECT TO CIVIL AND CRIMINAL PENALTIES THEREUNDER.

design. As discussed in the commentary to Section R405.1, if there are any additional components or features for which a designer wishes to make a tradeoff, the approval of such items would need to be based on Section R102.

The information that is determined for Tables R405.5.2(1) and R405.5.2(2) would be the type of information needed for both Sections R405.4.2.2, Item 2, and R405.4.3, Item 1.

TABLE R405.5.2(1). See page R4-41.

❖ As discussed in the commentary to Section R405.5.2, this table serves as the backbone of the requirements for Section R405. By comparing the annual energy cost of a standard reference design to that of a proposed design, designers may trade off the efficiency of one element or component for an increased efficiency in another.

The column dealing with "building components" helps to distinguish what building elements may be considered and included in the performance option of Section R405. The column labeled "Standard Reference Design" provides details used to determine the annual energy cost serving as the maximum energy cost that the proposed design could use. This column simply states how the standard design home is to be configured and treated in the simulations that will compare it to the proposed design home. This column simply ensures that comparisons between the two designs truly are based on a plan that meets the intended performance of the code. The "Proposed Design" column represents the home for which compliance is trying to be determined. As indicated, most of the items in a proposed design will be "as proposed." There are a few entries in this column where the proposed design must use the same values as the standard design. These items are restricted so that a fair comparison is provided and so that the design parameters may not simply be changed in an attempt to show improved efficiency. Additional comments about the table or specific component requirements are as follows:

Walls, roofs and fenestration: Similar to Sections R402.1 and R402.3, this table separates the impact of solar gains for fenestration such as windows or energy loss through windows and doors from the impact of wall *U*-factors. The provisions simply ensure that each component of the building's thermal envelope is evaluated separately.

Walls, floors, ceilings and roofs: To avoid gaming the comparison, the areas of these items must be the same in both designs. No valid comparison of the proposed and standard designs can be made if the size of the two designs is not equal.

Foundations: This section explicitly requires the foundation and on-grade floor type be the same for both designs. Without this provision, the possibility for the designer to select a less energy-efficient foundation or floor type (including modeling a floor system over a heated space) for the standard design and a more energy-efficient foundation type for the proposed design is left open. Under this circumstance, heat loss for the proposed design would be much less significant because of the lower heat loss through the foundation. The resulting loss "credit" results in less insulation being required for the proposed design. This type of credit is prohibited because the designer may not have intended to use the unfavorable foundation in the first place.

Doors: The amount of door area and the orientation for the door are specified. Whether the door is glazed or opaque is not a consideration for the standard design because the area of glazing is dealt with under a separate entry. By requiring the door to be on the north orientation, the effects of SHGC on a glazed door are minimized.

Glazing: This requirement exists in response to strong evidence showing that glazing area and geometry have some impact on the building's overall thermal transmittance, and that solar heat gain through windows constitutes a large portion of the air-conditioning load (typically 25 percent) in southern climates.

The area limitations help to ensure that the glazing areas are not manipulated to affect the efficiency of the various designs. The proposed glazing area limitation of 18 percent of the conditioned floor area of the residence is identical to the requirement of the Home Energy Rating System Council Guidelines (Version 2) for its standard design, and is equal to the maximum window area that was allowed by ASHRAE Standard 90.2-1993 for its standard design.

The code language, found in Note a, indicating that the glazing area includes the sash, framing and glazing is needed for completeness and clarification. The NFRC guidelines on window labeling require that window performance ratings be based on the full window system product. In other words, the *U*-factor, SHGC, visible light transmittance, air leakage and other properties of the window must be based on the combined impacts of both the glazing and its associated opaque constituents (defined here as "sash").

Orientation significantly affects the annual energy consumption on a building and is critical to achieving an optimum passive solar design. This section recognizes that building energy consumption is affected by orientation and that an orientation change of the glazing could be a way to manipulate the standard reference design so that it uses an increased amount of energy or gains an increased advantage by limiting solar heat gain.

Experimental evidence using eight cardinal exposures with equal glazing areas for the standard design as input for simulation programs shows that the procedure is inconvenient with very small increases in accuracy. Due to this, the four cardinal exposures are sufficient for achieving solar neutrality on the standard design. Because the percentage of glass-area facing in a particular orientation can vary significantly on a

INTERNATIONAL CODE COUNCIL®
Copyright © 2015 ICC. ALL RIGHTS RESERVED. Accessed by David Dammon on Jun 21, 2017 12:30:52 PM pursuant to License Agreement with ICC. No further reproduction or distribution authorized. ANY UNAUTHORIZED REPRODUCTION OR DISTRIBUTION IS A VIOLATION OF THE FEDERAL COPYRIGHT ACT AND THE LICENSE AGREEMENT, AND SUBJECT TO CIVIL AND CRIMINAL PENALTIES THEREUNDER.

proposed design, the actual orientations are needed for accuracy. The difference in a large amount of glazing facing directly south, versus southwest, will significantly increase annual energy use, peak loads and the time the peak loads occur. The trend is that the more passive solar techniques are applied to the building, the more important the orientation becomes.

The section establishes an SHGC standard of 0.4 for glazed fenestration products in climates with significant cooling loads. Specifically, this requirement applies to warmer climates (Climate Zones 1 through 3). As a result, this requirement applies throughout much of the southern region of the United States in Oklahoma, Arkansas, Tennessee and North Carolina and extending as far north as the warmer parts of California and Nevada. Although Table R402.1.2 does not require an SHGC in Climate Zones 4 through 8, this table establishes a requirement of 0.40 for these climate zones. When applying the SHGC provisions of the standard design, remember the application of Note e in Table R402.1.2 for Climate Zone 3, Marine.

This section explicitly addresses interior shading and limits considering the benefits of it on the performance of windows in residences. The term "interior shading" hours and the values to be used are specified. Most homeowners use some form of interior window treatment, such as drapes, blinds or shades, on their windows. In addition to their decorative aspects, drapes and curtains have been traditionally used by homeowners to control privacy and daylight, provide protection from overheating and reduce the fading of fabrics. To most effectively reduce solar heat gain, the drapery used to block the sunlight should have high reflectance and low transmittance. A densely woven, light-colored fabric would achieve this objective. Drapes can reduce the SHGC of clear glass from 20 to 70 percent, depending on the color and openness of the drapery fabric. The impact of drapery on solar heat gain is proportionally lessened if the window glass is shaded or tinted. The main disadvantage of drapes and other interior devices as solar control measures is that once the solar energy has entered a window, a large proportion of the energy absorbed by the shading system will remain inside the house as heat gain. Interior devices are thus most effective when they are highly reflective, with minimum absorption of solar energy. Interior shading devices, such as blinds and shades, primarily provide light and privacy control but also can have an impact on controlling solar heat gain. They include horizontal Venetian blinds, mini blinds, vertical slatted blinds of various materials, a wide variety of pleated and honeycomb shades and roll-down shades. White- or silver-colored blinds, coupled with clear glass, have the greatest potential for reducing solar heat gains. Some manufacturers have offered window-unit options that include mini blinds mounted inside sealed or unsealed insulating glass. The blinds, in the sealed dust-free environment, can be operated with a magnetic lever without breaking the air seal. Blinds in the unsealed glazing unit are protected as well but can be easily removed for cleaning or repair. These between-glass shading devices have a lower shading coefficient than equivalent blinds mounted on the interior. They also provide additional insulating value to the double glass by reducing convective loops in the airspace.

Unlike the other strategies to reduce heat gain, interior shades generally require consistent and active intervention by the homeowner. It is unlikely that anyone would operate all shades in a consistent, optimal pattern, as an analysis assumes they are to be operated. A value of 0.7 is proposed for summer conditions to approximate the condition of predominantly closed, medium-colored interior draperies. The winter value is increased to 0.85 to not unduly penalize winter heating performance. Variance from these values is specifically not allowed. It is possible to install motorized and automated shading systems, but these are quite costly and not yet in common use. When contemplating the use of high-performance glazing for the necessary solar control as opposed to just using interior shading, there are two important benefits: there is less need for operating the shades and the window is rarely covered, resulting in a clear view and daylight at all times. Of course, shades also provide privacy and darkness when desired so they may be closed part of the day in any case, but the high-performance glazing means there is less need to operate them in a particular manner to achieve significant reductions in energy use. Because of the uncertainty of actual application and more limited benefits of the interior shades, the code will generally require the proposed design to use the same values as the standard reference design.

Permanent, exterior-mounted shading devices for the standard design are considered atypical and, therefore, are not required or allowed to be included. Where credit is taken in the proposed design for these devices, the code official must approve and confirm the installation of the actual shading device proposed.

Skylights: This is intended to reduce the complexity of the design requirements as applied to skylight areas in the standard design. If this section was not included, ceilings and skylights would also require detailed treatment as in Section R402.3 and the glazing section above to fully specify the standard design.

Air exchange rate: This section establishes conditions under which air-leakage reduction can be claimed reliably. Without using an actual measurement, it often is not practical to document infiltration reduction measures beyond those in the standard design because the code (see Section R402.4) already assumes a fairly comprehensive air-sealing regimen. Where the test reports that the anticipated building infiltration performance is not achieved as was assumed in the permit application, infiltration must be lowered or some other means used to make up the increased energy use attributable to the defi-

INTERNATIONAL CODE COUNCIL®
Copyright © 2015 ICC. ALL RIGHTS RESERVED. Accessed by David Dammon on Jun 21, 2017 12:30:52 PM pursuant to License Agreement with ICC. No further reproduction or distribution authorized. ANY UNAUTHORIZED REPRODUCTION OR DISTRIBUTION IS A VIOLATION OF THE FEDERAL COPYRIGHT ACT AND THE LICENSE AGREEMENT, AND SUBJECT TO CIVIL AND CRIMINAL PENALTIES THEREUNDER.

ciency in infiltration rates. Note that "tight" buildings may require mechanical ventilation to improve occupant comfort. Controlling ventilation rates reduces cooking odors, damp musty smells, stale air and elevated levels of carbon dioxide. Ventilation also helps reduce concentrations of air-borne contaminants off-gassed from building materials and related to other household activities.

Internal gains: The calculations for both the standard and proposed designs must assume the same internal loads. Where the simulation tool allows specification of internal gains, the total heat gains (sensible + latent) are to be calculated based on this equation in both the standard and proposed designs (the code does not distinguish between sensible and latent gains). This equation makes internal gains a function of the conditioned area and the number of bedrooms.

Heating systems: This section simply requires that the heating and cooling equipment in the standard design meet the minimum efficiency requirements that are currently required at the time of the evaluation.

This section contains general guidelines for the proposed design for any annual energy analysis under Section R405. The standard and proposed designs must use the same energy sources (fuels) for the same function. For example, a gas-heated standard design cannot be compared to an electrically heated proposed design. For a fossil-fuel-heated building, the standard design must assume the applicable minimum efficiency as dictated by the code and the National Appliance Energy Conservation Act (NAECA).

Service water heating: Where the simulation tool or calculation models water heating energy, domestic service water-heating calculations must assume a set point of 120°F (49°C), with a daily usage of 30 gallons (113 L) per unit plus 10 gallons (37.8 L) per bedroom.

Thermal distribution systems [see Table R405.5.2(2)]: Research and practice in the past few years has shown that the major component of heating and cooling system efficiency stems from air leakage in hot and cold air distribution systems (primarily ducts, but also air-handler cabinets). The research has been conducted by ASHRAE; Lawrence-Berkley National Laboratory; Brookhaven National Laboratory; Electric Power Research Institute; Gas Research Institute; Florida Solar Energy Center; and numerous other research organizations and national utilities. Many, if not most, utilities in the nation now offer customers duct-leakage diagnosis and repair efforts as part of their energy conservation and demand side management programs. The Sheet Metal and Air-Conditioning Contractors National Association (SMACNA) has published test procedures in outlining the methods and air distribution systems through duct-system pressurization testing (see the SMACNA *HVAC Air Duct Leakage Test Manual*), and a number of calibrated pressurization test equipment manufacturers are now producing equipment for sale in the market.

Technical questions regarding the energy impacts and mechanisms of specific leak types in certain locations remain; however, there is no question the elimination of air leakage results in energy inefficiency in duct systems being limited to conduction gains and losses through the ducts themselves.

The virtual elimination of these leaks also results in much-improved heating- and cooling-system efficiencies (on the order of 95- to 99-percent efficient as opposed to 75- to 80-percent efficient). There is no technical disagreement that, once air leakage is no longer in question, air distribution system efficiency can be determined through straightforward engineering calculations using conduction heat-transfer equations, unencumbered by the complexities of air-leakage flows. A conservative assumption is that the ductwork in the standard design is 50-percent inside and 50-percent outside the conditioned space; however, the arrangement of ductwork in the standard design must be representative of that proposed.

Unless directly heated and cooled, attics and crawl spaces are unconditioned spaces. The specified distribution system efficiency (DSE) is to be used in the standard design where the designer wishes to take advantage of the impacts from improved DSEs in the proposed design and the entire distribution system is substantially leak free. Proposed designs use specified system efficiencies based on the proportion of ducts inside and outside a substantially leak-free conditioned system. It is acceptable for the proposed design to use system efficiencies other than those given where such factors result from a code-official-approved, post-construction duct system performance test. [Note that Table R405.5.2(2) is titled "Default Distribution System Efficiencies" and that Note a of that table indicates that the values are for untested distribution systems.] The provisions in this section are a mechanism that allows builders to take credit for substantially leak-free duct systems where they are installed.

R405.6 Calculation software tools. Calculation software, where used, shall be in accordance with Sections R405.6.1 through R405.6.3.

❖ See the commentary to Section R405.6.1.

INTERNATIONAL CODE COUNCIL®
Copyright © 2015 ICC. ALL RIGHTS RESERVED. Accessed by David Dammon on Jun 21, 2017 12:30:52 PM pursuant to License Agreement with ICC. No further reproduction or distribution authorized. ANY UNAUTHORIZED REPRODUCTION OR DISTRIBUTION IS A VIOLATION OF THE FEDERAL COPYRIGHT ACT AND THE LICENSE AGREEMENT, AND SUBJECT TO CIVIL AND CRIMINAL PENALTIES THEREUNDER.

TABLE R405.5.2(1)
SPECIFICATIONS FOR THE STANDARD REFERENCE AND PROPOSED DESIGNS

BUILDING COMPONENT	STANDARD REFERENCE DESIGN	PROPOSED DESIGN
Above-grade walls	Type: mass wall if proposed wall is mass; otherwise wood frame.	As proposed
	Gross area: same as proposed	As proposed
	U-factor: as specified in Table R402.1.4	As proposed
	Solar absorptance = 0.75	As proposed
	Emittance = 0.90	As proposed
Basement and crawl space walls	Type: same as proposed	As proposed
	Gross area: same as proposed	As proposed
	U-factor: from Table R402.1.4, with insulation layer on interior side of walls	As proposed
Above-grade floors	Type: wood frame	As proposed
	Gross area: same as proposed	As proposed
	U-factor: as specified in Table R402.1.4	As proposed
Ceilings	Type: wood frame	As proposed
	Gross area: same as proposed	As proposed
	U-factor: as specified in Table R402.1.4	As proposed
Roofs	Type: composition shingle on wood sheathing	As proposed
	Gross area: same as proposed	As proposed
	Solar absorptance = 0.75	As proposed
	Emittance = 0.90	As proposed
Attics	Type: vented with aperture = 1 ft^2 per 300 ft^2 ceiling area	As proposed
Foundations	Type: same as proposed	As proposed
	Foundation wall area above and below grade and soil characteristics: same as proposed	As proposed
Opaque doors	Area: 40 ft^2	As proposed
	Orientation: North	As proposed
	U-factor: same as fenestration from Table R402.1.4	As proposed
Vertical fenestration other than opaque doors	Total area[b] = (a) The proposed glazing area, where the proposed glazing area is less than 15 percent of the conditioned floor area (b) 15 percent of the conditioned floor area, where the proposed glazing area is 15 percent or more of the conditioned floor area	As proposed
	Orientation: equally distributed to four cardinal compass orientations (N, E, S & W).	As proposed
	U-factor: as specified in Table R402.1.4	As proposed
	SHGC: as specified in Table R402.1.2 except that for climates with no requirement (NR) SHGC = 0.40 shall be used.	As proposed
	Interior shade fraction: 0.92-(0.21 × SHGC for the standard reference design)	0.92-(0.21 × SHGC as proposed)
	External shading: none	As proposed
Skylights	None	As proposed
Thermally isolated sunrooms	None	As proposed
Air exchange rate	Air leakage rate of 5 air changes per hour in climate zones 1 and 2, and 3 air changes per hour in climate zones 3 through 8 at a pressure of 0.2 inches w.g (50 Pa). The mechanical ventilation rate shall be in addition to the air leakage rate and the same as in the proposed design, but no greater than $0.01 \times CFA + 7.5 \times (N_{br} + 1)$ where: CFA = conditioned floor area N_{br} = number of bedrooms Energy recovery shall not be assumed for mechanical ventilation.	For residences that are not tested, the same air leakage rate as the standard reference design. For tested residences, the measured air exchange rate[a]. The mechanical ventilation rate[b] shall be in addition to the air leakage rate and shall be as proposed.

(continued)

INTERNATIONAL CODE COUNCIL®
Copyright © 2015 ICC. ALL RIGHTS RESERVED. Accessed by David Dammon on Jun 21, 2017 12:30:52 PM pursuant to License Agreement with ICC. No further reproduction or distribution authorized. ANY UNAUTHORIZED REPRODUCTION OR DISTRIBUTION IS A VIOLATION OF THE FEDERAL COPYRIGHT ACT AND THE LICENSE AGREEMENT, AND SUBJECT TO CIVIL AND CRIMINAL PENALTIES THEREUNDER.

TABLE R405.5.2(1)—continued
SPECIFICATIONS FOR THE STANDARD REFERENCE AND PROPOSED DESIGNS

BUILDING COMPONENT	STANDARD REFERENCE DESIGN	PROPOSED DESIGN
Mechanical ventilation	None, except where mechanical ventilation is specified by the proposed design, in which case: Annual vent fan energy use: kWh/yr = 0.03942 × *CFA* + 29.565 × (N_{br} +1) where: *CFA* = conditioned floor area N_{br} = number of bedrooms	As proposed
Internal gains	IGain = 17,900 + 23.8 × *CFA* + 4104 × N_{br} (Btu/day per dwelling unit)	Same as standard reference design.
Internal mass	An internal mass for furniture and contents of 8 pounds per square foot of floor area.	Same as standard reference design, plus any additional mass specifically designed as a thermal storage element[c] but not integral to the building envelope or structure.
Structural mass	For masonry floor slabs, 80 percent of floor area covered by R-2 carpet and pad, and 20 percent of floor directly exposed to room air.	As proposed
	For masonry basement walls, as proposed, but with insulation required by Table R402.1.4 located on the interior side of the walls	As proposed
	For other walls, for ceilings, floors, and interior walls, wood frame construction	As proposed
Heating systems[d, e]	As proposed for other than electric heating without a heat pump, where the proposed design utilizes electric heating without a heat pump the standard reference design shall be an air source heat pump meeting the requirements of Section C403 of the IECC-Commercial Provisions. Capacity: sized in accordance with Section R403.7	As proposed
Cooling systems[d, f]	As proposed Capacity: sized in accordance with Section R403.7.	As proposed
Service water heating[d, e, f, g]	As proposed Use: same as proposed design	As proposed gal/day = 30 + (10 × N_{br})
Thermal distribution systems	Duct insulation: From Section R403.2.1 A thermal distribution system efficiency (DSE) of 0.88 shall be applied to both the heating and cooling system efficiencies for all systems other than tested duct systems. For tested duct systems, the leakage rate shall be 4 cfm (113.3 L/min) per 100 ft^2 (9.29 m^2) of *conditioned floor* area at a pressure of differential of 0.1 inches w.g. (25 Pa).	As tested or as specified in Table R405.5.2(2) if not tested. Duct insulation shall be as proposed.
Thermostat	Type: Manual, cooling temperature setpoint = 75°F; Heating temperature setpoint = 72°F	Same as standard reference

For SI: 1 square foot = 0.93 m^2, 1 British thermal unit = 1055 J, 1 pound per square foot = 4.88 kg/m^2, 1 gallon (US) = 3.785 L, °C = (°F-32)/1.8, 1 degree = 0.79 rad.

a. Where required by the *code official*, testing shall be conducted by an *approved* party. Hourly calculations as specified in the ASHRAE *Handbook of Fundamentals*, or the equivalent shall be used to determine the energy loads resulting from infiltration.

b. The combined air exchange rate for infiltration and mechanical ventilation shall be determined in accordance with Equation 43 of 2001 ASHRAE *Handbook of Fundamentals*, page 26.24 and the "Whole-house Ventilation" provisions of 2001 ASHRAE *Handbook of Fundamentals*, page 26.19 for intermittent mechanical ventilation.

c. Thermal storage element shall mean a component not part of the floors, walls or ceilings that is part of a passive solar system, and that provides thermal storage such as enclosed water columns, rock beds, or phase-change containers. A thermal storage element must be in the same room as fenestration that faces within 15 degrees (0.26 rad) of true south, or must be connected to such a room with pipes or ducts that allow the element to be actively charged.

d. For a proposed design with multiple heating, cooling or water heating systems using different fuel types, the applicable standard reference design system capacities and fuel types shall be weighted in accordance with their respective loads as calculated by accepted engineering practice for each equipment and fuel type present.

e. For a proposed design without a proposed heating system, a heating system with the prevailing federal minimum efficiency shall be assumed for both the standard reference design and proposed design.

f. For a proposed design home without a proposed cooling system, an electric air conditioner with the prevailing federal minimum efficiency shall be assumed for both the standard reference design and the proposed design.

g. For a proposed design with a nonstorage-type water heater, a 40-gallon storage-type water heater with the prevailing federal minimum energy factor for the same fuel as the predominant heating fuel type shall be assumed. For the case of a proposed design without a proposed water heater, a 40-gallon storage-type water heater with the prevailing federal minimum efficiency for the same fuel as the predominant heating fuel type shall be assumed for both the proposed design and standard reference design.

INTERNATIONAL CODE COUNCIL®
Copyright © 2015 ICC. ALL RIGHTS RESERVED. Accessed by David Dammon on Jun 21, 2017 12:30:52 PM pursuant to License Agreement with ICC. No further reproduction or distribution authorized. ANY UNAUTHORIZED REPRODUCTION OR DISTRIBUTION IS A VIOLATION OF THE FEDERAL COPYRIGHT ACT AND THE LICENSE AGREEMENT, AND SUBJECT TO CIVIL AND CRIMINAL PENALTIES THEREUNDER.

TABLE R405.5.2(2)
DEFAULT DISTRIBUTION SYSTEM EFFICIENCIES FOR PROPOSED DESIGNS[a]

DISTRIBUTION SYSTEM CONFIGURATION AND CONDITION	FORCED AIR SYSTEMS	HYDRONIC SYSTEMS[b]
Distribution system components located in unconditioned space	—	0.95
Untested distribution systems entirely located in conditioned space[c]	0.88	1
"Ductless" systems[d]	1	—

For SI: 1 cubic foot per minute = 0.47 L/s, 1 square foot = 0.093 m^2, 1 pound per square inch = 6895 Pa, 1 inch water gauge = 1250 Pa.

a. Default values given by this table are for untested distribution systems, which must still meet minimum requirements for duct system insulation.

b. Hydronic systems shall mean those systems that distribute heating and cooling energy directly to individual spaces using liquids pumped through closed-loop piping and that do not depend on ducted, forced airflow to maintain space temperatures.

c. Entire system in conditioned space shall mean that no component of the distribution system, including the air-handler unit, is located outside of the conditioned space.

d. Ductless systems shall be allowed to have forced airflow across a coil but shall not have any ducted airflow external to the manufacturer's air-handler enclosure.

R405.6.1 Minimum capabilities. Calculation procedures used to comply with this section shall be software tools capable of calculating the annual energy consumption of all building elements that differ between the *standard reference design* and the *proposed design* and shall include the following capabilities:

1. Computer generation of the *standard reference design* using only the input for the *proposed design.* The calculation procedure shall not allow the user to directly modify the building component characteristics of the *standard reference design.*
2. Calculation of whole-building (as a single *zone*) sizing for the heating and cooling equipment in the *standard reference design* residence in accordance with Section R403.6.
3. Calculations that account for the effects of indoor and outdoor temperatures and part-load ratios on the performance of heating, ventilating and air-conditioning equipment based on climate and equipment sizing.
4. Printed *code official* inspection checklist listing each of the *proposed design* component characteristics from Table R405.5.2(1) determined by the analysis to provide compliance, along with their respective performance ratings (*R*-value, *U*-factor, SHGC, HSPF, AFUE, SEER, EF are some examples).

❖ This section states the general capabilities for the calculation software and its ability to evaluate the effects of building parametrics, system design, climatic factors, operational characteristics and mechanical equipment on annual energy usage.

There are a number of different software programs available to perform these calculations. The complexity of the programs will often depend on the amount of parameters that may be varied between the designs. The phrase in the base section that the software must be capable of evaluating the consumption of "all building elements that differ" between the two designs is important because it is the differences between the standard design and the proposed design that determine whether the proposed design is acceptable.

To ensure that the comparisons are made only on the items that are being traded, Item 1 looks to keep the software from allowing any manipulation that would help to reduce the energy costs of the standard design.

R405.6.2 Specific approval. Performance analysis tools meeting the applicable provisions of Section R405 shall be permitted to be *approved.* Tools are permitted to be *approved* based on meeting a specified threshold for a jurisdiction. The *code official* shall be permitted to approve tools for a specified application or limited scope.

❖ Though this section may be viewed as accepting a reduced level of efficiency, the intent is really more in line with the provisions of Section R102. An alternative program for evaluating the energy efficiency of a building using performance criteria can be substituted here. However, that alternative must meet the performance criteria of Section R405.

R405.6.3 Input values. When calculations require input values not specified by Sections R402, R403, R404 and R405, those input values shall be taken from an *approved* source.

❖ This section simply requires that any additional input information required by the calculation software be approved by the code official. Through the use of the phrase "approved source," the code official would be able to review the source of the information that is being used for inputting information. This will help to ensure that the selected values are reasonable for the situation and not just an estimate.

SECTION R406
ENERGY RATING INDEX COMPLIANCE ALTERNATIVE

R406.1 Scope. This section establishes criteria for compliance using an Energy Rating Index (ERI) analysis.

❖ The Residential Provisions of the code allow for varying methods for demonstrating compliance. This includes a prescriptive and simulated performance option in addition to allowing efficiency programs

INTERNATIONAL CODE COUNCIL®
Copyright © 2015 ICC. ALL RIGHTS RESERVED. Accessed by David Dammon on Jun 21, 2017 12:30:52 PM pursuant to License Agreement with ICC. No further reproduction or distribution authorized. ANY UNAUTHORIZED REPRODUCTION OR DISTRIBUTION IS A VIOLATION OF THE FEDERAL COPYRIGHT ACT AND THE LICENSE AGREEMENT, AND SUBJECT TO CIVIL AND CRIMINAL PENALTIES THEREUNDER.

designed to go above the minimum code levels, as "deemed to comply" programs. These above-code programs must be approved by the code official to be used in the jurisdiction. Alternative programs that depend on an Energy Rating Index (ERI) have been approved as an alternative code or above-code program in at least six states and in over 130 jurisdictions. These types of programs typically take the form of a Home Energy Rating System (HERS) program. Under the current code there is no guidance on setting ERI scores, which will lead to inconsistent application of these types of programs based on climate zones.

This section provides an ERI with established rating numbers to allow alternative programs using an ERI to be designed to meet these criteria. The section provides guidelines for the development of the index, requirements for documentation to be provided to ensure compliance and a requirement that an approved third party verify that the building complies with the applicable ERI.

R406.2 Mandatory requirements. Compliance with this section requires that the provisions identified in Sections R401 through R404 be labeled as mandatory and Section R4103.5.3 be met. The building thermal envelope shall be greater than or equal to levels of efficiency and Solar Heat Gain Coefficient in Table 402.1.1 or 402.1.3 of the 2009 *International Energy Conservation Code*.

Exception: Supply and return ducts not completely inside the building thermal envelope shall be insulated to a minimum of R-6.

❖ As with Section R405.2 for the performance-based alternative, minimum requirements have been established in the code for all buildings. The sections that must be complied with separately include items that often cannot be effectively modeled. When using Section R406, it is important to review the provisions of Section R402.5, which place "hard limits" on the fenestration *U*-factors and SHGC that may be used for trade-offs (see commentary, Section R402.5).

R406.3 Energy Rating Index. The Energy Rating Index (ERI) shall be a numerical integer value that is based on a linear scale constructed such that the *ERI reference design* has an Index value of 100 and a *residential building* that uses no net purchased energy has an Index value of 0. Each integer value on the scale shall represent a 1-percent change in the total energy use of the rated design relative to the total energy use of the *ERI reference design*. The ERI shall consider all energy used in the *residential building*.

❖ To avoid confusion in the application of different ERI programs, the parameters for the index are established here. The reason is simple and logical—to allow a clear understanding of the meaning of the index and to be able to uniformly apply the requirements of the code.

R406.3.1 ERI reference design. The *ERI reference design* shall be configured such that it meets the minimum requirements of the 2006 *International Energy Conservation Code* prescriptive requirements.

The proposed *residential building* shall be shown to have an annual total normalized modified load less than or equal to the annual total loads of the *ERI reference design*.

❖ The reference house is based on a home built to the 2006 IECC, which is consistent with ERI-based programs that are used today.

R406.4 ERI-based compliance. Compliance based on an ERI analysis requires that the *rated design* be shown to have an ERI less than or equal to the appropriate value listed in Table R406.4 when compared to the *ERI reference design*.

TABLE R406.4
MAXIMUM ENERGY RATING INDEX

CLIMATE ZONE	ENERGY RATING INDEX
1	52
2	52
3	51
4	54
5	55
6	54
7	53
8	53

❖ Based on the energy conservation levels set by the 2015 IECC, the ERI required for the rated design (i.e., the proposed building) are set as shown.

R406.5 Verification by approved agency. Verification of compliance with Section R406 shall be completed by an *approved* third party.

❖ In order to ensure proper application of the parameters of the ERI chosen and the proper use of computer software, this option for energy conservation requires a third party to review the proposed design to ensure compliance with the code. The approved third party should be knowledgeable in the energy code, the ERI system and the use of computer software for design. By stating the agency or individual must be a "third party," the code is requiring financial independence, with no possible conflicts of interest.

R406.6 Documentation. Documentation of the software used to determine the ERI and the parameters for the residential building shall be in accordance with Sections R406.6.1 through R406.6.3.

❖ See the commentary to Section R405.4.

R406.6.1 Compliance software tools. Documentation verifying that the methods and accuracy of the compliance software tools conform to the provisions of this section shall be provided to the *code official*.

❖ See the commentary to Section R405.4.1.

INTERNATIONAL CODE COUNCIL®
Copyright © 2015 ICC. ALL RIGHTS RESERVED. Accessed by David Dammon on Jun 21, 2017 12:30:52 PM pursuant to License Agreement with ICC. No further reproduction or distribution authorized. ANY UNAUTHORIZED REPRODUCTION OR DISTRIBUTION IS A VIOLATION OF THE FEDERAL COPYRIGHT ACT AND THE LICENSE AGREEMENT, AND SUBJECT TO CIVIL AND CRIMINAL PENALTIES THEREUNDER.

R406.6.2 Compliance report. Compliance software tools shall generate a report that documents that the ERI of the *rated design* complies with Sections R406.3 and R406.4. The compliance documentation shall include the following information:

1. Address or other identification of the residential building.
2. An inspection checklist documenting the building component characteristics of the *rated design*. The inspection checklist shall show results for both the *ERI reference design* and the *rated design*, and shall document all inputs entered by the user necessary to reproduce the results.
3. Name of individual completing the compliance report.
4. Name and version of the compliance software tool.

Exception: Multiple orientations. Where an otherwise identical building model is offered in multiple orientations, compliance for any orientation shall be permitted by documenting that the building meets the performance requirements in each of the four (north, east, south and west) cardinal orientations.

❖ See the commentary to Section R405.4.2.

R406.6.3 Additional documentation. The *code official* shall be permitted to require the following documents:

1. Documentation of the building component characteristics of the *ERI reference design*.
2. A certification signed by the builder providing the building component characteristics of the *rated design.*
3. Documentation of the actual values used in the software calculations for the *rated design*.

❖ See the commentary to Section R405.4.3.

R406.7 Calculation software tools. Calculation software, where used, shall be in accordance with Sections R406.7.1 through R406.7.3.

❖ See the commentary to Sections R405.6.1 through R405.6.3.

R406.7.1 Minimum capabilities. Calculation procedures used to comply with this section shall be software tools capable of calculating the ERI as described in Section R406.3, and shall include the following capabilities:

1. Computer generation of the *ERI reference design* using only the input for the *rated design*.

The calculation procedure shall not allow the user to directly modify the building component characteristics of the *ERI reference design*.

2. Calculation of whole building, as a single *zone*, sizing for the heating and cooling equipment in the *ERI reference design* residence in accordance with Section R403.7.
3. Calculations that account for the effects of indoor and outdoor temperatures and part-load ratios on the performance of heating, ventilating and air-conditioning equipment based on climate and equipment sizing.
4. Printed *code official* inspection checklist listing each of the *rated design* component characteristics determined by the analysis to provide compliance, along with their respective performance ratings.

❖ See the commentary to Sections R405.6.1 through R405.6.3.

R406.7.2 Specific approval. Performance analysis tools meeting the applicable sections of Section R406 shall be *approved*. Tools are permitted to be *approved* based on meeting a specified threshold for a jurisdiction. The *code official* shall approve tools for a specified application or limited scope.

❖ See the commentary to Sections R405.6.1 through R405.6.3.

R406.7.3 Input values. When calculations require input values not specified by Sections R402, R403, R404 and R405, those input values shall be taken from an approved source.

❖ See the commentary to Sections R405.6.1 through R405.6.3.

INTERNATIONAL CODE COUNCIL®
Copyright © 2015 ICC. ALL RIGHTS RESERVED. Accessed by David Dammon on Jun 21, 2017 12:30:52 PM pursuant to License Agreement with ICC. No further reproduction or distribution authorized. ANY UNAUTHORIZED REPRODUCTION OR DISTRIBUTION IS A VIOLATION OF THE FEDERAL COPYRIGHT ACT AND THE LICENSE AGREEMENT, AND SUBJECT TO CIVIL AND CRIMINAL PENALTIES THEREUNDER.

INTERNATIONAL CODE COUNCIL®
Copyright © 2015 ICC. ALL RIGHTS RESERVED. Accessed by David Dammon on Jun 21, 2017 12:30:52 PM pursuant to License Agreement with ICC. No further reproduction or distribution authorized. ANY UNAUTHORIZED REPRODUCTION OR DISTRIBUTION IS A VIOLATION OF THE FEDERAL COPYRIGHT ACT AND THE LICENSE AGREEMENT, AND SUBJECT TO CIVIL AND CRIMINAL PENALTIES THEREUNDER.

Chapter 5 [RE]: Existing Buildings

General Comments

New for the 2015 IECC Residential Provisions is a separate chapter dealing with alterations, repairs, additions and change of occupancy of existing buildings. These provisions, for the most part, originated in Chapter 1 of the 2012 IECC Residential Provisions; however, the 2015 edition contains options dealing with situations where compliance with the code for additions is difficult. The provisions now allow an energy-neutral method for difficult-to-comply projects, essentially mandating simply that the building with the addition uses no more energy than the existing building. This will allow projects to take advantage of energy-efficient alterations on the existing building to offset compliance difficulties with features on the addition. Requirements for alterations are provided, giving specific details and exceptions for the building envelope, heating and cooling systems, hot water systems, and lighting. Finally, the code allows that repairs be done without consideration of compliance with this code.

Purpose

The purpose of this chapter is to provide requirements for the unique circumstances involved with existing building additions, alterations and repairs.

SECTION R501 GENERAL

R501.1 Scope. The provisions of this chapter shall control the *alteration*, repair, addition and change of occupancy of existing buildings and structures.

❖ The scope of this chapter includes specific circumstances related to changes to existing buildings. This chapter provides a roadmap when dealing with different types of projects—alterations, repairs, additions and changes of occupancy.

R501.1.1 Additions, alterations, or repairs: General. Additions, alterations, or repairs to an existing building, building system or portion thereof shall comply with Section R502, R503 or R504. Unaltered portions of the existing building or building supply system shall not be required to comply with this code.

❖ For commentary on additions, see Section R502; for alterations, see Section R503; and for repairs, see Section R504.

R501.2 Existing buildings. Except as specified in this chapter, this code shall not be used to require the removal, *alteration* or abandonment of, nor prevent the continued use and maintenance of, an existing building or building system lawfully in existence at the time of adoption of this code.

❖ This section addresses the fact that, in general, the code does not affect existing buildings. It will permit an addition to be made to an existing building without requiring the existing building to conform to the code. In such a case, the addition is expected to comply with the current code, but it will not require changes for the existing portion. Therefore, the code does not apply retroactively to existing buildings. When an existing building is modified by an addition, alteration, renovation or repair, Section R502, R503 or R504 will provide the guidance and requirements for such changes.

R501.3 Maintenance. Buildings and structures, and parts thereof, shall be maintained in a safe and sanitary condition. Devices and systems that are required by this code shall be maintained in conformance to the code edition under which installed. The owner or the owner's authorized agent shall be responsible for the maintenance of buildings and structures. The requirements of this chapter shall not provide the basis for removal or abrogation of energy conservation, fire protection and safety systems and devices in existing structures.

❖ The code is designed to regulate new construction and new work and is not intended to be applied retroactively to existing buildings except where existing envelope, lighting, mechanical or service water heating systems are specifically affected by Section R502, R503 or R504. Maintenance of building systems and components in accordance with the effective code at the time of their installation is required, but such systems and components need not be upgraded or modified to meet the code.

R501.4 Compliance. *Alterations*, *repairs*, *additions* and changes of occupancy to, or relocation of, existing buildings and structures shall comply with the provisions for *alterations*, *repairs*, *additions* and changes of occupancy or relocation, respectively, in the *International Residential Code*, *International Building Code*, *International Fire Code*, *International*

INTERNATIONAL CODE COUNCIL®
Copyright © 2015 ICC. ALL RIGHTS RESERVED. Accessed by David Dammon on Jun 21, 2017 12:30:52 PM pursuant to License Agreement with ICC. No further reproduction or distribution authorized. ANY UNAUTHORIZED REPRODUCTION OR DISTRIBUTION IS A VIOLATION OF THE FEDERAL COPYRIGHT ACT AND THE LICENSE AGREEMENT, AND SUBJECT TO CIVIL AND CRIMINAL PENALTIES THEREUNDER.

Fuel Gas Code, *International Mechanical Code*, *International Plumbing Code*, *International Property Maintenance Code*, *International Private Sewage Disposal Code* and NFPA 70.

❖ Compliance with the provisions of other *International Codes*® (I-Codes®), such as the IBC, should not be ignored. The I-Codes are intended to be a coordinated set of construction codes. This section clarifies the relationship between this chapter of the code and the IRC, IBC, *International Fire Code*® (IFC®), *International Fuel Gas Code*® (IFGC®), *International Mechanical Code*® (IMC®), *International Plumbing Code*® (IPC®), *International Property Maintenance Code*® (IPMC®), *International Private Sewage Disposal Code*® (IPSDC®) and NFPA 70.

When alterations and repairs are made to existing mechanical and plumbing systems, the provisions of the I-Codes and NFPA 70 for alterations and repairs must be followed. Those codes indicate the extent to which existing systems must comply with the stated requirements. Where portions of existing building systems, such as plumbing, mechanical and electrical systems, are not being altered or repaired, those systems may continue to exist without being upgraded as long as they are not hazardous or unsafe to building occupants.

R501.5 New and replacement materials. Except as otherwise required or permitted by this code, materials permitted by the applicable code for new construction shall be used. Like materials shall be permitted for repairs, provided hazards to life, health or property are not created. Hazardous materials shall not be used where the code for new construction would not permit their use in buildings of similar occupancy, purpose and location.

❖ There are two options for materials used in repairs to an existing building. Generally, the materials used for repairs should be those that are presently required or permitted for new construction under the I-Codes. It is also acceptable to use materials consistent with those that are already present, except where those materials pose a hazard. This allowance follows the general concept that any repair should not make a building more hazardous than it was prior to the repair. It is generally possible to repair a structure, its components and its systems with materials consistent with those materials that were used previously. However, where materials now deemed hazardous are involved in the repair work, they may no longer be used. For example, the code identifies asbestos and lead-based paint as two common hazardous building materials that cannot be used in the repair process. Certain materials previously considered acceptable for building construction are now known to threaten the health of occupants.

R501.6 Historic buildings. No provision of this code relating to the construction, *repair, alteration,* restoration and movement of structures, and *change of occupancy* shall be mandatory for *historic buildings* provided a report has been submitted to the code official and signed by the owner, a registered *design professional*, or a representative of the State Historic Preservation Office or the historic preservation authority having jurisdiction, demonstrating that compliance with that provision would threaten, degrade or destroy the historic form, fabric or function of the *building*.

❖ In some aspects, this is a bit of a continuation of the "existing building" provisions, but it goes even further—historic buildings are exempt. In earlier editions of the code, this exemption applied only to the exterior envelope of such buildings and to the interior only in those cases where the ordinance explicitly designated elements of the interior. With the current text, historic buildings are exempt from all aspects of the code. This exemption, however, is not without conditions. The most important criterion for application of this section is that the building must be specifically classified as being of historic significance by a qualified party or agency. Usually this is done by a state or local authority after considerable scrutiny of the historical value of the building. Most states and many local jurisdictions have authorities such as a landmark commission.

Because of the unique issues involved, historic buildings are exempt from the requirements of the code. This exemption could be extended to include all parts that are "historic," including additions, alterations and repairs that would normally be addressed by Section R502 or R503. If the proposed addition, alteration or renovation is not "historic," then the provisions of Section R502 or R503 should be applied. Consideration of energy conservation and compliance with the code is still of value in historic buildings. In exempting historic buildings, the code is simply recognizing that energy efficiency may be difficult to accomplish while maintaining the "historic" nature of the building.

SECTION R502
ADDITIONS

R502.1 General. Additions to an existing building, building system or portion thereof shall conform to the provisions of this code as those provisions relate to new construction without requiring the unaltered portion of the existing building or building system to comply with this code. Additions shall not create an unsafe or hazardous condition or overload existing building systems. An addition shall be deemed to comply with this code where the addition alone complies, where the existing building and addition comply with this code as a single building, or where the building with the addition uses no more energy than the existing building. Additions shall be in accordance with Section R502.1.1 or R502.1.2.

❖ Simply stated, new work must comply with the current requirements for new work. Any addition to an existing system involving new work is subject to the requirements of the code. Additions can place additional loads or different demands on an existing system and those loads or demands could necessitate changing all or part of the existing system. Additions and alterations must not cause an existing system to be

INTERNATIONAL CODE COUNCIL®
Copyright © 2015 ICC. ALL RIGHTS RESERVED. Accessed by David Dammon on Jun 21, 2017 12:30:52 PM pursuant to License Agreement with ICC. No further reproduction or distribution authorized. ANY UNAUTHORIZED REPRODUCTION OR DISTRIBUTION IS A VIOLATION OF THE FEDERAL COPYRIGHT ACT AND THE LICENSE AGREEMENT, AND SUBJECT TO CIVIL AND CRIMINAL PENALTIES THEREUNDER.

any less in compliance with the code than it was before the changes.

Additions to existing buildings must comply with the code when the addition is within the scope of the code and would not otherwise be exempted. Additions include new construction, such as a conditioned bedroom, sun space or enclosed porch added to an existing building. Additions also include existing spaces converted from unconditioned or exempt spaces to conditioned spaces. For example, a finished basement, an attic converted to a bedroom or a carport converted to a den are additions. The addition of an unconditioned garage would not be considered within the scope of the code because the code applies to heated or cooled (conditioned) spaces.

Although not specifically defined in the code, building codes typically define an "addition" as any increase in a building's habitable floor area (which can be interpreted as any increase in the conditioned floor area). For example, an unconditioned garage converted to a bedroom is an addition. If a conditioned floor area is expanded, such as a room made larger by moving out a wall, only the newly conditioned space must meet the code. A flat window added to a room does not increase the conditioned space and thus is not an addition by this definition. If several changes are made to a building at the same time, only the changes that expand the conditioned floor area are required to meet the code. The addition (the newly conditioned floor space) complies with the code if it complies with all of the applicable requirements in Chapter 4 [RE]. For example, requirements applicable to the addition of a new room would most likely include insulating the exterior walls, ceiling and floor to the levels specified in the code; sealing all joints and penetrations; installing a vapor retarder in unventilated frame walls, floors and ceilings; identifying installed insulation *R*-values and window *U*-factors; and insulating and sealing any ducts passing through unconditioned portions or within exterior envelope components (walls, ceilings or floors) of the new space.

R502.1.1 Prescriptive compliance. Additions shall comply with Sections R502.1.1.1 through R502.1.1.4.

❖ The basic premise of this section is that the addition alone, and not the remainder of the building, must comply with the code.

R502.1.1.1 Building envelope. New building envelope assemblies that are part of the addition shall comply with Sections R402.1, R402.2, R402.3.1 through R402.3.5, and R402.4.

Exception: Where nonconditioned space is changed to conditioned space, the building envelope of the addition shall comply where the UA, as determined in Section 402.1.4, of the existing building and the addition, and any alterations that are part of the project, is less than or equal to UA generated for the existing building.

❖ The exception is the key to this section. Again, the insulation, sealing and air infiltration barriers required in the code for new construction apply to the addition. However, the exception provides some guidance regarding the circumstance where nonconditioned space becomes conditioned space. A typical example of this would be enclosing an attached garage to become a family room. The baseline for the entire building including the existing building would be the UA of the existing building. That is the sum of the *U*-values for the walls, windows and doors multiplied by the respective areas of each of those components. Accordingly, the total sum of the UA for the completed building including the newly conditioned garage must be less than the UA for the existing building. This ensures that, regardless of how well insulated the existing building is, the addition will not make the building envelope less energy efficient.

Example: An existing house has a total UA of 222 (using the "Standard" Design as the existing house from the example in commentary Section R402.1.4). A 20-foot by 10-foot garage is proposed to be converted to a family room. For the example, assume the newly renovated garage has a 20-square-foot window.

The total UA of the existing building is 222 as calculated in Section R402.1.4. For the building with the new family room, we are using R-20 wall insulation in the cavity, with R-13 continuous insulation. Floor insulation is increased to R-38. The total UA for that combination of exterior wall values is 234, which is greater than 222. Therefore, some additional insulation will be required in order for the newly created conditioned space to meet the code.

EXISTING BUILDING	EXISTING BUILDING PLUS NEW FAMILY ROOM
Exterior Wall: 1,050 ft^2 $U_w = 0.057$ Glazed doors and windows: 192 ft^2 $U_g = 0.32$	Exterior Wall: 1,170 ft^2 850 ft^2 @ $U_w = 0.057$ 320 ft^2 @ $U_w = 0.032$ Glazed doors and windows: 222 ft^2 @ $U_g = 0.32$
Opaque Exterior Door: 38 ft^2 $U_g = 0.32$ Roof: 1,500 ft^2 $U_r = 0.026$ Floor (slab): 1,500 ft^2 $U_s = 0.033$	Opaque Exterior Door: 19 ft^2 $U_g = 0.32$ Roof: 1,700 ft^2 1,500 ft^2 @ $U_r = 0.026$ 200 ft^2 @ $U_r = 0.022$ Floor: 1,700 ft^2 1,500 @ $U_s = 0.033$ 200 ft^2 @ $U_s = 0.028$

INTERNATIONAL CODE COUNCIL®
Copyright © 2015 ICC. ALL RIGHTS RESERVED. Accessed by David Dammon on Jun 21, 2017 12:30:52 PM pursuant to License Agreement with ICC. No further reproduction or distribution authorized. ANY UNAUTHORIZED REPRODUCTION OR DISTRIBUTION IS A VIOLATION OF THE FEDERAL COPYRIGHT ACT AND THE LICENSE AGREEMENT, AND SUBJECT TO CIVIL AND CRIMINAL PENALTIES THEREUNDER.

R502.1.1.2 Heating and cooling systems. New heating, cooling and duct systems that are part of the addition shall comply with Sections R403.1, R403.2, R403.3, R403.5 and R403.6.

Exception: Where ducts from an existing heating and cooling system are extended to an addition, duct systems with less than 40 linear feet (12.19 m) in unconditioned spaces shall not be required to be tested in accordance with Section R403.3.3.

❖ Heating and cooling systems for additions are required to meet the current code for additions. The key to this section, again, is the exception that allows relaxation on duct-testing requirements. This accommodates a simple addition where there is a short reach with the ductwork in an attic or crawl space to the conditioned spaces in the addition.

R502.1.1.3 Service hot water systems. New service hot water systems that are part of the addition shall comply with Section R403.4.

❖ There is no relaxation of requirements for construction of new service hot water systems in additions.

R502.1.1.4 Lighting. New lighting systems that are part of the addition shall comply with Section R404.1.

❖ There is no relaxation of requirements for construction of new lighting systems in additions.

R502.1.2 Existing plus addition compliance (Simulated Performance Alternative). Where nonconditioned space is changed to conditioned space, the addition shall comply where the annual energy cost or energy use of the addition and the existing building, and any alterations that are part of the project, is less than or equal to the annual energy cost of the existing building when modeled in accordance with Section R405. The addition and any alterations that are part of the project shall comply with Section R405 in its entirety.

❖ Section R405 provides the performance alternative for compliance with the code. This section simply states that this performance alternative can be used in the design of an addition as well. The difference here is that the "standard design" is the existing building, rather than the standard building modeled from compliance with the code as used in Section R405.

SECTION R503
ALTERATIONS

R503.1 General. *Alterations* to any building or structure shall comply with the requirements of the code for new construction. *Alterations* shall be such that the existing building or structure is no less conforming to the provisions of this code than the existing building or structure was prior to the *alteration*.

Alterations to an existing building, building system or portion thereof shall conform to the provisions of this code as they relate to new construction without requiring the unaltered portions of the existing building or building system to comply with this code. Alterations shall not create an unsafe or hazardous condition or overload existing building systems. *Alterations* shall be such that the existing building or structure uses no more energy than the existing building or structure prior to the *alteration*. Alterations to existing buildings shall comply with Sections R503.1.1 through R503.2.

❖ Alterations include renovations, which implies that something is changed in the structure. For example, the removal, rearranagement or replacement of partition walls in an office building is an alteration because of, in part, possible impact on the means of egress, fire resistance or other life safety features of the building. Conversely, the replacement of damaged trim pieces on a door frame is considered a repair, not an alteration.

Basically, alterations are to conform to the requirements for a new structure, except as specifically stated in this section. For example, a new window installed where there was none will be required to have the *U*-factor rating and SHGC rating required for fenestration in the code, even if the insulation in the walls is not in conformance with the code. With this basic intent in mind, Sections R503.1.1, R503.1.2, R503.1.3, R503.1.4 and R503.2 address specific systems in the code that could be part of an alteration.

R503.1.1 Building envelope. Building envelope assemblies that are part of the alteration shall comply with Section R402.1.2 or R402.1.4, Sections R402.2.1 through R402.2.12, R402.3.1, R402.3.2, R402.4.3 and R402.4.4.

Exception: The following alterations need not comply with the requirements for new construction provided the energy use of the building is not increased:

1. Storm windows installed over existing fenestration.
2. Existing ceiling, wall or floor cavities exposed during construction provided that these cavities are filled with insulation.
3. Construction where the existing roof, wall or floor cavity is not exposed.
4. Roof recover.
5. Roofs without insulation in the cavity and where the sheathing or insulation is exposed during reroofing shall be insulated either above or below the sheathing.
6. Surface-applied window film installed on existing single pane fenestration assemblies to reduce solar heat gain provided the code does not require the glazing or fenestration assembly to be replaced.

❖ The exceptions to this section are the key to these provisions. Alterations involving exterior walls and roofs are required to meet the requirements for a new building unless one of these exceptions apply.

The exceptions address situations where the alteration or repair of a structure or element is not required to comply with the provisions of the code. Typically, such situations would be a normal part of ongoing maintenance of the building, would improve the building's energy performance, or would not pres-

INTERNATIONAL CODE COUNCIL®
Copyright © 2015 ICC. ALL RIGHTS RESERVED. Accessed by David Dammon on Jun 21, 2017 12:30:52 PM pursuant to License Agreement with ICC. No further reproduction or distribution authorized. ANY UNAUTHORIZED REPRODUCTION OR DISTRIBUTION IS A VIOLATION OF THE FEDERAL COPYRIGHT ACT AND THE LICENSE AGREEMENT, AND SUBJECT TO CIVIL AND CRIMINAL PENALTIES THEREUNDER.

ent an opportunity for improved energy savings. All of these exceptions are tied to the fact that they are permitted, provided "the energy use of the building is not increased."

Exception 1 is a fairly self-evident provision. Because of the limited nature of the work, there is little opportunity to make additional changes. This helps to reinforce the statement from the main paragraph that the intent is not to make "the unaltered portions(s) of the existing building or building system" comply with the code. In this case, the addition of a storm window over an existing window will only improve performance of the existing fenestration.

Exception 2 is important for a couple of the limitations that it contains. The provision only applies when the ceiling, wall or floor cavity is "exposed during construction." If the cavity is not opened up, then there is no requirement to do anything. If the cavity is exposed, the requirement will only be to "fill" it with insulation. Therefore, the level of insulation is not required to comply with the building thermal envelope requirements but is instead only required to be "filled" with any type of insulation and not to any specific *R*-value.

Exception 3 will exempt the need to make changes to the building thermal envelope because the building cavities are not exposed.

Exception 4 is straightforward. A roof recover is an alteration but does not impact the building envelope.

Exception 5 applies to roofs that are part of the building envelope and typically would have below-deck or above-deck insulation. The second sentence of Exception 4 permits the code-required insulation to be above or below the deck. For a typical single-family home (with nonconditioned space), the ceiling is the building thermal envelope and the roof is not; therefore, Exception 5 would not apply. However, if during reroofing the existing ceiling cavities are exposed, then Exception 3 would apply.

Exception 6 is straightforward as well. Surface film used to provide a lower SHGC rating is acceptable for windows that do not otherwise need to be replaced.

R503.1.1.1 Replacement fenestration. Where some or all of an existing fenestration unit is replaced with a new fenestration product, including sash and glazing, the replacement fenestration unit shall meet the applicable requirements for *U*-factor and SHGC as provided in Table R402.1.2.

❖ Replacement windows and doors are required to meet the requirements of the code for new construction, with no exceptions.

Replacing only a glass pane in an existing sash and frame would not fall under this provision if the *U*-factor and SHGC are equal to or lower than the values prior to the replacement. In situations where the existing values are not known or where the replacement is more than just replacing the glass pane, the provisions may be applicable. It is often common practice when fenestration is replaced to remove only the sash and glazing of an existing window and replace them with an entirely new fenestration product. Sometimes the existing frame also is removed, but many times the new fenestration product is custom made to fit in the existing space left after the sash and glazed portions are removed. In essence, the new fenestration is installed in or over the existing frame. Whether the existing frame is removed or not, these types of replacements are regulated by this section.

Section R503.1.1.1 requires that each fenestration unit replaced in a residence not exceed the maximum fenestration *U*-factor and SHGC for the applicable climate zone. This requirement applies to all replacement windows, even if the existing frame is not removed (e.g., the new window is placed inside the old frame), so long as the sash and glazing are replaced. In addition, remember that the definition of "Fenestration" includes doors, which must meet the same *U*-factor requirements as windows. Therefore, the replacement of a door also would have to meet these requirements.

When dealing with replacement fenestration, the code official should be consulted to explain how this requirement will be applied. For simple ease of application for both the code official and the installer, the *U*-factor and SHGC requirements could be applied to each fenestration unit. Therefore, the *U*-factor and SHGC required for each unit would be the values listed directly in Table R402.1.2. However, if acceptable to the code official and additional information is available regarding the performance of the remaining existing windows in the home, it may be reasonable to permit the use of the area-weighted values of Sections R402.3.1 and R402.3.2 or the exemptions of Sections R402.3.3 and R402.3.4 to the replaced fenestration unit.

In accordance with Section R102.1, the *U*-factor and SHGC for each replacement fenestration product must be obtained from a label attached to the product certifying that the values were determined in accordance with NFRC procedures by an accredited, independent laboratory. In the absence of an NFRC-labeled *U*-factor or SHGC, a value from the limited default tables [see Tables R303.1.3(1) through R303.1.3(3)] must be used. The NFRC procedures do include applicable methods to test various replacement products.

R503.1.2 Heating and cooling systems. New heating, cooling and duct systems that are part of the alteration shall comply with Sections R403.1, R403.2, R403.3 and R403.6.

> **Exception:** Where ducts from an existing heating and cooling system are extended, duct systems with less than 40 linear feet (12.19 m) in unconditioned spaces shall not be required to be tested in accordance with Section R403.3.3.

❖ Heating and cooling systems for additions are required to meet code requirements for new construction for alterations. The key to this section is the exception that allows relaxation on duct testing

INTERNATIONAL CODE COUNCIL®
Copyright © 2015 ICC. ALL RIGHTS RESERVED. Accessed by David Dammon on Jun 21, 2017 12:30:52 PM pursuant to License Agreement with ICC. No further reproduction or distribution authorized. ANY UNAUTHORIZED REPRODUCTION OR DISTRIBUTION IS A VIOLATION OF THE FEDERAL COPYRIGHT ACT AND THE LICENSE AGREEMENT, AND SUBJECT TO CIVIL AND CRIMINAL PENALTIES THEREUNDER.

requirements. This accommodates a simple alteration where there is a short reach with the ductwork in an attic or crawl space to the conditioned spaces in the alteration.

R503.1.3 Service hot water systems. New service hot water systems that are part of the alteration shall comply with Section R403.4.

❖ Service hot water systems in an alteration must meet the requirements of the code for new construction, with no exceptions.

R503.1.4 Lighting. New lighting systems that are part of the alteration shall comply with Section 404.1.

Exception: Alterations that replace less than 50 percent of the luminaires in a space, provided that such alterations do not increase the installed interior lighting power.

❖ Alterations involving lighting systems can be relaxed somewhat when fewer than 50 percent of the luminaires are being replaced. However, in keeping with the primary intent of the code for alterations, the final product cannot use more energy than the building that is being renovated. The code does not allow an increase in lighting power.

R503.2 Change in space conditioning. Any nonconditioned or low-energy space that is altered to become *conditioned space* shall be required to be brought into full compliance with this code.

Exception: Where the simulated performance option in Section R405 is used to comply with this section, the annual energy cost of the proposed design is permitted to be 110 percent of the annual energy cost otherwise allowed by Section R405.3.

❖ When nonconditioned spaces are converted to conditioned space, the impact on the community energy resources is the same as that for new construction. As such, they should be required to meet the minimum standards set by the code for new construction.

The exception recognizes the fact that full compliance with this code for existing buildings is extremely difficult and costly. Conditions such as slab edges, structural thermal bridges, and window configurations cannot be practically remedied in many cases. Therefore, an alternate compliance path allows a 10-percent higher total building performance value. This could result in the preservation and adaptive reuse of more existing buildings, which itself is a significant energy conservation measure.

SECTION R504
REPAIRS

R504.1 General. Buildings, structures and parts thereof shall be repaired in compliance with Section R501.3 and this section. Work on nondamaged components necessary for the required *repair* of damaged components shall be considered part of the *repair* and shall not be subject to the requirements for *alterations* in this chapter. Routine maintenance required by Section R501.3, ordinary repairs exempt from *permit*, and abatement of wear due to normal service conditions shall not be subject to the requirements for *repairs* in this section.

❖ This section and Section R504.2 detail examples of what a repair is. A repair is work not required to comply with the alterations provisions of the code. Section R503.2 provides some specific work that is considered repairs. This is done simply to clarify the code on these specific issues; the list is not intended to be comprehensive—other work could also be considered repairs, as described in this section.

R504.2 Application. For the purposes of this code, the following shall be considered repairs:

1. Glass-only replacements in an existing sash and frame.
2. Roof repairs.
3. Repairs where only the bulb and/or ballast within the existing luminaires in a space are replaced provided that the replacement does not increase the installed interior lighting power.

❖ See the commentary to Section R504.1.

SECTION R505
CHANGE OF OCCUPANCY OR USE

R505.1 General. Spaces undergoing a change in occupancy that would result in an increase in demand for either fossil fuel or electrical energy shall comply with this code.

❖ When a building undergoes a change of occupancy, energy-using systems (envelope, mechanical, service water heating, electrical distribution or illumination) must be evaluated to determine the effect the change of occupancy has on system performance and energy use. For example, if a mercantile building were converted to a restaurant, additional ventilation would be required for the public based on the increased occupant load. If an existing system serves an occupancy that is different from the occupancy it served when the code went into effect, the mechanical system must comply with the applicable code requirements for a mechanical system serving the newer occupancy. Depending on the nature of the previous occupancy, changing a building's occupancy classification could result in a change to the mechanical, service water heating, electrical distribution or illumination systems or any combination of these.

Buildings undergoing a change of occupancy must meet the applicable requirements of the code when peak demand is increased. For example, if a hotel is converted to multiple-family residential use and the conversion results in an increase in the building's peak connected load (space conditioning, lighting or service water heating), the entire building must be brought into compliance.

When the occupancy changes in a portion of an existing building (residential or commercial) and the new occupancy results in an increase in the peak demand for either fossil fuel or electrical energy sup-

INTERNATIONAL CODE COUNCIL®
Copyright © 2015 ICC. ALL RIGHTS RESERVED. Accessed by David Dammon on Jun 21, 2017 12:30:52 PM pursuant to License Agreement with ICC. No further reproduction or distribution authorized. ANY UNAUTHORIZED REPRODUCTION OR DISTRIBUTION IS A VIOLATION OF THE FEDERAL COPYRIGHT ACT AND THE LICENSE AGREEMENT, AND SUBJECT TO CIVIL AND CRIMINAL PENALTIES THEREUNDER.

ply, the portion of the building associated with the new occupancy must meet the code.

When a permittee claims that a change in occupancy will not increase the peak design rate of energy use for the building, it is the applicant's responsibility to demonstrate that the peak load of the converted building will not exceed the peak load of the original building. Without supporting documentation, the peak load generally must be assumed to increase with a change in occupancy.

It is also important that users realize that under the code there can be a difference between the change of occupancy (the way a building is used) and what the IBC deals with when a change of occupancy classification occurs. Therefore, if a storage building that has no heating or cooling is modified so that the building is heated to prevent stock items from freezing, the IBC would not consider this as a change of occupancy because the occupancy classification would still be Group S-1. The code, however, would consider this a change in occupancy because the way the building is used would change and it would result in an increase in the demand for energy.

R505.2 General. Any space that is converted to a dwelling unit or portion thereof from another use or occupancy shall comply with this code.

Exception: Where the simulated performance option in Section R405 is used to comply with this section, the annual energy cost of the proposed design is permitted to be 110 percent of the annual energy cost otherwise allowed by Section R405.3.

❖ This is a specific example of a change in occupancy. See commentary to Section R505.1.

The exception recognizes the fact that full compliance with the code for existing buildings is extremely difficult and costly. Conditions such as slab edges, structural thermal bridges and window configurations cannot be practically remedied in many cases. Therefore, an alternate compliance path allows a 10-percent higher total building performance value. This could result in the preservation and adaptive reuse of more existing buildings, which itself is a significant energy conservation measure.

INTERNATIONAL CODE COUNCIL®
Copyright © 2015 ICC. ALL RIGHTS RESERVED. Accessed by David Dammon on Jun 21, 2017 12:30:52 PM pursuant to License Agreement with ICC. No further reproduction or distribution authorized. ANY UNAUTHORIZED REPRODUCTION OR DISTRIBUTION IS A VIOLATION OF THE FEDERAL COPYRIGHT ACT AND THE LICENSE AGREEMENT, AND SUBJECT TO CIVIL AND CRIMINAL PENALTIES THEREUNDER.

INTERNATIONAL CODE COUNCIL®
Copyright © 2015 ICC. ALL RIGHTS RESERVED. Accessed by David Dammon on Jun 21, 2017 12:30:52 PM pursuant to License Agreement with ICC. No further reproduction or distribution authorized. ANY UNAUTHORIZED REPRODUCTION OR DISTRIBUTION IS A VIOLATION OF THE FEDERAL COPYRIGHT ACT AND THE LICENSE AGREEMENT, AND SUBJECT TO CIVIL AND CRIMINAL PENALTIES THEREUNDER.

Chapter 6 [RE]: Referenced Standards

General Comments

Chapter 6 [RE] contains a comprehensive list of standards that are referenced in the Residential Provisions of this code. It is organized to make locating specific document references easy.

It is important to understand that not every document related to energy conservation is qualified to be a "referenced standard." The International Code Council (ICC)® has adopted a criterion that referenced standards in the *International Codes*® (I-Codes®) and standards intended for adoption into the I-Codes must meet to qualify as a referenced standard. The policy is summarized as follows:

- Code references: The scope and application of the standard must be clearly identified in the code text.
- Standard content: The standard must be written in mandatory language and be appropriate for the subject covered. The standard cannot have the effect of requiring proprietary materials or prescribing a proprietary testing agency.
- Standard promulgation: The standard must be readily available and developed and maintained in a consensus process such as those used by ASTM or ANSI.

The ICC Code Development Procedures CP #28, of which the standards policy is a part, are updated periodically. A copy of the latest version can be obtained from the ICC offices.

Once a standard is incorporated into the code through the code development process, it becomes an enforceable part of the code. When the code is adopted by a jurisdiction, the standard also is part of that jurisdiction's adopted code. It is for this reason that the criteria were developed. Compliance with this policy means that documents incorporated into the code are developed through the use of a consensus process, are written in mandatory language and do not mandate the use of proprietary materials or agencies. The requirement for a standard to be developed through a consensus process means that the standard is representative of the most current body of available knowledge on the subject as determined by a broad range of interested or affected parties without dominance by any single interest group. A true consensus process has many attributes, including but not limited to:

- An open process that has formal (published) procedures allowing for the consideration of all viewpoints.
- A definitive review period that allows for the standard to be updated and/or revised.
- A process of notification to all interested parties.
- An appeals process.

Many available documents related to mechanical system design and installation and construction, though useful, are not "standards" and are not appropriate for reference in the code. Often, these documents are developed or written with the intention of being used for regulatory purposes and are unsuitable for use as a standard because of extensive use of recommendations, advisory comments and nonmandatory terms. Typical examples include installation instructions, guidelines and practices.

The objective of ICC's standards policy is to provide regulations that are clear, concise and enforceable; thus the requirement for standards to be written in mandatory language. This requirement is not intended to mean that a standard cannot contain informational or explanatory material that will aid the user of the standard in its application. When the standard's promulgating agency wants such material to be included, however, the information must appear in a nonmandatory location, such as an annex or appendix, and be clearly identified as not being part of the standard.

Overall, standards referenced by the code must be authoritative, relevant, up to date and, most important, reasonable and enforceable. Standards that comply with the ICC's standards policy fulfill these expectations.

Purpose

As a performance-based code, the *International Energy Conservation Code*® (IECC®) contains numerous references to documents that are used to regulate materials and methods of construction. The references to these documents within the code text consist of the promulgating agency's acronym and its publication designation (for example, ACCA Manual J) and a further indication that the document being referenced is the one that is listed in this chapter. This chapter contains all of the information that is necessary to identify the specific referenced document. Included is the following information on a document's promulgating agency (see Commentary Figure 6 [RE]):

- The promulgating agency (the agency's title).
- The promulgating agency's acronym.
- The promulgating agency's address.

INTERNATIONAL CODE COUNCIL®
Copyright © 2015 ICC. ALL RIGHTS RESERVED. Accessed by David Dammon on Jun 21, 2017 12:30:52 PM pursuant to License Agreement with ICC. No further reproduction or distribution authorized. ANY UNAUTHORIZED REPRODUCTION OR DISTRIBUTION IS A VIOLATION OF THE FEDERAL COPYRIGHT ACT AND THE LICENSE AGREEMENT, AND SUBJECT TO CIVIL AND CRIMINAL PENALTIES THEREUNDER.

For example, a reference to ASTM E 283 indicates that this document can be found in Chapter 6 [RE] under the heading ASTM. The specific standards designation is E 283. For convenience, these designations are listed in alphanumeric order. This chapter identifies that ASTM E 283 is titled *Test Method for Determining the Rate of Air Leakage Through Exterior Windows, Curtain Walls and Doors Under Specified Pressure Differences Across the Specimen*, the applicable edition (i.e., its year of publication) is 2004 and it is referenced in one section of the code.

This chapter will also indicate when a document has been discontinued or replaced by its promulgating agency. When a document is replaced by a different one, a note will appear to tell the user the designation and title of the new document.

The key aspect of the manner in which standards are referenced by the code is that a specific edition of a specific standard is clearly identified. In this manner, the requirements necessary for compliance can be readily determined. The basis for code compliance is, therefore, established and available on an equal basis to the building official, contractor, designer and owner.

This chapter lists the standards that are referenced in various sections of this document. The standards are listed herein by the promulgating agency of the standard, the standard identification, the effective date and title, and the section or sections of this document that reference the standard. The application of the referenced standards shall be as specified in Section R106.

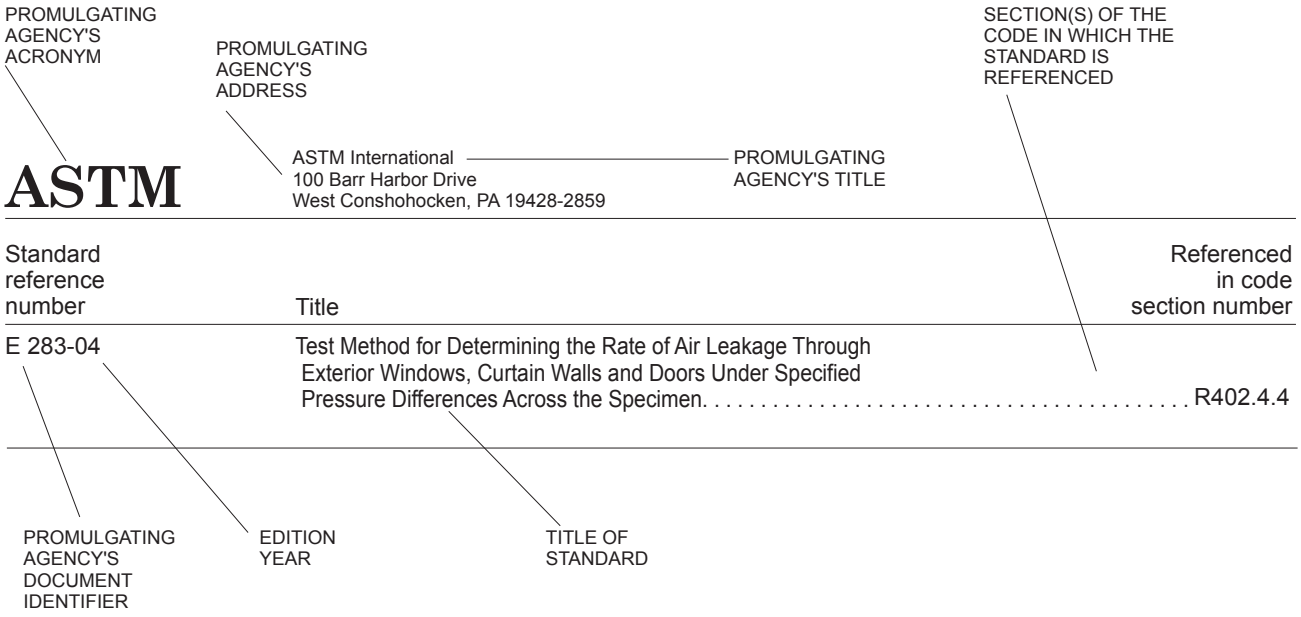

Figure 6 [RE]
REFERENCED STANDARDS

INTERNATIONAL CODE COUNCIL®
Copyright © 2015 ICC. ALL RIGHTS RESERVED. Accessed by David Dammon on Jun 21, 2017 12:30:52 PM pursuant to License Agreement with ICC. No further reproduction or distribution authorized. ANY UNAUTHORIZED REPRODUCTION OR DISTRIBUTION IS A VIOLATION OF THE FEDERAL COPYRIGHT ACT AND THE LICENSE AGREEMENT, AND SUBJECT TO CIVIL AND CRIMINAL PENALTIES THEREUNDER.

This chapter lists the standards that are referenced in various sections of this document. The standards are listed herein by the promulgating agency of the standard, the standard identification, the effective date and title, and the section or sections of this document that reference the standard. The application of the referenced standards shall be as specified in Section 106.

AAMA

American Architectural Manufacturers Association
1827 Walden Office Square
Suite 550
Schaumburg, IL 60173-4268

Standard reference number	Title	Referenced in code section number
AAMA/WDMA/CSA 101/I.S.2/A C440—11	North American Fenestration Standard/ Specifications for Windows, Doors and Unit Skylights	R402.4.3

ACCA

Air Conditioning Contractors of America
2800 Shirlington Road, Suite 300
Arlington, VA 22206

Standard reference number	Title	Referenced in code section number
Manual J—2011	Residential Load Calculation Eighth Edition	R403.7
Manual S—13	Residential Equipment Selection	R403.7

APSP

The Association of Pool and Spa Professionals
2111 Eisenhower Avenue
Alexandria, VA 22314

Standard reference number	Title	Referenced in code section number
APSP 14—11	American National Standard for Portable Electric Spa Energy Efficiency	R403.10.1, 403.11
APSP 15a—2013	American National Standard for Residential Swimming Pool and Spa Energy Efficiency	R403.12

ASHRAE

American Society of Heating, Refrigerating and Air-Conditioning Engineers, Inc.
1791 Tullie Circle, NE
Atlanta, GA 30329-2305

Standard reference number	Title	Referenced in code section number
ASHRAE—2013	ASHRAE Handbook of Fundamentals	R402.1.5, Table R405.5.2(1)
ASHRAE 193—2010	Method of Test for Determining the Airtightness of HVAC Equipment	R403.3.2.1

ASTM

ASTM International
100 Barr Harbor Drive
West Conshohocken, PA 19428-2859

Standard reference number	Title	Referenced in code section number
C 1363—11	Standard Test Method for Thermal Performance of Building Materials and Envelope Assemblies by Means of a Hot Box Apparatus	R303.1.4.1
E 283—04	Test Method for Determining the Rate of Air Leakage Through Exterior Windows, Curtain Walls and Doors Under Specified Pressure Differences Across the Specimen	R402.4.4

INTERNATIONAL CODE COUNCIL®
Copyright © 2015 ICC. ALL RIGHTS RESERVED. Accessed by David Dammon on Jun 21, 2017 12:30:52 PM pursuant to License Agreement with ICC. No further reproduction or distribution authorized. ANY UNAUTHORIZED REPRODUCTION OR DISTRIBUTION IS A VIOLATION OF THE FEDERAL COPYRIGHT ACT AND THE LICENSE AGREEMENT, AND SUBJECT TO CIVIL AND CRIMINAL PENALTIES THEREUNDER.

ASTM—continued

E 779—10	Standard Test Method for Determining Air Leakage Rate by Fan Pressurization	R402.4.1.2
E 1827—11	Standard Test Methods for Determining Airtightness of Building Using an Orifice Blower Door.	R402.4.1.2

CSA

CSA Group
8501 East Pleasant Valley
Cleveland, OH 44131-5575

Standard reference number	Title	Referenced in code section number
AAMA/WDMA/CSA 101/I.S.2/A440—11	North American Fenestration Standard/Specification for Windows, Doors and Unit Skylights.	R402.4.3
CSA 55.1—2012	Test Method for measuring efficiency and pressure loss of drain water heat recovery units.	R403.5.4
CSA 55.2—2012	Drain water heat recover units	R403.5.4

DASMA

Door and Access Systems Manufacturers Association
1300 Sumner Avenue
Cleveland, OH 44115-2851

Standard reference number	Title	Referenced in code section number
105—92(R2004)—13	Test Method for Thermal Transmittance and Air Infiltration of Garage Doors	R303.1.3

ICC

International Code Council, Inc.
500 New Jersey Avenue, NW
6th Floor
Washington, DC 20001

Standard reference number	Title	Referenced in code section number
IBC—15	International Building Code®	R201.3, R303.2, R402.1.1, R501.4
ICC 400—12	Standard on the Design and Construction of Log Structures	Table R402.5.1.1
IECC—15	International Energy Conservation Code®	R101.4.1, 403.8
IECC—09	2009 International Energy Conservation Code®	R406.2
ECC—06	2006 International Energy Conservation Code®	R202, R406.3.1
IFC—15	International Fire Code®	R201.3, R501.4
IFGC—15	International Fuel Gas Code®	R201.3, R501.4
IMC—15	International Mechanical Code®	R201.3, R403.3.2, R403.6, R501.4
IPC—15	International Plumbing Code®	R201.3, R501.4
IPSDC—15	International Private Sewage Disposal Code®	501.4
IPMC—15	International Property Maintenance Code®	501.4
IRC—15	International Residential Code®	R201.3, R303.2, R402.1.1, R402.2.11, R403.3.2, R403.6, R501.4

IIEEE

The Institute of Electrical and Electronic Engineers, Inc.
3 Park Avenue
New York, NY 1016-5997

Standard reference number	Title	Referenced in code section number
515.1—2012	IEEE Standard for the Testing, Design, Installation, and Maintenance of Electrical Resistance Trace Heating for Commercial Applications	R403.5.1.2

INTERNATIONAL CODE COUNCIL®
Copyright © 2015 ICC. ALL RIGHTS RESERVED. Accessed by David Dammon on Jun 21, 2017 12:30:52 PM pursuant to License Agreement with ICC. No further reproduction or distribution authorized. ANY UNAUTHORIZED REPRODUCTION OR DISTRIBUTION IS A VIOLATION OF THE FEDERAL COPYRIGHT ACT AND THE LICENSE AGREEMENT, AND SUBJECT TO CIVIL AND CRIMINAL PENALTIES THEREUNDER.

NFPA

National Fire Protection Association.
1 Batterymarch Park
Quincy, MA 02169-7471

Standard reference number	Title	Referenced in code section number
70—14	National Electrical Code	R501.4

NFRC

National Fenestration Rating Council, Inc.
6305 Ivy Lane, Suite 140
Greenbelt, MD 20770

Standard reference number	Title	Referenced in code section number
100—2009	Procedure for Determining Fenestration Products *U*-factors—Second Edition	R303.1.3
200—2009	Procedure for Determining Fenestration Product Solar Heat Gain Coefficients and Visible Transmittance at Normal Incidence—Second Edition	R303.1.3
400—2009	Procedure for Determining Fenestration Product Air Leakage—Second Edition	R402.4.3

UL

UL LLC
333 Pfingsten Road
Northbrook, IL 60062

Standard reference number	Title	Referenced in code section number
127—11	Standard for Factory Built Fireplaces	R402.4.2
515—11	Electrical Resistance Heat Tracing for Commercial and Industrial Applications including revisions through November 30, 2011	R403.5.1.2

US-FTC

United States-Federal Trade Commission
600 Pennsylvania Avenue NW
Washington, DC 20580

Standard reference number	Title	Referenced in code section number
CFR Title 16 (May 31, 2005)	R-value Rule.	R303.1.4

WDMA

Window and Door Manufacturers Association
2025 M Street, NW Suite 800
Washington, DC 20036-3309

Standard reference number	Title	Referenced in code section number
AAMA/WDMA/CSA 101/I.S.2/A440—11	North American Fenestration Standard/Specification for Windows, Doors and Unit Skylights	R402.4.3

INTERNATIONAL CODE COUNCIL®
Copyright © 2015 ICC. ALL RIGHTS RESERVED. Accessed by David Dammon on Jun 21, 2017 12:30:52 PM pursuant to License Agreement with ICC. No further reproduction or distribution authorized. ANY UNAUTHORIZED REPRODUCTION OR DISTRIBUTION IS A VIOLATION OF THE FEDERAL COPYRIGHT ACT AND THE LICENSE AGREEMENT, AND SUBJECT TO CIVIL AND CRIMINAL PENALTIES THEREUNDER.

INTERNATIONAL CODE COUNCIL®
Copyright © 2015 ICC. ALL RIGHTS RESERVED. Accessed by David Dammon on Jun 21, 2017 12:30:52 PM pursuant to License Agreement with ICC. No further reproduction or distribution authorized. ANY UNAUTHORIZED REPRODUCTION OR DISTRIBUTION IS A VIOLATION OF THE FEDERAL COPYRIGHT ACT AND THE LICENSE AGREEMENT, AND SUBJECT TO CIVIL AND CRIMINAL PENALTIES THEREUNDER.

Appendix RA: Recommended Procedure for Worst-case Testing of Atmospheric Venting Systems Under R402.4 or R405 Conditions ≤ 5ACH$_{50}$

(This appendix is informative and is not part of the code.)

General Comments

Energy efficiency improvements often have a direct impact on the building pressure boundary affecting the safe operation of combustion equipment. Under certain conditions, reduced natural-air leakage coupled with the installation of atmospheric combustion appliances will reduce air exchange to the outside of a building and potentially contribute to poor indoor air quality and health problems due to spillage, inadequate draft, or carbon monoxide concerns.

Purpose

This appendix is intended to provide guidance to builders, code officials and home performance contractors for worst-case testing of atmospheric venting systems to identify problems that weaken draft and restrict combustion air. Worst-case vent testing uses the home's exhaust fans, air-handling appliances and chimneys to create worst-case depressurization in the combustion appliance zone (CAZ). This appendix is basically a distilled version of predominant combustion safety test procedures for atmospherically vented appliances found in readily available home performance programs across the country, such as EPA's *Healthy Indoor Environments Protocols*, EPA's *Home Performance with Energy Star*, DOE's *Workforce Guidelines for Home Energy Upgrades*, HUD's *Community Development Block Grants and Weatherization Assistance Programs*, BPI's *Technical Standards for the Building Analyst Professional*, and RESNET's *Interim Guidelines for Combustion Appliance Testing and Writing Work Scopes*. This is intended to take the combustion safety test procedures that are used most commonly by these home performance, weatherization, and beyond-code programs, and reduce them to their simplest and most straightforward form for the purpose of combustion safety in field assessment through the use of building diagnostic tools.

SECTION RA101
SCOPE

RA101.1 General. This appendix is intended to provide guidelines for worst-case testing of atmospheric venting systems. Worst-case testing is recommended to identify problems that weaken draft and restrict combustion air.

SECTION RA201
GENERAL DEFINITIONS

COMBUSTION APPLIANCE ZONE (CAZ). A contiguous air volume within a building that contains a Category I or II atmospherically vented appliance or a Category III or IV direct-vent or integral vent appliance drawing combustion air from inside the building or dwelling unit. The CAZ includes, but is not limited to, a mechanical closet, a mechanical room, or the main body of a house or dwelling unit.

DRAFT. The pressure difference existing between the *appliance* or any component part and the atmosphere that causes a continuous flow of air and products of *combustion* through the gas passages of the *appliance* to the atmosphere.

Mechanical or induced draft. The pressure difference created by the action of a fan, blower or ejector that is located between the *appliance* and the *chimney* or vent termination.

Natural draft. The pressure difference created by a vent or *chimney* because of its height and the temperature difference between the *flue* gases and the atmosphere.

SPILLAGE. Combustion gases emerging from an appliance or venting system into the combustion appliance zone during burner operation.

SECTION RA301
TESTING PROCEDURE

RA301.1 Worst-case testing of atmospheric venting systems. Buildings or dwelling units containing a Category I or II atmospherically vented appliance; or a Category III or IV

INTERNATIONAL CODE COUNCIL®
Copyright © 2015 ICC. ALL RIGHTS RESERVED. Accessed by David Dammon on Jun 21, 2017 12:30:52 PM pursuant to License Agreement with ICC. No further reproduction or distribution authorized. ANY UNAUTHORIZED REPRODUCTION OR DISTRIBUTION IS A VIOLATION OF THE FEDERAL COPYRIGHT ACT AND THE LICENSE AGREEMENT, AND SUBJECT TO CIVIL AND CRIMINAL PENALTIES THEREUNDER.

direct-vent or integral vent appliance drawing combustion air from inside of the building or dwelling unit, shall have the Combustion Appliance Zone (CAZ) tested for spillage, acceptable draft and carbon monoxide (CO) in accordance with this section. Where required by the *code official*, testing shall be conducted by an *approved* third party. A written report of the results of the test shall be signed by the party conducting the test and provided to the *code official*. Testing shall be performed at any time after creation of all penetrations of the *building thermal* envelope and prior to final inspection.

Exception: Buildings or dwelling units containing only Category III or IV direct-vent or integral vent appliances that do not draw combustion air from inside of the building or dwelling unit.

The enumerated test procedure as follows shall be complied with during testing:

1. Set combustion appliances to the pilot setting or turn off the service disconnects for combustion appliances. Close exterior doors and windows and the fireplace damper. With the building or dwelling unit in this configuration, measure and record the baseline ambient pressure inside the building or dwelling unit CAZ. Compare the baseline ambient pressure of the CAZ to that of the outside ambient pressure and record the difference (Pa).
2. Establish worst case by turning on the *clothes dryer* and all exhaust fans. Close all interior doors that make the CAZ pressure more negative. Turn on the air handler, where present, and leave on if, as a result, the pressure in the CAZ becomes more negative. Check interior door positions again, closing only the interior doors that make the CAZ pressure more negative. Measure net change in pressure from the CAZ to outdoor ambient pressure, correcting for the base ambient pressure inside the home. Record "worst case depressurization" pressure and compare to Table RA301.1(1).

   Where CAZ depressurization limits are exceeded under worst-case conditions in accordance with Table RA301.1(1), additional combustion air shall be provided or other modifications to building air-leakage performance or exhaust appliances such that depressurization is brought within the limits prescribed in Table RA301.1(1).
3. Measure worst-case spillage, acceptable draft and carbon monoxide (CO) by firing the fuel-fired appliance with the smallest Btu capacity first.
   a. Test for spillage at the draft diverter with a mirror or smoke puffer. An appliance that continues to spill flue gases for more than 60 seconds fails the spillage test.
   b. Test for CO measuring undiluted flue gases in the throat or flue of the appliance using a digital gauge in parts per million (ppm) at the 10-minute mark. Record CO ppm readings to be compared with Table RA301.1(3) upon completion of Step 4. Where the spillage test fails under worst case, go to Step 4.
   c. Where spillage ends within 60 seconds, test for acceptable draft in the connector not less than 1 foot (305 mm), but not more than 2 feet (610 mm) downstream of the draft diverter. Record draft pressure and compare to Table RA301.1(2).
   d. Fire all other connected appliances simultaneously and test again at the draft diverter of each appliance

TABLE RA301.1(1)
CAZ DEPRESSURIZATION LIMITS

VENTING CONDITION	LIMIT (Pa)
Category I, atmospherically vented water heater	–2.0
Category I or II atmospherically vented boiler or furnace common-vented with a Category I atmospherically vented water heater	–3.0
Category I or II atmospherically vented boiler or furnace, equipped with a flue damper, and common vented with a Category I atmospherically vented water heater	–5.0
Category I or II atmospherically vented boiler or furnace alone	
Category I or II atmospherically vented, fan-assisted boiler or furnace common vented with a Category I atmospherically vented water heater	
Decorative vented, gas appliance	
Power-vented or induced-draft boiler or furnace alone, or fan-assisted water heater alone	–15.0
Category IV direct-vented appliances and sealed combustion appliances	–50.0

For SI: 6894.76 Pa = 1.0 psi.

TABLE RA301.1(2)
ACCEPTABLE DRAFT TEST CORRECTION

OUTSIDE TEMPERATURE (°F)	MINIMUM DRAFT PRESSURE REQUIRED (Pa)
< 10	–2.5
10 – 90	(Outside Temperature ÷ 40) – 2.75
> 90	–0.5

For SI: 6894.76 Pa = 1.0 psi.

INTERNATIONAL CODE COUNCIL®
Copyright © 2015 ICC. ALL RIGHTS RESERVED. Accessed by David Dammon on Jun 21, 2017 12:30:52 PM pursuant to License Agreement with ICC. No further reproduction or distribution authorized. ANY UNAUTHORIZED REPRODUCTION OR DISTRIBUTION IS A VIOLATION OF THE FEDERAL COPYRIGHT ACT AND THE LICENSE AGREEMENT, AND SUBJECT TO CIVIL AND CRIMINAL PENALTIES THEREUNDER.

for spillage, CO and acceptable draft using procedures 3a through 3c.

4. Measure spillage, acceptable draft, and carbon monoxide (CO) under natural conditions—without *clothes dryer* and exhaust fans on—in accordance with the procedure outlined in Step 3, measuring the net change in pressure from worst case condition in Step 3 to natural in the CAZ to confirm the worst case depressurization taken in Step 2. Repeat the process for each appliance, allowing each vent system to cool between tests.
5. Monitor indoor ambient CO in the breathing zone continuously during testing, and abort the test where indoor ambient CO exceeds 35 ppm by turning off the appliance, ventilating the space, and evacuating the building. The CO problem shall be corrected prior to completing combustion safety diagnostics.
6. Make recommendations based on test results and the retrofit action prescribed in Table RA301.1(3).

TABLE RA301.1(3)
ACCEPTABLE DRAFT TEST CORRECTION

CARBON MONOXIDE LEVEL (ppm)	AND OR	SPILLAGE AND ACCEPTABLE DRAFT TEST RESULTS	RETROFIT ACTION
0 – 25	and	Passes	Proceed with work
$25 < \times \leq 100$	and	Passes	Recommend that CO problem be resolved
$25 < \times \leq 100$	and	Fails in worst case only	Recommend an appliance service call and repairs to resolve the problem
$100 < \times \leq 400$	or	Fails under natural conditions	**Stop!** Work shall not proceed until appliance is serviced and problem resolved
> 400	and	Passes	**Stop!** Work shall not proceed until appliance is serviced and problem resolved
> 400	and	Fails under any condition	**Emergency!** Shut off fuel to appliance and call for service immediately

INTERNATIONAL CODE COUNCIL®
Copyright © 2015 ICC. ALL RIGHTS RESERVED. Accessed by David Dammon on Jun 21, 2017 12:30:52 PM pursuant to License Agreement with ICC. No further reproduction or distribution authorized. ANY UNAUTHORIZED REPRODUCTION OR DISTRIBUTION IS A VIOLATION OF THE FEDERAL COPYRIGHT ACT AND THE LICENSE AGREEMENT, AND SUBJECT TO CIVIL AND CRIMINAL PENALTIES THEREUNDER.

INTERNATIONAL CODE COUNCIL®
Copyright © 2015 ICC. ALL RIGHTS RESERVED. Accessed by David Dammon on Jun 21, 2017 12:30:52 PM pursuant to License Agreement with ICC. No further reproduction or distribution authorized. ANY UNAUTHORIZED REPRODUCTION OR DISTRIBUTION IS A VIOLATION OF THE FEDERAL COPYRIGHT ACT AND THE LICENSE AGREEMENT, AND SUBJECT TO CIVIL AND CRIMINAL PENALTIES THEREUNDER.

Appendix RB: Solar-ready Provisions—Detached One- and Two-family Dwellings, Multiple Single-family Dwellings (Townhouses)

(The provisions contained in this appendix are not mandatory unless specifically referenced in the adopting ordinance.)

General Comments

This appendix is intended to support future potential improvements for detached one- and two-family dwellings, and multiple single-family dwellings for solar electric and solar thermal systems. This appendix does not require the installation of conduit, prewiring, or preplumbing. It does not require any specific physical orientation of the residential building. It does not require any increased load capacities for residential roofing systems. It does not require the redesign of plans.

Many building departments have been mandated by local regulations to accelerate permits and inspections for solar installation. Having important information and documentation available to the building department, solar contractor and homeowner will assist in supporting the accelerated working environment many municipalities have mandated.

The U.S. Department of Energy's (DOE) SunShot Initiative has set a goal to make solar energy cost competitive with other forms of energy by the end of the decade, which would reduce installed costs of solar energy systems by about 75 percent. This initiative, combined with increased pressures on our energy supply and demand, is expected to drive greater adoption of renewable energy systems on residential buildings.

Purpose

This appendix is intended to identify the areas of a residential building roof, called the solar-ready zone, for potential future installation of renewable energy systems. The ability to plan ahead for possible future solar equipment starts with documenting necessary solar-ready zone information on the plans, some of which may already be required in permit construction requirements. This appendix also requires the builder to post specific information about the home for use by the homeowner(s).

The documentation of solar-ready zones and roof load calculations (already performed during the design phase) will assist building departments as well as any future solar contractors seeking to install renewable energy systems on the roof. The builder/designer is knowledgeable on the intricacies of each model and plan and can easily identify unobstructed roof areas as well as spaces where conduit, wiring and plumbing can be routed from the roof to the respective utility areas. This will save building departments and solar designers time and effort when installing future solar systems. If a homeowner wishes to install a solar energy system later, this documentation can save thousands of dollars in labor, installation, design and integration of the solar system into the house.

SECTION RB101
SCOPE

RB101.1 General. These provisions shall be applicable for new construction where solar-ready provisions are required.

SECTION RB102
GENERAL DEFINITION

SOLAR-READY ZONE. A section or sections of the roof or building overhang designated and reserved for the future installation of a solar photovoltaic or solar thermal system.

SECTION RB103
SOLAR-READY ZONE

RB103.1 General. New detached one- and two-family dwellings, and multiple single-family dwellings (townhouses) with not less than 600 square feet (55.74 m^2) of roof area oriented between 110 degrees and 270 degrees of true north shall comply with Sections RB103.2 through RB103.8.

Exceptions:

1. New residential buildings with a permanently installed on-site renewable energy system.

INTERNATIONAL CODE COUNCIL®
Copyright © 2015 ICC. ALL RIGHTS RESERVED. Accessed by David Dammon on Jun 21, 2017 12:30:52 PM pursuant to License Agreement with ICC. No further reproduction or distribution authorized. ANY UNAUTHORIZED REPRODUCTION OR DISTRIBUTION IS A VIOLATION OF THE FEDERAL COPYRIGHT ACT AND THE LICENSE AGREEMENT, AND SUBJECT TO CIVIL AND CRIMINAL PENALTIES THEREUNDER.

2. A building with a solar-ready zone that is shaded for more than 70 percent of daylight hours annually.

RB103.2 Construction document requirements for solar-ready zone. Construction documents shall indicate the solar-ready zone.

RB103.3 Solar-ready zone area. The total solar-ready zone area shall be not less than 300 square feet (27.87 m^2) exclusive of mandatory access or set back areas as required by the *International Fire Code*. New multiple single-family dwellings (townhouses) three stories or less in height above grade plane and with a total floor area less than or equal to 2,000 square feet (185.8 m^2) per dwelling shall have a solar-ready zone area of not less than 150 square feet (13.94 m^2). The solar-ready zone shall be composed of areas not less than 5 feet (1524 mm) in width and not less than 80 square feet (7.44 m^2) exclusive of access or set back areas as required by the *International Fire Code*.

RB103.4 Obstructions. Solar-ready zones shall be free from obstructions, including but not limited to vents, chimneys, and roof-mounted equipment.

RB103.5 Roof load documentation. The structural design loads for roof dead load and roof live load shall be clearly indicated on the construction documents.

RB103.6 Interconnection pathway. Construction documents shall indicate pathways for routing of conduit or plumbing from the solar-ready zone to the electrical service panel or service hot water system.

RB103.7 Electrical service reserved space. The main electrical service panel shall have a reserved space to allow installation of a dual pole circuit breaker for future solar electric installation and shall be labeled "For Future Solar Electric." The reserved space shall be positioned at the opposite (load) end from the input feeder location or main circuit location.

RB103.8 Construction documentation certificate. A permanent certificate, indicating the solar-ready zone and other requirements of this section, shall be posted near the electrical distribution panel, water heater or other conspicuous location by the builder or registered design professional.

INTERNATIONAL CODE COUNCIL®
Copyright © 2015 ICC. ALL RIGHTS RESERVED. Accessed by David Dammon on Jun 21, 2017 12:30:52 PM pursuant to License Agreement with ICC. No further reproduction or distribution authorized. ANY UNAUTHORIZED REPRODUCTION OR DISTRIBUTION IS A VIOLATION OF THE FEDERAL COPYRIGHT ACT AND THE LICENSE AGREEMENT, AND SUBJECT TO CIVIL AND CRIMINAL PENALTIES THEREUNDER.

INDEX

A

ACCESS HATCHES R402.2.4
ADDITIONS
Defined R202
Requirements R501.1.1, R502
ALTERATIONS
Defined R202
Requirements 503
ADMINISTRATION . . . . . Chapter 1
AIR BARRIER
Installation . . . . . R402.4.1.1, Table R402.4.1.1
Testing . . . . . ???
AIR ECONOMIZERS
Defined R202
AIR INFILTRATION
Defined R202
Requirements R402.8
AIR LEAKAGE R402.4, R403.3.3, R403.3.4
ALTERNATE MATERIALS R102
APPROVED
Defined R202
AUTOMATIC
Defined R202
ATMOSPHERIC VENTING . . . . . Appendix RA
Worst case testing RA103

B

BASEMENT WALLS
Defined R202
Requirements . . . . . R303.2.1, Table R402.1.2, Table R402.1.3, R402.2.8, Table R405.5.2(1)
BELOW-GRADE WALLS (see BASEMENT WALLS)
BOARD OF APPEALS R109
Qualifications of members R109.3
BUILDING
Defined R202
BUILDING THERMAL ENVELOPE
Air tightness R402.4.1
Compliance documentation R103.2, R401.2
Defined R202
Insulation R303.1.1
Insulation and fenestration criteria R402.1.2
Performance method . . . . . Table R405.5.2(1)
Requirements R102.1.1, R402

C

CEILINGS R402.2.1, R402.2.2
Specification for standard reference design . . . . . Table R405.5.2(1)
CERTIFICATE R401.3, B103.8
CHANGE OF OCCUPANCY R505
CIRCULATON SYSTEMS R403.5.1
CLIMATE TYPES
Defined . . . . . Table R301.3(1)
CLIMATE ZONES . . . . . R301, Figure R301.1, Table R301.1
By state or territory . . . . Figure R301.1, Table R301.1
International climate zones . . . . . R301.3, Table R301.3(1), Table R301.3(2)
Tropical R301.4
Warm humid . . . . . R301.2, Table R301.2, R301.3.1
CODE OFFICIAL
Defined R202
COMMERCIAL BUILDINGS
Compliance R101.5
Defined R202
COMPLIANCE AND ENFORCEMENT R101.5
Compliance Report R405.4.2.2
CONDITIONED FLOOR AREA
Defined R202
CONDITIONED SPACE
Defined R202
CONSTRUCTION DOCUMENTS R103
Amended. R103.4
Approval R103.3.1
Examination R103.3
Information required R103.2
Phased R103.3.3
Previous R103.3.2
Retention. R103.5
Thermal envelope depiction R405.4.2.2
CONTINUOUS AIR BARRIER
Defined R202
CONTROLS
Heat pump R403.1.1
Heating and cooling R403.1
Service water heating R403.5
CRAWL SPACE WALLS
Defined R202
Requirements . . . . . R303.2.1, Table R402.1.2, Table R402.1.3, R402.1.4, R402.2.10, Table R405.5.2(1)

INTERNATIONAL CODE COUNCIL®
Copyright © 2015 ICC. ALL RIGHTS RESERVED. Accessed by David Dammon on Jun 21, 2017 12:30:52 PM pursuant to License Agreement with ICC. No further reproduction or distribution authorized. ANY UNAUTHORIZED REPRODUCTION OR DISTRIBUTION IS A VIOLATION OF THE FEDERAL COPYRIGHT ACT AND THE LICENSE AGREEMENT, AND SUBJECT TO CIVIL AND CRIMINAL PENALTIES THEREUNDER.

D

DEFAULT DISTRIBUTION SYSTEM EFFICIENCIES . . . . . Table R405.5.2(2)
DEFINITIONS . . . . . Chapter 2
DEGREE DAY COOLING . . . . . Table R301.3(2)
DEGREE DAY HEATING . . . . . Table R301.3(2)
DEMAND RECIRCULATION WATER SYSTEM
Defined R202
Requirements R403.5.2
DESIGN CONDITIONS . . . . . Chapter 3, R302
DOORS
Attics and crawl spaces R402.2.4
Default *U*-factors . . . . . Table R303.1.3(2)
Opaque R402.3.4
Performance requirements . . . . . Table R405.5.2(1)
SHGC values . . . . . Table R402.1.2
U-values . . . . . Table R402.1.4
DUCTS
Defined R202
Insulation R103.2, R401.3, R403.3, R403.3.1
Sealing R103.2, R403.3.2
Tightness verification
Postconstruction test R403.3.2
Rough-in test R403.3.2
DUCT SYSTEM
Defined R202
DWELLING UNIT
Defined R202
Multiple units R403.8
DYNAMIC GLAZING R402.3.2
Defined R202

E

EAVE BAFFLE
Installation R402.2.3
ELECTRICAL POWER AND LIGHTING R404
ENERGY ANALYSIS, ANNUAL
Defined R202
Documentation R405.4
Requirements R405.3
ENERGY COST
Defined R202
Energy rating index compliance alternative R406
Energy rating index R406.3
ERI-based compliance R406.4
ENERGY RECOVERY VENTILATION SYSTEMS
Defined R202
Requirements . . . . . Table R405.5.2(1)
ENERGY SIMULATION TOOL
Defined R202
ENTRANCE DOOR
Defined R202
ENVELOPE, BUILDING THERMAL
Defined R202
ENVELOPE DESIGN PROCEDURES R402
EQUIPMENT EFFICIENCIES R103.2, R401.3
EQUIPMENT ROOM
Defined R202
EXISTING BUILDINGS . . . . . Chapter 5
EXTERIOR WALLS
Defined R202
Thermal performance . . . . . R402, R402.1.2, Table R405.5.2(1)

F

FEES R107
Refunds R107.5
Related fees R107.4
Schedule of permit fees R107.2
FENESTRATION R303.1.3, R402.3, R402.3.2, R402.4.3
Default *U*-factors . . . . . Table R303.1.3(1)
Defined R202
Rating and labeling R303.1.3, R402.1.1
Replacement R402.3.6
Requirements . . . . . Table R402.1.2
FENESTRATION PRODUCT, FIELD-FABRICATED
Defined R202
FENESTRATION PRODUCT, SITE-BUILT
Defined R202
FIREPLACES R402.4.2
FLOORS
Above-grade . . . . . Table R405.5.2(1)
Insulation R402.2.7
Slab-on-grade insulation requirements R402.2.9
FOUNDATIONS
Requirements . . . . . Table R402.5.1.1, Table R405.5.2(1)
FURNACE EFFICIENCY . . . . . Table R405.5.2(1)

G

GLAZED FENESTRATION R402.3.2, R403.3.3

INTERNATIONAL CODE COUNCIL®
Copyright © 2015 ICC. ALL RIGHTS RESERVED. Accessed by David Dammon on Jun 21, 2017 12:30:52 PM pursuant to License Agreement with ICC. No further reproduction or distribution authorized. ANY UNAUTHORIZED REPRODUCTION OR DISTRIBUTION IS A VIOLATION OF THE FEDERAL COPYRIGHT ACT AND THE LICENSE AGREEMENT, AND SUBJECT TO CIVIL AND CRIMINAL PENALTIES THEREUNDER.

H

HEAT PUMP R403.1.2
HEAT TRAPS
Defined R202
HEATED SLAB
Defined R202
HEATING AND COOLING LOADS. . R302.1, R403.1.2
HIGH-EFFICACY LAMPS
Defined R202
HISTORIC BUILDINGS. R101.4.2
HOT WATER
Piping insulation . . . . . R403.4.2, Table R403.4.2
HOT WATER BOILER
Outdoor temperature setback. R403.2
HVAC SYSTEMS
Tests
Postconstruction R403.3.4
Rough-in-test R403.3.4

I

IDENTIFICATION (MATERIALS, EQUIPMENTAND SYSTEM) R303.1
INDIRECTLY CONDITIONED SPACE (see CONDITIONED SPACE)
INFILTRATION, AIR LEAKAGE . . . . . R402.4, Table R405.5.2(1)
Defined R202
INSPECTIONS. R104
INSULATION
Basement walls R402.2.9
Ceilings with attic spaces R402.2.1
Ceilings without attic spaces R402.2.2
Crawl space walls. R402.2.10
Duct R403.2.1
Eave baffle R402.2.3
Floors R402.2.8
Hot water piping R403.4.2
Identification R303.1, R303.1.2
Installation . . . . . R303.1.1, R303.1.1.1, R303.1.2, R303.2, Table R402.4.1.2
Masonry veneer R402.2.11
Mass walls R402.2.5
Mechanical system piping R403.3
Product rating R303.1.4
Protection of exposed foundation R303.2.1
Protection of piping insulation. R403.3.1
Requirements . . . . . Table R402.1.1, R402.2
Slab-on-grade floors R402.2.9
Steel-frame ceilings, walls and floors . . . . . R402.2.6, Table R402.2.6
Sunroom R402.2.12
INSULATING SHEATHING
Defined R202
Requirements . . . . . Table R402.1.2, R402.1.2

L

LABELED
Defined R202
Requirements R303.1.3, R303.3, R402.4.3
LIGHTING POWER
Manufacturer's information R102.2,R102.3
LIGHTING SYSTEMS R404
Recessed R402.4.4, R404
LISTED
Defined R202
LOW ENERGY BUILDINGS R101.5.2
LOW-VOLTAGE LIGHTING
Defined R202
LUMINAIRE
Sealed. R402.4.3

M

MAINTENANCE INFORMATION R102.3
MANUALS R101.5.1, R102.3
Defined R202
MASONRY VENEER
Insulation. R402.2.12
MASS
Wall. . . . . 402.1.2, R402.1.3, R402.2.5, Table R402.2.6
MATERIALS AND EQUIPMENT. R303
MECHANICAL SYSTEMS AND EQUIPMENT. R403, R405.1
MECHANICAL VENTILATION . . . . . R403.6, Table R403.5.1, Table R405.5.2(1)
MULTIPLE DWELLING UNITS R403.8

O

OCCUPANCY
Requirements R101.4.4, R101.4.6, R101.5
OPAQUE DOORS R402.3.4

P

PERFORMANCE ANALYSIS R405
PERMIT
(see FEES)
Work commencing before permit R107.3
PIPE INSULATION R403.4, R403.5

INTERNATIONAL CODE COUNCIL®
Copyright © 2015 ICC. ALL RIGHTS RESERVED. Accessed by David Dammon on Jun 21, 2017 12:30:52 PM pursuant to License Agreement with ICC. No further reproduction or distribution authorized. ANY UNAUTHORIZED REPRODUCTION OR DISTRIBUTION IS A VIOLATION OF THE FEDERAL COPYRIGHT ACT AND THE LICENSE AGREEMENT, AND SUBJECT TO CIVIL AND CRIMINAL PENALTIES THEREUNDER.

PLANS AND SPECIFICATIONS R103
POOLS R403.10
Covers R403.10.4
Heaters R403.10.2
Time switches R403.10.3
PROPOSED DESIGN
Defined R202
Requirements . . . . . .R405, Table R405.5.2(1)
PUMPS
Time switches R403.10.3

R

***R*-VALUE**
Defined R202
Computation R402.1.3
Wood frame to cold formed steel frame ceiling, wall and floor insulation *R*-values . . . . . Table R402.2.6
READILY ACCESSIBLE
Defined R202
REFERENCED STANDARDS . . . . . R106, Chapter 6
REPAIR
Defined R202
Requirements R504
RESIDENTIAL BUILDINGS
Compliance R101.2, R101.5
Defined R202
Simulated performance alternative R405
ROOF ASSEMBLY
Defined R202
Requirements . . . . R101.4.3, R303.1.1.1, R402.2.2, Table R405.5.2(1)

S

SCOPE R101.2
SERVICE HOT WATER
Requirements R403.5
SHEATHING, INSULATING (see INSULATING SHEATHING)
SHGC (see SOLAR HEAT GAIN COEFFICIENT)
SHUTOFF DAMPERS R403.6
SIMULATED PERFORMANCE ALTERNATIVE R405
Documentation. R405.4
Mandatory requirements R405.2
Performance-based compliance R405.3
Report R405.4.2
Software tools R405.4.1
SIZING
Equipment and system. R405.6.1
SKYLIGHTS . . . . . R303.1.3, R402.1.2, R402.3, Table R405.5.2(1)
Defined. R202
SNOW MELT SYSTEM CONTROLS R403.9
SOLAR HEAT GAIN COEFFICIENT (SHGC) . . . . . .R102.1.3, R104.2, Table R303.1.3(3), R401.3, Table R402.1.2, R402.1.4, R402.3.2, R402.3.3, R402.3.6, R402.5
Defined. R202
STANDARD REFERENCE DESIGN
Defined. R202
Requirements. . . . . R405, Table R405.5.2(1)
STANDARDS, REFERENCED . . . . . R106, Chapter 5
STEEL FRAMING R402.2.6
STOP WORK ORDER R108
Authority. R108.1
Emergencies R108.3
Failure to comply R108.4
Issuance. R108.2
SUNROOM . . R402.2.13, R402.3.5, Table R405.5.2(1)
Defined. R202
Insulation R402.2.13
SWIMMING POOLS R403.9

T

THERMAL CONDUCTANCE (see C-Factor)
THERMAL ISOLATION . . . . . R402.2.12, R402.3.5, Table R405.5.2(1)
Defined. R202
THERMAL MASS (see MASS)
THERMAL RESISTANCE (see *R*-VALUE)
THERMAL TRANSMITTANCE (see *U*-FACTOR)
THERMOSTAT
Defined. R202
Controls R403.1
Programmable R403.1.1
TIME SWITCHES R403.9.2
TOTAL BUILDING PERFORMANCE
Residential R405
TOWNHOUSE (see RESIDENTIAL BUILDINGS)
TROPICAL CLIMATE ZONES R301.4, R401.2.1

U

***U*-FACTOR**
Alternative . . . . R402.1.3, Table R402.1.3, R402.1.4
Default door . . . . . Table R303.1.3(2)

INTERNATIONAL CODE COUNCIL®
Copyright © 2015 ICC. ALL RIGHTS RESERVED. Accessed by David Dammon on Jun 21, 2017 12:30:52 PM pursuant to License Agreement with ICC. No further reproduction or distribution authorized. ANY UNAUTHORIZED REPRODUCTION OR DISTRIBUTION IS A VIOLATION OF THE FEDERAL COPYRIGHT ACT AND THE LICENSE AGREEMENT, AND SUBJECT TO CIVIL AND CRIMINAL PENALTIES THEREUNDER.

Default glazed fenestration . . . . . Table R303.1.3(1)
Defined R202, R402.3.1, R402.5
Skylights . Table R402.1.1, Table R402.1.3, R402.3.5
Sunroom R402.3.5

V

VALIDITY. R105
VAPOR RETARDER R402.1.1
VENTILATION. . . . . R401.2.1, R403.6, Table R403.6.1, Table R405.5.2(1)
Defined R202
VISIBLE TRANSMITTANCE (VT)
Default glazed fenestration . . . . . Table R303.1.3(3)
Defined R202

W

WALL
Above-grade, defined R202
Standard reference design . . . . Table R405.5.2(1)
Basement, defined R202
Installation R402.2.9
Standard reference design . . . . Table R405.5.2(1)
Crawlspace, defined R202
Installation R402.2.11
Standard reference design . . . . Table R405.5.2(1)
Exterior, defined R202
Mass R402.2.5
Steel-frame . . . . . R402.2.6, Table R402.2.6
With partial structural sheathing R402.2.7
WALLS (see EXTERIOR WALLS AND BUILDING THERMAL ENVELOPE)
WALLS ADJACENT TO UNCONDITIONED SPACE (see BUILDING THERMAL ENVELOPE)
WATER HEATING. . . . . R401.3, R403.4, R405.1, Table R405.5.2(1)
WHOLE HOUSE MECHANICAL VENTILATION SYSTEM
Defined R202
System fan efficacy R403.6.1
WINDOW AREA (see FENESTRATION and GLAZING AREA)

INTERNATIONAL CODE COUNCIL®
Copyright © 2015 ICC. ALL RIGHTS RESERVED. Accessed by David Dammon on Jun 21, 2017 12:30:52 PM pursuant to License Agreement with ICC. No further reproduction or distribution authorized. ANY UNAUTHORIZED REPRODUCTION OR DISTRIBUTION IS A VIOLATION OF THE FEDERAL COPYRIGHT ACT AND THE LICENSE AGREEMENT, AND SUBJECT TO CIVIL AND CRIMINAL PENALTIES THEREUNDER.

INTERNATIONAL CODE COUNCIL®

Copyright © 2015 ICC. ALL RIGHTS RESERVED. Accessed by David Dammon on Jun 21, 2017 12:30:52 PM pursuant to License Agreement with ICC. No further reproduction or distribution authorized. ANY UNAUTHORIZED REPRODUCTION OR DISTRIBUTION IS A VIOLATION OF THE FEDERAL COPYRIGHT ACT AND THE LICENSE AGREEMENT, AND SUBJECT TO CIVIL AND CRIMINAL PENALTIES THEREUNDER.

ICC INTERNATIONAL CODE COUNCIL®

People Helping People Build a Safer World®

The International Code Council's Training and Education Department

Industry professionals look to ICC to provide the critical knowledge and experiences necessary to excel in today's challenging world. ICC's educational programs cover a broad spectrum of code and construction related topics, offering some of the highest quality instruction direct from the source.

INSTITUTES

Acquire Skills, Share Experiences, Earn CEUs

ICC's training institutes offer a comprehensive education experience and a great way to earn much needed CEUs. Learn best practices from the leading experts in the field, build your network of professional contacts and share experiences. Institutes are held across the country throughout the year. To see the full schedule go to www.iccsafe.org/training.

HIRE ICC TO TEACH

Bring ICC On-Site and Earn CEUs

Give your group the confidence they need to meet tough challenges head-on so they can reach their full potential. ICC's course catalog contains a wide variety of educational topics that are available for contract at a location of your choice. Customized training is also available to fit your needs. For our full course catalogue go to www.iccsafe.org/hireicc.

ICC ONLINE CAMPUS

Earn CEUs at Your Own Pace

Online courses offer access to a comprehensive training and education portal, providing you with an effective and convenient tool to enhance your professional skills. Courses are available anytime for 99 days following registration. Go to www.iccsafe.org/onlinecampus for our full offerings.

For more information about ICC's Training please contact us at **888-ICC-SAFE (422-7233) ext. 33818** or email us at **icctraining@iccsafe.org**.

15-10915

INTERNATIONAL CODE COUNCIL®

Copyright © 2015 ICC. ALL RIGHTS RESERVED. Accessed by David Dammon on Jun 21, 2017 12:30:52 PM pursuant to License Agreement with ICC. No further reproduction or distribution authorized. ANY UNAUTHORIZED REPRODUCTION OR DISTRIBUTION IS A VIOLATION OF THE FEDERAL COPYRIGHT ACT AND THE LICENSE AGREEMENT, AND SUBJECT TO CIVIL AND CRIMINAL PENALTIES THEREUNDER.

ICC INTERNATIONAL CODE COUNCIL®

People Helping People Build a Safer World®

GET IMMEDIATE DOWNLOADS OF THE STANDARDS YOU NEED

Browse hundreds of industry standards adopted by reference. Available to you 24/7!

Count on ICC for standards from a variety of publishers, including:

ACI	CPSC	GYPSUM
AISC	CSA	HUD
ANSI	DOC	ICC
APA	DOJ	ISO
APSP	DOL	NSF
ASHRAE	DOTn	SMACNA
ASTM	FEMA	USC
AWC	GBI	

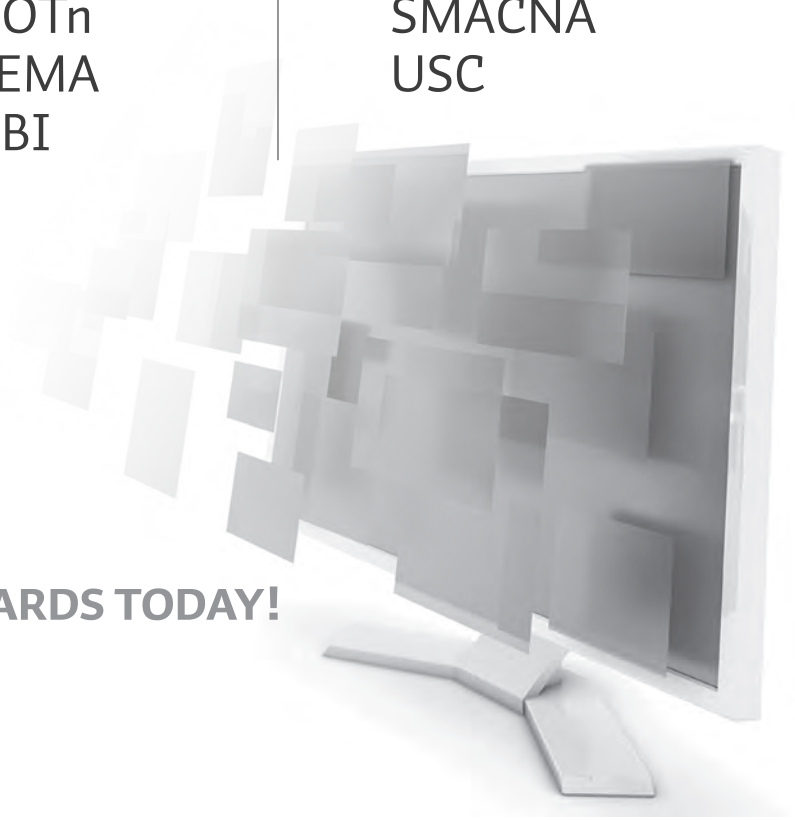

DOWNLOAD YOUR STANDARDS TODAY!
SHOP.ICCSAFE.ORG

15-11221

INTERNATIONAL CODE COUNCIL®

Copyright © 2015 ICC. ALL RIGHTS RESERVED. Accessed by David Dammon on Jun 21, 2017 12:30:52 PM pursuant to License Agreement with ICC. No further reproduction or distribution authorized. ANY UNAUTHORIZED REPRODUCTION OR DISTRIBUTION IS A VIOLATION OF THE FEDERAL COPYRIGHT ACT AND THE LICENSE AGREEMENT, AND SUBJECT TO CIVIL AND CRIMINAL PENALTIES THEREUNDER.

ICC EVALUATION SERVICE

Experts in Building Product Evaluation and Certification

Design with

CONFIDENCE



When facing new or unfamiliar materials, how do you know if they comply with building codes and standards?

- ICC-ES® Evaluation Reports are the most widely accepted and trusted technical reports for code compliance. When you specify products or materials with an ICC-ES report, you avoid delays on projects and improve your bottom line.
- ICC-ES is a subsidiary of ICC®, the publisher of the codes used throughout the U.S. and many global markets, so you can be confident in their code expertise.
- ICC-ES provides you with a free online directory of code compliant products at: **www.icc-es.org/Evaluation_Reports** and CEU courses that help you design with confidence.

ICC
INTERNATIONAL CODE COUNCIL

WWW.ICC-ES.ORG | 800-423-6587

ICC ES

ANSI
ANSI Accredited Program
PRODUCT CERTIFICATION
#1009

15-11219

INTERNATIONAL CODE COUNCIL®

Copyright © 2015 ICC. ALL RIGHTS RESERVED. Accessed by David Dammon on Jun 21, 2017 12:30:52 PM pursuant to License Agreement with ICC. No further reproduction or distribution authorized. ANY UNAUTHORIZED REPRODUCTION OR DISTRIBUTION IS A VIOLATION OF THE FEDERAL COPYRIGHT ACT AND THE LICENSE AGREEMENT, AND SUBJECT TO CIVIL AND CRIMINAL PENALTIES THEREUNDER.

ICC INTERNATIONAL CODE COUNCIL®

People Helping People Build a Safer World®

2015 I-Code Essentials

This helpful series uses a straightforward, focused approach to explore code requirements with non-code language, allowing readers to gain confidence in their understanding of the material. Each book is an invaluable companion guide to the 2015 IBC, IRC, IFC or IECC for both new and experienced code users.

- **Detailed full-color illustrations enhance comprehension of code provisions**
- **A focused, concise approach facilitates understanding of the essential code provisions**
- **References to corresponding code sections provide added value as companion guides to the 2015 I-Codes**
- **Glossary of code and construction terms clarifies their meaning in the context of the code**



A

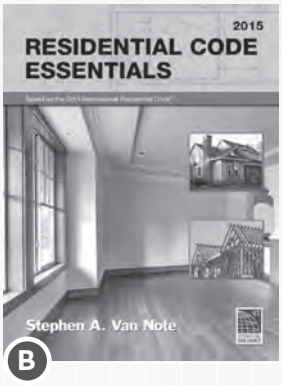

B

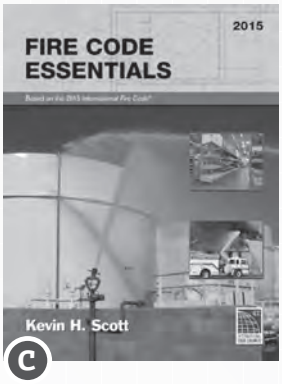

C

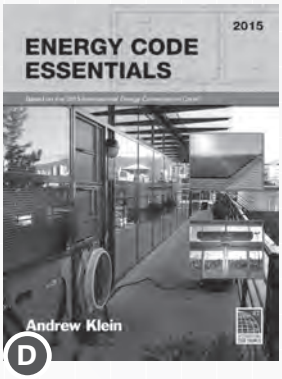

D

A. BUILDING CODE ESSENTIALS: BASED ON THE 2015 INTERNATIONAL BUILDING CODE

Explores those code provisions essential to understanding the application of the IBC in an easy-to-read format. The user-friendly approach of the text simplifies critical concepts so users can achieve a more complete understanding of the code's intent. Full-color illustrations, examples and simplified tables assist the reader in visualizing the code requirements. This up-to-date, step-by-step guide's topic organization reflects the intent of the IBC and facilitates understanding and application of the code provisions.

SOFT COVER #4031S15
PDF DOWNLOAD #8950P596

B. RESIDENTIAL CODE ESSENTIALS: BASED ON THE 2015 INTERNATIONAL RESIDENTIAL CODE

Explains those code provisions essential to understanding the application of the IRC to the most commonly encountered building practices. The information is presented in a user-friendly manner with an emphasis on technical accuracy and clear non-code language. Full-color illustrations, examples and simplified tables assist the reader in visualizing the code requirements.

SOFT COVER #4131S15
PDF DOWNLOAD #8950P59

C. FIRE CODE ESSENTIALS: BASED ON THE 2015 INTERNATIONAL FIRE CODE

Focuses on the essential provisions of the IFC for controlling ignition sources and fire hazards, fire department access to buildings, building uses and processes, fire protection and life safety systems, special processes and uses and hazardous materials.

SOFT COVER #4431S15
PDF DOWNLOAD #8950P59

D. ENERGY CODE ESSENTIALS: BASED ON THE 2015 INTERNATIONAL ENERGY CONSERVATION CODE®

Designed to provide a straightforward, easy-to-read companion guide to the IECC for both beginning and experienced code users. The text provides accurate information on critical energy code applications in the office and in the field for residential and commercial construction. The focused coverage examines those code provisions essential to understanding the application of the IECC to the most commonly encountered building practices and discusses the reasons behind the requirements.

SOFT COVER #4831S15
PDF DOWNLOAD #8950P651

ORDER YOUR I-CODE ESSENTIALS TODAY! 1-800-786-4452 | www.iccsafe.org/books

14-10387

INTERNATIONAL CODE COUNCIL®

Copyright © 2015 ICC. ALL RIGHTS RESERVED. Accessed by David Dammon on Jun 21, 2017 12:30:52 PM pursuant to License Agreement with ICC. No further reproduction or distribution authorized. ANY UNAUTHORIZED REPRODUCTION OR DISTRIBUTION IS A VIOLATION OF THE FEDERAL COPYRIGHT ACT AND THE LICENSE AGREEMENT, AND SUBJECT TO CIVIL AND CRIMINAL PENALTIES THEREUNDER.

IEBC®

2015 CODE AND COMMENTARY

The complete IEBC with commentary after each section



INTERNATIONAL CODE COUNCIL®

Copyright © 2015 ICC. ALL RIGHTS RESERVED. Accessed by David Dammon on Jun 21, 2017 12:30:52 PM pursuant to License Agreement with ICC. No further reproduction or distribution authorized. ANY UNAUTHORIZED REPRODUCTION OR DISTRIBUTION IS A VIOLATION OF THE FEDERAL COPYRIGHT ACT AND THE LICENSE AGREEMENT, AND SUBJECT TO CIVIL AND CRIMINAL PENALTIES THEREUNDER.

2015 IEBC®

CODE AND COMMENTARY

The complete IEBC with commentary after each section

ICC
INTERNATIONAL CODE COUNCIL®

INTERNATIONAL CODE COUNCIL®

Copyright © 2015 ICC. ALL RIGHTS RESERVED. Accessed by David Dammon on Jun 21, 2017 12:30:52 PM pursuant to License Agreement with ICC. No further reproduction or distribution authorized. ANY UNAUTHORIZED REPRODUCTION OR DISTRIBUTION IS A VIOLATION OF THE FEDERAL COPYRIGHT ACT AND THE LICENSE AGREEMENT, AND SUBJECT TO CIVIL AND CRIMINAL PENALTIES THEREUNDER.

2015 International Existing Building Code® and Commentary

First Printing: November 2015

ISBN: 978-1-60983-289-6 (soft-cover edition)

COPYRIGHT © 2015
by
INTERNATIONAL CODE COUNCIL, INC.

ALL RIGHTS RESERVED. This 2015 *International Existing Building Code® and Commentary* is a copyrighted work owned by the International Code Council, Inc. Without advance written permission from the copyright owner, no part of this book may be reproduced, distributed or transmitted in any form or by any means, including, without limitation, electronic, optical or mechanical means (by way of example, and not limitation, photocopying, or recording by or in an information storage retrieval system). For information on permission to copy material exceeding fair use, please contact: Publications, 4051 Flossmoor Road, Country Club Hills, IL 60478. Phone 1-888-ICC-SAFE (422-7233).

Trademarks: "International Code Council," the "International Code Council" logo and the "International Existing Building Code" are trademarks of the International Code Council, Inc.

PRINTED IN THE U.S.A.

INTERNATIONAL CODE COUNCIL®

Copyright © 2015 ICC. ALL RIGHTS RESERVED. Accessed by David Dammon on Jun 21, 2017 12:30:52 PM pursuant to License Agreement with ICC. No further reproduction or distribution authorized. ANY UNAUTHORIZED REPRODUCTION OR DISTRIBUTION IS A VIOLATION OF THE FEDERAL COPYRIGHT ACT AND THE LICENSE AGREEMENT, AND SUBJECT TO CIVIL AND CRIMINAL PENALTIES THEREUNDER.

PREFACE

The principal purpose of the Commentary is to provide a basic volume of knowledge and facts relating to building construction as it pertains to the regulations set forth in the 2015 *International Existing Building Code*. The person who is serious about effectively designing, constructing and regulating existing buildings and structures will find the Commentary to be a reliable data source and reference to almost all components in the built environment.

Throughout all of this, strenuous effort has been made to keep the vast quantity of material accessible and its method of presentation useful. With a comprehensive yet concise summary of each section, the Commentary provides a convenient reference for regulations applicable to the construction of buildings and structures. In the chapters that follow, discussions focus on the full meaning of application and the consequences of not adhering to the code text. Illustrations and examples are provided to aid understanding; they do not necessarily illustrate the only methods of achieving code compliance.

The format of the Commentary includes the full text of each section, table and figure in the code, followed immediately by the commentary applicable to that text. At the time of printing, the Commentary reflects the most up-to-date text of the 2015 *International Existing Building Code*. As stated in the preface to the *International Existing Building Code*, the content of sections in the code that begin with a letter designation (i.e., Section [B]1301.2) are maintained by another code development committee. Each section's narrative includes a statement of its objective and intent, and usually includes a discussion about why the requirement commands the conditions set forth. Code text and commentary text are easily distinguished from each other. All code text is shown as it appears in the *International Existing Building Code*, and all commentary is indented below the code text and begins with the symbol ❖.

Readers should note that the Commentary is to be used in conjunction with the *International Existing Building Code* and not as a substitute for the code. The Commentary is advisory only; the code official alone possesses the authority and responsibility for interpreting the code.

Comments and recommendations are encouraged, for through your input, we can improve future editions. Please direct your comments to the Code and Standards Department in the Chicago District Office.

The International Code Council would like to extend its thanks to Susan Gentry, Melvyn Green, Wayne Jewell, Ken Schoonover, Mark Stimac and the Structural Engineers Association of California (SEAOC) whose help as contributing authors made this document possible.

INTERNATIONAL CODE COUNCIL®

Copyright © 2015 ICC. ALL RIGHTS RESERVED. Accessed by David Dammon on Jun 21, 2017 12:30:52 PM pursuant to License Agreement with ICC. No further reproduction or distribution authorized. ANY UNAUTHORIZED REPRODUCTION OR DISTRIBUTION IS A VIOLATION OF THE FEDERAL COPYRIGHT ACT AND THE LICENSE AGREEMENT, AND SUBJECT TO CIVIL AND CRIMINAL PENALTIES THEREUNDER.

INTERNATIONAL CODE COUNCIL®
Copyright © 2015 ICC. ALL RIGHTS RESERVED. Accessed by David Dammon on Jun 21, 2017 12:30:52 PM pursuant to License Agreement with ICC. No further reproduction or distribution authorized. ANY UNAUTHORIZED REPRODUCTION OR DISTRIBUTION IS A VIOLATION OF THE FEDERAL COPYRIGHT ACT AND THE LICENSE AGREEMENT, AND SUBJECT TO CIVIL AND CRIMINAL PENALTIES THEREUNDER.

TABLE OF CONTENTS

CHAPTER 1 SCOPE AND ADMINISTRATION. . . . . 1-1 – 1-24

CHAPTER 2 DEFINITIONS. . . . . 2-1 – 2-6

CHAPTER 3 PROVISIONS FOR COMPLIANCE METHODS. . . . . 3-1 – 3-10

CHAPTER 4 PRESCRIPTIVE COMPLIANCE METHOD . . . . . 4-1 – 4-28

CHAPTER 5 CLASSIFICATION OF WORK . . . . . 5-1 – 5-4

CHAPTER 6 REPAIRS . . . . . 6-1 – 6-8

CHAPTER 7 ALTERATIONS—LEVEL 1 . . . . . 7-1 – 7-16

CHAPTER 8 ALTERATIONS—LEVEL 2 . . . . . 8-1 – 8-30

CHAPTER 9 ALTERATIONS—LEVEL 3 . . . . . 9-1 – 9-10

CHAPTER 10 CHANGE OF OCCUPANCY . . . . . 10-1 – 10-14

CHAPTER 11 ADDITIONS . . . . . 11-1 – 11-8

CHAPTER 12 HISTORIC BUILDINGS . . . . . 12-1 – 12-8

CHAPTER 13 RELOCATED OR MOVED BUILDINGS. . . . . 13-1 – 13-4

CHAPTER 14 PERFORMANCE COMPLIANCE METHODS . . . . . 14-1 – 14-40

CHAPTER 15 CONSTRUCTION SAFEGUARDS . . . . . 15-1 – 15-6

CHAPTER 16 REFERENCED STANDARDS . . . . . 16-1 – 16-6

APPENDIX A GUIDELINES FOR THE SEISMIC RETROFIT OF EXISTING BUILDINGS (GSREB) A1-1

CHAPTER A1 SEISMIC STRENGTHENING PROVISIONS FOR UNREINFORCED MASONRY BEARING WALL BUILDINGS. . . . . A1-1 – A1-28

CHAPTER A2 EARTHQUAKE HAZARD REDUCTION IN EXISTING REINFORCED CONCRETE AND REINFORCED MASONRY WALL BUILDINGS WITH FLEXIBLE DIAPHRAGMS . . . . . A2-1 – A2-10

CHAPTER A3 PRESCRIPTIVE PROVISIONS FOR SEISMIC STRENGTHENING OF CRIPPLE WALLS AND SILL PLATE ANCHORAGE OF LIGHT, WOOD-FRAME RESIDENTIAL BUILDINGS . . . . . A3-1 – A3-30

INTERNATIONAL CODE COUNCIL®

Copyright © 2015 ICC. ALL RIGHTS RESERVED. Accessed by David Dammon on Jun 21, 2017 12:30:52 PM pursuant to License Agreement with ICC. No further reproduction or distribution authorized. ANY UNAUTHORIZED REPRODUCTION OR DISTRIBUTION IS A VIOLATION OF THE FEDERAL COPYRIGHT ACT AND THE LICENSE AGREEMENT, AND SUBJECT TO CIVIL AND CRIMINAL PENALTIES THEREUNDER.

CHAPTER A4 EARTHQUAKE RISK REDUCTION IN WOOD-FRAMED RESIDENTIAL BUILDINGS WITH SOFT, WEAK OR OPEN FRONT WALLS ..... A4-1 – A4-14

CHAPTER A5 EARTHQUAKE HAZARD REDUCTION IN EXISTING CONCRETE BUILDINGS..... A5-1 – A5-8

CHAPTER A6 REFERENCED STANDARDS ..... A6-1 – A6-2

APPENDIX B SUPPLEMENTARY ACCESSIBILITY REQUIREMENTS FOR EXISTING BUILDINGS AND FACILITIES..... B-1 – B-4

APPENDIX C GUIDELINES FOR THE WIND RETROFIT OF EXISTING BUILDINGS C1-1

CHAPTER C1 GABLE END RETROFIT FOR HIGH-WIND AREAS..... C1-1 – C1-22

CHAPTER C2 ROOF DECK FASTENING FOR HIGH-WIND AREAS ..... C2-1 – C2-2

RESOURCE A GUIDELINES ON FIRE RATINGS OF ARCHAIC MATERIALS AND ASSEMBLIES.....RESOURCE A-1 – A-140

INDEX ..... INDEX-1 – INDEX-6

INTERNATIONAL CODE COUNCIL®

Copyright © 2015 ICC. ALL RIGHTS RESERVED. Accessed by David Dammon on Jun 21, 2017 12:30:52 PM pursuant to License Agreement with ICC. No further reproduction or distribution authorized. ANY UNAUTHORIZED REPRODUCTION OR DISTRIBUTION IS A VIOLATION OF THE FEDERAL COPYRIGHT ACT AND THE LICENSE AGREEMENT, AND SUBJECT TO CIVIL AND CRIMINAL PENALTIES THEREUNDER.

Chapter 1:
Scope and Administration

General Comments

This chapter contains provisions for the scope and application (Part 1), and the enforcement and administration (Part 2) of subsequent requirements of the code. In addition to establishing the scope of the code, Chapter 1 identifies which buildings and structures come under its purview. Part 1, Scope and Application, includes Sections 101 and 102. Section 101 addresses the scope of the code as it applies to existing structures undergoing repairs, alterations, change of occupancy and additions or relocation. Section 102 establishes the applicability of the code and addresses existing structures. Part 2, Administration and Enforcement, includes the balance of the provisions of Chapter 1. Section 103 establishes the Department of Building Safety and details the appointment of department personnel. Section 104 outlines the duties and authority of the code official with regard to permits, inspections and right of entry. It also establishes the authority of the code official to approve alternative materials, used materials and modifications. Section 105 states when permits are required and establishes the procedures for reviewing applications and issuing permits. Section 106 describes the information that must be included on the documents submitted with the application. Section 107 authorizes the code official to issue permits for temporary structures and uses. Section 108 establishes requirements for a fee schedule. Section 109 includes the inspection duties of the code official or an inspection agency that has been approved by the code official. Provisions for issuing certificates of occupancy are detailed in Section 110. Section 111 gives the code official the authority to approve utility connections. Section 112 establishes the board of appeals and the criteria for making applications for appeal. Administrative provisions for violations are addressed in Section 113, including provisions for unlawful acts, violation notices, prosecution and penalties. Section 114 describes procedures for stop work orders. Section 115 establishes the criteria for unsafe structures and equipment, and the procedures to be followed by the code official to abate such conditions and notify the responsible party. Section 116 describes the emergency measures that address structures in danger of collapse. Section 117 authorizes the code official to have structures demolished that are dangerous, unsafe, insanitary or otherwise unfit for human habitation or occupancy. Each state's building-code-enabling legislation, which is grounded in the police power of the state, is the source of all authority to enact building codes. In terms of how it is used, police power is the power of the state to legislate for the general welfare of its citizens. This power enables passage of such laws as building codes. If the state legislature has limited this power in any way, the municipality may not exceed these limitations. While the municipality may not further delegate its police power (e.g., by delegating the burden of determining code compliance to the building owner, contractor or architect), it may turn over the administration of the building code to a municipal official, such as a code official, provided that sufficient criteria are given to the code official to establish clearly the basis for decisions as to whether a proposed building conforms to the code.

Chapter 1 is largely concerned with maintaining "due process of law" in enforcing the building performance criteria contained in the body of the code. Only through careful observation of the administrative provisions can the code official reasonably hope to demonstrate that "equal protection under the law" has been provided. While it is generally assumed that the administration and enforcement section of a code is geared toward a code official, this is not entirely true. The provisions also establish the rights and privileges of the design professional, contractor and building owner. The position of the code official is merely to review the proposed and completed work, and to determine if the construction conforms to the code requirements. The design professional is responsible for the design of a safe structure. The contractor is responsible for constructing the structure in conformance to the plans.

During the course of construction, the code official reviews the activity to ascertain that the spirit and intent of the law are being met and that the safety, health and welfare of the public will be protected. As a public servant, the code official enforces the code in an unbiased, proper manner. Every individual is guaranteed equal enforcement of the provisions of the code. Further, design professionals, contractors and building owners have the right of due process for any requirement in the code.

Purpose

The code, as with any other code, is intended to be adopted as a legally enforceable document to safeguard health, safety, property and public welfare. A code cannot be effective without adequate provisions for its administration and enforcement. The code official charged with the administration and enforcement of building regulations has a great responsibility and with this responsibility comes authority. No matter how detailed the code may be, the code official must, to

INTERNATIONAL CODE COUNCIL®
Copyright © 2015 ICC. ALL RIGHTS RESERVED. Accessed by David Dammon on Jun 21, 2017 12:30:52 PM pursuant to License Agreement with ICC. No further reproduction or distribution authorized. ANY UNAUTHORIZED REPRODUCTION OR DISTRIBUTION IS A VIOLATION OF THE FEDERAL COPYRIGHT ACT AND THE LICENSE AGREEMENT, AND SUBJECT TO CIVIL AND CRIMINAL PENALTIES THEREUNDER.

some extent, exercise his or her own judgment in determining code compliance. The code official has the responsibility to establish that the homes in which the citizens of the community reside and the buildings in which they work are designed and constructed to be structurally stable, with adequate means of egress, light and ventilation, and to provide a minimum acceptable level of protection to life and property from fire.

A large number of existing buildings and structures do not comply with the current building code requirements for new construction. Although many of these buildings are potentially salvageable, rehabilitation is often cost prohibitive because they may not be able to comply with all the requirements for new construction. At the same time, it is necessary to regulate construction in existing buildings that undergo additions, alterations, renovations, extensive repairs or change of occupancy. Such activity represents an opportunity to ensure that new construction complies with the current building codes and that existing conditions are maintained, at a minimum, to their current level of compliance or are improved as required. To accomplish this objective, and to make the rehabilitation process easier, this chapter allows for a controlled departure from full compliance with the technical codes, without compromising the minimum standards for the fire prevention and life safety features of the rehabilitated building.

PART 1—SCOPE AND APPLICATION

SECTION 101
GENERAL

[A] 101.1 Title. These regulations shall be known as the *Existing Building Code* of **[NAME OF JURISDICTION]**, hereinafter referred to as "this code."

❖ The purpose of this section is to identify the adopted regulations by inserting the name of the adopting jurisdiction into the code.

[A] 101.2 Scope. The provisions of the *International Existing Building Code* shall apply to the *repair*, *alteration*, *change of occupancy*, *addition* to and relocation of *existing buildings*.

❖ This section establishes where the regulations contained in the code must be followed, whether all or in part. Something must happen (modification to an existing building or allowing an existing building or structure to become unsafe) for the code to be applicable. While such activity may not be as significant as for a new building, a fence is considered a structure and, therefore, its erection is within the scope of the code. The code is not a maintenance document requiring periodic inspections that will, in turn, result in an enforcement action, although periodic inspections are addressed by the *International Fire Code*® (IFC®).

[A] 101.3 Intent. The intent of this code is to provide flexibility to permit the use of alternative approaches to achieve compliance with minimum requirements to safeguard the public health, safety and welfare insofar as they are affected by the *repair*, *alteration*, *change of occupancy*, *addition* and relocation of *existing buildings*.

❖ The code is intended to set forth regulations that establish the minimum acceptable level to safeguard public health, safety and welfare. The intent becomes important in the application of sections such as Sections 102, 104.11 and 113, as well as any enforcement-oriented interpretive action or judgment. Like any code, the written text is subject to interpretation. Interpretations should not be affected by economics or the potential impact on any party. The only considerations should be the protection of public health, safety and welfare.

[A] 101.4 Applicability. This code shall apply to the *repair*, *alteration*, *change of occupancy*, *addition* and relocation of *existing buildings*, regardless of occupancy, subject to the criteria of Sections 101.4.1 and 101.4.2.

❖ All existing structures must comply with the provisions of the code when undergoing repair, alteration, change of occupancy, addition and relocation, subject to the criteria in Sections 101.4.1 and 101.4.2. Sections 101.4.1 and 101.4.2 contain provisions that are significantly different, based on whether the building has been previously occupied. Basically, if the building has not been previously occupied, it must comply with the requirements for new construction. This also applies to buildings undergoing alterations or additions.

[A] 101.4.1 Buildings not previously occupied. A building or portion of a building that has not been previously occupied or used for its intended purpose in accordance with the laws in existence at the time of its completion shall be permitted to comply with the provisions of the laws in existence at the time of its original permit unless such permit has expired. Subsequent permits shall comply with the *International Building Code* or *International Residential Code*, as applicable, for new construction.

❖ This section requires all buildings that have not been previously occupied to comply with the *International Building Code*® (IBC®) or the *International Residential Code*® (IRC®) if the permit for such building has expired. It also applies to any building that may have been completed and not occupied or used for its intended purpose. The building remains a new structure in terms of code compliance until such a time as it is occupied in whole or in part. Again this is based on the permit being expired. If the permit has not expired then the building can comply with the laws in existence at the time of construction.

INTERNATIONAL CODE COUNCIL®
Copyright © 2015 ICC. ALL RIGHTS RESERVED. Accessed by David Dammon on Jun 21, 2017 12:30:52 PM pursuant to License Agreement with ICC. No further reproduction or distribution authorized. ANY UNAUTHORIZED REPRODUCTION OR DISTRIBUTION IS A VIOLATION OF THE FEDERAL COPYRIGHT ACT AND THE LICENSE AGREEMENT, AND SUBJECT TO CIVIL AND CRIMINAL PENALTIES THEREUNDER.

[A] 101.4.2 Buildings previously occupied. The legal occupancy of any building existing on the date of adoption of this code shall be permitted to continue without change, except as is specifically covered in this code, the *International Fire Code*, or the *International Property Maintenance Code*, or as is deemed necessary by the *code official* for the general safety and welfare of the occupants and the public.

❖ This section allows for buildings that were legally occupied in part or in whole at the time the code was adopted to continue. There is a maintenance concern that is addressed by the requirement that the building comply with either the IFC or the *International Property Maintenance Code*® (IPMC®). These codes ensure that life safety systems, such as means of egress pathways and fire protection systems, are kept in place and able to protect the life and safety of the inhabitants of these existing structures.

[A] 101.5 Safeguards during construction. Construction work covered in this code, including any related demolition, shall comply with the requirements of Chapter 15.

❖ The fundamental rationale behind this section is to establish reasonable safety precautions, in accordance with Chapter 15, during all phases of construction and demolition. Chapter 15 also covers the protection of adjacent public and private properties.

[A] 101.6 Appendices. The *code official* is authorized to require rehabilitation and retrofit of buildings, structures or individual structural members in accordance with the appendices of this code if such appendices have been individually adopted.

❖ This section describes a unique aspect of the code whereby any appendix referenced in the code becomes a part of the code without the jurisdiction having to specifically adopt it. For example, in Chapter 7, voluntary alterations to lateral-force-resisting systems are allowed when conducted in accordance with Appendix A. Therefore, Appendix A, having been specifically referenced, is enforceable without having to be specifically adopted by the local jurisdiction. Any appendices not specifically referenced in the code must be individually adopted to be legally enforced.

[A] 101.7 Correction of violations of other codes. *Repairs* or *alterations* mandated by any property, housing, or fire safety maintenance code or mandated by any licensing rule or ordinance adopted pursuant to law shall conform only to the requirements of that code, rule, or ordinance and shall not be required to conform to this code unless the code requiring such *repair* or *alteration* so provides.

❖ This section is intended to keep the requirements of other codes or ordinances intact and separate from the requirements of the code.

SECTION 102
APPLICABILITY

[A] 102.1 General. Where there is a conflict between a general requirement and a specific requirement, the specific requirement shall be applicable. Where in any specific case different sections of this code specify different materials, methods of construction or other requirements, the most restrictive shall govern.

❖ In cases where the code establishes a specific requirement for a certain condition, that requirement is applicable even if it is less restrictive than a general requirement elsewhere in the code. Also, the most restrictive code requirement is to apply where there may be different requirements in the code for a specific installation.

[A] 102.2 Other laws. The provisions of this code shall not be deemed to nullify any provisions of local, state, or federal law.

❖ In some cases, other laws enacted by the jurisdiction, or the state or federal government may be applicable to a condition that is also governed by a requirement in the code. In such circumstances, the requirements of the code are in addition to that other law that is still in effect, although the code official may not be responsible for its enforcement.

[A] 102.3 Application of references. References to chapter or section numbers or to provisions not specifically identified by number shall be construed to refer to such chapter, section, or provision of this code.

❖ In a situation where the code may make reference to a chapter or section number or to another code provision without specifically identifying its location in the code, assume that the referenced section, chapter or provision is in the code and not in a referenced code or standard.

[A] 102.4 Referenced codes and standards. The codes and standards referenced in this code shall be considered part of the requirements of this code to the prescribed extent of each such reference and as further regulated in Sections 102.4.1 and 102.4.2.

Exception: Where enforcement of a code provision would violate the conditions of the listing of the equipment or appliance, the conditions of the listing shall govern.

❖ A referenced code, standard or portion thereof is an enforceable extension of the code as if the content of the standard were included in the body of the code. For example, Section 301.1.4 references ASCE 41 in its entirety for the seismic evaluation and design of an existing building. In those cases where the code references only portions of a standard, the use and application of the referenced standard is limited to those portions that are specifically identified. For

INTERNATIONAL CODE COUNCIL®
Copyright © 2015 ICC. ALL RIGHTS RESERVED. Accessed by David Dammon on Jun 21, 2017 12:30:52 PM pursuant to License Agreement with ICC. No further reproduction or distribution authorized. ANY UNAUTHORIZED REPRODUCTION OR DISTRIBUTION IS A VIOLATION OF THE FEDERAL COPYRIGHT ACT AND THE LICENSE AGREEMENT, AND SUBJECT TO CIVIL AND CRIMINAL PENALTIES THEREUNDER.

example, Item 4, Section 403.5 references structural irregularity as defined in ASCE 7. Therefore, it is only these portions of ASCE 7 that are applicable to this specific code requirement. Lastly, if conflicts between the requirements of the code and a referenced standard occur, the requirements of the code govern regardless of which requirement is more restrictive. The exception deals with possible conflicts between code requirements and the conditions of an equipment listing. If the code conflicts with or deviates from the conditions of the listing, this may or may not mean that the code violated the listing. For example, the listing for an appliance might allow a particular application of an appliance that is expressly prohibited by the code. In this case, the code has not violated the listing, but instead has simply limited the application allowed by the listing. The intent is for the highest level of safety to prevail.

[A] 102.4.1 Conflicts. Where conflicts occur between provisions of this code and referenced codes and standards, the provisions of this code shall apply.

❖ This section clarifies that the code takes precedence over a referenced code or standard. As discussed in the commentary to Section 102.4, it is also important to understand the extent to which another code or standard has been referenced. This may reduce the number of possible conflicts to be addressed.

[A] 102.4.2 Conflicting provisions. Where the extent of the reference to a referenced code or standard includes subject matter that is within the scope of this code, the provisions of this code as applicable, shall take precedence over the provisions in the referenced code or standard.

❖ Often it can be confusing when a standard is referenced in its entirety and has a similar scope but very different or simply conflicting requirements. This section clarifies that, although that standard may address similar issues, the code will take precedence over those requirements as a whole.

[A] 102.5 Partial invalidity. In the event that any part or provision of this code is held to be illegal or void, this shall not have the effect of making void or illegal any of the other parts or provisions.

❖ Only invalid sections of the code (as established by the court of jurisdiction) can be set aside. This is essential to safeguard the application of the code text to situations where a provision is declared illegal or unconstitutional. This section preserves the legislative action that put the legal provisions in place.

PART 2—ADMINISTRATION AND ENFORCEMENT

SECTION 103
DEPARTMENT OF BUILDING SAFETY

[A] 103.1 Creation of enforcement agency. The Department of Building Safety is hereby created, and the official in charge thereof shall be known as the *code official*.

❖ This section creates the building department and describes its composition (see Section 109 for a discussion of the inspection duties of the department). Appendix A of the IBC contains qualifications for the employees of the building department involved in the enforcement of the code. If a jurisdiction desires to establish these qualifications for its employees, Appendix A must be specifically referenced in the adopting ordinance.

The executive official in charge of the building department is named the "code official" by this section. In actuality, the person who is in charge of the department may hold a different title, such as building commissioner, building inspector or construction official. For the purpose of the code, that person is referred to as the "code official."

[A] 103.2 Appointment. The *code official* shall be appointed by the chief appointing authority of the jurisdiction.

❖ This section establishes the code official as an appointed position of the jurisdiction.

[A] 103.3 Deputies. In accordance with the prescribed procedures of this jurisdiction and with the concurrence of the appointing authority, the *code official* shall have the authority to appoint a deputy *code official*, the related technical officers, inspectors, plan examiners, and other employees. Such employees shall have powers as delegated by the *code official*.

❖ This section provides the code official with the authority to appoint other individuals to assist with the administration and enforcement of the code. These individuals have the authority and responsibility as designated by the code official. Such appointments, however, may be exercised only with the authorization of the chief appointing authority.

SECTION 104
DUTIES AND POWERS OF CODE OFFICIAL

[A] 104.1 General. The *code official* is hereby authorized and directed to enforce the provisions of this code. The *code*

INTERNATIONAL CODE COUNCIL®
Copyright © 2015 ICC. ALL RIGHTS RESERVED. Accessed by David Dammon on Jun 21, 2017 12:30:52 PM pursuant to License Agreement with ICC. No further reproduction or distribution authorized. ANY UNAUTHORIZED REPRODUCTION OR DISTRIBUTION IS A VIOLATION OF THE FEDERAL COPYRIGHT ACT AND THE LICENSE AGREEMENT, AND SUBJECT TO CIVIL AND CRIMINAL PENALTIES THEREUNDER.

official shall have the authority to render interpretations of this code and to adopt policies and procedures in order to clarify the application of its provisions. Such interpretations, policies, and procedures shall be in compliance with the intent and purpose of this code. Such policies and procedures shall not have the effect of waiving requirements specifically provided for in this code.

❖ The duty of the code official is to enforce the code, and he or she is the "authority having jurisdiction" for all matters relating to the code and its enforcement. It is the duty of the code official to interpret the code and to determine compliance. Code compliance will not always be easy to determine and will require judgment and expertise, particularly when enforcing the provisions of Sections 104.10 and 104.11. In exercising this authority, however, the code official cannot set aside or ignore any provision of the code.

[A] 104.2 Applications and permits. The *code official* shall receive applications, review construction documents, and issue permits for the *repair*, *alteration*, *addition*, demolition, *change of occupancy*, and relocation of buildings; inspect the premises for which such permits have been issued; and enforce compliance with the provisions of this code.

❖ The code enforcement process is normally initiated with an application for a permit. The code official is responsible for processing applications and issuing permits for the modification of buildings in accordance with the code.

[A] 104.2.1 Determination of substantially improved or substantially damaged existing buildings and structures in flood hazard areas. For applications for reconstruction, rehabilitation, repair, alteration, addition or other improvement of existing buildings or structures located in flood hazard areas, the building official shall determine where the proposed work constitutes substantial improvement or repair of substantial damage. Where the building official determines that the proposed work constitutes substantial improvement or repair of substantial damage, and where required by this code, the building official shall require the building to meet the requirements of Section 1612 of the *International Building Code*.

❖ This language is similar to IRC Section R105.3.1.1, which has the building official making a finding with regard to the value of the proposed work and market value of the building. This subsection describes what the building official does to determine whether work proposed for existing buildings meets those definitions. Some code officials have suggested to FEMA that the simple presence of the definitions is insufficient to ensure that these determinations are made and it would be helpful if the building official's responsibilities clearly specified making these determinations.

FEMA published extensive guidance on substantial improvement and substantial damage, including a number of acceptable methods to estimate market value and project costs. Most jurisdictions require the applicant to provide an estimate of costs, which is already required to be included in the application.

[A] 104.2.2 Preliminary meeting. When requested by the permit applicant or the *code official*, the *code official* shall meet with the permit applicant prior to the application for a construction permit to discuss plans for the proposed work or *change of occupancy* in order to establish the specific applicability of the provisions of this code.

Exception: *Repairs* and Level 1 *alterations*.

❖ The preliminary meeting is an important aspect of any repair, alteration, change of occupancy, addition or relocation of any building. At this phase in a project, it is considerably less expensive to make changes or corrections. Possible problem issues can be identified and solutions devised ahead of time resulting in fewer correction notices and rework being required. The exception recognizes that a preliminary meeting would not be necessary for a repair or alteration level for one project based on the fact that this level of work is not complicated or involved.

[A] 104.2.2.1 Building evaluation. The *code official* is authorized to require an *existing building* to be investigated and evaluated by a registered design professional based on the circumstances agreed upon at the preliminary meeting. The design professional shall notify the *code official* if any potential nonconformance with the provisions of this code is identified.

❖ This section authorizes the code official to have an existing structure investigated and evaluated by a design professional. Existing structures may have some structural problems that are not immediately visible. The ability to call in an experienced design professional to aid in the proper evaluation of an existing structure is invaluable.

[A] 104.3 Notices and orders. The *code official* shall issue necessary notices or orders to ensure compliance with this code.

❖ An important element of code enforcement is the necessary advisement of deficiencies and correction, which is accomplished through written notices and orders. The code official is required to issue orders to abate illegal or unsafe conditions. Section 115.3 contains additional information for these notices.

[A] 104.4 Inspections. The *code official* shall make the required inspections, or the *code official* shall have the authority to accept reports of inspection by approved agencies or individuals. Reports of such inspections shall be in writing and be certified by a responsible officer of such approved agency or by the responsible individual. The *code official* is authorized to engage such expert opinion as deemed necessary to report upon unusual technical issues that arise, subject to the approval of the appointing authority.

❖ The code official is required to make inspections as necessary to determine compliance with the code or to accept written reports of inspections by an approved agency. The inspection of the work in prog-

INTERNATIONAL CODE COUNCIL®
Copyright © 2015 ICC. ALL RIGHTS RESERVED. Accessed by David Dammon on Jun 21, 2017 12:30:52 PM pursuant to License Agreement with ICC. No further reproduction or distribution authorized. ANY UNAUTHORIZED REPRODUCTION OR DISTRIBUTION IS A VIOLATION OF THE FEDERAL COPYRIGHT ACT AND THE LICENSE AGREEMENT, AND SUBJECT TO CIVIL AND CRIMINAL PENALTIES THEREUNDER.

ress or accomplished to date is another significant element in determining code compliance. While a department does not have the resources to inspect every aspect of all work, the required inspections are those that are dictated by administrative rules and procedures based on many parameters, including available inspection resources. In order to expand the available resources for inspection purposes, the code official may approve an agency that, in his or her opinion, is objective and competent, has adequate equipment to perform any required tests, and employs experienced personnel educated in conducting, supervising and evaluating tests and inspections. When unusual, extraordinary or complex technical issues arise relative to building safety, the code official has the authority to seek the opinion and advice of experts. Since this usually involves the expenditure of funds, the approval of the jurisdiction's chief executive (or similar position) is required. A technical report from an expert requested by the code official can be used to assist in the approval process.

[A] 104.5 Identification. The *code official* shall carry proper identification when inspecting structures or premises in the performance of duties under this code.

❖ This section requires the code official (including, by definition, all authorized designees) to carry identification in the course of conducting the duties of the position. This removes any question as to the purpose and authority of the inspector.

[A] 104.6 Right of entry. Where it is necessary to make an inspection to enforce the provisions of this code, or where the *code official* has reasonable cause to believe that there exists in a structure or upon a premises a condition that is contrary to or in violation of this code that makes the structure or premises unsafe, *dangerous*, or hazardous, the *code official* is authorized to enter the structure or premises at reasonable times to inspect or to perform the duties imposed by this code, provided that if such structure or premises be occupied that credentials be presented to the occupant and entry requested. If such structure or premises be unoccupied, the *code official* shall first make a reasonable effort to locate the owner, the owner's authorized agent or other person having charge or control of the structure or premises and request entry. If entry is refused, the *code official* shall have recourse to the remedies provided by law to secure entry.

❖ The first part of this section establishes the right of the code official to enter the premises in order to make the permit inspections required by Section 109.3. Permit application forms typically include a statement in the certification signed by the applicant (who is the owner or owner's agent) granting the code official the authority to enter areas covered by the permit in order to enforce code provisions related to the permit. The right to enter other structures or premises is more limited. First, to protect the right of privacy, the owner or occupant must grant the code official permission before an interior inspection of the property can be conducted. Permission is not required for inspections that can be accomplished from the public right-of-way. Second, such access may be denied by the owner or occupant. Unless the inspector has reasonable cause to believe that a violation of the code exists, access may be unattainable. Third, code officials must present proper identification (see Section 104.5) and request admittance during reasonable hours—usually the normal business hours of the establishment—to be admitted. Fourth, inspections must be aimed at securing or determining compliance with the provisions and intent of the regulations that are specifically in the established scope of the code official's authority.

Searches to gather information for the purpose of enforcing the other codes, ordinances or regulations are considered unreasonable and are prohibited by the Fourth Amendment to the U.S. Constitution. "Reasonable cause" in the context of this section must be distinguished from "probable cause," which is required to gain access to property in criminal cases. The burden of proof establishing reasonable cause may vary among jurisdictions. Usually, an inspector must show that the property is subject to inspection under the provisions of the code; that the interests of the public's health, safety and welfare outweigh the individual's right to maintain privacy; and that such an inspection is required solely to determine compliance with the provisions of the code.

Many jurisdictions do not recognize the concept of an administrative warrant and may require the code official to prove probable cause in order to gain access upon refusal. This burden of proof is usually more substantial, often requiring the code official to stipulate in advance why access is needed (usually access is restricted to gathering evidence for seeking an indictment or making an arrest); what specific items or information is sought; its relevance to the case against the individual subject; how knowledge of the relevance of the information or items sought was obtained; and how the evidence sought will be used. In all such cases, the right to privacy must always be weighed against the right of the code official to conduct an inspection to verify that public health, safety and welfare are not in jeopardy. Such important and complex constitutional issues should be discussed with the jurisdiction's legal counsel. Jurisdictions should establish procedures for securing the necessary court orders when an inspection is deemed necessary following a refusal.

[A] 104.7 Department records. The *code official* shall keep official records of applications received, permits and certificates issued, fees collected, reports of inspections, and notices and orders issued. Such records shall be retained in the official records for the period required for retention of public records.

❖ In keeping with the need for efficient business practices, the code official must keep records pertaining to permit applications, permits, fees collected, inspections, notices and orders issued. Such documentation

INTERNATIONAL CODE COUNCIL®
Copyright © 2015 ICC. ALL RIGHTS RESERVED. Accessed by David Dammon on Jun 21, 2017 12:30:52 PM pursuant to License Agreement with ICC. No further reproduction or distribution authorized. ANY UNAUTHORIZED REPRODUCTION OR DISTRIBUTION IS A VIOLATION OF THE FEDERAL COPYRIGHT ACT AND THE LICENSE AGREEMENT, AND SUBJECT TO CIVIL AND CRIMINAL PENALTIES THEREUNDER.

provides a valuable resource if questions arise regarding the department's actions with respect to a building. The code does not require that construction documents be kept after the project is complete. It requires that other documents be kept for the length of time mandated by the jurisdiction or state laws or administrative rules for retaining public records.

[A] 104.8 Liability. The *code official*, member of the Board of Appeals, or employee charged with the enforcement of this code, while acting for the jurisdiction in good faith and without malice in the discharge of the duties required by this code or other pertinent law or ordinance, shall not thereby be rendered civilly or criminally liable personally and is hereby relieved from personal liability for any damage accruing to persons or property as a result of any act or by reason of an act or omission in the discharge of official duties.

❖ The code official, other department employees and members of the appeals board are not intended to be held liable for those actions performed in accordance with the code in a reasonable and lawful manner. The responsibility of the code official in this regard is subject to local, state and federal laws that may supersede this provision.

[A] 104.8.1 Legal defense. Any suit or criminal complaint instituted against an officer or employee because of an act performed by that officer or employee in the lawful discharge of duties and under the provisions of this code shall be defended by legal representatives of the jurisdiction until the final termination of the proceedings. The code official or any subordinate shall not be liable for cost in any action, suit, or proceeding that is instituted in pursuance of the provisions of this code.

❖ This section establishes that code officials (or subordinates) must not be liable for costs in any legal action instituted in response to the performance of lawful duties. These costs are to be borne by the state, county or municipality. The best way to be certain that the code official's action is a "lawful duty" is always to cite the applicable code section on which the enforcement action is based.

[A] 104.9 Approved materials and equipment. Materials, equipment, and devices approved by the *code official* shall be constructed and installed in accordance with such approval.

❖ The code is a compilation of criteria with which materials, equipment, devices and systems must comply to be suitable for a particular application. The code official has a duty to evaluate such materials, equipment, devices and systems for code compliance and, when compliance is determined, approve the same for use. The materials, equipment, devices and systems must be constructed and installed in compliance with, and all conditions and limitations considered as a basis for, that approval. For example, the manufacturer's instructions and recommendations are to be followed if the approval of the material was based, even in part, on those instructions and recommendations. The approval authority given the code official is a significant responsibility and is a key to code compliance. The approval process is first technical and then administrative and must be approached as such. For example, if data to determine code compliance are required, such data should be in the form of test reports or engineering analysis and not simply taken from a sales brochure.

[A] 104.9.1 Used materials and equipment. The use of used materials that meet the requirements of this code for new materials is permitted. Used equipment and devices shall be permitted to be reused subject to the approval of the *code official*.

❖ The code criteria for materials and equipment have changed over the years. Evaluation of testing and materials technology has permitted the development of new criteria that the old materials may not satisfy. As a result, used materials are required to be evaluated in the same manner as new materials. Used materials, equipment and devices must be specifically approved by the code official as being equivalent to that required by the code if they are to be used again in a new installation.

[A] 104.10 Modifications. Wherever there are practical difficulties involved in carrying out the provisions of this code, the *code official* shall have the authority to grant modifications for individual cases upon application of the owner or owner's authorized representative, provided the *code official* shall first find that special individual reason makes the strict letter of this code impractical, the modification is in compliance with the intent and purpose of this code and such modification does not lessen health, accessibility, life and fire safety, or structural requirements. The details of action granting modifications shall be recorded and entered in the files of the Department of Building Safety.

❖ The code official may amend or make exceptions to the code as needed where strict compliance is impractical. Only the code official has authority to grant modifications. Consideration of a particular difficulty is to be based on the application of the owner or owner's authorized agent and a demonstration that the intent of the code is accomplished. This section is not intended to permit setting aside or ignoring a code provision; rather, it is intended to provide for the acceptance of equivalent protection. Such modifications do not, however, extend to actions that are necessary to correct violations of the code. In other words, a code violation or the expense of correcting one cannot constitute a practical difficulty.

[A] 104.10.1 Flood hazard areas. For *existing buildings* located in *flood hazard areas* for which *repairs*, *alterations* and *additions* constitute *substantial improvement*, the *code official* shall not grant modifications to provisions related to flood resistance unless a determination is made that:

1. The applicant has presented good and sufficient cause that the unique characteristics of the size, configuration or topography of the site render compliance with the flood-resistant construction provisions inappropriate.
2. Failure to grant the modification would result in exceptional hardship.

INTERNATIONAL CODE COUNCIL®
Copyright © 2015 ICC. ALL RIGHTS RESERVED. Accessed by David Dammon on Jun 21, 2017 12:30:52 PM pursuant to License Agreement with ICC. No further reproduction or distribution authorized. ANY UNAUTHORIZED REPRODUCTION OR DISTRIBUTION IS A VIOLATION OF THE FEDERAL COPYRIGHT ACT AND THE LICENSE AGREEMENT, AND SUBJECT TO CIVIL AND CRIMINAL PENALTIES THEREUNDER.

3. The granting of the modification will not result in increased flood heights, additional threats to public safety, extraordinary public expense nor create nuisances, cause fraud on or victimization of the public or conflict with existing laws or ordinances.
4. The modification is the minimum necessary to afford relief, considering the flood hazard.
5. A written notice will be provided to the applicant specifying, if applicable, the difference between the design flood elevation and the elevation to which the building is to be built, stating that the cost of flood insurance will be commensurate with the increased risk resulting from the reduced floor elevation and that construction below the design flood elevation increases risks to life and property.

❖ This section addresses additional requirements for all buildings and structures in designated flood hazard areas. These areas are commonly referred to as "flood plains" and are shown on a community's Flood Insurance Rate Map (FIRM), prepared by the Federal Emergency Management Agency (FEMA), or other adopted flood hazard map. Through the adoption of the code, communities meet a significant portion of the flood plain management regulation requirements necessary to participate in the National Flood Insurance Program (NFIP). To participate in the NFIP, a jurisdiction must adopt, in addition to the flood-resistant requirements found in the code, Appendix G, Flood-Resistant Construction, of the IBC, or a flood plain management ordinance that contains, at a minimum, the provisions contained in Appendix G. In either case, flood plain management requirements must be applied for all existing buildings located in flood hazard areas for buildings undergoing repairs, alterations and additions that constitute substantial improvements. The code official may grant modifications to the provisions of this section for any of the five reasons listed in Section 104.10.1.

[A] 104.11 Alternative materials, design and methods of construction, and equipment. The provisions of this code are not intended to prevent the installation of any material or to prohibit any design or method of construction not specifically prescribed by this code, provided that any such alternative has been approved. An alternative material, design, or method of construction shall be approved where the *code official* finds that the proposed design is satisfactory and complies with the intent of the provisions of this code, and that the material, method, or work offered is, for the purpose intended, not less than the equivalent of that prescribed in this code in quality, strength, effectiveness, fire resistance, durability and safety. Where the alternative material, design or method of construction is not approved, the *code official* shall respond in writing, stating the reasons the alternative was not approved.

❖ The code is not intended to inhibit innovative ideas or technological advances. A comprehensive regulatory document, such as a building code, cannot envision and then address all future innovations in the industry. As a result, a performance code must be applicable to and provide a basis for the approval of an increasing number of newly developed, innovative materials, systems and methods for which no code text or referenced standards yet exist. The fact that a material, product or method of construction is not addressed in the code is not an indication that such material, product or method is intended to be prohibited. The code official is expected to apply sound technical judgment in accepting materials, systems or methods that, while not anticipated by the drafters of the current code text, can be demonstrated to offer equivalent performance. By virtue of its text, the code regulates new and innovative construction practices while addressing the relative safety of building occupants. The code official is responsible for determining if a requested alternative provides the equivalent level of protection of public health, safety and welfare as required by the code.

The last sentence is similar to that included in Section 105.3.1 regarding the rejection of a permit application. The reason for this additional level of communication is that the nonapproval of an alternative method is not the same as the nonapproval of a permit. In other words, the permit application may have been approved but an alternative method might not be approved until a later date. However, the reasons for responding to the applicant in writing are the same, as noted in the commentary to Section 105.3.1: "In order to ensure effective communication and due process of law, the reasons for denial of an application for a permit are required to be in writing." Similar language is found in all of the *International Codes*® (I-Codes®).

[A] 104.11.1 Research reports. Supporting data, where necessary to assist in the approval of materials or assemblies not specifically provided for in this code, shall consist of valid research reports from approved sources.

❖ When an alternative material or method is proposed for construction, it is incumbent upon the code official to determine whether this alternative is, in fact, an equivalent to the methods prescribed by the code. Reports providing evidence of this equivalency are required to be supplied by an approved source, meaning a source that the code official finds to be reliable and accurate. The ICC Evaluation Service is an example of an agency that provides research reports for alternative materials and methods.

[A] 104.11.2 Tests. Whenever there is insufficient evidence of compliance with the provisions of this code or evidence that a material or method does not conform to the requirements of this code, or in order to substantiate claims for alternative materials or methods, the *code official* shall have the authority to require tests as evidence of compliance to be made at no expense to the jurisdiction. Test methods shall be as specified in this code or by other recognized test standards. In the absence of recognized and accepted test methods, the *code official* shall approve the testing procedures. Tests shall be performed by an approved agency. Reports of such tests

INTERNATIONAL CODE COUNCIL®
Copyright © 2015 ICC. ALL RIGHTS RESERVED. Accessed by David Dammon on Jun 21, 2017 12:30:52 PM pursuant to License Agreement with ICC. No further reproduction or distribution authorized. ANY UNAUTHORIZED REPRODUCTION OR DISTRIBUTION IS A VIOLATION OF THE FEDERAL COPYRIGHT ACT AND THE LICENSE AGREEMENT, AND SUBJECT TO CIVIL AND CRIMINAL PENALTIES THEREUNDER.

shall be retained by the *code official* for the period required for retention.

❖ To provide the basis on which the code official can make a decision regarding an alternative material or method, sufficient technical data, test reports and documentation must be provided for evaluation by the code official. If evidence satisfactory to the code official indicates that the alternative material or construction method is equivalent to that required by the code, the code official may approve it. Any such approval cannot have the effect of waiving any requirements of the code. The burden of proof of equivalence lies with the applicant who proposes the use of alternative materials or methods.

The code official must require the submission of any appropriate information and data to assist in the determination of equivalency. This information should be submitted before a permit can be issued. The type of information required includes test data in accordance with referenced standards, evidence of compliance with the referenced standard specifications and design calculations. A research report issued by an authoritative agency is particularly useful in providing the code official with the technical basis for evaluation and approval of new and innovative materials and methods of construction. The use of authoritative research reports can greatly assist the code official by reducing the time-consuming engineering analysis necessary to review these materials and methods. Failure to adequately substantiate a request for the use of an alternative is a valid reason for the code official to deny a request. Any tests submitted in support of an application must have been performed by an agency approved by the code official based on evidence that the agency has the technical expertise, test equipment and quality assurance to properly conduct and report the necessary testing. The test reports submitted to the code official must be retained in accordance with the requirements of Section 104.7.

SECTION 105
PERMITS

[A] 105.1 Required. Any owner or owner's authorized agent who intends to repair, add to, alter, relocate, demolish, or change the occupancy of a building or to repair, install, add, alter, remove, convert, or replace any electrical, gas, mechanical, or plumbing system, the installation of which is regulated by this code, or to cause any such work to be performed, shall first make application to the *code official* and obtain the required permit.

❖ This section contains the administrative rules governing the issuance, suspension, revocation or modification of building permits. It also establishes how and by whom the application for a building permit is to be made, how it is to be processed, fees and what information it must contain or have attached to it.

In general, a permit is required for all activities that are regulated by the code or its referenced codes (see Section 101.4) and these activities cannot begin until the permit is issued, unless the activity is specifically exempted by Section 105.2. Only the owner or a person authorized by the owner can apply for the permit. Note that this section indicates a need for a permit for a change in occupancy, even if no work is contemplated. Although the occupancy of a building or portion thereof may change and the new activity is still classified in the same group, different code provisions may be applicable. The means of egress, structural loads, and light and ventilation provisions are examples of requirements that are occupancy sensitive. The purpose of the permit is to cause the work to be reviewed, approved and inspected to determine compliance with the code.

[A] 105.1.1 Annual permit. Instead of an individual permit for each *alteration* to an already approved electrical, gas, mechanical, or plumbing installation, the *code official* is authorized to issue an annual permit upon application therefor to any person, firm, or corporation regularly employing one or more qualified trade persons in the building, structure, or on the premises owned or operated by the applicant for the permit.

❖ In some instances, such as large buildings or industrial facilities, the repair, replacement or alteration of electrical, gas, mechanical or plumbing systems occurs on a frequent basis. This section allows the code official to issue an annual permit for this work. This relieves both the building department and the owners of such facilities from the burden of filing and processing individual applications for this activity; however, there are restrictions on who is entitled to these permits. They can be issued only for work on a previously approved installation and only to an individual or corporation that employs persons specifically qualified in the trade for which the permit is issued. If tradespeople who perform the work involved are required to be licensed in the jurisdiction, then only those persons would be permitted to perform the work. If trade licensing is not required, then the code official needs to review and approve the qualifications of the persons who will be performing the work. The annual permit can apply only to the individual property that is owned or operated by the applicant.

[A] 105.1.2 Annual permit records. The person to whom an annual permit is issued shall keep a detailed record of *alterations* made under such annual permit. The *code official* shall have access to such records at all times, or such records shall be filed with the *code official* as designated.

❖ The work performed in accordance with an annual permit must be inspected by the code official, so it is necessary to know the location of such work and when it was performed. This can be accomplished by having records of the work available to the code official either at the premises or in his or her office, as determined by the official.

INTERNATIONAL CODE COUNCIL®
Copyright © 2015 ICC. ALL RIGHTS RESERVED. Accessed by David Dammon on Jun 21, 2017 12:30:52 PM pursuant to License Agreement with ICC. No further reproduction or distribution authorized. ANY UNAUTHORIZED REPRODUCTION OR DISTRIBUTION IS A VIOLATION OF THE FEDERAL COPYRIGHT ACT AND THE LICENSE AGREEMENT, AND SUBJECT TO CIVIL AND CRIMINAL PENALTIES THEREUNDER.

[A] 105.2 Work exempt from permit. Exemptions from permit requirements of this code shall not be deemed to grant authorization for any work to be done in any manner in violation of the provisions of this code or any other laws or ordinances of this jurisdiction. Permits shall not be required for the following:

Building:

1. Sidewalks and driveways not more than 30 inches (762 mm) above grade and not over any basement or story below and that are not part of an accessible route.
2. Painting, papering, tiling, carpeting, cabinets, counter tops, and similar finish work.
3. Temporary motion picture, television, and theater stage sets and scenery.
4. Shade cloth structures constructed for nursery or agricultural purposes, and not including service systems.
5. Window awnings supported by an exterior wall of Group R-3 or Group U occupancies.
6. Movable cases, counters, and partitions not over 69 inches (1753 mm) in height.

Electrical:

Repairs and maintenance: Minor *repair* work, including the replacement of lamps or the connection of approved portable electrical equipment to approved permanently installed receptacles.

Radio and television transmitting stations: The provisions of this code shall not apply to electrical equipment used for radio and television transmissions, but do apply to equipment and wiring for power supply, the installations of towers, and antennas.

Temporary testing systems: A permit shall not be required for the installation of any temporary system required for the testing or servicing of electrical equipment or apparatus.

Gas:

1. Portable heating appliance.
2. Replacement of any minor part that does not alter approval of equipment or make such equipment unsafe.

Mechanical:

1. Portable heating appliance.
2. Portable ventilation equipment.
3. Portable cooling unit.
4. Steam, hot, or chilled water piping within any heating or cooling equipment regulated by this code.
5. Replacement of any part that does not alter its approval or make it unsafe.
6. Portable evaporative cooler.
7. Self-contained refrigeration system containing 10 pounds (4.54 kg) or less of refrigerant and actuated by motors of 1 horsepower (746 W) or less.

Plumbing:

1. The stopping of leaks in drains, water, soil, waste, or vent pipe; provided, however, that if any concealed trap, drainpipe, water, soil, waste, or vent pipe becomes defective and it becomes necessary to remove and replace the same with new material, such work shall be considered as new work, and a permit shall be obtained and inspection made as provided in this code.
2. The clearing of stoppages or the repairing of leaks in pipes, valves, or fixtures, and the removal and reinstallation of water closets, provided such *repairs* do not involve or require the replacement or rearrangement of valves, pipes, or fixtures.

❖ Section 105.1 essentially requires a permit for any activity involving work on a building and its systems and other structures. This section lists activities allowed without first obtaining a permit from the building department. Note that in some cases, such as Items 4 and 5, the work is exempt only for certain occupancies. Further, it is intended that even though work may be exempted for permit purposes, it must still comply with the code and the owner is responsible for proper and safe construction for all work being done. Work exempted by the codes adopted by reference in Section 101.4 is also included here.

[A] 105.2.1 Emergency repairs. Where equipment replacements and *repairs* must be performed in an emergency situation, the permit application shall be submitted within the next working business day to the *code official*.

❖ This section recognizes that, in some cases, emergency replacement and repair work must be done as quickly as possible and it is not practical to take the time necessary to apply for and obtain approval. A permit for the work must be obtained the next day that the building department is open for business. Any work performed before the permit is issued must be done in accordance with the code and corrected if not approved by the code official.

[A] 105.2.2 Repairs. Application or notice to the *code official* is not required for ordinary *repairs* to structures and items listed in Section 105.2. Such *repairs* shall not include the cutting away of any wall, partition, or portion thereof, the removal or cutting of any structural beam or load-bearing support, or the removal or change of any required means of egress or rearrangement of parts of a structure affecting the egress requirements; nor shall ordinary *repairs* include *addition* to, *alteration* of, replacement, or relocation of any standpipe, water supply, sewer, drainage, drain leader, gas, soil, waste, vent, or similar piping, electric wiring, or mechanical or other work affecting public health or general safety.

❖ This section distinguishes between what might be termed by some as repairs, but are in fact alterations

INTERNATIONAL CODE COUNCIL®
Copyright © 2015 ICC. ALL RIGHTS RESERVED. Accessed by David Dammon on Jun 21, 2017 12:30:52 PM pursuant to License Agreement with ICC. No further reproduction or distribution authorized. ANY UNAUTHORIZED REPRODUCTION OR DISTRIBUTION IS A VIOLATION OF THE FEDERAL COPYRIGHT ACT AND THE LICENSE AGREEMENT, AND SUBJECT TO CIVIL AND CRIMINAL PENALTIES THEREUNDER.

that cause the code to be applicable, and ordinary repairs, which are maintenance activities and thus do not require a permit.

[A] 105.2.3 Public service agencies. A permit shall not be required for the installation, *alteration*, or *repair* of generation, transmission, distribution, or metering or other related equipment that is under the ownership and control of public service agencies by established right.

❖ Utility-owned transmission lines and metering equipment that supply electricity, gas, water, telephone, television cable, etc., may be worked on without a permit. Utilities typically are regulated by other laws that give them specific rights and authority in this area. Appliances or equipment installed or serviced but not owned or controlled by such agencies is not exempt from a permit.

[A] 105.3 Application for permit. To obtain a permit, the applicant shall first file an application therefor in writing on a form furnished by the Department of Building Safety for that purpose. Such application shall:

1. Identify and describe the work in accordance with Chapter 3 to be covered by the permit for which application is made.
2. Describe the land on which the proposed work is to be done by legal description, street address, or similar description that will readily identify and definitely locate the proposed building or work.
3. Indicate the use and occupancy for which the proposed work is intended.
4. Be accompanied by construction documents and other information as required in Section 106.3.
5. State the valuation of the proposed work.
6. Be signed by the applicant or the applicant's authorized agent.
7. Give such other data and information as required by the *code official*.

❖ This section requires that a written application for a permit be filed on forms provided by the building department, and it details the information required on the application. Permit forms will typically have sufficient space to write a very brief description of the work to be accomplished, which is sufficient only for small jobs. For larger projects, the description will be augmented by construction documents as indicated in Item 4. As required by Section 105.1, the applicant must be the owner of the property or an authorized agent of the owner, such as an engineer, architect, contractor or tenant. The applicant must sign the application, and permit forms typically include a statement that if the applicant is not the owner, he or she has permission from the owner to make the application.

[A] 105.3.1 Action on application. The *code official* shall examine or cause to be examined applications for permits and amendments thereto within a reasonable time after filing. If the application or the construction documents do not conform to the requirements of pertinent laws, the *code official* shall reject such application in writing, stating the reasons therefor. If the *code official* is satisfied that the proposed work conforms to the requirements of this code and laws and ordinances applicable thereto, the *code official* shall issue a permit therefor as soon as practicable.

❖ This section requires the code official to act with reasonable speed on a permit application. In some instances, this time period is set by state or local law. The code official must refuse to issue a permit when the application and accompanying documents do not conform to the code. In order to ensure effective communication and due process of law, the reasons for denial of an application for a permit are required to be in writing. Once the code official determines that the work described conforms to the code and other applicable laws, the permit must be issued upon payment of the fees required by Section 108.

[A] 105.3.2 Time limitation of application. An application for a permit for any proposed work shall be deemed to have been abandoned 180 days after the date of filing, unless such application has been pursued in good faith or a permit has been issued; except that the *code official* is authorized to grant one or more extensions of time for additional periods not exceeding 90 days each. The extension shall be requested in writing and justifiable cause demonstrated.

❖ Typically, an application for a permit is submitted and goes through a review process that ends with the issuance of a permit. If a permit has not been issued 180 days after the date of filing, however, the application is considered abandoned, unless the applicant was diligent in efforts to obtain the permit. The code official has the authority to extend this time limitation (in increments of 90 days), provided there is reasonable cause. This would cover delays beyond the applicant's control, such as prerequisite permits or approvals from other authorities in the jurisdiction or state. The intent of this section is to limit the time between the review process and the issuance of a permit.

[A] 105.4 Validity of permit. The issuance or granting of a permit shall not be construed to be a permit for, or an approval of, any violation of any of the provisions of this code or of any other ordinance of the jurisdiction. Permits presuming to give authority to violate or cancel the provisions of this code or other ordinances of the jurisdiction shall not be valid. The issuance of a permit based on construction documents and other data shall not prevent the *code official* from requiring the correction of errors in the construction documents and other data. The *code official* is authorized to prevent occupancy or use of a structure where in violation of this code or of any other ordinances of this jurisdiction.

❖ This section states the fundamental premise that the permit is only a license to proceed with the work. It is not a license to violate, cancel or set aside any provisions of the code. This is significant because it

INTERNATIONAL CODE COUNCIL®
Copyright © 2015 ICC. ALL RIGHTS RESERVED. Accessed by David Dammon on Jun 21, 2017 12:30:52 PM pursuant to License Agreement with ICC. No further reproduction or distribution authorized. ANY UNAUTHORIZED REPRODUCTION OR DISTRIBUTION IS A VIOLATION OF THE FEDERAL COPYRIGHT ACT AND THE LICENSE AGREEMENT, AND SUBJECT TO CIVIL AND CRIMINAL PENALTIES THEREUNDER.

means that, despite any errors or oversights in the approval process, the permit applicant, not the code official, is responsible for code compliance. Also, the permit can be suspended or revoked in accordance with Section 105.6.

[A] 105.5 Expiration. Every permit issued shall become invalid unless the work on the site authorized by such permit is commenced within 180 days after its issuance, or if the work authorized on the site by such permit is suspended or abandoned for a period of 180 days after the time the work is commenced. The *code official* is authorized to grant, in writing, one or more extensions of time for periods not more than 180 days each. The extension shall be requested in writing and justifiable cause demonstrated.

❖ The permit becomes invalid under two distinct situations—both based on a 180-day period. The first situation is when no work has started 180 days from the issuance of the permit. The second situation is when the authorized work has stopped for 180 days. The person who was issued the permit should be notified, in writing, that the permit is invalid and what steps must be taken to reinstate it and restart the work. The code official has the authority to extend this time limitation (in increments of 180 days), provided the extension is requested in writing and there is reasonable cause, typically events beyond the permit holder's control.

[A] 105.6 Suspension or revocation. The *code official* is authorized to suspend or revoke a permit issued under the provisions of this code wherever the permit is issued in error or on the basis of incorrect, inaccurate, or incomplete information or in violation of any ordinance or regulation or any of the provisions of this code.

❖ A permit, is in reality, a license to proceed with the work. The code official, however, can suspend or revoke permits shown to be based, all or in part, on any false statement or misrepresentation of fact. A permit can also be suspended or revoked if it was issued in error, such as an omitted prerequisite approval or code violation indicated on the construction documents. An applicant may subsequently apply for a reinstatement of the permit with the appropriate corrections or modifications made to the application and construction documents.

[A] 105.7 Placement of permit. The building permit or copy shall be kept on the site of the work until the completion of the project.

❖ The permit, or copy thereof, is to be kept on the job site until the work is complete and made available to the code official or representative to conveniently make required entries thereon.

SECTION 106
CONSTRUCTION DOCUMENTS

[A] 106.1 General. Submittal documents consisting of construction documents, special inspection and structural observation programs, investigation and evaluation reports, and other data shall be submitted in two or more sets with each application for a permit. The construction documents shall be prepared by a registered design professional where required by the statutes of the jurisdiction in which the project is to be constructed. Where special conditions exist, the *code official* is authorized to require additional construction documents to be prepared by a registered design professional.

Exception: The *code official* is authorized to waive the submission of construction documents and other data not required to be prepared by a registered design professional if it is found that the nature of the work applied for is such that reviewing of construction documents is not necessary to obtain compliance with this code.

❖ This section establishes the requirement to provide the code official with submittal documents, including construction drawings, specifications and other documents that describe the structure or system for which a permit is sought. It describes the information that must be included in the documents, who must prepare them, and procedures for approving them.

A detailed description of the work for which the application is made must be submitted. When the work can be briefly described on the application form and the services of a registered design professional are not required, the code official may utilize judgment in determining the need for detailed documents. An example of work that may not involve the submission of detailed construction documents is the replacement of an existing 60-amp electrical service with a 200-amp service. These provisions are intended to reflect the minimum scope of information needed to determine code compliance. The code official should establish a consistent policy of the number of sets required by the jurisdiction and make this information readily available to applicants.

This section also requires the code official to determine that any state professional registration laws be complied with as they apply to the preparation of construction documents.

[A] 106.2 Construction documents. Construction documents shall be in accordance with Sections 106.2.1 through 106.2.5.

❖ This section describes, in detail, the minimum requirements for the construction documents portion of the submittal documents. Sections 106.2.1 through 106.2.5 contain the minimum information to be provided on the construction documents. The following subsections specify the detailed information that must be shown on the submitted construction documents. When specifically allowed by the code official, documents can be submitted in electronic form.

[A] 106.2.1 Construction documents. Construction documents shall be dimensioned and drawn upon suitable material. Electronic media documents are permitted to be submitted where approved by the *code official*. Construction documents shall be of sufficient clarity to indicate the location, nature and extent of the work proposed and show in detail that it will conform to the provisions of this code and

INTERNATIONAL CODE COUNCIL®
Copyright © 2015 ICC. ALL RIGHTS RESERVED. Accessed by David Dammon on Jun 21, 2017 12:30:52 PM pursuant to License Agreement with ICC. No further reproduction or distribution authorized. ANY UNAUTHORIZED REPRODUCTION OR DISTRIBUTION IS A VIOLATION OF THE FEDERAL COPYRIGHT ACT AND THE LICENSE AGREEMENT, AND SUBJECT TO CIVIL AND CRIMINAL PENALTIES THEREUNDER.

relevant laws, ordinances, rules and regulations, as determined by the *code official*. The work areas shall be shown.

❖ The construction documents are required to be of a quality and detail such that the code official can determine that the work conforms to the code and other applicable laws and regulations. General statements on the documents, such as "All work must comply with the *International Existing Building Code*," are not an acceptable substitute for showing the required information.

[A] 106.2.2 Fire protection system(s) shop drawings. Shop drawings for the fire protection system(s) shall be submitted to indicate conformance with this code and the construction documents and shall be approved prior to the start of system installation. Shop drawings shall contain information as required by the referenced installation standards in Chapter 9 of the *International Building Code*.

❖ Since the fire protection contractor(s) may not have been selected at the time a permit was issued for the construction of a building, detailed shop drawings for fire protection systems are not available. Because they provide the information necessary to determine code compliance, as specified in the appropriate referenced standard in Chapter 9 of the IBC, they must be submitted and approved by the code official before the contractor can begin installing the system. For example, the professional responsible for the design of an automatic sprinkler system should determine that the water supply is adequate, but will not be able to prepare a final set of hydraulic calculations if the specific materials and pipe sizes, lengths and arrangements have not been identified. Once the installing contractor is selected, specific hydraulic calculations can be prepared. Factors such as classification of the hazard, amount of water supply available and the density or concentration to be achieved by the system are to be included with the submission of the shop drawings. Specific data sheets identifying sprinklers, pipe dimensions, power requirements for smoke detectors, etc., should also be included with the submission.

[A] 106.2.3 Means of egress. The construction documents for *Alterations*—Level 2, *Alterations*—Level 3, *additions* and *changes of occupancy* shall show in sufficient detail the location, construction, size and character of all portions of the means of egress in compliance with the provisions of this code. The construction documents shall designate the number of occupants to be accommodated in every *work area* of every floor and in all affected rooms and spaces.

❖ The complete means of egress system is required to be indicated on the plans to permit the code official to initiate a review and identify pertinent code requirements for each component. Additionally, requiring such information to be reflected in the construction documents requires the designer not only to become familiar with the code, but also to be aware of egress principles, concepts and purposes. The need to ensure that the means of egress leads to a public way is also a consideration during the plan review. Such an evaluation cannot be made without the inclusion of a site plan, as required by Section 106.2.5.

Information essential for determining the required capacity of the egress components (see Section 1005 of the IBC) and the number of egress components required from a space (see Sections 1015.1 and 1020.1 of the IBC) must be provided. The designer must be aware of the occupancy of a space and properly identify it, along with its resultant occupant load, on the construction documents. In Group I-1, R-2 and R-3 occupancies, the occupant load can be readily determined with little difference in the number; thus, designating the occupant load on the construction documents is not required.

[A] 106.2.4 Exterior wall envelope. Construction documents for work affecting the exterior wall envelope shall describe the exterior wall envelope in sufficient detail to determine compliance with this code. The construction documents shall provide details of the exterior wall envelope as required, including windows, doors, flashing, intersections with dissimilar materials, corners, end details, control joints, intersections at roof, eaves, or parapets, means of drainage, water-resistive membrane, and details around openings.

The construction documents shall include manufacturer's installation instructions that provide supporting documentation that the proposed penetration and opening details described in the construction documents maintain the wind and weather resistance of the exterior wall envelope. The supporting documentation shall fully describe the exterior wall system that was tested, where applicable, as well as the test procedure used.

❖ This section specifically identifies details of exterior wall construction that are critical to the weather resistance of the wall and requires those details to be provided on the construction documents. Where the weather resistance of the exterior wall assembly is based on tests, the submitted documentation is to describe the details of the wall envelope and the test procedure that was used. This provides the code official with enough information necessary to determine code compliance.

[A] 106.2.5 Site plan. The construction documents submitted with the application for permit shall be accompanied by a site plan showing to scale the size and location of new construction and existing structures on the site, distances from lot lines, the established street grades, and the proposed finished grades; and it shall be drawn in accordance with an accurate boundary line survey. In the case of demolition, the site plan shall show construction to be demolished and the location and size of existing structures and construction that are to remain on the site or plot. The *code official* is authorized to waive or modify the requirement for a site plan where the application for permit is for *alteration*, *repair* or *change of occupancy*.

❖ Certain code requirements are dependent on the structure's location on the lot and the topography of the site. As a result, a scaled site plan containing the

INTERNATIONAL CODE COUNCIL®
Copyright © 2015 ICC. ALL RIGHTS RESERVED. Accessed by David Dammon on Jun 21, 2017 12:30:52 PM pursuant to License Agreement with ICC. No further reproduction or distribution authorized. ANY UNAUTHORIZED REPRODUCTION OR DISTRIBUTION IS A VIOLATION OF THE FEDERAL COPYRIGHT ACT AND THE LICENSE AGREEMENT, AND SUBJECT TO CIVIL AND CRIMINAL PENALTIES THEREUNDER.

data listed in this section is required to permit review for compliance. The code official can waive the requirement for a site plan when it is not required to determine code compliance, such as work involving only interior alterations or repairs.

[A] 106.3 Examination of documents. The *code official* shall examine or cause to be examined the submittal documents and shall ascertain by such examinations whether the construction or occupancy indicated and described is in accordance with the requirements of this code and other pertinent laws or ordinances.

❖ The requirements of this section are related to those found in Section 105.3.1 regarding the action of the code official in response to a permit application. The code official can delegate the review of the submittal documents to subordinates as provided for in Section 103.3.

[A] 106.3.1 Approval of construction documents. Where the *code official* issues a permit, the construction documents shall be approved in writing or by stamp as "Reviewed for Code Compliance." One set of construction documents so reviewed shall be retained by the *code official*. The other set shall be returned to the applicant, shall be kept at the site of work, and shall be open to inspection by the *code official* or a duly authorized representative.

❖ The code official must stamp or otherwise endorse as "Reviewed for Code Compliance" the construction documents on which the permit is based. One set of approved construction documents must be kept on the construction site to serve as the basis for all subsequent inspections. To avoid confusion, the construction documents on the site must be the documents that were approved and stamped. This is because inspections are to be performed with regard to the approved documents, not the code itself. Additionally, the contractor cannot determine compliance with the approved construction documents unless they are readily available. Unless the approved construction documents are available, the inspection should be postponed and work on the project halted.

[A] 106.3.2 Previous approval. This code shall not require changes in the construction documents, construction or designated occupancy of a structure for which a lawful permit has been issued and the construction of which has been pursued in good faith within 180 days after the effective date of this code and has not been abandoned.

❖ If a permit is issued and construction proceeds at a normal pace and a new edition of the code is adopted by the legislative body, requiring the building to be constructed to conform to the new code is unreasonable. This section provides for the continuity of permits issued under previous codes, as long as such permits are being "actively prosecuted" subsequent to the effective date of the ordinance adopting this edition of the code.

[A] 106.3.3 Phased approval. The *code official* is authorized to issue a permit for the construction of foundations or any other part of a building before the construction documents for the whole building or structure have been submitted, provided that adequate information and detailed statements have been filed complying with pertinent requirements of this code. The holder of such permit for the foundation or other parts of a building shall proceed at the holder's own risk with the building operation and without assurance that a permit for the entire structure will be granted.

❖ The code official has the authority to issue a partial permit to allow for the practice of "fast tracking" a job. Any construction under a partial permit is "at the holder's own risk" and "without assurance that a permit for the entire structure will be granted." The code official is under no obligation to accept work or issue a complete permit in violation of the code, ordinances or statutes, simply because a partial permit had been issued. Fast tracking places an unusual administrative and technical burden on the code official. The purpose is to proceed with construction while the design continues for other aspects of the work. Coordinating and correlating the code aspects into the project in phases requires attention to detail and project tracking so that all code issues are addressed. The coordination of these submittals is the responsibility of the registered design professional in responsible charge.

[A] 106.3.4 Deferred submittals. Deferral of any submittal items shall have the prior approval of the *code official*. The *registered design professional in responsible charge* shall list the deferred submittals on the construction documents for review by the *code official.*

Submittal documents for deferred submittal items shall be submitted to the *registered design professional* in responsible charge who shall review them and forward them to the *code official* with a notation indicating that the deferred submittal documents have been reviewed and that they have been found to be in general conformance to the design of the building. The deferred submittal items shall not be installed until their deferred submittal documents have been approved by the *code official*.

❖ Often, especially on larger projects, details of certain building parts are not available at the time of permit issuance because they have not yet been designed (e.g., exterior cladding, prefabricated items such as trusses and stairs, and the components of fire protection systems). The design professional in responsible charge must identify on the submittal documents the items to be included in any deferred submittals. Documents required for the approval of deferred items must be reviewed by the design professional in responsible charge for compatibility with the design of the building, forwarded to the code official with a notation that this is the case and approved by the code official before installation of the items. Sufficient time must be allowed for the approval process. Note that deferred submittals differ from the phased permits described in Section 106.3.3 in that they occur after the permit for the building is issued and are not for work covered by separate permits.

INTERNATIONAL CODE COUNCIL®
Copyright © 2015 ICC. ALL RIGHTS RESERVED. Accessed by David Dammon on Jun 21, 2017 12:30:52 PM pursuant to License Agreement with ICC. No further reproduction or distribution authorized. ANY UNAUTHORIZED REPRODUCTION OR DISTRIBUTION IS A VIOLATION OF THE FEDERAL COPYRIGHT ACT AND THE LICENSE AGREEMENT, AND SUBJECT TO CIVIL AND CRIMINAL PENALTIES THEREUNDER.

[A] 106.4 Amended construction documents. Work shall be installed in accordance with the reviewed construction documents, and any changes made during construction that are not in compliance with the approved construction documents shall be resubmitted for approval as an amended set of construction documents.

❖ Any amendments to the approved construction documents must be filed before constructing the amended item. In the broadest sense, amendments include all addenda, change orders, revised drawings and marked-up shop drawings. Code officials should maintain a policy that all amendments be submitted for review. Otherwise, a significant amendment may not be submitted because of misinterpretation, resulting in an activity that is not approved and that causes a needless delay in obtaining approval of the finished work.

[A] 106.5 Retention of construction documents. One set of approved construction documents shall be retained by the *code official* for a period of not less than the period required for retention of public records.

❖ A set of the approved construction documents must be kept by the code official as may be required by state or local laws, but for a period of not less than 180 days after the work is complete. Questions regarding an item shown on the approved documents may arise in the period immediately following completion of the work and the documents should be available for review. See Section 104.7 for requirements to retain other records that are generated as a result of the work.

[A] 106.6 Design professional in responsible charge. Where it is required that documents be prepared by a registered design professional, the *code official* shall be authorized to require the owner or the owner's authorized agent to engage and designate on the building permit application a registered design professional who shall act as the *registered design professional in responsible charge*. If the circumstances require, the owner or the owner's authorized agent shall designate a substitute *registered design professional in responsible charge* who shall perform the duties required of the original *registered design professional in responsible charge*. The code official shall be notified in writing by the owner or the owner's authorized agent if the *registered design professional in responsible charge* is changed or is unable to continue to perform the duties. The *registered design professional in responsible charge* shall be responsible for reviewing and coordinating submittal documents prepared by others, including phased and deferred submittal items, for compatibility with the design of the building. Where structural observation is required, the inspection program shall name the individual or firms who are to perform structural observation and describe the stages of construction at which structural observation is to occur.

❖ At the time of permit application and at various intervals during a project, the code requires detailed technical information to be submitted to the code official. This will vary depending on the complexity of the project, but typically includes the construction documents with supporting information, applications utilizing the phased approval procedure in Section 106.3.3, and reports from engineers, inspectors and testing agencies as required in Chapter 17 of the IBC. Since these documents and reports are prepared by numerous individuals, firms and agencies, it is necessary to have a single person charged with the responsibility for coordinating their submittal to the code official. This person is the point of contact for the code official for all information relating to the project. Otherwise, the code official could waste time and effort attempting to locate the source of accurate information when trying to resolve an issue, such as a discrepancy in plans submitted by different designers.

The requirement that the owner engage a person to act as the design professional in responsible charge is applicable to projects where the construction documents are required by law to be prepared by a registered design professional (see Section 106.1) and when required by the code official. The person employed by the owner to act as the design professional in responsible charge must be identified on the permit application, but the owner can change the designated person at any time during the course of the review process or work, provided the code official is so notified in writing.

SECTION 107
TEMPORARY STRUCTURES AND USES

[A] 107.1 General. The *code official* is authorized to issue a permit for temporary uses. Such permits shall be limited as to time of service but shall not be permitted for more than 180 days. The *code official* is authorized to grant extensions for demonstrated cause.

❖ In the course of construction or other activities, structures that have a limited service life are often necessary. This section contains the administrative provisions that permit such temporary structures without full compliance with the code requirements for permanently occupied structures.

This section allows the code official to issue permits for temporary structures or uses. The applicant must specify the time period desired for the temporary structure or use, but the approval period cannot exceed 180 days. Structures or uses that are "temporary" but are anticipated to be in existence for more than 180 days are required to conform to code requirements for permanent structures and uses. The code official is authorized to grant time extensions if the applicant can provide a valid reason for the extension. A typical example would be circumstances that have occurred beyond the applicant's control. This provision is not intended to be used to circumvent the 180-day limitation.

[A] 107.2 Conformance. Temporary uses shall conform to the structural strength, fire safety, means of egress, accessibility, light, ventilation and sanitary requirements of this code

INTERNATIONAL CODE COUNCIL®
Copyright © 2015 ICC. ALL RIGHTS RESERVED. Accessed by David Dammon on Jun 21, 2017 12:30:52 PM pursuant to License Agreement with ICC. No further reproduction or distribution authorized. ANY UNAUTHORIZED REPRODUCTION OR DISTRIBUTION IS A VIOLATION OF THE FEDERAL COPYRIGHT ACT AND THE LICENSE AGREEMENT, AND SUBJECT TO CIVIL AND CRIMINAL PENALTIES THEREUNDER.

as necessary to ensure the public health, safety and general welfare.

❖ This section prescribes those categories of the code that must be complied with, despite the fact that the structure will be removed or the use discontinued at some time in the future. These criteria are essential for measuring the safety of any use, temporary or permanent. Therefore, the application of these criteria to a temporary structure cannot be waived.

"Structural strength" refers to the ability of the temporary structure to resist anticipated live, environmental and dead loads (see Chapter 16 of the IBC). It also applies to anticipated live and dead loads imposed by a temporary use in an existing structure.

"Fire safety" provisions are those required by Chapters 8, 9 and 10 of the IBC invoked by virtue of the structure's size, use or location on the property.

"Means of egress" refers to full compliance with Chapter 10 of the IBC.

"Accessibility" refers to full compliance with Chapter 11 of the IBC for making buildings accessible to physically disabled persons, a requirement that is repeated in Section 1103.1 of the IBC.

"Light, ventilation and sanitary" requirements are those imposed by Chapter 12 of the IBC or applicable sections of the *International Plumbing Code*® (IPC®) or *International Mechanical Code*® (IMC®).

[A] 107.3 Temporary power. The *code official* is authorized to give permission to temporarily supply and use power in part of an electric installation before such installation has been fully completed and the final certificate of completion has been issued. The part covered by the temporary certificate shall comply with the requirements specified for temporary lighting, heat or power in NFPA 70.

❖ Commonly, the electrical service on most construction sites is installed and energized long before all of the wiring is completed. This procedure allows the power supply to be increased as construction demands; however, temporary permission is not intended to waive the requirements set forth in NFPA 70. Construction power from the permanent wiring of the building does not require the installation of temporary ground-fault circuit-interrupter (GFCI) protection or the assured equipment grounding program, because the building wiring installed as required by the code should be as safe for construction use as it would be for use after the completion of the building.

[A] 107.4 Termination of approval. The *code official* is authorized to terminate such permit for a temporary use and to order the temporary use to be discontinued.

❖ This section provides the code official with the necessary authority to terminate the permit for a temporary use. The code official can order that a temporary structure be removed or a temporary use be discontinued if conditions of the permit have been violated or the structure or use poses an imminent hazard to the public, in which case the provisions of Section 116 become applicable. This text is important because it allows the code official to act quickly when time is of the essence in order to protect public health, safety and welfare.

SECTION 108
FEES

[A] 108.1 Payment of fees. A permit shall not be valid until the fees prescribed by law have been paid. Nor shall an amendment to a permit be released until the additional fee, if any, has been paid.

❖ The code anticipates that jurisdictions will establish their own fee schedules. It is the intent that the fees collected by the department for building permit issuance, plan review and inspection be adequate to cover the costs to the department in these areas.

This section requires that all fees be paid prior to permit issuance or release of an amendment to a permit. Since department operations are intended to be supported by fees paid by the user of department activities, it is important that these fees are received before incurring any expense. This philosophy has resulted in a common practice of having fees paid prior to plan review and inspection.

[A] 108.2 Schedule of permit fees. On buildings, electrical, gas, mechanical, and plumbing systems or *alterations* requiring a permit, a fee for each permit shall be paid as required in accordance with the schedule as established by the applicable governing authority.

❖ The jurisdiction inserts its desired fee schedule at this location. The fees are established by law, such as in an ordinance adopting the code (see page xi of the code for a sample), a separate ordinance or legally promulgated regulation, as required by state or local law. Fee schedules are often based on a valuation of the work to be performed. This concept is based on the proposition that the valuation of a project is related to the amount of work to be expended in the plan review, inspections and administering the permit, plus an excess to cover department overhead.

[A] 108.3 Building permit valuations. The applicant for a permit shall provide an estimated permit value at time of application. Permit valuations shall include total value of work including materials and labor for which the permit is being issued, such as electrical, gas, mechanical, plumbing equipment, and permanent systems. If, in the opinion of the *code official*, the valuation is underestimated on the application, the permit shall be denied unless the applicant can show detailed estimates to meet the approval of the *code official*. Final building permit valuation shall be set by the *code official*.

❖ As indicated in Section 108.2, jurisdictions usually base their fees on the value of the work being performed. This section, therefore, requires the applicant to provide this figure, which is to include the total value of the work, including materials and labor, for which the permit is sought. If the code official believes that the value provided by the applicant is

INTERNATIONAL CODE COUNCIL®
Copyright © 2015 ICC. ALL RIGHTS RESERVED. Accessed by David Dammon on Jun 21, 2017 12:30:52 PM pursuant to License Agreement with ICC. No further reproduction or distribution authorized. ANY UNAUTHORIZED REPRODUCTION OR DISTRIBUTION IS A VIOLATION OF THE FEDERAL COPYRIGHT ACT AND THE LICENSE AGREEMENT, AND SUBJECT TO CIVIL AND CRIMINAL PENALTIES THEREUNDER.

underestimated, the permit is to be denied unless the applicant can substantiate the value by providing detailed estimates of the work to the satisfaction of the code official. For the construction of new buildings, the building valuation data referred to in Section 108.2 can be used by the code official as a yardstick against which to compare the applicant's estimate.

[A] 108.4 Work commencing before permit issuance. Any person who commences any work before obtaining the necessary permits shall be subject to an additional fee established by the *code official* that shall be in addition to the required permit fees.

❖ The code official will incur certain costs (i.e., inspection time and administrative) when investigating and citing a person who has commenced work without having obtained a permit. The code official is, therefore, entitled to recover these costs by establishing a fee imposed on the responsible party, in addition to that collected when the required permit is issued. Note that this is not a penalty, as described in Section 113.4, for which the person can also be liable.

[A] 108.5 Related fees. The payment of the fee for the construction, *alteration*, removal, or demolition of work done in connection to or concurrently with the work authorized by a building permit shall not relieve the applicant or holder of the permit from the payment of other fees that are prescribed by law.

❖ The fees for a building permit may be in addition to other fees required by the jurisdiction or others for related items such as sewer connections, water service taps, driveways and signs. It cannot be construed that the building permit fee includes these other items.

[A] 108.6 Refunds. The *code official* is authorized to establish a refund policy.

❖ This section allows for a refund of fees, which may be full or partial, typically resulting from the revocation, abandonment or discontinuance of a construction project for which a permit has been issued and fees have been collected. The refund of fees should be related to the cost of enforcement services not provided because of the termination of the project. The code official, when authorizing a fee refund, is authorizing the disbursement of public funds. Therefore, the request for a refund must be in writing and for good cause.

SECTION 109
INSPECTIONS

[A] 109.1 General. Construction or work for which a permit is required shall be subject to inspection by the *code official*, and such construction or work shall remain accessible and exposed for inspection purposes until approved. Approval as a result of an inspection shall not be construed to be an approval of a violation of the provisions of this code or of other ordinances of the jurisdiction. Inspections presuming to give authority to violate or cancel the provisions of this code or of other ordinances of the jurisdiction shall not be valid. It shall be the duty of the permit applicant to cause the work to remain accessible and exposed for inspection purposes. Neither the *code official* nor the jurisdiction shall be liable for expense entailed in the removal or replacement of any material required to allow inspection.

❖ The inspection function is one of the more important aspects of building department operations. This section authorizes the code official to inspect the work for which a permit has been issued and requires that the work to be inspected remain accessible to the code official until inspected and approved. Any expense incurred in removing or replacing material that conceals an item to be inspected is not the responsibility of the code official or the jurisdiction. As with the issuance of permits (see Section 105.4), approval as a result of an inspection is not a license to violate the code, and an approval in violation of the code does not relieve the applicant from complying with the code and is not valid.

[A] 109.2 Preliminary inspection. Before issuing a permit, the *code official* is authorized to examine or cause to be examined buildings and sites for which an application has been filed.

❖ The code official is granted authority to inspect the site before permit issuance. This may be necessary to verify existing conditions that impact the plan review and permit approval. This section provides the code official with the right-of-entry authority that otherwise does not occur until after the permit is issued (see Section 104.6).

[A] 109.3 Required inspections. The *code official*, upon notification, shall make the inspections set forth in Sections 109.3.1 through 109.3.9.

❖ The code official is required to verify that the work is completed in accordance with the approved construction documents. It is the responsibility of the permit holder to notify the code official when the item is ready for inspection. The inspections that are necessary to provide such verification are listed in the following sections, with the caveat in Section 109.3.8 that special inspections, in addition to those listed here, may be required depending on the work involved.

[A] 109.3.1 Footing or foundation inspection. Footing and foundation inspections shall be made after excavations for footings are complete and any required reinforcing steel is in place. For concrete foundations, any required forms shall be in place prior to inspection. Materials for the foundation shall be on the job, except where concrete is ready-mixed in accordance with ASTM C94, the concrete need not be on the job.

❖ It is necessary for the code official to inspect the soil on which the footing or foundation is to be placed. This inspection also includes any reinforcing steel,

INTERNATIONAL CODE COUNCIL®
Copyright © 2015 ICC. ALL RIGHTS RESERVED. Accessed by David Dammon on Jun 21, 2017 12:30:52 PM pursuant to License Agreement with ICC. No further reproduction or distribution authorized. ANY UNAUTHORIZED REPRODUCTION OR DISTRIBUTION IS A VIOLATION OF THE FEDERAL COPYRIGHT ACT AND THE LICENSE AGREEMENT, AND SUBJECT TO CIVIL AND CRIMINAL PENALTIES THEREUNDER.

concrete forms and materials to be used in the foundation, except for ready-mixed concrete that is prepared off site.

[A] 109.3.2 Concrete slab or under-floor inspection. Concrete slab and under-floor inspections shall be made after in-slab or under-floor reinforcing steel and building service equipment, conduit, piping accessories, and other ancillary equipment items are in place but before any concrete is placed or floor sheathing installed, including the sub floor.

❖ The code official must be able to inspect the soil and any required under-slab drainage, waterproofing or dampproofing material, as well as reinforcing steel, conduit, piping and other service equipment embedded in or installed below a slab prior to placing the concrete. Similarly, items installed below a floor system other than concrete must be inspected before they are concealed by the floor sheathing or subfloor.

[A] 109.3.3 Lowest floor elevation. For *additions* and *substantial improvements* to *existing buildings* in *flood hazard areas*, upon placement of the lowest floor, including basement, and prior to further vertical construction, the elevation documentation required in the *International Building Code* shall be submitted to the *code official*.

❖ Where a structure is located in a flood hazard area, as established in Section 1612.3 of the IBC, the code official must be provided with certification that either the lowest floor elevation (for structures located in flood hazard areas not subject to high-velocity wave action) or the elevation of the lowest horizontal structural member (for structures located in flood hazard areas subject to high-velocity wave action) is in compliance with Section 1612 of the IBC. This certification must be submitted prior to any construction proceeding above this level.

[A] 109.3.4 Frame inspection. Framing inspections shall be made after the roof deck or sheathing, framing, fire blocking, and bracing are in place and pipes, chimneys, and vents to be concealed are complete and the rough electrical, plumbing, heating wires, pipes, and ducts are approved.

❖ This section requires that the code official be able to inspect the framing members, such as studs, joists, rafters and girders, and other items such as vents and chimneys, that will be concealed by wall construction. Rough electrical work, plumbing, heating wires, pipes and ducts must have already been approved in accordance with the applicable codes prior to this inspection.

[A] 109.3.5 Lath or gypsum board inspection. Lath and gypsum board inspections shall be made after lathing and gypsum board, interior and exterior, is in place but before any plastering is applied or before gypsum board joints and fasteners are taped and finished.

Exception: Gypsum board that is not part of a fire-resistance-rated assembly or a shear assembly.

❖ In order to verify that lath and gypsum board is properly attached to framing members, it is necessary for the code official to be able to inspect before the plaster or joint finish material is applied. This is required only for gypsum board that is part of either a fire-resistant assembly or a shear wall.

[A] 109.3.6 Fire and smoke-resistant penetrations. Protection of joints and penetrations in fire-resistance-rated assemblies, smoke barriers and smoke partitions shall not be concealed from view until inspected and approved.

❖ The code official must have an opportunity to inspect joint protection and penetration protection as required by Sections 714 and 715 of the IBC for fire- and smoke-resistance-rated assemblies before it is concealed from view.

[A] 109.3.7 Other inspections. In addition to the inspections specified above, the *code official* is authorized to make or require other inspections of any construction work to ascertain compliance with the provisions of this code and other laws that are enforced by the Department of Building Safety.

❖ Any item regulated by the code is subject to inspection by the code official to determine compliance with the applicable code provision and no list can include all items in a given building. This section, therefore, gives the code official the authority to inspect any regulated items.

[A] 109.3.8 Special inspections. Special inspections shall be required in accordance with the *International Building Code*.

❖ Special inspections are to be provided by the owner for the types of work required in Section 1704 of the IBC. The code official is to approve special inspectors and verify that the required special inspections have been conducted.

[A] 109.3.9 Final inspection. The final inspection shall be made after work required by the building permit is completed.

❖ Upon completion of the work for which the permit has been issued and before the issuance of the certificate of occupancy required by Section 110.3, a final inspection is to be made. All violations of the approved construction documents and permit are to be noted and the holder of the permit is to be notified of the discrepancies.

[A] 109.4 Inspection agencies. The *code official* is authorized to accept reports of approved inspection agencies, provided such agencies satisfy the requirements as to qualifications and reliability.

❖ As an alternative to the code official conducting the inspection, he or she is permitted to accept inspections of and reports by approved inspection agencies. Appropriate criteria on which to base approval of inspection agencies can be found in Section 1703 of the IBC.

[A] 109.5 Inspection requests. It shall be the duty of the holder of the building permit or their duly authorized agent to notify the *code official* when work is ready for inspection. It shall be the duty of the permit holder to provide access to and

INTERNATIONAL CODE COUNCIL®
Copyright © 2015 ICC. ALL RIGHTS RESERVED. Accessed by David Dammon on Jun 21, 2017 12:30:52 PM pursuant to License Agreement with ICC. No further reproduction or distribution authorized. ANY UNAUTHORIZED REPRODUCTION OR DISTRIBUTION IS A VIOLATION OF THE FEDERAL COPYRIGHT ACT AND THE LICENSE AGREEMENT, AND SUBJECT TO CIVIL AND CRIMINAL PENALTIES THEREUNDER.

means for any inspections of such work that are required by this code.

❖ It is the responsibility of the permit holder or other authorized person, such as the contractor performing the work, to arrange the required inspections when completed work is ready and to allow sufficient time for the code official to schedule a visit to the site to prevent work from being concealed prior to inspection. Access to the work to be inspected must be provided, including any special means such as a ladder.

[A] 109.6 Approval required. Work shall not be done beyond the point indicated in each successive inspection without first obtaining the approval of the *code official*. The *code official*, upon notification, shall make the requested inspections and shall either indicate the portion of the construction that is satisfactory as completed or shall notify the permit holder or an agent of the permit holder wherein the same fails to comply with this code. Any portions that do not comply shall be corrected and such portion shall not be covered or concealed until authorized by the *code official*.

❖ This section establishes that work cannot progress beyond the point of a required inspection without the code official's approval. Upon making the inspection, the code official must either approve the completed work or notify the permit holder or other responsible party of that which does not comply with the code. Approvals and notices of noncompliance must be in writing, as required by Section 104.4, to avoid any misunderstanding as to what is required. Any item not approved cannot be concealed until it has been corrected and approved by the code official.

SECTION 110
CERTIFICATE OF OCCUPANCY

[A] 110.1 Altered area use and occupancy classification change. Altered areas of a building and relocated buildings shall not be used or occupied, and change in the existing use or occupancy classification of a building or portion thereof shall not be made until the code official has issued a certificate of occupancy therefor as provided herein. Issuance of a certificate of occupancy shall not be construed as an approval of a violation of the provisions of this code or of other ordinances of the jurisdiction.

❖ This section establishes that a building or structure that has been repaired, altered, relocated or has experienced a change of use or occupancy cannot be occupied until a certificate of occupancy is issued by the code official, which reflects the conclusion of the work allowed by the building permit. Also, no change in occupancy of an existing building is permitted without first obtaining a certificate of occupancy for the new use.

The tool that the code official uses to control the uses and occupancies of various buildings and structures is the certificate of occupancy. It is unlawful to use or occupy a building or structure unless a certificate of occupancy has been issued for that use. Its issuance does not relieve the building owner from the responsibility for correcting any code violation that may exist.

[A] 110.2 Certificate issued. After the *code official* inspects the building and does not find violations of the provisions of this code or other laws that are enforced by the Department of Building Safety, the *code official* shall issue a certificate of occupancy that shall contain the following:

1. The building permit number.
2. The address of the structure.
3. The name and address of the owner or the owner's authorized agent.
4. A description of that portion of the structure for which the certificate is issued.
5. A statement that the described portion of the structure has been inspected for compliance with the requirements of this code for the occupancy and division of occupancy and the use for which the proposed occupancy is classified.
6. The name of the *code official*.
7. The edition of the code under which the permit was issued.
8. The use and occupancy in accordance with the provisions of the *International Building Code*.
9. The type of construction as defined in the *International Building Code*.
10. The design occupant load and any impact the *alteration* has on the design occupant load of the area not within the scope of the work.
11. If fire protection systems are provided, whether the fire protection systems are required.
12. Any special stipulations and conditions of the building permit.

❖ The code official is required to issue a certificate of occupancy after a successful final inspection has been completed and all deficiencies and violations have been resolved. This section lists the information that must be included on the certificate. This information is useful to both the code official and owner because it indicates the criteria under which the structure was evaluated and approved at the time the certificate was issued. This is especially important when later applying Chapter 13 to existing structures.

[A] 110.3 Temporary occupancy. The *code official* is authorized to issue a temporary certificate of occupancy before the completion of the entire work covered by the permit, provided that such portion or portions shall be occupied safely. The *code official* shall set a time period during which the temporary certificate of occupancy is valid.

❖ The code official is permitted to issue a temporary certificate of occupancy for all or a portion of a building prior to the completion of all work. Such certification is to be issued only when the building or portion in question can be safely occupied prior to full com-

INTERNATIONAL CODE COUNCIL®
Copyright © 2015 ICC. ALL RIGHTS RESERVED. Accessed by David Dammon on Jun 21, 2017 12:30:52 PM pursuant to License Agreement with ICC. No further reproduction or distribution authorized. ANY UNAUTHORIZED REPRODUCTION OR DISTRIBUTION IS A VIOLATION OF THE FEDERAL COPYRIGHT ACT AND THE LICENSE AGREEMENT, AND SUBJECT TO CIVIL AND CRIMINAL PENALTIES THEREUNDER.

pletion. The certification is intended to acknowledge that some building features may not be completed even though the building is safe for occupancy, or that a portion of the building can be safely occupied while work continues in another area. This provision precludes the occupancy of a building or structure that does not contain all of the required fire protection systems and means of egress. Temporary certificates should be issued only when incidental construction remains, such as site work and interior work, that is not regulated by the code and exterior decoration not necessary to the integrity of the building envelope. The code official should view the issuance of a temporary certificate of occupancy as equally significant as the issuance of the final certificate. Indeed, the issuance of a temporary certificate of occupancy offers a greater potential for conflict because once the building or structure is occupied, it is very difficult to remove the occupants through legal means. The certificate must specify the time period for which it is valid.

[A] 110.4 Revocation. The *code official* is authorized to, in writing, suspend or revoke a certificate of occupancy or completion issued under the provisions of this code wherever the certificate is issued in error or on the basis of incorrect information supplied, or where it is determined that the building or structure or portion thereof is in violation of any ordinance or regulation or any of the provisions of this code.

❖ The code official is authorized to, in writing, suspend or revoke a certificate of occupancy or completion issued under the provisions of the code wherever the certificate is issued in error, or on the basis of incorrect information supplied, or where it is determined that the building or structure, or portion thereof, is in violation of any ordinance or regulation or any of the provisions of the code.

This section is needed to give the code official the authority to revoke a certificate of occupancy for the reasons indicated in the code text. The code official may also suspend the certificate of occupancy until all of the code violations are corrected.

SECTION 111
SERVICE UTILITIES

[A] 111.1 Connection of service utilities. A person shall not make connections from a utility, source of energy, fuel, or power to any building or system that is regulated by this code for which a permit is required, until approved by the *code official*.

❖ This section establishes the authority of the code official to approve utility connections to a building for items such as water, sewer, electricity, gas and steam; and to require their disconnection when hazardous conditions or emergencies exist.

The approval of the code official is required before a connection can be made from a utility to a building system that is regulated by the applicable code, including those referenced in Section 101.4. This includes utilities supplying water, sewer, electricity, gas and steam services. For the protection of building occupants, including workers, such systems must have had final inspection approvals, except as allowed by Section 111.2 for temporary connections.

[A] 111.2 Temporary connection. The *code official* shall have the authority to authorize the temporary connection of the building or system to the utility source of energy, fuel, or power.

❖ The code official is permitted to issue temporary authorization to make connections to the public utility system prior to the completion of all work. This acknowledges that, because of seasonal limitations, time constraints, or the need for testing or partial operation of equipment, some building systems may be safely connected even though the building is not suitable for final occupancy. The temporary connection and use of connected equipment should be approved when the requesting permit holder has demonstrated to the code official's satisfaction that public health, safety and welfare will not be endangered.

[A] 111.3 Authority to disconnect service utilities. The *code official* shall have the authority to authorize disconnection of utility service to the building, structure or system regulated by this code and the referenced codes and standards in case of emergency where necessary to eliminate an immediate hazard to life or property or where such utility connection has been made without the approval required by Section 111.1 or 111.2. The *code official* shall notify the serving utility and, wherever possible, the owner or the owner's authorized agent and occupant of the building, structure or service system of the decision to disconnect prior to taking such action. If not notified prior to disconnecting, the owner or occupant of the building, structure or service system shall be notified in writing, as soon as practical thereafter.

❖ When an immediate hazard to life or property exists, the code official has the authority to order the disconnection of utility services. This can also occur when utility service has been connected without the necessary approvals required by the code. Whenever possible, the building owner or owner's authorized agent and the building occupant or occupants should be notified prior to the disconnection of the services. Then, at the first practical opportunity, the code official is to formally notify the building owner or owner's authorized agent, in writing, of the disconnection activities. As with all administrative functions, all aspects of due process must be followed.

SECTION 112
BOARD OF APPEALS

[A] 112.1 General. In order to hear and decide appeals of orders, decisions, or determinations made by the code official relative to the application and interpretation of this code, there shall be and is hereby created a board of appeals. The board of appeals shall be appointed by the governing body

INTERNATIONAL CODE COUNCIL®
Copyright © 2015 ICC. ALL RIGHTS RESERVED. Accessed by David Dammon on Jun 21, 2017 12:30:52 PM pursuant to License Agreement with ICC. No further reproduction or distribution authorized. ANY UNAUTHORIZED REPRODUCTION OR DISTRIBUTION IS A VIOLATION OF THE FEDERAL COPYRIGHT ACT AND THE LICENSE AGREEMENT, AND SUBJECT TO CIVIL AND CRIMINAL PENALTIES THEREUNDER.

and shall hold office at its pleasure. The board shall adopt rules of procedure for conducting its business.

❖ This section provides an aggrieved party with a material interest in the decision of the code official a process to appeal such a decision before a board of appeals. This provides a forum, other than the court of jurisdiction, in which to review the code official's actions.

This section literally allows any person to appeal a decision of the code official. In practice, this section has been interpreted to permit appeals only by those aggrieved parties with a material or definitive interest in the decision of the code official. An aggrieved party may not appeal a code requirement per se. The intent of the appeal process is not to waive or set aside a code requirement; rather, it is intended to provide a means of reviewing a code official's decision on an interpretation or application of the code or to review the equivalency of protection to the code requirements. The members of the appeals board are appointed by the "governing body" of the jurisdiction, typically a council or administrator, such as a mayor or city manager, and remain members until removed from office. The board must establish procedures for electing a chairperson, scheduling, conducting meetings and administration. Note that Appendix B of the IBC contains complete, detailed requirements for creating an appeals board, including the number of members, qualifications and administrative procedures. Jurisdictions desiring to utilize these requirements must include Appendix B of the IBC in their adopting ordinance.

[A] 112.2 Limitations on authority. An application for appeal shall be based on a claim that the true intent of this code or the rules legally adopted thereunder have been incorrectly interpreted, the provisions of this code do not fully apply, or an equally good or better form of construction is proposed. The board shall not have authority to waive requirements of this code.

❖ This section establishes the grounds for an appeal, which claims that the code official has misinterpreted or misapplied a code provision. The board is not allowed to set aside any of the technical requirements of the code; however, it is allowed to consider alternative methods of compliance with the technical requirements (see Section 104.11).

[A] 112.3 Qualifications. The board of appeals shall consist of members who are qualified by experience and training to pass on matters pertaining to building construction and are not employees of the jurisdiction.

❖ It is important that the decisions of the appeals board are based purely on the technical merits involved in an appeal. It is not the place for policy or political deliberations. The members of the appeals board are, therefore, expected to have experience in building construction matters.

SECTION 113
VIOLATIONS

[A] 113.1 Unlawful acts. It shall be unlawful for any person, firm, or corporation to *repair*, alter, extend, add, move, remove, demolish, or change the occupancy of any building or equipment regulated by this code or cause same to be done in conflict with or in violation of any of the provisions of this code.

❖ Violations of the code are prohibited and form the basis for all citations and correction notices.

[A] 113.2 Notice of violation. The *code official* is authorized to serve a notice of violation or order on the person responsible for the *repair*, *alteration*, extension, *addition*, moving, removal, demolition, or change in the occupancy of a building in violation of the provisions of this code or in violation of a permit or certificate issued under the provisions of this code. Such order shall direct the discontinuance of the illegal action or condition and the abatement of the violation.

❖ The code official is required to notify the person responsible for the erection or use of a building found to be in violation of the code. The section that is allegedly being violated must be cited so that the responsible party can respond to the notice.

[A] 113.3 Prosecution of violation. If the notice of violation is not complied with promptly, the *code official* is authorized to request the legal counsel of the jurisdiction to institute the appropriate proceeding at law or in equity to restrain, correct, or abate such violation or to require the removal or termination of the unlawful occupancy of the building or structure in violation of the provisions of this code or of the order or direction made pursuant thereto.

❖ The code official must pursue, through the use of legal counsel of the jurisdiction, legal means to correct the violation. This is not optional.

Any extensions of time so that the violations may be corrected voluntarily must be for a reasonable, bona fide cause or the code official may be subject to criticism for "arbitrary and capricious" actions. In general, it is better to have a standard time limitation for the correction of violations. Departures from this standard must be for a clear and reasonable purpose, usually stated in writing by the violator.

[A] 113.4 Violation penalties. Any person who violates a provision of this code or fails to comply with any of the requirements thereof or who *repairs* or alters or changes the occupancy of a building or structure in violation of the approved construction documents or directive of the *code official* or of a permit or certificate issued under the provisions of this code shall be subject to penalties as prescribed by law.

❖ Penalties for violating provisions of the code are typically contained in state law, particularly if the code is adopted at that level and the building department must follow those procedures. If there is no such procedure already in effect, one must be established with the aid of legal counsel.

INTERNATIONAL CODE COUNCIL®
Copyright © 2015 ICC. ALL RIGHTS RESERVED. Accessed by David Dammon on Jun 21, 2017 12:30:52 PM pursuant to License Agreement with ICC. No further reproduction or distribution authorized. ANY UNAUTHORIZED REPRODUCTION OR DISTRIBUTION IS A VIOLATION OF THE FEDERAL COPYRIGHT ACT AND THE LICENSE AGREEMENT, AND SUBJECT TO CIVIL AND CRIMINAL PENALTIES THEREUNDER.

SECTION 114
STOP WORK ORDER

[A] 114.1 Authority. Whenever the *code official* finds any work regulated by this code being performed in a manner contrary to the provisions of this code or in a *dangerous* or unsafe manner, the *code official* is authorized to issue a stop work order.

❖ This section provides for the suspension of work for which a permit was issued, pending the removal or correction of a severe violation or unsafe condition identified by the code official.

Normally, correction notices, issued in accordance with Section 109.6, are used to inform the permit holder of code violations. Stop work orders are issued when enforcement can be accomplished no other way or when a dangerous condition exists.

[A] 114.2 Issuance. The stop work order shall be in writing and shall be given to the owner of the property involved, the owner's authorized agent or to the person doing the work. Upon issuance of a stop work order, the cited work shall immediately cease. The stop work order shall state the reason for the order and the conditions under which the cited work will be permitted to resume.

❖ Upon receipt of a violation notice from the code official, all construction activities identified in the notice must immediately cease, except as expressly permitted to correct the violation.

[A] 114.3 Unlawful continuance. Any person who shall continue any work after having been served with a stop work order, except such work as that person is directed to perform to remove a violation or unsafe condition, shall be subject to penalties as prescribed by law.

❖ This section states that the work in violation must terminate and that all work, except that which is necessary to correct the violation or unsafe condition, must cease as well. As determined by the municipality or state, a penalty may be assessed for failure to comply with this section.

SECTION 115
UNSAFE BUILDINGS AND EQUIPMENT

[A] 115.1 Conditions. Buildings, structures or equipment that are or hereafter become *unsafe*, shall be taken down, removed or made safe as the *code official* deems necessary and as provided for in this code.

❖ This section describes the responsibility of the code official to investigate reports of unsafe structures and equipment, and provides criteria for such determination.

"Unsafe structures" are defined as buildings or structures that are insanitary, deficient in light and ventilation or adequate exit facilities, constitute a fire hazard or are otherwise dangerous to human life.

All unsafe buildings must either be demolished or made safe and secure as deemed appropriate by the code official.

[A] 115.2 Record. The *code official* shall cause a report to be filed on an *unsafe* condition. The report shall state the occupancy of the structure and the nature of the *unsafe* condition.

❖ The code official must file a report on each investigation of unsafe conditions, stating the occupancy of the structure and the nature of the unsafe condition. This report provides the basis for the notice described in Section 115.3.

[A] 115.3 Notice. If an *unsafe* condition is found, the *code official* shall serve on the owner, the owner's authorized agent or person in control of the structure a written notice that describes the condition deemed *unsafe* and specifies the required *repairs* or improvements to be made to abate the *unsafe* condition, or that requires the *unsafe* building to be demolished within a stipulated time. Such notice shall require the person thus notified to declare immediately to the *code official* acceptance or rejection of the terms of the order.

❖ When a building or structure is deemed unsafe, the code official is required to notify the owner or owner's authorized agent of the building as the first step in correcting the problem. Such notice must describe the necessary repairs and improvements to correct the deficiency or must require the unsafe building or structure to be demolished in a specified time in order to provide for public health, safety and welfare. Additionally, such notice requires the immediate response of the owner or agent. If the owner or agent is not available, public notice of such declaration should suffice for the purposes of complying with this section (see Section 115.4). The code official may also determine that immediate work is necessary to correct an unsafe condition and seek a lien against the building or structure to compensate the municipality for the cost of remedial action.

[A] 115.4 Method of service. Such notice shall be deemed properly served if a copy thereof is delivered to the owner or the owner's authorized agent personally; sent by certified or registered mail addressed to the owner or the owner's authorized agent at the last known address with the return receipt requested; or delivered in any other manner as prescribed by local law. If the certified or registered letter is returned showing that the letter was not delivered, a copy thereof shall be posted in a conspicuous place in or about the structure affected by such notice. Service of such notice in the foregoing manner upon the owner's authorized agent or upon the person responsible for the structure shall constitute service of notice upon the owner.

❖ The notice must be delivered personally to the owner or owner's authorized agent. If the owner or agent cannot be located, additional procedures are established, including posting the unsafe notice on the premises in question. Such action may be considered the equivalent of personal notice; however, it may or may not be deemed by the courts as representing a "good faith" effort to notify. Therefore, in addition to complying with this section, public notice through the use of newspapers and other postings in a prominent location at the government center should be used.

INTERNATIONAL CODE COUNCIL®
Copyright © 2015 ICC. ALL RIGHTS RESERVED. Accessed by David Dammon on Jun 21, 2017 12:30:52 PM pursuant to License Agreement with ICC. No further reproduction or distribution authorized. ANY UNAUTHORIZED REPRODUCTION OR DISTRIBUTION IS A VIOLATION OF THE FEDERAL COPYRIGHT ACT AND THE LICENSE AGREEMENT, AND SUBJECT TO CIVIL AND CRIMINAL PENALTIES THEREUNDER.

[A] 115.5 Restoration. The building or equipment determined to be *unsafe* by the *code official* is permitted to be restored to a safe condition. To the extent that *repairs*, *alterations*, or *additions* are made or a *change of occupancy* occurs during the restoration of the building, such *repairs*, *alterations*, *additions*, or *change of occupancy* shall comply with the requirements of this code.

❖ This section provides that unsafe structures may be restored to a safe condition. This means that the cause of the unsafe structure notice can be abated without the structure being required to comply fully with the provisions for new construction. Any work done to eliminate the unsafe condition, as well as any change in occupancy that may occur, must comply with the code.

SECTION 116
EMERGENCY MEASURES

[A] 116.1 Imminent danger. Where, in the opinion of the *code official*, there is imminent danger of failure or collapse of a building that endangers life, or where any building or part of a building has fallen and life is endangered by the occupation of the building, or where there is actual or potential danger to the building occupants or those in the proximity of any structure because of explosives, explosive fumes or vapors, or the presence of toxic fumes, gases, or materials, or operation of defective or dangerous equipment, the *code official* is hereby authorized and empowered to order and require the occupants to vacate the premises forthwith. The *code official* shall cause to be posted at each entrance to such structure a notice reading as follows: "This Structure Is Unsafe and Its Occupancy Has Been Prohibited by the *Code Official*." It shall be unlawful for any person to enter such structure except for the purpose of securing the structure, making the required *repairs*, removing the hazardous condition, or of demolishing the same.

❖ If the code official has determined that failure or collapse of a building or structure is imminent, failure has occurred that results in a continued threat to the remaining structure or adjacent properties or any other unsafe condition as described in this section exists in a structure, the code official is authorized to require the occupants to vacate the premises and to post such buildings or structures as unsafe and unoccupiable. Unless authorized by the code official to make repairs, secure or demolish the structure, it is illegal for anyone to enter the building or structure. This will minimize the potential for injury.

[A] 116.2 Temporary safeguards. Notwithstanding other provisions of this code, whenever, in the opinion of the *code official*, there is imminent danger due to an unsafe condition, the *code official* shall order the necessary work to be done, including the boarding up of openings, to render such structure temporarily safe whether or not the legal procedure herein described has been instituted; and shall cause such other action to be taken as the *code official* deems necessary to meet such emergency.

❖ This section recognizes the need for immediate and effective action in order to protect the public. This section empowers the code official to cause the necessary work to be done to minimize the imminent danger temporarily without regard for due process. This section has to be viewed critically insofar as the danger of structural failure to which the code official has responded must be "imminent"; that is, readily apparent and immediate.

[A] 116.3 Closing streets. Where necessary for public safety, the *code official* shall temporarily close structures and close or order the authority having jurisdiction to close sidewalks, streets, public ways, and places adjacent to unsafe structures, and prohibit the same from being utilized.

❖ The code official is authorized to temporarily close sidewalks, streets and adjacent structures as needed to protect the public from the unsafe building or structure when an imminent danger exists. Since the code official may not have the direct authority to close sidewalks, streets and other public ways, the agency having such jurisdiction (e.g., the police or highway department) must be notified.

[A] 116.4 Emergency repairs. For the purposes of this section, the *code official* shall employ the necessary labor and materials to perform the required work as expeditiously as possible.

❖ The cost of emergency work may have to be paid initially by the jurisdiction. The important principle here is that the code official must act immediately to protect the public when warranted, leaving the details of costs and owner notification for later.

[A] 116.5 Costs of emergency repairs. Costs incurred in the performance of emergency work shall be paid by the jurisdiction. The legal counsel of the jurisdiction shall institute appropriate action against the owner of the premises or the owner's authorized agent where the unsafe structure is or was located for the recovery of such costs.

❖ The cost of emergency repairs is to be paid by the jurisdiction, with subsequent legal action against the owner or owner's authorized agent to recover such costs. This does not preclude, however, reaching an alternative agreement with the owner.

[A] 116.6 Hearing. Any person ordered to take emergency measures shall comply with such order forthwith. Any affected person shall thereafter, upon petition directed to the appeals board, be afforded a hearing as described in this code.

❖ Anyone ordered to take an emergency measure or to vacate a structure because of an emergency condition must do so immediately.

Thereafter, any affected party has the right to appeal the action to the appeals board to determine whether the order should be continued, modified or revoked.

INTERNATIONAL CODE COUNCIL®
Copyright © 2015 ICC. ALL RIGHTS RESERVED. Accessed by David Dammon on Jun 21, 2017 12:30:52 PM pursuant to License Agreement with ICC. No further reproduction or distribution authorized. ANY UNAUTHORIZED REPRODUCTION OR DISTRIBUTION IS A VIOLATION OF THE FEDERAL COPYRIGHT ACT AND THE LICENSE AGREEMENT, AND SUBJECT TO CIVIL AND CRIMINAL PENALTIES THEREUNDER.

It is imperative that appeals to an emergency order occur after the hazard has been abated, rather than before, to minimize the risk to the occupants, employees, clients and public.

SECTION 117
DEMOLITION

[A] 117.1 General. The *code official* shall order the owner or owner's authorized agent of any premises upon which is located any structure that in the *code official's* judgment is so old or dilapidated, or has become so out of *repair* as to be *dangerous*, unsafe, insanitary or otherwise unfit for human habitation of occupancy, and such that it is unreasonable to *repair* the structure, to demolish and remove such structure; or if such structure is capable of being made safe by *repairs*, to *repair* and make safe and sanitary or to demolish and remove to the owner's or the owner's authorized agent's option; or where there has been a cessation of normal construction of any structure for a period of more than two years, to demolish and remove such structure.

❖ This section describes the conditions where the code official has the authority to order the owner to remove the structure. Conditions where the code official may give the owner or owner's authorized agent the option of repairing the structure are also in this section. The code official should carefully document the condition of the structure prior to issuing a demolition order to provide an adequate basis for ordering the owner to remove the structure.

[A] 117.2 Notices and orders. Notices and orders shall comply with Section 113.

❖ Before the code official can pursue action to demolish a building in accordance with Section 117.1 or 117.3, it is imperative that all owners and any other persons with a recorded encumbrance on the property be given proper notice of the demolition plans. See Section 113 for notice and order requirements.

[A] 117.3 Failure to comply. If the owner or the owner's authorized agent of a premises fails to comply with a demolition order within the time prescribed, the *code official* shall cause the structure to be demolished and removed, either through an available public agency or by contract or arrangement with private persons, and the cost of such demolition and removal shall be charged against the real estate upon which the structure is located and shall be a lien upon such real estate.

❖ When the owner or owner's authorized agent fails to comply with a demolition order, the code official is authorized to take action to have the building razed and removed. The costs are to be charged as a lien against the real estate. To reduce complaints regarding the validity of demolition costs, the code official should obtain competitive bids from several demolition contractors before authorizing any contractor to raze the structure.

[A] 117.4 Salvage materials. Where any structure has been ordered demolished and removed, the governing body or other designated officer under said contract or arrangement aforesaid shall have the right to sell the salvage and valuable materials at the highest price obtainable. The net proceeds of such sale, after deducting the expenses of such demolition and removal, shall be promptly remitted with a report of such sale or transaction, including the items of expense and the amounts deducted, for the person who is entitled thereto, subject to any order of a court. If such a surplus does not remain to be turned over, the report shall so state.

❖ The governing body may sell any valuables or salvageable materials for the highest price obtainable. The costs of demolition are then to be deducted from any proceeds from the sale of salvage. If a surplus of funds remains, it is to be remitted to the owner with an itemized expense and income account. If no surplus remains, this must also be reported.

Bibliography

The following resource materials were used in the preparation of the commentary for this chapter of the code.

Legal Aspects of Code Administration. Washington, DC: International Code Council, 2003.

NEHRP, *Recommended Provisions fo Seismic Regulations for New Buildings and Other Structures*. Washington, DC: National Earthquake Hazards Reduction Program, 2009.

UCBC, *Uniform Code for Building Conservation*. Washington, DC: International Code Council, 2009.

INTERNATIONAL CODE COUNCIL®

Copyright © 2015 ICC. ALL RIGHTS RESERVED. Accessed by David Dammon on Jun 21, 2017 12:30:52 PM pursuant to License Agreement with ICC. No further reproduction or distribution authorized. ANY UNAUTHORIZED REPRODUCTION OR DISTRIBUTION IS A VIOLATION OF THE FEDERAL COPYRIGHT ACT AND THE LICENSE AGREEMENT, AND SUBJECT TO CIVIL AND CRIMINAL PENALTIES THEREUNDER.

Chapter 2: Definitions

General Comments

All terms defined in the code are located alphabetically in Chapter 2. The user should be familiar with the terms in this chapter because definitions are essential to the correct interpretation of the code, and the user might not be aware that a particular term encountered in the text has the special definition found herein.

Section 201.1 contains the scope of the chapter. Section 201.2 establishes the interchangeability of the terms in the code. Section 201.3 establishes the use of terms defined in other codes. Section 201.4 establishes the use of undefined terms, and Section 202 lists terms and their definitions according to the code.

Purpose

Codes by their very nature are technical documents. Every word, term and punctuation mark can alter a sentence's meaning and, if misused, muddy its intent.

Further, the code, with its broad scope of applicability, includes terms that have a different meaning than the generally accepted meaning of the term. These terms can have multiple meanings depending on the context or discipline.

For these reasons, maintaining a consensus on the specific meaning of terms contained in the code is essential. Chapter 2 performs this function by stating clearly what specific terms mean for the purpose of the code.

SECTION 201 GENERAL

201.1 Scope. Unless otherwise expressly stated, the following words and terms shall, for the purposes of this code, have the meanings shown in this chapter.

❖ This section contains language and provisions that are supplemental to the use of Chapter 2. It gives guidance to the use of the defined words relevant to tense, gender and plurality. Finally, this section provides direction on how to apply terms that are not defined in the code.

201.2 Interchangeability. Words used in the present tense include the future; words stated in the masculine gender include the feminine and neuter; the singular number includes the plural and the plural, the singular.

❖ While the definitions contained or referenced in Chapter 2 are to be taken literally, gender and tense are interchangeable; thus, any grammatical inconsistencies with the code text will not hinder the understanding or enforcement of the requirements.

201.3 Terms defined in other codes. Where terms are not defined in this code and are defined in the other *International Codes,* such terms shall have the meanings ascribed to them in those codes.

❖ When a word or term appears in the code and that word or term is not defined in this chapter, other references may be used to find its definition, such as the *International Building Code*® (IBC®), *International Residential Code*® (IRC®), *International Fire Code*® (IFC®), *International Plumbing Code*® (IPC®), *International Mechanical Code*® (IMC®), *International Fuel Gas Code*® (IFGC®), *International Code Council Performance Code*® *for Buildings and Facilities*® (ICC PC®), *International Private Sewage Disposal Code*® (IPSDC®), *International Property Maintenance Code*® (IPMC®), *International Energy Conservation Code*® (IECC®), *International Wildland-Urban Interface Code*® (IWUIC®) and *International Zoning Code*® (IZC®). These codes contain additional definitions (some parallel and duplicative), which may be used in the enforcement of the code or in the enforcement of the other codes by reference.

201.4 Terms not defined. Where terms are not defined through the methods authorized by this chapter, such terms shall have ordinarily accepted meanings such as the context implies.

❖ Words or terms not defined in the *International Codes*® series are intended to be applied based on their "ordinarily accepted meanings." The intent of this statement is that a dictionary definition may suffice, provided it is in context. Sometimes the construction terms used in the code are not specifically defined in the code or even in a dictionary. In such a case, definitions contained in the referenced standards (see Chapter 15) and published textbooks on the subject in question are good resources.

SECTION 202 GENERAL DEFINITIONS

❖ This section contains definitions of terms that are used throughout the code. It is important to empha-

INTERNATIONAL CODE COUNCIL®
Copyright © 2015 ICC. ALL RIGHTS RESERVED. Accessed by David Dammon on Jun 21, 2017 12:30:52 PM pursuant to License Agreement with ICC. No further reproduction or distribution authorized. ANY UNAUTHORIZED REPRODUCTION OR DISTRIBUTION IS A VIOLATION OF THE FEDERAL COPYRIGHT ACT AND THE LICENSE AGREEMENT, AND SUBJECT TO CIVIL AND CRIMINAL PENALTIES THEREUNDER.

size that these definitions are applicable everywhere the term is used in the code. Definitions of terms can help in the understanding and application of the code requirements.

[A] ADDITION. An extension or increase in floor area, number of stories, or height of a building or structure.

❖ This term is used to describe the condition when the floor area or height of an existing building or structure is increased. This term is only applicable to existing buildings, never new ones.

[A] ALTERATION. Any construction or renovation to an existing structure other than a *repair* or *addition*. Alterations are classified as Level 1, Level 2 and Level 3.

❖ The code utilizes this term to reflect construction operations intended for an existing building, but not in the scope of an addition or repair (see the definitions of "Addition" and "Repair").

[A] APPROVED. Acceptable to the *code official* or authority having jurisdiction.

❖ As related to the acceptance process for building installations, including materials, equipment and construction systems, this definition identifies where the ultimate authority rests. Where this term is used, it intends that only the enforcing authority can accept a specific installation or component as complying with the code. For the IBC and IRC, the "building official" is identified as the person responsible for administering code provisions. For the IFC, the "fire code official" is identified as the person responsible for administering IFC provisions. For the IECC*, International Existing Building Code*® *(*IEBC®*),* IFGC*, International Green Construction Code*® *(*IgCC®*),* IMC*,* IPC*,* IPMC*, International Swimming Pool and Spa Code*® *(*ISPSC®*)* and IWUIC, the "code official" is identified as the person responsible.

[A] CHANGE OF OCCUPANCY. A change in the use of the building or a portion of a building. A change of occupancy shall include any change of occupancy classification, any change from one group to another group within an occupancy classification or any change in use within a group for a specific occupancy classification.

❖ Changing the occupancy classification in an existing structure may change the level of inherent hazards addressed by the code. For example, a change from a mercantile occupancy to a business occupancy renders all Group B provisions applicable to all portions of the structure where the occupancy was changed. In addition, change of occupancy by way of change of use can change the level of inherent hazards (e.g., a Group A-2 restaurant changed to a Group A-2 nightclub). The classification may be the same, but the risk level has changed. Change of occupancy, whether change of occupancy classification or simply use, is specifically addressed in Chapter 10 of the code.

[A] CODE OFFICIAL. The officer or other designated authority charged with the administration and enforcement of this code.

❖ Regardless of title, the individual designated by the jurisdiction as the person who administers and enforces the code is the code official. In addition, the code official may appoint various other individuals to assist in the activities of the Department of Building Safety. In many jurisdictions, the authority of the code official is extended, to some degree, to plans examiners and inspectors. Section 104 sets forth the duties and responsibilities of the code official.

[BS] DANGEROUS. Any building, structure or portion thereof that meets any of the conditions described below shall be deemed dangerous:

1. The building or structure has collapsed, has partially collapsed, has moved off its foundation, or lacks the necessary support of the ground.
2. There exists a significant risk of collapse, detachment or dislodgement of any portion, member, appurtenance or ornamentation of the building or structure under service loads.

❖ This definition describes what is considered to be dangerous in building construction. There is a list of two specific criteria that will cause a structure to be classified as dangerous. These criteria take into consideration the collapse or likelihood of collapse of a structure, or a portion or element of a structure. This would also include any building element that could become detached and potentially result in the failure of one or more of the building's inherent systems.

[A] DEFERRED SUBMITTAL. Those portions of the design that are not submitted at the time of the application and that are to be submitted to the *code official* within a specified period.

❖ Submittal documents are required at the time of permit application (see Section 107). If a building is "fast-track" or is a shell building, a complete set of construction documents for the building may not be available at the time of the initial permit application. So that a complete set of documents is available for the building department review and records, some of the construction drawings may be provided at a later time. What documents and when they will be provided must be included in the initial submittal and approved by the building official.

EQUIPMENT OR FIXTURE. Any plumbing, heating, electrical, ventilating, air conditioning, refrigerating, and fire protection equipment, and elevators, dumb waiters, escalators, boilers, pressure vessels and other mechanical facilities or installations that are related to building services. Equipment or fixture shall not include manufacturing, production, or process equipment, but shall include connections from building service to process equipment.

❖ This definition outlines the type of building systems and devices that are considered to be categorized as

INTERNATIONAL CODE COUNCIL®
Copyright © 2015 ICC. ALL RIGHTS RESERVED. Accessed by David Dammon on Jun 21, 2017 12:30:52 PM pursuant to License Agreement with ICC. No further reproduction or distribution authorized. ANY UNAUTHORIZED REPRODUCTION OR DISTRIBUTION IS A VIOLATION OF THE FEDERAL COPYRIGHT ACT AND THE LICENSE AGREEMENT, AND SUBJECT TO CIVIL AND CRIMINAL PENALTIES THEREUNDER.

equipment or fixtures. It is important to note that while the list is quite extensive, the definition does not specifically exclude the terms "manufacturing," "production" or "process equipment."

[A] EXISTING BUILDING. A building erected prior to the date of adoption of the appropriate code, or one for which a legal building permit has been issued.

❖ This term is used to identify those structures or buildings that were constructed before the current edition of the code was adopted by the jurisdiction. Often erected under the provisions of an earlier edition of the code, the buildings are exempt from compliance with current code provisions unless otherwise stated or a hazardous condition is present, or when alterations or changes in building height and areas are made.

[A] FACILITY. All or any portion of buildings, structures, site improvements, elements and pedestrian or vehicular routes located on a site.

❖ This term is intentionally broad and includes all portions within a site and all aspects of that site containing features required to be accessible. This includes parking areas, exterior walkways leading to accessible features, recreational facilities such as playgrounds and picnic areas and any structures on the site (see also the commentary to the definition of "Site" in the IBC).

[BS] FLOOD HAZARD AREA. The greater of the following two areas:

1. The area within a flood plain subject to a 1-percent or greater chance of flooding in any year.
2. The area designated as a *flood hazard area* on a community's flood hazard map, or otherwise legally designated.

❖ The Federal Emergency Management Agency (FEMA) prepares Flood Insurance Rate Maps (FIRMs) that delineate the land area subject to inundation by the 1-percent annual chance flood. Some states and local jurisdictions develop and adopt maps of flood hazard areas that are more extensive than the areas shown on FEMA's maps. For the purpose of the code, the flood hazard area in which the requirements are to be applied is the greater of the two delineated areas.

[A] HISTORIC BUILDING. Any building or structure that is one or more of the following:

1. Listed, or certified as eligible for listing, by the State Historic Preservation Officer or the Keeper of the National Register of Historic Places, in the National Register of Historic Places.
2. Designated as historic under an applicable state or local law.
3. Certified as a contributing resource within a National Register, state designated or locally designated historic district.

❖ This definition specifies the criteria for consideration as a historic building. Chapter 11 contains the provisions for buildings that qualify as historic buildings.

LOAD-BEARING ELEMENT. Any column, girder, beam, joist, truss, rafter, wall, floor or roof sheathing that supports any vertical load in addition to its own weight or any lateral load.

❖ This term relates to all of the load-bearing elements in a structure. It is important to identify all such load-bearing elements to ensure that they can continue to accomplish their designed function of being able to transfer any vertical load, any lateral load and their own weight effectively to the earth.

NONCOMBUSTIBLE MATERIAL. A material that, under the conditions anticipated, will not ignite or burn when subjected to fire or heat. Materials that pass ASTM E 136 are considered noncombustible materials.

❖ A material that will not ignite or burn when subjected to fire or heat or that successfully passes the ASTM E136 test is considered to be noncombustible. The test determines whether a building material will act to aid combustion or add appreciable heat to a fire. A material may have a limited amount of combustible content but not contribute appreciably to a fire; thus, it may still qualify as noncombustible.

PRIMARY FUNCTION. A *primary function* is a major activity for which the facility is intended. Areas that contain a *primary function* include, but are not limited to, the customer services lobby of a bank, the dining area of a cafeteria, the meeting rooms in a conference center, as well as offices and other work areas in which the activities of the public accommodation or other private entity using the facility are carried out. Mechanical rooms, boiler rooms, supply storage rooms, employee lounges or locker rooms, janitorial closets, entrances, corridors and restrooms are not areas containing a *primary function*.

❖ Primary function areas contain the major activities for the building or space. Determination of what constitutes a primary function space can be somewhat subjective. There can be multiple areas containing a primary function in a single building. Primary function areas are not limited to public use areas. For example, both a bank lobby and the bank's employee areas, such as the teller areas and walk-in safe, are primary function areas. Areas that are not primary function spaces are support and circulation spaces. Determination of the primary function areas for a building will also determine when the route to that area and associated toilet rooms and drinking fountains must be evaluated for accessibility. If these items are not accessible, additional alternatives may be necessary (see commentary, Section 705.2).

INTERNATIONAL CODE COUNCIL®
Copyright © 2015 ICC. ALL RIGHTS RESERVED. Accessed by David Dammon on Jun 21, 2017 12:30:52 PM pursuant to License Agreement with ICC. No further reproduction or distribution authorized. ANY UNAUTHORIZED REPRODUCTION OR DISTRIBUTION IS A VIOLATION OF THE FEDERAL COPYRIGHT ACT AND THE LICENSE AGREEMENT, AND SUBJECT TO CIVIL AND CRIMINAL PENALTIES THEREUNDER.

[A] REGISTERED DESIGN PROFESSIONAL IN RESPONSIBLE CHARGE. A registered design professional engaged by the owner to review and coordinate certain aspects of the project, as determined by the *code official*, for compatibility with the design of the building or structure, including submittal documents prepared by others, deferred submittal documents and phased submittal documents.

❖ A registered design professional in responsible charge is a person typically in charge of the review and coordination of submittal documents prepared by others, deferred submittal documents and phased submittal documents for compatibility with the design of the building or structure. Refer to Section 106.3.4 for specific language dealing with this term.

REHABILITATION. Any work, as described by the categories of work defined herein, undertaken in an *existing building*.

❖ This process of returning a property to a state of utility through repair or alteration makes it possible to effect a positive contemporary use while preserving those portions and features of the property that are significant to its historic, architectural and cultural values.

REHABILITATION, SEISMIC. Work conducted to improve the seismic lateral force resistance of an *existing building*.

❖ This definition relates specifically to the efforts designed to help improve and perhaps reestablish seismic-lateral-force resistance of a property to an appropriate level.

RELOCATABLE BUILDING. A partially or completely assembled building constructed and designed to be reused multiple times and transported to different building sites.

[A] REPAIR. The reconstruction or renewal of any part of an *existing building* for the purpose of its maintenance or to correct damage.

❖ As indicated in Section 105.2.2, the repair of an item typically does not require a permit. This definition makes it clear: repair is limited to work on the item and does not include complete or substantial replacement or other new work. Note that the definition deals with both repair as it relates to maintenance and repairs as they relate to fixing damage inflicted on a building for various reasons. More specifically, the replacement of stairs due to daily wear and tear is related to the maintenance of a building; whereas a wall hit by a forklift or damage as a result of an earthquake would be considered damage as it relates to the definition.

[BS] REROOFING. The process of recovering or replacing an existing roof covering. See "Roof recover" and "Roof replacement."

❖ This term refers to the process of covering or replacing an existing roof system with a new roofing system (see Section 706).

[BS] ROOF RECOVER. The process of installing an additional roof covering over a prepared existing roof covering without removing the existing roof covering.

❖ This term refers to the process of covering an existing roof system with a new roofing system.

[BS] ROOF REPAIR. Reconstruction or renewal of any part of an existing roof for the purposes of its maintenance.

❖ Roofs should be maintained for the purpose of protection. If a section is damaged, then it should be repaired immediately.

[BS] ROOF REPLACEMENT. The process of removing the existing roof covering, repairing any damaged substrate and installing a new roof covering.

❖ This definition refers to the process of removing an existing roof system and replacing it with a new roofing system.

SEISMIC LOADING. The forces prescribed herein, related to the response of the structure to earthquake motions, to be used in the analysis and design of the structure and its components.

❖ This definition refers to the forces to be used in the seismic design of structures. This would apply to both structural and nonstructural components.

[BS] SUBSTANTIAL DAMAGE. For the purpose of determining compliance with the flood provisions of this code, damage of any origin sustained by a structure whereby the cost of restoring the structure to its before-damaged condition would equal or exceed 50 percent of the market value of the structure before the damage occurred.

❖ This term is used in the definition of "Substantial improvement." Substantial damage is a special case of substantial improvement, and if the cost of restoring damage equals or exceeds 50 percent of the market value of the structure, then compliance of the existing building is required. It is notable that a substantial damage determination is to be made regardless of what causes the damage. Buildings have sustained substantial damage due to flood, fire, wind, earthquake, deterioration and other causes.

[BS] SUBSTANTIAL IMPROVEMENT. For the purpose of determining compliance with the flood provisions of this code, any *repair*, *alteration*, *addition*, or improvement of a building or structure, the cost of which equals or exceeds 50 percent of the market value of the structure, before the improvement or *repair* is started. If the structure has sustained *substantial damage*, any repairs are considered *substantial improvement* regardless of the actual *repair* work performed. The term does not, however, include either:

1. Any project for improvement of a building required to correct existing health, sanitary, or safety code violations identified by the *code official* and that is the minimum necessary to ensure safe living conditions; or

INTERNATIONAL CODE COUNCIL®
Copyright © 2015 ICC. ALL RIGHTS RESERVED. Accessed by David Dammon on Jun 21, 2017 12:30:52 PM pursuant to License Agreement with ICC. No further reproduction or distribution authorized. ANY UNAUTHORIZED REPRODUCTION OR DISTRIBUTION IS A VIOLATION OF THE FEDERAL COPYRIGHT ACT AND THE LICENSE AGREEMENT, AND SUBJECT TO CIVIL AND CRIMINAL PENALTIES THEREUNDER.

2. Any *alteration* of a historic structure, provided that the *alteration* will not preclude the structure's continued designation as a historic structure.

❖ One of the long-range objectives of the National Flood Insurance Program (NFIP) is to reduce the exposure of older buildings that were built in flood hazard areas before local jurisdictions adopted flood hazard area maps and regulations. Section 105.3, Item 5 directs the applicant to state the valuation of the proposed work as part of the information submitted to obtain a permit. To make a determination as to whether a proposed repair, reconstruction, rehabilitation, addition or improvement constitutes substantial improvement or damage, the cost of the proposed work is to be compared to the market value of the building or structure before the work is started. In order to determine market value, the code official may require the applicant to provide such information, as allowed under Section 105.3. For additional guidance, refer to FEMA 213 and FEMA 311.

[BS] SUBSTANTIAL STRUCTURAL DAMAGE. A condition where one or both of the following apply:

1. In any story, the vertical elements of the lateral force-resisting system have suffered damage such that the lateral load-carrying capacity of the structure in any horizontal direction has been reduced by more than 33 percent from its predamage condition.
2. The capacity of any vertical gravity load-carrying component, or any group of such components, that supports more than 30 percent of the total area of the structure's floor(s) and roof(s) has been reduced more than 20 percent from its predamage condition and the remaining capacity of such affected elements, with respect to all dead and live loads, is less than 75 percent of that required by this code for new buildings of similar structure, purpose and location.

❖ This definition gives the specific parameters for evaluating when a building has sustained substantial structural damage. There are two separate criteria provided in the definition, either one of which will qualify a structure as being substantially damaged.

TECHNICALLY INFEASIBLE. An *alteration* of a facility that has little likelihood of being accomplished because the existing structural conditions require the removal or *alteration* of a load-bearing member that is an essential part of the structural frame, or because other existing physical or site constraints prohibit modification or addition of elements, spaces or features which are in full and strict compliance with the minimum requirements for new construction and which are necessary to provide accessibility.

❖ This term is defined in order to provide a basis for the application of accessibility provisions to existing buildings. Bringing any altered existing site or building into full compliance with all accessibility requirements applicable to new construction may require extraordinary effort because of existing physical characteristics. The code utilizes the concept of technical infeasibility to provide a basis for exceptions from strict compliance with the provisions for new construction in an existing building.

UNSAFE. Buildings, structures or equipment that are unsanitary, or that are deficient due to inadequate means of egress facilities, inadequate light and ventilation, or that constitute a fire hazard, or in which the structure or individual structural members meet the definition of "*Dangerous*," or that are otherwise *dangerous* to human life or the public welfare, or that involve illegal or improper occupancy or inadequate maintenance shall be deemed unsafe. A vacant structure that is not secured against entry shall be deemed unsafe.

❖ The term "unsafe" is defined in order to provide a basis for the code official to cause a condition that is hazardous to the health and welfare of individuals to be corrected, either by repair or demolition (see Section 115). Some unsafe buildings may be the result of unsafe or illegal occupancies. For example, prima facie evidence of an unsafe structure is an unsecured (open doors or windows) vacant structure. Because of the attractive nuisance they represent, all unsafe buildings must be either demolished or made safe and secure as deemed appropriate by the code official.

WORK AREA. That portion or portions of a building consisting of all reconfigured spaces as indicated on the construction documents. Work area excludes other portions of the building where incidental work entailed by the intended work must be performed and portions of the building where work not initially intended by the owner is specifically required by this code.

❖ This section specifically defines the area of all reconfigured spaces where work is expected to occur within the scope of a project. These areas are to be shown clearly on the construction documents. "Incidental" work areas are not required to be shown as work areas. Note that care needs to be taken in designating the work area. For instance, when a voluntary seismic upgrade (Level 2 alteration) is being made throughout a building, it would be reasonable to simply designate only the actual area of seismic upgrade to avoid placing the alteration in a Level 3 inappropriately. Since the work is voluntary, it seems inappropriate for such an upgrade to trigger Level 3 alteration requirements such as those for automatic sprinkler systems. In this example, only the actual floor area occupied by the columns, beams, walls, etc., that are being modified by the seismic upgrade would be included in the "work area." It would be inappropriate to include the floor area of an entire room simply because a wall or other structural element within that room was being altered. The key is that the definition states that the work area consist of "reconfigured spaces." Installing sprinklers or upgrading a structural element typically does not reconfigure a space.

INTERNATIONAL CODE COUNCIL®
Copyright © 2015 ICC. ALL RIGHTS RESERVED. Accessed by David Dammon on Jun 21, 2017 12:30:52 PM pursuant to License Agreement with ICC. No further reproduction or distribution authorized. ANY UNAUTHORIZED REPRODUCTION OR DISTRIBUTION IS A VIOLATION OF THE FEDERAL COPYRIGHT ACT AND THE LICENSE AGREEMENT, AND SUBJECT TO CIVIL AND CRIMINAL PENALTIES THEREUNDER.

INTERNATIONAL CODE COUNCIL®
Copyright © 2015 ICC. ALL RIGHTS RESERVED. Accessed by David Dammon on Jun 21, 2017 12:30:52 PM pursuant to License Agreement with ICC. No further reproduction or distribution authorized. ANY UNAUTHORIZED REPRODUCTION OR DISTRIBUTION IS A VIOLATION OF THE FEDERAL COPYRIGHT ACT AND THE LICENSE AGREEMENT, AND SUBJECT TO CIVIL AND CRIMINAL PENALTIES THEREUNDER.

Chapter 3:
Provisions for All Compliance Methods

General Comments

This chapter contains the provisions that explain how the code is intended to be applied. In addition, this chapter provides the procedures for seismic design and evaluation that apply throughout the code. These provisions were originally located in Chapter 1, but due to the technical nature of the seismic provisions and the fact that administration provisions are often heavily amended, a standalone chapter was necessary. Finally, this chapter provides some general sections regarding the applicability of other codes, building materials and occupancy classification.

In terms of the application of the code, this chapter explains the three main components of the code, which include the following:

- Prescriptive method.
- Work area method.
- Performance method.

It is intended that one method of compliance is chosen and applied in whole. The first of these methods is the prescriptive method, which is covered in Chapter 4. This chapter was originally excerpted from a portion of Chapter 34 of the *International Building Code*® (IBC®). Chapter 34 has been deleted from the IBC and Section 101.4.7 of that code refers users to the *International Existing Building Code*® (IEBC®) for existing building issues. Chapter 4 addresses additions, alterations, repairs, change of occupancy and accessibility in existing buildings. The requirements are fairly general, with a strong emphasis on structural evaluation and requirements for additions, repairs and alterations. Section 410, which addresses accessibility, provides a baseline of accessible improvement based on the type of work occurring in a building.

The second, core method introduced by the code is the work area method, which is addressed in Chapters 5 through 13. This concept was intended to provide more flexibility to encourage the reuse and continued use of existing buildings. More specifically, the provisions allow different levels of compliance based on the level of work occurring. Chapter 5 first classifies the type and level of work and then, based on that classification, specific provisions are applied. The various types and levels of work include the following:

- Repairs (Chapter 6)
- Alteration Level 1 (Chapter 7)
- Alteration Level 2 (Chapter 8)
- Alteration Level 3 (Chapter 9)
- Change of occupancy (Chapter 10)
- Additions (Chapter 11)
- Historic buildings (Chapter 12)
- Relocated or moved buildings (Chapter 13)

The final method provided in this code is the performance compliance method found in Chapter 14. Chapter 14 utilizes a scoring method to determine the overall safety level of a building. The main focus is on fire and life safety provisions, but base structural and accessibility requirements are also addressed. Specifically, Section 1401.2.5 addresses accessibility and Section 1401.4.1 addresses structural requirements. The accessibility provisions simply refer to the prescriptive method or work area method. The structural provisions are more basic than the prescriptive method and work area method. It is unclear whether this was intentionally different. The prescriptive and work area methods are more comprehensive and consistent with one another in terms of the structural requirements. The objective of this section is to provide an alternative compliance option that enables improvements to be made that will raise the score to a minimum level without strict compliance with the provisions of the IBC.

Chapter 3 also provides options related to seismic evaluation and design, which are intended to provide flexibility when addressing seismic design. These evaluation tools work with both the prescriptive and work area methods. The provisions help to determine which procedures and methods are to be applied when addressing seismic design in existing buildings. In some cases, the code requires compliance with the seismic design provisions of the IBC (Section 301.1.4.1), while in other sections, reduced seismic design provisions are permitted (Section 301.1.4.2). In both sections, specifics are provided regarding applicable procedures and methods. More detailed discussion about these methods is provided in the commentary to Sections 301.1.4, 301.1.4.1 and 301.1.4.2. In large part, these provisions are intended to facilitate an overall increase in seismic performance in existing buildings. Typically, buildings with higher occupant loads and those with increased importance due to their importance to the community will have more restrictive requirements.

Section 302 addresses generally applicable provisions for the overall code. Section 302.1 explains the applicability of this section to all aspects of the code. Section 302.2 notes that applicable requirements for existing situations are addressed in various *International Codes*® (I-Codes®) and the *National Electrical Code*® (NFPA 70). More specifically, codes such as the *International Plumbing Code*® (IPC®) have requirements for existing installations and how alterations or additions

INTERNATIONAL CODE COUNCIL®
Copyright © 2015 ICC. ALL RIGHTS RESERVED. Accessed by David Dammon on Jun 21, 2017 12:30:52 PM pursuant to License Agreement with ICC. No further reproduction or distribution authorized. ANY UNAUTHORIZED REPRODUCTION OR DISTRIBUTION IS A VIOLATION OF THE FEDERAL COPYRIGHT ACT AND THE LICENSE AGREEMENT, AND SUBJECT TO CIVIL AND CRIMINAL PENALTIES THEREUNDER.

are addressed. Other important examples are the retroactive provisions of Chapter 11 of the *International Fire Code*® (IFC®). Those provisions are applicable at all times regardless of whether a repair or alteration is being undertaken. These provisions remain applicable when applying this code. Additionally, this section states that where a conflict occurs, this code takes precedence.

Purpose

The purposes of this chapter are to define the three compliance options that are available to the users of the code, lay out the methods to be used for seismic design and evaluation throughout the code, and provide generally applicable minimum requirements for all three methods.

SECTION 301
ADMINISTRATION

301.1 General. The *repair*, *alteration*, *change of occupancy*, *addition* or relocation of all *existing buildings* shall comply with one of the methods listed in Sections 301.1.1 through 301.1.3 as selected by the applicant. Sections 301.1.1 through 301.1.3 shall not be applied in combination with each other. Where this code requires consideration of the seismic force-resisting system of an *existing building* subject to *repair*, *alteration*, *change of occupancy*, *addition* or relocation of *existing buildings*, the seismic evaluation and design shall be based on Section 301.1.4 regardless of which compliance method is used.

Exception: Subject to the approval of the *code official*, *alterations* complying with the laws in existence at the time the building or the affected portion of the building was built shall be considered in compliance with the provisions of this code unless the building is undergoing more than a limited structural *alteration* as defined in Section 907.4.4. New structural members added as part of the *alteration* shall comply with the *International Building Code*. *Alteration*s of *existing buildings* in *flood hazard areas* shall comply with Section 701.3.

❖ This section explains the options available to a designer or owner when dealing with construction related to existing buildings: prescriptive compliance method (Section 301.1.1), work area compliance method (Section 301.1.2) and performance compliance method (Section 301.1.3). This section also provides procedures for evaluation and design of seismic force-resisting systems of existing buildings where consideration of seismic forces is required by the structural provisions in the prescriptive and work area methods.

There is one alternative to using these three compliance methods that allows for compliance with the laws in existence at the time the structure was originally built, unless the building has sustained substantial structural damage or is undergoing more than a limited structural alteration. Repairs and alterations in flood hazard areas have additional requirements to the laws in existence at the time the structure was originally built.

301.1.1 Prescriptive compliance method. *Repairs*, *alterations*, *additions* and *changes of occupancy* complying with Chapter 4 of this code in buildings complying with the *International Fire Code* shall be considered in compliance with the provisions of this code.

❖ This section allows compliance in accordance with Chapter 4 of the code. These provisions are intended to prescribe specific minimum requirements for construction related to existing buildings, including additions, alterations, repairs, fire escapes, glass replacement, change of occupancy, historic buildings, moved structures and accessibility.

301.1.2 Work area compliance method. *Repairs*, *alterations*, *additions*, changes in occupancy and relocated buildings complying with the applicable requirements of Chapters 5 through 13 of this code shall be considered in compliance with the provisions of this code.

❖ This section allows compliance in accordance with Chapters 5 through 13 of the code. These chapters contain provisions based on a proportional approach to compliance where upgrades are triggered by the type and extent of the work.

301.1.3 Performance compliance method. *Repairs*, *alterations*, *additions*, changes in occupancy and relocated buildings complying with Chapter 14 of this code shall be considered in compliance with the provisions of this code.

❖ This section allows compliance in accordance with Chapter 14 of the code. This chapter provides a scoring method for evaluating a building based on fire safety, means of egress and general safety.

[BS] 301.1.4 Seismic evaluation and design procedures. The seismic evaluation and design shall be based on the procedures specified in the *International Building Code* or ASCE 41. The procedures contained in Appendix A of this code shall be permitted to be used as specified in Section 301.1.4.2.

❖ This section lists the documents that contain the provisions to be used for the seismic evaluation of an existing building as well as the design of any needed repairs. Since the scope of these documents varies considerably, brief descriptions are given below.

***International Building Code*® (IBC®)**

The IBC is a comprehensive model building code with seismic provisions that are based, for the most part, on ASCE 7 as well as the National Earthquake Hazards Reduction Program (NEHRP) *Recommended Provisions for Seismic Regulations for New Buildings*

INTERNATIONAL CODE COUNCIL®
Copyright © 2015 ICC. ALL RIGHTS RESERVED. Accessed by David Dammon on Jun 21, 2017 12:30:52 PM pursuant to License Agreement with ICC. No further reproduction or distribution authorized. ANY UNAUTHORIZED REPRODUCTION OR DISTRIBUTION IS A VIOLATION OF THE FEDERAL COPYRIGHT ACT AND THE LICENSE AGREEMENT, AND SUBJECT TO CIVIL AND CRIMINAL PENALTIES THEREUNDER.

and Other Structures. The requirements are intended to minimize the hazard to life for all buildings, increase the expected performance of higher occupancy buildings as compared to ordinary buildings and improve the capability of essential facilities to function during and after an earthquake. In addition to minimum seismic loading criteria, the earthquake design provisions include requirements for special inspection and testing as well as material-specific design requirements. Achieving the intended performance depends on a number of factors, including, for example, the structural framing type, configuration and construction materials.

The significant earthquake load concepts include the following:

1. The ground motions are based on a risk-targeted maximum considered earthquake (MCE_R) from ground motion response acceleration maps [IBC Figures 1613.3.1(1) through 1613.3.1(8)], which provide spectral response accelerations at short periods (S_S) and at a one-second period (S_1). These levels of ground motion are also used in ASCE 41.
2. Design for the effect of MCE_R: Considering the margin of safety inherent in seismic design practice, this achieves collapse prevention under MCE_R level ground motions. It is also intended that damage from the "design earthquake" ground motion would be repairable. For essential facilities (Risk Category IV) it is intended that damage from the "design earthquake" ground motion be relatively minor and allow continued occupancy and function of the facility. For higher ground motions, the intent is that there be a low probability of structural collapse.
3. Risk category and importance factors: The IBC assigns buildings to one of the four risk categories summarized in Commentary Figure 301.1.4(1). The intent is to provide increasingly higher performance as the risk category increases from I through IV. This is achieved in part by applying an importance factor in determining the design load. The importance factor specified in the load provisions of ASCE 7 directly impacts the calculation of seismic (as well as wind and snow) loads. The magnitude of the design load varies in proportion to the importance factor and a higher value is assigned to buildings with an occupancy that warrants a higher level of performance.
4. Nonlinear seismic behavior is accounted for through use of equivalent lateral forces that are reduced by a response modification factor (R). This approximates the internal forces under the design earthquake. The corresponding building displacements, however, must be increased by the deflection amplification factor (C_d) in meeting the drift limits. These factors are based on the type of seismic force-resisting system provided and are located in the referenced ASCE 7 load standard.
5. Detailing and limitations on the seismic force-resisting system are a function of a structure's seismic design category classification, which considers seismicity at the site, type of soil present at the site and the nature of the building occupancy. Since several code requirements and the *Guidelines for Seismic Retrofit of Existing Buildings* (GSREB) use the seismic design category as a threshold, but neither document contains the criteria for determining a building's seismic design category, Commentary Figure 301.1.4(2) depicts the steps used to determine a structure's seismic design category using the IBC seismic criteria.

Two levels of IBC seismic forces are used as the basis for the code requirements for seismic analysis and design. These two levels are either the full seismic force required by the IBC (see Section 301.1.4.1) or the reduced seismic force level, which is 75 percent of the full seismic forces required by the IBC (see Section 301.1.4.2) [see Commentary Figures 301.1.4(1) and 301.1.4(2)].

RISK CATEGORIES	NATURE OF OCCUPANCY	SEISMIC IMPORTANCE FACTOR FROM ASCE 7
I	Buildings and other structures that represent a low hazard to human life in the event of failure	1.0
II	Buildings and other structures except those listed in Categories I, III and IV	1.0
III	Buildings and other structures that represent a substantial hazard to human life in the event of failure	1.25
IV	Buildings and other structures designated as essential facilities	1.5

Figure 301.1.4(1)
RISK CATEGORIES AND IMPORTANCE FACTORS

INTERNATIONAL CODE COUNCIL®
Copyright © 2015 ICC. ALL RIGHTS RESERVED. Accessed by David Dammon on Jun 21, 2017 12:30:52 PM pursuant to License Agreement with ICC. No further reproduction or distribution authorized. ANY UNAUTHORIZED REPRODUCTION OR DISTRIBUTION IS A VIOLATION OF THE FEDERAL COPYRIGHT ACT AND THE LICENSE AGREEMENT, AND SUBJECT TO CIVIL AND CRIMINAL PENALTIES THEREUNDER.

***Seismic Rehabilitation of Existing Buildings*, ASCE 41**

ASCE 41-13, *Seismic Evaluation and Retrofit of Existing Buildings*, is a combination of previous standards ASCE 41-06 and ASCE 31-03.

- ASCE 41-06—*Seismic Rehabilitation of Existing Buildings.*
- ASCE 31-03—*Seismic Evaluation of Existing Buildings*.

ASCE 41 was initially an updated version of FEMA 356, *Prestandard and Commentary for the Seismic Rehabilitation of Buildings*. FEMA 356 was essentially an updated version of FEMA 273, *NEHRP Guidelines for the Seismic Rehabilitation of Buildings*. As noted ASCE 41 now includes what was formerly ASCE 31. ASCE 31 was a consensus standard that was developed as a replacement for FEMA 310. It is an evaluation tool that provides a standardized process for identifying potential seismic deficiencies in existing buildings and includes an integrated commentary. It takes a three-tier approach to evaluation, starting with a screening phase (Tier 1) and proceeding to a detailed evaluation phase (Tier 3), if required.

The significant concepts in this standard include the following:

1. Discrete rehabilitation objectives are established based on target building performance levels at various levels of ground motion (earthquake hazard). These are summarized in Commentary Figure 301.1.4(3), which is reproduced from the ASCE 41 commentary. Note that this entire array of rehabilitation objectives is only available under a voluntary upgrade to the seismic force-resisting system in accordance with Section 807.6. Otherwise, the required performance level is established by the code [see Commentary Figure 301.1.4(3)].
2. Two specific levels of ground motion based on USGS ground motion maps are defined in ASCE 41. Basic Safety Earthquake-2 (BSE-2) is the ground motion based on the MCE and the mapped spectral response accelerations (S_S and S_1). Basic Safety Earthquake-1 (BSE-1) is MCE_R. BSE-1 and BSE-2 are identified in the left-hand (earthquake hazard level) column of Commentary Figure 301.1.4(4). ASCE 41 also provides procedures to establish other ground-

1. Determine the mapped MCE spectral response acceleration at short periods, S_s, and at a 1-second period, S_1, for the site from Figures 1613.5(1) through 1613.5(4).
2. Determine the (soil) site class in accordance with Table 1613.5.2.
3. Determine the site coefficients, F_a and F_v, from Tables 1613.5.3(1) and 1613.5.3(2), respectively.
4. Determine the design spectral response acceleration at short periods, S_{DS}, and at a 1-second period, S_{D1}, as follows:

   $S_{DS} = (2/3)(F_a)(S_s)$

   $S_{D1} = (2/3)(F_v)(S_1)$
5. Determine the seismic design category as prescribed by Tables 1613.5.6(1) and 1616.5.6(2). The highest (most restrictive) of the seismic design categories from the two tables is the category assigned to the building.

Figure 301.1.4(2)
DETERMINATION OF SEISMIC DESIGN CATEGORY USING THE *INTERNATIONAL BUILDING CODE*

		TARGET BUILDING PERFORMANCE LEVELS			
		Operational Performance Level (1-A)	Immediate Occupancy Performance Level (1-B)	Life Safety Performance Level (3-C)	Collapse Prevention Performance Level (5-E)
Earthquake Hazard Level	50%/50 year	a	b	c	d
	20%/50 year	e	f	g	h
	BSE-1 (approx. 10%/50 year)	i	j	k	l
	BSE-2 (approx. 2%/50 year)	m	n	o	p

Notes:

1. Each cell in the above matrix represents a discrete rehabilitation objective.
2. The rehabilitation objectives in the matrix above may be used to represent the three specific rehabilitation objectives defined in Sections 1.4.1, 1.4.2 and 1.4.3 as follows:

k + p = Basic safety objective (BSO)

k + p + any of a, e, i, b, f, j or n = enhanced objectives

o alone or n alone or m alone = enhanced objectives

k alone or p alone = limited objectives

c, g, d, h, l = limited objectives

Figure 301.1.4(3)
FEMA 356 REHABILITATION OBJECTIVES

INTERNATIONAL CODE COUNCIL®
Copyright © 2015 ICC. ALL RIGHTS RESERVED. Accessed by David Dammon on Jun 21, 2017 12:30:52 PM pursuant to License Agreement with ICC. No further reproduction or distribution authorized. ANY UNAUTHORIZED REPRODUCTION OR DISTRIBUTION IS A VIOLATION OF THE FEDERAL COPYRIGHT ACT AND THE LICENSE AGREEMENT, AND SUBJECT TO CIVIL AND CRIMINAL PENALTIES THEREUNDER.

motion levels that may be of interest in rehabilitations.

3. Section 1.4.1 of ASCE 41 establishes a rehabilitation objective that is referred to as the basic safety objective (BSO). The BSO requires the life safety performance level for BSE-1 and collapse prevention performance level for BSE-2. This dual objective corresponds to entries k and p as illustrated in Commentary Figure 301.1.4(4). The BSO approximates the risk to life safety that has traditionally been accepted in earthquake design and is comparable to the intended performance for new buildings under the IBC [see Commentary Figure 301.1.4(4)].
4. Systematic versus simplified rehabilitation methodologies: Commentary Figure 301.1.4(5), reprinted from the ASCE 41 commentary, provides an overview of the rehabilitation process under ASCE 41 [see Commentary Figure 301.1.4(5)].
5. The level of seismicity for a building is defined as low, moderate or high, based on the design short period spectral response acceleration (S_{DS}) and design spectral response acceleration at a one-second period (S_{D1}). These values are identical to the IBC design level ground motions.
6. The level of performance is established as life safety (LS), damage control, limited safety, collapse prevention or immediate occupancy (IO). Note that in complying with code requirements, Table 301.1.4.1 establishes the performance level that applies based on a building's occupancy classification.
7. ASCE 41 accounts for nonlinear response to earthquake ground motions by applying pseudo static lateral forces representing the forces required to impose the expected actual deformations of the structure in its yielded state under the design ground motion.

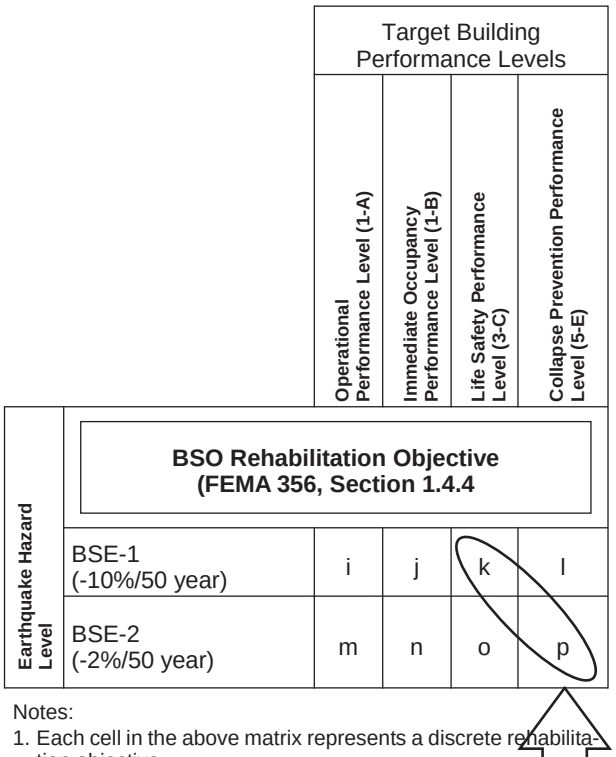

Figure 301.1.4(4)
BASIC SAFETY OBJECTIVES (BSO)
(Source: FEMA 356 Commentary)

Appendix A—*Guidelines for the Seismic Retrofit of Existing Buildings* (GSREB)

Seismic retrofit guidelines have been developed and utilized in the western United States for many years. The 1997 edition of the *Uniform Code for Building Conservation* (UCBC) included three appendix chapters (see A1, A2 and A3 below) dealing with seismic strengthening of specific building types. In 2000, these three chapters were combined with two new chapters (see A4 and A5 below) and published as a standalone document, GSREB. The code has incorporated the GSREB in Appendix A. The applicability of each appendix chapter is stated in Section 301.1.4.2, Items 2.1 through 2.5. These chapters provide mitigation for the following areas of concern in existing buildings:

A1 Unreinforced Masonry Bearing Wall Buildings: This chapter applies to buildings with one or more unreinforced masonry-bearing walls.

A2 Reinforced Concrete and Reinforced Masonry Wall Buildings with Flexible Diaphragms: This chapter has requirements for wall anchorage systems for reinforced concrete or masonry walls that are laterally supported by flexible diaphragms.

A3 Strengthening of Cripple Walls and Sill Plate Anchorage of Light, Wood-Frame Residential Buildings: This chapter has requirements for perimeter foundations, sill plate connections and unbraced cripple walls.

A4 Wood-Frame Residential Buildings with Soft, Weak or Open-Front Walls: This chapter has

INTERNATIONAL CODE COUNCIL®
Copyright © 2015 ICC. ALL RIGHTS RESERVED. Accessed by David Dammon on Jun 21, 2017 12:30:52 PM pursuant to License Agreement with ICC. No further reproduction or distribution authorized. ANY UNAUTHORIZED REPRODUCTION OR DISTRIBUTION IS A VIOLATION OF THE FEDERAL COPYRIGHT ACT AND THE LICENSE AGREEMENT, AND SUBJECT TO CIVIL AND CRIMINAL PENALTIES THEREUNDER.

requirements for wood-frame, multiple-unit residential buildings with soft, weak or open-front walls that are classified as Seismic Design Category C, D or E.

A5 Concrete Buildings: This chapter has requirements for concrete buildings. It is intended for buildings classified as Seismic Design Category B, C, D or E.

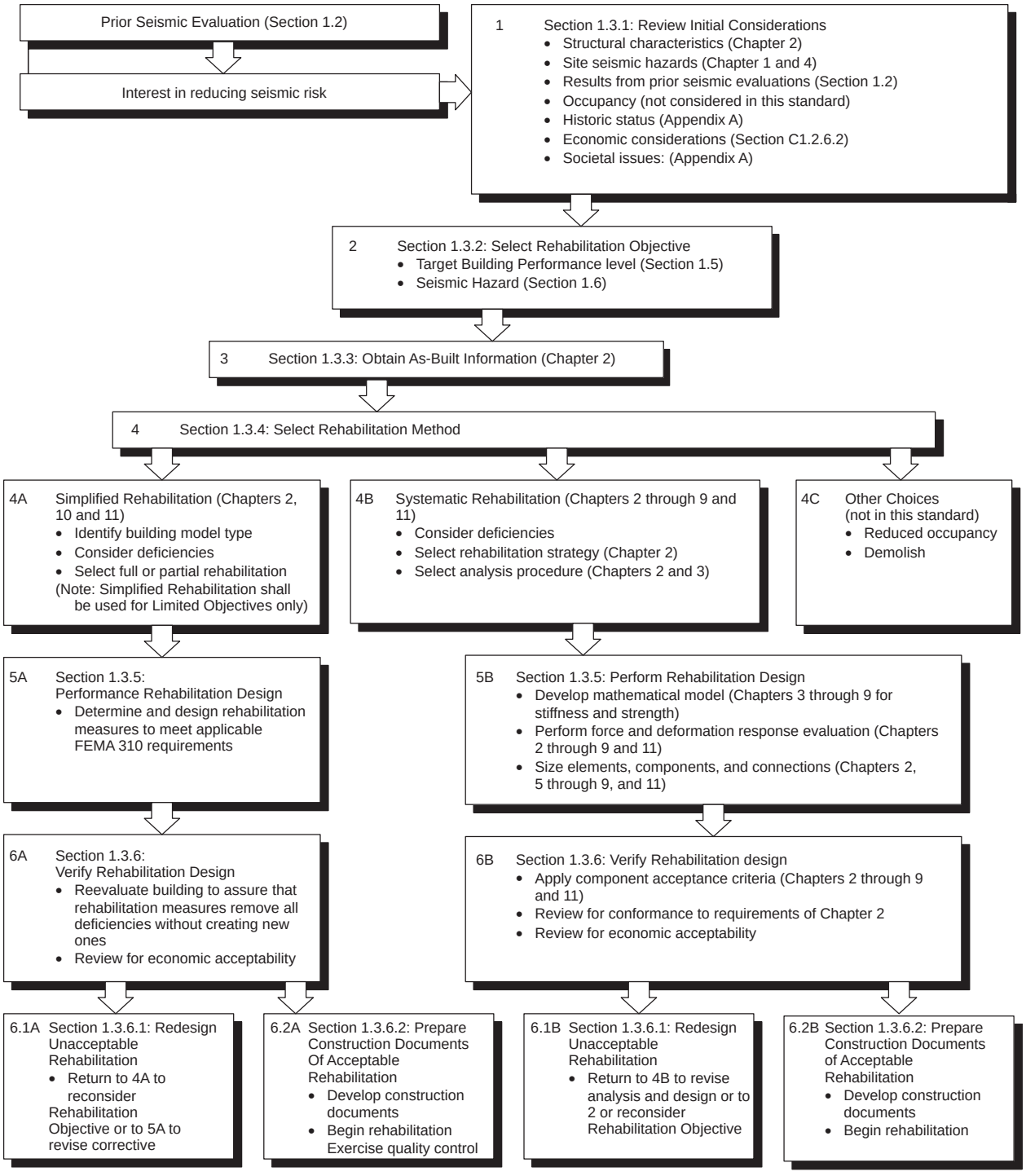

Figure 301.1.4(5)
FEMA 356 REHABILITATION PROCESS
(Source: FEMA 356 Commentary)

INTERNATIONAL CODE COUNCIL®
Copyright © 2015 ICC. ALL RIGHTS RESERVED. Accessed by David Dammon on Jun 21, 2017 12:30:52 PM pursuant to License Agreement with ICC. No further reproduction or distribution authorized. ANY UNAUTHORIZED REPRODUCTION OR DISTRIBUTION IS A VIOLATION OF THE FEDERAL COPYRIGHT ACT AND THE LICENSE AGREEMENT, AND SUBJECT TO CIVIL AND CRIMINAL PENALTIES THEREUNDER.

As noted previously, the scope and other thresholds include references to seismic criteria that correspond to the IBC as well (e.g., seismic design category). The GSREB is also based on IBC forces that require the use of a response modification coefficient (R) (see commentary, Section 301.1.4.1).

[BS] 301.1.4.1 Compliance with International Building Code-level seismic forces. Where compliance with the seismic design provisions of the *International Building Code* is required, the criteria shall be in accordance with one of the following:

1. One-hundred percent of the values in the *International Building Code*. Where the existing seismic force-resisting system is a type that can be designated as "Ordinary," values of R, Ω_0 and C_d used for analysis in accordance with Chapter 16 of the *International Building Code* shall be those specified for structural systems classified as "Ordinary" in accordance with Table 12.2-1 of ASCE 7, unless it can be demonstrated that the structural system will provide performance equivalent to that of a "Detailed," "Intermediate" or "Special" system.
2. ASCE 41, using a Tier 3 procedure and the two-level performance objective in Table 301.1.4.1 for the applicable risk category.

❖ Where the code requires the use of IBC-level seismic forces, it is intended to provide a level of earthquake performance comparable to new construction. The level of performance is typically a function of the building's occupancy classification (see commentary, Section 301.1.4 and Table 301.1.4.1).

One difficulty in applying the seismic requirements intended for new buildings to existing structures is the use of the response modification coefficient (R) in calculating the design seismic force. Under the IBC, the value of R that is obtained from the ASCE 7 standard is directly linked to the level of detailing required for any seismic force-resisting system. Systems are characterized as "ordinary," "intermediate" or "special" based on the extent of ductile detailing that is provided. In areas of moderate or higher seismicity (as reflected by a structure's seismic design category), the use of most ordinary systems (those with limited ductility) is typically restricted or prohibited. In an existing building, the system detailing is in place and the problem is in selecting an R-value that is consistent with the construction of that system. For this reason, Item 1 restricts R-values to be no greater than those listed for an ordinary system, unless there is clear evidence that a higher level of detailing has been provided.

By contrast, ASCE 41 avoids the previously discussed problem when assuming an R-value by instead considering the ductility of individual components. In Item 2, the code equates the use of full IBC seismic forces to the performance levels shown in Table 301.1.4.1 where ASCE 41 is used. The dual requirements listed in Table 301.1.4.1 are for BSE-1 and BSE-2 ground motions, which are discussed in the commentary to Section 301.1.4.

TABLE 301.1.4.1. See below.

❖ The performance levels listed in this table are comparable to those achieved under the IBC earthquake requirements. Risk Category III criteria are halfway between Risk Category II and Risk Category IV. This determination of Risk Category III is based on the definitions of "damage control" and "limited safety" within ASCE 41. This is analogous to the use of the seismic importance factor for new construction under the IBC.

[BS] 301.1.4.2 Compliance with reduced International Building Code-level seismic forces. Where seismic evaluation and design is permitted to meet reduced *International Building Code* seismic force levels, the criteria used shall be in accordance with one of the following:

1. The *International Building Code* using 75 percent of the prescribed forces. Values of R, Ω_0 and C_d used for analysis shall be as specified in Section 301.1.4.1 of this code.
2. Structures or portions of structures that comply with the requirements of the applicable chapter in Appendix A as specified in Items 2.1 through 2.5 and subject to the limitations of the respective Appendix A chapters shall be deemed to comply with this section.
   2.1. The seismic evaluation and design of unreinforced masonry bearing wall buildings in Risk Category I or II are permitted to be based on the procedures specified in Appendix Chapter A1.
   2.2. Seismic evaluation and design of the wall anchorage system in reinforced concrete and reinforced masonry wall buildings with flexible diaphragms in Risk Category I or II are permitted to be based on the procedures specified in Chapter A2.

[BS] TABLE 301.1.4.1
PERFORMANCE OBJECTIVES FOR USE IN ASCE 41 FOR COMPLIANCE WITH INTERNATIONAL BUILDING CODE-LEVEL SEISMIC FORCES

RISK CATEGORY (Based on IBC Table 1604.5)	STRUCTURAL PERFORMANCE LEVEL FOR USE WITH BSE-1N EARTHQUAKE HAZARD LEVEL	STRUCTURAL PERFORMANCE LEVEL FOR USE WITH BSE-2N EARTHQUAKE HAZARD LEVEL
I	Life Safety (S-3)	Collapse Prevention (S-5)
II	Life Safety (S-3)	Collapse Prevention (S-5)
III	Damage Control (S-2)	Limited Safety (S-4)
IV	Immediate Occupancy (S-1)	Life Safety (S-3)

INTERNATIONAL CODE COUNCIL®
Copyright © 2015 ICC. ALL RIGHTS RESERVED. Accessed by David Dammon on Jun 21, 2017 12:30:52 PM pursuant to License Agreement with ICC. No further reproduction or distribution authorized. ANY UNAUTHORIZED REPRODUCTION OR DISTRIBUTION IS A VIOLATION OF THE FEDERAL COPYRIGHT ACT AND THE LICENSE AGREEMENT, AND SUBJECT TO CIVIL AND CRIMINAL PENALTIES THEREUNDER.

2.3. Seismic evaluation and design of cripple walls and sill plate anchorage in residential buildings of light-frame wood construction in Risk Category I or II are permitted to be based on the procedures specified in Chapter A3.

2.4. Seismic evaluation and design of soft, weak, or open-front wall conditions in multiunit residential buildings of wood construction in Risk Category I or II are permitted to be based on the procedures specified in Chapter A4.

2.5. Seismic evaluation and design of concrete buildings assigned to Risk Category I, II or III are permitted to be based on the procedures specified in Chapter A5.

3. ASCE 41, using the performance objective in Table 301.1.4.2 for the applicable risk category.

❖ The lateral force-resisting systems in most older buildings are difficult, if not impossible, to upgrade to the same level of performance that is required of new construction. Where the code permits the use of this reduced seismic force level, it provides a means of achieving some improvement in earthquake performance of older buildings without making such efforts cost prohibitive. It also permits a building that is relatively close to current earthquake standards to comply outright. Item 1 establishes this level as 75 percent of the earthquake loading required in the design of new structures. The issues with *R*-value determination discussed in the commentary to Section 301.1.4.1 occur here as well.

The same approach is used in Appendix A (GSREB) and it is similar to the approach that has been used under FEMA 178. Therefore, Item 2 clarifies that Appendix A is a permitted alternative (see commentary, Section 301.1.4). Item 3 equates these reduced seismic forces to the level of performance required by Table 301.1.4.2 for only the BSE-1 under 41.

TABLE 301.1.4.2. See below.

❖ Item 3 of Section 301.1.4.2 references the values in Table 301.1.4.2 to use for compliance with reduced IBC-level seismic forces. The performance levels listed in this table are to allow for compliance by designing for seismic forces that are less than what is required by the IBC for those instances where the code allows this reduced level of compliance, such as for repairs. These performance levels are consistent with Item 1 of Section 301.1.4.2, which allows using 75 percent of the IBC-prescribed seismic forces. Note a addresses interpolation for Risk Category III. The ASCE 41 Tier 1 checklists are sufficiently conservative for the initial screening phase so that the less restrictive life safety performance level will not significantly compromise the overall seismic performance goals for Risk Category III buildings.

SECTION 302
GENERAL PROVISIONS

302.1 Applicability. The provisions of Section 302 apply to all alterations, repairs, additions, relocations of structures and changes of occupancy regardless of compliance method.

❖ This code contains three possible compliance paths: Prescriptive (Chapter 4), Work area (Chapters 5 through 13) and Performance (Chapter 14). For any of these paths, the requirements in Section 302 apply.

302.2 Additional codes. *Alterations, repairs, additions* and *changes of occupancy* to, or relocation of, *existing buildings* and structures shall comply with the provisions for *alterations, repairs, additions* and *changes of occupancy* or relocation, respectively, in this code and the *International Energy Conservation Code*, *International Fire Code*, *International Fuel Gas Code*, *International Mechanical Code*, *International Plumbing Code*, *International Property Maintenance Code*, *International Private Sewage Disposal Code*, *International Residential Code* and NFPA 70. Where provisions of the other codes conflict with provisions of this code, the provisions of this code shall take precedence.

❖ This section clarifies the relationship between this code and the IFC, *International Fuel Gas Code*® (IFGC®), *International Mechanical Code*® (IMC®), IPC, *International Property Maintenance Code*® (IPMC®), *International Private Sewage Disposal Code*® (IPSDC®), *International Residential Code*® (IRC®), *International Energy Conservation Code*® (IECC®) and NFPA 70. When alterations and repairs are made to existing mechanical and plumbing systems, the provisions of the I-Codes and NFPA 70 for alterations and repairs must be followed. Those codes indicate the extent to which existing systems must comply with the stated requirements. Where portions of existing building systems, such as plumbing, mechanical and electrical systems, are not being

[BS] TABLE 301.1.4.2
PERFORMANCE OBJECTIVES FOR USE IN ASCE 41 FOR COMPLIANCE WITH REDUCED INTERNATIONAL BUILDING CODE-LEVEL SEISMIC FORCES

RISK CATEGORY (Based on IBC Table 1604.5)	STRUCTURAL PERFORMANCE LEVEL FOR USE WITH BSE-1E EARTHQUAKE HAZARD LEVEL
I	Life Safety (S-3)
II	Life Safety (S-3)
III	Damage Control (S-2). See Note a
IV	Immediate Occupancy (S-1)

a. Tier 1 evaluation at the Damage Control performance level shall use the Tier 1 Life Safety checklists and Tier 1 Quick Check provisions midway between those specified for Life Safety and Immediate Occupancy performance.

INTERNATIONAL CODE COUNCIL®
Copyright © 2015 ICC. ALL RIGHTS RESERVED. Accessed by David Dammon on Jun 21, 2017 12:30:52 PM pursuant to License Agreement with ICC. No further reproduction or distribution authorized. ANY UNAUTHORIZED REPRODUCTION OR DISTRIBUTION IS A VIOLATION OF THE FEDERAL COPYRIGHT ACT AND THE LICENSE AGREEMENT, AND SUBJECT TO CIVIL AND CRIMINAL PENALTIES THEREUNDER.

altered or repaired, those systems may continue to exist without being upgraded as long as they are not hazardous or unsafe to the building occupants.

Another important element of this section is that this code will take precedence if a conflict occurs between one of the listed codes and this code. This is only as far as it concerns requirements for alteration, repairs, additions and change of occupancy. However, this would not address a situation where another code, such as the IFC, retroactively required changes to a building regardless if any repairs, alterations, additions or changes of occupancy were occurring.

302.3 Existing materials. Materials already in use in a building in compliance with requirements or approvals in effect at the time of their erection or installation shall be permitted to remain in use unless determined by the building official to be unsafe.

❖ This section is the same as Section 401.2.1. It has been repeated here as well to be generally applicable to all methods. If a material or system had been approved before the code took effect, it can continue to be used as long as it can be shown that the material or system is not detrimental to the health or safety of the building occupants or the public. Specifically, a material or system cannot be "unsafe" as defined in Chapter 2 and as addressed by Section 115. The code is not intended to be retroactive.

302.4 New and replacement materials. Except as otherwise required or permitted by this code, materials permitted by the applicable code for new construction shall be used. Like materials shall be permitted for *repairs* and *alterations*, provided no unsafe condition is created. Hazardous materials shall not be used where the code for new construction would not permit their use in buildings of similar occupancy, purpose and location.

❖ Similar to Section 302.3, this section is the same as Section 401.2.2. It has been repeated here to be generally applicable to all methods. There are two options for materials used in repairs to an existing building. Generally, the materials used for repairs should be those that are presently required or permitted for new construction in accordance with the I-Codes. It is also acceptable to use materials consistent with those that are already present, except where those materials pose a hazard. This allowance follows the general concept that any repair should not make a building more hazardous than it was prior to the repair. It is generally possible to repair a structure, its components and its systems with materials consistent with those materials that were used previously. However, where materials that are now deemed hazardous are involved in the repair work, they may no longer be used. For example, the code identifies asbestos and lead-based paint as two common hazardous materials that cannot be used in the repair process. Certain materials previously considered acceptable for building construction are now known to be threats to the health of occupants.

302.5 Occupancy and use. When determining the appropriate application of the referenced sections of this code, the occupancy and use of a building shall be determined in accordance with Chapter 3 of the *International Building Code*.

❖ This section provides a link to the occupancy classifications in the IBC. Any time a provision is based on occupancy classification, that classification is determined through IBC requirements, not from codes under which the building was originally built. Occupancy classifications have changed over the years and varied as to how they were named in previous codes.

In the early years of the last century, the essence of regulatory safeguards from fire was to provide a reasonable level of protection to property. The idea was that if property was adequately protected from fire, then the building occupants would also be protected.

From this outlook on fire safety, the concept of equivalent risk has evolved in the code. This concept maintains that, in part, an acceptable level of risk against the damages of fire, respective to a particular occupancy type (group), can be achieved by limiting the height and area of buildings containing such occupancies according to the building's construction type (i.e., its relative fire endurance).

The concept of equivalent risk involves three interdependent considerations: 1. The level of fire hazard associated with the specific occupancy of the facility; 2. The reduction of fire hazard by limiting the floor area(s) and the height of the building based on the fuel load (combustible contents and burnable building components); and 3. The level of overall fire resistance provided by the type of construction used for the building.

The interdependence of these fire safety considerations can be seen by first looking at IBC Tables 601 and 602, which show the fire-resistance ratings of the principal structural elements composing a building in relation to the five classifications for types of construction. Type I construction is the classification that generally requires the highest fire-resistance ratings for structural elements, whereas Type V construction, which is designated as a combustible type of construction, generally requires the least amount of fire-resistance-rated structural elements. If one then looks at IBC Tables 504.3, 504.4 and 504.5, the relationship among group classification, allowable heights and areas, and types of construction becomes apparent. Respective to each group classification, the greater the fire-resistance rating of structural elements, as represented by the type of construction, the greater the floor area and height allowances. The greater the potential fire hazards indicated as a function of the group, the lesser the height and area allowances for a particular construction type.

As a result of extensive research and advancements in fire technology, today's building codes are more comprehensive and complex regulatory instru-

INTERNATIONAL CODE COUNCIL®
Copyright © 2015 ICC. ALL RIGHTS RESERVED. Accessed by David Dammon on Jun 21, 2017 12:30:52 PM pursuant to License Agreement with ICC. No further reproduction or distribution authorized. ANY UNAUTHORIZED REPRODUCTION OR DISTRIBUTION IS A VIOLATION OF THE FEDERAL COPYRIGHT ACT AND THE LICENSE AGREEMENT, AND SUBJECT TO CIVIL AND CRIMINAL PENALTIES THEREUNDER.

ments than they were in the earlier years of code development. While the principle of equivalent risk remains an important component in building codes, perspectives have changed and life safety is now the paramount fire issue. Even so, occupancy classification still plays a key part in organizing and prescribing the appropriate protection measures. As such, threshold requirements for fire protection and means of egress systems are based on occupancy classification (see Chapters 9 and 10 of the IBC).

Bibliography

The following resource materials were used in the preparation of the commentary for this chapter of the code.

FEMA 178, *NEHRP Handbook for the Seismic Evaluation of Building*s. Washington, DC: Federal Emergency Management Agency, 2001.

FEMA 273, *NEHRP Guidelines for the Seismic Rehabilitation of Existing Buildings*. Washington, DC: Federal Emergency Management Agency, 2001.

FEMA 310, *Handbook for Seismic Evaluation of Buildings—A Prestandard*. Washington, DC: Federal Emergency Management Agency, 2001.

FEMA 356-00, *Prestandard and Commentary for the Seismic Rehabilitation of Buildings Guidelines for the Seismic Retrofit of Existing Buildings*. Washington, DC: Federal Emergency Management Agency, 2000.

INTERNATIONAL CODE COUNCIL®

Copyright © 2015 ICC. ALL RIGHTS RESERVED. Accessed by David Dammon on Jun 21, 2017 12:30:52 PM pursuant to License Agreement with ICC. No further reproduction or distribution authorized. ANY UNAUTHORIZED REPRODUCTION OR DISTRIBUTION IS A VIOLATION OF THE FEDERAL COPYRIGHT ACT AND THE LICENSE AGREEMENT, AND SUBJECT TO CIVIL AND CRIMINAL PENALTIES THEREUNDER.

Chapter 4:
Prescriptive Compliance Method

General Comments

This method of compliance is more simplistic and more administrative in nature than the work area method. It is derived from what was Chapter 34 of the *International Building Code*® (IBC®). It provides the basic requirements for additions (Section 402), alterations (Section 403), repairs (Section 404), change of occupancy (Section 407) and historic structures (Section 408). In addition, this chapter provides requirements for the use of fire escapes (Section 405) and glass replacement and window replacement (Section 406). Accessibility for existing buildings and facilities is addressed in Section 410.

Purpose

This chapter provides one of the three options of compliance available in the code for buildings and structures undergoing repair, alteration, addition or change of occupancy. This chapter originates from Chapter 34 of the IBC, Sections 3401 through 3409. Chapter 34 has been deleted from the 2015 IBC. The *International Existing Building Code*® (IEBC®) is now used for existing buildings. Section 101.4.7 of the IBC directs code users to the IEBC for existing buildings. There are also provisions from the other *International Codes*® (I-Codes®) dealing with system installations (electrical, energy, fuel gas, mechanical and plumbing), which have been duplicated in the code, as well. As a duplication of provisions, the ongoing code development maintenance will be accomplished by the code committee responsible for the code from which the provisions are being extracted and duplicated.

SECTION 401
GENERAL

401.1 Scope. The provisions of this chapter shall control the *alteration, repair, addition* and *change of occupancy* or relocation of *existing buildings* and structures, including *historic buildings* and structures as referenced in Section 301.1.1.

Exception: Existing bleachers, grandstands and folding and telescopic seating shall comply with ICC 300.

❖ This section states the scope of this chapter and references alternative methods of code compliance for alteration, repair, addition and change of occupancy of existing structures. This section also defines the responsibilities for maintenance, repairs, compliance with other codes and periodic testing. The exception sends the code user to ICC 300*, Standard for Bleachers, Folding and Telescopic Seating*, *and Grandstands* for alterations, repairs and additions to bleachers, grandstands, and folding and telescopic seating.

401.1.1 Compliance with other methods. *Alterations*, repairs, *additions* and *changes of occupancy* to or relocation of, *existing buildings* and structures shall comply with the provisions of this chapter or with one of the methods provided in Section 301.1.

❖ This section references Section 301.1 for the options available to deal with alterations, repairs, additions and changes of occupancy to existing structures. The following briefly describes the options available, other than compliance with this chapter:

1. Subject to the approval of the code official, repairs and alterations can comply with the requirements of the code at the time the building was built.
2. Repairs, alterations, additions and changes of occupancy can comply with the proportional approach where upgrades are triggered by the type and extent of the work. These work area method requirements are found in Chapters 5 through 13.
3. Repairs, alterations, additions and changes of occupancy can be designed in accordance with the compliance alternatives that are found in Chapter 14.

Please note that these options are separate and distinct and must not be combined in any way.

401.2 Building materials and systems. Building materials and systems shall comply with the requirements of this section.

❖ This section merely introduces the fact that materials and systems are required to comply with Sections 401.2.1 through 401.2.3. These sections deal with the use of existing materials, new and replacement materials and seismic force-resisting systems.

INTERNATIONAL CODE COUNCIL®
Copyright © 2015 ICC. ALL RIGHTS RESERVED. Accessed by David Dammon on Jun 21, 2017 12:30:52 PM pursuant to License Agreement with ICC. No further reproduction or distribution authorized. ANY UNAUTHORIZED REPRODUCTION OR DISTRIBUTION IS A VIOLATION OF THE FEDERAL COPYRIGHT ACT AND THE LICENSE AGREEMENT, AND SUBJECT TO CIVIL AND CRIMINAL PENALTIES THEREUNDER.

401.2.1 Existing materials. Materials already in use in a building in compliance with requirements or approvals in effect at the time of their erection or installation shall be permitted to remain in use unless determined by the building official to be unsafe per Section 115.

❖ If a material or system had been approved before the code took effect, it can continue to be used as long as it can be shown that the material or system is not detrimental to the health or safety of the building occupants or the public. Specifically, a material or system cannot be "unsafe" as defined in Chapter 2 and as addressed by Section 115. The code is not intended to be retroactive.

401.2.2 New and replacement materials. Except as otherwise required or permitted by this code, materials permitted by the applicable code for new construction shall be used. Like materials shall be permitted for *repairs* and *alterations*, provided no hazard to life, health or property is created. Hazardous materials shall not be used where the code for new construction would not permit their use in buildings of similar occupancy, purpose and location.

❖ There are two options for materials used in repairs to an existing building. Generally, the materials used for repairs should be those presently required or permitted for new construction in accordance with the I-Codes. It is also acceptable to use materials consistent with those that are already present, except where those materials pose a hazard. This allowance follows the general concept that any repair should not make a building more hazardous than it was prior to the repair. It is generally possible to repair a structure, its components and its systems with materials consistent with those materials that were used previously. However, where materials that are now deemed hazardous are involved in the repair work, they may no longer be used. For example, the code identifies asbestos and lead-based paint as two common hazardous materials that cannot be used in the repair process. Certain materials previously considered acceptable for building construction are now known to be a threat to the health of the occupants.

401.2.3 Existing seismic force-resisting systems. Where the existing seismic force-resisting system is a type that can be designated ordinary, values of R, Ω_0 and C_d for the existing seismic force-resisting system shall be those specified by the *International Building Code* for an ordinary system unless it is demonstrated that the existing system will provide performance equivalent to that of a detailed, intermediate or special system.

❖ This section provides guidance to engineers on selecting system-related design coefficients for existing seismic force systems. Previously, this guidance was located in each individual section related to alterations, additions, repairs and change of occupancy, but has been relocated to a more general section to ensure consistent application.

The intent is that existing systems should be considered "ordinary" by default. For seismic systems that may provide performance equivalent to that of a detailed, intermediate or special system, the code requires a demonstration of equivalence.

This only applies to systems for which there is a choice of "ordinary," "detailed," "intermediate" or "special" for the permitted seismic force systems. For example, light-frame shear walls are not categorized as "ordinary," "detailed," "intermediate" or "special." Those systems are acceptable, and the system coefficients specified for those systems in ASCE 7 are appropriate.

401.3 Dangerous conditions. The building official shall have the authority to require the elimination of conditions deemed *dangerous*.

❖ This section enables the building official to address dangerous conditions for any type of situation that may arise during renovations to existing buildings. "Dangerous" is specially defined in Chapter 2 and is related to structural stability. "Unsafe" is more general and is also specially defined in Chapter 2. Provisions for unsafe buildings are located in Section 115.

SECTION 402
ADDITIONS

402.1 General. *Additions* to any building or structure shall comply with the requirements of the *International Building Code* for new construction. Alterations to the *existing building* or structure shall be made to ensure that the *existing building* or structure together with the *addition* are no less conforming to the provisions of the *International Building Code* than the *existing building* or structure was prior to the *addition*. An *existing building* together with its *additions* shall comply with the height and area provisions of Chapter 5 of the *International Building Code*.

❖ The purpose of this section is to establish the guidelines for additions to existing buildings and structures.

An addition is an increase in the area or height of an existing building. When a new building is erected immediately adjacent to an existing building, and they are separated by a fire wall, it is considered a separate building, not an addition to the existing structure. The new building must be designed to comply with the technical provisions of Chapters 1 through 33 of the IBC; not with the provisions of this chapter. The existing building must be evaluated considering the elimination of the adjacent open space now occupied by the new building. An existing structure that is of a type of construction that does not comply with the height and area limitations of IBC Sections 504 and 506 may not be added to unless the type of construction is upgraded, or the allowable building height and area are increased through the installation of an automatic sprinkler system throughout both the existing building and the addition. A building with a proposed addition is to be evaluated based on the type of construction of the existing building or the addition, whichever is the lower type. When reviewing for compliance with IBC Sections 504 and 506, IBC Section

INTERNATIONAL CODE COUNCIL®
Copyright © 2015 ICC. ALL RIGHTS RESERVED. Accessed by David Dammon on Jun 21, 2017 12:30:52 PM pursuant to License Agreement with ICC. No further reproduction or distribution authorized. ANY UNAUTHORIZED REPRODUCTION OR DISTRIBUTION IS A VIOLATION OF THE FEDERAL COPYRIGHT ACT AND THE LICENSE AGREEMENT, AND SUBJECT TO CIVIL AND CRIMINAL PENALTIES THEREUNDER.

602.1.1 is also applicable. Commentary Figure 402.1 shows an example of this situation. If a sprinkler system is not planned for both the existing building and the addition, the proposed addition does not meet the requirements of IBC Table 506.2. The area limitation for the existing construction Type VB, Group F-1 is 8,500 square feet (790 m^2) and the total proposed area is 11,000 square feet (1022 m^2).

The area evaluation is based on Type VB construction, even though the proposed addition is Type VA construction, because the allowable area in IBC Table 506.2 for Type VB construction is less than the allowable area for Type VA construction. One option to satisfy the requirements is to upgrade the type of construction of the existing building to Type VA, which has an allowable area of 14,000 square feet (1301 m^2). Another solution is to install an automatic sprinkler system that complies with NFPA 13 throughout the building. The revised allowable area of the building would be 34,000 square feet (3159 m^2) because of the installation of the automatic sprinkler system. This would then exceed the proposed building area of 11,000 square feet (1022 m^2).

[BS] 402.2 Flood hazard areas. For buildings and structures in *flood hazard* areas established in Section 1612.3 of the *International Building Code*, or Section R322 of the *International Residential Code*, as applicable, any *addition* that constitutes *substantial improvement* of the existing structure shall comply with the flood design requirements for new construction, and all aspects of the existing structure shall be brought into compliance with the requirements for new construction for flood design.

For buildings and structures in *flood hazard areas* established in Section 1612.3 of the *International Building Code*, or Section R322 of the *International Residential Code*, as applicable, any *additions* that do not constitute *substantial improvement* of the existing structure are not required to comply with the flood design requirements for new construction.

❖ Reduction in exposure to flood hazards, including the exposure of older buildings, is one of the purposes for regulating flood plain development. Buildings or structures located in flood hazard areas are to be brought into compliance with the flood-resistance provisions of IBC Section 1612 or *International Residential Code*® (IRC®) Section R322, as applicable, where the value of improvements, including additions, exceeds a certain value. See Chapter 2 for the definition of "Substantial improvement."

Section 105.3 requires the applicant to state the valuation of proposed work, which is to include the total value of work, including materials and labor. If the proposed work will be performed on buildings in flood hazard areas, a determination must be made as to whether the proposed work constitutes a substantial improvement. If applicable, the value of work must include estimates of the value of the property owner's labor and the value of donated labor and materials.

To make a determination about whether a proposed addition constitutes a substantial improvement, the cost of the proposed work is to be compared to the market value of the building or structure before the work is started. In order to determine market value, the code official may require the applicant to provide an appraisal or use other methods acceptable to the Federal Emergency Management Agency (FEMA). For additional guidance see FEMA P-758, *Substantial Improvement/Substantial Damage Desk Reference*.

[BS] 402.3 Existing structural elements carrying gravity load. Any existing gravity load-carrying structural element for which an *addition* and its related alterations cause an increase in design gravity load of more than 5 percent shall be strengthened, supplemented, replaced or otherwise altered as needed to carry the increased gravity load required by the

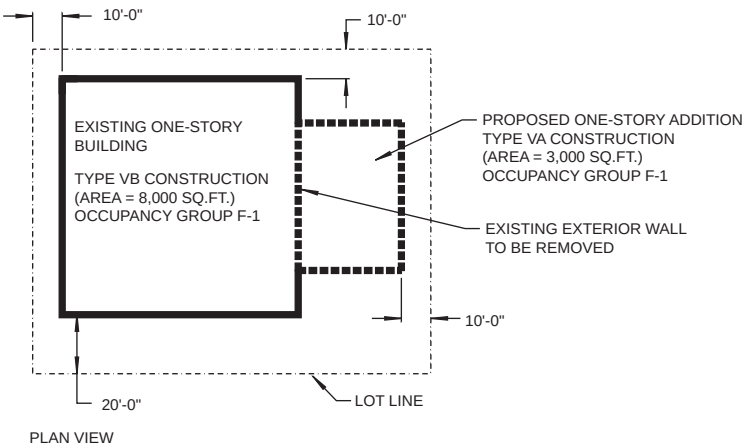

For SI: 1 inch = 25.4 mm, 1 foot = 304.8 mm, 1 square foot = 0.0929 m^2.

Figure 402.1
EXISTING BUILDING WITH ADDITION

INTERNATIONAL CODE COUNCIL®
Copyright © 2015 ICC. ALL RIGHTS RESERVED. Accessed by David Dammon on Jun 21, 2017 12:30:52 PM pursuant to License Agreement with ICC. No further reproduction or distribution authorized. ANY UNAUTHORIZED REPRODUCTION OR DISTRIBUTION IS A VIOLATION OF THE FEDERAL COPYRIGHT ACT AND THE LICENSE AGREEMENT, AND SUBJECT TO CIVIL AND CRIMINAL PENALTIES THEREUNDER.

International Building Code for new structures. Any existing gravity load-carrying structural element whose gravity load-carrying capacity is decreased shall be considered an altered element subject to the requirements of Section 403.3. Any existing element that will form part of the lateral load path for any part of the *addition* shall be considered an existing lateral load-carrying structural element subject to the requirements of Section 402.4.

❖ Wherever an addition to an existing building is made, the affected members of the original structure must be assessed to determine their ability to resist any increased forces. Because an addition typically adds new loads to the existing building, the architect or engineer responsible for the design of the project must analyze the existing gravity load-carrying elements to determine whether there are any structural components having loads increased by more than 5 percent, thus requiring reinforcement. Where an existing building was initially designed to support a future expansion, the code official should seek verification that the proposed addition will result in the affected building complying with current code requirements. Any new construction must comply with current code requirements.

[BS] 402.3.1 Design live load. Where the *addition* does not result in increased design live load, existing gravity load-carrying structural elements shall be permitted to be evaluated and designed for live loads approved prior to the *addition*. If the approved live load is less than that required by Section 1607 of the *International Building Code*, the area designed for the nonconforming live load shall be posted with placards of approved design indicating the approved live load. Where the *addition* does result in increased design live load, the live load required by Section 1607 of the *International Building Code* shall be used.

❖ It is not uncommon for the design live load requirements to change from the time a building is originally designed to when an addition is proposed. The live loads used in the original design may have been adequate for the building's initial use and may have been in compliance with all code requirements that were in effect at that time. Many years and many code changes can alter the status of the structural design criteria and code requirements, which does not mean the existing structural system is inadequate and cannot be used. It just means that when the live loads that were used for the design of the existing building are lower than those required by current standards, the design live loads used for the original design must be posted.

[BS] 402.4 Existing structural elements carrying lateral load. Where the *addition* is structurally independent of the existing structure, existing lateral load-carrying structural elements shall be permitted to remain unaltered. Where the *addition* is not structurally independent of the existing structure, the existing structure and its *addition* acting together as a single structure shall be shown to meet the requirements of Sections 1609 and 1613 of the *International Building Code.* For purposes of this section, compliance with ASCE 41, using a Tier 3 procedure and the two-level performance objective in Table 301.1.4.1 for the applicable risk category, shall be deemed to meet the requirements of Section 1613.

Exception: Any existing lateral load-carrying structural element whose demand-capacity ratio with the *addition* considered is no more than 10 percent greater than its demand-capacity ratio with the *addition* ignored shall be permitted to remain unaltered. For purposes of calculating demand-capacity ratios, the demand shall consider applicable load combinations with design lateral loads or forces in accordance with Sections 1609 and 1613 of the *International Building Code*. For purposes of this exception, comparisons of demand-capacity ratios and calculation of design lateral loads, forces and capacities shall account for the cumulative effects of *additions* and *alterations* since original construction.

❖ The requirements of this section do not affect an existing structure where the addition is structurally independent; in that case, the addition must comply with the seismic requirements for new structures. An existing building or structure where the addition will not be structurally independent must be carefully evaluated for its ability to withstand earthquake and wind loading. The seismic resistance of an existing building or structure cannot be lessened or pose any undue increase in the fire and life safety hazards of the building or structure. Because the addition and the existing structure resist lateral loads as a single structure, designing the entire structure to resist the total lateral seismic and wind load is necessary. This section specifically allows the use of ASCE 41 using a Tier 3 procedure and the two-level performance objectives of Section 301.1.4.1. The application of this procedure is also based on the risk category of the structure. This allowance provides more flexibility for existing buildings. ASCE 41 is specifically focused on the evaluation and rehabilitation of existing structures. See the commentary to Section 301.1.4 for more discussion on the origins and application of the standard.

The exception permits an addition that is not structurally independent without alteration to the seismic force-resisting system of the existing structure, provided the demand-capacity ratio is increased no more than 10 percent in any structural element. The demand is determined using the load combinations, including wind and seismic effects. By considering the demand-capacity ratio, any decrease in lateral resistance is accounted for as well.

402.5 Smoke alarms in existing portions of a building. Where an *addition* is made to a building or structure of a Group R or I-1 occupancy, the *existing building* shall be provided with smoke alarms in accordance with Section 1103.8 of the *International Fire Code*.

❖ This section provides a path to the *International Fire Code*® (IFC®) for the smoke alarm requirements in existing buildings. This section links the code directly to IFC Section 1103.8. The requirements in the IFC are retroactive and apply regardless of whether an

INTERNATIONAL CODE COUNCIL®
Copyright © 2015 ICC. ALL RIGHTS RESERVED. Accessed by David Dammon on Jun 21, 2017 12:30:52 PM pursuant to License Agreement with ICC. No further reproduction or distribution authorized. ANY UNAUTHORIZED REPRODUCTION OR DISTRIBUTION IS A VIOLATION OF THE FEDERAL COPYRIGHT ACT AND THE LICENSE AGREEMENT, AND SUBJECT TO CIVIL AND CRIMINAL PENALTIES THEREUNDER.

alteration, addition or change of occupancy is occurring. Section 403.10 has a similar requirement, but for alterations.

SECTION 403
ALTERATIONS

403.1 General. Except as provided by Section 401.2 or this section, *alterations* to any building or structure shall comply with the requirements of the *International Building Code* for new construction. *Alterations* shall be such that the *existing building* or structure is no less conforming to the provisions of the *International Building Code* than the *existing building* or structure was prior to the *alteration*.

Exceptions:

1. An existing stairway shall not be required to comply with the requirements of Section 1011 of the *International Building Code* where the existing space and construction does not allow a reduction in pitch or slope.
2. Handrails otherwise required to comply with Section 1011.11 of the *International Building Code* shall not be required to comply with the requirements of Section 1014.6 of the *International Building Code* regarding full extension of the handrails where such extensions would be hazardous due to plan configuration.

❖ Alterations include renovations, which imply that something is changed in the structure. For example, the removal, rearrangement or replacement of partition walls in an office building is an alteration because, in part, of the possible impact on the means of egress, fire resistance or other life safety features of the building. Conversely, the replacement of damaged trim pieces on a door frame is considered a repair, not an alteration. Alterations are to conform to the requirements for a new structure. For example, consider the corridor of an office building that is to be extended 18 feet (5486 mm), as shown in Commentary Figure 403.1. The existing office building has no sprinkler system (and none is proposed), so the corridor extension walls and doors are to be fire-resistance rated in accordance with IBC Section 1020. This is applicable even if, for some reason, the walls and doors of the existing corridor system are not fire-resistance-rated construction. This section also indicates that unaltered portions of a structure are not required to comply with code provisions for new construction. However, also see Section 410, which requires areas outside of the alteration area to be revised in order to provide an accessible route.

The exceptions address issues that arise with stairways. While not specifically addressed, ramps may have similar concerns. According to Exception 1, if an existing stairway was built with a steeper rise/run ratio than permitted in the current code, the stairway can be replaced with the existing configuration. Enlarging the opening to achieve the current rise/run ratio and headroom would be considered technically infeasible. The principle is that not allowing for this option could result in stairways that were not maintained because they could not be brought up to current codes.

Exception 2 deals with an allowance to reduce

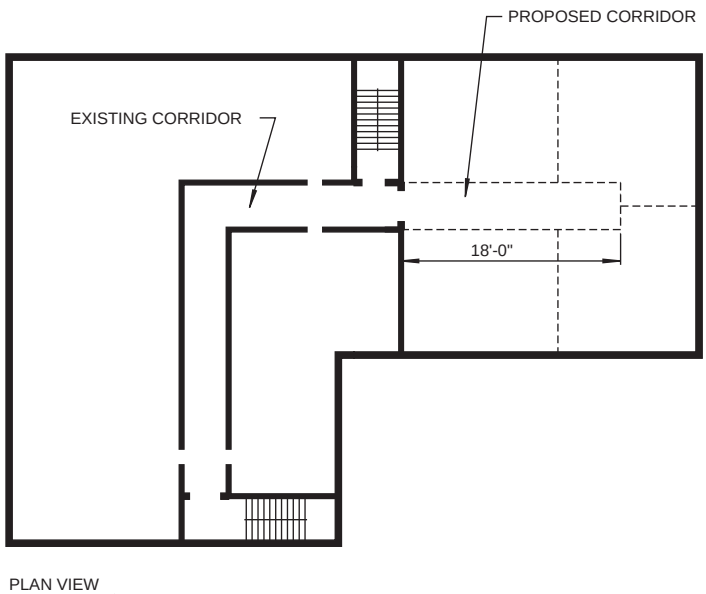

For SI: 1 inch = 25.4 mm, 1 foot = 304.8 mm.

Figure 403.1
PROPOSED CORRIDOR EXTENSION

INTERNATIONAL CODE COUNCIL®
Copyright © 2015 ICC. ALL RIGHTS RESERVED. Accessed by David Dammon on Jun 21, 2017 12:30:52 PM pursuant to License Agreement with ICC. No further reproduction or distribution authorized. ANY UNAUTHORIZED REPRODUCTION OR DISTRIBUTION IS A VIOLATION OF THE FEDERAL COPYRIGHT ACT AND THE LICENSE AGREEMENT, AND SUBJECT TO CIVIL AND CRIMINAL PENALTIES THEREUNDER.

handrail extensions when providing those extensions could become a protruding object for circulation or an obstruction for the means of egress. IBC Section 1014.6 requires the handrail extensions to continue in the direction of the stairway run. An example of an exempted configuration would be stairways having landings that are part of a corridor.

[BS] 403.2 Flood hazard areas. For buildings and structures in *flood hazard areas* established in Section 1612.3 of the *International Building Code*, or Section R322 of the *International Residential Code*, as applicable, any *alteration* that constitutes *substantial improvement* of the existing structure shall comply with the flood design requirements for new construction, and all aspects of the existing structure shall be brought into compliance with the requirements for new construction for flood design.

For buildings and structures in *flood hazard areas* established in Section 1612.3 of the *International Building Code*, or Section R322 of the *International Residential Code*, as applicable, any alterations that do not constitute *substantial improvement* of the existing structure are not required to comply with the flood design requirements for new construction.

❖ Reduction in exposure to flood hazards, including exposure of older buildings, is one of the purposes for regulating flood plain development. Buildings or structures that are located in flood hazard areas are to be brought into compliance with the flood-resistance provisions of IBC Section 1612 or IRC Section R322, as applicable, where the value of improvements, including alterations, exceeds a certain value. See Chapter 2 for the definition of "Substantial improvement."

Section 105.3 requires the applicant to state the valuation of the proposed work, which is to include the total value of the work, including materials and labor. If the proposed work will be performed on buildings in flood hazard areas, a determination must be made as to whether the proposed work constitutes a substantial improvement. If applicable, the value of the work must include estimates of the value of the property owner's labor and the value of donated labor and materials.

To make a determination about whether a proposed alteration constitutes a substantial improvement, the cost of the proposed work is to be compared to the market value of the building or structure before the work is started. In order to determine market value, the code official may require the applicant to provide an appraisal or use other methods acceptable to FEMA. For additional guidance, see FEMA P-758.

[BS] 403.3 Existing structural elements carrying gravity load. Any existing gravity load-carrying structural element for which an *alteration* causes an increase in design gravity load of more than 5 percent shall be strengthened, supplemented, replaced or otherwise altered as needed to carry the increased gravity load required by the *International Building Code* for new structures. Any existing gravity load-carrying structural element whose gravity load-carrying capacity is decreased as part of the *alteration* shall be shown to have the capacity to resist the applicable design gravity loads required by the *International Building Code* for new structures.

❖ Wherever an alteration to an existing building is made, the affected members must be assessed to determine their ability to resist the increased forces. Structural element forces may be increased by up to 5 percent, without the need to strengthen or replace that element.

[BS] 403.3.1 Design live load. Where the *alteration* does not result in increased design live load, existing gravity load-carrying structural elements shall be permitted to be evaluated and designed for live loads approved prior to the *alteration*. If the approved live load is less than that required by Section 1607 of the *International Building Code*, the area designed for the nonconforming live load shall be posted with placards of approved design indicating the approved live load. Where the *alteration* does result in increased design live load, the live load required by Section 1607 of the *International Building Code* shall be used.

❖ Where an existing building is undergoing alterations requiring changes to the structural loading, the applicable minimum design loads are those required by the code at the time of the original construction. It is not uncommon for the design live load requirements to change from the time a building is originally designed to when it undergoes a renovation. The live loads used in the original design may have been adequate for the building's initial use and may have been in compliance with all the code requirements that were in effect at that time. Many years and many code changes can impact the structural design parameters and code requirements, which does not mean the existing structural system is inadequate and cannot be used when the building is renovated. It just means that when the live loads used for the design of the existing building are lower than those required by current standards, the design live loads used for the original design must be posted. If the design live loads of the alteration are greater than those used for the existing building, then IBC Section 1607 would apply just as for new construction.

[BS] 403.4 Existing structural elements carrying lateral load. Except as permitted by Section 403.5, where the *alteration* increases design lateral loads in accordance with Section 1609 or 1613 of the *International Building Code*, or where the *alteration* results in a prohibited structural irregularity as defined in ASCE 7, or where the *alteration* decreases the capacity of any existing lateral load-carrying structural element, the structure of the altered building or structure shall be shown to meet the requirements of Sections 1609 and 1613 of the *International Building Code*. For purposes of this section, compliance with ASCE 41, using a Tier 3 procedure and the two-level performance objective in Table 301.1.4.1

INTERNATIONAL CODE COUNCIL®
Copyright © 2015 ICC. ALL RIGHTS RESERVED. Accessed by David Dammon on Jun 21, 2017 12:30:52 PM pursuant to License Agreement with ICC. No further reproduction or distribution authorized. ANY UNAUTHORIZED REPRODUCTION OR DISTRIBUTION IS A VIOLATION OF THE FEDERAL COPYRIGHT ACT AND THE LICENSE AGREEMENT, AND SUBJECT TO CIVIL AND CRIMINAL PENALTIES THEREUNDER.

for the applicable risk category, shall be deemed to meet the requirements of Section 1613 of the *International Building Code*.

Exception: Any existing lateral load-carrying structural element whose demand-capacity ratio with the *alteration* considered is no more than 10 percent greater than its demand-capacity ratio with the *alteration* ignored shall be permitted to remain unaltered. For purposes of calculating demand-capacity ratios, the demand shall consider applicable load combinations with design lateral loads or forces in accordance with Sections 1609 and 1613 of the *International Building Code*. For purposes of this exception, comparisons of demand-capacity ratios and calculation of design lateral loads, forces and capacities shall account for the cumulative effects of *additions* and *alterations* since original construction.

❖ An existing building or structure that is altered must be carefully evaluated for its ability to withstand earthquake and wind loads. The lateral resistance of an existing building or structure cannot be lessened or pose any undue increase in the fire and life safety hazards of the building or structure. This section of the code gives guidance with respect to the impact of an alteration on the lateral resistance of the structure. This section specifically allows the use of ASCE 41 using a Tier 3 procedure and the two-level performance objectives of Section 301.1.4.1. The application of this procedure is also based on the risk category of the structure. This allowance provides more flexibility for existing buildings. ASCE 41 is specifically focused on the evaluation and rehabilitation of existing structures. See the commentary to Section 301.1.4 for more discussion on the origins and application of the standard.

Alterations that affect existing structural elements to a lesser extent are permitted without requiring the existing structure to comply with the provisions for new structures, as long as the alteration itself complies. The exception allows alterations that increase the demand-capacity ratio on existing lateral load-carrying elements by no more than 10 percent or decrease the lateral resistance of existing structural elements by no more than 10 percent.

[BS] 403.4.1 Seismic Design Category F. Where the portion of the building undergoing the intended alteration exceeds 50 percent of the aggregate area of the building, and where the building is assigned to Seismic Design Category F, the structure of the altered building shall be shown to meet the earthquake design provisions of the *International Building Code*. For purposes of this section, the earthquake loads need not be taken greater than 75 percent of those prescribed in Section 1613 of the *International Building Code* for new buildings of similar occupancy, purpose and location. New structural members and connections required by this section shall comply with the detailing provisions of this code for new buildings of similar structure, purpose and location.

❖ This section is focused specifically on those buildings assigned to Seismic Design Category F, which is the most severe. Buildings in such areas are at a high risk for damage from a seismic event. Therefore, when a building is undergoing more than a 50-percent alteration, it was felt reasonable to also evaluate the lateral force-resisting system regardless of the extent of the structural alterations. This is intended to be consistent with Level 3 alterations in the work area method. The intention is that the alteration area is focused on reconfigured space. This section requires such buildings to be evaluated and analyzed to determine that the building's lateral load-resisting system meets the reduced IBC-level seismic forces. Section 907.4.3 addresses this topic with the work area method.

[BS] 403.5 Bracing for unreinforced masonry parapets upon reroofing. Where the intended alteration requires a permit for reroofing and involves removal of roofing materials from more than 25 percent of the roof area of a building assigned to Seismic Design Category D, E or F that has parapets constructed of unreinforced masonry, the work shall include installation of parapet bracing to resist out-of-plane seismic forces, unless an evaluation demonstrates compliance of such items. For purposes of this section, design seismic forces need not be taken greater than 75 percent of those that would be required for the design of similar nonstructural components in new buildings of similar purpose and location.

❖ The failure of parapets in unreinforced masonry-bearing (URM) wall buildings has been a recurring problem in areas that experience significant earthquakes. Because this poses a very real risk, the code requires these elements to be braced where the seismic hazard is deemed to be relatively high, as reflected in a building's seismic design category. Since the code does not provide the requirements for establishing the seismic design category, IBC Section 1613.3 must be used for this purpose. The code allows this parapet bracing to be designed using 75 percent of the seismic forces of other nonstructural elements of a building for similar purpose and location. It should be noted that this same requirement is found in Section 707.3.1, which allows compliance with Section 301.1.4.2.

An example of the prescribed parapet bracing is illustrated schematically in Commentary Figure 707.3.1. The approach shown—a steel brace anchored to the parapet wall and the roof structure—is a commonly used method of providing lateral support for a parapet. Other methods of strengthening a parapet can be used to mitigate the hazard, provided their use is approved as alternative methods of design and construction under Section 104.11.

Note that only the parapet bracing for seismic loads is required. Some buildings, especially those east of the Rocky Mountains, were not designed for seismic loads. They were only designed to resist wind loads. At the present time, the code does not require a review of the building for seismic loads unless the structure is altered or sustains substantial structural damage.

INTERNATIONAL CODE COUNCIL®
Copyright © 2015 ICC. ALL RIGHTS RESERVED. Accessed by David Dammon on Jun 21, 2017 12:30:52 PM pursuant to License Agreement with ICC. No further reproduction or distribution authorized. ANY UNAUTHORIZED REPRODUCTION OR DISTRIBUTION IS A VIOLATION OF THE FEDERAL COPYRIGHT ACT AND THE LICENSE AGREEMENT, AND SUBJECT TO CIVIL AND CRIMINAL PENALTIES THEREUNDER.

[BS] 403.6 Wall anchorage for unreinforced masonry walls in major alterations. Where the portion of the building undergoing the intended alteration exceeds 50 percent of the aggregate area of the building, the building is assigned to Seismic Design Category C, D, E or F, and the building's structural system includes unreinforced masonry walls, the alteration work shall include installation of wall anchors at the roof line to resist seismic forces, unless an evaluation demonstrates compliance of existing wall anchorage. For purposes of this section, design seismic forces need not be taken greater than 75 percent of those that would be required for the design of new buildings of similar structure, purpose and location.

❖ This section deals with unreinforced masonry walls in buildings where the alteration affects more than 50 percent of the building. This is intended to be consistent with Level 3 alterations in the work area method. The intention is that the alteration area is focused on reconfigured space.

The wall anchorage system includes the elements within the diaphragm required to develop wall anchorage forces, including: wall anchors, struts, subdiaphragms, cross ties and continuity ties. Note that if a structural evaluation indicates that the existing wall anchorage provided can already resist and transfer these forces, additional wall anchorage is not required. Section 907.4.5 addresses this topic with the work area method.

[BS] 403.7 Bracing for unreinforced masonry parapets in major alterations. Where the portion of the building undergoing the intended alteration exceeds 50 percent of the aggregate area of the building, and where the building is assigned to Seismic Design Category C, D, E or F, parapets constructed of unreinforced masonry shall have bracing installed as needed to resist out-of-plane seismic forces, unless an evaluation demonstrates compliance of such items. For purposes of this section, design seismic forces need not be taken greater than 75 percent of those that would be required for the design of similar nonstructural components in new buildings of similar purpose and location.

❖ The provisions found in this section are essentially the same as those found in Section 403.5. The reason for a duplication of the provision is related to the application of the provisions. Section 403.5 only applies if reroofing occurs and is only applicable to Seismic Design Categories D, E and F. This section also applies to Seismic Design Category C. These provisions will apply in buildings where the alteration affects more than 50 percent of the building. This is intended to be consistent with Level 3 alterations in the work area method. The intention is that the alteration area is focused on reconfigured space. It is felt that this bracing is a critical life safety measure that should be taken during larger alterations. Section 907.4.6 addresses this topic in the work area method.

[BS] 403.8 Roof diaphragms resisting wind loads in high-wind regions. Where the intended alteration requires a permit for reroofing and involves removal of roofing materials from more than 50 percent of the roof diaphragm of a building or section of a building located where the ultimate design wind speed is greater than 115 mph (51 m/s) in accordance with Figure 1609.3(1) of the *International Building Code* or in a special wind region as defined in Section 1609 of the *International Building Code*, roof diaphragms, connections of the roof diaphragm to roof framing members, and roof-to-wall connections shall be evaluated for the wind loads specified in Section 1609 of the *International Building Code*, including wind uplift. If the diaphragms and connections in their current condition are not capable of resisting at least 75 percent of those wind loads, they shall be replaced or strengthened in accordance with the loads specified in Section 1609 of the *International Building Code*.

❖ The removal of roofing provides an opportunity to inspect a portion of the structure that is otherwise concealed. In reroofing operations where more than 50 percent of the roof covering is removed and where the building is located where the ultimate design wind speed, V_{ult} [determined in accordance with IBC Table 1609.3(1)], is greater than 115 mph or in a special wind region, a roof diaphragm that is a part of the main windforce-resisting system is required to be evaluated for adequate strength to resist and transfer the wind loads in the IBC, including uplift loads. If the roof diaphragm is not able to resist 75 percent of the wind loads specified in the IBC, such connections are required to be strengthened or replaced. The 75-percent reduction is consistent with other structural allowances for existing conditions. Note that this section spells out which aspects of the roof need to be evaluated and possibly replaced and strengthened. This requirement is the same as that found in Section 707.3.2 in the work area method. These include the following:

- Roof diaphragms.
- Connections of the roof diaphragm to roof framing members.
- Roof-to-wall connections.

[BS] 403.9 Voluntary seismic improvements. *Alterations* to existing structural elements or *additions* of new structural elements that are not otherwise required by this chapter and are initiated for the purpose of improving the performance of the seismic force-resisting system of an existing structure or the performance of seismic bracing or anchorage of existing nonstructural elements shall be permitted, provided that an engineering analysis is submitted demonstrating the following:

1. The altered structure and the altered nonstructural elements are no less conforming to the provisions of the *International Building Code* with respect to earthquake design than they were prior to the *alteration*.
2. New structural elements are detailed as required for new construction.
3. New or relocated nonstructural elements are detailed and connected to existing or new structural elements as required for new construction.

INTERNATIONAL CODE COUNCIL®
Copyright © 2015 ICC. ALL RIGHTS RESERVED. Accessed by David Dammon on Jun 21, 2017 12:30:52 PM pursuant to License Agreement with ICC. No further reproduction or distribution authorized. ANY UNAUTHORIZED REPRODUCTION OR DISTRIBUTION IS A VIOLATION OF THE FEDERAL COPYRIGHT ACT AND THE LICENSE AGREEMENT, AND SUBJECT TO CIVIL AND CRIMINAL PENALTIES THEREUNDER.

4. The *alterations* do not create a structural irregularity as defined in ASCE 7 or make an existing structural irregularity more severe.

❖ This provision addresses the issue of upgrading existing structures voluntarily for improved seismic performance. It does not apply to situations where other code sections trigger full compliance with the code. Otherwise, it allows an owner to initiate an improvement to the seismic force-resisting system to the extent that it is viable to do so and provided the required engineering analysis is furnished. The intent is to encourage building owners to initiate upgrades to seismic systems that are considered prudent without making them cost prohibitive.

403.10 Smoke alarms. Individual sleeping units and individual dwelling units in Group R and I-1 occupancies shall be provided with smoke alarms in accordance with Section 1103.8 of the *International Fire Code*.

❖ This section is consistent with Section 402.5 but applies to alterations. As with Section 402.5, a reference to IFC Section 1103.8 is made for the requirements for smoke alarms in existing individual sleeping units and individual dwelling units in Group R and I-1 occupancies.

In the past, the code limited the level of building fire protection by isolating such requirements to work areas only. The structure of the IFC is that the retroactive requirements apply to all buildings, whether or not those buildings are undergoing an alteration.

403.11 Refuge areas. Where alterations affect the configuration of an area utilized as a refuge area, the capacity of the refuge area shall not be reduced below that required in Sections 403.11.1 through 403.11.3.

❖ This section was written with the concern that during alterations the capacity and arrangement of refuge areas, required for occupancies that limit movement of occupants or where occupants are incapable of self-preservation, may be reduced. Refuge areas are part of the defend-in-place strategy and are designed with a particular capacity in mind in each smoke compartment. The refuge areas created by horizontal exits also must be maintained as they use the same concept of moving occupants horizontally.

403.11.1 Smoke compartments. In Group I-2 and I-3 occupancies, the required capacity of the refuge areas for smoke compartments in accordance with Sections 407.5.1 and 408.6.2 of the *International Building Code* shall be maintained.

❖ The IBC requires that Group I-2 and I-3 occupancies provide the largest occupant load of the adjoining compartment. In Group I-2 occupancies, the criteria used to determine the capacity are 30 net square feet for each care recipient confined to a bed or stretcher and not less than 6 square feet for each ambulatory care recipient not confined to bed or stretcher and for other occupants. For Group I-3 occupancies, the IBC requires that 6 square feet per occupant shall be provided on both sides of the smoke barrier forming the smoke compartment.

403.11.2 Ambulatory care. In ambulatory care facilities required to be separated by Section 422.2 of the *International Building Code*, the required capacity of the refuge areas for smoke compartments in accordance with Section 422.4 of the *International Building Code* shall be maintained.

❖ Ambulatory care facilities are similar to Group I-2 occupancies and contain occupants that are incapable of self-preservation because of the procedures and surgeries done at such facilities. Therefore, the criteria are similar to that of Group I-2 occupancies and require 30 square feet for each nonambulatory care recipient. This area must be provided in the corridors, care recipient rooms, treatment rooms, lounge or dining areas and other low-hazard areas in the smoke compartment. Note that only ambulatory care facilities greater than 10,000 square feet require smoke compartments.

403.11.3 Horizontal exits. The required capacity of the refuge area for horizontal exits in accordance with Section 1026.4 of the *International Building Code* shall be maintained.

❖ This section is more general and addresses any occupancies using horizontal exits. Horizontal exits allow a similar concept to smoke compartments where occupants simply exit through doors into an adjoining area of the building separated by a fire barrier or fire wall. Section 1026.4 requires 3 square feet for each occupant. There are several specific exceptions for Group I-2 and I-3 occupancies that correlate with the criteria noted in Section 403.11.1

SECTION 404
REPAIRS

404.1 General. Buildings and structures, and parts thereof, shall be repaired in compliance with Sections 401.2 and 404. Work on nondamaged components that is necessary for the required *repair* of damaged components shall be considered part of the *repair* and shall not be subject to the requirements for *alterations* in this chapter. Routine maintenance required by Section 401.2, ordinary repairs exempt from permit in accordance with Section 105.2, and abatement of wear due to normal service conditions shall not be subject to the requirements for repairs in this section.

❖ The scope of this section differentiates repairs from alterations and clarifies that routine maintenance and any repairs not requiring permits would not have to meet these requirements.

In general, the section provides a logical method for evaluating damage and identifying cases where upgrades are warranted.

The provisions would require structural improvements meeting “the code for new structures,” in certain cases, in the event of damage due to fire, structural overload, settlement, natural hazard or any other cause, no matter how extensive or dispropor-

INTERNATIONAL CODE COUNCIL®
Copyright © 2015 ICC. ALL RIGHTS RESERVED. Accessed by David Dammon on Jun 21, 2017 12:30:52 PM pursuant to License Agreement with ICC. No further reproduction or distribution authorized. ANY UNAUTHORIZED REPRODUCTION OR DISTRIBUTION IS A VIOLATION OF THE FEDERAL COPYRIGHT ACT AND THE LICENSE AGREEMENT, AND SUBJECT TO CIVIL AND CRIMINAL PENALTIES THEREUNDER.

tionate the damage. This section identifies conditions of damage that should warrant improvements to the structural system for purposes of increasing safety.

[BS] 404.2 Substantial structural damage to vertical elements of the lateral force-resisting system. A building that has sustained *substantial structural damage* to the vertical elements of its lateral force-resisting system shall be evaluated and repaired in accordance with the applicable provisions of Sections 404.2.1 through 404.2.3.

Exceptions:

1. Buildings assigned to Seismic Design Category A, B or C whose substantial structural damage was not caused by earthquake need not be evaluated or rehabilitated for load combinations that include earthquake effects.
2. One- and two-family dwellings need not be evaluated or rehabilitated for load combinations that include earthquake effects.

❖ This section provides requirements that apply where the damage threshold regarding the extent of the damage to the vertical elements of the lateral-force-resisting system in any story is exceeded. Substantial structural damage to the lateral system triggers the evaluation of the entire building for wind and seismic loads (see Section 404.2.1). The emphasis is placed on vertical elements, such as walls and columns, rather than horizontal elements, because the vertical elements of the lateral force-resisting system primarily determine the structure's response, particularly to earthquakes.

There are two exceptions that exempt certain combinations of buildings: seismic risk and damage from triggered seismic upgrades. Basic repair—that is, restoring the predamaged condition—is still required even for the exceptions outlined.

Exception 1 is for buildings in areas of low or moderate seismicity (Seismic Design Category A, B or C), where the damage was not caused by an earthquake and therefore would not be required to be evaluated or rehabilitated for load combinations that include earthquake effects. Where earthquakes are rare, it serves no significant public purpose to trigger seismic upgrades following damage caused by fire, collision, wind, etc.

Exception 2 is for one- and two-family dwellings, where the public risk is especially low even though the damage may be associated with earthquake effects. Similar exceptions are found in Section 606.2.2.

[BS] 404.2.1 Evaluation. The building shall be evaluated by a *registered design professional*, and the evaluation findings shall be submitted to the *building official*. The evaluation shall establish whether the damaged building, if repaired to its predamage state, would comply with the provisions of the *International Building Code* for wind and earthquake loads.

Wind loads for this evaluation shall be those prescribed in Section 1609 of the *International Building Code*. Earthquake loads for this evaluation, if required, shall be permitted to be 75 percent of those prescribed in Section 1613 of the *International Building Code*. Alternatively, compliance with ASCE 41, using the performance objective in Table 301.1.4.2 for the applicable risk category, shall be deemed to meet the earthquake evaluation requirement.

❖ The extent of repairs is based on an evaluation prepared by a registered design professional. Generally, the code's approach is that complete structural upgrades should be relatively rare. In this section, a structural upgrade is only triggered by substantial structural damage to the lateral system, and only when the evaluation shows that the predamaged building was substandard.

This provision refers to IBC Sections 1609 and 1613 for wind and earthquake loads, respectively. It permits reduced earthquake loading for both the evaluation and any required seismic rehabilitation to recognize that existing buildings cannot be expected to perform as well as newer buildings. This concept of using reduced earthquake loading is consistent with FEMA standards, as well as the legacy building codes. This section specifically allows the use of ASCE 41 using the performance objectives in Table 301.1.4.2. The application of this procedure is also based on the risk category of the structure. This allowance provides more flexibility for existing buildings. ASCE 41 is specifically focused on the evaluation and rehabilitation of existing structures. See the commentary to Section 301.1.4 for more discussion on the origins and application of the standard

[BS] 404.2.2 Extent of repair for compliant buildings. If the evaluation establishes compliance of the predamage building in accordance with Section 404.2.1, then repairs shall be permitted that restore the building to its predamage state.

❖ Where the evaluation establishes that the predamaged building meets the structural provisions of the code as provided for in Section 404.2.1, then the repairs may be limited to a restoration of the structural components based on the condition prior to the damage. This is similar to Section 606.2.2.2 for repairs under the work area method.

[BS] 404.2.3 Extent of repair for noncompliant buildings. If the evaluation does not establish compliance of the predamage building in accordance with Section 404.2.1, then the building shall be rehabilitated to comply with applicable provisions of the *International Building Code* for load combinations that include wind or seismic loads. The wind loads for the repair shall be as required by the building code in effect at the time of original construction, unless the damage was caused by wind, in which case the wind loads shall be as required by the *International Building Code*. Earthquake loads for this rehabilitation design shall be those required for the design of the predamage building, but not less than 75 percent of those prescribed in Section 1613 of the *International Building Code*. New structural members and connections required by this rehabilitation design shall comply with the detailing provisions of the *International Building Code* for new buildings of similar structure, purpose and location.

INTERNATIONAL CODE COUNCIL®
Copyright © 2015 ICC. ALL RIGHTS RESERVED. Accessed by David Dammon on Jun 21, 2017 12:30:52 PM pursuant to License Agreement with ICC. No further reproduction or distribution authorized. ANY UNAUTHORIZED REPRODUCTION OR DISTRIBUTION IS A VIOLATION OF THE FEDERAL COPYRIGHT ACT AND THE LICENSE AGREEMENT, AND SUBJECT TO CIVIL AND CRIMINAL PENALTIES THEREUNDER.

Alternatively, compliance with ASCE 41, using the performance objective in Table 301.1.4.2 for the applicable risk category, shall be deemed to meet the earthquake rehabilitation requirement.

❖ If the evaluation of the building, in accordance with Section 404.2.1, shows that, in the hypothetically repaired condition, the building would not comply with the established requirements, then the building must be rehabilitated as described in this section. The general requirement is to comply with the IBC load combinations. These load combinations establish the required strength of structural members.

The effects of wind and seismic loads warrant special consideration. In determining the level of compliance for repairs to buildings that have sustained substantial structural damage, it is important to determine if wind forces have caused that damage. If so, it is considered prudent to require repairs to wind-damaged buildings to comply with the wind load provisions from the current code. Seismic forces for the rehabilitation can be those required by the building code in effect at the time of the building's construction, but this may not be less than the reduced seismic force level, as described in Section 404.2.1. Section 404.2.1 and this section also allow the application of ASCE 41 (see commentary, Section 404.2.1).

[BS] 404.3 Substantial structural damage to gravity load-carrying components. Gravity load-carrying components that have sustained *substantial structural damage* shall be rehabilitated to comply with the applicable provisions of the *International Building Code* for dead and live loads. Snow loads shall be considered if the substantial structural damage was caused by or related to snow load effects. Existing gravity load-carrying structural elements shall be permitted to be designed for live loads approved prior to the damage. If the approved live load is less than that required by Section 1607 of the *International Building Code*, the area designed for the nonconforming live load shall be posted with placards of *approved* design indicating the *approved* live load. Nondamaged gravity load-carrying components that receive dead, live or snow loads from rehabilitated components shall also be rehabilitated or shown to have the capacity to carry the design loads of the *rehabilitation* design. New structural members and connections required by this rehabilitation design shall comply with the detailing provisions of the *International Building Code* for new buildings of similar structure, purpose and location.

❖ Substantial structural damage to gravity load-carrying elements, such as columns or bearing walls, must be repaired so that these members are adequate to resist the dead and live loads in accordance with current code requirements, as must other elements of the load path. Snow loads must also be included where the substantial damage is associated with the effects of snow load.

[BS] 404.3.1 Lateral force-resisting elements. Regardless of the level of damage to vertical elements of the lateral force-resisting system, if *substantial structural damage* to gravity load-carrying components was caused primarily by wind or earthquake effects, then the building shall be evaluated in accordance with Section 404.2.1 and, if noncompliant, rehabilitated in accordance with Section 404.2.3.

Exceptions:

1. One- and two-family dwellings need not be evaluated or rehabilitated for load combinations that include earthquake effects.
2. Buildings assigned to Seismic Design Category A, B or C whose substantial structural damage was not caused by earthquake need not be evaluated or rehabilitated for load combinations that include earthquake effects.

❖ In determining the extent of repairs to these gravity load-carrying elements that are not part of the lateral force-resisting system, it is important to determine if wind or earthquakes have caused the structural damage. If the substantial structural damage is caused by wind or earthquake, the lateral system must be checked even if no damage is apparent. Where this is the case, then the structure must be evaluated in accordance with Section 404.2.1.

There are two exceptions that acknowledge that applying this requirement in some cases is excessive and may have the effect of discouraging or delaying certain repairs by imposing the additional costs of seismic upgrade. Exception 1 exempts one- and two-family dwellings, where the risk to the public of poor earthquake performance is especially low. Exception 2 exempts buildings in areas of low or moderate seismicity, where the damage was caused by something other than an earthquake. Where earthquakes are rare, it serves no significant public purpose to trigger seismic upgrades following damage caused by fire, collision, wind and other events. Basic repair—that is, restoring to the predamaged condition—is still required.

[BS] 404.4 Less than substantial structural damage. For damage less than *substantial structural damage*, repairs shall be allowed that restore the building to its predamage state. New structural members and connections used for this *repair* shall comply with the detailing provisions of the *International Building Code* for new buildings of similar structure, purpose and location.

❖ For damage that is not deemed to be substantial structural damage, repairs are allowed that restore the building to its predamaged state. This is consistent with Section 606.2.1 for the work area method. New structural members and connections used for these repairs are still required to comply with the detailing provisions for new buildings of similar materials, purpose and location.

[BS] 404.5 Flood hazard areas. For buildings and structures in *flood hazard areas* established in Section 1612.3 of the *International Building Code*, or Section R322 of the *International Residential Code*, as applicable, any repair that consti-

INTERNATIONAL CODE COUNCIL®
Copyright © 2015 ICC. ALL RIGHTS RESERVED. Accessed by David Dammon on Jun 21, 2017 12:30:52 PM pursuant to License Agreement with ICC. No further reproduction or distribution authorized. ANY UNAUTHORIZED REPRODUCTION OR DISTRIBUTION IS A VIOLATION OF THE FEDERAL COPYRIGHT ACT AND THE LICENSE AGREEMENT, AND SUBJECT TO CIVIL AND CRIMINAL PENALTIES THEREUNDER.

tutes *substantial improvement* or repair of *substantial damage* of the existing structure shall comply with the flood design requirements for new construction, and all aspects of the existing structure shall be brought into compliance with the requirements for new construction for flood design.

For buildings and structures in flood hazard areas established in Section 1612.3 of the *International Building Code*, or Section R322 of the *International Residential Code*, as applicable, any repairs that do not constitute *substantial improvement* or repair of *substantial damage* of the existing structure are not required to comply with the flood design requirements for new construction.

❖ Reduction in exposure to flood hazards, including exposure of older buildings, is one of the purposes for regulating flood plain development. Damaged buildings or structures that are located in flood hazard areas are to be brought into compliance with the flood-resistant provisions of IBC Section 1612 or IRC Section R322, as applicable, where the cost of repairs necessary to restore damage to its predamaged condition (even if less work is actually proposed) exceeds a certain value. See Section 202 for the definitions of "Substantial improvement" and "Substantial damage."

Section 105.3 requires the applicant to state the valuation of proposed work, which is to include the total value of work, including materials and labor. If the proposed work will be performed on buildings in flood hazard areas, the code official must determine whether the proposed work constitutes substantial improvement or repair of substantial damage. If applicable, the value of work must include estimates of the value of the property owner's labor and the value of donated labor and materials.

To make a determination about whether proposed repairs constitute repair of substantial damage, the cost of the proposed work is to be compared to the market value of the building or structure before the work is started. In order to determine market value, the code official may require the applicant to provide an appraisal or use other methods acceptable to FEMA. For additional guidance, see FEMA P-758, which advises that communities with many buildings in flood hazard areas become familiar with software developed to help make substantial damage determinations, especially in the post-disaster period. FEMA P-784, *Substantial Damage Estimator*, includes the software, user's manual and workbook.

SECTION 405
FIRE ESCAPES

405.1 Where permitted. Fire escapes shall be permitted only as provided for in Sections 405.1.1 through 405.1.4.

❖ Sections 405.1.1 through 405.1.4 address the current requirements for the use of exterior fire escapes. Their use and features, as defined in this section, should not be confused with the requirements for exterior exit stairways as defined in IBC Section 1027.

The use of exterior fire escapes as a means of egress was popular in building designs of the past. They were used for economy of construction and to "save" usable space in the buildings they served. Being located outside the building, they were also considered safer than the unenclosed interior exit stairways of the time. Over the years, exterior fire escapes lost their appeal for many reasons:

1. Fire escapes were never an integral part of the building's design; they were a necessary appendage hung from or attached to the building wall.
2. Fire escapes were most commonly constructed of cast-iron or steel, both of which required a high degree of maintenance to protect the corrodible materials from the effects of weather.
3. Because fire escapes are "open structures," they are subject to icing during the winter months. This makes them dangerous to use and, in extreme cases, they can become completely unusable.
4. People with a fear of heights can find exterior fire escapes difficult and sometimes impossible to use.
5. Fire escapes were an unpleasant sight and an unwanted element in the architectural design.

The use of exterior fire escapes is all but obsolete except for existing buildings with a clear deficiency in the means of egress that cannot be reasonably rectified in other ways.

This section indicates that fire escapes are permitted only on existing buildings. New fire escapes may be installed on existing buildings only where exterior stairs cannot be used. Section 405.2 addresses the location of fire escapes and Section 405.3 addresses the construction of fire escapes.

See also the requirements for fire escapes in IFC Section 1104.16. Note that these provisions are slightly different than those of Section 405.

405.1.1 New buildings. Fire escapes shall not constitute any part of the required means of egress in new buildings.

❖ Because of the inherent hazards and lack of dependability, open exterior fire escapes are not permitted as part of the required means of egress in new construction.

405.1.2 Existing fire escapes. Existing fire escapes shall continue to be accepted as a component in the means of egress in *existing buildings* only.

❖ Exterior fire escapes in existing buildings are acceptable as a component of the required means of egress because, in most cases, it would be physically impractical and economically prohibitive to retrofit older buildings with interior or exterior exit stairways that comply with all the code requirements for new construction.

INTERNATIONAL CODE COUNCIL®
Copyright © 2015 ICC. ALL RIGHTS RESERVED. Accessed by David Dammon on Jun 21, 2017 12:30:52 PM pursuant to License Agreement with ICC. No further reproduction or distribution authorized. ANY UNAUTHORIZED REPRODUCTION OR DISTRIBUTION IS A VIOLATION OF THE FEDERAL COPYRIGHT ACT AND THE LICENSE AGREEMENT, AND SUBJECT TO CIVIL AND CRIMINAL PENALTIES THEREUNDER.

405.1.3 New fire escapes. New fire escapes for *existing buildings* shall be permitted only where exterior stairways cannot be utilized due to lot lines limiting stairway size or due to the sidewalks, alleys or roads at grade level. New fire escapes shall not incorporate ladders or access by windows.

❖ Continuing corrosion of existing exterior fire escapes, as well as other factors that may affect the safety of the structures, often makes the replacement of these fire escapes necessary. The code official may determine that the means of egress in an existing building is unsafe, requiring some corrective action, which may be the installation of a new exterior fire escape. This section permits new exterior fire escapes for existing buildings where exterior stairways conforming to the requirements of IBC Section 1027 cannot be used because of lot lines that limit stairway size or encroachments on sidewalks, alleys or roads at grade level.

Because it was the accepted practice of the time, access to exterior fire escapes was quite often through windows located in corridors or individual dwelling units or offices. This practice is not permitted when replacement exterior fire escapes are used. The building must be altered to provide proper exit access to the fire escape.

The code does not permit the use of ladders as a component in the means of egress except as allowed in the IBC for control rooms or elevated facility observation rooms for Group I-3 occupancies; therefore, ladders can neither be used as a component part of an exterior fire escape, nor to access an exterior fire escape.

405.1.4 Limitations. Fire escapes shall comply with this section and shall not constitute more than 50 percent of the required number of exits nor more than 50 percent of the required exit capacity.

❖ For reasons of overall life safety, exterior fire escapes may be used as a component of the means of egress only when the total number used does not exceed one-half the required number of exits and more than one-half the total required exit capacity.

405.2 Location. Where located on the front of the building and where projecting beyond the building line, the lowest landing shall be not less than 7 feet (2134 mm) or more than 12 feet (3658 mm) above grade, and shall be equipped with a counterbalanced stairway to the street. In alleyways and thoroughfares less than 30 feet (9144 mm) wide, the clearance under the lowest landing shall be not less than 12 feet (3658 mm).

❖ In the past, exterior fire escapes were allowed to project beyond the property line and extend over sidewalks, alleyways and roads. Where such conditions are still accepted by the code (see Sections 405.1.2 and 405.1.3), the clearance to the lowest landing from grade level must be at least 7 feet (2134 mm), and not more than 12 feet (3658 mm) for exterior fire escapes located in front of the building. In alleyways and thoroughfares less than 30 feet (9144 mm) wide, the clearance under the lowest landing must be at least 12 feet (3658 mm). To facilitate these clearance requirements, exterior fire escapes are usually equipped with a counterbalanced stairway that retracts to a horizontal position when the fire escape is not in use.

405.3 Construction. The fire escape shall be designed to support a live load of 100 pounds per square foot (4788 Pa) and shall be constructed of steel or other approved *noncombustible materials*. Fire escapes constructed of wood not less than nominal 2 inches (51 mm) thick are permitted on buildings of Type V construction. Walkways and railings located over or supported by combustible roofs in buildings of Type III and IV construction are permitted to be of wood not less than nominal 2 inches (51 mm) thick.

❖ Traditionally and typically, exterior fire escapes are constructed of cast iron or steel, although the code does permit exterior fire escapes to be constructed of other noncombustible materials. The use of nominal 2-inch (51 mm) wood is permitted in Type V construction. Nominal 2-inch (51 mm) wood may also be used in Type III and IV construction when the exterior fire escape is supported by wood construction permitted by IBC Table 601.

405.4 Dimensions. Stairways shall be at least 22 inches (559 mm) wide with risers not more than, and treads not less than, 8 inches (203 mm) and landings at the foot of stairways not less than 40 inches (1016 mm) wide by 36 inches (914 mm) long, located not more than 8 inches (203 mm) below the door.

❖ The IBC's normal dimensions for interior and exterior exit stairways used in the means of egress do not apply to exterior fire escapes. The dimensional standard for exterior fire escapes has been in place for many years; thus, many exterior fire escapes in use were designed to comply with this standard. Many of these fire escapes are installed in places where it would be difficult, and often impossible, to retrofit a new fire escape if a new set of dimensional standards were employed. For this reason, it is judged appropriate to maintain the current standard. The minimum tread, riser, stair-width and landing-size dimensions for fire escape construction remain unchanged from the past.

405.5 Opening protectives. Doors and windows along the fire escape shall be protected with $^{3}/_{4}$-hour opening protectives.

❖ Safe exit access and exits are required for occupants using an exterior fire escape as a means of egress. Door and window openings in exterior walls adjacent to and along the path of travel of the exterior fire escape must be protected from the interior of the building with not less than a $^{3}/_{4}$-hour protective. This is similar to the requirements for protection of openings on interior exit stairways and ramps in IBC Section 1023.7 and exterior exit stairways and ramps in IBC Section 1027.6.

INTERNATIONAL CODE COUNCIL®
Copyright © 2015 ICC. ALL RIGHTS RESERVED. Accessed by David Dammon on Jun 21, 2017 12:30:52 PM pursuant to License Agreement with ICC. No further reproduction or distribution authorized. ANY UNAUTHORIZED REPRODUCTION OR DISTRIBUTION IS A VIOLATION OF THE FEDERAL COPYRIGHT ACT AND THE LICENSE AGREEMENT, AND SUBJECT TO CIVIL AND CRIMINAL PENALTIES THEREUNDER.

Where more-restrictive opening protectives are required by other sections elsewhere in the code, the more-restrictive protection must be used. The $^3/_4$-hour requirement for the exterior fire escape is the minimum when no other considerations are present (see IBC Tables 601, 602, 705.8 and 716.5).

SECTION 406
GLASS REPLACEMENT AND REPLACEMENT WINDOWS

406.1 Replacement glass. The installation or replacement of glass shall be as required for new installations.

❖ The technical provisions for glass and glazing are detailed in IBC Chapter 24. All technical requirements of the code for glass and glazing that apply to new construction also apply to all additions or alterations to existing buildings. There are no exceptions to this requirement. When glazing in an existing building is replaced or relocated within the same building, it must comply with current standards.

406.2 Replacement window opening control devices. In Group R-2 or R-3 buildings containing dwelling units, window opening control devices complying with ASTM F2090 shall be installed where an existing window is replaced and where all of the following apply to the replacement window:

1. The window is operable;
2. The window replacement includes replacement of the sash and the frame;
3. The top of the sill of the window opening is at a height less than 36 inches (915 mm) above the finished floor;
4. The window will permit openings that will allow passage of a 4-inch-diameter (102 mm) sphere when the window is in its largest opened position; and
5. The vertical distance from the top of the sill of the window opening to the finished grade or other surface below, on the exterior of the building, is greater than 72 inches (1829 mm).

The window opening control device, after operation to release the control device allowing the window to fully open, shall not reduce the minimum net clear opening area of the window unit to less than the area required by Section 1030.2 of the *International Building Code*.

Exceptions:

1. Operable windows where the top of the sill of the window opening is located more than 75 feet (22 860 mm) above the finished grade or other surface below, on the exterior of the room, space or building, and that are provided with window fall prevention devices that comply with ASTM F2006.
2. Operable windows with openings that are provided with window fall prevention devices that comply with ASTM F2090.

❖ This section requires that when windows are replaced, window opening control devices be provided to protect children from falls. There are several conditions that must be met before this section becomes applicable. The first condition is whether or not the window is even operable. If the window is not operable, the concern for safety from falling is not present. The second condition relates to whether the entire window is being replaced, including the sash and frame. If it is simply a repair of a pane of glass, the requirement would not be applicable. Item 3 addresses the specific location of the opening on the inside of the building [see Commentary Figure 702.4 (1)]. Item 4 focuses these provisions on not only operable windows but also windows with openings through which a child could actually fit. This criterion of a 4-inch-diameter sphere is used with guards in IBC Chapter 10 to avoid children fitting through. Finally, Item 5 addresses whether the window is high enough from the ground to be of concern for injury from falling [see Commentary Figure 702.4(2)]. This section applies to the following occupancies:

- Group R-2 occupancies containing dwelling units.
- Group R-3 occupancies containing dwelling units.

Note that the work area method also addresses one- and two-family dwellings. The control device cannot reduce to less than that required in IBC Section 1030.2. Section 702.4 also addresses this issue for the work area method. Note that the figures are located in Section 702 and simply referenced in this section.

406.3 Replacement window emergency escape and rescue openings. Where windows are required to provide *emergency escape* and *rescue openings* in Group R-2 and R-3 occupancies, replacement windows shall be exempt from the requirements of Sections 1030.2, 1030.3 and 1030.5 of the *International Building Code* provided the replacement window meets the following conditions:

1. The replacement window is the manufacturer's largest standard size window that will fit within the existing frame or existing rough opening. The replacement window shall be permitted to be of the same operating style as the existing window or a style that provides for an equal or greater window opening area than the existing window.
2. The replacement of the window is not part of a change of occupancy.

❖ This section focuses on how to address the replacement of windows intended to be emergency escape and rescue openings. More specifically, Group R-2 and R-3 occupancies in new construction require specifically sized windows for escape and rescue for certain windows in these structures. In existing buildings, meeting these requirements can be difficult. This section provides the necessary flexibility to these existing buildings to provide the largest window that can fit into the current opening without requiring

INTERNATIONAL CODE COUNCIL®
Copyright © 2015 ICC. ALL RIGHTS RESERVED. Accessed by David Dammon on Jun 21, 2017 12:30:52 PM pursuant to License Agreement with ICC. No further reproduction or distribution authorized. ANY UNAUTHORIZED REPRODUCTION OR DISTRIBUTION IS A VIOLATION OF THE FEDERAL COPYRIGHT ACT AND THE LICENSE AGREEMENT, AND SUBJECT TO CIVIL AND CRIMINAL PENALTIES THEREUNDER.

full compliance with the IBC. There are three criteria that must be met. The first is that the window is the largest size the manufacturer can provide for that opening (the existing frame or rough opening). The second aspect is focused on the operating style of the existing window. It is permitted to remain the same but needs to provide equal or greater opening area. Finally, this allowance is not permitted if these windows are associated with a change of occupancy.

This section also provides permission for the use of window opening control devices as required in Section 406.2. The focus of Section 406.2 is on fall safety, whereas this section is focused on emergency escape. This provision avoids conflict between the two requirements.

Section 702.5 also addresses this issue for the work area method. Note that the figures are located in Section 702 and simply referenced in this section.

SECTION 407
CHANGE OF OCCUPANCY

407.1 Conformance. No change shall be made in the use or occupancy of any building unless such building is made to comply with the requirements of the *International Building Code* for the use or occupancy. Changes in use or occupancy in a building or portion thereof shall be such that the existing building is no less complying with the provisions of this code than the existing building or structure was prior to the change. Subject to the approval of the building official, the use or occupancy of *existing buildings* shall be permitted to be changed and the building is allowed to be occupied for purposes in other groups without conforming to all of the requirements of this code for those groups, provided the new or proposed use is less hazardous, based on life and fire risk, than the existing use.

Exception: The building need not be made to comply with the seismic requirements for a new structure unless required by Section 407.4.

❖ A change of occupancy in an existing structure may change the level of inherent hazards that the code was initially intended to address.

Regardless of whether the change is to an occupancy considered to be more or less hazardous, this section applies the provisions of the code for new construction to an existing structure having a new occupancy. This is done so that the applicable code requirements adequately address the specific hazards of the new occupancy. For example, a change from an existing mercantile occupancy to a business occupancy renders all Group B provisions applicable to all portions of the structure where the occupancy has changed.

This section is one of the most frequently used provisions in the code for application to existing structures, since the occupancy in a building or structure is subject to change during the life of the building.

Note that this section does provide some flexibility to those buildings where the change of occupancy is to a less hazardous use. This requires some technical judgement as to what is considered less hazardous. Chapter 10, dealing with change of occupancy in the work area method, more specifically ranks these risks when addressing change of occupancy classification requirements.

The exception clarifies that seismic upgrades are only necessary as required by Section 407.4. Section 407.4 also focuses on those changes of occupancy that are to a higher risk category.

407.1.1 Change in the character of use. A change in occupancy with no change of occupancy classification shall not be made to any structure that will subject the structure to any special provisions of the applicable *International Codes*, without approval of the *building official*. Compliance shall be only as necessary to meet the specific provisions and is not intended to require the entire building be brought into compliance.

❖ This section focuses on buildings where the occupancy classification has not changed but its use has changed such that special use requirements apply. For example, the building is classified as a Group B office building and now is being converted to an ambulatory care facility. Ambulatory care facilities are Group B occupancies; however, they also have special requirements that must be met to address the risks found in such facilities. This section provides the authority to the code official to address these situations.

407.2 Certificate of occupancy. A certificate of occupancy shall be issued where it has been determined that the requirements for the new occupancy classification have been met.

❖ An existing building that has been classified into a new occupancy group must receive a certificate of occupancy before tenancy. The code requirements for one occupancy group are not always the same as those for the new occupancy group. The new occupancy must be inspected to verify that all the applicable code requirements have been met.

407.3 Stairways. An existing stairway shall not be required to comply with the requirements of Section 1011 of the *International Building Code* where the existing space and construction does not allow a reduction in pitch or slope.

❖ A stairway in an existing building does not have to be modified to comply with the dimensional provisions for width, tread and riser dimension, or landing size for new stairway construction. This provision is for the design of a particular stairway and is aimed at addressing that existing stairway only. This section, which is essentially an exception, is not intended to eliminate any of the other technical provisions that might apply to an occupancy group, such as means of egress, exit capacity, etc.

For example, when a building is altered or there is a change of tenant that results in a change in occupancy, the existing stairway is permitted to remain as it was prior to the alteration or change of occupancy. The means of egress capacity, however, must com-

INTERNATIONAL CODE COUNCIL®
Copyright © 2015 ICC. ALL RIGHTS RESERVED. Accessed by David Dammon on Jun 21, 2017 12:30:52 PM pursuant to License Agreement with ICC. No further reproduction or distribution authorized. ANY UNAUTHORIZED REPRODUCTION OR DISTRIBUTION IS A VIOLATION OF THE FEDERAL COPYRIGHT ACT AND THE LICENSE AGREEMENT, AND SUBJECT TO CIVIL AND CRIMINAL PENALTIES THEREUNDER.

ply with the requirements for the new occupancy. The capacity may not be lessened to match the existing stairway if it is not sufficient to provide the capacity required by the new occupancy. An additional stairway or another approved means of egress must be provided to comply with the means of egress requirements for the new occupancy as indicated in Chapter 10.

[BS] 407.4 Structural. When a *change of occupancy* results in a structure being reclassified to a higher risk category, the structure shall conform to the seismic requirements for a new structure of the higher risk category. For purposes of this section, compliance with ASCE 41, using a Tier 3 procedure and the two-level performance objective in Table 301.1.4.1 for the applicable risk category, shall be deemed to meet the requirements of Section 1613 of the *International Building Code*.

Exceptions:

1. Specific seismic detailing requirements of Section 1613 of the *International Building Code* for a new structure shall not be required to be met where the seismic performance is shown to be equivalent to that of a new structure. A demonstration of equivalence shall consider the regularity, overstrength, redundancy and ductility of the structure.
2. When a change of use results in a structure being reclassified from Risk Category I or II to Risk Category III and the structure is located where the seismic coefficient, S_{DS}, is less than 0.33, compliance with the seismic requirements of Section 1613 of the *International Building Code* is not required.

❖ An existing building that undergoes a change of use and occupancy that places the building in a higher risk category must be evaluated for its seismic resistance. For this provision, the code is referring to risk categories listed in IBC Table 1604.5, which must be used to determine whether an existing building should be reclassified to a higher risk category. It is important that an existing building that previously contained ordinary uses and occupancies must be able to meet current code requirements relative to seismic loading if it will be used as an "essential facility." This section specifically allows the use of ASCE 41 using a Tier 3 procedure and the two-level performance objectives of Section 301.1.4.1. The application of this procedure is also based on the risk category of the structure. This allowance provides more flexibility for existing buildings. ASCE 41 is specifically focused on the evaluation and rehabilitation of existing structures. See the commentary to Section 301.1.4 for more discussion on the origins and application of the standard.

Without Exception 1, it would be impossible in many instances to make an existing structure comply with the seismic requirements for a new structure. Exception 1 provides guidance for the code official and designer of areas that need to be investigated when compliance with the seismic requirements set forth in the code cannot be accomplished in a traditional manner.

Exception 2 has its origins in ASCE 7. The purpose is to permit a change from Risk Category I or II to Risk Category III for structures subjected to low earthquake accelerations without meeting the requirements for a new structure.

SECTION 408
HISTORIC BUILDINGS

408.1 Historic buildings. The provisions of this code that require improvements relative to a building's existing condition or, in the case of repairs, that require improvements relative to a building's predamage condition, shall not be mandatory for historic buildings unless specifically required by this section.

❖ This section provides an exception from code requirements when the building in question has historic value. The most important criterion for the application of this section is that the building must be essentially accredited as being of historic significance by a qualified party or agency (see the definition of "Historic building" in Section 202). Usually, this is done by a state or local authority after careful review of the historical value of the building. Most, if not all, states have such authorities, as do many local jurisdictions. The agencies with such authority can be located at the state or local government level or through the local chapter of the American Institute of Architects (AIA). This section also clarifies that the code generally does not apply unless specifically required by this section. There are two subsections. The first deals with addressing distinct hazards to life. The second deals with flood hazard areas and necessary upgrades as applicable. Note, as will be discussed, most historic buildings need not comply with the flood hazard requirements.

408.2 Life safety hazards. The provisions of this code shall apply to historic buildings judged by the building official to constitute a distinct life safety hazard.

❖ This section provides the authority to address distinct hazards to life safety. This can address issues such as structural instability or blocked or severely limited exits. Once a distinct hazard is established, the provisions of the code will apply. The extent of application is at the discretion of the code official.

[BS] 408.3 Flood hazard areas. Within flood *hazard areas* established in accordance with Section 1612.3 of the *International Building Code*, or Section R322 of the *International Residential Code*, as applicable, where the work proposed constitutes *substantial improvement,* the building shall be brought into compliance with Section 1612 of the *Interna-*

INTERNATIONAL CODE COUNCIL®
Copyright © 2015 ICC. ALL RIGHTS RESERVED. Accessed by David Dammon on Jun 21, 2017 12:30:52 PM pursuant to License Agreement with ICC. No further reproduction or distribution authorized. ANY UNAUTHORIZED REPRODUCTION OR DISTRIBUTION IS A VIOLATION OF THE FEDERAL COPYRIGHT ACT AND THE LICENSE AGREEMENT, AND SUBJECT TO CIVIL AND CRIMINAL PENALTIES THEREUNDER.

tional Building Code, or Section R322 of the *International Residential Code*, as applicable:

Exception: *Historic buildings* need not be brought into compliance that are:

1. Listed or preliminarily determined to be eligible for listing in the National Register of Historic Places;
2. Determined by the Secretary of the U.S. Department of Interior as contributing to the historical significance of a registered historic district or a district preliminarily determined to qualify as an historic district; or
3. Designated as historic under a state or local historic preservation program that is approved by the Department of Interior.

❖ With respect to provisions applicable to buildings in flood hazard areas, the discretion given in Section 408.1 allowing the code official to waive the requirements for historic structures extends only to historic structures that meet the specific limitations in the exception to this section. Location in a historic district does not qualify a structure as historic. Care must be taken to ensure that work on such historic structures will not cause them to lose their continued listing or designation. If improvements or repairs cause a structure to lose its listing or designation as a historic building, then the code official must enforce the substantial improvement requirements. Owners of historic structures should consider measures to reduce flood damage to the extent practical. For additional guidance, see FEMA P-467-2, *Floodplain Management Bulletin on Historic Structures,* and FEMA P-758.

SECTION 409
MOVED STRUCTURES

409.1 Conformance. Structures moved into or within the jurisdiction shall comply with the provisions of the *International Building Code* for new structures.

❖ Moved structures are required to comply with the provisions applicable to new construction, which is generally intended to mean the IBC. The moved structure may comply with the alternative provisions of Chapter 14 instead of the code requirements for new structures, which may be particularly useful if the moved structure is older than the effective date of the adoption of the building codes in the jurisdiction. The fire separation distance of the moved structure must comply with requirements for new structures even if the compliance alternative provisions of Chapter 14 are used to meet the code requirements.

SECTION 410
ACCESSIBILITY FOR EXISTING BUILDINGS

410.1 Scope. The provisions of Sections 410.1 through 410.9 apply to maintenance, *change of occupancy*, *additions* and *alterations* to *existing buildings*, including those identified as *historic buildings*.

❖ The purpose of Section 410 is to establish minimum criteria for accessibility when dealing with existing buildings and facilities. The history and efforts involved are similar to those discussed in the commentary for IBC Chapter 11. Access to buildings and structures for people with physical disabilities has been a subject that the building codes have regulated since the early 1970s. They have consistently relied on a consensus national standard, ICC A117.1, *Accessible and Useable Buildings and Facilities*. Accessibility is not a new subject to the construction regulatory community. There has been a great deal of emphasis and awareness placed on the subject of accessibility through the passage of two federal laws. The Americans with Disabilities Act (ADA) and the Fair Housing Amendment Act (FHA) are federal regulations that affect building construction as it relates to accessibility.

The International Code Council® (ICC®) recognizes the value of consistency between federal laws and the codes. Efforts for coordination with federal accessibility requirements are ongoing. Representatives from interested accessibility groups, the Department of Housing and Urban Development (HUD) and the Architectural and Transportation Barriers Compliance Board (ATBCB, commonly referred to as the Access Board), have been attending and participating in the code change process for the IBC and ICC A117.1. In addition, the ICC has participated in the public comment process on the development of federal regulations for accessibility. Appendix B includes information found in the *Americans with Disabilities Act Accessibility Guidelines* (ADAAG) that cannot be enforced through the typical code enforcement process, but would provide beneficial information for the designer/owner for full compliance purposes. The ICC has worked toward, and will continue to strive for, accessibility regulations that reflect the highest possible degree of consistency with federal regulations and, more importantly, reasonable and appropriate provisions to meet the needs of people with disabilities.

Buildings undergoing alterations are generally expected to fully comply with the accessibility provisions. However, exceptions are then provided to indicate the conditions under which less than full accessibility is permitted.

For example, if a door and frame are removed and replaced, the door must meet the requirements for width, height, maneuvering clearances and hardware. If just the doorknob is being removed, it must be replaced with lever hardware.

If the area undergoing alteration does not contain a primary function, there are no additional requirements; however, if the area contains a primary function, there is an additional criterion that may require work not in the original scope to achieve accessibility. This additional criterion is to provide an accessible

INTERNATIONAL CODE COUNCIL®
Copyright © 2015 ICC. ALL RIGHTS RESERVED. Accessed by David Dammon on Jun 21, 2017 12:30:52 PM pursuant to License Agreement with ICC. No further reproduction or distribution authorized. ANY UNAUTHORIZED REPRODUCTION OR DISTRIBUTION IS A VIOLATION OF THE FEDERAL COPYRIGHT ACT AND THE LICENSE AGREEMENT, AND SUBJECT TO CIVIL AND CRIMINAL PENALTIES THEREUNDER.

route to the altered area, including any toilets and drinking fountains that serve it. Requirements for an accessible route might specify that the door previously discussed be removed and replaced because it did not have adequate width or maneuvering clearances.

The principle behind this approach to upgrading existing buildings is that they will become more accessible over time. A valid time to work toward that goal is when a structure is being altered. Special considerations are offered because of the difficulty involved in dealing with existing facilities that may not have been built with accessibility for physically disabled persons in mind. For example, when a historically registered home is being made into a museum, if changing the front door to allow for wheelchair access would alter the historical significance, alternatives are offered in Section 410.9. Other examples include the alternatives offered in Section 410.7 if it is technically infeasible to provide full accessibility in an existing building. Please note that the term "technically infeasible" refers to either movement of a major structural element or other physical constraints. For example, a ramp to provide entrance or exit from a particular door may not be possible because of property lines or setback constraints.

410.2 Maintenance of facilities. A *facility* that is constructed or altered to be *accessible* shall be maintained *accessible* during occupancy.

❖ Continued compliance with the accessibility requirements of the code is dependent on maintenance of such facilities throughout the life of the building. For example, drinking fountains that are required to be accessible are of little value if they malfunction through deterioration or failure of any of the working parts. In other cases, inoperable elevators, locked accessible doors and obstructed accessible routes must be maintained such that they are readily usable by individuals with disabilities.

410.3 Extent of application. An *alteration* of an existing *facility* shall not impose a requirement for greater accessibility than that which would be required for new construction. *Alterations* shall not reduce or have the effect of reducing accessibility of a *facility* or portion of a *facility*.

❖ The purpose of this section is to clarify where alterations and scoping for alteration requirements apply. The requirements in Sections 410.6 and 410.7 do not impose a higher level of accessibility than the level required in new construction. At the same time, alterations cannot result in a lesser degree of accessibility than existed before the alterations were undertaken.

410.4 Change of occupancy. *Existing buildings* that undergo a change of group or occupancy shall comply with this section.

Exception: Type B dwelling or sleeping units required by Section 1107 of the *International Building Code* are not required to be provided in *existing buildings* and facilities undergoing a *change of occupancy* in conjunction with *alterations* where the *work area* is 50 percent or less of the aggregate area of the building.

❖ When an entire building undergoes a change of occupancy, the building must comply with the provisions in Section 410.4.2. If a portion of a building undergoes a change of occupancy, such as when there is a tenant change or a partial renovation where a space changes function, then the level of accessibility is addressed in Section 410.4.1.

The exception notes where Type B dwelling and sleeping units would not need to be included where there is a change of occupancy to a Group I or R building (see Section 1107 of the IBC). Where the change of occupancy does not involve extensive alterations (exceeding 50 percent of the square footage of the building), then Type B accessibility requirements would not need to be provided in the new or altered dwelling or sleeping units. This exception is similar to what is also found in the code for alterations where less than a Level 3 alteration occurs. A Level 3 alteration is greater than 50 percent of the square footage of the building. This, therefore, decreases the burden on many smaller projects. Type B dwelling units should be provided in larger alterations because, where major alterations are being performed, there is a prime opportunity to have those buildings move toward being able to serve a wider range of the population. With the population of the United States aging, there will be a steadily increasing demand for units that include accessibility features. See the commentary to Section 410.4.2, Section 410.6, Exception 4, and Section 410.8.8 for additional information.

410.4.1 Partial change in occupancy. Where a portion of the building is changed to a new occupancy classification, any *alterations* shall comply with Sections 410.6, 410.7 and 410.8.

❖ When a building undergoes a partial change of occupancy, such as where there is a tenant change or a change in function of a specific area, then the level of accessibility provided must achieve the same level as if that space were undergoing an alteration. Basically, the intent is that any spaces or elements being altered will meet new accessibility provisions unless technically infeasible (see Section 410.6). If the area changing occupancy is a primary function of the space, an evaluation of the accessible route, as well as bathrooms and drinking fountains serving this space, must be made. If these elements are not accessible, improvements must be made. However, there is a limit to the cost of the additional improvements to a maximum of 20 percent of the cost of the alteration (see Section 410.7). The reference to Section 410.8 provides for additional allowances because the designer/owner is still dealing with existing building constraints. For example, the accessible route could be provided by a platform lift (see Section 410.8.3), while in new construction, this option is limited (see IBC Sections 1009.5 and 1109.8).

INTERNATIONAL CODE COUNCIL®
Copyright © 2015 ICC. ALL RIGHTS RESERVED. Accessed by David Dammon on Jun 21, 2017 12:30:52 PM pursuant to License Agreement with ICC. No further reproduction or distribution authorized. ANY UNAUTHORIZED REPRODUCTION OR DISTRIBUTION IS A VIOLATION OF THE FEDERAL COPYRIGHT ACT AND THE LICENSE AGREEMENT, AND SUBJECT TO CIVIL AND CRIMINAL PENALTIES THEREUNDER.

410.4.2 Complete change of occupancy. Where an entire building undergoes a *change of occupancy*, it shall comply with Section 410.4.1 and shall have all of the following accessible features:

1. At least one accessible building entrance.
2. At least one accessible route from an accessible building entrance to *primary function* areas.
3. Signage complying with Section 1111 of the *International Building Code*.
4. Accessible parking, where parking is being provided.
5. At least one accessible passenger loading zone, when loading zones are provided.
6. At least one accessible route connecting accessible parking and accessible passenger loading zones to an accessible entrance.

Where it is *technically infeasible* to comply with the new construction standards for any of these requirements for a change of group or occupancy, the above items shall conform to the requirements to the maximum extent technically feasible.

Exception: The accessible features listed in Items 1 through 6 are not required for an accessible route to Type B units.

❖ For a project that involves a complete change of occupancy with alterations, full compliance with accessibility requirements is expected and reasonable for areas being altered, except where technical infeasibility can be demonstrated. If full compliance is technically infeasible, the element must be made accessible to the fullest extent that is feasible. This is consistent with the general approach that has always been taken relative to other matters regulated by the code.

In addition to accessibility requirements in the space, an accessible route is required to that space. Six items that make up that accessible route are listed. This section establishes that when an existing building undergoes a complete change of occupancy, compliance with those requirements, at minimum, is expected. That way, a person with mobility impairments would be able to arrive at the building (see Items 4 and 5), get to the accessible entrance (see Items 1, 3 and 6) and have at least one accessible route throughout the building to all the primary function areas (see Item 2). Changes between levels could be via a ramp (see Section 410.8.5), an elevator (see Section 410.8.2) or a platform lift (see Section 410.8.3). If the altered area would not be required to be served by an accessible route in new construction, an accessible route would not be required for a change of occupancy (see Section 410.3).

If the area undergoing a change of occupancy is being altered and contains a primary function area, the accessible route provisions in Section 410.7 are also applicable. This would not only require an accessible route to the change of occupancy area, but would also include possible upgrades to toilet rooms and drinking fountains that serve the area. These elements could use the 20-percent cap on cost offered in Section 410.7, Exception 1. If full compliance is technically infeasible, the element must be made accessible to the fullest extent that is feasible. See the commentary to Section 410.7 for additional information on the exceptions.

Typically, a building undergoing a complete change of occupancy is being, at least partially, gutted and undergoing alterations because of changes in function, possibly caused by increased occupant load, means of egress requirements, sprinkler requirements, or mechanical and plumbing changes. The intent is to create a balance between the change of occupancy meeting all new construction requirements for accessibility and the fact that the designer/owner is dealing with some existing building conditions.

This is not based on any specific provisions of the ADAAG, but parallels the intent of the requirements for the removal of barriers.

If the change of occupancy results in a Type B dwelling unit being provided, the exception permits the building to be exempt from providing the additional accessible route requirements listed in this section. This allowance addresses concerns of site impracticality for existing structures. This also reinforces the intent that the inclusion of Type B units is not meant to require elevators when alterations are performed on upper floors in nonelevator buildings (see the exceptions to Section 1107.7). These areas would have been exempted if built new under the FHA and IBC, and should continue to be exempted.

410.5 Additions. Provisions for new construction shall apply to *additions*. An *addition* that affects the accessibility to, or contains an area of, a *primary function* shall comply with the requirements in Section 410.7.

❖ Additions must comply with new construction. An addition, however, is also an alteration to an existing building; therefore, accessible route provisions for existing buildings are applicable (see commentary, Section 410.6). For example, a new dining area is added in a restaurant. All accessible elements within the parameter of the addition must be constructed to be accessible. If the route to or from the addition, or the bathrooms or drinking fountains that serve the addition, are in the existing building, the routes must be evaluated for accessibility. Section 410.7 specifies that the accessible route would include the route to these elements, the toilet rooms themselves, the fixtures in the toilet room and the drinking fountains.

410.6 Alterations. A *facility* that is altered shall comply with the applicable provisions in Chapter 11 of the *International Building Code*, unless *technically infeasible*. Where compli-

INTERNATIONAL CODE COUNCIL®
Copyright © 2015 ICC. ALL RIGHTS RESERVED. Accessed by David Dammon on Jun 21, 2017 12:30:52 PM pursuant to License Agreement with ICC. No further reproduction or distribution authorized. ANY UNAUTHORIZED REPRODUCTION OR DISTRIBUTION IS A VIOLATION OF THE FEDERAL COPYRIGHT ACT AND THE LICENSE AGREEMENT, AND SUBJECT TO CIVIL AND CRIMINAL PENALTIES THEREUNDER.

ance with this section is *technically infeasible*, the *alteration* shall provide access to the maximum extent technically feasible.

Exceptions:

1. The altered element or space is not required to be on an accessible route, unless required by Section 410.7.
2. Accessible means of egress required by Chapter 10 of the *International Building Code* are not required to be provided in existing facilities.
3. The alteration to Type A individually owned dwelling units within a Group R-2 occupancy shall be permitted to meet the provision for a Type B dwelling unit.
4. Type B dwelling or sleeping units required by Section 1107 of the *International Building Code* are not required to be provided in *existing buildings* and facilities undergoing a *change of occupancy* in conjunction with *alterations* where the *work area* is 50 percent or less of the aggregate area of the building.

❖ The code approaches the application of accessibility provisions to a facility that is altered by broadly requiring full conformance to new construction, meaning full accessibility is expected. Exceptions are then provided to indicate the conditions under which less than full accessibility is permitted.

The circumstance under which full compliance with accessibility provisions is not required is when it is deemed to be technically infeasible (see the commentary for the definition of "Technically infeasible" in Section 202). This is considered reasonable since, if not provided for, plans for alterations may be otherwise abandoned by the building owner. The opportunity to upgrade and increase the current level of accessibility in an existing building would then be lost. This concern is also embodied in the requirement that an altered element or space is expected to be made accessible to the extent to which it is technically feasible to do so. In this manner, the code accomplishes the greatest degree of accessibility while recognizing the justifiable difficulties that may be involved in providing full accessibility. Alterations are not required to exceed new construction requirements (see Section 410.3).

In accordance with Exception 1, if the area undergoing alteration does not contain a primary function (see Section 410.7), there are no additional requirements past the original scope of the project. However, if the area contains a primary function, there are additional criteria to achieve accessibility that may require work not in the original scope of the project. The additional criteria are to provide an accessible route to the altered area, as well as improvements to any toilets and drinking fountains that serve the altered area.

Exception 2 indicates that accessible means of egress are not required as a result of undertaking alterations to existing buildings. Strict compliance with IBC Section 1009 is often technically infeasible. The requirement for a 48-inch (1219 mm) clear width between handrails would require many stairways to be widened. This often would entail movement of major structural elements in order to accomplish this alteration.

Exception 3 addresses the specific circumstances where an existing Type A dwelling unit is being altered. While Section 410.2 says that a level of accessibility must be maintained, in the situations where a Type A dwelling unit is "individually owned," such as a condominium, then it only needs to meet the technical requirements for a Type B dwelling unit (see ICC A117.1, Section 1004) when it is altered or remodeled by the owner. Type B units require a lesser level of accessibility than Type A units. For example, if an owner wanted to alter the bathroom in his or her unit, he or she would only be required to meet the lesser accessibility requirements of a Type B unit with the new construction. This exception would not be applicable to units that are for rent.

Exception 4 allows some partial building alterations in Group I and R structures to occur without providing Type B dwelling units and sleeping units (see Section 1107). Where the alteration does not exceed 50 percent of the square footage of the building, then Type B accessibility requirements would not need to be provided in the dwelling or sleeping units being altered (see Sections 410.8.6 and 410.8.7 for alterations where Accessible units and Type A units are required). This exception is similar to what is also found in the code for change of occupancy where less than a Level 3 alteration is occurring. A Level 3 alteration is greater than 50 percent of the square footage of the building. This decreases the burden on many smaller projects.

Type B dwelling units must be provided in larger alterations. Where major alterations are being performed, there is a prime opportunity to have those buildings move toward being able to serve a wider range of the population. With the population of the United States aging, there will be a steadily increasing demand for units that include accessibility features. In addition, while the Fair Housing Act (FHA) is only applicable to new construction, this law was enacted in 1991. Some buildings constructed after that time may not be in compliance with the FHA. When a major alteration/renovation is occurring, there is an opportunity to bring those buildings into compliance. See the commentary to Sections 410.4.2 (the exception), 410.8.6, 410.8.7 and 410.8.8 for additional information.

INTERNATIONAL CODE COUNCIL®
Copyright © 2015 ICC. ALL RIGHTS RESERVED. Accessed by David Dammon on Jun 21, 2017 12:30:52 PM pursuant to License Agreement with ICC. No further reproduction or distribution authorized. ANY UNAUTHORIZED REPRODUCTION OR DISTRIBUTION IS A VIOLATION OF THE FEDERAL COPYRIGHT ACT AND THE LICENSE AGREEMENT, AND SUBJECT TO CIVIL AND CRIMINAL PENALTIES THEREUNDER.

410.7 Alterations affecting an area containing a primary function. Where an *alteration* affects the accessibility to, or contains an area of *primary function*, the route to the *primary function* area shall be *accessible*. The accessible route to the *primary function* area shall include toilet facilities and drinking fountains serving the area of *primary function*.

Exceptions:

1. The costs of providing the *accessible* route are not required to exceed 20 percent of the costs of the *alterations* affecting the area of *primary function*.
2. This provision does not apply to *alterations* limited solely to windows, hardware, operating controls, electrical outlets and signs.
3. This provision does not apply to *alterations* limited solely to mechanical systems, electrical systems, installation or *alteration* of fire protection systems and abatement of hazardous materials.
4. This provision does not apply to *alterations* undertaken for the primary purpose of increasing the accessibility of a *facility*.
5. This provision does not apply to altered areas limited to Type B dwelling and sleeping units.

❖ An area containing a primary function is one in which a major activity for which the building or facility is intended is carried out (see the definition of "Primary function" in Section 202). For example, the lobby of a hotel in which the registration and check-out desk is located would be a primary function area. Other examples would be the dining area of a restaurant, the meeting rooms or exhibition halls in a conference center, virtually all office and work areas in a business building, and retail display areas in a mercantile occupancy. The key concept is that a primary function area is one that contains a major activity of the facility. Areas that contain activities not related to the main purpose of the facility would not be considered a primary function area. For example, a mechanical equipment room, storage closet, toilet facilities, corridors, lounges and locker rooms would not be considered primary function areas. With this background, it is clear that areas containing a primary function are clearly more critical in terms of the purpose for which people enter and use the facility; therefore, this section reflects that when such areas are altered or added, it is important to require that an accessible route to the primary function area be provided. When an accessible route to a primary function area is required by this section, an accessible route to such facilities, including any restrooms and drinking fountains serving the primary function area, must also be made accessible, even though such facilities and areas may not by themselves be considered primary function areas. This is not just the route to the bathrooms and drinking fountains; the bathrooms and drinking fountains themselves must also be improved when not accessible.

There are conditions under which it may not be reasonable to strictly enforce this requirement for an accessible route to an altered or added primary function area. Exception 1 approaches this by utilizing the cost of the alterations or addition as a basis for determining if providing a complete accessible route is reasonable. The requirement for a complete accessible route does not apply when the cost of providing it exceeds 20 percent of the cost of the alterations or addition to the primary function area. These costs are intended to be based on the actual costs of the planned alterations or addition to the primary function area before consideration of the cost of providing an accessible route. For example, if the planned alterations will cost $100,000, not including the cost of an accessible route to a primary function area, this exception would apply if the additional cost of providing the accessible route would exceed $20,000.

It is not the intent to exempt all requirements for accessibility when the total cost for providing the accessible route exceeds the 20-percent threshold. Improvements to the accessible route are required to the extent that costs do not exceed 20 percent of the cost to the planned alteration or addition. It is not required that the full 20 percent be spent. If the accessible route (including accessible bathrooms and drinking fountains) is already provided, no additional expenditure is required. Note that there is not a priority list given for where money should be spent on improving the accessible route. The logical progression is access to the site, accessible exterior routes to accessible entrances, access throughout the facility, access to services in the facility, toilet and bathing rooms and, finally, drinking fountains. Evaluation on how and where the money available should best be spent must be made on a case-by-case basis. For example, if an accessible route is not available to an upper level, and the cost of an elevator is more than 20 percent of the cost of the renovation, then other alternatives could be investigated, such as a platform lift or limited access elevator, or adding the elevator pit and shaft at this time, with elevator equipment added later. If all such items are in excess of the 20-percent limit, perhaps the money available could be spent toward making the toilet rooms accessible. The idea is that existing buildings would become fully accessible over time.

Exceptions 2 and 3 identify certain alterations that are not intended to trigger the requirement for providing an accessible route to a primary function area. Alterations limited to such elements as windows, hardware, operating controls, electrical outlets, signage, mechanical, electrical and fire protection systems, including alterations for the purpose of abating a hazardous materials circumstance, do not affect the usability of a primary function area in the same manner as alterations that affect the floor plan or the configuration, location or size of rooms or spaces. It is therefore considered unreasonable to require the installation of an accessible route when the scope of alterations is limited to that reflected in these exceptions.

INTERNATIONAL CODE COUNCIL®
Copyright © 2015 ICC. ALL RIGHTS RESERVED. Accessed by David Dammon on Jun 21, 2017 12:30:52 PM pursuant to License Agreement with ICC. No further reproduction or distribution authorized. ANY UNAUTHORIZED REPRODUCTION OR DISTRIBUTION IS A VIOLATION OF THE FEDERAL COPYRIGHT ACT AND THE LICENSE AGREEMENT, AND SUBJECT TO CIVIL AND CRIMINAL PENALTIES THEREUNDER.

Note that the costs for these items are not "backed out" of the total cost for the alteration before applying Exception 1. Exceptions 2 and 3 are alterations limited to the specific items referenced.

Exception 4 is intended to avoid penalizing a building owner who is undertaking alterations or additions for the purpose of increasing accessibility. It is appropriate to encourage owners to make such alterations without requiring them to do more work simply because they chose to increase the accessibility of the space. This could otherwise have the opposite effect of discouraging such alterations to avoid the expense of undertaking more work and expense than was originally planned. For example, federal law (ADA) requires that owners of existing buildings remove certain existing barriers to accessibility. Removal of such barriers may require a permit from the code official. It would be unreasonable to have such activity trigger the mandatory requirement for further alterations to accomplish accessibility beyond the originally planned work. In principle, the code takes the view that some extent of greater accessibility is positive progress and should be encouraged, not penalized.

Where the alterations result in Type B dwelling units being provided where none previously existed (Section 410.6, Exception 4), Exception 5 would obviate the need for any additional money to be spent toward providing an accessible route to those Type B dwelling or sleeping units. This is intended to encourage the creation of such units without penalizing building owners. Similar to Section 410.4.2, this exception is intended to address the concerns of site impracticality for providing accessible routes to and into existing buildings providing Type B dwelling units.

This also reinforces the intent that the inclusion of Type B units is not meant to require elevators when alterations are performed on upper floors in nonelevator buildings (see exceptions to Section 1107.7). These areas would have been exempted if built new under the FHA and IBC, and should continue to be exempted.

410.8 Scoping for alterations. The provisions of Sections 410.8.1 through 410.8.14 shall apply to *alterations* to *existing buildings* and *facilities*.

❖ The specific provisions of this section are intended to reflect conditions under which less than full accessibility, as would be required in new construction, is permitted in altered areas. As previously discussed, Section 410.6 requires alterations to comply with the full range of accessibility-related provisions of the code for new construction. This section reflects a reasonable set of conditions under which a different level of accessibility can be provided. Sections 410.8.1 through 410.8.14 are part of the code's coordination effort with ICC A117.1 and the recommendations for the ADAAG Review Federal Advisory Committee.

410.8.1 Entrances. *Accessible* entrances shall be provided in accordance with Section 1105.

Exception: Where an *alteration* includes alterations to an entrance, and the *facility* has an *accessible* entrance, the altered entrance is not required to be *accessible*, unless required by Section 410.7. Signs complying with Section 1111 of the *International Building Code* shall be provided.

❖ This provision is contained here to point to the accessibility provisions of IBC Chapter 11 for entrances. A facility is not accessible if the entrances into it are inaccessible. IBC Section 1105 establishes reasonable criteria for providing accessible entrances. A facility is not required to have all of its entrances accessible in order to provide reasonable accommodation to disabled persons. If a facility has multiple public entrances, it is not considered unreasonable to require at least 60 percent of the entrances to be accessible. In addition to the 60-percent accessible public entrances requirement, entrances that have a specific function or provide access to only certain portions of the facility must be addressed.

If the building already has the accessible entrances required by IBC Section 1105, an entrance that is being altered is not required to be made accessible; however, if the entrance was required to be made accessible as part of the route to the altered primary function area, the exception would not apply. If entrances are not accessible, appropriate signage marking such entrances and directing persons with disabilities to the nearest accessible entrance is required.

410.8.2 Elevators. Altered elements of existing elevators shall comply with ASME A17.1 and ICC A117.1. Such elements shall also be altered in elevators programmed to respond to the same hall call control as the altered elevator.

❖ Requirements for new construction state that all elevators on an accessible route must be fully accessible in accordance with ICC A117.1. If a passenger elevator is altered, the altered element must be accessible in accordance with the requirements for existing elevators in Section 407 of ICC A117.1. If the altered elevator is part of a bank of elevators, the same element must be made accessible in every elevator that is part of that bank. The purpose of this requirement is to have consistency among elevators in a bank so that disabled people are not required to wait for a specific elevator when the general population can take the first available elevator. ICC A117.1 also provides accessibility requirements for limited use/limited access (LULA) elevators (ICC A117.1, Section 408) and private residence elevators (ICC A117.1, Section 409). While these types of elevators can serve as part of an accessible route, their use is limited by ASME A17.1.

INTERNATIONAL CODE COUNCIL®
Copyright © 2015 ICC. ALL RIGHTS RESERVED. Accessed by David Dammon on Jun 21, 2017 12:30:52 PM pursuant to License Agreement with ICC. No further reproduction or distribution authorized. ANY UNAUTHORIZED REPRODUCTION OR DISTRIBUTION IS A VIOLATION OF THE FEDERAL COPYRIGHT ACT AND THE LICENSE AGREEMENT, AND SUBJECT TO CIVIL AND CRIMINAL PENALTIES THEREUNDER.

410.8.3 Platform lifts. Platform (wheelchair) lifts complying with ICC A117.1 and installed in accordance with ASME A18.1 shall be permitted as a component of an accessible route.

❖ This section provides for the use of platform (wheelchair) lifts in existing buildings. In order to create an accessible route where there are changes in floor levels, the provisions for new construction would most often require the installation of an elevator or ramp. Platform lifts are allowed in new construction for limited conditions (see IBC Section 1109.8). If the space in an existing building precludes the installation of an elevator or ramp, a platform lift may be the only practical solution. Given the choice between no accessibility or accessibility by a platform lift, accessibility is preferable.

Previously, platform lift requirements were addressed in the elevator standard, ASME A17.1, but they are now addressed in their own standard, ASME A18.1. One of the many changes was the removal of the requirement for key operation, which previously discouraged independent utilization of platform lifts. Note that, in accordance with IBC Section 1009.5, platform lifts are also permitted for an accessible means of egress; however, accessible means of egress are not required in existing buildings undergoing alterations in accordance with IBC Section 410.6, Exception 2.

A chair lift is not acceptable as part of an accessible route in either new or existing construction. For examples of the difference between a chair lift and a platform lift, see the commentary to Section 1109.8 of the IBC.

410.8.4 Stairways and escalators in existing buildings. In *alterations*, *change of occupancy* or *additions* where an escalator or stairway is added where none existed previously and major structural modifications are necessary for installation, an accessible route shall be provided between the levels served by the escalator or stairways in accordance with Section 1104.4 of the *International Building Code.*

❖ If a stairway or escalator is added as part of an alteration in a location where one did not previously exist, the alteration must also include an accessible route between the same two levels. Where major structural modifications are required to install the stairway, there is no longer the argument that it is technically infeasible to add the accessible route to the other level. If an accessible route is already available between the two levels, or if the stairway or escalator is replacing an existing stairway or escalator, this requirement is not applicable. In conjunction with Section 410.3, if the requirement for the accessible route would be in excess of what is required for new construction, such as an accessible route to an area that was exempted by IBC Section 1103.2, 1104.4, 1107 or 1108, this requirement is not applicable. The intent is that if a route is provided between accessible levels for a nondisabled person to use, it is reasonable to also expect an accessible route.

410.8.5 Ramps. Where slopes steeper than allowed by Section 1012.2 of the *International Building Code* are necessitated by space limitations, the slope of ramps in or providing access to existing facilities shall comply with Table 410.8.5.

❖ This section recognizes the circumstances where, due to existing site or configuration constraints, a ramp with a slope of one unit vertical in 12 units horizontal (1:12) may not be feasible. A steeper slope is allowed where the elevation change does not exceed 6 inches (152 mm). Further ramp requirements, such as width, landings, etc., are set forth in IBC Section 1012.

TABLE 410.8.5
RAMPS

SLOPE	MAXIMUM RISE
Steeper than 1:10 but not steeper than 1:8	3 inches
Steeper than 1:12 but not steeper than 1:10	6 inches

For SI: 1 inch = 25.4 mm.

❖ In existing buildings, ramps that rise 3 inches (76 mm) or less may have a slope as steep as one unit vertical in eight units horizontal (1:8). In existing buildings, ramps that rise 6 inches (152 mm) or less may have a slope as steep as one unit vertical in 10 units horizontal (1:10). If it is possible to provide a lesser slope, it is desirable to do so. These steeper slopes should only be utilized when the one unit vertical in 12 units horizontal (1:12) slope is not possible.

410.8.6 Accessible dwelling or sleeping units. Where Group I-1, I-2, I-3, R-1, R-2 or R-4 dwelling or sleeping units are being altered or added, the requirements of Section 1107 of the *International Building Code* for Accessible units apply only to the quantity of spaces being altered or added.

❖ This section sets forth the rate for providing Accessible dwelling or sleeping units in Groups I-1, I-2, I-3, R-1, R-2 and R-4 where such facilities are altered or where units are added. Assuming that Accessible units are not already provided, the number of Accessible units to be incorporated into each alteration is based on the number being altered or added. For example, if a nursing home was being altered a portion at a time, 50 percent of the units being altered each time would be required to be fully wheelchair accessible. It is not the intent that all units being altered are required to be Accessible units until 50 percent of the units in the entire facility are Accessible. The total number of Accessible units in the facility is not required to exceed that required for new construction. It is unreasonable to require a greater level of accessibility in an existing building than is required in new construction.

410.8.7 Type A dwelling or sleeping units. Where more than 20 Group R-2 dwelling or sleeping units are being altered or added, the requirements of Section 1107 of the *International Building Code* for Type A units apply only to the quantity of the spaces being altered or added.

❖ Type A units are required in new construction where 20 or more apartments (including condominium style) are constructed on a site. Group R-2 requirements for

INTERNATIONAL CODE COUNCIL®
Copyright © 2015 ICC. ALL RIGHTS RESERVED. Accessed by David Dammon on Jun 21, 2017 12:30:52 PM pursuant to License Agreement with ICC. No further reproduction or distribution authorized. ANY UNAUTHORIZED REPRODUCTION OR DISTRIBUTION IS A VIOLATION OF THE FEDERAL COPYRIGHT ACT AND THE LICENSE AGREEMENT, AND SUBJECT TO CIVIL AND CRIMINAL PENALTIES THEREUNDER.

Type A units would also include convents and monasteries and could include some townhouse-style units (see the commentary to IBC Section 1107.6.2.2.1 for additional information).

Note that this requirement is applicable when 20 or more units are included in the construction project; not when an individual owner performs alterations to his or her condo when there are 20 or more units in the building. This section sets forth the rate for providing Type A dwelling or sleeping units in Group R-2 facilities in an addition where there is a change to the function of a space (i.e., a change of occupancy, such as creating apartments in an old warehouse, increasing the number of apartments by changing a storage area to apartment units or reconfiguring larger units into smaller units) or an alteration. Assuming that Type A units are not already provided, the number of Type A units required is based on the number being added or altered. For example, if a story was being added to an apartment building or a story in an apartment building was being altered, the number of Type A units required would be based on the number of units in the new story or the area being altered, not the number of units in the entire building. If Type A units are provided, the total number of Type A units in the facility is not required to exceed that required for new construction, as indicated in Section 410.3. It is unreasonable to require a greater level of accessibility in an existing building than is required in new construction.

410.8.8 Type B dwelling or sleeping units. Where four or more Group I-1, I-2, R-1, R-2, R-3 or R-4 dwelling or sleeping units are being added, the requirements of Section 1107 of the *International Building Code* for Type B units apply only to the quantity of the spaces being added. Where Group I-1, I-2, R-1, R-2, R-3 or R-4 dwelling or sleeping units are being altered and where the work area is greater than 50 percent of the aggregate area of the building, the requirements of Section 1107 of the *International Building Code* for Type B units apply only to the quantity of the spaces being altered.

❖ In new construction, Type B units are required where four or more dwelling units or sleeping units are constructed together and those units are "intended to be occupied as a residence" (see commentary, IBC Section 1107). The IRC references IBC Group R-3 for accessibility requirements for IRC units (see the definition of "Townhouse" and IRC Section R320.1).

This section sets forth the rate for providing Type B dwelling or sleeping units in Group I-1, I-2, R-1, R-2, R-3 or R-4 facilities. Type B units are required where more than four units are added in an addition or where major alterations are occurring that affect more the 50 percent of the area of the building. The Type B units in the facility are not required to exceed that required for new construction, as indicated in Section 410.3 and IBC Section 1107.7. It is unreasonable to require a greater level of accessibility in an existing building than is required in new construction. In consideration of existing site constraints, Sections 410.4.2 and 410.7 also include exceptions for the additional accessible route requirements in structures where Type B units are added as part of an alteration or change of occupancy. Note that this exception is not applicable to additions where Type B units are required.

410.8.9 Jury boxes and witness stands. In *alterations*, accessible wheelchair spaces are not required to be located within the defined area of raised jury boxes or witness stands and shall be permitted to be located outside these spaces where the ramp or lift access restricts or projects into the means of egress.

❖ This exception for jury boxes and witness stands is consistent with Sections 231 and 808 of the 2010 ADA *Standards for Accessible Design*. The intent is that if ramp access to a jury box or witness stand would have the ramp limiting or blocking the means of egress for the general population in the space, alternative locations for potential jurors or witnesses are viable. The same alternative is available if a platform lift would effectively be an obstruction for the general means of egress from the courtroom.

410.8.10 Toilet rooms. Where it is *technically infeasible* to alter existing toilet and bathing rooms to be *accessible*, an *accessible* family or assisted-use toilet or bathing room constructed in accordance with Section 1109.2.1 of the *International Building Code* is permitted. The family or assisted-use toilet or bathing room shall be located on the same floor and in the same area as the existing toilet or bathing rooms. At the inaccessible toilet and bathing rooms, provide directional signs indicating the location of the nearest family or assisted-use toilet room or bathing room. These directional signs shall include the International Symbol of Accessibility and sign characters shall meet the visual character requirements in accordance with ICC A117.1.

❖ This section deals with circumstances in which it is technically infeasible to alter existing toilet facilities to be accessible. Where new bathrooms are created in existing buildings or existing bathrooms are part of an alteration, both the men's and women's facilities would be required to be accessible. An alternative solution when it is technically infeasible to alter the existing toilet rooms would be the creation of a single unisex toilet or bathing room containing accessible facilities. The requirements for family or assisted-use toilet facilities in IBC Sections 1109.2.1 through 1109.2.1.7 provide guidance on what is required in such toilet rooms. If this alternative is selected, the room must be located on the same floor and in the same area as the existing toilet or bathroom. This is the best alternative to providing fully complying separate men's and women's facilities. One might argue that it is technically infeasible to accomplish either of these alternatives, since the alternative to altering existing facilities involves creation of an additional toilet or bathroom that was not otherwise contemplated. This would not be a persuasive argument, since there is likely to be space available somewhere in the facility to commit for use as a toilet or bathroom. In any case, the intent is that some form of an accessible toi-

INTERNATIONAL CODE COUNCIL®
Copyright © 2015 ICC. ALL RIGHTS RESERVED. Accessed by David Dammon on Jun 21, 2017 12:30:52 PM pursuant to License Agreement with ICC. No further reproduction or distribution authorized. ANY UNAUTHORIZED REPRODUCTION OR DISTRIBUTION IS A VIOLATION OF THE FEDERAL COPYRIGHT ACT AND THE LICENSE AGREEMENT, AND SUBJECT TO CIVIL AND CRIMINAL PENALTIES THEREUNDER.

let room or bathing facility is necessary and must be provided.

It should be noted that this alternative is not offered as a choice between making the existing separate-sex toilet rooms accessible or providing a family or assisted-use accessible toilet room. The existing separate-sex toilet rooms must be altered when it is technically feasible. Consideration of this alternative is only available when altering the existing toilet rooms is technically infeasible (see the definition of "Technically infeasible" in Section 202).

Signage must be provided at the inaccessible toilet rooms in accordance with IBC Sections 1110.1 and 1110.2 to notify disabled persons where a facility is not accessible and direct them to the nearest accessible facilities.

410.8.11 Dressing, fitting and locker rooms. Where it is *technically infeasible* to provide accessible dressing, fitting or locker rooms at the same location as similar types of rooms, one accessible room on the same level shall be provided. Where separate-sex facilities are provided, accessible rooms for each sex shall be provided. Separate-sex facilities are not required where only unisex rooms are provided.

❖ This section takes a similar approach for dressing rooms as provided for in Section 410.8.10 for toilet rooms and bathing facilities. If it is technically infeasible to alter existing dressing rooms to be accessible, then space elsewhere on the level must be committed to providing no less than one accessible dressing room. In this case, if the existing dressing rooms provide separate rooms for each sex, then no less than one accessible dressing room for each sex must be provided.

410.8.12 Fuel dispensers. Operable parts of replacement fuel dispensers shall be permitted to be 54 inches (1370 mm) maximum, measuring from the surface of the vehicular way where fuel dispensers are installed on existing curbs.

❖ The requirements for new fuel dispensers (i.e., gas pumps) can be found in Section 1109.14 of the IBC. Basically, the idea is that the controls must be within the reach ranges for someone standing on the parking lot surface. However, many existing facilities have gas pumps located on raised islands as a feature for protection of the pumps from accidental contact. This section would allow the new gas pump with the reach range of 15 inches (380 mm) to 48 inches (1220 mm) to be located on top of a 6-inch (150 mm) curb and still meet the maximum reach of 54 inches (1370 mm).

410.8.13 Thresholds. The maximum height of thresholds at doorways shall be $^3/_4$ inch (19.1 mm). Such thresholds shall have beveled edges on each side.

❖ Thresholds at doorways may be $^3/_4$ inch (19.1 mm) maximum in existing buildings. In new construction, a typical threshold is $^1/_2$ inch (12.7 mm) maximum in accordance with the IBC. This section recognizes that such things as differences in floor materials may create changes in elevation greater than that allowed in new construction. Edges of thresholds must be beveled to allow for the passage of a wheelchair.

410.8.14 Amusement rides. Where the structural or operational characteristics of an amusement ride are altered to the extent that the amusement ride's performance differs from that specified by the manufacturer or the original design, the amusement ride shall comply with requirements for new construction in Section 1110.4.8 of the *International Building Code.*

❖ To the extent that amusement rides are subject to the accessibility requirements of IBC Section 1110.4.8, they should be accessible and usable by individuals with disabilities. These scoping provisions are flexible, permitting latitude in terms of the method of access (e.g., transfer seat, roll-on seat or transfer device to lift the rider). Mobile and portable rides are exempted. Rides without seats, designed for children who are assisted onto the ride or controlled by the user are also exempted under IBC Section 1110.4.8.2 from providing wheelchair transfer spaces. Technical criteria can be found in the 2009 ICC A117.1, Section 1102 and includes accessible routes, load and unload areas, wheelchair spaces on rides, seats for transfer, and transfer devices. Recognizing the technical issues associated with existing amusement rides, compliance with accessibility requirements is required when the amusement ride is extensively altered.

410.9 Historic buildings. These provisions shall apply to *facilities* designated as historic structures that undergo *alterations* or a *change of occupancy*, unless *technically infeasible*. Where compliance with the requirements for accessible routes, entrances or toilet rooms would threaten or destroy the historic significance of the *facility*, as determined by the applicable governing authority, the alternative requirements of Sections 410.9.1 through 410.9.4 for that element shall be permitted.

Exception: Type B dwelling or sleeping units required by Section 1107 of the *International Building Code* are not required to be provided in historical buildings.

❖ The regulations of individual adopting jurisdictions may provide additional guidance or limitations on the use of this section. Basic ADA requirements permit exceptions and alternatives for historic buildings. These minimum requirements provide reasonable accommodations for building users.

For this section to be applicable, the building must be registered as historic. Historic buildings are treated much the same as provided for in Sections 410.4 and 410.6, in that a historic building that is altered or has undergone a change of occupancy is expected to comply with accessibility requirements, unless technical infeasibility can be demonstrated; however, this section also goes on to acknowledge that the historic character of a building may be adversely affected by strict compliance with accessibility provisions. For example, compliance with door width requirements may necessitate the removal of

INTERNATIONAL CODE COUNCIL®
Copyright © 2015 ICC. ALL RIGHTS RESERVED. Accessed by David Dammon on Jun 21, 2017 12:30:52 PM pursuant to License Agreement with ICC. No further reproduction or distribution authorized. ANY UNAUTHORIZED REPRODUCTION OR DISTRIBUTION IS A VIOLATION OF THE FEDERAL COPYRIGHT ACT AND THE LICENSE AGREEMENT, AND SUBJECT TO CIVIL AND CRIMINAL PENALTIES THEREUNDER.

an existing set of doors that is critical to the historic character of the building. To assist the code official in determining if the required provisions are detrimental to the historic significance, recommended guidelines have been incorporated into Appendix B, Section B101.

This section is intended to exempt such conditions in order to maintain the historic character of the building. Because limited extent of accessibility is desired in all facilities, Sections 410.9.1 through 410.9.4 allow for alternatives. In addition, there is an exception that would exempt the Type B dwelling or sleeping unit requirements for historical buildings, including when the alteration exceeds 50 percent of the building. This exception is important in that owners will not need to demonstrate that the addition of such units will threaten or destroy the historical character of the building.

In an effort to coordinate with the 2010 ADA *Standards for Accessible Design* requirements, items that cannot be enforced through the typical code enforcement process, but are associated with historical buildings, have been included in Appendix B Section B101.5.

410.9.1 Site arrival points. At least one accessible route from a site arrival point to an accessible entrance shall be provided.

❖ Full compliance would require an accessible route from all site arrival points. If this requirement would adversely affect the historical significance of the building, the alternative available is to provide an accessible route from one site arrival point to an accessible entrance.

410.9.2 Multilevel buildings and facilities. An accessible route from an accessible entrance to public spaces on the level of the accessible entrance shall be provided.

❖ It is not required in building alteration that accessibility to spaces above or below the level of accessible entrance be provided. Full compliance for new construction might require an accessible route to levels above or below, as well as throughout, the entrance level. If this requirement would adversely affect the historical significance of the building, the alternative is to provide an accessible route from the accessible entrance to all spaces open to the public on the entrance level. If elevators are provided, but are not accessible, signage in accordance with IBC Section 1110.2 is required.

410.9.3 Entrances. At least one main entrance shall be accessible.

Exceptions:

1. If a main entrance cannot be made accessible, an accessible nonpublic entrance that is unlocked while the building is occupied shall be provided; or
2. If a main entrance cannot be made accessible, a locked accessible entrance with a notification system or remote monitoring shall be provided.

Signs complying with Section 1111 of the *International Building Code* shall be provided at the primary entrance and the accessible entrance.

❖ Although uniform building access is the rule for new construction, older buildings may have main entrances that are both inaccessible and a significant element of the building's character. In these cases, providing access by an alternative route is deemed to meet the primary intent of the accessibility regulations.

Full compliance would require 60 percent of the entrances to be accessible. If this requirement would adversely affect the historical significance of the building, only one main entrance is required to be made accessible. If a main entrance cannot be made accessible, then an employee or service entrance may serve as the accessible entrance, provided that it remains unlocked when the building is open. Alternatively, a locked entrance, where monitoring or a notification system is available, could be provided. Signage must be provided at inaccessible entrances in accordance with IBC Sections 1111.1 and 1111.2.

410.9.4 Toilet and bathing facilities. Where toilet rooms are provided, at least one accessible family or assisted-use toilet room complying with Section 1109.2.1 of the *International Building Code* shall be provided.

❖ Full compliance would require an accessible toilet/bathing facility at each location where toilet/bathing facilities are provided. If altering the existing facilities to be accessible would adversely affect the historical significance of the building, only one unisex bathroom that complies with the accessible family or assisted-use toilet/bathing requirements in IBC Section 1109.2.1 is required. Signage must be provided at inaccessible toilet rooms in accordance with IBC Section 1110.2.

Bibliography

The following resource materials were used in the preparation of the commentary for this chapter of the code.

24 CFR, *Fair Housing Accessibility Guidelines* (FHAG). Washington, DC: Department of Housing and Urban Development, 1991.

36 CFR, Parts 1190 and 1191 Final Rule, *The Americans with Disabilities Act (ADA) Accessibility Guidelines; Architectural Barriers Act (ABA) Accessibility Guidelines*. Washington, DC: Architectural and Transportation Barriers Compliance Board, July 23, 2004.

INTERNATIONAL CODE COUNCIL®

Copyright © 2015 ICC. ALL RIGHTS RESERVED. Accessed by David Dammon on Jun 21, 2017 12:30:52 PM pursuant to License Agreement with ICC. No further reproduction or distribution authorized. ANY UNAUTHORIZED REPRODUCTION OR DISTRIBUTION IS A VIOLATION OF THE FEDERAL COPYRIGHT ACT AND THE LICENSE AGREEMENT, AND SUBJECT TO CIVIL AND CRIMINAL PENALTIES THEREUNDER.

42 USC 3601-88, *Fair Housing Amendments Act* (FHAA). Washington, DC: United States Code, 1988.

2010 *ADA Standards for Accessible Design*. Washington, DC: Department of Justice, September 15, 2010.

ASCE 7-10, *Minimum Design Loads for Buildings and Other Structures.* American Society of Civil Engineers, 2011.

DOJ 28 CFR, Part 36-91, *Americans with Disabilities Act* (ADA). Washington, DC: Department of Justice, 1991.

FEMA 311-07, *Residential Substantial Damage Estimators In Your Community*. Washington, DC: Federal Emergency Management Agency, 2007.

FEMA P-758, *Substantial Improvement/Substantial Damage Desk Reference*. Washington, DC: Federal Emergency Management Agency, 2009.

NFPA 13-07, *Installation of Sprinkler Systems*. Quincy, MA: National Fire Protection Association, 2007.

INTERNATIONAL CODE COUNCIL®

Copyright © 2015 ICC. ALL RIGHTS RESERVED. Accessed by David Dammon on Jun 21, 2017 12:30:52 PM pursuant to License Agreement with ICC. No further reproduction or distribution authorized. ANY UNAUTHORIZED REPRODUCTION OR DISTRIBUTION IS A VIOLATION OF THE FEDERAL COPYRIGHT ACT AND THE LICENSE AGREEMENT, AND SUBJECT TO CIVIL AND CRIMINAL PENALTIES THEREUNDER.

INTERNATIONAL CODE COUNCIL®
Copyright © 2015 ICC. ALL RIGHTS RESERVED. Accessed by David Dammon on Jun 21, 2017 12:30:52 PM pursuant to License Agreement with ICC. No further reproduction or distribution authorized. ANY UNAUTHORIZED REPRODUCTION OR DISTRIBUTION IS A VIOLATION OF THE FEDERAL COPYRIGHT ACT AND THE LICENSE AGREEMENT, AND SUBJECT TO CIVIL AND CRIMINAL PENALTIES THEREUNDER.

Chapter 5: Classification of Work

General Comments

This chapter provides an overview of the process for the repair, alteration and restoration of existing buildings. A brief description is provided that identifies the differences between the three levels of alterations. In addition, the topics of additions, historic buildings and relocated buildings are mentioned.

Purpose

This chapter enables the contractor, design professional or code official to easily identify the classification of and the associated chapter in the code for building alterations, additions and repairs.

SECTION 501 GENERAL

501.1 Scope. The provisions of this chapter shall be used in conjunction with Chapters 6 through 13 and shall apply to the *alteration*, *repair*, *addition* and *change of occupancy* of existing structures, including historic and moved structures, as referenced in Section 301.1.2. The work performed on an *existing building* shall be classified in accordance with this chapter.

❖ This section establishes when the regulations contained in the code must be followed, whether all or in part. Something must happen (modification to an existing building or allowing an existing building or structure to become unsafe) for the code to be applicable. The code is not a maintenance document requiring periodic inspections that will, in turn, result in an enforcement action. Periodic inspections are addressed by the *International Fire Code*® (IFC®).

501.1.1 Compliance with other alternatives. *Alterations*, *repairs*, *additions* and *changes of occupancy* to existing structures shall comply with the provisions of Chapters 6 through 13 or with one of the alternatives provided in Section 301.1.

❖ This section offers the code user compliance options. In addition to being able to use the provisions listed in Chapters 6 through 13, there are three other compliance alternatives listed under Section 301.1.

First, Section 301.1.1 offers a prescriptive compliance method for repairs, alterations, additions and changes of occupancy as long as they comply with Chapter 3 of the code and the IFC. Second, Section 301.1.2 describes the work area compliance method that requires compliance with the applicable provisions of Chapters 6 through 13. Third, Section 301.1.3 describes the performance compliance method that requires compliance with Chapter 14.

501.2 Work area. The *work area*, as defined in Chapter 2, shall be identified on the construction documents.

❖ As defined in Chapter 2, a "Work area" is the area of all reconfigured spaces where work is occurring within the scope of a project. These areas are to be shown clearly on the construction documents. Work areas exclude other portions of the building where incidental work is ongoing.

SECTION 502 REPAIRS

502.1 Scope. *Repairs,* as defined in Chapter 2, include the patching or restoration or replacement of damaged materials, elements, *equipment or fixtures* for the purpose of maintaining such components in good or sound condition with respect to existing loads or performance requirements.

❖ This section describes repairs to existing structures, including the restoration or replacement of damaged materials to good or sound condition, as they apply to existing loading and the performance requirements of any part of the building with any of the materials and methods listed in Section 502.1.

502.2 Application. *Repairs* shall comply with the provisions of Chapter 6.

❖ Chapter 6 provides the guidelines for repairs to existing structures. It covers topics ranging from building elements and materials to fire protection and accessibility. The main focus of Chapter 6 is covered in the provisions of Section 606.

502.3 Related work. Work on nondamaged components that is necessary for the required *repair* of damaged components shall be considered part of the *repair* and shall not be subject to the provisions of Chapter 7, 8, 9, 10 or 11.

❖ This section makes it clear that portions of a building, while they may be intact, that have to be removed to

INTERNATIONAL CODE COUNCIL®
Copyright © 2015 ICC. ALL RIGHTS RESERVED. Accessed by David Dammon on Jun 21, 2017 12:30:52 PM pursuant to License Agreement with ICC. No further reproduction or distribution authorized. ANY UNAUTHORIZED REPRODUCTION OR DISTRIBUTION IS A VIOLATION OF THE FEDERAL COPYRIGHT ACT AND THE LICENSE AGREEMENT, AND SUBJECT TO CIVIL AND CRIMINAL PENALTIES THEREUNDER.

repair or replace another part of the structure can be considered part of the repair even though they were not damaged and unserviceable. For example, a building that was not properly flashed around penetrations to the exterior envelope develops water intrusion. The water has resulted in the deterioration of the wall structure, which will have to be removed and replaced as necessary. Even though the siding covering the damaged portion of the structure is serviceable, it is considered part of the related work as it has to be removed and then replaced in order to fix the damaged portions.

SECTION 503
ALTERATION—LEVEL 1

503.1 Scope. Level 1 alterations include the removal and replacement or the covering of existing materials, elements, equipment, or fixtures using new materials, elements, equipment, or fixtures that serve the same purpose.

❖ Level 1 alterations represent the most basic or foremost level of building alterations. This includes the removal and replacement or the covering of existing materials, elements, equipment or fixtures. An example would be the addition of a new roof to an existing building. Another example would be the removal of aluminum siding exterior finish to be replaced with vinyl siding.

503.2 Application. Level 1 *alterations* shall comply with the provisions of Chapter 7.

❖ Chapter 7 describes, in detail, the requirements for Level 1 alterations. It is important to note that historic buildings must also comply with this chapter unless there is a modification noted in Chapter 12. Note that Level 1 alterations do not involve the reconfiguration of space.

SECTION 504
ALTERATION—LEVEL 2

504.1 Scope. Level 2 *alterations* include the reconfiguration of space, the addition or elimination of any door or window, the reconfiguration or extension of any system, or the installation of any additional equipment.

❖ Chapter 8 describes, in detail, the requirements for Level 2 alterations. The exception to Section 801.1 allows buildings undergoing alterations that are exclusively the result of compliance with the accessibility requirements of Section 705.2 to comply with Chapter 7.

504.2 Application. Level 2 *alterations* shall comply with the provisions of Chapter 7 for Level 1 *alterations* as well as the provisions of Chapter 8.

❖ In addition to the provisions listed in Chapter 8, Level 2 alterations are also required to meet all of the provisions of Chapter 7, Level 1 alterations. This requirement effectively compounds the requirements for someone planning to alter an existing structure. For example, if during the process of replacing the aluminum siding on a building with vinyl siding, the building owner decides to eliminate one of four windows from a room, then this project would be classified as a Level 2 alteration and would, therefore, be required to meet the provisions of Chapters 7 and 8.

SECTION 505
ALTERATION—LEVEL 3

505.1 Scope. Level 3 *alterations* apply where the work area exceeds 50 percent of the *building area*.

❖ Any time the work area, as defined in Section 202, exceeds one-half of the aggregate building area, it is considered to be a Level 3 alteration and, therefore, has to meet the requirements of Chapter 9. In the code, a work area encompasses all portions of the existing building that are proposed to be reconfigured.

505.2 Application. Level 3 *alterations* shall comply with the provisions of Chapters 7 and 8 for Level 1 and 2 *alterations*, respectively, as well as the provisions of Chapter 9.

❖ Any project that qualifies as a Level 3 alteration project must meet all of the requirements of Chapters 7, 8 and 9.

SECTION 506
CHANGE OF OCCUPANCY

506.1 Scope. *Change of occupancy* provisions apply where the activity is classified as a *change of occupancy* as defined in Chapter 2.

❖ A change of occupancy in an existing structure may change the level of inherent hazards that the code was initially intended to address.

This is done so that the applicable code requirements adequately address the specific hazards of the new occupancy. For example, a change from an existing mercantile occupancy to a business occupancy renders all Group B provisions applicable to all portions of the structure where the occupancy has changed.

506.2 Application. *Changes of occupancy* shall comply with the provisions of Chapter 10.

❖ This section indicates compliance with Chapter 10 for changes of occupancy. Chapter 10 contains provisions frequently used for existing structures since the occupancy in a building or structure often changes during the life of the building.

INTERNATIONAL CODE COUNCIL®
Copyright © 2015 ICC. ALL RIGHTS RESERVED. Accessed by David Dammon on Jun 21, 2017 12:30:52 PM pursuant to License Agreement with ICC. No further reproduction or distribution authorized. ANY UNAUTHORIZED REPRODUCTION OR DISTRIBUTION IS A VIOLATION OF THE FEDERAL COPYRIGHT ACT AND THE LICENSE AGREEMENT, AND SUBJECT TO CIVIL AND CRIMINAL PENALTIES THEREUNDER.

SECTION 507
ADDITIONS

507.1 Scope. Provisions for *additions* shall apply where work is classified as an *addition* as defined in Chapter 2.

❖ Any project that would increase the floor area, the number of stories in a building or the height of a structure would qualify as an addition.

507.2 Application. *Additions* to *existing buildings* shall comply with the provisions of Chapter 11.

❖ Additions to existing structures are specifically covered in Chapter 11 of the code.

SECTION 508
HISTORIC BUILDINGS

508.1 Scope. *Historic building* provisions shall apply to buildings classified as historic as defined in Chapter 2.

❖ The most important criterion for the application of this section is that the building must be certified as being of historic significance by a qualified party or agency. Usually this is done by a state or local authority after careful review of the historical value of the building. Most, if not all, states have such authorities, as do many local jurisdictions. The agencies with such authority can be located at the state or local government level or through the local chapter of the American Institute of Architects (AIA). Other considerations for classification as a historical building include the structural condition of the building (i.e., whether it is structurally sound), its proposed use, its impact on life safety and how the intent of the code, if not the letter, will be achieved.

508.2 Application. Except as specifically provided for in Chapter 12, *historic buildings* shall comply with applicable provisions of this code for the type of work being performed.

❖ Chapter 12 covers the various aspects of existing historic structures and includes specific sections on repairs, fire safety, alterations, change of occupancy and structure. In the absence of any specific requirements or provisions in Chapter 12, the remainder of the code is applicable to work proposed for historic buildings.

SECTION 509
RELOCATED BUILDINGS

509.1 Scope. Relocated building provisions shall apply to relocated or moved buildings.

❖ Any structure that is relocated or moved to a different lot or a new location on the same lot falls within the scope of Section 509.

Structures that are relocated or moved are required to comply with the provisions applicable for new construction. The moved structure may comply with the alternative provisions of Chapter 14 instead of the code requirements for new structures, which may be particularly useful if the moved structure is older than the effective date of the adoption of the building codes in the jurisdiction. The fire separation distance of the moved structure must also comply with the requirements for new structures even if the compliance alternative provisions in Chapter 14 are used to meet the code requirements.

509.2 Application. Relocated buildings shall comply with the provisions of Chapter 13.

❖ The requirements for relocated or moved buildings are found in Chapter 13 of the code.

INTERNATIONAL CODE COUNCIL®
Copyright © 2015 ICC. ALL RIGHTS RESERVED. Accessed by David Dammon on Jun 21, 2017 12:30:52 PM pursuant to License Agreement with ICC. No further reproduction or distribution authorized. ANY UNAUTHORIZED REPRODUCTION OR DISTRIBUTION IS A VIOLATION OF THE FEDERAL COPYRIGHT ACT AND THE LICENSE AGREEMENT, AND SUBJECT TO CIVIL AND CRIMINAL PENALTIES THEREUNDER.

INTERNATIONAL CODE COUNCIL®
Copyright © 2015 ICC. ALL RIGHTS RESERVED. Accessed by David Dammon on Jun 21, 2017 12:30:52 PM pursuant to License Agreement with ICC. No further reproduction or distribution authorized. ANY UNAUTHORIZED REPRODUCTION OR DISTRIBUTION IS A VIOLATION OF THE FEDERAL COPYRIGHT ACT AND THE LICENSE AGREEMENT, AND SUBJECT TO CIVIL AND CRIMINAL PENALTIES THEREUNDER.

Chapter 6: Repairs

General Comments

Chapter 6 governs the repair of existing buildings. The provisions define conditions under which repairs may be made using materials and methods like those of the original construction or the extent to which repairs must comply with requirements for new buildings.

It should be noted that buildings such as those completely destroyed by fire would typically no longer be considered repairs and would instead need to be constructed as a new building in accordance with the *International Building Code*® (IBC®). There are, however, many situations that would still allow the damage to be dealt with as a repair. An example may be a small kitchen fire where the cabinets may need replacing and the walls in that area may also need replacing.

Purpose

Repairs to an existing structure must be made with the proper materials in a manner that will safeguard the public and ensure the building does not become a hazard to life, health or property.

SECTION 601 GENERAL

601.1 Scope. Repairs as described in Section 502 shall comply with the requirements of this chapter. Repairs to *historic buildings* need only comply with Chapter 12.

❖ Repairs are described in Section 502 as the patching, restoration or replacement of damaged materials, elements, equipment or fixtures for the purpose of maintaining such materials and elements in good or sound condition with respect to existing loads or performance requirements. The scoping provisions of this section refer the user to Section 502 to be certain the work classification is "repair" and Chapter 6 is the appropriate chapter to be used. There are additional provisions specific to repairs in historic buildings and the code user is referred to Chapter 12 for the possible applicability of those provisions in addition to the requirements of Chapter 6. It is the intent of the code to allow original materials and construction methods for repairs to historical buildings in order to limit any negative impact on the structure's historical significance.

601.2 Conformance. The work shall not make the building less conforming than it was before the *repair* was undertaken.

❖ The general limitation on repairs is that the level of safety, health and public welfare of the existing building must not be reduced by any work being performed. This requirement can be broadly interpreted, as its applications vary on a case-by-case situation, but the level of safety provided by the structure and systems, such as plumbing and mechanical, is not to be decreased in the course of making repairs.

[BS] 601.3 Flood hazard areas. In flood hazard areas, repairs that constitute *substantial improvement* shall require that the building comply with Section 1612 of the *International Building Code*, or Section R322 of the *International Residential Code*, as applicable.

❖ If located in designated flood hazard areas, buildings and structures that are damaged by any cause are to be examined to determine if the damage constitutes substantial damage, in which the cost of repairing/restoring the building or structure to its predamaged condition equals or exceeds 50 percent of its market value before the damage occurred. All substantial improvements and repairs of buildings and structures that are substantially damaged are to meet the flood-resistant provisions of the IBC or *International Residential Code*® (IRC®).

SECTION 602 BUILDING ELEMENTS AND MATERIALS

602.1 Existing building materials. Materials already in use in a building in compliance with requirements or approvals in effect at the time of their erection or installation shall be permitted to remain in use unless determined by the *code official* to render the building or structure unsafe or *dangerous* as defined in Chapter 2.

❖ A material or system approved before the code took effect can continue to be used as long as it can be shown that the material or system is not detrimental to the health or safety of the building occupants or the public. In other words, the code is not retroactive.

602.2 New and replacement materials. Except as otherwise required or permitted by this code, materials permitted by the applicable code for new construction shall be used. Like materials shall be permitted for *repairs* and *alterations*, provided no *dangerous* or *unsafe* condition, as defined in Chap-

INTERNATIONAL CODE COUNCIL®
Copyright © 2015 ICC. ALL RIGHTS RESERVED. Accessed by David Dammon on Jun 21, 2017 12:30:52 PM pursuant to License Agreement with ICC. No further reproduction or distribution authorized. ANY UNAUTHORIZED REPRODUCTION OR DISTRIBUTION IS A VIOLATION OF THE FEDERAL COPYRIGHT ACT AND THE LICENSE AGREEMENT, AND SUBJECT TO CIVIL AND CRIMINAL PENALTIES THEREUNDER.

ter 2, is created. Hazardous materials, such as asbestos and lead-based paint, shall not be used where the code for new construction would not permit their use in buildings of similar occupancy, purpose and location.

❖ There are two options for materials used in repairs to an existing building. Generally, the materials used for repairs should be those that are presently required or permitted for new construction under the *International Codes*® (I-Codes®). It is also acceptable to use materials consistent with those that are already present, except where those materials pose a hazard. This allowance follows the general concept that any repair should not make a building more hazardous than it was prior to the repair. It is generally possible to repair a structure, its components and its systems with materials consistent with those materials that were used previously. However, where materials that are now deemed hazardous were used in areas subject to repair, they may no longer be used. For example, the code identifies asbestos and lead-based paint as two common hazardous materials that cannot be used in the repair process. Certain materials previously considered acceptable for building construction are now a threat to the health of the occupants.

602.3 Glazing in hazardous locations. Replacement glazing in hazardous locations shall comply with the safety glazing requirements of the *International Building Code* or *International Residential Code* as applicable.

Exception: Glass block walls, louvered windows, and jalousies repaired with like materials.

❖ When glazing in an existing building is replaced within the same building, it must comply with the current requirements and standards of the IBC or the IRC, as applicable. This includes installing new glass in an existing window, door or other type of opening, even where the glass replaced did not comply with the standards of the code.

Glass block walls are described in Chapter 21 of the IBC, which eliminates the Consumer Product Safety Commission (CPSC) test requirement. Glass block walls are not required to meet the test requirements of CPSC 16 CFR, Part 1201 for safety glazing; however, there are still safety requirements placed on the installation of the glass block.

Louvered and jalousie windows are exempt from safety glazing requirements in all applications, including those where a flat plane of glass is otherwise required to be safety glass. This exemption is based on records that show the injuries associated with this use of glass are primarily from persons impacting the glass edge with no cutting or piercing injuries resulting from glass breakage. Safety glass would not have an effect on the type of injury. There are also practical production reasons associated with fabricating safety glazing for the relatively long, thin slats.

SECTION 603
FIRE PROTECTION

603.1 General. Repairs shall be done in a manner that maintains the level of fire protection provided.

❖ Any level of fire protection that currently exists in a building must not be adversely affected as a result of any repair. For example, repairing the existing ceiling and sprinkler heads or repairing the fire alarm system equipment must ultimately provide the same level of coverage and protection that existed prior to the repairs being undertaken.

SECTION 604
MEANS OF EGRESS

604.1 General. Repairs shall be done in a manner that maintains the level of protection provided for the means of egress.

❖ Any level of protection provided by the means of egress that currently exists in a building must not be adversely affected as a result of any repair. For example, repairing the walls and doors of a corridor must ultimately provide the same level of protection that existed prior to the repairs being undertaken.

SECTION 605
ACCESSIBILITY

605.1 General. Repairs shall be done in a manner that maintains the level of accessibility provided.

❖ The level of accessibility that currently exists in a building must not be adversely affected as a result of any repair. Continued compliance with the accessibility requirements of the code is dependent on the maintenance of such facilities throughout the life of the building. For example, drinking fountains that are required to be accessible are of little value if they malfunction through the deterioration or failure of any of the working parts. In other cases, inoperable elevators, locked accessible doors and obstructed accessible routes must be maintained such that they are readily usable by individuals with disabilities.

SECTION 606
STRUCTURAL

[BS] 606.1 General. Structural repairs shall be in compliance with this section and Section 601.2. Regardless of the extent of structural or nonstructural damage, *dangerous* conditions shall be eliminated. Regardless of the scope of *repair*, new structural members and connections used for *repair* or *rehabilitation* shall comply with the detailing provisions of the *International Building Code* for new buildings of similar structure, purpose and location.

❖ This section gives the requirements that pertain to structural materials and elements in need of repair;

INTERNATIONAL CODE COUNCIL®
Copyright © 2015 ICC. ALL RIGHTS RESERVED. Accessed by David Dammon on Jun 21, 2017 12:30:52 PM pursuant to License Agreement with ICC. No further reproduction or distribution authorized. ANY UNAUTHORIZED REPRODUCTION OR DISTRIBUTION IS A VIOLATION OF THE FEDERAL COPYRIGHT ACT AND THE LICENSE AGREEMENT, AND SUBJECT TO CIVIL AND CRIMINAL PENALTIES THEREUNDER.

Section 606.2.1 addresses repairs for less than substantial structural damage; Section 606.2.2 addresses repairs for substantial structural damage to vertical elements of the lateral force-resisting system; and Section 606.2.3 addresses repairs for substantial structural damage to gravity load-carrying components. This section also requires dangerous conditions to be eliminated. See the definition of "Dangerous" in Section 202 for a list of the conditions that must always be corrected regardless of the extent of damage. Finally, regardless of the scope of work, new connections and new structural members must be in compliance with the IBC.

[BS] 606.2 Repairs to damaged buildings. Repairs to damaged buildings shall comply with this section.

❖ Buildings can suffer damage from numerous sources. Natural disasters, such as earthquakes, floods, hurricanes and tornadoes, can cause extensive damage over widespread areas, depending on the severity of the event. Water intrusion due to a failure in the building envelope, termite infestations or exposure to corrosive chemicals can all lead to the deterioration of structural members over time. For the most part, this section does not differentiate between the possible causes of the damage (the exceptions are Sections 606.2.2.3 and 606.2.3.1). Needless to say, determining the root cause of any damage would be advisable so that an owner can ascertain the risk of a recurrence and, if necessary, develop a plan to address that risk.

The primary concern in determining how repairs are to be accomplished is establishing the extent of the damage that has been sustained to see if it exceeds either of the thresholds contained in the definition of "Substantial structural damage." Where it does not, Section 606.2.4 applies and the repairs can typically be limited to restoring the building to its predamaged state. For buildings that have suffered substantial structural damage, the approach to repairs is dependent on whether that damage is to elements of the lateral system (see Section 606.2.2) or only to elements of the gravity system (see Section 606.2.3). This parallels the classes of substantial structural damage defined in Section 202. The definition of "Substantial structural damage" would itself necessitate some preliminary level of structural evaluation.

There are two repair requirements that are not related to the extent of the damage. Dangerous conditions must always be eliminated (see Section 606.2.1) and any new structural members and connections must meet the code requirements for new construction.

[BS] 606.2.1 Repairs for less than substantial structural damage. For damage less than *substantial structural damage*, the damaged elements shall be permitted to be restored to their predamage condition.

❖ For damage less than substantial structural damage, repairs are allowed that restore the building to its predamaged state using materials and strengths that existed prior to the damage. Again, as required in Section 606.1, new structural members and connections used for this repair must comply with the detailing provisions of the IBC for new buildings of similar structure, purpose and location.

[BS] 606.2.2 Substantial structural damage to vertical elements of the lateral force-resisting system. A building that has sustained *substantial structural damage* to the vertical elements of its lateral force-resisting system shall be evaluated in accordance with Section 606.2.2.1, and either repaired in accordance with Section 606.2.2.2 or repaired and rehabilitated in accordance with Section 606.2.2.3, depending on the results of the evaluation.

Exceptions:

1. Buildings assigned to Seismic Design Category A, B, or C whose substantial structural damage was not caused by earthquake need not be evaluated or rehabilitated for load combinations that include earthquake effects.
2. One- and two-family dwellings need not be evaluated or rehabilitated for load combinations that include earthquake effects.

❖ This section provides requirements that apply where the damage threshold based on the extent of damage to vertical elements of the lateral force-resisting system in any story is exceeded. Substantial structural damage to the lateral system triggers the evaluation of the whole building for wind and seismic loads (see Section 606.2.2.1). The emphasis is placed on vertical elements, such as walls and columns, rather than horizontal elements, because the vertical elements of the lateral force-resisting system determine the structure's response, particularly to earthquakes. Based on the results of this evaluation, the lateral force-resisting system is required to either be repaired (see Section 606.2.2.2), or repaired and rehabilitated (see Section 606.2.2.3).

There are two exceptions that exempt certain combinations of buildings: seismic risk and damage from triggered seismic upgrades. Basic repair—that is, restoring the predamaged condition—is still required even for the exceptions outlined.

Exception 1 is for buildings in areas of low or moderate seismicity (Seismic Design Category A, B or C), where the damage was not caused by an earthquake and therefore would not be required to be evaluated or rehabilitated for load combinations that include earthquake effects. Where earthquakes are rare, it serves no significant public purpose to trigger seismic upgrades following damage caused by fire, collision, wind, etc.

Exception 2 is for one- and two-family dwellings, where the public risk is especially low even though the damage may be associated with earthquake effects.

Similar exceptions are found in Section 404.2.

INTERNATIONAL CODE COUNCIL®
Copyright © 2015 ICC. ALL RIGHTS RESERVED. Accessed by David Dammon on Jun 21, 2017 12:30:52 PM pursuant to License Agreement with ICC. No further reproduction or distribution authorized. ANY UNAUTHORIZED REPRODUCTION OR DISTRIBUTION IS A VIOLATION OF THE FEDERAL COPYRIGHT ACT AND THE LICENSE AGREEMENT, AND SUBJECT TO CIVIL AND CRIMINAL PENALTIES THEREUNDER.

[BS] 606.2.2.1 Evaluation. The building shall be evaluated by a registered design professional, and the evaluation findings shall be submitted to the *code official*. The evaluation shall establish whether the damaged building, if repaired to its predamage state, would comply with the provisions of the *International Building Code* for load combinations that include wind or earthquake effects, except that the seismic forces shall be the reduced *International Building Code*-level seismic forces.

❖ This section contains the requirements for the building evaluation mandated by Section 606.2.2. For the purpose of establishing the structure's adequacy, the evaluation is to utilize the strength and stiffness of the original, predamaged structure.

The structural evaluation must assess the entire structure for compliance with IBC wind and seismic load combinations. This means that the evaluation must demonstrate compliance for all loads that are applicable to new construction. The only exception is that the approaches permitted for the reduced seismic forces in Section 301.1.4.2 may be used for the evaluation of seismic effects on the structure. Since no other exceptions are stated, the implication is that new construction requirements for material strength and detailing must be satisfied for loading considerations other than earthquakes.

If this evaluation indicates that the building's lateral force-resisting system complies with the IBC using the permitted reduced seismic design criteria (see Section 301.1.4.2), then it need only be repaired to the predamaged condition. Otherwise, the lateral force-resisting system must be rehabilitated in accordance with Section 606.2.2.3.

[BS] 606.2.2.2 Extent of repair for compliant buildings. If the evaluation establishes that the building in its predamage condition complies with the provisions of Section 606.2.2.1, then the damaged elements shall be permitted to be restored to their predamage condition.

❖ Where the evaluation provided for in Section 606.2.2.1 establishes that the predamaged building meets the structural provisions of the IBC, the repairs may be limited to a restoration of the structural components.

[BS] 606.2.2.3 Extent of repair for noncompliant buildings. If the evaluation does not establish that the building in its predamage condition complies with the provisions of Section 606.2.2.1, then the building shall be rehabilitated to comply with the provisions of this section. The wind loads for the *repair* and *rehabilitation* shall be those required by the building code in effect at the time of original construction, unless the damage was caused by wind, in which case the wind loads shall be in accordance with the *International Building Code*. The seismic loads for this *rehabilitation* design shall be those required by the building code in effect at the time of original construction, but not less than the reduced *International Building Code*-level seismic forces.

❖ If the evaluation of the building, when hypothetically repaired to its predamaged condition, does not comply with the requirements established in Section 606.2.2.1, then the building must be rehabilitated as described in this section. The general requirement is to comply with the IBC load combinations, which are used to establish the required strength of structural members. The effects of wind and seismic loads warrant special consideration.

In determining the level of compliance for repairs to buildings that have sustained substantial structural damage, it is important to determine if wind forces have caused that damage. If so, it is considered prudent to require the repairs of wind damage to use wind loading that is the higher of the building code in effect at the time of original construction or the IBC. If not, the wind loading in effect at the time of the original construction is the basis for design. Seismic forces for the rehabilitation can be those required by the building code in effect at the time of the building's construction, but this may not be less than the reduced IBC seismic force level.

[BS] 606.2.3 Substantial structural damage to gravity load-carrying components. Gravity load-carrying components that have sustained *substantial structural damage* shall be rehabilitated to comply with the applicable provisions for dead and live loads in the *International Building Code*. Snow loads shall be considered if the *substantial structural damage* was caused by or related to snow load effects. Undamaged gravity load-carrying components that receive dead, live or snow loads from rehabilitated components shall also be rehabilitated if required to comply with the design loads of the *rehabilitation* design.

❖ Substantial structural damage to gravity load-carrying elements, such as columns or bearing walls, must be repaired so that these members are adequate to resist the dead and live loads in accordance with current code requirements, as must other elements of the load path. Snow loads must also be considered if the substantial damage was in any way caused by snow load effects.

[BS] 606.2.3.1 Lateral force-resisting elements. Regardless of the level of damage to gravity elements of the lateral force-resisting system, if substantial structural damage to gravity load-carrying components was caused primarily by wind or seismic effects, then the building shall be evaluated in accordance with Section 606.2.2.1 and, if noncompliant, rehabilitated in accordance with Section 606.2.2.3.

Exceptions:

1. Buildings assigned to Seismic Design Category A, B, or C whose substantial structural damage was not caused by earthquake need not be evaluated or rehabilitated for load combinations that include earthquake effects.
2. One- and two-family dwellings need not be evaluated or rehabilitated for load combinations that include earthquake effects.

❖ In determining the extent of repairs to these gravity load-carrying elements that are not part of the lateral

INTERNATIONAL CODE COUNCIL®
Copyright © 2015 ICC. ALL RIGHTS RESERVED. Accessed by David Dammon on Jun 21, 2017 12:30:52 PM pursuant to License Agreement with ICC. No further reproduction or distribution authorized. ANY UNAUTHORIZED REPRODUCTION OR DISTRIBUTION IS A VIOLATION OF THE FEDERAL COPYRIGHT ACT AND THE LICENSE AGREEMENT, AND SUBJECT TO CIVIL AND CRIMINAL PENALTIES THEREUNDER.

force-resisting system, it is important to determine if wind or earthquakes have caused the structural damage. If the substantial structural damage is due to wind or earthquakes, then the lateral system is suspect and it must be checked even if no damage is apparent. Where this is the case, then the structure must be evaluated in accordance with Section 606.2.2.1.

There are two exceptions that acknowledge that applying this requirement in some cases is excessive and may have the effect of discouraging or delaying certain repairs by imposing the additional costs of a seismic upgrade. Exception 1 exempts buildings in areas of low or moderate seismicity, where the damage was caused by something other than an earthquake. Where earthquakes are rare, it serves no significant public purpose to trigger seismic upgrades following damage caused by fire, collision, wind and other events. Exception 2 exempts one- and two-family dwellings, where the risk to the public of poor earthquake performance is especially low. Basic repair—that is, restoring to the predamaged condition—is still required. Similar exceptions are found in Section 404.3.1.

[BS] 606.2.4 Flood hazard areas. In *flood hazard* areas, buildings that have sustained *substantial damage* shall be brought into compliance with Section 1612 of the *International Building Code*, or Section R322 of the *International Residential Code*, as applicable.

❖ The definition of "Flood hazard area" provided in Section 202 is taken from the IBC and establishes where this provision is applicable. If located in designated flood hazard areas, buildings that are damaged by any cause must be examined to determine if the damage constitutes substantial damage (see the definition of "Substantial damage" in Section 202). Buildings are considered to have sustained substantial damage when the cost of repairing the building to its predamaged condition is 50 percent or more of its market value before the damage occurred. Buildings determined to be substantially damaged must meet the flood-resistant provisions of the IBC (see FEMA-213, *Answers to Questions About Substantially Damaged Buildings*) or IRC Section R322, as applicable.

Section 1612 of the IBC and Section R322 of the IRC address requirements for buildings in designated flood hazard areas. The design and construction is required to be in accordance with ASCE 24, which in turn references the flood loading given in ASCE 7. Through use of these IBC and IRC provisions, communities meet a significant portion of the flood plain management regulation requirements necessary to participate in the National Flood Insurance Program (NFIP).

SECTION 607
ELECTRICAL

607.1 Material. Existing electrical wiring and equipment undergoing *repair* shall be allowed to be repaired or replaced with like material.

❖ In essence, this section states that existing wiring systems can be maintained in the same manner in which they were installed. Repairs are to be made with materials and components that do not in any way make the existing wiring system less safe. Materials and components can be replaced with items of equal quality and integrity or with items of superior quality and integrity. The intent is to allow necessary repairs without subjecting the system to new construction requirements. A wiring system material or component that is obsolete or no longer recognized by current codes is permitted to be used for the purpose of making repairs provided that it is consistent with the existing materials and components, and the system is not made any less safe.

607.1.1 Receptacles. Replacement of electrical receptacles shall comply with the applicable requirements of Section 406.4(D) of NFPA 70.

❖ This section ties the replacement of receptacle devices to the provisions of NFPA 70, which do not always allow replacement with similar devices. For example, where a grounding means exists, ungrounded-type (two conductor) receptacles must be replaced only with grounding-type (three conductor) receptacles. Similarly, receptacles in locations where ground-fault circuit-interrupter (GFCI) protection is required must be replaced only with GFCI-type receptacles or the branch circuit must provide such GFCI protection. See Sections 406.4(D)(1) through (D)(6) of NFPA 70 for more replacement provisions.

607.1.2 Plug fuses. Plug fuses of the Edison-base type shall be used for replacements only where there is no evidence of over fusing or tampering per applicable requirements of Section 240.51(B) of NFPA 70.

❖ This section does not allow Edison-base-type (screw base) fuses to replace existing fuses, except where there is no reason to believe that the wrong size fuses have been or are being used or where there is no evidence of attempts to defeat the protection afforded by the fuses. Edison-base fuses are plug-style fuses with the same screw thread base as the common incandescent lamp. Such fuses have ampere ratings of 30 amps and less, and are interchangeable, meaning that occupants are not prevented from inserting fuses that are rated higher than the capacity of the wiring they are intended to protect; therefore, fire hazards are likely to be created.

INTERNATIONAL CODE COUNCIL®
Copyright © 2015 ICC. ALL RIGHTS RESERVED. Accessed by David Dammon on Jun 21, 2017 12:30:52 PM pursuant to License Agreement with ICC. No further reproduction or distribution authorized. ANY UNAUTHORIZED REPRODUCTION OR DISTRIBUTION IS A VIOLATION OF THE FEDERAL COPYRIGHT ACT AND THE LICENSE AGREEMENT, AND SUBJECT TO CIVIL AND CRIMINAL PENALTIES THEREUNDER.

Evidence of oversized fuses being used or tampered with is the code's justification for prohibiting the installation of any new Edison-base plug fuses in existing fuseholders. Obviously, the hazardous condition of overfusing or tampering must not be allowed to continue to exist. In such cases, replacement fuses must be Type S fuses, which are designed to thwart overfusing and attempts at tampering or bypassing.

607.1.3 Nongrounding-type receptacles. For replacement of nongrounding-type receptacles with grounding-type receptacles and for branch circuits that do not have an equipment grounding conductor in the branch circuitry, the grounding conductor of a grounding-type receptacle outlet shall be permitted to be grounded to any accessible point on the grounding electrode system or to any accessible point on the grounding electrode conductor in accordance with Section 250.130(C) of NFPA 70.

❖ This section is a recognition of the provisions of Section 250.130(C) of NFPA 70. Section 607.1.1 addresses circumstances where existing receptacles cannot be replaced with like receptacles and this section describes one of the options specified in Section 406.4(D) of NFPA 70.

607.1.4 Group I-2 receptacles. Non-"hospital grade" receptacles in patient bed locations of Group I-2 shall be replaced with "hospital grade" receptacles, as required by NFPA 99 and Article 517 of NFPA 70.

❖ This section reflects the intent of Section 517.18(B) of NFPA 70 and it's an exception.

607.1.5 Grounding of appliances. Frames of electric ranges, wall-mounted ovens, counter-mounted cooking units, clothes dryers and outlet or junction boxes that are part of the existing branch circuit for these appliances shall be permitted to be grounded to the grounded circuit conductor in accordance with Section 250.140 of NFPA 70.

❖ This section is a recognition of a provision of Section 250.140 of NFPA 70 that parallels the intent of the code to allow repairs to be consistent with the original installation. Although allowed in the past, grounding of appliances to the grounded circuit conductor is considered to be unnecessarily risky and, therefore, is now allowed only for existing wiring installations under specified conditions that serve to limit the risk to an acceptable level.

SECTION 608
MECHANICAL

608.1 General. Existing mechanical systems undergoing *repair* shall not make the building less conforming than it was before the *repair* was undertaken.

❖ This section is essentially a referencing section to direct the user's attention to the possibility of other sections that might be relevant to mechanical systems. Repair work must not alter the nature of appliances and equipment in a way that would invalidate the listing or conditions of approval.

608.2 Mechanical draft systems for manually fired appliances and fireplaces. A mechanical draft system shall be permitted to be used with manually fired appliances and fireplaces where such a system complies with all of the following requirements:

1. The mechanical draft device shall be listed and installed in accordance with the manufacturer's installation instructions.
2. A device shall be installed that produces visible and audible warning upon failure of the mechanical draft device or loss of electrical power at any time that the mechanical draft device is turned on. This device shall be equipped with a battery backup if it receives power from the building wiring.
3. A smoke detector shall be installed in the room with the appliance or fireplace. This device shall be equipped with a battery backup if it receives power from the building wiring.

❖ This section contains a remedy for existing chimneys that do not produce sufficient draft. Some chimneys fail to produce sufficient draft intermittently because of wind speed and direction or outdoor temperatures. Gas-fired and oil-fired appliances can be interlocked to the exhauster to immediately shut off the flow of fuel if there is a power failure or malfunction of the exhauster. Obviously, the same interlock cannot be used in a wood-burning fireplace or stove. This section allows the use of mechanical draft systems with solid fuel-burning appliances and fireplaces if certain requirements are met.

The first requirement is that the draft device must be listed for this application and installed in compliance with the manufacturer's installation instructions. This will ensure that the draft system is installed in the same way it was tested in the laboratory of the listing agency.

The second requirement is that a visible and audible alarm be installed to warn occupants upon failure of the mechanical draft device or loss of electrical power. If the exhauster fails to operate, the solid fuel will continue to burn and produce smoke and other products of combustion. The occupants of the building must be warned that the potentially deadly products of combustion might be spilling into the living space. This is especially important in residential occupancies where the occupants may have gone to sleep with the fireplace or appliance still burning.

The third requirement is that a smoke detector must be installed in the room with the appliance to provide further warning should the exhauster fail to operate properly. This section is not intended to allow mechanical draft systems (chimney exhausters) as a substitute for proper chimney design and construction. It is intended to apply to existing chimneys that fail to produce the required draft.

INTERNATIONAL CODE COUNCIL®
Copyright © 2015 ICC. ALL RIGHTS RESERVED. Accessed by David Dammon on Jun 21, 2017 12:30:52 PM pursuant to License Agreement with ICC. No further reproduction or distribution authorized. ANY UNAUTHORIZED REPRODUCTION OR DISTRIBUTION IS A VIOLATION OF THE FEDERAL COPYRIGHT ACT AND THE LICENSE AGREEMENT, AND SUBJECT TO CIVIL AND CRIMINAL PENALTIES THEREUNDER.

SECTION 609
PLUMBING

609.1 Materials. Plumbing materials and supplies shall not be used for repairs that are prohibited in the *International Plumbing Code*.

❖ This section essentially refers the user to the *International Plumbing Code*® (IPC®) in order to determine prohibited materials for use in the repair of plumbing systems. For example, Chapters 7 and 8 of the IPC contain prohibited plumbing system joint and connection methods that would also be applicable to repair work.

609.2 Water closet replacement. The maximum water consumption flow rates and quantities for all replaced water closets shall be 1.6 gallons (6 L) per flushing cycle.

Exception: Blowout-design water closets [3.5 gallons (13 L) per flushing cycle].

❖ Federal legislation mandates the design and use of water closets to have flow rates restricted to 1.6 gallons (6.1 L) per flushing cycle, except where blowout-type fixtures are utilized. Blowout-designed water closets are exempt from the 1.6-gallon (6.1 L) requirement because such fixtures depend on high-volume and high-velocity water flow to evacuate the contents of the bowl. Therefore, such fixture designs may not be able to function at lower consumption rates.

Bibliography

The following resource materials were used in the preparation of the commentary for this chapter of the code.

ATC 20, *Procedures for Postearthquake Safety Evaluation of Buildings*. Redwood City, CA: Applied Technology Council, 1989.

ATC 20-2, *Addendum to the ATC 20 Postearthquake Building Safety Evaluation Procedures*. Redwood City, CA: Applied Technology Council, 1995.

ATC 40, *Seismic Evaluation and Retrofit of Concrete Buildings*. Redwood City, CA: Prepared by the Applied Technology Council for the California Seismic Safety Commission, 1996.

Chang, David and Hamid Naderi. "International Existing Building Code." *Structural Engineer*. October 2003, pp 22-25.

Chen, Wai-Fah and Charles Scawthorn. *Earthquake Engineering Handbook*. Boca Raton, FL: CRC Press LLC, 2003.

FEMA 178, *NEHRP Handbook for the Seismic Evaluation of Existing Buildings*. Washington, DC: Federal Emergency Management Agency, 1992.

FEMA 213, *Answers to Questions About Substantially Damaged Buildings*. Washington, DC: Federal Emergency Management Agency, 1991.

FEMA 259, *Engineering Principles and Practices for Retrofitting Flood-prone Residential Buildings*. Washington, DC: Federal Emergency Management Agency, 1995.

FEMA 273, *NEHRP Guidelines for the Seismic Rehabilitation of Buildings*. Washington, DC: Federal Emergency Management Agency, 1997.

FEMA 274, *NEHRP Commentary on the Guidelines for the Seismic Rehabilitation of Buildings*. Washington, DC: Federal Emergency Management Agency, 1997.

FEMA 310, *Handbook for the Seismic Evaluation of Buildings—A Prestandard*. Washington, DC: Federal Emergency Management Agency, 1998.

FEMA 311, *Guidance on Estimating Substantial Damage Using the NFIP Residential Substantial Damage Estimator*. Washington, DC: Federal Emergency Management Agency, 1998.

FEMA 312, *Homeowner's Guide to Retrofitting—Six Ways to Protect Your House From Flooding*. Washington, DC: Federal Emergency Management Agency, 1998.

FEMA 356, *Prestandard and Commentary for the Seismic Rehabilitation of Buildings*. Washington, DC: Federal Emergency Management Agency, 2000.

FEMA 450-1, *NEHRP Recommended Provisions for Seismic Regulations for New Buildings and Other Structures, Part 1*. Washington, DC: Prepared by the Building Seismic Safety Council for the Federal Emergency Management Agency, 2004.

FEMA 450-2, *NEHRP Recommended Provisions for Seismic Regulations for New Buildings and Other Structures Commentary, Part 2 Commentary*. Washington, DC: Prepared by the Building Seismic Safety Council for the Federal Emergency Management Agency, 2004.

Ghosh, S.K. and David A. Fanella. *Seismic and Wind Design of Concrete Buildings (2000 IBC, ASCE 7-98, ACI 318-99)*. Washington, DC: International Code Council, 2003.

Leyendecker, E.V., A.D. Frankel, K.S. Rustales. *Seismic Design Parameters*, U.S. Geological Survey Open-File Report 01-437. Washington, DC: United States Geological Survey, 2001.

Naeim, Farzad. *The Seismic Design Handbook*. Norwell, MA: Kluwer Academic Publishers, 2001.

INTERNATIONAL CODE COUNCIL®
Copyright © 2015 ICC. ALL RIGHTS RESERVED. Accessed by David Dammon on Jun 21, 2017 12:30:52 PM pursuant to License Agreement with ICC. No further reproduction or distribution authorized. ANY UNAUTHORIZED REPRODUCTION OR DISTRIBUTION IS A VIOLATION OF THE FEDERAL COPYRIGHT ACT AND THE LICENSE AGREEMENT, AND SUBJECT TO CIVIL AND CRIMINAL PENALTIES THEREUNDER.

Recommended Lateral Force Requirements and Commentary (SEAOC Blue Book). Sacramento, CA: Structural Engineers Association of California, 1999.

Reducing Flood Losses Through the International Code Series: Meeting the Requirements of the National Flood Insurance Program. Washington, DC: International Code Council, May 2000.

Taly, Narendra. *Loads and Loads Paths in Buildings Principles of Structural Design*. Washington, DC: International Code Council, 2003.

Williams, Alan. *Seismic and Wind Forces Structural Design Examples*. Washington, DC: International Code Council, 2003.

INTERNATIONAL CODE COUNCIL®

Copyright © 2015 ICC. ALL RIGHTS RESERVED. Accessed by David Dammon on Jun 21, 2017 12:30:52 PM pursuant to License Agreement with ICC. No further reproduction or distribution authorized. ANY UNAUTHORIZED REPRODUCTION OR DISTRIBUTION IS A VIOLATION OF THE FEDERAL COPYRIGHT ACT AND THE LICENSE AGREEMENT, AND SUBJECT TO CIVIL AND CRIMINAL PENALTIES THEREUNDER.

Chapter 7: Alterations—Level 1

General Comments

This chapter provides the technical requirements for existing buildings that undergo Level 1 alterations as described in Section 503, including the replacement or covering of existing materials, elements, equipment or fixtures using new materials for the same purpose.

This chapter, similar to other chapters of the code, covers all building-related subjects, such as structural, mechanical, plumbing, electrical and accessibility, as well as the fire and life safety issues when the alterations are classified as Level 1. Sections 701 and 702 are related to scoping building elements and materials. It should be noted that, in the interest of being brief and avoiding the presentation of materials that are repetitive in nature in various chapters, Section 801.2 requires that Level 2 alterations comply not only with Chapter 8, but also with Chapter 7. Similarly, Section 901.2 requires that Level 3 alterations comply with Chapters 7 and 8, as well as Chapter 9. As such, Chapter 7 is applicable to all levels of alteration work. Section 702, Building Elements and Materials, covers, in detail, elements such as interior finishes and carpeting. Section 702 also refers to the *International Building Code*® (IBC®), *International Energy Conservation Code*® (IECC®), *International Mechanical Code*® (IMC®) and *International Plumbing Code*® (IPC®) for new materials. The remainder of the chapter is related to fire protection, means of egress, accessibility, structural and energy conservation.

Level 1 alterations are considered the least drastic. Known in past codes simply as "alterations," the classification was broken into three levels based on the fact that minor alterations, not including space reconfiguration and extensive alterations that might include relocation of walls and partitions in the entire building, should be treated differently and with different threshold levels for requiring upgrades or improvements to the building or spaces in the building.

Purpose

The purpose of this chapter is to provide detailed requirements and provisions to identify mandated improvements in existing building elements, building spaces and the building's structural system. This chapter is distinguished from Chapters 8 and 9 by only involving the replacement of building components with new components. Level 2 alterations involve more space reconfiguration, while Level 3 alterations involve space reconfiguration exceeding 50 percent of the building area.

SECTION 701 GENERAL

701.1 Scope. Level 1 *alterations* as described in Section 503 shall comply with the requirements of this chapter. Level 1 *alterations* to *historic buildings* shall comply with this chapter, except as modified in Chapter 12.

❖ Level 1 alterations are described in Section 503 as the type of alterations that include the removal and replacement or the covering of existing materials and elements. The scoping provisions of this section refer the user to Section 503 to be certain that the work classification is Level 1 alterations and that Chapter 7 is the appropriate chapter to be used. Historic buildings have unique allowances and requirements in Chapter 12. The provisions of this chapter apply but the requirements of this chapter may be superseded by allowances or requirements in Chapter 12 that are specific to historic buildings.

701.2 Conformance. An *existing building* or portion thereof shall not be altered such that the building becomes less safe than its existing condition.

Exception: Where the current level of safety or sanitation is proposed to be reduced, the portion altered shall conform to the requirements of the *International Building Code*.

❖ The current level of safety or level of compliance with regulatory provisions in a building is not, in general, allowed to be reduced, regardless of the type of work taking place in the building. For example, a Class B interior wall finish in an exit passageway will not be allowed to be replaced with a finish material that has a Class C rating. The exception describes the only situation where the reduction of the level of safety or the level of compliance is allowed. This is the condition where the existing level of compliance is above the level required by the IBC and the reduced level of

INTERNATIONAL CODE COUNCIL®
Copyright © 2015 ICC. ALL RIGHTS RESERVED. Accessed by David Dammon on Jun 21, 2017 12:30:52 PM pursuant to License Agreement with ICC. No further reproduction or distribution authorized. ANY UNAUTHORIZED REPRODUCTION OR DISTRIBUTION IS A VIOLATION OF THE FEDERAL COPYRIGHT ACT AND THE LICENSE AGREEMENT, AND SUBJECT TO CIVIL AND CRIMINAL PENALTIES THEREUNDER.

compliance still meets or exceeds the IBC requirements. Some other examples where the reduction of level of compliance is not allowed might be to meet water supply requirements (see Commentary Figure 701.2), and to meet electrical loads or reduction in existing light and ventilation to below the levels required in the IBC, or below the existing levels, whichever is lower.

[BS] 701.3 Flood hazard areas. In *flood hazard areas*, *alterations* that constitute *substantial improvement* shall require that the building comply with Section 1612 of the *International Building Code*, or Section R322 of the *International Residential Code*, as applicable.

❖ When alterations to existing buildings that are located in flood hazard areas are proposed, determinations are to be made as to whether the proposed work is a substantial improvement. If the proposed alterations are determined to be substantial improvements, then the existing building is to be brought into compliance with the flood-resistant provisions of the IBC, which requires the design and construction of the building to comply with ASCE 24.

SECTION 702
BUILDING ELEMENTS AND MATERIALS

702.1 Interior finishes. All newly installed interior wall and ceiling finishes shall comply with Chapter 8 of the *International Building Code*.

❖ Newly installed interior finish materials are required to comply with the flame spread and smoke-developed index requirements of the IBC. The level of developed smoke, surface burning, flame spread and toxic byproducts of combustion are critical elements to be considered in fire situations. For this reason, the code explicitly outlines the criteria for interior finishes. These are requirements that have potentially dramatic effects on building and occupant safety in fire situations.

702.2 Interior floor finish. New interior floor finish, including new carpeting used as an interior floor finish material, shall comply with Section 804 of the *International Building Code*.

❖ The same description and reasoning provided in Section 702.1 apply here to materials newly installed as floor finish materials, including, but not limited to, carpeting.

702.3 Interior trim. All newly installed interior trim materials shall comply with Section 806 of the *International Building Code*.

❖ The same description and reasoning provided in Section 702.1 apply here to materials newly installed as interior trim materials.

702.4 Window opening control devices. In Group R-2 or R-3 buildings containing dwelling units and one- and two-family dwellings and townhouses regulated by the *International Residential Code*, window opening control devices complying with ASTM F2090 shall be installed where an existing window is replaced and where all of the following apply to the replacement window:

1. The window is operable;
2. The window replacement includes replacement of the sash and the frame;
3. One of the following applies:
   - 3.1. In Group R-2 or R-3 buildings containing dwelling units, the top of the sill of the window opening is at a height less than 36 inches (915 mm) above the finished floor; or
   - 3.2. In one- and two-family dwellings and townhouses regulated by the *International Residential Code*, the top sill of the window opening is at a height less than 24 inches (610 mm) above the finished floor;
4. The window will permit openings that will allow passage of a 4-inch-diameter (102 mm) sphere when the window is in its largest opened position; and

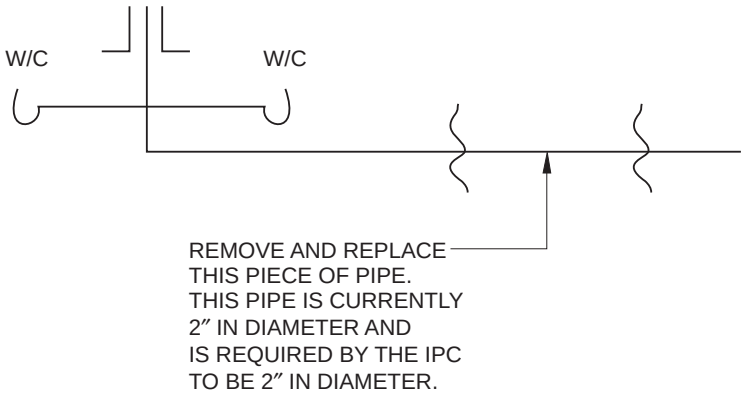

For SI: 1 inch = 25.4 mm.

Figure 701.2
CONFORMANCE OF AN EXISTING WATER SUPPLY SYSTEM

INTERNATIONAL CODE COUNCIL®
Copyright © 2015 ICC. ALL RIGHTS RESERVED. Accessed by David Dammon on Jun 21, 2017 12:30:52 PM pursuant to License Agreement with ICC. No further reproduction or distribution authorized. ANY UNAUTHORIZED REPRODUCTION OR DISTRIBUTION IS A VIOLATION OF THE FEDERAL COPYRIGHT ACT AND THE LICENSE AGREEMENT, AND SUBJECT TO CIVIL AND CRIMINAL PENALTIES THEREUNDER.

5. The vertical distance from the top of the sill of the window opening to the finished grade or other surface below, on the exterior of the building, is greater than 72 inches (1829 mm).

The window opening control device, after operation to release the control device allowing the window to fully open, shall not reduce the minimum net clear opening area of the window unit to less than the area required by the *International Building Code*.

Exceptions:

1. Operable windows where the top of the sill of the window opening is located more than 75 feet (22 860 mm) above the finished grade or other surface below, on the exterior of the room, space or building, and that are provided with window fall prevention devices that comply with ASTM F2006.
2. Operable windows with openings that are provided with window fall prevention devices that comply with ASTM F2090.

❖ This section requires that, when windows are replaced, window opening control devices be provided to protect children from falls. There are several conditions that must be met before this section becomes applicable. The first condition is that the window must be operable. If the window is not operable then the concern for safety from falling is not present. The second condition relates to whether the entire window including the sash and frame is being replaced. If it is simply a repair of a pane of glass then the requirement would not be applicable. Item 3 addresses the specific location of the opening on the inside of the building [see Commentary Figure 702.4(1)]. Item 4 focuses these provisions on not only operable windows but also windows through which a child could actually fit. If a 4-inch-diameter sphere can pass through a window opening, so can a child; thus, guards must be installed. Finally, Item 5 addresses whether the window is high enough from the ground to be of concern for injury from falling [see Commentary Figure 702.4(2)]. This section applies to the following occupancies.

- Group R-2 Occupancies containing dwelling units.
- Group R-3 Occupancies containing dwelling units.
- One- and two-family dwellings and townhouses.

The control device can not reduce to less than that required in IBC Section 1030.2. Section 406.2 also addresses this issue for the prescriptive method.

702.5 Emergency escape and rescue openings. Where windows are required to provide emergency escape and rescue openings in Group R-2 and R-3 occupancies and one- and two-family dwellings and townhouses regulated by the *International Residential Code*, replacement windows shall be exempt from the requirements of Sections 1030.2, 1030.3 and 1030.5 of the *International Building Code* and Sections R310.21 and R310.2.3 of the *International Residential Code* accordingly, provided the replacement window is the manufacturer's largest standard size window that will fit within the existing frame or existing rough opening. The replacement window shall be permitted to be of the same operating style as the existing window or a style that provides for an equal or greater window opening area than the existing window.

Window opening control devices complying with ASTM F2090 shall be permitted for use on windows required to provide *emergency escape* and *rescue openings*.

❖ This section focuses on how to address the replacement of windows intended to be emergency escape and rescue openings. More specifically, Groups R-2

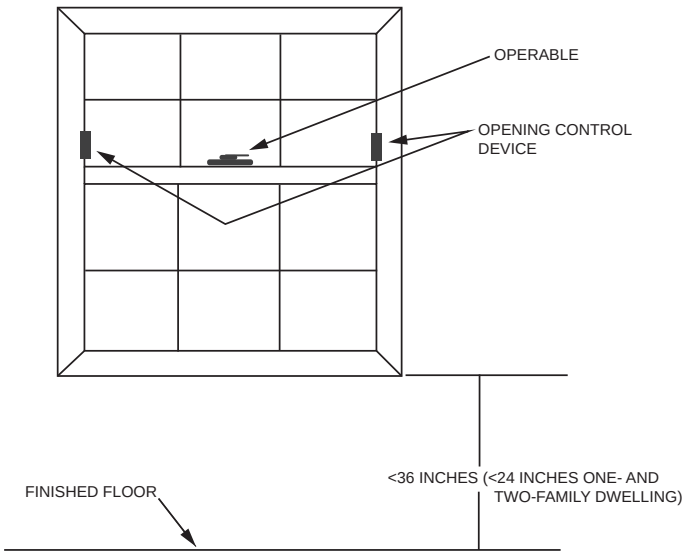

Figure 702.4(1)
HEIGHT OF OPENING FROM FLOOR

INTERNATIONAL CODE COUNCIL®
Copyright © 2015 ICC. ALL RIGHTS RESERVED. Accessed by David Dammon on Jun 21, 2017 12:30:52 PM pursuant to License Agreement with ICC. No further reproduction or distribution authorized. ANY UNAUTHORIZED REPRODUCTION OR DISTRIBUTION IS A VIOLATION OF THE FEDERAL COPYRIGHT ACT AND THE LICENSE AGREEMENT, AND SUBJECT TO CIVIL AND CRIMINAL PENALTIES THEREUNDER.

and R-3 and one- and two-family dwellings in new construction require certain windows to be specifically sized for escape and rescue in these structures. Meeting these requirements in existing buildings can be difficult. This section allows existing buildings to provide the largest window that can fit into the current opening without requiring full compliance with the IBC or *International Residential Code*® (IRC®), as applicable. There are two criteria that must be met. The first is that the window is the largest size that the manufacturer can provide for that opening (the existing frame or rough opening). The second permits the operating style of the original window to be replicated, but the replacement window must provide equal or greater opening area.

This section also permits the use of window opening control devices as required in Section 702.4. The focus of Section 702.4 is on fall safety, whereas this section is focused on emergency escape. This provision avoids conflict between the two requirements.

702.6 Materials and methods. All new work shall comply with the materials and methods requirements in the *International Building Code*, *International Energy Conservation Code*, *International Mechanical Code*, and *International Plumbing Code*, as applicable, that specify material standards, detail of installation and connection, joints, penetrations, and continuity of any element, component, or system in the building.

❖ Materials and methods requirements refer to the requirements of various codes, such as the IBC, IMC and IPC, that specify material standards, details of installation and connection, joints, penetrations and continuity of any element, component or system in the building. This description, which is not presented in the form of a definition, is so broad that there are numerous sections in the *International Codes*® (I-Codes®) that are considered to be related to materials and methods. One way of dealing with this section might have been to list every section in every I-Code that deals with materials and methods. As this would have been a long list of sections, the committee and the membership chose to address this issue in general terms rather than listing such sections from the I-Codes, except for the materials and methods sections of the *International Fuel Gas Code*® (IFGC®) that have been specifically listed in Section 702.1 of the code.

All new work in Level 1 alterations must comply with the materials and methods requirements of the I-Codes.

For example, the sheetrock from one side of an existing corridor is to be removed and replaced with new sheetrock and finish paneling. Regardless of how the existing sheetrock was attached and what the characteristics of the finish material were, the new sheetrock must comply with material referenced standards in IBC Section 2506 and its installation must be in accordance with IBC Table 2508.1. Accordingly, the interior finish paneling used must be of a class in compliance with IBC Table 803.11.

[FG] 702.6.1 International Fuel Gas Code. The following sections of the *International Fuel Gas Code* shall constitute the fuel gas materials and methods requirements for Level 1 alterations.

1. All of Chapter 3, entitled "General Regulations," except Sections 303.7 and 306.
2. All of Chapter 4, entitled "Gas Piping Installations," except Sections 401.8 and 402.3.
    2.1. Sections 401.8 and 402.3 shall apply when the work being performed increases the load on the system such that the existing pipe does not

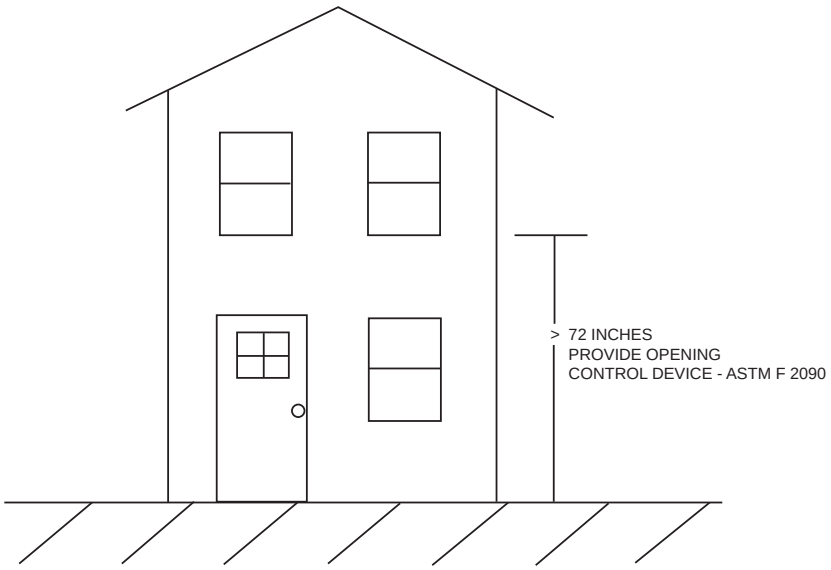

Figure 702.4(2)
HEIGHT OF OPENING FROM FINISHED GRADE

INTERNATIONAL CODE COUNCIL®
Copyright © 2015 ICC. ALL RIGHTS RESERVED. Accessed by David Dammon on Jun 21, 2017 12:30:52 PM pursuant to License Agreement with ICC. No further reproduction or distribution authorized. ANY UNAUTHORIZED REPRODUCTION OR DISTRIBUTION IS A VIOLATION OF THE FEDERAL COPYRIGHT ACT AND THE LICENSE AGREEMENT, AND SUBJECT TO CIVIL AND CRIMINAL PENALTIES THEREUNDER.

meet the size required by code. Existing systems that are modified shall not require resizing as long as the load on the system is not increased and the system length is not increased even if the altered system does not meet code minimums.

3. All of Chapter 5, entitled "Chimneys and Vents."
4. All of Chapter 6, entitled "Specific Appliances."

❖ Any alteration of fuel gas equipment or piping that falls under the category of Level 1 alterations must comply with the materials and methods requirements of the IFGC. This section identifies those sections of the IFGC that are considered to be related to materials and methods. These, with the exception of four specific sections, include all of Chapters 3, 4, 5 and 6 of the IFGC.

SECTION 703
FIRE PROTECTION

703.1 General. *Alterations* shall be done in a manner that maintains the level of fire protection provided.

❖ Any level of fire protection that currently exists in a building must not be adversely affected or lessened as a result of any alteration. For example, removing and replacing the existing ceiling and rearranging some fire sprinkler heads should ultimately provide the same level of sprinkler coverage and protection that existed prior to the alterations being undertaken. Section 701.2, however, allows a reduction in safety and sanitation if it complies with the IBC. Section 803.6 allows a reduction in fire-resistance ratings in a building where an automatic sprinkler system is installed. This is based on an analysis and the documentation that must be reviewed and approved by the code official. In this context, sprinklers are addressed in Chapter 8, as the installation of new systems is considered a Level 2 alteration.

SECTION 704
MEANS OF EGRESS

704.1 General. *Alterations* shall be done in a manner that maintains the level of protection provided for the means of egress.

❖ Any level of safety that currently exists in a building's means of egress system must not be adversely affected or lessened as a result of any alteration. This means that any new building element that is replacing the old one or new elements that are covering existing elements must be at least as safe as the old one. Chapter 7 must be checked for those cases where the building elements or components being installed as part of the alteration might need to comply with the IBC or the IRC. For example, replacement interior finishes are not allowed to simply duplicate the old one; they must meet the IBC requirements based on Section 702.1.

SECTION 705
ACCESSIBILITY

705.1 General. A *facility* that is altered shall comply with the applicable provisions in Sections 705.1.1 through 705.1.14, and Chapter 11 of the *International Building Code* unless it is *technically infeasibl*e. Where compliance with this section is *technically infeasible*, the alteration shall provide access to the maximum extent that is technically feasible.

A *facility* that is constructed or altered to be accessible shall be maintained accessible during occupancy.

Exceptions:

1. The altered element or space is not required to be on an accessible route unless required by Section 705.2.
2. Accessible means of egress required by Chapter 10 of the *International Building Code* are not required to be provided in existing *facilities*.
3. Type B dwelling or sleeping units required by Section 1107 of the *International Building Code* are not required to be provided in existing *facilities* undergoing less than a Level 3 *alteration*.
4. The alteration to Type A individually owned dwelling units within a Group R-2 occupancy shall meet the provisions for Type B dwelling units.

❖ The purpose of Section 705.1 is to establish the minimum criteria for accessibility when dealing with existing buildings and facilities that are being renovated or altered. The history and efforts involved are similar to that discussed in the commentary to Chapter 11 of the IBC. Access to buildings and structures for people with physical disabilities has been a subject regulated by the building codes since the early 1970s. The codes have consistently relied on a consensus national standard, ICC A117.1, as the technical basis for accessibility. There has been a great deal of emphasis and awareness placed on the subject of accessibility through the passage of two federal laws. The Americans with Disabilities Act (ADA) and the Fair Housing Amendment Act (FHAA) are federal regulations that affect building construction as it relates to accessibility.

The International Code Council® (ICC®) recognizes the value of consistency between federal laws and the codes. Efforts for coordination with the federal accessibility requirements are ongoing. Representatives from interested accessibility groups, the Department of Housing and Urban Development (HUD) and the Architectural and Transportation Barriers Compliance Board (ATBCB, commonly referred to as the Access Board), have been attending and participating in the code change process for the IBC and ICC A117.1. In addition, the ICC has participated in the public comment process on the development of federal regulations for accessibility. Appendix B includes information found in the *Americans with Disabilities Act Accessibility Guidelines* (ADAAG) that cannot be enforced through the typical code enforcement process, but would provide beneficial information for the

INTERNATIONAL CODE COUNCIL®
Copyright © 2015 ICC. ALL RIGHTS RESERVED. Accessed by David Dammon on Jun 21, 2017 12:30:52 PM pursuant to License Agreement with ICC. No further reproduction or distribution authorized. ANY UNAUTHORIZED REPRODUCTION OR DISTRIBUTION IS A VIOLATION OF THE FEDERAL COPYRIGHT ACT AND THE LICENSE AGREEMENT, AND SUBJECT TO CIVIL AND CRIMINAL PENALTIES THEREUNDER.

designer/owner for full compliance purposes. The ICC has worked toward, and will continue to strive for, accessibility regulations that reflect the highest possible degree of consistency with federal regulations and, more importantly, reasonable and appropriate provisions to meet the needs of people with disabilities.

The code approaches the application of accessibility provisions to a facility that is altered by broadly requiring full conformance to new construction, meaning full accessibility is expected (see Section 705.1.13). Exceptions are then provided to indicate the conditions under which less than full accessibility is permitted.

For example, if a door and frame are removed and replaced, the door must meet the requirements for width, height, maneuvering clearances and hardware. If just the doorknob is being removed, it must be replaced with lever hardware.

The circumstance under which full compliance with accessibility provisions is not required is when it is deemed to be technically infeasible (see the commentary to the definition of "Technically infeasible" in Section 202). This is considered reasonable since, if not provided for, plans for alterations may be otherwise abandoned by the building owner. The opportunity to upgrade and increase the current level of accessibility in an existing building would then be lost. This concern is also embodied in the requirement that an altered element or space is expected to be made accessible to the extent to which it is technically feasible to do so. In this manner, the code accomplishes the greatest degree of accessibility while at the same time recognizing the justifiable difficulties that may be involved in providing full accessibility in existing buildings.

In accordance with Exception 1, if the area undergoing alteration does not contain a primary function (see Section 705.2), there are no additional requirements past the original scope of the project. However, if the area contains a primary function, there are additional criteria to achieve accessibility that may require work not in the original scope of the project. These additional criteria are to provide an accessible route to the altered area, as well as improvements to any toilets and drinking fountains that serve the altered area. Requirements for an accessible route might specify, for instance, that the door discussed in the earlier example be removed and replaced because it does not have adequate width or maneuvering clearances.

Exception 2 indicates that accessible means of egress are not required as a result of undertaking alterations to existing buildings. Strict compliance with IBC Section 1009 is often technically infeasible. The requirement for a 48-inch (1219 mm) clear width between handrails would require many stairways to be widened. This often would entail the movement of major structural elements in order to accomplish this alteration. Note that this is not an exception for the accessible entrance requirements.

Exception 3 exempts existing buildings with a Level 1 or 2 alteration from having to provide Type B dwelling and sleeping units. Since this section is referenced from Chapter 10, this would include existing buildings undergoing a change of occupancy. Note that Chapter 10 has specific requirements for Type B dwelling and sleeping units that are both undergoing a change of occupancy classification and have a Level 3 alteration associated with the change of occupancy. Additions that contain four or more dwelling and sleeping units would be required to provide Type B units in accordance with IBC Section 1107. It should be noted that Accessible and Type A dwelling and sleeping units are required in existing residential and institutional buildings undergoing Level 1 or greater alterations (see Section 705.1.8 and the definitions in IBC Section 201 for "Accessible unit" and "Dwelling or sleeping unit, Type A").

The Type B dwelling units must be provided in Level 3 alterations. Where Level 3 alterations are being performed, there is a prime opportunity to have those buildings move toward being able to serve a wider range of the population. With the population of the United States aging, there will be a steadily increasing demand for units that include accessibility features. In addition, while the FHA is only applicable to new construction, this law was enacted in 1991. Some buildings constructed after that time may not be in compliance with the FHA. When a major alteration/renovation occurs, there is an opportunity to bring those buildings into compliance. See the commentary to Sections 705.1.7, 705.1.8, 1105.2, 1105.3 and 1105.4, and the exceptions to Sections 1012.8 and 1012.8.2 for additional information.

Exception 4 addresses the specific circumstances when an existing Type A dwelling unit is being altered. While Section 410.2 says that a level of accessibility must be maintained, in the situations where a Type A dwelling unit is "individually owned," such as a condominium, then it only needs to meet the technical requirements for a Type B dwelling unit (see ICC A117.1, Section 1004) when it is altered or remodeled by the owner. Type B units require a lesser level of accessibility than Type A units.

For example, if an owner wanted to alter the bathroom in his or her unit, he or she would only be required to meet the lesser accessibility requirements of a Type B unit with the new construction. This exception would not be applicable to units that are for rent.

The specific provisions of the following subsections are intended to reflect conditions under which less than full accessibility, as would be required in new construction, is permitted in altered areas. As previously discussed, Section 705.1 requires alterations to comply with the full range of accessibility-related provisions of the code for new construction. The exceptions and subsections reflect a reasonable set of conditions under which a different level of accessibil-

INTERNATIONAL CODE COUNCIL®
Copyright © 2015 ICC. ALL RIGHTS RESERVED. Accessed by David Dammon on Jun 21, 2017 12:30:52 PM pursuant to License Agreement with ICC. No further reproduction or distribution authorized. ANY UNAUTHORIZED REPRODUCTION OR DISTRIBUTION IS A VIOLATION OF THE FEDERAL COPYRIGHT ACT AND THE LICENSE AGREEMENT, AND SUBJECT TO CIVIL AND CRIMINAL PENALTIES THEREUNDER.

ity can be provided. Sections 705.1.1 through 705.1.14 are part of the IBC coordination effort with the ICC A117.1 accessibility standard and the recommendations for the ADAAG Review Federal Advisory Committee.

705.1.1 Entrances. Where an *alteration* includes alterations to an entrance, and the *facility* has an accessible entrance on an accessible route, the altered entrance is not required to be accessible unless required by Section 705.2. Signs complying with Section 1111 of the *International Building Code* shall be provided.

❖ This provision is contained here to point to the accessibility provisions of IBC Chapter 11 for entrances. A facility is not accessible if the entrances into it are inaccessible. IBC Section 1105 establishes reasonable criteria for providing accessible entrances. A facility is not required to have all of its entrances accessible in order to provide reasonable accommodation to disabled persons. If a facility has multiple public entrances, as a minimum, it is not considered unreasonable to require at least 60 percent of the entrances to be accessible. In addition to the 60-percent accessible public entrances, entrances that have a specific function or provide access to only certain portions of the facility must be addressed.

If the building already has the accessible entrances required by IBC Section 1105, an entrance that is being altered is not required to be made accessible. An exception to this would be if the entrance was required to be made accessible as part of the route to the altered primary function area. If not all entrances are accessible, provide appropriate signage to notify persons with disabilities when an entrance is or is not accessible and, if not accessible, direct them to the nearest accessible entrance.

705.1.2 Elevators. Altered elements of existing elevators shall comply with ASME A17.1/CSA B44 and ICC A117.1. Such elements shall also be altered in elevators programmed to respond to the same hall call control as the altered elevator.

❖ Requirements for new construction state that all elevators on an accessible route must be fully accessible in accordance with ICC A117.1. If a passenger elevator is altered, the altered element must be accessible in accordance with the requirements for existing elevators in Section 407 of ICC A117.1. If the altered elevator is part of a bank of elevators, the same element must be made accessible in every elevator that is part of that bank. The purpose of this requirement is to have consistency among elevators in a bank so that disabled people are not required to wait for a specific elevator, whereas the general population can take the first available elevator. The ICC A117.1 also provides accessibility requirements for limited use/limited access (LULA) elevators (ICC A117.1, Section 408) and private residence elevators (ICC A117.1, Section 409). While these types of elevators can serve as part of an accessible route, their use is limited by ASME A17.1.

705.1.3 Platform lifts. Platform (wheelchair) lifts complying with ICC A117.1 and installed in accordance with ASME A18.1 shall be permitted as a component of an accessible route.

❖ This section provides for the use of platform (wheelchair) lifts in existing buildings. In order to create an accessible route where there are changes in floor levels, the provisions for new construction would most often require the installation of an elevator or ramp. Platform lifts are allowed in new construction for limited conditions (see IBC Section 1109.8). If the space in an existing building precludes the installation of an elevator or ramp, a platform lift may be the only practical solution. Given the choice between no accessibility or accessibility by a platform lift, accessibility is preferred. Previously, platform lift requirements were addressed in the elevator standard, ASME A17.1, but they are now addressed in their own standard, ASME A18.1. One of the many changes was the removal of the requirement for key operation, which previously discouraged independent utilization of platform lifts. Note that in accordance with IBC Section 1009.5, platform lifts are also permitted for an accessible means of egress in some locations. However, accessible means of egress are not required in existing buildings in accordance with Section 705.1, Exception 2.

A chair lift is not acceptable as part of an accessible route in either new or existing construction. For examples of the difference between a chair lift and a platform lift, see the commentary to IBC Section 1109.8.

705.1.4 Ramps. Where steeper slopes than allowed by Section 1012.2 of the *International Building Code* are necessitated by space limitations, the slope of ramps in or providing access to existing facilities shall comply with Table 705.1.4.

❖ This section recognizes the circumstances where, because of existing site or configuration constraints, a ramp with a slope of one unit vertical in 12 units horizontal (1:12) may not be feasible. A steeper slope is allowed where the elevation change does not exceed 6 inches (152 mm). The remainder of ramp requirements, such as width, landings, etc., is set forth in IBC Section 1010.

TABLE 705.1.4
RAMPS

SLOPE	MAXIMUM RISE
Steeper than 1:10 but not steeper than 1:8	3 inches
Steeper than 1:12 but not steeper than 1:10	6 inches

For SI: 1 inch = 25.4 mm.

❖ In existing buildings, ramps that rise 3 inches (76 mm) or less may have a slope as steep as one unit vertical in eight units horizontal (1:8). In existing buildings, ramps that rise 6 inches (152 mm) or less may have a slope as steep as one unit vertical in 10 units horizontal (1:10). If it is possible to provide a lesser slope, it is desirable to do so. These steeper slopes

INTERNATIONAL CODE COUNCIL®
Copyright © 2015 ICC. ALL RIGHTS RESERVED. Accessed by David Dammon on Jun 21, 2017 12:30:52 PM pursuant to License Agreement with ICC. No further reproduction or distribution authorized. ANY UNAUTHORIZED REPRODUCTION OR DISTRIBUTION IS A VIOLATION OF THE FEDERAL COPYRIGHT ACT AND THE LICENSE AGREEMENT, AND SUBJECT TO CIVIL AND CRIMINAL PENALTIES THEREUNDER.

should only be utilized when the one unit vertical in 12 units horizontal (2 percent) (1:12) slope is not possible.

705.1.5 Dining areas. An accessible route to raised or sunken dining areas or to outdoor seating areas is not required provided that the same services and decor are provided in an accessible space usable by any occupant and not restricted to use by people with a disability.

❖ This section is intended to provide equal access to dining services for a disabled individual without segregation in existing buildings undergoing alterations. If equivalent dining services are available on an accessible level, an accessible route to other levels, or to outside dining, is not required as part of the alteration to an existing dining area. For example, where a snack bar is located on one level, while full dining is provided on two other levels, an accessible route would be required to the snack bar level and one of the full dining levels.

705.1.6 Jury boxes and witness stands. In *alterations*, accessible wheelchair spaces are not required to be located within the defined area of raised jury boxes or witness stands and shall be permitted to be located outside these spaces where ramp or lift access poses a hazard by restricting or projecting into a required means of egress.

❖ This exception for jury boxes and witness stands is consistent with Sections 231 and 808 of the ADA *Standards for Accessible Design*. The intent is that if ramp access to a jury box or witness stand would have the ramp limiting or blocking the means of egress for the general population in the space, alternative locations for potential jurors or witnesses are viable. The same alternative is available if a platform lift would effectively be an obstruction for the general means of egress from the courtroom.

705.1.7 Accessible dwelling or sleeping units. Where Group I-1, I-2, I-3, R-1, R-2 or R-4 dwelling or sleeping units are being altered, the requirements of Section 1107 of the *International Building Code* for Accessible units apply only to the quantity of the spaces being altered.

❖ This section sets forth the rate for providing Accessible dwelling or sleeping units in Groups I-1, I-2, I-3, R-1, R-2 and R-4 when such facilities are altered (also see Section 1105.2, and the definitions of "Dwelling unit," "Sleeping unit" and "Accessible unit" in IBC Chapter 2). Assuming that the required number of Accessible units is not already provided, the number of Accessible units to be incorporated into each alteration is based on the number being altered. For example, if a nursing home was being altered a portion at a time, 50 percent of the units being altered each time would be required to be wheelchair accessible. It is not the intent that all units being altered are required to be Accessible units until 50 percent of the units in the entire facility are Accessible units. The total number of Accessible units in the facility is not required to exceed that required for new construction, as indicated in Section 705.1.7. It is unreasonable to require a greater level of accessibility in an existing building than is required in new construction. The technical criteria for Accessible units is found in ICC A117.1, Section 1002.

705.1.8 Type A dwelling or sleeping units. Where more than 20 Group R-2 dwelling or sleeping units are being altered, the requirements of Section 1107 of the *International Building Code* for Type A units and Chapter 9 of the *International Building Code* for visible alarms apply only to the quantity of the spaces being altered.

❖ Type A units are required in new construction when 20 or more apartments (including condominium style) are constructed on a site. Group R-2 requirements for Type A units would also include convents and monasteries and could include some townhouse-style units (see the commentary to IBC Section 1107.6.2.2.1 for additional information).

Note that this requirement is applicable when 20 or more units are included in the construction project; not when an individual owner performs alterations to his or her condo when there are 20 or more units in the building (also see Section 1105.3, and the definitions of "Dwelling unit," "Sleeping unit" and "Type A unit" in IBC Chapter 2). Assuming that Type A units are not already provided, the number of Type A units required is based on the number being altered. For example, if a story in an apartment building was being altered, the number of Type A units required would be based on the number of units in the area being altered, not the number of units in the entire building. If Type A units are provided, the total number of Type A units in the facility is not required to exceed that required for new construction, as indicated in Section 705.1.13. It is unreasonable to require a greater level of accessibility in an existing building than is required in new construction.

705.1.9 Toilet rooms. Where it is technically infeasible to alter existing toilet and bathing rooms to be accessible, an accessible family or assisted-use toilet or bathing room constructed in accordance with Section 1109.2.1 of the *International Building Code* is permitted. The family or assisted-use toilet or bathing room shall be located on the same floor and in the same area as the existing toilet or bathing rooms. At the inaccessible toilet and bathing rooms, directional signs indicating the location of the nearest family or assisted-use toilet room or bathing room shall be provided. These directional signs shall include the International Symbol of Accessibility and sign characters shall meet the visual character requirements in accordance with ICC A117.1.

❖ This section deals with circumstances in which it is technically infeasible to alter existing toilet facilities to be accessible. Where new bathrooms are created in existing buildings or existing bathrooms are part of an alteration, both the men's and women's facilities would be required to be accessible. An alternative solution when it is technically infeasible to alter the existing toilet rooms would be the creation of a single

INTERNATIONAL CODE COUNCIL®
Copyright © 2015 ICC. ALL RIGHTS RESERVED. Accessed by David Dammon on Jun 21, 2017 12:30:52 PM pursuant to License Agreement with ICC. No further reproduction or distribution authorized. ANY UNAUTHORIZED REPRODUCTION OR DISTRIBUTION IS A VIOLATION OF THE FEDERAL COPYRIGHT ACT AND THE LICENSE AGREEMENT, AND SUBJECT TO CIVIL AND CRIMINAL PENALTIES THEREUNDER.

unisex toilet or bathing room containing accessible facilities. The requirements for family or assisted-use toilet facilities in IBC Sections 1109.2.1 through 1109.2.1.7 provide guidance on what is required in this toilet room. If this alternative is selected, the room must be located on the same floor and in the same area as the existing toilet or bathroom. This is the best alternative to providing fully complying separate men's and women's facilities. One might argue that it is technically infeasible to accomplish either of these alternatives, since the alternative to altering existing facilities involves creation of an additional toilet or bathroom that was not otherwise contemplated. This would not be a persuasive argument, since there is likely to be space available somewhere in the facility to commit for use as a toilet or bathroom. In any case, the intent is that some form of an accessible toilet room or bathing facility is necessary and must be provided.

It should be noted that this alternative is not offered as a choice between making the existing separate-sex toilet rooms accessible or providing a family or assisted-use accessible toilet room. The existing separate-sex toilet rooms must be altered when it is technically feasible. Consideration of the alternative is only available when altering the existing toilet rooms is technically infeasible (see the definition for "Technically infeasible" in Section 202).

Signage must be provided at the inaccessible toilet rooms in accordance with IBC Sections 1110.1 and 1110.2 to notify disabled persons that a facility is not accessible and direct them to the nearest accessible facilities.

705.1.10 Dressing, fitting and locker rooms. Where it is *technically infeasible* to provide accessible dressing, fitting, or locker rooms at the same location as similar types of rooms, one accessible room on the same level shall be provided. Where separate sex facilities are provided, accessible rooms for each sex shall be provided. Separate sex facilities are not required where only unisex rooms are provided.

❖ This section takes a similar approach for dressing rooms to that provided in Section 705.1.9 for toilet and bathing facilities. If it is technically infeasible to alter existing dressing rooms to be accessible, then space elsewhere on the level must be committed to providing not less than one accessible dressing room. In this case, if the existing dressing rooms provide separate rooms for each sex, then not less than one accessible dressing room for each sex must be provided.

705.1.11 Fuel dispensers. Operable parts of replacement fuel dispensers shall be permitted to be 54 inches (1370 mm) maximum measured from the surface of the vehicular way where fuel dispensers are installed on existing curbs.

❖ The requirements for new fuel dispensers (i.e., gas pumps) can be found in IBC Section 1109.14. Basically, the idea is that the controls must be in the reach ranges for someone standing on the parking lot surface. However, many existing facilities have gas pumps located on raised islands as a feature for protection of the pumps from accidental contact. This section would allow a new gas pump with a reach range of 15 inches (380 mm) to 48 inches (1220 mm) to be located on top of a 6-inch (150 mm) curb and still meet the maximum reach of 54 inches (1370 mm).

705.1.12 Thresholds. The maximum height of thresholds at doorways shall be $^3/_4$ inch (19.1 mm). Such thresholds shall have beveled edges on each side.

❖ Thresholds at doorways may be $^3/_4$ inch (19.1 mm) maximum in existing buildings. In new construction, a typical threshold is $^1/_2$ inch (12.7 mm) maximum in accordance with IBC Section 1008.1.7. This section recognizes that such things as differences in floor materials may create changes in elevation greater than that allowed in new construction. Edges of thresholds greater than $^1/_4$ inch (6.4 mm) must be beveled to allow for the passage of a wheelchair.

705.1.13 Extent of application. An *alteration* of an existing element, space, or area of a *facility* shall not impose a requirement for greater accessibility than that which would be required for new construction. *Alterations* shall not reduce or have the effect of reducing accessibility of a *facility* or portion of a *facility*.

❖ The purpose of this section is to clarify to which level the requirements of Sections 705.1 and 705.2 apply. The requirements are not intended to impose a higher level of accessibility than that required in new construction. At the same time, alterations cannot result in a lesser degree of accessibility than existed before alterations were undertaken.

705.1.14 Amusement rides. Where the structural or operational characteristics of an amusement ride are altered to the extent that the amusement ride's performance differs from that specified by the manufacturer or the original design, the amusement ride shall comply with requirements for new construction in accordance with Section 1110.4.8 of the *International Building Code*.

❖ To the extent that amusement rides are subject to the accessibility requirements of IBC Section 1110.4.8, they should be accessible and usable by individuals with disabilities. These scoping provisions are flexible, permitting latitude in terms of the method of access (e.g., transfer seat, roll-on seat or transfer device to lift the rider). Mobile and portable rides are exempted. Rides without seats, those designed for children who are assisted onto the ride and those rides controlled by the user are also exempted under IBC Section 1110.4.8.2 from providing wheelchair transfer spaces. Technical criteria can be found in the 2009 edition of the ICC A117.1, Section 1102 and includes accessible routes, load and unload areas, wheelchair spaces on rides, seats for transfer and transfer devices. Recognizing the technical issues associated with existing amusement rides, compli-

INTERNATIONAL CODE COUNCIL®
Copyright © 2015 ICC. ALL RIGHTS RESERVED. Accessed by David Dammon on Jun 21, 2017 12:30:52 PM pursuant to License Agreement with ICC. No further reproduction or distribution authorized. ANY UNAUTHORIZED REPRODUCTION OR DISTRIBUTION IS A VIOLATION OF THE FEDERAL COPYRIGHT ACT AND THE LICENSE AGREEMENT, AND SUBJECT TO CIVIL AND CRIMINAL PENALTIES THEREUNDER.

ance with accessibility requirements is required when the amusement ride is extensively altered.

705.2 Alterations affecting an area containing a primary function. Where an *alteration* affects the accessibility to a, or contains an area of, *primary function*, the route to the primary function area shall be accessible. The accessible route to the *primary function* area shall include toilet facilities and drinking fountains serving the area of *primary function*.

Exceptions:

1. The costs of providing the accessible route are not required to exceed 20 percent of the costs of the alterations affecting the area of *primary function*.
2. This provision does not apply to *alterations* limited solely to windows, hardware, operating controls, electrical outlets and signs.
3. This provision does not apply to *alterations* limited solely to mechanical systems, electrical systems, installation or *alteration* of fire protection systems and abatement of hazardous materials.
4. This provision does not apply to *alterations* undertaken for the primary purpose of increasing the accessibility of a *facility*.
5. This provision does not apply to altered areas limited to Type B dwelling and sleeping units.

❖ An area containing a primary function is one in which a major activity for which the building or facility is intended is carried out (see the definition of "Primary function" in Section 202). For example, the lobby of a hotel in which the registration and check-out desk is located would be a primary function area. Other examples would be the dining area of a restaurant, the meeting rooms or exhibition halls in a conference center, virtually all office and work areas in a business building, and retail display areas in a mercantile occupancy. The key concept is that a primary function area is one that contains a major activity of the facility. Areas that contain activities not related to the main purpose of the facility would not be considered a primary function area. For example, a mechanical equipment room, storage closet, toilet facilities, corridors, lounges and locker rooms would not be considered primary function areas. With this background, it is clear that areas containing a primary function are more critical in terms of the purpose for which people enter and use the facility; therefore, this section reflects that when such areas are altered or added, it is important to require that an accessible route to the primary function area be provided. Where an accessible route to a primary function area is required by this section, an accessible route to facilities such as any restrooms and drinking fountains serving the primary function area must also be made accessible, even though such facilities and areas may not by themselves be considered primary function areas. This is not just the route to the bathroom and drinking fountains; the bathrooms and drinking fountains themselves must also be improved when not accessible.

There are conditions under which it may not be reasonable to strictly enforce this requirement. Exception 1 approaches this by utilizing the cost of the alterations or addition as a basis for determining if providing a complete accessible route is reasonable. The requirement does not apply when the cost of providing an accessible route exceeds 20 percent of the cost of the alterations or addition to the primary function area. These costs are intended to be based on the actual costs of the planned alterations or addition to the primary function area before consideration of the cost of providing an accessible route. For example, if the planned alterations will cost $100,000, not including the cost of an accessible route to a primary function area, this exception would apply if the additional cost of providing the accessible route would exceed $20,000.

It is not the intent to exempt all requirements for accessibility when the total cost for providing the accessible route exceeds the 20-percent threshold. Improvements to the accessible route are required to the extent that costs do not exceed 20 percent of the cost to the planned alteration or addition. It is not required that the full 20 percent be spent. If the accessible route (including accessible bathrooms and drinking fountains) is already provided, no additional expenditure is required. Note that there is not a priority list given for where money should be spent on improving the accessible route. The logical progression is access to the site, accessible exterior routes to accessible entrances, access throughout the facility, access to services in the facility, toilet and bathing rooms and, finally, drinking fountains. Evaluation of how and where the money available should best be spent must be made on a case-by-case basis. For example, if an accessible route is not available to an upper level, and the cost of an elevator is more than 20 percent of the cost of the renovation, then other alternatives could be investigated, such as a platform lift or limited access elevator, or adding the elevator pit and shaft at this time, with elevator equipment added later. If all such items are in excess of the 20-percent limit, perhaps the money available could be spent toward making the toilet rooms accessible. The idea is that existing buildings would become fully accessible over time.

Exceptions 2 and 3 identify certain alterations that are not intended to trigger the requirement for providing an accessible route to a primary function area. Alterations limited to elements such as windows, hardware, operating controls, electrical outlets, signage, mechanical, electrical and fire protection systems, including alterations for the purpose of abating a hazardous materials circumstance, do not affect the usability of a primary function area in the same manner as alterations that affect the floor plan or the configuration, location or size of rooms or spaces. It is therefore considered unreasonable to require the installation of an accessible route when the scope of alterations is limited to that reflected in these exceptions.

INTERNATIONAL CODE COUNCIL®
Copyright © 2015 ICC. ALL RIGHTS RESERVED. Accessed by David Dammon on Jun 21, 2017 12:30:52 PM pursuant to License Agreement with ICC. No further reproduction or distribution authorized. ANY UNAUTHORIZED REPRODUCTION OR DISTRIBUTION IS A VIOLATION OF THE FEDERAL COPYRIGHT ACT AND THE LICENSE AGREEMENT, AND SUBJECT TO CIVIL AND CRIMINAL PENALTIES THEREUNDER.

Note that the costs for these items are not "backed out" of the total cost for the alteration before applying Exception 1. Exceptions 2 and 3 are alterations limited to the specific items referenced.

Exception 4 is intended to avoid penalizing a building owner who is undertaking alterations or additions for the purpose of increasing accessibility. It is appropriate to encourage owners to make such alterations without requiring them to do more work simply because they chose to increase the accessibility of the space. This could otherwise have the opposite effect of discouraging such alterations to avoid the expense of undertaking more work than was originally planned. For example, federal law (ADA) requires that owners of existing buildings remove certain existing barriers to accessibility. Removal of such barriers may require a permit from the code official. It would be unreasonable to have such activity trigger the mandatory requirement for further alterations to accomplish accessibility beyond the originally planned work. In principle, the code takes the view that some extent of greater accessibility is positive progress and should be encouraged, not penalized.

Where the alterations result in Type B dwelling units being provided where none previously existed (Section 410.6, Exception 4), Exception 5 would eliminate the need for any additional money to be spent toward providing an accessible route to those units. This is intended to encourage the creation of such units without penalizing building owners. Similar to Section 410.4.2, this exception is intended to address the concerns of site impracticality for providing accessible routes to and into existing buildings providing Type B dwelling units.

This also reinforces the intent that the inclusion of Type B units is not meant to require elevators when alterations are performed on upper floors in buildings not containing elevators (see exceptions to Section 1107.7). These areas would have been exempted if built new under the FHA and IBC, and should continue to be exempted.

SECTION 706
REROOFING

[BS] 706.1 General. Materials and methods of application used for recovering or replacing an existing roof covering shall comply with the requirements of Chapter 15 of the *International Building Code*.

Exception: Reroofing shall not be required to meet the minimum design slope requirement of one-quarter unit vertical in 12 units horizontal (2-percent slope) in Section 1507 of the *International Building Code* for roofs that provide positive roof drainage.

❖ This section simply states that when a roof is replaced or recovered it must comply with IBC Chapter 15 for the materials and methods used, with an exception for low-sloped roofs. This section does not mandate that the entire roof be replaced but simply that the portion being replaced comply with IBC Chapter 15.

For low-sloped roofs, the exception indicates that reroofing (i.e., recovering or replacement) is not required to meet the $^1/_4$:12 minimum slope requirement of IBC Section 1507, provided that the roof has positive drainage. The term "Positive roof drainage" is defined in IBC Chapter 2 as "the drainage condition in which consideration has been made for all loading deflections of the roof deck, and additional roof slope has been provided to ensure drainage of the roof area within 48 hours of precipitation."

[BS] 706.2 Structural and construction loads. Structural roof components shall be capable of supporting the roof-covering system and the material and equipment loads that will be encountered during installation of the system.

❖ The structural integrity of the roof must be maintained during reroofing operations, which can significantly contribute to the loading of the roof due to workers and material being present. The roof support system must be able to structurally support all additional layers of roof covering material.

[BS] 706.3 Recovering versus replacement. New roof coverings shall not be installed without first removing all existing layers of roof coverings down to the roof deck where any of the following conditions occur:

1. Where the existing roof or roof covering is water soaked or has deteriorated to the point that the existing roof or roof covering is not adequate as a base for additional roofing.
2. Where the existing roof covering is wood shake, slate, clay, cement or asbestos-cement tile.
3. Where the existing roof has two or more applications of any type of roof covering.

Exceptions:

1. Complete and separate roofing systems, such as standing-seam metal roof systems, that are designed to transmit the roof loads directly to the building's structural system and that do not rely on existing roofs and roof coverings for support, shall not require the removal of existing roof coverings.
2. Metal panel, metal shingle and concrete and clay tile roof coverings shall be permitted to be installed over existing wood shake roofs when applied in accordance with Section 706.4.
3. The application of a new protective coating over an existing spray polyurethane foam roofing system shall be permitted without tear-off of existing roof coverings.
4. Where the existing roof assembly includes an ice barrier membrane that is adhered to the roof deck, the existing ice barrier membrane

INTERNATIONAL CODE COUNCIL®
Copyright © 2015 ICC. ALL RIGHTS RESERVED. Accessed by David Dammon on Jun 21, 2017 12:30:52 PM pursuant to License Agreement with ICC. No further reproduction or distribution authorized. ANY UNAUTHORIZED REPRODUCTION OR DISTRIBUTION IS A VIOLATION OF THE FEDERAL COPYRIGHT ACT AND THE LICENSE AGREEMENT, AND SUBJECT TO CIVIL AND CRIMINAL PENALTIES THEREUNDER.

shall be permitted to remain in place and covered with an additional layer of ice barrier membrane in accordance with Section 1507 of the *International Building Code*.

❖ This section determines where all layers of previously installed roof covering systems must be removed prior to the installation of the new roof covering system. Note that roof coverings need to be removed down to the roof decking or sheathing.

Where the existing roof or roof covering is water soaked, it must be allowed to dry completely so as not to trap moisture beneath the new layer of covering. This could cause a rapid deterioration of the new covering material, as well as the existing sheathing. The existing covering is required to be removed if it cannot adequately dry out or if its physical properties have been permanently altered.

Wood shake, slate, clay, cement or asbestos-cement tile types of existing roof coverings historically do not make an adequate base for new roof coverings and could prevent the new covering from making a weather-tight seal. They could also allow penetration of water, snow, etc. These types of existing coverings must always be removed.

When the existing roof has two or more layers of any type of covering system, all layers need to be removed to enable the inspector and contractor to verify that the existing sheathing is not water damaged and still capable of providing an adequate nailing base.

Exception 1 states that new roofing systems designed to transmit all roof loads directly to the structural supports of the building do not necessitate removal of the existing roofing system. Exception 2 allows certain roof coverings, including metal, concrete panel and clay, to be placed over wood shingle and shake roofs only if any concealed combustible spaces are properly addressed in accordance with IBC Section 1510.4 (see commentary, IBC Section 1510.4). Exception 3 refers to the practice of "recoating," in which a new protective coating is placed over an existing spray polyurethane foam roofing system. Recoating can add many years to the effective life of a spray polyurethane foam roofing system without the associated downside of adding significant weight associated with other reroofing-type systems.

When removing roof coverings, it can be difficult, if not impossible, to remove an existing layer of adhered ice barrier membrane without damaging or replacing the roof deck. Exception 4 accounts for this condition by allowing an existing adhered ice barrier membrane to remain in place and be covered with a new ice barrier membrane as required in IBC Section 1507, followed by the installation of the new primary roof-covering material.

[BS] 706.4 Roof recovering. Where the application of a new roof covering over wood shingle or shake roofs creates a combustible concealed space, the entire existing surface shall be covered with gypsum board, mineral fiber, glass fiber or other approved materials securely fastened in place.

❖ "Roof recovering" is defined as the process of installing an additional roof covering over a prepared existing roof covering without removing the existing roof covering. Where recovering over wood shingles or shakes creates a combustible concealed space, the code requires that the entire surface of the wood shakes and shingles be covered with a material that will reduce the possibility of such materials adding fuel to a fire in such a space.

[BS] 706.5 Reinstallation of materials. Existing slate, clay or cement tile shall be permitted for reinstallation, except that damaged, cracked or broken slate or tile shall not be reinstalled. Existing vent flashing, metal edgings, drain outlets, collars and metal counterflashings shall not be reinstalled where rusted, damaged or deteriorated. Aggregate surfacing materials shall not be reinstalled.

❖ This section places conditions on the reuse of roof-covering materials. Historically, various types of materials have been removable without substantially damaging the material. Materials such as wood shingles and shakes, roll roofing and asphalt shingles are usually torn or cracked and cannot be reused. Fastener holes also violate the integrity of the material. Before reuse is allowed, materials such as slate, clay or cement tile should be examined thoroughly for cracks and deterioration.

[BS] 706.6 Flashings. Flashings shall be reconstructed in accordance with approved manufacturer's installation instructions. Metal flashing to which bituminous materials are to be adhered shall be primed prior to installation.

❖ Flashings to be reused or reconstructed must be in accordance with the manufacturer's installation instructions. Metal flashings that are to be reused for bituminous materials must be primed in accordance with the manufacturer's instructions.

SECTION 707
STRUCTURAL

[BS] 707.1 General. Where *alteration* work includes replacement of equipment that is supported by the building or where a reroofing permit is required, the provisions of this section shall apply.

❖ These requirements apply to alterations involving reroofing or the replacement of equipment that is supported by the building.

INTERNATIONAL CODE COUNCIL®
Copyright © 2015 ICC. ALL RIGHTS RESERVED. Accessed by David Dammon on Jun 21, 2017 12:30:52 PM pursuant to License Agreement with ICC. No further reproduction or distribution authorized. ANY UNAUTHORIZED REPRODUCTION OR DISTRIBUTION IS A VIOLATION OF THE FEDERAL COPYRIGHT ACT AND THE LICENSE AGREEMENT, AND SUBJECT TO CIVIL AND CRIMINAL PENALTIES THEREUNDER.

[BS] 707.2 Addition or replacement of roofing or replacement of equipment. Where addition or replacement of roofing or replacement of equipment results in additional dead loads, structural components supporting such reroofing or equipment shall comply with the gravity load requirements of the *International Building Code*.

Exceptions:

1. Structural elements where the additional dead load from the roofing or equipment does not increase the force in the element by more than 5 percent.
2. Buildings constructed in accordance with the *International Residential Code* or the conventional light-frame construction methods of the *International Building Code* and where the dead load from the roofing or equipment is not increased by more than 5 percent.
3. Addition of a second layer of roof covering weighing 3 pounds per square foot (0.1437 kN/m2) or less over an existing, single layer of roof covering.

❖ Where reroofing, the addition of a new layer of roofing or replacement of equipment results in a net increase in the supported dead load; the affected structural components must be checked to verify that the gravity load requirements of the IBC for a new structure are satisfied. The reference to only gravity loads is an indication that an analysis for the effects of lateral loads, such as seismic, would not be a necessity for this level of alteration.

There are three exceptions to satisfy full compliance with the IBC. Exception 1 allows an increase in the force in a structural element of up to 5 percent due to the additional dead load from the roofing or equipment. Exception 2 allows additional dead loads from roof coverings or replacement equipment to be increased by 5 percent beyond the original dead load of the roof coverings and equipment without having to do any further analysis, such as computation of structural member stress increases. Exceptions 1 and 2 do not specifically address the cumulative effects from successive alterations; for instance, it would be prudent to limit cumulative increases under these exceptions to a total of 5 percent unless it is clearly documented that the structure has additional capacity.

Exception 3 allows the addition of a second layer of roof covering over an existing single layer of roof covering as long as the new roof covering does not weigh more than 3 pounds per square foot (0.1437 kN/m^2). Under this exception, even though the new layer of roof covering might be adding more than 5 percent of the original dead load, there is still no analysis required. This exception recognizes a common practice in many jurisdictions across the country where the addition of a new lightweight layer of roof covering over an existing single layer has been allowed without known life safety issues. Note that Section 706 may have other limitations on reroofing.

[BS] 707.3 Additional requirements for reroof permits. The requirements of this section shall apply to *alteration* work requiring reroof permits.

❖ This section refers the code user to Sections 707.3.1 and 707.3.2 for additional requirements for reroofing projects where a permit has been issued.

[BS] 707.3.1 Bracing for unreinforced masonry bearing wall parapets. Where a permit is issued for reroofing for more than 25 percent of the roof area of a building assigned to Seismic Design Category D, E or F that has parapets constructed of unreinforced masonry, the work shall include installation of parapet bracing to resist the reduced *International Building Code* level seismic forces as specified in Section 301.1.4.2 of this code, unless an evaluation demonstrates compliance of such items.

❖ The failure of parapets in unreinforced masonry-bearing (URM) wall buildings has been a recurring problem in areas that experience significant earthquakes. Because this poses a very real risk, the code requires these elements to be braced where the seismic hazard is deemed to be relatively high as reflected in a building's seismic design category. Since the code does not provide the requirements for establishing the seismic design category, IBC Section 1613.3 must be used for this purpose. For an explanation of this process, see the commentary to Section 301.1.4. The code allows this parapet bracing to be designed using the reduced seismic forces of Section 301.1.4.2 and the design procedures listed in Section 301.1.4. See ASCE 41 or Section A113.6 of *Guidelines for Seismic Evaluation of Existing Buildings* (GSREB) in Appendix A of the code for specific requirements for parapets.

An example of the prescribed parapet bracing is illustrated schematically in Commentary Figure 707.3.1. The approach shown—a steel brace anchored to the parapet wall and the roof structure—is commonly used to provide lateral support for a parapet. Other methods of strengthening a parapet can be used to mitigate the hazard, provided their uses are approved as alternative methods of design and construction under Section 104.11.

Note that only the parapet bracing for seismic loads is required. Some buildings, especially those east of the Rocky Mountains, were not designed for seismic loads. They were only designed to resist wind loads. At the present time, the code does not require a review of the building for seismic loads.

INTERNATIONAL CODE COUNCIL®
Copyright © 2015 ICC. ALL RIGHTS RESERVED. Accessed by David Dammon on Jun 21, 2017 12:30:52 PM pursuant to License Agreement with ICC. No further reproduction or distribution authorized. ANY UNAUTHORIZED REPRODUCTION OR DISTRIBUTION IS A VIOLATION OF THE FEDERAL COPYRIGHT ACT AND THE LICENSE AGREEMENT, AND SUBJECT TO CIVIL AND CRIMINAL PENALTIES THEREUNDER.

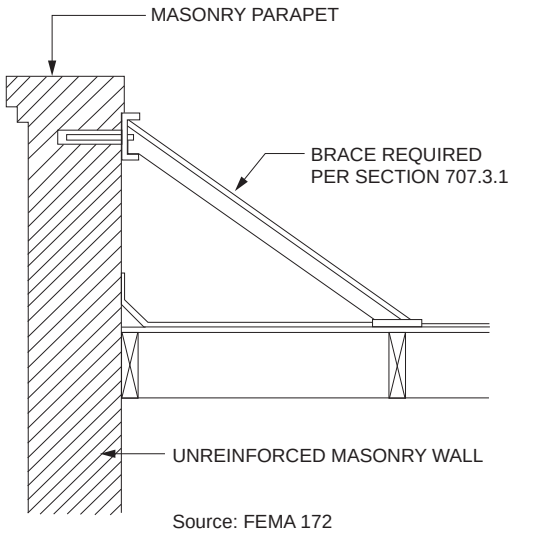

Source: FEMA 172
NEHRP Handbook for Seismic Rehabilitation of Existing Buildings

Figure 707.3.1
MASONRY PARAPET BRACE

[BS] 707.3.2 Roof diaphragms resisting wind loads in high-wind regions. Where roofing materials are removed from more than 50 percent of the roof diaphragm or section of a building located where the ultimate design wind speed, V_{ult}, determined in accordance with Figure 1609.3(1) of the *International Building Code,* is greater than 115 mph (51 m/s) or in a special wind region, as defined in Section 1609 of the *International Building Code*, roof diaphragms, connections of the roof diaphragm to roof framing members, and roof-to-wall connections shall be evaluated for the wind loads specified in the *International Building Code*, including wind uplift. If the diaphragms and connections in their current condition are not capable of resisting at least 75 percent of those wind loads, they shall be replaced or strengthened in accordance with the loads specified in the *International Building Code.*

❖ The removal of roofing provides an opportunity to inspect a portion of the structure that is otherwise concealed. Such inspections must take place where more than 50 percent of the roof covering is removed from a building located in a special wind region or where the ultimate design wind speed, V_{ult}, determined in accordance with IBC Table 1609.3(1), is greater than 115 mph.

A roof diaphragm that is a part of the main wind-force-resisting system is required to have adequate strength to resist and transfer the wind loads referenced in the IBC, including uplift loads. If the roof diaphragm is not able to resist 75 percent of the wind loads specified in the IBC, such connections are required to be strengthened or replaced. The 75-percent reduction is consistent with other structural allowances for existing conditions. Note that this section spells out which aspects of the roof need to be evaluated and possibly replaced and strengthened. These include the following:

- Roof diaphragms.
- Connections of the roof diaphragm to roof framing members.
- Roof-to-wall connections.

This requirement is also found in the prescriptive method in Section 403.8.

SECTION 708
ENERGY CONSERVATION

708.1 Minimum requirements. Level 1 *alterations* to *existing buildings* or structures are permitted without requiring the entire building or structure to comply with the energy requirements of the *International Energy Conservation Code* or *International Residential Code*. The *alterations* shall conform to the energy requirements of the *International Energy Conservation Code* or *International Residential Code* as they relate to new construction only.

❖ A building that undergoes Level 1 alterations is required to meet a certain level of energy compliance. The level of compliance depends on the extent of the alterations taking place. As Level 1 alterations are those alterations where certain building elements are removed and replaced with new elements or where old elements are covered with new elements, then any such new element is required to meet the applicable energy provisions of the IECC or IRC, in the case of buildings that fall under the scoping of the IRC. Elements in the building that are not being affected do not need to be evaluated and do not need to comply with the energy provisions. Essentially, the entire building is not required to meet the energy provisions; only a degree of possible improvement in the energy performance of the building is intended to be achieved by making the new elements meet the IECC or IRC requirements. The language in this section is intended to be consistent with the requirements in the IECC and IRC for alterations.

Bibliography

The following resource materials were used in the preparation of the commentary for this chapter of the code.

24 CFR, *Fair Housing Accessibility Guidelines* (FHAG). Washington, DC: Department of Housing and Urban Development, 1991.

36 CFR, Parts 1190 and 1191 Final Rule, *The Americans with Disabilities Act (ADA) Accessibility Guidelines; Architectural Barriers Act (ABA) Accessibility Guidelines*. Washington, DC: Architectural and Transportation Barriers Compliance Board, July 23, 2004.

INTERNATIONAL CODE COUNCIL®
Copyright © 2015 ICC. ALL RIGHTS RESERVED. Accessed by David Dammon on Jun 21, 2017 12:30:52 PM pursuant to License Agreement with ICC. No further reproduction or distribution authorized. ANY UNAUTHORIZED REPRODUCTION OR DISTRIBUTION IS A VIOLATION OF THE FEDERAL COPYRIGHT ACT AND THE LICENSE AGREEMENT, AND SUBJECT TO CIVIL AND CRIMINAL PENALTIES THEREUNDER.

42 USC 3601-88, *Fair Housing Amendments Act* (FHA). Washington, DC: United States Code, 1988.

2010 *ADA Standard for Accessible Design*. Washington, DC: Department of Justice, September 15, 2010.

ASCE 24-13, *Flood-resistance Design and Construction Standard*. Reston, VA: American Society of Civil Engineers, 2005.

DOJ 28 CFR, Part 36-91, *Americans with Disabilities Act* (ADA). Washington, DC: Department of Justice, 1991.

Guidelines for Seismic Retrofit of Existing Buildings. Birmingham, AL: Southern Building Code Congress International, 2000.

INTERNATIONAL CODE COUNCIL®
Copyright © 2015 ICC. ALL RIGHTS RESERVED. Accessed by David Dammon on Jun 21, 2017 12:30:52 PM pursuant to License Agreement with ICC. No further reproduction or distribution authorized. ANY UNAUTHORIZED REPRODUCTION OR DISTRIBUTION IS A VIOLATION OF THE FEDERAL COPYRIGHT ACT AND THE LICENSE AGREEMENT, AND SUBJECT TO CIVIL AND CRIMINAL PENALTIES THEREUNDER.

INTERNATIONAL CODE COUNCIL®
Copyright © 2015 ICC. ALL RIGHTS RESERVED. Accessed by David Dammon on Jun 21, 2017 12:30:52 PM pursuant to License Agreement with ICC. No further reproduction or distribution authorized. ANY UNAUTHORIZED REPRODUCTION OR DISTRIBUTION IS A VIOLATION OF THE FEDERAL COPYRIGHT ACT AND THE LICENSE AGREEMENT, AND SUBJECT TO CIVIL AND CRIMINAL PENALTIES THEREUNDER.

Chapter 8: Alterations—Level 2

General Comments

This chapter provides the technical requirements for those existing buildings that undergo Level 2 alterations. Reference is made to Level 2 alterations as described in Section 504, which includes the reconfiguration of space. Installation of additional equipment that did not previously exist, or the addition or elimination of doors and windows, are also considered Level 2 alterations and, hence, are covered by this chapter.

This chapter, similar to other chapters of the code, covers all building-related subjects, such as structural, mechanical, plumbing, electrical, accessibility and fire and life safety issues in Level 2 alterations. Sections 801, 802 and 803 are related to scoping, special use and occupancy, and building elements and materials. In the interest of being brief and avoiding the presentation of materials that are repetitive in nature in various chapters, Section 801.2 requires that Level 2 alterations comply not only with Chapter 8, but also with Chapter 7. As such, any alteration work that is classified as Level 2 is assumed to include everything related to Level 1 alterations plus the reconfiguration of space. Section 803, Building Elements and Materials, covers elements such as existing vertical openings and when such openings might be required to be enclosed, stairway enclosures, interior finishes and guards. The remainder of the chapter is related to fire protection, means of egress, accessibility, structural, electrical, mechanical and plumbing provisions. While the means of egress, Section 805, covers subjects such as the minimum number of exits, fire escape requirements and construction details, corridor openings and exit signs, the structural part of this chapter, Section 807, addresses subjects such as new and existing structural members, gravity loads, lateral loads and snow drift loads.

The level of improvements required as a result of Level 2 alterations is extensive when compared to Level 1 alterations because the extent of alterations is more drastic and space reconfiguration is involved. The level typically known as "alterations" in the *International Building Code*® (IBC®) and previous legacy building codes was divided into Levels 1, 2 and 3 because minor alterations that do not include space reconfiguration and extensive alterations such as the relocation of walls and partitions should be treated differently and with different threshold levels for requiring upgrades or improvements to the building or spaces in the building.

Purpose

The purpose of this chapter is to detail required improvements in existing building elements, building spaces and the building structural system. This chapter is distinguished from Chapters 7 and 9 by involving space reconfiguration that could be up to and including 50 percent of the area of the building. In contrast, Level 1 alterations do not involve space reconfiguration and Level 3 alterations involve extensive space reconfiguration exceeding 50 percent of the building area. Depending on the nature of alteration work, its location in the building and whether it encompasses one or more tenants, improvements and upgrades could be required for the open floor penetrations, sprinkler system or the installation of additional means of egress, such as stairs or fire escapes. At times, and under certain situations, this chapter is also intended to improve the safety of certain building features beyond the work area and in other parts of the building where no alteration work might be taking place.

SECTION 801 GENERAL

801.1 Scope. Level 2 *alterations* as described in Section 504 shall comply with the requirements of this chapter.

Exception: Buildings in which the reconfiguration is exclusively the result of compliance with the accessibility requirements of Section 705.2 shall be permitted to comply with Chapter 7.

❖ Any alteration work that results in the reconfiguration of space or otherwise falls under the classification of Level 2 alterations, as described in Section 504, must comply with Chapter 8 (see Commentary Figure 801.1). The exception is intended to encourage existing buildings to improve accessibility for the disabled by allowing any such alterations (which are solely for compliance with the accessibility provisions of Section 705) to only comply with Chapter 7 provisions, as if no space reconfiguration has taken place. This is an advantage for improving accessibility in buildings because Chapter 7 is related to alterations that do not encompass any space reconfiguration and, as such, has a lower level of compliance requirement and higher thresholds for triggering other improvements.

INTERNATIONAL CODE COUNCIL®
Copyright © 2015 ICC. ALL RIGHTS RESERVED. Accessed by David Dammon on Jun 21, 2017 12:30:52 PM pursuant to License Agreement with ICC. No further reproduction or distribution authorized. ANY UNAUTHORIZED REPRODUCTION OR DISTRIBUTION IS A VIOLATION OF THE FEDERAL COPYRIGHT ACT AND THE LICENSE AGREEMENT, AND SUBJECT TO CIVIL AND CRIMINAL PENALTIES THEREUNDER.

Example 801.1:

An existing office building does not comply with current accessibility requirements. The owner wishes to make the building completely accessible to the disabled by installing ramps, enlarging toilet rooms and widening doorways.

Q: What, if any, additional code requirements are triggered?

A: All affected areas can be rebuilt with similar materials, except glass at human impact areas, which must comply with safety glass requirements (see Section 602).

801.2 Alteration Level 1 compliance. In addition to the requirements of this chapter, all work shall comply with the requirements of Chapter 7.

❖ Chapters 8 and 9 have cascading effects by requiring that each level of alteration must comply with the chapter for the lower level of alteration. Accordingly, an alteration project that is classified as Level 2 must comply with Chapters 7 and 8. Similarly, an alteration project classified as Level 3 must comply with Chapters 7, 8 and 9. This is to eliminate the repetition of various requirements from Chapter 7 in Chapters 8 and 9 and from Chapter 8 in Chapter 9, as a Level 2 alteration, in general, includes various aspects of a Level 1 alteration; and a Level 3 alteration, in general, includes various aspects of Level 1 and 2 alterations. The code drafting committee decided to make reference to these chapters rather than repeat all such provisions again.

801.3 Compliance. All new construction elements, components, systems, and spaces shall comply with the requirements of the *International Building Code*.

Exceptions:

1. Windows may be added without requiring compliance with the light and ventilation requirements of the *International Building Code*.
2. Newly installed electrical equipment shall comply with the requirements of Section 808.
3. The length of dead-end corridors in newly constructed spaces shall only be required to comply with the provisions of Section 805.6.
4. The minimum ceiling height of the newly created habitable and occupiable spaces and corridors shall be 7 feet (2134 mm).

❖ New elements, components and spaces created as a result of Level 2 alteration work must comply with the IBC or other applicable code, as Section 101.4 of the IBC makes reference to other *International Codes*® (I-Codes®), such as the *International Plumbing Code*® (IPC®), *International Mechanical Code*® (IMC®) and *International Fire Code*® (IFC®). Exception 1 allows new windows to be added without complying with IBC light and ventilation requirements, so as not to discourage a building owner from making improvements in the current amount of natural light and ventilation. Exceptions 2 and 3 refer the user to Sections 805.6 and 808, which detail provisions for dead-end corridors and electrical equipment. Exception 4 allows the minimum ceiling height of newly created spaces to be lowered

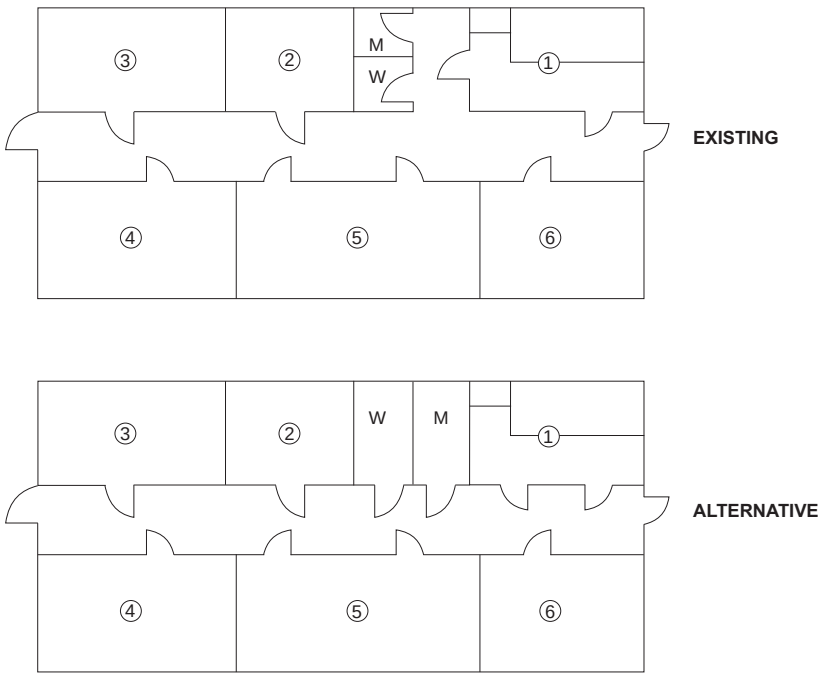

Figure 801.1
RECONFIGURED SPACE

INTERNATIONAL CODE COUNCIL®
Copyright © 2015 ICC. ALL RIGHTS RESERVED. Accessed by David Dammon on Jun 21, 2017 12:30:52 PM pursuant to License Agreement with ICC. No further reproduction or distribution authorized. ANY UNAUTHORIZED REPRODUCTION OR DISTRIBUTION IS A VIOLATION OF THE FEDERAL COPYRIGHT ACT AND THE LICENSE AGREEMENT, AND SUBJECT TO CIVIL AND CRIMINAL PENALTIES THEREUNDER.

from the IBC requirement of 7 feet, 6 inches (2289 mm) to 7 feet (2134 mm), recognizing that even though the space is newly created, it is in an existing building that might have framing members prohibiting higher ceilings.

SECTION 802
SPECIAL USE AND OCCUPANCY

802.1 General. *Alteration* of buildings classified as special use and occupancy as described in the *International Building Code* shall comply with the requirements of Section 801.1 and the scoping provisions of Chapter 1 where applicable.

❖ Special use and occupancy buildings described in Chapter 4 of the IBC, such as covered mall buildings and high-rise buildings, are treated the same as any other building when the work taking place is a Level 2 alteration. This section specifically and clearly provides this information because at higher levels of alteration work, or where there is a change of occupancy, some special use and occupancy buildings are required to comply with the IBC, either completely or in particular alteration areas (see Sections 802 and 902). By reference to Section 801.1 and Chapter 1, this section makes indirect reference to Section 101.2.

SECTION 803
BUILDING ELEMENTS AND MATERIALS

803.1 Scope. The requirements of this section are limited to work areas in which Level 2 alterations are being performed and shall apply beyond the work area where specified.

❖ This section provides the scoping provisions for vertical openings, smoke barriers, interior finish and guards by requiring that the work areas must comply with this section, and that at times there are supplementary requirements that apply to spaces beyond the work areas. Such supplementary requirements are found in Sections 803.2.2, 803.2.3 and 803.4.1 where the extent of compliance beyond the work area is identified.

803.2 Vertical openings. Existing vertical openings shall comply with the provisions of Sections 803.2.1, 803.2.2 and 803.2.3.

❖ The purpose of this section is to provide requirements for vertical openings in Level 2 alterations. Sections 803.2.1 and 803.2.2 provide these requirements.

803.2.1 Existing vertical openings. All existing interior vertical openings connecting two or more floors shall be enclosed with approved assemblies having a fire-resistance rating of not less than 1 hour with approved opening protectives.

Exceptions:

1. Where vertical opening enclosure is not required by the *International Building Code* or the *International Fire Code*.
2. Interior vertical openings other than stairways may be blocked at the floor and ceiling of the *work area* by installation of not less than 2 inches (51 mm) of solid wood or equivalent construction.
3. The enclosure shall not be required where:
   - 3.1. Connecting the main floor and mezzanines; or
   - 3.2. All of the following conditions are met:
     - 3.2.1. The communicating area has a low hazard occupancy or has a moderate hazard occupancy that is protected throughout by an automatic sprinkler system.
     - 3.2.2. The lowest or next to the lowest level is a street floor.
     - 3.2.3. The entire area is open and unobstructed in a manner such that it may be assumed that a fire in any part of the interconnected spaces will be readily obvious to all of the occupants.
     - 3.2.4. Exit capacity is sufficient to provide egress simultaneously for all occupants of all levels by considering all areas to be a single floor area for the determination of required exit capacity.
     - 3.2.5. Each floor level, considered separately, has at least one-half of its individual required exit capacity provided by an exit or exits leading directly out of that level without having to traverse another communicating floor level or be exposed to the smoke or fire spreading from another communicating floor level.
4. In Group A occupancies, a minimum 30-minute enclosure shall be provided to protect all vertical openings not exceeding three stories.
5. In Group B occupancies, a minimum 30-minute enclosure shall be provided to protect all vertical openings not exceeding three stories. This enclosure, or the enclosure specified in Section 803.2.1, shall not be required in the following locations:
   - 5.1. Buildings not exceeding 3,000 square feet (279 m^2) per floor.
   - 5.2. Buildings protected throughout by an approved automatic fire sprinkler system.

INTERNATIONAL CODE COUNCIL®
Copyright © 2015 ICC. ALL RIGHTS RESERVED. Accessed by David Dammon on Jun 21, 2017 12:30:52 PM pursuant to License Agreement with ICC. No further reproduction or distribution authorized. ANY UNAUTHORIZED REPRODUCTION OR DISTRIBUTION IS A VIOLATION OF THE FEDERAL COPYRIGHT ACT AND THE LICENSE AGREEMENT, AND SUBJECT TO CIVIL AND CRIMINAL PENALTIES THEREUNDER.

6. In Group E occupancies, the enclosure shall not be required for vertical openings not exceeding three stories when the building is protected throughout by an approved automatic fire sprinkler system.
7. In Group F occupancies, the enclosure shall not be required in the following locations:
    7.1. Vertical openings not exceeding three stories.
    7.2. Special purpose occupancies where necessary for manufacturing operations and direct access is provided to at least one protected stairway.
    7.3. Buildings protected throughout by an approved automatic sprinkler system.
8. In Group H occupancies, the enclosure shall not be required for vertical openings not exceeding three stories where necessary for manufacturing operations and every floor level has direct access to at least two remote enclosed stairways or other approved exits.
9. In Group M occupancies, a minimum 30-minute enclosure shall be provided to protect all vertical openings not exceeding three stories. This enclosure, or the enclosure specified in Section 803.2.1, shall not be required in the following locations:
    9.1. Openings connecting only two floor levels.
    9.2. Occupancies protected throughout by an approved automatic sprinkler system.
10. In Group R-1 occupancies, the enclosure shall not be required for vertical openings not exceeding three stories in the following locations:
    10.1. Buildings protected throughout by an approved automatic sprinkler system.
    10.2. Buildings with less than 25 dwelling units or sleeping units where every sleeping room above the second floor is provided with direct access to a fire escape or other approved second exit by means of an approved exterior door or window having a sill height of not greater than 44 inches (1118 mm) and where:
        10.2.1. Any exit access corridor exceeding 8 feet (2438 mm) in length that serves two means of egress, one of which is an unprotected vertical opening, shall have at least one of the means of egress separated from the vertical opening by a 1-hour fire barrier; and
        10.2.2. The building is protected throughout by an automatic fire alarm system, installed and supervised in accordance with the *International Building Code*.
11. In Group R-2 occupancies, a minimum 30-minute enclosure shall be provided to protect all vertical openings not exceeding three stories. This enclosure, or the enclosure specified in Section 803.2.1, shall not be required in the following locations:
    11.1. Vertical openings not exceeding two stories with not more than four dwelling units per floor.
    11.2. Buildings protected throughout by an approved automatic sprinkler system.
    11.3. Buildings with not more than four dwelling units per floor where every sleeping room above the second floor is provided with direct access to a fire escape or other approved second exit by means of an approved exterior door or window having a sill height of not greater than 44 inches (1118 mm) and the building is protected throughout by an automatic fire alarm system complying with Section 804.4.
12. One- and two-family dwellings.
13. Group S occupancies where connecting not more than two floor levels or where connecting not more than three floor levels and the structure is equipped throughout with an approved automatic sprinkler system.
14. Group S occupancies where vertical opening protection is not required for open parking garages and ramps.

❖ All existing vertical openings connecting two or more floors must be enclosed with assemblies of 1-hour fire-resistance-rated construction and approved protected openings. Even without its 14 exceptions, this provision is more relaxed than the IBC shaft enclosure requirements that require 2-hour fire-resistance-rated enclosures for buildings four stories or more in height. Additionally, the user should remember the scoping provisions of Section 803.1, which indicates that the enclosure requirements triggered under Level 2 alterations apply only to work areas. As such, if the alteration is on the first floor of a multiple-story building, and the vertical opening is in the work area, then only the portion of the vertical opening in the first floor, not the entire opening from the bottom to top floor, is required to be enclosed.

Exception 1 is provided so that the provisions of the code in relation to vertical openings are not more restrictive than those of the IBC and IFC. The IFC regulates vertical openings in existing buildings in Section 1103.4 of that code. This section allows vertical openings without enclosures where they connect only two stories in other than hazardous or institutional occupancies.

INTERNATIONAL CODE COUNCIL®
Copyright © 2015 ICC. ALL RIGHTS RESERVED. Accessed by David Dammon on Jun 21, 2017 12:30:52 PM pursuant to License Agreement with ICC. No further reproduction or distribution authorized. ANY UNAUTHORIZED REPRODUCTION OR DISTRIBUTION IS A VIOLATION OF THE FEDERAL COPYRIGHT ACT AND THE LICENSE AGREEMENT, AND SUBJECT TO CIVIL AND CRIMINAL PENALTIES THEREUNDER.

Exception 2 allows vertical openings other than stairways to be blocked by solid wood of 2 inches (51 mm) in thickness or equivalent construction. The 2 inches (51 mm) used here is the nominal thickness of the solid wood members.

Exception 3.1 is a repetition of IBC Section 712.1.11. Exception 3.2 provides five conditions that, if all are met simultaneously, do not require the enclosure of vertical openings. The combination of these five conditions is equivalent to a situation where the occupancy is a low-hazard occupancy, fire sprinklers are present and there is sufficient means-of-egress capacity.

Exceptions 4 through 11 and 13 allow either a 30-minute protection for vertical openings in lieu of 1-hour protection or allow the vertical opening to remain open for buildings three stories or less in height with certain features such as sprinklers or multiple remote means of egress.

Exceptions 12 and 14 allow existing vertical openings to remain open in single-family, duplex buildings and open parking garages. The IBC and IFC exception is listed under Exception 1. As can be seen, the exceptions within the IBC and the code allow for numerous methods of dealing with vertical openings so that the building owners and designers have many options to provide a minimum level of protection intended by the codes.

803.2.2 Supplemental shaft and floor opening enclosure requirements. Where the *work area* on any floor exceeds 50 percent of that floor area, the enclosure requirements of Section 803.2 shall apply to vertical openings other than stairways throughout the floor.

Exception: Vertical openings located in tenant spaces that are entirely outside the *work area*.

❖ Unenclosed vertical openings and shafts, other than stairways that would typically be required to be enclosed by the IBC, are required to be enclosed throughout a floor where the work area on that floor exceeds 50 percent of the floor area. Stairways are not included here because they are specifically addressed in Section 803.2.3. This is the first of the supplemental requirements for vertical enclosures to which the code user is referred in Section 803.1. The proportionality philosophy of the code is applied here, as it is believed that a work area extending to more than 50 percent of the floor area of a story is large enough to trigger additional vertical openings, other than stairways, to be enclosed. As the undertaking of such work in tenant spaces, which are completely outside of the work area and are not within the scope of the originally proposed alteration, is disruptive and an unacceptable practice, the exception eliminates this requirement in such tenant spaces.

Example 803.2.2:

An existing four-story retail building is being altered on the third floor. The alterations involve the reconfiguration of space in about 70 percent of the third floor. There are two enclosed stairways, an open escalator and an elevator without protected enclosures. The building is not sprinklered.

Q: Will the escalator and the elevator be required to be protected or enclosed in accordance with the IBC?

A: Since the work area on the third floor exceeds 50 percent of the area of the third floor, both the elevator and the escalator must be protected even though the elevator is outside of the work area. The protection is needed on the third floor only (see Section 803.1 and Commentary Figure 803.2.2).

803.2.3 Supplemental stairway enclosure requirements. Where the *work area* on any floor exceeds 50 percent of that floor area, stairways that are part of the means of egress serving the *work area* shall, at a minimum, be enclosed with smoke-tight construction on the highest *work area* floor and all floors below.

Exception: Where stairway enclosure is not required by the *International Building Code* or the *International Fire Code*.

❖ Stairways serving as part of the means-of-egress system must be enclosed, where possible, to increase the degree of protection for building occupants. The triggering mechanism in this section is the percentage of the work area on any given floor. If the work area exceeds 50 percent of the floor area on any floor, then stairways that are part of the means of egress and serve that work area must be enclosed, even though the stairways may not be located in the work area. This provision could affect several stairways, all of which might be located outside of the proposed work area. For example, a multiple-story building contains three required stairways, all of which are unenclosed. The work area on an upper floor that exceeds 50 percent of that story area triggers the requirement for the enclosure of all three stairways if they each serve as one of the exits for that work area. The enclosure need only be smoke tight and need not provide any fire-resistance rating, and the openings into such a smoke-tight enclosure need not be protected with fire-resistant assemblies, only smoke-protected assemblies. The extent of the enclosure is specified to be from the floor at which the work areas have triggered this requirement and all floors below it. The exception is a reminder that stairways not required to be enclosed by the IBC or IFC are not affected by this section.

803.3 Smoke compartments. In Group I-2 occupancies where the work area is on a story used for sleeping rooms for more than 30 patients, the story shall be divided into not less than two compartments by smoke barrier walls in accordance with Section 407.5 of the *International Building Code* as required for new construction.

❖ The smoke compartmentation and related smoke barrier provisions in alterations classified as Level 2 apply only to Group I-2 occupancies, such as hospitals, nursing homes, mental hospitals and detoxifica-

INTERNATIONAL CODE COUNCIL®
Copyright © 2015 ICC. ALL RIGHTS RESERVED. Accessed by David Dammon on Jun 21, 2017 12:30:52 PM pursuant to License Agreement with ICC. No further reproduction or distribution authorized. ANY UNAUTHORIZED REPRODUCTION OR DISTRIBUTION IS A VIOLATION OF THE FEDERAL COPYRIGHT ACT AND THE LICENSE AGREEMENT, AND SUBJECT TO CIVIL AND CRIMINAL PENALTIES THEREUNDER.

tion facilities. In such facilities, this section requires that a story used for sleeping rooms for more than 30 patients be divided into at least two compartments by the use of smoke barriers. The section then references Section 407.5 for smoke compartment size and other related limitations. More specifically, no such compartment can be larger than 22,500 square feet (2093 m^2) for Group I-2 Condition 1 and 40,000 square feet for Group I-2 Condition 2. Realizing that these compartments could be very long and narrow spaces, the travel distance from any point to reach a door in the smoke barrier is limited to 200 feet (60 960 mm). The trigger used to determine when a second compartment is required differs from the IBC. The IBC requires compartmentation in all sleeping areas regardless of occupant load, and in nonsleeping areas with an occupant load of 50 or more (see commentary, IBC Section 407.5).

803.4 Interior finish. The interior finish of walls and ceilings in exits and corridors in any *work area* shall comply with the requirements of the *International Building Code*.

Exception: Existing interior finish materials that do not comply with the interior finish requirements of the *International Building Code* shall be permitted to be treated with an approved fire-retardant coating in accordance with the manufacturer's instructions to achieve the required rating.

❖ The interior finish of corridor and exit walls and ceilings in work areas must meet the flame spread and smoke-development limitations and requirements of the IBC. "Corridors" and "Exits" are defined in IBC Section 202, and flame-spread and smoke-developed classifications are determined from IBC Table 803.11 and based on ASTM E84. To be able to maintain some interior finish materials that do not comply with the flame-spread and smoke-development requirements of the code, the exception provides the option of available technology for the use of fire-retardant treatment of such surfaces as long as the code official approves the coating and it is applied in accordance with the manufacturer's instructions to achieve the required rating.

803.4.1 Supplemental interior finish requirements. Where the *work area* on any floor exceeds 50 percent of the floor area, Section 803.4 shall also apply to the interior finish in

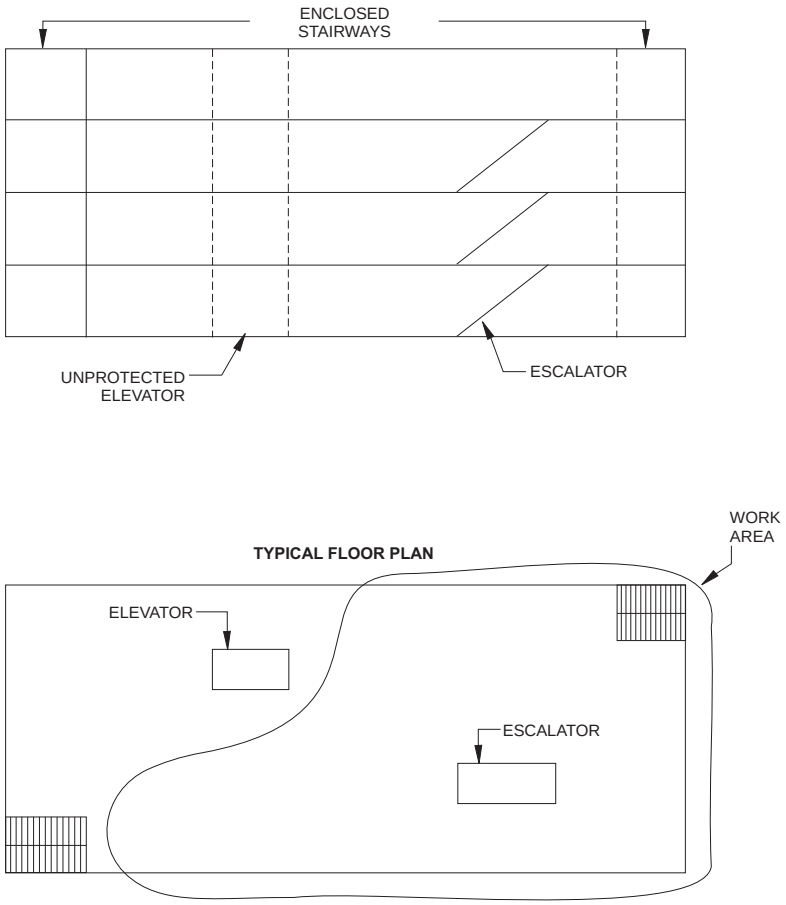

Figure 803.2.2
SUPPLEMENTAL SHAFT AND FLOOR OPENING ENCLOSURE REQUIREMENTS

INTERNATIONAL CODE COUNCIL®
Copyright © 2015 ICC. ALL RIGHTS RESERVED. Accessed by David Dammon on Jun 21, 2017 12:30:52 PM pursuant to License Agreement with ICC. No further reproduction or distribution authorized. ANY UNAUTHORIZED REPRODUCTION OR DISTRIBUTION IS A VIOLATION OF THE FEDERAL COPYRIGHT ACT AND THE LICENSE AGREEMENT, AND SUBJECT TO CIVIL AND CRIMINAL PENALTIES THEREUNDER.

exits and corridors serving the *work area* throughout the floor.

Exception: Interior finish within tenant spaces that are entirely outside the *work area*.

❖ The interior finish requirements discussed in Section 803.4 are also applicable in corridors and exits that are outside of the work area but serve that same work area, if the work area on any floor exceeds 50 percent of the floor area at that level. Similar to other supplemental requirements, this extended area of code application is not required in tenant spaces that are entirely outside of the work area.

803.5 Guards. The requirements of Sections 803.5.1 and 803.5.2 shall apply in all *work areas*.

❖ This is the charging paragraph for guard requirements. The detailed requirements are given in Sections 803.5.1 and 803.5.2.

803.5.1 Minimum requirement. Every portion of a floor, such as a balcony or a loading dock, that is more than 30 inches (762 mm) above the floor or grade below and is not provided with guards, or those in which the existing guards are judged to be in danger of collapsing, shall be provided with guards.

❖ To reduce the potential of an accidental fall, the IBC requires guards where open sides of walking surfaces, mezzanines, stairways, ramps, landings and other similar areas are located more than 30 inches (702 mm) above the floor or grade below. The code, in this section, uses the same criteria to require new guards where none existed before or to require that dangerous guards be replaced. This requirement is applicable only in the work areas and does not contain supplementary provisions. Replacement of existing guards is required if they are judged to be in danger of collapsing. This sentence makes it clear that the replacement of guards is triggered if anyone, including the owner, designer or code official, judges the guard to be in danger of collapsing. It needs to be stressed, though, that guards that could potentially collapse or could be considered unsafe, as defined in Section 202, are required to be replaced on the basis of Section 115.1, whether such guards are in the work area or not. Section 116 of the IBC and Section 110 of the IFC have the same effect and could require the replacement of guards anywhere in the building, even if no alterations are planned.

Where this section triggers the installation of new guards or the replacement of existing guards, the new guards must comply with the IBC for height, spacing between balusters and structural strength (see IBC Sections 1016 and 1607.8).

Example 803.5.1:

An existing restaurant has an elevated platform for performances, an elevated dining area and an outside dining deck, all of which require guards in accordance with the IBC. The performance area has no guards and the elevated dining area has existing guards that are in acceptable physical condition, but the spacing between the rails is $5^1/_2$ inches (140 mm). The outside dining deck has guards that are deteriorated and might collapse under applied loads. The owner plans to make some rearrangements of the kitchen, toilets and the elevated dining deck, which are all in the same area.

Q: What requirements related to guards are applicable?

A: 1. The guards for the elevated dining area do not require any upgrading, as they are in acceptable physical shape.

A: 2. The elevated performance area and the outside dining deck are not within the work area and, as such, are not covered by this section of the code. Both of these areas, however, could most likely be considered unsafe under the provisions of Section 115.1 and, accordingly, guards in full compliance with the IBC must be installed in both locations.

803.5.2 Design. Where there are no guards or where existing guards must be replaced, the guards shall be designed and installed in accordance with the *International Building Code*.

❖ The strength, load-carrying capacity and maximum opening requirements for guards are given by the IBC. This is consistent with the requirements of Section 702.6 for new building materials and equipment.

803.6 Fire-resistance ratings. Where approved by the code official, buildings where an automatic sprinkler system installed in accordance with Section 903.3.1.1 or 903.3.1.2 of the *International Building Code* has been added, and the building is now sprinklered throughout, the required fire-resistance ratings of building elements and materials shall be permitted to meet the requirements of the current building code. The building is required to meet the other applicable requirements of the *International Building Code*.

Plans, investigation and evaluation reports, and other data shall be submitted indicating which building elements and materials the applicant is requesting the code official to review and approve for determination of applying the current building code fire-resistance ratings. Any special construction features, including fire-resistance-rated assemblies and smoke-resistive assemblies, conditions of occupancy, means-of-egress conditions, fire code deficiencies, approved modifications or approved alternative materials, design and methods of construction, and equipment applying to the building that impact required fire-resistance ratings shall be identified in the evaluation reports submitted.

❖ This section provides allowances in fire-resistance-rating requirements where a building is equipped throughout with an automatic sprinkler system. This installation could be related to an alteration or compliance with retroactive code requirements. These reductions are allowed to be equivalent to the IBC. A concern with such allowances is how to ensure that such reductions in fire resistance do not result in an overall reduction of the existing levels of protection.

INTERNATIONAL CODE COUNCIL®
Copyright © 2015 ICC. ALL RIGHTS RESERVED. Accessed by David Dammon on Jun 21, 2017 12:30:52 PM pursuant to License Agreement with ICC. No further reproduction or distribution authorized. ANY UNAUTHORIZED REPRODUCTION OR DISTRIBUTION IS A VIOLATION OF THE FEDERAL COPYRIGHT ACT AND THE LICENSE AGREEMENT, AND SUBJECT TO CIVIL AND CRIMINAL PENALTIES THEREUNDER.

This section provides a process to review the required levels of protection with a sprinkler system as opposed to without. The process is that once an existing building is sprinklered throughout and meets other applicable requirements of the IBC, plans, investigation and evaluation reports, and other data can be submitted seeking approval of the code official for the assignment of the new fire-resistance ratings, which might result in a reduction, or potentially an increase.

The provisions require that the evaluation reports identify the following: any special construction features, conditions of occupancy, approved modifications or alternative materials, design and methods of construction, and equipment applying to the building that impact required fire-resistance ratings. This is to ensure special conditions are identified that may prevent a reduction in fire-resistance ratings.

SECTION 804
FIRE PROTECTION

804.1 Scope. The requirements of this section shall be limited to work areas in which Level 2 *alterations* are being performed, and where specified they shall apply throughout the floor on which the *work areas* are located or otherwise beyond the *work area*.

❖ The scoping provisions of fire protection are the same as all other subjects in Chapter 8. The requirements apply in work areas. At times, there are supplemental requirements that apply to areas outside of the work area.

804.1.1 Corridor ratings. Where an approved automatic sprinkler system is installed throughout the story, the required fire-resistance rating for any corridor located on the story shall be permitted to be reduced in accordance with the *International Building Code*. In order to be considered for a corridor rating reduction, such system shall provide coverage for the stairway landings serving the floor and the intermediate landings immediately below.

❖ Corridor reductions on a fully sprinklered floor provide a significant incentive to sprinklering the floor and a reasonable level of safety for the occupants of the floor. Once water is brought to the floor, trade-offs for rated corridor doors and dampers, plus the increase in multiple leasing design options, support an owner's decision to sprinkler. To be considered a fully sprinklered floor, the sprinkler system also needs to include the exit stairway(s). Once the sprinkler risers are provided in an existing building, future alterations may also easily be sprinklered by utilizing the riser. This trade-off is permitted for automatic sprinkler systems that are required as a result of the alteration, and in voluntary installations.

804.2 Automatic sprinkler systems. Automatic sprinkler systems shall be provided in accordance with the requirements of Sections 804.2.1 through 804.2.5. Installation requirements shall be in accordance with the *International Building Code*.

❖ The sprinkler requirements are grouped into four sections: high-rise buildings; Groups A, E, F-1, H, I, M, R-1, R-2, R-4, S-1 and S-2; windowless stories; and buildings and areas listed in IBC Table 903.2.11.6.

804.2.1 High-rise buildings. In high-rise buildings, work areas that have exits or corridors shared by more than one tenant or that have exits or corridors serving an occupant load greater than 30 shall be provided with automatic sprinkler protection in the entire *work area* where the *work area* is located on a floor that has a sufficient sprinkler water supply system from an existing standpipe or a sprinkler riser serving that floor.

❖ The requirement in high-rise buildings is dependent on the availability of a sufficient sprinkler water supply from an existing standpipe, or a sprinkler riser serving the floor where the alteration work area is located. These criteria are included because of the complexity and extensive cost involved in completely constructing new sprinkler water mains, risers, and associated piping and equipment in high-rise buildings. Where there are existing standpipe or sprinkler risers with a sufficient water supply serving a particular floor, work areas on that floor must be sprinklered if such work areas have exits or corridors shared by more than one tenant, or exits or corridors serving an occupant load greater than 30.

804.2.1.1 Supplemental automatic sprinkler system requirements. Where the *work area* on any floor exceeds 50 percent of that floor area, Section 804.2.1 shall apply to the entire floor on which the *work area* is located.

Exception: Occupied tenant spaces that are entirely outside the work area.

❖ If the work area on a floor exceeds 50 percent of that floor area, sprinklers as previously discussed must be installed throughout the floor except in occupied tenant areas that are entirely outside the work area. Note that the 50-percent rule applies to the floor area only and, therefore, this does not become a Level 3 alteration until the work area exceeds 50 percent of the aggregate area of all floors.

804.2.2 Groups A, B, E, F-1, H, I, M, R-1, R-2, R-4, S-1 and S-2. In buildings with occupancies in Groups A, B, E, F-1, H, I, M, R-1, R-2, R-4, S-1 and S-2, work areas that have exits or corridors shared by more than one tenant or that have exits or corridors serving an occupant load greater than 30 shall be provided with automatic sprinkler protection where all of the following conditions occur:

1. The *work area* is required to be provided with automatic sprinkler protection in accordance with the *Inter-*

INTERNATIONAL CODE COUNCIL®
Copyright © 2015 ICC. ALL RIGHTS RESERVED. Accessed by David Dammon on Jun 21, 2017 12:30:52 PM pursuant to License Agreement with ICC. No further reproduction or distribution authorized. ANY UNAUTHORIZED REPRODUCTION OR DISTRIBUTION IS A VIOLATION OF THE FEDERAL COPYRIGHT ACT AND THE LICENSE AGREEMENT, AND SUBJECT TO CIVIL AND CRIMINAL PENALTIES THEREUNDER.

national Building Code as applicable to new construction; and

2. The *work area* exceeds 50 percent of the floor area.

Exception: If the building does not have sufficient municipal water supply for design of a fire sprinkler system available to the floor without installation of a new fire pump, work areas shall be protected by an automatic smoke detection system throughout all occupiable spaces other than sleeping units or individual dwelling units that activates the occupant notification system in accordance with Sections 907.4, 907.5 and 907.6 of the *International Building Code*.

❖ While, in general, automatic sprinkler protection for various occupancies in the IBC is a function of the "fire area" size, in the code it is a function of four conditions in select occupancies. This section establishes the criteria for all occupancies, except for Group F-2 and U occupancies, because these groups are not required to be sprinklered in the IBC unless they are in special buildings, such as covered malls, high rises and the so-called windowless stories. The foremost consideration regarding potential sprinkler systems is whether such a work area would be required to be sprinklered under the IBC provisions for new construction. If the IBC does not require a sprinkler system for the space or building under consideration, neither will the code. Once this is established, the other conditions to address include: whether the work area has exits or corridors shared by more than one tenant, or has exits or corridors that serve an occupant load greater than 30; and whether the work area exceeds 50 percent of the floor area. The 30-occupant-load threshold in this section is taken from IBC Table 1020.1, which uses this threshold in most occupancies to require either sprinklers or rated corridors.

One exception to these requirements states that if the building does not have a sufficient municipal water supply for a sprinkler system at the floor where the work area is located, then sprinklers are not required; however, that same exception does require an automatic smoke detection system throughout the work area. The smoke detection coverage is required throughout all occupiable spaces other than areas already required to install smoke alarms.

804.2.2.1 Mixed uses. In work areas containing mixed uses, one or more of which requires automatic sprinkler protection in accordance with Section 804.2.2, such protection shall not be required throughout the *work area* provided that the uses requiring such protection are separated from those not requiring protection by fire-resistance-rated construction having a minimum 2-hour rating for Group H and a minimum 1-hour rating for all other occupancy groups.

❖ Designers and owners who do not wish to sprinkler entire work areas simply because one of a multiple number of mixed uses requires automatic sprinklers are provided an option to separate the various occupancies. This concept is very similar to the concept in IBC Section 508, where two options of nonseparated uses and separated uses are provided. Here, the code user is given the option of separating the occupancies by a 1-hour fire-resistance rating (2-hour rating in Group H occupancies) and sprinkler only the occupancy that has been triggered to provide sprinklers, or provide the automatic sprinkler in the entire work area and multiple occupancies in such work areas, thus eliminating the need for separation of the various mixed occupancies.

Example 804.2.2.1:

Q: Which occupancies or tenants must be provided with a sprinkler system?

A: First, the two conditions of Section 804.2.2 must be verified. Condition 2 is present. For Condition 1, IBC Section 903 requires sprinklers for tenants 2, 5, 7 and 10. Tenants 5 and 7, however, are outside of the work area and, as such, are not going to be required to provide sprinklers (see Section 804.1). Tenants 2 and 10 are in the work area. Accordingly, all of the tenants in the work area (tenants 1, 2, 3, 8, 9, 10 and 11) will be required to be sprinklered, even though tenants 1, 3, 8, 9 and 11 are not individually required to be sprinklered by the IBC. If the owner wishes to only sprinkler tenants 2 and 10, then full-height, 1-hour-rated partitions must be provided to separate tenants 2 and 10 from the adjacent tenants 1, 3, 9 and 11 (see Commentary Figure 804.2.2.1).

804.2.3 Windowless stories. Work located in a windowless story, as determined in accordance with the *International Building Code*, shall be sprinklered where the work area is required to be sprinklered under the provisions of the *International Building Code* for newly constructed buildings and the building has a sufficient municipal water supply without installation of a new fire pump.

❖ In the context of the code, a windowless story is a reference to IBC Section 903.2.11.1. In this context, work areas in any story or basement larger than 1,500 square feet (139 m^2) that do not have access to openings, as described in Items 1 and 2 of IBC Section 903.2.11.1, are required to be sprinklered. The only exception is if there is not a sufficient municipal water supply available to the building without the need for a new fire pump.

804.2.4 Other required automatic sprinkler systems. In buildings and areas listed in Table 903.2.11.6 of the *International Building Code*, *work areas* that have exits or corridors shared by more than one tenant or that have exits or corridors serving an occupant load greater than 30 shall be provided with an automatic sprinkler system under the following conditions:

1. The *work area* is required to be provided with an automatic sprinkler system in accordance with the *International Building Code* applicable to new construction; and

INTERNATIONAL CODE COUNCIL®
Copyright © 2015 ICC. ALL RIGHTS RESERVED. Accessed by David Dammon on Jun 21, 2017 12:30:52 PM pursuant to License Agreement with ICC. No further reproduction or distribution authorized. ANY UNAUTHORIZED REPRODUCTION OR DISTRIBUTION IS A VIOLATION OF THE FEDERAL COPYRIGHT ACT AND THE LICENSE AGREEMENT, AND SUBJECT TO CIVIL AND CRIMINAL PENALTIES THEREUNDER.

2. The building has sufficient municipal water supply for design of an automatic sprinkler system available to the floor without installation of a new fire pump.

❖ Special buildings and occupancies prompting separate consideration of additional suppression system requirements include: covered malls, atriums, stages and others listed in IBC Table 903.2.11.6; and dry cleaning plants, spray booths and others listed in IFC Table 903.2.11.6. The first condition to be considered for an area to require a sprinkler system is whether such a work area would be required to be sprinklered under the provisions of the IBC for new construction. If the IBC does not require a sprinkler system for the space or building under consideration, neither will the code. Once this is established, other conditions are evaluated, such as whether the work area has exits or corridors shared by more than one tenant or serving an occupant load greater than 30; and whether the building, without consideration for a new fire pump, has a sufficient municipal water supply for a sprinkler system at the floor where the work area is located. The 30-occupant-load threshold in this section is taken from IBC Table 1020.1, which uses this threshold in most occupancies to require either sprinklers or rated corridors.

804.2.5 Supervision. Fire sprinkler systems required by this section shall be supervised by one of the following methods:

1. Approved central station system in accordance with NFPA 72;
2. Approved proprietary system in accordance with NFPA 72;
3. Approved remote station system of the jurisdiction in accordance with NFPA 72; or
4. When approved by the *code official*, approved local alarm service that will cause the sounding of an alarm in accordance with NFPA 72.

Exception: Supervision is not required for the following:

1. Underground gate valve with roadway boxes.
2. Halogenated extinguishing systems.
3. Carbon dioxide extinguishing systems.
4. Dry- and wet-chemical extinguishing systems.

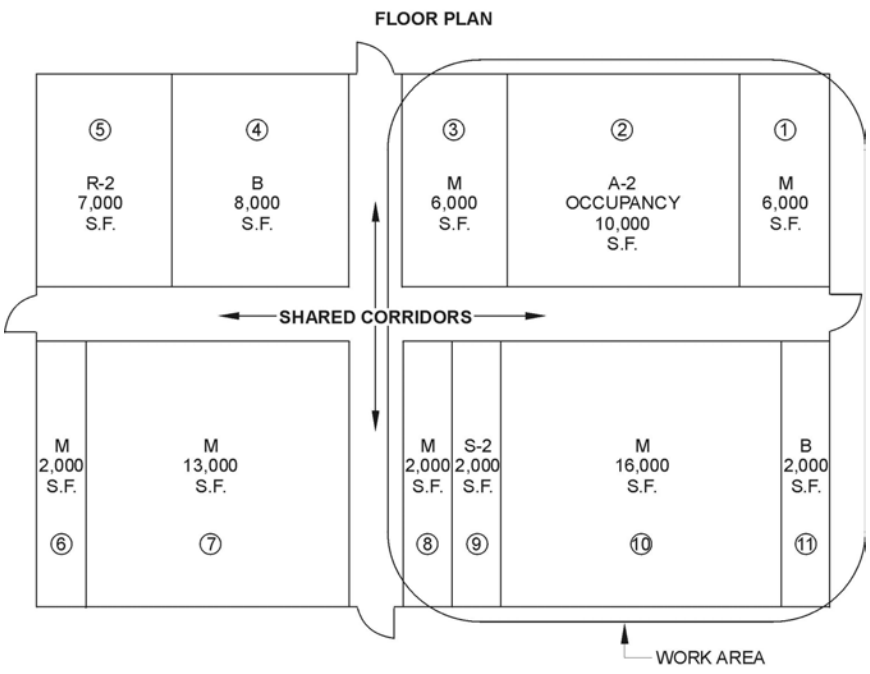

For SI: 1 square foot = 0.0929 m^2.

Figure 804.2.2.1
EXAMPLE 804.2.2.1

INTERNATIONAL CODE COUNCIL®
Copyright © 2015 ICC. ALL RIGHTS RESERVED. Accessed by David Dammon on Jun 21, 2017 12:30:52 PM pursuant to License Agreement with ICC. No further reproduction or distribution authorized. ANY UNAUTHORIZED REPRODUCTION OR DISTRIBUTION IS A VIOLATION OF THE FEDERAL COPYRIGHT ACT AND THE LICENSE AGREEMENT, AND SUBJECT TO CIVIL AND CRIMINAL PENALTIES THEREUNDER.

5. Automatic sprinkler systems installed in accordance with NFPA 13R where a common supply main is used to supply both domestic and automatic sprinkler systems and a separate shutoff valve for the automatic sprinkler system is not provided.

❖ If a sprinkler system is required based on Section 804.2.1, 804.2.2, 804.2.3 or 804.2.4, then such a system must be supervised in accordance with NFPA 72, the same standard used for the supervision of sprinklers in new buildings constructed under the IBC. This section identifies the four acceptable methods described in NFPA 72: central station system, proprietary systems, remote station system of the jurisdiction or local alarm service that will cause the sounding of an alarm. Five exceptions are provided where supervision is not required; these five exceptions are similar to the exceptions found in IBC Sections 903.4 and 903.4.1.

804.3 Standpipes. Where the *work area* includes exits or corridors shared by more than one tenant and is located more than 50 feet (15 240 mm) above or below the lowest level of fire department access, a standpipe system shall be provided. Standpipes shall have an approved fire department connection with hose connections at each floor level above or below the lowest level of fire department access. Standpipe systems shall be installed in accordance with the *International Building Code*.

Exceptions:

1. No pump shall be required provided that the standpipes are capable of accepting delivery by fire department apparatus of a minimum of 250 gallons per minute (gpm) at 65 pounds per square inch (psi) (946 L/m at 448KPa) to the topmost floor in buildings equipped throughout with an automatic sprinkler system or a minimum of 500 gpm at 65 psi (1892 L/m at 448KPa) to the topmost floor in all other buildings. Where the standpipe terminates below the topmost floor, the standpipe shall be designed to meet (gpm/psi) (L/m/KPa) requirements of this exception for possible future extension of the standpipe.
2. The interconnection of multiple standpipe risers shall not be required.

❖ Once a work area encompasses exits or corridors that are shared by more than one tenant, the standpipe requirement is triggered only by work area height criteria, similar to building height criteria in IBC Section 905.3.1. The standpipe triggers in the IBC for new buildings contain additional criteria based on Group A occupancies (see IBC Section 905.3.2), covered and open mall buildings (see IBC Section 905.3.3), underground buildings (see IBC Section 905.3.5), and helistops and heliports (see IBC Section 905.3.6), none of which are used as the basis for standpipe triggers in the code. Where the work area that includes exits or corridors serving more than one tenant is located more than 50 feet (15 240 mm) above or below the lowest level of fire department vehicle access, a standpipe system is required. Such standpipes must have a fire department connection with a hose connection at each floor level up to the level where the work area is located in accordance with the IBC. Even though the class of the standpipe system is not specified in this section, because the trigger is based on work area height, the standpipe intended is a Class III standpipe. The exceptions in IBC Section 905.3.1 that allow a Class I standpipe in lieu of a Class III would also be allowed here. Exception 1 allows the installation of a standpipe system without a fire pump if sufficient water with sufficient pressure could be delivered by means of fire department apparatus pumps to the topmost floor of the building. Under this exception, the location of the work area that has triggered the standpipe requirement is irrelevant, and the topmost floor must be considered whether the work area is located at the topmost floor or not. Exception 2 recognizes the fact that over the life of a building, and as a result of various alteration work in different parts of the building, multiple independent standpipe risers might be present and these are allowed to remain independent and function separately as needed.

804.4 Fire alarm and detection. An approved fire alarm system shall be installed in accordance with Sections 804.4.1 through 804.4.3. Where automatic sprinkler protection is provided in accordance with Section 804.2 and is connected to the building fire alarm system, automatic heat detection shall not be required.

An approved automatic fire detection system shall be installed in accordance with the provisions of this code and NFPA 72. Devices, combinations of devices, appliances, and equipment shall be approved. The automatic fire detectors shall be smoke detectors, except that an approved alternative type of detector shall be installed in spaces such as boiler rooms, where products of combustion are present during normal operation in sufficient quantity to actuate a smoke detector.

❖ Fire alarm system requirements are solely based on the nature of occupancy. Fire detection system requirements are based on specific features to perform specific functions as described in the IBC, such as elevator recall (see IBC Section 3003.2) or smoke-proof enclosure ventilation (see IBC Section 909.20). These requirements apply within the work area only. Such devices, where required, much the same as the IBC, must be installed in accordance with NFPA 72 and need not be anything other than smoke detectors, with certain minor exceptions.

804.4.1 Occupancy requirements. A fire alarm system shall be installed in accordance with Sections 804.4.1.1 through 804.4.1.7. Existing alarm-notification appliances shall be automatically activated throughout the building. Where the building is not equipped with a fire alarm system, alarm-noti-

INTERNATIONAL CODE COUNCIL®
Copyright © 2015 ICC. ALL RIGHTS RESERVED. Accessed by David Dammon on Jun 21, 2017 12:30:52 PM pursuant to License Agreement with ICC. No further reproduction or distribution authorized. ANY UNAUTHORIZED REPRODUCTION OR DISTRIBUTION IS A VIOLATION OF THE FEDERAL COPYRIGHT ACT AND THE LICENSE AGREEMENT, AND SUBJECT TO CIVIL AND CRIMINAL PENALTIES THEREUNDER.

fication appliances within the *work area* shall be provided and automatically activated.

Exceptions:

1. Occupancies with an existing, previously approved fire alarm system.
2. Where selective notification is permitted, alarm-notification appliances shall be automatically activated in the areas selected.

❖ As previously mentioned, fire alarm system requirements are based on occupancy classification as determined by Sections 804.4.1.1 through 804.4.1.7. If the automatic alarm system is required in the work area in a certain occupancy and alarm notification devices already exist in other parts of the building, then all such existing devices must be connected to the new alarm system and be automatically activated on the activation of the new alarm system. If there are no such existing alarms or notification devices, then the new alarm and its notification devices are only required in the work area. Unless the supplemental fire alarm system requirements of Section 804.4.2 are applicable, fire alarm systems are required in work areas only, in Groups E, I-1 residential care/assisted-living, I-2, I-3, R-1, R-2 and R-4 residential care/assisted-living facilities. The triggers are the same as the IFC retroactive triggers for the same occupancies.

804.4.1.1 Group E. A fire alarm system shall be installed in *work areas* of Group E occupancies as required by the *International Fire Code* for existing Group E occupancies.

❖ A building with a maximum of 1,000 square feet (93 m^2) in area that contains a single classroom and is located 50 feet (15 240 mm) or more from another building, and any building with an occupant load less than 50, are not required to have an alarm system. Work areas in Group E buildings are required to be provided with a manual fire alarm system. It must be noted, however, that in this case, the requirements of the IFC are more stringent than the code. If a jurisdiction enforces the retroactive provisions of the IFC, the entire Group E occupancy (and not just the work area) is required to be provided with a manual fire alarm system based on the size and occupant load criteria just discussed.

804.4.1.2 Group I-1. A fire alarm system shall be installed in *work areas* of Group I-1 residential care/assisted living facilities as required by the *International Fire Code* for existing Group I-1 occupancies.

❖ A manual fire alarm system must be installed in work areas of all Group I-1 residential care/assisted-living facilities. IFC Section 1103.7.2 requires this same system retroactively in the entire Group I-1 occupancy, which, if enforced, is more comprehensive than the code's requirement.

804.4.1.3 Group I-2. A fire alarm system shall be installed throughout Group I-2 occupancies as required by the *International Fire Code*.

❖ A manual fire alarm system is required to be provided in the entire Group I-2 occupancy where there is a Level 2 alteration. This is consistent with IFC retroactive provisions that require the entire existing Group I-2 occupancies to be provided with an automatic fire alarm system (see IFC Sections 907.2.6.2 and 1105.9).

804.4.1.4 Group I-3. A fire alarm system shall be installed in *work areas* of Group I-3 occupancies as required by the *International Fire Code*.

❖ The work areas of Group I-3 must be provided with a manual and automatic fire alarm system. IFC Sections 907.2.6.3 and 1103.7.4 require this same system retroactively in the entire Group I-3 occupancy, which, if enforced, is more comprehensive than the code's requirement.

804.4.1.5 Group R-1. A fire alarm system shall be installed in Group R-1 occupancies as required by the *International Fire Code* for existing Group R-1 occupancies.

❖ The fire alarm requirement is again referred to the retroactive provisions of the IFC. The IFC deals with Group R-1, hotels and motels, and Group R-1, boarding and rooming houses, differently. Boarding and rooming houses are required to be provided with a fire alarm system in the work area, regardless of the size of the building, height or number of stories. For hotels and motels, the trigger is set for buildings that are more than three stories in height or with more than 20 guestrooms. There is also an exception that is related to buildings that are less than two stories in height (see Sections 1103.7.5 through 1103.7.5.2.1 of the IFC).

804.4.1.6 Group R-2. A fire alarm system shall be installed in *work areas* of Group R-2 apartment buildings as required by the *International Fire Code* for existing Group R-2 occupancies.

❖ The fire alarm system trigger for apartments is similar to that of hotels and motels, and is set at buildings of more than three stories in height or containing more than 16 dwelling units. IFC Section 1103.7.6 includes three exceptions that are also applicable under the code for Group R-2 apartment buildings.

804.4.1.7 Group R-4. A fire alarm system shall be installed in *work areas* of Group R-4 residential care/assisted living facilities as required by the *International Fire Code* for existing Group R-4 occupancies.

❖ Other than the three exceptions found under IFC Section 1103.7.7, work areas in Group R-4 residential care/assisted-living facilities must be provided with a fire alarm system.

INTERNATIONAL CODE COUNCIL®
Copyright © 2015 ICC. ALL RIGHTS RESERVED. Accessed by David Dammon on Jun 21, 2017 12:30:52 PM pursuant to License Agreement with ICC. No further reproduction or distribution authorized. ANY UNAUTHORIZED REPRODUCTION OR DISTRIBUTION IS A VIOLATION OF THE FEDERAL COPYRIGHT ACT AND THE LICENSE AGREEMENT, AND SUBJECT TO CIVIL AND CRIMINAL PENALTIES THEREUNDER.

804.4.2 Supplemental fire alarm system requirements. Where the *work area* on any floor exceeds 50 percent of that floor area, Section 804.4.1 shall apply throughout the floor.

Exception: Alarm-initiating and notification appliances shall not be required to be installed in tenant spaces outside of the *work area*.

❖ The fire alarm requirements previously discussed for various occupancies apply to the work area only (except where the retroactive provisions of the IFC govern and are enforced by the jurisdiction, as previously discussed), unless the work area on any floor exceeds 50 percent of that floor area. In those cases, the fire alarm system must be provided beyond the work area throughout that floor. Where this provision applies and there are multiple tenants on the floor required to be equipped with a fire alarm system, the extension of the alarm system into tenant areas that are not part of the alteration work is very disruptive and, in most cases, acts as a major deterrent to undertaking certain levels of alteration. For this reason, the exception eliminates the requirement for the alarm-initiating and notification appliances to be installed in tenant spaces that are not part of the alteration work.

804.4.3 Smoke alarms. Individual sleeping units and individual dwelling units in any *work area* in Group R and I-1 occupancies shall be provided with smoke alarms in accordance with the *International Fire Code*.

Exception: Interconnection of smoke alarms outside of the *work area* shall not be required.

❖ Smoke alarms in sleeping and dwelling units in the work area must be provided as required by the IFC. Sections 1103.8 and 907.2.11 of the IFC are the applicable sections for smoke alarms. According to these sections, smoke alarms are required in sleeping rooms, in every room in the path of the means of egress from sleeping areas and in each story and basement. There are several exceptions to these smoke alarm placement requirements for buildings that comply with previous codes or that have smoke alarms connected to an automatic fire alarm system. Interconnection of smoke alarms is still required, unless such smoke alarms are located outside of the work area or qualify under Exception 2 of IFC Section 1103.8.2 for Groups R-2 and R-4 only. Also note that exceptions apply to the power source requirements in existing buildings in IFC Section 1103.8.3.

SECTION 805
MEANS OF EGRESS

805.1 Scope. The requirements of this section shall be limited to work areas that include exits or corridors shared by more than one tenant within the *work area* in which Level 2 *alterations* are being performed, and where specified they shall apply throughout the floor on which the *work areas* are located or otherwise beyond the *work area*.

❖ This section is entirely devoted to the means-of-egress requirements in existing buildings undergoing Level 2 or 3 alterations. The requirements of this section apply to the work area only, unless there are specific sections addressing supplemental requirements; in which case, the requirements will apply throughout the floor under consideration or beyond. The provisions of this section are applicable only when the alteration work area includes exits or corridors shared by more than one tenant. As such, in multiple-tenant buildings where the reconfiguration of space takes place in one of the tenant spaces and does not include corridors or exits that affect others, the tenant space undergoing alterations need only comply with the means-of-egress requirements of Section 704. In essence, if there are any egress conditions that are considered unsafe, the conditions must be remedied. It is not necessary to confirm that the level of egress safety has not been reduced compared to the current conditions.

805.2 General. The means of egress shall comply with the requirements of this section.

Exceptions:

1. Where the *work area* and the means of egress serving it complies with NFPA 101.
2. Means of egress conforming to the requirements of the building code under which the building was constructed shall be considered compliant means of egress if, in the opinion of the *code official*, they do not constitute a distinct hazard to life.

❖ The provisions of Section 805 are intended to address improvements in the means of egress that are crucial for the safe egress of occupants. With the exception of very old buildings, most existing buildings designed under the building codes of a jurisdiction provide a certain degree of safe egress. Accordingly, unless the code official finds that all or parts of the means-of-egress system constitute a distinct hazard, the means of egress does not need to comply with Section 805 as long as it complies with the requirements of the building code under which it was built, including NFPA 101. Where the code official finds a distinct hazard, the provisions of Section 805 could be applied or whatever other remedy determined by the code official must be followed.

805.3 Number of exits. The number of exits shall be in accordance with Sections 805.3.1 through 805.3.3.

❖ The number of exits in any building is one of the most important factors in the safe egress of occupants. The IBC and IFC make it unlawful to reduce the number of exits in a building.

INTERNATIONAL CODE COUNCIL®
Copyright © 2015 ICC. ALL RIGHTS RESERVED. Accessed by David Dammon on Jun 21, 2017 12:30:52 PM pursuant to License Agreement with ICC. No further reproduction or distribution authorized. ANY UNAUTHORIZED REPRODUCTION OR DISTRIBUTION IS A VIOLATION OF THE FEDERAL COPYRIGHT ACT AND THE LICENSE AGREEMENT, AND SUBJECT TO CIVIL AND CRIMINAL PENALTIES THEREUNDER.

805.3.1 Minimum number. Every story utilized for human occupancy on which there is a *work area* that includes exits or corridors shared by more than one tenant within the *work area* shall be provided with the minimum number of exits based on the occupancy and the occupant load in accordance with the *International Building Code*. In addition, the exits shall comply with Sections 805.3.1.1 and 805.3.1.2.

❖ Given that the number of exits is so important, this section requires that every story with a work area that falls within the limitations discussed in Section 805.1 be provided with a minimum number of exits as required for new construction (in accordance with the IBC). The code does, however, provide exceptions that allow single-exit construction, many of which are common to the IBC, as listed in Section 805.3.1.1. In addition, fire escapes can be used as a solution where more than one exit is required, as provided in Section 805.3.1.2.

805.3.1.1 Single-exit buildings. Only one exit is required from buildings and spaces of the following occupancies:

1. In Group A, B, E, F, M, U and S occupancies, a single exit is permitted in the story at the level of exit discharge when the occupant load of the story does not exceed 50 and the exit access travel distance does not exceed 75 feet (22 860 mm).
2. Group B, F-2, and S-2 occupancies not more than two stories in height that are not greater than 3,500 square feet per floor (326 m^2), when the exit access travel distance does not exceed 75 feet (22 860 mm). The minimum fire-resistance rating of the exit enclosure and of the opening protection shall be 1 hour.
3. Open parking structures where vehicles are mechanically parked.
4. In Group R-4 occupancies, the maximum occupant load excluding staff is 16.
5. Groups R-1 and R-2 not more than two stories in height, when there are not more than four dwelling units per floor and the exit access travel distance does not exceed 50 feet (15 240 mm). The minimum fire-resistance rating of the exit enclosure and of the opening protection shall be 1 hour.
6. In multilevel dwelling units in buildings of occupancy Group R-1 or R-2, an exit shall not be required from every level of the dwelling unit provided that one of the following conditions is met:
    6.1. The travel distance within the dwelling unit does not exceed 75 feet (22 860 mm); or
    6.2. The building is not more than three stories in height and all third-floor space is part of one or more dwelling units located in part on the second floor; and no habitable room within any such dwelling unit shall have a travel distance that exceeds 50 feet (15 240 mm) from the outside of the habitable room entrance door to the inside of the entrance door to the dwelling unit.
7. In Group R-2, H-4, H-5 and I occupancies and in rooming houses and child care centers, a single exit is permitted in a one-story building with a maximum occupant load of 10 and the exit access travel distance does not exceed 75 feet (22 860 mm).
8. In buildings of Group R-2 occupancy that are equipped throughout with an automatic fire sprinkler system, a single exit shall be permitted from a basement or story below grade if every dwelling unit on that floor is equipped with an approved window providing a clear opening of at least 5 square feet (0.47 m^2) in area, a minimum net clear opening of 24 inches (610 mm) in height and 20 inches (508 mm) in width, and a sill height of not more than 44 inches (1118 mm) above the finished floor.
9. In buildings of Group R-2 occupancy of any height with not more than four dwelling units per floor; with a smokeproof enclosure or outside stairway as an exit; and with such exit located within 20 feet (6096 mm) of travel to the entrance doors to all dwelling units served thereby.
10. In buildings of Group R-3 occupancy equipped throughout with an automatic fire sprinkler system, only one exit shall be required from basements or stories below grade.

❖ There are 10 specific conditions described where the building or a certain story could be provided with only one single exit. Several of these 10 conditions are either the same or similar to various provisions in the IBC. For example, Item 1 in this section is similar to the first row in IBC Table 1006.3.2(2). The only difference is that Item 1 of this section allows the condition at the level of exit discharge in multiple-story buildings while IBC Table 1006.3.2(2) allows this condition in a one-story building only. Item 3 of this section is the same as Exception 3 to IBC Section 1006.3.2, and Item 7 is the same as the third row in IBC Table 1006.3.2(2).

The characteristics considered for a building to be of single-exit construction include occupancy, maximum height of building above grade plane, maximum occupants or dwelling units per floor, and exit access travel distance per floor. The occupant load of each floor is determined in accordance with the provisions of IBC Section 1004.1. The exit access travel distance is measured along the natural and unobstructed path to the exit, as described in IBC Section 1017.1.

805.3.1.2 Fire escapes required. For other than Group I-2, where more than one exit is required, an existing or newly constructed fire escape complying with Section 805.3.1.2.1 shall be accepted as providing one of the required means of egress.

❖ The use of fire escapes as an element of the required means of egress has not been allowed by building

INTERNATIONAL CODE COUNCIL®
Copyright © 2015 ICC. ALL RIGHTS RESERVED. Accessed by David Dammon on Jun 21, 2017 12:30:52 PM pursuant to License Agreement with ICC. No further reproduction or distribution authorized. ANY UNAUTHORIZED REPRODUCTION OR DISTRIBUTION IS A VIOLATION OF THE FEDERAL COPYRIGHT ACT AND THE LICENSE AGREEMENT, AND SUBJECT TO CIVIL AND CRIMINAL PENALTIES THEREUNDER.

codes in many years. The typical problems with fire escapes are the difficulty of access in conditions of panic, the minimal width and their location outside the building where they can be subjected to ice, snow and slippery conditions. In existing buildings, however, fire escapes offer a solution where the construction of a new exit stair may be impossible because of the proximity of the exterior walls to property lines; the infeasibility of penetrating or rearranging interior or exterior structural elements; the prohibitive cost of major restructuring of building elements; or the impact on other relevant occupancy issues. As such, this section provides for the use of existing or newly constructed fire escapes to be used as a required element of the means-of-egress system in cases where more than one exit is required and the fire escape meets the construction requirements of this section. The fire escapes can be counted only as one of the required means of egress and not both. Specific detail requirements and construction requirements are given in Sections 805.3.1.2.1 and 805.3.1.2.2.

Since this is located in the alterations section of the code, it is important to stress that this could not be used for a second exit for a vertical addition. Additions are addressed by Chapter 11 and are essentially considered a new building in terms of the application of the IBC.

Group I-2 occupancies are specifically restricted from using the fire escape allowance for an existing building. The restriction is somewhat intuitive based on the type of occupancy, but in order to be consistent with federal licensing requirements this specific restriction is necessary.

805.3.1.2.1 Fire escape access and details. Fire escapes shall comply with all of the following requirements:

1. Occupants shall have unobstructed access to the fire escape without having to pass through a room subject to locking.
2. Access to a new fire escape shall be through a door, except that windows shall be permitted to provide access from single dwelling units or sleeping units in Group R-1, R-2 and I-1 occupancies or to provide access from spaces having a maximum occupant load of 10 in other occupancy classifications.
    2.1. The window shall have a minimum net clear opening of 5.7 square feet (0.53 m^2) or 5 square feet (0.46 m^2) where located at grade.
    2.2. The minimum net clear opening height shall be 24 inches (610 mm) and net clear opening width shall be 20 inches (508 mm).
    2.3. The bottom of the clear opening shall not be greater than 44 inches (1118 mm) above the floor.
    2.4. The operation of the window shall comply with the operational constraints of the *International Building Code*.
3. Newly constructed fire escapes shall be permitted only where exterior stairways cannot be utilized because of lot lines limiting the stairway size or because of the sidewalks, alleys, or roads at grade level.
4. Openings within 10 feet (3048 mm) of fire escape stairways shall be protected by fire assemblies having minimum $^3/_4$-hour fire-resistance ratings.

    Exception: Opening protection shall not be required in buildings equipped throughout with an approved automatic sprinkler system.
5. In all buildings of Group E occupancy, up to and including the 12th grade, buildings of Group I occupancy, rooming houses and childcare centers, ladders of any type are prohibited on fire escapes used as a required means of egress.

❖ This section provides the access and detail conditions that must be followed in order to make a fire escape an acceptable second exit.

Newly constructed fire escapes are allowed only if the construction of exterior stairs is impossible because of property lines, sidewalks, alleys or roads. If allowed to be used by this section, then a fire escape must be readily accessible without any obstructions, and access to it must be through a door with the exception of a single dwelling unit, sleeping unit or spaces with a maximum occupant load of 10, in which case access through a window is acceptable. The requirements for the size and location of a window providing access to the fire escape mirrors the requirement for emergency escape and rescue openings contained in IBC Chapter 10. The height of the bottom of the clear opening is limited to 44 inches (1118 mm) or less such that it can be used effectively as an emergency escape.

If security grilles, decorations or similar devices are installed on escape windows, such items must be readily removable to permit occupant escape without the use of any tools, keys or a force greater than that required for the normal operation of the window.

Where bars, grilles or grates are placed over the emergency escape and rescue opening, it is important that they are easily removable. Thus, the requirements for ease of operation are the same as those for windows.

All openings within 10 feet (3048 mm) of fire escape stairways used for a required means of egress must be protected by fire assemblies having a minimum $^3/_4$-hour fire-resistance rating. This is consistent with protection of openings adjacent to exterior exit stairways required by IBC Section 1023.7. Note that the exterior exit stairway requirements in Section 1027.6 reference the interior exit stairway requirements for this purpose. Much the same as IBC Section 1023.7, the protection of openings within 10 feet (3048 mm) of fire escapes is not required for buildings equipped throughout with an approved automatic sprinkler system in accordance with NFPA 13 or 13R.

INTERNATIONAL CODE COUNCIL®
Copyright © 2015 ICC. ALL RIGHTS RESERVED. Accessed by David Dammon on Jun 21, 2017 12:30:52 PM pursuant to License Agreement with ICC. No further reproduction or distribution authorized. ANY UNAUTHORIZED REPRODUCTION OR DISTRIBUTION IS A VIOLATION OF THE FEDERAL COPYRIGHT ACT AND THE LICENSE AGREEMENT, AND SUBJECT TO CIVIL AND CRIMINAL PENALTIES THEREUNDER.

Example 805.3.1.2.1:

An existing two-story downtown building is used for shops on the first floor and the second floor is used for offices of several tenants. The owner wishes to rearrange, add interior partitions to and alter about 80 percent of the second floor. The second floor has only one stairway and, because of its current uses and the building location on the lot, is not able to add a second stairway. The area of the second floor is such that it would require two stairways according to the IBC.

Q: Would the alteration trigger the requirement of the second stairway?

A: This would require the construction of a second stairway; however, it would allow fire escapes to be utilized in this case (see Sections 805.3 and 805.3.1.2).

805.3.1.2.2 Construction. The fire escape shall be designed to support a live load of 100 pounds per square foot (4788 Pa) and shall be constructed of steel or other approved *noncombustible materials*. Fire escapes constructed of wood not less than nominal 2 inches (51 mm) thick are permitted on buildings of Type V construction. Walkways and railings located over or supported by combustible roofs in buildings of Types III and IV construction are permitted to be of wood not less than nominal 2 inches (51 mm) thick.

❖ Sections 805.3.1.2.2 and 805.3.1.2.3 provide the minimum structural and dimensional requirements for new fire escapes. Existing fire escapes are not restricted to compliance with Sections 805.3.1.2.2 and 805.3.1.2.3, but must be inspected and evaluated to be sure no dangerous conditions exist and that they will function as intended for a required means of egress.

805.3.1.2.3 Dimensions. Stairways shall be at least 22 inches (559 mm) wide with risers not more than, and treads not less than, 8 inches (203 mm). Landings at the foot of stairways shall be not less than 40 inches (1016 mm) wide by 36 inches (914 mm) long and located not more than 8 inches (203 mm) below the door.

❖ Sections 805.3.1.2.2 and 805.3.1.2.3 provide the minimum structural and dimensional requirements for new fire escapes. Existing fire escapes are not restricted to compliance with Sections 805.3.1.2.2 and 805.3.1.2.3, but must be inspected and evaluated to be sure no dangerous conditions exist and that they will function as intended for a required means of egress.

805.3.2 Mezzanines. Mezzanines in the *work area* and with an occupant load of more than 50 or in which the travel distance to an exit exceeds 75 feet (22 860 mm) shall have access to at least two independent means of egress.

Exception: Two independent means of egress are not required where the travel distance to an exit does not exceed 100 feet (30 480 mm) and the building is protected throughout with an automatic sprinkler system.

❖ The means-of-egress requirements for mezzanines are almost exactly the same as the provisions found in the IBC. This applies to those mezzanines that are in the work area. The triggers for requiring two independent means of egress from mezzanines are the occupant load being greater than 50 or the travel distance being greater than 75 feet (22 860 mm), with an exception for sprinklered buildings allowing travel distance up to 100 feet (30 480 mm). Similar provisions are found in IBC Sections 505.2.2 and 1006.2.1. The code is somewhat less restrictive than the IBC since the occupant load trigger is set at over 50 regardless of occupancy classification, whereas IBC Table 1006.2.1 has a lower level of threshold trigger for hazardous, industrial, residential and storage occupancies. Additionally, the code limitation of 75 feet (22 860 mm) [or 100 feet (30 480 mm) in sprinklered buildings] is the measurement of travel distance, whereas the similar provisions in IBC Section 1006.2.1 are the measurement of the common path of egress travel.

805.3.3 Main entrance—Group A. All buildings of Group A with an occupant load of 300 or more shall be provided with a main entrance capable of serving as the main exit with an egress capacity of at least one-half of the total occupant load. The remaining exits shall be capable of providing one-half of the total required exit capacity.

Exception: Where there is no well-defined main exit or where multiple main exits are provided, exits shall be permitted to be distributed around the perimeter of the building provided that the total width of egress is not less than 100 percent of the required width.

❖ Assembly occupancy egress, particularly the capacity of the main entrance/main exit, is so critical for assembly occupancies with a high occupant load that the code, in this section, provides the same exact requirements found in Section 1029.2 of the IBC for new construction. Accordingly, when Level 2 or 3 alteration work is taking place in assembly occupancies with an occupant load greater than 300, the main entrance/exit must provide sufficient width to accommodate one-half of the total occupant load.

Example 805.3.3:

An existing community hall shown in Commentary Figure 805.3.3 is to undergo some reconfiguration of its interior spaces. There are currently several 3-foot (914 mm) doors that provide the needed exit width and separation of exit requirements based on the IBC.

Q: Are there any additional requirements related to the exterior doors that must be complied with?

A: Yes, but only for a Level 3 alteration since this only affects a single tenant (Section 805.1).

INTERNATIONAL CODE COUNCIL®
Copyright © 2015 ICC. ALL RIGHTS RESERVED. Accessed by David Dammon on Jun 21, 2017 12:30:52 PM pursuant to License Agreement with ICC. No further reproduction or distribution authorized. ANY UNAUTHORIZED REPRODUCTION OR DISTRIBUTION IS A VIOLATION OF THE FEDERAL COPYRIGHT ACT AND THE LICENSE AGREEMENT, AND SUBJECT TO CIVIL AND CRIMINAL PENALTIES THEREUNDER.

A main entrance must be provided that is wide enough to accommodate one-half of the total occupant load (450/2 = 225). This is a width of 225 × 0.2 = 45 inches (1143 mm) (see Section 1005.1 of the IBC and Commentary Figure 805.3.3). Note that this is applicable only if considered a Level 3 alteration. Section 805 only applies where there is more than one tenant. Chapter 9 and specifically Section 901.2 note that the requirements of Section 805 apply whether or not they include more than one tenant.

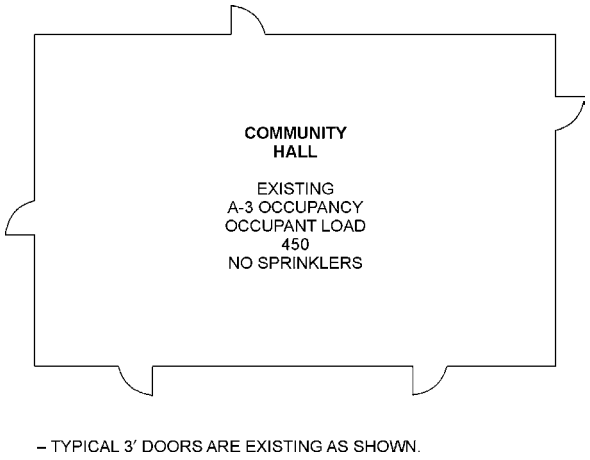

For SI: 1 foot = 304.8 mm.

Figure 805.3.3
MAIN ENTRANCE—GROUP A

805.4 Egress doorways. Egress doorways in any *work area* shall comply with Sections 805.4.1 through 805.4.5.

❖ This is the charging paragraph for the requirements for egress doorways in Level 2 or 3 alterations. The specific requirements are given in Sections 805.4.1 through 805.4.5, relating the number of egress doorways, door swing, door closing, panic hardware and emergency power in detention facilities.

805.4.1 Two egress doorways required. Work areas shall be provided with two egress doorways in accordance with the requirements of Sections 805.4.1.1 and 805.4.1.2.

❖ The triggers for requiring two egress doorways are similar in some respects to the IBC triggers. Section 805.4.1.1 relates these triggers for all occupancies, and Section 805.4.1.2 deals with Group I-2 occupancies.

805.4.1.1 Occupant load and travel distance. In any *work area*, all rooms and spaces having an occupant load greater than 50 or in which the travel distance to an exit exceeds 75 feet (22 860 mm) shall have a minimum of two egress doorways.

Exceptions:

1. Storage rooms having a maximum occupant load of 10.
2. Where the *work area* is served by a single exit in accordance with Section 805.3.1.1.

❖ The discussion in Section 805.3 demonstrated how several criteria for requiring only one means of egress are also found in the IBC for new construction. The same is true here: the occupant load being greater than 50 and travel distance exceeding 75 feet (22 860 mm) are the triggers used to require at least two egress doorways for all occupancies.

Exception 1 to Section 805.4.1.1 addresses storage rooms with small occupant loads that might be of such dimensions that the travel distance might exceed 75 feet (22 860 mm). Realizing that many storage rooms are generally not occupied regularly, and when occupied, such occupants are either employees or individuals who are familiar with the surroundings, this exception allows storage rooms of any size and any length of travel distance to have only one egress doorway as long as the occupant load does not exceed 10.

Example 805.4.1.1:

An existing grocery store as shown in Commentary Figure 805.4.1.1 is undergoing Level 2 or 3 alterations. The storage area has a travel distance of 90 feet (27 432 mm) within the storage room and an overall travel distance of 10 feet (3048 mm) to exit the building. There is currently one egress doorway from the storage room to the retail area.

Q: Is a second egress doorway required from the storage area?

A: No. The storage room has an occupant load of 10 (3,000/300 = 10) and falls under Exception 1.

- Storage room occupant load = 10 (see Table 1004.1.2 of the IBC).
- Maximum travel distance in storage room = 90 feet (27 432 mm).

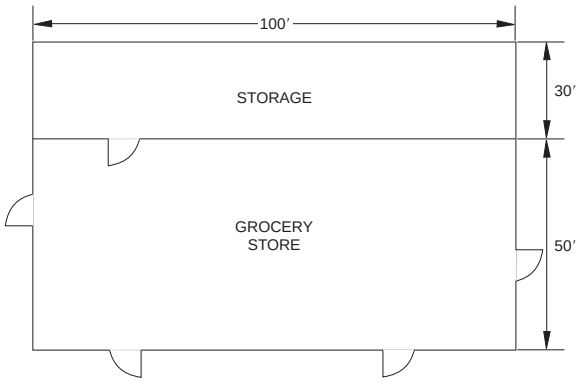

For SI: 1 foot = 304.8 mm.

Figure 805.4.1.1
OCCUPANT LOAD AND TRAVEL DISTANCE

INTERNATIONAL CODE COUNCIL®
Copyright © 2015 ICC. ALL RIGHTS RESERVED. Accessed by David Dammon on Jun 21, 2017 12:30:52 PM pursuant to License Agreement with ICC. No further reproduction or distribution authorized. ANY UNAUTHORIZED REPRODUCTION OR DISTRIBUTION IS A VIOLATION OF THE FEDERAL COPYRIGHT ACT AND THE LICENSE AGREEMENT, AND SUBJECT TO CIVIL AND CRIMINAL PENALTIES THEREUNDER.

- One egress doorway from the storage room is acceptable (see Section 805.4.1.1, Exception 1 and Commentary Figure 805.4.1.1).

Note that even if the travel distances were exceeded, this is a single-tenant building and unless the alteration is Level 3 this requirement would not apply. Section 805 only applies where there is more than one tenant. Chapter 9 and specifically Section 901.2 note that the requirements of Section 805 apply whether or not they include more than one tenant.

Exception 2 refers the user to Section 805.3.1.1 so that a building or space that qualifies under any of the 10 items listed would still be required to have one egress doorway.

805.4.1.2 Group I-2. In buildings of Group I-2 occupancy, any patient sleeping room or suite of patient rooms greater than 1,000 square feet (93 m^2) within the *work area* shall have a minimum of two egress doorways.

❖ Group I-2 occupancies have additional criteria for patient sleeping rooms or suites in this section. This additional criterion for Group I-2 patient sleeping areas is taken directly from a part of IBC Section 407.4.4.6.1, and recognizes the low patient-to-staff ratio of these facilities where staff is directly responsible for the safety of patients in the event of a fire.

805.4.2 Door swing. In the *work area* and in the egress path from any *work area* to the exit discharge, all egress doors serving an occupant load greater than 50 shall swing in the direction of exit travel.

❖ Door swings must be considered not only in the work area, but all the way from the work area along the path of egress to the exit discharge. Again, door swing is such a critical element of safe egress that existing doors must comply just as new doors do in accordance with the IBC. The threshold of "serving an occupant load greater than 50" of this section is taken directly from IBC Section 1010.1.2.1.

Example 805.4.2:

An existing three-story office building as shown in Commentary Figure 805.4.2 is undergoing Level 2 or 3 alterations on the third floor. Stairway 1 is the most obvious, the closest and the most likely path of egress for the occupants in the work area under consideration.

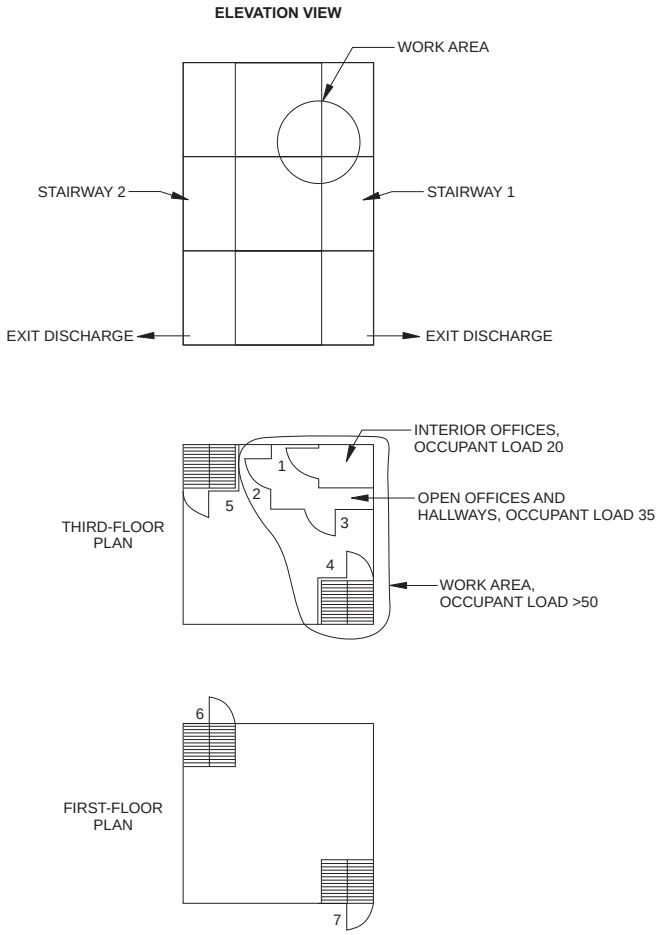

Figure 805.4.2
DOOR SWING

INTERNATIONAL CODE COUNCIL®
Copyright © 2015 ICC. ALL RIGHTS RESERVED. Accessed by David Dammon on Jun 21, 2017 12:30:52 PM pursuant to License Agreement with ICC. No further reproduction or distribution authorized. ANY UNAUTHORIZED REPRODUCTION OR DISTRIBUTION IS A VIOLATION OF THE FEDERAL COPYRIGHT ACT AND THE LICENSE AGREEMENT, AND SUBJECT TO CIVIL AND CRIMINAL PENALTIES THEREUNDER.

Q: Which doors are required to swing in the direction of egress travel?

A: Doors 2, 3, 4 and 7 in Commentary Figure 805.4.2 must swing in the direction of egress travel as they serve an occupant load greater than 50 and are either in the work area or along the egress path to the exit discharge (door 1 serves an occupant load less than 50, and doors 5 and 6 are not along the path of egress of the work area and, as such, are not required to comply with Section 805.4.2) (see Commentary Figure 805.4.2).

805.4.2.1 Supplemental requirements for door swing. Where the *work area* exceeds 50 percent of the floor area, door swing shall comply with Section 805.4.2 throughout the floor.

Exception: Means of egress within or serving only a tenant space that is entirely outside the *work area*.

❖ Door swings on the entire floor, except doors that are in a tenant space located entirely outside the work area, must swing in the direction of egress travel if the work area on that floor exceeds 50 percent of the area of that floor and if the occupant load the doors serve is greater than 50. Accordingly, all doors along the means of egress to the exit discharge must also swing in the direction of egress.

Example 805.4.2.1:

An existing two-story building has three tenants on the third floor as shown in Commentary Figure 805.4.2.1. The owner plans some alterations of the second floor. The work area will be more than 50 percent of the second floor area.

Q: Which doors must be brought into compliance with the door swing in the direction of egress travel?

A: Doors 4, 5, 6, 7, 10, 11, 12 and 13 in Commentary Figure 805.4.2.1 must swing in the direction of egress travel. Doors 6, 7 and 10 serve an occupant load of more than 50 and are in the work area. Door 11

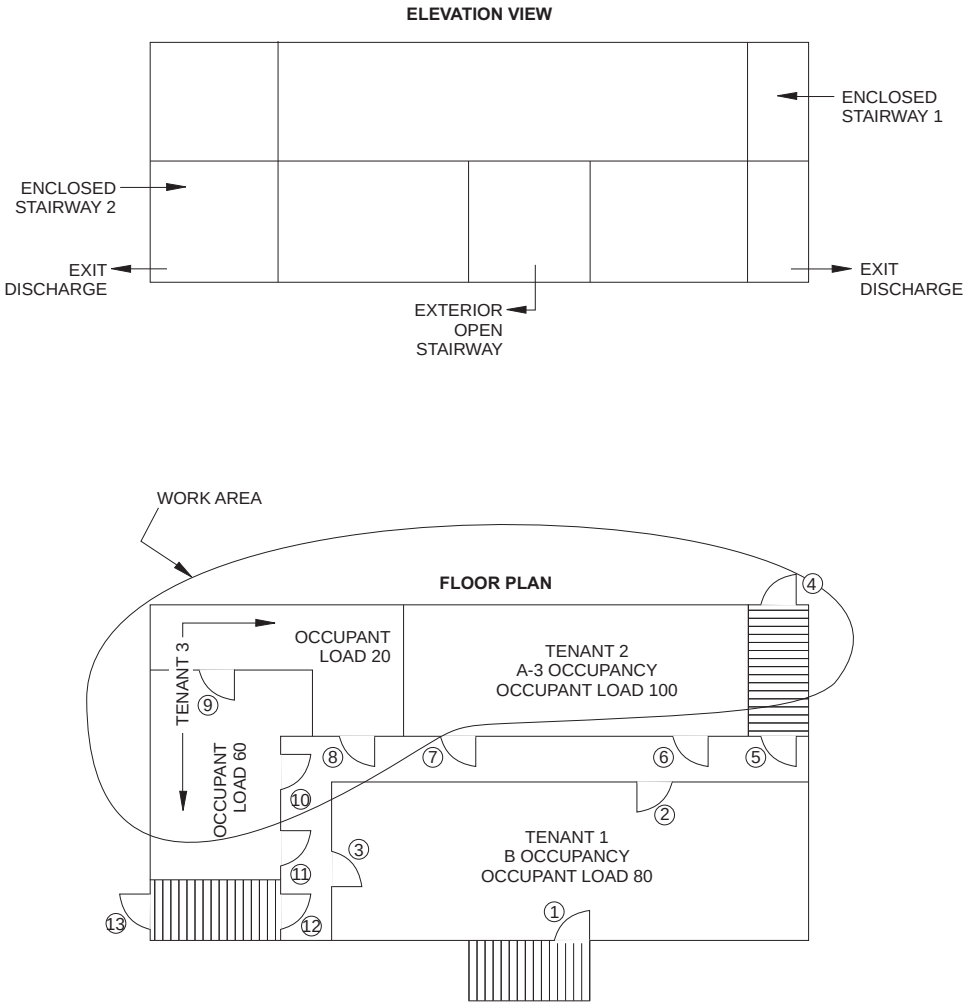

Figure 805.4.2.1
SUPPLEMENTAL REQUIREMENTS FOR DOOR SWING

INTERNATIONAL CODE COUNCIL®
Copyright © 2015 ICC. ALL RIGHTS RESERVED. Accessed by David Dammon on Jun 21, 2017 12:30:52 PM pursuant to License Agreement with ICC. No further reproduction or distribution authorized. ANY UNAUTHORIZED REPRODUCTION OR DISTRIBUTION IS A VIOLATION OF THE FEDERAL COPYRIGHT ACT AND THE LICENSE AGREEMENT, AND SUBJECT TO CIVIL AND CRIMINAL PENALTIES THEREUNDER.

serves an occupant load of more than 50 and is outside of the work area; however, because the work area is greater than 50 percent of the second-floor area, this door must also swing in the direction of egress. Doors 4, 5, 12 and 13 are on the egress path from the work area to exit discharge.

Doors 1, 2, 3, 8 and 9 are not required to change their swing to the direction of egress if they currently swing inward. Doors 1, 2 and 3 serve an occupant load greater than 50, but are in a tenant space completely outside of the work area and fall under the exception. Door 8 serves an occupant load less than 50, and door 9 is a convenience door, connecting the two parts of tenant 3 (see Commentary Figure 805.4.2.1).

805.4.3 Door closing. In any *work area*, all doors opening onto an exit passageway at grade or an exit stairway shall be self-closing or automatic-closing by listed closing devices.

Exceptions:

1. Where exit enclosure is not required by the *International Building Code*.
2. Means of egress within or serving only a tenant space that is entirely outside the *work area*.

❖ The same concepts discussed for door swing in the work area and beyond the work area when supplemental provisions are applicable are true for door closings. Doors opening into exit passageways and exit stairway enclosures are required to be self-closing or automatic closing by means of listed devices.

805.4.3.1 Supplemental requirements for door closing. Where the *work area* exceeds 50 percent of the floor area, doors shall comply with Section 805.4.3 throughout the exit stairway from the *work area* to, and including, the level of exit discharge.

❖ If the work area on the floor exceeds 50 percent of the area of that floor and if the occupant load it serves is greater than 50, all doors along the means of egress including the level of exit discharge must also be self-closing or automatic closing.

805.4.4 Panic hardware. In any *work area*, and in the egress path from any *work area* to the exit discharge, in buildings or portions thereof of Group A assembly occupancies with an occupant load greater than 100, all required exit doors equipped with latching devices shall be equipped with approved panic hardware.

❖ The panic hardware provisions are only applicable to Group A occupancies and are much the same as IBC Section 1010.1.10. The triggers for requiring panic hardware are the presence of latching devices on the door and the occupant load of the assembly occupancy being greater than 100. The panic hardware requirements are required in the work areas and the path of egress from the work area to the exit discharge. Panic hardware requirements could be applicable in other parts of the space or building beyond the work area and the path of egress when the supplemental provisions apply.

805.4.4.1 Supplemental requirements for panic hardware. Where the *work area* exceeds 50 percent of the floor area, panic hardware shall comply with Section 805.4.4 throughout the floor.

Exception: Means of egress within a tenant space that is entirely outside the *work area*.

❖ Similar to the supplemental requirements for door swing and door closing, work exceeding 50 percent of the floor area triggers a more restrictive requirement for panic hardware, as well. Except for means of egress in an unaffected tenant space, the 50-percent threshold triggers a requirement for panic hardware throughout the work area floor.

805.4.5 Emergency power source in Group I-3. Power-operated sliding doors or power-operated locks for swinging doors shall be operable by a manual release mechanism at the door. Emergency power shall be provided for the doors and locks in accordance with Section 2702 of the *International Building Code*.

Exceptions:

1. Emergency power is not required in facilities with 10 or fewer locks complying with the exception to Section 408.4.1 of the *International Building Code*.
2. Emergency power is not required where remote mechanical operating releases are provided.

❖ This threshold for emergency power for doors with remote power unlocking equipment is the same as given in IBC Section 408.4.2 for Group I-3 facilities.

805.5 Openings in corridor walls. Openings in corridor walls in any *work area* shall comply with Sections 805.5.1 through 805.5.4.

Exception: Openings in corridors where such corridors are not required to be rated in accordance with the *International Building Code*.

❖ This is the charging paragraph for the requirements for openings in corridor walls in Level 2 or 3 alterations. Sections 805.5.1 through 805.5.4 relate specific requirements for corridor doors, transoms and other corridor openings such as windows, and supplemental requirements. The protections prescribed in these four sections are required only if the corridor under consideration is required to be a fire-resistance-rated corridor in accordance with the IBC. The overall goal is to eliminate certain unsuitable doors and openings in rated corridors in a Level 2 or 3 work area, even if there was no intention by the scope of the alteration work to do anything to these elements.

805.5.1 Corridor doors. Corridor doors in the *work area* shall not be constructed of hollow core wood and shall not contain louvers. All dwelling unit or sleeping unit corridor doors in work areas in buildings of Groups R-1, R-2, and I-1 shall be at least $1^3/_8$-inch (35 mm) solid core wood or approved equivalent and shall not have any glass panels, other than approved wired glass or other approved glazing material in metal frames. All dwelling unit or sleeping unit corridor doors in *work areas* in buildings of Groups R-1, R-2,

INTERNATIONAL CODE COUNCIL®
Copyright © 2015 ICC. ALL RIGHTS RESERVED. Accessed by David Dammon on Jun 21, 2017 12:30:52 PM pursuant to License Agreement with ICC. No further reproduction or distribution authorized. ANY UNAUTHORIZED REPRODUCTION OR DISTRIBUTION IS A VIOLATION OF THE FEDERAL COPYRIGHT ACT AND THE LICENSE AGREEMENT, AND SUBJECT TO CIVIL AND CRIMINAL PENALTIES THEREUNDER.

and I-1 shall be equipped with approved door closers. All replacement doors shall be $1^3/_4$-inch (44 mm) solid bonded wood core or approved equivalent, unless the existing frame will accommodate only a $1^3/_8$-inch (35 mm) door.

Exceptions:

1. Corridor doors within a dwelling unit or sleeping unit.
2. Existing doors meeting the requirements of *Guidelines on Fire Ratings of Archaic Materials and Assemblies* (IEBC Resource A) for a rating of 15 minutes or more shall be accepted as meeting the provisions of this requirement.
3. Existing doors in buildings protected throughout with an approved automatic sprinkler system shall be required only to resist smoke, be reasonably tight fitting, and shall not contain louvers.
4. In group homes with a maximum of 15 occupants and that are protected with an approved automatic detection system, closing devices may be omitted.
5. Door assemblies having a fire protection rating of at least 20 minutes.

❖ In cases where doors are being replaced, these provisions require that a certain level of fire or smoke protection be provided. As such, no hollow core wood doors and no louvers are allowed in a rated corridor in the work area. In addition to this prohibition, if the occupancy of the building undergoing alteration is Group B-1, R-1, or R-2 and the corridor under consideration serves the dwelling or sleeping units of these occupancies, all doors in the rated corridors must be equipped with approved closers and be at least $1^3/_8$-inch (35 mm) solid core wood or an approved equivalent. Further, these doors cannot contain any glass panels unless tested assemblies or approved wired glass is used. Approved wired glass is generally considered to be $^1/_4$-inch (6.4 mm) wired glass.

Once the doors that are to be replaced have been identified, then the replacement doors must be at least $1^3/_4$-inch (45 mm) solid-bonded wood core or an approved equivalent. One-and-three-eighths-inch (35 mm) solid wood doors are allowed for such replacement doors if the existing frame can only accommodate a $1^3/_8$-inch-thick (35 mm) door. Five exceptions have been provided for corridor door requirements that are self-explanatory. The replacement doors have a greater protection requirement compared to those doors that are not being replaced but happen to be in the work area because it is unreasonable to require every existing door that provides a certain level of protection to be replaced within the entire work area, even though they provide a certain level of protection with a $1^3/_8$-inch (35 mm) solid core door or equivalent.

805.5.2 Transoms. In all buildings of Group I-1, I-2, R-1 and R-2 occupancies, all transoms in corridor walls in work areas shall be either glazed with $^1/_4$-inch (6.4 mm) wired glass set in metal frames or other glazing assemblies having a fire protection rating as required for the door and permanently secured in the closed position or sealed with materials consistent with the corridor construction.

❖ Transoms in corridors are specifically regulated only in Group I-1, I-2, R-1 and R-2 occupancies. It should be noted again that the applicability here is only in corridors that would be required to be rated. The IBC requires that glass sidelites and transoms perform the same as fire windows and does not consider these elements part of the door assembly. Based on this approach, sidelites and transoms in occupancies other than Group I-1, I-2, R-1 and R-2 would be covered in Section 805.5.3, which addresses sash, grilles and windows. Transoms must meet one of the following requirements:

1. Use $^1/_4$-inch (6.4 mm) wired glass in metal frame.
2. A minimum of 20-minute fire-resistant-protected glazing fixed assembly.
3. Do away with the transom and seal it with wall construction similar to the existing corridor wall.

805.5.3 Other corridor openings. In any *work area*, any other sash, grille, or opening in a corridor and any window in a corridor not opening to the outside air shall be sealed with materials consistent with the corridor construction.

❖ Openings other than doors, such as sash, grille, louver and windows, that open into a fire-resistance-rated corridor and do not open to the outside air, must be covered and sealed the same as the existing corridor wall construction. This is required to protect the corridor from potential smoke contamination from adjacent rooms. The reference to such openings "not opening to the outside air" is consistent with IBC Section 708.5, which allows corridor exterior walls and their openings to comply with the fire-resistance rating based primarily on proximity to property lines, otherwise known as "fire separation distance." Two questions arising from this provision are why windows in a rated corridor are required to be sealed with a wall construction, and is there a way to allow such windows to remain in place and not be covered with wall construction? The code in this section intends to improve the safety and protection of corridors and does not intend to necessarily eliminate all windows opening into a corridor. As such, if it is desired for such windows to remain, then the window and its glazing must comply with the fire window and fire-protection-rated glazing requirements of IBC Section 716.5.8. It must be clarified that sidelites and transoms are not considered part of the door assembly and are regulated by this section.

INTERNATIONAL CODE COUNCIL®
Copyright © 2015 ICC. ALL RIGHTS RESERVED. Accessed by David Dammon on Jun 21, 2017 12:30:52 PM pursuant to License Agreement with ICC. No further reproduction or distribution authorized. ANY UNAUTHORIZED REPRODUCTION OR DISTRIBUTION IS A VIOLATION OF THE FEDERAL COPYRIGHT ACT AND THE LICENSE AGREEMENT, AND SUBJECT TO CIVIL AND CRIMINAL PENALTIES THEREUNDER.

805.5.3.1 Supplemental requirements for other corridor opening. Where the *work area* exceeds 50 percent of the floor area, Section 805.5.3 shall be applicable to all corridor windows, grills, sashes, and other openings on the floor.

Exception: Means of egress within or serving only a tenant space that is entirely outside the *work area*.

❖ The supplemental provisions, where the work area exceeds 50 percent of the floor area, are the same as discussed in all previous sections. As in all other areas, the 50-percent threshold brings a more serious concern regarding the alteration and, thus, more restrictive requirements are applied throughout the floor, even in areas where no alteration is being performed. For other corridor openings, however, the tenant spaces that are unaffected do not require these alterations.

805.5.4 Supplemental requirements for corridor openings. Where the *work area* on any floor exceeds 50 percent of the floor area, the requirements of Sections 805.5.1 through 805.5.3 shall apply throughout the floor.

❖ The supplemental provisions, where the work area exceeds 50 percent of the floor area, are the same as discussed in all previous sections. As in all other areas, the 50-percent threshold brings a more serious concern regarding the alteration and, thus, more restrictive requirements are applied throughout the floor, even in areas where no alteration is being performed. This paragraph does not exclude tenant spaces that are unaffected by the alterations; therefore, the doors, openings and transoms must be modified according to the applicable section. This paragraph supersedes the exception given in Section 805.5.3.1.

805.6 Dead-end corridors. Dead-end corridors in any *work area* shall not exceed 35 feet (10 670 mm).

Exceptions:

1. Where dead-end corridors of greater length are permitted by the *International Building Code*.
2. In other than Group A and H occupancies, the maximum length of an existing dead-end corridor shall be 50 feet (15 240 mm) in buildings equipped throughout with an automatic fire alarm system installed in accordance with the *International Building Code*.
3. In other than Group A and H occupancies, the maximum length of an existing dead-end corridor shall be 70 feet (21 356 mm) in buildings equipped throughout with an automatic sprinkler system installed in accordance with the *International Building Code*.
4. In other than Group A and H occupancies, the maximum length of an existing, newly constructed, or extended dead-end corridor shall not exceed 50 feet (15 240 mm) on floors equipped with an automatic sprinkler system installed in accordance with the *International Building Code*.

❖ The dead-end corridor limitations are only applicable where more than one exit or exit access doorway is required. The typical existing dead-end length allowed is 35 feet (10 670 mm) with exceptions that allow lengths up to 70 feet (21 336 mm). Existing dead ends in Group A and H occupancies are limited to 35 feet (10 670 mm), unless Exception 3 of IBC Section 1020.4 could apply. This is the exception that allows unlimited dead-end length as long as the length of the corridor is less than two and one-half times the least width of the dead-end corridor.

The installation of an automatic fire alarm system would increase the allowed length of an existing dead end to as much as 50 feet (15 240 mm), and the installation of an automatic sprinkler system throughout the building would increase the allowed length to 70 feet (21 336 mm). These two allowances are only applicable to existing corridors that happen to be longer than allowed by the IBC and are intended to encourage the installation of fire alarms and fire sprinklers throughout the building where such a corridor exists. Existing dead-end corridors must be brought into compliance with the 35-foot (10 670 mm) length limitation if these exceptions are not used.

805.7 Means-of-egress lighting. Means-of-egress lighting shall be in accordance with this section, as applicable.

❖ This is the charging paragraph for the requirements for means-of-egress lighting in Level 2 or 3 alterations. The specific requirements are given in Sections 805.7.1 and 805.7.2, relating the requirements for artificial lighting and supplemental requirements, respectively.

805.7.1 Artificial lighting required. Means of egress in all work areas shall be provided with artificial lighting in accordance with the requirements of the *International Building Code.*

❖ The means of egress in the work area and beyond the work area in the entire floor, if the work area exceeds 50 percent of the floor area, must be illuminated in accordance with the requirements of the IBC. This illumination must be provided by artificial lighting and must be a minimum of 1 footcandle (11 lux) at the floor level. There are some exceptions to this requirement that can be found in Sections 1006.1 and 1006.2 of the IBC, which would apply here.

805.7.2 Supplemental requirements for means-of-egress lighting. Where the *work area* on any floor exceeds 50 percent of that floor area, means of egress throughout the floor shall comply with Section 805.7.1.

Exception: Means of egress within or serving only a tenant space that is entirely outside the *work area*.

❖ The supplemental provisions, where the work area exceeds 50 percent of the floor area, are the same

INTERNATIONAL CODE COUNCIL®
Copyright © 2015 ICC. ALL RIGHTS RESERVED. Accessed by David Dammon on Jun 21, 2017 12:30:52 PM pursuant to License Agreement with ICC. No further reproduction or distribution authorized. ANY UNAUTHORIZED REPRODUCTION OR DISTRIBUTION IS A VIOLATION OF THE FEDERAL COPYRIGHT ACT AND THE LICENSE AGREEMENT, AND SUBJECT TO CIVIL AND CRIMINAL PENALTIES THEREUNDER.

here as discussed in all previous sections. As in all other areas, the 50-percent threshold brings a more serious concern regarding the alteration and, thus, more restrictive requirements are applied throughout the floor, even in areas where no alteration is being performed. However, the tenant spaces that are unaffected do not require these alterations.

805.8 Exit signs. Exit signs shall be in accordance with this section, as applicable.

❖ This is the charging paragraph for the requirements for exit signs in Level 2 or 3 alterations. The specific requirements are given in Sections 805.8.1 and 805.8.2.

805.8.1 Work areas. Means of egress in all work areas shall be provided with exit signs in accordance with the requirements of the *International Building Code*.

❖ Exit signs are a critical element of directing occupants to safety outside the building. Exit signs must be installed in all Level 2 or 3 alteration work areas and beyond, where supplemental rules apply, in accordance with the IBC as if this was new construction. The exit sign provisions are found in IBC Section 1013, and it is important to note that such requirements as illumination and power source apply to exit signs being installed in an alteration.

805.8.2 Supplemental requirements for exit signs. Where the *work area* on any floor exceeds 50 percent of that floor area, means of egress throughout the floor shall comply with Section 805.8.1.

Exception: Means of egress within a tenant space that is entirely outside the *work area*.

❖ The supplemental provisions, where the work area exceeds 50 percent of the floor area, are the same here as discussed in all previous sections. As in all other areas, the 50-percent threshold brings a more serious concern regarding the alteration and, thus, more restrictive requirements are applied throughout the floor, even in areas where no alteration is being performed. However, the tenant spaces that are unaffected do not require these alterations.

805.9 Handrails. The requirements of Sections 805.9.1 and 805.9.2 shall apply to handrails from the *work area* floor to, and including, the level of exit discharge.

❖ This is the charging paragraph for the requirements for handrails in Level 2 or 3 alterations. The specific requirements are given in Sections 805.9.1 and 805.9.2, relating the minimum requirements for handrails and design requirements, respectively.

805.9.1 Minimum requirement. Every required exit stairway that is part of the means of egress for any *work area* and that has three or more risers and is not provided with at least one handrail, or in which the existing handrails are judged to be in danger of collapsing, shall be provided with handrails for the full length of the stairway on at least one side. All exit stairways with a required egress width of more than 66 inches (1676 mm) shall have handrails on both sides.

❖ Complying handrails must be installed in all required exit stairways that serve a work area. If additional stairways are provided that are not required by the IBC as an element of means of egress, then the handrail provisions of this section are not applicable to such stairways. The degree of compliance required is limited to a handrail on one side of the stairway only until the occupant load served is so high that the required width of the stairway would be a minimum of 66 inches (1676 mm). At this level of occupant load, complying handrails must be provided on both sides of the stairway. Intermediate handrails are not required as an improvement criterion under the code. This section requires complying handrails for those stairs that have three or more risers. This trigger level is an attempt to be compatible with an exception in some of the legacy building codes that did not require a handrail for stairways containing less than four risers in certain occupancies. The handrail requirement is applicable to required exit stairways that serve the work area, starting at the work area all the way to the level of exit discharge, including the exit discharge itself.

805.9.2 Design. Handrails required in accordance with Section 805.9.1 shall be designed and installed in accordance with the provisions of the *International Building Code*.

❖ Once a handrail is required by this section, its structural strength, height, continuity and other design features must comply with the IBC.

Example 805.9.2:

An existing two-story office building has two enclosed stairways: one convenience stairway, a mezzanine stair and a stair outside the building as shown in Commentary Figure 805.9.2. Stairs either have no handrails or have handrails that are not in compliance with the IBC.

Q: Which stairs must be provided with new complying handrails to bring the current handrails up to the IBC requirements?

A: Stairs 1 and 2 must be provided with new complying handrails to bring their existing handrails up to the IBC requirements. These stairways serve the work area and are both part of the required means-of-egress pathway (see Commentary Figure 805.9.2).

805.10 Refuge areas. Where alterations affect the configuration of an area utilized as a refuge area, the capacity of the refuge area shall not be reduced below that required in Sections 805.10.1 and 805.10.2.

❖ This section was written to prevent reduced capacity and arrangement of refuge areas, required for occupancies that limit movement of occupants or where occupants are incapable of self-preservation, during

INTERNATIONAL CODE COUNCIL®
Copyright © 2015 ICC. ALL RIGHTS RESERVED. Accessed by David Dammon on Jun 21, 2017 12:30:52 PM pursuant to License Agreement with ICC. No further reproduction or distribution authorized. ANY UNAUTHORIZED REPRODUCTION OR DISTRIBUTION IS A VIOLATION OF THE FEDERAL COPYRIGHT ACT AND THE LICENSE AGREEMENT, AND SUBJECT TO CIVIL AND CRIMINAL PENALTIES THEREUNDER.

alterations. Refuge areas are part of the defend-in-place strategy and are designed with a particular capacity in mind in each smoke compartment. Three different occupancy types in the I-Codes have such requirements, which are specifically and individually addressed in Sections 805.10.1.1 through 805.10.1.3. The horizontal exits are based on a strategy similar to defend-in-place but can be applied to any occupancy. The refuge areas created by horizontal exits also need to be maintained.

805.10.1 Capacity. The required capacity of refuge areas shall be in accordance with Sections 805.10.1.1 through 805.10.1.3.

❖ The three subsections address the necessary capacity for each of the occupancies individually since the requirements for refuge areas vary. Essentially, each references the appropriate section in the IBC for such requirements.

805.10.1.1 Group I-2. In Group I-2 occupancies, the required capacity of the refuge areas for smoke compartments in accordance with Section 407.5.1 of the *International Building Code* shall be maintained.

❖ The IBC requires that Group I-2 occupancies provide the largest occupant load of the adjoining compartments. The criteria used to determine the capacity are 30 net square feet for each care recipient confined to a bed or stretcher and not less than 6 square feet for each ambulatory care recipient not confined to bed or stretcher and for other occupants.

805.10.1.2 Group I-3. In Group I-3 occupancies, the required capacity of the refuge areas for smoke compartments in accordance with Section 408.6.2 of the *International Building Code* shall be maintained.

❖ For Group I-3 occupancies, the IBC requires that 6 square feet per occupant be provided on both sides of the smoke barrier forming the smoke compartment. This will include the total of adjoining smoke compartments. Occupants in Group I-3 are typically ambulatory but their movement is limited because of the nature of Group I-3 occupancies.

805.10.1.3 Ambulatory care. In ambulatory care facilities required to be separated by Section 422.2 of the *International Building Code*, the required capacity of the refuge areas for smoke compartments in accordance with Section 422.4 of the *International Building Code* shall be maintained.

❖ Ambulatory care facilities are similar to Group I-2 occupancies and contain occupants that are incapable of self-preservation because of the procedures and surgeries done at such facilities. Therefore, the criterion is similar to that of Group I-2 occupancies and requires 30 square feet for each nonambulatory care recipient. This area must be provided in the corridors, care recipient rooms, treatment rooms, lounge or dining areas and other low-hazard areas in the smoke compartment. Note that only larger ambulatory care facilities greater than 10,000 square feet require smoke compartments.

805.10.2 Horizontal exits. The required capacity of the refuge area for horizontal exits in accordance with Section 1026.4 of the *International Building Code* shall be maintained.

❖ This section is more general and addresses any occupancies using horizontal exits. Horizontal exits allow a similar concept to smoke compartments where occupants simply exit through doors into an adjoining area of the building separated by a fire barrier or fire wall. Section 1026.4 requires 3 square feet for each occupant. There are several specific exceptions for Group I-2 and I-3 occupancies that correlate with the criteria noted in Sections 805.10.1.1 and 805.10.1.2.

805.11 Guards. The requirements of Sections 805.11.1 and 805.11.2 shall apply to guards from the *work area* floor to,

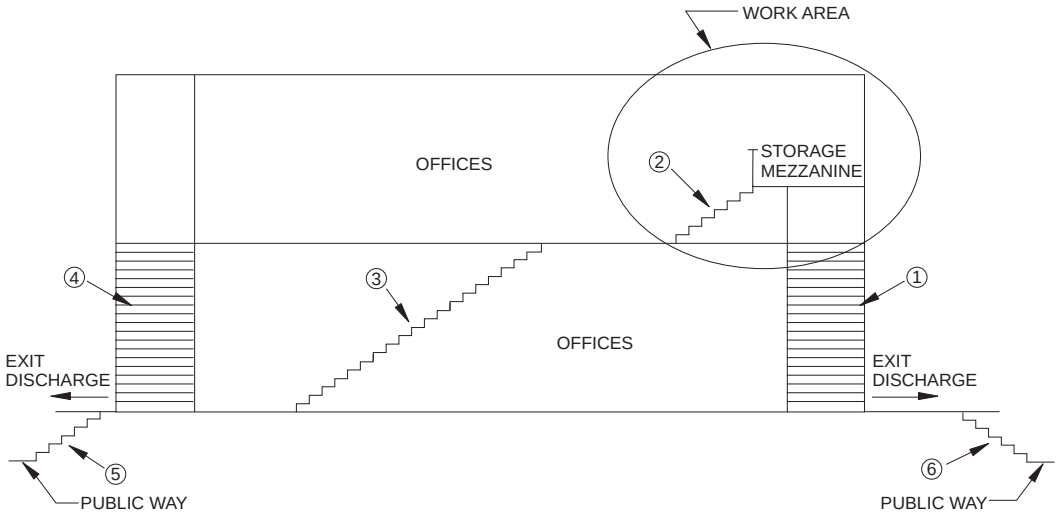

Figure 805.9.2
HANDRAILS

INTERNATIONAL CODE COUNCIL®
Copyright © 2015 ICC. ALL RIGHTS RESERVED. Accessed by David Dammon on Jun 21, 2017 12:30:52 PM pursuant to License Agreement with ICC. No further reproduction or distribution authorized. ANY UNAUTHORIZED REPRODUCTION OR DISTRIBUTION IS A VIOLATION OF THE FEDERAL COPYRIGHT ACT AND THE LICENSE AGREEMENT, AND SUBJECT TO CIVIL AND CRIMINAL PENALTIES THEREUNDER.

and including, the level of exit discharge but shall be confined to the egress path of any *work area*.

❖ This is the charging paragraph for the requirements for guards in Level 2 or 3 alterations. The specific requirements are given in Sections 805.11.1 and 805.11.2, relating the minimum location and design requirements for guards, respectively.

805.11.1 Minimum requirement. Every open portion of a stairway, landing, or balcony that is more than 30 inches (762 mm) above the floor or grade below and is not provided with guards, or those portions in which existing guards are judged to be in danger of collapsing, shall be provided with guards.

❖ The criteria and triggers for guards are much the same as those for handrails. IBC-compliant guards must be installed along the path of egress from the work area to and including the level of exit discharge, and anywhere at stairways, landings or balconies where an elevation difference of more than 30 inches (762 mm) exists and a complying guard is not present.

805.11.2 Design. Guards required in accordance with Section 805.11.1 shall be designed and installed in accordance with the *International Building Code*.

❖ Once a guard is required by this section, its structural strength, height, size of openings and other design features must comply with the IBC.

SECTION 806
ACCESSIBILITY

806.1 General. A building, *facility*, or element that is altered shall comply with this section and Section 705.

❖ A Level 2 or 3 alteration would include the reconfiguration of space, while a Level 1 alteration would not. Therefore, alterations covered under this section would have all accessibility requirements in Section 705, as well as addressing the possible need for an elevator where a stairway or escalator is being added.

806.2 Stairways and escalators in existing buildings. In *alterations* where an escalator or stairway is added where none existed previously, an accessible route shall be provided in accordance with Sections 1104.4 and 1104.5 of the *International Building Code*.

❖ If a stairway or escalator is added as part of an alteration in a location where one did not previously exist, the alteration must also include an accessible route between the same two levels. If an accessible route is already available between the two levels, this requirement is not applicable. If the stairway or escalator is replacing an existing stairway or escalator, this requirement is not applicable. In conjunction with Section 705.1.13, if the requirement for the accessible route would be in excess of what is required for new construction, such as an accessible route to an area that was exempted by IBC Section 1103.2, 1104, 1107 or 1108, this requirement is not applicable. The intent is that if a route is provided between accessible levels for a nondisabled person to use, it is reasonable to also expect an accessible route.

SECTION 807
STRUCTURAL

[BS] 807.1 General. Structural elements and systems within buildings undergoing Level 2 *alterations* shall comply with this section.

❖ This section directs the code user to the requirements contained in Sections 807.2 through 807.6. These structural requirements apply to alterations involving the addition of equipment or where a reconfiguration of building space results in an increased minimum live load required by IBC Section 1607. Note that the structural requirements for Level 1 alterations in Section 707 are also applicable according to Section 504.2.

[BS] 807.2 New structural elements. New structural elements in *alterations*, including connections and anchorage, shall comply with the *International Building Code*.

❖ Any new structural element that is added in the course of alteration work, including its connections to the existing structure, must comply with IBC requirements for new construction. There is no exception to this requirement.

[BS] 807.3 Minimum design loads. The minimum design loads on existing elements of a structure that do not support additional loads as a result of an *alteration* shall be the loads applicable at the time the building was constructed.

❖ Unless an alteration adds loads to an existing structural member, there is no need to reevaluate it against current code-loading criteria. This is in contrast to the treatment of existing members that have increased loading in accordance with Section 807.4. The applicable loads of the code at the time the building was built apply.

[BS] 807.4 Existing structural elements carrying gravity loads. *Alterations* shall not reduce the capacity of existing gravity load-carrying structural elements unless it is demonstrated that the elements have the capacity to carry the applicable design gravity loads required by the *International Building Code*. Existing structural elements supporting any additional gravity loads as a result of the *alterations*, including the effects of snow drift, shall comply with the *International Building Code*.

Exceptions:

1. Structural elements whose stress is not increased by more than 5 percent.
2. Buildings of Group R occupancy with not more than five dwelling or sleeping units used solely for residential purposes where the *existing building* and its *alteration* comply with the conventional light-frame construction methods of the *International Building*

INTERNATIONAL CODE COUNCIL®
Copyright © 2015 ICC. ALL RIGHTS RESERVED. Accessed by David Dammon on Jun 21, 2017 12:30:52 PM pursuant to License Agreement with ICC. No further reproduction or distribution authorized. ANY UNAUTHORIZED REPRODUCTION OR DISTRIBUTION IS A VIOLATION OF THE FEDERAL COPYRIGHT ACT AND THE LICENSE AGREEMENT, AND SUBJECT TO CIVIL AND CRIMINAL PENALTIES THEREUNDER.

Code or the provisions of the *International Residential Code*.

❖ In the course of reconfiguring building spaces, it is often necessary to relocate or add equipment. Further, sometimes a change in use (without actually changing the occupancy classification) necessitates use of a higher design live load. Consequently, existing structural members that are subjected to increased loads must comply with the requirements in this section for gravity loads. This section requires the evaluation of these additional loads, including the effects of snow drift, to determine if these loads decrease the capacity of the existing structural elements. Where the alterations result in a net increase in the gravity load that is supported by the existing structure, including the effects of snow drift, the affected structural components must be checked to verify they satisfy the requirements of the IBC for a new structure. There are two exceptions to full compliance with the IBC. One permits smaller Group R buildings and their alterations that comply with either the *International Residential Code*® (IRC®) or the conventional light-frame construction provisions of the IBC. Another exception allows additional gravity loads that do not increase stresses in affected structural elements by more than 5 percent. Allowing overstresses of up to 5 percent in existing structural members has been a long-standing rule of thumb used by structural engineers. This exception does not specifically address the cumulative effects from successive alterations, but it would be prudent to limit cumulative increases under this exception to a total of 5 percent unless it is clearly documented that a structure has additional capacity.

[BS] 807.5 Existing structural elements resisting lateral loads. Except as permitted by Section 807.6, where the alteration increases design lateral loads, or where the alteration results in prohibited structural irregularity as defined in ASCE 7, or where the alteration decreases the capacity of any existing lateral load-carrying structural element, the structure of the altered building or structure shall be shown to meet the wind and seismic provisions of the *International Building Code*. Reduced *International Building Code*-level seismic forces in accordance with Section 301.1.4.2 shall be permitted.

Exception: Any existing lateral load-carrying structural element whose demand-capacity ratio with the alteration considered is not more than 10 percent greater than its demand-capacity ratio with the alteration ignored shall be permitted to remain unaltered. For purposes of calculating demand-capacity ratios, the demand shall consider applicable load combinations with design lateral loads or forces in accordance with *International Building Code* Sections 1609 and 1613. Reduced *International Building Code*-level seismic forces in accordance with Section 301.1.4.2 shall be permitted. For purposes of this exception, comparisons of demand-capacity ratios and calculation of design lateral loads, forces and capacities shall account for the cumulative effects of additions and alterations since original construction.

❖ This section gives guidance with respect to the impact of an alteration on the lateral resistance of the structure. Alterations that affect existing structural elements to a lesser extent are permitted without requiring the existing structure to comply with the provisions for new structures, as long as the alteration itself complies. An existing building or structure that is altered must be carefully evaluated for its ability to withstand earthquake and wind loads. The lateral resistance of an existing building or structure cannot be lessened or pose any undue increase in the fire and life safety hazards of the building or structure. The exception allows alterations that increase the demand-capacity ratio on existing lateral load-carrying elements by no more than 10 percent or decrease the lateral resistance of existing structural elements by no more than 10 percent.

[BS] 807.6 Voluntary lateral force-resisting system alterations. *Alterations* of existing structural elements and additions of new structural elements that are initiated for the purpose of increasing the lateral force-resisting strength or stiffness of an existing structure and that are not required by other sections of this code shall not be required to be designed for forces conforming to the *International Building Code*, provided that an engineering analysis is submitted to show that:

1. The capacity of existing structural elements required to resist forces is not reduced;
2. The lateral loading to existing structural elements is not increased either beyond its capacity or more than 10 percent;
3. New structural elements are detailed and connected to the existing structural elements as required by the *International Building Code*;
4. New or relocated nonstructural elements are detailed and connected to existing or new structural elements as required by the *International Building Code*; and
5. A *dangerous* condition as defined in this code is not created. Voluntary *alterations* to lateral force-resisting systems conducted in accordance with Appendix A and the referenced standards of this code shall be permitted.

❖ This section addresses the issue of upgrading a building's lateral force-resisting system voluntarily to improve resistance to wind and seismic forces. It does not apply in situations where other code sections require compliance with the IBC or other specific minimum wind or seismic design loads. This section allows an owner to initiate an improvement to the lateral force-resisting system to the extent it is viable to do so and provided the requisite engineering analysis is furnished. Since no minimum load requirement is established by the code, the building owner and the design professional have the latitude to establish performance goals and objectives. Thus, an

INTERNATIONAL CODE COUNCIL®
Copyright © 2015 ICC. ALL RIGHTS RESERVED. Accessed by David Dammon on Jun 21, 2017 12:30:52 PM pursuant to License Agreement with ICC. No further reproduction or distribution authorized. ANY UNAUTHORIZED REPRODUCTION OR DISTRIBUTION IS A VIOLATION OF THE FEDERAL COPYRIGHT ACT AND THE LICENSE AGREEMENT, AND SUBJECT TO CIVIL AND CRIMINAL PENALTIES THEREUNDER.

owner can do something to mitigate the hazard of future earthquakes or wind storms in an existing building without being discouraged from doing so by incurring prohibitive costs.

For example, the retrofit of an existing building to improve performance in an earthquake to a level of resistance less than that required for a new building considers the overall benefit of hazard mitigation. It is an often-used approach to managing risk in areas that are susceptible to frequent earthquakes. This is the thrust of programs such as the Federal Emergency Management Agency's (FEMA) Project Impact. The *Guidelines for the Seismic Retrofit of Existing Buildings* (GSREB) in Appendix A and the other referenced standards for seismic evaluation and rehabilitation have been developed for this purpose, and this section of the code recognizes their use. A voluntary seismic upgrade of a building structure can, therefore, consider the full range of rehabilitation objectives available under, for instance, ASME 41 (see commentary, Section 301.1.4).

SECTION 808
ELECTRICAL

808.1 New installations. All newly installed electrical equipment and wiring relating to work done in any work area shall comply with all applicable requirements of NFPA 70 except as provided for in Section 808.3.

❖ In the course of alterations that involve the reconfiguration of space, there is sometimes a need to rewire or replace electrical equipment or fixtures. This section requires that all newly installed electrical equipment and wiring comply with NFPA 70 in the work area. This is reasonable since the space is being reconfigured and the alteration is substantial enough to justify upgraded electrical in these areas. Section 808.3 provides some exceptions to this for residential occupancies.

808.2 Existing installations. Existing wiring in all work areas in Group A-1, A-2, A-5, H and I occupancies shall be upgraded to meet the materials and methods requirements of Chapter 7.

❖ Faulty and damaged wiring or wiring that might not be suitable for certain applications contributes to many fires that might have electrical origins. To reduce the risk of such fires, this section requires upgrading electrical wiring in high occupant load, hazardous and institutional occupancies. The electrical wiring in the entire work area, in Group A-1, A-2, A-5, H and I occupancies, must be examined and, where such wiring does not comply with the materials and methods provisions of NFPA 70, it must be upgraded to comply. It should be noted that electrical wiring in partitions and other elements that are not being altered or relocated must also comply as long as they are within the work area. The wiring materials and methods are mostly covered in Chapter 3 of NFPA 70.

808.3 Residential occupancies. In Group R-2, R-3 and R-4 occupancies and buildings regulated by the *International Residential Code*, the requirements of Sections 808.3.1 through 808.3.7 shall be applicable only to work areas located within a dwelling unit.

❖ This is the charging paragraph for the requirements for electrical work in residential occupancies in Level 2 or 3 alterations. The specific requirements are given in Sections 808.3.1 through 808.3.7.

The work areas within a dwelling unit in Group R-2, R-3 and R-4 occupancies are required to meet a certain minimum number of receptacle outlets, ground-fault circuit interrupters (GFCI) and lighting outlets. This is true regardless of whether the listed occupancies are being regulated by the IBC or IRC. Kitchens, laundry areas, sleeping rooms, study rooms or other similar rooms are required to provide at least one or two duplex receptacle outlets.

Closets, storage areas, hallways, garages and basements are exempt from this requirement, even if they are within the work area. Even though receptacle outlets are needed and used in these areas, their use is not as frequent or as necessary compared to areas that are required to provide such receptacles under this section.

Where new receptacle outlets are installed, and if NFPA 70 requires GFCI for the location under consideration, then such GFCI must also be installed.

Lighting outlets must be provided in: detached garages that are served by electric power, attached garages, bathrooms, hallways, stairways, utility rooms, basements used for storage or mechanical equipment, exits and outdoor entrances that are within the work area.

Example 808.3:

Q: A homeowner wishes to remodel and reconfigure some interior spaces including a bathroom, laundry and the living room. There is currently no light fixture outside the front door. Is a light fixture required to be installed outside of the front door?

A. Yes. Even though the exterior wall at the front door is not being reconfigured, it is located at the wall, which is part of the alteration work area and, as such, is required to be provided with a light fixture (see Commentary Figure 808.3).

Electrical service equipment that is located in the work area and in the dwelling unit must be adjusted or relocated, or its surrounding obstructions must be removed or relocated such that the minimum clearances required by NFPA 70 are provided. Providing this clearance in compliance with NFPA 70 addresses the safety of repair personnel.

808.3.1 Enclosed areas. All enclosed areas, other than closets, kitchens, basements, garages, hallways, laundry areas,

INTERNATIONAL CODE COUNCIL®
Copyright © 2015 ICC. ALL RIGHTS RESERVED. Accessed by David Dammon on Jun 21, 2017 12:30:52 PM pursuant to License Agreement with ICC. No further reproduction or distribution authorized. ANY UNAUTHORIZED REPRODUCTION OR DISTRIBUTION IS A VIOLATION OF THE FEDERAL COPYRIGHT ACT AND THE LICENSE AGREEMENT, AND SUBJECT TO CIVIL AND CRIMINAL PENALTIES THEREUNDER.

utility areas, storage areas and bathrooms shall have a minimum of two duplex receptacle outlets or one duplex receptacle outlet and one ceiling or wall-type lighting outlet.

❖ See the commentary to Section 808.3.

808.3.2 Kitchens. Kitchen areas shall have a minimum of two duplex receptacle outlets.

❖ See the commentary to Section 808.3.

808.3.3 Laundry areas. Laundry areas shall have a minimum of one duplex receptacle outlet located near the laundry equipment and installed on an independent circuit.

❖ See the commentary to Section 808.3.

808.3.4 Ground fault circuit interruption. Newly installed receptacle outlets shall be provided with ground fault circuit interruption as required by NFPA 70.

❖ See the commentary to Section 808.3.

808.3.5 Minimum lighting outlets. At least one lighting outlet shall be provided in every bathroom, hallway, stairway, attached garage, and detached garage with electric power, and to illuminate outdoor entrances and exits.

❖ See the commentary to Section 808.3.

808.3.6 Utility rooms and basements. At least one lighting outlet shall be provided in utility rooms and basements where such spaces are used for storage or contain equipment requiring service.

❖ See the commentary to Section 808.3.

808.3.7 Clearance for equipment. Clearance for electrical service equipment shall be provided in accordance with the NFPA 70.

❖ See the commentary to Section 808.3.

SECTION 809
MECHANICAL

809.1 Reconfigured or converted spaces. All reconfigured spaces intended for occupancy and all spaces converted to habitable or occupiable space in any *work area* shall be provided with natural or mechanical ventilation in accordance with the *International Mechanical Code*.

Exception: Existing mechanical ventilation systems shall comply with the requirements of Section 809.2.

❖ This section is consistent with the basic premise for new building elements and materials given in Chapter 7, Section 702—that replacing elements is required to comply with the applicable code for new construction. The amount of mechanical ventilation must be provided in accordance with the IMC as required for new construction. This could be that air-moving equipment would need to be altered, as well. However, the exception allows special minimum provisions for existing mechanical equipment that would not require increasing the capacities for existing air-moving equipment, as long as minimum ventilation rates are provided.

809.2 Altered existing systems. In mechanically ventilated spaces, existing mechanical ventilation systems that are altered, reconfigured, or extended shall provide not less than 5 cubic feet per minute (cfm) (0.0024 m^3/s) per person of outdoor air and not less than 15 cfm (0.0071 m3/s) of ventilation air per person; or not less than the amount of ventilation air determined by the Indoor Air Quality Procedure of ASHRAE 62.

❖ This section essentially gives alternative minimum requirements to the IBC for ventilation in work areas

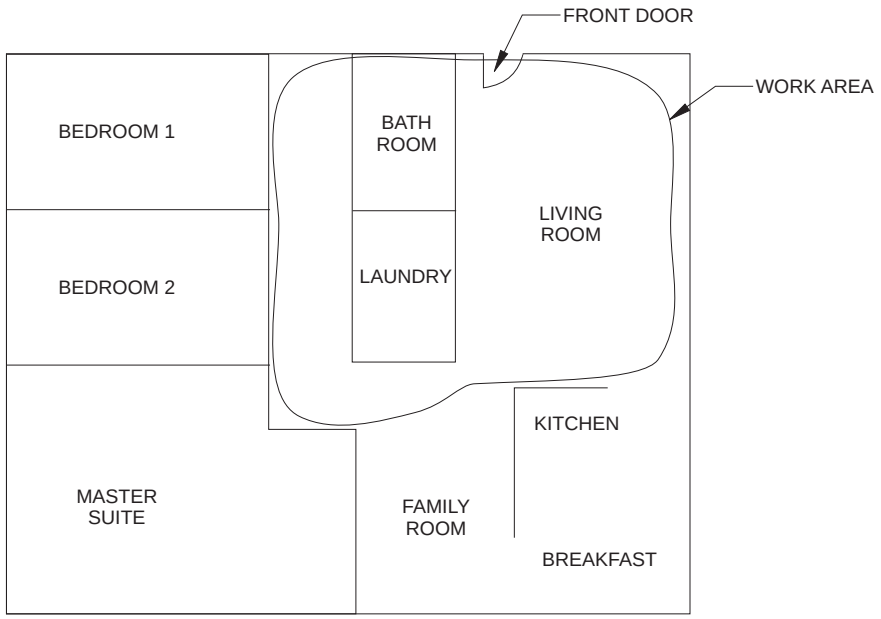

Figure 808.3
RESIDENTIAL OCCUPANCY ELECTRICAL

INTERNATIONAL CODE COUNCIL®
Copyright © 2015 ICC. ALL RIGHTS RESERVED. Accessed by David Dammon on Jun 21, 2017 12:30:52 PM pursuant to License Agreement with ICC. No further reproduction or distribution authorized. ANY UNAUTHORIZED REPRODUCTION OR DISTRIBUTION IS A VIOLATION OF THE FEDERAL COPYRIGHT ACT AND THE LICENSE AGREEMENT, AND SUBJECT TO CIVIL AND CRIMINAL PENALTIES THEREUNDER.

of Level 2 or 3 alterations. However, this does not really reduce the amount of engineering work that needs to be done in an altered space. The referenced ASHRAE 62 must be consulted for the overarching ventilation requirements, and then the minimums stated in this section must be provided. Therefore, even in a situation where the intent was not to change the air-moving equipment, but only the configuration of the ductwork or air channels, the minimum requirements could necessitate changes to air-moving equipment capabilities.

809.3 Local exhaust. All newly introduced devices, equipment, or operations that produce airborne particulate matter, odors, fumes, vapor, combustion products, gaseous contaminants, pathogenic and allergenic organisms, and microbial contaminants in such quantities as to affect adversely or impair health or cause discomfort to occupants shall be provided with local exhaust.

❖ This is a straightforward, common-sense requirement that will readily be observed, and probably already dealt with in the manufacturer's installation instructions for mechanical equipment. However, the code official should carefully review the particular details for all such equipment to ensure that appropriate measures are taken for local exhaust.

SECTION 810
PLUMBING

810.1 Minimum fixtures. Where the occupant load of the story is increased by more than 20 percent, plumbing fixtures for the story shall be provided in quantities specified in the *International Plumbing Code* based on the increased occupant load.

❖ Alterations involving the reconfiguration of spaces could, at times, result in an increased occupant load. The minimum number of plumbing fixtures is not affected and does not need to be reviewed or revised as long as the increased occupant load is 20 percent or less of the existing occupant load. This criterion is applied story by story and not to the building as a whole, because in most cases building occupants normally use the toilet facilities on the floor where they work or live and rarely travel to another floor to use the plumbing facilities. Once the 20-percent increased occupant load threshold is passed, then the entire occupant load of the story after alterations must be considered and the minimum plumbing fixtures, as required by the IPC, must be provided.

Example 810.1:

An existing mixed occupancy building as shown in Commentary Figure 810.1 is to undergo alterations to reconfigure certain areas and increase the occupant load as shown. There are four water closets currently provided in each restroom.

Q: What is the impact of the alterations on the required number of water closets?

A: Current occupant load is 650 (based on IBC Table 2902.1).

Offices: 100 occupant load, two water closets for male and two for female.

Restaurant: 300 occupant load, two water closets for male and two for female.

Retail: 250 occupant load, one water closet for male and one for female.

Total number of water closets in each restroom is five.

Case 1:

Office occupant load (100) + restaurant (375) + 292 = 767

Percent change of occupant load for the story = (767 - 650)/650 = 18 percent

The number of water closets does not need to be increased; there can remain four water closets in each male and female restroom.

Case 2:

Office occupant load (100) + restaurant (395) + 292 = 787

Percent change of occupant load for the story = (787 - 650)/650 = 21 percent

The number of water closets needs to be increased:

Offices: 100 occupant load, two water closets for male and two for female.

Restaurant: 395 occupant load, three water closets for male and three for female.

Retail: 292 occupant load, one water closet for male and one for female.

The number of water closets must be increased to six in each male and female restroom (see Commentary Figure 810.1).

SECTION 811
ENERGY CONSERVATION

811.1 Minimum requirements. Level 2 *alterations* to *existing buildings* or structures are permitted without requiring the entire building or structure to comply with the energy requirements of the *International Energy Conservation Code* or *International Residential Code*. The *alterations* shall conform to the energy requirements of the *International Energy Conservation Code* or *International Residential Code* as they relate to new construction only.

❖ A building that undergoes Level 2 alterations is required to meet a certain level of energy compliance. The level of compliance depends on the extent of the alterations taking place. As Level 2 alterations are those alterations where the reconfiguration of space takes place, new doors or windows are installed, or existing systems are extended, any such new ele-

INTERNATIONAL CODE COUNCIL®
Copyright © 2015 ICC. ALL RIGHTS RESERVED. Accessed by David Dammon on Jun 21, 2017 12:30:52 PM pursuant to License Agreement with ICC. No further reproduction or distribution authorized. ANY UNAUTHORIZED REPRODUCTION OR DISTRIBUTION IS A VIOLATION OF THE FEDERAL COPYRIGHT ACT AND THE LICENSE AGREEMENT, AND SUBJECT TO CIVIL AND CRIMINAL PENALTIES THEREUNDER.

ment is required to meet the applicable energy provisions of the *International Energy Conservation Code*® (IECC®) or the IRC in the case of buildings that fall under the scoping of the IRC. Elements in the building that are not being affected do not need to be evaluated and do not need to comply with the energy provisions. Essentially, the entire building is not required to meet the energy provisions; only a degree of possible improvement in the energy performance of the building is intended to be achieved by making the new elements meet the IECC or IRC requirements. In certain cases where the reconfiguration of space might have resulted in the creation of new spaces, the newly created space should be evaluated as a whole for compliance with the energy provisions, even though some of the elements in the space might actually not have been altered. Likewise, in a case where an existing mechanical system is being extended to other areas or new ductwork is being installed to reconfigure and reroute the ducts to various spaces, it is only required to have the new elements meet the energy provisions and not the entire system. The language in this section is intended to be consistent with the requirements in the IECC and the IRC for alterations.

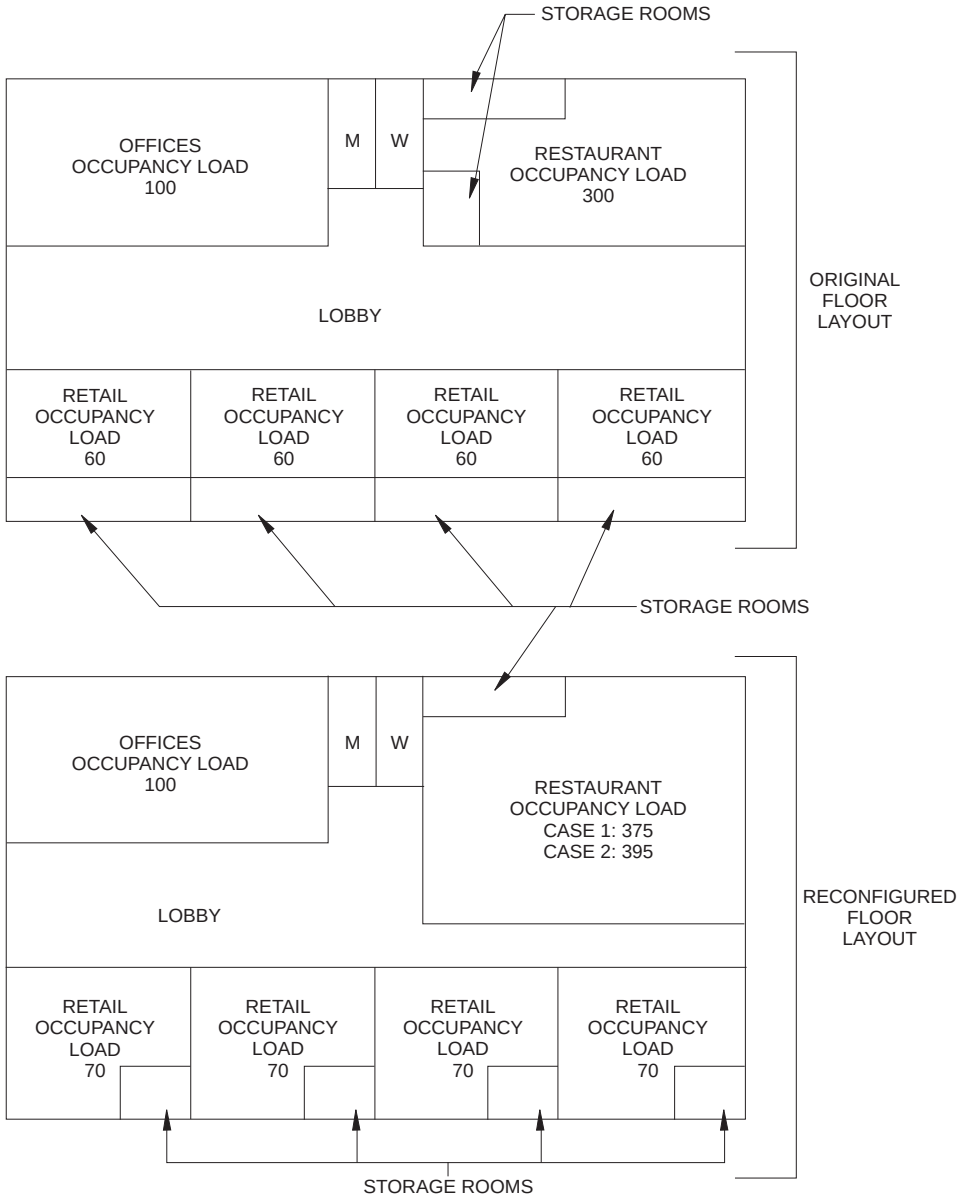

Figure 810.1
MINIMUM PLUMBING FIXTURES

INTERNATIONAL CODE COUNCIL®
Copyright © 2015 ICC. ALL RIGHTS RESERVED. Accessed by David Dammon on Jun 21, 2017 12:30:52 PM pursuant to License Agreement with ICC. No further reproduction or distribution authorized. ANY UNAUTHORIZED REPRODUCTION OR DISTRIBUTION IS A VIOLATION OF THE FEDERAL COPYRIGHT ACT AND THE LICENSE AGREEMENT, AND SUBJECT TO CIVIL AND CRIMINAL PENALTIES THEREUNDER.

Chapter 9: Alterations—Level 3

General Comments

This chapter provides the technical requirements for existing buildings that undergo Level 3 alterations. Reference is made to Level 3 alterations as described in Section 505, which includes any alteration that involves more than 50 percent of the aggregate area of the building.

This chapter, similar to other chapters of the code, covers all building-related subjects, such as structural, means of egress, accessibility and energy conservation, as well as the fire and life safety issues when the alterations are classified as Level 3. Sections 901, 902 and 903 are related to scoping, special use and occupancy, and building elements and materials. In the interest of being brief and avoiding the presentation of materials that are repetitive in nature in various chapters, Section 901.2 requires that Level 3 alterations comply not only with Chapter 9, but also with Chapters 7 and 8. As such, any alteration work that is classified as Level 3 is assumed to include everything related to Level 1 and 2 alterations plus the provisions of this chapter. Section 903, Building Elements and Materials, covers, in detail, elements such as existing shafts and vertical openings, including when such openings might be required to be enclosed, fire partitions and interior finishes. The remainder of the chapter is related to fire protection, means of egress, accessibility, structural, electrical, mechanical and plumbing provisions. Section 905 requires additional means of egress lighting and exit signs beyond what is required. Keep in mind that Section 805 covers a wide range of means of egress subjects, such as the minimum number of exits, fire escape requirements and construction details, corridor openings and exit signs, which are also applicable here. The structural provisions for Level 3 alterations are contained in Section 907.

Known in past codes simply as "alterations," the classification was broken into three levels based on the facts that minor alterations, not including space reconfiguration and extensive alterations that might include relocation of walls and partitions in the entire building, should be treated differently and with different threshold levels for requiring upgrades or improvements to the building or spaces in the building.

Purpose

The purpose of this chapter is to provide detailed requirements and provisions to identify mandated improvements in existing building elements, building spaces and building structural system. This chapter is distinguished from Chapters 7 and 8 by involving alterations that cover 50 percent of the aggregate area of the building. Level 1 alterations do not involve space reconfiguration, while Level 2 alterations involve space reconfiguration that does not exceed 50 percent of the building area. Depending on the nature of alteration work, its location in the building and whether it encompasses one or more tenants, improvements and upgrades could be required for open-floor penetrations, sprinkler systems or the installation of additional means of egress, such as stairs or fire escapes. Level 3 alteration requirements no longer look at occupant load or whether exits are shared by more than one tenant when applying requirements such as sprinklers, as is done in Chapter 8 for Level 2 alterations. Additionally, this chapter is intended to improve the safety of certain building features beyond the work area and in other parts of the building where no alteration work might be taking place.

SECTION 901 GENERAL

901.1 Scope. Level 3 *alterations* as described in Section 505 shall comply with the requirements of this chapter.

❖ Any alteration work that results in reconfiguration of space or otherwise falls under the classification of Level 3 alterations, as described in Section 505, must comply with Chapter 9. The exception of Section 901.2 is intended to encourage improved accessibility in existing buildings by allowing any alterations that are solely for compliance with the accessibility provisions of Section 705 to only comply with Chapter 7 provisions as if no space reconfiguration has taken place. This is an advantage for improving the accessibility of buildings since Chapter 7 is related to alterations that do not encompass any space reconfiguration and, as such, has a lower level of compliance requirements and lower threshold for triggering other improvements.

901.2 Compliance. In addition to the provisions of this chapter, work shall comply with all of the requirements of Chapters 7 and 8. The requirements of Sections 803, 804 and 805 shall apply within all *work areas* whether or not they include

INTERNATIONAL CODE COUNCIL®
Copyright © 2015 ICC. ALL RIGHTS RESERVED. Accessed by David Dammon on Jun 21, 2017 12:30:52 PM pursuant to License Agreement with ICC. No further reproduction or distribution authorized. ANY UNAUTHORIZED REPRODUCTION OR DISTRIBUTION IS A VIOLATION OF THE FEDERAL COPYRIGHT ACT AND THE LICENSE AGREEMENT, AND SUBJECT TO CIVIL AND CRIMINAL PENALTIES THEREUNDER.

exits and corridors shared by more than one tenant and regardless of the occupant load.

Exception: Buildings in which the reconfiguration of space affecting exits or shared egress access is exclusively the result of compliance with the accessibility requirements of Section 705.2 shall not be required to comply with this chapter.

❖ Chapters 8 and 9 have cascading effects in that each level of alteration must comply with the requirements for lower levels of alteration. Accordingly, an alteration project that is classified as Level 2 must comply with Chapter 7, as well as with Chapter 8. Similarly, an alteration project classified as Level 3 must comply with Chapters 7, 8 and 9. This is to eliminate the repetition of various requirements from Chapter 7 in Chapters 8 and 9, and from Chapter 8 in Chapter 9. The code drafting committee decided to make reference to these chapters rather than repeat all such provisions again.

Keep in mind that Section 801.3 is applicable in this chapter, as well. Section 801.3 requires that new elements, components and spaces created as a result of Level 2 alteration work must comply with the *International Building Code*® (IBC®) or other applicable codes, just as Section 101.4 of the IBC makes reference to other *International Codes*® (I-Codes®) such as the *International Plumbing Code*® (IPC®), *International Mechanical Code*® (IMC®) and *International Fire Code*® (IFC®). Please review the requirements and commentary in Section 801.3, including the exceptions, which also apply.

The exception allows for when a Level 1 alteration to a primary function area prompts improvement to the route, bathrooms and drinking fountains (in accordance with Section 705.2), and, thus, a reconfiguration of the space. Level 3 triggers other requirements, such as sprinklers, when a space is reconfigured. This exception allows the project to remain a Level 1 alteration.

SECTION 902
SPECIAL USE AND OCCUPANCY

902.1 High-rise buildings. Any building having occupied floors more than 75 feet (22 860 mm) above the lowest level of fire department vehicle access shall comply with the requirements of Sections 902.1.1 and 902.1.2.

❖ This is the charging paragraph for high-rise requirements. The specific requirements contained herein pertain to the recirculating or exhausting of air (see Section 902.1.1) or elevators (see Section 902.1.2). A high-rise building is defined as a building having an occupied floor located more than 75 feet (22 860 mm) above the lowest level of fire department vehicle access, which is the same as the IBC criteria for identifying a high-rise building. In high-rise buildings undergoing a Level 3 alteration, the subjects of recirculating air and elevators must specifically be addressed. All other provisions of Chapter 9 still apply to high-rise buildings, but these two are specific only to high rises. The notable difference between this section and IBC Section 403, is that IBC Section 403.1 has five exceptions. The five exceptions are buildings that do not fall under the high-rise provisions of IBC Section 403. The code does not contain any of these five exceptions. So whether the building under consideration is an airport traffic control tower (see IBC Section 403.1, Exception 1), an open parking garage (see IBC Section 403.1, Exception 2), a Group A-5 occupancy (see IBC Section 403.1, Exception 3), a low-hazard special industrial occupancy (see IBC Section 403.1, Exception 4) or a Group H-1, H-2 or H-3 occupancy (see IBC Section 403.1, Exception 5), the recirculating air and elevator recall requirements of Sections 902.1.1 and 902.1.2 are applicable. Even though this appears to be more restrictive than the IBC, it really is not, because in most buildings the five exceptions in IBC Section 403.1 have a special section in the IBC that they must comply with (see IBC Sections 406.5, 412 and 415). Also note that IFC Section 1103.3.2 requires the implementation of Phase 1 recall and Phase 2 emergency in-car operation for all existing elevators that travel a distance more than 25 feet, regardless of whether an alteration is being undertaken in the building.

902.1.1 Recirculating air or exhaust systems. When a floor is served by a recirculating air or exhaust system with a capacity greater than 15,000 cubic feet per minute (701 m3/s), that system shall be equipped with approved smoke and heat detection devices installed in accordance with the *International Mechanical Code*.

❖ This section applies to a high-rise building undergoing a Level 3 alteration, as described in Section 505, which has a floor served by a recirculating air or exhaust system with a capacity of greater than 15,000 cubic feet per minute (701 m^3/s). Such a system is required to be equipped with approved smoke and heat detection devices. This is clearly a condition where large mechanical devices have the potential of spreading products of combustion quickly through a particular floor and beyond. Over the years, it has been recognized that many injuries and deaths in high-rise fires have been the result of smoke inhalation due to smoke penetrating the floors above the floor of fire origin. The smoke and heat detection devices required to be installed in accordance with the IMC are intended to shut down the mechanical circulating air or exhaust system and to reduce the potential spread of smoke.

902.1.2 Elevators. Where there is an elevator or elevators for public use, at least one elevator serving the *work area* shall comply with this section. Existing elevators with a travel distance of 25 feet (7620 mm) or more above or below the main floor or other level of a building and intended to serve the needs of emergency personnel for fire-fighting or rescue pur-

INTERNATIONAL CODE COUNCIL®
Copyright © 2015 ICC. ALL RIGHTS RESERVED. Accessed by David Dammon on Jun 21, 2017 12:30:52 PM pursuant to License Agreement with ICC. No further reproduction or distribution authorized. ANY UNAUTHORIZED REPRODUCTION OR DISTRIBUTION IS A VIOLATION OF THE FEDERAL COPYRIGHT ACT AND THE LICENSE AGREEMENT, AND SUBJECT TO CIVIL AND CRIMINAL PENALTIES THEREUNDER.

poses shall be provided with emergency operation in accordance with ASME A17.3. New elevators shall be provided with Phase I emergency recall operation and Phase II emergency in-car operation in accordance with ASME A17.1.

❖ The elevator recall provisions found in this section are taken from the IFC and are intended to accommodate the needs of emergency personnel for firefighting or rescue purposes. Elevators are often used by emergency responders to access a building's various floor levels when responding to fires and other emergencies; because of these needs, the elevators must be capable of providing certain functions, such as recall and emergency operation.

Existing elevators that travel 25 feet (7620 mm) or more above or below the main level should, at minimum, be equipped with emergency operation capabilities that comply with ASME A17.3. New elevator installations are held to more restrictive requirements and must have both emergency recall and emergency in-car operation to comply with ASME A17.1 for any amount of travel distance. The ASME A17 standards are safety codes for elevators and escalators: ASME A17.1 is for new elevator installations and A17.3 is for existing elevators.

902.2 Boiler and furnace equipment rooms. Boiler and furnace equipment rooms adjacent to or within Groups I-1, I-2, I-4, R-1, R-2 and R-4 occupancies shall be enclosed by 1-hour fire-resistance-rated construction.

Exceptions:

1. Steam boiler equipment operating at pressures of 15 pounds per square inch gauge (psig) (103.4 KPa) or less is not required to be enclosed.
2. Hot water boilers operating at pressures of 170 psig (1171 KPa) or less are not required to be enclosed.
3. Furnace and boiler equipment with 400,000 British thermal units (Btu) (4.22 × 108 J) per hour input rating or less is not required to be enclosed.
4. Furnace rooms protected with an automatic sprinkler system are not required to be enclosed.

❖ The boiler and furnace room separation requirements are based on the separation concept of IBC Section 509, but the trigger mechanism is different from that of the IBC. The IBC requires any boiler or furnace room with a single piece of equipment larger than 400,000 Btu per hour (117 200 watts) input to be separated from the main areas by a fire barrier, whereas this code additionally requires any such room with high-pressure-type equipment be separated from certain uses. High pressure is considered 15 pounds-per-square-inch gauge (psig) (103.4 kPa) for steam equipment and 170 psig (1171 kPa) for hot water equipment. The uses from which the separation is required are those that are residential in nature or occupancies containing occupants who are not capable of self-preservation such as hospitals and day care facilities. Furnace rooms protected with an automatic sprinkler system are not required to be separated.

SECTION 903
BUILDING ELEMENTS AND MATERIALS

903.1 Existing shafts and vertical openings. Existing stairways that are part of the means of egress shall be enclosed in accordance with Section 803.2.1 from the highest *work area* floor to, and including, the level of exit discharge and all floors below.

❖ This section addresses the enclosure of existing stairways only. Other shafts and floor openings are regulated exactly the same as under Level 2 alterations. The code user is referred to Section 803.2.1 for stairway enclosure methods and triggers. Such enclosures, though, must be provided from the highest work area floor all the way to the level of exit discharge and all the floors below the level of exit discharge. Note that these enclosure requirements would also include the level of exit discharge. This requirement is only applicable to stairways that are part of the means of egress and not other stairways used for convenience, attending equipment or those that have other specific purposes.

903.2 Fire partitions in Group R-3. Fire separation in Group R-3 occupancies shall be in accordance with Section 903.2.1.

❖ This is the charging paragraph for fire separations between dwelling units in Group R-3 occupancies, sending the code user to Section 903.2.1. It should be noted that the title of this section is somewhat misleading, referring to "fire partitions," which are defined and detailed specifically in the IBC. However, the regulatory text describes the required separation between the dwelling units, never actually requiring construction of fire partitions as described in the IBC.

903.2.1 Separation required. Where the *work area* is in any attached dwelling unit in Group R-3 or any multiple single-family dwelling (townhouse), walls separating the dwelling units that are not continuous from the foundation to the underside of the roof sheathing shall be constructed to provide a continuous fire separation using construction materials consistent with the existing wall or complying with the requirements for new structures. All work shall be performed on the side of the dwelling unit wall that is part of the *work area*.

Exception: Where *alterations* or *repairs* do not result in the removal of wall or ceiling finishes exposing the structure, walls are not required to be continuous through concealed floor spaces.

❖ The separation of dwelling units in duplex and townhouse buildings is found in Chapter 3 of the *International Residential Code*® (IRC®) for new construction. The code in this section addresses the vertical separation aspect only. If the alteration includes the removal of wall or ceiling finishes that expose the wall

INTERNATIONAL CODE COUNCIL®
Copyright © 2015 ICC. ALL RIGHTS RESERVED. Accessed by David Dammon on Jun 21, 2017 12:30:52 PM pursuant to License Agreement with ICC. No further reproduction or distribution authorized. ANY UNAUTHORIZED REPRODUCTION OR DISTRIBUTION IS A VIOLATION OF THE FEDERAL COPYRIGHT ACT AND THE LICENSE AGREEMENT, AND SUBJECT TO CIVIL AND CRIMINAL PENALTIES THEREUNDER.

structure, then the separation wall must be evaluated for continuity from the foundation to roof deck. The existing wall construction is allowed to remain and be continued to the roof deck even if it does not provide the IRC's required 1-hour fire-resistance rating.

It is intended that this requirement not create a burden for the residents of adjacent dwellings if they are not involved in the alteration project; as such, it is allowed that the extension of such walls to the roof deck be placed on the side where an alteration project is taking place and not intrude in the neighboring units.

903.3 Interior finish. Interior finish in exits serving the *work area* shall comply with Section 803.4 between the highest floor on which there is a *work area* to the floor of exit discharge.

❖ The interior finish materials in Level 3 alterations are regulated the same as Level 2 alterations. The reader is referred to Section 803.4, where the code requires interior finishes in exits and corridors serving the work area to comply with the interior finish requirements of the IBC. The only additional requirement in Level 3 alterations is the extent of coverage. Exits serving the work area must comply with the interior finish requirements of Section 803.4, from the highest floor where there is any work area to the floor of exit discharge. Any corridors in the work area must also comply with Section 803.4, as Section 901.2 requires all Level 3 alterations to comply with Chapters 7, 8 and 9. Note that Chapter 8 of the IFC has interior finish requirements for existing buildings.

SECTION 904
FIRE PROTECTION

904.1 Automatic sprinkler systems. An automatic sprinkler system shall be provided in a work area where required by Section 804.2 or this section.

❖ Automatic sprinkler requirements are referenced by Section 804.2 where the requirements for various occupancies, mixed uses and windowless stories are provided. This section has specific requirements for high-rise buildings, and rubbish and linen chutes. When Section 804.2 requires an automatic sprinkler system for a Level 2 alteration, the system would also be required for a Level 3 alteration throughout the work area.

904.1.1 High-rise buildings. An automatic sprinkler system shall be provided in work areas where the high-rise building has a sufficient municipal water supply for the design and installation of an automatic sprinkler system at the site.

❖ Where there is sufficient municipal water to supply an automatic sprinkler system, then all of the work areas in the high-rise building must be sprinklered. "At the site" refers to the availability of water at the property line and not at the building itself. In certain high-rise, Level 3 alteration projects, this could have the effect of requiring the design and installation of a new fire line main and associated vaults, valves and other related components from the municipal water main to the building. Sprinklers could be required beyond the work areas on any floor where the work area exceeds 50 percent of that floor area. This extension of sprinklers is not required in tenant spaces that are entirely outside of the work area (see Commentary Figure 904.1.1).

Example:

Sprinklers required in:

Level 1: Tenants 1 and 3 (more than 50 percent of floor—tenant 2 is entirely outside the work area).

Level 2: Parts of tenants 1, 2 and 3 that are within the work area (work areas only—less than 50 percent of floor area).

Level 3: Tenant 2 (work area not more than 50 percent—tenant 1 is entirely outside of work area).

Level 4: Tenants 1, 2, 3 and 4 (work area is more than 50 percent of floor area—tenants 2 and 4 are not entirely outside the work area).

Level 5: Tenants 1, 2, 3 and 4 (work area is more than 50 percent of the area—tenants 2 and 4 are not entirely outside the work area).

904.1.2 Rubbish and linen chutes. Rubbish and linen chutes located in the *work area* shall be provided with automatic sprinkler system protection or an approved automatic fire-extinguishing system where protection of the rubbish and linen chute would be required under the provisions of the *International Building Code* for new construction.

❖ In any building undergoing a Level 3 alteration, the rubbish and linen chutes in the work areas must be provided with sprinklers in accordance with the IBC. The IBC requires an automatic sprinkler system at the top and in the terminal rooms of the rubbish and linen chutes; and, additional sprinkler heads are required at alternate floors and at the lowest intake. The IBC also requires protection at alternating floors where the chute extends more than one floor below the lowest intake. Accordingly, in a four-story building where there is a linen chute from the fourth floor to the first and there are alterations on all floors, the code sprinkler requirement for the chute will be exactly the same as the IBC. Chute sprinklers must be available for servicing (see Commentary Figure 904.1.2).

904.1.3 Upholstered furniture or mattresses. *Work areas* shall be provided with an automatic sprinkler system in accordance with the *International Building Code* where any of the following conditions exist:

1. A Group F-1 occupancy used for the manufacture of upholstered furniture or mattresses exceeds 2,500 square feet (232 m^2).
2. A Group M occupancy used for the display and sale of upholstered furniture or mattresses exceeds 5,000 square feet (464 m^2).

INTERNATIONAL CODE COUNCIL®
Copyright © 2015 ICC. ALL RIGHTS RESERVED. Accessed by David Dammon on Jun 21, 2017 12:30:52 PM pursuant to License Agreement with ICC. No further reproduction or distribution authorized. ANY UNAUTHORIZED REPRODUCTION OR DISTRIBUTION IS A VIOLATION OF THE FEDERAL COPYRIGHT ACT AND THE LICENSE AGREEMENT, AND SUBJECT TO CIVIL AND CRIMINAL PENALTIES THEREUNDER.

3. A Group S-1 occupancy used for the storage of upholstered furniture or mattresses exceeds 2,500 square feet (232 m^2).

❖ This section requires sprinklers for the protection of upholstered furniture and mattresses. The requirements mirror those required in the IFC and IBC in Sections 903.2.4 (Item 4), 903.2.7 (Item 4) and 903.2.9 (Item 5). The application of this section will only require an automatic sprinkler system in the work area versus throughout the building as required by the IFC and IBC. Note that this requirement is based on the size of the occupancy versus the size of the fire area. For example, consider a 9,000-square-foot Group M Occupancy, with a 4,500-square-foot work area. Although the work area is less than 5,000 square feet, the Group M occupancy is 9,000 square feet. Therefore, the 4,500-square-foot work area would need to be provided with an automatic sprinkler system.

904.2 Fire alarm and detection systems. Fire alarm and detection shall be provided in accordance with Section 907 of the *International Building Code* as required for new construction.

❖ This section essentially requires fire alarm systems as if the building were new. The requirements do not state "throughout the building," as it is not always the case that the fire alarm requirements would apply throughout the building. The reference to IBC Section 907 allows this to be dealt with as applicable. Most of the fire alarm requirements are based on occupancy rather than fire area, which is typically the basis for automatic sprinkler systems. Sections 904.2.1 and 904.2.2 are exceptions to this more general compliance requirement with the IBC, which focus on installation of such systems only in the work area.

904.2.1 Manual fire alarm systems. Where required by the *International Building Code,* a manual fire alarm system shall be provided throughout the *work area*. Alarm notification

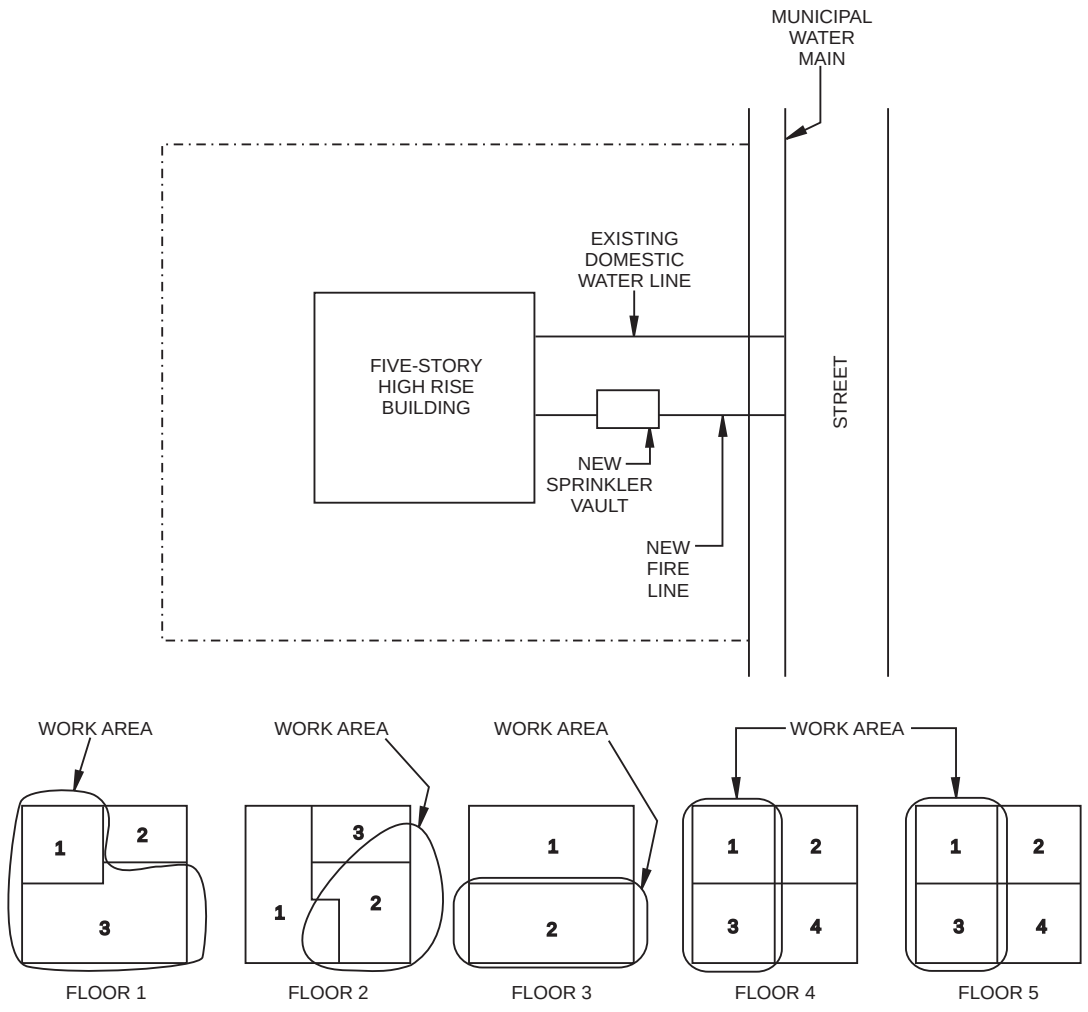

Figure 904.1.1
HIGH-RISE BUILDINGS

INTERNATIONAL CODE COUNCIL®
Copyright © 2015 ICC. ALL RIGHTS RESERVED. Accessed by David Dammon on Jun 21, 2017 12:30:52 PM pursuant to License Agreement with ICC. No further reproduction or distribution authorized. ANY UNAUTHORIZED REPRODUCTION OR DISTRIBUTION IS A VIOLATION OF THE FEDERAL COPYRIGHT ACT AND THE LICENSE AGREEMENT, AND SUBJECT TO CIVIL AND CRIMINAL PENALTIES THEREUNDER.

appliances shall be provided on such floors and shall be automatically activated as required by the *International Building Code*.

Exceptions:

1. Alarm-initiating and notification appliances shall not be required to be installed in tenant spaces outside of the *work area*.
2. Visual alarm notification appliances are not required, except where an existing alarm system is upgraded or replaced or where a new fire alarm system is installed.

❖ Manual fire alarm systems must be provided throughout the work areas in any occupancy where the IBC requires a manual fire alarm system. Note that this section only requires such systems in the work area. IBC Section 907.2, for example, requires a manual fire alarm system in Group A, B, E and M occupancies that exceed certain thresholds. This is required in the work areas on any floor regardless of the size of the work area on a particular floor. There are two exceptions for this requirement. Exception 1 addresses the typical exception that has been seen in many sections of the code, which is an exemption for tenant spaces that are completely outside of the work area. Exception 2 is an exemption for visual alarm notification when not upgrading an existing system or installing a new system.

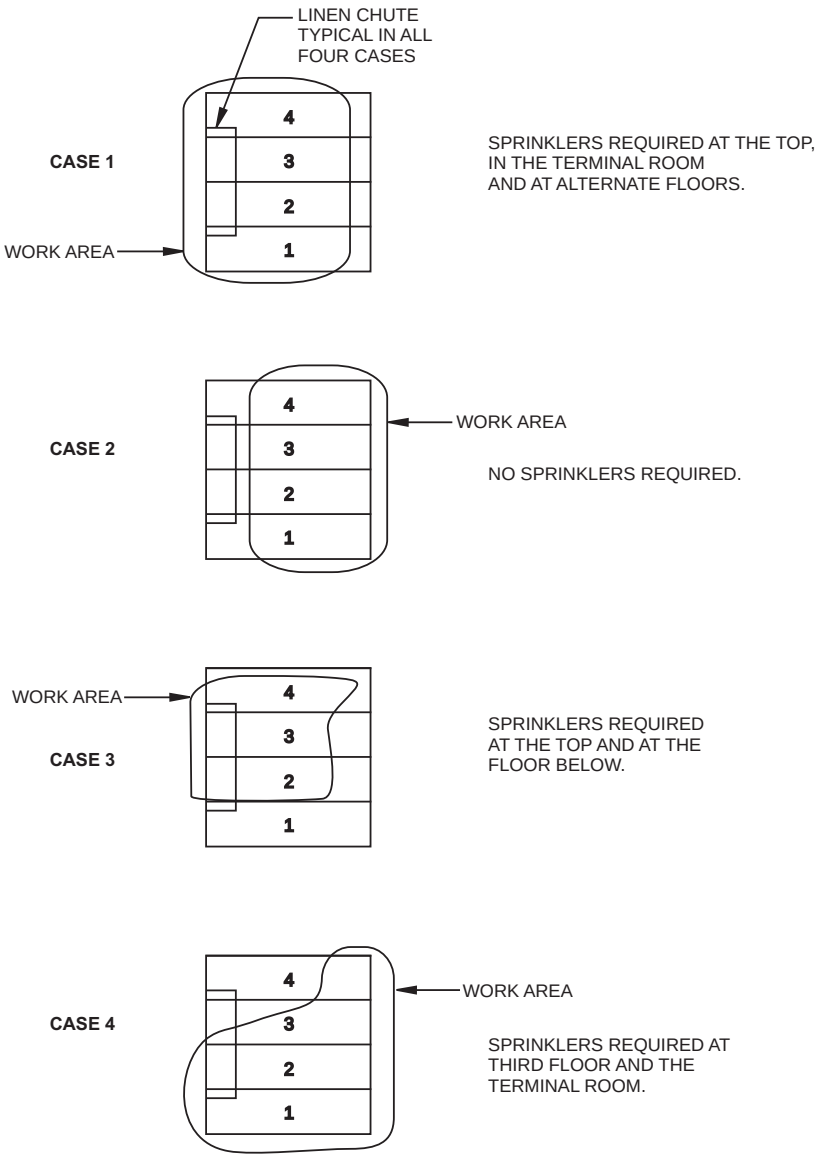

Figure 904.1.2
RUBBISH AND LINEN CHUTES

INTERNATIONAL CODE COUNCIL®
Copyright © 2015 ICC. ALL RIGHTS RESERVED. Accessed by David Dammon on Jun 21, 2017 12:30:52 PM pursuant to License Agreement with ICC. No further reproduction or distribution authorized. ANY UNAUTHORIZED REPRODUCTION OR DISTRIBUTION IS A VIOLATION OF THE FEDERAL COPYRIGHT ACT AND THE LICENSE AGREEMENT, AND SUBJECT TO CIVIL AND CRIMINAL PENALTIES THEREUNDER.

904.2.2 Automatic fire detection. Where required by the *International Building Code* for new buildings, automatic fire detection systems shall be provided throughout the *work area*.

❖ IBC Section 907.2 and its subsections require automatic fire detection systems for certain occupancies and in certain locations in a building, such as smoke detector requirements in mechanical equipment, electrical, transformer, telephone equipment and similar rooms. In some instances, sprinkler protection or other protective measures can substitute for such automatic fire detection systems. The provisions of this section allow existing buildings that are not equipped with an automatic sprinkler system, automatic fire detection system or other specific safety equipment to undergo Level 3 alterations as long as some improvement in the life safety systems of the building is achieved. For example, an existing Group I-2 nursing home undergoing a Level 3 alteration will be required to be equipped with an automatic fire detection system in the corridors and other spaces that are permitted to be open to such corridors, in accordance with IBC Section 907.2.6.2.

SECTION 905
MEANS OF EGRESS

905.1 General. The means of egress shall comply with the requirements of Section 805 except as specifically required in Sections 905.2 and 905.3.

❖ The means-of-egress requirements for Level 3 alterations are the same as the Level 2 alterations found in Section 805, with the exception that the means-of-egress lighting and exit signs must meet an additional criterion. Also, in accordance with Section 901.2, the means of egress requirements of Section 805 will apply regardless of whether the work area includes more than one tenant or a certain occupant load.

905.2 Means-of-egress lighting. Means of egress from the highest *work area* floor to the floor of exit discharge shall be provided with artificial lighting within the exit enclosure in accordance with the requirements of the *International Building Code*.

❖ The additional criteria for means-of-egress lighting requires that, in interior exit stairways, illumination be provided from the highest floor where there is any work area down to the level of exit discharge. The intensity of illumination, emergency power and performance of the system are detailed in the IBC requirements.

905.3 Exit signs. Means of egress from the highest *work area* floor to the floor of exit discharge shall be provided with exit signs in accordance with the requirements of the *International Building Code*.

❖ The additional criteria for exit signs require that the means of egress from the highest floor where there is any work area to the level of exit discharge be provided with exit signs. The location, height, illumination and other requirements of such exit signs must comply with the IBC.

SECTION 906
ACCESSIBILITY

906.1 General. A building, *facility* or element that is altered shall comply with this section and Sections 705 and 806.

❖ Alterations covered under this section must meet all accessibility requirements in Section 705, as well as two additional requirements covered in Section 806.

906.2 Type B dwelling or sleeping units. Where four or more Group I-1, I-2, R-1, R-2, R-3 or R-4 dwelling or sleeping units are being altered, the requirements of Section 1107 of the *International Building Code* for Type B units and Chapter 9 of the *International Building Code* for visible alarms apply only to the quantity of the spaces being altered.

Exception: Group I-1, I-2, R-2, R-3 and R-4 dwelling or sleeping units where the first certificate of occupancy was issued before March 15, 1991 are not required to provide Type B dwelling or sleeping units.

❖ This section sets forth the rate for providing Type B dwelling or sleeping units in Group I-1, I-2, R-2, R-3 or R-4 facilities that are undergoing a Level 3 alteration. Type B units are required when four or more units are added in the existing shell or extensively altered. The Type B units in the facility are not required to exceed that required for new construction, as indicated in Section 705.1.13. Section 705.2 also includes exceptions for the additional accessible route requirements in structures where Type B units are added as part of an alteration or change of occupancy. It is unreasonable to require a greater level of accessibility in an existing building than is required in new construction. Note that Section 1105.4 requires compliance with IBC Section 1107 when four or more dwelling or sleeping units are being added as part of an addition, but would not include the alteration of existing dwelling or sleeping units or a change of occupancy where dwelling and sleeping units were created in an existing building.

SECTION 907
STRUCTURAL

[BS] 907.1 General. Where buildings are undergoing Level 3 *alterations* including structural *alterations*, the provisions of this section shall apply.

❖ These structural requirements apply to alterations where the work area exceeds 50 percent of the aggregate area of the building. Note that the structural requirements for Level 1 and 2 alterations in Sections 706 and 807, respectively, are also applicable to Level 3 alterations according to Section 505.2.

INTERNATIONAL CODE COUNCIL®
Copyright © 2015 ICC. ALL RIGHTS RESERVED. Accessed by David Dammon on Jun 21, 2017 12:30:52 PM pursuant to License Agreement with ICC. No further reproduction or distribution authorized. ANY UNAUTHORIZED REPRODUCTION OR DISTRIBUTION IS A VIOLATION OF THE FEDERAL COPYRIGHT ACT AND THE LICENSE AGREEMENT, AND SUBJECT TO CIVIL AND CRIMINAL PENALTIES THEREUNDER.

[BS] 907.2 New structural elements. New structural elements shall comply with Section 807.2.

❖ Any new structural element that is added in the course of alteration work, including its connections to the existing structure, is required to comply with Section 807.2. Section 807.2 requires new structural elements to comply with the IBC. There is no exception to this requirement.

[BS] 907.3 Existing structural elements carrying gravity loads. Existing structural elements carrying gravity loads shall comply with Section 807.4.

❖ Existing gravity load-carrying elements are required to comply with Section 807.4. Section 807.4 requires the evaluation of these additional loads, including the effects of snow drift, to determine if these loads decrease the capacity of existing structural elements. See the commentary to Section 807.4 for further discussion of the specific requirements.

[BS] 907.4 Existing structural elements resisting lateral loads. All existing elements of the lateral force-resisting system shall comply with this section.

Exceptions:

1. Buildings of Group R occupancy with no more than five dwelling or sleeping units used solely for residential purposes that are altered based on the conventional light-frame construction methods of the *International Building Code* or in compliance with the provisions of the *International Residential Code*.
2. Where such *alterations* involve only the lowest story of a building and the *change of occupancy* provisions of Chapter 10 do not apply, only the lateral force-resisting components in and below that story need comply with this section.

❖ This section applies to all Level 3 alterations. This section also applies to Level 2 alterations where the demand-capacity ratio of an existing lateral load-resisting element, with a proposed alteration considered, exceeds 10 percent of its demand-capacity ratio with the alteration ignored. Where this occurs, it is necessary to have an engineering evaluation of the building. The loading criteria to be used in the evaluation is dependent on the extent of the alteration work that is undertaken. The code assumes that the structural members were properly designed for the applicable loads at the time of construction.

The seismic base shear depends on several variables, such as the mapped spectral accelerations at the site, the site soil coefficients, the importance factor based on the nature of the occupancy, as well as the structure's effective seismic weight and response modification factor. For work that is considered an alteration, it is primarily the structure's effective seismic weight that is of interest, as the other variables would likely remain fixed. The effective seismic weight (W) used to determine the base shear consists of the total weight of the structure, all equipment and other permanently attached items, as well as a percentage of the design live load for storage uses. It reflects the weight of all dead loads and contents that might reasonably be expected to be attached to the structure at the time the design earthquake occurs.

While equipment weight and some gravity loads are calculable to a 5-percent margin, seismic loads and response characteristics of existing materials are not realistically calculable with that precision and, as such, the trigger for possible seismic upgrades of Sections 807.6 and 907.4 is set at a rational 10-percent increase in seismic base shear or decrease in seismic base shear capacity. As it is possible that various alterations over the years might increase the seismic base shear or decrease the seismic base shear capacity in a cumulative manner beyond the 10-percent trigger level, the code makes it explicitly clear that the 10-percent threshold is calculated relative to the original building construction and not the latest alteration. Exceptions 1 and 2 are related to the evaluation requirement, one of which permits smaller Group R buildings that are altered to comply with either the IRC or the conventional light-frame construction provisions of the IBC. Exception 2 pertains to multiple-story buildings, where alterations are made to only the lowest story. This permits compliance with the IBC's wind and seismic criteria to be limited to the lateral force-resisting elements in that story and below. While the impact of wind and seismic loading contributed by the stories above must be considered, no evaluation of those stories is required. The code assumes the upper stories have been designed for wind and earthquakes according to the code in effect at the time of construction.

[BS] 907.4.1 Evaluation and analysis. An engineering evaluation and analysis that establishes the structural adequacy of the altered structure shall be prepared by a registered design professional and submitted to the *code official*.

❖ A building undergoing alterations that result in a seismic base shear increase greater than 10 percent and exceed the area threshold established in this section requires an engineering evaluation of the structure as described in this section. The evaluation must demonstrate that the altered structure complies with the IBC wind-loading criteria and with reduced IBC seismic forces in Section 301.1.4.2. The latter permits the use of the *Guidelines for Seismic Retrofit of Existing Buildings* (GSREB) in Appendix A of the code and ASCE 41 (see Commentary Section 301.1.4).

[BS] 907.4.2 Substantial structural alteration. Where more than 30 percent of the total floor and roof areas of the building or structure have been or are proposed to be involved in structural *alteration* within a 5-year period, the evaluation and analysis shall demonstrate that the lateral load-resisting system of the altered building or structure complies with the *International Building Code* for wind loading and with reduced *International Building Code*-level seismic forces in accordance with **Section** 301.1.4.2. The areas to be counted toward the 30 percent shall be those areas tributary to the vertical load-carrying components, such as joists, beams, col-

INTERNATIONAL CODE COUNCIL®
Copyright © 2015 ICC. ALL RIGHTS RESERVED. Accessed by David Dammon on Jun 21, 2017 12:30:52 PM pursuant to License Agreement with ICC. No further reproduction or distribution authorized. ANY UNAUTHORIZED REPRODUCTION OR DISTRIBUTION IS A VIOLATION OF THE FEDERAL COPYRIGHT ACT AND THE LICENSE AGREEMENT, AND SUBJECT TO CIVIL AND CRIMINAL PENALTIES THEREUNDER.

umns, walls and other structural components that have been or will be removed, added or altered, as well as areas such as mezzanines, penthouses, roof structures and in-filled courts and shafts.

❖ The area threshold of 30 percent of the floor and roof areas would likely include all Level 3 alterations, since Section 505.1 establishes that these are in excess of 50 percent of the aggregate area of the building. However, the 30-percent threshold is focused on structural alterations versus alterations in general. The additional stipulation that all structural alterations occurring over a 5-year period must be considered prevents a building owner from breaking a large alteration project into a series of smaller alterations in hopes of complying with less-stringent requirements. The clarification of exactly which areas contribute to meeting the area threshold of 30 percent is important. For instance, mezzanines complying with IBC Section 505 do not contribute to the building area but will contribute to the 30-percent criteria.

[BS] 907.4.3 Seismic Design Category F. Where the building is assigned to Seismic Design Category F, the evaluation and analysis shall demonstrate that the lateral load-resisting system of the altered building or structure complies with reduced *International Building Code*-level seismic forces in accordance with **Section** 301.1.4.2 and with the wind provisions applicable to a limited structural alteration.

❖ This section is focused specifically on those buildings assigned to Seismic Design Category F. Seismic Design Category F is the most severe. Buildings in such areas are at high risk for damage from a seismic event. Therefore, when a building is undergoing over 50-percent alteration (Level 3), it was felt reasonable to also evaluate the lateral force-resisting system regardless of how extensive the structural alterations. This section requires such buildings to be evaluated and analyzed to determine that the building's lateral load-resisting system meets the reduced IBC-level seismic forces. Since the hazard is seismic, the building only needs to meet the limited structural alteration requirements for wind. Note that this section is consistent with Section 403.4.1 in the prescriptive method.

[BS] 907.4.4 Limited structural alteration. Where the work does not involve a substantial structural *alteration* and the building is not assigned to Seismic Design Category F, the existing elements of the lateral load-resisting system shall comply with Section 807.5.

❖ A building undergoing alterations not exceeding the threshold established in Section 907.4.2 is required to comply with Section 807.5. See the commentary to Section 807.5 for additional information. This does not apply to buildings located in Seismic Design Category F. Those buildings must meet the reduced seismic loads and IBC wind loads regardless of the level of structural alteration. See the commentary to Section 907.4.3.

[BS] 907.4.5 Wall anchors for concrete and masonry buildings. For any building assigned to Seismic Design Category D, E or F with a structural system consisting of concrete or reinforced masonry walls with a flexible roof diaphragm and any building assigned to Seismic Design Category C, D, E or F with a structural system consisting of unreinforced masonry walls with any type of roof diaphragm, the alteration work shall include installation of wall anchors at the roof line to resist the reduced *International Building Code*-level seismic forces in accordance with **Section** 301.1.4.2, unless an evaluation demonstrates compliance of existing wall anchorage.

❖ This section deals with both reinforced concrete or masonry walls and unreinforced masonry walls. The two conditions where wall anchors may be necessary for wall anchorage systems if the existing system does not meet the reduced seismic level forces are:

- Buildings in Seismic Design Category D, E or F having a structural system consisting of reinforced concrete or masonry walls and a flexible roof diaphragm.
- Buildings in Seismic Design Category C, D, E or F having a structural system consisting of unreinforced masonry.

The wall anchorage system includes the elements in the diaphragm required to develop wall anchorage forces, including: wall anchors, struts, subdiaphragms, cross ties and continuity ties. Note that if a structural evaluation indicates that the existing wall anchorage provided can already resist and transfer these forces, additional wall anchorage is not required. This section is consistent with Section 403.6 of the prescriptive method.

[BS] 907.4.6 Bracing for unreinforced masonry parapets. Parapets constructed of unreinforced masonry in buildings assigned to Seismic Design Category C, D, E or F shall have bracing installed as needed to resist the reduced *International Building Code*-level seismic forces in accordance with **Section** 301.1.4.2, unless an evaluation demonstrates compliance of such items.

❖ The provisions found in this section are essentially the same as those found in Section 707.3.1. The reason for the duplication is related to the application of the provisions. Section 707.3.1 only applies if reroofing is occurring and is only applicable to Seismic Design Categories D, E and F. This section also applies to Seismic Design Category C. These provisions apply any time a Level 3 alteration occurs. It is felt that this bracing is a critical life safety measure that should be taken during larger alterations. This section is consistent with Section 403.7 of the prescriptive method.

INTERNATIONAL CODE COUNCIL®
Copyright © 2015 ICC. ALL RIGHTS RESERVED. Accessed by David Dammon on Jun 21, 2017 12:30:52 PM pursuant to License Agreement with ICC. No further reproduction or distribution authorized. ANY UNAUTHORIZED REPRODUCTION OR DISTRIBUTION IS A VIOLATION OF THE FEDERAL COPYRIGHT ACT AND THE LICENSE AGREEMENT, AND SUBJECT TO CIVIL AND CRIMINAL PENALTIES THEREUNDER.

SECTION 908
ENERGY CONSERVATION

908.1 Minimum requirements. Level 3 *alterations* to *existing buildings* or structures are permitted without requiring the entire building or structure to comply with the energy requirements of the *International Energy Conservation Code* or *International Residential Code*. The *alterations* shall conform to the energy requirements of the *International Energy Conservation Code* or *International Residential Code* as they relate to new construction only.

❖ A building that undergoes Level 3 alterations is required to meet a certain level of energy compliance. The level of compliance depends on the extent of the alterations taking place. As Level 3 alterations are those alterations where reconfiguration of space takes place in more than 50 percent of the building aggregate area, then any new element within the work area, as defined in Chapter 2, is required to meet the applicable energy provisions of the *International Energy Conservation Code*® (IECC®), or the IRC in the case of buildings that fall under its scoping. Elements in the building that are not being affected need not be evaluated and need not comply with the energy provisions. The entire building is not required to meet the energy provisions, but improvement in the energy performance of the building is intended to be achieved by making the new elements meet the IECC or IRC requirements. In those cases where the reconfiguration of space might have resulted in the creation of new spaces, the newly created spaces should be evaluated as a whole for compliance with the energy provisions, even though some of the elements in the space might not have been altered. Likewise, in a case where an existing mechanical system is being extended to other areas or new duct work is being installed to reconfigure and reroute the ducts to various spaces, it is only required to have the new elements meet the energy provisions and not the entire system. Newly installed systems must meet the energy provisions of the IECC or the IRC for buildings under the scoping of the IRC. The language in this section is intended to be consistent with the requirements in the IECC and IRC for alterations.

INTERNATIONAL CODE COUNCIL®
Copyright © 2015 ICC. ALL RIGHTS RESERVED. Accessed by David Dammon on Jun 21, 2017 12:30:52 PM pursuant to License Agreement with ICC. No further reproduction or distribution authorized. ANY UNAUTHORIZED REPRODUCTION OR DISTRIBUTION IS A VIOLATION OF THE FEDERAL COPYRIGHT ACT AND THE LICENSE AGREEMENT, AND SUBJECT TO CIVIL AND CRIMINAL PENALTIES THEREUNDER.

Chapter 10: Change of Occupancy

General Comments

This chapter deals with the special situations involved in an existing building when a change of occupancy occurs. A change of occupancy is not to be confused with a change of occupancy classification. The *International Building Code*® (IBC®) defines different occupancy classifications in Chapter 3, and special occupancy requirements in Chapter 4. Within specific occupancy classifications there can be many different types of actual activities that can take place. For instance, a Group A-3 occupancy classification deals with a wide variety of activities, including bowling alleys and courtrooms, indoor tennis courts and dance halls. When a facility changes use from a bowling alley to a dance hall, the occupancy classification remains A-3, but the different uses could lead to drastically different code requirements. Therefore, this chapter deals with the special circumstances that are associated with a change in the use of a building within the same occupancy classification, as well as a change of occupancy classification.

As a general rule, when a change of occupancy classification occurs, the requirements of Chapter 9 for Level 3 alterations apply, along with all of the provisions of Section 1012. However, there are exceptions to this rule as well, as provided in Section 1012.4, which deal with a change of occupancy where the change is clearly to a lesser hazard.

Purpose

The purpose of this chapter is to provide regulations for the circumstances when an existing building is subject to a change of occupancy or a change of occupancy classification. As previously discussed, a change of occupancy is defined in Chapter 2 of the code:

> **CHANGE OF OCCUPANCY.** A change in the use of the building or a portion of a building. A change of occupancy shall include any change of occupancy classification, any change from one group to another group within an occupancy classification or any change in use within a group for a specific occupancy classification.

In either case, some scenarios exist that are not dealt with in Chapters 7, 8 and 9 but must be addressed nevertheless. Changes in occupancy or occupancy classification change the activities or activity levels within a building, which can have implications on the life safety hazards associated with this change in activity. A change from a dance hall to a nightclub is a change in occupancy classification that has clear implications with regard to risks to life. A change from a restaurant to a nightclub is not a change in occupancy classification, but is, nevertheless, a significant change in use and activity levels with different related life safety risks.

SECTION 1001 GENERAL

1001.1 Scope. The provisions of this chapter shall apply where a *change of occupancy* occurs, as defined in Section 202.

❖ By definition, a "Change of occupancy" is the result of a change of use of the building that involves a change in application of the requirements of the code.

Chapter 10 would be applicable in the case of a structure where the use has changed but the occupancy classification has not. The scope of this chapter also includes a change of occupancy classification, in addition to a change in the occupancy group designation.

1001.2 Certificate of occupancy. A change of occupancy or a change of occupancy within a space where there is a different fire protection system threshold requirement in Chapter 9 of the *International Building Code* shall not be made to any structure without the approval of the *code official*. A certificate of occupancy shall be issued where it has been determined that the requirements for the change of occupancy have been met.

❖ A change of occupancy without a change in occupancy classification is a change in the level and/or type of use in a building that could have life safety implications. For instance, imagine that a community center is sold and converted to a dance hall. Both of these are considered by the IBC as being an Occupancy Classification A-3, but the requirements of the code to each facility could be considerably different. The dance hall might have a higher occupant load and, therefore, require different egress facilities. This section specifically states that if the change in occupancy would result in a different fire protection threshold in IBC Chapter 9, then it must be addressed. For instance, if the occupant load in the above example increases from 250 to 300, then an automatic sprinkler system would be required in accordance with IBC Section 903.2.1.3.

INTERNATIONAL CODE COUNCIL®
Copyright © 2015 ICC. ALL RIGHTS RESERVED. Accessed by David Dammon on Jun 21, 2017 12:30:52 PM pursuant to License Agreement with ICC. No further reproduction or distribution authorized. ANY UNAUTHORIZED REPRODUCTION OR DISTRIBUTION IS A VIOLATION OF THE FEDERAL COPYRIGHT ACT AND THE LICENSE AGREEMENT, AND SUBJECT TO CIVIL AND CRIMINAL PENALTIES THEREUNDER.

1001.2.1 Change of use. Any work undertaken in connection with a change in use that does not involve a *change of occupancy* classification or a change to another group within an occupancy classification shall conform to the applicable requirements for the work as classified in Chapter 5 and to the requirements of Sections 1002 through 1011.

Exception: As modified in Section 1205 for *historic buildings*.

❖ A change of occupancy that is only a change in use can be dealt with as a Level 1, 2 or 3 alteration, in accordance with Chapter 7, 8 or 9 depending on the extent of the remodel, and with the particular requirements contained in Sections 1007, Structural; 1008, Electrical; 1009, Mechanical; and 1010, Plumbing. The exception provides for special considerations for historic buildings, as given in Section 1205.

1001.2.2 Change of occupancy classification or group. Where the occupancy classification of a building changes, the provisions of Sections 1002 through 1012 shall apply. This includes a *change of occupancy* classification and a change to another group within an occupancy classification.

❖ When a use of a building changes and the occupancy classification changes, the provisions of Sections 1002 through 1012 will apply. For example, if an old downtown hardware store Occupancy Classification M is sold and remodeled into a condominium project Occupancy Classification R, then it is important to protect the new residents with all the required code provisions that may not have been in place when the property was utilized as a hardware store. Sections 1001.2 and 1012 require addressing IBC Chapter 9 requirements if the thresholds are exceeded through the change of occupancy classification or group.

1001.2.2.1 Partial change of occupancy. Where the occupancy classification or group of a portion of an *existing building* is changed, Section 1012 shall apply.

❖ Circumstances occur where only a portion of a building is changed to a different occupancy classification. This section refers to Section 1012, where Sections 1012.1.1 and 1012.1.2 address a partial change of occupancy for two options of separated and nonseparated conditions.

1001.3 Certificate of occupancy required. A certificate of occupancy shall be issued where a *change of occupancy* occurs that results in a different occupancy classification as determined by the *International Building Code*.

❖ A change of occupancy has historically been treated as severely as if the construction were new. In the code, the change of occupancy is treated as the most extensive alteration (Level 3); therefore, this is considered nearly as drastic as if the building were rebuilt. Ergo, the occupancy requires that a certificate of occupancy be issued again, as if the construction were new.

SECTION 1002
SPECIAL USE AND OCCUPANCY

1002.1 Compliance with the building code. Where the character or use of an *existing building* or part of an *existing building* is changed to one of the following special use or occupancy categories as defined in the *International Building Code*, the building shall comply with all of the applicable requirements of the *International Building Code*:

1. Covered and open mall buildings.
2. Atriums.
3. Motor vehicle-related occupancies.
4. Aircraft-related occupancies.
5. Motion picture projection rooms.
6. Stages and platforms.
7. Special amusement buildings.
8. Incidental use areas.
9. Hazardous materials.
10. Ambulatory care facilities.
11. Group I-2 occupancies.

❖ The IBC contains some special types of construction or occupancies. These are examples where the alteration to the building does not actually involve a change in occupancy classification, but involves a significant change to these special occupancies that are regulated by very specific provisions in Chapter 4 of the IBC. As such, the code cannot be applied to these specific provisions because such a change is outside the scope of the code. For instance, a large retail store could be converted to a multiple-tenant facility where the owner would like to use a covered mall concept. The utilization of the general provisions of the code would not adequately deal with the specific considerations for life safety envisioned as necessary in the special occupancy provisions of the IBC. Therefore, the designer must simply follow the provisions of the IBC as if the construction were new.

1002.2 Underground buildings. An underground building in which there is a change of use shall comply with the requirements of the *International Building Code* applicable to underground structures.

❖ Similar to the discussion for special occupancies given in Section 1002.1, underground buildings are dealt with in a specific manner in Chapter 4 of the IBC. The difference here is that, wherever there is a change of occupancy in an underground building, only the IBC requirements applicable to underground buildings apply versus full compliance with the IBC. The building is otherwise dealt with as a change of occupancy in accordance with the code.

INTERNATIONAL CODE COUNCIL®
Copyright © 2015 ICC. ALL RIGHTS RESERVED. Accessed by David Dammon on Jun 21, 2017 12:30:52 PM pursuant to License Agreement with ICC. No further reproduction or distribution authorized. ANY UNAUTHORIZED REPRODUCTION OR DISTRIBUTION IS A VIOLATION OF THE FEDERAL COPYRIGHT ACT AND THE LICENSE AGREEMENT, AND SUBJECT TO CIVIL AND CRIMINAL PENALTIES THEREUNDER.

SECTION 1003
BUILDING ELEMENTS AND MATERIALS

1003.1 General. Building elements and materials in portions of buildings undergoing a *change of occupancy* classification shall comply with Section 1012.

❖ Chapters 7, 8, 9 and 10 are all organized generally in the same manner: Special Use and Occupancy; Building Elements and Materials; Fire Protection; Means of Egress; Accessibility; and so on. Consistent with the stated requirements of Section 1001.2.1, a change of occupancy not involving a change of occupancy classification must be dealt with as a Level 1, 2 or 3 alteration; therefore, the requirements contained in those chapters for building elements and materials would apply, depending on the applicable requirements based on the classification of the work. Buildings or portions thereof that undergo a change of occupancy classification must further comply with the additional requirements in Section 1012.

SECTION 1004
FIRE PROTECTION

1004.1 General. Fire protection requirements of Section 1012 shall apply where a building or portions thereof undergo a *change of occupancy* classification or where there is a change of occupancy within a space where there is a different fire protection system threshold requirement in Chapter 9 of the *International Building Code*.

❖ Chapters 7, 8, 9 and 10 are all organized generally in the same manner: Special Use and Occupancy; Building Elements and Materials; Fire Protection; Means of Egress; Accessibility; and so on. Consistent with the stated requirements of Section 1001.2.1, a change of occupancy not involving a change of occupancy classification must be dealt with as a Level 1, 2 or 3 alteration, based on the classification of the work. This section also requires a review of the IBC Chapter 9 fire protection thresholds. If they are exceeded, a new fire protection system such as an automatic sprinkler system or fire alarm system may be required despite there not being a change of occupancy classification. Generally, buildings or portions thereof that undergo a change of occupancy classification must further comply with the additional requirements in Section 1012.

SECTION 1005
MEANS OF EGRESS

1005.1 General. Means of egress in portions of buildings undergoing a *change of occupancy* classification shall comply with Section 1012.

❖ Chapters 7, 8, 9 and 10 are all organized generally in the same manner: Special Use and Occupancy; Building Elements and Materials; Fire Protection; Means of Egress; Accessibility; and so on. Consistent with the stated requirements of Section 1001.2.1, a change of occupancy not involving a change of occupancy classification must be dealt with as a Level 1, 2 or 3 alteration; therefore, the requirements contained in those chapters for means of egress would apply, depending on the applicable requirements based on the classification of the work. Buildings or portions thereof that undergo a change of occupancy classification must further comply with the additional requirements in Section 1012.

SECTION 1006
ACCESSIBILITY

1006.1 General. Accessibility in portions of buildings undergoing a *change of occupancy* classification shall comply with Section 1012.8.

❖ When the use in a structure or a portion of a structure changes, the space must comply with new construction unless technically infeasible. For additional information, see Section 1012.5.

Chapters 7, 8, 9 and 10 are all organized in the same manner: Special Use and Occupancy; Building Elements and Materials; Fire Protection; Means of Egress; Accessibility; and so on. Consistent with the stated requirements of Section 1001.2.1, a change in occupancy not involving a change of occupancy classification must be dealt with as a Level 1, 2 or 3 alteration; therefore, the requirements contained in those chapters for accessibility would apply, depending on the applicable requirements based on the classification of the work. Buildings or portions thereof that undergo a change of occupancy classification must further comply with the additional requirements in Section 1012.

SECTION 1007
STRUCTURAL

[BS] 1007.1 Gravity loads. Buildings or portions thereof subject to a *change of occupancy* where such change in the nature of occupancy results in higher uniform or concentrated loads based on Table 1607.1 of the *International Building Code* shall comply with the gravity load provisions of the *International Building Code*.

Exception: Structural elements whose stress is not increased by more than 5 percent.

❖ These structural requirements apply where the change of occupancy results in an increased minimum live load required by IBC Section 1607. The exception allows increased gravity design loads that do not increase stresses in affected structural elements by more than 5 percent. Allowing overstresses of up to 5 percent in existing structural members has been a long-standing rule of thumb used by structural engineers.

[BS] 1007.2 Snow and wind loads. Buildings and structures subject to a *change of occupancy* where such change in the nature of occupancy results in higher wind or snow risk cate-

INTERNATIONAL CODE COUNCIL®
Copyright © 2015 ICC. ALL RIGHTS RESERVED. Accessed by David Dammon on Jun 21, 2017 12:30:52 PM pursuant to License Agreement with ICC. No further reproduction or distribution authorized. ANY UNAUTHORIZED REPRODUCTION OR DISTRIBUTION IS A VIOLATION OF THE FEDERAL COPYRIGHT ACT AND THE LICENSE AGREEMENT, AND SUBJECT TO CIVIL AND CRIMINAL PENALTIES THEREUNDER.

gories based on Table 1604.5 of the *International Building Code* shall be analyzed and shall comply with the applicable wind or snow load provisions of the *International Building Code*.

Exception: Where the new occupancy with a higher risk category is less than or equal to 10 percent of the total building floor area. The cumulative effect of the area of occupancy changes shall be considered for the purposes of this exception.

❖ This section addresses a change of occupancy that results in higher wind or snow risk categories than required for the current occupancy. The risk categories listed in Table 1604.5 of the IBC are directly proportional to the risk categories for snow and wind that are listed in the ASCE 7 design standard, which is referenced in the IBC for determining wind and snow loads (also see IBC Sections 1609 for wind and 1608 for snow). These risk categories are a function of the building's occupancy. The intent is to achieve a higher level of performance for the facilities that have higher risk categories; thus, the risk categories generally increase with the importance of the facility. The facilities listed as Category IV are considered essential facilities and are assigned the highest risk category. The facilities are essential in that their continuous use is needed. For example, fire, rescue and police stations and emergency vehicle garages are needed to be in service during and immediately after a major windstorm or earthquake event.

Where this applies, the structure must be analyzed for snow and wind loads and shown to be adequate under the provisions of the IBC for new buildings. The impact this may have on the existing structure and the minimum design loads depends on the magnitude of the risk category for the new (proposed) occupancy category relative to those required for the current occupancy category. Other less apparent impacts will result due to the fact that the basic design loads prior to considering the risk category (e.g., wind pressure) required by the IBC will often be different than the predecessor model code used in the building's original design.

The exception allows a change of occupancy to an occupancy requiring a higher risk category without a structural analysis where this occupancy comprises only a relatively small portion of the entire building.

[BS] 1007.3 Seismic loads. *Existing buildings* with a *change of occupancy* shall comply with the seismic provisions of Sections 1007.3.1 and 1007.3.2.

❖ A change of occupancy must comply with the seismic provisions of Sections 1007.3.1 and 1007.3.2.

[BS] 1007.3.1 Compliance with International Building Code-level seismic forces. Where a building or portion thereof is subject to a *change of occupancy* that results in the building being assigned to a higher risk category based on Table 1604.5 of the *International Building Code,* the building shall comply with the requirements for *International Building Code*-level seismic forces as specified in Section 301.1.4.1 for the new risk category.

Exceptions:

1. Where approved by the *code official*, specific detailing provisions required for a new structure are not required to be met where it can be shown that an equivalent level of performance and seismic safety is obtained for the applicable risk category based on the provision for reduced *International Building Code*-level seismic forces as specified in Section 301.1.4.2.
2. Where the area of the new occupancy with a higher hazard category is less than or equal to 10 percent of the total building floor area and the new occupancy is not classified as Risk Category IV. For the purposes of this exception, buildings occupied by two or more occupancies not included in the same risk category, shall be subject to the provisions of Section 1604.5.1 of the *International Building Code*. The cumulative effect of the area of occupancy changes shall be considered for the purposes of this exception.
3. Unreinforced masonry bearing wall buildings in Risk Category III when assigned to Seismic Design Category A or B shall be allowed to be strengthened to meet the requirements of Appendix Chapter A1 of this code [Guidelines for the Seismic Retrofit of Existing Buildings (GSREB)].

❖ The two types of occupancy changes that make it necessary to comply with IBC-level seismic forces in accordance with Section 301.1.4.1 are as follows:

- The change of occupancy results in the new occupancy requiring a higher risk category (see IBC Table 1604.5). The explanation is the same as that given in the commentary to Section 1007.2.
- The change of occupancy results in the new occupancy having a higher hazard category in accordance with Table 1012.4.

The code recognizes that the risk to safety is likely to be greater in the previously listed situations and conformance to the IBC seismic forces in accordance with Section 301.1.4.1 is mandated, unless compliance with any of the exceptions can be demonstrated. Section 301.1.4.1 contains two methods of compliance, either of which can be utilized. See the commentary to Section 301.1.4.1 for more information.

Exception 1 is based on a similar exception to Chapter 16 of the IBC and recognizes the difficulty of making an older structure comply with the seismic requirements for a new structure. It provides general guidance to the code official and designer on areas that need to be investigated when compliance with the seismic requirements for new buildings is not feasible. See Section 301.1.4.2 for the permitted evaluation and rehabilitation procedures.

INTERNATIONAL CODE COUNCIL®
Copyright © 2015 ICC. ALL RIGHTS RESERVED. Accessed by David Dammon on Jun 21, 2017 12:30:52 PM pursuant to License Agreement with ICC. No further reproduction or distribution authorized. ANY UNAUTHORIZED REPRODUCTION OR DISTRIBUTION IS A VIOLATION OF THE FEDERAL COPYRIGHT ACT AND THE LICENSE AGREEMENT, AND SUBJECT TO CIVIL AND CRIMINAL PENALTIES THEREUNDER.

Exception 2 contains requirements and exceptions that apply to buildings housing two or more occupancies that are classified in different risk categories. The general requirement for a change of occupancy resulting in a mixed-use building is that the entire structure must be designed in accordance with the requirements of the most critical risk (higher hazard classification) category, because it resists the earthquake forces as a unit. This is consistent with IBC Chapter 16. The actual exception to this rule is where a new occupancy having a risk category comprises no more than 10 percent of the total building area and it is not considered an essential facility. Through reference to IBC Section 1604.5.1, this exception further allows multiple occupancies that are structurally separated to be separately classified and designed independently using the risk categories applicable to each occupancy category.

Exception 3 refers to Chapter A1 of Appendix A, *Guidelines for Seismic Retrofit of Existing Buildings* (GSREB), which is applicable to unreinforced masonry-bearing (URM) wall buildings. These buildings would likely fall into the category of buildings already exempt under Exception 2. Nevertheless, this exception provides a direct link to the GSREB requirements for URM buildings that undergo a change of occupancy. Section A102.2 limitations make Chapter A1 applicable to Risk Categories I and II in IBC Table 1604.5.

[BS] 1007.3.2 Access to Risk Category IV. Where a *change of occupancy* is such that compliance with Section 1007.3.1 is required and the building is assigned to Risk Category IV, the operational access to the building shall not be through an adjacent structure, unless that structure conforms to the requirements for Risk Category IV structures. Where operational access is less than 10 feet (3048 mm) from either an interior lot line or from another structure, access protection from potential falling debris shall be provided by the owner of the Risk Category IV structure.

❖ This section is intended to ensure access for the occupant to essential facilities after an earthquake by prohibiting access through an adjacent structure that does not comply with the seismic criteria for essential facilities. These requirements are the result of lessons learned from previous earthquakes in which essential facilities have been rendered out of service because of the failure of an adjacent structure or a structure's exterior components. These requirements are based on ASCE 7, as well as FEMA 368.

SECTION 1008
ELECTRICAL

1008.1 Special occupancies. Where the occupancy of an *existing building* or part of an *existing building* is changed to one of the following special occupancies as described in NFPA 70, the electrical wiring and equipment of the building or portion thereof that contains the proposed occupancy shall comply with the applicable requirements of NFPA 70 whether or not a *change of occupancy* group is involved:

1. Hazardous locations.
2. Commercial garages, *repair*, and storage.
3. Aircraft hangars.
4. Gasoline dispensing and service stations.
5. Bulk storage plants.
6. Spray application, dipping, and coating processes.
7. Health care facilities.
8. Places of assembly.
9. Theaters, audience areas of motion picture and television studios, and similar locations.
10. Motion picture and television studios and similar locations.
11. Motion picture projectors.
12. Agricultural buildings.

❖ Similar to the discussion in Section 1002.1 of the code regarding the special occupancy provisions of IBC Chapter 4, the *National Electrical Code*®, NFPA 70, contains provisions for special types of constructions or occupancies. These are examples where the alteration to the building does not actually involve a change of occupancy classification, but involves a significant change to these special occupancies that are regulated by very specific provisions in NFPA 70. As such, the code cannot be applied to these specific provisions because such a change is outside the scope of the code. For instance, a large hospital could be renovated to change some of the spaces to a new emergency room or new testing facility. The utilization of the general provisions of the code would not adequately deal with the specific considerations for life safety envisioned as necessary in the special occupancy provisions of NFPA 70. Therefore, the designer must simply follow the provisions of NFPA 70 without modification.

1008.2 Unsafe conditions. Where the occupancy of an *existing building* or part of an *existing building* is changed, all unsafe conditions shall be corrected without requiring that all parts of the electrical system comply with NFPA 70.

❖ Buildings, structures or premises that constitute a fire hazard or are otherwise dangerous to human life, or that, in relation to existing use, constitute a hazard to safety, health or public welfare, by reason of inadequate maintenance, dilapidation, obsolescence, fire hazard, disaster damage or abandonment as specified in the code or any other ordinance, are unsafe conditions.

The intent of this section is to address unsafe electrical conditions before they can lead to injury or death. The code specifically requires only the unsafe wiring condition to be brought up to the current provisions of NFPA 70. Any additional existing wiring that

INTERNATIONAL CODE COUNCIL®
Copyright © 2015 ICC. ALL RIGHTS RESERVED. Accessed by David Dammon on Jun 21, 2017 12:30:52 PM pursuant to License Agreement with ICC. No further reproduction or distribution authorized. ANY UNAUTHORIZED REPRODUCTION OR DISTRIBUTION IS A VIOLATION OF THE FEDERAL COPYRIGHT ACT AND THE LICENSE AGREEMENT, AND SUBJECT TO CIVIL AND CRIMINAL PENALTIES THEREUNDER.

is isolated from the damaged area is not required to be repaired or replaced.

Example: On a typical downtown street above the main street commercial occupancies there are some older existing apartments. Prior to the rental of one particular unit, an inspector notices a damaged receptacle with wiring exposed. According to Section 1008.2 of the code, this outlet must be properly repaired or replaced in accordance with NFPA 70. The remainder of the existing electrical system would not be required to be changed unless it was damaged.

1008.3 Service upgrade. Where the occupancy of an *existing building* or part of an *existing building* is changed, electrical service shall be upgraded to meet the requirements of NFPA 70 for the new occupancy.

❖ If an existing structure or a portion thereof undergoes a change of occupancy, this section requires the wiring supporting the changed area to meet NFPA 70.

1008.4 Number of electrical outlets. Where the occupancy of an *existing building* or part of an *existing building* is changed, the number of electrical outlets shall comply with NFPA 70 for the new occupancy.

❖ The number of outlets that are inherent to an area undergoing a change of occupancy must meet NFPA 70 requirements for the new occupancy.

Example: A room is undergoing a change from meeting room usage to a kitchen. The old rule of being able to go in any direction along the wall no more than 6 feet (1829 mm) and reach an outlet is no longer sufficient. There would have to be outlets added such that no point along the counter wall line is more than 24 inches (610 mm) from an outlet.

SECTION 1009
MECHANICAL

1009.1 Mechanical requirements. Where the occupancy of an *existing building* or part of an *existing building* is changed such that the new occupancy is subject to different kitchen exhaust requirements or to increased mechanical ventilation requirements in accordance with the *International Mechanical Code*, the new occupancy shall comply with the respective *International Mechanical Code* provisions.

❖ This section deals with two specific scenarios that could occur in a change of occupancy that does not qualify as a change of occupancy classification.

The first scenario is a change in kitchen equipment that would require different exhaust requirements. A simple change in the size of a grill would require a different hood and levels of exhaust. This type of change meets the definition of a "Change of occupancy."

The second scenario is a change in ventilation requirements. Many changes of occupancy could lead to changes in the occupant load of the building. An increase in the occupant load could mean an increase in ventilation requirements. Therefore, ventilation levels would need to be based on the requirements of the *International Mechanical Code*® (IMC®).

SECTION 1010
PLUMBING

1010.1 Increased demand. Where the occupancy of an *existing building* or part of an *existing building* is changed such that the new occupancy is subject to increased or different plumbing fixture requirements or to increased water supply requirements in accordance with the *International Plumbing Code*, the new occupancy shall comply with the intent of the respective *International Plumbing Code* provisions.

❖ Many changes of occupancy could lead to changes in the occupant load of the building. An increase in the occupant load could mean an increase in needed plumbing fixtures. Therefore, fixture levels would need to be based on the intent of the *International Plumbing Code*® (IPC®).

1010.2 Food-handling occupancies. If the new occupancy is a food-handling establishment, all existing sanitary waste lines above the food or drink preparation or storage areas shall be panned or otherwise protected to prevent leaking pipes or condensation on pipes from contaminating food or drink. New drainage lines shall not be installed above such areas and shall be protected in accordance with the *International Plumbing Code.*

❖ When a change of occupancy involves new food-handling facilities, the health safety issues associated with the integrity of the existing plumbing equipment and facilities must be addressed. Again, the code does not contain special provisions for such a specific issue. Therefore, the facilities must be modified in accordance with the intent of the IPC for new facilities.

1010.3 Interceptor required. If the new occupancy will produce grease or oil-laden wastes, interceptors shall be provided as required in the *International Plumbing Code*.

❖ When a change of occupancy involves new facilities that produce grease or oil-laden wastes, the issues associated with the integrity of the existing plumbing equipment and facilities must be addressed. Again, the code does not contain special provisions for such a specific issue. Therefore, the facilities must be modified in accordance with the intent of the IPC for new facilities.

1010.4 Chemical wastes. If the new occupancy will produce chemical wastes, the following shall apply:

1. If the existing piping is not compatible with the chemical waste, the waste shall be neutralized prior to entering the drainage system, or the piping shall be changed to a compatible material.

INTERNATIONAL CODE COUNCIL®
Copyright © 2015 ICC. ALL RIGHTS RESERVED. Accessed by David Dammon on Jun 21, 2017 12:30:52 PM pursuant to License Agreement with ICC. No further reproduction or distribution authorized. ANY UNAUTHORIZED REPRODUCTION OR DISTRIBUTION IS A VIOLATION OF THE FEDERAL COPYRIGHT ACT AND THE LICENSE AGREEMENT, AND SUBJECT TO CIVIL AND CRIMINAL PENALTIES THEREUNDER.

2. No chemical waste shall discharge to a public sewer system without the approval of the sewage authority.

❖ When a change of occupancy involves new facilities that produce chemical wastes, issues associated with the integrity of existing plumbing equipment and facilities must be addressed. In this case, the performance requirements essentially address the intent of the IPC for health safety, life safety and environmental safety by requiring that the piping be made to handle the particular chemicals or the chemicals be treated so as to not harm the piping, and that the impact on the public sewer system be addressed.

1010.5 Group I-2. If the occupancy group is changed to Group I-2, the plumbing system shall comply with the applicable requirements of the *International Plumbing Code*.

❖ Similar to the provisions given in Section 1002.1 for special occupancies in the IBC, the utilization of the general provisions of the code would not adequately deal with the specific considerations for life safety and health safety envisioned as necessary in the specific provisions of the IPC for the plumbing facilities in a Group I-2 occupancy. Therefore, the designer must simply follow the provisions of the IPC as if the construction were new.

SECTION 1011
OTHER REQUIREMENTS

1011.1 Light and ventilation. Light and ventilation shall comply with the requirements of the *International Building Code* for the new occupancy.

❖ Many changes of occupancy could lead to changes in the occupant load of the building. An increase in the occupant load could mean an increase in needed lighting or ventilation. Therefore, the requirements of the IBC applicable to new construction are applied to light and ventilation.

SECTION 1012
CHANGE OF OCCUPANCY CLASSIFICATION

1012.1 General. The provisions of this section shall apply to buildings or portions thereof undergoing a change of occupancy classification. This includes a change of occupancy classification within a group as well as a change of occupancy classification from one group to a different group or where there is a change of occupancy within a space where there is a different fire protection system threshold requirement in Chapter 9 of the *International Building Code*. Such buildings shall also comply with Sections 1002 through 1011. The application of requirements for the change of occupancy shall be as set forth in Sections 1012.1.1 through 1012.1.4. A *change of occupancy*, as defined in Section 202, without a corresponding change of occupancy classification shall comply with Section 1001.2.

❖ Buildings that undergo a change of occupancy classification must meet the requirements of Section 1012. This would include a Group A-2 occupancy changing to a Group A-3 occupancy, as well as a Group B occupancy that changes to a Group M occupancy classification group.

1012.1.1 Compliance with Chapter 9. The requirements of Chapter 9 shall be applicable throughout the building for the new occupancy classification based on the separation conditions set forth in Sections 1012.1.1.1 and 1012.1.1.2.

❖ This section contains provisions that allow a change of occupancy classification within an existing building as defined in IBC Section 302.1, based on whether the proposed change of occupancy is separated from adjacent spaces with fire barriers as required in the IBC. Conditions to allow that change of occupancy classification require a review of the existing building, or area of the proposed change of occupancy, to be conducted to determine compliance with the requirements of Chapter 9. This essentially triggers a review against the requirements of Chapters 7, 8 and 9, and Sections 1002 through 1012. All deficiencies disclosed by the review are required to be brought into compliance with the provisions of the code. Design and detail of the corrective construction must be incorporated into the scope of work and identified in the construction documents. The basic philosophy of the code continues to be that as the level of alteration activity increases in scope or area of the building, the level of compliance with new construction code requirements also increases.

1012.1.1.1 Change of occupancy classification without separation. Where a portion of an *existing building* is changed to a new occupancy classification or where there is a change of occupancy within a space where there is a different fire protection system threshold requirement in Chapter 9 of the *International Building Code,* and that portion is not separated from the remainder of the building with fire barriers having a fire-resistance rating as required in the *International Building Code* for the separate occupancy, the entire building shall comply with all of the requirements of Chapter 9 applied throughout the building for the most restrictive occupancy classification in the building and with the requirements of this chapter.

❖ Requirements of this subsection and Section 1012.1.1.2 provide alternatives for the evaluation process where the change of occupancy occurs in only a portion of an existing building. These two sections incorporate two of the philosophies for mixed-use occupancies found in IBC Section 508.

If the portion of the building that is undergoing the change of occupancy classification is not separated from the remainder of the building by fire barriers, this section allows the two or more uses to remain unseparated from each other. However, the entire building must then comply with the requirements of Chapter 9 and those of this chapter for the most restrictive occupancy group. This also applies to exceeding IBC Chapter 9 thresholds. This philosophy is consistent with the approach made for mixed uses, nonseparated, as given in IBC Section 508.3. Note that this could require construction activity in existing occu-

INTERNATIONAL CODE COUNCIL®
Copyright © 2015 ICC. ALL RIGHTS RESERVED. Accessed by David Dammon on Jun 21, 2017 12:30:52 PM pursuant to License Agreement with ICC. No further reproduction or distribution authorized. ANY UNAUTHORIZED REPRODUCTION OR DISTRIBUTION IS A VIOLATION OF THE FEDERAL COPYRIGHT ACT AND THE LICENSE AGREEMENT, AND SUBJECT TO CIVIL AND CRIMINAL PENALTIES THEREUNDER.

pied spaces or portions of the building not otherwise impacted by the change of occupancy classification.

1012.1.1.2 Change of occupancy classification with separation. Where a portion of an *existing building* is changed to a new occupancy classification or where there is a change of occupancy within a space where there is a different fire protection system threshold requirement in Chapter 9 of the *International Building Code,* and that portion is separated from the remainder of the building with fire barriers having a fire-resistance rating as required in the *International Building Code* for the separate occupancy, that portion shall comply with all of the requirements of Chapter 9 for the new occupancy classification and with the requirements of this chapter.

❖ When the change of occupancy classification is wholly contained in a portion of the building that is completely separated from the other uses occupying the building by fire barriers as required by IBC Table 508.4, compliance with the requirements of Chapter 9 and Sections 1002 through 1012 is only required for that portion of the building occupied by the new occupancy classification. This also applies to exceeding IBC Chapter 9 thresholds. The remaining portion(s) of the building that are legally occupied are permitted to continue occupancy without change, until activities specifically covered in the code occur.

1012.1.2 Fire protection and interior finish. The provisions of Sections 1012.2 and 1012.3 for fire protection and interior finish, respectively, shall apply to all buildings undergoing a change of occupancy classification.

❖ When a building undergoes a change of occupancy classification, it is important that the interior finishes and fire protection systems meet the requirements for the new occupancy classification. This is especially the case when the provisions for the new occupancy classification are more restrictive than the existing occupancy classification. This section guarantees the appropriate level of protection for the building's occupants.

1012.1.3 Change of occupancy classification based on hazard category. The relative degree of hazard between different occupancy classifications shall be determined in accordance with the categories specified in Tables 1012.4, 1012.5 and 1012.6. Such a determination shall be the basis for the application of Sections 1012.4 through 1012.7.

❖ All of the classified occupancy groups were evaluated in three areas in which the degree of inherent hazards of an occupancy group can differ. These evaluations were reviewed, and like results were grouped and assigned a relative rating number, 1 through 4 or 5, depending on the element being evaluated. The lower the number, the higher the relative hazard of the occupancy classification. Aspects of a building that were considered were: fire and life safety, including the ability to exit; the height and area of the building; and the need to protect surrounding buildings from fire conflagration. Occupancies with equivalent relative hazard numbers were then grouped together to form Tables 1012.4, 1012.5 and 1012.6 of Sections 1012.4 through 1012.7. These tables are used to determine whether a change of occupancy classification is to a higher, lesser or equivalent occupancy classification, in relation to the relative hazard of the use.

1012.1.4 Accessibility. All buildings undergoing a change of occupancy classification shall comply with Section 1012.8.

❖ See the commentary to Section 1012.8.

1012.2 Fire protection systems. Fire protection systems shall be provided in accordance with Sections 1012.2.1 and 1012.2.2.

❖ Fire protection systems must comply with the fire protection requirements of Sections 1012.2.1 and 1012.2.2.

1012.2.1 Fire sprinkler system. Where a change in occupancy classification occurs or where there is a change of occupancy within a space where there is a different fire protection system threshold requirement in Chapter 9 of the *International Building Code* that requires an automatic fire sprinkler system to be provided based on the new occupancy in accordance with Chapter 9 of the *International Building Code*, such system shall be provided throughout the area where the *change of occupancy* occurs.

❖ Depending on the new occupancy classification, the need for an automatic sprinkler system may depend on not only the occupancy, but also the occupant load, fuel load, height and area of the building, as well as fire-fighting capabilities. IBC Section 903.2 addresses all occupancy conditions requiring automatic sprinkler systems. IBC Section 903.3 contains the installation requirements for all sprinkler systems, in addition to the requirements of NFPA 13, NFPA 13D and NFPA 13R. The supervision and alarm requirements for sprinkler systems are contained in IBC Section 903.4, whereas IBC Section 903.5 refers to testing and maintenance requirements for sprinkler systems in the *International Fire Code*® (IFC®).

1012.2.2 Fire alarm and detection system. Where a change in occupancy classification occurs or where there is a change of occupancy within a space where there is a different fire protection system threshold requirement in Chapter 9 of the *International Building Code* that requires a fire alarm and detection system to be provided based on the new occupancy in accordance with Chapter 9 of the *International Building Code*, such system shall be provided throughout the area where the *change of occupancy* occurs. Existing alarm notification appliances shall be automatically activated throughout the building. Where the building is not equipped with a fire alarm system, alarm notification appliances shall be provided throughout the area where the *change of occupancy* occurs in accordance with Section 907 of the *International Building Code* as required for new construction.

❖ Fire alarm systems, which typically include manual fire alarm systems and automatic fire detection systems, are required to be installed in accordance with the provisions of IBC Chapter 9 and NFPA 72.

Fire alarm systems are provided in buildings to limit

INTERNATIONAL CODE COUNCIL®
Copyright © 2015 ICC. ALL RIGHTS RESERVED. Accessed by David Dammon on Jun 21, 2017 12:30:52 PM pursuant to License Agreement with ICC. No further reproduction or distribution authorized. ANY UNAUTHORIZED REPRODUCTION OR DISTRIBUTION IS A VIOLATION OF THE FEDERAL COPYRIGHT ACT AND THE LICENSE AGREEMENT, AND SUBJECT TO CIVIL AND CRIMINAL PENALTIES THEREUNDER.

fire casualties and property losses. Fire alarm systems do this by promptly notifying the occupants of the building of an emergency condition, which increases the time available for evacuation. Similarly, when fire alarm systems are required to be supervised, the fire department will be promptly notified and its response time relative to the onset of the fire incident will be reduced.

Automatic fire detection systems are required under certain conditions to increase the likelihood that fire is detected and occupants are alerted in a timely manner. The detection system is a system of devices and associated hardware that activates the alarm system. The automatic detecting devices are to be smoke detectors unless a condition exists mandating the use of a different type of detector (see IBC Section 907).

1012.3 Interior finish. In areas of the building undergoing the change of occupancy classification, the interior finish of walls and ceilings shall comply with the requirements of the *International Building Code* for the new occupancy classification.

❖ The interior finish of corridor and exit walls and ceilings in the area where the change of occupancy occurs must meet the flame spread and smoke-development limitations and requirements of the IBC for each new occupancy classification. Corridors and exits are defined in IBC Section 202. Flame spread and smoke-developed classification are determined from IBC Table 803.11 and are further based on ASTM E84.

1012.4 Means of egress, general. Hazard categories in regard to life safety and means of egress shall be in accordance with Table 1012.4.

❖ This section requires that hazard categories for means of egress are established in accordance with Table 1012.4. See also the commentary to Table 1012.4.

TABLE 1012.4
MEANS OF EGRESS HAZARD CATEGORIES

RELATIVE HAZARD	OCCUPANCY CLASSIFICATIONS
1 (Highest Hazard)	H
2	I-2, I-3, I-4
3	A, E, I-1, M, R-1, R-2, R-4
4	B, F-1, R-3, S-1
5 (Lowest Hazard)	F-2, S-2, U

❖ As can be seen, the means-of-egress provisions for hazard classification contain five levels. These levels are established based on IBC requirements for different occupancies for means of egress, fire protection and fire-resistance-rated construction.

1012.4.1 Means of egress for change to higher hazard category. When a change of occupancy classification is made to a higher hazard category (lower number) as shown in Table 1012.4, the means of egress shall comply with the requirements of Chapter 10 of the *International Building Code*.

Exceptions:

1. Stairways shall be enclosed in compliance with the applicable provisions of Section 903.1.
2. Existing stairways including handrails and guards complying with the requirements of Chapter 9 shall be permitted for continued use subject to approval of the *code official*.
3. Any stairway replacing an existing stairway within a space where the pitch or slope cannot be reduced because of existing construction shall not be required to comply with the maximum riser height and minimum tread depth requirements.
4. Existing corridor walls constructed on both sides of wood lath and plaster in good condition or $^1/_2$-inch-thick (12.7 mm) gypsum wallboard shall be permitted. Such walls shall either terminate at the underside of a ceiling of equivalent construction or extend to the underside of the floor or roof next above.
5. Existing corridor doorways, transoms and other corridor openings shall comply with the requirements in Sections 805.5.1, 805.5.2 and 805.5.3.
6. Existing dead-end corridors shall comply with the requirements in Section 805.6.
7. An existing operable window with clear opening area no less than 4 square feet (0.38 m^2) and minimum opening height and width of 22 inches (559 mm) and 20 inches (508 mm), respectively, shall be accepted as an emergency escape and rescue opening.

❖ The basic premise here is for the means-of-egress requirements to be the same as required for new construction when the change of occupancy is to a higher (lower number) classification. The exceptions relate to common problem areas where it is practical to fully comply with requirements for new construction. Exception 1 allows the same provision for the limited enclosures of stairways as allowed for Level 3 alterations. Exception 2 allows handrails and guards to meet the limited requirements of Chapter 9. The reader will note that Chapter 9 contains no specific requirements for guards and handrails. However, it must be remembered that the provisions of Chapter 8 also apply to Chapter 9; therefore, the provisions of Sections 805.9 and 805.11 are applicable. Exceptions 3 through 7 give allowances for requirements commonly found in existing construction that make full compliance with the present IBC impractical.

1012.4.2 Means of egress for change of use to equal or lower hazard category. When a change of occupancy classification is made to an equal or lesser hazard category (higher number) as shown in Table 1012.4, existing elements of the means of egress shall comply with the requirements of Section 905 for the new occupancy classification. Newly con-

INTERNATIONAL CODE COUNCIL®
Copyright © 2015 ICC. ALL RIGHTS RESERVED. Accessed by David Dammon on Jun 21, 2017 12:30:52 PM pursuant to License Agreement with ICC. No further reproduction or distribution authorized. ANY UNAUTHORIZED REPRODUCTION OR DISTRIBUTION IS A VIOLATION OF THE FEDERAL COPYRIGHT ACT AND THE LICENSE AGREEMENT, AND SUBJECT TO CIVIL AND CRIMINAL PENALTIES THEREUNDER.

structed or configured means of egress shall comply with the requirements of Chapter 10 of the *International Building Code*.

Exception: Any stairway replacing an existing stairway within a space where the pitch or slope cannot be reduced because of existing construction shall not be required to comply with the maximum riser height and minimum tread depth requirements.

❖ Where the change of occupancy is to a lower hazard category (higher number), the code allows for the modifications to the means of egress provided for Level 3 alterations in Chapter 9 (see commentary, Section 905). Detailed requirements are actually provided in Section 805, which are applicable to Level 3 alterations in Chapter 9, as well. Section 905 gives additional requirements regarding means of egress lighting and exit signs, requiring these to be installed in accordance with the IBC.

The exception deals with a practical problem common in existing buildings, where the space provided for the stairway cannot accommodate the shallower pitch of steps required in the IBC.

1012.4.3 Egress capacity. Egress capacity shall meet or exceed the occupant load as specified in the *International Building Code* for the new occupancy.

❖ This provision is consistent throughout the code for all alterations and changes of occupancy. Reduction of egress capacity is strictly prohibited by Section 1001.2 of the IBC.

1012.4.4 Handrails. Existing stairways shall comply with the handrail requirements of Section 805.9 in the area of the change of occupancy classification.

❖ The special provisions of Section 805.9 for handrails are allowed for this category of change of use, which is similar to that allowed for change of occupancy to a higher classification in Exception 2 of Section 1012.4.1, except that the code official's specific approval is required in Section 1012.4.1. The provisions of Section 805.9 boil down to a simple requirement for a single handrail for all stairways with a width less than 66 inches (1676 mm). Stairways wider than 66 inches (1676 mm) require two handrails. The design of the handrails is regulated by the applicable provisions of the IBC.

1012.4.5 Guards. Existing guards shall comply with the requirements in Section 805.11 in the area of the change of occupancy classification.

❖ The provisions of Section 805.11 apply to guards for changes of occupancy in this category. The provisions are the same as that of the IBC; however, guards are only required to comply with Section 805.11 in the area of the change of occupancy.

1012.5 Heights and areas. Hazard categories in regard to height and area shall be in accordance with Table 1012.5.

❖ This section requires that hazard categories for building heights and areas are established in accordance with Table 1012.5. See also the commentary to Table 1012.5.

The provisions for hazard categories and requirements related to change of occupancy classification for height and areas are considerably simpler and more straightforward than the life safety and exits hazard category. Essentially, the change to a higher hazard category requires compliance with height and area limitations for new construction as given by the IBC, and the change to an equal or lesser hazard category allows for the height and area of the existing building to be deemed acceptable.

TABLE 1012.5
HEIGHTS AND AREAS HAZARD CATEGORIES

RELATIVE HAZARD	OCCUPANCY CLASSIFICATIONS
1 (Highest Hazard)	H
2	A-1, A-2, A-3, A-4, I, R-1, R-2, R-4
3	E, F-1, S-1, M
4 (Lowest Hazard)	B, F-2, S-2, A-5, R-3, U

❖ Table 1012.5 groups the relative hazards based on allowable heights and areas given by the IBC.

1012.5.1 Height and area for change to higher hazard category. When a change of occupancy classification is made to a higher hazard category as shown in Table 1012.5, heights and areas of buildings and structures shall comply with the requirements of Chapter 5 of the *International Building Code* for the new occupancy classification.

Exception: For high-rise buildings constructed in compliance with a previously issued permit, the type of construction reduction specified in Section 403.2.1 of the *International Building Code* is permitted. This shall include the reduction for columns. The high-rise building is required to be equipped throughout with an automatic sprinkler system in accordance with Section 903.3.1.1 of the *International Building Code.*

❖ As stated in Section 1012.5.1, the change to a higher hazard category requires compliance with height and area limitations for new construction as given by the IBC, with a single exception regarding Group E, one-story buildings. This approach is consistent with the premise that any alteration to a building cannot increase the hazard in the building. By definition, utilization of a building for a use in which the height or area for the occupancy is exceeded is an increase in the hazard of the building.

The exception addresses the revision to the IBC that prohibited the reduction of ratings on columns for high-rise buildings for Type IA construction under 420 feet and general reductions for Type IA construction over 420 feet in building height. This created a problem for existing buildings that had previously applied these reductions. Without this exception, the code would not recognize those previously complying buildings. For example, a change of occupancy from an office to a retail area would require a complete upgrade in the fire-resistance rating for all the columns in the entire building. This is excessive for

INTERNATIONAL CODE COUNCIL®
Copyright © 2015 ICC. ALL RIGHTS RESERVED. Accessed by David Dammon on Jun 21, 2017 12:30:52 PM pursuant to License Agreement with ICC. No further reproduction or distribution authorized. ANY UNAUTHORIZED REPRODUCTION OR DISTRIBUTION IS A VIOLATION OF THE FEDERAL COPYRIGHT ACT AND THE LICENSE AGREEMENT, AND SUBJECT TO CIVIL AND CRIMINAL PENALTIES THEREUNDER.

small changes in occupancy and often impractical. The exception makes it clear that if the building is protected throughout with an automatic fire sprinkler system, designed to meet NFPA 13 (not 13R), then the column ratings can be what was allowed prior to that revision to the IBC. Additions will need to meet the requirements for new construction, but a change in occupancy of this type should not require the entire building to fall into noncompliance when it was fully compliant when it was built.

1012.5.1.1 Fire wall alternative. In other than Groups H, F-1 and S-1, fire barriers and horizontal assemblies constructed in accordance with Sections 707 and 711, respectively, of the *International Building Code* shall be permitted to be used in lieu of fire walls to subdivide the building into separate buildings for the purpose of complying with the area limitations required for the new occupancy where all of the following conditions are met:

1. The buildings are protected throughout with an automatic sprinkler system in accordance with Section 903.3.1.1 of the *International Fire Code*.
2. The maximum allowable area between fire barriers, horizontal assemblies, or any combination thereof shall not exceed the maximum allowable area determined in accordance with Chapter 5 of the *International Building Code* without an increase allowed for an automatic sprinkler system in accordance with Section 506 of the *International Building Code*.
3. The fire-resistance rating of the fire barriers and horizontal assemblies shall be not less than that specified for fire walls in Table 706.4 of the *International Building Code*.

Exception: Where horizontal assemblies are used to limit the maximum allowable area, the required fire- resistance rating of the horizontal assemblies shall be permitted to be reduced by 1 hour provided the height and number of stories increases allowed for an automatic sprinkler system by Section 504 of the *International Building Code* are not used for the buildings.

❖ This section allows the use of fire barriers and rated horizontal assemblies to create separate buildings for the purpose of applying the height and area requirements. This allowance comes with several criteria, such as requiring an NFPA 13 sprinkler system, ratings in accordance with the fire wall ratings of IBC Table 706.4 and a limitation on the allowable area that does not include a sprinkler increase. This section provides necessary flexibility in meeting the height and area requirements in existing buildings such as old mill complexes where achieving the height and area limitations is very difficult.

1012.5.2 Height and area for change to equal or lesser hazard category. When a change of occupancy classification is made to an equal or lesser hazard category as shown in Table 1012.5, the height and area of the *existing building* shall be deemed acceptable.

❖ When the change of occupancy is to an equal or lesser hazard, the height and area of the existing building is not at issue. This can, however, create an interesting scenario where the new occupancy is housed in a facility with a height or area that would exceed that allowable height and area for new construction for that use. For instance, a Type IIB, Group S-1 building that was constructed to be 17,500 square feet (1626 m^2) could be converted entirely to an Occupancy Group M, even though the maximum allowable area for the Type IIB construction for Group M is 12,500 square feet (1161 m^2).

1012.5.3 Fire barriers. When a change of occupancy classification is made to a higher hazard category as shown in Table 1012.5, fire barriers in separated mixed use buildings shall comply with the fire-resistance requirements of the *International Building Code*.

Exception: Where the fire barriers are required to have a 1-hour fire-resistance rating, existing wood lath and plaster in good condition or existing $^1/_2$-inch-thick (12.7 mm) gypsum wallboard shall be permitted.

❖ This provision is in addition to the provisions of Sections 1012.1.1.1 and 1012.1.1.2. This provision requires fire barriers in compliance with the IBC in a mixed-use building where the proposed change of occupancy is made to a higher hazard category. The exception recognizes the ability of existing plaster and lath construction to provide a 1-hour fire-resistance rating.

1012.6 Exterior wall fire-resistance ratings. Hazard categories in regard to fire-resistance ratings of exterior walls shall be in accordance with Table 1012.6.

❖ The third hazard classification area is the exposure of the exterior walls, relating to the need to protect surrounding buildings from fire conflagration. This section requires that hazard categories for fire exposure of exterior walls are established in accordance with Table 1012.6. See also the commentary to Table 1012.6.

TABLE 1012.6
EXPOSURE OF EXTERIOR WALLS HAZARD CATEGORIES

RELATIVE HAZARD	OCCUPANCY CLASSIFICATION
1 (Highest Hazard)	H
2	F-1, M, S-1
3	A, B, E, I, R
4 (Lowest Hazard)	F-2, S-2, U

❖ Table 1012.6 groups the uses in the relative hazard levels based primarily on the requirements of Section 705, as well as IBC Table 602.

INTERNATIONAL CODE COUNCIL®
Copyright © 2015 ICC. ALL RIGHTS RESERVED. Accessed by David Dammon on Jun 21, 2017 12:30:52 PM pursuant to License Agreement with ICC. No further reproduction or distribution authorized. ANY UNAUTHORIZED REPRODUCTION OR DISTRIBUTION IS A VIOLATION OF THE FEDERAL COPYRIGHT ACT AND THE LICENSE AGREEMENT, AND SUBJECT TO CIVIL AND CRIMINAL PENALTIES THEREUNDER.

1012.6.1 Exterior wall rating for change of occupancy classification to a higher hazard category. When a change of occupancy classification is made to a higher hazard category as shown in Table 1012.6, exterior walls shall have fire resistance and exterior opening protectives as required by the *International Building Code.*

Exception: A 2-hour fire-resistance rating shall be allowed where the building does not exceed three stories in height and is classified as one of the following groups: A-2 and A-3 with an occupant load of less than 300, B, F, M or S.

❖ Consistent with the general rule throughout this chapter for a change of occupancy classification to a higher hazard category, the exterior wall rating is required to meet the ratings called for by the IBC for new construction. The exception is somewhat academic. These occupancy classifications are never required to have a 3-hour fire-resistance rating on exterior walls.

1012.6.2 Exterior wall rating for change of occupancy classification to an equal or lesser hazard category. When a change of occupancy classification is made to an equal or lesser hazard category as shown in Table 1012.6, existing exterior walls, including openings, shall be accepted.

❖ The exterior wall fire-resistance rating is allowed to remain without change when the change of occupancy classification is to an equal or lesser hazard category. Again, this is in keeping with the philosophy that no change is needed when the hazard to the building is not increased by the change or alteration of the building.

1012.6.3 Opening protectives. Openings in exterior walls shall be protected as required by the *International Building Code*. Where openings in the exterior walls are required to be protected because of their distance from the lot line, the sum of the area of such openings shall not exceed 50 percent of the total area of the wall in each story.

Exceptions:

1. Where the *International Building Code* permits openings in excess of 50 percent.
2. Protected openings shall not be required in buildings of Group R occupancy that do not exceed three stories in height and that are located not less than 3 feet (914 mm) from the lot line.
3. Where exterior opening protectives are required, an automatic sprinkler system throughout may be substituted for opening protection.
4. Exterior opening protectives are not required when the change of occupancy group is to an equal or lower hazard classification in accordance with Table 1012.6.

❖ At first glance, this provision would seem to contradict the provision in Section 1012.6.2, which states that opening protectives need not change for the change of occupancy to an equal or lesser hazard classification. However, Exception 4 eliminates that apparent contradiction. Still, it should be remembered that this requirement would apply in all cases where change is to a higher hazard category as described in Section 1012.6.1. The significance of this section is that it imposes a maximum area of openings to be 50 percent of the wall area when the fire separation distance requires opening protectives, contrary to the percentages given by IBC Table 705.8.

Exception 1 allows a higher percentage when the separation distance is such that the IBC would otherwise allow a greater distance than 50 percent. Exception 2 relates to the separation distances and requirements allowed by the *International Residential Code*® (IRC®). Exception 3 is consistent with, albeit more liberal than, the trade-off provided for automatic sprinkler systems given by IBC Table 705.8.

1012.7 Enclosure of vertical shafts. Enclosure of vertical shafts shall be in accordance with Sections 1012.7.1 through 1012.7.4.

❖ Section 1012.7 outlines the requirements for the enclosure of vertical shafts in the building.

1012.7.1 Minimum requirements. Vertical shafts shall be designed to meet the *International Building Code* requirements for atriums or the requirements of this section.

❖ Minimum requirements are set forth in Section 1012.7.1, which offers two options for compliance. First, vertical shafts are required to be designed to meet the requirements for atriums as prescribed in IBC Section 404. As an alternative, vertical shafts can comply with the requirements contained in the remaining subsections.

1012.7.2 Stairways. When a change of occupancy classification is made to a higher hazard category as shown in Table 1012.4, interior stairways shall be enclosed as required by the *International Building Code*.

Exceptions:

1. In other than Group I occupancies, an enclosure shall not be required for openings serving only one adjacent floor and that are not connected with corridors or stairways serving other floors.
2. Unenclosed existing stairways need not be enclosed in a continuous vertical shaft if each story is separated from other stories by 1-hour fire-resistance-rated construction or approved wired glass set in steel frames and all exit corridors are sprinklered. The openings between the corridor and the occupant space shall have at least one sprinkler head above the openings on the tenant side. The sprinkler system shall be permitted to be supplied from the domestic water-supply systems, provided the system is of adequate pressure, capacity, and sizing for the combined domestic and sprinkler requirements.
3. Existing penetrations of stairway enclosures shall be accepted if they are protected in accordance with the *International Building Code*.

❖ Specific requirements for stairways are found in Section 1012.7.2. When the change of occupancy is to a

INTERNATIONAL CODE COUNCIL®
Copyright © 2015 ICC. ALL RIGHTS RESERVED. Accessed by David Dammon on Jun 21, 2017 12:30:52 PM pursuant to License Agreement with ICC. No further reproduction or distribution authorized. ANY UNAUTHORIZED REPRODUCTION OR DISTRIBUTION IS A VIOLATION OF THE FEDERAL COPYRIGHT ACT AND THE LICENSE AGREEMENT, AND SUBJECT TO CIVIL AND CRIMINAL PENALTIES THEREUNDER.

higher hazard category, as shown in Table 1012.4, compliance with the IBC is required. Three exceptions are provided. Exceptions 1 and 2 provide equivalencies to the requirements for atrium enclosures. Exception 3 allows existing penetrations into the stairway if they are protected in accordance with the IBC.

1012.7.3 Other vertical shafts. Interior vertical shafts other than stairways, including but not limited to elevator hoistways and service and utility shafts, shall be enclosed as required by the *International Building Code* when there is a change of use to a higher hazard category as specified in Table 1012.4.

Exceptions:

1. Existing 1-hour interior shaft enclosures shall be accepted where a higher rating is required.
2. Vertical openings, other than stairways, in buildings of other than Group I occupancy and connecting less than six stories shall not be required to be enclosed if the entire building is provided with an approved automatic sprinkler system.

❖ Section 1012.7.3 outlines compliance requirements for all interior vertical shafts other than stairways. Again, there are minimum requirements when an increase in the hazard category occurs. Two exceptions are provided. Exception 1 is the same rating allowed for atriums, as stated in Section 404.6 of the IBC. Exception 2 is unique to the code and would allow five stories to be connected without a shaft enclosure when the building is sprinklered throughout. Most likely, Exception 2 would encourage the installation of a sprinkler system in buildings that would not have otherwise been required.

1012.7.4 Openings. All openings into existing vertical shaft enclosures shall be protected by fire assemblies having a fire protection rating of not less than 1 hour and shall be maintained self-closing or shall be automatic-closing by actuation of a smoke detector. All other openings shall be fire protected in an approved manner. Existing fusible link-type automatic door-closing devices shall be permitted in all shafts except stairways if the fusible link rating does not exceed 135°F (57°C).

❖ Section 1012.7.4 prescribes a minimum fire protection rating of 1 hour for all openings into vertical shaft enclosures. All openings, such as those created by doors, archways or window-type openings, are to be self-closing or automatic closing by actuation of a smoke detector. Any other openings are required to be protected by an approved method. The use of fusible links is acceptable to be used to control the closing of doors in all vertical shafts, except for stairways. This acceptance is limited to fusible links that have a temperature rating not exceeding 135°F (57°C).

1012.8 Accessibility. *Existing buildings* that undergo a change of group or occupancy classification shall comply with this section.

Exception: Type B dwelling or sleeping units required by Section 1107 of the *International Building Code* are not required to be provided in existing buildings and facilities undergoing a *change of occupancy* in conjunction with less than a Level 3 *alteration*.

❖ This section establishes accessibility requirements for existing buildings that undergo a change of occupancy. There are two thresholds to determine accessibility requirements: partial change of occupancy and complete change of occupancy.

Note that there is an exception provided to Section 1012.8 that essentially states that only a change of occupancy with a Level 3 alteration would be required to provide Type B dwelling units. See the commentary to Section 906.2 for more discussion on the applicability of the Type B accessible units in accordance with IBC Section 1107.

1012.8.1 Partial change in occupancy. Where a portion of the building is changed to a new occupancy classification, any *alteration* shall comply with Sections 705, 806 and 906, as applicable.

❖ Accessibility requirements for partial changes of occupancy must comply with the requirements for alterations in Sections 705, 806 and 906, as applicable. These sections approach the application of accessibility provisions to a facility that is altered by broadly requiring full conformance to new construction, meaning full accessibility is expected. Exceptions are then provided to indicate the conditions under which less than full accessibility is permitted. For more information, see the commentary to Sections 705, 806 and 906.

1012.8.2 Complete change of occupancy. Where an entire building undergoes a *change of occupancy*, it shall comply with Section 1012.8.1 and shall have all of the following accessible features:

1. At least one accessible building entrance.
2. At least one accessible route from an accessible building entrance to *primary function* areas.
3. Signage complying with Section 1111 of the *International Building Code*.
4. Accessible parking, where parking is provided.
5. At least one accessible passenger loading zone, where loading zones are provided.
6. At least one accessible route connecting accessible parking and accessible passenger loading zones to an accessible entrance.

Where it is *technically infeasible* to comply with the new construction standards for any of these requirements for a change of group or occupancy, the above items shall conform

INTERNATIONAL CODE COUNCIL®
Copyright © 2015 ICC. ALL RIGHTS RESERVED. Accessed by David Dammon on Jun 21, 2017 12:30:52 PM pursuant to License Agreement with ICC. No further reproduction or distribution authorized. ANY UNAUTHORIZED REPRODUCTION OR DISTRIBUTION IS A VIOLATION OF THE FEDERAL COPYRIGHT ACT AND THE LICENSE AGREEMENT, AND SUBJECT TO CIVIL AND CRIMINAL PENALTIES THEREUNDER.

to the requirements to the maximum extent technically feasible.

Exception: The accessible features listed in Items 1 through 6 are not required for an accessible route to Type B units.

❖ For a project that involves a complete change of occupancy, full compliance with accessibility requirements is expected and reasonable, except where technical infeasibility can be demonstrated. If full compliance is technically infeasible, the element must be made accessible to the fullest extent that is feasible. This is consistent with the general approach that has always been taken relative to other matters regulated by the code.

In addition to accessibility requirements in the space, an accessible route is required to that space. Six items that make up that accessible route are listed. The intent is to provide the bare minimum to get people from a point of arrival into the building and to the area of the new use. This is not based on any specific provisions of the *Americans with Disabilities Act Accessibility Guidelines* (ADAAG), but parallels the intent of the requirements for the removal of barriers. If the altered area would not be required to be served by an accessible route in new construction, an accessible route would not be required for a change of occupancy (see Section 705.1.13).

If the area undergoing a change of occupancy is being altered and contains a primary function area, the accessible route provisions in Section 705.2 are also applicable. This would not only require an accessible route to the change of occupancy area, but would also include possible upgrades to toilet rooms and drinking fountains that serve the area. See the commentary to Section 705.2 for additional information on the exceptions.

If the change of occupancy results in Type B dwelling units being provided, the exception permits the building to be exempt from providing the additional accessible route requirements listed in this section. This allowance addresses concerns of site impracticality for existing structures. This also reinforces the intent that the inclusion of Type B units is not meant to require elevators when alterations are performed on upper floors in nonelevator buildings (see IBC Section 1107.7). These areas would have been exempted if built new under the Fair Housing Act (FHA) and the IBC, and should continue to be exempted.

Bibliography

The following resource material was used in the preparation of the commentary for this chapter of the code.

FEMA 368, *NEHRP Recommended Provisions for Seismic Regulations for New Buildings and Other Structures, Part 1*. Washington, DC: Federal Emergency Management Agency, 2001.

INTERNATIONAL CODE COUNCIL®

Copyright © 2015 ICC. ALL RIGHTS RESERVED. Accessed by David Dammon on Jun 21, 2017 12:30:52 PM pursuant to License Agreement with ICC. No further reproduction or distribution authorized. ANY UNAUTHORIZED REPRODUCTION OR DISTRIBUTION IS A VIOLATION OF THE FEDERAL COPYRIGHT ACT AND THE LICENSE AGREEMENT, AND SUBJECT TO CIVIL AND CRIMINAL PENALTIES THEREUNDER.

Chapter 11: Additions

General Comments

An "Addition" is defined in Chapter 2 as "an extension or increase in the floor area, number of stories, or height of a building or structure." Chapter 11 contains the minimum requirements for an addition that is not separated from the existing building by a fire wall.

Purpose

Chapter 11 provides the requirements for additions, which correlate to the requirements for new construction. There are, however, some exceptions that are specifically stated in this chapter.

SECTION 1101 GENERAL

1101.1 Scope. An *addition* to a building or structure shall comply with the *International Codes* as adopted for new construction without requiring the *existing building* or structure to comply with any requirements of those codes or of these provisions, except as required by this chapter. Where an *addition* impacts the *existing building* or structure, that portion shall comply with this code.

❖ This section states the scope of Chapter 11 and indicates that the addition, but not the existing, unaltered portion of the building or structure, must meet the requirements of the current editions of the *International Codes*®. An "Addition" is defined in Chapter 2 as "an extension or increase in floor area, number of stories, or height of a building or structure."

The scope of this chapter would not include a situation where a new building is erected immediately adjacent to an existing building and they are separated by a fire wall, which would create separate buildings and not an addition to the existing structure. The new building must be designed to comply with the technical provisions of the *International Building Code*® (IBC®), not with the provisions of this chapter.

1101.2 Creation or extension of nonconformity. An *addition* shall not create or extend any nonconformity in the *existing building* to which the *addition* is being made with regard to accessibility, structural strength, fire safety, means of egress, or the capacity of mechanical, plumbing, or electrical systems.

❖ If an existing building is noncompliant in any way that may be affected by the addition, or if the addition causes a noncompliant situation, the addition is not allowed to be constructed without correction of the noncompliance. For example, if the existing building has a travel distance that is greater than allowed to an exit and the addition adds to that distance, the addition is not allowed unless the total travel distance is brought to within that which is required by the code. Another example is that an addition that blocks an existing required exit would not be allowed.

An existing structure that is of a type of construction that does not comply with the height and area limitations of IBC Section 503 may not be added to, unless the type of construction is upgraded or the allowable building height and area is increased through the addition of a sprinkler system throughout both the existing building and the addition as allowed by Chapter 5 of the IBC.

1101.3 Other work. Any *repair* or *alteration* work within an *existing building* to which an *addition* is being made shall comply with the applicable requirements for the work as classified in Chapter 5.

❖ This section requires that any existing structure to which an addition is made must comply with the provisions of Chapter 5 for the type of work performed as defined in that chapter. In other words, the provisions of Chapters 7, 8, 9, 10 and 12 would also apply depending on whether the work is a Level 1, 2 or 3 alteration, a change of occupancy or a renovation to a historic building, etc.

SECTION 1102 HEIGHTS AND AREAS

1102.1 Height limitations. No *addition* shall increase the height of an *existing building* beyond that permitted under the applicable provisions of Chapter 5 of the *International Building Code* for new buildings.

❖ See the commentary to Section 1102.2.

1102.2 Area limitations. No *addition* shall increase the area of an *existing building* beyond that permitted under the applicable provisions of Chapter 5 of the *International Building Code* for new buildings unless fire separation as required by the *International Building Code* is provided.

Exception: In-filling of floor openings and nonoccupiable appendages such as elevator and exit stairway shafts shall be permitted beyond that permitted by the *International Building Code*.

❖ The purposes of Sections 1102.1 and 1102.2 are to establish that, with one exception, the height and area of an existing building plus its addition must comply with the requirements for a new building of its

INTERNATIONAL CODE COUNCIL®
Copyright © 2015 ICC. ALL RIGHTS RESERVED. Accessed by David Dammon on Jun 21, 2017 12:30:52 PM pursuant to License Agreement with ICC. No further reproduction or distribution authorized. ANY UNAUTHORIZED REPRODUCTION OR DISTRIBUTION IS A VIOLATION OF THE FEDERAL COPYRIGHT ACT AND THE LICENSE AGREEMENT, AND SUBJECT TO CIVIL AND CRIMINAL PENALTIES THEREUNDER.

same occupancy and type of construction in accordance with Chapter 5 of the IBC.

A building with a proposed addition is to be evaluated based on the type of construction of the existing building or the addition, whichever is the lower type. When reviewing for compliance with IBC Table 506.2, see IBC Section 602.1.1.

Commentary Figure 1102.2(1) shows an example of this situation. If a sprinkler system is not planned for both the existing building and the addition, the proposed addition does not meet the requirements of IBC Table 506.2. The area limitation in IBC Table 506.2 for the nonsprinklered existing construction Type VB, Group F-1 is 8,500 square feet (789.7 m^2) and the total proposed area is 11,000 square feet (1022 m^2). The area evaluation is based on Type VB construction, even though the proposed addition is Type VA construction, because the allowable area in IBC Table 506.2 for Type VB construction is less than the allowable area for Type VA construction. One way to satisfy the requirements of IBC Table 506.2 is to upgrade the type of construction of the existing building to Type VA, which has an allowable area of 14,000 square feet (130 m^2). Another solution is to install an automatic sprinkler system that complies with NFPA 13 throughout the building. The revised allowable area of the building would be 34,000 square feet based on the use of sprinklers. This is more than the proposed building area of 11,000 square feet (1022 m^2).

The exception allows undesirable existing openings in floors that are no longer being utilized to be filled in without resulting in an increase to the building area. Additionally, areas of the building not normally occupied, such as exit stairs and elevator shafts, would not need to be counted into the building area. The logic being that those spaces do not contribute to the fire hazard in the building and some credit can be given for such spaces.

1102.3 Fire protection systems. Existing fire areas increased by the *addition* shall comply with Chapter 9 of the *International Building Code*.

❖ If an addition increases an existing building's fire area or areas to a level that is required to have fire protection systems by IBC Chapter 9, then those fire areas must comply with the new construction requirements, both in the addition and the existing building. The code provides no exceptions to the sprinkler threshold limits given in IBC Chapter 9.

Example: A restaurant is being increased from 4,000 square feet to 6,000 square feet (372 m^2 to 557 m^2), with no intervening fire barriers in the facility. IBC Section 903.2.1.2 requires sprinklers for this Group A-2 occupancy when the fire area is greater than 5,000 square feet (465 m^2). Therefore, with the new addition, the threshold of 5,000 square feet (465 m^2) is exceeded, and sprinklers are required throughout the building.

One area that is somewhat unclear is, where IBC Chapter 9 has a zero square footage threshold for sprinklers such as for Group R occupancies, whether the sprinklers would be required throughout the addition as well as the existing building or simply be limited to the addition.

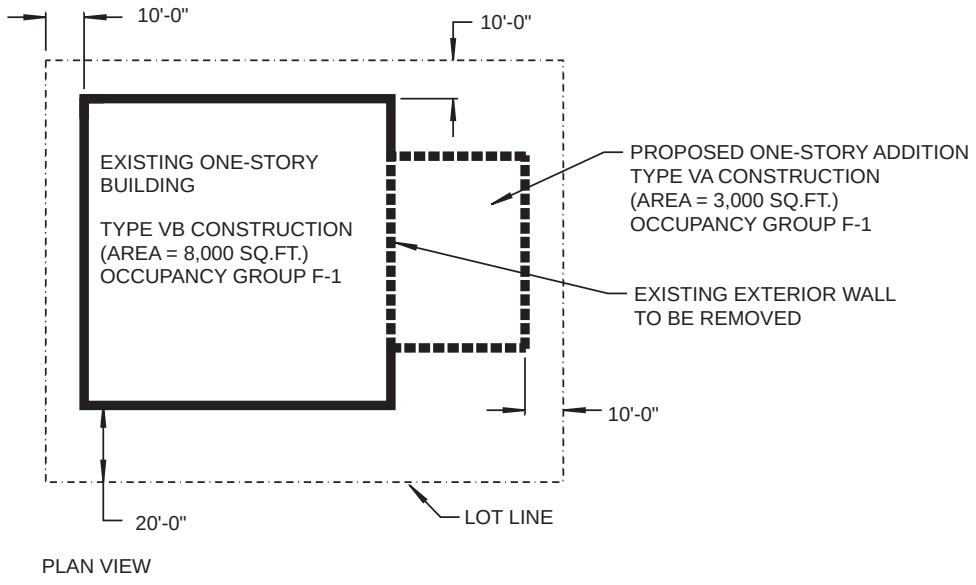

For SI: 1 inch = 25.4 mm, 1 foot = 304.8 mm,
1 square foot = 0.0929 m^2.

Figure 1102.2(1)
EXISTING BUILDING WITH ADDITION

INTERNATIONAL CODE COUNCIL®
Copyright © 2015 ICC. ALL RIGHTS RESERVED. Accessed by David Dammon on Jun 21, 2017 12:30:52 PM pursuant to License Agreement with ICC. No further reproduction or distribution authorized. ANY UNAUTHORIZED REPRODUCTION OR DISTRIBUTION IS A VIOLATION OF THE FEDERAL COPYRIGHT ACT AND THE LICENSE AGREEMENT, AND SUBJECT TO CIVIL AND CRIMINAL PENALTIES THEREUNDER.

SECTION 1103
STRUCTURAL

[BS] 1103.1 Compliance with the International Building Code. *Additions* to *existing buildings* or structures are new construction and shall comply with the *International Building Code*.

❖ An addition, by its very nature, is new construction so the addition itself must comply with the IBC requirements for new construction.

[BS] 1103.2 Additional gravity loads. Existing structural elements supporting any additional gravity loads as a result of additions shall comply with the *International Building Code*.

Exceptions:

1. Structural elements whose stress is not increased by more than 5 percent.
2. Buildings of Group R occupancy with no more than five dwelling units or sleeping units used solely for residential purposes where the *existing building* and the *addition* comply with the conventional light-frame construction methods of the *International Building Code* or the provisions of the *International Residential Code*.

❖ Unless the existing building was initially designed with future expansion in mind, it is very likely that an addition will impose loads on some portion of the existing structure that exceed the member's capacity and require reinforcement or other mitigation. In any event, where an addition results in added gravity load supported by an existing structure, the affected structural components must be checked to verify that they satisfy the requirements of the IBC for a new structure. Verification for gravity loading indicates compliance with the majority of Chapter 16 of the IBC except for seismic and wind loads.

There are two exceptions to full compliance with the IBC. One exception allows for an increase in gravity loads as long as the existing members affected by the increased loads do not experience an increase in stress of more than 5 percent. The other exception permits smaller Group R buildings and their additions that comply with either the *International Residential Code*® (IRC®) or the conventional light-frame construction provisions of the IBC. This is a prescriptive alternative to the loading provisions also permitted for new construction in IBC Chapter 16. See the limitations on these provisions in the IRC or IBC Chapter 23.

[BS] 1103.3 Lateral force-resisting system. The lateral force-resisting system of *existing buildings* to which additions are made shall comply with Sections 1103.3.1, 1103.3.2 and 1103.3.3.

Exceptions:

1. Buildings of Group R occupancy with no more than five dwelling or sleeping units used solely for residential purposes where the *existing building* and the *addition* comply with the conventional light-frame construction methods of the *International Building Code* or the provisions of the *International Residential Code*.
2. Any existing lateral load-carrying structural element whose demand-capacity ratio with the addition considered is not more than 10 percent greater than its demand-capacity ratio with the addition ignored shall be permitted to remain unaltered. For purposes of this exception, comparisons of demand-capacity ratios and calculation of design lateral loads, forces and capacities shall account for the cumulative effects of additions and alterations since original construction. For purposes of calculating demand-capacity ratios, the demand shall consider applicable load combinations involving *International Building Code*-level seismic forces in accordance with Section 301.1.4.1.

❖ An addition to an existing building requires the lateral force-resisting system to comply with Section 1103.3.1, if a story is added or the height is increased; Section 1103.3.2, if the addition is horizontal such as an extension of the floor area; or Section 1103.3.3, if there is a voluntary addition of structural elements to the lateral force-resisting system.

There are two exceptions to the previously listed requirements. One exception permits smaller Group R buildings, with not more than five dwelling or sleeping units and their additions, that comply with either the IRC or the conventional light-frame construction provisions of the IBC. Exception 2 permits an addition that is not structurally independent without alteration to the seismic-force-resisting system of the existing structure, provided the demand-capacity ratio is increased no more than 10 percent in any structural element. The demand is determined using the load combinations including wind and seismic effects. By considering the demand-capacity ratio, any decrease in lateral resistance is accounted for as well. This exception is the same as that allowed for additions in Section 402.4 in the prescriptive method.

Previously, this exception was story based versus element based. The intent is that elements triggered for lateral upgrade by Section 1103.3.1 or 1103.3.2 should be exempt based on their individual demand-capacity ratios, not on the overall story shear. A focus on story shear can miss critical individual elements in vertical additions and can be difficult to define in the case of horizontal additions. The *SEAOC Blue Book* and the *Uniform Building Code*® define "Story shear" as "the summation of design lateral forces above the story under consideration."

[BS] 1103.3.1 Vertical addition. Any element of the lateral force-resisting system of an *existing building* subjected to an increase in vertical or lateral loads from the vertical *addition* shall comply with the *International Building Code* wind provisions and the *International Building Code*-level seismic forces specified in Section 301.1.4.1 of this code.

❖ Where the addition of a story or an increase in height imposes additional loads, either vertical or lateral, on

INTERNATIONAL CODE COUNCIL®
Copyright © 2015 ICC. ALL RIGHTS RESERVED. Accessed by David Dammon on Jun 21, 2017 12:30:52 PM pursuant to License Agreement with ICC. No further reproduction or distribution authorized. ANY UNAUTHORIZED REPRODUCTION OR DISTRIBUTION IS A VIOLATION OF THE FEDERAL COPYRIGHT ACT AND THE LICENSE AGREEMENT, AND SUBJECT TO CIVIL AND CRIMINAL PENALTIES THEREUNDER.

portions of the existing lateral force-resisting system, this section requires that those members meet two specific lateral-load requirements: the wind-load requirements of the IBC and the IBC-level seismic provisions as specified in Section 301.1.4.1. Section 301.1.4.1 provides scoping language for using the IBC and ASCE 41 for seismic evaluation and design, which provides alternative options for compliance consistent with the overall goal of the code. Any element not meeting these provisions requires replacement, reinforcement or other measures in order to comply. See the commentary to Section 301.1.4.1 for more information.

[BS] 1103.3.2 Horizontal addition. Where horizontal *additions* are structurally connected to an existing structure, all lateral force-resisting elements of the existing structure affected by such *addition* shall comply with the *International Building Code* wind provisions and the IBC-level seismic forces specified in Section 301.1.4.1 of this code.

❖ A horizontal addition that is isolated from the existing structure is self-supporting and, therefore, has no impact on the existing structure. Where this is not the case, portions of the existing lateral force-resisting system affected by the addition are required to meet two specific lateral load requirements: the wind-load requirements of the IBC and the IBC-level seismic provisions as specified in Section 301.1.4.1. Section 301.1.4.1 provides scoping language for using the IBC and ASCE 41 for seismic evaluation and design, which provides alternative options for compliance consistent with the overall goal of the code. Any element not meeting these provisions requires replacement, reinforcement or other measures in order to comply. See the commentary to Section 301.1.4.1 for more information.

Compliance with the seismic load provisions of Section 301.1.4.1 necessitates consideration of many aspects of the new and existing construction. One of these is that in rigid diaphragm structures, the story shear is distributed according to the relative stiffness of the vertical elements of the lateral force system (rather than merely using the tributary area, as is permitted for flexible diaphragms). This requires consideration of torsional effects, as well as direct shear. This is illustrated in Commentary Figure 1103.3.2, which shows a horizontal addition is likely to affect the center of mass as well as the structure's center of rigidity. It is important, therefore, that the net effect of the resulting torsion on the combined structure be considered. This section simply reiterates what is already a required step in the seismic analysis of any rigid diaphragm structure.

[BS] 1103.3.3 Voluntary addition of structural elements to improve the lateral force-resisting system. Voluntary addition of structural elements to improve the lateral force-resisting system of an *existing building* shall comply with Section 807.6.

❖ Strictly speaking, the definition of "Addition" in Section 202 would not include adding structural elements voluntarily in order to improve a building's resistance to lateral forces. This is more likely to be considered an alteration. For good measure, this section cross references the provision under alterations that apply to voluntary upgrades.

[BS] 1103.4 Snow drift loads. Any structural element of an *existing building* subjected to additional loads from the effects of snow drift as a result of an *addition* shall comply with the *International Building Code*.

Exceptions:

1. Structural elements whose stress is not increased by more than 5 percent.
2. Buildings of Group R occupancy with no more than five dwelling units or sleeping units used solely for residential purposes where the *existing building* and the *addition* comply with the conventional light-frame construction methods of the *International Building Code* or the provisions of the *International Residential Code*.

❖ An addition with a roof level different than that of an adjoining existing roof necessitates the consideration of the potential for drifting snow. Commentary Figure 1103.4 illustrates this condition. If the addition is the portion of the building having the higher roof (side A in Commentary Figure 1103.4) then the potential impact on the existing roof structure (side B) is the greatest. If the addition is the lower portion of the building (side B), then the impact of drifting snow on the existing structure is limited only to those members, if any, of the existing structure that support the new roof. The magnitude of the drift loading that must be included is a function of building geometry. All things being equal, the larger the difference in roof heights, the higher the code-required drift loading.

IBC Chapter 16 requires the use of ASCE 7 procedures for snow drifts. The exceptions in this section of the code are similar to those of Section 1103.2, and

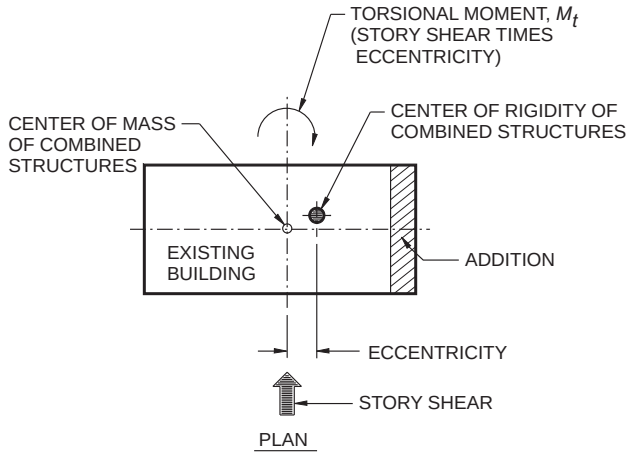

Figure 1103.3.2
HORIZONTAL ADDITIONS

INTERNATIONAL CODE COUNCIL®
Copyright © 2015 ICC. ALL RIGHTS RESERVED. Accessed by David Dammon on Jun 21, 2017 12:30:52 PM pursuant to License Agreement with ICC. No further reproduction or distribution authorized. ANY UNAUTHORIZED REPRODUCTION OR DISTRIBUTION IS A VIOLATION OF THE FEDERAL COPYRIGHT ACT AND THE LICENSE AGREEMENT, AND SUBJECT TO CIVIL AND CRIMINAL PENALTIES THEREUNDER.

could be construed as already requiring compliance with all the snow-load provisions of the IBC, including snow drifts. For good measure, this section makes it clear that the impact of this commonly occurring condition of existing elements must be considered.

[BS] 1103.5 Flood hazard areas. *Additions* and *foundations* in *flood hazard areas* shall comply with the following requirements:

1. For horizontal *additions* that are structurally interconnected to the *existing building*:
   1.1. If the *addition* and all other proposed work, when combined, constitute *substantial improvement*, the *existing building* and the *addition* shall comply with Section 1612 of the *International Building Code*, or Section R322 of the *International Residential Code*, as applicable.
   1.2. If the *addition* constitutes *substantial improvement*, the *existing building* and the *addition* shall comply with Section 1612 of the *International Building Code*, or Section R322 of the *International Residential Code*, as applicable.
2. For horizontal *additions* that are not structurally interconnected to the *existing building*:
   2.1. The *addition* shall comply with Section 1612 of the *International Building Code*, or Section R322 of the *International Residential Code*, as applicable.
   2.2. If the *addition* and all other proposed work, when combined, constitute *substantial improvement*, the *existing building* and the *addition* shall comply with Section 1612 of the *International Building Code*, or Section R322 of the *International Residential Code*, as applicable.
3. For vertical *additions* and all other proposed work that, when combined, constitute *substantial improvement*, the *existing building* shall comply with Section 1612 of the *International Building Code*, or Section R322 of the *International Residential Code*, as applicable.
4. For a raised or extended foundation, if the foundation work and all other proposed work, when combined, constitute *substantial improvement*, the *existing building* shall comply with Section 1612 of the *International Building Code,* or Section R322 of the *International Residential Code*, as applicable.
5. For a new foundation or replacement foundation, the foundation shall comply with Section 1612 of the *International Building Code* or Section R322 of the *International Residential Code*, as applicable.

❖ The definition of "Flood hazard area" provided in Section 202 is taken from the IBC and establishes where this provision applies. In these areas, additions that separately or in combination with other repairs or alterations are considered to be "substantial improvements" (see the definition of "Substantial improvement" in Section 202) require the entire structure to meet the flood-resistant provisions of IBC Section 1612 or IRC Section R322. Buildings are considered to have undergone substantial improvement when the cost of the improvement is 50 percent or more of its market value before the improvement is undertaken. A horizontal addition that is structurally separated must always comply with the flood-resistant provisions of the IBC or IRC even if it does not qualify as a substantial improvement, and this is merely a restatement of the requirement in Section 1103.1 for additions to comply with the IBC.

IBC Section 1612 and IRC Section R322 address requirements for buildings in designated flood hazard areas. The design and construction are required to be in accordance with ASCE 24, which in turn references the flood loading given in ASCE 7. Through use of these provisions, communities meet a significant portion of the flood plain management regulation requirements necessary to participate in the National

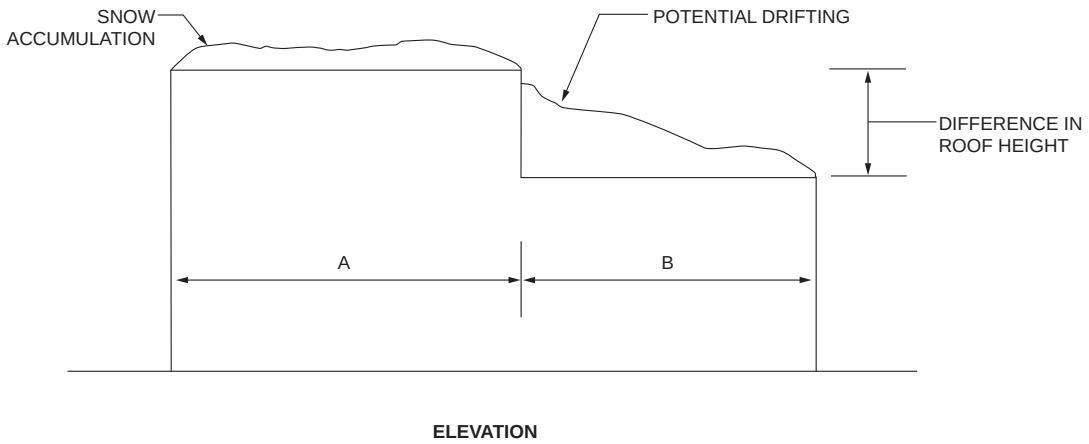

Figure 1103.4
DRIFTING SNOW DUE TO AN ADDITION

INTERNATIONAL CODE COUNCIL®
Copyright © 2015 ICC. ALL RIGHTS RESERVED. Accessed by David Dammon on Jun 21, 2017 12:30:52 PM pursuant to License Agreement with ICC. No further reproduction or distribution authorized. ANY UNAUTHORIZED REPRODUCTION OR DISTRIBUTION IS A VIOLATION OF THE FEDERAL COPYRIGHT ACT AND THE LICENSE AGREEMENT, AND SUBJECT TO CIVIL AND CRIMINAL PENALTIES THEREUNDER.

Flood Insurance Program (NFIP) (see the definition of "Substantial improvement" in Chapter 2). The requirements of Section 1103.5 correlate to the Federal Emergency Management Agency (FEMA) requirements for additions and existing buildings.

SECTION 1104
SMOKE ALARMS IN OCCUPANCY GROUPS R AND I-1

1104.1 Smoke alarms in existing portions of a building. Where an *addition* is made to a building or structure of a Group R or I-1 occupancy, the *existing building* shall be provided with smoke alarms as required by Section 1103.8 of the *International Fire Code* or Section R314 of the *International Residential Code* as applicable.

❖ Section 1104.1 requires that, for buildings containing Group R and I-1 occupancies, the existing building added to must comply with Section 1103.8 of the *International Fire Code*® (IFC®) or IRC Section R314 (if single family). Note that the addition, in accordance with Section 1101.1, would need to comply with the provisions in IBC Chapter 9 for new buildings pertaining to smoke alarms.

SECTION 1105
ACCESSIBILITY

1105.1 Minimum requirements. Accessibility provisions for new construction shall apply to additions. An addition that affects the accessibility to, or contains an area of, *primary function* shall comply with the requirements of Sections 705, 806 and 906, as applicable.

❖ Additions must comply with new construction. However, an addition is also an alteration to an existing building; therefore, accessible route provisions for existing buildings are applicable (see commentary, Sections 705 and 806).

Example: A new dining area is added to a restaurant. All accessible elements in the addition must be constructed accessible. If the accessible route to the addition is through the existing building, the route must be evaluated to see if elements need to be altered to meet accessibility requirements. In addition, any toilet rooms or drinking fountains that serve the addition would have to be evaluated for accessibility. This would include the route to these elements, the toilet rooms themselves, the fixtures in the toilet room and the drinking fountains.

1105.2 Accessible dwelling units and sleeping units. Where Group I-1, I-2, I-3, R-1, R-2 or R-4 dwelling or sleeping units are being added, the requirements of Section 1107 of the *International Building Code* for accessible units apply only to the quantity of spaces being added.

❖ This section sets forth the rate for providing accessible dwelling or sleeping units in Groups I-1, I-2, I-3, R-1, R-2 and R-4 where such facilities are being added. Assuming that the required number of accessible units is not already provided, the number of accessible units to be incorporated is based on the number of dwelling and sleeping units being added. The technical criteria for accessible units is found in ICC/ANSI A117.1-2010, Chapters 3 through 9.

Example: A nursing home is expanding through an addition that will have 30 sleeping units. Based on that number, IBC Section 1107.5.2.1 would require at least 50 percent to be accessible units. Therefore, 15 sleeping units would be required to be accessible.

1105.3 Type A dwelling or sleeping units. Where more than 20 Group R-2 dwelling or sleeping units are being added, the requirements of Section 1107 of the *International Building Code* for Type A units and Chapter 9 of the *International Building Code* for visible alarms apply only to the quantity of the spaces being added.

❖ This section sets forth the rate for providing Type A dwelling or sleeping units in Group R-2 where such facilities are added. The number of Type A units to be incorporated is based on the number being added. For example, if 24 units are being added to a Group R-2 apartment building, 2 percent of the 24 units being altered would be required to be designed to conform to Type A unit requirements. This would require only one unit to be added. The technical criteria for Type A units is found in ICC/ANSI A117.1-2010, Chapter 10. This section also references visible and audible alarm requirements in IBC Chapter 9. IBC Section 907.5.2.3.4 contains requirements for alarms in Group R-2 units. The visible alarm requirements would only require that such units have the capability to support the notification appliances of the visible alarms.

1105.4 Type B dwelling or sleeping units. Where four or more Group I-1, I-2, R-1, R-2, R-3 or R-4 dwelling or sleeping units are being added, the requirements of Section 1107 of the *International Building Code* for Type B units and Chapter 9 of the *International Building Code* for visible alarms apply only to the quantity of spaces being added.

❖ This section sets forth the rate for providing Type B dwelling or sleeping units in Groups I-1, I-2, I-3, R-1, R-2 and R-4 where such facilities are added to a building. The number of Type B units is based on the number being added. For example, if a nursing home was adding six sleeping units, those six units would be required to meet Type B requirements. The dwelling or sleeping units in the existing building do not need to meet Type B requirements. The technical criteria for Type B units is found in ICC A117.1, Chapter 10. This section also references visible and audible alarm requirements in IBC Chapter 9 for only the sleeping or dwelling units being added. Sleeping accommodations in Groups I-1 and R-1 are required to have visible alarms in accordance with IBC Table 907.5.2.3.2. An addition with 20 new sleeping or dwelling units in a Group R-1 would require four of

INTERNATIONAL CODE COUNCIL®
Copyright © 2015 ICC. ALL RIGHTS RESERVED. Accessed by David Dammon on Jun 21, 2017 12:30:52 PM pursuant to License Agreement with ICC. No further reproduction or distribution authorized. ANY UNAUTHORIZED REPRODUCTION OR DISTRIBUTION IS A VIOLATION OF THE FEDERAL COPYRIGHT ACT AND THE LICENSE AGREEMENT, AND SUBJECT TO CIVIL AND CRIMINAL PENALTIES THEREUNDER.

the units to be equipped with visible alarms. IBC Section 907.5.2.3.3 also contains requirements for alarms in Group R-2 units but focuses on future capabilities of such systems to support visible alarms.

SECTION 1106
ENERGY CONSERVATION

1106.1 Minimum requirements. *Additions* to *existing buildings* shall conform to the energy requirements of the *International Energy Conservation Code* or *International Residential Code* as they relate to new construction.

❖ This section is merely a pointer to the applicable requirements of the *International Energy Conservation Code*® (IECC®) or IRC, as applicable, with regard to energy conservation. No additional requirements are provided here; simply a reminder that requirements exist in other codes for these additions.

INTERNATIONAL CODE COUNCIL®
Copyright © 2015 ICC. ALL RIGHTS RESERVED. Accessed by David Dammon on Jun 21, 2017 12:30:52 PM pursuant to License Agreement with ICC. No further reproduction or distribution authorized. ANY UNAUTHORIZED REPRODUCTION OR DISTRIBUTION IS A VIOLATION OF THE FEDERAL COPYRIGHT ACT AND THE LICENSE AGREEMENT, AND SUBJECT TO CIVIL AND CRIMINAL PENALTIES THEREUNDER.

INTERNATIONAL CODE COUNCIL®
Copyright © 2015 ICC. ALL RIGHTS RESERVED. Accessed by David Dammon on Jun 21, 2017 12:30:52 PM pursuant to License Agreement with ICC. No further reproduction or distribution authorized. ANY UNAUTHORIZED REPRODUCTION OR DISTRIBUTION IS A VIOLATION OF THE FEDERAL COPYRIGHT ACT AND THE LICENSE AGREEMENT, AND SUBJECT TO CIVIL AND CRIMINAL PENALTIES THEREUNDER.

Chapter 12: Historic Buildings

General Comments

This section provides some overall exceptions from code requirements when the building in question has historic value. The most important criterion for the application of this section is that the building must be essentially accredited as being of historic significance by a qualified third party or agency. Usually, this is done by a state or local authority after careful review of the historical value of the building. Most, if not all, states have such authorities, as do many local jurisdictions. The agencies with such authority can be located at the state or local government level or through the local chapter of the American Institute of Architects (AIA). Other considerations include the structural condition of the building (i.e., whether the building is structurally sound), its proposed use, its impact on life safety and how the intent, if not the letter, of the code will be achieved.

Purpose

A large number of existing buildings and structures do not comply with current building code requirements for new construction. Although many of these buildings are potentially salvageable, rehabilitation is often cost prohibitive because they may not be able to comply with all of the requirements for new construction. At the same time, it is necessary to regulate construction in existing buildings that undergo additions, alterations, renovations, extensive repairs or change of occupancy. Such activity represents an opportunity to ensure that new construction complies with current building codes and that existing conditions are maintained, at a minimum, to their current level of compliance or are improved as required. To accomplish this objective, and to make the rehabilitation process easier, this chapter allows for a controlled departure from full compliance with the technical codes, without compromising the minimum standards for fire prevention and life safety features of the rehabilitated building.

SECTION 1201 GENERAL

1201.1 Scope. It is the intent of this chapter to provide means for the preservation of *historic buildings*. Historical buildings shall comply with the provisions of this chapter relating to their *repair*, *alteration*, relocation and *change of occupancy*.

❖ This section establishes that this chapter deals with the requirements for the repair, alteration, relocation and change of occupancy of buildings previously defined by the code as historic. Note that the code would not regard a reconstruction of a historic building as qualifying for treatment under this chapter, even if the building is reconstructed entirely from original, stored materials and assemblies.

[BS] 1201.2 Report. A *historic building* undergoing *repair*, *alteration*, or *change of occupancy* shall be investigated and evaluated. If it is intended that the building meet the requirements of this chapter, a written report shall be prepared and filed with the *code official* by a registered design professional when such a report is necessary in the opinion of the *code official*. Such report shall be in accordance with Chapter 1 and shall identify each required safety feature that is in compliance with this chapter and where compliance with other chapters of these provisions would be damaging to the contributing historic features. For buildings assigned to Seismic Design Category D, E or F, a structural evaluation describing, at a minimum, the vertical and horizontal elements of the lateral force-resisting system and any strengths or weaknesses therein shall be prepared. Additionally, the report shall describe each feature that is not in compliance with these provisions and shall demonstrate how the intent of these provisions is complied with in providing an equivalent level of safety.

❖ This section provides for a report that acts as a technical backup for the code official's judgment. The intent is to be able to retain a record of the decisions and the basis for those decisions for future reference.

The definition of "Historic building" refers to listing/eligibility for national register, state designation, inclusion in a survey or contributing to a national or state historic district. Contributing features may be limited to those features in nominations, historic structure reports or other such documents. This represents a systematized approach for evaluating proposals of equivalent performance (see the definition of "Historic building" in Section 202).

1201.3 Special occupancy exceptions—museums. When a building in Group R-3 is also used for Group A, B, or M purposes such as museum tours, exhibits, and other public assembly activities, or for museums less than 3,000 square feet (279 m^2), the *code official* may determine that the occupancy is Group B when life-safety conditions can be demonstrated in accordance with Section 1201.2. Adequate means of egress in such buildings, which may include a means of maintaining doors in an open position to permit egress, a limit

INTERNATIONAL CODE COUNCIL®
Copyright © 2015 ICC. ALL RIGHTS RESERVED. Accessed by David Dammon on Jun 21, 2017 12:30:52 PM pursuant to License Agreement with ICC. No further reproduction or distribution authorized. ANY UNAUTHORIZED REPRODUCTION OR DISTRIBUTION IS A VIOLATION OF THE FEDERAL COPYRIGHT ACT AND THE LICENSE AGREEMENT, AND SUBJECT TO CIVIL AND CRIMINAL PENALTIES THEREUNDER.

on building occupancy to an occupant load permitted by the means of egress capacity, a limit on occupancy of certain areas or floors, or supervision by a person knowledgeable in the emergency exiting procedures, shall be provided.

❖ This section acknowledges that dwellings used as museums and other public assembly activities are a special case.

The provision allows a small museum or historic house in a museum use to demonstrate life safety using operational controls that would not be permitted in most other uses. This is likely to be effective because of the high degree of supervision that would be necessary for security reasons in this occupancy. In this case, the building occupancy is classified as Occupancy Group B even though it may contain assembly or mercantile uses. It would also permit the occasional use of a residential building for tours and museum use.

[BS] 1201.4 Flood hazard areas. In *flood hazard areas*, if all proposed work, including repairs, work required because of a *change of occupancy*, and *alterations*, constitutes *substantial improvement*, then the *existing building* shall comply with Section 1612 of the *International Building Code*, or Section R322 of the *International Residential Code*, as applicable.

Exception: If an *historic building* will continue to be an *historic building* after the proposed work is completed, then the proposed work is not considered a *substantial improvement*. For the purposes of this exception, an *historic building* is:

1. Listed or preliminarily determined to be eligible for listing in the National Register of Historic Places;
2. Determined by the Secretary of the U.S. Department of Interior to contribute to the historical significance of a registered historic district or a district preliminarily determined to qualify as a historic district; or
3. Designated as historic under a state or local historic preservation program that is approved by the Department of Interior.

❖ In flood areas, historic buildings that meet one of the exceptions are not required to comply with the flood provisions, including the substantial improvement provision, as long as the building continues to be designated as historic. However, if plans to substantially improve a historic building would result in the loss of its designation as a "historic building," the building would be required to be brought into compliance with the requirements for flood hazard areas. The code official may require applicants to consult with the appropriate historic preservation authority to determine whether proposed work will jeopardize a structure's historic designation. To the extent practicable, owners of historic buildings may wish to incorporate flood-resistant provisions when such buildings undergo repairs and alterations. If the work on a historic structure does not cause the loss of its eligibility as a historic building as a result of the proposed work, then the work would not be considered as a substantial improvement; therefore, the building would not have to comply with Section 1612 of the *International Building Code*® (IBC®) or Section R322 of the *International Residential Code*® (IRC®), as applicable.

SECTION 1202
REPAIRS

1202.1 General. Repairs to any portion of an *historic building* or structure shall be permitted with original or like materials and original methods of construction, subject to the provisions of this chapter. Hazardous materials, such as asbestos and lead-based paint, shall not be used where the code for new construction would not permit their use in buildings of similar occupancy, purpose and location.

❖ Repair with like materials may be needed for aesthetic reasons or to meet material conservation needs. It is important to note that original or like materials can be used, but these materials cannot contain substances such as asbestos that are hazardous and would not be permitted under the current building code for new construction.

1202.2 Unsafe conditions. Conditions determined by the *code official* to be *unsafe* shall be remedied. No work shall be required beyond what is required to remedy the *unsafe* conditions.

❖ This section requires the repair of identified unsafe conditions in historic buildings without triggering secondary requirements. It is important to note the term "unsafe" in this section as it is specifically defined in Section 202. It is a more general term than the term "dangerous," which is specific to structural conditions.

1202.3 Relocated buildings. Foundations of relocated *historic buildings* and structures shall comply with the *International Building Code*. Relocated *historic buildings* shall otherwise be considered an *historic building* for the purposes of this code. Relocated *historic buildings* and structures shall be sited so that exterior wall and opening requirements comply with the *International Building Code* or with the compliance alternatives of this code.

❖ The foundation of a relocated building is a new structure; there is no reason why it should not comply with provisions for new construction. However, compared with code provisions that treat a relocated building as a new building, the rest of the building is still treated as a historic structure. In relocation, siting is, to some degree, a new design decision. Relationship of walls and openings to property lines is, therefore, reasonably able to be brought into compliance with the fire separation requirements of the code.

1202.4 Replacement. Replacement of existing or missing features using original materials shall be permitted. Partial

INTERNATIONAL CODE COUNCIL®
Copyright © 2015 ICC. ALL RIGHTS RESERVED. Accessed by David Dammon on Jun 21, 2017 12:30:52 PM pursuant to License Agreement with ICC. No further reproduction or distribution authorized. ANY UNAUTHORIZED REPRODUCTION OR DISTRIBUTION IS A VIOLATION OF THE FEDERAL COPYRIGHT ACT AND THE LICENSE AGREEMENT, AND SUBJECT TO CIVIL AND CRIMINAL PENALTIES THEREUNDER.

replacement for repairs that match the original in configuration, height, and size shall be permitted.

Replacement glazing in hazardous locations shall comply with the safety glazing requirements of Chapter 24 of the *International Building Code.*

Exception: Glass block walls, louvered windows, and jalousies repaired with like materials.

❖ In some cases, historic materials have not been tested for fire resistance or structural performance, but have been shown to perform adequately when in use. An excellent example would be a railing, where spacing, height or end conditions would not meet modern requirements. If sections of a railing are missing, or if repairs are needed, the railing is not required to meet the code provisions for new construction; however, the second paragraph of this section requires upgrading to the safety glazing requirements of IBC Chapter 24 since there is an established hazard and the cost to fabricate a historically correct reproduction of a proper material is negligible.

SECTION 1203
FIRE SAFETY

1203.1 Scope. *Historic buildings* undergoing *alterations*, *changes of occupancy*, or that are moved shall comply with Section 1203.

❖ This section recognizes the unique aspects associated with older historical structures. It reinforces the importance of the means of egress pathway while granting the code official some latitude in accepting some degree of variance in the egress components. (e.g., direction of exit door swing, egress path width and height).

1203.2 General. Every *historic building* that does not conform to the construction requirements specified in this code for the occupancy or use and that constitutes a distinct fire hazard as defined herein shall be provided with an approved automatic fire-extinguishing system as determined appropriate by the *code official*. However, an automatic fire-extinguishing system shall not be used to substitute for, or act as an alternative to, the required number of exits from any *facility*.

❖ Fire-extinguishing systems are effective substitutes for some requirements that are typical for new construction, particularly passive systems such as rated doors and corridors. By slowing or suppressing the development of a fire, a sprinkler system will make passive fire resistance unnecessary. This section also establishes that an automatic sprinkler system is not considered appropriate as a substitution for a reduction in the required number of exits.

1203.3 Means of egress. Existing door openings and corridor and stairway widths less than those specified elsewhere in this code may be approved, provided that, in the opinion of the *code official*, there is sufficient width and height for a person to pass through the opening or traverse the means of egress. When approved by the *code official*, the front or main exit doors need not swing in the direction of the path of exit travel, provided that other approved means of egress having sufficient capacity to serve the total occupant load are provided.

❖ This provision would permit the continuance of a structure no more hazardous than before rehabilitation, with minimum standards of usability. Provisions for new construction would require that exit doors swing in the direction of exit travel for an occupant load exceeding 50.

1203.4 Transoms. In fully sprinklered buildings of Group R-1, R-2 or R-3 occupancy, existing transoms in corridors and other fire-resistance-rated walls may be maintained if fixed in the closed position. A sprinkler shall be installed on each side of the transom.

❖ This permits the retention of nonwired/nonrated glass in historic transoms in rated walls in residential occupancies where protected by an automatic fire sprinkler system throughout the building. This section requires the transoms to be closed and specific protection on both sides of the transoms. This approach basically affords a level of safety equivalent to the passive protection provided by a rated corridor or other rated construction.

1203.5 Interior finishes. The existing finishes of walls and ceilings shall be accepted when it is demonstrated that they are the historic finishes.

❖ While existing wood paneling or other finishes may not meet flame spread requirements for walls or ceilings, this section allows the finishes to remain in place if they can be shown to be historic in nature. If not, there should be no reason not to address the flame spread rating of the materials since the sensitivity of the historic nature of the building is no longer an issue.

1203.6 Stairway enclosure. In buildings of three stories or less, exit enclosure construction shall limit the spread of smoke by the use of tight-fitting doors and solid elements. Such elements are not required to have a fire-resistance rating.

❖ Enclosure of stairways to control smoke would provide an improvement, but permitting the enclosure to be nonrated would allow for use of traditional materials. Example enclosures include plain or wired glass, smoke-activated doors and similar assemblies. This provides for flexibility, but requires at least a minimum level of passive smoke control to protect stairways for exiting.

1203.7 One-hour fire-resistant assemblies. Where 1-hour fire-resistance-rated construction is required by these provisions, it need not be provided, regardless of construction or occupancy, where the existing wall and ceiling finish is wood or metal lath and plaster.

❖ The substitution of standard, old-fashioned lath and plaster for 1-hour-rated wall construction is a well-

INTERNATIONAL CODE COUNCIL®
Copyright © 2015 ICC. ALL RIGHTS RESERVED. Accessed by David Dammon on Jun 21, 2017 12:30:52 PM pursuant to License Agreement with ICC. No further reproduction or distribution authorized. ANY UNAUTHORIZED REPRODUCTION OR DISTRIBUTION IS A VIOLATION OF THE FEDERAL COPYRIGHT ACT AND THE LICENSE AGREEMENT, AND SUBJECT TO CIVIL AND CRIMINAL PENALTIES THEREUNDER.

established alternative and is considered as meeting the intent of the code to provide a safe path for exit.

1203.8 Glazing in fire-resistance-rated systems. Historic glazing materials are permitted in interior walls required to have a 1-hour fire-resistance rating where the opening is provided with approved smoke seals and the area affected is provided with an automatic sprinkler system.

❖ Glazing of interior partitions can be vulnerable because of potential leakage around the edge of the glazing or because of heat-induced glass breakage. This provision addresses both concerns. The sprinkler system should be provided on both sides of the wall containing the glazing.

1203.9 Stairway railings. Grand stairways shall be accepted without complying with the handrail and guard requirements. Existing handrails and guards at all stairways shall be permitted to remain, provided they are not structurally *dangerous*.

❖ New construction requirements for handrail and guardrail height have increased over the years. However, since an ornamental railing is typically difficult to modify, particularly without significant architectural change, the code permits historic railings that are essentially safe to remain. This also would allow handrail profiles that may not meet current grip requirements, provided they are not structurally dangerous.

1203.10 Guards. Guards shall comply with Sections 1203.10.1 and 1203.10.2.

❖ This section establishes that guards in existing historic structures can remain in the configuration in which they were originally constructed. Guards would still have to conform to the restrictions in effect at the time the building was built.

1203.10.1 Height. Existing guards shall comply with the requirements of Section 604.

❖ Section 604 requires that repairs maintain the existing level of protection.

1203.10.2 Guard openings. The spacing between existing intermediate railings or openings in existing ornamental patterns shall be accepted. Missing elements or members of a guard may be replaced in a manner that will preserve the historic appearance of the building or structure.

❖ Requirements for voids in railings and grilles have become more stringent over the years. The spacing of a balustrade or ornamental pattern of a grille is frequently a significant contributor to the building's historic character. This provision enables the retention and repair of these elements.

1203.11 Exit signs. Where exit sign or egress path marking location would damage the historic character of the building, alternative exit signs are permitted with approval of the *code official*. Alternative signs shall identify the exits and egress path.

❖ Signs and exit path identification are still required, but location is permitted to be flexible within the limits of functionality.

1203.12 Automatic fire-extinguishing systems. Every historical building that cannot be made to conform to the construction requirements specified in the *International Building Code* for the occupancy or use and that constitutes a distinct fire hazard shall be deemed to be in compliance if provided with an approved automatic fire-extinguishing system.

Exception: When the *code official* approves an alternative life-safety system.

❖ This term is the generic name for all types of automatic fire-extinguishing systems, including the most common type: the automatic sprinkler system. See IBC Section 904 for requirements for particular alternative automatic fire-extinguishing systems, such as wet-chemical, dry-chemical, foam, carbon dioxide, halon and clean agent systems.

Note that the alternative is specific to the construction requirements (i.e., height and area limitations, construction type and passive fire resistance). Section 1203.2 states that an automatic fire-extinguishing system is not a substitute for the reduction in the number of exits from a facility.

The exception would allow the utilization of an alternative life safety system; however, it would have to first be approved by the code official or the local authority having jurisdiction.

SECTION 1204
ALTERATIONS

1204.1 Accessibility requirements. The provisions of Sections 705, 806 and 906, as applicable, shall apply to facilities designated as historic structures that undergo *alterations*, unless *technically infeasible*. Where compliance with the requirements for accessible routes, entrances or toilet rooms would threaten or destroy the historic significance of the building or *facility*, as determined by the *code official*, the alternative requirements of Sections 1204.1.1 through 1204.1.4 for that element shall be permitted.

Exception: Type B dwelling or sleeping units required by Section 1107 of the *International Building Code* are not required to be provided in historical buildings.

❖ The regulations of individual adopting jurisdictions may provide additional guidance or limitations on the use of this section. The basic Americans with Disabilities Act (ADA) requirements permit exceptions and alternatives for historic buildings. These minimum requirements provide reasonable accommodations for building users.

For this section to be applicable, the building must be registered as historic. Historic buildings are treated much the same as provided for in Sections 705, 806 and 906, in that a historic building that is altered is expected to comply with accessibility requirements, unless technical infeasibility can be demonstrated. However, this section also goes on to acknowledge that the historic character of a building may be adversely affected by strict compliance with accessibility provisions. For example, compliance

INTERNATIONAL CODE COUNCIL®
Copyright © 2015 ICC. ALL RIGHTS RESERVED. Accessed by David Dammon on Jun 21, 2017 12:30:52 PM pursuant to License Agreement with ICC. No further reproduction or distribution authorized. ANY UNAUTHORIZED REPRODUCTION OR DISTRIBUTION IS A VIOLATION OF THE FEDERAL COPYRIGHT ACT AND THE LICENSE AGREEMENT, AND SUBJECT TO CIVIL AND CRIMINAL PENALTIES THEREUNDER.

with door width requirements may necessitate the removal of an existing set of doors that is critical to the historic character of the building. To assist the code official in determining if the required provisions are detrimental to the historic significance, recommended guidelines have been incorporated into Appendix B, Section B101.

This section is intended to exempt such conditions in order to maintain the historic character of the building. Because some degree of accessibility is desired in all facilities, Sections 1204.1.1 through 1204.1.4 allow for alternatives. In addition, there is an exception that would exempt the Type B dwelling or sleeping unit requirements for historical buildings, including those undergoing a Level 3 alteration. This exception is important in that owners will not need to demonstrate that the addition of such units will threaten or destroy the historical character of the building.

In an effort to inform designers and owners of federal regulations that are not typically handled through the code enforcement process, information on the *Americans with Disabilities Act Accessibility Guidelines* (ADAAG) requirements for displays associated with historical buildings have been included in Appendix B, Section B101.5.

1204.1.1 Site arrival points. At least one accessible route from a site arrival point to an *accessible* entrance shall be provided.

❖ Full compliance would require an accessible route from all site arrival points. If this requirement would adversely affect the historical significance of the building, the available alternative is to provide an accessible route from one site arrival point to an accessible entrance.

1204.1.2 Multilevel buildings and facilities. An accessible route from an accessible entrance to public spaces on the level of the accessible entrance shall be provided.

❖ It is not required in building alteration that accessibility to spaces above or below the level of accessible entrance be provided. Full compliance for new construction might require an accessible route to levels above or below, as well as throughout, the entrance level. If this requirement would adversely affect the historical significance of the building, the alternative is to provide an accessible route from the accessible entrance to all spaces open to the public on the entrance level. If elevators are provided, but are not accessible, signage in accordance with IBC Section 1110.2 is required.

1204.1.3 Entrances. At least one main entrance shall be accessible.

Exceptions:

1. If a main entrance cannot be made accessible, an accessible nonpublic entrance that is unlocked while the building is occupied shall be provided; or
2. If a main entrance cannot be made accessible, a locked accessible entrance with a notification system or remote monitoring shall be provided.

❖ Although uniform building access is the rule for new construction, older buildings may have main entrances that are both inaccessible and a significant element of the building's character. In these cases, providing access by an alternative route is deemed to meet the primary intent of the accessibility regulations.

Full compliance would require 60 percent of the public entrances to be accessible, as well as any of the special types of entrances listed in Section 1205. If this requirement would adversely affect the historical significance of the building, only one main entrance is required to be made accessible. If a main entrance cannot be made accessible, then an employee or service entrance may serve as the accessible entrance, provided that it remains unlocked when the building is open. Alternatively, if the entrance is locked, some type of notification system (e.g., doorbell, intercom) or remote monitoring (e.g., security camera) is provided so that a person inside the facility would know to go to that entrance to admit someone. Signage must be provided at accessible and inaccessible entrances in accordance with IBC Sections 1110.1 and 1110.2.

1204.1.4 Toilet and bathing facilities. Where toilet rooms are provided, at least one accessible family or assisted-use toilet room complying with Section 1109.2.1 of the *International Building Code* shall be provided.

❖ If altering the existing facilities to be accessible would adversely affect the historical significance of the building, only one unisex bathroom that complies with the accessible family or assisted-use toilet/bathing requirements in IBC Section 1109.2.1 is required. Signage must be provided at inaccessible toilet rooms in accordance with IBC Section 1110.2.

SECTION 1205
CHANGE OF OCCUPANCY

1205.1 General. *Historic buildings* undergoing a *change of occupancy* shall comply with the applicable provisions of Chapter 10, except as specifically permitted in this chapter. When Chapter 10 requires compliance with specific requirements of Chapter 7, Chapter 8 or Chapter 9 and when those requirements are subject to the exceptions in Section 1202, the same exceptions shall apply to this section.

❖ Occupancy choice ideally minimizes code conflicts and the necessity for change. According to the Secretary of the Interior's *Standards for Treatment of Historic Properties*, "A property will be used as it was historically, or be given a new use that maximizes the retention of distinctive materials, features, spaces and spatial relationships." However, economic pres-

INTERNATIONAL CODE COUNCIL®
Copyright © 2015 ICC. ALL RIGHTS RESERVED. Accessed by David Dammon on Jun 21, 2017 12:30:52 PM pursuant to License Agreement with ICC. No further reproduction or distribution authorized. ANY UNAUTHORIZED REPRODUCTION OR DISTRIBUTION IS A VIOLATION OF THE FEDERAL COPYRIGHT ACT AND THE LICENSE AGREEMENT, AND SUBJECT TO CIVIL AND CRIMINAL PENALTIES THEREUNDER.

sures may dictate that a structure be used in a different occupancy than that for which it was intended.

1205.2 Building area. The allowable floor area for *historic buildings* undergoing a *change of occupancy* shall be permitted to exceed by 20 percent the allowable areas specified in Chapter 5 of the *International Building Code*.

❖ This section permits an allowable floor area in excess of 20 percent as required by the IBC. This is critical since changing the type of construction to be able to meet the current building area requirements may be very difficult and will likely affect the historical features of the building. This section does not prohibit the use of area increases from automatic sprinkler systems and frontage.

1205.3 Location on property. Historic structures undergoing a change of use to a higher hazard category in accordance with Section 1012.6 may use alternative methods to comply with the fire-resistance and exterior opening protective requirements. Such alternatives shall comply with Section 1201.2.

❖ When changing to a higher hazard category, a building should be evaluated for means to manage the new or increased hazards. Literal code compliance may not be the only way, or the best way, to accomplish this objective in a historic building.

1205.4 Occupancy separation. Required occupancy separations of 1 hour may be omitted when the building is provided with an approved automatic sprinkler system throughout.

❖ Substitution of automatic extinguishing systems for passive protection is established as an acceptable procedure.

1205.5 Roof covering. Regardless of occupancy or use group, roof-covering materials not less than Class C, when tested in accordance with ASTM E108 or UL 790, shall be permitted where a fire-retardant roof covering is required.

❖ Roof covering requirements are a spread-of-fire issue: first, to prevent fire spread to the building in question and, second, to keep burning brands generated by a fire in that building from igniting other buildings in a general conflagration. However, if a limited number of buildings do not meet this requirement, the hazard is not significantly increased.

1205.6 Means of egress. Existing door openings and corridor and stairway widths less than those that would be acceptable for nonhistoric buildings under these provisions shall be approved, provided that, in the opinion of the *code official*, there is sufficient width and height for a person to pass through the opening or traverse the exit and that the capacity of the exit system is adequate for the occupant load, or where other operational controls to limit occupancy are approved by the *code official*.

❖ This provision would permit the continued use of a structure that is no more hazardous than before rehabilitation, with minimum standards of usability.

1205.7 Door swing. When approved by the *code official*, existing front doors need not swing in the direction of exit travel, provided that other approved exits having sufficient capacity to serve the total occupant load are provided.

❖ Provisions for new construction would require that exit doors swing in the direction of exit travel for an occupant load exceeding 50. This section prescribes a method by which existing entry doors can be allowed to swing into the building rather than in the direction of egress travel.

1205.8 Transoms. In corridor walls required by these provisions to be fire-resistance rated, existing transoms may be maintained if fixed in the closed position, and fixed wired glass set in a steel frame or other approved glazing shall be installed on one side of the transom.

Exception: Transoms conforming to Section 1203.4 shall be accepted.

❖ These alternatives would be used primarily by nonresidential occupancies, as residential occupancies would use Section 1203.4.

1205.9 Finishes. Where interior finish materials are required to have a flame spread index of Class C or better, when tested in accordance with ASTM E84 or UL 723, existing nonconforming materials shall be surfaced with approved fire-retardant paint or finish.

Exception: Existing nonconforming materials need not be surfaced with an approved fire-retardant paint or finish where the building is equipped throughout with an automatic sprinkler system installed in accordance with the *International Building Code* and the nonconforming materials can be substantiated as being historic in character.

❖ This section sets a minimum flame spread index for interior finishes in historic structures. As an option, fire-retardant paint can be used to make the current historic materials comply. Fire retardants have the effect of slowing the development and spread of fire. The exception, which requires an automatic sprinkler system, can be used where conditions are unsuitable for the use of intumescent paint or varnish or other fire-retardant finishes.

1205.10 One-hour fire-resistant assemblies. Where 1-hour fire-resistance-rated construction is required by these provisions, it need not be provided, regardless of construction or occupancy, where the existing wall and ceiling finish is wood lath and plaster.

❖ The substitution of standard lath and plaster construction for 1-hour fire-resistance-rated wall construction is a well-established alternative. Pressed tin ceilings are an example of this issue. Some State Historic Preservation Offices (SHPO) may provide additional guidance on this subject and alternatives.

1205.11 Stairways and guards. Existing stairways shall comply with the requirements of these provisions. The *code official* shall grant alternatives for stairways and guards if

INTERNATIONAL CODE COUNCIL®
Copyright © 2015 ICC. ALL RIGHTS RESERVED. Accessed by David Dammon on Jun 21, 2017 12:30:52 PM pursuant to License Agreement with ICC. No further reproduction or distribution authorized. ANY UNAUTHORIZED REPRODUCTION OR DISTRIBUTION IS A VIOLATION OF THE FEDERAL COPYRIGHT ACT AND THE LICENSE AGREEMENT, AND SUBJECT TO CIVIL AND CRIMINAL PENALTIES THEREUNDER.

alternative stairways are found to be acceptable or are judged to meet the intent of these provisions. Existing stairways shall comply with Section 1203.

Exception: For buildings less than 3,000 square feet (279 m^2), existing conditions are permitted to remain at all stairways and guards.

❖ This provision gives an opportunity to analyze the stairways' functionality as an exit, and to alter only those elements that are judged to be unsafe or inadequate. The exception allows existing stairway conditions to remain for smaller buildings, taking into account the shorter time required for egress.

1205.12 Exit signs. The *code official* may accept alternative exit sign locations where such signs would damage the historic character of the building or structure. Such signs shall identify the exits and exit path.

❖ Signs and exit path identification are still required, but location is permitted to be flexible within limits of functionality.

[BS] 1205.13 Exit stair live load. Existing historic stairways in buildings changed to a Group R-1 or R-2 occupancy shall be accepted where it can be shown that the stairway can support a 75-pounds-per-square-foot (366 kg/m^2) live load.

❖ In the case of a building changed to a Group R occupancy, the likelihood is that stairs will be designed to a higher capacity than use would require. To substantiate that likelihood, structural calculations or other data using the structural properties of the existing stair construction could be submitted to the code official for approval.

1205.14 Natural light. When it is determined by the *code official* that compliance with the natural light requirements of Section 1011.1 will lead to loss of historic character or historic materials in the building, the existing level of natural lighting shall be considered acceptable.

❖ At the time the provisions requiring natural light in residential occupancies were enacted, they were a necessary public health reform. At this time, deviations from these requirements would probably not have health consequences.

1205.15 Accessibility requirements. The provisions of Section 1012.8 shall apply to facilities designated as historic structures that undergo a *change of occupancy*, unless *technically infeasible*. Where compliance with the requirements for accessible routes, ramps, entrances, or toilet rooms would threaten or destroy the historic significance of the building or *facility*, as determined by the authority having jurisdiction, the alternative requirements of Sections 1204.1.1 through 1204.1.4 for those elements shall be permitted

Exception: Type B dwelling or sleeping units required by Section 1107 of the *International Building Code* are not required to be provided in historical buildings.

❖ The regulations of individual adopting jurisdictions may provide additional guidance or limitations on the use of this section. The basic ADA requirements permit exceptions and alternatives for historic buildings. These minimum requirements provide reasonable accommodations for building users.

For this section to be applicable, the building must be registered as historic. Historic buildings are treated much the same as provided for in Section 1012.8, in that a historic building that has undergone a change of occupancy is expected to comply with accessibility requirements, unless technical infeasibility can be demonstrated. However, this section also goes on to acknowledge that the historic character of a building may be adversely affected by strict compliance with accessibility provisions. For example, compliance with door width requirements may necessitate the removal of an existing set of doors that is critical to the historic character of the building. To assist the code official in determining if the required provisions are detrimental to the historic significance, recommended guidelines have been incorporated into Appendix B, Section B101.

This section is intended to exempt such conditions in order to maintain the historic character of the building. Because some degree of accessibility is desired in all facilities, Sections 1204.1.1 through 1204.1.4 allow for alternatives. In addition, there is an exception that would exempt the Type B dwelling or sleeping unit requirements for historical buildings, including those undergoing a Level 3 alteration. This exception is important in that owners will not need to demonstrate that the addition of such units will threaten or destroy the historical character of the building.

In an effort to inform designers and owners of federal regulations that are not typically handled through the code enforcement process, information on the ADAAG requirements for displays associated with historical buildings have been included in Appendix B, Section B101.5.

SECTION 1206
STRUCTURAL

[BS] 1206.1 General. *Historic buildings* shall comply with the applicable structural provisions for the work as classified in Chapter 5.

Exception: The *code official* shall be authorized to accept existing floors and approve operational controls that limit the live load on any such floor.

❖ Any proposed work on historic buildings must comply with the structural provisions that apply based on the nature of that work. In other words, the classification of any proposed work is the first consideration. The only exception to this authorizes the code official to accept existing floors and approve operational controls that limit the live load on any such floor. This could be achieved by posting load limit signs in conspicuous locations. Actual loads on floors are typically less than the code-required loads. This section permits consideration of the actual loads as opposed to the probabilistic loads used for new design. Sec-

INTERNATIONAL CODE COUNCIL®
Copyright © 2015 ICC. ALL RIGHTS RESERVED. Accessed by David Dammon on Jun 21, 2017 12:30:52 PM pursuant to License Agreement with ICC. No further reproduction or distribution authorized. ANY UNAUTHORIZED REPRODUCTION OR DISTRIBUTION IS A VIOLATION OF THE FEDERAL COPYRIGHT ACT AND THE LICENSE AGREEMENT, AND SUBJECT TO CIVIL AND CRIMINAL PENALTIES THEREUNDER.

tion 1201.2 allows alternative approaches through the evaluation and report.

[BS] 1206.2 Dangerous conditions. Conditions determined by the *code official* to be *dangerous* shall be remedied. No work shall be required beyond what is required to remedy the *dangerous* condition.

❖ The definition of "Dangerous" in Section 202 gives five conditions under which a building, a portion of a building or an individual structural component is considered dangerous. Any building or structural component that is determined to be dangerous presents an unacceptable risk to public safety. Section 115.1 clarifies that a building considered dangerous is deemed to be unsafe, and in order for an unsafe building to remain in place the building must be made safe.

This section clarifies that in a historic building, any structural repair, strengthening or replacement applies only to the specific component(s) or portion(s) necessary to correct the dangerous condition(s).

Bibliography

The following resource materials were used in the preparation of the commentary for this chapter of the code.

2010 *ADA Standard for Accessible Design*. Washington, DC: Department of Justice, September 15, 2010.

36 CFR, Parts 1190 and 1191 Final Rule, *The Americans with Disabilities Act (ADA) Accessibility Guidelines; Architectural Barriers Act (ABA) Accessibility Guidelines*. Washington, DC: Architectural and Transportation Barriers Compliance Board, July 23, 2004.

Standards for Treatment of Historic Properties. Washington, DC: Secretary of the Interior, 1992.

INTERNATIONAL CODE COUNCIL®

Copyright © 2015 ICC. ALL RIGHTS RESERVED. Accessed by David Dammon on Jun 21, 2017 12:30:52 PM pursuant to License Agreement with ICC. No further reproduction or distribution authorized. ANY UNAUTHORIZED REPRODUCTION OR DISTRIBUTION IS A VIOLATION OF THE FEDERAL COPYRIGHT ACT AND THE LICENSE AGREEMENT, AND SUBJECT TO CIVIL AND CRIMINAL PENALTIES THEREUNDER.

Chapter 13: Relocated or Moved Buildings

General Comments

Chapter 13 is applicable to any building that is moved or relocated. This also includes relocatable buildings. Relocatable buildings are purposely built with the intention of being used multiple times at different sites. Relocatable buildings are defined in Chapter 2. The relocation of a building will automatically cause an inspection and evaluation process that enables the jurisdiction to determine the level of compliance with the *International Fire Code*® (IFC®) and the *International Property Maintenance Code*® (IPMC®). These two codes, by their scope, are applicable to existing buildings. Note the IFC has provisions that also apply to new construction in addition to existing buildings and facilities. The intent of this reference is to review the applicability of IFC Section 102 to determine the level of compliance necessary. For example, IFC Section 102.1, Item 3 requires that the construction and design provisions of Chapter 11 apply to existing buildings. This is the case regardless of any repair, remodeling, alteration work or change of occupancy occurring (see the IFC and IPMC).

Section 1302 addresses the building location of lot and structural considerations. Note that electrical, plumbing, and heating, ventilating and air conditioning (HVAC) are not addressed for relocated buildings. This means that relocated buildings are not necessarily required to improve the existing electrical, plumbing or HVAC systems beyond what is necessary for the appropriate interface with the public utilities at the new location, unless the code official discovers an unsafe or hazardous condition.

Section 1302.7 contains an inspection requirement that helps to determine the structural integrity of the structure's components and connections. The inspection will help the code official to properly evaluate a building to ensure it is safe for occupancy.

If the project scope involves repairs, alterations or a change of occupancy, in addition to moving or relocating the building, then it will also have to comply with the provisions of the chapters related to repair, alteration or change of occupancy. Any new construction of accessory elements to include decks, stairs, fences or accessory buildings must comply with the applicable code requirements for new construction.

Purpose

A large number of existing buildings and structures would not be able to comply with the current building code requirements for new construction. Although many of these buildings are potentially salvageable, relocation and rehabilitation is often cost prohibitive. It is necessary to regulate construction in existing buildings that undergo additions, alterations, renovations, extensive repairs or change of occupancy to ensure the safety of the public.

SECTION 1301 GENERAL

1301.1 Scope. This chapter provides requirements for relocated or moved structures, including relocatable buildings as defined in Chapter 2.

❖ This section states the scope of Chapter 13 and references the requirements for relocated or moved structures.

1301.2 Conformance. The building shall be safe for human occupancy as determined by the *International Fire Code* and the *International Property Maintenance Code*. Any *repair*, *alteration*, or *change of occupancy* undertaken within the moved structure shall comply with the requirements of this code applicable to the work being performed. Any field-fabricated elements shall comply with the requirements of the *International Building Code* or the *International Residential Code* as applicable.

❖ Moved structures that are subject to repair, alteration or change of occupancy are required to comply with the provisions of the code for such repair, alteration or change of occupancy. The prescriptive or performance method could potentially be applied to address such repairs, alterations or changes of occupancy. Additionally, it is important to note that the IFC and IPMC have provisions that are also applicable to existing buildings.

SECTION 1302 REQUIREMENTS

1302.1 Location on the lot. The building shall be located on the lot in accordance with the requirements of the *International Building Code* or the *International Residential Code* as applicable.

❖ Exterior walls of buildings may need fire-resistance ratings in accordance with either the *International Building Code*® (IBC®) (see IBC Section 705.5) or the *International Residential Code*® (IRC®) (see IRC Section R302), as applicable. The required rating in either code is based on the fire separation distance and, in accordance with the IBC, the occupancy and

INTERNATIONAL CODE COUNCIL®
Copyright © 2015 ICC. ALL RIGHTS RESERVED. Accessed by David Dammon on Jun 21, 2017 12:30:52 PM pursuant to License Agreement with ICC. No further reproduction or distribution authorized. ANY UNAUTHORIZED REPRODUCTION OR DISTRIBUTION IS A VIOLATION OF THE FEDERAL COPYRIGHT ACT AND THE LICENSE AGREEMENT, AND SUBJECT TO CIVIL AND CRIMINAL PENALTIES THEREUNDER.

type of construction must also be considered. Since the relocated building's exterior wall construction and, therefore, its fire-resistance rating are fixed, the building must be situated so that the exterior wall's fire-resistance rating is in compliance. Alternatively, the fire-resistance ratings and opening protectives of the existing exterior walls and openings can be upgraded as required to meet the IBC for the desired fire separation distance.

[BS] 1302.2 Foundation. The foundation system of relocated buildings shall comply with the *International Building Code* or the *International Residential Code* as applicable.

❖ The foundation for a relocated building is constructed at the building's new location. As new construction, the foundation, as well as the building's connection to it, is therefore required to comply with either the IBC or IRC, as applicable.

[BS] 1302.2.1 Connection to the foundation. The connection of the relocated building to the foundation shall comply with the *International Building Code* or the *International Residential Code* as applicable.

❖ See the commentary to Section 1302.2.

[BS] 1302.3 Wind loads. Buildings shall comply with *International Building Code* or *International Residential Code* wind provisions as applicable.

Exceptions:

1. Detached one- and two-family dwellings and Group U occupancies where wind loads at the new location are not higher than those at the previous location.
2. Structural elements whose stress is not increased by more than 10 percent.

❖ When a building is moved, it can be subjected to different design wind loading at the new location. The structure must be checked, therefore, to verify that it satisfies the wind-load criteria for a new structure using either the IBC or IRC, as applicable. There are two exceptions to full compliance, one of which exempts detached one- and two-family dwellings, as well as Group U occupancies if the design wind loads at the new location are no greater than those at the former location. Exception 2 allows additional wind loads that do not increase stresses in affected structural elements by more than 10 percent. Allowing overstresses of up to 10 percent in existing structural members has been a long-standing rule of thumb used by structural engineers.

[BS] 1302.4 Seismic loads. Buildings shall comply with *International Building Code* or *International Residential Code* seismic provisions at the new location as applicable.

Exceptions:

1. Structures in Seismic Design Categories A and B and detached one- and two-family dwellings in Seismic Design Categories A, B and C where the seismic loads at the new location are not higher than those at the previous location.
2. Structural elements whose stress is not increased by more than 10 percent.

❖ When a building is moved, the structure must satisfy the seismic load criteria for a new structure using either the IBC or IRC, as applicable at the new location. There are two exceptions to full compliance. Exception 1 exempts any building classified as Seismic Design Category A or B, in addition to detached one- and two-family dwellings classified as Seismic Design Category C, provided the design seismic loads at the new location are no greater than those at the former location. See the commentary to Section 301.1.4 for an explanation of seismic design category classification. While the design seismic loads are a function of several variables, with a relocated building that is not also undergoing a change of occupancy, the difference in the seismic load will merely be a function of two of those variables: the mapped spectral accelerations (e.g., S_S) and the site soil coefficients (e.g., F_a). In other words, comparing the design spectral accelerations (e.g., $S_{DS} = 2F_aS_S/3$) calculated at each site provides an indication of the difference in seismic loads. These parameters need to be determined using the IBC and are explained in the commentary to Section 301.1.4 (see IBC Section 1613.3). Exception 2 allows additional seismic loads that do not increase stresses in affected structural elements by more than 10 percent. Allowing overstresses of up to 10 percent in existing structural members has been a long-standing rule of thumb used by structural engineers.

[BS] 1302.5 Snow loads. Structures shall comply with *International Building Code* or *International Residential Code* snow loads as applicable where snow loads at the new location are higher than those at the previous location.

Exception: Structural elements whose stress is not increased by more than 5 percent.

❖ When a building is moved to a location that requires an increased design snow load, the structure must be checked to verify that it satisfies the snow load requirements for a new structure using either the IBC or IRC, as applicable. The exception to full compliance allows additional snow loading that does not increase stresses in affected structural elements by more than 5 percent. Allowing overstresses of up to 5 percent in existing structural members has been a long-standing rule of thumb used by structural engineers.

[BS] 1302.6 Flood hazard areas. If relocated or moved into a flood hazard area, structures shall comply with Section 1612 of the *International Building Code*, or Section R322 of the *International Residential Code*, as applicable.

❖ When a building is moved into a flood hazard area or relocated within a flood hazard area, the structure must satisfy the flood hazard criteria for a new structure under the IBC or the IRC, as applicable.

INTERNATIONAL CODE COUNCIL®
Copyright © 2015 ICC. ALL RIGHTS RESERVED. Accessed by David Dammon on Jun 21, 2017 12:30:52 PM pursuant to License Agreement with ICC. No further reproduction or distribution authorized. ANY UNAUTHORIZED REPRODUCTION OR DISTRIBUTION IS A VIOLATION OF THE FEDERAL COPYRIGHT ACT AND THE LICENSE AGREEMENT, AND SUBJECT TO CIVIL AND CRIMINAL PENALTIES THEREUNDER.

[BS] 1302.7 Required inspection and repairs. The code official shall be authorized to inspect, or to require approved professionals to inspect at the expense of the owner, the various structural parts of a relocated building to verify that structural components and connections have not sustained structural damage. Any repairs required by the code official as a result of such inspection shall be made prior to the final approval.

❖ In addition to the inspections required by Section 109, this section gives the code official the authority to inspect the structure of a relocated building to verify that structural components and connections have not been damaged. This is important because, in the course of being moved, the building can be subjected to movements and displacements that were never anticipated in the original structural design. In the event more specific expertise is required, the code official may require such inspections to be made by an approved professional at the owner's expense.

INTERNATIONAL CODE COUNCIL®
Copyright © 2015 ICC. ALL RIGHTS RESERVED. Accessed by David Dammon on Jun 21, 2017 12:30:52 PM pursuant to License Agreement with ICC. No further reproduction or distribution authorized. ANY UNAUTHORIZED REPRODUCTION OR DISTRIBUTION IS A VIOLATION OF THE FEDERAL COPYRIGHT ACT AND THE LICENSE AGREEMENT, AND SUBJECT TO CIVIL AND CRIMINAL PENALTIES THEREUNDER.

INTERNATIONAL CODE COUNCIL®
Copyright © 2015 ICC. ALL RIGHTS RESERVED. Accessed by David Dammon on Jun 21, 2017 12:30:52 PM pursuant to License Agreement with ICC. No further reproduction or distribution authorized. ANY UNAUTHORIZED REPRODUCTION OR DISTRIBUTION IS A VIOLATION OF THE FEDERAL COPYRIGHT ACT AND THE LICENSE AGREEMENT, AND SUBJECT TO CIVIL AND CRIMINAL PENALTIES THEREUNDER.

Chapter 14: Performance Compliance Methods

General Comments

Chapter 14 contains provisions for an alternative method of evaluation of additions, alterations or changes of occupancy in existing buildings and structures based on a numerical scoring system involving various safety issues and the degree of code compliance for each issue. This section contains the provisions to be included in the evaluation and the conditions on which that evaluation is based.

Neither the designer nor the code official can physically inspect and evaluate every aspect of an existing building or structure, because many of its features may be concealed in the construction. It is, therefore, necessary to emphasize those items that can be evaluated. There are 21 critically important elements that can be quantified and evaluated to determine the level of safety for an existing building.

This type of analysis provides the designer and the code official with a rational basis for establishing the safety of an existing building or structure without having physical access to every part of the building, documentation of the original design or the construction history of the building.

Purpose

A large number of existing buildings and structures do not comply with current building code requirements for new construction. Although many of these buildings are potentially salvageable, rehabilitation is often cost prohibitive because they may not be able to comply with all the requirements for new construction. At the same time, it is necessary to regulate construction in existing buildings that undergo additions, alterations, renovations, extensive repairs or changes of occupancy. Such activity represents an opportunity to ensure that new construction complies with the current building codes and that existing conditions are maintained, at a minimum, to their current level of compliance or are improved as required. To accomplish this objective, and to make the rehabilitation process easier, this chapter allows for a controlled departure from full compliance with the technical codes, without compromising the minimum standards for fire prevention and life safety features of the rehabilitated building.

SECTION 1401 GENERAL

1401.1 Scope. The provisions of this chapter shall apply to the *alteration*, *repair*, *addition* and *change of occupancy* of existing structures, including historic and moved structures, as referenced in Section 301.1.3. The provisions of this chapter are intended to maintain or increase the current degree of public safety, health and general welfare in *existing buildings* while permitting *repair*, *alteration*, *addition* and *change of occupancy* without requiring full compliance with Chapters 5 through 13, except where compliance with other provisions of this code is specifically required in this chapter.

❖ This section states the scope of Chapter 14 and references alternative methods of code compliance for alteration, repair, addition and change of occupancy of existing structures. Chapter 14 also describes the responsibilities for maintenance, repairs, compliance with other codes and periodic testing.

1401.1.1 Compliance with other methods. *Alterations*, *repairs*, *additions* and *changes of occupancy* to existing structures shall comply with the provisions of this chapter or with one of the methods provided in Section 301.1.

❖ This section references Section 301.1 for the options available to deal with alterations, repairs, additions and changes of occupancy to existing structures. The following briefly describes the options available, other than compliance with this chapter:

1. Subject to the approval of the code official, repairs and alterations can comply with the requirements of the code at the time the building was built.
2. Repairs, alterations, additions and changes of occupancy can comply with the prescriptive compliance method found in Chapter 4. These provisions are duplicated from Sections 3403 through 3411 of the *International Building Code*® (IBC®).
3. Repairs, alterations, additions and changes of occupancy can comply with the proportional approach where upgrades are triggered by the type and extent of the work. These requirements are found in Chapters 5 through 13.

Please note that these options are seperate and distinct and must not be combined in any way.

1401.2 Applicability. Structures existing prior to [**DATE TO BE INSERTED BY THE JURISDICTION. Note: it is recommended that this date coincide with the effective date of building codes within the jurisdiction**], in which there is work involving *addi-*

INTERNATIONAL CODE COUNCIL®
Copyright © 2015 ICC. ALL RIGHTS RESERVED. Accessed by David Dammon on Jun 21, 2017 12:30:52 PM pursuant to License Agreement with ICC. No further reproduction or distribution authorized. ANY UNAUTHORIZED REPRODUCTION OR DISTRIBUTION IS A VIOLATION OF THE FEDERAL COPYRIGHT ACT AND THE LICENSE AGREEMENT, AND SUBJECT TO CIVIL AND CRIMINAL PENALTIES THEREUNDER.

tions, *alterations* or *changes of occupancy* shall be made to conform to the requirements of this chapter or the provisions of Chapters 5 through 13. The provisions of Sections 1401.2.1 through 1401.2.5 shall apply to existing occupancies that will continue to be, or are proposed to be, in Groups A, B, E, F, I-2, M, R and S. These provisions shall not apply to buildings with occupancies in Group H or I-1, I-3 or I-4.

❖ The adopting jurisdiction is to insert the desired date for applicability as indicated in this section; therefore, Chapter 14 applies only to structures existing prior to the established date. The date that construction was first regulated through a comprehensive building code in the jurisdiction is recommended because buildings predating any building regulation are often not equipped with the types of systems and features that modern codes require. Newer buildings are more likely to be in closer compliance with contemporary code requirements for new construction. These older buildings are assumed to face more difficulty in achieving a minimum level of life safety and are more likely to need the greater flexibility of the provisions in Chapter 14. The occupancies that qualify for the provisions of Chapter 14 are listed in this section. Chapter 14 does not apply to Groups H and I-1, I-3, or I-4.

1401.2.1 Change in occupancy. Where an *existing building* is changed to a new occupancy classification and this section is applicable, the provisions of this section for the new occupancy shall be used to determine compliance with this code.

❖ When a building undergoes a change of occupancy classification and Chapter 14 is applied, the evaluation method in Chapter 14 must be applied to the new occupancy for determining whether the existing building meets the compliance alternative in the code. This recognizes that it is the proposed conditions and relative hazards that will exist and must be determined to be acceptable. It is also consistent with how changes of occupancy are regulated in the absence of the Chapter 14 alternative.

1401.2.2 Partial change in occupancy. Where a portion of the building is changed to a new occupancy classification and that portion is separated from the remainder of the building with fire barrier or horizontal assemblies having a fire-resistance rating as required by Table 508.4 of the *International Building Code* or Section R317 of the *International Residential Code* for the separate occupancies, or with approved compliance alternatives, the portion changed shall be made to conform to the provisions of this section.

Where a portion of the building is changed to a new occupancy classification and that portion is not separated from the remainder of the building with fire barriers or horizontal assemblies having a fire-resistance rating as required by Table 508.4 of the *International Building Code* or Section R317 of the *International Residential Code* for the separate occupancies, or with approved compliance alternatives, the provisions of this section which apply to each occupancy shall apply to the entire building. Where there are conflicting provisions, those requirements which secure the greater public safety shall apply to the entire building or structure.

❖ Where a portion of the building is changed to a new occupancy classification, the following options may be employed, dependent on the fire separation of the portion of the building from the remainder of the existing building.

Where a portion of the building is changed to a new occupancy classification and that portion is separated from the remainder of the building by a fire barrier that complies with the requirements for new construction, the new occupancy portion must be evaluated with the existing or proposed building design to be in full compliance with the provisions of Chapter 14. The remainder of the existing building must also be evaluated in accordance with Chapter 14. The mandatory safety scores for the new occupancy portion of the building and the existing occupancy are obtained from those listed in Table 1401.8 and are incorporated in the building's final evaluation score (see Table 1401.7).

Where a portion of the building is changed to a new occupancy classification and that portion is not separated by a fire barrier that complies with the requirements for new construction, the provisions of Chapter 14 for each occupancy must apply to the entire building. The requirements offering greater public safety are applied to the entire building. Any proposed or existing building attributes and modifications must be reviewed in light of these requirements. See the examples described in Sections 1401.6.16 and 1401.9.1 for mixed occupancies.

1401.2.3 Additions. *Additions* to *existing buildings* shall comply with the requirements of the *International Building Code*, *International Residential Code*, and this code for new construction. The combined height and area of the *existing building* and the new *addition* shall not exceed the height and area allowed by Chapter 5 of the *International Building Code*. Where a fire wall that complies with Section 706 of the *International Building Code* is provided between the *addition* and the *existing building*, the *addition* shall be considered a separate building.

❖ Additions effectively represent new construction. It is therefore reasonable to mandate that additions comply with code requirements for new construction. There are not assumed to be any existing conditions or other factors that would make full compliance impractical or difficult.

The requirements in this section are applied in the same way as those in Section 1401.1. This section is included in Chapter 14 so that provisions for additions are included for both optional methods of code compliance indicated in Section 1401.1 (see the commentary to Section 1401.1 for a discussion of these options).

The evaluation method in Chapter 14 may be used for an existing building that has been modified by an addition, provided that it meets the applicability requirements of Section 1401.2.

INTERNATIONAL CODE COUNCIL®
Copyright © 2015 ICC. ALL RIGHTS RESERVED. Accessed by David Dammon on Jun 21, 2017 12:30:52 PM pursuant to License Agreement with ICC. No further reproduction or distribution authorized. ANY UNAUTHORIZED REPRODUCTION OR DISTRIBUTION IS A VIOLATION OF THE FEDERAL COPYRIGHT ACT AND THE LICENSE AGREEMENT, AND SUBJECT TO CIVIL AND CRIMINAL PENALTIES THEREUNDER.

1401.2.4 Alterations and repairs. An *existing building* or portion thereof that does not comply with the requirements of this code for new construction shall not be altered or repaired in such a manner that results in the building being less safe or sanitary than such building is currently. If, in the *alteration* or *repair*, the current level of safety or sanitation is to be reduced, the portion altered or repaired shall conform to the requirements of Chapters 2 through 12 and Chapters 14 through 33 of the *International Building Code*.

❖ An existing building that is altered or repaired may be designed and evaluated in accordance with Chapter 14, provided it meets the applicability provisions of Section 1401.2.

When an existing building is altered or repaired, materials or methods consistent with the original construction must be used. This is described in Chapter 5. The alteration or repair must not cause the building to be less safe or sanitary than it is before the alterations are undertaken. This is true even if the existing condition exceeds the minimum requirements of the code under which it was originally built. Should the alteration or repair cause a reduction in safety or sanitation, the resulting condition must meet the requirements of Chapters 2 through 12 and Chapters 14 through 33 of the IBC. This effectively allows existing conditions that exceed new construction requirements to be reduced to, but not below, new construction requirements.

1401.2.5 Accessibility requirements. Accessibility shall be provided in accordance with Section 410 or 705.

❖ Any building or part of a building that has a change of occupancy must meet the requirements for accessibility in existing buildings found Section 410 or 705. These sections basically require full accessibility in the portion of the building undergoing a change of occupancy and, in addition, may require some work improving the accessible route to that space, and the bathrooms and drinking fountains that serve that space (see commentary, Sections 410 and 705).

1401.3 Acceptance. For *repairs, alterations, additions*, and *changes of occupancy* to *existing buildings* that are evaluated in accordance with this section, compliance with this section shall be accepted by the *code official*.

❖ The *International Codes*® (I-Codes®) regulate safety in existing buildings by establishing the appropriate minimum levels of safety and sanitation deemed necessary for the safe occupancy of buildings. This is accomplished in several different portions of the family of I-Codes®. The *International Fire Code*® (IFC®) addresses fire safety issues in existing buildings and the *International Property Maintenance Code*® (IPMC®) addresses matters of health and sanitation in existing buildings and sites. Codes traditionally give broad authority to the code official to abate unusually hazardous conditions or operations that may be encountered in existing buildings. Although these fire safety, health and sanitation requirements are addressed in different codes, they together make up the package of requirements that represent the minimum conditions any existing building must meet to be considered acceptable for occupancy under the I-Codes. Chapter 14 works in conjunction with the other codes in the family of I-Codes that regulate existing buildings by requiring compliance with those same minimum provisions. Without such references, Chapter 14 would be incomplete as an alternative tool for regulating existing buildings because it would otherwise allow conditions to exist that would not be permitted for any other existing building.

When an owner or designer of an existing building decides to apply Chapter 14 and complies with all the provisions of the chapter, including the applicability requirements in Section 1401.2, the code official must accept for review the proposed work or change of occupancy.

1401.3.1 Hazards. Where the *code official* determines that an unsafe condition exists as provided for in Section 115, such unsafe condition shall be abated in accordance with Section 115.

❖ When the code official finds an unsafe condition in the building that is not being corrected by the proposed work, he or she must order the abatement or correction of the unsafe condition or hazard just as would be ordered in an existing building that is not being renovated, as stipulated by Section 116. This section sets forth a required comprehensive performance objective of abating any condition that is unsafe, insanitary, illegal or of improper occupancy, egress deficient, fire hazardous, poorly maintained or otherwise dangerous to human life or the public welfare. Guidelines for abatement are provided in the code and in Chapter 1 of both the IPMC (see Sections 108 and 110) and the IFC.

1401.3.2 Compliance with other codes. Buildings that are evaluated in accordance with this section shall comply with the *International Fire Code* and *International Property Maintenance Code*.

❖ This section requires an existing building that is subjected to the evaluation scoring process of Section 1401.6 to also comply with the IFC and the IPMC. Those codes provide minimum requirements for health and safety that all existing buildings are expected to meet, regardless of whether there are any changes being made to the building or occupancy. Regardless of an existing building's final safety scores, the requirements of these referenced codes must be followed so occupants are safeguarded from the hazards addressed by those codes. This provision is similar to the requirements of Section 101.4.2.

1401.3.3 Compliance with flood hazard provisions. In *flood hazard areas*, buildings that are evaluated in accordance with this section shall comply with Section 1612 of the *International Building Code*, or Section R322 of the *Interna-*

INTERNATIONAL CODE COUNCIL®
Copyright © 2015 ICC. ALL RIGHTS RESERVED. Accessed by David Dammon on Jun 21, 2017 12:30:52 PM pursuant to License Agreement with ICC. No further reproduction or distribution authorized. ANY UNAUTHORIZED REPRODUCTION OR DISTRIBUTION IS A VIOLATION OF THE FEDERAL COPYRIGHT ACT AND THE LICENSE AGREEMENT, AND SUBJECT TO CIVIL AND CRIMINAL PENALTIES THEREUNDER.

tional Residential Code, as applicable if the work covered by this section constitutes *substantial improvement*.

❖ Regardless of how compliance with the provisions of the code is evaluated, buildings that are in flood hazard areas must meet the flood-resistant provisions of the IBC or *International Residential Code*® (IRC®), as applicable, if the proposed work is determined to be a substantial improvement.

1401.4 Investigation and evaluation. For proposed work covered by this chapter, the building owner shall cause the *existing building* to be investigated and evaluated in accordance with the provisions of Sections 1401.4 through 1401.9.

❖ This section and the subsequent subsections address what must be done by the owner/designer who elects to employ Chapter 14 for a proposed rehabilitation program and the corresponding action by the code official to assess the program objectively for approval or disapproval. The following actions must be taken:

- Fully investigate the building using both on-site inspections and research of all available building construction documents.
- Evaluate the building for conformance to Sections 1401.5 through 1401.9.
- Perform the required structural analysis of the structure.
- Determine whether the existing building, proposed work or change of occupancy complies with the accessibility provisions of Section 1401.2.5 (see commentary, Section 1401.5).
- Submit to the code official documented results of the investigation and evaluation plus any proposed compliance alternatives.

Thus, the election and implementation of Chapter 14 by the designer or owner is part of a code-compliance option that may be used for existing buildings that the code official has the responsibility to review and assess. A proper and satisfactorily prepared submission by the owner/designer offering qualitative and quantitative data requires review by the code official for approval. If the submission is disapproved, the code official must specifically cite any deficiencies and violations.

The owner is required to have an existing building and any proposed work therein investigated and evaluated for compliance with the 21 parameters of the evaluation process as specified in Section 1401.6.

[BS] 1401.4.1 Structural analysis. The owner shall have a structural analysis of the *existing building* made to determine adequacy of structural systems for the proposed *alteration*, *addition* or *change of occupancy*. The analysis shall demonstrate that the building with the work completed is capable of resisting the loads specified in Chapter 16 of the *International Building Code*.

❖ The owner is required to have a complete structural analysis of the building performed to ensure that it can support the required loads. This requires that all interior loads meet the minimum load requirements of Chapter 16 of the IBC. Through this analysis, existing and altered buildings must be shown to be capable of supporting the expected loading. Any existing exterior member not affected by either interior loading or additional exterior loading need not be evaluated, provided that the structural member has, over a period of time, proven its ability to withstand the forces that normally create stress. Loads imposed on existing structural members by alterations, additions or a change of occupancy must be shown to sustain the requirements of IBC Chapter 16. This structural analysis provides the owner and the code official with reasonable assurance that the building is structurally safe.

1401.4.2 Submittal. The results of the investigation and evaluation as required in Section 1401.4, along with proposed compliance alternatives, shall be submitted to the *code official*.

❖ The results of the investigation, including the structural analysis and evaluation, must be submitted to the code official. If alternative methods, materials or equivalency concepts are proposed, these must also be submitted to the code official for review and approval.

1401.4.3 Determination of compliance. The *code official* shall determine whether the *existing building*, with the proposed *addition*, *alteration*, or *change of occupancy*, complies with the provisions of this section in accordance with the evaluation process in Sections 1401.5 through 1401.9.

❖ When the results of the investigation and evaluation are submitted to the code official, he or she must determine whether the proposed work conforms to the provisions of Chapter 14 and whether the evaluation was performed in accordance with Sections 1401.5 through 1401.9.

1401.5 Evaluation. The evaluation shall be comprised of three categories: fire safety, means of egress, and general safety, as defined in Sections 1401.5.1 through 1401.5.3.

❖ This section and the subsequent subsections address three general areas of safety to be evaluated: fire safety (FS), means of egress (ME) and general safety (GS). Section 1401.6 and the subsequent subsections address 21 safety parameters that reflect on those areas. Each of the 21 safety parameters indicated in Sections 1401.6.1 through 1401.6.21 must be carefully reviewed and assigned a numerical value that signifies the degree of safety influence on the three overall general safety categories. The overall evaluation is divided into three categories or

INTERNATIONAL CODE COUNCIL®
Copyright © 2015 ICC. ALL RIGHTS RESERVED. Accessed by David Dammon on Jun 21, 2017 12:30:52 PM pursuant to License Agreement with ICC. No further reproduction or distribution authorized. ANY UNAUTHORIZED REPRODUCTION OR DISTRIBUTION IS A VIOLATION OF THE FEDERAL COPYRIGHT ACT AND THE LICENSE AGREEMENT, AND SUBJECT TO CIVIL AND CRIMINAL PENALTIES THEREUNDER.

areas, which are defined in Sections 1401.5.1 through 1401.5.3.

1401.5.1 Fire safety. Included within the fire safety category are the structural fire resistance, automatic fire detection, fire alarm, automatic sprinkler system and fire suppression system features of the *facility*.

❖ A partial list of the items used to evaluate fire safety in a building is given in this section.

1401.5.2 Means of egress. Included within the means of egress category are the configuration, characteristics, and support features for means of egress in the facility.

❖ The means-of-egress features evaluated by Chapter 14 fall in the general areas of configuration, characteristics and support features. The specific features include travel distance, dead ends, emergency lighting and exit capacity and number.

1401.5.3 General safety. Included within the general safety category are the fire safety parameters and the means-of-egress parameters.

❖ This category includes every item that is used in either the fire safety or means-of-egress evaluation.

1401.6 Evaluation process. The evaluation process specified herein shall be followed in its entirety to evaluate *existing buildings* in Groups A, B, E, F, M, R, S and U. For existing buildings in Group I-2, the evaluation process specified herein shall be followed and applied to each and every individual smoke compartment. Table 1401.7 shall be utilized for tabulating the results of the evaluation. References to other sections of this code indicate that compliance with those sections is required in order to gain credit in the evaluation herein outlined. In applying this section to a building with mixed occupancies, where the separation between the mixed occupancies does not qualify for any category indicated in Section 1401.6.16, the score for each occupancy shall be determined, and the lower score determined for each section of the evaluation process shall apply to the entire building, or to each smoke compartment for Group I-2 occupancies.

Where the separation between the mixed occupancies qualifies for any category indicated in Section 1401.6.16, the score for each occupancy shall apply to each portion, or smoke compartment of the building based on the occupancy of the space.

❖ This section is the key to understanding the entire evaluation process. The first sentence of this section clearly states that every one of the 21 safety parameters indicated in Sections 1401.6.1 through 1401.6.21 must be evaluated and nothing may be omitted. Although the evaluation process does not specifically evaluate all of the many issues that are regulated by the IBC for new construction, these 21 safety parameters have been determined to be the most critical factors related to the minimum degree of life safety and property protection needed in an existing building. The 21 safety parameters that must be evaluated are:

- Building height (see Section 1401.6.1).
- Building area (see Section 1401.6.2).
- Compartmentation (see Section 1401.6.3).
- Tenant and dwelling unit separations (see Section 1401.6.4).
- Corridor walls (see Section 1401.6.5).
- Vertical openings (see Section 1401.6.6).
- HVAC (heating, ventilating and air-conditioning) systems (see Section 1401.6.7).
- Automatic fire detection (see Section 1401.6.8).
- Fire alarm systems (see Section 1401.6.9).
- Smoke control (see Section 1401.6.10).
- Means-of-egress capacity and number (see Section 1401.6.11).
- Dead ends (see Section 1401.6.12).
- Maximum exit access travel distance to an exit (see Section 1401.6.13).
- Elevator control (see Section 1401.6.14).
- Means-of-egress emergency lighting (see Section 1401.6.15).
- Mixed occupancies (see Section 1401.6.16).
- Automatic sprinklers (see Section 1401.6.17).
- Standpipes (see Section 1401.6.18).
- Incidental uses (see Section 1401.6.19).
- Smoke compartmentation.
- Patient ability, concentration, and attendant to patient ratio (for I-2 occupancies).

The assigning of numerical values to each of the 21 safety parameters establishes a measurable quantity of each parameter's contribution to overall building safety. Some evaluated parameters have a negative influence; others have a positive one. In total, the parameters may or may not result in an acceptable building score. The evaluation will determine whether the existing building has enough positive parameters to overcome the negative parameters, or will indicate the negative factors that must be overcome. Modifications can be made to any aspect of the building that will accrue sufficient additional positive points to achieve the mandatory safety scores in each of the three evaluation categories. In other words, if, for example, the absence of a mixed occupancy separation under Section 1401.6.16.1 yielded a score of -10 (assume, for example, that the evaluation failed by 10 points in the fire safety category), it does not necessarily mean that a fire barrier must be constructed to separate the mixed occupancies. While that would be an acceptable solution, modifications could be made that accrue at least 10 additional points in any one or more of the other parameters in the fire safety category.

After the 21 safety parameters have been evaluated and assigned a numerical value, the values are entered in Table 1401.7. The values must be tabulated to obtain the building score for each of the three

INTERNATIONAL CODE COUNCIL®
Copyright © 2015 ICC. ALL RIGHTS RESERVED. Accessed by David Dammon on Jun 21, 2017 12:30:52 PM pursuant to License Agreement with ICC. No further reproduction or distribution authorized. ANY UNAUTHORIZED REPRODUCTION OR DISTRIBUTION IS A VIOLATION OF THE FEDERAL COPYRIGHT ACT AND THE LICENSE AGREEMENT, AND SUBJECT TO CIVIL AND CRIMINAL PENALTIES THEREUNDER.

evaluation categories. For I-2 occupancies, the evaluation score must be entered for each smoke compartment to obtain a score for each smoke compartment in all three evaluation categories.

Some of the 21 safety parameters listed require mandatory compliance with other sections of the code and establish the foundation for determining a proper evaluation of those parameters, regardless of whether the result is positive or negative. This involves a coordination of mandatory basic requirements with the respective existing building conditions to arrive at the numerical evaluations prescribed in Sections 1401.6.1 through 1401.6.21.

Section 1401.6.16 also addresses how mixed occupancies are handled in the evaluation. To apply this section, it is necessary to understand IBC Section 508. When mixed occupancies in an existing building are not separated by fire barriers or fire walls complying with the requirements for new construction, the entire evaluation must be based on the occupancy with the most restrictive requirements. The evaluation process considers the score for the various occupancies and applies the lowest score to the entire building. When the mixed occupancies are separated by fire barriers in compliance with IBC Section 508.4.4, they are to be evaluated separately and the score for each occupancy will apply to each portion based on its occupancy classification. If there are four different occupancies in the building, the values must be computed for each of the four occupancies. Each occupancy is required to meet the applicable mandatory building score for its occupancy classification. When mixed occupancies are separated by fire walls complying with the requirements of IBC Section 706, separate buildings are created and must be evaluated separately for all 21 safety parameters. See the commentary to Sections 1401.2.2 and 1401.6.16 for a further discussion of the application of the evaluation procedure for mixed occupancies.

1401.6.1 Building height and number of stories. The value for building height and number of stories shall be the lesser value determined by the formula in Section 1401.6.1.1. Section 504 of the *International Building Code* shall be used to determine the allowable height and number of stories of the building. Subtract the actual building height from the allowable height and divide by $12^{1}/_{2}$ feet (3810 mm). Enter the height value and its sign (positive or negative) in Table 1401.7 under Safety Parameter 1401.6.1, Building Height, for fire safety, means of egress, and general safety. The maximum score for a building shall be 10.

❖ As a starting point for the actual evaluation process, this section and Section 1401.6.1.1 define, in detail, how to perform the building height and number of stories evaluation. The exact values are to be computed and compared against the mandatory safety scores. The values are not to be rounded. For calculation purposes, two decimal places would be appropriate. It is not necessary to build in any inaccuracy that occurs through the rounding process.

The maximum number of points that can be scored for a building, regardless of the building's allowable height as compared to its actual height, is 10. Building height and number of stories, as well as building area, which is covered in Section 1401.6.2, determine the type of construction classification. Limiting the number of points that can be scored for height limits the weight that classification could otherwise have on the overall evaluation. A low-rise building that is built of a high type of construction could accrue a disproportionately high number of points for height as compared to the number of points that are scored for other safety parameters. The intent is to avoid a situation in which many deficiencies in other critical safety parameters can be overcome simply by a high type of construction classification.

1401.6.1.1 Height formula. The following formulas shall be used in computing the building height value.

$$\text{Height value, feet} = \frac{(AH) - (EBH)}{12.5} \times CF \qquad \textbf{(Equation 14-1)}$$

$$\text{Height value, stories} = (AS - EBS) \times CF \qquad \textbf{(Equation 14-2)}$$

where:

AH = Allowable height in feet (mm) from Section 504 of the *International Building Code*.

EBH = *Existing building* height in feet (mm).

AS = Allowable height in stories from Section 504 of the *International Building Code*.

EBS = *Existing building* height in stories.

CF = 1 if *(AH) – (EBH)* is positive.

CF = Construction-type factor shown in Table 1401.6.6(2) if *(AH) – (EBH)* is negative.

Note: Where mixed occupancies are separated and individually evaluated as indicated in Section 1401.6, the values *AH, AS, EBH* and *EBS* shall be based on the height of the occupancy being evaluated.

❖ Two height formulas for calculating the score to be entered in Table 1401.7 are given. One formula determines a height value based on the height in feet and the other formula determines a height value in number of stories, based on IBC Tables 504.4 and 504.3, respectively. The denominator in the formula for height in feet, 12.5, represents an average story height in feet. Both formulas must be calculated and the lesser of the two calculated values is the value that must be used in the evaluation.

The actual story height and the overall existing building height are to be directly compared to IBC

INTERNATIONAL CODE COUNCIL®
Copyright © 2015 ICC. ALL RIGHTS RESERVED. Accessed by David Dammon on Jun 21, 2017 12:30:52 PM pursuant to License Agreement with ICC. No further reproduction or distribution authorized. ANY UNAUTHORIZED REPRODUCTION OR DISTRIBUTION IS A VIOLATION OF THE FEDERAL COPYRIGHT ACT AND THE LICENSE AGREEMENT, AND SUBJECT TO CIVIL AND CRIMINAL PENALTIES THEREUNDER.

Tables 504.4 and 504.3, respectively. That table serves as a datum level that allows for establishing a numerical height value for the existing building by comparing its actual height and its type of construction as represented by a construction factor (*CF*). If the existing building's actual height in feet is less than or equal to the allowable height of IBC Table 504.3, then the construction factor value is 1 (no negative or positive multiplier is factored into the calculation). If the actual height exceeds the allowable height in IBC Table 504.3, the building is not in compliance with that table and represents a safety deficiency. A deficiency rating is assigned dependent on the type of construction. The construction factors to establish this negative value are given in Table 1401.6.6(2). When a building is not in compliance with IBC Tables 504.3 and 504.4, it is considered less safe than a building that does comply with those tables. As a result, deficiency points are assessed. Additional safeguards must be provided to compensate for this condition. This is the primary reason that a different construction factor must be used for buildings not in compliance. The construction factor is the equivalent deficiency that must be overcome by providing additional protection in other areas that are to be evaluated.

Example 1:

A six-story building of Type IB construction is 60 feet (18 288 mm) tall. The building is not sprinklered. It contains a Group B business occupancy.

The allowable story height from IBC Table 504.4 is 11 stories and the allowable height, in feet, from IBC Table 504.3 is 160 feet (48 800 mm).

AH = 160 feet

AS = 11 stories

EBH = 60 feet

EBS = 6 stories

CF = 1 from Table 1401.6.6(2) (because 160 - 60 is a positive number)

The governing building height value is 5, because it is the lesser of the two height values.

Example 2:

A seven-story building of Type IIIB construction is 80 feet (24 400 mm) tall. The building is sprinklered. It contains a Group M mercantile occupancy.

The allowable story height from IBC Table 504.4 is four stories and the allowable height, in feet, from IBC Table 504.3 is 55 feet (16 775 mm).

AH = 55 + 20 (for sprinklers) = 75 feet

AS = 4 + 1 (for sprinklers) = 5 stories

EBS = 7 stories

EBH = 80 feet

CF = 3.5 from Table 1401.6.6(2) (because 75 - 80 is a negative number)

The governing building height value is -7, because it is the lesser of the two height values.

The values in the examples determine the entries for the Summary Sheet of Table 1401.7 for the Safety Parameter of Building Height on line 1401.6.1.

In Example 1, the height value of 5 is entered into the columns for fire safety (FS), means of egress (ME) and general safety (GS).

In Example 2, the height value of -7 is entered into the columns for fire safety (FS), means of egress (ME) and general safety (GS).

The assessed height value parameter is only one of the 21 safety parameters that need to be evaluated. Example 1 shows a positive contribution; however, this may not be enough to result in a sufficient overall building score. Similarly, the negative value in Example 2 may not in itself result in an overall insufficient building score.

1401.6.2 Building area. The value for building area shall be determined by the formula in Section 1401.6.2.2. Section 506 of the *International Building Code* and the formula in Section 1401.6.2.1 shall be used to determine the allowable area of the building. Subtract the actual building area from the allowable area and divide by 1,200 square feet (112 m^2). Enter the area value and its sign (positive or negative) in Table 1401.7 under Safety Parameter 1401.6.2, Building Area, for fire safety, means of egress and general safety. In determining the area value, the maximum permitted positive value for area is 50 percent of the fire safety score as listed in Table 1401.8, Mandatory Safety Scores. Group I-2 occupancies shall be scored zero.

❖ In this section, the code user is shown how to calculate the building score for the building area. This section also requires the maximum score of a building in this category. The maximum value is 50 percent of just the fire safety score listed in Table 1401.8 (see the commentary to Section 1401.6.2.2). This maximum score is applicable and equal for the three building score categories—fire safety, means of egress and general safety. The positive score is limited to prevent this one parameter from providing enough points to unjustifiably overcome too many deficiencies in other parameters.

1401.6.2.1 Allowable area formula. The following formula shall be used in computing allowable area:

$$A_a = A_t + (NS \times I_f) \qquad \textbf{(Equation 14-3)}$$

where:

A_a = Allowable building area per story (square feet).

A_t = Tabular allowable area factor (NS, S1, S13R, or SM value, as applicable) in accordance with Table 506.2 of the *International Building Code*.

NS = Tabular allowable area factor in accordance with Table 506.2 of the *International Building Code* for a nonsprinklered building (regardless of whether the building is sprinklered).

INTERNATIONAL CODE COUNCIL®
Copyright © 2015 ICC. ALL RIGHTS RESERVED. Accessed by David Dammon on Jun 21, 2017 12:30:52 PM pursuant to License Agreement with ICC. No further reproduction or distribution authorized. ANY UNAUTHORIZED REPRODUCTION OR DISTRIBUTION IS A VIOLATION OF THE FEDERAL COPYRIGHT ACT AND THE LICENSE AGREEMENT, AND SUBJECT TO CIVIL AND CRIMINAL PENALTIES THEREUNDER.

I_f = Area factor increase due to frontage as calculated in accordance with Section 506.3 of the *International Building Code*.

❖ The formula used to calculate the allowable area of the building is a direct correlation of the area increases and reductions allowed for new buildings in IBC Section 506 The use of these increases and reductions is addressed in IBC Chapter 5.

1401.6.2.2 Area formula. The following formula shall be used in computing the area value. Determine the area value for each occupancy floor area on a floor-by-floor basis. For each occupancy, choose the minimum area value of the set of values obtained for the particular occupancy.

$$\text{Area value}_i = \frac{\text{Allowable area}_i}{1200 \text{ square feet}}\left[1 - \left(\frac{\text{Actual area}_i}{\text{Allowable area}_i} + \ldots + \frac{\text{Actual area}_n}{\text{Allowable area}_n}\right)\right]$$

(Equation 14-4)

where:

i = Value for an individual separated occupancy on a floor.

n = Number of separated occupancies on a floor.

❖ The area formula provides a numerical value for the actual building area to be entered in Table 1401.7 for the Safety Parameter Building Area on line 1401.6.2. If the area of the existing building is less than the allowable area, it is considered to be safer and the building receives a positive score. If the area of the existing building is larger than the allowable area, it represents a condition that is judged to be less safe and the building receives a negative score.

To use the formula for existing buildings that contain mixed occupancies, an area value must be determined for each story of a building. If a building contains just one occupancy or just one occupancy on a particular floor separated from other floors, the formula simply reduces to the allowable area minus the actual area divided by the constant of 1,200. The formula is also applicable to a story containing several separated occupancies. In such a situation, the formula requires each actual area to be divided by its respective allowable area. The resulting fractions are added together, subtracted from the constant of 1 and multiplied by the ratio of the allowable area of the particular use divided by the constant 1,200. This method of determining area values for several occupancies that are separated on a story is directly comparable to the unity formula in IBC Section 508.2.4.

Example 1:

Commentary Figure 1401.6.2.2(1) illustrates a Group B building of Type IIA construction.

The building is five stories in height, unsprinklered.

The overall building area is 200 feet (60 960 mm) by 200 feet (60 960 mm).

$$\text{Area value} = \frac{75{,}000}{1{,}200}\left[1 - \left(\frac{40{,}000}{75{,}000}\right)\right]$$

$$= 62.5\ (1 - 0.533)$$

$$= 29.2$$

Allowable area = 75,000 square feet

Actual area = 40,000 square feet

In Table 1401.7, enter the following values for the Safety Parameter of Building Area on line 1401.6.2:

Fire safety (FS) = 13.6

Means of egress (ME) = 13.6

General safety (GS) = 13.6

The positive values entered in Table 1401.7 under Safety Parameters 1401.6.2, Building Area (FS = 13.6, ME = 13.6 and GS = 13.6), represent the evaluation for only one of the 21 safety parameters that must be assessed to arrive at the overall building score evaluation of Table 1401.7. As previously described for the building height parameter values under line 1401.6.1 of Table 1401.7, a single parameter of the total 21 safety parameters to be assessed does not, in itself, determine the ultimate acceptable building score.

Example 2:

Commentary Figure 1401.6.2.2(2) illustrates a separated mixed occupancy building (Groups B, M and S-1) of Type IIIB construction. The building is two stories in height, fully sprinklered.

The overall building area is 100 feet (30 480 mm) by 200 feet (60 960 mm).

Actual area for Group M on first story = 20,000 square feet (1858 m^2).

Actual area for Group M on second story = 4,400 square feet (409 m^2).

Actual area for Group B on second story = 10,000 square feet (929 m^2).

Actual area for Group S-1 on second story = 5,600 square feet (520 m^2).

Frontage Increase = 5.6% (from Section 506.2)

Tabular areas from Table 506.2:

Group B = 57,000 square feet (1765 m^2)

Group M = 37,500 square feet (1161 m^2)

Group S-1 = 52,500 square feet (1626 m^2)

INTERNATIONAL CODE COUNCIL®
Copyright © 2015 ICC. ALL RIGHTS RESERVED. Accessed by David Dammon on Jun 21, 2017 12:30:52 PM pursuant to License Agreement with ICC. No further reproduction or distribution authorized. ANY UNAUTHORIZED REPRODUCTION OR DISTRIBUTION IS A VIOLATION OF THE FEDERAL COPYRIGHT ACT AND THE LICENSE AGREEMENT, AND SUBJECT TO CIVIL AND CRIMINAL PENALTIES THEREUNDER.

Allowable Areas:

AA = (NS × 0.056) × Tabular Area

NS for Group B = 19,000 square feet

AA for Group B = 58,064 square feet

NS for Group M = 12,500 square feet

AA for Group M = 38,200 square feet

NS for Group S-1 = 17,500 square feet

AA for Group S-1 = 53,480 square feet

Area Values:

For Group M, 1st story

$$\text{Area value} = \frac{38,200}{1,200}\left[1 - \left(\frac{20,000}{38,200}\right)\right]$$

$$= 31.83[1 - 0.52]$$

$$= 15.27$$

For Group B, 2nd story

$$\text{Area value} = \frac{58,064}{1,200}\left[1 - \left(\frac{10,000}{58,064} + \frac{4,400}{38,200} + \frac{5,600}{53,480}\right)\right]$$

$$= 48.39[1 - 0.39]$$

$$\text{Area value} = 29.51$$

For Group M, 2nd story

$$\text{Area value} = \frac{38,200}{1,200}[1 - 0.39]$$

$$\text{Area value} = 19.42$$

For Group S-1, 2nd story

$$\text{Area value} = \frac{53,480}{1,200}[1 - 0.39]$$

Area value = 27.19

Since these mixed occupancies are being separated so that one of the categories indicated in Section 1401.6.16 is applicable, a separate score must be computed for each occupancy.

In this example, the area value for the Group B occupancy is calculated to be 29.51, but the maximum area value permitted is 50 percent of the mandatory fire safety score listed in Table 1401.8. For a Group B occupancy, the mandatory fire safety score is 30; therefore, the maximum positive value that can be entered into Table 1401.7 is 15.

When an occupancy is located in more than one story, a separate area value must be calculated for each story. For input into Table 1401.7, the area value to be used is the lesser of all the individual area

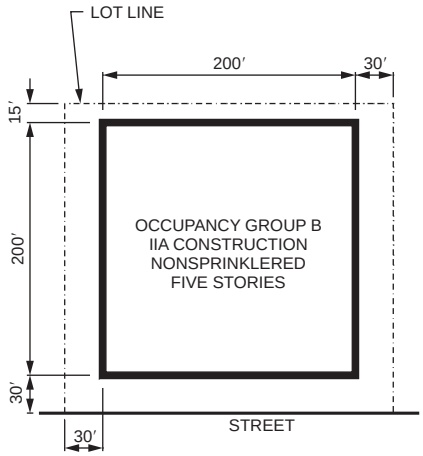

ACTUAL AREA = 200′ × 200′ = 40,000 SQ. F.T.

SP = 0 (FROM IBC SECTION 506.3)
OP = 100% (FROM IBC SECTION 506.2)
ALLOWABLE AREA IN IBC TABLE 506.2 = 37,500 SQ. F.T.

$$AA = \frac{(0 + 100 + 100) \times 37,500}{100} = \frac{200 \times 37,500}{100} = 75,000 \text{ SQ.FT.}$$

For SI: 1 foot = 304.8 mm, 1 square foot = 0.0929 m^2.

Figure 1401.6.2.2(1)
ALLOWABLE AREA—SINGLE-OCCUPANCY BUILDING

INTERNATIONAL CODE COUNCIL®
Copyright © 2015 ICC. ALL RIGHTS RESERVED. Accessed by David Dammon on Jun 21, 2017 12:30:52 PM pursuant to License Agreement with ICC. No further reproduction or distribution authorized. ANY UNAUTHORIZED REPRODUCTION OR DISTRIBUTION IS A VIOLATION OF THE FEDERAL COPYRIGHT ACT AND THE LICENSE AGREEMENT, AND SUBJECT TO CIVIL AND CRIMINAL PENALTIES THEREUNDER.

values for that occupancy group, but not greater than 50 percent of the mandatory fire safety score. In Commentary Figure 1401.6.2.2(2), there is an area classified as a Group M occupancy on both the first and second stories. The area value for the Group M occupancy on the first story is 15.27, and the area value for the second story is 19.42. Fifty percent of the mandatory fire safety score for Group M is 11.5. The lowest value for all the Group M occupant areas in the building is 11.5, which is 50 percent of the mandatory fire safety score.

The area value for the Group S-1 occupancy portion of the building is 27.19. This value, just as the values for the other occupancies in this example, exceeds the 50-percent maximum permitted by the mandatory fire safety score. The maximum for Group S-1 occupancy is 9.5, 50 percent of 19.

1401.6.3 Compartmentation. Evaluate the compartments created by fire barriers or horizontal assemblies which comply with Sections 1401.6.3.1 and 1401.6.3.2 and which are exclusive of the wall elements considered under Sections 1401.6.4 and 1401.6.5. Conforming compartments shall be figured as the net area and do not include shafts, chases, stairways, walls, or columns. Using Table 1401.6.3, determine the appropriate compartmentation value (CV) and enter that value into Table 1401.7 under Safety Parameter 1401.6.3, Compartmentation, for fire safety, means of egress, and general safety.

❖ This section establishes and evaluates the compartments contained in an existing building by the effectiveness of the enclosing fire barrier walls and fire-resistant floor/ceiling assemblies. Larger compartments are considered to be a greater safety risk than smaller compartments because the entire compartment is assumed to be involved when a fire incident occurs in the compartment and, therefore, a single fire incident affects a greater portion of the building at one time.

Fire barriers must comply with Sections 1401.6.3.1 and 1401.6.3.2. Fire barriers are exclusive of the other separations or enclosures that are evaluated in Sections 1401.6.4 and 1401.6.5.

The evaluation of the compartments contained in an existing building is a linear function allowing inter-

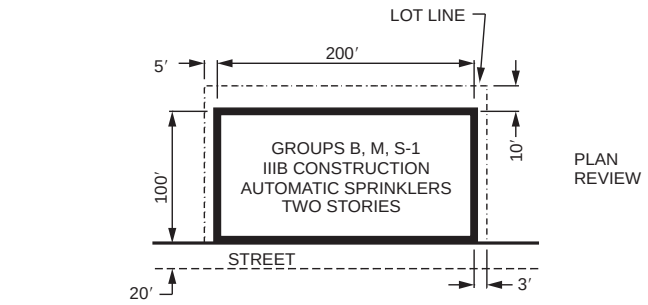

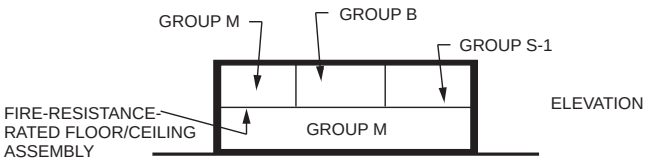

ACTUAL AREA = 100′ × 200′
= 20,000 SQ.FT.

SP = 200% (FROM IBC SECTION 506.3)
OP = 16.7% (FROM IBC SECTION 506.2)
ALLOWABLE AREA IN IBC TABLE 506.2 (GROUP B) = 19,000 SQ.FT.
ALLOWABLE AREA IN IBC TABLE 506.2 (GROUP M) = 12,500 SQ.FT.
ALLOWABLE AREA IN IBC TABLE 506.2 (GROUP S-1) = 17,500 SQ.FT.

$$\text{AA GROUP B} = \frac{(200 + 16.7 + 100) \times 19{,}000}{100} = 60{,}173 \text{ SQ.FT.}$$

$$\text{AA GROUP M} = \frac{(200 + 16.7 + 100) \times 12{,}500}{100} = 39{,}587 \text{ SQ.FT.}$$

$$\text{AA GROUP S-1} = \frac{(200 + 16.7 + 100) \times 17{,}500}{100} = 55{,}422 \text{ SQ.FT.}$$

For SI: 1 foot = 304.8 mm, 1 square foot = 0.0929 m^2.

Figure 1401.6.2.2(2)
ALLOWABLE AREA—MIXED-OCCUPANCY BUILDING

INTERNATIONAL CODE COUNCIL®
Copyright © 2015 ICC. ALL RIGHTS RESERVED. Accessed by David Dammon on Jun 21, 2017 12:30:52 PM pursuant to License Agreement with ICC. No further reproduction or distribution authorized. ANY UNAUTHORIZED REPRODUCTION OR DISTRIBUTION IS A VIOLATION OF THE FEDERAL COPYRIGHT ACT AND THE LICENSE AGREEMENT, AND SUBJECT TO CIVIL AND CRIMINAL PENALTIES THEREUNDER.

polation between the various categories. This approach allows the compartmentation value to increase or decrease consistent with the actual changes in compartment sizes. Such an adjustment removes the previously built-in bias against smaller-sized buildings. Higher compartmentation values are assigned to buildings with smaller compartments.

TABLE 1401.6.3. See below.

❖ Table 1401.6.3 contains compartment values based on the group and the square footage of individual compartments. The value increases as the size of the compartment decreases in order to recognize the safety benefit of fire-resistance-rated compartmentation.

If the existing floor construction inherently complies with Section 1401.6.3.2, creating compartments by constructing fire barriers in accordance with Section 1401.6.3.1 could be a cost-effective way to increase the building's safety score.

1401.6.3.1 Wall construction. A wall used to create separate compartments shall be a fire barrier conforming to Section 707 of the *International Building Code* with a fire-resistance rating of not less than 2 hours. Where the building is not divided into more than one compartment, the compartment size shall be taken as the total floor area on all floors. Where there is more than one compartment within a story, each compartmented area on such story shall be provided with a horizontal exit conforming to Section 1026 of the *International Building Code*. The fire door serving as the horizontal exit between compartments shall be so installed, fitted, and gasketed that such fire door will provide a substantial barrier to the passage of smoke.

❖ This section states that the walls determining the boundary of the compartment need to have fire-barrier ratings of not less than 2 hours. These assemblies must be constructed in accordance with IBC Section 707. For an existing building, this may need to be evaluated by both analyzing available plans and on-site investigations with a professional engineering determination of the required 2-hour fire-resistance rating. If the fire-resistance rating is less than 2 hours or cannot be reasonably determined, such walls should not be considered as creating a compartment. The entire story of an existing building must then be considered the compartment. If 2-hour-rated floor/ceiling assemblies are not present, the compartment size becomes the total area of all stories combined.

Opening protection and continuity requirements of IBC Section 707 must be followed to maintain the integrity of the fire-resistance-rated wall assemblies and thus the compartments. Horizontal exits and their fire doors must comply with IBC Section 1025.

The evaluation of an existing door condition requires an investigation of available engineering data and on-site inspections. Any uncertainty as to the performance of such doors may result in the openings being considered unprotected, which results in a larger assumed compartment area or requires modification of the door to meet the current requirements of IBC Section 1025.3.

1401.6.3.2 Floor/ceiling construction. A floor/ceiling assembly used to create compartments shall conform to Section 711 of the *International Building Code* and shall have a fire-resistance rating of not less than 2 hours.

❖ The building features that create the horizontal boundaries of the compartment must provide effective fire resistance between floors. The existing floor/ceiling assemblies must be rated for 2 hours and need to be tight against exterior walls. Penetrations in the floor/ceiling assemblies must be protected in accordance with IBC Section 714 to maintain their fire-resistant integrity. The floor/ceiling assemblies must conform to all of the requirements of IBC Section 711 to create the level of compartmentation required for this evaluation parameter.

1401.6.4 Tenant and dwelling unit separations. Evaluate the fire-resistance rating of floors and walls separating tenants, including dwelling units, and not evaluated under Sections 1401.6.3 and 1401.6.5. Group I-2 occupancies shall evaluate the rating of the separations between patient sleeping rooms.

Under the categories and occupancies in Table 1401.6.4, determine the appropriate value and enter that value in Table 1401.7 under Safety Parameter 1401.6.4, Tenant and Dwelling Unit Separation, for fire safety, means of egress, and general safety.

❖ This parameter is used to evaluate partitions in an existing building other than those used for the creation of compartments in Section 1401.6.3 or the enclosure of corridors in Section 1401.6.5. This sec-

TABLE 1401.6.3
COMPARTMENTATION VALUES

OCCUPANCY	CATEGORIES				
	a Compartment size equal to or greater than 15,000 square feet	b Compartment size of 10,000 square feet	c Compartment size of 7,500 square feet	d Compartment size of 5,000 square feet	e Compartment size of 2,500 square feet or less
A-1, A-3	0	6	10	14	18
A-2	0	4	10	14	18
A-4, B, E, S-2	0	5	10	15	20
F, M, R, S-1	0	4	10	16	22

For SI: 1 square foot = 0.0929 m^2.

INTERNATIONAL CODE COUNCIL®
Copyright © 2015 ICC. ALL RIGHTS RESERVED. Accessed by David Dammon on Jun 21, 2017 12:30:52 PM pursuant to License Agreement with ICC. No further reproduction or distribution authorized. ANY UNAUTHORIZED REPRODUCTION OR DISTRIBUTION IS A VIOLATION OF THE FEDERAL COPYRIGHT ACT AND THE LICENSE AGREEMENT, AND SUBJECT TO CIVIL AND CRIMINAL PENALTIES THEREUNDER.

tion examines the level of separation between tenant spaces and dwelling units. The listed categories specifically reference IBC Sections 707, 708 and 711 not only for fire-resistance ratings, but also for continuity and opening-protection purposes. Further credit is provided for existing buildings that have a 2-hour-rated separation between adjacent tenant spaces or dwelling units, which exceeds the requirement for new construction.

TABLE 1401.6.4
SEPARATION VALUES

OCCUPANCY	CATEGORIES				
	a	b	c	d	e
A-1	0	0	0	0	1
A-2	-5	-3	0	1	3
R	-4	-2	0	2	4
A-3, A-4, B, E, F, M, S-1	-4	-3	0	2	4
I-2	0	1	2	3	4
S-2	-5	-2	0	2	4

❖ Table 1401.6.4 provides values for tenant space and dwelling unit separations. The rationale for considering a nonfire-resistance-rated or incomplete separation as a safety deficiency is that even though the assembly may have some limited fire resistance, it cannot be assumed to provide the level of fire performance expected of a fully complying assembly. Buildings containing Group R occupancies have separation values based on the assumption that dwelling unit separations are more critical than tenant separations in other occupancies.

1401.6.4.1 Categories. The categories for tenant and dwelling unit separations are:

1. Category a—No fire partitions; incomplete fire partitions; no doors; doors not self-closing or automatic-closing.
2. Category b—Fire partitions or floor assemblies with less than 1-hour fire-resistance ratings or not constructed in accordance with Section 708 or 711 of the *International Building Code*, respectively.
3. Category c—Fire partitions with 1-hour or greater fire-resistance ratings constructed in accordance with Section 708 of the *International Building Code* and floor assemblies with 1-hour but less than 2-hour fire-resistance ratings constructed in accordance with Section 711 of the *International Building Code* or with only one tenant within the floor area.
4. Category d—Fire barriers with 1-hour but less than 2-hour fire-resistance ratings constructed in accordance with Section 707 of the *International Building Code* and floor assemblies with 2-hour or greater fire-resistance ratings constructed in accordance with Section 711 of the *International Building Code*.
5. Category e—Fire barriers and floor assemblies with 2-hour or greater fire-resistance ratings and constructed in accordance with Sections 707 and 711 of the *International Building Code*, respectively.

❖ Tenant space and dwelling unit separations are categorized by the partitions being evaluated. The values of each category are listed in Table 1401.6.4 by occupancy classifications. Typical illustrations of the types of partitions are shown in Commentary Figures 1401.6.4.1(1) and 1401.6.4.1(2). The listed catego-

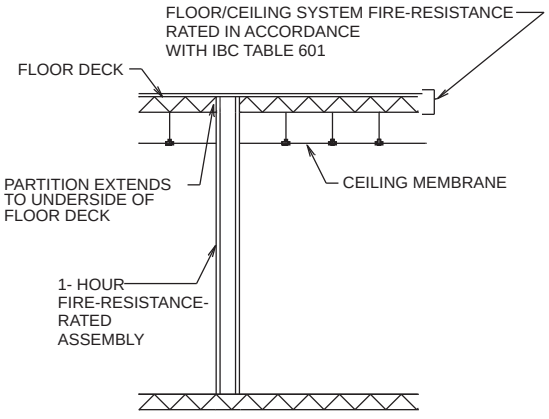

Figure 1401.6.4.1(1)
DWELLING UNIT SEPARATION

INTERNATIONAL CODE COUNCIL®
Copyright © 2015 ICC. ALL RIGHTS RESERVED. Accessed by David Dammon on Jun 21, 2017 12:30:52 PM pursuant to License Agreement with ICC. No further reproduction or distribution authorized. ANY UNAUTHORIZED REPRODUCTION OR DISTRIBUTION IS A VIOLATION OF THE FEDERAL COPYRIGHT ACT AND THE LICENSE AGREEMENT, AND SUBJECT TO CIVIL AND CRIMINAL PENALTIES THEREUNDER.

ries provide a graduated level of separation when compared to new construction requirements.

Category a addresses the situation where there is no separation or there are gaps in the separation provided between tenant spaces or dwelling units.

Category b accounts for those tenant spaces or dwelling units that are separated from one another with less than a 1-hour rating.

Category c represents what is required for new construction for tenant space and dwelling unit separation. An existing building meeting this level of compliance gains no benefit or penalty and, therefore, the separation value is zero.

Category d is given additional credit because the tenant space or dwelling unit separation has a fire-resistance rating that marginally exceeds the minimum required for new construction. Additionally, the walls are required to meet the fire barrier requirements of IBC Section 707.

Category e provides increased credit for existing buildings that have walls and floor/ceiling assemblies with fire-resistance ratings exceeding the new construction requirement by at least 1 full hour. This increased level of fire-resistant separation in an existing building is credited accordingly with high separation values.

1401.6.5 Corridor walls. Evaluate the fire-resistance rating and degree of completeness of walls which create corridors serving the floor and that are constructed in accordance with Section 1020 of the *International Building Code*. This evaluation shall not include the wall elements considered under Sections 1401.6.3 and 1401.6.4. Under the categories and groups in Table 1401.6.5, determine the appropriate value and enter that value into Table 1401.7 under Safety Parameter 1401.6.5, Corridor Walls, for fire safety, means of egress, and general safety.

❖ Corridor walls are evaluated as fire partitions possessing an adequate fire-resistance rating and completeness to restrict the spread of fire into the corridor. Various categories require compliance with prescribed requirements in IBC Sections 708 and 1018. Existing corridor walls require investigation and analysis to determine the equivalency to code requirements. Commentary Figures 1401.6.5.1(1) and 1401.6.5.1(2) illustrate various corridor wall values. Corridor walls contrast with the compartmentation and tenant dwelling unit separations of Sections 1401.6.3 and 1401.6.4 by requiring an appropriate fire-resistance rating and continuity (see commentary, IBC Section 708.4). The corridor wall evaluations do not include partitions required to establish a compartment (see Section 1401.6.3) or tenant and dwelling unit separations (see Section 1401.6.4). If a corridor wall serves as more than one of these elements, for example where it is both a corridor wall and it defines a compartment under Section 1401.6.3 and a corridor under this subsection, it may be evaluated under one parameter or the other at the designer's option, but not both.

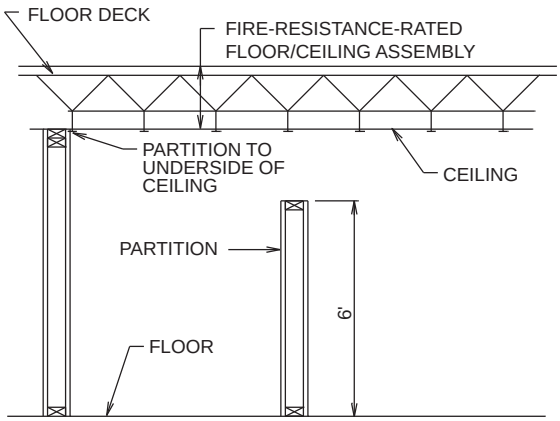

- FOOD COURT RESTAURANTS, OCCUPANCY GROUP A-3
- SOME PARTITIONS EXTEND TO CEILING OF FIRE-RESISTANCE-RATED FLOOR/CEILING ASSEMBLY
- NO CLOSERS ON DOORS BETWEEN ADJACENT TENANT SPACES
- SOME 6' PRIVACY PARTITIONS (PARTIAL PARTITIONS)

- CLASSIFICATION = CATEGORY a
- SCORE FROM TABLE 1401.6.4
- ENTER -4 IN TABLE 1401.7

For SI: 1 foot = 304.8 mm.

Figure 1401.6.4.1(2)
TENANT SEPARATION

INTERNATIONAL CODE COUNCIL®
Copyright © 2015 ICC. ALL RIGHTS RESERVED. Accessed by David Dammon on Jun 21, 2017 12:30:52 PM pursuant to License Agreement with ICC. No further reproduction or distribution authorized. ANY UNAUTHORIZED REPRODUCTION OR DISTRIBUTION IS A VIOLATION OF THE FEDERAL COPYRIGHT ACT AND THE LICENSE AGREEMENT, AND SUBJECT TO CIVIL AND CRIMINAL PENALTIES THEREUNDER.

TABLE 1401.6.5
CORRIDOR WALL VALUES

OCCUPANCY	CATEGORIES			
	a	b	c[a]	d[a]
A-1	-10	-4	0	2
A-2	-30	-12	0	2
A-3, F, M, R, S-1	-7	-3	0	2
A-4, B, E, S-2	-5	-2	0	5
I-2	-10	0	1	2

a. Corridors not providing at least one-half the exit access travel distance for all occupants on a floor shall use Category b.

❖ Table 1401.6.5 assigns values to the different uses based on the relative degree of fire resistance and smoke resistance of corridor walls. Since corridors are enclosed (confined) spaces subject to the rapid buildup of smoke and heat, a degree of protection is necessary to minimize this hazard to the occupants egressing the building. The table reflects this emphasis through substantial negative scores in buildings without properly enclosed corridors. Both Section 1401.6.5 and this table place an emphasis on corridor walls, which differs from that expressed elsewhere in the code. For example, Chapter 10 of the IBC does not require corridors to be provided except in Group I-2 occupancies. The emphasis here is that when corridors are already present, they must provide basic protection. The table is an assessment of the relative risk represented by the corridor.

Note a to the table further controls the application of Categories c and d to existing buildings with certain means-of-egress arrangements. Although an existing building may have corridors with significant fire-resistance ratings and protected openings, little credit can be granted when the building occupants are protected for only a short period of time. Very short corridors in large floor plans or corridors located in just one tenant space of a floor plan provide a benefit to only a portion of the occupant load for a small portion of the overall exit access travel and, thus, do not accrue any positive points. Unless rated corridors are available for all occupants of that particular floor or they provide a protected path of travel for at least one-half of the occupants' overall travel length, negative corridor wall values are assigned. In existing buildings with very short or limited-use corridors, the code user is directed to use Category b, regardless of the corridors' fire-resistance ratings and opening protectives.

1401.6.5.1 Categories. The categories for corridor walls are:

1. Category a—No fire partitions; incomplete fire partitions; no doors; or doors not self-closing.
2. Category b—Less than 1-hour fire-resistance rating or not constructed in accordance with Section 708.4 of the *International Building Code*.
3. Category c—1-hour to less than 2-hour fire-resistance rating, with doors conforming to Section 716 of the *International Building Code* or without corridors as permitted by Section 1020 of the *International Building Code*.

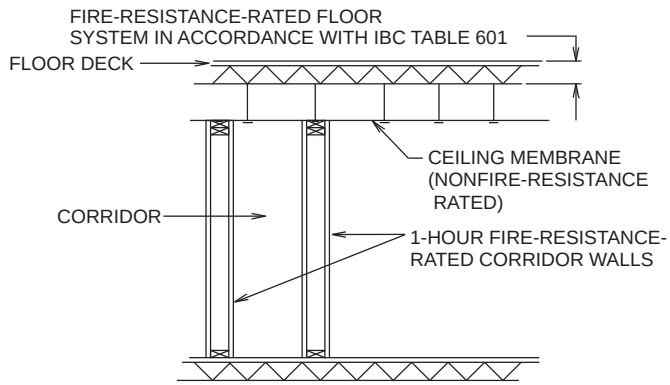

- OCCUPANCY GROUP B
- NO CLOSERS ON DOORS
- FLOOR SYSTEM COMPLIES WITH IBC TABLE 601
- SUSPENDED CEILING MEMBRANE IS NONFIRE-RESISTANCE RATED
- CORRIDOR WALLS ARE 1-HR FIRE-RESISTANCE RATED

NOTE: THESE CONDITIONS PRODUCE A CATEGORY a BECAUSE OF BOTH INCOMPLETE FIRE PARTITIONS AND NO SELF-CLOSING DOORS

- CLASSIFICATION = CATEGORY a
- SCORE FROM TABLE 1401.6.5 = -5
- ENTER -5 IN TABLE 1401.7

For SI: 1 foot = 304.8 mm.

Figure 1401.6.5.1(1)
CORRIDOR WALL VALUES—CATEGORY A

INTERNATIONAL CODE COUNCIL®
Copyright © 2015 ICC. ALL RIGHTS RESERVED. Accessed by David Dammon on Jun 21, 2017 12:30:52 PM pursuant to License Agreement with ICC. No further reproduction or distribution authorized. ANY UNAUTHORIZED REPRODUCTION OR DISTRIBUTION IS A VIOLATION OF THE FEDERAL COPYRIGHT ACT AND THE LICENSE AGREEMENT, AND SUBJECT TO CIVIL AND CRIMINAL PENALTIES THEREUNDER.

4. Category d—2-hour or greater fire-resistance rating, with doors conforming to Section 716 of the *International Building Code*.

❖ Corridor walls are categorized by the partitions being evaluated. The values of each category are listed in Table 1401.6.5 by occupancy classification.

1401.6.6 Vertical openings. Evaluate the fire-resistance rating of interior exit stairways or ramps, hoistways, escalator openings, and other shaft enclosures within the building, and openings between two or more floors. Table 1401.6.6(1) contains the appropriate protection values. Multiply that value by the construction-type factor found in Table 1401.6.6(2). Enter the vertical opening value and its sign (positive or negative) in Table 1401.7 under Safety Parameter 1401.6.6, Vertical Openings, for fire safety, means of egress, and general safety. If the structure is a one-story building or if all the unenclosed vertical openings within the building conform to the requirements of Section 713 of the *International Building Code*, enter a value of 2. The maximum positive value for this requirement shall be 2.

❖ Vertical openings are used to evaluate the fire-resistance ratings of openings between floors of a building and between shaft enclosures, such as stairs, elevator hoistways and escalator openings. This section also gives the formula for determining the score to be entered in Table 1401.7. This section recognizes the inherent safety of one-story buildings and of buildings where all vertical openings are protected in accordance with one of the methods in Section 713 by allowing the maximum value of 2 for these instances.

TABLE 1401.6.6(1)
VERTICAL OPENING PROTECTION VALUE

PROTECTION	VALUE
None (unprotected opening)	-2 times number of floors connected
Less than 1 hour	-1 times number of floors connected
1 to less than 2 hours	1
2 hours or more	2

❖ Table 1401.6.6(1) assigns relative protection values based on the fire-resistance ratings of the vertical openings in a building. The lower the fire-resistance rating, the greater the hazard to the rest of the building. The table also reflects the varying levels of impact to an existing building based on the number of stories that are connected by unprotected openings. The greater the number of floors that are interconnected by unprotected openings, the greater the number of negative points assessed in the existing building's evaluation scores. The closer the building comes to meeting new construction requirements for shaft protection, the greater the number of positive points that can be accrued. Noncomplying, unenclosed vertical openings consistently show up as contributing factors in unsuccessful fires. Consequently, a substantial number of points are at risk in this parameter, which is intended to be an incentive to bring noncomplying situations into compliance with new construction requirements.

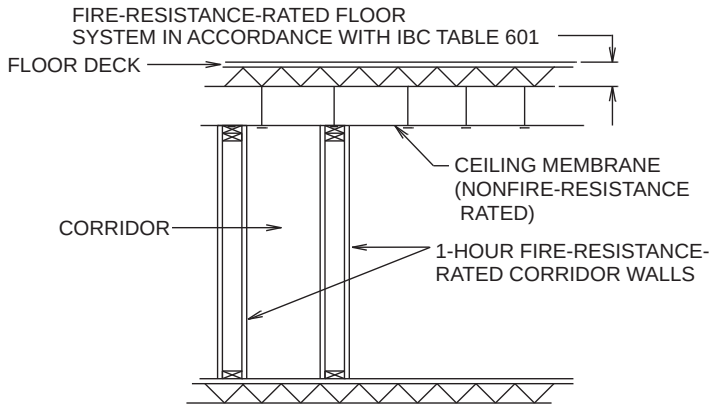

- OCCUPANCY GROUP B
- NO CLOSERS ON DOORS
- FLOOR SYSTEM COMPLIES WITH IBC TABLE 601
- SUSPENDED CEILING MEMBRANE IS NONFIRE-RESISTANCE RATED
- CORRIDOR WALLS ARE 1-HR FIRE-RESISTANCE RATED

NOTE: THESE CONDITIONS PRODUCE A CATEGORY a BECAUSE OF BOTH INCOMPLETE FIRE PARTITIONS AND NO SELF-CLOSING DOORS

- CLASSIFICATION = CATEGORY a
- SCORE FROM TABLE 1401.6.5 = -5
- ENTER -5 IN TABLE 1401.7

Figure 1401.6.5.1(2)
CORRIDOR WALL VALUES—CATEGORY B

INTERNATIONAL CODE COUNCIL®
Copyright © 2015 ICC. ALL RIGHTS RESERVED. Accessed by David Dammon on Jun 21, 2017 12:30:52 PM pursuant to License Agreement with ICC. No further reproduction or distribution authorized. ANY UNAUTHORIZED REPRODUCTION OR DISTRIBUTION IS A VIOLATION OF THE FEDERAL COPYRIGHT ACT AND THE LICENSE AGREEMENT, AND SUBJECT TO CIVIL AND CRIMINAL PENALTIES THEREUNDER.

TABLE 1401.6.6(2)
CONSTRUCTION-TYPE FACTOR

FACTOR	TYPE OF CONSTRUCTION								
	IA	IB	IIA	IIB	IIIA	IIIB	IV	VA	VB
	1.2	1.5	2.2	3.5	2.5	3.5	2.3	3.3	7

❖ Relative values for each type of construction are assigned in Table 1401.6.6(2). These represent the relative degree for fire hazard of each type of construction when compared to other types of construction. Similar factors were considered in the original development of IBC tables for height and area limitations. When one building has two different opening circumstances that individually result in different values, the lower value must be used.

1401.6.6.1 Vertical opening formula. The following formula shall be used in computing vertical opening value.

$$VO = PV \times CF \quad \textbf{(Equation 14-5)}$$

where:

VO= Vertical opening value.

PV= Protection value from Table 1401.6.6.(1).

CF= Construction-type factor from Table 1401.6.6.(2).

❖ See the commentary to Section 1401.6.6.

1401.6.7 HVAC systems. Evaluate the ability of the HVAC system to resist the movement of smoke and fire beyond the point of origin. Under the categories in Section 1401.6.7.1, determine the appropriate value and enter that value into Table 1401.7 under Safety Parameter 1401.6.7, HVAC Systems, for fire safety, means of egress, and general safety. Facilities in Group I-2 occupancies meeting Categories a, b or c shall be considered to fail the evaluation.

❖ This section evaluates the HVAC system's potential for resisting the movement and spread of fire and smoke. This section does not address HVAC systems that are used exclusively for smoke control in the building. The systems evaluated in this section are those that use either supply air, return air or exhaust air. For example, a typical building might have supply air ducts or shafts, return air ducts or shafts, toilet exhaust ducts or shafts, and kitchen exhaust ducts or shafts, all of which are considered HVAC systems. All systems in the building are evaluated and the lowest score obtained by any of the systems is the score that must be assigned to the entire building.

These provisions include two other safety aspects that are also applicable for new construction: plenums and air movement in egress elements, such as exit access corridors and exit stairways. These factors can significantly affect the relative safety of the occupants of the existing building in a fire condition. In some cases, these safety aspects can be more important than just the number of stories connected by an HVAC system.

1401.6.7.1 Categories. The categories for HVAC systems are:

1. Category a—Plenums not in accordance with Section 602 of the *International Mechanical Code*. -10 points.
2. Category b—Air movement in egress elements not in accordance with Section 1018.5 of the *International Building Code*. -5 points.
3. Category c—Both Categories a and b are applicable. -15 points.
4. Category d—Compliance of the HVAC system with Section 1020.5 of the *International Building Code* and Section 602 of the *International Mechanical Code*. 0 points.
5. Category e—Systems serving one story; or a central boiler/chiller system without ductwork connecting two or more stories. +5 points.

❖ The five categories that must be used in the evaluation process are defined in this section, along with their applicable values. The applicable value is entered in Table 1401.7 for the Safety Parameter of HVAC Systems on line 1401.6.7. These values are not occupancy sensitive, since the spread of fire is dependent on the HVAC system present in the existing building, not on its occupancy classification.

Category a requires a value of -10 for existing buildings that contain plenums not in compliance with the requirements of Section 602 of the *International Mechanical Code*® (IMC®). Locations of plenums in the existing buildings, the materials they are built of relative to the building's type of construction and the materials exposed to plenum air must all be evaluated.

Category b corresponds to existing buildings that have exit access corridors or exit stairways that are used to supply, return or exhaust air, or for other ventilation purposes. That type of layout puts the existing building's occupants at greater risk and must, therefore, be penalized with a value of -5.

Category c is applicable when an existing building has both noncomplying plenums and corridors or stairways used for air movement. A value of -15 must be assigned to such a building because the movement of smoke and fire throughout would pose an even greater hazard to the occupants.

Category d represents the base value of zero. A newly constructed building is required to meet all the provisions of IBC Section 1018.5 and IMC Section 602. An existing building that complies with these provisions is meeting this same minimum compliance level and, therefore, is neither penalized nor given benefit for that compliance.

INTERNATIONAL CODE COUNCIL®
Copyright © 2015 ICC. ALL RIGHTS RESERVED. Accessed by David Dammon on Jun 21, 2017 12:30:52 PM pursuant to License Agreement with ICC. No further reproduction or distribution authorized. ANY UNAUTHORIZED REPRODUCTION OR DISTRIBUTION IS A VIOLATION OF THE FEDERAL COPYRIGHT ACT AND THE LICENSE AGREEMENT, AND SUBJECT TO CIVIL AND CRIMINAL PENALTIES THEREUNDER.

Category e specifies a value of 5 points for HVAC systems that serve only one story of a building. The hazards of a fire spreading laterally through a story of a building via the HVAC system are minimal; therefore, the code assigns a positive value. A boiler/chiller system also does not lend itself to fire spread as long as there is no air movement in ducts.

Example 1:

A Group R-2 apartment building is six stories in height. Each apartment has its own HVAC equipment located in the dwelling unit. Bathrooms are ventilated by fans connected to a central exhaust shaft; kitchen exhaust hoods connect to a central exhaust shaft serving all floors. Corridors have a direct outside-supply air system on each floor with no exhaust. The HVAC systems are classified as Category b because the corridors are being used as the makeup air source for the bathroom and kitchen exhausts. A score of -5 is, therefore, entered in Table 1401.7 for the Safety Parameter for the HVAC Systems on line 1401.6.7.

Example 2:

A Group S-2 low-hazard storage occupancy is located in a one-story building. The building is preengineered steel Type IIB construction, and has a suspended gypsum board ceiling. Gypsum board has also been attached to the underside of the ceiling joists to serve as the upper membrane of a return air plenum. The plenum also contains plastic fire sprinkler piping for the automatic fire suppression system that is installed throughout the building.

The plenum is classified as noncombustible in accordance with Section 602 of the IMC. As long as the plastic fire sprinkler piping meets the optical density and flame spread limits, the plenum is in compliance with the code requirements for new construction. Therefore, the HVAC system will be classified as Category d. A value of zero is, therefore, entered in Table 1401.7 for the Safety Parameter of the HVAC Systems on line 1401.6.7.

1401.6.8 Automatic fire detection. Evaluate the smoke detection capability based on the location and operation of automatic fire detectors in accordance with Section 907 of the *International Building Code* and the *International Mechanical Code*. Under the categories and occupancies in Table 1401.6.8, determine the appropriate value and enter that value into Table 1401.7 under Safety Parameter 1401.6.8, Automatic Fire Detection, for fire safety, means of egress, and general safety. Facilities in Group I-2 occupancies meeting Category a, b or c shall be considered to fail the evaluation.

❖ This section considers the use of smoke detectors in a building. To receive credit for the smoke detectors, they must be connected to audible alarms and installed in accordance with IBC Section 907 and IMC Section 606.

TABLE 1401.6.8
AUTOMATIC FIRE DETECTION VALUES

OCCUPANCY	CATEGORIES					
	a	b	c	d	e	f
A-1, A-3, F, M, R, S-1	-10	-5	0	2	6	—
A-2	-25	-5	0	5	9	—
A-4, B, E, S-2	-4	-2	0	4	8	—
I-2	NP	NP	NP	4	5	2

❖ Table 1401.6.8 assigns values for each occupancy. The use of detectors increases the safety in a building by providing early warning of a fire condition to occupants. The lack of detectors and the associated early warning is considered less than optimum for safety in occupancies with high population densities and high combustible loads. Large deficiency points are accrued if adequate detection systems are not provided.

Example:

A four-story Group R-1 hotel has corridors and an elevator lobby on each story. Smoke detectors are installed throughout the corridors, closets, rooms and elevator lobbies. Single-station detectors are installed in the guestrooms. There are smoke detectors in the HVAC return air system and a fire alarm system is provided. An analysis of these building characteristics results in the selection of Category d. To be classified in Category e, guestrooms must have detectors connected to the building's emergency electrical system and annunciated by each room at a constantly attended location, such as the front desk. Additionally, the fire alarm system must be capable of being manually activated by the front desk when a smoke detector operates.

Category d value from Table 1401.6.8 = 2.

Enter 2 in Table 1401.7 for the Safety Parameter 1401.6.8 of Automatic Fire Detection on line 1401.6.8.

1401.6.8.1 Categories. The categories for automatic fire detection are:

1. Category a—None.
2. Category b—Existing smoke detectors in HVAC systems and maintained in accordance with the *International Fire Code*.
3. Category c—Smoke detectors in HVAC systems. The detectors are installed in accordance with the requirements for new buildings in the *International Mechanical Code*.

INTERNATIONAL CODE COUNCIL®
Copyright © 2015 ICC. ALL RIGHTS RESERVED. Accessed by David Dammon on Jun 21, 2017 12:30:52 PM pursuant to License Agreement with ICC. No further reproduction or distribution authorized. ANY UNAUTHORIZED REPRODUCTION OR DISTRIBUTION IS A VIOLATION OF THE FEDERAL COPYRIGHT ACT AND THE LICENSE AGREEMENT, AND SUBJECT TO CIVIL AND CRIMINAL PENALTIES THEREUNDER.

4. Category d—Smoke detectors throughout all floor areas other than individual sleeping units, tenant spaces and dwelling units.
5. Category e—Smoke detectors installed throughout the floor area.
6. Category f—Smoke detectors in corridors only.

❖ The categories are based on the location and completeness of the smoke detection system.

The categories represent a graduation in the levels of smoke detection that ranges from no detectors in Category a to full detection throughout all fire area spaces in Category e.

Category a is a facility that has no automatic smoke detection system.

Category b acknowledges that the IMC currently requires HVAC system detectors in more locations than may have been required in less contemporary model codes. This category, therefore, assumes that there are some smoke detectors in an existing building's HVAC system, but not to the extent required by the IMC for new construction. If the limited HVAC system detectors are maintained in accordance with the IFC, the detection system qualifies as Category b.

Category c addresses existing buildings that have upgraded HVAC systems with duct detectors installed in accordance with the IMC. The detection values for Category c are zero, since this is the level of protection required for new construction.

Category d is the classification for existing buildings that have full detection coverage throughout the public and common use spaces.

Category e has smoke detectors throughout floor areas in compliance with the provisions for new construction.

1401.6.9 Fire alarm systems. Evaluate the capability of the fire alarm system in accordance with Section 907 of the *International Building Code*. Under the categories and occupancies in Table 1401.6.9, determine the appropriate value and enter that value into Table 1401.7 under Safety Parameter 1401.6.9, Fire Alarm System, for fire safety, means of egress, and general safety.

❖ This section evaluates the capabilities of building fire alarm systems that are separate from the automatic fire detection system evaluated in Section 1401.6.8. A fire alarm system that is manually operated or activated by smoke detectors or sprinkler water-flow devices alerts the occupants to a fire condition. The fire alarm system will notify the occupants with visible or audible alarms so they may begin to take appropriate action. These systems are of particular importance in assembly, business, educational or residential occupancies, which can have large numbers of occupants in rooms with concentrated seating or people who are sleeping.

TABLE 1401.6.9
FIRE ALARM SYSTEM VALUES

OCCUPANCY	CATEGORIES			
	a	b[a]	c	d
A-1, A-2, A-3, A-4, B, E, R	-10	-5	0	5
F, M, S	0	5	10	15
I-2	-4	1	2	5

a. For buildings equipped throughout with an automatic sprinkler system, add 2 points for activation by a sprinkler water-flow device.

❖ Table 1401.6.9 gives values for each occupancy and type of fire alarm system provided. It reflects the idea that the presence of an alarm system in a building usually creates a safer condition for the occupants when compared to a building without a fire alarm system.

Deficiency points are assigned to occupancies without a fire alarm system but that have a high occupant load or number of sleeping occupants, such as Groups A-1, A-2, A-3, A-4, B, E and R, which are included in Categories a and b.

Example:

A one-story building with an assembly occupancy has a complete manual fire alarm system, a voice alarm system, a public address system and a fire command station that does not contain status indicators and controls for the air-handling system. The fire command station does not have emergency power or lighting system controls. It also does not have a fire department communication panel. As a result, the building is classified in Category c.

Category c value from Table 1401.6.9 = 0.

Enter 0 in Table 1401.7 for the Safety Parameter of Fire Alarm System on line 1401.6.9.

1401.6.9.1 Categories. The categories for fire alarm systems are:

1. Category a—None.
2. Category b—Fire alarm system with manual fire alarm boxes in accordance with Section 907.4 of the *International Building Code* and alarm notification appliances in accordance with Section 907.5.2 of the *International Building Code*.
3. Category c—Fire alarm system in accordance with Section 907 of the *International Building Code*.
4. Category d—Category c plus a required emergency voice/alarm communications system and a fire command station that conforms to Section 911 of the *International Building Code* and contains the emergency

INTERNATIONAL CODE COUNCIL®
Copyright © 2015 ICC. ALL RIGHTS RESERVED. Accessed by David Dammon on Jun 21, 2017 12:30:52 PM pursuant to License Agreement with ICC. No further reproduction or distribution authorized. ANY UNAUTHORIZED REPRODUCTION OR DISTRIBUTION IS A VIOLATION OF THE FEDERAL COPYRIGHT ACT AND THE LICENSE AGREEMENT, AND SUBJECT TO CIVIL AND CRIMINAL PENALTIES THEREUNDER.

voice/alarm communications system controls, fire department communication system controls, and any other controls specified in Section 911 of the *International Building Code* where those systems are provided.

❖ These categories are defined by the fire alarm system provided in the existing building.

Category a means that there is no fire alarm system in the building or it does not conform to all the requirements of IBC Section 907. This includes a system that does not have a secondary power supply in accordance with IBC Section 907 or one where the zones of a floor exceed 22,500 square feet (2090 m^2), as noted in IBC Section 907.6.3.

Category b applies when the manual fire alarm boxes comply with IBC Section 907.4.2 and NFPA 72. The alarm-notification appliances, specifically the audible alarms, are in accordance with IBC Section 907.5.2.1. Location, height and color of the manual fire alarm boxes must be specifically evaluated for compliance, along with the sound levels of the audible alarms when compared to the normal sound levels in the existing building.

Category c requires that the fire alarm system comply with IBC Section 907 and NFPA 72. This category indicates that a complete fire alarm system is present in the existing building and that the system complies with all the requirements for new construction.

Category d is applicable for a building that is provided with a fire command center for fire department operations that complies with IBC Section 911. This is a type of fire command station that is only required in new construction for high-rise buildings (see IBC Section 403.4.6). IBC Section 911 may be used when evaluating any building that complies with its performance requirements. This section specifies the fire command operations required, including the following:

- Voice/alarm communication system panels.
- Fire department communication panels.
- Fire detection and alarm system annunciator panels.
- An annunciator for visually indicating floor locations of elevators and whether they are operational.
- Status indicators and controls for air-handling systems.
- Controls for unlocking all stairway doors simultaneously.
- Sprinkler valve and water-flow detector display panels.
- Emergency and standby power status indicators.
- Elevator fire recall switch in accordance with ASME A17.1.

1401.6.10 Smoke control. Evaluate the ability of a natural or mechanical venting, exhaust, or pressurization system to control the movement of smoke from a fire. Under the categories and occupancies in Table 1401.6.10, determine the appropriate value and enter that value into Table 1401.7 under Safety Parameter 1401.6.10, Smoke Control, for means of egress and general safety.

❖ This section is used to evaluate characteristics that could limit smoke migration in the building, including operable windows, mechanical exhaust systems, pressurized stairways or smokeproof enclosures.

TABLE 1401.6.10
SMOKE CONTROL VALUES

OCCUPANCY	CATEGORIES					
	a	b	c	d	e	f
A-1, A-2, A-3	0	1	2	3	6	6
A-4, E	0	0	0	1	3	5
B, M, R	0	2[a]	3[a]	3[a]	3[a]	4[a]
F, S	0	2[a]	2[a]	3[a]	3[a]	3[a]
I-2	-4	0	0	0	3	0

a. This value shall be 0 if compliance with Category d or e in Section 1401.6.8.1 has not been obtained.

❖ Table 1401.6.10 assigns values for each occupancy and category of smoke control in the building. The table represents the relative benefits to the building occupants of various levels of smoke control methods provided in the building.

There are no negative points accrued under any circumstances, but zero positive points are indicated if no smoke control or only limited smoke control is provided. The table also indicates the value of smoke control in the exit stairs of a building and of automatic sprinkler systems as a means of limiting the volume of smoke production from a fire. Note a of the table assigns zero credit points for Groups B, M, R, F and S unless the building complies with Category d or e in Section 1401.6.8.1, which are the automatic fire detection system requirements.

Example 1:

A Group A-3 church sanctuary is located in a one-story building. It has no operable windows and no smoke control system.

Category a is applicable and the value from Table 1401.6.10 = 0.

Enter 0 in Table 1401.7 for the Safety Parameter of Smoke Control on line 1401.6.10, for only means of egress (ME) and general safety (GS) parameters. No entry is made under the fire safety (FS) parameter.

Example 2:

A three-story Group E high school has operable windows throughout the building. The stairways are interior without windows or a pressurization system.

Category b is applicable and the value from Table 1401.6.10 = 0.

Enter 0 in Table 1401.7 under Safety Parameter 1401.6.10, Smoke Control, for means of egress (ME) and general safety (GS) parameters.

INTERNATIONAL CODE COUNCIL®
Copyright © 2015 ICC. ALL RIGHTS RESERVED. Accessed by David Dammon on Jun 21, 2017 12:30:52 PM pursuant to License Agreement with ICC. No further reproduction or distribution authorized. ANY UNAUTHORIZED REPRODUCTION OR DISTRIBUTION IS A VIOLATION OF THE FEDERAL COPYRIGHT ACT AND THE LICENSE AGREEMENT, AND SUBJECT TO CIVIL AND CRIMINAL PENALTIES THEREUNDER.

Example 3:

A two-story Group A-2 nightclub is sprinklered throughout and has a smoke control system that meets the requirements for Category e.

Category e is applicable and the value from Table 1401.6.10 = 6.

Enter 6 in Table 1401.7 under Safety Parameter 1401.6.10, Smoke Control, for means of egress (ME) and general safety (GS) parameters.

Example 4:

A six-story Group B office building has three stairways: one is a smokeproof enclosure conforming to Section 909.20; one is pressurized in accordance with Section 909.20.5; and one has operable exterior windows. The building has smoke detectors throughout all floor spaces and fire areas.

Category f is applicable and the value from Table 1401.6.10 = 4.

Enter 4 in Table 1401.7 under Safety Parameter 1401.6.10, Smoke Control, for means of egress (ME) and general safety (GS).

If detectors are omitted from some of the offices of the buildings, then a score of 0 must be entered in Table 1401.7. This is determined from Note a in Table 1401.6.10.

1401.6.10.1 Categories. The categories for smoke control are:

1. Category a—None.
2. Category b—The building is equipped throughout with an automatic sprinkler system. Openings are provided in exterior walls at the rate of 20 square feet (1.86 m^2) per 50 linear feet (15 240 mm) of exterior wall in each story and distributed around the building perimeter at intervals not exceeding 50 feet (15 240 mm). Such openings shall be readily openable from the inside without a key or separate tool and shall be provided with ready access thereto. In lieu of operable openings, clearly and permanently marked tempered glass panels shall be used.
3. Category c—One enclosed exit stairway, with ready access thereto, from each occupied floor of the building. The stairway has operable exterior windows, and the building has openings in accordance with Category b.
4. Category d—One smokeproof enclosure and the building has openings in accordance with Category b.
5. Category e—The building is equipped throughout with an automatic sprinkler system. Each floor area is provided with a mechanical air-handling system designed to accomplish smoke containment. Return and exhaust air shall be moved directly to the outside without recirculation to other floor areas of the building under fire conditions. The system shall exhaust not less than six air changes per hour from the floor area. Supply air by mechanical means to the floor area is not required. Containment of smoke shall be considered as confining smoke to the floor area involved without migration to other floor areas. Any other tested and approved design that will adequately accomplish smoke containment is permitted.
6. Category f—Each stairway shall be one of the following: a smokeproof enclosure in accordance with Section 1023.11 of the *International Building Code*; pressurized in accordance with Section 909.20.5 of the *International Building Code*; or shall have operable exterior windows.

❖ The six categories to be evaluated are compared to the occupancies to determine the score to be entered in Table 1401.7 for the Safety Parameter of Smoke Control on line 1401.6.10.

Category a means there is no method of controlling smoke in the building.

Category b means the existing building is sprinklered and there are exterior windows that can be readily opened without the use of keys or tools. This category recognizes the benefit of manual venting capability taken from the high-rise provisions of the IBC for new construction, which include automatic sprinkler protection. Operable panels or windows in the exterior walls must be provided at the rate of 20 square feet per 50 lineal feet (1.85 m^2 per 15 240 mm) of exterior wall in each story. The openings must be distributed around the perimeter of the building at intervals not more than 50 feet (15 240 mm) between windows. A story with very high ceilings may have a strip of windows located well above the floor with latches or controls that are not easily reachable. Such openings would not meet Category b standards, even if they are provided and distributed at the required rate.

Category c requires at least one enclosed exit stairway to have operable windows that open to the exterior. Additionally, the building must have operable windows complying with the size and spacing requirements of Category b.

Category d requires a minimum of one smokeproof enclosure and operable windows in the building. These operable windows are the same as those addressed in Category b. By definition, a smokeproof enclosure refers to an enclosed interior exit stairway that conforms to IBC Section 1009 as designated in IBC Section 1022.

Section 1022.9 requires stairways to be protected from smoke by one of two methods: a smokeproof enclosure or stairway pressurization design (see IBC Section 909.20.5).

Additional requirements that must be considered when evaluating a smokeproof enclosure are: access (see IBC Section 909.20.1), construction (see IBC Section 909.20.2), ventilating equipment (see IBC Section 909.20.6) and standby power (see IBC Section 909.20.6.2).

INTERNATIONAL CODE COUNCIL®
Copyright © 2015 ICC. ALL RIGHTS RESERVED. Accessed by David Dammon on Jun 21, 2017 12:30:52 PM pursuant to License Agreement with ICC. No further reproduction or distribution authorized. ANY UNAUTHORIZED REPRODUCTION OR DISTRIBUTION IS A VIOLATION OF THE FEDERAL COPYRIGHT ACT AND THE LICENSE AGREEMENT, AND SUBJECT TO CIVIL AND CRIMINAL PENALTIES THEREUNDER.

Category e recognizes the use of a mechanical smoke control system designed in accordance with the provisions of the code in a fully sprinklered building. Each fire area in the building must have a mechanical smoke control system. Return and exhaust air from the system must be discharged directly to the exterior to achieve the necessary level of protection. A specific air change requirement is provided, independent of the fire area's volume or size. Note that a smoke control system designed in accordance with IBC Section 909 is also considered acceptable.

Category f recognizes the merits of smokeproof enclosures, pressurized stairways and stairways with operable exterior windows. To be classified in this category, all stairways in the building must comply with the requirements of any one, or a combination of, the three types of stairways. It is possible for a single building to have a smokeproof enclosure, a pressurized stairway and a stairway with operable exterior windows.

Both the categories and the occupancy of the building are used in determining the score that will be entered in Table 1401.7. This score is determined from Table 1401.6.10. Note a in Table 1401.6.10 can have a significant impact on the scores. The note states that, even if the building has some level of smoke control, it is to receive no credit if it does not have an automatic fire detection system complying with Category d or e in Section 1401.6.8.1.

1401.6.11 Means of egress capacity and number. Evaluate the means of egress capacity and the number of exits available to the building occupants. In applying this section, the means of egress are required to conform to the following sections of the *International Building Code:* 1003.7, 1004, 1005, 1006, 1007, 1016.2, 1026.1, 1028.2, 1028.5, 1029.2, 1029.3, 1029.4 and 1030. The number of exits credited is the number that is available to each occupant of the area being evaluated. Existing fire escapes shall be accepted as a component in the means of egress when conforming to Section 405.

Under the categories and occupancies in Table 1401.6.11, determine the appropriate value and enter that value into Table 1401.7 under Safety Parameter 1401.6.11, Means of Egress Capacity, for means of egress and general safety.

❖ This section addresses the exit capacity and number of existing exits available to the building occupants. Before a building can be evaluated in this category, and Chapter 14 in general, it must comply with the listed sections of the IBC.

The means of egress is required to conform to the following IBC sections for new construction before evaluation:

- IBC Section 1003.7 establishes that elevators, escalators and moving walks cannot be considered as part of the means of egress.
- IBC Section 1004 establishes the minimum number of occupants the exit facilities must accommodate.
- IBC Section 1005.3 defines the capacity of the means of egress by identifying a minimum width of egress component per occupant. This is used to calculate the total capacity of the means-of-egress component.
- IBC Section 1006.2.1 establishes requirements for common path of egress travel.
- IBC Section 1007.1 establishes requirements for the remoteness of exit doors and means-of-egress doors.
- IBC Section 1006 establishes requirements for minimum number of exits.
- IBC Sections 1027.1, 1027.2 and 1027.5 establish requirements related to the exit discharge.
- IBC Sections 1028.2, 1028.3 and 1028.4 establish requirements related to exits and lobbies for assembly occupancies.
- IBC Section 1030 establishes requirements for emergency escape and rescue.

TABLE 1401.6.11
MEANS OF EGRESS VALUES[a]

OCCUPANCY	CATEGORIES				
	a	b	c	d	e
A-1, A-2, A-3, A-4, E, I-2	-10	0	2	8	10
M	-3	0	1	2	4
B, F, S	-1	0	0	0	0
R	-3	0	0	0	0

a. The values indicated are for buildings six stories or less in height. For buildings over six stories above grade plane, add an additional -10 points.

❖ Table 1401.6.11 assigns values for each occupancy and category from Section 1401.6.11.1. The table gives credit for providing additional numbers of exits and additional exit capacity beyond the minimum required for new construction.

This additional evaluation contributes to the overall assessment of the building's safety and may offset other safety deficiencies [see Commentary Figures 1401.6.11(1) and 1401.6.11(2)]. Note a of the table provides a significant penalty for high-rise buildings that use fire escapes as part of the means of egress. In this case, if the building is seven stories or greater in height and uses fire escapes, -10 points must be added to the values already listed for Category a buildings.

INTERNATIONAL CODE COUNCIL®
Copyright © 2015 ICC. ALL RIGHTS RESERVED. Accessed by David Dammon on Jun 21, 2017 12:30:52 PM pursuant to License Agreement with ICC. No further reproduction or distribution authorized. ANY UNAUTHORIZED REPRODUCTION OR DISTRIBUTION IS A VIOLATION OF THE FEDERAL COPYRIGHT ACT AND THE LICENSE AGREEMENT, AND SUBJECT TO CIVIL AND CRIMINAL PENALTIES THEREUNDER.

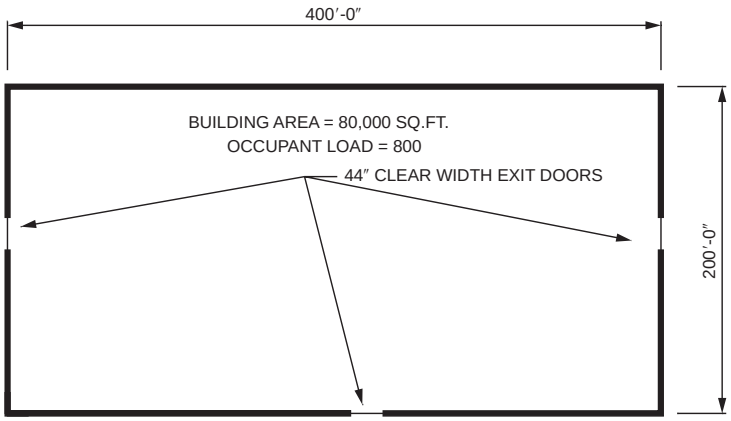

- OCCUPANCY GROUP F
- COMPLETE SPRINKLER SYSTEM
- EGRESS WIDTH PER IBC SECTION 1005.3
- THE EXIT CAPACITY OF THE THREE 44″ CLEAR WIDTH EXIT DOORS = $\frac{3 \times 44''}{0.15}$ = 880 OCCUPANTS

- CLASSIFICATION = CATEGORY b. THE EXIT CAPACITY OF 880 EXCEEDS THE ALLOWABLE CAPACITY OF 800, COMPLYING WITH IBC SECTION 1005.3

- SCORE = 0 FROM TABLE 1401.6.11
- ENTER 0 IN TABLE 1401.7

For SI: 1 inch = 25.4 mm, 1 foot = 304.8 mm, 1 square foot = 0.0929 m^2.

Figure 1401.6.11(1)
MEANS-OF-EGRESS VALUES—CATEGORY B

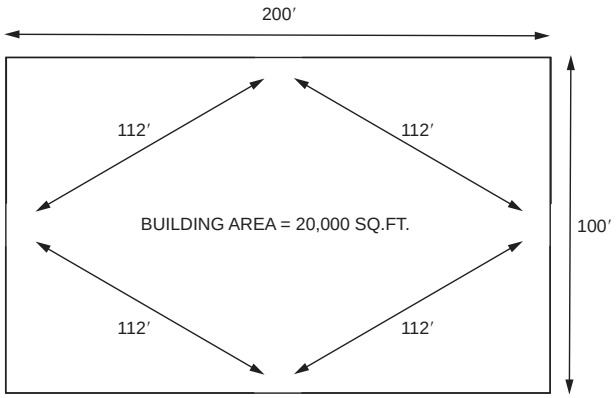

- OCCUPANCY GROUP A-3
- BUILDING FULLY SPRINKLERED
- NUMBER OF OCCUPANTS = 400
- IBC TABLE 1006.3.1 REQUIRES TWO EXITS, FOUR EXTERIOR DOORS (EXITS) ARE PROVIDED
- THE 1/3 DIAGONAL = $\frac{224'}{3}$ = 75′
- EACH DOOR IS SPACED 112′ APART
- CLASSIFICATION = CATEGORY d FROM TABLE 1401.6.11
- ENTER 8 IN TABLE 1401.7

For SI: 1 foot = 304.8 mm, 1 square foot = 0.0929 m^2.

Figure 1401.6.11(2)
MEANS-OF-EGRESS VALUES—CATEGORY A

INTERNATIONAL CODE COUNCIL®
Copyright © 2015 ICC. ALL RIGHTS RESERVED. Accessed by David Dammon on Jun 21, 2017 12:30:52 PM pursuant to License Agreement with ICC. No further reproduction or distribution authorized. ANY UNAUTHORIZED REPRODUCTION OR DISTRIBUTION IS A VIOLATION OF THE FEDERAL COPYRIGHT ACT AND THE LICENSE AGREEMENT, AND SUBJECT TO CIVIL AND CRIMINAL PENALTIES THEREUNDER.

1401.6.11.1 Categories. The categories for means-of-egress capacity and number of exits are:

1. Category a—Compliance with the minimum required means-of-egress capacity or number of exits is achieved through the use of a fire escape in accordance with Section 405.
2. Category b—Capacity of the means of egress complies with Section 1005 of the *International Building Code*, and the number of exits complies with the minimum number required by Section 1006 of the *International Building Code*.
3. Category c—Capacity of the means of egress is equal to or exceeds 125 percent of the required means-of-egress capacity, the means of egress complies with the minimum required width dimensions specified in the *International Building Code*, and the number of exits complies with the minimum number required by Section 1006 of the *International Building Code*.
4. Category d—The number of exits provided exceeds the number of exits required by Section 1006 of the *International Building Code*. Exits shall be located a distance apart from each other equal to not less than that specified in Section 1007 of the *International Building Code*.
5. Category e—The area being evaluated meets both Categories c and d.

❖ Five categories must be considered. These categories and the occupancy of the building will determine the score entered in Table 1401.7.

Category a is applicable to buildings that comply with either the means-of-egress capacity or the number of exits, including the use of fire escapes. Although the code allows fire escapes to be used as an egress element in existing buildings, this is the least desirable option in any type of building. The code requires a building using fire escapes to use Category a and its corresponding negative points.

Category b is used for buildings that meet the minimum requirements of IBC Section 1004 for capacity of means of egress and IBC Section 1021 for minimum number of exits and continuity.

Category c is used for buildings that exceed the requirements for new construction. This category provides small positive points for existing buildings that meet all of the following requirements:

- The capacity of all means-of-egress components is greater than 125 percent of the required capacity.
- All means-of-egress components comply with the minimum required widths [e.g., 32-inch (814 mm) clear for doors, corridors that are 44 inches (1118 mm) wide and stairways].
- The minimum number of exits is provided based on the number of occupants on each floor level.

By providing oversized egress capacity and minimum egress width requirements, an existing building has added safety, which is rewarded with a small number of positive points.

Category d simply relates to buildings where more exits are provided than required by IBC Section 1021, which contributes a positive factor to the building's exit capacity.

Before credit can be given to an existing building with a greater number of exits, the exits must be evaluated for their remoteness and independence from each other. All of the exits must be located at least one-half the length of the diagonal from each other before Category d can be used. If the building is equipped throughout with an automatic sprinkler system in accordance with NFPA 13 or 13R, the exits can be located one-third the length of the diagonal from each other.

Category e provides additional credit for existing buildings that have the characteristics of both Categories c and d. Such a building, which has oversized capacities in its egress elements, minimum required clear widths for the egress components and additional exits that are all remotely located from one another, is considered to have the highest degree of safety; however, this is true for only some of the applicable occupancies. In Group B, F, S and R occupancies, any additional capacity or increased number of exits is not a significant factor. No positive points are awarded for this life-safety issue for these occupancies.

1401.6.12 Dead ends. In spaces required to be served by more than one means of egress, evaluate the length of the exit access travel path in which the building occupants are confined to a single path of travel. Under the categories and occupancies in Table 1401.6.12, determine the appropriate value and enter that value into Table 1401.7 under Safety Parameter 1401.6.12, Dead Ends, for means of egress and general safety.

❖ This section is used to evaluate dead-end exit access conditions within the building. This section uses the terminology "confined to a single path of travel." Another way to illustrate the meaning of this is "a single direction of travel to reach an exit." A corridor is typically of a width that provides effectively only one path in which a building occupant can travel in one of two directions to reach exits. A dead end may be a single path, but the key feature of a dead end is that only one direction is available to reach an exit. When building occupants have only one direction of travel available, a potentially hazardous condition is created because they may become trapped if the direction of travel to the exit is blocked by fire or smoke.

This section addresses only dead ends that are a component of exit access travel, which is "that portion of a means of egress that leads to an entrance to an exit." Although a room containing only one egress door has only one way out, it is not considered a dead-end condition. The code takes this condition into account in establishing the limitations under which a room is allowed to have only one means of

INTERNATIONAL CODE COUNCIL®
Copyright © 2015 ICC. ALL RIGHTS RESERVED. Accessed by David Dammon on Jun 21, 2017 12:30:52 PM pursuant to License Agreement with ICC. No further reproduction or distribution authorized. ANY UNAUTHORIZED REPRODUCTION OR DISTRIBUTION IS A VIOLATION OF THE FEDERAL COPYRIGHT ACT AND THE LICENSE AGREEMENT, AND SUBJECT TO CIVIL AND CRIMINAL PENALTIES THEREUNDER.

egress. Dead ends are a concern in passageways and corridors where occupants may not realize that the corridor ends and they may have to retrace their steps in order to remain on a path toward an exit.

TABLE 1401.6.12
DEAD-END VALUES

OCCUPANCY	CATEGORIES[a]			
	a	b	c	d
A-1, A-3, A-4, B, F, M, R, S	-2	0	2	-4
A-2, E	-2	0	2	-4
I-2	-2	0	2	-6

a. For dead-end distances between categories, the dead-end value shall be obtained by linear interpolation.

❖ The table reflects the relative degree of hazard associated with dead-end passageways and corridors. This is shown by the deficiency points that apply where a dead end exceeds 35 or 70 feet (10 668 or 21 336 mm) in an occupancy with a relatively high occupant load, such as an assembly occupancy. Note a allows for the interpolation for actual dead-end lengths between the distances specified in the categories. For example, if a building contains a corridor that has a dead-end length of 10 feet (3048 mm) at each end beyond the exits, the value of 1 is used; this is the midpoint between Categories b and c.

1401.6.12.1 Categories. The categories for dead ends are:

1. Category a—Dead end of 35 feet (10 670 mm) in nonsprinklered buildings or 70 feet (21 340 mm) in sprinklered buildings.
2. Category b—Dead end of 20 feet (6096 mm); or 50 feet (15 240 mm) in Group B in accordance with Section 1020.4, Exception 2, of the *International Building Cod*e.
3. Category c—No dead ends; or ratio of length to width (l/w) is less than 2.5:1.
4. Category d—Dead ends exceeding Category a.

❖ This section defines the categories for dead-end exit access conditions.

Category a allows dead-end conditions of up to 35 feet (10 668 mm) for existing buildings that are not fully sprinklered and up to 70 feet (21 336 mm) for existing buildings that are fully sprinklered. These distances correspond to the absolute maximum dead-end lengths allowed in existing buildings by the IFC. Dead ends greater than these distances are considered an unsafe condition because they are not allowed by the IFC to occur in an existing building. It would, therefore, be inconsistent to allow greater dead-end lengths under this evaluation method. Since these lengths far exceed the allowable lengths permitted for new construction, negative values are associated with this category.

Category b is the classification for buildings that comply with the requirements for new construction. This zero-based category provides no extra credit for complying with new construction requirements.

Category c represents conditions that exceed the requirements for new construction. If there are no dead-end corridors or the "corridor" is more of a "space," Category c can be used. In Category c, the length-to-width ratio of 2.5 to define a space/corridor is the same as Exception 3 in IBC Section 1020.4. Such a space allows the building user a more circular route and full view of the space and, therefore, does not represent as great a potential hazard as a classic dead-end corridor.

These categories and occupancies of the building are used in Table 1401.6.12 to determine the score to be entered in Table 1401.7 for the Safety Parameter of Dead Ends on line 1401.6.12 [see Commentary Figures 1401.6.12.1(1), 1401.6.12.1(2) and 1401.6.12.1(3)].

1401.6.13 Maximum exit access travel distance to an exit. Evaluate the length of exit access travel to an approved exit. Determine the appropriate points in accordance with the following equation and enter that value into Table 1401.7 under Safety Parameter 1401.6.13, Maximum Exit Access Travel Distance for means of egress and general safety. The maximum allowable exit access travel distance shall be determined in accordance with Section 1016.1 of the *International Building Code*.

$$\text{Points} = 20 \times \frac{\text{Maximum allowable travel distance} - \text{Maximum actual travel distance}}{\text{Maximum allowable travel distance}}$$

(Equation 14-6)

❖ The length of exit access travel distance is evaluated in comparison to the travel distance allowed by IBC Table 1017.2 for a particular occupancy. The exit access travel distance is measured from the most remote point in the building to the nearest entrance to an exit. Total exit access travel distance in IBC Table 1017.2 includes travel within a room or space plus any exit access corridor travel to the exit. Some modifications to the IBC Table 1017.2 requirements are listed for certain occupancies and buildings as listed in the notes to that table.

To determine the value to be assigned for maximum travel distances to an exit, the specified equation must be used. This equation allows a graduated scale to be used to evaluate compliance of an existing situation with new construction travel distance requirements. With the equation, a more definite evaluation can occur with a broader range of scores. Any existing building having overall travel distances less than those specified in IBC Table 1017.2 will achieve a positive credit. Existing buildings with travel distances greater than those allowed for new construction will be assigned negative points based on the extent the travel distance exceeds the allowable limit.

INTERNATIONAL CODE COUNCIL®
Copyright © 2015 ICC. ALL RIGHTS RESERVED. Accessed by David Dammon on Jun 21, 2017 12:30:52 PM pursuant to License Agreement with ICC. No further reproduction or distribution authorized. ANY UNAUTHORIZED REPRODUCTION OR DISTRIBUTION IS A VIOLATION OF THE FEDERAL COPYRIGHT ACT AND THE LICENSE AGREEMENT, AND SUBJECT TO CIVIL AND CRIMINAL PENALTIES THEREUNDER.

For example, an existing Group B business building has a travel distance of 150 feet (45 720 mm). The distance is measured from the most remote corner of a partitioned office, down a corridor and to an exit door. IBC Table 1017.2 permits an unsprinklered Group B building to have a travel distance of 200 feet (60 960 mm). The equation yields the following:

$$\text{Points} = 20\left(\frac{200 \text{ feet} - 150 \text{ feet}}{200 \text{ feet}}\right)$$

$$= 5.0$$

See Commentary Figures 1401.6.13(1), 1401.6.13(2) and 1401.6.13(3) for other examples.

1401.6.14 Elevator control. Evaluate the passenger elevator equipment and controls that are available to the fire department to reach all occupied floors. Emergency recall and in-car operation of elevators shall be provided in accordance with the *International Fire Code*. Under the categories and occupancies in Table 1401.6.14, determine the appropriate value and enter that value into Table 1401.7 under Safety Parameter 1401.6.14, Elevator Control, for fire safety, means of egress and general safety. The values shall be zero for a single-story building.

❖ The availability of elevators in the building and their incapability in an emergency are evaluated. This section addresses four different categories of elevators in existing buildings. This section does not address the requirements of IBC Chapter 30. Access must be provided to all occupied floors by passenger elevators for the purposes of this evaluation. Freight elevators cannot be considered, since they may be in locations not readily accessible for fire department use. Emergency elevator operation must comply with the IFC for either a Phase I emergency recall or Phase II emergency in-car operation. One-story buildings, including those with mezzanines served by an elevator, are awarded zero value.

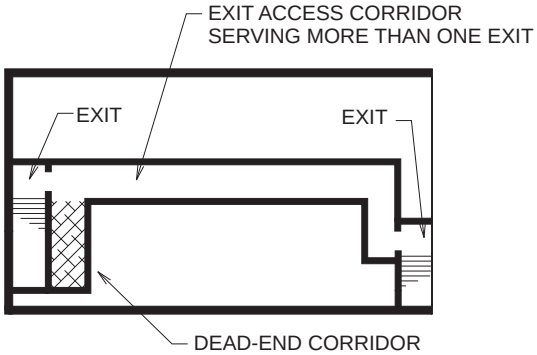

Figure 1401.6.12.1(1)
TYPICAL DEAD-END CORRIDOR

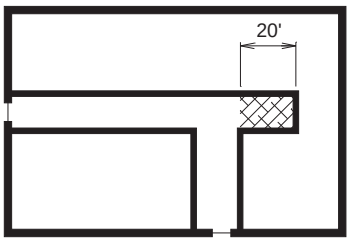

- OCCUPANCY GROUP B WITH MOVABLE PARTITIONS AND FURNITURE 6'-6" HIGH
- DEAD-END PASSAGEWAY IS 20'-0"
- CLASSIFICATION = CATEGORY b
- VALUE = 0 FROM TABLE 1401.6.12
- ENTER 0 IN TABLE 1401.7

For SI: 1 inch = 25.4 mm, 1 foot = 304.8 mm.

Figure 1401.6.12.1(2)
DEAD-END VALUES—CATEGORY B

INTERNATIONAL CODE COUNCIL®
Copyright © 2015 ICC. ALL RIGHTS RESERVED. Accessed by David Dammon on Jun 21, 2017 12:30:52 PM pursuant to License Agreement with ICC. No further reproduction or distribution authorized. ANY UNAUTHORIZED REPRODUCTION OR DISTRIBUTION IS A VIOLATION OF THE FEDERAL COPYRIGHT ACT AND THE LICENSE AGREEMENT, AND SUBJECT TO CIVIL AND CRIMINAL PENALTIES THEREUNDER.

TABLE 1401.6.14
ELEVATOR CONTROL VALUES

ELEVATOR TRAVEL	CATEGORIES			
	a	b	c	d
Less than 25 feet of travel above or below the primary level of elevator access for emergency fire-fighting or rescue personnel	-2	0	0	+2
Travel of 25 feet or more above or below the primary level of elevator access for emergency fire-fighting or rescue personnel	-4	NP	0	+4

For SI: 1 foot = 304.8 mm.
NP = Not permitted.

❖ The table assigns values based on the types of controls the elevators have, and the distance the elevators must travel to reach the floors they serve. The 25-foot (7620 mm) threshold of elevator travel is based on the IFC requirements and ASME A17.1. Elevator travel distance is based on the level where the elevator is accessed by the fire department. Usually, this is the ground floor or grade-level floor and corresponds to the level where fire command stations or fire alarm system annunciator panels are located. Any elevator that travels 25 feet (7620 mm) or more must always be provided with Phase I and II recall capabilities.

Example:

Assume a Group B business occupancy, three stories in height where the elevator lobbies are equipped

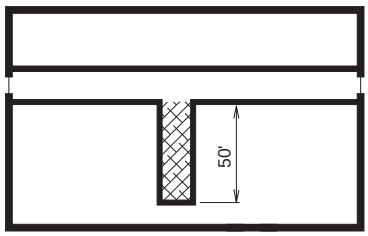

- OCCUPANCY GROUP R
- UNSPRINKLERED BUILDING
- DEAD-END CORRIDOR LENGTH IS 50'-0"
- CLASSIFICATION = CATEGORY a
- VALUE = -2 FROM TABLE 1401.6.12
- ENTER -2 IN TABLE 1401.7

For SI: 1 foot = 304.8 mm.

Figure 1401.6.12.1(3)
DEAD-END VALUES—CATEGORY A

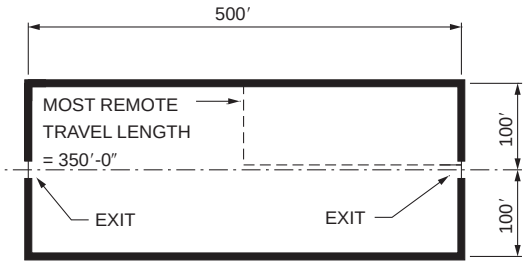

- COMBUSTIBLE STORAGE, OCCUPANCY GROUP S-1 WITH AUTOMATIC FIRE SUPPRESSION SYSTEM
- MOST REMOTE LENGTH OF EXIT ACCESS TRAVEL (IBC SECTION 1017.2)
- TRAVEL DISTANCE IN BUILDING = 350′-0″
- TRAVEL DISTANCE LIMIT FROM IBC TABLE 1017.2 = 250′-0″
- POINTS = $20 \times \frac{250 - 350}{250} = -8$

For SI: 1 inch = 25.4 mm, 1 foot = 304.8 mm.

Figure 1401.6.13(1)
EXIT ACCESS TRAVEL DISTANCE VALUE—OCCUPANCY GROUP S-1

INTERNATIONAL CODE COUNCIL®
Copyright © 2015 ICC. ALL RIGHTS RESERVED. Accessed by David Dammon on Jun 21, 2017 12:30:52 PM pursuant to License Agreement with ICC. No further reproduction or distribution authorized. ANY UNAUTHORIZED REPRODUCTION OR DISTRIBUTION IS A VIOLATION OF THE FEDERAL COPYRIGHT ACT AND THE LICENSE AGREEMENT, AND SUBJECT TO CIVIL AND CRIMINAL PENALTIES THEREUNDER.

with smoke detectors that recall the elevator to the main floor, or to an alternative floor if the main floor detector is activated. The elevator travels more than 25 feet (7620 mm) above the main floor.

This building must be placed in Category c. Because the elevator travels more than 25 feet (7620 mm) above the main floor, it must be brought into compliance with the IFC, which requires Phase I or II recall. When the elevators are brought into compliance with the IFC, they are placed automatically in Category c. The value from Table 1401.6.14 is zero; therefore, zero must be entered in Table 1401.7 for the Safety Parameter of Elevator Control on line 1401.6.14.

1401.6.14.1 Categories. The categories for elevator controls are:

1. Category a—No elevator.
2. Category b—Any elevator without Phase I emergency recall operation and Phase II emergency in-car operation.
3. Category c—All elevators with Phase I emergency recall operation and Phase II emergency in-car operation as required by the *International Fire Code*.
4. Category d—All meet Category c; or Category b where permitted to be without Phase I emergency recall operation and Phase II emergency in-car operation; and at least one elevator that complies with new construction requirements serves all occupied floors.

❖ The categories that a building may be placed in range from buildings with no elevators to buildings with elevators complying with new construction requirements and total elevator recall capability.

Category a is applicable to buildings with no elevators. Without an elevator in a multiple-story building, fire department personnel are required to use the stairs for rescuing people and accessing fire floors. Category a is assigned a negative value.

Category b is applicable to buildings in which elevators are present but have no recall controls. Without recall or fire department control, the elevators are allowed vertical travel distances of less than 25 feet (7620 mm). This approach is consistent with the IFC, which requires controls for elevators reaching 25 feet (7620 mm) or more.

Category c is applicable to buildings with elevators that have automatic recall as required by the IFC.

Category d is used for buildings when the elevator

- OCCUPANCY GROUP B WITHOUT FIRE SUPPRESSION SYSTEM
- MOST REMOTE TRAVEL LENGTH = 200′-0″
- TRAVEL DISTANCE IN BUILDING = 200′-0″
- TRAVEL DISTANCE LIMIT FROM TABLE 1017.2 = 200′-0″
- POINTS = $20 \times \frac{200 - 200}{200} = 0$

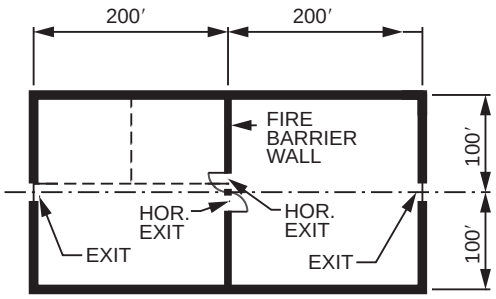

For SI: 1 inch = 25.4 mm, 1 foot = 304.8 mm.

Figure 1401.6.13(2)
EXIT ACCESS TRAVEL DISTANCE VALUE—OCCUPANCY GROUP B

- OCCUPANCY GROUP R WITH FIRE SUPPRESSION SYSTEM
- MOST REMOTE TRAVEL LENGTH = 100′-0″
- TRAVEL DISTANCE IN BUILDING = 100′-0″
- TRAVEL DISTANCE LIMIT FROM IBC TABLE 1017.2 = 250′-0″
- POINTS = $20 \times \frac{250 - 100}{250} = +12$

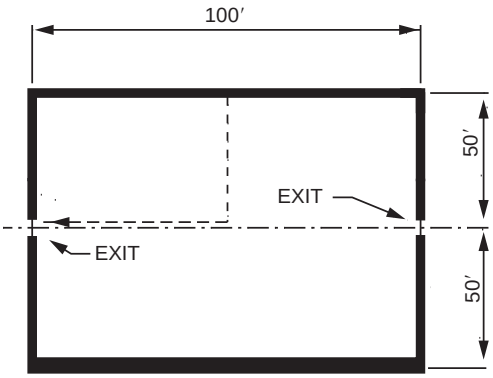

For SI: 1 inch = 25.4 mm, 1 foot = 304.8 mm.

Figure 1401.6.13(3)
EXIT ACCESS TRAVEL DISTANCE VALUE—OCCUPANCY GROUP R

INTERNATIONAL CODE COUNCIL®
Copyright © 2015 ICC. ALL RIGHTS RESERVED. Accessed by David Dammon on Jun 21, 2017 12:30:52 PM pursuant to License Agreement with ICC. No further reproduction or distribution authorized. ANY UNAUTHORIZED REPRODUCTION OR DISTRIBUTION IS A VIOLATION OF THE FEDERAL COPYRIGHT ACT AND THE LICENSE AGREEMENT, AND SUBJECT TO CIVIL AND CRIMINAL PENALTIES THEREUNDER.

controls comply with either Category b or c and at least one of the elevators in the existing building serves all occupied floor levels. The controls must also comply with all requirements for new construction. This category recognizes the benefits of having all elevators with Phase I emergency recall and Phase II emergency in-call operation controls, as well as having a newly constructed elevator with all the features to facilitate fire-fighting and rescue operations.

Based on the controls provided, or the lack of elevators, the appropriate category is determined. This category and the distance the elevator travels are then used along with Table 1401.6.14 to determine the value score the building will receive for this item. The value is then entered in Table 1401.7.

1401.6.15 Means-of-egress emergency lighting. Evaluate the presence of and reliability of means-of-egress emergency lighting. Under the categories and occupancies in Table 1401.6.15, determine the appropriate value and enter that value into Table 1401.7 under Safety Parameter 1401.6.15, Means-of-Egress Emergency Lighting, for means of egress and general safety.

❖ Lighting throughout the entire means of egress is evaluated in this section. Illumination of the means of egress is essential in a building during normal occupancy. During an emergency, illumination becomes even more important, because occupants may be under more stress when seeking to evacuate the building and visibility may be reduced by the buildup of smoke from a fire. The relative value of means-of-egress lighting is represented by the positive points assigned by Table 1401.6.15 when reliability of egress lighting is provided beyond the minimum required by the code.

TABLE 1401.6.15
MEANS-OF-EGRESS EMERGENCY LIGHTING VALUES

NUMBER OF EXITS REQUIRED BY SECTION 1015 OF THE *INTERNATIONAL BUILDING CODE*	CATEGORIES		
	a	b	c
Two or more exits	NP	0	4
Minimum of one exit	0	1	1

NP = Not permitted.

❖ This table is used to assess the relative risk to the occupants of the building when egress lighting is not adequate. The table reinforces the idea that when a building is required to have two or more exits, lighting has more significance. The lighting values are less critical in smaller buildings where only one exit is required because the hazard of a substantial occupant load locating and using the means of egress is minimal.

Example:

A Group A church building with a number of classrooms that will accommodate up to 60 people has at least 1 footcandle (11 lux) of illumination at the floor level throughout the entire means of egress. The means-of-egress lighting in the sanctuary, corridors and stairways is provided with battery back-up power that is sized to provide lighting for 1 hour. The classroom lighting is wired to the main switch panel in the building and has no emergency power source.

The lighting must be placed in Category a because the classrooms are part of the means of egress (exit access) and the lack of emergency power does not comply with IBC Section 1006.3. The classroom will accommodate up to 60 occupants; therefore, in accordance with IBC Section 1006.3.1 and IBC Table 1006.3.1, the rooms are required to have two means of egress. The lighting must be provided with an emergency power source in accordance with IBC Section 1006.3. The value determined from Table 1401.6.15 is "NP." Emergency power must be added to the lighting in the classrooms. The resulting Category b has a value of 0, which should be entered in Table 1401.7.

1401.6.15.1 Categories. The categories for means-of-egress emergency lighting are:

1. Category a—Means-of-egress lighting and exit signs not provided with emergency power in accordance with Section 2702 of the *International Building Code*.
2. Category b—Means-of-egress lighting and exit signs provided with emergency power in accordance with Section 2702 of the *International Building Code*.
3. Category c—Emergency power provided to means-of-egress lighting and exit signs, which provides protection in the event of power failure to the site or building.

❖ There are three categories of egress lighting. These categories are consistent with the requirements established by the IFC.

Category a is applicable when there is no emergency power source provided for the lighting in the means of egress. Without an emergency power source to ensure continued illumination of the means of egress, the means-of-egress lighting and exit signs would not provide as reliable a level of safety to the building occupants. For buildings in which only one exit is required, this category represents the zero-based criteria, which is the level required for new construction.

Category b is applicable to buildings that are provided with an emergency power source for means-of-egress illumination. For buildings in which a minimum of two exits are required, this category represents the zero-based criteria, which is the level required for new construction.

Category c is applicable when emergency power is provided for means-of-egress lighting and exit signs in excess of the minimum requirements for new construction. The emergency power requirements for new construction assume a power failure occurs in the building or somewhere in the building site. It does not assume that the power failure occurs at the source of power to the site (i.e., from the provider). If the emergency power provides full protection to the

INTERNATIONAL CODE COUNCIL®
Copyright © 2015 ICC. ALL RIGHTS RESERVED. Accessed by David Dammon on Jun 21, 2017 12:30:52 PM pursuant to License Agreement with ICC. No further reproduction or distribution authorized. ANY UNAUTHORIZED REPRODUCTION OR DISTRIBUTION IS A VIOLATION OF THE FEDERAL COPYRIGHT ACT AND THE LICENSE AGREEMENT, AND SUBJECT TO CIVIL AND CRIMINAL PENALTIES THEREUNDER.

site or building during power failure, Category c is applicable. Campus-type complexes or buildings that require extra security may have a power plant available to provide complete backup power for indefinite periods. This will qualify for the positive points of this category.

These categories, along with the number of required exits, are used to determine the appropriate value from Table 1401.6.15. The value determined from Table 1401.6.15 is then entered in Table 1401.7.

1401.6.16 Mixed occupancies. Where a building has two or more occupancies that are not in the same occupancy classification, the separation between the mixed occupancies shall be evaluated in accordance with this section. Where there is no separation between the mixed occupancies or the separation between mixed occupancies does not qualify for any of the categories indicated in Section 1401.6.16.1, the building shall be evaluated as indicated in Section 1401.6, and the value for mixed occupancies shall be zero. Under the categories and occupancies in Table 1401.6.16, determine the appropriate value and enter that value into Table 1401.7 under Safety Parameter 1401.6.16, Mixed Occupancies, for fire safety and general safety. For buildings without mixed occupancies, the value shall be zero. Facilities in Group I-2 occupancies meeting Category a shall be considered to fail the evaluation.

❖ This section is used to evaluate mixed occupancies in an existing building and whether the method of separating mixed occupancies conforms to the requirements of IBC Section 508. If IBC Section 508 is not completely understood, see the associated commentary before proceeding with the evaluation of the existing building in this section. Also, refer to the commentary to Section 1401.6.

This section is applicable only to separated mixed occupancies. If a building is a single occupancy, the applicable value for this section is zero. If an existing mixed-occupancy building has no fire-resistance-rated separation between the different uses, or the separation is fire-resistance rated for less than 1 hour, the applicable value is also zero. The building must also be evaluated in accordance with Section 1401.6. The zero-based category for this section is equivalent to full compliance with IBC Section 508, which is the requirement for new construction.

TABLE 1401.6.16
MIXED OCCUPANCY VALUES[a]

OCCUPANCY	CATEGORIES		
	a	b	C
A-1, A-2, R	-10	0	10
A-3, A-4, B, E, F, M, S	-5	0	5
I-2	NP	0	5

NP = not permitted.

a. For fire-resistance ratings between categories, the value shall be obtained by linear interpolation.

❖ This table addresses the relative risk of a building in or close to compliance with the provisions for separated mixed occupancies. Where mixed occupancies are not separated from each other, the risk from hazards is greater in high-density occupancies, such as Groups A-1 and A-2. This risk is also greater in residential occupancies, because occupants may be sleeping and may not be fully alert. For this reason, inadequate separation is given greater negative values. In buildings with lower occupant loads, and where the occupants are alert, the risks are relatively lower.

Note a permits linear interpolation of the corresponding values in each category. For example, an unsprinklered, Group B/Group F-2 mixed occupancy building is separated with a 1-hour fire-resistance-rated assembly. From IBC Table 508.4, the required fire-resistance rating of the separation between a Group B and a Group F-2 occupancy for Category b is 3 hours. Since the rating that is provided is only 1 hour, an interpolation halfway between Category a and Category b can be used. The resulting points are -2.5.

Example 1:

A three-story building has a Group M mercantile occupancy on the first floor and the upper two stories are Group R residential occupancies. The building is Type VB construction, 9,000 square feet (836 m^2) per floor. It is fully sprinklered, and only 25 percent of the perimeter is accessible. Although Type VB construction is not required to be protected, the Group M occupancy on the first floor is separated from the Group R occupancy on the second floor with a 2-hour fire-resistance-rated floor/ceiling assembly. In this case, IBC Table 508.4 requires a 1-hour fire-resistance rating because the building is equipped throughout with an automatic sprinkler system in accordance with IBC Section 903. The 2-hour rating provided is twice that required; therefore, this building qualifies for Category c. A value of 10 points is assigned to the residential portion of the building, and a value of 5 points is assigned to the mercantile portion (see Section 1401.6 for commentary about mixed uses).

Example 2:

A four-story building is Type IIB construction and is fully sprinklered. It has 15,000 square feet (1394 m^2) per floor with a 25-percent open perimeter. The building is to be a Group R-1 hotel, except for a portion of the first floor, which will be used as a Group A-2 nightclub, occupying 1,000 square feet (93 m^2). Although the building is unprotected Type IIB construction, the floor/ceiling assemblies of the first and second floors are 3 hours and the fire barrier assembly at the first floor between the Group R-1 occupancy and the Group A-2 occupancy is also 3 hours. Considering these building characteristics, the following determinations are made:

Because of the presence of an automatic sprinkler system, IBC Table 508.4 requires a fire-resistance

INTERNATIONAL CODE COUNCIL®
Copyright © 2015 ICC. ALL RIGHTS RESERVED. Accessed by David Dammon on Jun 21, 2017 12:30:52 PM pursuant to License Agreement with ICC. No further reproduction or distribution authorized. ANY UNAUTHORIZED REPRODUCTION OR DISTRIBUTION IS A VIOLATION OF THE FEDERAL COPYRIGHT ACT AND THE LICENSE AGREEMENT, AND SUBJECT TO CIVIL AND CRIMINAL PENALTIES THEREUNDER.

rating of 1 hour. Although this building is required to have a 1-hour separation, it has a 3-hour separation, which is more than double the minimum. This building is classified as Category c. A value of 10 points is awarded to both occupancies.

1401.6.16.1 Categories. The categories for mixed occupancies are:

1. Category a—Occupancies separated by minimum 1-hour fire barriers or minimum 1-hour horizontal assemblies, or both.
2. Category b—Separations between occupancies in accordance with Section 508.4 of the *International Building Code*.
3. Category c—Separations between occupancies having a fire-resistance rating of not less than twice that required by Section 508.4 of the *International Building Code*.

❖ This section addresses three different conditions:

Category a is applicable when the rating between mixed occupancies is less than specified in IBC Section 508.4 but is a fire barrier with a minimum 1-hour fire-resistance rating.

Category b is applicable when the separation between occupancies is in accordance with IBC Section 508.4 for fire-resistance ratings.

Category c is applicable when the fire-resistance rating that separates occupancies in an existing building is no less than twice the rating required by IBC Section 508.4. Category c gives bonus points or increased credits to existing buildings that have higher fire-resistance ratings.

Section 1401 does not require full compliance with all of IBC Section 508.4. Section 1401.6.16 evaluates whether the existing building's compliance with IBC Section 508.4 provides relative safety within the building. If the building does comply with IBC Section 508.4, Section 1401.6.16 acknowledges that there is no basis for assigning negative points, nor is there any basis for assigning positive points for safety; therefore, a neutral zero value is assigned. The appropriate value is entered in Table 1401.7 for the Safety Parameter of Mixed Occupancies on line 1401.

1401.6.17 Automatic sprinklers. Evaluate the ability to suppress a fire based on the installation of an automatic sprinkler system in accordance with Section 903.3.1.1 of the *International Building Code*. "Required sprinklers" shall be based on the requirements of this code. Under the categories and occupancies in Table 1401.6.17, determine the appropriate value and enter that value into Table 1401.7 under Safety Parameter 1401.6.17, Automatic Sprinklers, for fire safety, means of egress divided by 2, and general safety. High-rise buildings defined in Chapter 2 of the *International Building Code* that undergo a *change of occupancy* to Group R shall be equipped throughout with an automatic sprinkler system in accordance with Section 403 of the *International Building Code* and Chapter 9 of the *International Building Code*. Facilities in Group I-2 occupancies meeting Category a, b, c or f shall be considered to fail the evaluation.

❖ These provisions are used to determine the amount of credit that can be applied to the evaluation for the installation of an automatic sprinkler system in an existing building.

The value of sprinkler protection is reflected in the additional credit available in this parameter over and above the basic credits that are provided for building height in Section 1401.6.1, building area in Section 1401.6.2 and maximum travel distance to an exit in Section 1401.6.13. Throughout the code, additional credits are offered for the use of an automatic sprinkler system.

The evaluation of sprinklers in an existing building is based on whether an automatic sprinkler system is both required and installed. The criteria used to determine when an automatic sprinkler system is required are tied to the same requirements for new construction in IBC Section 903.2. The thresholds listed in IBC Sections 903.2.1 through 903.2.12 must be used to evaluate whether those characteristics and occupancies are present and whether a sprinkler system would be required for new construction.

The exceptions to IBC Section 903; the requirements for stories (including basements) without openings of IBC Section 903.2.11.1; and the suppression requirements for covered mall buildings, high-rise buildings, public garages and unlimited area buildings must also be evaluated. The determination of whether sprinklers are required in a building or a portion of a building must be done to correctly determine the category applicable to the existing building.

These guidelines for sprinklers allow for a more equitable evaluation of the contribution of that feature to overall building safety. This factor encourages the installation of automatic sprinkler systems in existing buildings by providing substantial negative and positive points.

The values for sprinklers are given in Table 1401.6.17. The appropriate credit values from Table 1401.6.17 are entered in Table 1401.7 for the Safety Parameter of Automatic Sprinklers on line 1401.6.17, for both fire safety (FS) and general safety (GS), but only one-half the value is entered under the means of egress (ME). The one-half credit for egress is allowed because some credits for sprinklers are incorporated into the parameters for means-of-egress capacity (see Section 1401.6.11), dead ends (see Section 1401.6.12) and maximum travel distance to an exit (see Section 1401.6.13).

INTERNATIONAL CODE COUNCIL®
Copyright © 2015 ICC. ALL RIGHTS RESERVED. Accessed by David Dammon on Jun 21, 2017 12:30:52 PM pursuant to License Agreement with ICC. No further reproduction or distribution authorized. ANY UNAUTHORIZED REPRODUCTION OR DISTRIBUTION IS A VIOLATION OF THE FEDERAL COPYRIGHT ACT AND THE LICENSE AGREEMENT, AND SUBJECT TO CIVIL AND CRIMINAL PENALTIES THEREUNDER.

TABLE 1401.6.17
SPRINKLER SYSTEM VALUES

OCCUPANCY	CATEGORIES					
	a[a]	b[a]	c	d	e	f
A-1, A-3, F, M, R, S-1	-6	-3	0	2	4	6
A-2	-4	-2	0	1	2	4
A-4, B, E, S-2	-12	-6	0	3	6	12
I-2	NP	NP	NP	8	10	NP

NP = not permitted.

a. These options cannot be taken if Category a in Section 1401.6.18 is used.

❖ This table lists the credit values for the respective categories of Section 1401.6.17.1, based on the occupancy being evaluated in the existing building. The assembly occupancies containing large combustible fuel loads with large occupant loads are included with those occupancies containing large fuel loads. These occupancies represent buildings where experience has shown that adequate sprinkler systems save lives and where an on-site sprinkler system is necessary to supplement the local fire department capabilities.

Group A-2 buildings are contained in a separate line in the table for determining sprinkler system values. This occupancy with its densely packed high occupant loads, ill-defined seating and aisle arrangements, and facilities services must be separately evaluated to adequately match its hazards with sprinkler system requirements. Churches and schools, which have high occupant loads but low fuel loads, are combined with other low fuel-load occupancies in the last line item in the table. Category c is the zero-based category. The categories to the left of this column contain negative values that define buildings and occupancies that would be required to be sprinklered as new construction, but are not sprinklered or are provided with inadequate sprinkler systems. The three categories to the right of this column contain positive values that represent buildings and occupancies with sprinkler systems that are deemed adequate or comply with current standards and requirements.

1401.6.17.1 Categories. The categories for automatic sprinkler system protection are:

1. Category a—Sprinklers are required throughout; sprinkler protection is not provided or the sprinkler system design is not adequate for the hazard protected in accordance with Section 903 of the *International Building Code*.
2. Category b—Sprinklers are required in a portion of the building; sprinkler protection is not provided or the sprinkler system design is not adequate for the hazard protected in accordance with Section 903 of the *International Building Code*.
3. Category c—Sprinklers are not required; none are provided.
4. Category d—Sprinklers are required in a portion of the building; sprinklers are provided in such portion; the system is one that complied with the code at the time of installation and is maintained and supervised in accordance with Section 903 of the *International Building Code*.
5. Category e—Sprinklers are required throughout; sprinklers are provided throughout in accordance with Chapter 9 of the *International Building Code*.
6. Category f—Sprinklers are not required throughout; sprinklers are provided throughout in accordance with Chapter 9 of the *International Building Code*.

❖ Six categories are defined in this section for evaluating the automatic sprinkler system in an existing building. These categories address all aspects, from existing buildings that are unsprinklered but are required to be sprinklered if new construction, to existing buildings that are sprinklered and are not required to be sprinklered if new construction. These categories reduce the impact of providing sprinkler protection required by Chapter 9 of the IBC to be sprinklered in new construction. This greater range of points increases the flexibility in the use of this evaluation method.

Category a includes buildings or occupancies that would be required by the new construction criteria of IBC Section 903 to be sprinklered throughout the building. Category a buildings are provided with either no sprinkler system, or one that is inadequate and does not provide the required level of protection. To evaluate the existing sprinkler system, a trained fire protection engineer should evaluate the system's design against the applicable referenced standards. This is not the same type of consideration needed in Category d, where the existing system actually meets all of the requirements of any earlier edition of the applicable referenced standards. This category is considered the lowest acceptable level of compliance and is, therefore, associated with the largest negative values in Table 1401.6.17.

Category b is applicable when only a portion of the existing building is required by the provisions of IBC Section 903 to be sprinklered. For example, a multiple-story building may have two of its stories qualify as windowless stories that require sprinklers, or a mercantile building may have one fire area exceeding 12,000 square feet (1115 m^2) and require sprinklers. In both cases, the buildings are without an automatic sprinkler system, or the sprinkler systems that are in place are inadequate and do not comply with the technical provisions of the code. Since only portions of the buildings are required to be sprinklered, the negative sprinkler system values for this category in Table 1401.6.17 are exactly half of the Category a values.

Category c is the zero-based category for this safety parameter. The existing building is not required by IBC Section 903 to be sprinklered and no sprinkler system is provided. Such buildings are neither penalized nor rewarded by Table 1401.6.17.

Category d is similar to Category b because only a portion of the existing building is required by IBC Sec-

INTERNATIONAL CODE COUNCIL®
Copyright © 2015 ICC. ALL RIGHTS RESERVED. Accessed by David Dammon on Jun 21, 2017 12:30:52 PM pursuant to License Agreement with ICC. No further reproduction or distribution authorized. ANY UNAUTHORIZED REPRODUCTION OR DISTRIBUTION IS A VIOLATION OF THE FEDERAL COPYRIGHT ACT AND THE LICENSE AGREEMENT, AND SUBJECT TO CIVIL AND CRIMINAL PENALTIES THEREUNDER.

tion 903 to be sprinklered. In this case, there is a sprinkler system in place in that portion of the building and the system was designed at the time of its installation to comply with the requirements of an earlier edition of IBC Section 903. An example of this is a sprinkler system designed to comply with the hydraulic design criteria of the 1989 edition of NFPA 13 for an ordinary Group 2 hazard. As long as this existing sprinkler system is still properly maintained and supervised, the building qualifies for the small positive values listed in Table 1401.6.17.

Category e addresses existing buildings that are required by the provisions of IBC Chapter 9 to be sprinklered throughout, and are protected throughout by a properly designed, installed and supervised sprinkler system. Although this category more closely represents the requirements for new construction, moderate positive values are awarded by Table 1401.6.17. The evaluation rewards existing buildings that are sprinklered with higher points.

Category f is the highest level of protection and is rewarded with maximum positive points in the accompanying table. Existing buildings, which are not required by IBC Section 903 to be sprinklered but are voluntarily provided with a fully designed, installed and supervised system, provide an added level of protection that justifies substantial bonus points that may ultimately determine whether an existing building meets its mandatory safety scores.

1401.6.18 Standpipes. Evaluate the ability to initiate attack on a fire by a making supply of water available readily through the installation of standpipes in accordance with Section 905 of the *International Building Code*. "Required Standpipes" shall be based on the requirements of the *International Building Code*. Under the categories and occupancies in Table 1401.6.18, determine the appropriate value and enter that value into Table 1401.7 under Safety Parameter 1401.6.18, Standpipes, for fire safety, means of egress, and general safety.

❖ These provisions are used to determine the amount of credit that can be applied to the evaluation for the installation of a standpipe system in an existing building. Standpipes are provided as a tool for use by fire fighters to aid their fire-fighting operations. The general consensus is that they are not recommended or intended for use by untrained building occupants.

The evaluation of standpipe systems in an existing building, much like that for automatic sprinker systems, is based on whether a standpipe system is both required and installed. The criteria used to determine when a standpipe system is required are tied to the same requirements for new construction in IBC Section 905.3. The thresholds listed in IBC Sections 905.3.1 through 905.3.8 must be used to evaluate whether those characteristics and occupancies are present and whether a standpipe system would be required for new construction. These parameters for standpipes encourage the installation of standpipe systems in existing buildings by providing substantial negative and positive points.

The values for standpipe systems are given in Table 1401.6.18. The appropriate values from Table 1401.6.18 are entered in Table 1401.7 for the Safety Parameter of Standpipes on line 1401.6.18, for fire safety (FS), means of egress (ME) and general safety (GS).

TABLE 1401.6.18
STANDPIPE SYSTEM VALUES

OCCUPANCY	CATEGORIES			
	a[a]	b	c	d
A-1, A-3, F, M, R, S-1	-6	0	4	6
A-2	-4	0	2	4
A-4, B, E, S-2	-12	0	6	12
I-2	-2	0	1	2

a. This option cannot be taken if Category a or Category b in Section 1401.6.17 is used.

❖ This table lists the credit values for the respective categories of Section 1401.6.18.1, based on the occupancy being evaluated in the existing building. The grouping of occupancies is the same as provided for the sprinkler system parameter since the need for and value of a standpipe system, like sprinkler systems, is a function of the likelihood and potential severity of a fire that the various occupancies present.

Category a contains negative values that define buildings and occupancies that would be required to have a standpipe system as new construction but are not provided with one, or are provided with a standpipe system that is not designed and installed in accordance with the design and installation requirements of IBC Section 905 for new construction. Category b is the zero-based category.

Categories c and d contain positive values that represent buildings and occupancies with standpipe systems that are deemed adequate or comply with current design standards and installation requirements.

1401.6.18.1 Standpipe categories. The categories for standpipe systems are:

1. Category a—Standpipes are required; standpipe is not provided or the standpipe system design is not in compliance with Section 905.3 of the *International Building Code*.
2. Category b—Standpipes are not required; none are provided.
3. Category c—Standpipes are required; standpipes are provided in accordance with Section 905 of the *International Building Code*.

INTERNATIONAL CODE COUNCIL®
Copyright © 2015 ICC. ALL RIGHTS RESERVED. Accessed by David Dammon on Jun 21, 2017 12:30:52 PM pursuant to License Agreement with ICC. No further reproduction or distribution authorized. ANY UNAUTHORIZED REPRODUCTION OR DISTRIBUTION IS A VIOLATION OF THE FEDERAL COPYRIGHT ACT AND THE LICENSE AGREEMENT, AND SUBJECT TO CIVIL AND CRIMINAL PENALTIES THEREUNDER.

4. Category d—Standpipes are not required; standpipes are provided in accordance with Section 905 of the *International Building Code*.

❖ Four categories are defined in this section for evaluating the standpipe system in an existing building. These categories address all aspects from existing buildings that do not have standpipes but would be required to have standpipes if new construction, to existing buildings that have standpipes and would not be required to have standpipes if new construction.

Category a is applicable to buildings or occupancies that would be required by the new construction criteria to be provided with a Class I, II or III standpipe system. Category a buildings are provided with either no standpipe system, or one that is inadequate and does not comply with the applicable design and installation criteria of IBC Section 905. To evaluate the existing standpipe system, a trained fire protection engineer should evaluate the system's design against the applicable referenced standards. This category is considered the lowest acceptable level of compliance and is, therefore, associated with the largest negative values in Table 1401.6.18. Category a is not an option in unsprinklered or inadequately sprinklered buildings that would be required to be partially or fully sprinklered as new construction. This is reflected in Note a to Table 1401.6.18, which indicates that Category a cannot be used if Category a or b is used in the automatic sprinkler parameter in Section 1401.6.17. The effect of this provision is that the absence of both sprinklers and standpipes is unacceptable in buildings that would be required to provide both sprinklers and standpipes. One or the other system must be provided in order to complete this evaluation method. If only one of the required systems is provided, negative points will be accrued in the parameter for the other system, but it is still possible to have an overall passing score for the building. This reflects the concept that, while both systems are required for new construction, it is permissible to only have one in an existing building because the absence of the other system will have positive attributes or features that offset the negative points accrued by its absence.

Category b is the zero-based category for this safety parameter. The existing building is not required by IBC Section 905 to have a standpipe system and no standpipe system is provided. Such buildings are neither penalized nor rewarded by Table 1401.6.18.

Category c is applicable to buildings that are required by IBC Section 905 to have a standpipe system, and are provided with the class standpipe system that would be required for new construction and is designed and installed in accordance with IBC Section 905.2. Although this category more closely represents the requirements for new construction, moderate positive values are awarded by Table 1401.6.18. The evaluation rewards existing buildings that have a contemporary, reliable standpipe system with higher points.

Category d is the highest level of protection and is rewarded with maximum positive points in the accompanying table. Existing buildings, which are not required by IBC Section 905 to have a standpipe system but are voluntarily provided with a fully designed and installed system, provide an added level of protection that justifies substantial bonus points.

1401.6.19 Incidental uses. Evaluate the protection of incidental uses in accordance with Section 509.4.2 of the *International Building Code*. Do not include those where this code requires automatic sprinkler systems throughout the building including covered and open mall buildings, high-rise buildings, public garages and unlimited area buildings. Assign the lowest score from Table 1401.6.19 for the building or floor area being evaluated and enter that value into Table 1401.7 under Safety Parameter 1401.6.19, Incidental Uses, for fire safety, means of egress and general safety. If there are no specific occupancy areas in the building or floor area being evaluated, the value shall be zero.

❖ This section includes an evaluation system for the separation/protection requirements indicated for incidental uses in an existing building. This evaluation is based on IBC Table 509.4.2. If the building designer chooses to separate/protect the small rooms or areas in an existing building in accordance with this table, the building is classified according to its main use. Because some existing buildings may have been designed in this fashion, an evaluation procedure has been added to account for the level of protection provided. The lowest score must be assigned to the building or fire area for the specific use areas. For example, an existing Group E high school has three laboratory classrooms. If two of the classrooms are protected with limited area sprinkler systems and separated with construction capable of resisting the passage of smoke, and the third room is not protected in the same manner, the lowest score for all the classrooms is determined by the single unprotected classroom. If the building designer chooses to treat the specific occupancy areas as separate occupancies, the provisions of Section 1401.9.1 are applicable and a zero is inserted in Table 1401.7 under Safety Parameter 1401.6.19, Incidental Use Areas.

TABLE 1401.6.19. See page 14-34.

❖ This table provides a matrix of characteristics arranged in a format of rows and columns for determining values for incidental uses. The values are inserted into the building score sheet. The left-hand column of the table is arranged for the separation/protection specified by IBC Table 509 for a particular occupancy room or area. IBC Table 509 must first be consulted to determine the level of separation/protection required by the code for new construction. This same entry is then found in the left-hand column of Table 1401.6.19. The top row represents the actual level of protection that is provided in the existing

INTERNATIONAL CODE COUNCIL®
Copyright © 2015 ICC. ALL RIGHTS RESERVED. Accessed by David Dammon on Jun 21, 2017 12:30:52 PM pursuant to License Agreement with ICC. No further reproduction or distribution authorized. ANY UNAUTHORIZED REPRODUCTION OR DISTRIBUTION IS A VIOLATION OF THE FEDERAL COPYRIGHT ACT AND THE LICENSE AGREEMENT, AND SUBJECT TO CIVIL AND CRIMINAL PENALTIES THEREUNDER.

building. The corresponding use area value is read and then inserted into Table 1401.7 under Safety Parameter 1401.6.19, Incidental Use Areas. Values of zero are assigned to all arrangements that represent compliance with the requirements for new construction. Negative values are assigned based on the degree of noncompliance with the requirements for new construction.

1401.6.20 Smoke compartmentation. Evaluate the smoke compartments for compliance with Section 407.5 of the *International Building Code*. Under the categories and occupancies in Table 1401.6.20, determine the appropriate smoke compartmentation value (SCV) and enter that value into Table 1401.7 under Safety Parameter 1401.6.20, Smoke Compartmentation, for fire safety, means of egress and general safety. Facilities in Group I-2 occupancies meeting Category b or c shall be considered to fail the evaluation.

❖ This section addresses the issue of smoke compartments, which are required for new construction in Group I-2. This provides scores to fully evaluate Group I-2 occupancies under this alternative method.

TABLE 1401.6.20
SMOKE COMPARTMENTATION VALUES

OCCUPANCY	CATEGORIES[a]		
	a	b	c
A, B, E, F, M, R and S	0	0	0
I-2	0	NP	NP

For SI: 1 square foot = 0.093 m^2.

NP = Not permitted.

a. For areas between categories, the smoke compartmentation value shall be obtained by linear interpolation.

❖ This table lists the credit values for the respective categories in the area of smoke compartments of Section 1401.6.20.1, based on the occupancy being evaluated in the existing building. The grouping of occupancies in the table is simply I-2, and all of the rest (A, B, E, F, M, R and S). The only occupancy that requires smoke compartments is Group I-2, and therefore this table establishes that a qualifying existing Group I-2 occupancy must have smoke compartments that are a maximum of 22,500 square feet. The score is 0 for those qualifying existing Group I-2 occupancies, and not permitted for Group I-2 occupancies with larger smoke compartments.

1401.6.20.1 Categories. Categories for smoke compartment size are:

1. Category a—Smoke compartment size is equal to or less than 22,500 square feet (2092 m^2).
2. Category b—Smoke compartment size is greater than 22,500 square feet (2092 m^2).
3. Category c—Smoke compartments are not provided.

❖ Three categories are provided in this section for evaluating smoke compartments in Group I-2 facilities. For Group I-2, if the smoke compartment falls in Category b (smoke compartment too large) or Category c (no smoke compartment), then the smoke compartment fails this evaluation.

1401.6.21 Patient ability, concentration, smoke compartment location and ratio to attendant. In I-2 occupancies, the ability of patients, their concentration and ratio to attendants shall be evaluated and applied in accordance with this section. Evaluate each smoke compartment using the categories in Sections 1401.6.21.1, 1401.6.21.2 and 1401.6.21.3 and enter the value in Table 1401.8. To determine the safety factor, multiply the three values together, if the product is 9 or greater, compliance has failed.

❖ This section addresses the issue of patient safety in a smoke compartment in Group I-2 facilities. There are three factors for patient safety included: 1. Patient ability (Section 1401.6.21.1); 2. Patient concentration (Section 1401.6.21.2); and 3. Attendant-to-patient ratio (Section 1401.6.21.3). Basically, these considerations address patient safety from the standpoint of the ability of patients to be brought to safety in the event of an emergency. These three factors are entered into Table 1401.7 for an overall score for the I-2 smoke compartment being evaluated.

This section also establishes a mandatory safety score for these three evaluation categories alone. The rule is that if the product of the three categories when multiplied together is 9 or greater, then the smoke compartment fails compliance. Observing the values for each of these factors will show that the value for Category c in each factor is 3. Therefore, if

TABLE 1401.6.19
INCIDENTAL USE AREA VALUES

PROTECTION REQUIRED BY TABLE 509 OF THE *INTERNATIONAL BUILDING CODE*	PROTECTION PROVIDED						
	None	1 hour	AS	AS with CRS	1 hour and AS	2 hours	2 hours and AS
2 hours and AS	-4	-3	-2	-2	-1	-2	0
2 hours, or 1 hour and AS	-3	-2	-1	-1	0	0	0
1 hour and AS	-3	-2	-1	-1	0	-1	0
1 hour	-1	0	-1	-1	0	0	0
1 hour, or AS with CRS	-1	0	-1	-1	0	0	0
AS with CRS	-1	-1	-1	-1	0	-1	0
1 hour or AS	-1	0	0	0	0	0	0

AS = Automatic sprinkler system;

CRS = Construction capable of resisting the passage of smoke (see IBC Section 509.4.2 of the *International Building Code*).

Note: For Table 1401.7, see page 75 of the code or page 14-36 of this volume.

INTERNATIONAL CODE COUNCIL®
Copyright © 2015 ICC. ALL RIGHTS RESERVED. Accessed by David Dammon on Jun 21, 2017 12:30:52 PM pursuant to License Agreement with ICC. No further reproduction or distribution authorized. ANY UNAUTHORIZED REPRODUCTION OR DISTRIBUTION IS A VIOLATION OF THE FEDERAL COPYRIGHT ACT AND THE LICENSE AGREEMENT, AND SUBJECT TO CIVIL AND CRIMINAL PENALTIES THEREUNDER.

the category for any two of the three factors is Category c, with the third factor being Category a, then the product of those factors would be 9, and compliance has failed. This means that for any compartment, only one of these three factors can be Category c, and when that occurs, one of the other factors must be Category a. By requiring a maximum multiple of 9, the code is requiring some level of trade-off on these categories.

1401.6.21.1 Patient ability for self-preservation. Evaluate the ability of the patients for self-preservation in each smoke compartment in an emergency. Under the categories and occupancies in Table 1401.6.21.1 determine the appropriate value and enter that value in Table 1401.7 under Safety Parameter 1401.6.21.1, Patient Ability for Self-preservation, for means of egress and general safety.

❖ See the commentary to Section 1401.6.21.

TABLE 1401.6.21.1
PATIENT ABILITY VALUES

OCCUPANCY	CATEGORIES		
	a	b	c
I-2	1	2	3

1401.6.21.1.1 Categories. The categories for patient ability for self-preservation are:

1. Category a—(mobile) Patients are capable of self-preservation without assistance.
2. Category c—(not mobile) Patients rely on assistance for evacuation or relocation.
3. Category d—(not movable) Patients cannot be evacuated or relocated.

❖ This section establishes the different categories for scoring patient ability in a Group I-2 smoke compartment.

1401.6.21.2 Patient concentration. Evaluate the concentration of patients in each smoke compartment under Section 1401.6.21.2. Under the categories and occupancies in Table 1401.6.21.2 determine the appropriate value and enter that value in Table 1401.7 under Safety Parameter 1401.6.21.2, Patient Concentration, for means of egress and general safety.

❖ See the commentary to Section 1401.6.21.

TABLE 1401.6.21.2
PATIENT CONCENTRATION VALUES

OCCUPANCY	CATEGORIES		
	a	b	c
I-2	1	2	3

1401.6.21.3 Attendant-to-patient ratio. Evaluate the attendant-to-patient ratio for each compartment under Section 1401.6.21.3. Under the categories and occupancies in Table 1401.6.21.3 determine the appropriate value and enter that value in Table 1401.7 under Safety Parameter 1401.6.21.3, Attendant-to-patient Ratio, for means of egress and general safety.

❖ See the commentary to Section 1401.6.21.

1401.6.21.3.1 Categories. The categories for attendant-to-patient concentrations are:

1. Category a—attendant-to-patient concentrations is 1:5.
2. Category b—attendant-to-patient concentrations is 1:6 to 1:10.
3. Category c—attendant-to-patient concentrations is greater than 1:10 or no patients.

❖ This section establishes the different categories for scoring attendant-to-patient ratio in a Group I-2 smoke compartment.

TABLE 1401.6.21.3
ATTENDANT-TO-PATIENT RATIO VALUES

OCCUPANCY	CATEGORIES		
	a	b	c
I-2	1	2	3

1401.7 Building score. After determining the appropriate data from Section 1401.6, enter those data in Table 1401.7 and total the building score.

❖ This section is the tally sheet for all of the 21 safety parameters evaluated in Sections 1401.6.1 through 1401.6.19, which determine the building's overall safety profile for fire safety, means of egress and general safety.

This section also directs the data and values of the 21 safety parameters of Sections 1401.6.1 through 1401.6.19 to be entered in Table 1401.7 for totaling the building scores.

TABLE 1401.7. See page 14-36.

❖ Table 1401.7 is the summary sheet containing all the relative attributes of the building. The summary sheet also contains a complete listing of the 21 safety parameters that have been evaluated. The upper portion of the summary sheet serves as a guide to the user to catalog and highlight existing building elements that relate to the 21 safety parameters and to the evaluation. The lower portion of the summary sheet is used to record the results of the 21 safety parameters that have been evaluated. These are added to produce the building score total values for fire safety, means of egress and general safety.

INTERNATIONAL CODE COUNCIL®
Copyright © 2015 ICC. ALL RIGHTS RESERVED. Accessed by David Dammon on Jun 21, 2017 12:30:52 PM pursuant to License Agreement with ICC. No further reproduction or distribution authorized. ANY UNAUTHORIZED REPRODUCTION OR DISTRIBUTION IS A VIOLATION OF THE FEDERAL COPYRIGHT ACT AND THE LICENSE AGREEMENT, AND SUBJECT TO CIVIL AND CRIMINAL PENALTIES THEREUNDER.

TABLE 1401.7
SUMMARY SHEET-BUILDING CODE

Existing occupancy _____ Proposed occupancy _____

Year building was constructed _____ Number of stories _____Height in feet _____

Type of construction _____ Area per floor _____

Percentage of open perimeter increase _____%

Completely suppressed: Yes _____ No _____ Corridor wall rating_____

Type: _____

Compartmentation: Yes _____ No _____ Required door closers: Yes_____ No_____

Fire-resistance rating of vertical opening enclosures _____

Type of HVAC system _____ , serving number of floors _____

Automatic fire detection: Yes _____No _____ Type and location _____

Fire alarm system: Yes _____No _____ Type _____

Smoke control: Yes _____No _____ Type _____

Adequate exit routes: Yes _____No _____ Dead ends:_____ Yes_____ No _____

Maximum exit access travel distance _____ Elevator controls: Yes_____ No _____

Means of egress emergency lighting: Yes _____No _____ Mixed occupancies: Yes_____ No _____

Standpipes Yes _____No _____ Patient ability for self-preservation_____

Incidental use Yes _____No _____ Patient concentration_____

Smoke compartmentation less than 22,500 sq. feet (2092 m^2) Yes _____No _____ Attendant-to-patient ratio _____

SAFETY PARAMETERS	FIRE SAFETY (FS)	MEANS OF EGRESS (ME)	GENERAL SAFETY (GS)
1401.6.1 Building Height 1401.6.2 Building Area 1401.6.3 Compartmentation			
1401.6.4 Tenant and Dwelling Unit Separations 1401.6.5 Corridor Walls 1401.6.6 Vertical Openings			
1401.6.7 HVAC Systems 1401.6.8 Automatic Fire Detection 1401.6.9 Fire Alarm System			
1401.6.10 Smoke control 1401.6.11 Means of Egress 1401.6.12 Dead ends	* * * * * * * * * * * *		
1401.6.13 Maximum Exit Access Travel Distance 1401.6.14 Elevator Control 1401.6.15 Means of Egress Emergency Lighting	* * * * * * * *		
1401.6.16 Mixed Occupancies 1401.6.17 Automatic Sprinklers 1401.6.18 Standpipes 1401.6.19 Incidental Use 1401.6.20 Smoke compartmentation 1401.6.21.1 Patient ability for self-preservation 1401.6.21.2 Patient concentration 1401.6.21.3 Attendant-to-patient Ratio	* * * * * * * * * * * *	* * * * ÷2 =	
Building score—total value			

* * * *No applicable value to be inserted.

INTERNATIONAL CODE COUNCIL®
Copyright © 2015 ICC. ALL RIGHTS RESERVED. Accessed by David Dammon on Jun 21, 2017 12:30:52 PM pursuant to License Agreement with ICC. No further reproduction or distribution authorized. ANY UNAUTHORIZED REPRODUCTION OR DISTRIBUTION IS A VIOLATION OF THE FEDERAL COPYRIGHT ACT AND THE LICENSE AGREEMENT, AND SUBJECT TO CIVIL AND CRIMINAL PENALTIES THEREUNDER.

1401.8 Safety scores. The values in Table 1401.8 are the required mandatory safety scores for the evaluation process listed in Section 1401.6.

❖ This section lists the minimum scores for fire safety, means of egress and general safety that must be obtained from the evaluation of the 21 safety parameters to be acceptable as a building meeting the code's objectives for public safety and health. This section summarizes the mandatory values of Table 1401.8 that must be met from the evaluation program.

TABLE 1401.8
MANDATORY SAFETY SCORES[a]

OCCUPANCY	FIRE SAFETY (MFS)	MEANS OF EGRESS (MME)	GENERAL SAFETY (MGS)
A-1	20	31	31
A-2	21	32	32
A-3	22	33	33
A-4, E	29	40	40
B	30	40	40
F	24	34	34
I-2	19	34	34
M	23	40	40
R	21	38	38
S-1	19	29	29
S-2	29	39	39

a. MFS = Mandatory Fire Safety.
MME = Mandatory Means of Egress.
MGS = Mandatory General Safety.

❖ The table lists the minimum mandatory safety scores for various occupancies in the areas of fire safety, means of egress and general safety. The mandatory safety values are based on the scores considered to provide an overall acceptable level of safety in an existing building on which approval of the alterations, repairs, change of occupancy or addition can be based. This is the zero-based concept. The scores have been determined as representing one level of compliance higher than the code's minimum requirements for new construction. The mandatory safety scores are consistent with the idea of establishing an equivalent level of safety, even though the existing building is evaluated only for the 21 safety parameters.

1401.9 Evaluation of building safety. The mandatory safety score in Table 1401.8 shall be subtracted from the building score in Table 1401.7 for each category. Where the final score for any category equals zero or more, the building is in compliance with the requirements of this section for that category. Where the final score for any category is less than zero, the building is not in compliance with the requirements of this section.

❖ The sections and table that follow are the final steps in the evaluation process. This section also discusses how mixed occupancies must be treated during the final step of the evaluation process.

This section compares the three building scores from Table 1401.7 to the three mandatory safety scores from Table 1401.8. If the values in all three categories from Table 1401.7 exceed the corresponding mandatory safety scores in Table 1401.8, the building passes and is in compliance with the code. If the score in any one category is less than the mandatory safety score, the building is deemed to have failed and additional measures must be taken to bring the scores to a point that will at least equal the mandatory safety scores.

TABLE 1401.9. See below.

❖ The sections and table that follow are the final steps in the evaluation process. This section also discusses how mixed occupancies must be treated during the final step of the evaluation process.

This section compares the three building scores from Table 1401.7 to the three mandatory safety scores from Table 1401.8. If the values in all three categories from Table 1401.7 exceed the corresponding mandatory safety scores in Table 1401.8, the building passes and is in compliance with the code. If the score in any one category is less than the mandatory safety score, the building is deemed to have failed and additional measures must be taken to bring the scores to a point that will at least equal the mandatory safety scores.

Table 1401.9 shows in simple equations whether a building passes the evaluation by subtracting the mandatory safety score from Table 1401.7. This is done for each of the three general categories of evaluation: fire safety, means of egress and general safety. If the difference for each category is zero or greater, the existing building passes and is considered to comply with the code objectives for public safety.

TABLE 1401.9
EVALUATION FORMULAS[a]

FORMULA	T1401.7	T1401.8		SCORE	PASS	FAIL
FS - MFS ≥ 0	_____ (FS) –	_____ (MFS)	=	_____	_____	_____
ME – MME ≥ 0	_____ (ME) –	_____ (MME)	=	_____	_____	_____
GS – MGS ≥ 0	_____ (GS) –	_____ (MGS)	=	_____	_____	_____

a. FS = Fire Safety.
ME = Means of Egress.
GS = General Safety.
MFS = Mandatory Fire Safety.
MME = Mandatory Means of Egress.
MGS = Mandatory Means of Safety.

INTERNATIONAL CODE COUNCIL®
Copyright © 2015 ICC. ALL RIGHTS RESERVED. Accessed by David Dammon on Jun 21, 2017 12:30:52 PM pursuant to License Agreement with ICC. No further reproduction or distribution authorized. ANY UNAUTHORIZED REPRODUCTION OR DISTRIBUTION IS A VIOLATION OF THE FEDERAL COPYRIGHT ACT AND THE LICENSE AGREEMENT, AND SUBJECT TO CIVIL AND CRIMINAL PENALTIES THEREUNDER.

Example:

A Group M mercantile occupancy receives evaluations for the 21 safety parameters that result in total building scores in Table 1401.7 as follows:

Fire safety (FS) = 23

Means of egress (ME) = 41

General safety (GS) = 42

These scores are compared to the mandatory safety scores for a Group M occupancy from Table 1401.8 (see Commentary Figure 1401.9).

Mandatory fire safety (MFS) = 23

Mandatory means of egress (MME) = 40

Mandatory general safety (MGS) = 40

The mandatory score is subtracted from the building score.

Conclusion:

The building is acceptable; all of the final safety scores are zero or greater. Each category must individually have a building score equal to or greater than the respective mandatory safety score for the building to pass the overall evaluation.

Table 1401.9
EVALUATION FORMULAS[a]

Formula	Table 1401.7	Table 1401.8	Score	Pass	Fail
FS-MFS ≥ 0	23 (FS)	- 23 (MFS) =	0	X	—
ME-MME ≥ 0	41 (ME)	- 40 (MME) =	1	X	—
GS-MGS ≥ 0	42 (GS)	- 40 (MGS) =	1	X	—

Note a.
FS = Fire Safety MFS = Mandatory Fire Safety
ME = Means of Egress MME = Mandatory Means of Egress
GS = General Safety MGS = Mandatory General Safety

Figure 1401.9
EXAMPLE OF EVALUATION FORMULAS

1401.9.1 Mixed occupancies. For mixed occupancies, the following provisions shall apply:

1. Where the separation between mixed occupancies does not qualify for any category indicated in Section 1401.6.16, the mandatory safety scores for the occupancy with the lowest general safety score in Table 1401.8 shall be utilized. (See Section 1401.6.)
2. Where the separation between mixed occupancies qualifies for any category indicated in Section 1401.6.16, the mandatory safety scores for each occupancy shall be placed against the evaluation scores for the appropriate occupancy.

❖ This section explains how to determine whether a mixed occupancy building passes or fails the process of evaluation. It restates the information in Sections 1401.6 and 1401.6.16. The mixed occupancy evaluation is based on the requirements of IBC Section 508. The two procedures described are:

Procedure 1:

For nonseparated occupancies in accordance with IBC Section 508, or for occupancies that are separated with a fire-resistance rating of less than 1 hour, mandatory safety scores for the occupancy with the lowest general safety score of Table 1401.8 apply.

Procedure 2:

For separated occupancies in accordance with IBC Section 508.4, or one of the categories listed in Section 1401.6.16, mandatory safety scores for each occupancy are compared to the evaluation scores for the appropriate occupancy. The total building score of Table 1401.7 is computed for each appropriate occupancy.

This section does not address a third option for mixed occupancies, and that is the separation of multiple occupancies within a single building or structure with one or more fire walls. Likewise, this option is not addressed in IBC Section 508. A fire wall creates separate and independent buildings; therefore, a separate evaluation must be done for each building that is created by fire walls.

Example:

A 40-foot (12 192 mm), three-story building has an open perimeter of 25 percent. It is Type IIB unprotected construction, unsprinklered. The building has 9,000 square feet (836 m^2) per floor. A Group A-2 assembly is on the first floor, with Group B business occupancies on the second and third floors. Although the building is unprotected Type IIB construction, there is a 2-hour fire-resistance-rated floor/ceiling assembly separating the first and second floors. An analysis of this building will result in the following: In accordance with IBC Section 508.4 and IBC Table 508.4, the mixed occupancies are separated by the required fire-rated assembly of 2 hours.

This building qualifies for Category b in Section 1401.6.16.1. A separate summary sheet for tabulating the building score in Table 1401.7 has to be completed for each of the two occupancies. The values of the building scores for fire safety, means of egress and general safety for the Group M mercantile occupancy and the Group R residential occupancy must be calculated. The mercantile building scores are compared to the mandatory safety scores from Table 1401.8 of 23, 40 and 40, and the residential building scores are compared to the mandatory safety scores from Table 1401.8 of 21, 38 and 38. If any one of the three building scores from either of the two occupancies does not equal or exceed the applicable safety score, the entire building fails the evaluation. For the building to pass, the safety parameters that are less than the mandatory safety score must be upgraded until a passing score is achieved.

INTERNATIONAL CODE COUNCIL®
Copyright © 2015 ICC. ALL RIGHTS RESERVED. Accessed by David Dammon on Jun 21, 2017 12:30:52 PM pursuant to License Agreement with ICC. No further reproduction or distribution authorized. ANY UNAUTHORIZED REPRODUCTION OR DISTRIBUTION IS A VIOLATION OF THE FEDERAL COPYRIGHT ACT AND THE LICENSE AGREEMENT, AND SUBJECT TO CIVIL AND CRIMINAL PENALTIES THEREUNDER.

Bibliography

The following resource materials were used in the preparation of the commentary for this chapter of the code.

36 CFR, Parts 1190 and 1191, Draft, *The Americans with Disabilities Act Accessibility Guidelines* (ADAAG). Washington, DC: Architectural and Transportation Barriers Compliance Board, April 2, 2002.

42 USC 3601-88, *Fair Housing Amendments Act* (FHAA). Washington, DC: United States Code, 1988.

Accessibility and Egress for People with Physical Disabilities. Falls Church, VA: CABO Board for the Coordination of the Model Codes Report, October 5, 1993.

"Final Report, Recommendations for a New ADAAG." Washington DC: ADAAG Review Federal Advisory Committee, September 30, 1996.

Rehabilitation Guidelines/1980. Washington, DC: National Institute of Building Science for the US Department of Housing and Urban Development, 1980.

1. Guideline for Setting and Adopting Standards for Building Rehabilitation;
2. Guideline for Approval of Building Rehabilitation;
3. Statutory Guideline for Building Rehabilitation;
4. Guideline for Managing Official Liability Associated with Building Rehabilitation;
5. Egress Guideline for Residential Rehabilitation;
6. Electrical Guideline for Residential Rehabilitation;
7. Plumbing DWV Guideline for Residential Rehabilitation; and
8. Guideline on Fire Ratings of Archaic Materials and Assemblies.

INTERNATIONAL CODE COUNCIL®
Copyright © 2015 ICC. ALL RIGHTS RESERVED. Accessed by David Dammon on Jun 21, 2017 12:30:52 PM pursuant to License Agreement with ICC. No further reproduction or distribution authorized. ANY UNAUTHORIZED REPRODUCTION OR DISTRIBUTION IS A VIOLATION OF THE FEDERAL COPYRIGHT ACT AND THE LICENSE AGREEMENT, AND SUBJECT TO CIVIL AND CRIMINAL PENALTIES THEREUNDER.

INTERNATIONAL CODE COUNCIL®
Copyright © 2015 ICC. ALL RIGHTS RESERVED. Accessed by David Dammon on Jun 21, 2017 12:30:52 PM pursuant to License Agreement with ICC. No further reproduction or distribution authorized. ANY UNAUTHORIZED REPRODUCTION OR DISTRIBUTION IS A VIOLATION OF THE FEDERAL COPYRIGHT ACT AND THE LICENSE AGREEMENT, AND SUBJECT TO CIVIL AND CRIMINAL PENALTIES THEREUNDER.

Chapter 15: Construction Safeguards

General Comments

The building construction process involves a number of known and unanticipated hazards. Chapter 15 establishes specific regulations in order to minimize risk to the public and adjacent property. Some construction failures have resulted during the initial stages of grading, excavation and demolition. During these early stages, poorly designed and installed sheeting and shoring have resulted in ditch and embankment cave-ins. Also, inadequate underpinning of adjoining existing structures and the careless removal of existing structures have produced construction failures.

The most critical period in building construction related to the physical safety of those on the job site is during the ongoing process when all building components have not yet been completed. Compounding this incomplete state is the use of dangerous construction methods, materials and equipment.

The importance of reasonable precautions is evidenced by the federal Occupational Safety and Health Act (OSHA), and related state and local regulations.

Purpose

The purpose of Chapter 15 is to cite safety requirements during construction or demolition of buildings and structures. These requirements are intended to protect the public from injury and adjoining property from damage.

SECTION 1501 GENERAL

[BG] 1501.1 Scope. The provisions of this chapter shall govern safety during construction that is under the jurisdiction of this code and the protection of adjacent public and private properties.

❖ The fundamental rationale behind this chapter is to establish that reasonable safety precautions are to be provided during the construction or demolition process to protect the public from injury and adjoining property from damage. This chapter does not address projects not associated with a building or structure. Section 101.2 establishes the scope as applicable to buildings or structures. For example, the widening or deepening of an existing river for flood control purposes or a similar project would not be regulated by this chapter.

[BG] 1501.2 Storage and placement. Construction equipment and materials shall be stored and placed so as not to endanger the public, the workers or adjoining property for the duration of the construction project.

❖ This section requires that construction materials and equipment must be located and protected pursuant to the governing provisions of this chapter so that the public and adjoining property are safeguarded at all times during construction or demolition processes.

[BG] 1501.3 Alterations, repairs, and additions. Required exits, existing structural elements, fire protection devices, and sanitary safeguards shall be maintained at all times during *alterations*, *repairs*, or *additions* to any building or structure.

Exceptions:

1. When such required elements or devices are being altered or repaired, adequate substitute provisions shall be made.
2. When the *existing building* is not occupied.

❖ Demolition and construction operations must not create a hazard for the occupants of a building during an alteration or addition. As such, the existing fire protection, means of egress elements and safety systems must remain in place and be functional. However, two exceptions are provided in this section that permit the fire protection, means of egress elements and safety systems to be changed, modified or removed. The first option provides an alternative method that must be approved by the code official. The second option is simply to have an unoccupied building, which means that residents of a dwelling unit or employees of a business are not to be present during the construction or demolition process.

[BG] 1501.4 Manner of removal. Waste materials shall be removed in a manner which prevents injury or damage to persons, adjoining properties, and public rights-of-way.

❖ Safe and sanitary procedures for the removal of building construction and demolition waste must be provided. The method of waste removal must be controlled such that debris will not pose a hazard, eyesore or nuisance to the public and neighboring properties. Examples of acceptable practices include: evidence that a professional disposal service will haul away the debris; limiting areas used for storing and handling demolished materials; enclosing storage areas so that only authorized personnel can gain access; establishing routes that waste removal vehicles are permitted to use; covering or tarping debris to prevent flying objects; providing fully enclosed chutes to control falling objects and dust; and scheduling waste removal when an adjoining property and the public will be least exposed to unusual and possibly dangerous situations caused by fumes, noise,

INTERNATIONAL CODE COUNCIL®
Copyright © 2015 ICC. ALL RIGHTS RESERVED. Accessed by David Dammon on Jun 21, 2017 12:30:52 PM pursuant to License Agreement with ICC. No further reproduction or distribution authorized. ANY UNAUTHORIZED REPRODUCTION OR DISTRIBUTION IS A VIOLATION OF THE FEDERAL COPYRIGHT ACT AND THE LICENSE AGREEMENT, AND SUBJECT TO CIVIL AND CRIMINAL PENALTIES THEREUNDER.

dust and unfamiliar events involved during a demolition process. Note that the accepted practice of waste removal is subject to the approval of the code official. A growing number of local jurisdictions as part of their sustainability, or green, programs limit the amount of construction and demolition debris that can be sent to landfills.

[BG] 1501.5 Fire safety during construction. Fire safety during construction shall comply with the applicable requirements of the *International Building Code* and the applicable provisions of Chapter 33 of the *International Fire Code.*

❖ This requirement correlates Section 3302 of the *International Building Code*® (IBC®) addressing "Construction Safeguards," and the construction safeguard requirements of this chapter with the *International Fire Code*® (IFC®) requirements on fire safety during construction and demolition. Chapter 33 of the IFC, "Fire Safety During Construction and Demolition," has all the fire safety requirements provided in one place for fire-safe operations during construction and demolition.

[BS] 1501.6 Protection of pedestrians. Pedestrians shall be protected during construction and demolition activities as required by Sections 1501.6.1 through 1501.6.7 and Table 1501.6. Signs shall be provided to direct pedestrian traffic.

❖ Safeguards are required to be in place during construction or demolition operations in accordance with Table 1501.6 and this chapter. In addition, since construction operations alter the familiar setting and path of travel, it is necessary to provide some form of visible directional sign to lead the public toward safety and away from potential hazards.

TABLE 1501.6. See below.

❖ Table 1501.6 establishes the type of protection required based on the location to overhead hazards and distance in relation to ground hazards. Once the type of protection is determined from the table, the applicable code section, such as Section 1501.6.3 for construction railings, Section 1501.6.4 for barriers and Section 1501.6.5 for covered walkways, must be followed.

[BS] 1501.6.1 Walkways. A walkway shall be provided for pedestrian travel in front of every construction and demolition site unless the applicable governing authority authorizes the sidewalk to be fenced or closed. Walkways shall be of sufficient width to accommodate the pedestrian traffic, but in no case shall they be less than 4 feet (1219 mm) in width. Walkways shall be provided with a durable walking surface. Walkways shall be accessible in accordance with Chapter 11 of the *International Building Code* and shall be designed to support all imposed loads and in no case shall the design live load be less than 150 pounds per square foot (psf) (7.2 kN/m^2).

❖ Construction operations must not narrow or impede the normal flow of pedestrian traffic along a walkway by the placement of a fence or other enclosure. Note that the applicable governing authority must approve any construction operations that will cause the narrowing or impedance of a walkway, such as the sidewalk. If a walkway is narrowed or enclosed, the construction of another or wider walkway is required for all pedestrians. The walkway must be able to handle the normal anticipated flow of pedestrian traffic and must not be less than the minimum 4-foot (1219 mm) width. Even though such walkways may be temporary installations, they may still need to be usable by persons with disabilities where such walkways must provide an accessible route in accordance with IBC Chapter 11. In addition, the walkway must be a stable surface that is capable of supporting all imposed loads. The minimum design load of the walkway must not be less than 150 pounds per square foot (psf) (7.2 kN/m^2 Pa).

[BS] 1501.6.2 Directional barricades. Pedestrian traffic shall be protected by a directional barricade where the walkway extends into the street. The directional barricade shall be of sufficient size and construction to direct vehicular traffic away from the pedestrian path.

❖ Similar to the local, federal and state guidelines that govern the provisions to protect employees while doing road work, this section establishes that a barrier must be erected. The barrier must be capable of redirecting and regulating the flow of vehicular traffic where constructed or projected into a street. An example of how to regulate traffic is to provide the necessary warnings, notice of caution and instructions to the operators of motor vehicles with signs

[BS] TABLE 1501.6
PROTECTION OF PEDESTRIANS

HEIGHT OF CONSTRUCTION	DISTANCE OF CONSTRUCTION TO LOT LINE	TYPE OF PROTECTION REQUIRED
8 feet or less	Less than 5 feet	Construction railings
	5 feet or more	None
More than 8 feet	Less than 5 feet	Barrier and covered walkway
	5 feet or more, but not more than one-fourth the height of construction	Barrier and covered walkway
	5 feet or more, but between one-fourth and one-half the height of construction	Barrier
	5 feet or more, but exceeding one-half the height of construction	None

For SI: 1 foot = 304.8 mm.

INTERNATIONAL CODE COUNCIL®
Copyright © 2015 ICC. ALL RIGHTS RESERVED. Accessed by David Dammon on Jun 21, 2017 12:30:52 PM pursuant to License Agreement with ICC. No further reproduction or distribution authorized. ANY UNAUTHORIZED REPRODUCTION OR DISTRIBUTION IS A VIOLATION OF THE FEDERAL COPYRIGHT ACT AND THE LICENSE AGREEMENT, AND SUBJECT TO CIVIL AND CRIMINAL PENALTIES THEREUNDER.

and colors that are common to the local, federal and state guidelines. Note that the intent of this visual barrier is to keep pedestrians out of vehicular traffic and prevent vehicles from encroaching on or using the pedestrian walkway as a roadway.

[BS] 1501.6.3 Construction railings. Construction railings shall be at least 42 inches (1067 mm) in height and shall be sufficient to direct pedestrians around construction areas.

❖ A barrier consisting of a horizontal rail and supports must be constructed with a minimum height of 42 inches (1067 mm). In addition, this barrier must be capable of controlling the flow of pedestrian traffic by routing travel away from the hazards associated with a construction area. Where construction railings are located where guards would be required by IBC Section 1015.1, such railings would also need to comply with IBC Section 1015. Even where guards are not required, the design standards for guards could be useful in designing construction railings.

[BS] 1501.6.4 Barriers. Barriers shall be a minimum of 8 feet (2438 mm) in height and shall be placed on the side of the walkway nearest the construction. Barriers shall extend the entire length of the construction site. Openings in such barriers shall be protected by doors which are normally kept closed.

❖ When a barrier is required by Table 1501.6, it must be constructed to impede, separate and obstruct passage of pedestrians onto a construction site. The structure must be a minimum 8 feet (2438 mm) in height and located continuously along the walkway on the side where construction activities are being done. Note that openings, such as doors or gates, are permitted as long as the only time they are open is during use by authorized personnel. As such, when the doors or gates are not being used they must remain closed.

[BS] 1501.6.4.1 Barrier design. Barriers shall be designed to resist loads required in Chapter 16 of the *International Building Code* unless constructed as follows:

1. Barriers shall be provided with 2 × 4 top and bottom plates.
2. The barrier material shall be a minimum of $^{3}/_{4}$ inch (19.1 mm) boards or $^{1}/_{4}$ inch (6.4 mm) wood structural use panels.
3. Wood structural use panels shall be bonded with an adhesive identical to that for exterior wood structural use panels.
4. Wood structural use panels $^{1}/_{4}$ inch (6.4 mm) or $^{1}/_{16}$ inch (1.6 mm) in thickness shall have studs spaced not more than 2 feet (610 mm) on center.
5. Wood structural use panels $^{3}/_{8}$ inch (9.5 mm) or $^{1}/_{2}$ inch (12.7 mm) in thickness shall have studs spaced not more than 4 feet (1219 mm) on center, provided a 2-inch by 4-inch (51 mm by 102 mm) stiffener is placed horizontally at the mid-height where the stud spacing exceeds 2 feet (610 mm) on center.
6. Wood structural use panels $^{5}/_{8}$ inch (15.9 mm) or thicker shall not span over 8 feet (2438 mm).

❖ This section establishes two methods that can be used to design barriers. The first method establishes that the barrier can be designed using the same materials and assembly instructions as indicated in Items 1 through 6. The second method provides for a barrier that will resist the loads imposed on it to be part of a designed assembly. The loads, which need to be resisted, are the same as those established in IBC Chapter 16.

[BS] 1501.6.5 Covered walkways. Covered walkways shall have a minimum clear height of 8 feet (2438 mm) as measured from the floor surface to the canopy overhead. Adequate lighting shall be provided at all times. Covered walkways shall be designed to support all imposed loads. In no case shall the design live load be less than 150 psf (7.2 kN/m^2) for the entire structure.

Exception: Roofs and supporting structures of covered walkways for new, light-frame construction not exceeding two stories above grade plane are permitted to be designed for a live load of 75 psf (3.6 kN/m^2) or the loads imposed on them, whichever is greater. In lieu of such designs, the roof and supporting structure of a covered walkway are permitted to be constructed as follows:

1. Footings shall be continuous 2 × 6 members.
2. Posts not less than 4 × 6 shall be provided on both sides of the roof and spaced not more than 12 feet (3658 mm) on center.
3. Stringers not less than 4 × 12 shall be placed on edge upon the posts.
4. Joists resting on the stringers shall be at least 2 × 8 and shall be spaced not more than 2 feet (610 mm) on center.
5. The deck shall be planks at least 2 inches (51 mm) thick or wood structural panels with an exterior exposure durability classification at least $^{23}/_{32}$ inch (18.3 mm) thick nailed to the joists.
6. Each post shall be knee-braced to joists and stringers by 2 × 4 minimum members 4 feet (1219 mm) long.
7. A 2 × 4 minimum curb shall be set on edge along the outside edge of the deck.

❖ Walkways with a covering that extends out over the pedestrian path of travel, pursuant to Table 1501.6, must be at least 8 feet (2438 mm) in height. The measurement must be taken from the top of the walking surface vertically upward to the underside of the roof covering. The walkway must maintain a satisfactory level of light to the space that will be equal to or better than that provided prior to the installation of the protective covering. The covered walkway must also be structurally capable of resisting the design loads

INTERNATIONAL CODE COUNCIL®
Copyright © 2015 ICC. ALL RIGHTS RESERVED. Accessed by David Dammon on Jun 21, 2017 12:30:52 PM pursuant to License Agreement with ICC. No further reproduction or distribution authorized. ANY UNAUTHORIZED REPRODUCTION OR DISTRIBUTION IS A VIOLATION OF THE FEDERAL COPYRIGHT ACT AND THE LICENSE AGREEMENT, AND SUBJECT TO CIVIL AND CRIMINAL PENALTIES THEREUNDER.

established in IBC Chapter 16, but not less than 150 psf (7.2 kN/m^2) for the live load.

Note that this section provides two alternative design options. One option permits the covered walkway to resist the design loads established in IBC Chapter 16, but not less than the minimum 75-psf (3.6 kN/m^2) live load if nearby construction does not exceed two stories in height and the construction materials are lightweight, such as light-frame construction. The second option is to construct the covered walkway in accordance with the seven criteria set forth in this section.

[BS] 1501.6.6 Repair, maintenance and removal. Pedestrian protection required by Section 1501.6 shall be maintained in place and kept in good order for the entire length of time pedestrians may be endangered. The owner or the owner's agent, upon the completion of the construction activity, shall immediately remove walkways, debris and other obstructions and leave such public property in as good a condition as it was before such work was commenced.

❖ Any safeguards required by this chapter must be kept in good functional condition for the entire duration of the construction or demolition activity so that the public will not be placed in harm's way. Once a building or structure is occupiable and the site is properly graded, the protection must be removed. As such, public property that was affected by the construction activity must be restored to or left in the condition that existed prior to the work.

[BS] 1501.6.7 Adjacent to excavations. Every excavation on a site located 5 feet (1524 mm) or less from the street lot line shall be enclosed with a barrier not less than 6 feet (1829 mm) high. Where located more than 5 feet (1524 mm) from the street lot line, a barrier shall be erected when required by the *code official*. Barriers shall be of adequate strength to resist wind pressure as specified in Chapter 16 of the *International Building Code*.

❖ This section establishes that whenever excavation is to take place less than 5 feet (1524 mm) from the edge of a roadway, a barrier must be erected with a minimum height of 6 feet (1829 mm). If the excavation is located greater than 5 feet (1524 mm) from the edge of the roadway, the code official must evaluate the level of hazard for the public and the necessary precautions to take. As such, the code official has the authority to order the construction of a structural barrier. Note that any barrier erected must maintain other provisions of the code such that it is capable of handling and resisting the design wind loads denoted in IBC Chapter 16.

1501.7 Facilities required. Sanitary facilities shall be provided during construction or demolition activities in accordance with the *International Plumbing Code*.

❖ Construction employees must have plumbing facilities available during the construction or demolition process of a building. The facilities must conform to the requirements set forth in the *International Plumbing Code*® (IPC®).

SECTION 1502
PROTECTION OF ADJOINING PROPERTY

[BS] 1502.1 Protection required. Adjoining public and private property shall be protected from damage during construction and demolition work. Protection must be provided for footings, foundations, party walls, chimneys, skylights and roofs. Provisions shall be made to control water runoff and erosion during construction or demolition activities. The person making or causing an excavation to be made shall provide written notice to the owners of adjoining buildings advising them that the excavation is to be made and that the adjoining buildings should be protected. Said notification shall be delivered not less than 10 days prior to the scheduled starting date of the excavation.

❖ This section emphasizes the need to protect all existing public and private property bordering proposed construction or demolition operations. The term "property" only alludes to existing buildings. As such, any building element or system must be provided with a safeguard that will limit the damage that could be caused from the processes involved to the equipment and materials used. Additionally, soil erosion and land disbursement control must be provided to prevent spillage and spread of disturbed soil debris. The owner or owner's agent has the responsibility to provide a written notice 10 days in advance for any demolition or construction activities that may warrant bordering lots to be protected from damage.

SECTION 1503
TEMPORARY USE OF STREETS, ALLEYS AND PUBLIC PROPERTY

[BG] 1503.1 Storage and handling of materials. The temporary use of streets or public property for the storage or handling of materials or equipment required for construction or demolition, and the protection provided to the public shall comply with the provisions of the applicable governing authority and this chapter.

❖ In addition to applicable regulations, this chapter establishes procedures for the storage of construction materials and equipment to protect access to public safety equipment, utilities and public transportation facilities.

[BG] 1503.2 Obstructions. Construction materials and equipment shall not be placed or stored so as to obstruct access to fire hydrants, standpipes, fire or police alarm boxes, catch basins or manholes, nor shall such material or equipment be located within 20 feet (6.1 m) of a street intersection, or placed so as to obstruct normal observations of traffic signals or to hinder the use of public transit loading platforms.

❖ This section indicates that precautions for material and equipment storage and placement must be provided so as not to block or obstruct access to fire hydrants, standpipes (including fire department siamese connections for sprinklers and standpipes), fire or police alarm boxes, utility boxes and meters, catch basins or manholes, or any other vital facility with a

INTERNATIONAL CODE COUNCIL®
Copyright © 2015 ICC. ALL RIGHTS RESERVED. Accessed by David Dammon on Jun 21, 2017 12:30:52 PM pursuant to License Agreement with ICC. No further reproduction or distribution authorized. ANY UNAUTHORIZED REPRODUCTION OR DISTRIBUTION IS A VIOLATION OF THE FEDERAL COPYRIGHT ACT AND THE LICENSE AGREEMENT, AND SUBJECT TO CIVIL AND CRIMINAL PENALTIES THEREUNDER.

function that contributes to the health, safety and welfare of the public. Also, storage must not be placed within 20 feet (6096 mm) of a street intersection if it obstructs the normal observation of traffic signals or hinders the use of any mass-transit loading platforms, such as sidewalk bus stops, taxi waiting areas, etc.

[BG] 1503.3 Utility fixtures. Building materials, fences, sheds or any obstruction of any kind shall not be placed so as to obstruct free approach to any fire hydrant, fire department connection, utility pole, manhole, fire alarm box, or catch basin, or so as to interfere with the passage of water in the gutter. Protection against damage shall be provided to such utility fixtures during the progress of the work, but sight of them shall not be obstructed.

❖ Utility fixtures, such as those used by electrical, telephone, water, gas or sewer companies, as well as fire protection devices, must not be hidden from view and not be blocked from access and use. When construction operations are near a utility fixture, precautions must be provided so as not to cause damage. Note that the utility companies and the authority having jurisdiction, including the fire department, may have specific requirements and guidelines to follow to limit the possibility of damage and obstruction.

SECTION 1504
FIRE EXTINGUISHERS

[F] 1504.1 Where required. All structures under construction, *alteration*, or demolition shall be provided with not less than one approved portable fire extinguisher in accordance with Section 906 of the *International Fire Code* and sized for not less than ordinary hazard as follows:

1. At each stairway on all floor levels where combustible materials have accumulated.
2. In every storage and construction shed.
3. Additional portable fire extinguishers shall be provided where special hazards exist including, but not limited to, the storage and use of flammable and combustible liquids.

❖ A means to provide fire protection during the construction and demolition process is required. As such, this section indicates provisions for portable fire extinguishers. In addition to the provisions of this section, the regulations of IFC Section 906 must be maintained.

[F] 1504.2 Fire hazards. The provisions of this code and of the *International Fire Code* shall be strictly observed to safeguard against all fire hazards attendant upon construction operations.

❖ Methods, procedures and construction materials each contribute, in some way, to creating a fire hazard. Therefore, in addition to the provisions of the code, the IFC must be used to regulate the proper means of safety that must be provided for a building being demolished, altered or constructed.

SECTION 1505
MEANS OF EGRESS

[BE] 1505.1 Stairways required. Where a building has been constructed to a building height of 50 feet (15 240 mm) or four stories, or where an *existing building* exceeding 50 feet (15 240 mm) in building height is altered, at least one temporary lighted stairway shall be provided unless one or more of the permanent stairways are erected as the construction progresses.

❖ Temporary stairways must be constructed in accordance with IBC Section 1009, including riser, tread, guard and handrail requirements.

[F] 1505.2 Maintenance of means of egress. Required means of egress shall be maintained at all times during construction, demolition, remodeling or *alterations* and *additions* to any building.

Exception: Approved temporary means of egress systems and facilities.

❖ Access to all existing required exits must remain unobstructed and usable by any occupants in the existing building while construction or demolition work is being done. Note that, depending on the extent of work, an exit may become obstructed. Therefore, an alternative exit must be provided if the blocked exit is a required exit.

SECTION 1506
STANDPIPE SYSTEMS

[F] 1506.1 Where required. In buildings required to have standpipes by Section 905.3.1 of the *International Building Code*, not less than one standpipe shall be provided for use during construction. Such standpipes shall be installed prior to construction exceeding 40 feet (12 192 mm) in height above the lowest level of fire department vehicle access. Such standpipe shall be provided with fire department hose connections at accessible locations adjacent to usable stairways. Such standpipes shall be extended as construction progresses to within one floor of the highest point of construction having secured decking or flooring.

❖ The scope of this section is to provide fire safety procedures during the construction operation in accordance with the code and the IFC. Standpipes that are required by IFC Section 905 and are to be a permanent part of the building must be installed and remain functional as construction progresses. Functional standpipes are required so that fire-fighting capability is available at all times within a reasonable proximity to all potential fire locations. Note that standpipes must be in place prior to a building or structure under construction exceeding 40 feet (12 192 mm) in height and thereafter as it progresses to its completed height. During construction, the standpipe must be operational no lower than one floor below the highest point of construction.

INTERNATIONAL CODE COUNCIL®
Copyright © 2015 ICC. ALL RIGHTS RESERVED. Accessed by David Dammon on Jun 21, 2017 12:30:52 PM pursuant to License Agreement with ICC. No further reproduction or distribution authorized. ANY UNAUTHORIZED REPRODUCTION OR DISTRIBUTION IS A VIOLATION OF THE FEDERAL COPYRIGHT ACT AND THE LICENSE AGREEMENT, AND SUBJECT TO CIVIL AND CRIMINAL PENALTIES THEREUNDER.

[F] 1506.2 Buildings being demolished. Where a building or portion of a building is being demolished and a standpipe is existing within such a building, such standpipe shall be maintained in an operable condition so as to be available for use by the fire department. Such standpipe shall be demolished with the building but shall not be demolished more than one floor below the floor being demolished.

❖ Standpipes in buildings under demolition must remain in service during the demolition process so that fire-fighting capability is maintained. Similar to buildings under construction, the standpipe is to remain in operation up to one floor level below the floor being demolished. Note that the purpose of this section is to establish the requirement for fire safety procedures during the demolition process in accordance with the code and the IFC.

[F] 1506.3 Detailed requirements. Standpipes shall be installed in accordance with the provisions of Chapter 9 of the *International Building Code*.

Exception: Standpipes shall be either temporary or permanent in nature, and with or without a water supply, provided that such standpipes conform to the requirements of Section 905 of the *International Building Code* as to capacity, outlets and materials.

❖ During the construction or demolition process, standpipes must be provided in a temporary or permanent location so that fire fighters will have a sufficient means to supply water to their connection. These standpipes must either be connected to a permanent water supply source or have the capabilities of being connected to one in accordance with IBC Section 1509.1. Note that all standpipes must comply with IBC Section 905 and must be installed and provided in a building pursuant to the regulations of IBC Chapter 9.

SECTION 1507
AUTOMATIC SPRINKLER SYSTEM

[F] 1507.1 Completion before occupancy. In portions of a building where an automatic sprinkler system is required by this code, it shall be unlawful to occupy those portions of the building until the automatic sprinkler system installation has been tested and approved, except as provided in Section 110.3.

❖ A certificate of occupancy must not be issued by the code official if a required automatic sprinkler system is not approved. However, a temporary occupancy may be granted at the discretion of the code official.

[F] 1507.2 Operation of valves. Operation of sprinkler control valves shall be permitted only by properly authorized personnel and shall be accompanied by notification of duly designated parties. When the sprinkler protection is being regularly turned off and on to facilitate connection of newly completed segments, the sprinkler control valves shall be checked at the end of each work period to ascertain that protection is in service.

❖ The scope of this section is to provide fire safety procedures during construction operations in accordance with the code and the IFC. Note that a sprinkler system must remain operable unless work is being done on it. In such a case, the water must only be shut off by authorized personnel coupled with the notification of the proper authorities so that a form of check and balance is achieved to make certain the water is turned back on.

SECTION 1508
ACCESSIBILITY

[BE] 1508.1 Construction sites. Structures, sites, and equipment directly associated with the actual process of construction, including but not limited to scaffolding, bridging, material hoists, material storage, or construction trailers are not required to be accessible.

❖ This section exempts structures directly associated with the construction process because the need for accessibility on a continuous or regular basis in those circumstances is unlikely to arise. Note that all structures that may be involved during a construction project are not exempt, only those specifically involved in the actual process of construction. For example, if mobile units are brought into house classrooms during a school addition project, those mobile units would have to comply with accessibility provisions. This is consistent with the exception permitted for new construction in IBC Section 1103.2.5.

SECTION 1509
WATER SUPPLY FOR FIRE PROTECTION

[F] 1509.1 When required. An approved water supply for fire protection, either temporary or permanent, shall be made available as soon as combustible material arrives on the site.

❖ Where a standpipe system is present during the construction process, pursuant to Section 1506.1, a water source must be readily available to provide fire-fighting capabilities at all times.

INTERNATIONAL CODE COUNCIL®
Copyright © 2015 ICC. ALL RIGHTS RESERVED. Accessed by David Dammon on Jun 21, 2017 12:30:52 PM pursuant to License Agreement with ICC. No further reproduction or distribution authorized. ANY UNAUTHORIZED REPRODUCTION OR DISTRIBUTION IS A VIOLATION OF THE FEDERAL COPYRIGHT ACT AND THE LICENSE AGREEMENT, AND SUBJECT TO CIVIL AND CRIMINAL PENALTIES THEREUNDER.

Chapter 16: Referenced Standards

General Comments

Chapter 16 contains a comprehensive list of all standards that are referenced in the code. It is organized in a manner that makes it easy to locate specific document references.

This chapter lists the standards that are referenced in various sections of this document. The standards are listed herein by the promulgating agency of the standard; the standard identification; the date and title; and the section or sections of this document that reference the standard. The application of the referenced standards shall be as specified in Section 102.4. It is important to understand that not every document related to building design and construction is qualified to be a "referenced standard." The International Code Council® (ICC®) has adopted a criterion that standards referenced in the *International Codes*® and standards intended for adoption into the *International Codes* must meet in order to qualify as a referenced standard. The policy is summarized as follows:

- Code references: The scope and application of the standard must be clearly identified in the code text.
- Standard content: The standard must be written in mandatory language and appropriate for the subject covered. The standard shall not have the effect of requiring proprietary materials or prescribing a proprietary testing agency.
- Standard promulgation: The standard must be readily available and developed and maintained in a consensus process, such as ASTM or ANSI.

It should be noted that the ICC Code Development Procedures, of which the standards policy is a part, are updated periodically. A copy of the latest version can be obtained from the ICC offices.

Once a standard is incorporated into the code through the code development process, it becomes an enforceable part of the code. When the code is adopted by a jurisdiction, the standard is also a part of that jurisdiction's adopted code. It is for this reason that the criteria were developed. Compliance with this policy provides that documents incorporated into the code are, among others, developed through the use of the consensus process, written in mandatory language and do not mandate the use of proprietary materials or agencies. The requirement for a standard to be developed through a consensus process is vital, as it means that the standard will be representative of the most current body of available knowledge on the subject as determined by a broad spectrum of interested or affected parties without dominance by any single interest group. A true consensus process has many attributes, including but not limited to:

- An open process that has formal (published) procedures that allow for the consideration of all viewpoints;
- A definitive review period that allows for the standard to be updated or revised;
- A process of notification to all interested parties; and
- An appeals process.

Many available documents related to design, installation and construction, though useful, are not "standards" and are not appropriate for reference in the code. Often, these documents are developed or written with the intention of being used for regulatory purposes and are unsuitable for use as a regulation due to extensive use of recommendations, advisory comments and nonmandatory terms. Typical examples of such documents include installation instructions, guidelines and practices.

The objective of ICC's standards policy is to provide regulations that are clear, concise and enforceable—thus, the requirement for standards to be written in mandatory language. This requirement is not intended to mean that a standard cannot contain informational or explanatory material that will aid the user of the standard in its application. When it is the desire of the standard's promulgating agency for such material to be included, however, the information must appear in a nonmandatory location, such as an annex or appendix, and be clearly identified as not being part of the standard.

Overall, standards referenced by the code must be authoritative, relevant, up to date and, most important, reasonable and enforceable. Standards that comply with ICC's standards policy fulfill these expectations.

Purpose

As a performance-oriented code, the code contains numerous references to documents that are used to regulate materials and methods of construction. The references to these documents within the code text consist of the promulgating agency's acronym and its publication designation (e.g., ASME A17.1) and a further indication that the document being referenced is the one that is listed in Chapter 16. Chapter 16 contains all the information that is necessary to identify the specific referenced document. Included is the following information on a document's promulgating agency (see Figure 16):

- The promulgating agency (i.e. the agency's title);

INTERNATIONAL CODE COUNCIL®
Copyright © 2015 ICC. ALL RIGHTS RESERVED. Accessed by David Dammon on Jun 21, 2017 12:30:52 PM pursuant to License Agreement with ICC. No further reproduction or distribution authorized. ANY UNAUTHORIZED REPRODUCTION OR DISTRIBUTION IS A VIOLATION OF THE FEDERAL COPYRIGHT ACT AND THE LICENSE AGREEMENT, AND SUBJECT TO CIVIL AND CRIMINAL PENALTIES THEREUNDER.

- The promulgating agency's acronym; and
- The promulgating agency's address.

For example, a reference to an ASME standard within the code indicates that the document is promulgated by the American Society of Mechanical Engineers (ASME), which is located in New York City. This chapter lists the standards agencies alphabetically for ease of identification. This chapter also includes the following information on the referenced document itself (see Figure 16):

- The document's publication designation;
- The document's edition year;
- The document's title;
- Any addenda or revisions to the document that are applicable; and
- Every section of the code in which the document is referred.

For example, a reference to ASME A17.1 indicates that this document can be found in Chapter 16 under the heading ASME. The specific standards designation is A17.1/CSA B44. For convenience, these designations are listed in alphanumeric order. Chapter 16 identifies that ASME A17.1/CSA B44 is titled Safety Code for Elevators and Escalators, the applicable edition (i.e., its year of publication) is 2007 and is referenced in numerous sections of the code.

This chapter also indicates when a document has been discontinued or replaced by its promulgating agency. When a document is replaced by a different one, a note will appear to tell the user the designation and title of the new document.

The key aspect of the manner in which standards are referenced by the code is that a specific edition of a specific standard is clearly identified. In this manner, the requirements necessary for compliance can be readily determined. The basis for code compliance is, therefore, established and available on an equal basis to the code official, contractor, designer and owner.

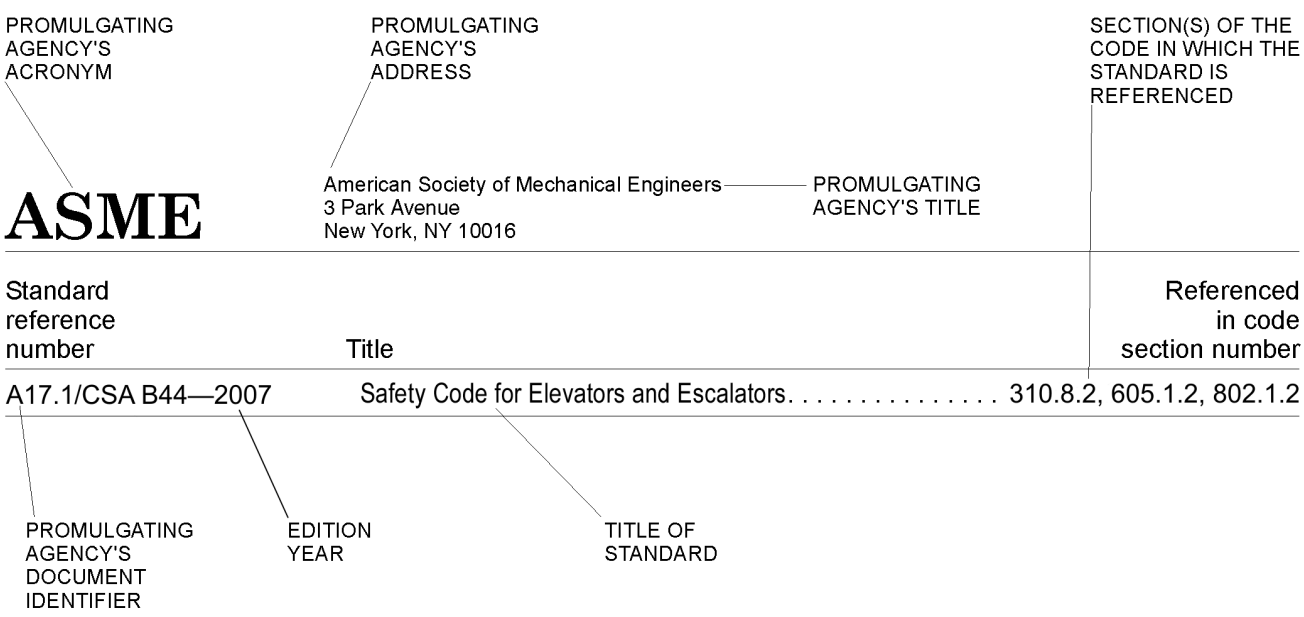

Figure 16
REFERENCED STANDARDS

INTERNATIONAL CODE COUNCIL®
Copyright © 2015 ICC. ALL RIGHTS RESERVED. Accessed by David Dammon on Jun 21, 2017 12:30:52 PM pursuant to License Agreement with ICC. No further reproduction or distribution authorized. ANY UNAUTHORIZED REPRODUCTION OR DISTRIBUTION IS A VIOLATION OF THE FEDERAL COPYRIGHT ACT AND THE LICENSE AGREEMENT, AND SUBJECT TO CIVIL AND CRIMINAL PENALTIES THEREUNDER.

This chapter lists the standards that are referenced in various sections of this document. The standards are listed herein by the promulgating agency of the standard, the standard identification, the effective date and title, and the section or sections of this document that reference the standard. The application of the referenced standards shall be as specified in Section 102.4.

ASCE/SEI

American Society of Civil Engineers
Structural Engineering Institute
1801 Alexander Bell Drive
Reston, VA 20191-4400

Standard reference number	Title	Referenced in code section number
7—10	Minimum Design Loads for Buildings and Other Structures with Supplement No. 1	301.1.4.1, 403.4, 403.9, 807.5
41—13	Seismic Evaluation and Retrofit of Existing Buildings	301.1.4, 301.1.4.1, Table 301.1.4.1 301.1.4.2, Table 301.1.4.2, 402.4, Table 402.4, 403.4, 404.2.1, Table 404.2.1, 404.2.3, 407.4

ASHRAE

American Society of Heating, Refrigerating and Air Conditioning Engineers
1791 Tullie Circle, NE
Atlanta, GA 30329

Standard reference number	Title	Referenced in code section number
62.1—2013	Ventilation for Acceptable Indoor Air Quality	809.2

ASME

American Society of Mechanical Engineers
3 Park Avenue
New York, NY 10016

Standard reference number	Title	Referenced in code section number
ASME A17.1/ CSA B44—2013	Safety Code for Elevators and Escalators	410.8.2, 705.1.2, 902.1.2
A17.3—2008	Safety Code for Existing Elevators and Escalators	902.1.2
A18.1—2008	Safety Standard for Platform Lifts and Stairway Chair Lifts	410.8.3, 705.1.3

ASTM

ASTM International
100 Barr Harbor Drive
West Conshohocken, PA 19428-2959

Standard reference number	Title	Referenced in code section number
C 94/C94M—13	Specification for Ready-mixed Concrete	109.3.1
E 84—13A	Test Method for Surface Burning Characteristics of Building Materials	1205.9

INTERNATIONAL CODE COUNCIL®
Copyright © 2015 ICC. ALL RIGHTS RESERVED. Accessed by David Dammon on Jun 21, 2017 12:30:52 PM pursuant to License Agreement with ICC. No further reproduction or distribution authorized. ANY UNAUTHORIZED REPRODUCTION OR DISTRIBUTION IS A VIOLATION OF THE FEDERAL COPYRIGHT ACT AND THE LICENSE AGREEMENT, AND SUBJECT TO CIVIL AND CRIMINAL PENALTIES THEREUNDER.

ASTM—continued

E 108—11	Standard Test Methods for Fire Tests of Roof Coverings	1205.5
E 136—2012	Test Method for Behavior of Materials in a Vertical Tube Furnace at 750°C	202
F 2006—10	Standard Safety Specification for Window Fall Prevention Devices for Non Emergency Escape (Egress) and Rescue (Ingress) Windows	406.2, 702.4
F 2090—10	Standard Specification for Window Fall Prevention Devices with Emergency (Egress) Release Mechanisms	406.2, 702.4, 705.5

ICC

International Code Council, Inc.
500 New Jersey Avenue, NW, 6th Floor
Washington, DC 20001

Standard reference number	Title	Referenced in code section number
IBC—15	International Building Code®	101.4.1, 106.2.2, 109.3.3, 109.3.8, 110.2, 202, 301.1, 301.1.4, 301.1.4.1, 301.1.4.2 401.2.3, 402.1, 402.2, 402.3, 402.3.1, 402.4, 403.1, 403.2, 403.3, 403.3.1, 403.4, 403.4.1, 403.8, 403.9, 404.2.1, 404.2.3, 404.3, 404.4, 404.5, 406.3, 407.1, 407.3, 407.4, 408.3, 410.4, 410.4.2, 410.6, 410.8.1, 410.8.4, 410.8.6, 410.8.5, 410.8.7, 410.8.8, 410.8.10, 410.8.14, 410.9, 410.9.3, 410.9.4, 501.3, 601.3, 602.3, 606.1, 606.2.2.1, 606.2.2.3, 606.2.3, 606.2.4 701.2, 701.3, 702.1, 702.2, 702.3, 702.4, 702.5, 702.6, 705.1, 705.1.1, 705.1.4, 705.1.7, 705.1.8, 705.1.9, 706.1, 706.3, 706.3.2, 707.2, 707.3.1, 707.3.2 801.3, 802.1, 803.2.1, 803.2.3, 803.3, 803.4, 803.5.2, 803.6, 804.1.1, 804.2, 804.2.2, 804.2.3, 804.2.4, 804.3, 805.3.1, 805.3.1.2.1, 805.4.3, 805.5, 805.6, 805.7.1, 805.8.1, 805.9.2, 805.10.1.1, 805.10.1.2, 805.10.1.3, 805.10.2, 805.11.2, 806.2, 806.3, 806.4, 806.5, 807.2, 807.4, 807.5, 807.6 904.1.2, 904.1.3, 904.2, 904.2.1, 904.2.2, 905.2, 905.3, 906.2, 907.4, 907.4.2 1001.3, 1002.1, 1002.2, 1007.1, 1007.2, 1007.3.1, 1011.1, 1012.1.1.1, 1012.1.1.2, 1012.2.1, 1012.2.2, 1012.3, 1012.4.1, 1012.4.2, 1012.4.3, 1012.5.1, 1012.5.1.1, 1012.5.3, 1012.6.1, 1012.6.3, 1012.7.1, 1012.7.2, 1012.7.3, 1012.8, 1012.8.2 1102.1, 1102.2, 1102.3, 1103.1, 1103.2, 1103.3, 1103.3.1, 1103.3.2, 1103.4, 1103.5, 1201.4, 1202.3, 1202.4, 1203.12, 1204.1, 1204.1.4, 1205.2, 1205.9, 1205.15, 1301.2, 1302.1, 1302.2, 1302.2.1, 1302.3, 1302.4, 1302.5, 1302.6, 1401.2.2, 1401.2.3, 1401.2.4, 1401.3.3, 1401.4.1, 1401.6.1, 1401.6.1.1, 1401.6.2, 1401.6.2.1, 1401.6.3.1, 1401.6.3.2, 1401.6.4.1, 1401.6.5, 1401.6.5.1, 1401.6.6, 1401.6.7.1, 1401.6.8, 1401.6.9, 1401.6.9.1, 1401.6.10, 1401.6.10.1, 1401.6.11, 1401.6.11.1, 1401.6.12.1, 1401.6.13, 1401.6.15.1, 1401.6.16.1, 1401.6.17, 1401.6.17.1, 1401.6.18, 1401.6.18.1, 1401.6.19, Table 1401.6.19, 1501.5, 1501.6.1, 1501.6.4.1, 1501.6.7, 1506.1, 1506.3
ICC A117.1—09	Accessible and Usable Buildings and Facilities	410.8.2, 410.8.3, 410.8.10, 705.1.2, 705.1.3
ICC 300—12	ICC Standard on Bleachers, Folding and Telescopic Seating and Grandstands	401.1
IECC—15	International Energy Conservation Code®	301.2, 702.6, 708.1, 811.1, 908.1
IFC—15	International Fire Code®	101.4.2, 301.1.1, 301.2, 402.5, 403.10, 803.2.1, 803.2.3, 804.4.1.1, 804.4.1.2, 804.4.1.3, 804.4.1.4, 804.4.1.5, 804.4.1.6, 804.4.1.7, 804.4.3, 1012.5.1.1, 1104.1, 1301.2, 1401.3.2, 1401.6.8.1, 1401.6.14, 1401.6.14.1, 1501.5, 1504.1, 1504.2
IFGC—15	International Fuel Gas Code®	301.2, 702.6.1
IMC—15	International Mechanical Code®	301.2, 702.6, 809.1, 902.1.1, 902.2.1, 1009.1, 1401.6.7.1, 1401.6.8, 1401.6.8.1
IPC—15	International Plumbing Code®	301.2, 609.1, 702.6, 810.1, 1010.1, 1010.2, 1010.3, 1010.5, 1501.7
IPMC—15	International Property Maintenance Code®	101.4.2, 301.2, 1301.2, 1401.3.2
IRC—15	International Residential Code®	101.4.1, 301.2, 402.2, 403.2, 404.5, 408.3, 602.3, 701.3, 702.5, 706.2, 707.2, 707.4, 707.5, 708.1 807.4, 808.3, 811.1, 907.4, 908.1, 1103.2, 1103.3, 1103.4, 1104.1, 1106.1, 1201.4, 1301.2, 1302.1, 1302.2, 1302.2.1, 1302.3, 1302.4, 1302.6, 1302.5, 1401.2.2, 1401.2.3, 1401.3.3

INTERNATIONAL CODE COUNCIL®
Copyright © 2015 ICC. ALL RIGHTS RESERVED. Accessed by David Dammon on Jun 21, 2017 12:30:52 PM pursuant to License Agreement with ICC. No further reproduction or distribution authorized. ANY UNAUTHORIZED REPRODUCTION OR DISTRIBUTION IS A VIOLATION OF THE FEDERAL COPYRIGHT ACT AND THE LICENSE AGREEMENT, AND SUBJECT TO CIVIL AND CRIMINAL PENALTIES THEREUNDER.

NFPA

National Fire Protection Agency
1 Batterymarch Park
Quincy, MA 02269-9101

Standard reference number	Title	Referenced in code section number
NFPA 13R—13	Standard for the Installation of Sprinkler Systems in Residential Occupancies up to and Including Four Stories in Height	804.2.5
NFPA 70—14	National Electrical Code	107.3, 301.2, 607.1.1, 607.1.2, 607.1.3, 607.1.4, 607.1.5, 808.1, 808.3.4, 808.3.7, 1008.1, 1008.2, 1008.3, 1008.4
NFPA 72—13	National Fire Alarm and Signaling Code	804.2.5, 804.4
NFPA 99—15	Health Care Facilities Code	607.1.4
NFPA 101—15	Life Safety Code	805.2

UL

UL LLC
333 Pfingsten Road
Northbrook, IL 60062

Standard reference number	Title	Referenced in code section number
723—08	Standard for Test for Surface Burning Characteristics of Building Materials with Revisions Through September 2010	1205.9
790—04	Standard Test Methods for Fire Tests of Roof Coverings with Revisions through October 2008	1205.5

INTERNATIONAL CODE COUNCIL®
Copyright © 2015 ICC. ALL RIGHTS RESERVED. Accessed by David Dammon on Jun 21, 2017 12:30:52 PM pursuant to License Agreement with ICC. No further reproduction or distribution authorized. ANY UNAUTHORIZED REPRODUCTION OR DISTRIBUTION IS A VIOLATION OF THE FEDERAL COPYRIGHT ACT AND THE LICENSE AGREEMENT, AND SUBJECT TO CIVIL AND CRIMINAL PENALTIES THEREUNDER.

INTERNATIONAL CODE COUNCIL®
Copyright © 2015 ICC. ALL RIGHTS RESERVED. Accessed by David Dammon on Jun 21, 2017 12:30:52 PM pursuant to License Agreement with ICC. No further reproduction or distribution authorized. ANY UNAUTHORIZED REPRODUCTION OR DISTRIBUTION IS A VIOLATION OF THE FEDERAL COPYRIGHT ACT AND THE LICENSE AGREEMENT, AND SUBJECT TO CIVIL AND CRIMINAL PENALTIES THEREUNDER.

Appendix A: Guidelines for the Seismic Retrofit of Existing Buildings

Chapter A1: Seismic Strengthening Provisions for Unreinforced Masonry Bearing Wall Buildings

[Commentary portions of Chapters A1 through A5 are produced by the Structural Engineers Association of California (SEAOC). This commentary is jointly copyrighted by SEAOC and ICC.]

General

Appendix Chapter A1, along with the rest of Appendix A of the code, is referenced by the *International Codes*® in two ways:

- Section 301.1.4.2 allows the use of Appendix A for qualifying buildings when "reduced IBC level seismic forces" are triggered.
- Section 807.6 allows the use of Appendix A for voluntary seismic retrofit.

The provisions in Appendix Chapter A1 require the selection of one of two procedures—either the general procedure or the special procedure for the analysis and seismic strengthening of unreinforced masonry (URM) buildings. The special procedure is based on research on the behavior of URM buildings at their limit state and on the experience of engineers who have upgraded buildings in the Los Angeles hazard reduction program; use of the special procedure is expected for most buildings. The general procedure is a procedure for buildings with rigid diaphragms that do not qualify for the special procedure; it is a combination of a conventional code approach and some portions of the special procedure. The commentary discusses the general and special procedures individually and in detail.

URM bearing wall buildings have shown poor performance in past earthquakes, including the following significant U.S. events: 1868 Hayward, California; 1906 San Francisco, California; 1925 Santa Barbara, California; 1933 Long Beach, California; 1935 Helena, Montana; 1952 Kern County, California; 1964 Olympia, Washington; 1971 San Fernando, California; 1983 Coalinga, California; 1987 Whittier, California; 1989 Loma Prieta, California; 1994 Northridge, California and 2001 Nisqually, Washington.

The loss of lives and property damage in future earthquakes will be heaviest in buildings that exist today, especially buildings of URM construction. The short-term impact of improved knowledge, codes and design practices will be limited to those relatively few recent buildings that take advantage of this improved knowledge. Thus, the dominant policy issues posed by earthquakes involve not new but existing buildings, particularly those structures that have obvious weaknesses and do not comply with the general intent and necessary requirements of current regulations. The issue before the public and the profession is determining how to set standards for these noncompliant existing buildings that are consistent with both the desire for safety and the limited resources available to achieve improved safety.

It is generally accepted that the intensity of earthquakes reasonably expected to occur in the moderate and high seismic zones of the United States would be sufficient to cause buildings with minimal seismic resistance characteristics to be seriously damaged, causing injury or death to occupants or passers-by.

It is reasonable, where a real seismic risk exists, to take steps to significantly reduce it. The objective of Appendix A1 is the reduction or elimination of seismic risk associated with URM buildings.

The main goal is to reduce life safety risks as best as possible with the available resources. The efforts are directed toward ensuring a coherent load path for lateral loads, reduction of out-of-plane wall failures, reduction of loss of support for floors and roofs and reduction of falling parapets or ornamentation. Application of this chapter will decrease the probability of loss of life, but this cannot be prevented. Inherent to the procedure is the acceptability of some major and irreparable damage as long as there is a decrease in the likelihood of falling building elements or loss of support for horizontal framing and a reduction in serious injury and loss of life.

The goal of this recommended strengthening is lower than the goal set for new construction. Appendix Chapter A1 recognizes that the economic difficulty of strengthening existing buildings necessitates reliance on building components with seismic performance characteristics that are less than ideal.

INTERNATIONAL CODE COUNCIL®
Copyright © 2015 ICC. ALL RIGHTS RESERVED. Accessed by David Dammon on Jun 21, 2017 12:30:52 PM pursuant to License Agreement with ICC. No further reproduction or distribution authorized. ANY UNAUTHORIZED REPRODUCTION OR DISTRIBUTION IS A VIOLATION OF THE FEDERAL COPYRIGHT ACT AND THE LICENSE AGREEMENT, AND SUBJECT TO CIVIL AND CRIMINAL PENALTIES THEREUNDER.

SECTION A101
PURPOSE

[BS] A101.1 Purpose. The purpose of this chapter is to promote public safety and welfare by reducing the risk of death or injury that may result from the effects of earthquakes on existing unreinforced masonry bearing wall buildings.

The provisions of this chapter are intended as minimum standards for structural seismic resistance, and are established primarily to reduce the risk of life loss or injury. Compliance with these provisions will not necessarily prevent loss of life or injury, or prevent earthquake damage to rehabilitated buildings.

❖ Appendix Chapter A1 is intended to reduce risks associated with the seismic performance of URM buildings. It represents minimum standards required to reduce risk of life loss or injury. The objective is accomplished by reducing the possibility of damage and the extent of damage. However, compliance with this chapter will not necessarily prevent earthquake damage to rehabilitated buildings. Risk of life loss or injury is significantly reduced but not eliminated by compliance with this chapter.

The risk reduction applies to the overall average performance of rehabilitated URM buildings. An individual building may have damage levels above or below the average, depending on its structural characteristics and the local ground motion. If it is desired to further limit damage to any specific building or preserve its post-earthquake function, the engineer should consider additional measures for strengthening the building.

SECTION A102
SCOPE

[BS] A102.1 General. The provisions of this chapter shall apply to all existing buildings having at least one unreinforced masonry bearing wall. The elements regulated by this chapter shall be determined in accordance with Table A1-A. Except as provided herein, other structural provisions of the building code shall apply. This chapter does not apply to the *alteration* of existing electrical, plumbing, mechanical or fire safety systems.

❖ This chapter is applicable to all existing buildings that have at least one URM wall or URM bearing wall. Section A103 defines a URM wall and URM bearing wall. URM walls constructed within concrete or steel frames are not bearing walls. These frame buildings with URM infill are considered as potentially hazardous, but they are not covered by this chapter.

Table A1-A lists elements of buildings that are regulated by this chapter. This listing of elements is related to observed damage or partial collapse of these elements and spectral intensity of ground shaking. Separation of unbraced parapets has been reported for cities distant from a large magnitude earthquake source. The measure of spectral velocity, S_{D1}, is used instead of short period spectral acceleration, S_{Ds}, because S_{D1} more accurately reflects the seismic behavior of unreinforced masonry buildings with flexible diaphragms and, to a lesser extent, the other items listed in Table A1-A. The upper bound value of S_{D1} given in Table A1-A corresponds to descriptions of Seismic Design Categories B, C and D.

Appendix Chapter A1 does not regulate nonstructural systems.

[BS] A102.2 Essential and hazardous facilities. The provisions of this chapter shall not apply to the strengthening of buildings in Risk Category III or IV. Such buildings shall be strengthened to meet the requirements of the *International Building Code* for new buildings of the same risk category or other such criteria approved by the *code official*.

❖ The degree of earthquake risk reduction anticipated in Appendix Chapter A1 is not considered acceptable for IBC Risk Categories III and IV. Buildings in these risk categories require special detailing considerations, increased seismic loading and limitations on seismic force-resisting systems.

SECTION A103
DEFINITIONS

For the purpose of this chapter, the applicable definitions in the building code shall also apply.

❖ In general, the definitions given in this section are self-explanatory. The commentary expands on several of the definitions that are critical to the use of Appendix Chapter A1.

[BS] COLLAR JOINT. The vertical space between adjacent wythes. A collar joint may contain mortar or grout.

❖ The collar joint is the space between wythes; space that may be empty or may be filled with mortar or grout. Although the condition of the collar joint may not be critical for in-plane wall shear stress, the procedure for determining allowable stress from in-plane shear tests takes into account the probable effect of mortar in the collar joint. The condition of the joint is of greater importance for out-of-plane forces where it is necessary to have the wythes of the wall act integrally. A visual examination of the collar joint to determine its mortar coverage is required to allow the use of the increased height-to-thickness ratios given in Table A1-B for buildings with crosswalls in all stories.

[BS] CROSSWALL. A new or existing wall that meets the requirements of Section A111.3 and the definition of Section A111.3. A crosswall is not a shear wall.

❖ A crosswall is a light-frame wall sheathed with new or existing materials. Light-frame walls with shear panels have a desirable hysteretic behavior and can, by their coupling strength, stiffen the diaphragm and reduce diaphragm deflections. They function as energy dissipaters when connecting flexible diaphragms or a flexible diaphragm to grade within the span of the diaphragm. They act similar to shear

INTERNATIONAL CODE COUNCIL®
Copyright © 2015 ICC. ALL RIGHTS RESERVED. Accessed by David Dammon on Jun 21, 2017 12:30:52 PM pursuant to License Agreement with ICC. No further reproduction or distribution authorized. ANY UNAUTHORIZED REPRODUCTION OR DISTRIBUTION IS A VIOLATION OF THE FEDERAL COPYRIGHT ACT AND THE LICENSE AGREEMENT, AND SUBJECT TO CIVIL AND CRIMINAL PENALTIES THEREUNDER.

walls to the extent that they diminish the displacement of a floor or roof relative to the building base, but are not true shear walls. Their in-plane stiffness is not comparable with shear walls of masonry, concrete or lateral load-resisting elements of structural steel. Moment-resisting frames may also be designed as crosswalls.

[BS] CROSSWALL SHEAR CAPACITY. The unit shear value times the length of the crosswall, $v_c L_c$.

❖ The unit shear capacities are listed in Tables A1-D and A1-E for existing and new construction, respectively. For crosswalls with openings, the minimum length of the sum of the individual crosswalls along a line through the openings should be used to determine the total length of crosswall, L_c.

[BS] DIAPHRAGM EDGE. The intersection of the horizontal diaphragm and a shear wall.

[BS] DIAPHRAGM SHEAR CAPACITY. The unit shear value times the depth of the diaphragm, $v_u D$.

[BS] FLEXIBLE DIAPHRAGM. A diaphragm of wood or untopped metal deck construction.

❖ The definition for "Flexible diaphragm" is required for Section A111.1, which determines where the special procedure can be used. For further explanation, refer to the commentary to the definition of "Rigid diaphragm."

[BS] NORMAL WALL. A wall perpendicular to the direction of seismic forces.

❖ A normal wall is a URM bearing wall with loads perpendicular to the wall. When the earthquake loads are parallel to an URM bearing wall, the wall is considered a shear wall.

[BS] OPEN FRONT. An exterior building wall line without vertical elements of the lateral force-resisting system in one or more stories.

❖ "Open front" is a term for the side of a building that does not have a shear wall, frame or braced frame at the exterior wall line. The open front may be at the first story or at all stories. The open front is defined as "on one side only." The definition is intended to be a limitation. Open-front buildings on street corners must have lateral load-resisting elements, such as shear walls installed on one of the street-front sides.

[BS] POINTING. The process of removal of deteriorated mortar from between masonry units and placement of new mortar. Also known as repointing or tuckpointing for purposes of this chapter.

❖ Pointing is equivalent to repointing. The recommended procedure for pointing is described in Section A106.3.3.9**.**

[BS] REPOINTING. See "Pointing."

[BS] RIGID DIAPHRAGM. A diaphragm of concrete construction.

❖ Whether a diaphragm should be considered flexible or rigid depends on the relationship of diaphragm in-plane shear stiffness to masonry wall in-plane stiffness. Concrete diaphragms, including older concrete diaphragms that are not "reinforced" based on current code definitions, are typically considered rigid based on stiffness. The engineer must consider the relative stiffness and strength limit states of other materials, such as gypsum concrete roofs, to determine a rational analysis procedure for the existing structural materials. An alternative procedure would be to use the IBC definition of a "Flexible diaphragm," which is based on the stiffness of only the diaphragm and the shear walls below the diaphragm level. Appendix Chapter A1 does not consider semirigid diaphragms.

[BS] TUCKPOINTING. See "Pointing."

[BS] UNREINFORCED MASONRY. Includes burned clay, concrete or sand-lime brick; hollow clay or concrete block; plain concrete; and hollow clay tile. These materials shall comply with the requirements of Section A106 as applicable.

[BS] UNREINFORCED MASONRY BEARING WALL. A URM wall that provides the vertical support for the reaction of floor or roof-framing members.

[BS] UNREINFORCED MASONRY (URM) WALL. A masonry wall that relies on the tensile strength of masonry units, mortar and grout in resisting design loads, and in which the area of reinforcement is less than 25 percent of the minimum ratio required by the building code for reinforced masonry.

❖ A URM wall is a wall constructed of solid clay or concrete units, or a wall constructed of hollow units, either clay or concrete. If the wall is constructed of hollow units, the net area of the masonry wall must be used for in-plane shear calculations. The allowable height-to-thickness ratios given in Table A1-B are not affected by the solidity of the masonry unit. Only the height-to-thickness ratio affects the stability of the wall. The weight per square foot of the wall is not a parameter for out-of-plane wall stability.

The in-plane bed joint shear strength or tensile splitting strength of the masonry must be determined by testing. Field stone or adobe masonry does not have a reliable test method for determination of in-plane shear strength. The engineer should, with the concurrence of the code official, determine strength limit state materials properties.

Appendix Chapter A1 has been developed for URM. The tensile strength of bed joints is considered as zero. A wall is considered unreinforced if the amount of reinforcing is less than 25 percent of the minimum amount that would be required by the IBC. The intention is to exclude engineered systems that have small but definite amounts of horizontal and vertical reinforcing.

In most cases, a wall will either contain reinforcing at or near the IBC requirements, or it will have no reinforcing at all. The reinforcing must be both vertical and horizontal. Steel straps laid along bed joints exist in some older types of construction; these should not

INTERNATIONAL CODE COUNCIL®
Copyright © 2015 ICC. ALL RIGHTS RESERVED. Accessed by David Dammon on Jun 21, 2017 12:30:52 PM pursuant to License Agreement with ICC. No further reproduction or distribution authorized. ANY UNAUTHORIZED REPRODUCTION OR DISTRIBUTION IS A VIOLATION OF THE FEDERAL COPYRIGHT ACT AND THE LICENSE AGREEMENT, AND SUBJECT TO CIVIL AND CRIMINAL PENALTIES THEREUNDER.

be considered horizontally reinforced since these straps could actually weaken the bed joint.

[BS] YIELD STORY DRIFT. The lateral displacement of one level relative to the level above or below at which yield stress is first developed in a frame member.

❖ This term refers to the lateral displacement of one level relative to the level above or below at which yield stress is first developed in a frame member of moment frames acting as crosswalls.

SECTION A104
SYMBOLS AND NOTATIONS

For the purpose of this chapter, the following notations supplement the applicable symbols and notations in the building code.

a_n = Diameter of core multiplied by its length or the area of the side of a square prism.

A = Cross-sectional area of unreinforced masonry pier or wall, square inches (10^{-6} m^2).

A_b = Total area of the bed joints above and below the test specimen for each in-place shear test, square inches (10^{-6} m^2).

D = In-plane width dimension of pier, inches (10^{-3} m), or depth of diaphragm, feet (m).

DCR = Demand-capacity ratio specified in Section A111.4.2.

f'_m = Compressive strength of masonry.

f_{sp} = Tensile-splitting strength of masonry.

F_{wx} = Force applied to a wall at level x, pounds (N).

H = Least clear height of opening on either side of a pier, inches (10^{-3} m).

h/t = Height-to-thickness ratio of URM wall. Height, h, is measured between wall anchorage levels and/or slab-on-grade.

L = Span of diaphragm between shear walls, or span between shear wall and open front, feet (m).

L_c = Length of crosswall, feet (m).

L_i = Effective span for an open-front building specified in Section A111.8, feet (m).

P = Applied force as determined by standard test method of ASTM C496 or ASTM E519, pounds (N).

P_D = Superimposed dead load at the location under consideration, pounds (kN). For determination of the rocking shear capacity, dead load at the top of the pier under consideration shall be used.

P_{D+L} = Press resulting from the dead plus actual live load in place at the time of testing, pounds per square inch (kPa).

P_w = Weight of wall, pounds (N).

R = Response modification factor for Ordinary plain masonry shear walls in Bearing Wall System from Table 12.2-1 of ASCE 7, where $R = 1.5$.

S_{DS} = Design spectral acceleration at short period, in g units.

S_{D1} = Design spectral acceleration at 1-second period, in g units.

v_a = The shear strength of any URM pier, v_mA/1.5 pounds (N).

v_c = Unit shear capacity value for a crosswall sheathed with any of the materials given in Table A1-D or A1-E, pounds per foot (N/m).

v_m = Shear strength of unreinforced masonry, pounds per square inch (kPa).

V_{aa} = The shear strength of any URM pier or wall, pounds (N).

V_{ca} = Total shear capacity of crosswalls in the direction of analysis immediately above the diaphragm level being investigated, v_cL_c, pounds (N).

V_{cb} = Total shear capacity of crosswalls in the direction of analysis immediately below the diaphragm level being investigated, v_cL_c, pounds (N).

V_p = Shear force assigned to a pier on the basis of its relative shear rigidity, pounds (N).

V_r = Pier rocking shear capacity of any URM wall or wall pier, pounds (N).

v_t = Mortar shear strength as specified in Section A106.3.3.5, pounds per square inch (kPa).

V_{test} = Load at incipient cracking for each in-place shear test performed in accordance with Section A106.3.3.1, pounds (kN).

v_{to} = Mortar shear test values as specified in Section A106.3.3.5, pounds per square inch (kPa).

v_u = Unit shear capacity value for a diaphragm sheathed with any of the materials given in Table A1-D or A1-E, pounds per foot (N/m).

V_{wx} = Total shear force resisted by a shear wall at the level under consideration, pounds (N).

W = Total seismic dead load as defined in the building code, pounds (N).

W_d = Total dead load tributary to a diaphragm level, pounds (N).

W_w = Total dead load of a URM wall above the level under consideration or above an open-front building, pounds (N).

W_{wx} = Dead load of a URM wall assigned to level x halfway above and below the level under consideration, pounds (N).

$\Sigma v_u D$ = Sum of diaphragm shear capacities of both ends of the diaphragm, pounds (N).

INTERNATIONAL CODE COUNCIL®
Copyright © 2015 ICC. ALL RIGHTS RESERVED. Accessed by David Dammon on Jun 21, 2017 12:30:52 PM pursuant to License Agreement with ICC. No further reproduction or distribution authorized. ANY UNAUTHORIZED REPRODUCTION OR DISTRIBUTION IS A VIOLATION OF THE FEDERAL COPYRIGHT ACT AND THE LICENSE AGREEMENT, AND SUBJECT TO CIVIL AND CRIMINAL PENALTIES THEREUNDER.

$\Sigma\Sigma v_u D$ = For diaphragms coupled with crosswalls, $v_u D$ includes the sum of shear capacities of both ends of diaphragms coupled at and above the level under consideration, pounds (N).

ΣW_d = Total dead load of all the diaphragms at and above the level under consideration, pounds (N).

❖ Selected definitions are given to clarify the use of the following symbols:

P_D = The tributary dead load at the top of the pier under consideration. For uniformly loaded bearing walls, it consists of the dead load on a width of wall extending between the centers of the openings adjacent to an interior pier, from the wall edge to the center of the adjacent opening for the exterior piers or from wall edge to wall edge. For use in Equations A1-4, A1-5 and A1-6, P_D is the superimposed dead load at the test location.

P_{D+L} = Stress resulting from the dead load plus actual live load in place at the time of testing, in pounds per square inch. For use in Equation A1-3, the quantity P_{D+L} is the stress obtained by dividing the axial load on the wall by the wall area, not the area of the test bed joints.

V_{test} = Load at incipient cracking for the in-place shear test described in Section A106.3.3.1, Item 1. This description of the in-place shear test has more detail than the obsolete UBC 21-6.

$\Sigma v_u D$ = The sum of the diaphragm shear capacities of both ends of the diaphragm that are parallel to the direction of the lateral load.

$\Sigma\Sigma v_u D$ = The sum of the Σv_{uD} values for all of the coupled diaphragms at and above the level under consideration.

SECTION A105
GENERAL REQUIREMENTS

[BS] A105.1 General. The seismic force-resisting system specified in this chapter shall comply with the building code, except as modified herein.

❖ Chapter 16 of the *International Building Code*® (IBC®) provides the basic requirements for a seismic force-resisting system. Distribution of lateral loads shall consider the relative rigidity of horizontal diaphragms. Flexible diaphragms have inadequate relative stiffness to redistribute force between those elements that are considered shear walls by the special procedure. Diaphragms in buildings that use the general procedure are capable of redistributing the lateral loads, causing increased forces due to torsional response and coupling the weight at each story level with the shear walls.

[BS] A105.2 Alterations and repairs. Alterations and repairs required to meet the provisions of this chapter shall comply with applicable structural requirements of the building code unless specifically provided for in this chapter.

❖ The IBC applies unless explicitly excluded or modified herein.

[BS] A105.3 Requirements for plans. The following construction information shall be included in the plans required by this chapter:

1. Dimensioned floor and roof plans showing existing walls and the size and spacing of floor and roof-framing members and sheathing materials. The plans shall indicate all existing and new crosswalls and shear walls and their materials of construction. The location of these walls and their openings shall be fully dimensioned and drawn to scale on the plans.
2. Dimensioned wall elevations showing openings, piers, wall classes as defined in Section A106.3.3.8, thickness, heights, wall shear test locations, cracks or damaged portions requiring repairs, the general condition of the mortar joints, and if and where pointing is required. Where the exterior face is veneer, the type of veneer, its thickness and its bonding and/or ties to the structural wall masonry shall also be noted.
3. The type of interior wall and ceiling materials, and framing.
4. The extent and type of existing wall anchorage to floors and roof when used in the design.
5. The extent and type of parapet corrections that were previously performed, if any.
6. *Repair* details, if any, of cracked or damaged unreinforced masonry walls required to resist forces specified in this chapter.
7. All other plans, sections and details necessary to delineate required retrofit construction.
8. The design procedure used shall be stated on both the plans and the permit application.
9. Details of the anchor prequalification program required by Section A107.5.3, if used, including location and results of all tests.

❖ These are minimum requirements for the plans to be submitted. Although this may seem like an administrative requirement, this section is needed to ensure that a thorough investigation of the building has been made and is shown on required plans that are submitted to the code official.

The plans should include openings and their dimensions. Each diaphragm should be investigated at several locations. The lay-up of the sheathing should be observed and properly described in the plans. However, the continuity of the finish floor sheathing under partitions need not be verified.

Section A107.5.3, referenced by Item 9, is based on the requirements originally written for the *Uniform Code for Building Conservation* [and later as *Uniform Building Code* (UBC) Standard 21-7] on the subject of direct tension testing of existing anchors and new

INTERNATIONAL CODE COUNCIL®
Copyright © 2015 ICC. ALL RIGHTS RESERVED. Accessed by David Dammon on Jun 21, 2017 12:30:52 PM pursuant to License Agreement with ICC. No further reproduction or distribution authorized. ANY UNAUTHORIZED REPRODUCTION OR DISTRIBUTION IS A VIOLATION OF THE FEDERAL COPYRIGHT ACT AND THE LICENSE AGREEMENT, AND SUBJECT TO CIVIL AND CRIMINAL PENALTIES THEREUNDER.

bolts, torque testing of new bolts and prequalification testing for bolts and other types of anchors. Prequalification testing may be used to justify capacities for new bolts that differ from the ones specified in Table A1-E; however, the tension and shear capacities of new bolts determined by prequalification testing may not exceed 1.5 times the values specified in Table A1-E.

[BS] A105.4 Structural observation, testing and inspection. Structural observation, in accordance with Section 1708 of the *International Building Code*, shall be required for all structures in which seismic retrofit is being performed in accordance with this chapter. Structural observation shall include visual observation of work for conformance with the approved construction documents and confirmation of existing conditions assumed during design.

Structural testing and inspection for new construction materials shall be in accordance with the building code, except as modified by this chapter.

❖ The construction phase of the retrofit program will usually uncover unforeseen conditions. The engineer or architect responsible for the design must provide a more extensive observation of this type of project than that required for new construction. This is the reason that structural observation is required for all structures undergoing a seismic retrofit.

SECTION A106
MATERIALS REQUIREMENTS

[BS] A106.1 General. Materials permitted by this chapter, including their appropriate strength design values and those existing configurations of materials specified herein, may be used to meet the requirements of this chapter.

❖ Existing materials, as described in Table A1-D; new materials, as described in Table A1-E; and masonry materials, when tested as described in this section or categorized by f'_m, may be used as a part of the seismic force-resisting structural system. New materials permitted by the IBC may be used to supplement the strength of existing materials.

[BS] A106.2 Existing materials. Existing materials used as part of the required vertical load-carrying or lateral force-resisting system shall be in sound condition, or shall be repaired or removed and replaced with new materials. All other unreinforced masonry materials shall comply with the following requirements:

1. The lay-up of the masonry units shall comply with Section A106.3.2, and the quality of bond between the units has been verified to the satisfaction of the building official;
2. Concrete masonry units are verified to be load-bearing units complying with ASTM C90 or such other standard as is acceptable to the building official; and
3. The compressive strength of plain concrete walls shall be determined based on cores taken from each class of concrete wall. The location and number of tests shall be the same as those prescribed for tensile-splitting strength tests in Sections A106.3.3.3 and A106.3.3.4, or in Section A108.1.

The use of materials not specified herein or in Section A108.1 shall be based on substantiating research data or engineering judgment, with the approval of the building official.

❖ ASTM C90 can be used for description of dimensions of load-bearing hollow concrete units. Face shell thickness of hollow units is needed for calculation of net bedded cross section; traditionally, only face shells are mortared in ungrouted hollow concrete units. Face shell thickness for nominal thickness of the unit is: 6 inches nominal, 1 inch; 8 inches nominal, $1^1/_4$ inches; 10 inches nominal, $1^3/_8$ inches; 12 inches nominal, $1^1/_2$ inches.

[BS] A106.3 Existing unreinforced masonry.

[BS] A106.3.1 General. Unreinforced masonry walls used to carry vertical loads or seismic forces parallel and perpendicular to the wall plane shall be tested as specified in this section. All masonry that does not meet the minimum standards established by this chapter shall be removed and replaced with new materials, or alternatively, shall have its structural functions replaced with new materials and shall be anchored to supporting elements.

❖ It is essential for the engineer to make a proper evaluation of the existing masonry. Allowable shear values for use in the analysis of shear walls and allowable height-to-thickness values for normal walls that are not analyzed for out-of-plane loading are based on the assumption of adequate strengths and lay-up of the masonry. Nonconforming masonry must be removed or treated as veneer.

[BS] A106.3.2 Lay-up of walls.

[BS] A106.3.2.1 Multiwythe solid brick. The facing and backing shall be bonded so that not less than 10 percent of the exposed face area is composed of solid headers extending not less than 4 inches (102 mm) into the backing. The clear distance between adjacent full-length headers shall not exceed 24 inches (610 mm) vertically or horizontally. Where the backing consists of two or more wythes, the headers shall extend not less than 4 inches (102 mm) into the most distant wythe, or the backing wythes shall be bonded together with separate headers with their area and spacing conforming to the foregoing. Wythes of walls not bonded as described above shall be considered veneer. Veneer wythes shall not be included in the effective thickness used in calculating the height-to-thickness ratio and the shear capacity of the wall.

Exception: Where S_{DI} is not more than 0.3, veneer wythes anchored as specified in the building code and made composite with backup masonry may be used for calculation of the effective thickness.

❖ The concern is for the integrity of the multiwythe wall acting as a whole in resisting out-of-plane forces. "Facing" means the wythe at the face of the wall, whether interior or exterior; "backing" means the

INTERNATIONAL CODE COUNCIL®
Copyright © 2015 ICC. ALL RIGHTS RESERVED. Accessed by David Dammon on Jun 21, 2017 12:30:52 PM pursuant to License Agreement with ICC. No further reproduction or distribution authorized. ANY UNAUTHORIZED REPRODUCTION OR DISTRIBUTION IS A VIOLATION OF THE FEDERAL COPYRIGHT ACT AND THE LICENSE AGREEMENT, AND SUBJECT TO CIVIL AND CRIMINAL PENALTIES THEREUNDER.

inner wythes that are not normally visible. "Lay-up" means the pattern of masonry units in each wythe and in the interlocking of wythes. The primary requirement is that all wythes be adequately interlocked by header bricks. The quantity of mortar in the collar joints between wythes is also important, having an effect on the allowable height-to-thickness ratio for the wall as specified in the notes to Table A1-B.

The section exception to the requirements of the common lay-up of multiwythe walls is permitted for lower seismic hazard zones. This exception is applicable where S_{D1} as defined and mapped in the IBC is 0.3g or less. The exception in this section permits veneer wythes with anchorage as specified by the IBC and made composite with the backing masonry to be considered as a part of the structural wall. The wythes may be bonded by a combination of additional ties or the combination of grout and ties and should be checked to determine if they can transfer the calculated stress between wythes.

[BS] A106.3.2.2 Grouted or ungrouted hollow concrete or clay block and structural hollow clay tile. Grouted or ungrouted hollow concrete or clay block and structural hollow clay tile shall be laid in a running bond pattern.

[BS] A106.3.2.3 Other lay-up patterns. Lay-up patterns other than those specified in Sections A106.3.2.1 and A106.3.2.2 above are allowed if their performance can be justified.

[BS] A106.3.3 Testing of masonry.

[BS] A106.3.3.1 Mortar tests. The quality of mortar in all masonry walls shall be determined by performing in-place shear tests in accordance with the following:

1. The bed joints of the outer wythe of the masonry shall be tested in shear by laterally displacing a single brick relative to the adjacent bricks in the same wythe. The head joint opposite the loaded end of the test brick shall be carefully excavated and cleared. The brick adjacent to the loaded end of the test brick shall be carefully removed by sawing or drilling and excavating to provide space for a hydraulic ram and steel loading blocks. Steel blocks, the size of the end of the brick, shall be used on each end of the ram to distribute the load to the brick. The blocks shall not contact the mortar joints. The load shall be applied horizontally, in the plane of the wythe. The load recorded at first movement of the test brick as indicated by spalling of the face of the mortar bed joints is V_{test} in Equation A1-3.
2. Alternative procedures for testing shall be used where in-place testing is not practical because of crushing or other failure mode of the masonry unit (see Section A106.3.3.2).

❖ **Item 1.** Mortar tests are performed by shearing of the mortar joints above and below the test masonry unit. The test load is recorded at the first sign of movement of the test brick. This can be detected when sand grains are detaching from the mortar joint. The user can refer to ASTM C1531 for a procedure for conducting shear strength tests.

Item 2. Many masonry walls in the United States have been constructed with mortars that have shear strength such that the mortar shear strength test is not possible (e.g., hollow masonry). The failure may be the bearing on the end of the masonry units at the jack. Where this occurs, an alternative testing method described in Section 106.3.3.2 determines tensile splitting strength by the standard ASTM procedure.

[BS] A106.3.3.2 Alternative procedures for testing masonry. The tensile-splitting strength of existing masonry, f_{sp}, or the prism strength of existing masonry, f'_m, may be determined in accordance with one of the following procedures:

1. Wythes of solid masonry units shall be tested by sampling the masonry by drilled cores of not less than 8 inches (203 mm) in diameter. A bed joint intersection with a head joint shall be in the center of the core. The tensile-splitting strength of these cores should be determined by the standard test method of ASTM C496. The core should be placed in the test apparatus with the bed joint 45 degrees (0.79 rad) from the horizontal. The tensile-splitting strength should be determined by the following equation:

$$f_{sp} = \frac{2P}{\pi a_n} \qquad \textbf{(Equation A1-1)}$$

2. Hollow unit masonry constructed of through-the-wall units shall be tested by sampling the masonry by a sawn square prism of not less than 18 inches square (11 613 mm^2). The tensile-splitting strength should be determined by the standard test method of ASTM E519. The diagonal of the prism should be placed in a vertical position. The tensile-splitting strength should be determined by the following equation:

$$f_{sp} = \frac{0.494P}{a_n} \qquad \textbf{(Equation A1-2)}$$

3. An alternative to material testing is estimation of the f'_m of the existing masonry. This alternative should be limited to recently constructed masonry. The determination of f'_m requires that the unit correspond to a specification of the unit by an ASTM standard and classification of the mortar by type.

❖ These procedures determine the tensile splitting strength of masonry, f_{sp}. The tensile splitting strength of masonry adjusted for the effects of axial load, as used in Equation A1-5, is used to determine the unreinforced masonry shear strength, v_m. The pier shear strength, V_m, is calculated using $v_m A_n/1.5$, which is the average strength in shear for a rectangular cross section.

Recently constructed masonry (post-1950) may be categorized by unit strength and mortar mix according to Tables 1 and 2 of TMS 602-11/ACI 530.1-11/ASCE 6-11. These tables may be used to estimate the compressive strength of the masonry. The estimate will be a conservative prism strength, which may be used to calculate peak shear stress. The shear strength of a

INTERNATIONAL CODE COUNCIL®
Copyright © 2015 ICC. ALL RIGHTS RESERVED. Accessed by David Dammon on Jun 21, 2017 12:30:52 PM pursuant to License Agreement with ICC. No further reproduction or distribution authorized. ANY UNAUTHORIZED REPRODUCTION OR DISTRIBUTION IS A VIOLATION OF THE FEDERAL COPYRIGHT ACT AND THE LICENSE AGREEMENT, AND SUBJECT TO CIVIL AND CRIMINAL PENALTIES THEREUNDER.

pier is calculated by Equation A1-20.

The shear strength is an expected shear strength; no load factors or capacity reduction factors are used in Appendix Chapter A1.

[BS] A106.3.3.3 Location of tests. The shear tests shall be taken at locations representative of the mortar conditions throughout the entire building, taking into account variations in workmanship at different building height levels, variations in weathering of the exterior surfaces, and variations in the condition of the interior surfaces due to deterioration caused by leaks and condensation of water and/or by the deleterious effects of other substances contained within the building. The exact test locations shall be determined at the building site by the engineer or architect in responsible charge of the structural design work. An accurate record of all such tests and their locations in the building shall be recorded, and these results shall be submitted to the building department for approval as part of the structural analysis.

❖ The test locations should be distributed over the wall surface to account for variability in construction, environmental influences and weathering. The exact location of each test shall be determined at the site by the engineer. Relatively small areas that are pointed due to local deterioration should not be used for test areas since pointed areas will produce higher values that can skew the test results.

[BS] A106.3.3.4 Number of tests. The minimum number of tests per class shall be as follows:

1. At each of both the first and top stories, not less than two tests per wall or line of wall elements providing a common line of resistance to lateral forces.
2. At each of all other stories, not less than one test per wall or line of wall elements providing a common line of resistance to lateral forces.
3. In any case, not less than one test per 1,500 square feet (139.4 m^2) of wall surface and not less than a total of eight tests.

❖ Numbers and locations are specified to ensure a representative sample of existing masonry, considering that the walls were not necessarily built at the same time and with the same workmanship. Workmanship may vary in a given wall, often being poorer near the top, and may not have been subjected to the same environmental influences. These and other conditions may make it desirable to divide walls into classes according to their relative overall quality (see Section A106.3.3.8). The number of tests in each class of wall should be established to provide a body of data that is adequate to establish a 20-percent value, v_t.

A common line of resistance is defined as a set of one or more masonry walls at an edge of a diaphragm. The wall may have offsets in that common line. A minimum of eight tests for a building is specified. This would be the minimum number for a single-story building. The area of 1,500 square feet (139 m^2) is gross area, including wall openings.

[BS] A106.3.3.5 Minimum quality of mortar.

1. Mortar shear test values, v_{to}, in pounds per square inch (kPa) shall be obtained for each in-place shear test in accordance with the following equation:

$$v_{to} = (V_{test}/A_b) - P_{D+L} \qquad \textbf{(Equation A1-3)}$$

2. Individual unreinforced masonry walls with v_{to} consistently less than 30 pounds per square inch (207 kPa) shall be entirely pointed prior to retesting.
3. The mortar shear strength, v_t, is the value in pounds per square inch (kPa) that is exceeded by 80 percent of the mortar shear test values, v_{to}.
4. Unreinforced masonry with mortar shear strength, v_t, less than 30 pounds per square inch (207 kPa) shall be removed, pointed and retested or shall have its structural function replaced, and shall be anchored to supporting elements in accordance with Sections A106.3.1 and A113.8. When existing mortar in any wythe is pointed to increase its shear strength and is retested, the condition of the mortar in the adjacent bed joints of the inner wythe or wythes and the opposite outer wythe shall be examined for extent of deterioration. The shear strength of any wall class shall be no greater than that of the weakest wythe of that class.

❖ A mortar shear test value, v_{to}, is obtained for each test location by dividing the test force, V_{test}, by the sum of the areas of the upper and lower surfaces of the brick, and subtracting the axial stress in the wall at the time of testing.

Axial stress is defined to include actual live load where it is significant; ordinarily the use of the dead weight of the superimposed masonry is close enough. A set of values of v_{to} is assembled for the whole building.

When an individual wall has values of v_{to} that are consistently below 30 pounds per square inch (psi) (207 kPa), the wall may be upgraded by pointing. Where this is done, the whole wall must be pointed. Then the upgraded wall is retested and improved values of v_{to} will be obtained. These improved values of v_{to} may be used in place of the original values for that wall, and a new set of values of v_{to} is assembled for calculation of v_{to}, since this wall now represents a class of masonry.

Once a set of values of v_{to} is obtained for the building or a class of masonry, the mortar shear strength, v_t, for the building or the class of masonry is determined as the value of v_{to} that is exceeded by 80 percent of the values of v_{to}.

When v_t is less than 30 psi (207 kPa) for the building or a common line of resistance, the masonry in the building, or line of resistance, must be either removed or upgraded by repointing, and then retested to verify that the mortar meets the minimum shear strength value of 30 psi (207 kPa). Alternatively, the wall's structural function shall be replaced and the masonry is to be anchored in accordance with code requirements.

INTERNATIONAL CODE COUNCIL®
Copyright © 2015 ICC. ALL RIGHTS RESERVED. Accessed by David Dammon on Jun 21, 2017 12:30:52 PM pursuant to License Agreement with ICC. No further reproduction or distribution authorized. ANY UNAUTHORIZED REPRODUCTION OR DISTRIBUTION IS A VIOLATION OF THE FEDERAL COPYRIGHT ACT AND THE LICENSE AGREEMENT, AND SUBJECT TO CIVIL AND CRIMINAL PENALTIES THEREUNDER.

[BS] A106.3.3.6 Minimum quality of masonry.

1. The minimum average value of tensile-splitting strength determined by Equation A1-1 or A1-2 shall be 50 pounds per square inch (344.7 kPa). The minimum value of f'_m determined by categorization of the masonry units and mortar should be 1,000 pounds per square inch (6895 kPa).
2. Individual unreinforced masonry walls with average tensile-splitting strength of less than 50 pounds per square inch (344.7 kPa) shall be entirely pointed prior to retesting.
3. Hollow unit unreinforced masonry walls with estimated prism compressive strength of less than 1,000 pounds per square inch (6895 kPa) shall be grouted to increase the average net area compressive strength.

❖ A minimum quality of an assemblage of units and mortar is required in order to have confidence in the determination of strength limit values. Hollow unit masonry can have its tensile splitting strength increased by pointing. Hollow unit masonry commonly has only the face shell supported on a mortar bed joint. Hollow unit masonry may also be grouted to increase its net area and tensile splitting strength.

[BS] A106.3.3.7 Collar joints. The collar joints shall be inspected at the test locations during each in-place shear test, and estimates of the percentage of adjacent wythe surfaces that are covered with mortar shall be reported along with the results of the in-place shear tests.

❖ When a masonry unit is removed for the in-place shear test, the collar joint between the exterior wythe and the interior wythe is exposed. The percentage of mortar coverage of the collar joint is estimated and reported with the results of the in-place shear testing. Fifty percent of the collar joint must be filled to meet the requirements of the notes to Table A1-B. Table A1-B specifies the allowable height-thickness ratios of URM walls.

[BS] A106.3.3.8 Unreinforced masonry classes. Existing unreinforced masonry shall be categorized into one or more classes based on shear strength, quality of construction, state of *repair*, deterioration and weathering. A class shall be characterized by the allowable masonry shear stress determined in accordance with Section A108.2. Classes shall be defined for whole walls, not for small areas of masonry within a wall.

❖ This section allows categorization of masonry into classes. A single wall may be defined as a class. The provision that 80 percent of the tests made in this wall exceed the test value v_{to} would require a minimum of five tests in that wall. A three-story or higher building will have a minimum of five tests in any wall. If categorization of a wall or walls as a class is contemplated in a building of fewer than three stories, additional tests will be required in each of the walls or line of walls.

[BS] A106.3.3.9 Pointing. Deteriorated mortar joints in unreinforced masonry walls shall be pointed in accordance with the following requirements:

1. **Joint preparation.** The deteriorated mortar shall be cut out by means of a toothing chisel or nonimpact power tool to a depth at which sound mortar is reached but not less than $^3/_4$ inch (19.1 mm). Care shall be taken not to damage the brick edges. After cutting is complete, all loose material shall be removed with a brush, air stream or water stream.
2. **Mortar preparation.** The mortar mix shall be proportioned as required by the registered design professional. The pointing mortar shall be prehydrated by first thoroughly mixing all ingredients dry and then mixing again, adding only enough water to produce a damp workable mix which will retain its form when pressed into a ball. The mortar shall be kept in a damp condition for $1^1/_2$ hours; then sufficient water shall be added to bring it to a consistency that is somewhat drier than conventional masonry mortar.
3. **Packing.** The joint into which the mortar is to be packed shall be damp but without freestanding water. The mortar shall be tightly packed into the joint in layers not exceeding $^1/_4$ inch (6.4 mm) in depth until it is filled; then it shall be tooled to a smooth surface to match the original profile.

Nothing shall prevent pointing of any deteriorated masonry wall joints before testing is performed in accordance with Section A106.3.3, except as required in Section A107.1.

❖ Pointing is maintenance work. Old mortars are subject to deterioration and, if so, they need to be pointed. Mortar joints may be pointed before testing to increase the shear test values, but this pointing must be performed with special inspection as required by Section A107.1.

A source for a detailed description of pointing of brick masonry joints is Technical Note 46 (2005). Alternative repointing procedures, such as those described in Preservation Brief 2, may also be appropriate subject to the code official's approval. Note it is very important that the deteriorated mortar be removed carefully so as to minimize damage to the existing materials that remain. The requirements of this section are based on those contained in UBC Standard 21-8, which is no longer maintained and therefore no longer referenced. The technical content of UBC 21-8 has been inserted into this section in its entirety (with minor editorial changes), with the only exception being the removal of a requirement in UBC Standard 21-8 for Type N or Type S pointing mortar. Selection of the mortar herein is left to the registered design professional.

INTERNATIONAL CODE COUNCIL®
Copyright © 2015 ICC. ALL RIGHTS RESERVED. Accessed by David Dammon on Jun 21, 2017 12:30:52 PM pursuant to License Agreement with ICC. No further reproduction or distribution authorized. ANY UNAUTHORIZED REPRODUCTION OR DISTRIBUTION IS A VIOLATION OF THE FEDERAL COPYRIGHT ACT AND THE LICENSE AGREEMENT, AND SUBJECT TO CIVIL AND CRIMINAL PENALTIES THEREUNDER.

SECTION A107
QUALITY CONTROL

[BS] A107.1 Pointing. Preparation and mortar pointing shall be performed with special inspection.

Exception: At the discretion of the building official, incidental pointing may be performed without special inspection.

❖ Preparation and pointing of mortar joints shall have special inspection. Section A106.3.3.9 provides guidance for the pointing work. The exception allows the code official to allow pointing of small, deteriorated areas at his or her discretion without special inspection.

[BS] A107.2 Masonry shear tests. In-place masonry shear tests shall comply with Section A106.3.3.1. Testing of masonry for determination of tensile-splitting strength shall comply with Section A106.3.3.2.

❖ See the commentary to Section A106.

[BS] A107.3 Existing wall anchors. Existing wall anchors used as all or part of the required tension anchors shall be tested in pullout according to Section A107.5.1. The minimum number of anchors tested shall be four per floor, with two tests at walls with joists framing into the wall and two tests at walls with joists parallel to the wall, but not less than 10 percent of the total number of existing tension anchors at each level.

❖ Refer to the commentary to Section A108.5 for a description of the testing procedure and interpretation of test results.

[BS] A107.4 New bolts. All new embedded bolts shall be subject to periodic special inspection in accordance with the building code, prior to placement of the bolt and grout or adhesive in the drilled hole. Five percent of all bolts that do not extend through the wall shall be subject to a direct-tension test, and an additional 20 percent shall be tested using a calibrated torque wrench. Testing shall be performed in accordance with Section A107.5. New bolts that extend through the wall with steel plates on the far side of the wall need not be tested.

Exception: Special inspection in accordance with the building code may be provided during installation of new anchors in lieu of testing.

All new embedded bolts resisting tension forces or a combination of tension and shear forces shall be subject to periodic special inspection in accordance with the building code, prior to placement of the bolt and grout or adhesive in the drilled hole. Five percent of all bolts resisting tension forces shall be subject to a direct-tension test, and an additional 20 percent shall be tested using a calibrated torque wrench. Testing shall be performed in accordance with Section A107.5. New through-bolts need not be tested.

[BS] A107.5 Tests of anchors in unreinforced masonry walls. Tests of anchors in unreinforced masonry walls shall be in accordance with Sections A107.5.1 through A107.5.4.

❖ The requirements of Section A107.5 are based on the requirements contained in UBC 21-7, which is no longer maintained and therefore no longer referenced herein. The technical content of UBC 21-7 has been inserted into this section in its entirety (with minor editorial changes).

[BS] A107.5.1 Direct tension testing of existing anchors and new bolts. The test apparatus shall be supported by the masonry wall. The distance between the anchor and the test apparatus support shall be not less than one-half the wall thickness for existing anchors and 75 percent of the embedment for new embedded bolts. Existing wall anchors shall be given a preload of 300 pounds (1335 N) prior to establishing a datum for recording elongation. The tension test load reported shall be recorded at $^1/_8$ inch (3.2 mm) relative movement between the existing anchor and the adjacent masonry surface. New embedded tension bolts shall be subject to a direct tension load of not less than 2.5 times the design load but not less than 1,500 pounds (6672 N) for five minutes (10-percent deviation).

[BS] A107.5.2 Torque testing of new bolts. Bolts embedded in unreinforced masonry walls shall be tested using a torque-calibrated wrench to the following minimum torques:

$^1/_2$-inch-diameter (12.7 mm) bolts: 40 foot pounds (54.2 N-m).

$^5/_8$-inch-diameter (15.9 mm) bolts: 50 foot pounds (67.8 N-m).

$^3/_4$-inch-diameter (19.1 mm) bolts: 60 foot pounds (81.3 N-m).

[BS] A107.5.3 Prequalification test for bolts and other types of anchors. This section is applicable when it is desired to use tension or shear values for anchors greater than those permitted by Table A1-E. The direct-tension test procedure set forth in Section A107.5.1 for existing anchors shall be used to determine the allowable tension values for new embedded through bolts, except that no preload is required. Bolts shall be installed in the same manner and using the same materials as will be used in the actual construction. A minimum of five tests for each bolt size and type shall be performed for each class of masonry in which they are proposed to be used. The allowable tension values for such anchors shall be the lesser of the average ultimate load divided by a safety factor of 5.0 or the average load at which $^1/_8$ inch (3.2 mm) elongation occurs for each size and type of bolt and class of masonry.

The test procedure for prequalification of shear bolts shall comply with ASTM E488 or another approved procedure.

The allowable values determined in this manner shall be permitted to exceed those set forth in Table A1-E.

[BS] A107.5.4 Reports. Results of all tests shall be reported. The report shall include the test results as related to anchor size and type, orientation of loading, details of the anchor installation and embedment, wall thickness and joist orientation.

SECTION A108
DESIGN STRENGTHS

[BS] A108.1 Values.

1. Strength values for existing materials are given in Table A1-D and for new materials in Table A1-E.

INTERNATIONAL CODE COUNCIL®
Copyright © 2015 ICC. ALL RIGHTS RESERVED. Accessed by David Dammon on Jun 21, 2017 12:30:52 PM pursuant to License Agreement with ICC. No further reproduction or distribution authorized. ANY UNAUTHORIZED REPRODUCTION OR DISTRIBUTION IS A VIOLATION OF THE FEDERAL COPYRIGHT ACT AND THE LICENSE AGREEMENT, AND SUBJECT TO CIVIL AND CRIMINAL PENALTIES THEREUNDER.

2. Capacity reduction factors need not be used.
3. The use of new materials not specified herein shall be based on substantiating research data or engineering judgment, with the approval of the building official.

❖ The materials resistance values used in Appendix Chapter A1 are strength values, but are not used with capacity reduction factors. Strength values obtained by experimental testing and in-place testing of URM are expected strength values. The strength values obtained by the ABK (Agbabian, Barnes and Kariotis) dynamic testing of ductile materials, such as sheathed diaphragms, are strength limit values.

Design of new elements intended to supplement the existing material should be designed using strength procedures, but not with capacity reduction factors.

When designing new elements, special attention should be paid to the relative stiffness of the existing structural elements and the new elements. For example, if new shear walls or braced frames supplement the strength of a URM wall, the loading should not be reduced by an increased *R*-factor. However, if the existing structural system is strengthened so that the system's ductility is increased, a higher *R*-factor could be justified. Such an example would be where new concrete shear walls are added and are designed to carry the full lateral load, and URM piers are adequate to accommodate the expected sum of linear and nonlinear displacements without shear failure.

[BS] A108.2 Masonry shear strength. The unreinforced masonry shear strength, v_m, shall be determined for each masonry class from one of the following equations:

1. The unreinforced masonry shear strength, v_m, shall be determined by Equation A1-4 when the mortar shear strength has been determined by Section A106.3.3.1.

$$v_m = 0.56v_t + \frac{0.75P_D}{A} \qquad \textbf{(Equation A1-4)}$$

The mortar shear strength values, v_t, shall be determined in accordance with Section A106.3.3.

2. The unreinforced masonry shear, v_m, shall be determined by Equation A1-5 when tensile-splitting strength has been determined in accordance with Section A 106.3.3.2, Item 1 or 2.

$$v_m = 0.8f_{sp} + 0.5\frac{P_D}{A} \qquad \textbf{(Equation A1-5)}$$

3. When f'_m has been estimated by categorization of the units and mortar in accordance with Section 2105.1 of the *International Building Code*, the unreinforced masonry shear strength, v_m, shall not exceed 200 pounds per square inch (1380 kPa) or the lesser of the following:

a) $2.5\sqrt{f'_m}$ or

b) 200 psi or

c) $v + 0.75\frac{P_D}{A}$ **(Equation A1-6)**

For SI: 1 psi = 6.895 kPa.

where:

v = 62.5 psi (430 kPa) for running bond masonry not grouted solid.

v = 100 psi (690 kPa) for running bond masonry grouted solid.

v = 25 psi (170 kPa) for stack bond grouted solid.

❖ **Item 1.** The correlation of v_t and v_m was obtained by physical testing performed by the ABK joint venture. Equation A1-4 is an empirical formula.

Item 2. Equation A1-5 is a theoretical formula adjusted for a probable coefficient of variation of the test data.

Item 3. Equation A1-6 is similar to the shear values given in the IBC. They are allowable strength values adjusted upward by about 1.7.

[BS] A108.3 Masonry compression. Where any increase in dead plus live compression stress occurs, the compression stress in unreinforced masonry shall not exceed 300 pounds per square inch (2070 kPa).

❖ This maximum allowable stress is a conservative estimate of the compressive strength of minimum acceptable masonry. No strength increase for seismic loading is permitted.

[BS] A108.4 Masonry tension. Unreinforced masonry shall be assumed to have no tensile capacity.

❖ Masonry is assumed to have no tensile strength. The overturning forces should therefore be fully resisted by the gravity resisting moment.

[BS] A108.5 Existing tension anchors. The resistance values of the existing anchors shall be the average of the tension tests of existing anchors having the same wall thickness and joist orientation.

❖ Each variation of wall anchor types used should be tested, in accordance with Section A107.3, considering wall thickness, wall framing conditions, masonry quality and other factors affecting the anchor. It should be noted that wall anchor capacity is dependent on its embedment in the masonry and attachment to the roof or floor framing.

[BS] A108.6 Foundations. For existing foundations, new total dead loads may be increased over the existing dead load by 25 percent. New total dead load plus live load plus seismic forces may be increased over the existing dead load plus live load by 50 percent. Higher values may be justified only in conjunction with a geotechnical investigation.

❖ Foundation loads may be increased over existing loads for several reasons. First, consolidation of foundation materials has decreased the probability of settlement due to added loads. Second, the dynamic loading of soils by earthquakes can be tolerated by foundation materials without additional settlement.

INTERNATIONAL CODE COUNCIL®
Copyright © 2015 ICC. ALL RIGHTS RESERVED. Accessed by David Dammon on Jun 21, 2017 12:30:52 PM pursuant to License Agreement with ICC. No further reproduction or distribution authorized. ANY UNAUTHORIZED REPRODUCTION OR DISTRIBUTION IS A VIOLATION OF THE FEDERAL COPYRIGHT ACT AND THE LICENSE AGREEMENT, AND SUBJECT TO CIVIL AND CRIMINAL PENALTIES THEREUNDER.

Third, in many cases, the dead load added by seismic strengthening is usually relatively insignificant compared to the dead load from the existing URM-bearing wall.

The restrictions may be illustrated by the following example:

Given original dead load = 100

Added dead load = 20

Live load = 50

Seismic = 30

The new dead load is 100 + 20 = 120.

According to the first sentence in Section A108.6, new dead load may be increased over the existing dead load by 25 percent: in the example, 120 is less than 1.25 x 100 = 125; therefore, the added dead load is acceptable. According to the second sentence, new dead plus live plus seismic may be increased over the existing dead load plus live load by 50 percent. In the example, new dead plus live plus seismic is 120 + 50 + 30 = 200, which is less than 1.5 x (100 + 50) = 225; therefore the added dead load is acceptable. If the dead load exceeds the specified limits, higher values may be used if justified by a geotechnical engineer.

Every structure should adequately resist overturning effects. This is less important for existing unreinforced masonry elements since their lateral load-carrying capacity is limited by their rocking capacity. However, where new elements are added, overturning can be a controlling issue. In these cases, the new elements should be designed to resist overturning in general accordance with the IBC.

SECTION A109
ANALYSIS AND DESIGN PROCEDURE

[BS] A109.1 General. The elements of buildings hereby required to be analyzed are specified in Table A1-A.

❖ Appendix Chapter A1 uses analysis and design procedures that are specific for URM buildings. The chapter is for analysis and retrofit for existing buildings. The elements of the masonry buildings that are regulated by Appendix Chapter A1 are given in Table A1-A. This table exempts certain items from regulation in low-to-moderate seismic hazard regions.

[BS] A109.2 Selection of procedure. Buildings with rigid diaphragms shall be analyzed by the general procedure of Section A110, which is based on the building code. Buildings with flexible diaphragms shall be analyzed by the general procedure or, when applicable, may be analyzed by the special procedure of Section A111.

❖ URM buildings with concrete floors and roofs (rigid diaphragms) must be analyzed using the general procedure. The general procedure follows the IBC in that the analysis base shear is calculated using the total mass of the building. The rigid diaphragms couple the shear walls of each level with the weight of the story level and normal walls. URM buildings with flexible diaphragms have an entirely different dynamic response characteristic. The mass of the floor, roofs and normal walls is coupled with the shear wall parallel to the direction of the seismic loading by a shear beam element that has a fundamental elastic period in the range where dynamic response is related to T, the elastic period of the diaphragm. This shear beam has significant ductility potential and the coupling of the story and normal wall mass with the shear wall will be limited to the shear capacity of the diaphragm at each story level. Section A111.1 provides the limits a building must satisfy in order for the special procedure to be used.

SECTION A110
GENERAL PROCEDURE

[BS] A110.1 Minimum design lateral forces. Buildings shall be analyzed to resist minimum lateral forces assumed to act nonconcurrently in the direction of each of the main axes of the structure in accordance with the following:

$$V = \frac{0.75 S_{DS} W}{R} \qquad \textbf{(Equation A1-7)}$$

❖ The base shear of the URM building with rigid diaphragms is given by Equation A1-7. This formula is recognizable as being related to the seismic design formula in the IBC. It is a simplified form of the usual base shear formula.

The fundamental elastic period of the building is taken as being in the constant acceleration range, i.e., S_{DS}. The base shear is at the maximum value for the seismic hazard zone.

This base shear is reduced by 25 percent to be consistent with the policy that the analysis forces for existing buildings are three-fourths of the design forces specified for new buildings. The base shear is also divided by an *R*-value of 1.5. This is consistent with the IBC for bearing wall systems having ordinary plain (unreinforced) masonry shear walls. It is recommended that this base shear be applied in a uniform loading pattern on a multidegree of freedom model, if the shear wall has substantial perforations at each story level. The multidegree of freedom model is a shear-yielding model, not a flexural beam model. Story yield mechanisms may be only a single floor level if the yield mechanism is in-plane shear in the piers. If rocking of the piers is the yield mechanism, it is a possibility that yield mechanisms may form at several story levels. If the wall is basically solid, a triangular loading should be applied, as per the IBC. The engineer should make preliminary calculations as to probable story strengths and yield mechanisms to determine a rational distribution of the base shear over the height of a multistory URM shear wall.

Global overturning is not a critical issue for URM shear walls. Flexural tensile forces due to global overturning cannot be carried downward without a

INTERNATIONAL CODE COUNCIL®
Copyright © 2015 ICC. ALL RIGHTS RESERVED. Accessed by David Dammon on Jun 21, 2017 12:30:52 PM pursuant to License Agreement with ICC. No further reproduction or distribution authorized. ANY UNAUTHORIZED REPRODUCTION OR DISTRIBUTION IS A VIOLATION OF THE FEDERAL COPYRIGHT ACT AND THE LICENSE AGREEMENT, AND SUBJECT TO CIVIL AND CRIMINAL PENALTIES THEREUNDER.

tension load path. Story height overturning moments cause a modification of the axial load on the pier, but equilibrium requires that the reduction in vertical pier loading be equal to the increase in vertical pier loading on other adjacent piers. The in-plane shear capacity and rocking shear capacity of individual piers is affected by pier vertical loading, but the total interstory shear capacity is not significantly changed.

[BS] A110.2 Lateral forces on elements of structures. Parts and portions of a structure not covered in Section A110.3 shall be analyzed and designed per the current building code, using force levels defined in Section A110.1.

Exceptions:

1. Unreinforced masonry walls for which height-to-thickness ratios do not exceed ratios set forth in Table A1-B need not be analyzed for out-of-plane loading. Unreinforced masonry walls that exceed the allowable *h/t* ratios of Table A1-B shall be braced according to Section A113.5.
2. Parapets complying with Section A113.6 need not be analyzed for out-of-plane loading.
3. Where walls are to be anchored to flexible floor and roof diaphragms, the anchorage shall be in accordance with Section A113.1.

❖ The failure of building elements, such as parapets and portions of walls, represents a major source of risk posed by URM buildings. All vulnerable elements should be identified and analyzed.

Diaphragms are analyzed for the loadings calculated by the distribution of base shear at the level of consideration. The allowable shear values of existing and new materials applied to existing materials given in Tables A1-D and A1-E are applicable to the general and special procedures. These provisions require the same force factors on parts and portions as are required for a new building.

Although not specifically stated in buildings being analyzed by the general procedure and having flexible diaphragms and crosswalls conforming to Section A111.3, use of the crosswalls to provide partial lateral support for the diaphragm loading has been used by some engineers and permitted by several jurisdictions.

Exception 1 states that normal walls of unreinforced masonry need not be analyzed for flexural capacity but may be deemed adequate if the height-to-thickness ratios specified in Table A1-B are not exceeded. Use of this table is very conservative for rigid diaphragms. The rigid diaphragm does not amplify the story level acceleration like a flexible diaphragm. In addition to this effect, the overburden/wall-weight ratio used in the development of Table A1-B uses the weight of wood floors and only one additional story for multistory buildings. The probable vertical load of concrete floors and roofs would greatly increase the acceptable height-to-thickness ratio for normal walls.

Exception 2 states that parapets that have height-to-thickness ratios less than specified in Section A113.6 need not be analyzed. Parapets with height-to-thickness ratios in excess of this limit shall be braced.

The special wall anchorage requirements of Exception 3 for flexible diaphragms are based on the ABK research performed in the 1980s. The wall anchorage force specified in Section A113.1.3 (0.9 S_{DS}) is higher than the anchorage force requirements for new masonry construction with flexible diaphragms of the IBC (in accordance with Section 12.11.2.1 of ASCE 7-10) for flexible diaphragms with a span less than 125 feet (38 100 mm).

The provisions of the IBC do apply for wall anchorage with rigid diaphragms (the exception only applies to flexible diaphragms). It is appropriate to make this distinction, since the ABK testing program did not cover buildings with rigid diaphragms.

[BS] A110.3 In-plane loading of URM shear walls and frames. Vertical lateral load-resisting elements shall be analyzed in accordance with Section A112.

❖ Once the story shear forces are determined by the methods of the general procedure, the analysis of unreinforced masonry shear walls follows the same procedures as specified for the special procedure. The masonry is tested as prescribed by Section A106; the allowable shear stress is determined in accordance with Section A108; and the piers in the shear wall are analyzed in accordance with Section A112.2.3.

[BS] A110.4 Redundancy and overstrength factors. Any redundancy or overstrength factors contained in the building code may be taken as unity. The vertical component of earthquake load (E_v) may be taken as zero.

❖ No redundancy or overstrength factors are required to be used, as the forces and the capacities are at strength limit states. The lack of redundancy is generally not an issue for buildings of unreinforced masonry construction. In addition, the overstrength factors of the wood-framed elements that couple the dynamic response of the rigid masonry walls are already included in the provisions.

SECTION A111
SPECIAL PROCEDURE

[BS] A111.1 Limits for the application of this procedure. The special procedures of this section may be applied only to buildings having the following characteristics:

1. Flexible diaphragms at all levels above the base of the structure.
2. Vertical elements of the lateral force-resisting system consisting predominantly of masonry or concrete shear walls.
3. Except for single-story buildings with an open front on one side only, a minimum of two lines of vertical elements of the lateral force-resisting system parallel to

INTERNATIONAL CODE COUNCIL®
Copyright © 2015 ICC. ALL RIGHTS RESERVED. Accessed by David Dammon on Jun 21, 2017 12:30:52 PM pursuant to License Agreement with ICC. No further reproduction or distribution authorized. ANY UNAUTHORIZED REPRODUCTION OR DISTRIBUTION IS A VIOLATION OF THE FEDERAL COPYRIGHT ACT AND THE LICENSE AGREEMENT, AND SUBJECT TO CIVIL AND CRIMINAL PENALTIES THEREUNDER.

each axis of the building (see Section A111.8 for open-front buildings).

❖ **Item 1.** The building must have flexible diaphragms at all story levels to qualify for this procedure, and the seismic loading used in this section is exclusively for flexible diaphragms. The definition of "Rigid diaphragm" given in Section A103 is purposely very narrow. Investigation of existing URM wall buildings will find materials that do not fit into this narrow definition. Such a building would have to be modeled with the unique stiffness characteristics of the materials. Stiffness degradation should be assessed if a linear elastic analysis is made. It is outside the scope of Appendix Chapter A1 to provide guidance for analysis of unique buildings. The engineer and the code official should make the decisions for an analysis procedure specific to a unique structural system.

Item 2. The vertical seismic force-resisting system should have stiffness such that the relative stiffness ratio of the diaphragms and shear walls assumed for this procedure is maintained. A steel or reinforced concrete moment frame does not have the story stiffness of a reinforced concrete or masonry shear wall designed for the same lateral loading. A moment frame may be adequate to act as a shear wall in the middle portion of a flexible diaphragm or at an open front of an unreinforced masonry building. Section A111.3.5 has special limits on yield drift of a moment frame used as a crosswall. Section A111.6.4 requires use of the same design forces as for a shear wall and further limits the elastic drift of this moment frame. Use of an *R*-factor in the design of the moment frame is prohibited.

Item 3. A minimum of two lines of vertical seismic force-resisting elements on each axis of the building is required. Section A111.1, Item 2 requires that each of these elements be "predominantly of masonry or concrete shear walls." If structural steel or reinforced concrete bracing is used for one or both of these vertical elements, a relative rigidity check of the bracing versus a shear wall should be made to confirm that the concept of a "rigid wall-flexible diaphragm" response to earthquake is probable.

[BS] A111.2 Lateral forces on elements of structures. With the exception of the provisions in Sections A111.4 through A111.7, elements of structures shall comply with Sections A110.2 through A110.4.

❖ This section specifies that floor and roof diaphragms are only checked for strength limit state and stiffness. The requirement for the check is given in Section A111.4. In addition, requirements for diaphragm shear, transfer shear walls and out-of-plane forces are given in Sections A111.5, A111.6 and A111.7, respectively. Other elements of structures are analyzed as prescribed by the IBC, but the forces are those given in Section A110, and the material's resistance values are those given in Section A108. These design strengths are calculated using the principle of load and resistance factor design (LRFD) (strength) methods. However, load is not factored and capacity reduction factors are not used for resistance values.

[BS] A111.3 Crosswalls. Crosswalls shall meet the requirements of this section.

[BS] A111.3.1 Crosswall definition. A crosswall is a wood-framed wall sheathed with any of the materials described in Table A1-D or A1-E or other system as defined in Section A111.3.5. Crosswalls shall be spaced no more than 40 feet (12 192 mm) on center measured perpendicular to the direction of consideration, and shall be placed in each story of the building. Crosswalls shall extend the full story height between diaphragms.

Exceptions:

1. Crosswalls need not be provided at all levels when used in accordance with Section A111.4.2, Item 4.
2. Existing crosswalls need not be continuous below a wood diaphragm at or within 4 feet (1219 mm) of grade, provided:
   2.1. Shear connections and anchorage requirements of Section A111.5 are satisfied at all edges of the diaphragm.
   2.2. Crosswalls with total shear capacity of $0.5S_{D1}\Sigma W_d$ interconnect the diaphragm to the foundation.
   2.3. The demand-capacity ratio of the diaphragm between the crosswalls that are continuous to their foundations does not exceed 2.5, calculated as follows:

$$DCR = \frac{(2.1S_{D1}W_d + V_{ca})}{2v_u D}$$

(Equation A1-8)

❖ The definition of a "Crosswall" is given and fully defined in this commentary in Sections A103 and A111.3.1. A crosswall is a light-frame sheathed wall parallel to the direction of earthquake loading. A crosswall is not considered as a shear wall in that it need not be designed for the tributary loads of the flexible diaphragm or diaphragms. The crosswall decreases the displacement of the center of the diaphragm relative to the shear walls and provides damping of the response of the diaphragm to earthquake shaking.

The spacing of the crosswalls along the diaphragm span length is limited to 40 feet (12 192 mm). This restriction is intended to limit the significant higher mode participation of the diaphragm between crosswalls. In general, if crosswalls are used to increase the allowable height-to-thickness ratio of normal walls, the crosswalls must be in each story of the building. Existing and new crosswalls must extend the full story height between diaphragm levels.

Exception 1 allows the use of crosswalls that extend only between the roof diaphragm and a floor diaphragm to couple these into a combined diaphragm for its demand capacity ratio (*DCR*) analysis.

INTERNATIONAL CODE COUNCIL®
Copyright © 2015 ICC. ALL RIGHTS RESERVED. Accessed by David Dammon on Jun 21, 2017 12:30:52 PM pursuant to License Agreement with ICC. No further reproduction or distribution authorized. ANY UNAUTHORIZED REPRODUCTION OR DISTRIBUTION IS A VIOLATION OF THE FEDERAL COPYRIGHT ACT AND THE LICENSE AGREEMENT, AND SUBJECT TO CIVIL AND CRIMINAL PENALTIES THEREUNDER.

Exception 2 allows a special condition that commonly occurs in residential occupancies. Often in this occupancy, many crosswalls interconnect the roof and floors. However, the first floor is commonly constructed over a crawl space without crosswalls. This exception allows the use of special crosswalls spaced as far apart as 40 feet (12 192 mm) to stiffen the lowest diaphragm. The crosswalls must have adequate strength to limit the deformation of the diaphragm at the special crosswalls. The loading of the first floor diaphragm is its tributary load and the entire capacity of the crosswalls that are above the first floor.

[BS] A111.3.2 Crosswall shear capacity. Within any 40 feet (12 192 mm) measured along the span of the diaphragm, the sum of the crosswall shear capacities shall be at least 30 percent of the diaphragm shear capacity of the strongest diaphragm at or above the level under consideration.

❖ The stiffness of sheathed systems such as flexible diaphragms and crosswalls is directly related to their peak strength; therefore, the minimum strength of a crosswall is related to the strength of the diaphragm that it is restraining. The minimum strength of a crosswall must be 30 percent of the strength of the diaphragm shear capacity of the stronger diaphragm at or above the level under consideration.

[BS] A111.3.3 Existing crosswalls. Existing crosswalls shall have a maximum height-to-length ratio between openings of 1.5 to 1. Existing crosswall connections to diaphragms need not be investigated as long as the crosswall extends to the framing of the diaphragms above and below.

❖ Existing crosswalls generally are perforated by door openings. The effective length of the crosswall used for calculations of the required crosswall strength cannot include portions that have a height-to-length ratio less than 1.5 to 1. If the openings were 9-foot-high (2743 mm) doors, a section between the door or doors and the end of the wall of less than 6 feet (1828 mm) cannot be used for the calculation of crosswall capacity.

The capacities of the connections of the existing crosswall to the diaphragms above or below the wall need not be investigated if the crosswall extends to the diaphragm level above. If the crosswall only extends to ceiling joists that are separate from the floor or roof framing above, then continuity of the crosswall must be provided. Note b of Table A1-D limits the total capacity to 900 pounds per foot (13.1 kN/m), regardless of the combined capacity of the existing materials on the crosswall. This limitation was provided in lieu of an investigation of the capacity of the connection of the crosswall to the diaphragm.

[BS] A111.3.4 New crosswalls. New crosswall connections to the diaphragm shall develop the crosswall shear capacity. New crosswalls shall have the capacity to resist an overturning moment equal to the crosswall shear capacity times the story height. Crosswall overturning moments need not be cumulative over more than two stories.

❖ Connections of new crosswalls to diaphragms shall be designed by the applicable strength design sections of the IBC. This includes the design of a vertical connection of the end of the crosswall to the foundation of the crosswall or support below the level of the crosswall. This connection is required to protect the floor framing from wall overturning effects. The dead load of the floor or roof framing supported by the crosswall cannot be used to resist the calculated overturning due to lateral forces. However, the calculated force at the end of the crosswall need not use an overturning moment accumulated from more than two stories, including the level of calculation.

[BS] A111.3.5 Other crosswall systems. Other systems, such as moment-resisting frames, may be used as crosswalls provided that the yield story drift does not exceed 1 inch (25 mm) in any story.

❖ Other systems may be used as crosswalls. A steel frame may be more desirable than a crosswall in a commercial space. Such a frame should be a moment frame rather than a braced frame, so as to have the damping effect of a crosswall rather than the rigid bracing effect of a shear wall. The prescription of yield story drift not to exceed 1 inch (25 mm) is intended to provide stiffness, an inelastic threshold and load deformation behavior similar to that of existing crosswalls.

The frame used as a crosswall is intended to yield, and the frame sections at which yielding will occur must be braced to building elements that can provide adequate restraint against lateral buckling.

Considering the cost of adding a frame, regardless of the design criteria, it may be better to provide a moment frame designed as a shear wall. When used as a shear wall, the moment frame is designed to resist the loading of the tributary area of the diaphragm or diaphragms, and its drift under this loading is limited by Section A111.6.4 to 0.015 times the story height.

[BS] A111.4 Wood diaphragms.

[BS] A111.4.1 Acceptable diaphragm span. A diaphragm is acceptable if the point (*L,DCR*) on Figure A1-1 falls within Region 1, 2 or 3.

❖ Conventional diaphragm analysis is not required by the special procedure. The strength and stiffness of a flexible diaphragm are acceptable if its span length and *DCR* fall in Region 1, 2 or 3 of Figure A1-1. Figure A1-1 is a plot of the estimated dynamic displacement of the center of the diaphragm of 5 inches (127 mm) measured relative to the shear walls that are shaking the diaphragm. The ground motions used for these calculations were scaled to the ATC-3 5-percent damped response spectrum having 0.40g effective peak acceleration and 12 inches per second (305 mm/s) peak ground velocity. The analysis of the *DCR*

INTERNATIONAL CODE COUNCIL®
Copyright © 2015 ICC. ALL RIGHTS RESERVED. Accessed by David Dammon on Jun 21, 2017 12:30:52 PM pursuant to License Agreement with ICC. No further reproduction or distribution authorized. ANY UNAUTHORIZED REPRODUCTION OR DISTRIBUTION IS A VIOLATION OF THE FEDERAL COPYRIGHT ACT AND THE LICENSE AGREEMENT, AND SUBJECT TO CIVIL AND CRIMINAL PENALTIES THEREUNDER.

of diaphragms is only required in IBC seismic areas where S_{D1} is 0.20g or greater.

[BS] A111.4.2 Demand-capacity ratios. Demand-capacity ratios shall be calculated for the diaphragm at any level according to the following formulas:

1. For a diaphragm without qualifying crosswalls at levels immediately above or below:

$$DCR = 2.1S_{D1}W_d/\Sigma v_u D \qquad \textbf{(Equation A1-9)}$$

2. For a diaphragm in a single-story building with qualifying crosswalls, or for a roof diaphragm coupled by crosswalls to the diaphragm directly below:

$$DCR = 2.1S_{D1}W_d/\Sigma v_u D + V_{cb} \qquad \textbf{(Equation A1-10)}$$

3. For diaphragms in a multistory building with qualifying crosswalls in all levels:

$$DCR = 2.1S_{D1}\Sigma W_d/(\Sigma\Sigma v_u D + V_{cb}) \qquad \textbf{(Equation A1-11)}$$

DCR shall be calculated at each level for the set of diaphragms at and above the level under consideration. In addition, the roof diaphragm shall also meet the requirements of Equation A1-10.

4. For a roof diaphragm and the diaphragm directly below, if coupled by crosswalls:

$$DCR = 2.1S_{D1}\Sigma W_d/\Sigma\Sigma v_u D \qquad \textbf{(Equation A1-12)}$$

❖ All of the *DCR* formulas assume that the resistance of each end of the diaphragm is nearly equal. If a large inequality exists, the total capacity of the diaphragm should be adjusted. A conservative assumption would be to use twice the capacity of the end with the least depth. The analysis of a flexible diaphragm for a *DCR* assumes that the diaphragm shape in any span is relatively rectangular. Buildings with plan irregularities but parallel walls can be analyzed by this method. The span of the diaphragm is the distance between shear walls when ties or collectors develop the load transfer to the shear wall.

*DCR*s are calculated for the following four conditions:

Item 1. If there are no qualifying crosswalls above or below the diaphragm level analyzed, the total lateral load tributary to the diaphragm, multiplied by a lateral load coefficient and spectral response factor, is divided by the total shear capacity of both ends of the diaphragm.

Item 2. The crosswalls in a single-story building are also usually an additional load path between the roof diaphragm and the ground. The capacity of both ends of the diaphragm and the crosswalls below the diaphragm are added together to determine the capacity of the diaphragm.

Item 3. If the building has crosswalls in all levels of the building, the calculation of *DCR* begins with the roof level and is made at each story level. The sum of the diaphragm loads above the level under consideration is used as the demand. The total capacity of all the diaphragms above the level under consideration and the capacity of the crosswalls below the diaphragm level analyzed are the combined capacity. The crosswalls at each level have a minimum capacity of 30 percent of the diaphragm capacity above and cause a nearly common displacement of the diaphragms relative to the shear walls.

Item 4. A special treatment of the roof diaphragm is provided in this paragraph. Roof diaphragms are generally more flexible than adjacent floors. This provision allows the calculation of a *DCR* for the combination of a roof and the adjacent floor when only these two diaphragms are coupled by crosswalls. Crosswalls may or may not exist in the stories below the floor adjacent to the roof diaphragm.

[BS] A111.4.3 Chords. An analysis for diaphragm flexure need not be made, and chords need not be provided.

❖ Diaphragms are checked using the demand-capacity formulas and Figure A1-1. The conventional analysis for diaphragm chords is not part of the special procedure and the analysis is explicitly excluded in the provisions. The reason is that there is not a significant flexural response in flexible wood diaphragms; the primary effect is shear yielding in the end zones. The source of flexural capacity of the diaphragm is the continuity inherent in the diaphragm construction. Since significant life-threatening damage related to lack of diaphragm chords has not been observed and virtually every diaphragm has some form of edge restraint and/or internal continuity capable of providing adequate flexural capacity, no rules for formal analysis of chords are included in Appendix Chapter A1.

[BS] A111.4.4 Collectors. An analysis of diaphragm collector forces shall be made for the transfer of diaphragm edge shears into vertical elements of the lateral force-resisting system. Collector forces may be resisted by new or existing elements.

❖ The transfer of shear forces at the edge of a diaphragm to the shear resisting elements at that edge may require a collector at the edge of the diaphragm for distribution of the diaphragm shear to the elements of the shear wall. If the shear wall is the full depth of the diaphragm, no need for a collector would exist as the uniformly distributed shear load of the diaphragm would be uniformly resisted along the length of the shear wall. If the shear wall strength and stiffness were at one end of that line of resistance, the collector would accumulate load from the diaphragm and act as a tie to the shear wall element. The calculated collector force may be resisted by existing or new elements. The relative rigidity of new and existing elements should be considered in apportioning the loads to the various elements.

A pier adjacent to a corner of the two intersecting

INTERNATIONAL CODE COUNCIL®
Copyright © 2015 ICC. ALL RIGHTS RESERVED. Accessed by David Dammon on Jun 21, 2017 12:30:52 PM pursuant to License Agreement with ICC. No further reproduction or distribution authorized. ANY UNAUTHORIZED REPRODUCTION OR DISTRIBUTION IS A VIOLATION OF THE FEDERAL COPYRIGHT ACT AND THE LICENSE AGREEMENT, AND SUBJECT TO CIVIL AND CRIMINAL PENALTIES THEREUNDER.

shear walls is much stiffer than the usual pier analysis indicates. The effect of the flange, which is the other wall around the corner, is significant when the flange is in tension. The stiffness of this pier may cause the spandrel to have a significant collector stress. This should be considered in the design of the collector. Because of this increased collector force, a minimum required spacing of the first shear bolt from the corner is specified in Section A113.1.4 to provide an attachment of the collector immediately adjacent to the corner.

[BS] A111.4.5 Diaphragm openings.

1. Diaphragm forces at corners of openings shall be investigated and shall be developed into the diaphragm by new or existing materials.
2. In addition to the demand-capacity ratios of Section A111.4.2, the demand-capacity ratio of the portion of the diaphragm adjacent to an opening shall be calculated using the opening dimension as the span.
3. Where an opening occurs in the end quarter of the diaphragm span, the calculation of $v_u D$ for the demand-capacity ratio shall be based on the net depth of the diaphragm.

❖ **Item 1.** The analysis of a diaphragm for its *DCR* assumes a rectangular shape. The presence of a large opening can increase the flexibility of the diaphragm and cause localized stresses. The diaphragm shear is assumed to be an average shear stress and this assumption implies that the uniform shear in the diaphragm adjacent to the opening must be transferred by collectors to the portion of the diaphragm that is continuous past the opening. Section A111.4.5 describes both the stiffness and strength check; the reduction in stiffness caused by an opening is checked as indicated in Item 3. If the strength of the existing diaphragm with the opening is adequate for the strength analysis, the transfer of uniform shear to the remaining section of the diaphragm could be assumed to be accomplished by the diaphragm itself, and the diaphragm edge adjacent to the opening could be assumed to have no shear stress.

Item 2. When the length of an opening is a significant part of the diaphragm span length and it is in the center half of the diaphragm, the *DCR* of the diaphragm that is continuous shall be checked. The demand is that part of the diaphragm load, W_d, within the length of opening and the span is the length of the opening measured parallel to the diaphragm span.

Item 3. Openings within the length of the diaphragm significantly affect its stiffness. The reduction of stiffness is approximated by using a capacity of the diaphragm that is calculated for the net depth rather than the full depth.

[BS] A111.5 Diaphragm shear transfer. Diaphragms shall be connected to shear walls with connections capable of developing the diaphragm-loading tributary to the shear wall given by the lesser of the following formulas:

$$V = 1.2 S_{D1} C_p W_d \qquad \textbf{(Equation A1-13)}$$

using the C_p values in Table A1-C, or

$$V = v_u D \qquad \textbf{(Equation A1-14)}$$

❖ The calculation of the capacity of the shear connection of the diaphragm to the shear wall is based on the coefficients for spectral acceleration, S_{D1} for the IBC, and a C_p factor that is based on the materials used for construction of the diaphragm. The values of the C_p range from 0.5 to 0.75. The least value is for a single layer of sheathing. The greatest value of C_p is for multiple layers of sheathing. A single layer of plywood with all edges supported on the framing or blocked is considered equivalent to a double-layer system. Steel decks without fill material have C_p values between those of single- and double-sheathed diaphragms. The stronger and stiffer diaphragms amplify the ground motions transmitted to the ends of the diaphragm by the shear walls more than single-sheathed systems and are assigned a high C_p coefficient.

The evaluation of the required capacity of the shear connection of a diaphragm to the shear wall is not a calculation of the reaction of a beam with a loading that may be variable within its span length. The required capacity of the connection is one-half of the total dead load of the diaphragm and normal walls, multiplied by the spectral response and construction coefficients. The analysis of diaphragms by the special procedure accepts nonlinear behavior of the diaphragm and limits the required capacity of the shear connection to the capacity of the diaphragm. The check for the acceptable *DCR* of the diaphragm is for displacement control. The limitation of the shear connection capacity to the shear capacity of the diaphragm provides a connection strength that causes shear yielding in the diaphragm.

[BS] A111.6 Shear walls (In-plane loading).

[BS] A111.6.1 Wall story force. The wall story force distributed to a shear wall at any diaphragm level shall be the lesser value calculated as:

$$F_{wx} = 0.8 S_{D1}(W_{wx} + W_d/2) \qquad \textbf{(Equation A1-15)}$$

but need not exceed

$$F_{wx} = 0.8 S_{D1} W_{wx} + v_u D \qquad \textbf{(Equation A1-16)}$$

❖ The special procedure differs from the general procedure in that the loading of the shear wall is determined by the diaphragm capacity rather than an arbitrary distribution of a base shear to the levels of the diaphragm. If there are no crosswalls, the story force of a diaphragm level is equal to the spectral response coefficient, S_{D1}, times the tributary weight of the wall at the level of calculation, plus one-half of the

INTERNATIONAL CODE COUNCIL®
Copyright © 2015 ICC. ALL RIGHTS RESERVED. Accessed by David Dammon on Jun 21, 2017 12:30:52 PM pursuant to License Agreement with ICC. No further reproduction or distribution authorized. ANY UNAUTHORIZED REPRODUCTION OR DISTRIBUTION IS A VIOLATION OF THE FEDERAL COPYRIGHT ACT AND THE LICENSE AGREEMENT, AND SUBJECT TO CIVIL AND CRIMINAL PENALTIES THEREUNDER.

dead load of the diaphragm and normal walls at the level of consideration. However, the story force need not exceed the spectral response coefficient times the tributary weight of the shear wall, plus the shear capacity of the diaphragm at the level of consideration.

[BS] A111.6.2 Wall story shear. The wall story shear shall be the sum of the wall story forces at and above the level of consideration.

$$V_{wx} = \Sigma F_{wx} \qquad \textbf{(Equation A1-17)}$$

❖ The design shear load in a shear wall at any level is the total of the wall story forces calculated at the stories above by Equations A1-15 and A1-16. The least value of calculated story shear is to be used for analysis of the existing shear wall.

[BS] A111.6.3 Shear wall analysis. Shear walls shall comply with Section A112.

❖ The forces calculated in this section are used to analyze the existing shear walls by the procedures specified in Section A112.

[BS] A111.6.4 Moment frames. Moment frames used in place of shear walls shall be designed as required by the building code, except that the forces shall be as specified in Section A111.6.1, and the story drift ratio shall be limited to 0.015, except as further limited by Section A112.4.2.

❖ Moment frames may be used as shear walls in locations where a shear wall does not exist. A common use for moment frames is at the open front of a commercial building. The loading of the moment frame is calculated as if it were an existing shear wall. The interstory drift of the moment frame is limited to 0.015 of the story height. If the moment frame is used in a line of resistance with a URM wall, more severe limitations on interstory drift are prescribed by Section A112.4.2 and the moment frame must be designed to take 100 percent of the load along that line.

[BS] A111.7 Out-of-plane forces-unreinforced masonry walls.

[BS] A111.7.1 Allowable unreinforced masonry wall height-to-thickness ratios. The provisions of Section A110.2 are applicable, except the allowable height-to-thickness ratios given in Table A1-B shall be determined from Figure A1-1 as follows:

1. In Region 1, height-to-thickness ratios for buildings with crosswalls may be used if qualifying crosswalls are present in all stories.
2. In Region 2, height-to-thickness ratios for buildings with crosswalls may be used whether or not qualifying crosswalls are present.
3. In Region 3, height-to-thickness ratios for "all other buildings" shall be used whether or not qualifying crosswalls are present.

❖ URM walls need not be analyzed for forces normal to the wall surface. Instead of a flexural analysis, acceptable height-to-thickness ratios for the URM walls are specified. Walls conforming to these height-to-thickness ratios are stable due to dynamic rocking stability, not because of the tensile capacity of the bed joints. The concept of dynamic stability assumes that the bed joints are cracked at the wall anchorage levels and near the center of the wall between wall anchorage levels. If the height-to-thickness ratio of the URM wall exceeds these prescribed ratios, the wall must be braced to increase its stability.

The allowable height-to-thickness ratios are given in Table A1-B. The height-to-thickness ratios were determined by data obtained by dynamic testing of full size walls. The walls at the uppermost story level are most vulnerable because there is no overburden. Walls at the first story of the buildings have less vulnerability as the unamplified ground motion shakes at one end of the wall. The increased ratios for buildings with crosswalls are due to the effect of damping by the crosswalls of the diaphragms. These height-to-thickness ratios, with the exception of buildings with crosswalls, are applicable to buildings analyzed by either the general or special procedure.

Buildings with crosswalls analyzed by the special procedure may have larger height-to-thickness ratios if several special limitations are met:

Item 1. In Region 1, the increased height-to-thickness ratios are applicable only to buildings with crosswalls in all story levels and if the following conditions are met:

- The tested mortar shear strength shall not be less than 100 psi (690 kPa) or where the visual examination of the collar joints indicates 50 percent or more of the collar joint is filled with mortar and the tested mortar shear strength is 60 psi (414 mm) or more.
- The separation of the building from an adjacent building shall not be less than 5 inches (127 mm) (see Section A113.10).

Item 2. A special condition exists when the *DCR* of the diaphragms falls in Region 2 of Figure A1-1. In this special condition, the height-to-thickness ratios for crosswalls may be used even though qualifying crosswalls are not present.

Item 3. This special provision allowing ratios of buildings "with crosswalls" when no crosswalls are present is due to the presence of hysteretic damping of diaphragms that have *DCR*s in excess of 2.5.

[BS] A111.7.2 Walls with diaphragms in different regions. When diaphragms above and below the wall under consideration have demand-capacity ratios in different regions of Figure A1-1, the lesser height-to-thickness ratio shall be used.

❖ The *DCR* of both the upper and lower diaphragms that shake the out-of-plane wall shall be checked. If the *DCR* of either diaphragm falls into Region 3 of Figure A1-1, the height-to-thickness ratios for "all other" buildings shall be used even if qualifying crosswalls are not present. The *DCR* of both diaphragms

INTERNATIONAL CODE COUNCIL®
Copyright © 2015 ICC. ALL RIGHTS RESERVED. Accessed by David Dammon on Jun 21, 2017 12:30:52 PM pursuant to License Agreement with ICC. No further reproduction or distribution authorized. ANY UNAUTHORIZED REPRODUCTION OR DISTRIBUTION IS A VIOLATION OF THE FEDERAL COPYRIGHT ACT AND THE LICENSE AGREEMENT, AND SUBJECT TO CIVIL AND CRIMINAL PENALTIES THEREUNDER.

must fall within Region 2 for the height-to-thickness ratios for "with crosswalls" to be used, even though crosswalls are not present. In the calculation of *DCR* for determination of height-to-thickness ratios, the capability of crosswalls to reduce diaphragm lengths or acting as lines to resist diaphragm shear is excluded.

[BS] A111.8 Open-front design procedure. A single-story building with an open front on one side and crosswalls parallel to the open front may be designed by the following procedure:

1. Effective diaphragm span, L_i, for use in Figure A1-1 shall be determined in accordance with the following formula:

$$L_i = 2[(W_w/W_d)L + L] \qquad \textbf{(Equation A1-18)}$$

2. Diaphragm demand-capacity ratio shall be calculated as:

$$DCR = 2.1S_{D1}(W_d + W_w)/[(v_u D) + V_{cb}] \qquad \textbf{(Equation A1-19)}$$

❖ It should be noted that "open-front" has an ordinary meaning, referring to a building face that is open, i.e., free from significant solid walls, usually at one story. Most commonly, an open-front building is the ground floor of a commercial building. Buildings on corners of blocks often have open fronts on two sides.

If a moment frame complying with Section A111.6.4 is placed in the open front, then the building meets the requirement of Section A111.1, Item 3 for two lines of vertical elements in the direction parallel to the front; therefore, the open-front procedure is not applicable.

Under the exception of Section A111.1, Item 3, the open front of a single-story building is permitted to remain open if the building satisfies the requirements of the open-front procedure in this section and the building contains crosswalls.

The open-front procedure is permitted only in one direction: if there are two open fronts, one of them must be provided with a braced frame or shear wall.

In case the open-front procedure is tried but cannot be satisfied, the solution would be to provide a braced frame or a moment frame in the open front. The open-front procedure uses Equation A1-18 to determine an effective span, L_i; the distance from the nearest shear wall to the open front is the length L. An additional length is calculated in order to account for the weight of masonry at the open front. This weight, which is a concentrated load at the end of the diaphragm, is assumed to be distributed uniformly along a length, $(W_w/W_d)\ L$. The augmented length is $[(W_w/W_d)\ L + L]$. This length is then doubled to estimate the span, L_i, of an equivalent diaphragm that has a deflected shape similar to a shear beam spanning between two shear walls.

The diaphragm *DCR* is calculated by Equation A1-19, using the spectral response coefficient, the sum of the diaphragm and normal wall dead load, the weight of the wall at the open front and the shear capacity of one end of the diaphragm and the required crosswall. This analysis determines the capacity of the crosswall that is required to control the displacement at the end of the diaphragm at the open front.

The required crosswall need not be right in the open front, but may be at some distance back within the building. It should also be noted that a moment frame or other system might be used in place of a crosswall in accordance with Section A111.3.5. Where the crosswall or other system is at some distance back from the open front, the analysis performed to determine the maximum distance that is permitted becomes an iterative process. It is similar to the analysis described above, except that a crosswall capacity is not included in the calculation of Equation A1-19. The maximum distance is L_i. A trial value of L is used in Equation A1-18, and the corresponding L_i and *DCR* are used to check the diaphragm. The process is repeated until an acceptable value of L is obtained.

SECTION A112
ANALYSIS AND DESIGN

[BS] A112.1 General. The following requirements are applicable to both the general procedure and the special procedure for analyzing vertical elements of the lateral force-resisting system.

❖ The requirements of this section are applicable to both the general and special procedures. The two procedures will determine different in-plane shear loading for the shear walls for buildings of equal floor area due to the difference in overall building weight and the coupling of the weight of normal walls with the shear walls.

[BS] A112.2 Existing unreinforced masonry walls.

[BS] A112.2.1 Flexural rigidity. Flexural components of deflection may be neglected in determining the rigidity of an unreinforced masonry wall.

❖ The relative rigidity of piers in a wall may be determined on the basis of net area and height as in a shear beam. Wall piers rarely have span-depth ratios that exceed the ratio where flexural stress-strain relationships exist. Use of shear deformations only for calculation of relative rigidity is an appropriate procedure.

[BS] A112.2.2 Shear walls with openings. Wall piers shall be analyzed according to the following procedure, which is diagrammed in Figure A1-2.

1. For any pier,
   1.1. The pier shear capacity shall be calculated as:

$$V_a = v_{mr}A/1.5 \qquad \textbf{(Equation A1-20)}$$

INTERNATIONAL CODE COUNCIL®
Copyright © 2015 ICC. ALL RIGHTS RESERVED. Accessed by David Dammon on Jun 21, 2017 12:30:52 PM pursuant to License Agreement with ICC. No further reproduction or distribution authorized. ANY UNAUTHORIZED REPRODUCTION OR DISTRIBUTION IS A VIOLATION OF THE FEDERAL COPYRIGHT ACT AND THE LICENSE AGREEMENT, AND SUBJECT TO CIVIL AND CRIMINAL PENALTIES THEREUNDER.

1.2. The pier rocking shear capacity shall be calculated as:

$$V_r = 0.9P_D D/H \quad \textbf{(Equation A1-21)}$$

2. The wall piers at any level are acceptable if they comply with one of the following modes of behavior:

2.1. Rocking controlled mode. When the pier rocking shear capacity is less than the pier shear capacity, i.e., $V_r < V_a$ for each pier in a level, forces in the wall at that level, V_{wx}, shall be distributed to each pier in proportion to $P_D D/H$.

For the wall at that level:

$$0.7V_{wx} < \Sigma V_r \quad \textbf{(Equation A1-22)}$$

2.2. Shear controlled mode. Where the pier shear capacity is less than the pier rocking capacity, i.e., $V_a < V_r$ in at least one pier in a level, forces in the wall at the level, V_{wx}, shall be distributed to each pier in proportion to D/H.

For each pier at that level:

$$V_p < V_a \quad \textbf{(Equation A1-23)}$$

and

$$V_p < V_r \quad \textbf{(Equation A1-24)}$$

If $V_p < V_a$ for each pier and $V_p > V_r$ for one or more piers, such piers shall be omitted from the analysis, and the procedure shall be repeated for the remaining piers, unless the wall is strengthened and reanalyzed.

3. Masonry pier tension stress. Unreinforced masonry wall piers need not be analyzed for tension stress.

❖ This section is for the analysis of a URM wall with windows and/or openings. The in-plane strength of the wall is the strength of the piers between the windows and doors. The pier shear capacity is its allowable shear, v_m, times the net area of the pier, A, and adjusted from peak shear stress to average shear stress. This adjusted shear strength is the average shear as used in the design of reinforced masonry and reinforced concrete. A second method of calculating the in-plane shear capacity is given by Equation A1-21. This rocking shear capacity assumes that the bed joints at the top and bottom of the pier have cracked and the axial load on the pier acting eccentrically on the displaced pier provides the restoring shear or rocking shear capacity. The effective lever arm of the axial loads on the ends of the pier is about 90 percent of the pier width. This restoring force is a strength limit state.

Rocking controlled mode. When the rocking shear capacity of each individual pier is less than that pier's shear capacity, the pier will rotate, or rock, as a rigid block and have a stable dynamic behavior. In this case, the capacity of the wall consisting of a series of piers is the sum of the rocking shear capacities of each pier, and each pier is loaded with a portion of the total base shear. The rocking shear capacity, P_D (D/H), is used as the relative rigidity of each pier.

Shear controlled mode. When the axial load on any wall pier is large enough to prevent bed joint cracking prior to the formation of a diagonal shear crack, a shear failure in this pier may occur at a small displacement. In this case, the load is proportioned to the piers by the relative shear rigidity. Flexural stiffness is not included in the relative rigidity calculations as the common pier shape is such that flexural deformations are those related to deep beams.

When the pier shear capacity, V_a, is less than the pier rocking capacity, V_r, in even one pier, the shear force in the wall, V_w, is distributed to the piers in accordance with their relative rigidity, D/H. The distributed load to a pier, V_p, must be less than V_a, and if $V_p < V_a$, the shear resistance of the wall piers is adequate. If $V_p < V_a$ for each pier and $V_p > V_r$ for one or more piers, then an incompatible pier capacity exists. The piers where $V_p > V_r$ are omitted from the analysis and the procedure is repeated using only the piers where $V_p > V_a$. This procedure is shown in a flow diagram in Figure A1-2.

Masonry pier tension stress. Flexural moments and tensile stresses are not calculated for unreinforced masonry piers. Flexural cracking may occur on bed joints due to out-of-plane flexure, but the pier system can be stable when subjected to the dynamic loading of an earthquake.

[BS] A112.2.3 Shear walls without openings. Shear walls without openings shall be analyzed the same as for walls with openings, except that V_r shall be calculated as follows:

$$V_r = 0.9(P_D + 0.5P_w)D/H \quad \textbf{(Equation A1-25)}$$

❖ These walls shall be analyzed as a single pier for in-plane shear capacity. The rocking shear computation uses one-half of the wall weight as the restoring force because the product of P_D is one-half of the wall length, D.

[BS] A112.3 Plywood-sheathed shear walls. Plywood-sheathed shear walls may be used to resist lateral forces for buildings with flexible diaphragms analyzed according to provisions of Section A111. Plywood-sheathed shear walls may not be used to share lateral forces with other materials along the same line of resistance.

❖ Sheathed light-frame shear walls may be used as shear walls in buildings with flexible diaphragms in conformity with the restrictions in the IBC. These sheathed walls cannot share lateral forces with other materials in the line of the sheathed light-frame walls.

[BS] A112.4 Combinations of vertical elements.

[BS] A112.4.1 Lateral-force distribution. Lateral forces shall be distributed among the vertical-resisting elements in

INTERNATIONAL CODE COUNCIL®
Copyright © 2015 ICC. ALL RIGHTS RESERVED. Accessed by David Dammon on Jun 21, 2017 12:30:52 PM pursuant to License Agreement with ICC. No further reproduction or distribution authorized. ANY UNAUTHORIZED REPRODUCTION OR DISTRIBUTION IS A VIOLATION OF THE FEDERAL COPYRIGHT ACT AND THE LICENSE AGREEMENT, AND SUBJECT TO CIVIL AND CRIMINAL PENALTIES THEREUNDER.

proportion to their relative rigidities, except that moment-resisting frames shall comply with Section A112.4.2.

❖ The distribution of the lateral force should be based on realistic calculations of stiffness. The compressive modulus of unreinforced brick has been determined by testing to have values vary from 100,000 psi (690 MPa) to 500,000 psi (345 Pa). Effective moduli of reinforced concrete and masonry shear walls vary from 10 to 20 percent of uncracked moduli. A special case is given in Section 112.4.2 for assignment of lateral loads, regardless of relative stiffness.

[BS] A112.4.2 Moment-resisting frames. Moment-resisting frames shall not be used with an unreinforced masonry wall in a single line of resistance unless the wall has piers that have adequate shear capacity to sustain rocking in accordance with Section A112.2.2. The frames shall be designed in accordance with the building code to carry 100 percent of the lateral forces tributary to that line of resistance, as determined from Equation A1-7. The story drift ratio shall be limited to 0.0075.

❖ Use of a combination of moment frame and URM shear wall in the same line of resistance is prohibited unless the piers in the wall have a rocking shear capacity that exceeds the pier shear capacity (see Equations A1-20 and A1-21). If this condition is met, a moment frame may be used with 100 percent of the load assigned to it. The minimum stiffness of the moment frame shall be twice that specified for other moment frames that are used to resist lateral loads (see Section A111.6.4). This section should not be interpreted to be applicable to a moment frame used in the open front of a URM building where the piers do not have significant stiffness. These masonry columns may support lintels that have a substantial load. The engineer should assess the stability of the masonry-bearing surface when the design drift of the open front occurs.

SECTION A113
DETAILED SYSTEM DESIGN REQUIREMENTS

[BS] A113.1 Wall anchorage.

[BS] A113.1.1 Anchor locations. Unreinforced masonry walls shall be anchored at the roof and floor levels as required in Section A110.2. Ceilings of plaster or similar materials, when not attached directly to roof or floor framing and where abutting masonry walls, shall either be anchored to the walls at a maximum spacing of 6 feet (1829 mm), or be removed.

❖ URM walls are anchored to all roofs and floors, and to ceilings in certain cases. If the ceiling is forced to displace with the roof diaphragm by existing wood trussing, the anchor should also be at the ceiling level. The URM wall is forced to remain vertical within the depth of the truss and the flexural crack will occur at the ceiling level. A depth of truss that triggers ceiling anchorage has not been defined. Engineering judgment should be used to determine an acceptable depth of the roof trusses not having anchorage at the ceiling level.

Ceiling systems of substantial weight act as loading on the walls. The transfer of the ceiling weight to the shear wall could be made by the diaphragm above and its shear connection, or by an independent shear connection and diaphragm at the ceiling level.

[BS] A113.1.2 Anchor requirements. Anchors shall consist of bolts installed through the wall as specified in Table A1-E, or an approved equivalent at a maximum anchor spacing of 6 feet (1829 mm). All wall anchors shall be secured to the joists to develop the required forces.

❖ When existing wall anchors have been tested to confirm the adequacy of the embedded end, the connection of the existing anchor to the wood framing shall be analyzed by rational engineering methods for its adequacy.

[BS] A113.1.3 Minimum wall anchorage. Anchorage of masonry walls to each floor or roof shall resist a minimum force determined as $0.9S_{DS}$ times the tributary weight or 200 pounds per linear foot (2920 N/m), whichever is greater, acting normal to the wall at the level of the floor or roof. Existing wall anchors, if used, must meet the requirements of this chapter or must be upgraded.

[BS] A113.1.4 Anchors at corners. At the roof and floor levels, both shear and tension anchors shall be provided within 2 feet (610 mm) horizontally from the inside of the corners of the walls.

❖ The end pier in a system of piers has additional stiffness due to the effect of the intersecting wall acting as a flange. The placement of the first shear anchor within 2 feet (610 mm) of the end of the wall aids in transferring the shear load from the diaphragm to the corner pier.

[BS] A113.2 Diaphragm shear transfer. Bolts transmitting shear forces shall have a maximum bolt spacing of 6 feet (1829 mm) and shall have nuts installed over malleable iron or plate washers when bearing on wood, and heavy-cut washers when bearing on steel.

[BS] A113.3 Collectors. Collector elements shall be provided that are capable of transferring the seismic forces originating in other portions of the building to the element providing the resistance to those forces.

❖ The transfer of shear forces at the edge of a diaphragm to the shear resisting elements at that edge may require a collector at the edge of the diaphragm for distribution of the diaphragm shear to the elements of the shear wall. If the shear wall is the full depth of the diaphragm, no need for a collector would exist, as the uniformly distributed shear load of the diaphragm would be uniformly resisted along the length of the shear wall. If the shear wall strength and stiffness were at one end of that line of resistance, the collector will accumulate load from the diaphragm and act as a tie to the shear wall element. The calculated collector force may be resisted by existing or

INTERNATIONAL CODE COUNCIL®
Copyright © 2015 ICC. ALL RIGHTS RESERVED. Accessed by David Dammon on Jun 21, 2017 12:30:52 PM pursuant to License Agreement with ICC. No further reproduction or distribution authorized. ANY UNAUTHORIZED REPRODUCTION OR DISTRIBUTION IS A VIOLATION OF THE FEDERAL COPYRIGHT ACT AND THE LICENSE AGREEMENT, AND SUBJECT TO CIVIL AND CRIMINAL PENALTIES THEREUNDER.

new elements. The relative rigidity of new and existing elements should be considered in apportioning loads to the various elements.

A pier adjacent to a corner of two intersecting shear walls is much stiffer than the usual pier analysis indicates. The effect of the flange, which is the other wall around the corner, is significant when the flange is in tension. The stiffness of this pier may cause the spandrel to have a significant collector stress. Because of this increased collector force, a minimum required spacing of the first shear bolt from the corner is specified to minimize the collector stress in the spandrel above the opening nearest to the building corner.

[BS] A113.4 Ties and continuity. Ties and continuity shall conform to the requirements of the building code.

[BS] A113.5 Wall bracing.

[BS] A113.5.1 General. Where a wall height-to-thickness ratio exceeds the specified limits, the wall may be laterally supported by vertical bracing members per Section A113.5.2 or by reducing the wall height by bracing per Section A113.5.3.

❖ Normal walls with excessive height-to-thickness ratios may be supported by an additional line of wall anchors that reduce the unbraced height or by vertical members that support the wall when cracked.

[BS] A113.5.2 Vertical bracing members. Vertical bracing members shall be attached to floor and roof construction for their design loads independently of required wall anchors. Horizontal spacing of vertical bracing members shall not exceed one-half of the unsupported height of the wall or 10 feet (3048 mm). Deflection of such bracing members at design loads shall not exceed one-tenth of the wall thickness.

❖ The vertical member shall be attached to the diaphragms. The reaction shall not be transferred into the URM wall and to its anchorage system. The horizontal spacing of the wall braces is limited to a distance equal to one-half of the wall height in order to provide a uniformly distributed resistance to out-of-plane displacements. This bracing does not prevent tension cracking of the URM wall. The brace should be anchored to the wall with a wall anchor at the center of the wall height as a minimum. The design loading of the wall brace is determined by the requirements of the IBC, and the stiffness of the wall brace must be sufficient to meet the deflection limitations.

[BS] A113.5.3 Intermediate wall bracing. The wall height may be reduced by bracing elements connected to the floor or roof. Horizontal spacing of the bracing elements and wall anchors shall be as required by design, but shall not exceed 6 feet (1829 mm) on center. Bracing elements shall be detailed to minimize the horizontal displacement of the wall by the vertical displacement of the floor or roof.

❖ Braces that extend between floors or roofs can reduce the unbraced height of the URM wall. A horizontal girt anchored on the face of the wall can be used to distribute the wall anchor force to braces that are spaced greater than 6 feet (1829 mm). Vertical displacement of the anchorage of the brace to the floor and roof will cause an outward displacement or bending stress in the URM wall. The deflection of the brace anchorage point caused by live loading shall be investigated and minimized.

[BS] A113.6 Parapets. Parapets and exterior wall appendages not conforming to this chapter shall be removed, or stabilized or braced to ensure that the parapets and appendages remain in their original positions.

The maximum height of an unbraced unreinforced masonry parapet above the lower of either the level of tension anchors or the roof sheathing shall not exceed the height-to-thickness ratio shown in Table A1-F. If the required parapet height exceeds this maximum height, a bracing system designed for the forces determined in accordance with the building code shall support the top of the parapet. Parapet corrective work must be performed in conjunction with the installation of tension roof anchors.

The minimum height of a parapet above any wall anchor shall be 12 inches (305 mm).

Exception: If a reinforced concrete beam is provided at the top of the wall, the minimum height above the wall anchor may be 6 inches (152 mm).

❖ A maximum height of unbraced parapets above the wall anchorage points is specified. This height of unreinforced wall will be dynamically stable, but may slide laterally by the diaphragm response. A minimum height of parapet above the wall anchorage is specified, as its tension capacity is dependent on the axial stress in the wall at the level of anchorage. An exception is provided for a minimum height of 6 inches (152 mm). This exception is necessary as it was specified for standard details used for parapet risk reduction prior to the development of comprehensive requirements for earthquake risk reduction. It is not a recommended detail, and reinforced concrete beams may be slid laterally on the top of the wall by anchorage forces. However, failure of the anchorage system has not been observed.

[BS] A113.7 Veneer.

1. Veneer shall be anchored with approved anchor ties conforming to the required design capacity specified in the building code and shall be placed at a maximum spacing of 24 inches (610 mm) with a maximum supported area of 4 square feet (0.372 m^2).

   Exception: Existing anchor ties for attaching brick veneer to brick backing may be acceptable, provided the ties are in good condition and conform to the following minimum size and material requirements.

   Existing veneer anchor ties may be considered adequate if they are of corrugated galvanized iron strips not less than 1 inch (25 mm) in width, 8 inches (203 mm) in length and $^1/_{16}$ inch (1.6 mm) in thickness, or the equivalent.

INTERNATIONAL CODE COUNCIL®
Copyright © 2015 ICC. ALL RIGHTS RESERVED. Accessed by David Dammon on Jun 21, 2017 12:30:52 PM pursuant to License Agreement with ICC. No further reproduction or distribution authorized. ANY UNAUTHORIZED REPRODUCTION OR DISTRIBUTION IS A VIOLATION OF THE FEDERAL COPYRIGHT ACT AND THE LICENSE AGREEMENT, AND SUBJECT TO CIVIL AND CRIMINAL PENALTIES THEREUNDER.

2. The location and condition of existing veneer anchor ties shall be verified as follows:

   2.1. An approved testing laboratory shall verify the location and spacing of the ties and shall submit a report to the building official for approval as part of the structural analysis.

   2.2. The veneer in a selected area shall be removed to expose a representative sample of ties (not less than four) for inspection by the building official.

❖ Unbonded brick veneer and veneer poorly bonded with angled bricks or sporadic flat metal ties to the URM structural wall have been found to detach from the structural wall when shaken with 20 to 30 percent of gravity ground motion. The exception in this section was taken from the 1930 *Los Angeles Building Code*.

[BS] A113.8 Nonstructural masonry walls. Unreinforced masonry walls that carry no design vertical or lateral loads and that are not required by the design to be part of the lateral force-resisting system shall be adequately anchored to new or existing supporting elements. The anchors and elements shall be designed for the out-of-plane forces specified in the building code. The height- or length-to-thickness ratio between such supporting elements for such walls shall not exceed nine.

❖ A nonstructural wall must be isolated from the structure on three sides. If the wall is not isolated from the structure, it must be considered as a shear wall and/or bearing masonry wall. The allowable height-to-thickness ratio is reduced from that allowed for a one-story bearing wall because vertical loading increases the stability of an unreinforced masonry wall. The height-to-thickness ratio may not exceed 9 to 1 or the limitations of Section A113.5.3.

[BS] A113.9 Truss and beam supports. Where trusses and beams other than rafters or joists are supported on masonry, independent secondary columns shall be installed to support vertical loads of the roof or floor members.

Exception: Secondary supports are not required where S_{D1} is less than 0.3g.

❖ Conformance of the URM wall with the height-to-thickness limitations does not imply that these walls will be uncracked and deform as flexural beams. It is highly likely that a crack will occur at each anchorage point and in the center part of the wall where the design level of intensity of shaking occurs. These blocks of walls will rotate on these cracks but will be dynamically stable. The rotation angle between a block above and below a wall anchorage could be greater than 5 degrees. A truss or beam that has an unyielding bearing surface can load the edge of its bearing on the masonry and cause spalling of the bearing surface. The secondary support serves the same purpose as shoring that would be installed after the earthquake. A foundation is not required for the secondary support, and the secondary support loads need not be accumulative in a multistory building. The exception to the requirement for secondary support of vertical loads of roof or floor members is permitted for lower seismic hazard zones. The exception is applicable where S_{D1}, as defined and mapped in the IBC, is 0.3g or less.

[BS] A113.10 Adjacent buildings. Where elements of adjacent buildings do not have a separation of at least 5 inches (127 mm), the allowable height-to-thickness ratios for "all other buildings" per Table A1-B shall be used in the direction of consideration.

❖ The increases in the allowable height-to-thickness ratios of URM walls when crosswalls are present in each story were predicated on allowing the diaphragms to have dynamic displacements that cause nonlinear displacements in the crosswalls and the diaphragm or in the diaphragm alone. Figure A1-1 was plotted by nonlinear analysis using ground motions scaled to 0.4g effective peak acceleration. The acceptable demand-capacity-span boundary is equivalent to 5 inches (127 mm) of displacement of the center of the diaphragm relative to the shear walls at the end of the span. If an adjacent building restricts the diaphragm displacement, the increase in the allowable height-to-thickness ratio is not applicable.

SECTION A114
WALLS OF UNBURNED CLAY, ADOBE OR STONE MASONRY

[BS] A114.1 General. Walls of unburned clay, adobe or stone masonry construction shall conform to the following:

1. Walls of unburned clay, adobe or stone masonry shall not exceed a height- or length-to-thickness ratio specified in Table A1-G.
2. Adobe may be allowed a maximum value of 9 pounds per square inch (62.1 kPa) for shear unless higher values are justified by test.
3. Mortar for repointing may be of the same soil composition and stabilization as the brick, in lieu of cement-mortar.

Bibliography

The following resource materials were used in the preparation of the commentary for this chapter of the code.

ABK-84, *Methodology for Mitigation of Seismic Hazards in Existing Unreinforced Masonry Buildings: The Methodology*. Topical Report 08, National Science

INTERNATIONAL CODE COUNCIL®
Copyright © 2015 ICC. ALL RIGHTS RESERVED. Accessed by David Dammon on Jun 21, 2017 12:30:52 PM pursuant to License Agreement with ICC. No further reproduction or distribution authorized. ANY UNAUTHORIZED REPRODUCTION OR DISTRIBUTION IS A VIOLATION OF THE FEDERAL COPYRIGHT ACT AND THE LICENSE AGREEMENT, AND SUBJECT TO CIVIL AND CRIMINAL PENALTIES THEREUNDER.

Foundation, Contract No. NSF-C-PFR78-19200. Washington, DC: Applied Science and Research Applications, 1984.

ABK-86, Guidelines for the Evaluation of Historic Brick Masonry Buildings in Earthquake Hazard Zones. ABK, A Joint Venture, Funded by the Department of Parks and Recreation of the State of California and the National Park Service, United States Government, January 1986.

ATC-78, *Tentative Provisions for the Development of Seismic Regulations for Buildings*, Report ATC 3-16. Redwood City, CA: Applied Technology Council, 1978.

ATC-87, *Evaluating the Seismic Resistance of Existing Buildings*, Report ATC-14. Redwood City, CA: Applied Technology Council, 1987.

ICBO-1988 through 1997, *Uniform Code for Building Conservation*. Whittier, CA: International Conference of Building Officials, 1988–1997.

ICBO-01, *Guidelines for the Seismic Retrofit of Existing, Buildings*. Whittier, CA: International Conference of Building Officials, 2006.

Preservation Brief 2, *Repointing Mortar Joints in Historic Masonry Buildings*. Robert C. Mack, FAIA, and John P. Speweik for the National Park Service, United States Government, October 1998.

TN 46, *Technical Note on Maintenance of Brick Masonry*, pp. 3-5, *Mortar Joint Repair*. Reston, VA: The Brick Industry Association, December 2005.

[BS] TABLE A1-A
ELEMENTS REGULATED BY THIS CHAPTER

BUILDING ELEMENTS	S_{D1}			
	≥ 0.067g < 0.133g	≥ 0.133g < 0.20g	≥ 0.20g < 0.30g	> 0.30g
Parapets	X	X	X	X
Walls, anchorage	X	X	X	X
Walls, *h/t* ratios		X	X	X
Walls, in-plane shear		X	X	X
Diaphragms[a]			X	X
Diaphragms, shear transfer[b]		X	X	X
Diaphragms, demand-capacity ratios[b]			X	X

a. Applies only to buildings designed according to the general procedures of Section A110.
b. Applies only to buildings designed according to the special procedures of Section A111.

[BS] TABLE A1-B
ALLOWABLE VALUE OF HEIGHT-TO-THICKNESS RATIO OF UNREINFORCED MASONRY WALLS

WALL TYPES	0.13g ≤ S_{D1} < 0.25g	0.25g ≤ S_{D1} < 0.4g	S_{D1} ≥ 0.4g BUILDINGS WITH CROSSWALLS[a]	S_{D1} > 0.4g ALL OTHER BUILDINGS
Walls of one-story buildings	20	16	16[b,c]	13
First-story wall of multistory building	20	18	16	15
Walls in top story of multistory building	14	14	14[b,c]	9
All other walls	20	16	16	13

a. Applies to the special procedures of Section A111 only. See Section A111.7 for other restrictions.
b. This value of height-to-thickness ratio may be used only where mortar shear tests establish a tested mortar shear strength, v_t, of not less than 100 pounds per square inch (690 kPa). This value may also be used where the tested mortar shear strength is not less than 60 pounds per square inch (414 kPa), and where a visual examination of the collar joint indicates not less than 50-percent mortar coverage.
c. Where a visual examination of the collar joint indicates not less than 50-percent mortar coverage, and the tested mortar shear strength, v_t, is greater than 30 pounds per square inch (207 kPa) but less than 60 pounds per square inch (414 kPa), the allowable height-to-thickness ratio may be determined by linear interpolation between the larger and smaller ratios in direct proportion to the tested mortar shear strength.

INTERNATIONAL CODE COUNCIL®
Copyright © 2015 ICC. ALL RIGHTS RESERVED. Accessed by David Dammon on Jun 21, 2017 12:30:52 PM pursuant to License Agreement with ICC. No further reproduction or distribution authorized. ANY UNAUTHORIZED REPRODUCTION OR DISTRIBUTION IS A VIOLATION OF THE FEDERAL COPYRIGHT ACT AND THE LICENSE AGREEMENT, AND SUBJECT TO CIVIL AND CRIMINAL PENALTIES THEREUNDER.

[BS] TABLE A1-C
HORIZONTAL FORCE FACTOR, C_p

CONFIGURATION OF MATERIALS	C_p
Roofs with straight or diagonal sheathing and roofing applied directly to the sheathing, or floors with straight tongue-and-groove sheathing.	0.50
Diaphragms with double or mulitple layers of boards with edges offset, and blocked plywood systems.	0.75
Diaphragms of metal deck without topping:	
Minimal welding or mechanical attachment.	0.6
Welded or mechanically attached for seismic resistance.	0.68

[BS] TABLE A1-D
STRENGTH VALUES FOR EXISTING MATERIALS

EXISTING MATERIALS OR CONFIGURATION OF MATERIALS[a]		STRENGTH VALUES x 14.594 for N/m
Horizontal diaphragms	Roofs with straight sheathing and roofing applied directly to the sheathing.	300 lbs. per ft. for seismic shear
	Roofs with diagonal sheathing and roofing applied directly to the sheathing.	750 lbs. per ft. for seismic shear
	Floors with straight tongue-and-groove sheathing.	300 lbs. per ft. for seismic shear
	Floors with straight sheathing and finished wood flooring with board edges offset or perpendicular.	1,500 lbs. per ft. for seismic shear
	Floors with diagonal sheathing and finished wood flooring.	1,800 lbs. per ft. for seismic shear
	Metal deck welded with minimal welding.[c]	1,800 lbs, per ft. for seismic shear
	Metal deck welded for seismic resistance.[d]	3,000 lbs. per ft. for seismic shear
Crosswalls[b]	Plaster on wood or metal lath.	600 lbs. per ft. for seismic shear
	Plaster on gypsum lath.	550 lbs. per ft. for seismic shear
	Gypsum wallboard, unblocked edges.	200 lbs. per ft. for seismic shear
	Gypsum wallboard, blocked edges.	400 lbs. per ft. for seismic shear
Existing footing, wood framing, structural steel, reinforcing steel	Plain concrete footings.	f'_c = 1,500 psi (10.34 MPa) unless otherwise shown by tests
	Douglas fir wood.	Same as D.F. No. 1
	Reinforcing steel.	F_y = 40,000 psi (124.1 N/mm^2) maximum
	Structural steel.	F_y = 33,000 psi (137.9 N/mm^2) maximum

For SI: 1 inch = 25.4 mm, 1 square inch = 645.16 mm^2, 1 pound = 4.4 N.

a. Material must be sound and in good condition.

b. Shear values of these materials may be combined, except the total combined value should not exceed 900 pounds per foot (4380 N/m).

c. Minimum 22-gage steel deck with welds to supports satisfying the standards of the Steel Deck Institute.

d. Minimum 22-gage steel deck with $^3/_4$ ϕ plug welds at an average spacing not exceeding 8 inches (203 mm) and with sidelap welds appropriate for the deck span.

INTERNATIONAL CODE COUNCIL®
Copyright © 2015 ICC. ALL RIGHTS RESERVED. Accessed by David Dammon on Jun 21, 2017 12:30:52 PM pursuant to License Agreement with ICC. No further reproduction or distribution authorized. ANY UNAUTHORIZED REPRODUCTION OR DISTRIBUTION IS A VIOLATION OF THE FEDERAL COPYRIGHT ACT AND THE LICENSE AGREEMENT, AND SUBJECT TO CIVIL AND CRIMINAL PENALTIES THEREUNDER.

[BS] TABLE A1-E
STRENGTH VALUES OF NEW MATERIALS USED IN CONJUNCTION WITH EXISTING CONSTRUCTION

NEW MATERIALS OR CONFIGURATION OF MATERIALS		STRENGTH VALUES
Horizontal diaphragms	Plywood sheathing applied directly over existing straight sheathing with ends of plywood sheets bearing on joists or rafters and edges of plywood located on center of individual sheathing boards.	675 lbs. per ft.
Crosswalls	Plywood sheathing applied directly over wood studs; no value should be given to plywood applied over existing plaster or wood sheathing.	1.2 times the value specified in the current building code.
	Drywall or plaster applied directly over wood studs.	The value specified in the current building code.
	Drywall or plaster applied to sheathing over existing wood studs.	50 percent of the value specified in the current building code.
Tension bolts[e]	Bolts extending entirely through unreinforced masonry wall secured with bearing plates on far side of a three-wythe-minimum wall with at least 30 square inches of area.[b,c]	5,400 lbs. per bolt. 2,700 lbs. for two-wythe walls.
Shear bolts[e]	Bolts embedded a minimum of 8 inches into unreinforced masonry walls; bolts should be centered in $2^1/_2$-inch-diameter holes with dry-pack or nonshrink grout around the circumference of the bolt.	The value for plain masonry specified for solid masonry in the current building code; no value larger than those given for $^3/_4$-inch bolts should be used.
Combined tension and shear bolts	Through-bolts—bolts meeting the requirements for shear and for tension bolts.[b,c]	Tension—same as for tension bolts. Shear—same as for shear bolts.
	Embedded bolts—bolts extending to the exterior face of the wall with a $2^1/_2$-inch round plate under the head and drilled at an angle of $22^1/_2$ degrees to the horizontal; installed as specified for shear bolts.[a,b,c]	Tension—3,600 lbs. per bolt. Shear—same as for shear bolts.
Infilled walls	Reinforced masonry infilled openings in existing unreinforced masonry walls; provide keys or dowels to match reinforcing.	Same as values specified for unreinforced masonry walls.
Reinforced masonry[d]	Masonry piers and walls reinforced per the current building code.	The value specified in the current building code for strength design.
Reinforced concrete[d]	Concrete footings, walls and piers reinforced as specified in the current building code.	The value specified in the current building code for strength design.

For SI: 1 inch = 25.4 mm, 1 square inch = 645.16 mm^2, 1 pound = 4.4 N.

a. Embedded bolts to be tested as specified in Section A107.4.

b. Bolts to be $^1/_2$ inch minimum in diameter.

c. Drilling for bolts and dowels shall be done with an electric rotary drill; impact tools should not be used for drilling holes or tightening anchors and shear bolt nuts.

d. No load factors or capacity reduction factor shall be used.

e. Other bolt sizes, values and installation methods may be used, provided a testing program is conducted in accordance with Section A107.5.3. The strength value shall be determined by multiplying the calculated allowable value, determined in accordance with Section A107.5.3, by 3.0, and the usable value shall be limited to a maximum of 1.5 times the value given in the table. Bolt spacing shall not exceed 6 feet on center and shall be not less than 12 inches on center.

[BS] TABLE A1-F
MAXIMUM ALLOWABLE HEIGHT-TO-THICKNESS RATIOS FOR PARAPETS

	S_{D1}		
	$0.13_g \le S_{D1} < 0.25g$	$0.25_g \le S_{D1} < 0.4g$	$S_{D1} \ge 0.4_g$
Maximum allowable height-to-thickness ratios	2.5	2.5	1.5

[BS] TABLE A1-G
MAXIMUM HEIGHT-TO-THICKNESS RATIOS FOR ADOBE OR STONE WALLS

	S_{D1}		
	$0.13_g \le S_{D1} < 0.25_g$	$0.25_g \le S_{D1} < 0.4_g$	$S_{D1} \ge 0.4_g$
One-story buildings	12	10	8
Two-story buildings			
First story	14	11	9
Second story	12	10	8

INTERNATIONAL CODE COUNCIL®
Copyright © 2015 ICC. ALL RIGHTS RESERVED. Accessed by David Dammon on Jun 21, 2017 12:30:52 PM pursuant to License Agreement with ICC. No further reproduction or distribution authorized. ANY UNAUTHORIZED REPRODUCTION OR DISTRIBUTION IS A VIOLATION OF THE FEDERAL COPYRIGHT ACT AND THE LICENSE AGREEMENT, AND SUBJECT TO CIVIL AND CRIMINAL PENALTIES THEREUNDER.

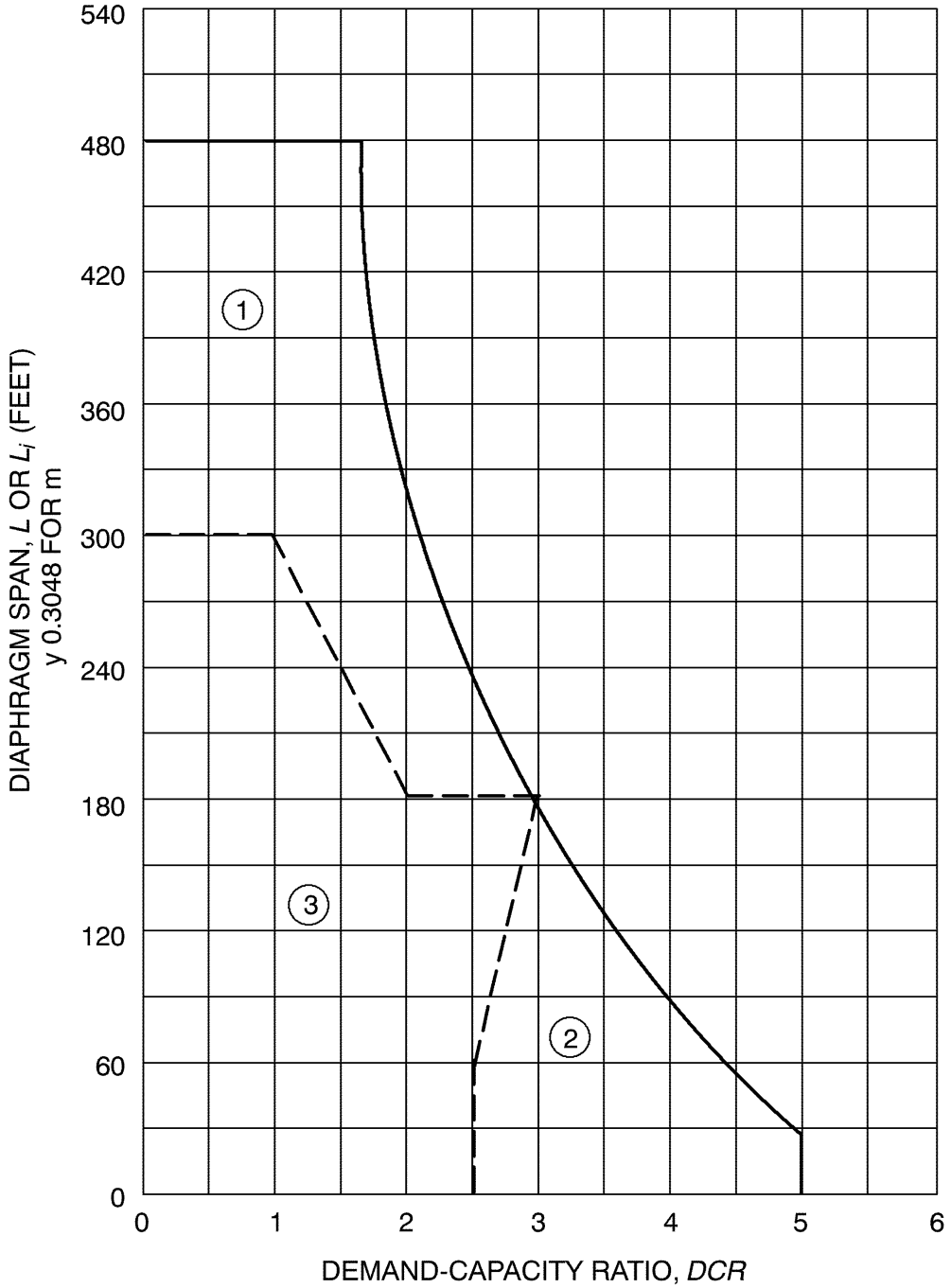

1. Region of demand-capacity ratios where crosswalls may be used to increase *h/t* ratios.
2. Region of demand-capacity ratios where *h/t* ratios of "buildings with crosswalls" may be used, whether or not crosswalls are present.
3. Region of demand-capacity ratios where *h/t* ratios of "all other buildings" shall be used, whether or not crosswalls are present.

[BS] FIGURE A1-1
ACCEPTABLE DIAPHRAGM SPAN

INTERNATIONAL CODE COUNCIL®
Copyright © 2015 ICC. ALL RIGHTS RESERVED. Accessed by David Dammon on Jun 21, 2017 12:30:52 PM pursuant to License Agreement with ICC. No further reproduction or distribution authorized. ANY UNAUTHORIZED REPRODUCTION OR DISTRIBUTION IS A VIOLATION OF THE FEDERAL COPYRIGHT ACT AND THE LICENSE AGREEMENT, AND SUBJECT TO CIVIL AND CRIMINAL PENALTIES THEREUNDER.

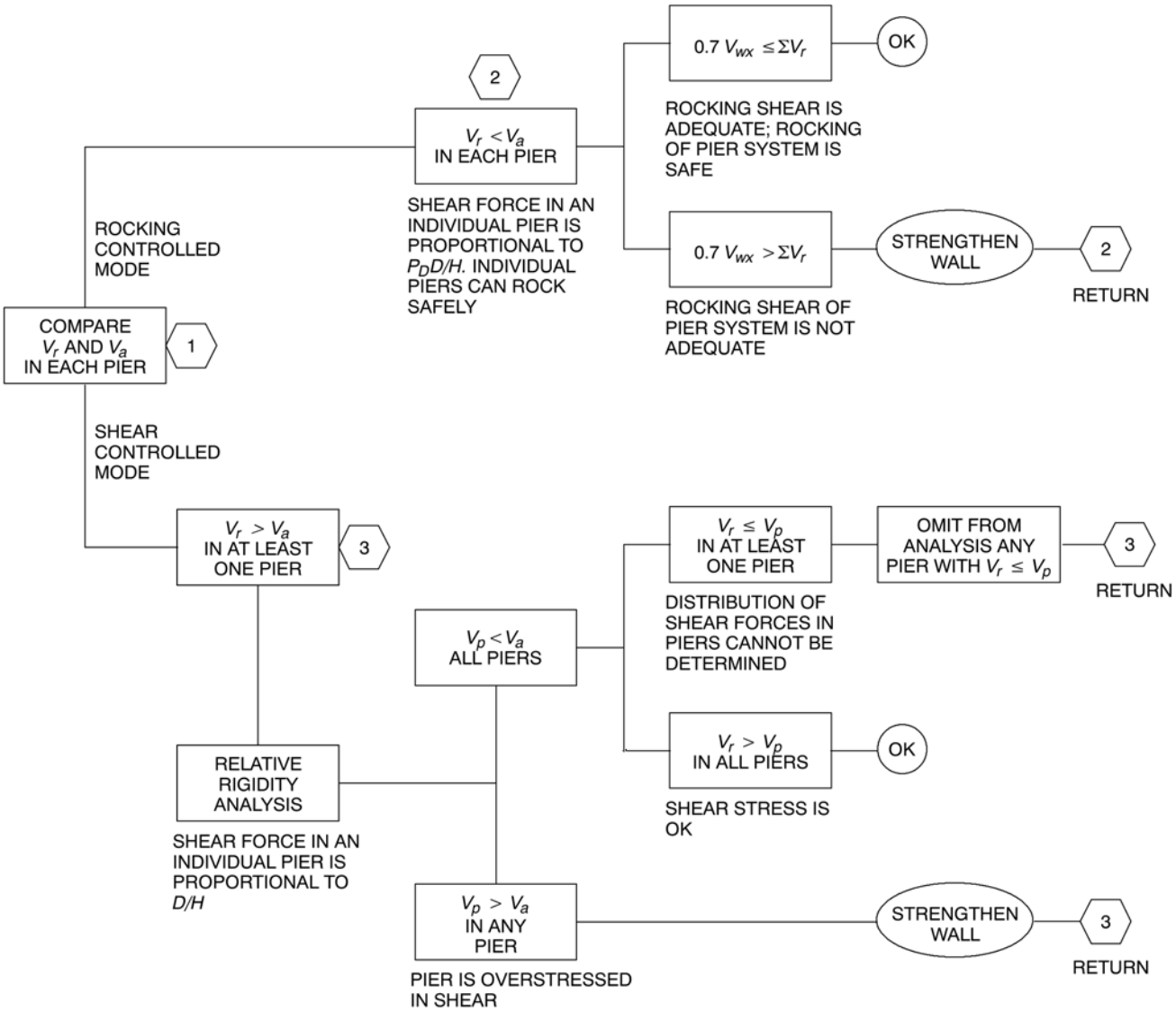

V_a = Allowable shear strength of a pier.
V_p = Shear force assigned to a pier on the basis of a relative shear rigidity analysis.
V_r = Rocking shear capacity of pier.
V_{wx} = Total shear force resisted by the wall.
ΣV_r = Rocking shear capacity of all piers in the wall.

[BS] FIGURE A1-2
ANALYSIS OF URM WALL IN-PLANE SHEAR FORCES

INTERNATIONAL CODE COUNCIL®
Copyright © 2015 ICC. ALL RIGHTS RESERVED. Accessed by David Dammon on Jun 21, 2017 12:30:52 PM pursuant to License Agreement with ICC. No further reproduction or distribution authorized. ANY UNAUTHORIZED REPRODUCTION OR DISTRIBUTION IS A VIOLATION OF THE FEDERAL COPYRIGHT ACT AND THE LICENSE AGREEMENT, AND SUBJECT TO CIVIL AND CRIMINAL PENALTIES THEREUNDER.

Chapter A2: Earthquake Hazard Reduction in Existing Reinforced Concrete and Reinforced Masonry Wall Buildings with Flexible Diaphragms

SECTION A201 PURPOSE

[BS] A201.1 Purpose. The purpose of this chapter is to promote public safety and welfare by reducing the risk of death or injury that may result from the effects of earthquakes on reinforced concrete and reinforced masonry wall buildings with flexible diaphragms. Based on past earthquakes, these buildings have been categorized as being potentially hazardous and prone to significant damage, including possible collapse in a moderate to major earthquake. The provisions of this chapter are minimum standards for structural seismic resistance established primarily to reduce the risk of life loss or injury on both subject and adjacent properties. These provisions will not necessarily prevent loss of life or injury, or prevent earthquake damage to an *existing building* that complies with these standards.

❖ Appendix Chapter A2, along with the rest of Appendix A of the code, is referenced by the *International Codes*® in two ways:

- Section 301.1.4.2 allows the use of Appendix A for qualifying buildings when "reduced IBC level seismic forces" are triggered.
- Section 807.6 allows the use of Appendix A for voluntary seismic retrofit.

The provisions of this chapter apply to buildings designed prior to the adoption of the 1997 *Uniform Building Code* (UBC) or a code based on the 1997 NEHRP *Recommended Provisions for Seismic Regulations for New Buildings and Other Structures,* such as the 2000 *International Building Code*® (IBC®). They address deficiencies that have been found to be direct threats to life safety during prior earthquakes. These deficiencies first became apparent during the 1971 San Fernando, California earthquake when a large number of tilt-up buildings partially collapsed. Further significant damage was observed in tilt-ups and concrete block wall buildings with flexible diaphragms in subsequent significant U.S. events, including the 1987 Whittier Narrows, 1989 Loma Prieta and 1994 Northridge earthquakes. These deficiencies are as follows:

- A commonly used method of connecting wall panels to roofs and floors for out-of-plane loading was to nail the diaphragms to wood ledgers and bolt the wood ledgers to the walls. This method of connection allowed the wall panels to separate from the roof or floor by failure of the ledger in cross-grain bending, nail pullout from the ledger or by tear-out of the nails through the edge of the wood structural panel.
- When used, wall-to-roof and wall-to-floor anchors have often included eccentric, flexible sheet metal hardware that is susceptible to buckling and fracture at stress concentrations such as those caused by holes for connectors to wood. Poor installation, including misalignment of anchors, created additional stresses.
- Out-of-plane forces have caused distress at girder-to-pilaster connections. The pilaster provides an edge support to the wall panel, which concentrates a substantial portion of the out-of-plane structural response to this connection. Commonly, the anchor bolts connecting girders to the top of the pilasters did not have adequate edge distance or confinement in the concrete. Typically, past damage included spalling of the inside face of the concrete pilasters and loss of support for the girders. The closely spaced ties required by the IBC at the top of the pilasters did not prevent this kind of damage.
- The lack of continuous ties across the full depth of the diaphragm allowed cross-grain tension failures of the framing members at continuous joints in the wood structural panel sheathing. This occurred in the interior of the roof or floor diaphragms. Lack of tension ties at glulam hinge locations also led to loss of support for suspended girders.
- Walls at reentrant corners or short architectural fin walls not designed to resist tributary loads and/or provided with collectors with adequate collector connections also experienced disproportionate damage.

Voluntary upgrade provisions for buildings designed with provisions predating the 1976 UBC

INTERNATIONAL CODE COUNCIL®
Copyright © 2015 ICC. ALL RIGHTS RESERVED. Accessed by David Dammon on Jun 21, 2017 12:30:52 PM pursuant to License Agreement with ICC. No further reproduction or distribution authorized. ANY UNAUTHORIZED REPRODUCTION OR DISTRIBUTION IS A VIOLATION OF THE FEDERAL COPYRIGHT ACT AND THE LICENSE AGREEMENT, AND SUBJECT TO CIVIL AND CRIMINAL PENALTIES THEREUNDER.

were developed in Los Angeles after the 1987 Whittier Narrows earthquake (Division 91, City of Los Angeles), and were then made mandatory for buildings designed to pre-1976 building codes in the City of Los Angeles after the 1994 Northridge earthquake. Other California jurisdictions have adopted similar provisions as either mandatory or voluntary ordinances.

This chapter requires:

- Positive anchorage of all reinforced concrete and masonry walls to develop the out-of-plane wall loads into the floor and roof diaphragms and to prevent splitting of the ledger or nails pulling through the edge of the sheathing.
- Provision for collectors and collector connections for walls.

Where large earthquakes have previously occurred and portions of the existing wall anchorage system may have been damaged due to deficiencies in the original design, it may be appropriate to further investigate and prioritize retrofits for these structures. Deteriorated and modified structures must also be investigated to determine the effect on the building's ability to withstand strong ground motions.

Other possible deficiencies, such as inadequate diaphragm strength, inadequate diaphragm stiffness or inadequate reinforcement at diaphragm openings, have not been reported as causing collapse or partial collapse, and are not addressed in this chapter because the level of risk associated with them is generally lower. (It is assumed that structural diaphragms exist in the structures covered by this chapter. That is, diaphragms such as gypsum or other proprietary components with minimal lateral load capacity are not used.) Although reinforced concrete and masonry wall buildings with metal deck diaphragms are within the scope of this chapter, they have been relatively rare in areas that have experienced earthquakes, and consequently post-earthquake observations and lessons learned from these configurations are very limited. It is possible that vulnerabilities associated with metal deck diaphragms will be observed in future earthquakes.

Similarly, the analysis of the walls for either in-plane or out-of-plane forces is not part of this chapter. Although walls are designed for smaller forces for out-of-plane bending than the forces used for wall anchor design, performance of reinforced walls in past earthquakes, provided that they have not been weakened by the introduction of large openings, has been good. Some engineers are concerned that walls consisting primarily of narrow piers without proper detailing may experience substantial damage caused by in-plane loading in a major earthquake. Thus, an engineer considering items beyond the scope of this chapter may want to evaluate and possibly strengthen walls consisting primarily of truck doors or large windows for in-plane shear and out-of-plane bending. Additionally, walls constructed using building codes without seismic requirements but located in regions with significant seismicity may represent an additional risk not addressed by the provisions.

This chapter was originally part of the *Guidelines for the Seismic Rehabilitation of Existing Buildings* (GSREB) (ICBO, 2001) and was intended to serve as a voluntary or mandatory retrofit ordinance. The chapter may be used for retrofits triggered by alterations to the building, occupancy changes at the building or repairs triggered by significant damage in an earthquake. However, in such cases, it is necessary to use other provisions (e.g., the provisions of the current edition of the IBC with reduced forces) to evaluate members not within the scope of this chapter (e.g., diaphragms and walls).

SECTION A202
SCOPE

[BS] A202.1 Scope. The provisions of this chapter shall apply to wall anchorage systems that resist out-of-plane forces and to collectors in existing reinforced concrete or reinforced masonry buildings with flexible diaphragms. Wall anchorage systems that were designed and constructed in accordance with the 1997 *Uniform Building Code*, 1999 *BOCA National Building Code*, 1999 *Standard Building Code* or the 2000 and subsequent editions of the *International Building Code* shall be deemed to comply with these provisions.

❖ The scope includes all reinforced concrete and reinforced masonry buildings with flexible diaphragms. Concrete tilt-up buildings are a subset of this type of structure. In terms of earthquake performance, there is little or no difference between buildings with precast concrete walls or other heavy walls, assuming the buildings have similar diaphragm spans, wall heights and wall reinforcing. The key is the transfer of forces associated with out-of-plane earthquake forces on these walls into the flexible diaphragms of the building.

The predecessor to Chapter A2, Division 91 of the *Los Angeles Building Code*, was developed for single-story reinforced concrete or masonry shear wall buildings with roofs sheathed with wood-based materials that are considered "flexible" diaphragms. Buildings with unreinforced walls are the subject of Chapter A1 and are not within the scope of this chapter.

The scope only includes buildings that were designed under a building code in effect prior to the adoption of the seismic provisions of the 1997 UBC, 1999 BOCA *National Building Code* (NBC), 1999 *Standard Building Code* (SBC) or the 2000 and subsequent editions of the IBC [changes based on observations in the 1994 Northridge earthquake were incorporated into both the 1997 UBC and 1997 *National Earthquake Hazards Reduction Program* (NEHRP)]. Structures that were designed according to these more recent building codes are presumed to have adequate designs and need not be strength-

INTERNATIONAL CODE COUNCIL®
Copyright © 2015 ICC. ALL RIGHTS RESERVED. Accessed by David Dammon on Jun 21, 2017 12:30:52 PM pursuant to License Agreement with ICC. No further reproduction or distribution authorized. ANY UNAUTHORIZED REPRODUCTION OR DISTRIBUTION IS A VIOLATION OF THE FEDERAL COPYRIGHT ACT AND THE LICENSE AGREEMENT, AND SUBJECT TO CIVIL AND CRIMINAL PENALTIES THEREUNDER.

ened. Past performance has indicated that partial and full collapse of these structures built with the deficient seismic design provisions of the past are likely at peak ground accelerations exceeding 0.20g. (This observation is based on past earthquakes with short to moderate duration. Ground shaking of less severity but longer duration could also result in collapses.)

The scope of this chapter includes only elements of the wall anchorage system and collectors and their connections. The wall anchorage system is defined in the IBC as including those elements in the diaphragm that are required to develop wall anchorage forces, such as wall anchors, struts, subdiaphragms, cross-ties and continuity ties.

SECTION A203
DEFINITIONS

[BS] A203.1 Definitions. For the purpose of this chapter, the applicable definitions listed in Chapters 16, 19, 21, 22 and 23 of the *International Building Code* and the following shall apply:

[BS] FLEXIBLE DIAPHRAGMS. Roofs and floors including, but not limited to, those sheathed with plywood, wood decking (1-by or 2-by) or metal decks without concrete topping slabs.

❖ The definition of "Flexible diaphragms" in this chapter is nearly identical to that in Section 12.3 of ASCE 7-10. It is not intended that materials such as gypsum, with minimal structural capacity, be included.

SECTION A204
SYMBOLS AND NOTATIONS

[BS] A204.1 General. For the purpose of this chapter, the applicable symbols and notations in the *International Building Code* shall apply.

❖ All symbols and notations used in this chapter are the same as those used in the IBC and ASCE/SEI 7.

SECTION A205
GENERAL REQUIREMENTS

[BS] A205.1 General. The seismic-resisting elements specified in this chapter shall comply with provisions of Section 1613 of the *International Building Code*, except as modified herein.

❖ It is only intended that the wall anchorage system, collectors and collector connections comply with the requirements of the IBC, as modified herein. Other structural components are considered lower priority in terms of reducing the potential for building collapse for these types of structures. As discussed in the commentary to Section A202, conditions where other components could be evaluated are identified.

[BS] A205.2 Alterations and repairs. Alterations and repairs required to meet the provisions of this chapter shall comply with applicable structural requirements of the building code unless specifically modified in this chapter.

[BS] A205.3 Requirements for plans. The plans shall accurately reflect the results of the engineering investigation and design and shall show all pertinent dimensions and sizes for plan review and construction. The following shall be provided:

1. Floor plans and roof plans shall show existing framing construction, diaphragm construction, proposed wall anchors, cross-ties and collectors. Existing nailing, anchors, cross-ties and collectors shall also be shown on the plans if they are considered part of the lateral force-resisting systems.
2. At elevations where there are alterations or damage, details shall show roof and floor heights, dimensions of openings, location and extent of existing damage and proposed *repair*.
3. Typical wall panel details and sections with panel thickness, height, pilasters and location of anchors shall be provided.
4. Details shall include existing and new anchors and the method of developing anchor forces into the diaphragm framing, existing and/or new cross-ties, and existing and/or new or improved support of roof and floor girders at pilasters or walls.
5. The basis for design and the building code used for the design shall be stated on the plans.

[BS] A205.4 Structural observation, testing and inspection. Structural observation, in accordance with Section 1709 of the *International Building Code*, shall be required for all structures in which seismic retrofit is being performed in accordance with this chapter. Structural observation shall include visual observation of work for conformance to the approved construction documents and confirmation of existing conditions assumed during design.

Structural testing and inspection for new construction materials shall be in accordance with the building code, except as modified by this chapter.

❖ The provisions of this chapter are intended to address deficiencies that represent direct threats to life safety. The primary concern is providing an adequate wall anchorage system. Lack of adequate collectors or collector connections at reentrant corners or internal walls can also be significant deficiencies that can lead to localized collapses. If the engineer finds that complete load paths are absent (e.g., some shear walls have no structural connections for force transfer from the roof to the shear walls), or if modifications or deterioration have introduced weaknesses, the requirements of the IBC for complete load paths (with reduced force levels) should be applied.

INTERNATIONAL CODE COUNCIL®
Copyright © 2015 ICC. ALL RIGHTS RESERVED. Accessed by David Dammon on Jun 21, 2017 12:30:52 PM pursuant to License Agreement with ICC. No further reproduction or distribution authorized. ANY UNAUTHORIZED REPRODUCTION OR DISTRIBUTION IS A VIOLATION OF THE FEDERAL COPYRIGHT ACT AND THE LICENSE AGREEMENT, AND SUBJECT TO CIVIL AND CRIMINAL PENALTIES THEREUNDER.

SECTION A206
ANALYSIS AND DESIGN

[BS] A206.1 Reinforced concrete and reinforced masonry wall anchorage. Concrete and masonry walls shall be anchored to all floors and roofs that provide lateral support for the wall. The anchorage shall provide a positive direct connection between the wall and floor or roof construction capable of resisting 75 percent of the horizontal forces specified in Section 1613 of the *International Building Code.*

❖ This chapter specifies that wall anchorage systems in existing buildings be evaluated using a force level of 75 percent of the design force required for new buildings, as it has historically. The wall anchorage system is defined in Section 12.11.2 of ASCE 7-10 as including the elements in the diaphragm required to develop wall anchorage forces, such as: wall anchors, struts, subdiaphragms, cross-ties and continuity ties. For design of wall anchors, ρ may be taken as 1.0. Note also that although wall anchors are connections between the roof diaphragm and the walls, it is not required that they be designed for 25-percent higher loads as required for buildings with reentrant corners (horizontal irregularity 2 in Table 12.3-1 of ASCE 7-10) as required in Section 12.3.3.4 of ASCE 7-10.

Once it is decided that retrofit of the wall anchorage system will be undertaken, additional risk reduction can often be achieved in a cost-effective manner through the use of stronger hardware that meets current IBC requirements. The engineer may want to discuss the possibility of such voluntary enhancements with the building owner.

[BS] A206.2 Special requirements for wall anchorage systems. The steel elements of the wall anchorage system shall be designed in accordance with the building code without the use of the 1.33 short duration allowable stress increase when using allowable stress design.

Wall anchors shall be provided to resist out-of-plane forces, independent of existing shear anchors.

Exception: Existing cast-in-place shear anchors are allowed to be used as wall anchors if the tie element can be readily attached to the anchors, and if the engineer or architect can establish tension values for the existing anchors through the use of approved as-built plans or testing and through analysis showing that the bolts are capable of resisting the total shear load (including dead load) while being acted upon by the maximum tension force due to an earthquake. Criteria for analysis and testing shall be determined by the building official.

Expansion anchors are only allowed with special inspection and approved testing for seismic loading.

Attaching the edge of plywood sheathing to steel ledgers is not considered compliant with the positive anchoring requirements of this chapter. Attaching the edge of steel decks to steel ledgers is not considered as providing the positive anchorage of this chapter unless testing and/or analysis are performed to establish shear values for the attachment perpendicular to the edge of the deck. Where steel decking is used as a wall anchor system, the existing connections shall be subject to field verification and the new connections shall be subject to special inspection.

❖ The wall anchorage forces are dependent on the span and stiffness of the diaphragm and the weight, thickness, height and flexibility of the walls. In a design earthquake, the probable dynamic forces will exceed the design force. Recent studies of strong motion records in buildings with flexible diaphragms show amplification at the roof diaphragm level of two to four times the peak ground acceleration. (Higher amplifications typically occur at lower ground accelerations where lower damping and no inelastic behavior of the diaphragm occurs.) Such amplifications of peak ground acceleration are expected for structures that have diaphragm periods corresponding with the peak of the response spectrum.

Although it is not recommended that wall anchors be designed to yield when subjected to major earthquakes (yielding would result in large deformations that could cause damage to diaphragm nailing at the ledgers for wood diaphragms), it is still recommended that the designer provide wall anchors that will yield rather than fail in a brittle manner at reduced sections (e.g., twisted straps or at steel straps with stress concentrations, such as those caused by holes in steel components).

Structural steel, which has a known ductile behavior and a small coefficient of variation in strength, has the lowest ratio of yield stress to allowable stress of all of the materials used in the wall anchor system. The material-specific factor of 1.4 in Section 12.11.2.2.2 of ASCE 7-10 was first introduced in the 1997 UBC for strength design, which adjusts the strength of the steel to meet the expected anchorage loading and, thus, maintains consistency in the elastic capacity of all of the materials used in the wall anchorage system. The steel components of the anchor hardware are designed using this load factor. (The embedment of the anchor bolts and bolts and nails in wood members are evaluated without the 1.4 factor for steel.)

It is also important to consider the stiffness of the steel and other materials in the anchorage. For example, the wall anchors should be substantially stiffer than the ledger nails adjacent to a wall anchor in order to prevent the nails from resisting substantial load and causing failure of the wood ledger in cross-grain bending. Clearly, stiff wall anchors and minimal bolt slip (e.g., no oversized holes) will help form a good wall anchorage system.

Existing ledger bolts embedded in the concrete or masonry wall may be used as a part of the wall anchorage system if their tension values can be established by testing or through analysis. The size and spacing of these anchor bolts must be shown on the approved plans and verified by site investigation. A strength design analysis must show that these embedded anchor bolts are capable of resisting the factored tension load in combination with the factored

INTERNATIONAL CODE COUNCIL®
Copyright © 2015 ICC. ALL RIGHTS RESERVED. Accessed by David Dammon on Jun 21, 2017 12:30:52 PM pursuant to License Agreement with ICC. No further reproduction or distribution authorized. ANY UNAUTHORIZED REPRODUCTION OR DISTRIBUTION IS A VIOLATION OF THE FEDERAL COPYRIGHT ACT AND THE LICENSE AGREEMENT, AND SUBJECT TO CIVIL AND CRIMINAL PENALTIES THEREUNDER.

combination of earthquake and gravity-induced shear loads in both the horizontal and vertical directions.

Use of new expansion anchors is only allowed if they are installed with special inspection, and if they meet the appropriate criteria [such as those anchors evaluated in an ICC Evaluation Services® (ICC-ES®) report] indicating the conditions for which the anchors are permitted to resist seismic forces.

Wall anchorage that relies on the tear-out strength (shot pins pulling through the edge) of the wood structural panel for attachment to a steel ledger is not considered compliant with the provisions of this chapter. This is because such connectors at the edge of the wood structural panel sheets are loaded with a combination of shear and tension (in-plane shear and tear-out) during an earthquake, resulting in local demand that is much higher than the original design capacity. In addition, tear-out values of connectors adjacent to the edge of the wood structural panel sheet are not specified in the IBC.

Welding steel decking to a steel ledger angle is not considered positive anchorage, as required by this chapter, when flutes are parallel to the wall in accordance with Section 12.11.2.2.4 of ASCE 7-10. The reasons are the same as for wood structural panel attachment, and also because the flutes have substantial flexibility. When flutes are perpendicular to the wall, it should be demonstrated through testing or calculation that the metal decking and ledger angle can be used for wall anchorage without significant displacement normal to the wall surface. Calculations should consider that the welds are also simultaneously loaded in shear due to global diaphragm behavior. The 1.4 material-specific factor should be used in calculations.

[BS] A206.3 Development of anchor loads into the diaphragm. Development of anchor loads into roof and floor diaphragms shall comply with Section 1613 of the *International Building Code* using horizontal forces that are 75 percent of those used for new construction.

Exception: If continuously tied girders are present, the maximum spacing of the continuity ties is the greater of the girder spacing or 24 feet (7315 mm).

In wood diaphragms, anchorage shall not be accomplished by use of toenails or nails subject to withdrawal. Wood ledgers, top plates or framing shall not be used in cross-grain bending or cross-grain tension. The continuous ties required in Section 1613 of the *International Building Code* shall be in addition to the diaphragm sheathing.

Lengths of development of anchor loads in wood diaphragms shall be based on existing field nailing of the sheathing unless existing edge nailing is positively identified on the original construction plans or at the site.

❖ This section presents the requirements of IBC Chapter 16 and Section 12.11.2.2.1 of ASCE 7-10 for development of wall anchorage loading. Continuous ties or struts between diaphragm chords are required to distribute wall anchorage forces into the body of the diaphragm. Subdiaphragms created with subdiaphragm chords at their boundaries may be used to transmit the anchorage forces to the main cross-ties. Note that although subdiaphragms are useful tools for helping to define rules for developing wall anchor forces into the diaphragms, the engineer should not really expect the force transfer to occur in a manner consistent with the subdiaphragm assumptions.

The span-depth ratio of subdiaphragms shall not exceed 2.5 to 1. This allowable span-depth ratio is substantially less than the 4.0 value permitted prior to the 1997 UBC. This limit is an indirect attempt to limit subdiaphragm shear. The combination of global diaphragm shear (from orthogonal directions) and subdiaphragm shears can exceed the actual diaphragm capacity, though this effect is commonly ignored by designers even in new structures. There was some discussion by the chapter authors about relaxing this requirement to allow a subdiaphragm ratio of 3:1 for existing buildings since subdiaphragms with 8-foot by 24-foot (2438 mm by 7315 mm) dimensions used to be common. However, this was a minority opinion and the requirement for retrofitting subdiaphragms with a length-to-depth ratio of more than 2.5:1 is a requirement of this chapter. For cases when retrofits are being performed on a voluntary basis and subdiaphragm ratios exceed 2.5:1 by a small amount, the engineer may want to consider omitting correction of this deficiency, since it is a lower priority item than other items included in this chapter.

The engineer should consider the existing wood structural panel layout when selecting locations for wall anchors. If members without edge nailing are used as part of the wall anchorage system, the reduced capacity for field nailing must be considered or new nailing must be provided. This includes locations where the wood structural panel is staggered and the subpurlin in the first bay has edge nailing, but the subpurlin in the second bay does not, or vice versa. If the diaphragm nailing is unknown (no design drawings exist), the roofing should be removed locally in a number of locations to determine edge nailing unless field nailing is assumed. As nailing will probably vary over the length of the diaphragm (zone nailing), the nailing should be verified in a number of regions. If there are indications of poor construction quality (e.g., nail spacing erratic, nails overdriven), removal of the roofing to verify nailing at wall anchor locations is recommended.

Note that the engineer should consider whether additional nailing into 2x members to increase either wall anchor transfer or diaphragm shear capacity will split the members. Generally, nail spacing (new and existing combined) should not be less than that permitted in 2x members in new diaphragms. It is sometimes difficult to tighten existing nail spacing without triggering the provisions associated with closely spaced nailing. For example, spacing at 6 inches (152 mm) cannot be decreased to 4 inches (102 mm) without placing one nail between two existing nails,

INTERNATIONAL CODE COUNCIL®
Copyright © 2015 ICC. ALL RIGHTS RESERVED. Accessed by David Dammon on Jun 21, 2017 12:30:52 PM pursuant to License Agreement with ICC. No further reproduction or distribution authorized. ANY UNAUTHORIZED REPRODUCTION OR DISTRIBUTION IS A VIOLATION OF THE FEDERAL COPYRIGHT ACT AND THE LICENSE AGREEMENT, AND SUBJECT TO CIVIL AND CRIMINAL PENALTIES THEREUNDER.

effectively producing a 3-inch (76 mm) spacing. Nailing from strap anchors on top of the 2x members increases the likelihood of splitting. If straps are applied on top of plywood, new diaphragm nailing at the same location may be omitted. Splitting of short 2x members (e.g., blocking) is more of a concern than longer 8-foot-long (2438 mm) members typical of panelized roofs. Predrilling of holes can be used to reduce the tendency for splitting. Staples may be used to enhance diaphragm capacity without splitting, although relative flexibility must be considered by using data from testing.

In previous editions a minimum member size of 3 inches (76 mm) nominal was required for wood members used to develop anchorage forces into the diaphragms. Since a minimum member size requirement does not exist in ASCE 7, this was considered inappropriate. Instead, whatever size can be shown adequate through calculation is allowed. It is difficult or impossible to make 2x members work due to edge distance requirements and typical construction tolerances, notwithstanding that it may appear adequate through calculation. An existing 2-inch (51 mm) nominal member can be supplemented with other 2-inch (51 mm) nominal member(s) if the additional member(s) are internailed. It is necessary to provide sufficient internailing between the new and existing member for force transfer. In addition, if no new nailing into the diaphragm is provided, the stresses due to the eccentric loading from the diaphragm nails in the existing member only must be considered. It is common practice to glue the top of the new member to the diaphragm in order to achieve stress transfer from the diaphragm to the new 2x member. However, the strength of the glue should not be relied upon in calculations unless it can be demonstrated that the glue does not lose its strength or become more brittle with age.

[BS] A206.4 Anchorage at pilasters. Anchorage at pilasters shall be designed for the tributary wall-anchoring load per Section A206.1, considering the wall as a two-way slab. The edges of the two-way slab shall be considered fixed when there is continuity at pilasters and shall be considered pinned at roof and floor. The pilasters or the walls immediately adjacent to the pilasters shall be anchored directly to the roof framing such that the existing vertical anchor bolts at the top of the pilasters are bypassed without permitting tension or shear failure at the top of the pilasters.

Exception: If existing vertical anchor bolts at the top of the pilasters are used for the anchorage, additional exterior confinement shall be provided as required to resist the total anchorage force.

The minimum anchorage force at a floor or roof between the pilasters shall be that specified in Section A206.1.

❖ It has been past practice to anchor walls to the floor and the roof diaphragms for tributary wall loading, assuming the wall panel spans between adjacent floors or between the floor and roof. However, when pilasters are present in the walls, the stiffening effect of the pilasters on the deformed shape of the wall-pilaster system must be taken into account. This is consistent with Section 12.11.2.2.7 of ASCE 7-10. Since the relative stiffness of the walls and pilasters may vary, a rational method is required to calculate the wall panel load carried by the pilaster. The reaction of a pilaster at the diaphragm level, resulting from the analysis of the wall-pilaster system, is the load applied directly to the girder through its existing anchorage to the top of the pilaster.

Three concerns must be addressed for existing wall anchors at pilasters: 1. The existing bolted connection to the girder must have adequate strength for the pilaster reaction; 2. The hardware must be strong enough (including the net section); and 3. The shear strength of the existing anchors, with consideration of the edge distance of the embedded bolts in the top of the pilaster, must be adequate.

An inadequate bolted connection to the girder can be enhanced by additional bolts. Side plates can be extended by either welding new plates to the existing plates, or by removing the existing bolts, providing a second longer plate with additional holes over each plate, and reinstalling the existing, plus new bolts.

Inadequate hardware strength can be addressed by replacing the existing anchors with new, stiff wall anchors designed to take the entire load. The stiffness of such a bypass system must be checked to verify that it is stiffer under loading than the existing system. If the new anchors are not significantly stiffer than the existing system, the existing system should be disconnected (e.g., remove bolts from girder).

If the shear strength of the existing bolts is not adequate due to their edge distance, additional exterior confinement at the top of the pilaster must be provided if the bolts are to be relied on to resist loads.

A single-story wall panel with pilasters at each end is supported at four edges by combination of the pilasters, the roof diaphragm and the slab-on-grade. Typically, the support at the slab-on-grade should be considered as a support without moment restraint. (The panel could also be modeled with lateral restraint at both the slab-on-grade and the footing in cases where the elevations of the two are substantially different.) The support condition of the panel at the pilaster can be a continuous span, a single span having moment restraint or a simple support. The moment restraint depends on whether continuity of the panel through the pilaster is shown on the drawings or whether an open joint exists at one side of the pilaster. The support condition at the roof level is typically considered as a support without moment restraint. A textbook or standard for the design of slabs supported on four edges may be used to determine reactions at each edge of the panel. These references consider the aspect ratio of the panel and the rotational restraint at each panel edge. Analyses can be complicated by the presence of openings and parapets. In such cases, approximate, conservative, simplifying assumptions should be used. A logical

INTERNATIONAL CODE COUNCIL®
Copyright © 2015 ICC. ALL RIGHTS RESERVED. Accessed by David Dammon on Jun 21, 2017 12:30:52 PM pursuant to License Agreement with ICC. No further reproduction or distribution authorized. ANY UNAUTHORIZED REPRODUCTION OR DISTRIBUTION IS A VIOLATION OF THE FEDERAL COPYRIGHT ACT AND THE LICENSE AGREEMENT, AND SUBJECT TO CIVIL AND CRIMINAL PENALTIES THEREUNDER.

approach regarding tributary area for the design of pilaster wall anchorage is included in Figure C108.1 of the 1999 Structural Engineers Association of California (SEAOC) *Recommended Lateral Force Requirements and Commentary (Bluebook)*. In any case, without an exact solution that considers pilaster to wall stiffness and different wall anchor stiffnesses, some conservatism is recommended.

The stiffening effect of pilasters should be considered even when framing members are not directly supported on the pilasters (e.g., purlins). Their presence will cause the out-of-plane loading at the diaphragm level adjacent to the pilaster to exceed the "average" anchorage loading. If possible, direct connection from the pilaster to nearby members is desirable.

Wall anchors at pilaster locations should be located close enough to the top of the pilaster to avoid overstressing the wall panels in bending from the higher wall anchor forces associated with the pilaster. The desire to avoid bending in the wall should be balanced with the fact that the roof framing members experience less bending when the wall anchors are close to the roof sheathing where the wall anchor load is transferred to the diaphragm. Also, tying them to the wall near the level of the roof provides some flexibility, negating, to an extent, the stiffening effect of the pilaster.

Although it is appropriate to increase the tributary wall anchor forces at pilasters to consider the pilasters' stiffness, design forces for adjacent wall anchors (i.e., subpurlins) should not be reduced.

[BS] A206.5 Symmetry. Symmetry of wall anchorage and continuity connectors about the minor axis of the framing member is required.

Exception: Eccentricity may be allowed when it can be shown that all components of forces are positively resisted. The resistance must be supported by calculations or tests.

❖ Symmetry of wall anchorage connectors that are placed on the vertical sides of the framing members (i.e., wall anchors that would generate bending about minor axis of the framing members) is required unless stresses caused by the eccentricity are accounted for in the design. This is consistent with Section 12.11.2.2.6 of ASCE 7-10. In the past, engineers often used allowable hardware values in the manufacturers' catalogs without consideration of member capacity, and specifically the stresses caused by eccentric connections. The values in the hardware catalog typically were developed by testing the hardware on a steel jig, and thus did not consider the eccentricity stresses in the wood members. It is very common to find single-sided wall anchor connections in existing buildings. This is especially a problem for subpurlins, but may be a problem for purlins and beams.

The flexural stresses about the minor axis caused by unsymmetrical connectors must be combined with stresses caused by gravity loading. Eccentricity between the line of loading on the connector and the centerline of the resisting member must be resisted by providing supports normal to the line of loading or by a resisting couple. The reactions at these supports must be determined by calculations or testing.

The engineer should be aware of the fact that eccentricity can arise either through design or because of bolt or strap misalignment (i.e., poor installation). Placing an anchor on each vertical face of the framing member at each connection is an easy method of providing symmetry. For a condition with an existing single-sided wall anchor, a second new wall anchor can be added, but the new anchor should closely match the existing anchor in terms of stiffness and strength unless the analysis considers the rigidity and strength (see Section A206.6).

Where two new anchors are provided, an offset of anchors along the length of the framing member may be required to avoid fastener interference for anchors that use screws or nails rather than through bolts.

[BS] A206.6 Combination of anchor types. New anchors used in combination on a single framing member shall be of compatible behavior and stiffness.

❖ The sharing of the load on a single framing member between wall anchors of different types requires an analysis of their relative stiffness. Stiffness must consider the type of anchor bolt used. Testing of J bolts has found that the smooth portion can exhibit minimal bond and pull-out may occur by straightening of the J bend. Thus J bolts tend to be inferior to headed bolts. Similarly, expansion anchors may slip prior to failure, resulting in unequal load distribution if used in combination with cast-in-place anchors or through bolts. If no data exists for calculation of relative stiffness of existing hardware and/or anchor bolts, load sharing between different types of wall anchors is not permitted.

Older hardware is often more flexible than new hardware, and it may be more practical to remove existing hardware or ignore it and provide two identical pieces of new hardware, one on each side of the member.

[BS] A206.7 Anchorage at interior walls. Existing interior reinforced concrete or reinforced masonry walls that extend to the floor above or to the roof diaphragm shall be anchored for out-of-plane forces per Sections A206.1 and A206.3. Walls extending through the roof diaphragm shall be anchored for out-of-plane forces on both sides, and continuity ties shall be spliced across or continuous through the interior wall to provide diaphragm continuity.

❖ This section requires interior walls to be provided with wall anchor systems. In Case 1, where the wall does not project through the diaphragm and the framing is continuous, it may only be necessary to provide wall anchorage on one side. For Case 2, in diaphragms interrupted by walls, it is necessary to provide wall anchors on both sides. The intent is that every wall be anchored into the framing and that the loads be dis-

INTERNATIONAL CODE COUNCIL®
Copyright © 2015 ICC. ALL RIGHTS RESERVED. Accessed by David Dammon on Jun 21, 2017 12:30:52 PM pursuant to License Agreement with ICC. No further reproduction or distribution authorized. ANY UNAUTHORIZED REPRODUCTION OR DISTRIBUTION IS A VIOLATION OF THE FEDERAL COPYRIGHT ACT AND THE LICENSE AGREEMENT, AND SUBJECT TO CIVIL AND CRIMINAL PENALTIES THEREUNDER.

tributed into the diaphragm for seismic loading in each direction. For Case 2, this requires either subdiaphragms on both sides of the wall or continuity ties through the wall.

[BS] A206.8 Collectors. If collectors are not present at reentrant corners or interior shear walls, they shall be provided. Existing or new collectors shall be designed for the capacity required to develop into the diaphragm a force equal to the lesser of the rocking or shear capacity of the reentrant wall or the tributary shear based on 75 percent of the horizontal forces specified in Chapter 16 of the *International Building Code*. The capacity of the collector need not exceed the capacity of the diaphragm to deliver loads to the collector. A connection shall be provided from the collector to the reentrant wall to transfer the full collector force (load). If a truss or beam other than a rafter or purlin is supported by the reentrant wall or by a column integral with the reentrant wall, then an independent secondary column is required to support the roof or floor members whenever rocking or shear capacity of the reentrant wall is less than the tributary shear.

❖ At reentrant corners (and fin walls), the concrete or masonry return walls may have been ignored in the diaphragm analysis performed in the original design. Because of their in-plane stiffness, these walls will function as diaphragm supports and may attract very large loads based on tributary area. Although lack of collectors at interior masonry or concrete walls (or braced frames) is not common, the walls may attract larger loads by tributary area than they were designed for due to changes in IBC provisions (i.e., increase in base shear or introduction of Ω). Even for narrow, relatively flexible walls, deflection of the diaphragm spanning between end walls of the building may not be compatible with the deformation of the top of these reentrant or interior masonry or concrete walls. This deformation incompatibility may result in diaphragm damage and/or separation of the diaphragm from the return wall. As an alternative to using a deflection compatibility approach, a simple comparison of strengths or capacities is recommended. The objective of the comparison is to find the minimum load needed to adequately tie the return wall to the diaphragm. The capacities of the diaphragm system or the return wall could be estimated as follows for a single-story structure:

1. Rocking capacity of a wall: The actual rocking capacity, V_R, of the wall shall be calculated from an equilibrium equation, using all the dead loads on the walls, including the weight of the wall, taken about an extreme edge of the footing. Other factors such as soil weight and contributions from continuous footings should be included, as underestimating the overturning resistance in this context is not conservative. Load factors specified in the IBC that provide the maximum resistance shall be applied.
2. Shear capacity of the wall: V_n shall be the nominal shear strength of the wall provided by the concrete or masonry and shear reinforcement without any strength reduction factor.
3. Maximum force that can be delivered by the diaphragm: $V_d = (v)(L_1 + L_2)$ where:

   L_1, L_2 = Depth of the diaphragm measured on each side of the return or interior wall.

   v = Allowable diaphragm shear value from IBC Chapter 23 times a factor of 3. The 2003 NEHRP may be used for strength design values for diagonal sheathing.

If the collector and collector connection capacity exceed each of the three capacities discussed above, then together they will not represent the weak link in the structure, and no strengthening is required. It should be noted that the consequences of failure of whichever element above has the weakest capacity should be considered even if such analysis is not required by this chapter. For instance, shear failure of the wall may not be acceptable.

The engineer should consider providing a redundant, independent vertical support beneath major framing members, such as girders or trusses supported by ends of return or interior walls, if these walls are limited in capacity (when either $V > V_n$ or $V > V_R$) and $V > V_d$, where V is the demand on the wall (strength design). The failure mode could be shear in the reinforced concrete or reinforced masonry wall, or a dynamic response that causes rocking in the return wall. A wall that fails in in-plane shear may lose its capacity to support vertical loads. A wall that rocks on its foundation may cause damage to the bearing surface providing support for the member framing onto the return wall.

Provision of a redundant support for smaller members such as purlins, rafters or subpurlins is not as important. It is likely that loss of support for such minor roof framing members will not result in significant collapse or threat to life safety.

Note that for design purposes, the three capacities identified above (rocking capacity of wall, shear capacity of wall and diaphragm capacity) are compared with the collector and collector connection capacity without reduction. The 0.75 factor is applied to code design forces only.

[BS] A206.9 Mezzanines. Existing mezzanines relying on reinforced concrete or reinforced masonry walls for vertical and/or lateral support shall be anchored to the walls for the tributary mezzanine load. Walls depending on the mezzanine for lateral support shall be anchored per Sections A206.1, A206.2 and A206.3.

Exception: Existing mezzanines that have independent lateral and vertical support need not be anchored to the walls.

❖ Existing buildings commonly have mezzanines that are used for office or light storage. Mezzanines may be dependent on the wall and pilasters for lateral sup-

INTERNATIONAL CODE COUNCIL®
Copyright © 2015 ICC. ALL RIGHTS RESERVED. Accessed by David Dammon on Jun 21, 2017 12:30:52 PM pursuant to License Agreement with ICC. No further reproduction or distribution authorized. ANY UNAUTHORIZED REPRODUCTION OR DISTRIBUTION IS A VIOLATION OF THE FEDERAL COPYRIGHT ACT AND THE LICENSE AGREEMENT, AND SUBJECT TO CIVIL AND CRIMINAL PENALTIES THEREUNDER.

port. In these configurations, the seismic load of a mezzanine is additive to the seismic load of the walls for calculation of the anchorage force at the top of the wall. This combined loading should be used for calculation of wall anchorage forces at the roof diaphragm level above and below (if applicable) the mezzanine. An alternative would be to provide a lateral load-resisting system for the mezzanine and use the mezzanine for support of the adjacent walls. In either of these cases, the mezzanine must be anchored to the wall. If the mezzanine is isolated from the wall in accordance with the building separation requirement of the IBC and has independent lateral and vertical support, no consideration of the anchorage of the mezzanine is required. This is what is meant by "independent lateral and vertical support" in the exception.

This chapter does not require that the flexural strength of the walls and/or pilasters be analyzed for lateral loads from the mezzanine. However, it is recommended that consideration be given to the existing strength of these elements before making a decision about the alternatives of providing lateral bracing below the existing mezzanine, or using the wall to transmit the seismic loading of the mezzanine to the roof and slab-on-grade levels. This is especially true if the mezzanine was added after the original construction. In past earthquakes, horizontal flexural cracks and bowing attributable to mezzanine loading on walls have been observed.

SECTION A207
MATERIALS OF CONSTRUCTION

[BS] A207.1 Materials. All materials permitted by the building code, including their appropriate strength or allowable stresses, may be used to meet the requirements of this chapter.

❖ This section generally gives permission to use any material allowed by the IBC as applicable to the situation.

Bibliography

The following resource materials were used in the preparation of the commentary for this chapter of the code.

Loma Prieta Earthquake Reconnaissance Report. EERI Spectra Vol. 6 Supplement, May 1990.

NEHRP, *Recommended Provisions for Seismic Regulation of New Buildings and Other Structures (FEMA 302)*. *Part 1: Provisions*. Washington, DC: Federal Emergency Management Agency, 1997.

NEHRP, *Recommended Provisions for Seismic Regulation of New Buildings and Other Structures (FEMA 450-1/2003)*. *Part 1: Provisions*. Washington, DC: Federal Emergency Management Agency, 2004.

Northridge Earthquake Reconnaissance Report, Vol. 2. EERI Spectra Vol. Supplement C to Vol. 11, January 1996.

SEAOC, *Recommended Lateral Force Requirements and Commentary*. Sacramento, CA: Structural Engineers Association of California, Seismology Committee, 1999.

The 1987 Whittier Earthquake. EERI Spectra Vol. 4, No. 1, Feb. 1988; and Vol. 4, No. 2, May 1988.

INTERNATIONAL CODE COUNCIL®
Copyright © 2015 ICC. ALL RIGHTS RESERVED. Accessed by David Dammon on Jun 21, 2017 12:30:52 PM pursuant to License Agreement with ICC. No further reproduction or distribution authorized. ANY UNAUTHORIZED REPRODUCTION OR DISTRIBUTION IS A VIOLATION OF THE FEDERAL COPYRIGHT ACT AND THE LICENSE AGREEMENT, AND SUBJECT TO CIVIL AND CRIMINAL PENALTIES THEREUNDER.

INTERNATIONAL CODE COUNCIL®
Copyright © 2015 ICC. ALL RIGHTS RESERVED. Accessed by David Dammon on Jun 21, 2017 12:30:52 PM pursuant to License Agreement with ICC. No further reproduction or distribution authorized. ANY UNAUTHORIZED REPRODUCTION OR DISTRIBUTION IS A VIOLATION OF THE FEDERAL COPYRIGHT ACT AND THE LICENSE AGREEMENT, AND SUBJECT TO CIVIL AND CRIMINAL PENALTIES THEREUNDER.

Chapter A3: Prescriptive Provisions for Seismic Strengthening of Cripple Walls and Sill Plate Anchorage of Light, Wood-frame Residential Buildings

SECTION A301 GENERAL

❖ Appendix Chapter A3, along with the rest of Appendix A, is referenced by the *International Codes*® in two ways:

- Section 301.1.4.2 allows the use of Appendix A for qualifying buildings when "reduced IBC level seismic forces" are triggered.
- Section 807.6 allows the use of Appendix A for voluntary seismic retrofit.

History has shown that light, wood-frame residential buildings with specific structural weaknesses in their original construction are susceptible to severe damage from earthquakes. The most common structural weaknesses are: 1. Absence of proper connection between the exterior walls and the foundation (i.e., anchor bolts); 2. Inadequate bracing of cripple walls between the foundation and first floor (i.e., lack of structural sheathing); 3. Discontinuous or inadequate foundations below the exterior walls; and 4. A perimeter foundation system that is constructed of weak or deteriorated unreinforced masonry or stone.

Unreinforced masonry chimneys and poorly reinforced masonry chimneys are also a common source of damage and, in some cases, pose a life safety threat. Chimneys are not included in the scope of this document since reduction of chimney vulnerability through pointing of mortar and bracing is not typically considered cost effective, particularly if the risks to life can be controlled by other means. For example, the Applied Technology Council (ATC) recommends adding plywood above the ceiling framing to reduce the chances of falling masonry from penetrating through the ceiling (ATC, 2002). Curtailing the occupancy and frequent use of property within the falling radius of chimneys could also be an effective way of minimizing the risk of casualties. The ATC recommends replacing upper portions of damaged chimneys with light-frame construction rather than diagonal bracing. Otherwise, masonry bearing wall chimneys should be replaced with light-frame construction with or without veneer [Los Angeles Department of Building and Safety (LA), 2001]. Generally, the cost of replacing existing chimneys is comparable to the cost of repairing or replacing a damaged chimney after earthquakes, so in many cases it is arguably best to forego chimney retrofits and instead take steps to reduce the exposure of occupants and neighbors and to anticipate the possibility of chimney replacement after future earthquakes.

Water heaters that are not restrained from toppling in earthquakes also pose significant risks of water and fire damage that are not addressed herein [National Institute of Standards and Technology (NIST), 1997]. Existing premanufactured restraint systems are available at many hardware stores and have been stamped as preapproved by a government agency for limited use. They are both economical and effective for water heaters typically located adjacent to wood-frame walls [California Division of State Architect (DSA), 2002]. However, atypical water heater bracing installations require engineered designs.

After the Loma Prieta, California, earthquake of 1989, the average cost to repair dwellings that suffered damage due to the above-stated weaknesses ranged from $25,000 to $30,000 in 1990 dollars (Gallagher, 1990), and would be much more today. Some dwellings with these deficiencies have been total losses. Experience indicates that the average cost for a licensed contractor to install sill bolts and cripple wall bracing to undamaged dwellings ranges from $2,500 to $5,000 in 1998 dollars [California Seismic Safety Commission (CSSC), 2002]. The total cost will also vary, depending on accessibility in the crawl space area. If dwelling owners elect to perform the strengthening work themselves, costs can be substantially lower. The cost effectiveness of correcting these weaknesses becomes more favorable by considering the potential costs of emergency shelters, interim housing and lost employee productivity while damaged dwellings are being repaired [Association of Bay Area Governments (ABAG), 2000] (Comerio, 1996). Some insurance companies offer retrofit discounts that can lower earthquake insurance premiums and insured losses [California Earthquake Authority (CEA), 2002]. Some cities also offer expedited and/or reduced plan check fees and, in some cases, financial assistance that can reduce the total project cost to strengthen these deficiencies.

The purpose of this chapter is to provide minimum

INTERNATIONAL CODE COUNCIL®
Copyright © 2015 ICC. ALL RIGHTS RESERVED. Accessed by David Dammon on Jun 21, 2017 12:30:52 PM pursuant to License Agreement with ICC. No further reproduction or distribution authorized. ANY UNAUTHORIZED REPRODUCTION OR DISTRIBUTION IS A VIOLATION OF THE FEDERAL COPYRIGHT ACT AND THE LICENSE AGREEMENT, AND SUBJECT TO CIVIL AND CRIMINAL PENALTIES THEREUNDER.

standards addressing the four primary structural weaknesses stated above. This chapter is intended to encourage and facilitate seismic strengthening of conventional dwellings and to provide standardized methods for performing this work. The provisions are written in a prescriptive format to eliminate the need, in most cases, for engineering design and to encourage the direct use of the chapter by building owners and contractors. In practice, the engineering fees involved in designing retrofits for small single-family dwellings can be substantial compared with the construction cost and can discourage owners from undertaking the work. Contractors who perform the work, however, are generally not licensed to provide engineering design services. Homeowners, meanwhile, might not fully recognize the distinction between an engineer's role and a contractor's. Therefore, prescriptive retrofit provisions are expected to be cost effective, to help ensure a complete scope of work for the contractor and to provide a measure of consumer protection for the owner.

Retrofit training for contractors has been periodically offered by the Federal Emergency Management Agency (FEMA) and the Association of Bay Area Governments (ABAG). By adopting and enforcing the provisions in this chapter, jurisdictions can further help protect the interests of homeowners and establish a standard for retrofit practice. Note that some jurisdictions (e.g., the cities of Los Angeles, San Leandro, Santa Barbara, Berkeley, Oakland and San Mateo) have prepared drawings with approved details to further assist in retrofitting dwellings. For regions outside of the western U.S., the Institute for Building and Home Safety (IBHS) offers a retrofit guide.

Wood-frame buildings with continuous concrete foundations in good condition, anchorages meeting the requirements of this chapter and wood structural panel sheathing or diagonal sheathing around the entire building perimeter, including the cripple walls anchored to the foundation, have performed well in past earthquakes. The provisions of this chapter need not be applied to these buildings.

"Prescriptive" means these provisions apply to specific conditions and must be used in precisely the manner described. "Prescriptive" also means "determined in advance," without the need for case-specific analysis or design. Through the use of these provisions and the accompanying details, the dwelling owner or contractor can develop plans without the services of a design professional (civil engineer, structural engineer or architect); however, the use of other materials, proprietary systems or methods not shown by the figures and details in this chapter may require the services of a registered design professional.

[BS] A301.1 Purpose. The provisions of this chapter are intended to promote public safety and welfare by reducing the risk of earthquake-induced damage to existing wood-frame residential buildings. The requirements contained in this chapter are prescriptive minimum standards intended to improve the seismic performance of residential buildings; however, they will not necessarily prevent earthquake damage.

This chapter sets standards for strengthening that may be approved by the *code official* without requiring plans or calculations prepared by a registered design professional. The provisions of this chapter are not intended to prevent the use of any material or method of construction not prescribed herein. The *code official* may require that construction documents for strengthening using alternative materials or methods be prepared by a registered design professional.

❖ In contrast to other earthquake retrofit guidelines and codes, the provisions of this chapter are not strictly designed for life safety protection. These provisions are, in fact, expected to reduce property damage, reduce the number of uninhabitable dwellings and avoid increased public assistance expenditures to repair damage and provide temporary housing after an earthquake (ABAG, 1999).

These provisions do not guarantee that strengthened structures will not be damaged; however, it is anticipated that costly damage to the vulnerable parts of dwellings below the first floor will be greatly reduced. According to the Consortium of Universities for Research in Earthquake Engineering (CUREE): "Cripple walls retrofitted to these provisions are generally expected to meet a life safety performance objective" (CUREE, 2002). However, other parts of the building may exceed or perform worse than this objective.

Analysis and design of strengthening for other structural or nonstructural components not addressed by these provisions must be performed in accordance with Section A301.3.

[BS] A301.2 Scope. The provisions of this chapter apply to residential buildings of light-frame wood construction containing one or more of the structural weaknesses specified in Section A303.

Exception: The provisions of this chapter do not apply to the buildings, or elements thereof, listed below. These buildings or elements require analysis by a registered design professional in accordance with Section A301.3 to determine appropriate strengthening:

1. Group R-1, R-2 or R-4 occupancies with more than four dwelling units.
2. Buildings with a lateral force-resisting system using poles or columns embedded in the ground.
3. Cripple walls that exceed 4 feet (1219 mm) in height.
4. Buildings exceeding three stories in height and any three-story building with cripple wall studs exceeding 14 inches (356 mm) in height.
5. Buildings where the *code official* determines that conditions exist that are beyond the scope of the prescriptive requirements of this chapter.

INTERNATIONAL CODE COUNCIL®
Copyright © 2015 ICC. ALL RIGHTS RESERVED. Accessed by David Dammon on Jun 21, 2017 12:30:52 PM pursuant to License Agreement with ICC. No further reproduction or distribution authorized. ANY UNAUTHORIZED REPRODUCTION OR DISTRIBUTION IS A VIOLATION OF THE FEDERAL COPYRIGHT ACT AND THE LICENSE AGREEMENT, AND SUBJECT TO CIVIL AND CRIMINAL PENALTIES THEREUNDER.

6. Buildings or portions thereof constructed on concrete slabs on grade.

❖ The provisions are intended to deal with specific structural weaknesses; therefore, the work that is being done is structural in nature and generally requires submitting plans and obtaining a building permit. The weaknesses that these provisions address are listed in Section A303. It should be clearly understood that the application of these provisions is limited because they are not suitable to use for strengthening hotels, motels or large multiunit apartments, which are typically larger structures that require engineered retrofits by licensed design professionals. Also excluded are dwellings built with cripple walls with studs taller than 4 feet (1219 mm) in any location; dwellings that have columns or poles embedded in the ground as their foundation system; and buildings exceeding three stories or any three-story building with cripple wall studs exceeding 14 inches (356 mm) in height. Each of these types of buildings presents unique conditions that preclude the use of prescriptive criteria to strengthen them.

The 4-foot (1219 mm) cripple wall stud height limits the amount of overturning in braced crippled walls with lengths defined in Figure A3-10. When the height of the wall studs exceeds 4 feet (1219 mm), the owner will need to have the bracing designed by an engineer or architect. The 4-foot (1219 mm) height is also intended to limit the provisions to level or very low-slope sites. Bracing and anchorage of dwellings on moderate- to high-slope sites are beyond the scope of this chapter.

Conventional construction provisions Section 2308.2.1 of the *International Building Code*® (IBC®) state that cripple walls with studs exceeding 14 inches (356 mm) in height are to be considered as first-story walls for the purpose of determining bracing. However, the bracing layout requirements in these provisions (see Figure A3-10) are provided according to the number of stories above the cripple wall.

The code official is also allowed to exclude other residential buildings to which these provisions would otherwise apply if they have vertical or horizontal irregularities or other features not considered by these prescriptive standards. Very few dwellings are rectangular in plan. U-, T- or L-shaped plans are not necessarily problems in conventional construction with wood diaphragms. However, split-level dwellings, hillside dwellings or structures where the upper-level exterior walls are horizontally offset from the line of the lower story exterior walls may be determined by the code official to be beyond the scope of these provisions. It is recommended that the owner or contractor consult with the authority having jurisdiction to determine whether these provisions can be applied.

Observations after past earthquakes have shown that cripple walls with substantially varying heights, such as those with sloping or stepped foundations, suffer more damage than cripple walls of constant height (SEAOSC, 2002). Where the height of cripple walls varies significantly, such as the case of hillside homes with stepped foundation systems, seismic strengthening should be determined by a registered design professional. It should be noted that hillside homes are beyond the scope of this prescriptive chapter. In general, shorter sections of cripple walls along the same direction are stiffer and tend to resist more horizontal seismic forces than taller ones. For buildings with more than a 2:1 height ratio between the tallest and shortest cripple wall bracing panels, additional anchors may be prudent. Additional information on hillside homes can be found at http://peer.berkeley.edu/publications/peer_reports/reports_2000/0003.pdf.

Also excluded from these provisions are buildings or portions of buildings constructed on concrete slabs-on-grade since these dwellings do not have cripple stud walls. While these buildings may have wall anchorage deficiencies, retrofit of these structures for installation of sill bolts would require removal of wall finishes and may not be as cost effective as retrofitting buildings with crawl spaces. While sliding of dwellings on slab-on-grade foundations has occasionally occurred in past earthquakes, it has not caused widespread economic and habitation losses. Dwellings with stem walls (reinforced concrete or masonry foundation walls that project above the ground to the underside of the first floor framing), however, will experience substantial damage if the dwelling slides off the foundation, resulting in partial or full collapse.

A majority of dwellings constructed in California prior to 1950 were unanchored. The UBC did not begin to specify anchorage until its 1946 edition (SEAOC, 1995); however, most local governments did not uniformly adopt such model codes immediately after their publication until the late 1970s. Further, some dwellings were constructed with inadequate cripple wall bracing in the 1970s and even later, particularly where building codes were not enforced. In the past, dwellings often used horizontal wood siding or stucco as wall sheathing material. Owners of older dwellings should examine the exterior walls from within the crawl space under the first floor to determine if the sill plates are adequately bolted to the foundation with bolt size and spacing that comply with Table A3-A. They should also determine whether reliable wall sheathing such as wood structural panels or diagonal sheathing already exists. Straight sheathing (where 1x boards are oriented horizontally) typically does not qualify as having adequate strength. Plaster or stucco finishes that are not underlain with wood structural panels or diagonal sheathing may also perform poorly. The structural performance of these finishes, while initially strong, often cracks and quickly loses strength under earthquake motion.

Note that most dwellings constructed after 1950 were nominally anchored to their foundations; how-

INTERNATIONAL CODE COUNCIL®
Copyright © 2015 ICC. ALL RIGHTS RESERVED. Accessed by David Dammon on Jun 21, 2017 12:30:52 PM pursuant to License Agreement with ICC. No further reproduction or distribution authorized. ANY UNAUTHORIZED REPRODUCTION OR DISTRIBUTION IS A VIOLATION OF THE FEDERAL COPYRIGHT ACT AND THE LICENSE AGREEMENT, AND SUBJECT TO CIVIL AND CRIMINAL PENALTIES THEREUNDER.

ever, this anchorage is often considered inadequate when compared to current requirements in terms of size, spacing and the use of plate washers. This nominal anchorage was done simply to hold the mudsill in place during construction; it was not specifically designed to resist horizontal forces due to wind and earthquakes. Any existing anchors, if relied on, should be inspected to ensure they have not lost capacity due to significant corrosion or wood splitting or that they were not originally installed in large oversized holes in sill plates that will allow sliding or uneven load distribution. In many areas, it is customary to ignore the capacity of these existing anchors as the relative cost of additional anchors is minimal. In high seismic regions, cripple wall bracing now considered inadequate was in common use in the 1970s and 1980s.

Previous versions of the code required that these provisions be applied to light-framed wood structures in Seismic Design Categories C, D and E. These requirements were deleted in the 2012 edition. While it is likely that these provisions would only be applied to structures in these seismic design categories, it is plausible that they could also be used for buildings in Seismic Design Category B. It should be noted that this appendix chapter is used either to satisfy triggered upgrades via Section 301.1.4.2 or for a voluntary seismic upgrade allowed under Section 807.6. For both reasons, the scoping of the appendix chapter should not restrict the use of upgrades to certain seismic design categories. The sections of the code where seismic upgrade triggers occur, such as Section 606.2.2, 807.5 or 907.4, do not distinguish between seismic design categories, so neither should this chapter.

[BS] A301.3 Alternative design procedures. The details and prescriptive provisions herein are not intended to be the only acceptable strengthening methods permitted. Alternative details and methods shall be permitted to be used where approved by the code official. Approval of alternatives shall be based on a demonstration that the method or material used is at least equivalent in terms of strength, deflection and capacity to that provided by the prescriptive methods and materials.

Where analysis by a registered design professional is required, such analysis shall be in accordance with all requirements of the building code, except that the seismic forces may be taken as 75 percent of those specified in the building code.

❖ "Prescriptive" means these provisions apply to specific conditions and must be used in precisely the manner described. "Prescriptive" also means "determined in advance," without the need for case-specific analysis or design. Through the use of these provisions and the accompanying details, the dwelling owner or contractor can develop plans without the services of a design professional (civil engineer, structural engineer or architect); however, the use of other materials, proprietary systems or methods not shown by the figures and details in this chapter may require the services of a registered design professional. This section is not intended to allow an owner or contractor to bypass the requirements of the engineer of record's details.

This section intentionally omits the commonly used statement that the design must comply with all the requirements of the IBC because complete code compliance is often not feasible with respect to existing buildings. For example, design professionals should not be expected to rigorously address issues such as the stiffness variations in existing flooring systems due to differences in the type, thickness or composition of the flooring. However, any strengthening designed by the design professional should at least be equivalent in terms of strength and deflection to that provided by the prescriptive methods. The specific reference to "test data" was deleted from the 2012 edition. The code typically allows alternatives, and test data is not always required. Reasonable alternatives can also be justified on the basis of engineering analysis, proprietary data, conventional methods or other consensus documents often derived from test data, but not necessarily based on that data directly.

The 75-percent factor applied to IBC design forces accounts in a general way for differences between current design criteria and the less conservative criteria that were likely in effect when the dwelling was originally constructed. Historically, existing buildings have been granted a 25-percent reduction in forces—in part to encourage reasonable and cost-effective strengthening measures and to account for the presumed reduced remaining life of the structure compared to that for new structures.

Where the geometry and construction of a residential building falls within the scope of this chapter, but existing building conditions do not permit the use of those prescriptive fastening requirements provided as part of this chapter, it is acceptable to use alternative fastening requirements provided that they are: documented in sufficient detail to permit plan check and shown by calculation to have a capacity not less than the equivalent connection requirements in this chapter. It is not necessary to provide an engineering design for the overall building. This approach is intended to encourage retrofitting by permitting the construction of equivalent strengthening measures to the provisions of this chapter without requiring the expense of a full engineered design.

SECTION A302
DEFINITIONS

For the purpose of this chapter, in addition to the applicable definitions in the building code, certain additional terms are defined as follows:

❖ Throughout this chapter there are references to "the building code." This term generally refers to the cur-

INTERNATIONAL CODE COUNCIL®
Copyright © 2015 ICC. ALL RIGHTS RESERVED. Accessed by David Dammon on Jun 21, 2017 12:30:52 PM pursuant to License Agreement with ICC. No further reproduction or distribution authorized. ANY UNAUTHORIZED REPRODUCTION OR DISTRIBUTION IS A VIOLATION OF THE FEDERAL COPYRIGHT ACT AND THE LICENSE AGREEMENT, AND SUBJECT TO CIVIL AND CRIMINAL PENALTIES THEREUNDER.

rent edition of the IBC or the jurisdiction's governing code.

[BS] ADHESIVE ANCHOR. An assembly consisting of a threaded rod, washer, nut, and chemical adhesive approved by the *code official* for installation in existing concrete or masonry.

[BS] CRIPPLE WALL. A wood-frame stud wall extending from the top of the foundation to the underside of the lowest floor framing.

[BS] EXPANSION ANCHOR. An approved post-installed anchor, inserted into a predrilled hole in existing concrete or masonry, that transfers loads to or from the concrete or masonry by direct bearing or friction or both.

[BS] PERIMETER FOUNDATION. A foundation system that is located under the exterior walls of a building.

[BS] SNUG-TIGHT. As tight as an individual can torque a nut on a bolt by hand, using a wrench with a 10-inch-long (254 mm) handle, and the point at which the full surface of the plate washer is contacting the wood member and slightly indenting the wood surface.

[BS] WOOD STRUCTURAL PANEL. A panel manufactured from veneers, wood strands or wafers or a combination of veneer and wood strands or wafers bonded together with waterproof synthetic resins or other suitable bonding systems. Examples of wood structural panels are:

Composite panels. A wood structural panel that is comprised of wood veneer and reconstituted wood-based material and bonded together with waterproof adhesive;

Oriented strand board (OSB). A mat-formed wood structural panel comprised of thin rectangular wood strands arranged in cross-aligned layers with surface layers normally arranged in the long panel direction and bonded with waterproof adhesive; or

Plywood. A wood structural panel comprised of plies of wood veneer arranged in cross-aligned layers. The plies are bonded with waterproof adhesive that cures on application of heat and pressure.

SECTION A303
STRUCTURAL WEAKNESSES

[BS] A303.1 General. For the purposes of this chapter, any of the following conditions shall be deemed a structural weakness:

1. Sill plates or floor framing that are supported directly on the ground without a foundation system that conforms to the building code.
2. A perimeter foundation system that is constructed only of wood posts supported on isolated pad footings.
3. Perimeter foundation systems that are not continuous.

   Exceptions:

   1. Existing single-story exterior walls not exceeding 10 feet (3048 mm) in length, forming an extension of floor area beyond the line of an existing continuous perimeter foundation.
   2. Porches, storage rooms and similar spaces not containing fuel-burning appliances.
4. A perimeter foundation system that is constructed of unreinforced masonry or stone.
5. Sill plates that are not connected to the foundation or that are connected with less than what is required by the building code.

   Exception: Where approved by the *code official*, connections of a sill plate to the foundation made with other than sill bolts may be accepted if the capacity of the connection is equivalent to that required by the building code.
6. Cripple walls that are not braced in accordance with the requirements of Section A304.4 and Table A3-A, or cripple walls not braced with diagonal sheathing or wood structural panels in accordance with the building code.

❖ This section provides criteria that allow owners and contractors to evaluate dwellings and identify the major areas of potential weakness below the first floor. The structural weaknesses listed in this section might not be the only weaknesses that may lead to structural damage when the building is subjected to earthquake forces; however, they represent conditions that can be addressed by prescriptive, nonengineered provisions that are most common and most cost effective to strengthen.

Sill Plates or Floor Framing without Approved Foundation System. Some older dwellings do not have a foundation system. Instead, the wall sill plate, and much of the floor framing, are supported directly on the ground. When subjected to earthquake-induced lateral and vertical forces, these structures can easily move because they are not adequately anchored. This movement can result in a variety of structural and nonstructural damage, including broken gas and utility lines. Damage to these utility lines can lead to fires. Further, these structures are highly susceptible to biologic growth and insect infestation due to inadequate separation between wood and earth.

Post and Pier Foundation Systems. Many dwellings have continuous cripple walls and foundation systems around their perimeter, but are supported on wood posts and isolated concrete pad footings (called a "post-and-pier" system) under the interior of the dwelling. Such a system is not generally assumed deficient since the continuous perimeter foundation system should provide ample resistance; however, if a post-and-pier system is directly below any perimeter walls, it is considered a structural weakness since they generally provide little horizontal resistance. This deficient foundation system is found in some older dwellings, including Victorian-era structures and

INTERNATIONAL CODE COUNCIL®
Copyright © 2015 ICC. ALL RIGHTS RESERVED. Accessed by David Dammon on Jun 21, 2017 12:30:52 PM pursuant to License Agreement with ICC. No further reproduction or distribution authorized. ANY UNAUTHORIZED REPRODUCTION OR DISTRIBUTION IS A VIOLATION OF THE FEDERAL COPYRIGHT ACT AND THE LICENSE AGREEMENT, AND SUBJECT TO CIVIL AND CRIMINAL PENALTIES THEREUNDER.

buildings in areas where soil moisture is high.

Providing diagonal bracing members between the posts does not generally solve the problem. Each post would then need to be adequately connected to a competent foundation system. Typically, the existing footing pads are too small to make the necessary connections and lack the required strength and stiffness to resist lateral earthquake forces. Simply providing bracing between the posts only moves the point of failure from the top of the post to the bottom of the post at the pad footing. For these buildings, bracing, anchorage and additional footings may be required.

Some post-and-pier-type structures may be considered as historic buildings. Care needs to be taken when performing strengthening work so the historic fabric of the building is not adversely impacted. Many jurisdictions have adopted specific requirements for historic buildings, such as those in Chapter 12. If a dwelling utilizes this type of system and might be considered a historic building, consult with the building department.

Noncontinuous Perimeter Foundation System. Noncontinuous perimeter foundations are another deficiency often found in older residential structures. There are many variations of partial foundation systems, and some do not necessarily represent a significant weakness. When applying these provisions to an existing building, the intent is to reduce the potential for damage to habitable portions of structures. Therefore, the standards include two exceptions to the requirement for continuous perimeter foundations.

> **Exception 1:** Observations after past earthquakes have shown that failures of relatively small enclosed spaces tend to be localized and may not result in the remainder of the dwelling being uninhabitable. Consequently, small extensions or appendages do not require addition of a perimeter footing.
>
> **Exception 2:** This exception addresses nonhabitable spaces (i.e., porches, storage rooms and other similar areas), the failure of which is unlikely to result in the structure becoming uninhabitable. Failures of these structures rarely impact the habitability of the structure although they may temporarily limit access or egress. Storage rooms, in this exception, include those areas adjacent to the dwelling and accessible from the outside of the building only, and storage buildings or areas that are separate from the main structure. Attached rooms with water heaters or furnaces are not exempt since damage to these areas could result in fires.

Unreinforced Masonry Perimeter Foundation. A perimeter foundation constructed of unreinforced masonry is assumed to lack the necessary deformation capacity to resist earthquake forces and potential building displacements that often result from earthquakes. These systems are common in many older dwellings built before codes were adopted in high seismic regions and may also exist in newer dwellings where codes have not been enforced. Section A304.2.2 requires analysis of unreinforced masonry foundations by either an architect or an engineer.

Inadequate Sill Plate Anchorage. While sliding between an unanchored sill plate and the foundation can occur, it is one of the more uncommon sources of damage. Regardless, it is still important that sill plate anchorage be present in order to complete the lateral force path. Bracing cripple walls without bolting the sill plate to the foundation simply moves the weak link to the interface of the sill and foundation. Compliance with either Tables A3-A and B or the IBC is deemed acceptable. Care should also be exercised when depending on existing anchors to meet Table A3-A and A3-B. Existing anchors often have minimal capacity to resist sliding where deteriorated or installed in oversize holes. In addition, anchors are often missing nuts and washers.

> **Exception:** Because details common in new construction are often impractical in retrofits, the provisions recognize alternative means of anchorage, including proprietary products. These proprietary products are especially useful in conditions where limited clearance prevents installation of bolts through the sill plate in the traditional fashion. Generally, cripple wall studs need to be 24 inches (610 mm) or taller to install anchor bolts with a normal drill. In some cases, drills with right-angle attachments can be used in more confined spaces.

Inadequate Cripple Wall Bracing. Past earthquakes have shown that the most common cause of major damage in dwellings is poorly braced cripple walls.

A common and very weak type of cripple wall can be found in older buildings constructed with horizontal exterior wood siding. This type of siding and its nailing are not adequate to resist earthquake forces associated with nearby moderate or major earthquakes.

Recent earthquakes have also shown that “let-in” diagonal bracing does not adequately brace cripple walls (LA, 1994). Let-in braces are usually single, nominal 1-inch (25 mm) thick and placed in a notch cut into the face of the stud or placed on the face of the stud. Let-in braces are no longer permitted as an acceptable bracing method in the IBC for buildings located in regions where strong earthquakes are expected to occur.

Let-in braces should not be confused with diagonal wood sheathing. Diagonal wood sheathing, which is acceptable by these provisions, is composed of individual boards nominally 1-inch (25 mm) thick, laid

INTERNATIONAL CODE COUNCIL®
Copyright © 2015 ICC. ALL RIGHTS RESERVED. Accessed by David Dammon on Jun 21, 2017 12:30:52 PM pursuant to License Agreement with ICC. No further reproduction or distribution authorized. ANY UNAUTHORIZED REPRODUCTION OR DISTRIBUTION IS A VIOLATION OF THE FEDERAL COPYRIGHT ACT AND THE LICENSE AGREEMENT, AND SUBJECT TO CIVIL AND CRIMINAL PENALTIES THEREUNDER.

diagonally across the face of the entire stud wall. These boards are laid next to one another covering the entire width and length of the wall extending from the top plate to the sill plate. If the cripple walls are covered with diagonal sheathing, the wall is assumed to be adequately braced, provided the boards are nailed to each stud they cross and to the top and bottom plates. Adequate nailing consists of three 8-penny nails at each stud and the ends. If the boards or the studs are split, or if the end nails are too close to the ends of the sheathing, this system can be deficient.

The most effective cripple wall bracing system that significantly reduces the risk of damage is wood structural panel sheathing [i.e., plywood or oriented strand board (OSB)] fully nailed around the sheet perimeters to each stud and to the top and bottom plates. It is critical that the structural sheathing be nailed along all edges; failure to nail the sheathing to the top plate or the sill plate can result in premature failure. If the dwelling has plywood sheathing as an exterior finish, check for nails spaced no more than 6 inches (152 mm) apart along all the edges of each sheet. If adequate nailing is not present, comply with the nailing requirements of this chapter.

Exterior plywood siding with vertical grooves (referred to as T1-11) can have another serious deficiency. At the edges where two adjacent panels adjoin, each panel must be nailed to the wall stud with a separate row of nails. These sheets have "lips" so that they overlap at the joints. A common, improper construction practice is providing only one row of nails through both sheets (at the overlap). This creates a weakness since the plywood thickness is only one-half of its normal thickness at the overlap and only half the number of nails are provided. Such practice led to failures in past earthquakes. In all cases where nailing is exposed to the elements, it is recommended that hot-dip galvanized nails be used.

Dwellings with existing Portland cement plaster (stucco) as the exterior finish may also be at risk since they often lack the toughness or durability to resist repeated accelerations. While stucco has been a recognized bracing material for a number of years, it is only as good as the connection of the lath to the studs and plates. Where cracks develop quickly in the stucco, these connections quickly degrade and cause loss of wall strength. Many dwellings with stucco applied directly over the studs without plywood or diagonal sheathing under the stucco experienced serious damage in the 1994 Northridge earthquake (LA, 1994) (NAHB, 1994). In high seismic regions, this failure most often was caused by inadequate attachment of the lath to the bottom sill plate (LA, 1994).

SECTION A304
STRENGTHENING REQUIREMENTS

[BS] A304.1 General.

[BS] A304.1.1 Scope. The structural weaknesses noted in Section A303 shall be strengthened in accordance with the requirements of this section. Strengthening work may include both new construction and alteration of existing construction. Except as provided herein, all strengthening work and materials shall comply with the applicable provisions of the building code.

❖ Use of materials, proprietary systems or methods not shown by the figures and details in this chapter requires the services of a design professional.

Where a dwelling has an unusual or irregular configuration or unusual features, the services of an engineer or architect to design a strengthening program utilizing the alternative procedures of Section A301.3 is required. The code official may require a predesign special inspection as described in Section A304.5 to determine which portions of the work require the services of a design professional. Alternative means of compliance are possible and addressed in Section A301.3.

Section A303 defines the most common structural weaknesses associated with these structures while Section A304 provides the means to "prescriptively" strengthen them. If a particular condition is not addressed by Section A304 then alternative design procedures may be used as defined in Section A301.3.

[BS] A304.1.2 Condition of existing wood materials. All existing wood materials that will be a part of the strengthening work (sills, studs, sheathing, etc.) shall be in a sound condition and free from defects that substantially reduce the capacity of the member. Any wood material found to contain fungus infection shall be removed and replaced with new material. Any wood material found to be infested with insects or to have been infested with insects shall be strengthened or replaced with new materials to provide a net dimension of sound wood at least equal to its undamaged original dimension.

❖ Wood decay, commonly known as "dry rot," can occur to wood framing exposed to dampness or to water leakage. Termite infestation is another cause of damage to wood members. All buildings being strengthened where damage is suspected should have a thorough inspection, but only those elements affected by retrofit need to be checked for the purposes of this chapter. If not repaired, dry rot and pest damage can weaken sill plates, studs and wood siding, and have a substantial adverse effect on a building's response to earthquakes.

Even dwellings without dry rot or termite damage may have weaknesses because of poor construction quality. For example, insufficient nailing of plywood, OSB or diagonal sheathing will result in a structure that is unable to resist the forces imposed during earthquakes. Simply repairing the weaknesses may not be adequate if the condition of the existing wood-framing members to be utilized is in doubt. It is recommended that the exposed wood be thoroughly inspected to ensure that all wood that is part of the

INTERNATIONAL CODE COUNCIL®
Copyright © 2015 ICC. ALL RIGHTS RESERVED. Accessed by David Dammon on Jun 21, 2017 12:30:52 PM pursuant to License Agreement with ICC. No further reproduction or distribution authorized. ANY UNAUTHORIZED REPRODUCTION OR DISTRIBUTION IS A VIOLATION OF THE FEDERAL COPYRIGHT ACT AND THE LICENSE AGREEMENT, AND SUBJECT TO CIVIL AND CRIMINAL PENALTIES THEREUNDER.

strengthening work is in good condition. Existing wood members showing evidence of wood decay commonly referred to as dry rot, or evidence of insect infestation, must be removed and replaced. Wood decay can be found by probing the wood members with a sharp object, like a knife or awl. If the probe easily penetrates the wood, the member likely has experienced decay and is weakened. Sound wood will be difficult to probe. It is important to perform probing and visual observations prior to construction and to be alert for the presence of wood decay or insect infestation during construction as well. Concealed wood decay may be encountered when drilling for new sill anchors. If the drill suddenly moves through the wood, a pocket of wood decay has likely been encountered. The portion of the sill plate containing the decayed wood will need to be cut out and replaced with a new piece of sill plate. The new sill plate must be anchored in accordance with Tables A3-A and A3-B. When replacing pieces of sill plate, pressure-treated lumber will need to be used to protect the new member from future decay.

Wood decay occurs where wood is made continually or repeatedly damp by a leaking plumbing pipe or by repeated saturation and drying from an exterior wall that leaks during rains. Simply removing and replacing damaged wood will not necessarily prevent the decay from recurring. It is important to find the cause of the leak, repair it and allow the remaining wood to dry.

Insect infestation, on the other hand, stops damaging the wood once the infestation has been stopped. Consequently, a member that has been significantly damaged by insects does not need to be removed if it can be strengthened. The easiest method of strengthening is to add a new member next to the damaged member. Unfortunately, there are no clear guidelines to indicate when insect damage requires strengthening. This determination must be based on judgment gained through experience.

Prior to removing sill plates or studs for repair caused by fungal or infestation damage, temporary shoring may be installed. The design of this shoring must be carefully planned by a qualified design professional and installed by a contractor, both having shoring experience.

[BS] A304.1.3 Floor joists not parallel to foundations. Floor joists framed perpendicular or at an angle to perimeter foundations shall be restrained either by an existing nominal 2-inch-wide (51 mm) continuous rim joist or by a nominal 2-inch-wide (51 mm) full-depth block between alternate joists in one-and two-story buildings, and between each joist in three-story buildings. Existing blocking for multistory buildings must occur at each joist space above a braced cripple wall panel.

Existing connections at the top and bottom edges of an existing rim joist or blocking need not be verified in one-story buildings. In multistory buildings, the existing top edge connection need not be verified; however, the bottom edge connection to either the foundation sill plate or the top plate of a cripple wall shall be verified. The minimum existing bottom edge connection shall consist of 8d toenails spaced 6 inches (152 mm) apart for a continuous rim joist, or three 8d toenails per block. When this minimum bottom edge-connection is not present or cannot be verified, a supplemental connection installed as shown in Figure A3-8A or A3-8C shall be provided.

Where an existing continuous rim joist or the minimum existing blocking does not occur, new $^{3}/_{4}$-inch (19.1 mm) or $^{23}/_{32}$-inch (18 mm) wood structural panel blocking installed tightly between floor joists and nailed as shown in Figure A3-9 shall be provided at the inside face of the cripple wall. In lieu of wood structural panel blocking, tight fitting, full-depth 2-inch (51 mm) blocking may be used. New blocking may be omitted where it will interfere with vents or plumbing that penetrates the wall.

❖ For these strengthening procedures to be effective, there must be a continuous horizontal load path from the exterior walls to the foundation. Where floor joists are perpendicular to a cripple wall, or frame into the cripple wall at an angle, existing rim joists (or blocking) need to be connected to either the foundation sill plate (if there are no cripple stud walls) or the top plate of the cripple wall. When reviewing existing construction, if there is a connection between the rim joist and the plate that meets the nailing requirements of this section, the connection may be considered adequate for this link in the load path. Where these connections do not exist, new connections must be made. Rim joists will need to be toe-nailed with 8-penny $2^{1}/_{2}$-inch-long (64 mm) common nails, spaced 6 inches (152 mm) apart, through the joist into the plate. Blocking will need to be toe-nailed. Use of proprietary products for these connections may be easier and more effective than toe-nailing. When approved by the code official, these connections may be made by using products with current evaluation reports by an independent testing authority.

Because the forces in a single-story structure are relatively small, it is not necessary to verify these connections if the blocking or rim joists are present. In multistory buildings, the connections between the foundation and the blocking or rim joists must be verified. When these requirements are not met or cannot be verified, the provisions of this chapter apply.

In some cases, existing construction might not include a rim joist or blocking. In other cases, the members are smaller in width than a nominal 2 inches (51 mm) [$1^{1}/_{2}$ inches (38 mm)]. In these cases, a new nominal 2-inch (51 mm) wide full-depth joist or blocking or one of the methods described in the chapter may be used to provide the load path from the floor to the sill plate or cripple wall. Figures A3-8A, A3-8B and A3-8C assume that an existing “end” or “rim” joist is present and provides the necessary information by which to connect this “rim” or “end” joint to the cripple wall or mud sill. Where this 2x “rim” or “end” joist is not present, solid 2x blocking can be added to achieve the same result. Figure A3-9 uti-

INTERNATIONAL CODE COUNCIL®
Copyright © 2015 ICC. ALL RIGHTS RESERVED. Accessed by David Dammon on Jun 21, 2017 12:30:52 PM pursuant to License Agreement with ICC. No further reproduction or distribution authorized. ANY UNAUTHORIZED REPRODUCTION OR DISTRIBUTION IS A VIOLATION OF THE FEDERAL COPYRIGHT ACT AND THE LICENSE AGREEMENT, AND SUBJECT TO CIVIL AND CRIMINAL PENALTIES THEREUNDER.

lizes plywood as an alternative to the addition of 2x solid blocking. In addition to providing a load path link, the rim joist or blocking provides rotational restraint for the ends of the floor joists. Note that these figures use the term "end joist" and "rim joist" interchangeably.

[BS] A304.1.4 Floor joists parallel to foundations. Where existing floor joists are parallel to the perimeter foundations, the end joist shall be located over the foundation and, except for required ventilation openings, shall be continuous and in continuous contact with the foundation sill plate or the top plate of the cripple wall. Existing connections at the top and bottom edges of the end joist need not be verified in one-story buildings. In multistory buildings, the existing top edge connection of the end joist need not be verified; however, the bottom edge connection to either the foundation sill plate or the top plate of a cripple wall shall be verified. The minimum bottom edge connection shall be 8d toenails spaced 6 inches (152 mm) apart. If this minimum bottom edge connection is not present or cannot be verified, a supplemental connection installed as shown in Figure A3-8B, A3-8C or A3-9 shall be provided.

❖ Where floor joists are parallel to a cripple wall, the same load path concept applies as with joists perpendicular to foundations. In this condition, the end floor joist must occur over the foundation wall or cripple wall and be connected. If this member is not connected to the plate, it will need to be toe-nailed with 8-penny common nails spaced 6 inches (152 mm) apart or with equivalent approved hardware. This connection need only be verified for multistory buildings, for which seismic forces are larger. If an end joist in a multistory building is not connected to the sill plate on top of the foundation, or this connection cannot be determined, the end joist may be connected to the sill plate with sheet metal angles (proprietary hardware is available). Where clearances do not permit installation of this angle, an alternative method using $^3/_4$-inch (19 mm) plywood attached to the foundation plate or cripple wall top plate and to the underside of the flooring as shown in Figure A3-9 may be used. Other alternatives are provided in Figure A3-8B or A3-8C. Figures A3-8B and A3-8C require a framing clip with a minimum horizontal capacity of 450 pounds (2002 N) where an existing rim joist or blocking nailing cannot be verified.

[BS] A304.2 Foundations.

[BS] A304.2.1 New perimeter foundations. New perimeter foundations shall be provided for structures with the structural weaknesses noted in Items 1 and 2 of Section A303. Soil investigations or geotechnical studies are not required for this work unless the building is located in a special study zone as designated by the *code official* or other authority having jurisdiction.

[BS] A304.2.2 Evaluation of existing foundations. Partial perimeter foundations or unreinforced masonry foundations shall be evaluated by a registered design professional for the force levels specified in Section A301.3. Test reports or other substantiating data to determine existing foundation material strengths shall be submitted to the *code official*. Where approved by the *code official*, these existing foundation systems may be strengthened in accordance with the recommendations included with the evaluation in lieu of being replaced.

Exception: In lieu of testing existing foundations to determine material strengths, and where approved by the *code official*, a new nonperimeter foundation system designed for the forces specified in Section A301.3 may be used to resist lateral forces from perimeter walls. A registered design professional shall confirm the ability of the existing diaphragm to transfer seismic forces to the new nonperimeter foundations.

❖ It might not be economical to replace existing partial perimeter foundations or unreinforced masonry foundations. In order to determine if existing foundation systems are adequate, an engineer or an architect should evaluate both the condition of the system and its ability to resist the prescribed forces. This analysis would be limited to the foundation system only. If other strengthening is to be performed, it must either be designed by a registered design professional or comply with the prescriptive provisions of this chapter. As specified in the exception, new interior foundation walls (nonperimeter foundations) can be used to resist lateral forces coming from the perimeter of the building. The design professional responsible for the new nonperimeter foundation should, however, check the floor diaphragm as part of this offset load path to ensure exterior lateral loads can be resisted at these interior locations.

[BS] A304.2.3 Details for new perimeter foundations. All new perimeter foundations shall be continuous and constructed according to either Figure A3-1 or A3-2. All new construction materials shall comply with the requirements of building code. Where approved by the *code official*, the existing clearance between existing floor joists or girders and existing grade below the floor need not comply with the building code.

Exception: Where designed by a registered design professional and approved by the *code official*, partial perimeter foundations may be used in lieu of a continuous perimeter foundation.

❖ The first three weaknesses listed in Section A303 involve buildings without complete foundation systems. These conditions will be resolved by installing a new concrete or masonry foundation system around the perimeter of the dwelling. It is the intent of these provisions that all new foundations meet the current minimum standards of the IBC.

The IBC has specific provisions for minimum clearance under the structure for both access and ventilation. Occasionally, existing construction does not provide the clearances that are required today. These provisions are not intended to require current code clearance when a new foundation must be installed. Excavating or raising the building would be extremely difficult and costly and would not improve its resis-

INTERNATIONAL CODE COUNCIL®
Copyright © 2015 ICC. ALL RIGHTS RESERVED. Accessed by David Dammon on Jun 21, 2017 12:30:52 PM pursuant to License Agreement with ICC. No further reproduction or distribution authorized. ANY UNAUTHORIZED REPRODUCTION OR DISTRIBUTION IS A VIOLATION OF THE FEDERAL COPYRIGHT ACT AND THE LICENSE AGREEMENT, AND SUBJECT TO CIVIL AND CRIMINAL PENALTIES THEREUNDER.

tance to earthquakes. If substantial fungal or insect infestation has occurred in the past, the owner may want to consider measures to prevent future damage. In some cases, remedial work will be required in accordance with Section A304.1.2.

An existing partial concrete foundation (weakness Type 3 in Section A303) may be replaced, or it may be evaluated by a design professional to determine if it can perform in a manner equivalent to a continuous foundation. An existing unreinforced masonry or stone foundation (weakness Type 4) may be replaced with a new foundation that complies with the IBC, or it may be evaluated in accordance with Section A304.2.2. Replacement might be uneconomical or aesthetically displeasing.

A well-maintained unreinforced masonry foundation might be adequate to support a building for normal vertical loads, but its strength and ability to brace the building during earthquakes should be evaluated. Where anchor bolts are being added between the foundation sill plate and foundation, the shear stress in the plane of the foundation wall is generally small and acceptable. The foundation, however, must be adequate to resist these anchorage forces without local failure at the anchor. Unless retrofit design includes the addition of tie-down anchors, significant spanning of the foundation to carry these tension loads is not necessary. An evaluation of the foundation should primarily consider the ability of the foundation to develop anchorage loads. This may be evaluated by installing and tension testing anchors in representative locations. Where poor materials or foundation deterioration result in a foundation that is not able to develop these local anchorage loads, it will be necessary to replace, augment or otherwise modify the existing foundation. One approach that has been used in deteriorated masonry foundations is the removal of a section of foundation approximately 1 foot long by 1 foot high (305 mm by 305 mm) at each anchor bolt location. Concrete is then cast back in around each anchor bolt, providing a concrete key into the deteriorated foundation. Another approach is to use longer anchors.

Deteriorated foundations are often common in certain locations and the result of local geographical climate or soil conditions. Local building jurisdictions are often aware and even familiar with similar problems and may provide guidance for repair or strengthening. The code user is encouraged to contact the local building department to see if there is knowledge of similar concerns and whether any additional guidance or requirements apply.

An evaluation of a foundation should also seek to identify signs of foundation settlement or other movement. Where this is the case, recommendations from a geotechnical engineer for stabilization of the foundation may be needed before anchor bolts can be installed.

If an existing unreinforced masonry foundation is assumed not to resist earthquake forces, a new foundation bracing system must be provided that is independent of the existing foundation. The new system must be designed to resist all the earthquake forces from the building occurring at the foundation level. In this case, unreinforced masonry foundations do not require analysis and strengthening when an alternative foundation system is used.

Older existing concrete foundations are often not reinforced and commonly have cracks due to shrinkage or long-term differential settlement. Even new footings have shrinkage cracks. Common locations for these cracks are at corners and near changes in footing height or thickness, as well as more uniformly distributed over the length of the footing. Typical shrinkage cracks in footings are straight and vertical and have uniform narrow width. Isolated cracks less than $^1/_8$ inch (3.2 mm) in width can be assumed not to significantly diminish the strength of the foundation (ATC, 2002). Where significant cracking or settlement of the foundation is present, the foundation shall by evaluated by an engineer. Additionally, a geotechnical engineer may be required for recommendations regarding stabilization of the foundation.

[BS] A304.2.4 New concrete foundations. New concrete foundations shall have a minimum compressive strength of 2,500 pounds per square inch (17.24 MPa) at 28 days.

[BS] A304.2.5 New hollow-unit masonry foundations. New hollow-unit masonry foundations shall be solidly grouted. The grout shall have minimum compressive strength of 2,000 pounds per square inch (13.79 MPa). Mortar shall be Type M or S.

[BS] A304.2.6 New sill plates. Where new sill plates are used in conjunction with new foundations, they shall be minimum 2× nominal thickness and shall be preservative-treated wood or naturally durable wood permitted by the building code for similar applications, and shall be marked or branded by an approved agency. Fasteners in contact with preservative-treated wood shall be hot-dip galvanized or other material permitted by the building code for similar applications. Anchors, that attach a preservative-treated sill plate to the foundation, shall be permitted to be of mechanically deposited zinc-coated steel with coating weights in accordance with ASTM B695, Class 55 minimum. Metal framing anchors in contact with preservative-treated wood shall be galvanized in accordance with ASTM A653 with a G 185 coating.

[BS] A304.3 Foundation sill plate anchorage.

[BS] A304.3.1 Existing perimeter foundations. Where the building has an existing continuous perimeter foundation, all perimeter wall sill plates shall be anchored to the foundation with adhesive anchors or expansion anchors in accordance with Table A3-A.

Anchors shall be installed in accordance with Figure A3-3, with the plate washer installed between the nut and the sill plate. The nut shall be tightened to a snug-tight condition after curing is complete for adhesive anchors and after expansion wedge engagement for expansion anchors. All anchors shall be installed in accordance with manufacturer's recom-

INTERNATIONAL CODE COUNCIL®
Copyright © 2015 ICC. ALL RIGHTS RESERVED. Accessed by David Dammon on Jun 21, 2017 12:30:52 PM pursuant to License Agreement with ICC. No further reproduction or distribution authorized. ANY UNAUTHORIZED REPRODUCTION OR DISTRIBUTION IS A VIOLATION OF THE FEDERAL COPYRIGHT ACT AND THE LICENSE AGREEMENT, AND SUBJECT TO CIVIL AND CRIMINAL PENALTIES THEREUNDER.

mendations. Where existing conditions prevent anchor installations through the sill plate, this connection shall be made in accordance with Figure A3-4A, A3-4B or A3-4C. The spacing of these alternate connections shall comply with the maximum spacing requirements of Table A3-A. Expansion anchors shall not be used where the installation causes surface cracking of the foundation wall at the locations of the anchor.

❖ The provisions for connecting existing sill plates to existing foundations maintain the older code requirements for $^1/_2$-inch-diameter (12.7 mm) anchors spaced a maximum of 6 feet (1829 mm) apart for one-story buildings. Two- and three-story buildings need progressively more anchors because their height and added weight result in larger forces to be resisted. Five-eighth-inch-diameter (15.9 mm) anchors, which are more common for new construction, are required for three-story buildings and can be substituted for $^1/_2$-inch-diameter (12.7 mm) expansion anchors or adhesive anchors.

Expansion anchors and adhesive anchors are acceptable for connecting to existing concrete. These connectors, due to their shorter length of embedment into the concrete, have lower capacity in concrete than anchor bolts that are cast in place when the foundation is placed. However, even with the required 4-inch (102 mm) embedment, these connectors will have the same capacity in the wood sill plate, which is the weakest link in this connection. Consequently, properly installed expansion or adhesive anchors can provide the same resistance against sliding as cast-in-place anchors. An expansion anchor is effective when the hole is drilled to the correct size and is relatively clean, and when the bolt is properly tightened to set the expanding portion of the assembly in accordance with manufacturers' specifications. For expansion anchors to be fully effective, the foundation material must be able to engage the expansion portion without cracking. Where subsequent cracking indicates conditions of poor quality concrete or masonry during installation or limited edge distance, expansion anchors should not be used. If cracks are observed during installation, installation should be stopped and an anchor should be installed at a new location at least 1 foot (305 mm) away. If the problem continues, adhesive or screw-type anchors should be used instead. All anchors must be installed at least 9 inches (229 mm) away from the end of the sill plate in order to be effective.

Adhesive anchors are allowed for all types of foundations, but are required where existing concrete is in poor condition or when the installation of expansion anchors causes cracking of the concrete. An adhesive anchor utilizes a threaded rod with an epoxy-type substance to set the anchor. Adhesive anchors are most effective when the hole is the correct size and is clean. Concrete dust must be removed in accordance with manufacturers' specifications. A clean hole is more critical for adhesive anchors than for expansion-type anchors.

Some adhesives are viscous enough for use in horizontal holes, but others are too fluid and tend to drain out of the holes before setting. To avoid this problem, consult the current product evaluation report, such as ICC Evaluation Services® (ICC-ES®) reports on anchor systems, as well as manufacturers' instructions before purchasing.

These provisions require square steel plate washers to be placed between the nuts and the sill plate. Table A3-A provides the size of the plate washers required.

The provisions call for the nut to be tightened to a "snug-tight condition" after epoxy curing is complete or after the nut has been tightened to set an expansion anchor. Tightening the nut to set the expansion anchors and tightening the nut to connect the sill plate to the foundation are separate operations. The setting requirements of expansion anchors vary according to the bolt used. The specific bolt manufacturer's procedures must be closely followed to ensure that the bolt is properly set and is capable of transmitting forces into the foundation. Because these procedures vary, the provisions only address how tight the nut should be after an expansion anchor has been properly set or the adhesive has set. If the nuts are not tight against the washer plates, the anchors may not function as intended. The nut should be tightened to the point at which the full surface of the plate washer is in contact with the wood member and slightly indents the wood surface. This section also gives the code official the authority to spot test the nut tightness during the required inspection. Since adhesive anchors require a larger diameter hole to be drilled through the sill and into the foundation than the diameter of the bolt, these provisions require the annular space between the hole and the bolt to be filled with additional adhesive to help ensure there is no relative movement between the mudsill and anchor.

Figures A3-4A, A3-4B and A3-4C show side plates with adhesive or expansion anchors into the foundation and lag bolts into the narrow face of the existing wood sill plate. Proprietary systems with ICC-ES reports or other independent test reports may be used with code official approval in lieu of the connections shown if they provide an equal or greater capacity.

Figure A3-4C also shows the condition of a battered footing. This type of slanted face footing will require that a wood shim installed between the steel plate and the wood sill plate must be shaped so the steel plate will have full contact against the shim when the lag screws are tightened. Further, a beveled washer under the head of the lag screw is needed to ensure that it bears fully on the steel plate. It is recommended that the shim be nailed to the sill plate (in addition to the lag screws), but the nailing must not split the shim. Predrilling of holes at $^1/_{16}$ inch (1.6 mm) less than the nail diameter may be necessary. Alternative details, including proprietary

INTERNATIONAL CODE COUNCIL®
Copyright © 2015 ICC. ALL RIGHTS RESERVED. Accessed by David Dammon on Jun 21, 2017 12:30:52 PM pursuant to License Agreement with ICC. No further reproduction or distribution authorized. ANY UNAUTHORIZED REPRODUCTION OR DISTRIBUTION IS A VIOLATION OF THE FEDERAL COPYRIGHT ACT AND THE LICENSE AGREEMENT, AND SUBJECT TO CIVIL AND CRIMINAL PENALTIES THEREUNDER.

anchors, such as the Simpson UFP10, may be easier and faster to install and should be acceptable in principle to the code official. Discuss potential alternatives with the building department or consider hiring a registered design professional to prepare an alternative for unique conditions.

[BS] A304.3.2 Placement of anchors. Anchors shall be placed within 12 inches (305 mm), but not less than 9 inches (229 mm), from the ends of sill plates and shall be placed in the center of the stud space closest to the required spacing. New sill plates may be installed in pieces where necessary because of existing conditions. For lengths of sill plates 12 feet (3658 mm) or greater, anchors shall be spaced along the sill plate as specified in Table A3-A. For other lengths of sill plate, anchor placement shall be in accordance with Table A3-B.

Exception: Where physical obstructions such as fireplaces, plumbing or heating ducts interfere with the placement of an anchor, the anchor shall be placed as close to the obstruction as possible, but not less than 9 inches (229 mm) from the end of the plate. Center-to-center spacing of the anchors shall be reduced as necessary to provide the minimum total number of anchors required based on the full length of the wall. Center-to-center spacing shall be not less than 12 inches (305 mm).

❖ Careful attention needs to be given to the proper location and spacing of sill bolts. In order to ensure that the sills are properly connected, this section not only specifies the minimum spacing, but also limits the placement of bolts at the ends of pieces of a sill plate. These provisions differ from those in the IBC in requiring the bolts to be placed no closer than 9 inches (229 mm) from the end of the sill plate. When bolts are placed closer than 9 inches (229 mm) to the end of a plate, there is a potential for that bolt to split the sill from the bolt hole to the end of the plate as the bolt is loaded from earthquake forces. When the bolt is placed more than 12 inches (305 mm) from the end of the piece, there is a tendency for the end of the plate to lift due to overturning forces on the wall (CUREE, 2002). Placing the bolt between 9 and 12 inches (229 mm and 305 mm) from the end will minimize both tendencies. Some judgment may be needed where placement of the anchor in this very small region is precluded by existing conditions.

These provisions also address the fact that existing sill plates may be installed in short pieces, either where the foundation wall steps or where new pieces of a sill plate must be installed to replace sections damaged by wood decay or insect infestation. Therefore, the provisions specify a minimum number of bolts for various lengths of sill plate.

It will not always be possible to install sill bolts at the exact spacing. There are many existing elements that can interfere with their placement, such as a fireplace, plumbing or mechanical ducts. The provisions of this chapter have taken these field situations into account and allow that where physical obstructions exist, the bolts may be omitted. However, the spacing of the remaining bolts needs to be adjusted so that the same total number of bolts is installed as though the obstruction did not exist. It is recommended that if possible, the bolts with close spacing should coincide with the sheathing locations.

[BS] A304.3.3 New perimeter foundations. Sill plates for new perimeter foundations shall be anchored in accordance with Table A3-A and as shown in Figure A3-1 or A3-2.

❖ Table A3-A specifies the size, type and spacing of anchors, which varies depending on the number of stories above the cripple wall. The anchor bolts should be centered as much as possible on the sill plate while having sufficient edge distance in the concrete or masonry wall to preclude premature failure.

[BS] A304.4 Cripple wall bracing.

[BS] A304.4.1 General. Exterior cripple walls not exceeding 4 feet (1219 mm) in height shall be permitted to be specified by the prescriptive bracing method in Section A304.4. Cripple walls over 4 feet (1219 mm) in height require analysis by a registered design professional in accordance with Section A301.3.

❖ When bracing a cripple wall, consideration must be given to providing adequate resistance to both the horizontal forces and the tendency for uplifting the ends of the wall. Any wall panel that is subject to earthquake forces has a tendency to lift up at an end, as well as slide. This uplift can be resisted by one of two methods. In new construction, a “hold-down” anchor consisting of a heavy gauge metal angle is anchored or attached to a stud and also anchored into the concrete foundation. The use of hold-downs, however, would require the existing foundation system to resist significant vertical tension and compression forces, which might not be possible without associated damage. As such, the method used in this chapter is based on increasing the length-to-height ratio of the cripple wall bracing panels. By making the panels longer, more weight from the walls and floor above can be engaged to resist these uplift forces. The basic proportion required is that the minimum length of the braced cripple wall panel be at least two times its height [Residential Retrofit and Repair Committee (RRR), 1992]. In addition, longer panels are needed as the number of stories above the wall increases. This is simply because a taller building imposes larger horizontal forces on the braced cripple wall panel.

Where floor joists run parallel to the wall, the cripple wall element will not engage as much weight, so hold-downs at the ends of nonbearing walls may be prudent, especially for multistory buildings. Hold-downs, however, should only be used where the existing foundation is of adequate quality to locally develop the expected tension forces and where the foundation is of sufficient size to provide enough dead load capacity. Where cripple wall bracing panels can be connected at corners of buildings and installed in combined panel lengths longer than the

INTERNATIONAL CODE COUNCIL®
Copyright © 2015 ICC. ALL RIGHTS RESERVED. Accessed by David Dammon on Jun 21, 2017 12:30:52 PM pursuant to License Agreement with ICC. No further reproduction or distribution authorized. ANY UNAUTHORIZED REPRODUCTION OR DISTRIBUTION IS A VIOLATION OF THE FEDERAL COPYRIGHT ACT AND THE LICENSE AGREEMENT, AND SUBJECT TO CIVIL AND CRIMINAL PENALTIES THEREUNDER.

minimum defined in Figure A3-10, the potential for wall overturning can be reduced. In addition, continuity provided by rim joists, plates and floor framing tends to create appreciable stability at the tops of the cripple walls that offsets wall overturning.

To stay within the limits of these prescriptive methods, a maximum of 4 feet (1219 mm) for the height of the cripple wall was established to limit overturning effects. When the height of the cripple wall exceeds 4 feet (1219 mm), the dwelling owner will need to have the bracing designed by a registered design professional.

[BS] A304.4.1.1 Sheathing installation requirements. Wood structural panel sheathing shall be not less than $^{15}/_{32}$-inch (12 mm) thick and shall be installed in accordance with Figure A3-5 or A3-6. All individual pieces of wood structural panels shall be nailed with 8d common nails spaced 4 inches (102 mm) on center at all edges and 12 inches (305 mm) on center at each intermediate support with not less than two nails for each stud. Nails shall be driven so that their heads are flush with the surface of the sheathing and shall penetrate the supporting member a minimum of $1^1/_2$ inches (38 mm). When a nail fractures the surface, it shall be left in place and not counted as part of the required nailing. A new 8d nail shall be located within 2 inches (51 mm) of the discounted nail and be hand-driven flush with the sheathing surface. Where the installation involves horizontal joints, those joints shall occur over nominal 2-inch by 4-inch (51 mm by 102 mm) blocking installed with the nominal 4-inch (102 mm) dimension against the face of the plywood.

Vertical joints at adjoining pieces of wood structural panels shall be centered on studs such that there is a minimum $^1/_8$ inch (3.2 mm) between the panels. Where required edge distances cannot be maintained because of the width of the existing stud, a new stud shall be added adjacent to the existing studs and connected in accordance with Figure A3-7.

❖ Plywood with a minimum thickness of $^{15}/_{23}$ inch (12 mm) with at least five plies or layers of wood is prescribed as the required sheathing because of observations of ruptured $^3/_8$-inch-thick (10 mm) (3 ply) plywood panels documented in the Modified Mercalli Intensity (MMI) VIII and IX intensity areas caused by the Northridge earthquake (LA, 1994).

Even though the provisions accept existing diagonal wood sheathing (see Section A303) as sheathing material for existing construction, it is no longer cost effective for strengthening weak cripple walls. The omission of this material was not based on its ability to resist lateral forces, as it has performed well in past earthquakes and high winds (LA, 1992). Instead, it was based on cost considerations and practicality, since this type of sheathing is more time consuming to install and more expensive than wood structural panels. Proprietary bracing methods may also be used when approved by the code official.

The most important component of wood structural sheathing is proper nailing. To prevent splitting of existing wood framing, 8-penny common nails are considered optimum for 2x material. If splitting of studs is observed, predrilling of holes is recommended. Predrilled holes should have about three-fourths of the diameter of the nail. Nail guns tend to produce less splitting than hand nailing. Minimum edge distance for nails should be maintained for plywood, the wood studs and top and sill plates to prevent splitting or premature nail failure. With this size nail, 4-inch (102 mm) spacing provides adequate capacity with the minimum bracing length permitted by Table A3-A and Figure A3-10. Further, using larger nails or closer spacing would, by comparison of capacity, require larger diameter sill anchors or closer spacing of the anchors than specified in Section A304.3.2.

In the code, the nail edge distance requirement was decreased from $^1/_2$ inch to $^3/_8$ inch. A $^3/_8$-inch edge distance in the plywood or OSB is considered adequate for this application. The engineer should be aware that in existing buildings with 2x members, satisfying edge distances for both the sheathing and framing may not be possible. The engineer should consider slanting the nails or predrilling to protect the existing framing.

When plywood is installed on the inside face of cripple walls with an exterior surface of stucco, care must be used to prevent damage to the stucco.

If a nail gun is used, the operator must make sure that the nail heads do not penetrate the surface of the plywood. Local variations in the density of the backing (new or existing wood-framing members) can create situations where it will be difficult to maintain consistent nail penetration. The use of a flush head attachment on a nailing gun will usually prevent overdriving. When a nail head fractures the plywood surface, the amount of force that this particular connection is capable of resisting is reduced significantly. It becomes much easier for the nail head to pull through the sheathing material. Whenever a nail head fractures the surface of the sheathing, the nail must be discounted.

When purchasing structural sheathing, one of the structural grades must be stamped on the sheets used. For installation in a raised floor space subject to moisture, exterior grade plywood should be used. While OSB board is also permitted within these provisions, it is generally not recommended where moisture can be present. The user is encouraged to refer to the IBC for more information.

[BS] A304.4.2 Distribution and amount of bracing. See Table A3-A and Figure A3-10 for the distribution and amount of bracing required for each wall line. Each braced panel length must be at least two times the height of the cripple stud. Where the minimum amount of bracing prescribed in Table A3-A cannot be installed along any walls, the bracing must be designed in accordance with Section A301.3.

Exception: Where physical obstructions such as fireplaces, plumbing or heating ducts interfere with the placement of cripple wall bracing, the bracing shall then be placed as close to the obstruction as possible. The total

INTERNATIONAL CODE COUNCIL®
Copyright © 2015 ICC. ALL RIGHTS RESERVED. Accessed by David Dammon on Jun 21, 2017 12:30:52 PM pursuant to License Agreement with ICC. No further reproduction or distribution authorized. ANY UNAUTHORIZED REPRODUCTION OR DISTRIBUTION IS A VIOLATION OF THE FEDERAL COPYRIGHT ACT AND THE LICENSE AGREEMENT, AND SUBJECT TO CIVIL AND CRIMINAL PENALTIES THEREUNDER.

amount of bracing required shall not be reduced because of obstructions.

❖ Table A3-A and Figure A3-10 note the location and distribution of bracing panels based on the number of stories and cripple stud height. The amount of bracing described is for each wall line. Bracing panels are required at or near each end of each wall line.

[BS] A304.4.3 Stud space ventilation. When bracing materials are installed on the interior face of studs forming an enclosed space between the new bracing and the existing exterior finish, each braced stud space must be ventilated. Adequate ventilation and access for future inspection shall be provided by drilling one 2-inch to 3-inch-diameter (51 mm to 76 mm) round hole through the sheathing, nearly centered between each stud at the top and bottom of the cripple wall. Such holes should be spaced a minimum of 1 inch (25 mm) clear from the sill or top plates. In stud spaces containing sill bolts, the hole shall be located on the center line of the sill bolt but not closer than 1 inch (25 mm) clear from the nailing edge of the sheathing. When existing blocking occurs within the stud space, additional ventilation holes shall be placed above and below the blocking, or the existing block shall be removed and a new nominal 2-inch by 4-inch (51 mm by 102 mm) block shall be installed with the nominal 4-inch (102 mm) dimension against the face of the plywood. For stud heights less than 18 inches (457 mm), only one ventilation hole need be provided.

❖ The most common form of cripple wall bracing will be to add sheathing to the interior face of the cripple wall from within the crawl space. When this is done, a closed space is created between each stud that does not allow natural ventilation. This can result in a buildup of moisture that may lead to wood decay. In order to protect these concealed spaces from decay, 2- to 3-inch diameter (51 mm to 76 mm) ventilation holes must be provided at the top and bottom of each stud space (see Figure A3-7). These ventilation holes will allow the free movement of air within the stud space, thereby minimizing the risk of future decay. When 2x horizontal blocking is needed in the stud space to provide backing for panel joint nailing, it must be installed with the wide face oriented vertically flush with the face of the stud on which the sheathing is being installed. This can be easily accomplished using commercially available fence rail hardware at each end to attach the block to the studs. This will eliminate blockage of ventilation inside the stud space. If the blocking is installed such that it blocks ventilation inside the stud space, ventilation holes must be provided above and below the blocking to ventilate all portions of the stud space.

Ventilation holes should be round wherever possible. Hole-cutting tools are available to cut the properly sized hole. Square holes, or other shapes with sharp corners or notches, can result in high concentrations of stress when the panel is loaded.

[BS] A304.4.4 Existing underfloor ventilation. Existing underfloor ventilation shall not be reduced without providing equivalent new ventilation as close to the existing ventilation as possible. Braced panels may include underfloor ventilation openings when the height of the opening, measured from the top of the foundation wall to the top of the opening, does not exceed 25 percent of the height of the cripple stud wall; however, the length of the panel shall be increased a distance equal to the length of the opening or one stud space minimum. Where an opening exceeds 25 percent of the cripple wall height, braced panels shall not be located where the opening occurs. See Figure A3-7.

Exception: For homes with a post and pier foundation system where a new continuous perimeter foundation system is being installed, new ventilation shall be provided in accordance with the building code.

❖ Air circulation under the floor protects the framing from wood decay.

[BS] A304.5 Quality control. All work shall be subject to inspection by the *code official* including, but not limited to:

1. Placement and installation of new adhesive or expansion anchors installed in existing foundations. Special inspection is not required for adhesive anchors installed in existing foundations regulated by the prescriptive provisions of this chapter.
2. Installation and nailing of new cripple wall bracing.
3. Any work may be subject to special inspection when required by the *code official* in accordance with the building code.

❖ Strengthening work is only as good as the quality of the construction. In most jurisdictions, the strengthening work required by this chapter will require building permits and inspections. Prior to requesting a permit, the owner or contractor should survey and determine all existing conditions, dimensions and other considerations significant to the retrofit or repair work. A plan should be prepared showing the location of the proposed sheathing and spacing of anchors. The drawings should differentiate between new and existing components. Because of the nature of the work being performed and the materials being used, there are some additional inspections that need to be performed that are not specified in the IBC for new construction.

Placement and Installation of New Adhesive and Expansion Anchors. The code official must approve the use of expansion and adhesive anchors. Code officials often use evaluation reports from agencies such as the ICC-ES as a guide for the products they approve. These reports set allowable design values based on testing and specify requirements for construction quality control. They often call for special inspection, especially for bolts that might be subject to tension forces. Special inspection generally involves inspection of the work while it is being performed, as opposed to when it is complete, and, in some cases, actual testing of the anchor. It is also performed by qualified individuals retained by the owner.

For the purposes of this appendix chapter, special inspection is not required because the anchors in

INTERNATIONAL CODE COUNCIL®
Copyright © 2015 ICC. ALL RIGHTS RESERVED. Accessed by David Dammon on Jun 21, 2017 12:30:52 PM pursuant to License Agreement with ICC. No further reproduction or distribution authorized. ANY UNAUTHORIZED REPRODUCTION OR DISTRIBUTION IS A VIOLATION OF THE FEDERAL COPYRIGHT ACT AND THE LICENSE AGREEMENT, AND SUBJECT TO CIVIL AND CRIMINAL PENALTIES THEREUNDER.

question are intended to act primarily in shear, not in tension; these anchors tend to work fairly well in shear whether or not they are installed perfectly. The waiving of special inspection, thus, represents a justifiable cost savings. While special inspection is not typically required, the code official may still require verification of proper installation in accordance with Section A304.3.1.

In lieu of special inspection, it is recommended that a post-installation torque test for expansion anchors be done together with the inspection for anchor spacing, end distance and a spot check to make sure the nuts are properly tightened. Usually, this inspection would be performed after the anchors were installed and before the cripple wall sheathing is placed.

Both expansion and adhesive anchors must be approved, as stated in the definitions in Section A302. This means that they generally must have a valid evaluation report from agencies such as the ICC-ES or an approved equivalent independent test report. Normally, adhesive anchors require continuous inspection during their installation as a part of their approval for use. Continuous inspection checks that the hole is the correct diameter and depth and is sufficiently clean prior to placing the epoxy material. The purpose of all the checks is to ensure that each anchor will attain the tension strength allowed by its evaluation report.

Installation and Nailing of New Cripple Wall Bracing. It is important to make sure that the connections of the wall bracing panels are installed correctly and completely. The bracing serves no purpose if the connections do not engage the proper framing members or, in the case of wood sheathing, are overdriven. The nailing of the new structural elements should be inspected to ensure that they meet the minimum requirements of this chapter.

Work May be Subject to Special Inspection. The code official may require a special inspection where conditions on a particular job site make inspections difficult. Retrofit and strengthening work often involve unusual conditions or proprietary components that require additional levels of quality control. In order to address these problems, the code official is allowed to require that a special inspector verify work.

Most dwellings have some features that will not conform to the conditions and strengthening provisions used in this chapter. To avoid situations where those existing conditions either preclude the use of these prescriptive provisions or where other complications may occur that would make their application to a specific building difficult, the code official is encouraged to perform a predesign inspection. The cost of this inspection, however, may be in addition to the normal permit fee. Such an inspection might not be necessary if the owner provides adequate drawings supplemented by photographs to permit adequate review by the code official.

The purpose of a predesign inspection is to notify the owner or contractor of problems that may need the services of design professionals. It is not intended to be a consulting service to the owner. Typically, this inspection should focus on the following issues:

1. Areas where obstructions in the crawl space along exterior walls might prevent installation of adequate lengths of bracing.
2. Areas that may be questionable with respect to insect or fungal damage to wood members to be used in the strengthening.
3. Foundations that may be questionable or too weak to be effectively used for anchoring sill plates.
4. Tests of nut snug tightness on sill anchors.
5. Inadequate rim joist or blocking conditions or unusual framing conditions that would require alterations to the prescriptive details indicated.
6. Other concerns that the owner or contractor believes will preclude the use of the prescriptive details or methods described in this chapter.

Phasing:

With the publication of the 2012 code, the former section on phasing (Section A304.6) was removed, as it was believed to be both unnecessary and costly. First, work may always be phased or sequenced at the discretion of the code official. The current provision is intended to ensure that the greatest seismic risks are reduced before other work is performed. But the probability that a significant earthquake occurs during the project is extremely low, even if the work is phased. Since this chapter is triggered by other provisions in the body of the code, the seismic improvements it requires will already be part of the project scope and should not inadvertently be delayed or left incomplete. By requiring a specific sequence of work, the provision could unnecessarily restrict an owner from completing work in the least disruptive or expensive way.

[BS] A304.5.1 Nails. All nails specified in this chapter shall be common wire nails of the following diameters and lengths: 8d nails shall be 0.131 inch by $2^1/_2$ inches. 10d nails shall be 0.148 inch by 3 inches. 12d nails shall be 0.148 inch by $3^1/_4$ inches. 16d nails shall be 0.162 inch by $3^1/_2$ inches. Nails used to attach metal framing connectors directly to wood members shall be as specified by the connector manufacturer in an approved report.

❖ The provisions of this chapter make many references to nails, but do not always indicate “common wire nails.” Many different types of nails are sold at lumber supply yards and hardware stores, so choosing the appropriate type of nail may be confusing. Further,

INTERNATIONAL CODE COUNCIL®
Copyright © 2015 ICC. ALL RIGHTS RESERVED. Accessed by David Dammon on Jun 21, 2017 12:30:52 PM pursuant to License Agreement with ICC. No further reproduction or distribution authorized. ANY UNAUTHORIZED REPRODUCTION OR DISTRIBUTION IS A VIOLATION OF THE FEDERAL COPYRIGHT ACT AND THE LICENSE AGREEMENT, AND SUBJECT TO CIVIL AND CRIMINAL PENALTIES THEREUNDER.

the substitution of inadequate nails is commonplace, where gage and length are not specified. This section clarifies what is required.

Bibliography

The following resource materials were used in the preparation of the commentary for this chapter of the code.

ABAG 99, *Preventing the Nightmare—Designing a Model Program to Encourage Owners of Homes and Apartments to Do Earthquake Retrofits*. Association of Bay Area Governments, 1999.

ABAG 2000, *Preventing the Nightmare—Post-earthquake Housing Issue Papers*. Association of Bay Area Governments, 2000.

ATC 50, *Simplified Seismic Assessment of Detached, Single-family, Wood-frame Dwellings*. Applied Technology Council, 2002.

ATC 50-1, *Seismic Retrofit Guidelines for Detached, Single-family Wood-frame Dwellings*. Applied Technology Council, 2002.

ATC 50-2, *Safer at Home in Earthquakes: A Proposed Earthquake Safety Program*. Applied Technology Council, 2002.

CEA 2002, *Earthquake Insurance Retrofit Premium Discounts, Rates and Premiums*. Policy Information, California Earthquake Authority, http://www.earthquakeauthority.com/rates/rates_premiums.html#top, 2002.

Comerio, Mary G., John D. Landis, Cathurin J. Fispo and Juan Pablo Manzan. *Residential Earthquake Recovery—Improving California's Post-disaster Rebuilding Policies and Programs*. Berkeley, CA: California Policy Seminar, 1996.

CSSC-98, *Homeowner's Guide to Earthquake Safety*. California Seismic Safety Commission, 2002.

CUREE 2002, *Recommendations for Earthquake Resistance in the Design and Construction of Wood-frame Buildings*. Consortium of Universities for Research in Earthquake Engineering, 2002 Final Review Draft.

DSA 2002, *Guidelines for Earthquake Bracing of Residential Water Heaters. DSA Review and Acceptance Procedures—Manufactured Earthquake Bracing Systems for Residential Water Heaters*. Division of the State Architect, Department of General Services, State of California, 2002.

FEMA 1995, *Seismic Retrofit Training for Building Contractors and Building Inspectors—Participant Handbook*. Wiss Janney, Elstner Assoc., EMW-92-C3852, 1995.

Gallagher, Ron. *Mitigation of Principal Earthquake Hazards in Wood-frame Dwellings and Mobile Dwellings*. California Department of Insurance, June 1990.

IBHS 1999, *Is Your Home Protected from Earthquake Disaster—A Homeowner's Guide to Earthquake Retrofit*. Institute for Building and Home Safety, 1999.

LA 1994, *Prescriptive Provisions for Seismic Strengthening of Light, Wood-frame, Residential Buildings*. Los Angeles: Department of Building and Safety, Joint City of Los Angeles/SEAOSC Subcommittee on Cripple Wall Buildings, 1994.

LA 2001, *Reconstruction and Replacement of Earthquake Damaged Masonry Chimneys*. Los Angeles: Department of Building & Safety, 2001.

NAHB 1994, *Assessment of Damage to Residential Buildings Caused by the Northridge Earthquake*. National Association of Home Builders, 1994.

NIST 1997, *Fire Hazards and Mitigation Measures Associated with Seismic Damage of Water Heaters*. Mroz and Soong, National Institute of Standards and Technology, 1997.

RRR 1992, *Prescriptive Provisions for Voluntary Seismic Strengthening of Light, Wood-frame Residential Buildings, (with Commentary)*. Residential Retrofit and Repair Committee Jointly sponsored by California Office of Emergency Services, California Building Officials, American Institute of Architects—California Council, Structural Engineers Association of California, State Historical Building Safety Board, available from California Seismic Safety Commission, 1994.

SEAOC 1995, *History of Conventional Construction*. Structural Engineers Association of California, 1995.

SEAOSC 2002, *Seismic Retrofit of Existing Buildings - Retrofit of Hillside Dwellings*. Seminar Notes, Nels Roselund, *Prescriptive Provisions for Seismic Strengthening of Cripple Walls*. Ben Schmid, June 2002.

SL 2002, City of San Leandro, CA *Retrofit Plan Set*, http://www.sanleandro.org/depts/cd/bldg/retrofit/default.asp, San Leandro, 2002.

INTERNATIONAL CODE COUNCIL®

Copyright © 2015 ICC. ALL RIGHTS RESERVED. Accessed by David Dammon on Jun 21, 2017 12:30:52 PM pursuant to License Agreement with ICC. No further reproduction or distribution authorized. ANY UNAUTHORIZED REPRODUCTION OR DISTRIBUTION IS A VIOLATION OF THE FEDERAL COPYRIGHT ACT AND THE LICENSE AGREEMENT, AND SUBJECT TO CIVIL AND CRIMINAL PENALTIES THEREUNDER.

[BS] TABLE A3-A
SILL PLATE ANCHORAGE AND CRIPPLE WALL BRACING

NUMBER OF STORIES ABOVE CRIPPLE WALLS	MINIMUM SILL PLATE CONNECTION AND MAXIMUM SPACING[a, b]	AMOUNT OF BRACING FOR EACH WALL LINE[c,d,e]	
		A Combination of Exterior Walls Finished with Portland Cement Plaster and Roofing Using Clay Tile or Concrete Tile Weighing More than 6 psf (287 N/m^2)	All Other Conditions
One story	$^1/_2$ inch (12.7 mm) spaced 6 feet, 0 inch (1829 mm) center-to-center with washer plate	Each end and not less than 50 percent of the wall length	Each end and not less than 40 percent of the wall length
Two stories	$^1/_2$ inch (12.7 mm) spaced 4 feet, 0 inch (1219 mm) center-to-center with washer plate; or $^5/_8$ inch (15.9 mm) spaced 6 feet, 0 inch (1829 mm) center-to-center with washer plate	Each end and not less than 70 percent of the wall length	Each end and not less than 50 percent of the wall length
Three stories	$^5/_8$ inch (15.9 mm) spaced 4 feet, 0 inch (1219 mm) center-to-center with washer plate	100 percent of the wall length[f]	Each end and not less than 80 percent of the wall length[f]

a. Sill plate anchors shall be adhesive anchors or expansion anchors in accordance with Section A304.3.1.
b. All washer plates shall be 3 inches by 3 inches by 0.229 inch minimum. The hole in the plate washer is permitted to be diagonally slotted with a width of up to $^3/_{16}$ inch larger than the bolt diameter and a slot length not to exceed $1^3/_4$ inches, provided a standard cut washer is placed between the plate washer and the nut.
c. See Figure A3-10 for braced panel layout.
d. Braced panels at ends of walls shall be located as near to the end as possible.
e. All panels along a wall shall be nearly equal in length and shall be nearly equal in spacing along the length of the wall.
f. The minimum required underfloor ventilation openings are permitted in accordance with Section A304.4.4.

[BS] TABLE A3-B
SILL PLATE ANCHORAGE FOR VARIOUS LENGTHS OF SILL PLATE[a,b]

NUMBER OF STORIES	LENGTHS OF SILL PLATE		
	Less than 12 feet (3658 mm) to 6 feet (1829 mm)	Less than 6 feet (1829 mm) to 30 inches (762 mm)	Less than 30 inches (762 mm)[c]
One story	Three connections	Two connections	One connection
Two stories	Four connections for $^1/_2$-inch (12.7 mm) anchors or bolts or three connections for $^5/_8$-inch (15.9 mm) anchors or bolts	Two connections	One connection
Three stories	Four connections	Two connections	One connection

a. Connections shall be either adhesive anchors or expansion anchors.
b. See Section A304.3.2 for minimum end distances.
c. Connections shall be placed as near to the center of the length of plate as possible.

INTERNATIONAL CODE COUNCIL®
Copyright © 2015 ICC. ALL RIGHTS RESERVED. Accessed by David Dammon on Jun 21, 2017 12:30:52 PM pursuant to License Agreement with ICC. No further reproduction or distribution authorized. ANY UNAUTHORIZED REPRODUCTION OR DISTRIBUTION IS A VIOLATION OF THE FEDERAL COPYRIGHT ACT AND THE LICENSE AGREEMENT, AND SUBJECT TO CIVIL AND CRIMINAL PENALTIES THEREUNDER.

MINIMUM FOUNDATION DIMENSIONS					MINIMUM FOUNDATION REINFORCING		
NUMBER OF STORIES	W	F	D[a, b, c]	T	H	VERTICAL REINFORCING	
						Single-pour wall and footing	Footing placed separate from wall
1	12 inches (305 mm)	6 inches (152 mm)	12 inches (305 mm)	6 inches (152 mm)	≤ 24 inches (610 mm)	#4 @ 48 inches (1219 mm) on center	#4 @ 32 inches (813 mm) on center
2	15 inches (381 mm)	7 inches (178 mm)	18 inches (457 mm)	8 inches (203 mm)	≥ 36 inches (914 mm)	#4 @ 48 inches (1219 mm) on center	#4 @ 32 inches (813 mm) on center
3	18 inches (457 mm)	8 inches (203 mm)	24 inches (610 mm)	10 inches (254 mm)	≥ 36 inches (914 mm)	#4 @ 48 inches (1219 mm) on center	#4 @ 18 inches (457 mm) on center

a. Where frost conditions occur, the minimum depth shall extend below the frost line.
b. The ground surface along the interior side of the foundation may be excavated to the elevation of the top of the footing.
c. Where the soil is designated as expansive, the foundation depth and reinforcement shall be approved by the code official.

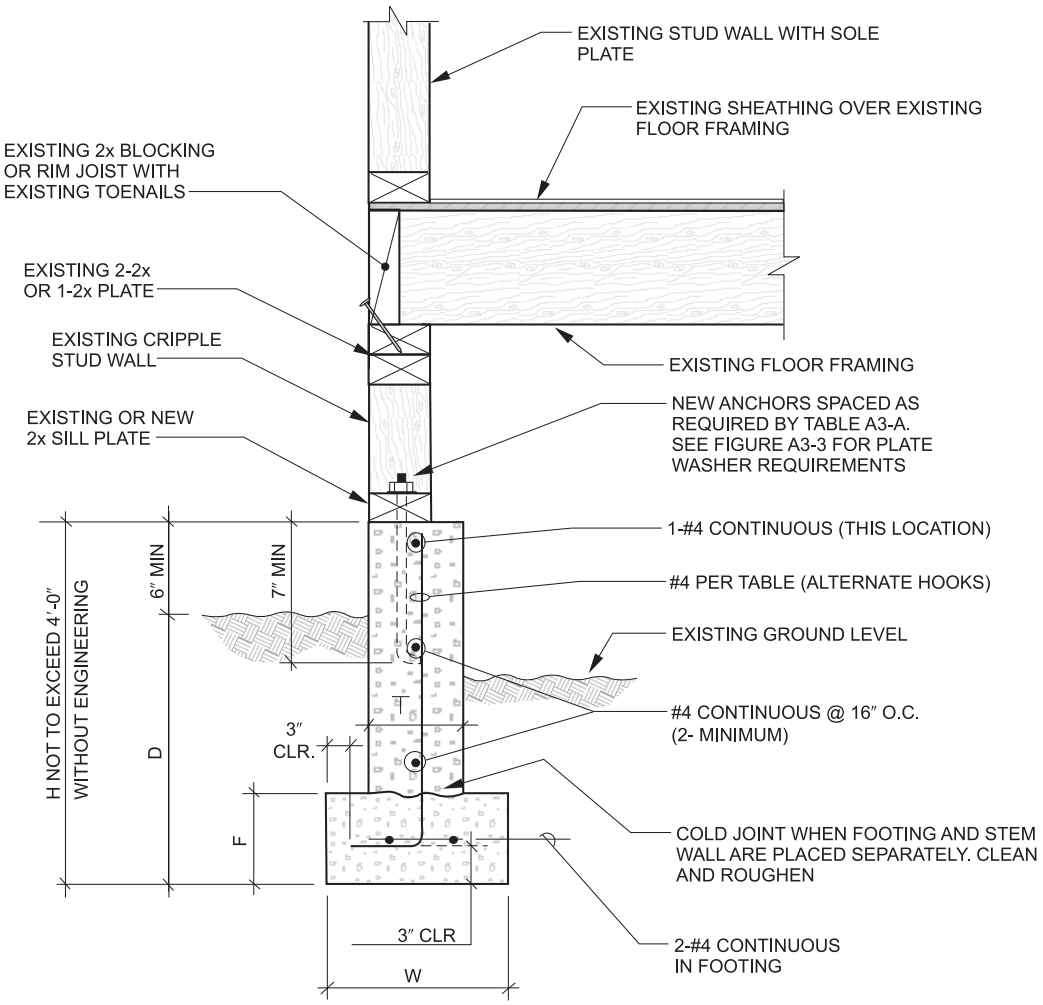

For SI: 1 inch = 25.4 mm, 1 foot = 304.8 mm.

[BS] FIGURE A3-1
NEW REINFORCED CONCRETE FOUNDATION SYSTEM

INTERNATIONAL CODE COUNCIL®
Copyright © 2015 ICC. ALL RIGHTS RESERVED. Accessed by David Dammon on Jun 21, 2017 12:30:52 PM pursuant to License Agreement with ICC. No further reproduction or distribution authorized. ANY UNAUTHORIZED REPRODUCTION OR DISTRIBUTION IS A VIOLATION OF THE FEDERAL COPYRIGHT ACT AND THE LICENSE AGREEMENT, AND SUBJECT TO CIVIL AND CRIMINAL PENALTIES THEREUNDER.

MINIMUM FOUNDATION DIMENSIONS					MINIMUM FOUNDATION REINFORCING		
NUMBER OF STORIES	W	F	D[a, b, c]	T	H	VERTICAL REINFORCING	HORIZONTAL REINFORCING
1	12 inches (305 mm)	6 inches (152 mm)	12 inches (305 mm)	6 inches (152 mm)	≤ 24 inches (610 mm)	#4 @ 24 inches (610 mm) on center	#4 continuous at top of stem wall
2	15 inches (381 mm)	7 inches (178 mm)	18 inches (457 mm)	8 inches (203 mm)	≥ 24 inches (610 mm)	#4 @ 24 inches (610 mm) on center	#4 @ 16 inches (406 mm) on center
3	18 inches (457 mm	8 inches (203 mm)	24 inches (610 mm)	10 inches (254 mm)	≥ 36 inches (914 mm)	#4 @ 24 inches (610 mm) on center	#4 @ 16 inches (406 mm) on center

a. Where frost conditions occur, the minimum depth shall extend below the frost line.
b. The ground surface along the interior side of the foundation may be excavated to the elevation of the top of the footing.
c. Where the soil is designated as expansive, the foundation depth and reinforcement shall be approved by the code official.

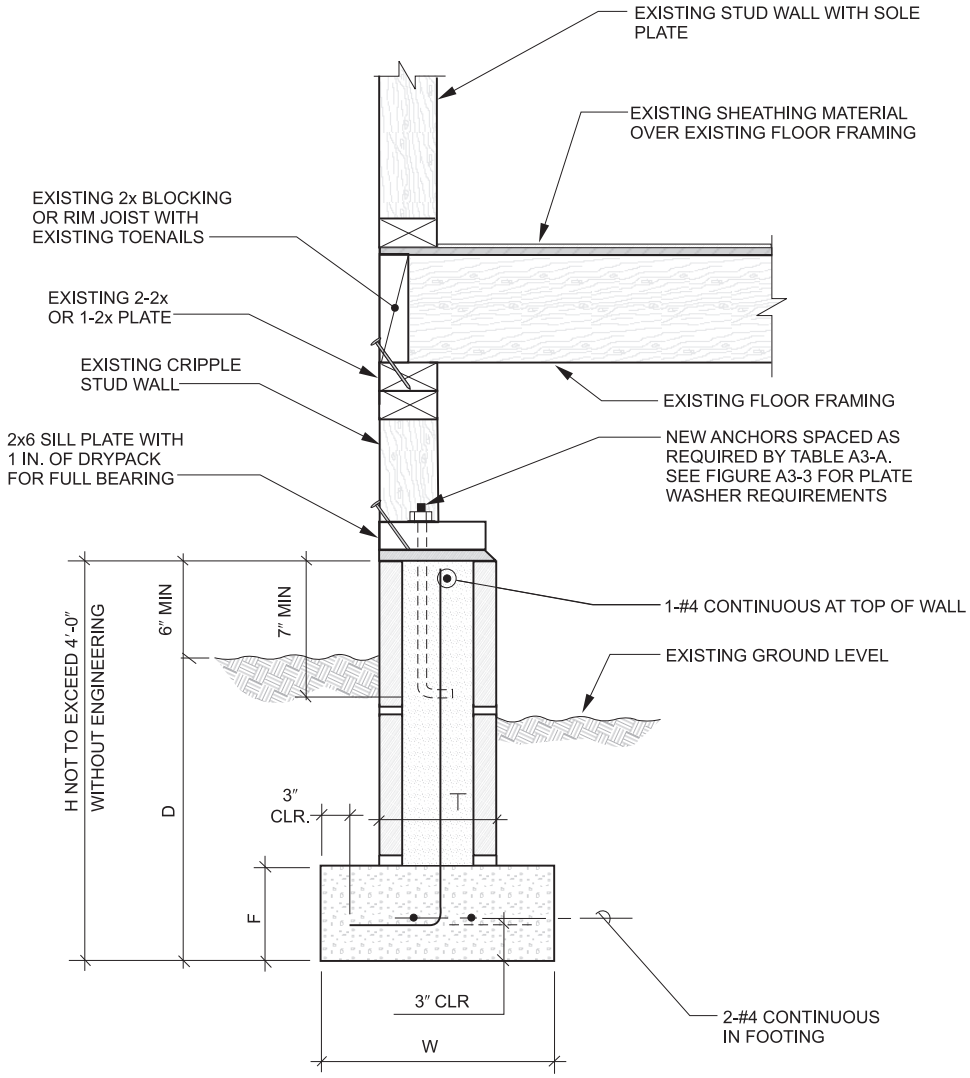

For SI: 1 inch = 25.4 mm, 1 foot = 304.8 mm.

[BS] FIGURE A3-2
NEW MASONRY CONCRETE FOUNDATION

INTERNATIONAL CODE COUNCIL®
Copyright © 2015 ICC. ALL RIGHTS RESERVED. Accessed by David Dammon on Jun 21, 2017 12:30:52 PM pursuant to License Agreement with ICC. No further reproduction or distribution authorized. ANY UNAUTHORIZED REPRODUCTION OR DISTRIBUTION IS A VIOLATION OF THE FEDERAL COPYRIGHT ACT AND THE LICENSE AGREEMENT, AND SUBJECT TO CIVIL AND CRIMINAL PENALTIES THEREUNDER.

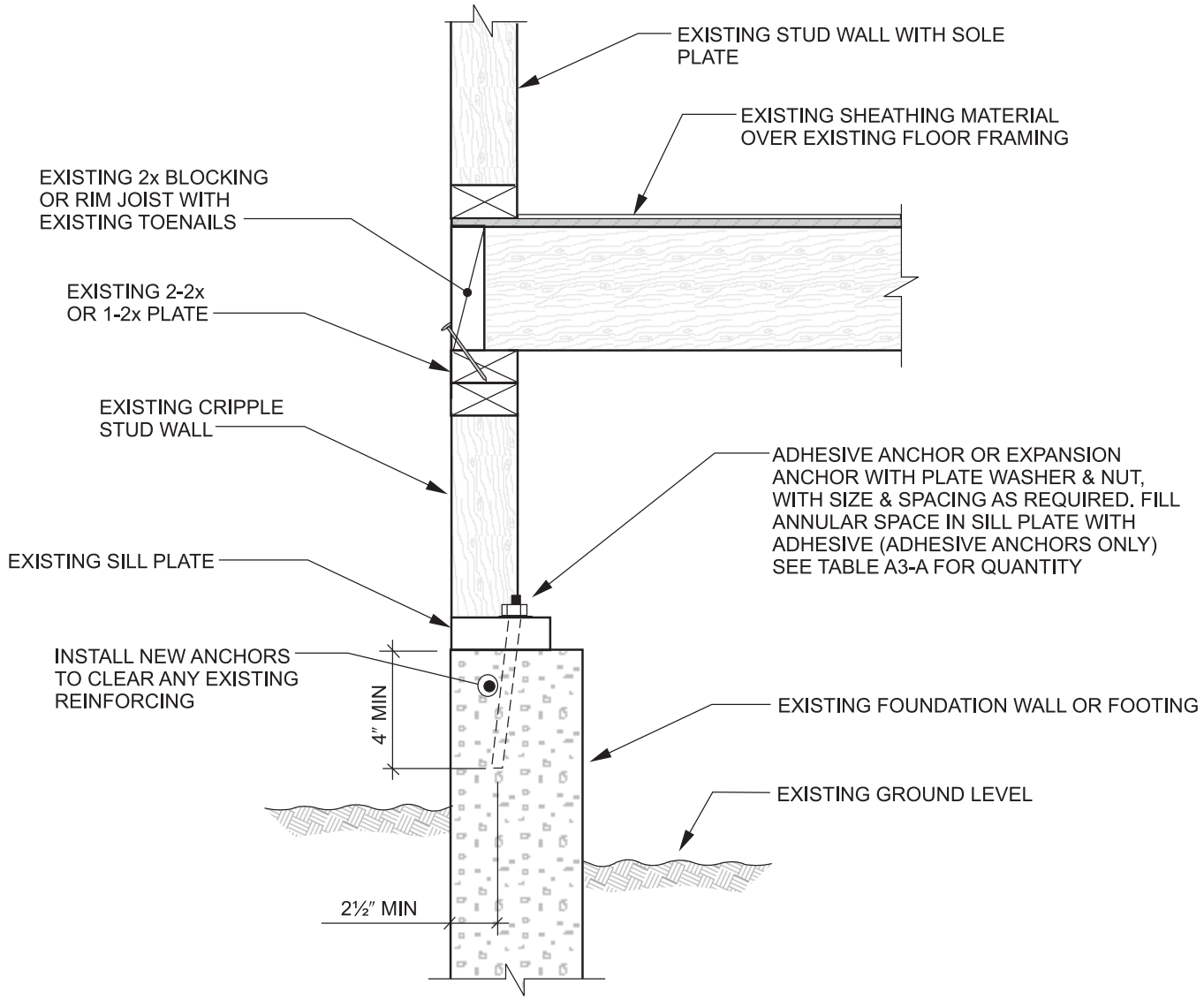

For SI: 1 inch = 25.4 mm.

NOTES:

1. Plate washers shall comply with the following:

   $^{1}/_{2}$-inch anchor or bolt—3 inches × 3 inches × 0.229 inch minimum.

   $^{5}/_{8}$-inch anchor or bolt—3 inches × 3 inches × 0.229 inch minimum.

   A diagonal slot in the plate washer is permitted in accordance with Table A3-A, Footnote b.
2. See Figure A3-5 or A3-6 for cripple wall bracing.

[BS] FIGURE A3-3
SILL PLATE BOLTING TO EXISTING FOUNDATION

INTERNATIONAL CODE COUNCIL®
Copyright © 2015 ICC. ALL RIGHTS RESERVED. Accessed by David Dammon on Jun 21, 2017 12:30:52 PM pursuant to License Agreement with ICC. No further reproduction or distribution authorized. ANY UNAUTHORIZED REPRODUCTION OR DISTRIBUTION IS A VIOLATION OF THE FEDERAL COPYRIGHT ACT AND THE LICENSE AGREEMENT, AND SUBJECT TO CIVIL AND CRIMINAL PENALTIES THEREUNDER.

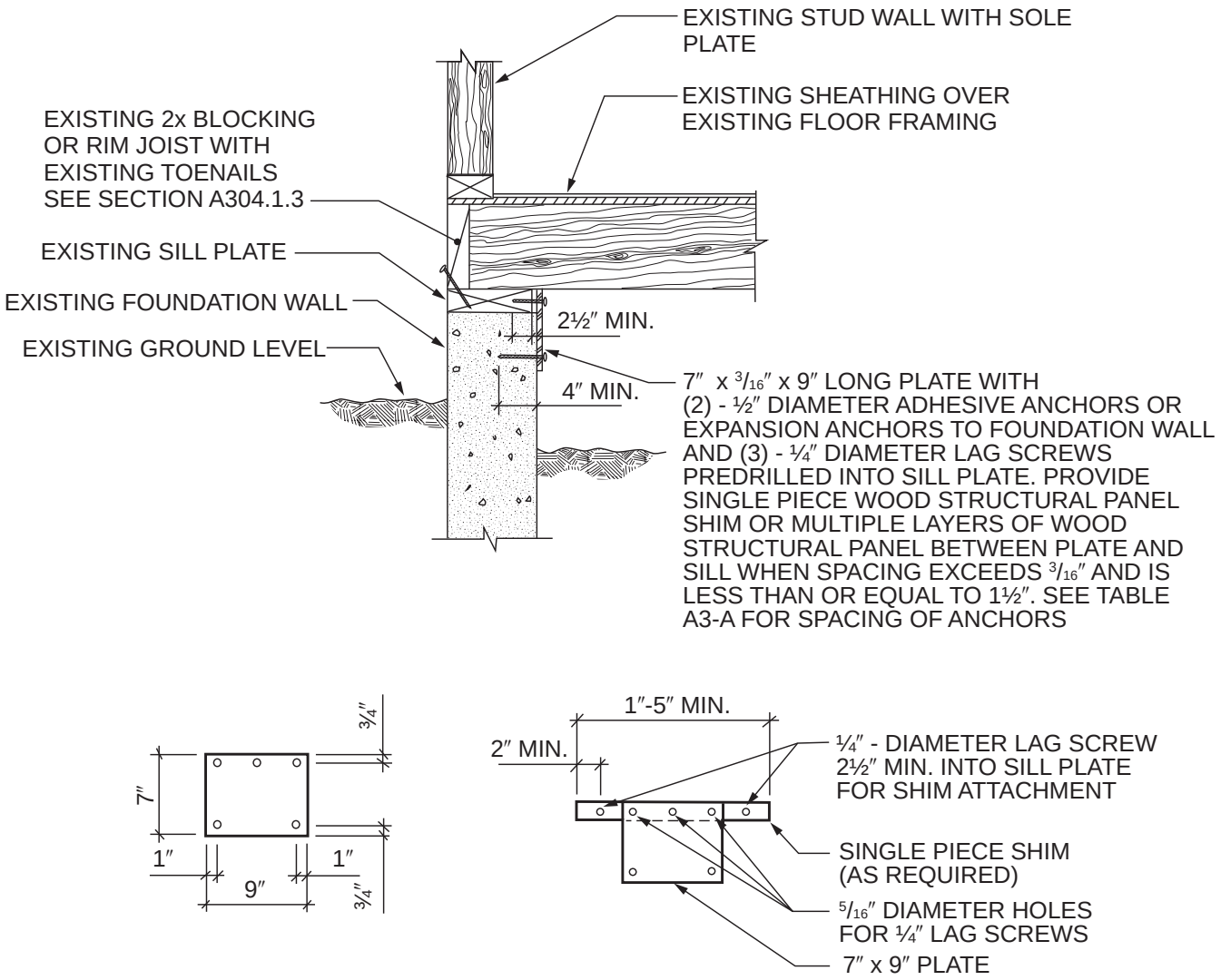

For SI: 1 inch = 25.4 mm, 1 foot = 304.8 mm.

NOTES:

1. If shim space exceeds $1^{1}/_{2}$ inches, alternate details will be required.
2. Where required, single piece shim shall be naturally durable wood or preservative-treated wood. If perservative-treated wood is used, it shall be isolated from the foundation system with a moisture barrier.

[BS] FIGURE A3-4A
ALTERNATE SILL PLATE ANCHORING IN EXISTING FOUNDATION—
WITHOUT CRIPPLE WALLS AND FLOOR FRAMING NOT PARALLEL TO FOUNDATIONS

INTERNATIONAL CODE COUNCIL®
Copyright © 2015 ICC. ALL RIGHTS RESERVED. Accessed by David Dammon on Jun 21, 2017 12:30:52 PM pursuant to License Agreement with ICC. No further reproduction or distribution authorized. ANY UNAUTHORIZED REPRODUCTION OR DISTRIBUTION IS A VIOLATION OF THE FEDERAL COPYRIGHT ACT AND THE LICENSE AGREEMENT, AND SUBJECT TO CIVIL AND CRIMINAL PENALTIES THEREUNDER.

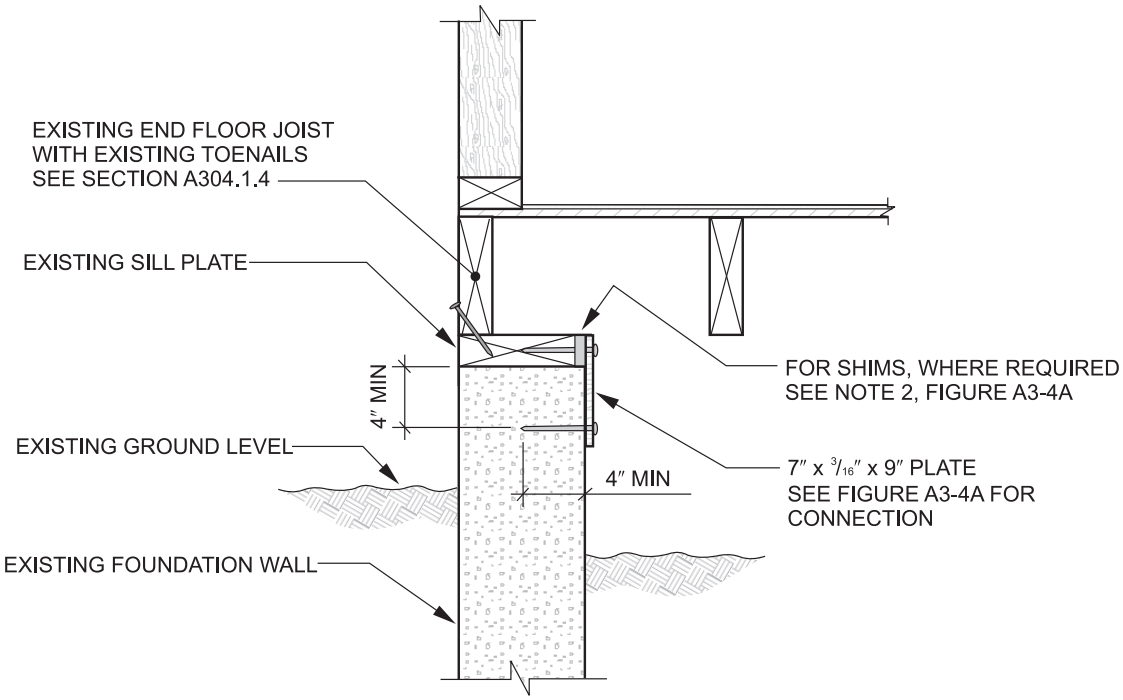

For SI: 1 inch = 25.4 mm.

[BS] FIGURE A3-4B
ALTERNATE SILL PLATE ANCHOR TO EXISTING FOUNDATION WITHOUT CRIPPLE WALL AND FLOOR FRAMING PARALLEL TO FOUNDATIONS

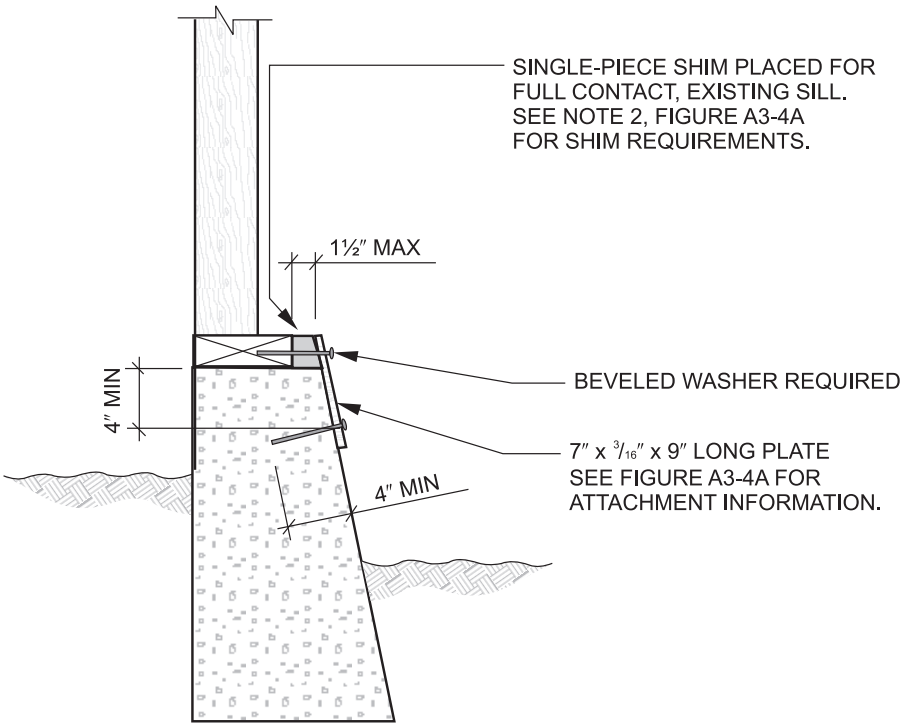

For SI: 1 inch = 25.4 mm.

[BS] FIGURE A3-4C
SILL PLATE ANCHORING TO EXISTING FOUNDATION—ALTERNATE CONNECTION FOR BATTERED FOOTING

INTERNATIONAL CODE COUNCIL®
Copyright © 2015 ICC. ALL RIGHTS RESERVED. Accessed by David Dammon on Jun 21, 2017 12:30:52 PM pursuant to License Agreement with ICC. No further reproduction or distribution authorized. ANY UNAUTHORIZED REPRODUCTION OR DISTRIBUTION IS A VIOLATION OF THE FEDERAL COPYRIGHT ACT AND THE LICENSE AGREEMENT, AND SUBJECT TO CIVIL AND CRIMINAL PENALTIES THEREUNDER.

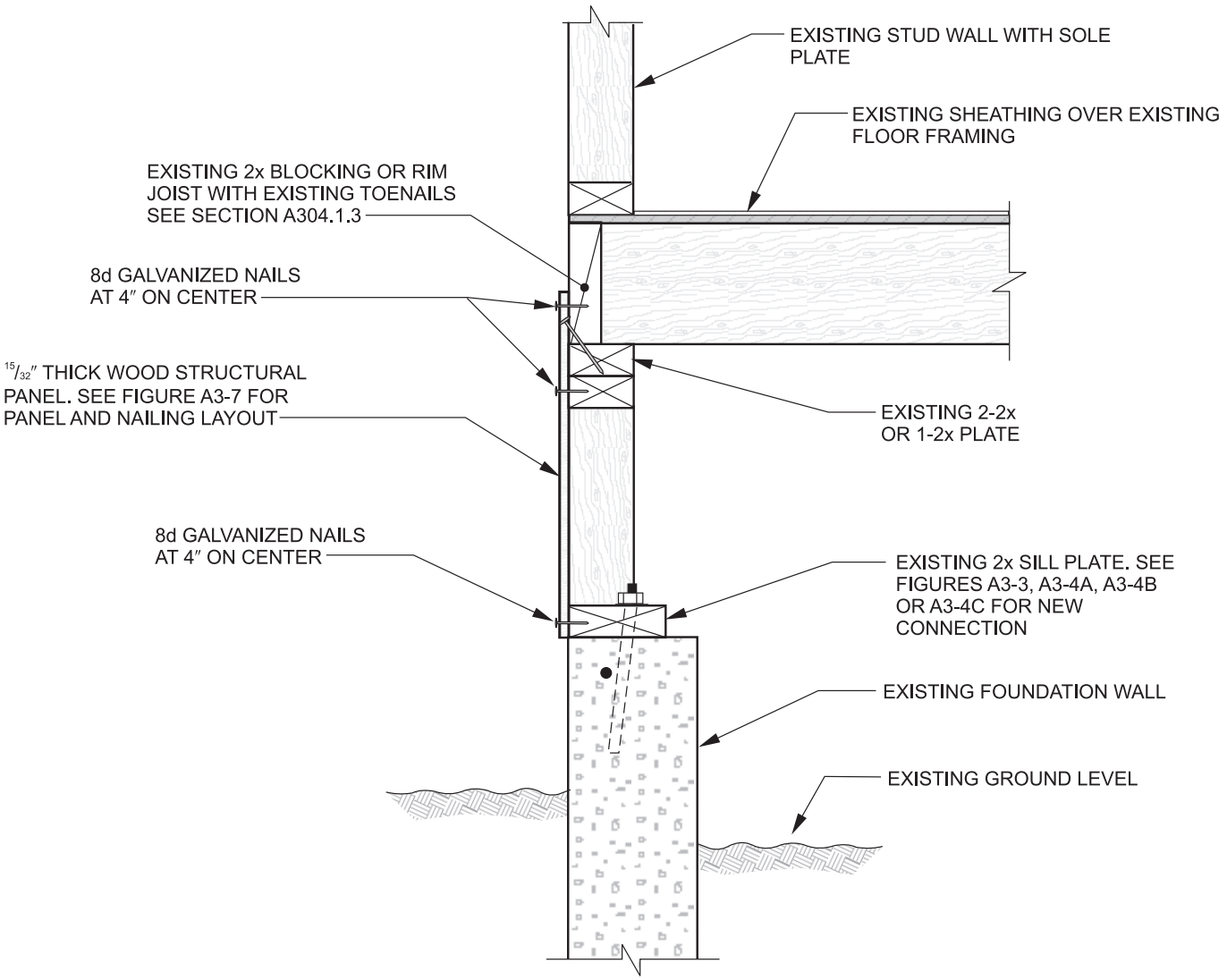

For SI: 1 inch = 25.4 mm.
NOTE: See Figure A3-3 for sill plate anchoring.

[BS] FIGURE A3-5
CRIPPLE WALL BRACING WITH NEW WOOD STRUCTURAL PANEL ON EXTERIOR FACE OF CRIPPLE STUDS

INTERNATIONAL CODE COUNCIL®
Copyright © 2015 ICC. ALL RIGHTS RESERVED. Accessed by David Dammon on Jun 21, 2017 12:30:52 PM pursuant to License Agreement with ICC. No further reproduction or distribution authorized. ANY UNAUTHORIZED REPRODUCTION OR DISTRIBUTION IS A VIOLATION OF THE FEDERAL COPYRIGHT ACT AND THE LICENSE AGREEMENT, AND SUBJECT TO CIVIL AND CRIMINAL PENALTIES THEREUNDER.

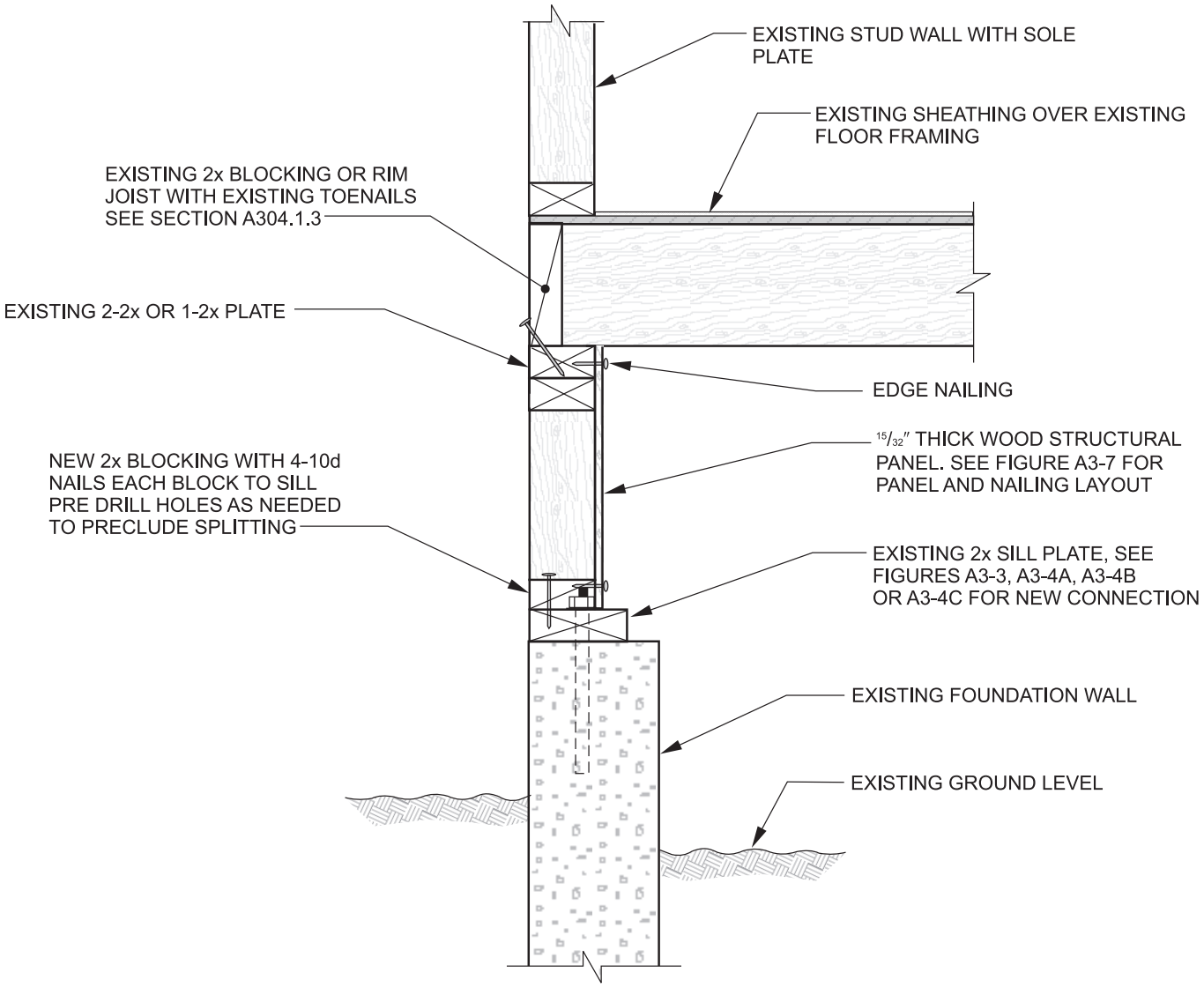

For SI: 1 inch = 25.4 mm.

[BS] FIGURE A3-6
CRIPPLE WALL BRACING WITH WOOD STRUCTURAL PANEL ON INTERIOR FACE OF CRIPPLE STUDS

INTERNATIONAL CODE COUNCIL®
Copyright © 2015 ICC. ALL RIGHTS RESERVED. Accessed by David Dammon on Jun 21, 2017 12:30:52 PM pursuant to License Agreement with ICC. No further reproduction or distribution authorized. ANY UNAUTHORIZED REPRODUCTION OR DISTRIBUTION IS A VIOLATION OF THE FEDERAL COPYRIGHT ACT AND THE LICENSE AGREEMENT, AND SUBJECT TO CIVIL AND CRIMINAL PENALTIES THEREUNDER.

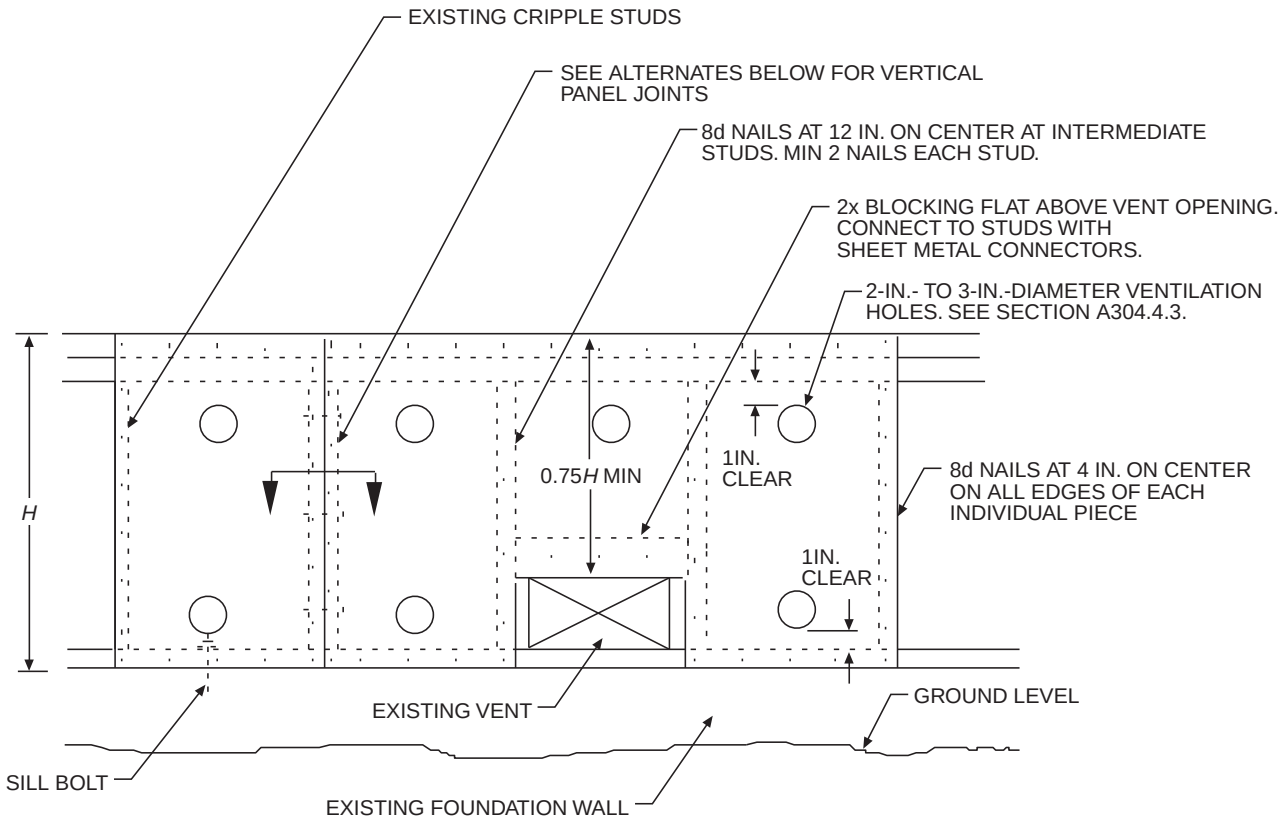

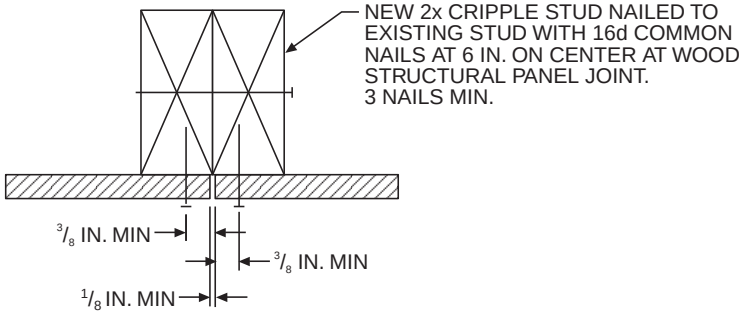

VERTICAL SPLICE AT DOUBLE STUD

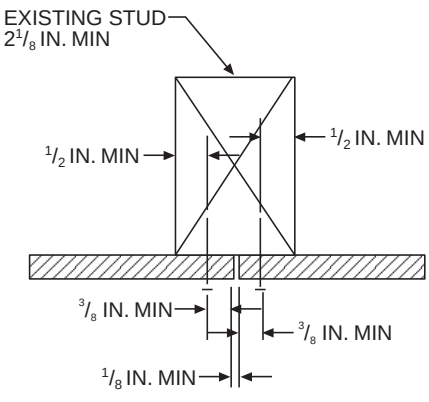

VERTICAL SPLICE AT SINGLE STUD

For SI: 1 inch = 25.4 mm.

[BS] FIGURE A3-7
PARTIAL CRIPPLE STUD WALL ELEVATION

INTERNATIONAL CODE COUNCIL®
Copyright © 2015 ICC. ALL RIGHTS RESERVED. Accessed by David Dammon on Jun 21, 2017 12:30:52 PM pursuant to License Agreement with ICC. No further reproduction or distribution authorized. ANY UNAUTHORIZED REPRODUCTION OR DISTRIBUTION IS A VIOLATION OF THE FEDERAL COPYRIGHT ACT AND THE LICENSE AGREEMENT, AND SUBJECT TO CIVIL AND CRIMINAL PENALTIES THEREUNDER.

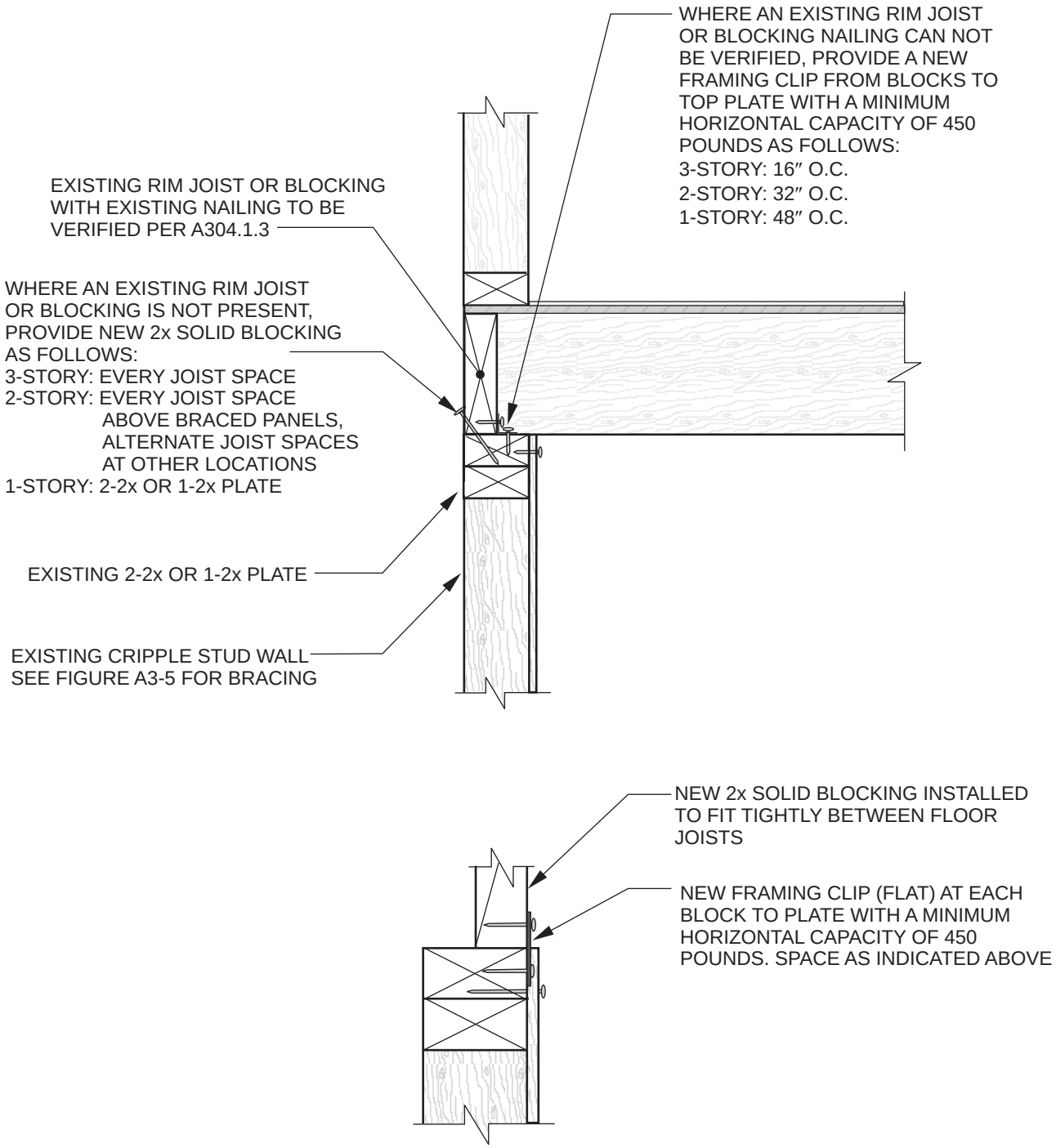

ALTERNATE DETAIL FOR FLUSH CONDITION

For SI: 1 inch = 25.4 mm, 1 pound = 4.4 N.

NOTE: See manufacturing instructions for nail sizes associated with metal framing clips.

[BS] FIGURE A3-8A
TYPICAL FLOOR TO CRIPPLE WALL CONNECTION (FLOOR JOISTS NOT PARALLEL TO FOUNDATIONS)

INTERNATIONAL CODE COUNCIL®
Copyright © 2015 ICC. ALL RIGHTS RESERVED. Accessed by David Dammon on Jun 21, 2017 12:30:52 PM pursuant to License Agreement with ICC. No further reproduction or distribution authorized. ANY UNAUTHORIZED REPRODUCTION OR DISTRIBUTION IS A VIOLATION OF THE FEDERAL COPYRIGHT ACT AND THE LICENSE AGREEMENT, AND SUBJECT TO CIVIL AND CRIMINAL PENALTIES THEREUNDER.

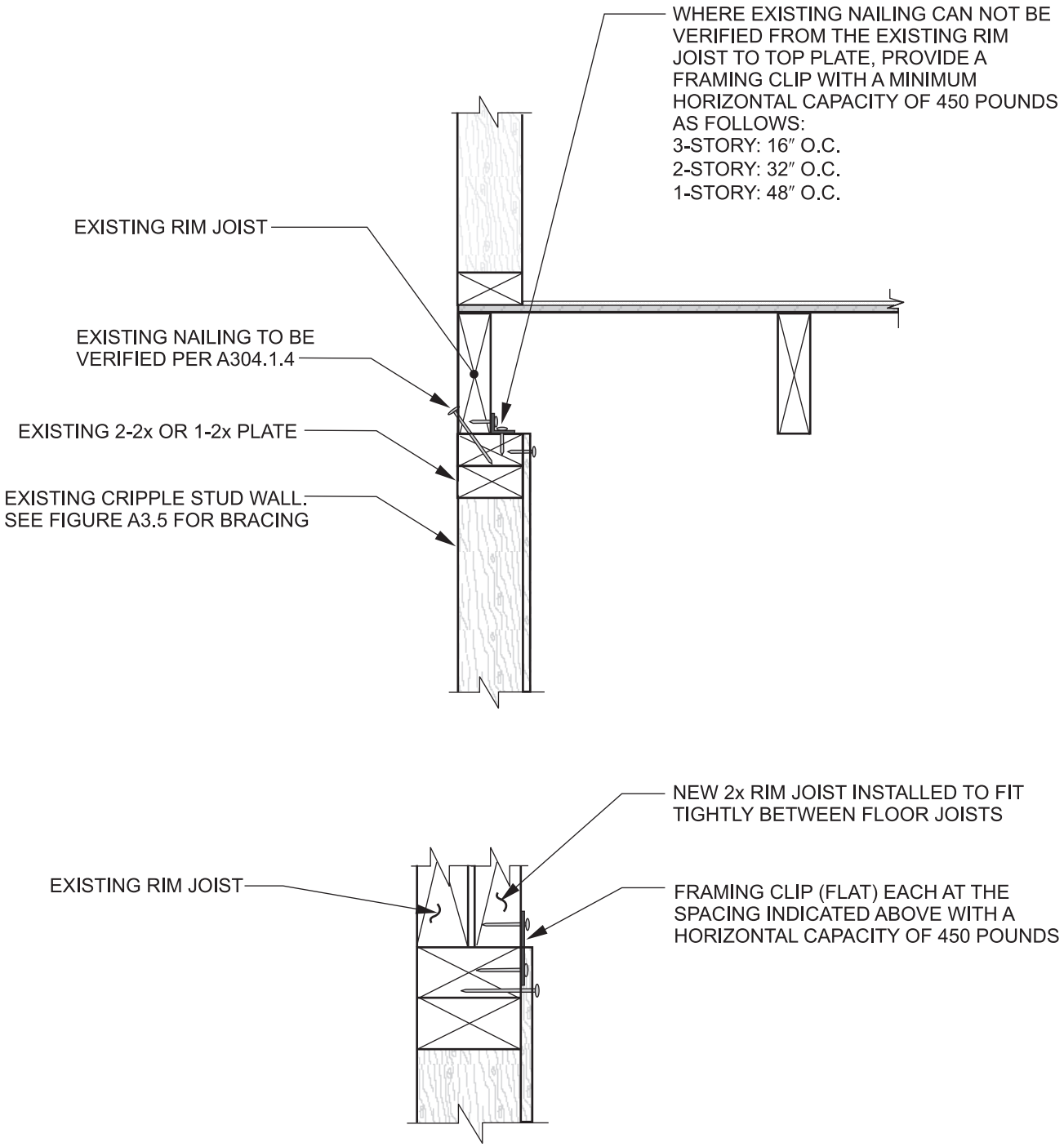

ALTERNATE CONNECTION FOR FLUSH CONNECTION

For SI: 1 inch = 25.4 mm, 1 pound = 4.4 N.

NOTE: See manufacturing instructions for nail sizes associated with metal framing clips.

[BS] FIGURE A3-8B
TYPICAL FLOOR TO CRIPPLE WALL CONNECTION (FLOOR JOISTS PARALLEL TO FOUNDATIONS)

INTERNATIONAL CODE COUNCIL®
Copyright © 2015 ICC. ALL RIGHTS RESERVED. Accessed by David Dammon on Jun 21, 2017 12:30:52 PM pursuant to License Agreement with ICC. No further reproduction or distribution authorized. ANY UNAUTHORIZED REPRODUCTION OR DISTRIBUTION IS A VIOLATION OF THE FEDERAL COPYRIGHT ACT AND THE LICENSE AGREEMENT, AND SUBJECT TO CIVIL AND CRIMINAL PENALTIES THEREUNDER.

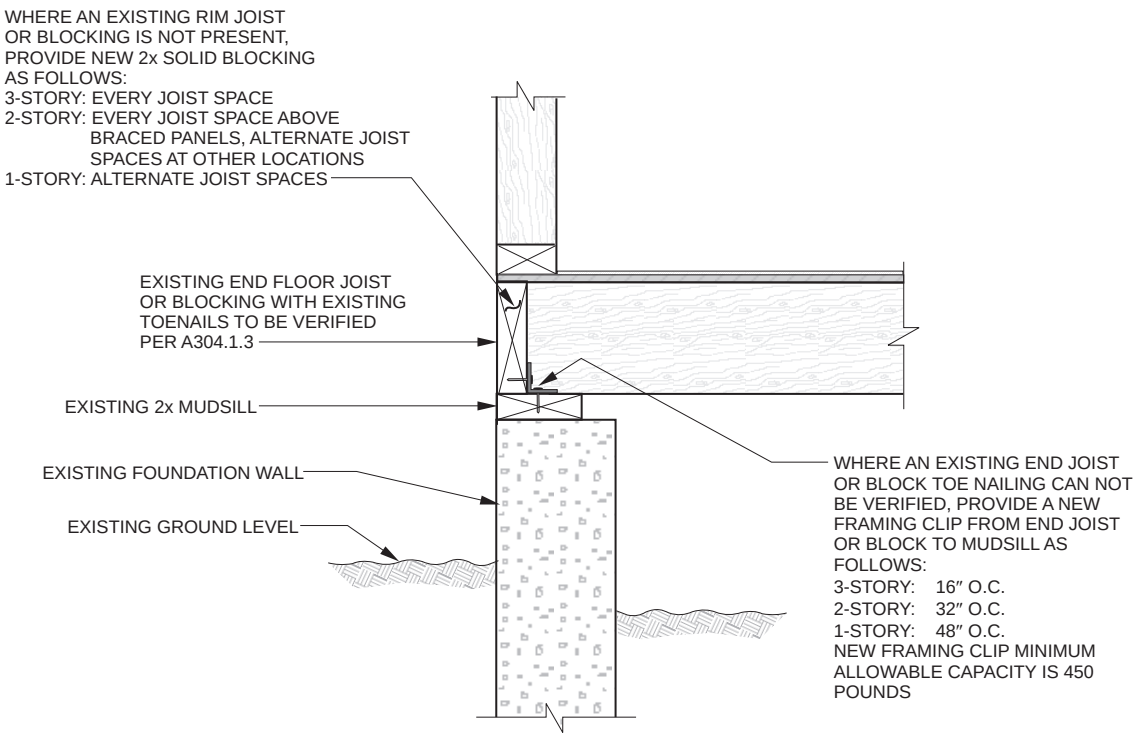

FLOOR JOISTS NOT PARALLEL TO FOUNDATIONS

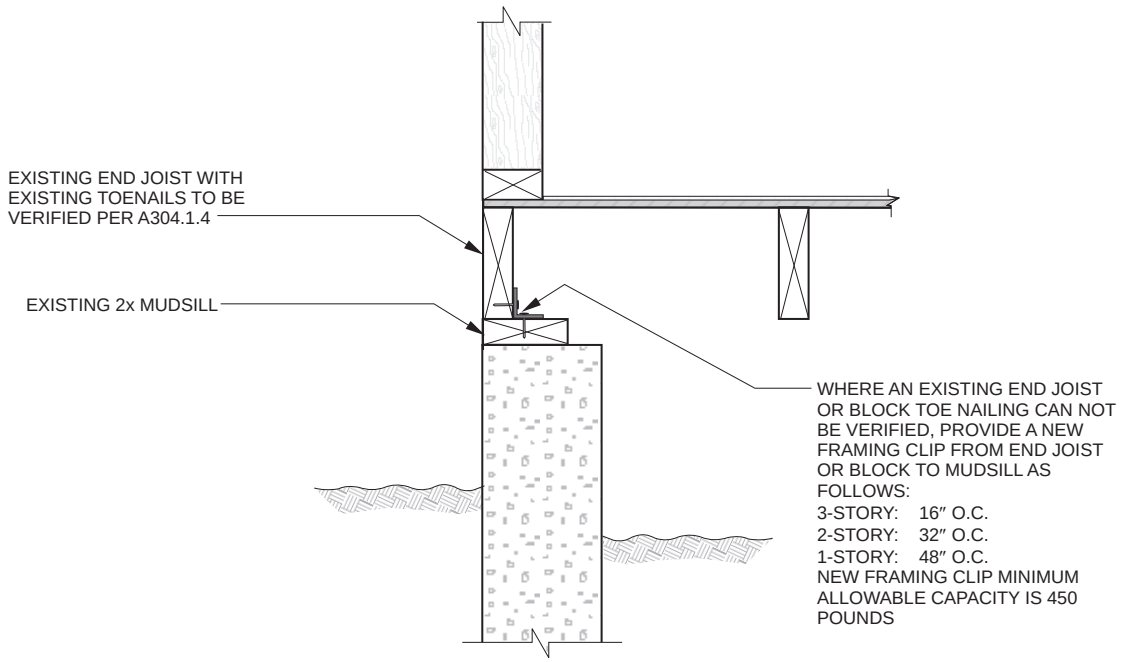

FLOOR JOISTS PARALLEL TO FOUNDATIONS

For SI: 1 inch = 25.4 mm.

NOTES:

1. See Section A304.3 for sill plate anchorage.
2. See manufacturing instructions for nail sizes associated with metal framing clips.

[BS] FIGURE A3-8C
TYPICAL FLOOR TO MUDSILL CONNECTIONS

INTERNATIONAL CODE COUNCIL®
Copyright © 2015 ICC. ALL RIGHTS RESERVED. Accessed by David Dammon on Jun 21, 2017 12:30:52 PM pursuant to License Agreement with ICC. No further reproduction or distribution authorized. ANY UNAUTHORIZED REPRODUCTION OR DISTRIBUTION IS A VIOLATION OF THE FEDERAL COPYRIGHT ACT AND THE LICENSE AGREEMENT, AND SUBJECT TO CIVIL AND CRIMINAL PENALTIES THEREUNDER.

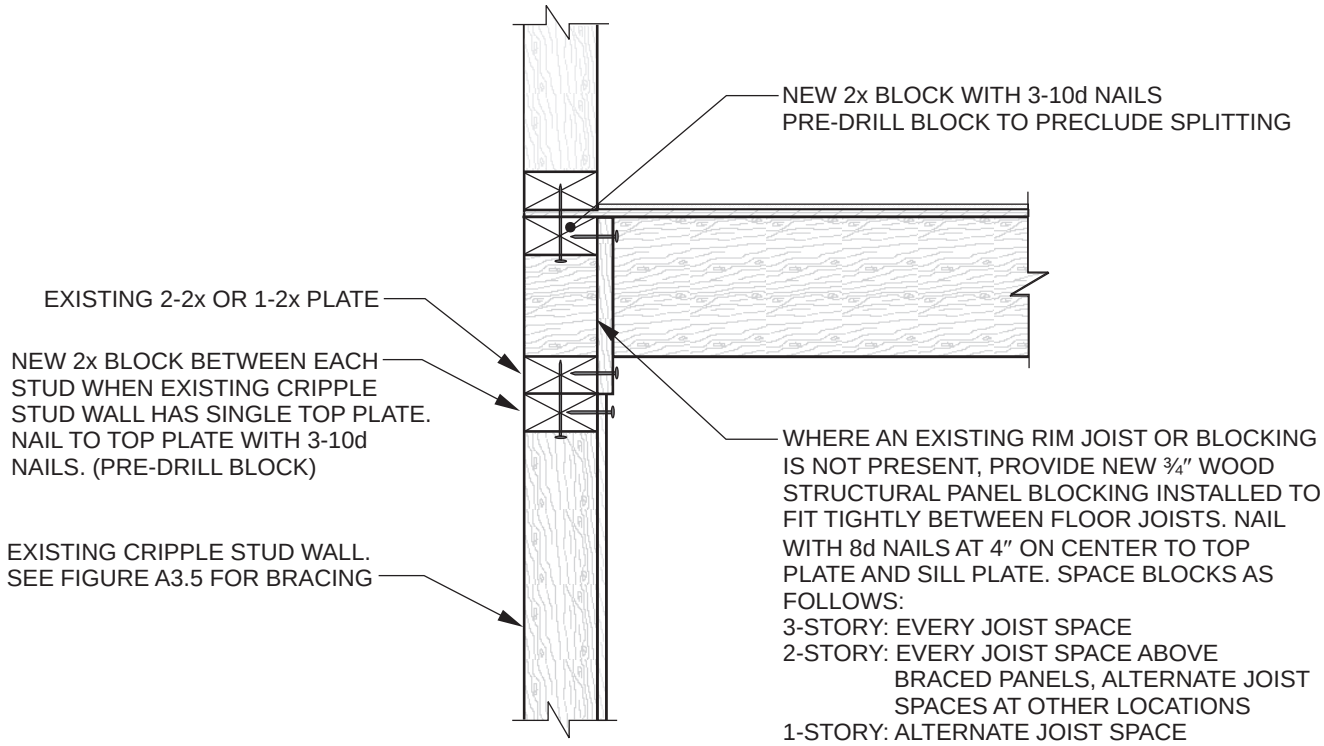

FLOOR JOISTS NOT PARALLEL TO FOUNDATION

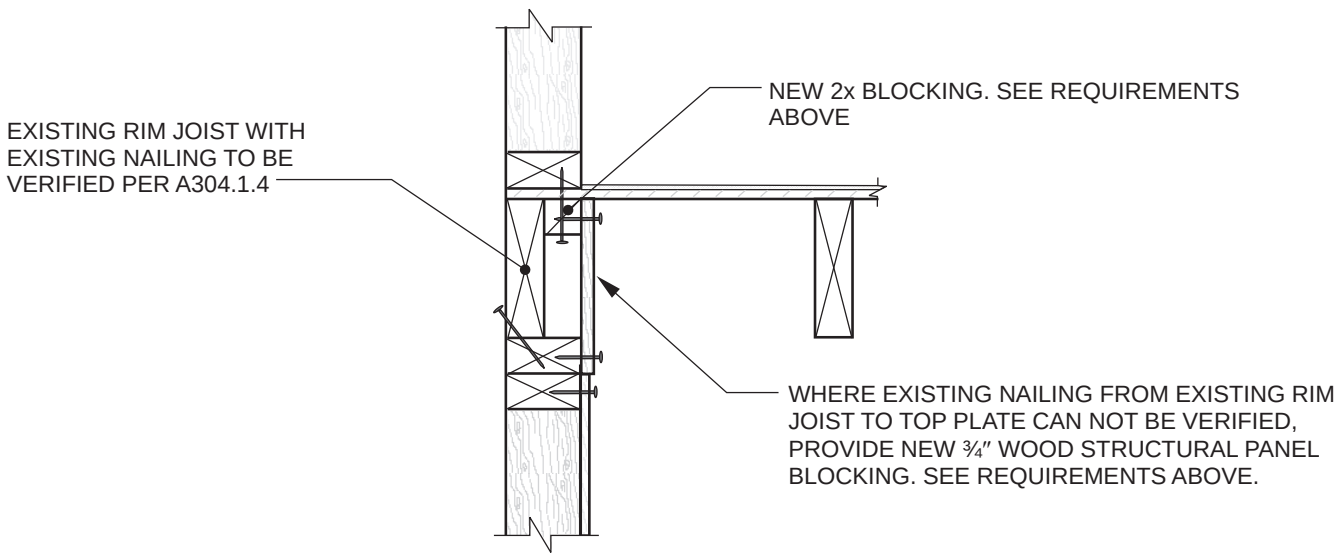

FLOOR JOISTS PARALLEL TO FOUNDATION

For SI: 1 inch = 25.4 mm, 1 pound = 4.4N.

NOTE: See Section A304.4 for cripple wall bracing.

[BS] FIGURE A3-9
ALTERNATE FLOOR FRAMING TO CRIPPLE WALL CONNECTION

INTERNATIONAL CODE COUNCIL®
Copyright © 2015 ICC. ALL RIGHTS RESERVED. Accessed by David Dammon on Jun 21, 2017 12:30:52 PM pursuant to License Agreement with ICC. No further reproduction or distribution authorized. ANY UNAUTHORIZED REPRODUCTION OR DISTRIBUTION IS A VIOLATION OF THE FEDERAL COPYRIGHT ACT AND THE LICENSE AGREEMENT, AND SUBJECT TO CIVIL AND CRIMINAL PENALTIES THEREUNDER.

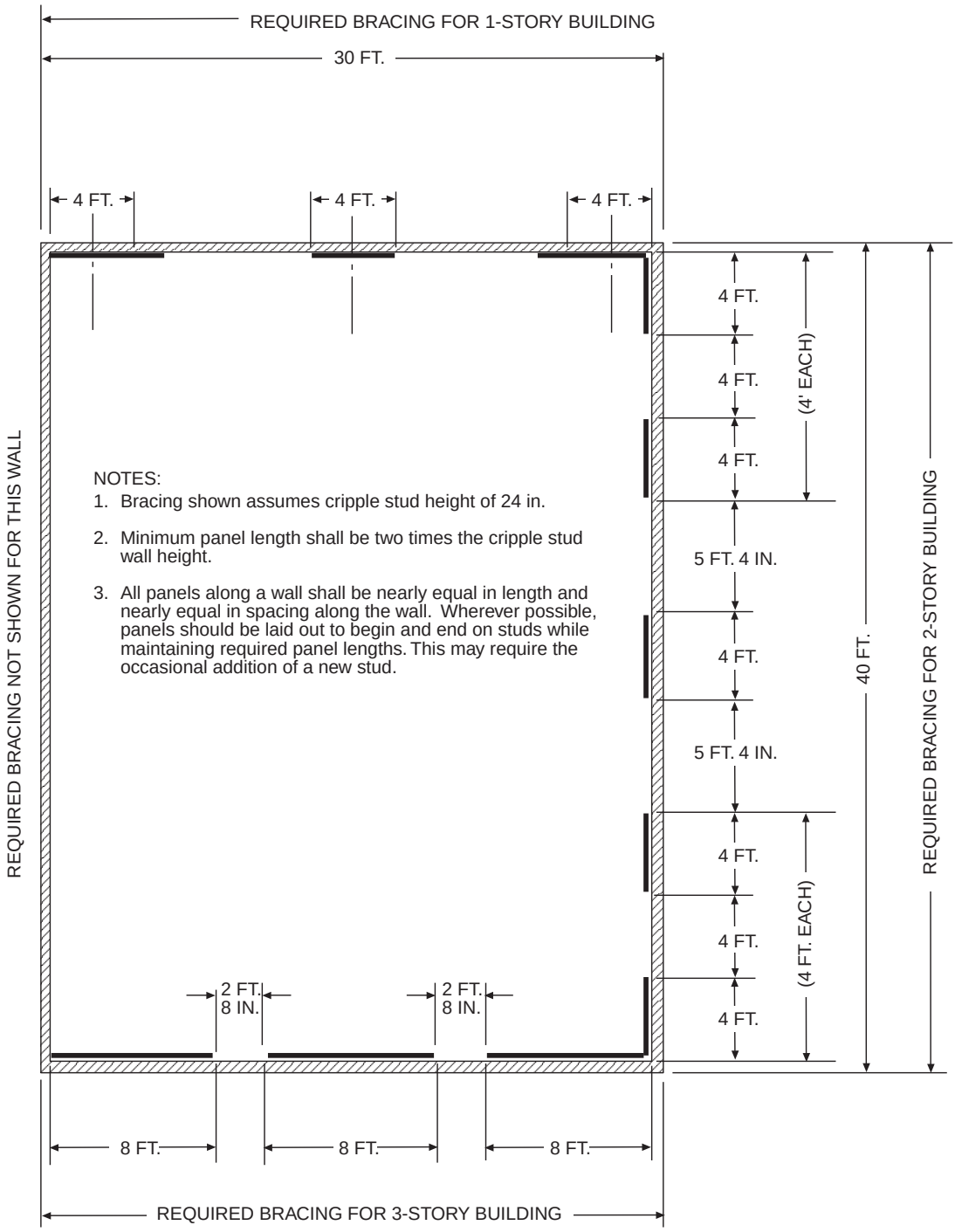

Bracing determination:

1-story building—each end and not less than 40% of wall length.[1]
Transverse wall—30 ft. × 0.40 = 12 ft. minimum panel length = 4 ft. 0 in.
2-story building—each end and not less than 50% of wall length.[1]
Longitudinal wall—40 ft. × 0.50 = 20 ft. 0 in. minimum of bracing.
3-story building—each end and not less than 80% of wall length.[1]
Transverse wall —30 ft. × 0.80 = 24 ft. 0 in. minimum of bracing.

[1]See Table A3-A for buildings with both plaster walls and roofing exceeding 6 psf (287 N/m^2).

For SI: 1 inch = 25.4 mm, 1 foot = 304.8 mm.

[BS] FIGURE A3-10
FLOOR PLAN-CRIPPLE WALL BRACING LAYOUT

INTERNATIONAL CODE COUNCIL®
Copyright © 2015 ICC. ALL RIGHTS RESERVED. Accessed by David Dammon on Jun 21, 2017 12:30:52 PM pursuant to License Agreement with ICC. No further reproduction or distribution authorized. ANY UNAUTHORIZED REPRODUCTION OR DISTRIBUTION IS A VIOLATION OF THE FEDERAL COPYRIGHT ACT AND THE LICENSE AGREEMENT, AND SUBJECT TO CIVIL AND CRIMINAL PENALTIES THEREUNDER.

Chapter A4: Earthquake Risk Reduction in Wood-framed Residential Buildings with Soft, Weak or Open Front Walls

❖ Appendix Chapter A4, along with the rest of Appendix A of the code, is referenced by the *International Codes*® in two ways:

- Section 301.1.4.2 allows the use of Appendix A for qualifying buildings when "reduced IBC level seismic forces" are triggered.
- Section 807.6 allows the use of Appendix A for voluntary seismic retrofit.

This chapter has its origins in documents developed for the City of Los Angeles [Los Angeles (LA), 1999] and the City of Fremont, California, after the 1994 Northridge earthquake. Later, those provisions were extended by the Structural Engineers Association of California (SEAOC) to become Chapter 4 of the 2000 edition of *Guidelines for the Seismic Retrofit of Existing Buildings* (GSREB), published in 2001 by the International Conference of Building Officials (ICBO). Chapter 4 of the GSREB was reprinted in its entirety as Appendix Chapter A4 of the 2003 code. The 2006 through 2015 editions made many clarifications and revisions, most proposed by SEAOC.

For convenience, this commentary uses the acronym "SWOF" to refer to buildings, wall lines or structural conditions characterized by soft, weak or open-front (SWOF) walls.

SECTION A401 GENERAL

[BS] A401.1 Purpose. The purpose of this chapter is to promote public welfare and safety by reducing the risk of death or injury that may result from the effects of earthquakes on existing wood-frame, multiunit residential buildings. The ground motions of past earthquakes have caused the loss of human life, personal injury and property damage in these types of buildings. This chapter creates minimum standards to strengthen the more vulnerable portions of these structures. When fully followed, these minimum standards will improve the performance of these buildings but will not necessarily prevent all earthquake-related damage.

❖ The provisions in this chapter are intended to reduce earthquake risks by preventing concentrations of drift and structural damage in the vulnerable first stories of typical wood-framed SWOF buildings. These retrofit provisions are not intended to make the entire structure conform to the current code. Instead, Appendix Chapter A4 provisions are intended to "reduce the risk" by addressing the principal seismic weaknesses of a SWOF building with significantly less design effort, construction cost and tenant disruption. Risk reduction does not take a comprehensive approach to life safety, does not aim to protect property or function and is not necessarily equivalent to new construction under the *International Building Code*® (IBC®). For many owners, tenants and jurisdictions, however, this risk-reduction approach represents an acceptable trade-off.

Risk reduction identifies and improves the structure's more vulnerable portions, often leaving the rest of the building untouched. The SWOF condition itself is considered by far the most vulnerable attribute of a SWOF building, and retrofit of the SWOF wall line can be expected to substantially reduce the likelihood of excessive drift or collapse. Indeed, if the SWOF condition is the building's only serious structural deficiency, proper retrofit of the SWOF condition may achieve the benefits of a full life safety retrofit. Other examples of risk-reduction retrofit schemes include the strengthening and bolting of unbraced cripple walls in a wood-framed house without consideration of the upper stories, and the bracing of parapets in unreinforced masonry (URM) buildings without consideration of the remaining URM walls.

The question of performance objectives and the suitability of Appendix Chapter A4 have been debated when jurisdictions in areas of high seismicity have shifted the focus of seismic programs from basic safety to community resilience. If a program's objective is to minimize the loss of housing stock so as to limit the need for post-earthquake emergency shelters and to facilitate recovery, Appendix Chapter A4 may not facilitate that objective. These issues are discussed in an Applied Technology Council (ATC) report for the City and County of San Francisco (ATC, 2009) and are among the topics studied by the ATC 71-1 project. Nevertheless, that debate is about retrofit mandates and ordinances. For work triggered by codes for individual buildings, the objective remains safety based, and Appendix Chapter A4 is deemed equivalent to the other methods prescribed in Appendix Chapter A1.

As with any building or retrofit code, these provisions are formulated for certain typical conditions, and the intended performance is expected to be achieved by the great majority of the buildings to

INTERNATIONAL CODE COUNCIL®
Copyright © 2015 ICC. ALL RIGHTS RESERVED. Accessed by David Dammon on Jun 21, 2017 12:30:52 PM pursuant to License Agreement with ICC. No further reproduction or distribution authorized. ANY UNAUTHORIZED REPRODUCTION OR DISTRIBUTION IS A VIOLATION OF THE FEDERAL COPYRIGHT ACT AND THE LICENSE AGREEMENT, AND SUBJECT TO CIVIL AND CRIMINAL PENALTIES THEREUNDER.

which the provisions apply. The performance of any specific building, however, might be better or worse than that intended by the provisions.

Section A401.1 refers to past earthquakes. Multistory SWOF buildings have shown unacceptable performance, including collapse and consequent loss of life, in the 1971 San Fernando, 1978 Santa Barbara, 1989 Loma Prieta and 1994 Northridge earthquakes. For more information on their past performance, see Harris et al. (1990), (1994), Mendes (1995) and Holmes and Somers (1996). For more information on analysis and retrofit approaches, see Vukazich (1998), Los Angeles Department of Building and Safety (LADBS) (1999), Rutherford and Chekene (2000), Federal Emergency Management Agency (FEMA) FEMA 547 (2006), Harris et al. (2009), Searer et al. (2009) and FEMA P-807 (2012).

[BS] A401.2 Scope. The provisions of this chapter shall apply to all existing Occupancy Group R-1 and R-2 buildings of wood construction or portions thereof where the structure has a soft, weak, or open-front wall line, and there exists one or more stories above.

❖ Section A401.2 describes the construction, occupancy and deficiencies for which this chapter is intended. The original intent of this section was that it apply only to voluntary retrofits in areas of relatively high seismicity (that is, Seismic Design Categories C, D and E but not F, which is for special occupancies outside the scope of the chapter). This appendix is currently written to be applied to SWOF buildings regardless of seismicity, and is now referenced from the body of the code (Section 301.1.4.2) as a design alternative for Seismic Risk Category I or II.

The provisions refer only to residential occupancies. Nevertheless, Appendix Chapter A4 is also intended to apply to certain buildings classified as "mixed occupancies," such as apartment buildings (Group R-2) with substantial ground floor private parking (Group U), restaurant (Group A-2), retail (Group B or M), public parking (Group S-2) or other incidental uses. In addition, these provisions are expected to apply to structurally similar cases, such as a building originally built as an apartment house but that has upper stories that were converted to office suites (Group B). Nevertheless, use of these provisions for nonresidential occupancies might require the concurrence of the code official. The important consideration is that the provisions of Appendix Chapter A4 presume that the diaphragm just above the critical SWOF story is relatively rigid and strong enough to distribute some lateral loads by rotation. This condition can be reasonably expected in wood-framed residential buildings, particularly buildings with floors composed of diagonal sheathing, plywood sheathing, two layers of perpendicular straight sheathing and/or acoustical concrete topping. Buildings for which a relatively stiff diaphragm cannot be reasonably presumed, regardless of occupancy, warrant additional attention by the designer and code official.

The most common SWOF conditions occur when the use of the building's first story differs from that of its upper stories, and particularly where the first-story use requires uninterrupted open areas and large openings in exterior walls, resulting in fewer and shorter walls to resist lateral loads. In general, the provisions in this chapter were conceived to address deficiencies in a building type with "tuck-under parking," so called because a ground-floor parking area is "tucked" under the upper stories. In California, many such structures were built in the 1960s and 1970s without considering earthquake loads or with sheathing materials that would not be allowed by the current code.

Structural characteristics of a typical wood-framed SWOF building of this era include:

- Perimeter wood-stud walls sheathed on the exterior face with stucco (sometimes over gypsum wallboard or plywood) and on the interior face with gypsum wallboard (drywall).
- Interior stud-framed partitions sheathed with drywall on both sides.
- No hold-down hardware.
- Floors of wood joists with wood sheathing, sometimes with lightweight concrete topping. Where parking is provided at the ground floor, the soffit sheathing and/or second floor construction would often be of a type sufficient for the code-required fire separation.
- Wood joist roof framing with wood sheathing.
- At the ground-floor parking or open area, steel pipe columns or wood posts supporting steel or wood beams and girders.

This chapter addresses only SWOF buildings that have wood-framed walls in the critical story.

The provision refers to SWOF wall lines "as defined in this chapter." The definitions in Section A402 differ somewhat from similar definitions of vertical irregularities in Table 12.3-2 of ASCE 7-10.

Appendix Chapter A4 is not intended to apply to one-story buildings because the principal risk from SWOF buildings is collapse of the first story under the weight of upper stories. Likewise, it does not apply to two-story houses over stucco-braced cripple walls because single-family houses are not in Occupancy Group R-1 or R-2 (such a structure might be covered by Appendix Chapter A3).

Though not explicitly stated, a multistory building might be exempted if the portion of the building with the SWOF condition is distinct from the rest of the building. That is, "stories above" may be reasonably understood to mean "stories above and influenced by the SWOF condition." For example, a three-story building with a one-story parking wing might be exempt if the SWOF condition occurs only in the one-story portion of the building. Such an interpretation requires engineering judgment and would likely be subject to the approval of the code official.

INTERNATIONAL CODE COUNCIL®
Copyright © 2015 ICC. ALL RIGHTS RESERVED. Accessed by David Dammon on Jun 21, 2017 12:30:52 PM pursuant to License Agreement with ICC. No further reproduction or distribution authorized. ANY UNAUTHORIZED REPRODUCTION OR DISTRIBUTION IS A VIOLATION OF THE FEDERAL COPYRIGHT ACT AND THE LICENSE AGREEMENT, AND SUBJECT TO CIVIL AND CRIMINAL PENALTIES THEREUNDER.

SECTION A402
DEFINITIONS

Notwithstanding the applicable definitions, symbols and notations in the building code, the following definitions shall apply for the purposes of this chapter:

❖ In general, "the building code" means the codes, standards, regulations and interpretations in effect in a specific jurisdiction. States and local jurisdictions typically adopt, and sometimes modify, a model code such as the *International Building Code*® (IBC®).

[BS] ASPECT RATIO. The span-width ratio for horizontal diaphragms and the height-length ratio for shear walls.

❖ "Vertical diaphragms" should be understood to mean "shear walls."

[BS] GROUND FLOOR. Any floor whose elevation is immediately accessible from an adjacent grade by vehicles or pedestrians. The ground floor portion of the structure does not include any floor that is completely below adjacent grades.

[BS] NONCONFORMING STRUCTURAL MATERIALS. Wall bracing materials other than wood structural panels or diagonal sheathing.

❖ This term is used only to define the scope of this chapter in Section A401.2. By this definition, some materials currently permitted for new construction by model codes such as the IBC are designated as nonconforming.

The Los Angeles and Fremont provisions for SWOF buildings (Los Angeles, 1999; Fremont) define "nonconforming structural materials" as any that are no longer permitted for new construction or any with design values (allowable shear or aspect ratio) that have been reduced since construction. Those standards are, therefore, more restrictive than the provisions given in this chapter.

For purposes of identifying SWOF conditions in Section A401.2, wood structural panels and diagonal sheathing are given more credit than other bracing methods such as let-in bracing, stucco (Portland cement plaster) or straight sheathing. Though deemed "conforming," it is possible that plywood or diagonal sheathing, even in buildings from the 1970s and 1980s, will not meet current post-Northridge requirements for new construction (for example, in terms of material specifications, hold-downs or nailing).

[BS] OPEN-FRONT WALL LINE. An exterior wall line, without vertical elements of the lateral force-resisting system, that requires tributary seismic forces to be resisted by diaphragm rotation or excessive cantilever beyond parallel lines of shear walls. Diaphragms that cantilever more than 25 percent of the distance between lines of lateral force-resisting elements from which the diaphragm cantilevers shall be considered excessive. Exterior exit balconies of 6 feet (1829 mm) or less in width shall not be considered excessive cantilevers.

❖ "Without vertical elements of the lateral force-resisting system" may be understood to mean wall lines without vertical elements (i.e., walls) sufficient to resist tributary lateral loads in the absence of diaphragm rotation. If there are insufficient elements of the seismic force-resisting system along a given diaphragm edge, then the wall line along that edge must meet the cantilever criteria of this definition or be considered "open."

More important than the solid wall length, though harder to calculate, is the reliance on diaphragm rotation or diaphragm cantilever. The open-front condition is largely a proxy for torsional irregularity, defined in Table 12.3-1 of ASCE 7-10. Torsional irregularity is often considered to be a concern only in rigid diaphragm structures. However, research has shown that torsion, or diaphragm rotation, contributes significantly to excessive drift along the open wall line, even in buildings with wood diaphragms [Consortium of Universities for Research in Earthquake Engineering (CUREE), 2002]. In lieu of complicated and potentially inaccurate drift calculations for a semirigid diaphragm that would be needed to determine torsional irregularity, the provisions use the more prescriptive definition of "Open front wall line."

Commentary Figure A402 illustrates the 25-percent calculation, which compares the cantilever length, c, to the backspan length, b. If c/b exceeds 0.25, the cantilever is considered excessive, and Line A is considered an open-front wall line. The 25-percent value is derived from judgment for consistency with previous code provisions, not from testing, analysis or performance statistics. See Section A403.8 and its commentary for additional discussion of cantilevered diaphragms.

Exit balconies are excluded because, in typical configurations, the outside edge of the balcony does not carry substantial gravity loads from the roof or stories above.

[BS] RETROFIT. An improvement of the lateral force-resisting system by *alteration* of existing structural elements or *addition* of new structural elements.

[BS] SOFT WALL LINE. A wall line whose lateral stiffness is less than that required by story drift limitations or deformation compatibility requirements of this chapter. In lieu of analysis, a soft wall line may be defined as a wall line in a story where the story stiffness is less than 70 percent of the story above for the direction under consideration.

❖ The definition calls for a calculation of story drift, but provides an alternative approach that compares stiffness in adjacent stories. The 70-percent value provided for the alternative approach is similar to the definition of soft story irregularity in Table 12.3-2 of ASCE 7-10; it does not make the distinction that ASCE 7 makes between "soft story" and "extreme soft story" irregularities.

It is generally difficult to make a meaningful or reliable calculation of story drifts for buildings for which seismic bracing in the upper stories is provided by interior plaster, gypsum wallboard and exterior wall finishes that are not part of an engineered seismic

INTERNATIONAL CODE COUNCIL®
Copyright © 2015 ICC. ALL RIGHTS RESERVED. Accessed by David Dammon on Jun 21, 2017 12:30:52 PM pursuant to License Agreement with ICC. No further reproduction or distribution authorized. ANY UNAUTHORIZED REPRODUCTION OR DISTRIBUTION IS A VIOLATION OF THE FEDERAL COPYRIGHT ACT AND THE LICENSE AGREEMENT, AND SUBJECT TO CIVIL AND CRIMINAL PENALTIES THEREUNDER.

force-resisting system. These materials generally provide great stiffness until their strength is exceeded, at which time their stiffnesses can deteriorate rapidly. Consequently, it will likely be easier to perform the soft-story calculation based on a comparative approach.

While the definition is for an individual wall line, the calculation is generally performed for an entire story. According to the definition, if the story is soft in a given direction, then each wall line in that direction is considered a soft wall line. It is probably more appropriate, however, to consider the sum of individual wall lines and to compare their total stiffness with the corresponding stiffness in the story above.

If actual story stiffness is to be calculated, it should include contributions from nonbearing walls and partitions (even those of nonconforming structural materials). Also, walls with hold-downs will be stiffer than walls subject to rocking or uplift. Section D.7.5 of the CUREE publication W-30b (Cobeen et al., 2004) provides information on reduced strength and stiffness for shear walls without hold-downs to restrain uplift. Experimental research by Ni and Karacabeyli (2000) also provides information regarding the response of structural panel walls with and without hold-downs.

[BS] STORY. A story as defined by the building code, including any basement or underfloor space of a building with cripple walls exceeding 4 feet (1219 mm) in height.

[BS] STORY STRENGTH. The total strength of all seismic-resisting elements sharing the same story shear in the direction under consideration.

❖ It is sometimes preferable to calculate element capacity based on strength values. For purposes of comparing the strengths of adjacent stories, however, allowable stresses may be used.

[BS] WALL LINE. Any length of wall along a principal axis of the building used to provide resistance to lateral loads. Parallel wall lines separated by less than 4 feet (1219 mm) shall be considered one wall line for the distribution of loads.

❖ "Separated by less than 4 feet (1219 mm)" refers to out-of-plane separation; for example, where part of a wall line is recessed for architectural purposes. A given wall line might consist of several individual noncontiguous shear wall panels separated in-plane by large door or window openings or by other architectural elements.

[BS] WEAK WALL LINE. A wall line in a story where the story strength is less than 80 percent of the story above in the direction under consideration.

❖ As discussed in the commentary to "Soft wall line," it is generally difficult to make a very precise calculation of story strength for upper stories of these buildings. The 80-percent value is consistent with Table 12.3-2 of ASCE 7-10, but Appendix Chapter A4 does not make the same distinction as ASCE 7 between "weak story" and "extreme weak story" irregularities.

See the commentary to "Soft wall line" for discussion of wall capacities with and without hold-downs.

Where story strength is calculated, it should include contributions from nonbearing walls and partitions (even those of nonconforming structural materials).

Another potential shortcoming of this definition is that it does not account for different force levels in adjacent stories. In a two-story building, the first-story shear is substantially higher than the second-story shear; thus, even if the two stories have the same strength, the first story will be critical. Therefore, where the lower story is just marginally strong enough to avoid classification as "weak," a comparison of demand-to-capacity ratios in adjacent stories is useful. If the lower story is clearly critical and its seismic force-resisting system does not provide ample ductility, the engineer might consider voluntarily classifying the story as "weak," regardless of the definition.

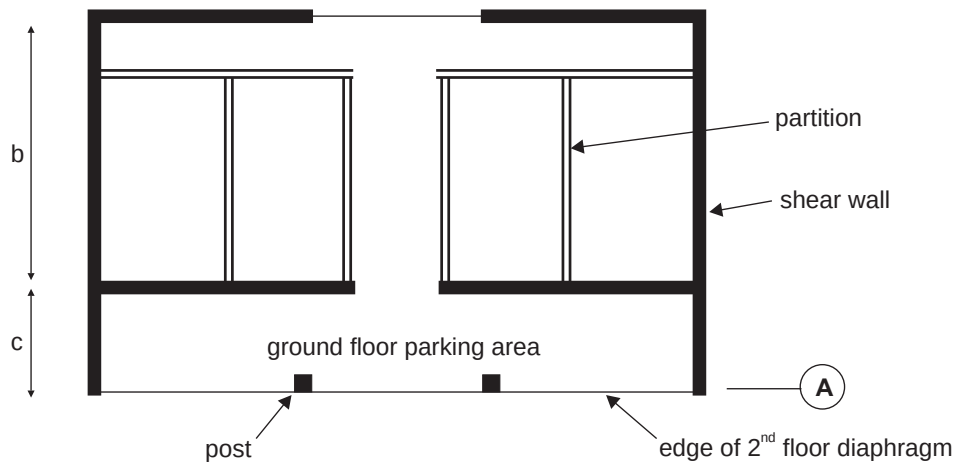

Figure A402
OPEN FRONT WALL LINE—EXCESSIVE CANTILEVER CALCULATION

INTERNATIONAL CODE COUNCIL®
Copyright © 2015 ICC. ALL RIGHTS RESERVED. Accessed by David Dammon on Jun 21, 2017 12:30:52 PM pursuant to License Agreement with ICC. No further reproduction or distribution authorized. ANY UNAUTHORIZED REPRODUCTION OR DISTRIBUTION IS A VIOLATION OF THE FEDERAL COPYRIGHT ACT AND THE LICENSE AGREEMENT, AND SUBJECT TO CIVIL AND CRIMINAL PENALTIES THEREUNDER.

SECTION A403
ANALYSIS AND DESIGN

[BS] A403.1 General. All modifications required by the provisions in this chapter shall be designed in accordance with the *International Building Code* provisions for new construction, except as modified by this chapter.

Exception: Buildings for which the prescriptive measures provided in Section A404 apply and are used.

No *alteration* of the existing lateral force-resisting system or vertical load-carrying system shall reduce the strength or stiffness of the existing structure, unless the altered structure would remain in conformance to the building code and this chapter.

❖ This section mandates that any modifications required by these provisions, principally new structural elements, must be made in accordance with IBC requirements for new construction unless specifically modified by this chapter. Further, reference to "the building code" throughout Appendix Chapter A4 should be understood to mean the provisions for new construction.

If the building qualifies for the prescriptive measures in Section A404, then the requirements of Section A403—including the weak story limits, drift limits, etc.—are waived. The requirements of Sections A405, A406 and A407 would still apply.

[BS] A403.2 Scope of analysis. This chapter requires the *alteration*, *repair*, replacement or *addition* of structural elements and their connections to meet the strength and stiffness requirements herein. The lateral-load-path analysis shall include the resisting elements and connections from the wood diaphragm immediately above any soft, weak or open-front wall lines to the foundation soil interface or to the uppermost story of a podium structure comprised of steel, masonry, or concrete structural systems that supports the upper, wood-framed structure. Stories above the uppermost story with a soft, weak, or open-front wall line shall be considered in the analysis but need not be modified. The lateral-load-path analysis for added structural elements shall also include evaluation of the allowable soil-bearing and lateral pressures in accordance with the building code. Where any portion of a building within the scope of this chapter is constructed on or into a slope steeper than one unit vertical in three units horizontal (33-percent slope), the lateral force-resisting system at and below the base level diaphragm shall be analyzed for the effects of concentrated lateral forces at the base caused by this hillside condition.

Exception: When an open-front, weak or soft wall line exists because of parking at the ground floor of a two-story building and the parking area is less than 20 percent of the ground floor area, then only the wall lines in the open, weak or soft directions of the enclosed parking area need comply with the provisions of this chapter.

❖ This section distinguishes Appendix Chapter A4's risk-reduction objective from a full life-safety objective. Using this chapter, the only structural elements that need to be considered for retrofit are those between the diaphragm immediately above the SWOF story and the foundation soil. Stories above that level need not be checked, though their mass and stiffness must still be included in the lateral analysis of the building and their role in global building response considered.

Further, if the wood-framed SWOF structure is supported by a steel, concrete or masonry podium structure, that podium structure need not be checked. The wording of this section is unclear as to whether the diaphragm strength itself needs to be checked or designed. Section A403.8 clarifies that it does not.

Top stories are exempt for the same reason that one-story buildings were exempted in Section A401.2. These provisions focus on the specific risks posed by the collapse of SWOF stories with substantial mass above. Racking or excessive drift in a one-story open-front building or in the upper stories of a multistory building is of lesser concern.

Soil stresses need only be checked where they are affected by added structural elements, such as walls, diagonal braces, frame columns, posts or other structural elements that are added as part of the retrofit. Where allowable soil stresses are exceeded due to these added elements, foundation elements may need to be supplemented as well.

The exception further reduces the scope of Appendix Chapter A4 for SWOF deficiencies that are judged to be remediable by local measures. Again, the risk reduction approach acknowledges that when the most critical deficiencies are easily identified and remedied, comprehensive analysis of the entire structure should not be necessary.

The exception is intended to cover a large subclass of SWOF buildings with minimal tuck-under parking. While the provision specifically mentions "parking," it could be reasonably applied to similar unoccupied spaces used for storage or other purposes. The 20-percent value is derived from judgment, not from testing, analysis or performance statistics. Use of the term "enclosed parking area" is intended to indicate a defined area bounded in plan by walls, partitions or the edge of the building; it does not mean that the parking (or other nonoccupiable) area must be physically enclosed.

The 20-percent value is to be based on floor area. All nonoccupiable areas (as opposed to just designated parking area) between the SWOF wall line and the nearest parallel wall line should be counted as the parking area. Commentary Figure A403.2 shows the type of common SWOF building for which this exception was intended. Other configurations are also eligible for the exception. For complex floor layouts, designation and calculation of the parking area might require some judgment.

With reference to Commentary Figure A403.2, Line A is assumed to be a SWOF wall line. Line B is the nearest parallel wall line. If $A_P/(L_xL_y)$ is less than 0.20, then only wall Lines A and B need to be checked and potentially strengthened or stiffened.

The intention of this exception is only to exempt

INTERNATIONAL CODE COUNCIL®
Copyright © 2015 ICC. ALL RIGHTS RESERVED. Accessed by David Dammon on Jun 21, 2017 12:30:52 PM pursuant to License Agreement with ICC. No further reproduction or distribution authorized. ANY UNAUTHORIZED REPRODUCTION OR DISTRIBUTION IS A VIOLATION OF THE FEDERAL COPYRIGHT ACT AND THE LICENSE AGREEMENT, AND SUBJECT TO CIVIL AND CRIMINAL PENALTIES THEREUNDER.

wall Lines C, 1 and 2 from drift and strength requirements. These wall lines must still be included in the structural model used to derive forces and deflections for Lines A and B. In considering Lines A and B, the load path from the second floor diaphragm to the soil-foundation interface must still be checked in accordance with Section A403.2.

This exception does not apply if the prescriptive provisions of Section A404 are used.

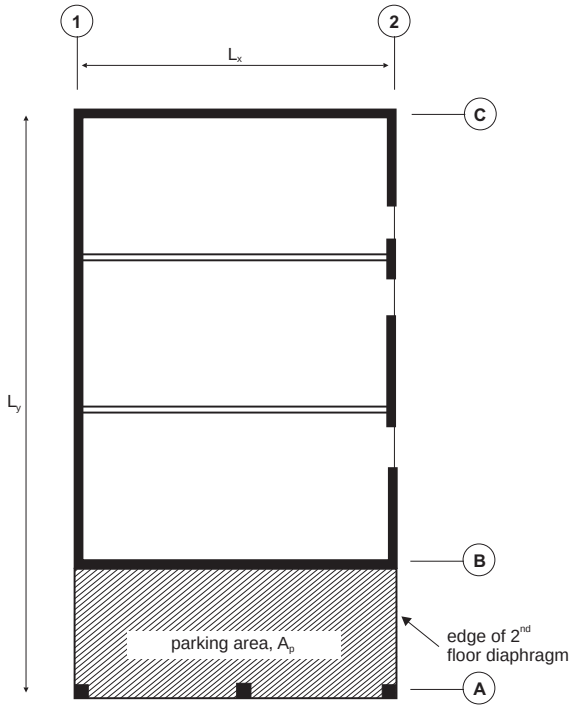

Figure A403.2
20-PERCENT EXCEPTION CALCULATION

[BS] A403.3 Design base shear and design parameters. The design base shear in a given direction shall be permitted to be 75 percent of the value required for similar new construction in accordance with the building code. The value of R used in the design of the strengthening of any story shall not exceed the lowest value of R used in the same direction at any story above. The system overstrength factor, Ω_0, and the deflection amplification factor, C_d, shall be not less than the largest respective value corresponding to the R factor being used in the direction under consideration.

Exceptions:

1. For structures assigned to Seismic Design Category B, values of R, Ω_0 and C_d shall be permitted to be based on the seismic force-resisting system being used to achieve the required strengthening.
2. For structures assigned to Seismic Design Category C or D, values of R, Ω_0 and C_d shall be permitted to be based on the seismic force-resisting system being used to achieve the required strengthening, provided that when the strengthening is complete, the strengthened structure will not have an extreme weak story irregularity defined as Type 5b in ASCE 7 Table 12.3-2.
3. For structures assigned to Seismic Design Category E, values of R, Ω_0 and C_d shall be permitted to be based on the seismic force-resisting system being used to achieve the required strengthening, provided that when the strengthening is complete, the strengthened structure will not have an extreme soft story, a weak story, or an extreme weak story irregularity defined, respectively, as Types 1b, 5a and 5b in ASCE 7 Table 12.3-2.

❖ The 75-percent value represents a common allowance for existing buildings with precedent in FEMA 178 (FEMA, 1992). FEMA 178 specified a design base shear of 85 percent (for short-period buildings) or 67 percent (for longer period buildings) of that required for new construction. At the time, the reduction was understood to be related to the difference between a "mean" earthquake and a "mean + one-sigma" earthquake. It is not clear whether that relationship still holds for the seismicity estimates and design parameters in current codes. Nevertheless, a reduction of about 25 percent remains traditional and is consistent with the concept of "reduced IBC level seismic forces" in Section 301.1.4.2 of the code.

Appendix Section A403.3 requires that the value of R, Ω_0 and C_d used the in strengthening of any story be used for similar new construction. These values would be those in Table 12.2-1 of ASCE 7-10. There are three exceptions to this requirement:

Exception 1 is specifically for Seismic Design Category B. It allows the use of design coefficients for the seismic force-resisting system used.

Exception 2 is specifically for Seismic Design Categories C and D. The design coefficients may be those of the seismic force-resisting system used if the strengthened structure does not have an extreme weak story irregularity.

Exception 3 is specifically for Seismic Design Category E. The seismic design coefficients may be those of the seismic force-resisting system used if the strengthened structure does not have an extreme soft story, a weak story or an extreme weak story irregularity. This escalation of conditions and requirements is based on the seismic design category (seismic demand) of the location and probable duration of ground shaking.

It is recommended that the design professional consider the strength of the upper stories, as required by the provisions of Section A403.2. Increasing the first-story strength and stiffness also increases the base shear that can be transmitted to the floors above. If the retrofitted strength of the first story exceeds the strength of the story above, the increased demand on the second story may propagate the expected failure up to the next level. The

INTERNATIONAL CODE COUNCIL®
Copyright © 2015 ICC. ALL RIGHTS RESERVED. Accessed by David Dammon on Jun 21, 2017 12:30:52 PM pursuant to License Agreement with ICC. No further reproduction or distribution authorized. ANY UNAUTHORIZED REPRODUCTION OR DISTRIBUTION IS A VIOLATION OF THE FEDERAL COPYRIGHT ACT AND THE LICENSE AGREEMENT, AND SUBJECT TO CIVIL AND CRIMINAL PENALTIES THEREUNDER.

user is referred to FEMA P-807 (FEMA, 2012) for further information.

[BS] A403.4 Story drift limitations. The calculated story drift for each retrofitted story shall not exceed the allowable deformation compatible with all vertical load-resisting elements and 0.025 times the story height. The calculated story drift shall not be reduced by the effects of horizontal diaphragm stiffness but shall be increased when these effects produce rotation. Drift calculations shall be in accordance with the building code.

❖ The IBC is based on ASCE 7, and "the calculated story drift" means the design story drift as defined in Section 12.8.6 of ASCE 7-10, based on center of mass deflections, d_{xe}, calculated from a linear elastic analysis using the forces prescribed in Section A403.3. $P\Delta$ effects must be included in the analysis as required by Section A403.5 (by reference to corresponding Section 12.8.7 of ASCE 7-10).

"Each retrofitted story" means each story subject to consideration, according to Section A403.2. Drifts need not be checked at stories above the SWOF conditions.

The limiting drift ratio of 0.025 was specified in the 2000 GSREB to match the limit for low- and mid-rise buildings in Section 1630.10.2 of the 1997 *Uniform Building Code* (UBC). Table 12.12-1 of ASCE 7-10 also limits drift ratios in most new low-rise buildings in Risk Categories I and II to 0.025.

Many existing SWOF buildings also have wood posts or steel pipe columns along the open side. For these, the limit of 0.025 is judged appropriate unless their condition is poor (decayed or corroded) or their connections are unable to accommodate that much deformation.

The provision regarding "horizontal diaphragm stiffness" requires that diaphragms be modeled as stiff or (semi) rigid relative to the walls, so that the effects of actual and accidental torsion can be conservatively estimated. The (semi) rigid diaphragm assumption is supported by testing that found that the effects of a wood diaphragm on an open-front structure were sufficiently approximated by modeling the diaphragm as a rotating rigid body (CUREE, 2002).

The provision to add, but not subtract, the effects of diaphragm rotation is a conservative requirement similar to those in Sections 12.8.6 and 12.12.1 of ASCE 7-10 for buildings subject to significant torsion.

Unless conservative assumptions regarding materials and details are made, stiffness calculations for elements not shown on plans will likely require destructive investigation per Section A405.3. This can be disruptive and expensive. The relative stiffness of existing materials can be estimated from procedures given in references such as ASCE 41 (2013) or CUREE (2002). However, while a given reference is likely to be internally consistent regarding its assumptions and definitions, different references might vary from one another. Therefore, the same reference should be used to derive the properties of all relevant materials whenever possible.

For purposes of comparing the stiffness of adjacent stories, any reasonable material and fixity assumptions are acceptable, as long as similar assumptions are made for the two stories being compared and the calculation is not given credit for undue precision. For simplicity, elastic (i.e., uncracked, nondegraded) stiffnesses may be used, and partitions and shear walls may be assumed fixed at the ground and floor levels with respect to in-plane rotation. Section 12.8.6 of ASCE 7-10 indicates that, where torsional deflections are significant, they should be included in story drift. Where a flexible diaphragm analysis is used, it is more practical to check drift at each shear wall line. Where a rigid or semirigid diaphragm analysis is used, peak drifts that include torsion should be used.

[BS] A403.4.1 Pole structures. The effects of rotation and soil stiffness shall be included in the calculated story drift where lateral loads are resisted by vertical elements whose required depth of embedment is determined by pole formulas. The coefficient of subgrade reaction used in deflection calculations shall be based on a geotechnical investigation conducted in accordance with the building code.

❖ The "rotation" referred to in this paragraph is the rotation of an embedded pole bearing laterally against soil, either with or without restraint at the ground surface by a slab or rigid pavement. The provision is intended to address pipe columns or posts supporting gravity loads along the building's open side. Pole systems are especially flexible and vulnerable to loss of vertical capacity. This provision applies mostly to analysis of the existing structure; in the retrofitted structure, the lateral stiffness contribution of posts is generally negligible compared to the stiffness of new wall, frame or brace elements and to the wall elements above the SWOF story. The coefficient of subgrade reaction refers to the passive stiffness of soil reacting against movement or rotation of the embedded post.

[BS] A403.5 Deformation compatibility and P Δ effects. The requirements of the building code shall apply, except as modified herein. All structural framing elements and their connections not required by design to be part of the lateral force-resisting system shall be designed and/or detailed to be adequate to maintain support of expected gravity loads when subjected to the expected deformations caused by seismic forces. Increased demand due to P Δ effects and story sidesway stability shall be considered in retrofit stories that rely on the strength and stiffness of cantilever columns for lateral resistance.

❖ Sections 12.1.2 and 12.12.5 of ASCE 7-10 require deformation compatibility checks for structural elements that are not part of the seismic force-resisting system (but are part of the gravity system), such as posts, pipe columns and wood-framed walls deformed out of plane. Inelasticity is permitted when members and connections are checked for deformation compatibility as long as the structure maintains its resistance to gravity loads.

In existing SWOF buildings, the most critical gravity

INTERNATIONAL CODE COUNCIL®
Copyright © 2015 ICC. ALL RIGHTS RESERVED. Accessed by David Dammon on Jun 21, 2017 12:30:52 PM pursuant to License Agreement with ICC. No further reproduction or distribution authorized. ANY UNAUTHORIZED REPRODUCTION OR DISTRIBUTION IS A VIOLATION OF THE FEDERAL COPYRIGHT ACT AND THE LICENSE AGREEMENT, AND SUBJECT TO CIVIL AND CRIMINAL PENALTIES THEREUNDER.

support elements are probably the posts along the open front because they often have weak flexural connections and because drift is greatest along that wall line. The design check should rule out any failure of the columns, base plates or connection hardware that would compromise stability.

[BS] A403.6 Ties and continuity. All parts of the structure included in the scope of Section A403.2 shall be interconnected as required by the building code.

❖ The applicable code provisions are in Sections 12.1.3 and 12.1.4 of ASCE 7-10.

As noted in ASCE 7, the connection forces prescribed by this provision do not apply to the overall design of the seismic force-resisting system. That is, they need not be added to the design forces prescribed by Section A403.3 for analysis and design of the seismic force-resisting system.

The minimum connection strengths required by this provision are prescriptive and are derived from judgment, not from testing, analysis or performance statistics.

[BS] A403.7 Collector elements. Collector elements shall be provided that can transfer the seismic forces originating in other portions of the building to the elements within the scope of Section A403.2 that provide resistance to those forces.

❖ This provision is similar to Section 12.10.2 of ASCE 7-10. "Other portions" does not mean elements outside the scope of Section A403.2; this terminology remains from past model code provisions for new construction (and is still present in ASCE 7-10). The intent of Section A403.7 is merely to ensure adequate collectors in the load path described in Section A403.2; that is, from the diaphragm above the SWOF condition to the existing or added components of the seismic force-resisting system.

The provision does not specify means for determining design forces for collectors. Acceptable design forces may be derived from formulas such as Equation 12.10-1 of ASCE 7-10, with the applied forces F_i determined from Section A403.3. Provisions in Section A403.6 set a minimum on this design force.

[BS] A403.8 Horizontal diaphragms. The strength of an existing horizontal diaphragm sheathed with wood structural panels or diagonal sheathing need not be investigated unless the diaphragm is required to transfer lateral forces from vertical elements of the seismic force-resisting system above the diaphragm to elements below the diaphragm because of an offset in placement of the elements.

Rotational effects shall be accounted for when asymmetric wall stiffness increases shear demands.

❖ Floor diaphragms are considered capable of rotating as rigid bodies without substantial distortion. They are therefore judged capable of transmitting forces if the seismic force-resisting system is not symmetric in plan or if the system has elements on only three sides.

"Rotational effects shall be accounted for when asymmetric wall stiffness increases shear demands" refers to torsional effects that increase the forces and drifts imposed on the seismic force-resisting system. The requirement to account for rotational effects on shear walls should apply as well to existing or new elements of other seismic force-resisting systems.

[BS] A403.9 Wood-framed shear walls. Wood-framed shear walls shall have strength and stiffness sufficient to resist the seismic loads and shall conform to the requirements of this section.

❖ Section A403.9 addresses only wood-framed shear walls. Other structural elements added for retrofit are to be evaluated against the demands of Sections A403.3 and A403.4, and detailed according to the IBC for new construction.

[BS] A403.9.1 Gypsum or cement plaster products. Gypsum or cement plaster products shall not be used to provide lateral resistance in a soft or weak story or in a story with an open-front wall line, whether or not new elements are added to mitigate the soft, weak or open-front condition.

❖ "Gypsum" refers primarily to gypsum wallboard but also includes traditional gypsum plaster and gypsum lath (sometimes called "buttonboard"). "Cement plaster" refers to plaster with Portland cement, commonly known as "stucco."

Even after retrofit, the SWOF story may experience significant ductility demands during intense ground shaking. The intent of this provision is to preclude existing gypsum and Portland cement plaster materials from being considered in the strength or stiffness of the retrofitted SWOF story.

[BS] A403.9.2 Wood structural panels.

[BS] A403.9.2.1 Drift limit. Wood structural panel shear walls shall meet the story drift limitation of Section A403.4. Conformance to the story drift limitation shall be determined by approved testing or calculation. Individual shear panels shall be permitted to exceed the maximum aspect ratio, provided the allowable story drift and allowable shear capacities are not exceeded.

❖ The intent of this section is to ensure that the drift in the strengthened story does not exceed reasonable limits.

[BS] A403.9.2.2 Openings. Shear walls are permitted to be designed for continuity around openings in accordance with the building code. Blocking and steel strapping shall be provided at corners of the openings to transfer forces from discontinuous boundary elements into adjoining panel elements. Alternatively, perforated shear wall provisions of the building code are permitted to be used.

❖ In the 2006 IBC, the applicable code provisions were those in Section 2305.8.2 for perforated shear walls. Section 2305 had been substantially revised by 2009. The intent of these provisions is to ensure performance that matches the characteristics assumed for analysis and design, principally that the shear wall acts as a unit, without substantial deformations or stress concentrations at openings. Commentary, background and design examples regarding perforated shear walls are available in Section 12.3 of the

INTERNATIONAL CODE COUNCIL®
Copyright © 2015 ICC. ALL RIGHTS RESERVED. Accessed by David Dammon on Jun 21, 2017 12:30:52 PM pursuant to License Agreement with ICC. No further reproduction or distribution authorized. ANY UNAUTHORIZED REPRODUCTION OR DISTRIBUTION IS A VIOLATION OF THE FEDERAL COPYRIGHT ACT AND THE LICENSE AGREEMENT, AND SUBJECT TO CIVIL AND CRIMINAL PENALTIES THEREUNDER.

2003 National Earthquake Hazards Reduction Program (NEHRP) commentary (BSSC, 2004).

[BS] A403.9.3 Hold-down connectors.

[BS] A403.9.3.1 Expansion anchors in tension. Expansion anchors that provide tension strength by friction resistance shall not be used to connect hold-down devices to existing concrete or masonry elements.

❖ This provision prohibits friction-based expansion anchors for tension loads because of poor performance in the 1994 Northridge earthquake. Since then, approval criteria have been made more restrictive and the design of some expansion anchors has been modified. Any anchor type approved for cyclic tension loads should be acceptable in this application.

[BS] A403.9.3.2 Required depth of embedment. The required depth of embedment or edge distance for the anchor used in the hold-down connector shall be provided in the concrete or masonry below any plain concrete slab unless satisfactory evidence is submitted to the *code official* that shows that the concrete slab and footings are of monolithic construction.

❖ "Monolithic construction" generally means concrete placed continuously (at the same time). A slab placed over the top of a previously placed footing will not be monolithic unless the top surface of the footing was cleaned/roughened, bent reinforcing dowels connect the two pours and there is no "visqueen" vapor barrier laid between the two pours. A slab with nominal reinforcing or wire mesh provided only for crack control should be considered plain concrete.

SECTION A404
PRESCRIPTIVE MEASURES FOR WEAK STORY

[BS] A404.1 Limitation. These prescriptive measures shall apply only to two-story buildings and only when deemed appropriate by the *code official*. These prescriptive measures rely on rotation of the second floor diaphragm to distribute the seismic load between the side and rear walls of the ground floor open area. In the absence of an existing floor diaphragm of wood structural panel or diagonal sheathing, a new wood structural panel diaphragm of minimum thickness of $^3/_4$ inch (19.1 mm) and with 10d common nails at 6 inches (152 mm) on center shall be applied.

❖ This section is not limited to weak story conditions. Any structure that meets the qualifications is eligible for these prescriptive measures. For buildings that qualify, Section A404 is intended as an alternative to Section A403. The requirements of Sections A405, A406 and A407 still apply. The main purpose of this prescriptive alternative is to reduce the cost of engineered evaluation and design. It is expected that Section A404 could be applied by a qualified contractor without the assistance of an engineer.

The provisions of Section A404 are derived from judgment, not from testing, analysis or performance statistics. No studies or tests have been performed to confirm that these prescriptive measures will result in the same performance with the same reliability as designs engineered to the provisions of Section A403. Nevertheless, for the buildings that qualify, these prescriptive measures are expected to achieve the same risk reduction objective.

Section A404 is intended for a two-story building with an uncomplicated footprint and a SWOF wall line on only one side. Commentary Figure A404.1 illustrates two such buildings in plan. In the bottom part of the figure, only the portion of the side wall between Lines A and B is considered to be enclosing the parking/open area, and only that portion should be counted toward the required wall length under these prescriptive measures.

The provision does not identify any detail requirements for the existing wood diaphragm. Instead, the provision appears to presume that the presence of a conforming material ensures acceptable sheathing thickness, material grade, condition and nailing.

Where a new diaphragm is required, it may be applied over the existing sheathing or to the underside of the second floor joists. Application to the underside of the floor joists will often be less disruptive.

[BS] A404.1.1 Additional conditions. To qualify for these prescriptive measures, the following additional conditions need to be satisfied by the retrofitted structure:

1. Diaphragm aspect ratio L/W is less than 0.67, where W is the diaphragm dimension parallel to the soft, weak or open-front wall line and L is the distance in the orthogonal direction between that wall line and the rear wall of the ground floor open area.
2. Minimum length of side shear walls = 20 feet (6096 mm).
3. Minimum length of rear shear wall = three-fourths of the total rear wall length.
4. No plan or vertical irregularities other than a soft, weak or open-front wall line.
5. Roofing weight less than or equal to 5 pounds per square foot (240 N/m^2).
6. Aspect ratio of the full second floor diaphragm meets the requirements of the building code for new construction.

❖ The ratios and shear wall lengths in this provision are derived from judgment, not from testing, analysis or performance statistics.

The six conditions need not be satisfied by the existing building as long as they are satisfied by the retrofit. In other words, wall elements may be added and openings may be modified to meet the specified criteria. Whether new or existing, only walls that comply with Section A404.2.3 should be counted for the purposes of satisfying these conditions.

L and W are the principal dimensions of the diaphragm bounded by the shear walls immediately adjacent to the SWOF wall line. The intention of the

INTERNATIONAL CODE COUNCIL®
Copyright © 2015 ICC. ALL RIGHTS RESERVED. Accessed by David Dammon on Jun 21, 2017 12:30:52 PM pursuant to License Agreement with ICC. No further reproduction or distribution authorized. ANY UNAUTHORIZED REPRODUCTION OR DISTRIBUTION IS A VIOLATION OF THE FEDERAL COPYRIGHT ACT AND THE LICENSE AGREEMENT, AND SUBJECT TO CIVIL AND CRIMINAL PENALTIES THEREUNDER.

aspect ratio limit is to restrict the prescriptive provisions to buildings that are not prone to substantial torsion. Where the critical diaphragm is the entire second floor, as in the top part of Commentary Figure A404.1, the preferred condition has the SWOF wall line along the long side of the building so that the center of mass and the center of rigidity are close together and torsion is limited. If the open wall line were along the short side, the three-sided structure would be subject to high torsion.

The bottom part of Commentary Figure A404.1 illustrates a potential shortcoming of this simple screening criterion. If *L/W* for this building were greater than 0.67, it would not qualify for the prescriptive measures of Section A404. Yet, this building might still be less vulnerable to torsion than the building in the top part of the figure. In the bottom part of the figure, the critical condition is the demand on the wall along Line B due to torsional response.

For the building in the bottom part of Commentary Figure A404.1, the side shear walls include only the portions between Line A and Line B. The portion between Line B and Line C is not counted toward the required 20 feet (6096 mm). Reasonable designs that make use of wall lengths not immediately adjacent to the open area (that is, lengths between Lines B and C) are possible, but should be subject to engineered design. For these prescriptive measures, it is appropriate to restrict certain design choices in order to ensure reliable outcomes in the absence of engineering calculations.

Plan and vertical structural irregularities are described in Tables 12.3-1 and 12.3-2 of ASCE 7-10.

The roofing weight limit of 5 pounds per square foot (240 N/m^2) is intended to rule out unusually heavy structures to which the prescriptive provisions should not apply. The limit is not intended to rule out the fairly common condition of two layers of asphalt roofing.

[BS] A404.2 Minimum required retrofit.

❖ For buildings that qualify, Section A404 is intended as an alternative to Section A403. The requirements of Sections A405, A406 and A407 still apply.

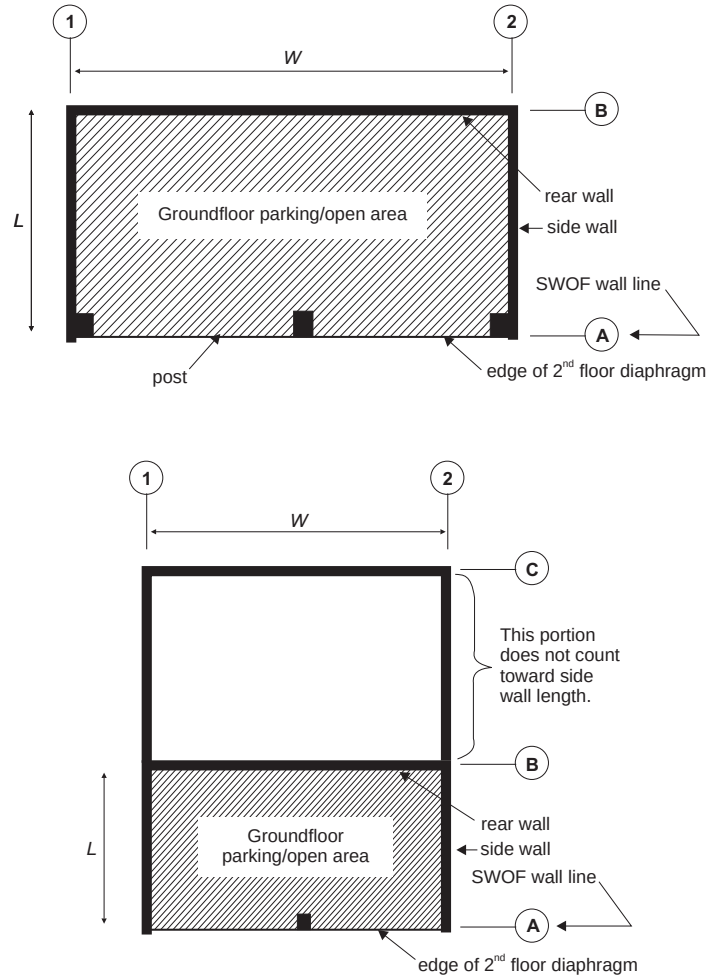

Figure A404.1
SECTION A404 DEFINITIONS

INTERNATIONAL CODE COUNCIL®
Copyright © 2015 ICC. ALL RIGHTS RESERVED. Accessed by David Dammon on Jun 21, 2017 12:30:52 PM pursuant to License Agreement with ICC. No further reproduction or distribution authorized. ANY UNAUTHORIZED REPRODUCTION OR DISTRIBUTION IS A VIOLATION OF THE FEDERAL COPYRIGHT ACT AND THE LICENSE AGREEMENT, AND SUBJECT TO CIVIL AND CRIMINAL PENALTIES THEREUNDER.

[BS] A404.2.1 Anchor size and spacing. The anchor size and spacing shall be a minimum of $^{3}/_{4}$ inch (19.1 mm) in diameter at 32 inches (813 mm) on center. Where existing anchors are inadequate, supplemental or alternative approved connectors (such as new steel plates bolted to the side of the foundation and nailed to the sill) shall be used.

❖ Anchors as specified in this provision must be provided only along the length of the side and rear walls.

"Inadequate" refers principally to anchor size and spacing, but judgment should be applied where existing anchors indicate poor workmanship (e.g., oversized holes in sill plates, insufficient edge distance or embedment) or poor condition (e.g., corrosion, spalling).

The provision specifies $^{3}/_{4}$-inch-diameter (19 mm) anchors. Smaller anchors are sometimes necessary for proper edge distance in narrow sill plates or concrete curbs. These smaller anchor sizes may be used if the code official approves and the designer demonstrates that the proposed anchor layout, which may combine new and existing anchors of different sizes, provides capacity equivalent to $^{3}/_{4}$-inch (19 mm) anchors at 32 inches (813 mm) on center. If the new anchors are substantially stiffer than the existing anchors, then the existing anchors should not be counted toward the required capacity.

Embedment must be into the footing (see commentary, Section A403.9.3.2).

The provision allows approved steel plate connectors. These are commonly used for retrofit of cripple walls where limited access prevents installation of new anchors vertically through the sill plate.

Sill plate damage is best prevented by proper design, location and installation of hold-downs. Plate washers are recommended near ends of shear walls.

Installation of expansion anchors can crack weak or deteriorated concrete. Adhesive, undercut or threaded screw-type anchors might be useful in these conditions. An adhesive anchor may be used to resist shear and/or tension loads; adhesive anchors use a structural adhesive (e.g., epoxy) to secure the metal fastener in a predrilled hole in hardened concrete or masonry. An undercut anchor, without grout or adhesive, may also be used to resist shear and/or tension; when tightened, an undercut anchor engages the sides and undercut surfaces of a specially predrilled hole in hardened concrete or masonry. Screw-type anchors self-thread a predrilled hole in hardened concrete and resist forces through the mechanical interlock of the anchor threads with the concrete.

[BS] A404.2.2 Connection to floor above. Shear wall top plates shall be connected to blocking or rim joist at upper floor with a minimum of 18-gage galvanized steel angle clips $4^{1}/_{2}$ inches (114 mm) long with 12-8d nails spaced no farther than 16 inches (406 mm) on center, or by equivalent shear transfer methods.

[BS] A404.2.3 Shear wall sheathing. The shear wall sheathing shall be a minimum of $^{15}/_{32}$ inch (11.9 mm) 5-Ply Structural I with 10d nails at 4 inches (102 mm) on center at edges and 12 inches (305 mm) on center at field; blocked all edges with 3 by 4 board or larger. Where existing sill plates are less than 3-by thick, place flat 2-by on top of sill between studs, with flat 18-gage galvanized steel clips $4^{1}/_{2}$ inches (114 mm) long with 12-8d nails or $^{3}/_{8}$-inch-diameter (9.5 mm) lags through blocking for shear transfer to sill plate. Stagger nailing from wall sheathing between existing sill and new blocking. Anchor new blocking to foundation as specified above.

❖ The requirements for $^{15}/_{32}$-inch (11.9 mm) five-ply sheathing and 3x framing and blocking are consistent with changes made to building codes after the 1994 Northridge earthquake. For additional discussion of their background, see Harder (1994) and SEAOC (1999), Appendix F.

The provision makes no allowance for existing $^{3}/_{8}$-inch (10 mm) sheathing. For these prescriptive measures, the specified sheathing is required without exception. If the existing sheathing is $^{1}/_{2}$ inch (12.7 mm), nail size and spacing must be verified; the nailing must be sufficient to develop the capacity equivalent to that required by the provision. If the existing sheathing or nailing does not meet the prescriptive requirements, the engineered approach of Section A403 may be used to take advantage of their strength contribution. If the required $^{15}/_{32}$-inch (11.9 mm) sheathing is applied to studs already sheathed with lesser material, care should be taken not to split the existing wall studs with new nailing. Doubled studs, predrilled holes or lag screws may be beneficial in this regard.

Sheathing applied to the inside face of existing studs should be provided with ventilation and inspection holes.

[BS] A404.2.4 Shear wall hold-downs. Shear walls shall be provided with hold-down anchors at each end. Two hold-down anchors are required at intersecting corners. Hold-downs shall be approved connectors with a minimum $^{5}/_{8}$-inch-diameter (15.9 mm) threaded rod or other approved anchor with a minimum allowable load of 4,000 pounds (17.8 kN). Anchor embedment in concrete shall be not less than 5 inches (127 mm). Tie-rod systems shall be not less than $^{5}/_{8}$ inch (15.9 mm) in diameter unless using high-strength cable. High-strength cable elongation shall not exceed $^{5}/_{8}$ inch (15.9 mm) under a 4,000 pound (17.8 kN) axial load.

❖ While the design provisions of Section A403 are generally waived, applicable portions of the hold-down provisions of Section A403.9.3 should be applied in addition to those given here.

The hold-down capacity might be limited by available concrete strength or edge distance. It is acceptable to use two 2,000-pound (8.9 kN) hold-downs, one on each side of the post, in lieu of a single 4,000-pound (17.8 kN) hold-down.

Posts to which hold-downs are connected should be sufficient to prevent failures due to reductions in cross section at bolt or connector holes. Posts built up from multiple 2x or 3x members are acceptable if adequately connected, but 4x or larger posts are preferred.

INTERNATIONAL CODE COUNCIL®
Copyright © 2015 ICC. ALL RIGHTS RESERVED. Accessed by David Dammon on Jun 21, 2017 12:30:52 PM pursuant to License Agreement with ICC. No further reproduction or distribution authorized. ANY UNAUTHORIZED REPRODUCTION OR DISTRIBUTION IS A VIOLATION OF THE FEDERAL COPYRIGHT ACT AND THE LICENSE AGREEMENT, AND SUBJECT TO CIVIL AND CRIMINAL PENALTIES THEREUNDER.

SECTION A405
MATERIALS OF CONSTRUCTION

[BS] A405.1 New materials. New materials shall meet the requirements of the *International Building Code*, except where allowed by this chapter.

[BS] A405.2 Allowable foundation and lateral pressures. The use of default values from the building code for continuous and isolated concrete spread footings shall be permitted. For soil that supports embedded vertical elements, Section A403.4.1 shall apply.

❖ See the commentary to Section A403.2 for additional discussion of soil-bearing pressures and the commentary to Section A403.4.1 for additional discussion of the coefficient of subgrade reaction.

[BS] A405.3 Existing materials. The physical condition, strengths, and stiffnesses of existing building materials shall be taken into account in any analysis required by this chapter. The verification of existing materials conditions and their conformance to these requirements shall be made by physical observation, material testing or record drawings as determined by the registered design professional subject to the approval of the *code official*.

❖ This section requires that existing materials be taken into account in terms of condition, strengths and stiffness when addressed in any analysis required by Appendix Chapter A4. The provision is intended to ensure that load path elements will not fail prematurely due to deterioration or errors/omissions in the original construction (e.g., "shiner" nails, misplaced anchors or missing hold-downs). This section allows archaic materials (e.g., an unreinforced brick foundation) if they can be shown by analysis or testing to work within the context of this chapter. The user is referred to Appendix D of FEMA P-807 (FEMA, 2012) for a summary of component testing (monotonic or backbone load-deflection curves) of commonly used materials for existing construction, retrofit and combinations thereof.

[BS] A405.3.1 Wood-structural-panel shear walls.

[BS] A405.3.1.1 Existing nails. When the required calculations rely on design values for common nails or surfaced dry lumber, their use in construction shall be verified by exposure.

❖ This section is intended to ensure that assumptions made in the analysis phase are reasonable. If an engineer is going to assume that the lumber installed during original construction was dry or that common nails were used, these items should be verified prior to analysis.

[BS] A405.3.1.2 Existing plywood. When verification of the existing plywood is by use of record drawings alone, plywood shall be assumed to be of three plies.

❖ Visual verification usually requires no more than a small core sample. If a sample is not taken and reliance is simply on the design drawing, then a conservative assumption of three plies is required to be made.

[BS] A405.3.2 Existing wood framing. Wood framing is permitted to use the design stresses specified in the building code under which the building was constructed or other stress criteria approved by the *code official*.

❖ Wood design stresses have changed significantly over the years; for the purposes of this chapter, it is acceptable to use the original design stresses.

[BS] A405.3.3 Existing structural steel. All existing structural steel shall be permitted to be assumed to comply with ASTM A36. Existing pipe or tube columns shall be assumed to be of minimum wall thickness unless verified by testing or exposure.

❖ This section is intended to ensure that conservative assumptions regarding the strength of steel elements are used; if higher strengths are needed, the physical characteristics of the steel must be verified.

[BS] A405.3.4 Existing concrete. All existing concrete footings shall be permitted to be assumed to be plain concrete with a compressive strength of 2,000 pounds per square inch (13.8 MPa). Existing concrete compressive strength taken greater than 2,000 pounds per square inch (13.8 MPa) shall be verified by testing, record drawings or department records.

❖ This section is intended to ensure that conservative assumptions regarding the strength of concrete elements are used; if higher strengths are needed, the physical characteristics of the concrete must be verified.

[BS] A405.3.5 Existing sill plate anchorage. The analysis of existing cast-in-place anchors shall be permitted to assume proper anchor embedment for purposes of evaluating shear resistance to lateral loads.

❖ This provision should be understood to mean that evaluation of existing cast-in-place anchors for shear resistance may reasonably assume anchor embedment sufficient to develop the capacity of the anchor, as limited by the wood sill plate.

SECTION A406
INFORMATION REQUIRED TO BE ON THE PLANS

[BS] A406.1 General. The plans shall show all information necessary for plan review and for construction and shall accurately reflect the results of the engineering investigation and design. The plans shall contain a note that states that this retrofit was designed in compliance with the criteria of this chapter.

❖ The requirements of this section are in addition to any other documentation required by the IBC or the code official.

Documentation requirements regarding calculated member capacities, design forces or results of engineering analysis may be waived when the prescriptive measures of Section A404 are used.

This provision is intended to ensure that the designer has accounted for existing conditions likely to compromise the seismic load path or interfere with the intended details. An investigation should verify

INTERNATIONAL CODE COUNCIL®
Copyright © 2015 ICC. ALL RIGHTS RESERVED. Accessed by David Dammon on Jun 21, 2017 12:30:52 PM pursuant to License Agreement with ICC. No further reproduction or distribution authorized. ANY UNAUTHORIZED REPRODUCTION OR DISTRIBUTION IS A VIOLATION OF THE FEDERAL COPYRIGHT ACT AND THE LICENSE AGREEMENT, AND SUBJECT TO CIVIL AND CRIMINAL PENALTIES THEREUNDER.

representative load path details. Specific conditions might require additional field investigation and detailing during the construction phase.

[BS] A406.2 Existing construction. The plans shall show existing diaphragm and shear wall sheathing and framing materials; fastener type and spacing; diaphragm and shear wall connections; continuity ties; and collector elements. The plans shall also show the portion of the existing materials that needs verification during construction.

❖ Details of existing construction need only be shown for the areas within the scope of the retrofit as indicated by Section A403.2.

The provisions in this chapter that address verification include Sections A405.3 (general condition assessment), A404.1.1 (diaphragm type), A404.2.1 (anchorage), A405.3.1 (wood shear wall construction), A405.3.3 (steel tube thickness) and A405.3.4 (concrete strength).

[BS] A406.3 New construction.

[BS] A406.3.1 Foundation plan elements. The foundation plan shall include the size, type, location and spacing of all anchor bolts with the required depth of embedment, edge and end distance; the location and size of all shear walls and all columns for braced frames or moment frames; referenced details for the connection of shear walls, braced frames or moment-resisting frames to their footing; and referenced sections for any grade beams and footings.

[BS] A406.3.2 Framing plan elements. The framing plan shall include the length, location and material of shear walls; the location and material of frames; references on details for the column-to-beam connectors, beam-to-wall connections and shear transfers at floor and roof diaphragms; and the required nailing and length for wall top plate splices.

[BS] A406.3.3 Shear wall schedule, notes and details. Shear walls shall have a referenced schedule on the plans that includes the correct shear wall capacity in pounds per foot (N/m); the required fastener type, length, gage and head size; and a complete specification for the sheathing material and its thickness. The schedule shall also show the required location of 3-inch (76 mm) nominal or two 2-inch (51 mm) nominal edge members; the spacing of shear transfer elements such as framing anchors or added sill plate nails; the required hold-down with its bolt, screw or nail sizes; and the dimensions, lumber grade and species of the attached framing member.

Notes shall show required edge distance for fasteners on structural wood panels and framing members; required flush nailing at the plywood surface; limits of mechanical penetrations; and the sill plate material assumed in the design. The limits of mechanical penetrations shall also be detailed showing the maximum notching and drilled hole sizes.

❖ See the commentary to Section A406.1 regarding documentation of member capacities on plans.

This provision is intended to document new and modified elements. The extensive list indicates the importance of quality control for shear walls.

"Complete specification" means enough information to ensure selection of the correct product by the builder and to allow inspection by the authority having jurisdiction. Reference to a material standard and a panel grade designation is generally sufficient (for example, "United States Voluntary Product Standard PS 1-95, Structural I").

[BS] A406.3.4 General notes. General notes shall show the requirements for material testing, special inspection and structural observation.

❖ In accordance with Section A403.1, the testing and inspection requirements are the same as those for new construction. For example, see IBC Chapter 17.

SECTION A407
QUALITY CONTROL

[BS] A407.1 Structural observation, testing and inspection. Structural observation, in accordance with Section 1709 of the *International Building Code*, shall be required for all structures in which seismic retrofit is being performed in accordance with this chapter. Structural observation shall include visual observation of work for conformance to the approved construction documents and confirmation of existing conditions assumed during design.

Structural testing and inspection for new construction materials shall be in accordance with the building code, except as modified by this chapter.

❖ In accordance with Section A403.1, the structural observation requirements are generally the same as those for new construction. For example, see IBC Section 1708. However, retrofit projects routinely involve unanticipated conditions. The designer and builder should make allowances for such conditions when developing a project schedule and quality control plan.

Bibliography

The following resource materials were used in the preparation of the commentary for this chapter of the code.

BSSC, *NEHRP Recommended Provisions for Seismic Regulations for New Buildings and Other Structures (FEMA 450-2/2003 Edition)*, *Part 2: Commentary*. Washington, DC: Building Seismic Safety Council, 2004.

Cobeen, K., J. Russell, and D.J. Dolan., *Recommendations for Earthquake Resistance in the Design and Construction of Woodframe Buildings*. (CUREE Publication No. W-30b), 2004.

CUREE, *Recommendations for Earthquake Resistance in the Design and Construction of Woodframe Buildings, Part I—Recommendations and Part II—Topical Discussions* (Final Review Draft). Richmond, CA: Consortium of Universities for Research in Earthquake Engineering, November 15, 2002.

INTERNATIONAL CODE COUNCIL®
Copyright © 2015 ICC. ALL RIGHTS RESERVED. Accessed by David Dammon on Jun 21, 2017 12:30:52 PM pursuant to License Agreement with ICC. No further reproduction or distribution authorized. ANY UNAUTHORIZED REPRODUCTION OR DISTRIBUTION IS A VIOLATION OF THE FEDERAL COPYRIGHT ACT AND THE LICENSE AGREEMENT, AND SUBJECT TO CIVIL AND CRIMINAL PENALTIES THEREUNDER.

FEMA 547/ICSSC-7, *Techniques for the Seismic Rehabilitation of Existing Buildings*. Washington, DC: Federal Emergency Management Agency, 2006.

Harder, Robert. *City of Los Angeles Department of Building and Safety and Structural Engineers Association of Southern California Joint Task Force: Wood Frame Construction Code Recommendations*. Proceedings: 63rd Annual Convention (1994 SEAOC Convention): Structural Engineers Association of California, 1994.

Harris, S.K., C. Scawthorn, and J. Egan, *Damage in the Marina District of San Francisco in the October 17, 1989 Loma Prieta Earthquake*. Tokyo: Proceedings of the 8th Japan Earthquake Engineering Symposium, 1990.

Holmes, W. and P. Somers, editors. "Northridge Earthquake of January 17, 1994." Reconnaissance Report, Volume 2. Supplement C to Volume 11. *Earthquake Spectra*, January 1996.

LADBS, *Multistory Wood Frame Buildings with Nonconforming Structural Materials and Tuck-under Parking Features: Summary of Wood Light-frame Building Subcommittee (Draft version 5.7.99)*. LADBS/ SCEC/SEAOSC Ground Motion Joint Task Force Committee, March 1999.

Mendes, S. *Lessons Learned from Four Earthquake Damaged Multi-story Type V Structures*. Proceedings: 64th Annual Convention. Indian Wells, CA: 1995 SEAOC Convention, 1995.

Ni, Chun and Erol, Karacabeyli, *Effect of Overturning Restraint on Performance of Shear Wall*. WCTC Conf., 2000.

Rutherford and Chekene. *Seismic Rehabilitation of Three Model Buildings with Tuckunder Parking: Engineering Assumptions and Cost Information.* San Jose, CA: Department of Housing and Office of Emergency Services, May 2000.

Searer, G.R, J. Valancius and K.E. Cobeen, *Soft/Weak Story Problems and Solutions for Residential Structures. Applied Technology Council and Structural Engineering Institute Conference on Improving the Seismic Performance of Existing Buildings and Other Structures*. San Francisco, CA: December 2009.

Seismology Committee, SEAOC, *Recommended Lateral Force Requirements and Commentary, Seventh Edition*. Sacramento, CA: Structural Engineers Association of California, 1999.

Vukazich, S. *The Apartment Owner's Guide to Earthquake Safety*. San Jose, CA: Residential Seismic Safety Program, August 1998.

FEMA P-807, Seismic Evaluation and Retrofit of Multi-Unit Wood Frame Buildings with Weak First Stories. Washington, DC: Federal Emergency Management Agency, 2012.

INTERNATIONAL CODE COUNCIL®

Copyright © 2015 ICC. ALL RIGHTS RESERVED. Accessed by David Dammon on Jun 21, 2017 12:30:52 PM pursuant to License Agreement with ICC. No further reproduction or distribution authorized. ANY UNAUTHORIZED REPRODUCTION OR DISTRIBUTION IS A VIOLATION OF THE FEDERAL COPYRIGHT ACT AND THE LICENSE AGREEMENT, AND SUBJECT TO CIVIL AND CRIMINAL PENALTIES THEREUNDER.

Chapter A5: Earthquake Hazard Reduction in Existing Concrete Buildings

Purpose

Appendix Chapter A5, along with the rest of Appendix A of the code, is referenced by *International Codes*® in two ways:

- Section 301.1.4.2 allows the use of Appendix A for qualifying buildings when "reduced IBC level seismic forces" are triggered.
- Section 807.6 allows the use of Appendix A for voluntary seismic retrofit.

Appendix Chapter A5 addresses structures where the gravity (and seismic) load-resisting system consists of bearing walls, columns and beams of reinforced cast-in-place concrete construction. The ability of these structures to dissipate seismic energy is strongly dependent on the detailing of the reinforcing. Older reinforced concrete buildings with inadequate detailing can experience sudden, brittle failures, as opposed to controlled local damage. Past performance has shown that strong ground shaking can cause these buildings to be heavily damaged or collapse, causing serious injury or death to the occupants or passers-by.

Code-required detailing for reinforced concrete frame seismic force-resisting systems ("space frame-ductile moment resisting") changed in the 1967 *Uniform Building Code* (UBC). The effectiveness of these design and detailing revisions was confirmed by damage surveys made after the 1971 San Fernando earthquake. The 1967 UBC changes were only applicable to UBC "zones" 2 and 3 in a seismic hazard mapping that has little relationship with current *International Building Code*® (IBC®) hazard mapping. Though there were few changes in detailing requirements going from the 1967 UBC to the 1976 UBC, the seismic loading requirements of the 1976 UBC were significantly higher. Buildings designed in accordance with the 1976 UBC can therefore be expected to have superior performance, and are selected as the benchmark building in Section A502.

Because attention to detailing was typically not a priority prior to 1967, caution is recommended for accepting what appears to be adequate detailing on contract documents for pre-1967 buildings without verification by destructive and nondestructive methods. The adoption dates in Section A502.1 [the 1992 BOCA National Building Code of Canada (NBC)], 1993 Standard Building Code (SBC) and 1976 UBC) give reasonable confidence that "special reinforced concrete moment frames" will have the detailing required for such structures.

Substantial damage and collapse of concrete buildings with inadequate detailing was observed in the San Fernando earthquake of 1971 (U.S. Department of Commerce, 1973), the Mexico City earthquake of 1985 (EERI, 1988), the Whittier Narrows earthquake of 1987 (EERI, 1988), the Loma Prieta earthquake of 1989 (EERI,1990), the Northridge earthquake of 1994 (EERI, 1996), the Kobe (Japan) earthquake of 1995 (EERI, 1995), the Izmit (Turkey) earthquake of 1999 (EERI, 2000) and the Chi-Chi (Taiwan) earthquake of 1999 (EERI, 2001). Also, more recent earthquakes such as the 2009 earthquake in l'Aquila, Italy (Progettazione Sismica, 2009) and the 2011 Christchurch earthquake in New Zealand caused substantial damage to concrete buildings. Further, a disproportionate loss of life was associated with the collapse of a limited number of concrete buildings with inadequate detailing because the occupancy of these so-called nonductile buildings tends to be above average, the relative mass (weight) of floor and roof construction is several times greater than steel frame and light-framed buildings, and stiffness and strength degradation of reinforced concrete systems significantly affects the fragility of the gravity load-carrying system. Stiffness degradation (i.e., cracking of the concrete) may result in concentration of nonlinear displacements in a few stories. This may exacerbate shear strength degradation in plastic hinge zones and result in loss of vertical support in walls and columns. Therefore, the consensus among code officials and engineers is that existing concrete buildings covered by this chapter can pose a significant seismic risk.

The impact of improved knowledge, codes and design practices will be limited to those relatively few recent buildings that take advantage of this improved knowledge. Thus, the dominant policy issues posed by earthquakes involve not new but existing buildings, particularly those structures that have obvious weaknesses and do not comply with the general intent and necessary requirements of current regulations. The issue before the public and the professionals is how to set standards for these noncompliant existing buildings consistent with both the desire for safety and the limited resources available to achieve improved safety.

It is reasonable to take steps to significantly reduce this risk. The objective of Appendix Chapter A5 is the reduction or mitigation of risk to the greatest extent practicable. Application of these provisions will decrease the probability of loss of life, but without a guarantee that loss of life will be prevented. Also, the possibility of major, perhaps irreparable, damage should be accepted as long as there is a decrease in the likelihood of collapse. The provisions in this chapter were derived

INTERNATIONAL CODE COUNCIL®
Copyright © 2015 ICC. ALL RIGHTS RESERVED. Accessed by David Dammon on Jun 21, 2017 12:30:52 PM pursuant to License Agreement with ICC. No further reproduction or distribution authorized. ANY UNAUTHORIZED REPRODUCTION OR DISTRIBUTION IS A VIOLATION OF THE FEDERAL COPYRIGHT ACT AND THE LICENSE AGREEMENT, AND SUBJECT TO CIVIL AND CRIMINAL PENALTIES THEREUNDER.

from several sources. The three-tiered approach is based on ASCE 41, sponsored by the Federal Emergency Management Agency (FEMA), which specifies methodologies to analyze existing concrete buildings. These provisions further draw on the provisions for analysis of existing reinforced concrete buildings developed by the City of Los Angeles (Chapter 95 of the *City of Los Angeles Building Code*) in response to California Senate Bill 547. Finally, this chapter builds on ongoing activities of the Structural Engineers Association of California's (SEAOC) Existing Building Committee related to the analysis of nonductile concrete buildings, such as Appendix Chapter A5 of the *Guidelines for Seismic Retrofit of Existing Buildings* (GSREB) (ICC, 2001).

The performance goal of Appendix Chapter A5 is lower than the performance goal set for new construction since the force level used for Tier 2 and Tier 3 analyses is 75 percent of current code. Use of a reduced seismic design force corresponds to a "reduced rehabilitation objective (Section 2.2.3.1 of ASCE 41-13). It should be recognized that the economic costs and difficulty of strengthening existing buildings necessitates reliance on building components with seismic performance characteristics that are less than ideal.

Analysis of concrete moment-resisting frame buildings with unreinforced masonry infill is no longer covered in Appendix Chapter A5.

SECTION A501
PURPOSE

[BS] A501.1 Purpose. The purpose of this chapter is to promote public safety and welfare by reducing the risk of death or injury that may result from the effects of earthquakes on concrete buildings and concrete frame buildings.

The provisions of this chapter are intended as minimum standards for structural seismic resistance, and are established primarily to reduce the risk of life loss or injury. Compliance with the provisions in this chapter will not necessarily prevent loss of life or injury or prevent earthquake damage to the rehabilitated buildings.

❖ The purpose of this chapter is to identify and reduce the likelihood of significant earthquake damage and collapse of existing concrete buildings designed and constructed prior to the adoption of the building codes listed in Section A502.

SECTION A502
SCOPE

[BS] A502.1 Scope. The provisions of this chapter shall apply to all buildings having concrete floors or roofs supported by reinforced concrete walls or by concrete frames and columns. This chapter shall not apply to buildings with roof diaphragms that are defined as flexible diaphragms by the building code, and shall not apply to concrete frame buildings with masonry infilled walls.

Buildings that were designed and constructed in accordance with the seismic provisions of the 1993 *BOCA National Building Code*, the 1994 *Standard Building Code*, the 1976 *Uniform Building Code*, the 2000 *International Building Code* or later editions of these codes shall be deemed to comply with these provisions, unless the seismicity of the region has increased since the design of the building.

Exception: This chapter shall not apply to buildings assigned to Risk Category IV.

❖ The exception in the first paragraph of Section A502 about concrete buildings "with roof diaphragms that are defined as flexible diaphragms" is related to a definition in Section 12.3.1.1 of ASCE 7-10: "Diaphragms of untopped steel decking or wood structural panels are permitted to be idealized as 'flexible' for concrete shear wall buildings." Note that this exception is not applicable for diaphragms of concrete moment frames. This chapter does not cover concrete buildings with flexible diaphragms such as untopped steel decking or wood structural panels.

Starting with the 2009 edition of the code, analysis of concrete moment-resisting framed buildings with unreinforced masonry infill is no longer covered in Appendix Chapter A5. The complex behavior of these buildings does not fit the three-tiered approach adopted in this chapter.

The concept of "benchmark building" used in ASCE 41 is adopted to limit the scope of this chapter. While benchmark buildings need not proceed with further evaluation, the design professional should demonstrate that the building is compliant with the benchmark document. Benchmark buildings are deemed likely to have improved performance compared to prebenchmark buildings and to not require strengthening "unless the mapped seismicity of the region has increased since the design of the building." This provision enables the authority having jurisdiction to decide whether newer buildings designed in accordance with the seismic provisions of more recent building codes comply. Unintentionally, this exception could be misinterpreted to nearly eliminate the concept of the benchmark building, and the design professional is encouraged to verify what the local interpretation of these provisions is before judging a building compliant based on the building code used for its design.

Chapter A5 is intended to improve a building's performance with respect to safety but not necessarily with respect to post-earthquake functionality or recovery. As such, it is not applicable to buildings assigned to Risk Category IV. Previously, this exemption had been applied to Seismic Design Category A because the perceived low seismicity made these provisions

INTERNATIONAL CODE COUNCIL®
Copyright © 2015 ICC. ALL RIGHTS RESERVED. Accessed by David Dammon on Jun 21, 2017 12:30:52 PM pursuant to License Agreement with ICC. No further reproduction or distribution authorized. ANY UNAUTHORIZED REPRODUCTION OR DISTRIBUTION IS A VIOLATION OF THE FEDERAL COPYRIGHT ACT AND THE LICENSE AGREEMENT, AND SUBJECT TO CIVIL AND CRIMINAL PENALTIES THEREUNDER.

unnecessary, but that limitation has been removed from this section and Chapter 3.

SECTION A503
GENERAL REQUIREMENTS

[BS] A503.1 General. This chapter provides a three-tiered procedure to evaluate the need for *seismic rehabilitation* of existing concrete buildings. The evaluation shall show that the *existing building* is in compliance with the appropriate part of the evaluation procedure as described in Sections A505, A506 and A507, or shall be modified to conform to the respective acceptance criteria. This chapter does not preclude a building from being evaluated or modified to conform to the acceptance criteria using other well-established procedures, based on rational methods of analysis in accordance with principles of mechanics and approved by the authority having jurisdiction.

❖ The term "compliant" (compliance) is used in Chapter 3. Determination of "compliance" by the requirements of the appendix chapters is defined in Section 301.1.4.2. As a result of the use of reduced IBC level seismic forces, achieving compliance through Tier 1, 2 or 3 analysis has a significant impact on the costs of the resulting repair and retrofit requirements.

If the building fails acceptance by Tier 1 evaluation, the engineer may reanalyze the structural system by Tier 2 procedures. If the building fails acceptance by the Tier 2 procedure, the Tier 3 procedure may be used for acceptance of the existing structural system. If the building cannot be shown to work by any of these methods, the building shall be strengthened so that it meets the acceptance criteria of one or more of the three tiers.

[BS] A503.2 Properties of cast-in-place materials. Except where specifically permitted herein, the stress-strain relationship of concrete and reinforcement shall be determined from published data or by testing. All available information, including building plans, original calculations and design criteria, site observations, testing and records of typical materials and construction practices prevalent at the time of construction, shall be considered when determining material properties.

For Tier 3 analysis, lower-bound and expected material properties shall be established in accordance with Section 10.2 of ASCE 41.

❖ All available data relating to the design and detailing of the existing building shall be used in the analysis. If data is unavailable or limited, the procedures of ASCE 41-13, Section 4.2.3, Default Properties shall be used for Tier 1 procedures.

The material properties used in Tier 2 procedures shall be nominal values. When sufficient information regarding the material properties is not available in the original design and construction documents, material properties shall be determined by sampling and testing as specified in Section 10.2 of ASCE 41-13. Nominal material values used in Tier 2 analyses should be reduced by the capacity reduction factors of ACI 318, in accordance with Section A506.5.2.

[BS] A503.3 Structural observation, testing and inspection. Structural observation, in accordance with Section 1709 of the *International Building Code,* shall be required for all structures in which seismic retrofit is being performed in accordance with this chapter. Structural observation shall include visual observation of work for conformance to the approved construction documents and confirmation of existing conditions assumed during design.

Structural testing and inspection for new construction materials shall be in accordance with the building code, except as modified by this chapter.

❖ Similar to new construction, structural observation is critical for quality control during construction of any retrofit of existing buildings. The structural observation required by Section A503.3 will help ensure that the construction conforms to the approved construction documents. In addition, structural observation can also provide a unique opportunity for confirmation of structural details that may affect the modeling and design assumptions.

Structural testing and inspection for new construction materials shall be in accordance with the building code.

SECTION A504
SITE GROUND MOTION

[BS] A504.1 Site ground motion for Tier 1 analysis. The earthquake loading used for the determination of demand on elements of the structure shall correspond to that required by ASCE 41 Chapter 4.

❖ The seismic force used for Tier 1 analyses may be higher than that used for Tier 3 analyses to limit the possibility that a building with marginal strength and detailing will be determined compliant with Appendix Chapter A5.

[BS] A504.2 Site ground motion for Tier 2 analysis. The earthquake loading used for the determination of demand on elements and the structure shall conform to 75 percent of that required by the building code.

❖ The earthquake loading used for determination of the demand on elements for a Tier 2 analysis is reduced to 75 percent of that required by current code. This earthquake loading is increased by the importance factor of Table 1.5-2 of ASCE 7-10, when applicable. This reduction in earthquake demand is consistent with Chapter 2 of ASCE 41-13. The 0.75 factor is consistent with historical retrofit requirements, is identical to that used in ASCE 31-03 for Tier 3 analyses and near identical to that used for FEMA 178/ June 1992 NEHRP *Handbook for the Seismic Evaluation of Existing Buildings* analyses.

[BS] A504.3 Site ground motion for Tier 3 analysis. The site ground motion shall be an elastic design response spectrum prepared in conformance to the building code but having spectral acceleration values equal to 75 percent of the

INTERNATIONAL CODE COUNCIL®
Copyright © 2015 ICC. ALL RIGHTS RESERVED. Accessed by David Dammon on Jun 21, 2017 12:30:52 PM pursuant to License Agreement with ICC. No further reproduction or distribution authorized. ANY UNAUTHORIZED REPRODUCTION OR DISTRIBUTION IS A VIOLATION OF THE FEDERAL COPYRIGHT ACT AND THE LICENSE AGREEMENT, AND SUBJECT TO CIVIL AND CRIMINAL PENALTIES THEREUNDER.

code design response spectrum. The spectral acceleration values shall be increased by the occupancy importance factor when required by the building code.

❖ The loading criterion for a Tier 3 analysis is an elastic design response spectrum compatible with mapped spectral acceleration and velocity parameters as modified by site soil class factors. The spectral acceleration values shall be reduced to 75 percent of the design-basis ground motion similar to that permitted for a Tier 2 analysis. The spectral acceleration values are increased by occupancy importance factors related to the building's risk category when applicable.

SECTION A505
TIER 1 ANALYSIS PROCEDURE

[BS] A505.1 General. Structures conforming to the requirements of the ASCE 41 Chapter 4, Screening Phase, are permitted to be shown to be in conformance to this chapter by submission of a report to the building official, as described in this section.

❖ This section provides a means for conducting simplified and rapid evaluations of existing concrete buildings. This section is not intended to be used for concrete-framed buildings with masonry infill. A few "quick checks" require analysis as part of the checklist process. The analysis is based on the simplified equivalent lateral force procedure of Section 4.5 of ASCE 41, using BSE-1E.

[BS] A505.2 Evaluation report. The registered design professional shall prepare a report summarizing the analysis conducted in compliance with this section. As a minimum, the report shall include the following items:

1. Building description.
2. Site inspection summary.
3. Summary of reviewed record documents.
4. Earthquake design data used for the evaluation of the building.
5. Completed checklists.
6. Quick-check analysis calculations.
7. Summary of deficiencies.

❖ The evaluation report is intended to summarize the evaluation performed and facilitate review by the code official. The report should state clearly that only compliant items exist in the building and as such no rehabilitation measures are necessary, or noncompliant items do exist in the building and what subsequent steps are to be followed by the design professional to address these items. As noted in Section A503.1, the design professional has the option of performing subsequent analyses (Tiers 2 or 3) to show that the noncompliant items are acceptable or, if not acceptable, to pursue a mitigation effort to correct the deficiencies noted from the Tier 1 analysis.

When a subsequent analysis is performed, the report required under this section is intended to be used as supporting documentation for limiting the analysis to only the noncompliant items.

SECTION A506
TIER 2 ANALYSIS PROCEDURE

[BS] A506.1 General. A Tier 2 analysis includes an analysis using the following linear methods: Static or equivalent lateral force procedures. A linear dynamic analysis may be used to determine the distribution of the base shear over the height of the structure. The analysis, as a minimum, shall address all potential deficiencies identified in Tier 1, using procedures specified in this section.

If a Tier 2 analysis identifies a nonconforming condition, such condition shall be modified to conform to the acceptance criteria. Alternatively, the design professional may choose to perform a Tier 3 analysis to verify the adequacy of the structure.

❖ The Tier 2 linear analysis procedure is the equivalent lateral force procedure described in Section 12.8 of ASCE 7-10. This procedure uses a single "global" response modification factor, *R*, for the entire structure. This approach differs from the linear static procedure analysis in ASCE 41, which employs a "component-based" ductility related factor, m, in checking the acceptability of the component evaluated.

The *R* factor for Tier 2 analyses shall be selected based on the type of existing seismic force-resisting system given in Table 12.2-1 of ASCE 7; ordinary reinforced concrete moment frame, *R* = *3*; ordinary reinforced concrete shear walls, *R* = *4*: ordinary reinforced shear walls in building frame, *R* = *5*. The Ω_o and C_d factors associated with the *R* factors shall be used when appropriate. Classification of seismic force-resisting systems as other than "ordinary" for selection of an *R*-factor from Table 12.2-1 of ASCE 7 is only allowed as specified in Sections 301.1.4.1, Item 1, and 301.1.4.2 of the code. It is unlikely that an existing building will meet all the provisions of the current code to qualify as a system other than "ordinary."

Acceptance of the building using the Tier 2 procedure is based on having the flexural strength, axial strength, shear strength and connection strength that are prescribed by referenced standards given in the IBC for resistance to the reduced seismic loading. These referenced standards include ACI 318 and ASCE 7.

[BS] A506.2 Limitations. A Tier 2 analysis procedure may be used if:

1. There is no in-plane offset in the lateral force-resisting system.
2. There is no out-of-plane offset in the lateral force-resisting system.
3. There is no torsional irregularity present in any story. A torsional irregularity may be deemed to exist in a story when the maximum story drift, computed including

INTERNATIONAL CODE COUNCIL®
Copyright © 2015 ICC. ALL RIGHTS RESERVED. Accessed by David Dammon on Jun 21, 2017 12:30:52 PM pursuant to License Agreement with ICC. No further reproduction or distribution authorized. ANY UNAUTHORIZED REPRODUCTION OR DISTRIBUTION IS A VIOLATION OF THE FEDERAL COPYRIGHT ACT AND THE LICENSE AGREEMENT, AND SUBJECT TO CIVIL AND CRIMINAL PENALTIES THEREUNDER.

accidental torsion, at one end of the structure transverse to an axis is more than 1.2 times the average of the story drifts at the two ends of the structure.

4. There is no weak story irregularity at any floor level on any axis of the building. A weak story is one in which the story strength is less than 80 percent of that in the story above. The story strength is the total strength of all seismic-resisting elements sharing the story shear for the direction under consideration.

Exception: Static or equivalent lateral force procedures shall not be used if:

1. The building is more than 100 feet (30 480 mm) in height.
2. The building has a vertical mass or stiffness irregularity (soft story). Mass irregularity shall be considered to exist where the effective mass of any story is more than 150 percent of the effective mass of any adjacent story. A soft story is one in which the lateral stiffness is less than 70 percent of that in the story above or less than 80 percent of the average stiffness of the three stories above.
3. The building has a vertical geometric irregularity. Vertical geometric irregularity shall be considered to exist where the horizontal dimension of the lateral force-resisting system in any story is more than 130 percent of that in an adjacent story.
4. The building has a nonorthogonal lateral force-resisting system.

❖ These limits for use of equivalent lateral force design procedures are similar to those limitations given in Table 12-6 and in Section 12.7.3 of ASCE 7. Linear static procedures are most applicable to buildings with regular geometries and prescribed distributions of stiffness, strength and mass.

For buildings with plan irregularities, soft stories, or weak stories, the inelastic ductility demand may significantly differ from the result of linear analyses; therefore, Tier 3 analysis procedures shall be used. For buildings with vertical irregularities or significant higher mode response, linear dynamic procedures may provide a more accurate vertical distribution of seismic demand as compared to the linear static procedure.

[BS] A506.3 Analysis procedure. A structural analysis shall be performed for all structures in accordance with the requirements of the building code, except as modified in Section A506. The response modification factor, *R*, shall be selected based on the type of seismic force-resisting system employed and shall comply with the requirements of Section 301.1.4.1.

❖ The stiffness of any component shall be calculated using the values given in Table 10-5 of ASCE 41-13. The building period calculated using a percentage of the gross stiffness to account for effective stiffness may exceed and is permitted to exceed the upper limit of calculated period given in the IBC. To determine the effective stiffness of a flat plate or flat slab, the design professional shall refer to available research data. The empirical limits on elastic fundamental period given in the IBC are not appropriate for analysis of the diversity of structural systems found in existing buildings.

[BS] A506.3.1 Mathematical model. The three-dimensional mathematical model of the physical structure shall represent the spatial distribution of mass and stiffness of the structure to an extent that is adequate for the calculation of the significant features of its distribution of lateral forces. All concrete and masonry elements shall be included in the model of the physical structure.

Exception: Concrete or masonry partitions that are isolated from the concrete frame members and the floor above.

Cast-in-place reinforced concrete floors with span-to-depth ratios less than three-to-one may be assumed to be rigid diaphragms. Other floors, including floors constructed of precast elements with or without a reinforced concrete topping, shall be analyzed in conformance to the building code to determine if they must be considered semi-rigid diaphragms. The effective in-plane stiffness of the diaphragm, including effects of cracking and discontinuity between precast elements, shall be considered. Parking structures that have ramps rather than a single floor level shall be modeled as having mass appropriately distributed on each ramp. The lateral stiffness of the ramp may be calculated as having properties based on the uncracked cross section of the slab exclusive of beams and girders.

❖ The mathematical model of the building must be three dimensional (3-D) and include all concrete elements that will be deformed by lateral forces. The exception allows isolated partitions to be omitted from the 3-D model. The partitions must be isolated from the structure at the top and along both vertical edges by joints adequate to accommodate expected inter-story drifts. Section 12.7.3 of ASCE 7-10 describes the elements that must be included in the 3-D model. This 3-D model shall be used for analysis on each axis of the building for compliance with applicable subsections of Section 12.5 of ASCE 7-10. Cast-in-place reinforced concrete floor systems may be assumed to act as rigid diaphragms if in conformance with the specified span-to-depth ratio of Section 12.3.1.1 of ASCE 7-10. Other floor systems must be analyzed in conformance with Section 12.3.1.3 of ASCE 7-10 to confirm that the floor diaphragm is not flexible. If the diaphragm is determined to be not flexible, the horizontal flexibility of the diaphragm must be included in the 3-D model. This definition of when a diaphragm is rigid or semirigid may be related to its orthogonal axis; the definition may be different along each axis of a rectangular building. In this case, use of a plate element as representative of the orthogonal horizontal stiffness of the diaphragm may simplify the analysis.

Parking structures that consist of ramps in lieu of horizontal floor levels shall have the mass distributed along the ramp length to determine their expected in-

INTERNATIONAL CODE COUNCIL®
Copyright © 2015 ICC. ALL RIGHTS RESERVED. Accessed by David Dammon on Jun 21, 2017 12:30:52 PM pursuant to License Agreement with ICC. No further reproduction or distribution authorized. ANY UNAUTHORIZED REPRODUCTION OR DISTRIBUTION IS A VIOLATION OF THE FEDERAL COPYRIGHT ACT AND THE LICENSE AGREEMENT, AND SUBJECT TO CIVIL AND CRIMINAL PENALTIES THEREUNDER.

plane deformations. The lateral stiffness of the ramps shall be the uncracked stiffness without stiffening effects of edge beams and girders. Columns that are restrained by floor beams at each adjacent ramp level may have critical shear stress induced by the floor beams and should be carefully considered in the model.

[BS] A506.3.2 Component stiffness. Component stiffness shall be calculated based on the approximate values shown in ASCE 41 Table 10-5.

❖ The ranges of approximate percentages of gross stiffness given in ASCE 41–reduce the element's gross section properties to an effective stiffness property. Cracking of the concrete in the elastic stress range and additional cracking in nonlinear behavior range must be considered. Effective stiffness properties are required for consideration of the relative rigidities of reinforced concrete elements and for linear dynamic procedures.

[BS] A506.4 Design, detailing requirements and structural component load effects. The design and detailing of new components of the seismic force-resisting system shall comply with the requirements of the *International Building Code*, unless specifically modified herein.

❖ The design and detailing of new elements of a supplemental seismic force-resisting system shall conform to the requirements of ACI 318 Chapter 18 and as modified by IBC Chapter 19.

[BS] A506.5 Acceptance criteria. The calculated strength of a member shall be not less than the load effects on that member.

❖ The strength of elements calculated in conformance with the IBC shall equal or exceed the load effects determined in conformance with the IBC.

[BS] A506.5.1 Load combinations. For load and resistance factor design (strength design), structures and all portions thereof shall resist the most critical effects from the combinations of factored loads prescribed in the building code.

Exception: For concrete beams and columns, the shear effect shall be determined based on the most critical load combinations prescribed in the building code. The shear load effect, because of seismic forces, shall be multiplied by a factor of *Cd,* but combined shear load effect need not be greater than *Ve*, as calculated in accordance with Equation A5-4. M_{pr1} and M_{pr2} are the end moments, assumed to be in the same direction (clockwise or counter clockwise), based on steel tensile stress being equal to $1.25 f_y$, where f_y is the specified yield strength.

$$V_e = \frac{M_{pr1} + M_{pr2}}{L} \pm \frac{W_g}{2} \qquad \textbf{(Equation A5-1)}$$

where:

W_g = Total gravity loads on the beam

❖ The critical load combinations for strength design or load and resistance factor design of the IBC shall be used. The exception in this section requires that the shear demands from seismic forces be multiplied by C_d, but need not exceed the value of V_e calculated using Equation A5-1. The C_d factor is used in this section to calculate the post-yield moments. C_d is the appropriate magnifier as the maximum moment occurs when the plastic hinge is at its maximum curvature which occurs at the point of maximum drift. It should be noted that the plastic moments and V_e will generally place an upper bound on the design shear force.

The end moments in Equation A5-1 are based on steel tensile stress of 125 percent of specified yield stress. The total gravity load may be calculated using the lower of the unfactored dead and reduced live load, or the gravity component of the factored load combination with earthquake loads as applicable for new construction.

This requirement is intended to minimize the probability of a shear failure in components with flexural and axial loadings prior to attaining the nonlinear displacement assumed by the response reduction factor in the calculation of the seismic loading. The commentary to Chapter 4 of the 2003 NEHRP (FEMA 450) for Figures C4.2-1 and C4.2-3 shows the relationship of nonlinear displacement and nonlinear flexural moments in systems or elements. The elastic moment increases the strength limit moment (ultimate) as the nonlinear curvature of the plastic hinge increases. These post-yield moments can be calculated by assuming a strain of yield strain x C_D at the tension face and a strain of 0.003 at the compression face. Equation A5-1 simplifies the determination of the probable moments by limiting the increase to 125 percent of yield moment.

[BS] A506.5.2 Determination of the strength of members. The strength of a member shall be determined by multiplying the nominal strength of the member by a strength reduction factor, ϕ. The nominal strength of the member shall be determined in accordance with the building code.

❖ Strength of members shall be determined by reducing the nominal strength by strength reduction factors (ϕ) specified in ACI 318. ACI 318 is the referenced standard given in the IBC for design of reinforced concrete.

SECTION A507
TIER 3 ANALYSIS PROCEDURE

[BS] A507.1 General. A Tier 3 evaluation shall be performed using the Nonlinear Static Procedure or Nonlinear Dynamic Procedure of Section 10.3.1.2.2 of ASCE 41. The general assumptions and requirements of Section 10.3 of ASCE 41, excluding those for concrete frames with infills, shall be used in the evaluation. Reduced *International Building Code* level site-ground motions in accordance with Section A504.3 are permitted for this evaluation. Structures meeting the ASCE 41 Life Safety (LS) acceptance criteria

INTERNATIONAL CODE COUNCIL®
Copyright © 2015 ICC. ALL RIGHTS RESERVED. Accessed by David Dammon on Jun 21, 2017 12:30:52 PM pursuant to License Agreement with ICC. No further reproduction or distribution authorized. ANY UNAUTHORIZED REPRODUCTION OR DISTRIBUTION IS A VIOLATION OF THE FEDERAL COPYRIGHT ACT AND THE LICENSE AGREEMENT, AND SUBJECT TO CIVIL AND CRIMINAL PENALTIES THEREUNDER.

shall be deemed to comply with this chapter. If a Tier 3 analysis identifies nonconforming conditions, such conditions shall be modified to conform to the acceptance criteria.

❖ The Tier 3 evaluation procedure is specified as a nonlinear procedure corresponding to ASCE 41. It is intended that life safety acceptance criteria be used. Use of linear static procedures is not permitted for Tier 3 analyses. The Tier 2 procedure uses the code equivalent lateral force procedure in lieu of the linear static procedures. If the building is shown noncompliant by a Tier 2 analysis, it would not be expected to be shown compliant by another linear analysis.

Engineers should familiarize themselves with ASCE 41 prior to beginning a Tier 3 analysis. ASCE 41 provides commentary in lieu of commentary in this document.

The procedure for Tier 3 analyses is described in Section 7.4.3 of ASCE 41.

The mathematical model of the building shall be subjected to monotonically increasing loads to 150 percent of target displacement, The target displacement shall be amplified for horizontal torsion, if applicable, in accordance with Section 7.2.3.2.2 of ASCE 41.

Acceptance criteria for nonlinear procedures shall be as prescribed in Section 7.5.3.2 of ASCE 41. Primary and secondary components shall have expected deformation capacities not less than the maximum deformation demands calculated at the target displacement. Component deformation limits are as described in Chapter 10 of ASCE 41 for the life safety performance level.

Force-controlled actions of primary and secondary components shall have strengths not less than the maximum design force.

For buildings with negative post-yield stiffness with target displacement greater than the displacement at maximum base shear, the maximum strength ratio, $\mu_{strength}$, shall be determined by Equation 7-32 of ASCE 41. If $\mu_{strength}$ exceeds μ_{max}, the nonlinear dynamic procedure shall be used to show compliance with reduced-level seismic forces. In lieu of this nonlinear dynamic procedure analysis, the lateral force-resisting system and/or gravity support system of this building may be deemed to be noncomplaint and modified to conform to the acceptance criteria.

Bibliography

The following resource materials were used in the preparation of the commentary for this chapter of the code.

California Earthquake of February 9, 1971. San Fernando, CA: U.S. Department of Commerce National Oceanic and Atmospheric Administration,1973.

"Chi-Chi, Taiwan, Earthquake." *EERI Spectra*, Supplement to Vol. 17, April 2001 and Vol. 17, No. 4, November 2001.

"Earthquake Hazard Reduction in Existing Reinforced Concrete Buildings and Concrete Frame Buildings with Masonry Fill." City of Los Angeles Building Code—Volume 2, 2008.

EERI, *The Hyogo-Ken Nanbu Earthquake Great Hanshin Earthquake Disaster January 17, 1995*. Preliminary Reconnaissance Report, February 1995.

Guidelines for the Seismic Retrofit of Existing Buildings, International Code Council, Washington, DC: 2001.

"Izmut Turkey Earthquake, 1999." *EERI Spectra.* Supplement A to Vol. 16, December 2000.

"Loma Prieta Earthquake, 1989." *EERI Spectra.* Vol. 6 Supplement, May 1990.

"Mexico City Earthquake, 1985." *EERI Spectra*. Vol. 4. No. 3, August 1988

NEHRP *Handbook for the Seismic Evaluation of Existing Buildings (FEMA 178)*. Washington, DC: Federal Emergency Management Agency, 1992.

NEHRP, *Recommended Provisions and Commentary for Seismic Regulations for New Buildings and Other Structures (FEMA 450)*. Washington, DC: Federal Emergency Management Agency, 2003.

"Northridge Earthquake, 1994" *EERI Spectra.* Vol. 4. No. 3, 1994

Progettazione Sismica, Special Issue on the April 6th 2009 l'Aquila earthquake. IUSS Press, Pavia, Vol. 1, No. 3, 2009.

"Whittier Earthquake, 1987." *EERI Spectra.* Vol. 4. No.1, February 1988 and Vol. 4 No. 2, May 1988.

INTERNATIONAL CODE COUNCIL®
Copyright © 2015 ICC. ALL RIGHTS RESERVED. Accessed by David Dammon on Jun 21, 2017 12:30:52 PM pursuant to License Agreement with ICC. No further reproduction or distribution authorized. ANY UNAUTHORIZED REPRODUCTION OR DISTRIBUTION IS A VIOLATION OF THE FEDERAL COPYRIGHT ACT AND THE LICENSE AGREEMENT, AND SUBJECT TO CIVIL AND CRIMINAL PENALTIES THEREUNDER.

INTERNATIONAL CODE COUNCIL®
Copyright © 2015 ICC. ALL RIGHTS RESERVED. Accessed by David Dammon on Jun 21, 2017 12:30:52 PM pursuant to License Agreement with ICC. No further reproduction or distribution authorized. ANY UNAUTHORIZED REPRODUCTION OR DISTRIBUTION IS A VIOLATION OF THE FEDERAL COPYRIGHT ACT AND THE LICENSE AGREEMENT, AND SUBJECT TO CIVIL AND CRIMINAL PENALTIES THEREUNDER.

Chapter A6:
Referenced Standards

ASCE/SEI

American Society of Civil Engineers
Structural Engineering Institute
1801 Alexander Bell Drive
Reston, VA 20191-4400

Standard reference number	Title	Referenced in code section number
7—10	Minimum Design Loads for Buildings and Other Structures with Supplement No. 1	A104, A403.3
41—13	Seismic Rehabilitation of Existing Buildings	A503.2, A504.1, A505.1, A506.3.2, A507.1

ASTM

ASTM International
100 Barr Harbor Drive
West Conshohocken, PA 19428-2959

Standard reference number	Title	Referenced in code section number
A36/A36M-08	Specification for Carbon Structural Steel	A405.3.3
A 653/A653M—11	Standard Specification for Steel Sheet, Zinc Coated (Galvanized) or Zinc-Iron Alloy-Coated (Galvannealed) by Hot-Dip Process	A304.2.6
B 695—04(2009)	Standard Specification for Coating of Zinc Mechanically Deposited on Iron And Steel	A304.2.6
C 496—96/C496M-11	Standard Test Method for Splitting Tensile Strength of Cylindrical Concrete Specimens	A104, A106.3.3.2
E 488-10	Test Method for Strength of Anchors in Concrete and Masonry Elements	A107.5.3
E 519/E519M—2010	Standard Test Method for Diagonal Tension (Shear) in Masonry Assemblages	A104, A106.3.3.2

ICC

International Code Council
500 New Jersey Avenue, NW, 6th Floor
Washington, DC 20001

Standard reference number	Title	Referenced in code section number
BNBC—93	BOCA National Building Code®	A502
BNBC—96	BOCA National Building Code®	A502
BNBC—99	BOCA National Building Code®	A202
IBC—00	International Building Code®	A202.1, A502.1
IBC—03	International Building Code®	A202.1, A502.1
IBC—06	International Building Code®	A202.1, A502.1
IBC—09	International Building Code®	A202.1, A502.1
IBC—12	International Building Code®	A202.1, A502.1
IBC—15	International Building Code®	A102.2, A108.2, A202.1, A203, A206.3, A206.9, A403.1, A405.1, A407.1, A502.1, A503.3, A506.4,
SBC—94	Standard Building Code®	A502
SBC—97	Standard Building Code®	A502
SBC—99	Standard Building Code®	A202, A502
UBC—76	Uniform Building Code®	A502
UBC—97	Uniform Building Code®	A202, A502

INTERNATIONAL CODE COUNCIL®
Copyright © 2015 ICC. ALL RIGHTS RESERVED. Accessed by David Dammon on Jun 21, 2017 12:30:52 PM pursuant to License Agreement with ICC. No further reproduction or distribution authorized. ANY UNAUTHORIZED REPRODUCTION OR DISTRIBUTION IS A VIOLATION OF THE FEDERAL COPYRIGHT ACT AND THE LICENSE AGREEMENT, AND SUBJECT TO CIVIL AND CRIMINAL PENALTIES THEREUNDER.

INTERNATIONAL CODE COUNCIL®
Copyright © 2015 ICC. ALL RIGHTS RESERVED. Accessed by David Dammon on Jun 21, 2017 12:30:52 PM pursuant to License Agreement with ICC. No further reproduction or distribution authorized. ANY UNAUTHORIZED REPRODUCTION OR DISTRIBUTION IS A VIOLATION OF THE FEDERAL COPYRIGHT ACT AND THE LICENSE AGREEMENT, AND SUBJECT TO CIVIL AND CRIMINAL PENALTIES THEREUNDER.

Appendix B: Supplementary Accessibility Requirements for Existing Buildings and Facilities

The provisions contained in this appendix are not mandatory unless specifically referenced in the adopting ordinance.

General Comments

As stated in Section 101.6, the provisions of the appendices do not apply unless specifically adopted.

Chapter 11 of the *International Building Code*® (IBC®) contains provisions that set forth requirements for accessibility to buildings and their associated sites and facilities for people with physical disabilities. Sections 410, 605, 705, 806, 906, 1006, 1012.1.4, 1012.8, 1105, 1204.1 and 1205.15 in the code address accessibility provisions and alternatives permitted in existing buildings. Appendix B was added to address accessibility in construction for items that are not typically enforceable through the traditional building code enforcement process.

Section B101 deals with historical facilities that are registered through the National Historic Preservation Act (NHPA) or a similar state or local law. If such a facility undergoes an alteration or change of occupancy, it must comply with accessibility regulations as specified in Sections 1204 and 1205.15. If the required alterations would adversely affect some historic aspect of the structure, alternatives are available. Before these alternatives can be utilized, the owner must go through a process to evaluate the requirements and implications of each. Section B101.3 describes the process if the building is registered through the NHPA. Section B101.4 describes the process if the building is registered through a state or local registration law. Section B101.5 provides alternatives for displays in historical buildings.

Section B102 lists criteria specific to fixed transportation facilities and stations, such as train stations.

Section B103 contains provisions related to communication features for altered or added dwelling or sleeping units.

Section B104 lists the standards referenced in this appendix.

Purpose

Appendix B includes scoping requirements found in the *Americans with Disabilities Act Accessibility Guidelines* (ADAAG) that are not in the accessibility provisions in the IBC or the code. Items in this appendix deal with topics not typically addressed in building codes. For example, Section B101 specifies the process to follow regarding alterations or change of occupancy in historically registered buildings.

This appendix is being included in the code for the convenience of building owners and designers who are required to comply with ADAAG, and for the benefit of jurisdictions that may wish to go beyond the traditional boundary of the code and formally adopt these additional ADAAG requirements. The requirements in the code indicate what is required and enforceable by the code official. The appendix includes items that are outside the scope of code enforcement, but must be complied with in addition to the code requirements to satisfy ADAAG regulations.

SECTION B101
QUALIFIED HISTORICAL BUILDINGS AND FACILITIES

B101.1 General. Qualified historic buildings and facilities shall comply with Sections B101.2 through B101.5.

❖ Special considerations are given to registered historic buildings (see commentary, Sections 410.9,1204 and 1205.15).

B101.2 Qualified historic buildings and facilities. These procedures shall apply to buildings and facilities designated as historic structures that undergo alterations or a *change of occupancy*.

❖ This section provides a process to evaluate historical registered buildings in the event where accessibility requirements may adversely affect the historical significance of the building.

B101.3 Qualified historic buildings and facilities subject to Section 106 of the National Historic Preservation Act. Where an *alteration* or *change of occupancy* is undertaken to a qualified *historic building* or facility that is subject to Section 106 of the National Historic Preservation Act, the federal agency with jurisdiction over the undertaking shall follow the Section 106 process. Where the state historic preservation officer or Advisory Council on Historic Preservation determines that compliance with the requirements for accessible routes, ramps, entrances, or toilet facilities would threaten or destroy the historic significance of the building or facility, the alternative requirements of Section 410.9 for that element are permitted.

❖ If a facility is subject to Section 106 of the NHPA, this section outlines the procedure to follow with the federal agency involved to allow the facility to utilize the

INTERNATIONAL CODE COUNCIL®
Copyright © 2015 ICC. ALL RIGHTS RESERVED. Accessed by David Dammon on Jun 21, 2017 12:30:52 PM pursuant to License Agreement with ICC. No further reproduction or distribution authorized. ANY UNAUTHORIZED REPRODUCTION OR DISTRIBUTION IS A VIOLATION OF THE FEDERAL COPYRIGHT ACT AND THE LICENSE AGREEMENT, AND SUBJECT TO CIVIL AND CRIMINAL PENALTIES THEREUNDER.

alternatives offered in Section 410.9. This information is repeated in Sections 1204 and 1205.15.

B101.4 Qualified historic buildings and facilities not subject to Section 106 of the National Historic Preservation Act. Where an *alteration* or *change of occupancy* is undertaken to a qualified *historic building* or facility that is not subject to Section 106 of the National Historic Preservation Act, and the entity undertaking the alterations believes that compliance with the requirements for accessible routes, ramps, entrances, or toilet facilities would threaten or destroy the historic significance of the building or facility, the entity shall consult with the state historic preservation officer. Where the state historic preservation officer determines that compliance with the accessibility requirements for accessible routes, ramps, entrances, or toilet facilities would threaten or destroy the historical significance of the building or facility, the alternative requirements of Section 410.9 for that element are permitted.

❖ If a facility is not subject to Section 106 of the NHPA, this section outlines the procedure to follow with the state historic preservation officer to allow the facility to utilize the alternatives offered in Section 410.9. This information is repeated in Sections 1204 and 1205.15.

B101.4.1 Consultation with interested persons. Interested persons shall be invited to participate in the consultation process, including state or local accessibility officials, individuals with disabilities, and organizations representing individuals with disabilities.

❖ Some type of public forum or meeting must be held to allow for the input of interested parties that may wish to utilize the facilities offered in the historic building.

B101.4.2 Certified local government historic preservation programs. Where the state historic preservation officer has delegated the consultation responsibility for purposes of this section to a local government historic preservation program that has been certified in accordance with Section 101 of the National Historic Preservation Act of 1966 [(16 U.S.C. 470a(c)] and implementing regulations (36 CFR 61.5), the responsibility shall be permitted to be carried out by the appropriate local government body or official.

❖ Where the state has certified a local group in accordance with the NHPA to oversee activity in a historic district or area, that group can take on the role of the state historic preservation officer.

B101.5 Displays. In qualified historic buildings and facilities where alternative requirements of Section 1105 are permitted, displays and written information shall be located where they can be seen by a seated person. Exhibits and signs displayed horizontally shall be 44 inches (1120 mm) maximum above the floor.

❖ Displays, exhibits and signs in historic buildings must be located so that a person in a wheelchair can look at them.

SECTION B102
FIXED TRANSPORTATION FACILITIES AND STATIONS

B102.1 General. Existing fixed transportation facilities and stations shall comply with Section B102.2.

❖ Fixed transportation facilities and stations, such as train or light rail stations, provide access to public transportation and are considered an essential service; therefore, accessibility in these facilities is of special concern. Requirements for new construction can be found in Appendix E of the IBC.

B102.2 Existing facilities—key stations. Rapid rail, light rail, commuter rail, intercity rail, high-speed rail and other fixed guideway systems, altered stations, and intercity rail and key stations, as defined under criteria established by the Department of Transportation in Subpart C of 49 CFR Part 37, shall comply with Sections B102.2.1 through B102.2.3.

❖ Existing guideway system facilities are required to meet a lesser degree of accessibility specified in Sections B102.2.1 through B102.2.3.

B102.2.1 Accessible route. At least one accessible route from an accessible entrance to those areas necessary for use of the transportation system shall be provided. The accessible route shall include the features specified in Appendix E109.2 of the *International Building Code*, except that escalators shall comply with *International Building Code* Section 3004.2.2. Where technical unfeasibility in existing stations requires the accessible route to lead from the public way to a paid area of the transit system, an accessible fare collection machine complying with *International Building Code* Appendix E109.2.3 shall be provided along such accessible route.

❖ At least one accessible route is required throughout passenger areas in an existing facility. Existing escalators in subway stations are not required to meet the criteria for a 32-inch (813 mm) minimum clear width in IBC Section 3004.2.2. If it is technically infeasible to provide an accessible route from the entrance to a ticket sales area, some type of fare-taking machinery may be provided along the accessible route to the train platform.

B102.2.2 Platform and vehicle floor coordination. Station platforms shall be positioned to coordinate with vehicles in accordance with applicable provisions of 36 CFR Part 1192. Low-level platforms shall be 8 inches (250 mm) minimum above top of rail.

Exception: Where vehicles are boarded from sidewalks or street-level, low-level platforms shall be permitted to be less than 8 inches (250 mm).

❖ In existing facilities, the vertical separation between the platform and the cars is slightly less restrictive than in new construction. The gap between the platform and the cars is only measured at accessible cars. Retrofitted cars may have an even larger variance. Where train cars cannot meet the vertical separation and gap requirements, alternatives such as lifts and ramps may be utilized.

INTERNATIONAL CODE COUNCIL®
Copyright © 2015 ICC. ALL RIGHTS RESERVED. Accessed by David Dammon on Jun 21, 2017 12:30:52 PM pursuant to License Agreement with ICC. No further reproduction or distribution authorized. ANY UNAUTHORIZED REPRODUCTION OR DISTRIBUTION IS A VIOLATION OF THE FEDERAL COPYRIGHT ACT AND THE LICENSE AGREEMENT, AND SUBJECT TO CIVIL AND CRIMINAL PENALTIES THEREUNDER.

B102.2.3 Direct connections. New direct connections to commercial, retail, or residential facilities shall, to the maximum extent feasible, have an accessible route complying with Section 705.2 from the point of connection to boarding platforms and transportation system elements used by the public. Any elements provided to facilitate future direct connections shall be on an accessible route connecting boarding platforms and transportation system elements used by the public.

❖ New buildings that provide a direct connection to the existing transit systems must also have an accessible route to the transit system. The exceptions in Section 705.2 are applicable. This information is repeated in Section 410.7.

SECTION B103
DWELLING UNITS AND SLEEPING UNITS

B103.1 Communication features. Where dwelling units and sleeping units are altered or added, the requirements of Section E104.3 of the *International Building Code* shall apply only to the units being altered or added until the number of units with accessible communication features complies with the minimum number required for new construction.

❖ Communication features are required in a limited number of rooms in transient lodging and jails (see IBC Appendix E, Section E104.2). The intent is to allow for special features for people with hearing impairments in those facilities.

Where transient lodging dwelling and sleeping units are altered or added, only these units are counted to determine the number of units that will require accessible communication features. Once the entire building meets the number required for new construction, no additional accessible communication features are required. This is consistent with the intent in the code expressed for when Accessible and Type A units are required in existing buildings.

SECTION B104
REFERENCED STANDARDS

Y3.H626 2P National Historic Preservation J101.2, 43/933 Act of 1966, as amended J101.3, 3rd Edition, Washington, DC: J101.3.2 US Government Printing Office, 1993.

49 CFR Part 37.43 (c), Alteration of Transportation Facilities by Public Entities, Department of Transportation, 400 7th Street SW, Room 8102, Washington, DC 20590-0001.

INTERNATIONAL CODE COUNCIL®
Copyright © 2015 ICC. ALL RIGHTS RESERVED. Accessed by David Dammon on Jun 21, 2017 12:30:52 PM pursuant to License Agreement with ICC. No further reproduction or distribution authorized. ANY UNAUTHORIZED REPRODUCTION OR DISTRIBUTION IS A VIOLATION OF THE FEDERAL COPYRIGHT ACT AND THE LICENSE AGREEMENT, AND SUBJECT TO CIVIL AND CRIMINAL PENALTIES THEREUNDER.

INTERNATIONAL CODE COUNCIL®

Copyright © 2015 ICC. ALL RIGHTS RESERVED. Accessed by David Dammon on Jun 21, 2017 12:30:52 PM pursuant to License Agreement with ICC. No further reproduction or distribution authorized. ANY UNAUTHORIZED REPRODUCTION OR DISTRIBUTION IS A VIOLATION OF THE FEDERAL COPYRIGHT ACT AND THE LICENSE AGREEMENT, AND SUBJECT TO CIVIL AND CRIMINAL PENALTIES THEREUNDER.

APPENDIX C: Guidelines for the Wind Retrofit of Existing Buildings

Chapter C1: Gable End Retrofit for High-wind Areas

The provisions contained in this appendix are not mandatory unless specifically referenced in the adopting ordinance.

General Comments

The provisions in Appendix Chapter C1 are focused on the retrofit of gable ends to increase the resistance to the effects of wind for existing structures. This is one of two appendix chapters focused on providing prescriptive methods to increase wind resistance for existing structures. Appendix Chapter C2 addresses roof deck fastening requirements.

The content of both Appendix Chapters C1 and C2 is similar in concept to that provided in Appendix A chapters dealing with seismic retrofit requirements. It is anticipated that, over time, additional retrofit methods will be provided in this appendix as new Appendix C chapters. These retrofits are voluntary and, as such, may or may not meet the requirements of new construction. However, these voluntary measures will serve to better protect the public and reduce damage from high-wind events.

Because most of America's buildings located in hurricane-prone regions were not built to today's building code standards, there is significant value added to the code if the retrofitting of buildings could be facilitated by the provisions of prescriptive means. This would inherently reduce the cost of retrofitting. The need for structural retrofitting has been highlighted in the recent spate of hurricanes and the insurance crises that have developed in the coastal high-wind areas of a number of states because of older buildings that do not meet current building code structural requirements. Clearly, it is in the best interests of the public health, welfare and safety to facilitate retrofitting. Given the importance of retrofitting to the public, retrofitting of buildings should be encouraged and facilitated by removing as many impediments as possible. The code can actually facilitate and encourage retrofitting by providing prescriptive means. Such methods should encourage, facilitate and reduce the cost of improving America's building stock.

Purpose

The purpose of Appendix Chapter C1 is to provide prescriptive means for retrofitting gable ends to resist high winds. These provisions will facilitate the retrofitting of gable ends without requiring site-specific engineering for common applications, thus removing some of the obstacles that might impede this important retrofit in hurricane-prone regions. Gable end failures are one of the most common types of structural failures observed in hurricanes. They have been documented in most major hurricanes and in many weaker hurricanes.

The provisions are intended to be a prescriptive approach to reduce retrofitting costs, facilitate retrofitting, minimize the need for engineering and facilitate code review and inspection. Appendix Chapter C1 provides standardized off-the-shelf methods that can be readily approved and easily inspected by building department personnel. Building departments can thus become creditable third-party resources for authenticating retrofitting just as they do for other structural issues of buildings.

The provisions were added as an appendix for several reasons. The first being the ease in adding future Appendix C chapters. Further, by grouping retrofit measures into a separate chapter, users will find them and perhaps even use the chapter as a catalog of potential retrofit measures. Additionally, grouping voluntary measures into a separate chapter (separate from mandatory measures) reduces confusion in the application of the code.

Currently, Appendix Chapter C1 is broken into four major sections

- C101 General. Provides the purpose, eligibility criterion and applicability of the *International Building Code*® (IBC®) and *International Residential Code*® (IRC®).
- C102 Definitions. Provides definitions relative to the application of the appendix chapter.
- C103 Materials of Construction. Provides the parameters for the materials that can be used for the retrofit of gable ends.
- C104 Retrofitting Gable End Walls to Enhance Wind Resistance. Provides the methodologies for retrofitting the gable ends.

INTERNATIONAL CODE COUNCIL®
Copyright © 2015 ICC. ALL RIGHTS RESERVED. Accessed by David Dammon on Jun 21, 2017 12:30:52 PM pursuant to License Agreement with ICC. No further reproduction or distribution authorized. ANY UNAUTHORIZED REPRODUCTION OR DISTRIBUTION IS A VIOLATION OF THE FEDERAL COPYRIGHT ACT AND THE LICENSE AGREEMENT, AND SUBJECT TO CIVIL AND CRIMINAL PENALTIES THEREUNDER.

SECTION C101
GENERAL

[BS] C101.1 Purpose. This chapter provides prescriptive methods for partial structural retrofit of an existing building to increase its resistance to out-of-plane wind loads. It is intended for voluntary use and for reference by mitigation programs. The provisions of this chapter do not necessarily satisfy requirements for new construction. Unless specifically cited, the provisions of this chapter do not necessarily satisfy requirements for structural improvements triggered by addition, alteration, repair, change of occupancy, building relocation or other circumstances.

[BS] C101.2 Eligible buildings and gable end walls. The provisions of this chapter are applicable only to buildings that meet the following eligibility requirements:

1. The building is not more than three stories tall, from adjacent grade to the bottom plate of each gable end wall being retrofitted with this chapter.
2. The building is classified as Occupancy Group R3 or is within the scope of the *International Residential Code*.
3. The structure includes one or more wood-framed gable end walls, either conventionally framed or metal-plate-connected.

In addition, the provisions of this chapter are applicable only to gable end walls that meet the following eligibility requirements:

4. Each gable end wall has or shall be provided with studs or vertical webs spaced 24 inches (610 mm) on center maximum.
5. Each gable end wall has a maximum height of 16 feet (4877 mm).

[BS] C101.3 Compliance. Eligible gable end walls in eligible buildings may be retrofitted with this chapter. All other modifications required for conformance with this chapter shall be designed and constructed in accordance with the *International Building Code* or *International Residential Code* provisions for new construction, except as specifically provided for by this chapter.

SECTION C102
DEFINITIONS

The following words and terms shall, for the purposes of this chapter, have the meanings shown herein.

[BS] ANCHOR BLOCK. A piece of lumber secured to horizontal braces and filling the gap between existing framing members for the purpose of restraining horizontal braces from movement perpendicular to the framing members.

[BS] COMPRESSION BLOCK. A piece of lumber used to restrain in the compression mode (force directed towards the interior of the attic) an existing or retrofit stud. It is attached to a horizontal brace and bears directly against the existing or retrofit stud.

[BS] CONVENTIONALLY FRAMED GABLE END. A gable end framed with studs whose faces are perpendicular to the gable end wall.

[BS] GABLE END FRAME. A factory or site-fabricated frame, installed as a complete assembly that incorporates vertical webs with their faces parallel to the plane of the frame.

[BS] HORIZONTAL BRACE. A piece of lumber used to restrain both compression and tension loads applied by a retrofit stud. It is typically installed horizontally on the top of attic floor framing members (truss bottom chords or ceiling joists) or on the bottom of pitched roof framing members (truss top chord or rafters).

[BS] HURRICANE TIES. Manufactured metal connectors designed to provide uplift and lateral restraint for roof framing members.

[BS] NAIL PLATE. A manufactured metal plate made of galvanized steel with factory-punched holes for fasteners. A nail plate may have the geometry of a strap.

[BS] RETROFIT. The voluntary process of strengthening or improving buildings or structures, or individual components of buildings or structures for the purpose of making existing conditions better serve the purpose for which they were originally intended or the purpose that current building codes intend.

[BS] RETROFIT STUD. A lumber member used to structurally supplement an existing gable end wall stud or gable end frame web.

[BS] STUD-TO-PLATE CONNECTOR. A manufactured metal connector designed to connect studs to plates.

SECTION C103
MATERIALS OF CONSTRUCTION

[BS] C103.1 Existing materials. All existing wood materials that will be part of the retrofitting work (trusses, rafters, ceiling joists, top plates, wall studs, etc.) shall be in sound condition and free from defects or damage that substantially reduces the load-carrying capacity of the member. Any wood materials found to be damaged or deteriorated shall be strengthened or replaced with new materials to provide a net dimension of sound wood equivalent to its undamaged original dimensions.

[BS] C103.2 New materials. All new materials shall comply with the standards for those materials as specified in the *International Building Code* or the *International Residential Code*.

[BS] C103.3. Material specifications for retrofits. Materials for retrofitting gable end walls shall comply with Table C103.3.

[BS] C103.4 Twists in straps. Straps shall be permitted to be twisted or bent where they transition between framing members or connection points. Straps shall be bent only once at a given location though it is permissible that they be bent or twisted at multiple locations along their length.

INTERNATIONAL CODE COUNCIL®
Copyright © 2015 ICC. ALL RIGHTS RESERVED. Accessed by David Dammon on Jun 21, 2017 12:30:52 PM pursuant to License Agreement with ICC. No further reproduction or distribution authorized. ANY UNAUTHORIZED REPRODUCTION OR DISTRIBUTION IS A VIOLATION OF THE FEDERAL COPYRIGHT ACT AND THE LICENSE AGREEMENT, AND SUBJECT TO CIVIL AND CRIMINAL PENALTIES THEREUNDER.

[BS] C103.5 Fasteners. Fasteners shall meet the requirements of Table C103.5, Sections C103.5.1 and C103.5.2, and shall be permitted to be screws or nails meeting the minimum length requirement shown in the figures and specified in the tables of this appendix. Fastener spacing shall meet the requirements of Section C103.5.3.

[BS] C103.5.1 Screws. Unless otherwise indicated in the appendix, screw sizes and lengths shall be in accordance with Table C103.5. Permissible screws include deck screws and wood screws. Screws shall have at least 1 inch (25 mm) of thread. Fine threaded screws or drywall screws shall not be permitted. Select the largest possible diameter screw such that the shank adjacent to the head fits through the hole in the strap.

[BS] C103.5.2 Nails. Unless otherwise indicated in this appendix, nail sizes and lengths shall be in accordance with Table C103.5.

[BS] C103.5.3 General fastener spacing. Fastener spacing for shear connections of lumber-to-lumber shall meet the requirements shown in Figure C103.6.3 and the following conditions.

[BS] TABLE C103.3
MATERIAL SPECIFICATIONS FOR RETROFITS

COMPONENT	MINIMUM SIZE OR THICKNESS	MINIMUM MATERIAL GRADE	MINIMUM CAPACITY
Anchor blocks, compression blocks, and horizontal braces	2 x 4 nominal lumber	#2 Spruce-Pine-Fir or better	N/A
Nail plates	20 gage thickness 8d minimum nail holes	Galvanized sheet steel	N/A
Retrofit studs	2 x 4 nominal lumber	#2 Spruce-Pine-Fir or better	N/A
Gusset angle	14 gage thickness	Galvanized sheet steel	350 pounds uplift and lateral load
Stud-to-plate connector	20 gage thickness	Galvanized sheet steel	500 pounds uplift
Metal plate connectors, straps, and anchors	20 gage thickness	Galvanized sheet steel	N/A

For SI: 1 pound = 4.4 N.

N/A = Not applicable

a. Metal plate connectors, nail plates, stud-to-plate connectors, straps and anchors shall be products *approved* for connecting wood-to-wood or wood-to-concrete as appropriate.

[BS] TABLE C103.5
NAIL AND SCREW REQUIREMENTS

FASTENER TYPE	MINIMUM SHANK DIAMETER	MINIMUM HEAD DIAMETER	MINIMUM FASTENER LENGTH
#8 screws	N/A	0.28 inches	1-1/4 inches
8d common nails	0.131 inches	0.28 inches	2-1/2 inches
10d common nails	0.148 inches	0.28 inches	3 inches

For SI: 1 inch = 25.4 mm.

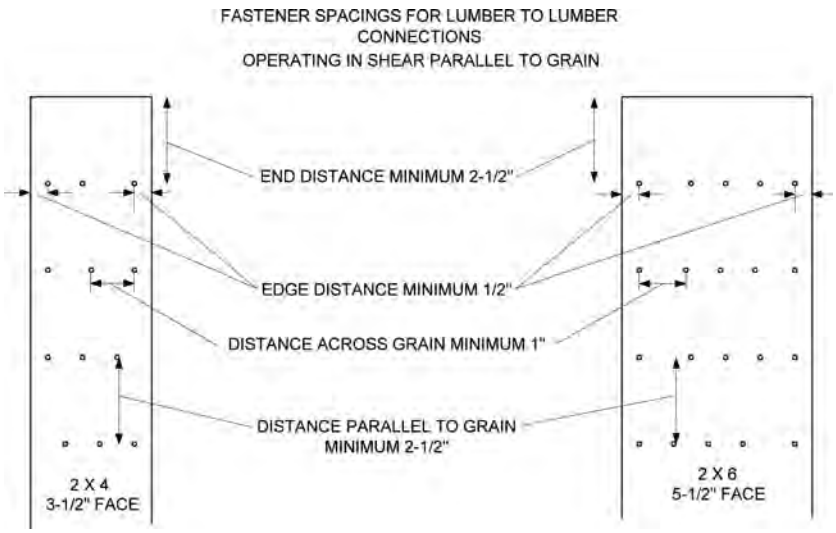

For SI: 1 inch = 25.4 mm.

[BS] FIGURE C103.6.3
FASTENER SPACINGS FOR LUMBER-TO-LUMBER CONNECTIONS OPERATING IN SHEAR PARALLEL TO GRAIN

INTERNATIONAL CODE COUNCIL®
Copyright © 2015 ICC. ALL RIGHTS RESERVED. Accessed by David Dammon on Jun 21, 2017 12:30:52 PM pursuant to License Agreement with ICC. No further reproduction or distribution authorized. ANY UNAUTHORIZED REPRODUCTION OR DISTRIBUTION IS A VIOLATION OF THE FEDERAL COPYRIGHT ACT AND THE LICENSE AGREEMENT, AND SUBJECT TO CIVIL AND CRIMINAL PENALTIES THEREUNDER.

[BS] C103.5.3.1 General fastener spacing. Fastener spacing shall meet the following conditions except as provided for in Section C103.5.3.

The distance between fasteners and the edge of lumber that is less than $3^1/_2$ inches deep (89 mm) in the direction of the fastener length shall be a minimum of $^3/_4$ inch (19.1 mm).

1. The distance between fasteners and the edge of lumber that is more than 2 inches (51 mm) thick in the direction of the fastener length shall be a minimum of $^1/_2$ inch (12.7 mm).
2. The distance between a fastener and the end of lumber shall be a minimum of $2^1/_2$ inches (64 mm).
3. The distance between fasteners parallel to the grain (center-to-center) shall be a minimum of $2^1/_2$ inches (64 mm).
4. The distance between fasteners perpendicular to the grain (center-to-center) in lumber that is less than $3^1/_2$ inches (89 mm) deep in the direction of the fastener length shall be 1 inch (25 mm).
5. The distance between fasteners perpendicular to the grain (center-to-center) in lumber that is more than 2 inches (51 mm) thick in the direction of the fastener length shall be $^1/_2$ inch (12.7 mm).

[BS] C103.5.3.2 Wood-to-wood connections of two members each 2 inches or less in thickness. Wood-to-wood connections fastener spacing shall meet the following conditions.

1. The distance between fasteners parallel to grain (center-to-center) shall be a minimum of $2^1/_2$ inches (64 mm).
2. The distance between fasteners across grain (center-to-center) shall be a minimum of 1 inch (25 mm).
3. For wood-to-wood connections of lumber at right angles, fasteners shall be spaced a minimum of $2^1/_2$ inches (64 mm) parallel to the grain and 1 inch (25 mm) perpendicular to the grain in any direction.

[BS] C103.5.3.3 Metal connectors for wood-to-wood connections. Metal connectors for wood-to-wood connections shall meet the following conditions.

1. Fastener spacing to edge or ends of lumber shall be as dictated by the prefabricated holes in the connectors and the connectors shall be installed in a configuration that is similar to that shown by the connector manufacturer.
2. Fasteners in $1^1/_4$-inch-wide (32 mm) metal straps that are installed on the narrow face of lumber shall be a minimum $^1/_4$ inch (6.4 mm) from either edge of the lumber. Consistent with Section C103.5.3.1, fasteners shall be permitted to be spaced according to the fastener holes fabricated into the strap.
3. Fasteners in metal nail plates shall be spaced a minimum of $^1/_2$ inch (12.7 mm) perpendicular to grain and a minimum of $1^1/_2$ inches (38 mm) parallel to grain.

SECTION C104
RETROFITTING GABLE END WALLS TO ENHANCE WIND RESISTANCE

[BS] C104.1 General. These prescriptive methods of retrofitting are intended to increase the resistance of existing gable end construction for out-of-plane wind loads resulting from high-wind events. The ceiling diaphragm shall be comprised of minimum $^1/_2$-inch-thick (12.7 mm) gypsum board, minimum nominal $^3/_8$-inch-thick (9.5 mm) wood structural panels, or plaster. An overview isometric drawing of one type of gable end retrofit to improve wind resistance is shown in Figure C104.1.1.

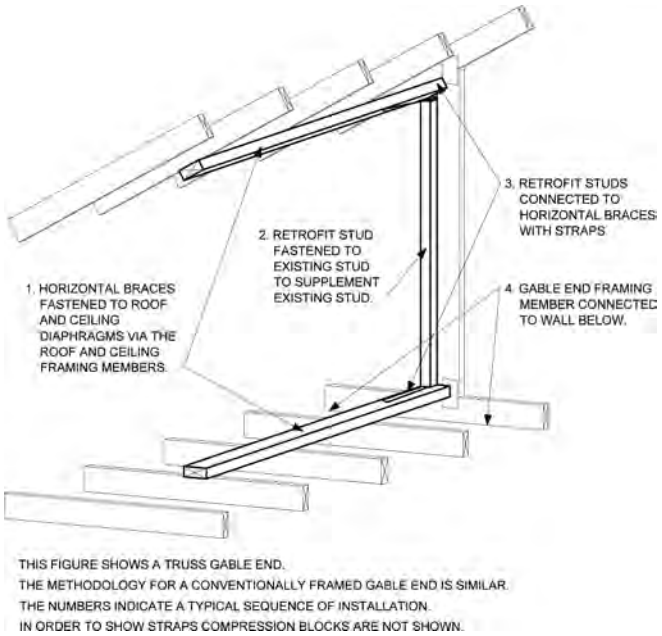

[BS]FIGURE C104.1.1
BASIC GABLE END RETROFIT METHODOLOGY

INTERNATIONAL CODE COUNCIL®
Copyright © 2015 ICC. ALL RIGHTS RESERVED. Accessed by David Dammon on Jun 21, 2017 12:30:52 PM pursuant to License Agreement with ICC. No further reproduction or distribution authorized. ANY UNAUTHORIZED REPRODUCTION OR DISTRIBUTION IS A VIOLATION OF THE FEDERAL COPYRIGHT ACT AND THE LICENSE AGREEMENT, AND SUBJECT TO CIVIL AND CRIMINAL PENALTIES THEREUNDER.

[BS] C104.2 Horizontal braces. Horizontal braces shall be installed perpendicular to the roof and ceiling framing members at the location of each existing gable end stud greater than 3 feet (91 cm) in length. Unless it is adjacent to an omitted horizontal brace location, horizontal braces shall be minimum 2x4 dimensional lumber as defined in Section C103.3. A single horizontal brace is required at the top and bottom of each gable end stud for Retrofit Configuration A, B, or C. Two horizontal braces are required at the top and bottom of each gable end stud for Retrofit Configuration D. Maximum heights of gable end wall studs and associated retrofit studs for each Retrofit Configuration shall not exceed the values listed in Table C104.2. Horizontal braces shall be oriented with their wide faces across the roof or ceiling framing members, be fastened to a minimum of three framing members, and extend at least 6 feet (183 cm) measured perpendicularly from the gable end plus $2^1/_2$ inches (64 mm) beyond the last top chord or bottom chord member (rafter or ceiling joist) from the gable end as shown in Figures C104.2(1), C104.2(2), C104.2(3) and C104.2(4).

[BS] C104.2.1 Existing gable end studs. If the spacing of existing vertical gable end studs is greater than 24 inches (64 mm), a new stud and corresponding horizontal braces shall be installed such that the maximum spacing between existing and added studs shall be no greater than 24 inches (64 mm). Additional gable end wall studs shall not be required at locations where their length would be 3 feet (914 mm) or less. Each end of each required new stud shall be attached to the existing roofing framing members (truss top chord or rafter and truss bottom chord or ceiling joist) using a minimum of two 3-inch (76 mm) toenail fasteners (#8 wood screws or 10d nails) and a metal connector with minimum uplift capacity of 175 pounds (778 N), or nail plates with a minimum of four $1^1/_4$-inch-long (32 mm) fasteners (No. 8 wood screws or 8d nails).

[BS] C104.2.2 Main method of installation. Each horizontal brace shall be fastened to each existing roof or ceiling member that it crosses using three 3-inch-long (76 mm) fasteners (No. 8 wood screws or 10d nails) as indicated in Figure C104.2(1) and Figure C104.2(3) for trusses and Figure C104.2(2) and Figure C104.2(4) for conventionally framed gable end walls. Alternative methods for providing horizontal bracing of the gable end studs as provided in Sections C104.2.3 through C104.2.9 shall be permitted.

[BS] C104.2.3 Omitted horizontal brace. Where conditions exist that prevent installation in accordance with Section C104.2.2, horizontal braces shall be permitted to be omitted for height limitations corresponding to Retrofit Configurations A and B as defined in Table C104.2 provided installation is as indicated in Figure C104.2.3 and provided all of the following conditions are met. This method is not permitted for Retrofit Configurations C or D.

1. There shall be at least two horizontal braces on each side of an omitted horizontal brace or at least one horizontal brace if it is the end horizontal brace. Omitted horizontal braces must be separated by at least two horizontal braces even if that location is composed of two retrofit studs and two horizontal braces.
2. Horizontal braces adjacent to the omitted horizontal brace shall be 2x6 lumber, shall butt against the existing studs, and shall be fastened to each existing roof or ceiling member crossed using three 3-inch-long (76 mm) fasteners (No. 8 wood screws or 10d nails). For Retrofit Configuration B, four fasteners shall be required on at least one of the connections between the horizontal brace and the existing roof and ceiling framing members. Fasteners shall be spaced a minimum of $^3/_4$ inch (19.1 mm) from the edges of the horizontal braces and a minimum of $1^3/_4$ inch (44 mm) from adjacent fasteners.
3. Where the existing studs on each side of an omitted horizontal brace have their wide face perpendicular to the gable end wall, the retrofit studs at those locations

[BS] TABLE C104.2
STUD LENGTH LIMITATIONS BASED ON EXPOSURE AND DESIGN WIND SPEED

EXPOSURE CATEGORY	MAXIMUM 3-SEC GUST BASIC WIND SPEED[a]	MAXIMUM HEIGHT OF GABLE END RETROFIT STUD[b]			
C	140	8'-0"	11'-3"	14'-9"	16'-0"
C	150	7'-6"	10'-6"	13'-6"	16'-0"
C	165	7'-0"	10'-0"	12'-3"	16'-0"
C	180	7'-0"	10'-0"	12'-3"	16'-0"
C	190	6'-6"	8'-9"	11'-0"	16'-0"
B	140	8'-0"	12'-3"	16'-0"	N/Rc
B	150	8'-0"	11'-3"	14'-9"	16'-0"
B	165	8'-0"	11'-3"	14'-9"	16'-0"
B	180	7'-6"	10'-6"	13'-6"	16'-0"
B	190	7'-0"	10'-0"	12'-3"	16'-0"
	Retrofit Configuration	A	B	C	D

For SI: 1 inch = 25.4 mm, 1 foot = 304.8 mm.

a. Interpolation between given wind speeds is not permitted.

b. Existing gable end studs less than or equal to 3 feet 0 inches in height shall not require retrofitting.

c. N/R = Not Required. Configuration C is acceptable to 16 inches 0 inches maximum height.

INTERNATIONAL CODE COUNCIL®
Copyright © 2015 ICC. ALL RIGHTS RESERVED. Accessed by David Dammon on Jun 21, 2017 12:30:52 PM pursuant to License Agreement with ICC. No further reproduction or distribution authorized. ANY UNAUTHORIZED REPRODUCTION OR DISTRIBUTION IS A VIOLATION OF THE FEDERAL COPYRIGHT ACT AND THE LICENSE AGREEMENT, AND SUBJECT TO CIVIL AND CRIMINAL PENALTIES THEREUNDER.

and the retrofit stud at the omitted horizontal brace locations shall extend a minimum of $3^3/_4$ inches (95 mm) beyond the interior edge of the existing studs for both Retrofit Configurations A and B. The edges of the three retrofit studs facing towards the interior of the attic shall be aligned such that they are the same distance from the gable end wall.

4. Retrofit studs shall be fastened to existing studs in accordance with Section C104.3.
5. Retrofit studs adjacent to the omitted horizontal brace shall be fastened to the horizontal brace using straps in accordance with Table C104.4.1 consistent with the size of the retrofit stud. The method applicable to Table C104.4.2 is not permitted.
6. A strong back made of minimum of 2x8 lumber shall be placed parallel to the gable end and shall be located on and span between horizontal braces on the two sides of the omitted horizontal brace and shall extend beyond each horizontal brace by a minimum of $2^1/_2$ inches (64 mm). The strong back shall be butted to the three retrofit studs. The strong back shall be attached to each of the horizontal braces on which it rests with five 3-inch-long (76 mm) fasteners (#8 screws or 8d nails). The fasteners shall have a minimum $^3/_4$-inch (19.1 mm) edge distance and a minimum $2^1/_2$-inch (64 mm) spacing between fasteners. Additional compression blocks shall not be required at locations where a strong back butts against a retrofit stud.
7. The retrofit stud at the location of the omitted horizontal braces shall be fastened to the strong back using a connector with minimum uplift capacity of 800 pounds (3559 N) and installed such that this capacity is oriented in the direction perpendicular to the gable end wall.
8. The use of shortened horizontal braces using the alternative method of Section C104.2.5 is not permitted for horizontal braces adjacent to the omitted horizontal braces.
9. Horizontal braces shall be permitted to be interrupted in accordance with Section C104.2.8.

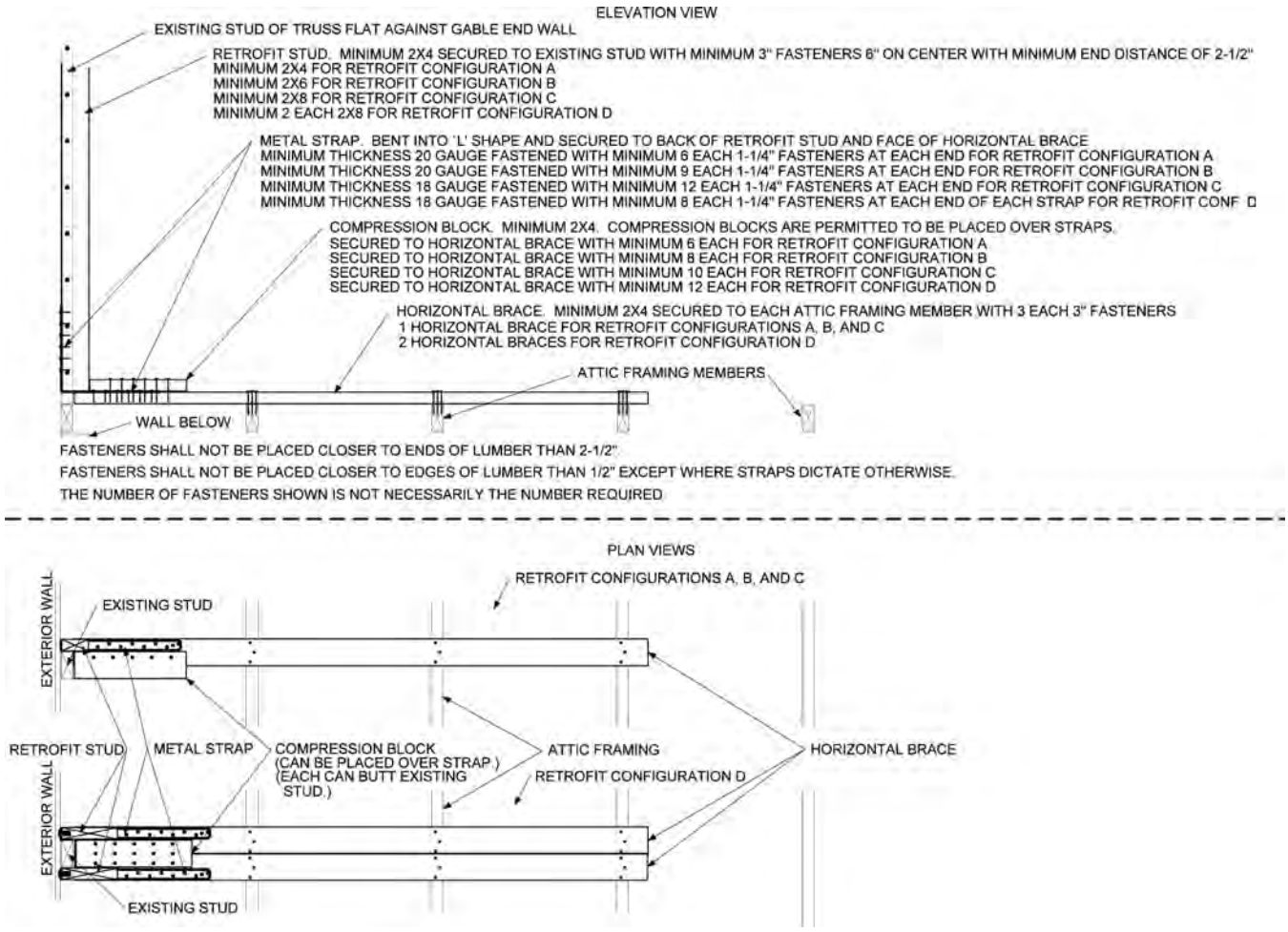

For SI: 1 inch = 25.4 mm.

[BS] FIGURE C104.2(1)
TRUSS FRAMED GABLE END

INTERNATIONAL CODE COUNCIL®
Copyright © 2015 ICC. ALL RIGHTS RESERVED. Accessed by David Dammon on Jun 21, 2017 12:30:52 PM pursuant to License Agreement with ICC. No further reproduction or distribution authorized. ANY UNAUTHORIZED REPRODUCTION OR DISTRIBUTION IS A VIOLATION OF THE FEDERAL COPYRIGHT ACT AND THE LICENSE AGREEMENT, AND SUBJECT TO CIVIL AND CRIMINAL PENALTIES THEREUNDER.

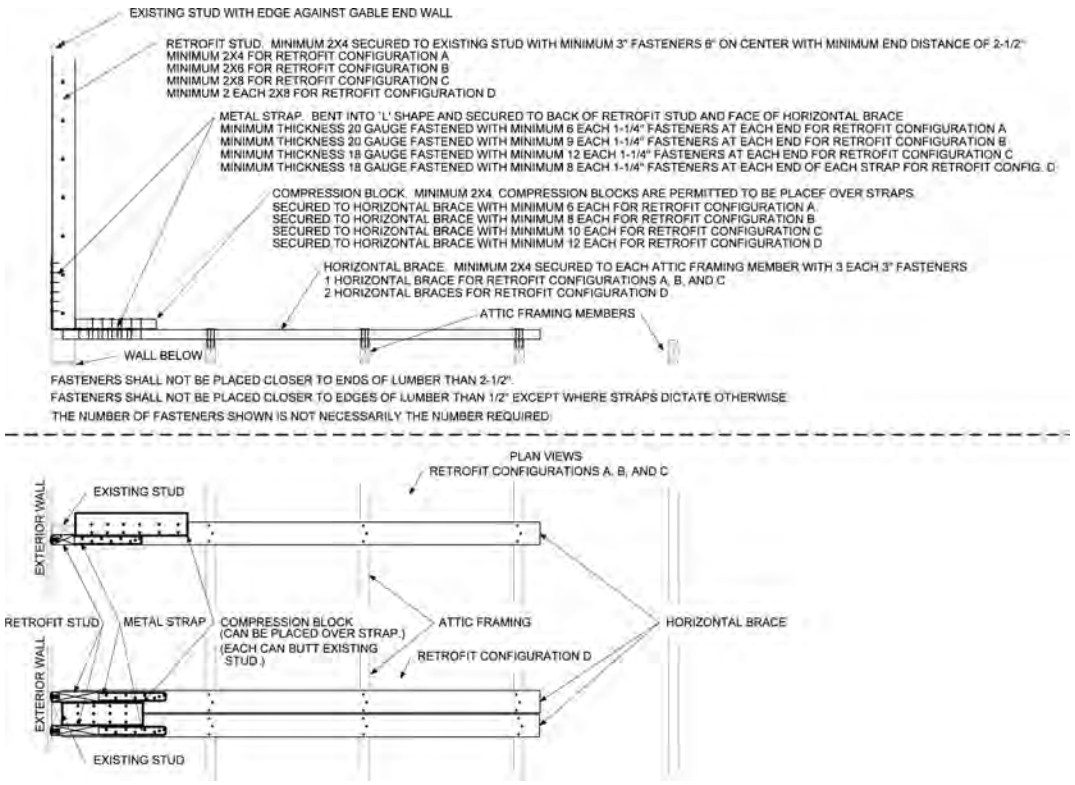

For SI: 1 inch = 25.4 mm.

[BS] FIGURE C104.2(2)
CONVENTIONALLY FRAMED GABLE END L-BENT STRAP

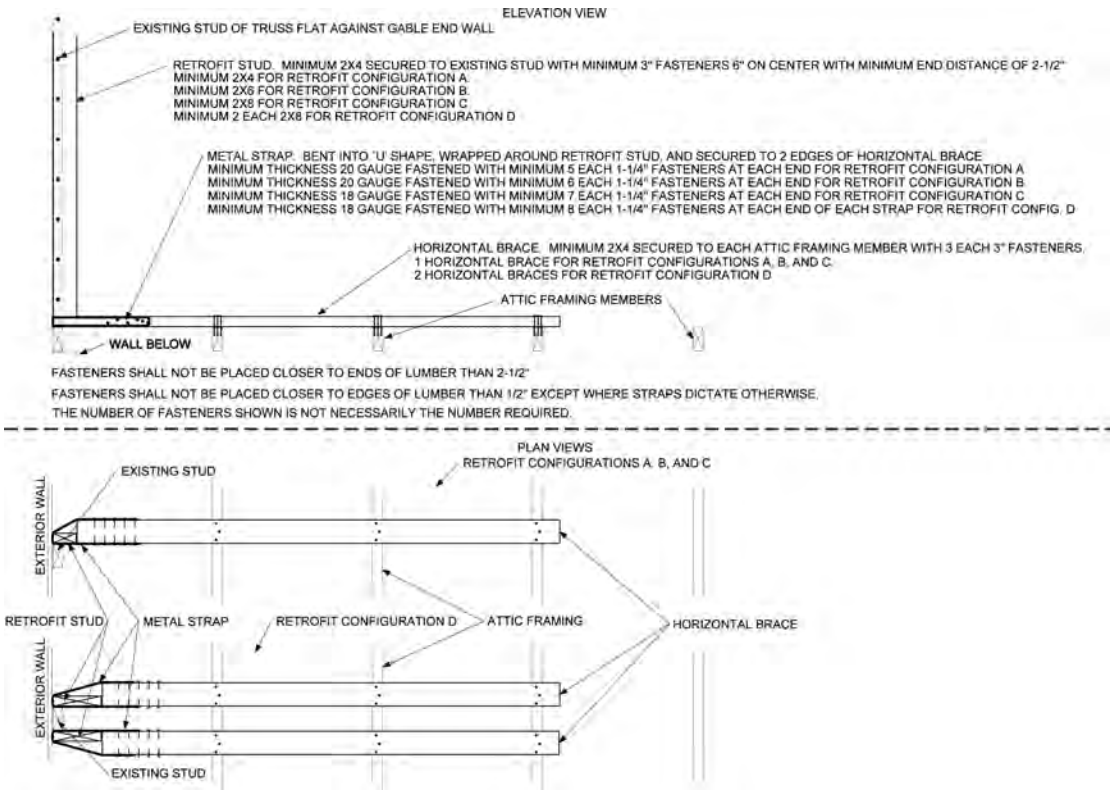

For SI: 1 inch = 25.4 mm.

[BS] FIGURE C104.2(3)
TRUSS FRAMED GABLE END U-BENT STRAP

INTERNATIONAL CODE COUNCIL®
Copyright © 2015 ICC. ALL RIGHTS RESERVED. Accessed by David Dammon on Jun 21, 2017 12:30:52 PM pursuant to License Agreement with ICC. No further reproduction or distribution authorized. ANY UNAUTHORIZED REPRODUCTION OR DISTRIBUTION IS A VIOLATION OF THE FEDERAL COPYRIGHT ACT AND THE LICENSE AGREEMENT, AND SUBJECT TO CIVIL AND CRIMINAL PENALTIES THEREUNDER.

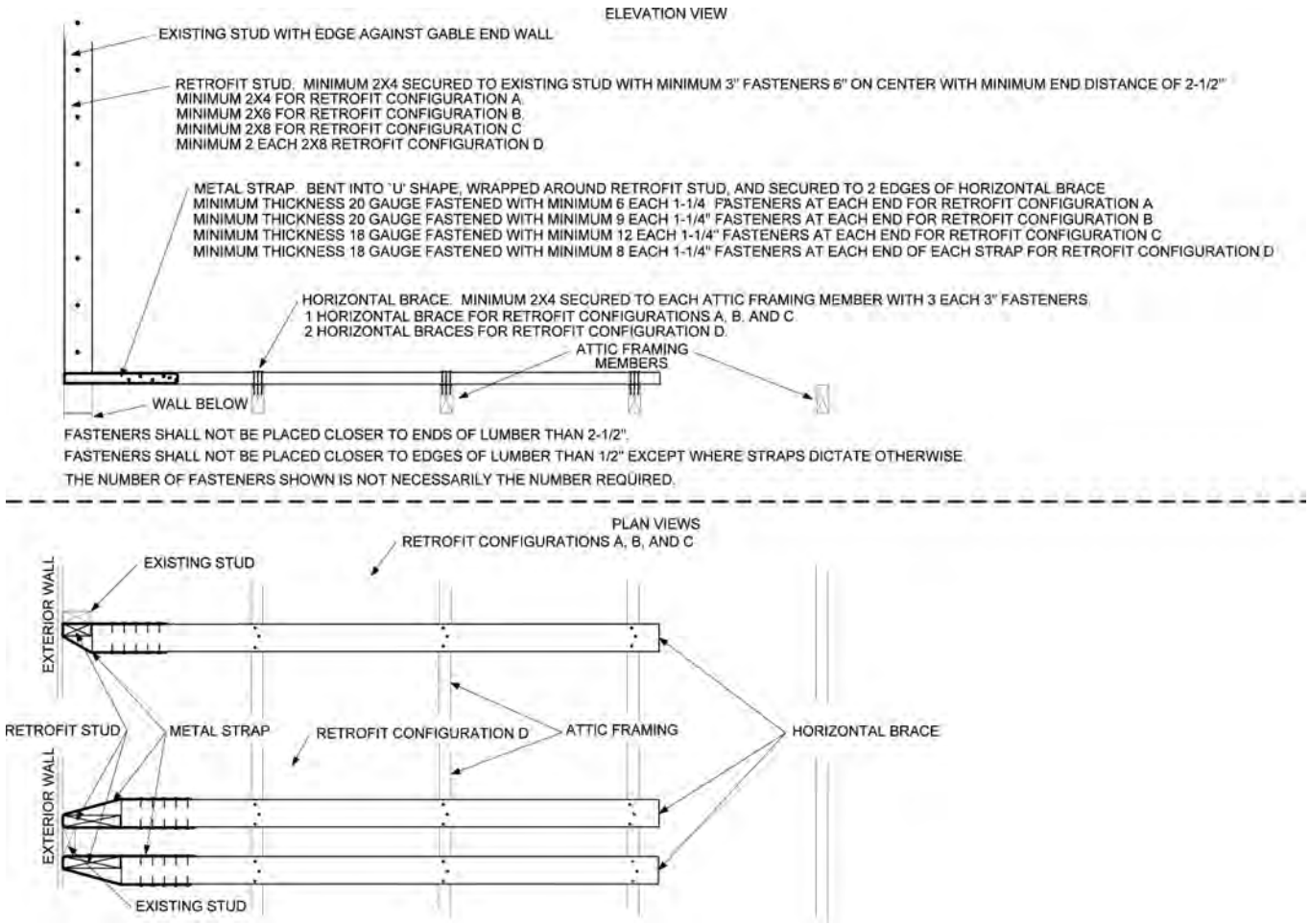

For SI: 1 inch = 25.4 mm.

[BS] FIGURE C104.2(4)
CONVENTIONALLY FRAMED GABLE END U-BENT STRAP

INTERNATIONAL CODE COUNCIL®
Copyright © 2015 ICC. ALL RIGHTS RESERVED. Accessed by David Dammon on Jun 21, 2017 12:30:52 PM pursuant to License Agreement with ICC. No further reproduction or distribution authorized. ANY UNAUTHORIZED REPRODUCTION OR DISTRIBUTION IS A VIOLATION OF THE FEDERAL COPYRIGHT ACT AND THE LICENSE AGREEMENT, AND SUBJECT TO CIVIL AND CRIMINAL PENALTIES THEREUNDER.

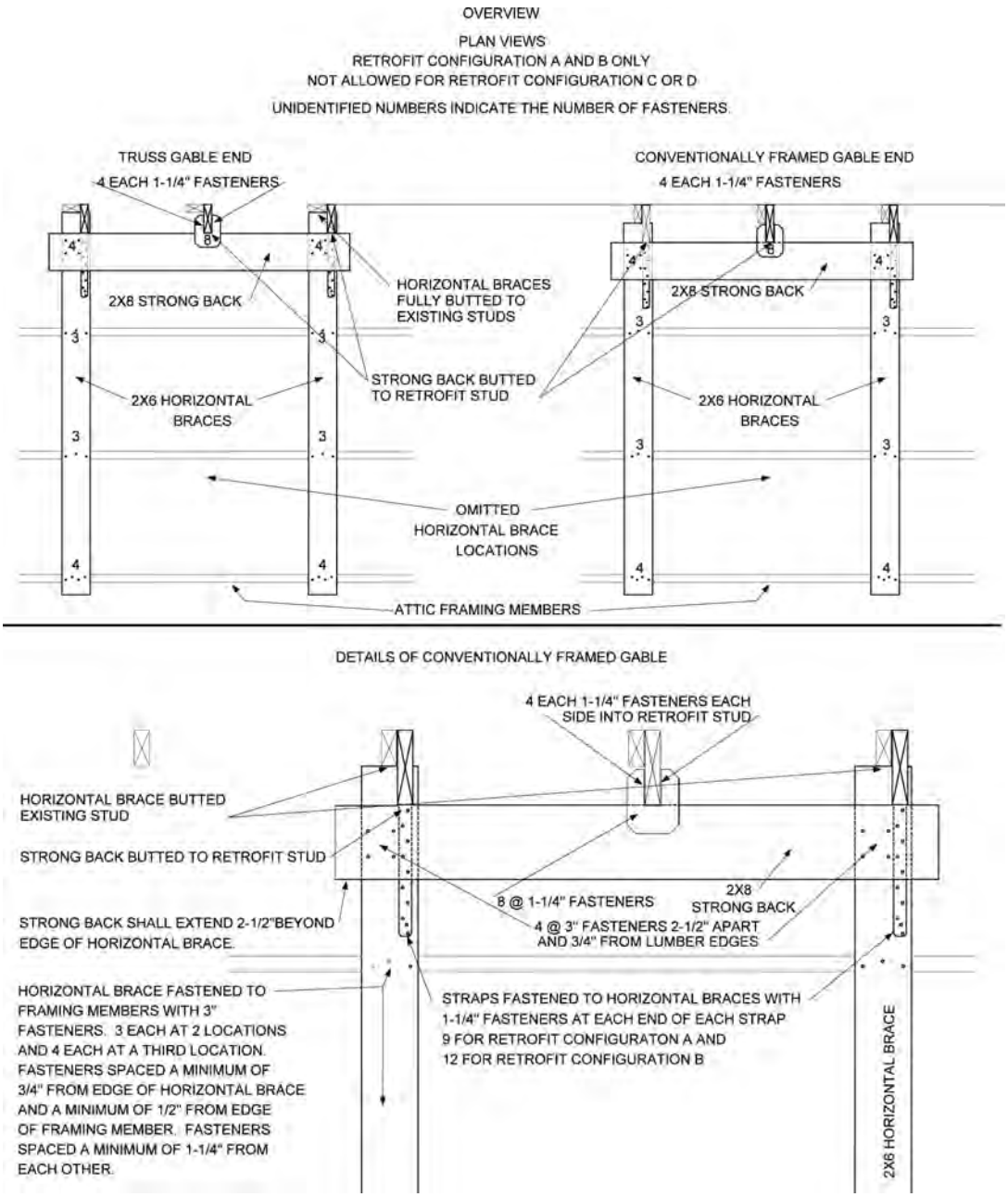

For SI: 1 inch = 25.4 mm.

[BS]FIGURE C104.2.3
OMITTED HORIZONTAL BRACE

INTERNATIONAL CODE COUNCIL®
Copyright © 2015 ICC. ALL RIGHTS RESERVED. Accessed by David Dammon on Jun 21, 2017 12:30:52 PM pursuant to License Agreement with ICC. No further reproduction or distribution authorized. ANY UNAUTHORIZED REPRODUCTION OR DISTRIBUTION IS A VIOLATION OF THE FEDERAL COPYRIGHT ACT AND THE LICENSE AGREEMENT, AND SUBJECT TO CIVIL AND CRIMINAL PENALTIES THEREUNDER.

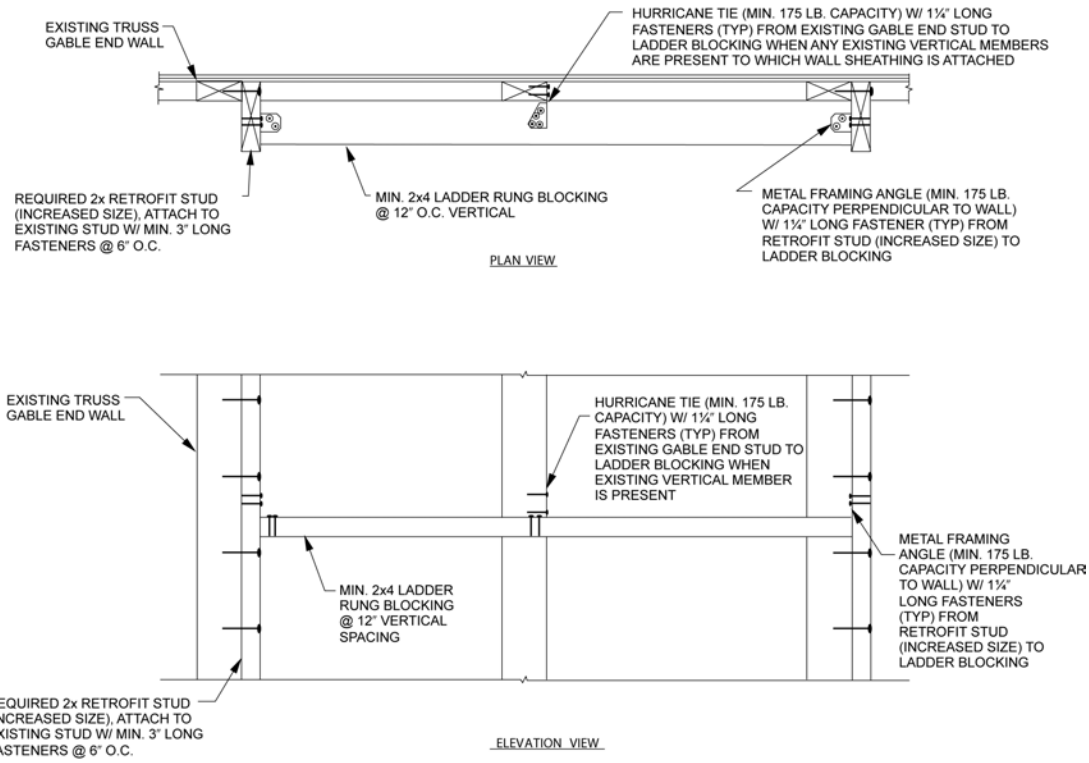

For SI: 1 inch = 25.4 mm; 1 pound = 4.4 N.

[BS] FIGURE C104.2.4(1)
LADDER BRACING FOR OMITTED RETROFIT STUD (GABLE END FRAME)

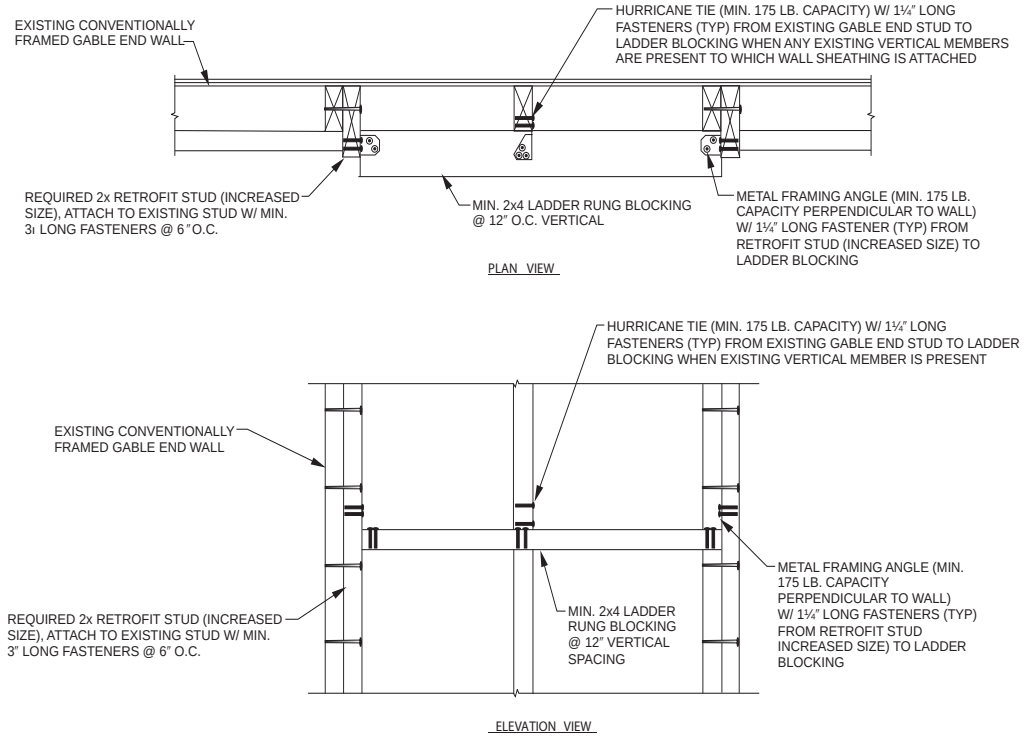

For SI: 1 inch = 25.4 mm; 1 pound = 4.4 N.

[BS]FIGURE C104.2.4(2)
LADDER BRACING FOR OMITTED RETROFIT STUD (CONVENTIONALLY FRAMED GABLE END)

INTERNATIONAL CODE COUNCIL®
Copyright © 2015 ICC. ALL RIGHTS RESERVED. Accessed by David Dammon on Jun 21, 2017 12:30:52 PM pursuant to License Agreement with ICC. No further reproduction or distribution authorized. ANY UNAUTHORIZED REPRODUCTION OR DISTRIBUTION IS A VIOLATION OF THE FEDERAL COPYRIGHT ACT AND THE LICENSE AGREEMENT, AND SUBJECT TO CIVIL AND CRIMINAL PENALTIES THEREUNDER.

[BS] C104.2.4 Omitted horizontal brace and retrofit stud. Where conditions exist that prevent installation in accordance with Section C104.2.2 or C104.2.3, then retrofit studs and horizontal braces shall be permitted to be omitted from those locations by installation of ladder assemblies for Retrofit Configurations A and B as defined in Table C104.2 provided all of the following conditions are met. This method is not permitted for Retrofit Configurations C or D.

1. No more than two ladder assemblies are permitted on a single gable end.
2. There shall be at least two retrofit studs and horizontal brace assemblies on either side of the locations where the retrofit studs and horizontal bracing members are omitted (no two ladder braces bearing on a single retrofit stud).
3. Where the existing studs on each side of an omitted horizontal brace have their wide face parallel to the gable end wall the retrofit studs at those locations and the retrofit stud at the omitted horizontal brace locations shall be 2x6 lumber for Retrofit Configuration A and 2x8 lumber for Retrofit Configuration B.
4. Horizontal braces adjacent to the omitted horizontal brace shall be 2x6 lumber and be fastened to each existing roof or ceiling member crossed using three 3-inch-long (76 mm) fasteners (#8 wood screws or 10d nails) as indicated in Figures C104.2(1) and C104.2(3) for gable end frames and Figures C104.2(2) and C104.2(4) for conventionally framed gable end walls. For Retrofit Configuration B, four fasteners shall be required on at least one of the connections between the horizontal brace and the existing roof and ceiling framing members.
5. Ladder rungs shall be provided across the location of the omitted retrofit studs as indicated in Figure C104.2.4(1) for gable end frames and Figure C104.2.4(2) for conventionally framed gable end walls.
6. Ladder rungs shall be minimum 2x4 lumber oriented with their wide face horizontal and spaced a maximum of 16 inches (41 cm) on center vertically.
7. Where ladder rungs cross wall framing members they shall be connected to the wall framing members with a metal connector with a minimum capacity of 175 pounds (778 N) in the direction perpendicular to the gable end wall.
8. Notching of the ladder rungs shall not be permitted unless the net depth of the framing member is a minimum of $3^1/_2$ inches (89 mm).

[BS] C104.2.5 Short horizontal brace. Where conditions exist that prevent installation in accordance with Section C104.2.2, C104.2.3 or C104.2.4, the horizontal braces shall be permitted to be shortened provided installation is as indicated in Figure C104.2.5 and all of the following conditions are met.

1. The horizontal brace shall be installed across a minimum of two framing spaces, extend a minimum of 4 feet (1220 mm) from the gable end wall plus $2^1/_2$ inches (64 mm) beyond the farthest roof or ceiling framing member from the gable end, and be fastened to each existing framing member with three 3-inch-long (76 mm) fasteners (#8 wood screws or 10d nails).
2. An anchor block shall be fastened to the side of the horizontal brace in the second framing space from the gable end wall as shown in Figure C104.2.5. The anchor block lumber shall have a minimum edge thickness of $1^1/_2$ inches (38 mm) and the depth shall be at a minimum the depth of the existing roof or ceiling framing member. Six 3-inch-long (76 mm) fasteners (#8 wood screws or 10d nails) shall be used to fasten the anchor block to the side of the horizontal brace.
3. The anchor block shall extend into the space between the roof or ceiling framing members a minimum of one-half the depth of the existing-framing members at the location where the anchor block is installed. The anchor block shall be installed tightly between the existing framing members such that the gap at either end shall not exceed $^1/_8$ inch (3.2 mm).
4. The use of omitted horizontal braces using the method of Section C104.2.3 adjacent to a short horizontal brace as defined in this section is not permitted.

[BS] C104.2.6 Installation of horizontal braces onto webs of trusses. Where existing conditions preclude installation of horizontal braces on truss top or bottom chords they shall be permitted to be installed on truss webs provided all of the following conditions are met.

1. Horizontal braces shall be installed as close to the top or bottom chords as practical without altering the truss or any of its components and not more than three times the depth of the truss member to which it would ordinarily be attached.
2. A racking block, comprised of an anchor block meeting the definition of anchor block of Section C102 or comprised of minimum $^{15}/_{32}$-inch (12 mm) plywood or $^7/_{16}$-inch (11.1 mm) Oriented Strand Board (OSB), shall be fastened to the horizontal brace in the second framing space from the gable end wall. The racking block shall extend toward the roof or ceiling diaphragm so that the edge of the racking block closest to the diaphragm is within $^1/_2$ the depth of the existing framing member from the diaphragm surface. The racking block shall be attached to horizontal braces using six fasteners (No. 8 wood screws or 10d nails) of sufficient length to provide $1^1/_2$ inches (38 mm) of penetration into the horizontal brace.
3. Racking blocks shall be permitted to be fastened to any face or edge of horizontal braces between each web or truss vertical posts to which a horizontal brace is attached. Racking blocks shall be permitted to be on alternate sides of horizontal braces. Racking blocks shall be installed tightly between the lumber of truss members or truss plates such that the gap at either end shall be a maximum of $^1/_8$ inch (3.2 mm).

INTERNATIONAL CODE COUNCIL®
Copyright © 2015 ICC. ALL RIGHTS RESERVED. Accessed by David Dammon on Jun 21, 2017 12:30:52 PM pursuant to License Agreement with ICC. No further reproduction or distribution authorized. ANY UNAUTHORIZED REPRODUCTION OR DISTRIBUTION IS A VIOLATION OF THE FEDERAL COPYRIGHT ACT AND THE LICENSE AGREEMENT, AND SUBJECT TO CIVIL AND CRIMINAL PENALTIES THEREUNDER.

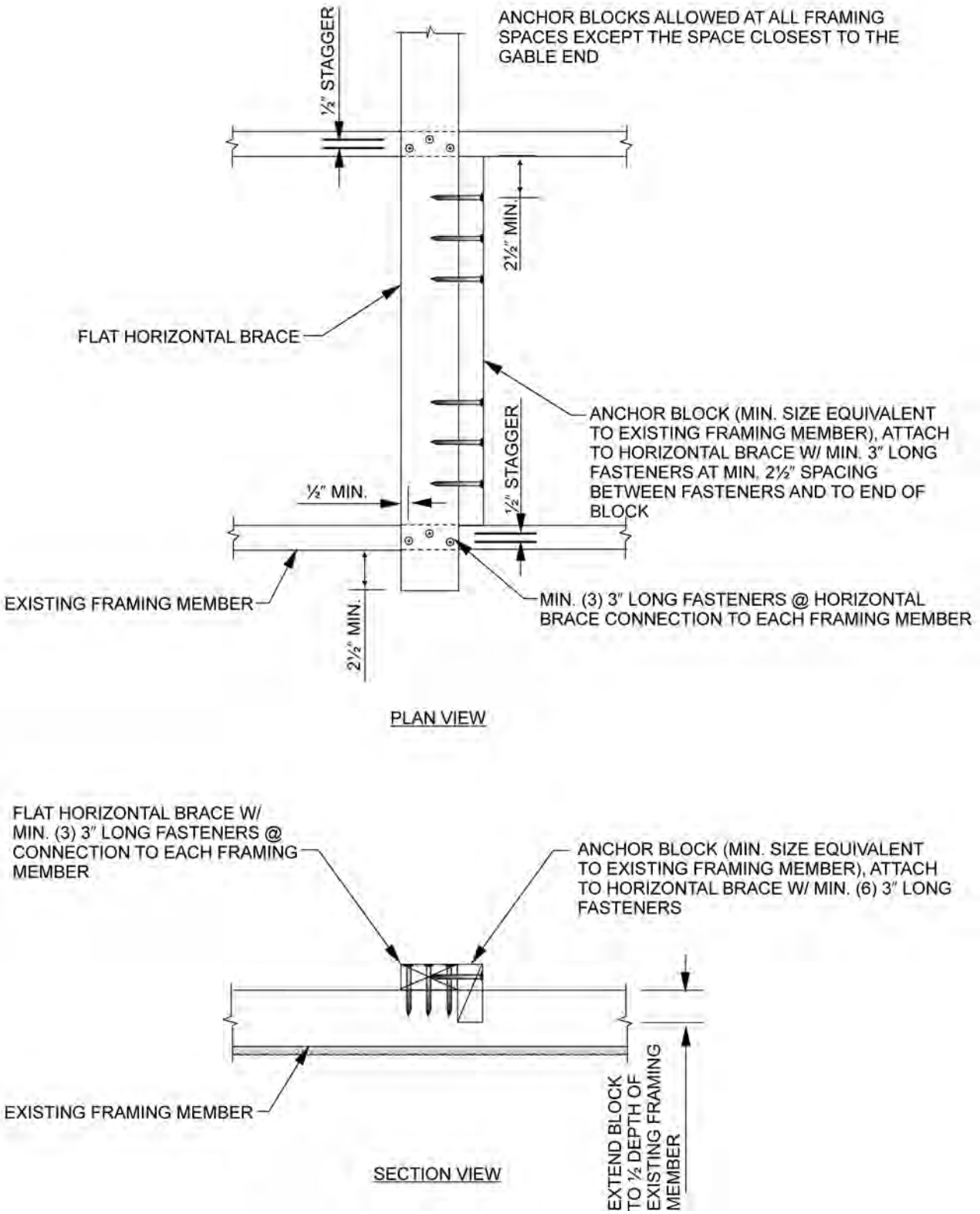

For SI: 1 inch = 25.4 mm.

[BS] FIGURE C104.2.5
ANCHOR BLOCK INSTALLATION

INTERNATIONAL CODE COUNCIL®
Copyright © 2015 ICC. ALL RIGHTS RESERVED. Accessed by David Dammon on Jun 21, 2017 12:30:52 PM pursuant to License Agreement with ICC. No further reproduction or distribution authorized. ANY UNAUTHORIZED REPRODUCTION OR DISTRIBUTION IS A VIOLATION OF THE FEDERAL COPYRIGHT ACT AND THE LICENSE AGREEMENT, AND SUBJECT TO CIVIL AND CRIMINAL PENALTIES THEREUNDER.

[BS] C104.2.7 Alternative method of installation of horizontal braces at truss ridges. Where conditions exist that limit or restrict installation of horizontal braces near the peak of the roof, ridge ties shall be added to provide support for the required horizontal brace. The top of additional ridge tie members shall be installed a maximum of 16 inches (406 mm) below the existing ridge line or 4 inches (102 mm) below impediments. A minimum 2x4 member shall be used for each ridge tie and fastening shall consist of two 3-inch-long (76 mm) wood screws, four 3-inch-long (76 mm) 10d nails or two $3^1/_2$-inch-long (89 mm) 16d nails driven through and clinched at each top chord or web member intersected by the ridge tie as illustrated in Figure C104.2.7.

[BS] C104.2.8 Interrupted horizontal braces. Where conditions exist that prevent the installation of a continuous horizontal brace then horizontal braces shall be permitted to be interrupted using the methods shown in Figures C104.2.8(1), C104.2.8(2), and C104.2.8(3). For interruptions that occur in the attic framing space closest to the gable end, nine 3-inch (76 mm) fasteners shall be used to connect each section of the interrupted horizontal braces. For interruptions that occur in the second attic space from the gable end, six 3-inch (76 mm) fasteners shall be used to connect each section of the interrupted horizontal braces. For interruptions that occur in the attic framing space farthest from the gable end, three 3-inch (76 mm) fasteners shall be used to connect each section of the interrupted horizontal braces. Horizontal braces shall be continued far enough to allow connections to three existing roof framing members as shown in Figure C104.2.8(1), C104.2.8(2) or C104.2.8(3). Fasteners shall be spaced in accordance with Section C103.5.3. Horizontal braces shall be the same width and depth as required for an uninterrupted member.

[BS] C104.2.9 Piggyback gable end frames. Piggyback gable end frames (gable end frames built in two sections one above the other) shall be permitted to be retrofitted if either of the following cases is true:

1. The existing studs in both the upper gable end frames and the lower gable end frames to which wall sheathing, panel siding, or other wall covering are attached are sufficiently in line that retrofit studs can be installed and connections made between the two with retrofit stud(s).
2. Existing studs in the upper frame are not sufficiently in line with the studs in the frame below and the existing studs in the upper frame are 3 feet (91 cm) or shorter.

For Condition 1 both the lower stud and the upper stud shall be retrofitted using the methods of Section C104.2. For Condition 2 the retrofit stud shall be connected to the lower studs using the methods of Section C104.2 and be continuous from the bottom horizontal brace to the top horizontal brace. No connection is required between the retrofit stud and the upper stud. In both conditions the bottom chord of the piggyback truss section shall be fastened to each retrofit stud using a connector with minimum axial capacity of 175 pounds (778 N).

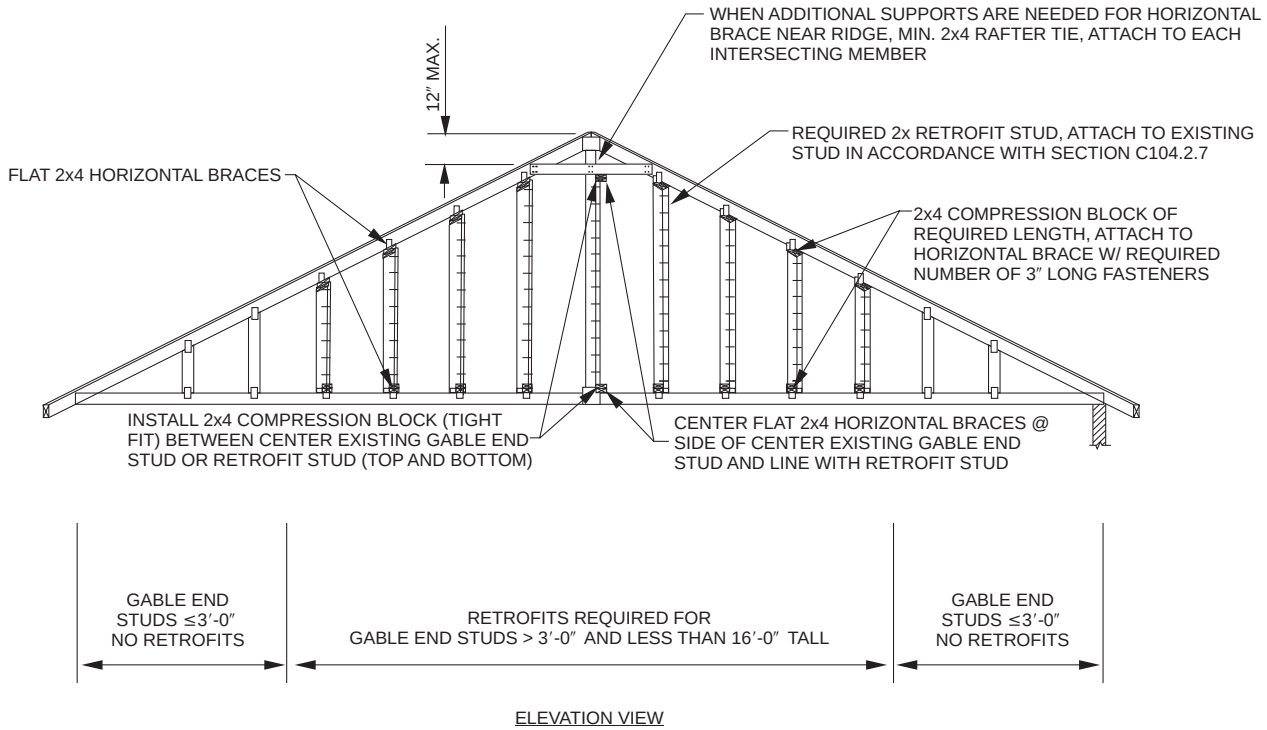

For SI: 1 inch = 25.4 mm; 1 foot = 304.8 mm.

[BS] FIGURE C104.2.7
DETAIL OF RETROFIT TIE INSTALLATION

INTERNATIONAL CODE COUNCIL®
Copyright © 2015 ICC. ALL RIGHTS RESERVED. Accessed by David Dammon on Jun 21, 2017 12:30:52 PM pursuant to License Agreement with ICC. No further reproduction or distribution authorized. ANY UNAUTHORIZED REPRODUCTION OR DISTRIBUTION IS A VIOLATION OF THE FEDERAL COPYRIGHT ACT AND THE LICENSE AGREEMENT, AND SUBJECT TO CIVIL AND CRIMINAL PENALTIES THEREUNDER.

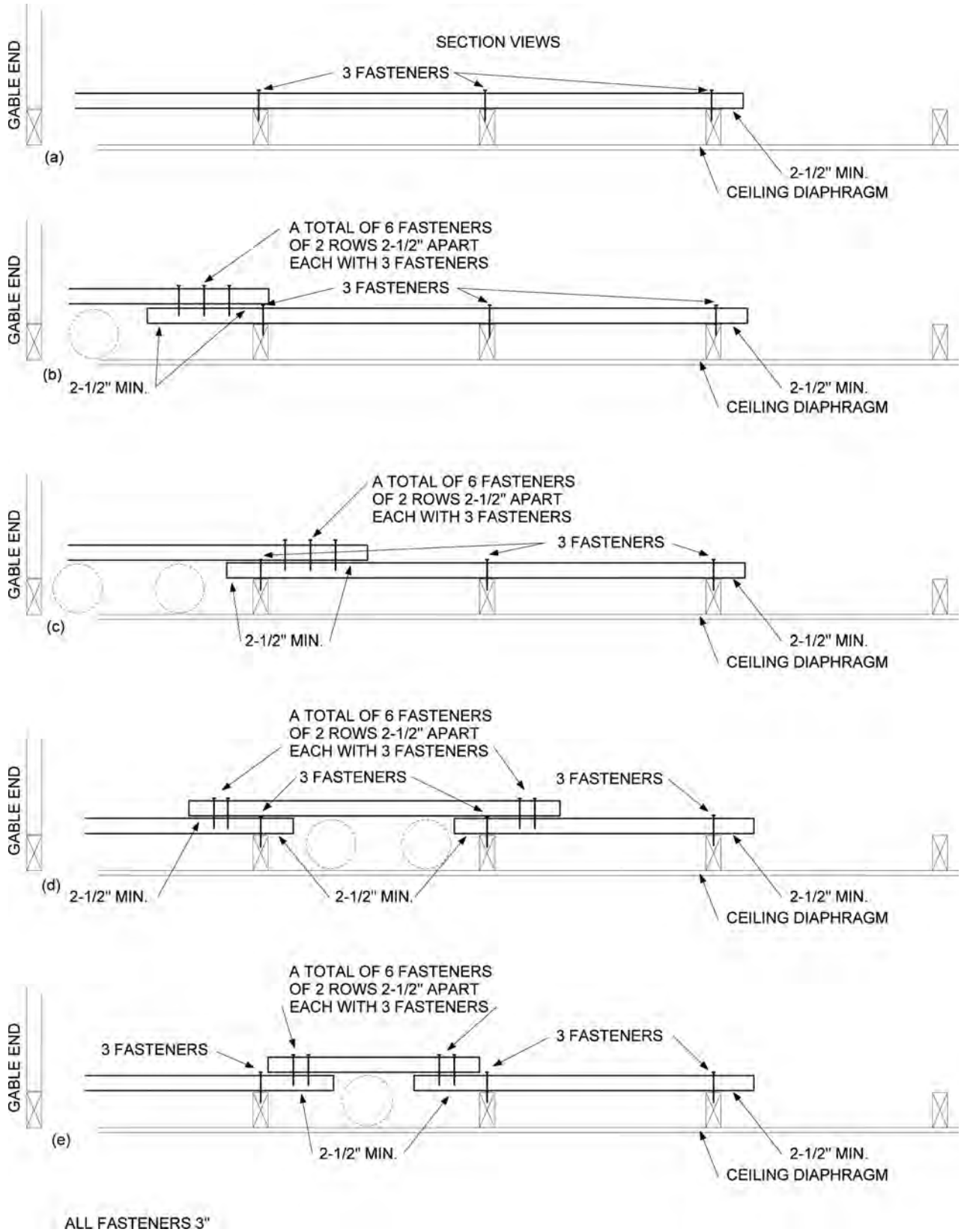

For SI: 1 inch = 25.4 mm.

[BS] FIGURE C104.2.8(1)
SPLICED HORIZONTAL BRACES

INTERNATIONAL CODE COUNCIL®
Copyright © 2015 ICC. ALL RIGHTS RESERVED. Accessed by David Dammon on Jun 21, 2017 12:30:52 PM pursuant to License Agreement with ICC. No further reproduction or distribution authorized. ANY UNAUTHORIZED REPRODUCTION OR DISTRIBUTION IS A VIOLATION OF THE FEDERAL COPYRIGHT ACT AND THE LICENSE AGREEMENT, AND SUBJECT TO CIVIL AND CRIMINAL PENALTIES THEREUNDER.

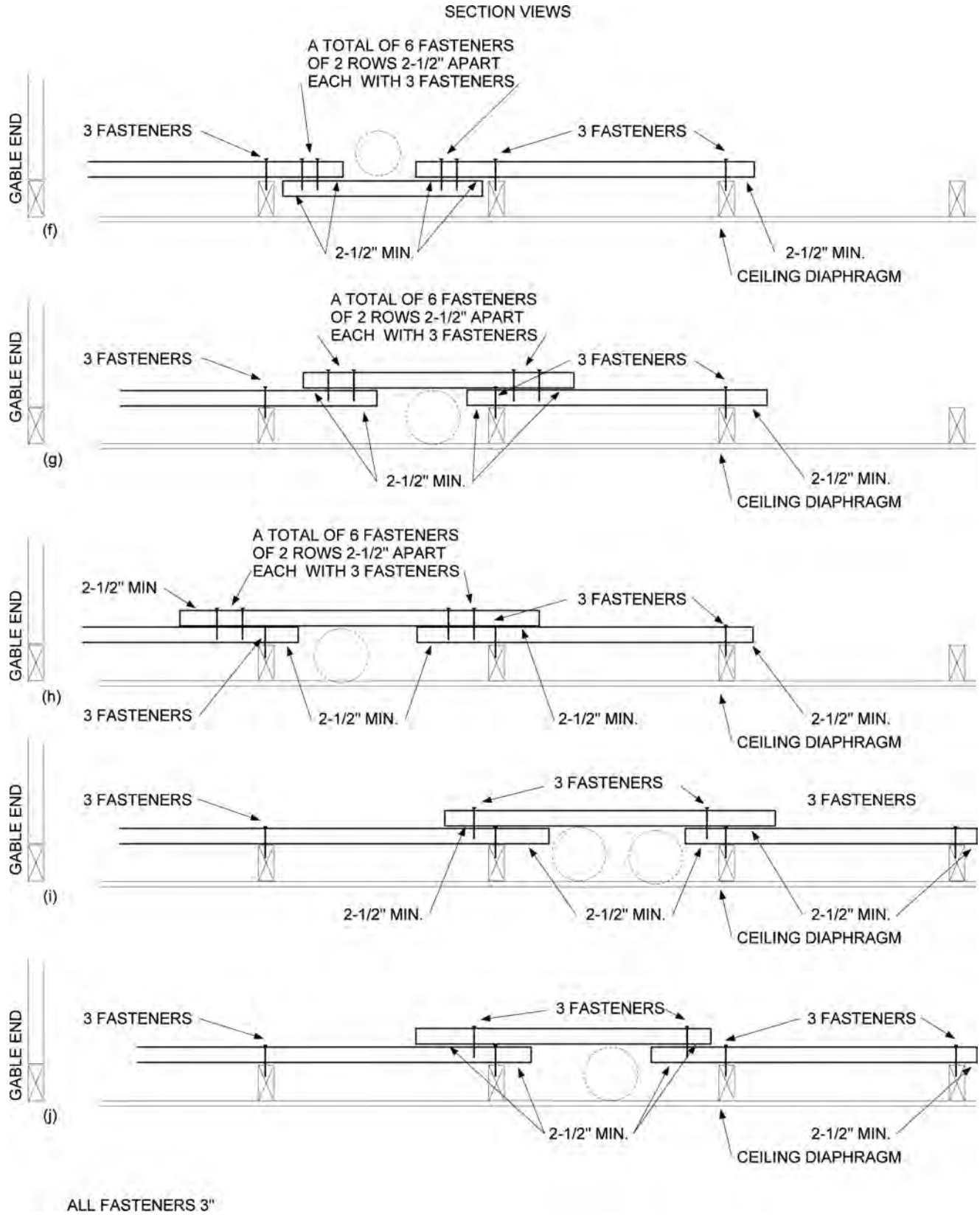

For SI: 1 inch = 25.4 mm.

[BS] FIGURE C104.2.8(2)
SPLICED HORIZONTAL BRACES

INTERNATIONAL CODE COUNCIL®
Copyright © 2015 ICC. ALL RIGHTS RESERVED. Accessed by David Dammon on Jun 21, 2017 12:30:52 PM pursuant to License Agreement with ICC. No further reproduction or distribution authorized. ANY UNAUTHORIZED REPRODUCTION OR DISTRIBUTION IS A VIOLATION OF THE FEDERAL COPYRIGHT ACT AND THE LICENSE AGREEMENT, AND SUBJECT TO CIVIL AND CRIMINAL PENALTIES THEREUNDER.

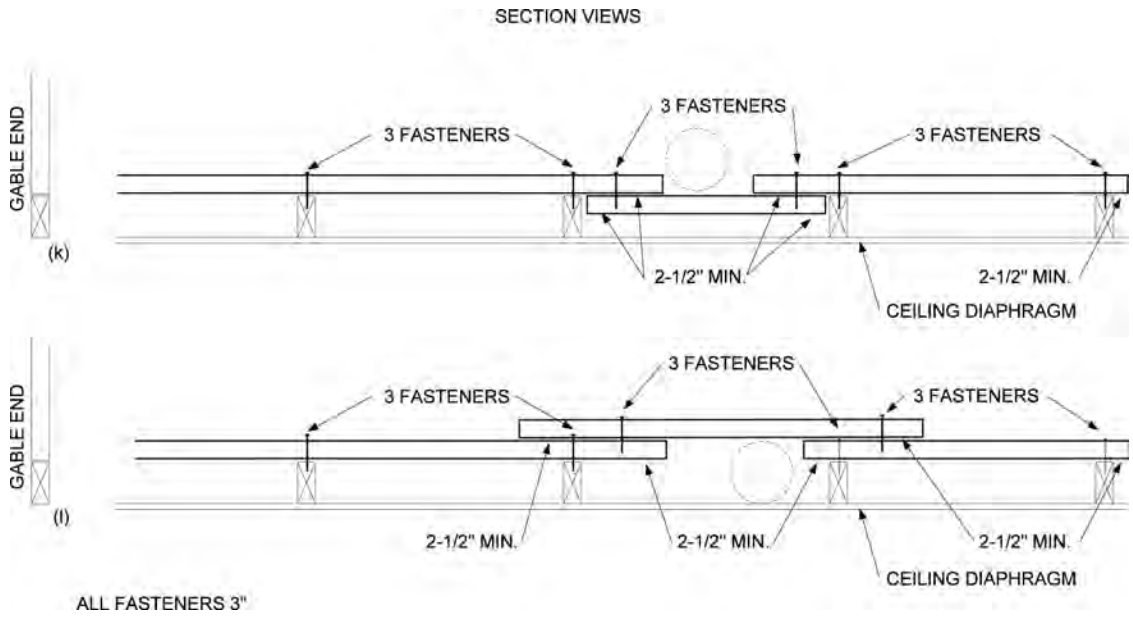

For SI: 1 inch = 25.4 mm.

[BS] FIGURE C104.2.8(3)
SPLICED HORIZONTAL BRACES

[BS] C104.3 Retrofit studs. Retrofit studs shall be installed in accordance with Section C104.3.1 using one of the five methods of Sections C104.3.2, C104.3.3, C104.3.4, C104.3.5, or C104.3.6. Figure C104.3 shows these methods of installation. For the Retrofit Configuration obtained from Table C104.2, the size of retrofit studs shall be as indicated in Table C104.4.1 or Table C104.4.2. Retrofit studs shall extend from the top of the lower horizontal brace to the bottom of the upper horizontal brace except that a maximum gap of $^1/_8$ inch (3.2 mm) is permitted at the bottom and $^1/_2$ inch (12.7 mm) at the top. Where wall sheathing, panel siding, or other wall covering is fastened to a conventionally framed gable end, retrofit studs shall be applied in accordance with Section C104.2.1.

[BS] C104.3.1 Fastening. Where nail plates are not used, retrofit studs shall be attached to existing studs using 3-inch (76 mm) fasteners at a maximum of 6 inches (152 mm) on center but no closer than $2^1/_2$ inches (64 mm) on center with fasteners no closer to ends of members than $2^1/_2$ inches (64 mm).

[BS] C104.3.2 Method #1: Face-to-edge or face-to-face method. Retrofit studs shall be installed immediately adjacent to existing gable end wall studs as indicated in Figure C104.3(a). The retrofit studs shall overlap the edge or side of the existing stud by a minimum of $1^1/_4$ inches (32 mm). Fasteners shall be installed as specified in Section C104.3.1.

[BS] C104.3.3 Method #2: Face-to-face offset method. Retrofit studs shall be installed against the face of existing studs as indicated in Figure C104.3(b) such that the faces overlap a minimum of $1^1/_2$ inches (38 mm) and the edge distance to fasteners is no less than $^3/_4$ inch (19.1 mm). Fasteners shall be installed as specified in Section C104.3.1.

[BS] C104.3.4 Method #3: Butted retrofit stud method. Provided that all of the following fastening conditions are met, retrofit studs shall be permitted to be butted by their edge to existing studs with the addition of nail plates as indicated in Figure C104.3(c) and Figure C104.3.4.

1. The narrow edge of retrofit studs shall be installed against the narrow or the wide face of existing studs.
2. A minimum of two nail plates shall be used.
3. Fasteners used to secure nail plates to studs shall be a minimum $1^1/_4$ inches (32 mm) long (#8 wood screws or 8d nails).
4. Fasteners placed in nail plates shall have a minimum end distance of $2^1/_2$ inches (64 mm) for both studs and a maximum end distance of 6 inches (152 mm) from the ends of the shorter stud.
5. Fasteners shall have a minimum $^1/_2$-inch (12.7 mm) edge distance. Fasteners shall be placed a maximum of $1^1/_2$ inches (38 mm) from the abutting vertical edges of existing studs and retrofit studs.
6. There shall be at least three fasteners through nail plates into all existing and retrofit studs to which the nail plate is attached.
7. Nail plates with three fasteners onto a single existing or retrofit stud shall be spaced a maximum of 15 inches (38 cm) on center.
8. Nail plates with more than three fasteners onto a single existing or retrofit stud shall be spaced a maximum of 20 inches (51 cm) on center.
9. Fasteners used to secure nail plates shall be spaced vertically a minimum of $1^1/_2$ inches (38 mm) on center. Staggered fasteners used to secure nail plates shall be spaced horizontally a minimum of $^1/_2$ inch (12.7 mm).

INTERNATIONAL CODE COUNCIL®
Copyright © 2015 ICC. ALL RIGHTS RESERVED. Accessed by David Dammon on Jun 21, 2017 12:30:52 PM pursuant to License Agreement with ICC. No further reproduction or distribution authorized. ANY UNAUTHORIZED REPRODUCTION OR DISTRIBUTION IS A VIOLATION OF THE FEDERAL COPYRIGHT ACT AND THE LICENSE AGREEMENT, AND SUBJECT TO CIVIL AND CRIMINAL PENALTIES THEREUNDER.

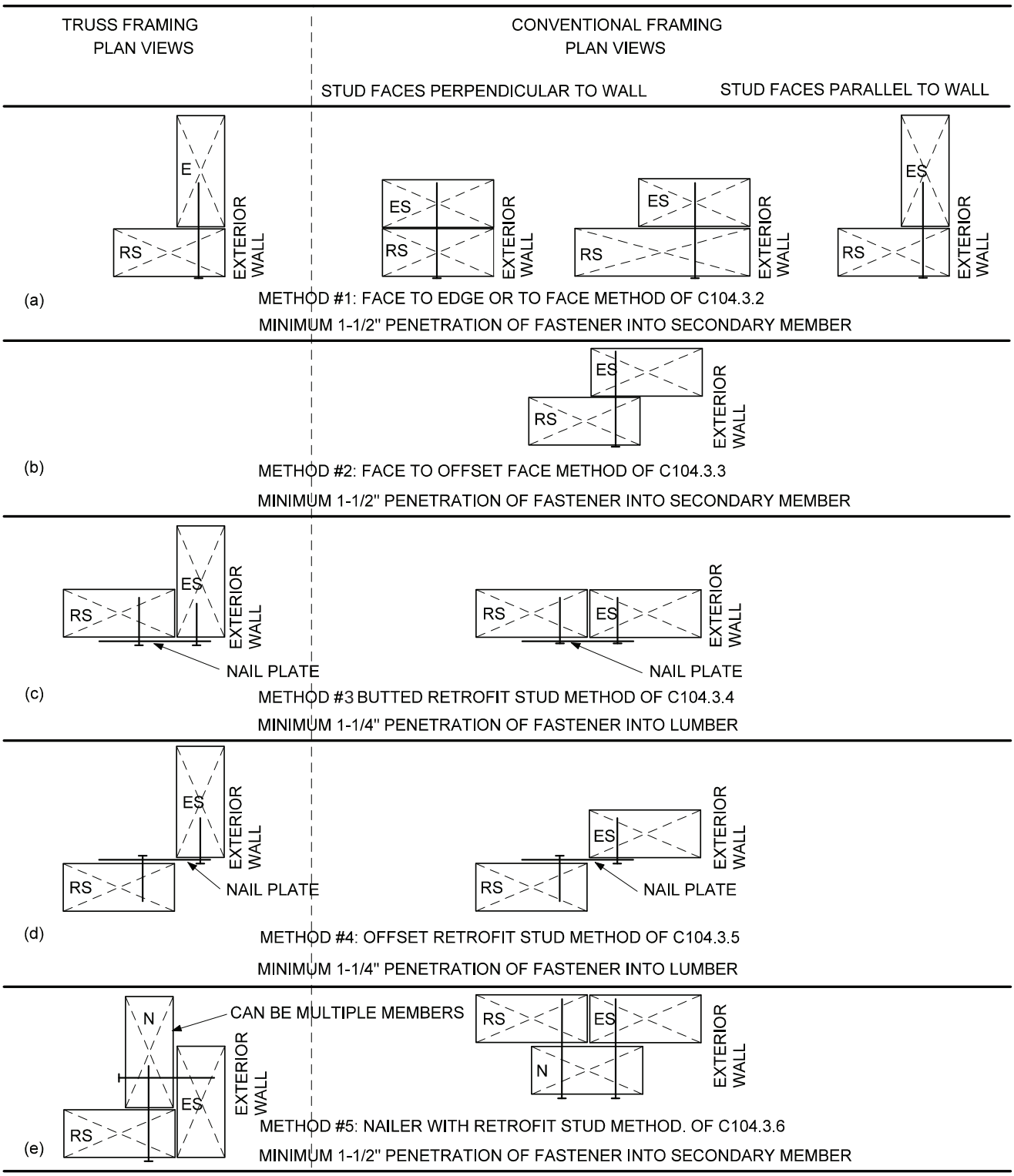

For SI: 1 inch = 25.4 mm.

[BS] FIGURE C104.3
METHOD OF INSTALLING RETROFIT STUDS

INTERNATIONAL CODE COUNCIL®
Copyright © 2015 ICC. ALL RIGHTS RESERVED. Accessed by David Dammon on Jun 21, 2017 12:30:52 PM pursuant to License Agreement with ICC. No further reproduction or distribution authorized. ANY UNAUTHORIZED REPRODUCTION OR DISTRIBUTION IS A VIOLATION OF THE FEDERAL COPYRIGHT ACT AND THE LICENSE AGREEMENT, AND SUBJECT TO CIVIL AND CRIMINAL PENALTIES THEREUNDER.

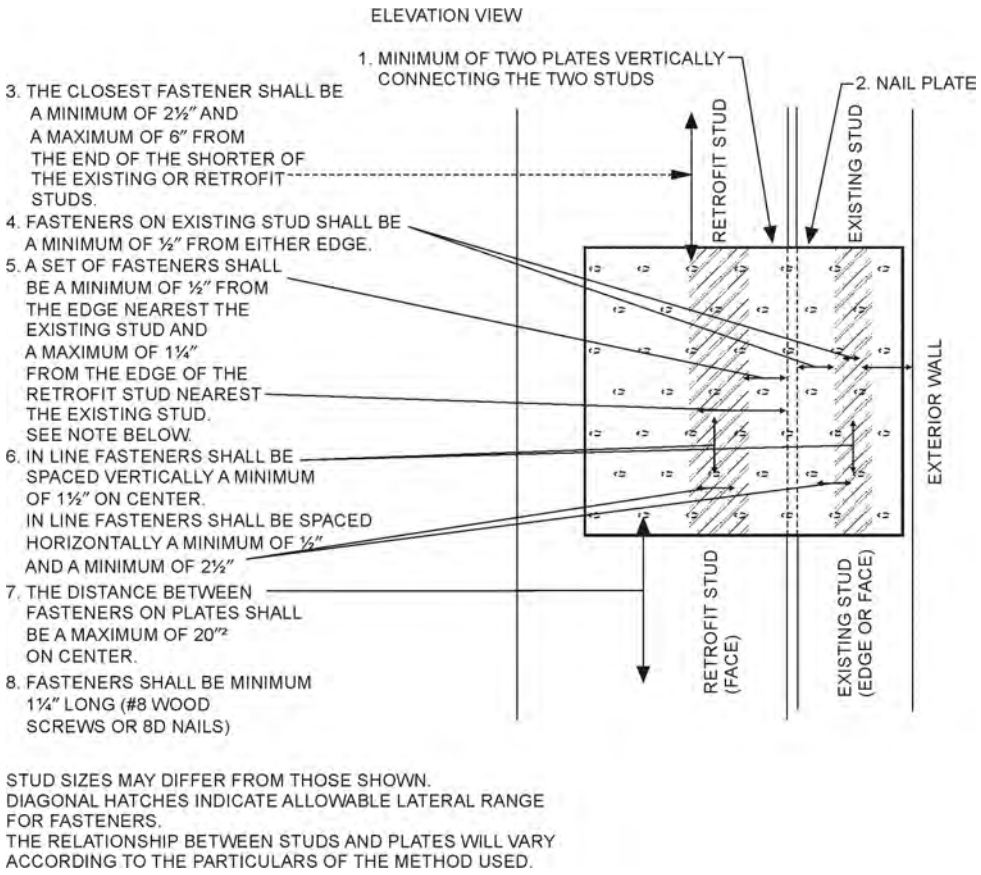

For SI: 1 inch = 25.4 mm.

[BS]FIGURE C104.3.4
NAIL PLATE FASTENING

[BS] C104.3.5 Method #4: Offset retrofit stud method. Retrofit studs may be offset from existing studs by use of nail plates as shown in Figure C104.3(d) such that the vertical corner of a retrofit stud shall align with the vertical corner of an existing stud as indicated in Figure C104.3(d) and Figure C104.3.4, and the fastening conditions of Section C104.3.4 are met.

[BS] C104.3.6 Method #5: Nailer with retrofit stud method. Retrofit studs and existing studs shall be permitted to be connected using noncontinuous 2x4 nailers as indicated in Figure C104.3(e) provided the following conditions are met.

1. Both the existing stud and the retrofit stud shall be butted to nailers and both shall be fastened to the nailer with 3-inch-long (76 mm) fasteners (#8 wood screws or 8d nails). Fasteners connecting each stud to the nailer shall be a spaced 6 inches (152 mm) o.c.
2. Fasteners into nailers from any direction shall be offset vertically by a minimum of $2^1/_2$ inches (64 mm).
3. Fasteners into nailers shall be a minimum of $2^1/_2$ inches (64 mm) but not more than 6 inches (152 mm) from the end of the shorter of the existing stud and retrofit stud to which they are fastened.

[BS] C104.3.7 Reduced depth of retrofit studs. Retrofit studs may be reduced in depth by notching, tapering, or other methods at any number of locations along their length provided that all of the following conditions are met:

1. Retrofit studs to be reduced in depth shall be sized such that the remaining minimum depth of member at the location of the notch (including cross-cut kerfs) shall be not less than that required by Table C104.4.1 or C104.4.2.
2. Reduced in-depth retrofit stud shall not be spliced within 12 inches (30 cm) of the location of notches. Splice members shall not be notched.
3. The vertical extent of notches shall not exceed 12 inches (30 cm) as measured at the depth of location of reduced depth.
4. A reduced in-depth retrofit stud member shall be fastened to the side of the existing gable end wall studs in accordance with Section C104.3.1. Two additional 3-inch (76 mm) fasteners (#8 wood screws or 10d nails) shall be installed on each side of notches in addition to those required by Section C104.3.1.

INTERNATIONAL CODE COUNCIL®
Copyright © 2015 ICC. ALL RIGHTS RESERVED. Accessed by David Dammon on Jun 21, 2017 12:30:52 PM pursuant to License Agreement with ICC. No further reproduction or distribution authorized. ANY UNAUTHORIZED REPRODUCTION OR DISTRIBUTION IS A VIOLATION OF THE FEDERAL COPYRIGHT ACT AND THE LICENSE AGREEMENT, AND SUBJECT TO CIVIL AND CRIMINAL PENALTIES THEREUNDER.

[BS] C104.3.8 Retrofit stud splices. Retrofit studs greater than 8 feet (244 cm) in height may be field spliced in accordance with Figure C104.3.8.

[BS] C104.4 Connection between horizontal braces and retrofit studs. Connections between horizontal braces and retrofit studs shall comply with Section C104.4.1 or C104.4.2. Each retrofit stud shall be connected to the top and bottom horizontal brace members with a minimum 20-gage $1^1/_4$-inch-wide (32 mm) flat or coil metal strap with prepunched holes for fasteners. Straps shall be fastened with $1^1/_4$-inch-long (32 mm) fasteners (#8 wood screws or 8d nails) with the number of fasteners as indicated in Tables C104.4.1 and C104.4.2. Fasteners shall be no closer to the end of lumber than $2^1/_2$ inches (64 mm).

[BS] C104.4.1 L-bent strap method. Retrofit studs shall be connected to horizontal braces or to strong backs in accordance with Figure C104.2(1), C104.2(2) or C104.2.3, and shall comply with the following conditions.

1. A strap shall be applied to the edges of a retrofit stud nearest the gable end wall and to the face of horizontal braces using at each end of the strap the number of fasteners specified in Table C104.4.1. Straps shall be long

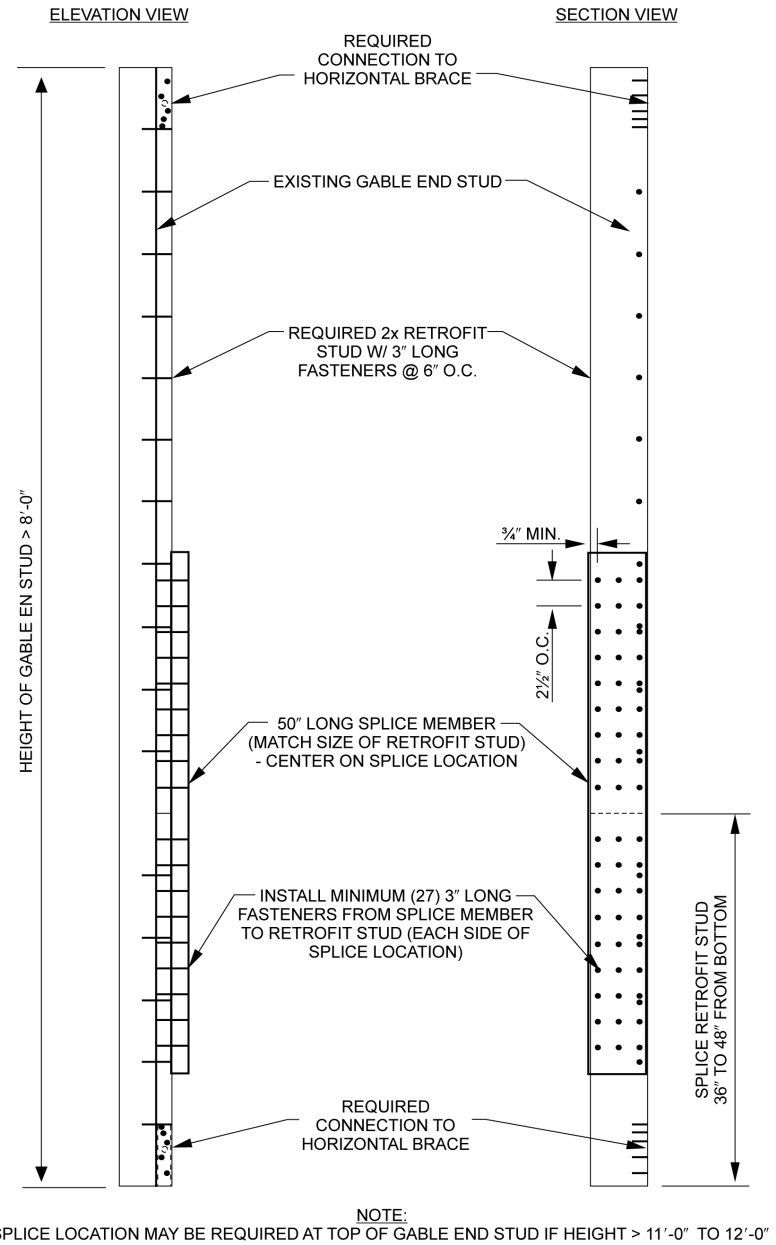

For SI: 1 inch = 25.4 mm; 1 foot = 304.8 mm.

[BS] FIGURE C104.3.8
RETROFIT STUD SPLICES

INTERNATIONAL CODE COUNCIL®
Copyright © 2015 ICC. ALL RIGHTS RESERVED. Accessed by David Dammon on Jun 21, 2017 12:30:52 PM pursuant to License Agreement with ICC. No further reproduction or distribution authorized. ANY UNAUTHORIZED REPRODUCTION OR DISTRIBUTION IS A VIOLATION OF THE FEDERAL COPYRIGHT ACT AND THE LICENSE AGREEMENT, AND SUBJECT TO CIVIL AND CRIMINAL PENALTIES THEREUNDER.

enough so that each strap extends sufficient distance onto the vertical face of the retrofit stud that the fastener closest to the ends of the studs is a minimum of $2^1/_2$ inches (64 mm) from the end of the stud. Straps shall be permitted to be twisted to accommodate the transition between the tops of retrofit studs and horizontal bracings following roof pitches.

2. Compression blocks shall be installed on the horizontal braces directly against either the existing vertical gable end wall stud or the retrofit stud. Figure C104.2(1) (trusses) and Figure C104.2(2) (conventionally framed) show the installation of the compression block against the existing vertical gable end wall stud with the strap from the retrofit stud running beside the compression block. Compression blocks shall be permitted to be placed over straps. Compression blocks shall be fastened to the horizontal braces with at least the minimum number of 3-inch-long (76 mm) fasteners (#8 wood screws or 10d nails) specified in Table C104.4.1. End and edge distances for fasteners shall be in accordance with Section C103.5.3.

[BS] C104.4.2 U-bent strap method. Retrofit studs shall be connected to horizontal braces in accordance with Figure C104.2(3) or C104.2(4), shall be limited to Retrofit Configurations A and B as defined in Table C104.2, and shall comply with the following conditions.

1. Straps of sufficient length to meet the requirements for the number of fasteners in accordance with Table C104.4.2 and meet the end distance requirements of Section C103.5.3 shall be shaped around retrofit studs and fastened to the edges of horizontal braces. Straps shall wrap the back edge of the retrofit stud snugly with a maximum gap of $^1/_4$ inch (6.4 mm). Rounded bends of straps shall be permitted. One fastener shall be installed that connects each strap to the side of the associated retrofit stud.
2. The horizontal brace shall butt snugly against the retrofit stud with a maximum gap of $^1/_4$ inch (6.4 mm).
3. Straps shall be permitted to be twisted to accommodate the transition between the tops of retrofit studs and horizontal braces that follow the roof pitch.

[BS] C104.5 Connection of gable end wall to wall below. The bottom chords or bottom members of wood-framed gable end walls shall be attached to the wall below using one of the methods prescribed in Sections C104.5.1 or C104.5.2. The particular method chosen shall correspond to the framing system and type of wall construction encountered.

[BS] C104.5.1 Gable end frame. The bottom chords of the gable end frame shall be attached to the wall below using gusset angles. A minimum of two fasteners shall be installed into the bottom chord. The gusset angles shall be installed throughout the portion of the gable end where the gable end wall height is greater than 3 feet (91 cm) at the spacing specified in Table C104.5.1. Connection to the wall below shall be by one of the methods listed below:

1. For a wood-frame wall below, a minimum of two fasteners shall be installed. The fasteners shall be of the same diameter and style specified by the gusset angle manufacturer and sufficient length to extend through the double top plate of the wall below.
2. For a concrete or masonry wall below without a sill plate, the type and number of fasteners into the wall shall be consistent with the gusset angle manufacturer's specifications for fasteners installed in concrete or masonry.

[BS] TABLE C104.4.1
ELEMENT SIZING AND SPACING FOR L-BENT RETROFIT METHOD

RETROFIT ELEMENTS	RETROFIT CONFIGURATION			
	A	B	C	D
Minimum size and number of Horizontal Braces	2 x 4	2 x 4	2 x 4	2 each 2 x 4
Minimum size and number of Retrofit Studs	2 x 4	2 x 6	2 x 8	2 each 2 x 8
Minimum number of fasteners connecting each end of straps to Retrofit Studs or to Horizontal Braces #8 screws or 10d nails $1^1/_4$" long	6	9	12	8 on each strap
Minimum number of fasteners to connect Compression Blocks to Horizontal Braces #8 screws or 10d nails 3" long	6	8	10	12

For SI: 1 inch = 25.4 mm, 1 foot = 304.8 mm.

[BS] TABLE C104.4.2
ELEMENT SIZING AND SPACING FOR U-BENT RETROFIT METHOD

RETROFIT ELEMENTS	RETROFIT CONFIGURATION			
	A	B	C	D
Minimum size and number of Horizontal Braces	2 x 4	2 x 4	2 x 4	2 each 2 x 4
Minimum size and number of Retrofit Studs	2 x 4	2 x 6	2 x 8	2 each 2 x 8
Minimum number of fasteners connecting Straps to each edge of Horizontal Braces #8 screws or 10d nails $1^1/_4$" long	6	7	7	6 on each side of strap

For SI: 1 inch = 25.4 mm, 1 foot = 304.8 mm.

INTERNATIONAL CODE COUNCIL®
Copyright © 2015 ICC. ALL RIGHTS RESERVED. Accessed by David Dammon on Jun 21, 2017 12:30:52 PM pursuant to License Agreement with ICC. No further reproduction or distribution authorized. ANY UNAUTHORIZED REPRODUCTION OR DISTRIBUTION IS A VIOLATION OF THE FEDERAL COPYRIGHT ACT AND THE LICENSE AGREEMENT, AND SUBJECT TO CIVIL AND CRIMINAL PENALTIES THEREUNDER.

3. For a concrete or masonry wall below with a 2x sill plate, the fasteners into the wall below shall be of the diameter and style specified by the gusset angle manufacturer for concrete or masonry connections; but, long enough to pass through the wood sill plate and provide the required embedment into the concrete or masonry below. Alternatively, the gusset angle can be anchored to the sill plate using four each $1^1/_2$-inch-long (38 mm) fasteners of the same type as specified by the gusset angle manufacturer for wood connections, provided that the sill plate is anchored to the wall on each side of the gusset angle by a $^1/_4$-inch-diameter (6.4 mm) masonry screw with $2^3/_4$ inches (70 mm) of embedment into the concrete or masonry wall. A $^1/_4$-inch (6.4 mm) washer shall be placed under the heads of the masonry screws.

[BS] C104.5.2 Conventionally framed gable end wall. Each stud in a conventionally framed gable end wall, throughout the length of the gable end wall where the wall height is greater than 3 feet (.91 m), shall be attached to the bottom or sill plate using a stud to plate connector with minimum uplift capacity of 175 pounds (778 N). The bottom or sill plate shall then be connected to the wall below using one of the methods listed below:

1. For a wood frame wall below, the sill or bottom plate shall be connected to the top plate of the wall below using $^1/_4$-inch-diameter (6.4 mm) lag bolt fasteners of sufficient length to penetrate the bottom plate of the upper gable end wall and extend through the bottom top plate of the wall below. A washer sized for the diameter of the lag bolt shall be placed under the head of each lag bolt. The fasteners shall be installed at the spacing indicated in Table C104.5.2.
2. For a concrete or masonry wall below, the sill or bottom plate shall be connected to the concrete or masonry wall below using $^1/_4$-inch-diameter (6.4 mm) concrete or masonry screws of sufficient length to provide $2^3/_4$ inches (70 mm) of embedment into the top of the concrete or masonry wall. A washer sized for the diameter of the lag bolt shall be placed under the head of each lag bolt. The fasteners shall be installed at the spacing indicated in Table C104.5.2.

[BS] TABLE C104.5.1
SPACING OF GUSSET ANGLES

EXPOSURE CATEGORY	BASIC WIND SPEED (mph)	SPACING OF GUSSET ANGLES (inches)
C	140	38
C	150	32
C	165	28
C	180	24
C	190	20
B	140	48
B	150	40
B	165	36
B	180	30
B	190	26

For SI: 1 inch = 25.4 mm, 1 mile per hour = 0.45 m/s.

[BS] TABLE C104.5.2
SPACING OF LAG OR MASONRY SCREWS USED TO CONNECT SILL PLATE OF GABLE END WALL TO TOP OF THE WALL BELOW

EXPOSURE CATEGORY	BASIC WIND SPEED (mph)	SPACING OF LAG OR MASONRY SCREWS (inches)
C	140	19
C	150	16
C	165	14
C	180	14
C	190	10
B	140	24
B	150	20
B	165	18
B	180	15
B	190	13

For SI: 1 inch = 25.4 mm, 1 mile per hour = 0.45 m/s.

INTERNATIONAL CODE COUNCIL®
Copyright © 2015 ICC. ALL RIGHTS RESERVED. Accessed by David Dammon on Jun 21, 2017 12:30:52 PM pursuant to License Agreement with ICC. No further reproduction or distribution authorized. ANY UNAUTHORIZED REPRODUCTION OR DISTRIBUTION IS A VIOLATION OF THE FEDERAL COPYRIGHT ACT AND THE LICENSE AGREEMENT, AND SUBJECT TO CIVIL AND CRIMINAL PENALTIES THEREUNDER.

INTERNATIONAL CODE COUNCIL®
Copyright © 2015 ICC. ALL RIGHTS RESERVED. Accessed by David Dammon on Jun 21, 2017 12:30:52 PM pursuant to License Agreement with ICC. No further reproduction or distribution authorized. ANY UNAUTHORIZED REPRODUCTION OR DISTRIBUTION IS A VIOLATION OF THE FEDERAL COPYRIGHT ACT AND THE LICENSE AGREEMENT, AND SUBJECT TO CIVIL AND CRIMINAL PENALTIES THEREUNDER.

Chapter C2:
Roof Deck Fastening for High-wind Areas

The provisions contained in this appendix are not mandatory unless specifically referenced in the adopting ordinance.

General Comments

The provisions in Appendix Chapter C2 are focused on the fastening of roof decks in high-wind areas. This is one of two appendix chapters focused on providing prescriptive methods to increase wind resistance for existing structures. Appendix Chapter C1 addresses the retrofit of gable ends to resist wind. This applicability is limited to buildings that fall in the scope of the *International Residential Code*® (IRC®) or are assigned to lower risk levels. Buildings assigned to higher risk level buildings would require more rigorous upgrades than this appendix can provide.

The content of both Appendix Chapters C1 and C2 is similar in concept to that provided in Appendix A chapters dealing with seismic retrofit requirements. It is anticipated that, over time, additional retrofit methods will be provided in this appendix as new Appendix C chapters. These retrofits are voluntary and, as such, may or may not meet the requirements of new construction. However, these voluntary measures will serve to better protect the public and reduce damage from high-wind events.

Because most of America's buildings located in hurricane-prone regions were not built to today's building code standards, there is significant value added to the code if the retrofitting of buildings could be facilitated by the provisions of prescriptive means. This would inherently reduce the cost of retrofitting. The need for structural retrofitting has been highlighted in the recent spate of hurricanes and the insurance crises that have developed in the coastal high-wind areas of a number of states because of older buildings that do not meet current building code structural requirements. Clearly, it is in the best interests of public health, welfare and safety to facilitate retrofitting. Given the importance of retrofitting to the public, retrofitting of buildings should be encouraged and facilitated by removing as many impediments as possible. The code can actually facilitate and encourage retrofitting by providing prescriptive means. Such methods should encourage, facilitate and reduce the cost of improving America's building stock.

Purpose

This appendix chapter is intended to provide a prescriptive solution for compliance with Section 707.3.2. These retrofits are voluntary, and as such, may or may not meet the requirements of new construction. However, these voluntary measures will serve to better protect the public and reduce damage from high-wind events.

Section 707.3.2 requires the roof deck to be evaluated and remedial action taken when insufficient or deteriorated connections are found. However, it gives little guidance on making the required determination or providing the required corrections. Ordinarily, one would turn to the requirements for new construction. However, blindly applying the same fastening requirements where fasteners already exist could potentially compromise performance because of damage to roof panels or framing members. The assumption is that there is an optimum spacing of existing and new fasteners that is a function of the number and type of existing connectors.

Adding fasteners where fasteners already exist is different than installing fasteners in new construction because of the greater potential for damaging sheathing or framing members. To date, the code only addresses nailing schedules for new installations without providing any guidance for retrofit nailing. The goal is that by adding additional fastener strengths, the code will at least approach current fastening requirements in order to approach the same performance level.

This appendix chapter is fairly brief and primarily provides guidance on fastening for sawn lumber, wood plank roofs or wood structural panel roofs. The nail spacings shown in Table C202.1.2 are derived from research conducted in the 1990s at Clemson University, tempered by the requirements for roof sheathing attachment for high winds in the *Wood Frame Construction Manual* and SSTD 10-99. Smaller diameter fasteners, such as staples, damage framing members less than larger diameter fasteners and provide significantly lower uplift resistance. Consequently, in these situations supplemental fasteners can be installed at typical new construction spacing without concern for splitting the structural members.

INTERNATIONAL CODE COUNCIL®
Copyright © 2015 ICC. ALL RIGHTS RESERVED. Accessed by David Dammon on Jun 21, 2017 12:30:52 PM pursuant to License Agreement with ICC. No further reproduction or distribution authorized. ANY UNAUTHORIZED REPRODUCTION OR DISTRIBUTION IS A VIOLATION OF THE FEDERAL COPYRIGHT ACT AND THE LICENSE AGREEMENT, AND SUBJECT TO CIVIL AND CRIMINAL PENALTIES THEREUNDER.

SECTION C201
GENERAL

[BS] C201.1 Purpose. This chapter provides prescriptive methods for partial structural retrofit of an existing building to increase its resistance to wind loads. It is intended for voluntary use where the ultimate design wind speed, V_{ult}, determined in accordance with Figure 1609.3(1) of the *International Building Code* exceeds 130 mph (58 m/s) and for reference by mitigation programs. The provisions of this chapter do not necessarily satisfy requirements for new construction. Unless specifically cited, the provisions of this chapter do not necessarily satisfy requirements for structural improvements triggered by addition, alteration, repair, change of occupancy, building relocation or other circumstances.

[BS] C201.2 Eligible conditions. The provisions of this chapter are applicable only to buildings that meet the following eligibility requirements:

1. Buildings assigned to Risk Category I or II in accordance with *International Building Code* Table 1604.5; or
2. Buildings within the scope of the *International Residential Code*.

SECTION C202
ROOF DECK ATTACHMENT FOR WOOD ROOFS

[BS] C202.1 Roof decking attachment for one- and two-family dwellings. For one- and two-family dwellings, fastening shall be in accordance with Section C202.1.1 or C202.1.2 as appropriate for the existing construction. The diameter of 8d nails shall be a minimum of 0.131 inch (3 mm) and the length shall be a minimum of $2^1/_4$ inches (57 mm) to qualify for the provisions of this section for existing nails regardless of head shape or head diameter.

[BS] C202.1.1 Sawn lumber or wood plank roofs. Roof decking consisting of sawn lumber or wood planks up to 12 inches (30 cm) wide and secured with at least two nails (minimum size 8d) to each roof framing member it crosses shall be deemed to be sufficiently connected. Sawn lumber or wood plank decking secured with smaller fasteners than 8d nails or with fewer than two nails (minimum size 8d) to each framing member it crosses shall be deemed sufficiently connected if fasteners are added such that two clipped head, round head, or ring shank nails (minimum size 8d) are in place on each framing member the nail crosses.

[BS] C202.1.2 Wood structural panel roofs. For roof decking consisting of wood structural panels, fasteners and spacings required in Table C202.1.2 are deemed to comply with the requirements of Section 707.3 of the *International Existing Building Code*.

Supplemental fasteners as required by Table C202.1.2 shall be 8d ring shank nails with round heads and the following minimum dimensions:

1. 0.113-inch-nominal (3 mm) shank diameter.
2. Ring diameter a minimum of 0.012 inch (0.3 mm) greater than shank diameter.
3. 16 to 20 rings per inch.
4. A minimum 0.280-inch (7 mm) full round head diameter.
5. Ring shank to extend a minimum of $1^1/_2$ inches (38 mm) from the tip of the nail.
6. Minimum $2^1/_4$-inch (57 mm) nail length.

[BS] TABLE C202.1.2
SUPPLEMENT FASTENERS AT PANEL EDGES AND INTERMEDIATE FRAMING

EXISTING FASTENERS	EXISTING FASTENER SPACING (EDGE OR INTERMEDIATE SUPPORTS)	MAXIMUM SUPPLEMENTAL FASTENER SPACING FOR 130 MPH < V_{ult} ≤ 140 MPH	MAXIMUM SUPPLEMENTAL FASTENER SPACING FOR INTERIOR ZONE[c] LOCATIONS FOR MPH V_{ult} > 140 MPH AND EDGE ZONES NOT COVERED BY THE COLUMN TO THE RIGHT	EDGE ZONE[d] FOR V_{ult} > 160 MPH AND EXPOSURE C, OR V_{ult} > 180 MPH AND EXPOSURE B
Staples or 6d	Any	6″ o.c.[b]	6″ o.c.[b]	4″ o.c.[b] at panel edges and 4″ o.c.[b] at intermediate supports
8d clipped head or round head smooth shank	6″ o.c. or less	None necessary	None necessary along edges of panels but 6″ o.c.[b] at intermediate supports of panel	4″ o.c.[a] at panel edges and 4″ o.c.[a] at intermediate supports
8d clipped head or round head ring shank	6″ o.c. or less	None necessary	None necessary	4″ o.c.[a] at panel edges and 4″ o.c.[a] at intermediate supports
8d clipped head or round head smooth shank	Greater than 6″ o.c.	6″ o.c.[a]	6″ o.c.[a] along panel edges and 6″ o.c.[b] at intermediate supports of panel	4″ o.c.[a] at panel edges and 4″ o.c.[a] at intermediate supports
8d clipped head or round head ring shank	Greater than 6″ o.c.	6″ o.c.[a]	6″ o.c.[a]	4″ o.c.[a] at panel edges and 4″ o.c.[a] at intermediate supports

For SI: 1 inch = 25.4 mm; 1 mile per hour = 0.447 m/s.

a. Maximum spacing determined based on existing fasteners and supplemental fasteners.

b. Maximum spacing determined based on supplemental fasteners only.

c. Interior zone = sheathing that is not located within 4 feet of the perimeter edge of the roof or within 4 feet of each side of a ridge.

d. Edge zone = sheathing that is located within 4 feet of the perimeter edge of the roof and within 4 feet of each side of a ridge.

INTERNATIONAL CODE COUNCIL®
Copyright © 2015 ICC. ALL RIGHTS RESERVED. Accessed by David Dammon on Jun 21, 2017 12:30:52 PM pursuant to License Agreement with ICC. No further reproduction or distribution authorized. ANY UNAUTHORIZED REPRODUCTION OR DISTRIBUTION IS A VIOLATION OF THE FEDERAL COPYRIGHT ACT AND THE LICENSE AGREEMENT, AND SUBJECT TO CIVIL AND CRIMINAL PENALTIES THEREUNDER.

RESOURCE A

GUIDELINES ON FIRE RATINGS OF ARCHAIC MATERIALS AND ASSEMBLIES

Introduction

The *International Existing Building Code*® (IEBC®) is a comprehensive code with the goal of addressing all aspects of work taking place in existing buildings and providing user-friendly methods and tools for regulation and improvement of such buildings. This resource document is included within the cover of the IEBC with that goal in mind and as a step towards accomplishing that goal.

In the process of *repair* and *alteration* of existing buildings, based on the nature and the extent of the work, the IEBC might require certain upgrades in the fire-resistance rating of building elements, at which time it becomes critical for the designers and the code officials to be able to determine the fire-resistance rating of the *existing building* elements as part of the overall evaluation for the assessment of the need for improvements. This resource document provides a guideline for such an evaluation for fire-resistance ratings of archaic materials that are not typically found in the modern model building codes.

Resource A is only a guideline and is not intended to be a document for specific adoption as it is not written in the format or language of ICC's *International Codes* and is not subject to the code development process.

PURPOSE

The *Guideline on Fire Ratings of Archaic Materials and Assemblies* focuses upon the fire-related performance of archaic construction. "Archaic" encompasses construction typical of an earlier time, generally prior to 1950. "Fire-related performance" includes fire resistance, flame spread, smoke production and degree of combustibility.

The purpose of this guideline is to update the information which was available at the time of original construction, for use by architects, engineers and code officials when evaluating the fire safety of a rehabilitation project. In addition, information relevant to the evaluation of general classes of materials and types of construction is presented for those cases when documentation of the fire performance of a particular archaic material or assembly cannot be found.

It has been assumed that the building materials and their fastening, joining and incorporation into the building structure are sound mechanically. Therefore, some determination must be made that the original manufacture, the original construction practice, and the rigors of aging and use have not weakened the building. This assessment can often be difficult because process and quality control was not good in many industries, and variations among locally available raw materials and manufacturing techniques often resulted in a product which varied widely in its strength and durability. The properties of iron and steel, for example, varied widely, depending on the mill and the process used.

There is nothing inherently inferior about archaic materials or construction techniques. The pressures that promote fundamental change are most often economic or technological matters not necessarily related to concerns for safety. The high cost of labor made wood lath and plaster uneconomical. The high cost of land and the congestion of the cities provided the impetus for high-rise construction. Improved technology made it possible. The difficulty with archaic materials is not a question of suitability, but familiarity.

Code requirements for the fire performance of key building elements (e.g., walls, floor/ceiling assemblies, doors, shaft enclosures) are stated in performance terms: hours of fire resistance. It matters not whether these elements were built in 1908 or 1980, only that they provide the required degree of fire resistance. The level of performance will be defined by the local community, primarily through the enactment of a building or rehabilitation code. This guideline is only a tool to help evaluate the various building elements, regardless of what the level of performance is required to be.

The problem with archaic materials is simply that documentation of their fire performance is not readily available. The application of engineering judgment is more difficult because building officials may not be familiar with the materials or construction method involved. As a result, either a full-scale fire test is required or the archaic construction in question removed and replaced. Both alternatives are time consuming and wasteful.

This guideline and the accompanying appendix are designed to help fill this information void. By providing the necessary documentation, there will be a firm basis for the continued acceptance of archaic materials and assemblies.

INTERNATIONAL CODE COUNCIL®
Copyright © 2015 ICC. ALL RIGHTS RESERVED. Accessed by David Dammon on Jun 21, 2017 12:30:52 PM pursuant to License Agreement with ICC. No further reproduction or distribution authorized. ANY UNAUTHORIZED REPRODUCTION OR DISTRIBUTION IS A VIOLATION OF THE FEDERAL COPYRIGHT ACT AND THE LICENSE AGREEMENT, AND SUBJECT TO CIVIL AND CRIMINAL PENALTIES THEREUNDER.

1
FIRE-RELATED PERFORMANCE OF ARCHAIC MATERIALS AND ASSEMBLIES

1.1
FIRE PERFORMANCE MEASURES

This guideline does not specify the level of performance required for the various building components. These requirements are controlled by the building occupancy and use and are set forth in the local building or rehabilitation code.

The fire resistance of a given building element is established by subjecting a sample of the assembly to a "standard" fire test which follows a "standard" time-temperature curve. This test method has changed little since the 1920s. The test results tabulated in the Appendix have been adjusted to reflect current test methods.

The current model building codes cite other fire-related properties not always tested for in earlier years: flame spread, smoke production, and degree of combustibility. However, they can generally be assumed to fall within well defined values because the principal combustible component of archaic materials is cellulose. Smoke production is more important today because of the increased use of plastics. However, the early flame spread tests, developed in the early 1940s, also included a test for smoke production.

"Plastics," one of the most important classes of contemporary materials, were not found in the review of archaic materials. If plastics are to be used in a rehabilitated building, they should be evaluated by contemporary standards. Information and documentation of their fire-related properties and performance is widely available.

Flame spread, smoke production and degree of combustibility are discussed in detail below. Test results for eight common species of lumber, published in an Underwriter's Laboratories' report (104), are noted in the following table:

TUNNEL TEST RESULTS FOR EIGHT SPECIES OF LUMBER

SPECIES OF LUMBER	FLAME SPREAD	FUEL CONTRIBUTED	SMOKE DEVELOPED
Western White Pine	75	50-60	50
Northern White Pine	120-215	120-140	60-65
Ponderosa Pine	80-215	120-135	100-110
Yellow Pine	180-190	130-145	275-305
Red Gum	140-155	125-175	40-60
Yellow Birch	105-110	100-105	45-65
Douglas Fir	65-100	50-80	10-100

Flame Spread

The flame spread of interior finishes is most often measured by the ASTM E84 "tunnel test." This test measures how far and how fast the flames spread across the surface of the test sample. The resulting flame spread rating (FSR) is expressed as a number on a continuous scale where cement-asbestos board is 0 and red oak is 100. (Materials with a flame spread greater than red oak have an FSR greater than 100.) The scale is divided into distinct groups or classes. The most commonly used flame spread classifications are: Class I or A*, with a 0-25 FSR; Class II or B, with a 26-75 FSR; and Class III or C, with a 76-200 FSR. The *NFPA Life Safety Code* also has a Class D (201-500 FSR) and Class E (over 500 FSR) interior finish.

These classifications are typically used in modern building codes to restrict the rate of fire spread. Only the first three classifications are normally permitted, though not all classes of materials can be used in all places throughout a building. For example, the interior finish of building materials used in exits or in corridors leading to exits is more strictly regulated than materials used within private dwelling units.

In general, inorganic archaic materials (e.g., bricks or tile) can be expected to be in Class I. Materials of whole wood are mostly Class II. Whole wood is defined as wood used in the same form as sawn from the tree. This is in contrast to the contemporary reconstituted wood products such as plywood, fiberboard, hardboard, or particle board. If the organic archaic material is not whole wood, the flame spread classification could be well over 200 and thus would be particularly unsuited for use in exits and other critical locations in a building. Some plywoods and various wood fiberboards have flame spreads over 200. Although they can be treated with fire retardants to reduce their flame spread, it would be advisable to assume that all such products have a flame spread over 200 unless there is information to the contrary.

Smoke Production

The evaluation of smoke density is part of the ASTM E84 tunnel test. For the eight species of lumber shown in the table above, the highest levels are 275-305 for Yellow Pine, but most of the others are less smoky than red oak which has an index of 100. The advent of plastics caused substantial increases in the smoke density values measured by the tunnel test. The ensuing limitation of the smoke production for wall and ceiling materials by the model building codes has been a reaction to the introduction of plastic materials. In general, cellulosic materials fall in the 50-300 range of smoke density which is below the general limitation of 450 adopted by many codes.

Degree of Combustibility

The model building codes tend to define "noncombustibility" on the basis of having passed ASTM E136 or if the material is totally inorganic. The acceptance of gypsum wallboard as noncombustible is based on limiting paper thickness to not over $^1/_8$ inch and a 0-50 flame spread rating by ASTM E84. At times there were provisions to define a Class I or A material (0-25 FSR) as noncombustible, but this is not currently recognized by most model building codes.

If there is any doubt whether or not an archaic material is noncombustible, it would be appropriate to send out samples for evaluation. If an archaic material is determined to be noncombustible according to ASTM E136, it can be expected that it will not contribute fuel to the fire.

* Some codes are Roman numerals, others use letters.

INTERNATIONAL CODE COUNCIL®
Copyright © 2015 ICC. ALL RIGHTS RESERVED. Accessed by David Dammon on Jun 21, 2017 12:30:52 PM pursuant to License Agreement with ICC. No further reproduction or distribution authorized. ANY UNAUTHORIZED REPRODUCTION OR DISTRIBUTION IS A VIOLATION OF THE FEDERAL COPYRIGHT ACT AND THE LICENSE AGREEMENT, AND SUBJECT TO CIVIL AND CRIMINAL PENALTIES THEREUNDER.

1.2 COMBUSTIBLE CONSTRUCTION TYPES

One of the earliest forms of timber construction used exterior load-bearing masonry walls with columns and/or wooden walls supporting wooden beams and floors in the interior of the building. This form of construction, often called "mill" or "heavy timber" construction, has approximately 1 hour fire resistance. The exterior walls will generally contain the fire within the building.

With the development of dimensional lumber, there was a switch from heavy timber to "balloon frame" construction. The balloon frame uses load-bearing exterior wooden walls which have long timbers often extending from foundation to roof. When longer lumber became scarce, another form of construction, "platform" framing, replaced the balloon framing. The difference between the two systems is significant because platform framing is automatically fire-blocked at every floor while balloon framing commonly has concealed spaces that extend unblocked from basement to attic. The architect, engineer, and *code official* must be alert to the details of construction and the ease with which fire can spread in concealed spaces.

2 BUILDING EVALUATION

A given rehabilitation project will most likely go through several stages. The preliminary evaluation process involves the designer in surveying the prospective building. The fire resistance of *existing building* materials and construction systems is identified; potential problems are noted for closer study. The final evaluation phase includes: developing design solutions to upgrade the fire resistance of building elements, if necessary; preparing working drawings and specifications; and the securing of the necessary code approvals.

2.1 PRELIMINARY EVALUATION

A preliminary evaluation should begin with a building survey to determine the existing materials, the general arrangement of the structure and the use of the occupied spaces, and the details of construction. The designer needs to know "what is there" before a decision can be reached about what to keep and what to remove during the rehabilitation process. This preliminary evaluation should be as detailed as necessary to make initial plans. The fire-related properties need to be determined from the applicable building or rehabilitation code, and the materials and assemblies existing in the building then need to be evaluated for these properties. Two work sheets are shown below to facilitate the preliminary evaluation.

Two possible sources of information helpful in the preliminary evaluation are the original building plans and the building code in effect at the time of original construction. Plans may be on file with the local building department or in the offices of the original designers (e.g., architect, engineer) or their successors. If plans are available, the investigator should verify that the building was actually constructed as called for in the plans, as well as incorporate any later alterations or changes to the building. Earlier editions of the local building code should be on file with the building official. The code in effect at the time of construction will contain fire performance criteria. While this is no guarantee that the required performance was actually provided, it does give the investigator some guidance as to the level of performance which may be expected. Under some code administration and enforcement systems, the code in effect at the time of construction also defines the level of performance that must be provided at the time of rehabilitation.

Figure 1 illustrates one method for organizing preliminary field notes. Space is provided for the materials, dimensions, and condition of the principal building elements. Each floor of the structure should be visited and the appropriate information obtained. In practice, there will often be identical materials and construction on every floor, but the exception may be of vital importance. A schematic diagram should be prepared of each floor showing the layout of exits and hallways and indicating where each element described in the field notes fits into the structure as a whole. The exact arrangement of interior walls within apartments is of secondary importance from a fire safety point of view and need not be shown on the drawings unless these walls are required by code to have a fire resistance rating.

The location of stairways and elevators should be clearly marked on the drawings. All exterior means of escape (e.g., fire escapes) should be identified.[1]

The following notes explain the entries in Figure 1.

Exterior Bearing Walls: Many old buildings utilize heavily constructed walls to support the floor/ceiling assemblies at the exterior of the building. There may be columns and/or interior bearing walls within the structure, but the exterior walls are an important factor in assessing the fire safety of a building.

The field investigator should note how the floor/ceiling assemblies are supported at the exterior of the building. If columns are incorporated in the exterior walls, the walls may be considered nonbearing.

Interior Bearing Walls: It may be difficult to determine whether or not an interior wall is load bearing, but the field investigator should attempt to make this determination. At a later stage of the rehabilitation process, this question will need to be determined exactly. Therefore, the field notes should be as accurate as possible.

Exterior Nonbearing Walls: The fire resistance of the exterior walls is important for two reasons. These walls (both bearing and nonbearing) are depended upon to: a) contain a fire within the building of origin; or b) keep an exterior fire *outside* the building. It is therefore important to indicate on the drawings where any openings are located as well as the materials and construction of all doors or shutters. The drawings

1. Problems providing adequate exiting are discussed at length in the *Egress Guideline for Residential Rehabilitation*.

INTERNATIONAL CODE COUNCIL®
Copyright © 2015 ICC. ALL RIGHTS RESERVED. Accessed by David Dammon on Jun 21, 2017 12:30:52 PM pursuant to License Agreement with ICC. No further reproduction or distribution authorized. ANY UNAUTHORIZED REPRODUCTION OR DISTRIBUTION IS A VIOLATION OF THE FEDERAL COPYRIGHT ACT AND THE LICENSE AGREEMENT, AND SUBJECT TO CIVIL AND CRIMINAL PENALTIES THEREUNDER.

should indicate the presence of wired glass, its thickness and framing, and identify the materials used for windows and door frames. The protection of openings adjacent to exterior means of escape (e.g., exterior stairways, fire escapes) is particularly important. The ground floor drawing should locate the building on the property and indicate the precise distances to adjacent buildings.

Interior Nonbearing Walls (Partitions): A partition is a "wall that extends from floor to ceiling and subdivides space within any story of a building." (48) Figure 1 has two categories (A & B) for Interior Nonbearing Walls (Partitions) which can be used for different walls, such as hallway walls as compared to inter-apartment walls. Under some circumstances there may be only one type of wall construction; in others, three or more types of wall construction may occur.

The field investigator should be alert for differences in function as well as in materials and construction details. In general, the details within apartments are not as important as the major exit paths and exit stairways. The preliminary field investigation should attempt to determine the thickness of all walls. A term introduced below called "thickness design" will depend on an accurate ($\pm$ $^1/_4$ inch) determination. Even though this initial field survey is called "preliminary," the data generated should be as accurate and complete as possible.

The field investigator should note the exact location from which observations are recorded. For instance, if a hole is found through a wall enclosing an exit stairway which allows a cataloguing of the construction details, the field investigation notes should reflect the location of the "find." At the preliminary stage it is not necessary to core every wall; the interior details of construction can usually be determined at some location.

Structural Frame: There may or may not be a complete skeletal frame, but usually there are columns, beams, trusses, or other like elements. The dimensions and spacing of the structural elements should be measured and indicated on the drawings. For instance, if there are 10-inch square columns located on a 30-foot square grid throughout the building, this should be noted. The structural material and cover or protective materials should be identified wherever possible. The thickness of the cover materials should be determined to an accuracy of $\pm$ $^1/_4$ inch. As discussed above, the preliminary field survey usually relies on accidental openings in the cover materials rather than a systematic coring technique.

Floor/Ceiling Structural Systems: The span between supports should be measured. If possible, a sketch of the cross-section of the system should be made. If there is no location where accidental damage has opened the floor/ceiling construction to visual inspection, it is necessary to make such an opening. An evaluation of the fire resistance of a floor/ceiling assembly requires detailed knowledge of the materials and their arrangement. Special attention should be paid to the cover on structural steel elements and the condition of suspended ceilings and similar membranes.

Roofs: The preliminary field survey of the roof system is initially concerned with water-tightness. However, once it is apparent that the roof is sound for ordinary use and can be retained in the rehabilitated building, it becomes necessary to evaluate the fire performance. The field investigator must measure the thickness and identify the types of materials which have been used. Be aware that there may be several layers of roof materials.

FIGURE 1
PRELIMINARY EVALUATION FIELD NOTES

BUILDING ELEMENT		MATERIALS	THICKNESS	CONDITION	NOTES
Exterior Bearing Walls					
Interior Bearing Walls					
Exterior Nonbearing Walls					
Interior Nonbearing Walls or Partitions:	A				
	B				
Structural Frame: Columns					
Beams					
Other					
Floor/Ceiling Structural System Spanning					
Roofs					
Doors (including frame and hardware): a) Enclosed vertical exitway					
b) Enclosed horizontal exitway					
c) Other					

INTERNATIONAL CODE COUNCIL®
Copyright © 2015 ICC. ALL RIGHTS RESERVED. Accessed by David Dammon on Jun 21, 2017 12:30:52 PM pursuant to License Agreement with ICC. No further reproduction or distribution authorized. ANY UNAUTHORIZED REPRODUCTION OR DISTRIBUTION IS A VIOLATION OF THE FEDERAL COPYRIGHT ACT AND THE LICENSE AGREEMENT, AND SUBJECT TO CIVIL AND CRIMINAL PENALTIES THEREUNDER.

Doors: Doors to stairways and hallways represent some of the most important fire elements to be considered within a building. The uses of the spaces separated largely controls the level of fire performance necessary. Walls and doors enclosing stairways or elevator shafts would normally require a higher level of performance than between the bedroom and bath. The various uses are differentiated in Figure 1.

Careful measurements of the thickness of door panels must be made, and the type of core material within each door must be determined. It should be noted whether doors have self-closing devices; the general operation of the doors should be checked. The latch should engage and the door should fit tightly in the frame. The hinges should be in good condition. If glass is used in the doors, it should be identified as either plain glass or wired glass mounted in either a wood or steel frame.

Materials: The field investigator should be able to identify ordinary building materials. In situations where an unfamiliar material is found, a sample should be obtained. This sample should measure at least 10 cubic inches so that an ASTM E136 fire test can be conducted to determine if it is combustible.

Thickness: The thickness of all materials should be measured accurately since, under certain circumstances, the level of fire resistance is very sensitive to the material thickness.

Condition: The method of attaching the various layers and facings to one another or to the supporting structural element should be noted under the appropriate building element. The "secureness" of the attachment and the general condition of the layers and facings should be noted here.

Notes: The "Notes" column can be used for many purposes, but it might be a good idea to make specific references to other field notes or drawings.

After the building survey is completed, the data collected must be analyzed. A suggested work sheet for organizing this information is given below as Figure 2.

The required fire resistance and flame spread for each building element are normally established by the local building or rehabilitation code. The fire performance of the existing materials and assemblies should then be estimated, using one of the techniques described below. If the fire performance of the *existing building* element(s) is equal to or greater than that required, the materials and assemblies may remain. If the fire performance is less than required, then corrective measures must be taken.

The most common methods of upgrading the level of protection are to either remove and replace the *existing building* element(s) or to *repair* and upgrade the existing materials and assemblies. Other fire protection measures, such as automatic sprinklers or detection and alarm systems, also could be con-

FIGURE 2
PRELIMINARY EVALUATION WORKSHEET

BUILDING ELEMENT		REQUIRED FIRE RESISTANCE	REQUIRED FLAME SPREAD	ESTIMATED FIRE RESISTANCE	ESTIMATED FLAME SPREAD	METHOD OF UPGRADING	ESTIMATED UPGRADED PROTECTION	NOTES
Exterior Bearing Walls								
Interior Bearing Walls								
Exterior Nonbearing Walls								
Interior Nonbearing Walls or Partitions:	A							
	B							
Structural Frame: Columns								
Beams								
Other								
Floor/Ceiling Structural System Spanning								
Roofs								
Doors (including frame and hardware): a) Enclosed vertical exitway								
b) Enclosed horizontal exitway								
c) Others								

INTERNATIONAL CODE COUNCIL®
Copyright © 2015 ICC. ALL RIGHTS RESERVED. Accessed by David Dammon on Jun 21, 2017 12:30:52 PM pursuant to License Agreement with ICC. No further reproduction or distribution authorized. ANY UNAUTHORIZED REPRODUCTION OR DISTRIBUTION IS A VIOLATION OF THE FEDERAL COPYRIGHT ACT AND THE LICENSE AGREEMENT, AND SUBJECT TO CIVIL AND CRIMINAL PENALTIES THEREUNDER.

sidered, though they are beyond the scope of this guideline. If the upgraded protection is still less than that required or deemed to be acceptable, additional corrective measures must be taken. This process must continue until an acceptable level of performance is obtained.

2.2 FIRE RESISTANCE OF EXISTING BUILDING ELEMENTS

The fire resistance of the *existing building* elements can be estimated from the tables and histograms contained in the Appendix. The Appendix is organized first by type of building element: walls, columns, floor/ceiling assemblies, beams, and doors. Within each building element, the tables are organized by type of construction (e.g., masonry, metal, wood frame), and then further divided by minimum dimensions or thickness of the building element.

A histogram precedes every table that has 10 or more entries. The X-axis measures fire resistance in hours; the Y-axis shows the number of entries in that table having a given level of fire resistance. The histograms also contain the location of each entry within that table for easy cross-referencing.

The histograms, because they are keyed to the tables, can speed the preliminary investigation. For example, Table 1.3.2, *Wood Frame Walls 4" to Less Than 6" Thick*, contains 96 entries. Rather than study each table entry, the histogram shows that every wall assembly listed in that table has a fire resistance of less than 2 hours. If the building code required the wall to have 2 hours fire resistance, the designer, with a minimum of effort, is made aware of a problem that requires closer study.

Suppose the code had only required a wall of 1 hour fire resistance. The histogram shows far fewer complying elements (19) than noncomplying ones (77). If the existing assembly is not one of the 19 complying entries, there is a strong possibility the existing assembly is deficient. The histograms can also be used in the converse situation. If the existing assembly is not one of the smaller number of entries with a lower than required fire resistance, there is a strong possibility the existing assembly will be acceptable.

At some point, the *existing building* component or assembly must be located within the tables. Otherwise, the fire resistance must be determined through one of the other techniques presented in the guideline. Locating the building component in the Appendix Tables not only guarantees the accuracy of the fire resistance rating, but also provides a source of documentation for the building official.

2.3 EFFECTS OF PENETRATIONS IN FIRE RESISTANT ASSEMBLIES

There are often many features in existing walls or floor/ceiling assemblies which were not included in the original certification or fire testing. The most common examples are pipes and utility wires passed through holes poked through an assembly. During the life of the building, many penetrations are added, and by the time a building is ready for rehabilitation it is not sufficient to just consider the fire resistance of the assembly as originally constructed. It is necessary to consider all penetrations and their relative impact upon fire performance. For instance, the fire resistance of the corridor wall may be less important than the effect of plain glass doors or transoms. In fact, doors are the most important single class of penetrations.

A fully developed fire generates substantial quantities of heat and excess gaseous fuel capable of penetrating any holes which might be present in the walls or ceiling of the fire compartment. In general, this leads to a severe degradation of the fire resistance of those building elements and to a greater potential for fire spread. This is particularly applicable to penetrations located high in a compartment where the positive pressure of the fire can force the unburned gases through the penetration.

Penetrations in a wall or floor/ceiling assembly will generally completely negate the barrier qualities of the assembly and will lead to rapid spread of fire and smoke to adjacent spaces. In order to maintain compartmentation of a building and impede the spread of fire and smoke, penetrations in rated assemblies need to be protected. The upper half of walls are similar to the floor/ceiling assembly in that a positive pressure can reasonably be expected in the top of the room, and this will push hot and/or burning gases through the penetration unless the penetration is completely sealed.

Building codes require doors installed in fire resistive walls to resist the passage of fire for a specified period of time. If the door to a fully involved room is not closed, a large plume of fire will typically escape through the doorway, preventing anyone from using the space outside the door while allowing the fire to spread. This is why door closers are so important. Glass in doors and transoms can be expected to rapidly shatter unless constructed of listed or approved wire glass in a steel frame. As with other building elements, penetrations or nonrated portions of doors and transoms must be upgraded or otherwise protected.

Table 5.1 in Section V of the Appendix contains 41 entries of doors mounted in sound tightfitting frames. Part 3.4 below outlines one procedure for evaluating and possibly upgrading existing doors.

3 FINAL EVALUATION AND DESIGN SOLUTION

The final evaluation begins after the rehabilitation project has reached the final design stage and the choice is made to keep certain archaic materials and assemblies in the rehabilitated building. The final evaluation process is essentially a more refined and detailed version of the preliminary evaluation. The specific fire resistance and flame spread requirements are determined for the project. This may involve local building and fire officials reviewing the preliminary evaluation as depicted in Figures 1 and 2 and the field drawings and notes. When necessary, provisions must be made to upgrade *existing building* elements to provide the required level of fire performance.

INTERNATIONAL CODE COUNCIL®
Copyright © 2015 ICC. ALL RIGHTS RESERVED. Accessed by David Dammon on Jun 21, 2017 12:30:52 PM pursuant to License Agreement with ICC. No further reproduction or distribution authorized. ANY UNAUTHORIZED REPRODUCTION OR DISTRIBUTION IS A VIOLATION OF THE FEDERAL COPYRIGHT ACT AND THE LICENSE AGREEMENT, AND SUBJECT TO CIVIL AND CRIMINAL PENALTIES THEREUNDER.

There are several approaches to design solutions that can make possible the continued use of archaic materials and assemblies in the rehabilitated structure. The simplest case occurs when the materials and assembly in question are found within the Appendix Tables and the fire performance properties satisfy code requirements. Other approaches must be used, though, if the assembly cannot be found within the Appendix or the fire performance needs to be upgraded. These approaches have been grouped into two classes: experimental and theoretical.

3.1 THE EXPERIMENTAL APPROACH

If a material or assembly found in a building is not listed in the Appendix Tables, there are several other ways to evaluate fire performance. One approach is to conduct the appropriate fire test(s) and thereby determine the fire-related properties directly. There are a number of laboratories in the United States which routinely conduct the various fire tests. A current list can be obtained by writing the Center for Fire Research, National Bureau of Standards, Washington, D.C. 20234.

The contract with any of these testing laboratories should require their observation of specimen preparation as well as the testing of the specimen. A complete description of where and how the specimen was obtained from the building, the transportation of the specimen, and its preparation for testing should be noted in detail so that the building official can be satisfied that the fire test is representative of the actual use.

The test report should describe the fire test procedure and the response of the material or assembly. The laboratory usually submits a cover letter with the report to describe the provisions of the fire test that were satisfied by the material or assembly under investigation. A building official will generally require this cover letter, but will also read the report to confirm that the material or assembly complies with the code requirements. Local code officials should be involved in all phases of the testing process.

The experimental approach can be costly and time consuming because specimens must be taken from the building and transported to the testing laboratory. When a load bearing assembly has continuous reinforcement, the test specimen must be removed from the building, transported, and tested in one piece. However, when the fire performance cannot be determined by other means, there may be no alternative to a full-scale test.

A "nonstandard" small-scale test can be used in special cases. Sample sizes need only be 10-25 square feet (0.93-2.3 m^2), while full-scale tests require test samples of either 100 or 180 square feet (9.3 or 17 m^2) in size. This small-scale test is best suited for testing nonload-bearing assemblies against thermal transmission only.

3.2 THE THEORETICAL APPROACH

There will be instances when materials and assemblies in a building undergoing rehabilitation cannot be found in the Appendix Tables. Even where test results are available for more or less similar construction, the proper classification may not be immediately apparent. Variations in dimensions, loading conditions, materials, or workmanship may markedly affect the performance of the individual building elements, and the extent of such a possible effect cannot be evaluated from the tables.

Theoretical methods being developed offer an alternative to the full-scale fire tests discussed above. For example, Section 4302(b) of the 1979 edition of the *Uniform Building Code* specifically allows an engineering design for fire resistance in lieu of conducting full-scale tests. These techniques draw upon computer simulation and mathematical modeling, thermodynamics, heat-flow analysis, and materials science to predict the fire performance of building materials and assemblies.

One theoretical method, known as the "Ten Rules of Fire Endurance Ratings," was published by T. Z. Harmathy in the May, 1965 edition of *Fire Technology*. (35) Harmathy's Rules provide a foundation for extending the data within the Appendix Tables to analyze or upgrade current as well as archaic building materials or assemblies.

HARMATHY'S TEN RULES

Rule 1: The "thermal"[1] *fire endurance of a construction consisting of a number of parallel layers is greater than the sum of the "thermal" fire endurances characteristic of the individual layers when exposed separately to fire.*

The minimum performance of an untested assembly can be estimated if the fire endurance of the individual components is known. Though the exact rating of the assembly cannot be stated, the endurance of the assembly is greater than the sum of the endurance of the components.

When a building assembly or component is found to be deficient, the fire endurance can be upgraded by providing a protective membrane. This membrane could be a new layer of brick, plaster, or drywall. The fire endurance of this membrane is called the "finish rating." Appendix Tables 1.5.1 and 1.5.2 contain the finish ratings for the most commonly employed materials. (See also the notes to Rule 2).

The test criteria for the finish rating is the same as for the thermal fire endurance of the total assembly: average temperature increases of 250°F (121°C) above ambient or 325°F (163°C) above ambient at any one place with the membrane being exposed to the fire. The temperature is measured at the interface of the assembly and the protective membrane.

Rule 2: The fire endurance of a construction does not decrease with the addition of further layers.

1. The "thermal" fire endurance is the time at which the average temperature on the unexposed side of a construction exceeds its initial value by 250° when the other side is exposed to the "standard" fire specified by ASTM Test Method E-19.

INTERNATIONAL CODE COUNCIL®
Copyright © 2015 ICC. ALL RIGHTS RESERVED. Accessed by David Dammon on Jun 21, 2017 12:30:52 PM pursuant to License Agreement with ICC. No further reproduction or distribution authorized. ANY UNAUTHORIZED REPRODUCTION OR DISTRIBUTION IS A VIOLATION OF THE FEDERAL COPYRIGHT ACT AND THE LICENSE AGREEMENT, AND SUBJECT TO CIVIL AND CRIMINAL PENALTIES THEREUNDER.

Harmathy notes that this rule is a consequence of the previous rule. Its validity follows from the fact that the additional layers increase both the resistance to heat flow and the heat capacity of the construction. This, in turn, reduces the rate of temperature rise at the unexposed surface.

This rule is not just restricted to "thermal" performance but affects the other fire test criteria: direct flame passage, cotton waste ignition, and load bearing performance. This means that certain restrictions must be imposed on the materials to be added and on the loading conditions. One restriction is that a new layer, if applied to the exposed surface, must not produce additional thermal stresses in the construction, i.e., its thermal expansion characteristics must be similar to those of the adjacent layer. Each new layer must also be capable of contributing enough additional strength to the assembly to sustain the added dead load. If this requirement is not fulfilled, the allowable live load must be reduced by an amount equal to the weight of the new layer. Because of these limitations, this rule should not be applied without careful consideration.

Particular care must be taken if the material added is a good thermal insulator. Properly located, the added insulation could improve the "thermal" performance of the assembly. Improperly located, the insulation could block necessary thermal transmission through the assembly, thereby subjecting the structural elements to greater temperatures for longer periods of time, and could cause premature structural failure of the supporting members.

Rule 3: The fire endurance of constructions containing continuous air gaps or cavities is greater than the fire endurance of similar constructions of the same weight, but containing no air gaps or cavities.

By providing for voids in a construction, additional resistances are produced in the path of heat flow. Numerical heat flow analyses indicate that a 10 to 15 percent increase in fire endurance can be achieved by creating an air gap at the midplane of a brick wall. Since the gross volume is also increased by the presence of voids, the air gaps and cavities have a beneficial effect on stability as well. However, constructions containing combustible materials within an air gap may be regarded as exceptions to this rule because of the possible development of burning in the gap.

There are numerous examples of this rule in the tables. For instance:

Table 1.1.4; Item W-8-M-82: Cored concrete masonry, nominal 8 inch thick wall with one unit in wall thickness and with 62 percent minimum of solid material in each unit, load bearing (80 PSI). Fire endurance: $2^1/_2$ hours.

Table 1.1.5; Item W-10-M-11: Cored concrete mansonry, nominal 10 inch thick wall with two units in wall thickness and a 2-inch (51 mm) air space, load bearing (80 PSI). The units are essentially the same as item W-8-M-82. Fire endurance: $3^1/_2$ hours.

These walls show 1 hour greater fire endurance by the addition of the 2-inch (51 mm) air space.

Rule 4: The farther an air gap or cavity is located from the exposed surface, the more beneficial is its effect on the fire endurance.

Radiation dominates the heat transfer across an air gap or cavity, and it is markedly higher where the temperature is higher.

The air gap or cavity is thus a poor insulator if it is located in a region which attains high temperatures during fire exposure.

Some of the clay tile designs take advantage of these factors. The double cell design, for instance, ensures that there is a cavity near the unexposed face. Some floor/ceiling assemblies have air gaps or cavities near the top surface and these enhance their thermal performance.

Rule 5: The fire endurance of a construction cannot be increased by increasing the thickness of a completely enclosed air layer.

Harmathy notes that there is evidence that if the thickness of the air layer is larger than about $^1/_2$ inch (12.7 mm), the heat transfer through the air layer depends only on the temperature of the bounding surfaces, and is practically independent of the distance between them. This rule is not applicable if the air layer is not completely enclosed, i.e., if there is a possibility of fresh air entering the gap at an appreciable rate.

Rule 6: Layers of materials of low thermal conductivity are better utilized on that side of the construction on which fire is more likely to happen.

As in Rule 4, the reason lies in the heat transfer process, though the conductivity of the solid is much less dependent on the ambient temperature of the materials. The low thermal conductor creates a substantial temperature differential to be established across its thickness under transient heat flow conditions. This rule may not be applicable to materials undergoing physico-chemical changes accompanied by significant heat absorption or heat evolution.

Rule 7: The fire endurance of asymmetrical constructions depends on the direction of heat flow.

This rule is a consequence of Rules 4 and 6, as well as other factors. This rule is useful in determining the relative protection of corridors and walls enclosing an exit stairway from the surrounding spaces. In addition, there are often situations where a fire is more likely, or potentially more severe, from one side or the other.

Rule 8: The presence of moisture, if it does not result in explosive spalling, increases the fire endurance.

The flow of heat into an assembly is greatly hindered by the release and evaporation of the moisture found within cementitious materials such as gypsum, portland cement, or magnesium oxychloride. Harmathy has shown that the gain in fire endurance may be as high as 8 percent for each percent (by volume) of moisture in the construction. It is the moisture chemically bound within the construction material at the time of manufacture or processing that leads to increased fire endurance. There is no direct relationship between the rela-

INTERNATIONAL CODE COUNCIL®
Copyright © 2015 ICC. ALL RIGHTS RESERVED. Accessed by David Dammon on Jun 21, 2017 12:30:52 PM pursuant to License Agreement with ICC. No further reproduction or distribution authorized. ANY UNAUTHORIZED REPRODUCTION OR DISTRIBUTION IS A VIOLATION OF THE FEDERAL COPYRIGHT ACT AND THE LICENSE AGREEMENT, AND SUBJECT TO CIVIL AND CRIMINAL PENALTIES THEREUNDER.

tive humidity of the air in the pores of the material and the increase in fire endurance.

Under certain conditions there may be explosive spalling of low permeability cementitious materials such as dense concrete. In general, one can assume that extremely old concrete has developed enough minor cracking that this factor should not be significant.

Rule 9: Load-supporting elements, such as beams, girders and joists, yield higher fire endurances when subjected to fire endurance tests as parts of floor, roof, or ceiling assemblies than they would when tested separately.

One of the fire endurance test criteria is the ability of a load-supporting element to carry its design load. The element will be deemed to have failed when the load can no longer be supported.

Failure usually results for two reasons. Some materials, particularly steel and other metals, lose much of their structural strength at elevated temperatures. Physical deflection of the supporting element, due to decreased strength or thermal expansion, causes a redistribution of the load forces and stresses throughout the element. Structural failure often results because the supporting element is not designed to carry the redistributed load.

Roof, floor, and ceiling assemblies have primary (e.g., beams) and secondary (e.g., floor joists) structural members. Since the primary load-supporting elements span the largest distances, their deflection becomes significant at a stage when the strength of the secondary members (including the roof or floor surface) is hardly affected by the heat. As the secondary members follow the deflection of the primary load-supporting element, an increasingly larger portion of the load is transferred to the secondary members.

When load-supporting elements are tested separately, the imposed load is constant and equal to the design load throughout the test. By definition, no distribution of the load is possible because the element is being tested by itself. Without any other structural members to which the load could be transferred, the individual elements cannot yield a higher fire endurance than they do when tested as parts of a floor, roof or ceiling assembly.

Rule 10: The load-supporting elements (beams, girders, joists, etc.) of a floor, roof, or ceiling assembly can be replaced by such other load-supporting elements which, when tested separately, yielded fire endurances not less than that of the assembly.

This rule depends on Rule 9 for its validity. A beam or girder, if capable of yielding a certain performance when tested separately, will yield an equally good or better performance when it forms a part of a floor, roof, or ceiling assembly. It must be emphasized that the supporting element of one assembly must not be replaced by the supporting element of another assembly if the performance of this latter element is not known from a separate (beam) test. Because of the load-reducing effect of the secondary elements that results from a test performed on an assembly, the performance of the supporting element alone cannot be evaluated by simple arithmetic. This rule also indicates the advantage of performing separate fire tests on primary load-supporting elements.

ILLUSTRATION OF HARMATHY'S RULES

Harmathy provided one schematic figure which illustrated his Rules.[1] It should be useful as a quick reference to assist in applying his Rules.

EXAMPLE APPLICATION OF HARMATHY'S RULES

The following examples, based in whole or in part upon those presented in Harmathy's paper (35), show how the Rules can be applied to practical cases.

Example 1

Problem

A contractor would like to keep a partition which consists of a $3^3/_4$ inch (95 mm) thick layer of red clay brick, a $1^1/_4$ inch (32 mm) thick layer of plywood, and a $^3/_8$ inch (9.5 mm) thick layer of gypsum wallboard, at a location where 2-hour fire endurance is required. Is this assembly capable of providing a 2-hour protection?

Solution

(1) This partition does not appear in the Appendix Tables.

(2) Bricks of this thickness yield fire endurances of approximately 75 minutes (Table 1.1.2, Item W-4-M-2).

(3) The $1^1/_4$ inch (32 mm) thick plywood has a finish rating of 30 minutes.

(4) The $^3/_8$ inch (9.5 mm) gypsum wallboard has a finish rating of 10 minutes.

(5) Using the recommended values from the tables and applying Rule 1, the fire endurance (FI) of the assembly is larger than the sum of the individual layers, or

$$FI > 75 + 30 + 10 = 115 \text{ minutes}$$

Discussion

This example illustrates how the Appendix Tables can be utilized to determine the fire resistance of assemblies not explicitly listed.

Example 2

Problem

(1) A number of buildings to be rehabilitated have the same type of roof slab which is supported with different structural elements.

(2) The designer and contractor would like to determine whether or not this roof slab is capable of yielding a 2-hour fire endurance. According to a rigorous interpretation of ASTM E119, however, only the roof assembly, including the roof slab as well as the cover and the supporting elements, can be subjected to a fire test.

1. Reproduced from the May 1065 *Fire Technology* (Vol. 1, No. 2). Copyright National Fire Protection Association, Boston. Reproduced by permission.

INTERNATIONAL CODE COUNCIL®
Copyright © 2015 ICC. ALL RIGHTS RESERVED. Accessed by David Dammon on Jun 21, 2017 12:30:52 PM pursuant to License Agreement with ICC. No further reproduction or distribution authorized. ANY UNAUTHORIZED REPRODUCTION OR DISTRIBUTION IS A VIOLATION OF THE FEDERAL COPYRIGHT ACT AND THE LICENSE AGREEMENT, AND SUBJECT TO CIVIL AND CRIMINAL PENALTIES THEREUNDER.

Therefore, a fire endurance classification cannot be issued for the slabs separately.

(3) The designer and contractor believe this slab will yield a 2-hour fire endurance even without the cover, and any beam of at least 2-hour fire endurance will provide satisfactory support. Is it possible to obtain a classification for the slab separately?

Solution

(1) The answer to the question is yes.

(2) According to Rule 10 it is not contrary to common sense to test and classify roofs and supporting elements separately. Furthermore, according to Rule 2, if the roof slabs actually yield a 2-hour fire endurance, the endurance of an assembly, including the slabs, cannot be less than 2 hours.

(3) The recommended procedure would be to review the tables to see if the slab appears as part of any tested roof or floor/ceiling assembly. The supporting system can be regarded as separate from the slab specimen, and the fire endurance of the assembly listed in the table is at least the fire endurance of the slab. There would have to be an adjustment for the weight of the roof cover in the allowable load if the test specimen did not contain a cover.

(4) The supporting structure or element would have to have at least a 2-hour fire endurance when tested separately.

Discussion

If the tables did not include tests on assemblies which contained the slab, one procedure would be to assemble the roof slabs on any convenient supporting system (not regarded as part of the specimen) and to subject them to a load which, besides the usually required superimposed load, includes some allowances for the weight of the cover.

Example 3

Problem

A steel-joisted floor and ceiling assembly is known to have yielded a fire endurance of 1 hour and 35 minutes. At a certain location, a 2-hour endurance is required. What is the most economical way of increasing the fire endurance by at least 25 minutes?

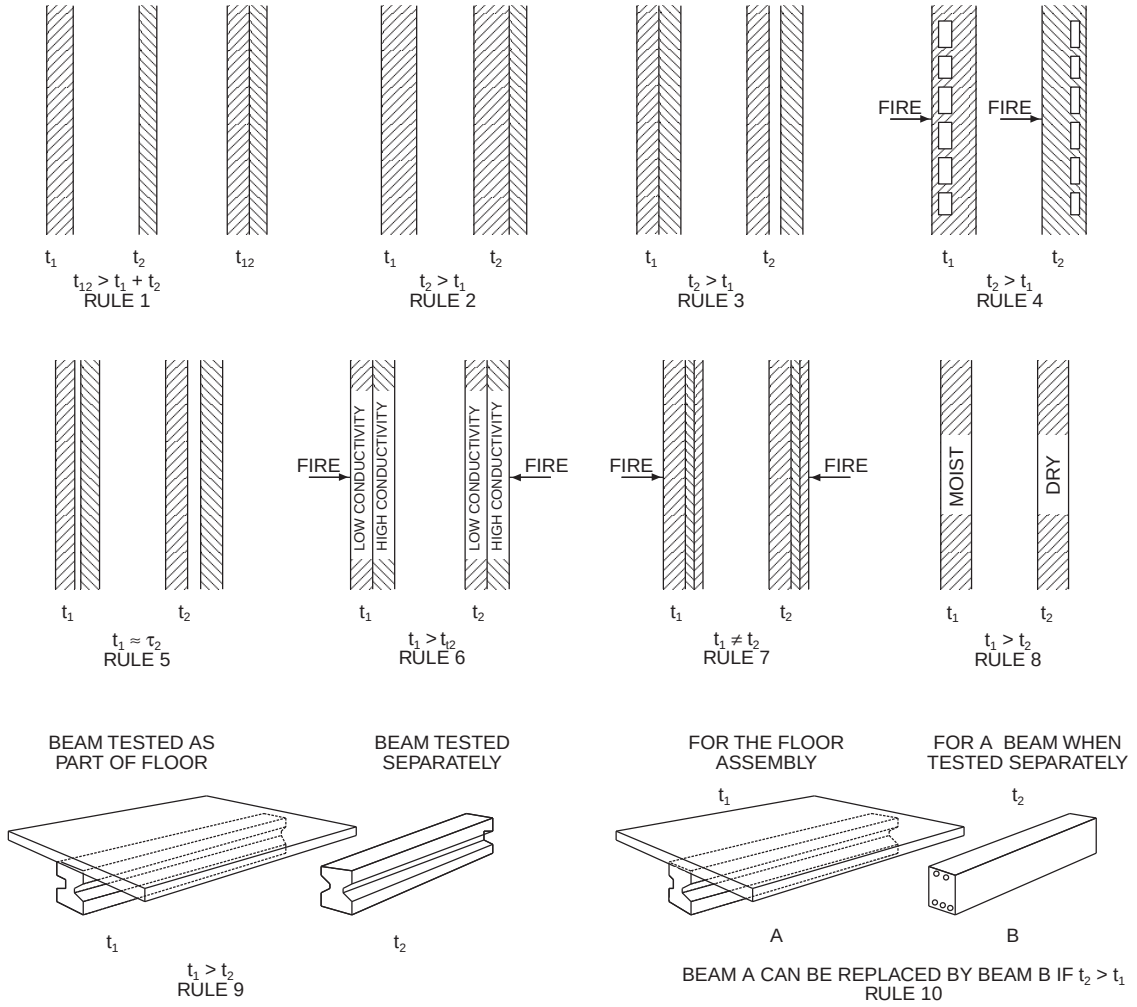

Diagrammatic illustration of ten rules.
t = fire endurance

INTERNATIONAL CODE COUNCIL®
Copyright © 2015 ICC. ALL RIGHTS RESERVED. Accessed by David Dammon on Jun 21, 2017 12:30:52 PM pursuant to License Agreement with ICC. No further reproduction or distribution authorized. ANY UNAUTHORIZED REPRODUCTION OR DISTRIBUTION IS A VIOLATION OF THE FEDERAL COPYRIGHT ACT AND THE LICENSE AGREEMENT, AND SUBJECT TO CIVIL AND CRIMINAL PENALTIES THEREUNDER.

Solution

(1) The most effective technique would be to increase the ceiling plaster thickness. Existing coats of paint would have to be removed and the surface properly prepared before the new plaster could be applied. Other materials (e.g., gypsum wallboard) could also be considered.

(2) There may be other techniques based on other principles, but an examination of the drawings would be necessary.

Discussion

(1) The additional plaster has at least three effects:

a) The layer of plaster is increased and thus there is a gain of fire endurance (Rule 1).

b) There is a gain due to shifting the air gap farther from the exposed surface (Rule 4).

c) There is more moisture in the path of heat flow to the structural elements (Rules 7 and 8).

(2) The increase in fire endurance would be at least as large as that of the finish rating for the added thickness of plaster. The combined effects in (1) above would further increase this by a factor of 2 or more, depending upon the geometry of the assembly.

Example 4

Problem

The fire endurance of item W-10-M-l in Table 1.1.5 is 4 hours. This wall consists of two $3^3/_4$ inch (95 mm) thick layers of structural tiles separated by a 2-inch (51 mm) air gap and $^3/_4$ inch (19 mm) portland cement plaster or stucco on both sides. If the actual wall in the building is identical to item W-10-M-1 except that it has a 4-inch (102 mm) air gap, can the fire endurance be estimated at 5 hours?

Solution

The answer to the question is no for the reasons contained in Rule 5.

Example 5

Problem

In order to increase the insulating value of its precast roof slabs, a company has decided to use two layers of different concretes. The lower layer of the slabs, where the strength of the concrete is immaterial (all the tensile load is carried by the steel reinforcement), would be made with a concrete of low strength but good insulating value. The upper layer, where the concrete is supposed to carry the compressive load, would remain the original high strength, high thermal conductivity concrete. How will the fire endurance of the slabs be affected by the change?

Solution

The effect on the thermal fire endurance is beneficial:

(1) The total resistance to heat flow of the new slabs has been increased due to the replacement of a layer of high thermal conductivity by one of low conductivity.

(2) The layer of low conductivity is on the side more likely to be exposed to fire, where it is more effectively utilized according to Rule 6. The layer of low thermal conductivity also provides better protection for the steel reinforcement, thereby extending the time before reaching the temperature at which the creep of steel becomes significant.

3.3 "THICKNESS DESIGN" STRATEGY

The "thickness design" strategy is based upon Harmathy's Rules 1 and 2. This design approach can be used when the construction materials have been identified and measured, but the specific assembly cannot be located within the tables. The tables should be surveyed again for thinner walls of like material and construction detail that have yielded the desired or greater fire endurance. If such an assembly can be found, then the thicker walls in the building have more than enough fire resistance. The thickness of the walls thus becomes the principal concern.

This approach can also be used for floor/ceiling assemblies, except that the thickness of the cover[1] and the slab become the central concern. The fire resistance of the untested assembly will be at least the fire resistance of an assembly listed in the table having a similar design but with less cover and/or thinner slabs. For other structural elements (e.g., beams and columns), the element listed in the table must also be of a similar design but with less cover thickness.

3.4 EVALUATION OF DOORS

A separate section on doors has been included because the process for evaluation presented below differs from those suggested previously for other building elements. The impact of unprotected openings or penetrations in fire resistant assemblies has been detailed in Part 2.3 above. It is sufficient to note here that openings left unprotected will likely lead to failure of the barrier under actual fire conditions.

For other types of building elements (e.g., beams, columns), the Appendix Tables can be used to establish a minimum level of fire performance. The benefit to rehabilitation is that the need for a full-scale fire test is then eliminated. For doors, however, this cannot be done. The data contained in Appendix Table 5.1, Resistance of Doors to Fire Exposure, can only provide guidance as to whether a successful fire test is even feasible.

For example, a door required to have 1 hour fire resistance is noted in the tables as providing only 5 minutes. The likelihood of achieving the required 1 hour, even if the door is upgraded, is remote. The ultimate need for replacement of the doors is reasonably clear, and the expense and time needed for testing can be saved. However, if the performance documented in the table is near or in excess of what is being required, then a fire test should be conducted. The test docu-

1. Cover: the protective layer or membrane of material which slows the flow of heat to the structural elements.

INTERNATIONAL CODE COUNCIL®
Copyright © 2015 ICC. ALL RIGHTS RESERVED. Accessed by David Dammon on Jun 21, 2017 12:30:52 PM pursuant to License Agreement with ICC. No further reproduction or distribution authorized. ANY UNAUTHORIZED REPRODUCTION OR DISTRIBUTION IS A VIOLATION OF THE FEDERAL COPYRIGHT ACT AND THE LICENSE AGREEMENT, AND SUBJECT TO CIVIL AND CRIMINAL PENALTIES THEREUNDER.

mentation can then be used as evidence of compliance with the required level of performance.

The table entries cannot be used as the sole proof of performance of the door in question because there are too many unknown variables which could measurably affect fire performance. The wood may have dried over the years; coats of flammable varnish could have been added. Minor deviations in the internal construction of a door can result in significant differences in performance. Methods of securing inserts in panel doors can vary. The major non-destructive method of analysis, an x-ray, often cannot provide the necessary detail. It is for these, and similar reasons, that a fire test is still felt to be necessary.

It is often possible to upgrade the fire performance of an existing door. Sometimes, "as is" and modified doors are evaluated in a single series of tests when failure of the unmodified door is expected. Because doors upgraded after an initial failure must be tested again, there is a potential savings of time and money.

The most common problems encountered are plain glass, panel inserts of insufficient thickness, and improper fit of a door in its frame. The latter problem can be significant because a fire can develop a substantial positive pressure, and the fire will work its way through otherwise innocent-looking gaps between door and frame.

One approach to solving these problems is as follows. The plain glass is replaced with approved or listed wire glass in a steel frame. The panel inserts can be upgraded by adding an additional layer of material. Gypsum wallboard is often used for this purpose. Intumescent paint applied to the edges of the door and frame will expand when exposed to fire, forming an effective seal around the edges. This seal, coupled with the generally even thermal expansion of a wood door in a wood frame, can prevent the passage of flames and other fire gases. Figure 3 below illustrates these solutions.

Because the interior construction of a door cannot be determined by a visual inspection, there is no absolute guarantee that the remaining doors are identical to the one(s) removed from the building and tested. But the same is true for doors constructed today, and reason and judgment must be applied. Doors that appear identical upon visual inspection can be weighed. If the weights are reasonably close, the doors can be assumed to be identical and therefore provide the same level of fire performance. Another approach is to fire test more than one door or to dismantle doors selected at random to see if they had been constructed in the same manner. Original building plans showing door details or other records showing that doors were purchased at one time or obtained from a single supplier can also be evidence of similar construction.

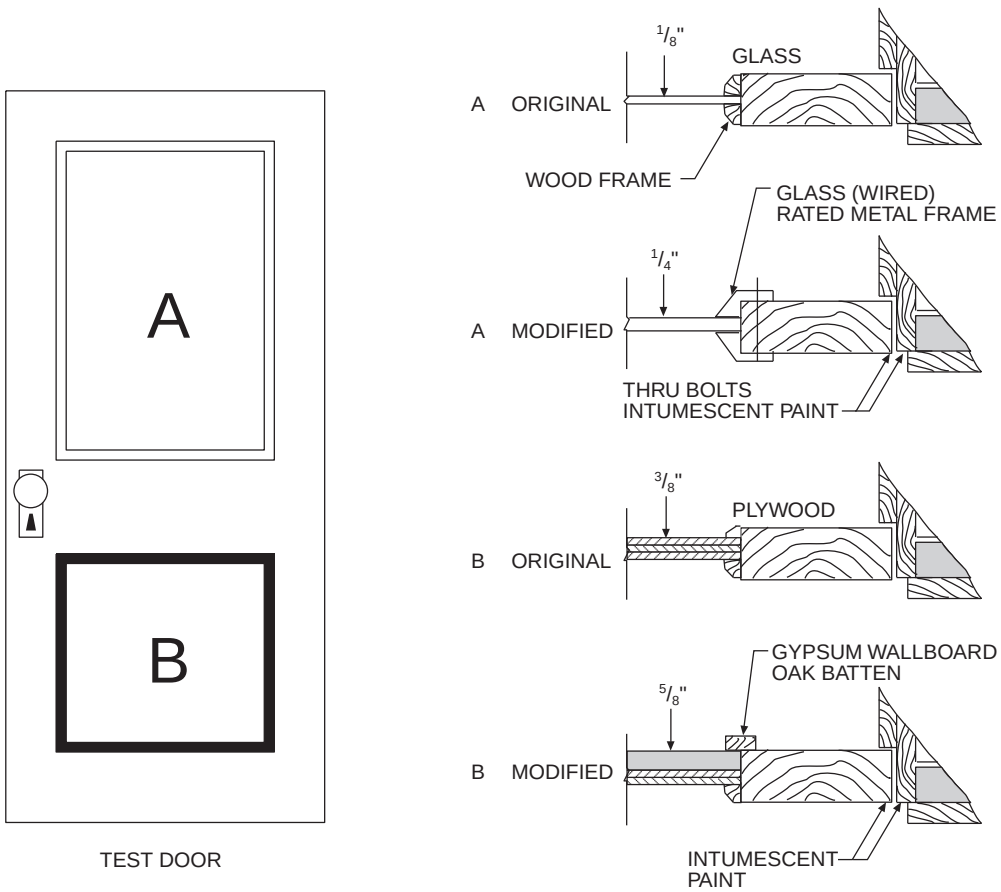

FIGURE 3
MODIFICATION DETAILS

INTERNATIONAL CODE COUNCIL®
Copyright © 2015 ICC. ALL RIGHTS RESERVED. Accessed by David Dammon on Jun 21, 2017 12:30:52 PM pursuant to License Agreement with ICC. No further reproduction or distribution authorized. ANY UNAUTHORIZED REPRODUCTION OR DISTRIBUTION IS A VIOLATION OF THE FEDERAL COPYRIGHT ACT AND THE LICENSE AGREEMENT, AND SUBJECT TO CIVIL AND CRIMINAL PENALTIES THEREUNDER.

More often though, it is what is visible to the eye that is most significant. The investigator should carefully check the condition and fit of the door and frame, and for frames out of plumb or separating from the wall. Door closers, latches, and hinges must be examined to see that they function properly and are tightly secured. If these are in order and the door and frame have passed a full-scale test, there can be a reasonable basis for allowing the existing doors to remain.

4
SUMMARY

This section summarizes the various approaches and design solutions discussed in the preceding sections of the guideline. The term "structural system" includes: frames, beams, columns, and other structural elements. "Cover" is a protective layer(s) of materials or membrane which slows the flow of heat to the structural elements. It cannot be stressed too strongly that the fire endurance of actual building elements can be greatly reduced or totally negated by removing part of the cover to allow pipes, ducts, or conduits to pass through the element. This must be repaired in the rehabilitation process.

The following approaches shall be considered equivalent.

4.1 The fire resistance of a building element can be established from the Appendix Tables. This is subject to the following limitations:

The building element in the rehabilitated building shall be constructed of the same materials with the same nominal dimensions as stated in the tables.

All penetrations in the building element or its cover for services such as electricity, plumbing, and HVAC shall be packed with noncombustible cementitious materials and so fixed that the packing material will not fall out when it loses its water of hydration.

The effects of age and wear and tear shall be repaired so that the building element is sound and the original thickness of all components, particularly covers and floor slabs, is maintained.

This approach essentially follows the approach taken by model building codes. The assembly must appear in a table either published in or accepted by the code for a given fire resistance rating to be recognized and accepted.

4.2 The fire resistance of a building element which does not explicitly appear in the Appendix Tables can be established if one or more elements of same design but different dimensions have been listed in the tables. For walls, the existing element must be thicker than the one listed. For floor/ceiling assemblies, the assembly listed in the table must have the same or less cover and the same or thinner slab constructed of the same material as the actual floor/ceiling assembly. For other structural elements, the element listed in the table must be of a similar design but with less cover thickness. The fire resistance in all instances shall be the fire resistance recommended in the table. This is subject to the following limitations:

The actual element in the rehabilitated building shall be constructed of the same materials as listed in the table. Only the following dimensions may vary from those specified: for walls, the overall thickness must exceed that specified in the table; for floor/ceiling assemblies, the thickness of the cover and the slab must be greater than, or equal to, that specified in the table; for other structural elements, the thickness of the cover must be greater than that specified in the table.

All penetrations in the building element or its cover for services such as electricity, plumbing, or HVAC shall be packed with noncombustible cementitious materials and so fixed that the packing material will not fall out when it loses its water of hydration.

The effects of age and wear and tear shall be repaired so that the building element is sound and the original thickness of all components, particularly covers and floor slabs, is maintained.

This approach is an application of the "thickness design" concept presented in Part 3.3 of the guideline. There should be many instances when a thicker building element was utilized than the one listed in the Appendix Tables. This guideline recognizes the inherent superiority of a thicker design. Note: "thickness design" for floor/ceiling assemblies and structural elements refers to cover and slab thickness rather than total thickness.

The "thickness design" concept is essentially a special case of Harmathy's Rules (specifically Rules 1 and 2). It should be recognized that the only source of data is the Appendix Tables. If other data are used, it must be in connection with the approach below.

4.3 The fire resistance of building elements can be established by applying Harmathy's Ten Rules of Fire Resistance Ratings as set forth in Part 3.2 of the guideline. This is subject to the following limitations:

The data from the tables can be utilized subject to the limitations in 4.2 above.

Test reports from recognized journals or published papers can be used to support data utilized in applying Harmathy's Rules.

Calculations utilizing recognized and well established computational techniques can be used in applying Harmathy's Rules. These include, but are not limited to, analysis of heat flow, mechanical properties, deflections, and load bearing capacity.

INTERNATIONAL CODE COUNCIL®
Copyright © 2015 ICC. ALL RIGHTS RESERVED. Accessed by David Dammon on Jun 21, 2017 12:30:52 PM pursuant to License Agreement with ICC. No further reproduction or distribution authorized. ANY UNAUTHORIZED REPRODUCTION OR DISTRIBUTION IS A VIOLATION OF THE FEDERAL COPYRIGHT ACT AND THE LICENSE AGREEMENT, AND SUBJECT TO CIVIL AND CRIMINAL PENALTIES THEREUNDER.

INTERNATIONAL CODE COUNCIL®

Copyright © 2015 ICC. ALL RIGHTS RESERVED. Accessed by David Dammon on Jun 21, 2017 12:30:52 PM pursuant to License Agreement with ICC. No further reproduction or distribution authorized. ANY UNAUTHORIZED REPRODUCTION OR DISTRIBUTION IS A VIOLATION OF THE FEDERAL COPYRIGHT ACT AND THE LICENSE AGREEMENT, AND SUBJECT TO CIVIL AND CRIMINAL PENALTIES THEREUNDER.

APPENDIX

INTRODUCTION

The fire-resistance tables that follow are a part of Resource A and provide a tabular form of assigning fire-resistance ratings to various archaic building elements and assemblies.

These tables for archaic materials and assemblies do for archaic materials what Tables 721.1(1-3) of the *International Building Code*® do for more modern building elements and assemblies. The fire resistance tables of Resource A should be used as described in the "Purpose and Procedure" that follows the table of contents for these tables.

RESOURCE A TABLE OF CONTENTS

Purpose and Procedure			**A-17**
Section I—Walls			
1.1.1	Masonry	0 in. - 4 in. thick	A-18
1.1.2	Masonry	4 in. - 6 in. thick	A-21
1.1.3	Masonry	6 in. - 8 in. thick	A-28
1.1.4	Masonry	8 in. - 10 in. thick	A-33
1.1.5	Masonry	10 in. - 12 in. thick	A-41
1.1.6	Masonry	12 in. - 14 in. thick	A-45
1.1.7	Masonry	14 in. or more thick	A-51
1.2.1	Metal Frame	0 in. - 4 in. thick	A-54
1.2.2	Metal Frame	4 in. - 6 in. thick	A-58
1.2.3	Metal Frame	6 in. - 8 in. thick	A-60
1.2.4	Metal Frame	8 in. - 10 in. thick	A-61
1.3.1	Wood Frame	0 in. - 4 in. thick	A-62
1.3.2	Wood Frame	4 in. - 6 in. thick	A-63
1.3.3	Wood Frame	6 in. - 8 in. thick	A-71
1.4.1	Miscellaneous Materials	0 in. - 4 in. thick	A-71
1.4.2	Miscellaneous Materials	4 in. - 6 in. thick	A-72
1.5.1	Finish Ratings—Inorganic Materials	Thickness	A-73
1.5.2	Finish Ratings—Organic Materials	Thickness	A-74
Section II—Columns			
2.1.1	Reinforced Concrete	Min. Dim. 0 in. - 6 in.	A-75
2.1.2	Reinforced Concrete	Min. Dim. 10 in. - 12 in.	A-76
2.1.3	Reinforced Concrete	Min. Dim. 12 in. - 14 in.	A-79
2.1.4	Reinforced Concrete	Min. Dim. 14 in. - 16 in.	A-80
2.1.5	Reinforced Concrete	Min. Dim. 16 in. - 18 in.	A-81
2.1.6	Reinforced Concrete	Min. Dim. 18 in. - 20 in.	A-83
2.1.7	Reinforced Concrete	Min. Dim. 20 in. - 22 in.	A-84
2.1.8	Hexagonal Reinforced Concrete	Diameter—12 in. - 14 in.	A-85

INTERNATIONAL CODE COUNCIL®
Copyright © 2015 ICC. ALL RIGHTS RESERVED. Accessed by David Dammon on Jun 21, 2017 12:30:52 PM pursuant to License Agreement with ICC. No further reproduction or distribution authorized. ANY UNAUTHORIZED REPRODUCTION OR DISTRIBUTION IS A VIOLATION OF THE FEDERAL COPYRIGHT ACT AND THE LICENSE AGREEMENT, AND SUBJECT TO CIVIL AND CRIMINAL PENALTIES THEREUNDER.

2.1.9	Hexagonal Reinforced Concrete	Diameter—14 in. - 16 in.	A-86
2.1.10	Hexagonal Reinforced Concrete	Diameter—16 in. - 18 in.	A-86
2.1.11	Hexagonal Reinforced Concrete	Diameter—20 in. - 22 in.	A-86
2.2	Round Cast Iron Columns	Minimum Dimension	A-87
2.3	Steel—Gypsum Encasements	Minimum Area of Solid Material	A-88
2.4	Timber	Minimum Dimension	A-89
2.5.1.1	Steel/Concrete Encasements	Minimum Dimension less than 6 in.	A-89
2.5.1.2	Steel/Concrete Encasements	Minimum Dimension 6 in. - 8 in.	A-90
2.5.1.3	Steel/Concrete Encasements	Minimum Dimension 8 in. - 10 in.	A-91
2.5.1.4	Steel/Concrete Encasements	Minimum Dimension 10 in. - 12 in.	A-93
2.5.1.5	Steel/Concrete Encasements	Minimum Dimension 12 in. - 14 in.	A-97
2.5.1.6	Steel/Concrete Encasements	Minimum Dimension 14 in. - 16 in.	A-99
2.5.1.7	Steel/Concrete Encasements	Minimum Dimension 16 in. - 18 in.	A-101
2.5.2.1	Steel/Brick and Block Encasements	Minimum Dimension 10 in. - 12 in.	A-101
2.5.2.2	Steel/Brick and Block Encasements	Minimum Dimension 12 in. - 14 in.	A-102
2.5.2.3	Steel/Brick and Block Encasements	Minimum Dimension 14 in. - 16 in.	A-102
2.5.3.1	Steel/Plaster Encasements	Minimum Dimension 6 in. - 8 in.	A-103
2.5.3.2	Steel/Plaster Encasements	Minimum Dimension 8 in. - 10 in.	A-103
2.5.4.1	Steel/Miscellaneous Encasements	Minimum Dimension 6 in. - 8 in.	A-103
2.5.4.2	Steel/Miscellaneous Encasements	Minimum Dimension 8 in. - 10 in.	A-104
2.5.4.3	Steel/Miscellaneous Encasements	Minimum Dimension 10 in. - 12 in.	A-104
2.5.4.4	Steel/Miscellaneous Encasements	Minimum Dimension 12 in. - 14 in.	A-104
Section III—Floor/Ceiling Assemblies			
3.1	Reinforced Concrete	Assembly thickness	A-105
3.2	Steel Structural Elements	Membrane thickness	A-111
3.3	Wood Joist	Membrane thickness	A-117
3.4	Hollow Clay Tile with Reinforced Concrete	Membrane thickness	A-121
Section IV—Beams			
4.1.1	Reinforced Concrete	Depth—10 in. - 12 in.	A-124
4.1.2	Reinforced Concrete	Depth—12 in. - 14 in.	A-127
4.1.3	Reinforced Concrete	Depth—14 in. - 16 in.	A-129
4.2.1	Reinforced Concrete/Unprotected	Depth—10 in. - 12 in.	A-130
4.2.2	Steel/Concrete Protection	Depth—10 in. - 12 in.	A-130
Section V—Doors			
5.1	Resistance of Doors to Fire Exposure	Thickness	A-131

INTERNATIONAL CODE COUNCIL®

Copyright © 2015 ICC. ALL RIGHTS RESERVED. Accessed by David Dammon on Jun 21, 2017 12:30:52 PM pursuant to License Agreement with ICC. No further reproduction or distribution authorized. ANY UNAUTHORIZED REPRODUCTION OR DISTRIBUTION IS A VIOLATION OF THE FEDERAL COPYRIGHT ACT AND THE LICENSE AGREEMENT, AND SUBJECT TO CIVIL AND CRIMINAL PENALTIES THEREUNDER.

PURPOSE AND PROCEDURE

The tables and histograms which follow are to be used only within the analytical framework detailed in the main body of this guideline.

Histograms precede any table with 10 or more entries. The use and interpretation of these histograms is explained in Part 2 of the guideline. The tables are in a format similar to that found in the model building codes. The following example, taken from an entry in Table 1.1.2, best explains the table format.

1. Item Code: The item code consists of a four place series in the general form w-x-y-z in which each member of the series denotes the following:

   w = Type of building element (e.g., W=Walls; F=Floors, etc.)

   x = The building element thickness rounded down to the nearest 1-inch increment (e.g., $4^{5}/_{8}$ inches is rounded off to 4 inches)

   y = The general type of material from which the building element is constructed (e.g., M=Masonry; W=Wood, etc.)

   z = The item number of the particular building element in a given table

   The item code shown in the example W-4-M-50 denotes the following:

   W = Wall, as the building element

   4 = Wall thickness in the range of 4 inches (102 mm) to less than 5 inches (127 mm)

   M = Masonry construction

   50 = The 50th entry in Table 1.1.2

2. The specific name or heading of this column identifies the dimensions which, if varied, has the greatest impact on fire resistance. The critical dimension for walls, the example here, is thickness. It is different for other building elements (e.g., depth for beams; membrane thickness for some floor/ceiling assemblies). The table entry is the named dimension of the building element measured at the time of actual testing to within $\pm^{1}/_{8}$ inch (3.2 mm) tolerance. The thickness tabulated includes facings where facings are a part of the wall construction.
3. Construction Details: The construction details provide a brief description of the manner in which the building element was constructed.
4. Performance: This heading is subdivided into two columns. The column labeled "Load" will either list the load that the building element was subjected to during the fire test or it will contain a note number which will list the load and any other significant details. If the building element was not subjected to a load during the test, this column will contain "n/a," which means "not applicable."

   The second column under performance is labeled "Time" and denotes the actual fire endurance time observed in the fire test.
5. Reference Number: This heading is subdivided into three columns: Pre-BMS-92; BMS-92; and Post-BMS-92. The table entry under this column is the number in the Bibliography of the original source reference for the test data.
6. Notes: Notes are provided at the end of each table to allow a more detailed explanation of certain aspects of the test. In certain tables the notes given to this column have also been listed under the "Construction Details" and/or "Load" columns.
7. Rec Hours: This column lists the recommended fire endurance rating, in hours, of a building element. In some cases, the recommended fire endurance will be less than that listed under the "Time" column. In no case is the "Rec Hours" greater than given in the "Time" column.

ITEM CODE	THICKNESS	CONSTRUCTION DETAILS	PERFORMANCE		REFERENCE NUMBER			NOTES	REC. HOURS
			LOAD	TIME	PRE-BMS-92	BMS-92	POST-BMS-92		
W-4-M-50	$4^{5}/_{8}$″	Core: structural clay tile, See notes 12, 16, 21; Facings on unexposed side only, see note 18	N/A	25 min.		1		3, 4, 24	$^{1}/_{3}$

INTERNATIONAL CODE COUNCIL®
Copyright © 2015 ICC. ALL RIGHTS RESERVED. Accessed by David Dammon on Jun 21, 2017 12:30:52 PM pursuant to License Agreement with ICC. No further reproduction or distribution authorized. ANY UNAUTHORIZED REPRODUCTION OR DISTRIBUTION IS A VIOLATION OF THE FEDERAL COPYRIGHT ACT AND THE LICENSE AGREEMENT, AND SUBJECT TO CIVIL AND CRIMINAL PENALTIES THEREUNDER.

SECTION I - WALLS

FIGURE 1.1.1
MASONRY WALLS
0″ TO LESS THAN 4″ THICK

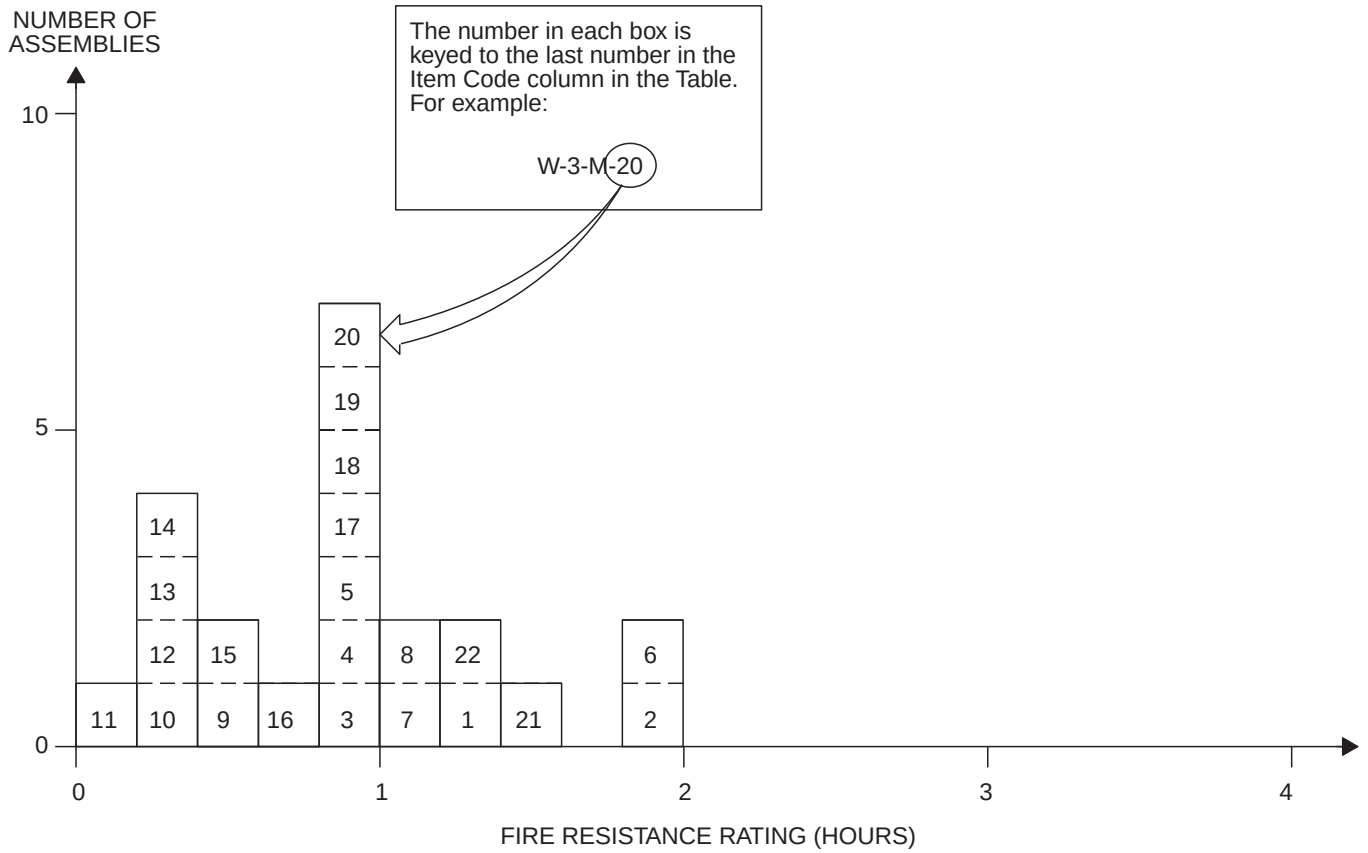

TABLE 1.1.1
MASONRY WALLS
0″ TO LESS THAN 4″ THICK

ITEM CODE	THICKNESS	CONSTRUCTION DETAILS	PERFORMANCE		REFERENCE NUMBER			NOTES	REC. HOURS
			LOAD	TIME	PRE-BMS-92	BMS-92	POST-BMS-92		
W-2-M-1	$2^1/_4$″	Solid partition; $^3/_4$″ gypsum plank- 10′ ×1′6″ ; $^3/_4$″ plus gypsum plaster each side.	N/A	1 hr. 22 min.			7	1	$1^1/_4$
W-3-M-2	3″	Concrete block (18″ × 9″ × 3″) of fuel ash, portland cement and plasticizer; cement/sand mortar.	N/A	2 hrs.			7	2, 3	2
W-2-M-3	2″	Solid gypsum block wall; No facings	N/A	1 hr.		1		4	1
W-3-M-4	3″	Solid gypsum blocks, laid in 1:3 sanded gypsum mortar.	N/A	1 hr.		1		4	1
W-3-M-5	3″	Magnesium oxysulfate wood fiber blocks; 2″ thick, laid in portland cement-lime mortar; Facings: $^1/_2$″ of 1:3 sanded gypsum plaster on both sides.	N/A	1 hr.		1		4	1
W-3-M-6	3″	Magnesium oxysulfate bound wood fiber blocks; 3″ thick; laid in portland cement-lime mortar; Facings: $^1/_2$″ of 1:3 sanded gypsum plaster on both sides.	N/A	2 hrs.		1		4	2

(continued)

INTERNATIONAL CODE COUNCIL®
Copyright © 2015 ICC. ALL RIGHTS RESERVED. Accessed by David Dammon on Jun 21, 2017 12:30:52 PM pursuant to License Agreement with ICC. No further reproduction or distribution authorized. ANY UNAUTHORIZED REPRODUCTION OR DISTRIBUTION IS A VIOLATION OF THE FEDERAL COPYRIGHT ACT AND THE LICENSE AGREEMENT, AND SUBJECT TO CIVIL AND CRIMINAL PENALTIES THEREUNDER.

TABLE 1.1.1—continued
MASONRY WALLS
0″ TO LESS THAN 4″ THICK

ITEM CODE	THICKNESS	CONSTRUCTION DETAILS	PERFORMANCE		REFERENCE NUMBER			NOTES	REC. HOURS
			LOAD	TIME	PRE-BMS-92	BMS-92	POST-BMS-92		
W-3-M-7	3″	Clay tile; Ohio fire clay; single cell thick; Face plaster: $^5/_8$″ (both sides) 1:3 sanded gypsum; Design “E,” Construction “A.”	N/A	1 hr. 6 min.	0		2	5, 6, 7, 11, 12, 39	1
W-3-M-8	3″	Clay tile; Illinois surface clay; single cell thick; Face plaster: $^5/_8$″ (both sides) 1:3 sanded gypsum; Design “A,” Construction “E.”	N/A	1 hr. 1 min			2	5, 8, 9, 11, 12, 39	1
W-3-M-9	3″	Clay tile; Illinois surface clay; single cell thick; No face plaster; Design “A,” Construction “C.”	N/A	25 min.			2	5, 10, 11, 12, 39	$^1/_3$
W-3-M-10	$3^7/_8$″	8″ × $4^7/_8$″ glass blocks; weight 4 lbs. each; portland cement-lime mortar; horizontal mortar joints reinforced with metal lath.	N/A	15 min.		1		4	$^1/_4$
W-3-M-11	3″	Core: structural clay tile; see Notes 14, 18, 13; No facings.	N/A	10 min.		1		5, 11, 26	$^1/_6$
W-3-M-12	3″	Core: structural clay tile; see Notes 14, 19, 23; No facings.	N/A	20 min.		1		5, 11, 26	$^1/_3$
W-3-M-13	$3^5/_8$″	Core: structural clay tile; see Notes 14, 18, 23; Facings: unexposed side; see Note 20.	N/A	20 min.		1		5, 11, 26	$^1/_3$
W-3-M-14	$3^5/_8$″	Core: structural clay tile; see Notes 14, 19, 23; Facings: unexposed side only; see Note 20.	N/A	20 min.		1		5, 11, 26	$^1/_3$
W-3-M-15	$3^5/_8$″	Core: clay structural tile; see Notes 14, 18, 23; Facings: side exposed to fire; see Note 20.	N/A	30 min.		1		5, 11, 26	$^1/_2$
W-3-M-16	$3^5/_8$″	Core: clay structural tile; see Notes 14, 19, 23; Facings: side exposed to fire; see Note 20.	N/A	45 min.		1		5, 11, 26	$^3/_4$
W-2-M-17	2″	2″ thick solid gypsum blocks; see Note 27.	N/A	1 hr.		1		27	1
W-3-M-18	3″	Core: 3″ thick gypsum blocks 70% solid; see Note 2; No facings.	N/A	1 hr.		1		27	1
W-3-M-19	3″	Core: hollow concrete units; see Notes 29, 35, 36, 38; No facings.	N/A	1 hr.		1		27	1
W-3-M-20	3″	Core: hollow concrete units; see Notes 28, 35, 36, 37, 38; No facings.	N/A	1 hr.		1			1
W-3-M-21	$3^1/_2$″	Core: hollow concrete units; see Notes 28, 35, 36, 37, 38; Facings: one side; see Note 37.	N/A	$1^1/_2$ hrs.		1			$1^1/_2$
W-3-M-22	$3^1/_2$″	Core: hollow concrete units; see Notes 29, 35, 36, 38; Facings: one side, see Note 37.	N/A	$1^1/_4$ hrs.		1			$1^1/_4$

For SI: 1 inch = 25.4 mm, 1 pound per square inch = 0.00689 MPa, °C = [(°F) - 32]/1.8.

Notes:

1. Failure mode—flame thru.
2. Passed 2-hour fire test (Grade “C” fire res. - British).
3. Passed hose stream test.
4. Tested at NBS under ASA Spec. No. A2-1934. As nonload bearing partitions.
5. Tested at NBS under ASA Spec. No. 42-1934 (ASTM C19-33) except that hose stream testing where carried was run on test specimens exposed for full test duration, not for a reduced period as is contemporarily done.
6. Failure by thermal criteria—maximum temperature rise 325°F.
7. Hose stream failure.
8. Hose stream—pass.
9. Specimen removed prior to any failure occurring.
10. Failure mode—collapse.
11. For clay tile walls, unless the source or density of the clay can be positively identified or determined, it is suggested that the lowest hourly rating for the fire endurance of a clay tile partition of that thickness be followed. Identified sources of clay showing longer fire endurance can lead to longer time recommendations.

(continued)

INTERNATIONAL CODE COUNCIL®
Copyright © 2015 ICC. ALL RIGHTS RESERVED. Accessed by David Dammon on Jun 21, 2017 12:30:52 PM pursuant to License Agreement with ICC. No further reproduction or distribution authorized. ANY UNAUTHORIZED REPRODUCTION OR DISTRIBUTION IS A VIOLATION OF THE FEDERAL COPYRIGHT ACT AND THE LICENSE AGREEMENT, AND SUBJECT TO CIVIL AND CRIMINAL PENALTIES THEREUNDER.

TABLE 1.1.1—continued
MASONRY WALLS
0″ TO LESS THAN 4″ THICK

12. See appendix for construction and design details for clay tile walls.
13. Load: 80 psi for gross wall area.
14. One cell in wall thickness.
15. Two cells in wall thickness.
16. Double shells plus one cell in wall thickness.
17. One cell in wall thickness, cells filled with broken tile, crushed stone, slag cinders or sand mixed with mortar.
18. Dense hard-burned clay or shale tile.
19. Medium-burned clay tile.
20. Not less than $^{5}/_{8}$ inch thickness of 1:3 sanded gypsum plaster.
21. Units of not less than 30 percent solid material.
22. Units of not less than 40 percent solid material.
23. Units of not less than 50 percent solid material.
24. Units of not less than 45 percent solid material.
25. Units of not less than 60 percent solid material.
26. All tiles laid in portland cement-lime mortar.
27. Blocks laid in 1:3 sanded gypsum mortar voids in blocks not to exceed 30 percent.
28. Units of expanded slag or pumice aggregate.
29. Units of crushed limestone, blast furnace, slag, cinders and expanded clay or shale.
30. Units of calcareous sand and gravel. Coarse aggregate, 60 percent or more calcite and dolomite.
31. Units of siliceous sand and gravel. Ninety percent or more quartz, chert or flint.
32. Unit at least 49 percent solid.
33. Unit at least 62 percent solid.
34. Unit at least 65 percent solid.
35. Unit at least 73 percent solid.
36. Ratings based on one unit and one cell in wall thickness.
37. Minimum of $^{1}/_{2}$ inch—1:3 sanded gypsum plaster.
38. Nonload bearing.
39. See Clay Tile Partition Design Construction drawings, below.

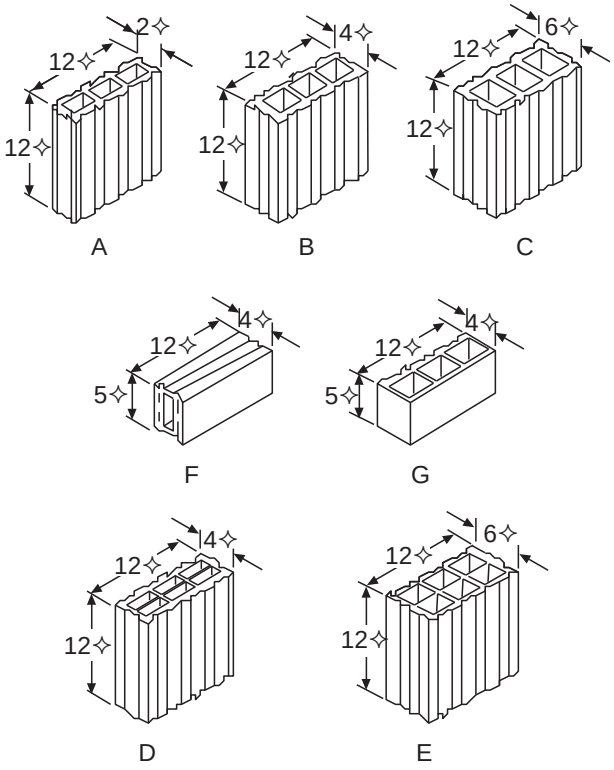

DESIGNS OF TILES USED IN FIRE-TEST PARTITIONS

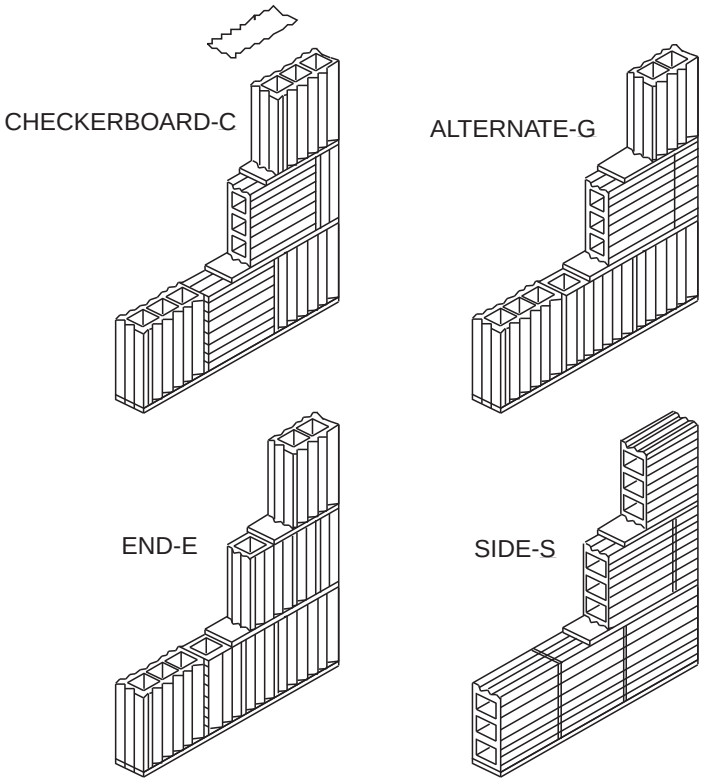

THE FOUR TYPES OF CONSTRUCTION USED IN FIRE-TEST PARTITIONS

INTERNATIONAL CODE COUNCIL®
Copyright © 2015 ICC. ALL RIGHTS RESERVED. Accessed by David Dammon on Jun 21, 2017 12:30:52 PM pursuant to License Agreement with ICC. No further reproduction or distribution authorized. ANY UNAUTHORIZED REPRODUCTION OR DISTRIBUTION IS A VIOLATION OF THE FEDERAL COPYRIGHT ACT AND THE LICENSE AGREEMENT, AND SUBJECT TO CIVIL AND CRIMINAL PENALTIES THEREUNDER.

FIGURE 1.1.2
MASONRY WALLS
4″ TO LESS THAN 6″ THICK

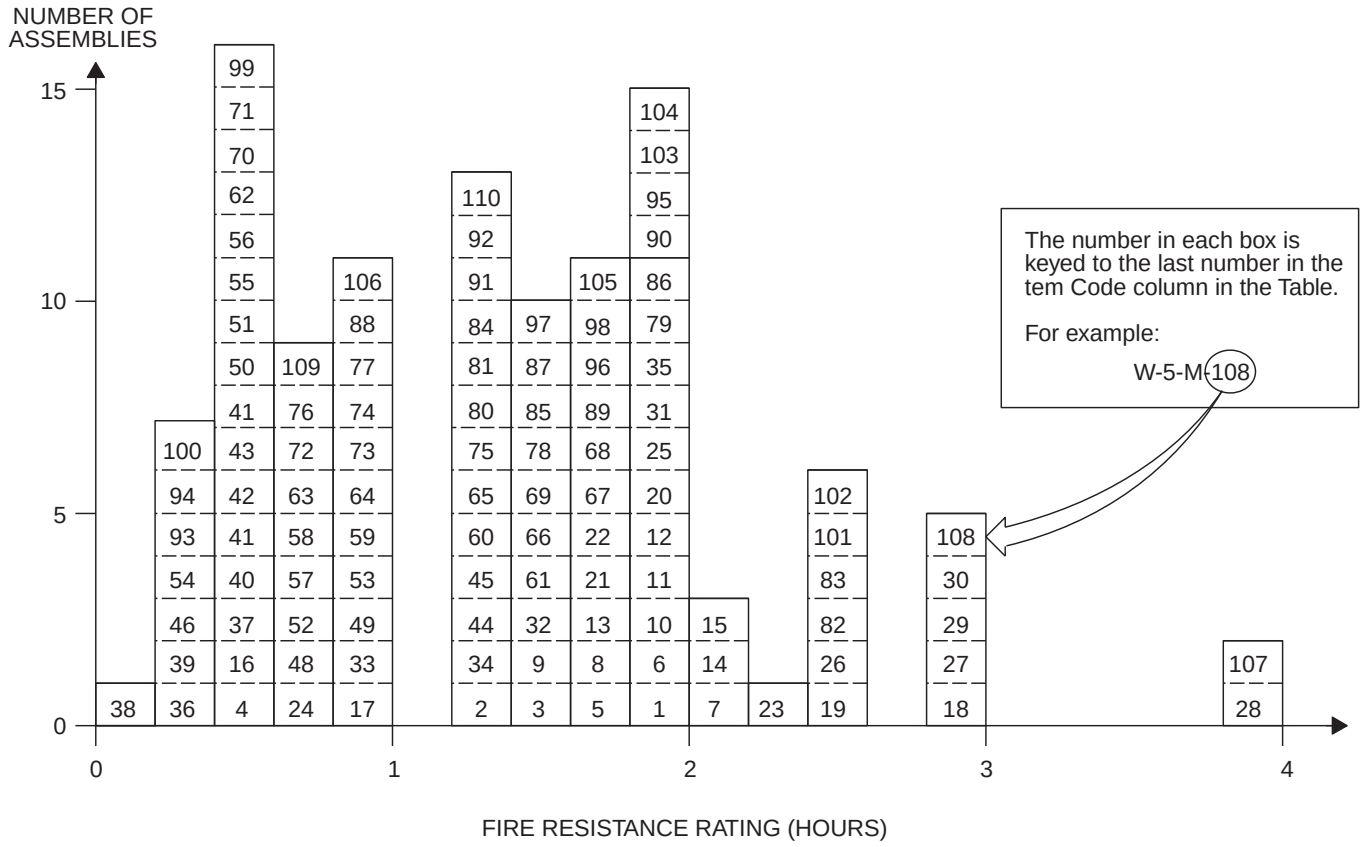

TABLE 1.1.2
MASONRY WALLS
4″ TO LESS THAN 6″ THICK

ITEM CODE	THICKNESS	CONSTRUCTION DETAILS	PERFORMANCE		REFERENCE NUMBER			NOTES	REC. HOURS
			LOAD	TIME	PRE-BMS-92	BMS-92	POST-BMS-92		
W-4-M-1	4″	Solid 3″ thick, gypsum blocks laid in 1:3 sanded gypsum mortar; Facings: $^1/_2$″ of 1:3 sanded gypsum plaster (both sides).	N/A	2 hrs.		1		1	2
W-4-M-2	4″	Solid clay or shale brick.	N/A	1 hr. 15 min		1		1, 2	$1^1/_4$
W-4-M-3	4″	Concrete; No facings.	N/A	1 hr. 30 min.		1		1	$1^1/_2$
W-4-M-4	4″	Clay tile; Illinois surface clay; single cell thick; No face plaster; Design “B,” Construction “C.”	N/A	25 min.			2	3-7, 36	$^1/_3$
W-4-M-5	4″	Solid sand-lime brick.	N/A	1 hr. 45 min.		1		1	$1^3/_4$
W-4-M-6	4″	Solid wall; 3″ thick block; $^1/_2$″ plaster each side; $17^3/_4$″ × $8^3/_4$″ × 4″ “Breeze Blocks”; portland cement/sand mortar.	N/A	1 hr. 52 min.			7	2	$1^3/_4$
W-4-M-7	4″	Concrete (4020 psi); Reinforcement: vertical $^3/_8$″; horizontal $^1/_4$″; 6″ × 6″ grid.	N/A	2 hrs. 10 min.			7	2	2
W-4-M-8	4″	Concrete wall (4340 psi crush); reinforcement $^1/_4$″ diameter rebar on 8″ centers (vertical and horizontal).	N/A	1 hr. 40 min.			7	2	$1^2/_3$

(continued)

INTERNATIONAL CODE COUNCIL®
Copyright © 2015 ICC. ALL RIGHTS RESERVED. Accessed by David Dammon on Jun 21, 2017 12:30:52 PM pursuant to License Agreement with ICC. No further reproduction or distribution authorized. ANY UNAUTHORIZED REPRODUCTION OR DISTRIBUTION IS A VIOLATION OF THE FEDERAL COPYRIGHT ACT AND THE LICENSE AGREEMENT, AND SUBJECT TO CIVIL AND CRIMINAL PENALTIES THEREUNDER.

TABLE 1.1.2—continued
MASONRY WALLS
4″ TO LESS THAN 6″ THICK

ITEM CODE	THICKNESS	CONSTRUCTION DETAILS	PERFORMANCE		REFERENCE NUMBER			NOTES	REC. HOURS
			LOAD	TIME	PRE-BMS-92	BMS-92	POST-BMS-92		
W-4-M-9	$4^{3}/_{16}$″	$4^{3}/_{16}$″ × $2^{5}/_{8}$″ cellular fletton brick (1873 psi) with $^{1}/_{2}$″ sand mortar; bricks are U-shaped yielding hollow cover (approx. 2″ × 4″) in final cross-section configuration.	N/A	1 hr. 25 min.			7	2	$1^{1}/_{3}$
W-4-M-10	$4^{1}/_{4}$″	$4^{1}/_{4}$″ × $2^{1}/_{2}$″ fletton (1831 psi) brick in $^{1}/_{2}$″ sand mortar.	N/A	1 hr. 53 min			7	2	$1^{3}/_{4}$
W-4-M-11	$4^{1}/_{4}$″	$4^{1}/_{4}$″ × $2^{1}/_{2}$″ London stock (683 psi) brick; $^{1}/_{2}$″ grout.	N/A	1 hr. 52 min.			7	2	$1^{3}/_{4}$
W-4-M-12	$4^{1}/_{2}$″	$4^{1}/_{4}$″ × $2^{1}/_{2}$″ Leicester red, wire-cut brick (4465 psi) in $^{1}/_{2}$″ sand mortar.	N/A	1 hr. 56 min.			7	6	$1^{3}/_{4}$
W-4-M-13	$4^{1}/_{4}$″	$4^{1}/_{4}$″ × $2^{1}/_{2}$″ stairfoot brick (7527 psi) $^{1}/_{2}$″ sand mortar.	N/A	1 hr. 37 min.			7	2	$1^{1}/_{2}$
W-4-M-14	$4^{1}/_{4}$″	$4^{1}/_{4}$″ × $2^{1}/_{2}$″ sand-lime brick (2603 psi) $^{1}/_{2}$″ sand mortar.	N/A	2 hrs. 6 min.			7	2	2
W-4-M-15	$4^{1}/_{4}$″	$4^{1}/_{4}$″ × $2^{1}/_{2}$″ concrete brick (2527 psi) $^{1}/_{2}$″ sand mortar.	N/A	2 hrs. 10 min.			7	2	2
W-4-M-16	$4^{1}/_{2}$″	4″ thick clay tile; Ohio fire clay; single cell thick; No plaster exposed face; $^{1}/_{2}$″ 1:2 gypsum back face; Design "F," Construction "S."	N/A	31 min.			2	3-6, 36	$^{1}/_{2}$
W-4-M-17	$4^{1}/_{2}$″	4″ thick clay tile; Ohio fire clay; single cell thick; Plaster exposed face; $^{1}/_{2}$″ 1:2 sanded gypsum; Back Face: none; Construction "S," Design "F."	80 psi	50 min.			2	3-5, 8, 36	$^{3}/_{4}$
W-4-M-18	$4^{1}/_{2}$″	Core: solid sand-lime brick; $^{1}/_{2}$″ sanded gypsum plaster facings on both sides.	80 psi	3 hrs.		1		1, 11	3
W-4-M-19	$4^{1}/_{2}$″	Core: solid sand-lime brick; $^{1}/_{2}$″ sanded gypsum plaster facings on both sides.	80 psi	2 hrs. 30 min.		1		1, 11	$2^{1}/_{2}$
W-4-M-20	$4^{1}/_{2}$″	Core: concrete brick $^{1}/_{2}$″ of 1:3 sanded gypsum plaster facings on both sides.	80 psi	2 hrs.		1		1, 11	2
W-4-M-21	$4^{1}/_{2}$″	Core: solid clay or shale brick; $^{1}/_{2}$″ thick, 1:3 sanded gypsum plaster facings on fire sides.	80 psi	1 hr. 45 min.		1		1, 2, 11	$1^{3}/_{4}$
W-4-M-22	$4^{3}/_{4}$″	4″ thick clay tile; Ohio fire clay; single cell thick; cells filled with cement and broken tile concrete; Plaster on exposed face; none on unexposed face; $^{3}/_{4}$″ 1:3 sanded gypsum; Design "G," Construction "E."	N/A	1 hr. 48 min.			2	2, 3-5, 9, 36	$1^{3}/_{4}$
W-4-M-23	$4^{3}/_{4}$″	4″ thick clay tile; Ohio fire clay; single cell thick; cells filled with cement and broken tile concrete; No plaster exposed faced; $^{3}/_{4}$″ neat gypsum plaster on unexposed face; Design "G," Construction "E."	N/A	2 hrs. 14 min.			2	2, 3-5, 9, 36	2
W-5-M-24	5″	3″ × 13″ air space; 1″ thick metal reinforced concrete facings on both sides; faces connected with wood splines.	2,250 lbs./ ft.	45 min.		1		1	$^{3}/_{4}$
W-5-M-25	5″	Core: 3″ thick void filled with "nondulated" mineral wool weighing 10 lbs./ft.^{3}; 1″ thick metal reinforced concrete facings on both sides.	2,250 lbs./ ft.	2 hrs.		1		1	2
W-5-M-26	5″	Core: solid clay or shale brick; $^{1}/_{2}$″ thick, 1:3 sanded gypsum plaster facings on both sides.	40 psi	2 hrs. 30 min.		1		1, 2, 11	$2^{1}/_{2}$
W-5-M-27	5″	Core: solid 4″ thick gypsum blocks, laid in 1:3 sanded gypsum mortar; $^{1}/_{2}$″ of 1:3 sanded gypsum plaster facings on both sides.	N/A	3 hrs.		1		1	3

(continued)

INTERNATIONAL CODE COUNCIL®
Copyright © 2015 ICC. ALL RIGHTS RESERVED. Accessed by David Dammon on Jun 21, 2017 12:30:52 PM pursuant to License Agreement with ICC. No further reproduction or distribution authorized. ANY UNAUTHORIZED REPRODUCTION OR DISTRIBUTION IS A VIOLATION OF THE FEDERAL COPYRIGHT ACT AND THE LICENSE AGREEMENT, AND SUBJECT TO CIVIL AND CRIMINAL PENALTIES THEREUNDER.

TABLE 1.1.2—continued
MASONRY WALLS
4″ TO LESS THAN 6″ THICK

ITEM CODE	THICKNESS	CONSTRUCTION DETAILS	PERFORMANCE		REFERENCE NUMBER			NOTES	REC. HOURS
			LOAD	TIME	PRE-BMS-92	BMS-92	POST-BMS-92		
W-5-M-28	5″	Core: 4″ thick hollow gypsum blocks with 30% voids; blocks laid in 1:3 sanded gypsum mortar; No facings.	N/A	4 hrs.		1		1	4
W-5-M-29	5″	Core: concrete brick; $^1/_2$″ of 1:3 sanded gypsum plaster facings on both sides.	160 psi	3 hrs.		1		1	3
W-5-M-30	$5^1/_4$″	4″ thick clay tile; Illinois surface clay; double cell thick; Plaster: $^5/_8$″ sanded gypsum 1:3 both faces; Design “D,” Construction “S.”	N/A	2 hrs. 53 min.			2	2-5, 9, 36	$2^3/_4$
W-5-M-31	$5^1/_4$″	4″ thick clay tile; New Jersey fire clay; double cell thick; Plaster: $^5/_8$″ sanded gypsum 1:3 both faces; Design “D,” Construction “S.”	N/A	1 hr. 52 min.			2	2-5, 9, 36	$1^3/_4$
W-5-M-32	$5^1/_4$″	4″ thick clay tile; New Jersey fire clay; single cell thick; Plaster: $^5/_8$″ sanded gypsum 1:3 both faces; Design “D,” Construction “S.”	N/A	1 hr. 34 min.	2		2	2-5, 9, 36	$1^1/_2$
W-5-M-33	$5^1/_4$″	4″ thick clay tile; New Jersey fire clay; single cell thick; Face plaster: $^5/_8$″ both sides; 1:3 sanded gypsum; Design “B,” Construction “S.”	N/A	50 min.			2	3-5, 8, 36	$^3/_4$
W-5-M-34	$5^1/_4$″	4″ thick clay tile; Ohio fire clay; single cell thick; Face plaster: $^5/_8$″ both sides; 1:3 sanded gypsum; Design “B,” Construction “A.”	N/A	1 hr. 19 min.			2	2-5, 9, 36	$1^1/_4$
W-5-M-35	$5^1/_4$″	4″ thick clay tile; Illinois surface clay; single cell thick; Face plaster: $^5/_8$″ both sides; 1:3 sanded gypsum; Design “B,” Construction “S.”	N/A	1 hr. 59 min.			2	2-5, 10 36	$1^3/_4$
W-5-M-36	4″	Core: structural clay tile; see Notes 12, 16, 21; No facings.	N/A	15 min.		1		3, 4, 24	$^1/_4$
W-4-M-37	4″	Core: structural clay tile; see Notes 12, 17, 21; No facings.	N/A	25 min.		1		3, 4, 24	$^1/_3$
W-4-M-38	4″	Core: structural clay tile; see Notes 12, 16, 20; No facings.	N/A	10 min.		1		3, 4, 24	$^1/_6$
W-4-M-39	4″	Core: structural clay tile; see Notes 12, 17, 20; No facings.	N/A	20 min.		1		3, 4, 24	$^1/_3$
W-4-M-40	4″	Core: structural clay tile; see Notes 13, 16, 23; No facings.	N/A	30 min.		1		3, 4, 24	$^1/_2$
W-4-M-41	4″	Core: structural clay tile; see Notes 13, 17, 23; No facings.	N/A	35 min.		1		3, 4, 24	$^1/_2$
W-4-M-42	4″	Core: structural clay tile; see Notes 13, 16, 21; No facings.	N/A	25 min.		1		3, 4, 24	$^1/_3$
W-4-M-43	4″	Core: structural clay tile; see Notes 13, 17, 21; No facings.	N/A	30 min.		1		3, 4, 24	$^1/_2$
W-4-M-44	4″	Core: structural clay tile; see Notes 15, 16, 20; No facings	N/A	1 hr. 15 min.		1		3, 4, 24	$1^1/_4$
W-4-M-45	4″	Core: structural clay tile; see Notes 15, 17, 20; No facings.	N/A	1 hr. 15 min.		1		3, 4, 24	$1^1/_4$
W-4-M-46	4″	Core: structural clay tile; see Notes 14, 16, 22; No facings.	N/A	20 min.		1		3, 4, 24	$^1/_3$
W-4-M-47	4″	Core: structural clay tile; see Notes 14, 17, 22; No facings.	N/A	25 min.		1		3, 4, 24	$^1/_3$
W-4-M-48	$4^1/_4$″	Core: structural clay tile; see Notes 12, 16, 21; Facings: both sides; see Note 18.	N/A	45 min.		1		3, 4, 24	$^3/_4$

(continued)

INTERNATIONAL CODE COUNCIL®
Copyright © 2015 ICC. ALL RIGHTS RESERVED. Accessed by David Dammon on Jun 21, 2017 12:30:52 PM pursuant to License Agreement with ICC. No further reproduction or distribution authorized. ANY UNAUTHORIZED REPRODUCTION OR DISTRIBUTION IS A VIOLATION OF THE FEDERAL COPYRIGHT ACT AND THE LICENSE AGREEMENT, AND SUBJECT TO CIVIL AND CRIMINAL PENALTIES THEREUNDER.

TABLE 1.1.2—continued
MASONRY WALLS
4″ TO LESS THAN 6″ THICK

ITEM CODE	THICKNESS	CONSTRUCTION DETAILS	PERFORMANCE		REFERENCE NUMBER			NOTES	REC. HOURS
			LOAD	TIME	PRE-BMS-92	BMS-92	POST-BMS-92		
W-4-M-49	$4^{1}/_{4}$″	Core: structural clay tile; see Notes 12, 17, 21; Facings: both sides; see Note 18.	N/A	1 hr.		1		3, 4, 24	1
W-4-M-50	$4^{5}/_{8}$″	Core: structural clay tile; see Notes 12, 16, 21; Facings: unexposed side only; see Note 18.	N/A	25 min.		1		3, 4, 24	$^{1}/_{3}$
W-4-M-51	$4^{5}/_{8}$″	Core: structural clay tile; see Notes 12, 17, 21; Facings: unexposed side only; see Note 18.	N/A	30 min.		1		3, 4, 24	$^{1}/_{2}$
W-4-M-52	$4^{5}/_{8}$″	Core: structural clay tile; see Notes 12, 16, 21; Facings: unexposed side only; see Note 18.	N/A	45 min.		1		3, 4, 24	$^{3}/_{4}$
W-4-M-53	$4^{5}/_{8}$″	Core: structural clay tile; see Notes 12, 17, 21; Facings: fire side only; see Note 18.	N/A	1 hr.		1		3, 4, 24	1
W-4-M-54	$4^{5}/_{8}$″	Core: structural clay tile; see Notes 12, 16, 20; Facings: unexposed side; see Note 18.	N/A	20 min.		1		3, 4, 24	$^{1}/_{3}$
W-4-M-55	$4^{5}/_{8}$″	Core: structural clay tile; see Notes 12, 17, 20; Facings: exposed side; see Note 18.	N/A	25 min.		1		3, 4, 24	$^{1}/_{3}$
W-4-M-56	$4^{5}/_{8}$″	Core: structural clay tile; see Notes 12, 16, 20; Facings: fire side only; see Note 18.	N/A	30 min.		1		3, 4, 24	$^{1}/_{2}$
W-4-M-57	$4^{5}/_{8}$″	Core: structural clay tile; see Notes 12, 17, 20; Facings: fire side only; see Note 18.	N/A	45 min.		1		3, 4, 24	$^{3}/_{4}$
W-4-M-58	$4^{5}/_{8}$″	Core: structural clay tile; see Notes 13, 16, 23; Facings: unexposed side only; see Note 18.	N/A	40 min.		1		3, 4, 24	$^{2}/_{3}$
W-4-M-59	$4^{5}/_{8}$″	Core: structural clay tile; see Notes 13, 17, 23; Facings: unexposed side only; see Note 18.	N/A	1 hr.		1		3, 4, 24	1
W-4-M-60	$4^{5}/_{8}$″	Core: structural clay tile; see Notes 13, 16, 23; Facings: fire side only; see Note 18.	N/A	1 hr. 15 min.		1		3, 4, 24	$1^{1}/_{4}$
W-4-M-61	$4^{5}/_{8}$″	Core: structural clay tile; see Notes 13, 17, 23; Facings: fire side only; see Note 18.	N/A	1 hr. 30 min.		1		3, 4, 24	$1^{1}/_{2}$
W-4-M-62	$4^{5}/_{8}$″	Core: structural clay tile; see Notes 13, 16, 21; Facings: unexposed side only; see Note 18.	N/A	35 min.		1		3, 4, 24	$^{1}/_{2}$
W-4-M-63	$4^{5}/_{8}$″	Core: structural clay tile; see Notes 13, 17, 21; Facings: unexposed face only; see Note 18.	N/A	45 min.		1		3, 4, 24	$^{3}/_{4}$
W-4-M-64	$4^{5}/_{8}$″	Core: structural clay tile; see Notes 13, 16, 23; Facings: exposed face only; see Note 18.	N/A	1 hr.		1		3, 4, 24	1
W-4-M-65	$4^{5}/_{8}$″	Core: structural clay tile; see Notes 13, 17, 21; Facings: exposed side only; see Note 18.	N/A	1 hr. 15 min.		1		3, 4, 24	$1^{1}/_{4}$
W-4-M-66	$4^{5}/_{8}$″	Core: structural clay tile; see Notes 15, 17, 20; Facings: unexposed side only; see Note 18	N/A	1 hr. 30 min.		1		3, 4, 24	$1^{1}/_{2}$
W-4-M-67	$4^{5}/_{8}$″	Core: structural clay tile; see Notes 15, 16, 20; Facings: exposed side only; see Note 18.	N/A	1 hr. 45 min.		1		3, 4, 24	$1^{3}/_{4}$
W-4-M-68	$4^{5}/_{8}$″	Core: structural clay tile; see Notes 15, 17, 20; Facings: exposed side only; see Note 18.	N/A	1 hr. 45 min.		1		3, 4, 24	$1^{3}/_{4}$
W-4-M-69	$4^{5}/_{8}$″	Core: structural clay tile; see Notes 15, 16, 20; Facings: unexposed side only; see Note 18.	N/A	1 hr. 30 min.		1		3, 4, 24	$1^{3}/_{4}$
W-4-M-70	$4^{5}/_{8}$″	Core: structural clay tile; see Notes 14, 16, 22; Facings: unexposed side only; see Note 18.	N/A	30 min.		1		3, 4, 24	$^{1}/_{2}$

(continued)

INTERNATIONAL CODE COUNCIL®
Copyright © 2015 ICC. ALL RIGHTS RESERVED. Accessed by David Dammon on Jun 21, 2017 12:30:52 PM pursuant to License Agreement with ICC. No further reproduction or distribution authorized. ANY UNAUTHORIZED REPRODUCTION OR DISTRIBUTION IS A VIOLATION OF THE FEDERAL COPYRIGHT ACT AND THE LICENSE AGREEMENT, AND SUBJECT TO CIVIL AND CRIMINAL PENALTIES THEREUNDER.

TABLE 1.1.2—continued
MASONRY WALLS
4″ TO LESS THAN 6″ THICK

ITEM CODE	THICKNESS	CONSTRUCTION DETAILS	PERFORMANCE		REFERENCE NUMBER			NOTES	REC. HOURS
			LOAD	TIME	PRE-BMS-92	BMS-92	POST-BMS-92		
W-4-M-71	4 5/8″	Core: structural clay tile; see Notes 14, 17, 22; Facings: exposed side only; see Note 18.	N/A	35 min.		1		3, 4, 24	1/2
W-4-M-72	4 5/8″	Core: structural clay tile; see Notes 14, 16, 22; Facings: fire side of wall only; see Note 18.	N/A	45 min.		1		3, 4, 24	3/4
W-4-M-73	4 5/8″	Core: structural clay tile; see Notes 14, 17, 22; Facings: fire side of wall only; see Note 18.	N/A	1 hr.		1		3, 4, 24	1
W-4-M-74	5 1/4″	Core: structural clay tile; see Notes 12, 16, 21; Facings: both sides; see Note 18.	N/A	1 hr.		1		3, 4, 24	1
W-5-M-75	5 1/4″	Core: structural clay tile; see Notes 12, 17, 21; Facings: both sides; see Note 18	N/A	1 hr. 15 min.		1		3, 4, 24	1 1/4
W-5-M-76	5 1/4″	Core: structural clay tile; see Notes 12, 16, 20; Facings: both sides; see Note 18.	N/A	45 min.		1		3, 4, 24	3/4
W-5-M-77	5 1/4″	Core: structural clay tile; see Notes 12, 17, 20; Facings: both sides; see Note 18.	N/A	1 hr.		1		3, 4, 24	1
W-5-M-78	5 1/4″	Core: structural clay tile; see Notes 13, 16, 23; Facings: both sides of wall; see Note 18.	N/A	1 hr. 30 min.		1		3, 4, 24	1 1/2
W-5-M-79	5 1/4″	Core: structural clay tile; see Notes 13, 17, 23; Facings: both sides of wall; see Note 18.	N/A	2 hrs.		1		3, 4, 24	2
W-5-M-80	5 1/4″	Core: structural clay tile; see Notes 13, 16, 21; Facings: both sides of wall; see Note 18.	N/A	1 hr. 15 min.		1		3, 4, 24	1 1/4
W-5-M-81	5 1/4″	Core: structural clay tile; see Notes 13, 16, 21; Facings: both sides of wall; see Note 18.	N/A	1 hr. 30 min.		1		3, 4, 24	1 1/2
W-5-M-82	5 1/4″	Core: structural clay tile; see Notes 15, 16, 20; Facings: both sides; see Note 18.	N/A	2 hrs. 30 min.		1		3, 4, 24	2 1/2
W-5-M-83	5 1/4″	Core: structural clay tile; see Notes 15, 17, 20; Facings: both sides; see Note 18.	N/A	2 hrs. 30 min.		1		3, 4, 24	2 1/2
W-5-M-84	5 1/4″	Core: structural clay tile; see Notes 14, 16, 22; Facings: both sides of wall; see Note 18.	N/A	1 hr. 15 min.		1		3, 4, 24	1 1/4
W-5-M-85	5 1/4″	Core: structural clay tile; see Notes 14, 17, 22; Facings: both sides of wall; see Note 18.	N/A	1 hr. 30 min.		1		3, 4, 24	1 1/2
W-4-M-86	4″	Core: 3″ thick gypsum blocks 70% solid; see Note 26; Facings: both sides; see Note 25.	N/A	2 hrs.		1			2
W-4-M-87	4″	Core: hollow concrete units; see Notes 27, 34, 35; No facings.	N/A	1 hr. 30 min.		1			1 1/2
W-4-M-88	4″	Core: hollow concrete units; see Notes 28, 33, 35; No facings.	N/A	1 hr.		1			1
W-4-M-89	4″	Core: hollow concrete units; see Notes 28, 34, 35; Facings: both sides; see Note 25.	N/A	1 hr. 45 min.		1			1 3/4
W-4-M-90	4″	Core: hollow concrete units; see Notes 27, 34, 35; Facings: both sides; see Note 25.	N/A	2 hrs.		1			2
W-4-M-91	4″	Core: hollow concrete units; see Notes 27, 32, 35; No facings.	N/A	1 hr. 15 min.		1			1 1/4
W-4-M-92	4″	Core: hollow concrete units; see Notes 28, 34, 35; No facings.	N/A	1 hr. 15 min.		1			1 1/4
W-4-M-93	4″	Core: hollow concrete units; see Notes 29, 32, 35; No facings.	N/A	20 min.		1			1/3

(continued)

INTERNATIONAL CODE COUNCIL®
Copyright © 2015 ICC. ALL RIGHTS RESERVED. Accessed by David Dammon on Jun 21, 2017 12:30:52 PM pursuant to License Agreement with ICC. No further reproduction or distribution authorized. ANY UNAUTHORIZED REPRODUCTION OR DISTRIBUTION IS A VIOLATION OF THE FEDERAL COPYRIGHT ACT AND THE LICENSE AGREEMENT, AND SUBJECT TO CIVIL AND CRIMINAL PENALTIES THEREUNDER.

TABLE 1.1.2—continued
MASONRY WALLS
4″ TO LESS THAN 6″ THICK

ITEM CODE	THICKNESS	CONSTRUCTION DETAILS	PERFORMANCE		REFERENCE NUMBER			NOTES	REC. HOURS
			LOAD	TIME	PRE-BMS-92	BMS-92	POST-BMS-92		
W-4-M-94	4″	Core: hollow concrete units; see Notes 30, 34, 35; No facings.	N/A	15 min.		1			1/4
W-4-M-95	4 1/2″	Core: hollow concrete units; see Notes 27, 34, 35; Facings: one side only; see Note 25.	N/A	2 hrs.		1			2
W-4-M-96	4 1/2″	Core: hollow concrete units; see Notes 27, 32, 35; Facings: one side only; see Note 25.	N/A	1 hr. 45 min.		1			1 3/4
W-4-M-97	4 1/2″	Core: hollow concrete units; see Notes 28, 33, 35; Facings: one side; see Note 25.	N/A	1 hr. 30 min.		1			1 1/2
W-4-M-98	4 1/2″	Core: hollow concrete units; see Notes 28, 34, 35; Facings: one side only; see Note 25.	N/A	1 hr. 45 min.		1			1 3/4
W-4-M-99	4 1/2″	Core: hollow concrete units; see Notes 29, 32, 35; Facings: one side; see Note 25.	N/A	30 min.		1			1/2
W-4-M-100	4 1/2″	Core: hollow concrete units; see Notes 30, 34, 35; Facings: one side; see Note 25.	N/A	20 min.		1			1/3
W-5-M-101	5″	Core: hollow concrete units; see Notes 27, 34, 35; Facings: both sides; see Note 25.	N/A	2 hrs. 30 min.		1			2 1/2
W-5-M-102	5″	Core: hollow concrete units; see Notes 27, 32, 35; Facings: both sides; see Note 25.	N/A	2 hrs. 30 min.		1			2 1/2
W-5-M-103	5″	Core: hollow concrete units; see Notes 28, 33, 35; Facings: both sides; see Note 25.	N/A	2 hrs.		1			2
W-5-M-104	5″	Core: hollow concrete units; see Notes 28, 31, 35; Facings: both sides; see Note 25.	N/A	2 hrs.		1			2
W-5-M-105	5″	Core: hollow concrete units; see Notes 29, 32, 35; Facings: both sides; see Note 25.	N/A	1 hr. 45 min.		1			1 3/4
W-5-M-106	5″	Core: hollow concrete units; see Notes 30, 34, 35; Facings: both sides; see Note 25.	N/A	1 hr.		1			1
W-5-M-107	5″	Core: 5″ thick solid gypsum blocks; see Note 26; No facings.	N/A	4 hrs.		1			4
W-5-M-108	5″	Core: 4″ thick hollow gypsum blocks; see Note 26; Facings: both sides; see Note 25.	N/A	3 hrs.		1			3
W-5-M-109	4″	Concrete with 4″ × 4″ No. 6 welded wire mesh at wall center.	100 psi	45 min.			43	2	3/4
W-4-M-110	4″	Concrete with 4″ × 4″ No. 6 welded wire mesh at wall center.	N/A	1 hr. 15 min.			43	2	1 1/4

For SI: 1 inch = 25.4 mm, 1 pound per square inch = 0.00689 MPa.

Notes:

1. Tested as NBS under ASA Spec. No. A 2-1934.
2. Failure mode—maximum temperature rise.
3. Treated at NBS under ASA Spec. No. 42-1934 (ASTM C19-53) except that hose stream testing where carried out was run on test specimens exposed for full test duration, not for or reduced period as is contemporarily done.
4. For clay tile walls, unless the source the clay can be positively identified, it is suggested that the most pessimistic hour rating for the fire endurance of a clay tile partition of that thickness to be followed. Identified sources of clay showing longer fire endurance can lead to longer time recommendations.
5. See appendix for construction and design details for clay tile walls.
6. Failure mode—flame thru or crack formation showing flames.
7. Hole formed at 25 minutes; partition collapsed at 42 minutes or removal from furnace.
8. Failure mode—collapse.
9. Hose stream pass.
10. Hose stream hole formed in specimen.
11. Load: 80 psi for gross wall cross sectional area.
12. One cell in wall thickness.
13. Two cells in wall thickness.

(continued)

INTERNATIONAL CODE COUNCIL®
Copyright © 2015 ICC. ALL RIGHTS RESERVED. Accessed by David Dammon on Jun 21, 2017 12:30:52 PM pursuant to License Agreement with ICC. No further reproduction or distribution authorized. ANY UNAUTHORIZED REPRODUCTION OR DISTRIBUTION IS A VIOLATION OF THE FEDERAL COPYRIGHT ACT AND THE LICENSE AGREEMENT, AND SUBJECT TO CIVIL AND CRIMINAL PENALTIES THEREUNDER.

TABLE 1.1.2—continued
MASONRY WALLS
4″ TO LESS THAN 6″ THICK

14. Double cells plus one cell in wall thickness.
15. One cell in wall thickness, cells filled with broken tile, crushed stone, slag, cinders or sand mixed with mortar.
16. Dense hard-burned clay or shale tile.
17. Medium-burned clay tile.
18. Not less than $^{5}/_{8}$ inch thickness of 1:3 sanded gypsum plaster.
19. Units of not less than 30 percent solid material.
20. Units of not less than 40 percent solid material.
21. Units of not less than 50 percent solid material.
22. Units of not less than 45 percent solid material.
23. Units of not less than 60 percent solid material.
24. All tiles laid in portland cement-lime mortar.
25. Minimum $^{1}/_{2}$ inch—1:3 sanded gypsum plaster.
26. Laid in 1:3 sanded gypsum mortar. Voids in hollow units not to exceed 30 percent.
27. Units of expanded slag or pumice aggregate.
28. Units of crushed limestone, blast furnace slag, cinders and expanded clay or shale.
29. Units of calcareous sand and gravel. Coarse aggregate, 60 percent or more calcite and dolomite.
30. Units of siliceous sand and gravel. Ninety percent or more quartz, chert or flint.
31. Unit at least 49 percent solid.
32. Unit at least 62 percent solid.
33. Unit at least 65 percent solid.
34. Unit at least 73 percent solid.
35. Ratings based on one unit and one cell in wall thickness.
36. See Clay Tile Partition Design Construction drawings, below.

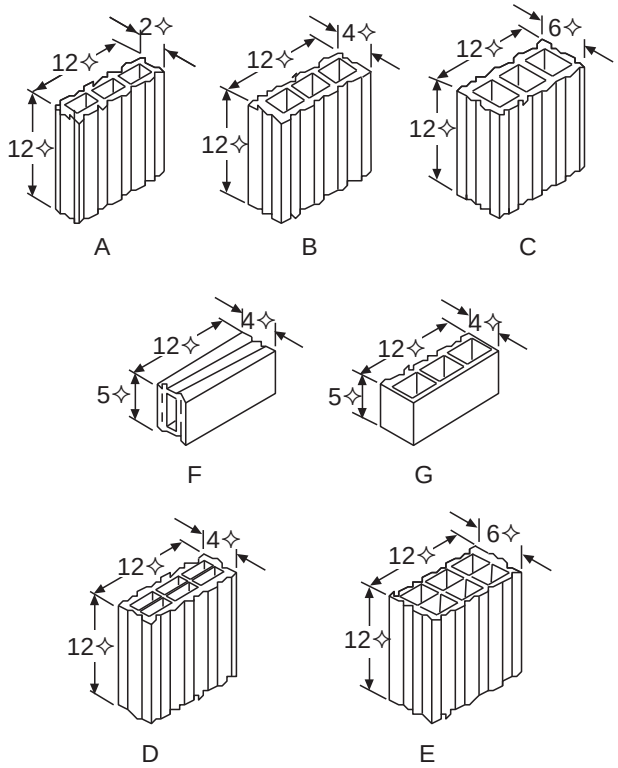

DESIGNS OF TILES USED IN FIRE-TEST PARTITIONS

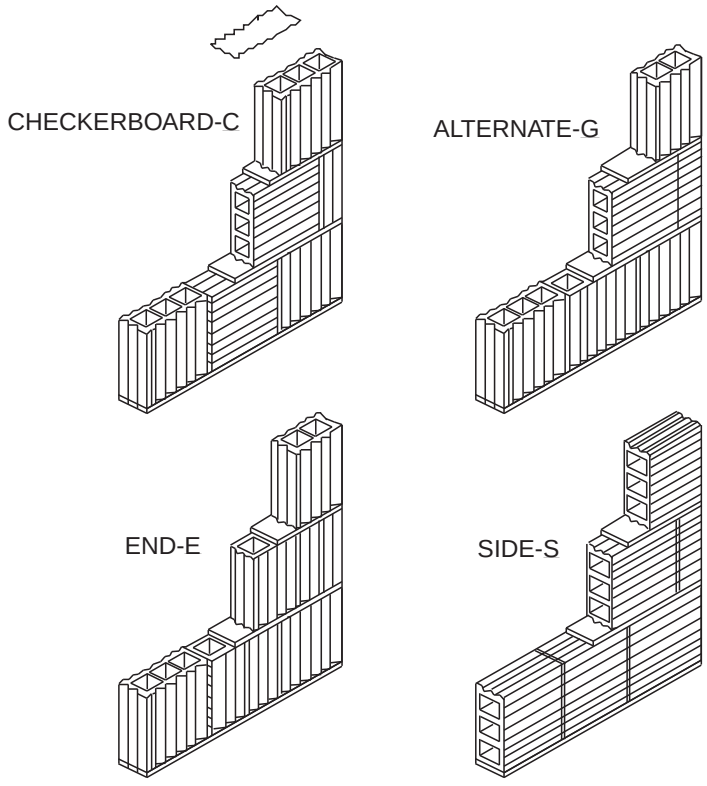

THE FOUR TYPES OF CONSTRUCTION USED IN FIRE-TEST PARTITIONS

INTERNATIONAL CODE COUNCIL®
Copyright © 2015 ICC. ALL RIGHTS RESERVED. Accessed by David Dammon on Jun 21, 2017 12:30:52 PM pursuant to License Agreement with ICC. No further reproduction or distribution authorized. ANY UNAUTHORIZED REPRODUCTION OR DISTRIBUTION IS A VIOLATION OF THE FEDERAL COPYRIGHT ACT AND THE LICENSE AGREEMENT, AND SUBJECT TO CIVIL AND CRIMINAL PENALTIES THEREUNDER.

FIGURE 1.1.3
MASONRY WALLS
6″ TO LESS THAN 8″ THICK

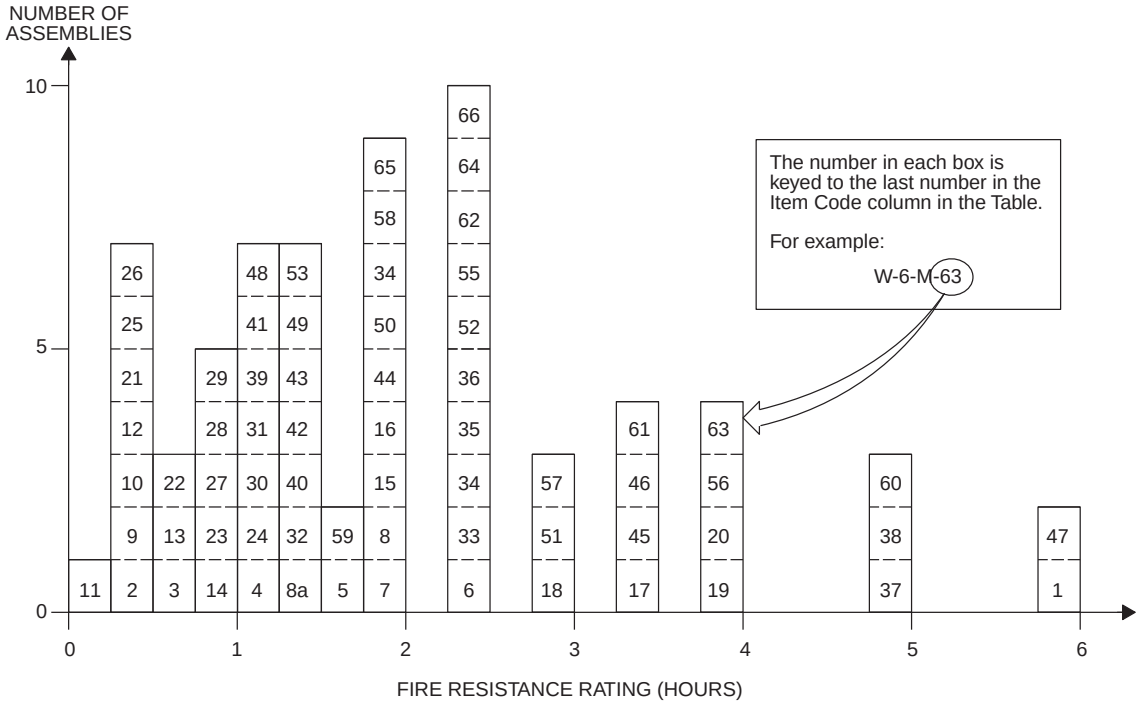

TABLE 1.1.3
MASONRY WALLS
6″ TO LESS THAN 8″ THICK

ITEM CODE	THICKNESS	CONSTRUCTION DETAILS	PERFORMANCE		REFERENCE NUMBER			NOTES	REC. HOURS
			LOAD	TIME	PRE-BMS-92	BMS-92	POST-BMS-92		
W-6-M-1	6″	Core: 5″ thick, solid gypsum blocks laid in 1:3 sanded gypsum mortar; $^1/_2$″ of 1:3 sanded gypsum plaster facings on both sides.	N/A	6 hrs.		1			6
W-6-M-2	6″	6″ clay tile; Ohio fire clay; single cell thick; No plaster; Design “C,” Construction “A.”	N/A	17 min.			2	1, 3, 4, 6, 55	$^1/_4$
W-6-M-3	6″	6″ clay tile; Illinois surface clay; double cell thick; No plaster; Design “E,” Construction “C.”	N/A	45 min.			2	1-4, 7, 55	$^3/_4$
W-6-M-4	6″	6″ clay tile; New Jersey fire clay; double cell thick; No plaster; Design “E,” Construction “S.”	N/A	1 hr. 1 min.			2	1-4, 8, 55	1
W-7-M-5	$7^1/_4$″	6″ clay tile; Illinois surface clay; double cell thick; Plaster: $^5/_8$″—1:3 sanded gypsum both faces; Design “E,” Construction “A.”	N/A	1 hr. 41 min.			2	1-4, 55	$1^2/_3$
W-7-M-6	$7^1/_4$″	6″ clay tile; New Jersey fire clay; double cell thick; Plaster: $^5/_8$″—1:3 sanded gypsum both faces; Design “E,” Construction “S.”	N/A	2 hrs. 23 min.			2	1-4, 9, 55	$2^1/_3$
W-7-M-7	$7^1/_4$″	6″ clay tile; Ohio fire clay; single cell thick; Plaster: $^5/_8$″ sanded gypsum; 1:3 both faces; Design “C,” Construction “A.”	N/A	1 hr. 54 min.			2	1-4, 9, 55	$2^3/_4$
W-7-M-8	$7^1/_4$″	6″ clay tile; Illinois surface clay; single cell thick; Plaster: $^5/_8$″ sanded gypsum 1:3 both faces; Design “C,” Construction “S.”	N/A	2 hrs.			2	1, 3, 4, 9, 10, 55	2
W-7-M-8a	$7^1/_4$″	6″ clay tile; Illinois surface clay; single cell thick; Plaster: $^5/_8$″ sanded gypsum 1:3 both faces; Design “C,” Construction “E.”	N/A	1 hr. 23 min			2	1-4, 9, 10, 55	$1^3/_4$

(continued)

INTERNATIONAL CODE COUNCIL®
Copyright © 2015 ICC. ALL RIGHTS RESERVED. Accessed by David Dammon on Jun 21, 2017 12:30:52 PM pursuant to License Agreement with ICC. No further reproduction or distribution authorized. ANY UNAUTHORIZED REPRODUCTION OR DISTRIBUTION IS A VIOLATION OF THE FEDERAL COPYRIGHT ACT AND THE LICENSE AGREEMENT, AND SUBJECT TO CIVIL AND CRIMINAL PENALTIES THEREUNDER.

TABLE 1.1.3—continued
MASONRY WALLS
6″ TO LESS THAN 8″ THICK

ITEM CODE	THICKNESS	CONSTRUCTION DETAILS	PERFORMANCE		REFERENCE NUMBER			NOTES	REC. HOURS
			LOAD	TIME	PRE-BMS-92	BMS-92	POST-BMS-92		
W-6-M-9	6″	Core: structural clay tile; see Notes 12, 16, 20; No facings.	N/A	20 min.		1		3, 5, 24	1/3
W-6-M-10	6″	Core: structural clay tile; see Notes 12, 17, 20; No facings.	N/A	25 min.		1		3, 5, 24	1/3
W-6-M-11	6″	Core: structural clay tile; see Notes 12, 16, 19; No facings.	N/A	15 min.		1		3, 5, 24	1/4
W-6-M-12	6″	Core: structural clay tile; see Notes 12, 17, 19; No facings.	N/A	20 min.		1		3, 5, 24	1/3
W-6-M-13	6″	Core: structural clay tile; see Notes 13, 16, 22; No facings.	N/A	45 min.		1		3, 5, 24	3/4
W-6-M-14	6″	Core: structural clay tile; see Notes 13, 17, 22; No facings.	N/A	1 hr.		1		3, 5, 24	1
W-6-M-15	6″	Core: structural clay tile; see Notes 15, 17, 19; No facings.	N/A	2 hrs.		1		3, 5, 24	2
W-6-M-16	6″	Core: structural clay tile; see Notes 15, 16, 19; No facings.	N/A	2 hrs.		1		3, 5, 24	2
W-6-M-17	6″	Cored concrete masonry; see Notes 12, 34, 36, 38, 41; No facings.	80 psi	3 hrs. 30 min.		1		5, 25	3 1/2
W-6-M-18	6″	Cored concrete masonry; see Notes 12, 33, 36, 38, 41; No facings.	80 psi	3 hrs.		1		5, 25	3
W-6-M-19	6 1/2″	Cored concrete masonry; see Notes 12, 34, 36, 38, 41; Facings: side 1; see Note 35.	80 psi	4 hrs.		1		5, 25	4
W-6-M-20	6 1/2″	Cored concrete masonry; see Notes 12, 33, 36, 38, 41; Facings: side 1; see Note 35.	80 psi	4 hrs.		1		5, 25	4
W-6-M-21	6 5/8″	Core: structural clay tile; see Notes 12, 16, 20; Facings: unexposed face only; see Note 18.	N/A	30 min.		1		3, 5, 24	1/2
W-6-M-22	6 5/8″	Core: structural clay tile; see Notes 12, 17, 20; Facings: unexposed face only; see Note 18.	N/A	40 min.		1		3, 5, 24	2/3
W-6-M-23	6 5/8″	Core: structural clay tile; see Notes 12, 16, 20; Facings: exposed face only; see Note 18.	N/A	1 hr.		1		3, 5, 24	1
W-6-M-24	6 5/8″	Core: structural clay tile; see Notes 12, 17, 20; Facings: exposed face only; see Note 18.	N/A	1 hr. 5 min.		1		3, 5, 24	1
W-6-M-25	6 5/8″	Core: structural clay tile; see Notes 12, 16, 19; Facings: unexposed side only; see Note 18.	N/A	25 min.		1		3, 5, 24	1/3
W-6-M-26	6 5/8″	Core: structural clay tile; see Notes 12, 7, 19; Facings: unexposed face only; see Note 18.	N/A	30 min.		1		3, 5, 24	1/2
W-6-M-27	6 5/8″	Core: structural clay tile; see Notes 12, 16, 19; Facings: exposed side only; see Note 18.	N/A	1 hr.		1		3, 5, 24	1
W-6-M-28	6 5/8″	Core: structural clay tile; see Notes 12, 17, 19; Facings: fire side only; see Note 18.	N/A	1 hr.		1		3, 5, 24	1
W-6-M-29	6 5/8″	Core: structural clay tile; see Notes 13, 16, 22; Facings: unexposed side only; see Note 18.	N/A	1 hr.		1		3, 5, 24	1
W-6-M-30	6 5/8″	Core: structural clay tile; see Notes 13, 17, 22; Facings: unexposed side only; see Note 18.	N/A	1 hr. 15 min.		1		3, 5, 24	1 1/4
W-6-M-31	6 5/8″	Core: structural clay tile; see Notes 13, 16, 22; Facings: fire side only; see Note 18.	N/A	1 hr. 15 min.		1		3, 5, 24	1 1/4
W-6-M-32	6 5/8″	Core: structural clay tile; see Notes 13, 17, 22; Facings: fire side only; see Note 18.	N/A	1 hr. 30 min.		1		3, 5, 24	1 1/2

(continued)

INTERNATIONAL CODE COUNCIL®
Copyright © 2015 ICC. ALL RIGHTS RESERVED. Accessed by David Dammon on Jun 21, 2017 12:30:52 PM pursuant to License Agreement with ICC. No further reproduction or distribution authorized. ANY UNAUTHORIZED REPRODUCTION OR DISTRIBUTION IS A VIOLATION OF THE FEDERAL COPYRIGHT ACT AND THE LICENSE AGREEMENT, AND SUBJECT TO CIVIL AND CRIMINAL PENALTIES THEREUNDER.

TABLE 1.1.3—continued
MASONRY WALLS
6″ TO LESS THAN 8″ THICK

ITEM CODE	THICKNESS	CONSTRUCTION DETAILS	PERFORMANCE		REFERENCE NUMBER			NOTES	REC. HOURS
			LOAD	TIME	PRE-BMS-92	BMS-92	POST-BMS-92		
W-6-M-33	$6^{5}/_{8}$″	Core: structural clay tile; see Notes 15, 16, 19; Facings: unexposed side only; see Note 18.	N/A	2 hrs. 30 min.		1		3, 5, 24	$2^{1}/_{2}$
W-6-M-34	$6^{5}/_{8}$″	Core: structural clay tile; see Notes 15, 17, 19; Facings: unexposed side only; see Note 18.	N/A	2 hrs. 30 min.		1		3, 5, 24	$2^{1}/_{2}$
W-6-M-35	$6^{5}/_{8}$″	Core: structural clay tile; see Notes 15, 16, 19; Facings: fire side only; see Note 18.	N/A	2 hrs. 30 min.		1		3, 5, 24	$2^{1}/_{2}$
W-6-M-36	$6^{5}/_{8}$″	Core: structural clay tile; see Notes 15, 17, 19; Facings: fire side only; see Note 18.	N/A	2 hrs. 30 min.		1		3, 5, 24	$2^{1}/_{2}$
W-6-M-37	7″	Cored concrete masonry; see Notes 12, 34, 36, 38, 41; see Note 35 for facings on both sides.	80 psi	5 hrs.		1		5, 25	5
W-6-M-38	7″	Cored concrete masonry; see Notes 12, 33, 36, 38, 41; see Note 35 for facings.	80 psi	5 hrs.		1		5, 25	5
W-6-M-39	$7^{1}/_{4}$″	Core: structural clay tile; see Notes 12, 16, 20; Facings: both sides; see Note 18.	N/A	1 hr. 15 min.		1		3, 5, 24	$1^{1}/_{4}$
W-6-M-40	$7^{1}/_{4}$″	Core: structural clay tile; see Notes 12, 17, 20; Facings: both sides; see Note 18.	N/A	1 hr. 30 min.		1		3, 5, 24	$1^{1}/_{2}$
W-6-M-41	$7^{1}/_{4}$″	Core: structural clay tile; see Notes 12, 16, 19; Facings: both sides; see Note 18.	N/A	1 hr. 15 min.		1		3, 5, 24	$1^{1}/_{4}$
W-6-M-42	$7^{1}/_{4}$″	Core: structural clay tile; see Notes 12, 17, 19; Facings: both sides; see Note 18.	N/A	1 hr. 30 min.		1		3, 5, 24	$1^{1}/_{2}$
W-7-M-43	$7^{1}/_{4}$″	Core: structural clay tile; see Notes 13, 16, 22; Facings: both sides of wall; see Note 18.	N/A	1 hr. 30 min.		1		3, 5, 24	$1^{1}/_{2}$
W-7-M-44	$7^{1}/_{4}$″	Core: structural clay tile; see Notes 13, 17, 22; Facings: both sides of wall; see Note 18.	N/A	2 hrs.		1		3, 5, 24	$1^{1}/_{2}$
W-7-M-45	$7^{1}/_{4}$″	Core: structural clay tile; see Notes 15, 16, 19; Facings: both sides; see Note 18.	N/A	3 hrs. 30 min.		1		3, 5, 24	$3^{1}/_{2}$
W-7-M-46	$7^{1}/_{4}$″	Core: structural clay tile; see Notes 15, 17, 19; Facings: both sides; see Note 18.	N/A	3 hrs. 30 min.		1		3, 5, 24	$3^{1}/_{2}$
W-6-M-47	6″	Core: 5″ thick solid gypsum blocks; see Note 45; Facings: both sides; see Note 45.	N/A	6 hrs.		1			6
W-6-M-48	6″	Core: hollow concrete units; see Notes 47, 50, 54; No facings.	N/A	1 hr. 15 min.		1			$1^{1}/_{4}$
W-6-M-49	6″	Core: hollow concrete units; see Notes 46, 50, 54; No facings.	N/A	1 hr. 30 min.		1			$1^{1}/_{2}$
W-6-M-50	6″	Core: hollow concrete units; see Notes 46, 41, 54; No facings.	N/A	2 hrs.		1			2
W-6-M-51	6″	Core: hollow concrete units; see Notes 46, 53, 54; No facings.	N/A	3 hrs.		1			3
W-6-M-52	6″	Core: hollow concrete units; see Notes 47, 53, 54; No facings.	N/A	2 hrs. 30 min.		1			$2^{1}/_{2}$
W-6-M-53	6″	Core: hollow concrete units; see Notes 47, 51, 54; No facings.	N/A	1 hr. 30 min.		1			$1^{1}/_{2}$
W-6-M-54	$6^{1}/_{2}$″	Core: hollow concrete units; see Notes 46, 50, 54; Facings: one side only; see Note 35.	N/A	2 hrs.		1			2
W-6-M-55	$6^{1}/_{2}$″	Core: hollow concrete units; see Notes 4, 51, 54; Facings: one side; see Note 35.	N/A	2 hrs. 30 min.		1			$2^{1}/_{2}$
W-6-M-56	$6^{1}/_{2}$″	Core: hollow concrete units; see Notes 46, 53, 54; Facings: one side; see Note 35.	N/A	4 hrs.		1			4

(continued)

INTERNATIONAL CODE COUNCIL®
Copyright © 2015 ICC. ALL RIGHTS RESERVED. Accessed by David Dammon on Jun 21, 2017 12:30:52 PM pursuant to License Agreement with ICC. No further reproduction or distribution authorized. ANY UNAUTHORIZED REPRODUCTION OR DISTRIBUTION IS A VIOLATION OF THE FEDERAL COPYRIGHT ACT AND THE LICENSE AGREEMENT, AND SUBJECT TO CIVIL AND CRIMINAL PENALTIES THEREUNDER.

TABLE 1.1.3—continued
MASONRY WALLS
6″ TO LESS THAN 8″ THICK

ITEM CODE	THICKNESS	CONSTRUCTION DETAILS	PERFORMANCE		REFERENCE NUMBER			NOTES	REC. HOURS
			LOAD	TIME	PRE-BMS-92	BMS-92	POST-BMS-92		
W-6-M-57	$6^1/_2$″	Core: hollow concrete units; see Notes 47, 53, 54; Facings: one side; see Note 35.	N/A	3 hrs.		1			3
W-6-M-58	$6^1/_2$″	Core: hollow concrete units; see Notes 47, 51, 54; Facings: one side; see Note 35.	N/A	2 hrs.		1			2
W-6-M-59	$6^1/_2$″	Core: hollow concrete units; see Notes 47, 50, 54; Facings: one side; see Note 35.	N/A	1 hr. 45 min.		1			$1^3/_4$
W-7-M-60	7″	Core: hollow concrete units; see Notes 46, 53, 54; Facings: both sides; see Note 35.	N/A	5 hrs.		1			5
W-7-M-61	7″	Core: hollow concrete units; see Notes 46, 51, 54; Facings: both sides; see Note 35.	N/A	3 hrs. 30 min.		1			$3^1/_2$
W-7-M-62	7″	Core: hollow concrete units; see Notes 46, 50, 54; Facings: both sides; see Note 35.	N/A	2 hrs. 30 min.		1			$2^1/_2$
W-7-M-63	7″	Core: hollow concrete units; see Notes 47, 53, 54; Facings: both sides; see Note 35.	N/A	4 hrs.		1			4
W-7-M-64	7″	Core: hollow concrete units; see Notes 47, 51, 54; Facings: both sides; see Note 35.	N/A	2 hrs. 30 min.		1			$2^1/_2$
W-7-M-65	7″	Core: hollow concrete units; see Notes 47, 50, 54; Facings: both sides; see Note 35.	N/A	2 hrs.		1			2
W-6-M-66	6″	Concrete wall with 4″ × 4″ No. 6 wire fabric (welded) near wall center for reinforcement.	N/A	2 hrs. 30 min.			43	2	$2^1/_2$

For SI: 1 inch = 25.4 mm, 1 pound per square inch = 0.00689 MPa.

Notes:

1. Tested at NBS under ASA Spec. No. 43-1934 (ASTM C19-53) except that hose stream testing where carried out was run on test specimens exposed for full test duration, not for a reduced period as is contemporarily done.
2. Failure by thermal criteria—maximum temperature rise.
3. For clay tile walls, unless the source or density of the clay can be positively identified or determined, it is suggested that the lowest hourly rating for the fire endurance of a clay tile partition of that thickness be followed. Identified sources of clay showing longer fire endurance can lead to longer time recommendations.
4. See Note 55 for construction and design details for clay tile walls.
5. Tested at NBS under ASA Spec. No. A2-1934.
6. Failure mode—collapse.
7. Collapsed on removal from furnace at 1 hour 9 minutes.
8. Hose stream—failed.
9. Hose stream—passed.
10. No end point met in test.
11. Wall collapsed at 1 hour 28 minutes.
12. One cell in wall thickness.
13. Two cells in wall thickness.
14. Double shells plus one cell in wall thickness.
15. One cell in wall thickness, cells filled with broken tile, crushed stone, slag, cinders or sand mixed with mortar.
16. Dense hard-burned clay or shale tile.
17. Medium-burned clay tile.
18. Not less than $^5/_8$ inch thickness of 1:3 sanded gypsum plaster.
19. Units of not less than 30 percent solid material.
20. Units of not less than 40 percent solid material.
21. Units of not less than 50 percent solid material.
22. Units of not less than 45 percent solid material.
23. Units of not less than 60 percent solid material.
24. All tiles laid in portland cement-lime mortar.
25. Load: 80 psi for gross cross sectional area of wall.
26. Three cells in wall thickness.
27. Minimum percent of solid material in concrete units = 52.
28. Minimum percent of solid material in concrete units = 54.
29. Minimum percent of solid material in concrete units = 55.
30. Minimum percent of solid material in concrete units = 57.

(continued)

INTERNATIONAL CODE COUNCIL®
Copyright © 2015 ICC. ALL RIGHTS RESERVED. Accessed by David Dammon on Jun 21, 2017 12:30:52 PM pursuant to License Agreement with ICC. No further reproduction or distribution authorized. ANY UNAUTHORIZED REPRODUCTION OR DISTRIBUTION IS A VIOLATION OF THE FEDERAL COPYRIGHT ACT AND THE LICENSE AGREEMENT, AND SUBJECT TO CIVIL AND CRIMINAL PENALTIES THEREUNDER.

TABLE 1.1.3—continued
MASONRY WALLS
6″ TO LESS THAN 8″ THICK

31. Minimum percent of solid material in concrete units = 62.
32. Minimum percent of solid material in concrete units = 65.
33. Minimum percent of solid material in concrete units = 70.
34. Minimum percent of solid material in concrete units = 76.
35. Not less than $^1/_2$ inch of 1:3 sanded gypsum plaster.
36. Noncombustible or no members framed into wall.
37. Combustible members framed into wall.
38. One unit in wall thickness.
39. Two units in wall thickness.
40. Three units in wall thickness.
41. Concrete units made with expanded slag or pumice aggregates.
42. Concrete units made with expanded burned clay or shale, crushed limestone, air cooled slag or cinders.
43. Concrete units made with calcareous sand and gravel. Coarse aggregate, 60 percent or more calcite and dolomite.
44. Concrete units made with siliceous sand and gravel. Ninety percent or more quartz, chert or flint.
45. Laid in 1:3 sanded gypsum mortar.
46. Units of expanded slag or pumice aggregate.
47. Units of crushed limestone, blast furnace, slag, cinder and expanded clay or shale.
48. Units of calcareous sand and gravel. Coarse aggregate, 60 percent or more calcite and dolomite.
49. Units of siliceous sand and gravel. Ninety percent or more quartz, chert or flint.
50. Unit minimum 49 percent solid.
51. Unit minimum 62 percent solid.
52. Unit minimum 65 percent solid.
53. Unit minimum 73 percent solid.
54. Ratings based on one unit and one cell in wall section.
55. See Clay Tile Partition Design Construction drawings, below.

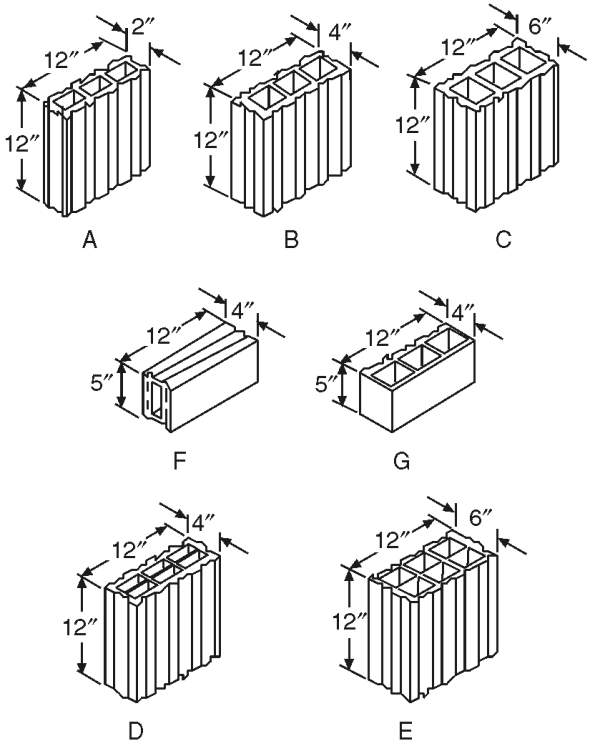

DESIGNS OF TILES USED IN FIRE-TEST PARTITIONS

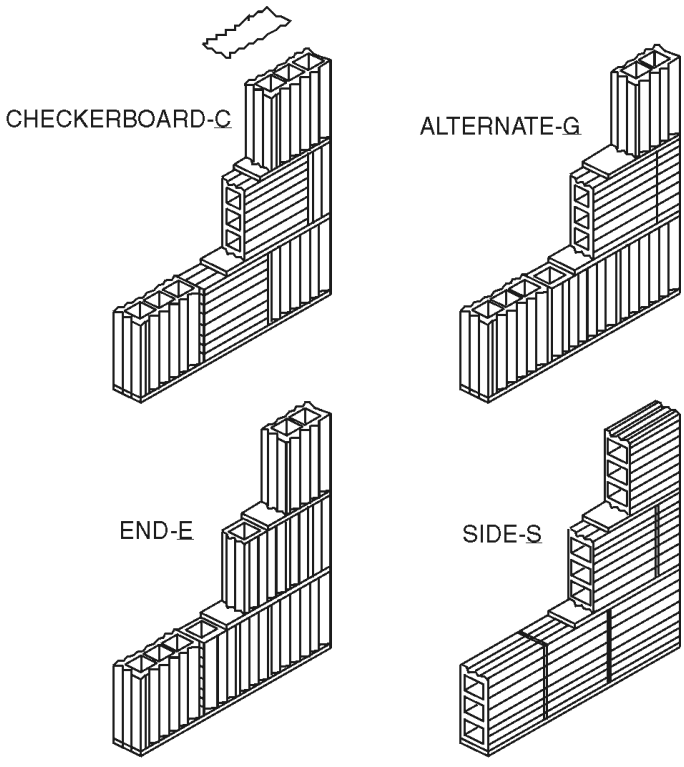

THE FOUR TYPES OF CONSTRUCTION USED IN FIRE-TEST PARTITIONS

INTERNATIONAL CODE COUNCIL®
Copyright © 2015 ICC. ALL RIGHTS RESERVED. Accessed by David Dammon on Jun 21, 2017 12:30:52 PM pursuant to License Agreement with ICC. No further reproduction or distribution authorized. ANY UNAUTHORIZED REPRODUCTION OR DISTRIBUTION IS A VIOLATION OF THE FEDERAL COPYRIGHT ACT AND THE LICENSE AGREEMENT, AND SUBJECT TO CIVIL AND CRIMINAL PENALTIES THEREUNDER.

FIGURE 1.1.4
MASONRY WALLS
8″ TO LESS THAN 10″ THICK

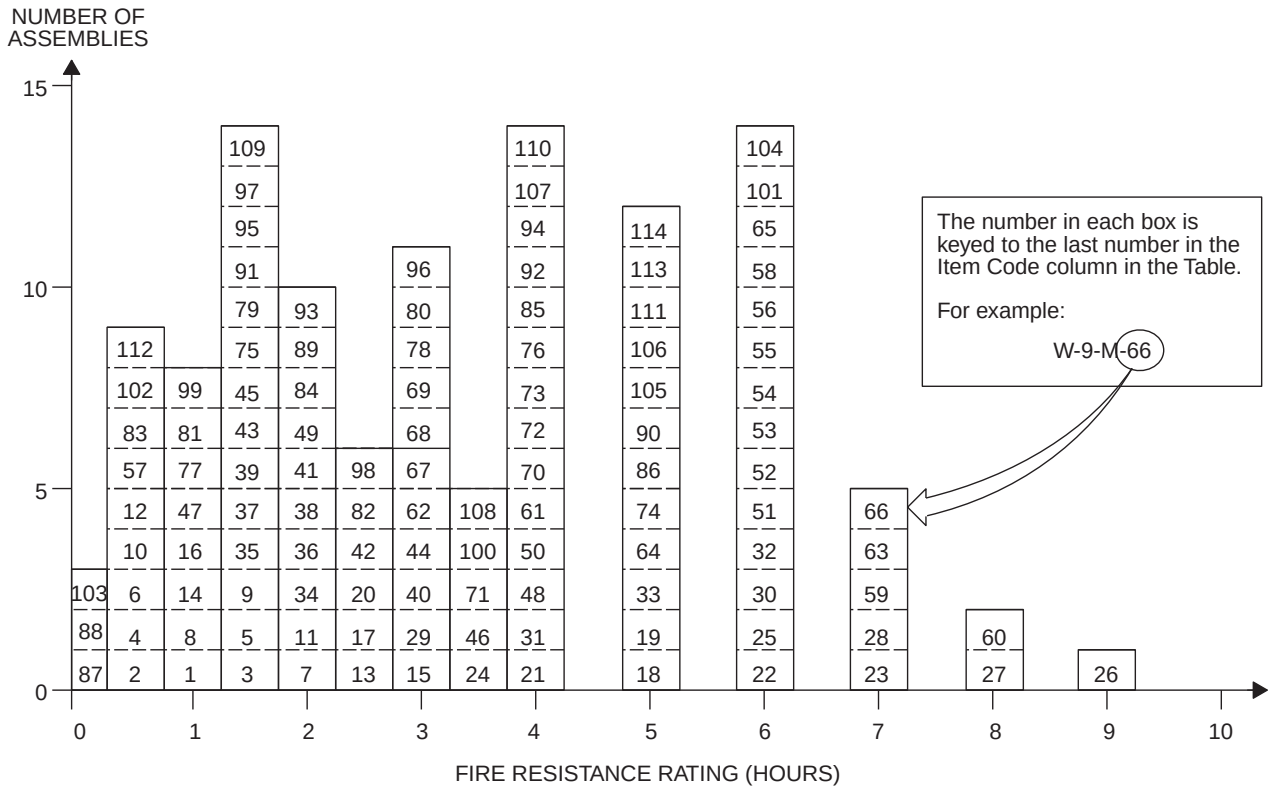

TABLE 1.1.4
MASONRY WALLS
8″ TO LESS THAN 10″ THICK

ITEM CODE	THICKNESS	CONSTRUCTION DETAILS	PERFORMANCE		REFERENCE NUMBER			NOTES	REC. HOURS
			LOAD	TIME	PRE-BMS-92	BMS-92	POST-BMS-92		
W-8-M-1	8″	Core: clay or shale structural tile; Units in wall thickness: 1; Cells in wall thickness: 2; Minimum % solids in units: 40.	80 psi	1 hr. 15 min.		1		1, 20	$1^1/_4$
W-8-M-2	8″	Core: clay or shale structural tile; Units in wall thickness: 1; Cells in wall thickness: 2; Minimum % solids in units: 40; No facings; Result for wall with combustible members framed into interior.	80 psi	45 min.		1		1, 20	$^3/_4$
W-8-M-3	8″	Core: clay or shale structural tile; Units in wall thickness: 1; Cells in wall thickness: 2; Minimum % solids in units: 43.	80 psi	1 hr. 30 min.		1		1, 20	$1^1/_2$
W-8-M-4	8″	Core: clay or shale structural tile; Units in wall thickness: 1; Cells in wall thickness: 2; Minimum % solids in units: 43; No facings; Combustible members framed into wall.	80 psi	45 min.		1		1, 20	$^3/_4$
W-8-M-5	8″	Core: clay or shale structural tile; No facings.	See Notes	1 hr. 30 min.		1		1, 2, 5, 10, 18, 20, 21	$1^1/_2$
W-8-M-6	8″	Core: clay or shale structural tile; No facings.	See Notes	45 min.		1		1, 2, 5, 10,19, 20, 21	$^3/_4$

(continued)

INTERNATIONAL CODE COUNCIL®
Copyright © 2015 ICC. ALL RIGHTS RESERVED. Accessed by David Dammon on Jun 21, 2017 12:30:52 PM pursuant to License Agreement with ICC. No further reproduction or distribution authorized. ANY UNAUTHORIZED REPRODUCTION OR DISTRIBUTION IS A VIOLATION OF THE FEDERAL COPYRIGHT ACT AND THE LICENSE AGREEMENT, AND SUBJECT TO CIVIL AND CRIMINAL PENALTIES THEREUNDER.

TABLE 1.1.4—continued
MASONRY WALLS
8″ TO LESS THAN 10″ THICK

ITEM CODE	THICKNESS	CONSTRUCTION DETAILS	PERFORMANCE		REFERENCE NUMBER			NOTES	REC. HOURS
			LOAD	TIME	PRE-BMS-92	BMS-92	POST-BMS-92		
W-8-M-7	8″	Core: clay or shale structural tile; No facings	See Notes	2 hrs.		1		1, 2, 5, 13, 18, 20, 21	2
W-8-M-8	8″	Core: clay or shale structural tile; No facings.	See Notes	1 hr. 45 min.		1		1, 2, 5, 13, 19, 20, 21	1 1/4
W-8-M-9	8″	Core: clay or shale structural tile; No facings.	See Notes	1 hr. 15 min.		1		1, 2, 6, 9, 18, 20, 21	1 3/4
W-8-M-10	8″	Core: clay or shale structural tile; No facings.	See Notes	45 min.		1		1, 2, 6, 9, 19, 20, 21	3/4
W-8-M-11	8″	Core: clay or shale structural tile; No facings.	See Notes	2 hrs.		1		1, 2, 6, 10, 18, 20, 21	2
W-8-M-12	8″	Core: clay or shale structural tile; No facings.	See Notes	45 min.		1		1, 2, 6, 10, 19, 20, 21	3/4
W-8-M-13	8″	Core: clay or shale structural tile; No facings.	See Notes	2 hrs. 30 min.		1		1, 3, 6, 12, 18, 20, 21	2 1/2
W-8-M-14	8″	Core: clay or shale structural tile; No facings.	See Notes	1 hr.		1		1, 2, 6, 12, 19, 20, 21	1
W-8-M-15	8″	Core: clay or shale structural tile; No facings.	See Notes	3 hrs.		1		1, 2, 6, 16, 18, 20, 21	3
W-8-M-16	8″	Core: clay or shale structural tile; No facings.	See Notes	1 hr. 15 min.		1		1, 2, 6, 16, 19, 20, 21	1 1/4
W-8-M-17	8″	Cored clay or shale brick; Units in wall thickness: 1; Cells in wall thickness: 1; Minimum % solids: 70; No facings.	See Notes	2 hrs. 30 min.		1		1, 44	2 1/2
W-8-M-18	8″	Cored clay or shale brick; Units in wall thickness: 2; Cells in wall thickness: 2; Minimum % solids: 87; No facings.	See Notes	5 hrs.		1		1, 45	5
W-8-M-19	8″	Core: solid clay or shale brick; No facings.	See Notes	5 hrs.		1		1, 22, 45	5
W-8-M-20	8″	Core: hollow rolok of clay or shale.	See Notes	2 hrs. 30 min.		1		1, 22, 45	2 1/2
W-8-M-21	8″	Core: hollow rolok bak of clay or shale; No facings.	See Notes	4 hrs.		1		1, 45	4
W-8-M-22	8″	Core: concrete brick; No facings.	See Notes	6 hrs.		1		1, 45	6
W-8-M-23	8″	Core: sand-lime brick; No facings.	See Notes	7 hrs.		1		1, 45	7
W-8-M-24	8″	Core: 4″, 40% solid clay or shale structural tile; 1 side 4″ brick facing.	See Notes	3 hrs. 30 min.		1		1, 20	3 1/2
W-8-M-25	8″	Concrete wall (3220 psi); Reinforcing vertical rods 1″ from each face and 1″ diameter; horizontal rods 5/8″ diameter.	22,200 lbs./ft.	6 hrs.			7		6
W-8-M-26	8″	Core: sand-line brick; 1/2″ of 1:3 sanded gypsum plaster facings on one side.	See Notes	9 hrs.		1		1, 45	9
W-8-M-27	8 1/2″	Core: sand-line brick; 1/2″ of 1:3 sanded gypsum plaster facings on one side.	See Notes	8 hrs.		1		1, 45	8
W-8-M-28	8 1/2″	Core: concrete; 1/2″ of 1:3 sanded gypsum plaster facings on one side.	See Notes	7 hrs.		1		1, 45	7

(continued)

INTERNATIONAL CODE COUNCIL®
Copyright © 2015 ICC. ALL RIGHTS RESERVED. Accessed by David Dammon on Jun 21, 2017 12:30:52 PM pursuant to License Agreement with ICC. No further reproduction or distribution authorized. ANY UNAUTHORIZED REPRODUCTION OR DISTRIBUTION IS A VIOLATION OF THE FEDERAL COPYRIGHT ACT AND THE LICENSE AGREEMENT, AND SUBJECT TO CIVIL AND CRIMINAL PENALTIES THEREUNDER.

TABLE 1.1.4—continued
MASONRY WALLS
8″ TO LESS THAN 10″ THICK

ITEM CODE	THICKNESS	CONSTRUCTION DETAILS	PERFORMANCE		REFERENCE NUMBER			NOTES	REC. HOURS
			LOAD	TIME	PRE-BMS-92	BMS-92	POST-BMS-92		
W-8-M-29	8 1/2″	Core: hollow rolok of clay or shale; 1/2″ of 1:3 sanded gypsum plaster facings on one side.	See Notes	3 hrs.		1		1, 45	3
W-8-M-30	8 1/2″	Core: solid clay or shale brick 1/2″ thick, 1:3 sanded gypsum plaster facings on one side.	See Notes	6 hrs.		1		1, 22, 45,	6
W-8-M-31	8 1/2″	Core: cored clay or shale brick; Units in wall thickness: 1; Cells in wall thickness: 1; Minimum % solids: 70; 1/2″ of 1:3 sanded gypsum plaster facings on both sides.	See Notes	4 hrs.		1		1, 44	4
W-8-M-32	8 1/2″	Core: cored clay or shale brick; Units in wall thickness: 2; Cells in wall thickness: 2; Minimum % solids: 87; 1/2″ of 1:3 sanded gypsum plaster facings on one side.	See Notes	6 hrs.		1		1, 45	6
W-8-M-33	8 1/2″	Core: hollow rolok bak of clay or shale; 1/2″ of 1:3 sanded gypsum plaster facings on one side.	See Notes	5 hrs.		1		1, 45	5
W-8-M-34	8 5/8″	Core: clay or shale structural tile; Units in wall thickness: 1; Cells in wall thickness: 2; Minimum % solids in units: 40; 5/8″ of 1:3 sanded gypsum plaster facings on one side.	See Notes	2 hrs.		1		1, 20 21	2
W-8-M-35	8 5/8″	Core: clay or shale structural tile; Units in wall thickness: 1; Cells in wall thickness: 2; Minimum % solids in units: 40; Exposed face: 5/8″ of 1:3 sanded gypsum plaster.	See Notes	1 hr. 30 min.		1		1, 20, 21	1 1/2
W-8-M-36	8 5/8″	Core: clay or shale structural tile; Units in wall thickness: 1; Cells in wall thickness: 2; Minimum % solids in units: 43; 5/8″ of 1:3 sanded gypsum plaster facings on one side.	See Notes	2 hrs.				1, 20,21	2
W-8-M-37	8 5/8″	Core: clay or shale structural tile; Units in wall thickness: 1; Cells in wall thickness: 2; Minimum % solids in units: 43; 5/8″ of 1:3 sanded gypsum plaster of the exposed face only.	See Notes	1 hr. 30 min.		1		1, 20, 21	1 1/2
W-8-M-38	8 5/8″	Core: clay or shale structural tile; Facings: side 1; see Note 17.	See Notes	2 hrs.		1		1, 2, 5, 10, 18, 20, 21	2
W-8-M-39	8 5/8″	Core: clay or shale structural tile; Facings: exposed side only; see Note 17.	See Notes	1 hr. 30 min.		1		1, 2, 5, 10, 19, 20, 21	1 1/2
W-8-M-40	8 5/8″	Core: clay or shale structural tile; Facings: exposed side only; see Note 17.	See Notes	3 hrs.		1		1, 2, 5, 13, 18, 20, 21	3
W-8-M-41	8 5/8″	Core: clay or shale structural tile; Facings: exposed side only; see Note 17.	See Notes	2 hrs.		1		1, 2, 5, 13, 19, 20, 21	2
W-8-M-42	8 5/8″	Core: clay or shale structural tile; Facings: side 1; see Note 17.	See Notes	2 hrs. 30 min.		1		1, 2, 9, 18, 20, 21	2 1/2
W-8-M-43	8 5/8″	Core: clay or shale structural tile; Facings: exposed side only; see Note 17.	See Notes	1 hr. 30 min.		1		1, 2, 6, 9, 19, 20, 21	1 1/2

(continued)

INTERNATIONAL CODE COUNCIL®
Copyright © 2015 ICC. ALL RIGHTS RESERVED. Accessed by David Dammon on Jun 21, 2017 12:30:52 PM pursuant to License Agreement with ICC. No further reproduction or distribution authorized. ANY UNAUTHORIZED REPRODUCTION OR DISTRIBUTION IS A VIOLATION OF THE FEDERAL COPYRIGHT ACT AND THE LICENSE AGREEMENT, AND SUBJECT TO CIVIL AND CRIMINAL PENALTIES THEREUNDER.

TABLE 1.1.4—continued
MASONRY WALLS
8″ TO LESS THAN 10″ THICK

ITEM CODE	THICKNESS	CONSTRUCTION DETAILS	PERFORMANCE		REFERENCE NUMBER			NOTES	REC. HOURS
			LOAD	TIME	PRE-BMS-92	BMS-92	POST-BMS-92		
W-8-M-44	$8^{5}/_{8}$″	Core: clay or shale structural tile; Facings: side 1, see Note 17; side 2, none.	See Notes	3 hrs.		1		1, 2, 10, 18, 20, 21	3
W-8-M-45	$8^{5}/_{8}$″	Core: clay or shale structural tile; Facings: fire side only; see Note 17.	See Notes	1 hr. 30 min.		1		1, 2, 6, 10, 19, 20, 21	$1^{1}/_{2}$
W-8-M-46	$8^{5}/_{8}$″	Core: clay or shale structural tile; Facings: side 1, see Note 17; side 2, none.	See Notes	3 hrs. 30 min.		1		1, 2, 6, 12, 18, 20, 21	$3^{1}/_{2}$
W-8-M-47	$8^{5}/_{8}$″	Core: clay or shale structural tile; Facings: exposed side only; see Note 17.	See Notes	1 hr. 45 min.		1		1, 2, 6, 12, 19, 20, 21	$1^{3}/_{4}$
W-8-M-48	$8^{5}/_{8}$″	Core: clay or shale structural tile; Facings: side 1, see Note 17; side 2, none.	See Notes	4 hrs.		1		1, 2, 6, 16, 18, 20, 21	4
W-8-M-49	$8^{5}/_{8}$″	Core: clay or shale structural tile; Facings: fire side only; see Note 17.	See Notes	2 hrs.		1		1, 2, 6, 16, 19, 20, 21	2
W-8-M-50	$8^{5}/_{8}$″	Core: 4″, 40% solid clay or shale clay structural tile; 4″ brick plus $^{5}/_{8}$″ of 1:3 sanded gypsum plaster facings on one side.	See Notes	4 hrs.		1		1, 20	4
W-8-M-51	$8^{3}/_{4}$″	$8^{3}/_{4}$″ × $2^{1}/_{2}$″ and 4″ × $2^{1}/_{2}$″ cellular fletton (1873 psi) single and triple cell hollow brick set in $^{1}/_{2}$″ sand mortar in alternate courses.	3.6 tons/ft.	6 hrs.			7	23, 29	6
W-8-M-52	$8^{3}/_{4}$″	$8^{3}/_{4}$″ thick cement brick (2527 psi) with P.C. and sand mortar.	3.6 tons/ft.	6 hrs.			7	23, 24	6
W-8-M-53	$8^{3}/_{4}$″	$8^{3}/_{4}$″ × $2^{1}/_{2}$″ fletton brick (1831 psi) in $^{1}/_{2}$″ sand mortar.	3.6 tons/ft.	6 hrs.			7	23, 24	6
W-8-M-54	$8^{3}/_{4}$″	$8^{3}/_{4}$″ × $2^{1}/_{2}$″ London stock brick (683 psi) in $^{1}/_{2}$″ P.C. - sand mortar.	7.2 tons/ft.	6 hrs.			7	23, 24	6
W-9-M-55	9″	9″ × $2^{1}/_{2}$″ Leicester red wire-cut brick (4465 psi) in $^{1}/_{2}$″ P.C. - sand mortar.	6.0 tons/ft.	6 hrs.			7	23, 24	6
W-9-M-56	9″	9″ × 3″ sand-lime brick (2603 psi) in $^{1}/_{2}$″ P.C. - sand mortar.	3.6 tons/ft.	6 hrs.			7	23, 24	6
W-9-M-57	9″	2 layers $2^{7}/_{8}$″ fletton brick (1910 psi) with $3^{1}/_{4}$″ air space; Cement and sand mortar.	1.5 tons/ft.	32 min.			7	23, 25	$^{1}/_{3}$
W-9-M-58	9″	9″ × 3″ stairfoot brick (7527 psi) in $^{1}/_{2}$″ sand-cement mortar.	7.2 tons/ft.	6 hrs.			7	23, 24	6
W-9-M-59	9″	Core: solid clay or shale brick; $^{1}/_{2}$″ thick; 1:3 sanded gypsum plaster facings on both sides.	See Notes	7 hrs.		1		1, 22, 45	7
W-9-M-60	9″	Core: concrete brick; $^{1}/_{2}$″ of 1:3 sanded gypsum plaster facings on both sides.	See Notes	8 hrs.		1		1, 45	8
W-9-M-61	9″	Core: hollow rolok of clay or shale; $^{1}/_{2}$″ of 1:3 sanded gypsum plaster facings on both sides.	See Notes	4 hrs.		1		1, 45	4
W-9-M-62	9″	Cored clay or shale brick; Units in wall thickness: 1; Cells in wall thickness: 1; Minimum % solids: 70; $^{1}/_{2}$″ of 1:3 sanded gypsum plaster facings on one side.	See Notes	3 hrs.		1		1, 44	3

(continued)

INTERNATIONAL CODE COUNCIL®
Copyright © 2015 ICC. ALL RIGHTS RESERVED. Accessed by David Dammon on Jun 21, 2017 12:30:52 PM pursuant to License Agreement with ICC. No further reproduction or distribution authorized. ANY UNAUTHORIZED REPRODUCTION OR DISTRIBUTION IS A VIOLATION OF THE FEDERAL COPYRIGHT ACT AND THE LICENSE AGREEMENT, AND SUBJECT TO CIVIL AND CRIMINAL PENALTIES THEREUNDER.

TABLE 1.1.4—continued
MASONRY WALLS
8″ TO LESS THAN 10″ THICK

ITEM CODE	THICKNESS	CONSTRUCTION DETAILS	PERFORMANCE		REFERENCE NUMBER			NOTES	REC. HOURS
			LOAD	TIME	PRE-BMS-92	BMS-92	POST-BMS-92		
W-9-M-63	9″	Cored clay or shale brick; Units in wall thickness: 2; Cells in wall thickness: 2; Minimum % solids: 87; 1/2″ of 1:3 sanded gypsum plaster facings on both sides.	See Notes	7 hrs.		1		1, 45	7
W-9-M-64	9-10″	Core: cavity wall of clay or shale brick; No facings.	See Notes	5 hrs.		1		1, 45	5
W-9-M-65	9-10″	Core: cavity construction of clay or shale brick; 1/2″ of 1:3 sanded gypsum plaster facings on one side.	See Notes	6 hrs.		1		1, 45	6
W-9-M-66	9-10″	Core: cavity construction of clay or shale brick; 1/2″ of 1:3 sanded gypsum plaster facings on both sides.	See Notes	7 hrs.		1		1, 45	7
W-9-M-67	9 1/4″	Core: clay or shale structural tile; Units in wall thickness: 1; Cells in wall thickness: 2; Minimum % solids in units: 40; 5/8″ of 1:3 sanded gypsum plaster facings on both sides.	See Notes	3 hrs.		1		1, 20, 21	3
W-9-M-68	9 1/4″	Core: clay or shale structural tile; Units in wall thickness: 1; Cells in wall thickness: 2; Minimum % solids in units: 43; 5/8″ of 1:3 sanded gypsum plaster facings on both sides.	See Notes	3 hrs.		1		1, 20, 21	3
W-9-M-69	9 1/4″	Core: clay or shale structural tile; Facings: sides 1 and 2; see Note 17.	See Notes	3 hrs.		1		1, 2, 5, 10, 18, 20, 21	3
W-9-M-70	9 1/4″	Core: clay or shale structural tile; Facings: sides 1 and 2; see Note 17.	See Notes	4 hrs.		1		1, 2, 5, 13, 18, 20, 21	4
W-9-M-71	9 1/4″	Core: clay or shale structural tile; Facings: sides 1 and 2; see Note 17.	See Notes	3 hrs. 30 min.		1		1, 2, 6, 9, 18, 20, 21	3 1/2
W-9-M-72	9 1/4″	Core: clay or shale structural tile; Facings: sides 1 and 2; see Note 17.	See Notes	4 hrs.		1		1, 2, 6, 10, 18, 20, 21	4
W-9-M-73	9 1/4″	Core: clay or shale structural tile; Facings: sides 1 and 2; see Note 17.	See Notes	4 hrs.		1		1, 2, 6, 12, 18, 20, 21	4
W-9-M-74	9 1/4″	Core: clay or shale structural tile; Facings: sides 1 and 2; see Note 17.	See Notes	5 hrs.		1		1, 2, 6 16, 18, 20, 21	5
W-9-M-75	8″	Cored concrete masonry; see Notes 2, 19, 26, 34, 40; No facings.	80 psi	1 hr. 30 min.		1		1, 20	1 1/2
W-8-M-76	8″	Cored concrete masonry; see Notes 2, 18, 26, 34, 40; No facings	80 psi	4 hrs.		1		1, 20	4
W-8-M-77	8″	Cored concrete masonry; see Notes 2, 19, 26, 31, 40; No facings.	80 psi	1 hr. 15 min.		1		1, 20	1 1/4
W-8-M-78	8″	Cored concrete masonry; see Notes 2, 18, 26, 31, 40; No facings.	80 psi	3 hrs.		1		1, 20	3
W-8-M-79	8″	Cored concrete masonry; see Notes 2, 19, 26, 36, 42; No facings.	80 psi	1 hr. 30 min.		1		1, 20	1 1/2

(continued)

INTERNATIONAL CODE COUNCIL®
Copyright © 2015 ICC. ALL RIGHTS RESERVED. Accessed by David Dammon on Jun 21, 2017 12:30:52 PM pursuant to License Agreement with ICC. No further reproduction or distribution authorized. ANY UNAUTHORIZED REPRODUCTION OR DISTRIBUTION IS A VIOLATION OF THE FEDERAL COPYRIGHT ACT AND THE LICENSE AGREEMENT, AND SUBJECT TO CIVIL AND CRIMINAL PENALTIES THEREUNDER.

TABLE 1.1.4—continued
MASONRY WALLS
8″ TO LESS THAN 10″ THICK

ITEM CODE	THICKNESS	CONSTRUCTION DETAILS	PERFORMANCE		REFERENCE NUMBER			NOTES	REC. HOURS
			LOAD	TIME	PRE-BMS-92	BMS-92	POST-BMS-92		
W-8-M-80	8″	Cored concrete masonry; see Notes 2, 18, 26, 36, 41; No facings.	80 psi	3 hrs.		1		1, 20	3
W-8-M-81	8″	Cored concrete masonry; see Notes 2, 19, 26, 34, 41; No facings.	80 psi	1 hr.		1		1, 20	1
W-8-M-82	8″	Cored concrete masonry; see Notes 2, 18, 26, 34, 41; No facings.	80 psi	2 hrs. 30 min.		1		1, 20	$2^1/_2$
W-8-M-83	8″	Cored concrete masonry; see Notes 2, 19, 26, 29, 41; No facings.	80 psi	45 min.		1		1, 20	$^3/_4$
W-8-M-84	8″	Cored concrete masonry; see Notes 2, 18, 26, 29, 41; No facings.	80 psi	2 hrs.		1		1, 20	2
W-8-M-85	$8^1/_2$″	Cored concrete masonry; see Notes 3, 18, 26, 34, 41; Facings: $2^1/_4$″ brick.	80 psi	4 hrs.		1		1, 20	4
W-8-M-86	8″	Cored concrete masonry; see Notes 3, 18, 26, 34, 41; Facings: $3^3/_4$″ brick face.	80 psi	5 hrs.		1		1, 20	5
W-8-M-87	8″	Cored concrete masonry; see Notes 2, 19, 26, 30, 43; No facings.	80 psi	12 min.		1		1, 20	$^1/_5$
W-8-M-88	8″	Cored concrete masonry; see Notes 2, 18, 26, 30, 43; No facings.	80 psi	12 min.		1		1, 20	$^1/_5$
W-8-M-89	$8^1/_2$″	Cored concrete masonry; see Notes 2, 19, 26, 34, 40; Facings: fire side only; see Note 38.	80 psi	2 hrs.		1		1, 20	2
W-8-M-90	$8^1/_2$″	Cored concrete masonry; see Notes 2, 18, 26, 34, 40; Facings: side 1; see Note 38.	80 psi	5 hrs.		1		1, 20	5
W-8-M-91	$8^1/_2$″	Cored concrete masonry; see Notes 2, 19, 26, 31, 40; Facings: fire side only; see Note 38.	80 psi	1 hr. 45 min.		1		1, 20	$1^3/_4$
W-8-M-92	$8^1/_2$″	Cored concrete masonry; see Notes 2, 18, 26, 31, 40; Facings: one side; see Note 38.	80 psi	4 hrs.		1		1, 20	4
W-8-M-93	$8^1/_2$″	Cored concrete masonry; see Notes 2, 19, 26, 36, 41; Facings: fire side only; see Note 38.	80 psi	2 hrs.		1		1, 20	2
W-8-M-94	$8^1/_2$″	Cored concrete masonry; see Notes 2, 18, 26, 36, 41; Facings: fire side only; see Note 38.	80 psi	4 hrs.		1		1, 20	4
W-8-M-95	$8^1/_2$″	Cored concrete masonry; see Notes 2, 19, 26, 34, 41; Facings: fire side only; see Note 38.	80 psi	1 hr. 30 min.		1		1, 20	$1^1/_2$
W-8-M-96	$8^1/_2$″	Cored concrete masonry; see Notes 2, 18, 26, 34, 41; Facings: one side; see Note 38.	80 psi	3 hrs.				1, 20	3
W-8-M-97	$8^1/_2$″	Cored concrete masonry; see Notes 2, 19, 26, 29, 41; Facings: fire side only; see Note 38.	80 psi	1 hr. 30 min.		1		1, 20	$1^1/_2$
W-8-M-98	$8^1/_2$″	Cored concrete masonry; see Notes 2, 18, 26, 29, 41; Facings: one side; see Note 38.	80 psi	2 hrs. 30 min.		1		1, 20	$2^1/_2$
W-8-M-99	$8^1/_2$″	Cored concrete masonry; see Notes 3, 19, 23, 27, 41; No facings.	80 psi	1 hr. 15 min.		1		1, 20	$1^1/_4$

(continued)

INTERNATIONAL CODE COUNCIL®
Copyright © 2015 ICC. ALL RIGHTS RESERVED. Accessed by David Dammon on Jun 21, 2017 12:30:52 PM pursuant to License Agreement with ICC. No further reproduction or distribution authorized. ANY UNAUTHORIZED REPRODUCTION OR DISTRIBUTION IS A VIOLATION OF THE FEDERAL COPYRIGHT ACT AND THE LICENSE AGREEMENT, AND SUBJECT TO CIVIL AND CRIMINAL PENALTIES THEREUNDER.

TABLE 1.1.4—continued
MASONRY WALLS
8″ TO LESS THAN 10″ THICK

ITEM CODE	THICKNESS	CONSTRUCTION DETAILS	PERFORMANCE		REFERENCE NUMBER			NOTES	REC. HOURS
			LOAD	TIME	PRE-BMS-92	BMS-92	POST-BMS-92		
W-8-M-100	$8^1/_2$″	Cored concrete masonry; see Notes 3, 18, 23, 27, 41; No facings.	80 psi	3 hrs. 30 min.		1		1, 20	$3^1/_2$
W-8-M-101	$8^1/_2$″	Cored concrete masonry; see Notes 3, 18, 26, 34, 41; Facings: $3^3/_4$″ brick face; one side only; see Note 38.	80 psi	6 hrs.		1		1, 20	6
W-8-M-102	$8^1/_2$″	Cored concrete masonry; see Notes 2, 19, 26, 30, 43; Facings: fire side only; see Note 38.	80 psi	30 min.		1		1, 20	$^1/_2$
W-8-M-103	$8^1/_2$″	Cored concrete masonry; see Notes 2, 18, 26, 30, 43; Facings: one side only; see Note 38.	80 psi	12 min.		1		1, 20	$^1/_5$
W-8-M-104	9″	Cored concrete masonry; see Notes 2, 18, 26, 34, 40; Facings: both sides; see Note 38.	80 psi	6 hrs.		1		1, 20	6
W-8-M-105	9″	Cored concrete masonry; see Notes 2, 18, 26, 31, 40; Facings: both sides; see Note 38.	80 psi	5 hrs.		1		1, 20	5
W-8-M-106	9″	Cored concrete masonry; see Notes 2, 18, 26, 36, 41; Facings: both sides of wall; see Note 38.	80 psi	5 hrs.		1		1, 20	5
W-8-M-107	9″	Cored concrete masonry; see Notes 2, 18, 26, 34, 41; Facings: both sides; see Note 38.	80 psi	4 hrs.		1		1, 20	4
W-8-M-108	9″	Cored concrete masonry; see Notes 2, 18, 26, 29, 41; Facings: both sides; see Note 38.	80 psi	3 hrs. 30 min.		1		1, 20	$3^1/_2$
W-8-M-109	9″	Cored concrete masonry; see Notes 3, 19, 23, 27, 40; Facings: fire side only; see Note 38.	80 psi	1 hr. 45 min.		1		1, 20	$1^3/_4$
W-8-M-110	9″	Cored concrete masonry; see Notes 3, 18, 23, 27, 41; Facings: one side only; see Note 38.	80 psi	4 hrs.		1		1, 20	4
W-8-M-111	9″	Cored concrete masonry; see Notes 3, 18, 26, 34, 41; $2^1/_4$″ brick face on one side only; see Note 38.	80 psi	5 hrs.		1		1, 20	5
W-8-M-112	9″	Cored concrete masonry; see Notes 2, 18, 26, 30, 43; Facings: both sides; see Note 38.	80 psi	30 min.		1		1, 20	$^1/_2$
W-9-M-113	$9^1/_2$″	Cored concrete masonry; see Notes 3, 18, 23, 27, 41; Facings: both sides; see Note 38.	80 psi	5 hrs.		1		1, 20	5
W-8-M-114	8″		200 psi	5 hrs.			43	22	5

For SI: 1 inch = 25.4 mm, 1 pound per square inch = 0.00689 MPa.

Notes:

1. Tested at NBS under ASA Spec. No. 43-1934 (ASTM C19-53).
2. One unit in wall thickness.
3. Two units in wall thickness.
4. Two or three units in wall thickness.
5. Two cells in wall thickness.
6. Three or four cells in wall thickness.
7. Four or five cells in wall thickness.
8. Five or six cells in wall thickness.
9. Minimum percent of solid materials in units = 40%.
10. Minimum percent of solid materials in units = 43%.
11. Minimum percent of solid materials in units = 46%.
12. Minimum percent of solid materials in units = 48%.
13. Minimum percent of solid materials in units = 49%.
14. inimum percent of solid materials in units = 45%.
15. Minimum percent of solid materials in units = 51%.
16. Minimum percent of solid materials in units = 53%.
17. Not less than $^5/_8$ inch thickness of 1:3 sanded gypsum plaster.
18. Noncombustible or no members framed into wall.

(continued)

INTERNATIONAL CODE COUNCIL®
Copyright © 2015 ICC. ALL RIGHTS RESERVED. Accessed by David Dammon on Jun 21, 2017 12:30:52 PM pursuant to License Agreement with ICC. No further reproduction or distribution authorized. ANY UNAUTHORIZED REPRODUCTION OR DISTRIBUTION IS A VIOLATION OF THE FEDERAL COPYRIGHT ACT AND THE LICENSE AGREEMENT, AND SUBJECT TO CIVIL AND CRIMINAL PENALTIES THEREUNDER.

TABLE 1.1.4—continued
MASONRY WALLS
8″ TO LESS THAN 10″ THICK

19. Combustible members framed into wall.
20. Load: 80 psi for gross cross-sectional area of wall.
21. Portland cement-lime mortar.
22. Failure mode thermal.
23. British test.
24. Passed all criteria.
25. Failed by sudden collapse with no preceding signs of impending failure.
26. One cell in wall thickness.
27. Two cells in wall thickness.
28. Three cells in wall thickness.
29. Minimum percent of solid material in concrete units = 52.
30. Minimum percent of solid material in concrete units = 54.
31. Minimum percent of solid material in concrete units = 55.
32. Minimum percent of solid material in concrete units = 57.
33. Minimum percent of solid material in concrete units = 60.
34. Minimum percent of solid material in concrete units = 62.
35. Minimum percent of solid material in concrete units = 65.
36. Minimum percent of solid material in concrete units = 70.
37. Minimum percent of solid material in concrete units = 76.
38. Not less than $^{1}/_{2}$ inch of 1:3 sanded gypsum plaster.
39. Three units in wall thickness.
40. Concrete units made with expanded slag or pumice aggregates.
41. Concrete units made with expanded burned clay or shale, crushed limestone, air cooled slag or cinders.
42. Concrete units made with calcareous sand and gravel. Coarse aggregate, 60 percent or more calcite and dolomite.
43. Concrete units made with siliceous sand and gravel. Ninety percent or more quartz, chert and dolomite.
44. Load: 120 psi for gross cross-sectional area of wall.
45. Load: 160 psi for gross cross-sectional area of wall.

INTERNATIONAL CODE COUNCIL®
Copyright © 2015 ICC. ALL RIGHTS RESERVED. Accessed by David Dammon on Jun 21, 2017 12:30:52 PM pursuant to License Agreement with ICC. No further reproduction or distribution authorized. ANY UNAUTHORIZED REPRODUCTION OR DISTRIBUTION IS A VIOLATION OF THE FEDERAL COPYRIGHT ACT AND THE LICENSE AGREEMENT, AND SUBJECT TO CIVIL AND CRIMINAL PENALTIES THEREUNDER.

FIGURE 1.1.5
MASONRY WALLS
10″ TO LESS THAN 12″ THICK

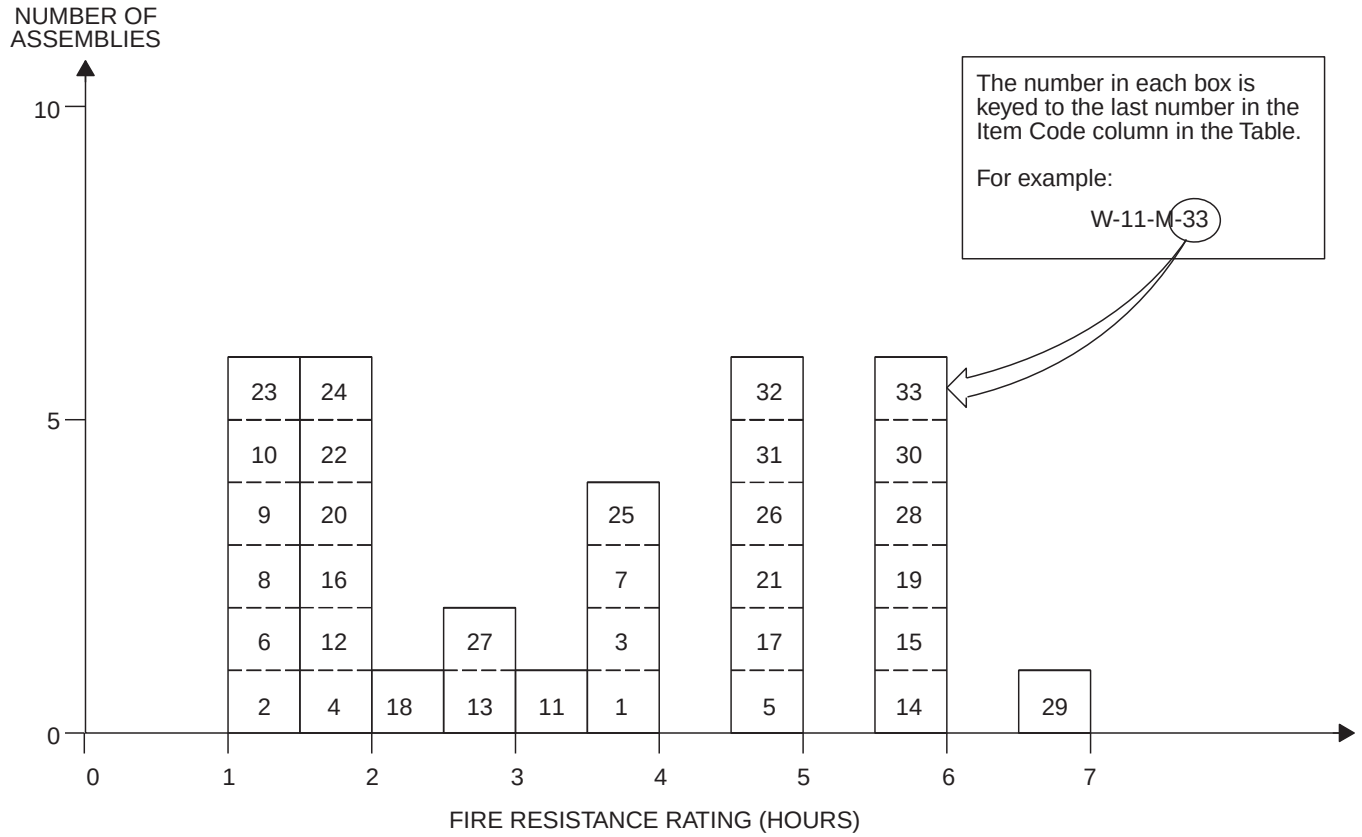

TABLE 1.1.5
MASONRY WALLS
10″ TO LESS THAN 12″ THICK

ITEM CODE	THICKNESS	CONSTRUCTION DETAILS	PERFORMANCE		REFERENCE NUMBER			NOTES	REC. HOURS
			LOAD	TIME	PRE-BMS-92	BMS-92	POST-BMS-92		
W-10-M-1	10″	Core: two $3^{3}/_{4}$″, 40% solid clay or shale structural tiles with 2″ air space between; Facings: $^{3}/_{4}$″ portland cement plaster on stucco on both sides.	80 psi	4 hrs.		1		1, 20	4
W-10-M-2	10″	Core: cored concrete masonry, 2″ air cavity; see Notes 3, 19, 27, 34, 40; No facings.	80 psi	1 hr. 30 min.		1		1, 20	$1^{1}/_{2}$
W-10-M-3	10″	Cored concrete masonry; see Notes 3, 18, 27, 34, 40; No facings.	80 psi	4 hrs.		1		1, 20	4
W-10-M-4	10″	Cored concrete masonry; see Notes 2, 19, 26, 34, 40; No facings.	80 psi	2 hrs.		1		1, 20	2
W-10-M-5	10″	Cored concrete masonry; see Notes 2, 18, 26, 33, 40; No facings.	80 psi	5 hrs.		1		1, 20	5
W-10-M-6	10″	Cored concrete masonry; see Notes 2, 19, 26, 33, 41; No facings.	80 psi	1 hr. 30 min.		1		1, 20	$1^{1}/_{2}$
W-10-M-7	10″	Cored concrete masonry; see Notes 2, 18, 26, 33, 41; No facings.	80 psi	4 hrs.		1		1, 20	4
W-10-M-8	10″	Cored concrete masonry (cavity type 2″ air space); see Notes 3, 19, 27, 34, 42; No facings.	80 psi	1 hr. 15 min.		1		1, 20	$1^{1}/_{4}$

(continued)

INTERNATIONAL CODE COUNCIL®
Copyright © 2015 ICC. ALL RIGHTS RESERVED. Accessed by David Dammon on Jun 21, 2017 12:30:52 PM pursuant to License Agreement with ICC. No further reproduction or distribution authorized. ANY UNAUTHORIZED REPRODUCTION OR DISTRIBUTION IS A VIOLATION OF THE FEDERAL COPYRIGHT ACT AND THE LICENSE AGREEMENT, AND SUBJECT TO CIVIL AND CRIMINAL PENALTIES THEREUNDER.

TABLE 1.1.5—continued
MASONRY WALLS
10″ TO LESS THAN 12″ THICK

ITEM CODE	THICKNESS	CONSTRUCTION DETAILS	PERFORMANCE		REFERENCE NUMBER			NOTES	REC. HOURS
			LOAD	TIME	PRE-BMS-92	BMS-92	POST-BMS-92		
W-10-M-9	10″	Cored concrete masonry (cavity type 2″ air space); see Notes 3, 18, 27, 34, 42; No facings.	80 psi	1 hr. 15 min.		1		1, 20	$1^1/_4$
W-10-M-10	10″	Cored concrete masonry (cavity type 2″ air space); see Notes 3, 19, 27, 34, 41; No facings.	80 psi	1 hr. 15 min.		1		1, 20	$1^1/_4$
W-10-M-11	10″	Cored concrete masonry (cavity type 2″ air space); see Notes 3, 18, 27, 34, 41; No facings.	80 psi	3 hrs. 30 min.		1		1, 20	$3^1/_2$
W-10-M-12	10″	9″ thick concrete block ($11^3/_4$″ × 9″ × $4^1/_4$″) with two 2″ thick voids included; $^3/_8$″ P.C. plaster $^1/_8$″ neat gypsum.	N/A	1 hr. 53 min.			7	23, 44	$1^3/_4$
W-10-M-13	10″	Holly clay tile block wall - $8^1/_2$″ block with two 3″ voids in each $8^1/_2$″ section; $^3/_4$″ gypsum plaster - each face.	N/A	2 hrs. 42 min.			7	23, 25	$2^1/_2$
W-10-M-14	10″	Two layers $4^1/_4$″ brick with $1^1/_2$″ air space; No ties sand cement mortar. (Fletton brick - 1910 psi).	N/A	6 hrs.			7	23, 24	6
W-10-M-15	10″	Two layers $4^1/_4$″ thick Fletton brick (1910 psi); $1^1/_2$″ air space; Ties: 18″ o.c. vertical; 3′ o.c. horizontal.	N/A	6 hrs.			7	23, 24	6
W-10-M-16	$10^1/_2$″	Cored concrete masonry; 2″ air cavity; see Notes 3, 19, 27, 34, 40; Facings: fire side only; see Note 38.	80 psi	2 hrs.		1		1, 20	2
W-10-M-17	$10^1/_2$″	Cored concrete masonry; see Notes 3, 18, 27, 34, 40; Facings: side 1 only; see Note 38.	80 psi	5 hrs.		1		1, 20	5
W-10-M-18	$10^1/_2$″	Cored concrete masonry; see Notes 2, 19, 26, 33, 40; Facings: fire side only; see Note 38.	80 psi	2 hrs. 30 min.		1		1, 20	$2^1/_2$
W-10-M-19	$10^1/_2$″	Cored concrete masonry; see Notes 2, 18, 26, 33, 40; Facings: one side; see Note 38.	80 psi	6 hrs.		1		1, 20	6
W-10-M-20	$10^1/_2$″	Cored concrete masonry; see Notes 2, 19, 26, 33, 41; Facings: fire side of wall only; see Note 38.	80 psi	2 hrs.		1		1, 20	2
W-10-M-21	$10^1/_2$″	Cored concrete masonry; see Notes 2, 18, 26, 33, 41; Facings: one side only; see Note 38.	80 psi	5 hrs.		1		1, 20	5
W-10-M-22	$10^1/_2$″	Cored concrete masonry (cavity type 2″ air space); see Notes 3,19, 27, 34, 42; Facings: fire side only; see Note 38.	80 psi	1 hr. 45 min.		1		1, 20	$1^3/_4$
W-10-M-23	$10^1/_2$″	Cored concrete masonry (cavity type 2″ air space); see Notes 3, 18, 27, 34, 42; Facings: one side only; see Note 38.	80 psi	1 hr. 15 min.		1		1, 20	$1^1/_4$
W-10-M-24	$10^1/_2$″	Cored concrete masonry (cavity type 2″ air space); see Notes 3, 19, 27, 34, 41; Facings: fire side only; see Note 38.	80 psi	2 hrs.		1		1, 20	2
W-10-M-25	$10^1/_2$″	Cored concrete masonry (cavity type 2″ air space); see Notes 3, 18, 27, 34, 41; Facings: one side only; see Note 38.	80 psi	4 hrs.		1		1, 20	4
W-10-M-26	$10^5/_8$″	Core: 8″, 40% solid tile plus 2″ furring tile; $^5/_8$″ sanded gypsum plaster between tile types; Facings: both sides $^3/_4$″ portland cement plaster or stucco.	80 psi	5 hrs.		1		1, 20	5

(continued)

INTERNATIONAL CODE COUNCIL®
Copyright © 2015 ICC. ALL RIGHTS RESERVED. Accessed by David Dammon on Jun 21, 2017 12:30:52 PM pursuant to License Agreement with ICC. No further reproduction or distribution authorized. ANY UNAUTHORIZED REPRODUCTION OR DISTRIBUTION IS A VIOLATION OF THE FEDERAL COPYRIGHT ACT AND THE LICENSE AGREEMENT, AND SUBJECT TO CIVIL AND CRIMINAL PENALTIES THEREUNDER.

TABLE 1.1.5—continued
MASONRY WALLS
10″ TO LESS THAN 12″ THICK

ITEM CODE	THICKNESS	CONSTRUCTION DETAILS	PERFORMANCE		REFERENCE NUMBER			NOTES	REC. HOURS
			LOAD	TIME	PRE-BMS-92	BMS-92	POST-BMS-92		
W-10-M-27	$10^{5}/_{8}$″	Core: 8″, 40% solid tile plus 2″ furring tile; $^{5}/_{8}$″ sanded gypsum plaster between tile types; Facings: one side $^{3}/_{4}$″ portland cement plaster or stucco.	80 psi	3 hrs. 30 min.		1		1, 20	$3^{1}/_{2}$
W-11-M-28	11″	Cored concrete masonry; see Notes 3, 18, 27, 34, 40; Facings: both sides; see Note 38.	80 psi	6 hrs.		1		1, 20	6
W-11-M-29	11″	Cored concrete masonry; see Notes 2, 18, 26, 33, 40; Facings: both sides; see Note 38.	80 psi	7 hrs.		1		1, 20	7
W-11-M-30	11″	Cored concrete masonry; see Notes 2, 18, 26, 33, 41; Facings: both sides of wall; see Note 38.	80 psi	6 hrs.		1		1, 20	6
W-11-M-31	11″	Cored concrete masonry (cavity type 2″ air space); see Notes 3, 18, 27, 34, 42; Facings: both sides; see Note 38.	80 psi	5 hrs.		1		1, 20	5
W-11-M-32	11″	Cored concrete masonry (cavity type 2″ air space); see Notes 3, 18, 27, 34, 41; Facings: both sides; see Note 38.	80 psi	5 hrs.		1		1, 20	5
W-11-M-33	11″	Two layers brick ($4^{1}/_{2}$″ Fletton, 2,428 psi) 2″ air space; galvanized ties; 18″ o.c. - horizontal; 3′ o.c. - vertical.	3 tons/ft.	6 hrs.			7	23, 24	6

For SI: 1 inch = 25.4 mm, 1 pound per square inch = 0.00689 MPa.

Notes:

1. Tested at NBS - ASA Spec. No. A2-1934.
2. One unit in wall thickness.
3. Two units in wall thickness.
4. Two or three units in wall thickness.
5. Two cells in wall thickness.
6. Three or four cells in wall thickness.
7. Four or five cells in wall thickness.
8. Five or six cells in wall thickness.
9. Minimum percent of solid materials in units = 40%.
10. Minimum percent of solid materials in units = 43%.
11. Minimum percent of solid materials in units = 46%.
12. Minimum percent of solid materials in units = 48%.
13. Minimum percent of solid materials in units = 49%.
14. Minimum percent of solid materials in units = 45%.
15. Minimum percent of solid materials in units = 51%.
16. Minimum percent of solid materials in units = 53%.
17. Not less than $^{5}/_{8}$ inch thickness of 1:3 sanded gypsum plaster.
18. Noncombustible or no members framed into wall.
19. Combustible members framed into wall.
20. Load: 80 psi for gross cross sectional area of wall.
21. Portland cement-lime mortar.
22. Failure mode—thermal.
23. British test.
24. Passed all criteria.
25. Failed by sudden collapse with no preceding signs of impending failure.
26. One cell in wall thickness.
27. Two cells in wall thickness.
28. Three cells in wall thickness.
29. Minimum percent of solid material in concrete units = 52%.
30. Minimum percent of solid material in concrete units = 54%.
31. Minimum percent of solid material in concrete units = 55%.
32. Minimum percent of solid material in concrete units = 57%.
33. Minimum percent of solid material in concrete units = 60%.
34. Minimum percent of solid material in concrete units = 62%.
35. Minimum percent of solid material in concrete units = 65%.

(continued)

INTERNATIONAL CODE COUNCIL®
Copyright © 2015 ICC. ALL RIGHTS RESERVED. Accessed by David Dammon on Jun 21, 2017 12:30:52 PM pursuant to License Agreement with ICC. No further reproduction or distribution authorized. ANY UNAUTHORIZED REPRODUCTION OR DISTRIBUTION IS A VIOLATION OF THE FEDERAL COPYRIGHT ACT AND THE LICENSE AGREEMENT, AND SUBJECT TO CIVIL AND CRIMINAL PENALTIES THEREUNDER.

TABLE 1.1.5—continued
MASONRY WALLS
10″ TO LESS THAN 12″ THICK

36. Minimum percent of solid material in concrete units = 70%.
37. Minimum percent of solid material in concrete units = 76%.
38. Not less than $^{1}/_{2}$ inch of 1:3 sanded gypsum plaster.
39. Three units in wall thickness.
40. Concrete units made with expanded slag or pumice aggregates.
41. Concrete units made with expanded burned clay or shale, crushed limestone, air cooled slag or cinders.
42. Concrete units made with calcareous sand and gravel. Coarse aggregate, 60 percent or more calcite and dolomite.

INTERNATIONAL CODE COUNCIL®
Copyright © 2015 ICC. ALL RIGHTS RESERVED. Accessed by David Dammon on Jun 21, 2017 12:30:52 PM pursuant to License Agreement with ICC. No further reproduction or distribution authorized. ANY UNAUTHORIZED REPRODUCTION OR DISTRIBUTION IS A VIOLATION OF THE FEDERAL COPYRIGHT ACT AND THE LICENSE AGREEMENT, AND SUBJECT TO CIVIL AND CRIMINAL PENALTIES THEREUNDER.

FIGURE 1.1.6
MASONRY WALLS
12″ TO LESS THAN 14″ THICK

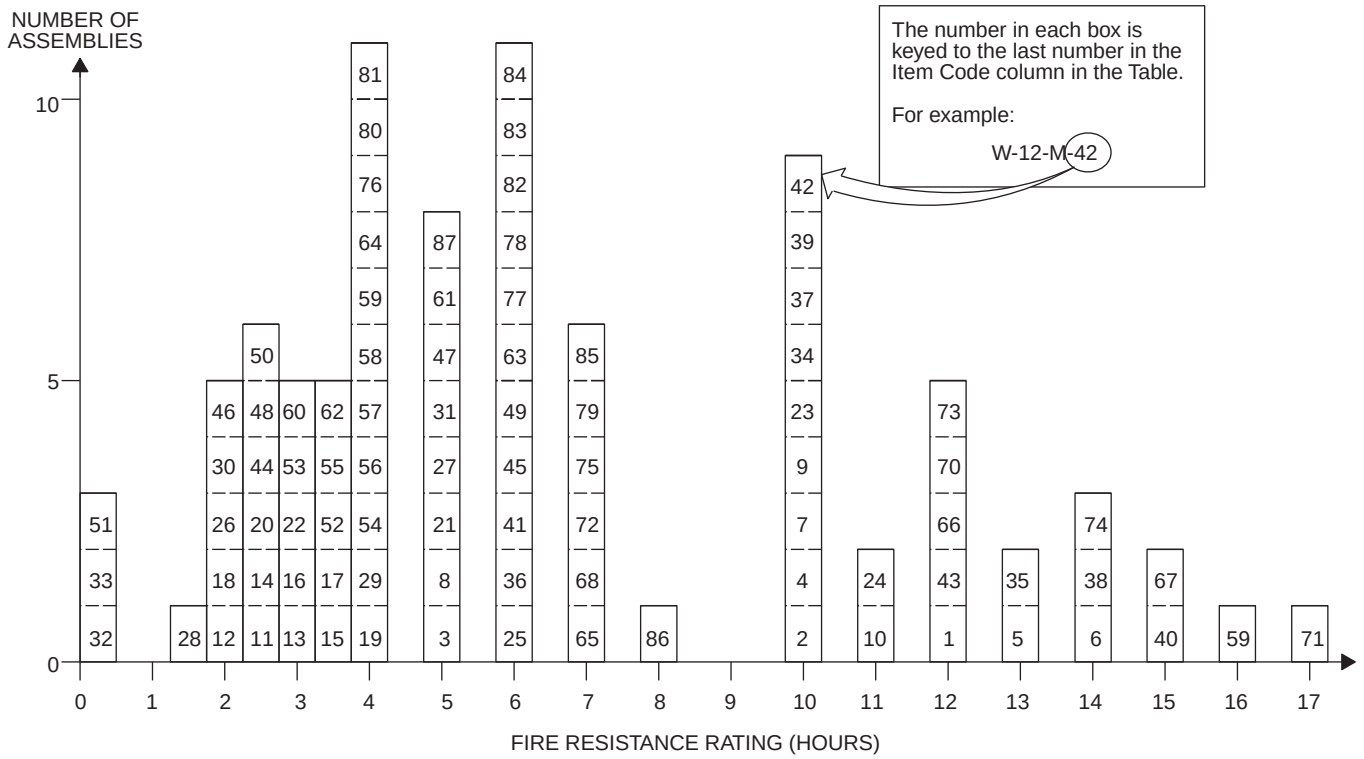

TABLE 1.1.6
MASONRY WALLS
12″ TO LESS THAN 14″ THICK

ITEM CODE	THICKNESS	CONSTRUCTION DETAILS	PERFORMANCE		REFERENCE NUMBER			NOTES	REC. HOURS
			LOAD	TIME	PRE-BMS-92	BMS-92	POST-BMS-92		
W-12-M-1	12″	Core: solid clay or shale brick; No facings.	N/A	12 hrs.		1		1	12
W-12-M-2	12″	Core: solid clay or shale brick; No facings.	160 psi	10 hrs.		1		1, 44	10
W-12-M-3	12″	Core: hollow rolok of clay or shale; No facings.	160 psi	5 hrs.		1		1, 44	5
W-12-M-4	12″	Core: hollow rolok bak of clay or shale; No facings.	160 psi	10 hrs.		1		1, 44	10
W-12-M-5	12″	Core: concrete brick; No facings.	160 psi	13 hrs.		1		1, 44	13
W-12-M-6	12″	Core: sand-lime brick; No facings.	N/A	14 hrs.		1		1	14
W-12-M-7	12″	Core: sand-lime brick; No facings.	160 psi	10 hrs.		1		1, 44	10
W-12-M-8	12″	Cored clay or shale brick; Units in wall thickness: 1; Cells in wall thickness: 2; Minimum % solids: 70; No facings.	120 psi	5 hrs.		1		1, 45	5
W-12-M-9	12″	Cored clay or shale brick; Units in wall thickness: 3; Cells in wall thickness: 3; Minimum % solids: 87; No facings.	160 psi	10 hrs.		1		1, 44	10
W-12-M-10	12″	Cored clay or shale brick; Units in wall thickness: 3; Cells in wall thickness: 3; Minimum % solids: 87; No facings.	N/A	11 hrs.		1		1	11

(continued)

INTERNATIONAL CODE COUNCIL®
Copyright © 2015 ICC. ALL RIGHTS RESERVED. Accessed by David Dammon on Jun 21, 2017 12:30:52 PM pursuant to License Agreement with ICC. No further reproduction or distribution authorized. ANY UNAUTHORIZED REPRODUCTION OR DISTRIBUTION IS A VIOLATION OF THE FEDERAL COPYRIGHT ACT AND THE LICENSE AGREEMENT, AND SUBJECT TO CIVIL AND CRIMINAL PENALTIES THEREUNDER.

TABLE 1.1.6—continued
MASONRY WALLS
12″ TO LESS THAN 14″ THICK

ITEM CODE	THICKNESS	CONSTRUCTION DETAILS	PERFORMANCE		REFERENCE NUMBER			NOTES	REC. HOURS
			LOAD	TIME	PRE-BMS-92	BMS-92	POST-BMS-92		
W-12-M-11	12″	Core: clay or shale structural tile; see Notes 2, 6, 9, 18; No facings.	80 psi	2 hrs.		1		1, 20	2 1/2
W-12-M-12	12″	Core: clay or shale structural tile; see Notes 2, 4, 9, 19; No facings.	80 psi	2 hrs.		1		1, 20	2
W-12-M-13	12″	Core: clay or shale structural tile; see Notes 2, 6, 14, 19; No facings.	80 psi	3 hrs.		1		1, 20	3
W-12-M-14	12″	Core: clay or shale structural tile; see Notes 2, 6, 14, 18; No facings.	80 psi	2 hrs. 30 min.		1		1, 20	2 1/2
W-12-M-15	12″	Core: clay or shale structural tile; see Notes 2, 4, 13, 18; No facings.	80 psi	3 hrs. 30 min.		1		1, 20	3 1/2
W-12-M-16	12″	Core: clay or shale structural tile; see Notes 2, 4, 13, 19; No facings.	80 psi	3 hrs.		1		1, 20	3
W-12-M-17	12″	Core: clay or shale structural tile; see Notes 3, 6, 9, 18; No facings.	80 psi	3 hrs. 30 min.		1		1, 20	3 1/2
W-12-M-18	12″	Core: clay or shale structural tile; see Notes 3, 6, 9, 19; No facings.	80 psi	2 hrs.		1		1, 20	2
W-12-M-19	12″	Core: clay or shale structural tile; see Notes 3, 6, 14, 18; No facings.	80 psi	4 hrs.		1		1, 20	4
W-12-M-20	12″	Core: clay or shale structural tile; see Notes 3, 6, 14, 19; No facings.	80 psi	2 hrs. 30 min.		1		1, 20	2 1/2
W-12-M-21	12″	Core: clay or shale structural tile; see Notes 3, 6, 16, 18; No facings.	80 psi	5 hrs.		1		1, 20	5
W-12-M-22	12″	Core: clay or shale structural tile; see Notes 3, 6, 16, 19; No facings.	80 psi	3 hrs.		1		1, 20	3
W-12-M-23	12″	Core: 8″, 70% solid clay or shale structural tile; 4″ brick facings on one side.	80 psi	10 hrs.		1		1, 20	10
W-12-M-24	12″	Core: 8″, 70% solid clay or shale structural tile; 4″ brick facings on one side.	N/A	11 hrs.		1		1	11
W-12-M-25	12″	Core: 8″, 40% solid clay or shale structural tile; 4″ brick facings on one side.	80 psi	6 hrs.		1		1, 20	6
W-12-M-26	12″	Cored concrete masonry; see Notes 1, 9, 15, 16, 20; No facings.	80 psi	2 hrs.		1		1, 20	2
W-12-M-27	12″	Cored concrete masonry; see Notes 2, 18, 26, 34, 41; No facings.	80 psi	5 hrs.		1		1, 20	5
W-12-M-28	12″	Cored concrete masonry; see Notes 2, 19, 26, 31, 41; No facings.	80 psi	1 hr. 30 min.		1		1, 20	1 1/2
W-12-M-29	12″	Cored concrete masonry; see Notes 2, 18, 26, 31, 41; No facings.	80 psi	4 hrs.		1		1, 20	4
W-12-M-30	12″	Cored concrete masonry; see Notes 3, 19, 27, 31, 43; No facings.	80 psi	2 hrs.		1		1, 20	2
W-12-M-31	12″	Cored concrete masonry; see Notes 3, 18, 27, 31, 43; No facings.	80 psi	5 hrs.		1		1, 20	5
W-12-M-32	12″	Cored concrete masonry; see Notes 2, 19, 26, 32, 43; No facings.	80 psi	25 min.		1		1, 20	1/3
W-12-M-33	12″	Cored concrete masonry; see Notes 2, 18, 26, 32, 43; No facings.	80 psi	25 min.		1		1, 20	1/3

(continued)

INTERNATIONAL CODE COUNCIL®
Copyright © 2015 ICC. ALL RIGHTS RESERVED. Accessed by David Dammon on Jun 21, 2017 12:30:52 PM pursuant to License Agreement with ICC. No further reproduction or distribution authorized. ANY UNAUTHORIZED REPRODUCTION OR DISTRIBUTION IS A VIOLATION OF THE FEDERAL COPYRIGHT ACT AND THE LICENSE AGREEMENT, AND SUBJECT TO CIVIL AND CRIMINAL PENALTIES THEREUNDER.

TABLE 1.1.6—continued
MASONRY WALLS
12″ TO LESS THAN 14″ THICK

ITEM CODE	THICKNESS	CONSTRUCTION DETAILS	PERFORMANCE		REFERENCE NUMBER			NOTES	REC. HOURS
			LOAD	TIME	PRE-BMS-92	BMS-92	POST-BMS-92		
W-12-M-34	12 1/2″	Core: solid clay or shale brick; 1/2″ of 1:3 sanded gypsum plaster facings on one side.	160 psi	10 hrs.		1		1, 44	10
W-12-M-35	12 1/2″	Core: solid clay or shale brick; 1/2″ of 1:3 sanded gypsum plaster facings on one side.	N/A	13 hrs.		1		1	13
W-12-M-36	12 1/2″	Core: hollow rolok of clay or shale; 1/2″ of 1:3 sanded gypsum plaster facings on one side.	160 psi	6 hrs.		1		1, 44	6
W-12-M-37	12 1/2″	Core: hollow rolok bak of clay or shale; 1/2″ of 1:3 sanded gypsum plaster facings on one side.	160 psi	10 hrs.		1		1, 44	10
W-12-M-38	12 1/2″	Core: concrete; 1/2″ of 1:3 sanded gypsum plaster facings on one side.	160 psi	14 hrs.		1		1, 44	14
W-12-M-39	12 1/2″	Core: sand-lime brick; 1/2″ of 1:3 sanded gypsum plaster facings on one side.	160 psi	10 hrs.		1		1, 44	10
W-12-M-40	12 1/2″	Core: sand-lime brick; 1/2″ of 1:3 sanded gypsum plaster facings on one side.	N/A	15 hrs.		1		1	15
W-12-M-41	12 1/2″	Cored clay or shale brick; Units in wall thickness: 1; Cells in wall thickness: 2; Minimum % solids: 70; 1/2″ of 1:3 sanded gypsum plaster facings on one side.	120 psi	6 hrs.		1		1, 45	6
W-12-M-42	12 1/2″	Cored clay or shale brick; Units in wall thickness: 3; Cells in wall thickness: 3; Minimum % solids: 87; 1/2″ of 1:3 sanded gypsum plaster facings on one side.	160 psi	10 hrs.		1		1, 44	10
W-12-M-43	12 1/2″	Cored clay or shale brick; Units in wall thickness: 3; Cells in wall thickness: 3; Minimum % solids: 87; 1/2″ of 1:3 sanded gypsum plaster facings on one side.	N/A	12 hrs.		1		1	12
W-12-M-44	12 1/2″	Cored concrete masonry; see Notes 2, 19, 26, 34, 41; Facings: fire side only; see Note 38.	80 psi	2 hrs. 30 min.		1		1, 20	2 1/2
W-12-M-45	12 1/2″	Cored concrete masonry; see Notes 2, 18, 26, 34, 39, 41; Facings: one side only; see Note 38.	80 psi	6 hrs.		1		1, 20	6
W-12-M-46	12 1/2″	Cored concrete masonry; see Notes 2, 19, 26, 31, 41; Facings: fire side only; see Note 38.	80 psi	2 hrs.		1		1, 20	2
W-12-M-47	12 1/2″	Cored concrete masonry; see Notes 2, 18, 26, 31, 41; Facings: one side of wall only; see Note 38.	80 psi	5 hrs.		1		1, 20	5
W-12-M-48	12 1/2″	Cored concrete masonry; see Notes 3, 19, 27, 31, 43; Facings: fire side only; see Note 38.	80 psi	2 hrs. 30 min.		1		1, 20	2 1/2
W-12-M-49	12 1/2″	Cored concrete masonry; see Notes 3, 18, 27, 31, 43; Facings: one side only; see Note 38.	80 psi	6 hrs.		1		1, 20	6
W-12-M-50	12 1/2″	Cored concrete masonry; see Notes 2, 19, 26, 32, 43; Facings: fire side only; see Note 38.	80 psi	2 hrs. 30 min.		1		1, 20	2 1/2

(continued)

INTERNATIONAL CODE COUNCIL®
Copyright © 2015 ICC. ALL RIGHTS RESERVED. Accessed by David Dammon on Jun 21, 2017 12:30:52 PM pursuant to License Agreement with ICC. No further reproduction or distribution authorized. ANY UNAUTHORIZED REPRODUCTION OR DISTRIBUTION IS A VIOLATION OF THE FEDERAL COPYRIGHT ACT AND THE LICENSE AGREEMENT, AND SUBJECT TO CIVIL AND CRIMINAL PENALTIES THEREUNDER.

TABLE 1.1.6—continued
MASONRY WALLS
12″ TO LESS THAN 14″ THICK

ITEM CODE	THICKNESS	CONSTRUCTION DETAILS	PERFORMANCE		REFERENCE NUMBER			NOTES	REC. HOURS
			LOAD	TIME	PRE-BMS-92	BMS-92	POST-BMS-92		
W-12-M-51	12 1/2″	Cored concrete masonry; see Notes 2, 18, 26, 32, 43; Facings: one side only; see Note 38.	80 psi	25 min.		1		1, 20	1/3
W-12-M-52	12 5/8″	Clay or shale structural tile; see Notes 2, 6, 9, 18; Facings: side 1, see Note 17; side 2, none.	80 psi	3 hrs. 30 min.		1		1, 20	3 1/2
W-12-M-53	12 5/8″	Clay or shale structural tile; see Notes 2, 6, 9, 19; Facings: fire side only; see Note 17.	80 psi	3 hrs.		1		1, 20	3
W-12-M-54	12 5/8″	Clay or shale structural tile; see Notes 2, 6, 14, 19; Facings: side 1, see Note 17; side 2, none.	80 psi	4 hrs.		1		1, 20	4
W-12-M-55	12 5/8″	Clay or shale structural tile; see Notes 2, 6, 14, 18; Facings: exposed side only; see Note 17.	80 psi	3 hrs. 30 min.		1		1, 20	3 1/2
W-12-M-56	12 5/8″	Clay or shale structural tile; see Notes 2, 4, 13, 18; Facings: side 1, see Note 17; side 2, none.	80 psi	4 hrs.		1		1, 20	4
W-12-M-57	12 5/8″	Clay or shale structural tile; see Notes 1, 4, 13, 19; Facings: fire side only; see Note 17.	80 psi	4 hrs.		1		1, 20	4
W-12-M-58	12 5/8″	Clay or shale structural tile; see Notes 3, 6, 9, 18; Facings: side 1, see Note 17; side 2, none.	80 psi	4 hrs.		1		1, 20	4
W-12-M-59	12 5/8″	Clay or shale structural tile; see Notes 3, 6, 9, 19; Facings: fire side only; see Note 17.	80 psi	3 hrs.		1		1, 20	3
W-12-M-60	12 5/8″	Clay or shale structural tile; see Notes 3, 6, 14, 18; Facings: side 1, see Note 17; side 2, none.	80 psi	5 hrs.		1		1, 20	5
W-12-M-61	12 5/8″	Clay or shale structural tile; see Notes 3, 6, 14, 19; Facings: fire side only; see Note 17.	80 psi	3 hrs. 30 min.		1		1, 20	3 1/2
W-12-M-62	12 5/8″	Clay or shale structural tile; see Notes 3, 6, 16, 18; Facings: side 1, see Note 17; side 2, none.	80 psi	6 hrs.		1		1, 20	6
W-12-M-63	12 5/8″	Clay or shale structural tile; see Notes 3, 6, 16, 19; Facings: fire side only; see Note 17.	80 psi	4 hrs.		1		1, 20	4
W-12-M-64	12 5/8″	Core: 8″, 40% solid clay or shale structural tile; Facings: 4″ brick plus 5/8″ of 1:3 sanded gypsum plaster on one side.	80 psi	7 hrs.		1		1, 20	7
W-13-M-65	13″	Core: solid clay or shale brick; 1/2″ of 1:3 sanded gypsum plaster facings on both sides.	160 psi	12 hrs.		1		1, 44	12
W-13-M-66	13″	Core: solid clay or shale brick; 1/2″ of 1:3 sanded gypsum plaster facings on both sides.	N/A	15 hrs.		1		1, 20	15
W-13-M-67	13″	Core: solid clay or shale brick; 1/2″ of 1:3 sanded gypsum plaster facings on both sides.	N/A	15 hrs.		1		1	15
W-13-M-68	13″	Core: hollow rolok of clay or shale; 1/2″ of 1:3 sanded gypsum plaster facings on both sides.	80 psi	7 hrs.		1		1, 20	7
W-13-M-69	13″	Core: concrete brick; 1/2″ of 1:3 sanded gypsum plaster facings on both sides.	160 psi	16 hrs.		1		1, 44	16

(continued)

INTERNATIONAL CODE COUNCIL®
Copyright © 2015 ICC. ALL RIGHTS RESERVED. Accessed by David Dammon on Jun 21, 2017 12:30:52 PM pursuant to License Agreement with ICC. No further reproduction or distribution authorized. ANY UNAUTHORIZED REPRODUCTION OR DISTRIBUTION IS A VIOLATION OF THE FEDERAL COPYRIGHT ACT AND THE LICENSE AGREEMENT, AND SUBJECT TO CIVIL AND CRIMINAL PENALTIES THEREUNDER.

TABLE 1.1.6—continued
MASONRY WALLS
12″ TO LESS THAN 14″ THICK

ITEM CODE	THICKNESS	CONSTRUCTION DETAILS	PERFORMANCE		REFERENCE NUMBER			NOTES	REC. HOURS
			LOAD	TIME	PRE-BMS-92	BMS-92	POST-BMS-92		
W-13-M-70	13″	Core: sand-lime brick; $^1/_2$″ of 1:3 sanded gypsum plaster facings on both sides.	160 psi	12 hrs.		1		1, 44	12
W-13-M-71	13″	Core: sand-lime brick; $^1/_2$″ of 1:3 sanded gypsum plaster facings on both sides.	N/A	17 hrs.		1		1	17
W-13-M-72	13″	Cored clay or shale brick; Units in wall thickness: 1; Cells in wall thickness: 2; Minimum % solids: 70; $^1/_2$″ of 1:3 sanded gypsum plaster facings on both sides.	120 psi	7 hrs.		1		1, 45	7
W-13-M-73	13″	Cored clay or shale brick; Units in wall thickness: 3; Cells in wall thickness: 3; Minimum % solids: 87; $^1/_2$″ of 1:3 sanded gypsum plaster facings on both sides.	160 psi	12 hrs.		1		1, 44	12
W-13-M-74	13″	Cored clay or shale brick; Units in wall thickness: 3; Cells in wall thickness: 2; Minimum % solids: 87; $^1/_2$″ of 1:3 sanded gypsum plaster facings on both sides.	N/A	14 hrs.		1		1	14
W-13-M-75	13″	Cored concrete masonry; see Notes 18, 23, 28, 39, 41; No facings.	80 psi	7 hrs.		1		1, 20	7
W-13-M-76	13″	Cored concrete masonry; see Notes 19, 23, 28, 39, 41; No facings.	80 psi	4 hrs.		1		1, 20	4
W-13-M-77	13″	Cored concrete masonry; see Notes 3, 18, 27, 31, 43; Facings: both sides; see Note 38.	80 psi	6 hrs.		1		1, 20	6
W-13-M-78	13″	Cored concrete masonry; see Notes 2, 18, 26, 31, 41; Facings: both sides; see Note 38.	80 psi	6 hrs.		1		1, 20	6
W-13-M-79	13″	Cored concrete masonry; see Notes 2, 18, 26, 34, 41; Facings: both sides of wall; see Note 38.	80 psi	7 hrs.		1		1, 20	7
W-13-M-80	$13^1/_4$″	Core: clay or shale structural tile; see Notes 2, 6, 9, 18; Facings: both sides; see Note 17.	80 psi	4 hrs.		1		1, 20	4
W-13-M-82	$13^1/_4$″	Core: clay or shale structural tile; see Notes 2, 4, 13, 18; Facings: both sides; see Note 17.	80 psi	6 hrs.		1		1, 20	6
W-13-M-83	$13^1/_4$″	Core: clay or shale structural tile; see Notes 3, 6, 9, 18; Facings: both sides; see Note 17.	80 psi	6 hrs.		1		1, 20	6
W-13-M-84	$13^1/_4$″	Core: clay or shale structural tile; see Notes 3, 6, 14, 18; Facings: both sides; see Note 17.	80 psi	6 hrs.		1		1, 20	6
W-13-M-85	$13^1/_4$″	Core: clay or shale structural tile; see Notes 3, 6, 16, 18; Facings: both sides; see Note 17.	80 psi	7 hrs.		1		1, 20	7

(continued)

INTERNATIONAL CODE COUNCIL®
Copyright © 2015 ICC. ALL RIGHTS RESERVED. Accessed by David Dammon on Jun 21, 2017 12:30:52 PM pursuant to License Agreement with ICC. No further reproduction or distribution authorized. ANY UNAUTHORIZED REPRODUCTION OR DISTRIBUTION IS A VIOLATION OF THE FEDERAL COPYRIGHT ACT AND THE LICENSE AGREEMENT, AND SUBJECT TO CIVIL AND CRIMINAL PENALTIES THEREUNDER.

TABLE 1.1.6—continued
MASONRY WALLS
12″ TO LESS THAN 14″ THICK

ITEM CODE	THICKNESS	CONSTRUCTION DETAILS	PERFORMANCE		REFERENCE NUMBER			NOTES	REC. HOURS
			LOAD	TIME	PRE-BMS-92	BMS-92	POST-BMS-92		
W-13-M-86	$13^{1}/_{2}$″	Cored concrete masonry; see Notes 18, 23, 28, 39, 41; Facings: one side only; see Note 38.	80 psi	8 hrs.		1		1, 20	8
W-13-M-87	$13^{1}/_{2}$″	Cored concrete masonry; see Notes 19, 23, 28, 39, 41; Facings: fire side only; see Note 38.	80 psi	5 hrs.		1		1, 20	5

For SI: 1 inch = 25.4 mm, 1 pound per square inch = 0.00689 MPa.

Notes:

1. Tested at NBS - ASA Spec. No. A2-1934.
2. One unit in wall thickness.
3. Two units in wall thickness.
4. Two or three units in wall thickness.
5. Two cells in wall thickness.
6. Three or four cells in wall thickness.
7. Four or five cells in wall thickness.
8. Five or six cells in wall thickness.
9. Minimum percent of solid materials in units = 40%.
10. Minimum percent of solid materials in units = 43%.
11. Minimum percent of solid materials in units = 46%.
12. Minimum percent of solid materials in units = 48%.
13. Minimum percent of solid materials in units = 49%.
14. Minimum percent of solid materials in units = 45%.
15. Minimum percent of solid materials in units = 51%.
16. Minimum percent of solid materials in units = 53%.
17. Not less than $^{5}/_{8}$ inch thickness of 1:3 sanded gypsum plaster.
18. Noncombustible or no members framed into wall.
19. Combustible members framed into wall.
20. Load: 80 psi for gross area.
21. Portland cement-lime mortar.
22. Failure mode-thermal.
23. British test.
24. Passed all criteria.
25. Failed by sudden collapse with no preceding signs of impending failure.
26. One cell in wall thickness.
27. Two cells in wall thickness.
28. Three cells in wall thickness.
29. Minimum percent of solid material in concrete units = 52%.
30. Minimum percent of solid material in concrete units = 54%.
31. Minimum percent of solid material in concrete units = 55%.
32. Minimum percent of solid material in concrete units = 57%.
33. Minimum percent of solid material in concrete units = 60%.
34. Minimum percent of solid material in concrete units = 62%.
35. Minimum percent of solid material in concrete units = 65%.
36. Minimum percent of solid material in concrete units = 70%.
37. Minimum percent of solid material in concrete units = 76%.
38. Not less than $^{1}/_{2}$ inch of 1:3 sanded gypsum plaster.
39. Three units in wall thickness.
40. Concrete units made with expanded slag or pumice aggregates.
41. Concrete units made with expanded burned clay or shale, crushed limestone, air cooled slag or cinders.
42. Concrete units made with calcareous sand and gravel. Coarse aggregate, 60 percent or more calcite and dolomite.
43. Concrete units made with siliceous sand and gravel. Ninety percent or more quartz, chert or flint.
44. Load: 160 psi of gross wall cross sectional area.
45. Load: 120 psi of gross wall cross sectional area.

INTERNATIONAL CODE COUNCIL®
Copyright © 2015 ICC. ALL RIGHTS RESERVED. Accessed by David Dammon on Jun 21, 2017 12:30:52 PM pursuant to License Agreement with ICC. No further reproduction or distribution authorized. ANY UNAUTHORIZED REPRODUCTION OR DISTRIBUTION IS A VIOLATION OF THE FEDERAL COPYRIGHT ACT AND THE LICENSE AGREEMENT, AND SUBJECT TO CIVIL AND CRIMINAL PENALTIES THEREUNDER.

FIGURE 1.1.7
MASONRY WALLS
14″ OR MORE THICK

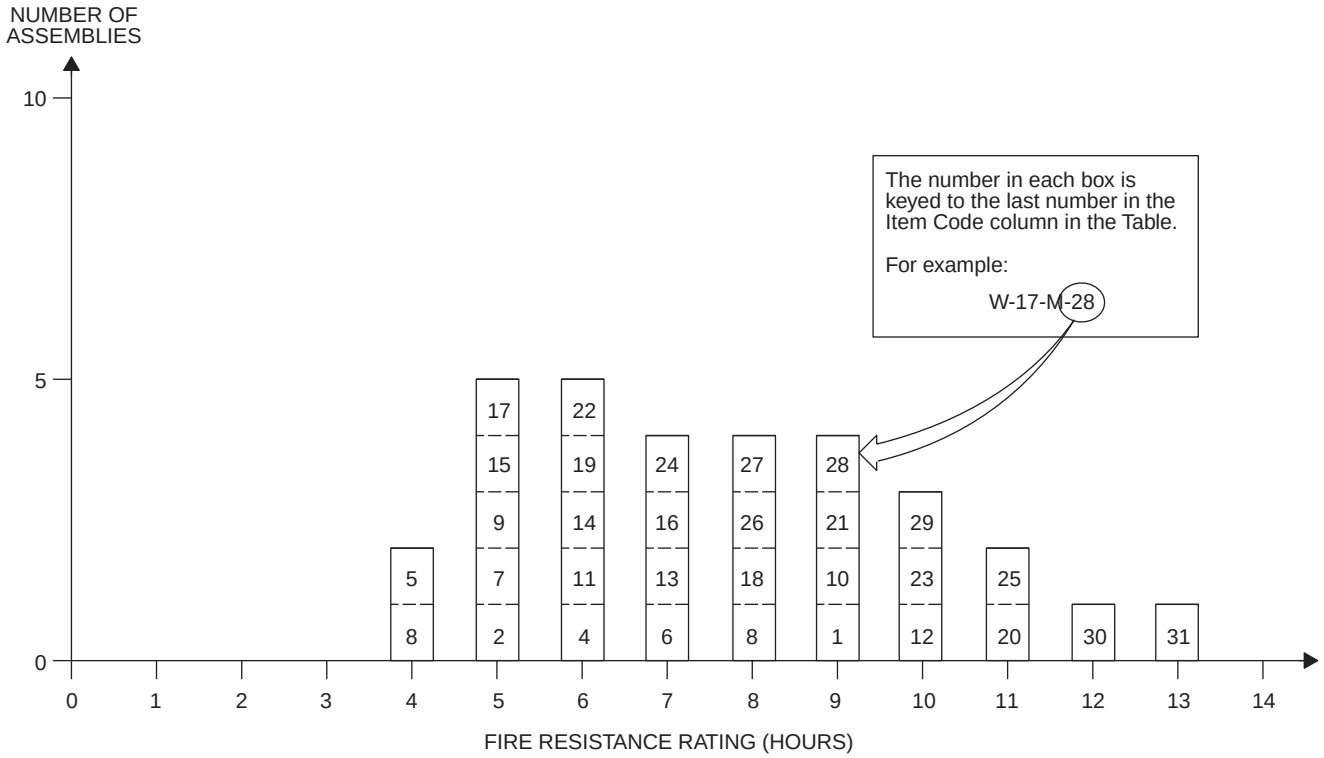

TABLE 1.1.7
MASONRY WALLS
14″ OR MORE THICK

ITEM CODE	THICKNESS	CONSTRUCTION DETAILS	PERFORMANCE		REFERENCE NUMBER			NOTES	REC. HOURS
			LOAD	TIME	PRE-BMS-92	BMS-92	POST-BMS-92		
W-14-M-1	14″	Core: cored masonry; see Notes 18, 28, 33, 39, 41; Facings: both sides; see Note 38.	80 psi	9 hrs.		1		1, 20	9
W-16-M-2	16″	Core: clay or shale structural tile; see Notes 4, 7, 9, 19; No facings.	80 psi	5 hrs.		1		1, 20	5
W-16-M-3	16″	Core: clay or shale structural tile; see Notes 4, 7, 9, 19; No facings.	80 psi	4 hrs.		1		1, 20	4
W-16-M-4	16″	Core: clay or shale structural tile; see Notes 4, 7, 10, 18; No facings.	80 psi	6 hrs.		1		1, 20	6
W-16-M-5	16″	Core: clay or shale structural tile; see Notes 4, 7, 10, 19; No facings.	80 psi	4 hrs.		1		1, 20	4
W-16-M-6	16″	Core: clay or shale structural tile; see Notes 4, 7, 11, 18; No facings.	80 psi	7 hrs.		1		1, 20	7
W-16-M-7	16″	Core: clay or shale structural tile; see Notes 4, 7, 11, 19; No facings.	80 psi	5 hrs.		1		1, 20	5
W-16-M-8	16″	Core: clay or shale structural tile; see Notes 4, 8, 13, 18; No facings.	80 psi	8 hrs.		1		1, 20	8
W-16-M-9	16″	Core: clay or shale structural tile; see Notes 4, 8, 13, 19; No facings.	80 psi	5 hrs.		1		1, 20	5

(continued)

INTERNATIONAL CODE COUNCIL®
Copyright © 2015 ICC. ALL RIGHTS RESERVED. Accessed by David Dammon on Jun 21, 2017 12:30:52 PM pursuant to License Agreement with ICC. No further reproduction or distribution authorized. ANY UNAUTHORIZED REPRODUCTION OR DISTRIBUTION IS A VIOLATION OF THE FEDERAL COPYRIGHT ACT AND THE LICENSE AGREEMENT, AND SUBJECT TO CIVIL AND CRIMINAL PENALTIES THEREUNDER.

TABLE 1.1.7—continued
MASONRY WALLS
14″ OR MORE THICK

ITEM CODE	THICKNESS	CONSTRUCTION DETAILS	PERFORMANCE		REFERENCE NUMBER			NOTES	REC. HOURS
			LOAD	TIME	PRE-BMS-92	BMS-92	POST-BMS-92		
W-16-M-10	16″	Core: clay or shale structural tile; see Notes 4, 8, 15, 18; No facings.	80 psi	9 hrs.		1		1, 20	9
W-16-M-11	16″	Core: clay or shale structural tile; see Notes 3, 7, 14, 18; No facings.	80 psi	6 hrs.		1		1, 20	6
W-16-M-12	16″	Core: clay or shale structural tile; see Notes 4, 8, 16, 18; No facings.	80 psi	10 hrs.		1		1, 20	10
W-16-M-13	16″	Core: clay or shale structural tile; see Notes 4, 6, 16, 19; No facings.	80 psi	7 hrs.		1		1, 20	7
W-16-M-14	$16^{5}/_{8}$″	Core: clay or shale structural tile; see Notes 4, 7, 9, 18; Facings: side 1, see Note 17; side 2, none.	80 psi	6 hrs.		1		1, 20	6
W-16-M-15	$16^{5}/_{8}$″	Core: clay or shale structural tile; see Notes 4, 7, 9, 19; Facings: fire side only; see Note 17.	80 psi	5 hrs.		1		1, 20	5
W-16-M-16	$16^{5}/_{8}$″	Core: clay or shale structural tile; see Notes 4, 7, 10, 18; Facings: side 1, see Note 17; side 2, none.	80 psi	7 hrs.		1		1, 20	7
W-16-M-17	$16^{5}/_{8}$″	Core: clay or shale structural tile; see Notes 4, 7, 10, 19; Facings: fire side only; see Note 17.	80 psi	5 hrs.		1		1, 20	5
W-16-M-18	$16^{5}/_{8}$″	Core: clay or shale structural tile; see Notes 4, 7, 11, 18; Facings: side 1, see Note 17; side 2, none.	80 psi	5 hrs.		1		1, 20	5
W-16-M-19	$16^{5}/_{8}$″	Core: clay or shale structural tile; see Notes 4, 7, 11, 19; Facings: fire side only; see Note 17.	80 psi	6 hrs.		1		1, 20	6
W-16-M-20	$16^{5}/_{8}$″	Core: clay or shale structural tile; see Notes 4, 8, 13, 18; Facings: sides 1 and 2; see Note 17.	80 psi	11 hrs.		1		1, 20	11
W-16-M-21	$16^{5}/_{8}$″	Core: clay or shale structural tile; see Notes 4, 8, 13 18; Facings: side 1, see Note 17; side 2, none.	80 psi	9 hrs.		1		1, 20	9
W-16-M-22	$16^{5}/_{8}$″	Core: clay or shale structural tile; see Notes 4, 8, 13, 19; Facings: fire side only; see Note 17.	80 psi	6 hrs.		1		1, 20	6
W-16-M-23	$16^{5}/_{8}$″	Core: clay or shale structural tile; see Notes 4, 8, 15, 18; Facings: side 1, see Note 17; side 2, none.	80 psi	10 hrs.		1		1, 20	10
W-16-M-24	$16^{5}/_{8}$″	Core: clay or shale structural tile; see Notes 4, 8, 15, 19; Facings: fire side only; see Note 17.	80 psi	7 hrs.		1		1, 20	7
W-16-M-25	$16^{5}/_{8}$″	Core: clay or shale structural tile; see Notes 4, 6, 16, 18; Facings: side 1, see Note 17; side 2, none.	80 psi	11 hrs.		1		1, 20	11
W-16-M-26	$16^{5}/_{8}$″	Core: clay or shale structural tile; see Notes 4, 6, 16, 19; Facings: fire side only; see Note 17.	80 psi	8 hrs.		1		1, 20	8

(continued)

INTERNATIONAL CODE COUNCIL®
Copyright © 2015 ICC. ALL RIGHTS RESERVED. Accessed by David Dammon on Jun 21, 2017 12:30:52 PM pursuant to License Agreement with ICC. No further reproduction or distribution authorized. ANY UNAUTHORIZED REPRODUCTION OR DISTRIBUTION IS A VIOLATION OF THE FEDERAL COPYRIGHT ACT AND THE LICENSE AGREEMENT, AND SUBJECT TO CIVIL AND CRIMINAL PENALTIES THEREUNDER.

TABLE 1.1.7—continued
MASONRY WALLS
14″ OR MORE THICK

ITEM CODE	THICKNESS	CONSTRUCTION DETAILS	PERFORMANCE		REFERENCE NUMBER			NOTES	REC. HOURS
			LOAD	TIME	PRE-BMS-92	BMS-92	POST-BMS-92		
W-17-M-27	$17^{1}/_{4}$″	Core: clay or shale structural tile; see Notes 4, 7, 9, 18; Facings: sides 1 and 2; see Note 17.	80 psi	8 hrs.		1		1, 20	8
W-17-M-28	$17^{1}/_{4}$″	Core: clay or shale structural tile; see Notes 4, 7, 10, 18; Facings: sides 1 and 2; see Note 17.	80 psi	9 hrs.		1		1, 20	9
W-17-M-29	$17^{1}/_{4}$″	Core: clay or shale structural tile; see Notes 4, 7, 11, 18; Facings: sides 1 and 2; see Note 17.	80 psi	10 hrs.		1		1, 20	10
W-17-M-30	$17^{1}/_{4}$″	Core: clay or shale structural tile; see Notes 4, 8, 15, 18; Facings: sides 1 and 2; see Note 17.	80 psi	12 hrs.		1		1, 20	12
W-17-M-31	$17^{1}/_{4}$″	Core: clay or shale structural tile; see Notes 4, 6, 16, 18; Facings: sides 1 and 2; see Note 17.	80 psi	13 hrs.		1		1, 20	13

For SI: 1 inch = 25.4 mm, 1 pound per square inch = 0.00689 MPa.

Notes:

1 Tested at NBS - ASA Spec. No. A2-1934.
2. One unit in wall thickness.
3. Two units in wall thickness.
4. Two or three units in wall thickness.
5. Two cells in wall thickness.
6. Three or four cells in wall thickness.
7. Four or five cells in wall thickness.
8. Five or six cells in wall thickness.
9. Minimum percent of solid materials in units = 40%.
10. Minimum percent of solid materials in units = 43%.
11. Minimum percent of solid materials in units = 46%.
12. Minimum percent of solid materials in units = 48%.
13. Minimum percent of solid materials in units = 49%.
14. Minimum percent of solid materials in units = 45%.
15. Minimum percent of solid materials in units = 51%.
16. Minimum percent of solid materials in units = 53%.
17. Not less than $^{5}/_{8}$ inch thickness of 1:3 sanded gypsum plaster.
18. Noncombustible or no members framed into wall.
19. Combustible members framed into wall.
20. Load: 80 psi for gross area.
21. Portland cement-lime mortar.
22. Failure mode—thermal.
23. British test.
24. Passed all criteria.
25. Failed by sudden collapse with no preceding signs of impending failure.
26. One cell in wall thickness.
27. Two cells in wall thickness.
28. Three cells in wall thickness.
29. Minimum percent of solid material in concrete units = 52%.
30. Minimum percent of solid material in concrete units = 54%.
31. Minimum percent of solid material in concrete units = 55%.
32. Minimum percent of solid material in concrete units = 57%.
33. Minimum percent of solid material in concrete units = 60%.
34. Minimum percent of solid material in concrete units = 62%.
35. Minimum percent of solid material in concrete units = 65%.
36. Minimum percent of solid material in concrete units = 70%.
37. Minimum percent of solid material in concrete units = 76%.
38. Not less than $^{1}/_{2}$ inch of 1:3 sanded gypsum plaster.
39. Three units in wall thickness.
40. Concrete units made with expanded slag or pumice aggregates.
41. Concrete units made with expanded burned clay or shale, crushed limestone, air cooled slag or cinders.
42. Concrete units made with calcareous sand and gravel. Coarse aggregate, 60 percent or more calcite and dolomite.
43. Concrete units made with siliceous sand and gravel. Ninety percent or more quartz, chert or flint.

INTERNATIONAL CODE COUNCIL®
Copyright © 2015 ICC. ALL RIGHTS RESERVED. Accessed by David Dammon on Jun 21, 2017 12:30:52 PM pursuant to License Agreement with ICC. No further reproduction or distribution authorized. ANY UNAUTHORIZED REPRODUCTION OR DISTRIBUTION IS A VIOLATION OF THE FEDERAL COPYRIGHT ACT AND THE LICENSE AGREEMENT, AND SUBJECT TO CIVIL AND CRIMINAL PENALTIES THEREUNDER.

FIGURE 1.2.1
METAL FRAME WALLS
0″ TO LESS THAN 4″ THICK

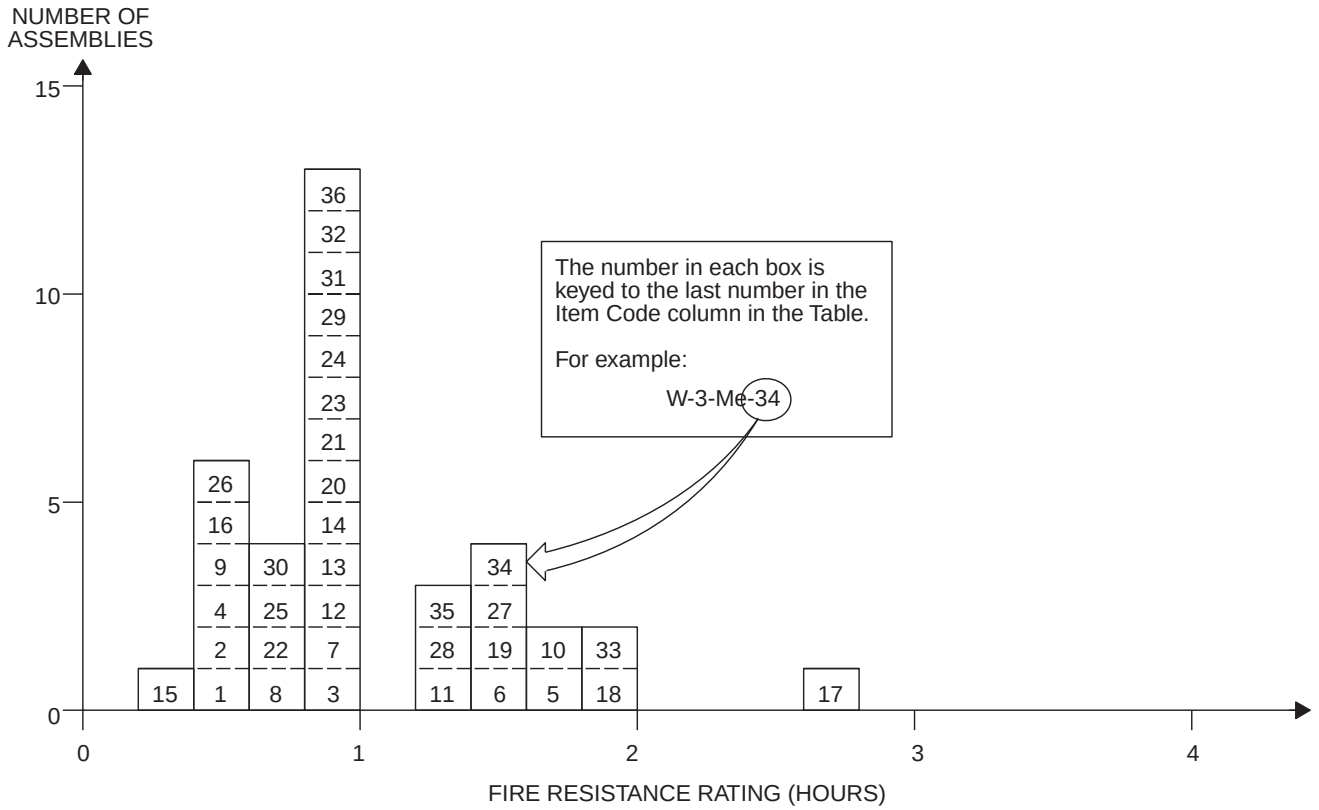

TABLE 1.2.1
METAL FRAME WALLS
0″ TO LESS THAN 4″ THICK

ITEM CODE	THICKNESS	CONSTRUCTION DETAILS	PERFORMANCE		REFERENCE NUMBER			NOTES	REC. HOURS
			LOAD	TIME	PRE-BMS-92	BMS-92	POST-BMS-92		
W-3-Me-1	3″	Core: steel channels having three rows of 4″ × $^{1}/_{8}$″ staggered slots in web; core filled with heat expanded vermiculite weighing 1.5 lbs./ft.^{2} of wall area; Facings: sides 1 and 2, 18 gage steel, spot welded to core.	N/A	25 min.		1			$^{1}/_{3}$
W-3-Me-2	3″	Core: steel channels having three rows of 4″ × $^{1}/_{8}$″ staggered slots in web; core filled with heat expanded vermiculite weighing 2 lbs./ft.^{2} of wall area; Facings: sides 1 and 2, 18 gage steel, spot welded to core.	N/A	30 min.		1			$^{1}/_{2}$
W-3-Me-3	$2^{1}/_{2}$″	Solid partition: $^{3}/_{8}$″ tension rods (vertical) 3′ o.c. with metal lath; Scratch coat: cement/sand/lime plaster; Float coats: cement/sand/lime plaster; Finish coats: neat gypsum plaster.	N/A	1 hr.			7	1	1
W-2-Me-4	2″	Solid wall: steel channel per Note 1; 2″ thickness of 1:2; 1:3 portland cement on metal lath.	N/A	30 min.		1			$^{1}/_{2}$

(continued)

INTERNATIONAL CODE COUNCIL®
Copyright © 2015 ICC. ALL RIGHTS RESERVED. Accessed by David Dammon on Jun 21, 2017 12:30:52 PM pursuant to License Agreement with ICC. No further reproduction or distribution authorized. ANY UNAUTHORIZED REPRODUCTION OR DISTRIBUTION IS A VIOLATION OF THE FEDERAL COPYRIGHT ACT AND THE LICENSE AGREEMENT, AND SUBJECT TO CIVIL AND CRIMINAL PENALTIES THEREUNDER.

TABLE 1.2.1—continued
METAL FRAME WALLS
0″ TO LESS THAN 4″ THICK

ITEM CODE	THICKNESS	CONSTRUCTION DETAILS	PERFORMANCE		REFERENCE NUMBER			NOTES	REC. HOURS
			LOAD	TIME	PRE-BMS-92	BMS-92	POST-BMS-92		
W-2-Me-5	2″	Solid wall: steel channel per Note 1; 2″ thickness of neat gypsum plaster on metal lath.	N/A	1 hr. 45 min.		1			$1^{3}/_{4}$
W-2-Me-6	2″	Solid wall: steel channel per Note 1; 2″ thickness of $1{:}1^{1}/_{2}$; $1{:}1^{1}/_{2}$ gypsum plaster on metal lath.	N/A	1 hr. 30 min.		1			$1^{1}/_{2}$
W-2-Me-7	2″	Solid wall: steel channel per Note 2; 2″ thickness of 1:1; 1:1 gypsum plaster on metal lath.	N/A	1 hr.		1			1
W-2-Me-8	2″	Solid wall: steel channel per Note 1; 2″ thickness of 1:2; 1:2 gypsum plaster on metal lath.	N/A	45 min.		1			$^{3}/_{4}$
W-2-Me-9	$2^{1}/_{4}$″	Solid wall: steel channel per Note 2; $2^{1}/_{4}$″ thickness of 1:2; 1:3 portland cement on metal lath.	N/A	30 min.		1			$^{1}/_{2}$
W-2-Me-10	$2^{1}/_{4}$″	Solid wall: steel channel per Note 2; $2^{1}/_{4}$″ thickness of neat gypsum plaster on metal lath.	N/A	2 hrs.		1			2
W-2-Me-11	$2^{1}/_{4}$″	Solid wall: steel channel per Note 2; $2^{1}/_{4}$ ″thickness of $1{:}^{1}/_{2}$; $1{:}^{1}/_{2}$ gypsum plaster on metal lath.	N/A	1 hr. 45 min.		1			1^{3}/4
W-2-Me-12	$2^{1}/_{4}$″	Solid wall: steel channel per Note 2; $2^{1}/_{4}$″ thickness of 1:1; 1:1 gypsum plaster on metal lath.	N/A	1 hr. 15 min.		1			$1^{1}/_{4}$
W-2-Me-13	$2^{1}/_{4}$″	Solid wall: steel channel per Note 2; $2^{1}/_{4}$″ thickness of 1:2; 1:2 gypsum plaster on metal lath.	N/A	1 hr.		1			1
W-2-Me-14	$2^{1}/_{2}$″	Solid wall: steel channel per Note 1; $2^{1}/_{2}$″ thickness of 4.5:1:7; 4.5:1:7 portland cement, sawdust and sand sprayed on wire mesh; see Note 3.	N/A	1 hr.		1			1
W-2-Me-15	$2^{1}/_{2}$″	Solid wall: steel channel per Note 2; $2^{1}/_{2}$″ thickness of 1:4; 1:4 portland cement sprayed on wire mesh; see Note 3.	N/A	20 min.		1			$^{1}/_{3}$
W-2-Me-16	$2^{1}/_{2}$″	Solid wall: steel channel per Note 2; $2^{1}/_{2}$″ thickness of 1:2; 1:3 portland cement on metal lath.	N/A	30 min.		1			$^{1}/_{2}$
W-2-Me-17	$2^{1}/_{2}$″	Solid wall: steel channel per Note 2; $2^{1}/_{2}$″ thickness of neat gypsum plaster on metal lath.	N/A	2 hrs. 30 min.		1			$2^{1}/_{2}$
W-2-Me-18	$2^{1}/_{2}$″	Solid wall: steel channel per Note 2; $2^{1}/_{2}$″ thickness of $1{:}^{1}/_{2}$; $1{:}^{1}/_{2}$ gypsum plaster on metal lath.	N/A	2 hrs.		1			2
W-2-Me-19	$2^{1}/_{2}$″	Solid wall: steel channel per Note 2; $2^{1}/_{2}$″ thickness of 1:1; 1:1 gypsum plaster on metal lath.	N/A	1 hr. 30 min.		1			$1^{1}/_{2}$

(continued)

INTERNATIONAL CODE COUNCIL®
Copyright © 2015 ICC. ALL RIGHTS RESERVED. Accessed by David Dammon on Jun 21, 2017 12:30:52 PM pursuant to License Agreement with ICC. No further reproduction or distribution authorized. ANY UNAUTHORIZED REPRODUCTION OR DISTRIBUTION IS A VIOLATION OF THE FEDERAL COPYRIGHT ACT AND THE LICENSE AGREEMENT, AND SUBJECT TO CIVIL AND CRIMINAL PENALTIES THEREUNDER.

TABLE 1.2.1—continued
METAL FRAME WALLS
0″ TO LESS THAN 4″ THICK

ITEM CODE	THICKNESS	CONSTRUCTION DETAILS	PERFORMANCE		REFERENCE NUMBER			NOTES	REC. HOURS
			LOAD	TIME	PRE-BMS-92	BMS-92	POST-BMS-92		
W-2-Me-20	2 1/2″	Solid wall: steel channel per Note 2; 2 1/2″ thickness of 1:2; 1:2 gypsum plaster on metal lath.	N/A	1 hr.		1			1
W-2-Me-21	2 1/2″	Solid wall: steel channel per Note 2; 2 1/2″ thickness of 1:2; 1:3 gypsum plaster on metal lath.	N/A	1 hr.		1			1
W-3-Me-22	3″	Core: steel channel per Note 2; 1:2; 1:2 gypsum plaster on 3/4″ soft asbestos lath; plaster thickness 2″.	N/A	45 min.		1			3/4
W-3-Me-23	3 1/2″	Solid wall: steel channel per Note 2; 2 1/2″ thickness of 1:2; 1:2 gypsum plaster on 3/4″ asbestos lath.	N/A	1 hr.		1			1
W-3-Me-24	3 1/2″	Solid wall: steel channel per Note 2; lath over and 1:2 1/2; 1:2 1/2 gypsum plaster on 1″ magnesium oxysulfate wood fiberboard; plaster thickness 2 1/2″.	N/A	1 hr.		1			1
W-3-Me-25	3 1/2″	Core: steel studs; see Note 4; Facings: 3/4″ thickness of 1:1/30:2; 1:1/30: 3 portland cement and asbestos fiber plaster.	N/A	45 min.		1			3/4
W-3-Me-26	3 1/2″	Core: steel studs; see Note 4; Facings: both sides 3/4″ thickness of 1:2; 1:3 portland cement.	N/A	30 min.		1			1/2
W-3-Me-27	3 1/2″	Core: steel studs; see Note 4; Facings: both sides 3/4″ thickness of neat gypsum plaster.	N/A	1 hr. 30 min.		1			1 1/2
W-3-Me-28	3 1/2″	Core: steel studs; see Note 4; Facings: both sides 3/4″ thickness of 1:1/2; 1:1/2 gypsum plaster.	N/A	1 hr. 15 min.		1			1 1/4
W-3-Me-29	3 1/2″	Core: steel studs; see Note 4; Facings: both sides 3/4″ thickness of 1:2; 1:2 gypsum plaster.	N/A	1 hr.		1			1
W-3-Me-30	3 1/2″	Core: steel studs; see Note 4; Facings: both sides 3/4″ thickness of 1:2; 1:3 gypsum plaster.	N/A	45 min.		1			3/4
W-3-Me-31	3 3/4″	Core: steel studs; see Note 4; Facings: both sides 7/8″ thickness of 1:1/30: 2; 1:1/30: 3 portland cement and asbestos fiber plaster.	N/A	1 hr.		1			1
W-3-Me-32	3 3/4″	Core: steel studs; see Note 4; Facings: both sides 7/8″ thickness of 1:2; 1:3 portland cement.	N/A	45 min.		1			3/4
W-3-Me-33	3 3/4″	Core: steel studs; see Note 4; Facings: both sides 7/8″ thickness of neat gypsum plaster.	N/A	2 hrs.		1			2
W-3-Me-34	3 3/4″	Core: steel studs; see Note 4; Facings: both sides 7/8″ thickness of 1:1/2; 1:1/2 gypsum plaster.	N/A	1 hr. 30 min.		1			1 1/2

(continued)

INTERNATIONAL CODE COUNCIL®
Copyright © 2015 ICC. ALL RIGHTS RESERVED. Accessed by David Dammon on Jun 21, 2017 12:30:52 PM pursuant to License Agreement with ICC. No further reproduction or distribution authorized. ANY UNAUTHORIZED REPRODUCTION OR DISTRIBUTION IS A VIOLATION OF THE FEDERAL COPYRIGHT ACT AND THE LICENSE AGREEMENT, AND SUBJECT TO CIVIL AND CRIMINAL PENALTIES THEREUNDER.

TABLE 1.2.1—continued
METAL FRAME WALLS
0″ TO LESS THAN 4″ THICK

ITEM CODE	THICKNESS	CONSTRUCTION DETAILS	PERFORMANCE		REFERENCE NUMBER			NOTES	REC. HOURS
			LOAD	TIME	PRE-BMS-92	BMS-92	POST-BMS-92		
W-3-Me-35	$3^3/_4$″	Core: steel studs; see Note 4; Facings: both sides $^7/_8$″ thickness of 1:2; 1:2 gypsum plaster.	N/A	1 hr. 15 min.		1			$1^1/_4$
W-3-Me-36	$3^3/_4$″	Core: steel; see Note 4; Facings: $^7/_8$″ thickness of 1:2; 1:3 gypsum plaster on both sides.	N/A	1 hr.		1			1

For SI: 1 inch = 25.4 mm.

Notes:

1. Failure mode—local temperature rise—back face.
2. Three-fourths inch or 1 inch channel framing—hot-rolled or strip-steel channels.
3. Reinforcement is 4-inch square mesh of No. 6 wire welded at intersections (no channels).
4. Ratings are for any usual type of nonload-bearing metal framing providing 2 inches (or more) air space.

General Note:

The construction details of the wall assemblies are as complete as the source documentation will permit. Data on the method of attachment of facings and the gauge of steel studs was provided when known. The cross-sectional area of the steel stud can be computed, thereby permitting a reasoned estimate of actual loading conditions. For load-bearing assemblies, the maximum allowable stress for the steel studs has been provided in the table "Notes." More often, it is the thermal properties of the facing materials, rather than the specific gauge of the steel, that will determine the degree of fire resistance. This is particularly true for nonbearing wall assemblies.

INTERNATIONAL CODE COUNCIL®
Copyright © 2015 ICC. ALL RIGHTS RESERVED. Accessed by David Dammon on Jun 21, 2017 12:30:52 PM pursuant to License Agreement with ICC. No further reproduction or distribution authorized. ANY UNAUTHORIZED REPRODUCTION OR DISTRIBUTION IS A VIOLATION OF THE FEDERAL COPYRIGHT ACT AND THE LICENSE AGREEMENT, AND SUBJECT TO CIVIL AND CRIMINAL PENALTIES THEREUNDER.

FIGURE 1.2.2
METAL FRAME WALLS
4″ TO LESS THAN 6″ THICK

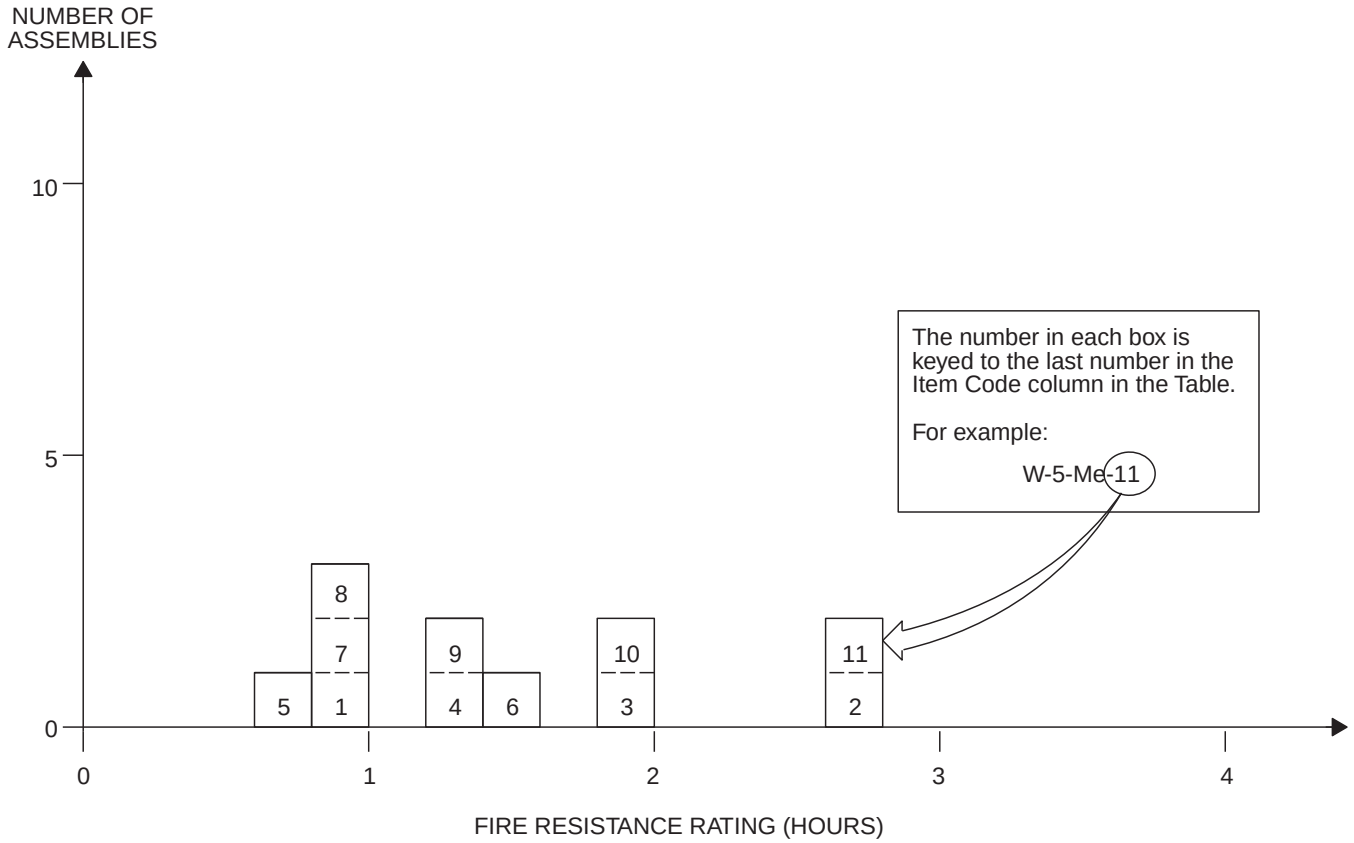

TABLE 1.2.2
METAL FRAME WALLS
4″ TO LESS THAN 6″ THICK

ITEM CODE	THICKNESS	CONSTRUCTION DETAILS	PERFORMANCE		REFERENCE NUMBER			NOTES	REC. HOURS
			LOAD	TIME	PRE-BMS-92	BMS-92	POST-BMS-92		
W-5-Me-1	$5^1/_2$″	3″ cavity with 16 ga. channel studs ($3^1/_2$″ o.c.) of $^1/_2$″ × $^1/_2$″ channel and 3″ spacer; Metal lath on ribs with plaster (three coats) $^3/_4$″ over face of lath; Plaster (each side): scratch coat, cement/lime/sand with hair; float coat, cement/lime/sand; finish coat, neat gypsum.	N/A	1 hr. 11 min.			7	1	1
W-4-Me-2	4″	Core: steel studs; see Note 2; Facings: both sides 1″ thickness of neat gypsum plaster.	N/A	2 hrs. 30 min.		1			$2^1/_2$
W-4-Me-3	4″	Core: steel studs; see Note 2; Facings: both sides 1″ thickness of 1:$^1/_2$; 1:$^1/_2$ gypsum plaster.	N/A	2 hrs.		1			2
W-4-Me-4	4″	Core: steel; see Note 2; Facings: both sides 1″ thickness of 1:2; 1:3 gypsum plaster.	N/A	1 hr. 15 min.		1			$1^1/_4$
W-4-Me-5	$4^1/_2$″	Core: lightweight steel studs 3″ in depth; Facings: both sides $^3/_4$″ thick sanded gypsum plaster, 1:2 scratch coat, 1:3 brown coat applied on metal lath.	See Note 4	45 min.		1		5	$^3/_4$

(continued)

INTERNATIONAL CODE COUNCIL®
Copyright © 2015 ICC. ALL RIGHTS RESERVED. Accessed by David Dammon on Jun 21, 2017 12:30:52 PM pursuant to License Agreement with ICC. No further reproduction or distribution authorized. ANY UNAUTHORIZED REPRODUCTION OR DISTRIBUTION IS A VIOLATION OF THE FEDERAL COPYRIGHT ACT AND THE LICENSE AGREEMENT, AND SUBJECT TO CIVIL AND CRIMINAL PENALTIES THEREUNDER.

TABLE 1.2.2—continued
METAL FRAME WALLS
4″ TO LESS THAN 6″ THICK

ITEM CODE	THICKNESS	CONSTRUCTION DETAILS	PERFORMANCE		REFERENCE NUMBER			NOTES	REC. HOURS
			LOAD	TIME	PRE-BMS-92	BMS-92	POST-BMS-92		
W-4-Me-6	$4^1/_2$″	Core: lightweight steel studs 3″ in depth; Facings: both sides $^3/_4$″ thick neat gypsum plaster on metal lath.	See Note 4	1 hr. 30 min.		1		5	$1^1/_2$
W-4-Me-7	$4^1/_2$″	Core: lightweight steel studs 3″ in depth; Facings: both sides $^3/_4$″ thick sanded gypsum plaster, 1:2 scratch and brown coats applied on metal lath.	See Note 4	1 hr.		1		5	1
W-4-Me-8	$4^3/_4$″	Core: lightweight steel studs 3″ in depth; Facings: both sides $^7/_8$″ thick sanded gypsum plaster, 1:2 scratch coat, 1:3 brown coat, applied on metal lath.	See Note 4	1 hr.		1		5	1
W-4-Me-9	$4^3/_4$″	Core: lightweight steel studs 3″ in depth; Facings: both sides $^7/_8$″ thick sanded gypsum plaster, 1:2 scratch and 1:3 brown coats applied on metal lath.	See Note 4	1 hr. 15 min.		1		5	$1^1/_4$
W-5-Me-10	5″	Core: lightweight steel studs 3″ in depth; Facings: both sides 1″ thick neat gypsum plaster on metal lath.	See Note 4	2 hrs.		1		5	2
W-5-Me-11	5″	Core: lightweight steel studs 3″ in depth; Facings: both sides 1″ thick neat gypsum plaster on metal lath.	See Note 4	2 hrs. 30 min.		1		5, 6	$2^1/_2$

For SI: 1 inch = 25.4 mm, 1 pound per square inch = 0.00689 MPa.

Notes:

1. Failure mode—local back face temperature rise.
2. Ratings are for any usual type of nonbearing metal framing providing a minimum 2 inches air space.
3. Facing materials secured to lightweight steel studs not less than 3 inches deep.
4. Rating based on loading to develop a maximum stress of 7270 psi for net area of each stud.
5. Spacing of steel studs must be sufficient to develop adequate rigidity in the metal-lath or gypsum-plaster base.
6. As per Note 4 but load/stud not to exceed 5120 psi.

General Note:

The construction details of the wall assemblies are as complete as the source documentation will permit. Data on the method of attachment of facings and the gauge of steel studs was provided when known. The cross sectional area of the steel stud can be computed, thereby permitting a reasoned estimate of actual loading conditions. For load-bearing assemblies, the maximum allowable stress for the steel studs has been provided in the table "Notes." More often, it is the thermal properties of the facing materials, rather than the specific gauge of the steel, that will determine the degree of fire resistance. This is particularly true for nonbearing wall assemblies.

INTERNATIONAL CODE COUNCIL®
Copyright © 2015 ICC. ALL RIGHTS RESERVED. Accessed by David Dammon on Jun 21, 2017 12:30:52 PM pursuant to License Agreement with ICC. No further reproduction or distribution authorized. ANY UNAUTHORIZED REPRODUCTION OR DISTRIBUTION IS A VIOLATION OF THE FEDERAL COPYRIGHT ACT AND THE LICENSE AGREEMENT, AND SUBJECT TO CIVIL AND CRIMINAL PENALTIES THEREUNDER.

TABLE 1.2.3
METAL FRAME WALLS
6″ TO LESS THAN 8″ THICK

ITEM CODE	THICKNESS	CONSTRUCTION DETAILS	PERFORMANCE		REFERENCE NUMBER			NOTES	REC HOURS
			LOAD	TIME	PRE-BMS-92	BMS-92	POST-BMS-92		
W-6-Me-1	$6^{5}/_{8}$″	On one side of 1″ magnesium oxysulfate wood fiberboard sheathing attached to steel studs (see Notes 1 and 2), 1″ air space, $3^{3}/_{4}$″ brick secured with metal ties to steel frame every fifth course; Inside facing of $^{7}/_{8}$″ 1:2 sanded gypsum plaster on metal lath secured directly to studs; Plaster side exposed to fire.	See Note 2	1 hr. 45 min.		1		1	$1^{3}/_{4}$
W-6-Me-2	$6^{5}/_{8}$″	On one side of 1″ magnesium oxysulfate wood fiberboard sheathing attached to steel studs (see Notes 1 and 2), 1″ air space, $3^{3}/_{4}$″ brick secured with metal ties to steel frame every fifth course; Inside facing of $^{7}/_{8}$″ 1:2 sanded gypsum plaster on metal lath secured directly to studs; Brick face exposed to fire.	See Note 2	4 hrs.		1		1	4
W-6-Me-3	$6^{5}/_{8}$″	On one side of 1″ magnesium oxysulfate wood fiberboard sheathing attached to steel studs (see Notes 1 and 2), 1″ air space, $3^{3}/_{4}$″ brick secured with metal ties to steel frame every fifth course; Inside facing of $^{7}/_{8}$″ vermiculite plaster on metal lath secured directly to studs; Plaster side exposed to fire.	See Note 2	2 hrs.		1		1	2

For SI: 1 inch = 25.4 mm, 1 pound per square inch = 0.00689 MPa.

Notes:

1. Lightweight steel studs (minimum 3 inches deep) used. Stud spacing dependent on loading, but in each case, spacing is to be such that adequate rigidity is provided to the metal lath plaster base.
2. Load is such that stress developed in studs is not greater than 5120 psi calculated from net stud area.

General Note:

The construction details of the wall assemblies are as complete as the source documentation will permit. Data on the method of attachment of facings and the gauge of steel studs was provided when known. The cross sectional area of the steel stud can be computed, thereby permitting a reasoned estimate of actual loading conditions. For load-bearing assemblies, the maximum allowable stress for the steel studs has been provided in the table "Notes." More often, it is the thermal properties of the facing materials, rather than the specific gauge of the steel, that will determine the degree of fire resistance. This is particularly true for nonbearing wall assemblies.

INTERNATIONAL CODE COUNCIL®
Copyright © 2015 ICC. ALL RIGHTS RESERVED. Accessed by David Dammon on Jun 21, 2017 12:30:52 PM pursuant to License Agreement with ICC. No further reproduction or distribution authorized. ANY UNAUTHORIZED REPRODUCTION OR DISTRIBUTION IS A VIOLATION OF THE FEDERAL COPYRIGHT ACT AND THE LICENSE AGREEMENT, AND SUBJECT TO CIVIL AND CRIMINAL PENALTIES THEREUNDER.

TABLE 1.2.4
METAL FRAME WALLS
8″ TO LESS THAN 10″ THICK

ITEM CODE	THICKNESS	CONSTRUCTION DETAILS	PERFORMANCE		REFERENCE NUMBER			NOTES	REC. HOURS
			LOAD	TIME	PRE-BMS-92	BMS-92	POST-BMS-92		
W-9-Me-1	$9^{1}/_{16}$″	On one side of $^{1}/_{2}$″ wood fiberboard sheathing next to studs, $^{3}/_{4}$″ air space formed with $^{3}/_{4}$″ × $1^{5}/_{8}$″ wood strips placed over the fiberboard and secured to the studs, paper backed wire lath nailed to strips $3^{3}/_{4}$″ brick veneer held in place by filling a $^{3}/_{4}$″ space between the brick and paper backed lath with mortar; Inside facing of $^{3}/_{4}$″ neat gypsum plaster on metal lath attached to $^{5}/_{16}$″ plywood strips secured to edges of steel studs; Rated as combustible because of the sheathing; See Notes 1 and 2; Plaster exposed.	See Note 2	1 hr. 45 min.		1		1	$1^{3}/_{4}$
W-9-Me-2	$9^{1}/_{16}$″	Same as above with brick exposed.	See Note 2	4 hrs.		1		1	4
W-8-Me-3	$8^{1}/_{2}$″	On one side of paper backed wire lath attached to studs and $3^{3}/_{4}$″ brick veneer held in place by filling a 1″ space between the brick and lath with mortar; Inside facing of 1″ paper-enclosed mineral wool blanket weighing 0.6 lb./ft.^{2} attached to studs, metal lath or paper backed wire lath laid over the blanket and attached to the studs, $^{3}/_{4}$″ sanded gypsum plaster 1:2 for the scratch coat and 1:3 for the brown coat; See Notes 1 and 2; Plaster face exposed.	See Note 2	4 hrs.		1		1	4
W-8-Me-4	$8^{1}/_{2}$″	Same as above with brick exposed.	See Note 2	5 hrs.		1		1	5

For SI: 1 inch = 25.4 mm, 1 pound per square inch = 0.00689 MPa.

Notes:

1. Lightweight steel studs ≥ 3 inches in depth. Stud spacing dependent on loading, but in any case, the spacing is to be such that adequate rigidity is provided to the metal-lath plaster base.
2. Load is such that stress developed in studs is ≤ 5120 psi calculated from the net area of the stud.

General Note:

The construction details of the wall assemblies are as complete as the source documentation will permit. Data on the method of attachment of facings and the gauge of steel studs was provided when known. The cross sectional area of the steel stud can be computed, thereby permitting a reasoned estimate of actual loading conditions. For load-bearing assemblies, the maximum allowable stress for the steel studs has been provided in the table "Notes." More often, it is the thermal properties of the facing materials, rather than the specific gauge of the steel, that will determine the degree of fire resistance. This is particularly true for nonbearing wall assemblies.

INTERNATIONAL CODE COUNCIL®
Copyright © 2015 ICC. ALL RIGHTS RESERVED. Accessed by David Dammon on Jun 21, 2017 12:30:52 PM pursuant to License Agreement with ICC. No further reproduction or distribution authorized. ANY UNAUTHORIZED REPRODUCTION OR DISTRIBUTION IS A VIOLATION OF THE FEDERAL COPYRIGHT ACT AND THE LICENSE AGREEMENT, AND SUBJECT TO CIVIL AND CRIMINAL PENALTIES THEREUNDER.

TABLE 1.3.1
WOOD FRAME WALLS
0″ TO LESS THAN 4″ THICK

ITEM CODE	THICKNESS	CONSTRUCTION DETAILS	PERFORMANCE		REFERENCE NUMBER			NOTES	REC. HOURS
			LOAD	TIME	PRE-BMS-92	BMS-92	POST-BMS-92		
W-3-W-1	$3^{3}/_{4}$″	Solid wall: $2^{1}/_{4}$″ wood-wool slab core; $^{3}/_{4}$″ gypsum plaster each side.	N/A	2 hrs.			7	1, 6	2
W-3-W-2	$3^{7}/_{8}$″	2 × 4 stud wall; $^{3}/_{16}$″ thick cement asbestos board on both sides of wall.	360 psi net area	10 min.		1		2-5	$^{1}/_{6}$
W-3-W-3	$3^{7}/_{8}$″	Same as W-3-W-2 but stud cavities filled with 1 lb./ft.^{2} mineral wool batts.	360 psi net area	40 min.		1		2-5	$^{2}/_{3}$

For SI: 1 inch = 25.4 mm, 1 pound per square inch = 0.00689 MPa.

Notes:

1. Achieved “Grade C” fire resistance (British).
2. Nominal 2 × 4 wood studs of No. 1 common or better lumber set edgewise, 2 × 4 plates at top and bottom and blocking at mid height of wall.
3. All horizontal joints in facing material backed by 2 × 4 blocking in wall.
4. Load: 360 psi of net stud cross sectional area.
5. Facings secured with 6d casing nails. Nail holes predrilled and 0.02 inch to 0.03 inch smaller than nail diameter.
6. The wood-wool core is a pressed excelsior slab which possesses insulating properties similar to cellulosic insulation.

INTERNATIONAL CODE COUNCIL®
Copyright © 2015 ICC. ALL RIGHTS RESERVED. Accessed by David Dammon on Jun 21, 2017 12:30:52 PM pursuant to License Agreement with ICC. No further reproduction or distribution authorized. ANY UNAUTHORIZED REPRODUCTION OR DISTRIBUTION IS A VIOLATION OF THE FEDERAL COPYRIGHT ACT AND THE LICENSE AGREEMENT, AND SUBJECT TO CIVIL AND CRIMINAL PENALTIES THEREUNDER.

FIGURE 1.3.2
WOOD FRAME WALLS
4″ TO LESS THAN 6″ THICK

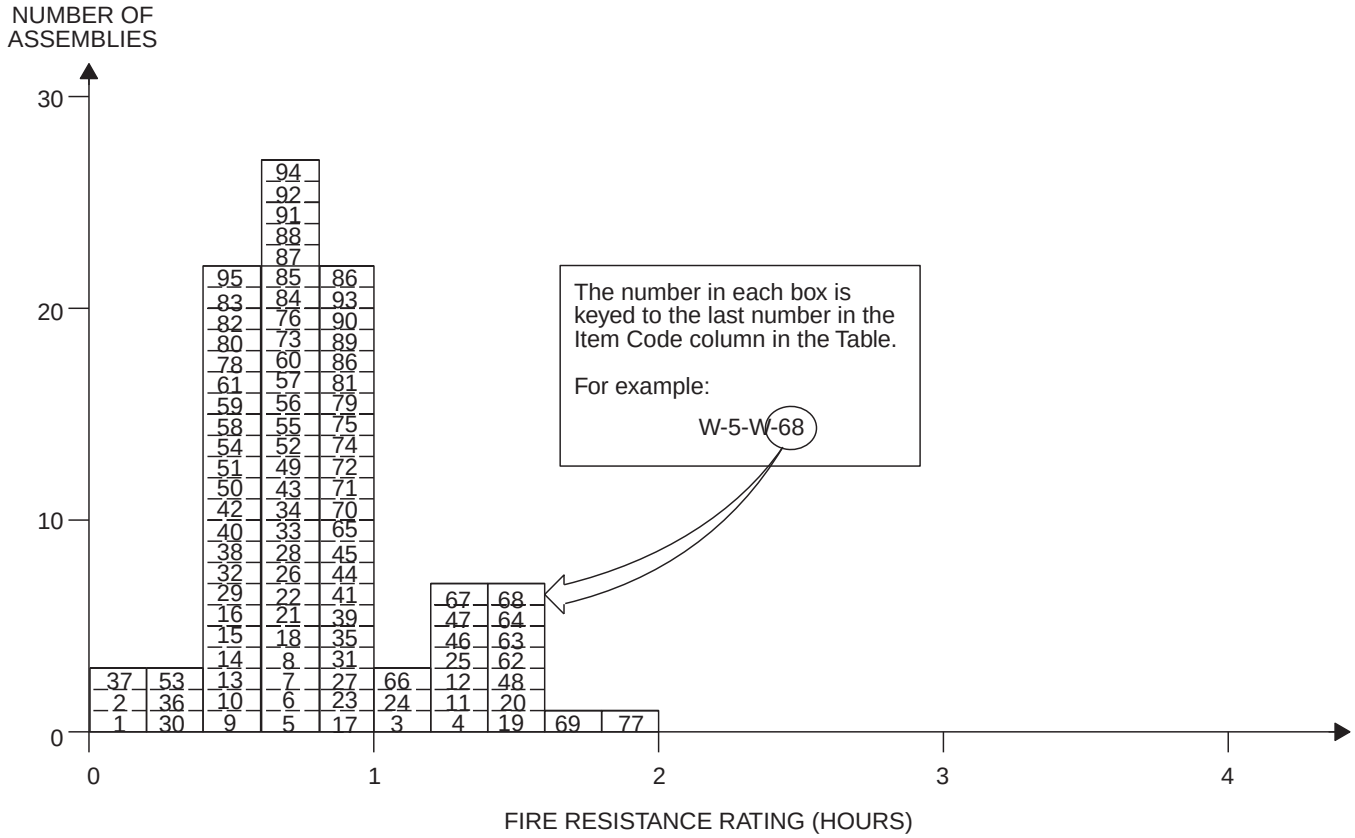

TABLE 1.3.2
WOOD FRAME WALLS
4″ TO LESS THAN 6″ THICK

ITEM CODE	THICKNESS	CONSTRUCTION DETAILS	PERFORMANCE		REFERENCE NUMBER			NOTES	REC. HOURS
			LOAD	TIME	PRE-BMS-92	BMS-92	POST-BMS-92		
W-4-W-1	4″	2″ × 4″ stud wall; $^{3}/_{16}$″ CAB; no insulation; Design A.	35 min.	10 min.			4	1-10	$^{1}/_{6}$
W-4-W-2	$4^{1}/_{8}$″	2″ × 4″ stud wall; $^{3}/_{16}$″ CAB; no insulation; Design A.	38 min.	9 min.			4	1-10	$^{1}/_{6}$
W-4-W-3	$4^{3}/_{4}$″	2″ × 4″ stud wall; $^{3}/_{16}$″ CAB and $^{3}/_{8}$″ gypsum board face (both sides); Design B.	62 min.	64 min.			4	1-10	1
W-5-W-4	5″	2″ × 4″ stud wall; $^{3}/_{16}$″ CAB and $^{1}/_{2}$″ gypsum board (both sides); Design B.	79 min.	Greater than 90 min.			4	1-10	1
W-4-W-5	$4^{3}/_{4}$″	2″ × 4″ stud wall; $^{3}/_{16}$″ CAB and $^{3}/_{8}$″ gypsum board (both sides); Design B.	45 min.	45 min.			4	1-12	—
W-5-W-6	5″	2″ × 4″ stud wall; $^{3}/_{16}$″ CAB and $^{1}/_{2}$″ gypsum board face (both sides); Design B.	45 min.	45 min.			4	1-10, 12, 13	—
W-4-W-7	4″	2″ × 4″ stud wall; $^{3}/_{16}$″ CAB face; $3^{1}/_{2}$″ mineral wool insulation; Design C.	40 min.	42 min.			4	1-10	$^{2}/_{3}$
W-4-W-8	4″	2″ × 4″ stud wall; $^{3}/_{16}$″ CAB face; $3^{1}/_{2}$″ mineral wool insulation; Design C.	46 min.	46 min.			4	1-10, 43	$^{2}/_{3}$
W-4-W-9	4″	2″ × 4″ stud wall; $^{3}/_{16}$″ CAB face; $3^{1}/_{2}$″ mineral wool insulation; Design C.	30 min.	30 min.			4	1-10, 12, 14	—

(continued)

INTERNATIONAL CODE COUNCIL®
Copyright © 2015 ICC. ALL RIGHTS RESERVED. Accessed by David Dammon on Jun 21, 2017 12:30:52 PM pursuant to License Agreement with ICC. No further reproduction or distribution authorized. ANY UNAUTHORIZED REPRODUCTION OR DISTRIBUTION IS A VIOLATION OF THE FEDERAL COPYRIGHT ACT AND THE LICENSE AGREEMENT, AND SUBJECT TO CIVIL AND CRIMINAL PENALTIES THEREUNDER.

TABLE 1.3.2—continued
WOOD FRAME WALLS
4″ TO LESS THAN 6″ THICK

ITEM CODE	THICKNESS	CONSTRUCTION DETAILS	PERFORMANCE		REFERENCE NUMBER			NOTES	REC. HOURS
			LOAD	TIME	PRE-BMS-92	BMS-92	POST-BMS-92		
W-4-W-10	$4^1/_8$″	2″ × 4″ stud wall; $^3/_{16}$″ CAB face; $3^1/_2$″ mineral wool insulation; Design C.	—	30 min.			4	1-8, 12, 14	—
W-4-W-11	$4^3/_4$″	2″ × 4″ stud wall; $^3/_{16}$″ CAB face; $^3/_8$″ gypsum strips over studs; $5^1/_2$″ mineral wool insulation; Design D.	79 min.	79 min.			4	1-10	1
W-4-W-12	$4^3/_4$″	2″ × 4″ stud wall; $^3/_{16}$″ CAB face; $^3/_8$″ gypsum strips at stud edges; $7^1/_2$″ mineral wool insulation; Design D.	82 min.	82 min.			4	1-10	1
W-4-W-13	$4^3/_4$″	2″ × 4″ stud wall; $^3/_{16}$″ CAB face; $^3/_8$″ gypsum board strips over studs; $5^1/_2$″ mineral wool insulation; Design D.	30 min.	30 min.			4	1-12	—
W-4-W-14	$4^3/_4$″	2″ × 4″ stud wall; $^3/_{16}$″ CAB face; $^3/_8$″ gypsum board strips over studs; 7″ mineral wool insulation; Design D.	30 min.	30 min.			4	1-12	—
W-5-W-15	$5^1/_2$″	2″ × 4″ stud wall; Exposed face: CAB shingles over 1″ × 6″; Unexposed face: $^1/_8$″ CAB sheet; $^7/_{16}$″ fiberboard (wood); Design E.	34 min.	—			4	1-10	$^1/_2$
W-5-W-16	$5^1/_2$″	2″ × 4″ stud wall; Exposed face: $^1/_8$″ CAB sheet; $^7/_{16}$″ fiberboard; Unexposed face: CAB shingles over 1″ × 6″; Design E.	32 min.	33 min.			4	1-10	$^1/_2$
W-5-W-17	$5^1/_2$″	2″ × 4″ stud wall; Exposed face: CAB shingles over 1″ × 6″; Unexposed face: $^1/_8$″ CAB sheet; gypsum at stud edges; $3^1/_2$″ mineral wood insulation; Design F.	51 min.	—			4	1-10	$^3/_4$
W-5-W-18	$5^1/_2$″	2″ × 4″ stud wall; Exposed face: $^1/_8$″ CAB sheet; gypsum board at stud edges; Unexposed face: CAB shingles over 1″ × 6″; $3^1/_2$″ mineral wool insulation; Design F.	42 min.	—			4	1-10	$^2/_3$
W-5-W-19	$5^5/_8$″	2″ × 4″ stud wall; Exposed face: CAB shingles over 1″ × 6″; Unexposed face: $^1/_8$″ CAB sheet; gypsum board at stud edges; $5^1/_2$″ mineral wool insulation; Design G.	74 min.	85 min.			4	1-10	1
W-5-W-20	$5^5/_8$″	2″ × 4″ stud wall; Exposed face: $^1/_8$″ CAB sheet; gypsum board at $^3/_{16}$″ stud edges; $^7/_{16}$″ fiberboard; Unexposed face: CAB shingles over 1″ × 6″; $5^1/_2$″ mineral wool insulation; Design G.	79 min.	85 min.			4	1-10	$1^1/_4$
W-5-W-21	$5^5/_8$″	2″ × 4″ stud wall; Exposed face: CAB shingles 1″ × 6″ sheathing; Unexposed face: CAB sheet; gypsum board at stud edges; $5^1/_2$″ mineral wool insulation; Design G.	38 min.	38 min.			4	1-10, 12, 14	—
W-5-W-22	$5^5/_8$″	2″ × 4″ stud wall; Exposed face: CAB sheet; gypsum board at stud edges; Unexposed face: CAB shingles 1″ × 6″ sheathing; $5^1/_2$″ mineral wool insulation; Design G.	38 min.	38 min.			4	1-12	—
W-6-W-23	6″	2″ × 4″ stud wall; 16″ o.c.; $^1/_2$″ gypsum board each side; $^1/_2$″ gypsum plaster each side.	N/A	60 min.			7	15	1

(continued)

INTERNATIONAL CODE COUNCIL®
Copyright © 2015 ICC. ALL RIGHTS RESERVED. Accessed by David Dammon on Jun 21, 2017 12:30:52 PM pursuant to License Agreement with ICC. No further reproduction or distribution authorized. ANY UNAUTHORIZED REPRODUCTION OR DISTRIBUTION IS A VIOLATION OF THE FEDERAL COPYRIGHT ACT AND THE LICENSE AGREEMENT, AND SUBJECT TO CIVIL AND CRIMINAL PENALTIES THEREUNDER.

TABLE 1.3.2—continued
WOOD FRAME WALLS
4″ TO LESS THAN 6″ THICK.

ITEM CODE	THICKNESS	CONSTRUCTION DETAILS	PERFORMANCE		REFERENCE NUMBER			NOTES	REC. HOURS
			LOAD	TIME	PRE-BMS-92	BMS-92	POST-BMS-92		
W-6-W-24	6″	2″ × 4″ stud wall; 16″ o.c.; 1/2″ gypsum board each side; 1/2″ gypsum plaster each side.	N/A	68 min.			7	16	1
W-6-W-25	6 7/8″	2″ × 4″ stud wall; 18″ o.c.; 3/4″ gypsum plank each side; 3/16″ gypsum plaster each side.	N/A	80 min.			7	15	1 1/3
W-5-W-26	5 1/8″	2″ × 4″ stud wall; 16″ o.c.; 3/8″ gypsum board each side; 3/16″ gypsum plaster each side.	N/A	37 min.			7	15	1/2
W-5-W-27	5 3/4″	2″ × 4″ stud wall; 16″ o.c.; 3/8″ gypsum lath each side; 1/2″ gypsum plaster each side.	N/A	52 min.			7	15	3/4
W-5-W-28	5″	2″ × 4″ stud wall; 16″ o.c.; 1/2″ gypsum board each side.	N/A	37 min.			7	16	1/2
W-5-W-29	5″	2″ × 4″ stud wall; 1/2″ fiberboard both sides 14% M.C. with F.R. paint at 35 gm./ft.^{2}.	N/A	28 min.			7	15	1/3
W-4-W-30	4 3/4″	2″ × 4″ stud wall; Fire side: 1/2″ (wood) fiberboard; Back side: 1/4″ CAB; 16″ o.c.	N/A	17 min.			7	15, 16	1/4
W-5-W-31	5 1/8″	2″ × 4″ stud wall; 16″ o.c.; 1/2″ fiberboard insulation with 1/32″ asbestos (both sides of each board).	N/A	50 min.			7	16	3/4
W-4-W-32	4 1/4″	2″ × 4″ stud wall; 3/8″ thick gypsum wallboard on both faces; insulated cavities.	See Note 23	25 min.		1		17, 18, 23	1/3
W-4-W-33	4 1/2″	2″ × 4″ stud wall; 1/2″ thick gypsum wallboard on both faces.	See Note 17	40 min.		1		17, 23	1/3
W-4-W-34	4 1/2″	2″ × 4″ stud wall; 1/2″ thick gypsum wallboard on both faces; insulated cavities.	See Note 17	45 min.		1		17, 18, 23	3/4
W-4-W-35	4 1/2″	2″ × 4″ stud wall; 1/2″ thick gypsum wallboard on both faces; insulated cavities.	N/A	1 hr.		1		17, 18, 24	1
W-4-W-36	4 1/2″	2″ × 4″ stud wall; 1/2″ thick, 1.1 lbs./ft.^{2} wood fiberboard sheathing on both faces.	See Note 23	15 min.		1		17, 23	1/4
W-4-W-37	4 1/2″	2″ × 4″ stud wall; 1/2″ thick, 0.7 lb./ft.^{2} wood fiberboard sheathing on both faces.	See Note 23	10 min.		1		17, 23	1/6
W-4-W-38	4 1/2″	2″ × 4″ stud wall; 1/2″ thick, flameproofed 1.6 lbs./ft.^{2} wood fiberboard sheathing on both faces.	See Note 23	30 min.		1		17, 23	1/2
W-4-W-39	4 1/2″	2″ × 4″ stud wall; 1/2″ thick gypsum wallboard on both faces; insulated cavities.	See Note 23	1 hr.		1		17, 18, 23	1
W-4-W-40	4 1/2″	2″ × 4″ stud wall; 1/2″ thick, 1:2; 1:3 gypsum plaster on wood lath on both faces.	See Note 23	30 min.		1		17, 21, 23	1/2
W-4-W-41	4 1/2″	2″ × 4″ stud wall; 1/2″, 1:2; 1:3 gypsum plaster on wood lath on both faces; insulated cavities.	See Note 23	1 hr.		1		17, 18, 21, 24	1

(continued)

INTERNATIONAL CODE COUNCIL®
Copyright © 2015 ICC. ALL RIGHTS RESERVED. Accessed by David Dammon on Jun 21, 2017 12:30:52 PM pursuant to License Agreement with ICC. No further reproduction or distribution authorized. ANY UNAUTHORIZED REPRODUCTION OR DISTRIBUTION IS A VIOLATION OF THE FEDERAL COPYRIGHT ACT AND THE LICENSE AGREEMENT, AND SUBJECT TO CIVIL AND CRIMINAL PENALTIES THEREUNDER.

TABLE 1.3.2—continued
WOOD FRAME WALLS
4″ TO LESS THAN 6″ THICK

ITEM CODE	THICKNESS	CONSTRUCTION DETAILS	PERFORMANCE		REFERENCE NUMBER			NOTES	REC. HOURS
			LOAD	TIME	PRE-BMS-92	BMS-92	POST-BMS-92		
W-4-W-42	4 1/2″	2″ × 4″ stud wall; 1/2″, 1:5; 1:7.5 lime plaster on wood lath on both wall faces.	See Note 23	30 min.		1		17, 21, 23	1/2
W-4-W-43	4 1/2″	2″ × 4″ stud wall; 1/2″ thick 1:5; 1:7.5 lime plaster on wood lath on both faces; insulated cavities.	See Note 23	45 min.		1		17, 18, 21, 23	3/4
W-4-W-44	4 5/8″	2″ × 4″ stud wall; 3/16″ thick cement-asbestos over 3/8″ thick gypsum board on both faces.	See Note 23	1 hr.		1		23, 25, 26, 27	1
W-4-W-45	4 5/8″	2″ × 4″ stud wall; studs faced with 4″ wide strips of 3/8″ thick gypsum board; 3/16″ thick gypsum cement-asbestos board on both faces; insulated cavities.	See Note 23	1 hr.		1		23, 25, 27, 28	1
W-4-W-46	4 5/8″	Same as W-4-W-45 but nonload bearing.	N/A	1 hr. 15 min.		1		24, 28	1 1/4
W-4-W-47	4 7/8″	2″ × 4″ stud wall; 3/16″ thick cement-asbestos board over 1/2″ thick gypsum sheathing on both faces.	See Note 23	1 hr. 15 min.		1		23, 25, 26, 27	1 1/4
W-4-W-48	4 7/8″	Same as W-4-W-47 but nonload bearing.	N/A	1 hr. 30 min.		1		24, 27	1 1/2
W-5-W-49	5″	2″ × 4″ stud wall; Exterior face: 3/4″ wood sheathing; asbestos felt 14 lbs./100 ft.^{2} and 5/32″ cement-asbestos shingles; Interior face: 4″ wide strips of 3/8″ gypsum board over studs; wall faced with 3/16″ thick cement-asbestos board.	See Note 23	40 min.		1		18, 23, 25, 26, 29	2/3
W-5-W-50	5″	2″ × 4″ stud wall; Exterior face: as per W-5-W-49; Interior face: 9/16″ composite board consisting of 7/16″ thick wood fiberboard faced with 1/8″ thick cement-asbestos board; Exterior side exposed to fire.	See Note 23	30 min.		1		23, 25, 26, 30	1/2
W-5-W-51	5″	Same as W-5-W-50 but interior side exposed to fire.	See Note 23	30 min.		1		23, 25, 26	1/2
W-5-W-52	5″	Same as W-5-W-49 but exterior side exposed to fire.	See Note 23	45 min.		1		18, 23, 25, 26	3/4
W-5-W-53	5″	2″ × 4″ stud wall; 3/4″ thick T&G wood boards on both sides.	See Note 23	20 min.		1		17, 23	1/3
W-5-W-54	5″	Same as W-5-W-53 but with insulated cavities.	See Note 23	35 min.		1		17, 18, 23	1/2
W-5-W-55	5″	2″ × 4″ stud wall; 3/4″ thick T&G wood boards on both sides with 30 lbs./100 ft.^{2} asbestos; paper, between studs and boards.	See Note 23	45 min.		1		17, 23	3/4
W-5-W-56	5″	2″ × 4″ stud wall; 1/2″ thick, 1:2; 1:3 gypsum plaster on metal lath on both sides of wall.	See Note 23	45 min.		1		17, 21, 34	3/4

(continued)

INTERNATIONAL CODE COUNCIL®
Copyright © 2015 ICC. ALL RIGHTS RESERVED. Accessed by David Dammon on Jun 21, 2017 12:30:52 PM pursuant to License Agreement with ICC. No further reproduction or distribution authorized. ANY UNAUTHORIZED REPRODUCTION OR DISTRIBUTION IS A VIOLATION OF THE FEDERAL COPYRIGHT ACT AND THE LICENSE AGREEMENT, AND SUBJECT TO CIVIL AND CRIMINAL PENALTIES THEREUNDER.

TABLE 1.3.2—continued
WOOD FRAME WALLS
4″ TO LESS THAN 6″ THICK

ITEM CODE	THICKNESS	CONSTRUCTION DETAILS	PERFORMANCE		REFERENCE NUMBER			NOTES	REC. HOURS
			LOAD	TIME	PRE-BMS-92	BMS-92	POST-BMS-92		
W-5-W-57	5″	2″ × 4″ stud wall; 3/4″ thick 2:1:8; 2:1:12 lime and Keene's cement plaster over metal lath on both sides of wall.	See Note 23	45 min.		1		17, 21, 23	1/2
W-5-W-58	5″	2″ × 4″ stud wall; 3/4″ thick 2:1:8; 2:1:10 lime portland cement plaster over metal lath on both sides of wall.	See Note 23	30 min.		1		17, 21, 23	1/2
W-5-W-59	5″	2″ × 4″ stud wall; 3/4″ thick 1:5; 1:7.5 lime plaster on metal lath on both sides of wall.	See Note 23	30 min.		1		17, 21, 23	1/2
W-5-W-60	5″	2″ × 4″ stud wall; 3/4″ thick 1:1/30:2; 1:1/30: 3 portland cement, asbestos fiber plaster on metal lath on both sides of wall.	See Note 23	45 min.		1		17, 21, 23	3/4
W-5-W-61	5″	2″ × 4″ stud wall; 3/4″ thick 1:2; 1:3 portland cement plaster on metal lath on both sides of wall.	See Note 23	30 min.		1		17, 21, 23	1/2
W-5-W-62	5″	2″ × 4″ stud wall; 3/4″ thick neat gypsum plaster on metal lath on both sides of wall.	N/A	1 hr. 30 min.		1		17, 22, 24	1 1/2
W-5-W-63	5″	2″ × 4″ stud wall; 3/4″ thick neat gypsum plaster on metal lath on both sides of wall.	See Note 23	1 hr. 30 min.		1		17, 21, 23	1 1/2
W-5-W-64	5″	2″ × 4″ stud wall; 3/4″ thick 1:2; 1:2 gypsum plaster on metal lath on both sides of wall; insulated cavities.	See Note 23	1 hr. 30 min.		1		17, 18, 21, 23	1 1/2
W-5-W-65	5″	2″ × 4″ stud wall; same as W-5-W-64 but cavities not insulated.	See Note 23	1 hr.		1		17, 21, 23	1
W-5-W-66	5″	2″ × 4″ stud wall; 3/4″ thick 1:2; 1:3 gypsum plaster on metal lath on both sides of wall; insulated cavities.	See Note 23	1 hr. 15 min.		1		17, 18, 21, 23	1 1/4
W-5-W-67	5 1/16″	Same as W-5-W-49 except cavity insulation of 1.75 lbs./ft.^{2} mineral wool bats; rating applies when either wall side exposed to fire.	See Note 23	1 hr. 15 min.		1		23, 26, 25	1 1/4
W-5-W-68	5 1/4″	2″ × 4″ stud wall, 7/8″ thick 1:2; 1:3 gypsum plaster on metal lath on both sides of wall; insulated cavities.	See Note 23	1 hr. 30 min.		1		17, 18, 21, 23	1 1/2
W-5-W-69	5 1/4″	2″ × 4″ stud wall; 7/8″ thick neat gypsum plaster applied on metal lath on both sides of wall.	N/A	1 hr. 45 min.		1		17, 22, 24	1 3/4
W-5-W-70	5 1/4″	2″ × 4″ stud wall; 1/2″ thick neat gypsum plaster on 3/8″ plain gypsum lath on both sides of wall.	See Note 23	1 hr.		1		17, 22, 23	1
W-5-W-71	5 1/4″	2″ × 4″ stud wall; 1/2″ thick of 1:2; 1:2 gypsum plaster on 3/8″ thick plain gypsum lath with 1 3/4″ × 1 3/4″ metal lath pads nailed 8″ o.c. vertically and 16″ o.c. horizontally on both sides of wall.	See Note 23	1 hr.		1		17, 21, 23	1
W-5-W-72	5 1/4″	2″ × 4″ stud wall; 1/2″ thick of 1:2; 1:2 gypsum plaster on 3/8″ perforated gypsum lath, one 3/4″ diameter hole or larger per 16″ square of lath surface, on both sides of wall.	See Note 23	1 hr.		1		17, 21, 23	1

(continued)

INTERNATIONAL CODE COUNCIL®
Copyright © 2015 ICC. ALL RIGHTS RESERVED. Accessed by David Dammon on Jun 21, 2017 12:30:52 PM pursuant to License Agreement with ICC. No further reproduction or distribution authorized. ANY UNAUTHORIZED REPRODUCTION OR DISTRIBUTION IS A VIOLATION OF THE FEDERAL COPYRIGHT ACT AND THE LICENSE AGREEMENT, AND SUBJECT TO CIVIL AND CRIMINAL PENALTIES THEREUNDER.

TABLE 1.3.2—continued
WOOD FRAME WALLS
4″ TO LESS THAN 6″ THICK

ITEM CODE	THICKNESS	CONSTRUCTION DETAILS	PERFORMANCE		REFERENCE NUMBER			NOTES	REC. HOURS
			LOAD	TIME	PRE-BMS-92	BMS-92	POST-BMS-92		
W-5-W-73	5 1/4″	2″ × 4″ stud wall; 1/2″ thick of 1:2; 1:2 gypsum plaster on 3/8″ gypsum lath (plain, indented or perforated) on both sides of wall.	See Note 23	45 min.		1		17, 21, 23	3/4
W-5-W-74	5 1/4″	2″ × 4″ stud wall; 7/8″ thick of 1:2; 1:3 gypsum plaster over metal lath on both sides of wall.	See Note 23	1 hr.		1		17, 21, 23	1
W-5-W-75	5 1/4″	2″ × 4″ stud wall; 7/8″ thick of 1:1/30:2; 1:1/30:3 portland cement, asbestos plaster applied over metal lath on both sides of wall.	See Note 23	1 hr.		1		17, 21, 23	1
W-5-W-76	5 1/4″	2″ × 4″ stud wall; 7/8″ thick of 1:2; 1:3 portland cement plaster over metal lath on both sides of wall.	See Note 23	45 min.		1		17, 21, 23	3/4
W-5-W-77	5 1/2″	2″ × 4″ stud wall; 1″ thick neat gypsum plaster over metal lath on both sides of wall; nonload bearing.	N/A	2 hrs.		1		17, 22, 24	2
W-5-W-78	5 1/2″	2″ × 4″ stud wall; 1/2″ thick of 1:2; 1:2 gypsum plaster on 1/2″ thick, 0.7 lb./ft.^{2} wood fiberboard on both sides of wall.	See Note 23	35 min.		1		17, 21, 23	1/2
W-4-W-79	4 3/4″	2″ × 4″ wood stud wall; 1/2″ thick of 1:2; 1:2 gypsum plaster over wood lath on both sides of wall; mineral wool insulation.	N/A	1 hr.			43	21, 31, 35, 38	1
W-4-W-80	4 3/4″	Same as W-4-W-79 but uninsulated.	N/A	35 min.			43	21, 31, 35	1/2
W-4-W-81	4 3/4″	2″ × 4″ wood stud wall; 1/2″ thick of 3:1:8; 3:1:12 lime, Keene's cement, sand plaster over wood lath on both sides of wall; mineral wool insulation.	N/A	1 hr.			43	21, 31, 35, 40	1
W-4-W-82	4 3/4″	2″ × 4″ wood stud wall; 1/2″ thick of 1:6 1/4; 1:6 1/4 lime Keene's cement plaster over wood lath on both sides of wall; mineral wool insulation.	N/A	30 min.			43	21, 31, 35, 40	1/2
W-4-W-83	4 3/4″	2″ × 4″ wood stud wall; 1/2″ thick of 1:5; 1:7.5 lime plaster over wood lath on both sides of wall.	N/A	30 min.			43	21, 31, 35	1/2
W-5-W-84	5 1/8″	2″ × 4″ wood stud wall; 11/16″ thick of 1:5; 1:7.5 lime plaster over wood lath on both sides of wall; mineral wool insulation.	N/A	45 min.			43	21, 31, 35, 39	3/4
W-5-W-85	5 1/4″	2″ × 4″ wood stud wall; 3/4 ″thick of 1:5; 1:7 lime plaster over wood lath on both sides of wall; mineral wool insulation.	N/A	40 min.			43	21, 31, 35, 40	2/3
W-5-W-86	5 1/4″	2″ × 4″ wood stud wall; 1/2″ thick of 2:1:12 lime, Keene's cement and sand scratch coat; 1/2″ thick 2:1:18 lime, Keene's cement and sand brown coat over wood lath on both sides of wall; mineral wool insulation.	N/A	1 hr.			43	21, 31, 35, 40	1
W-5-W-87	5 1/4″	2″ × 4″ wood stud wall; 1/2″ thick of 1:2; 1:2 gypsum plaster over 3/8″ plaster board on both sides of wall.	N/A	45 min.			43	21, 31	3/4

(continued)

INTERNATIONAL CODE COUNCIL®
Copyright © 2015 ICC. ALL RIGHTS RESERVED. Accessed by David Dammon on Jun 21, 2017 12:30:52 PM pursuant to License Agreement with ICC. No further reproduction or distribution authorized. ANY UNAUTHORIZED REPRODUCTION OR DISTRIBUTION IS A VIOLATION OF THE FEDERAL COPYRIGHT ACT AND THE LICENSE AGREEMENT, AND SUBJECT TO CIVIL AND CRIMINAL PENALTIES THEREUNDER.

TABLE 1.3.2—continued
WOOD FRAME WALLS
4″ TO LESS THAN 6″ THICK

ITEM CODE	THICKNESS	CONSTRUCTION DETAILS	PERFORMANCE		REFERENCE NUMBER			NOTES	REC. HOURS
			LOAD	TIME	PRE-BMS-92	BMS-92	POST-BMS-92		
W-5-W-88	$5^1/_4$″	2″ × 4″ wood stud wall; $^1/_2$″ thick of 1:2; 1:2 gypsum plaster over $^3/_8$″ gypsum lath on both sides of wall.	N/A	45 min.			43	21, 31	$^3/_4$
W-5-W-89	$5^1/_4$″	2″ × 4″ wood stud wall; $^1/_2$″ thick of 1:2; 1:2 gypsum plaster over $^3/_8$″ gypsum lath on both sides of wall.	N/A	1 hr.			43	21, 31, 33	1
W-5-W-90	$5^1/_4$″	2″ × 4 ″ wood stud wall; $^1/_2$″ thick neat plaster over $^3/_8$″ thick gypsum lath on both sides of wall.	N/A	1 hr.			43	21, 22, 31	1
W-5-W-91	$5^1/_4$″	2″ × 4″ wood stud wall; $^1/_2$″ thick of 1:2; 1:2 gypsum plaster over $^3/_8$″ thick indented gypsum lath on both sides of wall.	N/A	45 min.			43	21, 31	$^3/_4$
W-5-W-92	$5^1/_4$″	2″ × 4″ wood stud wall; $^1/_2$″ thick of 1:2; 1:2 gypsum plaster over $^3/_8$″ thick perforated gypsum lath on both sides of wall.	N/A	45 min.			43	21, 31, 34	$^3/_4$
W-5-W-93	$5^1/_4$″	2″ × 4″ wood stud wall; $^1/_2$″ thick of 1:2; 1:2 gypsum plaster over $^3/_8$″ perforated gypsum lath on both sides of wall.	N/A	1 hr.			43	21, 31	1
W-5-W-94	$5^1/_4$″	2″ × 4″ wood stud wall; $^1/_2$″ thick of 1:2; 1:2 gypsum plaster over $^3/_8$″ thick perforated gypsum lath on both sides of wall.	N/A	45 min.			43	21, 31, 34	$^3/_4$
W-5-W-95	$5^1/_2$″	2″ × 4″ wood stud wall; $^1/_2$″ thick of 1:2; 1:2 gypsum plaster over $^1/_2$″ thick wood fiberboard plaster base on both sides of wall.	N/A	35 min.			43	21, 31, 36	$^1/_2$
W-5-W-96	$5^3/_4$″	2″ × 4″ wood stud wall; $^1/_2$″ thick of 1:2; 1:2 gypsum plaster over $^7/_8$″ thick flameproofed wood fiberboard on both sides of wall.	N/A	1 hr.			43	21, 31, 37	1

For SI: 1 inch = 25.4 mm, 1 foot = 305 mm, 1 pound = 0.004448 kN, 1 pound per square inch = 0.00689 MPa, 1 pound per square foot = 47.9 N/m^2.

Notes:

1. All specimens 8 feet or 8 feet 8 inches by 10 feet 4 inches, i.e. one-half of furnace size. See Note 42 for design cross section.
2. Specimens tested in tandem (two per exposure).
3. Test per ASA No. A2-1934 except where unloaded. Also, panels were of "half" size of furnace opening. Time value signifies a thermal failure time.
4. Two-inch by 4-inch studs: 16 inches on center.; where 10 feet 4 inches, blocking at 2-foot 4-inch height.
5. Facing 4 feet by 8 feet, cement-asbestos board sheets, $^3/_{16}$ inch thick.
6. Sheathing (diagonal): 25/22 inch by $5^1/_2$ inch, 1 inch by 6 inches pine.
7. Facing shingles: 24 inches by 12 inches by $^5/_{32}$ inch where used.
8. Asbestos felt: asphalt sat between sheathing and shingles.
9. Load: 30,500 pounds or 360 psi/stud where load was tested.
10. Walls were tested beyond achievement of first test end point. A load-bearing time in excess of performance time indicates that although thermal criteria were exceeded, load-bearing ability continued.
11. Wall was rated for one hour combustible use in original source.
12. Hose steam test specimen. See table entry of similar design above for recommended rating.
13. Rated one and one-fourth hour load bearing. Rated one and one-half hour nonload bearing.
14. Failed hose stream.
15. Test terminated due to flame penetration.
16. Test terminated—local back face temperature rise.
17. Nominal 2-inch by 4-inch wood studs of No. 1 common or better lumber set edgewise. Two-inch by four-inch plates at top and bottom and blocking at mid height of wall.
18. Cavity insulation consists of rock wool bats 1.0 lb./ft.2 of filled cavity area.
19. Cavity insulation consists of glass wool bats 0.6 lb./ft.2 of filled cavity area.
20. Cavity insulation consists of blown-in forck wool 2.0 lbs./ft.2 of filled cavity area
21. Mix proportions for plastered walls as follows: first ratio indicates scratch coat mix, weight of dry plaster: dry sand; second ratio indicates brown coat mix.
22. "Neat" plaster is taken to mean unsanded wood-fiber gypsum plaster.
23. Load: 360 psi of net stud cross sectional area.
24. Rated as nonload bearing.

(continued)

INTERNATIONAL CODE COUNCIL®
Copyright © 2015 ICC. ALL RIGHTS RESERVED. Accessed by David Dammon on Jun 21, 2017 12:30:52 PM pursuant to License Agreement with ICC. No further reproduction or distribution authorized. ANY UNAUTHORIZED REPRODUCTION OR DISTRIBUTION IS A VIOLATION OF THE FEDERAL COPYRIGHT ACT AND THE LICENSE AGREEMENT, AND SUBJECT TO CIVIL AND CRIMINAL PENALTIES THEREUNDER.

TABLE 1.3.2—continued
WOOD FRAME WALLS
4″ TO LESS THAN 6″ THICK

25. Nominal 2-inch by 4-inch studs per Note 17, spaced at 16 inches on center.
26. Horizontal joints in facing material supported by 2-inch by 4-inch blocking within wall.
27. Facings secured with 6d casing nails. Nail holes predrilled and were 0.02 to 0.03 inch smaller than nail diameter.
28. Cavity insulation consists of mineral wool bats weighing 2 lbs./ft.^{2} of filled cavity area.
29. Interior wall face exposed to fire.
30. Exterior wall faced exposed to fire.
31. Nominal 2-inch by 4-inch studs of yellow pine or Douglas-fir spaced 16 inches on center in a single row.
32. Studs as in Note 31 except double row, with studs in rows staggered.
33. Six roofing nails with metal-lath pads around heats to each 16-inch by 48-inch lath.
34. Areas of holes less than $2^3/_4$ percent of area of lath.
35. Wood laths were nailed with either 3d or 4d nails, one nail to each bearing, and the end joining broken every seventh course.
36. One-half-inch thick fiberboard plaster base nailed with 3d or 4d common wire nails spaced 4 to 6 inches on center.
37. Seven-eighths-inch thick fiberboard plaster base nailed with 5d common wire nails spaced 4 to 6 inches on center.
38. Mineral wood bats 1.05 to 1.25 lbs./ft.^{2} with waterproofed-paper backing.
39. Blown-in mineral wool insulation, 2.2 lbs./ft.^{2}.
40. Mineral wool bats, 1.4 lbs./ft.^{2} with waterproofed-paper backing.
41. Mineral wood bats, 0.9 lb./ft.^{2}.
42. See wall design diagram, below.

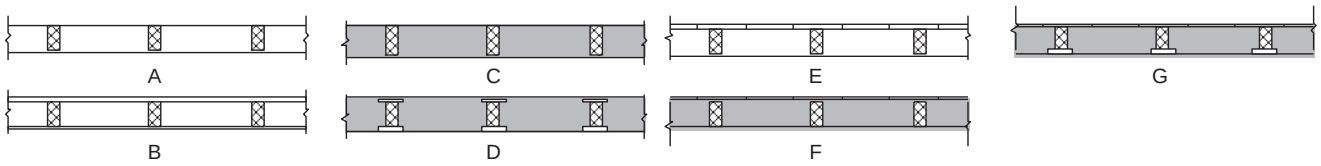

43. Duplicate specimen of W-4-W-7, tested simultaneously with W-4-W-7 in 18-foot test furnace.

INTERNATIONAL CODE COUNCIL®
Copyright © 2015 ICC. ALL RIGHTS RESERVED. Accessed by David Dammon on Jun 21, 2017 12:30:52 PM pursuant to License Agreement with ICC. No further reproduction or distribution authorized. ANY UNAUTHORIZED REPRODUCTION OR DISTRIBUTION IS A VIOLATION OF THE FEDERAL COPYRIGHT ACT AND THE LICENSE AGREEMENT, AND SUBJECT TO CIVIL AND CRIMINAL PENALTIES THEREUNDER.

TABLE 1.3.3
WOOD FRAME WALLS
6″ TO LESS THAN 8″ THICK

ITEM CODE	THICKNESS	CONSTRUCTION DETAILS	PERFORMANCE		REFERENCE NUMBER			NOTES	REC. HOURS
			LOAD	TIME	PRE-BMS-92	BMS-92	POST-BMS-92		
W-6-W-1	$6^1/_4$″	2 × 4 stud wall; $^1/_2$″ thick, 1:2; 1:2 gypsum plaster on $^7/_8$″ flameproofed wood fiberboard weighing 2.8 lbs./ft.^{2} on both sides of wall.	See Note 3	1 hr.		1		1-3	1
W-6-W-2	$6^1/_2$″	2 × 4 stud wall; $^1/_2$″ thick, 1:3; 1:3 gypsum plaster on 1″ thick magnesium oxysulfate wood fiberboard on both sides of wall.	See Note 3	45 min.		1		1-3	$^3/_4$
W-7-W-3	$7^1/_4$″	Double row of 2 × 4 studs, $^1/_2$″ thick of 1:2; 1:2 gypsum plaster applied over $^3/_8$″ thick perforated gypsum lath on both sides of wall; mineral wool insulation.	N/A	1 hr.			43	2, 4, 5	1
W-7-W-4	$7^1/_2$″	Double row of 2 × 4 studs, $^5/_8$″ thick of 1:2; 1:2 gypsum plaster applied over $^3/_8$″ thick perforated gypsum lath over laid with 2″ × 2″, 16 gage wire fabric, on both sides of wall.	N/A	1 hr. 15 min.			43	2, 4	$1^1/_4$

For SI: 1 inch = 25.4 mm, 1 pound = 0.004448 kN, 1 pound per square inch = 0.00689 MPa, 1 pound per square foot = 47.9 N/m^2.

Notes:

1. Nominal 2-inch by 4-inch wood studs of No. 1 common or better lumber set edgewise. Two-inch by 4-inch plates at top and bottom and blocking at mid height of wall.
2. Mix proportions for plastered walls as follows: first ratio indicates scratch coat mix, weight of dry plaster: dry sand; second ratio indicates brown coat mix.
3. Load: 360 psi of net stud cross sectional area.
4. Nominal 2-inch by 4-inch studs of yellow pine of Douglas-fir spaced 16 inches in a double row, with studs in rows staggered.
5. Mineral wool bats, 0.19 lb./ft.^{2}

TABLE 1.4.1
MISCELLANEOUS MATERIALS WALLS
0″ TO LESS THAN 4″ THICK

ITEM CODE	THICKNESS	CONSTRUCTION DETAILS	PERFORMANCE		REFERENCE NUMBER			NOTES	REC. HOURS
			LOAD	TIME	PRE-BMS-92	BMS-92	POST-BMS-92		
W-3-Mi-1	$3^7/_8$″	Glass brick wall: (bricks $5^3/_4$″ × $5^3/_4$″ × $3^7/_8$″) $^1/_4$″ mortar bed, cement/lime/sand; mounted in brick (9″) wall with mastic and $^1/_2$″ asbestos rope.	N/A	1 hr.			7	1, 2	1
W-3-Mi-2	3″	Core: 2″ magnesium oxysulfate wood-fiber blocks; laid in portland cement-lime mortar; Facings: on both sides; see Note 3.	N/A	1 hr.		1		3	1
W-3-Mi-3	$3^7/_8$″	Core: 8″ × $4^7/_8$″ glass blocks $3^7/_8$″ thick weighing 4 lbs. each; laid in portland cement-lime mortar; horizontal mortar joints reinforced with metal lath.	N/A	15 min.		1			$^1/_4$

For SI: 1 inch = 25.4 mm, 1 pound = 0.004448 kN.

Notes:

1. No failure reached at 1 hour.
2. These glass blocks are assumed to be solid based on other test data available for similar but hollow units which show significantly reduced fire endurance.
3. Minimum of $^1/_2$ inch of 1:3 sanded gypsum plaster required to develop this rating.

INTERNATIONAL CODE COUNCIL®
Copyright © 2015 ICC. ALL RIGHTS RESERVED. Accessed by David Dammon on Jun 21, 2017 12:30:52 PM pursuant to License Agreement with ICC. No further reproduction or distribution authorized. ANY UNAUTHORIZED REPRODUCTION OR DISTRIBUTION IS A VIOLATION OF THE FEDERAL COPYRIGHT ACT AND THE LICENSE AGREEMENT, AND SUBJECT TO CIVIL AND CRIMINAL PENALTIES THEREUNDER.

TABLE 1.4.2
MISCELLANEOUS MATERIALS WALLS
4″ TO LESS THAN 6″ THICK

ITEM CODE	THICKNESS	CONSTRUCTION DETAILS	PERFORMANCE		REFERENCE NUMBER			NOTES	REC. HOURS
			LOAD	TIME	PRE-BMS-92	BMS-92	POST-BMS-92		
W-4-Mi-1	4″	Core: 3″ magnesium oxysulfate wood-fiber blocks; laid in portland cement mortar; Facings: both sides; see Note 1.	N/A	2 hrs.		1			2

For SI: 1 inch = 25.4 mm.

Notes:

1. One-half inch sanded gypsum plaster. Voids in hollow blocks to be not more than 30 percent.

INTERNATIONAL CODE COUNCIL®

Copyright © 2015 ICC. ALL RIGHTS RESERVED. Accessed by David Dammon on Jun 21, 2017 12:30:52 PM pursuant to License Agreement with ICC. No further reproduction or distribution authorized. ANY UNAUTHORIZED REPRODUCTION OR DISTRIBUTION IS A VIOLATION OF THE FEDERAL COPYRIGHT ACT AND THE LICENSE AGREEMENT, AND SUBJECT TO CIVIL AND CRIMINAL PENALTIES THEREUNDER.

FIGURE 1.5.1
FINISH RATINGS—INORGANIC MATERIALS

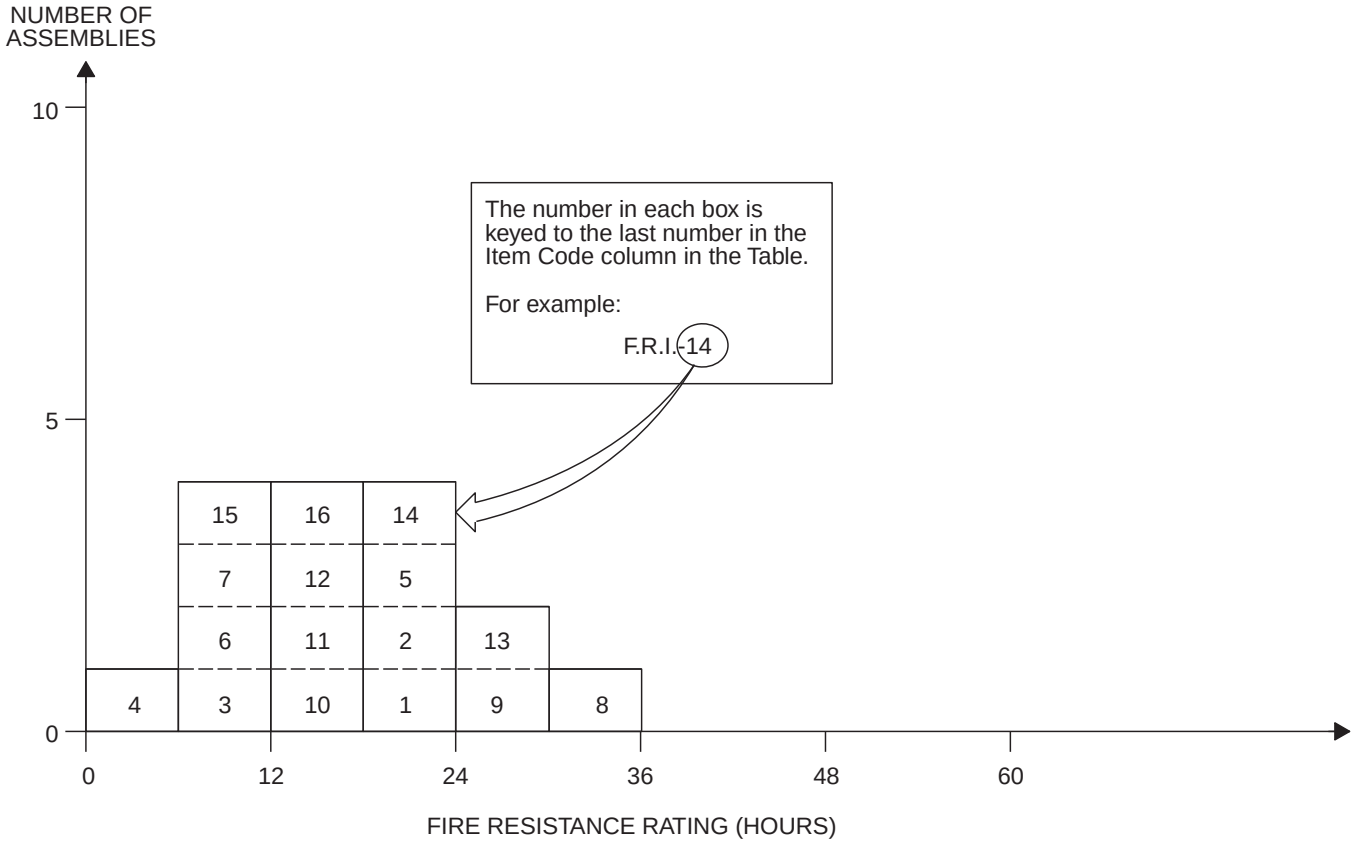

TABLE 1.5.1
FINISH RATINGS—INORGANIC MATERIALS

ITEM CODE	THICKNESS	CONSTRUCTION DETAILS	PERFORMANCE	REFERENCE NUMBER			NOTES	REC. F.R. (MIN.)
			FINISH RATING	PRE-BMS-92	BMS-92	POST-BMS-92		
F.R.-I-1	$^{9}/_{16}$″	$^{3}/_{8}$″ gypsum wallboard faced with $^{3}/_{16}$″ cement-asbestos board.	20 minutes		1		1, 2	15
F.R.-I-2	$^{11}/_{16}$″	$^{1}/_{2}$″ gypsum sheathing faced with $^{3}/_{16}$″ cement-asbestos board.	20 minutes		1		1, 2	20
F.R.-I-3	$^{3}/_{16}$″	$^{3}/_{16}$″ cement-asbestos board over uninsulated cavity.	10 minutes		1		1, 2	5
F.R.-I-4	$^{3}/_{16}$″	$^{3}/_{16}$″ cement-asbestos board over insulated cavities.	5 minutes		1		1, 2	5
F.R.-I-5	$^{3}/_{4}$″	$^{3}/_{4}$″ thick 1:2; 1:3 gypsum plaster over paper backed metal lath.	20 minutes		1		1, 2, 3	20
F.R.-I-6	$^{3}/_{4}$″	$^{3}/_{4}$″ thick portland cement plaster on metal lath.	10 minutes		1		1, 2	10
F.R.-I-7	$^{3}/_{4}$″	$^{3}/_{4}$″ thick 1:5; 1:7.5 lime plaster on metal lath.	10 minutes		1		1, 2	10
F.R.-I-8	1″	1″ thick neat gypsum plaster on metal lath.	35 minutes		1		1, 2, 4	35
F.R.-I-9	$^{3}/_{4}$″	$^{3}/_{4}$″ thick neat gypsum plaster on metal lath.	30 minutes		1		1, 2, 4	30

(continued)

INTERNATIONAL CODE COUNCIL®
Copyright © 2015 ICC. ALL RIGHTS RESERVED. Accessed by David Dammon on Jun 21, 2017 12:30:52 PM pursuant to License Agreement with ICC. No further reproduction or distribution authorized. ANY UNAUTHORIZED REPRODUCTION OR DISTRIBUTION IS A VIOLATION OF THE FEDERAL COPYRIGHT ACT AND THE LICENSE AGREEMENT, AND SUBJECT TO CIVIL AND CRIMINAL PENALTIES THEREUNDER.

TABLE 1.5.1—continued
FINISH RATINGS—INORGANIC MATERIALS

ITEM CODE	THICKNESS	CONSTRUCTION DETAILS	PERFORMANCE	REFERENCE NUMBER			NOTES	REC. F.R. (MIN.)
			FINISH RATING	PRE-BMS-92	BMS-92	POST-BMS-92		
F.R.-I-10	3/4″	3/4″ thick 1:2; 1:2 gypsum plaster on metal lath.	15 minutes		1		1, 2, 3	15
F.R.-I-11	1/2″	Same as F.R.-1-7, except 1/2″ thick on wood lath.	15 minutes		1		1, 2, 3	15
F.R.-I-12	1/2″	1/2″ thick 1:2; 1:3 gypsum plaster on wood lath.	15 minutes		1		1, 2, 3	15
F.R.-I-13	7/8″	1/2″ thick 1:2; 1:2 gypsum plaster on 3/8″ perforated gypsum lath.	30 minutes		1		1, 2, 3	30
F.R.-I-14	7/8″	1/2″ thick 1:2; 1:2 gypsum plaster on 3/8″ thick plain or indented gypsum plaster.	20 minutes		1		1, 2, 3	20
F.R.-I-15	3/8″	3/8″ gypsum wallboard.	10 minutes		1		1, 2	10
F.R.-I-16	1/2″	1/2″ gypsum wallboard.	15 minutes		1		1, 2	15

For SI: 1 inch = 25.4 mm, °C = [(°F) - 32]/1.8.

Notes:

1. The finish rating is the time required to obtain an average temperature rise of 250°F, or a single point rise of 325°F, at the interface between the material being rated and the substrate being protected.
2. Tested in accordance with the Standard Specifications for Fire Tests of Building Construction and Materials, ASA No. A2-1932.
3. Mix proportions for plasters as follows: first ratio, dry weight of plaster: dry weight of sand for scratch coat; second ratio, plaster: sand for brown coat.
4. Neat plaster means unsanded wood-fiber gypsum plaster.

General Note:

The finish rating of modern building materials can be found in the current literature.

TABLE 1.5.2
FINISH RATINGS—ORGANIC MATERIALS

ITEM CODE	THICKNESS	CONSTRUCTION DETAILS	PERFORMANCE	REFERENCE NUMBER			NOTES	REC. F.R. (MIN.)
			FINISH RATING	PRE-BMS-92	BMS-92	POST-BMS-92		
F.R.-O-1	9/16″	7/16″ wood fiberboard faced with 1/8″ cement-asbestos board.	15 minutes		1		1, 2	15
F.R.-O-2	29/32″	3/4″ wood sheathing, asbestos felt weighing 14 lbs./100 ft.^{2} and 5/32″ cement-asbestos shingles.	20 minutes		1		1, 2	20
F.R.-O-3	1 1/2″	1″ thick magnesium oxysulfate wood fiberboard faced with 1:3; 1:3 gypsum plaster, 1/2″ thick.	20 minutes		1		1, 2, 3	20
F.R.-O-4	1/2″	1/2″ thick wood fiberboard.	5 minutes		1		1, 2	5
F.R.-O-5	1/2″	1/2″ thick flameproofed wood fiberboard.	10 minutes		1		1, 2	10
F.R.-O-6	1″	1/2″ thick wood fiberboard faced with 1/2″ thick 1:2; 1:2 gypsum plaster.	15 minutes		1		1, 2, 3	30
F.R.-O-7	1 3/8″	7/8″ thick flameproofed wood fiberboard faced with 1/2″ thick 1:2; 1:2 gypsum plaster.	30 minutes		1		1, 2, 3	30
F.R.-O-8	1 1/4″	1 1/4″ thick plywood.	30 minutes			35		30

For SI: 1 inch = 25.4 mm, 1 pound = 0.004448 kN, 1 pound per square foot = 47.9 N/m^2, °C = [(°F) - 32]/1.8.

Notes:

1. The finish rating is the time required to obtain an average temperature rise of 250°F, or a single point rise of 325°F, at the interface between the material being rated and he substrate being protected.
2. Tested in accordance with the Standard Specifications for Fire Tests of Building Construction and Materials, ASA No. A2-1932.
3. Plaster ratios as follows: first ratio is for scratch coat, weight of dry plaster: weight of dry sand; second ratio is for the brown coat.

General Note:

The finish rating of thinner materials, particularly thinner woods, have not been listed because the possible effects of shrinkage, warpage and aging cannot be predicted.

INTERNATIONAL CODE COUNCIL®
Copyright © 2015 ICC. ALL RIGHTS RESERVED. Accessed by David Dammon on Jun 21, 2017 12:30:52 PM pursuant to License Agreement with ICC. No further reproduction or distribution authorized. ANY UNAUTHORIZED REPRODUCTION OR DISTRIBUTION IS A VIOLATION OF THE FEDERAL COPYRIGHT ACT AND THE LICENSE AGREEMENT, AND SUBJECT TO CIVIL AND CRIMINAL PENALTIES THEREUNDER.

SECTION II
COLUMNS

TABLE 2.1.1
REINFORCED CONCRETE COLUMNS
MINIMUM DIMENSION 0″ TO LESS THAN 6″

ITEM CODE	MINIMUM DIMENSION	CONSTRUCTION DETAILS	PERFORMANCE		REFERENCE NUMBER			NOTES	REC. HOURS
			LOAD	TIME	PRE-BMS-92	BMS-92	POST-BMS-92		
C-6-RC-1	6″	6″ × 6″ square columns; gravel aggregate concrete (4030 psi); Reinforcement: vertical, four $^{7}/_{8}$″ rebars; horizontal, $^{5}/_{16}$″ ties at 6″ pitch; Cover: 1″.	34.7 tons	62 min.			7	1, 2	1
C-6-RC-2	6″	6″ × 6″ square columns; gravel aggregate concrete (4200 psi); Reinforcement: vertical, four $^{1}/_{2}$″ rebars; horizontal, $^{5}/_{16}$″ ties at 6″ pitch; Cover: 1″.	21 tons	69 min.			7	1, 2	1

Notes:
1. Collapse.
2. British Test

INTERNATIONAL CODE COUNCIL®
Copyright © 2015 ICC. ALL RIGHTS RESERVED. Accessed by David Dammon on Jun 21, 2017 12:30:52 PM pursuant to License Agreement with ICC. No further reproduction or distribution authorized. ANY UNAUTHORIZED REPRODUCTION OR DISTRIBUTION IS A VIOLATION OF THE FEDERAL COPYRIGHT ACT AND THE LICENSE AGREEMENT, AND SUBJECT TO CIVIL AND CRIMINAL PENALTIES THEREUNDER.

FIGURE 2.1.2
REINFORCED CONCRETE COLUMNS
MINIMUM DIMENSION 10″ TO LESS THAN 12″

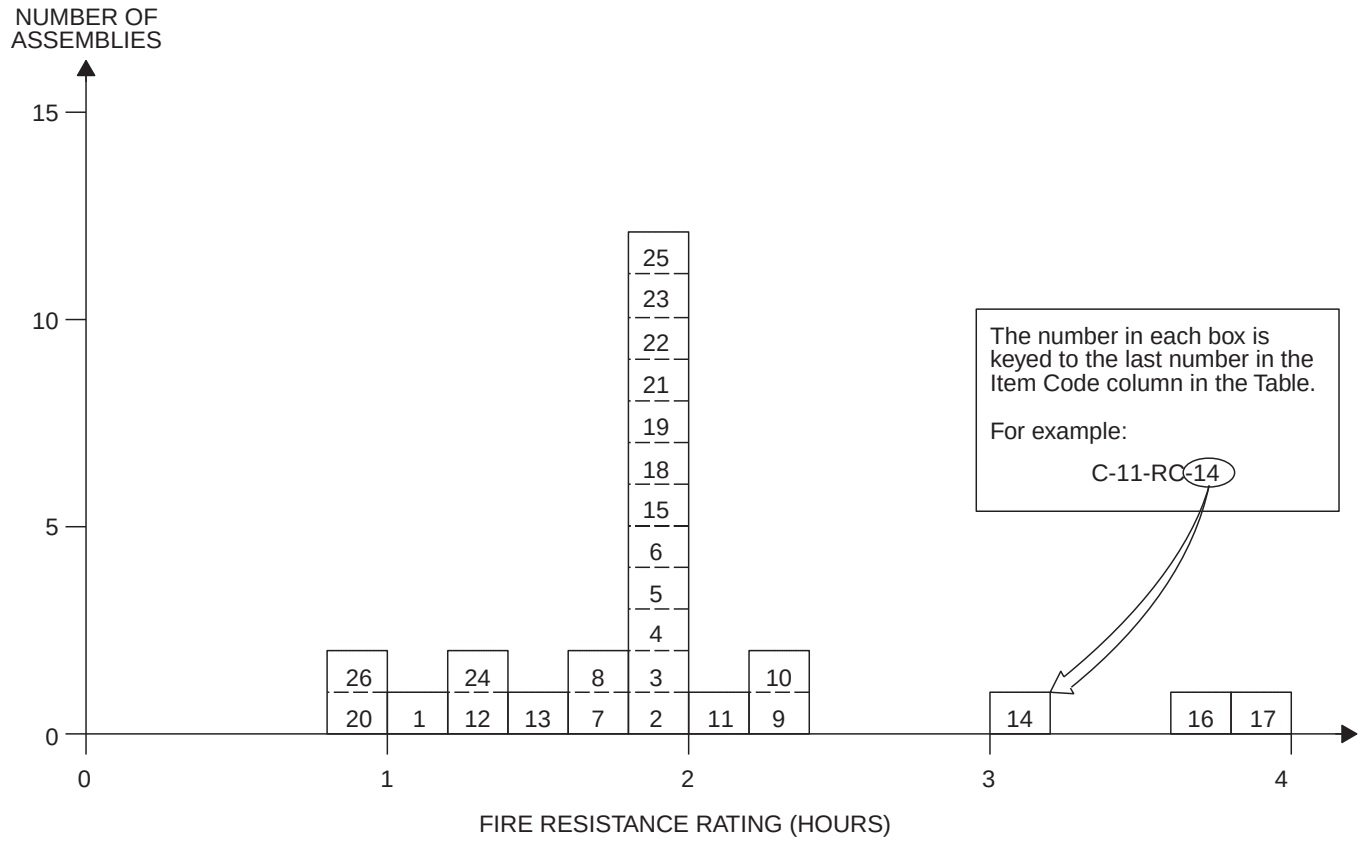

TABLE 2.1.2
REINFORCED CONCRETE COLUMNS
MINIMUM DIMENSION 10″ TO LESS THAN 12″

ITEM CODE	MINIMUM DIMENSION	CONSTRUCTION DETAILS	PERFORMANCE		REFERENCE NUMBER			NOTES	REC. HOURS
			LOAD	TIME	PRE-BMS-92	BMS-92	POST- BMS-92		
C-10-RC-1	10″	10″ square columns; aggregate concrete (4260 psi); Reinforcement: vertical, four $1^1/_4$″ rebars; horizontal, $^3/_8$″ ties at 6″ pitch; Cover: $1^1/_4$″.	92.2 tons	1 hr. 2 min.			7	1	1
C-10-RC-2	10″	10″ square columns; aggregate concrete (2325 psi); Reinforcement: vertical, four $^1/_2$″ rebars; horizontal, $^5/_{16}$″ ties at 6″ pitch; Cover: 1″.	46.7 tons	1 hr. 52 min.			7	1	$1^3/_4$
C-10-RC-3	10″	10″ square columns; aggregate concrete (5370 psi); Reinforcement: vertical, four $^1/_2$″ rebars; horizontal, $^5/_{16}$″ ties at 6″ pitch; Cover: 1″.	46.5 tons	2 hrs.			7	2, 3, 11	2
C-10-RC-4	10″	10″ square columns; aggregate concrete (5206 psi); Reinforcement: vertical, four $^1/_2$″ rebars; horizontal, $^5/_{16}$″ ties at 6″ pitch; Cover: 1″.	46.5 tons	2 hrs.			7	2, 7	2
C-10-RC-5	10″	10″ square columns; aggregate concrete (5674 psi); Reinforcement: vertical, four $^1/_2$″ rebars; horizontal, $^5/_{16}$″ ties at 6″ pitch; Cover: 1″.	46.7 tons	2 hrs.			7	1	2

(continued)

INTERNATIONAL CODE COUNCIL®
Copyright © 2015 ICC. ALL RIGHTS RESERVED. Accessed by David Dammon on Jun 21, 2017 12:30:52 PM pursuant to License Agreement with ICC. No further reproduction or distribution authorized. ANY UNAUTHORIZED REPRODUCTION OR DISTRIBUTION IS A VIOLATION OF THE FEDERAL COPYRIGHT ACT AND THE LICENSE AGREEMENT, AND SUBJECT TO CIVIL AND CRIMINAL PENALTIES THEREUNDER.

TABLE 2.1.2—continued
REINFORCED CONCRETE COLUMNS
MINIMUM DIMENSION 10″ TO LESS THAN 12″

ITEM CODE	MINIMUM DIMENSION	CONSTRUCTION DETAILS	PERFORMANCE		REFERENCE NUMBER			NOTES	REC. HOURS
			LOAD	TIME	PRE-BMS-92	BMS-92	POST- BMS-92		
C-10-RC-6	10″	10″ square columns; aggregate concrete (5150 psi); Reinforcement: vertical, four $1^1/_2$″ rebars; horizontal, $^5/_{16}$″ ties at 6″ pitch; Cover: 1″.	66 tons	1 hr. 43 min.			7	1	$1^3/_4$
C-10-RC-7	10″	10″ square columns; aggregate concrete (5580 psi); Reinforcement: vertical, four $^1/_2$″ rebars; horizontal, $^5/_{16}$″ ties at 6″ pitch; Cover: $1^1/_8$″.	62.5 tons	1 hr. 38 min.			7	1	$1^1/_2$
C-10-RC-8	10″	10″ square columns; aggregate concrete (4080 psi); Reinforcement: vertical, four $1^1/_8$″ rebars; horizontal, $^5/_{16}$″ ties at 6″ pitch; Cover: $1^1/_8$″.	72.8 tons	1 hr. 48 min.			7	1	$1^3/_4$
C-10-RC-9	10″	10″ square columns; aggregate concrete (2510 psi); Reinforcement: vertical, four $^1/_2$″ rebars; horizontal, $^5/_{16}$″ ties at 6″ pitch; Cover: 1″.	51 tons	2 hrs. 16 min.			7	1	$2^1/_4$
C-10-RC-10	10″	10″ square columns; aggregate concrete (2170 psi); Reinforcement: vertical, four $^1/_2$″ rebars; horizontal, $^5/_{16}$″ ties at 6″ pitch; Cover: 1″.	45 tons	2 hrs. 14 min.			7	12	$2^1/_4$
C-10-RC-11	10″	10″ square columns; gravel aggregate concrete (4015 psi); Reinforcement: vertical, four $^1/_2$″ rebars; horizontal, $^5/_{16}$″ ties at 6″ pitch; Cover: $1^1/_8$″.	46.5 tons	2 hrs. 6 min.			7	1	2
C-11-RC-12	11″	11″ square columns; gravel aggregate concrete (4150 psi); Reinforcement: vertical, four $1^1/_4$″ rebars; horizontal, $^3/_8$″ ties at $7^1/_2$″ pitch; Cover: $1^1/_2$″.	61 tons	1 hr. 23 min.			7	1	$1^1/_4$
C-11-RC-13	11″	11″ square columns; gravel aggregate concrete (4380 psi); Reinforcement: vertical, four $1^1/_4$″ rebars; horizontal, $^3/_8$″ ties at $7^1/_2$″ pitch; Cover: $1^1/_2$″.	61 tons	1 hr. 26 min.			7	1	$1^1/_4$
C-11-RC-14	11″	11″ square columns; gravel aggregate concrete (4140 psi); Reinforcement: vertical, four $1^1/_4$″ rebars; horizontal, $^3/_8$″ ties at $7^1/_2$″ pitch; steel mesh around reinforcement; Cover: $1^1/_2$″.	61 tons	3 hrs. 9 min.			7	1	3
C-11-RC-15	11″	11″ square columns; slag aggregate concrete (3690 psi); Reinforcement: vertical, four $1^1/_4$″ rebars; horizontal, $^3/_8$″ ties at $7^1/_2$″ pitch; Cover: $1^1/_2$″.	91 tons	2 hrs.			7	2, 3, 4, 5	2
C-11-RC-16	11″	11″ square columns; limestone aggregate concrete (5230 psi); Reinforcement: vertical, four $1^1/_4$″ rebars; horizontal, $^3/_8$″ ties at $7^1/_2$″ pitch; Cover: $1^1/_2$″.	91.5 tons	3 hrs. 41 min.			7	1	$3^1/_2$
C-11-RC-17	11″	11″ square columns; limestone aggregate concrete (5530 psi); Reinforcement: vertical, four $1^1/_4$″ rebars; horizontal, $^3/_8$″ ties at $7^1/_2$″ pitch; Cover: $1^1/_2$″.	91.5 tons	3 hrs. 47 min.			7	1	$3^1/_2$

(continued)

INTERNATIONAL CODE COUNCIL®
Copyright © 2015 ICC. ALL RIGHTS RESERVED. Accessed by David Dammon on Jun 21, 2017 12:30:52 PM pursuant to License Agreement with ICC. No further reproduction or distribution authorized. ANY UNAUTHORIZED REPRODUCTION OR DISTRIBUTION IS A VIOLATION OF THE FEDERAL COPYRIGHT ACT AND THE LICENSE AGREEMENT, AND SUBJECT TO CIVIL AND CRIMINAL PENALTIES THEREUNDER.

TABLE 2.1.2—continued
REINFORCED CONCRETE COLUMNS
MINIMUM DIMENSION 10″ TO LESS THAN 12″

ITEM CODE	MINIMUM DIMENSION	CONSTRUCTION DETAILS	PERFORMANCE		REFERENCE NUMBER			NOTES	REC. HOURS
			LOAD	TIME	PRE-BMS-92	BMS-92	POST- BMS-92		
C-11-RC-18	11″	11″ square columns; limestone aggregate concrete (5280 psi); Reinforcement: vertical, four $1^1/_4$″ rebars; horizontal, $^3/_8$″ ties at $7^1/_2$″ pitch; Cover: $1^1/_2$″.	91.5 tons	2 hrs.			7	2, 3, 4, 6	2
C-11-RC-19	11″	11″ square columns; limestone aggregate concrete (4180 psi); Reinforcement: vertical, four $^5/_8$″ rebars; horizontal, $^3/_8$″ ties at 7″ pitch; Cover: $1^1/_2$″.	71.4 tons	2 hrs.			7	2, 7	2
C-11-RC-20	11″	11″ square columns; gravel concrete (4530 psi); Reinforcement: vertical, four $^5/_8$″ rebars; horizontal, $^3/_8$″ ties at 7″ pitch; Cover: $1^1/_2$″ with $^1/_2$″ plaster.	58.8 tons	2 hrs.			7	2, 3, 9	$1^1/_4$
C-11-RC-21	11″	11″ square columns; gravel concrete (3520 psi); Reinforcement: vertical, four $^5/_8$″ rebars; horizontal, $^3/_8$″ ties at 7″ pitch; Cover: $1^1/_2$″.	Vari-able	1 hr. 24 min.			7	1, 8	2
C-11-RC-22	11″	11″ square columns; aggregate concrete (3710 psi); Reinforcement: vertical, four $^5/_8$″ rebars; horizontal, $^3/_8$″ ties at 7″ pitch; Cover: $1^1/_2$″.	58.8 tons	2 hrs.			7	2, 3, 10	2
C-11-RC-23	11″	11″ square columns; aggregate concrete (3190 psi); Reinforcement: vertical, four $^5/_8$″ rebars; horizontal, $^3/_8$″ ties at 7″ pitch; Cover: $1^1/_2$″.	58.8 tons	2 hrs.			7	2, 3, 10	2
C-11-RC-24	11″	11″ square columns; aggregate concrete (4860 psi); Reinforcement: vertical, four $^5/_8$″ rebars; horizontal, $^3/_8$″ ties at 7″ pitch; Cover: $1^1/_2$″.	86.1 tons	1 hr. 20 min.			7	1	$1^1/_3$
C-11-RC-25	11″	11″ square columns; aggregate concrete (4850 psi); Reinforcement: vertical, four $^5/_8$″ rebars; horizontal, $^3/_8$″ ties at 7″ pitch; Cover: $1^1/_2$″.	58.8 tons	1 hr. 59 min.			7	1	$1^3/_4$
C-11-RC-26	11″	11″ square columns; aggregate concrete (3834 psi); Reinforcement: vertical, four $^5/_8$″ rebars; horizontal, $^5/_{16}$″ ties at $4^1/_2$″ pitch; Cover: $1^1/_2$″.	71.4 tons	53 min.			7	1	$^3/_4$

For SI: 1 inch = 25.4 mm, 1 pound per square inch = 0.00689 MPa, 1 ton = 8.896 kN.

Notes:

1. Failure mode—collapse.
2. Passed 2 hour fire exposure.
3. Passed hose stream test.
4. Reloaded effectively after 48 hours but collapsed at load in excess of original test load.
5. Failing load was 150 tons.
6. Failing load was 112 tons.
7. Failed during hose stream test.
8. Range of load 58.8 tons (initial) to 92 tons (92 minutes) to 60 tons (80 minutes).
9. Collapsed at 44 tons in reload after 96 hours.
10. Withstood reload after 72 hours.
11. Collapsed on reload after 48 hours.

INTERNATIONAL CODE COUNCIL®
Copyright © 2015 ICC. ALL RIGHTS RESERVED. Accessed by David Dammon on Jun 21, 2017 12:30:52 PM pursuant to License Agreement with ICC. No further reproduction or distribution authorized. ANY UNAUTHORIZED REPRODUCTION OR DISTRIBUTION IS A VIOLATION OF THE FEDERAL COPYRIGHT ACT AND THE LICENSE AGREEMENT, AND SUBJECT TO CIVIL AND CRIMINAL PENALTIES THEREUNDER.

TABLE 2.1.3
REINFORCED CONCRETE COLUMNS
MINIMUM DIMENSION 12″ TO LESS THAN 14″

ITEM CODE	MINIMUM DIMENSION	CONSTRUCTION DETAILS	PERFORMANCE		REFERENCE NUMBER			NOTES	REC. HOURS
			LOAD	TIME	PRE-BMS-92	BMS-92	POST-BMS-92		
C-12-RC-1	12″	12″ square columns; gravel aggregate concrete (2647 psi); Reinforcement: vertical, four $^5/_8$″ rebars; horizontal, $^5/_{16}$″ ties at $4^1/_2$″ pitch; Cover: 2″.	78.2 tons	38 min.		1	7	1	$^1/_2$
C-12-RC-2	12″	Reinforced columns with $1^1/_2$″ concrete outside of reinforced steel; Gross diameter or side of column: 12″ ; Group I, Column A.	—	6 hrs.		1		2, 3	6
C-12-RC-3	12″	Description as per C-12-RC-2; Group I, Column B.	—	4 hrs.		1		2, 3	4
C-12-RC-4	12″	Description as per C-12-RC-2; Group II, Column A.	—	4 hrs.		1		2, 3	4
C-12-RC-5	12″	Description as per C-12-RC-2; Group II, Column B.	—	2 hrs. 30 min.		1		2, 3	$2^1/_2$
C-12-RC-6	12″	Description as per C-12-RC-2; Group III, Column A.	—	3 hrs.		1		2, 3	3
C-12-RC-7	12″	Description as per C-12-RC-2; Group III, Column B.	—	2 hrs.		1		2, 3	2
C-12-RC-8	12″	Description as per C-12-RC-2; Group IV, Column A.	—	2 hrs.		1		2, 3	2
C-12-RC-9	12″	Description as per C-12-RC-2; Group IV, Column B.	—	1 hr. 30 min.		1		2, 3	$1^1/_2$

For SI: 1 inch = 25.4 mm, 1 pound per square inch = 0.00689 MPa, 1 pound per square yard = 5.3 N/m^2.

Notes:

1. Failure mode—unspecified structural.
2. Group I: includes concrete having calcareous aggregate containing a combined total of not more than 10 percent of quartz, chert and flint for the coarse aggregate.

   Group II: includes concrete having trap-rock aggregate applied without metal ties and also concrete having cinder, sandstone or granite aggregate, if held in place with wire mesh or expanded metal having not larger than 4-inch mesh, weighing not less than 1.7 lbs./$yd.^2$, placed not more than 1 inch from the surface of the concrete.

   Group III: includes concrete having cinder, sandstone or granite aggregate tied with No. 5 gage steel wire, wound spirally over the column section on a pitch of 8 inches, or equivalent ties, and concrete having siliceous aggregates containing a combined total of 60 percent or more of quartz, chert and flint, if held in place with wire mesh or expanded metal having not larger than 4-inch mesh, weighing not less than 1.7 lbs./$yd.^2$, placed not more than 1 inch from the surface of the concrete.

   Group IV: includes concrete having siliceous aggregates containing a combined total of 60 percent or more of quartz, chert and flint, and tied with No. 5 gage steel wire wound spirally over the column section on a pitch of 8 inches, or equivalent ties.
3. Groupings of aggregates and ties are the same as for structural steel columns protected solidly with concrete, the ties to be placed over the vertical reinforcing bars and the mesh where required, to be placed within 1 inch from the surface of the column.

   Column A: working loads are assumed as carried by the area of the column inside of the lines circumscribing the reinforcing steel.

   Column B: working loads are assumed as carried by the gross area of the column.

INTERNATIONAL CODE COUNCIL®
Copyright © 2015 ICC. ALL RIGHTS RESERVED. Accessed by David Dammon on Jun 21, 2017 12:30:52 PM pursuant to License Agreement with ICC. No further reproduction or distribution authorized. ANY UNAUTHORIZED REPRODUCTION OR DISTRIBUTION IS A VIOLATION OF THE FEDERAL COPYRIGHT ACT AND THE LICENSE AGREEMENT, AND SUBJECT TO CIVIL AND CRIMINAL PENALTIES THEREUNDER.

TABLE 2.1.4
REINFORCED CONCRETE COLUMNS
MINIMUM DIMENSION 14″ TO LESS THAN 16″

ITEM CODE	MINIMUM DIMENSION	CONSTRUCTION DETAILS	PERFORMANCE		REFERENCE NUMBER			NOTES	REC. HOURS
			LOAD	TIME	PRE- BMS-92	BMS-92	POST- BMS-92		
C-14-RC-1	14″	14″ square columns; gravel aggregate concrete (4295 psi); Reinforcement: vertical four $^3/_4$″ rebars; horizontal: $^1/_4$″ ties at 9″ pitch; Cover: $1^1/_2$″	86 tons	1 hr. 22 min.			7	1	$1^1/_4$
C-14-RC-2	14″	Reinforced concrete columns with $1^1/_2$″ concrete outside reinforcing steel; Gross diameter or side of column: 12″ ; Group I, Column A.	—	7 hrs.		1		2, 3	7
C-14-RC-3	14″	Description as per C-14-RC-2; Group II, Column B.	—	5 hrs.		1		2, 3	5
C-14-RC-4	14″	Description as per C-14-RC-2; Group III, Column A.	—	5 hrs.		1		2, 3	5
C-14-RC-5	14″	Description as per C-14-RC-2; Group IV, Column B.	—	3 hrs. 30 min.		1		2, 3	$3^1/_2$
C-14-RC-6	14″	Description as per C-14-RC-2; Group III, Column A.	—	4 hrs.		1		2, 3	4
C-14-RC-7	14″	Description as per C-14-RC-2; Group III, Column B.	—	2 hrs. 30 min.		1		2, 3	$2^1/_2$
C-14-RC-8	14″	Description as per C-14-RC-2; Group IV, Column A.	—	2 hrs. 30 min.		1		2, 3	$2^1/_2$
C-14-RC-9	14″	Description as per C-14-RC-2; Group IV, Column B.	—	1 hr. 30 min.		1		2, 3	$1^1/_2$

For SI: 1 inch = 25.4 mm, 1 pound per square inch = 0.00689 MPa, 1 pound per square yard = 5.3 N/m^2.

Notes:

1. Failure mode—main rebars buckled between links at various points.
2. Group I: includes concrete having calcareous aggregate containing a combined total of not more than 10 percent of quartz, chert and flint for the coarse aggregate.

   Group II: includes concrete having trap-rock aggregate applied without metal ties and also concrete having cinder, sandstone or granite aggregate, if held in place with wire mesh or expanded metal having not larger than 4-inch mesh, weighing not less than 1.7 lbs./$yd.^2$, placed not more than 1 inch from the surface of the concrete.

   Group III: includes concrete having cinder, sandstone or granite aggregate tied with No. 5 gage steel wire, wound spirally over the column section on a pitch of 8 inches, or equivalent ties, and concrete having siliceous aggregates containing a combined total of 60 percent or more of quartz, chert and flint, if held in place with wire mesh or expanded metal having not larger than 4-inch mesh, weighing not less than 1.7 lbs./$yd.^2$, placed not more than 1 inch from the surface of the concrete.

   Group IV: includes concrete having siliceous aggregates containing a combined total of 60 percent or more of quartz, chert and flint, and tied with No. 5 gage steel wire wound spirally over the column section on a pitch of 8 inches, or equivalent ties.
3. Groupings of aggregates and ties are the same as for structural steel columns protected solidly with concrete, the ties to be placed over the vertical reinforcing bars and the mesh where required, to be placed within 1 inch from the surface of the column.

   Column A: working loads are assumed as carried by the area of the column inside of the lines circumscribing the reinforcing steel.

   Column B: working loads are assumed as carried by the gross area of the column.

INTERNATIONAL CODE COUNCIL®
Copyright © 2015 ICC. ALL RIGHTS RESERVED. Accessed by David Dammon on Jun 21, 2017 12:30:52 PM pursuant to License Agreement with ICC. No further reproduction or distribution authorized. ANY UNAUTHORIZED REPRODUCTION OR DISTRIBUTION IS A VIOLATION OF THE FEDERAL COPYRIGHT ACT AND THE LICENSE AGREEMENT, AND SUBJECT TO CIVIL AND CRIMINAL PENALTIES THEREUNDER.

FIGURE 2.1.5
REINFORCED CONCRETE COLUMNS
MINIMUM DIMENSION 16″ TO LESS THAN 18″

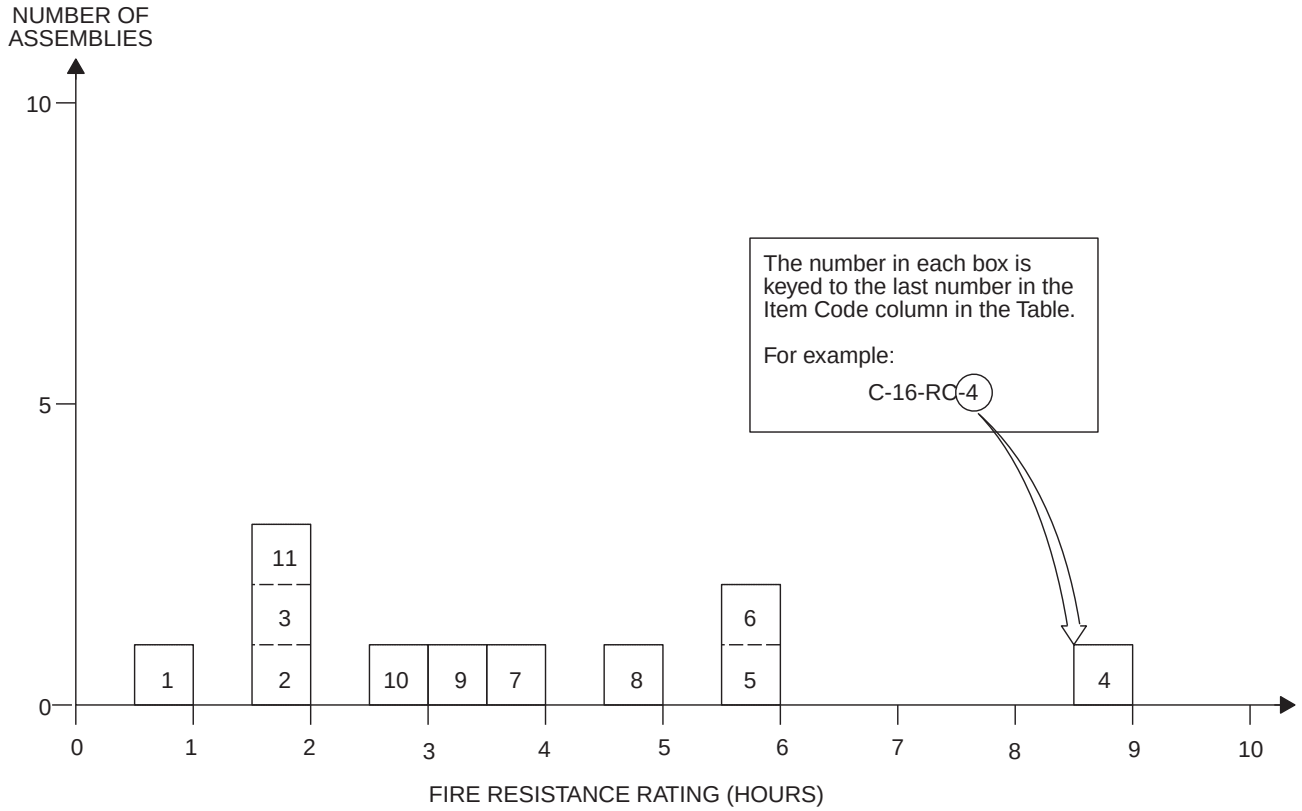

TABLE 2.1.5
REINFORCED CONCRETE COLUMNS
MINIMUM DIMENSION 16″ TO LESS THAN 18″

ITEM CODE	MINIMUM DIMENSION	CONSTRUCTION DETAILS	PERFORMANCE		REFERENCE NUMBER			NOTES	REC. HOURS
			LOAD	TIME	PRE-BMS-92	BMS-92	POST-BMS-92		
C-16-RC-1	16″	16″ square columns; gravel aggregate concrete (4550 psi); Reinforcement: vertical, eight $1^3/_8$″ rebars; horizontal, $^5/_{16}$″ ties at 6″ pitch $1^3/_8$″ below column surface and $^5/_{16}$″ ties at 6″ pitch linking center rebars of each face forming a smaller square in column cross section.	237 tons	1 hr			7	1, 2, 3	1
C-16-RC-2	16″	16″ square columns; gravel aggregate concrete (3360 psi); Reinforcement: vertical, eight $1^3/_8$″ rebars; horizontal, $^5/_{16}$″ ties at 6″ pitch; Cover: $1^3/_8$″.	210 tons	2 hrs.			7	2, 4, 5, 6	2
C-16-RC-3	16″	16″ square columns; gravel aggregate concrete (3980 psi); Reinforcement: vertical, four $^7/_8$″ rebars; horizontal, $^3/_8$″ ties at 6″ pitch; Cover: 1″.	123.5 tons	2 hrs.			7	2, 4, 7	2
C-16-RC-4	16″	Reinforced concrete columns with $1^1/_2$″ concrete outside reinforcing steel; Gross diameter or side of column: 16″ ; Group I, Column A.	—	9 hrs.		1		8, 9	9
C-16-RC-5	16″	Description as per C-16-RC-4; Group I, Column B.	—	6 hrs.		1		8, 9	6
C-16-RC-6	16″	Description as per C-16-RC-4; Group II, Column A.	—	6 hrs.		1		8, 9	6

(continued)

INTERNATIONAL CODE COUNCIL®
Copyright © 2015 ICC. ALL RIGHTS RESERVED. Accessed by David Dammon on Jun 21, 2017 12:30:52 PM pursuant to License Agreement with ICC. No further reproduction or distribution authorized. ANY UNAUTHORIZED REPRODUCTION OR DISTRIBUTION IS A VIOLATION OF THE FEDERAL COPYRIGHT ACT AND THE LICENSE AGREEMENT, AND SUBJECT TO CIVIL AND CRIMINAL PENALTIES THEREUNDER.

TABLE 2.1.5—continued
REINFORCED CONCRETE COLUMNS
MINIMUM DIMENSION 16″ TO LESS THAN 18

ITEM CODE	MINIMUM DIMENSION	CONSTRUCTION DETAILS	PERFORMANCE		REFERENCE NUMBER			NOTES	REC. HOURS
			LOAD	TIME	PRE-BMS-92	BMS-92	POST-BMS-92		
C-16-RC-7	16″	Description as per C-16-RC-4; Group II, Column B.	—	4 hrs.		1		8, 9	4
C-16-RC-8	16″	Description as per C-16-RC-4; Group III, Column A.	—	5 hrs.		1		8, 9	5
C-16-RC-9	16″	Description as per C-16-RC-4; Group III, Column B.	—	3 hrs. 30 min.		1		8, 9	$3^1/_2$
C-16-RC-10	16″	Description as per C-16-RC-4; Group IV, Column A.	—	3 hrs.		1		8, 9	3
C-16-RC-11	16″	Description as per C-16-RC-4; Group IV, Column B.	—	2 hrs.		1		8, 9	2

For SI: 1 inch = 25.4 mm, 1 pound per square inch = 0.00689 MPa, 1 pound per square yard = 5.3 N/m^2.

Notes:

1. Column passed 1-hour fire test.
2. Column passed hose stream test.
3. No reload specified.
4. Column passed 2-hour fire test.
5. Column reloaded successfully after 24 hours.
6. Reinforcing details same as C-16-RC-1.
7. Column passed reload after 72 hours.
8. Group I: includes concrete having calcareous aggregate containing a combined total of not more than 10 percent of quartz, chert and flint for the coarse aggregate.

   Group II: includes concrete having trap-rock aggregate applied without metal ties and also concrete having cinder, sandstone or granite aggregate, if held in place with wire mesh or expanded metal having not larger than 4-inch mesh, weighing not less than 1.7 lbs./$yd.^2$, placed not more than 1 inch from the surface of the concrete.

   Group III: includes concrete having cinder, sandstone or granite aggregate tied with No. 5 gage steel wire, wound spirally over the column section on a pitch of 8 inches, or equivalent ties, and concrete having siliceous aggregates containing a combined total of 60 percent or more of quartz, chert and flint, if held in place with wire mesh or expanded metal having not larger than 4-inch mesh, weighing not less than 1.7 lbs./$yd.^2$, placed not more than 1 inch from the surface of the concrete.

   Group IV: includes concrete having siliceous aggregates containing a combined total of 60 percent or more of quartz, chert and flint, and tied with No. 5 gage steel wire wound spirally over the column section on a pitch of 8 inches, or equivalent ties.
9. Groupings of aggregates and ties are the same as for structural steel columns protected solidly with concrete, the ties to be placed over the vertical reinforcing bars and the mesh where required, to be placed within 1 inch from the surface of the column.

   Column A: working loads are assumed as carried by the area of the column inside of the lines circumscribing the reinforcing steel.

   Column B: working loads are assumed as carried by the gross area of the column.

INTERNATIONAL CODE COUNCIL®
Copyright © 2015 ICC. ALL RIGHTS RESERVED. Accessed by David Dammon on Jun 21, 2017 12:30:52 PM pursuant to License Agreement with ICC. No further reproduction or distribution authorized. ANY UNAUTHORIZED REPRODUCTION OR DISTRIBUTION IS A VIOLATION OF THE FEDERAL COPYRIGHT ACT AND THE LICENSE AGREEMENT, AND SUBJECT TO CIVIL AND CRIMINAL PENALTIES THEREUNDER.

TABLE 2.1.6
REINFORCED CONCRETE COLUMNS
MINIMUM DIMENSION 18″ TO LESS THAN 20″

ITEM CODE	MINIMUM DIMENSION	CONSTRUCTION DETAILS	PERFORMANCE		REFERENCE NUMBER			NOTES	REC. HOURS
			LOAD	TIME	PRE- BMS-92	BMS-92	POST- BMS-92		
C-18-RC-1	18″	Reinforced concrete columns with $1^1/_2$″ concrete outside reinforced steel; Gross diameter or side of column: 18″ ; Group I, Column A.	—	11 hrs.		1		1, 2	11
C-18-RC-2	18″	Description as per C-18-RC-1; Group I, Column B.	—	8 hrs.		1		1, 2	8
C-18-RC-3	18″	Description as per C-18-RC-1; Group II, Column A.	—	7 hrs.		1		1, 2	7
C-18-RC-4	18″	Description as per C-18-RC-1; Group II, Column B.	—	5 hrs.		1		1, 2	5
C-18-RC-5	18″	Description as per C-18-RC-1; Group III, Column A.	—	6 hrs.		1		1, 2	6
C-18-RC-6	18″	Description as per C-18-RC-1; Group III, Column B.	—	4 hrs.		1		1, 2	4
C-18-RC-7	18″	Description as per C-18-RC-1; Group IV, Column A.	—	3 hrs. 30 min.		1		1, 2	$3^1/_2$
C-18-RC-8	18″	Description as per C-18-RC-1; Group IV, Column B.	—	2 hrs. 30 min.		1		1, 2	$2^1/_2$

For SI: 1 inch = 25.4 mm, 1 pound per square yard = 5.3 N/m^2.

Notes:

1. Group I: includes concrete having calcareous aggregate containing a combined total of not more than 10 percent of quartz, chert and flint for the coarse aggregate.

   Group II: includes concrete having trap-rock aggregate applied without metal ties and also concrete having cinder, sandstone or granite aggregate, if held in place with wire mesh or expanded metal having not larger than 4-inch mesh, weighing not less than 1.7 lbs./yd.^{2}, placed not more than 1 inch from the surface of the concrete.

   Group III: includes concrete having cinder, sandstone or granite aggregate tied with No. 5 gage steel wire, wound spirally over the column section on a pitch of 8 inches, or equivalent ties, and concrete having siliceous aggregates containing a combined total of 60 percent or more of quartz, chert and flint, if held in place with wire mesh or expanded metal having not larger than 4-inch mesh, weighing not less than 1.7 lbs./yd.^{2}, placed not more than 1 inch from the surface of the concrete.

   Group IV: includes concrete having siliceous aggregates containing a combined total of 60 percent or more of quartz, chert and flint and, tied with No. 5 gage steel wire wound spirally over the column section on a pitch of 8 inches, or equivalent ties.

2. Groupings of aggregates and ties are the same as for structural steel columns protected solidly with concrete, the ties to be placed over the vertical reinforcing bars and the mesh where required, to be placed within 1 inch from the surface of the column.

   Column A: working loads are assumed as carried by the area of the column inside of the lines circumscribing the reinforcing steel.

   Column B: working loads are assumed as carried by the gross area of the column.

INTERNATIONAL CODE COUNCIL®
Copyright © 2015 ICC. ALL RIGHTS RESERVED. Accessed by David Dammon on Jun 21, 2017 12:30:52 PM pursuant to License Agreement with ICC. No further reproduction or distribution authorized. ANY UNAUTHORIZED REPRODUCTION OR DISTRIBUTION IS A VIOLATION OF THE FEDERAL COPYRIGHT ACT AND THE LICENSE AGREEMENT, AND SUBJECT TO CIVIL AND CRIMINAL PENALTIES THEREUNDER.

FIGURE 2.1.7
REINFORCED CONCRETE COLUMNS
MINIMUM DIMENSION 20″ TO LESS THAN 22″

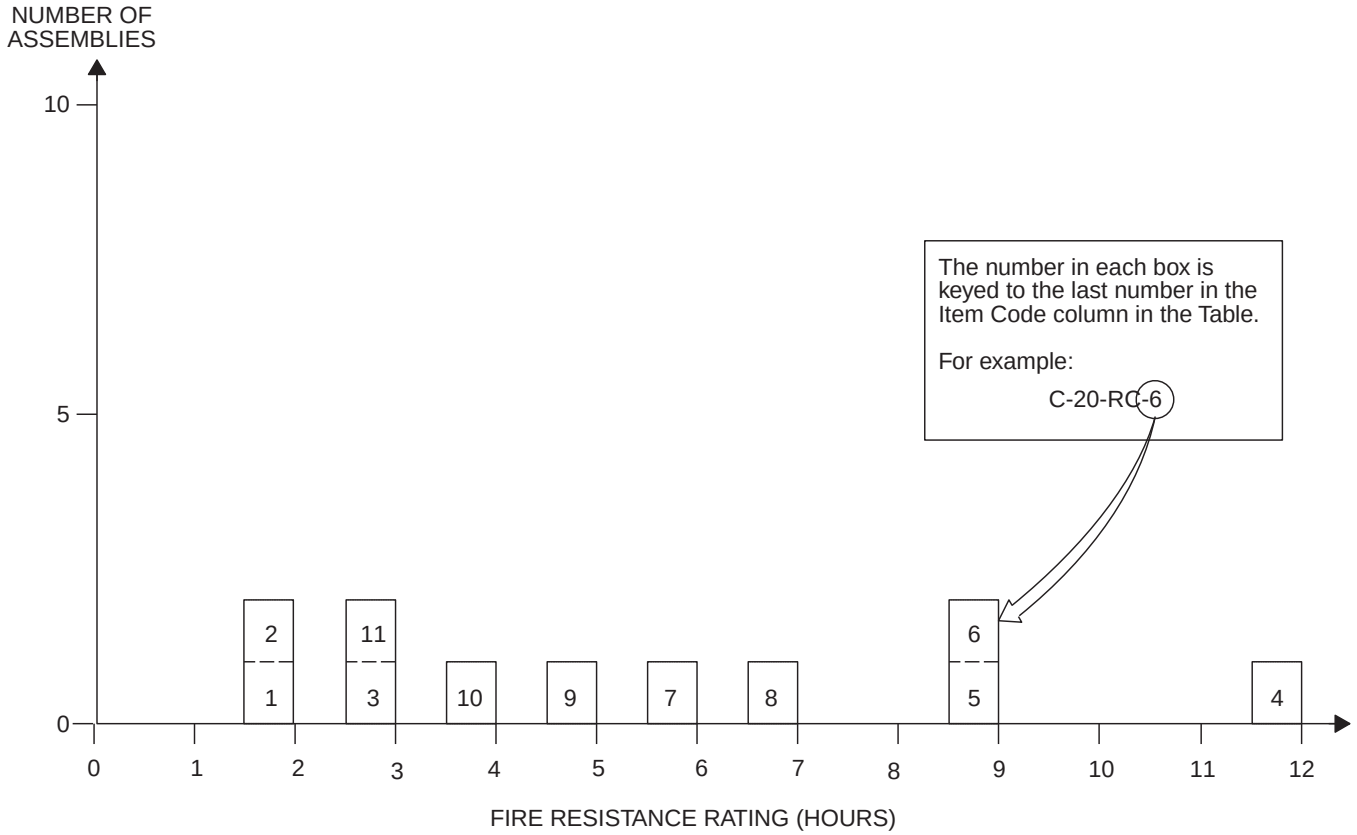

TABLE 2.1.7
REINFORCED CONCRETE COLUMNS
MINIMUM DIMENSION 20″ TO LESS THAN 22″

ITEM CODE	MINIMUM DIMENSION	CONSTRUCTION DETAILS	PERFORMANCE		REFERENCE NUMBER			NOTES	REC. HOURS
			LOAD	TIME	PRE-BMS-92	BMS-92	POST-BMS-92		
C-20-RC-1	20″	20″ square columns; gravel aggregate concrete (6690 psi); Reinforcement: vertical, four $1^3/_4$″ rebars; horizontal, $^3/_8$″ wire at 6″ pitch; Cover $1^3/_4$″.	367 tons	2 hrs.			7	1, 2, 3	2
C-20-RC-2	20″	20″ square columns; gravel aggregate concrete (4330 psi); Reinforcement: vertical, four $1^3/_4$″ rebars; horizontal, $^3/_8$″ ties at 6″ pitch; Cover $1^3/_4$″.	327 tons	2 hrs.			7	1, 2, 4	2
C-20-RC-3	$20^1/_4$″	20″ square columns; gravel aggregate concrete (4230 psi); Reinforcement: vertical, four $1^1/_8$″ rebars; horizontal, $^3/_8$″ wire at 5″ pitch; Cover $1^1/_8$″.	199 tons	2 hrs. 56 min.			7	5	$2^3/_4$
C-20-RC-4	20″	Reinforced concrete columns with $1^1/_2$″ concrete outside of reinforcing steel; Gross diameter or side of column: 20″ ; Group I, Column A.	—	12 hrs.		1		6, 7	12
C-20-RC-5	20″	Description as per C-20-RC-4; Group I, Column B.	—	9 hrs.		1		6, 7	9

(continued)

INTERNATIONAL CODE COUNCIL®
Copyright © 2015 ICC. ALL RIGHTS RESERVED. Accessed by David Dammon on Jun 21, 2017 12:30:52 PM pursuant to License Agreement with ICC. No further reproduction or distribution authorized. ANY UNAUTHORIZED REPRODUCTION OR DISTRIBUTION IS A VIOLATION OF THE FEDERAL COPYRIGHT ACT AND THE LICENSE AGREEMENT, AND SUBJECT TO CIVIL AND CRIMINAL PENALTIES THEREUNDER.

TABLE 2.1.7—continued
REINFORCED CONCRETE COLUMNS
MINIMUM DIMENSION 20″ TO LESS THAN 22″

ITEM CODE	MINIMUM DIMENSION	CONSTRUCTION DETAILS	PERFORMANCE		REFERENCE NUMBER			NOTES	REC. HOURS
			LOAD	TIME	PRE-BMS-92	BMS-92	POST-BMS-92		
C-20-RC-6	20″	Description as per C-20-RC-4; Group II, Column A.	—	9 hrs.		1		6, 7	9
C-20-RC-7	20″	Description as per C-20-RC-4; Group II, Column B.	—	6 hrs		1		6, 7	6
C-20-RC-8	20″	Description as per C-20-RC-4; Group III, Column A.	—	7 hrs.		1		6, 7	7
C-20-RC-9	20″	Description as per C-20-RC-4; Group III, Column B.	—	5 hrs.		1		6, 7	5
C-20-RC-10	20″	Description as per C-20-RC-4; Group IV, Column A.	—	4 hrs.		1		6, 7	4
C-20-RC-11	20″	Description as per C-20-RC-4; Group IV, Column B.	—	3 hrs.		1		6, 7	3

For SI: 1 inch = 25.4 mm, 1 pound per square yard = 5.3 N/m^2, 1 ton = 8.896 kN.

Notes:

1. Passed 2-hour fire test.
2. Passed hose stream test.
3. Failed during reload at 300 tons.
4. Passed reload after 72 hours.
5. Failure mode—collapse.
6. Group I: includes concrete having calcareous aggregate containing a combined total of not more than 10 percent of quartz, chert and flint for the coarse aggregate.

   Group II: includes concrete having trap-rock aggregate applied without metal ties and also concrete having cinder, sandstone or granite aggregate, if held in place with wire mesh or expanded metal having not larger than 4-inch mesh, weighing not less than 1.7 lbs./yd.^{2}, placed not more than 1 inch from the surface of the concrete.

   Group III: includes concrete having cinder, sandstone or granite aggregate tied with No. 5 gage steel wire, wound spirally over the column section on a pitch of 8 inches, or equivalent ties, and concrete having siliceous aggregates containing a combined total of 60 percent or more of quartz, chert and flint, if held in place with wire mesh or expanded metal having not larger than 4-inch mesh, weighing not less than 1.7 lbs./yd.^{2}, placed not more than 1 inch from the surface of the concrete.

   Group IV: includes concrete having siliceous aggregates containing a combined total of 60 percent or more of quartz, chert and flint, and tied with No. 5 gage steel wire wound spirally over the column section on a pitch of 8 inches, or equivalent ties.
7. Groupings of aggregates and ties are the same as for structural steel columns protected solidly with concrete, the ties to be placed over the vertical reinforcing bars and the mesh where required, to be placed within 1 inch from the surface of the column.

   Column A: working loads are assumed as carried by the area of the column inside of the lines circumscribing the reinforcing steel.

   Column B: working loads are assumed as carried by the gross area of the column.

TABLE 2.1.8
HEXAGONAL REINFORCED CONCRETE COLUMNS
MINIMUM DIMENSION 12″ TO LESS THAN 14″

ITEM CODE	MINIMUM DIMENSION	CONSTRUCTION DETAILS	PERFORMANCE		REFERENCE NUMBER			NOTES	REC. HOURS
			LOAD	TIME	PRE-BMS-92	BMS-92	POST-BMS-92		
C-12-HRC-1	12″	12″ hexagonal columns; gravel aggregate concrete (4420 psi); Reinforcement: vertical, eight $^1/_2$″ rebars; horizontal, $^5/_{16}$″ helical winding at 1$^1/_2$″ pitch; Cover: $^1/_2$″.	88 tons	58 min.			7	1	$^3/_4$
C-12-HRC-2	12″	12″ hexagonal columns; gravel aggregate concrete (3460 psi); Reinforcement: vertical, eight $^1/_2$″ rebars; horizontal, $^5/_{16}$″ helical winding at 1$^1/_2$″ pitch; Cover: $^1/_2$″.	78.7 tons	1 hr.			7	2	1

For SI: 1 inch = 25.4 mm, 1 pound per square inch = 0.00689 MPa, 1 ton = 8.896 kN.

Notes:

1. Failure mode—collapse.
2. Test stopped at 1 hour.

INTERNATIONAL CODE COUNCIL®
Copyright © 2015 ICC. ALL RIGHTS RESERVED. Accessed by David Dammon on Jun 21, 2017 12:30:52 PM pursuant to License Agreement with ICC. No further reproduction or distribution authorized. ANY UNAUTHORIZED REPRODUCTION OR DISTRIBUTION IS A VIOLATION OF THE FEDERAL COPYRIGHT ACT AND THE LICENSE AGREEMENT, AND SUBJECT TO CIVIL AND CRIMINAL PENALTIES THEREUNDER.

TABLE 2.1.9
HEXAGONAL REINFORCED CONCRETE COLUMNS
MINIMUM DIMENSION 14″ TO LESS THAN 16″

ITEM CODE	MINIMUM DIMENSION	CONSTRUCTION DETAILS	PERFORMANCE		REFERENCE NUMBER			NOTES	REC. HOURS
			LOAD	TIME	PRE-BMS-92	BMS-92	POST-BMS-92		
C-14-HRC-1	14″	14″ hexagonal columns; gravel aggregate concrete (4970 psi); Reinforcement: vertical, eight $^1/_2$″ rebars; horizontal, $^5/_{16}$″ helical winding on 2″ pitch; Cover: $^1/_2$″.	90 tons	2 hrs.			7	1, 2, 3	2

For SI: 1 inch = 25.4 mm, 1 pound per square inch = 0.00689 MPa, 1 ton = 8.896 kN.

Notes:

1. Withstood 2-hour fire test.
2. Withstood hose stream test.
3. Withstood reload after 48 hours.

TABLE 2.1.10
HEXAGONAL REINFORCED CONCRETE COLUMNS
DIAMETER—16″ TO LESS THAN 18″

ITEM CODE	MINIMUM DIMENSION	CONSTRUCTION DETAILS	PERFORMANCE		REFERENCE NUMBER			NOTES	REC. HOURS
			LOAD	TIME	PRE- BMS-92	BMS-92	POST-BMS-92		
C-16-HRC-1	16″	16″ hexagonal columns; gravel concrete (6320 psi); Reinforcement: vertical, eight $^5/_8$″ rebars; horizontal, $^5/_{16}$″ helical winding on $^3/_4$″ pitch; Cover: $^1/_2$″.	140 tons	1 hr. 55 min.			7	1	$1^3/_4$
C-16-HRC-2	16″	16″ hexagonal columns; gravel aggregate concrete (5580 psi); Reinforcement: vertical, eight $^5/_8$″ rebars; horizontal, $^5/_{16}$″ helical winding on $1^3/_4$″ pitch; Cover: $^1/_2$″	124 tons	2 hrs.			7	2	2

For SI: 1 inch = 25.4 mm, 1 pound per square inch = 0.00689 MPa, 1 ton = 8.896 kN.

Notes:

1. Failure mode—collapse.
2. Failed on furnace removal.

TABLE 2.1.11
HEXAGONAL REINFORCED CONCRETE COLUMNS
DIAMETER—20″ TO LESS THAN 22″

ITEM CODE	MINIMUM DIMENSION	CONSTRUCTION DETAILS	PERFORMANCE		REFERENCE NUMBER			NOTES	REC. HOURS
			LOAD	TIME	PRE- BMS-92	BMS-92	POST-BMS-92		
C-20-HRC-1	20″	20″ hexagonal columns; gravel concrete (6080 psi); Reinforcement: vertical, $^3/_4$″ rebars; horizontal, $^5/_6$″ helical winding on $1^3/_4$″ pitch; Cover: $^1/_2$″.	211 tons	2 hrs.			7	1	2
C-20-HRC-2	20″	20″ hexagonal columns; gravel concrete (5080 psi); Reinforcement: vertical, $^3/_4$″ rebars; horizontal, $^5/_{16}$″ wire on $1^3/_4$″ pitch; Cover: $^1/_2$″.	184 tons	2 hrs. 15 min.			7	2, 3, 4	$2^1/_4$

For SI: 1 inch = 25.4 mm, 1 pound per square inch = 0.00689 MPa, 1 ton = 8.896 kN.

Notes:

1. Column collapsed on furnace removal.
2. Passed $2^1/_4$-hour fire test.
3. Passed hose stream test.
4. Withstood reload after 48 hours.

INTERNATIONAL CODE COUNCIL®
Copyright © 2015 ICC. ALL RIGHTS RESERVED. Accessed by David Dammon on Jun 21, 2017 12:30:52 PM pursuant to License Agreement with ICC. No further reproduction or distribution authorized. ANY UNAUTHORIZED REPRODUCTION OR DISTRIBUTION IS A VIOLATION OF THE FEDERAL COPYRIGHT ACT AND THE LICENSE AGREEMENT, AND SUBJECT TO CIVIL AND CRIMINAL PENALTIES THEREUNDER.

TABLE 2.2
ROUND CAST IRON COLUMNS

ITEM CODE	MINIMUM DIMENSION	CONSTRUCTION DETAILS	PERFORMANCE		REFERENCE NUMBER			NOTES	REC. HOURS
			LOAD	TIME	PRE-BMS-92	BMS-92	POST-BMS-92		
C-7-CI-1	7″ O.D.	Column: 0.6″ minimum metal thickness; unprotected.	—	30 min.		1			1/2
C-7-CI-2	7″ O.D.	Column: 0.6″ minimum metal thickness concrete filled, outside unprotected.	—	45 min.		1			3/4
C-11-CI-3	11″ O.D.	Column: 0.6″ minimum metal thickness; Protection: 1 1/2″ portland cement plaster on high ribbed metal lath, 1/2″ broken air space.	—	3 hrs.		1			3
C-11-CI-4	11″ O.D.	Column: 0.6″ minimum metal thickness; Protection: 2″ concrete other than siliceous aggregate.	—	2 hrs. 30 min.		1			2 1/2
C-12-CI-5	12.5″ O.D.	Column: 7″ O.D. 0.6″ minimum metal thickness; Protection: 2″ porous hollow tile, 3/4″ mortar between tile and column, outside wire ties.	—	3 hrs.		1			3
C-7-CI-6	7.6″ O.D.	Column: 7″ I.D., 3/10″ minimum metal thickness, concrete filled unprotected.	—	30 min.		1			1/2
C-8-CI-7	8.6″ O.D.	Column: 8″ I.D., 3/10″ minimum metal thickness; concrete filled reinforced with four 3 1/2″ × 3/8″ angles, in fill; unprotected outside.	—	1 hr.		1			1

For SI: 1 inch = 25.4 mm.

INTERNATIONAL CODE COUNCIL®
Copyright © 2015 ICC. ALL RIGHTS RESERVED. Accessed by David Dammon on Jun 21, 2017 12:30:52 PM pursuant to License Agreement with ICC. No further reproduction or distribution authorized. ANY UNAUTHORIZED REPRODUCTION OR DISTRIBUTION IS A VIOLATION OF THE FEDERAL COPYRIGHT ACT AND THE LICENSE AGREEMENT, AND SUBJECT TO CIVIL AND CRIMINAL PENALTIES THEREUNDER.

FIGURE 2.3
STEEL COLUMNS-GYPSUM ENCASEMENTS

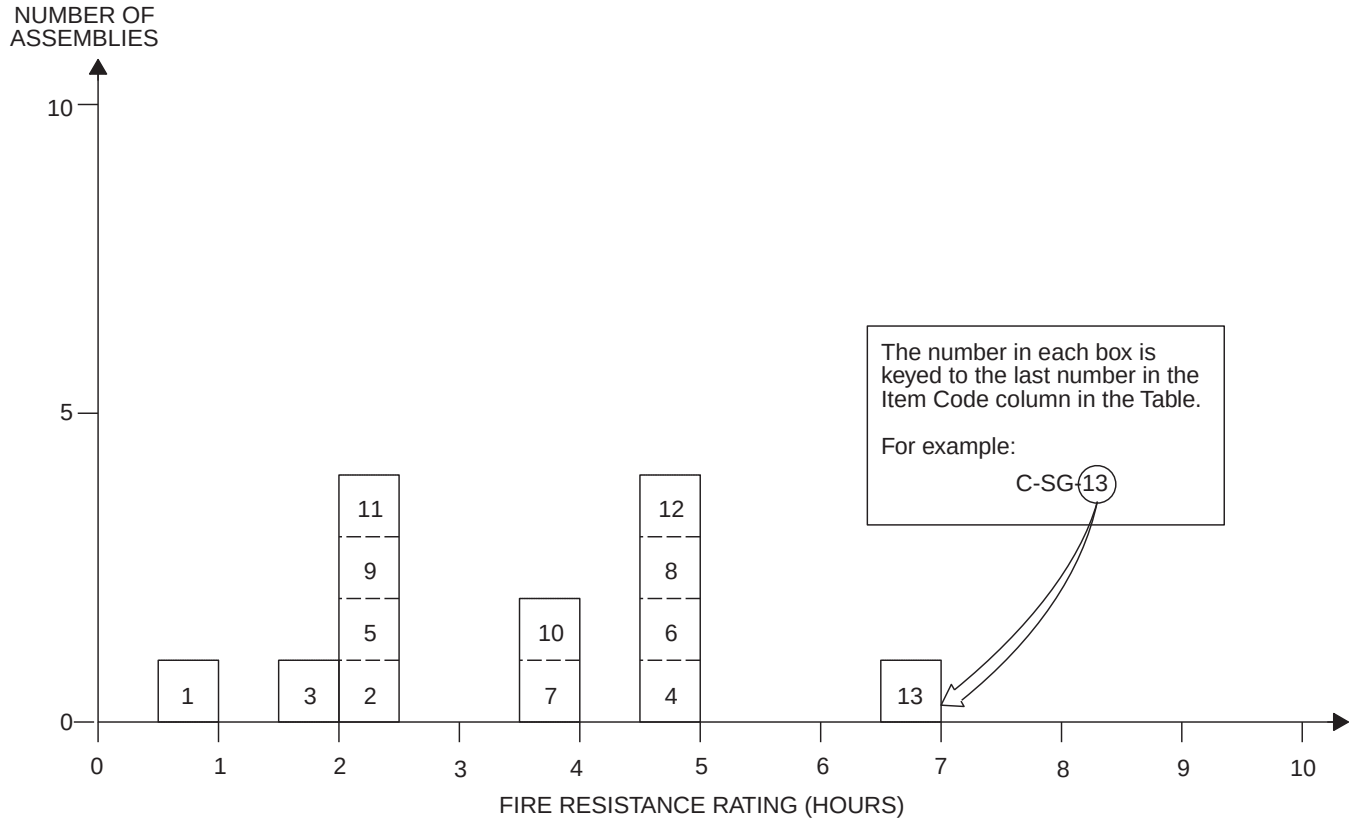

TABLE 2.3
STEEL COLUMNS—GYPSUM ENCASEMENTS

ITEM CODE	MINIMUM AREA OF SOLID MATERIAL	CONSTRUCTION DETAILS	PERFORMANCE		REFERENCE NUMBER			NOTES	REC. HOURS
			LOAD	TIME	PRE-BMS-92	BMS-92	POST-BMS-92		
C-SG-1	—	Steel protected with $^3/_4$″ 1:3 sanded gypsum or 1″ 1:2$^1/_2$ portland cement plaster on wire or lath; one layer.	—	1 hr.		1			1
C-SG-2	—	Same as C-SG-1; two layers.	—	2 hrs. 30 min.		1			2$^1/_2$
C-SG-3	130 in.^{2}	2″ solid blocks with wire mesh in horizontal joints; 1″ mortar on flange; reentrant space filled with block and mortar.	—	2 hrs.		1			2
C-SG-4	150 in.^{2}	Same as C-130-SG-3 with $^1/_2$″ sanded gypsum plaster.	—	5 hrs.		1			5
C-SG-5	130 in.^{2}	2″ solid blocks with wire mesh in horizontal joints; 1″ mortar on flange; reentrant space filled with gypsum concrete.	—	2 hrs. 30 min.		1			2$^1/_2$
C-SG-6	150 in.^{2}	Same as C-130-SG-5 with $^1/_2$″ sanded gypsum plaster.	—	5 hrs.		1			5
C-SG-7	300 in.^{2}	4″ solid blocks with wire mesh in horizontal joints; 1″ mortar on flange; reentrant space filled with block and mortar.	—	4 hrs.		1			4

(continued)

INTERNATIONAL CODE COUNCIL®
Copyright © 2015 ICC. ALL RIGHTS RESERVED. Accessed by David Dammon on Jun 21, 2017 12:30:52 PM pursuant to License Agreement with ICC. No further reproduction or distribution authorized. ANY UNAUTHORIZED REPRODUCTION OR DISTRIBUTION IS A VIOLATION OF THE FEDERAL COPYRIGHT ACT AND THE LICENSE AGREEMENT, AND SUBJECT TO CIVIL AND CRIMINAL PENALTIES THEREUNDER.

TABLE 2.3—continued
STEEL COLUMNS—GYPSUM ENCASEMENTS

ITEM CODE	MINIMUM AREA OF SOLID MATERIAL	CONSTRUCTION DETAILS	PERFORMANCE		REFERENCE NUMBER			NOTES	REC. HOURS
			LOAD	TIME	PRE-BMS-92	BMS-92	POST-BMS-92		
C-SG-8	300 in.^{2}	Same as C-300-SG-7 with reentrant space filled with gypsum concrete.	—	5 hrs.		1			5
C-SG-9	85 in.^{2}	2″ solid blocks with cramps at horizontal joints; mortar on flange only at horizontal joints; reentrant space not filled.	—	2 hrs. 30 min.		1			$2^1/_2$
C-SG-10	105 in.^{2}	Same as C-85-SG-9 with $^1/_2$″ sanded gypsum plaster.	—	4 hrs.		1			4
C-SG-11	95 in.^{2}	3″ hollow blocks with cramps at horizontal joints; mortar on flange only at horizontal joints; reentrant space not filled.	—	2 hrs. 30 min.		1			$2^1/_2$
C-SG-12	120 in.^{2}	Same as C-95-SG-11 with $^1/_2$″ sanded gypsum plaster.	—	5 hrs.		1			5
C-SG-13	130 in.^{2}	2″ neat fibered gypsum reentrant space filled poured solid and reinforced with 4″ × 4″ wire mesh $^1/_2$″ sanded gypsum plaster.	—	7 hrs.		1			7

For SI: 1 inch = 25.4 mm, 1 square inch = 645 mm^2.

TABLE 2.4
TIMBER COLUMNS MINIMUM DIMENSION

ITEM CODE	MINIMUM DIMENSION	CONSTRUCTION DETAILS	PERFORMANCE		REFERENCE NUMBER			NOTES	REC. HOURS
			LOAD	TIME	PRE-BMS-92	BMS-92	POST-BMS-92		
C-11-TC-1	11″	With unprotected steel plate cap.	—	30 min.		1		1, 2	$^1/_2$
C-11-TC-2	11″	With unprotected cast iron cap and pintle.	—	45 min.		1		1, 2	$^3/_4$
C-11-TC-3	11″	With concrete or protected steel or cast iron cap.	—	1 hr. 15 min.		1		1, 2	$1^1/_4$
C-11-TC-4	11″	With $^3/_8$″ gypsum wallboard over column and over cast iron or steel cap.	—	1 hr. 15 min.		1		1, 2	$1^1/_4$
C-11-TC-5	11″	With 1″ portland cement plaster on wire lath over column and over cast iron or steel cap; $^3/_4$″ air space.	—	2 hrs.		1		1, 2	2

For SI: 1 inch = 25.4 mm, 1 square inch = 645 mm^2.

Notes:

1. Minimum area: 120 square inches.
2. Type of wood: long leaf pine or Douglas fir.

TABLE 2.5.1.1
STEEL COLUMNS—CONCRETE ENCASEMENTS
MINIMUM DIMENSION LESS THAN 6″

ITEM CODE	MINIMUM DIMENSION	CONSTRUCTION DETAILS	PERFORMANCE		REFERENCE NUMBER			NOTES	REC. HOURS
			LOAD	TIME	PRE-BMS-92	BMS-92	POST-BMS-92		
C-5-SC-1	5″	5″ × 6″ outer dimensions; 4″ × 3″ × 10 lbs. “H” beam; Protection: gravel concrete (4900 psi) 6″ × 4″ - 13 SWG mesh.	12 tons	1 hr. 29 min.			7	1	$1^1/_4$

For SI: 1 inch = 25.4 mm, 1 pound per square inch = 0.00689 MPa, 1 ton = 8.896 kN.

Notes:

1. Failure mode—collapse.

INTERNATIONAL CODE COUNCIL®
Copyright © 2015 ICC. ALL RIGHTS RESERVED. Accessed by David Dammon on Jun 21, 2017 12:30:52 PM pursuant to License Agreement with ICC. No further reproduction or distribution authorized. ANY UNAUTHORIZED REPRODUCTION OR DISTRIBUTION IS A VIOLATION OF THE FEDERAL COPYRIGHT ACT AND THE LICENSE AGREEMENT, AND SUBJECT TO CIVIL AND CRIMINAL PENALTIES THEREUNDER.

TABLE 2.5.1.2
STEEL COLUMNS—CONCRETE ENCASEMENTS
6″ TO LESS THAN 8″ THICK

ITEM CODE	MINIMUM DIMENSION	CONSTRUCTION DETAILS	PERFORMANCE		REFERENCE NUMBER			NOTES	REC. HOURS
			LOAD	TIME	PRE-BMS-92	BMS-92	POST-BMS-92		
C-7-SC-1	7″	7″ × 8″ column; 4″ × 3″ × 10 lbs. “H” beam; Protection: brick filled concrete (6220 psi); 6″ × 4″ mesh - 13 SWG; 1″ below column surface.	12 tons	2 hrs. 46 min.			7	1	$2^3/_4$
C-7-SC-2	7″	7″ × 8″ column; 4″ × 3″ × 10 lbs. “H” beam; Protection: gravel concrete (5140 psi); 6″ × 4″ 13 SWG mesh 1″ below surface.	12 tons	3 hrs. 1 min.			7	1	3
C-7-SC-3	7″	7″ × 8″ column; 4″ × 3″ × 10 lbs. “H” beam; Protection: concrete (4540 psi); 6″ × 4″ - 13 SWG mesh; 1″ below column surface.	12 tons	3 hrs. 9 min.			7	1	3
C-7-SC-4	7″	7″ × 8″ column; 4″ × 3″ × 10 lbs. “H” beam; Protection: gravel concrete (5520 psi); 4″ × 4″ mesh; 16 SWG.	12 tons	2 hrs. 50 min.			7	1	$2^3/_4$

For SI: 1 inch = 25.4 mm, 1 pound per square inch = 0.00689 MPa, 1 ton = 8.896 kN.

Notes:

1. Failure mode—collapse.

INTERNATIONAL CODE COUNCIL®
Copyright © 2015 ICC. ALL RIGHTS RESERVED. Accessed by David Dammon on Jun 21, 2017 12:30:52 PM pursuant to License Agreement with ICC. No further reproduction or distribution authorized. ANY UNAUTHORIZED REPRODUCTION OR DISTRIBUTION IS A VIOLATION OF THE FEDERAL COPYRIGHT ACT AND THE LICENSE AGREEMENT, AND SUBJECT TO CIVIL AND CRIMINAL PENALTIES THEREUNDER.

FIGURE 2.5.1.3
STEEL COLUMNS—CONCRETE ENCASEMENTS
MINIMUM DIMENSION 8″ TO LESS THAN 10″

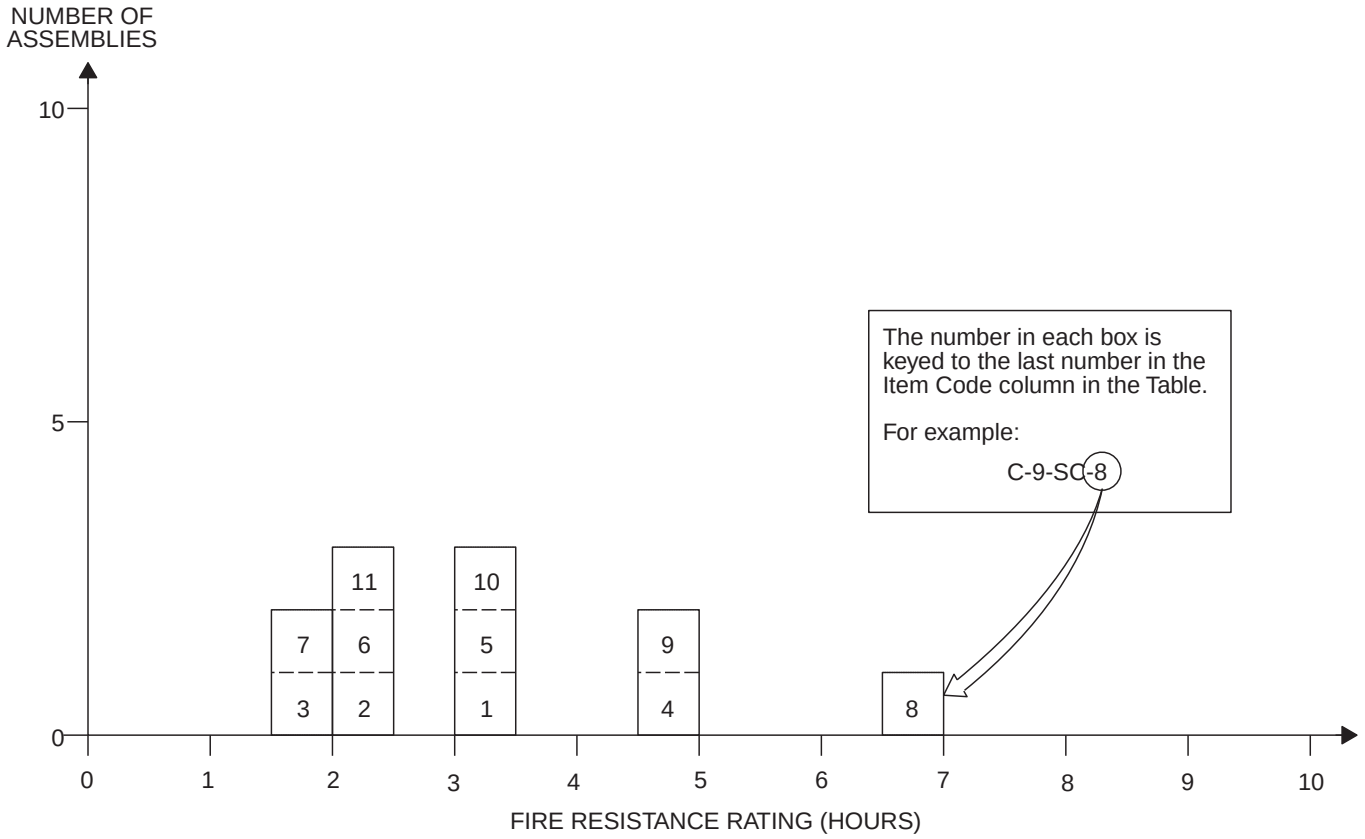

TABLE 2.5.1.3
STEEL COLUMNS—CONCRETE ENCASEMENTS
MINIMUM DIMENSION 8″ TO LESS THAN 10″

ITEM CODE	MINIMUM DIMENSION	CONSTRUCTION DETAILS	PERFORMANCE		REFERENCE NUMBER			NOTES	REC. HOURS
			LOAD	TIME	PRE-BMS-92	BMS-92	POST-BMS-92		
C-8-SC-1	$8^1/_2$″	$8^1/_2$″ × 10″ column; 6″ × $4^1/_2$″ × 20 lbs. “H” beam; Protection: gravel concrete (5140 psi); 6″ × 4″ - 13 SWG mesh.	39 tons	3 hrs. 8 min.			7	1	3
C-8-SC-2	8″	8″ × 10″ column; 8″ × 6″ × 35 lbs. “I” beam; Protection: gravel concrete (4240 psi); 6″ × 4″ - 13 SWG mesh; $^1/_2$″ cover.	90 tons	2 hrs. 1 min.			7	1	2
C-8-SC-3	8″	8″ × 10″ concrete encased column; 8″ × 6″ × 35 lbs. “H” beam; protection: aggregate concrete (3750 psi); 4″ mesh - 16 SWG reinforcing $^1/_2$″ below column surface.	90 tons	1 hr. 58 min.			7	1	$1^3/_4$
C-8-SC-4	8″	6″ × 6″ steel column; 2″ outside protection; Group I.	—	5 hrs.		1		2	5
C-8-SC-5	8″	6″ × 6″ steel column; 2″ outside protection; Group II.	—	3 hrs. 30 min.		1		2	$3^1/_2$
C-8-SC-6	8″	6″ × 6″ steel column; 2″ outside protection; Group III.	—	2 hrs. 30 min.		1		2	$2^1/_2$

(continued)

INTERNATIONAL CODE COUNCIL®
Copyright © 2015 ICC. ALL RIGHTS RESERVED. Accessed by David Dammon on Jun 21, 2017 12:30:52 PM pursuant to License Agreement with ICC. No further reproduction or distribution authorized. ANY UNAUTHORIZED REPRODUCTION OR DISTRIBUTION IS A VIOLATION OF THE FEDERAL COPYRIGHT ACT AND THE LICENSE AGREEMENT, AND SUBJECT TO CIVIL AND CRIMINAL PENALTIES THEREUNDER.

TABLE 2.5.1.3—continued
STEEL COLUMNS—CONCRETE ENCASEMENTS
MINIMUM DIMENSION 8″ TO LESS THAN 10″

ITEM CODE	MINIMUM DIMENSION	CONSTRUCTION DETAILS	PERFORMANCE		REFERENCE NUMBER			NOTES	REC. HOURS
			LOAD	TIME	PRE-BMS-92	BMS-92	POST-BMS-92		
C-8-SC-7	8″	6″ × 6″ steel column; 2″ outside protection; Group IV.	—	1 hr. 45 min.		1		2	$1^{3}/_{4}$
C-9-SC-8	9″	6″ × 6″ steel column; 3″ outside protection; Group I.	—	7 hrs.		1		2	7
C-9-SC-9	9″	6″ × 6″ steel column; 3″ outside protection; Group II.	—	5 hrs.		1		2	5
C-9-SC-10	9″	6″ × 6″ steel column; 3″ outside protection; Group III.	—	3 hrs. 30 min.		1		2	$3^{1}/_{2}$
C-9-SC-11	9″	6″ × 6″ steel column; 3″ outside protection; Group IV.	—	2 hrs. 30 min.		1		2	$2^{1}/_{2}$

For SI: 1 inch = 25.4 mm, 1 pound = 0.004448 kN, 1 pound per square inch = 0.00689 MPa, 1 pound per square yard = 5.3 N/m^2, 1 ton = 8.896 kN.

Notes:

1. Failure mode—collapse.
2. Group I: includes concrete having calcareous aggregate containing a combined total of not more than 10 percent of quartz, chert and flint for the coarse aggregate.

   Group II: includes concrete having trap-rock aggregate applied without metal ties and also concrete having cinder, sandstone or granite aggregate, if held in place with wire mesh or expanded metal having not larger than 4-inch mesh, weighing not less than 1.7 lbs./$yd.^2$, placed not more than 1 inch from the surface of the concrete.

   Group III: includes concrete having cinder, sandstone or granite aggregate tied with No. 5 gage steel wire, wound spirally over the column section on a pitch of 8 inches, or equivalent ties, and concrete having siliceous aggregates containing a combined total of 60 percent or more of quartz, chert and flint, if held in place with wire mesh or expanded metal having not larger than 4-inch mesh, weighing not less than 1.7 lbs./$yd.^2$, placed not more than 1 inch from the surface of the concrete.

   Group IV: includes concrete having siliceous aggregates containing a combined total of 60 percent or more of quartz, chert and flint, and tied with No. 5 gage steel wire wound spirally over the column section on a pitch of 8 inches, or equivalent ties.

INTERNATIONAL CODE COUNCIL®
Copyright © 2015 ICC. ALL RIGHTS RESERVED. Accessed by David Dammon on Jun 21, 2017 12:30:52 PM pursuant to License Agreement with ICC. No further reproduction or distribution authorized. ANY UNAUTHORIZED REPRODUCTION OR DISTRIBUTION IS A VIOLATION OF THE FEDERAL COPYRIGHT ACT AND THE LICENSE AGREEMENT, AND SUBJECT TO CIVIL AND CRIMINAL PENALTIES THEREUNDER.

FIGURE 2.5.1.4
STEEL COLUMNS—CONCRETE ENCASEMENTS
MINIMUM DIMENSION 10″ TO LESS THAN 12″

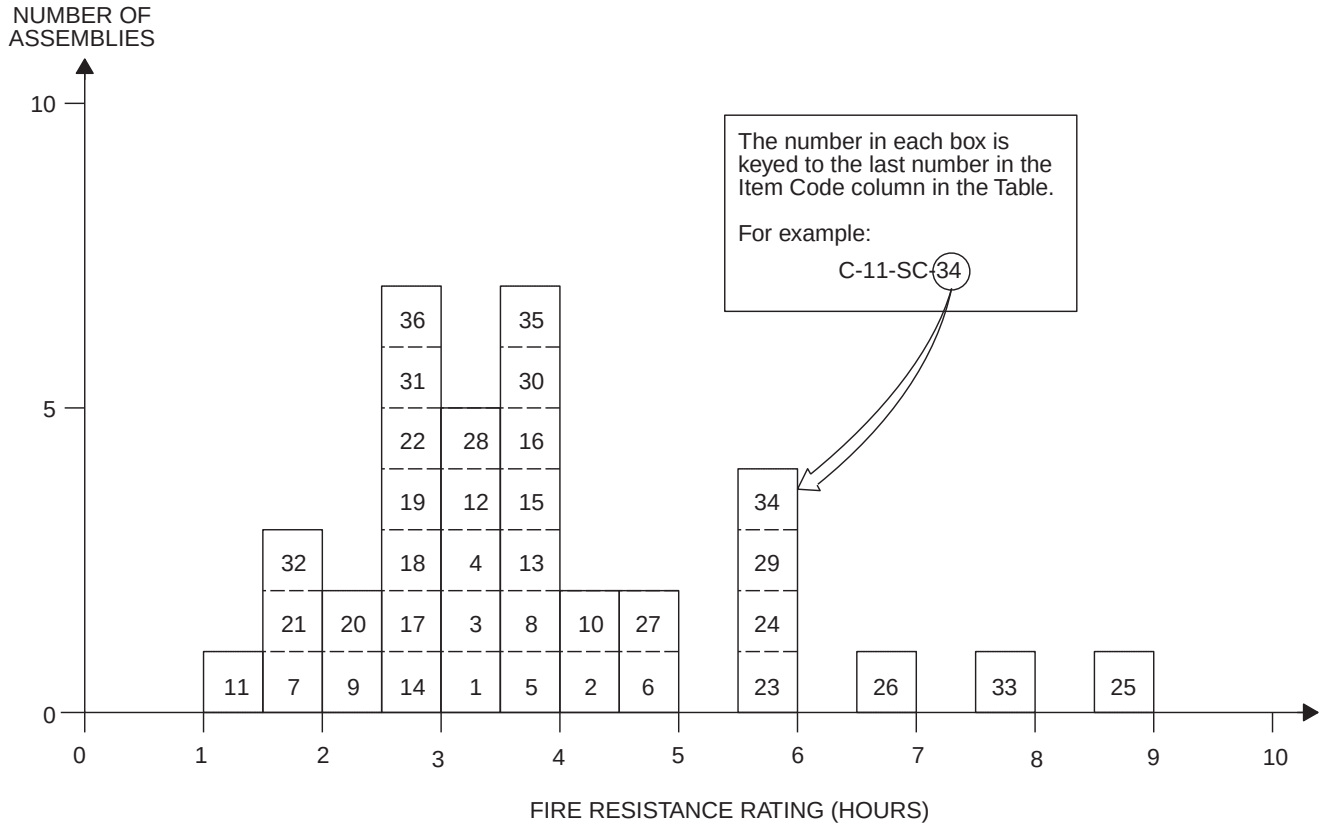

TABLE 2.5.1.4
STEEL COLUMNS—CONCRETE ENCASEMENTS
MINIMUM DIMENSION 10″ TO LESS THAN 12″

ITEM CODE	MINIMUM DIMENSION	CONSTRUCTION DETAILS	PERFORMANCE		REFERENCE NUMBER			NOTES	REC. HOURS
			LOAD	TIME	PRE-BMS-92	BMS-92	POST-BMS-92		
C-10-SC-1	10″	10″ × 12″ concrete encased steel column; 8″ × 6″ × 35 lbs. “H” beam; Protection: gravel aggregate concrete (3640 psi); Mesh 6″ × 4″ 13 SWG, 1″ below column surface.	90 tons	3 hrs. 7 min.			7	1,2	3
C-10-SC-2	10″	10″ × 16″ column; 8″ × 6″ × 35 lbs. “H” beam; Protection: clay brick concrete (3630 psi); 6″ × 4″ mesh; 13 SWG, 1″ below column surface.	90 tons	4 hrs. 6 min.			7	2	4
C-10-SC-3	10″	10″ × 12″ column; 8″ × 6″ × 35 lbs. “H” beam; Protection: crushed stone and sand concrete (3930 psi); 6″ × 4″ - 13 SWG mesh; 1″ below column surface.	90 tons	3 hrs. 17 min.			7	2	$3^1/_4$
C-10-SC-4	10″	10″ × 12″ column; 8″ × 6″ × 35 lbs. “H” beam; Protection: crushed basalt and sand concrete (4350 psi); 6″ × 4″ - 13 SWG mesh; 1″ below column surface.	90 tons	3 hrs. 22 min.			7	2	$3^1/_3$
C-10-SC-5	10″	10″ × 12″ column; 8″ × 6″ × 35 lbs. “H” beam; Protection: gravel aggregate concrete (5570 psi); 6″ × 4″ mesh; 13 SWG.	90 tons	3 hrs. 39 min.			7	2	$3^1/_2$
C-10-SC-6	10″	10″ × 16″ column; 8″ × 6″ × 35 lbs. “I” beam; Protection: gravel concrete (4950 psi); mesh; 6″ × 4″ 13 SWG 1″ below column surface.	90 tons	4 hrs. 32 min.			7	2	$4^1/_2$

(continued)

INTERNATIONAL CODE COUNCIL®
Copyright © 2015 ICC. ALL RIGHTS RESERVED. Accessed by David Dammon on Jun 21, 2017 12:30:52 PM pursuant to License Agreement with ICC. No further reproduction or distribution authorized. ANY UNAUTHORIZED REPRODUCTION OR DISTRIBUTION IS A VIOLATION OF THE FEDERAL COPYRIGHT ACT AND THE LICENSE AGREEMENT, AND SUBJECT TO CIVIL AND CRIMINAL PENALTIES THEREUNDER.

TABLE 2.5.1.4—continued
STEEL COLUMNS—CONCRETE ENCASEMENTS
MINIMUM DIMENSION 10″ TO LESS THAN 12″

ITEM CODE	MINIMUM DIMENSION	CONSTRUCTION DETAILS	PERFORMANCE		REFERENCE NUMBER			NOTES	REC. HOURS
			LOAD	TIME	PRE-BMS-92	BMS-92	POST-BMS-92		
C-10-SC-7	10″	10″ × 12″ concrete encased steel column; 8″ × 6″ × 35 lbs. “H” beam; Protection: aggregate concrete (1370 psi); 6″ × 4″ mesh; 13 SWG reinforcing 1″ below column surface.	90 tons	2 hrs.			7	3, 4	2
C-10-SC-8	10″	10″ × 12″ concrete encased steel column; 8″ × 6″ × 35 lbs. “H” column; Protection: aggregate concrete (4000 psi); 13 SWG iron wire loosely around column at 6″ pitch about 2″ beneath column surface.	86 tons	3 hrs. 36 min.			7	2	$3^1/_2$
C-10-SC-9	10″	10″ × 12″ concrete encased steel column; 8″ × 6″ × 35 lbs. “H” beam; Protection: aggregate concrete (3290 psi); 2″ cover minimum.	86 tons	2 hrs. 8 min.			7	2	2
C-10-SC-10	10″	10″ × 14″ concrete encased steel column; 8″ × 6″ × 35 lbs. “H” column; Protection: crushed brick filled concrete (5310 psi); 6″ × 4″ mesh; 13 SWG reinforcement 1″ below column surface.	90 tons	4 hrs. 28 min.			7	2	$4^1/_3$
C-10-SC-11	10″	10″ × 14″ concrete encased column; 8″ × 6″ × 35 lbs. “H” beam; Protection: aggregate concrete (342 psi); 6″ × 4″ mesh; 13 SWG reinforcement 1″ below surface.	90 tons	1 hr. 2 min.			7	2	1
C-10-SC-12	10″	10″ × 12″ concrete encased steel column; 8″ × 6″ × 35 lbs. “H” beam; Protection: aggregate concrete (4480 psi); four $^3/_8$″ vertical bars at “H” beam edges with $^3/_{16}$″ spacers at beam surface at 3′ pitch and $^3/_{16}$″ binders at 10″ pitch; 2″ concrete cover.	90 tons	3 hrs. 2 min.			7	2	3
C-10-SC-13	10″	10″ × 12″ concrete encased steel column; 8″ × 6″ × 35 lbs. “H” beam; Protection: aggregate concrete (5070 psi); 6″ × 4″ mesh; 13 SWG reinforcing at 6″ beam sides wrapped and held by wire ties across (open) 8″ beam face; reinforcements wrapped in 6″ × 4″ mesh; 13 SWG throughout; $^1/_2$″ cover to column surface.	90 tons	3 hrs. 59 min.			7	2	$3^3/_4$
C-10-SC-14	10″	10″ × 12″ concrete encased steel column; 8″ × 6″ × 35 lbs. “H” beam; Protection: aggregate concrete (4410 psi); 6″ × 4″ mesh; 13 SWG reinforcement $1^1/_4$″ below column surface; $^1/_2$″ limestone cement plaster with $^3/_8$″ gypsum plaster finish.	90 tons	2 hrs. 50 min.			7	2	$2^3/_4$
C-10-SC-15	10″	10″ × 12″ concrete encased steel column; 8″ × 6″ × 35 lbs. “H” beam; Protection: crushed clay brick filled concrete (4260 psi); 6″ × 4″ mesh; 13 SWG reinforcing 1″ below column surface.	90 tons	3 hrs. 54 min.			7	2	$3^3/_4$
C-10-SC-16	10″	10″ × 12″ concrete encased steel column; 8″ × 6″ × 35 lbs. “H” beam; Protection: limestone aggregate concrete (4350 psi); 6″ × 4″ mesh; 13 SWG reinforcing 1″ below column surface.	90 tons	3 hrs. 54 min.			7	2	$3^3/_4$

(continued)

INTERNATIONAL CODE COUNCIL®
Copyright © 2015 ICC. ALL RIGHTS RESERVED. Accessed by David Dammon on Jun 21, 2017 12:30:52 PM pursuant to License Agreement with ICC. No further reproduction or distribution authorized. ANY UNAUTHORIZED REPRODUCTION OR DISTRIBUTION IS A VIOLATION OF THE FEDERAL COPYRIGHT ACT AND THE LICENSE AGREEMENT, AND SUBJECT TO CIVIL AND CRIMINAL PENALTIES THEREUNDER.

TABLE 2.5.1.4—continued
STEEL COLUMNS—CONCRETE ENCASEMENTS
MINIMUM DIMENSION 10″ TO LESS THAN 12″

ITEM CODE	MINIMUM DIMENSION	CONSTRUCTION DETAILS	PERFORMANCE		REFERENCE NUMBER			NOTES	REC. HOURS
			LOAD	TIME	PRE-BMS-92	BMS-92	POST-BMS-92		
C-10-SC-17	10″	10″ × 12″ concrete encased steel column; 8″ × 6″ × 35 lbs. “H” beam; Protection: limestone aggregate concrete (5300 psi); 6″ × 4″; 13 SWG wire mesh 1″ below column surface.	90 tons	3 hrs.			7	4, 5	3
C-10-SC-18	10″	10″ × 12″ concrete encased steel column; 8″ × 6″ × 35 lbs. “H” beam; Protection: limestone aggregate concrete (4800 psi) with 6″ × 4″; 13 SWG mesh reinforcement 1″ below surface.	90 tons	3 hrs.			7	4, 5	3
C-10-SC-19	10″	10″ × 14″ concrete encased steel column; 12″ × 8″ × 65 lbs. “H” beam; Protection: aggregate concrete (3900 psi); 4″ mesh; 16 SWG reinforcing $^1/_2$″ below column surface.	118 tons	2 hrs. 42 min.			7	2	2
C-10-SC-20	10″	10″ × 14″ concrete encased steel column; 12″ × 8″ × 65 lbs. “H” beam; Protection: aggregate concrete (4930 psi); 4″ mesh; 16 SWG reinforcing $^1/_2$″ below column surface.	177 tons	2 hrs. 8 min.			7	2	2
C-10-SC-21	$10^3/_8$″	$10^3/_8$″ × $12^3/_8$″ concrete encased steel column; 8″ × 6″ × 35 lbs. “H” beam; Protection: aggregate concrete (835 psi) with 6″ × 4″ mesh; 13 SWG reinforcing $1^3/_{16}$″ below column surface; $^3/_{16}$″ gypsum plaster finish.	90 tons	2 hrs.			7	3, 4	2
C-11-SC-22	11″	11″ × 13″ concrete encased steel column; 8″ × 6″ × 35 lbs. “H” beam; Protection: ″open texture″ brick filled concrete (890 psi) with 6″ × 4″ mesh; 13 SWG reinforcing $1^1/_2$″ below column surface; $^3/_8$″ lime cement plaster; $^1/_8$″ gypsum plaster finish.	90 tons	3 hrs.			7	6, 7	3
C-11-SC-23	11″	11″ × 12″ column; 4″ × 3″ × 10 lbs. “H” beam; gravel concrete (4550 psi); 6″ × 4″ - 13 SWG mesh reinforcing; 1″ below column surface.	12 tons	6 hrs.			7	7, 8	6
C-11-SC-24	11″	11″ × 12″ column; 4″ × 3″ × 10 lbs. “H” beam; Protection: gravel aggregate concrete (3830 psi); with 4″ × 4″ mesh; 16 SWG, 1″ below column surface.	16 tons	5 hrs. 32 min.			7	2	$5^1/_2$
C-10-SC-25	10″	6″ × 6″ steel column with 4″ outside protection; Group I.	—	9 hrs.		1		9	9
C-10-SC-26	10″	Description as per C-SC-25; Group II.	—	7 hrs.		1		9	7
C-10-SC-27	10″	Description as per C-10-SC-25; Group III.	—	5 hrs.		1		9	5
C-10-SC-28	10″	Description as per C-10-SC-25; Group IV.	—	3 hrs. 30 min.		1		9	$3^1/_2$
C-10-SC-29	10″	8″ × 8″ steel column with 2″ outside protection; Group I.	—	6 hrs.		1		9	6
C-10-SC-30	10″	Description as per C-10-SC-29; Group II.	—	4 hrs.		1		9	4
C-10-SC-31	10″	Description as per C-10-SC-29; Group III.	—	3 hrs.		1		9	3
C-10-SC-32	10″	Description as per C-10-SC-29; Group IV.	—	2 hrs.		1		9	2

(continued)

INTERNATIONAL CODE COUNCIL®
Copyright © 2015 ICC. ALL RIGHTS RESERVED. Accessed by David Dammon on Jun 21, 2017 12:30:52 PM pursuant to License Agreement with ICC. No further reproduction or distribution authorized. ANY UNAUTHORIZED REPRODUCTION OR DISTRIBUTION IS A VIOLATION OF THE FEDERAL COPYRIGHT ACT AND THE LICENSE AGREEMENT, AND SUBJECT TO CIVIL AND CRIMINAL PENALTIES THEREUNDER.

TABLE 2.5.1.4—continued
STEEL COLUMNS—CONCRETE ENCASEMENTS
MINIMUM DIMENSION 10″ TO LESS THAN 12″

ITEM CODE	MINIMUM DIMENSION	CONSTRUCTION DETAILS	PERFORMANCE		REFERENCE NUMBER			NOTES	REC. HOURS
			LOAD	TIME	PRE-BMS-92	BMS-92	POST-BMS-92		
C-11-SC-33	11″	8″ × 8″ steel column with 3″ outside protection; Group I.	—	8 hrs.		1		9	8
C-11-SC-34	11″	Description as per C-10-SC-33; Group II.	—	6 hrs.		1		9	6
C-11-SC-35	11″	Description as per C-10-SC-33; Group III.	—	4 hrs.		1		9	4
C-11-SC-36	11″	Description as per C-10-SC-33; Group IV.	—	3 hrs.		1		9	3

For SI: 1 inch = 25.4 mm, 1 pound = 0.004448 kN, 1 pound per square inch = 0.00689 MPa, 1 pound per square yard = 5.3 N/m^2, 1 ton = 8.896 kN.

Notes:

1. Tested under total restraint load to prevent expansion—minimum load 90 tons.
2. Failure mode—collapse.
3. Passed 2-hour fire test (Grade "C," British).
4. Passed hose stream test.
5. Column tested and passed 3-hour grade fire resistance (British).
6. Column passed 3-hour fire test.
7. Column collapsed during hose stream testing.
8. Column passed 6-hour fire test.
9. Group I: includes concrete having calcareous aggregate containing a combined total of not more than 10 percent of quartz, chert and flint for the coarse aggregate.

   Group II: includes concrete having trap-rock aggregate applied without metal ties and also concrete having cinder, sandstone or granite aggregate, if held in place with wire mesh or expanded metal having not larger than 4-inch mesh, weighing not less than 1.7 lbs./$yd.^2$, placed not more than 1 inch from the surface of the concrete.

   Group III: includes concrete having cinder, sandstone or granite aggregate tied with No. 5 gage steel wire, wound spirally over the column section on a pitch of 8 inches, or equivalent ties, and concrete having siliceous aggregates containing a combined total of 60 percent or more of quartz, chert and flint, if held in place with wire mesh or expanded metal having not larger than 4-inch mesh, weighing not less than 1.7 lbs./$yd.^2$, placed not more than 1 inch from the surface of the concrete.

   Group IV: includes concrete having siliceous aggregates containing a combined total of 60 percent or more of quartz, chert and flint, and tied with No. 5 gage steel wire wound spirally over the column section on a pitch of 8 inches, or equivalent ties.

INTERNATIONAL CODE COUNCIL®
Copyright © 2015 ICC. ALL RIGHTS RESERVED. Accessed by David Dammon on Jun 21, 2017 12:30:52 PM pursuant to License Agreement with ICC. No further reproduction or distribution authorized. ANY UNAUTHORIZED REPRODUCTION OR DISTRIBUTION IS A VIOLATION OF THE FEDERAL COPYRIGHT ACT AND THE LICENSE AGREEMENT, AND SUBJECT TO CIVIL AND CRIMINAL PENALTIES THEREUNDER.

FIGURE 2.5.1.5
STEEL COLUMNS—CONCRETE ENCASEMENTS
MINIMUM DIMENSION 12″ TO LESS THAN 14″

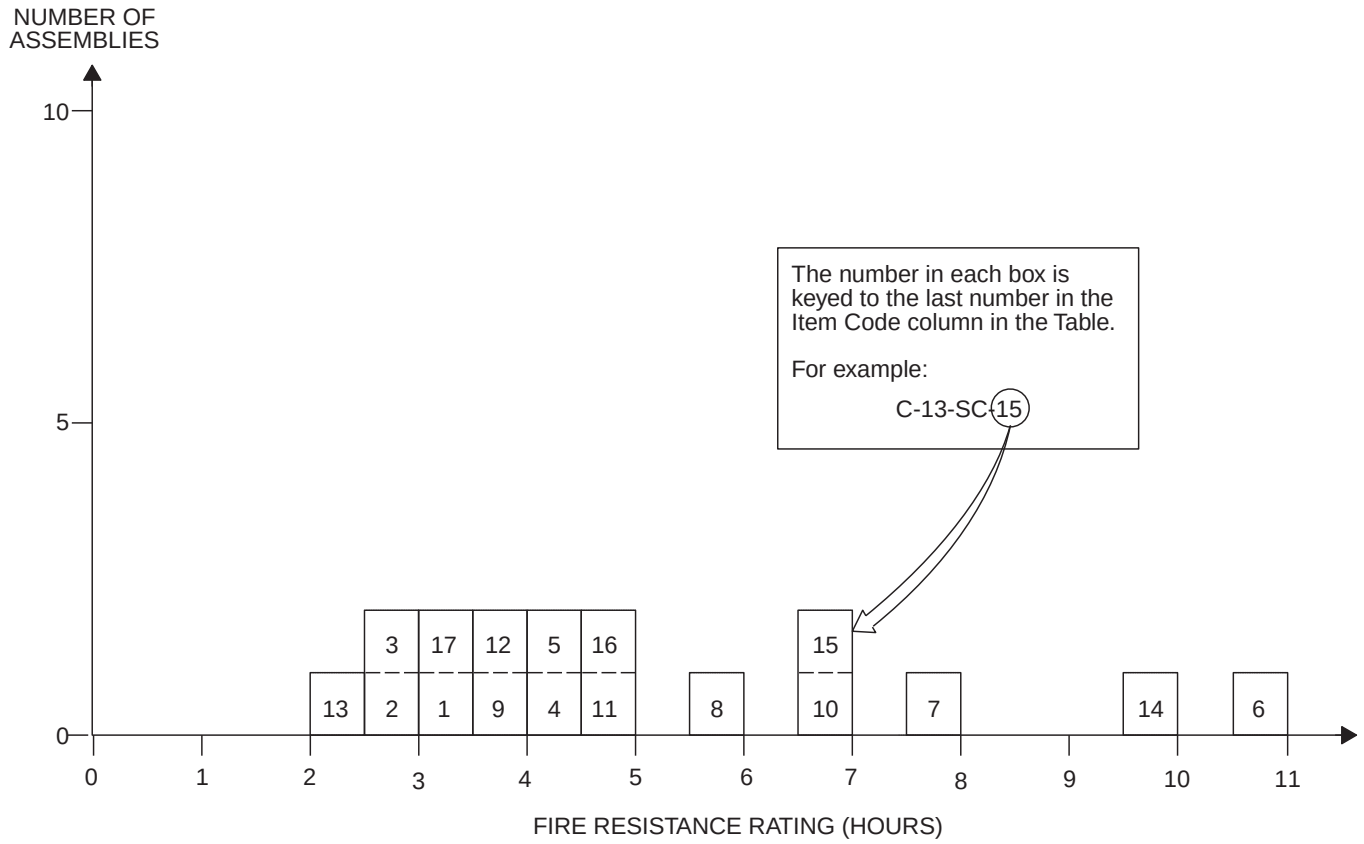

TABLE 2.5.1.5
STEEL COLUMNS—CONCRETE ENCASEMENTS
MINIMUM DIMENSION 12″ TO LESS THAN 14″

ITEM CODE	MINIMUM DIMENSION	CONSTRUCTION DETAILS	PERFORMANCE		REFERENCE NUMBER			NOTES	REC. HOURS
			LOAD	TIME	PRE-BMS-92	BMS-92	POST-BMS-92		
C-12-SC-1	12″	12″ × 14″ concrete encased steel column; 8″ × 6″ × 35 lbs. “H” beam; Protection: aggregate concrete (4150 psi) with 4″ mesh; 16 SWG reinforcing 1″ below column surface.	120 tons	3 hrs. 24 min.			7	1	$3^1/_3$
C-12-SC-2	12″	12″ × 16″ concrete encased column; 8″ × 6″ × 35 lbs. “H” beam; Protection: aggregate concrete (4300 psi) with 4″ mesh; 16 SWG reinforcing 1″ below column surface.	90 tons	2 hrs. 52 min.			7	1	$2^3/_4$
C-12-SC-3	12″	12″ × 16″ concrete encased steel column; 12″ × 8″ × 65 lbs. “H” column; Protection: gravel aggregate concrete (3550 psi) with 4″ mesh; 16 SWG reinforcement 1″ below column surface.	177 tons	2 hrs. 31 min.			7	1	$2^1/_2$
C-12-SC-4	12″	12″ × 16″ concrete encased column; 12″ × 8″ × 65 lbs. “H” beam; Protection: aggregate concrete (3450 psi) with 4″ mesh; 16 SWG reinforcement 1″ below column surface.	118 tons	4 hrs. 4 min.			7	1	4

(continued)

INTERNATIONAL CODE COUNCIL®
Copyright © 2015 ICC. ALL RIGHTS RESERVED. Accessed by David Dammon on Jun 21, 2017 12:30:52 PM pursuant to License Agreement with ICC. No further reproduction or distribution authorized. ANY UNAUTHORIZED REPRODUCTION OR DISTRIBUTION IS A VIOLATION OF THE FEDERAL COPYRIGHT ACT AND THE LICENSE AGREEMENT, AND SUBJECT TO CIVIL AND CRIMINAL PENALTIES THEREUNDER.

TABLE 2.5.1.5
STEEL COLUMNS—CONCRETE ENCASEMENTS
MINIMUM DIMENSION 12″ TO LESS THAN 14″

ITEM CODE	MINIMUM DIMENSION	CONSTRUCTION DETAILS	PERFORMANCE		REFERENCE NUMBER			NOTES	REC. HOURS
			LOAD	TIME	PRE-BMS-92	BMS-92	POST-BMS-92		
C-12-SC-5	$12^1/_2$″	$12^1/_2$″ × 14″ column; 6″ × $4^1/_2$″ × 20 lbs. "H" beam; Protection: gravel aggregate concrete (3750 psi) with 4″ × 4″ mesh; 16 SWG reinforcing 1″ below column surface.	52 tons	4 hrs. 29 min.			7	1	$4^1/_3$
C-12-SC-6	12″	8″ × 8″ steel column; 2″ outside protection; Group I.	—	11 hrs.			1	2	11
C-12-SC-7	12″	Description as per C-12-SC-6; Group II.	—	8 hrs.		1		2	8
C-12-SC-8	12″	Description as per C-12-SC-6; Group III.	—	6 hrs.		1		2	6
C-12-SC-9	12″	Description as per C-12-SC-6; Group IV.	—	4 hrs.		1		2	4
C-12-SC-10	12″	10″ × 10″ steel column; 2″ outside protection; Group I.	—	7 hrs.		1		2	7
C-12-SC-11	12″	Description as per C-12-SC-10; Group II.	—	5 hrs.		1		2	5
C-12-SC-12	12″	Description as per C-12-SC-10; Group III.	—	4 hrs.		1		2	4
C-12-SC-13	12″	Description as per C-12-SC-10; Group IV.	—	2 hrs. 30 min.		1		2	$2^1/_2$
C-13-SC-14	13″	10″ × 10″ steel column; 3″ outside protection; Group I.	—	10 hrs.		1		2	10
C-13-SC-15	13″	Description as per C-12-SC-14; Group II.	—	7 hrs.		1		2	7
C-13-SC-16	13″	Description as per C-12-SC-14; Group III.	—	5 hrs.		1		2	5
C-13-SC-17	13″	Description as per C-12-SC-14; Group IV.	—	3 hrs. 30 min.		1		2	$3^1/_2$

For SI: 1 inch = 25.4 mm, 1 pound = 0.004448 kN, 1 pound per square inch = 0.00689 MPa, 1 pound per square yard = 5.3 N/m^2, 1 ton = 8.896 kN.

Notes:

1. Failure mode—collapse.
2. Group I: includes concrete having calcareous aggregate containing a combined total of not more than 10 percent of quartz, chert and flint for the coarse aggregate.

   Group II: includes concrete having trap-rock aggregate applied without metal ties and also concrete having cinder, sandstone or granite aggregate, if held in place with wire mesh or expanded metal having not larger than 4-inch mesh, weighing not less than 1.7 lbs./yd.^{2}, placed not more than 1 inch from the surface of the concrete.

   Group III: includes concrete having cinder, sandstone or granite aggregate tied with No. 5 gage steel wire, wound spirally over the column section on a pitch of 8 inches, or equivalent ties, and concrete having siliceous aggregates containing a combined total of 60 percent or more of quartz, chert and flint, if held in place with wire mesh or expanded metal having not larger than 4-inch mesh, weighing not less than 1.7 lbs./yd.^{2}, placed not more than 1 inch from the surface of the concrete.

   Group IV: includes concrete having siliceous aggregates containing a combined total of 60 percent or more of quartz, chert and flint, and tied with No. 5 gage steel wire wound spirally over the column section on a pitch of 8 inches, or equivalent ties.

INTERNATIONAL CODE COUNCIL®
Copyright © 2015 ICC. ALL RIGHTS RESERVED. Accessed by David Dammon on Jun 21, 2017 12:30:52 PM pursuant to License Agreement with ICC. No further reproduction or distribution authorized. ANY UNAUTHORIZED REPRODUCTION OR DISTRIBUTION IS A VIOLATION OF THE FEDERAL COPYRIGHT ACT AND THE LICENSE AGREEMENT, AND SUBJECT TO CIVIL AND CRIMINAL PENALTIES THEREUNDER.

FIGURE 2.5.1.6
STEEL COLUMNS—CONCRETE ENCASEMENTS
MINIMUM DIMENSION 14″ TO LESS THAN 16″

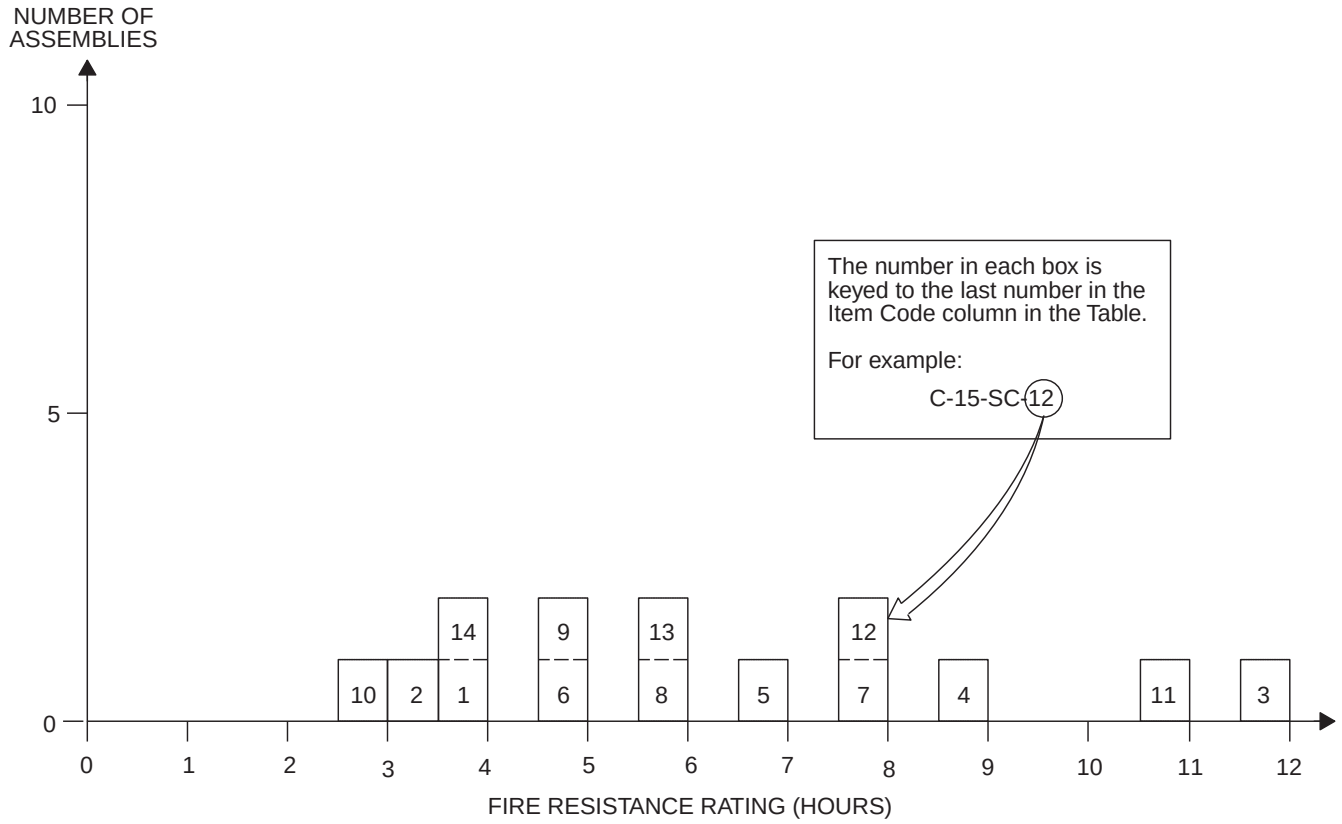

TABLE 2.5.1.6
STEEL COLUMNS—CONCRETE ENCASEMENTS
MINIMUM DIMENSION 14″ TO LESS THAN 16″

ITEM CODE	MINIMUM DIMENSION	CONSTRUCTION DETAILS	PERFORMANCE		REFERENCE NUMBER			NOTES	REC. HOURS
			LOAD	TIME	PRE-BMS-92	BMS-92	POST-BMS-92		
C-14-SC-1	14″	24″ × 16″ concrete encased steel column; 8″ × 6″ × 35 lbs. “H” column; Protection: aggregate concrete (4240 psi); 4″ mesh - 16 SWG reinforcing 1″ below column surface.	90 tons	3 hrs. 40 min.			7	1	3
C-14-SC-2	14″	14″ × 18″ concrete encased steel column; 12″ × 8″ × 65 lbs. “H” beam; Protection: gravel aggregate concrete (4000 psi) with 4″ - 16 SWG wire mesh reinforcement 1″ below column surface.	177 tons	3 hrs. 20 min.			7	1	3
C-14-SC-3	14″	10″ × 10″ steel column; 4″ outside protection; Group I.	—	12 hrs.		1		2	12
C-14-SC-4	14″	Description as per C-14-SC-3; Group II.	—	9 hrs.		1		2	9
C-14-SC-1	14″	24″ × 16″ concrete encased steel column; 8″ × 6″ × 35 lbs. “H” column; Protection: aggregate concrete (4240 psi); 4″ mesh - 16 SWG reinforcing 1″ below column surface.	90 tons	3 hrs. 40 min.			7	1	3

(continued)

INTERNATIONAL CODE COUNCIL®
Copyright © 2015 ICC. ALL RIGHTS RESERVED. Accessed by David Dammon on Jun 21, 2017 12:30:52 PM pursuant to License Agreement with ICC. No further reproduction or distribution authorized. ANY UNAUTHORIZED REPRODUCTION OR DISTRIBUTION IS A VIOLATION OF THE FEDERAL COPYRIGHT ACT AND THE LICENSE AGREEMENT, AND SUBJECT TO CIVIL AND CRIMINAL PENALTIES THEREUNDER.

ABLE 2.5.1.6—continued
STEEL COLUMNS—CONCRETE ENCASEMENTS
MINIMUM DIMENSION 14″ TO LESS THAN 16″

ITEM CODE	MINIMUM DIMENSION	CONSTRUCTION DETAILS	PERFORMANCE		REFERENCE NUMBER			NOTES	REC. HOURS
			LOAD	TIME	PRE-BMS-92	BMS-92	POST-BMS-92		
C-14-SC-2	14″	14″ × 18″ concrete encased steel column; 12″ × 8″ × 65 lbs. “H” beam; Protection: gravel aggregate concrete (4000 psi) with 4″-16 SWG wire mesh reinforcement 1″ below column surface.	177 tons	3 hrs. 20 min.			7	1	3
C-14-SC-3	14″	10″ × 10″ steel column; 4″ outside protection; Group I.	—	12 hrs.		1		2	12
C-14-SC-4	14″	Description as per C-14-SC-3; Group II.	—	9 hrs.		1		2	9
C-14-SC-5	14″	Description as per C-14-SC-3; Group III.	—	7 hrs.		1		2	7
C-14-SC-6	14″	Description as per C-14-SC-3; Group IV.	—	5 hrs.		1		2	5
C-14-SC-7	14″	12″ × 12″ steel column; 2″ outside protection; Group I.	—	8 hrs.		1		2	8
C-14-SC-8	14″	Description as per C-14-SC-7; Group II.	—	6 hrs.		1		2	6
C-14-SC-9	14″	Description as per C-14-SC-7; Group III.	—	5 hrs.		1		2	5
C-14-SC-10	14″	Description as per C-14-SC-7; Group IV	—	3 hrs.		1		2	3
C-15-SC-11	15″	12″ × 12″ steel column; 3″ outside protection; Group I.	—	11 hrs.		1		2	11
C-15-SC-12	15″	Description as per C-15-SC-11; Group II.	—	8 hrs.		1		2	8
C-15-SC-13	15″	Description as per C-15-SC-11; Group III.	—	6 hrs.		1		2	6
C-15-SC-14	15″	Description as per C-15-SC-11; Group IV.	—	4 hrs.		1		2	4

For SI: 1 inch = 25.4 mm, 1 pound = 0.004448 kN, 1 pound per square inch = 0.00689 MPa, 1 pound per square yard = 5.3 N/m^2, 1 ton = 8.896 kN.

Notes:

1. Collapse.
2. Group I: includes concrete having calcareous aggregate containing a combined total of not more than 10 percent of quartz, chert and flint for the coarse aggregate.

   Group II: includes concrete having trap-rock aggregate applied without metal ties and also concrete having cinder, sandstone or granite aggregate, if held in place with wire mesh or expanded metal having not larger than 4-inch mesh, weighing not less than 1.7 lbs./yd.^{2}, placed not more than 1 inch from the surface of the concrete.

   Group III: includes concrete having cinder, sandstone or granite aggregate tied with No. 5 gage steel wire, wound spirally over the column section on a pitch of 8 inches, or equivalent ties, and concrete having siliceous aggregates containing a combined total of 60 percent or more of quartz, chert and flint, if held in place with wire mesh or expanded metal having not larger than 4-inch mesh, weighing not less than 1.7 lbs./yd.^{2}, placed not more than 1 inch from the surface of the concrete.

   Group IV: includes concrete having siliceous aggregates containing a combined total of 60 percent or more of quartz, chert and flint, and tied with No. 5 gage steel wire wound spirally over the column section on a pitch of 8 inches, or equivalent ties.

INTERNATIONAL CODE COUNCIL®
Copyright © 2015 ICC. ALL RIGHTS RESERVED. Accessed by David Dammon on Jun 21, 2017 12:30:52 PM pursuant to License Agreement with ICC. No further reproduction or distribution authorized. ANY UNAUTHORIZED REPRODUCTION OR DISTRIBUTION IS A VIOLATION OF THE FEDERAL COPYRIGHT ACT AND THE LICENSE AGREEMENT, AND SUBJECT TO CIVIL AND CRIMINAL PENALTIES THEREUNDER.

TABLE 2.5.1.7
STEEL COLUMNS—CONCRETE ENCASEMENTS
MINIMUM DIMENSION 16″ TO LESS THAN 18″

ITEM CODE	MINIMUM DIMENSION	CONSTRUCTION DETAILS	PERFORMANCE		REFERENCE NUMBER			NOTES	REC. HOURS
			LOAD	TIME	PRE-BMS-92	BMS-92	POST-BMS-92		
C-16-SC-13	16″	12″ × 12″ steel column; 4″ outside protection; Group I.	—	14 hrs.		1		1	14
C-16-SC-2	16″	Description as per C-16-SC-1; Group II.	—	10 hrs.		1		1	10
C-16-SC-3	16″	Description as per C-16-SC-1; Group III.	—	8 hrs.		1		1	8
C-16-SC-4	16″	Description as per C-16-SC-1; Group IV.	—	5 hrs.		1		1	5

For SI: 1 inch = 25.4 mm.

Notes:

1. Group I: includes concrete having calcareous aggregate containing a combined total of not more than 10 percent of quartz, chert and flint for the coarse aggregate.
   Group II: includes concrete having trap-rock aggregate applied without metal ties and also concrete having cinder, sandstone or granite aggregate, if held in place with wire mesh or expanded metal having not larger than 4-inch mesh, weighing not less than 1.7 lbs./yd.^{2}, placed not more than 1 inch from the surface of the concrete.
   Group III: includes concrete having cinder, sandstone or granite aggregate tied with No. 5 gage steel wire, wound spirally over the column section on a pitch of 8 inches, or equivalent ties, and concrete having siliceous aggregates containing a combined total of 60 percent or more of quartz, chert and flint, if held in place with wire mesh or expanded metal having not larger than 4-inch mesh, weighing not less than 1.7 lbs./yd.^{2}, placed not more than 1 inch from the surface of the concrete.
   Group IV: includes concrete having siliceous aggregates containing a combined total of 60 percent or more of quartz, chert and flint, and tied with No. 5 gage steel wire wound spirally over the column section on a pitch of 8 inches, or equivalent ties.

TABLE 2.5.2.1
STEEL COLUMNS—BRICK AND BLOCK ENCASEMENTS
MINIMUM DIMENSION 10″ TO LESS THAN 12″

ITEM CODE	MINIMUM DIMENSION	CONSTRUCTION DETAILS	PERFORMANCE		REFERENCE NUMBER			NOTES	REC. HOURS
			LOAD	TIME	PRE-BMS-92	BMS-92	POST-BMS-92		
C-10-SB-1	$10^1/_2$″	$10^1/_2$″ × 13″ brick encased steel columns; 8″ × 6″ × 35 lbs. “H” beam; Protection. Fill of broken brick and mortar; 2″ brick on edge; joints broken in alternate courses; cement-sand grout; 13 SWG wire reinforcement in every third horizontal joint.	90 tons	3 hrs. 6 min.			7	1	3
C-10-SB-2	$10^1/_2$″	$10^1/_2$″ × 13″ brick encased steel columns; 8″ × 6″ × 35 lbs. “H” beam; Protection: 2″ brick; joints broken in alternate courses; cement-sand grout; 13 SWG iron wire reinforcement in alternate horizontal joints.	90 tons	2 hrs.			7	2, 3, 4	2
C-10-SB-3	10″	10″ × 12″ block encased columns; 8″ × 6″ × 35 lbs. “H” beam; Protection: 2″ foamed slag concrete blocks; 13 SWG wire at each horizontal joint; mortar at each joint.	90 tons	2 hrs.			7	5	2
C-10-SB-4	$10^1/_2$″	$10^1/_2$″ × 12″ block encased steel columns; 8″ × 6″ × 35 lbs. “H” beam; Protection: gravel aggregate concrete fill (unconsolidated) 2″ thick hollow clay tiles with mortar at edges.	86 tons	56 min.			7	1	$^3/_4$
C-10-SB-5	$10^1/_2$″	$10^1/_2$″ × 12″ block encased steel columns; 8″ × 6″ × 35 lbs. “H” beam; Protection: 2″ hollow clay tiles with mortar at edges.	86 tons	22 min.			7	1	$^1/_4$

For SI: 1 inch = 25.4 mm, 1 pound = 0.004448 kN, 1 ton = 8.896 kN.

Notes:

1. Failure mode—collapse.
2. Passed 2-hour fire test (Grade “C” - British).
3. Passed hose stream test.
4. Passed reload test.
5. Passed 2-hour fire exposure but collapsed immediately following hose stream test.

INTERNATIONAL CODE COUNCIL®
Copyright © 2015 ICC. ALL RIGHTS RESERVED. Accessed by David Dammon on Jun 21, 2017 12:30:52 PM pursuant to License Agreement with ICC. No further reproduction or distribution authorized. ANY UNAUTHORIZED REPRODUCTION OR DISTRIBUTION IS A VIOLATION OF THE FEDERAL COPYRIGHT ACT AND THE LICENSE AGREEMENT, AND SUBJECT TO CIVIL AND CRIMINAL PENALTIES THEREUNDER.

TABLE 2.5.2.2
STEEL COLUMNS—BRICK AND BLOCK ENCASEMENTS
MINIMUM DIMENSION 12″ TO LESS THAN 14″

ITEM CODE	MINIMUM DIMENSION	CONSTRUCTION DETAILS	PERFORMANCE		REFERENCE NUMBER			NOTES	REC. HOURS
			LOAD	TIME	PRE-BMS-92	BMS-92	POST-BMS-92		
C-12-SB-1	12″	12″ × 15″ brick encased steel columns; 8″ × 6″ × 35 lbs. “H” beam; Protection: $2^5/_8$″ thick brick; joints broken in alternate courses; cement-sand grout; fill of broken brick and mortar.	90 tons	1 hr. 49 min.			7	1	$1^3/_4$

For SI: 1 inch = 25.4 mm, 1 pound = 0.004448 kN, 1 ton = 8.896 kN.

Notes:

1. Failure mode—collapse.

TABLE 2.5.2.3
STEEL COLUMNS—BRICK AND BLOCK ENCASEMENTS
MINIMUM DIMENSION 14″ TO LESS THAN 16″

ITEM CODE	MINIMUM DIMENSION	CONSTRUCTION DETAILS	PERFORMANCE		REFERENCE NUMBER			NOTES	REC. HOURS
			LOAD	TIME	PRE-BMS-92	BMS-92	POST-BMS-92		
C-15-SB-1	15″	15″ × 17″ brick encased steel columns; 8″ × 6″ × 35 lbs. “H” beam; Protection: $4^1/_2$″ thick brick; joints broken in alternate courses; cement-sand grout; fill of broken brick and mortar.	45 tons	6 hrs.			7	1	6
C-15-SB-2	15″	15″ × 17″ brick encased steel columns; 8″ × 6″ × 35 lbs. “H” beam; Protection. Fill of broken brick and mortar; $4^1/_2$″ brick; joints broken in alternate courses; cement-sand grout.	86 tons	6 hrs.			7	2, 3, 4	6
C-15-SB-3	15″	15″ × 18″ brick encased steel columns; 8″ × 6″ × 35 lbs. “H” beam; Protection: $4^1/_2$″ brick work; joints alternating; cement-sand grout.	90 tons	4 hrs.			7	5, 6	4
C-15-SB-4	14″	14″ × 16″ block encased steel columns; 8″ × 6″ × 35 lbs. “H” beam; Protection: 4″ thick foam slag concrete blocks; 13 SWG wire reinforcement in each horizontal joint; mortar in joints.	90 tons	5 hrs. 52 min.			7	7	$4^3/_4$

For SI: 1 inch = 25.4 mm, 1 pound = 0.004448 kN, 1 ton = 8.896 kN.

Notes:

1. Only a nominal load was applied to specimen.
2. Passed 6-hour fire test (Grade “A” - British).
3. Passed (6 minute) hose stream test.
4. Reload not specified.
5. Passed 4-hour fire exposure.
6. Failed by collapse between first and second minute of hose stream exposure.
7. Mode of failure-collapse.

INTERNATIONAL CODE COUNCIL®
Copyright © 2015 ICC. ALL RIGHTS RESERVED. Accessed by David Dammon on Jun 21, 2017 12:30:52 PM pursuant to License Agreement with ICC. No further reproduction or distribution authorized. ANY UNAUTHORIZED REPRODUCTION OR DISTRIBUTION IS A VIOLATION OF THE FEDERAL COPYRIGHT ACT AND THE LICENSE AGREEMENT, AND SUBJECT TO CIVIL AND CRIMINAL PENALTIES THEREUNDER.

TABLE 2.5.3.1
STEEL COLUMNS—PLASTER ENCASEMENTS
MINIMUM DIMENSION 6″ TO LESS THAN 8″

ITEM CODE	MINIMUM DIMENSION	CONSTRUCTION DETAILS	PERFORMANCE		REFERENCE NUMBER			NOTES	REC. HOURS
			LOAD	TIME	PRE-BMS-92	BMS-92	POST-BMS-92		
C-7-SP-1	$7^1/_2$″	$7^1/_2$″ × $9^1/_2$″ plaster protected steel columns; 8″ × 6″ × 35 lbs. “H” beam; Protection: 24 SWG wire metal lath; $1^1/_4$″ lime plaster.	90 tons	57 min.			7	1	$^3/_4$
C-7-SP-2	$7^7/_8$″	$7^7/_8$″ × 10″ plaster protected steel columns; 8″ × 6″ × 35 lbs. “H” beam; Protection: $^3/_8$″ gypsum bal wire wound with 16 SWG wire helically wound at 4″ pitch; $^1/_2$″ gypsum plaster.	90 tons	1 hr. 13 min.			7	1	1
C-7-SP-3	$7^1/_4$″	$7^1/_4$″ × $9^3/_8$″ plaster protected steel columns; 8″ × 6″ × 35 lbs. “H” beam; Protection: $^3/_8$″ gypsum board; wire helically wound 16 SWG at 4″ pitch; $^1/_4$″ gypsum plaster finish.	90 tons	1 hr. 14 min.			7	1	1

Notes:
1. Failure mode—collapse.

TABLE 2.5.3.2
STEEL COLUMNS—PLASTER ENCASEMENTS
MINIMUM DIMENSION 8″ TO LESS THAN 10″

ITEM CODE	MINIMUM DIMENSION	CONSTRUCTION DETAILS	PERFORMANCE		REFERENCE NUMBER			NOTES	REC. HOURS
			LOAD	TIME	PRE-BMS-92	BMS-92	POST-BMS-92		
C-8-SP-1	8″	8″ × 10″ plaster protected steel columns; 8″ × 6″ × 35 lbs. “H” beam; Protection: 24 SWG wire lath; 1″ gypsum plaster.	86 tons	1 hr. 23 min.			7	1	$1^1/_4$
C-8-SP-2	$8^1/_2$″	$8^1/_2$″ × $10^1/_2$″ plaster protected steel columns; 8″ × 6″ × 35 lbs. “H” beam; Protection: 24 SWG metal lath wrap; $1^1/_4$″ gypsum plaster.	90 tons	1 hr. 36 min.			7	1	$1^1/_2$
C-9-SP-3	9″	9″ × 11″ plaster protected steel columns; 8″ × 6″ × 35 lbs. “H” beam; Protection: 24 SWG metal lath wrap; $^1/_8$″ M.S. ties at 12″ pitch wire netting $1^1/_2$″ × 22 SWG between first and second plaster coats; $1^1/_2$″ gypsum plaster.	90 tons	1 hr. 33 min.			7	1	$1^1/_2$
C-8-SP-4	$8^3/_4$″	$8^3/_4$″ × $10^3/_4$″ plaster protected steel columns; 8″ × 6″ × 35 lbs. “H” beam; Protection: $^3/_4$″ gypsum board; wire wound spirally (#16 SWG) at $1^1/_2$″ pitch; $^1/_2$″ gypsum plaster.	90 tons	2 hrs.			7	2, 3, 4	2

For SI: 1 inch = 25.4 mm, 1 pound = 0.004448 kN, 1 ton = 8.896 kN.

Notes:
1. Failure mode—collapse.
2. Passed 2 hour fire exposure test (Grade “C” - British).
3. Passed hose stream test.

TABLE 2.5.4.1
STEEL COLUMNS—MISCELLANEOUS ENCASEMENTS
MINIMUM DIMENSION 6″ TO LESS THAN 8″

ITEM CODE	MINIMUM DIMENSION	CONSTRUCTION DETAILS	PERFORMANCE		REFERENCE NUMBER			NOTES	REC. HOURS
			LOAD	TIME	PRE-BMS-92	BMS-92	POST-BMS-92		
C-7-SM-1	$7^5/_8$″	$7^5/_8$″ × $9^1/_2$″ (asbestos plaster) protected steel columns; 8″ × 6″ × 35 lbs. “H” beam; Protection: 20 gage $^1/_2$″ metal lath; $^9/_{16}$″ asbestos plaster (minimum).	90 tons	1 hr. 52 min.			7	1	$1^3/_4$

For SI: 1 inch = 25.4 mm, 1 pound = 0.004448 kN, 1 ton = 8.896 kN.

Notes:
1. Failure mode—collapse.

INTERNATIONAL CODE COUNCIL®
Copyright © 2015 ICC. ALL RIGHTS RESERVED. Accessed by David Dammon on Jun 21, 2017 12:30:52 PM pursuant to License Agreement with ICC. No further reproduction or distribution authorized. ANY UNAUTHORIZED REPRODUCTION OR DISTRIBUTION IS A VIOLATION OF THE FEDERAL COPYRIGHT ACT AND THE LICENSE AGREEMENT, AND SUBJECT TO CIVIL AND CRIMINAL PENALTIES THEREUNDER.

TABLE 2.5.4.2
STEEL COLUMNS—MISCELLANEOUS ENCASEMENTS
MINIMUM DIMENSION 8″ TO LESS THAN 10″

ITEM CODE	MINIMUM DIMENSION	CONSTRUCTION DETAILS	PERFORMANCE		REFERENCE NUMBER			NOTES	REC. HOURS
			LOAD	TIME	PRE-BMS-92	BMS-92	POST-BMS-92		
C-9-SM-1	$9^5/_8$″	$9^5/_8$″ × $11^3/_8$″ asbestos slab and cement plaster protected columns; 8″ × 6″ × 35 lbs. “H” beam; Protection: 1″ asbestos slab; wire wound; $^5/_8$″ plaster.	90 tons	2 hrs.			7	1, 2	2

For SI: 1 inch = 25.4 mm, 1 pound = 0.004448 kN, 1 ton = 8.896 kN.

Notes:

1. Passed 2 hour fire exposure test.
2. Collapsed during hose stream test.

TABLE 2.5.4.3
STEEL COLUMNS—MISCELLANEOUS ENCASEMENTS
MINIMUM DIMENSION 10″ TO LESS THAN 12″

ITEM CODE	MINIMUM DIMENSION	CONSTRUCTION DETAILS	PERFORMANCE		REFERENCE NUMBER			NOTES	REC. HOURS
			LOAD	TIME	PRE-BMS-92	BMS-92	POST-BMS-92		
C-11-SM-1	$11^1/_2$″	$11^1/_2$″ × $13^1/_2$″ wood wool and plaster protected steel columns; 8″ × 6″ × 35 lbs. “H” beam; Protection: wood-wool-cement paste as fill and to 2″ cover over beam; $^3/_4$″ gypsum plaster finish.	90 tons	2 hrs.			7	1, 2, 3	2
C-10-SM-1	10″	10″ × 12″ asbestos protected steel columns; 8″ × 6″ × 35 lbs. “H” beam; Protection: sprayed on asbestos paste to 2″ cover over column.	90 tons	4 hrs.			7	2, 3, 4	4

For SI: 1 inch = 25.4 mm, 1 pound = 0.004448 kN, 1 ton = 8.896 kN.

Notes:

1. Passed 2 hour fire exposure (Grade “C” - British).
2. Passed hose stream test.
3. Passed reload test.
4. Passed 4 hour fire exposure test.

TABLE 2.5.4.4
STEEL COLUMNS—MISCELLANEOUS ENCASEMENTS
MINIMUM DIMENSION 12″ TO LESS THAN 14″

ITEM CODE	MINIMUM DIMENSION	CONSTRUCTION DETAILS	PERFORMANCE		REFERENCE NUMBER			NOTES	REC. HOURS
			LOAD	TIME	PRE-BMS-92	BMS-92	POST-BMS-92		
C-12-SM-1	12″	12″ × $14^1/_4$″ cement and asbestos protected columns; 8″ × 6″ × 35 lbs. “H” beam; Protection: fill of asbestos packing pieces 1″ thick 1′3″ o.c.; cover of 2″ molded asbestos inner layer; 1″ molded asbestos outer layer; held in position by 16 SWG nichrome wire ties; wash of refractory cement on outer surface.	86 tons	4 hrs. 43 min.			7	1, 2, 3	$4^2/_3$

For SI: 1 inch = 25.4 mm, 1 pound = 0.004448 kN, 1 ton = 8.896 kN.

Notes:

1. Passed 4 hour fire exposure (Grade “B” - British).
2. Passed hose stream test.
3. Passed reload test.

INTERNATIONAL CODE COUNCIL®
Copyright © 2015 ICC. ALL RIGHTS RESERVED. Accessed by David Dammon on Jun 21, 2017 12:30:52 PM pursuant to License Agreement with ICC. No further reproduction or distribution authorized. ANY UNAUTHORIZED REPRODUCTION OR DISTRIBUTION IS A VIOLATION OF THE FEDERAL COPYRIGHT ACT AND THE LICENSE AGREEMENT, AND SUBJECT TO CIVIL AND CRIMINAL PENALTIES THEREUNDER.

SECTION III
FLOOR/CEILING ASSEMBLIES

FIGURE 3.1
FLOOR/CEILING ASSEMBLIES—REINFORCED CONCRETE

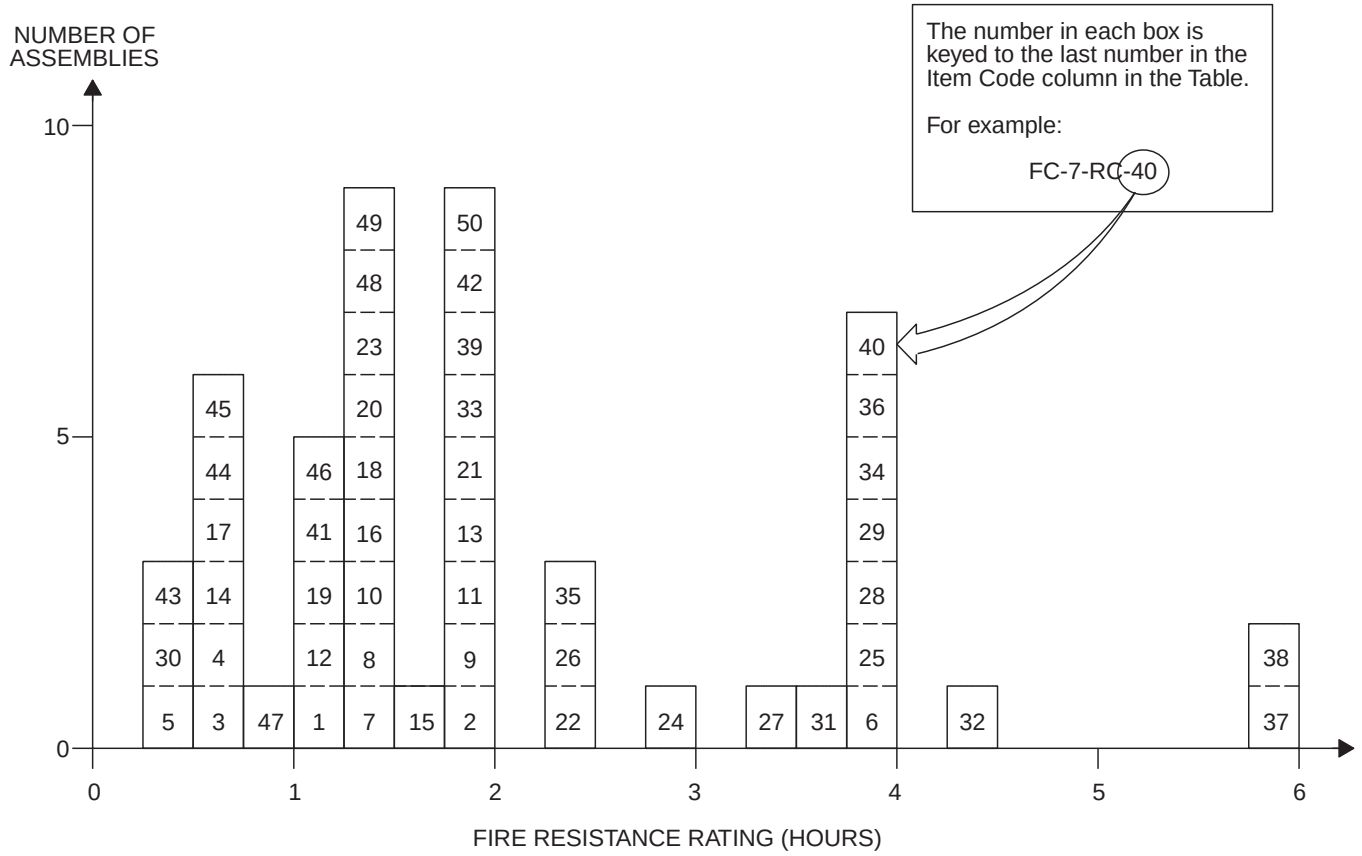

TABLE 3.1
FLOOR/CEILING ASSEMBLIES—REINFORCED CONCRETE

ITEM CODE	ASSEMBLY THICKNESS	CONSTRUCTION DETAILS	PERFORMANCE		REFERENCE NUMBER			NOTES	REC. HOURS
			LOAD	TIME	PRE-BMS-92	BMS-92	POST-BMS-92		
F/C-3-RC-1	$3^3/_4$″	$3^3/_4$ ″thick floor; $3^1/_4$″ (5475 psi) concrete deck; $^1/_2$″ plaster under deck; $^3/_8$″ main reinforcement bars at $5^1/_2$″ pitch with $^7/_8$″ concrete cover; $^3/_8$″ main reinforcement bars at $4^1/_2$″ pitch perpendicular with $^1/_2$″ concrete cover; 13′1″ span restrained.	195 psf	24 min.			7	1, 2	$^1/_3$
F/C-3-RC-2	$3^1/_4$″	$3^1/_4$″ deep (3540 psi) concrete deck; $^3/_8$″ main reinforcement bars at $5^1/_2$″ pitch with $^7/_8$″ cover; $^3/_8$″ main reinforcement bars at $4^1/_2$″ pitch perpendicular with $^1/_2$″ cover; 13′1″ span restrained.	195 psf	2 hrs.			7	1, 3, 4	2

(continued)

INTERNATIONAL CODE COUNCIL®
Copyright © 2015 ICC. ALL RIGHTS RESERVED. Accessed by David Dammon on Jun 21, 2017 12:30:52 PM pursuant to License Agreement with ICC. No further reproduction or distribution authorized. ANY UNAUTHORIZED REPRODUCTION OR DISTRIBUTION IS A VIOLATION OF THE FEDERAL COPYRIGHT ACT AND THE LICENSE AGREEMENT, AND SUBJECT TO CIVIL AND CRIMINAL PENALTIES THEREUNDER.

TABLE 3.1—continued
FLOOR/CEILING ASSEMBLIES—REINFORCED CONCRETE

ITEM CODE	ASSEMBLY THICKNESS	CONSTRUCTION DETAILS	PERFORMANCE		REFERENCE NUMBER			NOTES	REC. HOURS
			LOAD	TIME	PRE-BMS-92	BMS-92	POST-BMS-92		
F/C-3-RC-3	$3^1/_4$″	$3^1/_4$″ deep (4175 psi) concrete deck; $^3/_8$″ main reinforcement bars at $5^1/_2$″ pitch with $^7/_8$″ cover; $^3/_8$″ main reinforcement bars at $4^1/_2$″ pitch perpendicular with $^1/_2$″ cover; 13′1″ span restrained.	195 psf	31 min.			7	1, 5	$^1/_2$
F/C-3-RC-4	$3^1/_4$″	$3^1/_4$″ deep (4355 psi) concrete deck; $^3/_8$″ main reinforcement bars at $5^1/_2$″ pitch with $^7/_8$″ cover; $^3/_8$″ main reinforcement bars at $4^1/_2$″ pitch perpendicular with $^1/_2$″ cover; 13′1″ span restrained.	195 psf	41 min.			7	1, 5, 6	$^1/_2$
F/C-3-RC-5	$3^1/_4$″	$3^1/_4$″ thick (3800 psi) concrete deck; $^3/_8$″ main reinforcement bars at $5^1/_2$″ pitch with $^7/_8$″ cover; $^3/_8$″ main reinforcement bars at $4^1/_2$″ pitch perpendicular with $^1/_2$″ cover; 13′1″ span restrained.	195 psf	1 hr. 5 min.			7	1, 5	1
F/C-4-RC-6	$4^1/_4$″	$4^1/_4$″ thick; $3^1/_4$″ (4000 psi) concrete deck; 1″ sprayed asbestos lower surface; $^3/_8$″ main reinforcement bars at $5^7/_8$″ pitch with $^7/_8$″ concrete cover; $^3/_8$″ main reinforcement bars at $4^1/_2$″ pitch perpendicular with $^1/_2$″ concrete cover; 13′1″ span restrained.	195 psf	4 hrs.			7	1, 7	4
F/C-4-RC-7	4″	4″ (5025 psi) concrete deck; $^1/_4$″ reinforcement bars at $7^1/_2$″ pitch with $^3/_4$″ cover; $^3/_8$″ main reinforcement bars at $3^3/_4$″ pitch perpendicular with $^1/_2$″ cover; 13′1″ span restrained.	140 psf	1 hr. 16 min.			7	1, 2	$1^1/_4$
F/C-4-RC-8	4″	4″ thick (4905 psi) deck; $^1/_4$″ reinforcement bars at $7^1/_2$″ pitch with $^7/_8$″ cover; $^3/_8$″ main reinforcement bars at $3^3/_4$″ pitch perpendicular with $^1/_2$″ cover; 13′1″ span restrained.	100 psf	1 hr. 23 min.			7	1, 2	$1^1/_3$
F/C-4-RC-9	4″	4″ deep (4370 psi);$^1/_4$″ reinforcement bars at 6″ pitch with $^3/_4$″ cover; $^1/_4$″ main reinforcement bars at 4″ pitch perpendicular with $^1/_2$″ cover; 13′1″ span restrained.	150 psf	2 hrs.			7	1, 3	2
F/C-4-RC-10	4″	4″ thick (5140 psi) deck; $^1/_4$″ reinforcement bars at $7^1/_2$″ pitch with $^7/_8$″ cover; $^3/_8$″ main reinforcement bars at $3^3/_4$″ pitch perpendicular with $^1/_2$″ cover; 13′1″ span restrained.	140 psf	1 hr. 16 min.			7	1, 5	$1^1/_4$
F/C-4-RC-11	4″	4″ thick (4000 psi) concrete deck; 3″ × $1^1/_2$″ × 4 lbs. R.S.J.; 2′6″ C.R.S.; flush with top surface; 4″ × 6″ x 13 SWG mesh reinforcement 1″ from bottom of slab; 6′6″ span restrained.	150 psf	2 hrs.			7	1, 3	2

(continued)

INTERNATIONAL CODE COUNCIL®
Copyright © 2015 ICC. ALL RIGHTS RESERVED. Accessed by David Dammon on Jun 21, 2017 12:30:52 PM pursuant to License Agreement with ICC. No further reproduction or distribution authorized. ANY UNAUTHORIZED REPRODUCTION OR DISTRIBUTION IS A VIOLATION OF THE FEDERAL COPYRIGHT ACT AND THE LICENSE AGREEMENT, AND SUBJECT TO CIVIL AND CRIMINAL PENALTIES THEREUNDER.

TABLE 3.1—continued
FLOOR/CEILING ASSEMBLIES—REINFORCED CONCRETE

ITEM CODE	ASSEMBLY THICKNESS	CONSTRUCTION DETAILS	PERFORMANCE		REFERENCE NUMBER			NOTES	REC. HOURS
			LOAD	TIME	PRE-BMS-92	BMS-92	POST-BMS-92		
F/C-4-RC-12	4″	4″ deep (2380 psi) concrete deck; 3″ × 1 1/2″ × 4 lbs. R.S.J.; 2′6″ C.R.S.; flush with top surface; 4″ × 6″ x 13 SWG mesh reinforcement 1″ from bottom surface; 6′6″ span restrained.	150 psf	1 hr. 3 min.			7	1, 2	1
F/C-4-RC-13	4 1/2″	4 1/2″ thick (5200 psi) deck; 1/4″ reinforcement bars at 7 1/4″ pitch with 7/8″ cover; 3/8″ main reinforcement bars at 3 3/4″ pitch perpendicular with 1/2″ cover; 13′1″ span restrained.	140 psf	2 hrs.			7	1, 3	2
F/C-4-RC-14	4 1/2″	4 1/2″ deep (2525 psi) concrete deck; 1/4″ reinforcement bars at 7 1/2″ pitch with 7/8″ cover; 3/8″ main reinforcement bars at 3 3/8″ pitch perpendicular with 1/2″ cover; 13′1″ span restrained.	150 psf	42 min.			7	1, 5	2/3
F/C-4-RC-15	4 1/2″	4 1/2″ deep (4830 psi) concrete deck; 1 1/2″ × No. 15 gauge wire mesh; 3/8″ reinforcement bars at 15″ pitch with 1″ cover; 1/2″ main reinforcement bars at 6″ pitch perpendicular with 1/2″ cover; 12′ span simply supported.	75 psf	1 hr. 32 min.			7	1, 8	1 1/2
F/C-4-RC-16	4 1/2″	4 1/2″ deep (4595 psi) concrete deck; 1/4″ reinforcement bars at 7 1/2″ pitch with 7/8″ cover; 3/8″ main reinforcement bars at 3 1/2″ pitch perpendicular with 1/2″ cover; 12′ span simply supported.	75 psf	1 hr. 20 min.			7	1, 8	1 1/3
F/C-4-RC-17	4 1/2″	4 1/2″ deep (3625 psi) concrete deck; 1/4″ reinforcement bars at 7 1/2″ pitch with 7/8″ cover; 3/8″ main reinforcement bars at 3 1/2″ pitch perpendicular with 1/2″ cover; 12′ span simply supported.	75 psf	35 min.			7	1, 8	1/2
F/C-4-RC-18	4 1/2″	4 1/2″ deep (4410 psi) concrete deck; 1/4″ reinforcement bars at 7 1/2″ pitch with 7/8″ cover; 3/8″ main reinforcement bars at 3 1/2″ pitch perpendicular with 1/2″ cover; 12′ span simply supported.	85 psf	1 hr. 27 min.			7	1, 8	1 1/3
F/C-4-RC-19	4 1/2″	4 1/2″ deep (4850 psi) deck; 3/8″ reinforcement bars at 15″ pitch with 1″ cover; 1/2″ main reinforcement bars at 6″ pitch perpendicular with 1/2″ cover; 12′ span simply supported.	75 psf	2 hrs. 15 min.			7	1, 9	1 1/4
F/C-4-RC-20	4 1/2″	4 1/2″ deep (3610 psi) deck; 1/4″ reinforcement bars at 7 1/2″ pitch with 7/8″ cover; 3/8″ main reinforcement bars at 3 1/2″ pitch perpendicular with 1/2″ cover; 12′ span simply supported.	75 psf	1 hr. 22 min.			7	1, 8	1 1/3

(continued)

INTERNATIONAL CODE COUNCIL®
Copyright © 2015 ICC. ALL RIGHTS RESERVED. Accessed by David Dammon on Jun 21, 2017 12:30:52 PM pursuant to License Agreement with ICC. No further reproduction or distribution authorized. ANY UNAUTHORIZED REPRODUCTION OR DISTRIBUTION IS A VIOLATION OF THE FEDERAL COPYRIGHT ACT AND THE LICENSE AGREEMENT, AND SUBJECT TO CIVIL AND CRIMINAL PENALTIES THEREUNDER.

TABLE 3.1—continued
FLOOR/CEILING ASSEMBLIES—REINFORCED CONCRETE

ITEM CODE	ASSEMBLY THICKNESS	CONSTRUCTION DETAILS	PERFORMANCE		REFERENCE NUMBER			NOTES	REC. HOURS
			LOAD	TIME	PRE-BMS-92	BMS-92	POST-BMS-92		
F/C-5-RC-21	5″	5″ deep; 4 1/2″ (5830 psi) concrete deck; 1/2″ plaster finish bottom of slab; 1/4″ reinforcement bars at 7 1/2″ pitch with 7/8″ cover; 3/8″ main reinforcement bars at 3 1/2″ pitch perpendicular with 1/2″ cover; 12′ span simply supported.	69 psf	2 hrs.			7	1, 3	2
F/C-5-RC-22	5″	4 1/2″ (5290 psi) concrete deck; 1/2″ plaster finish bottom of slab; 1/4″ reinforcement bars at 7 1/2″ pitch with 7/8″ cover; 3/8″ main reinforcement bars at 3 1/2″ pitch perpendicular with 1/2″ cover; 12′ span simply supported.	No load	2 hrs. 28 min.			7	1, 10, 11	2 1/4
F/C-5-RC-23	5″	5″ (3020 psi) concrete deck; 3″ × 1 1/2″ × 4 lbs. R.S.J.; 2′ C.R.S. with 1″ cover on bottom and top flanges; 8′ span restrained.	172 psf	1 hr. 24 min.			7	1, 2, 12	1 1/2
F/C-5-RC-24	5 1/2″	5″ (5180 psi) concrete deck; 1/2″ retarded plaster underneath slab; 1/4″ reinforcement bars at 7 1/2″ pitch with 1 3/8″ cover; 3/8″ main reinforcement bars at 3 1/2″ pitch perpendicular with 1″ cover; 12′ span simply supported.	60 psf	2 hrs. 48 min.			7	1, 10	2 3/4
F/C-6-RC-25	6″	6″ deep (4800 psi) concrete deck; 1/4″ reinforcement bars at 7 1/2″ pitch with 7/8″ cover; 3/8″ main reinforcement bars at 3 1/2″ pitch perpendicular with 7/8″ cover; 13′1″ span restrained.	195 psf	4 hrs.			7	1, 7	4
F/C-6-RC-26	6″	6″ (4650 psi) concrete deck; 1/4″ reinforcement bars at 7 1/2″ pitch with 7/8″ cover; 3/8″ main reinforcement bars at 3 1/2″ pitch perpendicular with 1/2″ cover; 13′1″ span restrained.	195 psf	2 hrs. 23 min.			7	1, 2	2 1/4
F/C-6-RC-27	6″	6″ deep (6050 psi) concrete deck; 1/4″ reinforcement bars at 7 1/2″ pitch 7/8″ cover; 3/8″ reinforcement bars at 3 1/2″ pitch perpendicular with 1/2″ cover; 13′1″ span restrained.	195 psf	3 hrs. 30 min.			7	1, 10	3 1/2
F/C-6-RC-28	6″	6″ deep (5180 psi) concrete deck; 1/4″ reinforcement bars at 8″ pitch 3/4″ cover; 1/4″ reinforcement bars at 5 1/2″ pitch perpendicular with 1/2″ cover; 13′1″ span restrained.	150 psf	4 hrs.			7	1, 7	4
F/C-6-RC-29	6″	6″ thick (4180 psi) concrete deck; 4″ × 3″ × 10 lbs. R.S.J.; 2′ 6″ C.R.S. with 1″ cover on both top and bottom flanges; 13′1″ span restrained.	160 psf	3 hrs. 48 min.			7	1, 10	3 3/4
F/C-6-RC-30	6″	6″ thick (3720 psi) concrete deck; 4″ × 3″ × 10 lbs. R.S.J.; 2′ 6″ C.R.S. with 1″ cover on both top and bottom flanges; 12′ span simply supported.	115 psf	29 min.			7	1, 5, 13	1/4

(continued)

INTERNATIONAL CODE COUNCIL®
Copyright © 2015 ICC. ALL RIGHTS RESERVED. Accessed by David Dammon on Jun 21, 2017 12:30:52 PM pursuant to License Agreement with ICC. No further reproduction or distribution authorized. ANY UNAUTHORIZED REPRODUCTION OR DISTRIBUTION IS A VIOLATION OF THE FEDERAL COPYRIGHT ACT AND THE LICENSE AGREEMENT, AND SUBJECT TO CIVIL AND CRIMINAL PENALTIES THEREUNDER.

TABLE 3.1—continued
FLOOR/CEILING ASSEMBLIES—REINFORCED CONCRETE

ITEM CODE	ASSEMBLY THICKNESS	CONSTRUCTION DETAILS	PERFORMANCE		REFERENCE NUMBER			NOTES	REC. HOURS
			LOAD	TIME	PRE-BMS-92	BMS-92	POST-BMS-92		
F/C-6-RC-31	6″	6″ deep (3450 psi) concrete deck; 4″ × $1^3/_4$″ × 5 lbs. R.S.J.; 2′ 6″ C.R.S. with 1″ cover on both top and bottom flanges; 12′ span simply supported.	25 psf	3 hrs. 35 min.			7	1, 2	$3^1/_2$
F/C-6-RC-32	6″	6″ deep (4460 psi) concrete deck; 4″ × $1^3/_4$″ × 5 lbs. R.S.J.; 2′ C.R.S.; with 1″ cover on both top and bottom flanges; 12′ span simply supported.	60 psf	4 hrs. 30 min.			7	1, 10	$4^1/_2$
F/C-6-RC-33	6″	6″ deep (4360 psi) concrete deck; 4″ × $1^3/_4$″ × 5 lbs. R.S.J.; 2′ C.R.S.; with 1″ cover on both top and bottom flanges; 13′1″ span restrained.	60 psf	2 hrs.			7	1, 3	2
F/C-6-RC-34	$6^1/_4$″	$6^1/_4$″ thick; $4^3/_4$″ (5120 psi) concrete core; 1″ T&G board flooring; $^1/_2$″ plaster undercoat; 4″ × 3″ × 10 lbs. R.S.J.; 3′ C.R.S. flush with top surface concrete; 12′ span simply supported; 2″ × 1′3″ clinker concrete insert.	100 psf	4 hrs.			7	1, 7	4
F/C-6-RC-35	$6^1/_4$″	$4^3/_4$″ (3600 psi) concrete core; 1″ T&G board flooring; $^1/_2$″ plaster undercoat; 4″ × 3″ × 10 lbs. R.S.J.; 3′ C.R.S.; flush with top surface concrete; 12′ span simply supported; 2″ × 1′3″ clinker concrete insert.	100 psf	2 hrs. 30 min.			7	1, 5	$2^1/_2$
F/C-6-RC-36	$6^1/_4$″	$4^3/_4$″ (2800 psi) concrete core; 1″ T&G board flooring; $^1/_2$″ plaster undercoat; 4″ × 3″ × 10 lbs. R.S.J.; 3′ C.R.S.; flush with top surface concrete; 12″ span simply supported; 2″ × 1′3″ clinker concrete insert.	80 psf	4 hrs.			7	1, 7	4
F/C-7-RC-37	7″	(3640 psi) concrete deck; $^1/_4$″ reinforcement bars at 6″ pitch with $1^1/_2$″ cover; $^1/_4$″ reinforcement bars at 5″ pitch perpendicular with $1^1/_2$″ cover; 13′1″ span restrained.	169 psf	6 hrs.			7	1, 14	6
F/C-7-RC-38	7″	(4060 psi) concrete deck; 4″ × 3″ × 10 lbs. R.S.J.; 2′ 6″ C.R.S. with $1^1/_2$″ cover on both top and bottom flanges; 4″ × 6″ × 13 SWG mesh reinforcement $1^1/_2$″ from bottom of slab; 13′1″ span restrained.	175 psf	6 hrs.			7	1, 14	6
F/C-7-RC-39	$7^1/_4$″	$5^3/_4$″ (4010 psi) concrete core; 1″ T&G board flooring; $^1/_2$″ plaster undercoat; 4″ × 3″ × 10 lbs. R.S.J.; 2′ 6″ C.R.S.; 1″ down from top surface of concrete; 12′ simply supported span; 2″ × 1′ 3″ clinker concrete insert.	95 psf	2 hrs.			7	1, 3	2
F/C-7-RC-40	$7^1/_4$″	$5^3/_4$″ (3220 psi) concrete core; 1″ T&G flooring; $^1/_2$″ plaster undercoat; 4″ × 3″ × 10 lbs. R.S.J.; 2′6″ C.R.S.; 1″ down from top surface of concrete; 12′ simply supported span; 2″ × 1′3″ clinker concrete insert.	95 psf	4 hrs.			7	1, 7	4

(continued)

INTERNATIONAL CODE COUNCIL®
Copyright © 2015 ICC. ALL RIGHTS RESERVED. Accessed by David Dammon on Jun 21, 2017 12:30:52 PM pursuant to License Agreement with ICC. No further reproduction or distribution authorized. ANY UNAUTHORIZED REPRODUCTION OR DISTRIBUTION IS A VIOLATION OF THE FEDERAL COPYRIGHT ACT AND THE LICENSE AGREEMENT, AND SUBJECT TO CIVIL AND CRIMINAL PENALTIES THEREUNDER.

TABLE 3.1—continued
FLOOR/CEILING ASSEMBLIES—REINFORCED CONCRETE

ITEM CODE	ASSEMBLY THICKNESS	CONSTRUCTION DETAILS	PERFORMANCE		REFERENCE NUMBER			NOTES	REC. HOURS
			LOAD	TIME	PRE-BMS-92	BMS-92	POST-BMS-92		
F/C-7-RC-41	10″ (2 1/4″ Slab)	Ribbed floor, see Note 15 for details; slab 2 1/2″ deep (3020 psi); 1/4″ reinforcement bars at 6″ pitch with 3/4″ cover; beams 7 1/2″ deep × 5″ wide; 24″ C.R.S.; 5/8″ reinforcement bars two rows 1/2″ vertically apart with 1″ cover; 13′1″ span restricted.	195 psf	1 hr. 4 min.			7	1, 2, 15	1
F/C-5-RC-42	5 1/2″	Composite ribbed concrete slab assembly; see Note 17 for details.	See Note 16	2 hrs.			43	16, 17	2
F/C-3-RC-43	3″	2500 psi concrete; 5/8″ cover; fully restrained at test.	See Note 16	30 min.			43	16	1/2
F/C-3-RC-44	3″	2000 psi concrete; 5/8″ cover; free or partial restraint at test.	See Note 16	45 min.			43	16	3/4
F/C-4-RC-45	4″	2500 psi concrete; 5/8″ cover; fully restrained at test.	See Note 16	40 min.			43	16	2/3
F/C-4-RC-46	4″	2000 psi concrete; 3/4″ cover; free or partial restraint at test.	See Note 16	1 hr. 15 min.			43	16	1 1/4
F/C-5-RC-47	5″	2500 psi concrete; 3/4″ cover; fully restrained at test.	See Note 16	1 hr.			43	16	1
F/C-5-RC-48	5″	2000 psi concrete; 3/4″ cover; free or partial restraint at test.	See Note 16	1 hr. 30 min.			43	16	1 1/2
F/C-6-RC-49	6″	2500 psi concrete; 1″ cover; fully restrained at test.	See Note 16	1 hr. 30 min.			43	16	1 1/2
F/C-6-RC-50	6″	2000 psi concrete; 1″ cover; free or partial restraint at test.	See Note 16	2 hrs.			43	16	2

For SI: 1 inch = 25.4 mm, 1 foot = 305 mm, 1 pound per square inch = 0.00689 MPa, 1 pound per square foot = 47.9 N/m^2.

Notes :

1. British test.
2. Failure mode—local back face temperature rise.
3. Tested for Grade “C” (2 hour) fire resistance
4. Collapse imminent following hose stream.
5. Failure mode—flame thru.
6. Void formed with explosive force and report.
7. Achieved Grade “B” (4 hour) fire resistance (British).
8. Failure mode—collapse.
9. Test was run to 2 hours, but specimen was partially supported by the furnace at 1 1/4 hours.
10. Failure mode—average back face temperature.
11. Recommended endurance for nonload bearing performance only.
12. Floor maintained load bearing ability to 2 hours at which point test was terminated.
13. Test was run to 3 hours at which time failure mode 2 (above) was reached in spite of crack formation at 29 minutes.
14. Tested for Grade “A” (6 hour) fire resistance.
15. 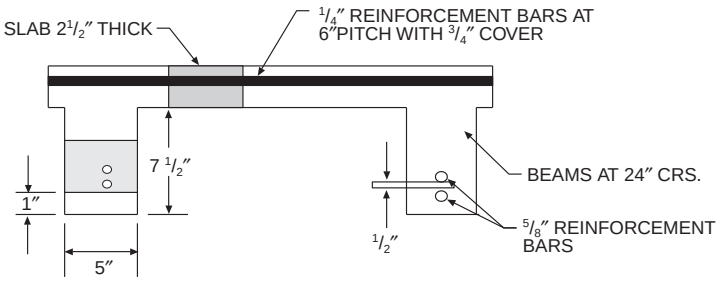

16. Load unspecified.
17. Total assembly thickness 5 1/2 inches. Three-inch thick blocks of molded excelsior bonded with portlandcement used as inserts with 2 1/2-inch cover (concrete) above blocks and 3/4-inch gypsum plaster below. Nine-inch wide ribs containing reinforcing steel of unspecified size interrupted 20-inch wide segments of slab composite (i.e., plaster, excelsior blocks, concrete cover).

INTERNATIONAL CODE COUNCIL®
Copyright © 2015 ICC. ALL RIGHTS RESERVED. Accessed by David Dammon on Jun 21, 2017 12:30:52 PM pursuant to License Agreement with ICC. No further reproduction or distribution authorized. ANY UNAUTHORIZED REPRODUCTION OR DISTRIBUTION IS A VIOLATION OF THE FEDERAL COPYRIGHT ACT AND THE LICENSE AGREEMENT, AND SUBJECT TO CIVIL AND CRIMINAL PENALTIES THEREUNDER.

FIGURE 3.2
FLOOR/CEILING ASSEMBLIES—STEEL STRUCTURAL ELEMENTS

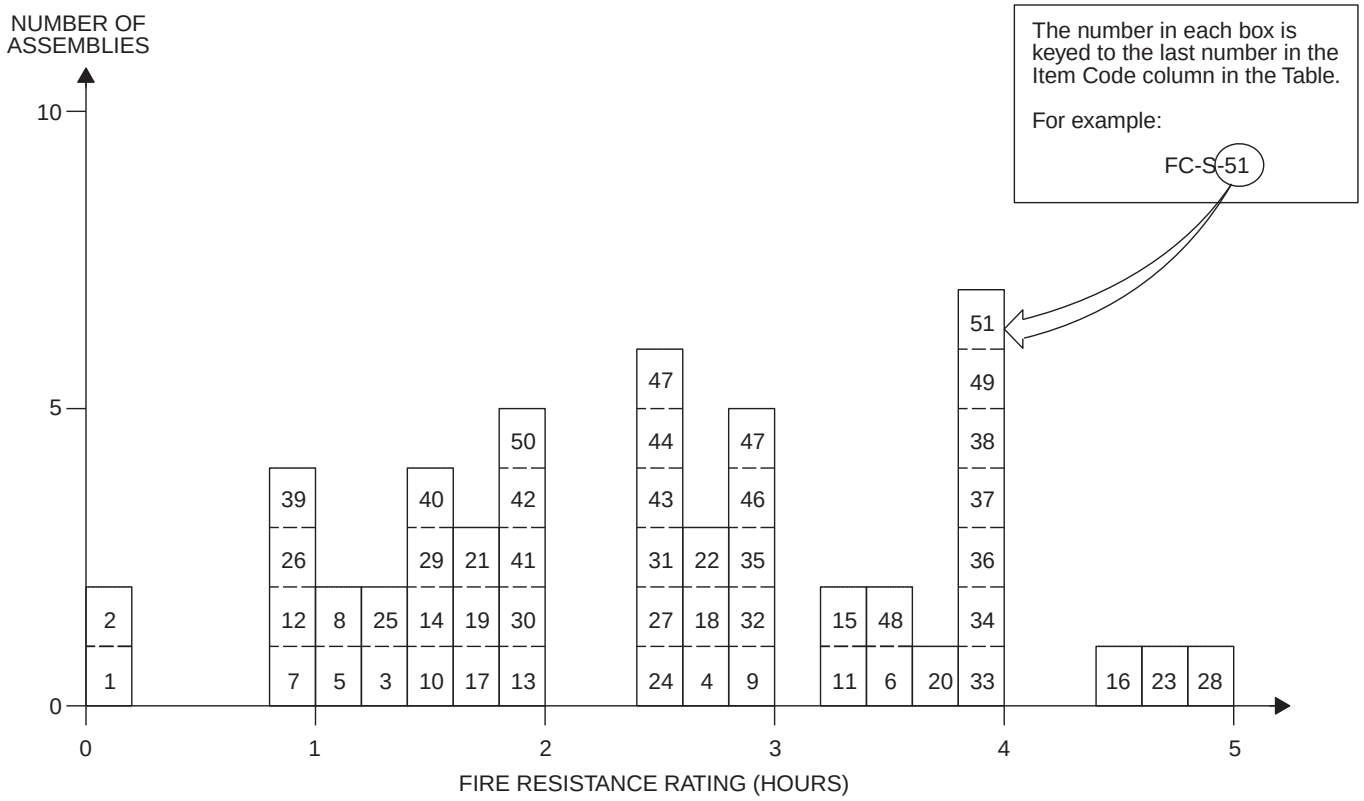

TABLE 3.2
FLOOR/CEILING ASSEMBLIES—STEEL STRUCTURAL ELEMENTS

ITEM CODE	MEMBRANE THICKNESS	CONSTRUCTION DETAILS	PERFORMANCE		REFERENCE NUMBER			NOTES	REC. HOURS
			LOAD	TIME	PRE-BMS-92	BMS-92	POST-BMS-92		
F/C-S-1	0″	10′ × 13′6″ ; S.J. 103 - 24″ o.c.; Deck: 2″ concrete; Membrane: none.	145 psf	7 min.			3	1, 2, 3, 8	0
F/C-S-2	0″	10′ × 13′6″ ; S.J. 103 - 24″ o.c.; Deck: 2″ concrete; Membrane: none	145 psf	7 min.			3	1, 2, 3, 8	0
F/C-S-3	$^1/_2$″	10′ × 13′ 6″ ; S.J. 103 - 24″ o.c.; Deck: 2″ concrete 1:2:4; Membrane: furring 12″ o.c.; Clips A, B, G; No extra reinforcement; $^1/_2$″ plaster - 1.5:2.5.	145 psf	1 hr. 15 min.			3	2, 3, 8	$1^1/_4$
F/C-S-4	$^1/_2$″	10′ × 13′ 6″ ; S.J. 103 - 24″ o.c.; Deck: 2″ concrete 1:2:4; Membrane: furring 16″ o.c.; Clips D, E, F, G; Diagonal wire reinforcement; $^1/_2$″ plaster - 1.5:2.5.	145 psf	2 hrs. 46 min.			3	3, 8	$2^3/_4$
F/C-S-5	$^1/_2$″	10′ × 13′6″ ; S.J. 103 - 24″ o.c.; Deck: 2″ concrete 1:2:4; Membrane: furring 16″ o.c.; Clips A, B, G; No extra reinforcement; $^1/_2$″ plaster - 1.5:2.5.	145 psf	1 hr. 4 min.			3	2, 3, 8	1
F/C-S-6	$^1/_2$″	10′ × 13′6″; S.J. 103 - 24″ o.c.; Deck: 2″ concrete 1:2:4; Membrane: furring 16″ o.c.; Clips D, E, F, G; Hexagonal mesh reinforcement; $^1/_2$″ plaster.	145 psf	3 hrs. 28 min.			3	2, 3, 8	$2^1/_3$

(continued)

INTERNATIONAL CODE COUNCIL®
Copyright © 2015 ICC. ALL RIGHTS RESERVED. Accessed by David Dammon on Jun 21, 2017 12:30:52 PM pursuant to License Agreement with ICC. No further reproduction or distribution authorized. ANY UNAUTHORIZED REPRODUCTION OR DISTRIBUTION IS A VIOLATION OF THE FEDERAL COPYRIGHT ACT AND THE LICENSE AGREEMENT, AND SUBJECT TO CIVIL AND CRIMINAL PENALTIES THEREUNDER.

TABLE 3.2—continued
FLOOR/CEILING ASSEMBLIES—STEEL STRUCTURAL ELEMENTS

ITEM CODE	MEMBRANE THICKNESS	CONSTRUCTION DETAILS	PERFORMANCE		REFERENCE NUMBER			NOTES	REC. HOURS
			LOAD	TIME	PRE-BMS-92	BMS-92	POST-BMS-92		
F/C-S-7	1/2″	10′ × 13′6″ ; S.J. 103 - 24″ o.c.; Deck: 4 lbs. rib lath; 6″ × 6″ - 10 × 10 ga. reinforcement; 2″ deck gravel concrete; Membrane: furring 16″ o.c.; Clips C, E; Reinforcement: none; 1/2″ plaster - 1.5:2.5 mill mix.	N/A	55 min.			3	5, 8	3/4
F/C-S-8	1/2″	Spec. 9′ × 4′4″; S.J. 103 bar joists - 18″ o.c.; Deck: 4 lbs. rib lath base; 6″ × 6″ - 10 × 10 ga. reinforcement; 2″ deck 1:2:4 gravel concrete; Membrane: furring, 3/4″ C.R.S., 16″ o.c.; Clips C, E; Reinforcement: none; 1/2″ plaster - 1.5:2.5 mill mix.	300 psf	1 hr. 10 min.			3	2, 3, 8	1
F/C-S-9	5/8″	10′ × 13′6″; S.J. 103 - 24″ o.c.; Deck: 2″ concrete 1:2:4; Membrane: furring 12″ o.c.; Clips A, B, G; Extra “A” clips reinforcement; 5/8″ plaster - 1.5:2; 1.5:3.	145 psf	3 hrs.			3	6, 8	3
F/C-S-10	5/8″	18′ × 13′6″ ; Joists, S.J. 103 - 24″ o.c.; Deck: 4 lbs. rib lath; 6″ × 6″ - 10 × 10 ga. reinforcement; 2″ deck 1:2:3.5 gravel concrete; Membrane: furring, spacing 16″ o.c.; Clips C, E; Reinforcement: none; 5/8″ plaster - 1.5:2.5 mill mix.	145 psf	1 hr. 25 min.			3	2, 3, 8	1 1/3
F/C-S-11	5/8″	10′ × 13′6″; S.J. 103 - 24″ o.c.; Deck: 2″ concrete 1:2:4; Membrane: furring 12″ o.c.; Clips D, E, F, G; Diagonal wire reinforcement; 5/8″ plaster - 1.5:2; 0.5:3.	145 psf	3 hrs. 15 min.			3	2, 4, 8	3 1/4
F/C-S-12	5/8″	10′ × 13′6″; Joists, S.J. 103 - 24″ o.c.; Deck: 3.4 lbs. rib lath; 6″ × 6″ - 10 × 10 ga. reinforcement; 2″ deck 1:2:4 gravel concrete; Membrane: furring 16″ o.c.; Clips D, E, F, G; Reinforcement: none; 5/8″ plaster - 1.5:2.5.	145 psf	1 hr.			3	7, 8	1
F/C-S-13	3/4″	Spec. 9′ × 4′4″; S.J. 103 - 18″ o.c.; Deck: 4 lbs. rib lath; 6″ × 6″ - 10 × 10 ga. reinforcement; 2″ deck 1:2:4 gravel concrete; Membrane: furring, 3/4″ C.R.S., 16″ o.c.; Clips C, E; Reinforcement: none; 3/4″ plaster - 1.5:2.5 mill mix.	300 psf	1 hr. 56 min.			3	3, 8	1 3/4
F/C-S-14	7/8″	Floor finish: 1″ concrete; plate cont. weld; 4″ - 7.7 lbs. “I” beams; Ceiling: 1/4″ rods 12″ o.c.; 7/8″ gypsum sand plaster.	105 psf	1 hr. 35 min.			6	2, 4, 9, 10	1 1/2
F/C-S-15	1″	Floor finish: 1 1/2″ L.W. concrete; 1/2″ limestone cement; plate cont. weld; 5″ - 10 lbs. “I” beams; Ceiling: 1/4″ rods 12″ o.c. tack welded to beams metal lath; 1″ P. C. plaster.	165 psf	3 hrs. 20 min.			6	4, 9, 11	3 1/3
F/C-S-16	1″	10′ × 13′6″ ; S.J. 103 - 24″ o.c.; Deck: 2″ concrete 1:2:4; Membrane: furring 12″ o.c.; Clips D, E, F, G; Hexagonal mesh reinforcement; 1″ thick plaster - 1.5:2; 1.5:3.	145 psf	4 hrs. 26 min.			3	2, 4, 8	4 1/3
F/C-S-17	1″	10′ × 13′6″ ; Joists - S.J. 103 - 24″ o.c.; Deck: 3.4 lbs. rib lath; 6″ × 6″ - 10 × 10 ga. reinforcement; 2″ deck 1:2:4 gravel concrete; Membrane: furring 16″ o.c.; Clips D, E, F, G; 1″ plaster.	145 psf	1 hr. 42 min.			3	2, 4, 8	1 2/3

(continued)

INTERNATIONAL CODE COUNCIL®
Copyright © 2015 ICC. ALL RIGHTS RESERVED. Accessed by David Dammon on Jun 21, 2017 12:30:52 PM pursuant to License Agreement with ICC. No further reproduction or distribution authorized. ANY UNAUTHORIZED REPRODUCTION OR DISTRIBUTION IS A VIOLATION OF THE FEDERAL COPYRIGHT ACT AND THE LICENSE AGREEMENT, AND SUBJECT TO CIVIL AND CRIMINAL PENALTIES THEREUNDER.

TABLE 3.2—continued
FLOOR/CEILING ASSEMBLIES—STEEL STRUCTURAL ELEMENTS

ITEM CODE	MEMBRANE THICKNESS	CONSTRUCTION DETAILS	PERFORMANCE		REFERENCE NUMBER			NOTES	REC. HOURS
			LOAD	TIME	PRE-BMS-92	BMS-92	POST-BMS-92		
F/C-S-18	1 1/8″	10′ × 13′6″ ; S. J. 103 - 24″ o.c.; Deck: 2″ concrete 1:2:4; Membrane: furring 12″ o.c.; Clips C, E, F, G; Diagonal wire reinforcement; 1 1/8″ plaster.	145 psf	2 hrs. 44 min.			3	2, 4, 8	2 2/3
F/C-S-19	1 1/8″	10′ × 13′6″ ; Joists - S.J. 103 - 24″ o.c.; Deck: 1 1/2″ gypsum concrete over; 1/2″ gypsum board; Membrane: furring 12″ o.c.; Clips D, E, F, G; 1 1/8″ plaster - 1.5:2; 1.5:3.	145 psf	1 hr. 40 min.			3	2, 3, 8	1 2/3
F/C-S-20	1 1/8″	2 1/2″ cinder concrete; 1/2″ topping; plate 6″ welds 12″ o.c.; 5″ - 18.9 lbs. “H” center; 5″ - 10 lbs. “I” ends; 1″ channels 18″ o.c.; 1 1/8″ gypsum sand plaster.	150 psf	3 hrs. 43 min.			6	2, 4, 9, 11	3 2/3
F/C-S-21	1 1/4″	10′ × 13′6″ ; Joists - S.J. 103 - 24″ o.c.; Deck: 1 1/2″ gypsum concrete over; 1/2″ gypsum board base; Membrane: furring 12″ o.c.; Clips D, E, F, G; 1 1/4″ plaster - 1.5:2; 1.5:3.	145 psf	1 hr. 48 min.			3	2, 3, 8	1 2/3
F/C-S-22	1 1/4″	Floor finish: 1 1/2″ limestone concrete; 1/2″ sand cement topping; plate to beams 3 1/2″; 12″ o.c. welded; 5″ - 10 lbs. “I” beams; 1″ channels 18″ o.c.; 1 1/4″ wood fiber gypsum sand plaster on metal lath.	292 psf	2 hrs. 45 min.			6	2, 4, 9, 10	2 3/4
F/C-S-23	1 1/2″	2 1/2″ L.W. (gas exp.) concrete; Deck: 1/2″ topping; plate 6 1/4″ welds 12″ o.c.; Beams: 5″ - 18.9 lbs. “H” center; 5″ - 10 lbs. “I” ends; Membrane: 1″ channels 18″ o.c.; 1 1/2″ gypsum sand plaster.	150 psf	4 hrs. 42 min.			6	2, 4, 9	4 2/3
F/C-S-24	1 1/2″	Floor finish: 1 1/2″ limestone concrete; 1/2″ cement topping; plate 3 1/2″ - 12″ o.c. welded; 5″ - 10 lbs. “I” beams; Ceiling: 1″ channels 18″ o.c.; 1 1/2″ gypsum plaster.	292 psf	2 hrs. 34 min.			6	2, 4, 9, 10	2 1/2
F/C-S-25	1 1/2″	Floor finish: 1 1/2″ gravel concrete on exp. metal; plate cont. weld; 4″ - 7.7 lbs. “I” beams; Ceiling: 1/4″ rods 12″ o.c. welded to beams; 1 1/2″ fiber gypsum sand plaster.	70 psf	1 hr. 24 min.			6	2, 4, 9, 10	1 1/3
F/C-S-26	2 1/2″	Floor finish: bare plate; 6 1/4″ welding - 12″ o.c.; 5″ - 18.9 lbs. “H” girders (inner); 5″ - 10 lbs “I” girders (two outer); 1″ channels 18″ o.c.; 2″ reinforced gypsum tile; 1/2″ gypsum sand plaster.	122 psf	1 hr.			6	7, 9, 11	1
F/C-S-27	2 1/2″	Floor finish: 2″ gravel concrete; plate to beams 3 1/2″ - 12″ o.c. welded; 4″ - 7.7 lbs. “I” beams; 2″ gypsum ceiling tiles; 1/2″ 1:3 gypsum sand plaster.	105 psf	2 hrs. 31 min.			6	2, 4, 9, 10	2 1/2
F/C-S-28	2 1/2″	Floor finish: 1 1/2″ gravel concrete; 1/2″ gypsum asphalt; plate continuous weld;4″ - 7.7 lbs. “I” beams; 12″ - 31.8 lbs. “I” beams - girder at 5′ from one end; 1″ channels 18″ o.c.; 2″ reinforcement gypsum tile; 1/2″ 1:3 gypsum sand plaster.	200 psf	4 hrs. 55 min.			6	2, 4, 9, 11	4 2/3

(continued)

INTERNATIONAL CODE COUNCIL®
Copyright © 2015 ICC. ALL RIGHTS RESERVED. Accessed by David Dammon on Jun 21, 2017 12:30:52 PM pursuant to License Agreement with ICC. No further reproduction or distribution authorized. ANY UNAUTHORIZED REPRODUCTION OR DISTRIBUTION IS A VIOLATION OF THE FEDERAL COPYRIGHT ACT AND THE LICENSE AGREEMENT, AND SUBJECT TO CIVIL AND CRIMINAL PENALTIES THEREUNDER.

TABLE 3.2—continued
FLOOR/CEILING ASSEMBLIES—STEEL STRUCTURAL ELEMENTS

ITEM CODE	MEMBRANE THICKNESS	CONSTRUCTION DETAILS	PERFORMANCE		REFERENCE NUMBER			NOTES	REC. HOURS
			LOAD	TIME	PRE-BMS-92	BMS-92	POST-BMS-92		
F/C-S-29	3/4″	Floor: 2″ reinforced concrete or 2″ precast reinforced gypsum tile; Ceiling: 3/4″ portland cement-sand plaster 1:2 for scratch coat and 1:3 for brown coat with 15 lbs. hydrated lime and 3 lbs. of short asbestos fiber bag per cement or 3/4″ sanded gypsum plaster 1:2 for scratch coat and 1:3 for brown coat.	See Note 12	1 hr. 30 min.		1		12, 13, 14	1 1/2
F/C-S-30	3/4″	Floor: 2 1/4″ reinforced concrete or 2″ reinforced gypsum tile; the latter with 1/4″ mortar finish; Ceiling: 3/4″ sanded gypsum plaster; 1:2 for scratch coat and 1:3 for brown coat.	See Note 12	2 hrs.		1		12, 13, 14	2
F/C-S-31	3/4″	Floor: 2 1/2″ reinforced concrete or 2″ reinforced gypsum tile; the latter with 1/4″ mortar finish; Ceiling: 1″ neat gypsum plaster or 3/4″ gypsum-vermiculite plaster, ratio of gypsum to fine vermiculite 2:1 to 3:1.	See Note 12	2 hrs. 30 min.		1		12, 13, 14	2 1/2
F/C-S-32	3/4″	Floor: 2 1/2″ reinforced concrete or 2″ reinforced gypsum tile; the latter with 1/2″ mortar finish; Ceiling: 1″ neat gypsum plaster or 3/4″ gypsum-vermiculite plaster, ratio of gypsum to fine vermiculite 2:1 to 3:1.	See Note 12	3 hrs.		1		12, 13, 14	3
F/C-S-33	1″	Floor: 2 1/2″ reinforced concrete or 2″ reinforced gypsum slabs; the latter with 1/2″ mortar finish; Ceiling: 1″ gypsum-vermiculite plaster applied on metal lath and ratio 2:1 to 3:1 gypsum to vermiculite by weight.	See Note 12	4 hrs.		1		12, 13, 14	4
F/C-S-34	2 1/2″	Floor: 2″ reinforced concrete or 2″ precast reinforced portland cement concrete or gypsum slabs; precast slabs to be finished with 1/4″ mortar top coat; Ceiling: 2″ precast reinforced gypsum tile, anchored into beams with metal ties or clips and covered with 1/2″ 1:3 sanded gypsum plaster.	See Note 12	4 hrs.		1		12, 13, 14	4
F/C-S-35	1″	Floor: 1:3:6 portland cement, sand and gravel concrete applied directly to the top of steel units and 1 1/2″ thick at top of cells, plus 1/2″ 1:2 1/2″ cement-sand finish, total thickness at top of cells, 2″ ; Ceiling: 1″ neat gypsum plaster, back of lath 2″ or more from underside of cellular steel.	See Note 15	3 hrs.		1		15, 16, 17, 18	3
F/C-S-36	1″	Floor: same as F/C-S-35; Ceiling: 1″ gypsum-vermiculite plaster (ratio of gypsum to vermiculite 2:1 to 3:1), the back of lath 2″ or more from under-side of cellular steel.	See Note 15	4 hrs.		1		15, 16, 17, 18	4
F/C-S-37	1″	Floor: same as F/C-S-35; Ceiling: 1″ neat gypsum plaster; back of lath 9″ or more from underside of cellular steel.	See Note 15	4 hrs.		1		15, 16, 17, 18	4
F/C-S-38	1″	Floor: same as F/C-S-35; Ceiling: 1″ gypsum-vermiculite plaster (ratio of gypsum to vermiculite 2:1 to 3:1), the back of lath being 9″ or more from underside of cellular steel.	See Note 15	5 hrs.		1		15, 16, 17,18	5

(continued)

INTERNATIONAL CODE COUNCIL®
Copyright © 2015 ICC. ALL RIGHTS RESERVED. Accessed by David Dammon on Jun 21, 2017 12:30:52 PM pursuant to License Agreement with ICC. No further reproduction or distribution authorized. ANY UNAUTHORIZED REPRODUCTION OR DISTRIBUTION IS A VIOLATION OF THE FEDERAL COPYRIGHT ACT AND THE LICENSE AGREEMENT, AND SUBJECT TO CIVIL AND CRIMINAL PENALTIES THEREUNDER.

TABLE 3.2—continued
FLOOR/CEILING ASSEMBLIES—STEEL STRUCTURAL ELEMENTS

ITEM CODE	MEMBRANE THICKNESS	CONSTRUCTION DETAILS	PERFORMANCE		REFERENCE NUMBER			NOTES	REC. HOURS
			LOAD	TIME	PRE-BMS-92	BMS-92	POST-BMS-92		
F/C-S-39	3/4″	Floor: asbestos paper 14 lbs./100 ft.^{2} cemented to steel deck with waterproof linoleum cement, wood screeds and 7/8″ wood floor; Ceiling: 3/4″ sanded gypsum plaster 1:2 for scratch coat and 1:3 for brown coat.	See Note 19	1 hr.		1		19, 20, 21, 22	1
F/C-S-40	3/4″	Floor: 1 1/2″, 1:2:4 portland cement concrete; Ceiling: 3/4″ sanded gypsum plaster 1:2 for scratch coat and 1:3 for brown coat.	See Note 19	1 hr. 30 min.		1		19, 20, 21, 22	1 1/2
F/C-S-41	3/4″	Floor: 2″, 1:2:4 portland cement concrete; Ceiling: 3/4″ sanded gypsum plaster, 1:2 for scratch coat and 1:3 for brown coat.	See Note 19	2 hrs.		1		19, 20, 21, 22	2
F/C-S-42	1″	Floor: 2″, 1:2:4 portland cement concrete; Ceiling: 1″ portland cement-sand plaster with 10 lbs. of hydrated lime for @ bag of cement 1:2 for scratch coat and 1:2 1/2″ for brown coat.	See Note 19	2 hrs.		1		19, 20, 21, 22	2
F/C-S-43	1 1/2″	Floor: 2″, 1:2:4 portland cement concrete; Ceiling: 1 1/2″, 1:2 sanded gypsum plaster on ribbed metal lath.	See Note 19	2 hrs. 30 min.		1		19, 20, 21, 22	2 1/2
F/C-S-44	1 1/8″	Floor: 2″, 1:2:4 portland cement concrete; Ceiling: 1 1/8″, 1:1 sanded gypsum plaster.	See Note 19	2 hrs. 30 min.		1		19, 20, 21, 22	2 1/2
F/C-S-45	1″	Floor: 2 1/2″, 1:2:4 portland cement concrete; Ceiling: 1″, 1:2 sanded gypsum plaster.	See Note 19	2 hrs. 30 min.		1		19, 20, 21, 22	2 1/2
F/C-S-46	3/4″	Floor: 2 1/2″, 1:2:4 portland cement concrete; Ceiling: 1″ neat gypsum plaster or 3/4″ gypsum-vermiculite plaster, ratio of gypsum to vermiculite 2:1 to 3:1.	See Note 19	3 hrs.		1		19, 20, 21, 22	3
F/C-S-47	1 1/8″	Floor: 2 1/2″, 1:2:4 portland cement, sand and cinder concrete plus 1/2″, 1:2 1/2″ cement-sand finish; total thickness 3″; Ceiling: 1 1/8″, 1:1 sanded gypsum plaster.	See Note 19	3 hrs.		1		19, 20, 21, 22	3
F/C-S-48	1 1/8″	Floor: 2 1/2″, gas expanded portland cement-sand concrete plus 1/2″, 1:2.5 cement-sand finish; total thickness 3″; Ceiling: 1 1/8″ , 1:1 sanded gypsum plaster.	See Note 19	3 hrs.| 30 min.		1		19, 20, 21, 22	3 1/2
F/C-S-49	1″	Floor: 2 1/2″, 1:2:4 portland cement concrete; Ceiling: 1″ gypsum- vermiculite plaster; ratio of gypsum to vermiculite 2:1 to 3:1.	See Note 19	4 hrs.		1		19, 20, 21, 22	4
F/C-S-50	2 1/2″	Floor: 2″, 1:2:4 portland cement concrete; Ceiling: 2″ interlocking gypsum tile supported on upper face of lower flanges of beams, 1/2″ 1:3 sanded gypsum plaster.	See Note 19	2 hrs.		1		19, 20, 21, 22	2
F/C-S-51	2 1/2″	Floor: 2″, 1:2:4 portland cement concrete; Ceiling: 2″ precast metal reinforced gypsum tile, 1/2″ 1:3 sanded gypsum plaster (tile clipped to channels which are clipped to lower flanges of beams).	See Note 19	4 hrs.		1		19, 20, 21, 22	4

For SI: 1 inch = 25.4 mm, 1 foot = 305 mm, 1 pound per square inch = 0.00689 MPa, 1 pound per square foot = 47.9 N/m^2.

Notes:

1. No protective membrane over structural steel.
2. Performance time indicates first endpoint reached only several tests were continued to points where other failures occurred.
3. Load failure.

(continued)

INTERNATIONAL CODE COUNCIL®
Copyright © 2015 ICC. ALL RIGHTS RESERVED. Accessed by David Dammon on Jun 21, 2017 12:30:52 PM pursuant to License Agreement with ICC. No further reproduction or distribution authorized. ANY UNAUTHORIZED REPRODUCTION OR DISTRIBUTION IS A VIOLATION OF THE FEDERAL COPYRIGHT ACT AND THE LICENSE AGREEMENT, AND SUBJECT TO CIVIL AND CRIMINAL PENALTIES THEREUNDER.

TABLE 3.2—continued
FLOOR/CEILING ASSEMBLIES—STEEL STRUCTURAL ELEMENTS

4. Thermal failure.
5. This is an estimated time to load bearing failure. The same joist and deck specimen was used for a later test with different membrane protection.
6. Test stopped at 3 hours to reuse specimen; no endpoint reached.
7. Test stopped at 1 hour to reuse specimen; no endpoint reached.
8. All plaster used = gypsum.
9. Specimen size - 18 feet by $13^{1}/_{2}$ inches. Floor deck - base material - $^{1}/_{4}$-inch by 18-foot steel plate welded to "I" beams.
10. "I" beams - 24 inches o.c.
11. "I" beams - 48 inches o.c.
12. Apply to open web joists, pressed steel joists or rolled steel beams, which are not stressed beyond 18,000 lbs./in.^{2} in flexure for open-web pressed or light rolled joists, and 20,000 lbs./in.^{2} for American standard or heavier rolled beams.
13. Ratio of weight of portland cement to fine and coarse aggregates combined for floor slabs shall not be less than $1:6^{1}/_{2}$.
14. Plaster for ceiling shall be applied on metal lath which shall be tied to supports to give the equivalent of single No. 18 gage steel wires 5 inches o.c.
15. Load: maximum fiber stress in steel not to exceed 16,000 psi.
16. Prefabricated units 2 feet wide with length equal to the span, composed of two pieces of No. 18 gage formed steel welded together to give four longitudinal cells.
17. Depth not less than 3 inches and distance between cells no less than 2 inches.
18. Ceiling: metal lath tied to furring channels secured to runner channels hung from cellular steel.
19. Load: rolled steel supporting beams and steel plate base shall not be stressed beyond 20,000 psi in flexure. Formed steel (with wide upper flange) construction shall not be stressed beyond 16,000 psi.
20. Some type of expanded metal or woven wire shall be embedded to prevent cracking in concrete flooring.
21. Ceiling plaster shall be metal lath wired to rods or channels which are clipped or welded to steel construction. Lath shall be no smaller than 18 gage steel wire and not more than 7 inches o.c.
22. The securing rods or channels shall be at least as effective as single $^{3}/_{16}$-inch rods with 1-inch of their length bent over the lower flanges of beams with the rods or channels tied to this clip with 14 gage iron wire.

INTERNATIONAL CODE COUNCIL®
Copyright © 2015 ICC. ALL RIGHTS RESERVED. Accessed by David Dammon on Jun 21, 2017 12:30:52 PM pursuant to License Agreement with ICC. No further reproduction or distribution authorized. ANY UNAUTHORIZED REPRODUCTION OR DISTRIBUTION IS A VIOLATION OF THE FEDERAL COPYRIGHT ACT AND THE LICENSE AGREEMENT, AND SUBJECT TO CIVIL AND CRIMINAL PENALTIES THEREUNDER.

FIGURE 3.3
FLOOR/CEILING ASSEMBLIES—WOOD JOIST

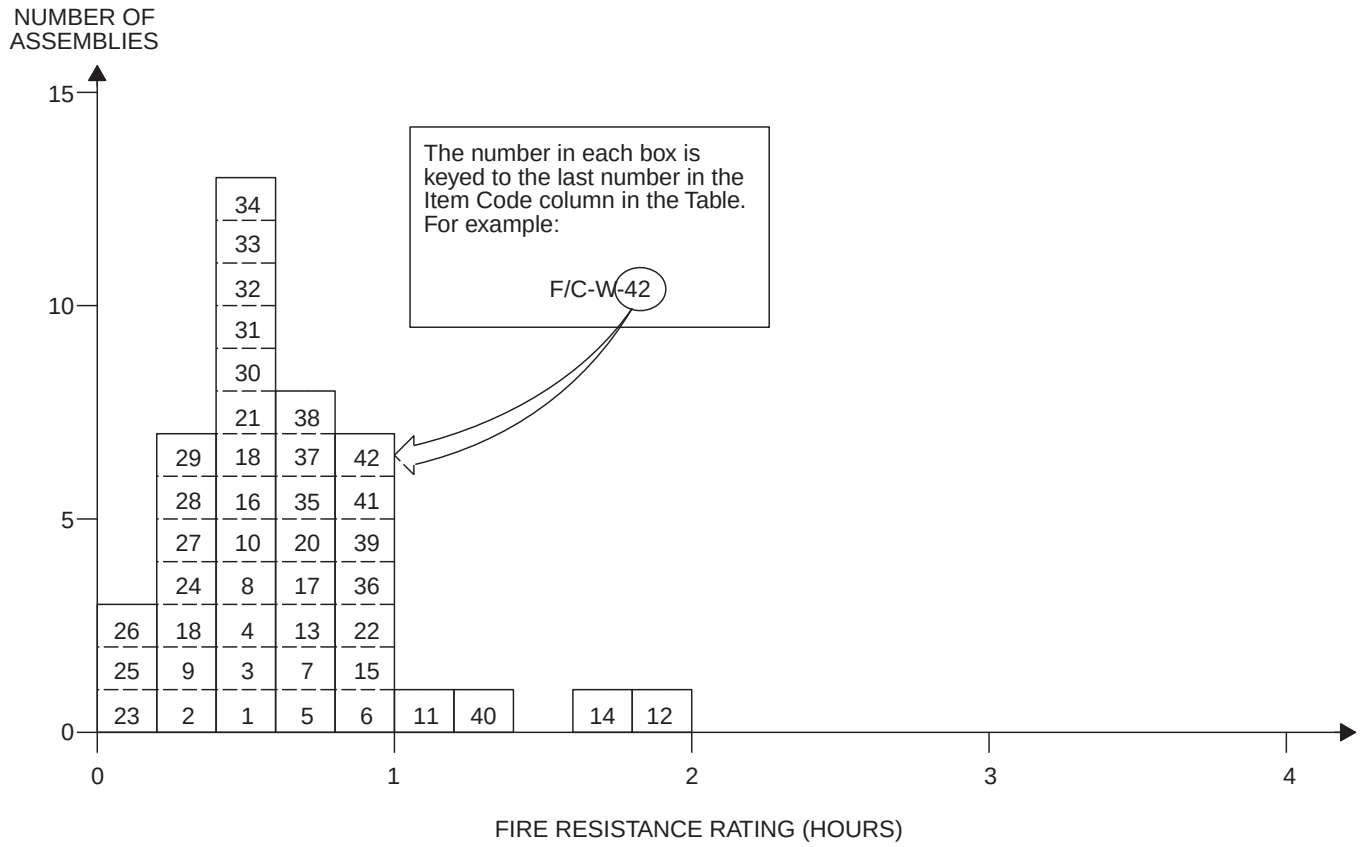

TABLE 3.3
FLOOR/CEILING ASSEMBLIES—WOOD JOIST

ITEM CODE	MEMBRANE THICKNESS	CONSTRUCTION DETAILS	PERFORMANCE		REFERENCE NUMBER			NOTES	REC. HOURS
			LOAD	TIME	PRE-BMS-92	BMS-92	POST-BMS-92		
F/C-W-1	$^3/_8$″	12′ clear span - 2″ × 9″ wood joists; 18″ o.c.; Deck: 1″ T&G; Filler: 3″ of ashes on $^1/_2$″ boards nailed to joist sides 2″ from bottom; 2″ air space; Membrane: $^3/_8$″ gypsum board.	60 psf	36 min.			7	1, 2	$^1/_2$
F/C-W-2	$^1/_2$″	12′ clear span - 2″ × 7″ joists; 15″ o.c.; Deck: 1″ nominal lumber; Membrane: $^1/_2$″ fiber board.	60 psf	22 min.			7	1, 2, 3	$^1/_4$
F/C-W-3	$^1/_2$″	12′ clear span - 2″ × 7″ wood joists; 16″ o.c.; 2″ × $1^1/_2$″ bridging at center; Deck: 1″ T&G; Membrane: $^1/_2$″ fiber board; 2 coats “distemper” paint.	30 psf	28 min.			7	1, 3, 15	$^1/_3$
F/C-W-4	$^3/_{16}$″	12′ clear span - 2″ × 7″ wood joists; 16″ o.c.; 2″ × $1^1/_2$″ bridging at center span; Deck: 1″ nominal lumber; Membrane: $^1/_2$″ fiber board under $^3/_{16}$″ gypsum plaster.	30 psf	32 min.			7	1, 2	$^1/_2$
F/C-W-5	$^5/_8$″	As per previous F/C-W-4 except membrane is $^5/_8$″ lime plaster.	70 psf	48 min.			7	1, 2	$^3/_4$
F/C-W-6	$^5/_8$″	As per previous F/C-W-5 except membrane is $^5/_8$″ gypsum plaster on 22 gage $^3/_8$″ metal lath.	70 psf	49 min.			7	1, 2	$^3/_4$

(continued)

INTERNATIONAL CODE COUNCIL®
Copyright © 2015 ICC. ALL RIGHTS RESERVED. Accessed by David Dammon on Jun 21, 2017 12:30:52 PM pursuant to License Agreement with ICC. No further reproduction or distribution authorized. ANY UNAUTHORIZED REPRODUCTION OR DISTRIBUTION IS A VIOLATION OF THE FEDERAL COPYRIGHT ACT AND THE LICENSE AGREEMENT, AND SUBJECT TO CIVIL AND CRIMINAL PENALTIES THEREUNDER.

TABLE 3.3—continued
FLOOR/CEILING ASSEMBLIES—WOOD JOIST

ITEM CODE	MEMBRANE THICKNESS	CONSTRUCTION DETAILS	PERFORMANCE		REFERENCE NUMBER			NOTES	REC. HOURS
			LOAD	TIME	PRE-BMS-92	BMS-92	POST-BMS-92		
F/C-W-7	1/2″	As per previous F/C-W-6 except membrane is 1/2″ fiber board under 1/2″ gypsum plaster.	60 psf	43 min.			7	1, 2, 3	2/3
F/C-W-8	1/2″	As per previous F/C-W-7 except membrane is 1/2″ gypsum board.	60 psf	33 min.			7	1, 2, 3	1/2
F/C-W-9	9/16″	12′ clear span - 2″ × 7″ wood joists; 15″ o.c.; 2″ × 1 1/2″ bridging at center; Deck: 1″ nominal lumber; Membrane: 3/8″ gypsum board; 3/16″ gypsum plaster.	60 psf	24 min.			7	1, 2, 3	1/3
F/C-W-10	5/8″	As per F/C-W-9 except membrane is 5/8″ gypsum plaster on wood lath.	60 psf	27 min.			7	1, 2, 3	1/3
F/C-W-11	7/8″	12′ clear span - 2″ × 9″ wood joists; 15″ o.c.; 2″ × 1 1/2″ bridging at center span; Deck: 1″ T&G; Membrane: original ceiling joists have 3/8″ plaster on wood lath; 4″ metal hangers attached below joists creating 15″ chases filled with mineral wool and closed with 7/8″ plaster (gypsum) on 3/8″ S.W.M. metal lath to form new ceiling surface.	75 psf	1 hr. 10 min.			7	1, 2	1
F/C-W-12	7/8″	12′ clear span - 2″ × 9″ wood joists; 15″ o.c.; 2″ × 1 1/2″ bridging at center; Deck: 1″ T&G; Membrane: 3″ mineral wood below joists; 3″ hangers to channel below joists; 7/8″ gypsum plaster on metal lath attached to channels.	75 psf	2 hrs.			7	1, 4	2
F/C-W-13	7/8″	12′ clear span - 2″ × 9″ wood joists; 16″ o.c.; 2″ × 1 1/2″ bridging at center span; Deck: 1″ T&G on 1″ bottoms on 3/4″ glass wool strips on 3/4″ gypsum board nailed to joists; Membrane: 3/4″ glass wool strips on joists; 3/8″ perforated gypsum lath; 1/2″ gypsum plaster.	60 psf	41 min.			7	1, 3	2/3
F/C-W-14	7/8″	12′ clear span - 2″ × 9″ wood joists; 15″ o.c.; Deck: 1″ T&G; Membrane: 3″ foam concrete in cavity on 1/2″ boards nailed to joists; wood lath nailed to 1″ × 1 1/4″ straps 14 o.c. across joists; 7/8″ gypsum plaster.	60 psf	1 hr. 40 min.			7	1, 5	1 2/3
F/C-W-15	7/8″	12′ clear span - 2″ × 9″ wood joists; 18″ o.c.; Deck: 1″ T&G; Membrane: 2″ foam concrete on 1/2″ boards nailed to joist sides 2″ from joist bottom; 2″ air space; 1″ × 1 1/4″ wood straps 14″ o.c. across joists; 7/8″ lime plaster on wood lath.	60 psf	53 min.			7	1, 2	3/4
F/C-W-16	7/8″	12′ clear span - 2″ × 9″ wood joists; Deck: 1″ T&G; Membrane: 3″ ashes on 1/2″ boards nailed to joist sides 2″ from joist bottom; 2″ air space; 1″ × 1 1/4″ wood straps 14″ o.c. ; 7/8″ gypsum plaster on wood lath.	60 psf	28 min.			7	1, 2	1/3
F/C-W-17	7/8″	As per previous F/C-W-16 but with lime plaster mix.	60 psf	41 min.			7	1, 2	2/3
F/C-W-18	7/8″	12′ clear span - 2″ × 9″ wood joists; 18″ o.c.; 2″ × 1 1/2″ bridging at center; Deck: 1″ T&G; Membrane: 7/8″ gypsum plster on wood lath.	60 psf	36 min.			7	1, 2	1/2
F/C-W-19	7/8″	As per previous F/C-W-18 except with lime plaster membrane and deck is 1″ nominal boards (plain edge).	60 psf	19 min.			7	1, 2	1/4

(continued)

INTERNATIONAL CODE COUNCIL®
Copyright © 2015 ICC. ALL RIGHTS RESERVED. Accessed by David Dammon on Jun 21, 2017 12:30:52 PM pursuant to License Agreement with ICC. No further reproduction or distribution authorized. ANY UNAUTHORIZED REPRODUCTION OR DISTRIBUTION IS A VIOLATION OF THE FEDERAL COPYRIGHT ACT AND THE LICENSE AGREEMENT, AND SUBJECT TO CIVIL AND CRIMINAL PENALTIES THEREUNDER.

TABLE 3.3—continued
FLOOR/CEILING ASSEMBLIES—WOOD JOIST

ITEM CODE	MEMBRANE THICKNESS	CONSTRUCTION DETAILS	PERFORMANCE		REFERENCE NUMBER			NOTES	REC. HOURS
			LOAD	TIME	PRE-BMS-92	BMS-92	POST-BMS-92		
F/C-W-20	7/8″	As per F/C-W-19, except deck is 1″ T&G boards.	60 psf	43 min.			7	1, 2	2/3
F/C-W-21	1″	12′ clear span - 2″ × 9″ wood joists; 16″ o.c.; 2″ × 1 1/2″ bridging at center; Deck: 1″ T&G; Membrane: 3/8″ gypsum base board; 5/8″ gypsum plaster.	70 psf	29 min.			7	1, 2	1/3
F/C-W-22	1 1/8″	12′ clear span - 2″ × 9″ wood joists; 16″ o.c.; 2″ × 2″ wood bridging at center; Deck: 1″ T&G; Membrane: hangers, channel with 3/8″ gypsum baseboard affixed under 3/4″ gypsum plaster.	60 psf	1 hr.			7	1, 2, 3	1
F/C-W-23	3/8″	Deck: 1″ nominal lumber; Joists: 2″ × 7″; 15″ o.c.; Membrane: 3/8″ plasterboard with plaster skim coat.	60 psf	11 1/2 min.			12	2, 6	1/6
F/C-W-24	1/2″	Deck: 1″ T&G lumber; Joists: 2″ × 9″; 16″ o.c.; Membrane: 1/2″ plasterboard.	60 psf	18 min.			12	2, 7	1/4
F/C-W-25	1/2″	Deck: 1″ T&G lumber; Joists: 2″ × 7″; 16″ o.c.; Membrane: 1/2″ fiber insulation board.	30 psf	8 min.			12	2, 8	2/15
F/C-W-26	1/2″	Deck: 1″ nominal lumber; Joists: 2″ × 7″; 15″ o.c.; Membrane: 1/2″ fiber insulation board.	60 psf	8 min.			12	2, 9	2/15
F/C-W-27	5/8″	Deck: 1″ nominal lumber; Joists: 2″ × 7″; 15″ o.c.; Membrane: 5/8″ gypsum plaster on wood lath.	60 psf	17 min.			12	2, 10	1/4
F/C-W-28	5/8″	Deck: 1″ T&G lumber; Joists: 2″ × 9″; 16″ o.c.; Membrane: 1/2″ fiber insulation board; 1/2″ plaster.	60 psf	20 min.			12	2, 11	1/3
F/C-W-29	No Membrane	Exposed wood joists.	See Note 13	15 min.		1		1, 12, 13, 14	1/4
F/C-W-30	3/8″	Gypsum wallboard: 3/8″ or 1/2″ with 1 1/2″ No. 15 gage nails with 3/16″ heads spaced 6″ centers with asbestos paper applied with paperhangers' paste and finished with casein paint.	See Note 13	25 min.		1		1, 12, 13, 14	1/2
F/C-W-31	1/2″	Gypsum wallboard: 1/2″ with 1 3/4″ No. 12 gage nails with 1/2″ heads, 6″ o.c., and finished with casein paint.	See Note 13	25 min.		1		1, 12, 13, 14	1/2
F/C-W-32	1/2″	Gypsum wallboard: 1/2″ with 1 1/2″ No. 12 gage nails with 1/2″ heads, 18″ o.c., with asbestos paper applied with paperhangers' paste and secured with 1 1/2″ No. 15 gage nails with 3/16″ heads and finished with casein paint; combined nail spacing 6″ o.c.	See Note 13	30 min.		1		1, 12, 13, 14	1/2
F/C-W-33	3/8″	Gypsum wallboard: two layers 3/8″ secured with 1 1/2″ No. 15 gage nails with 3/8″ heads, 6″ o.c.	See Note 13	30 min.		1		1, 12, 13, 14	1/2
F/C-W-34	1/2″	Perforated gypsum lath: 3/8″, plastered with 1 1/8″ No. 13 gage nails with 5/16″ heads, 4″ o.c.; 1/2″ sanded gypsum plaster.	See Note 13	30 min.		1		1, 12, 13, 14	1/2
F/C-W-35	1/2″	Same as F/C-W-34, except with 1 1/8″ No. 13 gage nails with 3/8″ heads, 4″ o.c.	See Note 13	45 min.		1		1, 12, 13, 14	3/4

(continued)

INTERNATIONAL CODE COUNCIL®
Copyright © 2015 ICC. ALL RIGHTS RESERVED. Accessed by David Dammon on Jun 21, 2017 12:30:52 PM pursuant to License Agreement with ICC. No further reproduction or distribution authorized. ANY UNAUTHORIZED REPRODUCTION OR DISTRIBUTION IS A VIOLATION OF THE FEDERAL COPYRIGHT ACT AND THE LICENSE AGREEMENT, AND SUBJECT TO CIVIL AND CRIMINAL PENALTIES THEREUNDER.

TABLE 3.3—continued
FLOOR/CEILING ASSEMBLIES—WOOD JOIST

ITEM CODE	MEMBRANE THICKNESS	CONSTRUCTION DETAILS	PERFORMANCE		REFERENCE NUMBER			NOTES	REC. HOURS
			LOAD	TIME	PRE-BMS-92	BMS-92	POST-BMS-92		
F/C-W-36	1/2″	Perforated gypsum lath: 3/8″ , nailed with 1 1/8″ No. 13 gage nails with 3/8″ heads, 4″ o.c.; joints covered with 3″ strips of metal lath with 1 3/4″ No. 12 nails with 1/2″ heads, 5″ o.c.; 1/2″ sanded gypsum plaster.	See Note 13	1 hr.		1		1, 12, 13, 14	1
F/C-W-37	1/2″	Gypsum lath: 3/8″ and lower layer of 3/8″ perforated gypsum lath nailed with 1 3/4″ No. 13 nails with 5/16″ heads, 4″ o.c.; 1/2″ sanded gypsum plaster or 1/2″ portland cement plaster.	See Note 13	45 min.		1		1, 12, 13, 14	3/4
F/C-W-38	3/4″	Metal lath: nailed with 1 1/4″ No. 11 nails with 3/8″ heads or 6d common driven 1″ and bent over, 6″ o.c.; 3/4″ sanded gypsum plaster.	See Note 13	45 min.		1		1, 12, 13, 14	3/4
F/C-W-39	3/4″	Same as F/C-W-38, except nailed with 1 1/2″ No. 11 barbed roof nails with 7/16″ heads, 6″ o.c.	See Note 13	1 hr.		1		1, 12, 13, 14	1
F/C-W-40	3/4″	Same as F/C-W-38, except with lath nailed to joists with additional supports for lath 27″ o.c.; attached to alternate joists and consisting of two nails driven 1 1/4″, 2″ above bottom on opposite sides of the joists, one loop of No. 18 wire slipped over each nail; the ends twisted together below lath.	See Note 13	1 hr. 15 min.		1		1, 12, 13, 14	1 1/4
F/C-W-41	3/4″	Metal lath: nailed with 1 1/2″ No. 11 barbed roof nails with 7/16″ heads, 6 o.c., with 3/4″ portland cement plaster for scratch coat and 1:3 for brown coat, 3 lbs. of asbestos fiber and 15 lbs. of hydrated lime/94 lbs. bag of cement.	See Note 13	1 hr.		1		1, 12, 13, 14	1
F/C-W-42	3/4″	Metal lath: nailed with 8d, No. 11 1/2 gage barbed box nails, 2 1/2″ driven, 1 1/4″ on slant and bent over, 6″ o.c.; 3/4″ sanded gypsum plaster, 1:2 for scratch coat and 1:3 for below coat.	See Note 13	1 hr.		1		1, 12, 13, 14	1

For SI: 1 inch = 25.4 mm, 1 foot = 305 mm, 1 pound per square inch = 0.00689 MPa, 1 pound per square foot = 47.9 N/m^2.

Notes:

1. Thickness indicates thickness of first membrane protection on ceiling surface.
2. Failure mode—flame thru.
3. Failure mode—collapse.
4. No endpoint reached at termination of test.
5. Failure imminent—test terminated.
6. Joist failure—11.5 minutes; flame thru—13 minutes; collapse—24 minutes.
7. Joist failure—17 minutes; flame thru—18 minutes; collapse—33 minutes.
8. Joist failure—18 minutes; flame thru—8 minutes; collapse—30 minutes.
9. Joist failure—12 minutes; flame thru—8 minutes; collapse—22 minutes.
10. Joist failure—11 minutes; flame thru—17 minutes; collapse—27 minutes.
11. Joist failure—17 minutes; flame thru—20 minutes; collapse—43 minutes.
12. Joists: 2-inch by 10-inch southern pine or Douglas fir; No. 1 common or better. Subfloor: 3/4-inch wood sheating diaphragm of asbestos paper, and finish of tongue-and-groove wood flooring.
13. Loadings: not more than 1,000 psi maximum fiber stress in joists.
14. Perforations in gypsum lath are to be not less than 3/4-inch diameter with one perforation for not more than 16/in.^{2} diameter.
15. “Distemper” is a British term for a water-based paint such as white wash or calcimine.

INTERNATIONAL CODE COUNCIL®
Copyright © 2015 ICC. ALL RIGHTS RESERVED. Accessed by David Dammon on Jun 21, 2017 12:30:52 PM pursuant to License Agreement with ICC. No further reproduction or distribution authorized. ANY UNAUTHORIZED REPRODUCTION OR DISTRIBUTION IS A VIOLATION OF THE FEDERAL COPYRIGHT ACT AND THE LICENSE AGREEMENT, AND SUBJECT TO CIVIL AND CRIMINAL PENALTIES THEREUNDER.

FIGURE 3.4
FLOOR/CEILING ASSEMBLIES—HOLLOW CLAY TILE WITH REINFORCED CONCRETE

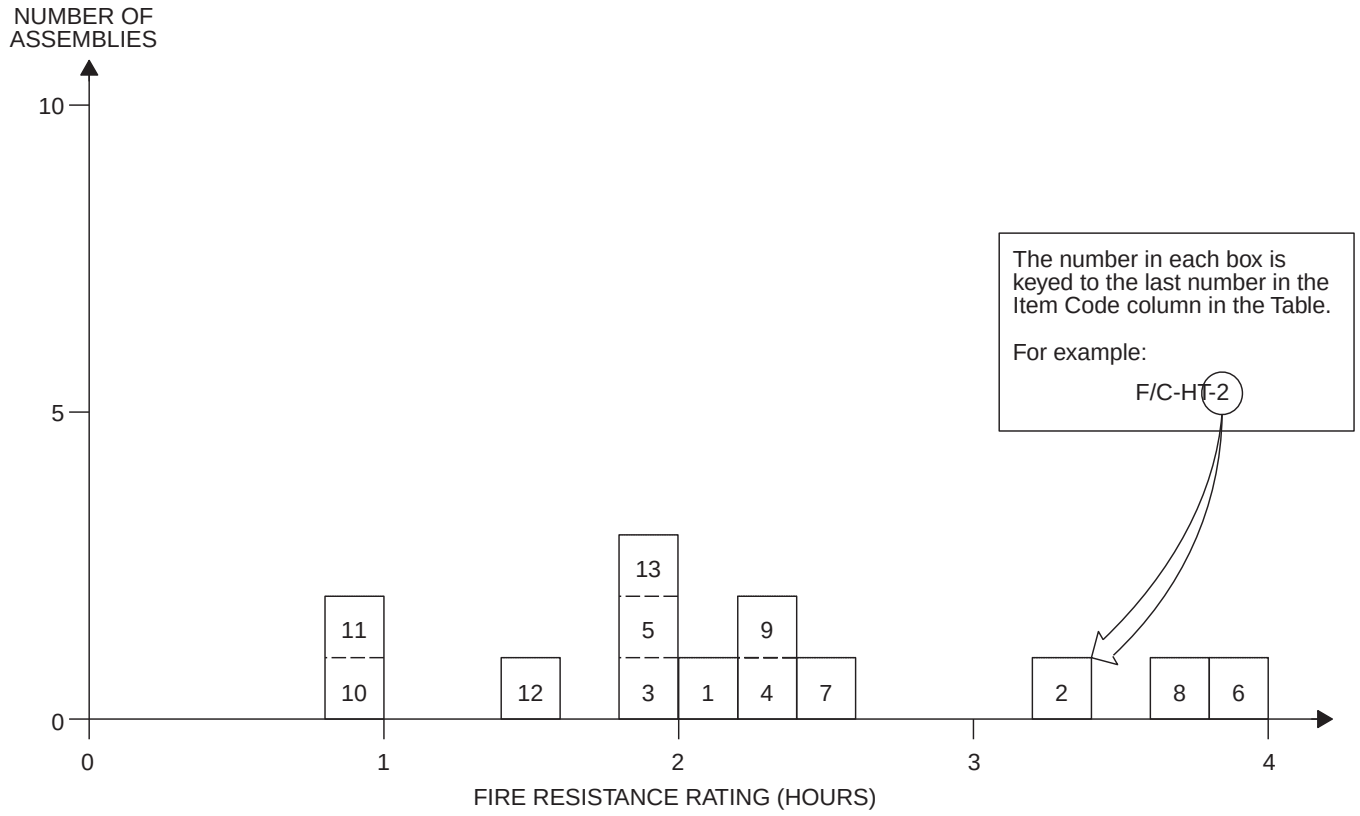

TABLE 3.4
FLOOR/CEILING ASSEMBLIES—HOLLOW CLAY TILE WITH REINFORCED CONCRETE

ITEM CODE	ASSEMBLY THICKNESS	CONSTRUCTION DETAILS	PERFORMANCE		REFERENCE NUMBER			NOTES	REC. HOURS
			LOAD	TIME	PRE-BMS-92	BMS-92	POST-BMS-92		
F/C-HT-1	6″	Cover: $1^1/_2$″ concrete (6080 psi); three cell hollow clay tiles, 12″ × 12″ × 4″; $3^1/_4$″ concrete between tiles including two $^1/_2$″ rebars with $^3/_4$″ concrete cover; $^1/_2$″ plaster cover, lower.	75 psf	2 hrs. 7 min.			7	1, 2, 3	2
F/C-HT-2	6″	Cover: $1^1/_2$″ concrete (5840 psi); three cell hollow clay tiles, 12″ × 12″ × 4″; $3^1/_4$″ concrete between tiles including two $^1/_2$″ rebars each with $^1/_2$″ concrete cover and $^5/_8$″ filler tiles between hollow tiles; $^1/_2$″ plaster cover, lower.	61 psf	3 hrs. 23 min.			7	3, 4, 6	$3^1/_3$
F/C-HT-3	6″	Cover: $1^1/_2$″ concrete (6280 psi); three cell hollow clay tiles, 12″ × 12″ × 4″; $3^1/_4$″ concrete between tiles including two $^1/_2$″ rebars with $^1/_2$″ cover; $^1/_2$″ plaster cover, lower.	122 psf	2 hrs.			7	1, 3, 5, 8	2
F/C-HT-4	6″	Cover: $1^1/_2$″ concrete (6280 psi); three cell hollow clay tiles, 12″ × 12″ × 4″; $3^1/_4$″ concrete between tiles including two $^1/_2$″ rebars with $^3/_4$″ cover; $^1/_2$″ plaster cover, lower.	115 psf	2 hrs. 23 min.			7	1, 3, 7	$2^1/_3$
F/C-HT-5	6″	Cover: $1^1/_2$″ concrete (6470 psi); three cell hollow clay tiles, 12″ × 12″ × 4″; $3^1/_4$″ concrete between tiles including two $^1/_2$″ rebars with $^1/_2$″ cover; $^1/_2$″ plaster cover, lower.	122 psf	2 hrs.			7	1, 3, 5, 8	2

(continued)

INTERNATIONAL CODE COUNCIL®
Copyright © 2015 ICC. ALL RIGHTS RESERVED. Accessed by David Dammon on Jun 21, 2017 12:30:52 PM pursuant to License Agreement with ICC. No further reproduction or distribution authorized. ANY UNAUTHORIZED REPRODUCTION OR DISTRIBUTION IS A VIOLATION OF THE FEDERAL COPYRIGHT ACT AND THE LICENSE AGREEMENT, AND SUBJECT TO CIVIL AND CRIMINAL PENALTIES THEREUNDER.

TABLE 3.4—continued
FLOOR/CEILING ASSEMBLIES—HOLLOW CLAY TILE WITH REINFORCED CONCRETE

ITEM CODE	ASSEMBLY THICKNESS	CONSTRUCTION DETAILS	PERFORMANCE		REFERENCE NUMBER			NOTES	REC. HOURS
			LOAD	TIME	PRE-BMS-92	BMS-92	POST-BMS-92		
F/C-HT-6	8″	Floor cover: $1^1/_2$″ gravel cement (4300 psi); three cell, 12″ × 12″ × 6″ ; $3^1/_2$″ space between tiles including two $^1/_2$″ rebars with 1″ cover from concrete bottom; $^1/_2$″ plaster cover, lower.	165 psf	4 hrs.			7	1, 3, 9, 10	4
F/C-HT-7	9″ (nom.)	Deck: $^7/_8$″ T&G on 2″ × $1^1/_2$″ bottoms (18″ o.c.) $1^1/_2$″ concrete cover (4600 psi); three cell hollow clay tiles, 12″ × 12″ × 4″; 3″ concrete between tiles including one $^3/_4$″ rebar $^3/_4$″ from tile bottom; $^3/_4$″ plaster cover.	95 psf	2 hrs. 26 min.			7	4, 11, 12, 13	$2^1/_3$
F/C-HT-8	9″ (nom.)	Deck: $^7/_8$″ T&G on 2″ × $1^1/_2$″ bottoms (18″ o.c.) $1^1/_2$″ concrete cover (3850 psi); three cell hollow clay tiles, 12″ × 12″ × 4″; 3″ concrete between tiles including one $^3/_4$″ rebar $^3/_4$″ from tile bottoms; $^1/_2$″ plaster cover.	95 psf	3 hrs. 28 min.			7	4, 11, 12, 13	
F/C-HT-9	9″ (nom.)	Deck: $^7/_8$″ T&G on 2″ × $1^1/_2$″ bottoms (18″ o.c.) $1^1/_2$″ concrete cover (4200 psi); three cell hollow clay tiles, 12″ × 12″ × 4″; 3″ concrete between tiles including one $^3/_4$″ rebar $^3/_4$″ from tile bottoms; $^1/_2$″ plaster cover.	95 psf	2 hrs. 14 min.			7	3, 5, 8, 11	
F/C-HT-10	$5^1/_2$″	Fire clay tile (4″ thick); $1^1/_2$″ concrete cover; for general details, see Note 15.	See Note 14	1 hr.			43	15	1
F/C-HT-11	8″	Fire clay tile (6″ thick); 2″ cover.	See Note 14	1 hr.			43	15	1
F/C-HT-12	$5^1/_2$″	Fire clay tile (4″ thick); $1^1/_2$″ cover; $^5/_8$″ gypsum plaster, lower.	See Note 14	1 hr. 30 min.			43	15	$1^1/_2$
F/C-HT-13	8″	Fire clay tile (6″ thick); 2″ cover; $^5/_8$″ gypsum plaster, lower.	See Note 14	2 hrs.			43	15	$1^1/_2$

For SI: 1 inch = 25.4 mm, 1 foot = 305 mm, 1 pound per square inch = 0.00689 MPa, 1 pound per square foot = 47.9 N/m^2.

Notes:

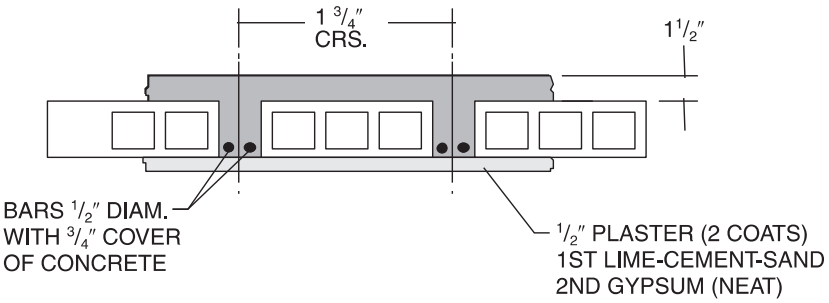

1. A generalized cross section of this floor type follows:
2. Failure mode - structural.
3. Plaster: base coat—lime-cement-sand; top coat—gypsum (neat).

(continued)

INTERNATIONAL CODE COUNCIL®
Copyright © 2015 ICC. ALL RIGHTS RESERVED. Accessed by David Dammon on Jun 21, 2017 12:30:52 PM pursuant to License Agreement with ICC. No further reproduction or distribution authorized. ANY UNAUTHORIZED REPRODUCTION OR DISTRIBUTION IS A VIOLATION OF THE FEDERAL COPYRIGHT ACT AND THE LICENSE AGREEMENT, AND SUBJECT TO CIVIL AND CRIMINAL PENALTIES THEREUNDER.

TABLE 3.4—continued
FLOOR/CEILING ASSEMBLIES-HOLLOW CLAY TILE WITH REINFORCED CONCRETE

4. Failure mode—collapse.
5. Test stopped before any endpoints were reached.
6. A generalized cross section of this floor type follows:

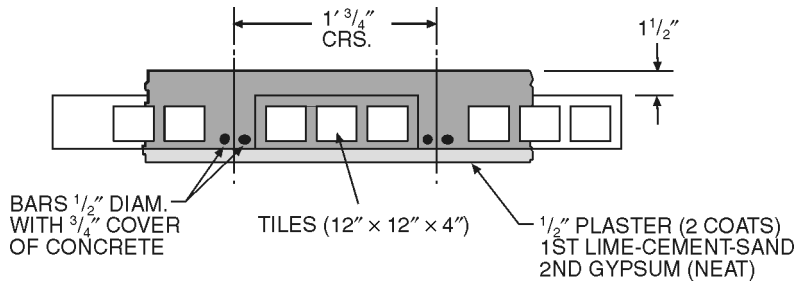

7. Failure mode—thermal—back face temperature rise.
8. Passed hose stream test.
9. Failed hose stream test.

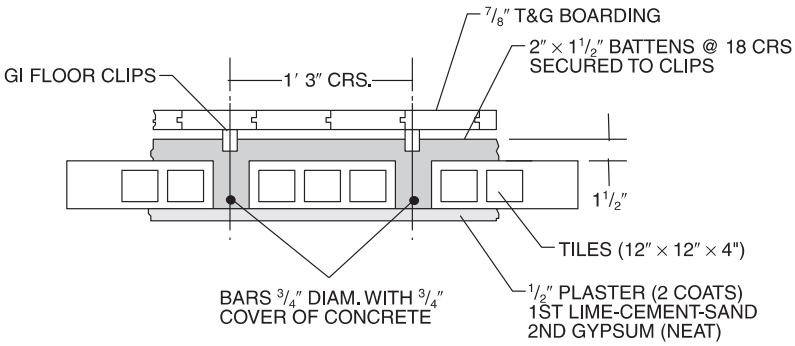

10. Test stopped at 4 hours before any endpoints were reached.
11. A generalized cross section of this floor type follows:
12. Plaster: base coat—retarded hemihydrate gypsum-sand; second coat—neat gypsum.
13. Concrete in Item 7 is P.C. based but with crushed brick aggregates while in Item 8 river sand and river gravels are used with the P.C.
14. Load - unspecified.
15. The 12-inch by 12-inch fire-clay tiles were laid end to end in rows spaced $2^1/_2$ inches or 4 inches apart. The reinforcing steel was placed between these rows and the concrete cast around them and over the tile to form the structural floor.

INTERNATIONAL CODE COUNCIL®
Copyright © 2015 ICC. ALL RIGHTS RESERVED. Accessed by David Dammon on Jun 21, 2017 12:30:52 PM pursuant to License Agreement with ICC. No further reproduction or distribution authorized. ANY UNAUTHORIZED REPRODUCTION OR DISTRIBUTION IS A VIOLATION OF THE FEDERAL COPYRIGHT ACT AND THE LICENSE AGREEMENT, AND SUBJECT TO CIVIL AND CRIMINAL PENALTIES THEREUNDER.

SECTION IV
BEAMS

TABLE 4.1.1
REINFORCED CONCRETE BEAMS
DEPTH 10″ TO LESS THAN 12″

ITEM CODE	DEPTH	CONSTRUCTION DETAILS	PERFORMANCE		REFERENCE NUMBER			NOTES	REC. HOURS
			LOAD	TIME	PRE-BMS-92	BMS-92	POST-BMS-92		
B-11-RC-1	11″	24″ wide × 11″ deep reinforced concrete "T" beam (3290 psi); Details: see Note 5 figure.	8.8 tons	4 hrs. 2 min.			7	1, 2, 14	4
B-10-RC-2	10″	24″ wide × 10″ deep reinforced concrete "T" beam (4370 psi); Details: see Note 6 figure.	8.8 tons	1 hr. 53 min.			7	1, 3	$1^{3}/_{4}$
B-10-RC-3	$10^{1}/_{2}$″	24″ wide × $10^{1}/_{2}$″ deep reinforced concrete "T" beam (4450 psi); Details: see Note 7 figure.	8.8 tons	2 hrs. 40 min.			7	1, 3	$2^{2}/_{3}$
B-11-RC-4	11″	24″ wide × 11″ deep reinforced concrete "T" beam (2400 psi); Details: see Note 8 figure.	8.8 tons	3 hrs. 32 min.			7	1, 3, 14	$3^{1}/_{2}$
B-11-RC-5	11″	24″ wide × 11″ deep reinforced concrete "T" beam (4250 psi); Details: see Note 9 figure.	8.8 tons	3 hrs. 3 min.			7	1, 3, 14	3
B-11-RC-6	11″	Concrete flange: 4″ deep × 2' wide (4895 psi) concrete; Concrete beam: 7″ deep × $6^{1}/_{2}$″ wide beam; "I" beam reinforcement; 10″ × $4^{1}/_{2}$″ × 25 lbs. R.S.J.; 1″ cover on flanges; Flange reinforcement: $^{3}/_{8}$″ diameter bars at 6″ pitch parallel to "T"; $^{1}/_{4}$″ diameter bars perpendicular to "T"; Beam reinforcement: 4″ × 6″ wire mesh No. 13 SWG; Span: 11' restrained; Details: see Note 10 figure.	10 tons	6 hrs.			7	1, 4	6
B-11-RC-7	11″	Concrete flange: 6″ deep × 1' $6^{1}/_{2}$″ wide (3525 psi) concrete; Concrete beam: 5″ deep × 8″ wide precast concrete blocks $8^{3}/_{4}$″ long; "I" beam reinforcement; 7″ × 4″ × 16 lbs. R.S.J.; 2″ cover on bottom; $1^{1}/_{2}$″ cover on top; Flange reinforcement: two rows $^{1}/_{2}$″ diameter rods parallel to "T"; Beam reinforcement: $^{1}/_{8}$″ wire mesh perpendicular to 1″ ; Span: 1′ 3″ simply supported; Details: see Note 11 figure.	3.9 tons	4 hrs.			7	1, 2	4
B-11-RC-8	11″	Concrete flange: 4″ deep × 2' wide (3525 psi) concrete; Concrete beam 7″ deep × $4^{1}/_{2}$″ wide; (scaled from drawing); "I" beam reinforcement; 10″ × $4^{1}/_{2}$″ × 25 lbs. R.S.J.; no concrete cover on bottom; Flange reinforcement: $^{3}/_{8}$″ diameter bars at 6 pitch parallel to "T"; $^{1}/_{4}$″ diameter bars perpendicular to "T"; Span: 11′ restricted.	10 tons	4 hrs.			7	1, 2, 12	4
B-11-RC-9	$11^{1}/_{2}$″	24″ wide × $11^{1}/_{2}$″ deep reinforced concrete "T" beam (4390 psi); Details: see Note 12 figure.	8.8 tons	3 hrs. 24 min.			7	1, 3	$3^{1}/_{3}$

For SI: 1 inch = 25.4 mm, 1 foot = 305 mm, 1 pound = 0.004448 kN, 1 pound per square inch = 0.00689 MPa, 1 ton = 8.896 kN.

Notes:

1. Load concentrated at mid span.
2. Achieved 4 hour performance (Class "B," British).
3. Failure mode—collapse.
4. Achieved 6 hour performance (Class "A," British).

(continued)

INTERNATIONAL CODE COUNCIL®
Copyright © 2015 ICC. ALL RIGHTS RESERVED. Accessed by David Dammon on Jun 21, 2017 12:30:52 PM pursuant to License Agreement with ICC. No further reproduction or distribution authorized. ANY UNAUTHORIZED REPRODUCTION OR DISTRIBUTION IS A VIOLATION OF THE FEDERAL COPYRIGHT ACT AND THE LICENSE AGREEMENT, AND SUBJECT TO CIVIL AND CRIMINAL PENALTIES THEREUNDER.

TABLE 4.1.1—continued
REINFORCED CONCRETE BEAMS
DEPTH 10″ TO LESS THAN 12″

5.

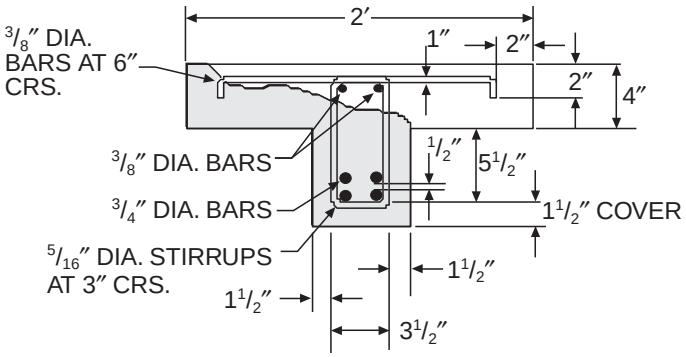

6.

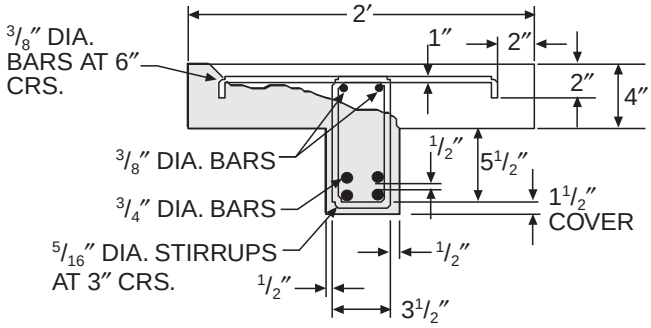

7.

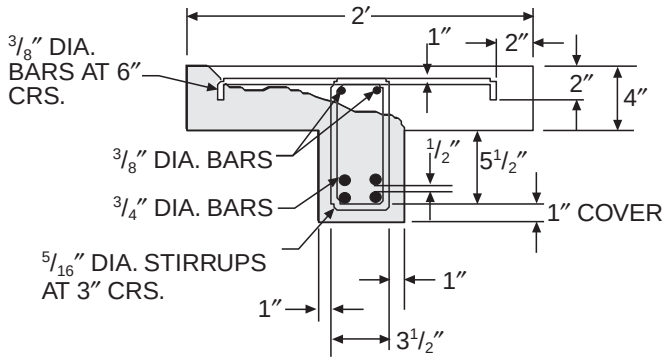

8.

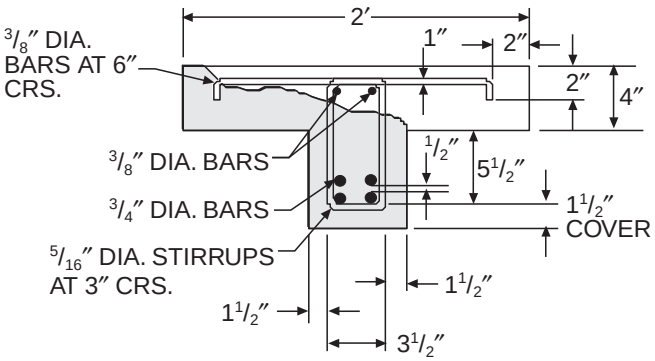

9.

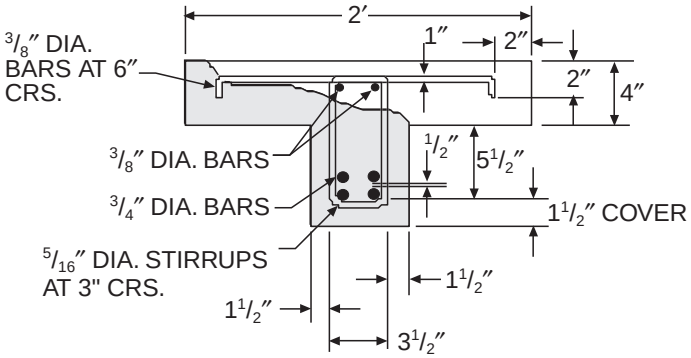

10.

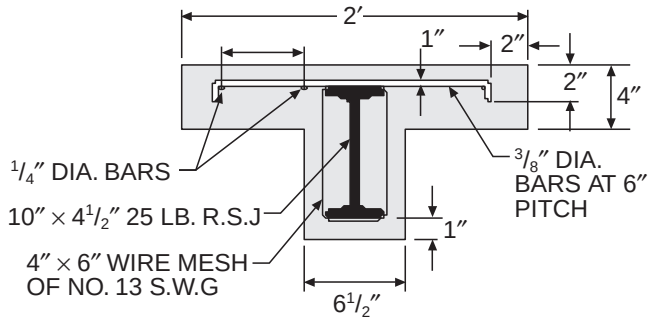

(continued)

INTERNATIONAL CODE COUNCIL®
Copyright © 2015 ICC. ALL RIGHTS RESERVED. Accessed by David Dammon on Jun 21, 2017 12:30:52 PM pursuant to License Agreement with ICC. No further reproduction or distribution authorized. ANY UNAUTHORIZED REPRODUCTION OR DISTRIBUTION IS A VIOLATION OF THE FEDERAL COPYRIGHT ACT AND THE LICENSE AGREEMENT, AND SUBJECT TO CIVIL AND CRIMINAL PENALTIES THEREUNDER.

TABLE 4.1.1—continued
REINFORCED CONCRETE BEAMS
DEPTH 10″ TO LESS THAN 12″

11.

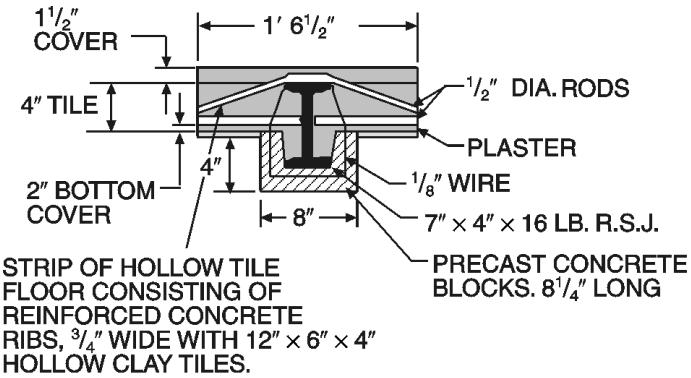

SPAN AND END CONDITIONS:-10′-3″ (CLEAR).
SIMPLY SUPPORTED.

12.

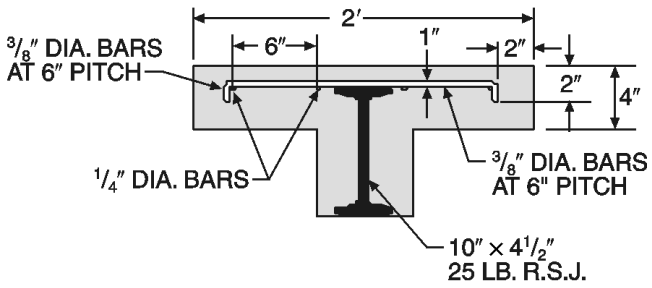

13.

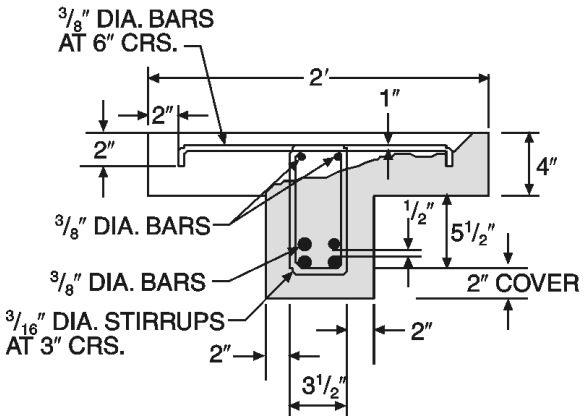

14. The different performances achieved by B-11-RC-1, B-11-RC-4 and B-11-RC-5 are attributable to differences in concrete aggregate compositions reported in the source document but unreported in this table. This demonstrates the significance of material composition in addition to other details.

INTERNATIONAL CODE COUNCIL®
Copyright © 2015 ICC. ALL RIGHTS RESERVED. Accessed by David Dammon on Jun 21, 2017 12:30:52 PM pursuant to License Agreement with ICC. No further reproduction or distribution authorized. ANY UNAUTHORIZED REPRODUCTION OR DISTRIBUTION IS A VIOLATION OF THE FEDERAL COPYRIGHT ACT AND THE LICENSE AGREEMENT, AND SUBJECT TO CIVIL AND CRIMINAL PENALTIES THEREUNDER.

TABLE 4.1.2
REINFORCED CONCRETE BEAMS
DEPTH 12″ TO LESS THAN 14″

ITEM CODE	DEPTH	CONSTRUCTION DETAILS	PERFORMANCE		REFERENCE NUMBER			NOTES	REC. HOURS
			LOAD	TIME	PRE-BMS-92	BMS-92	POST-BMS-92		
B-12-RC-1	12″	12″ × 8″ section; 4160 psi aggregate concrete; Reinforcement: 4-$^{7}/_{8}$″ rebars at corners; 1″ below each surface; $^{1}/_{4}$″ stirrups 10″ o.c.	5.5 tons	2 hrs.			7	1	2
B-12-RC-2	12″	Concrete flange: 4″ deep × 2' wide (3045 psi) concrete at 35 days; Concrete beam: 8″ deep; "I" beam reinforcement: 10″ × 4$^{1}/_{2}$″ × 25 lbs. R.S.J.; 1″ cover on flanges; Flange reinforcement: $^{3}/_{8}$″ diameter bars at 6″ pitch parallel to "T"; $^{1}/_{4}$″ diameter bars perpendicular to "T"; Beam reinforcement: 4″ × 6″ wire mesh No. 13 SWG; Span: 10′ 3″ simply supported.	10 tons	4 hrs.			7	2, 3, 5	4
B-13-RC-3	13″	Concrete flange: 4″ deep × 2' wide (3825 psi) concrete at 46 days; Concrete beam: 9″ deep × 8$^{1}/_{2}$″ wide; (scaled from drawing); "I" beam reinforcement: 10″ × 4$^{1}/_{2}$″ × 25 lbs. R.S.J.; 3″ cover on bottom flange; 1″ cover on top flange; Flange reinforcement: $^{3}/_{8}$″ diameter bars at 6″ pitch parallel to "T"; $^{1}/_{4}$″ diameter bars perpendicular to "T"; Beam reinforcement: 4″ × 6″ wire mesh No. 13 SWG; Span: 11′ restrained.	10 tons	6 hrs.			7	2, 3, 6, 8, 9	4
B-12-RC-4	12″	Concrete flange: 4″ deep × 2' wide (3720 psi) concrete at 42 days; Concrete beam: 8″ deep × 8$^{1}/_{2}$″ wide; (scaled from drawing); "I" beam reinforcement: 10″ × 4$^{1}/_{2}$″ × 25 lbs. R.S.J.; 2″ cover bottom flange; 1″ cover top flange; Flange reinforcement: $^{3}/_{8}$″ diameter bars at 6″ pitch parallel to "T"; $^{1}/_{4}$″ diameter bars perpendicular to "T"; Beam reinforcement: 4″ × 6″ wire mesh No. 13 SWG; Span: 11′ restrained.	10 tons	6 hrs.			7	1, 3, 4, 7, 8, 9	4

For SI: 1 inch = 25.4 mm, 1 foot = 305 mm, 1 pound = 0.004448 kN, 1 pound per square inch = 0.00689 MPa, 1 ton = 8.896 kN.

Notes:

1. Qualified for 2 hour use. (Grade "C," British) Test included hose stream and reload at 48 hours.
2. Load concentrated at mid span.
3. British test.
4. British test—qualified for 6 hour use (Grade "A").

(continued)

INTERNATIONAL CODE COUNCIL®
Copyright © 2015 ICC. ALL RIGHTS RESERVED. Accessed by David Dammon on Jun 21, 2017 12:30:52 PM pursuant to License Agreement with ICC. No further reproduction or distribution authorized. ANY UNAUTHORIZED REPRODUCTION OR DISTRIBUTION IS A VIOLATION OF THE FEDERAL COPYRIGHT ACT AND THE LICENSE AGREEMENT, AND SUBJECT TO CIVIL AND CRIMINAL PENALTIES THEREUNDER.

TABLE 4.1.2—continued
REINFORCED CONCRETE BEAMS
DEPTH 12″ TO LESS THAN 14″

5.

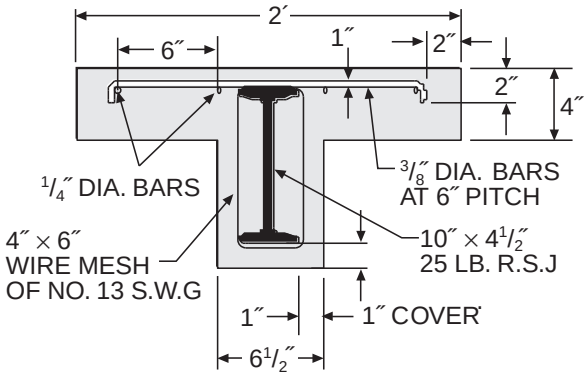

6.

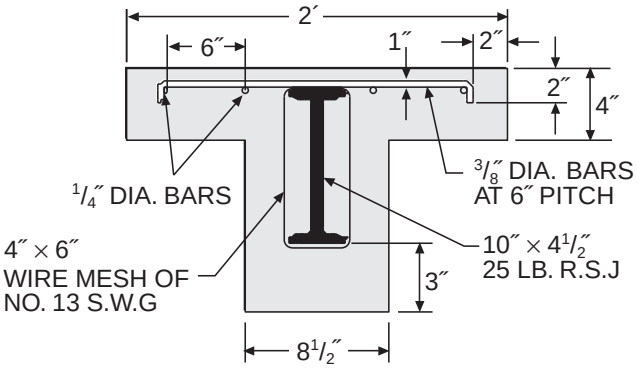

7.

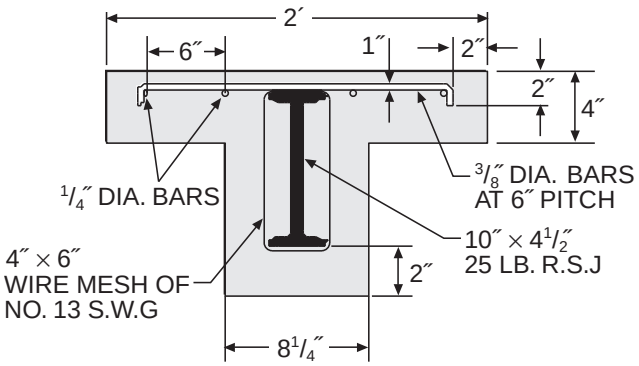

8. See Table 4.1.3, Note 5.

9. Hourly rating based upon B-12-RC-2 above.

INTERNATIONAL CODE COUNCIL®
Copyright © 2015 ICC. ALL RIGHTS RESERVED. Accessed by David Dammon on Jun 21, 2017 12:30:52 PM pursuant to License Agreement with ICC. No further reproduction or distribution authorized. ANY UNAUTHORIZED REPRODUCTION OR DISTRIBUTION IS A VIOLATION OF THE FEDERAL COPYRIGHT ACT AND THE LICENSE AGREEMENT, AND SUBJECT TO CIVIL AND CRIMINAL PENALTIES THEREUNDER.

TABLE 4.1.3
REINFORCED CONCRETE BEAMS
DEPTH 14″ TO LESS THAN 16″

ITEM CODE	DEPTH	CONSTRUCTION DETAILS	PERFORMANCE		REFERENCE NUMBER			NOTES	REC. HOURS
			LOAD	TIME	PRE-BMS-92	BMS-92	POST-BMS-92		
B-15-RC-1	15″	Concrete flange: 4″ deep × 2' wide (3290 psi) concrete; Concrete beam: 10″ deep × $8^1/_2$″ wide; "I" beam reinforcement: 10″ × $4^1/_2$″ × 25 lbs. R.S.J.; 4″ cover on bottom flange; 1″ cover on top flange; Flange reinforcement: $^3/_8$″ diameter bars at 6″ pitch parallel to "T"; $^1/_4$″ diameter bars perpendicular to "T"; Beam reinforcement: 4″ × 6″ wire mesh No. 13 SWG; Span: 11′ restrained.	10 tons	6 hrs.			7	1, 2, 3 5, 6	4
B-15-RC-2	15″	Concrete flange: 4″ deep × 2' wide (4820 psi) concrete; Concrete beam: 10″ deep × $8^1/_2$″ wide; "I" beam reinforcement: 10″ × $4^1/_2$″ × 25 lbs. R.S.J.; 1″ cover over wire mesh on bottom flange; 1″ cover on top flange; Flange reinforcement: $^3/_8$″ diameter bars at 6″ pitch parallel to "T"; $^1/_4$″ diameter bars perpendicular to "T"; Beam reinforcement: 4″ × 6″ wire mesh No. 13 SWG; Span: 11′ restrained.	10 tons	6 hrs.			7	1, 2, 4, 5, 6	4

For SI: 1 inch = 25.4 mm, 1 foot = 305 mm, 1 pound = 0.004448 kN, 1 pound per square inch = 0.00689 MPa, 1 ton = 8.896 kN.

Notes:

1. Load concentrated at mid span.
2. Achieved 6 hour fire rating (Grade "A," British).
3.

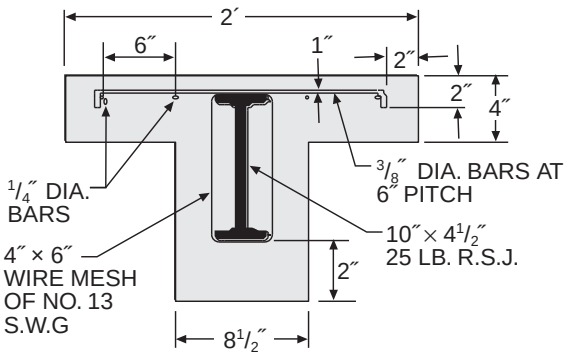

4.

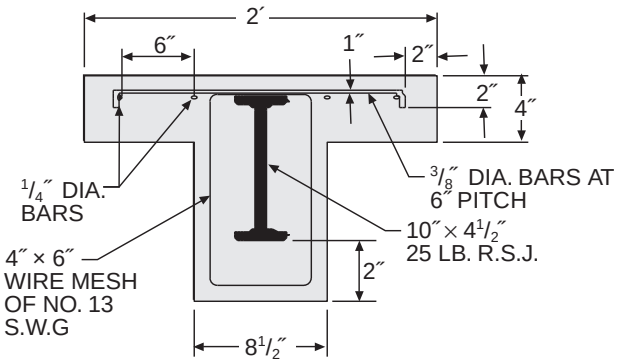

5. Section 43.147 of the 1979 edition of the *Uniform Building Code Standards* provides:

   "A restrained condition in fire tests, as used in this standard, is one in which expansion at the supports of a load-carrying element resulting from the effects of the fire is resisted by forces external to the element. An unrestrained condition is one in which the load-carrying element is free to expand and rotate at its support."

   "Restraint in buildings is defined as follows: Floor and roof assemblies and individual beams in buildings shall be considered restrained when the surrounding or supporting structure is capable of resisting the thermal expansion throughout the range of anticipated elevated temperatures. Construction not complying . . . is assumed to be free to rotate and expand and shall be considered as unrestrained."

   "Restraint may be provided by the lateral stiffness of supports for floor and roof assemblies and intermediate beams forming part of the assembly. In order to develop restraint, connections must adequately transfer thermal thrusts to such supports. The rigidity of adjoining panels or structures shall be considered in assessing the capability of a structure to resist therm expansion."

   Because it is difficult to determine whether an existing building's structural system is capable of providing the required restraint, the lower hourly ratings of a similar but unrestrained assembly have been recommended.
6. Hourly rating based upon Table 4.2.1, Item B-12-RC-2.

INTERNATIONAL CODE COUNCIL®
Copyright © 2015 ICC. ALL RIGHTS RESERVED. Accessed by David Dammon on Jun 21, 2017 12:30:52 PM pursuant to License Agreement with ICC. No further reproduction or distribution authorized. ANY UNAUTHORIZED REPRODUCTION OR DISTRIBUTION IS A VIOLATION OF THE FEDERAL COPYRIGHT ACT AND THE LICENSE AGREEMENT, AND SUBJECT TO CIVIL AND CRIMINAL PENALTIES THEREUNDER.

TABLE 4.2.1
REINFORCED CONCRETE BEAMS—UNPROTECTED DEPTH
10″ TO LESS THAN 12″

ITEM CODE	DEPTH	CONSTRUCTION DETAILS	PERFORMANCE		REFERENCE NUMBER			NOTES	REC. HOURS
			LOAD	TIME	PRE- BMS-92	BMS-92	POST-BMS-92		
B-SU-1	10″	10″ × $4^{1}/_{2}$″ × 25 lbs. “I” beam.	10 tons	39 min.			7	1	$^{1}/_{3}$

For SI: 1 inch = 25.4 mm, 1 pound = 0.004448 kN, 1 ton = 8.896 kN.

Notes:

1. Concentrated at mid span.

TABLE 4.2.2
STEEL BEAMS—CONCRETE PROTECTION DEPTH
10″ TO LESS THAN 12″

ITEM CODE	DEPTH	CONSTRUCTION DETAILS	PERFORMANCE		REFERENCE NUMBER			NOTES	REC. HOURS
			LOAD	TIME	PRE- BMS-92	BMS-92	POST- BMS-92		
B-SC-1	10″	10″ × 8″ rectangle; aggregate concrete (4170 psi) with 1″ top cover and 2″ bottom cover; No. 13 SWG iron wire loosely wrapped at approximately 6″ pitch about 7″ × 4″ × 16 lbs. “I” beam.	3.9 tons	3 hrs. 46 min.			7	1, 2, 3	$3^{3}/_{4}$
B-SC-1	10″	10″ × 8″ rectangle; aggregate concrete (3630 psi) with 1″ top cover and 2″ bottom cover; No. 13 SWG iron wire loosely wrapped at approximately 6″ pitch about 7″ × 4″ × 16 lbs. “I” beam.	5.5 tons	5 hrs. 26 min.			7	1, 4, 5, 6, 7	$3^{3}/_{4}$

For SI: 1 inch = 25.4 mm, 1 pound = 0.004448 kN, 1 pound per square inch = 0.00689 MPa, 1 ton = 8.896 kN.

Notes:

1. Load concentrated at mid span.
2. Specimen 10-foot 3-inch clear span simply supported.
3. Passed Grade “C” fire resistance (British) including hose stream and reload.
4. Specimen 11-foot clear span—restrained.
5. Passed Grade “B” fire resistance (British) including hose stream and reload.
6. See Table 4.1.3, Note 5.
7. Hourly rating based upon B-SC-1 above.

INTERNATIONAL CODE COUNCIL®
Copyright © 2015 ICC. ALL RIGHTS RESERVED. Accessed by David Dammon on Jun 21, 2017 12:30:52 PM pursuant to License Agreement with ICC. No further reproduction or distribution authorized. ANY UNAUTHORIZED REPRODUCTION OR DISTRIBUTION IS A VIOLATION OF THE FEDERAL COPYRIGHT ACT AND THE LICENSE AGREEMENT, AND SUBJECT TO CIVIL AND CRIMINAL PENALTIES THEREUNDER.

SECTION V
DOORS

FIGURE 5.1
RESISTANCE OF DOORS TO FIRE EXPOSURE

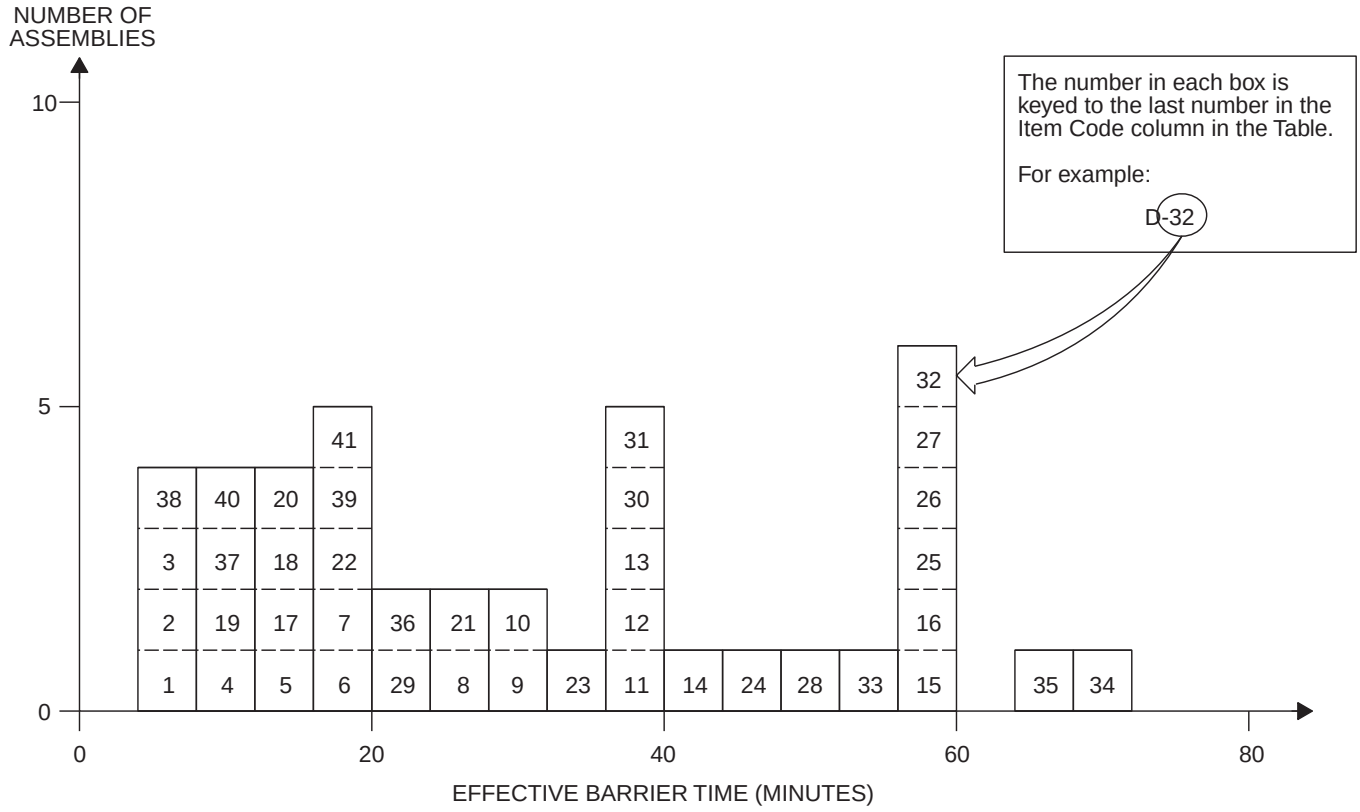

TABLE 5.1
RESISTANCE OF DOORS TO FIRE EXPOSURE

ITEM CODE	DOOR MINIMUM THICKNESS	CONSTRUCTION DETAILS	PERFORMANCE		REFERENCE NUMBER			NOTES	REC. (MIN.)
			EFFECTIVE BARRIER	EDGE FLAMING	PRE- BMS-92	BMS-92	POST- BMS-92		
D-1	$^3/_8$″	Panel door; pine perimeter ($1^3/_8$″); painted (enamel).	5 min. 10 sec.	N/A			90	1, 2	5
D-2	$^3/_8$″	As above, with two coats U.L. listed intumescent coating.	5 min. 30 sec.	5 min.			90	1, 2, 7	5
D-3	$^3/_8$″	As D-1, with standard primer and flat interior paint.	5 min. 55 sec.	N/A			90	1, 3, 4	5
D-4	$2^5/_8$″	As D-1, with panels covered each side with $^1/_2$″ plywood; edge grouted with sawdust filled plaster; door faced with $^1/_8$″ hardboard each side; paint see (5).	11 min. 15 sec.	3 min. 45 sec.			90	1, 2, 5, 7	10

(continued)

INTERNATIONAL CODE COUNCIL®
Copyright © 2015 ICC. ALL RIGHTS RESERVED. Accessed by David Dammon on Jun 21, 2017 12:30:52 PM pursuant to License Agreement with ICC. No further reproduction or distribution authorized. ANY UNAUTHORIZED REPRODUCTION OR DISTRIBUTION IS A VIOLATION OF THE FEDERAL COPYRIGHT ACT AND THE LICENSE AGREEMENT, AND SUBJECT TO CIVIL AND CRIMINAL PENALTIES THEREUNDER.

TABLE 5.1—continued
RESISTANCE OF DOORS TO FIRE EXPOSURE

ITEM CODE	DOOR MINIMUM THICKNESS	CONSTRUCTION DETAILS	PERFORMANCE		REFERENCE NUMBER			NOTES	REC. (MIN.)
			EFFECTIVE BARRIER	EDGE FLAMING	PRE- BMS-92	BMS-92	POST- BMS-92		
D-5	$^3/_8$″	As D-1, except surface protected with glass fiber reinforced intumescent fire retardant coating.	16 min.	N/A			90	1, 3, 4, 7	15
D-6	$1^5/_8$″	Door detail: As D-4, except with $^1/_8$″ cement asbestos board facings with aluminum foil; door edges protected by sheet metal.	17 min.	10 min. 15 sec.			90	1, 3, 4	15
D-7	$1^5/_8$″	Door detail with $^1/_8$″ hard-board cover each side as facings; glass fiber rein-forced intumescent coat-ing applied.	20 min.	N/A			90	1, 3, 4, 7	20
D-8	$1^5/_8$″	Door detail same as D-4; paint was glass reinforced epoxy intumescent.	26 min.	24 min. 45 sec.			90	1, 3, 4, 6, 7	25
D-9	$1^5/_8$″	Door detail same as D-4 with facings of $^1/_8$″ cement asbestos board.	29 min.	3 min. 15 sec.			90	1, 2	5
D-10	$1^5/_8$″	As per D-9.	31 min. 30 sec.	7 min. 20 sec.			90	1, 3, 4	6
D-11	$1^5/_8$″	As per D-7; painted with epoxy intumescent coating including glass fiber rov-ing.	36 min. 25 sec.	N/A			90	1, 3, 4	35
D-12	$1^5/_8$″	As per D-4 with intumes-cent fire retardant paint.	37 min. 30 sec.	24 min. 40 sec.			90	1, 3, 4	30
D-13	$1^1/_2$″ (nom.)	As per D-4, except with 24 ga. galvanized sheet metal facings.	39 min.	39 min.			90	1, 3, 4	39
D-14	$1^5/_8$″	As per D-9.	41 min. 30 sec.	17 min. 20 sec.			90	1, 3, 4, 6	20
D-15	—	Class C steel fire door.	60 min.	58 min.			90	7, 8	60
D-16	—	Class B steel fire door.	60 min.	57 min.			90	7, 8	60
D-17	$1^3/_4$″	Solid core flush door; core staves laminated to facings but not each other; Birch plywood facings $^1/_2$″ rebate in door frame for door; $^3/_{32}$″ clearance between door and wood frame.	15 min.	13 min.			37	11	13

(continued)

INTERNATIONAL CODE COUNCIL®
Copyright © 2015 ICC. ALL RIGHTS RESERVED. Accessed by David Dammon on Jun 21, 2017 12:30:52 PM pursuant to License Agreement with ICC. No further reproduction or distribution authorized. ANY UNAUTHORIZED REPRODUCTION OR DISTRIBUTION IS A VIOLATION OF THE FEDERAL COPYRIGHT ACT AND THE LICENSE AGREEMENT, AND SUBJECT TO CIVIL AND CRIMINAL PENALTIES THEREUNDER.

TABLE 5.1—continued
RESISTANCE OF DOORS TO FIRE EXPOSURE

ITEM CODE	DOOR MINIMUM THICKNESS	CONSTRUCTION DETAILS	PERFORMANCE		REFERENCE NUMBER			NOTES	REC. (MIN.)
			EFFECTIVE BARRIER	EDGE FLAMING	PRE- BMS-92	BMS-92	POST- BMS-92		
D-18	$1^{3}/_{4}$″	As per D-17.	14 min.	13 min.			37	11	13
D-19	$1^{3}/_{4}$″	Door same as D-17, except with 16 ga. steel; $^{3}/_{32}$″ door frame clearance.	12 min.	—			37	9, 11	10
D-20	$1^{3}/_{4}$″	As per D-19.	16 min.	—			37	10, 11	10
D-21	$1^{3}/_{4}$″	Doors as per D-17; intumescent paint applied to top and side edges.	26 min.	—			37	11	25
D-22	$1^{3}/_{4}$″	Door as per D-17, except with $^{1}/_{2}$″ × $^{1}/_{8}$″ steel strip set into edges of door at top and side facing stops; matching strip on stop.	18 min.	6 min.			37	11	18
D-23	$1^{3}/_{4}$″	Solid oak door.	36 min.	22 min.			15	13	25
D-24	$1^{7}/_{8}$″	Solid oak door.	45 min.	35 min.			15	13	35
D-25	$1^{7}/_{8}$″	Solid teak door.	58 min.	34 min.			15	13	35
D-26	$1^{7}/_{8}$″	Solid (pitch) pine door.	57 min.	36 min.			15	13	35
D-27	$1^{7}/_{8}$″	Solid deal (pine) door.	57 min.	30 min.			15	13	30
D-28	$1^{7}/_{8}$″	Solid mahogany door.	49 min.	40 min.			15	13	45
D-29	$1^{7}/_{8}$″	Solid poplar door.	24 min.	3 min.			15	13, 14	5
D-30	$1^{7}/_{8}$″	Solid oak door.	40 min.	33 min.			15	13	35
D-31	$1^{7}/_{8}$″	Solid walnut door.	40 min.	15 min.			15	13	20
D-32	$2^{5}/_{8}$″	Solid Quebec pine.	60 min.	60 min.			15	13	60
D-33	$2^{5}/_{8}$″	Solid pine door.	55 min.	39 min.			15	13	40
D-34	$2^{5}/_{8}$″	Solid oak door.	69 min.	60 min.			15	13	60
D-35	$2^{5}/_{8}$″	Solid teak door.	65 min.	17 min.			15	13	60
D-36	$1^{1}/_{2}$″	Solid softwood door.	23 min.	8.5 min.			15	13	10
D-37	$^{3}/_{4}$″	Panel door.	8 min.	7.5 min.			15	13	5
D-38	$^{5}/_{16}$″	Panel door.	5 min.	5 min.			15	13	5
D-39	$^{3}/_{4}$″	Panel door, fire retardant treated.	$17^{1}/_{2}$ min.	3 min.			15	13	8
D-40	$^{3}/_{4}$″	Panel door, fire retardant treated.	$8^{1}/_{2}$ min.	$8^{1}/_{2}$ min.			15	13	8
D-41	$^{3}/_{4}$″	Panel door, fire retardant treated.	$16^{3}/_{4}$ min.	$11^{1}/_{2}$ min.			15	13	8

For SI: 1 inch = 25.4 mm, 1 foot = 305 mm.

Notes:

1. All door frames were of standard lumber construction.
2. Wood door stop protected by asbestos millboard.
3. Wood door stop protected by sheet metal.
4. Door frame protected with sheet metal and weather strip.
5. Surface painted with intumescent coating.
6. Door edge sheet metal protected.
7. Door edge intumescent paint protected.
8. Formal steel frame and door stop.
9. Door opened into furnace at 12 feet.
10. Similar door opened into furnace at 12 feet.
11. The doors reported in these tests represent the type contemporaries used as 20-minute solid-core wood doors. The test results demonstrate the necessity of having wall anchored metal frames, minimum cleaners possible between door, frame and stops. They also indicate the utility of long throw latches and the possible use of intumescent paints to seal doors to frames in event of a fire.
12. Minimum working clearance and good latch closure are absolute necessities for effective containment for all such working door assemblies.
13. Based on British tests.
14. Failure at door-frame interface.

INTERNATIONAL CODE COUNCIL®
Copyright © 2015 ICC. ALL RIGHTS RESERVED. Accessed by David Dammon on Jun 21, 2017 12:30:52 PM pursuant to License Agreement with ICC. No further reproduction or distribution authorized. ANY UNAUTHORIZED REPRODUCTION OR DISTRIBUTION IS A VIOLATION OF THE FEDERAL COPYRIGHT ACT AND THE LICENSE AGREEMENT, AND SUBJECT TO CIVIL AND CRIMINAL PENALTIES THEREUNDER.

BIBLIOGRAPHY

1. Central Housing Committee on Research, Design, and Construction; Subcommittee on Fire Resistance Classifications, "Fire-Resistance Classifications of Building Constructions," *Building Materials and Structures,* Report BMS 92, National Bureau of Standards, Washington, Oct. 1942. (Available from NTIS No. COM-73-10974)
2. Foster, H. D., Pinkston, E. R., and Ingberg, S. H., "Fire Resistance of Structural Clay Tile Partitions," *Building Materials and Structures, Report* BMS 113, National Bureau of Standards, Washington, Oct. 1948.
3. Ryan, J. V., and Bender, E.W., "Fire Endurance of Open-Web Steel-Joist Floors with Concrete Slabs and Gypsum Ceilings," *Building Materials and Structures,* Report BMS 141, National Bureau of Standards, Washington, Aug. 1954.
4. Mitchell, N. D., "Fire Tests of Wood-Framed Walls and Partitions with Asbestos-Cement Facings," *Building Materials and Structures,* Report BMS 123, National Bureau of Standards, Washington, May 1951.
5. Robinson, H. E., Cosgrove, L. A., and Powell, F. J., "Thermal Resistance of Airspace and Fibrous Insulations Bounded by Reflective Surfaces," *Building Materials and Structures,* Report BMS 151, National Bureau of Standards, Washington, Nov. 1957.
6. Shoub, H., and Ingberg, S. H., "Fire Resistance of Steel Deck Floor Assemblies," *Building Science Series,* 11, National Bureau of Standards, Washington, Dec. 1967.
7. Davey, N., and Ashton, L. A., "Investigations on Building Fires, Part V: Fire Tests of Structural Elements," *National Building Studies,* Research Paper, No. 12, Dept. of Scientific and Industrial Research (Building Research Station), London, 1953.
8. National Board of Fire Underwriters, *Fire Resistance Ratings of Beam, Girder, and Truss Protections, Ceiling Constructions, Column Protections, Floor and Ceiling Constructions, Roof Constructions, Walls and Partitions,* New York, April 1959.
9. Mitchell, N.D., Bender, E.D., and Ryan, J.V., "Fire Resistance of Shutters for Moving-Stairway Openings," *Building Materials and Structures,* Report BMS 129, National Bureau of Standards, Washington, March 1952.
10. National Board of Fire Underwriters, *National Building Code; an Ordinance Providing for Fire Limits, and Regulations Governing the Construction, Alteration, Equipment, or Removal of Buildings or Structures,* New York, 1949.
11. Department of Scientific and Industrial Research and of the Fire Offices' Committee, Joint Committee of the Building Research Board, "Fire Gradings of Buildings, Part I: General Principles and Structural Precautions," *Post-War Building Studies,* No. 20, Ministry of Works, London, 1946.
12. Lawson, D. I., Webster, C. T., and Ashton, L. A., "Fire Endurance of Timber Beams and Floors," *National Building Studies,* Bulletin, No. 13, Dept. of Scientific and Industrial Research and Fire Offices' Committee (Joint Fire Research Organization), London, 1951.
13. Parker, T. W., Nurse, R. W., and Bessey, G. E., "Investigations on Building Fires. Part I: The Estimation of the Maximum Temperature Attained in Building Fires from Examination of the Debris, and Part II: The Visible Change in Concrete or Mortar Exposed to High Temperatures," *National Building Studies,* Technical Paper, No. 4, Dept. of Scientific and Industrial Research (Building Research Station), London, 1950.
14. Bevan, R. C., and Webster, C. T., "Investigations on Building Fires, Part III: Radiation from Building Fires," *National Building Studies,* Technical Paper, No. 5, Dept. of Scientific and Industrial Research (Building Research Station), London, 1950.
15. Webster, D. J., and Ashton, L. A., "Investigations on Building Fires, Part IV: Fire Resistance of Timber Doors," *National Building Studies,* Technical Paper, No. 6, Dept. of Scientific and Industrial Research (Building Research Station), London, 1951.
16. Kidder, F. E., *Architects' and Builders' Handbook: Data for Architects, Structural Engineers, Contractors, and Draughtsmen,* comp. by a Staff of Specialists and H. Parker, editor-in-chief, 18th ed., enl., J. Wiley, New York, 1936.
17. Parker, H., Gay, C. M., and MacGuire, J. W., *Materials and Methods of Architectural Construction,* 3rd ed., J. Wiley, New York, 1958.
18. Diets, A. G. H., *Dwelling House Construction,* The MIT Press, Cambridge, 1971.
19. Crosby, E. U., and Fiske, H. A., *Handbook of Fire Protection,* 5th ed., The Insurance Field Company, Louisville, Ky., 1914.
20. Crosby, E. U., Fiske, H. A., and Forster, H.W., *Handbook of Fire Protection,* 8th ed., R. S. Moulton, general editor, National Fire Protection Association, Boston, 1936.
21. Kidder, F. E., *Building Construction and Superintendence,* rev. and enl., by T. Nolan, W. T. Comstock, New York, 1909-1913, 2 vols.

INTERNATIONAL CODE COUNCIL®

Copyright © 2015 ICC. ALL RIGHTS RESERVED. Accessed by David Dammon on Jun 21, 2017 12:30:52 PM pursuant to License Agreement with ICC. No further reproduction or distribution authorized. ANY UNAUTHORIZED REPRODUCTION OR DISTRIBUTION IS A VIOLATION OF THE FEDERAL COPYRIGHT ACT AND THE LICENSE AGREEMENT, AND SUBJECT TO CIVIL AND CRIMINAL PENALTIES THEREUNDER.

22. National Fire Protection Association, Committee on Fire-Resistive Construction, *The Baltimore Conflagration,* 2nd ed., Chicago, 1904.

23. Przetak, L., *Standard Details for Fire-Resistive Building Construction,* McGraw-Hill Book Co., New York, 1977.

24. Hird, D., and Fischl, C. F., "Fire Hazard of Internal Linings," *National Building Studies,* Special Report, No. 22, Dept. of Scientific and Industrial Research and Fire Offices' Committee (Joint Fire Research Organization), London, 1954.

25. Menzel, C. A., *Tests of the Fire-Resistance and Strength of Walls Concrete Masonry Units,* Portland Cement Association, Chicago, 1934.

26. Hamilton, S. B., "A Short History of the Structural Fire Protection of Buildings Particularly in England," *National Building Studies,* Special Report, No. 27, Dept. of Scientific and Industrial Research (Building Research Station), London, 1958.

27. Sachs, E. O., and Marsland, E., "The Fire Resistance of Doors and Shutters being Tabulated Results of Fire Tests Conducted by the Committee," *Journal of the British Fire Prevention Committee,* No. VII, London, 1912.

28. Egan, M. D., *Concepts in Building Firesafety,* J. Wiley, New York, 1978.

29. Sachs, E. O., and Marsland, E., "The Fire Resistance of Floors being Tabulated Results of Fire Tests Conducted by the Committee," *Journal of the British Fire Prevention Committee,* No. VI, London, 1911.

30. Sachs, E. O., and Marsland, E., "The Fire Resistance of Partitions being Tabulated Results of Fire Tests Conducted by the Committee," *Journal of the British Fire Prevention Committee,* No. IX, London, 1914.

31. Ryan, J. V., and Bender, E. W., "Fire Tests of Precast Cellular Concrete Floors and Roofs," *National Bureau of Standards Monograph,* 45, Washington, April 1962.

32. Kingberg, S. H., and Foster, H. D., "Fire Resistance of Hollow Load-Bearing Wall Tile," *National Bureau of Standards* Research Paper, No. 37, (Reprint from *NBS Journal of Research*, Vol. 2) Washington, 1929.

33. Hull, W. A., and Ingberg, S. H., "Fire Resistance of Concrete Columns," *Technologic Papers of the Bureau of Standards,* No. 272, Vol. 18, Washington, 1925, pp. 635-708.

34. National Board of Fire Underwriters, *Fire Resistance Ratings of Less than One Hour,* New York, Aug. 1956.

35. Harmathy, T. Z., "Ten Rules of Fire Endurance Rating," *Fire Technology,* Vol. 1, May 1965, pp. 93-102.

36. Son, B. C., "Fire Endurance Test on a Steel Tubular Column Protected with Gypsum Board," *National Bureau of Standards,* NBSIR, 73-165, Washington, 1973.

37. Galbreath, M., "Fire Tests of Wood Door Assemblies," *Fire Study,* No. 36, Div. of Building Research, National Research Council Canada, Ottawa, May 1975.

38. Morris, W. A., "An Investigation into the Fire Resistance of Timber Doors," *Fire Research Note,* No. 855, Fire Research Station, Boreham Wood, Jan. 1971.

39. Hall, G. S., "Fire Resistance Tests of Laminated Timber Beams," *Timber Association Research Report,* WR/RR/1, High Sycombe, July 1968.

40. Goalwin, D. S., "Fire Resistance of Concrete Floors," *Building Materials and Structures,* Report BMS 134, National Bureau of Standards, Washington, Dec. 1952.

41. Mitchell, N. D., and Ryan, J. V., "Fire Tests of Steel Columns Encased with Gypsum Lath and Plaster," *Building Materials and Structures,* Report BMS 135, National Bureau of Standards, Washington, April 1953.

42. Ingberg, S. H., "Fire Tests of Brick Walls," *Building Materials and Structures,* Report BMS 143, National Bureau of Standards, Washington, Nov. 1954.

43. National Bureau of Standards, "Fire Resistance and Sound-Insulation Ratings for Walls, Partitions, and Floors," *Technical Report on Building Materials,* 44, Washington, 1944.

44. Malhotra, H. L., "Fire Resistance of Brick and Block Walls," *Fire Note,* No. 6, Ministry of Technology and Fire Offices' Committee Joint Fire Research Organization, London, HMSO, 1966.

45. Mitchell, N. D., "Fire Tests of Steel Columns Protected with Siliceous Aggregate Concrete," *Building Materials and Structures,* Report BMS 124, National Bureau of Standards, Washington, May 1951.

46. Freitag, J. K., *Fire Prevention and Fire Protection as Applied to Building Construction; a Handbook of Theory and Practice,* 2nd ed., J. Wiley, New York, 1921.

47. Ingberg, S. H., and Mitchell, N. D., "Fire Tests of Wood and Metal-Framed Partition," *Building Materials and Structures,* Report BMS 71, National Bureau of Standards, Washington, 1941.

INTERNATIONAL CODE COUNCIL®
Copyright © 2015 ICC. ALL RIGHTS RESERVED. Accessed by David Dammon on Jun 21, 2017 12:30:52 PM pursuant to License Agreement with ICC. No further reproduction or distribution authorized. ANY UNAUTHORIZED REPRODUCTION OR DISTRIBUTION IS A VIOLATION OF THE FEDERAL COPYRIGHT ACT AND THE LICENSE AGREEMENT, AND SUBJECT TO CIVIL AND CRIMINAL PENALTIES THEREUNDER.

48. Central Housing Committee on Research, Design, and Construction, Subcommittee on Definitions, "A Glossary of Housing Terms," *Building Materials and Structures,* Report BMS 91, National Bureau of Standards, Washington, Sept. 1942.

49. Crosby, E. U., Fiske, H. A., and Forster, H.W., *Handbook of Fire Protection,* 7th ed., D. Van Nostrand Co., New York 1924.

50. Bird, E. L., and Docking, S. J., *Fire in Buildings,* A. & C. Black, London, 1949.

51. American Institute of Steel Construction, Fire Resistant Construction in Modern Steel-Framed Buildings, New York, 1959.

52. Central Dockyard Laboratory, "Fire Retardant Paint Tests—a Critical Review," CDL Technical Memorandum, No. P87/73, H. M. Naval Base, Portsmouth, Dec. 1973.

53. Malhotra, H. L., "Fire Resistance of Structural Concrete Beams," *Fire Research Note,* No. 741, Fire Research Station, Borehamwood, May 1969.

54. Abrams, M. S., and Gustaferro, A. H., "Fire Tests of Poke-Thru Assemblies," *Research and Development Bulletin,* 1481-1, Portland Cement Association, Skokie, 1971.

55. Bullen, M. L., "A Note on the Relationship between Scale Fire Experiments and Standard Test Results," *Building Research Establishment Note,* N51/75, Borehamwood, May 1975.

56. The America Fore Group of Insurance Companies, Research Department, *Some Characteristic Fires in Fire Resistive Buildings,* Selected from twenty years record in the files of the N.F.P.A. "Quarterly," New York, c. 1933.

57. Spiegelhalter, F., "Guide to Design of Cavity Barriers and Fire Stops," *Current Paper,* CP 7/77, Building Research Establishment, Borehamwood, Feb. 1977.

58. Wardle, T. M. "Notes on the Fire Resistance of Heavy Timber Construction," *Information Series,* No. 53, New Zealand Forest Service, Wellington, 1966.

59. Fisher, R. W., and Smart, P. M. T., "Results of Fire Resistance Tests on Elements of Building Construction," *Building Research Establishment Report,* G R6, London, HMSO, 1975.

60. Serex, E. R., "Fire Resistance of Alta Bates Gypsum Block Non-Load Bearing Wall," Report to Alta Bates Community Hospital, *Structural Research Laboratory Report,* ES-7000, University of Calif., Berkeley, 1969.

61. Thomas, F. G., and Webster, C. T., "Investigations on Building Fires, Part VI: The Fire Resistance of Reinforced Concrete Columns," *National Building Studies,* Research Paper, No. 18, Dept. of Scientific and Industrial Research (Building Research Station), London, HMSO, 1953.

62. Building Research Establishment, "Timber Fire Doors," *Digest,* 220, Borehamwood, Nov. 1978.

63. *Massachusetts State Building Code; Recommended Provisions,* Article 22: Repairs, Alterations, Additions, and Change of Use of Existing Buildings, Boston, Oct. 23, 1978.

64. Freitag, J. K., *Architectural Engineering; with Especial Reference to High Building Construction, Including Many Examples of Prominent Office Buildings,* 2nd ed., rewritten, J. Wiley, New York, 1906.

65. Architectural Record, *Sweet's Indexed Catalogue of Building Construction for the Year 1906,* New York, 1906.

66. Dept. of Commerce, Building Code Committee, "Recommended Minimum Requirements for Fire Resistance in Buildings," *Building and Housing,* No. 14, National Bureau of Standards, Washington, 1931.

67. British Standards Institution, "Fire Tests on Building Materials and Structures," *British Standards,* 476, Pt. 1, London, 1953.

68. Löberg-Holm, K., "Glass," *The Architectural Record,* Oct. 1930, pp. 345-357.

69. Structural Clay Products Institute, "Fire Resistance," *Technical Notes on Brick and Tile Construction,* 16 rev., Washington, 1964.

70. Ramsey, C. G., and Sleeper, H. R., *Architectural Graphic Standards for Architects, Engineers, Decorators, Builders, and Draftsmen,* 3rd ed., J. Wiley, New York, 1941.

71. Underwriters' Laboratories, *Fire Protection Equipment List,* Chicago, Jan. 1957.

72. Underwriters' Laboratories, *Fire Resistance Directory; with Hourly Ratings for Beams, Columns, Floors, Roofs, Walls, and Partitions,* Chicago, Jan. 1977.

73. Mitchell, N. D., "Fire Tests of Gunite Slabs and Partitions," *Building Materials and Structures,* Report BMS 131, National Bureau of Standards, Washington, May 1952.

74. Woolson, I. H., and Miller, R. P., "Fire Tests of Floors in the United States," *Proceedings International Association for Testing Materials,* VIth Congress, New York, 1912, Section C, pp. 36-41.

INTERNATIONAL CODE COUNCIL®

Copyright © 2015 ICC. ALL RIGHTS RESERVED. Accessed by David Dammon on Jun 21, 2017 12:30:52 PM pursuant to License Agreement with ICC. No further reproduction or distribution authorized. ANY UNAUTHORIZED REPRODUCTION OR DISTRIBUTION IS A VIOLATION OF THE FEDERAL COPYRIGHT ACT AND THE LICENSE AGREEMENT, AND SUBJECT TO CIVIL AND CRIMINAL PENALTIES THEREUNDER.

75. Underwriters' Laboratories, "An Investigation of the Effects of Fire Exposure upon Hollow Concrete Building Units, Conducted for American Concrete Institute, Concrete Products Association, Portland Cement Association, Joint Submittors," *Retardant Report,* No. 1555, Chicago, May 1924.

76. Dept. of Scientific & Industrial Research and of the Fire Offices' Committee, Joint Committee of the Building Research Board, "Fire Gradings of Buildings. Part IV: Chimneys and Flues," *Post-War Building Studies,* No. 29, London, HMSO, 1952.

77. National Research Council of Canada. Associate Committee on the National Building Code, *Fire Performance Ratings,* Suppl. No. 2 to the National Building Code of Canada, Ottawa, 1965.

78. Associated Factory Mutual Fire Insurance Companies, The National Board of Fire Underwriters, and the Bureau of Standards, *Fire Tests of Building Columns; an Experimental Investigation of the Resistance of Columns, Loaded and Exposed to Fire or to Fire and Water, with Record of Characteristic Effects,* Jointly Conducted at Underwriters. Laboratories, Chicago, 1917-19.

79. Malhotra, H. L., "Effect of Age on the Fire Resistance of Reinforced Concrete Columns," *Fire Research Memorandum,* No. 1, Fire Research Station, Borehamwood, April 1970.

80. Bond, H., ed., *Research on Fire; a Description of the Facilities, Personnel and Management of Agencies Engaged in Research on Fire,* a Staff Report, National Fire Protection Association, Boston, 1957.

81. *California State Historical Building Code,* Draft, 1978.

82. Fisher, F. L., et al., "A Study of Potential Flashover Fires in Wheeler Hall and the Results from a Full Scale Fire Test of a Modified Wheeler Hall Door Assembly," *Fire Research Laboratory Report,* UCX 77-3; UCX-2480, University of Calif., Dept. of Civil Eng., Berkeley, 1977.

83. Freitag, J. K., *The Fireproofing of Steel Buildings,* 1st ed., J. Wiley, New York, 1906.

84. Gross, D., "Field Burnout Tests of Apartment Dwellings Units," *Building Science Series,* 10, National Bureau of Standards, Washington, 1967.

85. Dunlap, M. E., and Cartwright, F. P., "Standard Fire Tests for Combustible Building Materials," *Proceedings of the American Society for Testing Materials,* vol. 27, Philadelphia, 1927, pp. 534-546.

86. Menzel, C. A., "Tests of the Fire Resistance and Stability of Walls of Concrete Masonry Units," *Proceedings of the American Society for Testing Materials,* vol. 31, Philadelphia, 1931, pp. 607-660.

87. Steiner, A. J., "Method of Fire-Hazard Classification of Building Materials," *Bulletin of the American Society for Testing and Materials,* March 1943, Philadelphia, 1943, pp. 19-22.

88. Heselden, A. J. M., Smith, P. G., and Theobald, C. R., "Fires in a Large Compartment Containing Structural Steelwork; Detailed Measurements of Fire Behavior," *Fire Research Note,* No. 646, Fire Research Station, Borehamwood, Dec. 1966.

89. Ministry of Technology and Fire Offices' Committee Joint Fire Research Organization, "Fire and Structural Use of Timber in Buildings; Proceedings of the Symposium Held at the Fire Research Station, Borehamwood, Herts on 25th October, 1967," *Symposium*, No. 3, London, HMSO, 1970.

90. Shoub, H., and Gross, D., "Doors as Barriers to Fire and Smoke," *Building Science Series,* 3, National Bureau of Standards, Washington, 1966.

91. Ingberg, S. H., "The Fire Resistance of Gypsum Partitions," *Proceedings of the American Society for Testing and Materials,* vol. 25, Philadelphia, 1925, pp. 299-314.

92. Ingberg, S.H., "Influence of Mineral Composition of Aggregates on Fire Resistance of Concrete," *Proceedings of the American Society for Testing and Materials,* vol. 29, Philadelphia, 1929, pp. 824-829.

93. Ingberg, S. H., "The Fire Resistive Properties of Gypsum," *Proceedings of the American Society for Testing and Materials,* vol. 23, Philadelphia, 1923, pp. 254-256.

94. Gottschalk, F.W., "Some Factors in the Interpretation of Small-Scale Tests for Fire-Retardant Wood," *Bulletin of the American Society for Testing and Materials,* October 1945, pp. 40-43.

95. Ministry of Technology and Fire Offices' Committee Joint Fire Research Organization, "Behaviour of Structural Steel in Fire; Proceedings of the Symposium Held at the Fire Research Station Borehamwood, Herts on 24th January, 1967," *Symposium,* No. 2, London, HMSO, 1968.

96. Gustaferro, A. H., and Martin, L. D., *Design for Fire Resistance of Pre-cast Concrete,* prep. for the Prestressed Concrete Institute Fire Committee, 1st ed., Chicago, PCI, 1977.

97. "The Fire Endurance of Concrete; a Special Issue," *Concrete Construction,* vol. 18, no. 8, Aug. 1974, pp. 345-440.

INTERNATIONAL CODE COUNCIL®
Copyright © 2015 ICC. ALL RIGHTS RESERVED. Accessed by David Dammon on Jun 21, 2017 12:30:52 PM pursuant to License Agreement with ICC. No further reproduction or distribution authorized. ANY UNAUTHORIZED REPRODUCTION OR DISTRIBUTION IS A VIOLATION OF THE FEDERAL COPYRIGHT ACT AND THE LICENSE AGREEMENT, AND SUBJECT TO CIVIL AND CRIMINAL PENALTIES THEREUNDER.

98. The British Constructional Steelwork Association, "Modern Fire Protection for Structural Steelwork," *Publication,* No. FPl, London, 1961.

99. Underwriters' Laboratories, "Fire Hazard Classification of Building Materials," *Bulletin,* No. 32, Sept. 1944, Chicago, 1959.

100. Central Housing Committee on Research, Design, and Construction, Subcommittee on Building Codes, "Recommended Building Code Requirements for New Dwelling Construction with Special Reference to War Housing; Report," *Building Materials and Structures,* Report BMS 88, National Bureau of Standards, Washington, Sept. 1942.

101. De Coppet Bergh, D., *Safe Building Construction; a Treatise Giving in Simplest Forms Possible Practical and Theoretical Rules and Formulae Used in Construction of Buildings and General Instruction,* new ed., thoroughly rev. Macmillan Co., New York, 1908.

102. *Cyclopedia of Fire Prevention and Insurance; a General Reference Work on Fire and Fire Losses, Fireproof Construction, Building Inspection...,* prep. by architects, engineers, underwriters and practical insurance men. American School of Correspondence, Chicago, 1912.

103. Setchkin, N. P., and Ingberg, S. H., "Test Criterion for an Incombustible Material," *Proceedings of the American Society for Testing Materials,* vol. 45, Philadelphia, 1945, pp. 866-877.

104. Underwriters' Laboratories, "Report on Fire Hazard Classification of Various Species of Lumber," *Retardant,* 3365, Chicago, 1952.

105. Steingiser, S., "A Philosophy of Fire Testing," Journal of Fire & Flammability, vol. 3, July 1972, pp. 238-253.

106. Yuill, C. H., Bauerschlag, W. H., and Smith, H. M., "An Evaluation of the Comparative Performance of 2.4.1 Plywood and Two-Inch Lumber Roof Decking under Equivalent Fire Exposure," *Fire Protection Section, Final Report,* Project No. 717A-3-211, Southwest Research Institute, Dept. of Structural Research, San Antonio, Dec. 1962.

107. Ashton, L. A., and Smart, P.M. T., *Sponsored Fire-Resistance Tests on Structural Elements,* London, Dept. of Scientific and Industrial Research and Fire Offices. Committee, London, 1960.

108. Butcher, E. G., Chitty, T. B., and Ashton, L. A., "The Temperature Attained by Steel in Building Fires," *Fire Research Technical Paper,* No. 15, Ministry of Technology and Fire Offices. Committee, Joint Fire Research Organization, London, HMSO, 1966.

109. Dept. of the Environment and Fire Offices' Committee, Joint Fire Research Organization, "Fire-Resistance Requirements for Buildings—a New Approach; Proceedings of the Symposium Held at the Connaught Rooms, London, 28 September 1971," *Symposium,* No. 5, London, HMSO, 1973.

110. Langdon Thomas, G. J., "Roofs and Fire," *Fire Note,* No. 3, Dept. of Scientific and Industrial Research and Fire Offices' Committee, Joint Fire Research Organization, London, HMSO, 1963.

111. National Fire Protection Association and the National Board of Fire Underwriters, *Report on Fire the Edison Phonograph Works,* Thomas A. Edison, Inc., West Orange, N.J., December 9, 1914, Boston, 1915.

112. Thompson, J. P., *Fire Resistance of Reinforced Concrete Floors,* Portland Cement Association, Chicago, 1963.

113. Forest Products Laboratory, "Fire Resistance Tests of Plywood Covered Wall Panels," Information reviewed and reaffirmed, *Forest Service Report,* No. 1257, Madison, April 1961.

114. Forest Products Laboratory, "Charring Rate of Selected Woods—Transverse to Grain," Forest Service *Research Paper,* FLP 69, Madison, April 1967.

115. Bird, G. I., "Protection of Structural Steel Against Fire," *Fire Note,* No. 2, Dept. of Scientific and Industrial Research and Fire Offices' Committee, Joint Fire Research Organization, London, HMSO, 1961.

116. Robinson, W. C., *The Parker Building Fire,* Underwriters' Laboratories, Chicago, c. 1908.

117. Ferris, J. E., "Fire Hazards of Combustible Wallboards," *Commonwealth Experimental Building Station Special Report,* No. 18, Sydney, Oct. 1955.

118. Markwardt, L. J., Bruce, H. D., and Freas, A. D., "Brief Description of Some Fire-Test Methods Used for Wood and Wood Base Materials," *Forest Service Report,* No. 1976, Forest Products Laboratory, Madison, 1976.

119. Foster, H. D., Pinkston, E. R., and Ingberg, S. H., "Fire Resistance of Walls of Gravel-Aggregate Concrete Masonry Units," *Building Materials and Structures,* Report, BMS 120, National Bureau of Standards, Washington, March 1951.

120. Foster, H. D., Pinkston, E.R., and Ingberg, S. H., "Fire Resistance of Walls of Lightweight-Aggregate Concrete Masonry Units," *Building Materials and Structures,* Report BMS 117, National Bureau of Standards, Washington, May 1950.

121. Structural Clay Products Institute, "Structural Clay Tile Fireproofing," *Technical Notes on Brick & Tile Construction,* vol. 1, no. 11, San Francisco, Nov. 1950.

INTERNATIONAL CODE COUNCIL®

Copyright © 2015 ICC. ALL RIGHTS RESERVED. Accessed by David Dammon on Jun 21, 2017 12:30:52 PM pursuant to License Agreement with ICC. No further reproduction or distribution authorized. ANY UNAUTHORIZED REPRODUCTION OR DISTRIBUTION IS A VIOLATION OF THE FEDERAL COPYRIGHT ACT AND THE LICENSE AGREEMENT, AND SUBJECT TO CIVIL AND CRIMINAL PENALTIES THEREUNDER.

122. Structural Clay Products Institute, "Fire Resistance Ratings of Clay Masonry Walls—I," *Technical Notes on Brick & Tile Construction,* vol. 3, no. 12, San Francisco, Dec. 1952.

123. Structural Clay Products Institute, "Estimating the Fire Resistance of Clay Masonry Walls—II," *Technical Notes on Brick & Tile Construction*, vol. 4, no. 1, San Francisco, Jan. 1953.

124. Building Research Station, "Fire: Materials and Structures," *Digest,* No. 106, London, HMSO, 1958.

125. Mitchell, N. D., "Fire Hazard Tests with Masonry Chimneys," *NFPA Publication,* No. Q-43-7, Boston, Oct. 1949.

126. Clinton Wire Cloth Company, *Some Test Data on Fireproof Floor Construction Relating to Cinder Concrete, Terra Cotta and Gypsum,* Clinton, 1913.

127. Structural Engineers Association of Southern California, Fire Ratings Subcommittee, "Fire Ratings, a Report," part of *Annual Report,* Los Angeles, 1962, pp. 30-38.

128. Lawson, D. I., Fox, L. L., and Webster, C. T., "The Heating of Panels by Flue Pipes," *Fire Research, Special Report,* No. 1, Dept. of Scientific and Industrial Research and Fire Offices' Committee, London, HMSO, 1952.

129. Forest Products Laboratory, "Fire Resistance of Wood Construction," Excerpt from 'Wood Handbook—Basic Information on Wood as a Material of Construction with Data for its Use in Design and Specification,' *Dept. of Agriculture Handbook,* No. 72, Washington, 1955, pp. 337-350.

130. Goalwin, D. S., "Properties of Cavity Walls," *Building Materials and Structures,* Report BMS 136, National Bureau of Standards, Washington, May 1953.

131. Humphrey, R. L., "The Fire-Resistive Properties of Various Building Materials," *Geological Survey Bulletin,* 370, Washington, 1909.

132. National Lumber Manufacturers Association, "Comparative Fire Test on Wood and Steel Joists," *Technical Report,* No. 1, Washington, 1961.

133. National Lumber Manufacturers Association, "Comparative Fire Test of Timber and Steel Beams," *Technical Report,* No. 3, Washington, 1963.

134. Malhotra, H. L., and Morris, W. A., "Tests on Roof Construction Subjected to External Fire," *Fire Note,* No. 4, Dept. of Scientific and Industrial Research and Fire Offices' Committee, Joint Fire Research Organization, London, HMSO, 1963.

135. Brown, C. R., "Fire Tests of Treated and Untreated Wood Partitions," *Research Paper,* RP 1076, part of *Journal of Research of the National Bureau of Standards,* vol. 20, Washington, Feb. 1938, pp. 217-237.

136. Underwriters' Laboratories, "Report on Investigation of Fire Resistance of Wood Lath and Lime Plaster Interior Finish," *Publication,* SP. 1.230, Chicago, Nov. 1922.

137. Underwriters' Laboratories, "Report on Interior Building Construction Consisting of Metal Lath and Gypsum Plaster on Wood Supports," *Retardant,* No. 1355, Chicago, 1922.

138. Underwriters' Laboratories, "An Investigation of the Effects of Fire Exposure upon Hollow Concrete Building Units," *Retardant,* No. 1555, Chicago, May 1924.

139. Moran, T. H., "Comparative Fire Resistance Ratings of Douglas Fir Plywood," *Douglas Fir Plywood Association Laboratory Bulletin,* 57-A, Tacoma, 1957.

140. Gage Babcock & Association, "The Performance of Fire-Protective Materials under Varying Conditions of Fire Severity," Report 6924, Chicago, 1969.

141. International Conference of Building Officials, *Uniform Building Code* (1979 ed.), Whittier, CA, 1979.

142. Babrauskas, V., and Williamson, R. B., "The Historical Basis of Fire Resistance Testing, Part I and Part II," *Fire Technology,* vol. 14, no. 3 & 4, Aug. & Nov. 1978, pp. 184-194, 205, 304-316.

143. Underwriters' Laboratories, "Fire Tests of Building Construction and Materials," 8th ed., *Standard for Safety,* UL263, Chicago, 1971.

144. Hold, H. G., *Fire Protection in Buildings,* Crosby, Lockwood, London, 1913.

145. Kollbrunner, C. F., "Steel Buildings and Fire Protection in Europe," *Journal of the Structural Division,* ASCE, vol. 85, no. ST9, Proc. Paper 2264, Nov. 1959, pp. 125-149.

146. Smith, P., "Investigation and Repair of Damage to Concrete Caused by Formwork and Falsework Fire," *Journal of the American Concrete Institute,* vol. 60, Title no. 60-66, Nov. 1963, pp. 1535-1566.

147. "Repair of Fire Damage," 3 parts, *Concrete Construction,* March-May, 1972.

148. National Fire Protection Association, *National Fire Codes; a Compilation of NFPA Codes, Standards, Recommended Practices and Manuals,* 16 vols., Boston, 1978.

INTERNATIONAL CODE COUNCIL®
Copyright © 2015 ICC. ALL RIGHTS RESERVED. Accessed by David Dammon on Jun 21, 2017 12:30:52 PM pursuant to License Agreement with ICC. No further reproduction or distribution authorized. ANY UNAUTHORIZED REPRODUCTION OR DISTRIBUTION IS A VIOLATION OF THE FEDERAL COPYRIGHT ACT AND THE LICENSE AGREEMENT, AND SUBJECT TO CIVIL AND CRIMINAL PENALTIES THEREUNDER.

149. Ingberg, S. H. "Tests of Severity of Building Fires," *NFPA Quarterly,* vol. 22, no. 1, July 1928, pp. 43-61.

150. Underwriters' Laboratories, "Fire Exposure Tests of Ordinary Wood Doors," *Bulletin of Research,* no. 6, Dec. 1938, Chicago, 1942.

151. Parson, H., "The Tall Building under Test of Fire," *Red Book,* no. 17, British Fire Prevention Committee, London, 1899.

152. Sachs, E. O., "The British Fire Prevention Committee Testing Station," *Red Book,* no. 13, British Fire Prevention Committee, London, 1899.

153. Sachs, E. O., "Fire Tests with Unprotected Columns," *Red Book,* no. 11, British Fire Prevention Committee, London, 1899.

154. British Fire Prevention Committee, "Fire Tests with Floors a Floor by the Expended Metal Company," *Red Book,* no. 14, London, 1899.

155. *Engineering News,* vol. 56, Aug. 9, 1906, pp. 135-140.

156. *Engineering News,* vol. 36, Aug. 6, 1896, pp. 92-94.

157. Bauschinger, J., *Mittheilungen de Mech.-Tech. Lab. der K. Tech. Hochschule, Müchen,* vol. 12, 1885.

158. *Engineering News,* vol. 46, Dec. 26, 1901, pp. 482-486, 489-490.

159. *The American Architect and Building News,* vol. 31, March 28, 1891, pp. 195-201.

160. British Fire Prevention Committee, First International Fire Prevention Congress, *Official Congress Report,* London, 1903.

161. American Society for Testing Materials, *Standard Specifications for Fire Tests of Materials and Construction (C19-18),* Philadelphia, 1918.

162. International Organization for Standardization, *Fire Resistance Tests on Elements of Building Construction (R834),* London, 1968.

163. *Engineering Record,* vol. 35, Jan. 2, 1897, pp. 93-94; May 29, 1897, pp. 558-560; vol. 36, Sept. 18, 1897, pp. 337-340; Sept. 25, 1897, pp. 359-363; Oct. 2, 1897, pp. 382-387; Oct. 9, 1897, pp. 402-405.

164. Babrauskas, Vytenis, "Fire Endurance in Buildings," PhD Thesis. *Fire Research Group,* Report, No. UCB FRG 76-16, University of California, Berkeley, Nov. 1976.

165. The Institution of Structural Engineers and The Concrete Society, *Fire Resistance of Concrete Structures,* London, Aug. 1975.

INTERNATIONAL CODE COUNCIL®

Copyright © 2015 ICC. ALL RIGHTS RESERVED. Accessed by David Dammon on Jun 21, 2017 12:30:52 PM pursuant to License Agreement with ICC. No further reproduction or distribution authorized. ANY UNAUTHORIZED REPRODUCTION OR DISTRIBUTION IS A VIOLATION OF THE FEDERAL COPYRIGHT ACT AND THE LICENSE AGREEMENT, AND SUBJECT TO CIVIL AND CRIMINAL PENALTIES THEREUNDER.

INDEX

A

ACCESSIBILITY . . . . . .107.2, 410,605, 705, 801.1, 901.2, 906, 1006, 1012.8, 1101.2, 1105, 1105.2, 1204.1, 1205.15, 1401.2.5, 1508, Appendix B
Type A Units . .410.6, 410.8.8, 705.1, 705.1.9, 1105.3
Type B Units 410.4, 410.4.2, 410.6, 410.7, 410.8.9, 410.9, 705.1, 705.2, 1105.4
ADDITIONS . . . . . 101.2, 101.3, 104.2, 105.2.2, 106.2.3, 115.5, 202, 401.1, 401.1.1, 402, 403.4, 408.1, 410.1, 410.5, 410.8.4, 501.1, 507, Chapter 11, 1401.1,1401.1.1,1401.2, 1401.2.3, 1401.3, 1401.4.1, 1401.4.3, 1501.3, 1505.2
ADMINISTRATION . . . . . Chapter 1
ALTERATIONS . . . . . .101.2, 101.3, 101.4, 101.7, 104.2, 104.10.1, 105.1.1, 105.1.2, 105.2.2, 105.2.3, 106.2.3, 106.2.5, 108.2, 108.5, 110.2, 113.2, 115.5, 202, 301.1, 301.1.1, 301.1.2, 301.1.3, 301.2, 401.1, 401.1.1, 401.2.2, 402.4, 403, 404.1, 408.1, 410.1, 410.1.4, 410.3, 410.4.1, 410.6, 410.7, 410.8, 410.8.1, 410.8.4, 410.8.10, 410.9, 501.1, 501.1.1, 503, 504, 506, Chapter 7, Chapter 8, Chapter 9, 1001.2.1, 1007.3.1, 1012.8, 1012.8.1, 1101.3, 1201.1, 1201.2, 1201.4, 1203.1, 1204, 1301.2, 1401.1, 1401.1.1, 1401.2, 1401.2.4, 1401.3, 1401.4.1, 1401.4.3, 1501.3, 1504.1, 1505.2, A102.1, A105.2, A205.2, A403.2
Level 1 . . . . . 104.2.1, 202, 503, 504.2, 505.2, Chapter 7, 801.2
Level 2 . . . . . .106.2.3, 202, 504, 505.2, Chapter 8
Level 3 . . . . . 106.2.3, 202, 505, Chapter 9, 1007.3.1
ALTERNATIVE MATERIALS, DESIGN, AND METHODS OF CONSTRUCTION. 104.11, 104.11.1, 104.11.2
APPEALS 112, 116.6
APPLICABILITY 101.4, 102, 104.2.1, 1401.2
ARCHAIC MATERIALS AND ASSEMBLIES . . . . . .Resource A
ARCHITECT (see REGISTERED DESIGN PROFESSIONAL)
AREA (see BUILDING)
AUTOMATIC SPRINKLER SYSTEM . . . . . .803.2.1, 804.1.1, 804.2, 804.3, 804.4, 805.3.1.1, 805.3.1.2.1, 805.3.2, 805.5.1, 805.6, 902.2, 904.1, 1012.2.1, 1012.5.1, 1012.5.1.1, 1012.6.3, 1012.7.2, 1012.7.3, 1203.4, 1205.9, 1401.5.1, 1401.6.1, 1401.6.2, 1401.6.2.1, 1401.6.12.1, 1401.6.17, Table 1401.6.17, 1401.6.17.1, 1401.6.19, Table 1401.6.19, Table 1407.1, 1507

B

BOARD OF APPEALS 104.8, 112
BUILDING
Area . . . . . 1012.5, Table 1012.5, 1012.5.1, 1012.5.1.1, 1012.5.2, 1102, 1205.2, 1401.2.3, 1401.6.2, Table 1407.1
Dangerous 202, 1206.2
Existing 101.2, 202, 301.1, 301.2, 401.1, 401.1.1, 501.1, 507.2, 701.2, 707.1, 807.4, 908.1, 1001.3.1, 1002.1, 1007.3, 1007.3.1, 1008.1, 1008.2, 1008.3, 1008.4, 1009.1, 1010.1, 1012.1.1.1, 1012.1.1.2, 1012.5.2, 1012.8, 1101.1, 1101.2, 1101.3, 1102.1, 1102.2, 1103.1, 1103.2, 1103.3, 1103.4, 1103.5, 1104.1, 1106.1, 1201.4, 1401.1, 1401.2.1, 1401.2.3, 1401.2.4, 1401.3, 1401.4, 1401.4.1, 1401.4.3, 1401.6, 1401.6.1.1, 1501.3, 1505.1, A102.1, A201, A503.1
Height . . . . . 202, 402.1, 804.2.2, 805.3.1.1, 1007.3.1, 1012.5, Table 1012.5, 1012.5.1, 1012.5.1.1, 1012.5.2, 1012.6.1, 1012.6.3 1102.1, 1401.2.3, 1401.6.1, 1401.6.1.1, 1401.6.11, Table 1407.1, 1505.1, A301.2, A506.2
Historic . . . . . .202, 401.1, 408, 410.1, 410.9, 508, 601.1, 701.1, 1001.2.1, Chapter 12, 1401.1, B101.1, B101.2, B101.3, B101.4, B101.4.2, B101.5
Relocatable 1301.1
Relocated . . . . . .110.1, 301.1.2, 301.1.3, 409.1, 509, 1202.3, Chapter 13
Relocation of 101.2, 101.3, 101.4, 104.2, 301.1, 301.2, 401.1, 401.1.1,1201.1
Underground 1002.2
Unsafe. 115, 202, 602.1
BUILDING ELEMENTS AND MATERIALS 602, 702, 803, 903, 1003

INTERNATIONAL CODE COUNCIL®

Copyright © 2015 ICC. ALL RIGHTS RESERVED. Accessed by David Dammon on Jun 21, 2017 12:30:52 PM pursuant to License Agreement with ICC. No further reproduction or distribution authorized. ANY UNAUTHORIZED REPRODUCTION OR DISTRIBUTION IS A VIOLATION OF THE FEDERAL COPYRIGHT ACT AND THE LICENSE AGREEMENT, AND SUBJECT TO CIVIL AND CRIMINAL PENALTIES THEREUNDER.

C

CARPETING 105.2, 702.2
CEILING 702.1, 801.3, 803.2.1, 803.4, 808.1, 808.3.1, 903.2.1, 1012.3, 1012.4.1, 1203.5, 1203.7, 1205.10, 1401.6.3.2, A105.3, A113.1
CERTIFICATE OF OCCUPANCY 110, 407.2, 1001.2, 1001.4
CHANGE OF OCCUPANCY . . . . . 101.2, 101.3, 101.4, 101.5, 104.2, 104.2.1, 106.2.5, 115.5, 202, 401.1, 407, 408, 410.1, 410.4, 410.8.4, 410.9, 501.1, 506, 907.4, Chapter 10, 1201.1, 1201.2, 1201.4, 1205, 1301.2, 1401.1, 1401.2.1, 1401.2.2, 1401.2.5, 1401.4.1, 1401.4.3, 1401.6.17, B101.2, B101.3, B101.4
CODE OFFICIAL . . . . . Chapter 1, 202, 401.2.1, 404.1.1, 404.2.1, 602.1, 606.2.2.1, 804.2.5, 805.2, 907.4.1, 1001.2, 1007.3.1, 1012.4.1, 1201.2, 1201.3, 1203.2, 1203.3, 1203.11, 1203.12, 1204.1, 1205.6, 1205.7, 1205.11, 1205.12, 1205.14, 1206.1, 1206.2, 1302.7, 1401.3, 1401.3.1, 1401.4.2, 1401.4.3, 1501.6.7, A301.1, A404.1
COMPARTMENTATION . . . . . 803.3.1, 1401.6.3, Table 1401.6.3, Table 1401.7
COMPLIANCE METHODS . . . .301, Chapter 4, 501.1.1 Chapter 14
Prescriptive compliance method . .301.1.1, Chapter 4
Work area compliance method 301.1.2
Classification of work . . . . . .Chapter 5
Repairs . . . . . .Chapter 6
Alteration Level 1 . . . . . .Chapter 7
Alteration Level 2 . . . . . .Chapter 8
Alteration Level 3 . . . . . .Chapter 9
Change of occupancy . . . . . .Chapter 10
Additions . . . . . .Chapter 11
Historic buildings . . . . . .Chapter 12
Relocated buildings . . . . . .Chapter 13
Performance compliance method . . . . . 301.1.3, Chapter 14
CONFLICT 102.1, 104.10.1, 113.1, A301.2
CONSTRUCTION DOCUMENTS 104.2, 105.3, 105.3.1, 105.4, 106, 113.4, 202, 501.2, A105.4, A205.4, A301.1
CONSTRUCTION SAFEGUARDS . . 101.5, Chapter 15
CORRIDOR
Dead-end 801.3, 805.6, 1012.4.1
Doors 805.5.1, 1012.4.1
Exit access 801.3, 803.2.1, 803.4, 803.4.1, 804.2.1, 804.2.2, 804.2.4, 804.3, 805.1, 805.3.1, 901.2, 1012.7.2, 1203.3, 1205.6
Openings 805.5, 1012.4.1, 1012.7.2, 1205.8
Rating . . . . . 804.1.1, 1401.6.5, Table 1401.6.5, 1401.6.5.1, Table 1401.7

D

DEFERRED SUBMITTAL 106.3.4, 106.6, 202
DEFINITIONS 202
DEMOLITION 101.6, 104.2, 106.2.5, 108.5, 113.2, 117, 1501.6, 1501.7 1502.1, 1503.1, 1504.1, 1505.2
DEPARTMENT OF BUILDING SAFETY 103, 104.10, 105.3, 109.3.7, 110.2

E

EGRESS (see MEANS OF EGRESS)
ELECTRICAL 105.1, 105.1.1, 105.2, 108.2, 108.3, 109.3.4, 202, 410.7, 607, 608.2, 705.2, 801.3, 808, 1008, 1101.2, A102.1
ELEVATOR . . . . . 410.8.2, 705.1.2, 902.1.2, 1012.7.3, 1102.2, 1401.6.14, Table 1401.6.14, Table 1401.7
EMERGENCY ESCAPE AND RESCUE OPENINGS 406.3, 702.5
EMERGENCY POWER 805.4.5, 1401.6.15.1
ENERGY 702.4, 707, 811, 908
ENGINEER (see REGISTERED DESIGN PROFESSONAL)
EXISTING (see BUILDING)
EXIT . . . . . 405.1.4, 803.2.1, 803.4, 805.3.1.1, 805.3.1.2, 805.3.2, 805.3.3, 805.4.1.1, 805.4.2, 805.4.3, 805.4.3.1, 805.4.4, 805.8, 805.9, 805.9.1, 805.10, 903.1, 903.3, 905.2, 905.3, 1012.7.2, Table 1012.4, 1012.4.1, 1102.2, 1203.3, 1203.6, 1203.11, 1205.6, 1205.7, 1205.12, 1205.13, 1401.6.3.1, 1401.6.6, 1401.6.10.1, 1401.6.11, 1401.6.11.1, 1401.6.12, 1401.6.13, 1401.6.15.1, Table 1401.6.15, Table 1401.7, A402

F

FIRE ESCAPES 405, 805.3.1.2, 1401.6.11
FIRE PROTECTION 106.2.2, 110.2, 202, 410.7, 603, 703, 705.2, 804, 805.5.1, 805.5.2, 904, 1004, 1012.1.2, 1012.2, 1012.7.4,1102.3, 1501.3, 1509

INTERNATIONAL CODE COUNCIL®
Copyright © 2015 ICC. ALL RIGHTS RESERVED. Accessed by David Dammon on Jun 21, 2017 12:30:52 PM pursuant to License Agreement with ICC. No further reproduction or distribution authorized. ANY UNAUTHORIZED REPRODUCTION OR DISTRIBUTION IS A VIOLATION OF THE FEDERAL COPYRIGHT ACT AND THE LICENSE AGREEMENT, AND SUBJECT TO CIVIL AND CRIMINAL PENALTIES THEREUNDER.

FIRE RATINGS . . . . . 803.2.1, 803.3.2, 803.6, 804.1.1, 804.2.2.1, 805.3.1.1, 805.3.1.2.1, 805.5.1, 805.5.2, 1012.1.1.1, 1012.1.1.2, 1012.5.1, 1012.5.1.1, 1012.5.3, 1012.6, 1012.6.1, 1012.6.2, 1012.7.3, 1012.7.4, 1203.6, 1203.8, 1401.2.2, 1401.6.3.1, 1401.6.3.2, 1401.6.4, 1401.6.4.1, 1401.6.5, 1401.6.5.1, 1401.6.6, 1401.6.16.1, Table 1401.7, Resource A
FIRE SAFETY . . . . . .101.8, 104.10, 107.2, 1101.2, 1203, 1401.5, 1401.6.1, 1401.6.2, 1401.6.3, 1401.6.4, 1401.6.5, 1401.6.6, 1401.6.7, 1401.6.8, 1401.6.9, 1401.6.14, 1401.6.16, 1401.6.17, 1401.6.18, Table 1401.7, Table 1401.8, Table 1401.9, A102.1
FLAME SPREAD. . . . . 1205.9, Resource A
FLOOD HAZARD AREA 104.10.1, 109.3.3, 202, 301.1, 402.2, 403.2, 404.5, 408.2, 601.3, 606.2.4, 701.3, 1103.5, 1201.4, 1302.6, 1401.3.3
FUEL GAS. 702.4.1

G

GLASS. 406, 602.3, 805.5.1, 805.5.2, 1012.7.2, 1205.8, 1401.6.10.1
GRAVITY LOADS (see STRUCTURAL LOADS/ FORCES)
GUARDS 803.5, 805.10, 1012.4.1, 1012.4.5, 1203.9,1203.10
GUIDELINES FOR STRUCTURAL RETROFIT
Seismic . . . . . Appendix A
Wind . . . . . Appendix C, Appendix D

H

HANDRAILS 805.9, 1012.4.4, 1203.9
HAZARD CATEGORIES . . . . . .1007.3.1, 1012.1.3, 1012.4, Table 1012.4, 1012.5, Table 1012.5, 1012.6, Table 1012.6
HEIGHT (see BUILDING)
HIGH-RISE BUILDING 804.2.1, 902.1, 904.1.1, 1012.5.1, 1401.6.17, 1401.6.19

I

INSPECTION 104.4, 104.6, 104.7, 105.2, 106.1, 106.3.1, 106.6, 109, 1302.7, A105.4, A107.1, A107.4, A117.3, A205.4, A206.2, A304.4.3, A304.5, A406.3.4, A407.1, A503.3, A505.2
INTERIOR FINISHES 702.1, 702.2, 803.4, 903.3, 1012.1.2, 1012.3, 1203.5, 1205.9
INTERIOR TRIM 702.3

L

LIVE LOAD (see STRUCTURAL LOADS)
LOAD-BEARING ELEMENT 105.2.2, 202, A106.2

M

MAINTENANCE. 101.8, 105.2, 404.1, 410.1, 410.2, 1501.6.6
MEANS OF EGRESS . . . 105.2.2, 106.2.3, 107.2, 202, 405.1.1, 405.1.2, 410.6, 418.8.10, 604, 704, 705.1, 705.1.7, 803.2.1, 803.2.3, 805, 903.1, 905, 1005, 1012.4, 1012.4.1, 1012.4.2, Table 1012.5, 1101.2, 1201.3, 1203.3, 1205.6, 1401.5, 1401.5.2, 1401.6, 1401.6.11, Table 1401.7, Table 1401.8, Table 1401.9, 1505
MECHANICAL 105.1, 105.1.1, 105.2, 105.2.2, 108.2, 108.3, 410.7, 608, 702.4, 705.2, 809, 902.1.1, 902.2.1, 1009, 1101.2, 1401.6.7.1, 1401.6.8, 1401.6.8.1, 1401.6.10, 1401.6.10.1, A102.1
MOVED BUILDINGS (see BUILDING, RELOCATED)

O

OCCUPANCY GROUP . . . . . Chapter 10
OPENINGS . . . . . 106.2.4, 116.2, 803.2, 805.3.1.2.1, 805.5, 903.1 1012.4.1, 1012.6.3, 1012.7, 1102.2, 1202.3, 1203.3, 1203.10.2, 1205.3, 1205.6, 1401.6.6, Table 1401.6.6(1), 1401.6.10.1, Table 1401.7, 1501.6.4,

P

PERMITS 101.4.1, 101.5, 104.2, 104.2.1, 104.7, 105, 106.1, 106.2.5, 106.3.1, 106.3.2, 106.3.3, 106.6, 107.1, 107.4, 108.1, 108.2, 108.3, 108.4, 108.5, 109.1, 109.2, 109.3.9, 109.5, 109.6, 110.2, 110.3, 111.1, 113.2, 113.4, 301.1, 404.1, 706.1, 706.3, 706.3.1, A105.3
PLUMBING 105.1, 105.1.1, 105.2, 108.2, 108.3, 109.3.4, 609, 702.4, 810, 1010, 1101.2, 1501.5, A102.1, A304.1.3, A304.3.2, A304.4.2
PRIMARY FUNCTION 202, 410.4.2, 410.5, 410.7, 705.2, 1012.8.2, 1105.1

INTERNATIONAL CODE COUNCIL®
Copyright © 2015 ICC. ALL RIGHTS RESERVED. Accessed by David Dammon on Jun 21, 2017 12:30:52 PM pursuant to License Agreement with ICC. No further reproduction or distribution authorized. ANY UNAUTHORIZED REPRODUCTION OR DISTRIBUTION IS A VIOLATION OF THE FEDERAL COPYRIGHT ACT AND THE LICENSE AGREEMENT, AND SUBJECT TO CIVIL AND CRIMINAL PENALTIES THEREUNDER.

R

RAMPS 410.8.5, 410.8.10, 705.1.4, 705.1.7, 1205.15, B103.3, B103.4
REFERENCED STANDARDS . . . . . .Chapter 16
REFUGE AREAS
Capacity 805.10.1
Horizontal exits 805.10.2
REGISTERED DESIGN PROFESSIONAL 104.2.1.1, 106.1, 106.3.4, 106.6, 202, 404.2.1, 606.2.2.1, 907.4.1, 1201.2, A106.3.3.3, A206.2, A301.1, A301.2, A301.3, A304.2.2, A304.2.3, A304.4.1, A505.2, A506.2,
REHABILITATION 101.7, 202, 404.2.3, 404.3, 606.1, 606.2.2.3, 606.2.3, 804.4.3, A503.1
RELOCATABLE BUILDINGS (see BUILDINGS, RELOCATABLE)
RELOCATED BUILDINGS (see BUILDINGS, RELOCATED)
REPAIR . . . . . 101.2, 101.3, 101.4, 101.7, 104.2, 104.2.1, 104.10.1, 105.1, 105.2, 105.2.1, 105.2.2, 105.2.3, 106.2.5, 113.1, 113.2, 113.4, 115.3, 115.5, 116.1, 116.4, 116.5, 117.1, 202, 301.1, 301.1.1, 301.1.2, 301.1.3, 301.2, 401.1, 401.1.1, 401.2.2, 404, 408.1, 501.1, 502.3, Chapter 6, 1001.2.1, 1101.3, 1201.1, 1201.2, 1201.4, 1202, 1301.2, 1301.7, 1401.1, 1401.1.1, 1401.2.4, 1401.3,1501.3, 1501.6.6, A105.2, A105.3, A106.3.3.8, A205.2, A205.3, A403.2,
RISK CATEGORY . . . . . Table 301.1.4.1, 301.1.4.2, Table 301.1.4.2
ROOF
Recover 202, 706
Repair 202, 706
Replacement 202, 706, 707.2
Reroofing 202, 706
Diaphragms 707.3.2
Permit 707.3

S

SAFEGUARDS DURING CONSTRUCTION (see CONSTRUCTION SAFEGUARDS)
SAFETY PARAMETERS . . . . . 1401.5.3, 1401.6, Table 1401.7
SEISMIC FORCES (see STRUCTURAL LOADS/FORCES)
SEISMIC LOADS (see STRUCTURAL LOADS/FORCES)
SEISMIC RETROFIT . . . . . Appendix A
SHAFT ENCLOSURES 803.2.2, 1012.7,1401.6.6
SMOKE ALARMS 804.2.2, 804.4.3, 1104
SMOKE COMPARTMENTS 403.11, 803.3, 805.10, 1401.6.20
SMOKE CONTROL . . . . . 1401.6.10, Table 1401.7
SMOKE DETECTORS 608.2, 804.4, 1012.7.4
SNOW LOAD (see STRUCTURAL LOADS/FORCES)
SPECIAL USE AND OCCUPANCY . . . 802, 902, 1002, 1008.1, 1201.3
SPRINKLER SYSTEM (see AUTOMATIC SPRINKLER SYSTEM)
STAIRWAY 403.1, 405.2, 407.3, 410.8.4, 803.2.1, 803.2.2, 803.2.3, 804.1.1, 805.3.1.1, 805.3.1.2.1, 805.4.3, 805.4.3.1, 805.9.1, 805.10.1, 806.2, 808.3.5, 902.2.1, 903.1, 1012.4.1, 1012.4.2, 1012.4.4, 1012.7.2, 1012.7.3, 1012.7.4, 1102.2, 1203.3, 1203.6, 1203.9, 1205.1.3, 1205.6, 1205.11, 1205.13, 1401.6.3, 1401.6.1.10.1, 1504.1, 1505.1, 1506.1
STANDPIPE SYSTEMS . . . . . 105.2.2, 804.2.1, 804.3, 1401.6.18, Table 1401.6.18, 1401.6.18.1, Table 1401.7, 1506, 1503.2
STRUCTURAL 402.3, 402.4, 403.3, 403.4, 403.5, 404.2, 404.3, 407.4, 606, 706, 807, 907, 1007, 1103, 1206, 1302, 1401.4.1
STRUCTURAL ALTERATION–LIMITED 301.1, 907.4.3
STRUCTURAL LOADS/FORCES
Gravity loads . . . . . 402.3, 403.3, 706.2, 807.4, 907.3 , 1007.1, 1103.2, A206.6, A506.5.1
International Building Code-level . . . Table 301.1.4.1, 1103.3.1, 1103.3.2
Live loads 202, 402.3.1, 403.3.1, 404.3, 405.3, 606.2.3, 805.3.1.2.2, 1205.13, 1206.1, 1501.6.1, 1501.6.5, A108.6, A403.7
Reduced . . . . . 301.1.4.2, Table 301.1.4.2, 606.2.2.1, 606.2.2.3, 707.2.1, 907.4.2, 907.4.3, 1007.3.1, A103, A106.3.1, A108.6, A113.3, A206.2, A402, A403.5, A403.7, A403.9, A404.1
Seismic loads 202, 404.2.3, 606.2.2.1, 606.2.2.3, 707.2.1, 707.3.1, 907.4.2, 907.4.3, 1007.3.1, 1103.3.1,1302.4

INTERNATIONAL CODE COUNCIL®
Copyright © 2015 ICC. ALL RIGHTS RESERVED. Accessed by David Dammon on Jun 21, 2017 12:30:52 PM pursuant to License Agreement with ICC. No further reproduction or distribution authorized. ANY UNAUTHORIZED REPRODUCTION OR DISTRIBUTION IS A VIOLATION OF THE FEDERAL COPYRIGHT ACT AND THE LICENSE AGREEMENT, AND SUBJECT TO CIVIL AND CRIMINAL PENALTIES THEREUNDER.

Snow Loads 403.3, 606.2.3, 807.4, 1007.2, 1103.4, 1302.5
Wind Loads. 404.2.1, 404.2.3, 606.2.2.3, 707.3.2, 907.4.2, 1007.2, 1302.3, 1501.6.7
SUBSTANTIAL DAMAGE
Flood. 202, 402.2, 403.2, 404.5, 606.2.4
Structural 202, 404.2, 404.3, 404.3.1, 404.4, 606.2.1, 606.2.2, 606.2.3, 606.2.3.1
SUBSTANTIAL IMPROVEMENT . . .104.10.1, 109.3.3, 202, 402.2, 403.2, 404.5, 408.2, 601.3, 701.3, 1103.5, 1201.4, 1401.3.3
SUBSTANTIAL STRUCTURAL ALTERATION 907.5.2

T

TECHNICALLY INFEASIBLE 202, 410.4.2, 410.6, 410.8.6, 410.8.11, 410.8.12, 410.9, 705.1, 705.1.6, 705.1.10, 705.1.11, 1012.8.2, 1204.1, 1205.15
TEMPORARY STRUCTURE 107
TESTING 104.11.2, 105.2, 106.2.4, 1401.6.10.1, 1507.1, A105.4, A205.4, A408.1, A503.3
TRAVEL DISTANCE . . . . . 803.3.1, 805.3.1.1, 805.3.2, 805.4.1.1, 1401.6.13, Table 1401.7

U

UNSAFE 104.6, 105.2, 114.1, 114.3, 115, 202, 401.2.1, 602.1, 602.2, 1008.2, 1202.2, 1401.3.1
UTILITIES 111, 1503.3

V

VERTICAL OPENING PROTECTION . . . .803.2, 903.1, 1012.7, 1401.6.6, Table 1401.7
VIOLATIONS 101.7, 104.6, 105.2, 105.4, 105.6, 109.1, 110.1, 110.2, 110.4, 113, 114.3

W

WIND LOAD (see STRUCTURAL LOADS/FORCES)
WINDOWS
Emergency escape and rescue openings 702.5, 406.3
Opening control devices 702.4, 406.2
Glass replacement 406.1
Glazing 602.3

INTERNATIONAL CODE COUNCIL®
Copyright © 2015 ICC. ALL RIGHTS RESERVED. Accessed by David Dammon on Jun 21, 2017 12:30:52 PM pursuant to License Agreement with ICC. No further reproduction or distribution authorized. ANY UNAUTHORIZED REPRODUCTION OR DISTRIBUTION IS A VIOLATION OF THE FEDERAL COPYRIGHT ACT AND THE LICENSE AGREEMENT, AND SUBJECT TO CIVIL AND CRIMINAL PENALTIES THEREUNDER.

INTERNATIONAL CODE COUNCIL®
Copyright © 2015 ICC. ALL RIGHTS RESERVED. Accessed by David Dammon on Jun 21, 2017 12:30:52 PM pursuant to License Agreement with ICC. No further reproduction or distribution authorized. ANY UNAUTHORIZED REPRODUCTION OR DISTRIBUTION IS A VIOLATION OF THE FEDERAL COPYRIGHT ACT AND THE LICENSE AGREEMENT, AND SUBJECT TO CIVIL AND CRIMINAL PENALTIES THEREUNDER.

ICC INTERNATIONAL CODE COUNCIL®

People Helping People Build a Safer World®

ICC Plan Review Services...

Delivers the Most Detailed and Precise Plan Reviews in the Building Industry

As the association dedicated to the development of the I-Codes, no one has a better understanding of **all the International Codes** than our licensed and ICC-Certified engineers and architects. Whether you're falling behind in plan reviews or need special code expertise for highly complex projects, the I-Code experts at the International Code Council's (ICC) Plan Review Services is here to help you!

NEW! Streamline the document submittal process with our cloud-based ProjectDox, powered by Avolve plan review submittal system for easy plan review document submittal, storage and review.

To learn more about ICC Plan Review Services, visit **www.iccsafe.org/planreview** or contact: David Hunter–Director of Business Development and Outreach, Technical Services, 888-ICC-SAFE (888-422-7233), ext. 5577, dhunter@iccsafe.org

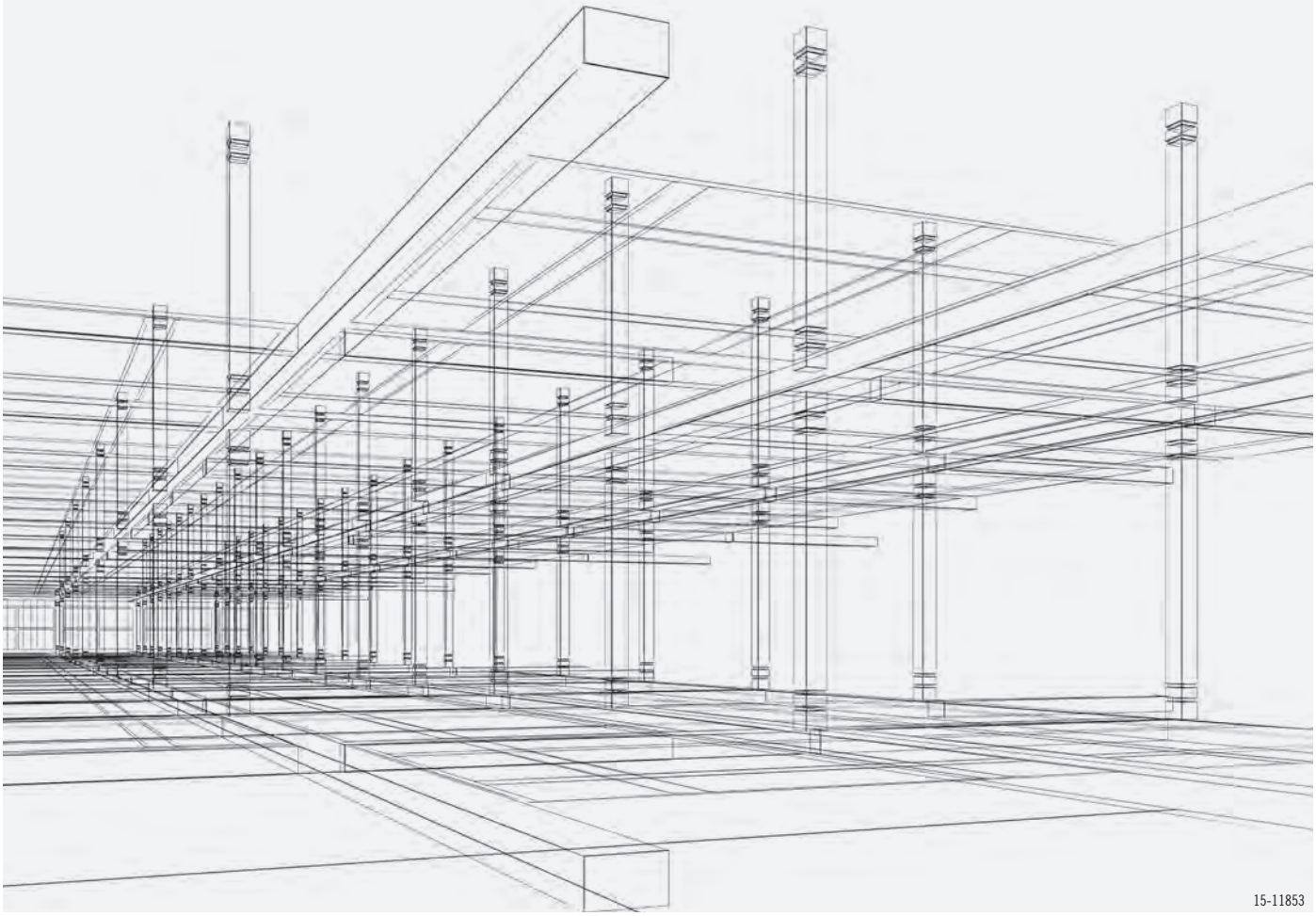

15-11853

INTERNATIONAL CODE COUNCIL®

Copyright © 2015 ICC. ALL RIGHTS RESERVED. Accessed by David Dammon on Jun 21, 2017 12:30:52 PM pursuant to License Agreement with ICC. No further reproduction or distribution authorized. ANY UNAUTHORIZED REPRODUCTION OR DISTRIBUTION IS A VIOLATION OF THE FEDERAL COPYRIGHT ACT AND THE LICENSE AGREEMENT, AND SUBJECT TO CIVIL AND CRIMINAL PENALTIES THEREUNDER.

ICC INTERNATIONAL CODE COUNCIL®

People Helping People Build a Safer World®

Get Connected with the Best Code Resources and Member Benefits in the Industry

As a building professional, being connected to a Member-driven association that offers exclusive I-Code resources and training can play a vital role in building your career. No other building code association offers you more I-Code resources to help enhance your code knowledge and your career than the International Code Council® (ICC®).

Become an ICC Member now to take advantage of:

- Free code opinions from I-Codes experts
- Free I-Code book(s) or download to new Members*
- Discounts on I-Code resources, training and certification renewal
- Free access to employment opportunities in the ICC Career Center, including posting jobs
- Free benefits - Governmental Members: Your staff can receive free ICC benefits too*
- Great opportunities to network at ICC events
- ***Savings of up to 25% on code books & Training materials***

Get connected now! Visit our Member page at **www.iccsafe.org/membership** or call 1-888-ICC-SAFE (422-7233), ext. 33804 to join or learn more today!

*Some restrictions apply. Speak with an ICC Member Services Representative for details.



15-11222

INTERNATIONAL CODE COUNCIL®

Copyright © 2015 ICC. ALL RIGHTS RESERVED. Accessed by David Dammon on Jun 21, 2017 12:30:52 PM pursuant to License Agreement with ICC. No further reproduction or distribution authorized. ANY UNAUTHORIZED REPRODUCTION OR DISTRIBUTION IS A VIOLATION OF THE FEDERAL COPYRIGHT ACT AND THE LICENSE AGREEMENT, AND SUBJECT TO CIVIL AND CRIMINAL PENALTIES THEREUNDER.

ICC EVALUATION SERVICE

Experts in Building Product Evaluation and Certification

Design with

CONFIDENCE



When facing new or unfamiliar materials, how do you know if they comply with building codes and standards?

- ICC-ES® Evaluation Reports are the most widely accepted and trusted technical reports for code compliance. When you specify products or materials with an ICC-ES report, you avoid delays on projects and improve your bottom line.
- ICC-ES is a subsidiary of ICC®, the publisher of the codes used throughout the U.S. and many global markets, so you can be confident in their code expertise.
- ICC-ES provides you with a free online directory of code compliant products at: **www.icc-es.org/Evaluation_Reports** and CEU courses that help you design with confidence.

ICC
INTERNATIONAL CODE COUNCIL

WWW.ICC-ES.ORG | 800-423-6587

ICC ES

ANSI
ANSI Accredited Program
PRODUCT CERTIFICATION
#1009

15-11219

INTERNATIONAL CODE COUNCIL®

Copyright © 2015 ICC. ALL RIGHTS RESERVED. Accessed by David Dammon on Jun 21, 2017 12:30:52 PM pursuant to License Agreement with ICC. No further reproduction or distribution authorized. ANY UNAUTHORIZED REPRODUCTION OR DISTRIBUTION IS A VIOLATION OF THE FEDERAL COPYRIGHT ACT AND THE LICENSE AGREEMENT, AND SUBJECT TO CIVIL AND CRIMINAL PENALTIES THEREUNDER.

ICC INTERNATIONAL CODE COUNCIL®

People Helping People Build a Safer World®

2015 I-Code Essentials

This helpful series uses a straightforward, focused approach to explore code requirements with non-code language, allowing readers to gain confidence in their understanding of the material. Each book is an invaluable companion guide to the 2015 IBC, IRC, IFC or IECC for both new and experienced code users.

- **Detailed full-color illustrations enhance comprehension of code provisions**
- **A focused, concise approach facilitates understanding of the essential code provisions**
- **References to corresponding code sections provide added value as companion guides to the 2015 I-Codes**
- **Glossary of code and construction terms clarifies their meaning in the context of the code**



A

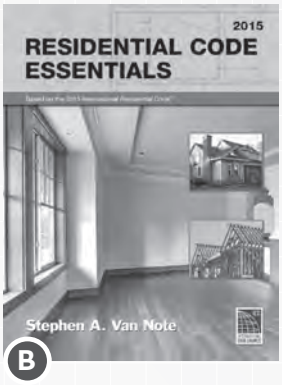

B

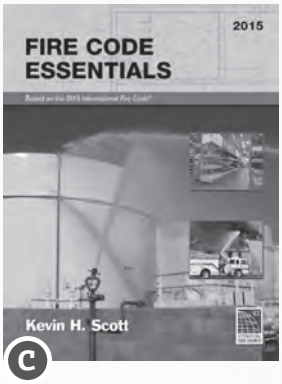

C

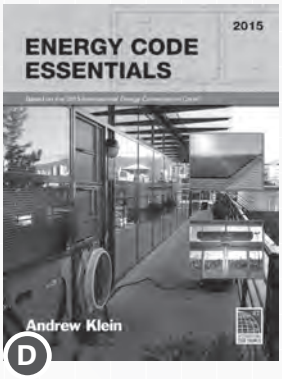

D

A. BUILDING CODE ESSENTIALS: BASED ON THE 2015 INTERNATIONAL BUILDING CODE

Explores those code provisions essential to understanding the application of the IBC in an easy-to-read format. The user-friendly approach of the text simplifies critical concepts so users can achieve a more complete understanding of the code's intent. Full-color illustrations, examples and simplified tables assist the reader in visualizing the code requirements. This up-to-date, step-by-step guide's topic organization reflects the intent of the IBC and facilitates understanding and application of the code provisions.

SOFT COVER #4031S15
PDF DOWNLOAD #8950P596

B. RESIDENTIAL CODE ESSENTIALS: BASED ON THE 2015 INTERNATIONAL RESIDENTIAL CODE

Explains those code provisions essential to understanding the application of the IRC to the most commonly encountered building practices. The information is presented in a user-friendly manner with an emphasis on technical accuracy and clear non-code language. Full-color illustrations, examples and simplified tables assist the reader in visualizing the code requirements.

SOFT COVER #4131S15
PDF DOWNLOAD #8950P59

C. FIRE CODE ESSENTIALS: BASED ON THE 2015 INTERNATIONAL FIRE CODE

Focuses on the essential provisions of the IFC for controlling ignition sources and fire hazards, fire department access to buildings, building uses and processes, fire protection and life safety systems, special processes and uses and hazardous materials.

SOFT COVER #4431S15
PDF DOWNLOAD #8950P59

D. ENERGY CODE ESSENTIALS: BASED ON THE 2015 INTERNATIONAL ENERGY CONSERVATION CODE®

Designed to provide a straightforward, easy-to-read companion guide to the IECC for both beginning and experienced code users. The text provides accurate information on critical energy code applications in the office and in the field for residential and commercial construction. The focused coverage examines those code provisions essential to understanding the application of the IECC to the most commonly encountered building practices and discusses the reasons behind the requirements.

SOFT COVER #4831S15
PDF DOWNLOAD #8950P651

ORDER YOUR I-CODE ESSENTIALS TODAY! 1-800-786-4452 | www.iccsafe.org/books

14-10387

INTERNATIONAL CODE COUNCIL®

Copyright © 2015 ICC. ALL RIGHTS RESERVED. Accessed by David Dammon on Jun 21, 2017 12:30:52 PM pursuant to License Agreement with ICC. No further reproduction or distribution authorized. ANY UNAUTHORIZED REPRODUCTION OR DISTRIBUTION IS A VIOLATION OF THE FEDERAL COPYRIGHT ACT AND THE LICENSE AGREEMENT, AND SUBJECT TO CIVIL AND CRIMINAL PENALTIES THEREUNDER.

2015 IPMC®

CODE AND COMMENTARY

The complete IPMC with commentary after each section



INTERNATIONAL CODE COUNCIL®

Copyright © 2015 ICC. ALL RIGHTS RESERVED. Accessed by David Dammon on Jun 21, 2017 12:30:52 PM pursuant to License Agreement with ICC. No further reproduction or distribution authorized. ANY UNAUTHORIZED REPRODUCTION OR DISTRIBUTION IS A VIOLATION OF THE FEDERAL COPYRIGHT ACT AND THE LICENSE AGREEMENT, AND SUBJECT TO CIVIL AND CRIMINAL PENALTIES THEREUNDER.

2015 IPMC®

CODE AND COMMENTARY

The complete IPMC with commentary after each section

ICC
INTERNATIONAL CODE COUNCIL

INTERNATIONAL CODE COUNCIL®

Copyright © 2015 ICC. ALL RIGHTS RESERVED. Accessed by David Dammon on Jun 21, 2017 12:30:52 PM pursuant to License Agreement with ICC. No further reproduction or distribution authorized. ANY UNAUTHORIZED REPRODUCTION OR DISTRIBUTION IS A VIOLATION OF THE FEDERAL COPYRIGHT ACT AND THE LICENSE AGREEMENT, AND SUBJECT TO CIVIL AND CRIMINAL PENALTIES THEREUNDER.

2015 International Property Maintenance Code® Commentary

First Printing: May 2015

ISBN: 978-1-60983-288-9 (soft-cover edition)

COPYRIGHT © 2015
by
INTERNATIONAL CODE COUNCIL, INC.

ALL RIGHTS RESERVED. This 2015 *International Property Maintenance Code® Commentary* is a copyrighted work owned by the International Code Council, Inc. Without advance written permission from the copyright owner, no part of this book may be reproduced, distributed or transmitted in any form or by any means, including, without limitation, electronic, optical or mechanical means (by way of example, and not limitation, photocopying or recording by or in an information storage retrieval system). For information on permission to copy material exceeding fair use, please contact: Publications, 4051 Flossmoor Road, Country Club Hills, IL 60478. Phone 1-888-ICC-SAFE (422-7233).

Trademarks: "International Code Council," the "International Code Council" logo and the "International Property Maintenance Code" are trademarks of the International Code Council, Inc.

PRINTED IN THE U.S.A.

INTERNATIONAL CODE COUNCIL®

Copyright © 2015 ICC. ALL RIGHTS RESERVED. Accessed by David Dammon on Jun 21, 2017 12:30:52 PM pursuant to License Agreement with ICC. No further reproduction or distribution authorized. ANY UNAUTHORIZED REPRODUCTION OR DISTRIBUTION IS A VIOLATION OF THE FEDERAL COPYRIGHT ACT AND THE LICENSE AGREEMENT, AND SUBJECT TO CIVIL AND CRIMINAL PENALTIES THEREUNDER.

PREFACE

The principal purpose of the Commentary is to provide a basic volume of knowledge and facts relating to existing structures as it pertains to the regulations regarding property maintenance set forth in the 2015 *International Property Maintenance Code*®. The person who is serious about effectively regulating property maintenance will find the Commentary to be a reliable data source and reference to almost all aspects of property maintenance.

As a follow-up to the *International Property Maintenance Code*, we offer a companion document, the *International Property Maintenance Code and Commentary.* The basic appeal of the Commentary is thus: it provides in a small package and at reasonable cost thorough coverage of many issues likely to be dealt with when using the *International Property Maintenance Code*, then supplements that coverage with historical and technical background. Reference lists, information sources and bibliographies are also included.

Throughout all of this, strenuous effort has been made to keep the vast quantity of material accessible and its method of presentation useful. With a comprehensive yet concise summary of each section, the Commentary provides a convenient reference for property maintenance regulations. In the chapters that follow, discussions focus on the full meaning and implications of the code text. Guidelines suggest the most effective method of application, and the consequences of not adhering to the code text. Illustrations are provided to aid understanding; they do not necessarily illustrate the only methods of achieving code compliance.

The format of the Commentary includes the full text of each section, table and figure in the code, followed immediately by the commentary applicable to that text. As stated in the preface of the 2015 *International Property Maintenance Code*, the content of sections in the code that begin with a letter designation (i.e., [P]502.1) are maintained by another code development committee. Each section's narrative includes a statement of its objective and intent, and usually includes a discussion about why the requirement commands the conditions set forth. Code text and commentary text are easily distinguished from each other. All code text is shown as it appears in the *International Property Maintenance Code*, and all commentary is indented below the code text and begins with the symbol❖.

Readers should note that the Commentary is to be used in conjunction with the *International Property Maintenance Code* and not as a substitute for the code. **The Commentary is advisory only**; the code official alone possesses the authority and responsibility for interpreting the code.

Comments and recommendations are encouraged, for through your input, we can improve future editions. Please direct your comments to the Codes and Standards Development Department at the Chicago District Office.

INTERNATIONAL CODE COUNCIL®
Copyright © 2015 ICC. ALL RIGHTS RESERVED. Accessed by David Dammon on Jun 21, 2017 12:30:52 PM pursuant to License Agreement with ICC. No further reproduction or distribution authorized. ANY UNAUTHORIZED REPRODUCTION OR DISTRIBUTION IS A VIOLATION OF THE FEDERAL COPYRIGHT ACT AND THE LICENSE AGREEMENT, AND SUBJECT TO CIVIL AND CRIMINAL PENALTIES THEREUNDER.

INTERNATIONAL CODE COUNCIL®
Copyright © 2015 ICC. ALL RIGHTS RESERVED. Accessed by David Dammon on Jun 21, 2017 12:30:52 PM pursuant to License Agreement with ICC. No further reproduction or distribution authorized. ANY UNAUTHORIZED REPRODUCTION OR DISTRIBUTION IS A VIOLATION OF THE FEDERAL COPYRIGHT ACT AND THE LICENSE AGREEMENT, AND SUBJECT TO CIVIL AND CRIMINAL PENALTIES THEREUNDER.

TABLE OF CONTENTS

CHAPTER 1 SCOPE AND ADMINISTRATION. . . . . 1-1 – 1-16

CHAPTER 2 DEFINITIONS. . . . . 2-1 – 2-8

CHAPTER 3 GENERAL REQUIREMENTS . . . . . 3-1 – 3-16

CHAPTER 4 LIGHT, VENTILATION AND OCCUPANCY LIMITATIONS. . . . . 4-1 – 4-14

CHAPTER 5 PLUMBING FACILITIES AND FIXTURE REQUIREMENTS . . . . . 5-1 – 5-10

CHAPTER 6 MECHANICAL AND ELECTRICAL REQUIREMENTS . . . . . 6-1 – 6-10

CHAPTER 7 FIRE SAFETY REQUIREMENTS. . . . . 7-1 – 7-6

CHAPTER 8 REFERENCED STANDARDS . . . . . 8-1 – 8-4

APPENDIX A BOARDING STANDARD . . . . . A-1 – A-2

INDEX . . . . . INDEX-1 – INDEX-12

INTERNATIONAL CODE COUNCIL®

Copyright © 2015 ICC. ALL RIGHTS RESERVED. Accessed by David Dammon on Jun 21, 2017 12:30:52 PM pursuant to License Agreement with ICC. No further reproduction or distribution authorized. ANY UNAUTHORIZED REPRODUCTION OR DISTRIBUTION IS A VIOLATION OF THE FEDERAL COPYRIGHT ACT AND THE LICENSE AGREEMENT, AND SUBJECT TO CIVIL AND CRIMINAL PENALTIES THEREUNDER.

INTERNATIONAL CODE COUNCIL®
Copyright © 2015 ICC. ALL RIGHTS RESERVED. Accessed by David Dammon on Jun 21, 2017 12:30:52 PM pursuant to License Agreement with ICC. No further reproduction or distribution authorized. ANY UNAUTHORIZED REPRODUCTION OR DISTRIBUTION IS A VIOLATION OF THE FEDERAL COPYRIGHT ACT AND THE LICENSE AGREEMENT, AND SUBJECT TO CIVIL AND CRIMINAL PENALTIES THEREUNDER.

Chapter 1:
Scope and Administration

General Comments

The law of building regulation is grounded on the police power of the state. This power is the source of all authority to enact building regulations. In terms of how it is used, police power is the power of the state to legislate for the general welfare of its citizens. This power enables the passage of laws such as a property maintenance code. It is from the police power delegated by the state legislature that local governments are able to enact building regulations. If the state legislature has limited this power in any way, the municipality may not exceed these limitations. While the municipality may not further delegate its police power (e.g., by delegating the burden of determining code compliance to the building owner, contractor or architect), it may turn over the administration of building regulations to a municipal official, such as a code official, provided that he or she is given sufficient criteria to clearly establish the basis for decisions as to whether a proposed building conforms to the code.

Chapter 1 is largely concerned with maintaining "due process of law" in enforcing the provisions contained in the body of the code. Only through careful observation of the administrative provisions can the code official reasonably hope to demonstrate that "equal protection under the law" has been provided. While it is generally assumed that the administrative and enforcement sections of a code are geared toward the responsibilities of the code official, the provisions also establish the rights and privileges of the design professional, contractor and building owner.

Purpose

Chapter 1 establishes the necessary legal basis for enforcement of the code by the authority having jurisdiction. All of the police powers inherent in enforcing minimum standards for the use and maintenance of buildings must follow the line of authority, from the U.S. Constitution to the state to the actual enforcer. Chapter 1 defines the role and responsibilities of the authority having jurisdiction. To protect all parties from an unfair enforcement action, this chapter also sets forth the due process that requires corrective actions to be accomplished in a constitutional manner. Police powers are not unlimited, and this chapter identifies those limitations.

PART 1 — SCOPE AND APPLICATION

SECTION 101
GENERAL

❖ This section sets forth the scope and intent of the code as it applies to existing structures.

[A] 101.1 Title. These regulations shall be known as the *International Property Maintenance Code* of **[NAME OF JURISDICTION]**, hereinafter referred to as "this code."

❖ The purpose of this section is to identify the adopted regulations by inserting the name of the adopting jurisdiction into the code.

[A] 101.2 Scope. The provisions of this code shall apply to all existing residential and nonresidential structures and all existing *premises* and constitute minimum requirements and standards for *premises*, structures, equipment and facilities for light, *ventilation*, space, heating, sanitation, protection from the elements, a reasonable level of safety from fire and other hazards, and for a reasonable level of sanitary maintenance; the responsibility of *owners*, an owner's authorized agent, *operator*s and *occupants*; the *occupancy* of existing structures and *premises*, and for administration, enforcement and penalties.

❖ This section establishes the broad purpose of the code—to protect the public health, safety and welfare in both existing residential and nonresidential structures and on all existing premises.

Four specific areas are addressed in greater detail in subsequent sections:

- Establishing minimum maintenance standards for such elements as basic equipment, light, ventilation, heating, sanitation and fire safety.
- Fixing responsibility among owners, operators and occupants for following the code.
- Regulating the use of existing structures and premises.
- Providing for administration, enforcement and penalties.

These four categories provide communities with the tools to reduce risks created by deteriorated or unsafe buildings and help communities upgrade and maintain other existing structures.

[A] 101.3 Intent. This code shall be construed to secure its expressed intent, which is to ensure public health, safety and welfare insofar as they are affected by the continued *occupancy* and maintenance of structures and *premises*. Existing structures and *premises* that do not comply with these provi-

INTERNATIONAL CODE COUNCIL®
Copyright © 2015 ICC. ALL RIGHTS RESERVED. Accessed by David Dammon on Jun 21, 2017 12:30:52 PM pursuant to License Agreement with ICC. No further reproduction or distribution authorized. ANY UNAUTHORIZED REPRODUCTION OR DISTRIBUTION IS A VIOLATION OF THE FEDERAL COPYRIGHT ACT AND THE LICENSE AGREEMENT, AND SUBJECT TO CIVIL AND CRIMINAL PENALTIES THEREUNDER.

sions shall be altered or repaired to provide a minimum level of health and safety as required herein.

❖ The code is intended to provide requirements addressing the public health, safety and welfare as they relate to the use and maintenance of existing structures and premises. The code requires existing structures and premises that are not in compliance with the code to be altered or repaired to meet the code. The code requirements are intended to represent the minimum acceptable level of public health and safety. As required in Section 102.3, repairs and alterations need to comply with several *International Codes*® (I-Codes®), including the *International Building Code*® (IBC®).

[A] 101.4 Severability. If a section, subsection, sentence, clause or phrase of this code is, for any reason, held to be unconstitutional, such decision shall not affect the validity of the remaining portions of this code.

❖ Only invalid sections of the code (as established by the court of jurisdiction) can be set aside. This is essential to safeguard the application of the code text to situations whereby a provision of the code is declared illegal or unconstitutional. This section would preserve the legislative action that put the legal provisions in place.

SECTION 102
APPLICABILITY

❖ This section details how to use the code under various conditions.

[A] 102.1 General. Where there is a conflict between a general requirement and a specific requirement, the specific requirement shall govern. Where differences occur between provisions of this code and the referenced standards, the provisions of this code shall apply. Where, in a specific case, different sections of this code specify different requirements, the most restrictive shall govern.

❖ The most restrictive requirement is to apply where there may be different requirements in the code for a specific situation. In cases where the code establishes a specific requirement for a certain condition, that requirement is applicable even if it is less restrictive than a general requirement mentioned elsewhere in the code.

[A] 102.2 Maintenance. Equipment, systems, devices and safeguards required by this code or a previous regulation or code under which the structure or *premises* was constructed, altered or repaired shall be maintained in good working order. No *owner*, owner's authorized agent, *operator* or *occupant* shall cause any service, facility, equipment or utility that is required under this section to be removed from, shut off from or discontinued for any occupied dwelling, except for such temporary interruption as necessary while repairs or alterations are in progress. The requirements of this code are not intended to provide the basis for removal or abrogation of fire protection and safety systems and devices in existing structures. Except as otherwise specified herein, the *owner* or the *owner's* authorized agent shall be responsible for the maintenance of buildings, structures and *premises*.

❖ This section contains general maintenance requirements. The code specifically prohibits the disconnection of any required utilities for an occupied dwelling. This helps to safeguard persons who have a physical condition and are dependent on these systems. Some examples of this include: a person who has to have electricity to power a kidney dialysis machine; a patient who is on an oxygen system full time; and someone with particularly bad allergies who needs to have an air-conditioning system to help filter the air. Any safety system that exists in a building must be maintained. A fire protection or safety system is not to be removed from a building if it is required by the code or a previous regulation or code that was in effect when the building was built. This section also specifies that the owner, the owner's authorized agent, or other person having control of the structure or premises is responsible for maintenance, not the tenants of rental properties.

[A] 102.3 Application of other codes. Repairs, additions or alterations to a structure, or changes of *occupancy*, shall be done in accordance with the procedures and provisions of the *International Building Code*, *International Existing Building Code*, *International Energy Conservation Code*, *International Fire Code*, *International Fuel Gas Code*, *International Mechanical Code*, *International Residential Code*, *International Plumbing Code* and NFPA 70. Nothing in this code shall be construed to cancel, modify or set aside any provision of the *International Zoning Code*.

❖ Repairs, additions or alterations are to be done as required by the IBC, *International Existing Building Code*® (IEBC®), *International Energy Conservation Code*® (IECC®), *International Fire Code*® (IFC®), *International Fuel Gas Code*® (IFGC®), *International Mechanical Code*® (IMC®), *International Residential Code*® (IRC®) and the *International Plumbing Code*® (IPC®). The *International Property Maintenance Code*® (IPMC®) is not intended to affect any of the requirements in the *International Zoning Code*® (IZC®).

[A] 102.4 Existing remedies. The provisions in this code shall not be construed to abolish or impair existing remedies of the jurisdiction or its officers or agencies relating to the removal or demolition of any structure that is dangerous, unsafe and insanitary.

❖ Section 110 establishes one set of criteria and procedures that may be used to demolish dangerous, unsafe or insanitary buildings. This section permits a jurisdiction to continue to use any remedies already adopted for demolishing buildings. In essence, a community may employ several procedures for removing dangerous buildings. It is advisable that one procedure be chosen over another to avoid confusion and errors in processing the demolition.

INTERNATIONAL CODE COUNCIL®
Copyright © 2015 ICC. ALL RIGHTS RESERVED. Accessed by David Dammon on Jun 21, 2017 12:30:52 PM pursuant to License Agreement with ICC. No further reproduction or distribution authorized. ANY UNAUTHORIZED REPRODUCTION OR DISTRIBUTION IS A VIOLATION OF THE FEDERAL COPYRIGHT ACT AND THE LICENSE AGREEMENT, AND SUBJECT TO CIVIL AND CRIMINAL PENALTIES THEREUNDER.

[A] 102.5 Workmanship. Repairs, maintenance work, alterations or installations that are caused directly or indirectly by the enforcement of this code shall be executed and installed in a *workmanlike* manner and installed in accordance with the manufacturer's instructions.

❖ All repairs, materials, alterations and installations must be executed in a skilled manner that allows the performance intended and anticipated by the code to be achieved, and must meet the criteria of the definition of "Workmanlike" in the code (see the definition of "Workmanlike" in Chapter 2).

Equipment needs to comply with the manufacturer's installation instructions for proper operation and safety.

[A] 102.6 Historic buildings. The provisions of this code shall not be mandatory for existing buildings or structures designated as historic buildings where such buildings or structures are judged by the *code official* to be safe and in the public interest of health, safety and welfare.

❖ This section provides the code official with the widest flexibility in enforcing the code when the building in question has historic value. This flexibility, however, is not provided without conditions. The most important criterion for application of this section is that the building must be specifically classified as being of historic significance by a qualified party or agent. Usually this is done by a state or local authority after considerable scrutiny of the historical value of the building. Most, if not all, states have such authorities, as do many local jurisdictions. The agencies with such authority typically exist at the state or local government level.

[A] 102.7 Referenced codes and standards. The codes and standards referenced in this code shall be those that are listed in Chapter 8 and considered part of the requirements of this code to the prescribed extent of each such reference and as further regulated in Sections 102.7.1 and 102.7.2.

Exception: Where enforcement of a code provision would violate the conditions of the listing of the equipment or appliance, the conditions of the listing shall apply.

❖ A referenced standard or portion thereof is enforceable to the same extent as if the content of the standard were included in the body of the code. For example, Section 604.2 references NFPA 70 for sizing the electrical main service for a building. The use and application of referenced standards are limited to those portions of the standards that are specifically identified in the code. It is the intention of the code to be in harmony with the referenced standards. If conflicts occur because of scope or purpose, the code text governs. The exception recognizes the rare circumstance of the code requiring or allowing something less restrictive or stringent than the product listing or manufacturer's instructions. If the code conflicts with or deviates from the conditions of the listing, this may or may not mean that the code violated the listing. For example, the listing for an appliance might allow a particular application of an appliance that is expressly prohibited by the code. In this case, the code has not violated the listing, but instead has simply limited the application allowed by the listing. The intent is for the highest level of safety to prevail.

[A] 102.7.1 Conflicts. Where conflicts occur between provisions of this code and the referenced standards, the provisions of this code shall apply.

❖ The use of referenced codes and standards to cover certain aspects of various occupancies and operations, rather than write parallel or competing requirements into the code, is a longstanding code development principle. Often, however, questions and potential conflicts in the use of referenced codes and standards can arise, which can lead to inconsistent enforcement of the code.

[A] 102.7.2 Provisions in referenced codes and standards. Where the extent of the reference to a referenced code or standard includes subject matter that is within the scope of this code, the provisions of this code, as applicable, shall take precedence over the provisions in the referenced code or standard.

❖ Section 102.7.2 expands upon the provisions of Section 102.7.1 by making it clear that, even if a referenced standard references other codes or standards (secondary reference) containing requirements that parallel the code, the provisions of the code will always take precedence. This section provides the policy underpinnings upon which sound code change proposals can be based.

[A] 102.8 Requirements not covered by code. Requirements necessary for the strength, stability or proper operation of an existing fixture, structure or equipment, or for the public safety, health and general welfare, not specifically covered by this code, shall be determined by the *code official*.

❖ Requirements necessary for the strength, stability or proper operation of an existing fixture, structure or equipment, or for the public safety, health and general welfare not specifically covered by the code must be determined by the code official.

Evolving technology in our society will inevitably result in a situation or circumstance in which the code is comparatively silent on an identified hazard. The reasonable application of the code to any hazardous, unforeseen condition is provided for in this section. Clearly such a section and the code official's judicious and reasonable application are needed. The purpose of the section, however, is not to impose requirements that may be preferred over explicit code requirements. Additionally, the section can be utilized to implement the general performance-oriented language of the code to specific enforcement situations.

INTERNATIONAL CODE COUNCIL®
Copyright © 2015 ICC. ALL RIGHTS RESERVED. Accessed by David Dammon on Jun 21, 2017 12:30:52 PM pursuant to License Agreement with ICC. No further reproduction or distribution authorized. ANY UNAUTHORIZED REPRODUCTION OR DISTRIBUTION IS A VIOLATION OF THE FEDERAL COPYRIGHT ACT AND THE LICENSE AGREEMENT, AND SUBJECT TO CIVIL AND CRIMINAL PENALTIES THEREUNDER.

[A] 102.9 Application of references. References to chapter or section numbers, or to provisions not specifically identified by number, shall be construed to refer to such chapter, section or provision of this code.

❖ In a situation where the code makes reference to a chapter or section number or to another code provision without specifically identifying its location in the code, assume that the referenced section, chapter or provision is in the code and not in a referenced code or standard.

[A] 102.10 Other laws. The provisions of this code shall not be deemed to nullify any provisions of local, state or federal law.

❖ In some cases, other laws enacted by the jurisdiction or the state or federal government may be applicable to a condition that is also governed by a requirement in the code. In such circumstances, the requirements of the code are in addition to the other law that is still in effect, although the code official may not be responsible for its enforcement.

PART 2 — ADMINISTRATION AND ENFORCEMENT

SECTION 103
DEPARTMENT OF PROPERTY MAINTENANCE INSPECTION

[A] 103.1 General. The department of property maintenance inspection is hereby created and the executive official in charge thereof shall be known as the *code official*.

❖ The executive official in charge of the property maintenance department is named the "code official" by this section. In actuality, the person who is in charge of the department may hold a different title, such as building commissioner, existing building inspector, housing inspector or construction official. For the purpose of the code, that person is referred to as the "code official."

[A] 103.2 Appointment. The *code official* shall be appointed by the chief appointing authority of the jurisdiction.

❖ This section establishes the code official as an appointed position from which he or she cannot be removed, except for cause subject to a due process review.

[A] 103.3 Deputies. In accordance with the prescribed procedures of this jurisdiction and with the concurrence of the appointing authority, the *code official* shall have the authority to appoint a deputy(s). Such employees shall have powers as delegated by the *code official*.

❖ This section provides the code official with the authority to appoint other individuals to assist with the administration and enforcement of the code. These individuals would have the authority and responsibility as designated by the code official. Such appointments, however, may be exercised only with the authorization of the chief appointing authority.

[A] 103.4 Liability. The *code official*, member of the board of appeals or employee charged with the enforcement of this code, while acting for the jurisdiction, in good faith and without malice in the discharge of the duties required by this code or other pertinent law or ordinance, shall not thereby be rendered civilly or criminally liable personally, and is hereby relieved from all personal liability for any damage accruing to persons or property as a result of an act or by reason of an act or omission in the discharge of official duties.

❖ The code official is not intended to be held liable for those actions performed in accordance with the code in a reasonable and lawful manner. The responsibility of the code official in this regard is subject to local, state and federal laws that may supersede this provision.

[A] 103.4.1 Legal defense. Any suit or criminal complaint instituted against any officer or employee because of an act performed by that officer or employee in the lawful discharge of duties and under the provisions of this code shall be defended by the legal representative of the jurisdiction until the final termination of the proceedings. The code official or any subordinate shall not be liable for costs in an action, suit or proceeding that is instituted in pursuance of the provisions of this code.

❖ This section establishes that the code official (or subordinates) is not liable for costs in any legal action instituted in response to the performance of lawful duties. These costs are to be borne by the jurisdiction. The best way to be certain that the code official's action is a "lawful duty" is to always cite the applicable code section on which the enforcement action is based.

[A] 103.5 Fees. The fees for activities and services performed by the department in carrying out its responsibilities under this code shall be as indicated in the following schedule.

[JURISDICTION TO INSERT APPROPRIATE SCHEDULE.]

❖ A published fee schedule must be established for permits and inspections. Ideally, the department should generate revenues that cover operating costs and expenses. The permit fee schedule is an integral part of this process.

SECTION 104
DUTIES AND POWERS OF THE CODE OFFICIAL

[A] 104.1 General. The *code official* is hereby authorized and directed to enforce the provisions of this code. The *code official* shall have the authority to render interpretations of this code and to adopt policies and procedures in order to clarify the application of its provisions. Such interpretations, policies and procedures shall be in compliance with the intent and purpose of this code. Such policies and procedures shall not have the effect of waiving requirements specifically provided for in this code.

❖ The duty of the code official is to enforce the code. Because the code official must respond to those who question the requirements of the code related to this responsibility, except as specifically exempted by stat-

INTERNATIONAL CODE COUNCIL®
Copyright © 2015 ICC. ALL RIGHTS RESERVED. Accessed by David Dammon on Jun 21, 2017 12:30:52 PM pursuant to License Agreement with ICC. No further reproduction or distribution authorized. ANY UNAUTHORIZED REPRODUCTION OR DISTRIBUTION IS A VIOLATION OF THE FEDERAL COPYRIGHT ACT AND THE LICENSE AGREEMENT, AND SUBJECT TO CIVIL AND CRIMINAL PENALTIES THEREUNDER.

utory requirements or elsewhere in the code, he or she is the "authority having jurisdiction" for all matters relating to the code and its enforcement. It is the duty of the code official both to interpret and to determine compliance with the code. Code compliance will not always be easy to determine and will require the judgment and expertise of the code official. In exercising this authority, however, the code official cannot set aside or ignore any provision of the code.

[A] 104.2 Inspections. The *code official* shall make all of the required inspections, or shall accept reports of inspection by *approved* agencies or individuals. Reports of such inspections shall be in writing and be certified by a responsible officer of such *approved* agency or by the responsible individual. The *code official* is authorized to engage such expert opinion as deemed necessary to report upon unusual technical issues that arise, subject to the approval of the appointing authority.

❖ The code official or designee is required to make the necessary inspections to determine compliance with the code, or may accept written reports of inspections by an approved agency. The inspection of work in progress or already accomplished is another significant element in determining code compliance. While a department does not have the resources to inspect every aspect of all work, the required inspections are those that are dictated by administrative rules and procedures based on many parameters, including available inspection resources. In order to expand the available resources, the code official may approve an inspection agency that, in his or her opinion, possesses the proper qualifications to perform the inspections. When unusual or complex technical issues arise relative to inspections, the code official has the authority to seek the opinion and advice of experts. A technical report from an expert requested by the code official can be used to assist in the approval process.

[A] 104.3 Right of entry. Where it is necessary to make an inspection to enforce the provisions of this code, or whenever the *code official* has reasonable cause to believe that there exists in a *structure* or upon a *premises* a condition in violation of this code, the *code official* is authorized to enter the structure or *premises* at reasonable times to inspect or perform the duties imposed by this code, provided that if such *structure* or *premises* is occupied the *code official* shall present credentials to the *occupant* and request entry. If such structure or *premises* is unoccupied, the *code official* shall first make a reasonable effort to locate the *owner*, owner's authorized agent or other person having charge or control of the *structure* or *premises* and request entry. If entry is refused, the *code official* shall have recourse to the remedies provided by law to secure entry.

❖ This section establishes the right of the code official to enter the premises in order to make the inspections required by Section 104.3. The right to enter structures or premises is limited. First, to protect the right of privacy, the owner or occupant must grant the code official permission before an interior inspection of the property can be conducted. Permission is not required for inspections that can be accomplished from within the public right-of-way. Second, such access may be denied by the owner or occupant. Unless the inspector has reasonable cause to believe that a code violation exists, access may be unattainable.

Searches of a private residence to gather information for the purpose of enforcing codes, ordinances or regulations are considered unreasonable and are prohibited by the Fourth Amendment to the U.S. Constitution. "Reasonable cause" in the context of this section must be distinguished from "probable cause," which is required to gain access to property in criminal cases. The burden of proof establishing reasonable cause may vary among jurisdictions. Usually, an inspector must show that the property is subject to inspection under the provisions of the code; that the interests of the public health, safety and welfare outweigh the individual's right to maintain privacy; and that such an inspection is required solely to determine compliance with the provisions of the code.

Many jurisdictions do not recognize the concept of an administrative warrant and may require the code official to prove probable or reasonable cause in order to gain access upon refusal. This burden of proof is usually more substantial, often requiring the code official to stipulate in advance why access is needed (usually access is restricted to gathering evidence for seeking an indictment or making an arrest); what specific items or pieces of information are sought; its relevance to the case against the individual subject; how knowledge of the relevance of the information or items sought was obtained; and how the evidence sought will be used. In all such cases, the right to privacy must always be weighed against the right of the code official to conduct an inspection to verify that the public health, safety and welfare are not in jeopardy. Such important and complex constitutional issues should be discussed with the jurisdiction's legal counsel. Jurisdictions should establish procedures for securing the necessary court orders when an inspection is deemed necessary following a refusal.

Third, code officials must present proper identification (see commentary, Section 104.4) and request admittance during reasonable hours—usually the normal business hours of the establishment—to be admitted. Fourth, inspections must be aimed at securing or determining compliance with the provisions and intent of the regulations that are specifically within the established scope of the code official's authority.

[A] 104.4 Identification. The *code official* shall carry proper identification when inspecting *structure*s or *premises* in the performance of duties under this code.

❖ This section requires the code official (including by definition all authorized representatives) to carry identification in the course of conducting the duties of the position. The identification removes any question as to the purpose and authority of the inspector.

INTERNATIONAL CODE COUNCIL®
Copyright © 2015 ICC. ALL RIGHTS RESERVED. Accessed by David Dammon on Jun 21, 2017 12:30:52 PM pursuant to License Agreement with ICC. No further reproduction or distribution authorized. ANY UNAUTHORIZED REPRODUCTION OR DISTRIBUTION IS A VIOLATION OF THE FEDERAL COPYRIGHT ACT AND THE LICENSE AGREEMENT, AND SUBJECT TO CIVIL AND CRIMINAL PENALTIES THEREUNDER.

[A] 104.5 Notices and orders. The *code official* shall issue all necessary notices or orders to ensure compliance with this code.

❖ An important element of code enforcement is the necessary advisement of deficiencies, which is accomplished through notices and orders. The code official is required to issue orders to abate illegal or unsafe conditions. Section 107 contains additional information for these notices.

[A] 104.6 Department records. The *code official* shall keep official records of all business and activities of the department specified in the provisions of this code. Such records shall be retained in the official records for the period required for retention of public records.

❖ In keeping with the need for efficient business practices, the code official must keep official records pertaining to fees collected, inspections, notices and orders issued. Such documentation provides a valuable source of information if questions arise throughout the life of the building and its occupancy regarding outstanding preexisting code violations or conditions.

SECTION 105
APPROVAL

[A] 105.1 Modifications. Whenever there are practical difficulties involved in carrying out the provisions of this code, the *code official* shall have the authority to grant modifications for individual cases upon application of the *owner* or *owner's* authorized agent, provided the *code official* shall first find that special individual reason makes the strict letter of this code impractical, the modification is in compliance with the intent and purpose of this code and that such modification does not lessen health, life and fire safety requirements. The details of action granting modifications shall be recorded and entered in the department files.

❖ The code official may amend or make exceptions to the code as needed where strict compliance is impractical. Only the code official has the authority to grant modifications. Consideration of a particular difficulty is to be based on the application of the owner and a demonstration that the intent of the code is accomplished. This section is not intended to permit setting aside or ignoring a code provision; rather, it is intended to provide for the acceptance of equivalent protection. For example, a code official might decide to accept the installation of a sprinkler system throughout the building instead of upgrading certain walls to have a fire-resistance rating. The modification of requirements would be based on the equivalent protection of the sprinkler system to the upgraded walls. Such modifications do not, however, extend to actions that are necessary to correct violations of the code. In other words, a code violation or the expense of correcting one cannot constitute a practical difficulty.

Filing the details of a modification action is necessary if the reasons for the modification are subject to review. Comprehensive written records are an essential part of an effective administrative system. Unless clearly written records of the considerations and documentation utilized in the modification process are created and maintained, subsequent enforcement action will be difficult to support and will be inconsistent.

[A] 105.2 Alternative materials, methods and equipment. The provisions of this code are not intended to prevent the installation of any material or to prohibit any method of construction not specifically prescribed by this code, provided that any such alternative has been *approved*. An alternative material or method of construction shall be *approved* where the *code official* finds that the proposed design is satisfactory and complies with the intent of the provisions of this code, and that the material, method or work offered is, for the purpose intended, at least the equivalent of that prescribed in this code in quality, strength, effectiveness, fire resistance, durability and safety. Where the alternative material, design or method of construction is not *approved*, the *code official* shall respond in writing, stating the reasons the alternative was not *approved*.

❖ The code is not intended to inhibit innovative ideas or technological advances. A comprehensive regulatory document cannot envision and then address all future innovations in the industry. As a result, the code must be applicable to and provide a basis for the approval of an increasing number of newly developed, innovative materials, systems and methods for which no code text or referenced standards yet exist. The fact that a material, product or method of construction is not specifically described in the code is not an indication that its use is intended to be prohibited. The code official is expected to apply sound technical judgment in accepting materials, systems or methods that, while not anticipated by the drafters of the current code text, can be demonstrated to offer equivalent performance. The code official is responsible for determining if a requested alternative provides the equivalent level of protection of the public health, safety and welfare as required by the code. When the code official determines the alternate method is not at least equivalent to what the code prescribes for safety, durability, fire-resistance, etc., the code official is required to provide a written response to the submitter.

[A] 105.3 Required testing. Whenever there is insufficient evidence of compliance with the provisions of this code or evidence that a material or method does not conform to the requirements of this code, or in order to substantiate claims for alternative materials or methods, the *code official* shall have the authority to require tests to be made as evidence of compliance at no expense to the jurisdiction.

❖ To provide the basis on which the code official can make a decision regarding an alternative material or type of equipment, sufficient technical data, test reports and documentation must be provided for evaluation by the code official. If evidence satisfactory to the code official proves that the alternative equipment,

INTERNATIONAL CODE COUNCIL®
Copyright © 2015 ICC. ALL RIGHTS RESERVED. Accessed by David Dammon on Jun 21, 2017 12:30:52 PM pursuant to License Agreement with ICC. No further reproduction or distribution authorized. ANY UNAUTHORIZED REPRODUCTION OR DISTRIBUTION IS A VIOLATION OF THE FEDERAL COPYRIGHT ACT AND THE LICENSE AGREEMENT, AND SUBJECT TO CIVIL AND CRIMINAL PENALTIES THEREUNDER.

material or construction method is equivalent to that required by the code, he or she is obligated to approve it. Any such approval cannot have the effect of waiving any requirements of the code. The burden of proof of equivalence lies with the applicant who proposes the use of alternative equipment, materials or methods.

[A] 105.3.1 Test methods. Test methods shall be as specified in this code or by other recognized test standards. In the absence of recognized and accepted test methods, the *code official* shall be permitted to approve appropriate testing procedures performed by an *approved* agency.

❖ The code official must require the submission of any appropriate information and data to assist in the determination of equivalency. This information must be submitted before a permit will be issued. The type of information required includes test data in accordance with the referenced standards, evidence of compliance with the referenced standard specifications and design calculations. If no test standard is available, the owner or owner's agent is to propose the test procedures and submit them to the code official for review and approval. For example, ICC Evaluation Service (ICC-ES) has issued evaluation reports that would be particularly useful in providing the code official with the technical basis for evaluation and approval of new and innovative plumbing materials and components. The use of such authoritative and credible research reports can greatly assist the code official by reducing the time-consuming engineering analysis necessary to review materials and products. Failure to adequately substantiate a request for the use of an alternative is a valid reason for the code official to deny a request.

[A] 105.3.2 Test reports. Reports of tests shall be retained by the *code official* for the period required for retention of public records.

❖ The testing agency must be approved by the code official. The testing agency should have technical expertise, test equipment and quality assurance to properly conduct and report the necessary testing.

[A] 105.4 Used material and equipment. The use of used materials that meet the requirements of this code for new materials is permitted. Materials, equipment and devices shall not be reused unless such elements are in good repair or have been reconditioned and tested where necessary, placed in good and proper working condition and *approved* by the *code official*.

❖ The code criteria for materials and equipment have changed over the years. Evaluation of testing and materials technology has facilitated the development of new criteria that old materials may not satisfy. As a result, used materials are required to be evaluated in the same manner as new materials. Used (previously installed) equipment must be equivalent to that required by the code if it is to be used again in a new installation.

[A] 105.5 Approved materials and equipment. Materials, equipment and devices *approved* by the *code official* shall be constructed and installed in accordance with such approval.

❖ The code is a compilation of criteria with which materials, equipment, devices and systems must comply to be suitable for a particular application. The code official has a duty to evaluate such materials, equipment, devices and systems for code compliance and, when compliance is determined, approve the same for use. The materials, equipment, devices and systems must be constructed and installed in compliance with, and all conditions and limitations considered as a basis for, that approval. For example, the manufacturer's instructions and recommendations are to be followed if the approval of the material was based even in part on those instructions and recommendations. The approval authority given to the code official is a significant responsibility and is a key to code compliance. The approval process is first technical and then administrative and must be approached as such. For example, if data to determine code compliance is required, such data should be in the form of test reports or engineering analysis and not simply taken from a sales brochure.

[A] 105.6 Research reports. Supporting data, where necessary to assist in the approval of materials or assemblies not specifically provided for in this code, shall consist of valid research reports from *approved* sources.

❖ When an alternative material or method is proposed for construction, it is incumbent upon the code official to determine whether this alternative is, in fact, an equivalent to the methods prescribed by the code. Reports providing evidence of this equivalency are required to be supplied by an approved source, meaning a source that the code official finds to be reliable and accurate. The ICC-ES is an example of an agency that provides research reports for alternative materials and methods.

SECTION 106
VIOLATIONS

[A] 106.1 Unlawful acts. It shall be unlawful for a person, firm or corporation to be in conflict with or in violation of any of the provisions of this code.

❖ Violations of the code are prohibited. This is the basis for all citations and correction notices with regard to code violations.

[A] 106.2 Notice of violation. The *code official* shall serve a notice of violation or order in accordance with Section 107.

❖ The code official is required to notify the person responsible for violating the code. The section that is allegedly being violated must be cited so that the responsible party can respond to the notice.

INTERNATIONAL CODE COUNCIL®
Copyright © 2015 ICC. ALL RIGHTS RESERVED. Accessed by David Dammon on Jun 21, 2017 12:30:52 PM pursuant to License Agreement with ICC. No further reproduction or distribution authorized. ANY UNAUTHORIZED REPRODUCTION OR DISTRIBUTION IS A VIOLATION OF THE FEDERAL COPYRIGHT ACT AND THE LICENSE AGREEMENT, AND SUBJECT TO CIVIL AND CRIMINAL PENALTIES THEREUNDER.

[A] 106.3 Prosecution of violation. Any person failing to comply with a notice of violation or order served in accordance with Section 107 shall be deemed guilty of a misdemeanor or civil infraction as determined by the local municipality, and the violation shall be deemed a *strict liability offense*. If the notice of violation is not complied with, the *code official* shall institute the appropriate proceeding at law or in equity to restrain, correct or abate such violation, or to require the removal or termination of the unlawful *occupancy* of the structure in violation of the provisions of this code or of the order or direction made pursuant thereto. Any action taken by the authority having jurisdiction on such *premises* shall be charged against the real estate upon which the structure is located and shall be a lien upon such real estate.

❖ This section classifies a violation as a "strict liability offense," which is defined in Section 202; thus, it is not required to prove that the person intended to violate the code or was negligent in doing so. All that is required for conviction is that the notice of violation for correction was properly served and that the person failed to comply. This aids jurisdictions in prosecuting code violators.

The code official must pursue, through the use of legal counsel of the jurisdiction, legal means to correct the violation.

Any extensions of time for the violations to be voluntarily corrected must be for a reasonable, bona fide cause or the code official may be subject to criticism for "arbitrary and capricious" actions. In general, it is better to have a standard time limitation for correction of violations. Departures from this standard must be for a clear and reasonable purpose, usually stated in writing by the violator. The code provides a mechanism for the municipality to recover costs expended on a property through placing a lien on the property. For example, if an unimproved lot had to be mown throughout the summer growing season, the cost of the mowing could be recovered through a lien on the property.

[A] 106.4 Violation penalties. Any person who shall violate a provision of this code, or fail to comply therewith, or with any of the requirements thereof, shall be prosecuted within the limits provided by state or local laws. Each day that a violation continues after due notice has been served shall be deemed a separate offense.

❖ An adopting jurisdiction is permitted to assess penalties for violations of the code. The penalties include monetary fines, as well as possible imprisonment. The severity of the fine or penalty is left for the jurisdiction to establish. The local jurisdiction, through its council and attorney or other administrative authority, will normally designate the range for the dollar amount of fines; however, the judge will determine the actual fine. This encourages support and agreement from all parties when enforcement action is taken. Fines should be large enough to discourage noncompliance with the code, but not so large as to be inappropriate for the violation being charged.

Each day a violation continues unabated after proper notice has been served is to be deemed a separate offense and may be charged as such. In general, it is better to cite violations daily. This action may expedite a court hearing or cause the owner to correct the violations rather than risk exorbitant fines or imprisonment. Whether to cite violations on a daily basis is a policy decision and should be made in cooperation with the attorney who will prosecute the cases.

[A] 106.5 Abatement of violation. The imposition of the penalties herein prescribed shall not preclude the legal officer of the jurisdiction from instituting appropriate action to restrain, correct or abate a violation, or to prevent illegal *occupancy* of a building, structure or *premises*, or to stop an illegal act, conduct, business or utilization of the building, structure or *premises*.

❖ Despite the assessment of a penalty in the form of a fine or imprisonment against a violator, the violation itself must still be corrected. Failure to make the necessary corrections will result in the violator being subject to additional penalties as described in the preceding section.

SECTION 107
NOTICES AND ORDERS

[A] 107.1 Notice to person responsible. Whenever the *code official* determines that there has been a violation of this code or has grounds to believe that a violation has occurred, notice shall be given in the manner prescribed in Sections 107.2 and 107.3 to the person responsible for the violation as specified in this code. Notices for condemnation procedures shall also comply with Section 108.3.

❖ Written notice must be given to the person responsible for the property (i.e., occupant) when the code official observes a violation of the code. When a property is condemned, the person responsible for the property must be informed of the intent to placard and vacate the structure.

The person responsible must be notified when a building is placarded. This is important because both the person responsible and the owner can be charged with a violation of the code if they fail to vacate the structure.

It is also important for the code official to keep copies of all written notices issued. If the person responsible for the property or occupants fail to abide by a verbal order, the code official needs something more substantial to pursue enforcement action. If further enforcement procedures are warranted, the code official will need a complete, chronologically written documentation of all notices and orders that have been issued.

[A] 107.2 Form. Such notice prescribed in Section 107.1 shall be in accordance with all of the following:

1. Be in writing.
2. Include a description of the real estate sufficient for identification.

INTERNATIONAL CODE COUNCIL®
Copyright © 2015 ICC. ALL RIGHTS RESERVED. Accessed by David Dammon on Jun 21, 2017 12:30:52 PM pursuant to License Agreement with ICC. No further reproduction or distribution authorized. ANY UNAUTHORIZED REPRODUCTION OR DISTRIBUTION IS A VIOLATION OF THE FEDERAL COPYRIGHT ACT AND THE LICENSE AGREEMENT, AND SUBJECT TO CIVIL AND CRIMINAL PENALTIES THEREUNDER.

3. Include a statement of the violation or violations and why the notice is being issued.
4. Include a correction order allowing a reasonable time to make the repairs and improvements required to bring the *dwelling unit* or structure into compliance with the provisions of this code.
5. Inform the property *owner* or owner's authorized agent of the right to appeal.
6. Include a statement of the right to file a lien in accordance with Section 106.3.

❖ The notice required by Section 107.1 must:

- Be in writing. A verbal notice is unreliable.
- Clearly identify the property. The address of the property is sufficient when it is readily available. The legal description may be necessary when the address for the property is missing or if the land is vacant and lacks an address.
- State why the notice is being issued, and identify what part of the code is being violated.
- Include a correction order, and state what repairs need to be made to bring the property back into compliance with the code.
- Allow a reasonable time for compliance. This is subjective. A reasonable time must not only include adequate time to allow owners to make repairs, but must also address the risk to the occupants and the public. As an example, if a portion of a building is collapsing, the owner may believe that a reasonable time to correct the damage should be several weeks or even months; however, a collapsing wall creates an immediate danger to the public. The code official should require completion of all repairs within a few days or, in extreme cases, in a matter of hours.
- Provide the person responsible for the property with a notice of his or her right to seek modification or withdrawal of the order by appealing to a board of appeals according to Section 111.
- Inform the person responsible for the property of his or her authority to file a lien upon such real estate that any action has been taken pursuant to Section 106.3.

[A] 107.3 Method of service. Such notice shall be deemed to be properly served if a copy thereof is:

1. Delivered personally;
2. Sent by certified or first-class mail addressed to the last known address; or
3. If the notice is returned showing that the letter was not delivered, a copy thereof shall be posted in a conspicuous place in or about the structure affected by such notice.

❖ Proper service of all notices is crucial. Improper or inadequate service may make satisfactory pursuit of enforcement impossible. Proper service requires one of the following methods:

- Personal delivery to the owner or the responsible person designated by the owner. This is the most effective form of service. Usually, personal service is provided by a personal service company (i.e., a third-party agency), the code official or the sheriff's office in the jurisdiction where the person to be served lives.
- Delivery by certified or registered mail addressed to the owner or the owner's designated agent at the last known address, with a return receipt requested. This is a valid method of service, but sometimes it is not reliable. The owner may refuse to accept or ignore the service if he or she knows the jurisdiction plans to send notices. Also, it may take 10 to 14 days before the code official is notified by the post office that service could not be made. If the notice required the owner or owner's agent to correct something in a short time, the time for compliance may pass before the code official is aware the post office has not made the delivery.
- If the certified or registered letter is returned as undelivered, posting a copy in an easy-to-see place in or about the structure will suffice. Since the code official must wait until the post office returns undelivered certified letters before they can be posted, this form of service is very time consuming.

All of the services noted above may be expensive and time consuming. In some communities, the courts may consider service to be valid if the notice was sent to the last known address of the owner or owner's agent by regular postage and the notice was not returned by the post office. This method of service is obviously much cheaper and usually faster than waiting for the return of a certified letter. It must, however, be acceptable to the court system. The jurisdiction's attorney should be consulted to determine that the type of service is legally acceptable, reasonably cost effective and timely.

[A] 107.4 Unauthorized tampering. Signs, tags or seals posted or affixed by the *code official* shall not be mutilated, destroyed or tampered with, or removed without authorization from the *code official*.

❖ This section states that tampering with signs, seals or tags posted at the property is a violation of the code. The safety of the occupants may depend on the warning signs posted by the code official remaining in place.

[A] 107.5 Penalties. Penalties for noncompliance with orders and notices shall be as set forth in Section 106.4.

❖ This section references Section 106.4, which establishes penalties for violating provisions of the code.

[A] 107.6 Transfer of ownership. It shall be unlawful for the *owner* of any *dwelling unit* or structure who has received a compliance order or upon whom a notice of violation has been served to sell, transfer, mortgage, lease or otherwise dispose of such *dwelling unit* or structure to another until the

INTERNATIONAL CODE COUNCIL®
Copyright © 2015 ICC. ALL RIGHTS RESERVED. Accessed by David Dammon on Jun 21, 2017 12:30:52 PM pursuant to License Agreement with ICC. No further reproduction or distribution authorized. ANY UNAUTHORIZED REPRODUCTION OR DISTRIBUTION IS A VIOLATION OF THE FEDERAL COPYRIGHT ACT AND THE LICENSE AGREEMENT, AND SUBJECT TO CIVIL AND CRIMINAL PENALTIES THEREUNDER.

provisions of the compliance order or notice of violation have been complied with, or until such *owner* or the owner's authorized agent shall first furnish the grantee, transferee, mortgagee or lessee a true copy of any compliance order or notice of violation issued by the *code official* and shall furnish to the *code official* a signed and notarized statement from the grantee, transferee, mortgagee or lessee, acknowledging the receipt of such compliance order or notice of violation and fully accepting the responsibility without condition for making the corrections or repairs required by such compliance order or notice of violation.

❖ When a property has a pending violation order, it is unlawful for an owner to sell, transfer, mortgage, lease or otherwise dispose of the property without either following the order or advising the buyer, mortgagee, etc., of the pending violation. The owner must prove that the buyer has received notice of pending violations by providing the code official with a signed, notarized receipt from the new transferee.

Determining the current owner of a building is a frustrating and difficult activity. To evade code enforcement action, owners will frequently transfer ownership of their property. This provision of the code permits the code official to cite the seller if he or she did not provide the code official with the required notification when the property was transferred; thus, even though the seller may avoid complying with the outstanding violation orders, he or she can still be charged with a violation for failing to provide proof that the transferee was aware of the pending orders.

SECTION 108
UNSAFE STRUCTURES AND EQUIPMENT

[A] 108.1 General. When a structure or equipment is found by the *code official* to be unsafe, or when a structure is found unfit for human *occupancy*, or is found unlawful, such structure shall be *condemned* pursuant to the provisions of this code.

❖ This section provides a brief description of conditions where the code official is given the authority to condemn an existing structure or equipment. Where a structure or equipment is "unlawful," as described in the text of this section, that structure or equipment does not comply with the requirements of the code. The deficiencies are such that an unsafe condition or a condition that is unfit for human occupancy exists.

[A] 108.1.1 Unsafe structures. An unsafe structure is one that is found to be dangerous to the life, health, property or safety of the public or the *occupants* of the structure by not providing minimum safeguards to protect or warn *occupants* in the event of fire, or because such structure contains unsafe equipment or is so damaged, decayed, dilapidated, structurally unsafe or of such faulty construction or unstable foundation, that partial or complete collapse is possible.

❖ Any building that endangers life, health, safety or property is unsafe. A building is considered dangerous if it meets one or more of the following conditions:

- It lacks adequate protection from fire;
- It contains unsafe equipment; or
- All or part of the building is likely to collapse.

Only structures with major defects or life-threatening conditions are considered unsafe. Minor defects, such as an inadequate number of electrical outlets or damaged plaster, do not necessarily create an unsafe structure, even though they are violations of the code.

[A] 108.1.2 Unsafe equipment. Unsafe equipment includes any boiler, heating equipment, elevator, moving stairway, electrical wiring or device, flammable liquid containers or other equipment on the *premises* or within the structure which is in such disrepair or condition that such equipment is a hazard to life, health, property or safety of the public or *occupants* of the *premises* or structure.

❖ Equipment may become unsafe when it is a hazard to life, health, property or safety.

The judgment of the code official is critical in determining when equipment should be deemed unsafe. If uncertain about appropriate enforcement action, he or she should seek additional expertise and advice and, if necessary, err on the side of safety.

[A] 108.1.3 Structure unfit for human occupancy. A structure is unfit for human *occupancy* whenever the *code official* finds that such structure is unsafe, unlawful or, because of the degree to which the structure is in disrepair or lacks maintenance, is insanitary, vermin or rat infested, contains filth and contamination, or lacks *ventilation*, illumination, sanitary or heating facilities or other essential equipment required by this code, or because the location of the structure constitutes a hazard to the *occupants* of the structure or to the public.

❖ A building is unfit for occupancy if it is: unsafe; unlawful; lacking maintenance to a serious degree; in disrepair; insanitary; vermin or rat infested; found to contain filth; lacking essential equipment; or located such that it is hazardous to the occupants or the public.

The list of reasons for declaring a structure unfit requires subjective judgement. Because the consequences of declaring a structure unfit for occupancy are severe, the code official should carefully and thoroughly document all conditions contributing to that determination.

[A] 108.1.4 Unlawful structure. An unlawful structure is one found in whole or in part to be occupied by more persons than permitted under this code, or was erected, altered or occupied contrary to law.

❖ An unlawful structure is one that has serious deficiencies such that an unsafe condition or a condition that is unfit for human occupancy exists. An unlawful structure does not mean one where there are criminal activities.

INTERNATIONAL CODE COUNCIL®
Copyright © 2015 ICC. ALL RIGHTS RESERVED. Accessed by David Dammon on Jun 21, 2017 12:30:52 PM pursuant to License Agreement with ICC. No further reproduction or distribution authorized. ANY UNAUTHORIZED REPRODUCTION OR DISTRIBUTION IS A VIOLATION OF THE FEDERAL COPYRIGHT ACT AND THE LICENSE AGREEMENT, AND SUBJECT TO CIVIL AND CRIMINAL PENALTIES THEREUNDER.

[A] 108.1.5 Dangerous structure or premises. For the purpose of this code, any structure or *premises* that has any or all of the conditions or defects described below shall be considered dangerous:

1. Any door, aisle, passageway, stairway, exit or other means of egress that does not conform to the *approved* building or fire code of the jurisdiction as related to the requirements for existing buildings.
2. The walking surface of any aisle, passageway, stairway, exit or other means of egress is so warped, worn loose, torn or otherwise unsafe as to not provide safe and adequate means of egress.
3. Any portion of a building, structure or appurtenance that has been damaged by fire, earthquake, wind, flood, *deterioration*, *neglect*, abandonment, vandalism or by any other cause to such an extent that it is likely to partially or completely collapse, or to become *detached* or dislodged.
4. Any portion of a building, or any member, appurtenance or ornamentation on the exterior thereof that is not of sufficient strength or stability, or is not so *anchored*, attached or fastened in place so as to be capable of resisting natural or artificial loads of one and one-half the original designed value.
5. The building or structure, or part of the building or structure, because of dilapidation, *deterioration*, decay, faulty construction, the removal or movement of some portion of the ground necessary for the support, or for any other reason, is likely to partially or completely collapse, or some portion of the foundation or underpinning of the building or structure is likely to fail or give way.
6. The building or structure, or any portion thereof, is clearly unsafe for its use and *occupancy*.
7. The building or structure is *neglected*, damaged, dilapidated, unsecured or abandoned so as to become an attractive nuisance to children who might play in the building or structure to their danger, becomes a harbor for vagrants, criminals or immoral persons, or enables persons to resort to the building or structure for committing a nuisance or an unlawful act.
8. Any building or structure has been constructed, exists or is maintained in violation of any specific requirement or prohibition applicable to such building or structure provided by the *approved* building or fire code of the jurisdiction, or of any law or ordinance to such an extent as to present either a substantial risk of fire, building collapse or any other threat to life and safety.
9. A building or structure, used or intended to be used for dwelling purposes, because of inadequate maintenance, dilapidation, decay, damage, faulty construction or arrangement, inadequate light, *ventilation*, mechanical or plumbing system, or otherwise, is determined by the *code official* to be unsanitary, unfit for human habitation or in such a condition that is likely to cause sickness or disease.
10. Any building or structure, because of a lack of sufficient or proper fire-resistance-rated construction, fire protection systems, electrical system, fuel connections, mechanical system, plumbing system or other cause, is determined by the *code official* to be a threat to life or health.
11. Any portion of a building remains on a site after the demolition or destruction of the building or structure or whenever any building or structure is abandoned so as to constitute such building or portion thereof as an attractive nuisance or hazard to the public.

❖ This specific section contains a general list of conditions establishing a baseline to evaluate a structure against to determine if its present condition is dangerous. The purpose of this section is to allow a code official to cite specific conditions under which he or she finds a structure to be dangerous. The list of conditions focuses on adequacy of the means of egress, structural, fire resistance, fire protection, and plumbing and ventilation systems.

[A] 108.2 Closing of vacant structures. If the structure is vacant and unfit for human habitation and *occupancy*, and is not in danger of structural collapse, the *code official* is authorized to post a placard of condemnation on the *premises* and order the structure closed up so as not to be an attractive nuisance. Upon failure of the *owner* or owner's authorized agent to close up the *premises* within the time specified in the order, the *code official* shall cause the *premises* to be closed and secured through any available public agency or by contract or arrangement by private persons and the cost thereof shall be charged against the real estate upon which the structure is located and shall be a lien upon such real estate and shall be collected by any other legal resource.

❖ Code officials are granted the authority to condemn, placard and vacate any building that they determine to be unsafe, unlawful or unfit for occupancy. Also, code officials may remove unsafe equipment from use.

No one is permitted to reoccupy or reuse any building or equipment until the code official has given his or her approval. Unsafe structures, unsafe equipment, buildings that are unfit for human occupancy and unlawful structures are further defined in subsequent sections.

The ability to condemn and vacate structures is a powerful enforcement tool. It protects occupants from danger and prevents owners from collecting income on their properties. Before condemning or vacating structures, the code official should establish a clearly defined list of violations that warrant such actions. Additionally, it is critical to document all of the violations found in each building to be condemned. When practical, photographs should be taken of violations. Should litigation become necessary, photographs provide documents that have a powerful impact.

INTERNATIONAL CODE COUNCIL®
Copyright © 2015 ICC. ALL RIGHTS RESERVED. Accessed by David Dammon on Jun 21, 2017 12:30:52 PM pursuant to License Agreement with ICC. No further reproduction or distribution authorized. ANY UNAUTHORIZED REPRODUCTION OR DISTRIBUTION IS A VIOLATION OF THE FEDERAL COPYRIGHT ACT AND THE LICENSE AGREEMENT, AND SUBJECT TO CIVIL AND CRIMINAL PENALTIES THEREUNDER.

Open, vacant buildings are an attractive nuisance to children, a potential fire hazard, a harborage for rodents and insects and a potential home for vagrants. Vacant buildings also create a blighting influence within a community.

The code official is authorized to condemn as unfit those buildings that are vacant and open to trespass but not in danger of collapse. When the owner has been ordered to secure an open building but fails to do so, the code official must secure the structure by contracting with a public or private agent to close up the building.

The costs for closing buildings are to be charged to the property in the form of a lien. Generally, once a lien has been filed against a property, it must be satisfied before the property can be sold. This section authorizes collection by any other legal resource. It also allows collection by additional methods such as small claims judgements, collection agency actions and personal liens. This enhances the chances of cost recovery.

[A] 108.2.1 Authority to disconnect service utilities. The *code official* shall have the authority to authorize disconnection of utility service to the building, structure or system regulated by this code and the referenced codes and standards set forth in Section 102.7 in case of emergency where necessary to eliminate an immediate hazard to life or property or where such utility connection has been made without approval. The *code official* shall notify the serving utility and, whenever possible, the *owner* or owner's authorized agent and *occupant* of the building, structure or service system of the decision to disconnect prior to taking such action. If not notified prior to disconnection the *owner,* owner's authorized agent or *occupant* of the building structure or service system shall be notified in writing as soon as practical thereafter.

❖ Disconnecting a service utility from the energy supply is the most radical method of hazard abatement available to the code official and should be reserved for cases in which all other lesser remedies have proven ineffective. Such an action must be preceded by a written notice to the owner and any occupants of the building being ordered to disconnect. Disconnection must be accomplished within the timeframe established by the code official in the written notification. When the hazard to the public health and welfare is so imminent as to mandate immediate disconnection, the code official has the authority and even the obligation to cause disconnection without notice.

[A] 108.3 Notice. Whenever the *code official* has condemned a structure or equipment under the provisions of this section, notice shall be posted in a conspicuous place in or about the structure affected by such notice and served on the *owner,* owner's authorized agent or the person or persons responsible for the structure or equipment in accordance with Section 107.3. If the notice pertains to equipment, it shall be placed on the condemned equipment. The notice shall be in the form prescribed in Section 107.2.

❖ The condemnation notice is required to be posted at the structure, and the owner, the owner's authorized agent or responsible person in charge is to be served notice in accordance with the procedure in Section 107.3, in the form prescribed in Section 107.2. If the notice includes condemned equipment, the notice must also be placed on that equipment.

[A] 108.4 Placarding. Upon failure of the *owner,* owner's authorized agent or person responsible to comply with the notice provisions within the time given, the *code official* shall post on the *premises* or on defective equipment a placard bearing the word "Condemned" and a statement of the penalties provided for occupying the *premises,* operating the equipment or removing the placard.

❖ If the owner fails to comply with the notice, a placard indicating that the structure is condemned as unfit for human occupancy or use should be posted on the property or equipment. This placard should also show the penalty for illegal occupancy of the building or equipment, and for removing the placard.

Immediate enforcement action should be pursued when there is an illegal occupancy of a condemned building or equipment. The credibility of the code enforcement program is dependent upon the public's belief that the code will be adequately enforced.

Any owner, owner's authorized agent, or other responsible party who has failed to comply with a correction order must vacate the property immediately after the time for correction has passed. All occupants should be given reasonable time to find other accommodations.

[A] 108.4.1 Placard removal. The *code official* shall remove the condemnation placard whenever the defect or defects upon which the condemnation and placarding action were based have been eliminated. Any person who defaces or removes a condemnation placard without the approval of the *code official* shall be subject to the penalties provided by this code.

❖ Only the code official is authorized to remove a condemnation placard. The code official is to remove the placard only when the defect or defects have been corrected as required by the code. Any other person who removes or defaces a placard is in violation of the code and subject to its penalties.

[A] 108.5 Prohibited occupancy. Any occupied structure condemned and placarded by the *code official* shall be vacated as ordered by the *code official*. Any person who shall occupy a placarded *premises* or shall operate placarded equipment, and any *owner,* owner's authorized agent or person responsible for the *premises* who shall let anyone occupy a placarded *premises* or operate placarded equipment shall be liable for the penalties provided by this code.

❖ It is important that any unsafe structure be vacated to help prevent possible injury to or death of its occupants. The code official has the authority to require a condemned building to be vacated. Anyone who continues to occupy a placarded building or equipment and any owner who permits another to occupy a placarded building or equipment are subject to the penalties provided by the code.

INTERNATIONAL CODE COUNCIL®
Copyright © 2015 ICC. ALL RIGHTS RESERVED. Accessed by David Dammon on Jun 21, 2017 12:30:52 PM pursuant to License Agreement with ICC. No further reproduction or distribution authorized. ANY UNAUTHORIZED REPRODUCTION OR DISTRIBUTION IS A VIOLATION OF THE FEDERAL COPYRIGHT ACT AND THE LICENSE AGREEMENT, AND SUBJECT TO CIVIL AND CRIMINAL PENALTIES THEREUNDER.

[A] 108.6 Abatement methods. The *owner*, owner's authorized agent, *operator* or *occupant* of a building, *premises* or equipment deemed unsafe by the *code official* shall abate or cause to be abated or corrected such unsafe conditions either by repair, rehabilitation, demolition or other *approved* corrective action.

❖ This section describes the usual circumstance in which a building has such critical violations that it is declared unsafe by the code official. The owner, operator or occupant should take abatement measures to correct the unsafe condition. If this is not done promptly, the code official has the authority to directly abate the unsafe conditions and bill the owner for the abatement work in accordance with the code.

[A] 108.7 Record. The *code official* shall cause a report to be filed on an unsafe condition. The report shall state the *occupancy* of the structure and the nature of the unsafe condition.

❖ The code official must file a report on each investigation of unsafe conditions, stating the occupancy of the structure and the nature of the unsafe condition.

SECTION 109
EMERGENCY MEASURES

[A] 109.1 Imminent danger. When, in the opinion of the *code official*, there is *imminent danger* of failure or collapse of a building or structure that endangers life, or when any structure or part of a structure has fallen and life is endangered by the occupation of the structure, or when there is actual or potential danger to the building *occupants* or those in the proximity of any structure because of explosives, explosive fumes or vapors or the presence of toxic fumes, gases or materials, or operation of defective or dangerous equipment, the *code official* is hereby authorized and empowered to order and require the *occupants* to vacate the *premises* forthwith. The *code official* shall cause to be posted at each entrance to such structure a notice reading as follows: "This *Structure* Is Unsafe and Its *Occupancy* Has Been Prohibited by the *Code Official*." It shall be unlawful for any person to enter such structure except for the purpose of securing the structure, making the required repairs, removing the hazardous condition or of demolishing the same.

❖ If the code official has determined that failure or collapse of a building or structure is imminent, failure has occurred that results in a continued threat to the remaining structure or adjacent properties or if any other unsafe condition as described in this section exists in a structure, he or she is authorized to require the occupants to vacate the premises and to post such buildings or structures as unsafe and not occupiable. Unless authorized by the code official to make repairs, secure or demolish the structure, it is illegal for anyone to enter the building or structure. This will minimize the potential for injury.

[A] 109.2 Temporary safeguards. Notwithstanding other provisions of this code, whenever, in the opinion of the *code official*, there is *imminent danger* due to an unsafe condition, the *code official* shall order the necessary work to be done, including the boarding up of openings, to render such structure temporarily safe whether or not the legal procedure herein described has been instituted; and shall cause such other action to be taken as the *code official* deems necessary to meet such emergency.

❖ This section recognizes the need for immediate and effective action in order to protect the public. This section empowers the code official to cause the necessary work to be done to temporarily minimize the imminent danger without regard for due process. This section has to be viewed critically insofar as the danger of structural failure must be "imminent"; that is, readily apparent and immediate.

[A] 109.3 Closing streets. When necessary for public safety, the *code official* shall temporarily close structures and close, or order the authority having jurisdiction to close, sidewalks, streets, *public ways* and places adjacent to unsafe structures, and prohibit the same from being utilized.

❖ The code official is authorized to temporarily close sidewalks, streets and adjacent structures as needed to provide for the public safety from the unsafe building or structure when an imminent danger exists. Since the code official may not have the direct authority to close sidewalks, streets and other public ways, the agency having such jurisdiction (e.g., the police or highway department) must be notified.

[A] 109.4 Emergency repairs. For the purposes of this section, the *code official* shall employ the necessary labor and materials to perform the required work as expeditiously as possible.

❖ The cost of emergency work may have to be initially paid for by the jurisdiction. The important principle here is that the code official must act immediately to protect the public when warranted, leaving the details of costs and owner notification for later.

[A] 109.5 Costs of emergency repairs. Costs incurred in the performance of emergency work shall be paid by the jurisdiction. The legal counsel of the jurisdiction shall institute appropriate action against the *owner* of the *premises* or owner's authorized agent where the unsafe structure is or was located for the recovery of such costs.

❖ The cost of emergency repairs is to be paid by the jurisdiction, with subsequent legal action against the owner to recover such costs. This does not preclude, however, reaching an alternative agreement with the owner.

[A] 109.6 Hearing. Any person ordered to take emergency measures shall comply with such order forthwith. Any affected person shall thereafter, upon petition directed to the appeals board, be afforded a hearing as described in this code.

❖ Anyone ordered to take an emergency measure or to vacate a structure because of an emergency condition must do so immediately.

Thereafter, any affected party has the right to appeal the action to the appeals board to determine whether the order should be continued, modified or revoked.

INTERNATIONAL CODE COUNCIL®
Copyright © 2015 ICC. ALL RIGHTS RESERVED. Accessed by David Dammon on Jun 21, 2017 12:30:52 PM pursuant to License Agreement with ICC. No further reproduction or distribution authorized. ANY UNAUTHORIZED REPRODUCTION OR DISTRIBUTION IS A VIOLATION OF THE FEDERAL COPYRIGHT ACT AND THE LICENSE AGREEMENT, AND SUBJECT TO CIVIL AND CRIMINAL PENALTIES THEREUNDER.

It is imperative that appeals to an emergency order occur after the hazard has been abated, rather than before, to minimize the risk to the occupants, employees, clients and the public.

SECTION 110
DEMOLITION

[A] 110.1 General. The *code official* shall order the *owner* or owner's authorized agent of any *premises* upon which is located any structure, which in the *code official's* or owner's authorized agent judgment after review is so deteriorated or dilapidated or has become so out of repair as to be dangerous, unsafe, insanitary or otherwise unfit for human habitation or occupancy, and such that it is unreasonable to repair the structure, to demolish and remove such structure; or if such structure is capable of being made safe by repairs, to repair and make safe and sanitary, or to board up and hold for future repair or to demolish and remove at the *owner's* option; or where there has been a cessation of normal construction of any structure for a period of more than two years, the *code official* shall order the *owner* or owner's authorized agent to demolish and remove such structure, or board up until future repair. Boarding the building up for future repair shall not extend beyond one year, unless *approved* by the building official.

❖ This section describes the conditions where the code official has the authority to order the owner to remove the structure. Conditions where the code official may give the owner the option of repairing the structure or boarding the structure for future repair are also in this section. The code official should carefully document the condition of the structure prior to issuing a demolition order to provide an adequate basis for ordering the owner to remove the structure. Note that Appendix A contains boarding provisions, but needs to be specifically referenced in the adopting ordinance of the jurisdiction to be mandatory.

[A] 110.2 Notices and orders. Notices and orders shall comply with Section 107.

❖ Before the code official can pursue action to demolish a building in accordance with Section 110.1 or 110.3, it is imperative that all owners and any other persons with a recorded encumbrance on the property be given proper notice of the demolition plans (see Section 107 for notice and order requirements).

[A] 110.3 Failure to comply. If the *owner* of a *premises* or owner's authorized agent fails to comply with a demolition order within the time prescribed, the *code official* shall cause the structure to be demolished and removed, either through an available public agency or by contract or arrangement with private persons, and the cost of such demolition and removal shall be charged against the real estate upon which the structure is located and shall be a lien upon such real estate.

❖ When the owner fails to comply with a demolition order, the code official is authorized to take action to have the building razed and removed. The costs are to be charged as a lien against the real estate. To reduce complaints regarding the validity of demolition costs, the code official will obtain competitive bids from several demolition contractors before authorizing any contractor to raze the structure.

[A] 110.4 Salvage materials. When any structure has been ordered demolished and removed, the governing body or other designated officer under said contract or arrangement aforesaid shall have the right to sell the salvage and valuable materials. The net proceeds of such sale, after deducting the expenses of such demolition and removal, shall be promptly remitted with a report of such sale or transaction, including the items of expense and the amounts deducted, for the person who is entitled thereto, subject to any order of a court. If such a surplus does not remain to be turned over, the report shall so state.

❖ The governing body may sell any valuables or salvageable materials for the highest price obtainable. The costs of demolition are then to be deducted from any proceeds from the sale of salvage. If a surplus of funds remains, it is to be remitted to the owner with an itemized expense and income account; however, if no surplus remains, this must also be reported.

SECTION 111
MEANS OF APPEAL

[A] 111.1 Application for appeal. Any person directly affected by a decision of the *code official* or a notice or order issued under this code shall have the right to appeal to the board of appeals, provided that a written application for appeal is filed within 20 days after the day the decision, notice or order was served. An application for appeal shall be based on a claim that the true intent of this code or the rules legally adopted thereunder have been incorrectly interpreted, the provisions of this code do not fully apply, or the requirements of this code are adequately satisfied by other means.

❖ This section allows a person with a material or definitive interest in the decision of the code official to appeal that decision. The aggrieved party may not appeal a code requirement. The intent of the appeal process is not to waive or set aside a code requirement; it is to provide a means of reviewing a code official's decision on an interpretation or application of the code or reviewing the code official's decision to approve or reject the equivalency of protection to the code requirement.

[A] 111.2 Membership of board. The board of appeals shall consist of not less than three members who are qualified by experience and training to pass on matters pertaining to property maintenance and who are not employees of the jurisdiction. The *code official* shall be an ex-officio member but shall have no vote on any matter before the board. The board shall be appointed by the chief appointing authority, and shall serve staggered and overlapping terms.

❖ The concept of the board is to provide an objective group of persons who review the matters brought to them and make a collective decision. The members of the board are not to be employees of the jurisdiction

INTERNATIONAL CODE COUNCIL®
Copyright © 2015 ICC. ALL RIGHTS RESERVED. Accessed by David Dammon on Jun 21, 2017 12:30:52 PM pursuant to License Agreement with ICC. No further reproduction or distribution authorized. ANY UNAUTHORIZED REPRODUCTION OR DISTRIBUTION IS A VIOLATION OF THE FEDERAL COPYRIGHT ACT AND THE LICENSE AGREEMENT, AND SUBJECT TO CIVIL AND CRIMINAL PENALTIES THEREUNDER.

and are to have sufficient knowledge and experience to act on the concerns that are heard. A minimum of three board members is specified for a fair and impartial hearing process. Staggered terms are appropriate for uniform changeover such that a minimum number of board members are new each year. The number of members is to be determined by the chief appointing authority.

[A] 111.2.1 Alternate members. The chief appointing authority shall appoint not less than two alternate members who shall be called by the board chairman to hear appeals during the absence or disqualification of a member. Alternate members shall possess the qualifications required for board membership.

❖ This section authorizes the chief appointing authority to appoint two alternate members who are to be available if the principal members of the board are absent or disqualified. Alternate members must possess the same qualifications as the principal members.

[A] 111.2.2 Chairman. The board shall annually select one of its members to serve as chairman.

❖ It is customary to determine chairmanship annually so that a regular opportunity is available to evaluate and either reappoint the current chairman or appoint a new one.

[A] 111.2.3 Disqualification of member. A member shall not hear an appeal in which that member has a personal, professional or financial interest.

❖ All members must disqualify themselves regarding any appeal in which they have a personal, professional or financial interest.

[A] 111.2.4 Secretary. The chief administrative officer shall designate a qualified person to serve as secretary to the board. The secretary shall file a detailed record of all proceedings in the office of the chief administrative officer.

❖ The chief administrative officer is to designate a qualified clerk to serve as secretary to the board. The secretary is required to file a detailed record of all proceedings in the office of the chief administrative officer.

[A] 111.2.5 Compensation of members. Compensation of members shall be determined by law.

❖ Members of the board of appeals are not required to be compensated unless required by the local municipality or jurisdiction.

[A] 111.3 Notice of meeting. The board shall meet upon notice from the chairman, within 20 days of the filing of an appeal, or at stated periodic meetings.

❖ The board must meet within 20 days of the filing of an appeal or at regularly scheduled meetings. This provides adequate time to coordinate the board members' schedules, and also requires that the board consider the appeal in a timely manner.

[A] 111.4 Open hearing. Hearings before the board shall be open to the public. The appellant, the appellant's representative, the *code official* and any person whose interests are affected shall be given an opportunity to be heard. A quorum shall consist of a minimum of two-thirds of the board membership.

❖ All hearings before the board must be open to the public. The appellant, the appellant's representative, the code official and any person whose interests are affected must be heard.

The quorum of two-thirds of the board is to be present for the board to take any official action.

[A] 111.4.1 Procedure. The board shall adopt and make available to the public through the secretary procedures under which a hearing will be conducted. The procedures shall not require compliance with strict rules of evidence, but shall mandate that only relevant information be received.

❖ The board is required to establish and make available to the public written procedures detailing how hearings are to be conducted. Additionally, this section provides that, although strict rules of evidence are not applicable, the information presented must be deemed relevant.

[A] 111.5 Postponed hearing. When the full board is not present to hear an appeal, either the appellant or the appellant's representative shall have the right to request a postponement of the hearing.

❖ When all members of the board are not present, either the appellant or the appellant's representative may request a postponement of the hearing. This request may be made even though a quorum is present.

[A] 111.6 Board decision. The board shall modify or reverse the decision of the *code official* only by a concurring vote of a majority of the total number of appointed board members.

❖ A concurring vote of a majority of the members present is needed to modify or reverse the decision of the code official.

[A] 111.6.1 Records and copies. The decision of the board shall be recorded. Copies shall be furnished to the appellant and to the *code official*.

❖ A formal decision is required to provide an official record. Copies are to be furnished to both the appellant and the code official. The code official is bound by the action of the board of appeals, unless it is the opinion of him or her that the board of appeals has acted improperly. In such cases, relief through the court having jurisdiction may be sought by corporate counsel.

[A] 111.6.2 Administration. The *code official* shall take immediate action in accordance with the decision of the board.

❖ To avoid any undue hindrance in the progress of construction, the code official is required to act without delay based on the board's decision. This action may be to enforce the decision or to seek judicial relief if the board's action can be demonstrated to be inappropriate.

[A] 111.7 Court review. Any person, whether or not a previous party of the appeal, shall have the right to apply to the appropriate court for a writ of certiorari to correct errors of

INTERNATIONAL CODE COUNCIL®
Copyright © 2015 ICC. ALL RIGHTS RESERVED. Accessed by David Dammon on Jun 21, 2017 12:30:52 PM pursuant to License Agreement with ICC. No further reproduction or distribution authorized. ANY UNAUTHORIZED REPRODUCTION OR DISTRIBUTION IS A VIOLATION OF THE FEDERAL COPYRIGHT ACT AND THE LICENSE AGREEMENT, AND SUBJECT TO CIVIL AND CRIMINAL PENALTIES THEREUNDER.

law. Application for review shall be made in the manner and time required by law following the filing of the decision in the office of the chief administrative officer.

❖ This section allows any person to request a review by the court of jurisdiction with regard to perceived errors of law. Application for such review must be made after the decision of the board is filed with the chief administrative officer. This helps all those concerned to observe due process.

[A] 111.8 Stays of enforcement. Appeals of notice and orders (other than *Imminent Danger* notices) shall stay the enforcement of the notice and order until the appeal is heard by the appeals board.

❖ The purpose of this section is to specify that if an appeal is made, the jurisdiction is not to enforce its notice or order until such appeal has been heard by the board of appeals. This does not apply, of course, to imminent danger notices.

SECTION 112
STOP WORK ORDER

[A] 112.1 Authority. Whenever the *code official* finds any work regulated by this code being performed in a manner contrary to the provisions of this code or in a dangerous or unsafe manner, the *code official* is authorized to issue a stop work order.

❖ This section provides for the suspension of work for which a permit was issued, pending the removal or correction of a severe violation or unsafe condition identified by the code official.

Normally, correction notices are used to inform the permit holder of code violations. Stop work orders are issued when enforcement can be accomplished no other way or when a dangerous condition exists.

[A] 112.2 Issuance. A stop work order shall be in writing and shall be given to the *owner* of the property, to the *owner's* authorized agent, or to the person doing the work. Upon issuance of a stop work order, the cited work shall immediately cease. The stop work order shall state the reason for the order and the conditions under which the cited work is authorized to resume.

❖ Upon receipt of a violation notice from the code official, all construction activities identified in the notice must immediately cease, except as expressly permitted to correct the violation.

[A] 112.3 Emergencies. Where an emergency exists, the *code official* shall not be required to give a written notice prior to stopping the work.

❖ This section gives the code official the authority to stop the work in dispute immediately when, in his or her opinion, there is an unsafe emergency condition that has been created by the work. The need for the written notice is suspended for this situation so that the work can be stopped immediately. After the work is stopped, immediate measures should be taken to correct the work at issue.

[A] 112.4 Failure to comply. Any person who shall continue any work after having been served with a stop work order, except such work as that person is directed to perform to remove a violation or unsafe condition, shall be liable to a fine of not less than **[AMOUNT]** dollars or more than **[AMOUNT]** dollars.

❖ The local jurisdiction is to designate the fine that is to apply to any person who continues work that is at issue, other than abatement work. The dollar amounts for the minimum and maximum fines are to be specified in the adopting ordinance. See a sample adoption ordinance on pages xi and xii of the code.

INTERNATIONAL CODE COUNCIL®
Copyright © 2015 ICC. ALL RIGHTS RESERVED. Accessed by David Dammon on Jun 21, 2017 12:30:52 PM pursuant to License Agreement with ICC. No further reproduction or distribution authorized. ANY UNAUTHORIZED REPRODUCTION OR DISTRIBUTION IS A VIOLATION OF THE FEDERAL COPYRIGHT ACT AND THE LICENSE AGREEMENT, AND SUBJECT TO CIVIL AND CRIMINAL PENALTIES THEREUNDER.

Chapter 2: Definitions

General Comments

The words or terms defined in this chapter are deemed to be of prime importance in either specifying the subject matter of code provisions or in giving meaning to certain terms used throughout the code for administrative or enforcement purposes.

Section 201 addresses the practical concerns encountered when interpreting the code in relation to the use of gender, tense and singular versus plural. This section also provides the code official with guidance for finding definitions of those words or terms not defined herein.

Section 202 provides an alphabetical listing of those terms that are commonly used throughout the code and that are required for the effective application of code requirements.

Purpose

Codes, by their very nature, are technical documents. Every word, term and punctuation mark can alter a sentence's meaning and, if misused, muddy its intent.

Further, the code, with its broad scope of applicability, includes terms inherent in a variety of construction disciplines. These terms can often have multiple meanings, depending on the context or discipline being used at the time.

For these reasons, it is necessary to maintain a consensus on the specific meaning of terms contained in the code. Chapter 2 performs this function by stating clearly what specific terms mean for the purpose of the code.

SECTION 201 GENERAL

201.1 Scope. Unless otherwise expressly stated, the following terms shall, for the purposes of this code, have the meanings shown in this chapter.

❖ In the application of the code, the terms used have the meanings given in this chapter.

201.2 Interchangeability. Words stated in the present tense include the future; words stated in the masculine gender include the feminine and neuter; the singular number includes the plural and the plural, the singular.

❖ While the definitions contained in this chapter are to be taken literally, gender and tense are to be considered interchangeable. This is so that any grammatical inconsistencies within the code text will not hinder the understanding or enforcement of the requirements.

201.3 Terms defined in other codes. Where terms are not defined in this code and are defined in the *International Building Code, International Existing Building Code, International Fire Code, International Fuel Gas Code, International Mechanical Code, International Plumbing Code, International Residential Code, International Zoning Code* or NFPA 70, such terms shall have the meanings ascribed to them as stated in those codes.

❖ When a word or term appears in the code and that word or term is not defined in this chapter, other references may be used to find its definition, including the *International Building Code*® (IBC®), *International Fire Code*® (IFC®), *International Existing Building Code*® (IEBC®), *International Residential Code*® (IRC®), *International Fuel Gas Code*® (IFGC®), *International Plumbing Code*® (IPC®), *International Mechanical Code*® (IMC®) and the *International Zoning Code*® (IZC®). These codes contain additional definitions (some parallel and duplicative) that may be used in the enforcement of either the code or other codes by reference.

201.4 Terms not defined. Where terms are not defined through the methods authorized by this section, such terms shall have ordinarily accepted meanings such as the context implies.

❖ Another resource for defining words or terms not defined herein or in other codes is their "ordinarily accepted meanings." The intent of this statement is that a dictionary definition may suffice, provided that the definition is in context.

Often, construction terms used throughout the code may not be defined in this chapter or in a dictionary. In such case, one would first turn to the definitions contained in the referenced standards (see Chapter 8) and then to published textbooks on the subject in question.

201.5 Parts. Whenever the words "*dwelling unit*," "dwelling," "*premises*," "building," "*rooming house*," "*rooming unit*," "*housekeeping unit*" or "story" are stated in this code, they shall be construed as though they were followed by the words "or any part thereof."

❖ Each and every portion of a structure, whether the structure is used for one type of occupancy or several, must comply with the appropriate regulations established by the code. It is understood that every portion

INTERNATIONAL CODE COUNCIL®
Copyright © 2015 ICC. ALL RIGHTS RESERVED. Accessed by David Dammon on Jun 21, 2017 12:30:52 PM pursuant to License Agreement with ICC. No further reproduction or distribution authorized. ANY UNAUTHORIZED REPRODUCTION OR DISTRIBUTION IS A VIOLATION OF THE FEDERAL COPYRIGHT ACT AND THE LICENSE AGREEMENT, AND SUBJECT TO CIVIL AND CRIMINAL PENALTIES THEREUNDER.

or any part of a structure must comply with the code. Instead of being wordy, "or any part thereof" is considered to be included after "dwelling," "building," housekeeping unit," "rooming unit," etc.

SECTION 202
GENERAL DEFINITIONS

ANCHORED. Secured in a manner that provides positive connection.

❖ This definition describes the term "anchored" for use in determining unsafe conditions related to exterior walls, flooring and flooring components, wall veneer and trim, overhangs and projections, stairs, porches and decks and foundation systems. Where it is apparent that a positive connection at these elements does not exist, the code official can cite the condition as unsafe and require repair as needed (see Sections 304.1.1 and 305.1.1).

[A] APPROVED. Acceptable to the *code official*.

❖ As related to the process of acceptance of building installations, including materials, equipment and construction systems, this definition identifies where ultimate authority rests. Where this term is used, the intent is that only the enforcing authority can accept a specific installation or component as complying with the code.

BASEMENT. That portion of a building which is partly or completely below grade.

❖ This definition defines that portion of a building that is partly or completely below grade as being a basement. In this case, "grade" refers to the finished ground level adjacent to the exterior walls at all points around the building perimeter.

BATHROOM. A room containing plumbing fixtures including a bathtub or shower.

❖ A bathroom is literally a room containing plumbing fixtures, which is used for personal hygiene.

To be considered a bathroom, such a room need only contain one or more bathtubs or showers. Traditionally, bathrooms are designed to afford privacy to an individual; however, such rooms may be designed to accommodate multiple users or bathers.

In everyday usage, the term is used interchangeably with toilet room (see the definition of "Toilet room") and, in this context, people expect a bathroom to also contain plumbing fixtures used for the elimination of bodily wastes (water closets and urinals), and fixtures used for bodily cleansing, such as lavatories (sinks).

The typical bathroom in residential occupancies contains a water closet, a lavatory and either a shower or a bathtub or a shower and a bathtub. A residential bathroom may also contain a bidet.

BEDROOM. Any room or space used or intended to be used for sleeping purposes in either a dwelling or *sleeping unit*.

❖ A bedroom, also referred to as a "sleeping room," is an area or room used for sleeping purposes. A bedroom typically contains a bed and a piece of furniture to store clothing or a closet, although these are not required. Bedrooms may also be temporarily used for other purposes when containing fold-up or dual-purpose furniture, such as daybeds or sleeper sofas. In any case, bedrooms must have sufficient floor space per person in order to be used as such in addition to meeting all the requirements of Section 404.4. The location and number of beds can be used to establish where people are sleeping and how many persons are occupying a dwelling at a given time.

[A] CODE OFFICIAL. The official who is charged with the administration and enforcement of this code, or any duly authorized representative.

❖ The statutory power to enforce the code is normally vested in a building department (or the like) of a state, county or municipality whose designated enforcement officer is termed the "code official" (see commentary, Section 104).

CONDEMN. To adjudge unfit for *occupancy*.

❖ To condemn is to pronounce a structure as unfit for occupancy or use. A condemnation is the result of the most serious of code violations in that it represents a condition that, in the opinion of the code official, poses a serious threat to the health and safety of the public or another structure or property. A violation that results in condemnation is typically followed by citations requesting immediate action. Depending on the severity of the situation, these actions may include vacating the premises, securing the structure or premises and, in some cases, demolition of the structure. When condemnation is used, care must be taken to follow all of the provisions outlined in Sections 107 through 110 (see commentary, Section 108).

COST OF SUCH DEMOLITION OR EMERGENCY REPAIRS. The costs shall include the actual costs of the demolition or repair of the structure less revenues obtained if salvage was conducted prior to demolition or repair. Costs shall include, but not be limited to, expenses incurred or necessitated related to demolition or emergency repairs, such as asbestos survey and abatement if necessary; costs of inspectors, testing agencies or experts retained relative to the demolition or emergency repairs; costs of testing; surveys for other materials that are controlled or regulated from being dumped in a landfill; title searches; mailing(s); postings; recording; and attorney fees expended for recovering of the cost of emergency repairs or to obtain or enforce an order of demolition made by a *code official*, the governing body or board of appeals.

❖ This definition summarizes the existing language of the code text in Sections 106.3, 105.5 and 110.3. All of these sections make reference to the jurisdiction's

INTERNATIONAL CODE COUNCIL®
Copyright © 2015 ICC. ALL RIGHTS RESERVED. Accessed by David Dammon on Jun 21, 2017 12:30:52 PM pursuant to License Agreement with ICC. No further reproduction or distribution authorized. ANY UNAUTHORIZED REPRODUCTION OR DISTRIBUTION IS A VIOLATION OF THE FEDERAL COPYRIGHT ACT AND THE LICENSE AGREEMENT, AND SUBJECT TO CIVIL AND CRIMINAL PENALTIES THEREUNDER.

ability to recover costs. This definition describes what those "costs" are to include. Without a definition that brings the scope of these three sections together, there can be a lack of uniform enforcement regarding the actual costs of actions taken by a jurisdiction. This provides a basis of what is to be considered when preparing an invoice of expenses paid by the jurisdiction to protect the public due to inaction by a property owner who has received proper notice or orders from a code official, governing body or board of appeals.

DETACHED. When a structural element is physically disconnected from another and that connection is necessary to provide a positive connection.

❖ This definition describes the term "detached" for use in determining unsafe conditions related to structural materials that may be beyond their limit state. "Limit state" is a condition beyond which a structure or member becomes unfit for service and is no longer useful for its intended function. Where it is apparent that a material is beyond its limit state due to detachment, the code official can cite the condition as unsafe and require repair as needed (see Section 306.1.1).

DETERIORATION. To weaken, disintegrate, corrode, rust or decay and lose effectiveness.

❖ This definition describes the term "deterioration" for use in determining unsafe conditions related to structural materials that may be beyond their limit state. "Limit state" is a condition beyond which a structure or member becomes unfit for service and is not longer useful for its intended function. Where it is apparent that a material is beyond its limit state as a result of deterioration, the code official can cite the condition as unsafe and require repair as needed (see Section 306.1.1).

[BG] DWELLING UNIT. A single unit providing complete, independent living facilities for one or more persons, including permanent provisions for living, sleeping, eating, cooking and sanitation.

❖ A dwelling unit contains elements necessary for independent living, including provisions for living space (family rooms, dining rooms, living rooms, dens, etc.); sleeping quarters; food preparation and eating spaces; and personal hygiene, cleanliness and sanitation facilities. Section 404 establishes minimum room sizes. Minimum required levels of light and ventilation are included in Sections 402 and 403, respectively.

A dwelling unit is typically occupied in one of two ways: either through renting or ownership. The code requirements are applied consistently to all dwellings, regardless of the type of ownership. Both owner-occupied and rented or leased dwellings must comply with the requirements of the code.

A dwelling unit can exist singularly as a one-family dwelling, or in combination with other dwelling units. When two dwelling units are grouped together in the same structure, the structure is considered a two-family dwelling. Apartment houses contain three or more dwelling units.

[Z] EASEMENT. That portion of land or property reserved for present or future use by a person or agency other than the legal fee *owner*(s) of the property. The *easement* shall be permitted to be for use under, on or above a said lot or lots.

❖ Easements are important mechanisms that allow the local municipality workers access to buried utilities, such as telephone and electric. Easements also allow access to property that would have otherwise been rendered landlocked or inaccessible. It is important to note and restrict permanent improvements that limit required access across these easements. For example, a fence without a gate erected by a neighboring property owner that would deny entrance to an electrical transformer.

EQUIPMENT SUPPORT. Those structural members or assemblies of members or manufactured elements, including braces, frames, lugs, snuggers, hangers or saddles, that transmit gravity load, lateral load and operating load between the equipment and the structure.

❖ This definition describes the term "equipment support" for use in determining unsafe conditions related to structural materials, used to support equipment, that may be beyond their limit state. "Limit state" is a condition beyond which a structure or member becomes unfit for service and is no longer useful for its intended function. Where it is apparent that equipment-supporting material is beyond its limit state, the code official can cite the condition as unsafe and require repair as needed (see Section 306.1).

EXTERIOR PROPERTY. The open space on the *premises* and on adjoining property under the control of *owners* or *operators* of such *premises*.

❖ Exterior property generally consists of the open space or area outside a building or an accessory structure on the same premises or property. It is often referred to as "the yard area," but can also include driveways, parking areas, portions of the public right-of-way, vacant lots or adjoining property under the control of the same owner.

GARBAGE. The animal or vegetable waste resulting from the handling, preparation, cooking and consumption of food.

❖ Garbage is discarded food waste and differs from rubbish (see the definition of "Rubbish") in that it provides a food source for rodents and other animals and insects. Garbage that is not properly handled and disposed of regularly can cause insanitary conditions and infestations of many types that could be the cause of illness in people and pets. Durable garbage containers with tight-fitting lids offer the best protection against these conditions.

INTERNATIONAL CODE COUNCIL®
Copyright © 2015 ICC. ALL RIGHTS RESERVED. Accessed by David Dammon on Jun 21, 2017 12:30:52 PM pursuant to License Agreement with ICC. No further reproduction or distribution authorized. ANY UNAUTHORIZED REPRODUCTION OR DISTRIBUTION IS A VIOLATION OF THE FEDERAL COPYRIGHT ACT AND THE LICENSE AGREEMENT, AND SUBJECT TO CIVIL AND CRIMINAL PENALTIES THEREUNDER.

[BE] GUARD. A building component or a system of building components located at or near the open sides of elevated walking surfaces that minimizes the possibility of a fall from the walking surface to a lower level.

❖ This is a term common to the IBC and IRC. Guards are sometimes mistakenly referred to as "guardrails." In actuality, the guard consists of the entire vertical portion of the barrier, not just the top rail. The purpose of guards is to minimize the potential for falls at dropoffs adjacent to walking surfaces.

[BG] HABITABLE SPACE. Space in a structure for living, sleeping, eating or cooking. *Bathrooms*, *toilet rooms*, closets, halls, storage or utility spaces, and similar areas are not considered *habitable spaces*.

❖ Habitable spaces are those spaces that are normally considered "inhabited" in the course of residential living and accommodate the four basic activities of living, sleeping, eating and cooking. Other spaces, such as halls or utility rooms, are not considered habitable, but would, in many instances, be considered occupiable spaces.

HISTORIC BUILDING. Any building or structure that is one or more of the following:

1. Listed or certified as eligible for listing, by the State Historic Preservation Officer or the Keeper of the National Register of Historic Places, in the National Register of Historic Places.
2. Designated as historic under an applicable state or local law.
3. Certified as a contributing resource within a National Register or state or locally designated historic district.

❖ The definition gives specificity as to how a building is officially determined to be eligible for the various lists of historic buildings. In accordance with the Code of Federal Regulations, Title 36, Chapter I, Part 63, determinations of eligibility for listing in the National Register of Historic Places are made by State Historic Preservation Offices in coordination with the Keeper of the National Register of Historic Places. This is an official process conducted in accordance with federal standards. This definition aligns the code language with the language of this official process and removes any ambiguity as to who can make determinations of eligibility.

HOUSEKEEPING UNIT. A room or group of rooms forming a single *habitable space* equipped and intended to be used for living, sleeping, cooking and eating which does not contain, within such a unit, a toilet, lavatory and bathtub or shower.

❖ Housekeeping units differ from a traditional dwelling unit, as defined in the IRC, in that the sanitary facilities are not contained within the unit.

IMMINENT DANGER. A condition which could cause serious or life-threatening injury or death at any time.

❖ As used in the code, imminent danger refers to a condition that poses a threat or danger to the building occupants or persons in the proximity of a building or premises. Section 109 empowers the code official to vacate an occupied premises, order the closing of streets or take other emergency measures to safeguard the public until the condition is no longer threatening.

INFESTATION. The presence, within or contiguous to, a structure or *premises* of insects, rodents, vermin or other pests.

❖ This definition is needed for the application of Sections 302.5 and 309.1. An infestation is the actual presence of live insects, rodents, vermin or other pests. If the actual presence of pests cannot be readily confirmed, the presence of fresh droppings, larvae, eggs, rodent holes or other such evidence can identify a current infestation.

INOPERABLE MOTOR VEHICLE. A vehicle which cannot be driven upon the public streets for reason including but not limited to being unlicensed, wrecked, abandoned, in a state of disrepair, or incapable of being moved under its own power.

❖ Motor vehicles that are in some stage of disrepair or disassembly are often the source of property maintenance complaints. This definition clearly identifies that vehicles that are unlicensed, wrecked, abandoned, in a state of disrepair or incapable of moving under their own power are inoperable.

[A] LABELED. Equipment, materials or products to which have been affixed a label, seal, symbol or other identifying mark of a nationally recognized testing laboratory, inspection agency or other organization concerned with product evaluation that maintains periodic inspection of the production of the above-*labeled* items and whose labeling indicates either that the equipment, material or product meets identified standards or has been tested and found suitable for a specified purpose.

❖ When a product is labeled, the label indicates, first, that the material has been tested for conformance to an applicable standard or has been determined suitable for a specified purpose, and second, that the component is subject to third-party inspection to verify that the minimum level of quality required by the appropriate standard is maintained. Labeling provides a readily available source of information that is useful for field inspection of installed products. The label identifies the product or material and provides other information that can be further investigated if there is any question as to its suitability for the specific installation. The labeling agency performing the third-party inspection must be approved by the code official. The basis for approval may include, but is not necessarily limited to, the capacity and capability of the agency to perform the specific testing and inspection.

While the code does not specifically state what information must be contained on the label, the applicable referenced standard often states the minimum identifying information required. The data contained on a label typically includes, but is not necessarily limited

INTERNATIONAL CODE COUNCIL®
Copyright © 2015 ICC. ALL RIGHTS RESERVED. Accessed by David Dammon on Jun 21, 2017 12:30:52 PM pursuant to License Agreement with ICC. No further reproduction or distribution authorized. ANY UNAUTHORIZED REPRODUCTION OR DISTRIBUTION IS A VIOLATION OF THE FEDERAL COPYRIGHT ACT AND THE LICENSE AGREEMENT, AND SUBJECT TO CIVIL AND CRIMINAL PENALTIES THEREUNDER.

to, the name of the manufacturer; product name or serial number; installation specifications; applicable tests and standards; the testing agency; and the labeling agency.

LET FOR OCCUPANCY or LET. To permit, provide or offer possession or *occupancy* of a dwelling, *dwelling unit*, *rooming unit*, building, premise or structure by a person who is or is not the legal *owner* of record thereof, pursuant to a written or unwritten lease, agreement or license, or pursuant to a recorded or unrecorded agreement of contract for the sale of land.

❖ This definition refers to a legal term meaning to lease or convey real estate or property to someone other than the owners.

NEGLECT. The lack of proper maintenance for a building or *structure*.

❖ This definition describes the term "neglect" for use in determining if a structure or premises is dangerous in accordance with Section 108.1.5. Where it is apparent that a structure or premises is dangerous due to neglect, the code official can cite the condition as unsafe and require repair as needed.

[A] OCCUPANCY. The purpose for which a building or portion thereof is utilized or occupied.

❖ The occupancy classification of a building is an indication of the level of hazard to which the occupants are exposed as a function of the actual building use. Occupancy, in terms of an occupancy group classification, is one of the primary considerations in the development and application of many code requirements designed to offset specific hazards inherent to each occupancy group. In enforcing the code, the approved occupancy of the building is generally an established fact.

OCCUPANT. Any individual living or sleeping in a building, or having possession of a space within a building.

❖ By definition, a person need not have possession or control of a space in order to be an occupant.

OPENABLE AREA. That part of a window, skylight or door which is available for unobstructed *ventilation* and which opens directly to the outdoors.

❖ The openable area is the actual area of a window or door (glazed or unglazed) through which outside air will flow into a structure. The openable area should be measured when the window or door is in its full, open position. When determining openable area, only the space between stops or between stops and sashes is to be measured. The area of sashes, meeting rails, mullions and muntins is to be deducted (see Figure 403.1).

OPERATOR. Any person who has charge, care or control of a structure or *premises* which is let or offered for *occupancy*.

❖ This definition is needed to distinguish the unique meaning of this term, as it is intended to be used in the code, from the ordinarily accepted meaning of the term "operator." An operator may not be the owner, but may represent the owner in the care or control of a structure.

[A] OWNER. Any person, agent, *operator*, firm or corporation having legal or equitable interest in the property; or recorded in the official records of the state, county or municipality as holding title to the property; or otherwise having control of the property, including the guardian of the estate of any such person, and the executor or administrator of the estate of such person if ordered to take possession of real property by a court.

❖ This term defines the person or other legal entity responsible for a building and its compliance with code requirements.

PERSON. An individual, corporation, partnership or any other group acting as a unit.

❖ A person can be an individual or group of individuals who have formed one of several types of business organizations. Corporations, partnerships and other types of business entities are treated as "persons" under the law. They are just as responsible as any individual for complying with the code and subject to the penalties established under local or state law (see Section 106.4).

PEST ELIMINATION. The control and elimination of insects, rodents or other pests by eliminating their harborage places; by removing or making inaccessible materials that serve as their food or water; by other *approved pest elimination* methods.

❖ This definition is needed since Section 309 requires the use of approved pest elimination methods that are not harmful to people.

[A] PREMISES. A lot, plot or parcel of land, *easement* or *public way*, including any structures thereon.

❖ When this term is used in the code, it is intended that the entire lot and all of the structures thereon be included within the scope of that code requirement.

[A] PUBLIC WAY. Any street, alley or similar parcel of land essentially unobstructed from the ground to the sky, which is deeded, dedicated or otherwise permanently appropriated to the public for public use.

❖ This term describes the ground upon which the public will be allowed passage.

ROOMING HOUSE. A building arranged or occupied for lodging, with or without meals, for compensation and not occupied as a one- or two-family dwelling.

❖ A rooming house provides shelter and sleeping arrangements for individuals. This differs from other living arrangements in that the occupant shares a dwelling unit rather than having his or her own complete and private dwelling unit. Each person rents individually from the owner and does not occupy the structure as part of a family. In most cases, occupants share a bathroom and cooking facilities. Another term that could be used is "boarding house," and it would be

INTERNATIONAL CODE COUNCIL®
Copyright © 2015 ICC. ALL RIGHTS RESERVED. Accessed by David Dammon on Jun 21, 2017 12:30:52 PM pursuant to License Agreement with ICC. No further reproduction or distribution authorized. ANY UNAUTHORIZED REPRODUCTION OR DISTRIBUTION IS A VIOLATION OF THE FEDERAL COPYRIGHT ACT AND THE LICENSE AGREEMENT, AND SUBJECT TO CIVIL AND CRIMINAL PENALTIES THEREUNDER.

classified as an Occupancy Group R-1 or R-2, depending upon the permanent or transient nature of the occupants.

ROOMING UNIT. Any room or group of rooms forming a single habitable unit occupied or intended to be occupied for sleeping or living, but not for cooking purposes.

❖ Rooming units differ from dwelling units since no cooking facilities are located in any rooming unit. Rooming units contain only sleeping and living facilities.

RUBBISH. Combustible and noncombustible waste materials, except garbage; the term shall include the residue from the burning of wood, coal, coke and other combustible materials, paper, rags, cartons, boxes, wood, excelsior, rubber, leather, tree branches, *yard* trimmings, tin cans, metals, mineral matter, glass, crockery and dust and other similar materials.

❖ The term is usually considered to be a synonym for similar terms such as "refuse" or "trash" and generally encompasses the broad range of worthless, discarded materials other than garbage. The term "garbage" is typically limited to describing wastes generated by food preparation operations.

[BG] SLEEPING UNIT. A room or space in which people sleep, which can also include permanent provisions for living, eating and either sanitation or kitchen facilities, but not both. Such rooms and spaces that are also part of a *dwelling unit* are not *sleeping units*.

❖ This definition is included to coordinate the *Fair Housing Act Guidelines* with the code. The definition for "Sleeping unit" is needed to clarify the differences between sleeping units and dwelling units. Some examples would be a hotel guestroom, a dormitory, a boarding house, etc. Another example would be an addition to a studio apartment with a kitchenette (i.e., microwave, sink, refrigerator). Since the cooking arrangements are not permanent, this configuration would be considered a sleeping unit, not a dwelling unit. As already defined in the code, a dwelling unit must contain permanent facilities for living, sleeping, eating, cooking and sanitation.

STRICT LIABILITY OFFENSE. An offense in which the prosecution in a legal proceeding is not required to prove criminal intent as a part of its case. It is enough to prove that the defendant either did an act which was prohibited, or failed to do an act which the defendant was legally required to do.

❖ This term, along with its usage in Section 106.3, brings the code in line with current legal terminology in regard to the prosecution of violations. With this term, a prosecutor is not required to prove that code violations were intended by a defendant or were even due to negligence. It is difficult to prove such intention or negligence in a court of law.

[A] STRUCTURE. That which is built or constructed or a portion thereof.

❖ This definition is intentionally broad so as to include within its scope, and therefore the scope of the code (see Section 101.2), everything that is built as an improvement to real property. The phrase "or a portion thereof" is included so that those words do not have to be inserted at each location in the code where a provision applies to only a portion of a structure.

TENANT. A person, corporation, partnership or group, whether or not the legal *owner* of record, occupying a building or portion thereof as a unit.

❖ This definition parallels that of the term "occupant" and makes it clear that, as used in the code, an owner-occupant is considered a tenant.

TOILET ROOM. A room containing a water closet or urinal but not a bathtub or shower.

❖ In the context of the code, a toilet room is a room that contains plumbing fixtures used for elimination of bodily wastes (water closets and urinals) and also includes fixtures used for handwashing (lavatories). Toilet rooms are typically associated with public occupancies. Although sometimes used interchangeably with the term "bathroom" (see the definition of "Bathroom"), a toilet room contains only those plumbing fixtures designed for waste elimination and handwashing. A toilet room becomes a bathroom when it contains a bathtub or shower.

ULTIMATE DEFORMATION. The deformation at which failure occurs and which shall be deemed to occur if the sustainable load reduces to 80 percent or less of the maximum strength.

❖ This definition describes the term "ultimate deformation" for use in determining unsafe conditions related to structural materials that may be beyond their limit state due to ultimate deformation. "Limit state" is a condition beyond which a structure or member becomes unfit for service and is no longer useful for its intended function. Where it is apparent that a material is beyond its limit state due to ultimate deformation, the code official can cite the condition as unsafe and require repair as needed (see Section 306.1.1).

[M] VENTILATION. The natural or mechanical process of supplying conditioned or unconditioned air to, or removing such air from, any space.

❖ Ventilation is the process of moving air to or from building spaces. This definition is used in this chapter to establish minimum levels of air movement within a building for the purposes of providing a healthful interior environment. Ventilation would include both natural (openable exterior windows and doors for wind movement) and mechanical (forced air with mechanical equipment) methods, when permitted by the code.

WORKMANLIKE. Executed in a skilled manner; e.g., generally plumb, level, square, in line, undamaged and without marring adjacent work.

❖ To be workmanlike, maintenance or repair work must be performed in a manner consistent with work done by a skilled craftsman. In general, floors should be level, walls plumb and square and windows installed

INTERNATIONAL CODE COUNCIL®
Copyright © 2015 ICC. ALL RIGHTS RESERVED. Accessed by David Dammon on Jun 21, 2017 12:30:52 PM pursuant to License Agreement with ICC. No further reproduction or distribution authorized. ANY UNAUTHORIZED REPRODUCTION OR DISTRIBUTION IS A VIOLATION OF THE FEDERAL COPYRIGHT ACT AND THE LICENSE AGREEMENT, AND SUBJECT TO CIVIL AND CRIMINAL PENALTIES THEREUNDER.

so that they operate easily and fit within the rough opening to exclude the elements. The use of proper tools, methods and materials is usually necessary for workmanlike repairs.

[Z] YARD. An open space on the same lot with a structure.

❖ Yard is similar to "exterior property" but pertains only to the open area on a lot with a structure. A vacant lot or property without a structure does not have a yard by this definition.

Bibliography

The following resource materials were used in the preparation of the commentary for this chapter of the code:

IBC-2015, *International Building Code*. Washington, D.C.: International Code Council, 2014.

IEBC-2015, *International Existing Building Code*. Washington, D.C.: International Code Council, 2014.

IFC-2015, *International Fire Code*. Washington, D.C.: International Code Council, 2014.

IFGC-2015, *International Fuel Gas Code*. Washington, D.C.: International Code Council, 2014.

IMC-2015, *International Mechanical Code*. Washington, D.C.: International Code Council, 2014.

IPC-2015, *International Plumbing Code*. Washington, D.C.: International Code Council, 2014.

IRC-2015, *International Residential Code*. Washington, D.C.: International Code Council, 2014.

IZC-2015, *International Zoning Code*. Washington, D.C.: International Code Council, 2014.

INTERNATIONAL CODE COUNCIL®
Copyright © 2015 ICC. ALL RIGHTS RESERVED. Accessed by David Dammon on Jun 21, 2017 12:30:52 PM pursuant to License Agreement with ICC. No further reproduction or distribution authorized. ANY UNAUTHORIZED REPRODUCTION OR DISTRIBUTION IS A VIOLATION OF THE FEDERAL COPYRIGHT ACT AND THE LICENSE AGREEMENT, AND SUBJECT TO CIVIL AND CRIMINAL PENALTIES THEREUNDER.

INTERNATIONAL CODE COUNCIL®
Copyright © 2015 ICC. ALL RIGHTS RESERVED. Accessed by David Dammon on Jun 21, 2017 12:30:52 PM pursuant to License Agreement with ICC. No further reproduction or distribution authorized. ANY UNAUTHORIZED REPRODUCTION OR DISTRIBUTION IS A VIOLATION OF THE FEDERAL COPYRIGHT ACT AND THE LICENSE AGREEMENT, AND SUBJECT TO CIVIL AND CRIMINAL PENALTIES THEREUNDER.

Chapter 3:
General Requirements

General Comments

The title for Chapter 3 ("General Requirements") indicates that it is broad in scope. It includes a variety of requirements for exterior property areas, as well as interior and exterior elements of the structure. Chapter 3 provides specific criteria for regulating the installation and maintenance of building components. This chapter also contains requirements regulating the safety, sanitation and appearance of the interior and exterior of structures and all exterior property areas.

Section 301 identifies the scope of Chapter 3 as containing provisions for maintaining a structure and its exterior property areas, and establishes who is responsible for complying with the chapter's provisions. This section also provides minimum maintenance requirements for vacant structures and land.

Section 302 establishes criteria for maintaining exterior property areas and accessory structures and provides vehicle storage regulations.

Section 303 contains the requirements for swimming pools, spas, hot tubs, protective barriers and gates in these barriers.

Section 304 establishes maintenance requirements for the structural, weather resistance, sanitary and safety performance of the exterior of a structure.

Section 305 establishes maintenance requirements for the structural, sanitary and safety performance of the interior of a structure.

Section 306 contains provisions for maintaining components of a structure, as well as for determining unsafe conditions based on specific parameters.

Section 307 provides for the safety and maintenance of handrails and guardrails.

Sections 308 and 309 establish the responsible parties for exterminating insects and rodents, and maintaining sanitary conditions in various types of occupancies. When specific requirements are not provided in the code, the following three options for establishing the necessary criteria are available:

1. If the jurisdiction has already established criteria, the code official can continue to enforce that criteria.
2. The jurisdiction may adopt its own criteria and incorporate them as an amendment to the appropriate section of the code.
3. The code official may adopt and enforce criteria already established by the *International Building Code*® (IBC®).

Inadequate sanitation and insect or rodent infestations can have a significant impact on a community. A poorly kept neighborhood affects the self-image of a community, as well as the impression neighboring communities and visitors have about the area. Responsible property owners may shy away from neighborhoods that look unkempt. As a result, property values decrease and the cycle can continue until the neighborhood is considered a slum.

An area that is neat, clean and well maintained attracts owners and occupants who are usually willing to keep the area attractive, if only to protect their own interests. The code official, with vigorous enforcement of sanitation and extermination regulations, can help a community maintain a positive self-image. This creates a favorable image to the rest of the community and its visitors.

Purpose

Chapter 3 provides requirements that are intended to maintain a minimum level of safety and sanitation for both the general public and the occupants of a structure, and to maintain a building's structural and weather-resistant performance.

SECTION 301
GENERAL

301.1 Scope. The provisions of this chapter shall govern the minimum conditions and the responsibilities of persons for maintenance of structures, equipment and *exterior property*.

❖ This chapter establishes minimum requirements for maintenance of property areas, premises and structures. The code deals with all types and all ages of structures; therefore, the criteria must be of a minimum nature, consistent with a reasonable level of protection for the health and safety of the occupants.

301.2 Responsibility. The *owner* of the *premises* shall maintain the structures and *exterior property* in compliance with these requirements, except as otherwise provided for in this code. A person shall not occupy as owner-occupant or permit another person to occupy *premises* that are not in a sanitary and safe condition and that do not comply with the require-

INTERNATIONAL CODE COUNCIL®
Copyright © 2015 ICC. ALL RIGHTS RESERVED. Accessed by David Dammon on Jun 21, 2017 12:30:52 PM pursuant to License Agreement with ICC. No further reproduction or distribution authorized. ANY UNAUTHORIZED REPRODUCTION OR DISTRIBUTION IS A VIOLATION OF THE FEDERAL COPYRIGHT ACT AND THE LICENSE AGREEMENT, AND SUBJECT TO CIVIL AND CRIMINAL PENALTIES THEREUNDER.

ments of this chapter. *Occupants* of a *dwelling unit, rooming unit* or *housekeeping unit* are responsible for keeping in a clean, sanitary and safe condition that part of the *dwelling unit, rooming unit, housekeeping unit* or *premises* which they occupy and control.

❖ The owner is responsible for complying with the requirements of Chapter 3, except when the code places the responsibility on the occupants to keep their portion of the premises in a safe and sanitary condition.

Simply stated, owners must provide a safe and sanitary property and premises when they let it for occupancy. Occupants must continue to keep it safe and sanitary while they occupy, control or use the property and premises.

301.3 Vacant structures and land. Vacant structures and *premises* thereof or vacant land shall be maintained in a clean, safe, secure and sanitary condition as provided herein so as not to cause a blighting problem or adversely affect the public health or safety.

❖ Both vacant structures and vacant land present special concerns to communities. Because no one is living on these premises, they are often ignored by the owners. Consequently, this section establishes the code official's authority to order the cleanup of vacant lands and the securing of vacant structures that might present an attractive nuisance.

When the owner fails to secure a vacant structure, Section 108.2 provides the code official with the authority to arrange for securing such buildings. Additionally, Section 110 authorizes the code official to pursue demolition of any structure that is deemed unreasonable to repair. When a structure is reasonable to repair, the code official is authorized to require the necessary repairs.

SECTION 302
EXTERIOR PROPERTY AREAS

302.1 Sanitation. *Exterior property* and *premises* shall be maintained in a clean, safe and sanitary condition. The *occupant* shall keep that part of the *exterior property* that such *occupant* occupies or controls in a clean and sanitary condition.

❖ This section establishes a simple, straightforward requirement that exterior areas shall be clean and free from rubbish and garbage (see the definitions in Chapter 2). The code official may find that enforcement of this section is frequently neither straightforward nor simple.

Each jurisdiction has neighborhoods within the overall community that have distinct characteristics. Deteriorated, low-cost housing may dominate in one area, while another has expensive, well-maintained housing units. Sanitation standards should be enforced uniformly and consistently.

302.2 Grading and drainage. *Premises* shall be graded and maintained to prevent the erosion of soil and to prevent the accumulation of stagnant water thereon, or within any structure located thereon.

Exception: *Approved* retention areas and reservoirs.

❖ Improperly graded property areas create health and safety hazards. Stagnant water provides a home for many nuisance insects, especially the mosquito. Stagnant water next to a structure can cause mold growth, which can lead to the decay of wooden members. Ponded water is an attractive nuisance for children and has contributed to numerous drowning deaths.

Stagnant water is foul or stale water. Regrading the premises may be necessary to prevent stagnant water. If regrading is not practical, some type of water-diversion system must be installed. Other solutions include replacing nonabsorbent soil with absorbent soil, installing underground drain tile or building an underground leaching pit.

Soil erosion can be a nuisance if material is being deposited in drainage systems or on adjacent properties, and is an indication of improper grading. Planting and maintaining an acceptable ground cover generally prevents erosion.

As indicated by the exception, water retention areas or reservoirs are permitted by the code even though they may contain stagnant water; however, the code official must approve their use.

302.3 Sidewalks and driveways. Sidewalks, walkways, stairs, driveways, parking spaces and similar areas shall be kept in a proper state of repair, and maintained free from hazardous conditions.

❖ The code official is authorized to require that all sidewalks, walkways, stairs, driveways, parking spaces, etc., are usable and kept in proper repair. Walking surfaces that have deteriorated to a condition that presents a hazard to pedestrians must be repaired or replaced to eliminate the hazard and thus reduce the potential for accidents or injuries.

302.4 Weeds. *Premises* and *exterior property* shall be maintained free from weeds or plant growth in excess of **[JURISDICTION TO INSERT HEIGHT IN INCHES]**. Noxious weeds shall be prohibited. Weeds shall be defined as all grasses, annual plants and vegetation, other than trees or shrubs provided; however, this term shall not include cultivated flowers and gardens.

Upon failure of the *owner* or agent having charge of a property to cut and destroy weeds after service of a notice of violation, they shall be subject to prosecution in accordance with Section 106.3 and as prescribed by the authority having jurisdiction. Upon failure to comply with the notice of violation, any duly authorized employee of the jurisdiction or contractor hired by the jurisdiction shall be authorized to enter upon the property in violation and cut and destroy the weeds growing thereon, and the costs of such removal shall be paid by the *owner* or agent responsible for the property.

❖ Criteria establishing maximum heights for grass and weeds are necessary to reduce rodent shelters and pollen dust problems.

INTERNATIONAL CODE COUNCIL®
Copyright © 2015 ICC. ALL RIGHTS RESERVED. Accessed by David Dammon on Jun 21, 2017 12:30:52 PM pursuant to License Agreement with ICC. No further reproduction or distribution authorized. ANY UNAUTHORIZED REPRODUCTION OR DISTRIBUTION IS A VIOLATION OF THE FEDERAL COPYRIGHT ACT AND THE LICENSE AGREEMENT, AND SUBJECT TO CIVIL AND CRIMINAL PENALTIES THEREUNDER.

This section provides a mechanism for removal of weeds on neglected or abandoned properties after proper notice has been given to the responsible owner or agent (see Sections 107 and 108.3). It is important that the code official act quickly in requiring weed removal to prevent the weeds from contributing to a blight condition that could eventually become a harbor for pests and rodents.

All noxious weeds are prohibited; however, each community has different weeds that are considered noxious. The code official should confer with the state or local agricultural agent to become familiar with weeds that are noxious in his or her community.

Cultivated flowers and gardens are not considered to be weeds. The word "cultivated" is important. Cultivated is defined as "to loosen or dig (soil) around growing plants." Uncultivated gardens should be treated the same as weeds and tall grasses.

302.5 Rodent harborage. Structures and *exterior property* shall be kept free from rodent harborage and *infestation*. Where rodents are found, they shall be promptly exterminated by *approved* processes that will not be injurious to human health. After pest elimination, proper precautions shall be taken to eliminate rodent harborage and prevent reinfestation.

❖ Rodents carry disease organisms in their feces and on their bodies. The code official must require the extermination of all rodents by approved processes. All harborage areas should be eliminated by removing piles of rubbish, towing or repairing inoperable cars and cutting back weeds. Garbage should be stored in solid containers with tight-fitting lids and disposed of regularly.

302.6 Exhaust vents. Pipes, ducts, conductors, fans or blowers shall not discharge gases, steam, vapor, hot air, grease, smoke, odors or other gaseous or particulate wastes directly upon abutting or adjacent public or private property or that of another *tenant*.

❖ There are three common problems associated with exhaust vent discharges:

- Odor problems caused from exhaust gases emanating from business and industrial properties.
- Noise problems created by exhaust vents.
- Health and safety problems created by exhausts that contain hazardous or potentially hazardous discharge.

To reduce these problems, exhaust vents are prohibited from discharging directly on abutting or adjacent public and private property.

302.7 Accessory structures. Accessory structures, including *detached* garages, fences and walls, shall be maintained structurally sound and in good repair.

❖ Accessory structures must be maintained in accordance with the criteria established by this section. Property owners often give detached garages, sheds, fences, retaining walls and similar structures a lower maintenance priority than the primary structure; thus, these structures are more frequently in disrepair. A thorough inspection of all property areas and accessory buildings is necessary to identify violations of the code and to improve a neighborhood's appearance.

302.8 Motor vehicles. Except as provided for in other regulations, no inoperative or unlicensed motor vehicle shall be parked, kept or stored on any *premises*, and no vehicle shall at any time be in a state of major disassembly, disrepair, or in the process of being stripped or dismantled. Painting of vehicles is prohibited unless conducted inside an *approved* spray booth.

Exception: A vehicle of any type is permitted to undergo major overhaul, including body work, provided that such work is performed inside a structure or similarly enclosed area designed and *approved* for such purposes.

❖ Improper storage of inoperable vehicles can be a serious problem for a community. The vehicles are unsightly, clutter the neighborhood, provide a harborage for rodents and are an attractive nuisance for children.

This section establishes criteria for acceptable vehicle storage. No inoperable or unlicensed vehicles are permitted on a property unless approved in other regulations adopted by the community. This regulation addresses two problems associated with vehicle storage and repair:

- The blighting influence that improperly stored inoperable vehicles have on a neighborhood.
- The neighborhood mechanic who attempts to operate a vehicle repair business from home.

Major vehicle repairs are permitted, but only if the work is performed in a structure designed and approved for such use. Of course, this regulation does not affect the storage of vehicles on property that complies with applicable zoning or license requirements, such as repair garages, salvage yards and similar establishments.

302.9 Defacement of property. No person shall willfully or wantonly damage, mutilate or deface any exterior surface of any structure or building on any private or public property by placing thereon any marking, carving or graffiti.

It shall be the responsibility of the *owner* to restore said surface to an *approved* state of maintenance and repair.

❖ Graffiti, carving and damage is a problem that plagues exterior surfaces of walls, fencing and sidewalks in cities and towns of all sizes. This problem begins as an eyesore and can result in serious consequences, including declining property values and degradation of the structures' ability to repel rain and snow.

It must be the responsibility of the owner to restore said surface to an approved state of maintenance and repair.

INTERNATIONAL CODE COUNCIL®
Copyright © 2015 ICC. ALL RIGHTS RESERVED. Accessed by David Dammon on Jun 21, 2017 12:30:52 PM pursuant to License Agreement with ICC. No further reproduction or distribution authorized. ANY UNAUTHORIZED REPRODUCTION OR DISTRIBUTION IS A VIOLATION OF THE FEDERAL COPYRIGHT ACT AND THE LICENSE AGREEMENT, AND SUBJECT TO CIVIL AND CRIMINAL PENALTIES THEREUNDER.

SECTION 303
SWIMMING POOLS, SPAS AND HOT TUBS

303.1 Swimming pools. Swimming pools shall be maintained in a clean and sanitary condition, and in good repair.

❖ Swimming pools, if neglected, can become a health hazard, resulting in insect-attracting stagnant water.

303.2 Enclosures. Private swimming pools, hot tubs and spas, containing water more than 24 inches (610 mm) in depth shall be completely surrounded by a fence or barrier not less than 48 inches (1219 mm) in height above the finished ground level measured on the side of the barrier away from the pool. Gates and doors in such barriers shall be self-closing and self-latching. Where the self-latching device is not less than 54 inches (1372 mm) above the bottom of the gate, the release mechanism shall be located on the pool side of the gate. Self-closing and self-latching gates shall be maintained such that the gate will positively close and latch when released from an open position of 6 inches (152 mm) from the gatepost. No existing pool enclosure shall be removed, replaced or changed in a manner that reduces its effectiveness as a safety barrier.

Exception: Spas or hot tubs with a safety cover that complies with ASTM F1346 shall be exempt from the provisions of this section.

❖ This performance-based criteria was specifically added to address pool-related problems where a child could possibly drown by gaining entry into a pool through a gate that failed to close and latch properly. Gates that may have deteriorated over time through age, wear and exposure to the elements are now addressed so that they will continue to provide the intended level of protection. The exception to this section allows for safety covers that comply with ASTM F1346. This exception is consistent with current provisions in the IBC and the *International Residential Code*® (IRC®).

ASTM F1346 requires fastening the safety cover to the hot tub or spa via key locks, combination locks or similar devices that will keep the cover in place; testing to demonstrate that the cover can support a minimum required weight; limitations on openings in the cover; and minimum installation requirements.

SECTION 304
EXTERIOR STRUCTURE

304.1 General. The exterior of a structure shall be maintained in good repair, structurally sound and sanitary so as not to pose a threat to the public health, safety or welfare.

❖ The exterior of structures must perform four primary functions:

- It must be in good repair. There should be no evidence of deterioration, or damaged or loose elements.
- It must be structurally sound. There should not be any loose or collapsing pieces. Stairways, porches, balconies and similar structural elements must safely perform their intended functions.
- It must be kept in a sanitary condition. There shall be no accumulation of litter or debris on porches and other parts of the exterior structure.
- It must be capable of preventing the elements (rain, snow and wind) and rodents from entering the interior areas.

304.1.1 Unsafe conditions. The following conditions shall be determined as unsafe and shall be repaired or replaced to comply with the *International Building Code* or the *International Existing Building Code* as required for existing buildings:

1. The nominal strength of any structural member is exceeded by nominal loads, the load effects or the required strength;
2. The *anchorage* of the floor or roof to walls or columns, and of walls and columns to foundations is not capable of resisting all nominal loads or load effects;
3. Structures or components thereof that have reached their limit state;
4. Siding and masonry joints including joints between the building envelope and the perimeter of windows, doors and skylights are not maintained, weather resistant or water tight;
5. Structural members that have evidence of *deterioration* or that are not capable of safely supporting all nominal loads and load effects;
6. Foundation systems that are not firmly supported by footings, are not plumb and free from open cracks and breaks, are not properly *anchored* or are not capable of supporting all nominal loads and resisting all load effects;
7. Exterior walls that are not *anchored* to supporting and supported elements or are not plumb and free of holes, cracks or breaks and loose or rotting materials, are not properly *anchored* or are not capable of supporting all nominal loads and resisting all load effects;
8. Roofing or roofing components that have defects that admit rain, roof surfaces with inadequate drainage, or any portion of the roof framing that is not in good repair with signs of *deterioration*, fatigue or without proper anchorage and incapable of supporting all nominal loads and resisting all load effects;
9. Flooring and flooring components with defects that affect serviceability or flooring components that show signs of *deterioration* or fatigue, are not properly *anchored* or are incapable of supporting all nominal loads and resisting all load effects;
10. Veneer, cornices, belt courses, corbels, trim, wall facings and similar decorative features not properly anchored or that are anchored with connections not capable of supporting all nominal loads and resisting all load effects;

INTERNATIONAL CODE COUNCIL®
Copyright © 2015 ICC. ALL RIGHTS RESERVED. Accessed by David Dammon on Jun 21, 2017 12:30:52 PM pursuant to License Agreement with ICC. No further reproduction or distribution authorized. ANY UNAUTHORIZED REPRODUCTION OR DISTRIBUTION IS A VIOLATION OF THE FEDERAL COPYRIGHT ACT AND THE LICENSE AGREEMENT, AND SUBJECT TO CIVIL AND CRIMINAL PENALTIES THEREUNDER.

11. Overhang extensions or projections including, but not limited to, trash chutes, canopies, marquees, signs, awnings, fire escapes, standpipes and exhaust ducts not properly *anchored* or that are *anchored* with connections not capable of supporting all nominal loads and resisting all load effects;
12. Exterior stairs, decks, porches, balconies and all similar appurtenances attached thereto, including *guard*s and handrails, are not structurally sound, not properly *anchored* or that are *anchored* with connections not capable of supporting all nominal loads and resisting all load effects; or
13. Chimneys, cooling towers, smokestacks and similar appurtenances not structurally sound or not properly *anchored*, or that are anchored with connections not capable of supporting all nominal loads and resisting all load effects.

Exceptions:

1. Where substantiated otherwise by an *approved* method.
2. Demolition of unsafe conditions shall be permitted where *approved* by the *code official*.

❖ The purpose of these requirements is to set out general and specific delineations in a building or structure that would make it unsafe. These delineations allow the code official more specific references to conditions that characterize an unsafe building or structure.

Section 304.1.1 describes in detail unsafe conditions related to the exterior of the structure to provide the code official the ability to require replacement or repair.

Item 1 indicates that if the strength of the structural member is exceeded by either the nominal loads or load effects, the condition is to be regarded as unsafe. Nominal strength and load effects, as defined by the IBC and Items 2–13 of this section, are when a structure or component is regarded as incapable of performing its intended function and thus becomes unsafe.

Item 2 deals with required strength of connections between structural members. More specifically, each connection must be able to resist nominal loads and load effects; otherwise, the building or affected portion thereof is to be regarded as unsafe. Anchorage of various elements of a structure is essential to its stability. When anchorage is not capable of transferring the intended loads, the structure or component is said to be unsafe.

Item 3 specifies that any condition beyond which a structure or member becomes unfit for service and is no longer useful for its intended function is to be unsafe. This includes its serviceability limit and strength limit state. "Limit state," as defined by the IBC, is a condition beyond which a structure or member becomes unfit for service and is no longer useful for its intended function (serviceability limit state) or to be unsafe (strength limit state). Any structure reaching this state is said to be unsafe.

Since weather penetration can degrade structural components, Item 4 specifies that if any joint in the building envelope allows weather to penetrate, it may be used as a basis to classify the structure as unsafe. This may be, in and of itself, the basis for the classification. However, supporting evidence of deterioration caused by the penetration would add weight to the characterization as unsafe.

Item 5 addresses structural members. Structural members are essential to the structural integrity of any building. If any structural member is deteriorated to the point that it cannot safely support the nominal loads, the building may be regarded as unsafe.

Item 6 addresses foundations. Foundation systems are essential to the structural integrity of any building. If any portion of any foundation system is not supported by adequate soil, is not plumb as intended to distribute the loads, has cracks or breaks or is inadequately anchored, the building may be regarded as unsafe.

Item 7 addresses exterior walls. Exterior walls are essential to the structural integrity of any building. If any portion of any exterior or bearing wall system is not supported by adequate foundation, is not plumb as intended to distribute the loads, has cracks or breaks or is inadequately anchored, the building may be regarded as unsafe.

Item 8 addresses roofing and roofing components. Since weather penetration can degrade structural components, this section specifies that if any roof component allows weather to penetrate, it may be used as a basis to classify the structure as unsafe. This may be, in and of itself, the basis for the classification. However, supporting evidence of deterioration caused by the penetration would add weight to the characterization as unsafe. Additionally, any structural component of the roof assembly not capable of supporting design loads is a basis for classifying as unsafe.

Item 9 addresses flooring and flooring components. Walking surfaces in floors with fatigue, defects or deterioration are a basis for determining that a building or structure is unsafe. If a floor may collapse due to any of these conditions or is likely to cause harm or injury, it may be regarded as unsafe.

Item 10 addresses exterior wall facings. Decorative features either inside or outside that may become detached and fall is a basis for classifying a building or portion thereof as unsafe. Lateral movement, such as an earthquake or wind, may cause any feature such as this to fall if not secured properly.

Item 11 addresses overhangs and projections from a building. As with decorative features, any overhang, extension or projection—such as trash chutes, canopies, marquis, sign, etc.—that is not anchored properly and can fall is a basis for declaring that an unsafe condition exists.

Item 12 addresses exterior stairs, decks and similar appurtenances. Exterior stairs, decks, porches, balconies and all similar appurtenances are all portions of a

INTERNATIONAL CODE COUNCIL®
Copyright © 2015 ICC. ALL RIGHTS RESERVED. Accessed by David Dammon on Jun 21, 2017 12:30:52 PM pursuant to License Agreement with ICC. No further reproduction or distribution authorized. ANY UNAUTHORIZED REPRODUCTION OR DISTRIBUTION IS A VIOLATION OF THE FEDERAL COPYRIGHT ACT AND THE LICENSE AGREEMENT, AND SUBJECT TO CIVIL AND CRIMINAL PENALTIES THEREUNDER.

means of egress system and as such represent a significant safety concern if left in an unsafe condition. Should any of these elements of a means of egress system become structurally unsound, the building or portion thereof may be regarded as unsafe.

Item 13 addresses chimneys, cooling towers and similar appurtenances. As with decorative features and other appurtenances, chimneys, cooling towers, smokestacks or similar large vertical elements that become structurally unsound may be regarded as unsafe.

Exception 1 is to recognize that a qualified entity could substantiate an alternative method or material that meets the purpose and intent of the code. This alternative would need to be approved by the code official. An engineering study that substantiates the structural integrity in a rational analysis may be the basis for accepting a contention that the building is not unsafe.

Exception 2 allows a building owner the option of demolition of an unsafe condition subject to the code official's approval. If the building or structure or portion thereof is demolished, and does not exist, the condition is considered to be resolved.

304.2 Protective treatment. Exterior surfaces, including but not limited to, doors, door and window frames, cornices, porches, trim, balconies, decks and fences, shall be maintained in good condition. Exterior wood surfaces, other than decay-resistant woods, shall be protected from the elements and decay by painting or other protective covering or treatment. Peeling, flaking and chipped paint shall be eliminated and surfaces repainted. Siding and masonry joints, as well as those between the building envelope and the perimeter of windows, doors and skylights, shall be maintained weather resistant and water tight. Metal surfaces subject to rust or corrosion shall be coated to inhibit such rust and corrosion, and surfaces with rust or corrosion shall be stabilized and coated to inhibit future rust and corrosion. Oxidation stains shall be removed from exterior surfaces. Surfaces designed for stabilization by oxidation are exempt from this requirement.

❖ Other sections of the code require items such as walls, doors, windows and architectural trim to be maintained in good repair and condition. This section makes it clear that if paint or other protective covering or treatment is used to provide protection from the elements, it cannot be peeling, flaking or chipped. Additionally, buildings with deteriorated paint or with masonry joints and siding in disrepair or not weather tight will eventually decay and exert a blighting influence on the community.

[F] 304.3 Address identification. Buildings shall be provided with approved address identification. The address identification shall be legible and placed in a position to be visible from the street or road fronting the property. Address identification characters shall contrast with their background. Address numbers shall be Arabic numerals or alphabetical letters. Numbers shall not be spelled out. Each character shall be a minimum of 4 inches (102 mm) in height with a minimum stroke width of 0.5 inch (12.7 mm). Where required by the fire code official, address identification shall be provided in additional approved locations to facilitate emergency response. Where access is by means of a private road and the building cannot be viewed from the public way, a monument, pole or other sign or means shall be used to identify the structure. Address identification shall be maintained.

❖ Identifying buildings during an emergency (i.e., fire department, ambulances, medical, police) is greatly aided by the proper placement of address identification. In other than emergencies, the address identification serves as a convenience for people attempting to locate a building. The size and contrast criteria are intended to aid visibility from the street. Where multiple structures are remotely located on a site or set back into a property, at locations where multiple addresses are provided (e.g., strip malls) or where the address is not readily visible from the public way, an approved method of identification will also be required. The fire code official has the authority to require that address numbers be located in all locations deemed necessary to properly identify the building by street address. The primary concern is for emergency personnel to locate the building without going through a lengthy search procedure. In the case of a strip mall, identification would be provided for the backs of buildings that face alleys or roads since the emergency response unit may often be directed to the back entrance. The address numbers must be maintained in a readily visible condition to provide for continuous identification. This would include repainting faded numbers or trimming trees or other vegetation that may be obscuring visibility of the address.

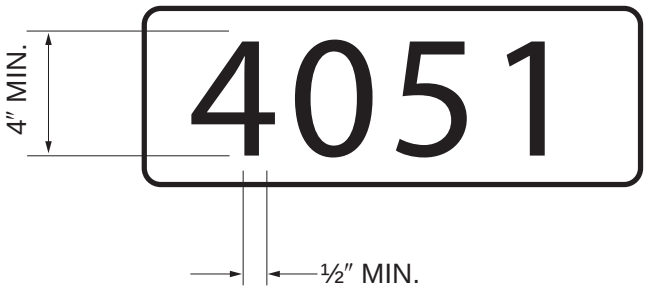

For SI: 1 inch = 25.4 mm.

Figure 304.3
ADDRESS IDENTIFICATION

304.4 Structural members. Structural members shall be maintained free from *deterioration*, and shall be capable of safely supporting the imposed dead and live loads.

❖ Building components that must support other building components are considered structural. Structural members must be kept sound and capable of supporting all of the dead and live loads imposed upon them. Dead loads are the loads created by the structure

INTERNATIONAL CODE COUNCIL®
Copyright © 2015 ICC. ALL RIGHTS RESERVED. Accessed by David Dammon on Jun 21, 2017 12:30:52 PM pursuant to License Agreement with ICC. No further reproduction or distribution authorized. ANY UNAUTHORIZED REPRODUCTION OR DISTRIBUTION IS A VIOLATION OF THE FEDERAL COPYRIGHT ACT AND THE LICENSE AGREEMENT, AND SUBJECT TO CIVIL AND CRIMINAL PENALTIES THEREUNDER.

itself. The footing must adequately carry the load of the foundation, beams, joists, walls, roof and other similar members located above it.

Live loads are the weights that are added to the finished structure. Live loads include furniture, appliances, equipment and other items added to the inside of the building. Snow, rain, ice and wind are environmental conditions that are also considered live loads in the code.

304.5 Foundation walls. Foundation walls shall be maintained plumb and free from open cracks and breaks and shall be kept in such condition so as to prevent the entry of rodents and other pests.

❖ The foundation must safely support the entire structure. Minor problems left uncorrected can become major. Major foundation problems can result in collapse of the structure.

Minor damage includes hairline cracks, loose and flaking mortar and surface deterioration of cement blocks and poured concrete walls. Major damage includes large horizontal and vertical step cracks, and large areas of missing foundation material (see Commentary Figure 304.5).

Three of the most frequent causes of foundation failure result from damage caused at the time of construction, soil problems (settling, sliding, heaving and expanding) and the effects of water. Water entering the foundation through cracks, holes or breaks can freeze and expand, causing damage to the foundation.

The code official should order replacement of structural elements when major damage has occurred and should order appropriate maintenance, such as tuckpointing, if the damage is only minor.

All conditions that permit entry of rodents or other pests must also be corrected.

304.6 Exterior walls. Exterior walls shall be free from holes, breaks, and loose or rotting materials; and maintained weatherproof and properly surface coated where required to prevent *deterioration*.

❖ Holes, cracks, decayed wood or any other condition that permits rain or dampness to enter the structure must be repaired. Exterior surface materials must be properly coated to prevent deterioration if they are not naturally decay resistant. Many materials do not require surface coating, including: certain metals (aluminum, copper, etc.); masonry products (bricks, stone, stucco, etc.); naturally, decay-resistant woods (redwood, cedar, etc.); and woods that have been treated with chemicals to prevent decay.

304.7 Roofs and drainage. The roof and flashing shall be sound, tight and not have defects that admit rain. Roof drainage shall be adequate to prevent dampness or *deterioration* in the walls or interior portion of the structure. Roof drains, gut-

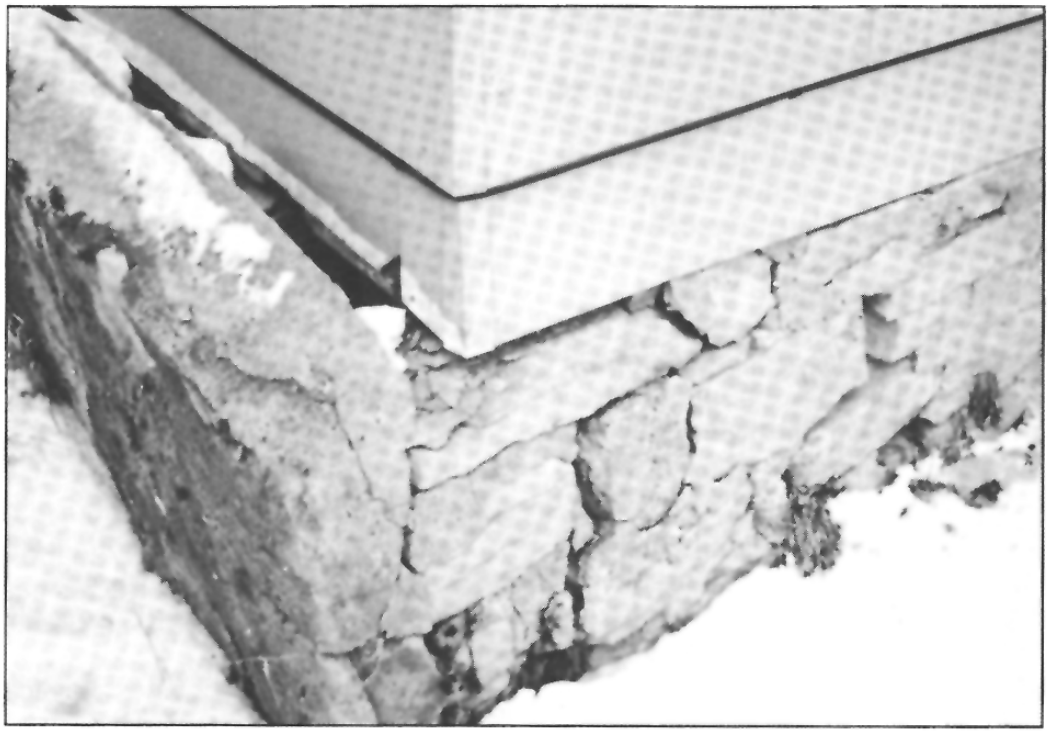

Figure 304.5
MAJOR DAMAGE TO A FOUNDATION WALL
This foundation is crumbling. Failure to repair it will eventually lead to its collapse.

INTERNATIONAL CODE COUNCIL®
Copyright © 2015 ICC. ALL RIGHTS RESERVED. Accessed by David Dammon on Jun 21, 2017 12:30:52 PM pursuant to License Agreement with ICC. No further reproduction or distribution authorized. ANY UNAUTHORIZED REPRODUCTION OR DISTRIBUTION IS A VIOLATION OF THE FEDERAL COPYRIGHT ACT AND THE LICENSE AGREEMENT, AND SUBJECT TO CIVIL AND CRIMINAL PENALTIES THEREUNDER.

ters and downspouts shall be maintained in good repair and free from obstructions. Roof water shall not be discharged in a manner that creates a public nuisance.

❖ A secure, nonleaking roof is necessary to keep a building properly maintained. Even small leaks can cause thousands of dollars in damage to insulation, plaster, studs and joists. Roof leaks usually occur along valley areas, around plumbing vents, chimneys, dormers and other penetrations through the roof.

Water runoff should be diverted away from the structure to prevent damage to the foundation and other structural elements. Runoff must be diverted away from neighboring properties, public sidewalks, alleys and streets to prevent nuisance problems. Two problems that can result from improper water runoff are flooding of basements and standing water or ice buildup on sidewalks, alleys and streets. Drains, gutters and downspouts must be kept in working order so that water runoff is properly diverted.

304.8 Decorative features. Cornices, belt courses, corbels, terra cotta trim, wall facings and similar decorative features shall be maintained in good repair with proper anchorage and in a safe condition.

❖ Exterior decorative features require regular maintenance to prevent their deterioration and to keep them from falling from the building.

304.9 Overhang extensions. Overhang extensions including, but not limited to, canopies, marquees, signs, metal awnings, fire escapes, standpipes and exhaust ducts shall be maintained in good repair and be properly *anchored* so as to be kept in a sound condition. Where required, all exposed surfaces of metal or wood shall be protected from the elements and against decay or rust by periodic application of weather-coating materials, such as paint or similar surface treatment.

❖ Most problems related to overhang extensions, especially signs, marquees, fire escapes and awnings, are a result of deterioration at the points where they are anchored to the building. Anchorage points should be carefully inspected on a regular basis.

Fire escapes, standpipes and exhaust ducts serve the critical functions of providing proper exiting, fire protection and the removal of exhaust products. Regular maintenance is important for their continued compliance with the code.

304.10 Stairways, decks, porches and balconies. Every exterior stairway, deck, porch and balcony, and all appurtenances attached thereto, shall be maintained structurally sound, in good repair, with proper anchorage and capable of supporting the imposed loads.

❖ Regular maintenance is required to keep stairs, decks, porches and balconies in good repair so they do not become a hazard to occupants or visitors. Positive anchorage of elevated decks and exterior stairs that may be subject to collapse is especially important.

Although not mandated, the applicable building code could be consulted for the live loads that these elements are typically required to support.

304.11 Chimneys and towers. Chimneys, cooling towers, smoke stacks, and similar appurtenances shall be maintained structurally safe and sound, and in good repair. Exposed surfaces of metal or wood shall be protected from the elements and against decay or rust by periodic application of weather-coating materials, such as paint or similar surface treatment.

❖ Chimneys, towers of all types and other similar appurtenances are frequently ignored until they become nonfunctional or are in danger of collapse. Because of the corrosiveness of exhaust gases, chimneys and smokestacks often deteriorate on the inside first. The code official should examine chimneys and towers for excessive rust, loose or missing mortar and cracked or disintegrating bricks.

Occasionally, deterioration may prevent the chimney or smokestack from operating properly. Obstructed chimneys have resulted in numerous carbon monoxide deaths. If fuel-burning appliances vent into chimneys or smokestacks, the code official should see that the exhaust gases are being properly conveyed to the chimney, including the connection of the vent to the chimney.

Weather-coating materials may be applied periodically to reduce the effects of the elements on these items.

304.12 Handrails and guards. Every handrail and *guard* shall be firmly fastened and capable of supporting normally imposed loads and shall be maintained in good condition.

❖ This section provides for the safety and maintenance of handrails and guards.

304.13 Window, skylight and door frames. Every window, skylight, door and frame shall be kept in sound condition, good repair and weather tight.

❖ All windows, skylights and doors must be installed in their frames so that they are weather tight (i.e., able to prevent wind, rain or other elements from entering the structure). A workmanlike installation will provide appropriate protection while maintaining operational capability.

304.13.1 Glazing. Glazing materials shall be maintained free from cracks and holes.

❖ All glass is to be maintained without open cracks or holes, which can admit wind and moisture. Defective glass poses hazards to occupants.

304.13.2 Openable windows. Every window, other than a fixed window, shall be easily openable and capable of being held in position by window hardware.

❖ Windows that have broken or are missing hold-open hardware create a dual hazard.

First, windows without hardware are frequently propped open with sticks and other objects. These objects can be dislodged and cause the windows to fall, causing bodily injuries.

Second, in the event of a fire, occupants are at an increased risk if windows cannot be readily secured in an open position. People have died because of inop-

INTERNATIONAL CODE COUNCIL®
Copyright © 2015 ICC. ALL RIGHTS RESERVED. Accessed by David Dammon on Jun 21, 2017 12:30:52 PM pursuant to License Agreement with ICC. No further reproduction or distribution authorized. ANY UNAUTHORIZED REPRODUCTION OR DISTRIBUTION IS A VIOLATION OF THE FEDERAL COPYRIGHT ACT AND THE LICENSE AGREEMENT, AND SUBJECT TO CIVIL AND CRIMINAL PENALTIES THEREUNDER.

erable windows, even though they could have easily broken the windows and escaped. It is advisable for the code official to check windows to make sure they open properly and remain open with their own hardware.

304.14 Insect screens. During the period from **[DATE]** to **[DATE]**, every door, window and other outside opening required for *ventilation* of habitable rooms, food preparation areas, food service areas or any areas where products to be included or utilized in food for human consumption are processed, manufactured, packaged or stored shall be supplied with *approved* tightly fitting screens of minimum 16 mesh per inch (16 mesh per 25 mm), and every screen door used for insect control shall have a self-closing device in good working condition.

Exception: Screens shall not be required where other *approved* means, such as air curtains or insect repellent fans, are employed.

❖ Screens reduce insect infestations. Communities are required to establish the number of months screens must be used on windows and doors to accommodate the time period that insects are active. Insect populations become dormant or die during the cold season; thus, screens would not be required during cold months.

The requirements for tight-fitting screens (not less than 16 mesh per 25 mm) in any food preparation, storage or service area are extremely important. Improper insect protection in these areas can lead to large-scale contamination of food supplies.

As indicated in the exception, air curtains, insect repellent fans or similar systems may be accepted. The code official must be sure that such a system is operational and employed whenever the doors and windows are open. Although permitted for any opening, these systems are useful for openings that are difficult to screen properly, such as out-swinging doors.

304.15 Doors. Exterior doors, door assemblies, operator systems if provided, and hardware shall be maintained in good condition. Locks at all entrances to dwelling units and sleeping units shall tightly secure the door. Locks on means of egress doors shall be in accordance with Section 702.3.

❖ All exterior doors, door assemblies, operator systems and hardware must properly perform their intended functions (e.g., open and close easily and keep out the elements). Locks must be readily released without keys, special knowledge or effort in accordance with Section 702.3. Security locks that comply with this requirement must function to secure the door as well. Malfunctioning or sticking locks that cannot secure the door may also impede egress because of difficulty in operation or release. The phrase "operator systems if provided" draws attention to automated doors. Maintaining the proper performance of the operator systems, where present, further assures proper egress will be maintained.

304.16 Basement hatchways. Every *basement* hatchway shall be maintained to prevent the entrance of rodents, rain and surface drainage water.

❖ Basement hatchways must prevent rain, water and rodents from entering the structure. When maintenance is ignored, wood members (including doors) decay, metal doors and latches rust and hinges break.

Drainage must be provided to prevent water from accumulating around hatchways and leaking inside the structure.

304.17 Guards for basement windows. Every *basement* window that is openable shall be supplied with rodent shields, storm windows or other *approved* protection against the entry of rodents.

❖ Basement windows are especially susceptible to the entry of the Norway rat, one of several rodents that frequently nest in the ground near structures. Ratproof shields, screens, storm windows or other protective materials must be installed on windows capable of being opened to eliminate their use as an entry point.

304.18 Building security. Doors, windows or hatchways for *dwelling units*, room units or *housekeeping units* shall be provided with devices designed to provide security for the *occupant*s and property within.

❖ This section establishes criteria for providing security for occupants of dwelling units, rooming units and housekeeping units that are rented, leased or let.

304.18.1 Doors. Doors providing access to a *dwelling unit*, *rooming unit* or *housekeeping unit* that is rented, leased or let shall be equipped with a deadbolt lock designed to be readily openable from the side from which egress is to be made without the need for keys, special knowledge or effort and shall have a minimum lock throw of 1 inch (25 mm). Such deadbolt locks shall be installed according to the manufacturer's specifications and maintained in good working order. For the purpose of this section, a sliding bolt shall not be considered an acceptable deadbolt lock.

❖ Everyone has a right to feel safe in their own dwelling; therefore, the installation of locking hardware to secure entry doorways is essential. When installed for security purposes, however, locks and latches can intentionally prohibit the use of an egress door and thus interfere with or prevent the egress of occupants at the time of an emergency, such as a fire. The ability of occupants to easily egress a building in case of a fire or emergency situation is a primary concern to help prevent the loss of human life. Examples of special knowledge would be a combination lock or an unlocking device in an unknown, unexpected or hidden location. Special effort would require unusual and unexpected physical ability to unlock or make the door fully available for egress.

304.18.2 Windows. Operable windows located in whole or in part within 6 feet (1828 mm) above ground level or a walking surface below that provide access to a *dwelling unit*, *rooming*

INTERNATIONAL CODE COUNCIL®
Copyright © 2015 ICC. ALL RIGHTS RESERVED. Accessed by David Dammon on Jun 21, 2017 12:30:52 PM pursuant to License Agreement with ICC. No further reproduction or distribution authorized. ANY UNAUTHORIZED REPRODUCTION OR DISTRIBUTION IS A VIOLATION OF THE FEDERAL COPYRIGHT ACT AND THE LICENSE AGREEMENT, AND SUBJECT TO CIVIL AND CRIMINAL PENALTIES THEREUNDER.

unit or *housekeeping unit* that is rented, leased or let shall be equipped with a window sash locking device.

❖ In order to coordinate the provisions of the code with the U.S. Housing and Urban Development Department (HUD) housing quality standard requirements for rental properties, a height requirement of 6 feet (1827 mm) above the ground was established for windows. This could be considered a security concern, thus dictating the need for window locks.

304.18.3 Basement hatchways. *Basement* hatchways that provide access to a *dwelling unit*, *rooming unit* or *housekeeping unit* that is rented, leased or let shall be equipped with devices that secure the units from unauthorized entry.

❖ Windows to basements are equally problematic from a security point of view and, therefore, need to be equipped with locking devices to provide security for the units.

304.19 Gates. Exterior gates, gate assemblies, operator systems if provided, and hardware shall be maintained in good condition. Latches at all entrances shall tightly secure the gates.

❖ Similar to Section 304.15 addressing doors, all gate assemblies, operator systems and hardware must be maintained to perform their intended functions (i.e., open and close as intended). Malfunctioning or sticking latches that cannot secure the gate may also impede egress because of difficulty in operation or release. The phrase "operator systems if provided" draws attention to automated doors. Maintaining the proper performance of the operator systems, where present, further assures proper egress will be maintained.

SECTION 305
INTERIOR STRUCTURE

305.1 General. The interior of a structure and equipment therein shall be maintained in good repair, structurally sound and in a sanitary condition. *Occupants* shall keep that part of the structure that they occupy or control in a clean and sanitary condition. Every *owner* of a structure containing a *rooming house*, *housekeeping units*, a hotel, a dormitory, two or more *dwelling units* or two or more nonresidential occupancies, shall maintain, in a clean and sanitary condition, the shared or public areas of the structure and *exterior property*.

❖ The interior of a structure and its equipment must be maintained so as not to adversely affect the occupants' health and safety. A structure must protect occupants from the exterior environment.

305.1.1 Unsafe conditions. The following conditions shall be determined as unsafe and shall be repaired or replaced to comply with the *International Building Code* or the *International Existing Building Code* as required for existing buildings:

1. The nominal strength of any structural member is exceeded by nominal loads, the load effects or the required strength;
2. The anchorage of the floor or roof to walls or columns, and of walls and columns to foundations is not capable of resisting all nominal loads or load effects;
3. Structures or components thereof that have reached their limit state;
4. Structural members are incapable of supporting nominal loads and load effects;
5. Stairs, landings, balconies and all similar walking surfaces, including *guards* and handrails, are not structurally sound, not properly *anchored* or are *anchored* with connections not capable of supporting all nominal loads and resisting all load effects;
6. Foundation systems that are not firmly supported by footings are not plumb and free from open cracks and breaks, are not properly *anchored* or are not capable of supporting all nominal loads and resisting all load effects.

Exceptions:

1. Where substantiated otherwise by an *approved* method.
2. Demolition of unsafe conditions shall be permitted when *approved* by the *code official.*

❖ Section 305.1.1 describes unsafe conditions related to the interior of the structure, and thus details situations which can prompt the code official to require replacement or repair.

Item 1 indicates that if the strength of the structural member is exceeded by either the nominal loads or load effects, the condition is to be regarded as unsafe. Nominal strength and load effects, as defined by the IBC and Items 2–6 of this section, are when a structure or component is regarded as incapable of performing its intended function and thus becomes unsafe.

Item 2 deals with required strength of connections between structural members. More specifically, each connection must be able to resist nominal loads and load effects; otherwise, the building or affected portion thereof is to be regarded as unsafe. Anchorage of various elements of a structure is essential to its stability. When anchorage is not capable of transferring the intended loads, the structure or component is said to be unsafe.

Item 3 specifies that any condition beyond which a structure or member becomes unfit for service and is no longer useful for its intended function is considered to be unsafe. This includes its serviceability limit and strength limit state. "Limit state," as defined by the IBC, is a condition beyond which a structure or member becomes unfit for service and is no longer useful for its intended function (serviceability limit state) or to be unsafe (strength limit state). Any structure reaching this state is said to be unsafe.

Items 4 through 6: The interior of a building may contain other structural elements as well. These items, which include stairs, walking surfaces, handrails and guards, are specifically denoted as essential structural elements that must be preserved to allow for safe means of egress and protection.

INTERNATIONAL CODE COUNCIL®
Copyright © 2015 ICC. ALL RIGHTS RESERVED. Accessed by David Dammon on Jun 21, 2017 12:30:52 PM pursuant to License Agreement with ICC. No further reproduction or distribution authorized. ANY UNAUTHORIZED REPRODUCTION OR DISTRIBUTION IS A VIOLATION OF THE FEDERAL COPYRIGHT ACT AND THE LICENSE AGREEMENT, AND SUBJECT TO CIVIL AND CRIMINAL PENALTIES THEREUNDER.

Item 4 addresses structural members that have become unable to support the intended loads.

Item 5 addresses interior stairs, decks, porches, balconies and all similar elements that are portions of a means of egress system and as such represent a significant safety concern if left in an unsafe condition. Should any of these elements of a means of egress system become structurally unsound, the building or portions thereof may be regarded as unsafe.

Item 6 addresses foundation systems. Foundation systems are essential to the structural integrity of any building. If any portion of any foundation system is not supported by adequate soil, is not plumb as intended to distribute the loads, has cracks or breaks or is inadequately anchored, the building may be regarded as unsafe.

Exception 1 is to recognize that a qualified entity could substantiate an alternative method or material that meets the purpose and intent of the code. This alternative would need to be approved by the code official. An engineering study that substantiates the structural integrity in a rational analysis may be the basis for accepting a contention that the building is not unsafe.

Exception 2 allows a building owner the option of demolition of an unsafe condition subject to the code official's approval. If the building or structure or portion thereof is demolished, and does not exist, the condition is considered to be resolved.

305.2 Structural members. Structural members shall be maintained structurally sound, and be capable of supporting the imposed loads.

❖ Improper original construction, unapproved additions and repairs, water damage, deferred maintenance and overloading of structural members will result in structural damage and failure.

Common construction and repair defects include: undersized structural members that, over time, sag, crack and even collapse; inadequately fastened structural members that loosen and separate from each other; poor-quality construction materials; improperly installed or oversized notches and holes in structural members and poorly installed structural members.

Water is one of the most destructive elements to structures. Water damage most frequently occurs from roof leaks, plumbing leaks in bathrooms and kitchens, and water penetration into basements and crawl spaces. Unrepaired leaks can rot and decay structural members. Areas of concern include the bottom of columns, the outside ends of beams and joists, flooring under bathrooms and kitchens and the underside of roofs. Check all of these for evidence of water penetration and damage.

Deferred maintenance is a problem with all buildings. A structure begins to deteriorate the moment it is completed. Both outside and inside factors affect structures—water, sun and wind on the outside, and furniture, equipment and occupants on the inside. As equipment wears out or malfunctions, it needs to be repaired or replaced.

Structural members must be able to bear the loads imposed upon them. Commercial and industrial buildings present special concerns for the code official. To provide some level of confidence that a structure will safely withstand the anticipated loads, the code official may want to require the owner to provide evidence of the load-bearing capacity of the structure, as determined by a registered architect or engineer.

This information may be useful every time a structure changes occupancy. The code official cannot be sure structural changes have not occurred since the previous calculations were prepared.

305.3 Interior surfaces. Interior surfaces, including windows and doors, shall be maintained in good, clean and sanitary condition. Peeling, chipping, flaking or abraded paint shall be repaired, removed or covered. Cracked or loose plaster, decayed wood and other defective surface conditions shall be corrected.

❖ Interior surface damage is frequently the result of tenant abuse or water damage. Water damage results from leaking roofs, plumbing fixtures and water pipes, and also damaged or open windows and doors that permit rain to enter. Any damaged interior surfaces are required to be repaired and the cause of the damage must be corrected.

Interior surfaces that contain lead-based paint may present serious health hazards to occupants, especially children. Lead is a toxic heavy metal that enters the body by inhalation or ingestion of fine particulate. Lead affects many organs as well as the central nervous system, and is particularly toxic to young children because it retards brain and central nervous system development.

HUD estimates that three-quarters of the dwellings built before 1980 contain some lead-based paint. Because the amount of lead in paint was gradually reduced during the 30 years prior to its prohibition in general application in 1978 (lead-based paint is currently produced for specialized industrial applications), dwellings built before 1950 are more likely to contain lead-based paint and paint with higher concentrations of lead. HUD surveys show that 90 percent of dwellings built before 1940, 80 percent of dwellings built between 1940 and 1959 and 62 percent of dwellings built between 1960 and 1979 contain lead-based paint. Lead-based paint is often found under newer layers of paint that is not lead based.

Intact lead-based paint is not an immediate hazard because the predominant route of lead poisoning is through ingestion or inhalation of fine lead particulate found in contaminated dust. The risk of poisoning becomes significant when lead-based paint contaminates dust through peeling, chipping, flaking and abraded conditions identified in the code. Lead contamination may also be caused by lead-based paint that is disturbed during repair and remodeling activities such as scraping, sanding, drilling and cutting.

Lead hazard control is achieved by removing lead-contaminated dust and eliminating the source of contamination. The determination of the type of activities

INTERNATIONAL CODE COUNCIL®
Copyright © 2015 ICC. ALL RIGHTS RESERVED. Accessed by David Dammon on Jun 21, 2017 12:30:52 PM pursuant to License Agreement with ICC. No further reproduction or distribution authorized. ANY UNAUTHORIZED REPRODUCTION OR DISTRIBUTION IS A VIOLATION OF THE FEDERAL COPYRIGHT ACT AND THE LICENSE AGREEMENT, AND SUBJECT TO CIVIL AND CRIMINAL PENALTIES THEREUNDER.

(abatement, interim controls or repair) needed to correct hazardous conditions depends on the extent of paint deterioration and the occupancy. More protective measures should be taken if children under 6 years of age are likely to occupy the building because they are more sensitive to lead contamination. All activities that disturb lead-based paint can generate significant lead hazards. Precautions should be initiated to protect workers, occupants and the environment. Precautions include selection of procedures that minimize the creation of dust [such as wet sanding, wet scraping, power tools with high-efficiency particulate air (HEPA) filtered vacuum attachments and heat guns less than 1,100°F (593°C)]; containment of dust and debris; covering and securing horizontal surfaces, occupants' furniture and fixtures (if exterior work, the ground and plants) with polyethylene to prevent contamination; thorough cleaning with HEPA-filtered vacuum and detergent; and clearance testing to prove lead concentrations are below hazardous levels before occupancy.

Federal regulations recognize two levels of lead-specific hazard control measures—abatement and interim controls. Abatement is defined as measures designed to last more than 20 years, while less durable measures are considered interim controls. Environmental Protection Agency (EPA) regulations or state regulations approved by the EPA require workers and supervisors to be trained and certified to undertake activities specifically intended to abate or control lead-based paint hazards. The same activities that are undertaken as specific lead abatement or interim controls (demolition, paint removal, door or window replacement, etc.) may be undertaken by non-certified workers and supervisors if they are a part of general repair and remodeling activities.

More detailed information on lead hazard evaluation and control is available from state and local agencies, the National Lead Information Center (800-424-5323) sponsored by the EPA and the HUD Office of Lead Hazard Control. The code official can help protect public health and safety by coordinating code enforcement with enforcement of lead regulations and providing lead hazard awareness and hazard control information to contractors and property owners.

305.4 Stairs and walking surfaces. Every stair, ramp, landing, balcony, porch, deck or other walking surface shall be maintained in sound condition and good repair.

❖ Handrails, treads and risers must be structurally sound, firmly attached to the structure and properly maintained to safely perform their intended functions. All parts of a stair also should be inspected, including stringers, risers, treads, balusters, guards and handrails, and also all walking surfaces such as floors, landings, decks or ramps.

305.5 Handrails and guards. Every handrail and *guard* shall be firmly fastened and capable of supporting normally imposed loads and shall be maintained in good condition.

❖ This section provides for the safety and maintenance of handrails and guards. Although not mandated, loads for handrails and guards in the applicable building code can be considered the normally imposed loads.

305.6 Interior doors. Every interior door shall fit reasonably well within its frame and shall be capable of being opened and closed by being properly and securely attached to jambs, headers or tracks as intended by the manufacturer of the attachment hardware.

❖ The ability of a door to function as the manufacturer intended is one of the key elements in being able to properly exit a building. In addition to contributing to building egress, doors are also key elements in providing for security and privacy; therefore, all interior doors should be kept in a state of repair that will allow them to function effectively.

SECTION 306
COMPONENT SERVICEABILITY

306.1 General. The components of a structure and equipment therein shall be maintained in good repair, structurally sound and in a sanitary condition.

❖ Section 306.1 contains a general provision for components and equipment related to a structure to be maintained in sound and sanitary condition, which is the spirit and intent of this code.

306.1.1 Unsafe conditions. Where any of the following conditions cause the component or system to be beyond its limit state, the component or system shall be determined as unsafe and shall be repaired or replaced to comply with the *International Building Code* or the *International Existing Building Code* as required for existing buildings:

1. Soils that have been subjected to any of the following conditions:
   1.1. Collapse of footing or foundation system;
   1.2. Damage to footing, foundation, concrete or other structural element due to soil expansion;
   1.3. Adverse effects to the design strength of footing, foundation, concrete or other structural element due to a chemical reaction from the soil;
   1.4. Inadequate soil as determined by a geotechnical investigation;
   1.5. Where the allowable bearing capacity of the soil is in doubt; or
   1.6. Adverse effects to the footing, foundation, concrete or other structural element due to the ground water table.
2. Concrete that has been subjected to any of the following conditions:
   2.1. *Deterioration*;
   2.2. *Ultimate deformation*;
   2.3. Fractures;
   2.4. Fissures;
   2.5. Spalling;

INTERNATIONAL CODE COUNCIL®
Copyright © 2015 ICC. ALL RIGHTS RESERVED. Accessed by David Dammon on Jun 21, 2017 12:30:52 PM pursuant to License Agreement with ICC. No further reproduction or distribution authorized. ANY UNAUTHORIZED REPRODUCTION OR DISTRIBUTION IS A VIOLATION OF THE FEDERAL COPYRIGHT ACT AND THE LICENSE AGREEMENT, AND SUBJECT TO CIVIL AND CRIMINAL PENALTIES THEREUNDER.

2.6. Exposed reinforcement; or

2.7. *Detached,* dislodged or failing connections.

3. Aluminum that has been subjected to any of the following conditions:

3.1. *Deterioration*;

3.2. Corrosion;

3.3. Elastic deformation;

3.4. *Ultimate deformation*;

3.5. Stress or strain cracks;

3.6. Joint fatigue; or

3.7. *Detached,* dislodged or failing connections.

4. Masonry that has been subjected to any of the following conditions:

4.1. *Deterioration;*

4.2. *Ultimate deformation;*

4.3. Fractures in masonry or mortar joints;

4.4. Fissures in masonry or mortar joints;

4.5. Spalling;

4.6. Exposed reinforcement; or

4.7. *Detached,* dislodged or failing connections.

5. Steel that has been subjected to any of the following conditions:

5.1. *Deterioration;*

5.2. Elastic deformation;

5.3. *Ultimate deformation;*

5.4. Metal fatigue; or

5.5. *Detached,* dislodged or failing connections.

6. Wood that has been subjected to any of the following conditions:

6.1. *Ultimate deformation;*

6.2. *Deterioration;*

6.3. Damage from insects, rodents and other vermin;

6.4. Fire damage beyond charring;

6.5. Significant splits and checks;

6.6. Horizontal shear cracks;

6.7. Vertical shear cracks;

6.8. Inadequate support;

6.9. *Detached,* dislodged or failing connections; or

6.10. Excessive cutting and notching.

Exceptions:

1. Where substantiated otherwise by an *approved* method.
2. Demolition of unsafe conditions shall be permitted where *approved* by the *code official.*

❖ In order to analyze all of the elements of a building, this section ensures that each component of a building must meet its intended purpose or the building (or portion thereof) can be regarded as unsafe. This provision specifies that each material (such as soil, concrete, masonry, wood, steel, etc.) used to create a building or structure must continue to be viable.

Item 1 delineates some conditions of soil or foundation stability that denote unsafe conditions. Any of these allow the code official to determine that an unsafe condition exists.

Items 2 through 6 delineate some conditions that, if present in structural elements, are sufficient to determine that an unsafe condition exists.

SECTION 307
HANDRAILS AND GUARDRAILS

307.1 General. Every exterior and interior flight of stairs having more than four risers shall have a handrail on one side of the stair and every open portion of a stair, landing, balcony, porch, deck, ramp or other walking surface that is more than 30 inches (762 mm) above the floor or grade below shall have *guards.* Handrails shall be not less than 30 inches (762 mm) in height or more than 42 inches (1067 mm) in height measured vertically above the nosing of the tread or above the finished floor of the landing or walking surfaces. *Guards* shall be not less than 30 inches (762 mm) in height above the floor of the landing, balcony, porch, deck, or ramp or other walking surface.

Exception: *Guards* shall not be required where exempted by the adopted building code.

❖ Note that this section does not discuss maintenance requirements for handrails and guards. It contains requirements for handrail and guard installations at specific locations in all existing buildings. If these locations are present at an existing building, then the minimum handrail and guard requirements are mandated. Handrails are required on at least one side of all means of egress stairs more than four risers in height. Handrails can neither be less than 30 inches (762 mm) nor more than 42 inches (1067 mm) above the nosing of the tread (see Commentary Figure 307.1).

Guards are required on the open side of all uneven walking surfaces greater than 30 inches (762 mm) in height that include stairs, landings, balconies, porches, decks or ramps. The guard must be at least 30 inches (762 mm) above the floor in all cases. Guards are to contain intermediate rails, balusters or other construction to reduce the chance of an adult or child from falling through the guard. If the guard is missing some intermediate rails or balustrades, it is recommended that it be repaired to its original condition if it will provide protection equivalent to that when originally constructed.

The exception refers to the building code currently adopted by the jurisdiction. If the current adopted building code would not require a guard for a particular location in a new building, then a guard would not be required in accordance with this exception.

INTERNATIONAL CODE COUNCIL®
Copyright © 2015 ICC. ALL RIGHTS RESERVED. Accessed by David Dammon on Jun 21, 2017 12:30:52 PM pursuant to License Agreement with ICC. No further reproduction or distribution authorized. ANY UNAUTHORIZED REPRODUCTION OR DISTRIBUTION IS A VIOLATION OF THE FEDERAL COPYRIGHT ACT AND THE LICENSE AGREEMENT, AND SUBJECT TO CIVIL AND CRIMINAL PENALTIES THEREUNDER.

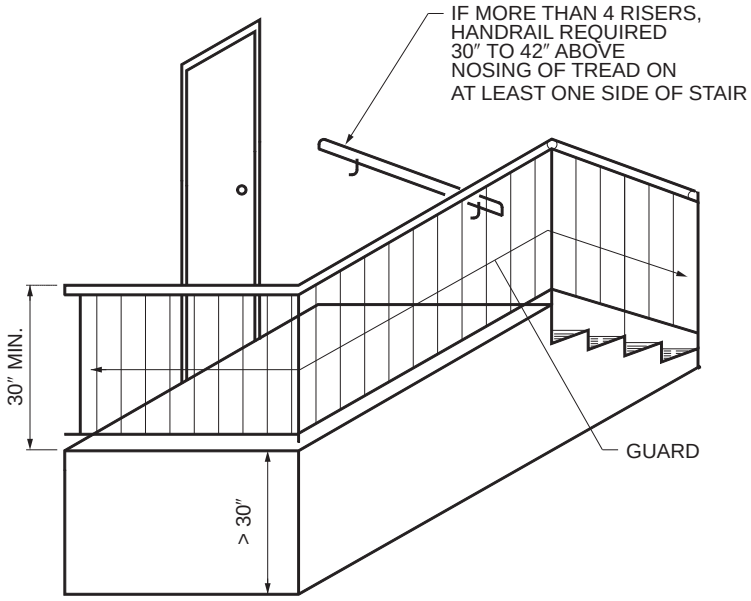

For SI: 1 inch = 25.4 mm.

Figure 307.1
HANDRAILS AND GUARDS

SECTION 308
RUBBISH AND GARBAGE

308.1 Accumulation of rubbish or garbage. *Exterior property* and *premises*, and the interior of every structure, shall be free from any accumulation of *rubbish* or garbage.

❖ Insanitary houses are found in almost every community. The code official may frequently find conditions where occupants fail to properly store and remove their garbage and refuse. Occasionally, the conditions may be so bad that he or she must condemn the structure as unfit for human occupancy in accordance with Section 108.1.3. Emotional, physical and mental problems may be contributing factors. The code official may have to work with health officials, social workers, child protection workers and a host of other social service agencies to obtain a solution to the problem.

Improperly stored garbage and rubbish in public halls and stairways may result in insect and rodent infestations, trip hazards and accidental fires. More importantly, improper storage creates a hazard when the exit must be used in an emergency, such as a fire.

308.2 Disposal of rubbish. Every *occupant* of a structure shall dispose of all *rubbish* in a clean and sanitary manner by placing such *rubbish* in *approved* containers.

❖ Rubbish includes all waste materials except garbage. Occupants are responsible for disposing of their own rubbish in proper containers. Three frequent causes for improper rubbish disposal are:

- The occupants are careless—rubbish is stacked and stored in a haphazard fashion.
- Insufficient containers are provided to handle rubbish.
- The rubbish is not being picked up frequently enough to eliminate the volume being created.

The code official should work with occupants and owners to determine the cause of the problem and then order the owners or occupants to take the appropriate action to resolve it.

308.2.1 Rubbish storage facilities. The *owner* of every occupied *premises* shall supply *approved* covered containers for *rubbish*, and the *owner* of the *premises* shall be responsible for the removal of *rubbish*.

❖ The owner is responsible for the removal of all rubbish. This provision is helpful as an enforcement tool. It eliminates confusion as to whether the tenant, the operator or the owner is responsible.

308.2.2 Refrigerators. Refrigerators and similar equipment not in operation shall not be discarded, abandoned or stored on *premises* without first removing the doors.

❖ Discarded refrigerators pose an attractive nuisance to children. Children often climb into the refrigerator and close the door afterward to create a hiding place. Due to the risk of suffocation from being trapped in the refrigerator, the doors must be removed before it is considered safe to keep it during periods of storage or to properly dispose of the unit.

308.3 Disposal of garbage. Every *occupant* of a structure shall dispose of garbage in a clean and sanitary manner by placing such garbage in an *approved* garbage disposal facility or *approved* garbage containers.

❖ Garbage is the animal and vegetable waste created from the preparation and consumption of food. Occupants are responsible for properly disposing of their garbage by either using a garbage disposal (if avail-

INTERNATIONAL CODE COUNCIL®
Copyright © 2015 ICC. ALL RIGHTS RESERVED. Accessed by David Dammon on Jun 21, 2017 12:30:52 PM pursuant to License Agreement with ICC. No further reproduction or distribution authorized. ANY UNAUTHORIZED REPRODUCTION OR DISTRIBUTION IS A VIOLATION OF THE FEDERAL COPYRIGHT ACT AND THE LICENSE AGREEMENT, AND SUBJECT TO CIVIL AND CRIMINAL PENALTIES THEREUNDER.

able) or by placing the waste in approved garbage storage containers.

Improper disposal of garbage can attract rodents, insects, animals and vermin, produce noxious odors and create potential health problems. Similar to rubbish disposal, garbage disposal problems can be the result of:

- Careless disposal (not properly wrapped or stored) by the occupants.
- Insufficient containers to handle the regular amount of garbage.
- Garbage not being picked up frequently enough.
- The mechanical garbage disposal not operating.

The health consequences to the occupants and the neighborhood are probably more severe with garbage than rubbish; therefore, the code official must promptly order the correction of this problem and require an ongoing program of garbage disposal.

308.3.1 Garbage facilities. The *owner* of every dwelling shall supply one of the following: an *approved* mechanical food waste grinder in each *dwelling unit;* an *approved* incinerator unit in the structure available to the *occupants* in each *dwelling unit;* or an *approved* leakproof, covered, outside garbage container.

❖ The owner of any dwelling must provide a mechanical garbage disposal, an approved incinerator or enough containers to hold all garbage produced.

The storage of garbage in plastic bags is not allowed. Animals, rodents and vermin can easily open such bags and spread the garbage stored in them. Garbage containers are to be placed outside of the dwelling unit and be constructed of material that is resistant to animals and rodents. The garbage containers are to be covered with lids.

308.3.2 Containers. The *operator* of every establishment producing garbage shall provide, and at all times cause to be utilized, *approved* leakproof containers provided with close-fitting covers for the storage of such materials until removed from the *premises* for disposal.

❖ The operators of restaurants and similar establishments that produce garbage are required to provide sufficient numbers of containers to store the garbage properly until such time that it is removed from the premises.

Improper storage of animal and vegetable wastes produces noxious odors and permits rodents and other vermin access to the garbage. It also creates potential health problems.

SECTION 309
PEST ELIMINATION

309.1 Infestation. Structures shall be kept free from insect and rodent *infestation.* Structures in which insects or rodents are found shall be promptly exterminated by *approved* processes that will not be injurious to human health. After pest elimination, proper precautions shall be taken to prevent reinfestation.

❖ There are two basic types of insect infestations: nuisance and wood destroying. Nuisance insects include flies, fleas, bees, cockroaches and silverfish. Wood-destroying insects include termites, powder-post beetles and carpenter ants.

Nuisance insects are usually found near food sources and in damp areas.

Wood-destroying insects are sometimes difficult to find. The code official or a professional exterminator may probe wood members for evidence of infestation. Concrete in contact with the soil should be visually checked for evidence of termite tubes leading from the soil to wood members. Wood infested with powder-post beetles frequently has the appearance of having been penetrated by shotgun pellets. A large powder-post beetle infestation leaves many small holes in the wood. Additionally, active beetles leave a fine wood powder called “frass” on the wood.

Eliminating nuisance insects may require treating the building with insect spray on a regular basis. Eliminating wood-destroying insects may require poisoning the soil around the building. Severe insect infestations may necessitate replacement of structural members.

Evidence of a rodent infestation can include droppings, gnaw marks and oily rub stains (imprints left where the rodent’s body rubbed against the structure). Such infestations should be ordered exterminated. Additionally, corrective measures must be taken to reduce the possibility of a reinfestation.

309.2 Owner. The *owner* of any structure shall be responsible for pest elimination within the structure prior to renting or leasing the structure.

❖ The owner must eliminate all rodents and insects before a building or portion of a building can be rented or leased. Although it would appear easy to enforce this provision, the reality is that a new occupant may not notice any insect or rodent problems until after the building has been occupied. It may be difficult and even impossible to determine if an infestation existed before the new occupants moved in. One practical way to resolve this problem is to require the owner to have the building inspected for infestations before occupancy.

309.3 Single occupant. The *occupant* of a one-family dwelling or of a single-*tenant* nonresidential structure shall be responsible for pest elimination on the *premises.*

❖ In a single-family dwelling or a single-tenant nonresidential unit, the occupant of the unit—not the owner—is responsible for maintaining the property free of infestation. Accordingly, the code official should cite the occupant for rodent or insect infestations.

309.4 Multiple occupancy. The *owner* of a structure containing two or more *dwelling unit*s, a multiple *occupancy,* a *rooming house* or a nonresidential structure shall be responsible for pest elimination in the public or shared areas of the

INTERNATIONAL CODE COUNCIL®
Copyright © 2015 ICC. ALL RIGHTS RESERVED. Accessed by David Dammon on Jun 21, 2017 12:30:52 PM pursuant to License Agreement with ICC. No further reproduction or distribution authorized. ANY UNAUTHORIZED REPRODUCTION OR DISTRIBUTION IS A VIOLATION OF THE FEDERAL COPYRIGHT ACT AND THE LICENSE AGREEMENT, AND SUBJECT TO CIVIL AND CRIMINAL PENALTIES THEREUNDER.

structure and *exterior property*. If *infestation* is caused by failure of an *occupant* to prevent such *infestation* in the area occupied, the *occupant* and *owner* shall be responsible for pest elimination.

❖ The owners of public or shared areas in multiunit residential and nonresidential buildings must eliminate rodents and insects from the public or shared areas of the structure and exterior property. If a single unit in one of these buildings is infested, it is the owner and occupant's responsibility to provide for the extermination.

309.5 Occupant. The *occupant* of any structure shall be responsible for the continued rodent and pest-free condition of the structure.

Exception: Where the *infestations* are caused by defects in the structure, the *owner* shall be responsible for pest elimination.

❖ Occupants must maintain their units in a clean and sanitary manner, free of rodents. If the occupants fail to maintain their unit, then they are responsible for all pest elimination costs.

From a practical point of view, this section is difficult to enforce. Occupants who are going to be charged pest elimination fees may move out before paying such a fee. Unfortunately, once the unit is vacant the owner becomes responsible for the pest elimination. Because the owner is responsible for correcting any defects in the structure (see Section 301.2), he or she is then responsible for any infestation caused by these defects.

Bibliography

The following resource materials were used in the preparation of the commentary for this chapter of the code:

IBC-2015, *International Building Code*. Washington, D.C.: International Code Council, 2014.

IRC-2015, *International Residential Code*. Washington, D.C.: International Code Council, 2014.

INTERNATIONAL CODE COUNCIL®

Copyright © 2015 ICC. ALL RIGHTS RESERVED. Accessed by David Dammon on Jun 21, 2017 12:30:52 PM pursuant to License Agreement with ICC. No further reproduction or distribution authorized. ANY UNAUTHORIZED REPRODUCTION OR DISTRIBUTION IS A VIOLATION OF THE FEDERAL COPYRIGHT ACT AND THE LICENSE AGREEMENT, AND SUBJECT TO CIVIL AND CRIMINAL PENALTIES THEREUNDER.

Chapter 4:
Light, Ventilation and Occupancy Limitations

General Comments

Chapter 4 establishes the minimum criteria for light and ventilation and identifies occupancy limitations.

Section 401 outlines the scope of Chapter 4 (i.e., minimum light, ventilation and space requirements). This section also establishes who is responsible for complying with the provisions of the chapter, permits alternative arrangements of windows and other devices to comply with the requirements for light and ventilation and prohibits certain room arrangements and occupancy uses.

Requirements for light, ventilation and space have not always been incorporated in construction and occupancy codes. In the United States, one of the first attempts to establish criteria for light and ventilation occurred with the passage of the 1867 Tenement Housing Act in New York City. A principal feature of the act required sleeping rooms to communicate directly with external air, or to have a ventilating window or transom connected to a neighboring room or hall.

In 1879, New York City passed a second Tenement Housing Act, which expanded the light and ventilation requirements of the 1867 law by mandating that windows have an opening of at least 12 square feet (1.1 m^2) in every room. Finally, New York City passed the Tenement Housing Act of 1901, which required owners to provide additional lighting and ventilation to all tenements. Many other provisions also contributed to the health, safety and welfare of the occupants.

Light, ventilation and space requirements relate to basic human needs. In its Basic Principles of Healthful Housing, the Committee on the Hygiene of Housing of the American Public Health Association (APHA) established several principles regarding the relationship of housing to health. These basic principles include several that relate specifically to the need for adequate light, ventilation and space, including physiological needs, psychological needs and protection against disease and accidents:

Fundamental physiological needs:

- An atmosphere of reasonable chemical purity (proper ventilation removes chemicals from the home and work environment).
- Adequate daylight illumination and avoidance of undue daylight glare.
- Direct sunlight (the sun's rays assist in killing germs).
- Adequate artificial illumination and avoidance of glare.
- Adequate space for exercise and for the play of children.

Fundamental psychological needs:

- Adequate privacy for the individual.
- Facilities that make possible the performance of household tasks without undue physical and mental fatigue (adequate space and sufficient ceiling heights reduce physical and mental fatigue).
- Protection against contagion.
- Sufficient space in sleeping rooms to minimize the danger of contact infection.

Protection against accidents:

- Adequate facilities for escape in case of fire.

Protection against overcrowding:

- Population controls can maintain neighborhood density, which can avoid overtaxing public facilities such as parks and schools, and avoid accelerated wear of dwellings.

Habitable rooms require adequate light to assist occupants in providing for proper cleanliness and sanitation, and to reduce trip hazards. Well-lighted rooms have a positive impact on mental health, while dark, dingy rooms can have the opposite effect.

Ventilation is defined as "the natural or mechanical process of supplying conditioned or unconditioned air to, or removing such air from, any space." Ventilating air into a space serves three functions:

- Combustion and makeup air for fuel-burning appliances is provided.
- Air being exhausted from the building through mechanical or natural means is replaced.
- Air movement within the structure is enhanced.

Ventilation air exhausting from a structure also serves three functions:

- Excess moisture is eliminated.
- Unpleasant odors, toxic fumes, dirt, dust and other particulate matter are removed.
- Air movement within the structure is enhanced.

Oversized or improperly installed mechanical ventilation can cause fuel-burning appliances to backdraft into the structure and may cause toxic materials to be exhausted into inappropriate locations.

Adequate space provides for the physical and mental health of occupants. Crowded conditions have a negative impact on occupants by preventing easy movement

INTERNATIONAL CODE COUNCIL®
Copyright © 2015 ICC. ALL RIGHTS RESERVED. Accessed by David Dammon on Jun 21, 2017 12:30:52 PM pursuant to License Agreement with ICC. No further reproduction or distribution authorized. ANY UNAUTHORIZED REPRODUCTION OR DISTRIBUTION IS A VIOLATION OF THE FEDERAL COPYRIGHT ACT AND THE LICENSE AGREEMENT, AND SUBJECT TO CIVIL AND CRIMINAL PENALTIES THEREUNDER.

throughout the dwelling. Crowded conditions may also lead to accidents and injuries. Additionally, occupants are subjected to an increase in the spread of disease and germs through sneezing and coughing.

Overcrowding may also have a negative effect on mental health.

Purpose

Minimum light, ventilation and space requirements are based on the physiological and psychological impact of these factors on building occupants. The purpose of Chapter 4 is to set forth these requirements in the code and to establish the minimum environment for occupiable and habitable buildings.

SECTION 401
GENERAL

401.1 Scope. The provisions of this chapter shall govern the minimum conditions and standards for light, *ventilation* and space for occupying a structure.

❖ Buildings must comply with minimum criteria and conditions for light, ventilation and space. Specific requirements are outlined in this chapter.

401.2 Responsibility. The *owner* of the structure shall provide and maintain light, *ventilation* and space conditions in compliance with these requirements. A person shall not occupy as *owner-occupant*, or permit another person to occupy, any *premises* that do not comply with the requirements of this chapter.

❖ The owner is responsible for complying with all light, ventilation and space requirements established in this chapter. A noncomplying structure cannot be occupied until it is brought into compliance with the criteria.

401.3 Alternative devices. In lieu of the means for natural light and *ventilation* herein prescribed, artificial light or mechanical *ventilation* complying with the *International Building Code* shall be permitted.

❖ Light and ventilation by artificial methods are permitted, such as electric lighting instead of natural light and mechanical ventilation instead of natural ventilation. Electric lighting is permitted to replace the natural light requirements of Section 402. Mechanical ventilation is permitted to replace the natural ventilation requirements of Section 403. Any alternative method approved by the code official must also comply with the installation and performance requirements of the building code.

SECTION 402
LIGHT

402.1 Habitable spaces. Every *habitable space* shall have not less than one window of *approved* size facing directly to the outdoors or to a court. The minimum total glazed area for every *habitable space* shall be 8 percent of the floor area of such room. Wherever walls or other portions of a structure face a window of any room and such obstructions are located less than 3 feet (914 mm) from the window and extend to a level above that of the ceiling of the room, such window shall not be deemed to face directly to the outdoors nor to a court and shall not be included as contributing to the required minimum total window area for the room.

Exception: Where natural light for rooms or spaces without exterior glazing areas is provided through an adjoining room, the unobstructed opening to the adjoining room shall be not less than 8 percent of the floor area of the interior room or space, but a minimum of 25 square feet (2.33 m^2). The exterior glazing area shall be based on the total floor area being served.

❖ "Habitable space" is defined in Chapter 2. Habitable spaces are those spaces that are normally considered "inhabited" in the course of residential living and provide the four basic characteristics of living, sleeping, eating and cooking. Other spaces, such as halls or utility rooms, are not considered habitable, but would in many instances be considered occupiable.

As stated in Section 401.3, the natural lighting requirements of this section are not required if artificial light is provided. Electric lighting is almost always provided. Where electric lighting is provided instead of natural lighting, the code official must rely on a light meter to assess whether the illumination provided meets the criteria in the referenced building code.

All habitable spaces must have one or more windows and the total glazed area must equal at least 8 percent of the floor area of the room served [see Commentary Figure 402.1(1)].

Windows must face directly to the outdoors or to a court. Any window that faces a wall or other obstruction that is less than 3 feet (914 mm) from the window and higher than the ceiling of the room cannot be included in calculating the minimum total window area needed for the room it serves [see Commentary Figure 402.1(2)].

The exception addresses a case where a space (or room) has no glazed area open to the required courts or yards but is adjacent to one that does. The internal room may "borrow" natural lighting from the adjacent space if the opening in the wall between the two spaces is at least 8 percent of the floor area of the interior room but not less than 25 square feet (2.3 m^2). The required glazed area facing the required court or yard is to be based on the total floor area of all rooms served [see Commentary Figure 402.1(3)].

In Commentary Figure 402.1(3), the glazed area opening onto a court or yard in the space provided with the openings must be greater than 8 percent of the total floor areas served; therefore, in Commentary Figure 402.1(3), the glazed area in Space B is required to be equal to or greater than 0.08 (floor area of Space A + floor area of Space B).

INTERNATIONAL CODE COUNCIL®
Copyright © 2015 ICC. ALL RIGHTS RESERVED. Accessed by David Dammon on Jun 21, 2017 12:30:52 PM pursuant to License Agreement with ICC. No further reproduction or distribution authorized. ANY UNAUTHORIZED REPRODUCTION OR DISTRIBUTION IS A VIOLATION OF THE FEDERAL COPYRIGHT ACT AND THE LICENSE AGREEMENT, AND SUBJECT TO CIVIL AND CRIMINAL PENALTIES THEREUNDER.

The next step is to require the opening between the adjacent spaces to be a minimum of 25 square feet (2.3 m^2), but not less than 0.08 multiplied by the floor area of Space A.

402.2 Common halls and stairways. Every common hall and stairway in residential occupancies, other than in one- and two-family dwellings, shall be lighted at all times with not less than a 60-watt standard incandescent light bulb for each 200 square feet (19 m^2) of floor area or equivalent illumination, provided that the spacing between lights shall not be greater than 30 feet (9144 mm). In other than residential occupancies, means of egress, including exterior means of egress, stairways shall be illuminated at all times the building space served by the means of egress is occupied with not less than 1 footcandle (11 lux) at floors, landings and treads.

❖ The intent of this section is to establish a minimum level of lighting in common halls and stairs of residential occupancies, such as apartment buildings. Adequate lighting in hallways and stairs is essential for safe exiting in a fire emergency, reduces the chance of injury due to falls during normal use and helps deter crime.

This section contains a prescriptive requirement [60-watt lightbulbs for every 200 square feet (19 m^2)] for ease of application and enforcement (see Commentary Figure 402.2). It assumes a typical ceiling height of no more than 10 feet (3048 mm). Equivalent illumination by means other than 60-watt incandescent bulbs is explicitly permitted, and the code official would establish equivalency by judgment or by actually measuring with a light meter. This lighting is required to be provided at all times, since residential buildings are typically occupied at all times.

In all occupancy groups other than residential, a lower, minimum level of lighting [1 footcandle (11 lux)] is required at all times when the building is occupied. The [1 footcandle (11 lux)] threshold is consistent with the *International Fire Code*® (IFC®) and the *International Building Code*® (IBC®) for acceptable lighting in means of egress components.

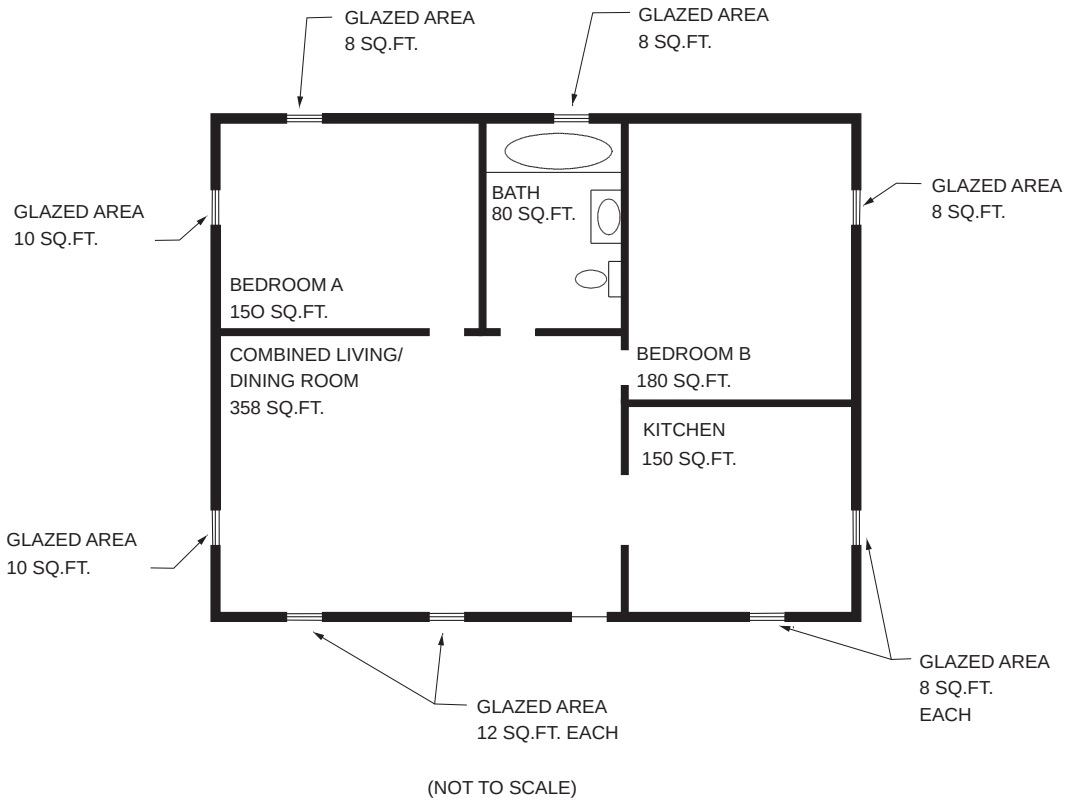

(NOT TO SCALE)

IN THE ABOVE EXAMPLE, ALL ROOMS EXCEPT BEDROOM B HAVE SUFFICIENT WINDOW AREA EQUAL TO AT LEAST 8 PERCENT OF THE ROOMS' FLOOR AREA. BEDROOM B IS 180 SQ.FT. IN AREA, BUT THE WINDOW IS ONLY 8 SQ.FT. BEDROOM B REQUIRES A MINIMUM WINDOW AREA OF 14.4 SQ.FT.; THEREFORE, EITHER ANOTHER WINDOW MUST BE INSTALLED OR THE EXISTING WINDOW MUST BE REPLACED WITH A LARGER WINDOW.

For SI: 1 square foot = 0.0929 m^2.

Figure 402.1(1)
DETERMINATION OF MINIMUM GLAZED AREA

INTERNATIONAL CODE COUNCIL®
Copyright © 2015 ICC. ALL RIGHTS RESERVED. Accessed by David Dammon on Jun 21, 2017 12:30:52 PM pursuant to License Agreement with ICC. No further reproduction or distribution authorized. ANY UNAUTHORIZED REPRODUCTION OR DISTRIBUTION IS A VIOLATION OF THE FEDERAL COPYRIGHT ACT AND THE LICENSE AGREEMENT, AND SUBJECT TO CIVIL AND CRIMINAL PENALTIES THEREUNDER.

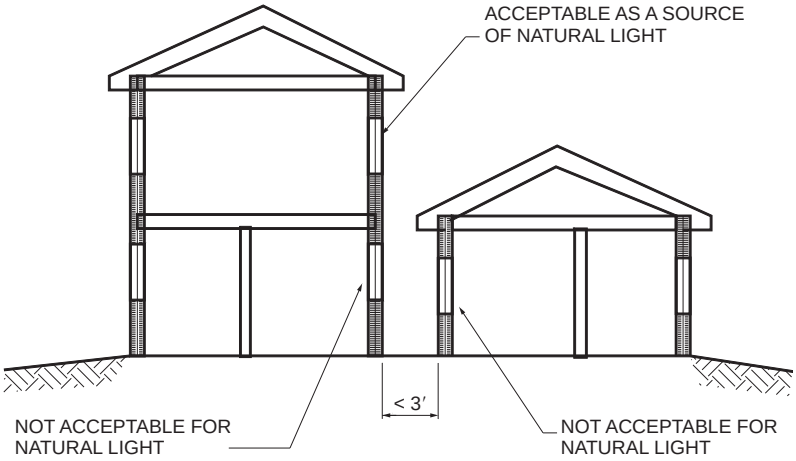

IN THE DIAGRAM ABOVE, THE FIRST-FLOOR WINDOWS FACING EACH OTHER ARE NOT ACCEPTABLE FOR PROVIDING NATURAL LIGHT TO THEIR ROOMS. THE WINDOWS MUST FACE AN OPEN SPACE AT LEAST 3 FEET AWAY FROM THE WINDOW. OTHER METHODS OF ACCOMMODATING NATURAL LIGHT REQUIREMENTS MUST BE CONSIDERED. PERHAPS AN INTERIOR WALL CAN BE REMOVED TO COMBINE TWO ROOMS OR A WINDOW MAY BE RELOCATED TO ANOTHER LOCATION THAT PROVIDES UNOBSTRUCTED LIGHT.

For SI: 1 foot = 304.8 mm.

Figure 402.1(2)
DETERMINATION OF NATURAL LIGHT SOURCES

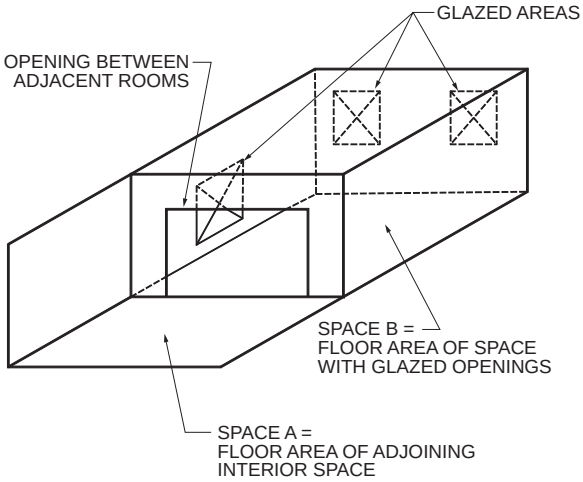

Figure 402.1(3)
NATURAL LIGHT FROM ADJACENT SPACE

402.3 Other spaces. All other spaces shall be provided with natural or artificial light sufficient to permit the maintenance of sanitary conditions, and the safe *occupancy* of the space and utilization of the appliances, equipment and fixtures.

❖ No specific criteria for minimum light and ventilation are established for other spaces, such as storage and utility rooms, closets and mud rooms. All spaces, however, must have enough light to maintain their cleanliness and to allow for the safe use of appliances, equipment and fixtures located within them.

INTERNATIONAL CODE COUNCIL®
Copyright © 2015 ICC. ALL RIGHTS RESERVED. Accessed by David Dammon on Jun 21, 2017 12:30:52 PM pursuant to License Agreement with ICC. No further reproduction or distribution authorized. ANY UNAUTHORIZED REPRODUCTION OR DISTRIBUTION IS A VIOLATION OF THE FEDERAL COPYRIGHT ACT AND THE LICENSE AGREEMENT, AND SUBJECT TO CIVIL AND CRIMINAL PENALTIES THEREUNDER.

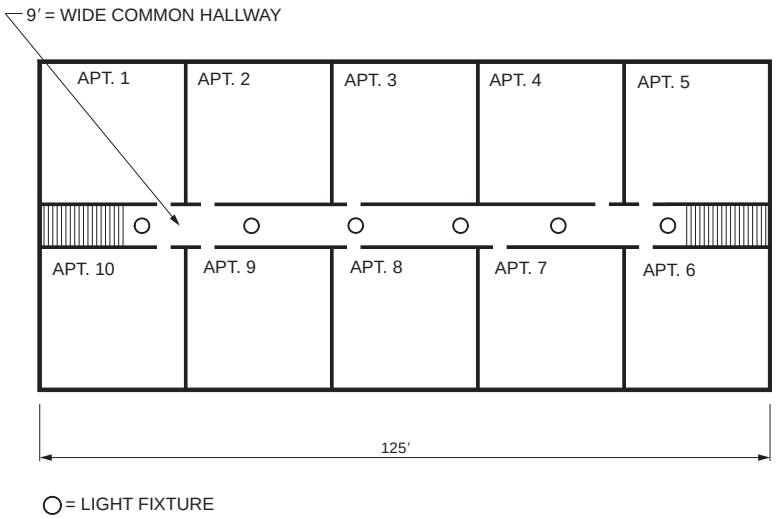

For SI: 1 foot = 304.8 mm, 1 square foot = 0.0929 m^2.

Figure 402.2
COMMON HALLWAY LIGHTING

SECTION 403
VENTILATION

403.1 Habitable spaces. Every *habitable space* shall have not less than one openable window. The total openable area of the window in every room shall be equal to not less than 45 percent of the minimum glazed area required in Section 402.1.

Exception: Where rooms and spaces without openings to the outdoors are ventilated through an adjoining room, the unobstructed opening to the adjoining room shall be not less than 8 percent of the floor area of the interior room or space, but not less than 25 square feet (2.33 m^2). The *ventilation* openings to the outdoors shall be based on a total floor area being ventilated.

❖ As stated in Section 401.3, mechanical ventilation is an acceptable alternative to the natural ventilation requirements in this section. Most detached single-family dwellings utilize natural ventilation. Every habitable room (see the definition of "Habitable space" in Chapter 2) must have one window that can be easily opened to provide natural ventilation. In order to supply adequate natural ventilation, workable windows must be capable of opening to at least 45 percent of the minimum glazed area required for natural light, as established in Section 403.1 (see the definition of "Openable area" in Chapter 2). The openable area should be measured when the window or door is in its full, open position. When determining openable area, only the space between stops or between stops and sash is to be measured. The area of sashes, meeting rails, mullions and muntins is to be deducted (see Commentary Figure 403.1).

The exception allows for rooms to "share" required ventilation openings, as long as there are substantial interior openings between the rooms. The example given in the commentary to Section 402.1 is applicable here.

403.2 Bathrooms and toilet rooms. Every *bathroom* and *toilet room* shall comply with the *ventilation* requirements for *habitable spaces* as required by Section 403.1, except that a window shall not be required in such spaces equipped with a mechanical *ventilation* system. Air exhausted by a mechanical *ventilation* system from a *bathroom* or *toilet room* shall discharge to the outdoors and shall not be recirculated.

❖ All bathrooms and toilet rooms must have windows that conform to the requirements of Section 402.1 for natural light and Section 403.1 for natural ventilation. If a window is not provided or not large enough to comply with the light and ventilation requirements of these two sections, then an approved mechanical vent may be used.

Mechanical ventilation in dwelling unit bathrooms and toilet rooms is required to exhaust moisture-laden air to the exterior. The vent must not terminate in any attic or other closed space (see Commentary Figure 403.2), which would allow moisture to condense on the building structure and lead to deterioration of the structure.

INTERNATIONAL CODE COUNCIL®
Copyright © 2015 ICC. ALL RIGHTS RESERVED. Accessed by David Dammon on Jun 21, 2017 12:30:52 PM pursuant to License Agreement with ICC. No further reproduction or distribution authorized. ANY UNAUTHORIZED REPRODUCTION OR DISTRIBUTION IS A VIOLATION OF THE FEDERAL COPYRIGHT ACT AND THE LICENSE AGREEMENT, AND SUBJECT TO CIVIL AND CRIMINAL PENALTIES THEREUNDER.

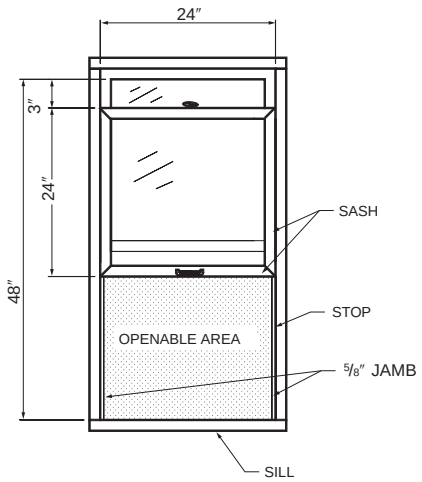

OPENABLE AREA:

HEIGHT: (48″ - 24″ - 3″) = 21″
WIDTH: [24″ - (2 × 5/8″)] = 22¾″

21″ HIGH × 22¾″ WIDE = 3.3 SQ. FT.

For SI: 1 inch = 25.4 mm, 1 square foot = 0.0929 m^2.

Figure 403.1
DETERMINATION OF OPENABLE AREA

403.3 Cooking facilities. Unless *approved* through the certificate of *occupancy*, cooking shall not be permitted in any *rooming unit* or dormitory unit, and a cooking facility or appliance shall not be permitted to be present in the *rooming unit* or dormitory unit.

Exceptions:

1. Where specifically *approved* in writing by the *code official*.
2. Devices such as coffee pots and microwave ovens shall not be considered cooking appliances.

❖ Unless approval has been granted through a certificate of occupancy, cooking is prohibited in dormitory or rooming units (see the definition of "Rooming unit" in Chapter 2). Cooking equipment is prohibited in these types of rooms, since cooking in sleeping areas may create fire and health hazards, as well as odor and moisture problems.

Exception 1 provides for the allowance of cooking in a rooming unit or a dormitory unit based on written approval as granted by the code official. Such an allowance should take into consideration the types of food to be cooked and the heat source and conditions under which the cooking will be done. Requiring approval in writing verifies that there will be a traceable, verifiable record of the conditions of approval. Such a record is useful in enforcing the conditions of the approval. Exception 2 allows the use of coffee pots and microwave ovens in rooming units and dormitory units. These types of appliances are typically used for short periods of time, and are currently used in hotel and motel units without significant problems.

403.4 Process ventilation. Where injurious, toxic, irritating or noxious fumes, gases, dusts or mists are generated, a local exhaust *ventilation* system shall be provided to remove the contaminating agent at the source. Air shall be exhausted to the exterior and not be recirculated to any space.

❖ A mechanical vent, hood or cabinet is required when any process creates potentially hazardous fumes, gases or dust. The ventilation has to be located at the source of the contamination and must exhaust directly to the exterior. The criteria for new exhaust systems are found in the *International Mechanical Code*® (IMC®). If the exhausted air contains dust, dirt, chemicals or other contaminants, the exhaust may require

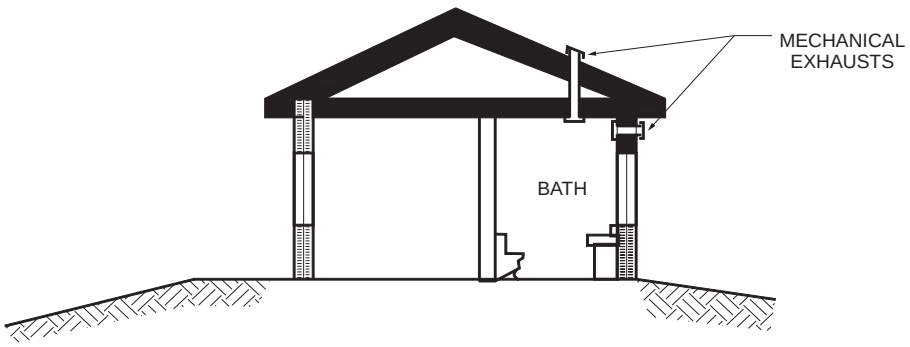

MECHANICAL EXAUST FROM BATHROOMS MUST TERMINATE OUTSIDE. THE VENT SHOULD NEITHER RECIRCULATE AIR NOR TERMINATE IN THE ATTIC OR OTHER INTERIOR SPACE.

Figure 403.2
BATHROOM EXHAUST

INTERNATIONAL CODE COUNCIL®
Copyright © 2015 ICC. ALL RIGHTS RESERVED. Accessed by David Dammon on Jun 21, 2017 12:30:52 PM pursuant to License Agreement with ICC. No further reproduction or distribution authorized. ANY UNAUTHORIZED REPRODUCTION OR DISTRIBUTION IS A VIOLATION OF THE FEDERAL COPYRIGHT ACT AND THE LICENSE AGREEMENT, AND SUBJECT TO CIVIL AND CRIMINAL PENALTIES THEREUNDER.

additional treatment to prevent contamination of the exterior air (see Commentary Figure 403.4).

403.5 Clothes dryer exhaust. Clothes dryer exhaust systems shall be independent of all other systems and shall be exhausted outside the structure in accordance with the manufacturer's instructions.

Exception: Listed and *labeled* condensing (ductless) clothes dryers.

❖ Clothes dryers are prohibited from exhausting into other ventilation or exhaust systems. Clothes dryers create large volumes of lint, dust and moisture that will clog or corrode any system not designed for this type of exhaust. Additionally, the exhaust gases are hot and may contain combustion products. Improper or inadequate provisions for exhaust may create a fire and health hazard.

Manufacturers' installation instructions must be followed when exhausting clothes dryers. The exception recognizes condensing ductless clothes dryers. Typically, in a condenser dryer, there are two separate loops. The inside loop of air that is sealed from the outside loop of environment air from within the drum is heated, then blown through the tumbling clothes, then the moisture-laden air is passed through a heat exchanger, where the water recondenses. The same dry air is then reheated, where it is again blown through the drum and clothes, and the cycle begins again.

The outside loop in a condenser dryer consists of either air or water. Some condenser dryer models are air-cooled, and use the ambient room air as a heat sink by blowing it across the outside of the heat exchanger. These dryers will tend to heat the indoor air in one's laundry room significantly. Note, however, that only heat is released, and all moisture is contained within the unit. The condensed water can be either pumped away to a drain line or stored in a container within the dryer to be emptied later.

SECTION 404
OCCUPANCY LIMITATIONS

404.1 Privacy. *Dwelling units*, hotel units, *housekeeping units, rooming units* and dormitory units shall be arranged to provide privacy and be separate from other adjoining spaces.

❖ Privacy is a fundamental psychological need. Every person needs a space to relax, sleep and dress that is separate from public or common rooms. Walls, corridors and doors should be arranged to offer the occupants their own private space.

404.2 Minimum room widths. A habitable room, other than a kitchen, shall be not less than 7 feet (2134 mm) in any plan dimension. Kitchens shall have a minimum clear passageway of 3 feet (914 mm) between counterfronts and appliances or counterfronts and walls.

❖ To prevent the use of inadequately sized rooms for living space, the code establishes a minimum dimension of 7 feet (2134 mm) at the narrowest width of all habitable rooms, except kitchens. Narrow rooms do not allow for the installation of furniture without unduly obstructing passageways through the rooms.

Kitchens require only 3 feet (914 mm) of clearance between countertops and appliances or countertops and walls. Kitchens are not expected to be occupied for long periods of time, nor is it expected that kitchens will be occupied by a large number of persons at any one time.

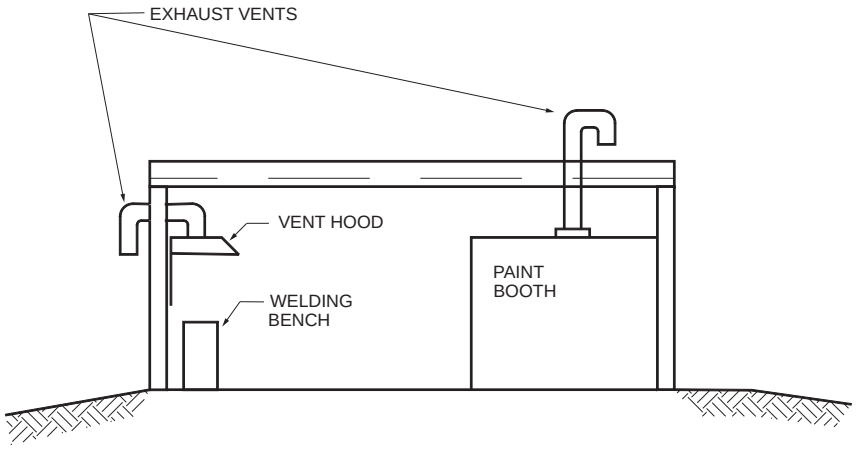

Figure 403.4
PROCESS VENTILATION

INTERNATIONAL CODE COUNCIL®
Copyright © 2015 ICC. ALL RIGHTS RESERVED. Accessed by David Dammon on Jun 21, 2017 12:30:52 PM pursuant to License Agreement with ICC. No further reproduction or distribution authorized. ANY UNAUTHORIZED REPRODUCTION OR DISTRIBUTION IS A VIOLATION OF THE FEDERAL COPYRIGHT ACT AND THE LICENSE AGREEMENT, AND SUBJECT TO CIVIL AND CRIMINAL PENALTIES THEREUNDER.

404.3 Minimum ceiling heights. *Habitable spaces*, hallways, corridors, laundry areas, *bathrooms*, *toilet rooms* and habitable *basement* areas shall have a minimum clear ceiling height of 7 feet (2134 mm).

Exceptions:

1. In one- and two-family dwellings, beams or girders spaced not less than 4 feet (1219 mm) on center and projecting a maximum of 6 inches (152 mm) below the required ceiling height.
2. *Basement* rooms in one- and two-family dwellings occupied exclusively for laundry, study or recreation purposes, having a minimum ceiling height of 6 feet 8 inches (2033 mm) with a minimum clear height of 6 feet 4 inches (1932 mm) under beams, girders, ducts and similar obstructions.
3. Rooms occupied exclusively for sleeping, study or similar purposes and having a sloped ceiling over all or part of the room, with a minimum clear ceiling height of 7 feet (2134 mm) over not less than one-third of the required minimum floor area. In calculating the floor area of such rooms, only those portions of the floor area with a minimum clear ceiling height of 5 feet (1524 mm) shall be included.

❖ Sufficient ceiling heights are necessary to provide an adequate volume of air for occupants in closed spaces and to provide for their psychological well-being. The height requirements are established by this section.

To accommodate various conditions, the code establishes exceptions that permit a reduction in ceiling height within limited conditions. These exceptions include the following:

Exception 1 makes provisions for beams and girders to extend into the required minimum height. This is consistent with the IBC and the *International Residential Code*® (IRC®) requirements, which allow this type of projection to accommodate structural members.

Exception 2 is included to permit the use of existing basements with low headroom. It is anticipated that these rooms will be used only occasionally and will not adversely affect the occupants' health or safety.

Exception 3 is included to accommodate the many $1^1/_2$-story houses that have the sloped attic area finished into bedrooms and similar uses.

Similar to the previous exception, the 7-foot-high (2134 mm) ceiling must extend over one-third of the required area established in Section 404.4.1. Thus, if a room is larger than the minimum required size for its use, the 7-foot-high (2134 mm) portion may be less than one-third of the room's actual floor area.

Example: A bedroom of 175 square feet (16.3 m^2) would be required to have a 7-foot-high (2134 mm) ceiling over no less than 23.3 square feet (2.2 m^2) of the room area. The minimum required area of a bedroom is 70 square feet (6.5 m^2) (see Section 404.4.1); one-third of the required 70 square feet (6.5 m^2) is 23.3 square feet (2.2 m^2).

404.4 Bedroom and living room requirements. Every *bedroom* and living room shall comply with the requirements of Sections 404.4.1 through 404.4.5.

❖ The size of bedrooms and living rooms in a dwelling unit are determining factors in the comfort and safety of occupants. As such, the code establishes minimum sizes and restricts certain configurations in regard to bathrooms, means of egress and other habitable rooms.

404.4.1 Room area. Every living room shall contain not less than 120 square feet (11.2 m^2) and every bedroom shall contain not less than 70 square feet (6.5 m^2) and every bedroom occupied by more than one person shall contain not less than 50 square feet (4.6 m^2) of floor area for each occupant thereof.

❖ The smallest living room allowed is 120 square feet (11.1 m^2). Utilizing the minimum room width of 7 feet (2134 mm) would result in a living room size of approximately 7 feet by 17 feet (2134 mm by 5182 mm). A more functional room size would perhaps be 10 feet by 12 feet (3048 mm by 3658 mm). The smallest bedroom allowed is 70 square feet (6.5 m^2). This is barely enough space for a regular-sized (twin) bed and dresser. If a bedroom is intended to accommodate more than one person, the room must have at least 50 square feet (4.6 m^2) per person. A sleeping room for two people must contain at least 100 square feet (9.3 m^2), for three, 150 square feet (13.9 m^2) and so on. Inadequate sleeping space may increase the spread of communicable diseases, reduce privacy and provide insufficient space for clothes, furniture and other personal belongings. See the commentary to Section 404.5 for examples of the application of the requirements of this section.

404.4.2 Access from bedrooms. *Bedrooms* shall not constitute the only means of access to other *bedrooms* or *habitable spaces* and shall not serve as the only means of egress from other *habitable spaces*.

Exception: Units that contain fewer than two *bedrooms*.

❖ Every occupant must be provided with privacy in his or her sleeping room. The need for privacy may lead occupants to lock or barricade doors in certain situations; therefore, if the only access to other habitable spaces or the means of egress is through a bedroom, there is a possibility that the only way out of a dwelling unit may be blocked in an emergency situation. Even without an emergency, occupants may be seriously inconvenienced in their movement about the dwelling unit. Bedrooms, therefore, must be arranged so that other occupants and guests do not have to pass through one bedroom to get to another bedroom or other habitable spaces (see Commentary Figure 404.4.2). Additionally, dwelling units must be configured such that occupants can egress from any habitable room in the dwelling unit without passing through a bedroom. The exception would permit a dwelling unit with only one bedroom to have an arrangement where the only access to habitable rooms or the means of

INTERNATIONAL CODE COUNCIL®
Copyright © 2015 ICC. ALL RIGHTS RESERVED. Accessed by David Dammon on Jun 21, 2017 12:30:52 PM pursuant to License Agreement with ICC. No further reproduction or distribution authorized. ANY UNAUTHORIZED REPRODUCTION OR DISTRIBUTION IS A VIOLATION OF THE FEDERAL COPYRIGHT ACT AND THE LICENSE AGREEMENT, AND SUBJECT TO CIVIL AND CRIMINAL PENALTIES THEREUNDER.

egress is through the bedroom. It is assumed in this case that only the occupants of the bedroom will require access to other rooms or the means of egress.

404.4.3 Water closet accessibility. Every *bedroom* shall have access to not less than one water closet and one lavatory without passing through another *bedroom*. Every *bedroom* in a *dwelling unit* shall have access to not less than one water closet and lavatory located in the same story as the *bedroom* or an adjacent story.

❖ Every occupant of a bedroom must have access to a water closet without having to pass through another room used as a bedroom. Readily accessible water closets are important for privacy. Occupants should be able to use bathroom facilities without compromising their modesty or the privacy of the occupants in a bedroom. The requirement that every bedroom be served by a water closet and lavatory on the same floor level or on an adjacent level is considered an acceptable minimum standard for the convenience of occupants.

404.4.4 Prohibited occupancy. Kitchens and nonhabitable spaces shall not be used for sleeping purposes.

❖ The code prohibits kitchens, interior public areas and nonhabitable spaces from being used as bedrooms. These spaces provide neither privacy nor safety. Such rooms may also lack adequate light, ventilation, fire exits and sufficient habitable space.

This section provides the code official with another tool to control overcrowding problems.

404.4.5 Other requirements. *Bedrooms* shall comply with the applicable provisions of this code including, but not limited to, the light, *ventilation*, room area, ceiling height and room width requirements of this chapter; the plumbing facilities and water-heating facilities requirements of Chapter 5; the heating facilities and electrical receptacle requirements of Chapter 6; and the smoke detector and emergency escape requirements of Chapter 7.

❖ Sections 404.4.1 through 404.4.5 do not contain all the code requirements that pertain to bedrooms. Bedrooms are habitable rooms (see the definition and commentary for "Habitable room" in Chapter 2) and as such are subject to all the code requirements that apply to habitable rooms. The purpose of this section is to alert the code user to requirements for bedrooms that are located in other sections and chapters of the code. In particular, see the following sections of the code and the associated commentary:

- Section 402.1 for minimum light requirements.
- Section 403.1 for minimum ventilation requirements.
- Section 404.2 for minimum room width.
- Section 404.3 for minimum ceiling height.

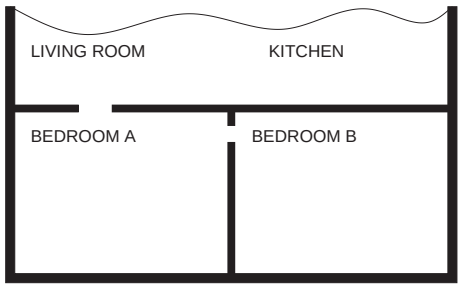

THIS BEDROOM ARRANGEMENT IS NOT ACCEPTABLE. OCCUPANT MUST PASS THROUGH BEDROOM A TO REACH BEDROOM B.

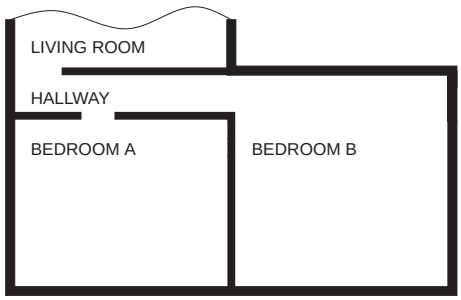

THIS BEDROOM ARRANGEMENT IS ACCEPTABLE. THE OCCUPANT OF BEDROOM B CAN GAIN ACCESS TO THE BEDROOM WITHOUT PASSING THROUGH BEDROOM A.

Figure 404.4.2
BEDROOM ACCESS

INTERNATIONAL CODE COUNCIL®
Copyright © 2015 ICC. ALL RIGHTS RESERVED. Accessed by David Dammon on Jun 21, 2017 12:30:52 PM pursuant to License Agreement with ICC. No further reproduction or distribution authorized. ANY UNAUTHORIZED REPRODUCTION OR DISTRIBUTION IS A VIOLATION OF THE FEDERAL COPYRIGHT ACT AND THE LICENSE AGREEMENT, AND SUBJECT TO CIVIL AND CRIMINAL PENALTIES THEREUNDER.

- Section 503.2, which prohibits a toilet room from being the only passageway to a hall or other space from a bedroom.
- Section 505.4, which requires a provision for combustion air in bedrooms that contain a fuel-burning water heater.
- Sections 602.2 and 602.5 for minimum heat required in a bedroom.
- Section 605.2, which requires at least two separate and remote receptacle outlets in each bedroom.
- Section 702.4 for required emergency escape windows and doors in bedrooms.
- Section 704 for required smoke detectors in the vicinity of the bedrooms.

404.5 Overcrowding. Dwelling units shall not be occupied by more occupants than permitted by the minimum area requirements of Table 404.5.

❖ Overcrowding is often a problem in rental properties and in small, single-family dwellings. It can create serious problems; for example, disease spreads more easily, privacy is lost, mental health is affected and buildings are subject to more abuse and wear. Overcrowding can have a destructive effect on a whole neighborhood if it takes place in several houses on the same block or in several units in the same apartment building. Reducing overcrowding will reduce related health and safety hazards.

The code requires all types of dwelling units to comply with occupancy area requirements. There is no exception for owner-occupied houses; however, overcrowding of owner-occupied, single-family residences requires the careful thought and judgement of the code official to determine an appropriate course of action.

Proving that a building is overcrowded may be difficult. Tenants may lie about the number of occupants in their unit to avoid eviction. To determine the number of occupants, the code official may try to count beds or the names on mailboxes. Neighbors may also provide valuable information about the number of occupants and may be able to tell when the occupants are most likely to be home. It may be necessary to conduct inspections during evening hours in order to find an adult occupant at home. School enrollment records can also provide information on overcrowding.

Some communities have laws requiring an occupancy permit to be issued before a dwelling unit can be occupied. This allows the number of occupants shown on the application to be checked against the maximum occupancy of the dwelling unit as determined by an inspection [see Commentary Figure 404.5(1)].

Some floor plan arrangements would allow the dining and living room areas to be considered as combined dining/living/sleeping rooms. To illustrate the alternative analytical approach for the maximum number of occupants, consider the following example in which two analyses will be made: the first assumes only the three bedrooms are used for sleeping purposes; the second assumes the living/dining area is to be counted as providing sleeping space [see Commentary Figure 404.5(2) for an example of an arrangement where the access to the kitchen is not through the dining/living room]. The requirement of Section 404.4.2, therefore, would be met and the maximum occupant load would be the highest of the following two analyses.

ANALYSIS 1 OCCUPANT LOAD ANALYSIS WITH NO COMBINED SLEEPING ROOM USAGE

1. Sleeping space: Section 404.4.1 indicates that 70 square feet (6.5 m^2) is required for a room occupied by one person and 50 square feet (4.6 m^2) per person is required for a room occupied by more than one person. In this example, we arrive at the following:

SLEEPING AREAS	ACTUAL AREA (SQUARE FEET)	ALLOWABLE NO. OF OCCUPANTS
Bedroom 1	113	2
Bedroom 2	127	2
Bedroom 3	92	1

For SI: 1 square foot = 0.0929 m^2.

At this point the maximum possible occupant load is five. It can be no higher due to lack of additional sleeping space.

2. Living, dining and kitchen space: Table 404.5 establishes the minimum required areas that will accommodate various numbers of occupants. By using Table 404.5, the following is derived:

SPACE	ACTUAL AREA (SQUARE FEET)	ALLOWABLE NO. OF OCCUPANTS
Living room	220	6 or more
Dining room	100	6 or more

For SI: 1 square foot = 0.0929 m^2.

3. Maximum allowable number of occupants: The actual living, dining and kitchen areas provide the maximum required space for six or more occupants; therefore, the maximum allowable number of occupants based on this analysis, which is five occupants, is governed by the sleeping space provided.

   In this case, the living, dining and kitchen areas provide the minimum required space for any number of occupants. As such, if Bedroom 3 were 100 square feet (9.3 m^2) rather than 90 square feet (8.4 m^2), the maximum allowable occupant load would be six, rather than five, because Bedroom 3 would provide adequate sleeping space for two occupants.

ANALYSIS 2 OCCUPANT LOAD ANALYSIS WITH COMBINED LIVING/DINING/SLEEPING SPACE

It was previously determined that the bedrooms provide sleeping space for five occupants and the living, dining and kitchen areas are adequate for any

INTERNATIONAL CODE COUNCIL®
Copyright © 2015 ICC. ALL RIGHTS RESERVED. Accessed by David Dammon on Jun 21, 2017 12:30:52 PM pursuant to License Agreement with ICC. No further reproduction or distribution authorized. ANY UNAUTHORIZED REPRODUCTION OR DISTRIBUTION IS A VIOLATION OF THE FEDERAL COPYRIGHT ACT AND THE LICENSE AGREEMENT, AND SUBJECT TO CIVIL AND CRIMINAL PENALTIES THEREUNDER.

number of occupants; however, the code does not prohibit the dual use of a room as living/sleeping or living/dining/sleeping, as long as the room meets the requirements for each intended use. In this example, the living/dining room could be considered a combined living/dining/sleeping room.

When determining the maximum occupant load for a combined living/sleeping or living/dining/sleeping room, Section 404.5.1 mandates that the minimum areas required by Table 404.5 are not to be included as sleeping areas; therefore, if the combined living/dining/sleeping room were used by one person for sleeping, at least 70 square feet (6.5 m^2) is necessary (Section 404.4.1), leaving 250 square feet (23.2 m^2) available for combined living/dining purposes [320 square feet (29.7 m^2) total minus 70 square feet (6.5 m^2) equals 250 square feet (23.2 m^2)]. Table 404.5 and Section 404.5.2 would allow a combined living/dining room of 250 square feet (23.2 m^2) to accommodate any number of occupants (six or more), which is the same as the first example. The total number of occupants for which a sleeping area is provided is now a maximum of six (the bedrooms accommodate five and the combined living/dining/sleeping room accommodates one); therefore, the maximum allowable occupant load based on this analysis would be six.

In this example the combined living/dining/sleeping room would be subject to all requirements for sleeping areas, including emergency escape windows (Section 702.4) and smoke detectors (Section 704).

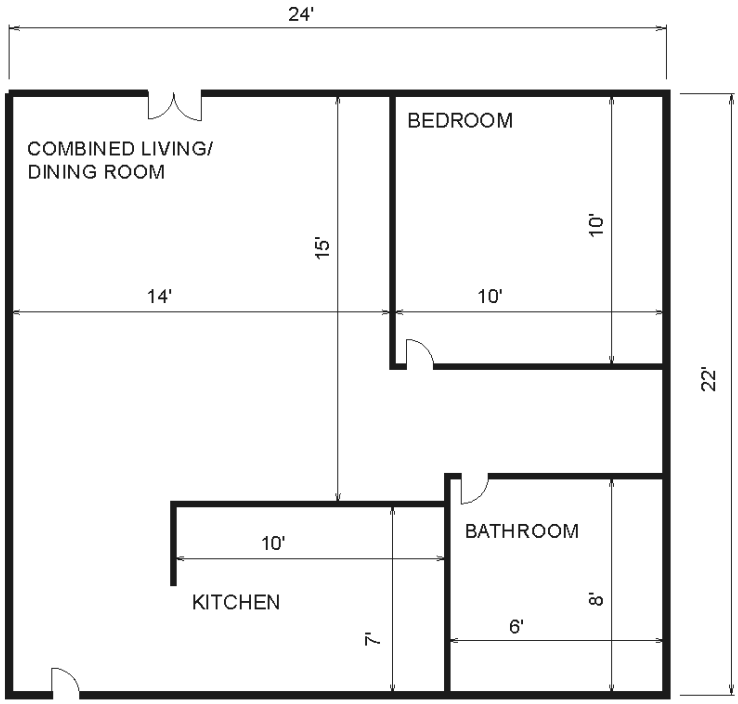

MAXIMUM OCCUPANCY ALLOWED:

1. COMBINED LIVING/DINING ROOM = 210 SQ.FT.
   THIS SPACE WOULD ACCOMMODATE NO MORE THAN FIVE OCCUPANTS IN ACCORDANCE WITH TABLE 404.5 AND SECTION 404.5.2.

2. KITCHEN = 70 SQ.FT.
   THIS SPACE WOULD ACCOMMODATE AN UNLIMITED NUMBER OF OCCUPANTS IN ACCORDANCE WITH TABLE 404.5.

3. BEDROOM = 100 SQ.FT.
   THIS SPACE WOULD ACCOMMODATE ONE OR TWO OCCUPANTS IN ACCORDANCE WITH TABLE 404.5.

BECAUSE THE BEDROOM WILL ONLY PERMIT A MAXIMUM OCCUPANCY OF TWO, THAT IS THE MAXIMUM OCCUPANCY FOR THIS ENTIRE UNIT. THE OCCUPANCY IS LIMITED TO THE MAXIMUM PERMITTED BY THE LEAST AREA PROVIDED IN ONE OF THE CATEGORIES IN TABLE 404.5.

For SI: 1 foot = 304.8 mm, 1 square foot = 0.0929 m^2.

Figure 404.5(1)
MAXIMUM OCUPANCY LOAD IN DWELLINGS

INTERNATIONAL CODE COUNCIL®
Copyright © 2015 ICC. ALL RIGHTS RESERVED. Accessed by David Dammon on Jun 21, 2017 12:30:52 PM pursuant to License Agreement with ICC. No further reproduction or distribution authorized. ANY UNAUTHORIZED REPRODUCTION OR DISTRIBUTION IS A VIOLATION OF THE FEDERAL COPYRIGHT ACT AND THE LICENSE AGREEMENT, AND SUBJECT TO CIVIL AND CRIMINAL PENALTIES THEREUNDER.

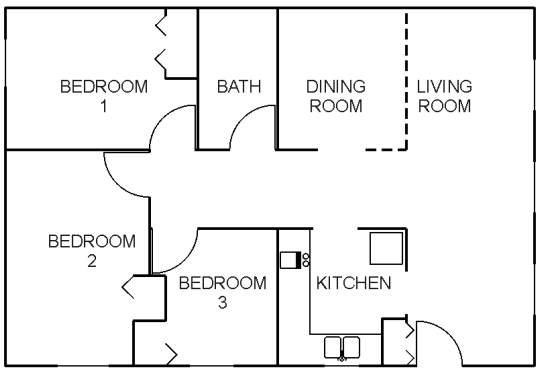

For SI: 1 square foot = 0.0929 m^2.

Figure 404.5(2)
COMBINED LIVING/DINING/SLEEPING ROOM EXAMPLE

TABLE 404.5
MINIMUM AREA REQUIREMENTS

SPACE	MINIMUM AREA IN SQUARE FEET		
	1-2 occupants	3-5 occupants	6 or more occupants
Living room[a, b]	120	120	150
Dining room[a, b]	No requirement	80	100
Bedrooms	Shall comply with Section 404.4.1		

For SI: 1 square foot = 0.0929 m^2.

a. See Section 404.5.2 for combined living room/dining room spaces.

b. See Section 404.5.1 for limitations on determining the minimum occupancy area for sleeping purposes.

❖ Table 404.5 establishes the minimum room sizes and the maximum occupant loads for living spaces. The code official is to use this table to determine if a residence is overcrowded. See the commentary to Section 404.5 for examples of the application of this table.

404.5.1 Sleeping area. The minimum occupancy area required by Table 404.5 shall not be included as a sleeping area in determining the minimum occupancy area for sleeping purposes. Sleeping areas shall comply with Section 404.4.

❖ The purpose of this section is to prohibit the dual use of dining rooms and living rooms as sleeping rooms, unless they are of sufficient size to incorporate the minimum required space for sleeping, in addition to the minimum required space for the dining or living room areas listed in Table 404.5. For example, if a dwelling is occupied by five people and one person is using the living room as a sleeping area, the minimum required size of the living room would be 190 square feet (17.7 m^2). This is based on 120 square feet (11.1 m^2) for the living room, in accordance with Table 404.5, and 70 square feet (6.5 m^2) for the single-occupant sleeping area, in accordance with Section 404.4.1.

The code does not prohibit a living or dining room from serving a dual purpose as a sleeping area; however, the room must be sized to accommodate both functions. See the commentary to Section 404.5 for additional examples of calculating the maximum allowable occupant load in dwellings where certain rooms are used for dual purposes.

404.5.2 Combined spaces. Combined living room and dining room spaces shall comply with the requirements of Table 404.5 if the total area is equal to that required for separate rooms and if the space is located so as to function as a combination living room/dining room.

❖ When a living room and a dining room are combined into one room, the combined area must equal the sum of the minimum required area of each separate room established by Table 404.5. See Analysis 2 in the commentary to Section 404.5 for further illustration.

404.6 Efficiency unit. Nothing in this section shall prohibit an efficiency living unit from meeting the following requirements:

1. A unit occupied by not more than one occupant shall have a minimum clear floor area of 120 square feet (11.2 m^2). A unit occupied by not more than two *occupants* shall have a minimum clear floor area of 220 square feet (20.4 m^2). A unit occupied by three *occupants* shall have a minimum clear floor area of 320 square feet (29.7 m^2). These required areas shall be exclusive of the areas required by Items 2 and 3.
2. The unit shall be provided with a kitchen sink, cooking appliance and refrigeration facilities, each having a minimum clear working space of 30 inches (762 mm) in front. Light and *ventilation* conforming to this code shall be provided.

INTERNATIONAL CODE COUNCIL®
Copyright © 2015 ICC. ALL RIGHTS RESERVED. Accessed by David Dammon on Jun 21, 2017 12:30:52 PM pursuant to License Agreement with ICC. No further reproduction or distribution authorized. ANY UNAUTHORIZED REPRODUCTION OR DISTRIBUTION IS A VIOLATION OF THE FEDERAL COPYRIGHT ACT AND THE LICENSE AGREEMENT, AND SUBJECT TO CIVIL AND CRIMINAL PENALTIES THEREUNDER.

3. The unit shall be provided with a separate *bathroom* containing a water closet, lavatory and bathtub or shower.
4. The maximum number of *occupants* shall be three.

❖ Efficiency units are typically very small apartments consisting of one or two rooms and a bathroom. Efficiency units that comply with this section are not required to comply with the minimum area requirements for bedrooms in Section 404.4. The total allowable number of occupants in the dwelling, however, is limited to two or three, depending on the area of the unit. The purpose of efficiency units and this section is to provide for combined use of spaces in an economical or "efficient" manner without jeopardizing health or comfort. This is possible because of the limit of total occupants to two or three persons.

Item 1 establishes the minimum required area based on the number of occupants. The item states that these areas are exclusive of the areas required by Items 2 and 3. For example, Item 2 requires that the kitchen be provided with (at minimum) a sink, cooking appliance and refrigerator. It further requires that each of these have a 30-inch (762 mm) clear working space in front of the fixture or appliance. The space taken up by the appliance and the required clear working space of 30 inches (762 mm) in front of each appliance cannot be included in the minimum required floor space in Item 1 (see the last sentence of Item 1). Similarly, the floor area of the bathroom required in Item 3 is not included in the minimum required floor space in Item 1. Lastly, Item 4 establishes the maximum occupant load as three.

There are no minimum floor areas required in the kitchen or bathroom. Having enough space for the required fixtures, appliances and working spaces is considered sufficient to provide functional floor area.

404.7 Food preparation. All spaces to be occupied for food preparation purposes shall contain suitable space and equipment to store, prepare and serve foods in a sanitary manner. There shall be adequate facilities and services for the sanitary disposal of food wastes and refuse, including facilities for temporary storage.

❖ Kitchens must be provided with stoves, ovens, refrigerators, freezers, cabinets, countertops and drawers in sufficient quantity and in a condition that the occupants can store their food safely and at appropriate temperatures to protect the food. All equipment must be constructed and maintained so that it can be cleaned.

Food preparation areas must also be provided with garbage disposals or containers that permit the safe temporary storage of garbage and refuse. Containers should be constructed and maintained to prevent insect and rat infestations.

Bibliography

The following resource materials were used in the preparation of the commentary for this chapter of the code:

Basic Principles of Healthful Housing. New York: American Public Health Association, Committee on the Hygiene of Housing, 1939.

IBC-2015, *International Building Code*. Washington, D.C.: International Code Council, 2014.

IFC-2015, *International Fire Code*. Washington, D.C.: International Code Council, 2014.

IMC-2015, *International Mechanical Code*. Washington, D.C.: International Code Council, 2014.

IRC-2015, *International Residential Code*. Washington, D.C.: International Code Council, 2014.

INTERNATIONAL CODE COUNCIL®
Copyright © 2015 ICC. ALL RIGHTS RESERVED. Accessed by David Dammon on Jun 21, 2017 12:30:52 PM pursuant to License Agreement with ICC. No further reproduction or distribution authorized. ANY UNAUTHORIZED REPRODUCTION OR DISTRIBUTION IS A VIOLATION OF THE FEDERAL COPYRIGHT ACT AND THE LICENSE AGREEMENT, AND SUBJECT TO CIVIL AND CRIMINAL PENALTIES THEREUNDER.

INTERNATIONAL CODE COUNCIL®
Copyright © 2015 ICC. ALL RIGHTS RESERVED. Accessed by David Dammon on Jun 21, 2017 12:30:52 PM pursuant to License Agreement with ICC. No further reproduction or distribution authorized. ANY UNAUTHORIZED REPRODUCTION OR DISTRIBUTION IS A VIOLATION OF THE FEDERAL COPYRIGHT ACT AND THE LICENSE AGREEMENT, AND SUBJECT TO CIVIL AND CRIMINAL PENALTIES THEREUNDER.

Chapter 5: Plumbing Facilities and Fixture Requirements

General Comments

Chapter 5 establishes the minimum criteria for the installation, maintenance and location of plumbing systems and facilities, including water supply systems, water-heating appliances, sewage disposal systems and related plumbing fixtures. Existing plumbing installations may present unique inspection problems for the code official. Almost all installations are concealed by finished walls, ceilings and floors. The code official must inspect the visible portions of the system and assess the acceptability of the whole installation. To help the code official make suitable judgments, a foundation of basic principles may aid in the enforcement process. The following is a listing of 23 basic principles of environmental sanitation and safety for the design, installation and maintenance of plumbing systems, which establish the fundamental concepts behind health and safety regulations for plumbing systems. Knowing these principles aids in understanding the code requirements, which leads to more effective code enforcement.

Principle No. 1: All Occupied Premises Shall Have Potable Water

All buildings, structures and premises intended for human habitation, occupancy, use or employment, or the preparation or processing of food, drinks or other materials for human consumption shall be provided with an adequate, safe and potable water supply through a safe system of piping to all fixtures, appliances and appurtenances. Such a water supply must not be connected to an unsafe water source, nor shall it be subjected to the hazards of backflow.

Principle No. 2: Adequate Water Required

Plumbing fixtures, devices and appurtenances shall be supplied with water in sufficient volume and at pressures adequate to enable them to function properly and without undue noise under normal conditions of use.

Principle No. 3: Hot Water Required

Hot water shall be supplied to all plumbing fixtures that normally need or require hot water for their proper use and function.

Principle No. 4: Water Conservation

Plumbing shall be designed and adjusted to use the minimum quantity of water consistent with proper performance and cleaning.

Principle No. 5: Dangers of Explosion or Overheating

Devices for heating and storing water shall be designed and installed so as to guard against dangers from explosion or overheating.

Principle No. 6: Use Public Water and Sewers Where Available

Every building with installed plumbing fixtures intended for human habitation, occupancy or use and located where there is a public water supply and sewer service shall have a connection with the water supply and sewer.

Principle No. 7: Required Plumbing Fixtures

Each family dwelling unit shall have at least one water closet, one lavatory, one kitchen-type sink and one bathtub or shower to meet the basic requirements of sanitation and personal hygiene. All other structures for human occupancy or use shall be equipped with sufficient sanitary facilities as prescribed in the code, but with no less than one water closet and lavatory.

Principle No. 8: Smooth Surfaces Required

Plumbing fixtures shall be made of durable, smooth, nonabsorbent and corrosion-resistant material and shall be free from concealed fouling surfaces.

Principle No. 9: Drainage System of Adequate Size

The drainage system shall be designed, constructed and maintained to guard against fouling, deposit of solids and clogging, and with adequate cleanouts arranged so that the pipes may be readily cleaned.

Principle No. 10: Durable Materials and Good Workmanship

The piping of the plumbing system shall be of durable material, free from defective workmanship and designed and constructed so as to give satisfactory service for its reasonably expected life.

Principle No. 11: Liquid Seal Traps Required

Each fixture directly connected to the drainage system shall be equipped with a liquid seal trap.

Principle No. 12: Trap Seals Must Be Protected

The drainage system shall be designed to provide adequate circulation of air in all pipes without danger of siphonage, aspiration or forcing of trap seals under conditions of ordinary use.

INTERNATIONAL CODE COUNCIL®
Copyright © 2015 ICC. ALL RIGHTS RESERVED. Accessed by David Dammon on Jun 21, 2017 12:30:52 PM pursuant to License Agreement with ICC. No further reproduction or distribution authorized. ANY UNAUTHORIZED REPRODUCTION OR DISTRIBUTION IS A VIOLATION OF THE FEDERAL COPYRIGHT ACT AND THE LICENSE AGREEMENT, AND SUBJECT TO CIVIL AND CRIMINAL PENALTIES THEREUNDER.

Principle No. 13: Exhaust Foul Air to Outside

Each open vent terminal shall be extended to the outdoors, and be installed so as to minimize the possibilities of clogging and the return of foul air to the building. Note that the *International Plumbing Code*® (IPC®) and the *International Residential Code*® (IRC®) allow for the use of air admittance valves for vent terminals. However, each plumbing drain system must have not less than one vent terminal open to the outdoors.

Principle No. 14: Test the Plumbing System

The plumbing system shall be subjected to tests that will effectively disclose all leaks and defects in the work or material.

Principle No. 15: Exclude Certain Substances from the Plumbing System

Storm, surface or ground water or any substance that will clog or accentuate clogging of pipes, produce explosive mixtures, destroy the pipes or their joints or interfere unduly with the sewage disposal process shall not be allowed to enter the building drainage system.

Principle No. 16: Prevent Contamination

Proper protection shall be provided to prevent contamination of food, water, sterile goods and similar materials from backflow of sewage. When necessary, the fixture, device or appliance shall be connected indirectly with the building drainage system.

Principle No. 17: Light, Heat and Ventilation

A water closet, urinal, lavatory, bathtub or shower shall not be located in a room or compartment that is not properly lighted, heated and ventilated in accordance with accepted practice.

Principle No. 18: Individual Sewage Disposal Systems

If water closets or other plumbing fixtures are installed in buildings where there is not a public sewer, provisions shall be made for disposing of the building sewage by an approved method of treatment and disposal.

Principle No. 19: Prevent Sewer Flooding

Where a plumbing drainage system is subject to backflow of sewage from the public sewer, provisions shall be made to prevent its overflow into the building.

Principle No. 20: Proper Maintenance

Plumbing systems shall be maintained in a safe and serviceable condition from the standpoints of both mechanics and health.

Principle No. 21: Fixtures Shall Be Accessible

All plumbing fixtures shall be installed with regard to spacing so access is provided for their intended use and for cleansing.

Principle No. 22: Structural Safety

Plumbing shall be installed with due regard to preservation of the strength of structural members and prevention of damage to walls and other surfaces through fixture usage.

Principle No. 23: Protect Ground and Surface Water

Sewage or other waste shall not be discharged into surface or subsurface water unless it has first been subjected to an approved form of treatment.

Purpose

Sanitary and clean conditions in occupied buildings are dependent upon certain basic plumbing principles, including providing potable water to a building, providing fixtures to utilize that water and removing waste from the building. Chapter 5 establishes the minimum criteria to verify that these principles are maintained throughout the life of a building.

SECTION 501
GENERAL

501.1 Scope. The provisions of this chapter shall govern the minimum plumbing systems, facilities and plumbing fixtures to be provided.

❖ Buildings must comply with the minimum criteria for the provisions of plumbing systems, facilities and fixtures established by this chapter. Any structure that does not conform to these criteria is in violation of the code and is subject to all penalties established by the jurisdiction as indicated in Section 106.

501.2 Responsibility. The *owner* of the structure shall provide and maintain such plumbing facilities and plumbing fixtures in compliance with these requirements. A person shall not occupy as *owner-occupant* or permit another person to occupy any structure or *premises* that does not comply with the requirements of this chapter.

❖ The owner is responsible for complying with the requirements of this chapter. A structure must not be occupied if the plumbing systems or facilities do not conform to the minimum code requirements.

INTERNATIONAL CODE COUNCIL®
Copyright © 2015 ICC. ALL RIGHTS RESERVED. Accessed by David Dammon on Jun 21, 2017 12:30:52 PM pursuant to License Agreement with ICC. No further reproduction or distribution authorized. ANY UNAUTHORIZED REPRODUCTION OR DISTRIBUTION IS A VIOLATION OF THE FEDERAL COPYRIGHT ACT AND THE LICENSE AGREEMENT, AND SUBJECT TO CIVIL AND CRIMINAL PENALTIES THEREUNDER.

SECTION 502
REQUIRED FACILITIES

[P] 502.1 Dwelling units. Every *dwelling unit* shall contain its own bathtub or shower, lavatory, water closet and kitchen sink that shall be maintained in a sanitary, safe working condition. The lavatory shall be placed in the same room as the water closet or located in close proximity to the door leading directly into the room in which such water closet is located. A kitchen sink shall not be used as a substitute for the required lavatory.

❖ Every dwelling unit is to have at least one water closet, one lavatory, one kitchen-type sink and one bathtub or shower to meet the basic requirements for sanitation and personal hygiene.

The lavatory must be located in the same room as or near the door that leads to the water closet. This requirement makes it convenient for occupants to wash their hands after using the water closet, which is good practice for personal hygiene and greatly reduces the spread of germs and bacteria.

The required kitchen sink is intended to provide separate facilities for food preparation and dishwashing and is not intended for hand cleansing after using the toilet facilities, thus reducing the likelihood of contamination of surfaces that are subject to contact with food.

[P] 502.2 Rooming houses. Not less than one water closet, lavatory and bathtub or shower shall be supplied for each four *rooming units*.

❖ Rooming houses with shared bathroom and toilet facilities must conform to the following minimum number of fixtures: one water closet, one lavatory and one bathtub or shower (i.e., one bathroom group) for each four rooming units, or portion thereof.

For example, a house with 22 rooming units requires at least six bathroom groups of plumbing fixtures ($22 \div 4 = 5.5$; rounded up to 6).

[P] 502.3 Hotels. Where private water closets, lavatories and baths are not provided, one water closet, one lavatory and one bathtub or shower having access from a public hallway shall be provided for each 10 *occupants.*

❖ Hotels with guestrooms that share bathroom and toilet facilities must conform to the following minimum number of fixtures: one water closet, one lavatory and one bathtub or shower for each 10 occupants, or portion thereof.

For example, a hotel with 22 occupants requires a minimum of three water closets, three lavatories and three bathtubs or showers, or a combination of three bathtubs and showers ($22 \div 10 = 2.2$; rounded up to 3).

[P] 502.4 Employees' facilities. Not less than one water closet, one lavatory and one drinking facility shall be available to employees.

❖ To provide employees with sufficient sanitary facilities, every place of employment is to have at least one water closet, one lavatory and one drinking facility.

This is a minimum requirement that provides the employees with at least one toilet room for their use. Obviously, the number of employees working for a company will affect the adequacy of providing only one water closet and one hand sink. When economically and physically practical, the code official should encourage a place of employment to install the minimum number of plumbing facilities established in the IPC.

[P] 502.4.1 Drinking facilities. Drinking facilities shall be a drinking fountain, water cooler, bottled water cooler or disposable cups next to a sink or water dispenser. Drinking facilities shall not be located in *toilet rooms* or *bathrooms*.

❖ To reduce the potential of contaminating the water, drinking facilities must be separate from toilet rooms or bathrooms. Water shall be provided by a drinking fountain, water cooler, bottled water cooler or disposable cups located next to a sink or water dispenser.

The requirement for disposable cups should be monitored, as many diseases are transmitted through shared, unwashed or unsanitized eating and drinking utensils.

[P] 502.5 Public toilet facilities. Public toilet facilities shall be maintained in a safe, sanitary and working condition in accordance with the *International Plumbing Code*. Except for periodic maintenance or cleaning, public access and use shall be provided to the toilet facilities at all times during *occupancy* of the *premises*.

❖ The purposes of this section are to establish minimum maintenance provisions for public toilet facilities and to ensure the availability of these facilities to the public at all times the building is occupied.

SECTION 503
TOILET ROOMS

[P] 503.1 Privacy. *Toilet rooms* and *bathrooms* shall provide privacy and shall not constitute the only passageway to a hall or other space, or to the exterior. A door and interior locking device shall be provided for all common or shared *bathrooms* and *toilet rooms* in a multiple dwelling.

❖ To protect human dignity and modesty, all toilet rooms and bathrooms must afford privacy. Where toilet rooms or bathrooms are shared by building occupants in dormitories or boarding houses, there is to be a door with a locking device either for each water closet compartment in a toilet room/bathroom or that controls access to the toilet room/bathroom.

Passage through bathrooms and toilet rooms to get to other rooms, spaces, corridors or the exterior is inconvenient and could also jeopardize the means of egress because of locked doors, wet floors and obstructions.

[P] 503.2 Location. *Toilet rooms* and *bathrooms* serving hotel units, *rooming units* or dormitory units or *housekeeping units*, shall have access by traversing not more than one flight

INTERNATIONAL CODE COUNCIL®
Copyright © 2015 ICC. ALL RIGHTS RESERVED. Accessed by David Dammon on Jun 21, 2017 12:30:52 PM pursuant to License Agreement with ICC. No further reproduction or distribution authorized. ANY UNAUTHORIZED REPRODUCTION OR DISTRIBUTION IS A VIOLATION OF THE FEDERAL COPYRIGHT ACT AND THE LICENSE AGREEMENT, AND SUBJECT TO CIVIL AND CRIMINAL PENALTIES THEREUNDER.

of stairs and shall have access from a common hall or passageway.

❖ Occupants of hotel units, rooming units, dormitory units or housekeeping units should not have to travel beyond the next adjacent story or pass through another occupant's unit to gain access to a bathroom or toilet facility. Convenient access to facilities is a basic necessity for their use and maintenance.

[P] 503.3 Location of employee toilet facilities. Toilet facilities shall have access from within the employees' working area. The required toilet facilities shall be located not more than one story above or below the employees' working area and the path of travel to such facilities shall not exceed a distance of 500 feet (152 m). Employee facilities shall either be separate facilities or combined employee and public facilities.

Exception: Facilities that are required for employees in storage structures or kiosks, which are located in adjacent structures under the same ownership, lease or control, shall not exceed a travel distance of 500 feet (152 m) from the employees' regular working area to the facilities.

❖ Employers are required to provide toilet facilities for employees within the employees' regular work areas. Employees should not have to travel more than 500 feet (152 m) or beyond the next adjacent story to reach the toilet room.

Employee toilet facilities can be for employees' use only or they can share customer facilities.

If toilet rooms are inconvenient or located too far from the work area, they create a physical hardship for employees.

This section does not require storage buildings and kiosks to contain toilet facilities, as long as there are toilet facilities in an adjacent building such that the distance from the work area to the toilet facilities does not exceed 500 feet (152 m). The building with the toilet facilities must be under the same ownership, lease or control as the storage area. Employers cannot expect their employees to depend upon neighborhood gas stations, stores or other businesses to provide access to toilet facilities.

[P] 503.4 Floor surface. In other than *dwelling units*, every *toilet room* floor shall be maintained to be a smooth, hard, nonabsorbent surface to permit such floor to be easily kept in a clean and sanitary condition.

❖ A toilet room floor is much easier to maintain if the surface is smooth, hard and nonabsorbent. In areas such as toilet rooms where the public is likely to enter a facility, the primary concern remains keeping the floor area as clean as possible to safeguard against the spread of disease.

SECTION 504
PLUMBING SYSTEMS AND FIXTURES

[P] 504.1 General. Plumbing fixtures shall be properly installed and maintained in working order, and shall be kept free from obstructions, leaks and defects and be capable of performing the function for which such plumbing fixtures are designed. Plumbing fixtures shall be maintained in a safe, sanitary and functional condition.

❖ All plumbing fixtures must operate adequately and perform their intended functions. Fixtures must drain quickly without permitting sewer gases to enter the structure. Fixtures are not to leak from either the water supply piping or the waste discharge piping.

Fixtures must not be worn or deteriorated so that they cannot be adequately cleaned. Kitchen sinks and lavatories that have defects that prevent them from being kept clean increase the likelihood that disease-causing organisms can be spread to food sources or from person to person. Fixtures with structural cracks can fail suddenly, possibly causing personal injury and further property damage.

[P] 504.2 Fixture clearances. Plumbing fixtures shall have adequate clearances for usage and cleaning.

❖ Inadequate clearance between fixtures and adjacent surfaces can create confined spaces that allow disease and odor-causing bacteria to multiply. For proper sanitation, the fixture must have sufficient clearances for proper use and cleaning.

Although the code does not specify exact clearances between fixtures and adjacent surfaces, the code official must use good judgment and must review the required clearances for compliance with the IPC.

[P] 504.3 Plumbing system hazards. Where it is found that a plumbing system in a structure constitutes a hazard to the *occupants* or the structure by reason of inadequate service, inadequate venting, cross connection, backsiphonage, improper installation, *deterioration* or damage or for similar reasons, the *code official* shall require the defects to be corrected to eliminate the hazard.

❖ Any plumbing system having a deficiency or condition that is deemed by the code official as hazardous to the occupants or to the structure must be repaired or altered to eliminate the hazard. Hazards in a plumbing system include, but are not limited to, the following:

- Undersized piping.
- Inadequate venting.
- Cross connections.
- Lack of backflow prevention means.
- Lack of sufficient fixtures.
- Improperly installed piping, fixtures or fittings.
- Deteriorated, damaged, worn or otherwise defective piping, fixtures or fittings.
- Inadequately supported fixtures or piping.
- Inadequate water pressure or volume.

One of the most commonly encountered hazards is a submerged outlet in older-style fixtures in water closets, bathtubs, lavatories, laundry tubs and water softeners. Cross connections and improperly protected outlets greatly increase the likelihood that contaminated water will be introduced into the potable water supply.

INTERNATIONAL CODE COUNCIL®
Copyright © 2015 ICC. ALL RIGHTS RESERVED. Accessed by David Dammon on Jun 21, 2017 12:30:52 PM pursuant to License Agreement with ICC. No further reproduction or distribution authorized. ANY UNAUTHORIZED REPRODUCTION OR DISTRIBUTION IS A VIOLATION OF THE FEDERAL COPYRIGHT ACT AND THE LICENSE AGREEMENT, AND SUBJECT TO CIVIL AND CRIMINAL PENALTIES THEREUNDER.

SECTION 505
WATER SYSTEM

505.1 General. Every sink, lavatory, bathtub or shower, drinking fountain, water closet or other plumbing fixture shall be properly connected to either a public water system or to an *approved* private water system. Kitchen sinks, lavatories, laundry facilities, bathtubs and showers shall be supplied with hot or tempered and cold running water in accordance with the *International Plumbing Code*.

❖ The water for all plumbing fixtures must be properly connected to either a public or an approved private water system. If there is any question about the quality of the private water source, the code official should require that the water be tested and approved by either a private testing service or a local health department. A plumbing system cannot be considered adequate if the water entering the system is contaminated or otherwise unfit for human consumption and use.

The desired qualities for safe water are:

- Free of pathogenic organisms.
- Free of toxic chemicals.
- Free of odor, taste, color and turbidity.
- Free of excessive minerals.
- Relatively noncorrosive.
- Adequate in quantity and pressure.

All sinks, lavatories, bathtubs and showers must be supplied with cold and hot or tempered running water as regulated by the IPC. Heated water is a basic necessity for all cleansing and bathing needs. It should be noted that the IPC only allows tempered water [water that is 85°F (29°C) to 110°F (43°C)] to be used for bathing and washing in nonresidential occupancies. The IPC requires tempered water to be supplied to hand-washing fixtures located in public toilet facilities.

[P] 505.2 Contamination. The water supply shall be maintained free from contamination, and all water inlets for plumbing fixtures shall be located above the flood-level rim of the fixture. Shampoo basin faucets, janitor sink faucets and other hose bibs or faucets to which hoses are attached and left in place, shall be protected by an approved atmospheric-type vacuum breaker or an approved permanently attached hose connection vacuum breaker.

❖ Cross connections and unprotected outlets are the most common sources of contamination in potable water systems. The IPC defines a cross connection as any physical connection or arrangement between two otherwise separate piping systems—one of which contains potable water and the other water of either unknown or questionable safety, steam, gas or chemical—whereby there exists the possibility for flow from one system to the other, with the direction of flow depending on the pressure differential between the two systems.

The code official might not always be able to discover all cross connections and unprotected outlets in a building, but should become familiar with the locations where such usually occur. Many older-style plumbing fixtures were designed or installed with built-in submerged water supply outlets. A few of the more common fixtures and appliances that might have unprotected outlets include: water closets, bathtubs, lavatories, laundry tubs and hose bibbs (sill cocks). Water softener drains are often improperly connected to the drainage system, thereby creating cross connections [see Commentary Figure 505.2(1)].

There are two basic methods of preventing contamination of the potable water supply. The first is to provide an air gap between the water outlet and the flood level rim of the fixture. The second is to install backflow prevention devices in the water supply line.

An air gap is the ideal solution because it does not rely on the performance of mechanical devices to prevent backflow into the water supply. Typically, an air gap must be twice the diameter of the supply pipe to the fixture, but never less than 1 inch (25 mm) above the flood level rim. The requirements for air gap protection of fixtures are found in Table 608.15.1 of the IPC.

An example of an unprotected outlet is identified in Commentary Figure 505.2(2) when the following conditions exist:

- The third-floor water closet has the ball cock (fill valve) submerged in the water of the water closet tank.
- The water pressure within the building is low because of corrosion buildup in the water pipes or simultaneous usage of fixtures.
- The third-floor water closet is flushed, thereby opening the ball cock.
- Contaminated water can be drawn from the water closet tank into the supply pipes.

In such circumstances when the sink is filling, the pressure can be reduced to less than atmospheric at the water closet fill valve. This creates a siphon action in the water closet tank. A potentially hazardous event has occurred that could introduce contaminated water into the potable water supply.

The solution to this problem is fairly simple. The water closet fill valve (ball cock) needs to be replaced with an antisiphon fill valve that extends a minimum of 1 inch (25 mm) above the overflow tube in the water closet tank. Additionally, the water pressure throughout the building should be increased by replacing or upsizing the water supply piping.

Another common backflow hazard can result from hoses being attached to threaded outlets. Backflow can occur when the open end of the hose is submerged in any liquid. For example, the possibility of backflow exists when a homeowner uses a hose to spread chemical fertilizers, herbicides or insecticides. If negative pressure should occur in the water supply piping, the water and chemicals from the hose could be siphoned into the water supply.

The solution to this problem is to install a hose-connection-type vacuum breaker on the water supply outlet fitting. When a negative pressure occurs in the

INTERNATIONAL CODE COUNCIL®
Copyright © 2015 ICC. ALL RIGHTS RESERVED. Accessed by David Dammon on Jun 21, 2017 12:30:52 PM pursuant to License Agreement with ICC. No further reproduction or distribution authorized. ANY UNAUTHORIZED REPRODUCTION OR DISTRIBUTION IS A VIOLATION OF THE FEDERAL COPYRIGHT ACT AND THE LICENSE AGREEMENT, AND SUBJECT TO CIVIL AND CRIMINAL PENALTIES THEREUNDER.

water supply, the vacuum breaker opens to the atmosphere allowing air to enter the piping system, thus "breaking" the vacuum.

A type of cross connection occurs when a water supply is connected directly to an appliance or a piece of equipment. Some examples are water supplies to hot water and steam boilers; lawn irrigation systems; fire suppression systems; carbonated beverage machines and equipment used for various industrial applications, such as manufacturing. These items are typically not able to function with an air gap between the supply pipe and the appliance or fixture. Consequently, some type of backflow preventer device must be installed in the water supply line to prevent the water flow from reversing direction. Common types of protection are pressure-type vacuum breakers, barometric loops and reduced pressure principle backflow preventers.

Any time there is not an obvious air gap or visible backflow preventer device in a water supply line, the code official should attempt to determine if a hazard exists.

Cross connections between a private water supply (typically a well system) and a potable public water supply are not permitted under any circumstance. If the ground water becomes contaminated, a cross connection could affect the entire public water supply system.

The code official should work with local plumbing inspectors or water departments to identify and eliminate all cross connections and unprotected potable water outlets.

505.3 Supply. The water supply system shall be installed and maintained to provide a supply of water to plumbing fixtures, devices and appurtenances in sufficient volume and at pressures adequate to enable the fixtures to function properly, safely, and free from defects and leaks.

❖ Inadequate water pressure or insufficient volume can cause plumbing fixtures, washing machines, dishwashers and other appliances to operate improperly. Inadequate water pressure can restrict the flow of water into bathtubs, showers and sinks to the point that the fixtures are not usable. The code requires enough pressure and volume so that all fixtures and appliances are functional and free of undue hazards.

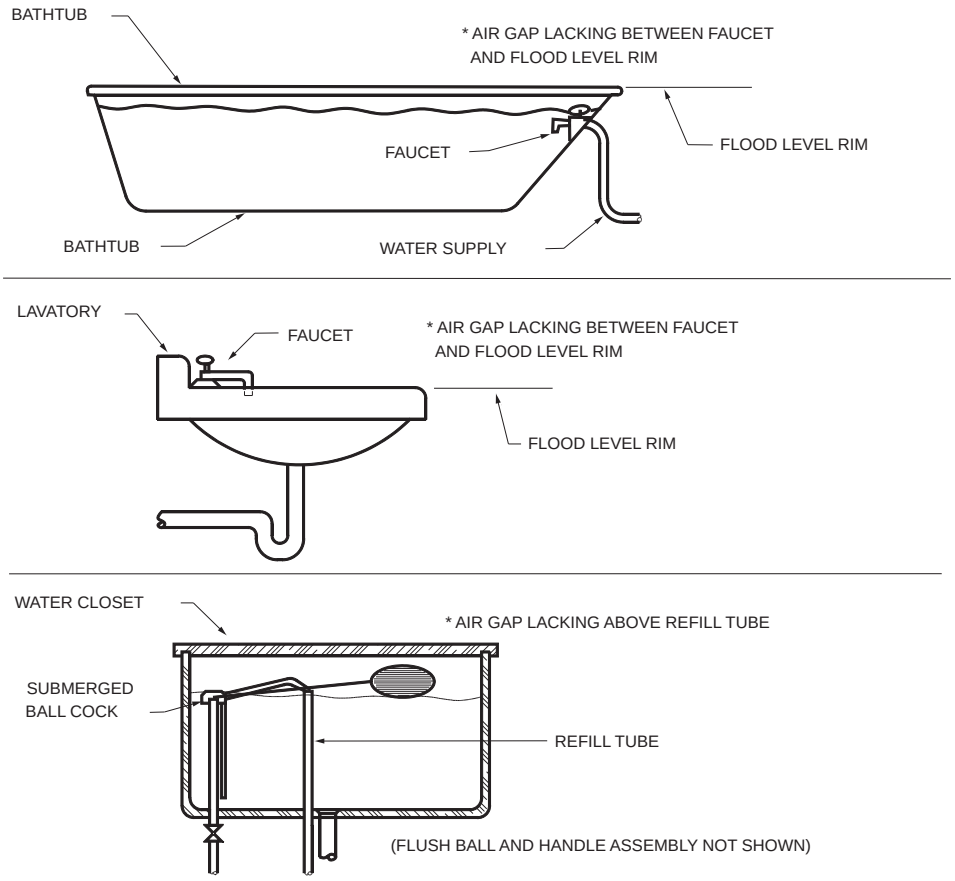

Figure 505.2(1)
COMMON CROSS CONNECTIONS

INTERNATIONAL CODE COUNCIL®
Copyright © 2015 ICC. ALL RIGHTS RESERVED. Accessed by David Dammon on Jun 21, 2017 12:30:52 PM pursuant to License Agreement with ICC. No further reproduction or distribution authorized. ANY UNAUTHORIZED REPRODUCTION OR DISTRIBUTION IS A VIOLATION OF THE FEDERAL COPYRIGHT ACT AND THE LICENSE AGREEMENT, AND SUBJECT TO CIVIL AND CRIMINAL PENALTIES THEREUNDER.

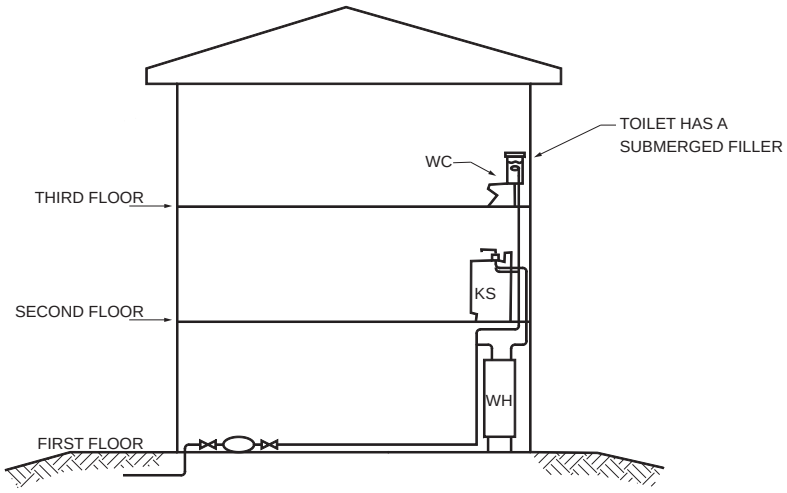

Figure 505.2(2)
WATER SUPPLY PROTECTION

There are many causes of inadequate water pressure and lack of sufficient volume. A few of the common causes include:

- Private wells.
- Inadequate ground-water supply.
- Defective pump or a pump that has lost its prime.
- Storage tank that has lost its air cushion.
- Sand or silt plugging the well point.

Municipal systems:

- Inadequate pressure in the public water main.
- Sudden loss of pressure in an area caused by the use of a nearby fire hydrant, a broken main water line, etc.

Quite frequently, an inadequate water supply is the result of problems within a building. A few examples include clogged or corroded pipes, undersized piping, crimped or bent pipes and a system that is inadequately designed. A change in occupancy of a building might create demands that exceed the original water piping capacity.

505.4 Water heating facilities. Water heating facilities shall be properly installed, maintained and capable of providing an adequate amount of water to be drawn at every required sink, lavatory, bathtub, shower and laundry facility at a minimum temperature of 110°F (43°C). A gas-burning water heater shall not be located in any *bathroom*, *toilet room*, *bedroom* or other occupied room normally kept closed, unless adequate combustion air is provided. An *approved* combination temperature and pressure-relief valve and relief valve discharge pipe shall be properly installed and maintained on water heaters.

❖ A water heater can be dangerous if it is not properly installed and maintained. A water heater is a closed vessel that can be subjected to high temperature and pressure. Under the right conditions, a water heater can explode violently and cause extensive structural damage to buildings and personal injury or death. As such, water heaters should be thoroughly inspected. The following is a guide for the inspection of water heater systems.

1. Electric water heaters:
   - Is the electric service for the house adequate to supply the normal demands of the house as well as the increased demands of a water heater?
   - Is the electric wiring for the water heater of adequate size and properly installed in accordance with the electrical code?
   - Are all conductors properly installed and protected against physical damage?
2. Fuel-burning water heaters:
   - Which fuel is being used? Commonly used fuels include natural gas, propane gas and fuel oil.
   - Is the fuel piping constructed from approved materials, properly connected and adequately supported?
   - Is there a readily accessible, properly installed shutoff valve to stop the fuel supply?
3. Safety controls (electric and fuel-burning):
   - Do the safety controls and devices appear to be in good condition without evidence of tampering or modification?
   - Is the thermostat (temperature control) operational and in good condition?
   - Does the water heater have a temperature and a pressure relief valve or a combination temperature and pressure relief valve? These safety valves are necessary to relieve excessive pressures, thereby preventing an explosion of

INTERNATIONAL CODE COUNCIL®
Copyright © 2015 ICC. ALL RIGHTS RESERVED. Accessed by David Dammon on Jun 21, 2017 12:30:52 PM pursuant to License Agreement with ICC. No further reproduction or distribution authorized. ANY UNAUTHORIZED REPRODUCTION OR DISTRIBUTION IS A VIOLATION OF THE FEDERAL COPYRIGHT ACT AND THE LICENSE AGREEMENT, AND SUBJECT TO CIVIL AND CRIMINAL PENALTIES THEREUNDER.

the water heater. The temperature and pressure relief valves or combination temperature and pressure relief valve must be rated for a pressure not higher than the working pressure rating of the water heater, and in no case higher than 150 pounds per square inch (psi) (1034 kPa).

- Is the temperature relief-valve-sensing element located in the top 6 inches (152 mm) of the water heater tank? This is the hottest water in the tank.
- Is the relief valve in good condition and free of corrosion or leakage?
- Is the relief valve rating equal to or greater than the British thermal unit per hour (Btu/h) input rating of the water heater? An undersized safety relief valve does not offer adequate protection.
- Does the relief valve have a discharge pipe to divert heated water toward the floor and to a point where it will not cause damage to the structure? The discharge pipe must be rigid piping of the same diameter as the relief valve outlet. The lower end of the discharge pipe must not be closed or plugged and is not to have a threaded end that would invite closure. The relief valve discharge pipe must not be located where it would be subject to freezing, as this could result in a complete blockage of the pipe.

4. Venting:

- Do all fuel-burning water heaters vent the combustion products to an approved chimney or venting system?
- Does the vent have adequate clearance from combustible materials (wood, paper, cloth, etc.)?
- Are the vent or chimney connectors constructed of approved materials? They should be constructed from corrosion-resistant materials such as aluminum, galvanized steel and stainless steel. The joints should be fastened with sheet metal screws, rivets or other approved means.
- Does the chimney, vent or connector show signs of deterioration, corrosion or condensation?
- Is the vent/chimney connector properly supported and connected to the vent or chimney?

If there is a doubt or question about a particular installation (see Commentary Figure 505.4), plumbing inspectors or water department officials should be consulted.

Fuel-burning water heaters must not be installed in bathrooms, toilet rooms, bedrooms or any other rooms that are normally kept closed when in use, unless combustion air is brought directly to the appliance from outside of the room. Adequate combustion air must always be provided regardless of the appliance location. The *International Mechanical Code*® (IMC®) prohibits the installation of fuel-fired water heaters in such rooms in all cases, except where the water heater is a direct-vent type or is placed in a dedicated enclosure completely isolated from the occupied room. Asphyxiation of the room occupants could possibly result from inadequate combustion air, venting system failure or appliance malfunction (see Section 603.2).

The code official must also be sure that the water heater is able to provide water of at least 110°F (43°C) to every fixture requiring hot water (see Section 505.1).

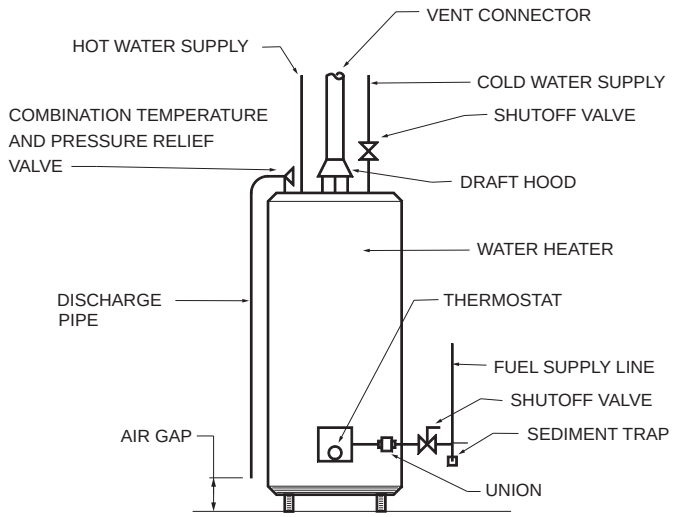

Figure 505.4
WATER HEATER INSTALLATION REQUIREMENTS

INTERNATIONAL CODE COUNCIL®
Copyright © 2015 ICC. ALL RIGHTS RESERVED. Accessed by David Dammon on Jun 21, 2017 12:30:52 PM pursuant to License Agreement with ICC. No further reproduction or distribution authorized. ANY UNAUTHORIZED REPRODUCTION OR DISTRIBUTION IS A VIOLATION OF THE FEDERAL COPYRIGHT ACT AND THE LICENSE AGREEMENT, AND SUBJECT TO CIVIL AND CRIMINAL PENALTIES THEREUNDER.

Temperature and pressure relief valves are absolutely necessary to prevent the possibility of water heater explosion resulting from overheating.

SECTION 506
SANITARY DRAINAGE SYSTEM

[P] 506.1 General. Plumbing fixtures shall be properly connected to either a public sewer system or to an *approved* private sewage disposal system.

❖ Plumbing fixtures must be connected to an approved public or private sewer system. Private systems that should not be approved would include pit privies, cesspools or any system that discharges to storm drains, ponds, lakes, streams or rivers.

[P] 506.2 Maintenance. Every plumbing stack, vent, waste and sewer line shall function properly and be kept free from obstructions, leaks and defects.

❖ All waste, soil, sewer and vent piping must be installed and maintained so as to function properly. Obstructions or defects that present health hazards must be corrected. Leaking pipes or joints must be replaced or repaired. All repairs and new installations must be in accordance with the IPC.

A thorough and accurate inspection of the plumbing system requires knowledge of plumbing systems; however, with training and experience, the code official can identify typical problems and improper installations. In broad terms, he or she should inspect the following elements of a plumbing system: fixtures; sanitary drainage systems; vents and venting; traps; drainage cleanouts; and hangers and supports.

1. Sanitary drainage system: The system must be free of leaks. Leaking drain pipes can cause structural damage and spread illness from the pathogenic organisms in the waste water.

   The code official should inspect all visible drainpipes for any improper connections or installations. A few frequently encountered problems include the following:

   a. Improperly installed materials: Materials not designed or approved for plumbing applications are often used for repairs and modifications in plumbing systems. The improper use of fittings, joining means and connectors is common in existing structures. Drainage piping with no slope or reverse slope can promote blockages.

   b. Joints and pipes that have been "patched" with tape, putty, caulking or tar thus indicating past or current leakage in the drainage system.

   c. Unworkmanlike installation: This often indicates that an untrained handyman has made repairs.

   The code official should check the entire system for any indications of unvented fixtures, improper materials or other typical violations. Additionally, it should be determined whether permits were obtained to install the work.

2. Vents and venting: Plumbing systems are designed with an integral venting system to prevent loss of the water seals in fixture traps. Fixture vents must be provided and maintained where necessary to protect traps from pressure fluctuations and siphon action that cause loss of the water seal.

3. Traps: Each plumbing fixture must have a trap at the connection to the sanitary drainage system. A trap creates a water seal that prevents sewer gas from entering the structure. Sewer gases can be toxic and carry bacteria-laden aerosols. Some types of sewer gases are even explosive.

4. Hangers and supports: Improperly or inadequately supported waste and vent piping frequently indicates a nonprofessional installation. All piping is required to be adequately supported to maintain pitch and alignment and prevent strain on connections and joints.

In general, the code official should inspect the entire visible plumbing system for: leakage; the presence of fixture, standpipe and floor drain traps; approved materials (with approved connections) and an acceptable venting system.

[P] 506.3 Grease interceptors. Grease interceptors and automatic grease removal devices shall be maintained in accordance with this code and the manufacturer's installation instructions. Grease interceptors and automatic grease removal devices shall be regularly serviced and cleaned to prevent the discharge of oil, grease, and other substances harmful or hazardous to the building drainage system, the public sewer, the private sewage disposal system or the sewage treatment plant or processes. Records of maintenance, cleaning and repairs shall be available for inspection by the code official.

❖ This section clarifies that grease interceptors and automatic grease removal devices require ongoing, routine maintenance in order to perform their intended functions. Any such maintenance should be in accordance with the manufacturer's maintenance criteria. The language is coordinated with the provisions of Section 1003.1 of the IPC, which establishes when these devices are required to be installed. Failure to maintain these devices results in public health risks via sanitary sewer overflows into buildings, roads and streams and premature deterioration and failure of public and private sewage systems.

INTERNATIONAL CODE COUNCIL®
Copyright © 2015 ICC. ALL RIGHTS RESERVED. Accessed by David Dammon on Jun 21, 2017 12:30:52 PM pursuant to License Agreement with ICC. No further reproduction or distribution authorized. ANY UNAUTHORIZED REPRODUCTION OR DISTRIBUTION IS A VIOLATION OF THE FEDERAL COPYRIGHT ACT AND THE LICENSE AGREEMENT, AND SUBJECT TO CIVIL AND CRIMINAL PENALTIES THEREUNDER.

SECTION 507
STORM DRAINAGE

[P] 507.1 General. Drainage of roofs and paved areas, *yards* and courts, and other open areas on the *premises* shall not be discharged in a manner that creates a public nuisance.

❖ Storm water must be discharged so that it does not pond in paved areas, yards, courts or open areas. Standing water can freeze in cold climates, thereby causing a slip hazard. In warm weather, standing water can create an insect breeding ground.

Roof gutters and downspouts are not required, provided that storm water is discharged in such a manner that it does not create a public nuisance.

The code official should also check local ordinances to determine if run-off storm drainage water and sump pumps can be allowed to enter the sanitary sewer system. Most communities are now requiring all storm drainage water to be separated from the sanitary sewer system. Disconnecting the storm water from the sanitary sewer system can reduce the costs of sewage treatment and eliminate an overload of the treatment facility.

The emphasis in storm drainage is to remove the water quickly without creating hazards to pedestrians or causing damage to any structures on the same or neighboring property.

Bibliography

The following resource materials were used in the preparation of the commentary for this chapter of the code:

IFGC-2015, *International Fuel Gas Code*. Washington, D.C.: International Code Council, 2014.

IMC-2015, *International Mechanical Code*. Washington, D.C.: International Code Council, 2014.

IPC-2015, *International Plumbing Code*. Washington, D.C.: International Code Council, 2014.

INTERNATIONAL CODE COUNCIL®

Copyright © 2015 ICC. ALL RIGHTS RESERVED. Accessed by David Dammon on Jun 21, 2017 12:30:52 PM pursuant to License Agreement with ICC. No further reproduction or distribution authorized. ANY UNAUTHORIZED REPRODUCTION OR DISTRIBUTION IS A VIOLATION OF THE FEDERAL COPYRIGHT ACT AND THE LICENSE AGREEMENT, AND SUBJECT TO CIVIL AND CRIMINAL PENALTIES THEREUNDER.

Chapter 6:
Mechanical and Electrical Requirements

General Comments

Chapter 6 establishes minimum criteria for the installation and maintenance of the following: heating and air-conditioning equipment, appliances and systems; water-heating equipment, appliances and systems; cooking equipment and appliances; ventilation and exhaust equipment; gas and liquid fuel distribution piping and components; fireplaces and solid fuel-burning appliances; chimneys and vents; electrical services; lighting fixtures; electrical receptacle outlets; electrical distribution system equipment, devices and wiring; and elevators, escalators and dumbwaiters.

The primary objectives of mechanical and heating equipment inspections are to detect, identify and abate any condition that is a potential fire or explosion hazard; is a potential cause of asphyxiation or carbon monoxide poisoning; poses the risk of physical injury to an occupant; prevents the equipment from adequately performing its intended function; or that otherwise endangers the occupants or the structure.

The primary objectives of electrical equipment and system inspections are to detect, identify and abate any condition that is a potential fire hazard or electrical shock hazard. Any condition that inadequately provides for the supply and distribution of electrical power throughout the structure must also be detected, identified and abated.

All mechanical and electrical facilities must be capable of providing the minimum levels of safety, illumination, comfort, utility and convenience as prescribed in this chapter.

Purpose

All mechanical and electrical equipment, appliances and systems must be properly installed to serve the intended purpose. Proper installation, however, does not in itself guarantee safety or performance. In addition to proper installation, all such equipment, appliances and systems must be maintained, as they are subject to deterioration, wear and aging, and may require cleaning, lubrication, adjustment, etc. All materials and components used to construct mechanical and electrical systems have a limited life span, and require repair or replacement at various time intervals that are specific to the material or component.

The purpose of Chapter 6 is to establish minimum performance requirements for electrical and mechanical facilities and to establish minimum standards for the safety of such facilities.

SECTION 601
GENERAL

601.1 Scope. The provisions of this chapter shall govern the minimum mechanical and electrical facilities and equipment to be provided.

❖ Minimum performance guidelines for mechanical and electrical facilities and equipment are established in this chapter. Installations that do not conform to these minimum criteria are unacceptable.

601.2 Responsibility. The *owner* of the structure shall provide and maintain mechanical and electrical facilities and equipment in compliance with these requirements. A person shall not occupy as *owner-occupant* or permit another person to occupy any *premises* that does not comply with the requirements of this chapter.

❖ It is the responsibility of the owner of the structure to provide and maintain the required electrical and mechanical facilities. An owner must not occupy or allow any other person to occupy a structure that is not in compliance with this chapter; thus, the requirements of this chapter are the minimum necessary to make a structure occupiable.

SECTION 602
HEATING FACILITIES

602.1 Facilities required. Heating facilities shall be provided in structures as required by this section.

❖ This section establishes the scope of requirements in Section 602 [see the *International Mechanical Code*® (IMC®) for space-heating requirements for new structures].

602.2 Residential occupancies. Dwellings shall be provided with heating facilities capable of maintaining a room temperature of 68°F (20°C) in all habitable rooms, *bathrooms* and *toilet rooms* based on the winter outdoor design temperature for the locality indicated in Appendix D of the *International Plumbing Code*. Cooking appliances shall not be used, nor shall portable unvented fuel-burning space heaters be used, as a means to provide required heating.

Exception: In areas where the average monthly temperature is above 30°F (-1°C), a minimum temperature of 65°F (18°C) shall be maintained.

❖ This section establishes the following minimum requirements for space heating in residential structures.

INTERNATIONAL CODE COUNCIL®
Copyright © 2015 ICC. ALL RIGHTS RESERVED. Accessed by David Dammon on Jun 21, 2017 12:30:52 PM pursuant to License Agreement with ICC. No further reproduction or distribution authorized. ANY UNAUTHORIZED REPRODUCTION OR DISTRIBUTION IS A VIOLATION OF THE FEDERAL COPYRIGHT ACT AND THE LICENSE AGREEMENT, AND SUBJECT TO CIVIL AND CRIMINAL PENALTIES THEREUNDER.

Adequate heat is required for human health and comfort. The elderly, infirm and very young are most susceptible to illness and death from inadequate space heating.

Heating equipment must be provided and maintained by the owner and must be able to heat all habitable rooms, bathrooms and toilet rooms to at least 68°F (20°C) based on the outside design temperature established for each locality adopting the code. This 68°F (20°C) standard is believed to be the minimum indoor temperature at which people can be reasonably comfortable and can maintain healthy living. This is intended as an absolute minimum since most dwelling occupants will seek indoor temperatures 5°F to 10°F (-15°C to -12°C) higher than this.

The outdoor design temperatures are listed in Appendix D of the *International Plumbing Code*® (IPC®). Outdoor design temperatures provide a baseline from which heat load calculations are made. Heating system capacity is dependent on the predicted outdoor temperatures during the heating season. As the outdoor temperature falls, the heat input to a building must increase to offset the increasing heat losses through the building envelope. Heating systems are designed to have the capacity to maintain the desired indoor temperature when the outdoor temperature is at or above the outdoor design temperature. When the outdoor temperatures are below the outdoor design temperature, the heating system will not be able to maintain a desired indoor temperature. It would be impractical, for example, to design a heating system based on the assumption that someday it might be -20°F (-29°C) outdoors if the outdoor temperature in that region rarely, if ever, dropped that low. In such a case, the heating system would be oversized and, thereby, less efficient and economical.

The winter outdoor design temperature is defined as follows: For 97.5 percent of the total hours in the northern hemisphere heating season, from December through February, the predicted outdoor temperatures will be at or above the values given in Appendix D of the IPC. It would be unreasonable to expect any heating system to maintain a desired indoor temperature when the outdoor temperature is below the design temperature. When the 97.5 percent column in Appendix D of the IPC is used, it can be assumed that the actual outdoor temperature will be at or below the design temperature for roughly 54 hours of the total of 2,160 hours in the months of December through February ($2^1/_2$% of 2,160 = 2,160 hours $\times$ 0.025 = 54).

The lack of adequate space-heating systems can result in the misuse of cooking appliances. It is not uncommon for occupants to use fuel-fired ovens and cooktop burners to supply space heating when the minimum required indoor temperature cannot be maintained, and unfortunately, the typical occupant is not aware of the danger in doing so. Fuel-fired cooking appliances in almost all occupancies are unvented and, therefore, discharge all products of combustion directly to the occupied space. Prolonged use of such appliances can produce dangerously high levels of carbon monoxide and other contaminants, especially considering that the occupants will not be opening windows or operating exhaust systems in an effort to conserve heat.

Also, cooking appliances are not designed for the purpose of space heating, and like all appliances, could be dangerous if used in any way other than intended by the manufacturer. Cooking appliances are not designed for continuous or unattended use, and open flames, heat radiation and high surface temperatures pose a significant fire hazard when the appliance is misused.

This section also prohibits the use of fuel-burning, unvented space heaters as a means to provide any portion of the heating that is required for residential occupancies. Similar to cooking appliances, fuel-burning, portable unvented space heaters can be dangerous, especially when used as one of the essential means of providing the required heat. Occupants are likely to locate portable space heaters in rooms where they should not be and also locate such heaters too close to combustible materials and furnishings.

The exception recognizes that in warmer portions of the country, where the average monthly temperature meets or exceeds 30°F (1°C), the minimum inside temperature can be 65°F (18°C). As a result of this code requirement, the occupants are ensured of having a comfortable interior environment.

602.3 Heat supply. Every *owner* and *operator* of any building who rents, leases or lets one or more *dwelling units* or *sleeping units* on terms, either expressed or implied, to furnish heat to the *occupants* thereof shall supply heat during the period from **[DATE]** to **[DATE]** to maintain a minimum temperature of 68°F (20°C) in all habitable rooms, *bathrooms* and *toilet rooms*.

Exceptions:

1. When the outdoor temperature is below the winter outdoor design temperature for the locality, maintenance of the minimum room temperature shall not be required provided that the heating system is operating at its full design capacity. The winter outdoor design temperature for the locality shall be as indicated in Appendix D of the *International Plumbing Code*.
2. In areas where the average monthly temperature is above 30°F (-1°C), a minimum temperature of 65°F (18°C) shall be maintained.

❖ The owner or operator of a rental residential property who agrees to provide heat by express agreement or implication must provide it to all habitable rooms, bathrooms and toilet rooms. The heat supply must be capable of maintaining a temperature of at least 68°F (20°C), 24 hours per day. The occupants could set the temperature in the space under their control at a lower temperature if desired, but 68°F (20°C) must be attainable. Based on local climatic conditions, each commu-

INTERNATIONAL CODE COUNCIL®
Copyright © 2015 ICC. ALL RIGHTS RESERVED. Accessed by David Dammon on Jun 21, 2017 12:30:52 PM pursuant to License Agreement with ICC. No further reproduction or distribution authorized. ANY UNAUTHORIZED REPRODUCTION OR DISTRIBUTION IS A VIOLATION OF THE FEDERAL COPYRIGHT ACT AND THE LICENSE AGREEMENT, AND SUBJECT TO CIVIL AND CRIMINAL PENALTIES THEREUNDER.

nity needs to establish the period of the year during which heating equipment must be in operation in order to maintain the required temperatures. The intent of this section is to protect tenants from being subjected to uncomfortable and unhealthy conditions created by undersized, malfunctioning, defective or otherwise inadequate space-heating systems. Having adequate space heating also helps eliminate the need for auxiliary room/space heaters, as well as the unsafe use of cooking appliances for space heating (see Section 602.2). When tenants are forced to use room/space heaters, the risk of fire and asphyxiation increases because of improper use, contact with or close proximity to combustible materials; overloaded wiring and extension cords; lack of ventilation and the user's typical lack of understanding of the potential hazards.

Exception 1 recognizes the limitations of all heating systems that operate when the outdoor temperature is below the design temperature. This exception states that the minimum indoor temperature requirement of 68°F (20°C) does not apply when the outdoor temperature is below the design temperature for the heating system. The exception addresses only the circumstance where the heating system cannot keep up because the outdoor conditions exceed that for which it was designed (see Section 602.2). The exception applies only to heating systems that are operating at their full design capacity (heat output). It does not apply to improperly designed systems, undersized systems or any system operating at less than its full output for whatever reason. On those rare days when the outdoor temperature is lower than what the heating system was designed to handle, it is anticipated that the indoor temperature might not be attainable. Heating systems that were sized based on outdoor temperatures above the actual outdoor design temperature for the locality in which they are installed are improperly designed, and as such, do not comply with the intent of the exception (see commentary, Section 602.2).

Exception 2 is the same as the exception to Section 602.2.

602.4 Occupiable work spaces. Indoor occupiable work spaces shall be supplied with heat during the period from **[DATE]** to **[DATE]** to maintain a minimum temperature of 65°F (18°C) during the period the spaces are occupied.

Exceptions:

1. Processing, storage and operation areas that require cooling or special temperature conditions.
2. Areas in which persons are primarily engaged in vigorous physical activities.

❖ Mercantile, business, factory and similar occupancies in which people are employed must be kept at a temperature of at least 65°F (18°C) during the hours that employees are working. People cannot be expected to work productively and remain in good health if their workplace is uncomfortable. The 65°F (18°C) minimum is lower than required for residential occupancies and is intended to apply to the typical workplace having sedentary employee activities.

Exception 1 recognizes that some occupancies have operations and processes that require temperatures lower than 65°F (18°C), including meat-packing plants, canneries and manufacturing facilities.

Exception 2 recognizes that a minimum temperature of 65°F (18°C) is not necessary where employees are engaged in physical activities such as construction, fabrication and loading in factories.

The period of the year during which structures must comply with this section is to be established by each locality based on local climatic conditions.

602.5 Room temperature measurement. The required room temperatures shall be measured 3 feet (914 mm) above the floor near the center of the room and 2 feet (610 mm) inward from the center of each exterior wall.

❖ To determine compliance with Section 602, temperature measurements are required to be taken at multiple locations. For example, in a room with two exterior walls, a total of three measurements is required. The room temperature requirements of Section 602 must be met in all of the measurement locations. The intent is to make sure that the required temperature will be uniformly reached throughout the occupiable portions of the room or space. The coldest part of a room during the heating season will typically be at the floor level by an outside wall. The measurements are taken at points that are expected to be occupied and that do not reflect the potential temperature extremes in a space (see Commentary Figure 602.5).

Any space that cannot maintain the minimum indoor temperatures as established in Section 602 when the outdoor temperature is at or above the design temperature for the locality should be posted as unfit for human occupancy until enough heat can be supplied.

SECTION 603
MECHANICAL EQUIPMENT

603.1 Mechanical appliances. Mechanical appliances, fireplaces, solid fuel-burning appliances, cooking appliances and water heating appliances shall be properly installed and maintained in a safe working condition, and shall be capable of performing the intended function.

❖ Because appliances, mechanical equipment and fireplaces are subject to aging, wear and deterioration, periodic inspection and servicing is required to maintain performance and to verify continued safe operation. Fireplaces and solid fuel-burning appliances must be properly installed, inspected and maintained. They require frequent inspection and maintenance because of the extreme temperatures and corrosive flue gases to which they are subjected. Routine cleaning is required to remove the highly flammable creosote deposits found in chimneys and connectors. Inspections should include such related items as chimney flues, chimney caps, dampers, doors,

INTERNATIONAL CODE COUNCIL®
Copyright © 2015 ICC. ALL RIGHTS RESERVED. Accessed by David Dammon on Jun 21, 2017 12:30:52 PM pursuant to License Agreement with ICC. No further reproduction or distribution authorized. ANY UNAUTHORIZED REPRODUCTION OR DISTRIBUTION IS A VIOLATION OF THE FEDERAL COPYRIGHT ACT AND THE LICENSE AGREEMENT, AND SUBJECT TO CIVIL AND CRIMINAL PENALTIES THEREUNDER.

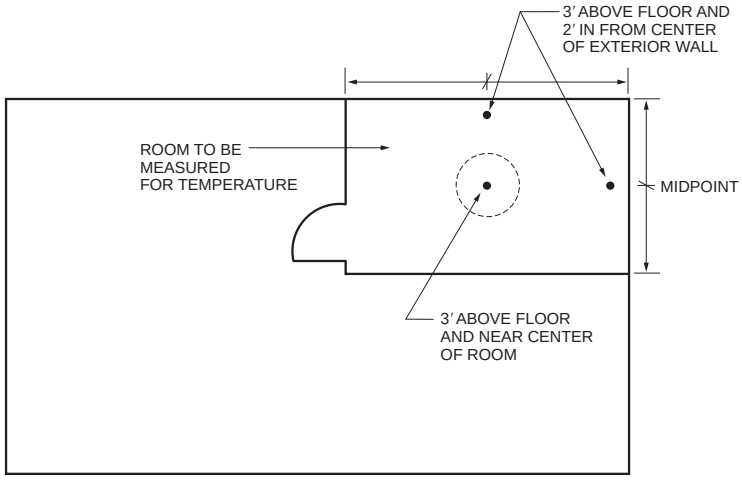

For SI: 1 foot = 304.8 mm.

Figure 602.5
ROOM TEMPERATURE MEASUREMENTS

screens, connectors, hearth extensions and clearances to combustibles.

Appliances located in buildings that are not owner-occupied are less likely to receive attention or be observed and are therefore more likely to be neglected. Appliances of concern include water heaters, furnaces, boilers, room heaters, clothes dryers and cooking appliances.

Fireplaces and solid fuel-burning appliances must be installed and maintained in accordance with the IMC.

The appliance manufacturer's installation instructions and the IMC, *International Fuel Gas Code*® (IFGC®) and IPC should be consulted in determining if an appliance or mechanical equipment is installed properly.

603.2 Removal of combustion products. Fuel-burning equipment and appliances shall be connected to an *approved* chimney or vent.

Exception: Fuel-burning equipment and appliances that are *labeled* for unvented operation.

❖ All fuel-burning appliances are required to discharge the products of combustion (flue gases) to an approved chimney or vent (see exception). Chimneys and vents must be capable of creating sufficient draft to properly vent the appliances served. Appliances that are listed and labeled for unvented operation such as domestic cooking appliances, room heaters and gas-fired refrigerators are exempt from this requirement.

Some components of the combustion products produced by fuel-burning appliances are toxic to humans and animals and can cause illness and death. The most harmful component of combustion products is carbon monoxide (CO). Typical symptoms of CO poisoning are nausea, headache, dizziness, disorientation, confusion, rapid breathing, fatigue, flu-like symptoms and loss of consciousness. Exposure to CO is detrimental to health in all cases and can be lethal depending upon its concentration, the duration of exposure and the condition of the occupants. Combustion products must not be allowed to enter or leak into any occupiable or habitable space.

Chimneys and vents should be periodically inspected for deterioration or blockage that could impair their operation or allow combustion products to leak into the building. The appliance and equipment connections to a chimney or vent should also be inspected for deterioration, blockage or separation of connections.

Evidence of chimney or vent connector decay or rusting generally indicates improper draft. A venting system that creates insufficient draft or that is subject to backdraft (reverse flow) will experience accelerated deterioration because of the corrosive effect of the combustion products (flue gases). "Draft" is the pressure differential necessary to cause the flow of flue gases from the appliance or equipment to the chimney or vent and up to the outdoor atmosphere. Proper draft should be verified by a trained heating technician and should be checked each time the appliance or equipment is serviced.

The exception recognizes that a chimney or vent is not required for fuel-burning appliances listed and labeled for unvented operation. It is imperative that unvented appliances be operated and maintained in strict accordance with the manufacturer's instructions (see the IFGC for additional requirements for unvented room heaters).

INTERNATIONAL CODE COUNCIL®
Copyright © 2015 ICC. ALL RIGHTS RESERVED. Accessed by David Dammon on Jun 21, 2017 12:30:52 PM pursuant to License Agreement with ICC. No further reproduction or distribution authorized. ANY UNAUTHORIZED REPRODUCTION OR DISTRIBUTION IS A VIOLATION OF THE FEDERAL COPYRIGHT ACT AND THE LICENSE AGREEMENT, AND SUBJECT TO CIVIL AND CRIMINAL PENALTIES THEREUNDER.

603.3 Clearances. Required clearances to combustible materials shall be maintained.

❖ Proper clearances must be maintained between combustible materials and all heat-producing appliances and equipment. Adequate clearances are necessary to prevent the possible ignition of combustibles. The required clearances for the labeled appliances and equipment must be maintained in accordance with the manufacturer's requirements. Clearances for chimneys, vents and their connectors are also specified in the IMC and IFGC.

Frequently, an inspector will encounter combustible materials that have been placed too close to heat-producing appliances and equipment after the initial installation. Combustible storage, furnishings and remodeling are typical examples of such encounters. Most occupants are unaware of the hazard created when they store combustibles near or in contact with heat-producing appliances.

It is imperative that adequate clearances be maintained to avoid a potential fire hazard.

603.4 Safety controls. Safety controls for fuel-burning equipment shall be maintained in effective operation.

❖ All appliances and heating equipment are equipped with safety controls and devices intended to prevent fire or explosion in the event of equipment malfunction or abnormal operation. Typical controls and devices are as follows: temperature limit switches; pressure limit switches; pressure relief valves; low-water cutoffs; stack controls; pilot safety controls; draft monitoring controls and flame supervision controls. These controls are designed to prevent such conditions as overheating, excessive pressures, loss of heat transfer medium, loss of ignition source, loss of venting means and loss of main flame, among others.

All such safety controls must be periodically tested and inspected to verify their proper functioning and assess their reliability. Such testing and inspection should be performed by trained technicians when the appliances are serviced and cleaned.

An inoperative or otherwise malfunctioning safety control or device could create an extreme life safety hazard.

603.5 Combustion air. A supply of air for complete combustion of the fuel and for *ventilation* of the space containing the fuel-burning equipment shall be provided for the fuel-burning equipment.

❖ Combustion air includes the air necessary for complete combustion of the fuel, the air required for draft hood dilution and the air necessary for ventilation of the enclosure in which the appliance is located. A lack of combustion air will result in the incomplete combustion of fuel that, in turn, causes soot production, increased CO production, serious appliance malfunction and the risk of fire or explosion. The lack of draft hood dilution air will result in improper draft and appliance venting. The incomplete combustion of fuel and improper draft and venting compound each other and greatly increase the risk of CO poisoning. The lack of ventilation air can result in excessive temperatures in the appliance enclosure, thereby introducing the risk of overheating the appliance and the risk of fire.

In existing structures, adequate combustion air provisions are often lacking or have been blocked, covered or otherwise defeated. Looking for proper combustion air supply is an important part of any inspection.

Fuel-burning equipment must be provided with combustion air in accordance with the IMC and IFGC.

603.6 Energy conservation devices. Devices intended to reduce fuel consumption by attachment to a fuel-burning appliance, to the fuel supply line thereto, or to the vent outlet or vent piping therefrom, shall not be installed unless *labeled* for such purpose and the installation is specifically *approved*.

❖ Energy-saving devices are required to bear the label of an approved testing agency, must be installed in accordance with the manufacturer's installation instructions and must be installed with the specific approval of the code official.

Improperly installed or applied energy-saving devices can adversely affect the operation of an appliance and cause it to become unsafe. A common example would be the improper installation of a flue damper or restrictor device in the chimney or vent connector of a fuel-burning appliance. The resultant installation could cause vent failure and subject the occupants to CO poisoning.

The installation of such devices would require a permit under the IFGC or IMC.

SECTION 604
ELECTRICAL FACILITIES

604.1 Facilities required. Every occupied building shall be provided with an electrical system in compliance with the requirements of this section and Section 605.

❖ This section prescribes the minimum electrical facilities that must be installed and maintained in all buildings used for human occupancy.

604.2 Service. The size and usage of appliances and equipment shall serve as a basis for determining the need for additional facilities in accordance with NFPA 70. *Dwelling units* shall be served by a three-wire, 120/240 volt, single-phase electrical service having a minimum rating of 60 amperes.

❖ This section prescribes the minimum size of the electrical service that must be provided for all structures. The electrical service consists of the service entrance conductors, metering devices, service grounding means, main disconnect, main overcurrent device and, typically, the distribution panelboard and all overcurrent devices. The size of the service is dependent upon the size of the load (demand). The total electrical usage or load must be determined as prescribed in NFPA 70. For dwelling units, the IRC also provides load calculation methods.

INTERNATIONAL CODE COUNCIL®
Copyright © 2015 ICC. ALL RIGHTS RESERVED. Accessed by David Dammon on Jun 21, 2017 12:30:52 PM pursuant to License Agreement with ICC. No further reproduction or distribution authorized. ANY UNAUTHORIZED REPRODUCTION OR DISTRIBUTION IS A VIOLATION OF THE FEDERAL COPYRIGHT ACT AND THE LICENSE AGREEMENT, AND SUBJECT TO CIVIL AND CRIMINAL PENALTIES THEREUNDER.

If the actual load exceeds the capacity of the service, this section is intended to prompt added capacity. In no case is the service for a dwelling unit permitted to be less than 60 amperes. Additionally, all dwelling unit services are to be 120/240 volt (three wire). The electrical usage in a typical dwelling unit today requires a service of at least a 60-ampere capacity to meet the occupants' needs. The requirement for a three-wire (120/240 volt) service is intended to allow the use of 240-volt appliances, such as clothes dryers, air conditioners and ranges. Additionally, appliances that operate at 240 volts consume less current, thereby conserving the remaining capacity of the service.

Overloading or constant loading to capacity subjects the service to excessive heating and component stress. Not only does this invite failure, but it also increases the risk of fire and creates the inconveniences of a nuisance circuit breaker tripping or fuse blowing. Nuisance fuse blowing, in turn, encourages the dangerous practice of replacing blown fuses with fuses of larger size. Overfusing is one of the largest potential causes of fire in any electrical system.

An inadequately sized service could also restrict the occupants' use of appliances by imposing nonsimultaneous use to avoid overloading the service.

A service determined to be undersized in accordance with this section and the requirements of NFPA 70 or the IRC should be enlarged as necessary.

604.3 Electrical system hazards. Where it is found that the electrical system in a structure constitutes a hazard to the *occupants* or the structure by reason of inadequate service, improper fusing, insufficient receptacle and lighting outlets, improper wiring or installation, *deterioration* or damage, or for similar reasons, the *code official* shall require the defects to be corrected to eliminate the hazard.

❖ Any electrical system deficiency or condition that is deemed hazardous to the occupants or to the structure must be abated to eliminate the hazard. Electrical system hazards include, but are not limited to, the following:

- Inadequate (undersized) service.
- Improper fusing and overcurrent protection.
- Insufficient receptacle distribution.
- Lack of sufficient lighting fixtures.
- Deteriorated, damaged, worn or otherwise defective wiring, equipment and appliances.
- Improperly installed or protected wiring methods.
- Lack of proper service or equipment grounding.
- Open splices in wiring.
- Inadequately supported devices, wiring or equipment.
- Any exposed conductors or components constituting a shock hazard.
- Missing or damaged device cover plates.
- Excessive use of extension cords.
- Overloaded receptacles or circuitry.
- Lack of ground fault circuit interrupter (GFCI) protection.

The most common hazard is improper overcurrent protection of conductors. Fuses and circuit breakers are devices designed to limit current flow to the maximum safe current-carrying capacity (ampacity) of a conductor. With rare exception, the conductor's current-carrying capacity (ampacity) must be greater than or at least equal to the ampere rating of the overcurrent device that supplies it. If a fuse or circuit breaker has a larger ampere-rating capacity than the conductors it is intended to protect, the device will permit the conductors to carry currents in excess of the conductors' capacity. The resultant overload will cause conductor heating, insulation deterioration and, possibly, a fire. The typical scenario involves an occupant who thinks he or she has "cured" a fuse-blowing problem by substituting fuses that are larger in size. In actuality, an extreme fire hazard has been created by eliminating the circuit conductor overcurrent protection. Type S tamper-proof fuses and adapters can be installed to prevent the occupants from installing the wrong size fuses.

604.3.1 Abatement of electrical hazards associated with water exposure. The provisions of this section shall govern the repair and replacement of electrical systems and equipment that have been exposed to water.

❖ The purpose of this section is to provide enforceable provisions to the code official that address hazards in electrical equipment that has been exposed to water. These provisions are derived from "Guidelines for Handling Water-damaged Electrical Equipment," published by the National Electrical Manufacturers Association (NEMA).

Section 604.3.1 defines the scope of the section as pertaining to electrical equipment and systems that have been exposed to water.

604.3.1.1 Electrical equipment. Electrical distribution equipment, motor circuits, power equipment, transformers, wire, cable, flexible cords, wiring devices, ground fault circuit interrupters, surge protectors, molded case circuit breakers, low-voltage fuses, luminaires, ballasts, motors and electronic control, signaling and communication equipment that have been exposed to water shall be replaced in accordance with the provisions of the *International Building Code*.

Exception: The following equipment shall be allowed to be repaired where an inspection report from the equipment manufacturer or *approved* manufacturer's representative indicates that the equipment has not sustained damage that requires replacement:

1. Enclosed switches, rated a maximum of 600 volts or less;
2. Busway, rated a maximum of 600 volts;
3. Panelboards, rated a maximum of 600 volts;
4. Switchboards, rated a maximum of 600 volts;
5. Fire pump controllers, rated a maximum of 600 volts;

INTERNATIONAL CODE COUNCIL®
Copyright © 2015 ICC. ALL RIGHTS RESERVED. Accessed by David Dammon on Jun 21, 2017 12:30:52 PM pursuant to License Agreement with ICC. No further reproduction or distribution authorized. ANY UNAUTHORIZED REPRODUCTION OR DISTRIBUTION IS A VIOLATION OF THE FEDERAL COPYRIGHT ACT AND THE LICENSE AGREEMENT, AND SUBJECT TO CIVIL AND CRIMINAL PENALTIES THEREUNDER.

6. Manual and magnetic motor controllers;
7. Motor control centers;
8. Alternating current high-voltage circuit breakers;
9. Low-voltage power circuit breakers;
10. Protective relays, meters and current transformers;
11. Low- and medium-voltage switchgear;
12. Liquid-filled transformers;
13. Cast-resin transformers;
14. Wire or cable that is suitable for wet locations and whose ends have not been exposed to water;
15. Wire or cable, not containing fillers, that is suitable for wet locations and whose ends have not been exposed to water;
16. Luminaires that are listed as submersible;
17. Motors;
18. Electronic control, signaling and communication equipment.

❖ Listed in this section are certain types of electrical equipment that, if exposed to conditions such as submersion in floodwater or inundation by fire sprinkler discharge, must be replaced. Protective components, such as circuit breakers, overload relays, low voltage or medium voltage protective devices within a switchgear assembly, and fuses are necessary for the safe operation of the distribution circuits and should be replaced when exposed to water. The ability of a transformer to operate as intended can be impaired by corrosion to the transformer core, flood debris deposited inside the transformer, or contamination of the transformer fluid. The exception to this section allows for repair of certain components of an electrical distribution system and certain electrical equipment provided that an inspection report from the equipment manufacturer or approved manufacturer's representative is submitted to the code official indicating that the level of damage to the equipment does not warrant replacement. Note that panelboards and switchboards listed in the exception refer to the boards, busses and related hardware, not the circuit breakers that they hold.

604.3.2 Abatement of electrical hazards associated with fire exposure. The provisions of this section shall govern the repair and replacement of electrical systems and equipment that have been exposed to fire.

❖ This section defines the scope of the section as pertaining to electrical equipment and systems that have been exposed to fire.

604.3.2.1 Electrical equipment. Electrical switches, receptacles and fixtures, including furnace, water heating, security system and power distribution circuits, that have been exposed to fire, shall be replaced in accordance with the provisions of the *International Building Code*.

> **Exception:** Electrical switches, receptacles and fixtures that shall be allowed to be repaired where an inspection report from the equipment manufacturer or *approved* manufacturer's representative indicates that the equipment has not sustained damage that requires replacement.

❖ This section lists the type of electrical components and equipment that must be replaced, where they have been exposed to fire. Note that the code does not elaborate on what is meant by "exposed to fire," but the assumption is that the equipment and components have been subjected to heat, smoke and/or direct flame impingement. The ability of electrical switches, receptacles and fixtures—including furnace, water heating, security system and power distribution circuits—to operate as intended can be impaired by exposure to fire. The exception to this section allows for repair of these components provided that an inspection report from the equipment manufacturer or approved manufacturer's representative is submitted to the code official indicating that the level of damage to the equipment does not warrant replacement.

SECTION 605
ELECTRICAL EQUIPMENT

605.1 Installation. Electrical equipment, wiring and appliances shall be properly installed and maintained in a safe and *approved* manner.

❖ This section provides necessary safety requirements for electrical equipment, wiring and appliances.

All electrical equipment, wiring and appliances must be properly installed and maintained in accordance with this code and NFPA 70 or the *International Residential Code*® (IRC®). It is the responsibility of the building owner or operator to provide and safely maintain the electrical facilities required herein.

605.2 Receptacles. Every *habitable space* in a dwelling shall contain not less than two separate and remote receptacle outlets. Every laundry area shall contain not less than one grounding-type receptacle or a receptacle with a ground fault circuit interrupter. Every *bathroom* shall contain not less than one receptacle. Any new *bathroom* receptacle outlet shall have ground fault circuit interrupter protection. All receptacle outlets shall have the appropriate faceplate cover for the location.

❖ Every room or space in a dwelling unit that is used for living, sleeping, eating or cooking must be provided with at least two separate receptacle outlets. Such outlets must be as remote from each other as practicable. The quantity of receptacles required by this section is far less than that required by NFPA 70 and the IRC for new construction, but is considered to be a reasonable compromise for existing structures.

This provision is intended to minimize or eliminate the use of extension cords. The amount of electrical current that any extension cord can safely conduct is limited by the size of its conductors. This principle is not understood by much of the general population. As a result, extension cords are commonly overloaded by the connection of either too many appliances or any loads in excess of the cord's capacity. Overloading

INTERNATIONAL CODE COUNCIL®
Copyright © 2015 ICC. ALL RIGHTS RESERVED. Accessed by David Dammon on Jun 21, 2017 12:30:52 PM pursuant to License Agreement with ICC. No further reproduction or distribution authorized. ANY UNAUTHORIZED REPRODUCTION OR DISTRIBUTION IS A VIOLATION OF THE FEDERAL COPYRIGHT ACT AND THE LICENSE AGREEMENT, AND SUBJECT TO CIVIL AND CRIMINAL PENALTIES THEREUNDER.

extension cords causes an increase in the conductor's temperature. This increase can exceed the temperature rating of the conductor's insulation, causing it to melt, decompose or burn. The burning insulation can easily start a fire, and the resultant loss of conductor insulation can cause a short circuit or ground fault that can also act as a source of ignition. The buildup of heat in an extension cord is often made worse by excessive cord length and by the insulating effect of rugs that often cover these cords. Extension cords are much more susceptible to physical damage than permanent wiring methods. Damage to cords increases the likelihood of shorts, ground faults and poor connections, all of which can cause a fire. In addition to the fire hazard, extension cords pose a tripping hazard to the occupants and, when damaged, pose an electric shock hazard.

Every laundry room is required to have at least one grounded-type receptacle outlet. Appliances typically used in a laundry room require a grounding conductor for safe operation. Grounding appliances reduces the risk of electrical shock, which can occur when an occupant comes in contact with a defective appliance. This section appears to allow a GFCI-protected receptacle outlet in lieu of a grounded-type receptacle; however, this is only allowed for very limited circumstances by NFPA 70. As a general rule, GFCI protection is not a substitute for grounding-type receptacles. Where grounding-type receptacles cannot be installed, a GFCI receptacle offers a measure of protection from electrical shock. Adding GFCI protection to existing receptacle outlets is generally simple and inexpensive. Where existing boxes are small or crowded, surface extension boxes can be added to make room or GFCI circuit breakers can be used for the branch circuit.

Every bathroom must have at least one receptacle outlet to accommodate the many grooming and personal hygiene appliances that are commonly used in bathrooms. This requirement also applies to toilet rooms with lavatories that do not contain bathing fixtures, as they could also be used for grooming and personal hygiene purposes. If a bathroom receptacle outlet has to be installed in order to achieve compliance with this section, this code, NFPA 70 and the IRC, all would require GFCI protection for such outlet.

To protect occupants from accidental contact with electrical wiring or components, appropriate faceplates are required for all receptacles.

The installation of a receptacle where one previously did not exist is considered new work and must comply with the provisions of NFPA 70 or the IRC.

605.3 Luminaires. Every public hall, interior stairway, *toilet room,* kitchen, *bathroom,* laundry room, boiler room and furnace room shall contain not less than one electric luminaire. Pool and spa luminaires over 15 V shall have ground fault circuit interrupter protection.

❖ Permanent lighting outlets must be provided to illuminate hallways, stairways, kitchens, bathrooms and laundry, toilet, furnace and boiler rooms. The activities in such spaces are not compatible with portable lighting such as floor or table lamps; therefore, permanent lighting outlets (fixtures/luminaires) are required. In all other spaces, it is assumed that the occupants will provide lamps or other portable fixtures to meet their artificial lighting needs when natural lighting does not exist. Adequate lighting is necessary for occupants to traverse stairs and corridors without undue hazard, to allow for the proper use of plumbing fixtures and appliances, and to allow for inspection and servicing of appliances.

Furnace and boiler rooms are defined terms in the IMC, and the term "furnace room" also applies to a room containing a water heater.

Lighting related to pools and spas is required to be protected with GFCIs when it is over 15 volts. Providing this protection in these wet locations results in safer conditions for the users.

605.4 Wiring. Flexible cords shall not be used for permanent wiring, or for running through doors, windows, or cabinets, or concealed within walls, floors, or ceilings.

❖ The use of flexible cords in place of permanent fixed wiring is typically an indication of inadequate electrical wiring capacity or incompatible demands. Physical damage to flexible cords caused by concealment or improper or inadequate maintenance could result in localized resistance heating, shorts and ground faults.

The amount of electrical current that any flexible cord can safely conduct is limited by the size of its conductor, its insulation type and its environment. This principle is often not understood by the general public. As a result, extension cords are commonly overloaded by connecting appliances and other loads in excess of the cord's capacity.

Overloading of flexible cords causes an increase in the conductor's temperature. This increase in temperature can exceed the temperature rating of the conductor insulation, causing it to melt, decompose or burn. The burning insulation can ignite other combustible materials. The resulting loss of conductor insulation can also cause a short circuit or ground fault that can act as a source of ignition. The buildup of heat in an extension cord is often made worse by excessive cord length and by the insulating effect of rugs that often cover extension cords. Flexible cords are much more susceptible to physical damage than permanent wiring. Damage to flexible cords increases the likelihood of shorts and poor connections, both of which can cause a fire.

In addition to the fire hazard, extension cords pose a tripping hazard to the occupants and, when damaged, can pose an electrical shock hazard. Securing flexible cords to a wall baseboard, door jambs, etc., with nails, staples or other fasteners to eliminate tripping hazards can create another dangerous condition by pinching or piercing the cord and causing shorts or faults that could lead to ignition.

INTERNATIONAL CODE COUNCIL®
Copyright © 2015 ICC. ALL RIGHTS RESERVED. Accessed by David Dammon on Jun 21, 2017 12:30:52 PM pursuant to License Agreement with ICC. No further reproduction or distribution authorized. ANY UNAUTHORIZED REPRODUCTION OR DISTRIBUTION IS A VIOLATION OF THE FEDERAL COPYRIGHT ACT AND THE LICENSE AGREEMENT, AND SUBJECT TO CIVIL AND CRIMINAL PENALTIES THEREUNDER.

SECTION 606
ELEVATORS, ESCALATORS AND DUMBWAITERS

606.1 General. Elevators, dumbwaiters and escalators shall be maintained in compliance with ASME A17.1. The most current certificate of inspection shall be on display at all times within the elevator or attached to the escalator or dumbwaiter, be available for public inspection in the office of the building *operator* or be posted in a publicly conspicuous location *approved* by the *code official*. The inspection and tests shall be performed at not less than the periodic intervals listed in ASME A17.1, Appendix N, except where otherwise specified by the authority having jurisdiction.

❖ Elevators, escalators and dumbwaiters must be maintained in compliance with ASME A17.1, *Safety Code for Elevators and Escalators*. ASME A17.1 contains requirements for periodic inspection and testing that are necessary to detect any possible defects. The safety of the occupants is dependent upon routine safety checks performed by competent elevator service technicians.

Displaying the certificate of inspection is an aid to building inspectors and provides the users of the machinery with some confidence in its safety. This requirement will also encourage the owner to obtain the required inspections. Additionally, the option to post the certificate in a publicly conspicuous location approved by the code official allows a building operator to request that the certificate be placed in a location other than in the elevator or on the escalator or dumbwaiter, provided that location is publicly conspicuous and approved by the code official.

606.2 Elevators. In buildings equipped with passenger elevators, not less than one elevator shall be maintained in operation at all times when the building is occupied.

Exception: Buildings equipped with only one elevator shall be permitted to have the elevator temporarily out of service for testing or servicing.

❖ If a building has more than one passenger elevator, at least one such elevator must be kept operational during all periods of building occupancy. As indicated in the exception, a building with only one elevator is allowed to have its elevator temporarily out of service only for the purpose of maintenance, repair or testing.

SECTION 607
DUCT SYSTEMS

607.1 General. Duct systems shall be maintained free of obstructions and shall be capable of performing the required function.

❖ Exhaust ducts for toilet rooms, bathrooms, kitchens and clothes dryers require maintenance to prevent blockages and obstructions that can cause appliance/equipment malfunction, poor performance and potential fire hazards. Heating, cooling and ventilation ducts also need to be maintained to allow proper airflow, to maintain proper HVAC equipment operation and to help eliminate air-borne contaminants that could cause health hazards. Ducts can collect hazardous quantities of grease, lint, dust and debris that could be potential fire hazards. Duct systems of all types are typically ignored by building owners and occupants and thus receive little or no maintenance.

Bibliography

The following resource materials were used in the preparation of the commentary for this chapter of the code:

ASME A17.1/CSA B44-2013, *Safety Code For Elevators and Escalators*. New York: American Society of Mechanical Engineers, 2013.

IFGC-2015, *International Fuel Gas Code*. Washington, D.C.: International Code Council, 2014.

IMC-2015, *International Mechanical Code*. Washington, D.C.: International Code Council, 2014.

IPC-2015, *International Plumbing Code*. Washington, D.C.: International Code Council, 2014.

IRC-2015, *International Residential Code*. Washington, D.C.: International Code Council, 2014.

NFPA 70-14, *National Electrical Code*. Quincy, MA: National Fire Protection Association, 2013.

INTERNATIONAL CODE COUNCIL®
Copyright © 2015 ICC. ALL RIGHTS RESERVED. Accessed by David Dammon on Jun 21, 2017 12:30:52 PM pursuant to License Agreement with ICC. No further reproduction or distribution authorized. ANY UNAUTHORIZED REPRODUCTION OR DISTRIBUTION IS A VIOLATION OF THE FEDERAL COPYRIGHT ACT AND THE LICENSE AGREEMENT, AND SUBJECT TO CIVIL AND CRIMINAL PENALTIES THEREUNDER.

INTERNATIONAL CODE COUNCIL®
Copyright © 2015 ICC. ALL RIGHTS RESERVED. Accessed by David Dammon on Jun 21, 2017 12:30:52 PM pursuant to License Agreement with ICC. No further reproduction or distribution authorized. ANY UNAUTHORIZED REPRODUCTION OR DISTRIBUTION IS A VIOLATION OF THE FEDERAL COPYRIGHT ACT AND THE LICENSE AGREEMENT, AND SUBJECT TO CIVIL AND CRIMINAL PENALTIES THEREUNDER.

Chapter 7:
Fire Safety Requirements

General Comments

Chapter 7 establishes minimum requirements for fire safety facilities and fire protection systems.

A critical element that must be investigated during an inspection is the condition of fire safety systems.

These provisions take on even greater importance in those jurisdictions where periodic fire inspections are not conducted in accordance with a comprehensive fire code.

In jurisdictions where fire inspections are regularly performed on existing facilities, all inspections must be coordinated between the appropriate officials to alleviate multiple and duplicative notices and, at the worst, conflicting instructions.

A great potential for fatal fires exists where people sleep—dwelling units, hotels, motels, nursing homes, etc. The reasons for the increased hazard are obvious: there are often delayed reactions before people notice a fire (occupants waking from sleep are temporarily confused), rooms are darkened and the occupants are dressed in bedclothes. All of these circumstances reduce the reaction time of the occupants and increase the likelihood that they will make a fatal misjudgment.

Purpose

Building codes regulating new construction are intended to verify, prior to occupancy, that the building has been constructed in a manner that will provide the occupants a relatively safe and secure environment. Once these new structures are occupied, a variety of hazards inherent in their use may arise. Often, these hazards are unanticipated and can affect the overall safety of the occupants.

The purpose of Chapter 7 is to address those fire hazards that arise as the result of a building's occupancy. It also provides minimum requirements for the fire safety issues that are most likely to arise in older buildings.

SECTION 701
GENERAL

❖ This section establishes the overall goal of the chapter and outlines who is responsible for complying with its provisions.

701.1 Scope. The provisions of this chapter shall govern the minimum conditions and standards for fire safety relating to structures and exterior *premises*, including fire safety facilities and equipment to be provided.

❖ In the *International Codes*® (I-Codes®), the foremost code to address fire safety in existing buildings is the *International Fire Code*® (IFC®). Fire safety is also within the scope of the code; however, for correlation with the IFC most of the requirements of Chapter 7 either parallel or directly reference that code. As stated in the preface to this commentary, sections of this chapter with the [F] designation in front of the section number are controlled initially by the International Fire Code Development Committee during the annual code change process of the International Code Council® (ICC®), thereby preventing conflicts between the code and the IFC.

Fire safety requirements having to do with means of egress, fire-resistance rating of building elements and fire protection systems, such as sprinklers and smoke detectors, are addressed in this chapter. Fire safety topics such as storage of combustibles, use or storage of hazardous materials and the regulation of certain activities or operations within buildings that contribute to the fire hazard are covered exclusively in the IFC.

701.2 Responsibility. The *owner* of the *premises* shall provide and maintain such fire safety facilities and equipment in compliance with these requirements. A person shall not occupy as *owner-occupant* or permit another person to occupy any *premises* that do not comply with the requirements of this chapter.

❖ The owner of the premises should provide and maintain such fire safety facilities and equipment in compliance with these requirements. A person should not occupy as owner-occupant or allow another person to occupy any premises that does not comply with the requirements of this chapter.

This section clearly establishes that the owner of the premises is responsible for compliance with these requirements. Whereas occupants who are not owners have some responsibility in regard to clean and safe conditions within individual dwelling units (see Section 301.2), the requirements of this chapter pertain to building systems and components that are not typically under the control of the occupants.

INTERNATIONAL CODE COUNCIL®
Copyright © 2015 ICC. ALL RIGHTS RESERVED. Accessed by David Dammon on Jun 21, 2017 12:30:52 PM pursuant to License Agreement with ICC. No further reproduction or distribution authorized. ANY UNAUTHORIZED REPRODUCTION OR DISTRIBUTION IS A VIOLATION OF THE FEDERAL COPYRIGHT ACT AND THE LICENSE AGREEMENT, AND SUBJECT TO CIVIL AND CRIMINAL PENALTIES THEREUNDER.

SECTION 702
MEANS OF EGRESS

❖ Means of egress in existing buildings is regulated by the IFC. The IFC contains provisions for number of exits, egress width, stairs, guards, handrails, corridors, dead ends, obstructed exits, exit signs and other requirements for evaluating the means of egress in existing buildings. Aisles, locked doors and emergency escape openings are life safety features that are frequently affected by routine operations in existing buildings, and can be inspected by property maintenance inspectors in the course of a typical inspection. These topics, therefore, are included in the subsections of Section 702 of the code.

[F] 702.1 General. A safe, continuous and unobstructed path of travel shall be provided from any point in a building or structure to the *public way*. Means of egress shall comply with the *International Fire Code.*

❖ Even a slight delay in a fire situation can mean the difference between life and death. Dangerous levels of smoke can develop in a deceptively quick manner at the early stages of a fire, and obstruction to means of egress or insufficient means of egress very often leads to tragedy in a fire.

This section prohibits obstruction of corridors, hallways and stairs by miscellaneous storage that could delay egress. It also prohibits dead-end corridors or passageways that could cause confusion or require occupants to retrace their steps to find a way out of the building. Specific requirements for means of egress, such as permissible length of dead-end corridors or required means of egress width, are found in the IFC.

[F] 702.2 Aisles. The required width of aisles in accordance with the *International Fire Code* shall be unobstructed.

❖ Assembly occupancies that contain seats, tables, displays and similar furnishings or equipment present a unique challenge for efficient and orderly exiting in an emergency situation. For this reason, the IFC contains detailed requirements for the configuration, width and availability of aisles in these occupancies. This section requires aisles to be unobstructed so that they will serve their intended (and required) function.

[F] 702.3 Locked doors. Means of egress doors shall be readily openable from the side from which egress is to be made without the need for keys, special knowledge or effort, except where the door hardware conforms to that permitted by the *International Building Code*.

❖ One of the fundamental principles of means of egress in both new and existing buildings is that doors must be readily operable from the "egress side" (the side occupants approach in order to exit the building). Locks that require key operation from the inside are prohibited except in very limited circumstances involving security at main entrance doors for certain occupancies as prescribed in the *International Building Code*® (IBC®). Locks that are operated from the interior, such as thumb turns or flush bolts, are typically prohibited since they require special knowledge or effort, although this is subject to the judgement of the code official in existing buildings. Doors that are locked from the exterior of the building but are released by the unlatching mechanism from the interior, such as panic hardware and security hardware involving doorknobs or lever mechanisms, are the preferred alternative if security is needed.

[F] 702.4 Emergency escape openings. Required emergency escape openings shall be maintained in accordance with the code in effect at the time of construction, and the following. Required emergency escape and rescue openings shall be operational from the inside of the room without the use of keys or tools. Bars, grilles, grates or similar devices are permitted to be placed over emergency escape and rescue openings provided the minimum net clear opening size complies with the code that was in effect at the time of construction and such devices shall be releasable or removable from the inside without the use of a key, tool or force greater than that which is required for normal operation of the escape and rescue opening.

❖ This section takes into account that many changes have occurred over the years in the many editions of the construction codes. The provisions for emergency escape and rescue openings are only subject to the code that is in effect at the time of construction, rather than expecting all structures to retroactively meet the requirements of each new code.

"Required emergency escape openings" refers to the escape windows and doors that are required for sleeping rooms and basements in new construction. In the IBC, emergency escape openings are required from all basements as well as all sleeping rooms; however, codes for new construction prior to the development of the IBC did not require emergency escape windows in basements without sleeping rooms.

The intent of this section is that emergency escape openings required at the time of a building's construction be maintained unobstructed. It prohibits the installation of security devices on these required openings unless the windows or doors provide a net clear opening of at least that which is required for new construction in accordance with the IBC. If installed, these devices must be removable (or movable to provide the required net clear opening space) in a manner that facilitates the quick use of the window in an emergency situation; therefore, security devices that require the unscrewing of screws or bolts, prying with a bar or unlocking with a key in order to be removed or moved are not permitted on these openings. In addition, they must not require excessive force for their removal, since they may need to be operated by children or the elderly.

INTERNATIONAL CODE COUNCIL®
Copyright © 2015 ICC. ALL RIGHTS RESERVED. Accessed by David Dammon on Jun 21, 2017 12:30:52 PM pursuant to License Agreement with ICC. No further reproduction or distribution authorized. ANY UNAUTHORIZED REPRODUCTION OR DISTRIBUTION IS A VIOLATION OF THE FEDERAL COPYRIGHT ACT AND THE LICENSE AGREEMENT, AND SUBJECT TO CIVIL AND CRIMINAL PENALTIES THEREUNDER.

SECTION 703
FIRE-RESISTANCE RATINGS

❖ Required fire-resistance-rated walls and opening protectives are those elements that are required to be rated in accordance with the code that was in effect at the time of construction. This section requires that these be maintained so that they will perform their intended function.

[F] 703.1 Fire-resistance-rated assemblies. The required fire-resistance rating of fire-resistance-rated walls, fire stops, shaft enclosures, partitions and floors shall be maintained.

❖ The "required fire-resistance rating" means the required rating of walls or floors at the time of construction. These required rated assemblies cannot be compromised in terms of construction or they will not perform as intended in a fire emergency. For instance, holes for running pipe or cable cannot be created in rated corridor walls where they extend above the ceiling line if the rated walls were required at the time of construction to extend to the floor deck above. Penetrations of this type would be prohibited unless protected as set forth in the IBC for new construction. Similarly, wall sheathing on rated walls cannot be removed and replaced unless the new material conforms to the listing for the rated wall.

[F] 703.2 Opening protectives. Required opening protectives shall be maintained in an operative condition. Fire and smokestop doors shall be maintained in operable condition. Fire doors and smoke barrier doors shall not be blocked or obstructed or otherwise made inoperable.

❖ Opening protectives are window and door assemblies that have been tested in accordance with the applicable standard and have a fire protection rating. For example, corridor walls that are required to be rated are also required to have rated door assemblies (typically 20 minutes) protecting the door openings. These doors are required to be self-closing or automatic closing so that they can serve their intended function and limit the spread of smoke and fire in a fire emergency. If a closer is removed or the door is propped open by a doorstop, the door has been made inoperable and would allow the free passage of flame and smoke as if the opening were not protected. Similarly, if a fire shutter protecting a window opening is removed or propped open such that it will not operate upon detection of heat, it has been made inoperable and violates this section of the code.

SECTION 704
FIRE PROTECTION SYSTEMS

❖ Smoke detectors are an essential life safety feature in residential occupancies, and are the only fire protection devices that are required in all dwellings; therefore, the code contains provisions for them and references the IFC for installation details.

[F] 704.1 General. Systems, devices and equipment to detect a fire, actuate an alarm, or suppress or control a fire or any combination thereof shall be maintained in an operable condition at all times in accordance with the *International Fire Code*.

❖ Fire protection systems currently in existing buildings, including sprinklers, standpipes, smoke detectors and fire alarms, are regulated by the IFC.

[F] 704.1.1 Automatic sprinkler systems. Inspection, testing and maintenance of automatic sprinkler systems shall be in accordance with NFPA 25.

❖ This section gives the code official the requirements for the inspection, testing and maintenance of fire sprinklers, fire pumps, standpipes, etc., on existing buildings. This information will be useful in areas where the property maintenance inspector is the individual verifying the requirements.

[F] 704.1.2 Fire department connection. Where the fire department connection is not visible to approaching fire apparatus, the fire department connection shall be indicated by an *approved* sign mounted on the street front or on the side of the building. Such sign shall have the letters "FDC" not less than 6 inches (152 mm) high and words in letters not less than 2 inches (51 mm) high or an arrow to indicate the location. Such signs shall be subject to the approval of the fire code official.

❖ The section acknowledges that fire department connections (FDCs) on existing buildings may not always be readily visible from the street or nearest point of fire department vehicle access. In those instances, the location of the connection must be clearly marked with signage. The FDC may be located on the side of the building or in an alley, not visible to arriving fire-fighting forces. A sign is necessary so that those driving the arriving apparatus know where to maneuver the vehicle to get close to the FDC. This language is also found in section 912.2.2 of the IBC.

[F] 704.2 Single- and multiple-station smoke alarms. Single- and multiple-station smoke alarms shall be installed in existing Group I-1 and R occupancies in accordance with Sections 704.2.1 through 704.2.3.

❖ This section introduces the requirements for the installation of smoke alarms in existing Group I-1 and R occupancies. These requirements recognize the benefit of installing smoke alarms in existing structures, but provide several exceptions for buildings that are not undergoing substantial renovations. These provisions also correlate with Section 1103.8 of the IFC.

[F] 704.2.1 Where required. Existing Group I-1 and R occupancies shall be provided with single-station smoke alarms in accordance with Sections 704.2.1.1 through 704.2.1.4. Interconnection and power sources shall be in accordance with Sections 704.2.2 and 704.2.3.

Exceptions:

1. Where the code that was in effect at the time of construction required smoke alarms and smoke alarms

INTERNATIONAL CODE COUNCIL®
Copyright © 2015 ICC. ALL RIGHTS RESERVED. Accessed by David Dammon on Jun 21, 2017 12:30:52 PM pursuant to License Agreement with ICC. No further reproduction or distribution authorized. ANY UNAUTHORIZED REPRODUCTION OR DISTRIBUTION IS A VIOLATION OF THE FEDERAL COPYRIGHT ACT AND THE LICENSE AGREEMENT, AND SUBJECT TO CIVIL AND CRIMINAL PENALTIES THEREUNDER.

complying with those requirements are already provided.

2. Where smoke alarms have been installed in occupancies and dwellings that were not required to have them at the time of construction, additional smoke alarms shall not be required provided that the existing smoke alarms comply with requirements that were in effect at the time of installation.
3. Where smoke detectors connected to a fire alarm system have been installed as a substitute for smoke alarms.

❖ This section requires that Group I-1 and R occupancies without smoke alarms be provided with single-station smoke alarms. Reference is made to Sections 704.2.1.1 through 704.2.1.4 for the primary location requirements. Three exceptions are also provided to address possible scenarios where smoke alarms have already been installed but the installation does not meet the current code requirements, recognizing that the intent of the code is to permit existing smoke alarm installations to continue unchanged where they meet the code that was in effect at the time they were installed.

Exception 1 indicates that smoke alarms which have been installed and maintained in accordance with the applicable code at the time of construction can continue unchanged. Exception 2 indicates that smoke alarms, which were not required by the code at the time of construction, but were later installed, can continue when they meet the requirements of the applicable code at the time of installation. Exception 3 indicates that smoke detectors connected to a fire alarm system may be used in lieu of smoke alarms.

In summary, this section requires the installation of smoke alarms in Group I-1 and R occupancies that do not currently have any smoke alarms. It does not mandate compliance with current smoke alarm requirements if the building already has smoke alarms meeting the requirements applicable when they were installed. The focus here is not to have the owner replace or revise his or her smoke alarms any time the code requirements for new construction change.

[F] 704.2.1.1 Group R-1. Single- or multiple-station smoke alarms shall be installed in all of the following locations in Group R-1:

1. In sleeping areas.
2. In every room in the path of the *means of egress* from the sleeping area to the door leading from the *sleeping unit*.
3. In each story within the *sleeping unit*, including basements. For *sleeping units* with split levels and without an intervening door between the adjacent levels, a smoke alarm installed on the upper level shall suffice for the adjacent lower level provided that the lower level is less than one full story below the upper level.

❖ Because the occupants of a sleeping unit or suite may be asleep and unaware of a fire developing in the room or in the egress path, single- or multiple-station smoke alarms must be provided in the sleeping unit and in any intervening room between the sleeping unit and the exit access door from the room. If the sleeping unit or suite involves more than one level, a smoke alarm must be installed on every level. See the commentary to the definition of "Sleeping unit."

Smoke alarms are required in split-level arrangements, except those that meet the conditions described in Item 3. In accordance with Section 704.2.2, all smoke alarms within a sleeping unit or suite must be interconnected so that actuation of one alarm will actuate all smoke alarms within the sleeping unit or suite.

[F] 704.2.1.2 Groups R-2, R-3, R-4 and I-1. Single- or multiple-station smoke alarms shall be installed and maintained in Groups R-2, R-3, R-4 and I-1 regardless of *occupant load* at all of the following locations:

1. On the ceiling or wall outside of each separate sleeping area in the immediate vicinity of bedrooms.
2. In each room used for sleeping purposes.
3. In each story within a *dwelling unit*, including *basements* but not including crawl spaces and uninhabitable attics. In *dwellings* or *dwelling units* with split levels and without an intervening door between the adjacent levels, a smoke alarm installed on the upper level shall suffice for the adjacent lower level provided that the lower level is less than one full story below the upper level.

❖ Because the occupants of a dwelling unit may be asleep and unaware of a fire developing in the room or in an area within the dwelling unit, which would affect their ability to escape, single- or multiple-station smoke alarms must be installed in every bedroom, in the vicinity of all bedrooms (e.g., hallways leading to the bedrooms) and on each story of the dwelling unit (the commentary to Section 202 for the definition of "Dwelling unit").

If a sprinkler system was installed throughout the building in accordance with NFPA 13, 13R or 13D, if applicable, smoke alarms would still be required in the bedrooms even if residential sprinklers were used.

Smoke alarms are required in split-level arrangements. As required by Section 704.2.2, all smoke alarms within a dwelling unit must be interconnected so that actuation of one alarm will actuate the alarms in all detectors within the dwelling unit.

These provisions do not apply to one- and two-family dwellings and multiple single-family dwellings (townhouses) not more than three stories in height with a separate means of egress that are regulated by the IRC. The IRC is intended to be a stand-alone document. But, if the residential units do not fall within the scope of the IRC or for other reasons are intended to be subject to this code, then the requirements of this section would apply. International Fire Code Committee Interpretation No. 42-03 addresses this condition and contains additional explanatory information about

INTERNATIONAL CODE COUNCIL®
Copyright © 2015 ICC. ALL RIGHTS RESERVED. Accessed by David Dammon on Jun 21, 2017 12:30:52 PM pursuant to License Agreement with ICC. No further reproduction or distribution authorized. ANY UNAUTHORIZED REPRODUCTION OR DISTRIBUTION IS A VIOLATION OF THE FEDERAL COPYRIGHT ACT AND THE LICENSE AGREEMENT, AND SUBJECT TO CIVIL AND CRIMINAL PENALTIES THEREUNDER.

the IRC and its relationship to the other *International Codes*.

Although the occupants of a sleeping unit in a Group I-1 occupancy may be asleep, they are still considered capable of self-preservation. Regardless, smoke alarms are required in sleeping units.

[F] 704.2.1.3 Installation near cooking appliances. Smoke alarms shall not be installed in the following locations unless this would prevent placement of a smoke alarm in a location required by Section 704.2.1.1 or 704.2.1.2.

1. Ionization smoke alarms shall not be installed less than 20 feet (6096 m) horizontally from a permanently installed cooking appliance.
2. Ionization smoke alarms with an alarm-silencing switch shall not be installed less than 10 feet (3048 mm) horizontally from a permanently installed cooking appliance.
3. Photoelectric smoke alarms shall not be installed less than 6 feet (1829 mm) horizontally from a permanently installed cooking appliance.

❖ This section and the following section are intended to reduce nuisance alarms attributed to locating smoke alarms in close proximity to cooking appliances and bathrooms in which steam is produced. The provisions are consistent with similar requirements included in Section 29.8.3.4 of the 2010 and 2013 editions of NFPA 72.

[F] 704.2.1.4 Installation near bathrooms. Smoke alarms shall be installed not less than 3 feet (914 mm) horizontally from the door or opening of a bathroom that contains a bathtub or shower unless this would prevent placement of a smoke alarm required by Section 704.2.1.1 or 704.2.1.2.

❖ See the commentary to Section 704.2.1.

[F] 704.2.2 Interconnection. Where more than one smoke alarm is required to be installed within an individual *dwelling* or *sleeping unit*, the smoke alarms shall be interconnected in such a manner that the activation of one alarm will activate all of the alarms in the individual unit. Physical interconnection of smoke alarms shall not be required where listed wireless alarms are installed and all alarms sound upon activation of one alarm. The alarm shall be clearly audible in all bedrooms over background noise levels with all intervening doors closed.

Exceptions:

1. Interconnection is not required in buildings that are not undergoing *alterations*, repairs or construction of any kind.
2. Smoke alarms in existing areas are not required to be interconnected where *alterations* or repairs do not result in the removal of interior wall or ceiling finishes exposing the structure, unless there is an attic, crawl space or basement available that could provide access for interconnection without the removal of interior finishes.

❖ The installation of smoke alarms in areas remote from the sleeping area will be of minimal value if the alarm is not heard by the occupants. Interconnection of multiple smoke alarms within an individual dwelling unit or sleeping unit is required in order to alert a sleeping occupant of a remote fire within the unit before the combustion products reach the smoke alarm in the sleeping area and thus provide additional time for evacuation.

The term "interconnection" refers to either hard-wired systems or listed wireless systems. UL has listed smoke detectors that use this technology. It is presumed that on safely evacuating the unit or room of fire origin, an occupant will notify other occupants by actuating the manual fire alarm system or using other available means.

Exception 1 exempts buildings that are not undergoing any new work (alterations, additions, repairs, etc.) from providing interconnection between smoke alarms. This is to recognize that interconnection could require removal and replacement of interior finishes.

Exception 2 exempts areas of buildings that are not being altered or repaired to result in the removal of interior finishes. Where interior finishes are being removed, interconnection is required.

[F] 704.2.3 Power source. Single-station smoke alarms shall receive their primary power from the building wiring provided that such wiring is served from a commercial source and shall be equipped with a battery backup. Smoke alarms with integral strobes that are not equipped with battery backup shall be connected to an emergency electrical system. Smoke alarms shall emit a signal when the batteries are low. Wiring shall be permanent and without a disconnecting switch other than as required for overcurrent protection.

Exceptions:

1. Smoke alarms are permitted to be solely battery operated in existing buildings where no construction is taking place.
2. Smoke alarms are permitted to be solely battery operated in buildings that are not served from a commercial power source.
3. Smoke alarms are permitted to be solely battery operated in existing areas of buildings undergoing *alterations* or repairs that do not result in the removal of interior walls or ceiling finishes exposing the structure, unless there is an attic, crawl space or *basement* available that could provide access for building wiring without the removal of interior finishes.

❖ Smoke alarms are required to use AC as a primary power source and battery power as a secondary source to improve their reliability. For example, during a power outage, the probability of fire is increased because of the use of candles or lanterns for temporary light. Required backup battery power is intended to provide continued functioning of the smoke alarms. Smoke alarms are commonly designed to emit a recurring signal when batteries are low and need to be replaced.

INTERNATIONAL CODE COUNCIL®
Copyright © 2015 ICC. ALL RIGHTS RESERVED. Accessed by David Dammon on Jun 21, 2017 12:30:52 PM pursuant to License Agreement with ICC. No further reproduction or distribution authorized. ANY UNAUTHORIZED REPRODUCTION OR DISTRIBUTION IS A VIOLATION OF THE FEDERAL COPYRIGHT ACT AND THE LICENSE AGREEMENT, AND SUBJECT TO CIVIL AND CRIMINAL PENALTIES THEREUNDER.

Certain occupancies may already have an emergency electrical system in the building to monitor other building system conditions. The emergency electrical system provides a level of reliability equivalent to battery backup.

Exception 1 allows DC power operation only where no construction work is being done.

Exception 2 allows DC power operation only where buildings do not have commercial electrical service.

Exception 3 allows DC operation only in areas of buildings that are not being altered or repaired to result in the removal of interior finishes. Where interior finishes are being removed, DC power will be required unless Exception 2 is met.

[F] 704.2.4 Smoke detection system. Smoke detectors listed in accordance with UL 268 and provided as part of the building's fire alarm system shall be an acceptable alternative to single- and multiple-station smoke alarms and shall comply with the following:

1. The fire alarm system shall comply with all applicable requirements in Section 907 of the *International Fire Code*.
2. Activation of a smoke detector in a dwelling or sleeping unit shall initiate alarm notification in the *dwelling* or *sleeping unit* in accordance with Section 907.5.2 of the *International Fire Code*.
3. Activation of a smoke detector in a *dwelling* or *sleeping unit* shall not activate alarm notification appliances outside of the *dwelling* or *sleeping unit*, provided that a supervisory signal is generated and monitored in accordance with Section 907.6.5 of the *International Fire Code*.

❖ This section specifically allows the use of an automatic smoke detection system as an alternative to smoke alarms. In the past, when this concept was proposed, it was only specifically allowed through an alternative method and materials approach even though in concept it provides the same level of protection as smoke alarms. Such systems provides the same safety features necessary for occupants but are simply part of a fire alarm system. Note that if a detector activates within a sleeping or dwelling unit, the occupant notification system is not intended to activate. This is consistent with the operation of smoke alarms. Item 3 specifically requires the notification to be only to occupants of the sleeping unit or dwelling unit.

Bibliography

The following resource materials were used in the preparation of the commentary for this chapter of the code:

IBC-2015, *International Building Code*. Washington, D.C.: International Code Council, 2014.

IFC-2015, *International Fire Code*. Washington, D.C.: International Code Council, 2014.

INTERNATIONAL CODE COUNCIL®

Copyright © 2015 ICC. ALL RIGHTS RESERVED. Accessed by David Dammon on Jun 21, 2017 12:30:52 PM pursuant to License Agreement with ICC. No further reproduction or distribution authorized. ANY UNAUTHORIZED REPRODUCTION OR DISTRIBUTION IS A VIOLATION OF THE FEDERAL COPYRIGHT ACT AND THE LICENSE AGREEMENT, AND SUBJECT TO CIVIL AND CRIMINAL PENALTIES THEREUNDER.

Chapter 8: Referenced Standards

General Comments

Chapter 8 contains a comprehensive list of all standards that are referenced in the code. It is organized in a manner that makes it easy to locate specific references.

This chapter lists the standards that are referenced in various sections of this document. The standards are listed herein by the promulgating agency of the standard, the standard identification, the effective date and title and the section or sections of this document that reference the standard. The application of the referenced standards shall be as specified in Section 102.7.

It is important to understand that not every document related to building design and construction is qualified to be a "referenced standard." The ICC has adopted a criterion that standards referenced in the *International Codes*® and standards intended for adoption into the *International Codes* must meet in order to qualify as a referenced standard. The policy is summarized as follows:

- Code references: The scope and application of the standard must be clearly identified in the code text.
- Standard content: The standard must be written in mandatory language and appropriate for the subject covered. The standard shall not have the effect of requiring proprietary materials or prescribing a proprietary testing agency.
- Standard promulgation: The standard must be readily available and developed and maintained in a consensus process such as ASTM or ANSI.

The ICC Code Development Procedures, of which the standards policy is a part, are updated periodically. A copy of the latest version can be obtained from the ICC offices.

Once a standard is incorporated into the code through the code development process, it becomes an enforceable part of the code. When the code is adopted by a jurisdiction, the standard also is part of that jurisdiction's adopted code. It is for this reason that the criteria were developed. Compliance with this policy provides that documents incorporated into the code are, among others, developed through the use of a consensus process, written in mandatory language and do not mandate the use of proprietary materials or agencies. The requirement for a standard to be developed through a consensus process is vital, as it means that the standard will be representative of the most current body of available knowledge on the subject as determined by a broad spectrum of interested or affected parties without dominance by any single interest group. A true consensus process has many attributes, including, but not limited to:

- An open process that has formal (published) procedures that allow for the consideration of all viewpoints.
- A definitive review period that allows for the standard to be updated or revised.
- A process of notification to all interested parties.
- An appeals process.

Many available documents related to plumbing system design, installation and construction, though useful, are not "standards," and are not appropriate for reference in the code. Often, these documents are developed or written with the intention of being used for regulatory purposes, and are unsuitable for use as a regulation due to extensive use of recommendations, advisory comments and nonmandatory terms. Typical examples of such documents include installation instructions, guidelines and practices.

The objective of ICC's standards policy is to provide regulations that are clear, concise and enforceable—thus the requirement for standards to be written in mandatory language. This requirement is not intended to mean that a standard cannot contain informational or explanatory material that will aid the user of the standard in its application. When it is the desire of the standard's promulgating agency for such material to be included, however, the information must appear in a nonmandatory location, such as an annex or appendix, and be clearly identified as not being part of the standard.

Overall, standards referenced by the code must be authoritative, relevant, up to date and, most important, reasonable and enforceable. Standards that comply with ICC's standards policy fulfill these expectations.

Purpose

As a performance-oriented code, the code contains numerous references to documents that are used to regulate materials and methods of construction. The references to these documents within the code text consist of the promulgating agency's acronym, its publication designation (e.g., IBC) and a further indication that the document being referenced is the one that is listed in Chapter 8. Chapter 8 contains all of the information that is necessary to identify the specific referenced document. Included is the following information on a document's promulgating agency (see Figure 8):

- The promulgating agency (i.e., the agency's title).

INTERNATIONAL CODE COUNCIL®
Copyright © 2015 ICC. ALL RIGHTS RESERVED. Accessed by David Dammon on Jun 21, 2017 12:30:52 PM pursuant to License Agreement with ICC. No further reproduction or distribution authorized. ANY UNAUTHORIZED REPRODUCTION OR DISTRIBUTION IS A VIOLATION OF THE FEDERAL COPYRIGHT ACT AND THE LICENSE AGREEMENT, AND SUBJECT TO CIVIL AND CRIMINAL PENALTIES THEREUNDER.

- The promulgating agency's acronym.
- The promulgating agency's address.

For example, a reference to an ICC standard within the code indicates that the document is promulgated by the International Code Council® (ICC®), which is located in Washington, D.C. Chapter 8 lists the standards agencies alphabetically for ease of identification.

Chapter 8 also includes the following information on the referenced document itself (see Figure 8):

- The document's publication designation.
- The document's edition year.
- The document's title.
- Any addenda or revisions to the document known at the time of the code's publication.
- Every section of the code in which the document is referenced.

The heading designations are listed in alphabetical order. In this case, there is only one referenced in Figure 8.

Chapter 8 identifies that ICC, IBC-15 is titled the *International Building Code*®, the applicable edition (i.e., its year of publication) is 2015 and it is referenced in four specific sections of the code.

The key aspect of the manner in which standards are referenced by the code is that a specific edition of a specific standard is clearly identified. In this manner, the requirements necessary for compliance can be readily determined. The basis for code compliance is, therefore, established and available on an equal basis to the code official, contractor, designer and owner.

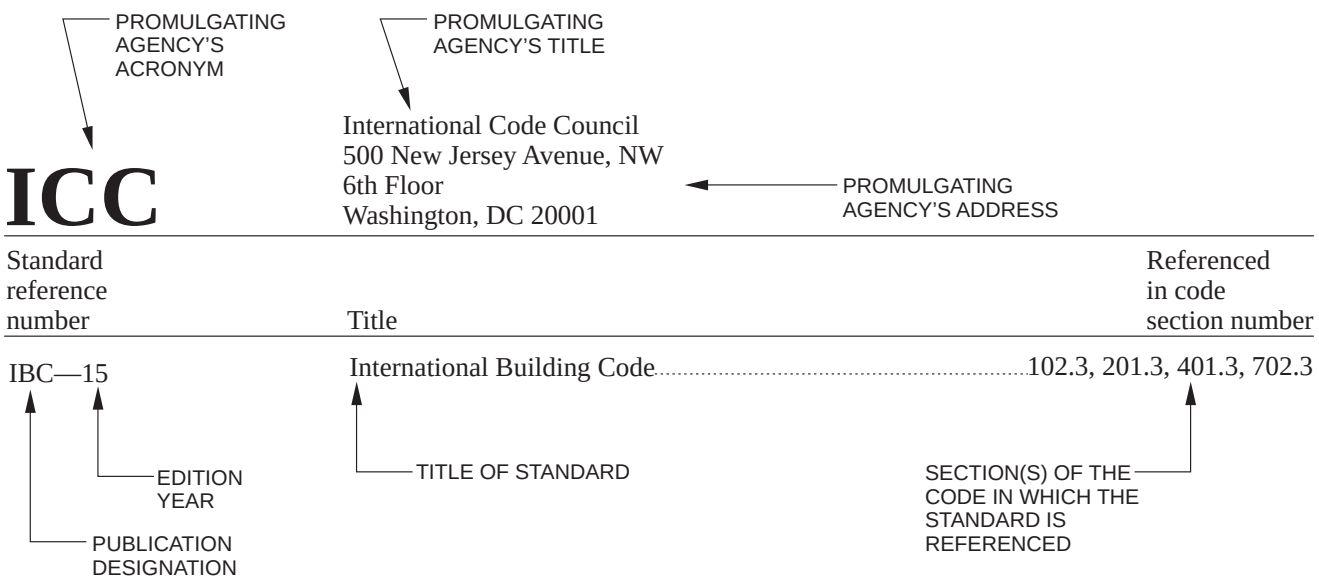

Figure 8
REFERENCED STANDARDS

INTERNATIONAL CODE COUNCIL®
Copyright © 2015 ICC. ALL RIGHTS RESERVED. Accessed by David Dammon on Jun 21, 2017 12:30:52 PM pursuant to License Agreement with ICC. No further reproduction or distribution authorized. ANY UNAUTHORIZED REPRODUCTION OR DISTRIBUTION IS A VIOLATION OF THE FEDERAL COPYRIGHT ACT AND THE LICENSE AGREEMENT, AND SUBJECT TO CIVIL AND CRIMINAL PENALTIES THEREUNDER.

This chapter lists the standards that are referenced in various sections of this document. The standards are listed herein by the promulgating agency of the standard, the standard identification, the effective date and title and the section or sections of this document that reference the standard. The application of the referenced standards shall be as specified in Section 102.7.

ASME

American Society of Mechanical Engineers
Three Park Avenue
New York, NY 10016-5990

Standard reference number	Title	Referenced in code section number
ASME A17.1/CSA B44—2013	Safety Code for Elevators and Escalators	606.1

ASTM

ASTM International
100 Barr Harbor Drive
West Conshohocken, PA 19428-2959

Standard reference number	Title	Referenced in code section number
F 1346—91 (2010)	Performance Specifications for Safety Covers and Labeling Requirements for All Covers for Swimming Pools, Spas and Hot Tubs	303.2

ICC

International Code Council
500 New Jersey Avenue, NW
6th Floor
Washington, DC 20001

Standard reference number	Title	Referenced in code section number
IBC—15	International Building Code®	102.3, 201.3, 401.3, 702.3
IEBC—15	International Existing Building Code®	305.1.1, 306.1.1
IFC—15	International Fire Code®	201.3, 604.3.1.1, 604.3.2.1, 702.1, 702.2, 704.1, 704.2
IFGC—15	International Fuel Gas Code®	102.3
IMC—15	International Mechanical Code®	102.3, 201.3
IPC—15	International Plumbing Code®	201.3, 505.1, 602.2, 602.3
IRC—15	International Residential Code®	201.3
IZC—15	International Zoning Code®	102.3, 201.3

NFPA

National Fire Protection Association
1 Batterymarch Park
Quincy, MA 02269

Standard reference number	Title	Referenced in code section number
25—14	Standard for the Inspection, Testing and Maintenance of Water-Based Fire Protection Systems	704.1.1
70—14	National Electrical Code	102.4, 201.3, 604.2

INTERNATIONAL CODE COUNCIL®
Copyright © 2015 ICC. ALL RIGHTS RESERVED. Accessed by David Dammon on Jun 21, 2017 12:30:52 PM pursuant to License Agreement with ICC. No further reproduction or distribution authorized. ANY UNAUTHORIZED REPRODUCTION OR DISTRIBUTION IS A VIOLATION OF THE FEDERAL COPYRIGHT ACT AND THE LICENSE AGREEMENT, AND SUBJECT TO CIVIL AND CRIMINAL PENALTIES THEREUNDER.

INTERNATIONAL CODE COUNCIL®
Copyright © 2015 ICC. ALL RIGHTS RESERVED. Accessed by David Dammon on Jun 21, 2017 12:30:52 PM pursuant to License Agreement with ICC. No further reproduction or distribution authorized. ANY UNAUTHORIZED REPRODUCTION OR DISTRIBUTION IS A VIOLATION OF THE FEDERAL COPYRIGHT ACT AND THE LICENSE AGREEMENT, AND SUBJECT TO CIVIL AND CRIMINAL PENALTIES THEREUNDER.

Appendix A: Boarding Standard

Appendix A provides minimum specifications for boarding a structure. This can be utilized by a jurisdiction as a set of minimum requirements in order to result in consistent boarding quality. These requirements also provide a reasonable means to eliminate having to approve numerous methods or materials for the boarding and securing of a structure. It is important to note that the provisions of Appendix A are not mandatory unless specifically referenced in the adopting ordinance of the jurisdiction having authority.

The provisions contained in this appendix are not mandatory unless specifically referenced in the adopting ordinance.

A101 GENERAL

A101.1 General. Windows and doors shall be boarded in an *approved* manner to prevent entry by unauthorized persons and shall be painted to correspond to the color of the existing structure.

A102 MATERIALS

A102.1 Boarding sheet material. Boarding sheet material shall be minimum $^1/_2$-inch-thick (12.7 mm) wood structural panels complying with the *International Building Code*.

A102.2 Boarding framing material. Boarding framing material shall be minimum nominal 2-inch by 4-inch (51 mm by 102 mm) solid sawn lumber complying with the *International Building Code*.

A102.3 Boarding fasteners. Boarding fasteners shall be minimum $^3/_8$-inch-diameter (9.5 mm) carriage bolts of such a length as required to penetrate the assembly and as required to adequately attach the washers and nuts. Washers and nuts shall comply with the *International Building Code*.

A103 INSTALLATION

A103.1 Boarding installation. The boarding installation shall be in accordance with Figures A103.1(1) and A103.1(2) and Sections A103.2 through A103.5.

A103.2 Boarding sheet material. The boarding sheet material shall be cut to fit the door or window opening neatly or shall be cut to provide an equal overlap at the perimeter of the door or window.

A103.3 Windows. The window shall be opened to allow the carriage bolt to pass through or the window sash shall be removed and stored. The 2-inch by 4-inch (51 mm by 102 mm) strong back framing material shall be cut minimum 2 inches (51 mm) wider than the window opening and shall be placed on the inside of the window opening 6 inches (152 mm) minimum above the bottom and below the top of the window opening. The framing and boarding shall be predrilled. The assembly shall be aligned and the bolts, washers and nuts shall be installed and secured.

A103.4 Door walls. The door opening shall be framed with minimum 2-inch by 4-inch (51 mm by 102 mm) framing material secured at the entire perimeter and vertical members at a maximum of 24 inches (610 mm) on center. Blocking shall also be secured at a maximum of 48 inches (1219 mm) on center vertically. Boarding sheet material shall be secured with screws and nails alternating every 6 inches (152 mm) on center.

A103.5 Doors. Doors shall be secured by the same method as for windows or door openings. One door to the structure shall be available for authorized entry and shall be secured and locked in an *approved* manner.

A104 REFERENCED STANDARD

IBC—15	International Building Code	A102.1, A102.2, A102.3

INTERNATIONAL CODE COUNCIL®
Copyright © 2015 ICC. ALL RIGHTS RESERVED. Accessed by David Dammon on Jun 21, 2017 12:30:52 PM pursuant to License Agreement with ICC. No further reproduction or distribution authorized. ANY UNAUTHORIZED REPRODUCTION OR DISTRIBUTION IS A VIOLATION OF THE FEDERAL COPYRIGHT ACT AND THE LICENSE AGREEMENT, AND SUBJECT TO CIVIL AND CRIMINAL PENALTIES THEREUNDER.

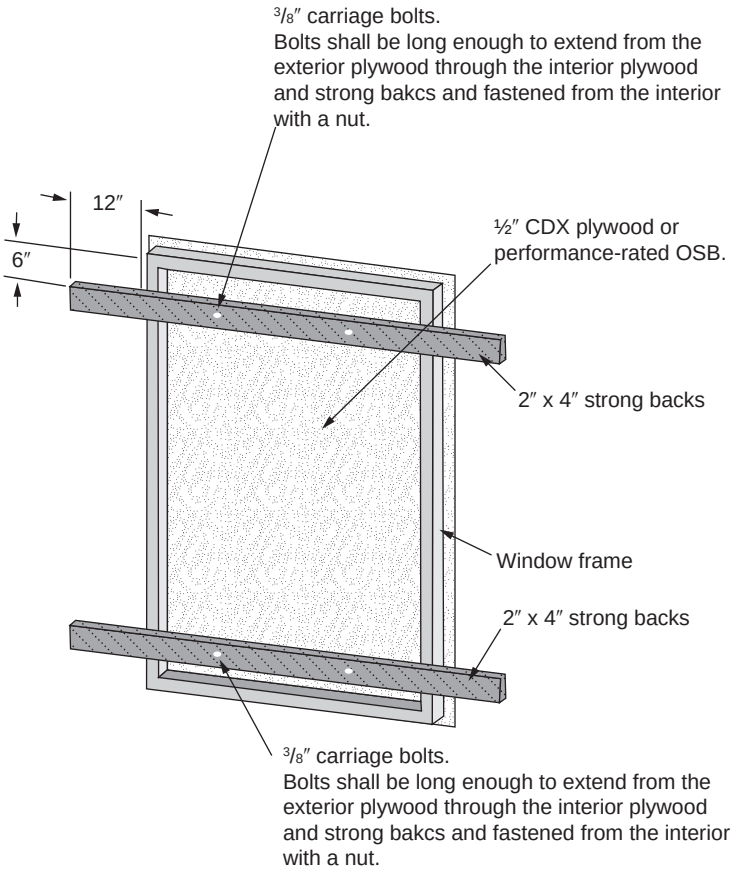

FIGURE A103.1(1)
BOARDING OF DOOR OR WINDOW

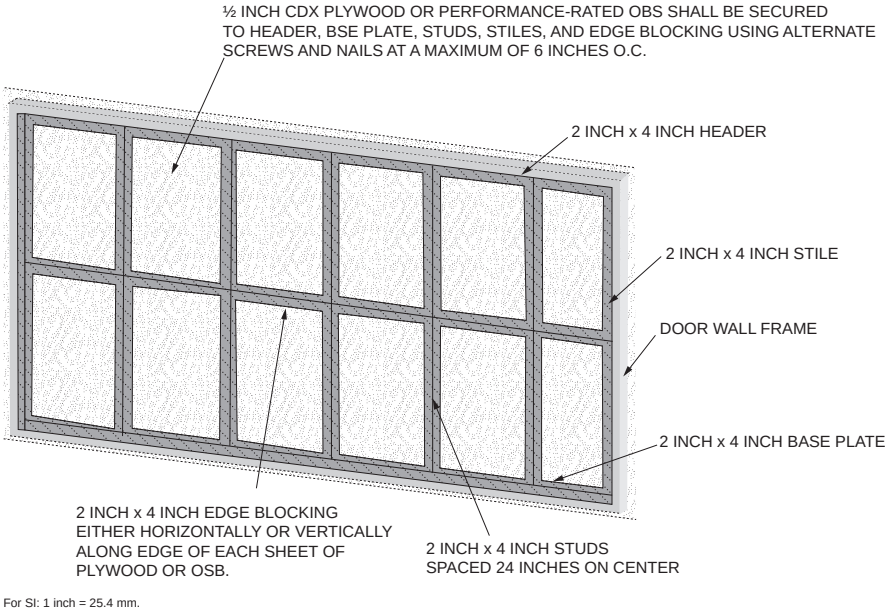

For SI: 1 inch = 25.4 mm.

FIGURE A103.1(2)
BOARDING OF DOOR WALL

INTERNATIONAL CODE COUNCIL®
Copyright © 2015 ICC. ALL RIGHTS RESERVED. Accessed by David Dammon on Jun 21, 2017 12:30:52 PM pursuant to License Agreement with ICC. No further reproduction or distribution authorized. ANY UNAUTHORIZED REPRODUCTION OR DISTRIBUTION IS A VIOLATION OF THE FEDERAL COPYRIGHT ACT AND THE LICENSE AGREEMENT, AND SUBJECT TO CIVIL AND CRIMINAL PENALTIES THEREUNDER.

INDEX

A

ACCESS
Emergency egress 702
From bedrooms 404.4.2
Plumbing fixtures, access for cleaning 504.2
To public way 702.1
Toilet room as passageway 503.1
Water closet 404.4.3
ADJACENT
Privacy (hotel units, rooming units). 404.1
ADMINISTRATION
Scope 101.2
AGENT (See also OPERATOR, OWNER)
Definition. 202
AIR
Combustion air 603.5
AISLES
Minimum width 702.2
ALTERATION
Applicability of other codes. 102.3
Inspection 104.2
Prosecution. 106.3
Unlawful acts 106.1
ANCHOR
Anchored, definition 202
Architectural trim. 304.8
Signs, marquees and awnings 304.9
Unsafe conditions 304.1.1
APPEAL
Application 111.1
Board decision 111.6
Board of appeals 111.2
Court review 111.7
Disqualification 111.2.3
Financial interest 111.2.3
Hearing, emergency orders 109.6
Membership 111.2
Notice of appeal 111.1
Postponed hearing 111.5
Records 104.6
Right to appeal 111.1
Vote 111.6
APPLIANCE
Cooking 403.3, 602.2
Mechanical 603.1
APPLICABILITY
Application of references 102.9
General 102.1
Other laws. 102.10
Referenced codes and standards. 102.7
APPROVAL
Alternatives 105.2
Authority 104.1, 105.2
Modifications. 105.1
Research reports 105.6
Used material and equipment. 105.4
APPROVED
Alternative materials, methods and equipment 105.2
Definition. 202
Energy conservation devices 603.6
Garbage storage facilities 308.3.1
Modifications. 105.1
Used materials and equipment 105.4
ARTIFICIAL
Lighting of habitable rooms. 401.3
Lighting of other spaces 402.3
AUTOMOBILE
Motor vehicles. 302.8
AWNING
Signs, marquees and awnings 304.9

B

BALCONY
Handrails and guardrails. 304.12
BASEMENT
Definition. 202
Hatchways 304.16
Windows 304.17
BATHROOM
Common bathrooms 502.3, 503.1
Hotels 502.3
Lighting 605.3
Locks. 503.1
Outlets required 605.2
Privacy 503.1
Ventilation. 403.2
BATHTUB
Dwelling units 502.1
Rooming houses. 502.2
Sewage system. 506.1
Water-heating facilities 505.4
Water system 505.1

INTERNATIONAL CODE COUNCIL®
Copyright © 2015 ICC. ALL RIGHTS RESERVED. Accessed by David Dammon on Jun 21, 2017 12:30:52 PM pursuant to License Agreement with ICC. No further reproduction or distribution authorized. ANY UNAUTHORIZED REPRODUCTION OR DISTRIBUTION IS A VIOLATION OF THE FEDERAL COPYRIGHT ACT AND THE LICENSE AGREEMENT, AND SUBJECT TO CIVIL AND CRIMINAL PENALTIES THEREUNDER.

BOARDING
Boarding standard . . . . . Appendix A
BOILER
Unsafe equipment 108.1.2

C

CAPACITY
Heating facilities. 602.2, 602.3, 602.4
CAR (See AUTOMOBILE)
CEILING
Basement rooms 404.3
Fire-resistance ratings 703.1
Interior surfaces 305.3
Minimum height 404.3
Sleeping rooms 404.3
CHANGE, MODIFY
Application of other codes 102.3
CHIMNEY
Exterior structure 304.11
Flue 603.2, 603.3
CLEANING
Access for cleaning 504.2
Disposal of garbage 308.3
Disposal of rubbish 308.2
Interior and exterior sanitation 308.1
Interior surfaces 305.3
Plumbing facilities, maintained 504.1
Required plumbing facilities 502
Responsibility of persons 305.1
Trash containers 308.3.2
Vacant structures and land 301.3
CLEARANCE
Heating facilities. 603.3
Plumbing fixtures 504.2
CLOSING
Streets 109.3
Vacant structures. 108.2
CLOTHES DRYER
Exhaust 403.5
CODE OFFICIAL
Condemnation 108.1
Demolition 110
Duties. 104
Emergency order 109
Enforcement authority 104.1
Failure to comply with demolition order 110.3
Identification. 104.3
Inspections. 104.2
Liability, relief of personal 103.4
Membership of board of appeals 111.2
Notice of violation 104.5, 107
Notices and orders 107
Official records 104.6
Personal liability 103.4
Placarding 108.4
Prosecution 106.3
Removal of placard 108.4.1
Right of entry 104.3
Transfer of ownership 107.6
Vacant structures 108.2
Voting of appeals board 111.2, 111.6
COMBUSTION
Combustion air 603.5
COMPONENT SERVICEABILITY
Unsafe conditions. 306.1.1
CONDEMNATION
Closing of vacant structures. 108.2
Failure to comply 110.3
General 108.1
Notices and orders 108.2, 108.3
Placarding 108.4
Removal of placard 108.4.1
CONFLICT
Conflict of interest 111.2.3
Violations 106.1
CONNECTION
Sewage system 506.1
Water heating. 505.4
Water system 505.1
CONSTRUCTION
Existing structures 101.2
CONTAINER
Garbage 308.3.2
Rubbish storage 308.2.1
CONTINUOUS
Unobstructed egress 702.1
CONTROL
Rodent control 302.5, 304.5
Safety controls 603.4
Weed 302.4
COOLING
Cooling towers 304.11
CORRIDOR
Accumulation of rubbish. 308.1
Light 402.2
Lighting fixtures 605.3
Obstructions 702.1, 702.2
Ratings maintained 703

D

DAMP, DAMPNESS
Roofs 304.7

INTERNATIONAL CODE COUNCIL®
Copyright © 2015 ICC. ALL RIGHTS RESERVED. Accessed by David Dammon on Jun 21, 2017 12:30:52 PM pursuant to License Agreement with ICC. No further reproduction or distribution authorized. ANY UNAUTHORIZED REPRODUCTION OR DISTRIBUTION IS A VIOLATION OF THE FEDERAL COPYRIGHT ACT AND THE LICENSE AGREEMENT, AND SUBJECT TO CIVIL AND CRIMINAL PENALTIES THEREUNDER.

Window, door frames 304.13
DANGEROUS, HAZARDOUS
Condemnation 108.1
Demolition. 110
Electrical hazards 604.3, 604.3.1
Existing remedies 102.4
Imminent danger. 202
Unsafe equipment 108.1.2
Unsafe structures or premises 108.1.5
DECKS
Handrails and guardrails. 304.12
Maintenance 304.2, 304.10
DEMOLITION
Existing remedies 102.4
Failure to comply 110.3
General. 110
Order 110.2
Salvage materials 110.4
DETECTORS
Smoke 704
DETERIORATION
Components of systems 306.1.1
Definition. 202
Exterior structure 304.1.1
Exterior walls 304.6
DIRECT
Egress 702.1
DISPOSAL
Disposal of garbage 308.3
Disposal of rubbish 308.2
DOOR
Exit doors 702.3
Fire 703.2
Hardware 304.15
Insect screens 304.14
Interior surfaces 305.3
Locks 304.15, 702.3
Maintenance 304.13, 304.15
Weather tight 304.13
Window and door frames 304.13
DORMITORY (ROOMING HOUSE, HOTEL, MOTEL)
Locked doors 702.3
Privacy 503.1, 503.2
DRAIN, DRAINAGE
Basement hatchways 304.16
Plumbing connections 506
Storm drainage 507
DUCT
Exhaust duct. 304.9
Duct systems 607
DUST
Process ventilation 403.4
DWELLING
Cleanliness 305.1, 308.1
Definition 202
Electrical 604.1
Heating facilities 602
Required facilities 502

E

EGRESS
Aisles 702.2
Emergency escape 702.4
General 702.1
Lighting 402.2
Locked doors 702.3
Obstructions prohibited 702.1
Stairs, porches and railings. 304.10, 305.4, 305.5, 307.1
ELECTRIC, ELECTRICAL EQUIPMENT
Abatement of hazards, fire exposure 604.3.2
Abatement of hazards, water exposure 604.3.1
Condemnation. 108.1
Electrical equipment 604.3.1.1
Facilities required 604.1
Hazards. 604.3
Installation. 605.1
Lighting fixtures. 605.3
Receptacles 604.3, 605.2
Responsibility 601.2
Service 604.2
ELEVATOR, ESCALATORS, DUMBWAITERS
Condemnation. 108.1
General 606.1
Maintenance 606.1, 606.2
EMERGENCY
Emergency escape openings 702.4
Emergency measures 109
Emergency orders. 109.1
ENFORCEMENT
Duties and powers 104
Scope 101.2
EQUIPMENT
Alternative 105.2
Combustion air 603.5
Condemnation. 108.1.2, 108.3
Electrical installation 605.1
Emergency order 109.1
Energy conservation devices 603.6
Installation. 603.1

INTERNATIONAL CODE COUNCIL®
Copyright © 2015 ICC. ALL RIGHTS RESERVED. Accessed by David Dammon on Jun 21, 2017 12:30:52 PM pursuant to License Agreement with ICC. No further reproduction or distribution authorized. ANY UNAUTHORIZED REPRODUCTION OR DISTRIBUTION IS A VIOLATION OF THE FEDERAL COPYRIGHT ACT AND THE LICENSE AGREEMENT, AND SUBJECT TO CIVIL AND CRIMINAL PENALTIES THEREUNDER.

Interior structure 305.1
Placarding 108.4, 108.5
Prohibited use 108.5
Responsibility 601.2
Safety controls 603.4
Scope 101.2
Scope, mechanical and electrical 601.1
Support, definition 202
Unsafe 108.1.2
Used 105.4
EXHAUST
Clothes dryer 403.5
Exhaust ducts 304.9
Process ventilation 403.4
EXISTING
Remedies 102.4
Scope 101.2
Structural members 304.1.1, 304.4
Structures 101.3
EXTERIOR
Decorative features 304.8
Exterior structure 304
Exterior walls 304.6
Painting 304.2, 304.6
Rodent harborage 302.5, 304.5
Sanitation 304.1
Scope 301.1
Stair 304.10
Street numbers 304.3
Unsafe conditions 304.1.1
Weather tight 304.13

F

FAN
Exhaust vents 302.6
FEES, EXPENSES, COST
Closing vacant structures 108.2
Demolition 110.1, 110.3, 110.4
Extermination 309.2, 309.3, 309.4, 309.5
General 103.5
Relief from personal liability 103.4
FENCE
Accessory 302.7
Maintenance 304.2
FIRE
Automatic sprinkler systems 704.1.1
Fire-resistance-rated assemblies 703.1
Fire department connection 704.1.2
Fire protection systems 704
Responsibility, fire safety 701.2
Scope 101.2
Scope, fire safety 701.1
Smoke alarms 704.2
FLAMMABLE LIQUID
Containers 108.1.2
FLOOR, FLOORING
Area for sleeping purposes 404.4.1
Fire-resistance ratings 703.1
Interior surfaces 305.1, 305.3
Space requirements 404.4.1, 404.6
FOOD PREPARATION
Cooking equipment 403.3
Sanitary condition 305.1, 404.7
Ventilation 403.4
FOUNDATION
Condemnation 108.1.1
Foundation walls 304.5
Unsafe conditions 304.1.1, 305.1.1
FRAME
Window and door frames 304.13

G

GAS
Energy conservation devices 603.6
Exhaust vents 302.6
GLAZING
Materials 304.13.1
GRADE
Drainage 302.2, 507
GUARD
Anchorage and maintenance 304.12
Basement windows 304.18.2
Definition 202

H

HABITABLE
Definition 202
Light 402
Minimum ceiling height 404.3
Minimum room width 404.2
Required plumbing facilities 502
Residential heating facilities 602.2, 602.3
Space requirements 404.4.1
Ventilation 403
HANDRAILS AND GUARDRAILS
Handrails 304.12, 305.5, 307.1
Stairs and porches 304.10
HARDWARE
Door hardware 304.15, 702.3
Openable windows 304.13.2

INTERNATIONAL CODE COUNCIL®
Copyright © 2015 ICC. ALL RIGHTS RESERVED. Accessed by David Dammon on Jun 21, 2017 12:30:52 PM pursuant to License Agreement with ICC. No further reproduction or distribution authorized. ANY UNAUTHORIZED REPRODUCTION OR DISTRIBUTION IS A VIOLATION OF THE FEDERAL COPYRIGHT ACT AND THE LICENSE AGREEMENT, AND SUBJECT TO CIVIL AND CRIMINAL PENALTIES THEREUNDER.

HAZARDOUS (See DANGEROUS, HAZARDOUS)
HEAT, HEATING
Energy conservation devices 603.6
Fireplaces 603.1
Heating 603.1
Mechanical equipment 603.1
Required capabilities 602
Residential heating 602.2, 602.3
Supply 602.3
Water heating facilities 505.4
Water system 505
HEIGHT
Minimum ceiling height 404.3
HOT (See HEAT, HEATING)
HOTELS, ROOMING HOUSES AND DORMITORY UNITS, MOTELS
Definition 202
Locked doors 702.3
Required facilities 502
Toilet rooms 503
HOUSEKEEPING UNIT
Definition 202

I

IDENTIFICATION
Code official 104.4
INFESTATION
Condemnation 108.1.3
Definition 202
Insect and rodent 302.5, 304.14, 309.1
INSECTS
Infestation 309.1
Insect screens 304.14
Pest elimination 309
INSPECTIONS
General 104.2
Right of entry 104.3
INSPECTOR
Identification 104.4
Inspections 104.2
Records 104.6
INTENT
Code 101.3
INTERIOR
Interior structure 305
Interior surfaces 305.3
Means of egress 702
Sanitation 305.1
Unsafe conditions 305.1.1

J

JURISDICTION
Title 101.1

K

KITCHEN
Electrical outlets required 605.2
Minimum width 404.2
Prohibited use 404.4.4
Room lighting 605.3
Water heating facilities 505.4

L

LANDING
Handrails and guards 304.12, 305.5, 306.1
Maintenance 304.10, 305.4
LAUNDRY
Room lighting 605.3
Water-heating facilities 505.4
LAVATORY
Hotels 502.3
Required facilities 502
Rooming houses 502.2
Sanitary drainage system 506
Water-heating facilities 505.4
Water system 505
LEASE (SELL, RENT)
Heat supplied 602.3
Salvage materials 110.4
Transfer of ownership 107.6
LIEN
Closing of vacant structures 108.2
Demolition 110.3
Failure to comply 110.3
LIGHT, LIGHTING
Common halls and stairways 402.2, 605.3
General 402
Habitable rooms 402.1
Kitchen 605.3
Laundry rooms 605.3
Luminaires 605.3
Other spaces 402.3
Responsibility 401.2
Scope 101.2
Toilet rooms 605.3
LIVING ROOM
Room area 404.4.1

INTERNATIONAL CODE COUNCIL®
Copyright © 2015 ICC. ALL RIGHTS RESERVED. Accessed by David Dammon on Jun 21, 2017 12:30:52 PM pursuant to License Agreement with ICC. No further reproduction or distribution authorized. ANY UNAUTHORIZED REPRODUCTION OR DISTRIBUTION IS A VIOLATION OF THE FEDERAL COPYRIGHT ACT AND THE LICENSE AGREEMENT, AND SUBJECT TO CIVIL AND CRIMINAL PENALTIES THEREUNDER.

LOAD, LOADING
Elevators, escalators and dumbwaiters 606.1
Handrails and guardrails 304.12, 305.5
Live load 304.4, 305.2
Stairs and porches 304.10, 305.2
Structural members 304.4, 305.2

M

MAINTENANCE
Required 102.2
MATERIAL
Alternative 105.2
Salvage 110.4
Used 105.4
MEANS OF EGRESS (See EGRESS)
MECHANICAL
Installation 603.1
Responsibility 601.2
Scope 601.1
Ventilation, general 403
Ventilation, toilet rooms 403.2
MINIMUM
Ceiling height 404.3
Room area 404.4.1
Room width 404.2
MODIFICATION
Approval 105.1
MOTEL (See HOTELS)
MOTOR VEHICLES
Inoperative 302.8
Painting 302.8

N

NATURAL
Lighting 401.3, 402
Ventilation 401.3, 403
NOTICES AND ORDERS
Appeal 111.1
Form 107.2
Method of service 107.3
Orders 107
Owner, responsible person 107.1
Penalties 107.5
Placarding of structure 108.4
Transfer of ownership 107.6
Unauthorized tampering 107.4
Vacating structure 108.2
NOXIOUS
Process ventilation 403.4
Weeds 302.4
NUISANCE
Closing of vacant structures 108.2

O

OBSTRUCTION
Light 402.1
Right of entry 104.3
OCCUPANCY (See USE)
OPENABLE
Locked doors 702.3
Windows 304.13.2, 403.1
OPERATOR
Definition 202
ORDER (See NOTICE)
ORDINANCE, RULE
Applicability 102
Application for appeal 111.1
OUTLET
Electrical 605.2
OWNER
Closing of vacant structures 108.2
Definition 202
Demolition 110
Failure to comply 110.3
Insect and rat control 302.5, 309.2, 309.4
Notice 107.1, 108.3
Pest elimination 309.2
Placarding of structure 108.4
Responsibility 301.2
Responsibility, fire safety 701.2
Responsibility, light, ventilation 401.2
Responsibility, mechanical and electrical 601.2
Responsibility, plumbing facilities 501.2
Right of entry 104.3
Rubbish storage 308.2.1
Scope 101.2
Transfer of ownership 107.6

P

PASSAGEWAY
Common hall and stairway 402.2
Interior surfaces 305.3
Toilet rooms, direct access 503.1
PENALTY
Notices and orders 107.5
Placarding of structure 108.4
Prohibited occupancy 108.5
Removal of placard 108.4.1
Scope 101.2
Violations 106.4

INTERNATIONAL CODE COUNCIL®
Copyright © 2015 ICC. ALL RIGHTS RESERVED. Accessed by David Dammon on Jun 21, 2017 12:30:52 PM pursuant to License Agreement with ICC. No further reproduction or distribution authorized. ANY UNAUTHORIZED REPRODUCTION OR DISTRIBUTION IS A VIOLATION OF THE FEDERAL COPYRIGHT ACT AND THE LICENSE AGREEMENT, AND SUBJECT TO CIVIL AND CRIMINAL PENALTIES THEREUNDER.

PEST ELIMINATION
Condemnation 108.1
Definition 202
Insect and rodent control 302.5, 304.5, 304.14, 309.1
Pest elimination 309.1
Responsibility of owner 301.2, 309.2
Responsibility of tenant-occupant 309.3, 309.4, 309.5
PLACARD, POST
Closing 108.2
Condemnation 108.1
Demolition 110
Emergency, notice 109.1
Notice to owner 107.1, 108.3
Placarding of structure 108.4
Prohibited use 108.5
Removal 108.4.1
PLUMBING
Clean and sanitary 504.1
Clearance 504.2
Connections 505.1
Contamination 505.2
Employee's facilities 503.3
Fixtures 504.1
Required facilities 502
Responsibility 501.2
Sanitary drainage system 506
Scope 501.1
Storm drainage 507
Supply 505.3
Water heating facilities 505.4
PORCH
Handrails 304.12
Structurally sound 304.10
PORTABLE (TEMPORARY)
Cooking equipment 603.1
PRESSURE
Water supply 505.3
PRIVATE, PRIVACY
Bathtub or shower 503.1
Occupancy limitations 404.1
Required plumbing facilities 502
Sewage system 506.1
Water closet and lavatory 503.1
Water system 505.1
PROPERTY, PREMISES
Cleanliness 304.1, 308.1
Condemnation 108
Definition 202
Demolition 110
Emergency measures 109
Exterior areas 302
Failure to comply 110.3
Grading and drainage 302.2
Pest elimination, multiple occupancy . . . 302.5, 309.4
Pest elimination, single occupancy 302.5, 309.3
Responsibility 301.2
Scope 301.1
Storm drainage 507
Vacant structures and land 301.3
PROTECTION
Basement windows 304.17
Fire protection systems 704
Signs, marquees and awnings 304.9
PUBLIC
Cleanliness 304.1, 305.1
Egress 702.1
Hallway 502.3
Sewage system 506.1
Toilet facilities 502.5, 503
Vacant structures and land 301.3
Water system 505
PUBLIC WAY
Definition 202

R

RAIN (PREVENTION OF ENTRY INTO BUILDING EXTERIOR ENVELOPE)
Basement hatchways 304.16
Exterior walls 304.6
Grading and drainage 302.2
Roofs 304.7
Window and door frames 304.13
RECORD
Official records 104.6
REPAIR
Application of other codes 102.3
Chimneys 304.11
Demolition 110.1
Exterior surfaces 304.1
Intent 101.3
Maintenance 102.2
Signs, marquees and awnings 304.9
Stairs and porches 304.10
Weather tight 304.13
Workmanship 102.5
REPORTS
Test reports 105.3.2
RESIDENTIAL
Pest elimination 309
Residential heating 602.2
Scope 101.2

INTERNATIONAL CODE COUNCIL®
Copyright © 2015 ICC. ALL RIGHTS RESERVED. Accessed by David Dammon on Jun 21, 2017 12:30:52 PM pursuant to License Agreement with ICC. No further reproduction or distribution authorized. ANY UNAUTHORIZED REPRODUCTION OR DISTRIBUTION IS A VIOLATION OF THE FEDERAL COPYRIGHT ACT AND THE LICENSE AGREEMENT, AND SUBJECT TO CIVIL AND CRIMINAL PENALTIES THEREUNDER.

RESPONSIBILITY
Pest elimination 309
Fire safety 701.2
Garbage disposal 308.3
General 301.2
Mechanical and electrical 601.2
Persons 301.1
Placarding of structure 108.4
Plumbing facilities 501.2
Rubbish storage 308.2.1
Scope 101.2, 301.1
REVOKE, REMOVE
Demolition 110
Existing remedies 102.4
Removal of placard 108.4.1
Rubbish removal 308.2.1
RIGHT OF ENTRY
Duties and powers of code official 104.3
Inspections 104.2
RODENTS
Basement hatchways 304.16
Condemnation 108
Foundations 304.5
Guards for basement windows 304.17
Harborage 302.5
Insect and rodent control 309.1
Pest elimination 302.5, 309
ROOF
Exterior structure 304.1
Roofs 304.7
Storm drainage 507
ROOM
Bedroom and living room 404.4
Cooking facilities 403.3
Direct access 503.2
Habitable 402.1
Heating facilities 602
Light 402
Minimum ceiling heights 404.3
Minimum width 404.2
Overcrowding 404.5
Prohibited use 404.4.4
Temperature 602.5
Toilet 503
Ventilation 403
ROOMING HOUSES (See DORMITORY)
RUBBISH
Accumulation 308.1
Definition 202
Disposal 308.2
Garbage facilities 308.3.1
Rubbish storage 308.2.1

S

SAFETY, SAFE
Fire safety requirements 701, 702, 703, 704
Safety controls 603.4
SANITARY
Cleanliness 304.1, 305.1
Disposal of garbage 308.3
Disposal of rubbish 308.2
Exterior property areas 302.1
Exterior structure 304.1
Food preparation 404.7
Furnished by occupant 302.1
Grease interceptors 506.3
Interior surfaces 305.3
Plumbing fixtures 504.1
Required plumbing facilities 502
Scope 101.2
SCREENS
Insect screens 304.14
SECURITY
Basement hatchways 304.18.3
Building 304.18
Doors 304.18.1
Vacant structures and land 301.3
Windows 304.18.2
SELF-CLOSING SCREEN DOORS
Insect screens 304.14
SEPARATION
Fire-resistance ratings 703
Privacy 404.1
Separation of units 404.1
SERVICE
Electrical 604.2
Method 107.3
Notices and orders 107.1, 108.3
Service on occupant 108.3
SEWER
General 506.1
Maintenance 506.2
SHOWER
Bathtub or shower 502.1
Rooming houses 502.2
Water-heating facilities 505.4
Water system 505

INTERNATIONAL CODE COUNCIL®
Copyright © 2015 ICC. ALL RIGHTS RESERVED. Accessed by David Dammon on Jun 21, 2017 12:30:52 PM pursuant to License Agreement with ICC. No further reproduction or distribution authorized. ANY UNAUTHORIZED REPRODUCTION OR DISTRIBUTION IS A VIOLATION OF THE FEDERAL COPYRIGHT ACT AND THE LICENSE AGREEMENT, AND SUBJECT TO CIVIL AND CRIMINAL PENALTIES THEREUNDER.

SIGN
Signs, marquees and awnings 304.9
Unauthorized tampering 107.4
SINGLE-FAMILY DWELLING
Extermination 309
SINK
Kitchen sink 502.1
Sewage system 506
Water supply 505.3
SIZE
Efficiency unit 404.6
Habitable room, light 402
Habitable room, ventilation 403
Room area 404.4.1
SMOKE ALARMS
Alarms 704.2
Installation near bathrooms 704.2.2
Installation near cooking appliances 704.2.1
Interconnection 704.4
Power source 704.3
SPACE
General, light 402
General, ventilation 403
Occupancy limitations 404
Privacy 404.1
Scope 401.1
STACK
Smoke 304.11
STAIRS
Common halls and stairways, light 402.2
Exit facilities 305.4
Exterior property areas 302.3
Handrails 304.12, 305.5
Lighting 605.3
Stairs and porches 304.10
STANDARD
Referenced 102.7
STOP WORK ORDER
Authority 112.1
Emergencies 112.3
Failure to comply 112.4
Issuance 112.2
STORAGE
Food preparation 404.7
Garbage storage facilities 308.3
Rubbish storage facilities 308.2.1
Sanitation 308.1
STRUCTURE
Accessory structures 302.7
Closing of vacant structures 108.2
Definition 202
Emergency measures 109
General, condemnation 110
General, exterior 304.1
General, interior structure 305.1
Placarding of structure 108.4
Scope 301.1
Structural members 304.4, 305.2
Vacant structures and land 301.3
SUPPLY
Combustion air 603.5
Public water system 505.1
Water-heating facilities 505.4
Water supply 505.3
Water system 505
SURFACE
Exterior surfaces 304.2, 304.6
Interior surfaces 305.3
SWIMMING
Enclosure 303.2
Safety covers 303.2
Swimming pools 303.1

T

TEMPERATURE
Nonresidential structures 602.4
Residential buildings 602.2
Water-heating facilities 505.4
TENANT
Scope 101.2
TEST, TESTING
Agency 105.3.1
Methods 105.3.1
Reports 105.3.2
Required 105.3
TOXIC
Process ventilation 403.4
TRASH
Rubbish and garbage 308

U

UNOBSTRUCTED
Access to public way 702.1
General, egress 702.1
UNSAFE STRUCTURES AND EQUIPMENT
Abatement methods 108.6
Dangerous structure or premises 108.1.5
Equipment 108.1.2
Existing remedies 102.4
General, condemnation 108, 110
General, demolition 110

INTERNATIONAL CODE COUNCIL®
Copyright © 2015 ICC. ALL RIGHTS RESERVED. Accessed by David Dammon on Jun 21, 2017 12:30:52 PM pursuant to License Agreement with ICC. No further reproduction or distribution authorized. ANY UNAUTHORIZED REPRODUCTION OR DISTRIBUTION IS A VIOLATION OF THE FEDERAL COPYRIGHT ACT AND THE LICENSE AGREEMENT, AND SUBJECT TO CIVIL AND CRIMINAL PENALTIES THEREUNDER.

Notices and orders. 107, 108.3
Record 108.7
Structures 108.1.1
USE
Application of other codes 102.3
General, demolition 110
UTILITIES
Authority to disconnect 108.2.1

V

VACANT
Abatement methods. 108.6
Authority to disconnect service utilities 108.2.1
Closing of vacant structures 108.2
Emergency measure 109
Method of service 107.3, 108.3
Notice to owner or to person responsible. 107, 108.3
Placarding of structure. 108.4
Record 108.7
Vacant structures and land 301.3
VAPOR
Exhaust vents 302.6
VEHICLES
Inoperative. 302.8
Painting 302.8
VENT
Plumbing hazard 504.3
Exhaust vents 302.6
Flue 603.2
VENTILATION
Clothes dryer exhaust 403.5
Combustion air. 603.5
Definition 202
General, ventilation 403
Habitable rooms. 403.1
Process ventilation. 403.4
Recirculation 403.2, 403.4
Toilet rooms. 403.2
VERMIN
Condemnation 108
Insect and rodent control 302.5, 309
VIOLATION
Condemnation 108
Enforcement 106.2
General 106
Notice. 107, 108.3
Separate offenses 106.4
Placarding of structure. 108.4
Prosecution 106.3
Strict liability offense 106.3, 202
Transfer of ownership 107.6

W

WALK
Sidewalks. 302.3
WALL
Accessory structures 302.7
Exterior surfaces 304.2, 304.6
Exterior walls 304.6
Foundation walls 304.5
General, fire-resistance rating 703.1
Interior surfaces 305.3
Outlets required 605.2
Temperature measurement 602.5
WASTE
Disposal of garbage 308.3
Disposal of rubbish. 308.2
Garbage storage facilities 308.3.1
WATER
Basement hatchways. 304.16
Connections 506.1
Contamination 505.2
General, sewage 506
General, storm drainage 507
General, water system 505
Heating. 505.4
Hotels. 502.3
Kitchen sink 502.1
Required facilities. 502
Rooming houses 502.2
Supply 505.3
System 505
Toilet rooms 503
Water-heating facilities. 505.4
WEATHER, CLIMATE
Heating facilities. 602
WEEDS
Noxious weeds. 302.4
WIDTH
Minimum room width 404.2
WINDOW
Emergency escape 702.4
Glazing. 304.13.1
Guards for basement windows. 304.17
Habitable rooms. 402.1
Insect screens 304.14
Interior surface 305.3

INTERNATIONAL CODE COUNCIL®
Copyright © 2015 ICC. ALL RIGHTS RESERVED. Accessed by David Dammon on Jun 21, 2017 12:30:52 PM pursuant to License Agreement with ICC. No further reproduction or distribution authorized. ANY UNAUTHORIZED REPRODUCTION OR DISTRIBUTION IS A VIOLATION OF THE FEDERAL COPYRIGHT ACT AND THE LICENSE AGREEMENT, AND SUBJECT TO CIVIL AND CRIMINAL PENALTIES THEREUNDER.

Light 402
Openable windows 304.13.2
Toilet rooms 403.2
Ventilation 403
Weather tight 304.13
Window and door frames 304.13

WORKMANSHIP

General 102.5

INTERNATIONAL CODE COUNCIL®
Copyright © 2015 ICC. ALL RIGHTS RESERVED. Accessed by David Dammon on Jun 21, 2017 12:30:52 PM pursuant to License Agreement with ICC. No further reproduction or distribution authorized. ANY UNAUTHORIZED REPRODUCTION OR DISTRIBUTION IS A VIOLATION OF THE FEDERAL COPYRIGHT ACT AND THE LICENSE AGREEMENT, AND SUBJECT TO CIVIL AND CRIMINAL PENALTIES THEREUNDER.

INTERNATIONAL CODE COUNCIL®
Copyright © 2015 ICC. ALL RIGHTS RESERVED. Accessed by David Dammon on Jun 21, 2017 12:30:52 PM pursuant to License Agreement with ICC. No further reproduction or distribution authorized. ANY UNAUTHORIZED REPRODUCTION OR DISTRIBUTION IS A VIOLATION OF THE FEDERAL COPYRIGHT ACT AND THE LICENSE AGREEMENT, AND SUBJECT TO CIVIL AND CRIMINAL PENALTIES THEREUNDER.

ICC INTERNATIONAL CODE COUNCIL®

People Helping People Build a Safer World®

2015 I-Code Essentials

This helpful series uses a straightforward, focused approach to explore code requirements with non-code language, allowing readers to gain confidence in their understanding of the material. Each book is an invaluable companion guide to the 2015 IBC, IRC, IFC or IECC for both new and experienced code users.

- **Detailed full-color illustrations enhance comprehension of code provisions**
- **A focused, concise approach facilitates understanding of the essential code provisions**
- **References to corresponding code sections provide added value as companion guides to the 2015 I-Codes**
- **Glossary of code and construction terms clarifies their meaning in the context of the code**



A

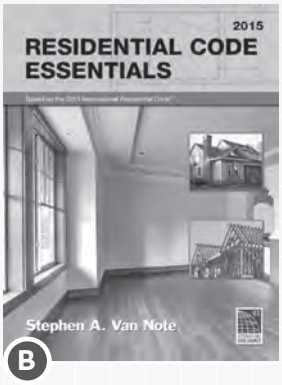

B

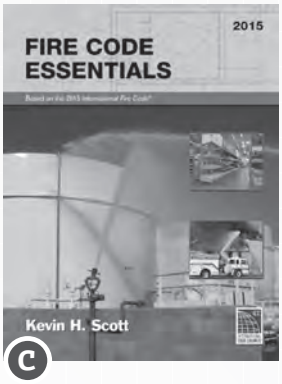

C

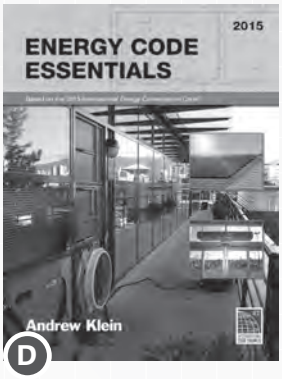

D

A. BUILDING CODE ESSENTIALS: BASED ON THE 2015 INTERNATIONAL BUILDING CODE

Explores those code provisions essential to understanding the application of the IBC in an easy-to-read format. The user-friendly approach of the text simplifies critical concepts so users can achieve a more complete understanding of the code's intent. Full-color illustrations, examples and simplified tables assist the reader in visualizing the code requirements. This up-to-date, step-by-step guide's topic organization reflects the intent of the IBC and facilitates understanding and application of the code provisions.

SOFT COVER #4031S15
PDF DOWNLOAD #8950P596

B. RESIDENTIAL CODE ESSENTIALS: BASED ON THE 2015 INTERNATIONAL RESIDENTIAL CODE

Explains those code provisions essential to understanding the application of the IRC to the most commonly encountered building practices. The information is presented in a user-friendly manner with an emphasis on technical accuracy and clear non-code language. Full-color illustrations, examples and simplified tables assist the reader in visualizing the code requirements.

SOFT COVER #4131S15
PDF DOWNLOAD #8950P59

C. FIRE CODE ESSENTIALS: BASED ON THE 2015 INTERNATIONAL FIRE CODE

Focuses on the essential provisions of the IFC for controlling ignition sources and fire hazards, fire department access to buildings, building uses and processes, fire protection and life safety systems, special processes and uses and hazardous materials.

SOFT COVER #4431S15
PDF DOWNLOAD #8950P59

D. ENERGY CODE ESSENTIALS: BASED ON THE 2015 INTERNATIONAL ENERGY CONSERVATION CODE®

Designed to provide a straightforward, easy-to-read companion guide to the IECC for both beginning and experienced code users. The text provides accurate information on critical energy code applications in the office and in the field for residential and commercial construction. The focused coverage examines those code provisions essential to understanding the application of the IECC to the most commonly encountered building practices and discusses the reasons behind the requirements.

SOFT COVER #4831S15
PDF DOWNLOAD #8950P651

ORDER YOUR I-CODE ESSENTIALS TODAY! 1-800-786-4452 | www.iccsafe.org/books

14-10387

INTERNATIONAL CODE COUNCIL®

Copyright © 2015 ICC. ALL RIGHTS RESERVED. Accessed by David Dammon on Jun 21, 2017 12:30:52 PM pursuant to License Agreement with ICC. No further reproduction or distribution authorized. ANY UNAUTHORIZED REPRODUCTION OR DISTRIBUTION IS A VIOLATION OF THE FEDERAL COPYRIGHT ACT AND THE LICENSE AGREEMENT, AND SUBJECT TO CIVIL AND CRIMINAL PENALTIES THEREUNDER.

ICC INTERNATIONAL CODE COUNCIL®

People Helping People Build a Safer World®

The International Code Council's Training and Education Department

Industry professionals look to ICC to provide the critical knowledge and experiences necessary to excel in today's challenging world. ICC's educational programs cover a broad spectrum of code and construction related topics, offering some of the highest quality instruction direct from the source.

INSTITUTES

Acquire Skills, Share Experiences, Earn CEUs

ICC's training institutes offer a comprehensive education experience and a great way to earn much needed CEUs. Learn best practices from the leading experts in the field, build your network of professional contacts and share experiences. Institutes are held across the country throughout the year. To see the full schedule go to www.iccsafe.org/training.

HIRE ICC TO TEACH

Bring ICC On-Site and Earn CEUs

Give your group the confidence they need to meet tough challenges head-on so they can reach their full potential. ICC's course catalog contains a wide variety of educational topics that are available for contract at a location of your choice. Customized training is also available to fit your needs. For our full course catalogue go to www.iccsafe.org/hireicc.

ICC ONLINE CAMPUS

Earn CEUs at Your Own Pace

Online courses offer access to a comprehensive training and education portal, providing you with an effective and convenient tool to enhance your professional skills. Courses are available anytime for 99 days following registration. Go to www.iccsafe.org/onlinecampus for our full offerings.

For more information about ICC's Training please contact us at **888-ICC-SAFE (422-7233) ext. 33818** or email us at **icctraining@iccsafe.org**.

15-10915

INTERNATIONAL CODE COUNCIL®

Copyright © 2015 ICC. ALL RIGHTS RESERVED. Accessed by David Dammon on Jun 21, 2017 12:30:52 PM pursuant to License Agreement with ICC. No further reproduction or distribution authorized. ANY UNAUTHORIZED REPRODUCTION OR DISTRIBUTION IS A VIOLATION OF THE FEDERAL COPYRIGHT ACT AND THE LICENSE AGREEMENT, AND SUBJECT TO CIVIL AND CRIMINAL PENALTIES THEREUNDER.

ICC INTERNATIONAL CODE COUNCIL®

People Helping People Build a Safer World®

GET IMMEDIATE DOWNLOADS OF THE STANDARDS YOU NEED

Browse hundreds of industry standards adopted by reference. Available to you 24/7!

Count on ICC for standards from a variety of publishers, including:

ACI	CPSC	GYPSUM
AISC	CSA	HUD
ANSI	DOC	ICC
APA	DOJ	ISO
APSP	DOL	NSF
ASHRAE	DOTn	SMACNA
ASTM	FEMA	USC
AWC	GBI	

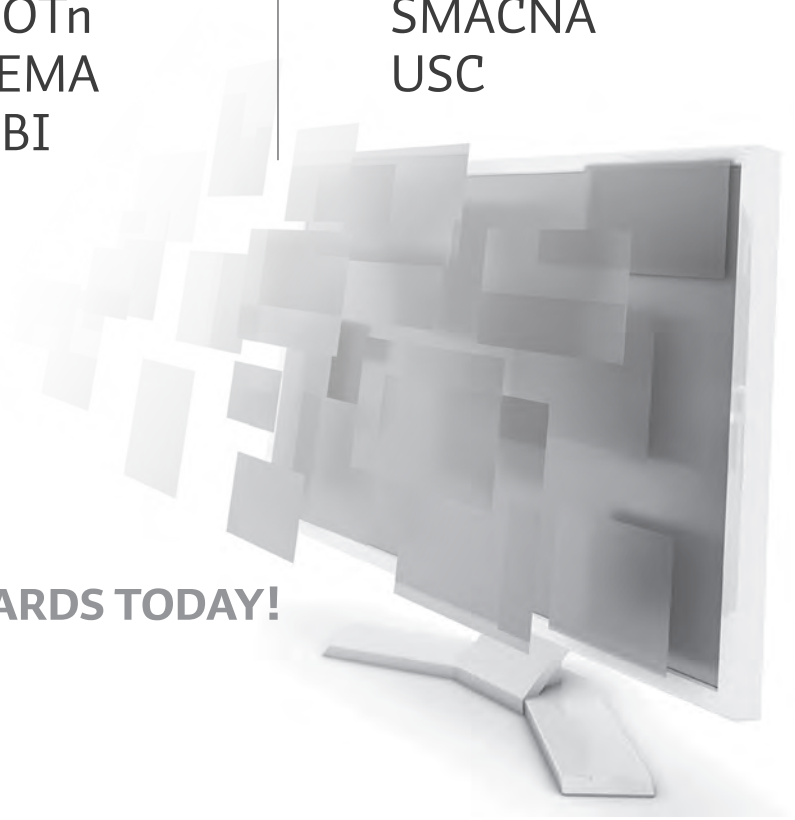

DOWNLOAD YOUR STANDARDS TODAY!
SHOP.ICCSAFE.ORG

15-11221

INTERNATIONAL CODE COUNCIL®

Copyright © 2015 ICC. ALL RIGHTS RESERVED. Accessed by David Dammon on Jun 21, 2017 12:30:52 PM pursuant to License Agreement with ICC. No further reproduction or distribution authorized. ANY UNAUTHORIZED REPRODUCTION OR DISTRIBUTION IS A VIOLATION OF THE FEDERAL COPYRIGHT ACT AND THE LICENSE AGREEMENT, AND SUBJECT TO CIVIL AND CRIMINAL PENALTIES THEREUNDER.

ICC INTERNATIONAL CODE COUNCIL®

People Helping People Build a Safer World®

Valuable Guides to Changes in the 2015 I-Codes®

NEW!

FULL COLOR! HUNDREDS OF PHOTOS AND ILLUSTRATIONS!

SIGNIFICANT CHANGES TO THE 2015 INTERNATIONAL CODES®

Practical resources that offer a comprehensive analysis of the critical changes made between the 2012 and 2015 editions of the codes. Authored by ICC code experts, these useful tools are "must-have" guides to the many important changes in the 2015 International Codes.



SIGNIFICANT CHANGES TO THE IBC, 2015 EDITION
#7024S15

SIGNIFICANT CHANGES TO THE IRC, 2015 EDITION
#7101S15

SIGNIFICANT CHANGES TO THE IFC, 2015 EDITION
#7404S15

SIGNIFICANT CHANGES TO THE IPC/IMC/IFGC, 2015 EDITION
#7202S15

Changes are identified then followed by in-depth discussion of how the change affects real world application. Photos, tables and illustrations further clarify application.

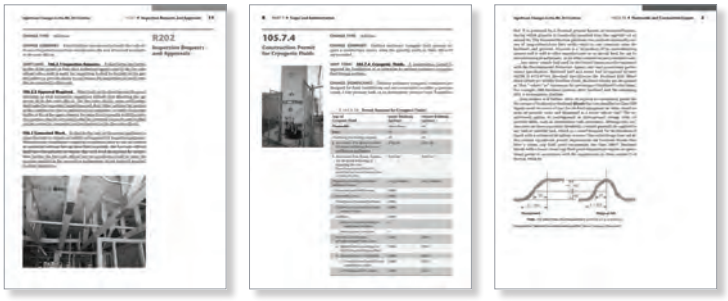

ORDER YOUR HELPFUL GUIDES TODAY!
1-800-786-4452 | www.iccsafe.org/books

HIRE ICC TO TEACH

Want your group to learn the Significant Changes to the I-Codes from an ICC expert instructor? Schedule a seminar today!

email: **ICCTraining@iccsafe.org** | phone: **1-888-422-7233 ext. 33818**

14-09379

INTERNATIONAL CODE COUNCIL®

Copyright © 2015 ICC. ALL RIGHTS RESERVED. Accessed by David Dammon on Jun 21, 2017 12:30:52 PM pursuant to License Agreement with ICC. No further reproduction or distribution authorized. ANY UNAUTHORIZED REPRODUCTION OR DISTRIBUTION IS A VIOLATION OF THE FEDERAL COPYRIGHT ACT AND THE LICENSE AGREEMENT, AND SUBJECT TO CIVIL AND CRIMINAL PENALTIES THEREUNDER.

ISPSC™

2015 CODE AND COMMENTARY

The complete ISPSC with commentary after each section

APSP
The Association of Pool & Spa Professionals®

ICC
INTERNATIONAL CODE COUNCIL®

INTERNATIONAL CODE COUNCIL®

Copyright © 2015 ICC. ALL RIGHTS RESERVED. Accessed by David Dammon on Jun 21, 2017 12:30:52 PM pursuant to License Agreement with ICC. No further reproduction or distribution authorized. ANY UNAUTHORIZED REPRODUCTION OR DISTRIBUTION IS A VIOLATION OF THE FEDERAL COPYRIGHT ACT AND THE LICENSE AGREEMENT, AND SUBJECT TO CIVIL AND CRIMINAL PENALTIES THEREUNDER.

ISPSC®

2015 CODE AND COMMENTARY

Includes:

- The complete ISPSC with commentary after each section
- APSP-7 Standard for Suction Entrapment Avoidance

APSP
The Association of Pool & Spa Professionals®

ICC
INTERNATIONAL CODE COUNCIL

INTERNATIONAL CODE COUNCIL®

Copyright © 2015 ICC. ALL RIGHTS RESERVED. Accessed by David Dammon on Jun 21, 2017 12:30:52 PM pursuant to License Agreement with ICC. No further reproduction or distribution authorized. ANY UNAUTHORIZED REPRODUCTION OR DISTRIBUTION IS A VIOLATION OF THE FEDERAL COPYRIGHT ACT AND THE LICENSE AGREEMENT, AND SUBJECT TO CIVIL AND CRIMINAL PENALTIES THEREUNDER.

2015 International Swimming Pool and Spa Code® Commentary

First Printing: May 2015

ISBN: 978-1-60983-294-0 (soft-cover edition)

COPYRIGHT © 2015
by
INTERNATIONAL CODE COUNCIL, INC.

ALL RIGHTS RESERVED. This 2015 *International Swimming Pool and Spa Code® Commentary* is a copyrighted work owned by the International Code Council, Inc. Without advance written permission from the copyright owner, no part of this book may be reproduced, distributed or transmitted in any form or by any means, including, without limitation, electronic, optical or mechanical means (by way of example, and not limitation, photocopying or recording by or in an information storage retrieval system). For information on permission to copy material exceeding fair use, please contact: Publications, 4051 Flossmoor Road, Country Club Hills, IL 60478. Phone 1-888-ICC-SAFE (422-7233).

Trademarks: "International Code Council," the "International Code Council" logo and the "International Swimming Pool and Spa Code" are trademarks of the International Code Council, Inc.

PRINTED IN THE U.S.A.

INTERNATIONAL CODE COUNCIL®

Copyright © 2015 ICC. ALL RIGHTS RESERVED. Accessed by David Dammon on Jun 21, 2017 12:30:52 PM pursuant to License Agreement with ICC. No further reproduction or distribution authorized. ANY UNAUTHORIZED REPRODUCTION OR DISTRIBUTION IS A VIOLATION OF THE FEDERAL COPYRIGHT ACT AND THE LICENSE AGREEMENT, AND SUBJECT TO CIVIL AND CRIMINAL PENALTIES THEREUNDER.

PREFACE

As a followup to the *International Swimming Pool and Spa Code*®, we offer a companion document, the *International Swimming Pool and Spa Code*® *Commentary.* The basic appeal of the Commentary is this: it provides in a small package and at reasonable cost thorough coverage of many issues likely to be dealt with when using the *International Swimming Pool and Spa Code*—and then supplements that coverage with historical and technical background. Reference lists, information sources and bibliographies are also included.

Throughout all of this, strenuous effort has been made to keep the vast quantity of material accessible and its method of presentation useful. With a comprehensive yet concise summary of each section, the Commentary provides a convenient reference for swimming pool and spa regulations. In the chapters that follow, discussions focus on the full meaning and implications of the code text. Guidelines suggest the most effective method of application and the consequences of not adhering to the code text. Illustrations are provided to aid understanding; they do not necessarily illustrate the only methods of achieving code compliance.

The format of the Commentary includes the full text of each section, table and figure in the code, followed immediately by the commentary applicable to that text. Each section's narrative includes a statement of its objective and intent, and usually includes a discussion about why the requirement commands the conditions set forth. Code text and commentary text are easily distinguished from each other. All code text is shown as it appears in the *International Swimming Pool and Spa Code*, and all commentary is indented below the code text and begins with the symbol ❖.

Readers should note that the Commentary is to be used in conjunction with the *International Swimming Pool and Spa Code* and not as a substitute for the code. **The Commentary is advisory only;** the code official alone possesses the authority and responsibility for interpreting the code.

Comments and recommendations are encouraged, for through your input, we can improve future editions. Please direct your comments to the Codes and Standards Development Department at the Chicago District Office.

INTERNATIONAL CODE COUNCIL®
Copyright © 2015 ICC. ALL RIGHTS RESERVED. Accessed by David Dammon on Jun 21, 2017 12:30:52 PM pursuant to License Agreement with ICC. No further reproduction or distribution authorized. ANY UNAUTHORIZED REPRODUCTION OR DISTRIBUTION IS A VIOLATION OF THE FEDERAL COPYRIGHT ACT AND THE LICENSE AGREEMENT, AND SUBJECT TO CIVIL AND CRIMINAL PENALTIES THEREUNDER.

INTERNATIONAL CODE COUNCIL®
Copyright © 2015 ICC. ALL RIGHTS RESERVED. Accessed by David Dammon on Jun 21, 2017 12:30:52 PM pursuant to License Agreement with ICC. No further reproduction or distribution authorized. ANY UNAUTHORIZED REPRODUCTION OR DISTRIBUTION IS A VIOLATION OF THE FEDERAL COPYRIGHT ACT AND THE LICENSE AGREEMENT, AND SUBJECT TO CIVIL AND CRIMINAL PENALTIES THEREUNDER.

TABLE OF CONTENTS

CHAPTER 1 SCOPE AND ADMINISTRATION . . . . . 1-1 – 1-18

PART 1—SCOPE AND APPLICATION. 1-1

PART 2—ADMINISTRATION AND ENFORCEMENT 1-5

CHAPTER 2 DEFINITIONS . . . . . 2-1 – 2-14

CHAPTER 3 GENERAL COMPLIANCE . . . . . 3-1 – 3-46

CHAPTER 4 PUBLIC SWIMMING POOLS . . . . . 4-1 – 4-14

CHAPTER 5 PUBLIC SPAS AND PUBLIC EXERCISE SPAS. . . . . 5-1 – 5-4

CHAPTER 6 AQUATIC RECREATION FACILITIES . . . . . 6-1 – 6-10

CHAPTER 7 ONGROUND STORABLE RESIDENTIAL SWIMMING POOLS . . . . . 7-1 – 7-10

CHAPTER 8 PERMANENT INGROUND RESIDENTIAL SWIMMING POOLS. . . . . 8-1 – 8-8

CHAPTER 9 PERMANENT RESIDENTIAL SPAS AND PERMANENT RESIDENTIAL EXERCISE SPAS. . . . . 9-1 – 9-2

CHAPTER 10 PORTABLE RESIDENTIAL SPAS AND PORTABLE RESIDENTIAL EXERCISE SPAS. . . . . 10-1 – 10-2

CHAPTER 11 REFERENCED STANDARDS . . . . . 11-1 – 11-6

INDEX . . . . . INDEX-1 – INDEX-4

INTERNATIONAL CODE COUNCIL®

Copyright © 2015 ICC. ALL RIGHTS RESERVED. Accessed by David Dammon on Jun 21, 2017 12:30:52 PM pursuant to License Agreement with ICC. No further reproduction or distribution authorized. ANY UNAUTHORIZED REPRODUCTION OR DISTRIBUTION IS A VIOLATION OF THE FEDERAL COPYRIGHT ACT AND THE LICENSE AGREEMENT, AND SUBJECT TO CIVIL AND CRIMINAL PENALTIES THEREUNDER.

INTERNATIONAL CODE COUNCIL®
Copyright © 2015 ICC. ALL RIGHTS RESERVED. Accessed by David Dammon on Jun 21, 2017 12:30:52 PM pursuant to License Agreement with ICC. No further reproduction or distribution authorized. ANY UNAUTHORIZED REPRODUCTION OR DISTRIBUTION IS A VIOLATION OF THE FEDERAL COPYRIGHT ACT AND THE LICENSE AGREEMENT, AND SUBJECT TO CIVIL AND CRIMINAL PENALTIES THEREUNDER.

Chapter 1: Scope and Administration

General Comments

The law of building regulation is grounded on the police power of the state. In terms of how it is used, this is the power of the state to legislate for the general welfare of its citizens. This power enables passage of such laws as a swimming pool and spa code. It is from the police power delegated by the state legislature that local governments are able to enact building regulations. If the state legislature has limited this power in any way, the municipality may not exceed these limitations. Although the municipality may not further delegate its police power (e.g., by delegating the burden of determining code compliance to the building owner, contractor or architect), it may turn over the administration of building regulations to a municipal official, such as a code official, provided that he or she is given sufficient criteria to clearly establish the basis for decisions as to whether or not a proposed swimming pool or spa conforms to the code.

Chapter 1 is largely concerned with maintaining "due process of law" in enforcing the performance criteria contained in the code. Only through careful observation of the administrative provisions can the code official reasonably hope to demonstrate that "equal protection under the law" has been provided. Although it is generally assumed that the administrative and enforcement sections of a code are geared toward the code official, this is not entirely true. The provisions also establish the rights and privileges of the design professional, contractor and swimming pool or spa owner. The position of the code official is merely to review the proposed and completed work and determine whether a swimming pool or spa installation conforms to the code requirements. The design professional is responsible for the design of a safe swimming pool or spa.

The contractor is responsible for installing the swimming pool or spa in strict accordance with the plans.

During the course of the construction of a swimming pool or spa, the code official reviews the activity to make sure that the spirit and intent of the law are being met and that the swimming pool or spa provides adequate protection of public health. As a public servant, the code official enforces the code in an unbiased, proper manner. Every individual is guaranteed equal enforcement of the code. Furthermore, design professionals, contractors and building owners have the right of due process for any requirement in the code.

Purpose

A swimming pool and spa code, as with any other code, is intended for adoption as a legally enforceable document to safeguard health, safety, property and public welfare. A swimming pool and spa code cannot be effective without adequate provisions for its administration and enforcement. The official charged with the administration and enforcement of pool and spa regulations has a great responsibility, and with this responsibility goes authority. No matter how detailed the swimming pool and spa code may be, the code official must, to some extent, exercise judgment in determining compliance. The code official has the responsibility for establishing that pools and spas are designed and constructed to be reasonably free from hazards associated with the presence and use of the pools and spas. The code is intended to establish an acceptable level of safety.

PART 1—SCOPE AND APPLICATION

SECTION 101 GENERAL

[A] 101.1 Title. These regulations shall be known as the Swimming Pool and Spa Code of **[NAME OF JURISDICTION]**, hereinafter referred to as "this code."

❖ This section sets forth the scope and intent of the code as it applies to new and existing swimming pools and spas. The adopted regulations are identified by inserting the name of the adopting jurisdiction into the code.

[A] 101.2 Scope. The provisions of this code shall apply to the construction, alteration, movement, renovation, replacement, repair and maintenance of aquatic recreation facilities, pools and spas. The pools and spas covered by this code are either permanent or temporary, and shall be only those that are designed and manufactured to be connected to a circulation system and that are intended for swimming, bathing or wading.

❖ This section describes the types of swimming pool or spa construction-related activities to which the code is intended to apply. The applicability of the code encompasses the initial design of swimming pools and spas, the installation and construction phases and the maintenance of operating systems. The code intends to regulate any and all swimming pool- and spa-related appliances, systems and associated equipment that can affect the health, safety and wel-

INTERNATIONAL CODE COUNCIL®
Copyright © 2015 ICC. ALL RIGHTS RESERVED. Accessed by David Dammon on Jun 21, 2017 12:30:52 PM pursuant to License Agreement with ICC. No further reproduction or distribution authorized. ANY UNAUTHORIZED REPRODUCTION OR DISTRIBUTION IS A VIOLATION OF THE FEDERAL COPYRIGHT ACT AND THE LICENSE AGREEMENT, AND SUBJECT TO CIVIL AND CRIMINAL PENALTIES THEREUNDER.

fare of users insofar as they are affected by the installation, operation and maintenance of such appliances and systems.

The key factors as to whether this code applies to a swimming pool or spa is the intended use of the pool or spa for swimming, bathing or wading and whether the pool or spa is designed and manufactured to be connected to a circulation system. The pools or spas can be of permanent construction or of portable construction.

For example, although a permanent decorative fountain not associated with a pool has a circulation system, the fountain is not intended for swimming, bathing or wading. Thus, the fountain is not covered by the code. Similarly, consider a portable plastic wading pool intended for wading, but not designed to be connected to a circulation system. Therefore, the wading pool is also not covered by the code. See Commentary Figures 101.2(1) through 101.2(4).

[A] 101.3 Intent. The purpose of this code is to establish minimum standards to provide a reasonable level of safety and protection of health, property and public welfare by regulating and controlling the design, construction, installation, quality of materials, location and maintenance or use of pools and spas.

❖ The intent of the code is to set forth requirements that establish the minimum acceptable level to safeguard life or limb, health, property and public welfare. Intent becomes important in the application of sections, such as Sections 102, 104.2, 105.2 and 108, as well as any enforcement-oriented interpretive action or judgment. As with any code, the written text is subject to interpretation. Interpretations should not be affected by economics or the potential impact on any party. The only consideration should be protection of the public health, safety and welfare.



FIGURE 101.2(1)
TYPICAL INGROUND POOL
(Photo courtesy of Hamilton & Associates Architecture, Engineering, Technical Services)



FIGURE 101.2(3)
PORTABLE POOL NOT DESIGNED TO HAVE A CIRCULATION SYSTEM
(Photo courtesy of Intex Marketing Inc.)



FIGURE 101.2(2)
NATURAL BODY OF WATER IS NOT POOL
(Photo courtesy of Hamilton & Associates Architecture, Engineering, Technical Services)

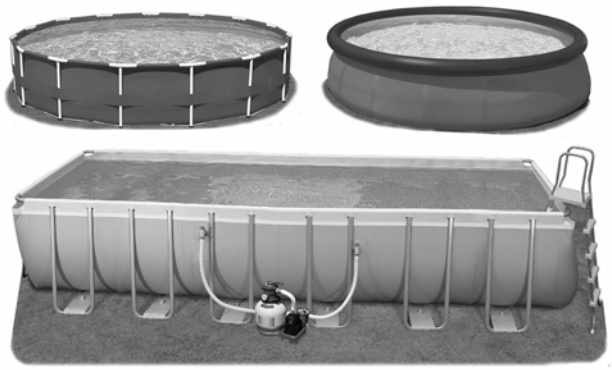

FIGURE 101.2(4)
ONGROUND STORABLE POOLS WITH CIRCULATION SYSTEM
(Photo courtesy of Intex Marketing Inc.)

INTERNATIONAL CODE COUNCIL®
Copyright © 2015 ICC. ALL RIGHTS RESERVED. Accessed by David Dammon on Jun 21, 2017 12:30:52 PM pursuant to License Agreement with ICC. No further reproduction or distribution authorized. ANY UNAUTHORIZED REPRODUCTION OR DISTRIBUTION IS A VIOLATION OF THE FEDERAL COPYRIGHT ACT AND THE LICENSE AGREEMENT, AND SUBJECT TO CIVIL AND CRIMINAL PENALTIES THEREUNDER.

[A] 101.4 Severability. If any section, subsection, sentence, clause or phrase of this code is for any reason held to be unconstitutional, such decision shall not affect the validity of the remaining portions of this code.

❖ Only invalid sections of the code (as established by the court of jurisdiction) can be set aside. This is essential to safeguard the application of the code text to situations in which a provision of the code is declared illegal or unconstitutional. This section preserves the legislative action that put the legal provisions in place.

SECTION 102
APPLICABILITY

[A] 102.1 General. Where there is a conflict between a general requirement and a specific requirement, the specific requirement shall govern. Where, in any specific case, different sections of this code specify different materials, methods of construction or other requirements, the most restrictive shall govern.

❖ Specific requirements of the code override or take precedence over general requirements.

[A] 102.2 Existing installations. Any pool or spa and related mechanical, electrical and plumbing systems lawfully in existence at the time of the adoption of this code shall be permitted to have their use and maintenance continued if the use, maintenance or repair is in accordance with the original design and no hazard to life, health or property is created.

❖ An existing swimming pool or spa is generally considered to be "grandfathered" with code adoption if the system meets a minimum level of safety. Frequently the criteria for this level are the regulations (or code) under which the existing swimming pool or spa was originally constructed. If there are no previous code criteria to apply, the code official is to apply those provisions that are reasonably applicable to existing swimming pools and spas.

[A] 102.3 Maintenance. Pools and spas and related mechanical, electrical and plumbing systems, both existing and new, and parts thereof, shall be maintained in proper operating condition in accordance with the original design in a safe and sanitary condition. Devices or safeguards that are required by this code shall be maintained in compliance with the edition of the code under which they were installed.

The owner or the owner's authorized agent shall be responsible for maintenance of systems. To determine compliance with this provision, the code official shall have the authority to require any system to be reinspected.

❖ All swimming pools, spas and equipment are subject to deterioration resulting from aging, wear, accumulation of dirt and debris, corrosion and other factors. Maintenance is necessary to keep swimming pools, spas and equipment in proper operating condition. Required safety devices and controls must be maintained to continue providing the protection that they afford. Existing equipment and systems could have safety devices or other measures that were necessary because of the nature of the equipment, and such safeguards may have been required by a code that predates the current code. Safeguards required by previous or present codes must be maintained for the life of the equipment or system.

The maintenance of swimming pools and spas as prescribed in this section is the responsibility of the owner of the property. The owner may authorize another party to be responsible for the property, in which case that party is responsible for the maintenance of the swimming pools and spas involved.

The reinspection authority of the code official is needed to ensure compliance with the maintenance requirements in this section

[A] 102.4 Additions, alterations or repairs. Additions, *alterations*, renovations or *repairs* to any pool, spa or related system shall conform to that required for a new system without requiring the existing systems to comply with the requirements of this code. Additions, alterations or repairs shall not cause existing systems to become unsafe, insanitary or overloaded.

Minor additions, alterations, renovations and repairs to existing systems shall be permitted in the same manner and arrangement as in the existing system, provided that such repairs or replacement are not hazardous and are *approved*.

❖ Simply stated, new work must comply with current code requirements. Any alteration or addition to an existing swimming pool or spa involves some new work, and therefore is subject to the requirements of the code. Additions or alterations to an existing swimming pool or spa can place different demands on the system, which could necessitate changing all or part of the swimming pool or spa.

Repair of an existing nonconforming swimming pool or spa is permitted without having to completely replace the nonconforming portion. This typically occurs when repairing the swimming pool or spa wall. This section distinguishes between alterations (subject to applicable provisions of the code) and ordinary repairs (maintenance activities not requiring a permit). The intent of this section is to allow the continued use of the existing swimming pools, spas and equipment that may or may not be designed and constructed as required for new installations.

Existing swimming pools, spas and equipment will normally require repair and component replacement to remain operational. This section permits repair and component replacements without requiring the redesign, alteration or replacement of the entire system. In other words, the swimming pool or spa is allowed to stay as is if it is not hazardous. It is important to note that the word "minor" in this section is intended to modify "additions," "alterations," "renovations" and "repairs." It is not the intent of this section to waive code requirements for the replacement of all or major portions of systems under the guise of repair. Any work, other than minor repairs or replacement of minor portions of a swimming pool or spa, must be considered as new work subject to all applicable provisions of the code. Repairs and minor component replacements are permitted in a manner that is con-

INTERNATIONAL CODE COUNCIL®
Copyright © 2015 ICC. ALL RIGHTS RESERVED. Accessed by David Dammon on Jun 21, 2017 12:30:52 PM pursuant to License Agreement with ICC. No further reproduction or distribution authorized. ANY UNAUTHORIZED REPRODUCTION OR DISTRIBUTION IS A VIOLATION OF THE FEDERAL COPYRIGHT ACT AND THE LICENSE AGREEMENT, AND SUBJECT TO CIVIL AND CRIMINAL PENALTIES THEREUNDER.

sistent with the existing swimming pool or spa if those repairs or replacements are approved by the code official; are not hazardous; do not cause the swimming pool, spa or equipment to be any less in compliance with the code than before; and are, to the extent practicable, in compliance with the provisions of the code applicable to new work.

[A] 102.5 Historic buildings. The provisions of this code relating to the construction, alteration, repair, enlargement, restoration, relocation or moving of pools, spas or systems shall not be mandatory for existing pools, spas or systems identified and classified by the state or local jurisdiction as part of a historic structure when such pools, spas or systems are judged by the code official to be safe and in the public interest of health, safety and welfare regarding any proposed construction, alteration, repair, enlargement, restoration, relocation or moving of such pool or spa.

❖ This section gives the code official the widest possible flexibility in enforcing the code where the swimming pool or spa in question has historic value. This flexibility does not come without conditions. The most important criterion for application of this section is that the swimming pool or spa must be specifically classified as being of historic significance by a qualified party or agency. Usually this is done by a state or local authority after considerable scrutiny. Most, if not all, states have such authorities, as do many local jurisdictions. Agencies with such authority typically exist at the state or local government level.

[A] 102.6 Moved pools and spas. Except as determined by Section 102.2, systems that are a part of a pool, spa or system moved into or within the jurisdiction shall comply with the provisions of this code for new installations.

❖ Swimming pools and spas that have been relocated are subject to the requirements of the code as if they were new construction. Placing a pool or spa where one did not previously exist is analogous to constructing a new swimming pool or spa. It is the intent of this section to require alteration of the existing pool or spa to the extent necessary to bring it into compliance with the provisions of the code applicable to new construction or make the existing swimming pool or spa comply with Section 102.2.

Some onground storable pools are intended to be disassembled and stored during winter and need not be treated as a new pool when reassembled or placed back in use.

[A] 102.7 Referenced codes and standards. The codes and standards referenced in this code shall be those that are listed in Chapter 11 and such codes and standards shall be considered as part of the requirements of this code to the prescribed extent of each such reference. Where differences occur between provisions of this code and the referenced standards, the provisions of this code shall be the minimum requirements.

❖ The code references many standards and codes promulgated and published by other organizations. A complete list of referenced standards appears in Chapter 11. The wording of this provision, "shall be those that are listed in Chapter 11," was carefully chosen to establish the edition of the standard or code that is enforceable under the code.

[A] 102.7.1 Application of the International Codes. Where the *International Residential Code* is referenced in this code, the provisions of the *International Residential Code* shall apply to related systems in detached one- and two-family dwellings and townhouses not more than three stories in height. Other related systems shall comply with the applicable International Code or referenced standard.

❖ Where swimming pools or spas are associated with one- and two-family detached dwellings and townhouses not more than three stories in height, the *International Residential Code*® (IRC®) is the referenced building code. All other swimming pools or spas are covered by the remaining family of International Codes® (I-Codes®).

[A] 102.8 Requirements not covered by code. Any requirements necessary for the strength, stability or proper operation of an existing or proposed system, or for the public safety, health and general welfare, not specifically covered by this code shall be determined by the code official.

❖ Evolving technology in our society will inevitably result in a situation in which the code is comparatively silent on an identified hazard. The reasonable application of the code to such hazardous, unforeseen conditions is addressed in this section. Clearly this section and the code official's judicious and reasonable application of it is necessary. The purpose of this section, however, is not to impose requirements that may be preferred when the code provides alternative methods or is not silent on the circumstances. Additionally, this section can be used to implement the general performance-oriented language of the code to specific enforcement situations.

[A] 102.9 Other laws. The provisions of this code shall not be deemed to nullify any provisions of local, state or federal law.

❖ Other laws enacted by the local, state or federal government may be applicable to a condition that is also governed by a requirement in the code. In such circumstances, the requirements of the code are in addition to those other laws, even though the code official may not be responsible for the enforcement of those laws.

[A] 102.10 Application of references. References to chapter or section numbers, or to provisions not specifically identified by number, shall be construed to refer to such chapter, section or provision of this code.

❖ In a situation where the code may make reference to a chapter or section number or to another code provision without specifically identifying its location in the code, assume that the referenced section, chapter or provision is in the code and not in a referenced code or standard.

INTERNATIONAL CODE COUNCIL®
Copyright © 2015 ICC. ALL RIGHTS RESERVED. Accessed by David Dammon on Jun 21, 2017 12:30:52 PM pursuant to License Agreement with ICC. No further reproduction or distribution authorized. ANY UNAUTHORIZED REPRODUCTION OR DISTRIBUTION IS A VIOLATION OF THE FEDERAL COPYRIGHT ACT AND THE LICENSE AGREEMENT, AND SUBJECT TO CIVIL AND CRIMINAL PENALTIES THEREUNDER.

PART 2—ADMINISTRATION AND ENFORCEMENT

SECTION 103
DEPARTMENT OF BUILDING SAFETY

[A] 103.1 Creation of enforcement agency. The department of building safety is hereby created and the official in charge thereof shall be known as the code official.

❖ The executive official in charge of the building safety department is named the "code official" by this section. In actuality, the person who is in charge of the department may hold a different title such as building commissioner, plumbing inspector, construction official, etc. For the purpose of the code, the person is referred to as the "code official" on being appointed.

[A] 103.2 Appointment. The code official shall be appointed by the chief appointing authority of the jurisdiction.

❖ This section establishes the code official as an appointed position from which he or she cannot be removed, except for cause, subject to a due process review.

[A] 103.3 Deputies. In accordance with the prescribed procedures of the jurisdiction and with the concurrence of the appointing authority, the code official shall have the authority to appoint a deputy code official, the related technical officers, inspectors, plans examiners and other employees. Such employees shall have powers as delegated by the code official.

❖ This section gives the code official the authority to appoint other individuals to assist with the administration and enforcement of the code. These individuals have authority and responsibility as designated by the code official.

[A] 103.4 Liability. The *c*ode official, member of the board of appeals or employee charged with the enforcement of this code, while acting for the jurisdiction in good faith and without malice in the discharge of the duties required by this code or other pertinent law or ordinance, shall not thereby be rendered civilly or criminally liable personally and is hereby relieved from personal liability for any damage accruing to persons or property as a result of any act or by reason of an act or omission in the discharge of official duties.

❖ The code official is not intended to be held liable for actions performed in accordance with the code in a reasonable and lawful manner. The responsibility of the code official in this regard is subject to local, state and federal laws that may supersede this provision. This section further establishes that the code official (or subordinates) is not liable for costs in any legal action instituted in response to the performance of lawful duties. These costs are to be assumed by the state or municipality. The best way to be certain that the code official's action is a "lawful duty" is to always cite the applicable code section on which the enforcement action is based.

[A] 103.4.1 Legal defenses. Any suit or criminal complaint instituted against an officer or employee because of an act performed by that officer or employee in the lawful discharge of duties and under the provisions of this code shall be defended by legal representatives of the jurisdiction until the final termination of the proceedings. The code official or any subordinate shall not be liable for cost in any action, suit or proceeding that is instituted in pursuance of the provisions of this code.

❖ The cost of defending a code official in a legal action will be borne by the jurisdiction.

SECTION 104
DUTIES AND POWERS OF THE CODE OFFICIAL

[A] 104.1 General. The code official is hereby authorized and directed to enforce the provisions of this code. The code official shall have the authority to render interpretations of this code and to adopt policies and procedures in order to clarify the application of its provisions. Such interpretations, policies and procedures shall be in compliance with the intent and purpose of this code. Such policies and procedures shall not have the effect of waiving requirements specifically provided for in this code.

❖ The duty of the code official is to enforce the code, and he or she is the "authority having jurisdiction" for all matters relating to the code and its enforcement. It is the duty of the code official to interpret the code and to determine compliance. Code compliance will not always be easy to determine and will require judgment and expertise, particularly when enforcing the provisions of Sections 104.10 and 104.11. In exercising this authority, however, the code official cannot set aside or ignore any provision of the code.

[A] 104.2 Applications and permits. The code official shall receive applications, review construction documents and issue permits for the erection, alteration, demolition and moving of pools, spas and related mechanical, electrical and plumbing systems. The code official shall inspect the premises for which such permits have been issued and enforce compliance with the provisions of this code.

❖ The code enforcement process is normally initiated with an application for a permit. The code official is responsible for processing the application and issuing permits for the installation, replacement, addition to or modification of swimming pools, spas and related systems in accordance with the code.

[A] 104.3 Notices and orders. The code official shall issue necessary notices or orders to ensure compliance with this code.

❖ An important element of code enforcement is the necessary advisement of deficiencies and needed corrections, which is accomplished through notices and orders. The code official is required to issue orders to abate illegal or unsafe conditions.

[A] 104.4 Inspections. The code official shall make the required inspections, or the code official shall have the authority to accept reports of inspection by *approved* agencies or individuals. Reports of such inspections shall be in writing and be certified by a responsible officer of such

INTERNATIONAL CODE COUNCIL®
Copyright © 2015 ICC. ALL RIGHTS RESERVED. Accessed by David Dammon on Jun 21, 2017 12:30:52 PM pursuant to License Agreement with ICC. No further reproduction or distribution authorized. ANY UNAUTHORIZED REPRODUCTION OR DISTRIBUTION IS A VIOLATION OF THE FEDERAL COPYRIGHT ACT AND THE LICENSE AGREEMENT, AND SUBJECT TO CIVIL AND CRIMINAL PENALTIES THEREUNDER.

approved agency or by the responsible individual. The code official is authorized to engage such expert opinion as deemed necessary to report on unusual technical issues that arise, subject to the approval of the appointing authority.

❖ The code official is required to make inspections, as necessary, to determine compliance with the code or to accept written reports of inspections by an approved agency. The inspection of the work in progress or accomplished is another significant element in determining code compliance. Even though a department may not have the resources to inspect every aspect of all work, the required inspections are those that are dictated by administrative rules and procedures based on many parameters, including available inspection resources. To expand the available inspection resources, the code official may approve an inspection agency that, in his or her opinion, possesses the proper qualifications. When unusual, extraordinary or complex technical issues arise relative to a pool or spa installation or to the safety of an existing pool or spa, the code official has the authority to seek the opinion and advice of experts. A technical report from an expert can be used to assist the code official in the approval process.

[A] 104.5 Identification. The code official shall carry proper identification when inspecting structures or premises in the performance of duties under this code.

❖ This section requires the code official (including by definition all authorized designees) to carry identification in the course of conducting the duties of the position. This identification removes any question concerning the purpose and authority of the inspector.

[A] 104.6 Right of entry. Where it is necessary to make an inspection to enforce the provisions of this code, or where the code official has reasonable cause to believe that there exists in a structure or upon a premises a condition which is contrary to or in violation of this code that makes the structure or premises unsafe, dangerous or hazardous, the code official is authorized to enter the structure or premises at reasonable times to inspect or to perform the duties imposed by this code, provided that if such structure or premises be occupied that credentials be presented to the occupant and entry requested. If such structure or premises is unoccupied, the code official shall first make a reasonable effort to locate the owner, the owner's authorized agent or other person having charge or control of the structure or premises and request entry. If entry is refused, the code official shall have recourse to the remedies provided by law to secure entry.

❖ The first part of this section establishes the right of the code official to enter the premises to make the inspections required by Section 106. Permit application forms typically include a statement signed by the applicant (who is the owner or owner's authorized agent) granting the code official the authority to enter specific areas to enforce code provisions related to the permit. The right to enter other structures or premises is more limited. First, to protect the right of privacy, the owner or occupant must grant the code official permission before the interior of the property can be inspected. Permission is not required for inspections that can be accomplished from within the public right-of-way. Second, access may be denied by the owner or occupant. Unless the inspector has reasonable cause to believe that a violation exists, access may be unattainable. Third, code officials must present proper identification and request admittance during reasonable hours—usually the normal business hours of the establishment. Fourth, inspections must be aimed at securing or determining compliance with the provisions and intent of the regulations that are specifically within the established scope of the code official's authority.

Searches to gather information for the purpose of enforcing other codes, ordinances or regulations are considered unreasonable and are prohibited by the Fourth Amendment to the U.S. Constitution. "Reasonable cause" in the context of this section must be distinguished from "probable cause," which is required to gain access to property in criminal cases. The burden of proof establishing reasonable cause may vary among jurisdictions. Usually, an inspector must show that the property is subject to inspection under the provisions of the code; that the interests of the public health, safety and welfare outweigh the individual's right to maintain privacy; and that such an inspection is required solely to determine compliance with the provisions of the code.

Many jurisdictions do not recognize the concept of an administrative warrant and may require the code official to prove probable cause in order to gain access upon refusal. This burden of proof is usually more substantial, often requiring the code official to stipulate in advance why access is needed (usually access is restricted to gathering evidence for seeking an indictment or making an arrest); what specific items or information is sought; its relevance to the case against the individual subject; how knowledge of the relevance of the information or items sought was obtained; and how the evidence sought will be used. In all such cases, the right to privacy must always be weighed against the right of the code official to conduct an inspection to establish public health, safety and welfare. Such important and complex constitutional issues should be discussed with the jurisdiction's legal counsel. Jurisdictions should establish procedures for securing the necessary court orders when an inspection is deemed necessary following a refusal.

[A] 104.7 Department records. The code official shall keep official records of applications received, permits and certificates issued, fees collected, reports of inspections, and notices and orders issued. Such records shall be retained in the official records for the period required for retention of public records.

❖ In keeping with the need for an efficiently conducted business practice, the code official must keep records pertaining to permit applications, permits, fees collected, inspections, notices and orders issued. Such

INTERNATIONAL CODE COUNCIL®
Copyright © 2015 ICC. ALL RIGHTS RESERVED. Accessed by David Dammon on Jun 21, 2017 12:30:52 PM pursuant to License Agreement with ICC. No further reproduction or distribution authorized. ANY UNAUTHORIZED REPRODUCTION OR DISTRIBUTION IS A VIOLATION OF THE FEDERAL COPYRIGHT ACT AND THE LICENSE AGREEMENT, AND SUBJECT TO CIVIL AND CRIMINAL PENALTIES THEREUNDER.

documentation provides a valuable resource if questions arise regarding the department's actions with respect to a building. It requires that other documents be kept for the length of time mandated by a jurisdiction's, or its state's, laws or administrative rules for retaining public records.

[A] 104.8 Modifications. Where there are practical difficulties involved in carrying out the provisions of this code, the code official shall have the authority to grant modifications for individual cases, upon application of the owner or owner's authorized agent, provided the code official shall first find that special individual reason makes the strict letter of this code impractical and the modification is in compliance with the intent and purpose of this code and that such modification does not lessen sustainability, health, accessibility, life safety and structural requirements. The details of action granting modifications shall be recorded and entered in the files of the department of building safety.

❖ The code official may amend or make exceptions to the code as needed where strict compliance is impractical. Only the code official has authority to grant modifications. Consideration of a particular difficulty is to be based on the application of the owner and a demonstration that the intent of the code is accomplished. This section is not intended to permit setting aside or ignoring a code provision: rather, it is intended to provide acceptance of equivalent protection. Such modifications do not, however, extend to actions that are necessary to correct violations of the code. In other words, a code violation, or the expense of correcting one, cannot constitute a practical difficulty.

[A] 104.9 Alternative materials, methods and equipment. The provisions of this code are not intended to prevent the installation of any material or to prohibit any method of construction not specifically prescribed by this code, provided that any such alternative has been *approved*. An alternative material or method of construction shall be *approved* where the code official finds that the proposed design is satisfactory and complies with the intent of the provisions of this code, and that the material, method or work offered is, for the purpose intended, not less than the equivalent of that prescribed in this code in quality, strength, effectiveness, durability and safety.

❖ The code is not intended to inhibit innovative ideas or technological advances. A comprehensive regulatory document such as a swimming pool and spa code cannot envision and then address all future innovations in the industry. As a result, a performance code must be applicable to and provide a basis for the approval of an increasing number of newly developed, innovative materials, systems and methods for which no code text or referenced standards yet exist. The fact that a material, product or method of construction is not addressed in the code is not an indication that the material, product or method is prohibited. The code official is expected to apply sound technical judgment in accepting materials, systems or methods which, although not anticipated by the drafters of the current code text, can be demonstrated to offer equivalent performance. By virtue of its text, the code regulates new and innovative construction practices while addressing the relative safety of building occupants. The code official is responsible for determining whether a requested alternative provides an equivalent level of protection of the public health, safety and welfare as required by the code.

The most common application of an alternative approval occurs with the proposed use of new material. For example, if a new piping material is produced, the manufacturer may gain approval for use by submitting adequate technical data indicating it is equivalent in quality, strength, effectiveness, fire resistance, durability and safety to the piping material listed as acceptable in the code. At the same time, the manufacturer may submit a proposed code change to recognize the new piping material. If the code official rejects the request for an alternative approval, the applicant may appeal the decision, as regulated by Section 108.

[A] 104.10 Required testing. Where there is insufficient evidence of compliance with the provisions of this code, or evidence that a material or method does not conform to the requirements of this code, or in order to substantiate claims for alternative materials or methods, the code official shall have the authority to require tests as evidence of compliance to be made at no expense to the jurisdiction.

❖ To provide the basis on which the code official can make a decision regarding an alternative material or type of equipment, sufficient technical data, test reports and documentation must be provided for evaluation. If evidence satisfactory to the code official proves that the alternative equipment, material or construction method is equivalent to that required by the code, the code official is obligated to approve it for use. Any such approval cannot have the effect of waiving any requirements of the code. The burden of proof of equivalence lies with the applicant who proposes the use of alternative equipment, materials or methods.

[A] 104.10.1 Test methods. Test methods shall be as specified in this code or by other recognized test standards. In the absence of recognized and accepted test methods, the code official shall approve the testing procedures.

❖ The code official must require the submission of any appropriate information and data to assist in the determination of equivalency before a permit can be issued. The type of information required includes test data in accordance with the referenced standards, evidence of compliance with the referenced standard specifications and design calculations. An evaluation report issued by an authoritative agency, such as ICC Evaluation Service, Inc. (ICC-ES), is particularly useful in providing the code official with the technical basis for evaluation and approval of new and innovative plumbing materials and components. The use of authoritative research reports can greatly assist the code official by reducing the time-consuming engi-

INTERNATIONAL CODE COUNCIL®
Copyright © 2015 ICC. ALL RIGHTS RESERVED. Accessed by David Dammon on Jun 21, 2017 12:30:52 PM pursuant to License Agreement with ICC. No further reproduction or distribution authorized. ANY UNAUTHORIZED REPRODUCTION OR DISTRIBUTION IS A VIOLATION OF THE FEDERAL COPYRIGHT ACT AND THE LICENSE AGREEMENT, AND SUBJECT TO CIVIL AND CRIMINAL PENALTIES THEREUNDER.

neering analysis necessary to review materials and products. Failure to adequately substantiate a request for the use of an alternative is a valid reason for the code official to deny a request.

[A] 104.10.2 Testing agency. Tests shall be performed by an *approved* agency.

❖ The testing agency must be approved by the code official. The testing agency should have the technical expertise, test equipment and quality assurance to properly conduct and report the necessary testing.

[A] 104.10.3 Test reports. Reports of tests shall be retained by the code official for the period required for retention of public records.

❖ Test reports substantiating the modification must be retained in accordance with public record laws. The attorney of the jurisdiction could be asked to verify the specific time period in applicable laws of the jurisdiction.

[A] 104.11 Alternative engineered design. The design, documentation, inspection, testing and approval of an alternative engineered design shall comply with Sections 104.11.1 through 104.11.6.

❖ This section permits an engineer or architect to design a swimming pool or spa that may not comply with all of the provisions found in Chapters 3 through 11. The design must be approved by the code official and must conform to accepted engineering principles. The engineered pool or spa must provide an equivalent level of protection of the public health, safety and welfare intended by the code.

[A] 104.11.1 Design criteria. An alternative engineered design shall conform to the intent of the provisions of this code and shall provide an equivalent level of quality, strength, effectiveness, durability and safety. Material, equipment or components shall be designed and installed in accordance with the manufacturer's instructions.

❖ Although an engineered swimming pool or spa may not comply with all of the minimum requirements set forth in Chapters 3 through 11, it must comply with the intent of these provisions. This section permits the use of standard engineering principles in the design of an innovative system as long as there is no sacrifice of quality, strength, effectiveness, fire resistance, durability and safety. This section further reinforces the intent of Section 104.9 for the acceptance of alternative materials and equipment. The requirement for compliance with the manufacturer's installation instructions is generally intended to address entire engineered systems. The manufacturer or appropriate industry association provides criteria contained in design and installation handbooks. The manufacturer's instructions must be followed for all innovative fittings or products regulated by this section.

[A] 104.11.2 Submittal. The registered design professional shall indicate on the permit application that the system is an alternative engineered design. The permit and permanent permit records shall indicate that an alternative engineered design was part of the *approved* installation.

❖ The permit and permanent permit records must indicate that an alternative engineered design is part of the proposed swimming pool or spa design. This is essential information to have on file to maintain a complete legal record of the pool or spa. When future permits are applied for regarding alterations or modifications, appropriate measures can then be taken to determine that the future work will not adversely affect the original design.

[A] 104.11.3 Technical data. The registered design professional shall submit sufficient technical data to substantiate the proposed alternative engineered design and to prove that the performance meets the intent of this code.

❖ The appropriate information and data must be submitted to the code official to assist in the approval of the alternative engineered design. This is not an option; rather, it is a requirement. Acceptable data to substantiate the performance of the proposed swimming pool, spa or components include results of tests performed by an approved third-party testing agency, design calculations or an evaluation report issued by an authoritative agency, such as ICC-ES.

[A] 104.11.4 Construction documents. The registered design professional shall submit to the code official two complete sets of signed and sealed construction documents for the alternative engineered design.

❖ This section is used in conjunction with Section 105.3. The required detailing of such documents is needed to provide the code official with the necessary information to review and approve the plans.

[A] 104.11.5 Design approval. Where the code official determines that the alternative engineered design conforms to the intent of this code, the system shall be *approved*. If the alternative engineered design is not *approved*, the code official shall notify the registered design professional in writing, stating the reasons why the alternative was not *approved*.

❖ The code official is responsible for determining whether the requested alternative engineered design provides the equivalent level of protection of public health, safety and welfare as required by the code. The code official's response to the design professional must be in writing, stating the reason for either accepting or rejecting the request. If the code official rejects the request for the alternative engineered system, the registered design professional may appeal the decision.

[A] 104.11.6 Inspection and testing. The alternative engineered design shall be tested and inspected in accordance with the requirements of Section 106.12.

❖ As is the case for all swimming pool and spa installations, the code official must inspect the alternative engineered design pools and spas to verify that the work is in compliance with the construction documents. Section 106 requires the code official to witness the testing of the swimming pool or spa before it

INTERNATIONAL CODE COUNCIL®
Copyright © 2015 ICC. ALL RIGHTS RESERVED. Accessed by David Dammon on Jun 21, 2017 12:30:52 PM pursuant to License Agreement with ICC. No further reproduction or distribution authorized. ANY UNAUTHORIZED REPRODUCTION OR DISTRIBUTION IS A VIOLATION OF THE FEDERAL COPYRIGHT ACT AND THE LICENSE AGREEMENT, AND SUBJECT TO CIVIL AND CRIMINAL PENALTIES THEREUNDER.

is placed in service to verify that it is free from leaks or other defects.

[A] 104.12 Material and equipment reuse. Materials, equipment and devices shall not be reused unless such elements have been reconditioned, tested, placed in good and proper working condition and *approved*.

❖ The code criteria for materials and equipment have changed over the years. Evaluation of testing and materials technology has permitted the development of new criteria, which the old materials may not satisfy. As a result, used materials must be evaluated in the same manner as new materials. Used (previously installed) equipment must be equivalent to that required by the code if it is to be used in a new installation.

SECTION 105
PERMITS

[A] 105.1 When required. Any owner, or owner's authorized agent who desires to construct, enlarge, alter, repair, move, or demolish a pool or spa or to erect, install, enlarge, alter, repair, remove, convert or replace any system, the installation of which is regulated by this code, or to cause any such work to be performed, shall first make application to the code official and obtain the required permit for the work.

❖ This section contains the administrative rules governing the issuance, suspension, revocation or modification of swimming pool and spa permits. It also establishes how and by whom the application for a pool or spa permit is to be made, how it is to be processed and what information it must contain or have attached to it. In general, a permit is required for all activities that are regulated by the code, and these activities cannot begin until the permit is issued.

A swimming pool or spa permit is required for the installation, replacement, alteration or modification of all pools, spas and components that are in the scope of applicability of the code. Replacement of an existing component, piece of equipment or related piping is treated no differently than a new installation in new swimming pool or spa construction. The purpose of a permit is to cause the work to be inspected to determine compliance with the intent of the code.

[A] 105.2 Application for permit. Each application for a permit, with the required fee, shall be filed with the code official on a form furnished for that purpose and shall contain a general description of the proposed work and its location. The application shall be signed by the owner or the owner's authorized agent. The permit application shall contain such other information required by the code official.

❖ This section limits persons who may apply for a permit to the building owner or an authorized agent. An owner's authorized agent could be anyone who is given written permission to act in the owner's interest for the purpose of obtaining a permit, such as an architect, an engineer, a contractor, a tenant or other. Permit forms generally have sufficient space to write a very brief description of the work to be accomplished, which is acceptable for small jobs. For larger projects, the description will be augmented by construction documents.

[A] 105.3 Construction documents. Construction documents, engineering calculations, diagrams and other such data shall be submitted in two or more sets with each application for a permit. The code official shall require construction documents, computations and specifications to be prepared and designed by a registered design professional when required by state law. Construction documents shall be drawn to scale and shall be of sufficient clarity to indicate the location, nature and extent of the work proposed and show in detail that the work conforms to the provisions of this code.

❖ A detailed description of the work for which application is made must be submitted. When the work is of a "minor nature," either in scope or needed description, the code official may use judgment in determining the need for a detailed description of the work. For example, the construction documents for an on-ground storable pool could be in the form of the manufacturer's installation instructions.

These provisions are intended to reflect the minimum scope of information needed to determine code compliance. A statement such as, "All swimming pool and spa work will comply with the 2015 ISPSC," on the construction document is not an acceptable substitute for showing the required information.

This section also requires the code official to determine compliance with any state professional registration laws as they apply to the preparation of construction documents.

[A] 105.4 Time limitation of application. An application for a permit for any proposed work shall be deemed to have been abandoned 180 days after the date of filing unless such application has been pursued in good faith or a permit has been issued; except that the code official is authorized to grant one or more extensions of time for additional periods not exceeding 180 days each. The extension shall be requested in writing and justifiable cause demonstrated.

❖ Once an application for a permit has been submitted for proposed work, a time limit of 180 days is established for issuance of the permit. This prevents the code official from having to hold on to incomplete or delayed applications for an indefinite amount of time. The code official can grant extensions for this time period if provided with a written request with justifiable reasons for the extension request.

[A] 105.5 Permit issuance. The application, construction documents and other data filed by an applicant for permit shall be reviewed by the code official. If the code official finds that the proposed work conforms to the requirements of this code and laws and ordinances applicable thereto, and that the fees specified in Section 105.6 have been paid, a permit shall be issued to the applicant.

❖ This section requires the code official to review all submittals for a permit for compliance with the code and to verify that the project will be carried out in accordance with any other applicable laws. This may

INTERNATIONAL CODE COUNCIL®
Copyright © 2015 ICC. ALL RIGHTS RESERVED. Accessed by David Dammon on Jun 21, 2017 12:30:52 PM pursuant to License Agreement with ICC. No further reproduction or distribution authorized. ANY UNAUTHORIZED REPRODUCTION OR DISTRIBUTION IS A VIOLATION OF THE FEDERAL COPYRIGHT ACT AND THE LICENSE AGREEMENT, AND SUBJECT TO CIVIL AND CRIMINAL PENALTIES THEREUNDER.

involve interagency communication and cooperation so that all laws are being obeyed. Once the code official verifies this, a permit may be issued upon payment of the required fees.

[A] 105.5.1 Approved construction documents. When the code official issues the permit where construction documents are required, the construction documents shall be endorsed in writing and stamped "APPROVED." Such *approved* construction documents shall not be changed, modified or altered without authorization from the code official. Work shall be done in accordance with the *approved* construction documents.

The code official shall have the authority to issue a permit for the construction of a part of a system before the entire construction documents for the whole system have been submitted or *approved*, provided adequate information and detailed statements have been filed complying with pertinent requirements of this code. The holders of such permit shall proceed at their own risk without assurance that the permit for the entire system will be granted.

❖ Construction documents that reflect compliance with code requirements form an integral part of the permit process. Successful prosecution of the work depends on these documents. This section requires the code official to stamp the complying construction documents as being "approved." Once approved, no further revisions to the documents may be made without the expressed authorization of the code official in order to maintain code compliance.

In the interest of saving time and coordinating construction phases, it is common practice for contractors to seek permits solely applicable to the installation of site work, such as water or electric services. This practice allows the project to proceed before the final construction documents are completed, thus minimizing delays in the construction process. This also allows the builder to perform site work while the weather permits.

The holder of a partial permit must realize that a permit for the remainder of the pool or spa may not be granted for various reasons. Issuance of a partial permit in no way guarantees issuance of a permit for the entire scope of the project.

[A] 105.5.2 Validity. The issuance of a permit or approval of construction documents shall not be construed to be a permit for, or an approval of, any violation of any of the provisions of this code or any other ordinance of the jurisdiction. No permit presuming to give authority to violate or cancel the provisions of this code shall be valid.

The issuance of a permit based upon construction documents and other data shall not prevent the code official from thereafter requiring the correction of errors in said construction documents and other data or from preventing building operations being carried on thereunder when in violation of this code or of other ordinances of this jurisdiction.

❖ An important code section, this section states the fundamental premise that the permit is only "a license to proceed with the work." It is not a license to "violate, cancel or set aside any provisions of the code." This is important because it means that despite any errors in the approval process, the permit applicant is responsible for code compliance.

[A] 105.5.3 Expiration. Every permit issued shall become invalid unless the work authorized by such permit is commenced within 180 days after its issuance, or if the work authorized by such permit is suspended or abandoned for a period of 180 days after the time the work is commenced. The code official is authorized to grant, in writing, one or more extensions of time, for a period not more than 180 days. The extension shall be requested in writing and justifiable cause demonstrated.

❖ The permit becomes invalid under two distinct situations, both based on a six-month period. The first situation is when no work has started six months from issuance of the permit. The second situation is when there is no continuation of authorized work for six months. The person who was issued the permit should be notified in writing that it is invalid and what steps must be taken to restart the work.

This section also provides the administrative authority with a means of offsetting the costs associated with expired permits by charging a nominal fee for permit reissuance. If, however, the nature or scope of the work to be resumed is different from that covered by the original permit, the permit process essentially starts from "scratch" and full fees are charged. The same procedure would also apply if the work has not commenced within one year of the date of permit issuance or if work has to be suspended for a year or more.

[A] 105.5.4 Extensions. Any permittee holding an unexpired permit shall have the right to apply for an extension of the time within which the permittee will commence work under that permit when work is unable to be commenced within the time required by this section for good and satisfactory reasons. The code official shall extend the time for action by the permittee for a period not exceeding 180 days if there is reasonable cause. The fee for an extension shall be one-half the amount required for a new permit for such work.

❖ Although it is typical for a project to begin immediately following issuance of a permit, there are occasions when an unforeseen delay may occur. This section intends to afford the permit holder the opportunity to apply for and receive a single, 180-day extension within which to begin a project under a still-valid permit (i.e., less than 180 days old). The applicant must, however, provide the code official with an adequate explanation for the delay in starting a project, which could include such things as the need to obtain approvals or permits from other agencies having jurisdiction. This section requires the code official to determine what constitutes "good and satisfactory" reasons for any delay, and further allows the jurisdiction to offset its administrative costs for extending the permit by charging one-half the fee for a new permit for the extension.

INTERNATIONAL CODE COUNCIL®
Copyright © 2015 ICC. ALL RIGHTS RESERVED. Accessed by David Dammon on Jun 21, 2017 12:30:52 PM pursuant to License Agreement with ICC. No further reproduction or distribution authorized. ANY UNAUTHORIZED REPRODUCTION OR DISTRIBUTION IS A VIOLATION OF THE FEDERAL COPYRIGHT ACT AND THE LICENSE AGREEMENT, AND SUBJECT TO CIVIL AND CRIMINAL PENALTIES THEREUNDER.

[A] 105.5.5 Suspension or revocation of permit. The code official shall revoke a permit or approval issued under the provisions of this code in case of any false statement or misrepresentation of fact in the application or on the construction documents upon which the permit or approval was based.

❖ A permit is, in reality, a license to proceed with the work. The code official must revoke all permits shown to be based, all or in part, on any false statement or misrepresentation of fact. An applicant may subsequently reapply for a permit with the appropriate corrections or modifications made to the application and construction documents.

[A] 105.5.6 Retention of construction documents. One set of *approved* construction documents shall be retained by the code official for a period of not less than 180 days from date of completion of the permitted work, or as required by state or local laws. One set of *approved* construction documents shall be returned to the applicant, and said set shall be kept on the site of the building or work at all times during which the work authorized thereby is in progress.

❖ Once the code official has stamped or endorsed as approved the construction documents on which the permit is based (see the commentary to Section 105.5.1), one set of approved construction documents must be kept on the construction site to serve as the basis for all subsequent inspections. To avoid confusion, the construction documents on the site must be precisely the documents that were approved and stamped. This is because inspections are based on the approved documents. Additionally, the contractor cannot determine compliance with the approved construction documents unless those documents are readily available. Unless the approved construction documents are available, the inspection should be postponed and work on the project halted.

[A] 105.6 Fees. A permit shall not be valid until the fees prescribed by law have been paid. An amendment to a permit shall not be released until the additional fee, if any, has been paid.

❖ All fees are to be paid prior to permit issuance. This requirement establishes that the permit applicant intends to proceed with the work, as well as facilitates payment.

[A] 105.6.1 Work commencing before permit issuance. Any person who commences any work on a system before obtaining the necessary permits shall be subject to a fee as indicated in the adopted fee schedule and would be in addition to the required permit fees.

❖ This section is intended to serve as a deterrent to proceeding with work on a swimming pool or spa without a permit. As a punitive measure, it doubles the cost of the permit fee. This section does not, however, intend to penalize a contractor called on to do emergency work after hours, provided that he or she makes prompt notification to the code official the next business day, obtains the requisite permit for the work done and has the required inspections performed.

[A] 105.6.2 Fee schedule. The fees for work shall be as indicated in the following schedule:

[JURISDICTION TO INSERT APPROPRIATE SCHEDULE]

❖ A published fee schedule must be established for plans examination, permits and inspections. Ideally, the department should generate revenues that cover operating costs and expenses. The permit fee schedule is an integral part of this process.

[A] 105.6.3 Fee refunds. The code official shall authorize the refunding of fees as follows:

1. The full amount of any fee paid hereunder that was erroneously paid or collected.
2. Not more than **[SPECIFY PERCENTAGE]** percent of the permit fee paid when no work has been done under a permit issued in accordance with this code.
3. Not more than **[SPECIFY PERCENTAGE]** percent of the plan review fee paid when an application for a permit for which a plan review fee has been paid is withdrawn or canceled before any plan review effort has been expended.

The code official shall not authorize the refunding of any fee paid except upon written application filed by the original permittee not later than 180 days after the date of fee payment.

❖ This section allows for a partial refund of fees resulting from the revocation, abandonment or discontinuance of a swimming pool or spa project for which a permit has been issued and fees have been collected. The incomplete work for which the excess fees are to be refunded refers to the work that would have been required by the department had the permit not been terminated. The refund of fees should be related to the cost of enforcement services not provided because of termination of the project.

SECTION 106
INSPECTIONS

[A] 106.1 General. Construction or work for which a permit is required shall be subject to inspection by the code official and such construction or work shall remain accessible and exposed for inspection purposes until *approved*. Approval as a result of an inspection shall not be construed to be an approval of a violation of the provisions of this code or of other ordinances of the jurisdiction. Inspections presuming to give authority to violate or cancel the provisions of this code or of other ordinances of the jurisdiction shall not be valid. It shall be the duty of the permit applicant to cause the work to remain accessible and exposed for inspection purposes. Neither the code official nor the jurisdiction shall be liable for expense entailed in the removal or replacement of any material required to allow inspection.

❖ The inspection function is one of the more important aspects of building department operations. This section authorizes the code official to inspect the work for which a permit has been issued and requires that the work to be inspected remain accessible to the code

INTERNATIONAL CODE COUNCIL®
Copyright © 2015 ICC. ALL RIGHTS RESERVED. Accessed by David Dammon on Jun 21, 2017 12:30:52 PM pursuant to License Agreement with ICC. No further reproduction or distribution authorized. ANY UNAUTHORIZED REPRODUCTION OR DISTRIBUTION IS A VIOLATION OF THE FEDERAL COPYRIGHT ACT AND THE LICENSE AGREEMENT, AND SUBJECT TO CIVIL AND CRIMINAL PENALTIES THEREUNDER.

official until inspected and approved. Any expense incurred in removing or replacing material that conceals an item to be inspected is not the responsibility of the code official or the jurisdiction. As with the issuance of permits, an approval as a result of an inspection is not a license to violate the code. Any work approved that might contain a violation of the code does not relieve the applicant from complying with the code.

[A] 106.2 Preliminary inspection. Before issuing a permit, the code official is authorized to examine or cause to be examined buildings, structures and sites for which an application has been filed.

❖ Some projects might require a preliminary inspection by the code official prior to a permit being issued. This is especially useful for remodel and addition projects where the conditions of the existing aquatic vessel are unknown or questionable. This section authorizes the code official to make such inspections.

[A] 106.3 Required inspections and testing. Pool and spa installations or alterations thereto, including equipment, piping, and appliances related thereto, shall be inspected by the code official to ensure compliance with the requirements of this code.

❖ This section requires that all portions of the swimming pool or spa be inspected before and after final accessories are installed. The code official has the authority to require noncomplying items to be brought into compliance and reinspected.

Inspections are necessary to determine that an installation conforms to all code requirements. Because some parts of swimming pool and spa systems are hidden underground, periodic inspections are necessary before portions of the system are concealed. The code official is required to determine that swimming pools, spas and equipment are installed in accordance with the approved construction documents and the applicable code requirements. All inspections that are necessary to provide such verification must be conducted. Generally, the administrative rules of a department may list the required interim inspections. Construction that occurs in steps or phases may necessitate multiple inspections; therefore, an exact number of required inspections cannot be specified. Where violations are noted and corrections are required, reinspections may be necessary. As time permits, frequent inspections of some job sites, especially where the work is complex, can be beneficial in detecting code compliance or other potential problems before they develop or become more difficult to correct.

It is the responsibility of the contractor, the builder, the owner or other authorized party to arrange for the required inspections and to coordinate them to prevent work from being concealed before it is inspected.

1. Inspection of underground piping is especially important because once it is covered, it is the most challenging part of a swimming pool and spa system in which to detect a leak. If repairs are necessary, underground repairs are proportionately more expensive because of the need for heavy equipment and the more labor-intensive nature of working below grade level.

2. A rough-in inspection is a visual observation of all parts of the piping system that will eventually be concealed. Rough-in inspections also include verification that the applicable test pressures are applied to the system and that leaks do not exist. The inspection must be made before any of the system is covered by finish materials or hidden by future work.

   A rough-in inspection may be completed in one visit or as a series of inspections. This is administratively determined by the local inspections department and typically is dependent on the size of the job.

3. A final inspection may be done as a series of inspections or in one visit, similar to a rough-in inspection. A final inspection is required prior to the approval of a swimming pool or spa installation. To verify that all previously issued correction orders have been complied with and to determine whether subsequent violations exist, a final inspection must be made. All violations observed during the final inspection must be noted and the permit holder must be advised.

   The final inspection follows the completion of the work or installation. The final inspection is an inspection of all that was installed after the rough-in inspection and not concealed in the construction. Subsequent re-inspections are necessary if the final inspection generates a notice of violation.

[A] 106.4 Other inspections. In addition to the inspections specified in Sections 106.2 and 106.3, the code official is authorized to make or require other inspections of any construction work to ascertain compliance with the provisions of this code and other laws that are enforced.

❖ Any item regulated by the code is subject to inspection by the code official to determine compliance with the applicable code provision, and no list can include all types of work in a given building. Also, other inspections before, during or after the rough-in could be necessary. This section gives the code official the authority to inspect any regulated work.

[A] 106.5 Inspection request. It shall be the duty of the holder of the permit or their duly authorized agent to notify the code official when work is ready for inspection. It shall be the duty of the permit holder to provide access to and means for inspections of such work that are required by this code.

❖ This section clarifies that it is the responsibility of the permit holder to arrange for the required inspections when the completed work is ready. It also establishes his or her responsibility for keeping the work open for inspection and providing all means needed to accomplish the inspections.

INTERNATIONAL CODE COUNCIL®
Copyright © 2015 ICC. ALL RIGHTS RESERVED. Accessed by David Dammon on Jun 21, 2017 12:30:52 PM pursuant to License Agreement with ICC. No further reproduction or distribution authorized. ANY UNAUTHORIZED REPRODUCTION OR DISTRIBUTION IS A VIOLATION OF THE FEDERAL COPYRIGHT ACT AND THE LICENSE AGREEMENT, AND SUBJECT TO CIVIL AND CRIMINAL PENALTIES THEREUNDER.

[A] 106.6 Approval required. Work shall not be done beyond the point indicated in each successive inspection without first obtaining the approval of the code official. The code official, upon notification, shall make the requested inspection and shall either indicate the portion of the construction that is satisfactory as completed, or notify the permit holder or his or her agent wherein the same fails to comply with this code. Any portions that do not comply shall be corrected and such portion shall not be covered or concealed until authorized by the code official.

❖ This section establishes that work cannot progress beyond the point of a required inspection without the code official's approval. On making the inspection, the code official must either approve the completed work or notify the permit holder or other responsible party of that which does not comply with the code. Approvals and notices of noncompliance must be in writing, as required by Section 104.4, to avoid any misunderstanding as to what is required. Any work not approved cannot be concealed until it has been corrected and approved by the code official.

[A] 106.7 Approved agencies. Test reports submitted to the code official for consideration shall be developed by *approved* agencies that have satisfied the requirements as to qualifications and reliability.

❖ The code official is responsible for determining whether to accept an agency's test report, as well as whether the reporting agency is acceptable.

[A] 106.8 Evaluation and follow-up inspection services. Prior to the approval of a closed, prefabricated system and the issuance of a permit, the code official shall require the submittal of an evaluation report on each prefabricated system indicating the complete details of the system, including a description of the system and its components, the basis upon which the system is being evaluated, test results and similar information, and other data as necessary for the code official to determine conformance to this code.

❖ As an alternative to a physical inspection at the plant or location where systems and components are prefabricated, the code official has the option of accepting an evaluation report from an approved agency detailing such inspections. These evaluation reports can serve as the basis for code compliance.

[A] 106.9 Evaluation service. The code official shall designate the evaluation service of an *approved* agency as the evaluation agency, and review such agency's evaluation report for adequacy and conformance to this code.

❖ The code official is required to review all submitted reports for conformity to the applicable code requirements. If, in the judgment of the code official, the submitted reports are acceptable, he or she should document the basis for the approval.

[A] 106.10 Follow-up inspection. Except where ready access is provided to systems, service equipment and accessories for complete inspection at the site without disassembly or dismantling, the code official shall conduct the frequency of in-plant inspections necessary to ensure conformance to the *approved* evaluation report or shall designate an independent, *approved* inspection agency to conduct such inspections. The inspection agency shall furnish the code official with the follow-up inspection manual and a report of inspections on request, and the system shall have an identifying label permanently affixed to the system indicating that factory inspections have been performed.

❖ The owner is required to provide special inspections of fabricated assemblies at the fabrication plant. The code official or an approved inspection agency must conduct periodic in-plant inspections to ensure conformance to the approved evaluation report. Such inspections would not be required where the pool or spa can be inspected completely at the job site.

[A] 106.11 Test and inspection records. Required test and inspection records shall be available to the code official at all times during the fabrication of the system and the installation of the system, or such records as the code official designates shall be filed.

❖ All testing and inspection records related to a fabricated assembly must be filed with the code official so he or she can maintain a complete and legal record of the assembly and erection of the swimming pool or spa.

[A] 106.12 Special inspections. Special inspections of alternative engineered design systems shall be conducted in accordance with Sections 106.12.1 and 106.12.2.

❖ This section establishes that the design professional has to periodically inspect the alternative engineered design, keep records of such inspections and submit a final report to the code official certifying that all work conforms to the construction documents. Because of the unusual nature and possible complexity of alternative engineered swimming pools and spas, it is necessary for the designer to be involved in the inspection process.

[A] 106.12.1 Periodic inspection. The registered design professional or designated inspector shall periodically inspect and observe the alternative engineered design to determine that the installation is in accordance with the *approved* construction documents. Discrepancies shall be brought to the immediate attention of the contractor for correction. Records shall be kept of inspections.

❖ The registered design professional must periodically inspect the engineered swimming pools and spas during installation to determine that the pools and spas conform to the approved construction documents. This is an important step because the design professional can identify any deviations from the approved plans in the early stages of the work. The design professional must then advise the contractor of any problems so that corrective measures can be taken before needless costs are incurred, and labor and materials are wasted.

The design professional must compile a complete legal record of the project, which must include all inspections made, discrepancies found and resolutions of discrepancies. It is the responsibility of the design professional to document and submit inspec-

INTERNATIONAL CODE COUNCIL®
Copyright © 2015 ICC. ALL RIGHTS RESERVED. Accessed by David Dammon on Jun 21, 2017 12:30:52 PM pursuant to License Agreement with ICC. No further reproduction or distribution authorized. ANY UNAUTHORIZED REPRODUCTION OR DISTRIBUTION IS A VIOLATION OF THE FEDERAL COPYRIGHT ACT AND THE LICENSE AGREEMENT, AND SUBJECT TO CIVIL AND CRIMINAL PENALTIES THEREUNDER.

tion records and written certification in accordance with Section 106.12.2.

[A] 106.12.2 Written report. The registered design professional shall submit a final report in writing to the code official upon completion of the installation, certifying that the alternative engineered design conforms to the *approved* construction documents. A notice of approval for the system shall not be issued until a written certification has been submitted.

❖ After all work is completed, the design professional is required to inspect the entire alternative engineered swimming pool or spa. The details of that inspection, including verification of compliance with the approved construction documents, must be submitted in writing to the code official before final approval can be granted.

[A] 106.13 Testing. Systems shall be tested as required by this code. Tests shall be made by the permit holder and the code official shall have the authority to witness such tests.

❖ Visual inspection of a swimming pool or spa is not all that is required in the determination of compliance with the code. The code has requirements for testing to be performed to disclose leaks and defects.

[A] 106.14 New, altered, extended or repaired systems. New systems and parts of existing systems that have been altered, extended or repaired shall be tested as prescribed by this code.

❖ Every swimming pool or spa system must be tested before it is placed into service. Testing is necessary to make sure that the system is free from leaks or other defects. Testing is also required, to the extent practicable, for portions of existing systems that have been repaired, altered or extended.

[A] 106.15 Equipment, material and labor for tests. Equipment, material and labor required for testing a system or part thereof shall be furnished by the permit holder.

❖ The permit holder is responsible for performing tests, as well as for supplying all of the labor, equipment and apparatus necessary to conduct such tests. The code official observes, but never performs, the test.

[A] 106.16 Reinspection and testing. Where any work or installation does not pass any initial test or inspection, the necessary corrections shall be made to comply with this code. The work or installation shall then be resubmitted to the code official for inspection and testing.

❖ If a system, or portion thereof, does not pass the initial test or inspection, all violations must be corrected and the system must be reinspected.

To encourage code compliance and cover the expense of the code official's time, many jurisdictions charge fees for inspections that are required subsequent to the first reinspection.

[A] 106.17 Approval. After the prescribed tests and inspections indicate that the work complies in all respects with this code, a notice of approval shall be issued by the code official.

❖ After the code official has performed the required inspections and observed the required equipment and system tests (or has received written reports of the results of such tests), he or she must determine whether the installation or work is in compliance with all applicable sections of the code. The code official must issue a written notice of approval if it has been determined that the work or installation is in apparent compliance with the code. The notice of approval is given to the permit holder, and a copy of the notice is retained on file by the code official.

[A] 106.17.1 Revocation. The code official is authorized to, in writing, suspend or revoke a notice of approval issued under the provisions of this code wherever the notice is issued in error, or on the basis of the incorrect information supplied, or where it is determined that the building or structure, premise, system or portion thereof is in violation of any ordinance or regulation or any of the provisions of this code.

❖ This section is needed to give the code official the authority to revoke a notice of approval for the reasons indicated in the code text. The code official can suspend the notice until all of the code violations are corrected.

[A] 106.18 Temporary connection. The code official shall have the authority to authorize the temporary connection of the building or system to the utility source for the purpose of testing systems.

❖ The typical procedure for a local jurisdiction is to withhold the issuance of the certificate of occupancy until approvals have been received from each code official responsible for inspection of the structure. The code official is permitted to issue a temporary authorization to make connections to the public utility system prior to the completion of all work. The certification is intended to acknowledge that, because of seasonal limitations, time constraints, the need for testing or partial operation of equipment, some systems may be connected even though the pool or spa is not suitable for use. The intent of this section is that a request for temporary occupancy or the connection and use of systems should not be denied when the requesting permit holder has demonstrated to the code official's satisfaction that the public health, safety and welfare will not be endangered.

The code official should view the issuance of a "temporary authorization or certificate of occupancy" as substantial an act as the issuance of the final certificate. Indeed, the issuance of a temporary certificate of occupancy offers a greater potential for conflict because once the pool or spa is in use, it is very difficult to remove the occupants through legal means.

[A] 106.19 Connection of service utilities. A person shall not make connections from a utility, source of energy, fuel, power, water system or sewer system to any building or system that is regulated by this code for which a permit is required until authorized by the code official.

❖ This section establishes the authority of the code official to approve utility connections to a building, such as water, sewer, electricity, gas and steam, and to require their disconnection when such approval has

INTERNATIONAL CODE COUNCIL®
Copyright © 2015 ICC. ALL RIGHTS RESERVED. Accessed by David Dammon on Jun 21, 2017 12:30:52 PM pursuant to License Agreement with ICC. No further reproduction or distribution authorized. ANY UNAUTHORIZED REPRODUCTION OR DISTRIBUTION IS A VIOLATION OF THE FEDERAL COPYRIGHT ACT AND THE LICENSE AGREEMENT, AND SUBJECT TO CIVIL AND CRIMINAL PENALTIES THEREUNDER.

not been granted. For the protection of the people who work on swimming pools and spas, such systems must have had final inspection approvals.

SECTION 107
VIOLATIONS

[A] 107.1 Unlawful acts. It shall be unlawful for any person, firm or corporation to erect, construct, alter, repair, remove, demolish or utilize any system, or cause same to be done, in conflict with or in violation of any of the provisions of this code.

❖ This section describes the citing, recording and subsequent actions pursuant to observed code violations. Violations of the code are prohibited; this is the basis for all citations and correction notices.

[A] 107.2 Notice of violation. The code official shall serve a notice of violation or order to the person responsible for the erection, installation, alteration, extension, repair, removal or demolition of work in violation of the provisions of this code, or in violation of a detail statement or the *approved* construction documents there under, or in violation of a permit or certificate issued under the provisions of this code. Such order shall direct the discontinuance of the illegal action or condition and the abatement of the violation.

❖ The code official is required to notify the person responsible for the erection or use of a swimming pool or spa found to be in violation of the code. The section that is allegedly being violated must be cited so that the responsible party can respond to the notice.

[A] 107.3 Prosecution of violation. If the notice of violation is not complied with promptly, the code official shall request the legal counsel of the jurisdiction to institute the appropriate proceeding at law or in equity to restrain, correct or abate such violation, or to require the removal or termination of the unlawful pool or spa in violation of the provisions of this code or of the order or direction made pursuant thereto.

❖ The code official must pursue, through the use of legal counsel of the jurisdiction, legal means to correct the violation. This is not optional.

Any extensions of time for voluntary correction of the violations must be for a reasonable, legitimate cause, or the code official may be subject to criticism for "arbitrary and capricious" actions. In general, it is better to have a standard time limitation for correction of violations. Departures from this standard must be for a clear and reasonable purpose, usually stated in writing by the violator.

[A] 107.4 Violation penalties. Any person who shall violate a provision of this code or shall fail to comply with any of the requirements thereof or who shall erect, install, alter or repair a pool or spa in violation of the *approved* construction documents or directive of the code official, or of a permit or certificate issued under the provisions of this code, shall be guilty of a **[SPECIFY OFFENSE]**, punishable by a fine of not more than **[AMOUNT]** dollars or by imprisonment not exceeding **[NUMBER OF DAYS]**, or both such fine and imprisonment. Each day that a violation continues after due notice has been served shall be deemed a separate offense.

❖ A standard fine, or other penalty, as deemed appropriate by the jurisdiction is prescribed in this section. Additionally, this section identifies a principle that "each day that a violation continues shall be deemed a separate offense" for the purpose of applying the prescribed penalty in order to facilitate prompt resolution.

[A] 107.5 Stop work orders. Upon notice from the *code official*, work on any system that is being performed contrary to the provisions of this code or in a dangerous or unsafe manner shall immediately cease. Such notice shall be in writing and shall be given to the owner of the property, or to the owner's authorized agent, or to the person performing the work. The notice shall state the conditions under which work is authorized to resume. Where an emergency exists, the code official shall not be required to give a written notice prior to stopping the work. Any person who shall continue any work in or about the structure after having been served with a stop work order, except such work as that person is directed to perform to remove a violation or unsafe condition, shall be liable to a fine of not less than **[AMOUNT]** dollars or more than **[AMOUNT]** dollars.

❖ On receipt of a violation notice from the code official, the owner of the property, the owner's agent or the person doing the work must immediately cease all construction activities identified in the notice, except as expressly permitted to correct the violation. A stop work order can prevent a violation from becoming worse and more difficult or expensive to correct. However, it can result in inconvenience and monetary loss to the affected parties; therefore, justification must be evident and judgment must be exercised before such an order is issued.

A stop work order may be issued where work is proceeding without a permit. Hazardous conditions could develop where the code official is unaware of the nature of the work and a permit has not been issued. As determined by the adopting jurisdiction, a penalty may be assessed for failure to comply with this section, and it is to be inserted in the blanks provided.

[A] 107.6 Abatement of violation. The imposition of the penalties herein prescribed shall not preclude the legal officer of the jurisdiction from instituting appropriate action to prevent violation, or to prevent illegal use of a pool or spa, or to stop an illegal act, conduct, business or utilization of the plumbing on or about any premises.

❖ Despite the assessment of a penalty in the form of a fine or imprisonment against a violator, the violation itself must still be corrected. Failure to make the necessary corrections will result in the violator being subject to additional penalties as described in the preceding section.

[A] 107.7 Unsafe systems. Any system regulated by this code that is unsafe or that constitutes a fire or health hazard, insanitary condition, or is otherwise dangerous to human life

INTERNATIONAL CODE COUNCIL®
Copyright © 2015 ICC. ALL RIGHTS RESERVED. Accessed by David Dammon on Jun 21, 2017 12:30:52 PM pursuant to License Agreement with ICC. No further reproduction or distribution authorized. ANY UNAUTHORIZED REPRODUCTION OR DISTRIBUTION IS A VIOLATION OF THE FEDERAL COPYRIGHT ACT AND THE LICENSE AGREEMENT, AND SUBJECT TO CIVIL AND CRIMINAL PENALTIES THEREUNDER.

is hereby declared unsafe. Any use of a system regulated by this code constituting a hazard to safety, health or public welfare by reason of inadequate maintenance, dilapidation, obsolescence, fire hazard, disaster, damage or abandonment is hereby declared an unsafe use. Any such unsafe system is hereby declared to be a public nuisance and shall be abated by repair, rehabilitation, demolition or removal.

❖ Unsafe conditions include those that constitute a health hazard, fire hazard, explosion hazard, shock hazard, asphyxiation hazard, physical injury hazard or are otherwise dangerous to human life and property.

In the course of performing duties, the code official may identify a hazardous condition. Such condition must be declared in violation of the code and, therefore, must be abated.

[A] 107.7.1 Authority to condemn a system. Whenever the code official determines that any system, or portion thereof, regulated by this code has become hazardous to life, health or property or has become insanitary, the code official shall order in writing that such system either be removed or restored to a safe or sanitary condition. A time limit for compliance with such order shall be specified in the written notice. No person shall use or maintain a defective system after receiving such notice.

When such a system is to be disconnected, written notice as prescribed in Section 107.2 shall be given. In cases of immediate danger to life or property, such disconnection shall be made immediately without such notice.

❖ When a swimming pool, spa or related equipment is determined to be unsafe, the code official is required to notify the owner or agent as the first step in correcting the difficulty. Such notice is to describe the repairs and improvements necessary to correct the deficiency or require removal or replacement of the unsafe equipment or system. All such notices must specify a time frame in which the corrective actions must occur. Additionally, such notice should require the immediate response of the owner or agent. If he or she is not available, public notice of such declaration should suffice for the purposes of complying with this section. The code official may also determine that disconnection of the utilities is necessary to correct an unsafe condition and must give written notice to that effect unless immediate disconnection is essential for public health and safety reasons (see the commentary to Section 107.7.2).

[A] 107.7.2 Authority to disconnect service utilities. The code official shall have the authority to authorize disconnection of utility service to the pool or spa regulated by the technical codes in case of an emergency, where necessary, to eliminate an immediate danger to life or property. Where possible, the owner or the owner's authorized agent and occupant of the building where the pool or spa is located shall be notified of the decision to disconnect utility service prior to taking such action. If not notified prior to disconnecting, the owner, the owner's authorized agent or the occupant of the building shall be notified in writing, as soon as practical thereafter.

❖ The code official must have the authority to order disconnection of any utility supplied to a swimming pool, spa or equipment regulated by the code when it is determined that the equipment or any portion thereof has become an immediate danger. Written notice of an order to disconnect service and the causes therefore should be given to the owner and the occupant of the swimming pool, spa or premises. However, disconnection should be done without such notice in cases of immediate danger to life or property.

[A] 107.7.3 Connection after order to disconnect. A person shall not make connections from any energy, fuel, power supply or water distribution system, or supply energy, fuel or water to any equipment regulated by this code that has been disconnected or ordered to be disconnected by the code official or the use of which has been ordered to be discontinued by the code official until the code official authorizes the reconnection and use of such equipment.

When any system is maintained in violation of this code, and in violation of any notice issued pursuant to the provisions of this section, the code official shall institute any appropriate action to prevent, restrain, correct or abate the violation.

❖ Once the reason for discontinuation of use or disconnection of the utility no longer exists, only the code official can authorize resumption of use or reconnection of the system after it is demonstrated to his or her satisfaction that all repairs or other work are in compliance with applicable sections of the code. This section also requires the owner to take action to abate code violations.

SECTION 108
MEANS OF APPEAL

[A] 108.1 Application for appeal. Any person shall have the right to appeal a decision of the code official to the board of appeals. An application for appeal shall be based on a claim that the true intent of this code or the rules legally adopted there under have been incorrectly interpreted, the provisions of this code do not fully apply, or an equally good or better form of construction is proposed. The application shall be filed on a form obtained from the code official within 20 days after the notice was served.

❖ This section holds that any aggrieved party with a material interest in the decision of the code official may challenge such a decision before a board of appeals. This provides a forum, other than the court of jurisdiction, in which to review the code official's actions.

This section literally allows any person to appeal a decision of the code official. In practice, this section has been interpreted to permit appeals only by aggrieved parties with a material or definitive interest in the decision of the code official. An aggrieved party may not appeal a code requirement per se. The intent of the appeal process is not to waive or set aside a code requirement; rather, it is to provide a means of reviewing a code official's decision on an interpreta-

INTERNATIONAL CODE COUNCIL®
Copyright © 2015 ICC. ALL RIGHTS RESERVED. Accessed by David Dammon on Jun 21, 2017 12:30:52 PM pursuant to License Agreement with ICC. No further reproduction or distribution authorized. ANY UNAUTHORIZED REPRODUCTION OR DISTRIBUTION IS A VIOLATION OF THE FEDERAL COPYRIGHT ACT AND THE LICENSE AGREEMENT, AND SUBJECT TO CIVIL AND CRIMINAL PENALTIES THEREUNDER.

tion or application of the code or to review the equivalency of protection to the code requirements.

[A] 108.2 Membership of board. The board of appeals shall consist of five members appointed by the chief appointing authority as follows: one for 5 years, one for 4 years, one for 3 years, one for 2 years and one for 1 year. Thereafter, each new member shall serve for 5 years or until a successor has been appointed.

❖ The board of appeals is to consist of five members appointed by the "chief appointing authority"—typically, the mayor or city manager. One member is to be appointed for five years, one for four, one for three, one for two and one for one year. This method of appointment allows for a smooth transition of board of appeals members, allowing continuity of action over the years.

[A] 108.2.1 Qualifications. The board of appeals shall consist of five individuals, one from each of the following professions or disciplines:

1. Registered design professional who is a registered architect; or a builder or superintendent of building construction with not less than 10 years' experience, 5 years of which shall have been in responsible charge of work.
2. Registered design professional with structural engineering or architectural experience.
3. Registered design professional with mechanical and plumbing engineering experience; or a mechanical and plumbing contractor with not less than 10 years' experience, 5 years of which shall have been in responsible charge of work.
4. Registered design professional with electrical engineering experience; or an electrical contractor with not less than 10 years' experience, 5 years of which shall have been in responsible charge of work.
5. Registered design professional with pool or spa experience; or a contractor with not less than 10 years' experience, 5 years of which shall have been in responsible charge of work.

❖ The board of appeals consists of five persons with the qualifications and experience indicated in this section. One must be a registered design professional (see Item 2) with structural or architectural experience. The others must be registered design professionals, construction superintendents or contractors with experience in various areas of swimming pool or spa construction. These requirements are important in that technical people rule on technical matters. The board of appeals is not the place for policy or political deliberations. It is intended that these matters be decided purely on their technical merits, with due regard for state-of-the-art construction technology.

[A] 108.2.2 Alternate members. The chief appointing authority shall appoint two alternate members who shall be called by the board chairman to hear appeals during the absence or disqualification of a member. Alternate members shall possess the qualifications required for board membership, and shall be appointed for 5 years or until a successor has been appointed.

❖ This section authorizes the chief appointing authority to appoint two alternate members who are to be available if the principal members of the board are absent or disqualified. Alternate members must possess the same qualifications as the principal members and are appointed for a term of five years or until such time that a successor is appointed.

[A] 108.2.3 Chairman. The board shall annually select one of its members to serve as chairman.

❖ It is customary to determine chairmanship annually so that a regular opportunity is available to evaluate and either reappoint the current chairman or appoint a new one.

[A] 108.2.4 Disqualification of member. A member shall not hear an appeal in which that member has any personal, professional or financial interest.

❖ All members must disqualify themselves regarding any appeal in which they have a personal, professional or financial interest.

[A] 108.2.5 Secretary. The chief administrative officer shall designate a qualified clerk to serve as secretary to the board. The secretary shall file a detailed record of proceedings in the office of the chief administrative officer.

❖ The chief administrative officer is to designate a qualified clerk to serve as secretary to the board. The secretary is required to record the proceedings using detailed records.

[A] 108.2.6 Compensation of members. Compensation of members shall be determined by law.

❖ Members of the board of appeals need not be compensated unless required by the local municipality or jurisdiction.

[A] 108.3 Notice of meeting. The board shall meet upon notice from the chairman, within 10 days of the filing of an appeal or at stated periodic meetings.

❖ The board must meet within 10 days of the filing of an appeal or at regularly scheduled meetings.

[A] 108.4 Open hearing. Hearings before the board shall be open to the public. The appellant, the appellant's representative, the code official and any person whose interests are affected shall be given an opportunity to be heard.

❖ All hearings before the board must be open to the public. The appellant, the appellant's representative, the code official and any person whose interests are affected must be heard.

[A] 108.4.1 Procedure. The board shall adopt and make available to the public through the secretary procedures under which a hearing will be conducted. The procedures shall not

INTERNATIONAL CODE COUNCIL®
Copyright © 2015 ICC. ALL RIGHTS RESERVED. Accessed by David Dammon on Jun 21, 2017 12:30:52 PM pursuant to License Agreement with ICC. No further reproduction or distribution authorized. ANY UNAUTHORIZED REPRODUCTION OR DISTRIBUTION IS A VIOLATION OF THE FEDERAL COPYRIGHT ACT AND THE LICENSE AGREEMENT, AND SUBJECT TO CIVIL AND CRIMINAL PENALTIES THEREUNDER.

require compliance with strict rules of evidence, but shall mandate that only relevant information be received.

❖ The board is required to establish, and make available to the public, written procedures detailing how hearings are to be conducted. Additionally, this section provides that although strict rules of evidence are not applicable, the information presented must be deemed relevant.

[A] 108.5 Postponed hearing. When five members are not present to hear an appeal, either the appellant or the appellant's representative shall have the right to request a postponement of the hearing.

❖ When all five members of the board are not present, either the appellant or the appellant's representative may request a postponement of the hearing.

[A] 108.6 Board decision. The board shall modify or reverse the decision of the code official by a concurring vote of three members.

❖ A concurring vote of three members of the board is needed to modify or reverse the decision of the code official.

[A] 108.6.1 Resolution. The decision of the board shall be by resolution. Certified copies shall be furnished to the appellant and to the code official.

❖ A formal decision in the form of a resolution is required to provide an official record. Copies of this resolution are to be furnished to both the appellant and the code official. The code official is bound by the action of the board of appeals unless he or she thinks that the board of appeals has acted improperly. In such cases, relief through the court having jurisdiction may be sought by corporate council.

[A] 108.6.2 Administration. The code official shall take immediate action in accordance with the decision of the board.

❖ To avoid any undue hindrance in the progress of construction, the code official is required to act without delay, based on the board's decision. This action may be to enforce the decision or to seek legislative relief if the board's action can be demonstrated to be inappropriate.

[A] 108.7 Court review. Any person, whether or not a previous party of the appeal, shall have the right to apply to the appropriate court to correct errors of law. Application for review shall be made in the manner and time required by law following the filing of the decision in the office of the chief administrative officer.

❖ This section allows any person to request a review, by the court of jurisdiction, of perceived errors of law. Application for such review must be made after the decision of the board is filed with the chief administrative officer. This helps to establish the observance of due process for all concerned.

Bibliography

The following resource material was used in the preparation of the commentary for this chapter of the code.

Legal Aspects of Code Administration. Washington, DC: International Code Council, 2002.

INTERNATIONAL CODE COUNCIL®
Copyright © 2015 ICC. ALL RIGHTS RESERVED. Accessed by David Dammon on Jun 21, 2017 12:30:52 PM pursuant to License Agreement with ICC. No further reproduction or distribution authorized. ANY UNAUTHORIZED REPRODUCTION OR DISTRIBUTION IS A VIOLATION OF THE FEDERAL COPYRIGHT ACT AND THE LICENSE AGREEMENT, AND SUBJECT TO CIVIL AND CRIMINAL PENALTIES THEREUNDER.

Chapter 2: Definitions

General Comments

Chapter 2 establishes the meanings of key words and terms used in the code. The words or terms are deemed to be of prime importance in both specifying the subject matter and giving meaning to certain terms used throughout the code for administrative or enforcement purposes.

Purpose

Codes, by their very nature, are technical documents. Every word, term and punctuation mark can alter a sentence's meaning and, if misused, muddy its intent.

Further, the code, with its broad scope of applicability, includes terms used in a variety of construction disciplines. These terms can often have multiple meanings depending on the context or discipline being used at the time.

For these reasons, a consensus on the specific meaning of terms contained in the code must be maintained. Chapter 2 performs this function by stating clearly what specific terms mean for the purpose of the code.

SECTION 201 GENERAL

201.1 Scope. Unless otherwise expressly stated, the following words and terms shall, for the purposes of this code, have the meanings shown in this chapter.

❖ This section contains language and provisions that are supplemental regarding the use of Chapter 2. It gives guidance to the use of the defined words relevant to tense, gender, and plurality.

201.2 Interchangeability. Words used in the present tense include the future; words stated in the masculine gender include the feminine and neuter; the singular number includes the plural and the plural, the singular.

❖ Although the definitions contained in Chapter 2 are to be taken literally, gender and tense are considered to be interchangeable. This is so that any grammatical inconsistencies within the code do not hinder the understanding or enforcement of the requirements.

201.3 Terms defined in other codes. Where terms are not defined in this code and are defined in the *International Building Code*, *International Energy Conservation Code*, *International Fire Code*, *International Fuel Gas Code*, *International Mechanical Code*, *International Plumbing Code* or *International Residential Code*, such terms shall have the meanings ascribed to them as in those codes.

❖ When a word or term appears in the code that is not defined in this chapter, other references may be used to find its definition, such as the other International Codes® (I-Codes®), which are coordinated to prevent conflict between documents.

201.4 Terms not defined. Where terms are not defined through the methods authorized by this section, such terms shall have ordinarily accepted meanings such as the context implies.

❖ Another resource for defining words or terms not defined herein or in other codes is their "ordinarily accepted meanings." The intent of this statement is that a dictionary definition could suffice, provided that such definition refers to the context.

Some of the construction terms used throughout the code may not be defined in Chapter 2 or in a dictionary. In such a case, one would first turn to the definitions contained in the referenced standards (see Chapter 11) and then to published textbooks on the subject in question.

SECTION 202 DEFINITIONS

ACCESSIBLE. Signifies access that requires the removal of an access panel or similar removable obstruction.

❖ Components and equipment for pools or spas must be provided with access so that they can be adjusted, repaired or replaced. The term "accessible" indicates that a component or item must be provided with access.

ACTIVITY POOL. A pool designed primarily for play activity that uses constructed features and devices including lily pad walks, flotation devices, small slide features, and similar attractions.

❖ Where a pool has features or equipment that offer activities other than just swimming in the water, the pool is considered an activity pool.

INTERNATIONAL CODE COUNCIL®
Copyright © 2015 ICC. ALL RIGHTS RESERVED. Accessed by David Dammon on Jun 21, 2017 12:30:52 PM pursuant to License Agreement with ICC. No further reproduction or distribution authorized. ANY UNAUTHORIZED REPRODUCTION OR DISTRIBUTION IS A VIOLATION OF THE FEDERAL COPYRIGHT ACT AND THE LICENSE AGREEMENT, AND SUBJECT TO CIVIL AND CRIMINAL PENALTIES THEREUNDER.

AIR INDUCTION SYSTEM. A system whereby a volume of air is introduced into hollow ducting built into a spa floor, bench, or hydrotherapy jets.

❖ Air is sometimes used to provide turbulence in spas and in localized areas of pools for stimulation and relaxation of the spa or pool users. The system that provides the air for such uses can be piping or cavities that carry pressurized air to the outlets, orifices and jets.

ALTERATION. Construction or renovation to an existing pool or spa other than repair that requires a permit.

❖ Alterations generally increase or decrease the size or function of an existing pool or spa. Such changes require a permit.

[A] APPROVED. Acceptable to the code official or authority having jurisdiction.

❖ As related to the process of acceptance of pool or spa installations, including materials, equipment and construction systems, this definition identifies where ultimate authority rests. Whenever this term is used, it intends that only the enforcing authority can accept a specific installation or component as complying with the code. It should be noted that the research reports prepared and published by ICC Evaluation Service, Inc. (ICC-ES) can be used by code officials to aid in their review and approval of the material or method described in the report. Publishing a report does not indicate any form of "approval" for the material or method described in the report.

[A] APPROVED AGENCY. An established and recognized agency regularly engaged in conducting tests or furnishing inspection services, when such agency has been *approved* by the code official.

❖ An established and recognized agency approved by the code official that is regularly engaged in conducting tests or furnishing inspection services.

The word "approved" means "as approved by the code official." The basis for approval of an agency for a particular activity could include the capacity and capability of the agency to perform the work.

AQUATIC RECREATION FACILITY. A facility that is designed for free-form aquatic play and recreation. The facilities may include, but are not limited to, wave or surf action pools, leisure rivers, sand bottom pools, vortex pools, activity pools, inner tube rides, body slides and interactive play attractions.

❖ Aquatic recreation facilities typically are very large, have multiple sections with different activities, and are a centerpoint attraction for the region.

BACKWASH. The process of cleansing the filter medium or elements by the reverse flow of water through the filter.

❖ Filter mediums are cleaned by reversing the flow through the filter unit to flush out impurities trapped by the filter.

BACKWASH CYCLE. The time required to backwash the filter medium or elements and to remove debris in the pool or spa filter.

❖ Backwashing of a filter must occur for a specified amount of time in order to provide a filter that is sufficiently cleaned for the period of time that it will be in service.

BARRIER. A permanent fence, wall, building wall, or combination thereof that completely surrounds the pool or spa and obstructs the access to the pool or spa. The term "permanent" shall mean not being able to be removed, lifted, or relocated without the use of a tool.

❖ The purpose of a barrier is to provide significant restricted access and reliable latching devices on entry points to a pool or spa so that children cannot gain access unless an adult provides such access.

BATHER. A person using a pool, spa or hot tub and adjoining deck area for the purpose of water sports, recreation, therapy or related activities.

❖ Although the term "bathing" seems to imply that a user has the intent of cleaning body parts, in the context of the code, "bather" means a person who uses a pool or spa for activities other than personal hygiene maintenance.

BATHER LOAD. The number of persons in the pool or spa water at any given moment or during any stated period of time.

❖ The number of bathers in a body of water "loads" the water with impurities and bacteria that must be filtered and disinfected, respectively, in order to maintain sanitary conditions in the pool, spa or hot tub. Bather load is used in determining filter sizing and disinfectant levels.

BEACH ENTRY. Sloping entry starting above the waterline at deck level and ending below the waterline. The presence of sand is not required. Also called "zero entry."

❖ Just as one would find at a lake or the ocean, a beach entry permits entry into the water without having to use steps or ramps.

CHEMICAL FEEDER. A floating or mechanical device for adding a chemical to pool or spa water.

❖ The addition of chemicals to a pool or spa is necessary to maintain sanitary water conditions. Chemical feeders provide a metered amount of chemicals over time so that large doses of chemicals are not injected into the water all at once.

CIRCULATION EQUIPMENT. The components of a circulation system.

❖ This includes all of the pumping components of the circulation system.

CIRCULATION SYSTEM. The mechanical components that are a part of a recirculation system on a pool or spa. Circulation equipment may be, but is not limited to, categories of pumps, hair and lint strainers, filters, valves, gauges, meters, heaters, surface skimmers, inlet fittings, outlet fittings and chemical feeding devices. The components have separate

INTERNATIONAL CODE COUNCIL®
Copyright © 2015 ICC. ALL RIGHTS RESERVED. Accessed by David Dammon on Jun 21, 2017 12:30:52 PM pursuant to License Agreement with ICC. No further reproduction or distribution authorized. ANY UNAUTHORIZED REPRODUCTION OR DISTRIBUTION IS A VIOLATION OF THE FEDERAL COPYRIGHT ACT AND THE LICENSE AGREEMENT, AND SUBJECT TO CIVIL AND CRIMINAL PENALTIES THEREUNDER.

functions, but when connected to each other by piping, perform as a coordinated system for purposes of maintaining pool or spa water in a clear and sanitary condition.

❖ This is an all-encompassing definition that includes every part in the path that the water takes from the pool or spa and back into the pool or spa.

[A] CODE OFFICIAL. The officer or other designated authority charged with the administration and enforcement of this code, or a duly authorized representative.

❖ The statutory power to enforce the code is normally vested in a building department (or the like) of a state, county or municipality whose designated enforcement officer is termed the "code official" (see commentary, Section 103).

[A] CONSTRUCTION DOCUMENTS. Written, graphic and pictorial documents prepared or assembled for describing the design, location and physical characteristics of the elements of a project necessary for obtaining a building permit.

❖ For the code official to determine that proposed construction is in compliance with code requirements, sufficient information must be submitted for review. This typically consists of the drawings (floor plans, elevations, sections, details, etc.), specifications and product information describing the proposed work. Some onground storable pools could be installed by the consumer, in which case the manufacturer's instructions will serve as the construction documents.

DECK. An area immediately adjacent to or attached to a pool or spa that is specifically constructed or installed for sitting, standing, or walking.

❖ A deck for a pool or spa is that specific area next to the pool or spa that is intended for walking, sitting or standing directly adjacent to the pool or spa. The general requirements for decks in Section 306, and especially the slope requirement, also define a pool or spa deck.

DEEP AREA. Water depth areas exceeding 5 feet (1524 mm).

DESIGN PROFESSIONAL. An individual who is registered or licensed to practice his or her respective design profession as defined by the statutory requirements of the professional registration or licensing laws of the state or jurisdiction in which the project is to be constructed.

❖ This could be a professional engineer, a structural engineer, an architect, a mechanical engineer or any other type of design professional that the state or jurisdiction licenses to allow that person to do specific type of design work.

DESIGN RATE OF FLOW. The rate of flow used for design calculations in a system.

❖ The system referred to is the circulating system of a pool or spa.

DESIGN WATERLINE. The centerline of the *skimmer* or other point as defined by the designer of the pool or spa.

❖ This is the design elevation of the water in a pool or spa. At this elevation, the skimmer system is fully operational. In practice, the waterline will vary depending on how many users are in the pool or spa, the amount of evaporation and rainfall.

DIVING AREA. The area of a swimming pool that is designed for diving.

❖ If diving will occur in a swimming pool, the pool must be specifically designed for that purpose. A pool designed for diving must consider the type of diving board and must have certain depths, widths and transition zones to allow for safe diving. Diving equipment is tested and rated for pool type based on length, spring characteristic and intended height, all of which can affect diver trajectory and velocity. Proper installation in accordance with the manufacturer's instructions is critical to ensure that the user is provided with a sufficient body of water in which to safely maneuver and complete the dive.

DIVING BOARD. A flexible board secured at one end that is used for diving such as a spring board or a jump board.

❖ Diving and jump boards are specifically designed for the type of pool for which they will be used.

DIVING PLATFORM. A stationary platform designed for diving.

❖ Diving platforms are used in a specific location where diving into the pool can be safely executed.

DIVING STAND. Any supporting device for a springboard, jump board or diving board.

❖ Most diving boards require some elevation above the design waterline so that there is enough vertical clearance to allow the board to be sufficiently depressed to project the diver into the air to perform diving maneuvers, such as flips and twists, before entering the water. Diving stands can be relatively short in height or a typical building story or more in height.

EXERCISE SPA (Also known as a swim spa). Variants of a spa in which the design and construction includes specific features and equipment to produce a water flow intended to allow recreational physical activity including, but not limited to, swimming in place. Exercise spas can include peripheral jetted seats intended for water therapy, heater, circulation and filtration system, or can be a separate distinct portion of a combination spa/exercise spa and can have separate controls. These spas are of a design and size such that they have an unobstructed volume of water large enough to allow the 99th Percentile Man as specified in APSP 16 to swim or exercise in place.

❖ Swimming "laps" is usually done in large, long pools. However, swimming can also be performed "in place" if the water in the pool is moving at the same speed as the swimmer is swimming. See Commentary Figure 202(1).

INTERNATIONAL CODE COUNCIL®
Copyright © 2015 ICC. ALL RIGHTS RESERVED. Accessed by David Dammon on Jun 21, 2017 12:30:52 PM pursuant to License Agreement with ICC. No further reproduction or distribution authorized. ANY UNAUTHORIZED REPRODUCTION OR DISTRIBUTION IS A VIOLATION OF THE FEDERAL COPYRIGHT ACT AND THE LICENSE AGREEMENT, AND SUBJECT TO CIVIL AND CRIMINAL PENALTIES THEREUNDER.



FIGURE 202(1)
PERMANENT RESIDENTIAL EXERCISE SPA

EXISTING POOL OR SPA. A pool or spa constructed prior to the date of adoption of this code, or one for which a legal building permit has been issued.

FILTER. A device that removes undissolved particles from water by recirculating the water through a porous substance such as filter medium or elements.

❖ Circulating systems for small spas typically use reusable filter elements that can be removed and manually cleaned. Pools and large spas typically use diatomaceous earth filter media that can be backwashed to renew the cleaning capability of the media.

FILTRATION. The process of removing undissolved particles from water by recirculating the water through a porous substance such as filter medium or elements.

[BS] FLOOD HAZARD AREA. The greater of the following two areas:

1. The area within a flood plain subject to a 1-percent or greater chance of flooding in any year.
2. The area designated as *a flood hazard area* on a community's flood hazard map, or otherwise legally designated.

❖ The Federal Emergency Management Agency (FEMA) prepares Flood Insurance Rate Maps (FIRMs) that delineate the land area that is subject to inundation by the 1-percent annual chance flood. Some states and local jurisdictions develop and adopt maps of flood hazard areas that are more extensive than the areas shown on FEMA's maps. For the purposes of the code, the flood hazard area within which the requirements are to be applied is the greater of the two delineated areas.

FLUME. A trough-like or tubular structure, generally recognized as a water slide, that directs the path of travel and the rate of descent by the rider.

❖ In general terms, a flume is a sloped open channel that conveys water from one point to another. In context with pools or spas, flumes are intended to also carry a rider along with the water flow. Flumes are attractions that allow riders to be safely transported at high velocity down the flume, ending in a big splash in a pool of water.

GUTTER. Overflow trough in the perimeter wall of a pool that is a component of the circulation system or flows to waste.

❖ Some pool and spa designs have perimeter gutters instead of skimmer openings. The gutters allow for more uniform skimming of the water surface and are often used for a handhold.

HAIR AND LINT STRAINER. A device attached on or in front of a pump to which the influent line (suction line) is connected for the purpose of entrapping lint, hair, or other debris that could damage the pump.

❖ Pumps can have difficulty with pumping lint and hair, so placing a strainer before the pump suction can eliminate those problems.

HANDHOLD. That portion of a pool or spa structure or a specific element that is at or above the design waterline that users in the pool grasp onto for support.

❖ Although a handhold is usually thought of as a rigid bar or tube that can be grasped for support, other features in a pool environment can provide the same intended support such as the edge of deck coping or rope handles.

HANDRAIL. A support device that is intended to be gripped by a user for the purpose of resting or steadying, typically located within or at exits to the pool or spa or as part of a set of steps.

❖ Handrails generally are round in shape, although other shapes are possible.

HYDROTHERAPY JET. A fitting that blends air and water, creating a high-velocity turbulent stream of air-enriched water.

❖ Air bubbles in a jet of water create turbulence. The turbulence massages areas of the body, allowing the bather to feel more refreshed than if the water was still. Hydrotherapy jets are the key feature that makes a spa relaxing.

JUMP BOARD. A manufactured diving board that has a coil spring, leaf spring, or comparable device located beneath the board that is activated by the force exerted by jumping on the board's end.

❖ The difference between a springboard and a jump board is that a springboard is designed to provide spring action through deflection of an engineered plank of composite materials, whereas a jump board obtains its spring action from an externally mounted spring. See "Diving board."

[A] JURISDICTION. The governmental unit that has adopted this code under due legislative authority.

❖ The governmental unit adopting the code has legal authority to do so under state statutes.

INTERNATIONAL CODE COUNCIL®
Copyright © 2015 ICC. ALL RIGHTS RESERVED. Accessed by David Dammon on Jun 21, 2017 12:30:52 PM pursuant to License Agreement with ICC. No further reproduction or distribution authorized. ANY UNAUTHORIZED REPRODUCTION OR DISTRIBUTION IS A VIOLATION OF THE FEDERAL COPYRIGHT ACT AND THE LICENSE AGREEMENT, AND SUBJECT TO CIVIL AND CRIMINAL PENALTIES THEREUNDER.

[A] LABEL. An identification applied on a product by the manufacturer that contains the name of the manufacturer, the function and performance characteristics of the product or material, and the name and identification of an *approved* agency and that indicates that the representative sample of the product or material has been tested and evaluated by an *approved* agency.

❖ See "Labeled."

[A] LABELED. Equipment, materials or products to which has been affixed a *label*, seal, symbol or other identifying mark of a nationally recognized testing laboratory, inspection agency or other organization concerned with product evaluation that maintains periodic inspection of the production of the above-*labeled* items and whose *labeling* indicates either that the equipment, material or product meets identified standards or has been tested and found suitable for a specified purpose.

❖ When a product is labeled, the label indicates that the material has been tested for conformance to an applicable standard and that the component is subject to third-party inspection to verify that the minimum level of quality required by the standard has been maintained. Labeling provides a readily available source of information that is useful for field inspection of installed products. The label identifies the product or material and provides other information that can be further investigated if there is question concerning the suitability of the product or material for the specific installation. The labeling agency performing the third-party inspection must be approved by the code official, and the basis for this approval may include, but is not necessarily limited to, the capacity and capability of the agency to perform the specific testing and inspection.

LADDER. A structure for ingress and egress that usually consists of two long parallel side pieces joined at intervals by crosspieces such as treads.

TYPE A DOUBLE ACCESS LADDER. An "A-Frame" ladder that straddles the pool wall of an above-ground pool and provides ingress and egress and is intended to be removed when not in use.

❖ See Figure 702.2.

TYPE B LIMITED ACCESS LADDER. An "A-Frame" ladder that straddles the pool wall of an above-ground/onground pool. Type B ladders are removable and have a built-in feature that prevents entry to the pool when the pool is not in use.

❖ See Figure 702.2.

TYPE C LADDER. A "ground to deck" staircase ladder that allows access to an above-ground pool deck and has a built-in entry-limiting feature.

❖ See Figure 702.3.

TYPE D IN-POOL LADDER. Located in the pool to provide a means of ingress and egress from the pool to the deck.

❖ See Figure 702.4.

TYPE E or F IN-POOL STAIRCASE LADDER. Located in the pool to provide a means of ingress and egress from the pool to the deck.

❖ See Figure 702.5.

LIFELINE. An anchored line thrown to aid in rescue.

❖ The key element of a lifeline is that it is anchored so that the person being rescued can pull him- or herself to safety without the aid of another person.

[A] LISTED. Equipment, materials, products or services included in a list published by an organization acceptable to the code official and concerned with evaluation of products or services that maintains periodic inspection of production of *listed* equipment or materials or periodic evaluation of services and whose listing states either that the equipment, material, product or service meets identified standards or has been tested and found suitable for a specified purpose.

❖ The term "listed," which is not to be confused with "labeled," is a form of quality control. Essentially, a particular product, piece of equipment or system is evaluated or tested and the results are published in a list by agencies, such as approved testing laboratories and inspection agencies. Listed products and equipment are periodically inspected to maintain the listing. The code often requires listed equipment or systems or equipment to be "labeled" (see the definition for "Labeled").

MAINTAINED ILLUMINATION. The value, in foot-candles or equivalent units, below which the average illuminance on a specified surface is not allowed to fall. *Maintained illumination* equals the initial average illuminance on the specified surface with new lamps, multiplied by the light loss factor (LLF), to account for reduction in lamp intensity over time.

❖ Proper illumination for public pools is critical for safety of the users. The design of lighting systems must consider the "aging" of the light source so after a period of time of operation, specific lighting levels are still maintained at the surface of the water.

NEGATIVE EDGE. See "Vanishing edge."

NONENTRY AREA. An area of the deck from which entry into the pool or spa is prohibited.

❖ Certain areas of a pool or spa may be unsafe for entry by the user. One example is behind a cassion wall, in a wave action pool.

ONGROUND STORABLE POOL. A pool which can be disassembled for storage or transport. This includes portable pools with flexible or nonrigid walls that achieve their structural integrity by means of uniform shape, a support frame or a combination thereof, and that can be disassembled for storage or relocation.

❖ Onground storable pools include those that have inflatable walls.

OVERFLOW GUTTER. The *gutter* around the top perimeter of the pool or spa, which is used to skim the surface.

❖ See definition for "Gutter."

INTERNATIONAL CODE COUNCIL®
Copyright © 2015 ICC. ALL RIGHTS RESERVED. Accessed by David Dammon on Jun 21, 2017 12:30:52 PM pursuant to License Agreement with ICC. No further reproduction or distribution authorized. ANY UNAUTHORIZED REPRODUCTION OR DISTRIBUTION IS A VIOLATION OF THE FEDERAL COPYRIGHT ACT AND THE LICENSE AGREEMENT, AND SUBJECT TO CIVIL AND CRIMINAL PENALTIES THEREUNDER.

[A] OWNER. Any person, agent, firm or corporation having a legal or equitable interest in the property.

[A] PERMIT. An official document or certificate issued by the authority having jurisdiction that authorizes performance of a specified activity.

❖ Permits control activity by requiring that the person doing such activity reports to the code official prior to the activity being performed.

POOL. See "Public swimming pool" and "Residential swimming pool."

POWER SAFETY COVER. A pool cover that is placed over the water area, and is opened and closed with a motorized mechanism activated by a control switch.

❖ The purpose of a power safety cover is to protect a pool against entry during the period of time when the pool is not open for use.

PUBLIC SWIMMING POOL (Public Pool). A pool, other than a *residential* pool, that is intended to be used for swimming or bathing and is operated by an owner, lessee, operator, licensee or concessionaire, regardless of whether a fee is charged for use. Public pools shall be further classified and defined as follows:

❖ If a pool is not a residential swimming pool as defined in this chapter, the pool is considered public.

CLASS A, COMPETITION POOL. A pool intended for use for accredited competitive aquatic events such as Federation Internationale De Natation (FINA), USA Swimming, USA Diving, USA Synchronized Swimming, USA Water Polo, National Collegiate Athletic Association (NCAA), or the National Federation of State High School Associations (NFHS).

❖ Competition pools are built to the stringent requirements of national or international competitive event organizations so that such pools offer the same competitive conditions no matter where they are constructed [see Commentary Figures 202(2) and 202(3)].

CLASS B, PUBLIC POOL. A pool intended for public recreational use that is not identified in the other classifications of public pools.

❖ Public pools can be of any shape, volume or depth. They are intended to be used by the public for play, exercise and relaxation [see Commentary Figures 202(4) and 202(5)]. Some public pools can be classified as being in another class. But where public pools do not fit into another class, they are classified as a Class B pool.

CLASS C, SEMI-PUBLIC POOL. A pool operated solely for and in conjunction with lodgings such as hotels, motels, apartments or condominiums.

❖ Semi-public pools are connected with hotels, motels, apartments and condominiums [see Commentary Figure 202(6)]. The code does not currently have any special consideration for semi-public pools. They are regulated the same as any other public pool.

CLASS D-1, WAVE ACTION POOL. A pool designed to simulate breaking or cyclic waves for purposes of general play or surfing.

❖ A wave pool simulates the action of ocean water at the beach.

CLASS D-2, ACTIVITY POOL. A pool designed for casual water play ranging from simple splashing activity to the use of attractions placed in the pool for recreation.

❖ Activity pools provide for self-directed activities in the water through the use of specialized equipment that enhances the enjoyment of being in and around the water [see Commentary Figure 202(7)].

CLASS D-3, CATCH POOL. A body of water located at the termination of a manufactured waterslide attraction. The body of water is provided for the purpose of terminating the slide action and providing a means for exit to a deck or walkway area.

❖ Catch pools are receptors of the persons who have ridden a water slide attraction to its end. The body of water provides for deceleration of the person coming



FIGURE 202(2)
CLASS A, COMPETITION POOL (INDOOR)



FIGURE 202(3)
CLASS A, COMPETITION POOL

INTERNATIONAL CODE COUNCIL®
Copyright © 2015 ICC. ALL RIGHTS RESERVED. Accessed by David Dammon on Jun 21, 2017 12:30:52 PM pursuant to License Agreement with ICC. No further reproduction or distribution authorized. ANY UNAUTHORIZED REPRODUCTION OR DISTRIBUTION IS A VIOLATION OF THE FEDERAL COPYRIGHT ACT AND THE LICENSE AGREEMENT, AND SUBJECT TO CIVIL AND CRIMINAL PENALTIES THEREUNDER.



FIGURE 202(4)
CLASS B, PUBLIC POOL



FIGURE 202(5)
CLASS B, PUBLIC POOL



FIGURE 202(6)
CLASS C, SEMI-PUBLIC POOL



FIGURE 202(7)
CLASS D-2, ACTIVITY POOL

from the slide and allows the person to stand to walk out of the catch pool [see Commentary Figures 202(8) through 202(10)].

CLASS D-4, LEISURE RIVER. A manufactured stream of water of near-constant depth in which the water is moved by pumps or other means of propulsion to provide a river-like flow that transports bathers over a defined path that may include water features and play devices.

❖ A leisure river simulates the action of a natural stream or river. Participants usually ride individual floating tubes or multiperson round floating vessels [see Commentary Figure 202(11)].

CLASS D-5, VORTEX POOL. A circular pool equipped with a method of transporting water in the pool for the purpose of propelling riders at speeds dictated by the velocity of the moving stream of water.

❖ Usually part of and within a larger pool, vortex pools are round and have a water current that moves the pool occupants around in a circular path.

CLASS D-6, INTERACTIVE PLAY ATTRACTION. A manufactured water play device or a combination of water-based play devices in which water flow volumes, pressures or patterns can be varied by the bather without negatively influencing the hydraulic conditions for other connected devices. These attractions incorporate devices or activities such as slides, climbing and crawling structures, visual effects, user-actuated mechanical devices and other elements of bather-driven and bather-controlled play.

❖ An interactive pool has many features that allow the occupants to direct water streams, change patterns of flow and generally interact with the water using various mechanisms [see Commentary Figures 202(12) and 202(13)].

CLASS E. Pools used for instruction, play or therapy and with temperatures above 86°F (30°C).

❖ This type of pool has water purposely heated to greater than 86°F (30°C).

INTERNATIONAL CODE COUNCIL®
Copyright © 2015 ICC. ALL RIGHTS RESERVED. Accessed by David Dammon on Jun 21, 2017 12:30:52 PM pursuant to License Agreement with ICC. No further reproduction or distribution authorized. ANY UNAUTHORIZED REPRODUCTION OR DISTRIBUTION IS A VIOLATION OF THE FEDERAL COPYRIGHT ACT AND THE LICENSE AGREEMENT, AND SUBJECT TO CIVIL AND CRIMINAL PENALTIES THEREUNDER.



FIGURE 202(8)
CLASS D-3, CATCH POOL
(Photo courtesy of Tolomato Community Development District—Novatee)



FIGURE 202(11)
CLASS D-4, LEISURE RIVER



FIGURE 202(9)
CLASS D-3, CATCH POOL



FIGURE 202(12)
CLASS D-6, INTERACTIVE PLAY ATTRACTION



FIGURE 202(10)
CLASS D-3, CATCH POOL
(Photo courtesy of Tolomato Community Development District—Novatee)



FIGURE 202(13)
CLASS D-6, INTERACTIVE PLAY ATTRACTION

INTERNATIONAL CODE COUNCIL®
Copyright © 2015 ICC. ALL RIGHTS RESERVED. Accessed by David Dammon on Jun 21, 2017 12:30:52 PM pursuant to License Agreement with ICC. No further reproduction or distribution authorized. ANY UNAUTHORIZED REPRODUCTION OR DISTRIBUTION IS A VIOLATION OF THE FEDERAL COPYRIGHT ACT AND THE LICENSE AGREEMENT, AND SUBJECT TO CIVIL AND CRIMINAL PENALTIES THEREUNDER.

CLASS F. Class F pools are wading pools and are covered within the scope of this code as set forth in Section 405.

❖ Wading pools are pools specifically designed for small children just learning to become adjusted to bodies of water that are much larger than a bathtub but not as expansive and deep as a regular swimming pool. The shallow depth allows for adults to easily sit in the water with the child and assist/encourage the child with learning the playful nature of pool use [see Commentary Figure 202(14)].

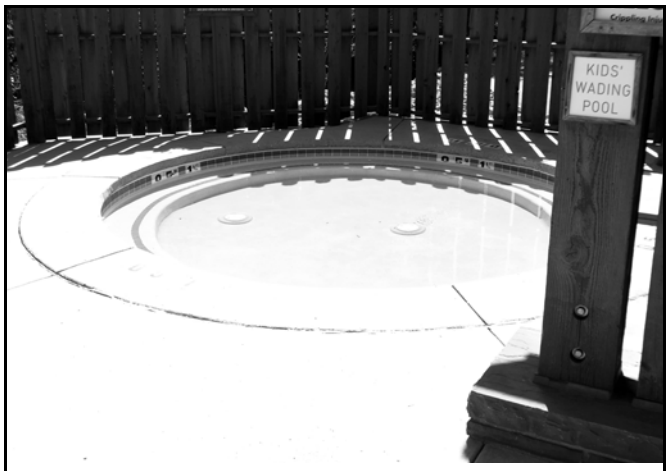

FIGURE 202(14)
WADING POOL

Public pools are either a diving or nondiving type. Diving types of public pools are classified into types as an indication of the suitability of a pool for use with diving equipment.

TYPES VI-IX. Public pools suitable for the installation of diving equipment by type.

❖ Pool types indicate what type of diving equipment can be used in a public pool, based on the pool's diving envelope dimensions (see Table 402.12).

TYPE O. A nondiving public pool.

❖ A Type O pool is a pool where a diving envelope has not been provided. Such pools must not be used for diving.

RECESSED TREADS. A series of vertically spaced cavities in a pool or spa wall creating tread areas for step holes.

❖ Recessed treads offer the same convenience of use that a ladder does, except without ladder hardware creating an obstruction in the main body of water.

RECIRCULATION SYSTEM. See "Circulation system."

[A] REPAIR. The restoration to good or sound condition of any part of a pool or spa for the purpose of its maintenance or to correct damage.

❖ Repairs might include replacement of broken piping, caulking cracks in concrete decks, resurfacing the inside of a concrete pool or replacement of broken tile or coping [see Commentary Figure 202(15)].

RESIDENTIAL. For purposes of this code, *residential* applies to detached one- and two-family dwellings and townhouses not more than three stories in height.

❖ The term "residential," as used in this code, does not include apartment buildings because in the family of I-Codes, apartment buildings are regulated by the *International Building Code*® (IBC®).

RESIDENTIAL SWIMMING POOL (Residential Pool). A pool intended for use which is accessory to a *residential* setting and available only to the household and its guests. All other pools shall be considered public pools for purposes of this code.

❖ Residential swimming pools are only those pools that are associated with buildings that are covered by the *International Residential Code*® (IRC®) [see Commentary Figures 101.2(4), 202(16) and 202(17)].

The use of the term "residential" in this definition appears to make clear that these pools are only those associated with detached one- and two- family dwellings and townhouses that are not more than three stories in height; in other words, buildings that would typically be constructed using the IRC. Section 102.7.1 provides some support for making the connection that "residential" means "in accordance with the IRC."

There are, however, at least a few gray areas known to exist for interpretation about whether a pool should be built under residential or public regulations.

One example is a townhouse development built under the IRC. There could be a "central" pool associated with the townhouses. Should the pool be built using the residential sections of this code? If the residential swimming pool definition is read literally, "...accessory to a residential setting" and "to the household," the implication seems to be that "residential" only applies to a pool for a single home (or dwelling unit in a townhouse building). The use of the term "it's" (as opposed to "their") in describing the



FIGURE 202(15)
REPAIR ON INSIDE OF POOL

INTERNATIONAL CODE COUNCIL®
Copyright © 2015 ICC. ALL RIGHTS RESERVED. Accessed by David Dammon on Jun 21, 2017 12:30:52 PM pursuant to License Agreement with ICC. No further reproduction or distribution authorized. ANY UNAUTHORIZED REPRODUCTION OR DISTRIBUTION IS A VIOLATION OF THE FEDERAL COPYRIGHT ACT AND THE LICENSE AGREEMENT, AND SUBJECT TO CIVIL AND CRIMINAL PENALTIES THEREUNDER.

household in which guests are allowed, makes a stronger connection. Further complicating this interpretation issue is the common practice of some jurisdictions allowing "pool support buildings" for residential subdivisions and townhouse developments adjacent to the pool, such as a "clubhouse" or "party building" to be built under the IRC. Perhaps those jurisdictions consider such a building not much different than someone's home where the homeowner invited a number of guests to attend a pool party. For example, know that these pool support buildings are: usually occupied on a less-frequent basis than a typical one- or two-family dwelling; located on a dedicated parcel of land owned by the housing subdivision (and not a public entity); and in making the "it's an IRC building" assessment, provide a cost-effective resolution for a number of IBC-generated design and cost issues such as design for accessibility, fire sprinkling, egress requirements and toilet facility requirements. As such, then maybe the jurisdiction has made a logical and realistic judgment call about these types of buildings. But how those pool support buildings are classified is not the direct subject of this code because such pools can be built without a pool support building.

Another example that creates an interpretation issue is some types of Group R3 buildings (IBC occupancy classification) that are allowed to be built (or renovated) under the IRC. IBC Sections 310.5.1 or 310.5.2 are involved. IBC Section 310.5.1 is about "care" homes that have five or fewer persons that receive care. For example, a single-family dwelling where persons, not related to the owner/occupant of the single-family dwelling, are provided custodial care (such as meals prepared, laundry performed, assistance with everyday living tasks) along with a sleeping room. In other words, such as a small group home involved with social rehabilitation of individuals. IBC Section 310.5.2 concerns small lodging houses, sometimes called "bed-and-breakfast" homes. The threshold is five or fewer guest rooms (sleeping rooms), regardless of how many persons are in each sleeping room. Given that these buildings are built (or renovated) under the IRC and as such, are considered to be detached one- or two-family dwellings, should the pools for these buildings be allowed to comply with residential provisions of this code?

Where the jurisdiction must coordinate with a public health department involved with the regulation of the operation of pools for health purposes, the decision as to whether the pool is residential or public may already be made by pool heath regulations. If not, the code official will need to carefully consider how to apply the intent of this code as there are significant impacts to the pool design with regard to costs and aesthetics. For example, an onground storable residential pool may or may not be an applicable choice for some applications that are considered to be "residential" by the IBC and IRC.



FIGURE 202(16)
RESIDENTIAL POOL



FIGURE 202(17)
RESIDENTIAL POOL AT REAR OF HOME

TYPES I–V. *Residential* pools suitable for the installation of diving equipment by type.

❖ Pool types indicate different sizes of diving envelopes so that equipment manufacturers can refer to a type of their choice for a specific product as it relates to Point A on the diving envelope (see Table 804.1). Note that if a residential pool has diving envelope dimensions meeting or exceeding the diving envelope dimensions for a public pool or a competitive diving event-type pool, those residential pools can have diving equipment that matches the diving envelope requirements for public pools or competitive diving pools.

TYPE O. A nondiving *residential* pool.

❖ A Type O pool is a pool where a diving envelope has not been provided. Such pools must not be used for diving.

RETURN INLET. The aperture or fitting through which the water under positive pressure returns into a pool.

❖ Water that has been drawn from the vessel and filtered is returned to the vessel through a return inlet.

INTERNATIONAL CODE COUNCIL®
Copyright © 2015 ICC. ALL RIGHTS RESERVED. Accessed by David Dammon on Jun 21, 2017 12:30:52 PM pursuant to License Agreement with ICC. No further reproduction or distribution authorized. ANY UNAUTHORIZED REPRODUCTION OR DISTRIBUTION IS A VIOLATION OF THE FEDERAL COPYRIGHT ACT AND THE LICENSE AGREEMENT, AND SUBJECT TO CIVIL AND CRIMINAL PENALTIES THEREUNDER.

RING BUOY. A ring-shaped floating buoy capable of supporting a user, usually attached to a throwing line.

❖ Ring buoys come in various diameters and are especially useful if a throwing line is attached so that the thrower can retrieve the buoy in case the intended destination (a swimmer in distress) is missed. The throwing rope can also be used to tow the swimmer to the side of the vessel.

ROPE AND FLOAT LINE. A continuous line not less than $^1/_4$ inch (6 mm) in diameter that is supported by buoys and attached to opposite sides of a pool to separate the deep and shallow ends.

❖ Rope and float lines can be of any color. There is no requirement for the number of floats to be used for such a line.

RUNOUT. A continuation of water slide flume surface where riders are intended to decelerate and come to a stop.

❖ A runout is an area of the pool where riders of water slide flumes are deposited at the end of the flume.

SAFETY COVER. A structure, fabric or assembly, along with attendant appurtenances and anchoring mechanisms, that is temporarily placed or installed over an entire pool, spa or hot tub and secured in place after all bathers are absent from the water.

❖ When properly installed or deployed, a safety cover (listed and labeled to ASTM F1346) provides the same protection against entry to the vessel by children as does a fence-type barrier constructed in accordance with Section 305.

SHALL. The term, when used in the code, is construed as mandatory.

SHALLOW AREAS. Portions of a pool or spa with water depths less than 5 feet (1524 mm).

❖ The definition of the shallow area of the pool or spa is necessary for establishing where the deep end begins.

SKIMMER. A device installed in the pool or spa that permits the removal of floating debris and surface water to the filter.

❖ A skimmer is an outlet (but not a suction outlet) from the pool or spa that captures flow at the top surface of the water.

SLIP RESISTANT. A surface that has been treated or constructed to significantly reduce the chance of a user slipping. The surface shall not be an abrasion hazard.

❖ It is very difficult to define the slip resistance of a surface with respect to secure footing. It is also just as difficult to determine what might be an abrasion hazard. This definition simply requires that surfaces are to be slip resistant but also specially constructed or treated to reduce slipping hazards.

SLOPE BREAK. Occurs at the point where the slope of the pool floor changes to a greater slope.

❖ See Commentary Figure 811.1 for illustrations of slope break.

SPA. A product intended for the immersion of persons in temperature-controlled water circulated in a closed system, and not intended to be drained and filled with each use. A spa usually includes a filter, an electric, solar or gas heater, a pump or pumps, and a control, and can also include other equipment, such as lights, blowers, and water-sanitizing equipment.

❖ A spa is a relatively small vessel of water (as compared to a swimming pool) where persons sit or recline while enjoying the warm, effervescent water. Because the volume of such vessels is too large to be refilled for each use, these vessels have circulating systems that filter the water.

PERMANENT RESIDENTIAL SPA. A spa, intended for use that is accessory to a *residential* setting and available to the household and its guests and where the water heating and water-circulating equipment is not an integral part of the product. The spa is intended as a permanent plumbing fixture and not intended to be moved.

❖ A permanent spa is field assembled. The vessel could be a factory-built plastic or fiberglass tub or could be field constructed using vinyl or other materials such as shotcrete. Other factory-manufactured components are installed and field connected to the vessel. Typically, a permanent spa is built in a deck so that the top surface of the spa is at or just above the deck surface. The residential part of this defined term means that the vessel is used by the residents and guests of a residential household. Commentary Figure 202(18) shows a permanent spa.



FIGURE 202(18)
PERMANENT SPA

PORTABLE RESIDENTIAL SPA. A spa intended for use that is accessory to a *residential* setting and available to the household and its guests and where it is either self-contained or nonself-contained.

❖ A portable spa is an appliance that is factory built, manufactured, sold, purchased and transported as a

INTERNATIONAL CODE COUNCIL®
Copyright © 2015 ICC. ALL RIGHTS RESERVED. Accessed by David Dammon on Jun 21, 2017 12:30:52 PM pursuant to License Agreement with ICC. No further reproduction or distribution authorized. ANY UNAUTHORIZED REPRODUCTION OR DISTRIBUTION IS A VIOLATION OF THE FEDERAL COPYRIGHT ACT AND THE LICENSE AGREEMENT, AND SUBJECT TO CIVIL AND CRIMINAL PENALTIES THEREUNDER.

unit ready for use by the consumer. It is designed and intended to be capable of being readily relocated. A portable spa incorporates a number of unique features that differentiate it from a permanent spa. These unique features include a preinstalled, connected and electrically bonded frame, pump, filtration, heating, low-voltage lighting and control equipment, provision for electrically grounding conductive portions of the entire manufactured assembly, provision for electrical connection to power via a properly sized and protected grounding-type wiring arrangement (cord-and-plug or hard-wired), and construction by the manufacturer with an enclosure on all four sides extending from the base to the top of the tub. Manufactured and listed self-contained portable spas and hot tubs are designed and intended to be placed on a deck surface and have relatively tall perimeter walls, making it extremely unlikely that a user immersed in the water will make solid contact with the perimeter surfaces at the same time. Therefore, a portable spa is not intended, designed or manufactured to be either partially or completely buried in the earth or abutted by berms or other similar structures [see Commentary Figure 202(19)].



FIGURE 202(19)
TYPICAL PORTABLE SPA
(Photo courtesy of Hot Springs Spas)

PUBLIC SPA. A spa other than a permanent *residential* spa or portable *residential* spa which is intended to be used for bathing and is operated by an owner, licensee or concessionaire, regardless of whether a fee is charged for use.

❖ Simply stated, a public spa is any spa that is not a residential spa.

SELF-CONTAINED SPA. A factory-built spa in which all control, water heating and water-circulating equipment is an integral part of the product. Self-contained spas may be permanently wired or cord connected.

❖ A self-contained spa is a complete packaged unit that does not require assembly at the job site. All that is required is connection to a power supply and filling with water.

NONSELF-CONTAINED SPA. A factory-built *spa* in which the water heating and circulating equipment is not an integral part of the product. Nonself-contained spas may employ separate components such as an individual filter, pump, heater and controls, or they can employ assembled combinations of various components.

❖ A nonself-contained spa could be a complete factory-supplied package that requires field assembly at the job site. Field assembly might include mounting heaters, pumps and controls on field-built equipment pads and installing piping to and from the vessel.

SPRAY POOL. A pool or basin occupied by construction features that spray water in various arrays for the purpose of wetting the persons playing in the spray streams.

❖ A spray pool is a vessel of water that has features that spray water onto the persons in the water.

SUBMERGED VACUUM FITTING. A fitting intended to provide a point of connection for suction side automatic swimming pool, *spa*, and hot tub cleaners.

❖ Pools and large spas periodically need to have their floors vacuumed to remove settled dirt. Vacuum equipment could connect to a port in the side of the pool or spa wall. The port is below the water level of the vessel.The port is connected to the suction side of the filtration pump.

SUCTION OUTLET. A submerged fitting, fitting assembly, cover/grate and related components that provide a localized low-pressure area for the transfer of water from a swimming pool, spa or hot tub. Submerged suction outlets have also been referred to as main drains.

❖ Essentially, a suction outlet is any designed and installed opening, below the design water line, through which water from the pool, spa or hot tub could escape. Although the term “suction” seems to imply that a pump suction inlet is connected to the opening, this is not always the situation. Any transfer of water through the outlet to a zone of lower pressure outside of the pool or spa creates a localized “suction” at the outlet. This is no different than removing a drain stopper in a kitchen sink full of water. The initial removal of the stopper requires minimal effort. However, once the water begins draining and flow is well established in the drain pipe below the sink, placing the stopper just above and in close proximity to the drain opening will result in the stopper being pulled into the drain opening with significant force. Such suction forces are of great concern to the

INTERNATIONAL CODE COUNCIL®
Copyright © 2015 ICC. ALL RIGHTS RESERVED. Accessed by David Dammon on Jun 21, 2017 12:30:52 PM pursuant to License Agreement with ICC. No further reproduction or distribution authorized. ANY UNAUTHORIZED REPRODUCTION OR DISTRIBUTION IS A VIOLATION OF THE FEDERAL COPYRIGHT ACT AND THE LICENSE AGREEMENT, AND SUBJECT TO CIVIL AND CRIMINAL PENALTIES THEREUNDER.

designer of pools and spas as the suction force can pull a bather in close proximity towards the outlet and prevent the bather from surfacing.

Many pools and spas are designed with a main drain located at the bottom. A main drain allows for an easy way to drain all of the water in the pool or spa. A main drain is also a convenient location (and in addition to the outflow from skimmers) for water to flow to the circulation system for filtration. Main drains for swimming pools and spas are not required.

SURFACE SKIMMING SYSTEM. A device or system installed in the pool or spa that permits the removal of floating debris and surface water to the filter.

❖ See the commentary for "Skimmer."

SURGE CAPACITY. The storage volume in a surge tank, *gutter*, and plumbing lines.

❖ When a pool or spa is at rest and bathers are not in the water, the water level is at the design water level. When bathers enter the water, the water level rises and the excess water spills over into the gutter system. The excess water is stored in a surge tank. As bathers leave the water, the water in the pool or spa drops below the design water level. The water in the surge tank is pumped back into the pool or spa to restore the water level to the design water level. The volume of the surge tank, gutter, and associated piping between the two is known as the surge capacity.

SURGE TANK. A storage vessel within the pool recirculating system used to contain the water displaced by bathers.

❖ See the commentary for "Surge capacity."

SWIMOUT. An underwater seat area that is placed completely outside of the perimeter shape of the pool. Where located at the deep end, swimouts are permitted to be used as the deep-end means of entry or exit to the pool.

❖ A swimout is a feature that allows swimmers an area of rest at the side of a pool but still within the water.

TUBE RIDE. A gravity flow attraction found at a waterpark designed to convey riders on an inner-tube-like device through a series of chutes, channels, flumes or pools.

❖ Also see "Leisure river."

TURNOVER RATE. The period of time, usually in hours, required to circulate a volume of water equal to the pool or spa capacity.

❖ Shorter turnover rates are required for heavier demands on the filtration system. For example, a public pool has many bathers and that creates a heavier demand than a private pool that does not have as many bathers. Therefore, public pools are required to have a shorter turnover rate as compared to private pools.

UNDERWATER LEDGE. A narrow shelf projecting from the side of a vertical structure whose dimensions are defined in the appropriate standard.

❖ Underwater ledges are typically used for standing.

UNDERWATER SEAT. An underwater ledge that is placed completely inside the perimeter shape of the pool, generally located in the shallow end of the pool.

❖ Underwater seats are wider than underwater ledges and typically are not more than 20 inches below the water level.

VANISHING EDGE. Water-feature detail in which water flows over the edge of at least one of the pool walls and is collected in a catch basin. Also called "Negative edge."

❖ Visually, a pool with a vanishing edge appears not to be bounded by a wall along the vanishing edge.

WATERLINE. See "Design waterline."

WAVE POOL CAISSON. A large chamber used in wave generation. This chamber houses pulsing water and air surges in the wave generation process and is not meant for human occupancy.

❖ Most wave pools are pneumatically driven, although some designs use hydraulics. The caisson chamber holds water that is forced out into the wave pool to create a surge or wave in the pool.

ZERO ENTRY. See "Beach entry."

INTERNATIONAL CODE COUNCIL®
Copyright © 2015 ICC. ALL RIGHTS RESERVED. Accessed by David Dammon on Jun 21, 2017 12:30:52 PM pursuant to License Agreement with ICC. No further reproduction or distribution authorized. ANY UNAUTHORIZED REPRODUCTION OR DISTRIBUTION IS A VIOLATION OF THE FEDERAL COPYRIGHT ACT AND THE LICENSE AGREEMENT, AND SUBJECT TO CIVIL AND CRIMINAL PENALTIES THEREUNDER.

INTERNATIONAL CODE COUNCIL®
Copyright © 2015 ICC. ALL RIGHTS RESERVED. Accessed by David Dammon on Jun 21, 2017 12:30:52 PM pursuant to License Agreement with ICC. No further reproduction or distribution authorized. ANY UNAUTHORIZED REPRODUCTION OR DISTRIBUTION IS A VIOLATION OF THE FEDERAL COPYRIGHT ACT AND THE LICENSE AGREEMENT, AND SUBJECT TO CIVIL AND CRIMINAL PENALTIES THEREUNDER.

Chapter 3: General Compliance

General Comments

There are a significant number of aspects concerning pool and spa design and installation that are common to all. For example, piping materials, suction entrapment avoidance, decks, dimensional tolerances, circulation systems, heater systems and barriers have general characteristics that are the same no matter with what pool or spa they are connected. Placing the regulations for these common items in one location, Chapter 3, makes them easier to find and results in fewer coordination problems as the code is changed in future editions.

Purpose

Chapter 3 contains regulations for electrical, plumbing, energy consumption, barriers, decks, suction entrapment avoidance, circulation systems, heaters and lighting for all types of pools and spas. First and foremost, these regulations provide for the protection of the users of pools and spas. The regulations also provide for a level of quality necessary to ensure that the pools and spas are installed correctly to provide for long-term performance.

SECTION 301 GENERAL

301.1 Scope. The provisions of this chapter shall govern the general design and construction of public and *residential* pools and spas and related piping, equipment, and materials. Provisions that are unique to a specific type of pool or spa are located in Chapters 4 through 10.

❖ Many requirements for different types of pools or spas are identical. For example, barriers (such as fences and walls) have the same requirements no matter what pool or spa the barriers protect. Rather than repeat these common requirements for each type of pool or spa, the requirements are stated once in this chapter. Requirements that are specific to each type of pool or spa are indicated in Chapters 4 through 10.

301.1.1 Application of Chapters 4 through 10. Where differences occur between the provisions of this chapter and the provisions of Chapters 4 through 10, the provisions of Chapters 4 through 10 shall apply.

❖ Chapters 4 through 10 have requirements that are specific to each type of pool or spa. Where Chapter 3 has a requirement that is also discussed in each of Chapters 4 through 10, and the requirements are different, the requirements in Chapters 4 through 10 take precedence over the requirement in Chapter 3. In other words, the specific overrides the general.

SECTION 302 ELECTRICAL, PLUMBING, MECHANICAL AND FUEL GAS REQUIREMENTS

302.1 Electrical. Electrical requirements for aquatic facilities shall be in accordance with NFPA 70 or the *International Residential Code*, as applicable in accordance with Section 102.7.1.

Exception: Internal wiring for portable *residential* spas and portable *residential* exercise spas.

❖ The *National Electrical Code* (NEC), NFPA 70, is to be applied to the electrical installations in connection with pools and spas except for those pools and spas that are associated with residential structures covered by the *International Residential Code*® (IRC®). The IRC contains chapters on electrical installation that are based on residential-appropriate portions of NFPA 70. Internal wiring requirements for portable residential spas and portable residential exercise spas are covered under UL 1563 or CSA C22.2 No. 218.1. Chapter 10 requires portable residential spas and portable residential exercise spas to be listed and labeled to one of those standards.

This code references specific editions of NFPA 70 and the IRC. Unless the jurisdiction makes an amendment to the code at the time of adoption to change the year of NFPA 70 or the IRC that is referenced, the editions that are referenced in Chapter 11 are to be enforced. Note that a jurisdiction has the authority to adopt local amendments to the code as well as to NFPA 70 and the IRC. Local amendments to the electrical codes might be the result of formal interpretations (FI) or temporary interim amendments (TIA) that were generated by NFPA for the NEC. Designers and installers should never assume that these FIs or TIAs are part of the electrical codes being enforced in any jurisdiction. Designers and installers should always consult with each jurisdiction to determine what local amendments might apply for that jurisdiction.

This code, the IRC and the NEC do not address who is responsible for performing the design and installation of electrical work covered by the regulations in these codes. Each jurisdiction decides who is qualified to perform such work and typically requires licensure of those individuals at either a state or local

INTERNATIONAL CODE COUNCIL®
Copyright © 2015 ICC. ALL RIGHTS RESERVED. Accessed by David Dammon on Jun 21, 2017 12:30:52 PM pursuant to License Agreement with ICC. No further reproduction or distribution authorized. ANY UNAUTHORIZED REPRODUCTION OR DISTRIBUTION IS A VIOLATION OF THE FEDERAL COPYRIGHT ACT AND THE LICENSE AGREEMENT, AND SUBJECT TO CIVIL AND CRIMINAL PENALTIES THEREUNDER.

level. The licensing laws of the jurisdiction dictate the extent of work that can be performed by licensed individuals.

Section 102.4 covers additions, alterations, renovations or repairs to existing pools and spas. The code official has the responsibility to decide how much of an existing electrical installation must be brought up to the current code. Designers and installers should always consult with each jurisdiction to determine the extent of electrical rework that is necessary for any remodeling project on a pool or spa.

The electrical requirements in NFPA 70 and the IRC are minimum requirements. These codes do not prohibit designs that exceed the minimum requirements.

302.2 Water service and drainage. Piping and fittings used for water service, makeup and drainage piping for pools and spas shall comply with the *International Plumbing Code*. Fittings shall be *approved* for installation with the piping installed.

❖ This section addresses piping for the supply of potable water to the pool or spa and drainage (wastewater) from the pool or spa. The *International Plumbing Code*® (IPC®) has provisions for the installation of such piping.

302.3 Pipe, fittings and components. Pipe, fittings and components shall be *listed* and *labeled* in accordance with NSF 50 or NSF 14. Plastic jets, fittings, and outlets used in public spas shall be *listed* and *labeled* in accordance with NSF 50.

Exceptions:

1. Portable *residential* spas and portable *residential* exercise spas *listed* and *labeled* in accordance with UL 1563 or CSA C22.2 No. 218.1.
2. *Onground storable pools* supplied by the pool manufacturer as a kit that includes all pipe, fittings and components.

❖ The requirement for the listing and labeling of items to NSF 50 or NSF 14 provides for a certain level of quality for those items so that they will not structurally fail under the intended service conditions, not impart harmful chemicals to the water in the pool or spa, and will properly fit with other listed and labeled components. Where pipe, fittings, components, plastic jets and outlets are part of portable residential spas and portable residential exercise spas listed and labeled to UL 1563 or CSA C22.2 No. 218.1, the quality of the items are controlled, as necessary, by those standards.

Because onground storable pools are made for disassembly and storage, replacement of pipe and fittings is more easily accomplished. More frequent replacement of these types of components is generally expected by the owner of this type of pool. The owner will most likely not purchase replacement components listed and labeled to NSF 50 or NSF 14 because similar components that will "do the job" will be less expensive and be readily available at local hardware stores. Thus, from a manufacturer's point of view, there is no need to initially build these systems with components meeting NSF 50 because replacement of components is relatively easy and inexpensive. See Section 704.5.

302.4 Concealed piping inspection. Piping, including process piping, that is installed in trenches, shall be inspected prior to backfilling.

❖ Piping installed in trenches must be inspected prior to backfilling the trench so that the installation can be checked for leaks, proper piping bedding and the use of appropriate fittings.

302.5 Backflow protection. Water supplies for pools and spas shall be protected against backflow in accordance with the *International Plumbing Code* or the *International Residential Code*, as applicable in accordance with Section 102.7.1.

❖ Potable water supplies to pools or spas must be kept safe from contamination. The IPC or the IRC, as applicable, provides the necessary requirements for protection against backflow.

302.6 Waste-water discharge. Where waste water from pools and spas, backwash from filters and water from deck drains discharge to the building drainage system, such installation shall be in accordance with the *International Plumbing Code* or the *International Residential Code*, as applicable in accordance with Section 102.7.1.

❖ Where wastewater from a pool or spa can be legally disposed of is a decision that must be made in each jurisdiction. Where the jurisdiction requires that such water be discharged to a building drainage system, then the requirements of the IPC or the IRC, as applicable, must be followed.

302.7 Tests. Tests on water piping systems constructed of plastic piping shall not use compressed air for the test.

❖ Air testing of plastic piping is dangerous because compressed air contains significant potential energy. Should the piping or fittings have imperfections or cracks created during manufacturing, such defects could explode during testing. Dirt, rocks and plastic pipe shrapnel propelled by a failure of the piping could injure nearby personnel. Testing piping systems, including the equipment such as filters and pumps connected to the piping, with water, is much safer.

302.8 Maintenance. Pools and spas shall be maintained in a clean and sanitary condition, and in good repair.

❖ Pools and spas that are not maintained become breeding grounds for mosquitoes. A pool or spa in need of repair can be dangerous to users and possibly to the environment where water leaks out of the pool or spa into the surrounding earth. This section provides the code official with the authority to make the owner of a pool or spa perform the necessary maintenance and repairs.

INTERNATIONAL CODE COUNCIL®
Copyright © 2015 ICC. ALL RIGHTS RESERVED. Accessed by David Dammon on Jun 21, 2017 12:30:52 PM pursuant to License Agreement with ICC. No further reproduction or distribution authorized. ANY UNAUTHORIZED REPRODUCTION OR DISTRIBUTION IS A VIOLATION OF THE FEDERAL COPYRIGHT ACT AND THE LICENSE AGREEMENT, AND SUBJECT TO CIVIL AND CRIMINAL PENALTIES THEREUNDER.

302.8.1 Manuals. An operating and maintenance manual in accordance with industry-accepted standards shall be provided for each piece of equipment requiring maintenance.

❖ In order to properly maintain equipment associated with pools and spas, instructions in written form must be provided for each piece of equipment. Equipment manuals typically are included within the product or component packaging. Such materials, if not placed in a secure location, can be inadvertently lost, discarded or damaged. The contractor should deliver all product and component manuals, instructions, accompanying signage and other literature to the owner/operator at or before the completion of the project. Because manuals contain important end user safety, proper operation and maintenance information, it is helpful to include this requirement on inspection checklists.

SECTION 303
ENERGY

303.1 Energy consumption of pools and permanent spas. The energy consumption of pools and permanent spas shall be controlled by the requirements in Sections 303.1.1 through 303.1.3.

❖ The energy consumption of pools and permanent spas can be significant because filter pumps operate continuously. This section covers methods and equipment to limit energy consumption. Note that Section 303.3 has additional requirements for residential pools and permanent residential spas.

303.1.1 Heaters. The electric power to heaters shall be controlled by a readily accessible on-off switch that is an integral part of the heater, mounted on the exterior of the heater or external to and within 3 feet (914 mm) of the heater. Operation of such switch shall not change the setting of the heater thermostat. Such switches shall be in addition to a circuit breaker for the power to the heater. Gas-fired heaters shall not be equipped with continuously burning ignition pilots.

❖ The provision of an easily accessed on-off switch for a heater goes a long way towards offering the user of the pool or spa a method to limit energy use. Where adjustment of a thermostat is required for turning off a heater, most users will elect not to make the adjustment because they have it set to their preferred temperature. The switch for the heater needs to be within close proximity to the heater (or mounted externally on the heater) so that a person knows to what piece of equipment the switch belongs. This is especially useful (and safe) for servicing a heater where there are multiple heaters in one location. Although NFPA 70 (and the electrical chapters of the IRC) do not require a separate switch where the circuit breaker is within sight of the equipment, having such a switch further enables users to turn off the heater when not in use. Some users might have safety concerns (generally unwarranted) about "flipping" a circuit breaker in a circuit breaker panel (having multiple circuit breakers). Also, some circuit breaker panel doors are difficult to open, especially those suitable for outdoor service. Older circuit breakers in existing circuit breaker panels might not have circuit breakers that are rated for "switch duty." Frequent use of those older circuit breakers might result in damage to the circuit breaker. Gas heaters with "standing pilots" (continuously burning pilots) waste energy. There are other technologies available to provide ignition for gas-fired heaters.

303.1.2 Time switches. Time switches or other control methods that can automatically turn off and on heaters and pump motors according to a preset schedule shall be installed for heaters and pump motors. Heaters and pump motors that have built-in time switches shall be in compliance with this section.

Exceptions:

1. Where public health standards require 24-hour pump operation.
2. Pumps that operate solar- or waste-heat recovery pool heating systems.

❖ The area where the pools or spas are located might not be open to users during certain hours of the day or on certain days. A time switch is a simple way to automatically shut off heaters and pumps during these times. The first exception allows for not providing the time switch where the public health standards require that the pool be heated or circulated (or both) 24 hours per day. The second exception is for pools that are provided with a heat recovery pool heating system or solar heating system. Pumps for these systems need to run when the heat source is available to maximize the energy savings that those systems offer.

303.1.3 Covers. Outdoor heated pools and outdoor permanent spas shall be provided with a vapor-retardant cover or other *approved* vapor-retardant means in accordance with Section 104.11.

Exception: Where more than 70 percent of the energy for heating, computed over an operating season, is from site-recovered energy such as from a heat pump or solar energy source, covers or other vapor-retardant means shall not be required.

❖ The majority of energy loss from a heated pool or spa is from the open surface of the water, primarily because of the cooling effect that evaporation of water from the surface causes. Covering pools and spas with a vapor-retardant cover when the pool or spa is not in use is highly beneficial. As an encouragement for pool and spa owners to actually install a cover on the pool or spa, this section requires that a cover be present (but not necessarily installed) at final inspection. Although the code official cannot make the owner install the cover, it is hoped that if the owner incurred the expense for having the cover present, he will use it to his benefit for saving money on energy use.

The exception recognizes that where the 70 percent of the energy (over an operating season) for

INTERNATIONAL CODE COUNCIL®
Copyright © 2015 ICC. ALL RIGHTS RESERVED. Accessed by David Dammon on Jun 21, 2017 12:30:52 PM pursuant to License Agreement with ICC. No further reproduction or distribution authorized. ANY UNAUTHORIZED REPRODUCTION OR DISTRIBUTION IS A VIOLATION OF THE FEDERAL COPYRIGHT ACT AND THE LICENSE AGREEMENT, AND SUBJECT TO CIVIL AND CRIMINAL PENALTIES THEREUNDER.

heating pool or spa water is "free" energy available at the site, such as capturing waste heat generated from equipment (site-recovered energy) or energy from the sun (site solar energy), then the overall objective for reducing consumption of utility energy is achieved. The 70-percent level is established because site waste energy (heat) might not be generated or the sun might not shine on the thermal collectors to the extent required to keep the pool or spa water heated to design temperatures.

There are many different types of equipment that can generate waste heat. A heat pump generates waste heat when in the mode of cooling conditioned spaces in a building. Fuel-fired boilers and water heaters waste heat. Refrigeration equipment generates heat waste heat. That heat can be captured and put to use to reduce consumption of utility energy.

Solar thermal energy is nearly always available. Site locations (geographic) and weather patterns (based on historic data) affect the amount of heat energy that is available from this source over the anticipated operating season for the pool or spa.

This exception is not concerned with the efficiency of pool or spa water heating equipment requiring utility power (electricity or gas) for directly heating pool and spa water. Although such equipment is becoming slightly more efficient as equipment designs improve over time, greater efficiencies are difficult to achieve without exorbitant equipment cost and increasing complexity. Installation of pool water heating equipment with higher efficiency (less use of utility power) is often a wise decision. However, choosing higher efficiency equipment at a greater cost to lower power costs where abundant "free" energy is available at the site might not be as wise of a decision in the long run. Equipment requires servicing, parts require replacement and eventually, equipment needs replacing. Complex, high-efficiency equipment can have a significant cost that needs to be carefully considered against the benefits gained. Thus, the purpose of this section and its exception becomes more clear. There is a cost associated with supplying a pool cover. Without question, pool and spa covers, especially for large or oddly-shaped pools and spas, can be difficult to install, resulting in the fact that many will never be installed. This defeats the intent for reducing consumption of utility-generated energy. Installing higher efficiency direct pool or spa water-heating equipment is senseless where that energy is just allowed to, literally, evaporate into the air. Where there is significant use of abundant free energy (heat) at the site, why not eliminate the requirement for the cover (that most times will rarely be used) and spend that money on equipment to capture that free energy? Once installed, the pool operator doesn't need to install a cover to gain the same benefit, if not a greater benefit, of reducing power costs.

A vapor-retardant cover is a solid layer of material (not mesh or netting) that rests on or at the water's surface to retard or curtail evaporation. In a swimming pool, the solid vapor retardant cover must touch most of the water's surface to impede the majority of water molecules from escaping [see Commentary Figures 303.1.3(1) and (2)].

On a spa, the vapor-retardant cover can be above the water's surface as long as all sides of the spa rim or coping are sealed by the cover to confine the water molecules that have escaped the water's surface to the airspace between the water and the cover, keeping them from escaping into the atmosphere [see Commentary Figure 303.1.3(3)].

303.2 Portable spas. The energy consumption of electric-powered portable spas shall be controlled by the requirements of APSP 14.

❖ Electric-powered portable spas are products manufactured to numerous standards, one of which is APSP 14, which specifically addresses energy efficiency for these types of products.

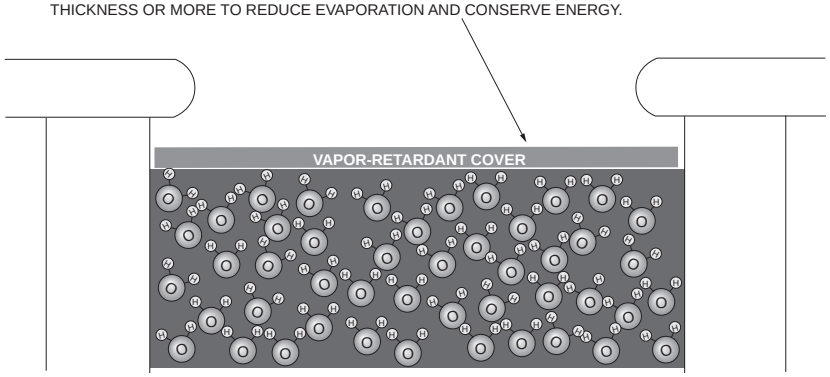

For SI: 1 inch = 25.4 mm.

FIGURE 303.1.3(1)
FLOATING-TYPE SOLID VAPOR-RETARDANT COVER
[Illustration courtesy of the Association of Pool and Spa Professionals (APSP)]

INTERNATIONAL CODE COUNCIL®
Copyright © 2015 ICC. ALL RIGHTS RESERVED. Accessed by David Dammon on Jun 21, 2017 12:30:52 PM pursuant to License Agreement with ICC. No further reproduction or distribution authorized. ANY UNAUTHORIZED REPRODUCTION OR DISTRIBUTION IS A VIOLATION OF THE FEDERAL COPYRIGHT ACT AND THE LICENSE AGREEMENT, AND SUBJECT TO CIVIL AND CRIMINAL PENALTIES THEREUNDER.

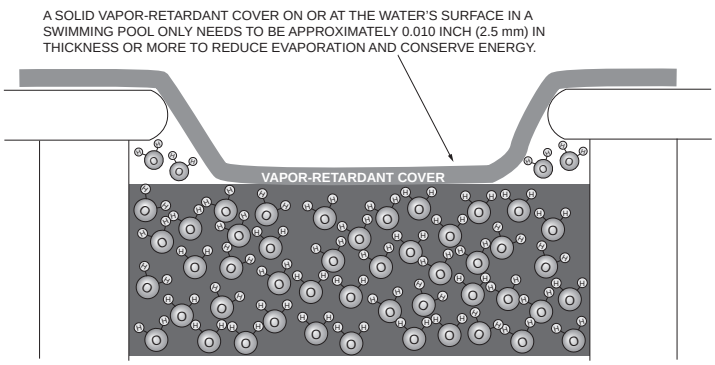

For SI: 1 inch = 25.4 mm.

FIGURE 303.1.3(2)
POWERED OR PIN-DOWN-TYPE SOLID VAPOR-RETARDANT COVER
[Illustration courtesy of the Association of Pool and Spa Professionals (APSP)]

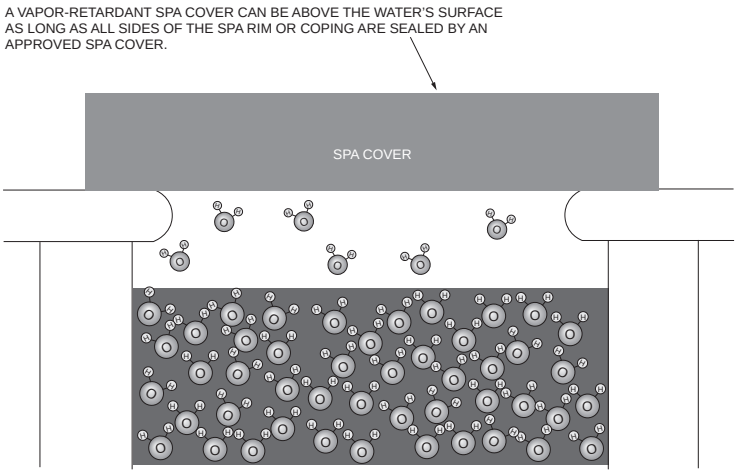

FIGURE 303.1.3(3)
SOLID VAPOR-RETARDANT SPA COVER
[Illustration courtesy of the Association of Pool and Spa Professionals (APSP)]

303.3 Residential pools and permanent residential spas. The energy consumption of *residential* swimming pools and permanent *residential* spas shall be controlled in accordance with the requirements of APSP 15.

❖ By some estimates, there are over 7 million permanent inground residential swimming pools in the United States alone. Some of the "higher-end" residential pools also have permanent residential spas with separate circulation systems. There is also an increasing trend of installation of permanent residential spas without pools as space and finances might not be available for a pool installation. The number of permanent inground residential swimming pools and permanent residential spas far surpasses the number of public pools in the United States. As every pool and spa must have one or more pumps for circulation, the collective amount of energy used by all of these pumps is staggering. Controlling the energy consumption by these currently installed pumping systems is strongly encouraged by all electric utilities. Many owners of existing pools and spas have taken advantage of electric utility rebates to replace their old, inefficient pumps that consumed an amount of energy that was nearly 50% of their monthly household electric bill. For new pumping systems, APSP 15 provides the requirements to design and install low-energy-consuming circulation systems. APSP 15 also provides details on how to select energy-efficient pumps from a database that all pump manufacturers populate with certified energy usage data for the models that they sell.

APSP 15 covers residential swimming pool filtration systems, including the filtration pump, controller, filter, backwash valve, filtration piping and valves. Note that only systems used for filtration are regulated by the standard; other systems, such as for cleaning, spa boosting and various water features, are not regulated. However, where a system is used for multiple purposes, one of which is filtration, the system is regulated by APSP 15.

INTERNATIONAL CODE COUNCIL®
Copyright © 2015 ICC. ALL RIGHTS RESERVED. Accessed by David Dammon on Jun 21, 2017 12:30:52 PM pursuant to License Agreement with ICC. No further reproduction or distribution authorized. ANY UNAUTHORIZED REPRODUCTION OR DISTRIBUTION IS A VIOLATION OF THE FEDERAL COPYRIGHT ACT AND THE LICENSE AGREEMENT, AND SUBJECT TO CIVIL AND CRIMINAL PENALTIES THEREUNDER.

APSP 15 requires that residential swimming pool and spa filtration pumps be listed in either the APSP Appliance Efficiency Pool Pump Database (available from APSP) or the California Energy Commission's Appliance Efficiency Database for Residential Pool Pumps. In order to be listed in these databases, the manufacturer of the filtration pump/motor assembly must have the assembly tested by an independent testing laboratory to produce energy factor information about the pump operating at three different operating conditions that represent three different types of circulation systems. The energy factor in the database is listed in "gallons per watt-hour" ("liters per watt-hour") and is similar in concept to the "miles per gallon" ("km per liter") rating of an automobile. The energy factor information makes it easy for the purchaser of a pump/motor assembly to compare the energy consumption of various pump models. The purchaser can then make a decision about which assembly to use based on the expected savings in energy usage (energy cost). Commentary Figure 303.3 shows the three circulation system curves that are used in the pump testing required by APSP 15. Pools that are 17,000 gallons (64 352 L) or less in volume use the flow rate listed for Curve A; pools more than 17,000 gallons (64 352 L) use the flow rate listed for Curve C.

The size and capacity of pumps are limited based on pool volume, while ensuring adequate turnover. All residential pools must have a pump capable of achieving turnover in 12 hours or less (see Section 810). APSP 15 also requires that single-speed pumps in residential pools must not be capable of turning over the pool volume in less than 6 hours. Multispeed-pumps (which include dual and variable speed) must have at least one speed that will not turn over the pool volume in less than 6 hours.

According to APSP 15, pools with a capacity of less than 13,320 gallons (50 422 L) are not subject to the 6-hour turnover limit. Instead a single-speed pump that is not capable of exceeding 36 gallons per minute (gpm) (136 lpm) or a multiple-speed pump in which at least one setting will not exceed this flow rate can be used. This exception for smaller pools is necessary because skimmers or other sanitizing equipment might not operate properly at lower flow rates. Without the 36 gpm (136 lpm) allowance, a 4,000-gallon (15 141 L) patio home pool would be limited to a design flow rate of 11 gpm (42 lpm) (4000/360=11.1), a flow rate that few, if any, swimming pool filter pumps can achieve. This does not mean pool filter pumps cannot operate below 36 gpm (136 lpm): they can and often do. It is left to the contractor and property owner/operator to decide what is best to achieve the water quality requirements of Section 302.1. Using the 4,000-gallon (15 141 L) pool example, a two-speed pump on low speed, pumping 22 gpm (83 lpm), will turn over the pool in 3 hours, whereas 36 gpm (136 lpm) will turn over the pool in about 2 hours. Both flow rates exceed all turnover requirements for public pools (having more severe requirements), thereby ensuring that circulation is not compromised for smaller pools.

APSP 15 provides minimum sizes for pool filters, their backwash valves and the filtration piping to and from the swimming pool. These minimum sizes are calculated based on the pool volume; the larger the pool, the larger they must be. Control valves in the pool filtration loop must be at least as large as the pipe. This minimum pipe, fitting and valve size requirement does not apply to the pipe connections associated with the pump (which typically are smaller), heater, sanitizer and safety equipment, such as a safety vacuum release system and suction-limiting vents.

Note that APSP 15 does not currently specify a maximum limit for how much energy a pump can use. The information in the database should be enough to steer most buyers toward more energy-efficient pump models. Spending more for a high-efficiency pump that will be installed in a geographic location where electric energy costs are high should be an easy choice as the payback period for the higher cost of the pump (as compared to the lower cost of a lower-efficiency pump) will be relatively short. On the other hand, perhaps the decision on what pump to buy might not include the concern about having to pay for the energy consumption after the pump is installed. APSP 15 allows this flexibility in pump efficiency choice as the pump can be easily changed to a higher-efficiency model at a later date.

The APSP 15 requirements for permanently installed residential spas include those of Section 303.1 and minimum heater efficiency ratings that are set by federal regulations. Gas-fired heaters manufactured before April 16, 2013, must be at least 78-percent efficient; after this date they must be at least 82-percent efficient. Heat pumps must have a coefficient of performance of not less than 4.0.

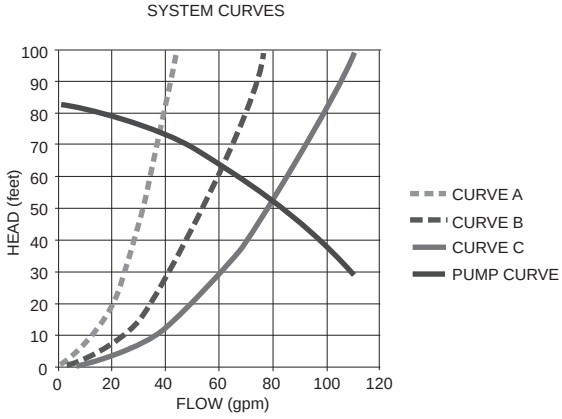

For SI: 1 foot = 305 mm, 1 gallon per minute = 3.8 lpm.

FIGURE 303.3
CIRCULATION SYSTEM CURVES VERSUS PUMP CURVE
[Illustration courtesy of the Association of Pool and Spa Professionals (APSP)]

INTERNATIONAL CODE COUNCIL®
Copyright © 2015 ICC. ALL RIGHTS RESERVED. Accessed by David Dammon on Jun 21, 2017 12:30:52 PM pursuant to License Agreement with ICC. No further reproduction or distribution authorized. ANY UNAUTHORIZED REPRODUCTION OR DISTRIBUTION IS A VIOLATION OF THE FEDERAL COPYRIGHT ACT AND THE LICENSE AGREEMENT, AND SUBJECT TO CIVIL AND CRIMINAL PENALTIES THEREUNDER.

SECTION 304
FLOOD HAZARD AREAS

304.1 General. The provisions of Section 304 shall control the design and construction of pools and spas installed in *flood hazard areas.*

❖ Pools and spas installed in flood hazard areas must be specifically designed for the application.

[BS] 304.2 Determination of impacts based on location. Pools and spas located in *flood hazard areas* indicated within the *International Building Code* or the *International Residential Code* shall comply with Section 304.2.1 or 304.2.2.

> **Exception:** Pools and spas located in riverine *flood hazard areas* that are outside of designated floodways and pools and spas located in *flood hazard areas* where the source of flooding is tides, storm surges or coastal storms.

❖ The flood hazard areas are defined by the *International Building Code*® (IBC®) or the IRC. Pools and spas in designated floodways must comply with Section 304.2.1 or 304.2.2. Pools and spas, especially those that extend above ground and those that involve fill, can block floodwater and cause waters to rise higher if the vessels are placed in areas with effective flow (effective flow areas are those that pass the greatest volumes of water, typically with higher velocities). The requirement to consider the impacts of development on flood heights where floodways have not been designated is consistent with the National Flood Insurance Program (NFIP), IRC Section R322.1.4.2, and IBC Section 1612.3. No specific requirements apply if pools and spas are located outside of floodways (i.e., in areas sometimes referred to as the "floodway fringe") or in areas subject to coastal flooding.

[BS] 304.2.1 Pools and spas located in designated floodways. Where pools and spas are located in designated floodways, documentation shall be submitted to the code official that demonstrates that the construction of the pools and spas will not increase the design flood elevation at any point within the jurisdiction.

❖ Floodways are portions of riverine floodplains where encroachments may block the flow of floodwaters and increase flood heights and flood risks on adjacent properties. FEMA has provided floodway delineations along many rivers and streams shown on FIRMs. Placement of pools and spas that encroach into floodways, especially those that are on ground, partially in the ground and those that involve fill, are required to be evaluated by a qualified professional in accordance with accepted engineering practices. To be acceptable, the encroachment analysis must demonstrate that there will be no increase in the design flood elevation. Several states have more restrictive requirements, which can be determined by contacting the NFIP state coordinator (each state has an agency designated to coordinate the NFIP with communities).

[BS] 304.2.2 Pools and spas located where floodways have not been designated. Where pools and spas are located where design flood elevations are specified but floodways have not been designated, the applicant shall provide a floodway analysis that demonstrates that the proposed pool or spa and any associated grading and filling, will not increase the design flood elevation more than 1 foot (305 mm) at any point within the jurisdiction.

❖ Although FEMA has mapped floodways along many rivers and streams shown on a community's FIRM, other riverine flood hazard areas have base flood elevations but do not have designated floodways. In these areas, the potential effects that floodplain activities may have on flood elevations have not been evaluated. If FEMA has not designated a regulatory floodway, the community is responsible for regulating development that encroaches into these areas so as not to increase flood elevations by more than 1 foot (305 mm) at any point in the community. In effect, this means a community must either prepare a hydraulic analysis for proposed activities or require permit applicants to do so. Encroachment analyses should be prepared by a qualified professional in accordance with accepted engineering practices. Several states have more restrictive requirements, which can be determined by contacting the NFIP state coordinator.

[BS] 304.3 Pools and spas in coastal high-hazard areas. Pools and spas installed in coastal hazard areas shall be designed and constructed in accordance with ASCE 24.

❖ Flood hazard areas in a coastal community include areas subject to flooding that are not expected to have high waves and usually have coastal high-hazard areas where wave heights of 3 feet (914 mm) or higher are expected above the elevation of floodwaters during the base flood (identified on FIRMs as "Zone V"). Some FIRMs also delineate areas where wave heights of 1.5 to 3 feet are expected to occur (called "Coastal A Zones"). Waves impose significant loads on structures, including pools and spas. ASCE 24 requires consideration of flood loads and requires pools to be elevated and designed to break away without producing debris capable of causing significant damage to adjacent structures or designed to remain in the ground. Alternatively, pools may be designed and constructed to remain in the ground during design flood conditions without obstructing flow that results in damage to any structure. The IBC (by reference to ASCE 24) and IRC Section R322.3.3 require pools to be structurally independent of buildings unless the buildings are designed to resist the additional imposed flood load. Additional guidance is found in FEMA TB #5.

[BS] 304.4 Protection of equipment. Equipment shall be elevated to or above the design flood elevation or be anchored to prevent flotation and protected to prevent water from entering or accumulating within the components during conditions of flooding.

❖ Equipment associated with a pool or spa, such as filters, pumps and heaters, must be installed above the design flood elevation to protect such equipment. If equipment cannot be elevated and still serve the

INTERNATIONAL CODE COUNCIL®
Copyright © 2015 ICC. ALL RIGHTS RESERVED. Accessed by David Dammon on Jun 21, 2017 12:30:52 PM pursuant to License Agreement with ICC. No further reproduction or distribution authorized. ANY UNAUTHORIZED REPRODUCTION OR DISTRIBUTION IS A VIOLATION OF THE FEDERAL COPYRIGHT ACT AND THE LICENSE AGREEMENT, AND SUBJECT TO CIVIL AND CRIMINAL PENALTIES THEREUNDER.

intended function, it can be installed below the flood elevation if it is anchored and protected.

304.5 GFCI protection. Electrical equipment installed below the design flood elevation shall be supplied by branch circuits that have ground-fault circuit interrupter protection for personnel.

❖ Electrical equipment that is installed below the design flood level, such as lighting, receptacle outlets and motorized pool covers, must be supplied by circuits that have ground-fault circuit interrupter (GFCI) protection.

SECTION 305
BARRIER REQUIREMENTS

305.1 General. The provisions of this section shall apply to the design of barriers for pools and spas. These design controls are intended to provide protection against the potential drowning and near drowning by restricting access to such pools or spas. These requirements provide an integrated level of protection against potential drowning through the use of physical barriers and warning devices.

Exceptions:

1. Spas and hot tubs with a lockable *safety cover* that complies with ASTM F1346.
2. Swimming pools with a powered *safety cover* that complies with ASTM F1346.

❖ Barriers around pools and spas significantly restrict unauthorized access to such pools and spas. The perimeter barrier design requirements in this section are especially focused on preventing children from having access to an area where the potential for drowning or near drowning is very high. Once children are inside the barrier perimeter, only constant adult supervision of those children can prevent drowning or near drowning. Thus, when adults choose to leave the pool and spa area, common sense dictates that all children should also leave the area and be taken outside of the perimeter barrier. Therefore, a thorough inspection of perimeter barriers is necessary, as they are the only required line of defense against drowning or near drowning of children when adults are not present.

The exceptions allow for spas and hot tubs with lockable covers complying with ASTM F1346 and pools with power safety covers complying with ASTM F1346 to not require barriers. A cover installed on a pool or installed on a spa or hot tub offers the same level of protection as a barrier, so barriers are not required. Commentary Figures 305.1(1) and 305.1(2) show powered safety covers on residential and public swimming pools, respectively. When covers are retracted or removed, only constant adult supervision of a pool and spa can prevent children from drowning or near drowning. Thus, when adults choose to leave the pool or spa area, common sense dictates that children are removed from the pool or spa and the cover installed immediately. Therefore, a thorough inspection of covers, cover latching systems and cover deployment systems (and their operation) is necessary, as these covers are the only required line of defense against drowning or near drowning of children when adults are not present. Although the code is silent about the controls for electric-powered safety covers for pools, it is a reasonable assumption that care would be taken to keep the operating controls secured so only those persons responsible enough to not trap users in the pool would be operating the cover [see Commentary Figure 305.1(3)].

Note that a nonpowered pool cover (i.e., one that is manually installed) does not provide relief of the barrier requirement [see Commentary Figure 305.1(4)]. Even though a manual pool cover might comply with the requirements of ASTM F1346, installation of manually installed covers are time consuming and could be somewhat complicated such that they would not be used every time the pool was not in use.



FIGURE 305.1(1)
ON-DECK-TYPE POWERED SAFETY COVER FOR RESIDENTIAL POOL



FIGURE 305.1(2)
INTEGRAL-TYPE POWERED SAFETY COVER FOR PUBLIC POOL

INTERNATIONAL CODE COUNCIL®
Copyright © 2015 ICC. ALL RIGHTS RESERVED. Accessed by David Dammon on Jun 21, 2017 12:30:52 PM pursuant to License Agreement with ICC. No further reproduction or distribution authorized. ANY UNAUTHORIZED REPRODUCTION OR DISTRIBUTION IS A VIOLATION OF THE FEDERAL COPYRIGHT ACT AND THE LICENSE AGREEMENT, AND SUBJECT TO CIVIL AND CRIMINAL PENALTIES THEREUNDER.



FIGURE 305.1(3)
KEY SWITCH FOR POWERED POOL COVER OPERATION



FIGURE 305.1(4)
NONPOWERED MESH COVER DOES NOT ALLOW FOR ABSENCE OF BARRIER AROUND POOL

305.2 Outdoor swimming pools and spas. Outdoor pools and spas and indoor swimming pools shall be surrounded by a barrier that complies with Sections 305.2.1 through 305.7.

❖ Sections 305.2 through 305.7 cover the requirements for barriers.

305.2.1 Barrier height and clearances. Barrier heights and clearances shall be in accordance with all of the following:

1. The top of the barrier shall be not less than 48 inches (1219 mm) above grade where measured on the side of the barrier that faces away from the pool or spa. Such height shall exist around the entire perimeter of the barrier and for a distance of 3 feet (914 mm) measured horizontally from the outside of the required barrier.
2. The vertical clearance between grade and the bottom of the barrier shall not exceed 2 inches (51 mm) for grade surfaces that are not solid, such as grass or gravel, where measured on the side of the barrier that faces away from the pool or spa.
3. The vertical clearance between a surface below the barrier to a solid surface, such as concrete, and the bottom of the required barrier shall not exceed 4 inches (102 mm) where measured on the side of the required barrier that faces away from the pool or spa.
4. Where the top of the pool or spa structure is above grade, the barrier shall be installed on grade or shall be mounted on top of the pool or spa structure. Where the barrier is mounted on the top of the pool or spa, the vertical clearance between the top of the pool or spa and the bottom of the barrier shall not exceed 4 inches (102 mm).

❖ The barrier height of 48 inches (1219 mm) ensures that smaller children cannot simply "hop the fence" to gain access to the pool or spa. Those persons who are capable of climbing over a 48-inch-high (1219 mm) barrier are probably of sufficient maturity to avoid the pool if they cannot swim or are uncomfortable with the idea of entering the water of a spa. The height is measured on the outside of the barrier from the highest elevation of grade or concrete slab for a distance of 3 feet (914 mm) away from the outside of the barrier [see Commentary Figure 305.2.1(1)]. This requirement coordinates with Section 305.2.9 that requires a clear zone of 36 inches (914 mm) around the outside of the barrier.

Barriers that are not close to the surface of the ground could be bypassed by a child maneuvering under the barrier. Where over grass or gravel, the bottom of the barrier must be within 2 inches (51 mm) of the ground surface from which the grass grows from or onto which the gravel is placed. It is unlikely that a child would be able to dig out more than 2 inches (51 mm) of settled, naturally compacted earth in order to make an opening large enough to gain access to the pool or spa. If the bottom of the barrier is over concrete, the bottom must be within 4 inches (102 mm) of the concrete surface to prevent a child from maneuvering through the opening to gain access to the pool or spa [see Commentary Figures 305.2.1(2) and (3)].

The top of a pool or spa could be above grade. The barrier for this arrangement could be installed at grade or the barrier could be installed on top of the pool or spa [see Commentary Figure 305.2.1(4)]. Where mounted on top of the pool or spa, the vertical clearance from the top of the pool or spa to the underside of the barrier cannot exceed 4 inches (102 mm) [see Commentary Figure 305.2.1(5)] to prevent a child from maneuvering through the opening to gain access to the pool or spa.

305.2.2 Openings. Openings in the barrier shall not allow passage of a 4-inch-diameter (102 mm) sphere.

❖ The 4-inch (102 mm) opening is narrow enough to prevent passage of a small child through the barrier (see Commentary Figure 305.2.2).

INTERNATIONAL CODE COUNCIL®
Copyright © 2015 ICC. ALL RIGHTS RESERVED. Accessed by David Dammon on Jun 21, 2017 12:30:52 PM pursuant to License Agreement with ICC. No further reproduction or distribution authorized. ANY UNAUTHORIZED REPRODUCTION OR DISTRIBUTION IS A VIOLATION OF THE FEDERAL COPYRIGHT ACT AND THE LICENSE AGREEMENT, AND SUBJECT TO CIVIL AND CRIMINAL PENALTIES THEREUNDER.

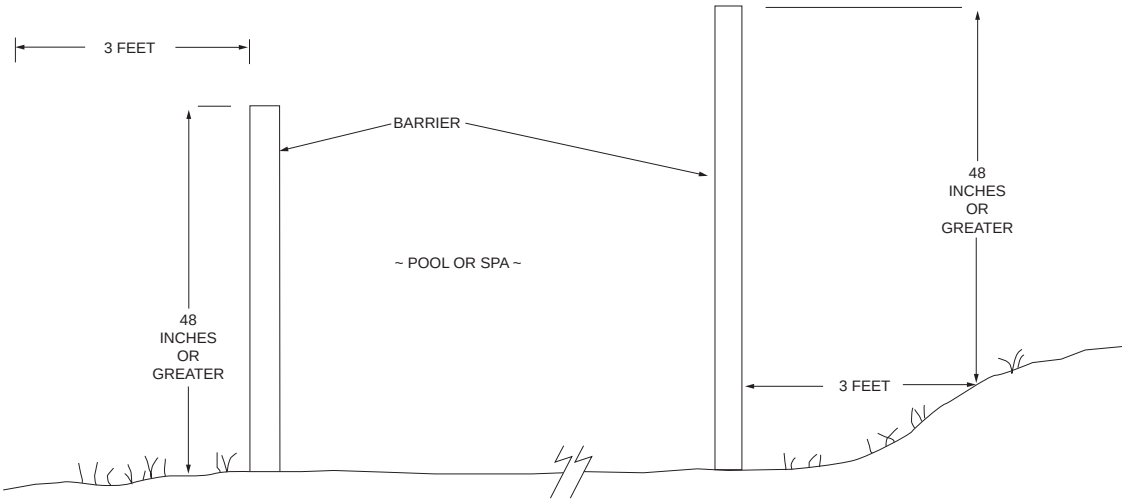

For SI: 1 inch = 25.4 mm, 1 foot = 304.8 mm.

FIGURE 305.2.1(1)
HEIGHT OF BARRIER ABOVE GRADE

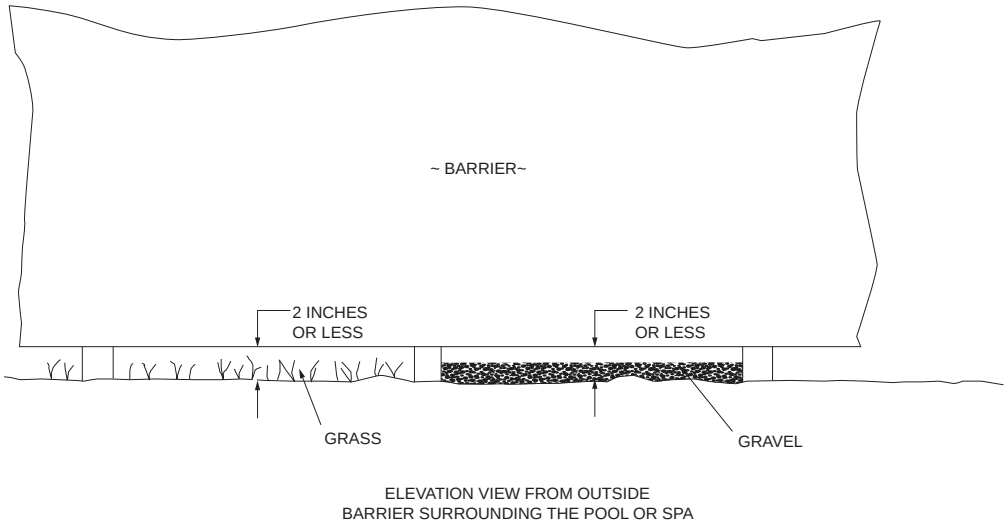

For SI: 1 inch = 25.4 mm.

FIGURE 305.2.1(2)
MAXIMUM CLEARANCE FROM BOTTOM OF BARRIER TO GRADE

305.2.3 Solid barrier surfaces. Solid barriers that do not have openings shall not contain indentations or protrusions that form handholds and footholds, except for normal construction tolerances and tooled masonry joints.

❖ An important characteristic of a barrier is that the exterior vertical face not offer any protrusions or indentations such that a toehold or handhold could assist in the climbing of the barrier.

305.2.4 Mesh fence as a barrier. Mesh fences, other than chain link fences in accordance with Section 305.2.7, shall be installed in accordance with the manufacturer's instructions and shall comply with the following:

1. The bottom of the mesh fence shall be not more than 1 inch (25 mm) above the deck or installed surface or grade.
2. The maximum vertical clearance from the bottom of the mesh fence and the solid surface shall not permit the fence to be lifted more than 4 inches (102 mm) from grade or decking.
3. The fence shall be designed and constructed so that it does not allow passage of a 4-inch (102 mm) sphere under any mesh panel. The maximum vertical clearance from the bottom of the mesh fence and the solid surface

INTERNATIONAL CODE COUNCIL®
Copyright © 2015 ICC. ALL RIGHTS RESERVED. Accessed by David Dammon on Jun 21, 2017 12:30:52 PM pursuant to License Agreement with ICC. No further reproduction or distribution authorized. ANY UNAUTHORIZED REPRODUCTION OR DISTRIBUTION IS A VIOLATION OF THE FEDERAL COPYRIGHT ACT AND THE LICENSE AGREEMENT, AND SUBJECT TO CIVIL AND CRIMINAL PENALTIES THEREUNDER.

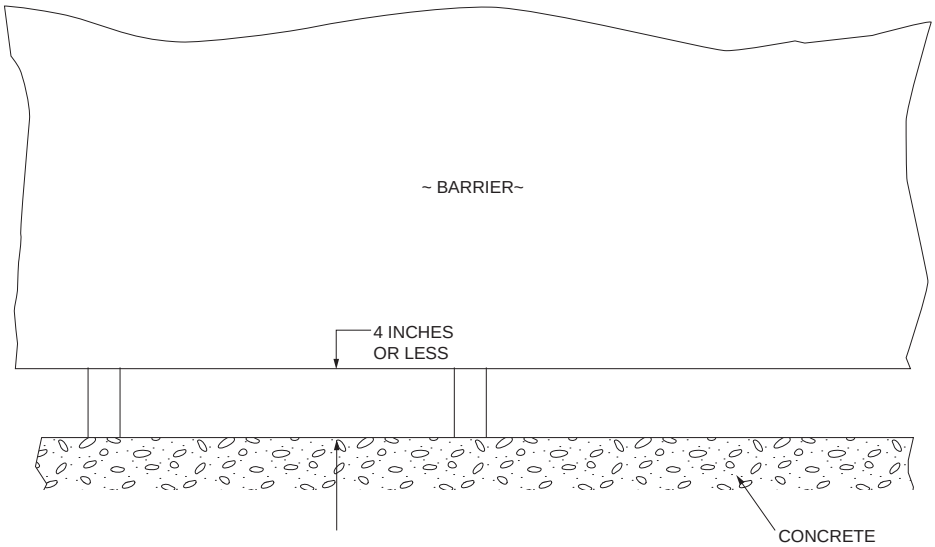

ELEVATION VIEW FROM OUTSIDE
OF BARRIER SURROUNDING THE POOL OR SPA

For SI: 1 inch = 25.4 mm.

FIGURE 305.2.1(3)
MAXIMUM CLEARANCE FROM BOTTOM OF BARRIER TO SOLID SURFACE

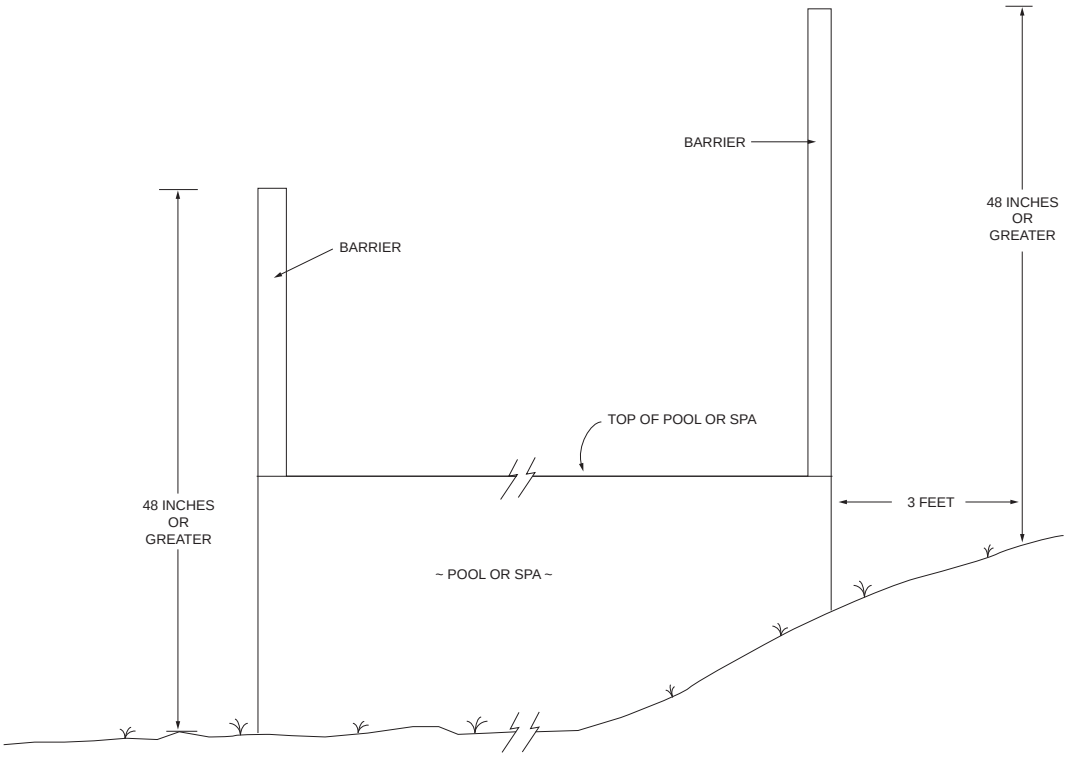

For SI: 1 inch = 25.4 mm, 1 foot = 304.8 mm.

FIGURE 305.2.1(4)
HEIGHT OF BARRIER WHERE MOUNTED ON TOP OF THE POOL OR SPA

INTERNATIONAL CODE COUNCIL®
Copyright © 2015 ICC. ALL RIGHTS RESERVED. Accessed by David Dammon on Jun 21, 2017 12:30:52 PM pursuant to License Agreement with ICC. No further reproduction or distribution authorized. ANY UNAUTHORIZED REPRODUCTION OR DISTRIBUTION IS A VIOLATION OF THE FEDERAL COPYRIGHT ACT AND THE LICENSE AGREEMENT, AND SUBJECT TO CIVIL AND CRIMINAL PENALTIES THEREUNDER.

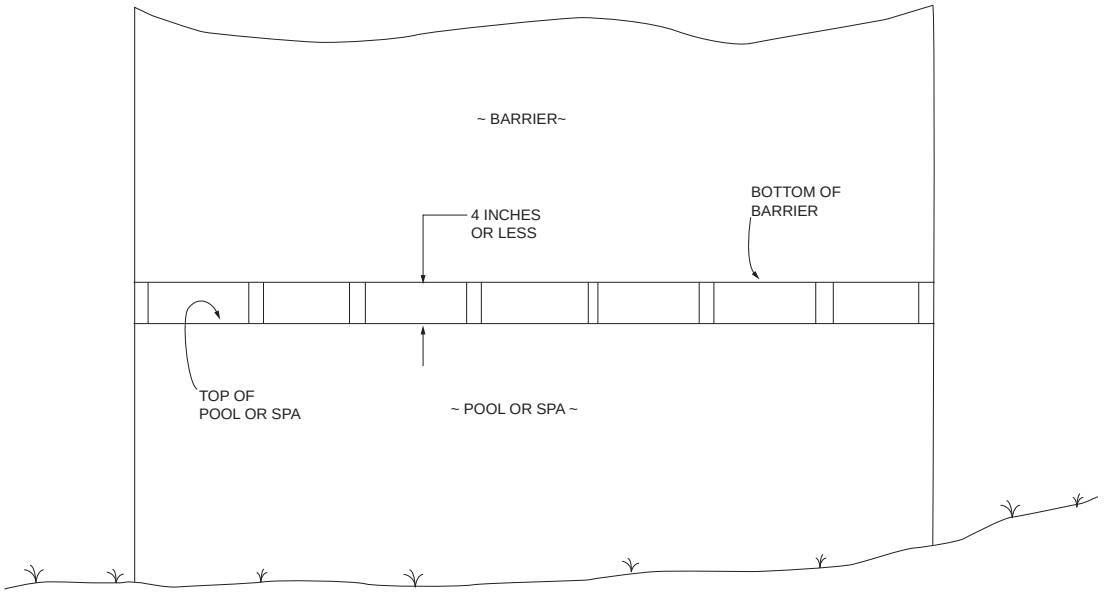

FIGURE 305.2.1(5)
MAXIMUM CLEARANCE FROM BOTTOM OF BARRIER TO TOP OF THE POOL OR SPA WHERE BARRIER IS MOUNTED ON TOP OF THE POOL OR SPA

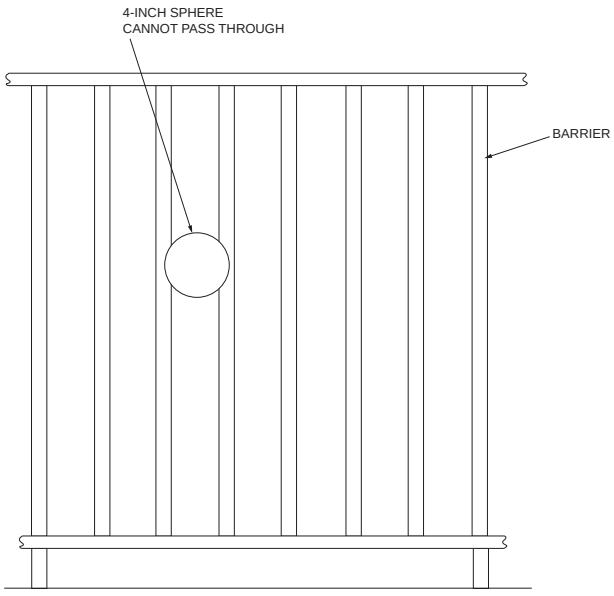

For SI: 1 inch = 25.4 mm.

FIGURE 305.2.2
FOUR-INCH SPHERE CANNOT PASS THROUGH BARRIER OPENINGS

shall not be more than 4 inches (102 mm) from grade or decking.

4. An attachment device shall attach each barrier section at a height not lower than 45 inches (1143 mm) above grade. Common attachment devices include, but are not limited to, devices that provide the security equal to or greater than that of a hook-and-eye-type latch incorporating a spring-actuated retaining lever such as a safety gate hook.
5. Where a hinged gate is used with a mesh fence, the gate shall comply with Section 305.3.
6. Patio deck sleeves such as vertical post receptacles that are placed inside the patio surface shall be of a nonconductive material.
7. Mesh fences shall not be installed on top of onground *residential* pools.

❖ Mesh fences provide a temporary, removable barrier for a pool or spa. For example, consider a pool with a permanent barrier on three sides and the fourth side is bounded by a building. During times when the pool is not in use, a mesh barrier could be erected between the pool and the building so that the space between the building and the mesh fence could be used without concern that the pool could be easily accessed by children. The bottom of the mesh barrier (fence) must not be able to be lifted more than 4 inches (102 mm) above the pool deck so that a child cannot crawl under the barrier. The attachment devices between mesh barrier sections and the posts must be not less than 45 inches (1142 mm) above the deck so that they are out of reach of small children. The attachment devices must offer the same difficulty to disengage as a spring-loaded hook and eye latch. Gates with mesh fences must comply with gate requirements in Section 305.3.

Mesh fences must not be used on top of onground residential pools because mesh fencing cannot resist the forces of an adult falling against it. An adult could

INTERNATIONAL CODE COUNCIL®
Copyright © 2015 ICC. ALL RIGHTS RESERVED. Accessed by David Dammon on Jun 21, 2017 12:30:52 PM pursuant to License Agreement with ICC. No further reproduction or distribution authorized. ANY UNAUTHORIZED REPRODUCTION OR DISTRIBUTION IS A VIOLATION OF THE FEDERAL COPYRIGHT ACT AND THE LICENSE AGREEMENT, AND SUBJECT TO CIVIL AND CRIMINAL PENALTIES THEREUNDER.

topple off the deck of an above-ground pool and onto the ground below (see Commentary Figure 305.2.4).



FIGURE 305.2.4
MESH FENCE AS A STRUCTURE-TO-POOL BARRIER

305.2.5 Closely spaced horizontal members. Where the barrier is composed of horizontal and vertical members and the distance between the tops of the horizontal members is less than 45 inches (1143 mm), the horizontal members shall be located on the pool or spa side of the fence. Spacing between vertical members shall not exceed $1^3/_4$ inches (44 mm) in width. Where there are decorative cutouts within vertical members, spacing within the cutouts shall not exceed $1^3/_4$ inches (44 mm) in width.

❖ Conventional fencing that is not chain link fence is typically constructed with horizontal rails attached to vertical posts. Vertical pickets are fastened to the horizontal rails to complete the barrier. If the distance between the top surface of the horizontal rails is less than 45 inches (1143 mm), such spacing could allow a child to climb up and over the barrier. Therefore, these closely spaced rails must be located on the pool or spa side of the barrier so that a child on the outside of the barrier cannot climb over it. Where closely spaced rails exist and are exposed between vertical members on the exterior of the fence, the gap between vertical pickets must not be more than $1^3/_4$ inches (44 mm) wide so that a child cannot wedge his or her foot in the gap and gain a handhold on the top closely spaced horizontal member in order to scale the fence [see Commentary Figure 305.2.5(1)]. Any decorative cutouts in the pickets must not have an opening greater than $1^3/_4$ inches (44 mm) for the same reason [see Commentary Figure 305.2.5(2)].

There are welded metal wire mesh products and flexible "on a roll" plastic fence products that "technically comply" with the dimensional requirements of this section. However, this section was written with the typical wood or rigid vinyl fence construction in mind. Consider a wood fence with 4-inch by 4-inch vertical posts with two 2-inch by 4-inch horizontal rails (one near the top, one near the bottom of the fence)

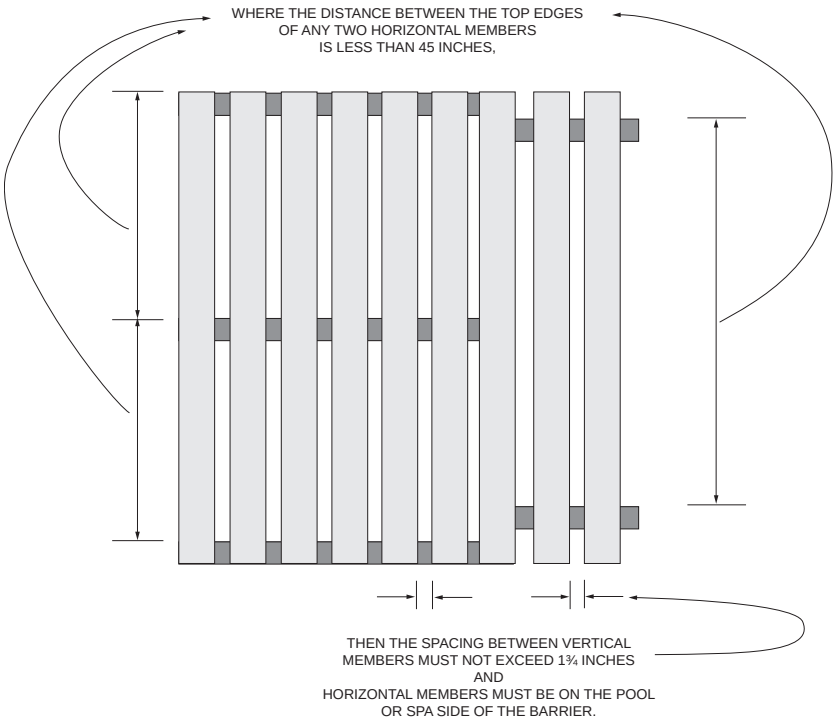

For SI: 1 inch = 25.4 mm.

FIGURE 305.2.5(1)
MAXIMUM SPACING BETWEEN VERTICAL MEMBERS WHERE DISTANCE BETWEEN TOP OF HORIZONTAL MEMBERS IS LESS THAN 45 INCHES

INTERNATIONAL CODE COUNCIL®
Copyright © 2015 ICC. ALL RIGHTS RESERVED. Accessed by David Dammon on Jun 21, 2017 12:30:52 PM pursuant to License Agreement with ICC. No further reproduction or distribution authorized. ANY UNAUTHORIZED REPRODUCTION OR DISTRIBUTION IS A VIOLATION OF THE FEDERAL COPYRIGHT ACT AND THE LICENSE AGREEMENT, AND SUBJECT TO CIVIL AND CRIMINAL PENALTIES THEREUNDER.

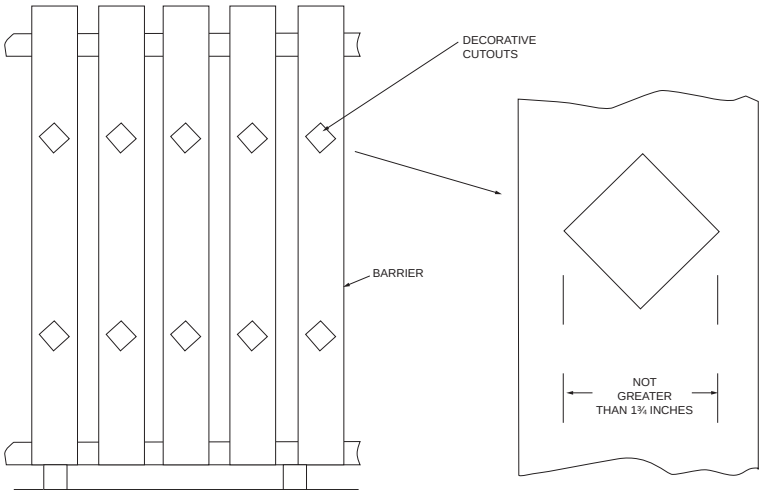

For SI: 1 inch = 25.4 mm.

FIGURE 305.2.5(2)
MAXIMUM OPENING WIDTH OF DECORATIVE CUTOUTS IN BARRIER MATERIALS

with $^3/_4$-inch-thick vertical pickets (4 to 6 inches wide) horizontally spaced apart not more than about the thickness of 2-inch (nominal) material. Such construction has "thickness of its vertical members," making it difficult to climb. For example, reaching between the pickets to grab onto a 2-inch by 4-inch horizontal rail will be difficult. Similarly, wedging the toe of a shoe between the (thick) pickets to get a toehold onto the horizontal rail will be difficult. And generally, such a fence would not be constructed with many closely spaced horizontal rails as it would be too costly and structurally unnecessary.

Do these metal or plastic mesh products with horizontal "members" every 4 inches or closer (but with the width between vertical "members" less than $1^3/_4$ inches) offer an equivalent resistance to climbing by children? Does such a product offer a similar rigidity and ruggedness to a fence constructed of wood members given that the code does not specify a distance between vertical posts? There are situations where, for public safety, a code official might have to make a decision about items that are not specifically covered by the code. Section 102.8 provides support to the code official in these instances.

305.2.6 Widely spaced horizontal members. Where the barrier is composed of horizontal and vertical members and the distance between the tops of the horizontal members is 45 inches (1143 mm) or more, spacing between vertical members shall not exceed 4 inches (102 mm). Where there are decorative cutouts within vertical members, the interior width of the cutouts shall not exceed $1^3/_4$ inches (44 mm).

❖ Conventional fencing that is not chain link fencing is typically constructed with horizontal rails attached to vertical posts. Vertical pickets are fastened to the horizontal rails to complete the barrier. If the distance between the top surface of the horizontal rails is greater than or equal to 45 inches (1143 mm), such spacing poses a climbing difficulty for children. Therefore, these widely spaced rails could be located on either side of the fence. Because there is not a reachable horizontal top member to gain a handhold, the vertical pickets could be spaced as far as 4 inches apart [see Commentary Figure 305.2.6(1)]. However, note that Section 305.2.2 requires that openings in the barrier must not allow the passage of a 4-inch (102 mm) sphere. Any decorative cutouts in the pickets must not have an opening that is greater

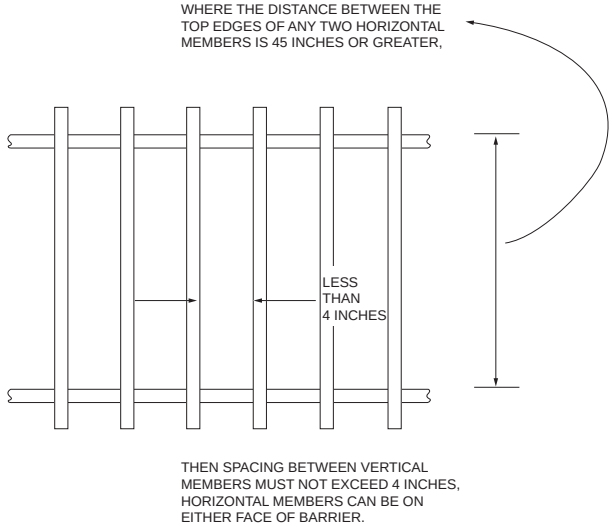

For SI: 1 inch = 25.4 mm.

FIGURE 305.2.6(1)
MAXIMUM SPACING BETWEEN VERTICAL MEMBERS WHERE DISTANCE BETWEEN TOPS OF HORIZONTAL MEMBERS IS 45 INCHES OR GREATER

INTERNATIONAL CODE COUNCIL®
Copyright © 2015 ICC. ALL RIGHTS RESERVED. Accessed by David Dammon on Jun 21, 2017 12:30:52 PM pursuant to License Agreement with ICC. No further reproduction or distribution authorized. ANY UNAUTHORIZED REPRODUCTION OR DISTRIBUTION IS A VIOLATION OF THE FEDERAL COPYRIGHT ACT AND THE LICENSE AGREEMENT, AND SUBJECT TO CIVIL AND CRIMINAL PENALTIES THEREUNDER.

than $1^3/_4$ inches (44 mm) to prevent a child from gaining a foothold to scale the fence [see Commentary Figure 305.2.5(2)].

Commentary Figure 305.2.6(2) shows a barrier. The fence is known to be 4 feet (1219 mm) high. It is obvious that the distance between the horizontal rails is less than 45 inches (1143 mm) and the vertical pickets spaced wider than 1.75 inches (44 mm). Thus, this fence is a violation because the horizontal members are not at least 45 inches (1143 mm) apart.



FIGURE 305.2.6(2)
VIOLATION—BARRIER (FENCE) HORIZONTAL MEMBERS TOO CLOSE

305.2.7 Chain link dimensions. The maximum opening formed by a chain link fence shall be not more than $1^3/_4$ inches (44 mm). Where the fence is provided with slats fastened at the top and bottom which reduce the openings, such openings shall be not more than $1^3/_4$ inches (44 mm).

❖ Chain link fencing has diamond-shaped or square openings. The most common sizes of chain link openings (measured between parallel sides of the opening) are 2 inches (51 mm) and $2^1/_4$ inches (57 mm). This section requires that the openings be not greater than $1^3/_4$ inches (44 mm) so that a child cannot wedge his or her foot in the opening in order to climb the fence (see Commentary Figure 305.2.7). Two-inch (51 mm) and $2^1/_4$-inch (57 mm) chain link fence must have the openings reduced in size by the installation of slats (sometimes called privacy slats) vertically or diagonally. Where slats are used, they must be attached to the top and bottom of the fence so that they cannot be removed for gaining a hand- or foothold on the fence. The slats must be of a width that reduces the openings to less than $1^3/_4$ inches (44 mm).

Chain link fencing is also available in $1^1/_4$-inch (32 mm) size (mesh). The resulting diagonal opening is $1^3/_4$ inches (44 mm). Therefore, slats would not be required for this size of chain link fence.

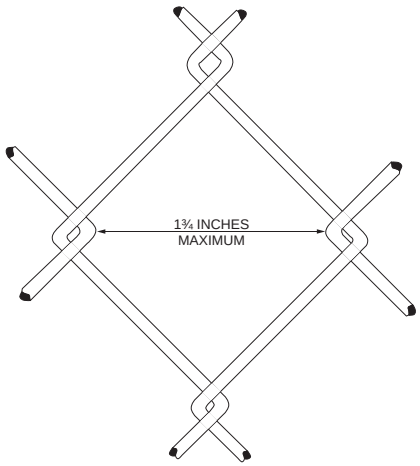

For SI: 1 inch = 25.4 mm.

FIGURE 305.2.7
MAXIMUM OPENING WIDTH IN BARRIERS BUILT WITH CHAIN LINK FENCING

305.2.8 Diagonal members. Where the barrier is composed of diagonal members, the maximum opening formed by the diagonal members shall be not more than $1^3/_4$ inches (44 mm). The angle of diagonal members shall be not greater than 45 degrees (0.79 rad) from vertical.

❖ Some barrier designs use diagonal members (latticework) as part of the barrier. Where diagonal members are installed, the angle cannot be more than 45 degrees (0.79 rad) from vertical and the opening created by the diagonal members cannot be greater than $1^3/_4$ inches (44 mm) so a child cannot wedge a foot in the opening to climb the barrier (see Commentary Figure 305.2.8).

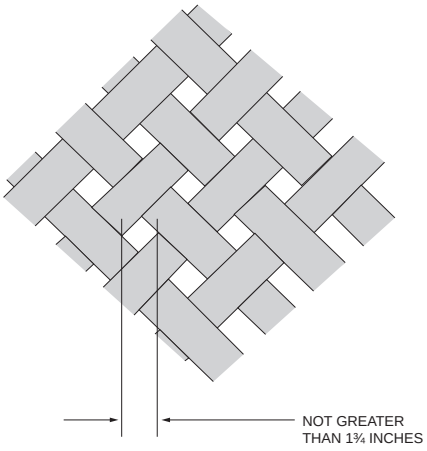

For SI: 1 inch = 25.4 mm.

FIGURE 305.2.8
MAXIMUM OPENING WIDTH IN BARRIERS BUILT WITH DIAGONAL MEMBERS

INTERNATIONAL CODE COUNCIL®
Copyright © 2015 ICC. ALL RIGHTS RESERVED. Accessed by David Dammon on Jun 21, 2017 12:30:52 PM pursuant to License Agreement with ICC. No further reproduction or distribution authorized. ANY UNAUTHORIZED REPRODUCTION OR DISTRIBUTION IS A VIOLATION OF THE FEDERAL COPYRIGHT ACT AND THE LICENSE AGREEMENT, AND SUBJECT TO CIVIL AND CRIMINAL PENALTIES THEREUNDER.

305.2.9 Clear zone. There shall be a clear zone of not less than 36 inches (914 mm) between the exterior of the barrier and any permanent structures or equipment such as pumps, filters and heaters that can be used to climb the barrier.

❖ A barrier of any height is not much of a deterrent to gaining access to the pool or spa if there is equipment, trees or storage boxes that are within 3 feet (914 mm) of the outside of the barrier. These items could be used to assist someone in climbing over the barrier.

305.2.10 Poolside barrier setbacks. The pool or spa side of the required barrier shall be not less than 20 inches (508 mm) from the water's edge.

❖ Barriers must not be installed so close to the pool or spa such that if a child did manage to climb over the barrier, he or she would not immediately fall into the water.

305.3 Gates. Access gates shall comply with the requirements of Sections 305.3.1 through 305.3.3 and shall be equipped to accommodate a locking device. Pedestrian access gates shall open outward away from the pool or spa, shall be self-closing and shall have a self-latching device.

❖ There can be two types of gates in a barrier: a service access gate, which is required by Section 305.3.1 to be secured by a lock, and a pedestrian gate for user access to the pool or spa. This section requires that pedestrian gates open outward, self-close and self-latch so that the barrier is continuous all around the pool or spa after a user passes through the gate. The code is not specific as to the conditions whereby the gate must be self-closing and self-latching. Wind, degree of opening and instability of the barriers and gate could affect the closing and latching of the gate. The code official will have to use his or her best judgment concerning this section. Commentary Figure 305.3 shows a pedestrian access gate that swings in the wrong direction.



FIGURE 305.3
VIOLATION—WRONG SWING DIRECTION ON PEDESTRIAN ACCESS GATE

Some code officials might consider an outdoor public pool and spa area a location where "means of egress," as defined by the IBC, applies. Section 1010 of the IBC pertaining to doors and gates has requirements for self-closing and self-latching doors (of which the IBC considers gates as doors).

305.3.1 Utility or service gates. Gates not intended for pedestrian use, such as utility or service gates, shall remain locked when not in use.

❖ This section requires that service gates be locked when not in use.

305.3.2 Double or multiple gates. Double gates or multiple gates shall have at least one leaf secured in place and the adjacent leaf shall be secured with a self-latching device. The gate and barrier shall not have openings larger than $^1/_2$ inch (12.7 mm) within 18 inches (457 mm) of the latch-release mechanism. The self-latching device shall comply with the requirements of Section 305.3.3.

❖ In some cases, gates could be installed with several movable (swinging) sections. One swinging section must be provided with a self-latching device that is located on the pool or spa side of the gate. The other portions of the gate must be secured so that they are normally stationary. For example, the normally stationary side of the gate might be prevented from swinging by a sliding rod mounted on the gate that can penetrate into a hole in the deck or walkway. The latch on the other gate must be of the self-latching type and must be on the pool or spa side of the gate. The inside release mechanism must be protected against tampering from the outside of the gate by providing a solid panel or mesh with openings of not greater than $^1/_2$ inch (12.7 mm). The panel or small opening mesh must extend not less than 18 inches (457 mm) in all directions (except not beyond the top of the required gate height) of the inside latch-release mechanism (refer to the commentary to Section 305.3.3).

305.3.3 Latches. Where the release mechanism of the self-latching device is located less than 54 inches (1372 mm) from grade, the release mechanism shall be located on the pool or spa side of the gate not less than 3 inches (76 mm) below the top of the gate, and the gate and barrier shall not have openings greater than $^1/_2$ inch (12.7 mm) within 18 inches (457 mm) of the release mechanism.

❖ This section requires that the gate's latch-release mechanism on the nonpool or spa side of the gate be not less than 54 inches (1372 mm) above grade or, if less than 54 inches (1372 mm), then the release mechanism must be on the pool or spa side of the gate. Placing the release mechanism at 54 inches (1372 mm) puts the release out of reach of small children. But there may be aesthetic reasons for having the latch at less than 54 inches (1372 mm) above grade. Where located on the pool or spa side of the gate, the latch must be not less than 3 inches (76 mm) below the top of the gate. This allows for adults outside of the gate to reach the release but preventing children outside the gate from reaching the latch

INTERNATIONAL CODE COUNCIL®
Copyright © 2015 ICC. ALL RIGHTS RESERVED. Accessed by David Dammon on Jun 21, 2017 12:30:52 PM pursuant to License Agreement with ICC. No further reproduction or distribution authorized. ANY UNAUTHORIZED REPRODUCTION OR DISTRIBUTION IS A VIOLATION OF THE FEDERAL COPYRIGHT ACT AND THE LICENSE AGREEMENT, AND SUBJECT TO CIVIL AND CRIMINAL PENALTIES THEREUNDER.

release. The inside (backside of the gate) release mechanism must be protected against tampering from the outside of the gate by providing a solid panel or mesh with openings of not greater than $^1/_2$ inch (12.7 mm). The panel or small opening mesh must extend not less than 18 inches (457 mm) in all directions of the inside latch-release mechanism [see Commentary Figure 305.3.3(1)].

This section reflects the "traditional approach" for latch-release mechanisms on pedestrian access gates to pool and spa areas. Although suitable for most residential (as defined by this code) pool and spa access gates, this approach might not coordinate with designs for accessibility and controlled access needs in a public environment. For example, a latch-release on the inside (backside) of the gate or at a 54-inch height above the walking surface on either side of a gate is out of the reach range for persons seated in a wheelchair. Key card or key entry might also be necessary to control when the pool or spa can be used and who can use the pool or spa [see Commentary Figure 305.3.3(2)]. Therefore, the designer of the barrier system and pedestrian access gate for a public environment will need to assess each gate arrangement against all code requirements and the needs of the client in order to propose an alternative method to the code official for compliance to this section (see Section 104.11).



FIGURE 305.3.3(2)
KEY CARD ENTRY ON GATE TO POOL AND SPA AREA MIGHT REQUIRE ALTERNATIVE METHOD APPROVAL

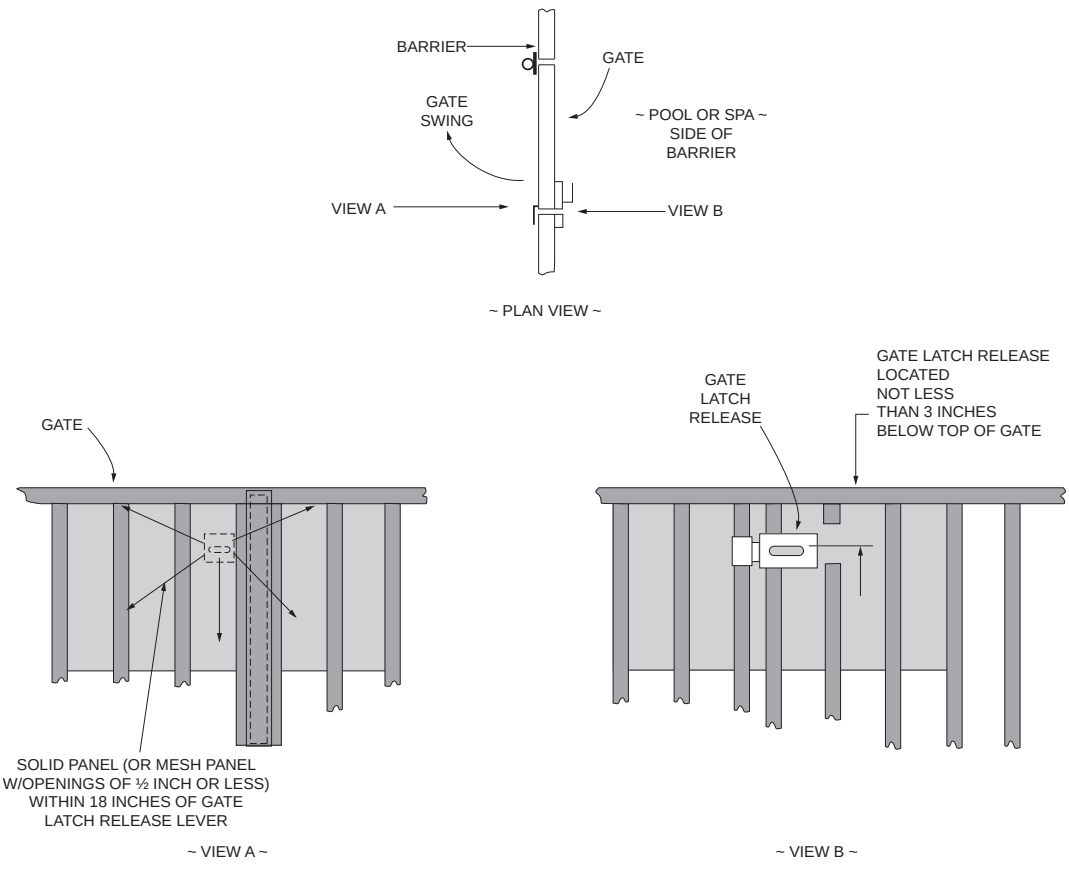

For SI: 1 inch = 25.4 mm.

FIGURE 305.3.3(1)
LOCATION AND PROTECTION OF BARRIER GATE LATCH RELEASE WHERE LOCATED AT LESS THAN 54 INCHES ABOVE WALKING SURFACE

INTERNATIONAL CODE COUNCIL®
Copyright © 2015 ICC. ALL RIGHTS RESERVED. Accessed by David Dammon on Jun 21, 2017 12:30:52 PM pursuant to License Agreement with ICC. No further reproduction or distribution authorized. ANY UNAUTHORIZED REPRODUCTION OR DISTRIBUTION IS A VIOLATION OF THE FEDERAL COPYRIGHT ACT AND THE LICENSE AGREEMENT, AND SUBJECT TO CIVIL AND CRIMINAL PENALTIES THEREUNDER.

305.4 Structure wall as a barrier. Where a wall of a dwelling or structure serves as part of the barrier and where doors or windows provide direct access to the pool or spa through that wall, one of the following shall be required:

1. Operable windows having a sill height of less than 48 inches (1219 mm) above the indoor finished floor and doors shall have an alarm that produces an audible warning when the window, door or their screens are opened. The alarm shall be *listed* and *labeled* as a water hazard entrance alarm in accordance with UL 2017. In dwellings or structures not required to be Accessible units, Type A units or Type B units, the operable parts of the alarm deactivation switches shall be located 54 inches (1372 mm) or more above the finished floor. In dwellings or structures required to be Accessible units, Type A units or Type B units, the operable parts of the alarm deactivation switches shall be located not greater than 54 inches (1372 mm) and not less than 48 inches (1219 mm) above the finished floor.
2. A *safety cover* that is *listed* and *labeled* in accordance with ASTM F1346 is installed for the pools and spas.
3. An *approved* means of protection, such as self-closing doors with self-latching devices, is provided. Such means of protection shall provide a degree of protection that is not less than the protection afforded by Item 1 or 2.

❖ A building wall can serve as part of the barrier. Where that building wall has openings such as doors or operable windows, those openings can provide access to the pool or spa by a child. If the wall has only operable windows and those windowsill heights are 48 inches (1219 mm) or more above the inside floor of the structure, then the wall provides a similar level of protection that a 48-inch-high (1219 mm) barrier does. Although furniture could be placed against that wall that could aid in a child gaining access to the window, the code official can only be concerned about the height of the window above what is considered to be a permanent and "normal" walking surface. The code official doesn't have any control over the placement of furniture in a building. Walking surfaces would include, for example, permanent stairs and landings intersecting walls having operable windows. However, a kitchen countertop with windows just above the countertop would not be considered a "normal" walking surface even though a child might use kitchen drawers to climb to the countertop to access the window.

If the operable windowsill heights are lower than 48 inches (1219 mm) above the floor, either screen or window alarms listed and labeled to UL 2017 must be installed; or a safety cover listed and labeled to ASTM F1346 must be provided for the pool or spa [see Commentary Figure 305.4(1)].

Where there is a door in the wall, either a door alarm listed and labeled to UL 2017 must be installed; or a safety cover listed and labeled to ASTM F1346 must be provided for the pool or spa. A third option for a door could be to provide a self-closing and self-latching door with a latch-release mechanism that is not less than 54 inches (1372 mm) above the floor, but this option requires approval by the code official.

Where a door or window alarm is installed, the deactivation switches must be not less than 54 inches (1372 mm) above the floor [see Commentary Figure 305.4(2)]. This height corresponds to the same height required for latch-release mechanisms for gates in Section 305.3.3. Where the structure is required to be an Accessible unit, a Type A accessible unit or a Type B accessible unit, the deactivation switch height can be reduced to 48 inches (1219 mm) above the floor to be within upper reach range of persons seated in a wheelchair. Accessible units, Type A accessible units and Type B accessible units are defined in the IBC.

Note that Item 2 does not specify that pools are required to have a powered safety cover in compliance with ASTM F1346. A manual safety cover is the minimum requirement. This is in contrast to Exception 2 in Section 305.1 for not requiring a barrier around the pool. If there is a barrier around the pool (perhaps a structure forms part of that barrier) or the pool has a powered safety cover, then the public at large is kept safe. The requirement for a safety cover (manual type as a minimum) for relief of the alarm requirement for doors and windows for a structure serving as part of the barrier is more for the occupants (including their children) of the structure. It is then a personal decision by the occupant as to whether they will install the safety cover to protect their children. The code intends that the means for safety be provided to the occupant—the code official cannot make the occupant use those means. Commentary Figure 305.1(4) shows a manual installed safety cover (however, it is unknown whether what is shown meets ASTM F1346). Note the barrier (fence) in the background on the left of the photo.

305.5 Onground residential pool structure as a barrier. An onground *residential* pool wall structure or a barrier mounted on top of an onground *residential* pool wall structure shall serve as a barrier where all of the following conditions are present:

1. Where only the pool wall serves as the barrier, the bottom of the wall is on grade, the top of the wall is not less than 48 inches (1219 mm) above grade for the entire perimeter of the pool, the wall complies with the requirements of Section 305.2 and the pool manufacturer allows the wall to serve as a barrier.
2. Where a barrier is mounted on top of the pool wall, the top of the barrier is not less than 48 inches (1219 mm) above grade for the entire perimeter of the pool, and the wall and the barrier on top of the wall comply with the requirements of Section 305.2.
3. Ladders or steps used as means of access to the pool are capable of being secured, locked or removed to prevent

INTERNATIONAL CODE COUNCIL®
Copyright © 2015 ICC. ALL RIGHTS RESERVED. Accessed by David Dammon on Jun 21, 2017 12:30:52 PM pursuant to License Agreement with ICC. No further reproduction or distribution authorized. ANY UNAUTHORIZED REPRODUCTION OR DISTRIBUTION IS A VIOLATION OF THE FEDERAL COPYRIGHT ACT AND THE LICENSE AGREEMENT, AND SUBJECT TO CIVIL AND CRIMINAL PENALTIES THEREUNDER.

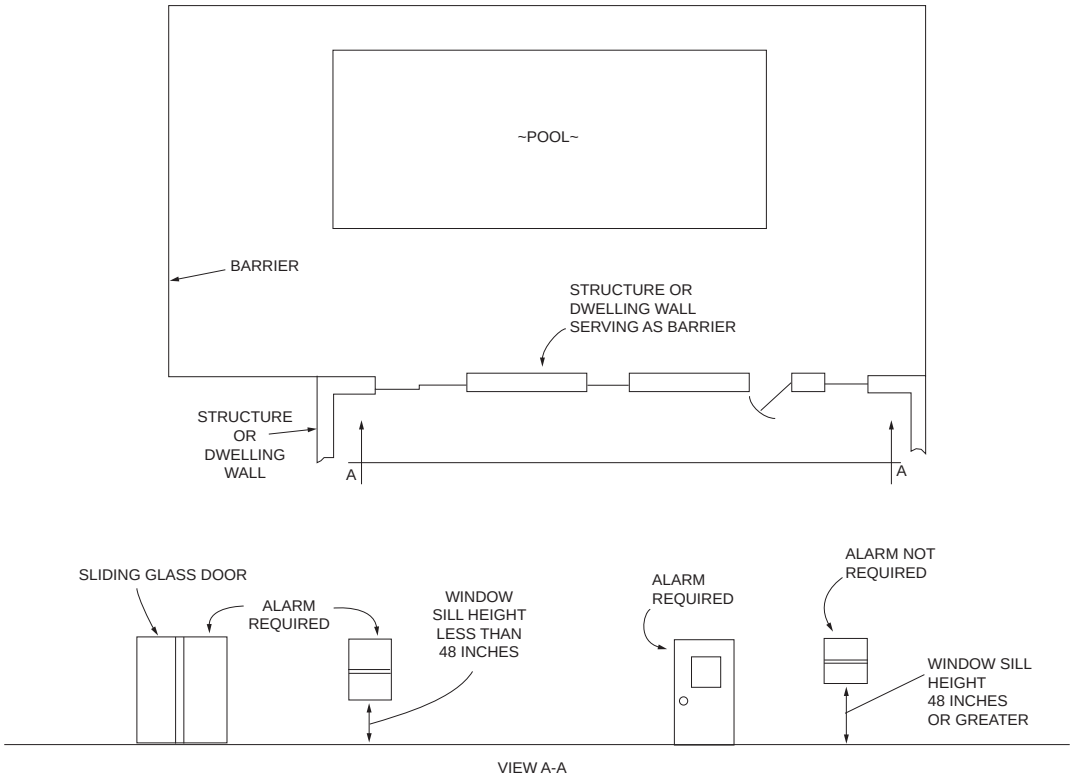

For SI: 1 inch = 25.4 mm.

FIGURE 305.4(1)
STRUCTURE OR DWELLING WALL SERVING AS A BARRIER TO A POOL OR SPA

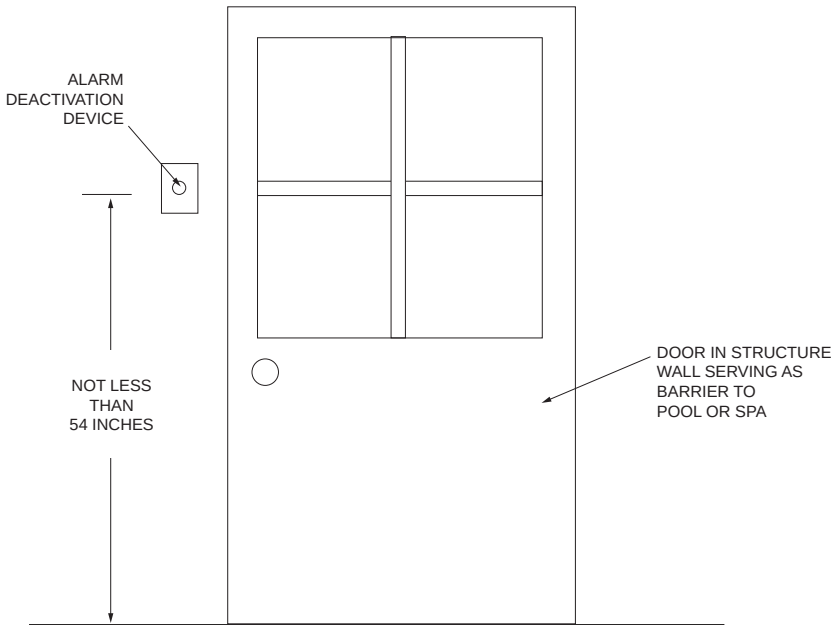

For SI: 1 inch = 25.4 mm.

FIGURE 305.4(2)
ALARM DEACTIVATION DEVICE LOCATION FOR OPENING IN STRUCTURE OR DWELLING WALL SERVING AS BARRIER TO A POOL OR SPA

INTERNATIONAL CODE COUNCIL®
Copyright © 2015 ICC. ALL RIGHTS RESERVED. Accessed by David Dammon on Jun 21, 2017 12:30:52 PM pursuant to License Agreement with ICC. No further reproduction or distribution authorized. ANY UNAUTHORIZED REPRODUCTION OR DISTRIBUTION IS A VIOLATION OF THE FEDERAL COPYRIGHT ACT AND THE LICENSE AGREEMENT, AND SUBJECT TO CIVIL AND CRIMINAL PENALTIES THEREUNDER.

access except where the ladder or steps are surrounded by a barrier that meets the requirements of Section 305.

4. Openings created by the securing, locking or removal of ladders and steps do not allow the passage of a 4-inch (102 mm) diameter sphere.
5. Barriers that are mounted on top of onground *residential* pool walls are installed in accordance with the pool manufacturer's instructions.

❖ Onground pools that have the top of the structure at 48 inches (1219 mm) or more above grade around the entire perimeter can serve as their own barrier from entry to the vessel. In order to serve as the barrier, all the requirements of Section 305.2 must be met; for example, a clear zone of 36 inches (914 mm) around the vessel and the outside of the pool wall cannot be climbable by children. Because the pool is above ground, a stairway or ladder is needed to access the vessel. Such ladders or stairways must be either removable or locked in some manner so that children cannot access the vessel. Any resulting opening from the removal or securing of a stairway must not leave openings where a 4-inch sphere (102 mm) will pass through. Barriers for stairways are provided by the manufacturer of the stairway, so the installation of such barriers must be in accordance with the manufacturer's instructions.

305.6 Natural barriers. In the case where the pool or spa area abuts the edge of a lake or other natural body of water, public access is not permitted or allowed along the shoreline, and required barriers extend to and beyond the water's edge not less than 18 inches (457 mm), a barrier is not required between the natural body of water shoreline and the pool or spa.

❖ Although natural bodies of water are not a barrier, they can restrict access to pools and spas by a child simply because he or she would have to navigate through not less than 18 inches (457 mm) depth of the natural body of water before reaching the pool or spa. If the child is successful, there is a low probably that he or she will have difficulty in the pool and spa water.

305.7 Natural topography. Natural topography that prevents direct access to the pool or spa area shall include but not be limited to mountains and natural rock formations. A natural barrier approved by the governing body shall be acceptable provided that the degree of protection is not less than the protection afforded by the requirements of Sections 305.2 through 305.5.

❖ Natural topography could present significant difficulty for children to access the pool and spa. For example, a pool or spa area that is adjacent to a steep and rocky hillside might be too treacherous for anyone to traverse, let alone a child. However, the code official must approve such arrangements to allow elimination of a barrier or portion thereof.

SECTION 306
DECKS

306.1 General. Decks shall be designed and installed in accordance with the *International Residential Code* or the *International Building Code*, as applicable in accordance with Section 102.7.1, except as provided in this section.

❖ The design and construction of decks must follow the requirements of the IBC or IRC, as applicable, and the requirements of this section.

306.2 Slip resistant. Decks, ramps, coping, and similar step surfaces shall be slip resistant and cleanable. Special features in or on decks such as markers, brand insignias, and similar materials shall be slip resistant.

❖ The presence of water on a walking surface significantly increases the slip potential. Special attention must be given to markers and insignias to make sure that they do not present an increased slip hazard.

306.3 Step risers and treads. Step risers for decks of public pools and spas shall be uniform and have a height not less than $3^3/_4$ inches (95 mm) and not greater than $7^1/_2$ inches (191 mm). The tread distance from front to back shall be not less than 11 inches (279 mm). Step risers for decks of *residential* pools and spas shall be uniform and shall have a height not exceeding $7^1/_2$ inches (191 mm). The tread distance from front to back shall be not less than 10 inches (254 mm).

❖ Step riser heights and tread depths are slightly different for decks associated with pools and spas, depending on whether they are associated with the IBC or the IRC.

306.4 Deck steps handrail required. Public pool and spa deck steps having three or more risers shall be provided with a handrail.

❖ For three or more steps associated with a pool or spa deck for a public pool or public spa, a handrail is needed. There is not a similar requirement for steps associated with pool or spa decks for residential pools or spas, noting the definition of "residential" in Chapter 2. Note that the IRC does require handrails for stairways with four or more risers where the stairway is part of the means of egress for an IRC building (see IRC Section 311). However, not all exterior doors (such as a sliding patio door) of an IRC building are intended to be means of egress doors.

306.5 Slope. The minimum slope of decks shall be in accordance with Table 306.5 except where an alternative drainage method is provided that prevents the accumulation or pooling of water. The slope for decks, other than wood decks, shall be not greater than $^1/_2$ inch per foot (1 mm per 24 mm) except for ramps. The slope for wood and wood/plastic composite decks shall be not greater than $^1/_4$ inch per 1 foot (1 mm per 48 mm). Decks shall be sloped so that standing water will not be deeper than $^1/_8$ inch (3.2 mm), 20 minutes after the cessation of the addition of water to the deck.

❖ Decks around pools and spas must be sloped to drain excess water. Puddles of water deeper than $^1/_8$

INTERNATIONAL CODE COUNCIL®
Copyright © 2015 ICC. ALL RIGHTS RESERVED. Accessed by David Dammon on Jun 21, 2017 12:30:52 PM pursuant to License Agreement with ICC. No further reproduction or distribution authorized. ANY UNAUTHORIZED REPRODUCTION OR DISTRIBUTION IS A VIOLATION OF THE FEDERAL COPYRIGHT ACT AND THE LICENSE AGREEMENT, AND SUBJECT TO CIVIL AND CRIMINAL PENALTIES THEREUNDER.

TABLE 306.5
MINIMUM DRAINAGE SLOPES FOR DECK SURFACES

SURFACE	MINIMUM DRAINAGE SLOPE (INCH PER FOOT)
Carpet	$^1/_2$
Exposed aggregate	$^1/_4$
Textured, hand-finished concrete	$^1/_8$
Travertine/brick-set pavers, public pools or spas	$^3/_8$
Travertine/brick-set pavers, residential pools or spas	$^1/_8$
Wood	$^1/_8$
Wood/plastic composite	$^1/_8$

For SI: 1 inch = 25.4 mm, 1 foot = 304.8 mm.

inch (3.2 mm) are a slip hazard. The maximum slope of a deck other than a wood deck cannot be more than $^1/_2$ inch per foot (41.7 mm per meter) because excess slope and a wet surface is also a slip hazard. The slope of wood and wood/plastic decks' must be held to not greater than $^1/_4$ inch per foot (20.8 mm per meter), as these surfaces are considerably "slicker" than decks of other material. See Table 306.5.

306.6 Gaps. Gaps shall be provided between deck boards in wood and wood/plastic composite decks. Gaps shall be consistent with *approved* engineering methods with respect to the type of wood used and shall not cause a tripping hazard.

❖ Floor planks of wood and wood/plastic composite decks must be properly gapped to prevent buckling when the planks expand.

306.6.1 Maximum gap. The open gap between pool decks and adjoining decks or walkways, including joint material, shall be not greater than $^3/_4$ inch (19.1 mm). The difference in vertical elevation between the pool deck and the adjoining sidewalk shall be not greater than $^1/_4$ inch (6.4 mm).

❖ Gaps between pool decks and adjoining decks and walkways must be limited to not greater than $^3/_4$ inch (19.1 mm) so that toes will not get caught in the gap. The vertical elevation between decks must not exceed $^1/_4$ inch (6.4 mm) to prevent a tripping hazard.

306.7 Concrete joints. Isolation joints that occur where the pool coping meets the concrete deck shall be water tight.

❖ Water intrusion between the coping of the pool and the adjacent concrete deck can cause damage to both the deck and the coping.

306.7.1 Joints at coping. Joints that occur where the pool coping meets the concrete deck shall be installed to protect the coping and its mortar bed from damage as a result of the anticipated movement of adjoining deck.

❖ There must be a joint between the pool coping and the adjoining concrete deck so that thermal expansion of those materials can occur without damage to the coping or deck. Typically, the joint will be $^1/_4$ to $^1/_2$ inch (6.4 mm to 12.8 mm) in width and will be occupied by compressible foam material that completely separates the coping mortar bed and coping from the concrete deck slab. The top of the joint is filled with a flexible caulking material to prevent water entry into the joint.

306.7.2 Crack control. Joints in a deck shall be provided to minimize visible cracks outside of the control joints caused by imposed stresses or movement of the slab.

❖ Concrete decks must have an adequate number of control joints to limit random cracking in the concrete slab. The control joints can be tooled into the slab when the concrete is in a plastic state or cut into the slab when the concrete is in a "green" state. Control joints are typically not deeper than one-third of the slab thickness and must not cut any reinforcing steel that was placed in the slab. Control joints provide a weakened area in the slab so that when stresses develop in the slab, the slab will be most likely to crack along these joint lines.

306.7.3 Movement control. Areas where decks join existing concrete work shall be provided with a joint to protect the pool from damage caused by relative movement.

❖ New concrete decks placed against existing concrete must have a joint between the two so that differential movement does not cause damage.

306.8 Deck edges. The edges of decks shall be radiused, tapered, or otherwise designed to eliminate sharp corners.

❖ A sharp edge on a concrete slab can be very dangerous, especially to wet feet.

306.9 Valves under decks. Valves installed in or under decks shall be accessible for operation, service, and maintenance. Where access through the deck walking surface is required, an access cover shall be provided for the opening in the deck. Such access covers shall be slip resistant and secured.

❖ There could be a need for a valve to be placed below a pool or spa deck. Such valves must be provided with access, and the opening must have a cover. The cover's walking surface must be slip resistant.

306.9.1 Hose bibbs. Hose bibbs shall be provided for rinsing down the entire deck and shall be installed in accordance with the *International Plumbing Code* or *International Residential Code*, as applicable in accordance with Section 102.7.1, and shall be located not more than 150 feet (45 720 mm) apart.

INTERNATIONAL CODE COUNCIL®
Copyright © 2015 ICC. ALL RIGHTS RESERVED. Accessed by David Dammon on Jun 21, 2017 12:30:52 PM pursuant to License Agreement with ICC. No further reproduction or distribution authorized. ANY UNAUTHORIZED REPRODUCTION OR DISTRIBUTION IS A VIOLATION OF THE FEDERAL COPYRIGHT ACT AND THE LICENSE AGREEMENT, AND SUBJECT TO CIVIL AND CRIMINAL PENALTIES THEREUNDER.

Water-powered devices, such as water-powered lifts, shall have a dedicated hose bibb water source.

Exception: *Residential* pools and spas shall not be required to have hose bibbs located at 150-foot (45 720 mm) intervals, or have a dedicated hose bibb for water-powered devices.

❖ Decks around pools and spas need periodic wash downs. Therefore, hose bibbs must be located every 150 feet (45 720 mm) around the deck to facilitate this maintenance operation. Where water power devices are installed on a pool or spa, a dedicated hose bibb must be provided for these devices. As most residential pools and residential spas are small and typically are located close to a building, hose bibbs are not required to be installed as part of those pool or spa installations. A hose can always be connected to an available hose connection located on the residential building.

SECTION 307
GENERAL DESIGN

307.1 General. The provisions of this section apply to all pools and spas.

Exception: The provisions of Sections 307.3 through 307.6 do not apply to *listed* and *labeled* portable *residential* spas and *listed* and *labeled* portable *residential* exercise spas.

❖ Section 307 covers the general design requirements for all pools and spas, except for listed and labeled portable residential spas and portable residential exercise spas.

307.2 Glazing in hazardous locations. Hazardous locations for glazing shall be as defined in the *International Building Code* or the *International Residential Code*, as applicable in accordance with Section 102.7.1 of this code. Where glazing is determined to be in a hazardous location, the requirements for the glazing shall be in accordance with those codes, as applicable.

❖ Section R308 of the IRC defines what glazing is considered hazardous. Section R308.4.5 of the IRC specifically covers walls, enclosures or fences that are 60 inches (1524 mm) or less from the water's edge. Where the bottom edge of the glazing is 60 inches (1524 mm) or less above the walking surfaces, the glazing must be safety glazing.

Section 2406.4 of the IBC defines what glazing is considered hazardous. Section 2406.4.5 specifically covers walls, enclosures or fences that are 60 inches (1524 mm) or less from the water's edge. Where the bottom edge of the glazing is 60 inches (1524 mm) or less above the walking surfaces, the glazing must be safety glazing.

307.3 Materials. Pools and spas and appurtenances thereto shall be constructed of materials that are nontoxic to humans and the environment; that are generally or commonly regarded to be impervious and enduring; that will withstand the design stresses; and that will provide a watertight structure with a smooth and easily cleanable surface without cracks or joints, excluding structural joints, or that will provide a watertight structure to which a smooth, easily cleaned surface/finish is applied or attached. Material surfaces that come in contact with the user shall be finished, so that they do not constitute a cutting, pinching, puncturing or abrasion hazard under casual contact and intended use.

❖ This section covers the required general attributes for materials that are used to build pools and spas. The last line of this section is very important, as wet skin is easily torn or cut by edges that normally would not present a hazard when the skin is dry.

307.3.1 Beach pools. Clean sand or similar material, where used in a beach pool environment, shall be used over an impervious surface. The sand area shall be designed and controlled so that the circulation system, maintenance, safety, sanitation, and operation of the pool are not adversely affected.

❖ A beach pool allows the user to walk directly into the pool. Some beach pool entry areas have a sand bottom to simulate entry into the ocean's edge. A sand bottom must be placed over an impervious surface to prevent the beach area from eroding an earth surface.

307.3.2 Compatibility. Assemblies of different materials shall be chemically and mechanically compatible for their intended use and environment.

❖ Materials in a water environment, especially those in water that has been disinfected with chlorine, will experience accelerated corrosion. Where two or more different materials in contact with one another have a chemical reaction in a dry environment, the water environment increases the reactivity between the materials, which could lead to material degradation or failures.

307.4 Materials and structural design. Pools and spas shall conform to one or more of the standards indicated in Table 307.4. The structural design of pools and spas shall be in accordance with the *International Building Code* or the *International Residential Code*, as applicable in accordance with Section 102.7.1 of this code.

❖ Table 307.4 indicates the common materials, other than "concrete" materials, and their applicable standards, that pools and spas are made from.

The IBC and the IRC do not currently have structural design requirements that are specifically for pools and spas. Note that Section 304 does have requirements for pools and spas located in flood hazard areas.

For "concrete" pools and spas, some people might say that the reference to the IRC and the IBC for structural design requirements implies that the sections covering retaining walls in those codes apply. Section R404.4 of the IRC indicates that retaining walls are to be designed in accordance with accepted engineering practices. Section 1807.2 of the IBC covering retaining walls addresses issues that would be

INTERNATIONAL CODE COUNCIL®
Copyright © 2015 ICC. ALL RIGHTS RESERVED. Accessed by David Dammon on Jun 21, 2017 12:30:52 PM pursuant to License Agreement with ICC. No further reproduction or distribution authorized. ANY UNAUTHORIZED REPRODUCTION OR DISTRIBUTION IS A VIOLATION OF THE FEDERAL COPYRIGHT ACT AND THE LICENSE AGREEMENT, AND SUBJECT TO CIVIL AND CRIMINAL PENALTIES THEREUNDER.

considered as accepted engineering practice. Although some of the same (retaining wall) engineering analyses might be necessary for the design of "concrete" swimming pool and spa structures, the design of swimming pool and spa structures of "concrete" or any other material is very specialized and not within the intended coverage for structural design of the IRC and the IBC.

TABLE 307.4
RESERVOIRS AND SHELLS

MATERIAL	STANDARD
Fiberglass reinforced plastic	IAPMO Z124.7
Plastic	IAPMO Z124.7
Stainless steel (Types 316, 316L, 304, 304L)	ASTM A240
Tile	ANSI A108/A118/A136.1
Vinyl	ASTM D1593

307.4.1 Installation. Equipment for pools and spas shall be supported to prevent damage from misalignment and settling and located so as to allow access for inspection, servicing, removal and repair of component parts.

❖ Equipment, such as pumps and filters, must be installed on a solid base such as a concrete pad, a metal bracket or wood decking so that piping connected between the pumps and filters and the pool or spa will not be misaligned and stressed.

307.5 Freeze protection. In climates subject to freezing temperatures, outdoor pool and spa shells and appurtenances, piping, filter systems, pumps and motors, and other components shall be designed and constructed to provide protection from damage from freezing.

❖ When water freezes into ice, the ice expands. If the moisture in the ground freezes, this can cause the soil to expand and apply pressure to the outside of the pool or spa shell. The shell must be designed to accommodate these pressures under the designer-specified external earth-fill conditions and internal water-fill conditions. Normally there is water in the piping from the pool or spa to the pumps and filters. If the piping is exposed to freezing temperatures, the water freezing in the pipes could cause them to break. The design and installation of the piping, filters and pumps must allow for the water to be drained, vacuumed out or blown out with air so that freeze damage will not occur. Onground storable pools can be drained or pumped out and the piping systems disassembled so that freezing temperatures will not cause damage to these types of pools themselves or to the piping for them.

307.6 Surface condition. The surfaces within public pools and spas intended to provide footing for users shall be slip resistant and shall not cause injury during normal use.

❖ Pools and spas in a public setting have a variety of users who might not be familiar with the walking surfaces in the pool or spa. Therefore, all walking surfaces in the pool must be slip resistant to aid in the prevention of falls.

307.7 Colors and finishes. The colors, patterns, or finishes of the pool or spa interior shall not obscure objects or surfaces within the pool or spa.

Exception: *Residential* pools and spas.

❖ In a public setting, it is imperative that the operators of pools and spas have the best possible view of all swimmers and bathers in the pool or spa so that it can be easily and quickly determined if someone is in distress. Typically, light pastel blue to white colors are used to color the pool or spa interior, providing for maximum visibility of swimmers and bathers in and under the water. The exception allows the interior surfaces of residential pools and spas to have any colors, patterns or finishes that the customer desires.

307.8 Roofs or canopies. Roofs or canopies over pools and spas shall be in accordance with the *International Building Code* or *International Residential Code*, as applicable in accordance with Section 102.7.1 and shall be constructed so as to prevent water runoff into the pool or spa.

❖ Structures such as roofs or canopies built over a pool or spa must be designed in accordance with the IRC or the IBC, as applicable. Rainwater runoff from such structures must not be allowed to flow into the pool or spa, because the roof surfaces collect dirt, pollutants and bird droppings that would wash into the pool or spa and contaminate the water with a concentrate of pollutants. The concentrated polluted rainwater could make the pool or spa water unsuitable for use until after the circulation system has had time to process the pool or spa water to make it clean enough for use.

307.9 Accessibility. An accessible route to public pools and spas shall be provided in accordance with the *International Building Code*. Accessibility within public pools and spas shall be provided as required by the accessible recreational facilities provisions of the *International Building Code*. Accessibility for pools and spas accessory to detached one- and two-family dwellings and townhouses not more than three stories in height shall be provided where required by the *International Residential Code*.

❖ The term "accessible" in this code section concerns facilities designed to accommodate persons having physical disabilities. For public pools and spas, Chapters 10 and 11 of the IBC cover the requirements for accessible routes to and around pool and spa areas. Section 1110.4.13 of the IBC states that all swimming pools, wading pools, hot tubs and spas are required to be accessible. There are few exceptions in that section that relax this requirement. Note that Section 411.1 of this code indicates that pool lifts, transfer walls and transfer systems provided for accessibility cannot be counted as a means of entry and exit as required by Section 411.

Residential pool and spa areas associated with a detached one- and two-family dwelling or a townhouse dwelling unit not more than three stories in height are not required to have accessible routes or to have pools and spas be accessible.

INTERNATIONAL CODE COUNCIL®
Copyright © 2015 ICC. ALL RIGHTS RESERVED. Accessed by David Dammon on Jun 21, 2017 12:30:52 PM pursuant to License Agreement with ICC. No further reproduction or distribution authorized. ANY UNAUTHORIZED REPRODUCTION OR DISTRIBUTION IS A VIOLATION OF THE FEDERAL COPYRIGHT ACT AND THE LICENSE AGREEMENT, AND SUBJECT TO CIVIL AND CRIMINAL PENALTIES THEREUNDER.

SECTION 308
DIMENSIONAL DESIGN

308.1 Floor slope. The slope of the floor from the point of the first slope change to the deep area shall not exceed one unit vertical in three units horizontal (33-percent slope).

Exception: Portable *residential* spas and portable *residential* exercise spas.

❖ Changes in floor slope to the deep area of a pool should not be so abrupt that the bather walking on the floor is startled and loses footing. A slope of 1 unit vertical in 3 units horizontal has been established, through experience and time, to be acceptable. The exception recognizes that portable residential spas and residential exercise spas don't have "deep" areas so that the slope of floor transitions would not be of concern.

308.2 Walls. Walls shall intersect with the floor at an angle or a transition profile. Where a transitional profile is provided at water depths of 3 feet (914 mm) or less, a transitional radius shall not exceed 6 inches (152 mm) and shall be tangent to the wall and is permitted to be tangent to or intersect the floor.

Exceptions:

1. Portable *residential* spas and portable *residential* exercise spas.
2. *Onground storable pools*.

❖ Walls of pools and spas could intersect the floor at a sharp angle, but in most cases this intersection is a smooth radius, as it allows for easier construction of the walls and floor. Where the water depth is 3 feet (914 mm) or less, a small radius at the wall-to-floor intersection is needed so that bathers have a flat footing surface next to the wall, as in shallow areas where bathers tend to congregate at the wall to rest.

Exception 1 recognizes that portable residential spas and residential exercise spas are not the types of spas where bathers typically stand at the walls of the spa.

Exception 2 recognizes that onground storable pools have a liner that conforms to whatever contour is created by the earth-to-wall intersection. Such contours are difficult to accurately control during installation of the liner.

308.3 Shape. This code is not intended to regulate the shape of a pool or spa other than to take into account the effect that a given shape will have on the safety of the occupants and to maintain the minimum required level of circulation to ensure sanitation.

❖ Pools and spas can be designed with any shape, as long as the safety of the bathers and adequate circulation for sanitation is taken into account in the design.

308.4 Waterline. The *design waterline* shall have a maximum construction tolerance at the time of completion of the work of plus or minus $^1/_4$ inch (6.4 mm) for pools and spas with adjustable weir surface skimming systems, and plus or minus $^1/_8$ inch (3.2 mm) for pools and spas with nonadjustable surface skimming systems.

❖ The design waterline must be held to close tolerances so that skimmers and gutters function as designed and water depths around the perimeter are consistent.

SECTION 309
EQUIPMENT

309.1 Electrically operated equipment. Electrically operated equipment shall be *listed* and *labeled* in accordance with applicable product standards.

Exception: Portable *residential* spas and portable *residential* exercise spas *listed* and *labeled* in accordance with UL 1563 or CSA C22.2 No. 218.1.

❖ Where electrically operated equipment is installed in conjunction with a pool or spa, such equipment must be listed and labeled to the standards to which the equipment is stated to be in compliance. Electrically operated equipment includes, but is not limited to, pump motors, lighting, time clocks, heaters and automation controls. The listing and labeling requirement provides for an increased level of safety because the manufacturing of such equipment is carefully monitored and the products tested on a periodic basis. The exception recognizes that portable residential spas and portable residential exercise spas are covered by different standards that ensure safe electrical products.

309.2 Treatment and circulation system equipment. Treatment and circulation system equipment for public pools and spas shall be *listed* and *labeled* in accordance with NSF 50 and other applicable standards.

❖ The requirement for treatment and circulation equipment to be listed and labeled to NSF 50 provides for a level of quality suitable for the intended use.

SECTION 310
SUCTION ENTRAPMENT AVOIDANCE

310.1 General. Suction entrapment avoidance for pools and spas shall be provided in accordance with APSP 7.

Exceptions:

1. Portable spas and portable exercise spas *listed* and *labeled* in accordance with UL 1563 or CSA C22.2 No. 218.1.
2. Suction entrapment avoidance for wading pools shall be provided in accordance with Section 405.

❖ APSP 7 covers the design and performance criteria for circulation systems, including components, devices and related technology installed to protect against entrapment hazards in residential and public swimming pools, wading pools, spas, hot tubs and catch basins. The first exception recognizes that portable residential spas and portable residential exer-

INTERNATIONAL CODE COUNCIL®
Copyright © 2015 ICC. ALL RIGHTS RESERVED. Accessed by David Dammon on Jun 21, 2017 12:30:52 PM pursuant to License Agreement with ICC. No further reproduction or distribution authorized. ANY UNAUTHORIZED REPRODUCTION OR DISTRIBUTION IS A VIOLATION OF THE FEDERAL COPYRIGHT ACT AND THE LICENSE AGREEMENT, AND SUBJECT TO CIVIL AND CRIMINAL PENALTIES THEREUNDER.

cise spas that are in compliance with UL 1563 or CSA C22.2 No. 218.1 are tested by a third-party agency to ensure compliance to APSP 7. The second exception allows for the requirements of Section 405 to provide for suction entrapment avoidance. Section 405 prohibits suction outlets from being installed in wading pools.

SECTION 311
CIRCULATION SYSTEMS

311.1 General. The provisions of this section shall apply to circulation systems for pools and spas.

Exceptions:

1. Portable *residential* spas and portable *residential* exercise spas.
2. *Onground storable pools* supplied by the pool manufacturer as a kit that includes circulation system equipment that is in accordance with Section 704.

❖ Section 311 covers requirements for circulation systems for all pools and spas other than portable residential spas, onground storable pools and portable residential exercise spas.

311.2 System design. A circulation system consisting of pumps, piping, return inlets and outlets, filters, and other necessary equipment shall be provided for the complete circulation of water. Wading pools and spas shall have separate dedicated filtering systems.

Exception: Separate filtering systems are not required for *residential* pools and spas.

❖ A water circulation system for a pool and spa is required in order to filter out dirt, hair and other particulates that accumulate in the water; provide sanitizing chemicals to the vessel water; and, in some cases, provide heated water to the pool or spa. The circulation system provides for complete movement of the water in all areas of the pool or spa so that disinfection chemicals are well distributed for proper sanitary conditions. The requirement for wading pools and spas to have filter systems that are separate from each other and a main pool or spa is so that the disinfection levels in those smaller pools and spas can be better controlled. Also, if someone in the smaller pool or spa throws up or a child has an unexpected bowel movement, the pool or spa is isolated from the other pools and spas.

The exception allows residential spas to be an integral part of a residential swimming pool and share a common circulation system. Separate filtering systems are not needed because in a residential environment, use of the pool can be easily discontinued until the disinfection levels are returned to proper levels (see Commentary Figure 311.2).

311.2.1 Turnover rate. The equipment shall be sized to turn over the volume of water that the pool or spa is capable of containing as specified in this code for the specific installation.

❖ Turnover rate is the number of hours required to circulate the entire volume of water in the pool or spa through the filter one time. The flow capacity of the filtration pump determines the turnover rate. Thus, choosing the correct size of filtration pump is critical for providing a safe water quality in the pool or spa.

The flow rate of a filtration pump is dependent on the resistance to flow in the circulating system. Commentary Figure 311.2.1(1) shows the typical equipment in a circulation system.

This resistance to flow is called the total dynamic head of the system. Total dynamic heads for a circulation system can be calculated for various flow rates through the system. Plotting those points on a graph allows a circulation system curve to be drawn. Commentary Figure 311.2.1(2) illustrates the resulting circulating system curves for three different circulation systems. Circulation system A (Curve A) has the highest total dynamic head for any given flow rate. Circulation system C (Curve C) has the lowest total

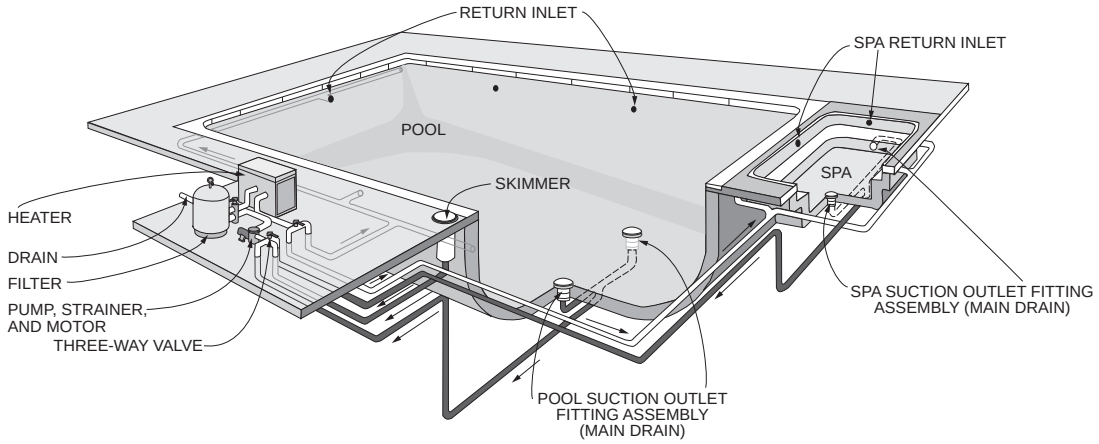

FIGURE 311.2
TYPICAL RESIDENTIAL POOL AND SPA COMBINATION
[Illustration courtesy of the Association of Pool and Spa Professionals (APSP)]

INTERNATIONAL CODE COUNCIL®
Copyright © 2015 ICC. ALL RIGHTS RESERVED. Accessed by David Dammon on Jun 21, 2017 12:30:52 PM pursuant to License Agreement with ICC. No further reproduction or distribution authorized. ANY UNAUTHORIZED REPRODUCTION OR DISTRIBUTION IS A VIOLATION OF THE FEDERAL COPYRIGHT ACT AND THE LICENSE AGREEMENT, AND SUBJECT TO CIVIL AND CRIMINAL PENALTIES THEREUNDER.

dynamic head for those same given flow rates. The intersection of the system curve and the pump curve is the operating point of the system.

Each design of the filtration pump (a centrifugal pump) is tested to generate a performance curve that indicates the flow rate that the pump will produce when pumping against resistance (head). Commentary Figure 311.2.1(2) illustrates a pump performance curve for a single-speed pump. Even though the pump is capable of a wide flow range, the total dynamic head of the circulation system determines what the flow rate of the pump will be. In other words, when choosing a single-speed pump for this application, the total dynamic head of the system at the desired flow rate must be carefully calculated so that the pump will produce the desired flow rate.

The use of multispeed or variable speed circulation pumps reduces the need for detailed head calculations for the system as the pump speed can be field adjusted to produce the desired flow rate for meeting the minimum turnover rate. Lower speeds provide for maximum energy efficiency and quieter operation. Multispeed and variable speed pumps can be temporarily operated at higher speeds for operating cleaning equipment.

311.2.2 Servicing. Circulation system components that require replacement or servicing shall be provided with access for inspection, repair, or replacement and shall be installed in accordance with the manufacturer's specifications.

❖ Pumps, pump motor filters, motors, heaters, control systems and other serviceable equipment require inspection, adjustment and replacement. Adequate space must be provided for these operations. The manufacturer's instructions regarding access must be followed when installing components. Commentary Figure 311.2.2 shows an example of access to the equipment. Although it cannot be determined from this photo whether manufacturer-specified access has been provided, the area does appear to be usually congested to allow for maintenance.

311.2.3 Equipment anchorage. Pool and spa equipment and related piping shall be designed and installed in accordance with the manufacturer's instructions.

❖ The installation instructions for pool and spa equipment provide the best source of information on how to properly install the equipment. Such instructions, along with the code, provide the basis for inspection of the installation. Note that anchoring of pool and spa equipment in high-wind locations or seismic zones is especially critical.

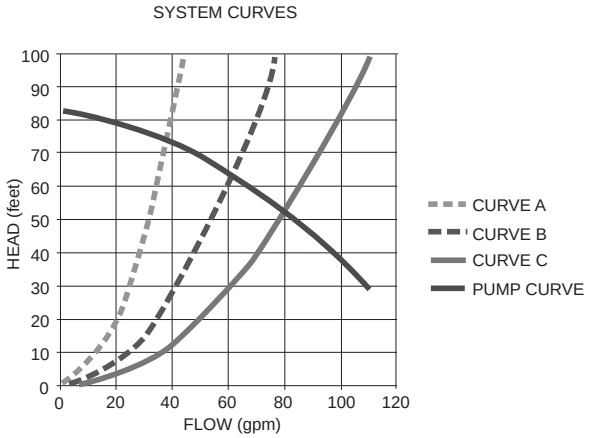

For SI: 1 foot = 305 mm, 1 gpm = 3.8 lpm.

FIGURE 311.2.1(2)
CIRCULATION SYSTEM
CURVES VERSUS PUMP CURVE
[Illustration courtesy of the Association of Pool and Spa Professionals (APSP)]

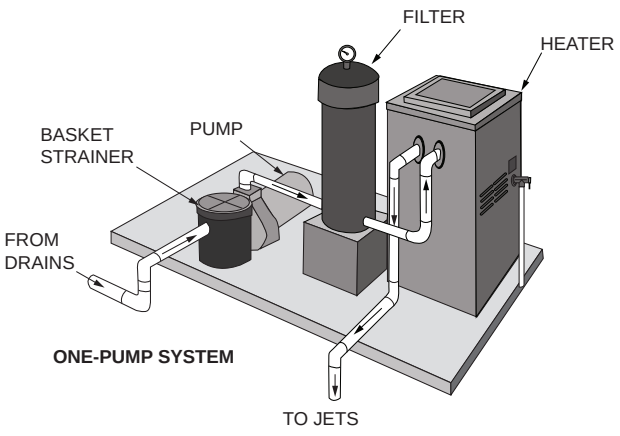

FIGURE 311.2.1(1)
TYPICAL EQUIPMENT IN A
CIRCULATION SYSTEM
[Illustration courtesy of the Association of Pool and Spa Professionals (APSP)]



FIGURE 311.2.2
EXAMPLE OF ACCESS

INTERNATIONAL CODE COUNCIL®
Copyright © 2015 ICC. ALL RIGHTS RESERVED. Accessed by David Dammon on Jun 21, 2017 12:30:52 PM pursuant to License Agreement with ICC. No further reproduction or distribution authorized. ANY UNAUTHORIZED REPRODUCTION OR DISTRIBUTION IS A VIOLATION OF THE FEDERAL COPYRIGHT ACT AND THE LICENSE AGREEMENT, AND SUBJECT TO CIVIL AND CRIMINAL PENALTIES THEREUNDER.

311.3 Water velocity. The water velocity in return lines shall not exceed 8 feet (2.4 m) per second. The water velocity in suction piping shall be as required by Section 310.

❖ Return piping discharges water into the pool and spa. Suction piping removes water from the pool and spa. The generally accepted maximum velocity (for pipe longevity and low "flowing noise") in circulation piping for pool and spa applications is 8 feet (2.4 m) per second. This section's pointer to Section 310 for suction piping maximum water velocity is a dead end because APSP 7 no longer specifies such velocities. However, note that APSP 15 (as referenced in Section 303.3) limits the velocity in all filtration suction piping to 6 feet (1.8) per second for residential pools and inground spas to keep piping friction losses in check for pump energy consumption considerations. Although APSP 15 does not apply to public pools, designing for low water velocity in suction piping of a public pool would be prudent for the same reason. The code and APSP 7 do not specify a maximum water velocity in suction piping for public pools.

Suction piping systems can be designed without any control/isolation valves. Without valves installed, the flow velocity in the piping will always be the same. However, where a suction piping system has control/isolation valves, those valves could be adjusted to cause 100 percent of the pump flow to be drawn through any piping section. For residential pools and spas complying with APSP 15 and ideally for public pools, the calculated flow velocity must be at or below the maximum allowable calculated flow velocity for the piping section when the piping is carrying 100 percent of the pump flow. When evaluating water velocity, the circulation flow between all operating pipes is divided accordingly. For example, if two skimmers are piped separately between a pool and the circulation pump, the total flow for the skimmers is divided by two for sizing each skimmer pipe. The same concept applies to the return piping system. Branch piping can reduce in size after each tee, dividing the flow of water between any number of adjustable return inlets (see Commentary Figure 311.3).

Compliance with APSP 7 and APSP 15 helps to conserve energy, reduce noise and improve equipment performance. Such compliance also serves to prevent or reduce the risk of entrapment on residen-

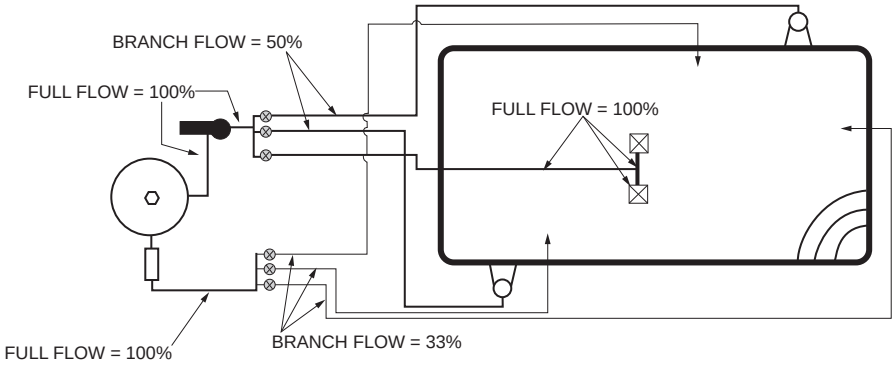

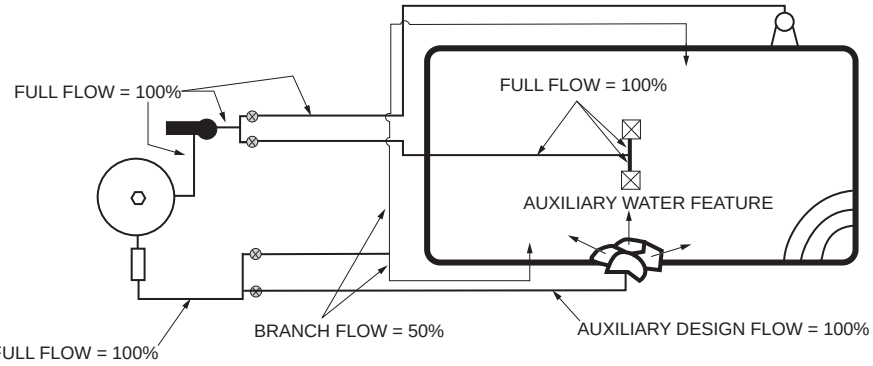

FIGURE 311.3
DETERMINING FLOWS IN PIPING TO DETERMINE PIPING VELOCITY
[Illustration courtesy of the Association of Pool and Spa Professionals (APSP)]

INTERNATIONAL CODE COUNCIL®
Copyright © 2015 ICC. ALL RIGHTS RESERVED. Accessed by David Dammon on Jun 21, 2017 12:30:52 PM pursuant to License Agreement with ICC. No further reproduction or distribution authorized. ANY UNAUTHORIZED REPRODUCTION OR DISTRIBUTION IS A VIOLATION OF THE FEDERAL COPYRIGHT ACT AND THE LICENSE AGREEMENT, AND SUBJECT TO CIVIL AND CRIMINAL PENALTIES THEREUNDER.

tial pools that still contain suction fittings manufactured prior to the December 19, 2008, effective date of the federal Virginia Graeme Baker Pool and Spa Safety Act regulating suction outlet fittings (main drains). Suction fittings manufactured and sold prior to that date might be of "flat" configuration that are intended to be, and frequently are, flush mounted to the pool (or spa) wall and floor surface. The flush mounting might not prevent certain forms of entrapment. Larger pipe between multiple suction outlets reduces the suction force at each outlet by limiting how fast the water moves through each of the outlets. Federal law requires all suction outlet fittings manufactured or sold after this effective date to pass a revised and enhanced body entrapment and hair entrapment test. Flush or flat mount fittings will not pass the body test, unless they are listed as unblockable, meaning the fitting cannot be sufficiently shadowed by an 18-inch by 23-inch (457 mm by 584 mm) blocking element to create a hazardous suction force as described in APSP 7.

311.4 Piping and fittings. Plastic pipe and fittings used in circulation systems shall be nontoxic and shall be able to withstand the design operating pressures and conditions of the pool or spa. Plastic pipe shall be *listed* and *labeled* as complying with NSF 14. Circulation system piping shall be *listed* and *labeled* as complying with one of the standards in Table 311.4.

❖ The requirement for the listing and labeling of plastic pipe to NSF 14 ensures that the pipe manufacturing process is closely monitored to ensure the quality of the product. The pipe used in the circulation system must be listed and labeled to any of the standards identified in Table 311.4.

TABLE 311.4. See below.

❖ The choice of what pipe material to use in an application must also consider the pressure and temperature of use.

311.4.1 Fittings. Fittings used in circulation systems shall be *listed* and *labeled* as complying with one of the standards in Table 311.4.1.

Exceptions:

1. Suction outlet fitting assemblies and manufacturer-provided components certified in accordance with APSP 16.
2. Skimmers and manufacturer-provided components.
3. *Gutter* overflow grates and fittings installed above or outside of the overflow point of the pool or spa.

❖ Fittings for the piping material chosen must comply with any of the standards indicated in Table 311.4. Fittings must be listed and labeled to the standard. The exceptions recognize special fitting assemblies, such as suction outlet fittings, skimmers and gutter overflow grates, that do not meet the standards indicated in Table 311.4.1 but are an integral part of many pool or spa designs.

Suction outlet fittings are federally regulated by the Virginia Graeme Baker Pool and Spa Safety Act. They are tested to and must be marked with either "APSP 16," "ASME A112.19.8-2007" or "VGB-2008." In accordance with APSP 16 (or the predecessor ASME/ANSI edition), field-fabricated suction fittings that exceed 18 inches by 23 inches (457 mm by 584 mm) and are typically found in water parks need not be marked, provided they have been approved by a registered design professional. In this case, there will be a sealed engineering report documenting compliance with the standard. Commentary Figure 311.4.1 shows a typical suction outlet cover at the bottom of a spa (it is unknown whether this particular cover complies with APSP 16 as this photo was taken some time ago).

The overflow point of a gutter system is the inside rim, where water spills into the channel or opening, even if this is below the level of the deck. These pools typically have a "high water overflow point" associated with the gutter collection system, and it may be readily visible. The key to Exception 3 is that the grate and fittings cannot be installed where a bather can be held under water because of suction, limb or hair entrapment.

TABLE 311.4.1. See page 3-29.

❖ The choice of what pipe fitting material to use in an application must also consider the pressure and temperature of use.

311.4.2 Joints. Joints shall be made in accordance with manufacturer's instructions.

❖ Pipe-to-fitting joints must be made in accordance with the pipe manufacturer's instructions to ensure a strong, leak-free connection.

TABLE 311.4
CIRCULATION SYSTEM PIPE MATERIAL STANDARD

MATERIAL	STANDARD
Acrylonitrile butadiene styrene (ABS) plastic pipe	ASTM D1527
Chlorinated polyvinyl chloride (CPVC) plastic pipe and tubing	ASTM D2846; CSA B137.6
Copper or copper-alloy tubing	ASTM B88; ASTM B447
Polyvinyl chloride (PVC) hose	ASTM D1785; ASTM D2241; ASTM D2672; CSA B137.3
Polyvinyl chloride (PVC) plastic pipe	ASTM D1785; CSA B137.3
Stainless steel pipe, Types 304, 304L, 316, 316L	ASTM A312

INTERNATIONAL CODE COUNCIL®
Copyright © 2015 ICC. ALL RIGHTS RESERVED. Accessed by David Dammon on Jun 21, 2017 12:30:52 PM pursuant to License Agreement with ICC. No further reproduction or distribution authorized. ANY UNAUTHORIZED REPRODUCTION OR DISTRIBUTION IS A VIOLATION OF THE FEDERAL COPYRIGHT ACT AND THE LICENSE AGREEMENT, AND SUBJECT TO CIVIL AND CRIMINAL PENALTIES THEREUNDER.

TABLE 311.4.1
CIRCULATION SYSTEM FITTINGS

MATERIAL	STANDARD
Acrylonitrile butadiene styrene (ABS) plastic pipe	ASTM D1527
Chlorinated polyvinyl chloride (CPVC) plastic pipe and tubing	ASTM D2846; ASTM F437; ASTM F438; ASTM F439; CSA B137.6
Copper or copper-alloy tubing	ASME B 16.15
Polyvinyl chloride (PVC) plastic pipe	ASTM D2464; ASTM D2466; ASTM D2467; CSA B137.2; CSA B137.3
Stainless steel pipe, Types 304, 304L, 316, 316L	ASTM A182; ASTM A403

311.4.3 Piping subject to freezing. Piping subject to damage by freezing shall have a uniform slope in one direction and shall be equipped with valves for drainage or shall be capable of being evacuated to remove the water.

❖ Many outdoor pools are only used seasonally because the weather conditions are too cold for bathers. Some climates experience freezing temperatures such that water remaining in circulation system piping would freeze and break the piping. Piping that could freeze must be drained of water. This section requires that the piping be sloped to a drain point or some other method for removing the water from the piping is provided. Piping in pools that are disassembled and stored in the winter is not subject to damage from freezing.

311.4.4 Suction outlet fitting assemblies. Suction outlet fitting assemblies shall be *listed* and *labeled* in compliance with APSP 16.

❖ APSP 16 requires testing of each design of suction outlet fitting assembly to verify that the design meets the suction entrapment avoidance criteria (see Commentary Figure 311.4.1).

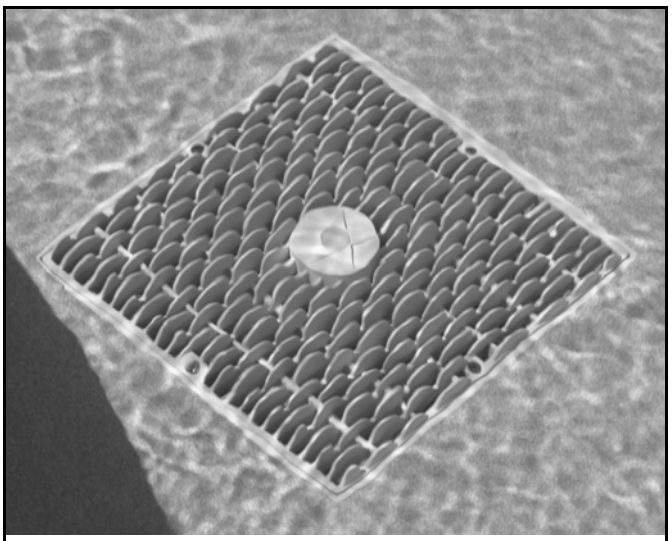

FIGURE 311.4.1
SUCTION OUTLET COVER

311.5 System draining. Equipment shall be designed and fabricated to drain the water from the equipment, together with exposed face piping, by removal of drain plugs, manipulating valves, or by other methods. Drainage shall be in accordance with manufacturer's specifications.

❖ Circulation system equipment must be protected from water freezing and damaging the equipment. This section requires that a method for draining water from the equipment be provided (see the commentary to Section 307.5).

311.6 Pressure or vacuum gauge. Gauges shall be provided on the circulation system for public pools. Gauges shall be provided with ready access.

1. A pressure gauge shall be located downstream of the pump and between the pump and filter.
2. A vacuum gauge shall be located between the pump and filter and upstream of the pump.

❖ Pressure (and vacuum) gauges provide operational information about the circulation system such as when a pump is running, condition of the filter media and when it is safe to open a filter unit. It would be difficult to operate a public pool without gauges being installed. Circulation systems for other than public pools are not as complex and operation of those systems can be accomplished without gauges.

The pressure gauge is installed between the pump and filter, or can be installed in the drain plug opening on the pressure side of the pump housing. If a pressure gauge calibrated in pounds per square inch (psi) is used, the pressure indicated can be multiplied by 2.31 feet per psi to approximate the pressure head (in feet of water head) of the circulation system. The vacuum gauge is installed on the suction side of the pump, or it can be installed in the drain plug opening on the suction side of the pump housing. If the vacuum gauge, calibrated in inches of mercury column, is used, the vacuum indicated can be multiplied by 1.13 feet per inch of mercury column to approximate the suction head (in feet of water head) of the circulation system. Adding the suction and pressure heads together when the pump is running, provides a close approximation of the total dynamic head of the circulation system. Commentary Figure 311.6 shows pressure and vacuum gauges installed on a circulation pump.

INTERNATIONAL CODE COUNCIL®
Copyright © 2015 ICC. ALL RIGHTS RESERVED. Accessed by David Dammon on Jun 21, 2017 12:30:52 PM pursuant to License Agreement with ICC. No further reproduction or distribution authorized. ANY UNAUTHORIZED REPRODUCTION OR DISTRIBUTION IS A VIOLATION OF THE FEDERAL COPYRIGHT ACT AND THE LICENSE AGREEMENT, AND SUBJECT TO CIVIL AND CRIMINAL PENALTIES THEREUNDER.

311.7 Flow measurement. Public swimming pools and wading pools shall be equipped with a flow-measuring device that indicates the rate of flow through the filter system. The flow rate measuring device shall indicate gallons per minute (lpm) and shall be selected and installed to be accurate within plus or minus 10 percent of actual flow.

❖ Flow meters for public swimming pool and wading pool filter systems are necessary to verify that the flow rate achieves the required turnover rate. If the filter clogs, the circulation system will not provide enough circulation to keep the water in a sanitary condition. The location of the flow meter greatly affects accuracy and the accuracy published by the manufacturer is dependent on being installed in accordance with the flow meter's instructions. The most common flow meters require 10 pipe diameters of straight pipe upstream of the flow meter location. Commentary Figure 311.7 shows the display panel for a typical flow meter.

311.8 Instructions. Written operation and maintenance instructions shall be provided for the circulation system of public pools.

❖ Public pool circulation systems can be complex. Written instructions provide the needed information to troubleshoot problems, properly maintain the equipment and operate the system as was intended by the designer.

311.9 Hydrostatic pressure test. Circulation system piping, other than that integrally included in the manufacture of the pool or spa, shall be subjected to a hydrostatic pressure test of 25 pounds per square inch (psi) (172.4 kPa). This pressure shall be held for not less than 15 minutes.

❖ Field-installed circulation system piping must be tested for leaks. Ideally, this testing should occur before backfilling with earth, placement of concrete or application of shotcrete so that repairs are simple to perform. Where circulation system piping is included as part of the manufacture of a factory-built pool or spa, field pressure testing is not required. Typically, factory-built circulation systems are only designed to withstand a test pressure of 1.5 times the rated pressure of the pump. Section 302.7 prohibits the use of compressed air for testing.

SECTION 312
FILTERS

312.1 General. The provisions of this section apply to filters for pools and spas.

Exceptions:

1. Portable *residential* spas and portable *residential* exercise spas.
2. *Onground storable pools* supplied by the pool manufacturer as a kit that includes a filter that is in accordance with Section 704.

❖ Section 312 covers filters for all pools and spas other than those for portable residential spas and portable exercise spas. Commentary Figure 312.1 shows three common filter types.

312.2 Design. Filters shall have a flow rating equal to or greater than the design flow rate of the system. Filters shall be installed in accordance with the manufacturer's instructions. Filters shall be designed so that filtration surfaces can be inspected and serviced.

❖ In order to ensure effective filtration and removal of unwanted particulates and to minimize system total dynamic head, the maximum filter flow rate must be compatible with the complete circulation system (including pipe, fitting and pump sizing). Filters must have the capacity to pass water through the unit at the design flow rate of the circulation system when the filter is in clean condition. The filter surfaces must be able to be inspected and cleaned or replaced when dirty. Filters must be installed according to the manufacturer's instructions to ensure proper performance. APSP 15 covers sizing of various types of filters.



FIGURE 311.6
LOCATION OF PRESSURE GAUGES



FIGURE 311.7
TYPICAL FLOW METER DISPLAY PANEL

INTERNATIONAL CODE COUNCIL®
Copyright © 2015 ICC. ALL RIGHTS RESERVED. Accessed by David Dammon on Jun 21, 2017 12:30:52 PM pursuant to License Agreement with ICC. No further reproduction or distribution authorized. ANY UNAUTHORIZED REPRODUCTION OR DISTRIBUTION IS A VIOLATION OF THE FEDERAL COPYRIGHT ACT AND THE LICENSE AGREEMENT, AND SUBJECT TO CIVIL AND CRIMINAL PENALTIES THEREUNDER.

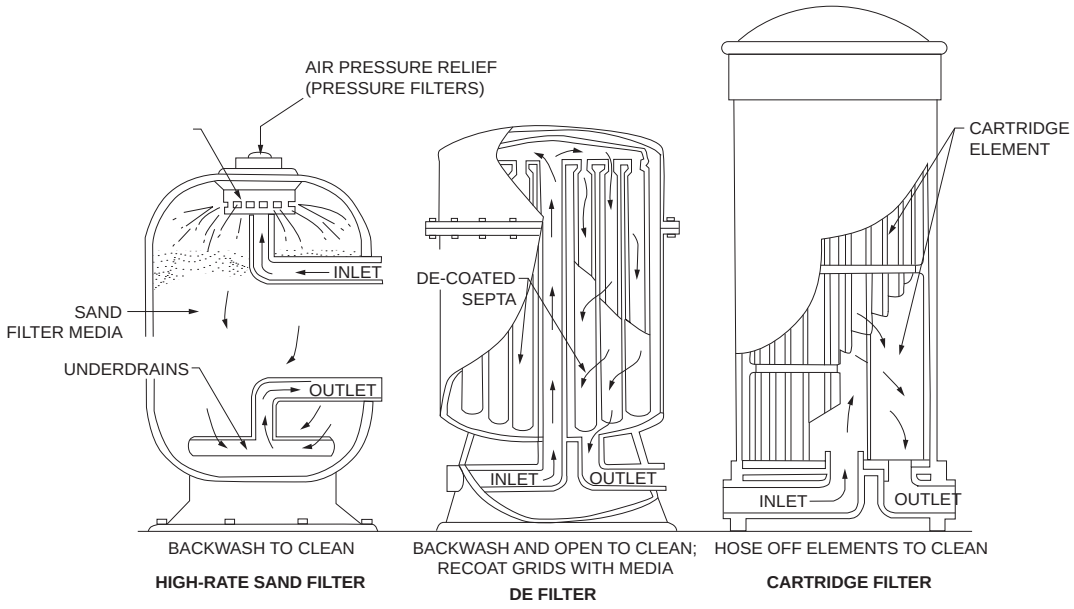

FIGURE 312.1
TYPICAL FILTER TYPES
[Illustration courtesy of the Association of Pool and Spa Professionals (APSP)]

312.3 Internal pressure. For pressure-type filters, a means shall be provided to allow the release of internal pressure.

❖ A pressure filter could retain internal pressure after the pump has been shut off. Some type of pressure relief device for the filter must be provided.

312.3.1 Air release. Filters incorporating an automatic means of internal air release as the principal means of air release shall have one or more lids that provide a slow and safe release of pressure as a part of the design and shall have a manual air release in addition to an automatic release.

❖ Buildup of air pressure in a filter can be very hazardous and can result in the separation of the filter or forceful release of various sections of the filter. Some filters have an automatic air release device that relieves air pressure in the filter. The lids for these filters must be designed to relieve pressure before allowing the lid to be removed. Automatic air release devices must be provided with a manual air release device. Only original equipment manufacturers' air release systems should be installed on equipment, as other air release systems might not be properly designed to safely relieve air pressure. Commentary Figure 312.3.1(1) shows a sand filter unit with air release. Commentary Figure 312.3.1(2) shows a cartridge filter unit with air release.

312.3.2 Separation tanks. A separation tank used in conjunction with a filter tank shall have a manual method of air release or a lid that provides for a slow and safe release of pressure as it is opened.

❖ Separation tanks are typically used in conjunction with diatomaceous earth (DE) to capture backwash carryover of the media. The tank must have an air release or a lid design that cannot be fully opened until pressure is relieved. Commentary Figure 312.3.2 shows a separation tank with a filter tank arrangement.

SECTION 313
PUMPS AND MOTORS

313.1 General. The provisions of this section apply to pumps and motors for pools and spas.

Exceptions:

1. Portable *residential* spas and portable *residential* exercise spas.
2. *Onground storable pools* supplied by the pool manufacturer as a kit that includes a pump and motor that is in accordance with Section 704.

❖ Section 313 covers pumps and motors for all pools and spas other than those for portable residential spas and portable exercise spas.

INTERNATIONAL CODE COUNCIL®
Copyright © 2015 ICC. ALL RIGHTS RESERVED. Accessed by David Dammon on Jun 21, 2017 12:30:52 PM pursuant to License Agreement with ICC. No further reproduction or distribution authorized. ANY UNAUTHORIZED REPRODUCTION OR DISTRIBUTION IS A VIOLATION OF THE FEDERAL COPYRIGHT ACT AND THE LICENSE AGREEMENT, AND SUBJECT TO CIVIL AND CRIMINAL PENALTIES THEREUNDER.



FIGURE 312.3.1(1)
SAND FILTER WITH AUTOMATIC AIR RELEASE
(Photo courtesy of Zodiac Pool Systems, Inc.)

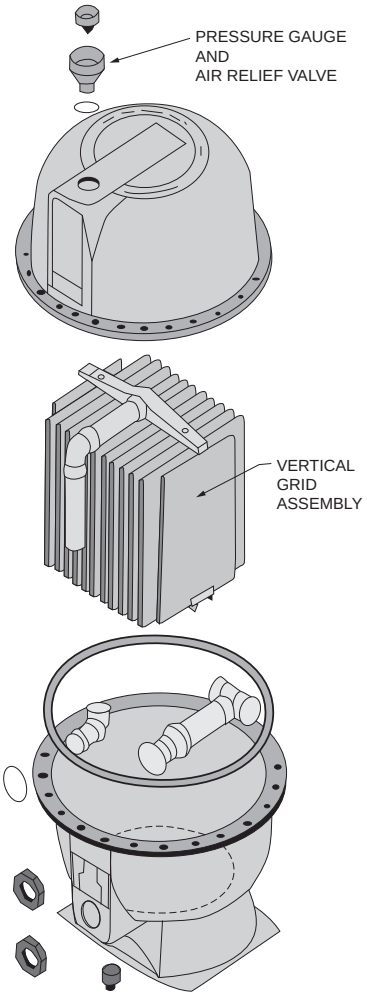

FIGURE 312.3.1(2)
GRID FILTER WITH AIR RELEASE
(Illustration courtesy of Pentair Aquatic Systems)

313.2 Performance. A pump shall be provided for circulation of the pool water. The pump shall be capable of providing the flow required for filtering the pool water and filter cleaning, if applicable, against the total dynamic head developed by the complete system.

❖ A pump must be installed to circulate the water in a pool or spa through a filter and return the water to the pool or spa. The pump must have the capability of providing for the required flow rate at the total dynamic head of the circulation system. Commentary Figure 313.2 shows one-pump and two-pump systems.

All centrifugal pumps are capable of operating over a wide flow range that is determined by the rest of the system, including pipe size and length of pipe run, filter size and many other engineering factors. Commentary Figure 311.2.1(2) illustrates the performance of a single-speed pump performance where installed on three different systems. Design professionals need to factor in all elements of the system before selecting a pump of any type. Where two-speed and variable-speed pumps are used, they can be field adjusted to meet this and other performance requirements, including energy efficiency, without detailed head loss calculations.

Multispeed pumps must have a speed capable of meeting the required gpm to operate the cleaning or auxiliary function plus a lower speed that meets the energy efficiency requirements and limited turnover rate for residential swimming pool filtration systems. APSP 15 covers the details concerning pump selection.

APSP 15 (as referenced by Section 303.3) requires pumps for residential pools and inground spas be listed in the APSP Appliance Efficiency Pool Pump Database or the California Energy Commission's Appliance Efficiency Database for Residential Pool Pumps.

Proper pump location is critical in getting the expected performance of a pump. Suction lift, static head, equipment vault/room heat and humidity, electrical load schedule, drainage and serviceability are all important factors.

313.3 Intake protection. A cleanable strainer, skimmer basket, or screen shall be provided for pools and spas, upstream or as an integral part of circulation pumps, to remove solids, debris, hair, and lint on pressure filter systems.

❖ Where a public pool or spa has a pressure filter system, the intake to the circulation pump must have a strainer to remove solids, debris, hair and lint before becoming trapped in the filter unit.

313.4 Location. Pumps and motors shall be accessible for inspection and service in accordance with the manufacturer's specifications.

❖ Pumps and motors require inspection and servicing so it is important that manufacturer's instructions concerning required access be followed.

INTERNATIONAL CODE COUNCIL®
Copyright © 2015 ICC. ALL RIGHTS RESERVED. Accessed by David Dammon on Jun 21, 2017 12:30:52 PM pursuant to License Agreement with ICC. No further reproduction or distribution authorized. ANY UNAUTHORIZED REPRODUCTION OR DISTRIBUTION IS A VIOLATION OF THE FEDERAL COPYRIGHT ACT AND THE LICENSE AGREEMENT, AND SUBJECT TO CIVIL AND CRIMINAL PENALTIES THEREUNDER.

313.5 Safety. The design, construction, and installation of pumps and component parts shall be in accordance with the manufacturer's specifications.

❖ Pumps and component parts must be installed in accordance with the manufacturer's instructions.

313.6 Isolation valves. Shutoff valves shall be installed on the suction and discharge sides of pumps that are located below the waterline. Such valves shall be provided with access.

❖ Pumps located below the waterline would be impossible to remove and replace without draining the pool or spa if shutoff valves were not provided on the inlet and outlet piping to the pump.

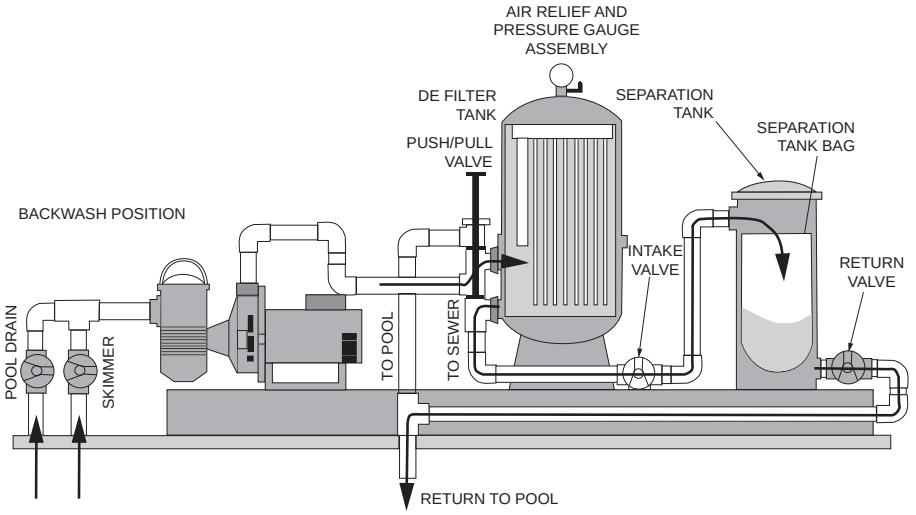

FIGURE 312.3.2
SEPARATION TANK WITH FILTER TANK ARRANGEMENT
(Illustration courtesy of PoolPlaza.com)

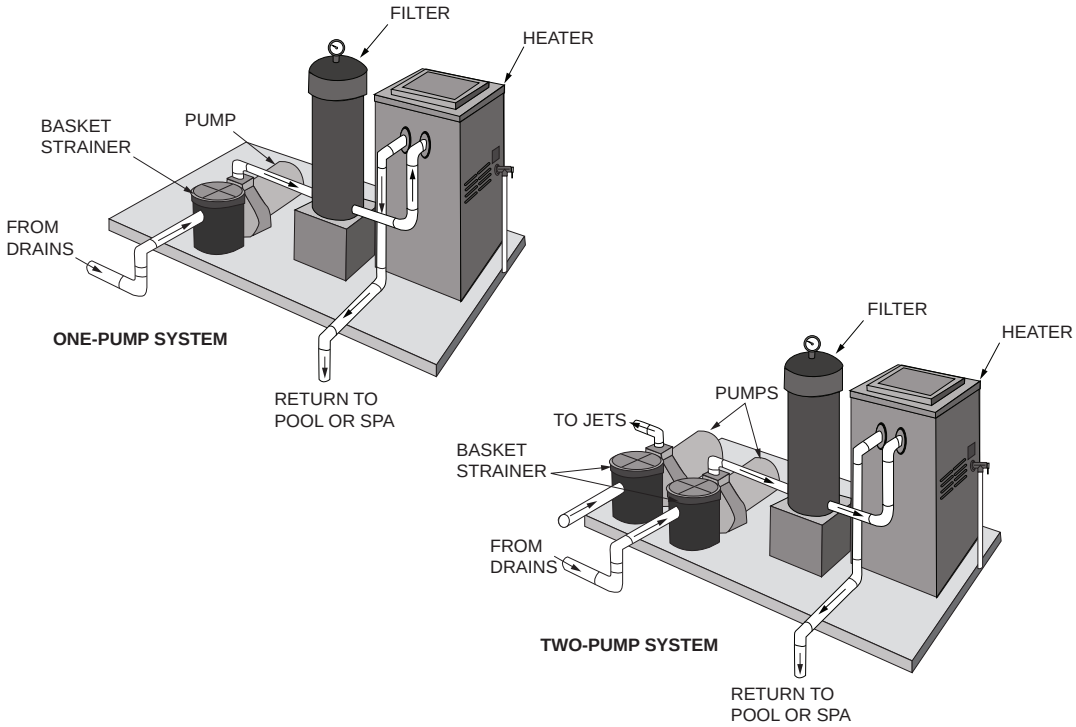

FIGURE 313.2
SINGLE- AND DOUBLE-PUMP CONFIGURATIONS
[Illustration courtesy of the Association of Pool and Spa Professionals (APSP)]

INTERNATIONAL CODE COUNCIL®
Copyright © 2015 ICC. ALL RIGHTS RESERVED. Accessed by David Dammon on Jun 21, 2017 12:30:52 PM pursuant to License Agreement with ICC. No further reproduction or distribution authorized. ANY UNAUTHORIZED REPRODUCTION OR DISTRIBUTION IS A VIOLATION OF THE FEDERAL COPYRIGHT ACT AND THE LICENSE AGREEMENT, AND SUBJECT TO CIVIL AND CRIMINAL PENALTIES THEREUNDER.

313.7 Emergency shutoff switch. An emergency shutoff switch shall be provided to disconnect power to recirculation and jet system pumps and air blowers. Emergency shutoff switches shall be: provided with access; located within sight of the pool or spa; and located not less than 5 feet (1524 mm) horizontally from the inside walls of the pool or spa.

Exception: *Onground storable pools*, permanent inground *residential* swimming pools, *residential* spas and *residential* water features.

❖ If an emergency condition develops with a swimmer or bather in a pool or spa, quick shutdown of the recirculation system and air blowers enables rescuers to see into the water more clearly (see Commentary Figure 313.7). Onground storable and permanent inground residential swimming pools are exempt from this requirement, as providing a disconnect would simply invite children to tamper with the switch and result in the circulation system not operating for long periods of time.



FIGURE 313.7
EMERGENCY SHUTOFF FOR CIRCULATION PUMPS AND AIR BLOWERS

313.8 Motor performance. Motors shall comply with UL 1004-1, UL 1081, CSA C22.2 No. 108 or the relevant motor requirements of UL 1563 or CSA C22.2 No. 218.1, as applicable.

❖ Motors for pumps must meet one of the standards listed to ensure quality and safety.

SECTION 314
RETURN AND SUCTION FITTINGS

314.1 General. The provisions of this section apply to return and suction fittings for pools and spas

Exception: Portable *residential* spas and portable *residential* exercise spas.

❖ Section 314 covers return and suction fittings for all pools and spas other than those for portable residential spas and portable exercise spas.

314.2 Entrapment avoidance. Entrapment avoidance means shall be provided in accordance with Section 310.

❖ Suction fittings, if not designed and installed properly, have the potential to entrap a swimmer. This section refers to the regulations in Section 310, which directs the code user to comply with APSP 7.

314.3 Flow distribution. The suction outlet fitting assemblies, where installed, and the skimming systems shall each be designed to accommodate 100 percent of the circulation turnover rate.

❖ Pools and spas are not required to have submerged suction outlets or main drains in order to maintain adequate circulation and sanitization of the water in the pool or spa. [APSP 7, as referenced by Section 310, also indicates that submerged suction outlets (main drains) are optional.] If one or two submerged suction outlets are provided, each suction outlet fitting must be designed for the full design flow rate required by the turnover rate. If three or more suction outlets are provided, see APSP 7. Skimming systems must also be designed for the full design flow rate required by the turnover rate.

314.3.1 Multiple systems. Where multiple systems are used in a single pool to meet this requirement, each subsystem shall proportionately be designed such that the maximum design flow rates cannot be exceeded during normal operation.

❖ Some pools and spas might require multiple circulation systems. Each system's suction outlet fittings must be designed for the full design flow rate for the individual system.

314.4 Return inlets. One return inlet shall be provided for every 300 square feet (27.9 m^2) of pool surface area, or fraction thereof.

Exception: *Onground storable pools*.

❖ Having a sufficient number of return inlets into a pool or spa provides for proper circulation of the water. A return inlet for each 300 square feet (27.87 m^2) of pool or spa water surface ensures that enough inlets are provided; however, more inlets may be used. Commentary Figure 314.4 shows a typical return inlet.

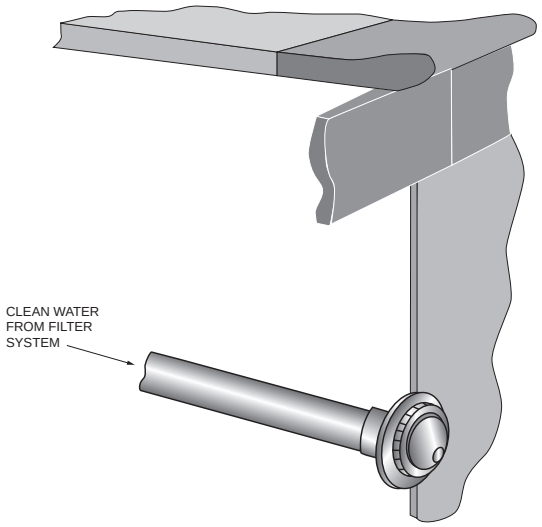

FIGURE 314.4
TYPICAL RETURN INLET
(Illustration courtesy of Pentair Aquatic Systems)

INTERNATIONAL CODE COUNCIL®
Copyright © 2015 ICC. ALL RIGHTS RESERVED. Accessed by David Dammon on Jun 21, 2017 12:30:52 PM pursuant to License Agreement with ICC. No further reproduction or distribution authorized. ANY UNAUTHORIZED REPRODUCTION OR DISTRIBUTION IS A VIOLATION OF THE FEDERAL COPYRIGHT ACT AND THE LICENSE AGREEMENT, AND SUBJECT TO CIVIL AND CRIMINAL PENALTIES THEREUNDER.

314.4.1 Design. Return and suction fittings for the circulation system shall be designed so as not to constitute a hazard to the bather.

❖ The bather is exposed to the fittings at the termination of the return inlets and suction. The fittings should not excessively protrude from the inside surface of the pool or spa, and the surfaces of the fittings should be smooth.

314.5 Vacuum fittings. Where installed, s*ubmerged vacuum fittings* shall be accessible and shall be located not greater than 12 inches (305 mm) below the water level.

❖ A submerged vacuum fitting is a special suction outlet fitting that is located in the wall of the pool or spa just below the waterline. The purpose of the fitting is to allow maintenance personnel to connect vacuuming equipment to the suction side of the circulation system so that the floor of the pool or spa can be cleaned. The reference to Section 310 in Section 314.2 directs the code user to APSP 7 as a submerged vacuum fitting is a suction outlet. The standard specifies the location of the fitting and requires that the fitting have a self-closing, self-latching cover. The standard also requires that the piping to the suction fitting be provided with a shutoff valve.

SECTION 315
SKIMMERS

315.1 General. The provisions of this section apply to skimmers for pools and spas.

Exceptions:

1. Portable *residential* spas and portable *residential* exercise spas.
2. *Onground storable pools* supplied by the pool manufacturer as a kit that includes a skimming system that is in accordance with Section 704.

❖ Section 315 covers skimmers for all pools and spas other than those for portable residential spas, portable exercise spas and onground storable pools.

315.2 Required. A surface skimming system shall be provided for public pools and spas. Surface skimming systems shall be *listed* and *labeled* in accordance with NSF 50. Either a surface skimming system or perimeter overflow system shall be provided for permanent inground *residential* pools and permanent *residential* spas. Where installed, surface skimming systems shall be designed and constructed to create a skimming action on the pool water surface when the water level in the pool is within operational parameters.

Exceptions:

1. Class D public pools designed in accordance with Chapter 6.
2. Skimmers that are an integral part of a spa that has been *listed* and *labeled* in accordance with UL1563 shall not be required to be *listed* and *labeled* in accordance with NSF 50.

❖ A skimming system causes flow on the water surface to direct floating particles and oils to the skimmer openings at the walls of the pool or spa. Commentary Figure 315.2(1) shows a skimmer wall opening. The water collected by the skimmers is directed into the circulation system for the pool or spa. An alternative to a skimmer system is a perimeter overflow system, which consists of a continuous gutter arrangement completely or partially around the pool or spa. Commentary Figure 315.2(2) shows a perimeter overflow system. The water level in the pool or spa is manually or automatically adjusted so that surface water continuously flows into the gutter and then into the circulation system.

The exception allows Class D public pools to not have a skimming system because these pools do not have a consistent level water surface during operation that would allow a skimming system to be effective.

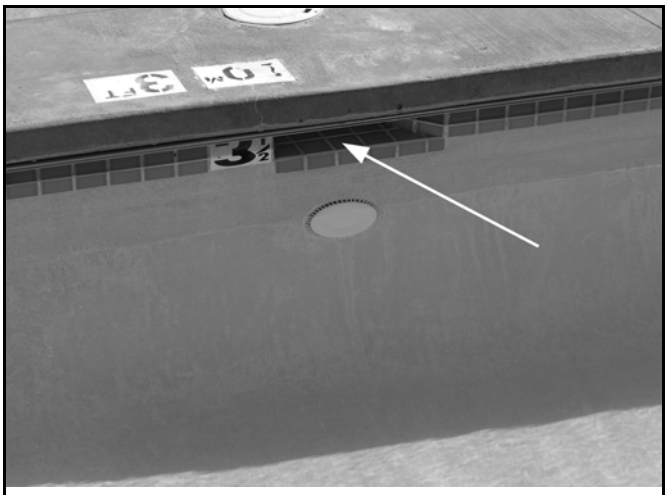

FIGURE 315.2(1)
SKIMMER OPENING IN WALL

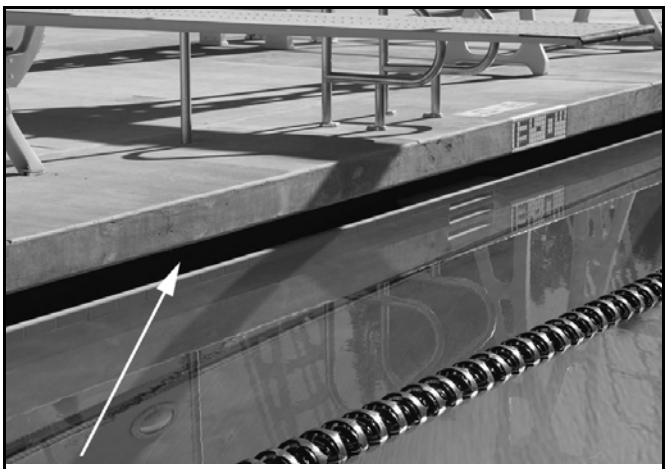

FIGURE 315.2(2)
PERIMETER OVERFLOW (GUTTER) SKIMMING SYSTEM

INTERNATIONAL CODE COUNCIL®
Copyright © 2015 ICC. ALL RIGHTS RESERVED. Accessed by David Dammon on Jun 21, 2017 12:30:52 PM pursuant to License Agreement with ICC. No further reproduction or distribution authorized. ANY UNAUTHORIZED REPRODUCTION OR DISTRIBUTION IS A VIOLATION OF THE FEDERAL COPYRIGHT ACT AND THE LICENSE AGREEMENT, AND SUBJECT TO CIVIL AND CRIMINAL PENALTIES THEREUNDER.

315.2.1 Circulation systems. Public pool circulation systems shall be designed to process not less than 100 percent of the turnover rate through skimmers.

❖ The circulation system of a public pool or spa must have the capability to handle the turnover rate (the flow necessary to circulate the entire volume of the pool or spa in so many hours) for the pool or spa through the skimming system.

315.3 Skimmer sizing. Where automatic surface skimmers are used as the sole overflow system, not less than one surface skimmer shall be provided for the square foot (square meter) areas, or fractions thereof, indicated in Table 315.3. Skimmers shall be located to maintain effective skimming action.

❖ Depending on the type of pool or spa that a skimmer is installed in, the effectiveness of the skimmer is limited by the water surface area that the skimmer is intended to cover. Table 315.3 indicates the maximum water surface area that a skimmer can cover.

TABLE 315.3
SKIMMER SIZING TABLE

POOL OR SPA	AREA PER SKIMMER (SQ. FT)
Public pool	500
Residential pool	800
Spas (all types)	150

For SI: 1 square foot = 0.0929 m^2.

❖ Spas have warm water and turbulence that accelerates the removal of body oil, hair and dead skin. Therefore, spas need a higher density of skimmers than pools. Residential pools typically do not have the bather load that a public pool has, so those pools have the lowest density of skimmers.

315.4 Perimeter coverage. Where a perimeter-type surface skimming system is used as the sole surface skimming system, the system shall extend around not less than 50 percent of the pool or spa perimeter.

❖ Perimeter skimming systems are not required to be completely around the pool or spa, but they must be present for at least 50 percent of the perimeter.

315.4.1 Surge capacity. Where perimeter surface skimming systems are used, they shall be connected to a circulation system with a system surge capacity of not less than 1 gallon for each square foot (40.7 liters per square meter) of water surface. The capacity of the perimeter overflow system and related piping is permitted to be considered as a portion of the surge capacity.

❖ A perimeter surface skimming system [see Commentary Figure 315.2(2)] could become "flooded" if a large number of bathers enter the pool or spa in a short amount of time. Flooding of the system would allow the particulates already captured by the system to refloat out onto the surface of the water. This section requires that perimeter skimming systems have a minimum surge capacity based on the water surface area of the pool or spa so that the potential for a flooding event is minimized.

315.5 Equalizers. Equalizers on skimmers shall be prohibited.

❖ An equalizer for a surface skimmer is a pipe installed between the pool or spa to the skimmer body. The pipe is below the waterline [see Commentary Figure 315.5(1)]. The purpose of an equalizer pipe is to make sure that the skimmer is constantly supplied with water, so that air is not pulled into the circulation system should the pool or spa water level drop below the elevation of the skimmer. Because the inlet of the equalizer pipe is submerged in the pool or spa, this could constitute a suction outlet. With proper circulation system design, equalizers are unnecessary and because they might not be provided with proper protection, the code simply prohibits them.

Commentary Figure 315.5(2) shows a skimmer equalizer that was retrofitted with a suction outlet cover (it is unknown whether this particular cover complies with APSP 16). New construction in compliance with this code would not allow a skimmer equalizer. However, skimming systems for public pools in existence prior to adoption of this code were required to have suction outlet covers installed on equalizers as the design of those circulation/skimming systems might have not tolerated elimination of the equalizer.

315.6 Hazard. Skimming devices shall be designed and installed so as not to create a hazard to the user.

❖ The inlet to a surface skimmer could pose a danger to a bather with respect to entrapment of hands and arms. Proper design of the skimmer ensures that such hazards are abated.

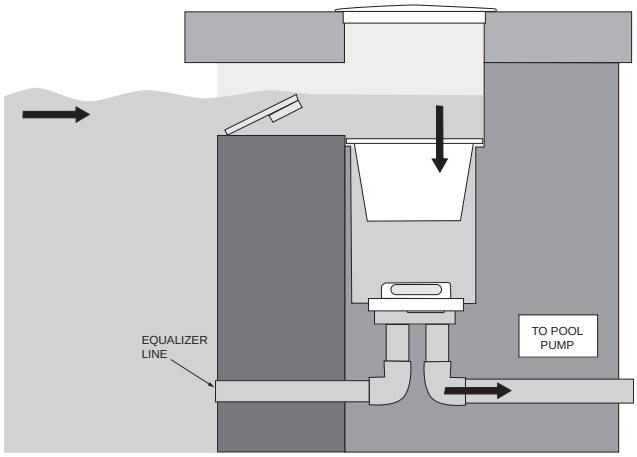

FIGURE 315.5(1)
PROHIBITED SKIMMER EQUALIZER LINE
(Illustration courtesy of PoolPlaza.com)

INTERNATIONAL CODE COUNCIL®
Copyright © 2015 ICC. ALL RIGHTS RESERVED. Accessed by David Dammon on Jun 21, 2017 12:30:52 PM pursuant to License Agreement with ICC. No further reproduction or distribution authorized. ANY UNAUTHORIZED REPRODUCTION OR DISTRIBUTION IS A VIOLATION OF THE FEDERAL COPYRIGHT ACT AND THE LICENSE AGREEMENT, AND SUBJECT TO CIVIL AND CRIMINAL PENALTIES THEREUNDER.

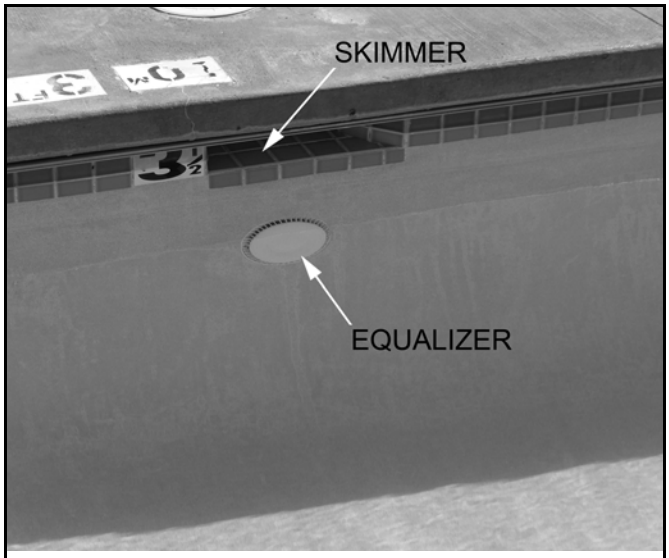

FIGURE 315.5(2)
SUCTION OUTLET COVER INSTALLED ON EXISTING SKIMMER EQUALIZER (NOT PERMITTED FOR NEW CONSTRUCTION)

SECTION 316
HEATERS

316.1 General. The provisions of this section apply to heaters for pools and spas.

Exception: Portable *residential* spas and portable *residential* exercise spas.

❖ Section 316 covers heaters for all pools and spas other than those for portable residential spas and portable exercise spas. Commentary Figure 316.1 shows typical heater configurations.

316.2 Listed and labeled. Heaters shall be *listed* and *labeled* in accordance with the applicable standard listed in Table 316.2.

❖ Heating equipment must be listed and labeled to one or more of the applicable standards in Table 316.2 to ensure safe, reliable operation of such units. Water heaters must comply with one or more of the standards listed so that quality and safety of the appliance is ensured.

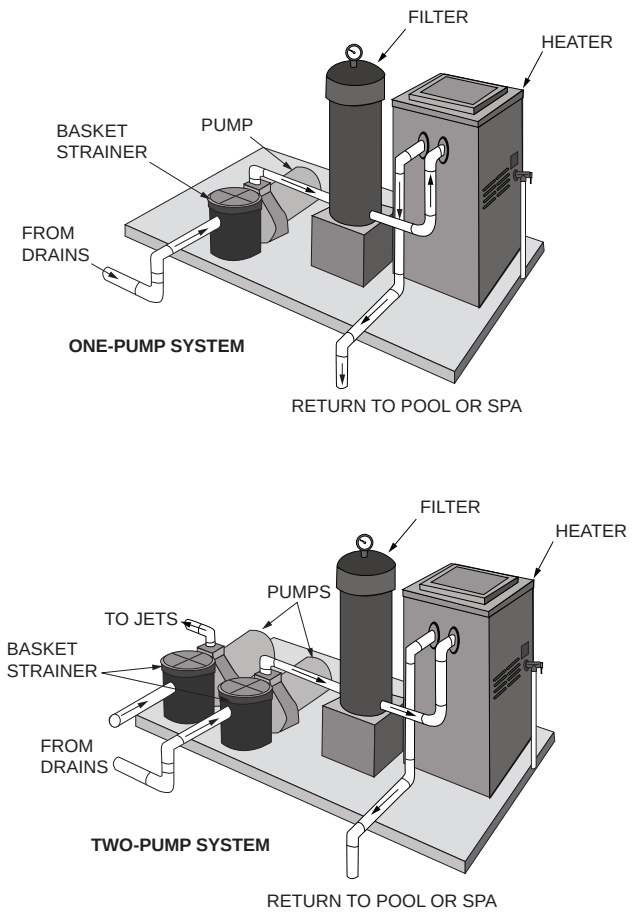

FIGURE 316.1
TYPICAL HEATER CONFIGURATIONS
[Illustration courtesy of the Association of Pool and Spa Professionals (APSP)]

316.3 Sizing. Heaters shall be sized in accordance with the manufacturer's specifications.

❖ Sizing of a pool heater is not an exact science because of the unknown variables, such as the desired temperature setting, wind on the water surface area, air temperature and the amount of time it takes to bring up to temperature. Manufacturers of water heaters have the experience to make appropri-

TABLE 316.2
WATER HEATERS

DEVICE	STANDARD
Electric water heater	UL 1261, UL 1563 or CSA C22.2 No. 218.1
Gas-fired water heater	ANSI Z21.56/CSA 4.7a
Heat exchanger	NSF 50
Heat pump water heater	UL 1995, AHRI 1160, CSA C22.2 No. 236
Photovoltaic solar water heaters	NSF 50
Thermal radiant solar water heater	NSF 50

INTERNATIONAL CODE COUNCIL®
Copyright © 2015 ICC. ALL RIGHTS RESERVED. Accessed by David Dammon on Jun 21, 2017 12:30:52 PM pursuant to License Agreement with ICC. No further reproduction or distribution authorized. ANY UNAUTHORIZED REPRODUCTION OR DISTRIBUTION IS A VIOLATION OF THE FEDERAL COPYRIGHT ACT AND THE LICENSE AGREEMENT, AND SUBJECT TO CIVIL AND CRIMINAL PENALTIES THEREUNDER.

ate recommendations for satisfactory outcomes in various climates.

316.4 Installation. Heaters shall be installed in accordance with the manufacturer's specifications and the *International Fuel Gas Code*, *International Mechanical Code*, *International Energy Conservation Code*, NFPA 70 or *International Residential Code*, as applicable in accordance with Section 102.7.1.

❖ Depending on the energy sources required by the heater and what type of building the pool or spa is associated with, various codes could have requirements that affect the installation of water heaters. Installation of any pool or spa water heater must be performed in accordance with the manufacturer's instructions, as well as any codes that apply to such installations.

316.4.1 Temperature. A means shall be provided to monitor water temperature.

❖ Pool and spa water heaters must have controls that monitor the temperature of the water discharged. Commentary Figure 316.4.1 shows a typical heater control.



FIGURE 316.4.1
TYPICAL TEMPERATURE CONTROL
(Photo courtesy of Pentair Aquatic Systems)

316.4.2 Access prohibited. For public pools and spas, public access to controls shall be prohibited.

❖ In a public environment, the controls for pool or spa water heating must be protected against tampering by unauthorized persons. Controls typically are located behind a locked door or gate.

316.5 Heater circulation system. Heater circulation systems shall comply with Sections 316.5.1 and 316.5.2.

❖ Sections 316.5.1 and 316.5.2 provide requirements for pool and spa water heater circulation systems.

316.5.1 Water flow. Water flow through the heater bypass piping, back-siphonage protection, and the use of heat sinks shall be in accordance with the heater manufacturer's specifications.

❖ The discharge temperature from some pool and spa water heaters is controlled by blending cool water from the inlet of the heater with hotter water coming from the outlet of the heating element or heat exchanger. The cool water flows through bypass piping. The piping from the outlet of the heating element or heat exchanger is subject to temperatures that are too extreme to be carried by polyvinyl chloride (PVC) plastic pipe. A heat sink pipe of metal or high-temperature plastic must be used to accommodate the higher temperatures before the hot water is blended with cooler water. The type and arrangement of bypass piping and heat sink piping must be in accordance with the manufacturer's instructions.

316.5.2 Pump delay. Where required by the manufacturer, heaters shall be installed with an automatic device that will ensure that the pump continues to run after the heater shuts off for the time period specified by the manufacturer.

❖ Abruptly shutting off the flow through a pool or spa water heater immediately after the element or burner stops can cause damage to the heater. Circulation pumps must be kept running for a period of time after the heater has shut off to cool down the heater components.

SECTION 317
AIR BLOWER AND AIR INDUCTION SYSTEM

317.1 General. This section applies to devices and systems that induce or allow air to enter pools and spas either by means of a powered pump or passive design.

❖ Section 317 covers those devices that push air into the pool or spa to create turbulence.

317.2 Backflow prevention. Air blower systems shall be equipped with backflow protection as specified in UL 1563 or CSA C22.2 No. 218.1.

❖ An air blower system must be protected against the backflow of water into the air-producing unit to prevent damage to the unit. The standards indicated cover such methods or devices that will prevent this from happening.

317.3 Air intake source. Air intake sources shall not induce water, dirt or contaminants.

❖ The air drawn by the air induction system must be filtered and protected from rainwater entry.

317.4 Sizing. Air induction systems shall be sized in accordance with the manufacturer's specifications.

❖ Manufacturers of air induction systems have the experience to properly size systems for pools or spas. Manufacturer's instructions for such systems must be followed.

INTERNATIONAL CODE COUNCIL®
Copyright © 2015 ICC. ALL RIGHTS RESERVED. Accessed by David Dammon on Jun 21, 2017 12:30:52 PM pursuant to License Agreement with ICC. No further reproduction or distribution authorized. ANY UNAUTHORIZED REPRODUCTION OR DISTRIBUTION IS A VIOLATION OF THE FEDERAL COPYRIGHT ACT AND THE LICENSE AGREEMENT, AND SUBJECT TO CIVIL AND CRIMINAL PENALTIES THEREUNDER.

317.5 Inspection and service. Air blowers shall be provided with access for inspection and service.

❖ Air blowers for air induction systems consist of an air pump with a motor. The blower must be serviced or replaced periodically, so such units must be provided with access for that purpose.

SECTION 318
WATER SUPPLY

318.1 Makeup water. Makeup water to maintain the water level and water used as a vehicle for sanitizers or other chemicals, for pump priming, or for other such additions, shall be from a potable water source.

❖ Pools and spas will lose water by evaporation and carryout on bather's bodies. Water used to either refill the pool or spa or provide it with sanitizing chemicals must be potable water.

318.2 Protection of potable water supply. Potable water supply systems shall be designed, installed and maintained so as to prevent contamination from nonpotable liquids, solids or gases being introduced into the potable water supply through cross-connections or other piping connections to the system. Means of protection against backflow in the potable water supply shall be provided through an air gap complying with ASME A112.1.2 and the *International Residential Code* or the *International Plumbing Code*, as applicable in accordance with Section 102.7.1.

❖ Water supplies to a pool or spa or to the equipment serving it must be kept in a potable condition. This section requires that potable water be provided to the pool or spa or equipment through an air gap.

318.3 Over-the-rim spouts. Over-the-rim spouts shall be located under a diving board, adjacent to a ladder, or otherwise shielded so as not to create a hazard. The open end of such spouts shall not have sharp edges and shall not protrude more than 2 inches (51 mm) beyond the edge of the pool. The open end shall be separated from the water by an air gap of not less than 1.5 pipe diameters measured from the pipe outlet to the rim.

❖ Where water is discharged into the pool or spa through an over-the-rim spout, the spout needs to be in a protected area, such as under a diving board, if one exists. Spouts must not have sharp edges and must not project beyond the edge of the vessel by more than 2 inches (50.8 mm). The outlet must be located at least 1.5 pipe diameters above the rim of the vessel.

SECTION 319
SANITIZING EQUIPMENT

319.1 Equipment standards. Sanitizing equipment installed in public pools and spas shall be capable of introducing the quantity of sanitizer necessary to maintain the appropriate levels under all conditions of intended use.

❖ Public pools or spas must have a sanitizing system that ensures that appropriate sanitation of the water is maintained under all intended use conditions. Commentary Figure 319.1 shows a typical sanitizing equipment room.



FIGURE 319.1
TYPICAL SANITIZING EQUIPMENT ROOM

319.2 Chemical feeders. Where installed, chemical feed systems shall be installed in accordance with the manufacturer's specifications. Chemical feed pumps shall be wired so that they cannot operate unless there is adequate return flow to disburse the chemical throughout the pool or spa as designed.

❖ If chemical feeders are installed, it must be in accordance with the manufacturer's instructions. The flow from chemical feeders must be mixed with the return inlet flow to the pool or spa so that the chemicals are distributed throughout the pool or spa.

SECTION 320
WASTE WATER DISPOSAL

320.1 Backwash water or draining water. Backwash water and draining water shall be discharged to the sanitary or storm sewer, or into an *approved* disposal system on the premise, or shall be disposed of by other means *approved* by the state or local authority. Direct connections shall not be made between the end of the backwash line and the disposal system. Drains shall discharge through an air gap.

❖ Water from pool or spa filter system backwashing or from draining a pool or spa must be disposed of in a sanitary sewer system, in a storm water system, in an approved disposal system on the premises or in accordance with the requirements of the state or local authority. Backwash drain lines and drain lines must not be directly connected to the point of disposal [see Commentary Figures 320.1(1) through (3)].

320.2 Water salvage. Filter backwash water shall not be returned to the vessel except where the backwash water has been filtered to remove particulates, treated to eliminate coli form bacteria and waterborne pathogens, and such return has been *approved* by the state or local authority.

❖ Backwash water from a circulation filter unit must not be returned to the pool or spa unless it has been filtered and treated to remove coliform bacteria and

INTERNATIONAL CODE COUNCIL®
Copyright © 2015 ICC. ALL RIGHTS RESERVED. Accessed by David Dammon on Jun 21, 2017 12:30:52 PM pursuant to License Agreement with ICC. No further reproduction or distribution authorized. ANY UNAUTHORIZED REPRODUCTION OR DISTRIBUTION IS A VIOLATION OF THE FEDERAL COPYRIGHT ACT AND THE LICENSE AGREEMENT, AND SUBJECT TO CIVIL AND CRIMINAL PENALTIES THEREUNDER.

pathogens. Reuse of water must be approved by the state or local authority.

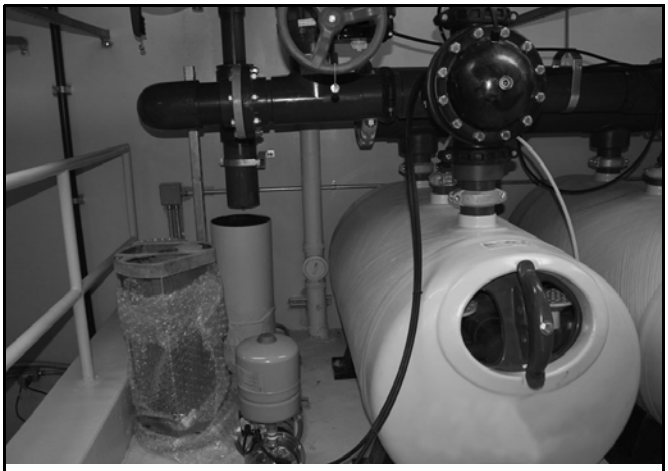

FIGURE 320.1(1)
TYPICAL WASTEWATER DISPOSAL



FIGURE 320.1(2)
AIR GAP AT WASTEWATER DISPOSAL POINT

320.3 Waste post treatment. Where necessary, filter backwash water and drainage water shall be treated chemically or through the use of settling tanks to eliminate or neutralize chemicals, diatomaceous earth, and contaminants in the water that exceed the limits set by the state or local effluent discharge requirements.

❖ State or local authorities could set limitations on what level of contaminants can be in wastewater from pools and spas when such water is discharged to a sanitary sewer system or a storm sewer system. If the wastewater exceeds those limits, some type of pretreatment might be necessary, including treatment with chemicals, settling or other methods.

SECTION 321
LIGHTING

321.1 General. The provisions of Sections 321.2 and 321.3 shall apply to lighting for public pools and spas. The provisions of Section 321.4 shall apply to lighting for residential pools and spas.

❖ Sections 321.2 and 321.3 cover lighting requirements for public pools and spas. Section 321.4 covers lighting requirements for residential pools and spas. This section applies to inground, above ground, indoor, outdoor, permanent, temporary and portable installations.

321.2 Artificial lighting required. When a pool is open during periods of low natural illumination, artificial lighting shall be provided so that all areas of the pool, including all suction outlets on the bottom of the pool, will be visible. Illumination shall be sufficient to enable a lifeguard or other persons standing on the deck or sitting on a lifeguard stand adjacent to the pool edge to determine if a pool user is lying on the bottom of the pool and that the pool water is transparent and free from cloudiness.

These two conditions shall be met when all suction outlets are visible from the edge of the deck at all times when artificial lighting is illuminated and when an 8-inch-diameter (152 mm) black disk, placed at the bottom of the pool in the deepest point, is visible from the edge of the pool deck at all times when artificial lighting is illuminated.

❖ This section and its subsections apply only to public pools. The intent is for all areas within the pool to be visible at all times that the pool is open to the public.

A public pool that is accessible to swimmers, waders and other persons, both in and out of the water, must be illuminated and the water must be of sufficient clarity to allow unimpeded viewing of all areas of the pool, including the deepest part(s) and the main drain(s) during all periods when the pool is open.

Proper and unimpeded visibility is essential at all times for swimmers in the water and persons out of the water on adjacent perimeter surfaces, such as the deck, diving boards, lifeguard stands, etc. Water is a good transmitter and diffuser of light, but it also is a good reflector. Pool lighting should be designed and installed to reduce the effects of glare caused by reflection of light off the surface of the water. Gener-

INTERNATIONAL CODE COUNCIL®
Copyright © 2015 ICC. ALL RIGHTS RESERVED. Accessed by David Dammon on Jun 21, 2017 12:30:52 PM pursuant to License Agreement with ICC. No further reproduction or distribution authorized. ANY UNAUTHORIZED REPRODUCTION OR DISTRIBUTION IS A VIOLATION OF THE FEDERAL COPYRIGHT ACT AND THE LICENSE AGREEMENT, AND SUBJECT TO CIVIL AND CRIMINAL PENALTIES THEREUNDER.

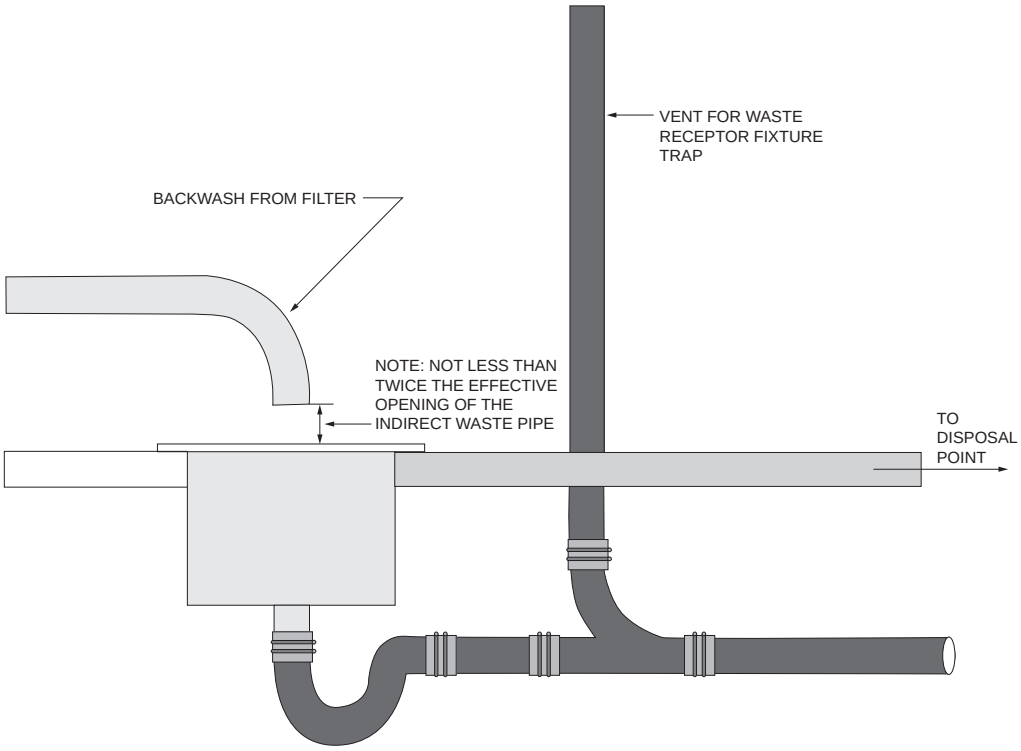

FIGURE 320.1(3)
AIR GAP AT WASTEWATER DISPOSAL POINT

ally, the glare from reflected components of light increases as the angle between the light source and the pool surface decreases. Consequently, there is minimal glare and deep penetration of light into the water from overhead luminaires, skylights and windows placed directly over the pool or spa [effectively a 90-degree (1.57 rad) angle with the surface]. As the angle becomes shallower (i.e., the light source position is moved outward away from the edge of the pool or spa and over the perimeter surface while being lowered toward pool water elevation), the reflected component increases and light penetration of the water decreases, causing what are referred to as "veiling reflections" that obscure visibility into and within the pool, by (1) making it progressively more difficult for swimmers to be seen from the perimeter surface and (2) reducing illumination in the water itself. If the overhead luminaires or exterior windows are at or near the perimeter surface level, there may be little or no visibility in the water itself, and swimmers also may not be visible from the perimeter surface.

Diffuse light sources generally will reduce glare. The use of translucent overhead skylights or windows with splayed matte-finish wells and matte-finish metallic parts produce more uniform lighting levels and prevent shafts of light from entering the pool area.

Expected water turbidity must be considered in determining proper illumination levels. Obviously, clear water is desirable for a number of reasons, including visibility. An excessively turbid pool will impede visibility both in the water and from the perimeter surface into the water, and thus poses a safety hazard.

This section requires that the artificial lighting be of an intensity to be able to see all suction outlets (whether on the bottom or on the sides) and an 8-inch-diameter black disc placed at the deepest point, when viewed from the edge of the pool (or spa). Obviously, the turbidity of the water for this "test" would have to be within acceptable parameters required by the authority that regulates public pool and spa operations.

321.2.1 Pool and deck illumination. Overhead lighting, underwater lighting or both shall be provided to illuminate the pool and adjacent deck areas. The lighting shall be *listed* and *labeled*. The lighting shall be installed in accordance with NFPA 70.

❖ When the pool is open to the public, it must have lighting for the pool and the adjacent deck. The lighting devices must be listed and labeled to a standard. The installation of such devices must be in accordance with NFPA 70.

All listed equipment will have a prominent label and an identifying mark from an independent testing labo-

INTERNATIONAL CODE COUNCIL®
Copyright © 2015 ICC. ALL RIGHTS RESERVED. Accessed by David Dammon on Jun 21, 2017 12:30:52 PM pursuant to License Agreement with ICC. No further reproduction or distribution authorized. ANY UNAUTHORIZED REPRODUCTION OR DISTRIBUTION IS A VIOLATION OF THE FEDERAL COPYRIGHT ACT AND THE LICENSE AGREEMENT, AND SUBJECT TO CIVIL AND CRIMINAL PENALTIES THEREUNDER.

ratory. Commentary Figure 321.2.1 shows an example of the typical markings. If such a label is not found on the equipment, the installer must assume that the equipment is not listed and labeled and, therefore, must not install the equipment.

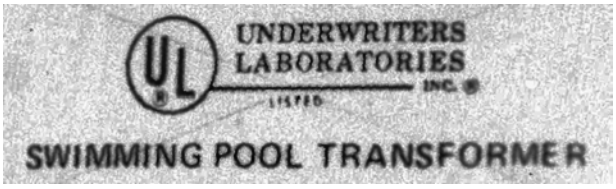

FIGURE 321.2.1
LABEL FOR LISTED AND LABELED PRODUCT
(Photo Courtesy of Hamilton & Associates Architecture, Engineering, Technical Services)

321.2.2 Illumination intensity. For outdoor pools, any combination of overhead and underwater lighting shall provide *maintained illumination* not less than 10 horizontal foot-candles (10 lumens per square foot) [108 lux] at the pool water surface. For indoor pools, any combination of overhead and underwater lighting shall provide *maintained illumination* of not less than 30 horizontal foot-candles (30 lumens per square foot) [323 lux] at the pool water surface. Deck area lighting for both indoor and outdoor pools shall provide *maintained illumination* of not less than 10 horizontal foot-candles (10 lumens per square foot) [108 lux] at the walking surface of the deck.

❖ Adequate illumination intensity (technically referred to as illuminance) over the life of the installation is essential for safety both in and around the pool. For outdoor public pools, the illumination at the surface of the water is required to be at least 10 horizontal foot-candles (10 lumens per square foot) [108 lux]. For indoor public pools, the illumination at the surface of the water is required to be at least 30 horizontal foot-candles (30 lumens per square foot) [323 lux]. The illumination values are "maintained illumination" values. "Maintained illumination" is a term that is specific to the lighting industry and is defined in Chapter 2. Illumination at the pool can be achieved by overhead area lighting, underwater lighting, or both. Many technical terms in the lighting industry are not universally understood or accepted; the specifier and purchaser should carefully consult with lighting equipment vendors to prevent misunderstanding.

According to good design practice, luminances (measured in foot-lamberts) in the pool should exceed the luminance of any reflected light to provide improved safety and visibility of swimmers, both from within the water and from the perimeter surface. While the general minimum values are indicated in this section, different locations and facility functions may require higher levels of illumination.

In addition to the lighting for in-the-pool water and on-the-pool water, this section also requires illumination of the pool deck of at least 10 horizontal foot-candles (10 lumens per square foot) [108 lux] so that egress and emergency operations around the pool are not hindered.

Obviously, light sources should be located to provide as much uniform illumination as possible throughout the pool and perimeter surface areas expected to be used by people. Any pedestrian hazards outside the perimeter surface area should also be lighted for safety.

The reflectance (in percent) of the pool basin surfaces (pool walls and bottom) can have a significant effect on illumination and visibility within the water for a given light input. Darker (less reflective) surfaces will result in darker underwater areas, requiring increased lumen output to achieve safe levels of lighting.

321.2.3 Underwater lighting. Underwater lighting shall provide not less than 8 horizontal foot-candles (8 lumens per square foot) [86 lux] at the pool water surface area, or not less than a total wattage of $^1/_2$ watt/ft^2 (5.4 watts/m^2) of pool water surface for incandescent underwater lighting where the fixtures and lamps are rated in watts.

Exception: The requirement of this section shall not apply where overhead lighting provides not less than 15 foot-candles (15 lumens per square foot) [161 lux] of *maintained illumination* at the pool water surface, the overhead lighting provides visibility, without glare, of all areas of the pool, and the requirements of Section 321.2.2 are met or exceeded.

❖ Where underwater lighting is used in public pools, not less than 8 foot-candles (8 lumens per square foot) [86 lux] must be provided at the pool water surface.

A good design practice (but not a code requirement) is to aim underwater lights upwards approximately 10 degrees (0.17 rad) above horizontal to increase the reflection of light off the water surface back into the pool to enhance underwater visibility.

Underwater lights should not be mounted so that they face swimmers in competitive lanes, but should be placed along the long side of the pool. Closer light spacing may be required for competitive pools that are too wide for safe illumination using conventional spacings. Similarly, bottom-mounted underwater lights should not be installed in the area beneath diving boards and platforms where they could interfere with divers' visibility.

Underwater lights are not required where adequate illumination levels, without glare, are achieved or exceeded with overhead area lighting. The exception recognizes that if the overhead lighting provides at least 15 foot-candles per square foot (8 lumens per square foot) [161 lux] at the water surface, without glare, the underwater lighting is not required to be 8 foot-candles (8 lumens per square foot) [86 lux].

321.3 Emergency illumination. Public pools and public pool areas that operate during periods of low illumination shall be provided with emergency lighting that will automatically turn on to permit evacuation of the pool and securing of the area in

INTERNATIONAL CODE COUNCIL®
Copyright © 2015 ICC. ALL RIGHTS RESERVED. Accessed by David Dammon on Jun 21, 2017 12:30:52 PM pursuant to License Agreement with ICC. No further reproduction or distribution authorized. ANY UNAUTHORIZED REPRODUCTION OR DISTRIBUTION IS A VIOLATION OF THE FEDERAL COPYRIGHT ACT AND THE LICENSE AGREEMENT, AND SUBJECT TO CIVIL AND CRIMINAL PENALTIES THEREUNDER.

the event of power failure. Emergency lighting facilities shall be arranged to provide initial illumination that is not less than 0.1 foot-candle (0.1 lumen per square foot) [1 lux] measured at any point on the water surface and at any point on the walking surface of the deck, and not less than an average of 1 foot-candle (1 lumen per square foot) [11 lux]. At the end of the emergency lighting time duration, the illumination level shall be not less than 0.06 foot-candle (0.06 lumen per square foot) [0.65 lux] measured at any point on the water surface and at any point on the walking surface of the deck, and not less than an average of 0.6 foot-candle (0.6 lumen per square foot) [6.46 lux]. A maximum-to-minimum illumination uniformity ratio of 40 to 1 shall not be exceeded.

❖ Emergency escape from the water and egress from pool areas must be provided for all public pools and pool areas operating at night or during other periods of darkness or low ambient illumination. Public pools must have emergency lighting (lighting that activates in case of a power outage) that provides for at least 0.1 foot-candle (0.1 lumen per square foot) [1 lux] at the water surface and at the walking surface of the deck at the beginning of the emergency lighting period. The 0.1 foot-candle (0.1 lumen per square foot) [1 lux] minimum requirement is consistent with requirements for emergency egress lighting for other types of facilities.

Numerous means to facilitate emergency lighting are available, ranging from battery-powered wall packs and overhead light fixtures, to generator installations. For battery-powered emergency lighting, the connected and operating lighting will usually become dimmer as the battery set "dies." This code does not specify the amount of time that is required for the emergency lighting to be working. For whatever time period is required, this section does require that at the end of that time period, the illumination shall be not less than 0.06 foot-candle (0.06 lumen per square foot) [0.65 lux].

321.4 Residential pool and deck illumination. Where lighting is installed for, and in, *residential* pools and permanent *residential* spas, such lighting shall be installed in accordance with NFPA 70 or the *International Residential Code*, as applicable in accordance with Section 102.7.1.

❖ The code does not require lighting for residential pools and spas. Where lighting is desired by the owner, there are not any minimum illumination requirements. Residential pool and permanent residential spa lighting must be installed in accordance with NFPA 70 or the electrical provisions of the IRC. Listed self-contained (factory-built) portable electric spas and exercise spas equipped with lighting are factory configured and tested to meet the electrical requirements of standards associated with these products.

SECTION 322
LADDERS AND RECESSED TREADS

322.1 General. Ladders and recessed treads shall comply with the provisions of this section and the applicable provisions of Chapters 4 through 10 based on the type of pool or spa.

❖ This section covers the general requirements for ladders and treads used in pools and spas. Other provisions for ladders and treads found in Chapters 4 through 10 also apply.

322.2 Outside diving envelope. Where installed, steps and ladders shall be located outside of the minimum diving water envelope as indicated in Figure 322.2.

❖ The minimum diving envelope (the dimensions required for installation and use of manufactured diving equipment) is defined for public and residential

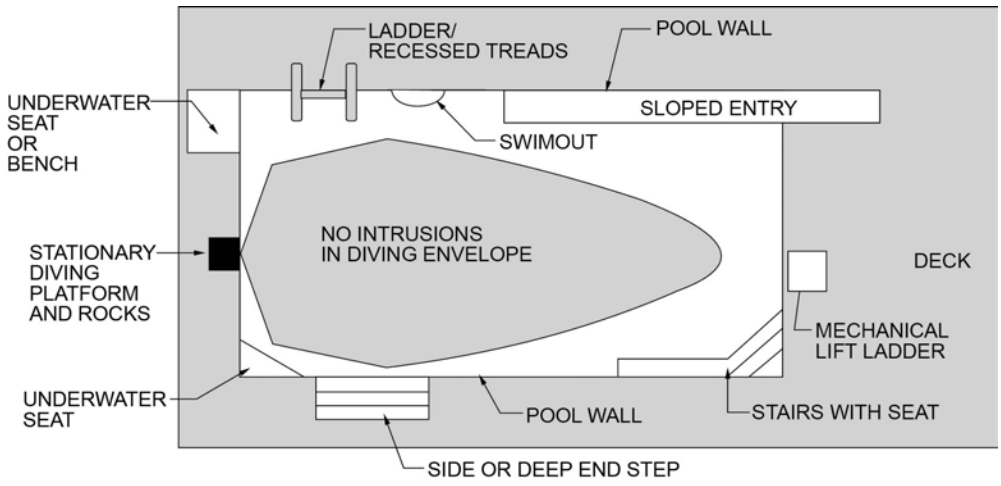

FIGURE 322.2
MINIMUM WATER DIVING ENVELOPE

INTERNATIONAL CODE COUNCIL®
Copyright © 2015 ICC. ALL RIGHTS RESERVED. Accessed by David Dammon on Jun 21, 2017 12:30:52 PM pursuant to License Agreement with ICC. No further reproduction or distribution authorized. ANY UNAUTHORIZED REPRODUCTION OR DISTRIBUTION IS A VIOLATION OF THE FEDERAL COPYRIGHT ACT AND THE LICENSE AGREEMENT, AND SUBJECT TO CIVIL AND CRIMINAL PENALTIES THEREUNDER.

inground pools in Chapters 4 and 8, respectively. Where diving equipment is installed, all protrusions, including ladders, benches, swimouts and steps, must be located outside the minimum diving envelope. Figure 322.2 illustrates a typical shape of a diving envelope. While this figure shows a stationary platform or diving rock, the same principle applies where a diving or springboard is present.

The minimum diving envelope encompasses the shape within the water that a diver's trajectory will most likely travel in the water.

322.3 Ladders. Ladder treads shall have a uniform horizontal depth of not less than 2 inches (51 mm). There shall be a uniform distance between ladder treads, with a distance of not less than 7 inches (178 mm) and not greater than 12 inches (305 mm). The top tread of a ladder shall be located not greater than 12 inches (305 mm) below the top of the deck or coping. Ladder treads shall have slip-resistant surfaces.

❖ Uniform tread depth and uniform tread spacing on ladders lowers the probability that a user could slip and fall back into the water. Slip-resistant surfaces on ladder treads are especially necessary in a wet environment.

322.3.1 Wall clearance. There shall be a clearance of not less than 3 inches (76 mm) and not greater than 6 inches (152 mm) between the pool wall and the ladder.

❖ Ladder treads are not very usable if the backside of the tread is so close to the wall that the user cannot get a good foothold onto the tread. A minimum clearance of 3 inches (76 mm) provides the necessary space for an adult foot on a tread. The clearance should not be too great, as legs and arms could get entangled behind the ladder.

322.3.2 Handrails and handholds. Ladders shall be provided with two handholds or two handrails. The clear distance between ladder handrails shall be not less than 17 inches (432 mm) and not greater than 24 inches (610 mm).

❖ Climbing a ladder is nearly impossible without using two hands on separate handholds or handrails. The separation between handrails is necessary to provide stability for the ladder user [see Commentary Figures 322.3.2(1) and 322.3.2(2)].

322.4 Recessed treads. Recessed treads shall have a minimum depth of not less than 5 inches (127 mm) and a width of not less than 12 inches (305 mm). The vertical distance between the pool coping edge, deck, or step surface and the uppermost recessed tread shall be not greater than 12 inches (305 mm). Recessed treads shall have slip-resistant surfaces.

❖ A recessed tread is a pocket built into the wall of a pool that is large enough for a foothold. A vertical series of recessed treads provides the user with a ladder effect to climb out of the pool. Slip-resistant surfaces on recessed treads are especially necessary in a wet environment.

322.4.1 Vertical spacing. Recessed treads at the centerline shall have a uniform vertical spacing of not less than 7 inches (178 mm) and not greater than 12 inches (305 mm).

❖ Uniform tread depth and uniform tread spacing on recessed treads lower the probability that a user could slip and fall back into the water.

322.4.2 Drainage. Recessed treads shall drain into the pool.

❖ Drainage of recessed treads keeps dirt from accumulating in the recessed area.

322.4.3 Handrails and grab rails. Recessed treads shall be provided with a handrail or grab rail on each side of the treads. The clear distance between handrails and grab rails shall be not less than 17 inches (432 mm) and not greater than 24 inches (610 mm).

❖ Climbing a set of recessed treads is nearly impossible without using two hands on separate grab rails or handrails. The separation between the rails is necessary to provide stability for the ladder user.



FIGURE 322.3.2(1)
LADDER AS VIEWED ABOVE THE WATERLINE

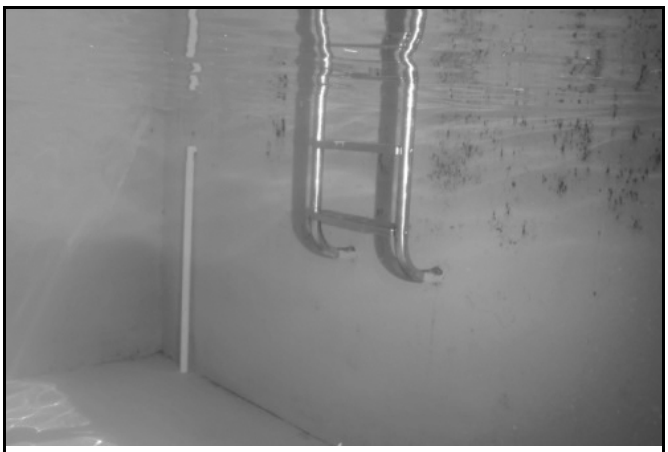

FIGURE 322.3.2(2)
LADDER AS VIEWED BELOW THE WATERLINE

INTERNATIONAL CODE COUNCIL®
Copyright © 2015 ICC. ALL RIGHTS RESERVED. Accessed by David Dammon on Jun 21, 2017 12:30:52 PM pursuant to License Agreement with ICC. No further reproduction or distribution authorized. ANY UNAUTHORIZED REPRODUCTION OR DISTRIBUTION IS A VIOLATION OF THE FEDERAL COPYRIGHT ACT AND THE LICENSE AGREEMENT, AND SUBJECT TO CIVIL AND CRIMINAL PENALTIES THEREUNDER.

SECTION 323
SAFETY

323.1 Handholds required. Where the depth below the *design waterline* of a pool or spa exceeds 42 inches (1067 mm), handholds along the perimeter shall be provided. Handholds shall be located at the top of deck or coping.

Exceptions:

1. Handholds shall not be required where an underwater bench, seat or swimout is installed.
2. Handholds shall not be required for wave action pools and action rivers.

❖ All sides of pools and spas are considered to be the nearest point of safety for water depths greater than 42 inches (1067 mm). In order for these locations to be a point of safety, there must be a place to grasp to hold the user in position at the side of the pool or spa.The edge of the decking typically is made so that it can easily be grasped or special coping materials with a rounded grasping area are installed all along these locations. Because an underwater beach, seat or a swimout provides a place for the user to sit, handholds are not required in those areas. In wave action pools and action rivers, handholds are not desirable because this would encourage users to congregate against the walls where wave action could force a user into the wall and cause injury.

323.1.1 Height above water. Handholds shall be located not more than 12 inches (305 mm) above the *design waterline*.

❖ Handholds must be close to the surface of the water so that small children can reach them.

323.1.2 Handhold type. Handholds shall be one or more of the following:

1. Top of pool deck or coping.
2. Secured rope.
3. Rail.
4. Rock.
5. Ledge.
6. Ladder.
7. Stair step.
8. Any design that allows holding on with one hand while at the side of the pool.

❖ Item 8 provides the overall intent of this list. If the user can grasp it, then the item can serve as a handhold.

323.1.3 Handhold spacing. Handholds shall be horizontally spaced not greater than 4 feet (1219 mm) apart.

❖ Where handholds are required, it is not necessary that they be continuous. A spacing of up to 4 feet (2438 mm) apart is well within reach of most young adult users.

323.2 Handrails. Where handrails are installed, they shall conform to this section.

❖ Handrails are covered by this section and its subsections. This section only covers handrails within the pool and not elsewhere on the pool deck or on the route leading to the pool deck.

323.2.1 Height. The top of the gripping surface of handrails for public pools and public spas shall be 34 inches (864 mm) to 38 inches (965 mm) above the ramp or step surface as measured at the nosing of the step or finished surface of the slope. The top of the gripping surface of handrails for *residential* pools and *residential* spas shall be 30 inches (762 mm) to 38 inches (965 mm) above the ramp or step surface as measured at the nosing of the step or finished surface of the slope.

❖ The 34-inch (864 mm) to 38-inch (965 mm) height range is the standard range for handrails in the public environment. The lower 30-inch (762 mm) dimension for residential pools is more “child friendly” and less obtrusive for a residential environment.

323.2.2 Material. Handrails shall be made of corrosion-resistant materials.

❖ A wet environment is hard on metal materials unless they are of corrosion-resistant material.

323.2.3 Nonremovable. Handrails shall be installed so that they cannot be removed without the use of tools.

❖ Handrails are sometimes removed for maintenance to the pool or to install seasonal pool covers. When the handrail is in position, the removability feature without some type of locking mechanism could present a hazard to the user. Therefore, handrails must require tools to remove.

323.2.4 Leading edge distance. The leading edge of handrails for stairs, pool entries and exits shall be located not greater than 18 inches (457 mm) from the vertical face of the bottom riser.

❖ The leading edge of a handrail is an indicator that the beginning of the stairs is near. Placement of the end of the handrail behind the leading edge of the stairs could cause the user to trip.

323.2.5 Diameter. The outside diameter or width of *handrails* shall be not less than $1^1/_4$ inches (32 mm) and not greater than 2 inches (51 mm).

❖ Handrails must be graspable by all users. The range of dimensions has been proved to be user friendly.

323.3 Obstructions and entrapment avoidance. There shall not be obstructions that can cause the user to be entrapped or injured. Types of entrapment include, but are not limited to, wedge or pinch-type openings and rigid, nongiving cantilevered protrusions.

❖ This section provides overall requirements to make pools and spas safe to use. Entrapment of arms, hands, feet and legs poses significant hazard to the user. The design and construction must consider all possible entrapment potentials.

INTERNATIONAL CODE COUNCIL®
Copyright © 2015 ICC. ALL RIGHTS RESERVED. Accessed by David Dammon on Jun 21, 2017 12:30:52 PM pursuant to License Agreement with ICC. No further reproduction or distribution authorized. ANY UNAUTHORIZED REPRODUCTION OR DISTRIBUTION IS A VIOLATION OF THE FEDERAL COPYRIGHT ACT AND THE LICENSE AGREEMENT, AND SUBJECT TO CIVIL AND CRIMINAL PENALTIES THEREUNDER.

INTERNATIONAL CODE COUNCIL®
Copyright © 2015 ICC. ALL RIGHTS RESERVED. Accessed by David Dammon on Jun 21, 2017 12:30:52 PM pursuant to License Agreement with ICC. No further reproduction or distribution authorized. ANY UNAUTHORIZED REPRODUCTION OR DISTRIBUTION IS A VIOLATION OF THE FEDERAL COPYRIGHT ACT AND THE LICENSE AGREEMENT, AND SUBJECT TO CIVIL AND CRIMINAL PENALTIES THEREUNDER.

Chapter 4:
Public Swimming Pools

General Comments

The size of public swimming pools ranges from Olympic-size competition pools for diving or racing to much smaller pools serving neighborhoods or motels. These pools are used by persons who may be unfamiliar with the particular pool site. Such pools can be used by a large number of persons at one time. Public pools are required to have many features that make the pools safer to be used by the general population.

Purpose

This chapter covers a number of important safety topics for public pools including floor slope, diving envelopes, maximum bather loads, decks, depth markings and signage.

SECTION 401
GENERAL

401.1 Public swimming pools. The provisions of this chapter shall apply to public swimming pools. Public swimming pools covered in this chapter include Class A, Class B, Class C and Class E pools.

❖ This chapter regulates all public pools, including public wading pools, except for Class D.

401.2 Scope. The requirements contained in this chapter provide specifications for the design, equipment, operation, warning signs, installation, sanitation, new construction, and alteration of public swimming pools.

❖ This chapter covers the details of public pools.

401.3 General. In addition to the requirements of this chapter, public swimming pools shall comply with the requirements of Chapter 3.

❖ Chapter 3 requirements must be applied along with the requirements of this chapter. Note that Section 301.1.1 states that where differences occur between the provisions of this chapter and the provisions of Chapter 3, the provisions of this chapter control.

401.4 Dimensional tolerances. Finished pool dimensions, for other than Class A pools, shall be held within the construction tolerances shown in Table 401.4. Other dimensions, unless otherwise specified, shall have a tolerance of ± 2 inches (51 mm).

❖ Because Class A pools are used for competitive events, the finished pool dimensions are held to very close tolerances. For other classes of pools, the tolerances in Table 401.4 provide for a reasonable level of quality control so that the actual pool dimensions don't stray too far from the design dimensions. Note that the negative construction tolerances must not apply to the minimum dimensions of the diving water envelopes given in Table 402.12. Of all the tolerances indicated, those for step treads and risers and waterline are most critical, as they directly relate to the safety of the users and sanitary conditions, respectively.

401.4.1 Class A pool tolerances. Dimensional tolerances for Class A pools shall be determined by the authority that governs such pools.

❖ The tolerances for Class A pool dimensions are determined by the sanctioning body for the type of competitive events that are intended to be performed in the pool.

401.5 Floor slope. Except where required to meet the accessibility requirements in accordance with Section 307.9, the slope of the floor in the shallow area of a pool shall not exceed 1 unit vertical in 10 units horizontal (10-percent slope) for Class C pools and 1 unit vertical in 12 units horizontal (8-percent slope) for Class B pools. The slope limit shall apply in any direction to the point of the first slope change, where a slope change exists. The point of the first slope change shall be defined as the point at which the floor slope exceeds 1 unit vertical in 10 units horizontal (10-percent slope) for Class C pools and 1 unit vertical in 12 units horizontal (8-percent slope) for Class B pools.

❖ A Class B pool typically is large in size, outdoors and the land space area that it occupies is more than ample to accept low-sloped, shallow areas of pools. A Class C pool typically is not very large and is commonly installed either inside of a building or in a land space area that is compact in size. The steeper slope for shallow areas in Class C pools allows for a shorter pool length without compromising the safety of the user.

401.6 Dimensions for Class A pools. Class A pools shall be designed and constructed to provide the dimensions determined by the authority that governs such pools.

❖ Class A pool dimensions and their tolerances are determined by the sanctioning body for the type of competitive events that are intended to be performed in the pool. Obviously, where winning or losing some competitive events is determined in 100ths of a second, dimensional tolerances of the swimming pool

INTERNATIONAL CODE COUNCIL®
Copyright © 2015 ICC. ALL RIGHTS RESERVED. Accessed by David Dammon on Jun 21, 2017 12:30:52 PM pursuant to License Agreement with ICC. No further reproduction or distribution authorized. ANY UNAUTHORIZED REPRODUCTION OR DISTRIBUTION IS A VIOLATION OF THE FEDERAL COPYRIGHT ACT AND THE LICENSE AGREEMENT, AND SUBJECT TO CIVIL AND CRIMINAL PENALTIES THEREUNDER.

TABLE 401.4
CONSTRUCTION TOLERANCES

DESIGN ASPECT	CONSTRUCTION TOLERANCE
Depth–deep area, including diving area	± 3 inches
Depth–shallow area	± 2 inches
Length–overall	± 3 inches
Step treads & risers	± 1/2 inch
Wall slopes	± 3 degrees
Waterline–pools with adjustable weir skimmers	± 1/4 inch
Waterline–pools with nonadjustable skimming systems (gutters)	± 1/8 inch
Width–overall	± 3 inches
All dimensions not otherwise specified herein	± 2 inches

For SI: 1 inch = 25.4 mm, 1 degree = 0.017 radians.

must be accurately controlled so that variations in dimensions such as lane length are small.

SECTION 402
DIVING

402.1 General. This section covers diving requirements for Class B, Class C, and Class E pools. Manufactured and fabricated diving equipment and appurtenances shall not be installed on Type O pools.

❖ Where a pool has provisions for a user to dive from a platform or board into a pool, the body of water needs to have a certain minimum shape to accommodate the trajectory of the diver in the water without the diver hitting the floor or walls of the pool at an unsafe speed. This section covers the requirements for diving for Class B, Class C and Class E pools. A pool that is designated as a Type O pool may not have a body of water of a shape that can accommodate diving.

402.2 Manufactured and fabricated diving equipment. Manufactured and fabricated diving equipment shall be in accordance with Section 808 and shall be designed for swimming pool use.

❖ Although Section 808 is in the permanent residential inground swimming pool chapter, those requirements apply to the public pools covered by this section. Equipment for diving must be specifically designed for swimming pool diving purposes.

402.3 Installation. The installation of manufactured diving equipment shall be in accordance with Sections 402.3 through 402.12. Manufactured diving equipment shall be located in the deep area of the pool so as to provide the minimum dimensions shown in Table 402.12 and shall be installed in accordance with the manufacturer's instructions. Installation and use instructions for manufactured diving equipment shall be provided by the manufacturer and shall specify the minimum water dimensions required for each diving board and diving stand combination. The manufacturer's instructions shall refer to the water envelope type by dimensionally relating their products to Point A on the water envelopes shown in Table 402.12. The diving board manufacturer shall specify which boards fit on the design pool geometry types as indicated in Table 402.12.

❖ The type of diving equipment to be used on a pool drives the design of the pool with respect to the required diving envelope. Diving boards are tested and rated for pool type based on their length, spring characteristic and intended installation height, all of which can affect diver trajectory and velocity. Proper installation in accordance with the manufacturer's instructions is critical to ensure that the user is provided with a body of water in which to safely maneuver and complete the dive. Table 402.12 and the associated Figure 402.12 provide the minimum diving water envelope dimensions for different types of pools intended for diving.

402.4 Slip resistance. Diving equipment shall have slip-resistant walking surfaces.

❖ The need for slip-resistant walking surfaces on diving equipment is especially important to avoid falls onto the diving equipment or onto the deck of a pool.

402.5 Point A. For the application of Table 402.12, Point A shall be the point from which dimensions of width, length and depth are established for the minimum diving water envelope. If the tip of the diving board or diving platform is located at a distance of WA (see Figure 804.1) or greater from the deep end wall and the water depth at that location is equal to or greater than the water depth requirement at Point A, the point on the water surface directly below the center of the tip of the diving board or diving platform shall be identified as Point A.

❖ The location of Point A on the water surface establishes the position of where the outside of the minimum diving water envelope will be in the pool. The pool walls and floor need to be constructed to not encroach on the minimum diving envelope. The minimum diving water envelope is a 3-dimensional space in the water. The actual construction of a pool for diving must not be made to exactly that same shape because other requirements in the code prevent such a design as floor slopes and ladders for egress must be outside the water envelope. Preferably, pools for diving would be designed to be much larger than the minimum diving water envelope because pool users

INTERNATIONAL CODE COUNCIL®
Copyright © 2015 ICC. ALL RIGHTS RESERVED. Accessed by David Dammon on Jun 21, 2017 12:30:52 PM pursuant to License Agreement with ICC. No further reproduction or distribution authorized. ANY UNAUTHORIZED REPRODUCTION OR DISTRIBUTION IS A VIOLATION OF THE FEDERAL COPYRIGHT ACT AND THE LICENSE AGREEMENT, AND SUBJECT TO CIVIL AND CRIMINAL PENALTIES THEREUNDER.

do not always execute, by error or on purpose, a dive in the intended direction that the envelope assumes. Point A is located directly beneath the forward tip of the diving board, provided that the distance from that point to the deep end wall equals or exceeds the minimum specified for WA for the pool type in question and that the depth at this point equals or exceeds the depth specified at Point A.

402.6 Location of pool features in a diving pool. Where a pool is designed for use with diving equipment, the location of steps, pool stairs, ladders, underwater benches, special features and other accessory items shall be outside of the minimum diving water envelope. See Figure 322.2.

❖ Diving pools must be designed so that the minimum diving water envelope does not have any obstructions placed in it.

402.7 Stationary diving platforms and diving rocks. Where stationary diving platforms and diving rocks are built on site, flush with the wall and located in the diving area of the pool, Point A shall be in front of the wall at the platform or diving rock centerline.

❖ Some designs of diving pools have platforms or rocks placed at the edge of the deep end of the pool to enable diving. In these circumstances, Point A (see Section 402.5) is considered to be directly below the center of the front edge of the platform or rock at the water surface.

402.8 Location of diving equipment. Manufactured and fabricated diving equipment shall be located so that the tip of the board or platform is located directly above Point A as defined by Section 402.5.

❖ This section reinforces that once Point A has been established for a diving pool, the tip of the board or edge of the platform must be installed directly above Point A.

402.9 Elevation. The maximum elevation of a diving board above the *design waterline* shall be in accordance with the manufacturer's instructions.

❖ The diving board is designed and tested by the manufacturer to determine a maximum installation height, to ensure that a diver does not enter the pool at an unsafe velocity, and will have sufficient room within the specified diving envelope to safely maneuver and complete the dive. Installing a diving board higher than the maximum recommended height by the board manufacturer could result in diver injury.

402.10 Platform height above waterline. The height of an *approved* stationary diving apparatus, platform, or diving rock above the *design waterline* shall not exceed the limits of the manufacturer's specifications or the limits of the design prepared by a design professional.

❖ Manufacturers of stationary platforms establish the maximum height that the platform can be above the water, based on the depth of the water below the platform. Where stationary platforms are not manufactured but are field fabricated, the height at which they are installed must not exceed the maximum height that is provided by the platform's design professional.

402.11 Clearance. The diving equipment manufacturer shall specify the minimum headroom required above the tip of the board.

❖ This section applies to manufactured diving equipment, especially springboards and jump boards. The spring of such boards enables the diver to attain a higher altitude above the board than what he or she could jump from a solid surface. The manufacturer of the diving equipment must specify a required head room above the tip of the board so that the diver doesn't hit overhead obstacles.

402.12 Water envelopes. The minimum diving water envelopes shall be in accordance with Table 402.12.

❖ Table 402.12 in conjunction with Figure 402.12 establishes the shape of the body of water that must be accommodated by the pool walls and floor so that diving is practical and relatively safe. Note that the dimensions in the table are minimum dimensions. The tolerances of Table 401.4 do not apply.

402.13 Ladders for diving equipment. Ladders shall be provided with two grab rails or two handrails. There shall be a uniform distance between ladder treads, with a 7-inch (178 mm) minimum distance and a 12-inch (305 mm) maximum distance.

Exception: The distance between treads for the top and bottom riser can vary but shall be not less than 7 inches (178 mm) and not greater than 12 inches (305 mm).

❖ Uniform tread depth and uniform tread spacing on ladders decrease the probability that a user could slip and fall back onto the deck. Slip-resistant surfaces on

TABLE 402.12
MINIMUM DIVING WATER ENVELOPES
(SEE FIGURE 402.12)

POOL TYPE	MINIMUM DIMENSIONS								MINIMUM WIDTH OF POOL AT:		
	D_1	D_2	R	L_1	L_2	L_3	L_4	L_5	Pt. A	Pt. B	Pt. C
VI	7'-0"	8'-6"	5'-6"	2'-6"	8'-0"	10'-6"	7'-0"	28'-0"	16'-0"	18'-0"	18'-0"
VII	7'-6"	9'-0"	6'-0"	3'-0"	9'-0"	12'-0"	4'-0"	28'-0"	18'-0"	20'-0"	20'-0"
VIII	8'-6"	10'-0"	7'-0"	4'-0"	10'-0"	15'-0"	2'-0"	31'-0"	20'-0"	22'-0"	22'-0"
IX	11'-0"	12'-0"	8'-6"	6'-0"	10'-6"	21'-0"	0	37'-6"	22'-0"	24'-0"	24'-0"

For SI: 1 inch = 25.4 mm, 1 foot = 304.8 mm.

INTERNATIONAL CODE COUNCIL®
Copyright © 2015 ICC. ALL RIGHTS RESERVED. Accessed by David Dammon on Jun 21, 2017 12:30:52 PM pursuant to License Agreement with ICC. No further reproduction or distribution authorized. ANY UNAUTHORIZED REPRODUCTION OR DISTRIBUTION IS A VIOLATION OF THE FEDERAL COPYRIGHT ACT AND THE LICENSE AGREEMENT, AND SUBJECT TO CIVIL AND CRIMINAL PENALTIES THEREUNDER.

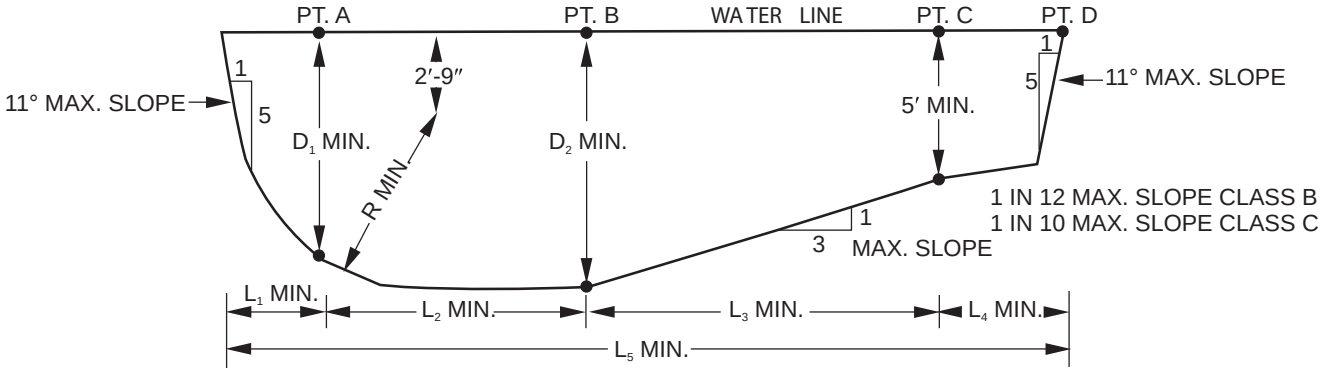

For SI: 1 degree = 0.017 rad, 1 inch = 25.4 mm, 1 foot = 304.8 mm.

FIGURE 402.12
(MINIMUM DIVING WATER ENVELOPES)
CONSTRUCTION DIMENSIONS FOR WATER ENVELOPES FOR CLASS B AND CLASS C POOLS

ladder treads are especially necessary in a wet environment. Climbing a set of treads is nearly impossible without using two hands on separate grab rails or handrails. The separation between the rails is necessary to provide stability for the ladder user. The exception recognizes that some variation between the top and bottom tread to the surface at the top and bottom of the ladder is possible as the fabrication of ladders is more economically produced with the same tread spacing.

402.14 Springboard fall protection guards. Springboards located at a height greater than 5 feet (1524 mm) above the pool deck shall have a fall protection guard on each side of the springboard. The design and the selection of the materials of construction of the fall protection guards shall be determined by the manufacturer of the springboard support structure. The installation and maintenance of the fall protection guards shall be in accordance with the fall protection guard manufacturer's instructions.

❖ Springboards (diving boards) that are above a deck can be dangerous if someone falls off the springboard before that person has moved out on the board enough to be over the water. Springboard manufacturers will provide the design for guards or might provide the guards along with the springboard.

SECTION 403
BATHER LOAD

403.1 Maximum bather load. The maximum bather load of Class B and Class C pools shall be in accordance with Table 403.1.

❖ Ultimately, the number of bathers in a pool establishes the demand for sanitation and requires a circulation turnover rate to achieve minimum sanitary conditions. The required turnover rates established elsewhere in the code were determined based on a maximum bather load for the pool. Table 403.1 shows how to compute a maximum bather load so that the operator of the pool has some means to decide how many persons can have access to the pool. The table provides the maximum densities of users according to various areas of the pool and is based on the deck area around the pool. The information provides the operator of the pool some means to decide how many persons can have access to the pool at any given time.

SECTION 404
REST LEDGES

404.1 Rest ledges. Rest ledges along the pool walls are permitted. They shall be not less than 4 feet (1220 mm) below the water surface. Where a ledge is provided, the width of the ledge shall be not less than 4 inches (102 mm) and not greater than 6 inches (152 mm).

❖ A rest ledge is a narrow stepping zone that is not less than 4 feet (1219 mm) underwater. Users can stand or put a foot on a rest ledge to help them stay or rest at the side or end of the pool. The resting area can be either a ledge or a recessed area for placing the feet.

SECTION 405
WADING POOLS

405.1 Wading pools. Class F wading pools shall be separate pools with an independent circulation system, shall be physically separated from the main pool and shall be constructed in accordance with Sections 405.2 through 405.6.

❖ Wading pools are intended for use by small children. Children can have accidental bowel movements or could throw up in a wading pool. Keeping the circula-

INTERNATIONAL CODE COUNCIL®
Copyright © 2015 ICC. ALL RIGHTS RESERVED. Accessed by David Dammon on Jun 21, 2017 12:30:52 PM pursuant to License Agreement with ICC. No further reproduction or distribution authorized. ANY UNAUTHORIZED REPRODUCTION OR DISTRIBUTION IS A VIOLATION OF THE FEDERAL COPYRIGHT ACT AND THE LICENSE AGREEMENT, AND SUBJECT TO CIVIL AND CRIMINAL PENALTIES THEREUNDER.

TABLE 403.1
MAXIMUM BATHER LOAD

POOL/DECK AREA	SHALLOW INSTRUCTIONAL OR WADING AREAS	DEEP AREA (NOT INCLUDING THE DIVING AREA)	DIVING AREA (PER EACH DIVING BOARD)
Pools with minimum deck area	15 sq. ft. per user	20 sq. ft. per user	300 sq. ft.
Pools with deck area at least equal to water surface area	12 sq. ft. per user	15 sq. ft. per user	300 sq. ft.
Pools with deck area at least twice the water surface area	8 sq. ft. per user	10 sq. ft. per user	300 sq. ft.

For SI: 1 square foot = 0.09 square meters.

tion system for wading pools independent from other pools protects the other pools from contamination should an accident happen in the wading pool. The words "physically separated" might or might not mean that a barrier must be between other pools and a wading pool. The code official will have to interpret what "physically separated" means.

405.2 Nonentry areas. The areas where the water depth at the edge of the pool exceeds 9 inches (229 mm) shall be considered as nonentry areas.

❖ Although wading pools are shallow, any water depth at the perimeter of the wading pool that is greater than 9 inches (229 mm) poses an entry hazard, especially for adults carrying small children into the pool. The intent is for users, adult and children, to use the provided stairs or other designated entry points to gradually move into the water.

405.3 Floor slope. The floors of wading pools shall be uniform and sloped with a maximum slope of 1 unit vertical in 12 units horizontal (8-percent slope).

❖ Small children and adults carrying children in wading pools must have sure footing to avoid falls. Requiring uniformity in the slope and a maximum slope ensures the safety of the users. This section does not require wading pool floors to be sloped at, or less than, the maximum slope or to have any slope at all.

405.4 Maximum depth. The water depth shall not exceed 18 inches (457 mm).

❖ Wading pools are intended for use by small children and must be limited in depth for that reason. The 18-inch (457 mm) dimension allows for most adults to sit on the floor of the pool while holding and playing with a child.

405.5 Distance from deck to waterline. The maximum distance from the top of the deck to the waterline shall not exceed 6 inches (152 mm).

❖ Limiting the distance from the waterline to the top of the deck provides a convenient handhold access especially for small children. This allows for an easy entry and exit to or from the pool, provided that the water depth at the perimeter does not exceed 9 inches (229 mm) in accordance with Section 405.2.

405.6 Suction entrapment avoidance. Wading pools shall not have suction outlets. Skimmers or overflow *gutters* shall be installed and shall accommodate 100 percent of the circulation system flow rate.

❖ The best way to avoid suction entrapment in a pool is to not have any suction outlets in the pool. Skimmers or gutters can provide the needed return flow. Return inlets can be arranged low on the wall or on the bottom of the pool to create the necessary circulating effects for sanitation control.

SECTION 406
DECKS AND DECK EQUIPMENT

406.1 General. Decks shall comply with the provisions of Section 306, except as otherwise required in this section.

❖ Section 306 covers the general requirements for decks, but this section has specific requirements for decks around public pools.

406.2 Pool perimeter access. A deck or unobstructed access shall be provided for not less than 90 percent of the pool perimeter.

❖ Where a pool user rescue is necessary, access all around a pool perimeter is especially helpful. However, this section recognizes that it might not be feasible to provide for 100-percent perimeter access in all situations for various reasons. The code is silent as to what is meant by "unobstructed," what width is required for the required access or whether that access can be at an elevation significantly higher or lower than the top of the pool. In many standard public pool designs, there is a wide pool deck around the entire perimeter of the pool. Some "necessary" obstructions at the perimeter of a pool might be permanent lifeguard stands, diving boards, chair lifts (for accessibility) and above-deck pool cover mechanisms. However, public pools of more complex designs having perimeter water features such as fountains, waterfalls and vanishing edges might challenge the designer and code official on how to interpret this section.

Note that this section does not require a pool deck or decking at the perimeter that requires access.

INTERNATIONAL CODE COUNCIL®
Copyright © 2015 ICC. ALL RIGHTS RESERVED. Accessed by David Dammon on Jun 21, 2017 12:30:52 PM pursuant to License Agreement with ICC. No further reproduction or distribution authorized. ANY UNAUTHORIZED REPRODUCTION OR DISTRIBUTION IS A VIOLATION OF THE FEDERAL COPYRIGHT ACT AND THE LICENSE AGREEMENT, AND SUBJECT TO CIVIL AND CRIMINAL PENALTIES THEREUNDER.

406.3 Deck clearance. Decking not less than 4 feet (1219 mm) in width shall be provided on the sides and rear of any diving equipment. A deck clearance of 4 feet (1219 mm) shall be provided around all other deck equipment.

❖ Users crowding around deck-mounted equipment, such as diving boards, can lead to pushing and shoving, which can result in injuries and falls. Adequate space is needed in diving equipment areas.

406.4 Decks between pools and spas. Decks between pools, spas or any combination of pools and spas, shall have a width of not less than 6 feet (1829 mm).

❖ There needs to be adequate space between adjacent pools and spas to facilitate maintenance of each and room for emergency rescue operations.

406.5 Deck covering. Walking surfaces of decks within 4 feet (1219 mm) of a pool or spa shall be slip resistant.

❖ Slip resistance of a walking surface in wet environments is necessary to avoid injuries to pool and spa users. Next to a pool or spa is even more important because a person could fall into the water unexpectedly and not know how to immediately right themselves or swim. A falling person could also injure other people in the pool and create a multiple-person rescue situation.

406.6 Distances above diving boards. A completely unobstructed minimum distance above the tip of the diving board shall be specified by the diving equipment manufacturer.

❖ This section applies to manufactured diving equipment, especially springboards and jump boards. The spring of such boards enables the diver to attain a higher altitude above the board than what he or she could jump from a solid surface. The manufacturer of the diving board must specify a required head room above the tip of the board so that the diver doesn't hit overhead obstacles.

406.7 Dimensional requirements. Public pools with diving equipment of 39 inches (991 mm) or greater in height, and pools designed for springboard or platform diving, shall comply with the dimensional design requirements of the diving equipment manufacturer or the authority that governs such pools.

❖ This section specifically applies to public pools where the diving equipment is located greater than 39 inches (991 mm) above the design water surface. Diving equipment located greater than this height is found on competition pools that are regulated by a competitive event-sanctioning body that approves such pools and diving equipment for competition.

406.8 Diving equipment. Diving equipment shall be installed in accordance with the manufacturer's specifications.

❖ All of the best plans and all the right diving equipment still requires that the equipment be installed in accordance with the diving equipment manufacturer's instructions.

406.8.1 Label. A label shall be permanently affixed to the diving equipment or jump board in a readily visible location and shall include all of the following:

1. The minimum diving water envelope required for each diving board and diving stand combination.
2. Manufacturer's name and address.
3. Manufacturer's identification and date of manufacture.
4. The maximum allowable weight of the user.

❖ Even though diving equipment and jump boards could be ordered to meet the requirements of the application, the installer has the responsibility to verify that the equipment or the board is what was ordered and that all of the relevant pool dimensions meet or exceed those stated in the code for the pool type specified by the manufacturer. A readily visible label on the equipment or board provides the user and installer with important information about the equipment.

406.8.2 Use instructions. The diving equipment manufacturer shall provide diving equipment use instructions.

❖ The manufacturer of the diving equipment has the responsibility to provide instructions for the safe use of the product.

406.8.3 Tread surface. Diving equipment shall have slip-resistant tread surfaces.

❖ The need for slip-resistant walking surfaces on diving equipment is especially important to avoid falls onto either the diving equipment or the deck of a pool.

406.8.4 Supports for diving equipment. Supports, platforms, stairs, and ladders for diving equipment shall be designed to carry the anticipated loads. Stairs and ladders shall be of corrosion-resistant materials, shall be easily cleanable and shall have slip-resistant treads. Diving stands higher than 21 inches (533 mm), measured from the deck to the top back end of the board, shall be provided with stairs or a ladder. Step treads shall be self-draining.

❖ The first line of this section appears to state the obvious; however, it is there to remind the designer to think about what the anticipated loads will be on the supports, platforms, stairs and ladders. For example, if the diving equipment is rated for a 300-pound (136 kg) user, then all related diving equipment should be designed to accommodate a 300-pound (136 kg) user. Pool water can be aggressive to many metals, so metal stairs and ladders must be made from corrosion-resistant materials. The need for slip-resistant tread surfaces is especially important in order to avoid falls onto either the diving equipment or the deck of a pool. The requirement for treads to be self-draining keeps dirt from accumulating on them or worse, mildew and mold from accumulating and making the surfaces slippery. Where a diving stand is higher than 21 inches (533 mm) above the deck, it is difficult for an adult, much less a child, to step up onto the diving stand. Therefore, stairs or a ladder must be provided.

INTERNATIONAL CODE COUNCIL®
Copyright © 2015 ICC. ALL RIGHTS RESERVED. Accessed by David Dammon on Jun 21, 2017 12:30:52 PM pursuant to License Agreement with ICC. No further reproduction or distribution authorized. ANY UNAUTHORIZED REPRODUCTION OR DISTRIBUTION IS A VIOLATION OF THE FEDERAL COPYRIGHT ACT AND THE LICENSE AGREEMENT, AND SUBJECT TO CIVIL AND CRIMINAL PENALTIES THEREUNDER.

406.8.5 Guardrails. Diving equipment 39 inches (991 mm) or greater in height shall be provided with a top guardrail. Such guardrail shall extend not less than 30 inches (762 mm) above the diving board and extend to the edge of the pool wall.

❖ Falls from a height of 39 inches (991 mm) or more have a high probability of resulting in serious injury. A guardrail on both sides of diving equipment that is 39 inches (991 mm) or more above the deck provides for safer use of the diving equipment. The requirement that the guardrails extend to the edge of the pool wall does not mean all the way down to the deck but simply to a point directly above the edge of the pool (see Section 402.14).

406.9 Starting blocks. In new construction or substantial alteration, starting blocks intended for competitive swimming shall be located at a water depth of not less than 5 feet (1524 mm).

❖ Diving from starting blocks into water that is shallower than 5 feet (1524 mm) creates a greater risk of injury. It is intended that starting blocks are to be used by swimmers who have received specific training on proper entry from a diving stand and that diving from starting blocks is supervised by a swimming instructor or coach. Diving stands are not intended to be used by the casual user who has not been specifically trained on diving from a stand into what would be considered otherwise, a too shallow water depth for diving.

406.10 Swimming pool slides. Swimming pool slides shall comply with the requirements of 16 CFR, Part 1207. The manufacturer of the slide shall provide installation and use instructions for the slide. Slides shall be installed in accordance with the manufacturer's instructions.

❖ The design of swimming pool slides is regulated by Title 16 of the Code of Federal Regulations, Part 1207, because of the significant number of injuries that were reported to the Consumer Product Safety Commission prior to the enactment of the regulation. The regulation requires that the manufacturer provide instructions for proper installation and safe use of the slide.

406.11 Play and water activity equipment. Play and water activity equipment shall be installed in accordance with the manufacturer's instructions.

❖ Where play and water activity equipment is installed, the manufacturer's instructions must be followed.

SECTION 407
CIRCULATION SYSTEMS

407.1 General. Circulation systems for pools shall comply with Section 311 and the provisions of this section.

❖ Section 311 covers the general requirements for circulation systems. This section provides requirements that are specific to public pools.

407.2 Turnover. Circulation equipment shall be sized to turn over the entire water capacity of the pool as specified in Table 407.2. The system shall be designed to provide the required turnover rate based on the maximum pressure and flow rate recommended by the manufacturer of the filter with clean filter media.

❖ Turnover or turnover rate is determined by dividing the volume of the pool by the flow rate of the circulation system. Table 407.2 indicates the turnover rate for various types of public pools. Wading pools have a high turnover rate because of the greater potential for small children having a toileting accident in the pool.

SECTION 408
FILTERS

408.1 General. Filters shall be designed in accordance with Section 312, except as otherwise required in this section.

❖ Section 312 covers all of the requirements for filters, with the exception of the requirement in Section 408.2.

408.2 Air release warning. The following statement shall be posted in a conspicuous location within the areas of the air release:

> DO NOT START THE SYSTEM AFTER MAINTENANCE WITHOUT FIRST PROPERLY REASSEMBLING THE FILTER AND SEPARATION TANK AND OPENING ALL AIR RELEASE VALVES.

❖ This safety notice is needed in a public pool environment because the volume of filters and separation tanks can be very large, which in turn creates significant potential for injury and damage if tanks are not properly reassembled or the air valves are not opened prior to disassembly. The conspicuous display location is needed because of the number of different persons who could be servicing the equipment.

TABLE 407.2
TURNOVER RATE

SWIMMING POOL CATEGORY	TURNOVER RATE IN HOURS
Class A, B, and C pools	Hours equal $1^1/_2$ times the average depth of pool in feet not to exceed 6 hours
Wading pools	1

For SI: 1 foot = 304.8 mm.

INTERNATIONAL CODE COUNCIL®
Copyright © 2015 ICC. ALL RIGHTS RESERVED. Accessed by David Dammon on Jun 21, 2017 12:30:52 PM pursuant to License Agreement with ICC. No further reproduction or distribution authorized. ANY UNAUTHORIZED REPRODUCTION OR DISTRIBUTION IS A VIOLATION OF THE FEDERAL COPYRIGHT ACT AND THE LICENSE AGREEMENT, AND SUBJECT TO CIVIL AND CRIMINAL PENALTIES THEREUNDER.

SECTION 409
SPECIFIC SAFETY FEATURES

409.1 Handholds. Handholds shall comply with the provisions of Section 323.

❖ Section 323 covers the requirements for handholds in public pools.

409.2 Depth markers. Depth markers shall be provided in accordance with Sections 409.2.1 through 409.2.8.

❖ Water depth markers around a public pool are necessary to warn the pool user of the depth of water he or she is about to enter (see Commentary Figure 409.2). Sections 409.2.1 through 409.2.8 cover the details for depth marker location and appearance.



FIGURE 409.2
DEPTH MARKERS ON POOL DECK

409.2.1 Where required. Depth markers shall be installed at the maximum and minimum water depths and at all points of slope change. Depth markers shall be installed at water depth increments not to exceed 2 feet (607 mm). Depth markers shall be spaced at intervals not to exceed 25 feet (7620 mm).

❖ Depth markers must be frequently located around the pool so that the pool user is constantly being made aware of the water depth.

409.2.2 Marking of depth. The depth of water in feet (meters) shall be plainly and conspicuously marked on the vertical pool wall at or above the waterline.

Exception: Pools with a vanishing edge and rim flow *gutters*.

❖ Depth markers below or partially below the waterline are difficult to read. Markers must be at or above the waterline for best readability. The exception recognizes that there is not a wall above the waterline on vanishing edge pools and where pools have rim flow (perimeter overflow) gutters, sometimes there is limited vertical space above the gutter. Commentary Figure 409.2.2 shows where wall depth markers were able to be installed on a pool having a perimeter overflow system.



FIGURE 409.2.2
DEPTH MARKER ON WALL OF POOL WITH PERIMETER OVERFLOW SYSTEM

409.2.3 Depth accuracy. Depth markers shall indicate the actual pool depth within ± 3 inches (76 mm), at normal operating water level when measured 3 feet (914 mm) from the pool wall or at the tangent point where the cove radius meets the floor, whichever is deeper.

❖ The indication on the depth markers must reflect the actual depth of the water within plus-or-minus 3 inches (76 mm). The depth is to be measured at a point 3 feet (91 cm) out from the wall, except where the depth is greater where the cove radius of a sidewall meets the floor. In that case, the greater depth is posted.

409.2.4 Position on pool wall. Depth markers on the vertical pool wall shall be positioned to be read from the waterside. Depth markers shall be placed so as to allow as much of the numbers to be visible above the waterline as possible.

❖ Depth markers on the pool wall help inform users where the shallow end of the pool is located. Depth markers below or almost completely below the waterline are difficult to read. Markers must be at (bisected by the waterline) or above the waterline for best readability. Commentary Figure 409.2.4 shows depth markers bisected by the waterline.

409.2.5 Position on deck. Depth markers on the deck shall be located within 18 inches (457 mm) of the water edge and positioned to be read while standing on the deck facing the water.

❖ Deck-mounted depth markers inform the pool user of the depth of water he or she is about to enter and must be readable in the position a user would be in when entering the pool (see Commentary Figure 409.2.5).

409.2.6 Horizontal markers. Horizontal depth markers shall be slip resistant.

❖ Depth markers on the deck must not contribute added potential for slips and falls.

INTERNATIONAL CODE COUNCIL®
Copyright © 2015 ICC. ALL RIGHTS RESERVED. Accessed by David Dammon on Jun 21, 2017 12:30:52 PM pursuant to License Agreement with ICC. No further reproduction or distribution authorized. ANY UNAUTHORIZED REPRODUCTION OR DISTRIBUTION IS A VIOLATION OF THE FEDERAL COPYRIGHT ACT AND THE LICENSE AGREEMENT, AND SUBJECT TO CIVIL AND CRIMINAL PENALTIES THEREUNDER.

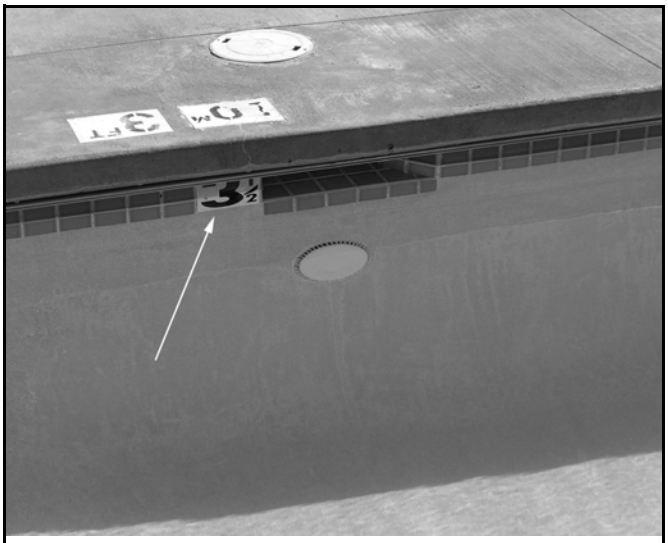

FIGURE 409.2.4
BISECTED DEPTH MARKER ON WALL

feet and inches marking, the marking must be in meters and the abbreviation of "M" used. The order of whether the feet-inches or meter dimension comes first does not matter; however, the code always requires the feet-inch dimension. Note that in Commentary Figure 409.2.4, the wall marker does not have a corresponding meter dimension even though the marker on the pool deck has the meter dimension. This is technically not a code violation as the metric dimension is not required.

409.3 No diving symbol. Where the pool depth is 5 feet (1524 mm) or less, the "No Diving" symbol shall be displayed. The symbol shall be placed on the deck at intervals of not greater than 25 feet (7620 mm) and directly adjacent to a depth marker. Additional signage shall be in accordance with NEMA Z535.

❖ Where pool depths are 5 feet (1524 mm) or less, diving (from the poolside) is prohibited and thus the "No Diving" symbol (pictograph) must be installed on the deck (see Commentary Figure 409.3).



FIGURE 409.2.5
DEPTH MARKER ON POOL DECK

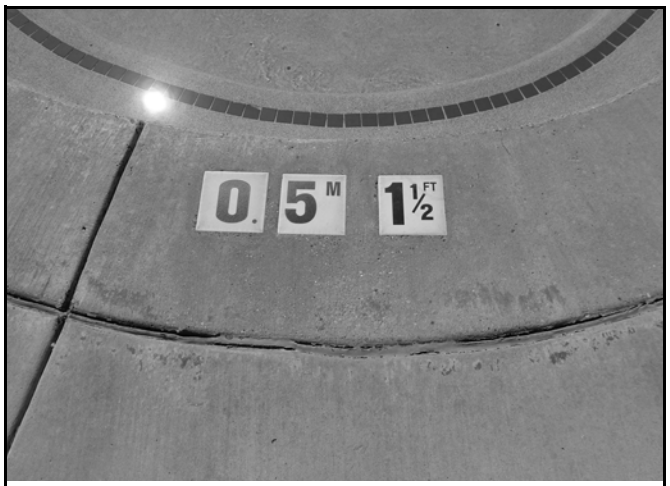

FIGURE 409.3
DEPTH MARKER ON POOL DECK

409.2.7 Uniform distribution. Depth markers shall be distributed uniformly on both sides and both ends of the pool.

❖ Uniform distribution of the depth markers, on both sides and at the ends of the pool, is necessary to maintain a clear and distinct message about pool water depths.

409.2.8 Numbers and letters. Depth markers shall be not less than 4 inches (102 mm) in height. The color of the numbers shall contrast with the background on which they are applied and the color shall be of a permanent nature. The lettering shall spell out the words "feet" and "inches" or abbreviate them as "Ft." and "In." respectively. Where displayed in meters in addition to feet and inches, the word meter shall be spelled out or abbreviated as "M."

❖ Numbers and letters of depth markers must be not less than 4 inches (102 mm) tall for readability at a distance. Where metric dimensions are added to the

409.4 Lifesaving equipment. Public pool Classes A, B, and C shall be provided with lifesaving equipment in accordance with Sections 409.4.1 through 409.4.3. Such lifesaving equipment shall be visually conspicuous and conveniently located at all times.

❖ Sections 409.4.1 though 409.4.3 cover the requirements for lifesaving equipment. The equipment must not be stowed away in a closet or equipment room, as it must be readily available for use by anyone at anytime.

409.4.1 Accessory pole. A swimming pool accessory pole not less than 12 feet (3658 mm) in length and including a body hook shall be provided.

❖ A pole not less than 12 feet (3658 mm) long with an attached body hook is a mainstay of pool safety equipment. The body hook allows the rescuer the opportunity to snag a bather who is struggling under-

INTERNATIONAL CODE COUNCIL®
Copyright © 2015 ICC. ALL RIGHTS RESERVED. Accessed by David Dammon on Jun 21, 2017 12:30:52 PM pursuant to License Agreement with ICC. No further reproduction or distribution authorized. ANY UNAUTHORIZED REPRODUCTION OR DISTRIBUTION IS A VIOLATION OF THE FEDERAL COPYRIGHT ACT AND THE LICENSE AGREEMENT, AND SUBJECT TO CIVIL AND CRIMINAL PENALTIES THEREUNDER.

water. Note that some jurisdictions prohibit the use of metallic (conductive) poles for public pools. Commentary Figure 409.4.1 shows a body hook on a metallic pole, resting in brackets on the wall of a public pool building.



FIGURE 409.4.1
BODY HOOK HANGING ON POOL BUILDING WALL

409.4.2 Throwing rope. A throwing rope attached to a ring buoy or similar flotation device shall be provided. The rope shall be not less than $^1/_4$ inch (6.4 mm) in diameter and shall have a length of not less than $1^1/_2$ times the maximum width of the pool or 50 feet (15 240 mm), whichever is less. A ring buoy shall have an outside diameter of not less than 15 inches (381 mm).

❖ A 15-inch (381 mm) ring buoy with a rope attached is another mainstay of pool safety equipment. The rescuer can throw the buoy to a bather who is struggling at the surface of the water and use the rope to pull the bather to the side of the pool. Commentary Figure 409.4.2 shows a prominently displayed ring buoy with attached rope.



FIGURE 409.4.2
RING BUOY WITH ATTACHED ROPE

409.4.3 Emergency response units. Pools covered by this chapter shall be provided with first aid equipment, including a first aid kit. First aid equipment and kits shall be located in an accessible location.

❖ A first aid kit is a basic necessity for any public operated pool and must be accessible at all times. Generally, first aid kits have bandaids, bandages, antiseptic creams, tweezers, eye washes, sting remedies and elastic wraps for sprains. Other first aid equipment that could be valuable to have on hand is a backboard, oxygen mask with canister and neck brace. The items that are required in the first aid kit are not specified by the code. The health authority that governs the operation of the public pool usually has a set list of the minimum requirements for different sizes of the pool and whether or not the pool is manned by trained lifeguards. Note that the code does not require that the first aid kit be provided with "ready access" (i.e., not behind a cabinet door). The first aid kit could be in a cabinet or a room that would require opening of a door (locked or unlocked).

SECTION 410
DRESSING AND SANITARY FACILITIES

410.1 Dressing and sanitary facilities. Dressing and sanitary facilities shall be provided for Class A and B pools as required by the *International Building Code* and *International Plumbing Code*.

❖ The *International Building Code*® (IBC®) provides the occupant density for pools and decks surrounding pools and the *International Plumbing Code*® (IPC®) provides the number and type of plumbing fixtures required.

SECTION 411
SPECIAL FEATURES

411.1 Entry and exit. Pools shall have not less than two means of entry and exit that are located so as to serve both ends of a pool. Pool lifts, transfer walls and transfer systems that provide for pool entry and exit by persons with physical disabilities in accordance with Section 307.9 shall not be counted as the means of entry or exit that is required by this section.

❖ A pool must have an entry and exit to serve each end of the pool to facilitate users getting in and out of the pool. This section does not require that the entry and exit be only on the "end walls" of the pool but generally "near" the ends.

Entry and exit means for accessibility design cannot count for the entry or exit required by this section. Users of the accessibility designed entries and exits could be restricted from using an entry or exit or could be injured by others who do not need the use of that type of entry and exit.

411.1.1 Natural entry. Where areas have water depths of 24 inches (607 mm) or less at the pool wall, such areas shall be

INTERNATIONAL CODE COUNCIL®
Copyright © 2015 ICC. ALL RIGHTS RESERVED. Accessed by David Dammon on Jun 21, 2017 12:30:52 PM pursuant to License Agreement with ICC. No further reproduction or distribution authorized. ANY UNAUTHORIZED REPRODUCTION OR DISTRIBUTION IS A VIOLATION OF THE FEDERAL COPYRIGHT ACT AND THE LICENSE AGREEMENT, AND SUBJECT TO CIVIL AND CRIMINAL PENALTIES THEREUNDER.

considered as providing their own natural mode for entry and exit.

Exception: Wading pools as outlined in Section 405.

❖ In shallow water depths, pool users are typically capable of entering and exiting the pool without the use of ladders or stairs. A 24-inch (607 mm) or less water depth is considered to be shallow enough for this purpose. The exception recognizes that wading pools have a different requirement for a shallow area that can be entered and exited without the use of ladders or steps. This section does not allow for a reduction in the required two entries and exits required by Section 411.1.

411.1.2 Shallow area. A means of entry and exit shall be provided in shallow areas of pools and shall consist of pool stairs, a ramp or a beach entry.

❖ In a shallow area of a pool, the required entry and exit could be satisfied by stairs, a ramp or a beach entry.

411.1.3 Deep area. The means of entry and exit in the deep area of pools shall consist of one of the following:

1. Steps/stairs.
2. Ladders.
3. Grab rails with recessed treads.
4. Ramps.
5. Beach entries.
6. Swimouts.
7. Other designs that provide the minimum utility as specified in this code.

❖ They are many options for providing entries and exits for the deep area of a pool. The last item on the list leaves the code open for other possibilities that are not on the list.

411.1.4 Pools greater than 30 feet wide. Swimming pools greater than 30 feet (9144 mm) in width shall be provided with entries and exits on each side of the deep area of the pool. The entries and exits on the sides of the deep area of a pool shall be located not more than 82 feet (25 m) apart.

❖ Pools over 30 feet (9144 mm) wide would be challenging for the user to exit the deep area if there was only one means provided for exiting on a long wall of a pool.

411.1.5 Diving envelope. Where the pool is designed for use with diving equipment, the entries and exits, pool stairs, ladders, underwater benches, special features and other accessories shall be located outside of the minimum diving water envelope indicated in Figure 322.2.

❖ The minimum diving envelope encompasses the shape that a diver's trajectory will most likely travel in the water. The minimum diving envelope must not have any obstructions that encroach on the diving water envelope.

411.1.6 Treads. Treads shall have slip-resistant surfaces.

❖ The need for slip-resistant walking surfaces is important in order to avoid falls.

411.2 Pool stairs. The design and construction of stairs extending into the pool in either shallow or deep water, including recessed pool stairs, shall comply with Sections 411.2.1 through 411.2.4.

❖ Stairs into the pool are regulated by Sections 411.2.1 through 411.2.4. See Commentary Figure 411.2 for an example of stairs in the shallow end of a pool.

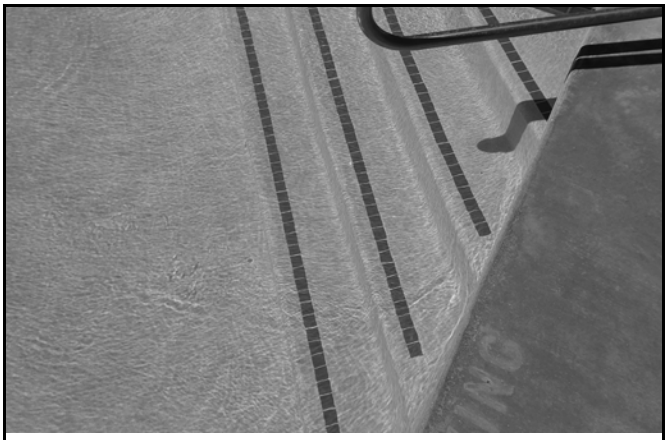

FIGURE 411.2
SHALLOW END STAIRS

411.2.1 Tread dimensions and area. Treads shall be not less than 24 inches (607 mm) at the leading edge. Treads shall have an unobstructed surface area of not less than 240 square inches (0.154 m^2) and an unobstructed horizontal depth of not less than 10 inches (254 mm) at the center- line.

❖ The width of the leading edge tread must be at least 24 inches (607 mm) so that the user can easily find the beginning of the stairs. The center of the tread must be at least 10 inches (254 mm) deep at the centerline so an adult foot can be firmly placed on the step. The area of the step must be at least 240 square inches (154 838 mm^2) so that the step is visible underwater.

411.2.2 Risers. Risers, except for the bottom riser, shall have a uniform height of not greater than 12 inches (305 mm) measured at the centerline. The bottom riser height is allowed to vary to the floor.

❖ A uniform riser height is necessary to reduce the potential for falls when using the steps. A maximum step height of 12 inches (305 mm) is at the limit where users start to have difficulty in using the stairs comfortably. Greater distances increase the risk of injury. In order to enable the stairs to be adaptable to the specific dimension of the pool, it is necessary to allow for variation in the bottom riser only.

411.2.3 Top tread. The vertical distance from the pool coping, deck, or step surface to the uppermost tread shall be not greater than 12 inches (305 mm).

❖ The top tread height of the stairs cannot be greater than 12 inches (305 mm), as greater top tread heights create difficulty for persons entering and exiting the top of the stairs.

INTERNATIONAL CODE COUNCIL®
Copyright © 2015 ICC. ALL RIGHTS RESERVED. Accessed by David Dammon on Jun 21, 2017 12:30:52 PM pursuant to License Agreement with ICC. No further reproduction or distribution authorized. ANY UNAUTHORIZED REPRODUCTION OR DISTRIBUTION IS A VIOLATION OF THE FEDERAL COPYRIGHT ACT AND THE LICENSE AGREEMENT, AND SUBJECT TO CIVIL AND CRIMINAL PENALTIES THEREUNDER.

411.2.4 Bottom tread. Where stairs are located in water depths greater than 48 inches (1219 mm), the lowest tread shall be not less than 48 inches (1219 mm) below the deck and shall be recessed in the pool wall.

❖ This section requires that staircases for entry and exit from water depths greater than 48 inches (1219 mm) be completely recessed into the pool wall. A set of stairs protruding from the wall in the deep end of the pool would be a hazard to swimmers.

411.3 Shallow end detail for beach and sloping entries. Sloping entries used as a pool entrance shall have a maximum slope of 1 unit vertical in 10 units horizontal (10-percent slope).

❖ Ramps and slopes into pools must not have a slope of greater than one unit vertical in ten units horizontal so that they can be easily navigated.

411.3.1 Benches and steps. Where benches are used in conjunction with sloping entries, the vertical riser distance shall not exceed 12 inches (305 mm). Where steps are used in conjunction with sloping entries, the requirements of Section 411.2 shall apply.

❖ Some ramp designs have one or more benches along the side of the ramp at the pool wall. The benches must not be higher than 12 inches (305 mm) so a user can easily step on top of the bench from the ramp surfaces. The benches must be built as if they were stairs.

411.3.2 Vertical drops. A vertical drop exceeding 12 inches (305 mm) within a sloping entry shall be provided with a handrail.

❖ The side of the ramp along the open side of the pool will have a dropoff to the floor of the pool. Where the dropoff exceeds 12 inches (305 mm), the edge of the ramp must have a handrail so that ramp users do not walk off the edge.

411.3.3 Surfaces. Beach and sloping entry surfaces shall be of slip-resistant materials.

❖ Ramps and other sloping surfaces must be slip resistant to reduce the potential for falls.

411.4 Pool ladder design and construction. The design and construction of ladders shall comply with Section 322.

❖ Where ladders are used for entry and exit into pools, they must comply with the requirements of Section 322.

411.5 Underwater seats, benches, and swimouts. The design and construction of underwater seats, benches, and *swimouts* shall comply with Sections 411.5.1 and 411.5.2.

❖ Sections 411.5.1 and 411.5.2 regulate the design and construction of underwater seats, benches and swimouts.

411.5.1 Swimouts. Swimouts, located in either the deep or shallow area of a pool, shall comply with all of the following:

1. The horizontal surface shall be not greater than 20 inches (508 mm) below the waterline.
2. An unobstructed surface shall be provided that is equal to or greater than that required for the top tread of the pool stairs in accordance with Section 411.2.
3. Where used as an entry and exit access, swimouts shall be provided with steps that comply with the pool stair requirements of Section 411.2.
4. The leading edge shall be visibly set apart.

❖ A swimout is a rest area that is recessed into the pool wall so that it is not an obstruction in the main pool area. The depth of the swimout must not be greater than 20 inches (508 mm) below the waterline. The area of the swimout must not be less than 240 square inches (154 838 mm^2) so that there is ample room for a user to sit and rest. If the swimout is intended to be a required entry and exit to the pool, then stairs to the swimout must be provided. The edge of the swimout where the water becomes deeper must be made visible with a contrasting color.

411.5.2 Underwater seats and benches. Underwater seats and benches, whether used alone or in conjunction with pool stairs, shall comply with all of the following:

1. The horizontal surface shall be not greater than 20 inches (508 mm) below the waterline.
2. An unobstructed surface shall be provided that is not less than 10 inches (254 mm) in depth and not less than 24 inches (607 mm) in width.
3. Underwater seats and benches shall not be used as the required entry and exit access.
4. Where underwater seats are located in the deep area of the pool where manufactured or constructed diving equipment is installed, such seats shall be located outside of the minimum diving water envelope for diving equipment.
5. The leading edge shall be visually set apart.
6. The horizontal surface shall be at or below the waterline.
7. A tanning ledge or sun shelf used as the required entry and exit access shall be located not greater than 12 inches (305 mm) below the waterline.

❖ Underwater seats and benches are rest areas along the wall of the pool. The depth of these features must not be greater than 20 inches (508 mm) below the waterline. The area of these features must not be less than 10 inches by 24 inches (254 mm by 607 mm) so that there is ample room for a user to sit and rest. These features must not be used as a required entry and exit to the pool. If there is diving equipment in the pool, then these features must be located outside the minimum diving envelope. The edge of these features, where the water becomes deeper, must be made visible with a contrasting color.

Where these features are intended for a sunning shelf or a tanning ledge, the depth must not be greater than 12 inches (305 mm) below the waterline to enable them to be used for sunning.

INTERNATIONAL CODE COUNCIL®
Copyright © 2015 ICC. ALL RIGHTS RESERVED. Accessed by David Dammon on Jun 21, 2017 12:30:52 PM pursuant to License Agreement with ICC. No further reproduction or distribution authorized. ANY UNAUTHORIZED REPRODUCTION OR DISTRIBUTION IS A VIOLATION OF THE FEDERAL COPYRIGHT ACT AND THE LICENSE AGREEMENT, AND SUBJECT TO CIVIL AND CRIMINAL PENALTIES THEREUNDER.

SECTION 412
SIGNAGE

412.1 Safety signage. Safety signage advising on the danger of diving into *shallow areas* and on the prevention of drowning shall be provided as required by the authority that governs such pools. Safety signage shall be as shown in Figure 412.1 or similar thereto.

❖ One or more signs, must be installed in the pool area to remind users of two very basic cautionary messages for all pools. The sign shown in Code Figure 412.1 is one example of a sign that has been widely accepted and used for several decades. Other signs may be used, provided they are comparable in wording and message. Commentary Figure 412.1 shows a typical "No Diving" sign that would usually be considered "similar thereto" to Code Figure 412.1 for pools other than wading pools. In the opinion of this writer; however, the sign shown in the photo seems to be especially lacking the message required by the right side of Code Figure 412.1, given the fact that the sign is next to a wading pool. The decision of how signage complies with the intent of Code Figure 412.1 is up to the code official.



For SI: 1 inch = 25.4 mm.

FIGURE 412.1
SAFETY SIGN

412.2 Emergency telephone signs. A sign indicating the location of the nearest landline telephone that can be used to call emergency services shall be posted within sight of the main entry into a pool facility. The sign shall indicate the telephone numbers, including area code, that can be called for emergency services including, but not limited to, police, fire, ambulance and rescue services. If "9-1-1" telephone service is available for any of those services, "9-1-1" shall be indicated next to the telephone number for such services. The sign shall include the street address and city where the pool is located. The nearest landline telephone indicated by the sign shall be one that can be used free of charge to call for emergency services. A sign with the telephone number and address information required by this section shall be posted within sight of the landline telephone.

❖ It is sometimes taken for granted that there will always be a working telephone somewhere within the vicinity of a public pool. Although it might seem unlikely that there would not be someone nearby who has a cellular telephone, there are areas where some cellular telephones will not work or 9-1-1 service is not available. Cell phones, if pool users think about bringing one along, can be too easily dropped or kicked into the water, especially during an emergency situation. Connection to the correct local emergency services through cellular phones can also be time-consuming depending on the signal routing. Commentary Figure 412.2 shows a telephone box that is known to have a hard-wired (land line) telephone inside. This telephone box was mounted at the entrance to the toilet facilities of the public pool. All the entry gates had signage indicating the location of the phone; however, this section only indicates that the sign has to be at the "main" gate.

Once the correct emergency services are reached, the caller has to identify the location. In most cases, pool users will be unfamiliar with the street address, the town or even the proper name for the facility. Detailed signage provides the needed information in the correct locations to reduce delays in getting help.

The code does not require that the landline telephone be located in the pool area (within the perime-



FIGURE 412.1
NO DIVING SIGN



FIGURE 412.2
TELEPHONE

INTERNATIONAL CODE COUNCIL®
Copyright © 2015 ICC. ALL RIGHTS RESERVED. Accessed by David Dammon on Jun 21, 2017 12:30:52 PM pursuant to License Agreement with ICC. No further reproduction or distribution authorized. ANY UNAUTHORIZED REPRODUCTION OR DISTRIBUTION IS A VIOLATION OF THE FEDERAL COPYRIGHT ACT AND THE LICENSE AGREEMENT, AND SUBJECT TO CIVIL AND CRIMINAL PENALTIES THEREUNDER.

ter of the barrier for the pool), right outside the pool barrier or be inside of a red box or, for that matter, in any kind of box. The telephone could be on a table or a wall anywhere, including "down the road." The only requirements are that the access to the telephone not be restricted such as in someone's house or a business that would be locked during pool use and that the telephone be allowed to be used free of charge. Although outdoor pay telephones are becoming less common, they do offer landline telephone access in a rugged package. Such telephones can be set up to facilitate emergency calling without fees.

412.3 Sign placement. Signs shall be positioned for effective visual observation by users as required by the authority that governs such pools.

❖ The sign(s) required by Sections 412.1 and 412.2 must be located in accordance with the authority that governs the operation of pools.

412.4 Emergency shutoff switch. Signs shall be posted that clearly indicate the location of the pump emergency shutoff switch. Such switch shall be clearly identified as the pump emergency shutoff switch.

❖ The emergency pump shutoff switch must be marked clearly so that users and observers clearly understand its location and function (see Commentary Figure 313.7).

INTERNATIONAL CODE COUNCIL®
Copyright © 2015 ICC. ALL RIGHTS RESERVED. Accessed by David Dammon on Jun 21, 2017 12:30:52 PM pursuant to License Agreement with ICC. No further reproduction or distribution authorized. ANY UNAUTHORIZED REPRODUCTION OR DISTRIBUTION IS A VIOLATION OF THE FEDERAL COPYRIGHT ACT AND THE LICENSE AGREEMENT, AND SUBJECT TO CIVIL AND CRIMINAL PENALTIES THEREUNDER.

Chapter 5:
Public Spas and Public Exercise Spas

General Comments

Although there is not a limit on the size of a public spa, most spas usually accommodate about 16 persons. As exercise spas are intended to be used by a single person for swimming, such spas are relatively small. All spas share common features and require designs that provide for safe use by persons who may not be familiar with a particular spa site.

Purpose

The purpose of this chapter is to regulate certain features of spa design such as floor slope, water depth, suction fittings, heaters, temperature control and signage so that safety is ensured for the users.

SECTION 501
GENERAL

501.1 Scope. This chapter shall govern the design, installation, construction and repair of public spas and exercise spas regardless of whether a fee is charged for use.

❖ The absence of a fee for entry or use does not alter the public nature of the spa or allow for an exemption from this chapter. Commentary Figures 501.1(1) and 501.1(2) show public spas.

501.2 General. In addition to the requirements of this chapter, public spas and public exercise spas shall comply with the requirements of Chapter 3.

❖ Chapter 3 has many details and references to requirements that must be adhered to for public spas and exercise spas, including, but not limited to, barriers, circulation and lighting.

SECTION 502
MATERIALS

502.1 Pumps and motors. Pumps and motors shall be *listed* and *labeled* for use in spas.

❖ Pumps and motors must be built for the specific conditions for spa service. The listing and labeling requirement ensures that these pumps and motors are built to standards and that periodic inspection of the manufactured product occurs.

SECTION 503
STRUCTURE AND DESIGN

503.1 Water depth. The maximum water depth for spas shall be 4 feet (1219 mm) measured from the *design waterline* except for spas that are designed for special purposes and *approved* by the authority having jurisdiction. The water



FIGURE 501.1(1)
PUBLIC SPA



FIGURE 501.1(2)
PUBLIC SPA

INTERNATIONAL CODE COUNCIL®
Copyright © 2015 ICC. ALL RIGHTS RESERVED. Accessed by David Dammon on Jun 21, 2017 12:30:52 PM pursuant to License Agreement with ICC. No further reproduction or distribution authorized. ANY UNAUTHORIZED REPRODUCTION OR DISTRIBUTION IS A VIOLATION OF THE FEDERAL COPYRIGHT ACT AND THE LICENSE AGREEMENT, AND SUBJECT TO CIVIL AND CRIMINAL PENALTIES THEREUNDER.

depth for exercise spas shall not exceed 6 feet 6 inches (1981 mm) measured from the *design waterline*.

❖ A spa that is not an exercise spa is built for sitting or reclining by the users. There is no need for such a spa to be deeper than 4 feet (1219 mm). However, spas with greater depths can be constructed where approved. Exercise spas are allowed to be deeper to allow users to perform vertical exercise routines.

503.2 Multilevel seating. Where multilevel seating is provided, the maximum water depth of any seat or sitting bench shall be 28 inches (711 mm) measured from the *design waterline* to the lowest measurable point.

❖ Seats located more than 28 inches (711 mm) below the waterline cannot be safely used by many people.

503.3 Floor slope. The slope of the floor shall not exceed 1 unit vertical in 12 units horizontal (8.3-percent slope). Where multilevel floors are provided, the change in depth shall be indicated.

❖ A floor slope of one unit vertical in 12 units horizontal can be walked on with little difficulty. If the floor has abrupt changes in elevation, the change needs to be indicated, usually by a change in color at the leading edge of the higher floor level.

SECTION 504
PUMPS AND MOTORS

504.1 Emergency shutoff switch. One emergency shutoff switch shall be provided to disconnect power to circulation and jet system pumps and air blowers. Emergency shutoff switches shall be accessible, located within sight of the spa and shall be located not less than 5 feet (1524 mm) but not greater than 10 feet (3048 mm) horizontally from the inside walls of the spa.

❖ For electrical safety, it is important that the shutoff switch is located more than 5 feet (1524 mm) from the spa so that it cannot be reached by someone who is in the spa. The shutoff switch needs to be no farther than 10 feet (3048 mm) from the spa so that it can easily be found by those in the area.

504.1.1 Alarms. Emergency shutoff switches shall be provided with an audible alarm rated at not less than 80 decibel sound pressure level and a light near the spa that will operate continuously until deactivated when the shutoff switch is operated. The following statements shall appear on a sign that is posted in a location that is visible from the spa:

ALARM INDICATES SPA PUMPS OFF. DO NOT USE SPA WHEN ALARM SOUNDS AND LIGHT IS ILLUMINATED UNTIL ADVISED OTHERWISE.

❖ Visual and auditory signals are necessary to indicate to users that there is a problem with the spa or exercise spa and it is necessary to get out of the spa. An emergency shutoff switch must be located near the spa so that it can be found and activated when there is an emergency. A sign needs to be located near the spa so that users will know what the noise and light mean. There is not a code requirement for the light to flash, be of any specific color, or to be of any specific size (wattage or illuminance). There is not a code requirement for the type of noise. A siren, klaxon, buzzer or bell are commonly used.

SECTION 505
RETURN AND SUCTION FITTINGS

505.1 Return fittings. Return fittings shall be provided and arranged to facilitate a uniform circulation of water and maintain a uniform sanitizer residual throughout the entire spa or exercise spa.

❖ The positioning of return fittings is essential for even distribution of the sanitizing agent and for the movement of debris in order to maintain a clear and safe body of water.

505.2 Suction fittings. Suction fittings shall be in accordance with Sections 505.2.1 through 505.2.4.

❖ Sections 505.2.1 through 505.2.4 cover the requirements for suction fittings. Suction fittings are sometimes referred to as suction outlet fittings or drain covers.

505.2.1 Testing and certification. Suction fittings shall be *listed* and *labeled* in accordance with APSP 16.

❖ Suction fittings for spas must be designed and tested in accordance with APSP 16. A third-party certification agency must perform the testing, list the product and perform periodic inspection to ensure that the products continue to meet the standard.

505.2.2 Installation. Suction fittings shall be sized and installed in accordance with the manufacturer's specifications. Spas and exercise spas shall not be used or operated if the suction outlet cover is missing, damaged, broken or loose.

❖ Proper sizing and installation of suction fittings are keys to providing the level of safety necessary to prevent suction entrapment of spa users. Because missing and broken suction outlet covers have been a leading cause of user entrapment in spas, the Virginia Graeme Baker Pool and Spa Safety Act, a U.S. federal law, mandates that all public spas have compliant suction outlet fittings while in operation and if any of these fittings are broken, loose or missing, the unit must be shut down until the fittings can be replaced or repaired.

505.2.3 Outlets per pump. Suction fittings shall be provided in accordance with Section 310.

❖ Section 310 requires that suction fittings be in accordance with APSP 7.

505.2.4 Submerged vacuum fittings. *Submerged vacuum fittings* shall be in accordance with Section 310.

❖ Section 310 requires that submerged vacuum fittings be in accordance with APSP 7.

INTERNATIONAL CODE COUNCIL®
Copyright © 2015 ICC. ALL RIGHTS RESERVED. Accessed by David Dammon on Jun 21, 2017 12:30:52 PM pursuant to License Agreement with ICC. No further reproduction or distribution authorized. ANY UNAUTHORIZED REPRODUCTION OR DISTRIBUTION IS A VIOLATION OF THE FEDERAL COPYRIGHT ACT AND THE LICENSE AGREEMENT, AND SUBJECT TO CIVIL AND CRIMINAL PENALTIES THEREUNDER.

SECTION 506
HEATER AND TEMPERATURE REQUIREMENTS

506.1 General. This section pertains to fuel-fired and electric appliances used for heating spa or exercise spa water.

❖ Fuel-fired and electric water-heating appliances used for heating spa water are covered by this section.

506.2 Water temperature controls. Components provided for water temperature controls shall be suitable for the intended application.

❖ Water temperature control components must be designed for the intended purpose of controlling spa water temperature.

506.2.1 Water temperature regulating controls. Water temperature regulating controls shall comply with UL 873 or UL 372. A means shall be provided to indicate the water temperature in the spa.

Exception: Water temperature regulating controls that are integral to the heating appliance and *listed* in accordance with the applicable end use appliance standard.

❖ Water temperature regulating controls built to these standards ensure safety and reliability. Spas must also have a temperature indicator for the temperature of the water in the spa. The exception allows for controls that are integral to but not in compliance with the standards indicated in the section, but are in compliance with the standards covering the appliance.

506.2.2 Water temperature limiting controls. Water temperature limiting controls shall comply with UL 873 or UL 372. Water temperature at the heater return outlet shall not exceed 140°F (60°C).

❖ Water temperature limiting controls built to these standards ensure safety and reliability. Water temperatures greater than 140°F (60°C) at the heater return outlet could result in excessive temperature at the entrance to the spa.

SECTION 507
WATER SUPPLY

507.1 Water temperature. The temperature of the incoming makeup water shall not exceed 104°F (40°C).

❖ Water temperatures greater than 104°F (40°C), even for a short duration, can be harmful to the spa users.

SECTION 508
SANITIZING, OXIDATION EQUIPMENT AND CHEMICAL FEEDERS

508.1 Automatic controllers. Where an automatic controller is installed on a spa or hot tub for public use, the controller shall be installed with an automatic pH and an oxidation reduction potential controller *listed* and *labeled* in compliance with NSF 50.

❖ This section does not require automatic controllers for spas; but, where they are installed, they must be in compliance with NSF 50. The design of such controllers must be examined by a third-party agency and the production of the controller must be periodically monitored for ensuring quality control.

SECTION 509
SAFETY FEATURES

509.1 Instructions and safety signs. Instructions and safety signage shall comply with the requirements of the local jurisdiction. In the absence of local requirements, safety signs and instructions shall comply with UL 1563 or CSA C22.2 No. 218.1.

❖ State or local health codes typically require conspicuous placement of safety signage and instructions, including the risk associated with running, use of alcohol, prolonged exposure and use of spas by children and pregnant women. Where state or local health codes do not require signage, the requirements within UL 1563 or CSA 22.2 No. 218.1 have requirements for safety signage.

509.2 Operational signs. Operational signs shall include, but not be limited to, the following messages as required by the local jurisdiction:

1. Do not allow the use of or operate spa if the suction outlet cover is missing, damaged or loose.
2. Check spa temperature before each use. Do not enter the spa if the temperature is above 104°F (40°C).
3. Keep breakable objects out of the spa area.
4. Spa shall not be operated during severe weather conditions.
5. Never place electrical appliances within 5 feet (1524 mm) of the spa.
6. No diving.

❖ Observation of these rules is essential for the safety of users in and around spas. Such signs should be clearly visible in the area of the spa.

509.3 Depth markers. Public spas shall have permanent depth markers with numbers not less than 4 inches (102 mm) in height that are plainly and conspicuously visible from obvious points of entry and in conformance to this section.

❖ A 4-inch (102 mm) number height offers readability by approaching spa users who have decided not to wear their glasses in the spa.

509.3.1 Number. There shall be not less than two depth markers for each spa, regardless of spa size or shape.

❖ Having at least two depth markers provides a greater probability for the user to see one of the markers if the other is obscured by bathers or objects.

509.3.2 Spacing. Depth markers shall be spaced at not more than 25-foot (7620 mm) intervals and shall be uniformly located around the perimeter of the spa.

❖ Spas with large perimeters need to have depth markers at not less than 25-foot (7620 mm) intervals around the perimeter.

INTERNATIONAL CODE COUNCIL®
Copyright © 2015 ICC. ALL RIGHTS RESERVED. Accessed by David Dammon on Jun 21, 2017 12:30:52 PM pursuant to License Agreement with ICC. No further reproduction or distribution authorized. ANY UNAUTHORIZED REPRODUCTION OR DISTRIBUTION IS A VIOLATION OF THE FEDERAL COPYRIGHT ACT AND THE LICENSE AGREEMENT, AND SUBJECT TO CIVIL AND CRIMINAL PENALTIES THEREUNDER.

509.3.3 Marking. Spas and exercise spas shall have the maximum water depth clearly marked on the required surfaces and such markers shall be positioned on the deck within 18 inches (457 mm) of the *design waterline*. Depth markers shall be positioned to be read while standing on the deck facing the water.

❖ The depth marking needs to reflect the greatest depth within the spa and not the depth that is at the spa wall. The marking must be within 18 inches (457 mm) of the waterline. The marking needs to be oriented to be read by a person entering the spa.

509.3.4 Slip resistant. Depth markers in or on the deck surfaces shall be slip resistant.

❖ Most surfaces are more slippery when wet. Depth markers on the deck must have surfaces that are treated or configured to be slip resistant.

509.4 Clock. Public facilities shall have a clock that is visible to spa users.

❖ Prolonged use of a spa may cause injury or illness. The presence of a clock enables users to monitor their use and exposure (see Commentary Figure 509.4). The code does not specify the size or type of clock; or how far the clock is from the edge of the spa. Common sense dictates that the clock time be discernible by someone using the spa and having average visual acuity.



FIGURE 509.4
CLOCK FOR SPA USERS

INTERNATIONAL CODE COUNCIL®
Copyright © 2015 ICC. ALL RIGHTS RESERVED. Accessed by David Dammon on Jun 21, 2017 12:30:52 PM pursuant to License Agreement with ICC. No further reproduction or distribution authorized. ANY UNAUTHORIZED REPRODUCTION OR DISTRIBUTION IS A VIOLATION OF THE FEDERAL COPYRIGHT ACT AND THE LICENSE AGREEMENT, AND SUBJECT TO CIVIL AND CRIMINAL PENALTIES THEREUNDER.

Chapter 6:
Aquatic Recreation Facilities

General Comments

Aquatic recreation facilities offer many water activities in conjunction with pools that are located within these facilities. Unlike a standard public pool (as covered by Chapter 4), aquatic recreation facility pools serve different purposes and have special requirements to accommodate how they are used. Aquatic recreation pools include wave action pools, activity pools, catch pools, leisure rivers, vortex pools and interactive play attraction pools.

Purpose

The purpose of this chapter is provide requirements for floor slopes, handholds, lifelines, barriers, toilet facilities and signage so that the users of these facilities will have a safe experience.

SECTION 601
GENERAL

601.1 Scope. This chapter covers public pools and water containment systems used for aquatic recreation. This chapter provides specifications for the design, equipment, operation, signs, installation, sanitation, new construction, and rehabilitation of public pools for aquatic play. This chapter covers Class D-1 through Class D-6 public pools whether they are provided as stand-alone attractions or in various combinations in a composite attraction.

❖ This chapter covers all Class D pools (see Chapter 2, "Public swimming pool," Class D definitions). The focus of Class D pools is fun derived from the motion of the water in the pool or use of equipment that uses pool water to entertain. Note that the code does not regulate amusement equipment such as inner tube rides, interactive play attractions and body slides.

601.2 Combinations. Where combinations of Class D-1 through Class D-6 pools exist within a facility, each element in the facility shall comply with the applicable code sections as if the element functioned as a part of a freestanding pool of Class D-1 through Class D-6.

❖ An aquatic recreation facility could have numerous independent Class D pools within the facility. This section indicates that these independent pools be treated as if they were connected together, serving as one pool. The primary purpose of this section is to not require individual barrier systems for each independent pool. Once the user enters the aquatic recreation facility, the user (or supervising adult) accepts the risk of using the pools in the facility in the same manner as they accept the risk of using one pool inside the barrier system for an aquatic recreation facility.

601.3 General. In addition to the requirements of this chapter, aquatic recreation facilities shall comply with the requirements of Chapter 3.

❖ Chapter 3 contains requirements applicable to all pools and spas, including aquatic recreation facilities. Commentary Figure 601.3 shows a typical aquatic recreation facility.



FIGURE 601.3
AQUATIC RECREATION FACILITY
(Photo courtesy of Tolomato Community Development District - Novatee)

SECTION 602
FLOORS

602.1 Floor slope. In water depths of less than 5 feet (1524 mm), the floor slope shall be not greater than 1 unit vertical in

INTERNATIONAL CODE COUNCIL®
Copyright © 2015 ICC. ALL RIGHTS RESERVED. Accessed by David Dammon on Jun 21, 2017 12:30:52 PM pursuant to License Agreement with ICC. No further reproduction or distribution authorized. ANY UNAUTHORIZED REPRODUCTION OR DISTRIBUTION IS A VIOLATION OF THE FEDERAL COPYRIGHT ACT AND THE LICENSE AGREEMENT, AND SUBJECT TO CIVIL AND CRIMINAL PENALTIES THEREUNDER.

12 units horizontal (8.3-percent slope) except where the function of the attraction requires greater slopes in limited areas.

Exception: The slope of the floor in Class D-3 pools shall not exceed 1 unit vertical in 7 units horizontal (14-percent slope).

❖ A floor slope of one unit vertical in 12 units horizontal is gradual enough that the slip hazard is very low, thus reducing the risk of drowning for small children and nonswimmers. The exception recognizes that catch pools are often placed where there is limited space, so the floor slope must be steeper. Even though this floor slope is greater (and the slip hazard greater), catch pools are not designed to be very deep.

SECTION 603
MARKINGS AND INDICATORS

603.1 Markings. Markings in areas of deep water shall comply with Section 409.2 except where the function of the pool dictates otherwise.

❖ Where the water depth is greater than 5 feet (1.52 m), depth markers must be installed according to Section 409.2.

603.2 Class D-2 pools. Where a Class D-2 pool has a bather-accessible depth greater than $4^1/_2$ feet (1372 mm), the floor shall have a distinctive marking at the $4^1/_2$ feet (1372 mm) water depth.

❖ Bathers in a Class D-2 pool need to be aware of the point at which they begin to enter the deep end of the pool. A demarcation on the floor at the $4^1/_2$-foot (1372 mm) point provides this awareness.

603.3 Shallow-to-deep-end rope and float line. Where a pool has a water depth ranging from less than 5 feet (1524 mm) to greater than 5 feet (1524 mm), a rope and float line shall be located 1 foot (305 mm) horizontally from the 5-foot (1524 mm) depth location, toward the shallow end of the pool.

❖ Bathers in a pool that has shallow-to-deep water depths need to be aware of the point at which they begin to enter the deep end of the pool. A rope and float line across the pool before the water becomes deep provides such awareness.

603.4 Nozzles. Pools having nonflush propulsion nozzles in the floor shall have a distinctive marking at the location of such nozzles.

❖ Protrusions on the pool floor can be a trip hazard. Nonflush water propulsion nozzles must have a distinctive marking so that the bather can be aware of their presence. Although suction outlet fittings on the pool floor will not be flush with the floor, they are large enough to be easily noticed and avoided. Return inlet nozzles are much smaller and cannot be readily seen without some type of distinctive markings.

SECTION 604
CIRCULATION SYSTEMS

604.1 General. A circulation system consisting of pumps, piping, return inlets and suction outlets, filters, and other necessary equipment shall be provided for complete circulation of water with the pool.

❖ All pools within an aquatic recreation facility must be provided with a circulation system that filters the water within the pool.

604.2 Turnover. Circulation system equipment shall be designed to turn over 100 percent of the nominal pool water volume in the amount of time specified in Table 604.2. The system shall be designed to give the required turnover time based on the manufacturer's recommended maximum pressure and flow of the filter in clean media condition.

❖ Turnover time is the amount of time required to circulate the entire volume of the pool. Table 604.2 indicates the maximum turnover times for each class of pool. Note that the turnover time is based on the filter media being in clean condition. Turnover time is calculated by dividing the volume of the pool by the filtration pump flow rate. For example, a pool with 10,000 gallons (37 854 L) of water has a filtration pump that circulates 36 gallons per minute (136.3 L/m) and provides for a 4.6-hour turnover rate.

604.2.1 24-hour circulation required. Circulation systems shall circulate treated and filtered water for 24 hours a day.

❖ Twenty-four-hour-a-day circulation of pool water is required to maintain exceptional clarity of water.

TABLE 604.2
TURNOVER TIME

CLASS OF POOL	MAXIMUM TURNOVER TIME[a] (hours)
D-1	2
D-2 with less than 24 inches water depth	1
D-2 with 24 inches or greater water depth	2
D-3	1
D-4	2
D-5	1
D-6	1

For SI: 1 inch = 25.4 mm.

a. Pools with a sand bottom require a 1-hour turnover time.

INTERNATIONAL CODE COUNCIL®
Copyright © 2015 ICC. ALL RIGHTS RESERVED. Accessed by David Dammon on Jun 21, 2017 12:30:52 PM pursuant to License Agreement with ICC. No further reproduction or distribution authorized. ANY UNAUTHORIZED REPRODUCTION OR DISTRIBUTION IS A VIOLATION OF THE FEDERAL COPYRIGHT ACT AND THE LICENSE AGREEMENT, AND SUBJECT TO CIVIL AND CRIMINAL PENALTIES THEREUNDER.

604.2.2 Reduced circulation rate. The circulation rate shall be permitted to be reduced during periods that the pool is closed for use provided that acceptable water clarity conditions are met prior to reopening the pool for public use. The reduced circulation rate shall not be zero.

❖ The turnover rates indicated in Table 604.2 are based on the maximum occupant load allowed for the pool. When the pool is not occupied (the facility is closed), turnover time can be increased (in other words, the filtration pump circulation rate reduced). Reduction in the pump circulation rate reduces power consumption. The only limits to how low the circulation rate can be is that it can't be zero and the clarity of water at the time of opening the facility for use must be acceptable. Clarity of water is often determined by the deployment of a secchi disk in the deepest part of the pool. The pattern on the secchi disk must be easily discernable by the observer at the poolside.

604.3 Surface skimming systems. Surface skimming systems shall be in accordance with Table 604.3.

❖ Table 604.3 indicates which types of skimming systems are allowed to be used for the different classes of pools. The type of skimming system for a pool must be appropriate for the class of pool. This table indicates which types of skimming systems are appropriate.

604.3.1 Class D-5 pool skimmers. The installation of skimmers in the side areas of Class D-5 pools shall be prohibited.

❖ Class D-5 pools are vortex pools. The water in vortex pools moves in a circular pattern. Skimmers in the side walls of such pools could be a hazard if a bather uses the skimmer as a handhold and other bathers could be propelled into the stationary bather.

SECTION 605
HANDHOLDS AND ROPES

605.1 Handholds. Handholds shall be provided in accordance with Section 323.

Exception: Handholds shall not be provided for wave action and action rivers.

❖ Section 323 covers the requirements for handholds in all pools and spas. The exception recognizes that handholds in wave action or action river pools could create an increased risk of injury from bathers who are propelled past or against the person holding on.

605.2 Rope and float line. A rope and float line shall be provided for all of the following situations:

1. Separation of activity areas.
2. Identification of a break in floor slope at water depths of less than 5 feet (1524 mm).
3. Identification of a water depth greater than $4^1/_2$ feet (1372 mm) in constant floor slope in Class D-2 pools.

Exception: Class D-1 pools or any other pool where the designer indicates that such a line is not required or that the line would constitute a hazard.

❖ A rope and float line provides bather awareness at the water surface that the condition of the pool such as water depth, floor slope or activity changes on the other side of the rope and float line. The exception to Item 3 recognizes that a rope and float line could create a hazard in pools where the motion of the water would interfere with involuntary bather movements.

605.2.1 Location. The rope and float line shall be located 1 foot (305 mm) toward the shallow end in each location.

❖ The rope and float assembly on the shallow side of a slope break or 5-foot (1525 mm) depth is intended to alert bathers and supervisors of an approaching change in slope or depth.

605.3 Caisson wall rope and float line. For Class D-1 pools, a rope and float line shall be installed to restrict bather access to the wave pool caisson wall. The location of the rope and float line shall be in accordance with the wave equipment manufacturer's instructions.

❖ A wave pool cassion wall could be a hazard to wave pool users because the wave action could propel the user against the wall. A rope and float line provides a demarcation line that safety supervisors can use to enforce prohibiting users from being too close to the wall.

605.4 Fastening. Rope and float lines shall be securely fastened to wall anchors made of corrosion-resistant materials. Wall anchors shall be of the recessed type and shall not have projections that will constitute a hazard when the rope and float line is removed.

❖ Corrosion-resistant anchors for rope and float lines are necessary to ensure that the anchor will not

TABLE 604.3
SURFACE SKIMMING SYSTEMS

CLASS OF POOL	SURFACE SKIMMING SYSTEM
D-1	Zero-depth trench located at static water level or other skimming systems
D-2	Auto skimmer, zero-depth trench or gutters
D-3	Auto skimmer, zero-depth trench or perimeter device
D-4	Single or multiple skimmer devices for skimming flow
D-5	Skimmers prohibited in side area
D-6	Auto skimmer, zero-depth trench, or gutter

INTERNATIONAL CODE COUNCIL®
Copyright © 2015 ICC. ALL RIGHTS RESERVED. Accessed by David Dammon on Jun 21, 2017 12:30:52 PM pursuant to License Agreement with ICC. No further reproduction or distribution authorized. ANY UNAUTHORIZED REPRODUCTION OR DISTRIBUTION IS A VIOLATION OF THE FEDERAL COPYRIGHT ACT AND THE LICENSE AGREEMENT, AND SUBJECT TO CIVIL AND CRIMINAL PENALTIES THEREUNDER.

degrade and not provide a suitable anchor point for the line. The requirement for recessed anchors is necessary to prevent injury to a bather should he or she come in contact with a protruding wall anchor.

605.5 Size. Rope and float lines shall be not less than $^5/_8$ inch (15.9 mm) in diameter and shall be made of polypropylene material.

❖ Polypropylene rope material is rot and decay resistant in a pool environment. The $^5/_8$-inch (16 mm) diameter provides for adequate strength and an easy handhold.

SECTION 606
DEPTHS

606.1 Class D-6 depth. The captured or standing water depth in Class D-6 pools shall be not more than 12 inches (305 mm).

❖ The 12-inch (305 mm) depth of a Class D-6 interactive pool allows for children to engage in play activities.

606.2 Spray pools. The water depths in spray pools shall be not more than 6 inches (152 mm).

❖ The 6-inch (152 mm) depth of a spray pool allows for small children to engage in play activities.

SECTION 607
BARRIERS

607.1 Barriers. Multiple pools and spas within a single complex shall be permitted without barriers where a barrier separates the single complex from the surrounding property in accordance with Section 305.

❖ It is not necessary to separate multiple pools and spas within a single facility. Once the user enters the aquatic recreation facility, the user (or supervising adult) accepts the risk of using the pools in the facility in the same manner as they accept the risk of using one pool inside the barrier system for an aquatic recreation facility. Note that where wading pools exist, Section 405.1 requires that a wading pool be "physically separated" from a main pool. The words might or might not mean that a barrier is to be between other pools and a wading pool. The code official will have to interpret what "physically separated" means.

SECTION 608
NUMBER OF OCCUPANTS

608.1 Occupant load. The occupant load for the pools or spas in the facility shall be calculated in accordance with Table 608.1. The occupant load shall be the combined total of the number of users based on the pool or spa water surface area and the deck area surrounding the pool or spa. The deck area occupant load shall be based on the occupant load calculated where a deck is provided or based on an assumed 4-foot-wide (1219 mm) deck surrounding the entire perimeter of the pool or spa, whichever is greater.

❖ Occupant loads for pools and spas in recreation facilities are based on an occupant density for the pool plus the occupant density for the deck area adjacent to the pool or spa. Where the deck area adjacent to the pool or spa is smaller than the area of a 4-foot-wide (1219 mm) deck around the entire perimeter of the pool or spa, the area of the 4-foot-wide (1219 mm) deck must be used for occupant load calculation. Table 608.1 indicates the occupant densities to be used for calculating the occupant load. For example, if the shallow area of a pool is 1000 square feet (93 m^2), the number of occupants allowed for the area would be 1000 divided by 8 square feet (0.743 m^2) per user, which equals 125 occupants.

608.2 Facility capacity. For multiple pools and spas in a single aquatic recreation facility, the total facility occupant capacity shall not be limited by the number of occupants calculated in accordance with Section 608.1.

❖ The aquatic recreation facility's maximum occupant load is not based only on the occupant load of the pools and spas. There typically are also areas for picnicking, food courts and other activities that are not involved with the pools and spas.

SECTION 609
TOILET ROOMS AND BATHROOMS

609.1 General. Toilet and bath facilities shall be in accordance with Sections 609.2 through 609.9.

❖ Sections 609.2 through 609.9 cover the requirements for toilet and bath facilities in aquatic recreation facilities. Although this code does not specify the location of toilet facilities with respect to pools, the requirements of IRC Chapter 4 could apply.

TABLE 608.1
OCCUPANT LOAD

	SHALLOW OR WADING AREAS	DEEP AREA (NOT INCLUDING THE DIVING AREA)	DIVING AREA (PER EACH DIVING BOARD)	DECK AREA
Vessel water surface area	8 sq. ft per user	10 sq. ft. per user	300 sq. ft. per user	—
Deck area	—	—	—	1 user per 15 sq. ft.

For SI: 1 square foot = 0.0929 m^2.

INTERNATIONAL CODE COUNCIL®
Copyright © 2015 ICC. ALL RIGHTS RESERVED. Accessed by David Dammon on Jun 21, 2017 12:30:52 PM pursuant to License Agreement with ICC. No further reproduction or distribution authorized. ANY UNAUTHORIZED REPRODUCTION OR DISTRIBUTION IS A VIOLATION OF THE FEDERAL COPYRIGHT ACT AND THE LICENSE AGREEMENT, AND SUBJECT TO CIVIL AND CRIMINAL PENALTIES THEREUNDER.

609.2 Number of fixtures. Pools shall have toilet facilities with the number of fixtures in accordance with Section 609.2.1 or 609.2.2.

❖ The number of plumbing fixtures required in aquatic recreation facilities is based on whether the facility is small or large. A small facility is one where the water surface area that can be accessed by bathers is less than 7500 square feet (697 m^2). A large facility is one where the water surface area is 7500 square feet (697 m^2) or greater.

609.2.1 Water area less than 7500 square feet. Facilities that have less than 7500 gross square feet (697 m^2) of water area available for bather access shall have not less than one water closet for males, one urinal for males, one lavatory for males, one shower for males, two water closets for females, one lavatory for females and one shower for females.

❖ A facility where the water surface area that can be accessed by bathers is less than 7,500 square feet (697 m^2) is considered small. All small facilities require the same number of plumbing fixtures.

609.2.2 Water area 7500 square feet or more. Facilities that have 7500 gross square feet (697 m^2) or more of water area available for bather access shall have not less than 0.7 water closet for males, one urinal for males, 0.85 lavatory for males, one shower for males, two water closets for females, one lavatory for females and one shower for females for every 7500 square feet (697 m^2) or portion thereof. Where the result of the fixture calculation is a portion of a whole number, the result shall be rounded up to the nearest whole number.

❖ A facility where the water surface area that can be accessed by bathers is 7500 square feet (697 m^2) or greater is considered large. The plumbing fixture requirements are based on the increments of 7500-square-foot (697 m^2) areas. For example, given a facility with 20,000 square feet (1858 m^2) of water area, the male plumbing fixture requirements would be 2.1 water closets (round to three), three urinals, 2.55 lavatories (round to three) and three showers. The female plumbing fixture requirements would be six water closets, three lavatories and three showers.

609.3 Showers. Showers shall be in accordance with Sections 609.3.1 through 609.3.5.

❖ Sections 609.3.1 through 609.3.5 cover the requirements for showers in aquatic recreation facilities. Commentary Figure 609.3 shows one type of deck shower.

609.3.1 Deck shower. Not less than one shower and not greater than half of the total number of showers required by Section 609.2 shall be located on the deck of or at the entrance of each pool.

❖ Deck showers are necessary so that bathers who have been sun tanning (using suntan lotions) can rinse themselves off before entering the pool. They are also convenient for bathers who exit the pool and want to rinse themselves of chlorinated pool water. The code does not specify the location of the shower on the deck or the proximity of the shower to the entrance of a pool. The overall intent is to make deck showers available to persons who are entering and exiting the pool.

609.3.2 Anti-scald device. Where heated water is provided to showers, the shower water supply shall be controlled by an anti-scald device.

❖ Although this code section is not specific about what type of anti-scald device is required, Chapter 4 of the *International Plumbing Code*® (IPC®) has specific requirements for shower valves.

609.3.3 Water heater and mixing valve. Bather access to water heaters and thermostatically controlled mixing valves for showers shall be prohibited.

❖ Water heaters and thermostatically controlled mixing valves must not be capable of being accessed by bathers, as unauthorized tampering could result in dangerous shower water temperatures. This is not to say that the bather using the shower should not have a control that can alter the temperature of the shower to a lower temperature at which they feel more comfortable (see Section 609.3.5).

609.3.4 Flow rate. Each showerhead shall have a water flow of not less than 2 gallons per minute (7.6 lpm).

❖ The flow from shower heads must be sufficient to be useful in washing and rinsing. Flows lower than 2 gallons per minute (gpm) (7.6 lpm) might not allow anti-scald shower mixing valves to properly operate to prevent temperature fluctuations from occurring. The IPC also regulates the maximum flow allowed through showerheads.

609.3.5 Temperature. At each showerhead, the heated shower water temperature shall be not less than 90°F (32°C) and not greater than 120°F (49°C).

❖ The IPC requires that shower water temperature not exceed 120°F (49°C). Most users cannot withstand



FIGURE 609.3
POOL DECK SHOWER

INTERNATIONAL CODE COUNCIL®
Copyright © 2015 ICC. ALL RIGHTS RESERVED. Accessed by David Dammon on Jun 21, 2017 12:30:52 PM pursuant to License Agreement with ICC. No further reproduction or distribution authorized. ANY UNAUTHORIZED REPRODUCTION OR DISTRIBUTION IS A VIOLATION OF THE FEDERAL COPYRIGHT ACT AND THE LICENSE AGREEMENT, AND SUBJECT TO CIVIL AND CRIMINAL PENALTIES THEREUNDER.

shower water that is 120°F (49°C). Where the user has control of the temperature of the shower water, he or she can adjust the temperature to their preference. Where the user cannot adjust the shower water temperature (such as where a master thermostatic mixing valve is used to control the water temperature), the temperature discharged by the shower is usually recommended to be not greater than 104°F (40°C).

609.4 Soap dispensers. Soap dispensers shall be in accordance with Sections 609.4.1 and 609.4.2.

❖ Sections 609.4.1 and 609.4.2 regulate soap dispensers.

609.4.1 Liquid or powder. Soap dispensers shall be provided in each toilet facility. Soap dispensers shall dispense liquid or powdered soap. Reusable cake soap is prohibited.

❖ Soap dispensers are necessary in the area where lavatories are located. In accordance with the IPC, lavatories are required to be located in the same room as the water closets. Bar soap is prohibited because it can transmit bacteria to the next user and is too easily lost or stolen. This leaves liquid or powdered soap as the only type of soap that can be used.

609.4.2 Metal or plastic. Soap dispensers shall be made of metal or plastic. Glass materials shall be prohibited.

❖ A soap dispenser with a glass reservoir would create a hazard if dropped on the floor and users enter the facility in only their bare feet. Only plastic or metal soap dispensers must be used.

609.5 Toilet tissue holder. A toilet paper holder shall be provided at each water closet.

❖ Toilet tissue needs to be in a dispenser so that it does not end up on the floor. There is not a code requirement for toilet paper holders to be of the locked type to prevent toilet paper rolls from theft.

609.6 Lavatory mirror. Where mirrors are provided, they shall be shatter resistant.

❖ A standard mirror is typically made of glass. However, glass mirrors could be broken, creating a hazard to the toilet facility user who could be bare foot. Mirrors made of stainless steel or acrylic are shatter resistant.

609.7 Sanitary napkin receptacles. Sanitary napkin receptacles shall be provided in each water closet compartment for females and in the area of the showers for female use only.

❖ Women have special needs for disposal of sanitary napkins. Receptacles for sanitary napkin disposal must be located at each water closet and in the female-only shower area.

609.8 Sanitary napkin dispensers. A sanitary napkin dispenser shall be provided in each toilet facility for females.

❖ Women need to have access to sanitary napkins in case they find themselves needing one but did not bring one with them to the aquatic recreation facility.

609.9 Infant care. Baby-changing tables shall be provided in toilet facilities having two or more water closets.

❖ A baby-changing table in a toilet facility is a convenience for both male and female caretakers. Because toilet facilities having less than two water closets are small, those facilities are not required to have changing tables.

SECTION 610
SPECIAL FEATURES

610.1 Locations. Entry and exit locations shall be in accordance with Table 610.1. The primary means of entry and exit shall consist of ramps, beach entries, pool stairs, or ladders.

❖ Table 610.1 indicates the allowable points of entry and exit to and from various Class D pools. The primary means of entry and exit must be a ramp, a beach entry, stairs or ladders. Most entry and exit locations for Class D pools are determined by the pool designer. Only Class D-1 and D-3 pools have specific requirements.

610.2 Secondary entry and exit means. Where secondary means of entry and exit are provided, they shall consist of one of the following:

1. Steps.
2. Stairs.
3. Ladders with grab rails.
4. Recessed treads.
5. Ramps.
6. Beach entries.

TABLE 610.1
ENTRY AND EXIT LOCATIONS

CLASS OF POOL	ENTRY AND EXIT LOCATIONS
D-1	Entry at beach end only; exit at beach end, sides or end wall
D-2	Entry and exit determined by the pool designer
D-3	Entry prohibited from deck areas; exit by ladders, steps or ramps as determined by pool designer
D-4	Entry and exit determined by the pool designer
D-5	Entry and exit determined by the pool designer
D-6	Entry and exit determined by the pool designer

INTERNATIONAL CODE COUNCIL®
Copyright © 2015 ICC. ALL RIGHTS RESERVED. Accessed by David Dammon on Jun 21, 2017 12:30:52 PM pursuant to License Agreement with ICC. No further reproduction or distribution authorized. ANY UNAUTHORIZED REPRODUCTION OR DISTRIBUTION IS A VIOLATION OF THE FEDERAL COPYRIGHT ACT AND THE LICENSE AGREEMENT, AND SUBJECT TO CIVIL AND CRIMINAL PENALTIES THEREUNDER.

7. Swimouts.
8. Designs that provide the minimum utility as specified in this code.

❖ Secondary entries and exits are in addition to the primary means of entry and exit for a pool. Pool operators may wish to restrict the use of certain entry and exit means for safety. For example, it is common industry practice to restrict entry and exit in Class D-1 (wave action pools), Class D-3 (catch pools), Class D-4 (leisure rivers) and Class D-5 (vortex pools) to specifically marked entry and exit points. All prohibited entry and exit points are typically blocked by a barrier and posted with signage directing the user towards acceptable entry and exit points.

Where ladders are installed on the sidewalls of Class D-1 pools, such ladders typically are posted as emergency only exits to keep bathers from attempting to use the ladder as an exit or as a handhold.

As Table 610.1 indicates, bather entry into Class D-3 (catch pools) from the deck is prohibited. This means that entry to the pool is only possible through the slide that the catch pool serves.

610.3 Provisions for diving. Where diving facilities are part of the attraction or pool complex, entries, exits, pool stairs, ladders, underwater benches, special features, and other accessories shall be located outside of the minimum diving water envelope in accordance with Figure 322.2.

❖ If an aquatic recreation facility allows diving into pools, the minimum diving water envelope must not be encroached on by any feature of the pool such as, but not limited to, ladders, swimouts, steps and water features.

610.4 Beach entry, zero-depth entry, and sloping entries. The shallow end for beach entries and sloping entries shall be in accordance with Sections 610.4.1 through 610.4.4 or the regulations of the local jurisdiction.

❖ Sections 610.4.1 through 610.4.4 cover the requirements for shallow end beach entry and sloping entry. Local jurisdictions could have other requirements.

610.4.1 Maximum entry slope. The slope of sloping entries used as a pool entry shall not exceed 1 unit vertical in 12 units horizontal (8.3-percent slope).

❖ A floor slope of one unit vertical in 12 units horizontal is gradual enough that the slip hazard is very low, thus reducing the risk of falls.

610.4.2 Benches. Where benches are used in conjunction with sloping entries, the vertical riser height shall not exceed 12 inches (305 mm).

❖ A maximum riser height of 12 inches (305 mm) for benches allows the benches to be easily stepped onto and off of.

610.4.3 Steps. Where steps are used in conjunction with sloping entries, all of the requirements of Section 610.5 shall apply.

❖ Steps used as part of sloping entries must comply with Section 610.5.

610.4.4 Slip-resistant surfaces. Beach and sloping entry walking surfaces at water depths up to 18 inches (457 mm) shall be slip resistant.

❖ The sloped walking surfaces must be slip resistant to reduce the potential for falls. Where the water depth is 18 inches (457 mm) or greater, walking surfaces are not required to be slip resistant as the water will cushion falls.

610.5 Pool steps. The design and construction of steps for stairs into the shallow end and recessed pool stairs shall be in accordance with Sections 610.5.1 through 610.5.6.

❖ Shallow end stair and recessed stair requirements are covered by Sections 610.5.1 through 610.5.6.

610.5.1 Uniform height of 9 inches. Except for the bottom riser, risers at the centerline shall have a maximum uniform height of 9 inches (229 mm). The bottom riser height shall be permitted to vary from the other risers.

❖ Step riser heights that are greater than 9 inches (229 mm) are difficult to climb. Lower height risers are easier to climb, especially if carrying items such as inner tubes or body slide mats. The bottom riser height might have to vary from the other riser heights.

610.5.2 Distance from coping or deck. The vertical distance from the pool coping, deck, or step surface to the uppermost tread shall be not greater than 9 inches (229 mm).

❖ The distance from the top step to the top of the deck or top of the pool coping must not be greater than 9 inches (229 mm), as greater heights are difficult to climb.

610.5.3 Color to mark leading edge. The leading edge of steps shall be distinguished by a color contrasting with the color of the steps and the pool floor.

❖ Steps that are underwater are difficult for the user to see where the step begins. A contrasting color on the leading edge of each step provides visual assistance to the user (see Commentary Figure 610.5.3).

610.5.4 Stairs in water depths over 48 inches. Stairs that are located in water depths greater than 48 inches (1219 mm) shall have the lowest tread located below the deck at a distance of not less than 48 inches (1219 mm) below the deck.

❖ Where stairs are in a water depth greater than 48 inches (1219 mm), the bottom step of the stairs needs to be at least 48 inches (1219 mm) below the top of the deck.

610.5.5 Tread horizontal depth. Treads shall have an unobstructed horizontal depth of not less than 11 inches (279 mm).

❖ Step treads are required to have a depth of not less than 11 inches (279 mm) so that an adult can place his or her foot completely on the step.

610.5.6 Tread surface area. Treads shall have an unobstructed surface area of not less than 240 square inches (.017 m^2).

❖ Step treads are required to have an area of not less than 240 square inches (0.017 m^2) so that it is easy

INTERNATIONAL CODE COUNCIL®
Copyright © 2015 ICC. ALL RIGHTS RESERVED. Accessed by David Dammon on Jun 21, 2017 12:30:52 PM pursuant to License Agreement with ICC. No further reproduction or distribution authorized. ANY UNAUTHORIZED REPRODUCTION OR DISTRIBUTION IS A VIOLATION OF THE FEDERAL COPYRIGHT ACT AND THE LICENSE AGREEMENT, AND SUBJECT TO CIVIL AND CRIMINAL PENALTIES THEREUNDER.

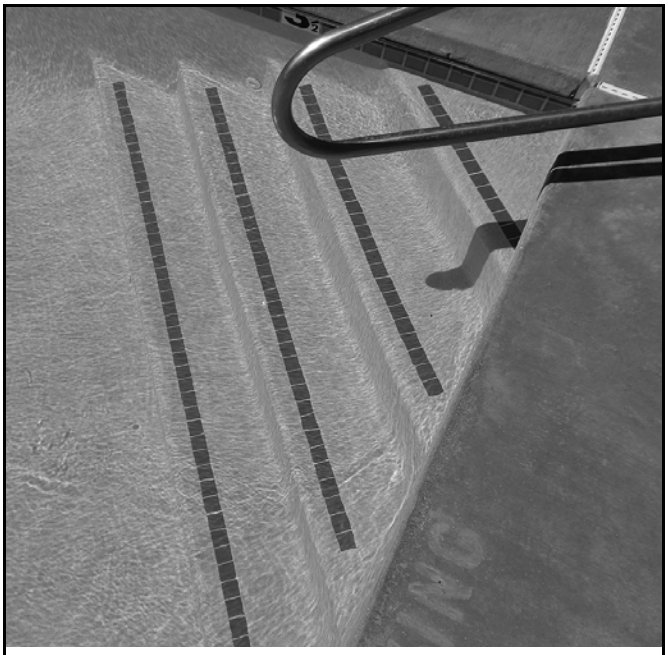

FIGURE 610.5.3
MARKING OF LEADING EDGE OF STEPS

for the user to find the step and have an area large enough to stand with both feet on the step.

610.6 Swimouts. Swimouts shall be located completely outside of the water current or wave action of the pool or spa and can be located in shallow or deep areas of water.

❖ Swimouts are a refuge point for swimmers. They must be located outside of wave action or water currents that are in the main part of the pool.

610.6.1 Surface area. An unobstructed surface equal to or greater than that required for the top tread of the pool stairs shall be provided in accordance with Sections 610.5.5 and 610.5.6.

❖ A swimout must meet the requirements of Sections 610.5.5 and 610.5.6.

610.6.2 Step required. Where a swimout is used as an entry and exit access point, it shall be provided with a step that meets the pool stair requirements (see Section 610.5).

❖ If the swimout is intended to be used as an entry and exit to the pool, then one or more steps must be provided from the swimout to the top of the deck or top of the coping. The steps must comply with Section 610.5.

610.6.3 Maximum depth. The horizontal surface of a swimout shall be not greater than 20 inches (508 mm) below the waterline.

❖ The top surface of a swimout cannot be greater than 20 inches (508 mm) below the waterline.

610.6.4 Color marking. The leading edge of a swimout shall be visually set apart by a stripe having a width of not less than $^3/_4$ inch (19 mm) and not greater than 2 inches (51 mm). The stripe shall be of a contrasting color to the adjacent surfaces.

❖ A contrasting color on the leading edge of a swimout provides visual assistance to the user. The color stripe on the leading edge must be $^3/_4$ inch (19 mm) to 2 inches (50 mm) wide.

610.7 Underwater seats and benches. Underwater seats and benches shall comply with this section.

❖ Sections 610.7.1 through 610.7.6 cover the requirements for underwater seats and benches.

610.7.1 Prohibited location. Underwater seats shall not be located in the diving water envelope.

❖ This section reinforces the intent of Section 322.2.

610.7.2 Surface dimensions. Underwater seats shall have an unobstructed surface dimension of not less than 10 inches (254 mm) measured front to back and not less than 24 inches (610 mm) in width.

❖ Underwater seats and benches must be large enough for an adult to sit as well as place their hands on the seat or bench for assistance in getting on and off the seat or bench.

610.7.3 Not an entry or exit. Underwater seats and benches shall not be used as an entry or exit for a pool but can be located in shallow or deep areas of water.

❖ An underwater seat or bench typically will be located too far below the top of the pool deck or coping to be useful as a step. Therefore, entry and exit to and from the pool from an underwater seat or bench is prohibited.

610.7.4 Depth. The horizontal surface of seats and benches shall be not greater than 20 inches (508 mm) below the waterline.

❖ The top surface of an underwater bench or seat cannot be greater than 20 inches (508 mm) below the waterline.

610.7.5 Color marking. The leading edge of seats and benches shall be visually set apart by a stripe having a width not less than $^3/_4$ inch (19 mm) and not greater than 2 inches (51 mm). The stripe shall be of a contrasting color to the adjacent surfaces.

❖ A contrasting color on the leading edge of an underwater bench or seat provides visual assistance to the user. The color stripe on the leading edge must be $^3/_4$ inch (19 mm) to 2 inches (50 mm) wide.

610.7.6 Slip resistant. The top surface of seats and benches shall be slip resistant.

❖ An underwater seat or bench would be difficult to stay seated on if the surface of the seat was not slip resistant.

INTERNATIONAL CODE COUNCIL®
Copyright © 2015 ICC. ALL RIGHTS RESERVED. Accessed by David Dammon on Jun 21, 2017 12:30:52 PM pursuant to License Agreement with ICC. No further reproduction or distribution authorized. ANY UNAUTHORIZED REPRODUCTION OR DISTRIBUTION IS A VIOLATION OF THE FEDERAL COPYRIGHT ACT AND THE LICENSE AGREEMENT, AND SUBJECT TO CIVIL AND CRIMINAL PENALTIES THEREUNDER.

610.8 Objects permitted. The design, construction, and operation of decorative objects and structures intended for climbing, walking, and hanging on by a bather are not covered by this code.

❖ Play equipment and play structures placed in pools are not covered by the code.

610.8.1 Floating devices. Floating devices not intended to be mobile shall be anchored in a manner to restrict movement to the range established by the designer. The anchoring of such floating devices shall be configured to minimize the possibility of entrapment of bathers, bodies, hair, limbs, and appendages should they come in contact with any element of the floating device or its anchors.

❖ Pool wall or floor anchor fittings and restraints that are installed to keep floating devices in position must be configured to minimize the possibility of entrapment of bathers. This includes entanglement of entire bodies, limbs and hair.

SECTION 611
SIGNAGE

611.1 Posting of signs. Signs stating rules, instructions, and warnings shall be posted. Signs for suction entrapment warning in accordance with Section 310 shall be posted. Signs shall be placed so that they squarely face approaching traffic. The center of the message panel shall be located not less than 66 inches (1676 mm) above the walking surface.

❖ Signs inform and alert users to proper and safe use of the facilities. For maximum exposure to the users, signs need to face the flow of users coming into the facility or attraction with the center of the sign being located not less than 66 inches (1676 mm) above the walking surface.

611.2 Prohibited mounting. Signs shall not be mounted on fences and gates alongside of guest walkways and staircases.

❖ Mounting of signs on fences and gates that are parallel to the flow of guest traffic is prohibited, as these locations are not visually prominent to the guest.

611.3 Message delivery. Messages delivered on signs shall comply with all of the following:

1. Messages shall be pertinent to the activity being performed or to be performed.
2. Messages shall be specific by providing details about the activity.
3. Messages shall be short and concise.
4. Messages shall be direct without humor or embellishments.

❖ The design of signs must convey the intended message so that the guest can quickly understand and remember the thoughts conveyed by the message. The four "rules" of this section cover the basic parameters that must be used to design signs.

611.4 Text font and size. The message text shall be in a clear, bold font such as Arial. The character height shall be proportional to 1 inch (25 mm) for 10 feet (3048 mm) of intended viewing distance but not less than 1 inch (25 mm).

❖ The size and shape of the text on a sign needs to be such that the text can be clearly read from a distance.

611.5 Distinct sign classes. Facility signs shall be categorized into four sign classes in accordance with Sections 611.5.1 through 611.5.4.

❖ Signs have distinct purposes and can be categorized into four types that are covered by Sections 611.5.1 through 611.5.4.

611.5.1 General information. General information signs shall be posted facility-wide and shall not be attraction specific.

❖ General information signs might include hours of operation and general facility safety rules such as "no running" and "no glass containers" (see Commentary Figure 611.5.1).



FIGURE 611.5.1
GENERAL FACILITY RULE SIGN

611.5.2 Directional signs. Directional signs shall identify the location of services and attractions in the park and shall include directional arrows. Directional signs shall be posted at various crossroads in the facility.

❖ Directional signs might include pointing the way to toilet facilities, specific attractions and food establishments (see Commentary Figure 611.5.2).

611.5.3 Rule signs. Rule signs shall inform guests of the qualifications that they must meet to allow them to participate on a specific ride or attraction. Rules shall include, but are not limited to, limits for weight and height, proper attire and ride (and ride vehicle) stipulations. Rule signs shall be located at a point where the guests make the initial commitment to participate on the ride.

❖ Rules signs are specific to a particular ride or attraction. Such signs inform the guest of what the ride or attraction is about, the qualifications for participation (height and weight) and the limitations for use (no

INTERNATIONAL CODE COUNCIL®
Copyright © 2015 ICC. ALL RIGHTS RESERVED. Accessed by David Dammon on Jun 21, 2017 12:30:52 PM pursuant to License Agreement with ICC. No further reproduction or distribution authorized. ANY UNAUTHORIZED REPRODUCTION OR DISTRIBUTION IS A VIOLATION OF THE FEDERAL COPYRIGHT ACT AND THE LICENSE AGREEMENT, AND SUBJECT TO CIVIL AND CRIMINAL PENALTIES THEREUNDER.



FIGURE 611.5.2
DIRECTIONAL SIGN

glasses, no pregnant women or no impaired guests). These signs are placed at the entry of the ride or attraction to head off conflicts at the dispatch platform of the ride or attraction. It gives the guest an opportunity to decide to not use the ride or attraction early on and not at the top of a series of staircases where they either change their mind or are denied use of the attraction and are forced to walk back down the steps against the flow of traffic.

611.5.4 Instructional signs. Instructional signs shall inform guests of specific instructions for the use of the ride. Instructions shall include, but are not limited to, riding posture, prohibited activity, and user exit requirements at the ride termination. Instructional signs shall be located along the queue approaching the ride dispatch area.

❖ Instructional signs are all about how to use the ride or attraction. Instructional signs at dispatch should rarely restate the rules. The focus is on delivering clear and simple instructions so the rider can have a fun and safe experience.

611.6 Materials. Sign panels shall be durable for the weather conditions and shall be resistant to damage from guests. The message surface shall be clean and smooth and shall readily accept paint or pre-cut lettering adhesives.

❖ Signs will not be effective if the lettering is extremely faded or fragmented either by weather or guest damage.

611.7 Shape and size consistency. The panel shape and size for each class of signs shall be the same. Where the total message to be indicated is larger than what can be placed upon one sign, multiple signs of the same size shall be used to display the message.

❖ Uniformity of signs of the same class offers further clarification in the mind of a sign reader. For example, rules signs might have the shape of an eight-sided hexagon (like a stop sign) so that readers will actually stop for a moment, take in the message and then make a decision to proceed ahead or divert to another ride or attraction.

611.8 Pictograms. Pictograms shall always be accompanied by text indicating the same message. Pictograms shall be designed to illustrate one clear and specific meaning to all individuals.

❖ Even the best, well-thought-out pictograms could be interpreted differently by different people. Words accompanying the pictogram ensure that the message is clear. Pictograms are not a required item but can be very helpful if well considered and of simple art. Commentary Figure 611.8 shows a pictogram.



FIGURE 611.8
EXAMPLE OF A PICTOGRAM

611.9 Theming or artwork. Theming or artwork applied to signs shall not invade the message panel. Signs shall have a distinct border.

❖ Facility sign design often includes graphic artwork that makes the signs "tie in" to the facility's overall theme. For example, an aquatic recreation facility might have a logo that is used on all advertising and signs. Such logos and other graphic artwork must be outside of the message panel of the sign. The message panel should have a distinct border to distinguish the message portion of the sign from the graphics portion of the sign.

611.10 Shallow water. Safety signs shall be in accordance with Section 412.

❖ Safety signs must comply with Section 412.

611.11 Cold water. Where a pool could have a water temperature below 70°F (21°C), a cold water warning sign shall be posted at the point of entry to the pool or at the attraction using such water.

❖ Some guests might have an aversion to being in contact with cold water. Where water temperature of a pool is below 70°F (21°C), signs must be posted to alert guests that the water is cold.

INTERNATIONAL CODE COUNCIL®
Copyright © 2015 ICC. ALL RIGHTS RESERVED. Accessed by David Dammon on Jun 21, 2017 12:30:52 PM pursuant to License Agreement with ICC. No further reproduction or distribution authorized. ANY UNAUTHORIZED REPRODUCTION OR DISTRIBUTION IS A VIOLATION OF THE FEDERAL COPYRIGHT ACT AND THE LICENSE AGREEMENT, AND SUBJECT TO CIVIL AND CRIMINAL PENALTIES THEREUNDER.

Chapter 7: Onground Storable Residential Swimming Pools

General Comments

Onground storable pools for residential use are extremely popular as they have a relatively low initial cost of ownership (as compared to permanent inground residential pools) and can be disassembled and moved to another location. While these kinds of pools have special unique requirements for equipment, overall they are still required to comply with Chapter 3, except as specifically noted.

Purpose

The purpose of this chapter is to regulate the unique features of onground storable pools including, but not limited to, floor slopes, ladders, stairs, decks and circulation systems.

SECTION 701 GENERAL

701.1 Scope. This chapter describes certain criteria for the design, manufacturing, and testing of *onground storable pools* intended for *residential* use. This includes portable pools with flexible or nonrigid side walls that achieve their structural integrity by means of uniform shape, support frame or a combination thereof, and that can be disassembled for storage or relocation. This chapter includes what has been commonly referred to in past standards or codes as onground or above-ground pools.

❖ Onground storable pools are sometimes referred to as onground pools or above-ground pools. This chapter applies to onground storable pools that are installed for residential use. Onground storable pools can be of the type that has metal or fiberglass walls that support an internal liner or of the type that has flexible walls that contain the water by the nature of their shape and top edge reinforcement. All onground pools are designed with the intention to be disassembled/taken down and moved to another location or stored. Pools with rigid walls typically remain erected throughout the year, even though winter conditions could occur. Flexible wall pools are sometimes taken down and moved to storage during the winter months [see Commentary Figure 202(4)].

701.1.1 Permanent inground residential swimming pool. This chapter does not apply to permanent inground *residential* pools, as defined in Chapter 8.

❖ None of the special provisions for these factory-manufactured pools that can be disassembled and reassembled, apply to permanent inground residential pools.

701.2 General. In addition to the requirements of this chapter, onground storable *residential* swimming pools shall comply with the requirements of Chapter 3.

❖ The requirements of Chapter 3 apply to onground storable pools, except where specific exceptions in Chapter 3 exempt such pools from a requirement.

701.3 Floor slopes. Floor slopes shall be uniform and in accordance with Sections 701.3.1 through 701.3.4.

❖ In between transition points of the slope in the floor, floor slopes need to be uniform so that the bather has some expectation of where the floor is when walking. An uneven floor makes walking difficult and could result in stumbles and falls. Sections 701.3.1 through 701.3.4 cover the requirements for floor slopes.

701.3.1 Shallow end. The slope of the floor from the shallow end wall towards the deep area shall not exceed 1 unit vertical in 7 units horizontal (14-percent slope) to the point of the first slope change.

❖ A floor slope of one unit vertical in seven units horizontal in the shallow end of onground storable pools provides for an adequate walking surface that allows bathers to feel comfortable.

701.3.2 Transition. The slope of the floor from the point of the first slope change towards the deepest point shall not exceed 1 unit vertical in 3 units horizontal (33-percent slope).

❖ The slope of the floor at the transition point from shallow to deep water needs to be controlled so that the bathers are not startled by an abrupt change in slope.

701.3.3 Adjacent. The slope adjacent to the shallow area shall not exceed 1 unit vertical in 3 units horizontal (33-percent slope) and the slope adjacent to the side walls shall not exceed 1 unit vertical in 1 unit horizontal (100-percent slope).

❖ Where the floor meets the sidewall, the slope of the floor cannot be greater than one unit vertical in one unit horizontal so that bathers will not stub their toes when approaching the sidewall.

INTERNATIONAL CODE COUNCIL®
Copyright © 2015 ICC. ALL RIGHTS RESERVED. Accessed by David Dammon on Jun 21, 2017 12:30:52 PM pursuant to License Agreement with ICC. No further reproduction or distribution authorized. ANY UNAUTHORIZED REPRODUCTION OR DISTRIBUTION IS A VIOLATION OF THE FEDERAL COPYRIGHT ACT AND THE LICENSE AGREEMENT, AND SUBJECT TO CIVIL AND CRIMINAL PENALTIES THEREUNDER.

701.3.4 Change point. The point of the first slope change shall be defined as the point at which the shallow area slope exceeds 1 unit vertical in 7 units horizontal (14-percent slope) and is not less than 6 feet (1889 mm) from the shallow end wall of the pool.

❖ The transition point where the shallow end of the pool becomes the deep end of the pool must be at least 6 feet (1889 mm) from the shallow end wall.

701.4 Identification. For onground storable *residential* pools with a vinyl liner, the manufacturer's name and the liner identification number shall be affixed to the liner. For onground storable *residential* pools without a liner, the manufacturer's name and identification number shall be affixed to the exterior of the pool structure.

❖ For onground storable pools that have vinyl liners, the liner manufacturer's name and liner identification number must be affixed to the liner so that the customer has access to the information for replacement purposes. Some onground storable pools do not have liners so the information about the pool needs to be on the exterior of the pool structure.

701.5 Installation. *Onground storable pools* shall be installed in accordance with the manufacturer's instructions.

❖ Manufacturer's instructions must be followed when installing onground storable pools because the manufacturer knows how the product was designed to be installed for safe operation and reliable service. Installation instructions and other important safety related information, including NO DIVING signs, are provided by the manufacturer, although in some cases, typically with flexible or inflatable pools, the signage is embossed on the exterior of the pool. It is the contractor's responsibility (where one is used) to deliver all product or component manuals, instructions, and accompanying signage and other literature to the owner/operator at or before the completion of the project. Signage must be installed in accordance with the manufacturer's instructions as part of the installation.

SECTION 702
LADDERS AND STAIRS

702.1 Ladders and stairs. Pools shall have a means of entry and exit consisting of not less than one ladder or a ladder and staircase combination.

❖ Onground storable pools will have a wall height above ground that requires a ladder or ladder/staircase arrangement to enable bathers to enter and exit the pool safety.

702.2 Type A and Type B ladders. Type A, double access, and Type B, limited access, A-frame ladders shall comply with Sections 702.2.1 through 702.2.7. See Figure 702.2.

❖ Type A and Type B A-frame ladders are defined in Chapter 2. Detailed requirements for A-frame ladders are covered in Sections 702.2.1 through 702.2. Figure 702.2 illustrates a Type A, A-frame ladder with a top platform. A Type B ladder would have some type of panel installed on one side of the ladder so the steps on the outside of the pool could not be used when the pool is closed.

702.2.1 Barrier required. Ladders in the pool shall have a physical barrier to prevent children from swimming through the riser openings or behind the ladder.

Exception: Barriers for ladders shall not be required where the ladder manufacturer provides a certification statement that the ladder complies with the ladder entrapment test requirements of APSP 4.

❖ Figure 702.2 does not show barriers that are required to prevent children from swimming between the ladder and the pool wall or between the risers. The manufacturer of the ladder can certify that the ladder meets the ladder entrapment standard of APSP 4 and in that situation, barriers on the ladder are not required. If a manufacturer does not want to make such certification, then the ladder has to be supplied with barriers. Such barriers can be of any configuration that restricts access to the openings of the ladder.

702.2.2 Platform. Where an A-frame ladder has a platform between the handrails, the platform shall have a width of not less than 12 inches (305 mm) and a length of not less than 12 inches (305 mm). The platform shall be at or above the highest ladder tread. The walking surface of the platform shall be slip resistant.

❖ Some A-frame ladders could be designed with a top platform (see Figure 702.2). The platform must be at least 12 inches by 12 inches (305 mm by 305 mm) so that an adult can have adequate space to place his or

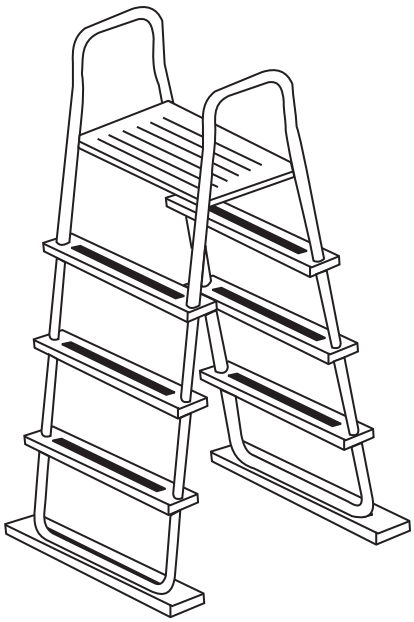

FIGURE 702.2
TYPICAL A-FRAME LADDER, TYPES A AND B

INTERNATIONAL CODE COUNCIL®
Copyright © 2015 ICC. ALL RIGHTS RESERVED. Accessed by David Dammon on Jun 21, 2017 12:30:52 PM pursuant to License Agreement with ICC. No further reproduction or distribution authorized. ANY UNAUTHORIZED REPRODUCTION OR DISTRIBUTION IS A VIOLATION OF THE FEDERAL COPYRIGHT ACT AND THE LICENSE AGREEMENT, AND SUBJECT TO CIVIL AND CRIMINAL PENALTIES THEREUNDER.

her feet. The platform must be slip resistant to reduce the potential for falls into the pool or onto the ground.

702.2.3 Handrails or handholds. A-frame ladders shall have two handrails or handholds that serve all treads. The height of the handrails and handholds shall be not less than 20 inches (508 mm) above the platform or uppermost tread, whichever is higher.

❖ Two handrails are required for a ladder because climbing a ladder is nearly impossible without using two hands on separate handholds or handrails. The handrails must rise up above the top tread of the ladder by at least 20 inches (508 mm) so that the user can steady themselves on the top rung (step).

702.2.4 Diameter. The outside diameter of handrails and handholds shall be not less than 1 inch (25 mm) and not greater than 1.9 inches (48 mm).

❖ The A-frame type of ladder is designed to be able to be removed and installed by one able adult while at the same time providing basic access from grade to pool. If the ladder was made to comply with the general handrail requirements (larger diameter tube) in Chapter 3, the ladder would be difficult to remove and install on a frequent basis (perhaps multiple times in a day). Thus, a heavier ladder would not be removed and the safety of the pool would be compromised because access would not be limited as intended (by the removal of the ladder).

702.2.5 Clear distance. The clear distance between ladder handrails shall be not less than a space of 12 inches (305 mm).

❖ The required clear distance between A-frame ladder handrails specifies the required usable tread width for the ladder. Too narrow of tread width would make standing on a tread unstable for the user.

702.2.6 Treads. Ladder treads shall have a horizontal uniform depth of not less than 2 inches (51 mm).

❖ Two inches (51 mm) is the minimum tread depth for comfort to the arch of an adult foot. Lesser tread depth imparts too much pressure per square inch on an adult foot.

702.2.7 Riser height. Risers, other than the bottom riser, shall be of uniform height that is not less than 7 inches (178 mm) and not greater than 12 inches (305 mm). The bottom riser height shall be not less than 7 inches (178 mm) and not greater than 12 inches (305 mm). The vertical distance from the platform or top of the pool structure to the uppermost tread shall be the same as the uniform riser heights.

❖ Uniformity of riser heights reduces the potential for the user's foot missing the tread or stubbing their toe into the tread. Either event could cause the user to fall from the ladder. The indicated range of riser heights is climbable by both adults and children. The height of the bottom riser is required to be variable; the ladder might have to be shortened to accommodate differences in elevation between the top of the pool and the ground outside of the pool.

702.3 Type C staircase ladders (ground to deck). Type C staircase ladders shall comply with Sections 702.3.1 through 702.3.6. See Figure 702.3.

❖ The Type C staircase ladder is defined in Chapter 2. Detailed requirements for Type C staircase ladders are covered in Sections 702.3.1 through 702.3.6. Figure 702.3 illustrates a Type C staircase ladder.

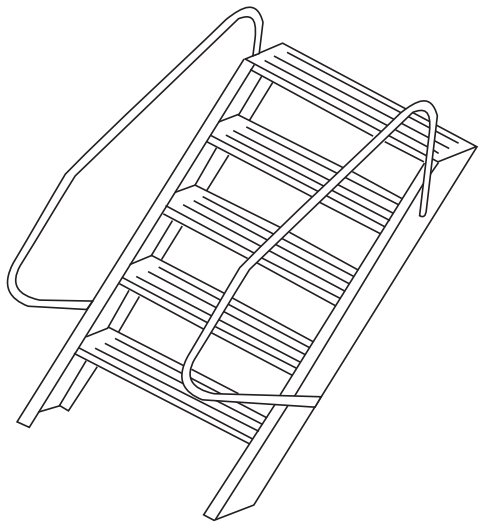

FIGURE 702.3
TYPICAL STAIRCASE LADDER, TYPE C

702.3.1 Handrails or handholds. Staircase ladders shall have not less than two handrails or handholds that serve all treads. The height of the handrails and handholds shall be not less than 20 inches (508 mm) above the platform or uppermost tread, whichever is higher.

❖ Because a staircase user is somewhat unsteady when transferring their weight from one foot to the other when ascending or descending stairs, there is a significant potential for falls if handrails or handholds are not provided for the user to steady himself or herself. Because staircase ladder treads are at least 19 inches (483 mm) wide, handrails or handholds need to be on both sides of the staircase ladder. The handrails or handholds must be at least 20 inches (508 mm) above the uppermost tread (or platform) so the user can easily reach the handrail or handhold before stepping off the top tread (or platform) down to the next tread.

702.3.2 Diameter. The outside diameter of handrails and handholds shall be not less than 1 inch (25 mm) and not greater than 1.9 inches (48 mm).

❖ A too-small handrail diameter is difficult to grip for adults with large hands. Too large of a handrail diameter is difficult to grip for children. The dimension range has been an onground storable pool industry standard for decades.

INTERNATIONAL CODE COUNCIL®
Copyright © 2015 ICC. ALL RIGHTS RESERVED. Accessed by David Dammon on Jun 21, 2017 12:30:52 PM pursuant to License Agreement with ICC. No further reproduction or distribution authorized. ANY UNAUTHORIZED REPRODUCTION OR DISTRIBUTION IS A VIOLATION OF THE FEDERAL COPYRIGHT ACT AND THE LICENSE AGREEMENT, AND SUBJECT TO CIVIL AND CRIMINAL PENALTIES THEREUNDER.

702.3.3 Treads. Ladder treads shall have a horizontal uniform depth of not less than 4 inches (102 mm).

❖ Four inches (102 mm) is a comfortable tread depth for user's placement of the ball of the foot on the tread. Lesser tread depth imparts too much pressure per square inch on the ball of an adult foot.

702.3.4 Riser height. Risers, other than the bottom riser, shall be of uniform height that is not less than 7 inches (178 mm) and not greater than 12 inches (305 mm). The bottom riser height shall be not less than 7 inches (178 mm) and not greater than 12 inches (305 mm). The vertical distance from the platform or top of the pool structure to the uppermost tread shall be the same as the uniform riser heights.

❖ Uniformity of riser heights reduces the potential for the user's foot missing the tread or stubbing their toe into the tread. Either event could cause the user to fall. The indicated range of riser heights is climbable by both adults and children. The exception allows for the height of the bottom riser to vary, as the overall height of the staircase ladder might have to be shortened (at the bottom) to adjust for a difference in elevation between the top of the pool wall (or a platform) and the ground surface.

702.3.5 Top step. The top step of a staircase ladder shall be flush with the deck or 7 inches (178 mm) to 12 inches (305 mm) below the deck level.

❖ Staircase ladders are sometimes used in conjunction with the decks that are installed around the pool perimeter. The top tread (or platform) of a staircase ladder must either be flush with the top of the deck or must be located below the deck by a distance that equals the uniform riser height of the staircase ladder. In other words, the deck surface is really serving as the top tread of a set of stairs and needs to be located at the same riser height as the other steps in the set of stairs so that users do not stumble and fall at the top step (see the last sentence of Section 702.3.4).

702.3.6 Width. Steps shall have a minimum unobstructed width of 19 inches (483 mm) between the side rails.

❖ A step width of 19 inches (483 mm) provides for adequate width for an adult to use the stairs safely.

702.4 Type D in-pool ladders. Type D in-pool ladders shall be in accordance with Sections 702.4.1 through 702.4.7. See Figure 702.4.

❖ The Type D in-pool ladder is defined in Chapter 2. Detailed requirements for Type D in-pool ladders are covered in Sections 702.4.1 through 702.4.7. Figure 702.4 illustrates a Type D in-pool ladder.

702.4.1 Clearance. There shall be a clearance of not less than 3 inches (76 mm) and not greater than 6 inches (152 mm) between the pool wall and the ladder.

❖ The minimum clearance indicated provides adequate toe clearance for an adult foot that is placed on the ladder rung. The maximum clearance indicated significantly reduces the potential that a child could be trapped between the backside of the ladder and the pool wall.

702.4.2 Handrails or handholds. Ladders shall be equipped with two handrails or handholds that extend above the platform or deck not less than 20 inches (508 mm).

❖ Two handrails are required for a ladder because climbing a ladder is nearly impossible without using two hands on separate handholds or handrails. The handrails must rise up above the platform or deck by at least 20 inches (508 mm) so that the user can steady themselves on the top rung (step).

702.4.3 Clear distance. The clear distance between ladder handrails shall be not less than 12 inches (305 mm).

❖ The required clear distance between Type D in-pool ladder handrails specifies the required useable tread width for the ladder. Too narrow of tread width would make standing on a tread unstable for the user.

702.4.4 Diameter. The outside diameter of handrails and handholds shall be not less than 1 inch (25 mm) and not greater than 1.9 inches (48 mm).

❖ A too-small handrail diameter is difficult to grip for adults with large hands. Too large of a handrail diameter is difficult to grip for children.

702.4.5 Riser height. Risers, other than the bottom riser, shall be of uniform height that is not less than 7 inches (178 mm) and not greater than 12 inches (305 mm). The bottom riser height shall be not less than 7 inches (178 mm) and not greater than 12 inches (305 mm).

❖ Uniformity of riser heights reduces the potential for the user's foot missing the tread or stubbing their toe into the tread. Either event could cause the user to fall. The indicated range of riser heights is climbable by both adults and children. The height of the bottom riser is allowed to vary as the height of a Type D lad-

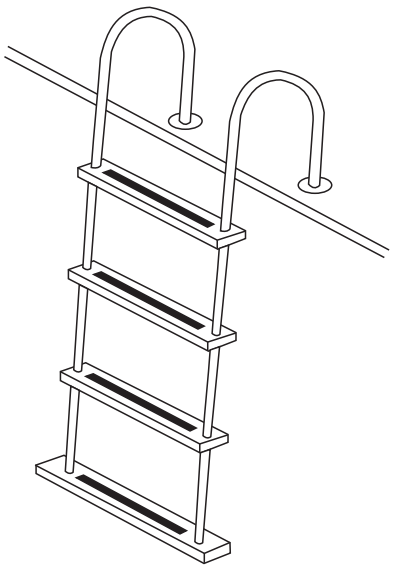

FIGURE 702.4
TYPICAL IN-POOL LADDER, TYPE D

INTERNATIONAL CODE COUNCIL®
Copyright © 2015 ICC. ALL RIGHTS RESERVED. Accessed by David Dammon on Jun 21, 2017 12:30:52 PM pursuant to License Agreement with ICC. No further reproduction or distribution authorized. ANY UNAUTHORIZED REPRODUCTION OR DISTRIBUTION IS A VIOLATION OF THE FEDERAL COPYRIGHT ACT AND THE LICENSE AGREEMENT, AND SUBJECT TO CIVIL AND CRIMINAL PENALTIES THEREUNDER.

der is selected so that the bottom rung of the ladder is above the floor of the pool. That distance above the floor could vary from pool to pool.

702.4.6 Top tread. The vertical distance from the pool coping, deck, or step surface to the uppermost tread shall be not less than 7 inches (178 mm) and not greater than 12 inches (305 mm) and uniform with other riser heights.

❖ The handrails of Type D in-pool ladders are designed to be attached to the deck around the pool (see Figure 702.4). The top tread of the ladder must be located below the deck by a distance that equals the uniform riser height of the other rungs of the ladder so that users do not stumble and fall at the top step.

702.4.7 Tread depth. Ladder treads shall have a horizontal uniform depth of not less than 2 inches (51 mm).

❖ Two inches (51 mm) is the minimum tread depth for comfort to the arch of an adult foot. Lesser tread depth imparts too much pressure per square inch on an adult foot.

702.5 Type E protruding in-pool stairs. Type E protruding in-pool stairs shall be in accordance with Sections 702.5.1 through 702.5.7. See Figure 702.5.

❖ The Type E in-pool staircase is defined in Chapter 2. Detailed requirements for Type E in-pool staircases are covered in Sections 702.5.1 through 702.5.7. Figure 702.5 illustrates a Type E in-pool staircase.

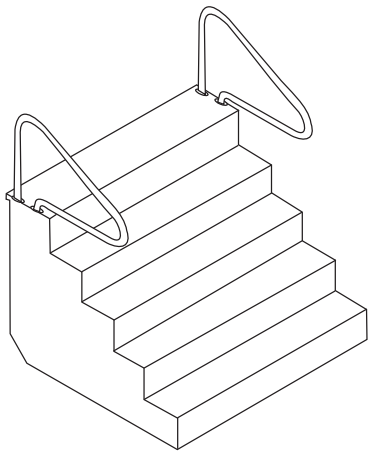

FIGURE 702.5
TYPICAL IN-POOL STAIRCASE, TYPES E AND F

702.5.1 Barrier required. In-pool stairs shall have a physical barrier to prevent children from swimming through the riser openings or behind the in-pool stairs.

❖ Staircases in the pool need to be designed so that a child cannot swim between the staircase and the pool wall or swim between the risers of the staircase. These areas could entrap a child (or even an adult) if not protected.

702.5.2 Handrails or handholds. In-pool stairs shall be equipped with not less than one handrail or handhold that serves all treads with a height of not less than 20 inches (508 mm) above the platform or uppermost tread, whichever is higher.

❖ Only one handrail or handhold is required for an in-pool staircase. The handrail or handhold must rise up above the platform or deck by at least 20 inches (508 mm) so that the user can steady themselves on the top step before descending the staircase.

702.5.3 Removable handrails. Where handrails are removable, they shall be installed such that they cannot be removed without the use of tools.

❖ Requiring the use of tools reduces the risk that the handrails will become loose or missing. Tools include typical hand tools, such as screwdrivers, wrenches or pliers.

702.5.4 Leading edge distance. The leading edge of handrails shall be 18 inches (457 mm) ± 3 inches (± 76 mm), horizontally from the vertical plane of the bottom riser.

❖ Users of the staircase need to be able to reach the handrail before they step onto the bottom step of the staircase. The 18-inch (457 mm) dimension provides adequate access for most users.

702.5.5 Diameter. The outside diameter of handrails and handholds shall be not less than 1 inch (25 mm) and not greater than 1.9 inches (48 mm).

❖ A too-small handrail diameter is difficult to grip for adults with large hands. Too large of a handrail diameter is difficult to grip for children. The dimension range has been an onground storable pool industry standard for decades.

702.5.6 Tread width and depth. Treads shall have an unobstructed horizontal depth of not less than 10 inches (254 mm) and an unobstructed surface area of not less than 240 square inches (0.15 m^2).

❖ A 10-inch (254 mm) tread depth is adequate for most adults to place their feet securely on the steps of the staircase.

702.5.7 Uniform riser height. Risers, other than the bottom riser, shall be of uniform height that is not less than 7 inches (178 mm) and not greater than 12 inches (305 mm). The bottom riser height shall be not less than 7 inches (178 mm) and not greater than 12 inches (305 mm). The vertical distance from the pool coping, deck or step surface to the uppermost tread of the stairs shall be the same as the uniform riser heights.

❖ Uniformity of riser heights reduces the potential for the user's foot missing the tread or stubbing their toe into the tread. Either event could cause the user to fall. The indicated range of riser heights is climbable by both adults and children. The height of the bottom riser is allowed to vary, as the bottom riser height is the only variable that can be changed where all other riser heights are fixed. The top step to the top of the deck, pool coping or step surface must be located at the same height as the riser height for the other steps in the staircase.

INTERNATIONAL CODE COUNCIL®
Copyright © 2015 ICC. ALL RIGHTS RESERVED. Accessed by David Dammon on Jun 21, 2017 12:30:52 PM pursuant to License Agreement with ICC. No further reproduction or distribution authorized. ANY UNAUTHORIZED REPRODUCTION OR DISTRIBUTION IS A VIOLATION OF THE FEDERAL COPYRIGHT ACT AND THE LICENSE AGREEMENT, AND SUBJECT TO CIVIL AND CRIMINAL PENALTIES THEREUNDER.

702.6 Type F recessed in-pool stairs. Type F recessed in-pool stairs shall be in accordance with Sections 702.6.1 through 702.6.7. See Figure 702.5.

❖ The Type F recessed in-pool staircase is defined in Chapter 2. Detailed requirements for Type F recessed in-pool staircases are covered in Sections 702.6.1 through 702.6.7. Figure 702.5 illustrates a Type F recessed in-pool staircase.

702.6.1 Barrier required. In-pool stairs shall have a physical barrier to prevent children from swimming through the riser openings or behind the in-pool stairs.

❖ Staircases in the pool need to be designed so that a child cannot swim between the staircase and the pool wall or swim between the risers of the staircase. These areas could entrap a child (or even an adult) if not protected.

702.6.2 Handrails or handholds. In-pool stairs shall be equipped with not less than one handrail or handhold that serves all treads with a height of not less than 20 inches (508 mm) above the platform or uppermost tread, whichever is higher.

❖ Only one handrail or handhold is required for a recessed in-pool staircase. The handrail or handhold must rise up above the platform or deck by at least 20 inches (508 mm) so that the user can steady themselves on the top step before descending the staircase.

702.6.3 Removable handrails. Where handrails are removable, they shall be installed such that they cannot be removed without the use of tools.

❖ Requiring the use of tools reduces the risk that the handrails will become loose or missing. Tools include typical hand tools, such as screwdrivers, wrenches or pliers.

702.6.4 Leading edge distance. The leading edge of handrails shall be 18 inches (457 mm) ± 3 inches (± 76 mm), horizontally from the vertical plane of the bottom riser.

❖ Users of the staircase need to be able to reach the handrail before they step onto the bottom step of the staircase. The 18-inch (457 mm) dimension provides adequate access for most users.

702.6.5 Diameter. The outside diameter of handrails and handholds shall be not less than 1 inch (25 mm) and not greater than 1.9 inches (48 mm).

❖ A too-small handrail diameter is difficult to grip for adults with large hands. Too large of a handrail diameter is difficult to grip for children. The dimension range has been an onground storable pool industry standard for decades.

702.6.6 Tread width and depth. Treads shall have an unobstructed horizontal depth of not less than 10 inches (254 mm) at all points and an unobstructed surface area of not less than 240 square inches (0.15 m^2).

❖ A 10-inch (254 mm) tread depth is adequate for most adults to place their feet securely on the steps of the staircase.

702.6.7 Uniform riser height. Risers, other than the bottom riser, shall be of uniform height that is not less than 7 inches (178 mm) and not greater than 12 inches (305 mm). The bottom riser height shall be not less than 7 inches (178 mm) and not greater than 12 inches (305 mm). The vertical distance from the pool coping, deck or step surface to the uppermost tread of the stairs shall be the same as the uniform riser heights.

❖ Uniformity of riser heights reduces the potential for the user's foot missing the tread or stubbing their toe into the tread. Either event could cause the user to fall. The indicated range of riser heights is climbable by both adults and children. The height of the bottom riser is allowed to vary, as the bottom riser height is the only variable that can be changed where all other riser heights are fixed. The top step to the top of the deck, pool coping or step surface must be located at the same height as the riser height for the other steps in the staircase.

SECTION 703
DECKS

703.1 General. Decks provided by the pool manufacturer shall be installed in accordance with the manufacturer's instructions. Decks fabricated on-site shall be in accordance with the *International Residential Code*.

❖ Decks for onground storable residential pools can be provided by the pool manufacturer. Because the manufacturer designed the deck, they know how the deck needs to be installed to provide for a safe installation. Other decks that are field fabricated must comply with the deck requirements of the *International Residential Code*® (IRC®).

703.2 Cantilevered. The top surface of a cantilevered deck shall be not greater than 1 inch (25 mm) higher than the top of the pool wall. See Figure 703.4. The top surface of a noncantilevered deck shall be not higher than the top of the pool wall.

❖ A cantilevered deck is where the deck structure relies on the pool structure for support.

703.3 No gaps. Decks that are installed flush with the top rail of the pool shall have all gap openings between the deck and top rails closed-off or capped.

❖ Gaps between the deck and the top rail could cause a toe to become caught and cause the user of the pool to fall.

703.4 Extension over pool. Where a deck extends inside the top rail of the pool, it shall extend not more than 3 inches (76 mm) beyond the inside of the top rail of the pool in accordance with Figure 703.4 and shall have a smooth finish.

❖ The deck must not cover the water surface too much because this could obscure visibility into the water for someone who is watching others swim.

INTERNATIONAL CODE COUNCIL®
Copyright © 2015 ICC. ALL RIGHTS RESERVED. Accessed by David Dammon on Jun 21, 2017 12:30:52 PM pursuant to License Agreement with ICC. No further reproduction or distribution authorized. ANY UNAUTHORIZED REPRODUCTION OR DISTRIBUTION IS A VIOLATION OF THE FEDERAL COPYRIGHT ACT AND THE LICENSE AGREEMENT, AND SUBJECT TO CIVIL AND CRIMINAL PENALTIES THEREUNDER.

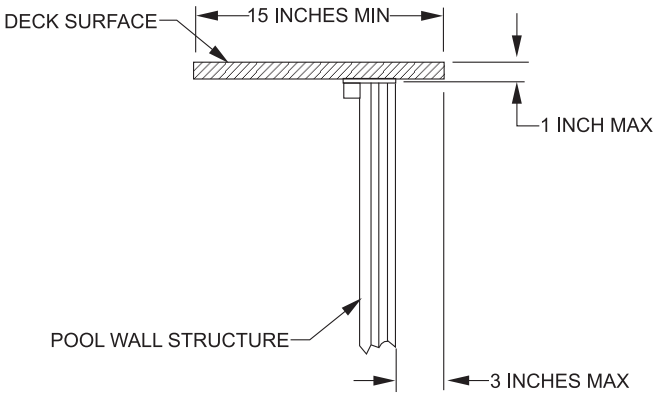

For SI: 1 inch = 25.4 mm.

FIGURE 703.4
TYPICAL CANTILEVERED DECK SUPPORT

703.5 Slip resistant. The deck walking surface shall be slip resistant.

❖ The presence of water on a walking surface significantly increases the slip potential. Special attention must be given to markers and insignias to make sure that they do not present an increased slip hazard.

703.6 Walk-around decks. Walk-around decks shall have a level walking surface of not less than 15 inches (381 mm) in width, as measured from the inside edge of the pool top rail to the outside of the pool walk-around. See Figure 703.6.

❖ A walking surface of at least 15 inches (381 mm) allows for convenience and safety of the user.

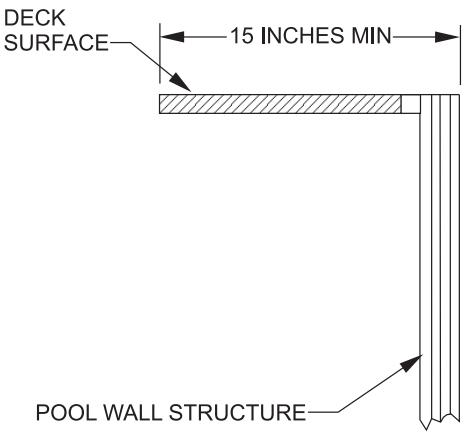

For SI: 1 inch = 25.4 mm.

FIGURE 703.6
WALK-AROUND DECK WIDTH

SECTION 704
CIRCULATION SYSTEM

704.1 General. A circulation system consisting of pumps, hoses, tubing, piping, return inlets, suction outlets, filters and other related equipment that provides for the circulation of water throughout the pool shall be located so that such items cannot be used by young children as a means of access to the pool.

❖ The installer must not put the circulation equipment where children could climb on the equipment to gain access to the pool.

704.2 Installation and support. Circulation equipment shall be installed, mounted and supported in accordance with the manufacturer's instructions.

❖ For circulation systems to operate as intended and have reasonable life, the system needs to be supported as the manufacturer intended.

704.3 Draining the system. In climates subject to freezing, circulation system equipment shall be designed and fabricated to drain the pool water from the equipment and exposed piping, by removal of drain plugs and manipulating valves or by other methods in accordance with the manufacturer's instructions.

❖ Some onground storable pools are intended to remain erected during periods of the year where freezing conditions are possible. Circulation equipment for those pools must have means for draining water from the equipment and piping so that remaining water does not freeze and damage the components and piping. Other onground storable pools are drained, folded up and stored along with the circulation equipment.

704.4 Turnover. A pump including a motor shall be provided for circulation of the pool water. The equipment shall be sized to provide a turnover of the pool water not less than once every 12 hours. The system shall be designed to provide the required turnover rate based on the manufacturer's specified maximum flow rate of the filter, with a clean media condition of the filter. The system flow shall not exceed the filter manufacturer's maximum filter flow rate.

❖ Turnover or turnover rate is determined by dividing the volume of the pool by the flow rate of the circulation system. For example, a 10,000-gallon (37 854 L) pool with a 36-gallon-per-minute (gpm) (136.3 lpm) filtration pump with filter will have a 4.6-hour turnover rate. In other words, it will take 4.6 hours for the entire volume of the pool to be filtered one time.

704.5 Piping and fittings. The process piping of the circulation system, including but not limited to hoses, tubing, piping, and fittings, shall be made of nontoxic material and shall be capable of withstanding an internal pressure of not less than $1^1/_2$ times the rated pressure of the pump. Piping on the suction side of the pump shall not collapse when flow into such piping is blocked.

❖ Section 302.3 has an exception that allows for circulation system components for onground storable pools to not meet NSF 50. However, that does not

INTERNATIONAL CODE COUNCIL®
Copyright © 2015 ICC. ALL RIGHTS RESERVED. Accessed by David Dammon on Jun 21, 2017 12:30:52 PM pursuant to License Agreement with ICC. No further reproduction or distribution authorized. ANY UNAUTHORIZED REPRODUCTION OR DISTRIBUTION IS A VIOLATION OF THE FEDERAL COPYRIGHT ACT AND THE LICENSE AGREEMENT, AND SUBJECT TO CIVIL AND CRIMINAL PENALTIES THEREUNDER.

mean that just any component in these systems is suitable. This section requires two criteria for components: nontoxicity and ability to withstand the pressure of service. These simple criteria keep the cost of the product affordable while at the same time, provide for a safe circulation system.

704.6 Filters. Pressure-type filters shall have an automatic internal means or a manual external means to relieve accumulated air pressure inside the filter tank. Filter tanks composed of upper and lower tank lids that are held in place by a perimeter clamp shall have a perimeter clamp that provides for a slow and safe release of air pressure before the clamp disengages the lids.

❖ Pressure-type filters can retain pressure long after the circulation pump is shut off. The section requires safety mechanisms to prevent a filter from being completely opened when pressure is still on the filter.

704.6.1 Automatic internal air relief. Filter tanks incorporating an automatic internal air relief as the principal means of air release shall be designed with a means to provide for a slow and safe release of pressure.

❖ A manual air release on a filter tank allows for the user to adjust the rate at which pressure is released, hopefully in a responsible manner. Where the air release is automatic, the mechanism is required to control the pressure release in a safe manner.

704.6.2 Separation tank. A separation tank used in conjunction with a filter tank shall have a manual air release or the tank shall be designed to provide for a slow and safe release of pressure when the tank is opened.

❖ Separation tanks are similar to filters with regard to holding pressure after the pump is shut off. Thus, a separation tank has same requirements for safe release of pressure.

704.7 Pumps. Pool pumps shall be tested and certified by a nationally recognized testing laboratory in accordance with UL 1081.

❖ An exception in Section 313.1 allows for pumps and motors that are supplied as part of the "kit" with an onground storable pool package to not comply with the requirements in Section 313. Pool pumps for onground storable pools are only required to be tested and certified to UL 1081.

704.7.1 Cleanable strainer. Where a pressure-type filter is installed, a cleanable strainer or screen that captures materials such as solids, debris, hair and lint shall be provided upstream of the circulation pump.

❖ A strainer is only required where a pressure-type filter is installed. Although Section 313 requires a strainer for all pool circulation systems, Exception 2 of Section 313.1 removes this requirement for onground storable pools.

704.7.2 Accessible pumps and motors. Pumps and motors shall be accessible for inspection and service in accordance with the pump and motor manufacturer's instructions.

❖ For proper servicing which increases longevity, a pump and motor has to be in the right environment and in a location where the user can maintain them.

704.7.3 Pump shutoff valves. An accessible means of shut off of the suction and discharge piping for the pump shall be provided for maintenance and removal of the pump.

❖ As most pumps are below the water line of the pool, valves are needed to shut off the water to the pump so the pool does not require draining to replace or repair the pump.

704.8 Outlets and return inlets. Outlets or suction outlets and return inlets shall be provided and arranged to produce uniform circulation of water so that sanitizer residual is maintained throughout the pool. Where installed, submerged suction outlets shall conform to APSP 16.

❖ The pool manufacturer typically decides how many inlets and outlets are necessary and where placement should be to achieve proper circulation of the pool water. Many onground storable pools have one or more skimmers as the only outlets for the pool. Where a suction outlet is needed for a pool, the outlet is required to comply with the standard for suction outlets. (APSP 16)

704.9 Surface skimmer systems. The surface skimming system provided shall be designed and constructed to skim the pool surface when the water level is maintained between the minimum and maximum fill level of the pool.

❖ A surface skimming system is always necessary to provide for clear, properly filtered water.

704.9.1 Coverage where used as a sole outlet. Where surface skimmers are used as the only pool water outlet system, not less than one skimmer shall be provided for each 800 square feet (74.3 m^2), or fraction thereof, of the water surface area.

❖ The section states the minimum number of skimmers required based on water surface area. A 30-foot-diameter (9.1 m) pool has about 700 square feet (65 m^2) of water surface area. Thus only one skimmer is required for a 30-foot-diameter (9.1 m) pool. Note that the minimum skimmer coverage is the same as for any other type of residential pool (see Table 315.3)

704.9.2 Coverage where used in combination with other outlets. Where surface skimmers are not the only outlet for pool water, they shall be considered to cover only that fraction of the 800 square feet (74.3 m^2).

❖ Outlets, other than surface skimmers, might be present. For example, there might be a water overflow along one portion of the pool wall. In this situation, one skimmer covers 50 percent of the water surface area and the overflow outlet covers the other 50 percent of the area.

INTERNATIONAL CODE COUNCIL®
Copyright © 2015 ICC. ALL RIGHTS RESERVED. Accessed by David Dammon on Jun 21, 2017 12:30:52 PM pursuant to License Agreement with ICC. No further reproduction or distribution authorized. ANY UNAUTHORIZED REPRODUCTION OR DISTRIBUTION IS A VIOLATION OF THE FEDERAL COPYRIGHT ACT AND THE LICENSE AGREEMENT, AND SUBJECT TO CIVIL AND CRIMINAL PENALTIES THEREUNDER.

704.9.3 Location and venting. Skimmers shall be equipped with a vent that serves as a vacuum break.

❖ A vacuum break is necessary to prevent the skimmer from causing a siphon that would drain the pool to the lowest level of the skimmer.

SECTION 705
SAFETY SIGNS

705.1. Signs to be installed prior to final inspection. Safety signage such as "NO DIVING" signs and other safe use instruction signs that are provided by the pool and ladder manufacturer shall be posted in accordance with the manufacturer's instructions prior to final inspection.

❖ It is not enough that the pool manufacturer supplies the safety signage. The signs are only effective when they are posted.

705.2 Safety signs for ladders. Safety signage for ladders shall be in accordance with Sections 705.2.1 through 705.2.3.2.

❖ Advisements on how to use each type of ladder are necessary to encourage safe use and significantly reduce the potential for accidents.

705.2.1 A-frame ladders. Safety signage for A-frame ladders shall be in accordance with Sections 705.2.1.1 through 705.2.1.4.1. The words on the signage shall be readable by persons standing in the pool and standing outside of the pool as applicable for the required location of each sign.

❖ Signage has to be readable by the pool users who are about to use the ladders. This could mean that some signs would have to be facing a user who is in the pool.

705.2.1.1 No diving warning. A-frame ladders shall have the following words posted on the in-pool side of the ladder and on the pool entry side of the ladder: "NO DIVING." The location of the words shall be above the elevation of the design water level of the pool.

❖ The designated entry and exits point(s) of an onground storable pool are the best locations to warn the user that diving is prohibited. Children frequently attempt to dive from a ladder as it is the easiest way to climb above the water surface.

705.2.1.2 Entrapment warning. A-frame ladders shall have the following words posted on the pool side of the ladder: "TO PREVENT ENTRAPMENT OR DROWNING DO NOT SWIM THROUGH, BEHIND, OR AROUND LADDER."

❖ Even though A-frame ladders are either designed to reduce entrapment or are equipped with blocking material and means to reduce entrapment, users still need to be warned to stay away from A-frame ladders while swimming.

705.2.1.3 Type A, A-frame ladders. Type A double access A-frame ladders shall have the following words posted on the ladder: "REMOVE AND SECURE LADDER WHEN POOL IS NOT OCCUPIED."

❖ The Type A ladder is made to be removed to limit access to the pool. The signage reminds the responsible person to remove the ladder.

705.2.1.4 Type B, A-frame ladders. Type B limited access A-frame ladders shall have the following words posted on the ladder: "SECURE LADDER WHEN POOL IS NOT OCCUPIED."

❖ The Type B ladder is made to be "secured" to limit access to the pool. "Secured" means to close off with the ladder manufacturer-supplied cover or blocking mechanism to limit access to the pool. The signage reminds the responsible person to "secure" the ladder.

705.2.1.4.1 Swing up or slide up secured ladders. Type B limited access A-frame ladders that utilize swing-up or slide-up sections for limiting access to the pool shall have the following words posted on the ladder as applicable for the type of securing method:

1. "WHEN POOL IS NOT OCCUPIED, SWING UP AND SECURE."
2. "WHEN POOL IS NOT OCCUPIED, LIFT OFF."
3. "WHEN POOL IS NOT OCCUPIED, SLIDE UP AND SECURE."

❖ Some Type B ladders are made having "swing up," "lift off" or integral sliding cover capability. Specific signage is required for those special types of Type B ladders.

705.2.2 Type C staircase ladders. Type C staircase ladders that swing up to limit access to the pool or that are removed to limit access to the pool shall have the following words posted on the ladder: "WHEN NOT IN USE SWING UP AND SECURE OR REMOVE."

❖ Some Type C ladders are "swing up" or removal types. Special signage is required for those types where the ladder is the primary access limitation for the pool.

705.2.3 Type D in-pool ladder. Safety signage for Type D in-pool ladders shall be in accordance with Sections 705.2.3.1 and 705.2.3.2. The words on the signage shall be readable by persons standing in the pool or standing outside the pool as applicable for the required location of each sign.

❖ Signage has to be readable by the pool users who are about to use the ladders. This could mean that some signs would have to be facing a user who is in the pool.

705.2.3.1 No diving warning. Type D in-pool ladders shall have the following words posted on the in-pool side of the ladder and on the pool entry side of the ladder: "NO DIV-

INTERNATIONAL CODE COUNCIL®
Copyright © 2015 ICC. ALL RIGHTS RESERVED. Accessed by David Dammon on Jun 21, 2017 12:30:52 PM pursuant to License Agreement with ICC. No further reproduction or distribution authorized. ANY UNAUTHORIZED REPRODUCTION OR DISTRIBUTION IS A VIOLATION OF THE FEDERAL COPYRIGHT ACT AND THE LICENSE AGREEMENT, AND SUBJECT TO CIVIL AND CRIMINAL PENALTIES THEREUNDER.

ING." The location of the words shall be above the elevation of the design water level of the pool.

❖ The designated entry and exit point(s) of an onground storable pool are the best locations to warn the user that diving is prohibited. Children frequently attempt to dive from a ladder as it is the easiest way to climb above the water surface.

705.2.3.2 Entrapment warning. Type D in-pool ladders shall have the following words posted on the ladder: "WARNING: TO PREVENT ENTRAPMENT OR DROWNING, DO NOT SWIM THROUGH, BEHIND, OR AROUND LADDER."

❖ Even though Type D ladders are designed to reduce entrapment or are equipped with blocking material and means to reduce entrapment, users still need to be warned to stay away from ladders while swimming.

INTERNATIONAL CODE COUNCIL®
Copyright © 2015 ICC. ALL RIGHTS RESERVED. Accessed by David Dammon on Jun 21, 2017 12:30:52 PM pursuant to License Agreement with ICC. No further reproduction or distribution authorized. ANY UNAUTHORIZED REPRODUCTION OR DISTRIBUTION IS A VIOLATION OF THE FEDERAL COPYRIGHT ACT AND THE LICENSE AGREEMENT, AND SUBJECT TO CIVIL AND CRIMINAL PENALTIES THEREUNDER.

Chapter 8: Permanent Inground Residential Swimming Pools

General Comments

By some estimates, there are over 7 million permanent inground residential swimming pools in the United States alone. This far surpasses the number of public pools in the United States. Permanent inground residential pools are designed with a variety of shapes and water depths. The design possibilities are endless. However, no matter the shape or size of the pool, certain criteria for the design must be followed to provide for safe use of the pool.

Purpose

The purpose of this chapter is to regulate the design and installation of permanent inground residential swimming pools. Features such as steps, diving water envelopes, floor slopes, underwater benches and circulation systems have detailed requirements and restrictions. These regulations, in addition to those found in Chapter 3, control the installation of permanent inground residential swimming pools.

SECTION 801 GENERAL

801.1 Scope. The provisions of this chapter shall govern permanent inground *residential* swimming pools. Permanent inground *residential* swimming pools shall include pools that are partially or entirely above grade. This chapter does not cover pools that are specifically manufactured for aboveground use and that are capable of being disassembled and stored. This chapter covers new construction, modification and repair of inground *residential* swimming pools.

❖ Even though the chapter title and this section implies that permanent residential pools are always "in the ground," there are some arrangements where permanent residential pools are partially "in the ground," "on the ground" or even far above the ground. The latter two arrangements are rare as compared to millions of the "site constructed in an excavation" pools that have been built and will continue to be built in the future. The possibilities for permanent residential pool designs are endless. This chapter offers the widest latitude for design conceptualization by the future pool owner while at the same time, regulating important design aspects for safety in the residential-use environment.

Permanent inground residential pools are not necessarily completely site constructed. They can be fabricated, by the manufacturer, in part or whole, brought to the site, and lowered into an excavation or placed in its permanent location. Ancillary equipment packages (filters, pumps, blowers, water features, etc.) can be fabricated by a manufacturer, shipped to the jobsite and connected to the pool itself. The key point to make is that even though built in a factory and jobsite assembled, permanent inground residential pools are not manufactured with the intent to be disassembled, stored or reassembled elsewhere. Once installed, permanent inground residential pools will be as permanent as any other permanent building structure, until the pool structure is demolished.

801.2 General. Permanent inground *residential* pools shall comply with the requirements of Chapter 3.

❖ All requirements of Chapter 3 apply to residential pools except where the code exempts residential pools from complying with specific sections of the code. Note that Section 301.1.1 states that where there are differences between the provisions of this chapter and the provisions of Chapter 3, the provisions of Chapter 8 apply.

SECTION 802 DESIGN

802.1 Materials of components and accessories. The materials of components and accessories used for permanent inground *residential* swimming pools shall be suitable for the environment in which they are installed. The materials shall be capable of fulfilling the design, installation and the intended use requirements in the *International Residential Code*.

❖ A pool environment can be harsh on many materials because of the exposure to sanitizing chemicals and sunlight.

802.2 Structural design. The structural design and materials shall be in accordance with the *International Residential Code*.

❖ See the commentary to Section 307.4.

INTERNATIONAL CODE COUNCIL®
Copyright © 2015 ICC. ALL RIGHTS RESERVED. Accessed by David Dammon on Jun 21, 2017 12:30:52 PM pursuant to License Agreement with ICC. No further reproduction or distribution authorized. ANY UNAUTHORIZED REPRODUCTION OR DISTRIBUTION IS A VIOLATION OF THE FEDERAL COPYRIGHT ACT AND THE LICENSE AGREEMENT, AND SUBJECT TO CIVIL AND CRIMINAL PENALTIES THEREUNDER.

SECTION 803
CONSTRUCTION TOLERANCES

803.1 Construction tolerances. The construction tolerance for dimensions for the overall length, width and depth of the pool shall be ± 3 inches (76 mm). The construction tolerance for all other dimensions shall be ± 2 inches (51 mm), unless otherwise specified by the design engineer.

❖ In typical building construction, dimensional tolerances are usually much smaller than those given in this section. However, in the construction of inground pools, it is much more difficult to control the overall dimensions of the vessel because of the way that the materials are placed on the reinforcing framework. A tolerance of plus or minus 3 inches (76 mm) provides adequate construction allowance for the length, width and depth of the pool. Other construction dimensions are allowed to vary within plus or minus 2 inches (51 mm). The design engineer for the pool could specify closer tolerances.

SECTION 804
DIVING WATER ENVELOPES

804.1 General. The minimum diving water envelopes shall be in accordance with Table 804.1 and Figure 804.1. Negative construction tolerances shall not be applied to the dimensions of the minimum diving water envelopes given in Table 804.1.

❖ Diving water envelopes may vary, within tolerances, to create larger water envelopes, but may not vary to create a smaller diving water envelope. In other words, the dimensions in Table 804.1 are absolute minimums.

TABLE 804.1. See below.

❖ The basis for the information in this table comes from *Diving Safety in Swimming Pools: A Report to the National Swimming Pool Foundation*—written by Richard Stone, PhD, and published in 1980.

SECTION 805
WALLS

805.1 General. Walls in the shallow area and deep area of the pool shall have a wall-to-floor transition point that is not less than 33 inches (838 mm) below the *design waterline*. Above the transition point, the walls shall be within 11 degrees (0.19 rad) of vertical.

❖ See Chapter 2 for the definition of "Design waterline." The wall-to-floor transition point all around the pool must be at least 33 inches (838 mm) below the design waterline and the wall above the transition point must be within 11 degrees (0.19 rad) of vertical, so that a bather jumping in at the side of the pool has a low probability of hitting the side of the pool. Note that Section 807.2 allows for the depth of the shallow area of pools to be less than 33 inches (838 mm) where steps, beach entries or architectural features are installed in the shallow end of the pool.

SECTION 806
OFFSET LEDGES

806.1 Maximum width. Offset ledges shall be not greater than 8 inches (203 mm) in width.

❖ Offset ledges are for standing or walking along the walls of a pool. The ledges must not be more than 8 inches (1067 mm) wide so that they do not create an obstruction for someone jumping into the pool, right alongside the wall. See the commentary to Section 807.1.

806.2 Reduced width required. Where an offset ledge is located less than 42 inches (1067 mm) below the *design waterline*, the width of such ledge shall be proportionately less than 8 inches (203 mm) in width so as to fall within 11 degrees of vertical as measured from the top of the *design waterline*.

❖ Offset ledges must become narrower than the allowable 8 inches (203 mm), where the depth of the ledge is less than 42 inches (1067 mm) below the design waterline. Therefore, the width of the offset ledge is

TABLE 804.1
MININUM DIVING WATER ENVELOPE FOR SWIMMING POOLS DESIGNATED TYPES I-V[b]

POOL TYPE	MINIMUM DEPTHS AT POINT FEET-INCHES				MINIMUM WIDTHS AT POINT FEET-INCHES				MINIMUM LENGTHS BETWEEN POINTS FEET-INCHES					
	A	B	C	D	A	B	C	D	WA	AB	BC	CD	DE	WE
I	6-0	7-6	5-0	2-9	10-0	12-0	10-0	8-0	1-6	7-0	7-6	Note a	6-0	28-9
II	6-0	7-6	5-0	2-9	12-0	15-0	12-0	8-0	1-6	7-0	7-6	Note a	6-0	28-9
III	6-10	8-0	5-0	2-9	12-0	15-0	12-0	8-0	2-0	7-6	9-0	Note a	6-0	31-3
IV	7-8	8-0	5-0	2-9	15-0	18-0	15-0	9-0	2-6	8-0	10-6	Note a	6-0	31-3
V	8-6	9-0	5-0	2-9	15-0	18-0	15-0	9-0	3-0	9-0	12-0	Note a	6-0	36-9

For SI: 1 inch = 25.4 mm, 1 foot = 304.8 mm.

a. The minimum length between points C and D varies based on water depth at point D and the floor slope between points C and D.

b. See Figure 804.1 for location of points.

INTERNATIONAL CODE COUNCIL®
Copyright © 2015 ICC. ALL RIGHTS RESERVED. Accessed by David Dammon on Jun 21, 2017 12:30:52 PM pursuant to License Agreement with ICC. No further reproduction or distribution authorized. ANY UNAUTHORIZED REPRODUCTION OR DISTRIBUTION IS A VIOLATION OF THE FEDERAL COPYRIGHT ACT AND THE LICENSE AGREEMENT, AND SUBJECT TO CIVIL AND CRIMINAL PENALTIES THEREUNDER.

equal to water depth times the tangent of 11 (0.19 rad) or 0.194. For example, at a 36-inch (914 mm) depth, the offset ledge width can only be 36 (0.194) = 7 inches (178 mm).

SECTION 807
POOL FLOORS

807.1 Floor slopes. Floor slopes shall be in accordance with Sections 807.1.1 through 807.1.3.

❖ Sections 807.1 through 807.1.3 cover the requirements for floor slopes.

807.1.1 Shallow end. The slope of the floor from the beginning of the shallow end to the deep area floor slope transition point, indicated in Figure 804.1 as Point E to Point D, shall not exceed 1 unit vertical in 7 units horizontal.

❖ A gradual slope of one unit vertical to seven units horizontal in the shallow end of a pool is easily walkable by most bathers with little fear that they will slip and slide into the deep end. The rope and float line required by Section 811.1 is an indicator to alert bathers that they are getting close to the transition point to the deep end of the pool.

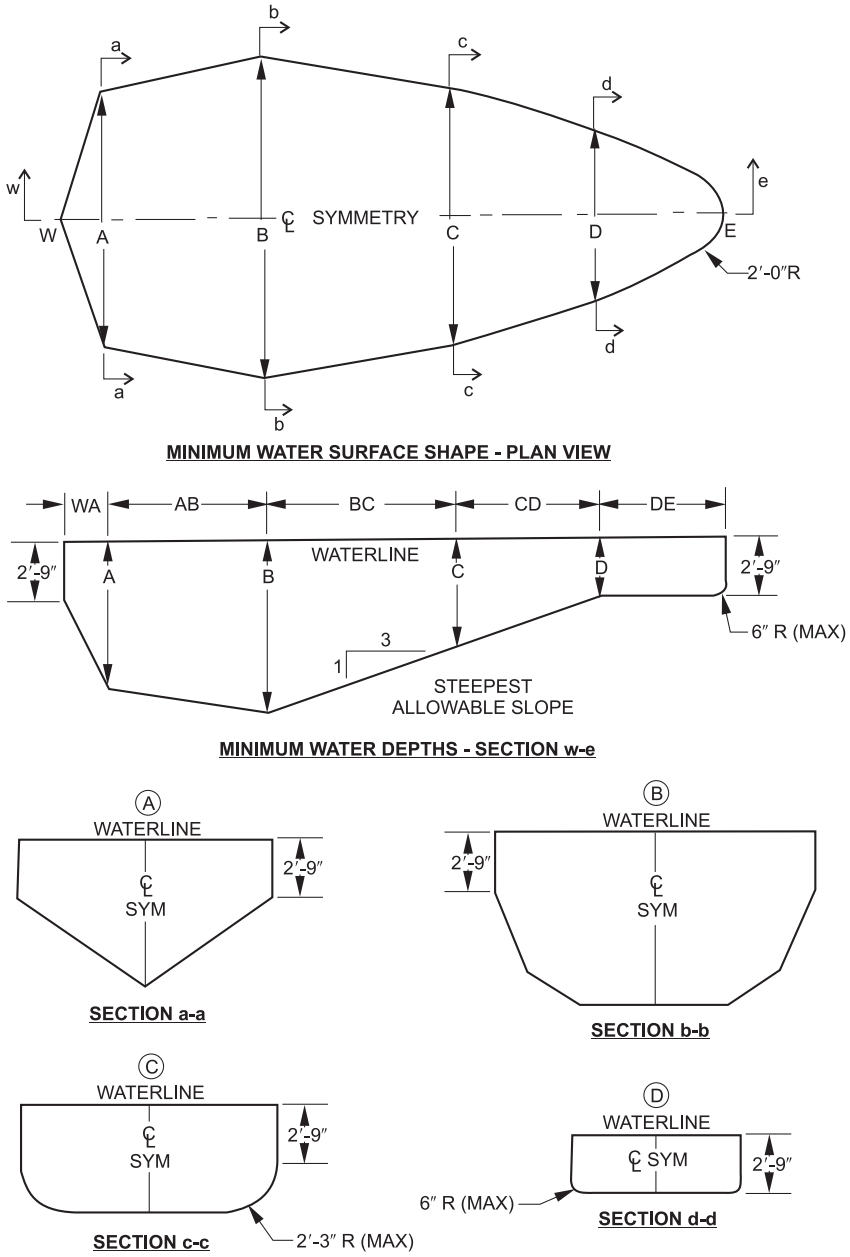

For SI: 1 inch = 25.4 mm, 1 foot = 304.8 mm.

FIGURE 804.1
MINIMUM DIVING WATER ENVELOPE

INTERNATIONAL CODE COUNCIL®
Copyright © 2015 ICC. ALL RIGHTS RESERVED. Accessed by David Dammon on Jun 21, 2017 12:30:52 PM pursuant to License Agreement with ICC. No further reproduction or distribution authorized. ANY UNAUTHORIZED REPRODUCTION OR DISTRIBUTION IS A VIOLATION OF THE FEDERAL COPYRIGHT ACT AND THE LICENSE AGREEMENT, AND SUBJECT TO CIVIL AND CRIMINAL PENALTIES THEREUNDER.

807.1.2 Shallow to deep transition. The shallow to deep area floor slope transition point, indicated in Figure 804.1 as Point D, shall occur at a depth not less than 33 inches (838 mm) below the *design waterline* and at a point not less than 6 feet (1829 mm) from the beginning of the shallow end, indicated in Figure 804.1 as Point E, except as specified in Section 809.7.

❖ The change in the floor slope at the shallow-to-deep end transition point must be at a water depth of not less than 33 inches (838 mm) and located not less than 6 feet (1829 mm) from the shallow end pool wall.

807.1.3 Deep end. The slope of the floor in the deep end, indicated in Figure 804.1 as Point B to Point D, shall not exceed a slope of 1 unit vertical in 3 units horizontal (33-percent slope).

❖ After the shallow to deep end transition point, the deep end floor slope from Point B to Point D in Figure 804.1 must not be greater than one unit vertical in three units horizontal. Slopes steeper than this can create a serious slip and fall hazard when walking from the shallow to the deep area.

807.2 Shallow end water depths. The design water depth as measured at the shallowest point in the shallow area shall be not less than 33 inches (838 mm) and not greater than 4 feet (1219 mm). Shallow areas designed in accordance with Sections 809.6, 809.7 and 809.8 shall be exempt from the minimum depth requirement.

❖ The floor of the shallow end of the pool must be at least 33 inches (838 mm) deep, but not more than 4 feet (1219 mm) deep, so that children and nonswimmers have a relatively safe area for enjoyment of the pool. The minimum depth of the pool can be less than 33 inches (838 mm) where beach entries, steps or architectural features are installed in the shallow end.

SECTION 808
DIVING EQUIPMENT

808.1 Manufactured and fabricated diving equipment. Manufactured and fabricated diving equipment shall be in accordance with this section. Manufactured and fabricated diving equipment and appurtenances shall not be installed on a Type O pool.

❖ Manufactured diving equipment includes diving boards and jump boards. Fabricated diving equipment includes built-on-site platforms, diving rocks, cavern roofs, etc. Where a pool is not designed in accordance with the minimum diving water envelope dimensions of Table 804.1, the pool is a nondiving pool and diving equipment, manufactured or fabricated, must not be installed on the pool.

808.2 Manufactured diving equipment. Manufactured diving equipment shall be designed for swimming pool use.

❖ Manufacturers of diving equipment will typically specify pool type based on testing and evaluation by the manufacturer of the specific equipment design and performance. Two types of manufactured diving equipment are shown in Commentary Figure 808.2.

808.3 Installation. Where manufactured diving equipment is installed, the installation shall be located in the deep area of the pool so as to provide the minimum dimensions as shown in Table 804.1 and shall be installed in accordance with the manufacturer's instructions.

❖ Manufactured diving equipment must be located such that the entry point from diving is into the deep area of the pool. Section 808.6 covers the precise location for placement of diving equipment. Diving equipment must be installed in accordance with the manufacturer's instructions.

808.4 Labeling. Manufactured diving equipment shall have a permanently affixed label indicating the manufacturer's name and address, the date of manufacture, the minimum diving envelope and the maximum weight limitation.

❖ Identification of the manufacturer of diving equipment and the specifics concerning the equipment must be on the board so that the owner can replace the board with the same model (or manufacturer's replacement model), report any manufacturing defects and obtain any written instructions about the use of the board.

808.5 Slip resistant. Diving equipment shall have slip-resistant walking surfaces.

❖ The walking surfaces of diving equipment must not be so smooth that the user will lose traction, slip and fall onto the pool deck or onto the board.

808.6 Point A. For the application of Table 804.1, Point A shall be the point from which all dimensions of width, length and depth are established for the minimum diving water envelope. If the tip of the diving board or diving platform is located at a distance of WA or greater from the deep end wall and the water depth at that location is equal to or greater than the water depth requirement at Point A, then the point on the water surface directly below the center of the tip of the diving board or diving platform shall be identified as Point A.

❖ The location of Point A on the water surface establishes where the pool walls and floor need to be constructed to provide the minimum diving water envelope.

808.7 Location of pool features in a diving pool. Where a pool is designed for use with diving equipment, the location of steps, pool stairs, ladders, underwater benches, special features and other accessory items shall be outside of the minimum diving water envelope as indicated in Figure 322.2.

❖ No features or equipment of the pool are allowed to encroach into the diving water envelope.

808.8 Stationary diving platforms and diving rocks. Stationary diving platforms and diving rocks built on-site shall be permitted to be flush with the wall and shall be located in the diving area of the pool. Point A shall be in front of the wall at the platform or diving rock centerline.

❖ Where platforms or rocks are installed on a pool, some designs place them at the edge of the deep end of the pool. In these circumstances, Point A (see Sec-

INTERNATIONAL CODE COUNCIL®
Copyright © 2015 ICC. ALL RIGHTS RESERVED. Accessed by David Dammon on Jun 21, 2017 12:30:52 PM pursuant to License Agreement with ICC. No further reproduction or distribution authorized. ANY UNAUTHORIZED REPRODUCTION OR DISTRIBUTION IS A VIOLATION OF THE FEDERAL COPYRIGHT ACT AND THE LICENSE AGREEMENT, AND SUBJECT TO CIVIL AND CRIMINAL PENALTIES THEREUNDER.

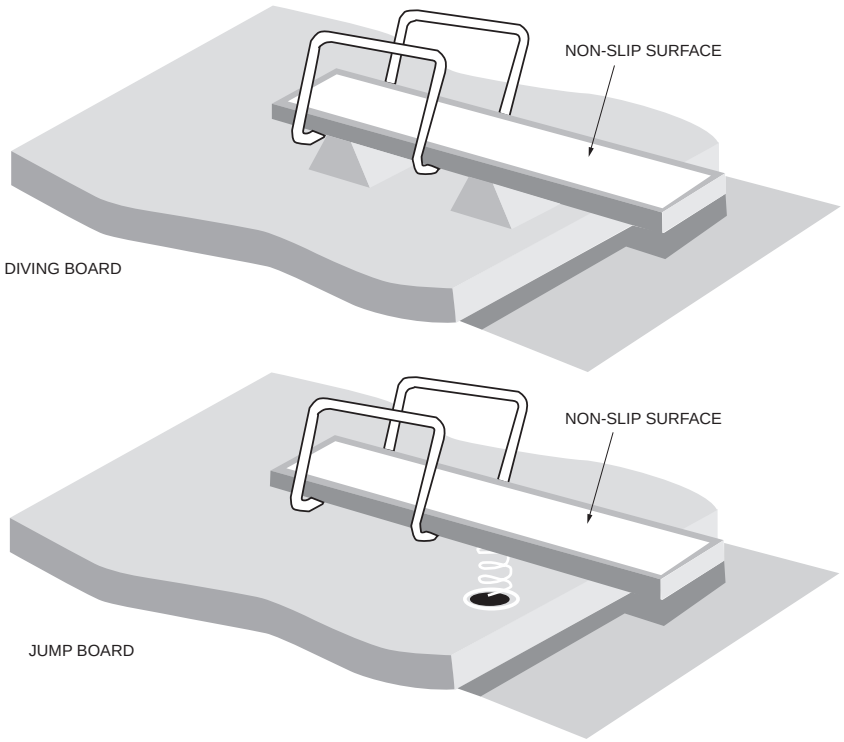

FIGURE 808.2
MANUFACTURED DIVING EQUIPMENT
[Illustration courtesy of the Association of Pool and Spa Professionals (APSP)]

tion 808.6) is considered to be directly below the center of the front edge of the platform or rock.

808.9 Location. The forward tip of manufactured or fabricated diving equipment shall be located directly above Point A as defined by Section 808.6.

❖ All measurements for the diving water envelope are derived from Point A, as referenced in Section 808.6.

808.10 Elevation. The maximum elevation of a diving board above the *design waterline* shall be in accordance with the manufacturer's instructions.

❖ Diving boards are designed and tested by the manufacturer to determine a maximum installation height to ensure that a diver does not enter the pool at too great a velocity. Given this maximum entry velocity, the specified diving water envelope for the diving board should provide sufficient room for the diver to maneuver safely and recover from the dive. Installing a diving board higher than the maximum allowable by the board manufacturer will result in a higher entry velocity and a distance which could result in diver injury.

808.11 Minimum water envelope. Manufactured diving equipment installation and use instructions shall be provided by the diving equipment manufacturer and shall specify the minimum water dimensions required for each diving board and diving stand combination. The board manufacturer shall indicate the water envelope type by dimensionally relating their products to Point A on the water envelopes as shown in Figure 804.1 and Table 804.1. The board manufacturer shall specify which boards fit on the design pool geometry types as indicated in Table 804.1.

❖ The type of diving equipment to be used on a pool drives the design of the pool with respect to the diving water envelope required. Diving boards are tested by the manufacturer who typically selects a pool type based on the board's length, spring characteristic and intended installation height. These factors can affect diver trajectory and velocity of entry into the water. Installation in accordance with the manufacturer's instructions is critical to ensure that the equipment is provided with a sufficient body of water in which the diver can safely maneuver and recover from the dive. Table 804.1 and the associated Figure 804.1 provide the minimum diving envelope dimensions for different types of pools intended for diving.

808.12 Platform height above waterline. The height of a stationary diving platform or a diving rock above the *design waterline* shall not exceed the dimensions in Table 808.12.

❖ Manufactured or fabricated diving platforms or diving rocks must be installed in accordance with Table 808.12.

INTERNATIONAL CODE COUNCIL®
Copyright © 2015 ICC. ALL RIGHTS RESERVED. Accessed by David Dammon on Jun 21, 2017 12:30:52 PM pursuant to License Agreement with ICC. No further reproduction or distribution authorized. ANY UNAUTHORIZED REPRODUCTION OR DISTRIBUTION IS A VIOLATION OF THE FEDERAL COPYRIGHT ACT AND THE LICENSE AGREEMENT, AND SUBJECT TO CIVIL AND CRIMINAL PENALTIES THEREUNDER.

TABLE 808.12
DIVING PLATFORM OR APPURTENANCE HEIGHT ABOVE DESIGN WATERLINE

POOL TYPE	HEIGHT INCHES
I	42
II	42
III	50
IV	60
V	69

For SI: 1 inch = 25.4 mm.

808.13 Headroom above the board. The diving equipment manufacturer shall specify the minimum headroom required above the board tip.

❖ This section applies to manufactured diving equipment, especially springboards and jump boards. The spring of such boards enables the diver to attain a higher altitude above the board than what he or she could jump from a solid surface. The manufacturer of the diving equipment must specify a required head room above the tip of the board so that the diver doesn't hit overhead obstacles.

SECTION 809
SPECIAL FEATURES

809.1 Slides. Slides shall be installed in accordance with the manufacturer's instructions.

❖ The manufacturer knows how the slide is intended to be used and must provide instructions that address the required installation details for ensuring safe use of the slide.

809.2 Entry and exit. Pools shall have a means of entry and exit in all shallow areas where the design water depth of the shallow area at the shallowest point exceeds 24 inches (610 mm). Entries and exits shall consist of one or a combination of the following: steps, stairs, ladders, treads, ramps, beach entries, underwater seats, benches, swimouts and other *approved* designs. The means of entry and exit shall be located on the shallow side of the first slope change.

❖ Shallow areas of pools are required to have a water depth of at least 33 inches (838 mm) (see Section 807.2). A means of entry and exit must be provided because it is too difficult to enter and exit at the side of the pool at the 33-inch (838 mm) depth. A number of means of exit/entry can be used.

809.3 Secondary entries and exits. Where water depth in the deep area of a pool exceeds 5 feet (1524 mm), a means of entry and exit shall be provided in the deep area of the pool.

❖ The means of entry and exit from the deep end of a pool include, but are not limited to, ladders, swimouts and recessed stairs.

809.4 Over 30 feet in width. Pools over 30 feet (9144 mm) in width at the deep area shall have an entry and exit on both sides of the deep area of the pool.

❖ Pools that are very wide need to have an entry/exit means at both sides of the deep area so that the bather is not challenged by having to traverse too far of a distance just to get out of the pool.

809.5 Pool stairs. The design and construction of stairs into the shallow end and recessed pool stairs shall conform to Sections 809.5.1 through 809.5.3.

❖ Sections 809.5.1 through 809.5.4 cover the requirements for stairs and recessed stairs.

809.5.1 Tread dimension and area. Treads shall have a minimum unobstructed horizontal depth of 10 inches (254 mm) and a minimum unobstructed surface area of 240 square inches (0.15 m^2).

❖ A minimum tread depth provides for the entire placement of an adult foot. The minimum area of the step provides enough space for an adult to stand comfortably with both feet on the step.

809.5.2 Riser heights. Risers, other than the top and bottom riser, shall have a uniform height of not greater than 12 inches (305 mm). The top riser height shall be any dimension not exceeding 12 inches (305 mm). The bottom riser height shall be any dimension not exceeding 12 inches (305 mm). The top and bottom riser heights shall not be required to be equal to each other or equal to the uniform riser height. Riser heights shall be measured at the horizontal centerline of the stairs.

❖ The bottom riser of stairs in the shallow area of a pool can vary in height from the floor because the floor could be sloped or uneven. The top riser of stairs in the pool can vary in height from the deck because it is often difficult to know the exact elevation of deck when the pool steps are being constructed. Also, in renovations of the pool deck, overlays (such as tile or special surfacing) would impact the top riser dimension triggering special reconstruction of the pool stairs. Just as long as the riser heights at the top and bottom of the stairs do not exceed 12 inches (305 mm), a residential user will easily become accustomed to a top and bottom riser height that are different from all of the other risers.

809.5.3 Additional steps. In design water depths exceeding 48 inches (1219 mm), additional steps shall not be required.

❖ Steps could be installed in the deep area of the pool [areas where the water depth is greater than 48 inches (1219 mm)].

809.6 Beach and sloping entries. The slope of beach and sloping entries used as a pool entrance shall not exceed 1 unit vertical in 7 units horizontal (14-percent slope).

❖ The slope of the floor for beach entries to a pool cannot be greater than the maximum slope allowed for the shallow area of the pool.

809.7 Steps and sloping entries. Where steps and benches are used in conjunction with sloping entries, the vertical riser distance shall not exceed 12 inches (305 mm). For steps used in conjunction with sloping entries, the requirements of Section 809.6 shall apply.

❖ Regardless of how steps and benches are used with sloping entries, the riser height of the step or bench must not exceed 12 inches (305 mm).

INTERNATIONAL CODE COUNCIL®
Copyright © 2015 ICC. ALL RIGHTS RESERVED. Accessed by David Dammon on Jun 21, 2017 12:30:52 PM pursuant to License Agreement with ICC. No further reproduction or distribution authorized. ANY UNAUTHORIZED REPRODUCTION OR DISTRIBUTION IS A VIOLATION OF THE FEDERAL COPYRIGHT ACT AND THE LICENSE AGREEMENT, AND SUBJECT TO CIVIL AND CRIMINAL PENALTIES THEREUNDER.

809.8 Architectural features. Surfaces of architectural features shall not be required to comply with the 1 unit vertical in 7 units horizontal (14-percent slope) slope limitation.

❖ Architectural features are not intended to be used by bathers, so they are not restricted to a floor slope of one unit vertical in seven units horizontal. These architectural features include items such as vanishing edge walls (see Commentary Figure 809.8).



FIGURE 809.8
SLOPED VANISHING EDGE WALL
(Photo courtesy of Swim, Inc.)

809.9 Maximum depth. The horizontal surface of underwater seats, benches and swimouts shall be not greater than 20 inches (508 mm) below the design waterline.

❖ Underwater seats, benches and swimouts must not be more than 20 inches (508 mm) below the design waterline so that when bathers sit on them, their heads remain above water.

SECTION 810
CIRCULATION SYSTEMS

810.1 Turnover rate. The circulation system equipment shall be sized to provide a turnover of the pool water not less than once every 12 hours. The system shall be designed to provide the required turnover rate based on the manufacturer's specified maximum flow rate of the filter, with a clean media condition of the filter.

❖ Turnover at least once every 12 hours is essential to maintaining water clarity and quality. Filter manufacturer instructions may call for a faster turnover.

810.2 Strainer required. Pressure filter systems shall be provided with a strainer located between the pool and the circulation pump.

❖ The strainer basket at the inlet of a typical pool pump complies with this requirement. If the pump used does not incorporate a strainer basket, one must be installed in the piping from the pool into the pump.

SECTION 811
SAFETY FEATURES

811.1 Rope and float. In pools where the point of first slope break occurs, a rope and float assembly shall be installed across the width of the pool. The rope assembly shall be located not less than 1 foot (305 mm) and not greater than 2 feet (610 mm) towards the shallow side of the slope break. Rope anchoring devices shall be permanently attached to the pool wall, coping or deck. Rope ends shall attach to the rope anchor devices so that the rope ends can be disconnected from the rope anchor device.

❖ The rope and float assembly on the shallow side of a slope break is intended to indicate an approaching significant change in slope which might create a slip hazard into deeper water. Slope break is a break in the angle or slant of the pool floor, typically found in vinyl liner pools with a hopper and potentially in pools designed for diving.

Pools with constant slope floors or gently curving floors from shallow to deep areas do not incorporate a slope break and do not require a rope and float assembly. Commentary Figure 811.1 illustrates various slope breaks.

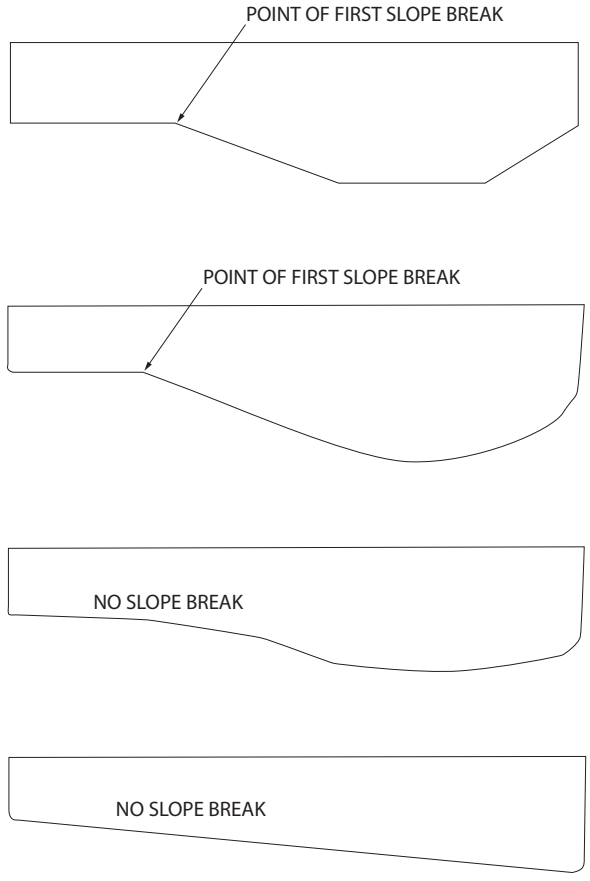

FIGURE 811.1
ILLUSTRATION OF SLOPE BREAK

INTERNATIONAL CODE COUNCIL®
Copyright © 2015 ICC. ALL RIGHTS RESERVED. Accessed by David Dammon on Jun 21, 2017 12:30:52 PM pursuant to License Agreement with ICC. No further reproduction or distribution authorized. ANY UNAUTHORIZED REPRODUCTION OR DISTRIBUTION IS A VIOLATION OF THE FEDERAL COPYRIGHT ACT AND THE LICENSE AGREEMENT, AND SUBJECT TO CIVIL AND CRIMINAL PENALTIES THEREUNDER.

INTERNATIONAL CODE COUNCIL®
Copyright © 2015 ICC. ALL RIGHTS RESERVED. Accessed by David Dammon on Jun 21, 2017 12:30:52 PM pursuant to License Agreement with ICC. No further reproduction or distribution authorized. ANY UNAUTHORIZED REPRODUCTION OR DISTRIBUTION IS A VIOLATION OF THE FEDERAL COPYRIGHT ACT AND THE LICENSE AGREEMENT, AND SUBJECT TO CIVIL AND CRIMINAL PENALTIES THEREUNDER.

Chapter 9: Permanent Residential Spas and Permanent Residential Exercise Spas

General Comments

Permanent residential spas and permanent residential exercise spas are popular permanent additions to an existing residential property as they can be used year round in just about any climate. As with permanent inground residential swimming pools, the design shape and size possibilities are endless. These spas are sometimes installed in conjunction with inground residential swimming pools

Purpose

The purpose of this chapter is to regulate the design and construction of permanent residential spas and permanent residential exercise spas to provide for a safe spa experience for the user. This chapter points the reader to Chapters 3 and 5 for the details of the requirements for spas.

SECTION 901 GENERAL

901.1 Scope. This chapter shall govern the design, installation, construction and repair of permanently installed *residential* spas and exercise spas intended for *residential* use.

❖ Permanent residential spas and permanent residential exercise spas can be installed as a stand-alone spa or in conjunction with a residential pool (see Commentary Figure 901.1).

901.2 General. Permanent *residential* spas and permanent *residential* exercise spas shall comply with Chapter 5 except that Sections 504.1, 504.1.1, 508.1 and 509 shall not apply. Such spas shall comply with the requirements of Chapter 3.

❖ Spas covered by this chapter are not much different than the public spas covered by Chapter 5, so all of the requirements of Chapter 5 apply, with the exception of Sections 504.1, 504.1.1, 508.1 and 509.

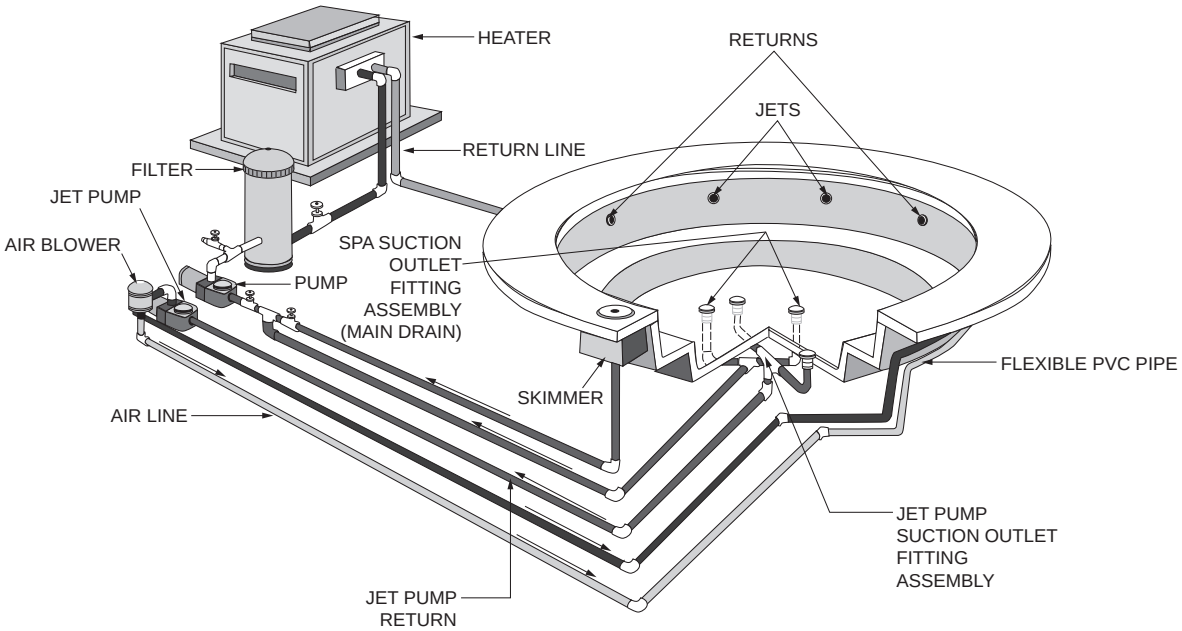

FIGURE 901.1
PERMANENT RESIDENTIAL SPA
[Illustration courtesy of the Association of Pool and Spa Professionals (APSP)]

INTERNATIONAL CODE COUNCIL®
Copyright © 2015 ICC. ALL RIGHTS RESERVED. Accessed by David Dammon on Jun 21, 2017 12:30:52 PM pursuant to License Agreement with ICC. No further reproduction or distribution authorized. ANY UNAUTHORIZED REPRODUCTION OR DISTRIBUTION IS A VIOLATION OF THE FEDERAL COPYRIGHT ACT AND THE LICENSE AGREEMENT, AND SUBJECT TO CIVIL AND CRIMINAL PENALTIES THEREUNDER.

SECTION 902
SAFETY FEATURES

902.1 Instructions and safety signage. Instructions and safety signage shall comply with the manufacturer's recommendations and the requirements of the local jurisdiction.

❖ Permanent residential spas and permanent residential exercise spas can be complete factory-built units that are intended to be permanently installed. The manufacturer of these complete units may include instructions and safety signage. If not, the local jurisdiction might require safety signage.

INTERNATIONAL CODE COUNCIL®
Copyright © 2015 ICC. ALL RIGHTS RESERVED. Accessed by David Dammon on Jun 21, 2017 12:30:52 PM pursuant to License Agreement with ICC. No further reproduction or distribution authorized. ANY UNAUTHORIZED REPRODUCTION OR DISTRIBUTION IS A VIOLATION OF THE FEDERAL COPYRIGHT ACT AND THE LICENSE AGREEMENT, AND SUBJECT TO CIVIL AND CRIMINAL PENALTIES THEREUNDER.

Chapter 10: Portable Residential Spas and Portable Residential Exercise Spas

General Comments

Portable residential spas are a very popular addition to many homes as they are relatively inexpensive (as compared to their permanent counterpart) and can be moved to another location if need be. The factory-built nature of these spas ensures high-quality and safe construction, as they are built in accordance with specific product standards.

Purpose

This chapter regulates portable residential spas and portable residential exercise spas by requiring them to be listed and labeled to standards applicable to those products. In addition to those standards, the spas must also comply with the requirements of Chapter 3, except where specifically noted.

SECTION 1001 GENERAL

1001.1 Scope. This chapter shall govern the installation, alteration and repair of portable *residential* spas and portable exercise spas intended for *residential* use.

❖ See Chapter 2 for the definitions of portable residential spas and portable residential exercise spas to better understand the scope of this chapter. This chapter applies to spas that are self-contained, as well as those that have the circulation equipment provided separately from the spa unit itself. Whether self-contained or nonself-contained, the units covered by this chapter are designed to be able to be moved from one location to another.

1001.2 General. In addition to the requirements of this chapter, portable *residential* spas and portable *residential* exercise spas shall also comply with the requirements of Chapter 3.

❖ The requirements of Chapter 3 apply to portable residential spas or portable residential exercise spas, except where such spas are specifically excluded in the sections of Chapter 3. For example, the internal wiring of portable residential spas or portable residential exercise spas is excluded from the requirement of Section 302.1.

1001.3 Listing. Equipment and appliances shall be *listed* and *labeled*, and installed as required by the terms of their approval, in accordance with the conditions of the listing, the manufacturer's instructions and this code. Manufacturer's instructions shall be available on the job site at the time of inspection.

❖ Listing and labeling of portable residential spas and portable residential exercise spas are based on testing of the complete unit, including on product labeling and instructions. The process is administered by an independent third-party testing agency. Improper installation can affect the ability of the spa to perform the intended function or provide the intended level of safety. Therefore, it is imperative that the manufacturer's instructions be strictly followed. The code official must have access to the installation instructions in order to verify that the product is installed in accordance with the listing. The product cannot be modified in any manner beyond that which is allowed by the instructions provided.

1001.4 Certification. Factory-built portable spas and portable exercise spas installed in *residential* applications shall be *listed* and *labeled* in compliance with UL 1563 or CSA C22.2 No. 218.1.

❖ This section requires that the spas covered by this chapter comply with UL 1563 or CSA 22.2 No 218.1. Compliance is determined by a third-party certification agency, which lists the spa as complying with the standard and affixes a label to the unit. The standards require testing of all components of the appliance and inspection of the instructions for the unit. No modifications to the appliance are allowed, other than those indicated by the manufacturer's instructions.

1001.5 Installation. Spa equipment shall be supported to prevent damage from misalignment and settling in accordance with the manufacturer's instructions.

❖ The spa manufacturer's instructions will provide details for adequate support and restraint for the spa and related equipment. As the manufacturer's instructions are part of the listing and labeling for the spa, those support details must be followed. For example, the spa manufacturer could require a concrete pad of a minimum thickness to accommodate the heavy load of the spa with water and occupants.

1001.6 Access. Electrical components that require placement or servicing shall be accessible.

❖ Electrical components such as switches, heating elements, motors, bulbs and sensors will need replacement, adjustment or inspection. The spa

INTERNATIONAL CODE COUNCIL®
Copyright © 2015 ICC. ALL RIGHTS RESERVED. Accessed by David Dammon on Jun 21, 2017 12:30:52 PM pursuant to License Agreement with ICC. No further reproduction or distribution authorized. ANY UNAUTHORIZED REPRODUCTION OR DISTRIBUTION IS A VIOLATION OF THE FEDERAL COPYRIGHT ACT AND THE LICENSE AGREEMENT, AND SUBJECT TO CIVIL AND CRIMINAL PENALTIES THEREUNDER.

manufacturer's instructions will indicate how to gain access to these components. The installer of the spa must make sure that the access points for these components can be reached after the spa is in its intended position. For example, the installer must not place a spa with a spa equipment access panel facing and next to a wall. Factory-built portable electric spas or exercise spas must be installed in accordance with the manufacturer's instructions.

1001.7 Instructions and safety signage. Instructions and safety signage shall comply with UL 1563 or CSA C22.2 No. 218.1, the manufacturer's recommendations, and the requirements of the local jurisdiction.

❖ UL 1563 and CSA C22.2 No. 218.1 have specific requirements for the manufacturer to supply instructions and safety signage to make sure that users are properly informed. The manufacturer might provide, or the jurisdiction might require, additional signage.

INTERNATIONAL CODE COUNCIL®
Copyright © 2015 ICC. ALL RIGHTS RESERVED. Accessed by David Dammon on Jun 21, 2017 12:30:52 PM pursuant to License Agreement with ICC. No further reproduction or distribution authorized. ANY UNAUTHORIZED REPRODUCTION OR DISTRIBUTION IS A VIOLATION OF THE FEDERAL COPYRIGHT ACT AND THE LICENSE AGREEMENT, AND SUBJECT TO CIVIL AND CRIMINAL PENALTIES THEREUNDER.

Chapter 11: Referenced Standards

General Comments

This chapter lists the standards that are referenced in various sections of the code. The standards are listed herein by the promulgating agency, the standard identification, the date and title, and the section or sections of the code that reference the standard. The application of the referenced standards is as specified in Section 102.7.

It is important to understand that not every document related to building design and construction is qualified to be a "referenced standard." The International Code Council® (ICC®) has adopted a criteria that standards referenced in the *International Codes*® (I-Codes®) and standards intended for adoption into the I-Codes must meet to qualify as a referenced standard. The policy is summarized as follows:

- Code references: The scope and application of the standard must be clearly identified in the code text.
- Standard content: The standard must be written in mandatory language and be appropriate for the subject covered. The standard must not have the effect of requiring proprietary materials or prescribing a proprietary testing agency.
- Standard promulgation: The standard must be readily available and developed and maintained in a consensus process such as ASTM or ANSI.

The ICC Code Development Procedures, of which the standards policy is a part, are updated periodically. A copy of the latest version can be obtained from the ICC offices.

Once a standard is incorporated into the code through the code development process, it becomes an enforceable part of the code. When the code is adopted by a jurisdiction, the standard also is part of that jurisdiction's adopted code. It is for this reason that the criteria were developed. Compliance with this policy means that documents incorporated into the code are developed through the use of a consensus process, written in mandatory language and do not mandate the use of proprietary materials or agencies. The requirement for a standard to be developed through a consensus process is vital because it means that the standard will be representative of the most current body of available knowledge on the subject as determined by a broad spectrum of interested or affected parties without dominance by any single interest group. A true consensus process has many attributes, including but not limited to:

- An open process that has formal (published) procedures that allow for the consideration of all viewpoints;
- A definitive review period that allows for the standard to be updated or revised;
- A process of notification to all interested parties; and
- An appeals process.

Many available documents related to design, installation and construction, though useful, are not "standards" and are not appropriate for reference in the code. Often, these documents are developed or written with the intention of being used for regulatory purposes and are unsuitable for use as a regulation because of extensive use of recommendations, advisory comments and nonmandatory terms. Typical examples of such documents include installation instructions, guidelines and practices.

The objective of ICC's standards policy is to provide regulations that are clear, concise and enforceable—thus the requirement for standards to be written in mandatory language. This requirement is not intended to mean that a standard cannot contain informational or explanatory material that will aid the user of the standard in its application. When it is the desire of the standard's promulgating agency for such material to be included, however, the information must appear in a nonmandatory location, such as an annex or appendix, and be clearly identified as not being part of the standard.

Overall, standards referenced by the code must be authoritative, relevant, up to date and, most importantly, reasonable and enforceable. Standards that comply with the ICC standards policy fulfill these expectations.

Purpose

As a performance-oriented code, the code contains numerous references to documents that are used to regulate materials and methods of construction. The references to these documents within the code text consist of the promulgating agency's acronym and its publication designation (e.g., ASME A112.1.2) and a further indication that the document being referenced is the one that is listed in Chapter 11. Chapter 11 contains all of the information that is necessary to identify the specific referenced document. Included is the following information on a document's promulgating agency (see Commentary Figure 11):

- The promulgating agency (i.e., the agency's title);
- The promulgating agency's acronym; and
- The promulgating agency's address. For example, a reference to an ASME standard within the code indicates that the document is promulgated by the

INTERNATIONAL CODE COUNCIL®
Copyright © 2015 ICC. ALL RIGHTS RESERVED. Accessed by David Dammon on Jun 21, 2017 12:30:52 PM pursuant to License Agreement with ICC. No further reproduction or distribution authorized. ANY UNAUTHORIZED REPRODUCTION OR DISTRIBUTION IS A VIOLATION OF THE FEDERAL COPYRIGHT ACT AND THE LICENSE AGREEMENT, AND SUBJECT TO CIVIL AND CRIMINAL PENALTIES THEREUNDER.

- American Society of Mechanical Engineers (ASME), which is located in New York City. Chapter 11 lists the standards agencies alphabetically for ease of identification.

Chapter 11 also includes the following information on the referenced document itself (see Commentary Figure 11):

- The document's publication designation;
- The document's edition year;
- The document's title;
- Any addenda or revisions to the document that are applicable; and
- Every section of the code in which the document is referenced.

For example, a reference to ASME A112.1.2 indicates that this document can be found in Chapter 11 under the heading ASME. The specific standards designation is A112.1.2. For convenience, these designations are listed in alphanumeric order. Chapter 11 identifies that ASME A112.1.2 is titled *Air Gaps in Plumbing Systems (For Plumbing Fixtures and Water-Connected Receptors)*; the applicable edition (i.e., its year of publication) is 2004; and it is referenced in one section of the code (Section 318.2).

The key aspect of the manner in which standards are referenced by the code is that a specific edition of a specific standard is clearly identified. In this manner, the requirements necessary for compliance can be readily determined. The basis for code compliance is, therefore, established and available on an equal basis to the code official, the contractor, the designer and the owner.

This chapter lists the standards that are referenced in various sections of this document. The standards are listed herein by the promulgating agency of the standard, the standard identification, the effective date and title, and the section or sections of this document that reference the standard. The application of the referenced standards must be as specified in Section 102.7.

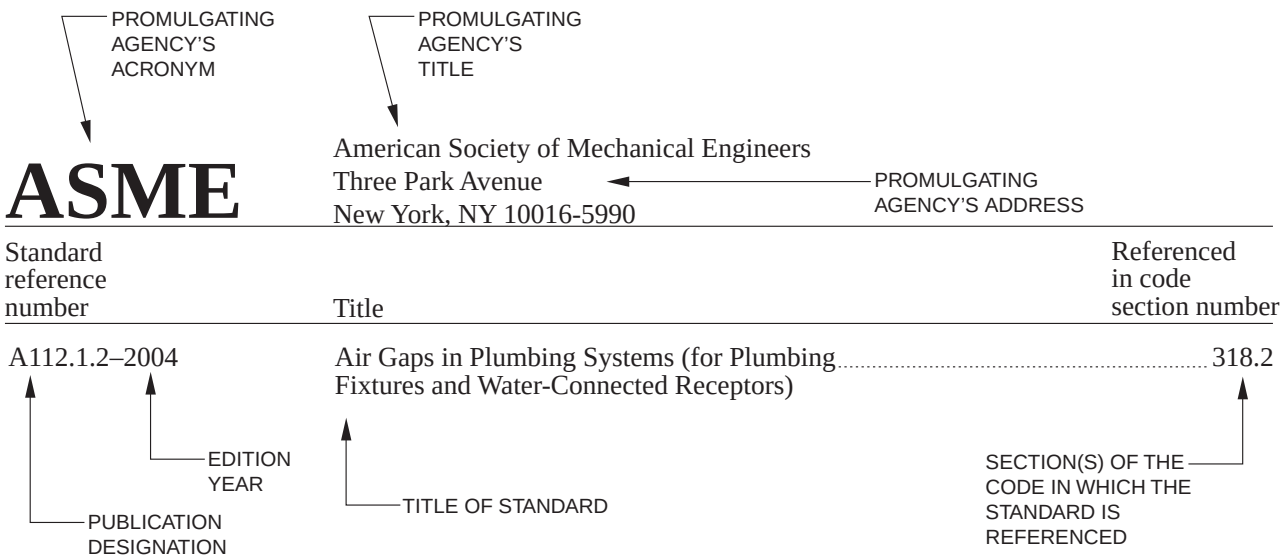

FIGURE 11
REFERENCED STANDARDS

INTERNATIONAL CODE COUNCIL®
Copyright © 2015 ICC. ALL RIGHTS RESERVED. Accessed by David Dammon on Jun 21, 2017 12:30:52 PM pursuant to License Agreement with ICC. No further reproduction or distribution authorized. ANY UNAUTHORIZED REPRODUCTION OR DISTRIBUTION IS A VIOLATION OF THE FEDERAL COPYRIGHT ACT AND THE LICENSE AGREEMENT, AND SUBJECT TO CIVIL AND CRIMINAL PENALTIES THEREUNDER.

This chapter lists the standards that are referenced in various sections of this document. The standards are listed herein by the promulgating agency of the standard, the standard identification, the effective date and title, and the section or sections of this document that reference the standard. The application of the referenced standards shall be as specified in Section 102.7.

AHRI

Air Conditioning, Heating and Refrigeration Institute
2111 Wilson Boulevard, Suite 500
Arlington, VA 22201

Standard reference number	Title	Referenced in code section number
1160(I-P)—09	Performance Rating of Heat Pump Pool Heaters	Table 316.2

ANSI

American National Standards Institute
25 West 43rd Street, Fourth Floor
New York, NY 10036

Standard reference number	Title	Referenced in code section number
A108/A118/A136.1—2009	Specifications for Installation of Ceramic Tile	Table 307.4
Z21.56a/CSA 4.7—2013	Gas Fired Pool Heaters	Table 316.2

APSP

The Association of Pool & Spa Professionals
2111 Eisenhower Avenue
Alexandria, VA 22314

Standard reference number	Title	Referenced in code section number
ANSI/APSP/ICC 4—12	Standard for Aboveground/Onground Residential Swimming Pools	702.2.1
ANSI/APSP/ICC 7—13	American National Standard for Suction Entrapment Avoidance in Swimming Pools, Wading Pools, Spas, Hot Tubs, and Catch Basins	310.1
ANSI/APSP/ICC 14—11	American National Standard for Portable Electric Spa Energy Efficiency	303.2
ANSI/APSP/ICC 15a —2013	American National Standard for Residential Swimming Pool and Spa Energy Efficiency	303.3
ANSI/APSP/ICC 16—11	American National Standard for Suction Fittings for Use in Swimming Pools, Wading Pools, Spas, and Hot Tubs	202, 311.4.1, 311.4.4, 505.2.1

ASCE/SEI

American Society of Civil Engineers
Structural Engineering Institute
1801 Alexander Bell Drive
Reston, VA 20191-4400

Standard reference number	Title	Referenced in code section number
ASCE 24—13	Flood Resistant Design & Construction	304.3

ASME

American Society of Mechanical Engineers
Three Park Avenue
New York, NY 10016-5990

Standard reference number	Title	Referenced in code section number
A112.1.2—2004	Air Gaps in Plumbing Systems (For Plumbing Fixtures and Water-Connected Receptors)	318.2
ASME B16.15—2011	Cast Bronze Threaded Fittings	Table 311.4.1

INTERNATIONAL CODE COUNCIL®
Copyright © 2015 ICC. ALL RIGHTS RESERVED. Accessed by David Dammon on Jun 21, 2017 12:30:52 PM pursuant to License Agreement with ICC. No further reproduction or distribution authorized. ANY UNAUTHORIZED REPRODUCTION OR DISTRIBUTION IS A VIOLATION OF THE FEDERAL COPYRIGHT ACT AND THE LICENSE AGREEMENT, AND SUBJECT TO CIVIL AND CRIMINAL PENALTIES THEREUNDER.

ASTM

ASTM International
100 Barr Harbor
West Conshohocken, PA 19428-2959

Standard reference number	Title	Referenced in code section number
A182—13	Standard Specification for Forged or Rolled Alloy and Stainless Steel Pipe Flanges, Forged Fittings, and Valves and Parts for High-Temperature Service	Table 311.4.1
A240—13a	Standard Specification for Chromium and Chromium-Nickel Stainless Steel Plate, Sheet and Strip for Pressure Vessels and for General Applications	Table 307.4
A312—13a	Standard Specification for Seamless, Welded, and Heavily Cold Worked Austenitic Stainless Steel Pipes	Table 311.4
A403—13	Standard Specification for Wrought Austenitic Stainless Steel Piping Fittings	Table 311.4.1
B88—09	Standard Specification for Seamless Copper Water Tube	Table 311.4
B447—12a	Specification for Welded Copper Tube	Table 311.4
D1527—99(2005)	Specifications for Acrylonitrile Butadiene Styrene (ABS) Plastic Pipe, Schedules 40 and 80	Table 311.4, Table 311.4.1
D1593—09	Non-rigid vinyl chloride plastic film and sheeting	Table 307.4
D1785—12	Specification for Poly Vinyl Chloride (PVC) Plastic Pipe, Schedules 40, 80 and 120	Table 311.4
D2241—09	Standard Specification for Poly(Vinyl Chloride) (PVC) Pressure-Rated Pipe (SDR Series).	
D2464—06	Standard Specification for Threaded Poly(Vinyl Chloride) (PVC) Plastic Pipe Fittings, Schedule 80	Table 311.4.1
D2466—06	Standard Specification for Poly(Vinyl Chloride) (PVC) Plastic Pipe Fittings, Schedule 40	Table 311.4.1
D2467—06	Standard Specification for Poly(Vinyl Chloride) (PVC) Plastic Pipe Fittings, Schedule 80	Table 313.4.1
D2672—96a(2009)	Standard Specification for Joints for IPS PVC Pipe Using Solvent Cement	Table 311.4
D2846/D2846M—09be1	Standard Specification for Chlorinated Poly(Vinyl Chloride) (CPVC) Plastic Hot- and Cold-Water Distribution Systems	Table 311.4, Table 311.4.1
F437—09	Standard Specification for Threaded Chlorinated Poly(Vinyl Chloride) (CPVC) Plastic Pipe Fittings, Schedule 80	Table 311.4.1
F438—09	Standard Specification for Socket-Type Chlorinated Poly(Vinyl Chloride) (CPVC) Plastic Pipe Fittings, Schedule 40	Table 311.4.1
F439—12	Standard Specification for Chlorinated Poly (Vinyl Chloride) (CPVC) Plastic Pipe Fittings, Schedule 80	Table 311.4.1
F1346—91(2010)	Standard Performance Specification for Safety Covers and Labeling Requirements for All Covers for Swimming Pools, Spas and Hot Tubs	305.1, 305.4

CPSC

Consumer Product Safety Commission
4330 East West Highway
Bethesda, MD 30814-4408

Standard reference number	Title	Referenced in code section number
16 CFR Part 1207—04	Safety Standard for Swimming Pool Slides	406.10

CSA

CSA Group
8501 East Pleasant Valley
Cleveland, OH 44131-5516

Standard reference number	Title	Referenced in code section number
B137.2—13	Polyvinylchloride (PVC) Injection-Moulded Gasketed Fittings for Pressure Application	Table 311.4, Table 311.4.1
B137.3—13	Rigid Polyvinylchloride (PVC) Pipe and Fitting and Pressure Applications	Table 311.4, Table 311.4.1
B137.6—13	Chlorinated Polyvinylchloride (CPVC) Pipe, Tubing, and Fitting for Hot- and Cold-Water Distribution Systems	Table 311.4, Table 311.4.1
C22.2 No. 108—01 (R2010)	Liquid Pump	313.8
C22.2 No. 218.1—M89 (R2011)	Spas, Hot Tubs and Associated Equipment	302.3, 309.1, 310.1, 313.8, Table 316.2, 317.2, 509.1, 1001.4, 1001.7
C22.2 No. 236—11	Cooling Equipment	Table 316.2
Z21.56a/CSA 4.7—2013	Gas Fired Pool Heaters	Table 316.2

INTERNATIONAL CODE COUNCIL®
Copyright © 2015 ICC. ALL RIGHTS RESERVED. Accessed by David Dammon on Jun 21, 2017 12:30:52 PM pursuant to License Agreement with ICC. No further reproduction or distribution authorized. ANY UNAUTHORIZED REPRODUCTION OR DISTRIBUTION IS A VIOLATION OF THE FEDERAL COPYRIGHT ACT AND THE LICENSE AGREEMENT, AND SUBJECT TO CIVIL AND CRIMINAL PENALTIES THEREUNDER.

IAPMO

IAPMO
4755 E. Philadelphia Street
Ontario, CA 91761-USA

Standard reference number	Title	Referenced in code section number
IAPMO Z124.7—2012	Prefabricated Plastic Spa Shells	Table 307.4

ICC

International Code Council, Inc.
500 New Jersey Avenue, NW
6th Floor
Washington, DC 20001

Standard reference number	Title	Referenced in code section number
IBC—15	International Building Code®	201.3, 304.2, 306.1, 307.2, 307.4, 307.8, 307.9, 410.1
IECC—15	International Energy Conservation Code®	201.3, 316.4
IFC—15	International Fire Code®	201.3
IFGC—15	International Fuel Gas Code®	201.3, 316.4
IMC—15	International Mechanical Code®	201.3, 316.4
IPC—15	International Plumbing Code®	201.3, 302.2, 302.5, 302.6, 306.8, 306.8.1, 318.2, 410.1
IRC—15	International Residential Code®	102.7.1, 201.3, 302.1, 302.5, 302.6, 304.2, 306.1, 306.3, 306.8, 306.8.1, 307.2, 307.4, 307.8, 307.9, 316.4, 318.2, 321.2.1, 321.4, 703.1, 802.1, 802.2

NEMA

National Electrical Manufacturers Association
1300 North 17th Street
Suite 1752
Rosslyn, VA 2209

Standard reference number	Title	Referenced in code section number
NEMA Z535—2006	ANSI/NEMA Color Chart	409.3

NFPA

National Fire Protection Association
1 Batterymarch Park
Quincy, MA 02269

Standard reference number	Title	Referenced in code section number
NFPA 70—2014	National Electrical Code	302.1, 316.4, 321.2.1, 321.4

NSF

NSF International
789 Dixboro Road
Ann Arbor, MI 48105

Standard reference number	Title	Referenced in code section number
NSF 14—2011	Plastics Pumping Systems Components and Related Materials	302.3, 311.4
NSF 50—2012	Equipment for Swimming Pools, Spas, Hot Tubs, and other Recreational Water Facilities	302.3, 309.2, Table 316.2, 508.1

INTERNATIONAL CODE COUNCIL®
Copyright © 2015 ICC. ALL RIGHTS RESERVED. Accessed by David Dammon on Jun 21, 2017 12:30:52 PM pursuant to License Agreement with ICC. No further reproduction or distribution authorized. ANY UNAUTHORIZED REPRODUCTION OR DISTRIBUTION IS A VIOLATION OF THE FEDERAL COPYRIGHT ACT AND THE LICENSE AGREEMENT, AND SUBJECT TO CIVIL AND CRIMINAL PENALTIES THEREUNDER.

UL

UL LLC
333 Pfingsten Road
Northbrook, IL 60062

Standard reference number	Title	Referenced in code section number
372—2007	Automatic Electrical Controls for Household and Similar Use—Part 2: Particular Requirements for Burner Ignition Systems and Components—with revisions through July 25, 2012	506.2.1, 506.2.2
873—2007	Temperature-Indicating and Regulating Equipment—with revisions through July 25, 2012	506.2.1, 506.2.2
1004-1—12	Standard for Rotating Electrical Machines General Requirements—with revisions through June 23, 2011	313.8
1081—2008	Standard for Swimming Pool Pumps, Filters and Chlorinators—with revisions through May 2013	313.8
1261—2001	Standard for Electric Water Heaters for Pools and Tubs—with revisions through July 2012	Table 316.2
1563—2009	Standard for Electric Hot Tubs, Spas and Associated Equipment—with revisions through July 2012	302.3, 309.1, 310.1, 313.8, Table 316.2, 317.2, 509.1, 1001.4, 1001.7
1995—2011	Heating and Cooling Equipment.	Table 316.2
2017—2008	General-Purpose Signaling Devices and Systems—with revisions through May 2011	305.4

INTERNATIONAL CODE COUNCIL®
Copyright © 2015 ICC. ALL RIGHTS RESERVED. Accessed by David Dammon on Jun 21, 2017 12:30:52 PM pursuant to License Agreement with ICC. No further reproduction or distribution authorized. ANY UNAUTHORIZED REPRODUCTION OR DISTRIBUTION IS A VIOLATION OF THE FEDERAL COPYRIGHT ACT AND THE LICENSE AGREEMENT, AND SUBJECT TO CIVIL AND CRIMINAL PENALTIES THEREUNDER.

INDEX

A

AIR BLOWER 317, 504.1
ALARM 305.4, 504.1.1
AUTOMATIC CONTROLLER 508.1

B

BACKFLOW 302.5, 317.2, 318.2
BACKWASH 302.6, 320.1
BARRIER 305, 607
BATH FACILITIES 609
BATHER LOAD 403, 608
BEACH ENTRY 411.1.2, 610.4, 809.6

C

CANOPIES (see ROOFS)
CHEMICAL FEEDER 319.2
CIRCULATION EQUIPMENT 407.2, 704.2
CIRCULATION SYSTEM 311, 407, 604, 704, 810
CLOCK 509.4
CONSTRUCTION TOLERANCE 305.2.3, 308.4, 401.4, 604.1, 803
CONTROLS 316.4.2, 508.1
COVER 303.4, 306.8, 505.2.2, 509.2

D

DECK AROUND DIVING EQUIPMENT 406.3
DECK DISTANCE TO WATERLINE 405.5
DECK GAPS 306.5
DECK SLOPE 306.4
DECKS 306, 406, 703
DESIGN
Beach pool 307.3.1
Dimensions 308
Structural 307.4, 602.2
DIVING AREA . . . . . Table 401.4, 402.7, Table 403.1, 808.8
DIVING BOARD 406.6,Table 608.1, 808.6
DIVING ENVELOPE 411.1.5, 804, 808.4
DIVING EQUIPMENT 402, 808
DIVING PLATFORM 402.5, 808.8
DIVING STAND 402.3, 406.8.1, 808.11
DOORS 305.4
DRESSING FACILITIES 410

E

ELECTRICAL 302, 304.5, 309.1, 1001.6.1
ENERGY 303
ENTRAPMENT 310
EQUALIZER 315.5
EXIT 323.2.4, 411.1, 610.1, 611.5.4, 702.1, 809.2

F

FEATURES
In diving pool 808.7
FENCE (See BARRIER)
FILTER
Backwash from 302.6, 320.2
Design 312
Freeze protection 307.5
System 312
Air release 312.3.1, 408
Pressure type 312.3, 313.3
Separation tank for 312.3.2
FIRST AID 409.4.3
FLOATING DEVICES 610.8
FLOOD HAZARD AREA 304
FLOTATION 304.4, 409.4.2
FLOW RATE
Measurement 311.7
FREEZE PROTECTION 307.5, 311.4.3, 704.1

G

GATE 305.2.4, 305.3, 611.2
GAUGES 311.6
GLAZING 307.2
GROUND FAULT 304.5
GUARDRAIL 406.8.5
GUTTER . . . . . 311.4.1, Table 401.4, 409.2.2, 604.3

H

HANDHOLDS 323.1, 409, 605
HEATER 303.2, 316, 506, 609.3.3
HOSE BIBB 306.8.1

I

ILLUMINATION (Also see LIGHTING) 321.2
ISOLATION JOINT 306.6

INTERNATIONAL CODE COUNCIL®

Copyright © 2015 ICC. ALL RIGHTS RESERVED. Accessed by David Dammon on Jun 21, 2017 12:30:52 PM pursuant to License Agreement with ICC. No further reproduction or distribution authorized. ANY UNAUTHORIZED REPRODUCTION OR DISTRIBUTION IS A VIOLATION OF THE FEDERAL COPYRIGHT ACT AND THE LICENSE AGREEMENT, AND SUBJECT TO CIVIL AND CRIMINAL PENALTIES THEREUNDER.

J

JETS 302.3
JOINTS
Concrete 306.6
JUMP BOARD 406.8.1

L

LADDER 322, 402.6, 601.2, 610, 702, 808.7, 809.2
LATCH 305.2.4, 305.3.2
LIFELINE 603.3
LIFESAVING EQUIPMENT 409.4
LIFTS 306.8.1, 809.2
LIGHTING 321
LINER 701.4
LOCKING DEVICE 305.3

M

MAIN DRAIN 321.2
MARKER
Distribution 409.2.7
For depth 409.2, 509.3, 603
Letters 409.2.8
No diving 409.3, 509.2
Readability 409.2.4, 509.3.3
Position 409.2.4, 509.3.3
MAINTAINED ILLUMINATION 202, 321.2.2, 321.2.3
MATERIALS
Compatibility 307.3.2
MOTOR 313, 502.1, 504

N

NONENTRY AREA 405.2
NOZZLES 603.4

O

OBSCURITY 307.7
OCCUPANT LOAD (CAPACITY) 608.1

P

POLE 409.4.1
POOL
Beach 307.3.1
PORTABLE SPA 303.2
POWER SAFETY COVER 305.1
PUMP 313, 316.2, 504

R

REST LEDGES 404
RETURN 314, 505, 604.1
RING BUOY 409.4.2
ROOFS 307.9
ROPE AND FLOAT LINE 605.2

S

SAFETY COVER 305.1
SAND 307.3.1
SANITATION 307.3.1, 308.3, 401.2, 601.1
SANITIZING EQUIPMENT 319
SETTLING 307.4.1, 320.3, 1001.5
SHOWERS 609.2.1
SIGNAGE 412, 504.1.1, 509, 611, 705, 902.1, 1001.7
SKIMMER 315, 505
SLIDE 406.8, 809.1
SLOPE
Deck 306.4
Floor 401.5, 503.3, 602.1, 605.2, 610.4.1, 701.3, 807.1.1, 809.2, 811.1
SOAP DISPENSER 609.4, 809.4.2
SPECIAL FEATURES 610
SPOUTS 318.3
STAIRS 411.2, 809.5
STARTING BLOCKS 406.9
STEPS 610.5, 702
STRAINER 313.3, 810.3
SUCTION 314
Entrapment avoidance 310, 405.6
Fitting 311.4.1, 314.3
SWIMOUT 323.1, 610.6, 809.2
SWITCHES
Emergency 313.7, 412.3, 504.1

T

TEMPERATURE 316.4.1, 506, 507.1, 509.2, 609.3.5, 611.11
TEST
Pressure 302.7, 311.9, 810.2
THROWING ROPE 409.4.2
TOILET FACILITIES 609.2
TOLERANCES 308.4, 401.4, 609.9, 803, 804.1
TURNOVER RATE 314.3, 315.2.1, 407.2, 704.2, 810.1

INTERNATIONAL CODE COUNCIL®
Copyright © 2015 ICC. ALL RIGHTS RESERVED. Accessed by David Dammon on Jun 21, 2017 12:30:52 PM pursuant to License Agreement with ICC. No further reproduction or distribution authorized. ANY UNAUTHORIZED REPRODUCTION OR DISTRIBUTION IS A VIOLATION OF THE FEDERAL COPYRIGHT ACT AND THE LICENSE AGREEMENT, AND SUBJECT TO CIVIL AND CRIMINAL PENALTIES THEREUNDER.

U

UNDERWATER SEAT 411.5, 503.2, 610.7, 809.2

V

VALVES
Under deck 306.8
VANISHING EDGE 409.2.2

W

WADING POOL. . . . . 405, 411.1.1, Table 608.1
WARNING 305.1, 408.2, 611.2
WASTEWATER. 302.6, 320
WATER
Cold 611.11
Makeup. 318.1
Protection of potable. 318.2
Supply. 318
Velocity 311.3
WAVE POOL CAISSON 605.3
WEIR . . . . . 308.4, Table 401.4

INTERNATIONAL CODE COUNCIL®
Copyright © 2015 ICC. ALL RIGHTS RESERVED. Accessed by David Dammon on Jun 21, 2017 12:30:52 PM pursuant to License Agreement with ICC. No further reproduction or distribution authorized. ANY UNAUTHORIZED REPRODUCTION OR DISTRIBUTION IS A VIOLATION OF THE FEDERAL COPYRIGHT ACT AND THE LICENSE AGREEMENT, AND SUBJECT TO CIVIL AND CRIMINAL PENALTIES THEREUNDER.

INTERNATIONAL CODE COUNCIL®
Copyright © 2015 ICC. ALL RIGHTS RESERVED. Accessed by David Dammon on Jun 21, 2017 12:30:52 PM pursuant to License Agreement with ICC. No further reproduction or distribution authorized. ANY UNAUTHORIZED REPRODUCTION OR DISTRIBUTION IS A VIOLATION OF THE FEDERAL COPYRIGHT ACT AND THE LICENSE AGREEMENT, AND SUBJECT TO CIVIL AND CRIMINAL PENALTIES THEREUNDER.

ANSI/APSP/ICC-7 2013

American National Standard for

Suction Entrapment Avoidance In Swimming Pools, Wading Pools, Spas, Hot Tubs, and Catch Basins

Approved October 8, 2013



APSP
The Association of Pool & Spa Professionals®

ICC INTERNATIONAL CODE COUNCIL®

INTERNATIONAL CODE COUNCIL®

Copyright © 2015 ICC. ALL RIGHTS RESERVED. Accessed by David Dammon on Jun 21, 2017 12:30:52 PM pursuant to License Agreement with ICC. No further reproduction or distribution authorized. ANY UNAUTHORIZED REPRODUCTION OR DISTRIBUTION IS A VIOLATION OF THE FEDERAL COPYRIGHT ACT AND THE LICENSE AGREEMENT, AND SUBJECT TO CIVIL AND CRIMINAL PENALTIES THEREUNDER.

INTERNATIONAL CODE COUNCIL®

Copyright © 2015 ICC. ALL RIGHTS RESERVED. Accessed by David Dammon on Jun 21, 2017 12:30:52 PM pursuant to License Agreement with ICC. No further reproduction or distribution authorized. ANY UNAUTHORIZED REPRODUCTION OR DISTRIBUTION IS A VIOLATION OF THE FEDERAL COPYRIGHT ACT AND THE LICENSE AGREEMENT, AND SUBJECT TO CIVIL AND CRIMINAL PENALTIES THEREUNDER.

ANSI/APSP/ICC-7 2013

American National Standard for Suction Entrapment Avoidance in Swimming Pools, Wading Pools, Spas, Hot Tubs And Catch Basins

SECRETARIAT:

Association of Pool & Spa Professionals
2111 Eisenhower Avenue
Alexandria, VA 22314
703 838-0083
www.APSP.org

Approved October 8, 2013
American National Standards Institute

INTERNATIONAL CODE COUNCIL®

Copyright © 2015 ICC. ALL RIGHTS RESERVED. Accessed by David Dammon on Jun 21, 2017 12:30:52 PM pursuant to License Agreement with ICC. No further reproduction or distribution authorized. ANY UNAUTHORIZED REPRODUCTION OR DISTRIBUTION IS A VIOLATION OF THE FEDERAL COPYRIGHT ACT AND THE LICENSE AGREEMENT, AND SUBJECT TO CIVIL AND CRIMINAL PENALTIES THEREUNDER.

American National Standard

Approval of an American National Standard requires verification by ANSI that the requirements for due process, consensus, and other criteria for approval have been met by the standard developer. Consensus is established when, in the judgment of the ANSI Board of Standards Review, substantial agreement has been reached by directly and materially affected interests. Substantial agreement means much more than a simple majority, but not necessarily unanimity.

Consensus requires that all views and objections be considered and that a concerted effort be made toward their resolution. The use of American National Standards is completely voluntary; their existence does not in any respect preclude anyone, whether he has approved this standard or not, from manufacturing, marketing, purchasing, or using products, processes, or procedures not conforming to the standards.

The American National Standards Institute does not develop standards and will in no circumstances give an interpretation of any American National Standard. Moreover, no person shall have the right or authority to issue an interpretation of an American National Standard in the name of the American National Standards Institute. Requests for interpretations should be addressed to the secretariat or sponsor whose name appears on the title page of this standard.

NOTICE: This American National Standard may be revised or withdrawn at any time. The procedures of the American National Standards Institute require that action be taken periodically to reaffirm, revise, or withdraw this standard.

Important Notice about this Document

This voluntary standard has been developed under the published procedures of the American National Standards Institute (ANSI). The ANSI process brings together volunteers representing varied viewpoints and interests to achieve consensus.

APSP does not write the standards. Rather, APSP facilitates a forum for its members, and others interested in pool and spa design and safety, to develop standards through the consensus procedures of the American National Standards Institute (ANSI). While the APSP administers the process and establishes rules to promote fairness in the development of consensus, it does not independently test, evaluate, or verify the accuracy of any information or the soundness of any judgments contained in its codes and standards.

In issuing and making this document available, the APSP is not undertaking to render professional or other services for or on behalf of any person or entity. Nor is the APSP undertaking to perform any duty owed by any person or entity to someone else. The APSP disclaims liability for any personal injury, property, or other damages of any nature whatsoever, whether special, indirect, consequential, or compensatory, directly or indirectly resulting from the publication of, use of, or reliance on this document.

The APSP has no power, nor does it undertake, to police or enforce compliance with the contents of this document. The APSP does not list, certify, test, or inspect products, designs, or installations for compliance with this document. Any certification or other statement of compliance with the requirements of this document shall not be attributable to the APSP. Any certification of products stating compliance with requirements of this document is the sole responsibility of the certifier or maker of the statement. The APSP, its members, and those participating in its activities do not accept any liability resulting from compliance or noncompliance with the provisions given herein, for any restrictions imposed on materials, or for the accuracy and completeness of the text.

Anyone using this document should rely on his or her own independent judgment or, as appropriate, seek the advice of a competent professional in determining the exercise of reasonable care in any given circumstance. It is assumed and intended that spa users will exercise appropriate personal judgment and responsibility and that public spa owners and operators will create and enforce rules of behavior and warnings appropriate for their facility.

Copyright Notice

Copyright ©2013 by The Association of Pool & Spa Professionals, 2111 Eisenhower Avenue, Alexandria, VA 22314-4695. Printed in the United States of America. All rights reserved. No part of this book may be reproduced, stored in a retrieval system, transcribed or transmitted, in any form or by any means or method, electronic, mechanical, photocopy, recording, or otherwise, without advance written permission from the publisher: The Association of Pool & Spa Professionals, 2111 Eisenhower Avenue, Alexandria, VA 22314-4695.

"APSP," "The Association of Pool & Spa Professionals," and the APSP logo are trademarks of The Association of Pool & Spa Professionals.

INTERNATIONAL CODE COUNCIL®
Copyright © 2015 ICC. ALL RIGHTS RESERVED. Accessed by David Dammon on Jun 21, 2017 12:30:52 PM pursuant to License Agreement with ICC. No further reproduction or distribution authorized. ANY UNAUTHORIZED REPRODUCTION OR DISTRIBUTION IS A VIOLATION OF THE FEDERAL COPYRIGHT ACT AND THE LICENSE AGREEMENT, AND SUBJECT TO CIVIL AND CRIMINAL PENALTIES THEREUNDER.

Foreword

This Foreword is not part of the American National Standard ANSI/APSP/ICC-7 2013. It is included for information only.

The *ANSI/APSP/ICC-7 2013 Standard for Suction Entrapment Avoidance in Swimming Pools, Wading Pools, Spas, Hot Tubs And Catch Basins* was approved by ANSI on October 8, 2013.

The objective of this voluntary standard is to provide recommended minimum guidelines for suction entrapment avoidance in the design, equipment, operation, and installation of new and existing swimming pools, wading pools, spas, hot tubs, and catch basins for builders, installers, pool operators, and service professionals. It is intended to meet the needs for incorporation into national or regional building codes, and also for adoption by state and/or local municipalities as a local code or ordinance. It is understood that for the sake of applicability and enforceability, the style and format of the standard may need adjustment to meet code or ordinance style of the jurisdiction adopting this document.

The design recommendations and construction practices in this standard are based upon sound engineering principles, research, and field experience that, when applied properly, contribute to the delivery and installation of a safe product.

The words "safe" and "safety" are not absolutes. While the goal of this standard is to design and construct a safe, enjoyable product, it is recognized that risk factors cannot, as a practical matter, be reduced to zero in any human activity. This standard does not replace good judgment and personal responsibility. In permitting use of the pool, spa, swim spa or portable spa by others, owners must consider the skill, attitude, training and experience of the expected user.

As with any product, the specific recommendations for installation and use provided by the manufacturer should be carefully observed.

This standard was prepared by the This standard was prepared by the APSP-7 Suction Entrapment Avoidance Standard Writing Committee of the Association of Pool and Spa Professionals (APSP) in accordance with American National Standards Institute (ANSI) Essential Requirements: Due process requirements for American National Standards.

Consensus approval was achieved by a ballot of the balanced APSP Standards Consensus Committee and through an ANSI Public Review process. The ANSI Public Review provided an opportunity for additional input from industry, academia, regulatory agencies, safety experts, state code and health officials, and the public at large.

Suggestions for improvement of this standard should be sent to The Association of Pool and Spa Professionals, 2111 Eisenhower Avenue, Alexandria, VA 22314.

This standard is published in partnership with the International Code Council (ICC). ICC develops and publishes the *International Building Code (IBC)* and *International Residential Code (IRC)*, which are adopted as the basis for the building codes used in most states and jurisdictions within the United States. Additionally, APSP and ICC have collaborated to develop the first comprehensive model swimming pool and spa code, known as the *International Swimming Pool and Spa Code*. This landmark document incorporates and references material from ANSI/APSP standards and ICC's model codes, to create a stand-alone code that is consistent with codes and standards from both organizations.

These codes and standards are the result of a joint effort between ICC and APSP as a service to both the swimming pool and spa community, and building code professionals. It is the hope of both organizations that they will lead to enhanced safety for pool and spa users around the world.

©2013 The Association of Pool & Spa Professionals

INTERNATIONAL CODE COUNCIL®

Copyright © 2015 ICC. ALL RIGHTS RESERVED. Accessed by David Dammon on Jun 21, 2017 12:30:52 PM pursuant to License Agreement with ICC. No further reproduction or distribution authorized. ANY UNAUTHORIZED REPRODUCTION OR DISTRIBUTION IS A VIOLATION OF THE FEDERAL COPYRIGHT ACT AND THE LICENSE AGREEMENT, AND SUBJECT TO CIVIL AND CRIMINAL PENALTIES THEREUNDER.

Organizations Represented

Consensus approval in accordance with ANSI procedures was achieved by ballot of the following APSP Standards Consensus Committee. Inclusion in this list does not necessarily imply that the organization concurred with the submittal of the proposed standard to ANSI.

Producers

All American Custom Pools & Spas, Inc . . . John Romano
Custom Pools, Inc . . . . . Scott Heusser
Gary Pools, Inc . . . . . Leif Zars
Hayward Industries . . . . . John O'Hare
HornerXpress South Florida . . . . . Bill Kent
Master Spas Inc . . . . . Nathan Coelho
Rosebrook Carefree Pools, Inc . . . . . John Bently
Trilogy Pools Div. of Viking Pools LCC . . . . . Ted Baudendistel
S.R. Smith, LLC . . . . . Bill Svendsen
Van Kirk & Sons, Inc . . . . . Don Cesarone

General Interest

American Hotel & Lodging Association . . . . Tony Mendez
American Red Cross . . . . . Connie Harvey
Chesapeake Aquatic Consultants, LLC . . . . Frank Goldstein
Con-Serv Associates Inc. . . . . Wally James
Conroe Independent School District, TX . . . Louis Sam Fruia
Don Witte Consultant. . . . . Don Witte
National Environmental Health Association (NEHA) . . . . . Florence Higgins
Walt Disney Parks and Resorts. . . . . Michael Beatty
World Waterpark Association . . . . . Rick Root
YMCA of the USA. . . . . Albert Tursi

Government/User

City of Martinsville, VA . . . . . Kris Bridges
City of Mount Dora, FL. . . . . Tom Allen
Fairfax County, VA . . . . . Marc Mordue
Green Oak Charter Township . . . . . Wayne Jewell
Illinois Department of Public Health . . . . . Justin DeWitt
International Code Council. . . . . Lee Clifton
New Jersey Dept. of Community Affairs Division of Codes and Standards . . . . . Thomas Pitcherello
North Carolina Building Office Office of State Fire Marshall. . . . . Helen DiPietro
Oregon Public Health Division . . . . . Stephen Keifer
Washington State Dept. of Health . . . . . Gary Fraser
U.S. Consumer Product Safety Commission Mark Eilbert*
*non-voting

In accordance with American National Standards Institute (ANSI) procedures, this document will be reviewed periodically. The Association of Pool & Spa Professionals welcomes your comments and suggestions, and continues to review all APSP standards, which include:

ANSI/APSP/ICC-1 2013 Standard for Public Swimming Pools
ANSI/APSP-2 1999 Standard for Public Spas
ANSI/APSP-3 1999 Standard for Permanently Installed Residential Spas
ANSI/APSP/ICC-4 a 2013 Standard for Aboveground/Onground Residential Swimming Pools
ANSI/APSP/ICC-5 2011 Standard for Residential Inground Swimming Pools
ANSI/APSP/ICC-6 2013 Standard for Residential Portable Spas and Swim Spas
ANSI/APSP/ICC-7 2013 Standard for Suction Entrapment Avoidance in Recreational Aquatic Vessels
ANSI/APSP/ICC-8 2005 (R2013) Model Barrier Code for Residential Swimming Pools, Spas and Hot Tubs
ANSI/APSP-9 Standard for Aquatic Recreation Facilities (in progress)
ANSI/APSP-11 2009 Standard for Water Quality in Public Pools and Spas
ANSI/APSP/ICC-14 2011 Standard for Portable Electric Spa Energy Efficiency
ANSI/APSP/ICC-15-a 2013 Standard for Residential Pool and Spa Energy Efficiency
ANSI/APSP-16 2011 Suction Fittings for Use in Swimming Pools, Wading Pools, Spas, and Hot Tubs
APSP 2013 Workmanship Standards for Swimming Pools and Spas

©2013 The Association of Pool & Spa Professionals

INTERNATIONAL CODE COUNCIL®
Copyright © 2015 ICC. ALL RIGHTS RESERVED. Accessed by David Dammon on Jun 21, 2017 12:30:52 PM pursuant to License Agreement with ICC. No further reproduction or distribution authorized. ANY UNAUTHORIZED REPRODUCTION OR DISTRIBUTION IS A VIOLATION OF THE FEDERAL COPYRIGHT ACT AND THE LICENSE AGREEMENT, AND SUBJECT TO CIVIL AND CRIMINAL PENALTIES THEREUNDER.

Contents

Sections

		Page
American National Standard		ii
Foreword		iii
1	Scope	1
2	Normative References	1
3	Definitions	1
4	General requirements for suction entrapment avoidance systems and components	4
5	New construction	6
6	Existing pools and spas	8

Appendices

A	Symbols	A-1
B	Field Checklist for Identifying Suction Entrapments Hazards	A-2
C	Suction Entrapment Warning	A-6
D	Sources of Material	A-7

Figures

		Page
1	Branch piping	1
2	A system curve	3
3a	Example of unblockable outlet	4
3b	Example of unblockable suction outlet	4
4	Single unblockable channel outlet to single pump	5
5	Single unblockable channel outlet to two pumps	5
6	Large unblockable outlet of any shape to single pump	5
7	Skimmer, vent through lid	6
8	Skimmer with equalizer	6
9	Dual outlets in parallel to one pump	7
10	Dual outlets in parallel to dual pumps	7
11	Dual parallel outlets to two pumps	7
12	Dual outlets on different planes	7
13	Three or more outlets to single pump(s)	8
14	Three or more outlets in parallel, looped piping	8
15	Sumps in series	8

APSP-7 Writing Committee

Zodiac Pool Systems	Shajee Siddiqui, Chairman
Afras Industries, Inc.	Reza Afshar
Aquatic Development Group	Jim Dunn
Fail Safe Products, LLC	Michael L. Wolfe
Gary Pools	Leif Zars
H_2O Flow Controls	Paul Hackett
Latham International	Michael Tinkler
Newport Controls LLC	Lee West
Pentair Aquatic Systems	Steve Barnes
Professional Pool Solutions, LCC	Maria Bella
Regal Beloit Corporation	Howard Richardson
Stingl Products	David Stingl
Swim, Inc.	Dan Johnson
Vac-Alert	Paul Pennington
Vacless	Hassan Hamza
Walt Disney	Andrea Crabb
Waterway Plastics	Ray Mirzaei

Observers

Custom Molding Products, Inc.	Angelo Pugliese
IAPMO R & T Lab	Tony Zhou
International Code Council (ICC)	Lee Clifton
ICC Alternate	Maribel Campos
Intex Recreation Corp.	Matthew (Chip) Whalen
Master Spas Inc.	Nathan Coelho
Tropical Pools Inc.	Adam Alstott
U.S. Consumer Product Safety Commission	Mark Eilbert*
Vak Pak	Alex Fletcher
Watkins Manufacturing	Mike McAgue

* Non-voting

Also Contributing

Consultant	Ray Cronise
Hayward Pool Products	Robert Rung

APSP Staff

Bernice Crenshaw, Director, Technical and Standards
Carvin DiGiovanni, Senior Director, Technical and Standards

©2013 The Association of Pool & Spa Professionals

INTERNATIONAL CODE COUNCIL®

Copyright © 2015 ICC. ALL RIGHTS RESERVED. Accessed by David Dammon on Jun 21, 2017 12:30:52 PM pursuant to License Agreement with ICC. No further reproduction or distribution authorized. ANY UNAUTHORIZED REPRODUCTION OR DISTRIBUTION IS A VIOLATION OF THE FEDERAL COPYRIGHT ACT AND THE LICENSE AGREEMENT, AND SUBJECT TO CIVIL AND CRIMINAL PENALTIES THEREUNDER.

INTERNATIONAL CODE COUNCIL®

Copyright © 2015 ICC. ALL RIGHTS RESERVED. Accessed by David Dammon on Jun 21, 2017 12:30:52 PM pursuant to License Agreement with ICC. No further reproduction or distribution authorized. ANY UNAUTHORIZED REPRODUCTION OR DISTRIBUTION IS A VIOLATION OF THE FEDERAL COPYRIGHT ACT AND THE LICENSE AGREEMENT, AND SUBJECT TO CIVIL AND CRIMINAL PENALTIES THEREUNDER.

American National Standard for Suction Entrapment Avoidance in Swimming Pools, Wading Pools, Spas, Hot Tubs And Catch Basins

1 Scope

1.1 General. This standard covers design and performance criteria for circulation systems including components, devices, and related technology installed to protect against entrapment hazards in residential and public swimming pools, wading pools, inground spas, infinity edge basins, (infinity edge type pools) and catch Pools, and Aquatic Recreation Facilities.

1.1.1 Portable Factory Built Electric Spas/Hot Tubs. Suction entrapment avoidance guidelines for portable electric spas/hot tubs are not covered by this standard they are covered by UL 1563, Electric Spas, equipment Assemblies, and Associated Equipment.[6]

1.1.2 This standard applies to new and, when retrofitting, existing installations.

1.1.3 DANGER! SUCTION ENTRAPMENT HAZARD: To avoid serious injury or death, the pool or spa shall be closed to bathers if any suction outlet cover/grate is missing, broken, or incorrectly installed. There is no backup for a missing, damaged or incorrectly installed suction outlet cover/grate. See Appendix C.

1.2 Alternative methods. The provisions of this standard are not intended to prevent the use of any alternative material, system, or method of construction, provided any such alternative meets the intent and requirements of this standard, follows manufacturer's product specific instructions and is approved by the authority having jurisdiction.

2 Normative references

The following standards contain provisions that, through reference in this text, constitute provisions of this standard.

ANSI/APSP-16 2011, Suction fittings for swimming and wading pools, spas, hot tubs and whirlpool bathtub appliances[1]

ANSI/ASME A112.19.17-2010, Manufactured safety vacuum release systems (SVRS) for residential and commercial swimming pool, spa, hot tub and wading pool suction systems[2]

ASTM F 2387-12, Standard specification for manufactured safety vacuum release systems, swimming pools, spas and hot tubs[3]

IAPMO SPS-4 2009, Special use suction fittings for swimming pools, spas and hot tubs (for suction side automatic swimming pool cleaners)[4]

NFPA 70-2011, National Electrical Code, Article 680, Swimming pools, fountains, and similar installations[5]

UL 1563 2009, Electric Spas, Equipment Assemblies, and Associated Equipment.[6]

3 Definitions

alternative method: A substitute way of achieving the same goal or purpose.

anti-entrapment cover: See CERTIFIED SUCTION OUTLET COVER/GRATE.

anti-vortex cover: An outlet cover designed to prevent air entrainment from the surface of the water. This term is no longer used to describe CERTIFIED SUCTION OUTLET COVER/GRATE.

approved safety outlet cover: See CERTIFIED SUCTION OUTLET COVER/GRATE.

automatic pump shut-off system (APSS): A pump motor control or other device capable of turning off, stopping, or otherwise incapacitating a pump(s) in response to a condition (i.e., high vacuum, low flow, low current, etc.) that would indicate that a suction entrapment event has occurred.

branch piping: All pipe and fittings, including the "run" of the junction tee, located between multiple suction outlets fitting (see *Figures 1* and *9–14*).

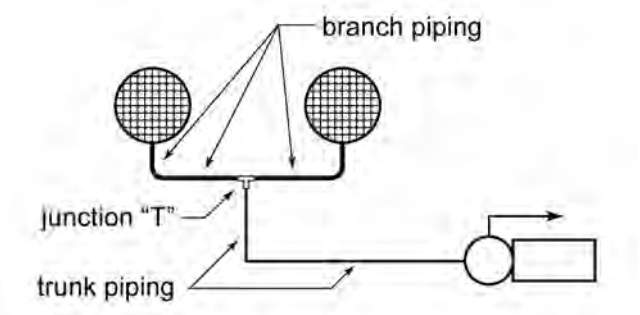

Figure 1. Branch piping

1. Association of Pool & Spa Professionals (APSP) , 2111 Eisenhower Avenue, Alexandria, VA 22314 (703) 838-0083, www.APSP.org.
2. American Society of Mechanical Engineers (ASME), 3 Park Avenue, 20th Floor, New York, NY 10016, (212) 591-8562, www.asme.org
3. ASTM International, 100 Barr Harbor Drive, West Conshohocken, PA 19428, (610) 832-9500, www.astm.org
4. International Association of Plumbing and Mechanical Officials (IAPMO), 5001 E. Philadelphia St., Ontario, CA 91761. (909) 472-4100, www.iapmo.org
5. National Fire Protection Association (NFPA), 1 Batterymarch Park, Quincy, MA 02169-7471, (617) 770-3000, www.nfpa.org
6. Underwriters Laboratories Inc. (UL), 333 Pfingston Road, Northbrook, IL 60062-2096. (847) 272-8800, www.ul.com

©2013 The Association of Pool & Spa Professionals

INTERNATIONAL CODE COUNCIL®

Copyright © 2015 ICC. ALL RIGHTS RESERVED. Accessed by David Dammon on Jun 21, 2017 12:30:52 PM pursuant to License Agreement with ICC. No further reproduction or distribution authorized. ANY UNAUTHORIZED REPRODUCTION OR DISTRIBUTION IS A VIOLATION OF THE FEDERAL COPYRIGHT ACT AND THE LICENSE AGREEMENT, AND SUBJECT TO CIVIL AND CRIMINAL PENALTIES THEREUNDER.

catch pool: The pool at the discharge of a waterslide or similar aquatic facility or a body of water supplied by gravity overflow from another pool or vessel.

CAUTION: Indicates a potentially hazardous situation that, if not avoided, could result in minor or moderate injury. It may also be used to alert against unsafe practices.

certified: The published certification by an ILAC approved laboratory that a device, system, or alternate method has been tested and certified to be in conformance with the full intent of a standard.

certified automatic pump shut-off system APSS: An automatic pump shut-off system tested and certified in accordance with Section 4.3.2 of this standard which requires compliance with ANSI/ASME A112.19.17 or ASTM F2387.

certified safety cover: See CERTIFIED SUCTION OUTLET COVER/GRATE.

certified safety outlet cover: See CERTIFIED SUCTION OUTLET COVER/GRATE.

certified suction outlet cover/grate: A manufactured suction outlet or field fabricated outlet that has been Certified in accordance with Section 4.3.1 of this standard which requires compliance with ANSI/APSP-16[7].

certified SVRS: A manufactured safety vacuum release system tested and certified in accordance with Section 4.3.2 of this standard which requires compliance with ANSI/ASME A112.19.17 or ASTM F 2387.

check valve: A mechanical device in a pipe that permits the flow of water in one direction only.

closed pool: A pool in which access to bathers is prohibited. This may be accomplished by locking gates and doors, by posting notices, conspicuously placed "Barricade" tape. Pool circulation systems may be in operation when closed.

DANGER: Indicates an imminently hazardous situation that, if not avoided, will result in death or serious injury.

debris removal system: A system comprised of a large opening suction outlet, large diameter pipe and a debris collection basket, typically located in the deck or the pump basket. Because of unique challenges passing debris through the suction outlet cover/grate and suction piping, these systems are designed specifically for debris removal and are commonly sold as kits with detailed installation requirements to address suction safety.

drain: See MAIN DRAIN.

effluent: The outflow of water from a filter, pump, or pool

engineer: A Licensed Professional Engineer (P.E.).

equalizer line: 1. A pipe with a Certified suction outlet cover/grate located below the waterline and connected to the body of a skimmer to prevent air from being drawn into the pump if the water level drops below the skimmer weir. 2. A pipe connecting two bodies of water with Certified Suction Outlet Fitting Assemblies to equalize water levels.

feet of head: The measure of resistance in a hydraulic system based on the equivalent to the height of a column of water that causes the same resistance (100 feet of head = 43 pounds per square inch).

field built sump: A sump built below or behind the suction outlet cover/grate of a design specified by the cover/grate manufacturer to control flow distribution through the open area of the cover/grate. Field built sumps may be formed, cut or carved out of the gunite or concrete material of the pool structure. They are to be constructed so as to accommodate suitable fastening means to attach the cover/grate. They must conform to the requirements of APSP/ANSI-16.

field fabricated outlet(s): These are site specific unblockable suction outlet fitting assemblies defined per ANSI/APSP-16 as being intended as but not limited to a single suction outlet and are limited to 1.5 ft/sec *(0.46 m/s)* of flow velocity through the open area of the cover/grate unless rated at a lower flow rate by the Registered Design Professional. They are to be of such a size that the 18 in. × 23 in. × 4 in. corner radii *(457 mm × 584 mm × 102 mm)* blocking element will not cause a differential pressure that could cause body entrapment.

flow rate: The quantity of water flowing through a pipe within a specified time, such as the number of gallons flowing past a point in one minute; abbreviated as GPM or *liters/minute, Lpm* (1 GPM = *3.7854 L/min*).

flow rating: The maximum allowable flow rate through a cover/grate.

GPM: Abbreviations for gallons per minute.

gravity drainage: See VENTED RESERVOIR.

gutter: Overflow trough at the perimeter wall of a pool or at the bottom of a vanishing edge wall of a pool that is a component of the circulation system or flows to waste.

hydrostatic relief valve: A valve to allow rising groundwater to enter an empty pool to prevent flotation.

incorrectly installed: not installed in strict conformance with manufacturers product specific instructions.

infinity edge basin: a basin designed to receive the water that flows over the "infinity edge" of a pool and/or spa during the circulation pump cycle and/or feature pump operational time.

influent: The water entering a filter or other device

inlet: See RETURN INLET.

junction tee: A tee between suction outlet fittings, which joins their flow into a trunk line to the pump.
NOTE: This usage is different from the standard usage in the piping industry. The trunk line is connected to the single branch of the tee fitting and the two branch lines from the outlets are connected to the run of the tee fitting.

main drain: An obsolete term for suction outlet, which is a fitting, fitting assembly, cover/grate, and related components that provide a localized low-pressure area for the transfer of water from a swimming pool, wading pool, spa, or hot tub.

manifold: A branch pipe arrangement that connects several influent pipes into one chamber or pump, or one chamber into several effluent pipes.

7. The Consumer Product Safety Commission has voted unanimously to approve ANSI/APSP-16 2011 as the successor standard to the ANSI/ASME A112.19.8 suction outlet cover standard mandated by the Virginia Graeme Baker Pool and Spa Safety Act. The Commission determined that the new standard, ANSI/APSP-16 2011, was in the public interest, and incorporated this standard into its regulations. This means that, effective September 6, 2011, suction outlet covers manufactured, distributed, or entered into commerce in the United States must conform to the requirements of ANSI/APSP-16 2011.

©2013 The Association of Pool & Spa Professionals

INTERNATIONAL CODE COUNCIL®
Copyright © 2015 ICC. ALL RIGHTS RESERVED. Accessed by David Dammon on Jun 21, 2017 12:30:52 PM pursuant to License Agreement with ICC. No further reproduction or distribution authorized. ANY UNAUTHORIZED REPRODUCTION OR DISTRIBUTION IS A VIOLATION OF THE FEDERAL COPYRIGHT ACT AND THE LICENSE AGREEMENT, AND SUBJECT TO CIVIL AND CRIMINAL PENALTIES THEREUNDER.

maximum system flow rate: For purposes of this suction entrapment avoidance standard, maximum system flow rate is defined as the maximum potential flow when all available system flow is directed through the submerged suction outlet(s). See Section 4.4.9 for specific procedures required to determine the system specific, maximum system flow rate.

operating point: The condition at which the pump will operate. It is the intersection of the pump curve and system curve.

overflow system: An outlet with flow across a fixed or movable weir and where there is a free surface interface with atmosphere.

P.E.: See ENGINEER.

parallel: A piping arrangement allowing flow through multiple paths.

pump: A mechanical device, usually powered by an electric motor that causes hydraulic flow and pressure for the purpose of filtration, heating, and circulation of pool and spa water. Typically a centrifugal pump is used for pools, spas, and hot tubs.

pump curve, pump performance curve: A graph that represents the pressure rise of a pump plotted against flow rate. See SYSTEM CURVE AND OPERATING POINT.

Registered Design Professional: an individual who is registered or licensed to practice their respective design profession as defined by the statutory requirements of the professional registration laws of the state or jurisdiction in which the project is to be constructed.

retrofit: The act of adding a component or accessory to the pool and spa that was not part of the original installation—for example, replacing a non-certified suction outlet cover/grate with one that is Certified. See also Section 6.5.

return inlet: The aperture or fitting through which the water under pressure returns into the pool or spa.

safety drain cover: See CERTIFIED SUCTION OUTLET s/GRATE.

safety vacuum release system (SVRS): A system capable of providing vacuum release at a suction outlet in case of a high vacuum occurrence due to a suction outlet flow blockage. Methods may include, but are not necessarily limited to, venting the suction line to atmosphere and/or turning off the circulation pump, or reversing the circulation flow.

secured control system: Any means that reasonably prevents unauthorized access to pump and valve control systems by persons who could make adjustments resulting in flow rates above which the system has been stamped and sealed in accordance with this standard by the Registered Design Professional responsible for this system.
NOTE: Secured control systems include, but are not limited to; equipment rooms not accessible to unqualified persons, control systems that are protected by passwords not available to unqualified persons, and valves with adjustment handles locked.

single outlet, alternative suction systems: A single Certified suction outlet cover/grate and an alternative suction system, including a venturi-driven system, turbine driven system, or any other mechanical means of circulating water without the use of a centrifugal pump.

skimmer: A device installed in the wall of a body of water that permits the removal of floating debris and surface water.

static lines: Piping that connects two bodies of water to maintain equal levels (example—a static line from a collector tank to a pool so that the auto-fill device in the collection tank can be adjusted to maintain the proper water level in the pool.)

suction: The flow of fluid into a partial vacuum or region of lower pressure. The gradient between this region and the ambient pressure will propel matter towards the low-pressure area.

suction-limiting gravity flow systems: See VENTED RESERVOIR.

suction-limiting system: A safety vacuum release system, vent system, gravity drainage/flow system, vented reservoir, automatic pump shut-off system, properly spaced multiple suction outlets, or other methods capable of limiting the duration of a high-vacuum occurrence and/or the magnitude of the vacuum at a suction outlet cover/grate in case of suction flow blockage.

suction outlet: Indicates a fitting, fitting assembly, cover/grate, sump, and related components that provide a localized low-pressure area for the transfer of water from a swimming pool, wading pool, spa, or hot tub. See also CERTIFIED SUCTION OUTLET COVER/GRATE.

suction system piping: All piping on the suction side of the system between the pool and the pump.

sump: The vessel between the suction outlet cover/grate and suction outlet piping. This may be manufactured or field built.

sumps in series: An arrangement of outlets such that effluent of one sump is influent to another sump. It is commonly used in piping submerged suction outlet(s) to skimmer body(ies).

swim jet system: Combination fitting or fittings that incorporate(s) a suction outlet and inlet designed to move a large volume of water at high velocity in a single direction.

system curve: A graph that shows the pressure difference required to induce flow through the entire piping system. It is plotted with head pressure on the vertical axis of the chart and flow rate on the horizontal axis of the chart (see *Figure 2*).

tee: A fitting in the shape of a "T" used to connect branch pipes. The trunk pipe is perpendicular to the two branch pipes.

testing: For the purposes of this standard, "testing" means the physical activity of performing an evaluation in accordance with the procedures and protocols defined by this standard and/or a referenced standard.

total dynamic head (TDH): The sum of the difference in elevation between the source and destination and the friction losses in a piping system. It has units of pressure (such as psi) but is commonly given in feet of head. Since friction losses depend on flow rate, TDH must be specified for a particular flow rate.

trunk line: piping from a junction tee to a suction source, such as a pump or vented reservoir.

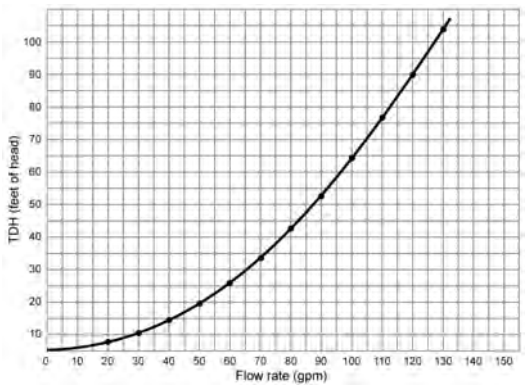

Figure 2. A system curve

©2013 The Association of Pool & Spa Professionals

INTERNATIONAL CODE COUNCIL®

Copyright © 2015 ICC. ALL RIGHTS RESERVED. Accessed by David Dammon on Jun 21, 2017 12:30:52 PM pursuant to License Agreement with ICC. No further reproduction or distribution authorized. ANY UNAUTHORIZED REPRODUCTION OR DISTRIBUTION IS A VIOLATION OF THE FEDERAL COPYRIGHT ACT AND THE LICENSE AGREEMENT, AND SUBJECT TO CIVIL AND CRIMINAL PENALTIES THEREUNDER.

unblockable: A suction outlet defined as all components, including the sump and/or body, cover/grate, and hardware such that its perforated (open) area cannot be shadowed by the area of the 18 × 23 in. *(457 × 584 mm)* Body Blocking Element of ANSI/APSP-16, and that the rated flow through the remaining open area cannot create a suction force in excess of the removal force values in *Table 1* of that standard. All suction outlet covers, manufactured or field-fabricated, are to be certified as meeting the applicable requirements of the ANSI/APSP-16 (see *Figures 3a* and *3b*).

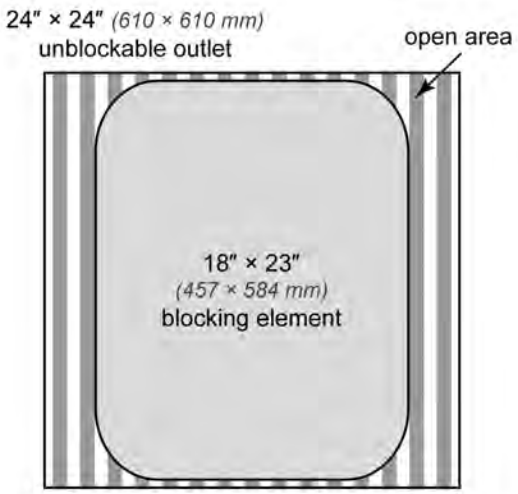

Figure 3a. Example of unblockable suction outlet

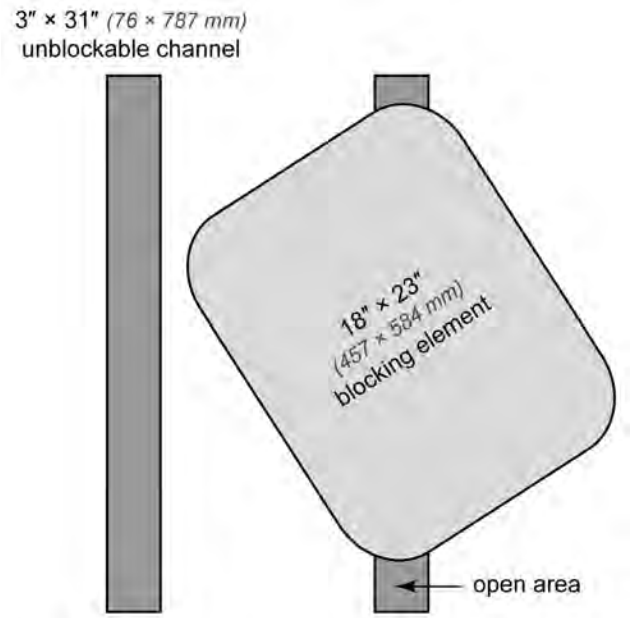

Figure 3b. Example of unblockable suction outlet

vacuum: A condition in which the pressure inside an outlet or suction pipe is lower than pool pressure.

vanishing edge: A design feature incorporated into a pool wall wherein the water flows over the wall (edge) into a catch gutter or catch pool, creating the illusion that the water vanishes.

vent: A vent to the atmosphere that connects to the suction pipe between the pool and the pump. When a high vacuum event occurs, air from the vent pipe replaces the water in the suction pipe thereby breaking the vacuum.

vented reservoir: A receptacle or container incorporated as part of a circulation system that is vented to atmosphere and receives water from the pool/spa or water feature by force of gravity, from which the pump draws its water supply. Systems including vented reservoirs are commonly referred to as *gravity flow systems, gravity feed systems,* or *gravity drainage systems.* Vented reservoirs include, but are not limited, to the following: catch pools, surge tanks, collector tanks, skimmers open to the atmosphere, atmospheric vent, gutters, overflow gutters, or perimeter gutter systems.

wading pool: A separate pool designed for use by small children with an independent circulation system and a maximum water depth of 18 in. *(457 mm)*.

wall vacuum fitting: A fitting in the wall of a pool intended to provide a point of connection of suction for suction side cleaners.

WARNING: Indicates a potentially hazardous situation that, if not avoided, could result in death or serious injury.

4 General requirements for suction entrapment avoidance systems and components

4.1 DANGER! To avoid serious injury or death, the pool or spa shall be closed to bathers if any suction outlet cover/grate is missing, broken, or incorrectly installed. There is no backup for a missing, damaged or incorrectly installed suction outlet cover/grate.

4.2 Codes. Pools and spas covered by this standard shall be constructed and operated to comply with all applicable codes governing safety and environmental regulations.

4.2.1 Electrical components. All associated electrical components installed in and/or adjacent to the circulation system shall comply with the requirements of the *National Electrical Code,* Article 680, Swimming pools, fountains, and similar installations, or the applicable revision and any state or local codes.

4.3 Certifications

4.3.1 Suction outlet certification

4.3.1.1 Manufactured suction outlet fitting assembly(ies). When used, fully submerged suction outlet fitting assembly(ies) including cover/grate and associated fittings, fasteners and components shall be tested and certified by a third-party test lab accredited by the International Laboratory Accreditation Cooperation (ILAC) to test and certify products as conforming to ANSI/APSP-16.

4.3.1.2 Field fabricated suction outlet(s). When used, field fabricated suction outlet cover/grate, sump, fasteners and assemblies shall be Certified by a Registered Design Professional as conforming to ANSI/APSP-16.

©2013 The Association of Pool & Spa Professionals

INTERNATIONAL CODE COUNCIL®
Copyright © 2015 ICC. ALL RIGHTS RESERVED. Accessed by David Dammon on Jun 21, 2017 12:30:52 PM pursuant to License Agreement with ICC. No further reproduction or distribution authorized. ANY UNAUTHORIZED REPRODUCTION OR DISTRIBUTION IS A VIOLATION OF THE FEDERAL COPYRIGHT ACT AND THE LICENSE AGREEMENT, AND SUBJECT TO CIVIL AND CRIMINAL PENALTIES THEREUNDER.

4.3.2 Manufactured Safety Vacuum Release Systems (SVRS) and Automatic Pump Shut-off Systems (APSS). When used, SVRS and APSS devices shall be tested and certified by a third-party test lab accredited by the International Laboratory Accreditation Cooperation (ILAC) to test and certify products as conforming to ASME/ANSI A112.19.17, ASTM F 2387 or any successor standards recognized by the U.S. Consumer Product Safety Commission (CPSC).

NOTE: As of the publication date of this standard, automatic pump shut-off systems do not have a performance standard to which they can be certified, as a result the U.S. Consumer Product Safety Commission (CPSC) states APSS are to be tested and certified in accordance with one of the SVRS standards.

NOTICE: Operating conditions. Systems are tested for operation, in accordance with current standards, at room temperature. For substantially varying environmental conditions, including freezing, heat, salt spray, and humidity, confirm suitability with the SVRS manufacturer prior to installation and use.

CAUTION: Incompatible configurations. Some suction vacuum release systems may be incompatible with certain system configurations. The designer or installer shall confirm suitability with the SVRS manufacturer prior to installation and use. Incompatible configurations may include check valves; two or more suction outlets, hydrostatic relief valves, skimmers, solar systems, elevated or submerged pump suction, multilevel bodies of water, and water features.

4.4 Performance requirements for suction outlets and suction-limiting systems

NOTE: Suction-limiting systems protect against body entrapment but are not considered "backup" systems as there is no known suction-limiting system that will completely protect against the remaining four (evisceration, limb, hair, mechanical) of the five known hazards and presenting suction-limiting systems as "backup" systems would promote a false sense of security among the users of these devices/systems.

4.4.1 Submerged suction outlets are optional. Fully submerged suction outlets (main drains) are not required in pools and spas. Surface skimming or overflow systems shall be permitted to provide 100 percent of the flow.

4.4.2 Field built sumps. Field built sumps shall be built in accordance with the suction outlet fitting assembly manufacturer's instructions or as may be site specific designed by a Registered Design Professional.

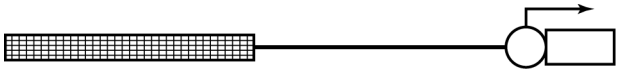

Figure 4. Single unblockable channel outlet to single pump.

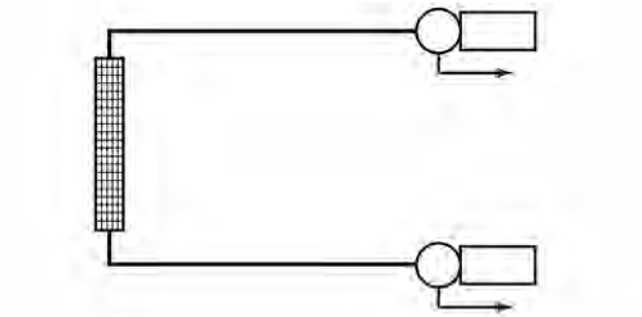

Figure 5. Single unblockable channel outlet to two pumps.

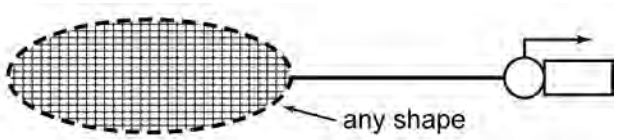

Figure 6. large unblockable outlet of any shape to single pump.

4.4.3 Unblockable outlets–single. A fully submerged unblockable outlet shall have a flow rating equal to or greater than the maximum system flow as determined in accordance with Section 4.4.9 (see *Figures 4, 5,* and *6*).

4.4.4 Unblockable outlets–multiple. Fully submerged unblockable outlets shall have a combined flow rating equal to or greater than the maximum system flow as verified in accordance with Section 4.4.9.

4.4.5 Blockable outlets–dual. When the secondary source of water for a blockable outlet is another submerged suction outlet assembly, each shall have a flow rating equal to or greater than the maximum system flow as determined in accordance with Section 4.4.9.

4.4.6 Blockable outlets–three, or more. When the secondary source of water for a blockable outlet is two or more submerged suction outlet assemblies, the flow rating of the set shall be determined by combining the flow rating of all outlets, minus the flow rating of one. The combined flow rating of the set shall be equal to or greater than the maximum system flow as determined in accordance with Section 4.4.9. If the flow ratings of all outlets are not equal, subtract the flow rating of the outlet with the highest flow rating.

4.4.7 Blockable outlets–multiple separation. For new construction see Section 5.3. For existing pools and spas see Section 6.9.

©2013 The Association of Pool & Spa Professionals

INTERNATIONAL CODE COUNCIL®

Copyright © 2015 ICC. ALL RIGHTS RESERVED. Accessed by David Dammon on Jun 21, 2017 12:30:52 PM pursuant to License Agreement with ICC. No further reproduction or distribution authorized. ANY UNAUTHORIZED REPRODUCTION OR DISTRIBUTION IS A VIOLATION OF THE FEDERAL COPYRIGHT ACT AND THE LICENSE AGREEMENT, AND SUBJECT TO CIVIL AND CRIMINAL PENALTIES THEREUNDER.

4.4.9 Maximum system flow rate. The maximum system flow rate shall be determined according to control system type where facilities with unsecured control systems use the options in 4.4.9.1 and facilities with secured control systems use the options in 4.4.9.2:

4.4.9.1 Maximum system flow rate–unsecured control systems. The maximum system flow rate is the pump's flow rate at the highest user selectable speed while the system is configured to operate at the lowest achievable system TDH when all flow is from the submerged suction system (skimmers off), the filter(s) is clean (when included), and all pressure-side valves are in the open (maximum flow) position. This operating point is determined by one of the following:

- Measuring with flow meter accurate to ±10% and installed according to the manufacturers specification, or
- Computing using complete system TDH calculations and then looking up the flow rate using the manufacturers certified pump curve, or
- Measuring system TDH at the pump's drain plugs and then looking up the flow rate using the manufacturer's certified pump curve.

4.4.9.2 Maximum system flow rate–secured control systems. The maximum system flow rate is the flow rate for the pump at its highest operating speed with the lowest operating system resistance as defined by the Registered Design Professional. It applies to new or replacement pumps. Measurements shall be made with a properly sized flow meter accurate to ±10% and installed according to manufacturer's instructions.

NOTE: The flow meter must be installed in accordance with the manufacturer's specific instructions. Careful consideration must be given to pipe diameter and the required straight pipe distances between the flow meter and other fittings such as, but not limited to, elbows, tees, valves etc.
No offset or estimation is to be allowed for flow meters that are not installed in accordance with the manufacturer's instructions. The manufacturer's claims must be NIST[8] traceable and verified by a third party.

4.5 Skimmers. Skimmers shall be vented to the atmosphere through openings in the lid, or through a separate vent pipe (see *Figure 7*).

4.5.1 Skimmer equalizer lines. Skimmer equalizer lines shall not be used on new construction. Existing equalizer(s) shall comply with all submerged suction outlet requirements of this standard (see *Figure 8*).

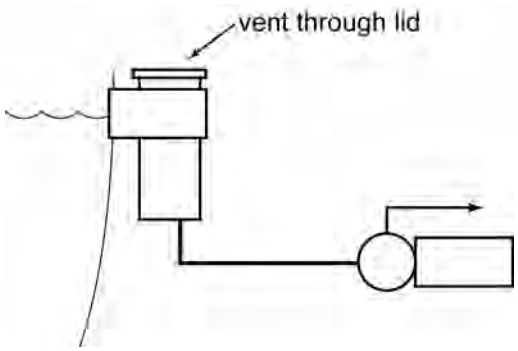

Figure 7. Skimmer, vent through lid

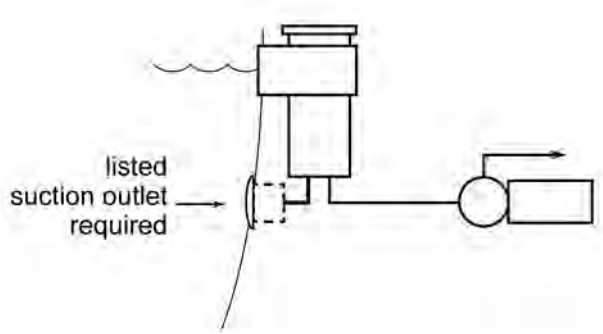

Figure 8. Skimmer with equalizer

4.6 Wall vacuum fitting(s). When used, vacuum cleaner fitting(s) shall be located in an accessible position(s) no greater than 12 inches *(305 mm)* below the water level and the self closing, self latching fitting shall comply with IAPMO SPS 4. In addition, the vacuum piping shall be equipped with a valve to remain in the closed position when not in use.

NOTICE: SPS-4 requires tools to remove, but due to incompatible components, there have been multiple cases of removal upon each usage, sometimes resulting in loss of components, and the essential safety feature. Make sure that the attachment of a vacuum hose in normal usage never leads to removal of the self-closing self-latching feature.

5 New construction

5.1 General. Methods to avoid entrapment in circulation systems, swim jet systems, alternative suction systems, and debris removal systems are shown in Sections 5.2 through 5.5.

5.2 Submerged suction outlets are optional. See Section 4.4.1.

5.2.1 Wading Pools. Due to the unique hazard presented by submerged suction outlets in wading pools, submerged suction outlets are prohibited in wading pools in all areas accessible to the bather.

8. National Institute of Standards and Technology

INTERNATIONAL CODE COUNCIL®
Copyright © 2015 ICC. ALL RIGHTS RESERVED. Accessed by David Dammon on Jun 21, 2017 12:30:52 PM pursuant to License Agreement with ICC. No further reproduction or distribution authorized. ANY UNAUTHORIZED REPRODUCTION OR DISTRIBUTION IS A VIOLATION OF THE FEDERAL COPYRIGHT ACT AND THE LICENSE AGREEMENT, AND SUBJECT TO CIVIL AND CRIMINAL PENALTIES THEREUNDER.

5.3 Submerged suction outlets. When used, fully submerged suction outlet fitting assemblies and systems shall be certified in accordance with Section 4.3.1. Dual or multiple outlets piped in a single suction system through a common suction line to a pump(s) shall not be capable of being isolated by valves.

5.3.1 Blockable outlets–dual separation. Dual outlets shall be separated by a minimum of 3 feet *(914 mm)* measured from center to center of the suction outlet cover/grate (see *Figures 9, 10,* and *11)* or located on two (2) different planes, i.e., one (1) on the bottom and one (1) on the vertical wall, or one (1) each on two (2) separate vertical walls. (See *Figures 12* and *15*). Suction outlets shall not be installed in seating areas.

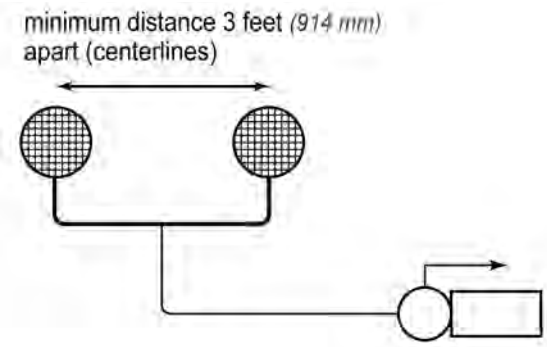

Figure 9. Dual outlets in parallel to one pump

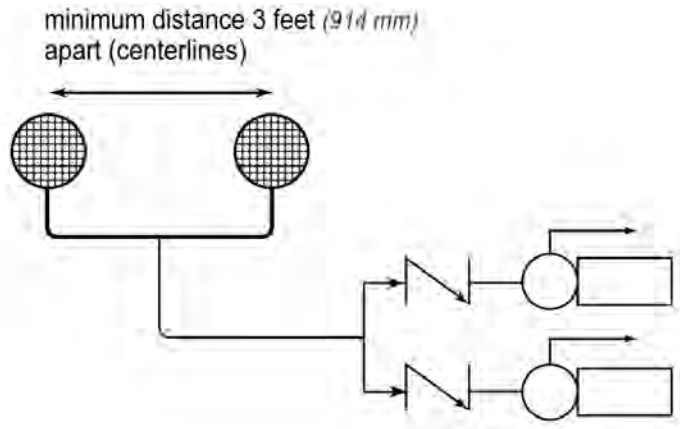

Figure 10. Dual outlets in parallel to dual pumps

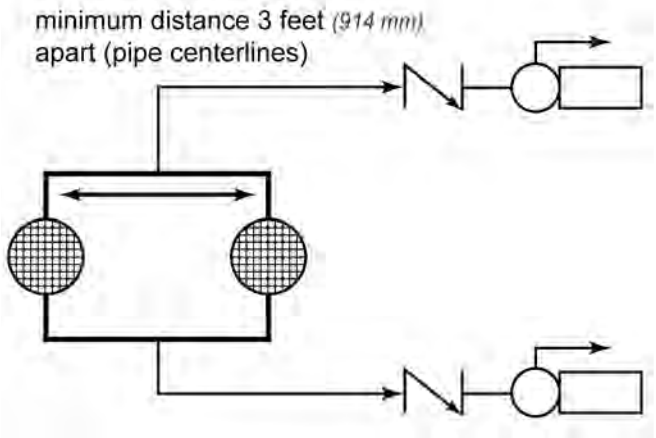

Figure 11. Dual parallel outlets to two pumps

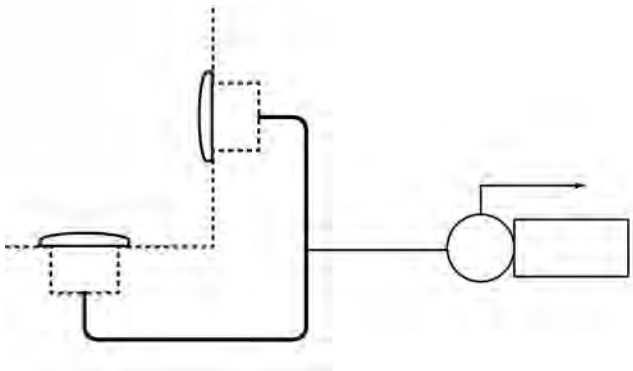

Figure 12. Dual outlets on different planes

©2013 The Association of Pool & Spa Professionals

INTERNATIONAL CODE COUNCIL®

Copyright © 2015 ICC. ALL RIGHTS RESERVED. Accessed by David Dammon on Jun 21, 2017 12:30:52 PM pursuant to License Agreement with ICC. No further reproduction or distribution authorized. ANY UNAUTHORIZED REPRODUCTION OR DISTRIBUTION IS A VIOLATION OF THE FEDERAL COPYRIGHT ACT AND THE LICENSE AGREEMENT, AND SUBJECT TO CIVIL AND CRIMINAL PENALTIES THEREUNDER.

5.3.2 Multiple Blockable Separation. Three or more submerged outlets are subject to the separation requirement of 5.3.1 only on the most widely spaced of the group. (See *Figure 13* or *14*.)

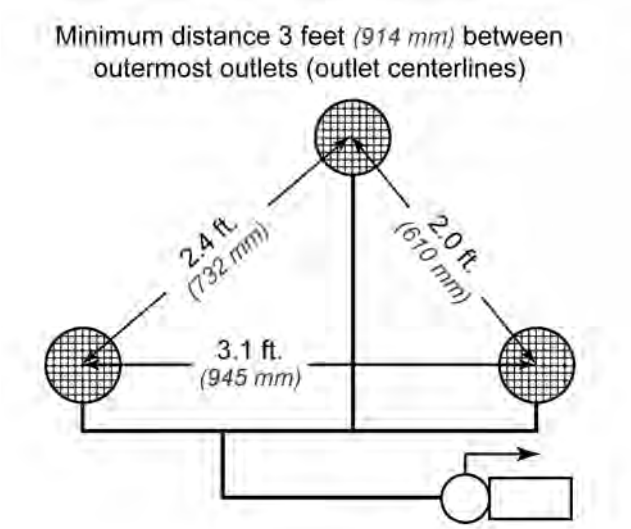

Figure 13. Three or more outlets to (a) single pump(s)

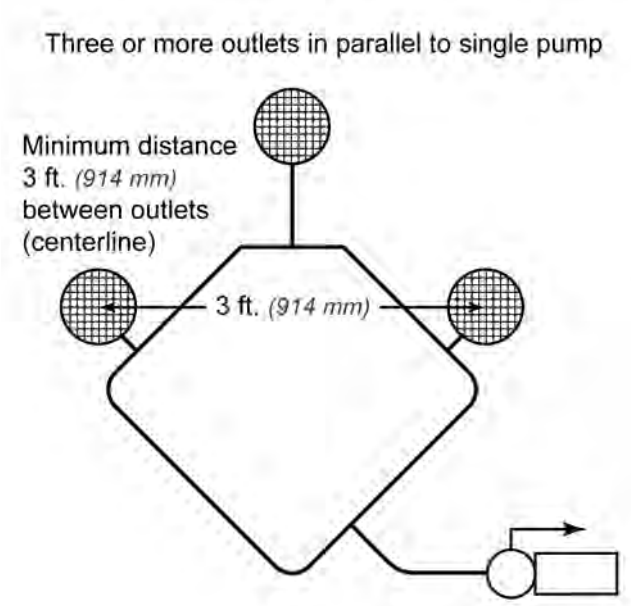

Figure 14. Three or more outlets in parallel, looped piping

5.4 Outlet sumps in series. Two manufactured sumps or field-fabricated sumps, with certified suction outlet covers/grates, piped in series, are typically intended for debris removal. Between the debris suction outlet and the pump, there shall be one of the options certified (see *Figure 15*). The manufacturer of such debris removal systems shall test and approve for the purpose at least one of these.

5.4.1 One (1) additional suction outlet (not in series) with Certified suction outlet cover/grate located a minimum of 18 inches *(457 mm)* from the suction outlet fitting assembly in the suction line to the pump(s); or

5.4.2 Engineered suction-limiting vent system; or

5.4.3 Certified manufactured SVRS or APSS.

5.5 Other means. See Section 1.2.

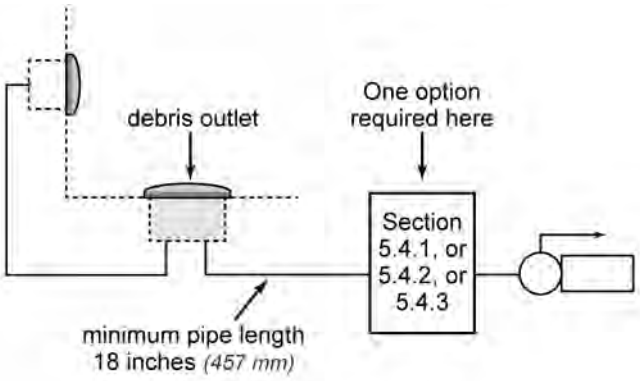

Figure 15. Sumps in series

6 Existing pools and spas

6.1 DANGER! To avoid serious injury or death, the pool or spa shall be closed to bathers if any suction outlet cover/grate is missing, broken, or incorrectly installed. There is no backup for a missing, damaged or incorrectly installed suction outlet cover/grate. See Appendix C.

6.2 Certified Suction Outlet Covers/Grates. When used, fully submerged suction outlet fitting assemblies, cover/grate and associated fitting, fasteners and assemblies shall be certified in accordance with Section 4.3.1, not exceed their installed life in years as indicated by the Certified manufactured or field fabricated outlet documentation, and located in accordance with Section 5.3.

6.3 Wading Pools. Due to the unique hazard presented by submerged suction outlets in wading pools, it is recommended that, whenever possible, the submerged suction outlet(s) be permanently disabled, or converted to a return fitting(s) in accordance with 6.6.1, provided the system piping and skimmer(s)/overflow gutters are capable of handling the required full system flow

6.4 Evaluation for compliance. All suction outlets, suction entrapment avoidance systems, and related components shall be evaluated and brought into compliance by a person who is licensed or qualified by the authority having jurisdiction.

©2013 The Association of Pool & Spa Professionals

INTERNATIONAL CODE COUNCIL®
Copyright © 2015 ICC. ALL RIGHTS RESERVED. Accessed by David Dammon on Jun 21, 2017 12:30:52 PM pursuant to License Agreement with ICC. No further reproduction or distribution authorized. ANY UNAUTHORIZED REPRODUCTION OR DISTRIBUTION IS A VIOLATION OF THE FEDERAL COPYRIGHT ACT AND THE LICENSE AGREEMENT, AND SUBJECT TO CIVIL AND CRIMINAL PENALTIES THEREUNDER.

6.5 Retrofitting suction system piping or outlets. When retrofitting, the retrofit installations shall be permitted to utilize a portion of the existing facility and add or replace other elements. The retrofit shall be in accordance with applicable sections of this standard.

6.6 Existing installations–single blockable outlets. The options of Sections 6.6.1 through 6.6.3 shall be permitted.

6.6.1 Convert suction outlet to return inlet by changing the piping and installing an appropriate floor (or wall) inlet(s), designed and/or approved by the manufacturer for that purpose, provided the system piping and skimmer(s) shall be capable of handling the full system flow, in accordance with Section 4.4.9.

6.6.2 Permanently disable the single outlet, provided the system piping and skimmer(s) shall be capable of handling the minimum system flow in accordance with Section 4.4.9. Methods shall include, but not be limited to: permanently plug or cap the suction outlet, or permanently disconnect it from pool pump suction.

6.6.3 When retrofitting existing installations with a single blockable suction outlet, the system shall be retrofitted with either a Certified unblockable suction outlet or a Certified blockable suction outlet cover/grate and at least one of the following:

- Manufactured SVRS or APSS in accordance with Section 4.3.2; or
- Suction-limiting vent system; or
- Gravity drainage/flow system; or
- One or more additional certified suction outlet cover/grate certified in accordance with Section 4.3.1 and located in accordance with Section 5.3.
- Other system approved by the CPSC.

6.7 Existing skimmer equalizer lines. Existing equalizer lines, when used, shall be retrofitted to comply with Section 4.5.

6.8 Existing single blockable outlet piped through skimmer. A single blockable suction outlet piped through a skimmer shall comply with Section 6.6.

6.9 Existing installation–two or more outlets flowing through a common line to pump(s). When retrofitting existing installations, each submerged suction outlet shall comply with Sections 4.3.1 and 4.4.9.

6.9.1 Multiple outlet separation. When existing blockable outlets do not comply with Section 5.3, including applicable subsections 5.3.1 and 5.3.2; the system shall be considered a single blockable outlet system, requiring compliance with Section 6.6.

6.10 Winterization. CAUTION shall be exercised when pools are reopened. All winterizing plugs shall be removed, suction outlet cover/grates shall be secured in place in accordance with manufacturer's instructions, and any safety systems shall be functioning in accordance with manufacturer's instructions.

©2013 The Association of Pool & Spa Professionals
INTERNATIONAL CODE COUNCIL®
Copyright © 2015 ICC. ALL RIGHTS RESERVED. Accessed by David Dammon on Jun 21, 2017 12:30:52 PM pursuant to License Agreement with ICC. No further reproduction or distribution authorized. ANY UNAUTHORIZED REPRODUCTION OR DISTRIBUTION IS A VIOLATION OF THE FEDERAL COPYRIGHT ACT AND THE LICENSE AGREEMENT, AND SUBJECT TO CIVIL AND CRIMINAL PENALTIES THEREUNDER.

Appendix A: Symbols

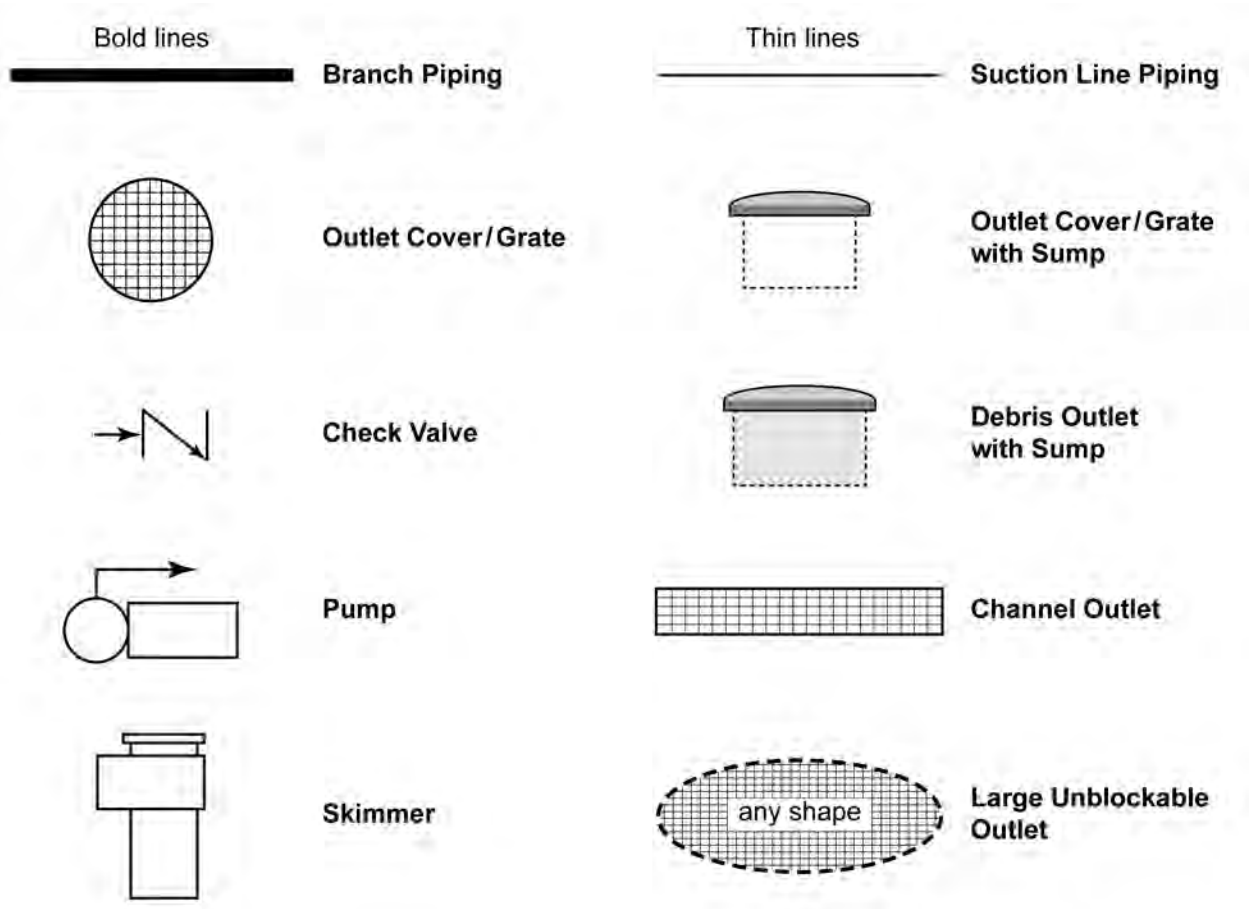

©2012 The Association of Pool & Spa Professionals
INTERNATIONAL CODE COUNCIL®
Copyright © 2015 ICC. ALL RIGHTS RESERVED. Accessed by David Dammon on Jun 21, 2017 12:30:52 PM pursuant to License Agreement with ICC. No further reproduction or distribution authorized. ANY UNAUTHORIZED REPRODUCTION OR DISTRIBUTION IS A VIOLATION OF THE FEDERAL COPYRIGHT ACT AND THE LICENSE AGREEMENT, AND SUBJECT TO CIVIL AND CRIMINAL PENALTIES THEREUNDER.

Appendix B: Field Checklist for Identifying Suction Entrapment Hazards

This Appendix is not part of the American National Standard ANSI/APSP/ICC-7 2013 but is included for information only. Additional copies of the ANSI/APSP/ICC-7 standard and this Appendix can be purchased by contacting APSP Member Services at 703.838.0083, ext. 301.

Introduction

This field checklist for identifying suction entrapment hazards provides information and a systematic process that will help identify and eliminate suction entrapment hazards in swimming pools, wading pools, spas, hot tubs, and catch basins. This information and system is intended to address the hazards of hair entrapment, limb entrapment, body suction entrapment, evisceration/disembowelment, and mechanical entrapment. It does not replace or supersede the information in the body of the ANSI/APSP/ICC-7 standard. These guidelines are intended for use in inspecting, maintaining, and upgrading residential and public swimming pools, wading pools, spas, hot tubs, and catch basins. They are appropriate for use by service companies, builders, installers, facility owners/operators, home inspection specialists, parks and recreation personnel, and others who are responsible for pool and spa safety.

Reference numbers next to each block are used to facilitate telephone discussion. Mark the tracking boxes with an × to clearly document the current condition and actions needed and/or taken.

> ⚠ **DANGER: To avoid serious injury or death, close the pool or spa to bathers if any suction outlet cover/ grate is missing, broken or inoperative.**

Company _____

www. _____

Address _____

City _____

State _____ Zip _____

Date _____ Phone _____

Inspected by _____

Pool _____

Pump System _____

Address _____

City _____

State _____ Zip _____

Date _____ Phone _____

Owner/Operator _____

EVALUATION / ACTIONS TAKEN

_____

_____

_____

_____

_____

_____

_____

_____

_____

_____

_____

Inspector _____
(Print Name)

_____
(Signature) (Date)

Owner/Operator _____
(Print Name)

_____
(Signature) (Date)

The provisions described herein are not intended to prevent the use of any alternative configuration or system, provided any such alternative meets the intent and requirements of these Guidelines.

©2013 The Association of Pool & Spa Professionals

INTERNATIONAL CODE COUNCIL®

Copyright © 2015 ICC. ALL RIGHTS RESERVED. Accessed by David Dammon on Jun 21, 2017 12:30:52 PM pursuant to License Agreement with ICC. No further reproduction or distribution authorized. ANY UNAUTHORIZED REPRODUCTION OR DISTRIBUTION IS A VIOLATION OF THE FEDERAL COPYRIGHT ACT AND THE LICENSE AGREEMENT, AND SUBJECT TO CIVIL AND CRIMINAL PENALTIES THEREUNDER.

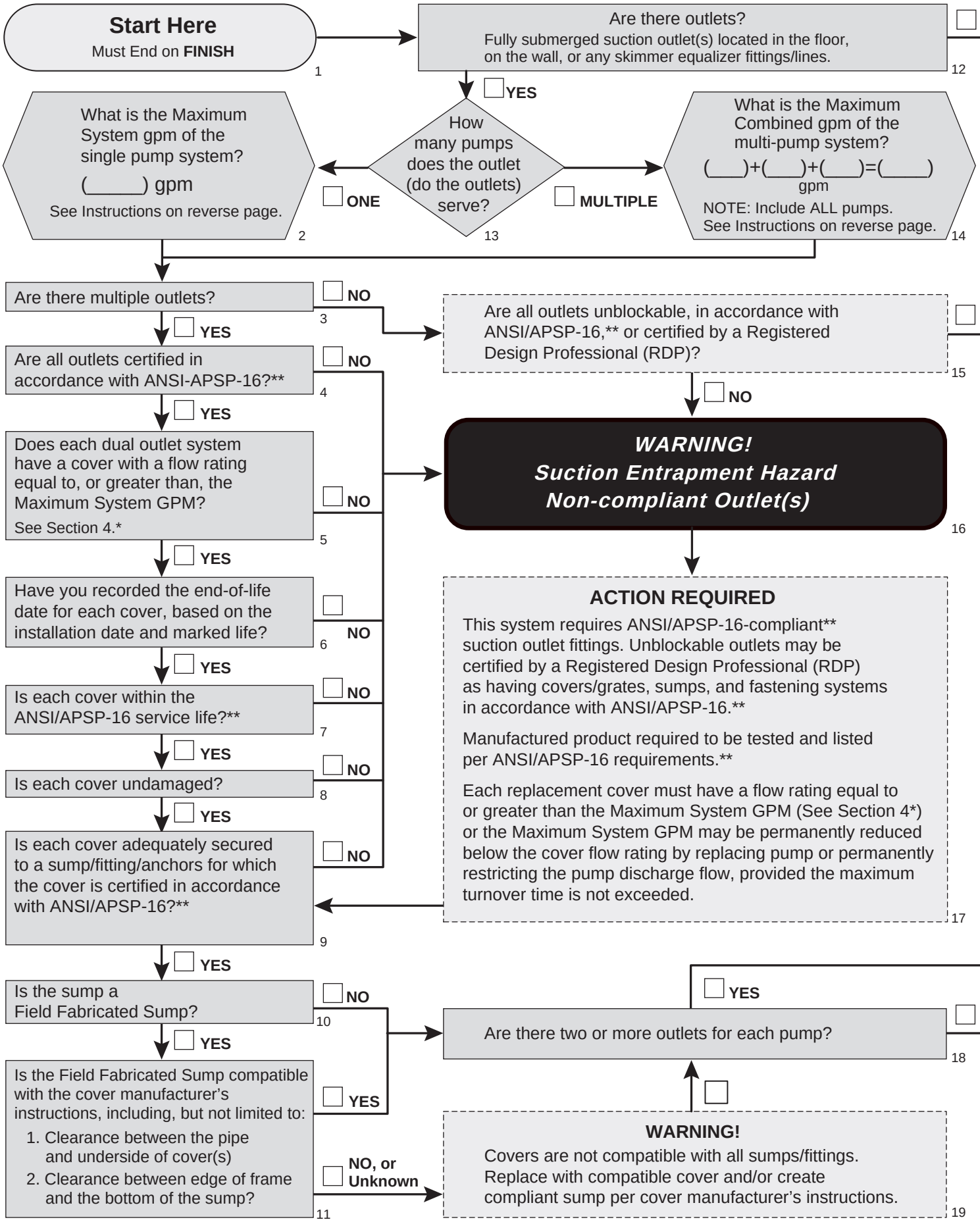

* Unless explicitly noted, all section numbers refer to ANSI/APSP/ICC-7 2013. ** All references to ANSI/APSP-16 mean ANSI/APSP-16

©2013 The Association of Pool & Spa Professionals

INTERNATIONAL CODE COUNCIL®
Copyright © 2015 ICC. ALL RIGHTS RESERVED. Accessed by David Dammon on Jun 21, 2017 12:30:52 PM pursuant to License Agreement with ICC. No further reproduction or distribution authorized. ANY UNAUTHORIZED REPRODUCTION OR DISTRIBUTION IS A VIOLATION OF THE FEDERAL COPYRIGHT ACT AND THE LICENSE AGREEMENT, AND SUBJECT TO CIVIL AND CRIMINAL PENALTIES THEREUNDER.

Pump/System: Date:

© 2006-2013 The Association of Pool & Spa Professionals. All rights reserved. Revised Date 10-29-13S

NO

VACUUM FITTING 20

Is there a dedicated vacuum cleaner fitting? 24

☐ NO

☐ YES

Is there a fitting lid (cover) tested and listed by an Independent Testing Laboratory in accordance with IAPMO-SPS 4? 25

☐ YES

☐ NO

Install or replace with fitting lid tested to IAPMO-SPS 4. 26

☐

FINISH ☐ 27

YES

APSP

The Association of Pool & Spa Professionals®

OCTOBER, 2013

WARNING! Suction Entrapment Hazard
Choose at Least One Option 28

Install ANSI/APSP-16-compliant** multiple outlets with adequate flow ratings, and with center-to-center distance between the covers of at least 36 inches, *or* with the outlets on separate planes. See Sections 5.3* and 5.4.* 29 ☐

Convert single suction outlet to return inlet by changing the piping, provided that the system piping and skimmer(s) are capable of handling the full system flow. 30 ☐

Convert to a gravity flow system. 31 ☐

Install an engineered vent system. 32 ☐

Install and test per manufacturer's installation instructions, a manufactured safety vacuum release system (SVRS) in accordance with Section 4.3.2.* 33 ☐

Permanently disable the single outlet. Verify that the overflow and skimmers are capable of handling the required system flow and that minimum turnover rates are achieved. 34 ☐

Complete ☐ **GO TO VACUUM FITTING** 21

☐ YES

Is the center-to-center distance between the covers at least 36 inches, or are the outlets on separate planes? 22

☐ NO

☐ NO

NO

Is the single outlet...

A. an equalizer line piped through the second port of a skimmer?

B. unblockable?

C. a combination outlet/inlet incorporated into a single fitting?

D. a venturi-driven system? 23

☐ YES

Complete ☐ **GO TO VACUUM FITTING** 35

or ASME A112.19.8 2007 or VGB 2008.

©2013 The Association of Pool & Spa Professionals

INTERNATIONAL CODE COUNCIL®

Copyright © 2015 ICC. ALL RIGHTS RESERVED. Accessed by David Dammon on Jun 21, 2017 12:30:52 PM pursuant to License Agreement with ICC. No further reproduction or distribution authorized. ANY UNAUTHORIZED REPRODUCTION OR DISTRIBUTION IS A VIOLATION OF THE FEDERAL COPYRIGHT ACT AND THE LICENSE AGREEMENT, AND SUBJECT TO CIVIL AND CRIMINAL PENALTIES THEREUNDER.

Finding the Maximum Flow Rate of an Existing System

Preparation:

1. Open all valves to their full open position for pool or spa circulation. (For secured systems, do not adjust valves.)
2. Remove eyeball fittings from return inlets (when removable by hand).
3. Clean skimmer and pump baskets. Turn off skimmer to isolate outlet, if possible.
4. Backwash or clean sand filter/DE grids, or remove cartridge.

When inspecting existing installations, the maximum possible flow rate of suction system must be determined as explained in 4.4.9.*.

Pump Method 1: Measure flow rate with a flow meter accurate to ±10% (see Section 4.4.9).*

Pump Method 2: Calculate using pressure and vacuum gauge readings (see diagram below).

1. Install a vacuum gauge as close to the bottom of the strainer basket as possible.
2. Install a pressure gauge as close to the pump discharge as possible.
   NOTE: It may be necessary to use an NPT[9] × barb fitting with a short section of plastic tubing connected to a gauge if gauges cannot be screwed into drain holes provided in pump.
3. Multiply vacuum reading by 1.13 and record.
4. Multiply pressure reading by 2.31 and record.
5. Add results of steps 3 and 4 together to get the approximate Total Dynamic Head (TDH) in feet of head.
6. Using the published curve for the pump, find the Total Dynamic Head calculated above on the vertical axis, and read the flow rate on the horizontal axis.
7. This will give you the maximum flow rate within approx. 10%.

Pressure head: gauge psi × 2.31 = feet of water
Suction head: gauge inches Hg × 1.13 = feet of water

EXAMPLE: If the pressure gauge reads 14 psi and the vacuum gauge reads 6 inches of mercury (Hg), the approximate Total Dynamic Head (TDH) of the system would be 39.12 feet.

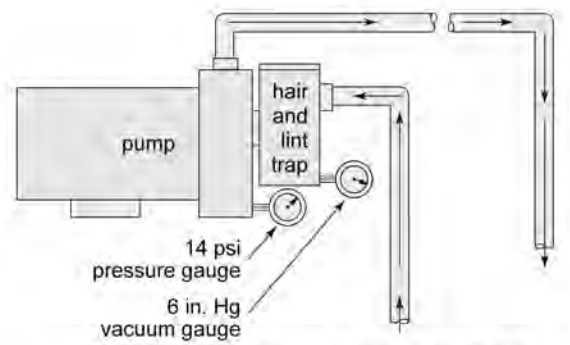

Gravity Flow Calculation

$$\text{Flow (gpm)} = \sqrt{\frac{1786 \times [\text{D (inch)}]^5 \times \text{H (inch)}}{\text{L (inch)} + [55 \times \text{D (inch)}]}}$$

(Where 55 D accounts for energy loss of stream)

EXAMPLE: Gravity flow through 2" IPS Schedule 40 PVC pipe with an inside diameter of 2.067" with 32.0 feet of pipe and 2 elbows of equivalent length of 6.0 feet. The top of the pipe opening into the collector tank is 8" below pool water level.

$$\text{Flow (gpm)} = \sqrt{\frac{1786 \times [2.067]^5 \times 8}{[32 + (2 \times 6)] \times 12 + [55 \times 2.067]}} = 29 \text{ gpm}$$

Cover/Grate Audit

Existing Pump _____ (Manufacturer) _____ (Model)

Pool Volume _____ (Gallons)

Filter _____ (Manufacturer) _____ (Model) _____ (Size (Sq. Ft.))

Existing Cover _____ (Manufacturer) _____ (Model) _____ (GPM)

Pressure _____ (PSI) Vacuum _____ (Inches of Hg)

TDH _____ (Feet of water) System Flow _____ (GPM) (from Pump Curve)

Maximum Flow _____ (GPM)

New Cover _____ (Manufacturer) _____ (Model) _____ (GPM)

Replacement Date _____/_____/ _____

Maximum Drawdown _____ (Calculated)

_____ (Measured) _____ (Measured) _____ (Measured) _____ (Measured)

NOTE: Check cover manufacturer's installation instructions for the following items per ANSI/APSP-16.**

☐ Cover compatible with sump
☐ Attachments (hardware/screws)
☐ Field fabricated sump as specified by cover manufacturer

APSP
The Association of Pool & Spa Professionals®

8. National Pipe Thread

©2013 The Association of Pool & Spa Professionals

INTERNATIONAL CODE COUNCIL®
Copyright © 2015 ICC. ALL RIGHTS RESERVED. Accessed by David Dammon on Jun 21, 2017 12:30:52 PM pursuant to License Agreement with ICC. No further reproduction or distribution authorized. ANY UNAUTHORIZED REPRODUCTION OR DISTRIBUTION IS A VIOLATION OF THE FEDERAL COPYRIGHT ACT AND THE LICENSE AGREEMENT, AND SUBJECT TO CIVIL AND CRIMINAL PENALTIES THEREUNDER.

Appendix C: Entrapment Avoidance Warning Sign

This appendix is not part of the American National Standard ANSI/APSP/ICC-7 2013. It is included for information only.

WARNING

Drowning Hazard



Avoid Drain Covers



Avoid Body Entrapment



Avoid Evisceration



Avoid Hair Entanglement



Avoid Finger Entrapment

- **Never play or swim near drains (submerged suction fittings). Your body or hair may be trapped, causing permanent injury or drowning.**
- **Never enter the pool or spa if a drain cover (suction fitting cover) is loose, broken, or missing.**
- **Immediately notify the pool/spa owner or operator if you find a drain cover (suction fitting cover) loose, broken, or missing.**

For further information contact The Association of Pool & Spa Professionals.

Visit the U.S. Consumer Product Safety Commission website at www.cpsc.gov to read their entrapment guidelines: "Guidelines for Entrapment Hazards: Making Pools and Spas Safer 2005" Also visit: www.poolsafely.gov and www.APSP.org

IMPORTANT SAFETY NOTE: If you choose to display this warning device as a sign, please make sure that it conforms to ANSI/NEMA Z535.4-2011 Standard for Product Safety Signs and Labels, or latest revision.

©2013 The Association of Pool & Spa Professionals.

INTERNATIONAL CODE COUNCIL®

Copyright © 2015 ICC. ALL RIGHTS RESERVED. Accessed by David Dammon on Jun 21, 2017 12:30:52 PM pursuant to License Agreement with ICC. No further reproduction or distribution authorized. ANY UNAUTHORIZED REPRODUCTION OR DISTRIBUTION IS A VIOLATION OF THE FEDERAL COPYRIGHT ACT AND THE LICENSE AGREEMENT, AND SUBJECT TO CIVIL AND CRIMINAL PENALTIES THEREUNDER.

Appendix D: Sources of Material

This Appendix is not part of the American National Standard ANSI/APSP/ICC-8 2005 (R2013). It is included for information only.

ANSI American National Standards Institute
25 West 43rd Street
New York NY 10036
Tel: 212-642-4900
Fax: 212-398-0023
www.ansi.org

APSP Association of Pool & Spa Professionals
(formerly National Spa and Pool Institute)
2111 Eisenhower Avenue
Alexandria VA 22314
Tel: 703-838-0083
Fax: 703-549-0493
www.APSP.org

ASTM International Standards Worldwide
(formerly American Society of Testing & Materials)
100 Barr Harbor Drive
West Conshohocken, PA 19428-2959
Tel: 610-832-9500
Fax: 610-832-9555
www.astm.org

IAPMO International Association of Plumbing and Mechanical Officials
5001 E. Philadelphia Street
Ontario, CA 91761
Tel: 909-595-8449
Fax: 909-472-4150
www.iapmo.org

NFPA National Fire Protection Association
1 Batterymarch Park
Quincy MA 02269
Tel: 617-770-3000
Fax: 617-770-0700
www.nfpa.org

UL Underwriters Laboratories Inc.
333 Pfingsten Road
Northbrook IL 60062-2096
Tel: 847-272-8800
Fax: 877-272-8129
www.ul.com

(Approved by the American National Standards Institute October 8, 2013)

©2013 The Association of Pool & Spa Professionals

INTERNATIONAL CODE COUNCIL®
Copyright © 2015 ICC. ALL RIGHTS RESERVED. Accessed by David Dammon on Jun 21, 2017 12:30:52 PM pursuant to License Agreement with ICC. No further reproduction or distribution authorized. ANY UNAUTHORIZED REPRODUCTION OR DISTRIBUTION IS A VIOLATION OF THE FEDERAL COPYRIGHT ACT AND THE LICENSE AGREEMENT, AND SUBJECT TO CIVIL AND CRIMINAL PENALTIES THEREUNDER.

INTERNATIONAL CODE COUNCIL®

Copyright © 2015 ICC. ALL RIGHTS RESERVED. Accessed by David Dammon on Jun 21, 2017 12:30:52 PM pursuant to License Agreement with ICC. No further reproduction or distribution authorized. ANY UNAUTHORIZED REPRODUCTION OR DISTRIBUTION IS A VIOLATION OF THE FEDERAL COPYRIGHT ACT AND THE LICENSE AGREEMENT, AND SUBJECT TO CIVIL AND CRIMINAL PENALTIES THEREUNDER.

ANSI/APSP/ICC-7 2013

American National Standard for Suction Entrapment Avoidance in Swimming Pools, Wading Pools, Spas, Hot Tubs, and Catch Basins

Familiarity with the ANSI/APSP/ICC standards is essential for anyone who builds, manufactures, sells, or services pools, spas or hot tubs.

APSP
The Association of Pool & Spa Professionals®

2111 Eisenhower Avenue
Alexandria VA 22314-4695

703.838.0083
memberservices@APSP.org
APSP.org

INTERNATIONAL CODE COUNCIL®

Copyright © 2015 ICC. ALL RIGHTS RESERVED. Accessed by David Dammon on Jun 21, 2017 12:30:52 PM pursuant to License Agreement with ICC. No further reproduction or distribution authorized. ANY UNAUTHORIZED REPRODUCTION OR DISTRIBUTION IS A VIOLATION OF THE FEDERAL COPYRIGHT ACT AND THE LICENSE AGREEMENT, AND SUBJECT TO CIVIL AND CRIMINAL PENALTIES THEREUNDER.

ICC EVALUATION SERVICE

Experts in Building Product Evaluation and Certification

Design with

CONFIDENCE



When facing new or unfamiliar materials, how do you know if they comply with building codes and standards?

- ICC-ES® Evaluation Reports are the most widely accepted and trusted technical reports for code compliance. When you specify products or materials with an ICC-ES report, you avoid delays on projects and improve your bottom line.
- ICC-ES is a subsidiary of ICC®, the publisher of the codes used throughout the U.S. and many global markets, so you can be confident in their code expertise.
- ICC-ES provides you with a free online directory of code compliant products at: **www.icc-es.org/Evaluation_Reports** and CEU courses that help you design with confidence.

ICC
INTERNATIONAL CODE COUNCIL

WWW.ICC-ES.ORG | 800-423-6587

ICC ES

ANSI
ANSI Accredited Program
PRODUCT CERTIFICATION
#1009

15-11219

INTERNATIONAL CODE COUNCIL®

Copyright © 2015 ICC. ALL RIGHTS RESERVED. Accessed by David Dammon on Jun 21, 2017 12:30:52 PM pursuant to License Agreement with ICC. No further reproduction or distribution authorized. ANY UNAUTHORIZED REPRODUCTION OR DISTRIBUTION IS A VIOLATION OF THE FEDERAL COPYRIGHT ACT AND THE LICENSE AGREEMENT, AND SUBJECT TO CIVIL AND CRIMINAL PENALTIES THEREUNDER.

ICC INTERNATIONAL CODE COUNCIL®

People Helping People Build a Safer World®

The International Code Council's Training and Education Department

Industry professionals look to ICC to provide the critical knowledge and experiences necessary to excel in today's challenging world. ICC's educational programs cover a broad spectrum of code and construction related topics, offering some of the highest quality instruction direct from the source.

INSTITUTES

Acquire Skills, Share Experiences, Earn CEUs

ICC's training institutes offer a comprehensive education experience and a great way to earn much needed CEUs. Learn best practices from the leading experts in the field, build your network of professional contacts and share experiences. Institutes are held across the country throughout the year. To see the full schedule go to www.iccsafe.org/training.

HIRE ICC TO TEACH

Bring ICC On-Site and Earn CEUs

Give your group the confidence they need to meet tough challenges head-on so they can reach their full potential. ICC's course catalog contains a wide variety of educational topics that are available for contract at a location of your choice. Customized training is also available to fit your needs. For our full course catalogue go to www.iccsafe.org/hireicc.

ICC ONLINE CAMPUS

Earn CEUs at Your Own Pace

Online courses offer access to a comprehensive training and education portal, providing you with an effective and convenient tool to enhance your professional skills. Courses are available anytime for 99 days following registration. Go to www.iccsafe.org/onlinecampus for our full offerings.

For more information about ICC's Training please contact us at **888-ICC-SAFE (422-7233) ext. 33818** or email us at **icctraining@iccsafe.org**.

15-10915

INTERNATIONAL CODE COUNCIL®

Copyright © 2015 ICC. ALL RIGHTS RESERVED. Accessed by David Dammon on Jun 21, 2017 12:30:52 PM pursuant to License Agreement with ICC. No further reproduction or distribution authorized. ANY UNAUTHORIZED REPRODUCTION OR DISTRIBUTION IS A VIOLATION OF THE FEDERAL COPYRIGHT ACT AND THE LICENSE AGREEMENT, AND SUBJECT TO CIVIL AND CRIMINAL PENALTIES THEREUNDER.

ICC INTERNATIONAL CODE COUNCIL®

People Helping People Build a Safer World®

GET IMMEDIATE DOWNLOADS OF THE STANDARDS YOU NEED

Browse hundreds of industry standards adopted by reference. Available to you 24/7!

Count on ICC for standards from a variety of publishers, including:

ACI	CPSC	GYPSUM
AISC	CSA	HUD
ANSI	DOC	ICC
APA	DOJ	ISO
APSP	DOL	NSF
ASHRAE	DOTn	SMACNA
ASTM	FEMA	USC
AWC	GBI	

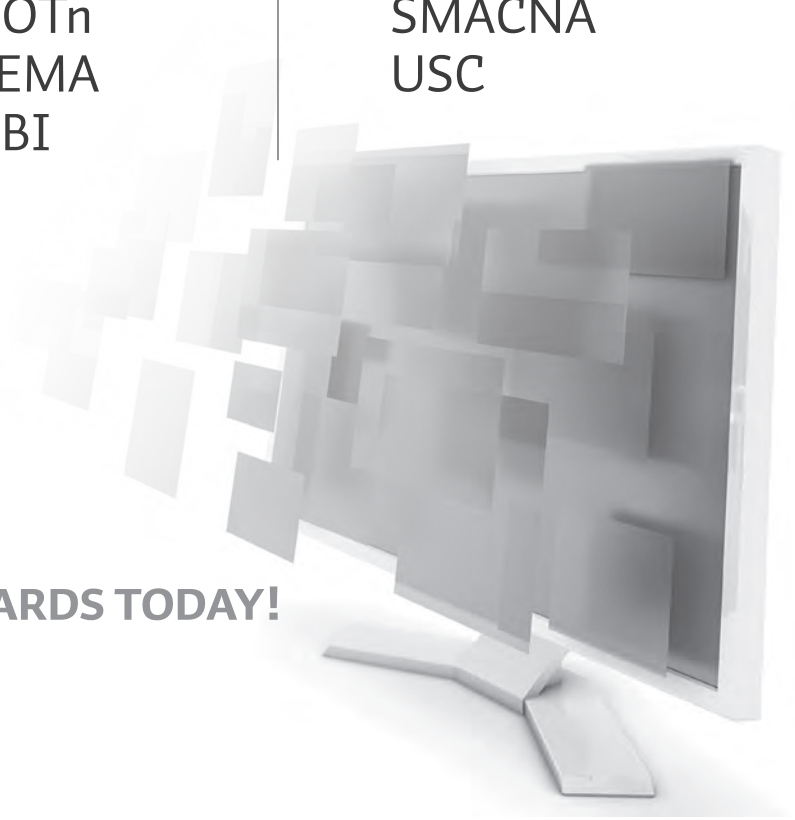

DOWNLOAD YOUR STANDARDS TODAY!
SHOP.ICCSAFE.ORG

15-11221

INTERNATIONAL CODE COUNCIL®

Copyright © 2015 ICC. ALL RIGHTS RESERVED. Accessed by David Dammon on Jun 21, 2017 12:30:52 PM pursuant to License Agreement with ICC. No further reproduction or distribution authorized. ANY UNAUTHORIZED REPRODUCTION OR DISTRIBUTION IS A VIOLATION OF THE FEDERAL COPYRIGHT ACT AND THE LICENSE AGREEMENT, AND SUBJECT TO CIVIL AND CRIMINAL PENALTIES THEREUNDER.

ICC INTERNATIONAL CODE COUNCIL®

People Helping People Build a Safer World®

Get Connected with the Best Code Resources and Member Benefits in the Industry

As a building professional, being connected to a Member-driven association that offers exclusive I-Code resources and training can play a vital role in building your career. No other building code association offers you more I-Code resources to help enhance your code knowledge and your career than the International Code Council® (ICC®).

Become an ICC Member now to take advantage of:

- Free code opinions from I-Codes experts
- Free I-Code book(s) or download to new Members*
- Discounts on I-Code resources, training and certification renewal
- Free access to employment opportunities in the ICC Career Center, including posting jobs
- Free benefits - Governmental Members: Your staff can receive free ICC benefits too*
- Great opportunities to network at ICC events
- ***Savings of up to 25% on code books & Training materials***

Get connected now! Visit our Member page at **www.iccsafe.org/membership** or call 1-888-ICC-SAFE (422-7233), ext. 33804 to join or learn more today!

*Some restrictions apply. Speak with an ICC Member Services Representative for details.



15-11222

INTERNATIONAL CODE COUNCIL®

Copyright © 2015 ICC. ALL RIGHTS RESERVED. Accessed by David Dammon on Jun 21, 2017 12:30:52 PM pursuant to License Agreement with ICC. No further reproduction or distribution authorized. ANY UNAUTHORIZED REPRODUCTION OR DISTRIBUTION IS A VIOLATION OF THE FEDERAL COPYRIGHT ACT AND THE LICENSE AGREEMENT, AND SUBJECT TO CIVIL AND CRIMINAL PENALTIES THEREUNDER.

IFGC®

2015 CODE AND COMMENTARY

The complete IFGC with commentary after each section

AGA American Gas Association

ICC INTERNATIONAL CODE COUNCIL

INTERNATIONAL CODE COUNCIL®

Copyright © 2015 ICC. ALL RIGHTS RESERVED. Accessed by David Dammon on Jun 21, 2017 12:30:52 PM pursuant to License Agreement with ICC. No further reproduction or distribution authorized. ANY UNAUTHORIZED REPRODUCTION OR DISTRIBUTION IS A VIOLATION OF THE FEDERAL COPYRIGHT ACT AND THE LICENSE AGREEMENT, AND SUBJECT TO CIVIL AND CRIMINAL PENALTIES THEREUNDER.

2015 IFGC®

CODE AND COMMENTARY

The complete IFGC with commentary after each section





INTERNATIONAL CODE COUNCIL®

Copyright © 2015 ICC. ALL RIGHTS RESERVED. Accessed by David Dammon on Jun 21, 2017 12:30:52 PM pursuant to License Agreement with ICC. No further reproduction or distribution authorized. ANY UNAUTHORIZED REPRODUCTION OR DISTRIBUTION IS A VIOLATION OF THE FEDERAL COPYRIGHT ACT AND THE LICENSE AGREEMENT, AND SUBJECT TO CIVIL AND CRIMINAL PENALTIES THEREUNDER.

2015 International Fuel Gas Code® Commentary

First Printing: May 2015

ISBN: 978-1-6083-292-6

COPYRIGHT© 2015
by
INTERNATIONAL CODE COUNCIL, INC.

ALL RIGHTS RESERVED. This 2015 *International Fuel Gas Code® Commentary* is a copyrighted work owned by the International Code Council, Inc. Without advance written permission from the copyright owner, no part of this book may be reproduced, distributed, or transmitted in any form or by any means, including, without limitation, electronic, optical or mechanical means (by way of example, and not limitation, photocopying, or recording by or in an information storage retrieval system). For information on permission to copy material exceeding fair use, please contact: Publications, 4051 Flossmoor Road, Country Club Hills, IL 60478. Phone 1-888-ICC-SAFE (422-7233).

Trademarks: "International Code Council," the "International Code Council" logo and the "International Fuel Gas Code" are trademarks of the International Code Council, Inc.

Material designated IFGS
by
AMERICAN GAS ASSOCIATION
400 N. Capitol Street, N.W. • Washington, DC 20001
(202) 824-7000
Copyright © American Gas Association, 2009. All rights reserved.

PRINTED IN THE U.S.A.

INTERNATIONAL CODE COUNCIL®

Copyright © 2015 ICC. ALL RIGHTS RESERVED. Accessed by David Dammon on Jun 21, 2017 12:30:52 PM pursuant to License Agreement with ICC. No further reproduction or distribution authorized. ANY UNAUTHORIZED REPRODUCTION OR DISTRIBUTION IS A VIOLATION OF THE FEDERAL COPYRIGHT ACT AND THE LICENSE AGREEMENT, AND SUBJECT TO CIVIL AND CRIMINAL PENALTIES THEREUNDER.

PREFACE

The principal purpose of the Commentary is to provide a basic volume of knowledge and facts relating to building construction as it pertains to the regulations set forth in the 2015 *International Fuel Gas Code*® (IFGC®). The person who is serious about effectively designing, constructing and regulating buildings and structures will find the Commentary to be a reliable data source and reference to almost all fuel gas components of the built environment.

As a follow-up to the *International Fuel Gas Code*, we offer a companion document, the *International Fuel Gas Code Commentary*. The basic appeal of the Commentary is that it provides in a small package and at reasonable cost thorough coverage of many issues likely to be dealt with when using the *International Fuel Gas Code*. It then supplements that coverage with historical and technical background. Reference lists, information sources and bibliographies are also included.

Throughout all of this, strenuous effort has been made to keep the vast quantity of material accessible and its method of presentation useful. With a comprehensive yet concise summary of each section, the Commentary provides a convenient reference for regulations applicable to the construction of buildings and structures. In the chapters that follow, discussions focus on the full meaning and implications of the code text. Guidelines suggest the most effective method of application, and the consequences of not adhering to the code text. Illustrations are provided to aid understanding; they do not necessarily illustrate the only methods of achieving code compliance.

The format of the Commentary includes the full text of each section, table and figure in the code, followed immediately by the commentary applicable to that text. At the time of printing, the Commentary reflects the most up-to-date text of the 2015 *International Fuel Gas Code*. Each chapter's narrative includes a section on "General Comments" and "Purpose," and each section's narrative usually includes a discussion about why the requirement commands the conditions set forth. Code text is reproduced as it appears in the *International Fuel Gas Code*, and commentary is indented below the code text, beginning with the symbol ❖. Code figures and tables are reproduced as they appear in the *International Fuel Gas Code*. Commentary figures and tables are identified in the text by the word "Commentary" (as in "see Commentary Figure 704.3"), and each has a full border.

The *International Fuel Gas Code* is segregated by section numbers into two categories: code and standard. Code sections are identified as IFGC; standard sections are identified as IFGS.

Commentary is to be used in conjunction with the *International Fuel Gas Code* and not as a substitute for the code. **The Commentary is advisory only;** the code official alone possesses the authority and responsibility for interpreting the code.

Comments and recommendations are encouraged, for through your input, we can improve future editions. Please direct your comments to the Codes and Standards Development Department at the Chicago District Office.

INTERNATIONAL CODE COUNCIL®
Copyright © 2015 ICC. ALL RIGHTS RESERVED. Accessed by David Dammon on Jun 21, 2017 12:30:52 PM pursuant to License Agreement with ICC. No further reproduction or distribution authorized. ANY UNAUTHORIZED REPRODUCTION OR DISTRIBUTION IS A VIOLATION OF THE FEDERAL COPYRIGHT ACT AND THE LICENSE AGREEMENT, AND SUBJECT TO CIVIL AND CRIMINAL PENALTIES THEREUNDER.

INTERNATIONAL CODE COUNCIL®

Copyright © 2015 ICC. ALL RIGHTS RESERVED. Accessed by David Dammon on Jun 21, 2017 12:30:52 PM pursuant to License Agreement with ICC. No further reproduction or distribution authorized. ANY UNAUTHORIZED REPRODUCTION OR DISTRIBUTION IS A VIOLATION OF THE FEDERAL COPYRIGHT ACT AND THE LICENSE AGREEMENT, AND SUBJECT TO CIVIL AND CRIMINAL PENALTIES THEREUNDER.

TABLE OF CONTENTS

CHAPTER 1 SCOPE AND ADMINISTRATION . . . . . 1-1 – 1-20

PART 1—SCOPE AND APPLICATION. 1-1

PART 2—ADMINISTRATION AND ENFORCEMENT 1-5

CHAPTER 2 DEFINITIONS . . . . . 2-1 – 2-28

CHAPTER 3 GENERAL REGULATIONS . . . . . 3-1 – 3-60

CHAPTER 4 GAS PIPING INSTALLATIONS . . . . . 4-1 – 4-114

CHAPTER 5 CHIMNEYS AND VENTS. . . . . 5-1 – 5-100

CHAPTER 6 SPECIFIC APPLIANCES . . . . . 6-1 – 6-44

CHAPTER 7 GASEOUS HYDROGEN SYSTEMS . . . . . 7-1 – 7-12

CHAPTER 8 REFERENCED STANDARDS . . . . . 8-1 – 8-6

APPENDIX A SIZING AND CAPACITIES OF GAS PIPING (IFGS) . . . . . A-1 – A-10

APPENDIX B SIZING OF VENTING SYSTEMS SERVING APPLIANCES EQUIPPED WITH DRAFT HOODS, CATEGORY I APPLIANCES AND APPLIANCES LISTED FOR USE WITH TYPE B VENTS (IFGS) . . . . . B-1 – B-10

APPENDIX C EXIT TERMINALS OF MECHANICAL DRAFT AND DIRECT-VENT VENTING SYSTEMS (IFGS) . . . . . C-1 – C-2

APPENDIX D RECOMMENDED PROCEDURE FOR SAFETY INSPECTION OF AN EXISTING APPLIANCE INSTALLATION (IFGS) . . . . . D-1 – D-6

INDEX . . . . . INDEX-1 – INDEX-4

INTERNATIONAL CODE COUNCIL®

Copyright © 2015 ICC. ALL RIGHTS RESERVED. Accessed by David Dammon on Jun 21, 2017 12:30:52 PM pursuant to License Agreement with ICC. No further reproduction or distribution authorized. ANY UNAUTHORIZED REPRODUCTION OR DISTRIBUTION IS A VIOLATION OF THE FEDERAL COPYRIGHT ACT AND THE LICENSE AGREEMENT, AND SUBJECT TO CIVIL AND CRIMINAL PENALTIES THEREUNDER.

INTERNATIONAL CODE COUNCIL®
Copyright © 2015 ICC. ALL RIGHTS RESERVED. Accessed by David Dammon on Jun 21, 2017 12:30:52 PM pursuant to License Agreement with ICC. No further reproduction or distribution authorized. ANY UNAUTHORIZED REPRODUCTION OR DISTRIBUTION IS A VIOLATION OF THE FEDERAL COPYRIGHT ACT AND THE LICENSE AGREEMENT, AND SUBJECT TO CIVIL AND CRIMINAL PENALTIES THEREUNDER.

Chapter 1:
Scope and Administration

General Comments

The law of building regulation is grounded on the police power of the state. It is used so that the state may legislate for the general welfare of its citizens. This power enables passage of such laws as a fuel gas code. It is from the police power delegated by the state legislature that local governments are able to enact building regulations. If the state legislature has limited this power in any way, the municipality may not exceed these limitations. Although the municipality may not further delegate its police power (e.g., by delegating the burden of determining code compliance with the building owner, contractor or architect), it may turn over the administration of building regulations to a municipal official, such as a code official, if he or she is given sufficient criteria to clearly establish the basis for decisions concerning whether or not a proposed building, including its fuel gas systems, conforms to the code.

Chapter 1 is largely concerned with maintaining "due process of law" in enforcing the performance criteria contained in the code. Only through careful observation of the administrative provisions can the code official reasonably hope to demonstrate that "equal protection under the law" has been established. Although it is generally assumed that the administrative and enforcement sections of a code are geared toward the code official, this is not entirely true. The provisions also establish the rights and privileges of the registered design professional, the contractor and the building owner. The position of the code official is merely to review the proposed and completed work and determine whether a fuel gas installation conforms to the code requirements. The registered design professional is responsible for the design of a safe, sanitary fuel gas system. The contractor is responsible for installing the system in strict accordance with the plans.

During the course of the construction of a fuel gas system, the code official reviews the activity to verify that the spirit and intent of the law are being met and that the fuel gas system provides adequate protection of public health. As a public servant, the code official enforces the code without bias. Every individual is guaranteed equal enforcement of the code. Furthermore, design professionals, contractors and building owners have the right of due process for any requirement in the code.

Purpose

A fuel gas code, like any other code, is intended to be adopted as a legally enforceable document to safeguard health, safety, property and public welfare. A fuel gas code cannot be effective without adequate provisions for its administration and enforcement. The official charged with the administration and enforcement of fuel gas regulations has a great responsibility, and with this responsibility goes authority. No matter how detailed the fuel gas code may be, the code official must, to some extent, exercise judgment in determining compliance. The code official has the responsibility of establishing that the homes in which the citizens of the community reside and the buildings in which they work are designed and constructed to be reasonably free from hazards associated with the presence and use of fuel gas appliances, appurtenances, fixtures and systems. The code intends to establish a minimum acceptable level of safety.

PART 1—SCOPE AND APPLICATION

SECTION 101 (IFGC)
GENERAL

[A] 101.1 Title. These regulations shall be known as the *Fuel Gas Code* of **[NAME OF JURISDICTION]**, hereinafter referred to as "this code."

❖ This section identifies the adopted regulations by inserting the name of the adopting jurisdiction into the code.

[A] 101.2 Scope. This code shall apply to the installation of fuel-gas *piping* systems, fuel gas appliances, gaseous hydrogen systems and related accessories in accordance with Sections 101.2.1 through 101.2.5.

Exception: Detached one- and two-family dwellings and multiple single-family dwellings (townhouses) not more than three stories high with separate means of egress and their accessory structures shall comply with the *International Residential Code.*

❖ This section describes the types of fuel gas systems to which the code is intended to apply and specifically lists those systems to which the code does not apply. The applicability of the code spans from the initial design of fuel gas systems, through the installation

INTERNATIONAL CODE COUNCIL®
Copyright © 2015 ICC. ALL RIGHTS RESERVED. Accessed by David Dammon on Jun 21, 2017 12:30:52 PM pursuant to License Agreement with ICC. No further reproduction or distribution authorized. ANY UNAUTHORIZED REPRODUCTION OR DISTRIBUTION IS A VIOLATION OF THE FEDERAL COPYRIGHT ACT AND THE LICENSE AGREEMENT, AND SUBJECT TO CIVIL AND CRIMINAL PENALTIES THEREUNDER.

and construction phases, and into the maintenance of operating systems. Chapter 24 of the *International Residential Code*® (IRC®) covers fuel gas systems and is a duplication of the applicable *International Fuel Gas Code*® (IFGC®) text.

[A] 101.2.1 Gaseous hydrogen systems. Gaseous hydrogen systems shall be regulated by Chapter 7.

❖ See the general comments for Chapter 7.

[A] 101.2.2 Piping systems. These regulations cover *piping* systems for natural gas with an operating pressure of 125 pounds per square inch gauge (psig) (862 kPa gauge) or less, and for LP-gas with an operating pressure of 20 psig (140 kPa gauge) or less, except as provided in Section 402.6. Coverage shall extend from the *point of delivery* to the outlet of the *appliance* shutoff valves. *Piping* system requirements shall include design, materials, components, fabrication, assembly, installation, testing, inspection, operation and maintenance.

❖ The code does not limit the operating pressure of systems, but rather limits the code's coverage of piping systems to those having pressures less than or equal to the stated pressures. Consistent with the definition, piping systems begin at the point of delivery and end at the outlet of the appliance shutoff valves (see Section 101.2.3 and definition of "Piping system").

[A] 101.2.3 Gas appliances. Requirements for gas appliances and related accessories shall include installation, combustion and ventilation air and venting and connections to *piping* systems.

❖ The piping and connectors between the appliance shutoff valves and the appliance served are covered by the code, although the piping and connectors are outside the scope of the definition of "Piping system."

[A] 101.2.4 Systems, appliances and equipment outside the scope. This code shall not apply to the following:

1. Portable LP-gas appliances and *equipment* of all types that is not connected to a fixed fuel *piping* system.
2. Installation of farm appliances and *equipment* such as brooders, dehydrators, dryers and irrigation *equipment*.
3. Raw material (feedstock) applications except for *piping* to special atmosphere generators.
4. Oxygen-fuel gas cutting and welding systems.
5. Industrial gas applications using gases such as acetylene and acetylenic compounds, hydrogen, ammonia, carbon monoxide, oxygen and nitrogen.
6. Petroleum refineries, pipeline compressor or pumping stations, loading terminals, compounding plants, refinery tank farms and natural gas processing plants.
7. Integrated chemical plants or portions of such plants where flammable or combustible liquids or gases are produced by, or used in, chemical reactions.
8. LP-gas installations at utility gas plants.
9. Liquefied natural gas (LNG) installations.
10. Fuel gas *piping* in power and atomic energy plants.
11. Proprietary items of *equipment*, apparatus or instruments such as gas-generating sets, compressors and calorimeters.
12. LP-gas *equipment* for vaporization, gas mixing and gas manufacturing.
13. Temporary LP-gas *piping* for buildings under construction or renovation that is not to become part of the permanent *piping* system.
14. Installation of LP-gas systems for railroad switch heating.
15. Installation of hydrogen gas, LP-gas and compressed natural gas (CNG) systems on vehicles.
16. Except as provided in Section 401.1.1, gas *piping*, meters, gas pressure regulators and other appurtenances used by the serving gas supplier in the distribution of gas, other than undiluted LP-gas.
17. Building design and construction, except as specified herein.
18. *Piping* systems for mixtures of gas and air within the flammable range with an operating pressure greater than 10 psig (69 kPa gauge).
19. Portable fuel cell appliances that are neither connected to a fixed *piping* system nor interconnected to a power grid.

❖ This section lists the specific installations and equipment that the code does not intend to regulate. Item 19 relates to Chapter 7 and addresses portable fuel cell appliances as defined in Chapter 2.

[A] 101.2.5 Other fuels. The requirements for the design, installation, maintenance, *alteration* and inspection of mechanical systems operating with fuels other than fuel gas shall be regulated by the *International Mechanical Code*.

❖ This section simply defers the coverage of all equipment other than gas-fired equipment to the *International Mechanical Code*® (IMC®). The IRC also regulates the installation of residential equipment that is not gas fired.

[A] 101.3 Appendices. Provisions in the appendices shall not apply unless specifically adopted.

❖ This section certifies that the appendices are not part of the code unless specifically included in the adopting ordinance of the jurisdiction. Otherwise, the appendices are not intended to be enforceable.

[A] 101.4 Intent. The purpose of this code is to establish minimum standards to provide a reasonable level of safety, health, property protection and public welfare by regulating and controlling the design, construction, installation, quality of materials, location, operation and maintenance or use of fuel gas systems.

❖ The intent of the code is to set forth requirements that establish the minimum acceptable level to safeguard life or limb, health, property and public welfare. The intent becomes important in the application of such sections as Sections 102, 104.2, 105.2 and 108, as

INTERNATIONAL CODE COUNCIL®
Copyright © 2015 ICC. ALL RIGHTS RESERVED. Accessed by David Dammon on Jun 21, 2017 12:30:52 PM pursuant to License Agreement with ICC. No further reproduction or distribution authorized. ANY UNAUTHORIZED REPRODUCTION OR DISTRIBUTION IS A VIOLATION OF THE FEDERAL COPYRIGHT ACT AND THE LICENSE AGREEMENT, AND SUBJECT TO CIVIL AND CRIMINAL PENALTIES THEREUNDER.

well as any enforcement-oriented interpretive action or judgement. Like any code, the written text is subject to interpretation. Interpretations should not be affected by economics or the potential impact on any party. The only consideration should be protection of the public health, safety and welfare.

[A] 101.5 Severability. If a section, subsection, sentence, clause or phrase of this code is, for any reason, held to be unconstitutional, such decision shall not affect the validity of the remaining portions of this code.

❖ Once the code is adopted, only a court can set aside any provisions of the code. This is essential to safeguard the application of the code text if a provision of the code is declared illegal or unconstitutional. This section would preserve the legislative action that established the legal provisions.

SECTION 102 (IFGC) APPLICABILITY

[A] 102.1 General. Where there is a conflict between a general requirement and a specific requirement, the specific requirement shall govern. Where, in a specific case, different sections of this code specify different materials, methods of construction or other requirements, the most restrictive shall govern.

❖ The scope of the code as described in Section 101 is referenced in this section. The most restrictive code requirement is to apply where different requirements may be specified in the code for a specific installation. The code is designed to regulate new construction and new work and is not intended to be applied retroactively to existing buildings except where existing fuel-gas-related systems are specifically addressed in this section and Section 108.

[A] 102.2 Existing installations. Except as otherwise provided for in this chapter, a provision in this code shall not require the removal, *alteration* or abandonment of, nor prevent the continued utilization and maintenance of, existing installations lawfully in existence at the time of the adoption of this code.

❖ Existing installations are generally considered to be "grandfathered" with code adoption if the system meets a minimum level of safety. Frequently the criteria for this level are the regulations (or code) under which the existing building was originally constructed. If there are no previous code criteria to apply, the code official is to apply those provisions of the code that are reasonably applicable to existing buildings. A specific level of safety is dictated by provisions dealing with hazard abatement in existing buildings and maintenance provisions as contained in this code, the *International Property Maintenance Code*® (IPMC®) and the *International Fire Code*® (IFC®).

[A] 102.2.1 Existing buildings. Additions, alterations, renovations or repairs related to building or structural issues shall be regulated by the *International Building Code*.

❖ This section states that the *International Building Code*® (IBC®) regulates construction related to building or structural issues.

[A] 102.3 Maintenance. Installations, both existing and new, and parts thereof shall be maintained in proper operating condition in accordance with the original design and in a safe condition. Devices or safeguards that are required by this code shall be maintained in compliance with the edition of the code under which they were installed. The owner or the owner's authorized agent shall be responsible for maintenance of installations. To determine compliance with this provision, the code official shall have the authority to require an installation to be reinspected.

❖ Fuel gas systems and equipment are subject to deterioration resulting from aging, wear, accumulation of dirt and debris, corrosion and other factors. Maintenance is necessary to keep these systems and equipment in proper operating condition. Required safety devices and controls must be maintained to continue providing the protection that they afford. Existing equipment and systems could be equipped with safety devices or other measures that were necessary because of the nature of the equipment, and such safeguards may have been required by a code that predates the current code. All such safeguards required by previous or present codes must be maintained for the life of the equipment or system served by those safeguards.

[A] 102.4 Additions, alterations or repairs. Additions, alterations, renovations or repairs to installations shall conform to that required for new installations without requiring the existing installation to comply with all of the requirements of this code. Additions, alterations or repairs shall not cause an existing installation to become unsafe, hazardous or overloaded.

Minor additions, alterations, renovations and repairs to existing installations shall meet the provisions for new construction, unless such work is done in the same manner and arrangement as was in the existing system, is not hazardous and is *approved*.

❖ Simply stated, new work must comply with the current requirements for new work. Any alteration or addition to an existing system involves some extent of new work, and such new work is subject to the requirements of the code. Additions and alterations must not cause an existing system to be any less in compliance with the code than it was before the changes.

[A] 102.5 Change in occupancy. It shall be unlawful to make a change in the *occupancy* of a structure that will subject the structure to the special provisions of this code applicable to the new *occupancy* without approval. The code

INTERNATIONAL CODE COUNCIL®
Copyright © 2015 ICC. ALL RIGHTS RESERVED. Accessed by David Dammon on Jun 21, 2017 12:30:52 PM pursuant to License Agreement with ICC. No further reproduction or distribution authorized. ANY UNAUTHORIZED REPRODUCTION OR DISTRIBUTION IS A VIOLATION OF THE FEDERAL COPYRIGHT ACT AND THE LICENSE AGREEMENT, AND SUBJECT TO CIVIL AND CRIMINAL PENALTIES THEREUNDER.

official shall certify that such structure meets the intent of the provisions of law governing building construction for the proposed new *occupancy* and that such change of *occupancy* does not result in any hazard to the public health, safety or welfare.

❖ When a building undergoes a change of occupancy, the fuel gas systems must be evaluated to determine what effect the change of occupancy has on them. If an existing system serves an occupancy that is different from the occupancy it served when the code went into effect, the fuel gas system must comply with the applicable code requirements for a system serving the newer occupancy. Depending on the nature of the previous occupancy, changing a building's occupancy classification could result in a change to the fuel gas system. For example, if a mercantile building is converted to a restaurant, additional fuel gas piping system capacity and modifications may be required.

[A] 102.6 Historic buildings. The provisions of this code relating to the construction, *alteration*, repair, enlargement, restoration, relocation or moving of buildings or structures shall not be mandatory for existing buildings or structures identified and classified by the state or local jurisdiction as historic buildings where such buildings or structures are judged by the code official to be safe and in the public interest of health, safety and welfare regarding any proposed construction, *alteration*, repair, enlargement, restoration, relocation or moving of buildings.

❖ This section gives the code official the widest possible flexibility in enforcing the code when the building in question has historic value. This flexibility, however, is not without conditions. The most important criterion for application of this section is that the building must be specifically classified as being of historic significance by a qualified party or agency. Usually, a state or local authority does this after considerable scrutiny of the historical value of the building. The agencies with this authority typically exist at the state or local government level.

[A] 102.7 Moved buildings. Except as determined by Section 102.2, installations that are a part of buildings or structures moved into or within the jurisdiction shall comply with the provisions of this code for new installations.

❖ Buildings that have been relocated are subject to the requirements of the code as if they were new construction. Placing a building where one did not previously exist is the same as constructing a new building. This section requires that the existing fuel gas systems be altered to the extent necessary to bring them into compliance with the provisions of the code applicable to new construction or that the existing fuel gas system comply with Section 102.2.

[A] 102.8 Referenced codes and standards. The codes and standards referenced in this code shall be those that are *listed* in Chapter 8 and such codes and standards shall be considered as part of the requirements of this code to the prescribed extent of each such reference and as further regulated in Sections 102.8.1 and 102.8.2.

Exception: Where enforcement of a code provision would violate the conditions of the listing of the *equipment* or *appliance*, the conditions of the listing and the manufacturer's installation instructions shall apply.

❖ A referenced standard or portion of one is an enforceable extension of the code as if the content of the standard were included in the body of the code.

The use and application of referenced standards are limited to those portions of the standards that are specifically identified. It is the intention of the code to be in harmony with the referenced standards. In the unlikely event that conflicts occur, the code text governs. The exception recognizes the extremely unlikely but possible occurrence of the code requiring or allowing something less restrictive or stringent than the product listing or manufacturer's instructions. If the code conflicts with or deviates from the conditions of the listing, this may or may not mean that the code violated the listing. For example, the listing for an appliance might allow a particular application of an appliance that is expressly prohibited by the code. In this case, the code has not violated the listing, but instead has simply limited the application allowed by the listing. The intent is for the highest level of safety to prevail.

[A] 102.8.1 Conflicts. Where conflicts occur between the provisions of this code and the referenced standards, the provisions of this code shall apply.

❖ There could be instances where the code is intentionally more stringent than a provision in a referenced standard; therefore, the code intends to prevail (see Section 102.8).

[A] 102.8.2 Provisions in referenced codes and standards. Where the extent of the reference to a referenced code or standard includes subject matter that is within the scope of this code, the provisions of this code, as applicable, shall take precedence over the provisions in the referenced code or standard.

❖ This code might reference a standard that has coverage for a subject that is also covered in this code. In such case, the coverage in this code is applicable, not the coverage in the referenced standard. Otherwise, there would be dual coverage of a subject and such coverage would likely conflict or prescribe differing and incompatible requirements. For example, this code references NFPA 211 and that standard contains many installation provisions that are already covered by this code, many of which will differ. Standards are often referenced for a particular or narrow purpose and this section prevents the unintended consequence of such a reference enacting other requirements in the standard that were not meant to be included. See Section 102.8 and the commentary to Section 401.2.

INTERNATIONAL CODE COUNCIL®
Copyright © 2015 ICC. ALL RIGHTS RESERVED. Accessed by David Dammon on Jun 21, 2017 12:30:52 PM pursuant to License Agreement with ICC. No further reproduction or distribution authorized. ANY UNAUTHORIZED REPRODUCTION OR DISTRIBUTION IS A VIOLATION OF THE FEDERAL COPYRIGHT ACT AND THE LICENSE AGREEMENT, AND SUBJECT TO CIVIL AND CRIMINAL PENALTIES THEREUNDER.

[A] 102.9 Requirements not covered by code. Requirements necessary for the strength, stability or proper operation of an existing or proposed installation, or for the public safety, health and general welfare, not specifically covered by this code, shall be determined by the code official.

❖ New technology and unusual installations will sometimes result in a situation or circumstance not specifically covered by the code. This section of the code gives the code official the authority to decide whether and how the code can be used to cover the new situation. Clearly such a section is needed, and the code official's reasonable application of the section is necessary. The purpose of the section, however, is not to impose requirements that may be preferred when the code provides alternative methods or is not silent on the circumstances. Additionally, the section can be used to implement the general performance-oriented language of the code to specific enforcement situations.

[A] 102.10 Other laws. The provisions of this code shall not be deemed to nullify any provisions of local, state or federal law.

❖ In some cases, other laws enacted by the jurisdiction or the state or federal government may be applicable to a condition that is also governed by a requirement in the code. In such circumstances, the requirements of the code are in addition to the other law that is still in effect, although the code official may not be responsible for its enforcement.

[A] 102.11 Application of references. Reference to chapter section numbers, or to provisions not specifically identified by number, shall be construed to refer to such chapter, section or provision of this code.

❖ In a situation where the code may make reference to a chapter or section number or to another code provision without specifically identifying its location in the code, assume that the referenced section, chapter or provision is in the code and not in a referenced code or standard.

PART 2—ADMINISTRATION AND ENFORCEMENT

SECTION 103 (IFGC)
DEPARTMENT OF INSPECTION

[A] 103.1 General. The Department of Inspection is hereby created and the executive official in charge thereof shall be known as the code official.

❖ The executive official in charge of inspections is named the "code official" by this section. In actuality, the person who is in charge of the department may hold a different title, such as building commissioner, plumbing inspector, mechanical inspector or construction official. For the purpose of the code, that person is referred to as the "code official."

[A] 103.2 Appointment. The code official shall be appointed by the chief appointing authority of the jurisdiction.

❖ This section establishes the code official as an appointed position and gives the circumstances under which the official can be removed from office.

[A] 103.3 Deputies. In accordance with the prescribed procedures of this jurisdiction and with the concurrence of the appointing authority, the code official shall have the authority to appoint a deputy code official, other related technical officers, inspectors and other employees. Such employees shall have powers as delegated by the code official.

❖ This section gives the code official the authority to appoint other individuals to assist with the administration and enforcement of the code. These individuals have the authority and responsibility as designated by the code official.

[A] 103.4 Liability. The code official, member of the board of appeals or employee charged with the enforcement of this code, while acting for the jurisdiction in good faith and without malice in the discharge of the duties required by this code or other pertinent law or ordinance, shall not thereby be rendered civilly or criminally liable personally, and is hereby relieved from all personal liability for any damage accruing to persons or property as a result of an act or by reason of an act or omission in the discharge of official duties.

❖ Any suit instituted against any officer or employee because of an act performed by that officer or employee in the lawful discharge of duties and under the provisions of this code must be defended by the legal representative of the jurisdiction until the final termination of the proceedings. The code official or any subordinate is not liable for costs in an action, suit or proceeding that is instituted in pursuance of the provisions of this code; and any officer of the department of mechanical inspection who is acting in good faith and without malice is free from liability for acts performed under any of its provisions or by reason of any act or omission in the performance of official duties.

[A] 103.4.1 Legal defense. Any suit or criminal complaint instituted against any officer or employee because of an act performed by that officer or employee in the lawful discharge of duties and under the provisions of this code shall be defended by the legal representatives of the jurisdiction until the final termination of the proceedings. The code official or any subordinate shall not be liable for costs in an action, suit or proceeding that is instituted in pursuance of the provisions of this code.

❖ See the commentary to Section 103.4.

SECTION 104 (IFGC)
DUTIES AND POWERS OF THE CODE OFFICIAL

[A] 104.1 General. The code official is hereby authorized and directed to enforce the provisions of this code. The code

INTERNATIONAL CODE COUNCIL®
Copyright © 2015 ICC. ALL RIGHTS RESERVED. Accessed by David Dammon on Jun 21, 2017 12:30:52 PM pursuant to License Agreement with ICC. No further reproduction or distribution authorized. ANY UNAUTHORIZED REPRODUCTION OR DISTRIBUTION IS A VIOLATION OF THE FEDERAL COPYRIGHT ACT AND THE LICENSE AGREEMENT, AND SUBJECT TO CIVIL AND CRIMINAL PENALTIES THEREUNDER.

official shall have the authority to render interpretations of this code and to adopt policies and procedures in order to clarify the application of its provisions. Such interpretations, policies and procedures shall be in compliance with the intent and purpose of this code. Such policies and procedures shall not have the effect of waiving requirements specifically provided in this code.

❖ The duty of the code official is to enforce the code. Because the code official must also act on all questions related to this responsibility except as specifically exempted by law or elsewhere in the code, the code official is the "authority having jurisdiction" for all matters relating to the code and its enforcement. It is the duty of the code official to interpret the code and to determine compliance with the code. Code compliance will not always be easy to determine and will require the judgement and expertise of the code official. When the code is silent with respect to a particular mechanical installation or lack thereof, the code official is obligated to secure the intent of the code by using the best possible judgement in acting on the matter.

[A] 104.2 Applications and permits. The code official shall receive applications, review *construction documents* and issue permits for installations and alterations of fuel gas systems, inspect the premises for which such permits have been issued and enforce compliance with the provisions of this code.

❖ The code enforcement process normally begins with an application for a permit. The code official is responsible for processing the applications and issuing permits for the installation, replacement, addition to or modification of fuel gas systems in accordance with the code.

[A] 104.3 Inspections. The code official shall make all of the required inspections, or shall accept reports of inspection by *approved* agencies or individuals. Reports of such inspections shall be in writing and shall be certified by a responsible officer of such *approved* agency or by the responsible individual. The code official is authorized to engage such expert opinion as deemed necessary to report upon unusual technical issues that arise, subject to the approval of the appointing authority.

❖ The code official must make inspections as necessary to determine compliance with the code or to accept written reports of inspections by an approved agency. The inspection of the work in progress or accomplished is another significant element in determining code compliance. Although a department might not have the resources to inspect every aspect of all work, the required inspections are those that are dictated by administrative rules and procedures based on many factors, including available inspection resources. To expand the resources available for inspections, the code official may approve an inspection agency that, in the code official's opinion, possesses the proper qualifications to perform the inspections. When unusual, extraordinary or complex technical issues arise relative to either fuel gas installations or the safety of an existing fuel gas system, the code official has the authority to seek the opinion and advice of experts. A technical report from an expert requested by the code official can be used to assist the code official in the approval process.

[A] 104.4 Right of entry. Where it is necessary to make an inspection to enforce the provisions of this code, or where the code official has reasonable cause to believe that there exists in a building or upon any premises any conditions or violations of this code that make the building or premises unsafe, dangerous or hazardous, the code official shall have the authority to enter the building or premises at all reasonable times to inspect or to perform the duties imposed upon the code official by this code. If such building or premises is occupied, the code official shall present credentials to the occupant and request entry. If such building or premises is unoccupied, the code official shall first make a reasonable effort to locate the owner, the owner's authorized agent or other person having charge or control of the building or premises and request entry. If entry is refused, the code official has recourse to every remedy provided by law to secure entry.

Where the code official has first obtained a proper inspection warrant or other remedy provided by law to secure entry, an owner, the owner's authorized agent, occupant or person having charge, care or control of the building or premises shall not fail or neglect, after proper request is made as herein provided, to promptly permit entry therein by the code official for the purpose of inspection and examination pursuant to this code.

❖ The first part of this section establishes the right of the code official to enter premises to conduct the permit inspections required by Section 107. Permit application forms typically include a statement in the certification signed by the applicant (who is the owner or the owner's agent) granting the code official the authority to enter areas covered by the permit to enforce code provisions related to the permit. The right to enter other structures or premises is more limited. First, to protect the right of privacy, the owner or occupant must grant the code official permission before an interior inspection of the property can be conducted. Permission is not required for inspections that can be accomplished from within the public right-of-way. Second, the owner or occupant may deny access. Unless the inspector has reasonable cause to believe that a violation of the code exists, access may be unattainable. Third, code officials must present proper identification (see commentary, Section 104.5) and request admittance during reasonable hours—usually, the normal business hours of the establishment. Fourth, inspections must be aimed at securing or determining compliance with the provisions and intent of the regulations that are specifically within the established scope of the code official's authority.

Searches to gather information for the enforcement of other codes, ordinances or regulations are considered unreasonable and are prohibited by the Fourth

INTERNATIONAL CODE COUNCIL®
Copyright © 2015 ICC. ALL RIGHTS RESERVED. Accessed by David Dammon on Jun 21, 2017 12:30:52 PM pursuant to License Agreement with ICC. No further reproduction or distribution authorized. ANY UNAUTHORIZED REPRODUCTION OR DISTRIBUTION IS A VIOLATION OF THE FEDERAL COPYRIGHT ACT AND THE LICENSE AGREEMENT, AND SUBJECT TO CIVIL AND CRIMINAL PENALTIES THEREUNDER.

Amendment to the U.S. Constitution. "Reasonable cause" in the context of this section must be distinguished from "probable cause," which is required to gain access to property in criminal cases. The burden of proof establishing reasonable cause may vary among jurisdictions. Usually, an inspector must show that the property is subject to inspection under the provisions of the code; that the interests of the public health, safety and welfare outweigh the individual's right to maintain privacy; and that such an inspection is required solely to determine compliance with the provisions of the code.

Many jurisdictions do not recognize the concept of an administrative warrant and may require the code official to prove probable cause in order to gain access. This burden of proof often requires the code official to state in advance why access is needed (usually access is restricted to gathering evidence for seeking an indictment or making an arrest); what specific items or information is sought; the information's relevance to the case against the subject; how knowledge of the relevance of the information or items sought was obtained; and how the evidence sought will be used. In all such cases, the right to privacy must always be weighed against the right of the code official to conduct an inspection to verify that the public health, safety and welfare are not in jeopardy. Such important and complex constitutional issues should be discussed with the jurisdiction's legal counsel. Jurisdictions should establish procedures for securing the necessary court orders when an inspection is deemed necessary following a refusal.

The last paragraph in this section requires the owner or occupant to permit entry for inspection if a proper inspection warrant or other documentation required by law has been obtained.

[A] 104.5 Identification. The code official shall carry proper identification when inspecting structures or premises in the performance of duties under this code.

❖ This section requires the code official (including all authorized inspection personnel) to carry identification when conducting the duties of the position. The identification removes any question of the purpose and authority of the inspector.

[A] 104.6 Notices and orders. The code official shall issue all necessary notices or orders to ensure compliance with this code.

❖ An important element of code enforcement is the necessary advisement of deficiencies and corrections that is accomplished through notices and orders. The code official is required to issue orders to abate illegal or unsafe conditions. Sections 108.7, 108.7.1, 108.7.2 and 108.7.3 contain additional information for these notices.

[A] 104.7 Department records. The code official shall keep official records of applications received, permits and certificates issued, fees collected, reports of inspections and notices and orders issued. Such records shall be retained in the official records for the period required for the retention of public records.

❖ Good business practice requires the code official to keep official records pertaining to permit applications, permits, fees collected, inspections, notices and orders issued. This documentation is a valuable source of information if questions arise "throughout the life of the building and its occupancy." The code does not require that the construction documents be kept after the project is complete, but other regulations or the administrative rules may state a minimum period for retaining the construction documents.

SECTION 105 (IFGC)
APPROVAL

[A] 105.1 Modifications. Where there are practical difficulties involved in carrying out the provisions of this code, the code official shall have the authority to grant modifications for individual cases, upon application of the owner or owner's authorized agent, provided that the code official shall first find that special individual reason makes the strict letter of this code impractical and that such modification is in compliance with the intent and purpose of this code and does not lessen health, life and fire safety requirements. The details of action granting modifications shall be recorded and entered in the files of the Department of Inspection.

❖ The code official may amend or make exceptions to the code as needed where strict compliance with the code is impractical. Only the code official has the authority to grant modifications. Consideration of a particular difficulty is to be based on the application of the owner and a demonstration that the intent of the code is satisfied. This section is not intended to permit setting a code provision aside or ignoring a provision; rather, it is intended to provide for the acceptance of equivalent protection. Such modifications do not, however, extend to actions that are necessary to correct violations of the code. In other words, a code violation or the expense of correcting a code violation cannot constitute a practical difficulty.

Details of the modification must be filed for later retrieval to substantiate the reasons for the modification. Comprehensive written records are an essential part of an effective administrative system. Unless clearly written records of the considerations and documentation used in the modification process are created and maintained, subsequent enforcement action cannot be supported.

[A] 105.2 Alternative materials, methods, appliances and equipment. The provisions of this code are not intended to prevent the installation of any material or to prohibit any method of construction not specifically prescribed by this code, provided that any such alternative has been *approved*. An alternative material or method of construction shall be *approved* where the code official finds that the proposed design is satisfactory and complies with the intent of the provisions of this code, and that the material, method or work offered is, for the purpose intended, not less than the equiva-

INTERNATIONAL CODE COUNCIL®
Copyright © 2015 ICC. ALL RIGHTS RESERVED. Accessed by David Dammon on Jun 21, 2017 12:30:52 PM pursuant to License Agreement with ICC. No further reproduction or distribution authorized. ANY UNAUTHORIZED REPRODUCTION OR DISTRIBUTION IS A VIOLATION OF THE FEDERAL COPYRIGHT ACT AND THE LICENSE AGREEMENT, AND SUBJECT TO CIVIL AND CRIMINAL PENALTIES THEREUNDER.

lent of that prescribed in this code in quality, strength, effectiveness, fire resistance, durability and safety. Where the alternative material, design or method of construction is not *approved*, the *code official* shall respond in writing, stating the reasons why the alternative was not *approved*.

❖ The code is not intended to inhibit innovative ideas or technological advances. A comprehensive regulatory document, such as a fuel gas code, cannot envision and then address all future innovations in the industry. As a result, a performance code must be applicable to and provide a basis for the approval of an increasing number of newly developed, innovative materials, systems and methods for which no code text or referenced standards yet exist. The fact that a material, product or method of construction is not addressed in the code is not an indication that prohibition of the material, product or method is intended. The code official is expected to apply sound technical judgement in accepting materials, systems or methods that, although not anticipated by the drafters of the current code text, can be demonstrated to offer equivalent performance. By virtue of its text, the code regulates new and innovative construction practices while addressing the relative safety of building occupants. The code official is responsible for determining whether a requested alternative provides a level of protection of the public health, safety and welfare as required by the code.

[A] 105.2.1 Research reports. Supporting data, where necessary to assist in the approval of materials or assemblies not specifically provided for in this code, shall consist of valid research reports from *approved* sources.

❖ When an alternative material or method is proposed for construction, it is incumbent upon the code official to determine whether this alternative is, in fact, an equivalent to the methods prescribed by the code. Reports providing evidence of this equivalency are required to be supplied by an approved source, meaning a source that the code official finds to be reliable and accurate. The ICC Evaluation Service (ICC-ES) is an example of an agency that provides research reports for alternative materials and methods.

[A] 105.3 Required testing. Where there is insufficient evidence of compliance with the provisions of this code or evidence that a material or method does not conform to the requirements of this code, or in order to substantiate claims for alternative materials or methods, the code official shall have the authority to require tests as evidence of compliance to be made at no expense to the jurisdiction.

❖ Sufficient technical data, test reports and documentation must be submitted for evaluation by the code official to provide the basis on which the code official can make a decision regarding an alternative material or type of equipment. If evidence satisfactory to the code official proves that the alternative equipment, material or construction method is equivalent to that required by the code, the code official is obligated to approve it. Any such approval cannot have the effect of waiving any requirements of the code. The burden of proof of equivalence lies with the applicant who proposes the use of alternative equipment, materials or methods.

[A] 105.3.1 Test methods. Test methods shall be as specified in this code or by other recognized test standards. In the absence of recognized and accepted test methods, the code official shall approve the testing procedures.

❖ The code official must require the submission of any appropriate information and data to assist in the determination of equivalency. This information must be submitted before a permit can be issued. The type of information required includes test data in accordance with the referenced standards, evidence of compliance with the referenced standard specifications and design calculations. A research report issued by an authoritative agency is particularly useful in providing the code official with the technical basis for evaluation and approval of new and innovative materials and components. The use of authoritative research reports can greatly assist the code official by reducing the time-consuming engineering analysis necessary to review materials and products. Failure to substantiate a request for the use of an alternative is a valid reason for the code official to deny a request.

[A] 105.3.2 Testing agency. Tests shall be performed by an *approved* agency.

❖ The code official must approve the testing agency, and the agency should have technical expertise, test equipment and quality assurance to properly conduct and report the necessary testing.

[A] 105.3.3 Test reports. Reports of tests shall be retained by the code official for the period required for retention of public records.

❖ Test reports are to be retained as required by public record laws. The attorney of the jurisdiction could be questioned concerning the specific time period of applicable laws of the localities.

[A] 105.4 Used material, appliances and equipment. The use of used materials which meet the requirements of this code for new materials is permitted. Used appliances, *equipment* and devices shall not be reused unless such elements have been reconditioned, tested and placed in good and proper working condition, and *approved* by the code official.

❖ The code criteria for materials, equipment and devices have changed over the years. Evaluation of testing and materials technology has permitted the development of new criteria that the old materials may not satisfy. As a result, used materials must be evaluated in the same manner as new materials. Used (previously installed) equipment must be equivalent to that required by the code if it is to be used again in a new installation.

INTERNATIONAL CODE COUNCIL®
Copyright © 2015 ICC. ALL RIGHTS RESERVED. Accessed by David Dammon on Jun 21, 2017 12:30:52 PM pursuant to License Agreement with ICC. No further reproduction or distribution authorized. ANY UNAUTHORIZED REPRODUCTION OR DISTRIBUTION IS A VIOLATION OF THE FEDERAL COPYRIGHT ACT AND THE LICENSE AGREEMENT, AND SUBJECT TO CIVIL AND CRIMINAL PENALTIES THEREUNDER.

[A] 105.5 Approved materials and equipment. Materials, *equipment* and devices *approved* by the code official shall be constructed and installed in accordance with such approval.

❖ The code is a compilation of criteria with which materials, equipment, devices and systems must comply to be suitable for a particular application. The code official has a duty to evaluate such materials, equipment, devices and systems for code compliance and, when compliance is determined, approve the same for use. The materials, equipment, devices and systems must be constructed and installed in compliance with, and all conditions and limitations considered as a basis for, that approval. For example, the manufacturer's instructions and recommendations are to be followed if the approval of the material was based even in part on those instructions and recommendations. The approval authority given to the code official is a significant responsibility and is a key to code compliance. The approval process is first technical and then administrative and must be approached as such. For example, if data to determine code compliance is required, such data should be in the form of test reports or engineering analysis and not simply taken from a sales brochure.

SECTION 106 (IFGC) PERMITS

[A] 106.1 Where required. An owner, owner's authorized agent or contractor who desires to erect, install, enlarge, alter, repair, remove, convert or replace an installation regulated by this code, or to cause such work to be performed, shall first make application to the code official and obtain the required permit for the work.

Exception: Where *appliance* and *equipment* replacements and repairs are required to be performed in an emergency situation, the permit application shall be submitted within the next working business day of the Department of Inspection.

❖ In general, a permit is required for all activities that are regulated by the code, and these activities cannot begin until the permit is issued.

A fuel gas permit is required for the installation, replacement, alteration or modification of fuel gas systems and components that are in the scope of applicability of the code. Replacement of an existing piece of equipment or related piping is treated no differently than a new installation in new building construction. A permit causes the work to be inspected to determine compliance with the intent of the code.

The exception provides for prompt permit applications for situations where equipment and appliance replacements and repairs are done to address an emergency. This action enables the department having jurisdiction to promptly inspect the work.

[A] 106.1.1 Annual permit. Instead of an individual construction permit for each alteration to an already *approved* system or *equipment* installation, the code official is authorized to issue an annual permit upon application therefor to any person, firm or corporation regularly employing one or more qualified tradespersons in the building, structure or on the premises owned or operated by the applicant for the permit.

❖ Sometimes the authority having jurisdiction (AHJ) will issue an annual permit for buildings, such as hospitals, school campuses, industrial and manufacturing plants, and the like, where work that requires a permit is ongoing throughout the year. Such occupancies typically have their own full-time engineering and trades employees to design, oversee and perform the work. Some buildings are altered continuously because of changes in technologies and changing operations within the occupancy; therefore, it would be burdensome to obtain numerous permits throughout the year on a continuous basis. It is the responsibility of the permit holder to make arrangements with the code official regarding periodic inspections for the work. This is especially important for work that will be concealed.

[A] 106.1.2 Annual permit records. The person to whom an annual permit is issued shall keep a detailed record of alterations made under such annual permit. The code official shall have access to such records at all times or such records shall be filed with the code official as designated.

❖ Annual permits need to be monitored to prevent abuse of the privilege and to allow for changes in the scope of the work or changes in who is performing the work. Accurate record keeping of the work performed will advise the code official of situations where a project-specific permit needs to be issued instead of being under the umbrella of an annual permit.

[A] 106.2 Permits not required. Permits shall not be required for the following:

1. Portable heating *appliances*.
2. Replacement of any minor component of an *appliance* or *equipment* that does not alter approval of such *appliance* or *equipment* or make such *appliance* or *equipment* unsafe.

Exemption from the permit requirements of this code shall not be deemed to grant authorization for work to be done in violation of the provisions of this code or of other laws or ordinances of this jurisdiction.

❖ The installations exempt from the requirement for a permit are very limited as evidenced by Items 1 and 2. Item 1 pertains to appliances and equipment that are used temporarily and that are not designed for permanent installation. Examples of portable heating appliances and equipment include space heaters and construction site heaters.

Item 2 applies to the replacement of minor equipment and appliance components. A permit would be required if the component replacement could potentially affect either the safety of the equipment or the conditions of approval of the equipment. For example, replacement of a defective control with a control of the same type and specifications as the original factory-

INTERNATIONAL CODE COUNCIL®
Copyright © 2015 ICC. ALL RIGHTS RESERVED. Accessed by David Dammon on Jun 21, 2017 12:30:52 PM pursuant to License Agreement with ICC. No further reproduction or distribution authorized. ANY UNAUTHORIZED REPRODUCTION OR DISTRIBUTION IS A VIOLATION OF THE FEDERAL COPYRIGHT ACT AND THE LICENSE AGREEMENT, AND SUBJECT TO CIVIL AND CRIMINAL PENALTIES THEREUNDER.

supplied control would not require a permit. Replacement of a burner assembly with a burner assembly having a different input capacity or one that is designed to burn a different fuel would require a permit.

[A] 106.3 Application for permit. Each application for a permit, with the required fee, shall be filed with the code official on a form furnished for that purpose and shall contain a general description of the proposed work and its location. The application shall be signed by the owner or an owner's authorized agent. The permit application shall indicate the proposed *occupancy* of all parts of the building and of that portion of the site or lot, if any, not covered by the building or structure and shall contain such other information required by the code official.

❖ This section states that the building owner or an authorized agent of the owner is the only person who can apply for a building permit. An owner's authorized agent could be anyone who is given written permission to act in the owner's interest to obtain a permit, such as an architect, engineer, contractor or tenant. Permit forms will generally have enough space for a very brief description of the work to be accomplished, which is sufficient for small jobs. For larger projects, the description will be contained in construction documents.

[A] 106.3.1 Construction documents. *Construction documents*, engineering calculations, diagrams and other data shall be submitted in two or more sets with each application for a permit. The code official shall require *construction documents*, computations and specifications to be prepared and designed by a registered design professional where required by state law. *Construction documents* shall be drawn to scale and shall be of sufficient clarity to indicate the location, nature and extent of the work proposed and show in detail that the work conforms to the provisions of this code. *Construction documents* for buildings more than two stories in height shall indicate where penetrations will be made for installations and shall indicate the materials and methods for maintaining required structural safety, fire-resistance rating and fireblocking.

Exception: The code official shall have the authority to waive the submission of *construction documents*, calculations or other data if the nature of the work applied for is such that reviewing of *construction documents* is not necessary to determine compliance with this code.

❖ When the work is of a "minor nature," either in scope or needed description, the code official may use judgement in determining the need for a detailed description of the work. An example of minor work that may not involve a detailed description is the replacement of an existing piece of equipment in a mechanical system or the replacement or repair of a defective portion of a piping system.

These provisions are intended to reflect the minimum scope of information needed to determine code compliance. A statement on the construction documents, such as "All fuel gas systems must comply with the 2009 edition of the *International Fuel Gas Code*® (IFGC®)," is not an acceptable substitute for showing the required information.

This section also requires the code official to determine that state professional registration laws are complied with as they apply to the preparation of construction documents.

[A] 106.3.2 Time limitation of application. An application for a permit for any proposed work shall be deemed to have been abandoned 180 days after the date of filing, unless such application has been pursued in good faith or a permit has been issued; except that the code official shall have the authority to grant one or more extensions of time for additional periods not exceeding 180 days each. The extension shall be requested in writing and justifiable cause shall be demonstrated.

❖ Typically, an application for a permit is submitted and goes through a review process that ends with the issuance of a permit. If a permit has not been issued 180 days after the date of filing, the application is considered to be abandoned, unless the applicant was diligent in efforts to obtain the permit. The code official has the authority to extend this time limitation, provided that there is reasonable cause. This would cover delays beyond the applicant's control, such as prerequisite permits or approvals from other authorities within the jurisdiction or state. The intent of this section is to limit the time between the review process and the issuance of a permit.

[A] 106.4 Preliminary inspection. Before a permit is issued, the code official is authorized to inspect and evaluate the systems, *equipment*, buildings, devices, premises and spaces or areas to be used.

❖ The code official is granted authority to inspect the site before permit issuance. This may be necessary to verify existing conditions that impact the plan review and permit approval. This section provides the code official with the right-of-entry authority that otherwise does not occur until after the permit is issued.

[A] 106.5 Permit issuance. The application, *construction documents* and other data filed by an applicant for a permit shall be reviewed by the code official. If the code official finds that the proposed work conforms to the requirements of this code and all laws and ordinances applicable thereto, and that the fees specified in Section 106.6 have been paid, a permit shall be issued to the applicant.

❖ This section requires the code official to review submittals for a permit for compliance with the code and verify that the project will be carried out in accordance with other applicable laws. This may involve interagency communication and cooperation so that all laws are being obeyed. Once the code official finds this to be so, a permit may be issued upon payment of the required fees.

[A] 106.5.1 Approved construction documents. When the code official issues the permit where *construction documents* are required, the *construction documents* shall be endorsed in writing and stamped "APPROVED." Such *approved con-*

INTERNATIONAL CODE COUNCIL®
Copyright © 2015 ICC. ALL RIGHTS RESERVED. Accessed by David Dammon on Jun 21, 2017 12:30:52 PM pursuant to License Agreement with ICC. No further reproduction or distribution authorized. ANY UNAUTHORIZED REPRODUCTION OR DISTRIBUTION IS A VIOLATION OF THE FEDERAL COPYRIGHT ACT AND THE LICENSE AGREEMENT, AND SUBJECT TO CIVIL AND CRIMINAL PENALTIES THEREUNDER.

struction documents shall not be changed, modified or altered without authorization from the code official. Work shall be done in accordance with the *approved construction documents*.

The code official shall have the authority to issue a permit for the construction of part of an installation before the *construction documents* for the entire installation have been submitted or *approved*, provided adequate information and detailed statements have been filed complying with all pertinent requirements of this code. The holder of such permit shall proceed at his or her own risk without assurance that the permit for the entire installation will be granted.

❖ Construction documents that reflect compliance with code requirements form an integral part of the permit process. Successful completion of the work depends on these documents. This section requires the code official to stamp the complying construction documents as being "APPROVED" and fix the status of the document in time. Once approved, the documents may not be revised without the express authorization of the code official. This maintains the code-compliance level of the documents.

[A] 106.5.2 Validity. The issuance of a permit or approval of *construction documents* shall not be construed to be a permit for, or an approval of, any violation of any of the provisions of this code or of other ordinances of the jurisdiction. A permit presuming to give authority to violate or cancel the provisions of this code shall be invalid.

The issuance of a permit based upon *construction documents* and other data shall not prevent the code official from thereafter requiring the correction of errors in said *construction documents* and other data or from preventing building operations from being carried on thereunder when in violation of this code or of other ordinances of this jurisdiction.

❖ This powerful code section states the fundamental premise that the permit is only "a license to proceed with the work." It is not a license to "violate, cancel or set aside any provisions of the code." This statement is important because, despite any errors in the approval process, the permit applicant is responsible for code compliance.

[A] 106.5.3 Expiration. Every permit issued by the code official under the provisions of this code shall expire by limitation and become null and void if the work authorized by such permit is not commenced within 180 days from the date of such permit, or is suspended or abandoned at any time after the work is commenced for a period of 180 days. Before such work recommences, a new permit shall be first obtained and the fee therefor shall be one-half the amount required for a new permit for such work, provided that changes have not been and will not be made in the original *construction documents* for such work, and further that such suspension or abandonment has not exceeded one year.

❖ The permit becomes invalid in two distinct situations, but both are based on a 6-month period. The first situation is when no work has started 6 months from issuance of the permit. The second situation is when there is no continuation of authorized work for 6 months. The person who was issued the permit should be notified in writing that the permit is invalid and what steps must be taken to allow work to begin again.

This section also gives the administrative authority a means of offsetting the costs associated with the administration of expired, reissued permits by charging a nominal fee for permit reissuance. If, however, the nature or scope of the work to be resumed is different from that indicated on the original permit, the permit process essentially starts all over again, and full fees are charged. The same procedure would also apply if the work has not commenced within 1 year of the date of permit issuance or if work has been suspended for a year or more.

[A] 106.5.4 Extensions. A permittee holding an unexpired permit shall have the right to apply for an extension of the time within which he or she will commence work under that permit when work is unable to be commenced within the time required by this section for good and satisfactory reasons. The code official shall extend the time for action by the permittee for a period not exceeding 180 days if there is reasonable cause. A permit shall not be extended more than once. The fee for an extension shall be one-half the amount required for a new permit for such work.

❖ Although it is customary for a project to begin immediately following issuance of a permit, there may be occasions when an unforeseen delay may occur. This section affords the permit holder an opportunity to apply for and receive a single, 180-day extension within which to begin a project under a still-valid permit (less than 180 days old). The applicant must, however, submit to the code official an adequate explanation for the delay in starting a project that could include such things as the need to obtain approvals or permits for the project from other agencies having jurisdiction. This section requires the code official to determine what constitutes "good and satisfactory" reasons for any delay and further allows the jurisdiction to offset its administrative costs for extending the permit by charging one-half the permit fee for the extension.

[A] 106.5.5 Suspension or revocation of permit. The code official shall have the authority to suspend or revoke a permit issued under the provisions of this code wherever the permit is issued in error or on the basis of incorrect, inaccurate or incomplete information, or in violation of any ordinance or regulation or any of the provisions of this code.

❖ A permit is, in reality, a license to proceed with the work. The code official, however, must revoke all permits shown to be based, all or in part, on any false statement or misrepresentation of fact. An applicant may subsequently reapply for a permit with the appropriate corrections or modifications made to the application and construction documents.

[A] 106.5.6 Retention of construction documents. One set of *approved construction documents* shall be retained by the

INTERNATIONAL CODE COUNCIL®
Copyright © 2015 ICC. ALL RIGHTS RESERVED. Accessed by David Dammon on Jun 21, 2017 12:30:52 PM pursuant to License Agreement with ICC. No further reproduction or distribution authorized. ANY UNAUTHORIZED REPRODUCTION OR DISTRIBUTION IS A VIOLATION OF THE FEDERAL COPYRIGHT ACT AND THE LICENSE AGREEMENT, AND SUBJECT TO CIVIL AND CRIMINAL PENALTIES THEREUNDER.

code official for a period of not less than 180 days from date of completion of the permitted work, or as required by state or local laws. One set of *approved construction documents* shall be returned to the applicant, and said set shall be kept on the site of the building or work at all times during which the work authorized thereby is in progress.

❖ Once the code official has stamped or endorsed as approved the construction documents on which the permit is based (see commentary, Section 106.5.1), one set of approved construction documents must be kept on the construction site to serve as the basis for all subsequent inspections. To avoid confusion, the construction documents on the site must be precisely the documents that were approved and stamped because inspections are to be performed based on the approved documents. Additionally, the contractor cannot determine compliance with the approved construction documents unless those documents are readily available. If the approved construction documents are not available, the inspection should be postponed and work on the project halted.

[A] 106.5.7 Previous approvals. This code shall not require changes in the *construction documents*, construction or designated *occupancy* of a structure for which a lawful permit has been heretofore issued or otherwise lawfully authorized, and the construction of which has been pursued in good faith within 180 days after the effective date of this code and has not been abandoned.

❖ Under circumstances where a new edition of the code is adopted by the legislative body of the jurisdiction at the same time that construction is proceeding at an acceptable pace on a project where a permit has been issued, requiring that the building be constructed to conform to the new edition of the code is unreasonable. This section provides for the continuity of permits issued under previous codes, as long as such permits are being "actively prosecuted" subsequent to the effective date of the ordinance adopting this edition of the code.

[A] 106.5.8 Posting of permit. The permit or a copy shall be kept on the site of the work until the completion of the project.

❖ The permit, or copy thereof, is to be kept on the job site and made available to the code official or representative to conveniently make required entries thereon until the work is complete.

[A] 106.6 Fees. A permit shall not be issued until the fees prescribed in Section 106.6.2 have been paid, nor shall an amendment to a permit be released until the additional fee, if any, due to an increase of the installation, has been paid.

❖ All fees are to be paid prior to permit issuance. This requirement facilitates payment and also establishes that the permit applicant intends to proceed with the work.

[A] 106.6.1 Work commencing before permit issuance. Any person who commences work on an installation before obtaining the necessary permits shall be subject to 100 percent of the usual permit fee in addition to the required permit fees.

❖ This section is intended to serve as a deterrent to proceeding with work on a fuel gas system without a permit (except as provided in Section 106.2). As a punitive measure, it doubles the cost of the permit fee to be charged. This section does not, however, intend to penalize a contractor called upon to do emergency work after hours if he or she promptly notifies the code official the next business day, obtains the requisite permit for the work done and has the required inspections performed.

[A] 106.6.2 Fee schedule. The fees for work shall be as indicated in the following schedule.

[JURISDICTION TO INSERT APPROPRIATE SCHEDULE]

❖ A published fee schedule must be established for plans examination, permits and inspections. Ideally, the department should generate revenues that cover operating costs and expenses. The permit fee schedule is an integral part of this process.

[A] 106.6.3 Fee refunds. The code official shall authorize the refunding of fees as follows.

1. The full amount of any fee paid hereunder that was erroneously paid or collected.
2. Not more than **[SPECIFY PERCENTAGE]** percent of the permit fee paid where work has not been done under a permit issued in accordance with this code.
3. Not more than **[SPECIFY PERCENTAGE]** percent of the plan review fee paid where an application for a permit for which a plan review fee has been paid is withdrawn or canceled before any plan review effort has been expended.

The code official shall not authorize the refunding of any fee paid, except upon written application filed by the original permittee not later than 180 days after the date of fee payment.

❖ The code official must not authorize the refunding of any fee paid, except upon written application filed by the original permittee not later than 180 days after the date of fee payment.

SECTION 107 (IFGC)
INSPECTIONS AND TESTING

[A] 107.1 General. The code official is authorized to conduct such inspections as are deemed necessary to determine compliance with the provisions of this code. Construction or work for which a permit is required shall be subject to inspection by the code official, and such construction or work shall remain accessible and exposed for inspection purposes until *approved*. Approval as a result of an inspection shall not be construed to be an approval of a violation of the provisions of this code or of other ordinances of the jurisdiction. Inspections presuming to give authority to violate or cancel the pro-

INTERNATIONAL CODE COUNCIL®
Copyright © 2015 ICC. ALL RIGHTS RESERVED. Accessed by David Dammon on Jun 21, 2017 12:30:52 PM pursuant to License Agreement with ICC. No further reproduction or distribution authorized. ANY UNAUTHORIZED REPRODUCTION OR DISTRIBUTION IS A VIOLATION OF THE FEDERAL COPYRIGHT ACT AND THE LICENSE AGREEMENT, AND SUBJECT TO CIVIL AND CRIMINAL PENALTIES THEREUNDER.

visions of this code or of other ordinances of the jurisdiction shall not be valid.

❖ The inspection function is one of the more important aspects of building department operations. This section authorizes the code official to inspect the work for which a permit has been issued and requires that the work to be inspected remain accessible to the code official until inspected and approved. Any expense incurred in removing or replacing material that conceals an item to be inspected is not the responsibility of the code official or the jurisdiction. As with the issuance of permits (see Section 106.5), approval as a result of an inspection is not a license to violate the code and an approval in violation of the code does not relieve the applicant from complying with the code and is not valid.

[A] 107.2 Required inspections and testing. The code official, upon notification from the permit holder or the permit holder's agent, shall make the following inspections and other such inspections as necessary, and shall either release that portion of the construction or notify the permit holder or the permit holder's agent of violations that are required to be corrected. The holder of the permit shall be responsible for scheduling such inspections.

1. Underground inspection shall be made after trenches or ditches are excavated and bedded, *piping* is installed and before backfill is put in place. Where excavated soil contains rocks, broken concrete, frozen chunks and other rubble that would damage or break the *piping* or cause corrosive action, clean backfill shall be on the job site.
2. Rough-in inspection shall be made after the roof, framing, fireblocking and bracing are in place and components to be concealed are complete, and prior to the installation of wall or ceiling membranes.
3. Final inspection shall be made upon completion of the installation.

The requirements of this section shall not be considered to prohibit the operation of any heating *appliance* installed to replace an existing heating *appliance* serving an occupied portion of a structure in the event a request for inspection of such heating *appliance* has been filed with the department not more than 48 hours after replacement work is completed, and before any portion of such *appliance* is concealed by any permanent portion of the structure.

❖ Inspections are necessary to determine that an installation conforms to all code requirements. Because the majority of a fuel gas piping system could be hidden within the building enclosure, periodic inspections are necessary before portions of the system are concealed. The code official is required to determine that fuel gas systems and equipment are installed in accordance with the approved construction documents and the applicable code requirements. Inspections that are necessary to provide verification must be conducted. Generally, the administrative rules of a department may list the interim inspections judged to be required. Construction that occurs in steps or phases may necessitate multiple inspections; therefore, an exact number of required inspections cannot be specified. Where violations are noted and corrections are required, reinspections may be necessary. As time permits, frequent inspections of some job sites, especially where the work is complex, can be beneficial if the inspector detects code-compliance problems or potential problems before they develop or become more difficult to correct. The contractor, builder, owner or other authorized party is responsible for arranging for the required inspections and coordinating inspections to prevent work from being concealed before it is inspected.

1. Inspection of underground piping is especially important because once it is covered, it is the most challenging part of a fuel gas system in which to detect a leak. If repairs are necessary, underground repairs are proportionally more expensive because of the need for heavy equipment and the more labor-intensive nature of working below ground. To reduce possible damage to pipe from rubble, rocks and other rough materials, excavations must be bedded and backfilled with clean fill materials spread and tamped to provide adequate support and protection for piping.
2. A rough-in inspection is an inspection of all parts of the fuel gas system that will eventually be concealed in the building structure. The inspection must be made before any of the system is closed up or hidden from view. To gain approval, the fuel gas systems must pass the required rough-in tests.
3. A rough-in inspection may be completed all at one time or as a series of inspections. This is administratively determined by the local inspections department and is typically dependent on the size of the job.
4. A final inspection may be done as a series of inspections or all at one time, similar to a rough-in inspection. A final inspection is required prior to the approval of mechanical work and fuel gas installations. For the construction of a new building, final approval is required prior to the issuance of the certificate of occupancy as specified in the building code. To verify that all previously issued correction orders have been complied with and to determine whether subsequent violations exist, a final inspection must be made. Violations observed during the final inspection must be noted, and the permit holder must be advised of them.

   The final inspection is made after the completion of the work or installation. Typically, the final inspection is an inspection of all that was installed after the rough-in inspection and not concealed in the building construction. Subse-

INTERNATIONAL CODE COUNCIL®
Copyright © 2015 ICC. ALL RIGHTS RESERVED. Accessed by David Dammon on Jun 21, 2017 12:30:52 PM pursuant to License Agreement with ICC. No further reproduction or distribution authorized. ANY UNAUTHORIZED REPRODUCTION OR DISTRIBUTION IS A VIOLATION OF THE FEDERAL COPYRIGHT ACT AND THE LICENSE AGREEMENT, AND SUBJECT TO CIVIL AND CRIMINAL PENALTIES THEREUNDER.

quent reinspections are necessary if the final inspection has generated a notice of violation.

The last paragraph of this section is emergency related and provides for prompt operation of replacement heating equipment, allowing the occupied areas of a facility to be heated as soon as the new heating equipment is installed. Such installations are subject to all requirements of the code.

[A] 107.2.1 Other inspections. In addition to the inspections specified in Section 107.2, the code official is authorized to make or require other inspections of any construction work to ascertain compliance with the provisions of this code and other laws that are enforced.

❖ Any item regulated by the code is subject to inspection by the code official to determine compliance with the applicable code provision, and no list can include all items in a given project. This section, therefore, gives the code official the authority to inspect any regulated items.

[A] 107.2.2 Inspection requests. It shall be the duty of the holder of the permit or his or her duly authorized agent to notify the code official when work is ready for inspection. It shall be the duty of the permit holder to provide *access* to and means for inspection of such work that is required by this code.

❖ It is the responsibility of the permit holder or other authorized person, such as the contractor performing the work, to arrange for the required inspections when completed work is ready and to allow for sufficient time for the code official to schedule a visit to the site to prevent work from being concealed prior to being inspected. Access to the work to be inspected must be provided, including any special means such as a ladder.

[A] 107.2.3 Approval required. Work shall not be done beyond the point indicated in each successive inspection without first obtaining the approval of the code official. The code official, upon notification, shall make the requested inspections and shall either indicate the portion of the construction that is satisfactory as completed, or notify the permit holder or his or her agent wherein the same fails to comply with this code. Any portions that do not comply shall be corrected and such portion shall not be covered or concealed until authorized by the code official.

❖ This section establishes that work cannot progress beyond the point of a required inspection without the code official's approval. Upon making the inspection, the code official must either approve the completed work or notify the permit holder or other responsible party of that which does not comply with the code. Approvals and notices of noncompliance must be in writing, as required by Section 104.3, to avoid any misunderstanding as to what is required. Any item not approved cannot be concealed until it has been corrected and approved by the code official.

[A] 107.2.4 Approved inspection agencies. The code official is authorized to accept reports of *approved* agencies, provided that such agencies satisfy the requirements as to qualifications and reliability.

❖ As an alternative to conducting the inspection, the code official can accept inspections and reports by approved inspection agencies. Appropriate criteria on which to base approval of an inspection agency include competence, objectivity, certifications and experience.

[A] 107.2.5 Evaluation and follow-up inspection services. Prior to the approval of a prefabricated construction assembly having concealed work and the issuance of a permit, the code official shall require the submittal of an evaluation report on each prefabricated construction assembly, indicating the complete details of the installation, including a description of the system and its components, the basis upon which the system is being evaluated, test results and similar information and other data as necessary for the code official to determine conformance to this code.

❖ As an alternative to the physical inspection by the code official in the plant or location where prefabricated components are fabricated (such as modular homes and prefabricated structures), the code official has the option of accepting an evaluation report from an approved agency detailing such inspections. These evaluation reports can serve as the basis upon which the code official will determine code compliance.

[A] 107.2.5.1 Evaluation service. The code official shall designate the evaluation service of an *approved* agency as the evaluation agency, and review such agency's evaluation report for adequacy and conformance to this code.

❖ The code official must review all submitted reports for conformity to the applicable code requirements. If in the judgment of the code official the submitted reports are acceptable, the code official should document the basis for the approval.

[A] 107.2.5.2 Follow-up inspection. Except where ready *access* is provided to installations, appliances, service *equipment* and accessories for complete inspection at the site without disassembly or dismantling, the code official shall conduct the in-plant inspections as frequently as necessary to ensure conformance to the *approved* evaluation report or shall designate an independent, *approved* inspection agency to conduct such inspections. The inspection agency shall furnish the code official with the follow-up inspection manual and a report of inspections upon request, and the installation shall have an identifying label permanently affixed to the system indicating that factory inspections have been performed.

❖ The owner must provide special inspections of fabricated assemblies at the fabrication plant. The code official or an approved inspection agency must conduct periodic in-plant inspections to ensure conformance to the approved evaluation report described in Section 107.2.5. Such inspections are required if the fuel gas systems cannot be inspected completely at the job site.

[A] 107.2.5.3 Test and inspection records. Required test and inspection records shall be available to the code official

INTERNATIONAL CODE COUNCIL®
Copyright © 2015 ICC. ALL RIGHTS RESERVED. Accessed by David Dammon on Jun 21, 2017 12:30:52 PM pursuant to License Agreement with ICC. No further reproduction or distribution authorized. ANY UNAUTHORIZED REPRODUCTION OR DISTRIBUTION IS A VIOLATION OF THE FEDERAL COPYRIGHT ACT AND THE LICENSE AGREEMENT, AND SUBJECT TO CIVIL AND CRIMINAL PENALTIES THEREUNDER.

at all times during the fabrication of the installation and the erection of the building; or such records as the code official designates shall be filed.

❖ All testing and inspection records related to a fabricated assembly must be filed with the code official to maintain a complete and legal record of the assembly and erection of the building.

[A] 107.3 Testing. Installations shall be tested as required in this code and in accordance with Sections 107.3.1 through 107.3.3. Tests shall be made by the permit holder and observed by the code official.

❖ Testing of fuel gas systems is required where testing is specified in the technical chapters of the code. See Section 406 for specific requirements and methods of testing gas piping systems.

[A] 107.3.1 New, altered, extended or repaired installations. New installations and parts of existing installations, which have been altered, extended, renovated or repaired, shall be tested as prescribed herein to disclose leaks and defects.

❖ Testing is necessary to make sure that the system is free from leaks and other defects. To the extent specified in the technical chapters of the code, testing is also required for portions of existing systems that have been altered, extended, renovated or repaired.

[A] 107.3.2 Apparatus, instruments, material and labor for tests. Apparatus, instruments, material and labor required for testing an installation or part thereof shall be furnished by the permit holder.

❖ The permit holder is responsible for performing tests, as well as for supplying all of the labor and apparatus necessary to conduct the tests. The code official observes, but never performs, the test.

[A] 107.3.3 Reinspection and testing. Where any work or installation does not pass an initial test or inspection, the necessary corrections shall be made so as to achieve compliance with this code. The work or installation shall then be resubmitted to the code official for inspection and testing.

❖ If a system or portion of a system does not pass the initial test or inspection, violations must be corrected and the system must be reinspected.

[A] 107.4 Approval. After the prescribed tests and inspections indicate that the work complies in all respects with this code, a notice of approval shall be issued by the code official.

❖ After the code official has performed the required inspections and observed any required equipment and system tests (or has received written reports of the results of such tests), he or she must determine whether the installation or work is in compliance with all applicable sections of the code. The code official must issue a written notice of approval if the subject work or installation is in apparent compliance with the code. This notice is given to the permit holder, and a copy of the notice is retained on file by the code official.

[A] 107.4.1 Revocation. The code official is authorized to, in writing, suspend or revoke a notice of approval issued under the provisions of this code wherever the notice is issued in error, or on the basis of incorrect information supplied or where it is determined that the building or structure, premise, or portion thereof is in violation of any ordinance or regulation or any of the provisions of this code.

❖ The code official is authorized to, in writing, suspend or revoke a certificate of occupancy or completion issued under the provisions of the code wherever the certificate is issued in error, on the basis of incorrect information supplied, or where it is determined that the building or structure or portion thereof is in violation of any ordinance, regulation or any of the provisions of this code.

This section is needed to give the code official the authority to revoke a certificate of occupancy for the reasons indicated in the code text. The code official may also suspend the certificate of occupancy until all of the code violations are corrected.

[A] 107.5 Temporary connection. The code official shall have the authority to allow the temporary connection of an installation to the sources of energy for the purpose of testing the installation or for use under a temporary certificate of *occupancy*.

❖ Typical procedure for a local jurisdiction is to withhold the issuance of the certificate of occupancy until approvals have been received from each code official responsible for inspection of the structure. The code official is permitted to issue a temporary authorization to make connections to the public utility system prior to the completion of all work. The certification is intended to acknowledge that, because of seasonal limitations, time constraints or the need for testing or partial operation of equipment, some building systems may be connected even though the building is not suitable for final occupancy. The intent of this section is that a request for temporary occupancy or the connection and use of mechanical equipment or systems should be granted when the requesting permit holder has demonstrated to the code official's satisfaction that the public health, safety and welfare will not be endangered. The code official should view the issuance of a "temporary authorization or certificate of occupancy" as substantial an act as the issuance of the final certificate. Indeed, the issuance of a temporary certificate of occupancy offers a greater potential for conflict because once the building or structure is occupied, it is very difficult to remove the occupants through legal means.

[A] 107.6 Connection of service utilities. A person shall not make connections from a utility, source of energy, fuel or power to any building or system that is regulated by this code for which a permit is required until authorized by the code official.

❖ This section establishes the authority of the code official to approve utility connections to a building for items such as water, sewer, electricity, gas and

INTERNATIONAL CODE COUNCIL®
Copyright © 2015 ICC. ALL RIGHTS RESERVED. Accessed by David Dammon on Jun 21, 2017 12:30:52 PM pursuant to License Agreement with ICC. No further reproduction or distribution authorized. ANY UNAUTHORIZED REPRODUCTION OR DISTRIBUTION IS A VIOLATION OF THE FEDERAL COPYRIGHT ACT AND THE LICENSE AGREEMENT, AND SUBJECT TO CIVIL AND CRIMINAL PENALTIES THEREUNDER.

steam, and to require their disconnection when hazardous conditions or emergencies exist.

The approval of the code official is required before a connection can be made from a utility to a building system that is regulated by the code. This includes utilities supplying water, sewer, electricity, gas and steam services. For the protection of building occupants, including workers, such systems must have had final inspection approvals, except as allowed by Section 110.3 for temporary connections.

SECTION 108 (IFGC) VIOLATIONS

[A] 108.1 Unlawful acts. It shall be unlawful for a person, firm or corporation to erect, construct, alter, repair, remove, demolish or utilize an installation, or cause same to be done, in conflict with or in violation of any of the provisions of this code.

❖ Violations of the code are unlawful. This is the basis for all citations and correction notices related to violations of the code.

[A] 108.2 Notice of violation. The code official shall serve a notice of violation or order to the person responsible for the erection, installation, *alteration*, extension, repair, removal or demolition of work in violation of the provisions of this code, or in violation of a detail statement or the *approved construction documents* thereunder, or in violation of a permit or certificate issued under the provisions of this code. Such order shall direct the discontinuance of the illegal action or condition and the abatement of the violation.

❖ The code official must notify the person responsible for the erection or use of a building found to be in violation of the code. The section that is allegedly being violated must be cited so that the responsible party can respond to the notice.

[A] 108.3 Prosecution of violation. If the notice of violation is not complied with promptly, the code official shall request the legal counsel of the jurisdiction to institute the appropriate proceeding at law or in equity to restrain, correct or abate such violation, or to require the removal or termination of the unlawful *occupancy* of the structure in violation of the provisions of this code or of the order or direction made pursuant thereto.

❖ The code official must pursue legal means to correct the violation through the use of legal counsel of the jurisdiction. This is not optional.

[A] 108.4 Violation penalties. Persons who shall violate a provision of this code, fail to comply with any of the requirements thereof or erect, install, alter or repair work in violation of the *approved construction documents* or directive of the code official, or of a permit or certificate issued under the provisions of this code, shall be guilty of a **[SPECIFY OFFENSE]**, punishable by a fine of not more than **[AMOUNT]** dollars or by imprisonment not exceeding **[NUMBER OF DAYS]**, or both such fine and imprisonment. Each day that a violation continues after due notice has been served shall be deemed a separate offense.

❖ This section prescribes a standard fine or other penalty as deemed appropriate by the jurisdiction. Additionally, this section identifies a principle that "each day that a violation continues . . . shall be deemed a separate offense" for the purpose of applying the prescribed penalty to facilitate prompt resolution.

[A] 108.5 Stop work orders. Upon notice from the code official that work is being performed contrary to the provisions of this code or in a dangerous or unsafe manner, such work shall immediately cease. Such notice shall be in writing and shall be given to the owner of the property, the owner's authorized agent, or the person doing the work. The notice shall state the conditions under which work is authorized to resume. Where an emergency exists, the code official shall not be required to give a written notice prior to stopping the work. Any person who shall continue any work on the system after having been served with a stop work order, except such work as that person is directed to perform to remove a violation or unsafe condition, shall be liable for a fine of not less than **[AMOUNT]** dollars or more than **[AMOUNT]** dollars.

❖ Upon receipt of a violation notice from the code official, the builders must immediately cease construction activities identified in the notice, except as expressly permitted to correct the violation. A stop work order can result in inconvenience and monetary loss to the affected parties; therefore, justification must be evident and judgment must be exercised before a stop work order is issued. A stop work order can prevent a violation from becoming worse and more difficult or expensive to correct.

A stop work order may be issued where work is proceeding without a permit to perform the work. Hazardous conditions could develop when the code official is unaware of the nature of the work and a permit for the work has not been issued.

The issuance of a stop work order on a fuel gas system may result from work done by the contractor that affects a building component that is not fuel-gas related. For example, if a contractor cuts a structural element to install piping, the structure may be weakened enough to cause a partial or complete structural failure. As determined by the adopting jurisdiction, a penalty may be assessed for failure to comply with this section, and the dollar amount is to be inserted in the blanks shown.

[A] 108.6 Abatement of violation. The imposition of the penalties herein prescribed shall not preclude the legal officer of the jurisdiction from instituting appropriate action to prevent unlawful construction, restrain, correct or abate a violation, prevent illegal occupancy of a building, structure or premises, or stop an illegal act, conduct, business or utilization of the installations on or about any premises.

❖ Despite the assessment of a penalty in the form of a fine or imprisonment against a violator, the violation itself must still be corrected. Failure to make the nec-

INTERNATIONAL CODE COUNCIL®
Copyright © 2015 ICC. ALL RIGHTS RESERVED. Accessed by David Dammon on Jun 21, 2017 12:30:52 PM pursuant to License Agreement with ICC. No further reproduction or distribution authorized. ANY UNAUTHORIZED REPRODUCTION OR DISTRIBUTION IS A VIOLATION OF THE FEDERAL COPYRIGHT ACT AND THE LICENSE AGREEMENT, AND SUBJECT TO CIVIL AND CRIMINAL PENALTIES THEREUNDER.

essary corrections will result in the violator being subject to additional penalties as described in the preceding section.

[A] 108.7 Unsafe installations. An installation that is unsafe, constitutes a fire or health hazard, or is otherwise dangerous to human life, as regulated by this code, is hereby declared an unsafe installation. Use of an installation regulated by this code constituting a hazard to health, safety or welfare by reason of inadequate maintenance, dilapidation, fire hazard, disaster, damage or abandonment is hereby declared an unsafe use. Such unsafe installations are hereby declared to be a public nuisance and shall be abated by repair, rehabilitation, demolition or removal.

❖ In the course of performing duties, the code official may identify a hazardous condition that must be declared in violation of the code and, therefore, must be abated.

[A] 108.7.1 Authority to condemn installations. Whenever the code official determines that any installation, or portion thereof, regulated by this code has become hazardous to life, health or property, he or she shall order in writing that such installations either be removed or restored to a safe condition. A time limit for compliance with such order shall be specified in the written notice. A person shall not use or maintain a defective installation after receiving such notice.

Where such installation is to be disconnected, written notice as prescribed in Section 108.2 shall be given. In cases of immediate danger to life or property, such disconnection shall be made immediately without such notice.

❖ When a system is determined to be unsafe, the code official must notify the owner or the agent of the building as the first step in correcting the difficulty. The notice is to describe the repairs and improvements necessary to correct the deficiency or require removal or replacement of the unsafe equipment or system. Such notices must specify a time frame in which the corrective actions must occur. Additionally, the notice should require the immediate response of the owner or the agent. If the owner or the agent is not available, public notice of the declaration should suffice for complying with this section. The code official may also determine that disconnecting the system is necessary to correct an unsafe condition and must give written notice to that effect (see commentary, Section 108.2), unless immediate disconnection is essential for public health and safety reasons (see commentary, Section 108.7.2).

[A] 108.7.2 Authority to disconnect service utilities. The code official shall have the authority to require disconnection of utility service to the building, structure or system regulated by the technical codes in case of emergency where necessary to eliminate an immediate hazard to life or property. The code official shall notify the serving utility and, where possible, the owner or the owner's authorized agent and occupant of the building, structure or service system of the decision to disconnect prior to taking such action. If not notified prior to disconnection, the owner or occupant of the building, structure or service system shall be notified in writing, as soon as practicable thereafter.

❖ Disconnecting the utility service is the most radical method of hazard abatement available to the code official and should be reserved for cases in which all other lesser remedies have proven ineffective. Such an action must be preceded by written notice to the owner and any occupants of the building being ordered to disconnect. Disconnection must be accomplished within the time frame established by the code official in the written notification to disconnect. When the hazard to the public health and welfare is so imminent as to mandate immediate disconnection, the code official has the authority and even the obligation to cause disconnection without notice.

[A] 108.7.3 Connection after order to disconnect. A person shall not make energy source connections to installations regulated by this code which have been disconnected or ordered to be disconnected by the code official, or the use of which has been ordered to be discontinued by the code official until the code official authorizes the reconnection and use of such installations.

Where an installation is maintained in violation of this code, and in violation of a notice issued pursuant to the provisions of this section, the code official shall institute appropriate action to prevent, restrain, correct or abate the violation.

❖ When any fuel gas system is maintained in violation of the code and in violation of any notice issued pursuant to the provisions of this section, the code official is to institute appropriate action to prevent, restrain, correct or abate the violation.

Once the reason for discontinuation of use or disconnection of the fuel gas system no longer exists, only the code official may authorize resumption of use or reconnection of the system after it is demonstrated to the code official's satisfaction that all repairs or other work are in compliance with applicable sections of the code. This section also requires the code official to take action to abate code violations (see commentary, Section 108.2).

SECTION 109 (IFGC)
MEANS OF APPEAL

[A] 109.1 Application for appeal. A person shall have the right to appeal a decision of the code official to the board of appeals. An application for appeal shall be based on a claim that the true intent of this code or the rules legally adopted thereunder have been incorrectly interpreted, the provisions of this code do not fully apply or an equally good or better form of construction is proposed. The application shall be filed on a form obtained from the code official within 20 days after the notice was served.

❖ This section holds that any aggrieved party with a material interest in the decision of the code official may appeal that decision before a board of appeals.

INTERNATIONAL CODE COUNCIL®
Copyright © 2015 ICC. ALL RIGHTS RESERVED. Accessed by David Dammon on Jun 21, 2017 12:30:52 PM pursuant to License Agreement with ICC. No further reproduction or distribution authorized. ANY UNAUTHORIZED REPRODUCTION OR DISTRIBUTION IS A VIOLATION OF THE FEDERAL COPYRIGHT ACT AND THE LICENSE AGREEMENT, AND SUBJECT TO CIVIL AND CRIMINAL PENALTIES THEREUNDER.

This provides a forum other than the court of jurisdiction in which to review the code official's actions.

This section allows any person to appeal a decision of the code official. In practice, this section has been interpreted to permit appeals only by those aggrieved parties with a material or definitive interest in the decision of the code official. An aggrieved party may not appeal a code requirement per se. The intent of the appeal process is not to waive or set aside a code requirement; rather, it is intended to provide a means of reviewing a code official's decision on an interpretation or application of the code or to review the equivalency of protection to the code requirements.

[A] 109.2 Membership of board. The board of appeals shall consist of five members appointed by the chief appointing authority as follows: one for 5 years; one for 4 years; one for 3 years; one for 2 years and one for 1 year. Thereafter, each new member shall serve for 5 years or until a successor has been appointed.

❖ The board of appeals is to consist of five members appointed on a rotating basis by the "chief appointing authority"—typically, the mayor or city manager. This method of appointment allows for a smooth transition of board of appeals members, thus ensuring continuity of action over the years.

[A] 109.2.1 Qualifications. The board of appeals shall consist of five individuals, one from each of the following professions or disciplines.

1. Registered design professional who is a registered architect; or a builder or superintendent of building construction with not less than 10 years' experience, 5 of which shall have been in responsible charge of work.
2. Registered design professional with structural engineering or architectural experience.
3. Registered design professional with fuel gas and plumbing engineering experience; or a fuel gas contractor with not less than 10 years' experience, 5 of which shall have been in responsible charge of work.
4. Registered design professional with electrical engineering experience; or an electrical contractor with not less than 10 years' experience, 5 of which shall have been in responsible charge of work.
5. Registered design professional with fire protection engineering experience; or a fire protection contractor with not less than 10 years' experience, 5 of which shall have been in responsible charge of work.

❖ The board of appeals consists of five persons with the qualifications and experience indicated in this section. One must be a registered design professional (see Item 2) with structural or architectural experience. The others must be registered design professionals, construction superintendents or contractors with experience in the various areas of building construction. These requirements are important in that technical people rule on technical matters. The board of appeals is not the place for policy or political deliberations. The intent is that these matters be decided purely on their technical merits with the appropriate regard for state-of-the-art construction technology.

[A] 109.2.2 Alternate members. The chief appointing authority shall appoint two alternate members who shall be called by the board chairman to hear appeals during the absence or disqualification of a member. Alternate members shall possess the qualifications required for board membership and shall be appointed for 5 years, or until a successor has been appointed.

❖ This section authorizes the chief appointing authority to appoint two alternate members who are to be available if the principal members of the board are absent or disqualified. Alternate members must possess the same qualifications as the principal members and are appointed for a term of 5 years, or until such time that a successor is appointed.

[A] 109.2.3 Chairman. The board shall annually select one of its members to serve as chairman.

❖ It is customary to determine chairmanship annually so that a regular opportunity is available to evaluate and either reappoint the current chairman or appoint a new one.

[A] 109.2.4 Disqualification of member. A member shall not hear an appeal in which that member has a personal, professional or financial interest.

❖ Members must not participate in the hearing of any appeal in which they have a personal, professional or financial interest.

[A] 109.2.5 Secretary. The chief administrative officer shall designate a qualified clerk to serve as secretary to the board. The secretary shall file a detailed record of all proceedings in the office of the chief administrative officer.

❖ The chief administrative officer is to designate a qualified clerk to serve as secretary to the board. The secretary is required to file a detailed record of all proceedings in the office of the chief administrative officer.

[A] 109.2.6 Compensation of members. Compensation of members shall be determined by law.

❖ Members of the board of appeals need not be compensated unless required by the local municipality or jurisdiction.

[A] 109.3 Notice of meeting. The board shall meet upon notice from the chairman, within 10 days of the filing of an appeal, or at stated periodic meetings.

❖ The board must meet within 10 days of the filing of an appeal or at regularly scheduled meetings.

[A] 109.4 Open hearing. Hearings before the board shall be open to the public. The appellant, the appellant's representative, the code official and any person whose interests are affected shall be given an opportunity to be heard.

❖ Hearings before the board must be open to the public. The person who filed the appeal, his or her representative, the code official and any person whose interests are affected must be heard.

INTERNATIONAL CODE COUNCIL®
Copyright © 2015 ICC. ALL RIGHTS RESERVED. Accessed by David Dammon on Jun 21, 2017 12:30:52 PM pursuant to License Agreement with ICC. No further reproduction or distribution authorized. ANY UNAUTHORIZED REPRODUCTION OR DISTRIBUTION IS A VIOLATION OF THE FEDERAL COPYRIGHT ACT AND THE LICENSE AGREEMENT, AND SUBJECT TO CIVIL AND CRIMINAL PENALTIES THEREUNDER.

[A] 109.4.1 Procedure. The board shall adopt and make available to the public through the secretary procedures under which a hearing will be conducted. The procedures shall not require compliance with strict rules of evidence, but shall mandate that only relevant information be received.

❖ The board is required to establish and make available to the public written procedures detailing how hearings are to be conducted. Additionally, this section provides that although strict rules of evidence are not applicable, the information presented must be deemed relevant.

[A] 109.5 Postponed hearing. When five members are not present to hear an appeal, either the appellant or the appellant's representative shall have the right to request a postponement of the hearing.

❖ When all five members of the board are not present, either the person making the appeal or his or her representative may request a postponement of the hearing.

[A] 109.6 Board decision. The board shall modify or reverse the decision of the code official by a concurring vote of three members.

❖ A concurring vote of three members of the board is needed to modify or reverse the decision of the code official.

[A] 109.6.1 Resolution. The decision of the board shall be by resolution. Certified copies shall be furnished to the appellant and to the code official.

❖ A formal decision in the form of a resolution is required to provide an official record. Copies of this resolution are to be furnished to both the person making the appeal and the code official. The code official is bound by the action of the board of appeals, unless it is the opinion of the code official that the board of appeals has acted improperly. In such cases, relief through the court having jurisdiction may be sought by corporate council.

[A] 109.6.2 Administration. The code official shall take immediate action in accordance with the decision of the board.

❖ To avoid any unnecessary delay in the progress of construction, the code official is required to act quickly on the board's decision. This action may be to enforce the decision or to seek legislative relief if the board's action can be demonstrated to be inappropriate.

[A] 109.7 Court review. Any person, whether or not a previous party to the appeal, shall have the right to apply to the appropriate court for a writ of certiorari to correct errors of law. Application for review shall be made in the manner and time required by law following the filing of the decision in the office of the chief administrative officer.

❖ This section allows any person to request a review by the court of jurisdiction if that person believes errors of law have occurred. Review must be applied for after the decision of the board is filed with the chief administrative officer. This helps to establish the observance of due process for all concerned.

SECTION 110 (IFGC)
TEMPORARY EQUIPMENT, SYSTEMS AND USES

[A] 110.1 General. The code official is authorized to issue a permit for temporary *equipment*, systems and uses. Such permits shall be limited as to time of service, but shall not be permitted for more than 180 days. The code official is authorized to grant extensions for demonstrated cause.

❖ In the course of construction or other activities, equipment or systems are sometimes needed or desired for a short time. This section contains the administrative provisions that permit such temporary equipment, systems, or uses without full compliance with the code requirements for permanently installed systems.

This section allows the code official to issue permits for temporary equipment, systems or uses. The applicant must specify the time period desired for the temporary equipment, system, or use, but the approval period cannot exceed 180 days. Equipment, systems, or uses that are temporary but are anticipated to be in existence for more than 180 days are required to conform to code requirements for permanent systems and uses. The section also authorizes the code official to grant extensions to this time period if the applicant can provide a valid reason for the extension, which typically includes circumstances beyond the applicant's control. This provision is not intended to be used to circumvent the 180-day limitation.

[A] 110.2 Conformance. Temporary *equipment*, systems and uses shall conform to the structural strength, fire safety, means of egress, accessibility, light, ventilation and sanitary requirements of this code as necessary to ensure the public health, safety and general welfare.

❖ This section prescribes those categories of the code requirements that must be complied with, despite the fact that the system will be removed or the use discontinued some time in the near future. These criteria are essential for measuring the safety of any system or use, temporary or permanent; therefore, the application of these criteria to a temporary system cannot be waived.

"Structural strength" refers to the ability of the temporary structure to resist anticipated live, environmental and dead loads (see Chapter 16 of the IBC). It also applies to anticipated live and dead loads imposed by a temporary equipment, system or use on the structure.

"Fire safety" provisions are those required by Chapters 7, 8 and 9 of the IBC or by provisions in the IMC and this code invoked by virtue of the type of temporary system or use, and the potential for increased fire risk.

"Means of egress" refers to full compliance with Chapter 10 of the IMC.

INTERNATIONAL CODE COUNCIL®
Copyright © 2015 ICC. ALL RIGHTS RESERVED. Accessed by David Dammon on Jun 21, 2017 12:30:52 PM pursuant to License Agreement with ICC. No further reproduction or distribution authorized. ANY UNAUTHORIZED REPRODUCTION OR DISTRIBUTION IS A VIOLATION OF THE FEDERAL COPYRIGHT ACT AND THE LICENSE AGREEMENT, AND SUBJECT TO CIVIL AND CRIMINAL PENALTIES THEREUNDER.

"Accessibility" refers to full compliance with Chapter 11 of the IBC for making buildings accessible to physically disabled persons.

"Light, ventilation and sanitary" requirements are those imposed by Chapter 12 of the code or applicable sections of the *International Plumbing Code*® (IPC®) or IMC.

[A] 110.3 Temporary utilities. The code official is authorized to give permission to temporarily supply utilities before an installation has been fully completed and the final certificate of completion has been issued. The part covered by the temporary certificate shall comply with the requirements specified for temporary lighting, heat or power in the code.

❖ Commonly, heating appliances/equipment are installed and operated during construction of a building. This section allows the code official to grant permission for fuel and power supplies to be connected to the building on a temporary basis.

[A] 110.4 Termination of approval. The code official is authorized to terminate such permit for a temporary structure or use and to order the temporary structure or use to be discontinued.

❖ This section provides the code official with the necessary authority to terminate the permit for temporary equipment, systems or uses. The code official can order that temporary equipment or systems be removed or temporary uses be discontinued if conditions of the permit have been violated or the structure or use poses an imminent hazard to the public. This text is important because it allows the code official to act quickly when time is of the essence in order to protect public health, safety and welfare.

INTERNATIONAL CODE COUNCIL®

Copyright © 2015 ICC. ALL RIGHTS RESERVED. Accessed by David Dammon on Jun 21, 2017 12:30:52 PM pursuant to License Agreement with ICC. No further reproduction or distribution authorized. ANY UNAUTHORIZED REPRODUCTION OR DISTRIBUTION IS A VIOLATION OF THE FEDERAL COPYRIGHT ACT AND THE LICENSE AGREEMENT, AND SUBJECT TO CIVIL AND CRIMINAL PENALTIES THEREUNDER.

Chapter 2: Definitions

General Comments

The words or terms defined in this chapter are deemed to be of prime importance in either specifying the subject matter of code provisions or in giving meaning to certain terms used throughout the code for administration or enforcement. The user of the code should be familiar with the terms found in this chapter, because the definitions are essential to the correct interpretation of the code and because the user might not be aware that a particular term found in the text is defined.

Purpose

Codes, by their very nature, are technical documents. Every word, term and punctuation mark can alter a sentence's meaning and, if misused, muddy its intent.

Further, the code, with its broad scope of applicability, includes terms used in a variety of construction disciplines. These terms can often have multiple meanings depending on the context or discipline being used at the time.

For these reasons, a consensus must be reached on the specific meaning of terms contained in the code. Chapter 2 performs this function by stating clearly what specific terms mean for the purpose of the code.

SECTION 201 (IFGC) GENERAL

201.1 Scope. Unless otherwise expressly stated, the following words and terms shall, for the purposes of this code and standard, have the meanings indicated in this chapter.

❖ In the application of the code, the terms used have the meanings given in Section 202.

201.2 Interchangeability. Words used in the present tense include the future; words in the masculine gender include the feminine and neuter; the singular number includes the plural and the plural, the singular.

❖ Although the definitions contained in Section 202 are to be taken literally, gender and tense are considered to be interchangeable; thus, any grammatical inconsistencies within the code text will not hinder the understanding or enforcement of the requirements.

201.3 Terms defined in other codes. Where terms are not defined in this code and are defined in the *International Building Code*, *International Fire Code*, *International Mechanical Code* or *International Plumbing Code*, such terms shall have meanings ascribed to them as in those codes.

❖ When a word or term appears in the code that is not defined in this chapter, other references may be used to find its definition. These include the *International Building Code*® (IBC®), the *International Fire Code*® (IFC®), the *International Mechanical Code*® (IMC®) and the *International Plumbing Code*® (IPC®). These codes contain additional definitions (some parallel and duplicative) that may be used in the enforcement of the code or in the enforcement of the other codes by reference.

201.4 Terms not defined. Where terms are not defined through the methods authorized by this section, such terms shall have ordinarily accepted meanings such as the context implies.

❖ Another resource for defining words or terms not defined in this chapter or in other codes is their "ordinarily accepted meanings." The intent of this statement is to indicate that a dictionary definition may suffice if the definition is in the proper context.

Construction terms used throughout the code might not be defined in Chapter 2 or in a dictionary. In such cases, one would first turn to the definitions contained in the referenced standards (see Chapter 8) and then to textbooks on the subject in question.

SECTION 202 (IFGC) GENERAL DEFINITIONS

❖ This section contains definitions of terms that are associated with the subject matter of the code. Definitions of terms are necessary for the understanding and application of the code requirements. The meaning of a term as used in the code might be different than an ordinarily understood meaning of that term. Some terms are unique to the code. A code provision could be misinterpreted if the definition of a term, as used in the context of the code, is not understood.

[M] ACCESS (TO). That which enables a device, *appliance* or *equipment* to be reached by ready *access* or by a means

INTERNATIONAL CODE COUNCIL®
Copyright © 2015 ICC. ALL RIGHTS RESERVED. Accessed by David Dammon on Jun 21, 2017 12:30:52 PM pursuant to License Agreement with ICC. No further reproduction or distribution authorized. ANY UNAUTHORIZED REPRODUCTION OR DISTRIBUTION IS A VIOLATION OF THE FEDERAL COPYRIGHT ACT AND THE LICENSE AGREEMENT, AND SUBJECT TO CIVIL AND CRIMINAL PENALTIES THEREUNDER.

that first requires the removal or movement of a panel, door or similar obstruction (see also "Ready *access*").

❖ Access to equipment means that the equipment can be physically reached without someone having to remove a permanent portion of the structure. Access to equipment and appliances is necessary to facilitate inspection, observation, maintenance, adjustment, repair or replacement. It is acceptable, for example, to install equipment in an interstitial space that would require removal of lay-in suspended ceiling panels to gain access. Equipment would not be considered as being provided with access if it were necessary to remove or open any portion of a structure other than panels, doors, covers or similar obstructions intended to be removed or opened [also see the definition of "Ready access (to)"].

Access can be described as the capability of being reached or approached for the purpose of inspection, observation, maintenance, adjustment, repair or replacement. Achieving access may first require the removal or opening of a panel, door or similar obstruction and may require overcoming an obstacle such as elevation.

AIR CONDITIONER, GAS-FIRED. A gas-burning, automatically operated *appliance* for supplying cooled or dehumidified air or chilled liquid.

❖ Gas-fired air conditioners are not specifically referred to in the code, but would include systems fueled with natural or propane gas including absorption-type units and reciprocating units powered by internal combustion engines.

[M] AIR CONDITIONING. The treatment of air so as to control simultaneously the temperature, humidity, cleanness and distribution of the air to meet the requirements of a conditioned space.

❖ Air conditioning is commonly referred to only in the context of cooling and dehumidifying air; however, the definition also indicates a much broader scope. In essence, the process of supplying ventilation air to a space constitutes air conditioning because the introduction of any ventilation air is an attempt to control the indoor environment.

[M] AIR, EXHAUST. Air being removed from any space or piece of *equipment* or *appliance* and conveyed directly to the atmosphere by means of openings or ducts.

❖ Exhaust air may be from a space, an appliance or a piece of equipment. Exhaust air systems are terminated outside of the building, in some cases after the exhaust air has been treated to remove any harmful emissions. Exhaust air is not recirculated.

[M] AIR-HANDLING UNIT. A blower or fan used for the purpose of distributing supply air to a room, space or area.

❖ In addition to blowers, air-handling units may contain heat exchangers, filters and means to control air volume.

[M] AIR, MAKEUP. Any combination of outdoor and transfer air intended to replace exhaust air and exfiltration.

❖ Makeup air is not to be confused with combustion air. Makeup air replaces the air being exhausted through such systems as bathroom and toilet exhausts, kitchen exhaust hoods and clothes dryer exhaust systems. Refer to Section 614.5 for specific requirements for makeup air. Exhaust systems cannot function at design capacity without adequate volumes of makeup air to replace the air being exhausted.

[A] ALTERATION. A change in a system that involves an extension, addition or change to the arrangement, type or purpose of the original installation.

❖ An alteration is any modification or change made to an existing installation. For example, increasing the size of piping for a portion of the system to accommodate different appliances would be an alteration.

ANODELESS RISER. A transition assembly in which plastic *piping* is installed and terminated above ground outside of a building.

❖ As the name implies, these riser assemblies protect the steel riser from corrosion by means other than cathodic protection that involves a sacrificial anode. Some anodeless risers allow the termination of plastic piping aboveground by encasing the piping in a steel conduit equipped with a plastic-to-steel transition fitting [see Commentary Figure 202(1)].

[M] APPLIANCE. Any apparatus or device that utilizes a fuel or raw material to produce light, heat, power, refrigeration or air conditioning.

❖ An appliance is a manufactured component or assembly of components that converts one source of energy into a different form of energy to serve a specific purpose. The term "appliance" generally refers to residential- and commercial-type utilization equipment that is manufactured in standardized sizes or types. The term "appliance" is generally not associated with industrial-type equipment. For the application of the code provisions, the terms "appliance" and "equipment" are not interchangeable.

Examples of appliances regulated by the code include furnaces; boilers; water heaters; room heaters; decorative gas log sets; cooking appliances; clothes dryers; pool, spa and hot tub heaters; unit heaters; ovens and similar gas-fired appliances (see the definition of "Equipment"). Note that the definition intends to state that a fuel can be used as a raw material to produce energy rather than the apparent statement that an appliance utilizes raw materials that are not fuels. For example, a fuel cell system could use natural gas as a raw material for the production of hydrogen for use in the fuel cell. The definition was revised to recognize that in a few instances in the code, the term "appliance" is used to describe appliances that are fueled by other than gaseous fuels, whereas generally, the term describes gas-fired appliances.

INTERNATIONAL CODE COUNCIL®
Copyright © 2015 ICC. ALL RIGHTS RESERVED. Accessed by David Dammon on Jun 21, 2017 12:30:52 PM pursuant to License Agreement with ICC. No further reproduction or distribution authorized. ANY UNAUTHORIZED REPRODUCTION OR DISTRIBUTION IS A VIOLATION OF THE FEDERAL COPYRIGHT ACT AND THE LICENSE AGREEMENT, AND SUBJECT TO CIVIL AND CRIMINAL PENALTIES THEREUNDER.



Figure 202(1)
ANODELESS RISERS
(Photo courtesy of Perfection Corporation)

APPLIANCE, AUTOMATICALLY CONTROLLED. Appliances equipped with an automatic burner ignition and safety shutoff device and other automatic devices which accomplish complete turn-on and shutoff of the gas to the main burner or burners, and graduate the gas supply to the burner or burners, but do not affect complete shutoff of the gas.

❖ With respect to the code, an automatically controlled appliance is an appliance that is cycled through its operation by controls, such as thermostats, pressure switches and timers, without manual intervention. A residential water heater is automatically controlled: a four-burner cooktop is not.

APPLIANCE, FAN-ASSISTED COMBUSTION. An *appliance* equipped with an integral mechanical means to either draw or force products of combustion through the combustion chamber or heat exchanger.

❖ Fan-assisted appliances are a specific type of Category I appliance, typically furnaces and boilers. They are not to be confused with Category II, III or IV appliances; power-vented appliances; or appliances served by exhausters. As the name implies, these appliances use a fan (blower) to "assist" the combustion process by helping the flue gases to overcome the internal flow resistance of the appliance heat exchanger. Some fan-assisted appliances are field-convertible to Category III appliances.

APPLIANCE TYPE.

Low-heat appliance (residential appliance). Any *appliance* in which the products of combustion at the point of entrance to the flue under normal operating conditions have a temperature of 1,000°F (538°C) or less.

❖ Residential appliances, including solid-fuel appliances, are in this category.

Medium-heat appliance. Any *appliance* in which the products of combustion at the point of entrance to the flue under normal operating conditions have a temperature of more than 1,000°F (538°C), but not greater than 2,000°F (1093°C).

❖ This classification includes industrial-type equipment such as furnaces, kilns, ovens, dryers and incinerators.

APPLIANCE, UNVENTED. An *appliance* designed or installed in such a manner that the products of combustion are not conveyed by a vent or chimney directly to the outside atmosphere.

❖ Direct-fired makeup air heaters, gas-fired infrared radiant unit heaters, gas-fired cooking equipment and small gas-fired room heaters are examples of appliances that are sometimes unvented. With the exception of direct-fired equipment, the appliances listed herein can also be of the vented type, depending on the design and type of appliance and the particular application. Unvented appliances must be designed, installed and operated to avoid both the depletion of the oxygen supply and the accumulation of toxic combustion byproducts (see Sections 501.8, 621 and 630).

[M] APPLIANCE, VENTED. An *appliance* designed and installed in such a manner that all of the products of combustion are conveyed directly from the *appliance* to the outdoor atmosphere through an *approved* chimney or vent system.

❖ Most fuel-fired appliances are designed to vent the products of combustion to the outdoors through one or more specific types of vent or chimney (see Section 501.2).

[A] APPROVED. Acceptable to the code official.

❖ As related to the process of acceptance of fuel gas-related installations, including materials, equipment

INTERNATIONAL CODE COUNCIL®
Copyright © 2015 ICC. ALL RIGHTS RESERVED. Accessed by David Dammon on Jun 21, 2017 12:30:52 PM pursuant to License Agreement with ICC. No further reproduction or distribution authorized. ANY UNAUTHORIZED REPRODUCTION OR DISTRIBUTION IS A VIOLATION OF THE FEDERAL COPYRIGHT ACT AND THE LICENSE AGREEMENT, AND SUBJECT TO CIVIL AND CRIMINAL PENALTIES THEREUNDER.

and construction systems, this definition identifies where ultimate authority rests. Whenever this term is used, it means that only the enforcing authority can accept a specific installation or component as complying with the code. Research reports prepared and published by the International Code Council® (ICC®) may be used by code officials to aid in their review and approval of the material or method described in the report. Publishing a report does not indicate automatic "approval" for the material or method described in the report. When the code states that an item or method "shall be approved," it does not mean that the code official is obligated to allow or accept it. Rather, it means that the code official must determine whether the item or method is acceptable; that is, the code official must make the decision to allow or disallow; accept or reject.

[A] APPROVED AGENCY. An established and recognized agency that is regularly engaged in conducting tests or furnishing inspection services, where such agency has been approved by the *code official*.

❖ The word "approved" means as approved by the code official. The basis for approval of an agency for a particular activity may include the capacity and capability of the agency to perform the work in accordance with Sections 301.4 through 301.4.2.3.

ATMOSPHERIC PRESSURE. The pressure of the weight of air and water vapor on the surface of the earth, approximately 14.7 pounds per square inch (psi) (101 kPa absolute) at sea level.

❖ This is the "standard" atmospheric pressure at sea level. The actual atmospheric pressure varies with climate conditions. Barometric pressure is a measure of the actual atmospheric pressure, usually given as inches of mercury. One standard atmosphere (14.7 psi) is equal to 29.9 inches of mercury (101.4 kPa) at 32°F (0°C). Absolute pressure includes atmospheric pressure. Gauge pressure is the pressure above atmospheric pressure. If not otherwise defined, stated pressure is the pressure above atmospheric pressure (gauge pressure). A vacuum (partial or complete) is a pressure below atmospheric pressure.

AUTOMATIC IGNITION. Ignition of gas at the burner(s) when the gas controlling device is turned on, including reignition if the flames on the burner(s) have been extinguished by means other than by the closing of the gas controlling device.

❖ As opposed to manual ignition, automatic ignition is accomplished by pilot burners, spark ignitors, hot surface ignitors and similar means.

BAFFLE. An object placed in an *appliance* to change the direction of or retard the flow of air, air-gas mixtures or flue gases.

❖ Baffles are used in gas-fired equipment to regulate the flow through the combustion chamber or flueways for various purposes, such as improving the mixing of fuel and air and affecting the speed and direction of flow of flue gases.

BAROMETRIC DRAFT REGULATOR. A balanced damper device attached to a chimney, vent connector, breeching or flue gas manifold to protect combustion appliances by controlling chimney draft. A double-acting barometric draft regulator is one whose balancing damper is free to move in either direction to protect combustion appliances from both excessive draft and backdraft.

❖ These units automatically open or close depending on the difference between the internal vent pressure and the atmospheric pressure. See the commentary for the definition of "Atmospheric pressure." Excessive negative pressure in the vent will cause excessive draft; therefore, the draft regulator will open as a result of the higher atmospheric pressure on the exterior of the damper, allowing air to enter the vent and thereby increase the internal vent pressure. With excessive positive internal vent pressure, a double-acting regulator will open to relieve the pressure, lowering the vent internal pressure [see Commentary Figure 202(2)].

BOILER, LOW-PRESSURE. A self-contained *appliance* for supplying steam or hot water.

❖ Low-pressure boilers operate at pressures less than or equal to 15 pounds per square inch (psi) (103 kPa) for steam and 160 psi (1103 kPa) for water. High-pressure boilers exceed those operating pressures.

Boilers are usually manufactured of steel, cast iron or copper and are used to transfer heat from the combustion of a fuel or from an electric-resistance element to water to make steam or pressurized hot water for heating or other process or power purposes.

Boilers are usually installed in closed systems where the heat transfer medium is recirculated and retained within the system.

Boilers must be labeled and installed in accordance with the manufacturer's instructions and the applicable sections of the code. Boilers are rated in

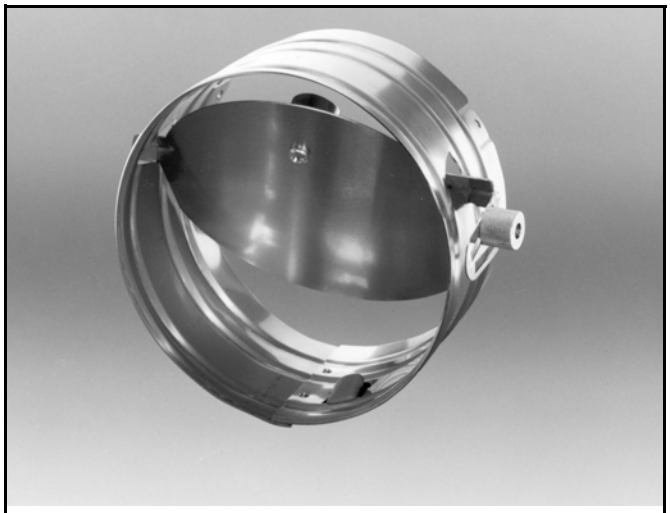

Figure 202(2)
BAROMETRIC DRAFT REGULATOR
(Photo courtesy of Tjernlund Products, Inc.)

INTERNATIONAL CODE COUNCIL®
Copyright © 2015 ICC. ALL RIGHTS RESERVED. Accessed by David Dammon on Jun 21, 2017 12:30:52 PM pursuant to License Agreement with ICC. No further reproduction or distribution authorized. ANY UNAUTHORIZED REPRODUCTION OR DISTRIBUTION IS A VIOLATION OF THE FEDERAL COPYRIGHT ACT AND THE LICENSE AGREEMENT, AND SUBJECT TO CIVIL AND CRIMINAL PENALTIES THEREUNDER.

accordance with standards published by the American Society of Mechanical Engineers (ASME), the Hydronics Institute, the Steel Boiler Institute (SBI), the Canadian Standards Association (CSA) and the American Boiler Manufacturers Association (ABMA). Boilers can be classified by working temperature, working pressure, type of fuel used (or electric boilers), materials of construction and whether or not the heat transfer medium changes phase from a liquid to a vapor [see Commentary Figure 202(3)].

Hot water heating boiler. A boiler in which no steam is generated, from which hot water is circulated for heating purposes and then returned to the boiler, and that operates at water pressures not exceeding 160 pounds per square inch gauge (psig) (1100 kPa gauge) and at water temperatures not exceeding 250°F (121°C) at or near the boiler *outlet*.

- Hot water heating boilers are normally part of a closed system in which the heated water is circulated through fan coils or radiators of various types, including convectors, finned tube units, radiant floor tubing systems and baseboard units.

Hot water supply boiler. A boiler, completely filled with water, which furnishes hot water to be used externally to itself, and that operates at water pressures not exceeding 160 psig (1100 kPa gauge) and at water temperatures not exceeding 250°F (121°C) at or near the boiler *outlet*.

- Hot water supply boilers are normally part of open systems in which the heated water is supplied and used externally to the boiler. Large domestic (potable) water heating systems often use hot water supply boilers.

WEIL-McLAIN
MODEL LGB SERIES 2 BOILER

TO DETERMINE BOILER SIZE, COUNT THE NUMBER OF SECTIONS OR MEASURE THE JACKET LENGTH. CHECK BOX NEXT TO BOILER SIZE INSTALLED.

MODEL NUMBER	NUMBER OF SECTIONS	JACKET LENGTH INCHES	MIN. RELIEF VALVE CAP. LBS/HR OR MBH	INPUT BTU/HR	MINIMUM INPUT BTU/HR	CSA GROSS OUTPUT BTU/HR	NET I=B=R OUTPUT		
							Steam Sq. Ft.	Steam MBH	Water MBH
☐ LGB-4	4	21	325	400,000	---	324,000	1013	243	282
☐ LGB-5	5	26	422	520,000	---	421,200	1317	316	366
☐ LGB-6	6	31	527	650,000	325,000	526,500	1646	395	458
☐ LGB-7	7	36	632	780,000	390,000	631,800	1975	474	549
☐ LGB-8	8	41	738	910,000	455,000	737,100	2304	553	641
☐ LGB-9	9	46	843	1,040,000	520,000	842,400	2633	632	733
☐ LGB-10	10	51	948	1,170,000	585,000	947,700	2965	711	824
☐ LGB-11	11	56	1053	1,300,000	650,000	1,053,000	3292	790	916
☐ LGB-12	12	61	1159	1,430,000	715,000	1,158,300	3621	869	1007
☐ LGB-13	13	66	1264	1,560,000	780,000	1,263,600	3954	949	1099
☐ LGB-14	14	71	1369	1,690,000	845,000	1,368,900	4313	1035	1190
☐ LGB-15	15	76	1475	1,820,000	910,000	1,474,200	4679	1123	1282
☐ LGB-16	16	81	1580	1,950,000	975,000	1,579,500	5046	1211	1373
☐ LGB-17	17	86	1685	2,080,000	1,040,000	1,684,800	5408	1298	1465
☐ LGB-18	18	91	1791	2,210,000	1,105,000	1,790,100	5775	1386	1557
☐ LGB-19	19	96	1896	2,340,000	1,170,000	1,895,400	6125	1470	1648
☐ LGB-20	20	101	2001	2,470,000	1,235,000	2,000,700	6471	1553	1740
☐ LGB-21	21	106	2106	2,600,000	1,300,000	2,106,000	6813	1635	1831
☐ LGB-22	22	111	2212	2,730,000	1,365,000	2,211,300	7155	1717	1923
☐ LGB-23	23	116	2317	2,860,000	1,430,000	2,316,600	7496	1799	2014

CERTIFIED BY
WEIL-McLAIN
523 S New Street
Eden, North Carolina
27288-3623

MAWP, WATER 50 PSI
MAWP, STEAM 15 PSI
MAX. WATER TEMP. 250°F

Electrical Input Less Than
12 Amperes, 120 Volts, & 60 Hertz.
Canadian Registration No. H7268.51234679T
MEA Number: 333-85-E
Design Certified Under ANSI Z21.13a 2005• CSA 4.9a 2005
Low Pressure Boiler

IMPORTANT
Installation not complete unless gas information label attached here.
Labels are attached to gas train in gas control carton.

- For installation on noncombustible flooring.
- Provide service clearances and minimum 24" between jacket and any combustible wall(s) and ceiling. Install in space large in comparison to size of boiler.
- Vent Category I.

550-223-880 (0606)

Figure 202(3)
LABEL FOR LOW-PRESSURE BOILER
(Figure courtesy of Weil-McLain)

INTERNATIONAL CODE COUNCIL®
Copyright © 2015 ICC. ALL RIGHTS RESERVED. Accessed by David Dammon on Jun 21, 2017 12:30:52 PM pursuant to License Agreement with ICC. No further reproduction or distribution authorized. ANY UNAUTHORIZED REPRODUCTION OR DISTRIBUTION IS A VIOLATION OF THE FEDERAL COPYRIGHT ACT AND THE LICENSE AGREEMENT, AND SUBJECT TO CIVIL AND CRIMINAL PENALTIES THEREUNDER.

Steam heating boiler. A boiler in which steam is generated and that operates at a steam pressure not exceeding 15 psig (100 kPa gauge).

❖ Steam heating boilers are normally part of a closed system in which low-pressure steam can be circulated through a variety of terminal units, including natural convection units, forced-convection units and radiant panel systems.

BONDING JUMPER. A conductor installed to electrically connect metallic gas *piping* to the grounding electrode system.

❖ This term is used in the subsections of Section 310.1.1 relative to the bonding of gas piping systems. It is a number 6 AWG or larger copper conductor or equivalent that is used to electrically bond gas piping to the grounding electrodes that are a part of the electrical service for the structure.

[M] BRAZING. A metal-joining process wherein coalescence is produced by the use of a nonferrous filler metal having a melting point above 1,000°F (538°C), but lower than that of the base metal being joined. The filler material is distributed between the closely fitted surfaces of the joint by capillary action.

❖ Brazing is the act of producing a brazed joint and is often referred to as silver soldering. Silver soldering is more accurately described as silver brazing and uses high-silver-bearing alloys primarily composed of silver, copper and zinc. Silver soldering (brazing) typically requires temperatures in excess of 1,000°F (538°C), and these solders are classified as "hard" solders.

Confusion has always existed concerning the distinction between "silver solder" and "silver-bearing solder." Silver solders are unique and can be further subdivided into soft and hard categories that are determined by the percentages of silver and the other component elements of the particular alloy. The distinction is that silver-bearing solders [melting point below 600°F (316°C)] are used in soft-soldered joints, and silver solders [melting point above 1,000°F (538°C)] are used in silver-brazed joints.

Brazed joints are considered to have superior strength and stress resistance and, because of the high melting point, are less likely to fail when exposed to fire.

Brazing with a filler metal conforming to AWS A5.8 produces a strong joint that will perform under extreme service conditions. The surfaces to be brazed must be cleaned to be free from oxides and impurities. Flux should be applied as soon as possible after the surfaces have been cleaned. Flux helps to remove residual traces of oxides, to promote wetting and to protect the surfaces from oxidation during heating. Care should be taken to prevent flux from entering the piping system during the brazing operation because flux that remains may corrode the pipe or contaminate the system.

Air and any other residual products should be removed from the pipe being brazed by purging the piping with a nonflammable gas such as carbon dioxide or nitrogen. Purging the system has several benefits, such as preventing oxidation from occurring on the inside of the pipe and preventing the creation of toxic gases that can result from the chemical breakdown of other products. Additionally, purging will eliminate the possibility of an explosion from any other flammable gas in the pipe that could ignite when mixed with air.

BROILER. A general term including salamanders, barbecues and other appliances cooking primarily by radiated heat, excepting toasters.

❖ The food being cooked can be above or below the gas flame and is usually placed on an open grill to allow draining away of grease from meat products.

BTU. Abbreviation for British thermal unit, which is the quantity of heat required to raise the temperature of 1 pound (454 g) of water 1°F (0.56°C) (1 Btu = 1055 J).

❖ Btu (J) is a unit of energy measurement. Fuel-fired appliances and equipment are rated based on their Btu/h (W) input or output.

BURNER. A device for the final conveyance of the gas, or a mixture of gas and air, to the combustion zone.

❖ There are several types of burners that vary in the method of providing combustion air and the pressures of fuel/air mixtures. Burner types include atmospheric ribbon, ported, porous ceramic, slotted and cone types and atmospheric or powered inshot and upshot gun burners.

Induced-draft. A burner that depends on draft induced by a fan that is an integral part of the *appliance* and is located downstream from the burner.

❖ See the commentary to the definition of "Draft/ mechanical or induced draft."

Power. A burner in which gas, air or both are supplied at pressures exceeding, for gas, the line pressure, and for air, atmospheric pressure, with this added pressure being applied at the burner.

❖ Power burners are typically used on very large nonresidential-type appliances and use a blower to introduce combustion air under pressure and mix it with the fuel.

[M] CHIMNEY. A primarily vertical structure containing one or more flues, for the purpose of carrying gaseous products of combustion and air from an *appliance* to the outside atmosphere.

❖ Chimneys differ from vents in their materials of construction and the type of appliance they are designed to serve. Chimneys are capable of venting much higher temperature flue gases than vents [see Commentary Figure 202(4)].

INTERNATIONAL CODE COUNCIL®
Copyright © 2015 ICC. ALL RIGHTS RESERVED. Accessed by David Dammon on Jun 21, 2017 12:30:52 PM pursuant to License Agreement with ICC. No further reproduction or distribution authorized. ANY UNAUTHORIZED REPRODUCTION OR DISTRIBUTION IS A VIOLATION OF THE FEDERAL COPYRIGHT ACT AND THE LICENSE AGREEMENT, AND SUBJECT TO CIVIL AND CRIMINAL PENALTIES THEREUNDER.

Factory-built chimney. A *listed* and *labeled* chimney composed of factory-made components, assembled in the field in accordance with manufacturer's instructions and the conditions of the listing.

❖ A factory-built chimney is a manufactured listed and labeled chimney that has been tested by an approved agency to determine its performance characteristics. Factory-built chimneys are manufactured in two basic designs: a double-wall mineral fiber insulated design and a triple-wall air-cooled design. Some chimneys use both convection cooling and mineral-fiber insulation. Both designs use stainless steel inner liners to resist the corrosive effects of combustion products [see Commentary Figure 202(5)].

Masonry chimney. A field-constructed chimney composed of solid masonry units, bricks, stones or concrete.

❖ Masonry chimneys can have one or more flues within them and are field constructed of brick, stone, concrete or fire-clay materials. Masonry chimneys can stand alone or be part of a masonry fireplace.

Metal chimney. A field-constructed chimney of metal.

❖ Metal chimneys, being field constructed, are unlisted and often referred to as smokestacks. Metal chimneys are associated with industrial installations and equipment.

[M] CLEARANCE. The minimum distance through air measured between the heat-producing surface of the mechanical *appliance*, device or *equipment* and the surface of the *combustible material* or *assembly*.

❖ Clearances between sources of heat and combustibles are always airspace clearances.



Figure 202(4)
FACTORY-BUILT CHIMNEYS
(Photo courtesy of Selkirk, L.L.C.)

CLOTHES DRYER. An *appliance* used to dry wet laundry by means of heated air. Dryer classifications are as follows:

Type 1. Factory-built package, multiple production. Primarily used in family living environment. Usually the smallest unit physically and in function output.

❖ Type 1 clothes dryers are used in dwelling units and in residential settings.

Type 2. Factory-built package, multiple production. Used in business with direct intercourse of the function with the public. Not designed for use in individual family living environment.

❖ Type 2 clothes dryers are intended for commercial, public or institutional use.

[A] CODE. These regulations, subsequent amendments thereto or any emergency rule or regulation that the administrative authority having jurisdiction has lawfully adopted.

❖ The adopted regulations are generally referred to as "the code" and include not only this code, but also any adopted modifications to the code and all other related rules and regulations promulgated and enacted by the jurisdiction.

[A] CODE OFFICIAL. The officer or other designated authority charged with the administration and enforcement of this code, or a duly authorized representative.

❖ The statutory power to enforce the code is normally vested in a building department (or the like) of a state, county or municipality whose designated enforcement officer is termed the "code official."

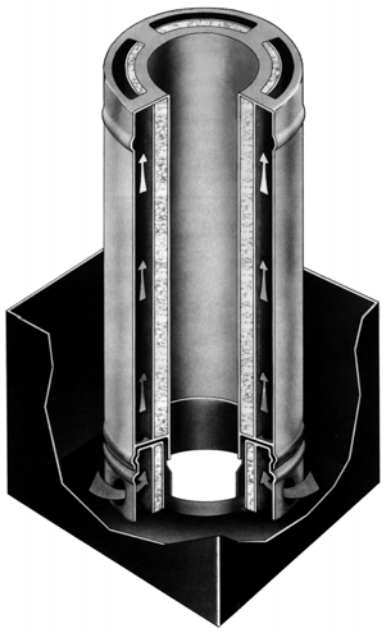

Figure 202(5)
AIR-COOLED FACTORY-BUILT CHIMNEY SECTION
(Figure courtesy of Simpson Dura-Vent Company, Incorporated)

INTERNATIONAL CODE COUNCIL®
Copyright © 2015 ICC. ALL RIGHTS RESERVED. Accessed by David Dammon on Jun 21, 2017 12:30:52 PM pursuant to License Agreement with ICC. No further reproduction or distribution authorized. ANY UNAUTHORIZED REPRODUCTION OR DISTRIBUTION IS A VIOLATION OF THE FEDERAL COPYRIGHT ACT AND THE LICENSE AGREEMENT, AND SUBJECT TO CIVIL AND CRIMINAL PENALTIES THEREUNDER.

[M] COMBUSTIBLE ASSEMBLY. Wall, floor, ceiling or other assembly constructed of one or more component materials that are not defined as noncombustible.

❖ A combustible assembly is made up of one or more combustible components. For example, a wall assembly with wood studs is combustible regardless of the nature of the sheathing attached to the studs. Likewise, a metal stud wall with gypsum board sheathing is a combustible assembly because the gypsum board is not noncombustible. A noncombustible assembly has no combustible elements. See the definition of "Noncombustible materials."

[M] COMBUSTIBLE MATERIAL. Any material not defined as noncombustible.

❖ See the definition of "Noncombustible materials."

[M] COMBUSTION. In the context of this code, refers to the rapid oxidation of fuel accompanied by the production of heat or heat and light.

❖ The primary components of combustion are fuel, oxygen and heat. The code regulates many aspects of combustion technology, including the process of combustion and providing sufficient air; the use of energy produced from combustion; the safe venting of the products of combustion; combustion efficiency; the containment and control of combustion; and the fuel supplies for combustion equipment and appliances.

[M] COMBUSTION AIR. Air necessary for complete combustion of a fuel, including theoretical air and excess air.

❖ The process of combustion requires a specific amount of oxygen to initiate and sustain the combustion reaction. Combustion air includes primary air, secondary air, draft hood dilution air and excess air. Combustion air includes the amount of atmospheric air required for complete combustion of a fuel and is related to the molecular composition of the fuel being burned, the design of the fuel-burning equipment and the percentage of oxygen in the combustion air. Too little combustion air will result in incomplete combustion of a fuel and the possible formation of carbon deposits (soot), carbon monoxide, toxic alcohols, ketones, aldehydes, nitrous oxides and other by-products. The required amount of combustion air is usually stated in terms of cubic feet per minute (m^3/s) or pounds per hour (kg/h).

[M] COMBUSTION CHAMBER. The portion of an *appliance* within which combustion occurs.

❖ Combustion chambers are either open to the atmosphere or are isolated (sealed) from the atmosphere in which the appliance is installed. Combustion chambers are often referred to as "fireboxes."

[M] COMBUSTION PRODUCTS. Constituents resulting from the combustion of a fuel with the oxygen of the air, including inert gases, but excluding excess air.

❖ Such products include water, carbon dioxide, carbon monoxide, nitrous oxides and various trace compounds.

[M] CONCEALED LOCATION. A location that cannot be accessed without damaging permanent parts of the building structure or finish surface. Spaces above, below or behind readily removable panels or doors shall not be considered as concealed.

❖ The space above a "drop-in" tile suspended ceiling system, for example, would not be considered as a concealed location.

CONCEALED PIPING. *Piping* that is located in a *concealed location* (see "*Concealed location*").

❖ This refers to gas piping in locations meeting the definition of "Concealed location."

CONDENSATE. The liquid that condenses from a gas (including flue gas) caused by a reduction in temperature or increase in pressure.

❖ Condensate forms when the temperature of a vapor is lowered to its dew point temperature. Air conditioning systems produce condensate when an airstream contacts cooling coils. The moisture in the air condenses on the cold surface of the coils and the air is "dehumidified." High-efficiency (84 percent and up) fuel-burning appliances produce condensate from the combustion gases. Condensate also forms within improperly designed chimneys and vents when the products of combustion (that contain water vapor) contact the colder inner walls of the vent or chimney. If the temperature of the products of combustion is lowered to the dew point temperature of the water vapor, condensate will form on the inside walls of the vent or chimney. Condensed steam in hydronic systems is also referred to as "condensate."

CONNECTOR, APPLIANCE (Fuel). Rigid metallic pipe and fittings, semirigid metallic tubing and fittings or a *listed* and *labeled* device that connects an *appliance* to the gas *piping* system.

❖ An appliance fuel connector is the piping, tubing or factory-built device that is installed downstream of the equipment shutoff to connect the appliance to the gas piping system. See the definition of "Piping system." Section 411.1 lists the types of appliance connectors that include both factory-built assemblies and field-constructed assemblies of pipe, tube and fittings. Note that rigid metallic piping, such as Schedule 40 black steel, used to connect an appliance to the gas piping system is considered to be an appliance connector because it is placed between the appliance and the piping system, downstream of the appliance shutoff valve. As defined, the gas piping ends at the appliance/equipment shutoff valve, therefore, everything downstream of that point is defined, sized and installed as a connector except as required by Sections 409.5.2, 409.5.3 and the exception to Section 411.1.3.1.

CONNECTOR, CHIMNEY OR VENT. The pipe that connects an *appliance* to a chimney or vent.

❖ In most cases, appliances are not located directly in line with the vertically rising chimney or vent; there-

INTERNATIONAL CODE COUNCIL®
Copyright © 2015 ICC. ALL RIGHTS RESERVED. Accessed by David Dammon on Jun 21, 2017 12:30:52 PM pursuant to License Agreement with ICC. No further reproduction or distribution authorized. ANY UNAUTHORIZED REPRODUCTION OR DISTRIBUTION IS A VIOLATION OF THE FEDERAL COPYRIGHT ACT AND THE LICENSE AGREEMENT, AND SUBJECT TO CIVIL AND CRIMINAL PENALTIES THEREUNDER.

fore, a vent or chimney connector is necessary to connect the appliance flue outlet to the vent or chimney. Vent and chimney connectors can be single- or double-wall pipes and are usually made from steel, galvanized steel, stainless steel or aluminum sheet metal, depending on the application. Vent connectors are also made of corrugated aluminum. In many installations, the vent connectors must be constructed of the same material as the vent, as is typically done with Type B vent systems. There are many requirements in the code (see Sections 503 and 504) regulating the location, length, size and type of connector.

[A] CONSTRUCTION DOCUMENTS. All of the written, graphic and pictorial documents prepared or assembled for describing the design, location and physical characteristics of the elements of the project necessary for obtaining a mechanical permit.

❖ To determine that proposed construction is in compliance with code requirements, sufficient information must be submitted to the code official for review. This typically consists of the drawings (floor plans, elevations, sections, piping diagrams, etc.), specifications and product information describing the proposed work.

[M] CONTROL. A manual or automatic device designed to regulate the gas, air, water or electrical supply to, or operation of, a mechanical system.

❖ A control is a device designed to respond to changes in temperature, pressure, liquid or gas flow rates, current, voltage, resistance, humidity and/or liquid levels.

CONVERSION BURNER. A unit consisting of a burner and its controls for installation in an *appliance* originally utilizing another fuel.

❖ Typical conversion burners are designed to convert an appliance, such as a boiler, from solid-fuel-fired to oil-fired or from oil-fired to gas-fired.

COUNTER APPLIANCES. Appliances such as coffee brewers and coffee urns and any appurtenant water-heating *appliance*, food and dish warmers, hot plates, griddles, waffle bakers and other appliances designed for installation on or in a counter.

❖ Counter appliances are small low-energy-input appliances and need not be vented unless the aggregate input rating of all the appliances exceeds that allowed in Section 501.8.

CUBIC FOOT. The amount of gas that occupies 1 cubic foot (0.02832 m^3) when at a temperature of 60°F (16°C), saturated with water vapor and under a pressure equivalent to that of 30 inches of mercury (101 kPa).

❖ This definition applies specifically to a measurement of fuel gas.

[M] DAMPER. A manually or automatically controlled device to regulate draft or the rate of flow of air or combustion gases.

❖ Dampers act as restrictors or valves in a gaseous flow stream (see Section 503.13).

DECORATIVE APPLIANCE, VENTED. A vented *appliance* wherein the primary function lies in the aesthetic effect of the flames.

❖ Such appliances include so-called "gas fireplaces" that are designed to simulate a wood-burning fireplace. The title of the standard for vented decorative gas-fired appliances (ANSI Z21.50) has been changed to *Vented Gas Fireplaces*.

DECORATIVE APPLIANCES FOR INSTALLATION IN VENTED FIREPLACES. A vented *appliance* designed for installation within the fire chamber of a vented *fireplace*, wherein the primary function lies in the aesthetic effect of the flames.

❖ These appliances include gas log sets for installation in solid-fuel-burning fireplaces.

DEMAND. The maximum amount of gas input required per unit of time, usually expressed in cubic feet per hour, or Btu/h (1 Btu/h = 0.2931 W).

❖ Demand refers to the load that appliances place on the fuel-gas distribution system.

[BS] DESIGN FLOOD ELEVATION. The elevation of the "design flood," including wave height, relative to the datum specified on the community's legally designated flood hazard map. In areas designated as Zone AO, the *design flood elevation* shall be the elevation of the highest existing grade of the *building's* perimeter plus the depth number (in feet) specified on the flood hazard map. In areas designated as Zone AO where a depth number is not specified on the map, the depth number shall be taken as being equal to 2 feet (610 mm).

❖ The design flood elevation is the height to which the floodwaters are predicted to rise during passage or occurrence of the design flood. The datum specified on the flood hazard map is important because it may differ from that used locally for other purposes. Communities adopt the Flood Insurance Rate Maps (FIRMS) prepared by the Federal Emergency Management Agency (FEMA) or another flood hazard map that shows at least the same flood hazard areas. FEMA uses commonly accepted computer models that estimate hydrologic and hydraulic conditions to determine the 1-percent annual chance (base) flood. Along rivers and streams, statistical methods and computer models may have been used to estimate the runoff and to develop flood elevations. The models take into consideration watershed characteristics and the shape and nature of the floodplain, including natural ground contours and the presence of buildings, bridges and culverts. Along coastal areas, base flood elevations may be developed using models that take into account offshore bathymetry, historical

INTERNATIONAL CODE COUNCIL®
Copyright © 2015 ICC. ALL RIGHTS RESERVED. Accessed by David Dammon on Jun 21, 2017 12:30:52 PM pursuant to License Agreement with ICC. No further reproduction or distribution authorized. ANY UNAUTHORIZED REPRODUCTION OR DISTRIBUTION IS A VIOLATION OF THE FEDERAL COPYRIGHT ACT AND THE LICENSE AGREEMENT, AND SUBJECT TO CIVIL AND CRIMINAL PENALTIES THEREUNDER.

storms and typical wind patterns. In many coastal areas, the base flood elevation includes wave heights.

DILUTION AIR. Air that is introduced into a draft hood and is mixed with the flue gases.

❖ Dilution air is associated only with draft-hood equipped Category I appliances. Fan-assisted Category I appliances do not involve dilution air because all of the air brought in by the fan passes directly through the combustion chamber of the appliance. Dilution air lowers the dew point of vent gases, reducing the possibility that condensation will occur inside the vent or chimney.

DIRECT-VENT APPLIANCES. Appliances that are constructed and installed so that all air for combustion is derived directly from the outdoor atmosphere and all flue gases are discharged directly to the outdoor atmosphere.

❖ These appliances have independent exhaust and intake pipes or have concentric pipes that vent combustion gases through the inner pipe and convey combustion air in the annular space between the inner and outer pipe walls [see Commentary Figures 202(6) and 202(7)].

[M] DRAFT. The pressure difference existing between the *appliance* or any component part and the atmosphere, that causes a continuous flow of air and products of combustion through the gas passages of the *appliance* to the atmosphere.

❖ Draft is the negative static pressure measured relative to atmospheric pressure that is developed in chimneys and vents and in the flue-ways of fuel-burning appliances. Draft can be produced by hot flue-gas buoyancy ("stack effect"), mechanically by fans and exhausters or by a combination of both natural and mechanical means.

Mechanical or induced draft. The pressure difference created by the action of a fan, blower or ejector that is located between the *appliance* and the chimney or vent termination.

❖ Induced draft systems use a fan or blower to boost or "induce" draft in a venting system that produces insufficient natural draft. Draft induction implies that the combustion gases are "pulled" through a passageway or conduit. Draft inducers produce negative pressures on the inlet (upstream) side of the fan or blower. They are separate field-installed units located between an appliance and its venting system. Draft inducers are used with natural draft venting systems to overcome the resistance of vent or chimney connectors and to compensate for the inability of the chimney or vent to produce sufficient and reliable draft.

Draft induction is also a design principle used in many fan-assisted appliances. Draft-inducer fans or blowers that are integral with fuel-fired appliances are necessary to overcome the internal resistance of the heat exchanger flue passageways. To attain higher thermal transfer efficiencies, some heat exchanger designs use flue passageways that retain the combustion gases longer over a greater surface area, thus extracting more heat. Such heat exchanger designs cannot rely on natural (gravity) venting to overcome the higher resistance to flow and, therefore, must rely on mechanical means to pull the combustion gases through the heat exchanger.

Induced draft systems are not to be confused with systems using power exhausters or other self-venting equipment.

Mechanical draft systems produce positive pressures on the discharge side of the fan or blower and can be said to "push" combustion gases through a passageway or conduit.

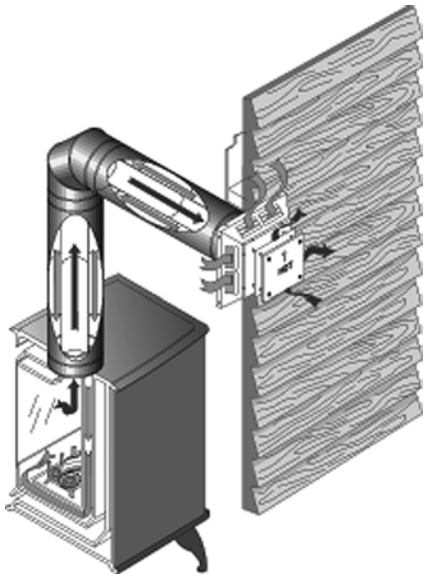

Figure 202(6)
DIRECT-VENT APPLIANCE
(Figure courtesy of Simpson Dura-Vent Company, Incorporated)

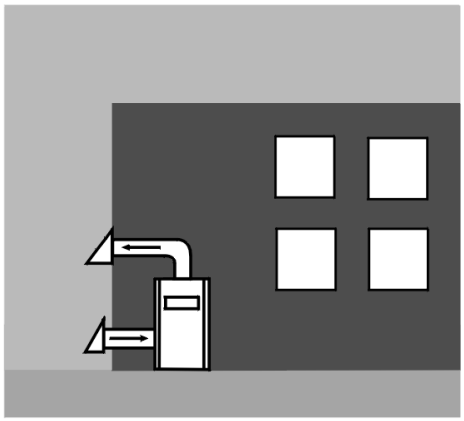

Figure 202(7)
DIRECT-VENT APPLIANCE
(Figure courtesy of Simpson Dura-Vent Company, Incorporated)

INTERNATIONAL CODE COUNCIL®
Copyright © 2015 ICC. ALL RIGHTS RESERVED. Accessed by David Dammon on Jun 21, 2017 12:30:52 PM pursuant to License Agreement with ICC. No further reproduction or distribution authorized. ANY UNAUTHORIZED REPRODUCTION OR DISTRIBUTION IS A VIOLATION OF THE FEDERAL COPYRIGHT ACT AND THE LICENSE AGREEMENT, AND SUBJECT TO CIVIL AND CRIMINAL PENALTIES THEREUNDER.

Natural draft. The pressure difference created by a vent or chimney because of its height, and the temperature difference between the flue gases and the atmosphere.

❖ Natural draft systems do not use mechanical devices such as fans or blowers, but instead rely on the principle of buoyancy to carry the products of combustion to the atmosphere. Because of the difference in temperature and the resultant difference in density between the hot products of combustion and the ambient atmosphere, the gases within the chimney or flue will rise, creating a buoyant "draft." The phenomenon of natural draft is sometimes referred to as "stack effect" and is measured in inches of water column (kPa). The amount of draft is affected by the height of the chimney or vent and also by the ability of the chimney or vent to maintain the temperature differential between the combustion gases and the ambient air.

DRAFT HOOD. A nonadjustable device built into an *appliance*, or made as part of the vent connector from an *appliance*, that is designed to (1) provide for ready escape of the flue gases from the *appliance* in the event of no draft, backdraft or stoppage beyond the draft hood, (2) prevent a backdraft from entering the *appliance*, and (3) neutralize the effect of stack action of the chimney or gas vent upon operation of the *appliance*.

❖ Draft hoods are integral to or supplied with natural draft atmospheric-burner gas-fired appliances other than fan-assisted appliances. When classified, appliances equipped with draft hoods are classified by the manufacturer as Category I appliances. Because of minimum efficiency standards and the popularity of mechanical and other special proprietary venting systems, draft-hood-equipped appliances are becoming increasingly rare in the marketplace [see Commentary Figure 202(8)].

DRAFT REGULATOR. A device that functions to maintain a desired draft in the *appliance* by automatically reducing the draft to the desired value.

❖ Excessive draft reduces the combustion and thermal efficiency of an appliance. Draft regulators automatically adjust the draft by admitting air into the vent, thereby reducing the draft [see Commentary Figure 202(2)].

[M] DRIP. The container placed at a low point in a system of *piping* to collect condensate and from which the condensate is removable.

❖ These reservoirs, also referred to as "drip legs," are made up of pipe and fittings and are intended to collect liquid in piping systems where condensables are possible. A"drip leg" is distinct from a "sediment trap" even though they may be constructed identically.

DRY GAS. A gas having a moisture and hydrocarbon dew point below any normal temperature to which the gas *piping* is exposed.

❖ The dew point referred to herein is the temperature at which fuel gas hydrocarbons or water vapor begin to condense into liquid fuel or liquid water. Condensate will not form if the gas piping system temperature is maintained above the dew point of the fuel gas and the water vapor.

The gas supplier (utility company) should be contacted to determine the nature of the gas supplied.

DUCT FURNACE. A warm-air furnace normally installed in an air distribution duct to supply warm air for heating. This definition shall apply only to a warm-air heating *appliance* that depends for air circulation on a blower not furnished as part of the furnace.

❖ Duct furnaces are vented appliances and consist of burners, heat exchangers and related controls. Duct furnaces depend on an external air handler or blower.

[M] DUCT SYSTEM. A continuous passageway for the transmission of air that, in addition to ducts, includes duct fittings, dampers, plenums, fans and accessory air-handling *equipment*.

❖ Duct systems are part of an air distribution system and include supply, return and relief/exhaust air systems.

[BG] DWELLING UNIT. A single unit providing complete, independent living facilities for one or more persons, includ-



Figure 202(8)
DRAFT-HOOD-EQUIPPED APPLIANCE
(Photo courtesy of A.O. Smith Water Products)

INTERNATIONAL CODE COUNCIL®
Copyright © 2015 ICC. ALL RIGHTS RESERVED. Accessed by David Dammon on Jun 21, 2017 12:30:52 PM pursuant to License Agreement with ICC. No further reproduction or distribution authorized. ANY UNAUTHORIZED REPRODUCTION OR DISTRIBUTION IS A VIOLATION OF THE FEDERAL COPYRIGHT ACT AND THE LICENSE AGREEMENT, AND SUBJECT TO CIVIL AND CRIMINAL PENALTIES THEREUNDER.

ing permanent provisions for living, sleeping, eating, cooking and sanitation.

❖ Contrast this definition with the definition of "Sleeping unit." All of the listed provisions must be present for the occupancy to be considered as a dwelling unit.

EQUIPMENT. Apparatus and devices other than appliances.

❖ The term "equipment" does not refer to or describe anything that is defined as an "Appliance," despite the fact that some appliances are commonly referred to in the field as "pieces of equipment." The term "equipment" includes control devices, pressure regulators, valves, appliance appurtenances, gas connectors, power exhausters, fans, air handlers and a multitude of other devices that do not fit the description of "appliance."

EXCESS FLOW VALVE (EFV). A valve designed to activate when the fuel gas passing through it exceeds a prescribed flow rate.

❖ Some utility companies install EFVs in gas service lines to provide protection against high-pressure leaks resulting from damage to the piping caused by excavation, hole boring or hand digging. The device is a type of shutoff valve that abruptly closes when the gas flow through it reaches an abnormal flow rate corresponding to its design setting. The excess flow pushes a spring loaded element against a seat in the EFV body. The upstream gas pressure holds the valve in the closed position. After the gas line is repaired and closed off on the load end, the EFV will reset itself by allowing a small flow of gas to pass through an orifice in the valve into the downstream piping, thereby equalizing the pressure on both sides of the valve and allowing the valve to reopen by the force of the spring. Service line EFVs do not fall within the scope of the code because the service line is upstream of the point of delivery. Appliance-type EFVs are addressed by the code, are designed to protect individual appliances and are installed in the supply piping to the appliance. Some types are installed on the supply end of a gas appliance connector. The basic operating principle is the same for all types although some do not allow bypass gas flow and are, therefore, not self-resetting. The moving component of EFVs, depending on the type, is held open by gravity, a spring or a magnet. The gravity type must be installed in a vertical position.

EFVs can be compared to electrical circuit breakers in that they stop gas flow when a predetermined flow rate is exceeded just as the circuit breakers interrupt electrical current flow when the amperage setting is exceeded. Imagine the scenario where an appliance gas connector is severed or a gas line breaks loose at a fitting and gas would be flowing into the space at a high rate. An EFV device installed upstream of the point of leakage would recognize the abnormal flow and either shut off the gas flow completely or reduce the flow to a small bypass flow (see Section 410.4).

EXTERIOR MASONRY CHIMNEYS. Masonry chimneys exposed to the outdoors on one or more sides below the roof line.

❖ The part of a chimney that extends above the roof will obviously be exposed to the outdoors, but some of the sizing methods in Section 504 are based on the chimney being indoors below the roof. If any one wall or multiple walls of a chimney are exposed to the outdoors, the chimney will be hard to warm up, will lose heat more rapidly, will likely produce condensation internally and may fail to produce the required draft. Some tables in Section 504 are specific to exterior masonry chimneys.

[M] FIREPLACE. A fire chamber and hearth constructed of *noncombustible material* for use with solid fuels and provided with a chimney.

❖ Fireplaces burn solid fuels (wood, coal, etc.) and are not referred to as appliances in the code. The IBC and the *International Residential Code*® (IRC®) cover construction of masonry fireplaces.

Factory-built fireplace. A *fireplace* composed of *listed* factory-built components assembled in accordance with the terms of listing to form the completed *fireplace*.

❖ Factory-built fireplaces are solid-fuel-burning units having a fire chamber that is intended to be either open to the room or, if equipped with doors, operated with the doors either open or closed. Fireplaces are not referred to as appliances. The term "fireplace" describes a complete assembly that includes the hearth, the fire chamber and a chimney. A factory-built fireplace is composed of factory-built components representative of the prototypes tested and is installed in accordance with the manufacturer's instructions to form the completed fireplace.

Masonry fireplace. A hearth and fire chamber of solid masonry units such as bricks, stones, *listed* masonry units or reinforced concrete, provided with a suitable chimney.

❖ Masonry fireplaces must be constructed in accordance with the requirements found in the IBC or the IRC. These specific requirements are based on tradition and field experience and describe the conventional fireplace that has proven to be reliable where properly constructed, used and maintained.

FIRING VALVE. A valve of the plug and barrel type designed for use with gas, and equipped with a lever handle for manual operation and a dial to indicate the percentage of opening.

❖ This term is not used in the code.

FLAME SAFEGUARD. A device that will automatically shut off the fuel supply to a main burner or group of burners when the means of ignition of such burners becomes inoperative, and when flame failure occurs on the burner or group of burners.

❖ These devices are primary safety controls and are provided on all automatically operated fuel-fired appliances.

INTERNATIONAL CODE COUNCIL®
Copyright © 2015 ICC. ALL RIGHTS RESERVED. Accessed by David Dammon on Jun 21, 2017 12:30:52 PM pursuant to License Agreement with ICC. No further reproduction or distribution authorized. ANY UNAUTHORIZED REPRODUCTION OR DISTRIBUTION IS A VIOLATION OF THE FEDERAL COPYRIGHT ACT AND THE LICENSE AGREEMENT, AND SUBJECT TO CIVIL AND CRIMINAL PENALTIES THEREUNDER.

FLASHBACK ARRESTOR CHECK VALVE. A device that will prevent the backflow of one gas into the supply system of another gas and prevent the passage of flame into the gas supply system.

❖ See the commentary to Section 410.5.

[BS] FLOOD HAZARD AREA. The greater of the following two areas:

1. The area within a floodplain subject to a 1 percent or greater chance of flooding in any given year.
2. This area designated as a *flood hazard area* on a community's flood hazard map, or otherwise legally designated.

❖ FEMA prepares FIRMS that delineate the land area that is subject to inundation by the 1-percent annual chance flood. Some states and local jurisdictions develop and adopt maps of flood hazard areas that are more extensive than the areas shown on FEMA's map. For the purpose of the code, the flood hazard area within which the requirements are to be applied is the greater of the two delineated areas (see Section 301.11).

FLOOR FURNACE. A completely self-contained furnace suspended from the floor of the space being heated, taking air for combustion from outside such space and with means for observing flames and lighting the *appliance* from such space.

❖ These units supply heat through a floor grille placed directly over the unit's heat exchanger.

Fan type. A floor furnace equipped with a fan that provides the primary means for circulating air.

❖ Floor furnaces may be equipped with factory-installed fans to circulate the air.

Gravity type. A floor furnace depending primarily upon circulation of air by gravity. This classification shall also include floor furnaces equipped with booster-type fans that do not materially restrict free circulation of air by gravity flow when such fans are not in operation.

❖ Typically floor furnaces are classified as gravity-type furnaces. Air circulates from a gravity-type floor furnace by convection.

FLUE, APPLIANCE. The passage(s) within an *appliance* through which combustion products pass from the combustion chamber of the *appliance* to the draft hood inlet opening on an *appliance* equipped with a draft hood or to the *outlet* of the *appliance* on an *appliance* not equipped with a draft hood.

❖ Appliance flues are the passages through an appliance from the combustion chamber, through the heat exchanger and through the vent outlet.

FLUE COLLAR. That portion of an *appliance* designed for the attachment of a draft hood, vent connector or venting system.

❖ The flue collar size will be a determining factor in vent connector sizing.

FLUE GASES. Products of combustion plus excess air in *appliance* flues or heat exchangers.

❖ The exact composition of flue gases will depend on the fuel being burned. The primary components of flue gases are nitrogen, carbon dioxide, water vapor, particulates and a myriad of compounds and trace elements that vary with the nature of the fuel and purity of the combustion air. Carbon monoxide is also a component of flue gas.

[M] FLUE LINER (LINING). A system or material used to form the inside surface of a flue in a chimney or vent, for the purpose of protecting the surrounding structure from the effects of combustion products and for conveying combustion products without leakage to the atmosphere.

❖ Flue liners must be resistant to heat and the corrosive action of the products of combustion. They provide insulation value to retard the transfer of heat to the chimney structure and limit exposure of the chimney structure to the harmful effects of combustion products. Flue liners are generally made of fire-clay tile, refractory brick, poured-in-place refractory materials, stainless steel alloys and aluminum. Flue liners used with gas-fired appliances are typically made of stainless steel or aluminum [see Commentary Figure 202(9)].

FUEL GAS. A natural gas, manufactured gas, liquefied petroleum gas or mixtures of these gases.

❖ The nature of fuel gases makes proper design, installation and selection of materials and devices necessary to minimize the possibility of fire or explosion. Bringing fuel gases into a building is in itself a risk. The provisions of the code are intended to reduce that risk to a level comparable to that associated with other energy sources such as electricity.

The two most commonly used fuel gases are natural gas and liquefied petroleum gas (LP-gas or LPG). These fuel gases have the following characteristics or properties.

Natural gas: The principal constituent of natural gas is methane (CH_4). It can also contain small quantities of nitrogen, carbon dioxide, hydrogen sulfide, water vapor, other hydrocarbons (such as ethane and propane) and various trace elements. Natural gas is colorless, tasteless and odorless; however, an odorant is added to the gas so that it can be readily detected. Natural gas is lighter than air (specific gravity of 0.60 typical) and has the tendency to rise when escaping to the atmosphere. Natural gas has a rather narrow flammability range (approximately 3 to 15 percent volume in air) above and below which the gas-to-air mixture ratio will be too rich or too lean to support combustion. The heating value of natural gas is approximately 1,050 Btu per cubic foot (39 MJ/m^3).

LP-gas: Liquefied petroleum gases include commercial propane and commercial butane. LP-gas vapors are heavier than air (specific gravity of 1.52 typical)

INTERNATIONAL CODE COUNCIL®
Copyright © 2015 ICC. ALL RIGHTS RESERVED. Accessed by David Dammon on Jun 21, 2017 12:30:52 PM pursuant to License Agreement with ICC. No further reproduction or distribution authorized. ANY UNAUTHORIZED REPRODUCTION OR DISTRIBUTION IS A VIOLATION OF THE FEDERAL COPYRIGHT ACT AND THE LICENSE AGREEMENT, AND SUBJECT TO CIVIL AND CRIMINAL PENALTIES THEREUNDER.

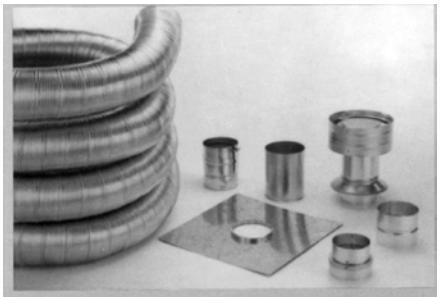

Basic Kits contain 25' or 35' of flexible liner, cap assembly, flashing, flex coupling, mortar sleeve, female adapter, and universal adapter.

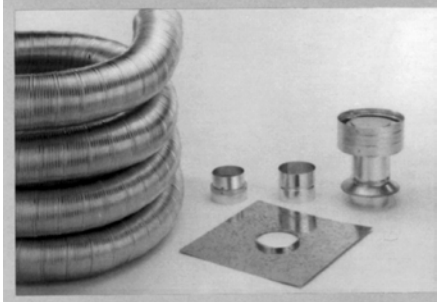

Gas Fireplace kits contain 25' of flexible liner, cap assembly, flashing, flex coupling, and universal adapter.

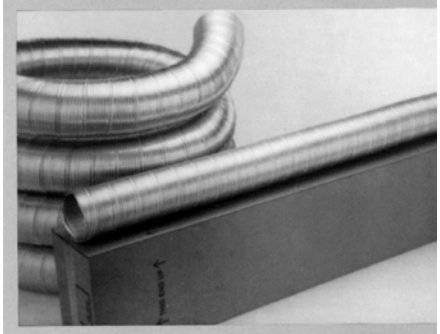

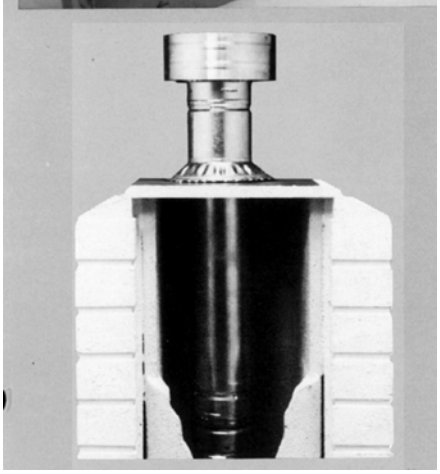

For SI: 1 foot = 304.8 mm.

Figure 202(9)
CHIMNEY FLUE LINER SYSTEM FOR GAS APPLIANCE (Photo courtesy of Simpson Dura-Vent Company, Incorporated)

and tend to accumulate in low areas and near the floor; however, a gas/air mixture that is within its flammability range will have a specific gravity very close to that of air. The ranges of flammability for LP-gases are narrower than those of natural gas (approximately 2 to 10 percent volume in air). Like natural gas, LP-gases are odorized to make them detectable. The heating value of propane is approximately 2,500 Btu per cubic foot (93 MJ/m^3) of gas. The heating value of butane is approximately 3,300 Btu per cubic foot (123 MJ/m^3) of gas.

[M] FURNACE. A completely self-contained heating unit that is designed to supply heated air to spaces remote from or adjacent to the *appliance* location.

❖ The single most distinguishing characteristic of furnaces is that they use air as the heat transfer medium. Furnaces can be fueled by gas, oil, solid fuel or electricity and use fans, blowers or gravity (convection) to circulate air to and from the unit. In the context of the code, the primary usage of the term "furnace" refers to heating appliances that combine a combustion chamber with related burner and control components, one or more heat exchangers, a flue gas conveying system and air-handling fans/blowers.

FURNACE, CENTRAL. A self-contained *appliance* for heating air by transfer of heat of combustion through metal to the air, and designed to supply heated air through ducts to spaces remote from or adjacent to the *appliance* location.

❖ The term "central furnace" has been adopted to identify a furnace that supplies conditioned air to remote locations from a central location. There are many types of furnaces. Most of these variations are a result of architectural design related to available space, desired location of the unit and size of the area to be conditioned.

Downflow furnace. A furnace designed with airflow discharge vertically downward at or near the bottom of the furnace.

❖ Downflow furnaces are typically installed with airflow directed into a plenum and ductwork installed in a crawl space.

Forced air furnace with cooling unit. A single-package unit, consisting of a gas-fired forced-air furnace of one of the types listed below combined with an electrically or fuel gas-powered summer air-conditioning system, contained in a common casing.

❖ A forced-air furnace with cooling unit is typically a package unit designed for outdoor installation on a rooftop or on a pad on grade.

Forced-air type. A central furnace equipped with a fan or blower that provides the primary means for circulation of air.

❖ All furnaces equipped with a fan/blower for the purpose of circulating air through the unit would be considered forced-air-type furnaces.

Gravity furnace with booster fan. A furnace equipped with a booster fan that does not materially restrict free cir-

INTERNATIONAL CODE COUNCIL®
Copyright © 2015 ICC. ALL RIGHTS RESERVED. Accessed by David Dammon on Jun 21, 2017 12:30:52 PM pursuant to License Agreement with ICC. No further reproduction or distribution authorized. ANY UNAUTHORIZED REPRODUCTION OR DISTRIBUTION IS A VIOLATION OF THE FEDERAL COPYRIGHT ACT AND THE LICENSE AGREEMENT, AND SUBJECT TO CIVIL AND CRIMINAL PENALTIES THEREUNDER.

culation of air by gravity flow when the fan is not in operation.

❖ These units can be equipped with a booster fan that may or may not operate continually, depending on the application, to assist in the circulation of air.

Gravity type. A central furnace depending primarily on circulation of air by gravity.

❖ Gravity type units are used for relatively small spaces where the natural flow of air by convection will condition the space.

Horizontal forced-air type. A furnace with airflow through the *appliance* essentially in a horizontal path.

❖ Horizontal forced-air-type units are commonly installed in spaces above ceilings, suspended from ceiling and roof structures and installed in attics.

Multiple-position furnace. A furnace designed so that it can be installed with the airflow discharge in the upflow, horizontal or downflow direction.

❖ Many furnaces today are designed for multiple applications, allowing a single unit to be used in all of the common locations.

Upflow furnace. A furnace designed with airflow discharge vertically upward at or near the top of the furnace. This classification includes "highboy" furnaces with the blower mounted below the heating element and "lowboy" furnaces with the blower mounted beside the heating element.

❖ Upflow furnaces (typically made in high-boy and low-boy styles) are typically installed in basements and attics.

FURNACE, ENCLOSED. A specific heating, or heating and ventilating, furnace incorporating an integral total enclosure and using only outside air for combustion.

❖ Enclosed furnaces are believed to be extinct. Such furnaces had an integral housing that isolated the combustion chamber from the conditioned space, thus allowing all combustion air to be obtained directly from the housing that opened to the outdoors.



Figure 202(10)
GAS CONVENIENCE OUTLET
(Photo courtesy of Gastite Division/Titeflex Corporation)

FURNACE PLENUM. An air compartment or chamber to which one or more ducts are connected and that forms part of an air distribution system.

❖ The term "plenum" is no longer defined or used in the code. A furnace plenum is a box made of sheet metal or other duct material that is attached directly to a furnace to facilitate connection of supply and return ducts to the furnace air inlet and outlet. This term does not refer to cavities within a building, such as stud and joist spaces and spaces above dropped ceilings.

GAS CONVENIENCE OUTLET. A permanently mounted, manually operated device that provides the means for connecting an *appliance* to, and disconnecting an *appliance* from, the supply *piping*. The device includes an integral, manually operated valve with a nondisplaceable valve member and is designed so that disconnection of an *appliance* only occurs when the manually operated valve is in the closed position.

❖ These devices are listed and labeled and designed to mate with specialized appliance connectors. A gas outlet is the point at which the gas distribution system connects to a gas appliance. The outlets are intended for use with portable appliances such as space heaters and outdoor cooking appliances [see Commentary Figures 202(10) and 202(11)].

GAS PIPING. An installation of pipe, valves or fittings installed on a premises or in a building and utilized to convey fuel gas.

❖ Gas piping includes all the components, fittings and piping needed to deliver the fuel gas from the point of delivery to the appliance or equipment connection. The point of delivery may be a regulator or meter that is typically installed by the gas utility. The point of delivery may be located at the user's property line, immediately outside the structure or in some instances in the structure.



Figure 202(11)
GAS CONVENIENCE OUTLET
(Photo courtesy of Maxitrol Company)

INTERNATIONAL CODE COUNCIL®
Copyright © 2015 ICC. ALL RIGHTS RESERVED. Accessed by David Dammon on Jun 21, 2017 12:30:52 PM pursuant to License Agreement with ICC. No further reproduction or distribution authorized. ANY UNAUTHORIZED REPRODUCTION OR DISTRIBUTION IS A VIOLATION OF THE FEDERAL COPYRIGHT ACT AND THE LICENSE AGREEMENT, AND SUBJECT TO CIVIL AND CRIMINAL PENALTIES THEREUNDER.

[F] GASEOUS HYDROGEN SYSTEM. See Section 702.1.

[M] HAZARDOUS LOCATION. Any location considered to be a fire hazard for flammable vapors, dust, combustible fibers or other highly combustible substances. The location is not necessarily categorized in the building code as a high-hazard group classification.

❖ The environment in which mechanical equipment and appliances operate plays a significant role in the safe performance of the equipment installation. Locations that may contain ignitable or explosive atmospheres are classified as hazardous locations for the installation of mechanical equipment and appliances. For example, repair garages can be classified as hazardous locations because they can contain gasoline vapors from vehicles stored within them as well as other volatile chemicals. Public and private garages are not considered hazardous locations even though the presence of motor vehicles and the storage of fuel, paint, varnish, thinner, lawn- and home-maintenance products and other chemicals are a concern, as evidenced by Sections 305.3 and 305.5.

HOUSE PIPING. See "*Piping* system."

❖ House piping is the distribution piping downstream of the point of delivery. House piping is an antiquated term.

[F] HYDROGEN FUEL-GAS ROOM. See Section 702.1.

HYDROGEN-GENERATING APPLIANCE. See Section 702.1.

IGNITION PILOT. A pilot that operates during the lighting cycle and discontinues during main burner operation.

❖ Commonly referred to as "interrupted pilots," such pilots are ignited by a spark or hot surface device. Generally an electronic circuit controls the ignition system. When main burner ignition has been proven, the ignition pilot is shut off, and the main burner flame is supervised for the entire burn cycle.

[M] IGNITION SOURCE. A flame, spark or hot surface capable of igniting flammable vapors or fumes. Such sources include *appliance* burners, burner ignitors and electrical switching devices.

❖ This definition is important in the application of Section 305.3 regarding the elevation of ignition sources. By means of this definition, Section 305.3 applies to unintentional ignition sources, such as electrical switching devices, as well as intentional ignition sources, such as pilot lights, spark ignitors and hot surface ignitors.

In the context of Section 305.3, an "ignition source" is something capable of igniting flammable vapors that are present in the atmosphere in the locations listed in Section 305.3.

INCINERATOR. An *appliance* used to reduce combustible refuse material to ashes and that is manufactured, sold and installed as a complete unit.

❖ These appliances are believed to be extinct.

INDUSTRIAL AIR HEATERS, DIRECT-FIRED NON-RECIRCULATING. A heater in which all the products of combustion generated by the burners are released into the air stream being heated. The purpose of the heater is to offset building heat loss by heating only outdoor air.

❖ These heaters have traditionally been called makeup air heaters because they heat 100 percent of outdoor air without recirculation of any air across the burner. These heaters are unvented (direct-fired) appliances regulated by Section 611 (see Commentary Figure 611.1).

INDUSTRIAL AIR HEATERS, DIRECT-FIRED RECIRCULATING. A heater in which all the products of combustion generated by the burners are released into the air stream being heated. The purpose of the heater is to offset building heat loss by heating outdoor air, and, if applicable, indoor air.

❖ These heaters are used in large spaces, such as warehouses, and are often referred to as "air turnover units" because they are typically vertical air handlers designed to prevent air stratification. These heaters are unvented (direct-fired) appliances regulated by Section 612.

INFRARED RADIANT HEATER. A heater that directs a substantial amount of its energy output in the form of infrared radiant energy into the area to be heated. Such heaters are of either the vented or unvented type.

❖ These heaters include low-intensity tubular types and high-intensity ceramic burner element types. They heat objects (such as people) by direct radiation and do not heat the ambient air.

[M] JOINT, FLANGED. A joint made by bolting together a pair of flanged ends.

❖ Flanges are commonly used with large piping at locations where the piping must be disassembled periodically and at connections to valves, regulators, devices and equipment. Full-face gaskets must be used with bronze and cast-iron flange fittings. Typically, materials for flange gaskets include metal or metal-jacketed asbestos, asbestos and aluminum "O" rings or spiral-wound metal gaskets. Gaskets must be replaced whenever a joint is opened. The gasket material must be compatible with the piping contents to prevent chemical reaction.

[M] JOINT, FLARED. A metal-to-metal compression joint in which a conical spread is made on the end of a tube that is compressed by a flare nut against a mating flare.

❖ Because the pipe end is expanded in a flared joint, only annealed and bending-tempered soft-drawn copper tubing may be flared. Commonly used flaring tools use a screw yoke and block assembly or an expander tool that is driven into the tube with a hammer. The flared tubing end is compressed between a fitting seat and a threaded nut to form a metal-to-metal seal.

INTERNATIONAL CODE COUNCIL®
Copyright © 2015 ICC. ALL RIGHTS RESERVED. Accessed by David Dammon on Jun 21, 2017 12:30:52 PM pursuant to License Agreement with ICC. No further reproduction or distribution authorized. ANY UNAUTHORIZED REPRODUCTION OR DISTRIBUTION IS A VIOLATION OF THE FEDERAL COPYRIGHT ACT AND THE LICENSE AGREEMENT, AND SUBJECT TO CIVIL AND CRIMINAL PENALTIES THEREUNDER.

JOINT, MECHANICAL. A general form of gas-tight joints obtained by the joining of metal parts through a positive-holding mechanical construction, such as press joint, flanged joint, threaded joint, flared joint or compression joint.

❖ Mechanical joints can take many forms, but most share a common characteristic, which is applying a radial pressure to the pipes or fittings they join. Mechanical joining methods can be proprietary, which means that they are specific to one manufacturer of the fittings and devices and such manufacturer must provide adequate instructions for assembling the joint. Press joint fittings must be assembled with a special tool that is unique to the fitting. Press joints are irreversible because the fitting and pipe are permanently deformed by the pressing operation. Some press joint systems are manufactured for use with copper piping and some are manufactured for use with steel piping.

[M] JOINT, PLASTIC ADHESIVE. A joint made in thermoset plastic *piping* by the use of an adhesive substance that forms a continuous bond between the mating surfaces without dissolving either one of them.

❖ Unlike solvent-welded joints, adhesive (glue) joints are surface bonded. Often people refer to solvent-welded joints, such as used for PVC, CPVC and ABS piping, as "glued" joints, when actually, they are chemically welded, not glued.

[M] JOINT, PLASTIC HEAT FUSION. A joint made in thermoplastic *piping* by heating the parts sufficiently to permit fusion of the materials when the parts are pressed together.

❖ Heat-fusion joints for plastic pipe are analogous to welded joints for steel pipe. Only polyethylene and polybutylene can be joined by heat fusion and only in accordance with the pipe manufacturer's instructions. The process involves heating the pipe and fittings with a special iron. Some fittings have integral heating elements that are connected to a special power supply. When the parts to be joined reach their melting points, they are assembled and allowed to fuse together.

[M] JOINT, WELDED. A gas-tight joint obtained by the joining of metal parts in molten state.

❖ A welded joint is similar to a brazed joint. The primary differences are the temperature at which the joint is made, the type of filler metal used, and the fact that welding reaches the melting point of the base metal, whereas brazing temperatures are well below the melting point of the pipe and fittings.

[A] LABELED. Equipment, materials or products to which have been affixed a label, seal, symbol or other identifying mark of a nationally recognized testing laboratory, inspection agency or other organization concerned with product evaluation that maintains periodic inspection of the production of the above-labeled items and whose labeling indicates either that the *equipment*, material or product meets identified standards or has been tested and found suitable for a specified purpose.

❖ When a product is labeled, the label indicates that the material has been tested for conformance to an applicable standard and that the component is subject to third-party inspection to verify that the minimum level of quality required by the standard is maintained. Labeling provides a readily available source of information that is useful for field inspection of installed products. The label identifies the product or material and provides other information that can be further investigated if there is question concerning the suitability of the product or material for the specific installation. The labeling agency performing the third-party inspection must be approved by the code official. The basis for this approval may include, but is not necessarily limited to, the capacity and capability of the agency to perform the specific testing and inspection.

The referenced standard often states the minimum identifying information that must be on a label. The data contained on a label typically includes, but is not necessarily limited to, name of the manufacturer; product name or serial number; installation specifications; applicable tests and standards; and the approved testing and labeling agency.

This definition correlates with the definitions provided in other *International Codes*® (I-Codes®) [see Commentary Figure 202(12)].

LEAK CHECK. An operation performed on a gas *piping* system to verify that the system does not leak.

❖ A leak check is not the same as the pressure test required by Sections 406.1 through 406.5.2 (see Section 406.6).

LIMIT CONTROL. A device responsive to changes in pressure, temperature or level for turning on, shutting off or throttling the gas supply to an *appliance*.

❖ Limit controls are safety devices used to protect equipment, appliances, property and persons. The controls act at their setpoint to limit a condition, such as temperature or pressure, and include high and low limits. This definition applies to controls for all types of fuel, including gas, liquid and solid.

LIQUEFIED PETROLEUM GAS or LPG (LP-GAS). Liquefied petroleum gas composed predominately of propane, propylene, butanes or butylenes, or mixtures thereof that is gaseous under normal atmospheric conditions, but is capable of being liquefied under moderate pressure at normal temperatures.

❖ Liquefied petroleum gases are usually obtained as a byproduct of oil refinery operations or by stripping natural gas and are commercially available as butane, propane or a mixture of the two. Propane has a boiling point of -40°F (-40°C) at atmospheric pressure and a heating value of approximately 2,500 Btu per cubic foot (93 MJ/m^2). Butane has a boiling point of 32°F (0°C) at atmospheric pressure and a heating

INTERNATIONAL CODE COUNCIL®
Copyright © 2015 ICC. ALL RIGHTS RESERVED. Accessed by David Dammon on Jun 21, 2017 12:30:52 PM pursuant to License Agreement with ICC. No further reproduction or distribution authorized. ANY UNAUTHORIZED REPRODUCTION OR DISTRIBUTION IS A VIOLATION OF THE FEDERAL COPYRIGHT ACT AND THE LICENSE AGREEMENT, AND SUBJECT TO CIVIL AND CRIMINAL PENALTIES THEREUNDER.

value of approximately 3,300 Btu per cubic foot (123 MJ/m^3). LP-gas is odorized so that gas leakage can be detected.

[A] LISTED. Equipment, materials, products or services included in a list published by an organization acceptable to the code official and concerned with evaluation of products or services that maintains periodic inspection of production of *listed equipment* or materials or periodic evaluation of services and whose listing states either that the *equipment*, material, product or service meets identified standards or has been tested and found suitable for a specified purpose.

❖ This definition correlates with the definition of "Listed" in other I-Codes. When a product is listed, it indicates that it has been tested for conformance to an applicable standard and was subject to a third-party inspection quality assurance (QA) program. The QA verifies that the minimum level of quality required by the appropriate standard is maintained. The agency performing the third-party inspection must be approved by the code official, and the basis for this approval may include, but is not limited to, the capacity and capability of the agency to perform the specified testing and inspection.

[M] LIVING SPACE. Space within a *dwelling unit* utilized for living, sleeping, eating, cooking, bathing, washing and sanitation purposes.

❖ The code uses this term to define locations that are not to be considered as part of a private garage for the purpose of requiring the elevation of ignition sources (see Section 305.3).

LOG LIGHTER. A manually operated solid fuel ignition *appliance* for installation in a vented solid fuel-burning *fireplace*.

❖ Log lighters are simple, manually operated burners used to start wood fires. Log lighters are not considered as decorative but rather as functional appliances. The heat produced by the log lighter flame raises the temperature of the wood fuel to its ignition temperature. A log lighter is designed to be turned off manually after the wood fire is capable of sustaining combustion.

LUBRICATED PLUG-TYPE VALVE. A valve of the plug and barrel type provided with means for maintaining a lubricant between the bearing surfaces.

❖ Valves of this type are rarely used today. They became rare with the advent of ball valves. This term is currently not used in the body of the code.

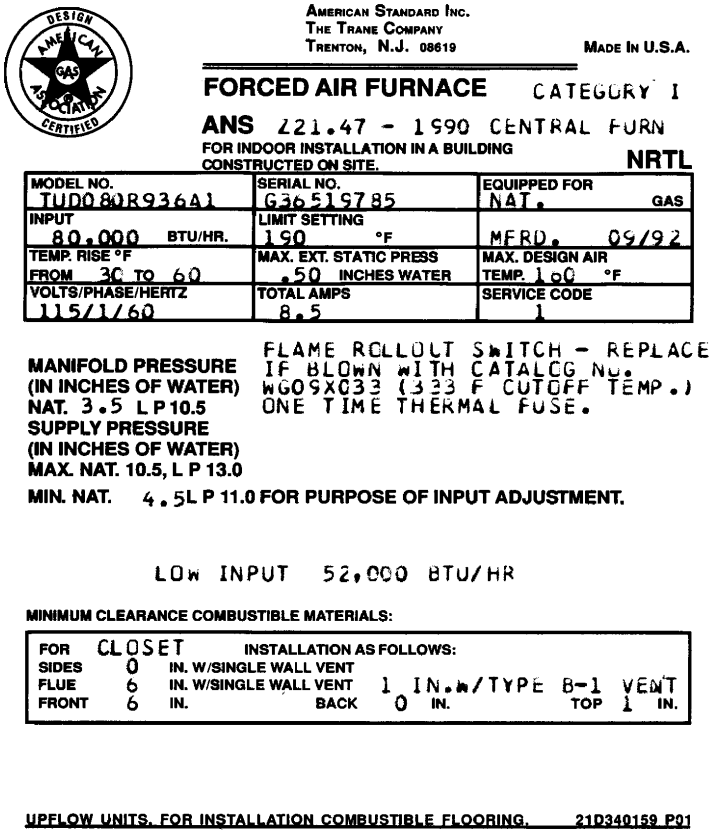
AMERICAN STANDARD INC.
THE TRANE COMPANY
TRENTON, N.J. 08619
MADE IN U.S.A.

FORCED AIR FURNACE CATEGORY I

ANS Z21.47 - 1990 CENTRAL FURN

FOR INDOOR INSTALLATION IN A BUILDING CONSTRUCTED ON SITE.

NRTL

MODEL NO.	SERIAL NO.	EQUIPPED FOR
TUD080R936A1	G3651978S	NAT. GAS
INPUT 80,000 BTU/HR.	LIMIT SETTING 190 °F	MFRD. 09/92
TEMP. RISE °F FROM 30 TO 60	MAX. EXT. STATIC PRESS .50 INCHES WATER	MAX. DESIGN AIR TEMP. 180 °F
VOLTS/PHASE/HERTZ 115/1/60	TOTAL AMPS 8.5	SERVICE CODE 1

MANIFOLD PRESSURE
(IN INCHES OF WATER)
NAT. 3.5 L P 10.5
SUPPLY PRESSURE
(IN INCHES OF WATER)
MAX. NAT. 10.5, L P 13.0
MIN. NAT. 4.5 L P 11.0 FOR PURPOSE OF INPUT ADJUSTMENT.

FLAME ROLLOUT SWITCH - REPLACE IF BLOWN WITH CATALOG NO. WG09X033 (333 F CUTOFF TEMP.) ONE TIME THERMAL FUSE.

LOW INPUT 52,000 BTU/HR

MINIMUM CLEARANCE COMBUSTIBLE MATERIALS:

FOR CLOSET INSTALLATION AS FOLLOWS:
SIDES 0 IN. W/SINGLE WALL VENT
FLUE 6 IN. W/SINGLE WALL VENT 1 IN. W/TYPE B-1 VENT
FRONT 6 IN. BACK 0 IN. TOP 1 IN.

UPFLOW UNITS. FOR INSTALLATION COMBUSTIBLE FLOORING. 21D340159 P01

Figure 202(12)
TYPCIAL APPLIANCE LABEL
(Figure courtesy of the Trane Company, an Amercian Standard Company)

INTERNATIONAL CODE COUNCIL®
Copyright © 2015 ICC. ALL RIGHTS RESERVED. Accessed by David Dammon on Jun 21, 2017 12:30:52 PM pursuant to License Agreement with ICC. No further reproduction or distribution authorized. ANY UNAUTHORIZED REPRODUCTION OR DISTRIBUTION IS A VIOLATION OF THE FEDERAL COPYRIGHT ACT AND THE LICENSE AGREEMENT, AND SUBJECT TO CIVIL AND CRIMINAL PENALTIES THEREUNDER.

MAIN BURNER. A device or group of devices essentially forming an integral unit for the final conveyance of gas or a mixture of gas and air to the combustion zone, and on which combustion takes place to accomplish the function for which the *appliance* is designed.

❖ With the exception of small amounts of fuel for the pilot or ignition burners, the main burner consumes the entire fuel input into an appliance. Common types of atmospheric burners are the drilled port, slotted port, ribbon and single port.

METER. The instrument installed to measure the volume of gas delivered through it.

❖ The meter is the actual point of commerce and is usually associated with the point of delivery. The code does not require or regulate meters. The gas-supplying utility generally installs meters for natural gas. Occasionally in locations where there are several tenants (large office buildings, mobile home parks and apartment complexes, for example), the gas utility installs one meter for the property owner and the owner installs individual tenant meters. Liquefied petroleum may be metered to individual tenants from a storage tank in the same manner [see Commentary Figure 202(13)].



Figure 202(13)
TYPICAL RESIDENTIAL GAS METER SETTING
(Photo courtesy of Washington Gas)

MODULATING. Modulating or throttling is the action of a control from its maximum to minimum position in either predetermined steps or increments of movement as caused by its actuating medium.

❖ In the context of the code, modulating is associated with burner control valves. One type of automatic control is a modulating control that can infinitely vary the controlled variable over the range being controlled. Another common type of control is a two-position action control, which simply turns the variable being controlled, such as fuel gas, on and off. Another type of control is the floating action control. It regulates the controlled device by adjusting the controlled variable between the open or closed position using a sensing element, which must react faster than the actuating drive time or the system would be essentially the same as a two-position control.

[M] NONCOMBUSTIBLE MATERIALS. Materials that, when tested in accordance with ASTM E136, have at least three of four specimens tested meeting all of the following criteria:

1. The recorded temperature of the surface and interior thermocouples shall not at any time during the test rise more than 54ºF (30ºC) above the furnace temperature at the beginning of the test.
2. There shall not be flaming from the specimen after the first 30 seconds.
3. If the weight loss of the specimen during testing exceeds 50 percent, the recorded temperature of the surface and interior thermocouples shall not at any time during the test rise above the furnace air temperature at the beginning of the test, and there shall not be flaming of the specimen.

❖ If the material is not determined to be noncombustible, it is, by default, a combustible material. ASTM E136 is a test standard used to determine the combustion characteristics of building materials. The test method in the standard is intended to indicate whether a material will assist in combustion or add appreciable heat to an ambient fire. The listed criteria are taken from ASTM E136. In the standard, Items 1 and 2 are applicable if the weight loss of the specimen during the test is 50 percent or less. Item 3 applies if such weight loss is greater than 50 percent. The standard intends for three out of the four samples to comply with either Items 1 and 2 or Item 3.

[A] OCCUPANCY. The purpose for which a building, or portion thereof, is utilized or occupied.

❖ The occupancy classification of a building is an indication of the level of hazard to which the occupants are exposed to as a function of the actual building use. Occupancy in terms of a group classification is one of the primary considerations in the development and application of many code requirements that are designed to offset the hazards specific to each group designation.

[M] OFFSET (VENT). A combination of *approved* bends that makes two changes in direction bringing one section of the vent out of line but into a line parallel with the other section.

❖ An offset results in the lateral displacement of a vertical vent. Vent offsets are measured in degrees of angle from vertical and are limited in venting systems because they restrict the flow of flue gas. An offset angle is measured between a line that is an extension of the original vertical vent and the new line of direction of the vent [see Commentary Figure 202(14)]. Note that an offset is more than just a single change in direction and always involves two or more fittings and two changes of direction.

INTERNATIONAL CODE COUNCIL®
Copyright © 2015 ICC. ALL RIGHTS RESERVED. Accessed by David Dammon on Jun 21, 2017 12:30:52 PM pursuant to License Agreement with ICC. No further reproduction or distribution authorized. ANY UNAUTHORIZED REPRODUCTION OR DISTRIBUTION IS A VIOLATION OF THE FEDERAL COPYRIGHT ACT AND THE LICENSE AGREEMENT, AND SUBJECT TO CIVIL AND CRIMINAL PENALTIES THEREUNDER.



Figure 202(14)
VENT OFFSET
(Photo courtesy of Selkirk, L.L.C.)

ORIFICE. The opening in a cap, spud or other device whereby the flow of gas is limited and through which the gas is discharged to the burner.

❖ An orifice is a precisely sized hole through which gas flows. The orifice is located in the spud or cap that is generally attached to a manifold or supply line. The orifice should be installed in accordance with the manufacturer's instructions to ensure proper sizing to prevent underfiring or overfiring of the gas appliance.

OUTLET. The point at which a gas-fired *appliance* connects to the gas *piping* system.

❖ A gas outlet is analogous to an electrical receptacle outlet. See Section 404.16 for requirements covering the location of gas piping outlets.

OXYGEN DEPLETION SAFETY SHUTOFF SYSTEM (ODS). A system designed to act to shut off the gas supply to the main and pilot burners if the oxygen in the surrounding atmosphere is reduced below a predetermined level.

❖ An Oxygen Depletion Safety Shutoff System (ODS) is intended to protect the occupants from carbon monoxide build-up. The ODS measures the oxygen level in the air and shuts off the appliance if the level falls below a preset level, typically 18 percent. Monitoring oxygen levels will inversely monitor carbon monoxide levels because of the natural relationship between a decreasing oxygen level and an increasing carbon monoxide level [see Commentary Figure 202(15)].

PILOT. A small flame that is utilized to ignite the gas at the main burner or burners.

❖ Pilot burners (pilot lights) can be continuously burning or can be intermittent or interrupted depending upon the type of appliance. Continuously burning (standing) pilots are becoming more rare and are typically found only in certain hearth appliances, water heaters and commercial ranges. Intermittent pilots burn only while the main burner(s) are firing and interrupted pilots burn only until the main burner(s) are ignited and proven.

[M] PIPING. Where used in this code, "*piping*" refers to either pipe or tubing, or both.

Pipe. A rigid conduit of iron, steel, copper, brass or plastic.

Tubing. Semirigid conduit of copper, aluminum, plastic or steel.

❖ Piping includes tubing and pipe used to convey fuel gases. See the definition for "Piping system."

PIPING SYSTEM. All fuel *piping*, valves and fittings from the outlet of the *point of delivery* to the outlets of the *appliance* shutoff valves.

❖ A piping system includes tubing, pipe, fittings, valves and line pressure regulators used to convey fuel gas from the point of delivery to the appliance. This definition was revised to state that the piping system ends at the outlets of the appliance shutoff valves. This revision allows the last 6 feet (1829 mm) or less of gas conduit between the shutoff valve and the appliance inlet connection to be sized as a connector (see Section 409.5 and the definition for "Point of delivery").

[M] PLASTIC, THERMOPLASTIC. A plastic that is capable of being repeatedly softened by increase of temperature and hardened by decrease of temperature.

❖ Polyvinyl chloride (PVC) is a type of thermoplastic.

POINT OF DELIVERY. For natural gas systems, the *point of delivery* is the outlet of the service meter assembly or the outlet of the service regulator or service shutoff valve where a meter is not provided. Where a valve is provided at the outlet of the service meter assembly, such valve shall be considered



Figure 202(15)
OXYGEN DEPLETION SAFETY SHUTOFF
(Photo by D.F. Noyes Studios, courtesy of DESA International)

INTERNATIONAL CODE COUNCIL®
Copyright © 2015 ICC. ALL RIGHTS RESERVED. Accessed by David Dammon on Jun 21, 2017 12:30:52 PM pursuant to License Agreement with ICC. No further reproduction or distribution authorized. ANY UNAUTHORIZED REPRODUCTION OR DISTRIBUTION IS A VIOLATION OF THE FEDERAL COPYRIGHT ACT AND THE LICENSE AGREEMENT, AND SUBJECT TO CIVIL AND CRIMINAL PENALTIES THEREUNDER.

to be downstream of the *point of delivery*. For undiluted liquefied petroleum gas systems, the point of delivery shall be considered to be the outlet of the service pressure regulator, exclusive of line gas regulators, in the system.

❖ It is necessary to understand where the point of delivery begins with respect to fuel gas systems because that is the location where the enforcement of Chapter 4 begins. The point of delivery is a point of demarcation that determines what is or is not covered by the chapter. For natural gas systems, the utility-owned service piping, service shutoff valve, service pressure regulator and meter are all upstream of the point of delivery and thus are not covered by the code. Any valve located on the outlet of the service meter assembly is considered to be part of the piping system and under the scope of the code.

For liquefied petroleum (LP) applications, the point of delivery is the outlet of the service pressure regulator (see definition). NFPA 58 regulates the piping and components upstream of the outlet of the service pressure regulator, including the regulator itself. In typical two-stage LP systems, the service pressure regulator is the second-stage regulator. Two-stage systems use a first-stage regulator located at the tank to reduce tank pressure down to 10 psig, and a second-stage regulator to reduce the 10 psig pressure down to 11 inches water column (w.c.). Some two-stage systems use separate first- and second-stage regulators and some use integral two-stage regulators, located at the tank, in which both the first- and second-stage regulators are contained within a single unit. A 2-psig system is becoming more popular in LP applications. These systems use three stages of regulation, which include a first-stage regulator to reduce tank pressure to 10 psig, a 2-psi regulator (the service pressure regulator) to reduce the 10 psig pressure to 2 psig, and line gas pressure regulators (see definition) used to reduce the 2 psig pressure to 11 inches w.c. for delivery to the appliances. In these systems, the point of delivery is the outlet of the 2-psi service pressure regulator.

PORTABLE FUEL CELL APPLIANCE. A fuel cell generator of electricity, which is not fixed in place. A portable fuel cell *appliance* utilizes a cord and plug connection to a grid-isolated load and has an integral fuel supply.

❖ As stated in Section 101.2.4, Item 19, the code does not regulate these appliances because they do not connect to a fuel piping system and are completely self-contained.

PRESSURE DROP. The loss in pressure due to friction or obstruction in pipes, valves, fittings, regulators and burners.

❖ The pressure in a fuel gas system is reduced as the gas flows in the system. This is caused by a loss of energy resulting from friction and turbulence. Fuel gas systems are designed so that the pressure drop does not result in the system pressure falling below the minimum pressure required for proper equipment operation.

PRESSURE TEST. An operation performed to verify the gas-tight integrity of gas *piping* following its installation or modification.

❖ Installed piping systems are tested on the job site to verify that the system is free of leaks.

PURGE. To free a gas conduit of air or gas, or a mixture of gas and air.

❖ Piping systems are purged (flushed) to remove gaseous, liquid or solid contaminants that could be harmful to the piping contents, the piping system or the system components or that could create a fire or explosion hazard.

QUICK-DISCONNECT DEVICE. A hand-operated device that provides a means for connecting and disconnecting an *appliance* or an *appliance* connector to a gas supply and that is equipped with an automatic means to shut off the gas supply when the device is disconnected.

❖ These devices are commonly installed with gas appliance connectors and used with commercial cooking appliances and other gas appliances that are routinely moved for cleaning or used in another location [see Commentary Figure 202(16)].



Figure 202(16)
QUICK-DISCONNECT DEVICE
(Photo courtesy of Dormont Manufacturing Company)

[M] READY ACCESS (TO). That which enables a device, *appliance* or *equipment* to be directly reached, without requiring the removal or movement of any panel, door or similar obstruction (see "*Access*").

❖ Ready access can be described as the capability of being quickly reached or approached for the purpose of operation, inspection, observation or emergency action. Ready access does not require the removal or movement of any access door, panel or similar obstruction, nor does it require surmounting physical obstructions or obstacles, including differences in elevation. Note that this definition does not refer to the egress/ingress door through which a person enters a room or building.

[A] REGISTERED DESIGN PROFESSIONAL. An individual who is registered or licensed to practice their respective design profession as defined by the statutory

INTERNATIONAL CODE COUNCIL®
Copyright © 2015 ICC. ALL RIGHTS RESERVED. Accessed by David Dammon on Jun 21, 2017 12:30:52 PM pursuant to License Agreement with ICC. No further reproduction or distribution authorized. ANY UNAUTHORIZED REPRODUCTION OR DISTRIBUTION IS A VIOLATION OF THE FEDERAL COPYRIGHT ACT AND THE LICENSE AGREEMENT, AND SUBJECT TO CIVIL AND CRIMINAL PENALTIES THEREUNDER.

requirements of the professional registration laws of the state or jurisdiction in which the project is to be constructed.

❖ Each state establishes legal qualifications for engineers and architects. Licensing and registration of engineers and architects is based on written or oral examinations offered by states or by reciprocity (licensing in other states).

REGULATOR. A device for controlling and maintaining a uniform supply pressure, either pounds-to-inches water column (MP regulator) or inches-to-inches water column (*appliance* regulator).

❖ In the context of the code, these devices are fuel-gas pressure regulating devices that reduce a higher pressure to a lower pressure.

REGULATOR, GAS APPLIANCE. A pressure regulator for controlling pressure to the manifold of the *appliance*. Types of *appliance* regulators are as follows:

Adjustable.

1. Spring type, limited adjustment. A regulator in which the regulating force acting upon the diaphragm is derived principally from a spring, the loading of which is adjustable over a range of not more than 15 percent of the outlet pressure at the midpoint of the adjustment range.
2. Spring type, standard adjustment. A regulator in which the regulating force acting upon the diaphragm is derived principally from a spring, the loading of which is adjustable. The adjustment means shall be concealed.

Multistage. A regulator for use with a single gas whose adjustment means is capable of being positioned manually or automatically to two or more predetermined outlet pressure settings. Each of these settings shall be adjustable or nonadjustable. The regulator may modulate outlet pressures automatically between its maximum and minimum predetermined outlet pressure settings.

Nonadjustable.

1. Spring type, nonadjustable. A regulator in which the regulating force acting upon the diaphragm is derived principally from a spring, the loading of which is not field adjustable.
2. Weight type. A regulator in which the regulating force acting upon the diaphragm is derived from a weight or combination of weights.

❖ These regulators are integral to the appliance and serve to stabilize the appliance input pressure and supply fuel gas to the appliance at the desired pressure. Most appliances come equipped with appliance regulators because the appliances are designed to operate at a pressure lower than the delivery pressure, even when low pressure gas [0.5 psig or lower (3.4 kPa)] is supplied. Commonly, appliance regulators reduce a pressure of 5 to 8 inches water column down to a manifold pressure of 3.5 inches w.c.

REGULATOR, LINE GAS PRESSURE. A device placed in a gas line between the service pressure regulator and the *appliance* for controlling, maintaining or reducing the pressure in that portion of the *piping* system downstream of the device.

❖ Line gas pressure regulators are used to reduce the gas pressure supplied by the service (point of delivery) regulator. They are typically located at the connection to each gas appliance and are commonly used as "pounds to inches" regulators in systems having elevated [14 inches (3.5 kPa) wc to 5 psi typical (34.5 kPa)] supply pressures.

REGULATOR, MEDIUM-PRESSURE (MP Regulator). A line pressure regulator that reduces gas pressure from the range of greater than 0.5 psig (3.4 kPa) and less than or equal to 5 psig (34.5 kPa) to a lower pressure.

❖ With the increased use of high-pressure gas distribution systems, systems are designed with one or more regulators in addition to the service regulators. Medium-pressure (MP) regulators are most commonly associated with 2 psi (13.8 kPa) manifold distribution systems used with copper tubing or corrugated stainless steel tubing (CSST) systems. Appliances are also equipped with factory-installed regulators that control burner input (manifold) pressure. MP regulators are used to reduce the service pressure to a pressure suitable for delivery to the gas appliances where the appliance regulator may further reduce the pressure (see Section 410.2). MP regulators are used where the distribution line pressure is in the range of 5 psig (34.5 kPa) down to 0.5 psig (3.4 kPa) and such pressure needs to be reduced to be compatible with input pressure needs of the load.

REGULATOR, PRESSURE. A device placed in a gas line for reducing, controlling and maintaining the pressure in that portion of the *piping* system downstream of the device.

❖ See the definition and commentary to "Regulator."

REGULATOR, SERVICE PRESSURE. For natural gas systems, a device installed by the serving gas supplier to reduce and limit the service line pressure to delivery pressure. For undiluted liquefied petroleum gas systems, the regulator located upstream from all line gas pressure regulators, where installed, and downstream from any first stage or a high pressure regulator in the system.

❖ The utility company (gas supplier) installs this regulator to reduce the gas pressure from the utility distribution mains to that required for delivery to the meter and customer. For the typical house service, the pressure is reduced from 60 psig to 2 psig or less. The devices are usually located near the meter and outdoors [see Commentary Figure 202(17)]. For LP-gas systems, the service regulator is the regulator between the first-stage regulator and the line pressure regulators or between the first-stage regulator and the appliances served where there are no line pressure regulators. The service regulator is upstream of the point of delivery for natural and LP-gases (see "Point of delivery").

INTERNATIONAL CODE COUNCIL®
Copyright © 2015 ICC. ALL RIGHTS RESERVED. Accessed by David Dammon on Jun 21, 2017 12:30:52 PM pursuant to License Agreement with ICC. No further reproduction or distribution authorized. ANY UNAUTHORIZED REPRODUCTION OR DISTRIBUTION IS A VIOLATION OF THE FEDERAL COPYRIGHT ACT AND THE LICENSE AGREEMENT, AND SUBJECT TO CIVIL AND CRIMINAL PENALTIES THEREUNDER.

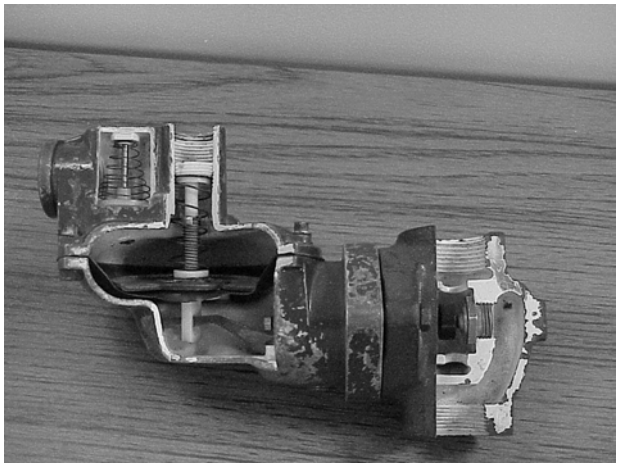

Figure 202(17)
SERVICE REGULATOR
(Photo courtesy of Washington Gas)

RELIEF OPENING. The opening provided in a draft hood to permit the ready escape to the atmosphere of the flue products from the draft hood in the event of no draft, back draft or stoppage beyond the draft hood, and to permit air into the draft hood in the event of a strong chimney updraft.

❖ Dilution air, a component of combustion air, enters the venting system through the draft hood opening. Combustion gases spilling from (exiting) a draft hood relief opening create an abnormal and potentially hazardous condition except for brief periods of spillage that might occur at the start of an appliance firing cycle. Typical periods of spillage at start-up last only a few seconds.

RELIEF VALVE (DEVICE). A safety valve designed to forestall the development of a dangerous condition by relieving either pressure, temperature or vacuum in the hot water supply system.

❖ A relief valve is a safety device designed to prevent the development of a potentially damaging or dangerous condition in a closed system. This is usually associated with a closed system that has a heat source as part of the system. Requirements for the installation of relief valves in water distribution systems and water heaters are given in Section 504 of the IPC.

RELIEF VALVE, PRESSURE. An automatic valve that opens and closes a relief vent, depending on whether the pressure is above or below a predetermined value.

❖ Pressure relief valves are intended to prevent harm to life and property. These valves are safety devices used to relieve abnormal pressures and to prevent the overpressurization of the vessel or system to which the valves are connected. Pressure relief valves are designed to operate (discharge) only when an abnormal pressure exists in a system. They are not to be used as regulating valves, nor are they intended to control or regulate flow or pressure. Pressure relief valves are set at the factory to begin opening at a predetermined pressure and are rated according to the maximum energy discharge per unit of time, usually in units of British thermal units per hour (Btu/h)(W).

Pressure relief valves must be properly sized and rated for the boiler, pressure vessel or system served; otherwise, a system malfunction could cause the pressure within the system to continue to rise, thereby creating a hazardous condition. Pressure relief valves do not open fully when they reach the factory-preset pressure; rather, the valves open an amount proportional to the forces produced by the pressure in the system. The valves open fully at a certain percentage above the preset pressure, then close when the pressure drops below the preset pressure. Pressure relief valves are sometimes combined in the same body with temperature relief valves, creating combination temperature and pressure relief valves.

RELIEF VALVE, TEMPERATURE.

Manual reset type. A valve that automatically opens a relief vent at a predetermined temperature and that must be manually returned to the closed position.

Reseating or self-closing type. An automatic valve that opens and closes a relief vent, depending on whether the temperature is above or below a predetermined value.

❖ Temperature relief valves are designed to open in response to excessive temperatures and to discharge heated water to limit the temperature of the water in the vessel, tank or system. Water heater control failure or improper adjustments could allow excessive temperature rises, which can heat water above the temperature at which it would vaporize at atmospheric pressure. Water heated to above 212°F (100°C) is referred to as superheated water and will flash to steam when the pressure is reduced below its vapor pressure. Very hot water and the presence of steam are hazardous; however, more importantly, higher temperatures produce higher pressures and superheated water increases the potential for, and the magnitude of, an explosion.

RELIEF VALVE, VACUUM. A valve that automatically opens and closes a vent for relieving a vacuum within the hot water supply system, depending on whether the vacuum is above or below a predetermined value.

❖ The vacuum relief valve is intended to prevent the possible reduction in pressure within the system (water heater tanks being of main concern) to below atmospheric pressure (that is, a partial vacuum). Many tanks are not designed to resist external pressures exceeding internal pressures; therefore, a vacuum relief valve is necessary to prevent atmospheric pressure from possibly collapsing or otherwise damaging the tank. A partial vacuum could also cause water to be siphoned from the tank, thereby creating an overheating hazard in a water heater.

INTERNATIONAL CODE COUNCIL®
Copyright © 2015 ICC. ALL RIGHTS RESERVED. Accessed by David Dammon on Jun 21, 2017 12:30:52 PM pursuant to License Agreement with ICC. No further reproduction or distribution authorized. ANY UNAUTHORIZED REPRODUCTION OR DISTRIBUTION IS A VIOLATION OF THE FEDERAL COPYRIGHT ACT AND THE LICENSE AGREEMENT, AND SUBJECT TO CIVIL AND CRIMINAL PENALTIES THEREUNDER.

The vacuum relief valve operates by automatically opening the system to the atmosphere when a partial vacuum is created, thereby permitting air to enter and maintaining the internal pressure at atmospheric pressure.

RISER, GAS. A vertical pipe supplying fuel gas.

❖ A vertical gas pipe that distributes gas from a building main to upper floor levels is commonly referred to as a "riser."

ROOM HEATER, UNVENTED. See "Unvented room heater."

❖ See the commentary to "Unvented room heater" and Commentary Figure 202(18).



Figure 202(18)
UNVENTED ROOM HEATER
(Photo courtesy of Empire Comfort Systems Inc.)

ROOM HEATER, VENTED. A free-standing heating unit used for direct heating of the space in and adjacent to that in which the unit is located (see also "Vented room heater").

❖ These heaters are typically small space-heating appliances designed to heat a single room.

SAFETY SHUTOFF DEVICE. See "Flame safeguard."

❖ See the commentary to "Flame safeguard."

[BF] SHAFT. An enclosed space extending through one or more stories of a building, connecting vertical openings in successive floors, or floors and the roof.

❖ A shaft is an enclosed, vertical passage that passes through stories and floor levels within a building. Shafts are sometimes referred to as "chases" and are usually constructed of fire-resistance-rated assemblies.

[BG] SLEEPING UNIT. A room or space in which people sleep, which can also include permanent provisions for living, eating and either sanitation or kitchen facilities, but not both. Such rooms and spaces that are also part of a *dwelling unit* are not sleeping units.

❖ Contrast this definition with the definition of "Dwelling unit."

SPECIFIC GRAVITY. As applied to gas, specific gravity is the ratio of the weight of a given volume to that of the same volume of air, both measured under the same condition.

❖ Analogous to density, specific gravity values are used to describe how a gaseous substance will behave in, for example, air or piping systems. Specific gravity indicates the density of a gas with respect to air, with air being assigned a value of 1. For example, natural gas has a specific gravity of less than 1, therefore it is less dense and lighter than air. LP-gas has a specific gravity of 1.5, therefore it is one and one-half times the density of air.

STATIONARY FUEL CELL POWER PLANT. A self-contained package or factory-matched packages that constitute an automatically operated assembly of integrated systems for generating electrical energy and recoverable thermal energy that is permanently connected and fixed in place.

❖ See the commentary to Chapter 7.

THERMOSTAT.

Electric switch type. A device that senses changes in temperature and controls electrically, by means of separate components, the flow of gas to the burner(s) to maintain selected temperatures.

Integral gas valve type. An automatic device, actuated by temperature changes, designed to control the gas supply to the burner(s) in order to maintain temperatures between predetermined limits, and in which the thermal actuating element is an integral part of the device.

1. Graduating thermostat. A thermostat in which the motion of the valve is approximately in direct proportion to the effective motion of the thermal element induced by temperature change.
2. Snap-acting thermostat. A thermostat in which the thermostatic valve travels instantly from the closed to the open position, and vice versa.

❖ Thermostats most often consist of one or more thermally actuated on/off switches, but also include types that transmit varying voltage and signals. A thermostat is also referred to as a controller. The set point or desired unit of temperature is adjusted or set at the thermostat. The thermostat transmits a signal to the controlled device or appliance.

[P] THIRD-PARTY CERTIFICATION AGENCY. An approved agency operating a product or material certification system that incorporates initial product testing, assessment and surveillance of a manufacturer's quality control system.

❖ These agencies evaluate products, verify compliance with specific standards or criteria and conduct periodic inspections of the manufacturer's production facilities to verify ongoing compliance with such standards or criteria (see commentary, Section 401.10).

INTERNATIONAL CODE COUNCIL®
Copyright © 2015 ICC. ALL RIGHTS RESERVED. Accessed by David Dammon on Jun 21, 2017 12:30:52 PM pursuant to License Agreement with ICC. No further reproduction or distribution authorized. ANY UNAUTHORIZED REPRODUCTION OR DISTRIBUTION IS A VIOLATION OF THE FEDERAL COPYRIGHT ACT AND THE LICENSE AGREEMENT, AND SUBJECT TO CIVIL AND CRIMINAL PENALTIES THEREUNDER.

[P] THIRD-PARTY CERTIFIED. Certification obtained by the manufacturer indicating that the function and performance characteristics of a product or material have been determined by testing and ongoing surveillance by an approved third-party certification agency. Assertion of certification is in the form of identification in accordance with the requirements of the third-party certification agency.

❖ A third-party certification agency certifies that a product meets specific standards or criteria and identifies the product with a certification mark. This mark is an indication to the installer and inspector that the product has been evaluated and tested and the manufacturing process has been monitored so as to verify compliance with the relative product standards or criteria. Additionally, the agency typically provides a list of the products that it certifies, which provides information relative to the certification (see Section 401.10).

[P] THIRD-PARTY TESTED. Procedure by which an approved testing laboratory provides documentation that a product, material or system conforms to specified requirements.

❖ A third-party testing laboratory or agency tests a product to verify that it meets specific standards or criteria and provides documentation to that fact. Having a product tested is not the same as having it listed, as listing entails additional requirements such as ongoing monitoring of the manufacturing process. Third-party tested products can be marked to indicate the testing agency.

[M] TRANSITION FITTINGS, PLASTIC TO STEEL. An adapter for joining plastic pipe to steel pipe. The purpose of this fitting is to provide a permanent, pressure-tight connection between two materials that cannot be joined directly one to another.

❖ Piping joined of dissimilar materials, such as plastic and steel, requires specialized transition fittings. For example, such fittings are used with underground plastic fuel-gas piping and steel meter setting risers [see Commentary Figure 202(19)].

UNIT HEATER.

High-static pressure type. A self-contained, automatically controlled, vented *appliance* having integral means for circulation of air against 0.2 inch (15 mm H_2O) or greater static pressure. Such *appliance* is equipped with provisions for attaching an outlet air duct and, where the *appliance* is for indoor installation remote from the space to be heated, is also equipped with provisions for attaching an inlet air duct.

Low-static pressure type. A self-contained, automatically controlled, vented *appliance*, intended for installation in the space to be heated without the use of ducts, having integral means for circulation of air. Such units are allowed to be equipped with louvers or face extensions made in accordance with the manufacturer's specifications.

❖ Unit heaters are similar to warm-air furnaces, except that ducts are not usually associated with unit heaters. These heaters are typically suspended from ceilings or roof structures.

UNLISTED BOILER. A boiler not *listed* by a nationally recognized testing agency.

❖ Boilers in new installations must be listed, and gas equipment installed in existing unlisted boilers must be installed according to the manufacturers' instructions and the IMC (see the commentary to "Boiler, low-pressure").

UNVENTED ROOM HEATER. An unvented heating *appliance* designed for stationary installation and utilized to provide comfort heating. Such appliances provide radiant heat or convection heat by gravity or fan circulation directly from the heater and do not utilize ducts.

❖ As opposed to vented heaters, unvented heaters discharge all products of combustion into the space being heated [see Commentary Figure 202(18)].

VALVE. A device used in *piping* to control the gas supply to any section of a system of *piping* or to an *appliance*.

❖ The code requires valves to perform various functions in a fuel gas system as described in the definitions that follow. These valves are designed for the specific use intended and many are factory installed on equipment and are part of the listed equipment. However, there are valves that are not listed or manufactured in accordance with the standards listed in the code and if allowed must be evaluated in accordance with Section 105.2.



Figure 202(19)
TRANSITION FITTINGS
(Photo courtesy of Perfection Corporation)

INTERNATIONAL CODE COUNCIL®
Copyright © 2015 ICC. ALL RIGHTS RESERVED. Accessed by David Dammon on Jun 21, 2017 12:30:52 PM pursuant to License Agreement with ICC. No further reproduction or distribution authorized. ANY UNAUTHORIZED REPRODUCTION OR DISTRIBUTION IS A VIOLATION OF THE FEDERAL COPYRIGHT ACT AND THE LICENSE AGREEMENT, AND SUBJECT TO CIVIL AND CRIMINAL PENALTIES THEREUNDER.

Appliance shutoff. A valve located in the *piping* system, used to isolate individual appliances for purposes such as service or replacement.

❖ The definition makes it clear that the primary purpose of an appliance shutoff valve is not related to the emergency shutoff of the appliance.

Automatic. An automatic or semiautomatic device consisting essentially of a valve and operator that control the gas supply to the burner(s) during operation of an *appliance*. The operator shall be actuated by application of gas pressure on a flexible diaphragm, by electrical means, by mechanical means, or by other *approved* means.

Automatic gas shutoff. A valve used in conjunction with an automatic gas shutoff device to shut off the gas supply to a water-heating system. It shall be constructed integrally with the gas shutoff device or shall be a separate assembly.

Individual main burner. A valve that controls the gas supply to an individual main burner.

Main burner control. A valve that controls the gas supply to the main burner manifold.

Manual main gas-control. A manually operated valve in the gas line for the purpose of completely turning on or shutting off the gas supply to the *appliance*, except to pilot or pilots that are provided with independent shutoff.

Manual reset. An automatic shutoff valve installed in the gas supply *piping* and set to shut off when unsafe conditions occur. The device remains closed until manually reopened.

Service shutoff. A valve, installed by the serving gas supplier between the service meter or source of supply and the customer *piping* system, to shut off the entire *piping* system.

VENT. A pipe or other conduit composed of factory-made components, containing a passageway for conveying combustion products and air to the atmosphere, *listed* and *labeled* for use with a specific type or class of *appliance*.

❖ In code terminology, vents are distinguished from chimneys and usually are constructed of factory-made listed and labeled components intended to function as a system. Type B and BW vents are constructed of galvanized steel and aluminum sheet metal and are double wall and air insulated. Such vents are designed to vent gas-fired appliances and equipment that are equipped with draft hoods or are specifically listed (labeled) for use with Type B or BW vents. Type L vents are typically constructed of sheet steel and stainless steel. They are double wall and air insulated and are designed to vent gas- and oil-fired appliances and equipment. Some appliances are designed for use with corrosion-resistant special vents, such as those made of plastic pipe and special alloys of stainless steel [see Commentary Figure 202(20)].

Special gas vent. A vent *listed* and *labeled* for use with *listed* Category II, III and IV appliances.

❖ These vents include high-temperature plastic pipe, stainless steel pipe and low-temperature (PVC and CPVC) plastic pipes.

Type B vent. A vent *listed* and *labeled* for use with appliances with draft hoods and other Category I appliances that are *listed* for use with Type B vents.

❖ See the commentary to "Vent."

Type BW vent. A vent *listed* and *labeled* for use with wall furnaces.

❖ See the commentary to "Vent."

Type L vent. A vent *listed* and *labeled* for use with appliances that are *listed* for use with Type L or Type B vents.

❖ See the commentary to "Vent."

VENT CONNECTOR. See "Connector."

❖ See the commentary to "Connector."

VENT GASES. Products of combustion from appliances plus excess air plus dilution air in the vent connector, gas vent or chimney above the draft hood or draft regulator.

❖ It is critical that the materials used in venting systems be compatible with the vent gases being generated by the connecting appliances, equipment and venting system. The most important area of concern is the generation of condensate, which will be acidic and will corrode most metal venting systems. As newer equipment is produced and designed for higher effi-



Figure 202(20)
TYPE B VENT
(Photo courtesy of Selkirk, L.L.C.)

INTERNATIONAL CODE COUNCIL®
Copyright © 2015 ICC. ALL RIGHTS RESERVED. Accessed by David Dammon on Jun 21, 2017 12:30:52 PM pursuant to License Agreement with ICC. No further reproduction or distribution authorized. ANY UNAUTHORIZED REPRODUCTION OR DISTRIBUTION IS A VIOLATION OF THE FEDERAL COPYRIGHT ACT AND THE LICENSE AGREEMENT, AND SUBJECT TO CIVIL AND CRIMINAL PENALTIES THEREUNDER.

ciencies, which will result in lower vent-gas temperatures, the potential for generating condensate in the vent gases increases. Combustion gases that have not exited the appliance are called "flue gases."

VENT PIPING.

Breather. *Piping* run from a pressure-regulating device to the outdoors, designed to provide a reference to atmospheric pressure. If the device incorporates an integral pressure relief mechanism, a breather vent can also serve as a relief vent.

❖ A breather vent is distinct from a relief vent and allows the cavity on the air side of the regulator diaphragm to "breathe" by letting air in and out as the diaphragm moves within the regulator housing (see commentary, Section 410.3). Although not addressed in the definition, breather vents are also part of diaphragm-operated gas controls such as high- and low-pressure gas cutoffs.

Relief. *Piping* run from a pressure-regulating or pressure-limiting device to the outdoors, designed to provide for the safe venting of gas in the event of excessive pressure in the gas *piping* system.

❖ Relief vent piping discharges fuel gas from a pressure relief valve or pressure regulator with an integral relief valve. Unlike breather vents that would discharge fuel gas only in the event of diaphragm failure, relief vents will always discharge fuel gas, if they discharge at all. Relief devices release fuel gas under emergency conditions to prevent over pressurizing the piping system being monitored and protected.

VENTED APPLIANCE CATEGORIES. Appliances that are categorized for the purpose of vent selection are classified into the following four categories:

❖ Gas appliances are categorized for the purpose of matching the appliance to the required type of venting. Not all gas appliances are assigned a category.

Category I. An *appliance* that operates with a nonpositive vent static pressure and with a vent gas temperature that avoids excessive condensate production in the vent.

❖ These appliances include draft-hood-equipped and fan-assisted types.

Category II. An *appliance* that operates with a nonpositive vent static pressure and with a vent gas temperature that is capable of causing excessive condensate production in the vent.

❖ The condition of nonpositive pressure (draft dependent) combined with low flue-gas temperatures makes it difficult to design such an appliance. At the time of this publication, no such appliances are known to exist in the marketplace.

Category III. An *appliance* that operates with a positive vent static pressure and with a vent gas temperature that avoids excessive condensate production in the vent.

❖ These appliances include mid-efficiency (approximately 78 to 83 percent) appliances that are typically sidewall-vented with stainless steel special vents.

Category IV. An *appliance* that operates with a positive vent static pressure and with a vent gas temperature that is capable of causing excessive condensate production in the vent.

❖ These appliances include high-efficiency (84 percent and higher) condensing-type furnaces, boilers and water heaters.

VENTED ROOM HEATER. A vented self-contained, freestanding, nonrecessed *appliance* for furnishing warm air to the space in which it is installed, directly from the heater without duct connections.

❖ These appliances are typically small space heaters that discharge all products of combustion to the outdoors.

VENTED WALL FURNACE. A self-contained vented *appliance* complete with grilles or equivalent, designed for incorporation in or permanent attachment to the structure of a building, mobile home or travel trailer, and furnishing heated air circulated by gravity or by a fan directly into the space to be heated through openings in the casing. This definition shall exclude floor furnaces, unit heaters and central furnaces as herein defined.

❖ Wall furnaces are designed to occupy very little area of the room and provide space heating for one or more rooms in small occupancies, such as dwelling units, cottages and the like.

VENTING SYSTEM. A continuous open passageway from the flue collar or draft hood of an *appliance* to the outdoor atmosphere for the purpose of removing flue or vent gases. A venting system is usually composed of a vent or a chimney and vent connector, if used, assembled to form the open passageway.

❖ Venting systems fall into one of two categories: natural draft or mechanical draft systems. Natural draft chimneys and vents do not rely on any mechanical means to convey combustion products to the outdoors. Draft is produced by the temperature difference between the vent gases (combustion gases) and the ambient atmosphere. Hot gases are less dense and more buoyant; therefore, they are displaced by cooler (more dense) ambient gases, causing the hotter gases to rise and produce a draft.

Mechanical draft systems use fans or other mechanical means to cause the removal of flue or vent gases and also fall into one of two categories, based on positive or nonpositive static vent pressure. The positive vent pressure systems are referred to as forced-draft or power venting systems, and the nonpositive vent pressure systems are referred to as induced-draft venting systems.

Forced-draft venting system. A portion of a venting system using a fan or other mechanical means to cause the removal of flue or vent gases under positive static vent pressure.

❖ Power exhausters, including power draft venting systems, and some power burner systems are examples of forced-draft systems. Vents and chimneys must be

INTERNATIONAL CODE COUNCIL®
Copyright © 2015 ICC. ALL RIGHTS RESERVED. Accessed by David Dammon on Jun 21, 2017 12:30:52 PM pursuant to License Agreement with ICC. No further reproduction or distribution authorized. ANY UNAUTHORIZED REPRODUCTION OR DISTRIBUTION IS A VIOLATION OF THE FEDERAL COPYRIGHT ACT AND THE LICENSE AGREEMENT, AND SUBJECT TO CIVIL AND CRIMINAL PENALTIES THEREUNDER.

listed for positive-pressure applications where used with forced-draft systems.

Induced draft venting system. A portion of a venting system using a fan or other mechanical means to cause the removal of flue or vent gases under nonpositive static vent pressure.

❖ Induced-draft venting is commonly accomplished with field-installed inducer fans designed to supplement natural draft chimneys or vents.

Mechanical draft venting system. A venting system designed to remove flue or vent gases by mechanical means, that consists of an induced draft portion under nonpositive static pressure or a forced draft portion under positive static pressure.

❖ These systems do not depend on draft, but rather, use fans or blowers.

Natural draft venting system. A venting system designed to remove flue or vent gases under nonpositive static vent pressure entirely by natural draft.

❖ Natural draft chimneys and vents do not rely on any mechanical means to convey combustion products to the outdoors. Draft is produced by the temperature difference between the combustion gases (flue gases) and the ambient atmosphere. Hot gases are less dense and more buoyant; therefore, they rise as they are displaced by more dense ambient air.

WALL HEATER, UNVENTED-TYPE. A room heater of the type designed for insertion in or attachment to a wall or partition. Such heater does not incorporate concealed venting arrangements in its construction and discharges all products of combustion through the front into the room being heated.

❖ See the definition and commentary to "Unvented room heater."

[M] WATER HEATER. Any heating *appliance* or *equipment* that heats potable water and supplies such water to the potable hot water distribution system.

❖ A water heater is a closed pressure vessel or heat exchanger that has a heat source and that supplies potable (drinkable) water to the building's hot water distribution system. Large commercial water heaters are sometimes referred to as "hot water supply boilers." Water heaters can be of the storage type with an integral storage vessel, circulating type for use with an external storage vessel, tankless instantaneous type without storage capacity and point-of-use type with or without storage capacity. The code and the IPC regulate water heaters because these appliances have elements and installation requirements related to both mechanical and plumbing systems.

Bibliography

The following resource materials were used in the preparation of the commentary for this chapter of the code.

IBC-2015, *International Building Code*. Washington, DC: International Code Council, 2014.

IFC-2015, *International Fire Code*. Washington, DC: International Code Council, 2014.

IMC-2015, *International Mechanical Code*. Washington, DC: International Code Council, 2014.

IPC-2015, *International Plumbing Code*. Washington, DC: International Code Council, 2014.

INTERNATIONAL CODE COUNCIL®

Copyright © 2015 ICC. ALL RIGHTS RESERVED. Accessed by David Dammon on Jun 21, 2017 12:30:52 PM pursuant to License Agreement with ICC. No further reproduction or distribution authorized. ANY UNAUTHORIZED REPRODUCTION OR DISTRIBUTION IS A VIOLATION OF THE FEDERAL COPYRIGHT ACT AND THE LICENSE AGREEMENT, AND SUBJECT TO CIVIL AND CRIMINAL PENALTIES THEREUNDER.

Chapter 3: General Regulations

General Comments

A fundamental principle of the code is its dependence on the listing and labeling method of approval for appliances and equipment. Section 301.3 prohibits the installation of unlisted appliances except where approved in accordance with Section 105.

Purpose

Chapter 3 contains requirements for the safe and proper installation of gas-fired equipment and appliances to help ensure protection of life and property.

SECTION 301 (IFGC) GENERAL

301.1 Scope. This chapter shall govern the approval and installation of all *equipment* and appliances that comprise parts of the installations regulated by this code in accordance with Section 101.2.

❖ This section states that this chapter governs the approval and installation of all gas-fired equipment and appliances that are regulated by the code. Section 101.2 establishes the scope of application of the code (see commentary, Section 101.2).

301.1.1 Other fuels. The requirements for combustion and dilution air for gas-fired appliances shall be governed by Section 304. The requirements for combustion and dilution air for appliances operating with fuels other than fuel gas shall be regulated by the *International Mechanical Code*.

❖ This code and the *International Mechanical Code*® (IMC®) each have a combustion air chapter that is specific to the fuels addressed in the respective code.

301.2 Energy utilization. Heating, ventilating and air-conditioning systems of all structures shall be designed and installed for efficient utilization of energy in accordance with the *International Energy Conservation Code*.

❖ This section states that all appliances and equipment must be designed and installed to use depletable energy sources efficiently. The *International Energy Conservation Code*® (IECC®) is the applicable document for regulating the efficiency and performance of appliances and heating, ventilating and air-conditioning (HVAC) systems. Special applications such as process heating or cooling should be designed for the maximum energy efficiency attainable.

301.3 Listed and labeled. Appliances regulated by this code shall be *listed* and *labeled* for the application in which they are used unless otherwise *approved* in accordance with Section 105. The approval of unlisted appliances in accordance with Section 105 shall be based on *approved* engineering evaluation.

❖ Gas-fired appliances must be listed and labeled by an approved agency to show that they comply with the applicable national standards. The code requires listing and labeling for appliances, such as boilers, furnaces, space heaters, direct-fired heaters, cooking appliances, clothes dryers, rooftop HVAC units, etc. The code also requires listing for system components as specifically stated in the text addressing those components. The label is the primary, if not the only, assurance to the installer, the inspector and the end user that a representative sample of an appliance model has been tested and evaluated by an approved agency and has been determined to perform safely and efficiently when installed and operated in accordance with its listing.

Appliances must be listed and labeled for the application in which they are used, otherwise the installation would be a misapplication of the appliance. For example, if an appliance is listed for indoor use only and is installed outdoors, this installation is a misapplication of the appliance and serious malfunctions and/or conditions could result. An appliance might be marketed and installed for a particular purpose for which it was not tested and listed and this is what this section intends to prohibit. Verifying that an appliance has a testing agency label is only part of the code official's responsibility. He or she must also verify that the listing from the testing agency includes the application at hand. The bottom line is, the use of an appliance must match the use for which the appliance was tested.

The presence of a label is part of the information that the code official considers when approving appliances. The only exception to the labeling requirement occurs when the code official approves a specific appliance in accordance with the authority granted in Section 105.2.

Approval of unlabeled appliances must be based on documentation that demonstrates compliance with applicable standards or, where no product standards exist, that the appliance is appropriate for the intended use and will provide the same level of performance as would be provided by listed and labeled appliances. A fundamental principle of the code is the reliance on the listing and labeling process to ensure

INTERNATIONAL CODE COUNCIL®
Copyright © 2015 ICC. ALL RIGHTS RESERVED. Accessed by David Dammon on Jun 21, 2017 12:30:52 PM pursuant to License Agreement with ICC. No further reproduction or distribution authorized. ANY UNAUTHORIZED REPRODUCTION OR DISTRIBUTION IS A VIOLATION OF THE FEDERAL COPYRIGHT ACT AND THE LICENSE AGREEMENT, AND SUBJECT TO CIVIL AND CRIMINAL PENALTIES THEREUNDER.

appliance performance; approvals granted in accordance with Section 105.2 must be well justified with supporting documentation. To the code official, the installer and the end-user, very little is known about the performance of an appliance that is not tested and built to an appliance standard.

301.4 Labeling. Labeling shall be in accordance with the procedures set forth in Sections 301.4.1 through 301.4.2.3.

❖ This section establishes the requirements for testing and labeling appliances by an approved agency. Included within this section are the requirements for testing the product and for approval of the testing agency, the testing equipment and the personnel who conduct the test. Also included is the information that must appear on a label.

301.4.1 Testing. An *approved* agency shall test a representative sample of the appliances being *labeled* to the relevant standard or standards. The *approved* agency shall maintain a record of all of the tests performed. The record shall provide sufficient detail to verify compliance with the test standard.

❖ When an approved agency labels an appliance, the agency is ensuring that a representative sample of the appliance has been tested in accordance with an appropriate standard and has been determined to perform acceptably when installed and operated in accordance with the appliance's listing.

The basis for a label is the requirement for testing a representative, perhaps identical, sample of the appliance to indicate conformance to a required standard. This is an important premise in the code because a code official will consider the presence of a label in the approval of an appliance. For this reason, the appliance must meet the requirements of the standard. Because the appliance tested is installed and operated in accordance with the manufacturer's instructions, these instructions must provide for proper installation and operation. This is important because the code requires that the labeled appliance be installed in accordance with the manufacturer's instructions, and operating instructions must be either attached to or shipped with each appliance.

There are numerous standards, not all of which are specifically referenced in the code, applicable to various appliances and equipment. For this reason, the approved agency determines the applicable standards to be used for testing and then, in turn, as the basis for labeling. Each standard contains safety requirements for a given appliance or piece of equipment and specifies tests that must be performed. The labeling agency is required to maintain sufficient documentation to demonstrate compliance with the test standard. The code official may require that copies of the test reports be submitted to determine the validity of the label.

Examples of standards that are used as a basis for testing and labeling include:

- ANSI Z21.47, *Gas-fired Central Furnaces*;
- ANSI Z83.8, *Gas Unit Heaters*; and
- UL 795, *Commercial—Industrial Gas Heating Equipment*.

301.4.2 Inspection and identification. The *approved* agency shall periodically perform an inspection, which shall be in-plant if necessary, of the appliances to be *labeled*. The inspection shall verify that the *labeled* appliances are representative of the appliances tested.

❖ The approved agency whose identification insignia appears on the label must perform periodic in-plant inspections. The primary objective of these inspections is to determine that the manufactured product is equivalent to the sample that was tested. Because the label is good only for the products that were tested, the in-plant inspections are intended to discover any design changes or production quality control problems. If any discrepancies are found, that the labeling agency would discontinue labeling of that particular product, and the manufacturer would be required to resolve the problem and, if necessary, have the redesigned product retested before the labeling process is resumed.

301.4.2.1 Independent. The agency to be *approved* shall be objective and competent. To confirm its objectivity, the agency shall disclose all possible conflicts of interest.

❖ As a part of the basis for a code official's approval of a particular labeling agency, the agency must demonstrate both its independence from the manufacturer of the product and its competence to perform the required tests. The judgment of objectivity is linked to the financial and fiduciary independence of the agency. The competence of the agency is judged by its experience, organization and the experience of its personnel. As a hypothetical example, the Acme Inspection Agency is performing testing for gas-fired furnaces for the Real Hot Furnace Company. After some investigation, both Acme and Real Hot are found to be the subsidiaries of the same parent company. The inspection agency and the manufacturer clearly have a relationship that presents the potential for conflict of interest, and the objectivity of the inspection agency is sufficiently questionable for the code official to justify not approving Acme as a testing and labeling agency for equipment produced by the Real Hot Furnace Company.

301.4.2.2 Equipment. An *approved* agency shall have adequate *equipment* to perform all required tests. The *equipment* shall be periodically calibrated.

❖ Referring to the example in the commentary for Section 301.4.2.1, if the Acme Inspection Agency had only the facilities to test and label fire doors, the agency would not be qualified to test and label a gas-fired furnace. Although this example is oversimplified, the point is that the inspection agency must have all of the necessary equipment to perform the testing required by the applicable standard.

In addition to having the proper equipment, the agency must maintain records of the maintenance and calibration of their equipment to demonstrate that

INTERNATIONAL CODE COUNCIL®
Copyright © 2015 ICC. ALL RIGHTS RESERVED. Accessed by David Dammon on Jun 21, 2017 12:30:52 PM pursuant to License Agreement with ICC. No further reproduction or distribution authorized. ANY UNAUTHORIZED REPRODUCTION OR DISTRIBUTION IS A VIOLATION OF THE FEDERAL COPYRIGHT ACT AND THE LICENSE AGREEMENT, AND SUBJECT TO CIVIL AND CRIMINAL PENALTIES THEREUNDER.

the equipment can be relied on to produce accurate, consistent and reproducible results. Testing apparatus, instruments and equipment must often be capable of measurements using very small units of measure within a specified tolerance. To produce accurate, dependable readings and reliable test results, testing apparatus, equipment and instruments must be routinely calibrated to a fixed reference. Having the proper testing equipment can be just as important as the competence of the testing personnel.

301.4.2.3 Personnel. An *approved* agency shall employ experienced personnel educated in conducting, supervising and evaluating tests.

❖ The competence of an inspection agency is based on the agency having the proper equipment to perform the test, as stated in Section 301.4.2.2, and also on the experience and abilities of its personnel. The best calibrated equipment can produce accurate results only when operated by experienced personnel who are trained to conduct, supervise and evaluate tests. For example, consider a newly formed agency that has employed individuals who do not have experience related to the testing to be conducted and have not been adequately trained. The capabilities and experience of supervisory personnel overseeing their work is also important.

301.5 Label information. A permanent factory-applied nameplate(s) shall be affixed to appliances on which shall appear in legible lettering, the manufacturer's name or trademark, the model number, serial number and, for *listed* appliances, the seal or mark of the testing agency. A label shall include the hourly rating in British thermal units per hour (Btu/h) (W); the type of fuel *approved* for use with the *appliance*; and the minimum *clearance* requirements.

❖ This section requires that the label be a metal plate, tag or other permanent label. In general, label materials other than metal tags or plates usually consist of material that is similar in appearance to a decal, and the label, its adhesive and the printed information must be durable and water resistant. Because of the important information given by a label, the label is intended to be permanent, not susceptible to damage and legible for the life of the appliance to which it is attached. The standards that appliances are tested to usually specify the required label performance criteria, the method of attachment and the required label information. The code requires that the label be affixed permanently and prominently on the appliance or equipment and specifies the information that must appear on the label. The manufacturer may be required by the relevant standard or may voluntarily provide additional information on the label. Commentary Figures 301.5(1) and 301.5(2) show typical appliance labels.

301.6 Plumbing connections. Potable water supply and building drainage system connections to appliances regulated by this code shall be in accordance with the *International Plumbing Code*.

❖ Plumbing connections to appliances and equipment regulated by the code must be in accordance with the *International Plumbing Code*® (IPC®).

Section 624.2 of the code requires that combination domestic water heating and hydronic supply water heating units be listed and installed according to their listing and manufacturer's instructions.

Hydronic systems normally require a means of supplying fill and makeup water to replace any water lost to evaporation, leakage or intentional draining. Where direct connections are made to the potable water supply, the connections must be isolated from the potable water source. This requirement is intended to protect the potable water system from contamination by backflow when a direct connection is made to a hydronic system.

Hydronic systems are normally pressurized, contain nonpotable water and fluids and can contain conditioning chemicals or antifreeze solutions. Low-temperature hydronic fluids and cooling towers have also been associated with disease-causing organisms such as the Legionnaires' disease bacterium. The potable water system must be protected from potential contamination resulting from connection to hydronic systems, water-wash filter systems, cooling towers, solar systems, water-cooled heat exchangers, cooking appliances, ice makers, humidifiers, evaporative coolers, etc.

In addition, water heaters are part of the potable water distribution system and, therefore, must comply with both the code and the IPC. A water heater installation is complex in that it has a fuel or power supply; a chimney or vent connection, if fuel-fired; a combustion air supply, if fuel-fired; connections to the plumbing potable water distribution system and controls and devices to prevent a multitude of potential hazards from conditions such as excessively high temperatures, pressures and ignition failure.

It is not uncommon for jurisdictions to issue both plumbing and mechanical permits for water heater installations or to require that the installer be licensed in both the plumbing and mechanical trades when performing such installations (see commentary, Section 624). Water heaters are clearly under the purview of both plumbing and fuel gas codes. This section also refers to the IPC for the drainage associated with mechanical appliances and equipment, such as those addressed in Section 307.

301.7 Fuel types. Appliances shall be designed for use with the type of fuel gas that will be supplied to them.

❖ Appliances are usually designed by the manufacturer to operate on one specifically designated type of fuel. An element of information used for the approval of appliances is the label, which ensures that the appliance has been tested in accordance with a valid stan-

INTERNATIONAL CODE COUNCIL®
Copyright © 2015 ICC. ALL RIGHTS RESERVED. Accessed by David Dammon on Jun 21, 2017 12:30:52 PM pursuant to License Agreement with ICC. No further reproduction or distribution authorized. ANY UNAUTHORIZED REPRODUCTION OR DISTRIBUTION IS A VIOLATION OF THE FEDERAL COPYRIGHT ACT AND THE LICENSE AGREEMENT, AND SUBJECT TO CIVIL AND CRIMINAL PENALTIES THEREUNDER.

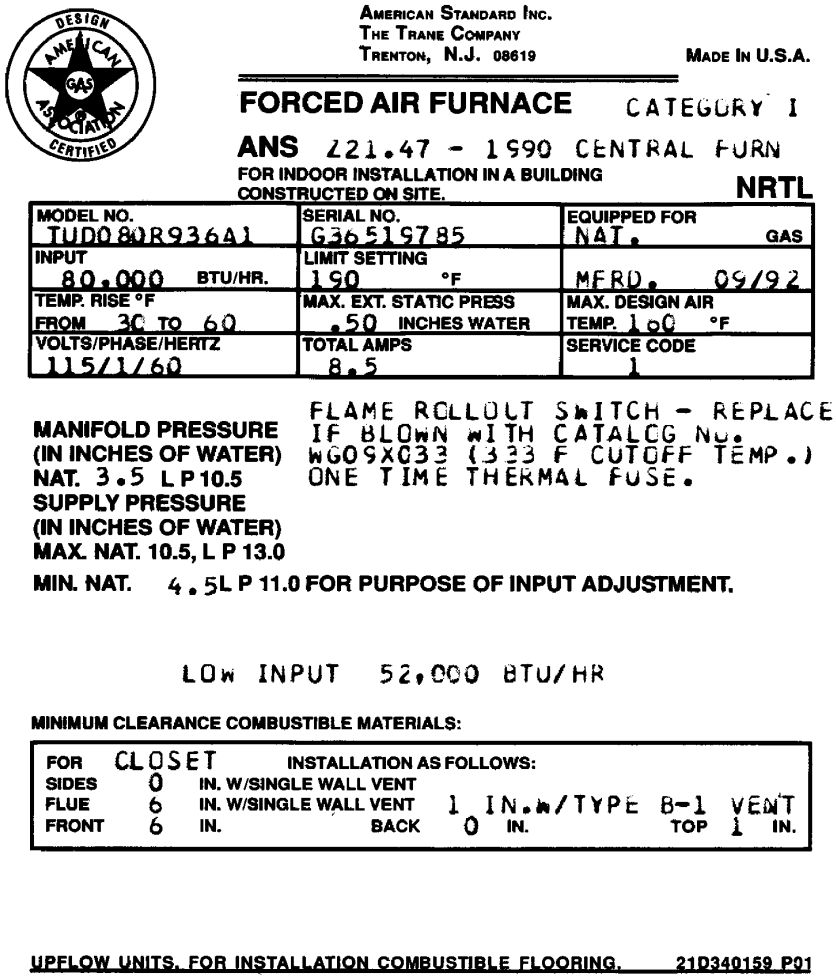

AMERICAN STANDARD INC.
THE TRANE COMPANY
TRENTON, N.J. 08619
MADE IN U.S.A.

FORCED AIR FURNACE CATEGORY I

ANS Z21.47 - 1990 CENTRAL FURN

FOR INDOOR INSTALLATION IN A BUILDING CONSTRUCTED ON SITE.

NRTL

MODEL NO.	SERIAL NO.	EQUIPPED FOR
TUD080R936A1	G36519785	NAT. GAS
INPUT 80,000 BTU/HR.	LIMIT SETTING 190 °F	MFRD. 09/92
TEMP. RISE °F FROM 30 TO 60	MAX. EXT. STATIC PRESS .50 INCHES WATER	MAX. DESIGN AIR TEMP. 100 °F
VOLTS/PHASE/HERTZ 115/1/60	TOTAL AMPS 8.5	SERVICE CODE 1

MANIFOLD PRESSURE
(IN INCHES OF WATER)
NAT. 3.5 L P 10.5
SUPPLY PRESSURE
(IN INCHES OF WATER)
MAX. NAT. 10.5, L P 13.0
MIN. NAT. 4.5 L P 11.0 FOR PURPOSE OF INPUT ADJUSTMENT.

FLAME ROLLOUT SWITCH - REPLACE IF BLOWN WITH CATALOG NO. WG09XC33 (333 F CUTOFF TEMP.) ONE TIME THERMAL FUSE.

LOW INPUT 52,000 BTU/HR

MINIMUM CLEARANCE COMBUSTIBLE MATERIALS:

FOR CLOSET INSTALLATION AS FOLLOWS:
SIDES 0 IN. W/SINGLE WALL VENT
FLUE 6 IN. W/SINGLE WALL VENT 1 IN. W/TYPE B-1 VENT
FRONT 6 IN. BACK 0 IN. TOP 1 IN.

UPFLOW UNITS. FOR INSTALLATION COMBUSTIBLE FLOORING. 21D340159 P01

Figure 301.5(1)
TYPCIAL LABEL FOR A CATEGORY I GAS-FIRED FURNACE
(Figure courtesy of the Trane Company, an American Standard Company)

dard and determined to perform acceptably when installed and operated in accordance with the appliance listing (see commentary, Section 301.5). The fuel used in the appliance test must be the type of fuel specified by the manufacturer.

301.7.1 Appliance fuel conversion. Appliances shall not be converted to utilize a different fuel gas except where complete instructions for such conversion are provided in the installation instructions, by the serving gas supplier or by the *appliance* manufacturer.

❖ A mismatch between an appliance and a fuel will create an extremely hazardous condition that can be avoided by examining the appliance label. When an appliance is converted to a different type of fuel, the original label that appears on the appliance is no longer valid. Because the original approval of the appliance is based in part on the label, the appliance is no longer approved for use. Fuel conversion kits will include a replacement label.

Many gas appliances are listed and labeled for more than one fuel, most commonly natural gas and liquefied petroleum (LP) (propane). Such appliances can be converted from one fuel to the other using a manufacturer's conversion kit and following instructions provided by the manufacturer. These conversions must be done only with the approval of the code official to make sure that the instructions are complied with and the safety of the original installation is maintained. Fuel conversions that are not performed correctly can adversely affect the performance of burners, the venting of combustion gases and the proper clearance to combustibles.

Once a conversion has been completed, a supplemental label must be installed to update the information contained on the original label, thereby alerting any service personnel to the modifications that have been made.

Fuel-fired appliances are designed to operate with a maximum and minimum heat energy input capacity.

INTERNATIONAL CODE COUNCIL®
Copyright © 2015 ICC. ALL RIGHTS RESERVED. Accessed by David Dammon on Jun 21, 2017 12:30:52 PM pursuant to License Agreement with ICC. No further reproduction or distribution authorized. ANY UNAUTHORIZED REPRODUCTION OR DISTRIBUTION IS A VIOLATION OF THE FEDERAL COPYRIGHT ACT AND THE LICENSE AGREEMENT, AND SUBJECT TO CIVIL AND CRIMINAL PENALTIES THEREUNDER.

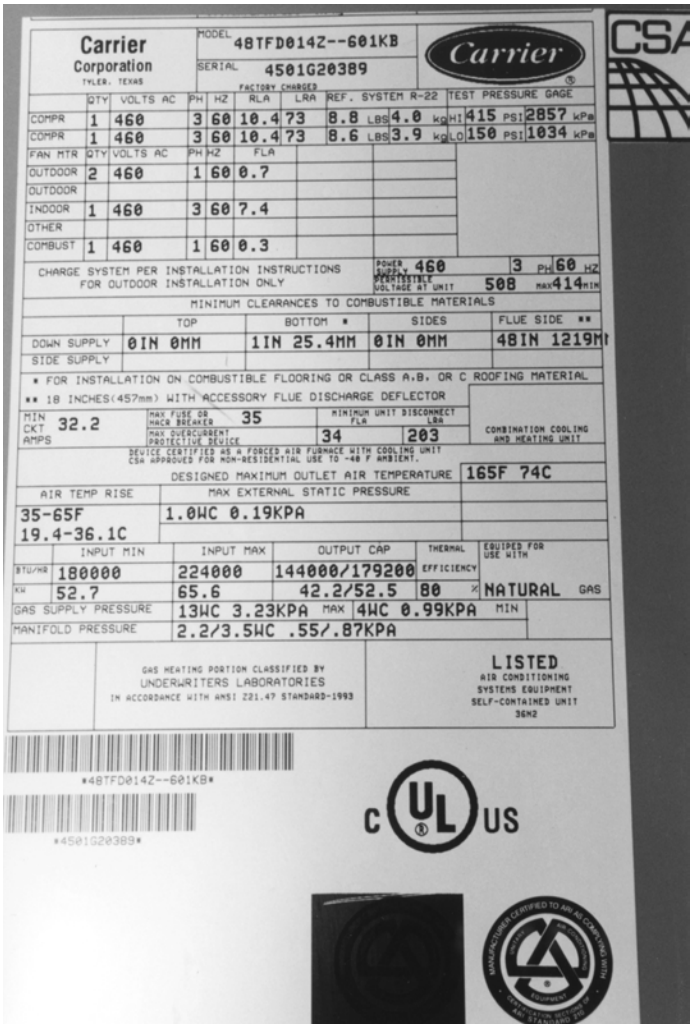

Figure 301.5(2)
ROOFTOP HVAC UNIT LABEL

In accordance with the appliance manufacturer's instructions, this capacity might need to be field adjusted to suit the elevation because of the change in air density at different elevations. Alteration of heat energy input beyond the allowable limits can result in hazardous overfiring or underfiring. Either condition can cause operation problems that include overheating, vent failure, corrosion, poor draft and poor combustion. Input adjustments for different elevations are dictated by the appliance manufacturer and are not addressed in the code, other than by Section 305.1.

301.8 Vibration isolation. Where means for isolation of vibration of an *appliance* is installed, an *approved* means for support and restraint of that *appliance* shall be provided.

❖ Where vibration isolation connections are used in ducts and piping and where equipment is mounted with vibration dampers, support is required for the ducts, piping and equipment to maintain positioning and alignment and to prevent stress and strain on the vibration connectors and dampers.

301.9 Repair. Defective material or parts shall be replaced or repaired in such a manner so as to preserve the original approval or listing.

❖ Repair work must not alter the nature of appliances and equipment in a way that would invalidate the listing or conditions of approval. For example, replacement of safety control devices with different devices could alter the design and operation of an appliance from that intended by the manufacturer and the listing agency.

301.10 Wind resistance. Appliances and supports that are exposed to wind shall be designed and installed to resist the wind pressures determined in accordance with the *International Building Code*.

❖ Installations of equipment and appliances that are subject to wind forces must be designed to resist those forces. The wind pressures must be based on the wind provisions in the code. The wind pressure requirements are based on the exposure of the building and wind speeds for that region.

INTERNATIONAL CODE COUNCIL®
Copyright © 2015 ICC. ALL RIGHTS RESERVED. Accessed by David Dammon on Jun 21, 2017 12:30:52 PM pursuant to License Agreement with ICC. No further reproduction or distribution authorized. ANY UNAUTHORIZED REPRODUCTION OR DISTRIBUTION IS A VIOLATION OF THE FEDERAL COPYRIGHT ACT AND THE LICENSE AGREEMENT, AND SUBJECT TO CIVIL AND CRIMINAL PENALTIES THEREUNDER.

[BS] 301.11 Flood hazard. For structures located in flood hazard areas, the appliance, equipment and system installations regulated by this code shall be located at or above the elevation required by Section 1612 of the *International Building Code* for utilities and attendant equipment.

Exception: The appliance, equipment and system installations regulated by this code are permitted to be located below the elevation required by Section 1612 of the *International Building Code* for utilities and attendant equipment provided that they are designed and installed to prevent water from entering or accumulating within the components and to resist hydrostatic and hydrodynamic loads and stresses, including the effects of buoyancy, during the occurrence of flooding to such elevation.

❖ In flood hazard areas, mechanical systems, equipment and appliances must be elevated above the elevation specified in the *International Building Code*® (IBC®). Exposure to water can damage most mechanical system components as well as cause serious appliance and equipment malfunctions. For example, the majority of appliance manufacturers require the replacement of safety controls or entire appliances that have been submerged in flood waters. See FEMA 348 for additional guidance.

The exception to this section provides criteria for placing specific equipment below the required elevation. To do so, the equipment must be designed to prevent the entry or accumulation of water. Standard equipment that typically is installed at-grade is not designed to withstand the entry of water and would not meet the requirements of this exception.

301.12 Seismic resistance. When earthquake loads are applicable in accordance with the *International Building Code*, the supports shall be designed and installed for the seismic forces in accordance with that code.

❖ This code requires building systems to be designed for specified seismic forces. This section references the detailed equipment and component seismic support requirements contained in the code to bring these requirements to the attention of the design professional and the permit applicant.

Equipment piping must be braced for earthquake loads as stated in the code. The failure of the supports for these components has been shown to be a threat to health and safety in geographical areas where moderate- to high-magnitude earthquakes occur. The code specifies the geographical locations where earthquake design is required for certain piping and equipment and the size of the components that must be braced.

301.13 Ducts. Ducts required for the installation of systems regulated by this code shall be designed and installed in accordance with the *International Mechanical Code*.

❖ Chapter 6 of the IMC governs duct systems used for the movement of environmental air, governing the construction, installation, alteration, maintenance and repair of these systems (see the definition of "Duct system" in Chapter 2).

301.14 Rodentproofing. Buildings or structures and the walls enclosing habitable or occupiable rooms and spaces in which persons live, sleep or work, or in which feed, food or foodstuffs are stored, prepared, processed, served or sold, shall be constructed to protect against rodents in accordance with the *International Building Code*.

❖ This section states the requirements to prevent rodent infestation of a building. Efforts must be made to protect the annular spaces around openings in exterior walls. The annular spaces can be sealed by any effective method, but the primary methods used are to fill the annular space with a sealant material or to place a metal collar around the penetrating pipe, duct, etc. The collar material must be durable for the weather exposure and strong enough to prevent the rodents from chewing through and entering the building.

Effort must also be made to cover ventilation and combustion air openings with wire mesh material to prevent the entry of rodents through the opening.

301.15 Prohibited location. The appliances, *equipment* and systems regulated by this code shall not be located in an elevator shaft.

❖ The code views an elevator shaft as an unnecessarily risky location for fuel-gas system components. There is a potential for leaks in fuel-gas system equipment and piping, which would release fuel gas into the shaft, creating a hazardous condition. Because the elevator is often relied on for fire-fighting access as well as egress for those with disabilities, the shaft must be maintained free from contaminants and potential hazards that could render the elevator inoperative or unsafe for the occupants. The location of fuel-gas-fired equipment in an elevator shaft could also create access problems for service of the gas-fired equipment and the elevator equipment.

SECTION 302 (IFGC)
STRUCTURAL SAFETY

[BS] 302.1 Structural safety. The building shall not be weakened by the installation of any gas *piping*. In the process of installing or repairing any gas *piping*, the finished floors, walls, ceilings, tile work or any other part of the building or premises which is required to be changed or replaced shall be left in a safe structural condition in accordance with the requirements of the *International Building Code*.

❖ The installation of fuel gas systems must not adversely affect the structural integrity of the building components. The code dictates the structural safety requirements that must be applied to any structural portion of the building that is penetrated, altered or removed during the installation, replacement or repair of fuel gas systems.

[BS] 302.2 Penetrations of floor/ceiling assemblies and fire-resistance-rated assemblies. Penetrations of floor/ceiling assemblies and assemblies required to have a fire-resis-

INTERNATIONAL CODE COUNCIL®
Copyright © 2015 ICC. ALL RIGHTS RESERVED. Accessed by David Dammon on Jun 21, 2017 12:30:52 PM pursuant to License Agreement with ICC. No further reproduction or distribution authorized. ANY UNAUTHORIZED REPRODUCTION OR DISTRIBUTION IS A VIOLATION OF THE FEDERAL COPYRIGHT ACT AND THE LICENSE AGREEMENT, AND SUBJECT TO CIVIL AND CRIMINAL PENALTIES THEREUNDER.

tance rating shall be protected in accordance with the *International Building Code*.

❖ Penetrations of fire-resistance-rated assemblies can diminish the integrity of the assembly, allowing smoke and fire to pass through and cause it to fail prematurely.

[BS] 302.3 Cutting, notching and boring in wood members. The cutting, notching and boring of wood members shall comply with Sections 302.3.1 through 302.3.4.

❖ The sections referenced provide prescriptive sizes and locations of acceptable cuts, notches and bored holes in wood framing members. Ideally, framing members should not be altered in any way, but because this is not always practical, the code permits alterations that do not significantly weaken the members.

[BS] 302.3.1 Engineered wood products. Cuts, notches and holes bored in trusses, structural composite lumber, structural glued-laminated members and I-joists are prohibited except where permitted by the manufacturer's recommendations or where the effects of such alterations are specifically considered in the design of the member by a registered design professional.

❖ This section applies to engineered lumber products that are manufactured structural members. These products often have installation instructions that specifically state if, where and how the member can be altered, drilled, notched, etc. What appears to be a harmless cut, notch or boring might actually be structurally damaging to the member (see Section 302.4).

[BS] 302.3.2 Joist notching and boring. Notching at the ends of joists shall not exceed one-fourth the joist depth. Holes bored in joists shall not be within 2 inches (51 mm) of the top and bottom of the joist and their diameters shall not exceed one-third the depth of the member. Notches in the top or bottom of the joist shall not exceed one-sixth the depth and shall not be located in the middle one-third of the span.

❖ The code recognizes that at times floor and ceiling joists must be cut, notched or bored. The provisions are based on location and size limitations to ensure that the structural member can support the load.

A notch or cut will decrease the allowable stress of the member. A notch or cut might place a lumber defect that was previously in a low-stress location in the interior of the board into a high-stress area at the edge of the notch or cut. Cutting and notching also cause shear stress concentrations in the member at the corners of the notch or cut. Because of these shear stress concentrations, the full extent of the damage to the member cannot be calculated. In consideration of the detrimental effects of cutting and notching, it is a good practice to avoid cutting, notching or boring adjacent to areas of the member that contain knots and, where possible, to use rounded or sloped edged notches to reduce the stress concentrations at the corners [see Commentary Figure 302.3.2(1)].

Structural elements of engineered wood systems, such as metal-plate-connected parallel-chord wood trusses, premanufactured I-joists and metal-plate-connected wood roof trusses cannot be cut or notched unless structural analysis is provided by a qualified design professional.

Notches are not to exceed those permitted in this section unless a structural analysis is completed by a qualified design professional.

Holes cut and bored in joists and studs have the same effect as notches. Holes reduce the strength of the member. This section permits holes to be drilled in wood structural members within certain limitations. The limitations given in this section are not to be exceeded unless a structural analysis is submitted by a qualified design professional [see Commentary Figure 302.3.2(2)].

[BS] 302.3.3 Stud cutting and notching. In exterior walls and bearing partitions, any wood stud is permitted to be cut or notched to a depth not exceeding 25 percent of its width. Cutting or notching of studs to a depth not greater than 40 percent of the width of the stud is permitted in nonload-bearing partitions supporting no loads other than the weight of the partition.

❖ The load-sharing characteristics of a wall with studs, sheathing and plates allow for the stated limitation for notches in load-bearing studs. The maximum notch in a stud is not to exceed 25 percent of its depth unless the stud is reinforced to resist the anticipated load. See the commentary to Section 302.3.2 for further discussion of the effects of notching and cutting (see Commentary Figure 302.3.3).

[BS] 302.3.4 Bored holes. The diameter of bored holes in wood studs shall not exceed 40 percent of the stud depth. The diameter of bored holes in wood studs shall not exceed 60 percent of the stud depth in nonbearing partitions. The diameter of bored holes in wood studs shall not exceed 60 percent of the stud depth in any wall where each stud is doubled, provided that not more than two such successive doubled studs are so bored. The edge of the bored hole shall be not closer than $^{5}/_{8}$ inch (15.9 mm) to the edge of the stud. Bored holes shall not be located at the same section of stud as a cut or notch.

❖ This section specifies the limits of bored holes in wood studs. The 40-percent limit is intended for studs in exterior walls and for load-bearing walls. The 60-percent limit for doubled studs is also intended to apply to studs in exterior walls and other load-bearing walls. Bored holes not greater than 60 percent are allowed in any nonload-bearing stud.

The bored-hole edge location limitations maintain the load-carrying capacity of the stud. These limits are intended to apply to load-bearing and nonload-bearing partitions and studs in exterior walls. A bored hole in the same cross section as a cut or notch could cause the stud to fail (see Commentary Figure 302.3.3).

INTERNATIONAL CODE COUNCIL®
Copyright © 2015 ICC. ALL RIGHTS RESERVED. Accessed by David Dammon on Jun 21, 2017 12:30:52 PM pursuant to License Agreement with ICC. No further reproduction or distribution authorized. ANY UNAUTHORIZED REPRODUCTION OR DISTRIBUTION IS A VIOLATION OF THE FEDERAL COPYRIGHT ACT AND THE LICENSE AGREEMENT, AND SUBJECT TO CIVIL AND CRIMINAL PENALTIES THEREUNDER.

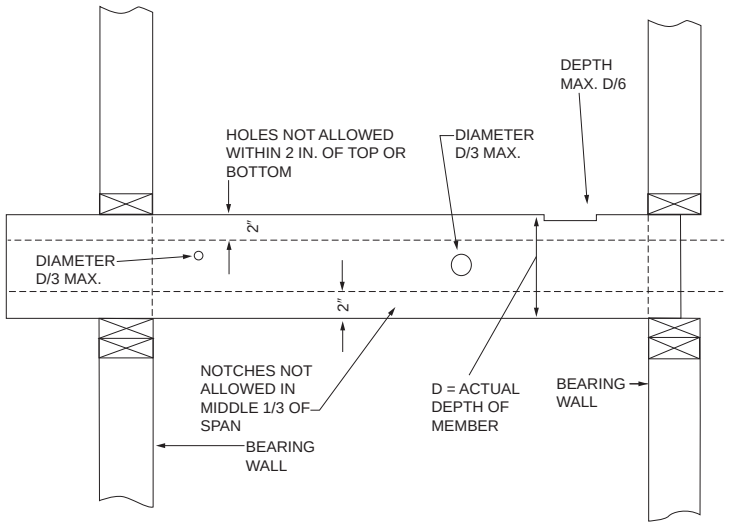

For SI: 1 inch = 25.4 mm.

Figure 302.3.2(1)
CUTTING, NOTCHING AND BORING IN JOIST

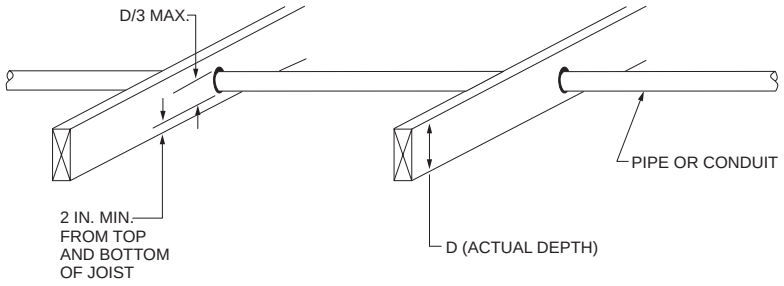

For SI: 1 inch = 25.4 mm.

Figure 302.3.2(2)
BORING JOISTS

[BS] 302.4 Alterations to trusses. Truss members and components shall not be cut, drilled, notched, spliced or otherwise altered in any way without the written concurrence and approval of a registered design professional. Alterations resulting in the addition of loads to any member, such as HVAC *equipment* and water heaters, shall not be permitted without verification that the truss is capable of supporting such additional loading.

❖ A truss is an engineered system of components that function as a structural unit. Trusses are susceptible to weakening by almost any type of alteration, such as boring, notching and cutting. Unlike dimensional solid lumber members, such as studs, rafters and joists, trusses cannot be altered in a code-prescribed way. The only exception is obtaining written approval of a specific alteration from a registered design professional.

The placement of a water heater in an attic, for example, can result in abnormal loads on roof trusses that must be accounted for structurally. A simple 40-gallon water heater weighs well over 400 pounds and is a point load. Subjecting trusses to loads that they were not designed to carry is considered to be an alteration and is prohibited without a structural analysis to verify that the truss can bear the additional weight.

[BS] 302.5 Cutting, notching and boring holes in structural steel framing. The cutting, notching and boring of holes in structural steel framing members shall be as prescribed by the registered design professional.

❖ The sizes and locations of acceptable cuts, notches and bored holes in steel framing members must be specified by the designer of the structure; that is, the architect or structural engineer.

[BS] 302.6 Cutting, notching and boring holes in cold-formed steel framing. Flanges and lips of load-bearing, cold-formed steel framing members shall not be cut or notched. Holes in webs of load-bearing, cold-formed steel framing members shall be permitted along the centerline of the web of the framing member and shall not exceed the dimensional limitations, penetration spacing or minimum

INTERNATIONAL CODE COUNCIL®
Copyright © 2015 ICC. ALL RIGHTS RESERVED. Accessed by David Dammon on Jun 21, 2017 12:30:52 PM pursuant to License Agreement with ICC. No further reproduction or distribution authorized. ANY UNAUTHORIZED REPRODUCTION OR DISTRIBUTION IS A VIOLATION OF THE FEDERAL COPYRIGHT ACT AND THE LICENSE AGREEMENT, AND SUBJECT TO CIVIL AND CRIMINAL PENALTIES THEREUNDER.

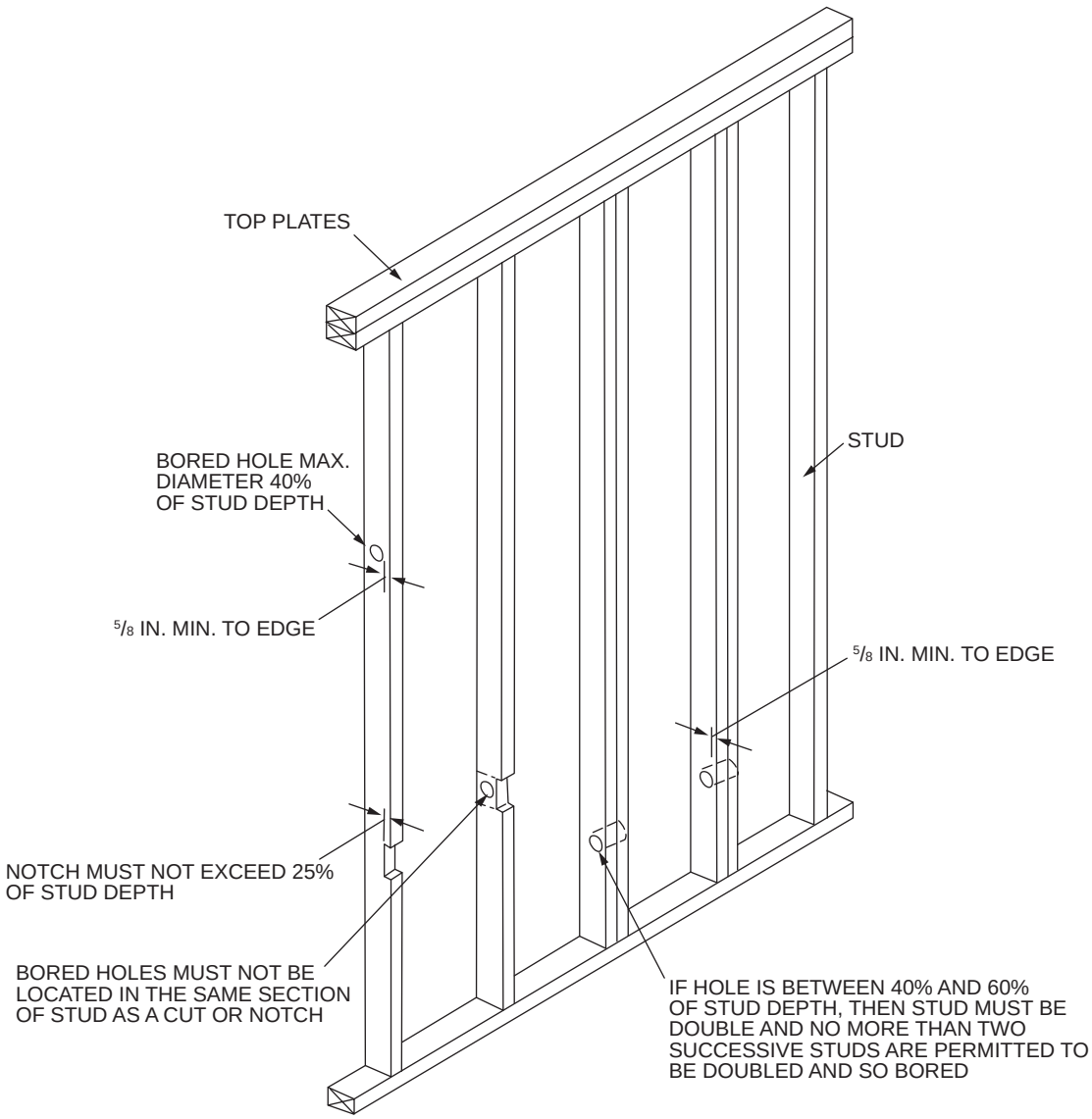

For SI: 1 inch = 25.4 mm.

Figure 302.3.3
BORING AND NOTCHING OF STUDS

hole edge distance as prescribed by the registered design professional. Cutting, notching and boring holes of steel floor/roof decking shall be as prescribed by the registered design professional.

❖ This section does not allow any structural steel framing member to be cut, notched or bored without approval by a registered design professional. Unlike Section 302.3, which allows field cutting, notching and boring of wood studs and joists within the prescribed limits, this section requires that alterations to steel structural framing members be allowed only as dictated by a registered design professional prior to the alteration. The code official should not approve any alterations to structural members unless a signed drawing or revision is on the job site showing the allowed size and location of the cut, notch or bored hole.

[BS] 302.7 Cutting, notching and boring holes in nonstructural cold-formed steel wall framing. Flanges and lips of nonstructural cold-formed steel wall studs shall be permitted along the centerline of the web of the framing member, shall not exceed $1^1/_2$ inches (38 mm) in width or 4 inches (102 mm) in length, and the holes shall not be spaced less than 24

INTERNATIONAL CODE COUNCIL®
Copyright © 2015 ICC. ALL RIGHTS RESERVED. Accessed by David Dammon on Jun 21, 2017 12:30:52 PM pursuant to License Agreement with ICC. No further reproduction or distribution authorized. ANY UNAUTHORIZED REPRODUCTION OR DISTRIBUTION IS A VIOLATION OF THE FEDERAL COPYRIGHT ACT AND THE LICENSE AGREEMENT, AND SUBJECT TO CIVIL AND CRIMINAL PENALTIES THEREUNDER.

inches (610 mm) center to center from another hole or less than 10 inches (254 mm) from the bearing end.

❖ This section does not allow any cutting or notching of the flanges and lips of any cold-formed steel framing member. However, holes may be made in the web of nonstructural cold-formed steel wall studs without the involvement of a registered design professional if the prescribed size, location and spacing requirements are met.

SECTION 303 (IFGC)
APPLIANCE LOCATION

303.1 General. Appliances shall be located as required by this section, specific requirements elsewhere in this code and the conditions of the *equipment* and *appliance* listing.

❖ Section 303 is a consolidation of the code's generally applicable location requirements and limitations. The listing for an appliance or equipment will often contain location requirements parallel with or in addition to these sections.

303.2 Hazardous locations. Appliances shall not be located in a *hazardous location* unless *listed* and *approved* for the specific installation.

❖ Gas-fired appliances that are to be installed in a hazardous location must be approved and listed for use in that location. A hazardous location is defined as any location considered to be a potential fire hazard from flammable vapors, dust, combustible fibers or other highly combustible substances. This location is not necessarily classified in the IBC or NFPA 70 as a high-hazard occupancy classification. Appliances located in a hazardous location require special design, construction and installation because of the potential for an explosion or fire caused by the presence of dust, flammable vapors and highly combustible materials.

This section does not specify the type of appliance to be used in any particular hazardous location; therefore, the code official must evaluate information submitted by the designer on the intended occupancy of a space, the specification for the appliance and the location of the appliance in the space to determine the requirements. For example, these requirements may include spark-resistant materials for moving parts, such as fan blades; explosionproof construction for electrical switches, starters and motors; or sealed combustion chambers for fuel-burning appliances (see commentary, Sections 305.3 and 305.6).

Examples of appliances installed in a hazardous location are fuel-fired appliances in an industrial baking facility where fine flour dust is present and fuel-fired appliances in a paint shop where paint fumes and vapors are present.

303.3 Prohibited locations. Appliances shall not be located in sleeping rooms, bathrooms, toilet rooms, storage closets or surgical rooms, or in a space that opens only into such rooms or spaces, except where the installation complies with one of the following:

1. The *appliance* is a direct-vent *appliance* installed in accordance with the conditions of the listing and the manufacturer's instructions.
2. Vented room heaters, wall furnaces, vented decorative appliances, vented gas fireplaces, vented gas fireplace heaters and decorative appliances for installation in vented solid fuel-burning fireplaces are installed in rooms that meet the required volume criteria of Section 304.5.
3. A single wall-mounted unvented room heater is installed in a bathroom and such unvented room heater is equipped as specified in Section 621.6 and has an input rating not greater than 6,000 Btu/h (1.76 kW). The bathroom shall meet the required volume criteria of Section 304.5.
4. A single wall-mounted unvented room heater is installed in a bedroom and such unvented room heater is equipped as specified in Section 621.6 and has an input rating not greater than 10,000 Btu/h (2.93 kW). The bedroom shall meet the required volume criteria of Section 304.5.
5. The *appliance* is installed in a room or space that opens only into a bedroom or bathroom, and such room or space is used for no other purpose and is provided with a solid weather-stripped door equipped with an *approved* self-closing device. All *combustion air* shall be taken directly from the outdoors in accordance with Section 304.6.

❖ The intent of this section is to prevent fuel-fired appliances from being installed in rooms and spaces where the combustion process could pose a threat to the occupants. Potential threats include depleted oxygen levels; elevated levels of carbon dioxide, nitrous oxides, carbon monoxide, and other combustion gases; ignition of combustibles and elevated levels of flammable gases.

In small rooms, such as bedrooms and bathrooms, the doors are typically closed when the room is occupied, which could allow combustion gases to build up to life-threatening levels. In bedrooms, sleeping occupants would not be alert to or aware of impending danger.

If an appliance obtains combustion air from a room or space, it communicates with the atmosphere in that room or space whether or not it is installed in that room or space. An appliance might be in a room, closet or alcove and obtain combustion air from an adjacent room, so Section 303.3 is worded to address the location of an appliance in the rooms listed and in spaces that open only into such rooms. In other words, an appliance in a closet accessed from a bedroom is no different from an appliance located within the bedroom. It is not the intent of this section to prevent combustion air from being taken from a bedroom, bathroom, etc., as evidenced in

INTERNATIONAL CODE COUNCIL®
Copyright © 2015 ICC. ALL RIGHTS RESERVED. Accessed by David Dammon on Jun 21, 2017 12:30:52 PM pursuant to License Agreement with ICC. No further reproduction or distribution authorized. ANY UNAUTHORIZED REPRODUCTION OR DISTRIBUTION IS A VIOLATION OF THE FEDERAL COPYRIGHT ACT AND THE LICENSE AGREEMENT, AND SUBJECT TO CIVIL AND CRIMINAL PENALTIES THEREUNDER.

Items 2, 3 and 4. For example, the volume of a bedroom could be added to the volume of other rooms for the purpose of providing indoor combustion air for an appliance not installed in a location prohibited by this section if openings are installed to conjoin the space volumes in accordance with Section 304.5.3. If an appliance obtains combustion air from a room, the appliance combustion chamber would be open to the room and the appliance must be considered to be in that room.

Item 1 recognizes that direct-vent appliances have sealed combustion chambers and obtain all combustion air directly from the outdoors. The appliance combustion chambers do not communicate with the room atmosphere.

Item 2 requires that the room be able to supply the necessary combustion air by infiltration as specified in Section 304.5.3. Note that Item 2 includes both vented decorative appliances and vented gas fireplaces which are both addressed by ANSI Z21.50 and are essentially the same appliance, known by different names. Vented gas fireplace heaters (ANSI Z21.88) were also added to Item 2.

Items 3 and 4 allow the installation of a single wall-mounted unvented room heater in bathrooms and bedrooms if the heaters are equipped with oxygen depletion safety shutoff systems; are limited in Btu input rating; and the space is capable of supplying indoor combustion air in accordance with Section 304.5. These exceptions specify "wall-mounted" heaters, which are fully enclosed and less susceptible to tampering and other conditions that might affect the combustion process. Items 3 and 4 would not apply to room heaters that stand on the floor or fasten to a fireplace hearth or ventless firebox hearth [see Commentary Figure 303.3(1)].

Item 5 would allow installation of fuel-fired appliances within a separate dedicated space that is accessed from the rooms and spaces listed in this section. A separated space containing the appliance must be open to the outdoors in accordance with Section 304.6, and the access door to the space must be solid and weather-stripped to prevent communication between atmospheres in the separated spaces. The door must also be self-closing and not rely on occupants to keep it closed. The enclosure must not be used for storage or any other purpose. The intent is to isolate the appliance(s) from the rooms listed in this section and to obtain all combustion air directly from the outdoors [see Commentary Figure 303.3(2)]. This item can be used to avoid relocating an appliance when an existing appliance installed in a prohibited location needs to be replaced [see Commentary Figure 303.3(2)].

303.4 Protection from vehicle impact damage. Appliances shall not be installed in a location subject to vehicle impact damage except where protected by an *approved* means.

❖ Appliances must be installed with consideration for potential damage. Damage can result in property loss and can cause hazardous malfunctions, fire or explosions. Potential damage includes impact from vehicles such as fork-lifts, farm machinery and passenger cars and trucks. For example, an appliance installed in a garage might be subject to vehicle impact. Means of protection of appliances must be approved and effective and if barriers are used, they must be strong enough to resist the impact anticipated. Locating appliances out of the vehicle's normal travel path can be a simple and effective means of protection (see Commentary Figure 303.4).

303.5 Indoor locations. Furnaces and boilers installed in closets and alcoves shall be *listed* for such installation.

❖ Fuel-fired appliances installed in spaces such as alcoves and closets can pose a potential fire hazard because of the heat emanating from the appliance and the inadequate ventilation afforded by the boundaries of small enclosures.

For appliances installed in closets or alcoves, the clearances stated in the listing (label) are necessary for ventilation cooling of the appliance and must not be reduced as provided for in Section 308.



Figure 303.3(1)
UNVENTED WALL-MOUNTED ROOM HEATER
(Photo by D.F. Noyes Studios, courtesy of DESA International)

INTERNATIONAL CODE COUNCIL®
Copyright © 2015 ICC. ALL RIGHTS RESERVED. Accessed by David Dammon on Jun 21, 2017 12:30:52 PM pursuant to License Agreement with ICC. No further reproduction or distribution authorized. ANY UNAUTHORIZED REPRODUCTION OR DISTRIBUTION IS A VIOLATION OF THE FEDERAL COPYRIGHT ACT AND THE LICENSE AGREEMENT, AND SUBJECT TO CIVIL AND CRIMINAL PENALTIES THEREUNDER.

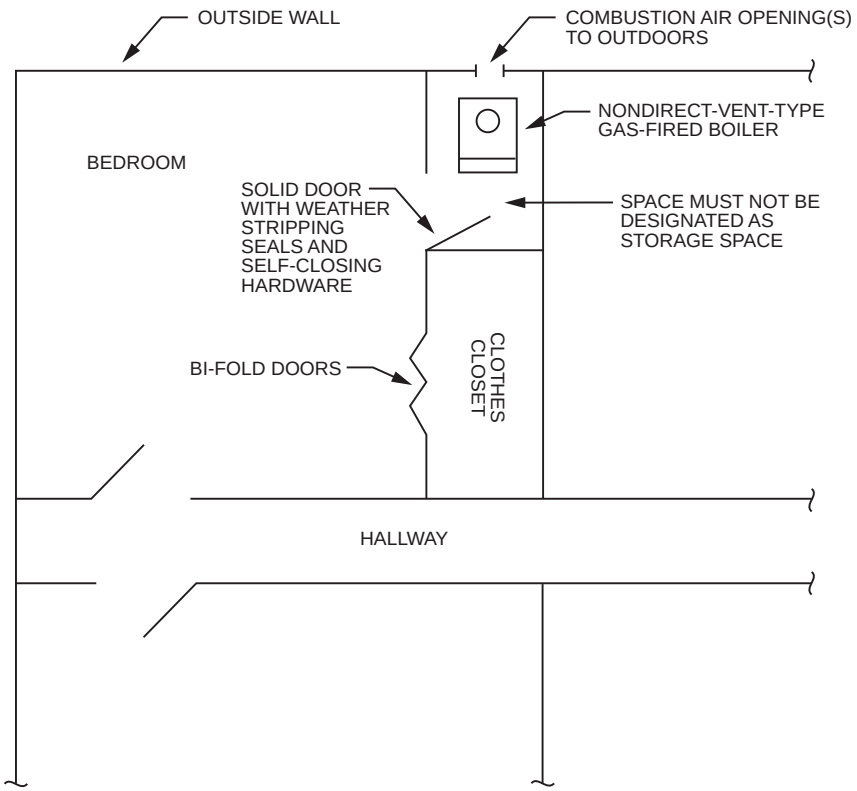

Figure 303.3(2)
APPLIANCE ENCLOSURE

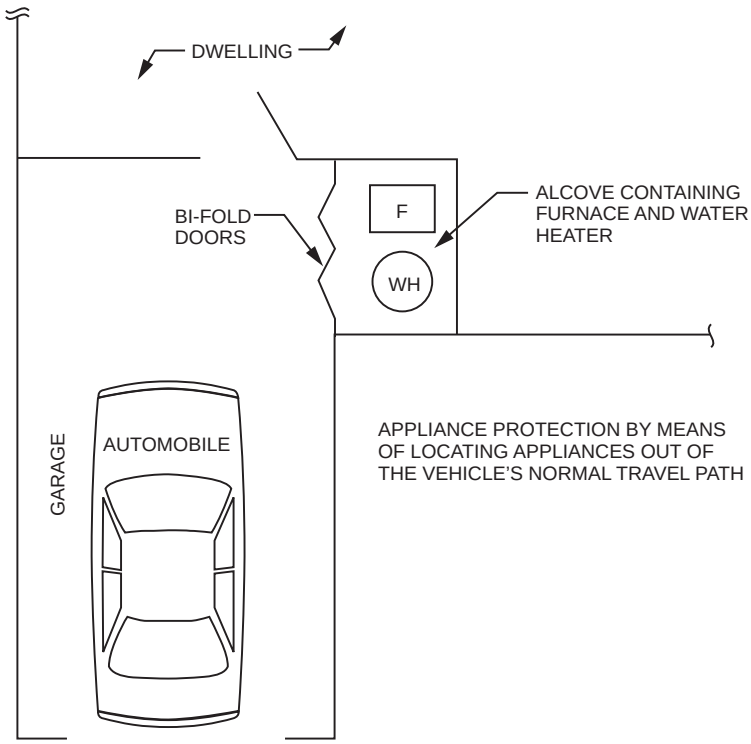

Figure 303.4
APPLIANCE PROTECTED FROM VEHICLE IMPACT

INTERNATIONAL CODE COUNCIL®
Copyright © 2015 ICC. ALL RIGHTS RESERVED. Accessed by David Dammon on Jun 21, 2017 12:30:52 PM pursuant to License Agreement with ICC. No further reproduction or distribution authorized. ANY UNAUTHORIZED REPRODUCTION OR DISTRIBUTION IS A VIOLATION OF THE FEDERAL COPYRIGHT ACT AND THE LICENSE AGREEMENT, AND SUBJECT TO CIVIL AND CRIMINAL PENALTIES THEREUNDER.

303.6 Outdoor locations. Appliances installed in outdoor locations shall be either *listed* for outdoor installation or provided with protection from outdoor environmental factors that influence the operability, durability and safety of the appliances.

❖ Appliances installed outdoors must be specifically listed for outdoor installation or be protected from outdoor conditions that will affect the "operability, durability and safety of the equipment."

The concern is for weather and ambient temperatures. The manufacturer's instructions and listing must be consulted to determine whether a particular appliance is designed for or can be made suitable for outdoor installation. For example, furnaces cannot be installed outdoors in cold climates regardless of any weatherproof enclosure, unless the heat exchanger, burner assemblies and venting system are designed for exposure to temperatures below normal indoor temperatures. Cold ambient temperatures can cause harmful condensation to occur on heat exchanger surfaces of fuel-fired appliances.

Additionally, there may be local ordinances that govern the outdoor installation of appliances. Before installing an appliance outdoors, consult local zoning regulations, ordinances and subdivision covenants. Many of these regulations strictly limit the location of outdoor mechanical equipment and appliances. Also, for roof installations, the roof structure must be able to support all imposed static and dynamic structural loads. Substantiating data on the structural adequacy of the entire installation must be submitted and approved.

303.7 Pit locations. Appliances installed in pits or excavations shall not come in direct contact with the surrounding soil. The sides of the pit or excavation shall be held back a minimum of 12 inches (305 mm) from the *appliance*. Where the depth exceeds 12 inches (305 mm) below adjoining grade, the walls of the pit or excavation shall be lined with concrete or masonry, such concrete or masonry shall extend a minimum of 4 inches (102 mm) above adjoining grade and shall have sufficient lateral load-bearing capacity to resist collapse. The *appliance* shall be protected from flooding in an *approved* manner.

❖ Where installed in a depression, appliances could be damaged by corrosion or a malfunction could be caused by blockage of an opening by the entry of soil. Because a depression could hold water, protection from flooding is also necessary.

SECTION 304 (IFGS)
COMBUSTION, VENTILATION AND DILUTION AIR

304.1 General. Air for combustion, ventilation and dilution of flue gases for appliances installed in buildings shall be provided by application of one of the methods prescribed in Sections 304.5 through 304.9. Where the requirements of Section 304.5 are not met, outdoor air shall be introduced in accordance with one of the methods prescribed in Sections 304.6 through 304.9. *Direct-vent appliances*, gas appliances of other than natural draft design, vented gas appliances not designated as Category I and appliances equipped with power burners shall be provided with combustion, ventilation and dilution air in accordance with the *appliance* manufacturer's instructions.

Exception: Type 1 clothes dryers that are provided with makeup air in accordance with Section 614.6.

❖ The provisions of Section 304 describe requirements for the combustion air necessary for the complete combustion of fuel gas, dilution of flue gases, and ventilation of gas-fired appliances and the space in which they are installed. An inadequate combustion air supply to gas-fired appliances can compromise safety by causing incomplete combustion, resulting in appliance malfunction and production of excess carbon monoxide.

Complete combustion of fuel gas is essential for the proper operation of gas-fired appliances. If insufficient quantities of oxygen are supplied, the combustion process will be incomplete, creating hazardous byproducts [see Commentary Figures 304.1(1) and 304.1(2)].

Although not implied in the term, combustion air also serves other purposes in addition to supplying oxygen. Combustion air ventilates and cools appliances and the rooms or spaces that enclose them. Combustion air also plays an important role in producing and controlling draft in vents and chimneys.

Despite the fact that an adequate combustion air supply is extremely important, it is one aspect of gas-fired equipment installations that is often overlooked, ignored or compromised. Depending on the appliance type, location and building construction, supplying combustion air can either be easy or can involve complex designs and extraordinary methods. In any case, the importance of a proper combustion air supply cannot be overemphasized.

The methods of supplying combustion air range from simple (inherently more dependable) methods to more complex methods. This section offers five methods for providing combustion air [see Commentary Figure 304.1(3)]:

1. All indoor air.
2. All outdoor air.
3. Combination indoor and outdoor air.
4. Mechanical combustion air supply.
5. Engineered design.

The last sentence of this section clarifies that the section is intended to apply only to natural-draft atmospheric-burner-design appliances; Category I appliances; nondirect-vent appliances; and appliances not equipped with power burners (see Commentary, Section 304.8). For example, the application of Section 304.6 with large power-burner-equipped (nonnatural-draft, nonatmospheric-burner designs) boilers could result in excessively large openings in an outside

INTERNATIONAL CODE COUNCIL®
Copyright © 2015 ICC. ALL RIGHTS RESERVED. Accessed by David Dammon on Jun 21, 2017 12:30:52 PM pursuant to License Agreement with ICC. No further reproduction or distribution authorized. ANY UNAUTHORIZED REPRODUCTION OR DISTRIBUTION IS A VIOLATION OF THE FEDERAL COPYRIGHT ACT AND THE LICENSE AGREEMENT, AND SUBJECT TO CIVIL AND CRIMINAL PENALTIES THEREUNDER.

wall, causing environmental problems within the boiler room [see Commentary Figure 304.1(6)].

Section 304.1 states that the methods of providing combustion air as prescribed in Sections 304.5 through 304.9 are applicable only to certain types of appliances, namely natural-draft appliances with draft hoods and fan-assisted appliances. The other types of appliances, including direct-vent appliances (direct-vent appliances can be natural-draft type but have no draft hoods), power-vented appliances and Category II, III and IV appliances, must be provided with combustion air as dictated in the appliance manufacturer's instructions. Another type of appliance has been added to the types that are subject only to the requirements in the manufacturer's instructions—appliances equipped with power burners. Power burners pull in combustion air under fan power and mix it with the fuel gas before conveying it to the burner. Natural-draft appliances take in combustion air by means of the weak force produced by the natural draft in the venting system only. Clearly there is a significant difference between the mechanical force of power burners with combustion air fans and natural-draft appliances that must rely on the venting system draft to cause combustion air to enter the appliance. The methods in Sections 304.5 through 304.9 were based on the physics of natural-draft, fan-assisted and Category I appliances and, therefore, failed to account for the nature of powered systems like power burners. This fact has perplexed designers for many years as they tried to design combustion air openings for large input boilers and similar appliances that are commonly equipped with power burners. When they used the sizing rules in the code for combustion air openings in the exterior wall of a boiler room, for example, the opening size would be so large that it would be impossible to prevent the freezing of pipes and equipment in colder climates. The openings to the outdoors were prohibitively large for such large input power-burner appliances and out of proportion with the need when considering that power burners mechanically draw in combustion air. When natural draft is depended on, larger openings are necessary to reduce the pressure drop across the openings; however, power burners can tolerate much larger pressure drops, thus allowing smaller openings. The manufacturers' instructions for large input power-burner appliances specify the size of combus-

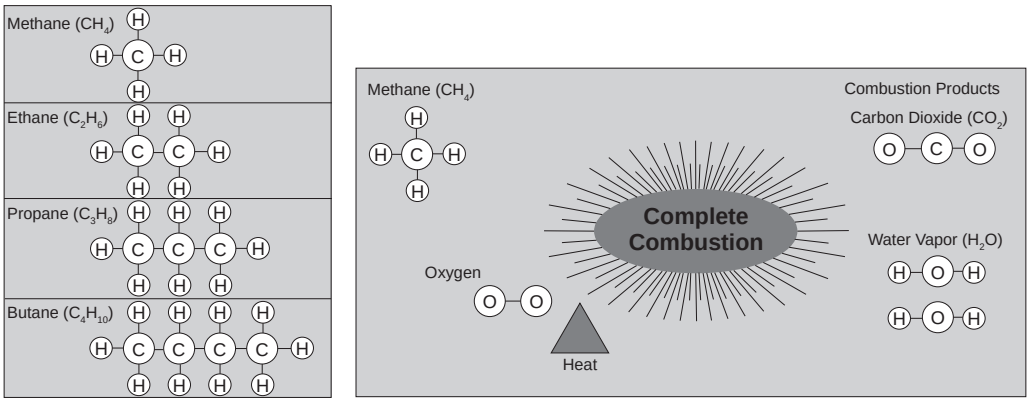

Figure 304.1(1)
THE CHEMISTRY OF IDEAL COMBUSTION
(Figure courtesy of Reznor/Homas & Betts Corporation)

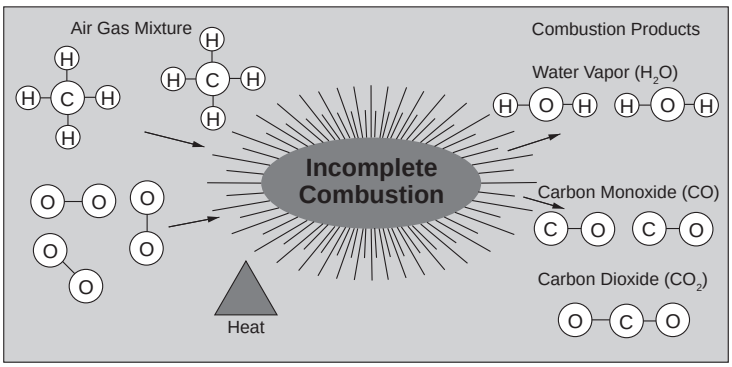

Figure 304.1(2)
THE CHEMISTRY OF INCOMPLETE COMBUSTION
(Figure courtesy of Reznor/Homas & Betts Corporation)

INTERNATIONAL CODE COUNCIL®
Copyright © 2015 ICC. ALL RIGHTS RESERVED. Accessed by David Dammon on Jun 21, 2017 12:30:52 PM pursuant to License Agreement with ICC. No further reproduction or distribution authorized. ANY UNAUTHORIZED REPRODUCTION OR DISTRIBUTION IS A VIOLATION OF THE FEDERAL COPYRIGHT ACT AND THE LICENSE AGREEMENT, AND SUBJECT TO CIVIL AND CRIMINAL PENALTIES THEREUNDER.

tion air openings by their own methods. Typically those methods result in much smaller openings than prescribed in the code; however, some manufacturers simply refer back to the code instead of offering their own method. A research study demonstrated that the code-prescribed opening sizing methods were overkill for power-burner appliances.

Direct-vent appliances supply their own combustion air through an outdoor air intake pipe or duct [see Commentary Figures 304.1(4) and 304.1(5)].

The exception recognizes that clothes dryers receive the required combustion air from the makeup air that compensates for the exhaust airflow from the appliance.

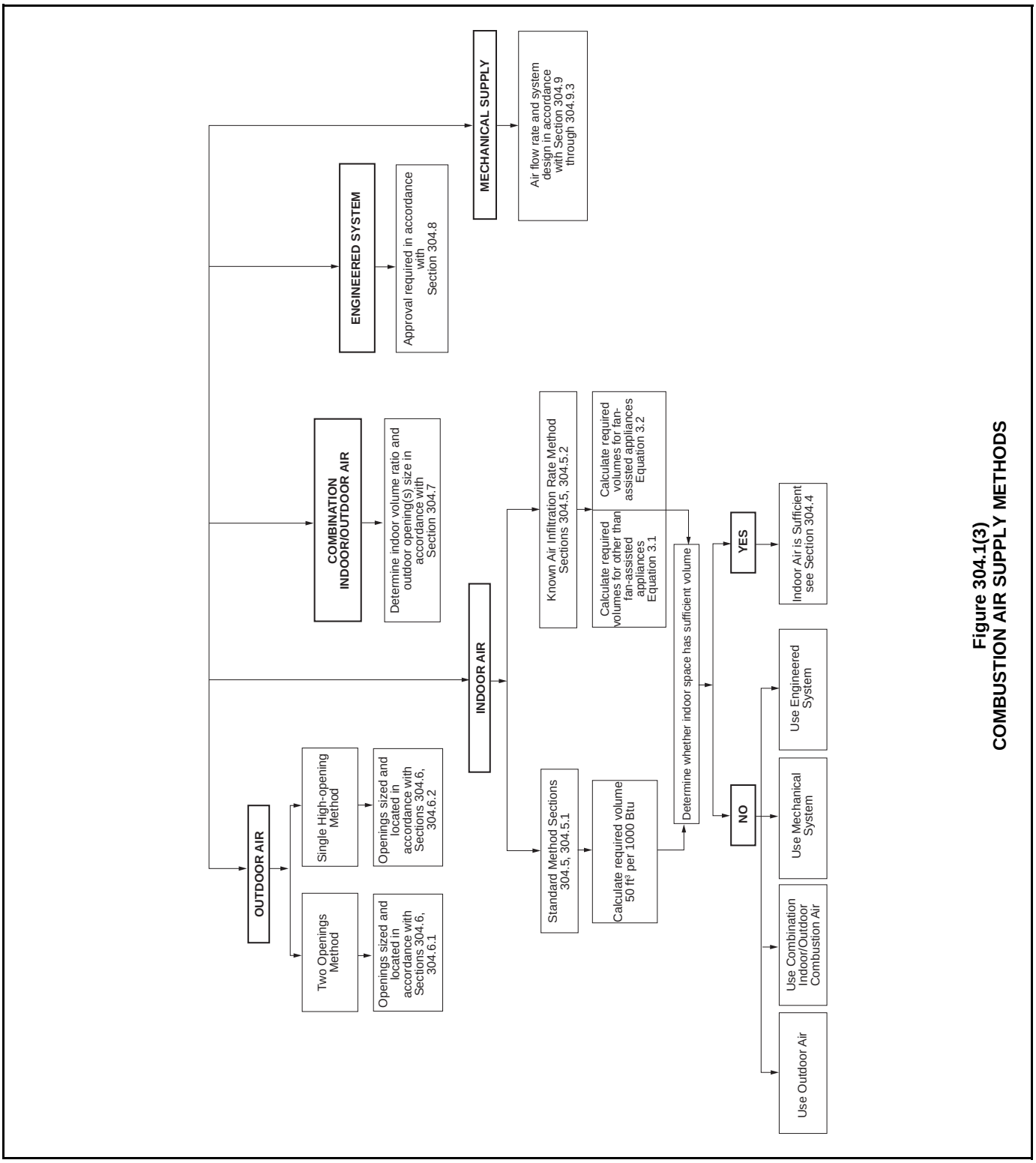

Figure 304.1(3)
COMBUSTION AIR SUPPLY METHODS

INTERNATIONAL CODE COUNCIL®
Copyright © 2015 ICC. ALL RIGHTS RESERVED. Accessed by David Dammon on Jun 21, 2017 12:30:52 PM pursuant to License Agreement with ICC. No further reproduction or distribution authorized. ANY UNAUTHORIZED REPRODUCTION OR DISTRIBUTION IS A VIOLATION OF THE FEDERAL COPYRIGHT ACT AND THE LICENSE AGREEMENT, AND SUBJECT TO CIVIL AND CRIMINAL PENALTIES THEREUNDER.

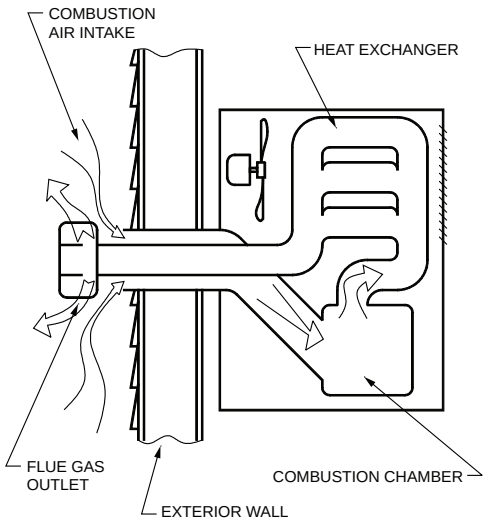

Figure 304.1(4)
DIRECT-VENT APPLIANCE

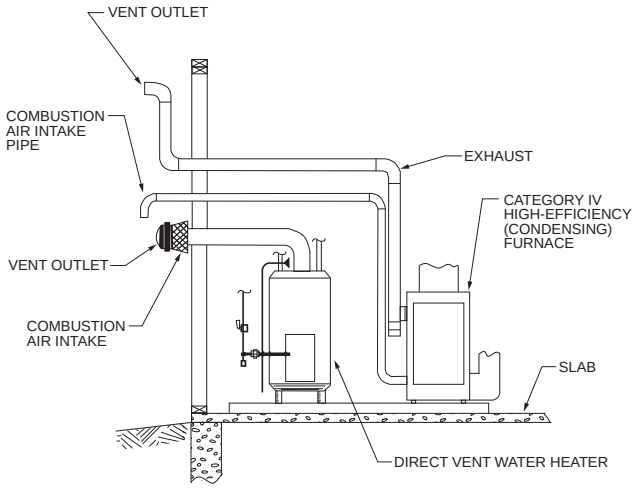

Figure 304.1(5)
DIRECT COMBUSTION AIR CONNECTION TO THE OUTDOORS

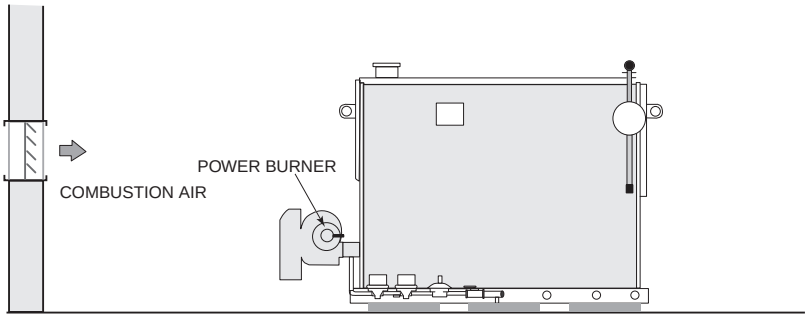

Figure 304.1(6)
BOILER WITH POWER BURNER

304.2 Appliance location. Appliances shall be located so as not to interfere with proper circulation of combustion, ventilation and dilution air.

❖ The provisions of Section 304 rely on the natural (gravity) movement of air; therefore, installations must allow unimpeded flow of combustion air from the source to the appliances being supplied. Other mechanical systems, appliances or equipment in the same room or building can adversely affect the combustion air supply. For example, when placed too close to the combustion air openings, gas-fired appliances or equipment will restrict the free circulation of air.

304.3 Draft hood/regulator location. Where used, a draft hood or a barometric draft regulator shall be installed in the same room or enclosure as the *appliance* served to prevent any difference in pressure between the hood or regulator and the *combustion air* supply.

❖ It is important that draft hoods and barometric draft regulators be located in the same pressure zone as the appliance combustion chamber.

Draft hoods and barometric regulators both serve to stabilize draft through an appliance and, in some cases, act to relieve backpressure/downdraft in the venting system. It is the draft in a Category I appliance that moves combustion air into the appliance and conveys the combustion gases to the venting system. Pressure differences between the atmospheres in which the draft hood/regulator and the combustion chamber are located could interfere with the function of the draft hood/regulator, resulting in poor combustion, excess draft, insufficient draft, combustion gas spillage and/or hazardous appliance

INTERNATIONAL CODE COUNCIL®
Copyright © 2015 ICC. ALL RIGHTS RESERVED. Accessed by David Dammon on Jun 21, 2017 12:30:52 PM pursuant to License Agreement with ICC. No further reproduction or distribution authorized. ANY UNAUTHORIZED REPRODUCTION OR DISTRIBUTION IS A VIOLATION OF THE FEDERAL COPYRIGHT ACT AND THE LICENSE AGREEMENT, AND SUBJECT TO CIVIL AND CRIMINAL PENALTIES THEREUNDER.

operation. A draft hood/regulator is installed under the assumption that the combustion chamber it serves sees the same atmospheric pressure.

304.4 Makeup air provisions. Where exhaust fans, clothes dryers and kitchen ventilation systems interfere with the operation of appliances, makeup air shall be provided.

❖ The introduction of makeup air is critical to the proper operation of all fuel-burning appliances located in areas subject to the effects of exhaust systems. Too little makeup air will cause excessive negative pressures to develop, not only reducing the exhaust airflow but also interfering with appliance venting. Too little makeup air can cause loss of draft in appliance vents and chimneys or cause combustion byproducts to discharge into the building. It is the draft produced in an appliance that causes combustion air to enter the combustion chamber of natural-draft atmospheric-burner appliances. It is the draft in the venting system that causes the combustion gases and dilution air to move through the venting system toward the vent terminal. A lack of combustion air can result in incomplete fuel combustion, appliance malfunction and flue gas spillage.

A significant reduction in building pressure could be created by fireplaces, exhaust fans, ventilation systems, clothes dryers and similar appliances and equipment. Gas-fired appliances are often in competition with other equipment or systems for the available combustion air and makeup air that flows through (infiltrates) the building envelope or is otherwise introduced into a building, room or space. The competition between powered exhaust equipment and natural-draft gas-fired appliance venting systems is an unfair contest at best. Eventually, the powered equipment will starve the natural-draft appliances unless provisions are made to compensate for the effect of the powered exhaust equipment/appliances. Supplying makeup air will prevent negative pressures within a space, thus negating the effect of exhaust fans and clothes dryers. In many cases, makeup air will be required because this is the only way to prevent exhaust systems from negatively affecting the appliance venting systems that draw combustion air from the same space from which the exhaust systems remove air.

Natural-draft appliances also compete among themselves for combustion air. The appliance venting system that produces the strongest draft, such as a solid-fuel appliance or fireplace, can cause combustion air shortages for the appliance venting systems that produce a weaker draft.

Exhaust fans and similar equipment and appliances can produce significant negative building pressures that can interfere with the operation of vents and chimneys. This interference can cause reverse flow as outdoor air enters the building through the vents and chimneys because of the pressure difference. Any such interference with vents or chimneys could cause products of combustion to be discharged into the building and, therefore, must be avoided. The provisions of Section 304 could be woefully inadequate or nullified where compensating features are not installed to mitigate the effect of appliances or equipment removing air from any room or space.

When any system depends on infiltration as the source of combustion air, it will probably be necessary to supply makeup air to offset the deficiency in many buildings. It is obvious that natural draft appliance installations cannot compete with exhaust fans and clothes dryers for the available infiltration air. Without makeup air, the gas-fired appliance venting systems and the mechanical exhaust systems will indeed compete for the same infiltration air, which could be insufficient to satisfy either need (see Commentary Figure 304.4). Note that exhaust fans, clothes dryers and similar equipment that remove air from a space will have no negative impact on unvented appliances because unvented appliances have no venting system. Direct-vent appliances are also immune in most cases.

304.5 Indoor combustion air. The required volume of indoor air shall be determined in accordance with Section 304.5.1 or 304.5.2, except that where the air infiltration rate is known to be less than 0.40 air changes per hour (ACH), Section 304.5.2 shall be used. The total required volume shall be the sum of the required volume calculated for all appliances located within the space. Rooms communicating directly with the space in which the appliances are installed through openings not furnished with doors, and through *combustion air* openings sized and located in accordance with Section 304.5.3, are considered to be part of the required volume.

❖ The terms “confined space,” “unconfined space” and “unusually tight construction” are no longer used in the code. The required room volume is determined by two methods: one method based on the actual air infiltration rate of the building and the other based on the familiar fixed ratio of 50 cubic feet per 1,000 Btu/h (4.8 m^3/kW). Air taken directly from inside the building is an acceptable source of combustion air if a sufficient volume of air is available for the appliances served and the building construction allows sufficient infiltration. The provisions of this section rely on building envelope infiltration as the only source of combustion air.

The method given in Section 304.5.1 is based on a conservative assumed air infiltration rate of at least 0.40 air change per hour (ACH); therefore, if the ACH is known to be less than 0.40, this method cannot be used. The air infiltration rate for most buildings is not known, and it is possible for the ACH rate of a building to be actually less than 0.40; however, some research suggests that buildings having less than 0.40 ACH are rare. It is believed that 80 to 95 percent of U.S. homes have infiltration rates of 0.35 ACH or greater; however, those numbers are changing because of more stringent energy codes and sustainable “green” building practices. A rate of 0.40 ACH or less is the quantitative expression of “tight construction.” Note that the 0.40 ACH rate has an assumed pressure differential between the indoors and out-

INTERNATIONAL CODE COUNCIL®
Copyright © 2015 ICC. ALL RIGHTS RESERVED. Accessed by David Dammon on Jun 21, 2017 12:30:52 PM pursuant to License Agreement with ICC. No further reproduction or distribution authorized. ANY UNAUTHORIZED REPRODUCTION OR DISTRIBUTION IS A VIOLATION OF THE FEDERAL COPYRIGHT ACT AND THE LICENSE AGREEMENT, AND SUBJECT TO CIVIL AND CRIMINAL PENALTIES THEREUNDER.

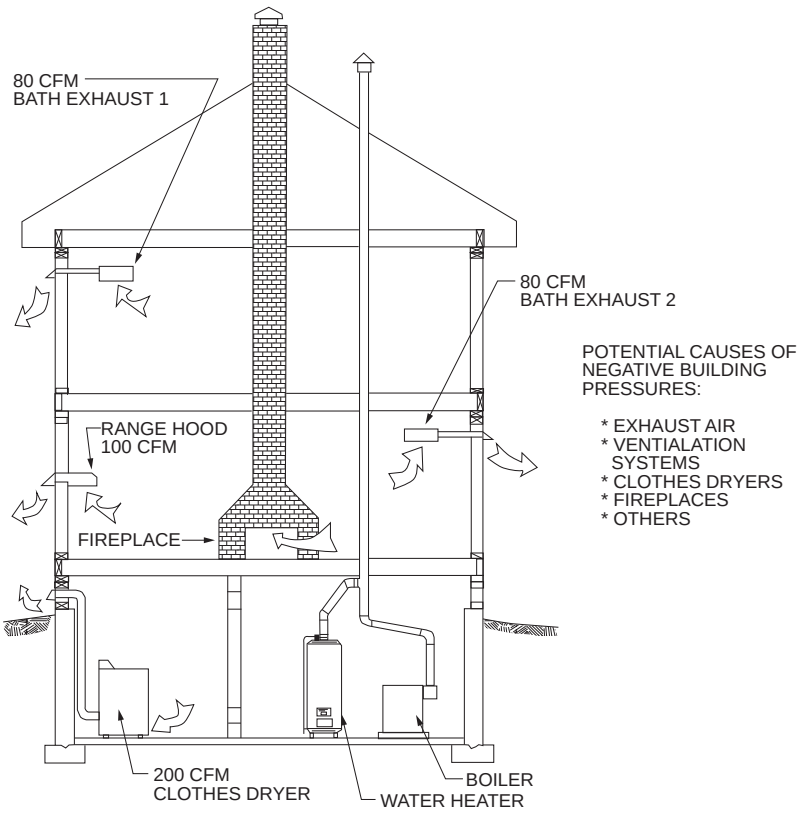

For SI: 1 cubic foot per minute = 0.0004710 m^3/s.

Figure 304.4
DEPLETION OF COMBUSTION AIR

doors of that equal to the draft produced by natural draft-vented appliances, not the typical 50 Pa used for determining the energy efficiency of buildings. Testing also indicates that the 50 cubic feet per 1,000 Btu/h (4.8 m^3/kW) convention is somewhat liberal; thus, a built-in safety factor exists. If the designer suspects that the building in question is extraordinarily tight (less than 0.40 ACH), calculations and/or testing should be done to verify the ACH rate. A conservative approach could be to use the method in Section 304.5.2 with a conservative ACH rate such as 0.25, 0.30 or 0.35. Commentary Figure 304.5.2 shows calculated required volumes for appliances up to 300,000 Btu/h (87.9 kW) input rating based on the standard method and known ACH method for multiple ACH rates.

The standard method can be calculated for each appliance and then all the volumes are added or can be calculated by adding all of the appliance inputs first and then calculating the total volume. The known ACH-rate method must be performed in at least two distinct calculations where both fan-assisted and draft-hood-equipped appliances are present.

To increase the available volume, the code allows rooms and spaces to be coupled together by doorways without doors and by openings installed in accordance with Section 304.5.3.

304.5.1 Standard method. The minimum required volume shall be 50 cubic feet per 1,000 Btu/h (4.8 m^3/kW) of the *appliance* input rating.

❖ This is the optional default method intended for use when the ACH rate is unknown. If the actual ACH rate is known to be greater than 0.40, the method of Section 304.5.2 will yield smaller required volumes.

If the ACH rate is known to be less than 0.40, this method must not be used because it is based on an assumed ACH rate of at least 0.40. The rate of 50 ft^3/1,000 Btu/h (4.8 m^3/kW) is a carryover from the previous editions of the code and was used for buildings that were not of unusually tight construction.

304.5.2 Known air-infiltration-rate method. Where the air infiltration rate of a structure is known, the minimum required volume shall be determined as follows:

For appliances other than fan-assisted, calculate volume using Equation 3-1.

$$Required\ Volume_{other} \geq \frac{21\ ft^3}{ACH}\left(\frac{I_{other}}{1{,}000\ Btu/h}\right)$$

(Equation 3-1)

For fan-assisted appliances, calculate volume using Equation 3-2.

INTERNATIONAL CODE COUNCIL®
Copyright © 2015 ICC. ALL RIGHTS RESERVED. Accessed by David Dammon on Jun 21, 2017 12:30:52 PM pursuant to License Agreement with ICC. No further reproduction or distribution authorized. ANY UNAUTHORIZED REPRODUCTION OR DISTRIBUTION IS A VIOLATION OF THE FEDERAL COPYRIGHT ACT AND THE LICENSE AGREEMENT, AND SUBJECT TO CIVIL AND CRIMINAL PENALTIES THEREUNDER.

$$Required\ Volume_{fan} \geq \frac{15\ ft^3}{ACH}\left(\frac{I_{fan}}{1{,}000\ Btu/h}\right)$$

(Equation 3-2)

where:

I_{other} = All appliances other than fan assisted (input in Btu/h).

I_{fan} = Fan-assisted *appliance* (input in Btu/h).

ACH = Air change per hour (percent of volume of space exchanged per hour, expressed as a decimal).

For purposes of this calculation, an infiltration rate greater than 0.60 *ACH* shall not be used in Equations 3-1 and 3-2.

❖ This method considers the actual or calculated ACH rate and requires space volumes to be commensurate with that rate. This method can also be used when the ACH rate is unknown by simply picking a conservative ACH rate (0.40 ACH or less) representing the lowest anticipated ACH rate for the given building. Equation 3-1 is for draft-hood-equipped appliances and reflects recent research and test results that show that such appliances need less airflow than previously assumed. The standard ratio of 50 ft^3/1,000 Btu/h (4.8 m^3/kW) that has been in codes for many years was based on an assumed combustion airflow need of 25 ft^3/1,000 Btu/h (2.4 m^3/kW) with an assumed ACH rate of 0.50. The 25 ft^3/1,000 Btu/h airflow consisted of the air required for stoichiometric combustion (10 ft^3/ft^3 of natural gas) plus excess air to ensure complete combustion, draft hood dilution air and a safety factor allowance. The volume of 25 cubic feet (0.7 m^3) divided by an ACH rate of 0.50 yields the familiar 50 ft^3/1,000 Btu/h ratio. Equation 3-1 is based on a total airflow need of 21 cubic feet (0.6 m^3) instead of 25 (0.7 m^3) because research supports a less conservative revised volume.

Equation 3-2 is for fan-assisted appliances only and accounts for the fact that fan-assisted appliances have no draft hood and, therefore, do not need dilution air. Fan-assisted appliances need only air for stoichiometric combustion (10 ft^3/ft^3 of natural gas) and excess air (5 ft^3/ft^3 of natural gas). Dividing by the ACH rate adjusts the required volume to correspond to the available infiltration rate.

For example, if the ACH rate is 0.35, 42.8 cubic feet (1.2 m^3) would be required for each 1,000 Btu/h (ft^3 natural gas), and if the ACH rate is 0.50, 30 cubic feet (0.8 m^3) would be required for each 1,000 Btu/h. The greater the ACH rate, the lower the room volume needed.

Research and testing results indicate that the absolute minimum volume for draft-hood-equipped appliances must be 35 ft^3/1,000 Btu/h (3.4 m^3/kW) and for fan-assisted appliances it must be 25 ft^3/1,000 Btu/h (2.4 m^3/kW). This is why this section limits the infiltration rate to a maximum of 0.60 ACH. Limiting the ACH rate to 0.60 results in a lower limit safety factor for the required volume, thereby preventing appliances from being installed in exceedingly small spaces. Commentary Figure 304.5.2 is based on the methodology of Sections 304.5.1 and 304.5.2 and is provided for convenience.

304.5.3 Indoor opening size and location. Openings used to connect indoor spaces shall be sized and located in accordance with Sections 304.5.3.1 and 304.5.3.2 (see Figure 304.5.3).

❖ Sections 304.5.3.1 and 304.5.3.2 prescribe the size and location of openings used to conjoin (couple) spaces for the purpose of increasing the available volume. The last sentence of Section 304.5 speaks of this. These openings must be permanently open, except where interlocked motorized dampers are used in accordance with Section 304.10.

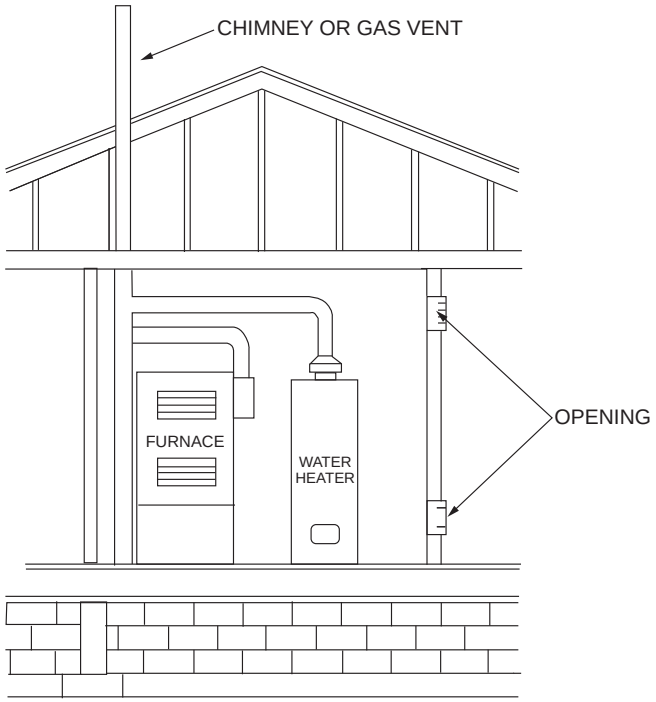

FIGURE 304.5.3
ALL AIR FROM INSIDE THE BUILDING
(see Section 304.5.3)

304.5.3.1 Combining spaces on the same story. Each opening shall have a minimum free area of 1 square inch per 1,000 Btu/h (2,200 mm^2/kW) of the total input rating of all appliances in the space, but not less than 100 square inches (0.06 m^2). One opening shall commence within 12 inches (305 mm) of the top and one opening shall commence within 12 inches (305 mm) of the bottom of the enclosure. The minimum dimension of air openings shall be not less than 3 inches (76 mm).

❖ This section is applicable to adjacent spaces on the same floor level and provides for the familiar high and low openings. The opening configuration creates a thermosiphon airflow with the bottom opening acting

INTERNATIONAL CODE COUNCIL®
Copyright © 2015 ICC. ALL RIGHTS RESERVED. Accessed by David Dammon on Jun 21, 2017 12:30:52 PM pursuant to License Agreement with ICC. No further reproduction or distribution authorized. ANY UNAUTHORIZED REPRODUCTION OR DISTRIBUTION IS A VIOLATION OF THE FEDERAL COPYRIGHT ACT AND THE LICENSE AGREEMENT, AND SUBJECT TO CIVIL AND CRIMINAL PENALTIES THEREUNDER.

Standard Method Required Volume All Appliances		Known Air Infiltration Rate Method, Minimum Space Volume for Appliance Other Than Fan-Assisted, For Specified Infiltration Rates (ACH*)				Known Air Infiltration Rate Method, Minimum Space Volume for Fan-Assisted Appliance, For Specified Infiltration Rates (ACH*)			
Appliance Input Btu/h	Space Volume (ft^3)	Appliance Input Btu/h	Space Volume (ft^3) 0.25 ACH	Space Volume (ft^3) 0.30 ACH	Space Volume (ft^3) 0.35 ACH	Appliance Input Btu/h	Space Volume (ft^3) 0.25 ACH	Space Volume (ft^3) 0.30 ACH	Space Volume (ft^3) 0.35 ACH
5,000	250	5,000	420	350	300	5,000	300	250	214
10,000	500	10,000	840	700	600	10,000	600	500	429
15,000	750	15,000	1,260	1,050	900	15,000	900	750	643
20,000	1,000	20,000	1,680	1,400	1,200	20,000	1,200	1,000	857
25,000	1,250	25,000	2,100	1,750	1,500	25,000	1,500	1,250	1,071
30,000	1,500	30,000	2,520	2,100	1,800	30,000	1,800	1,500	1,286
35,000	1,750	35,000	2,940	2,450	2,100	35,000	2,100	1,750	1,500
40,000	2,000	40,000	3,360	2,800	2,400	40,000	2,400	2,000	1,714
45,000	2,250	45,000	3,780	3,150	2,700	45,000	2,700	2,250	1,929
50,000	2,500	50,000	4,200	3,500	3,000	50,000	3,000	2,500	2,143
55,000	2,750	55,000	4,620	3,850	3,300	55,000	3,300	2,750	2,357
60,000	3,000	60,000	5,040	4,200	3,600	60,000	3,600	3,000	2,571
65,000	3,250	65,000	5,460	4,550	3,900	65,000	3,900	3,250	2,786
70,000	3,500	70,000	5,800	4,900	4,200	70,000	4,200	3,500	3,000
75,000	3,750	75,000	6,300	5,250	4,500	75,000	4,500	3,750	3,214
80,000	4,000	80,000	6,720	5,600	4,800	80,000	4,800	4,000	3,429
85,000	4,250	85,000	7,140	5,950	5,100	85,000	5,100	4,250	3,643
90,000	4,500	90,000	7,500	6,300	5,400	90,000	5,400	4,500	3,857
95,000	4,750	95,000	7,900	6,650	5,700	95,000	5,700	4,750	4,071
100,000	5,000	100,000	8,400	7,000	6,000	100,000	6,000	5,000	4,286
105,000	5,250	105,000	8,820	7,350	6,300	105,000	6,300	5,250	4,500
110,000	5,500	110,000	9,240	7,700	6,600	110,000	6,600	5,500	4,714
115,000	5,750	115,000	9,660	8,050	6,900	115,000	6,900	5,750	4,929
120,000	6,000	120,000	10,080	8,400	7,200	120,000	7,200	6,000	5,143
125,000	6,250	125,000	10,500	8,750	7,500	125,000	7,500	6,250	5,357
130,000	6,500	130,000	10,920	9,100	7,800	130,000	7,800	6,500	5,571
135,000	6,750	135,000	11,340	9,450	8,100	135,000	8,100	6,750	5,786
140,000	7,000	140,000	11,760	9,800	8,400	140,000	8,400	7,000	6,000
145,000	7,250	145,000	12,180	10,150	8,700	145,000	8,700	7,250	6,214
150,000	7,500	150,000	12,600	10,500	9,000	150,000	9,000	7,500	6,429
160,000	8,000	160,000	13,440	11,200	9,600	160,000	9,600	8,000	6,857
170,000	8,500	170,000	14,280	11,900	10,200	170,000	10,200	8,500	7,286
180,000	9,000	180,000	15,120	12,600	10,800	180,000	10,800	9,000	7,714
190,000	9,500	190,000	15,960	13,300	11,400	190,000	11,400	9,500	8,143
200,000	10,000	200,000	16,800	14,000	12,000	200,000	12,000	10,000	8,571
210,000	10,500	210,000	17,640	14,700	12,600	210,000	12,600	10,500	9,000
220,000	11,000	220,000	18,480	15,400	13,200	220,000	13,200	11,000	9,429
230,000	11,500	230,000	19,320	16,100	13,800	230,000	13,800	11,500	9,857
240,000	12,000	240,000	20,160	16,800	14,400	240,000	14,400	12,000	10,286
250,000	12,500	250,000	21,000	17,500	15,000	250,000	15,000	12,500	10,714
260,000	13,000	260,000	21,840	18,200	15,600	260,000	15,600	13,000	11,143
270,000	13,500	270,000	22,680	18,900	16,200	270,000	16,200	13,500	11,571
280,000	14,000	280,000	23,520	19,600	16,800	280,000	16,800	14,000	12,000
290,000	14,500	290,000	24,360	20,300	17,400	290,000	17,400	14,500	12,429
300,000	15,000	300,000	25,200	21,000	18,000	300,000	18,000	15,000	12,857

***ACH=Air Change per Hour** ***ACH=Air Change per Hour**

For SI: 1 British thermal unit per hour = 0.293 W, 1 cubic foot = 0.028 m^3.

Figure 304.5.2
CALCULATED VOLUMES
(Figure Courtesy of American Gas Association)

INTERNATIONAL CODE COUNCIL®
Copyright © 2015 ICC. ALL RIGHTS RESERVED. Accessed by David Dammon on Jun 21, 2017 12:30:52 PM pursuant to License Agreement with ICC. No further reproduction or distribution authorized. ANY UNAUTHORIZED REPRODUCTION OR DISTRIBUTION IS A VIOLATION OF THE FEDERAL COPYRIGHT ACT AND THE LICENSE AGREEMENT, AND SUBJECT TO CIVIL AND CRIMINAL PENALTIES THEREUNDER.

as an inlet and the top opening acting as an outlet. This provision originated as a means to conjoin a small appliance enclosure (such as a furnace or boiler room) with other spaces, thereby effectively increasing the volume of the enclosures.

304.5.3.2 Combining spaces in different stories. The volumes of spaces in different stories shall be considered as communicating spaces where such spaces are connected by one or more openings in doors or floors having a total minimum free area of 2 square inches per 1,000 Btu/h (4402 mm^2/kW) of total input rating of all appliances.

❖ This section is a new concept that allows spaces on different floor levels to be conjoined, thereby effectively increasing the available volume for supplying combustion air. Installing a high- and low-opening configuration in accordance with the previous section would serve no purpose when vertically connecting adjacent stories; thus, a single opening is permitted. The opening or openings can be in a floor or in a door opening to an unenclosed stairway that connects the two stories. This method of conjoining spaces is particularly useful for dwelling units where the volume of a basement in which the appliances are located can be conjoined with the open spaces on upper stories by means of a louvered door at the basement stairs. The opening size requirement is simply the addition of the areas of the two openings required by Section 304.5.3.1. Bear in mind that openings in floors and stairway doors in other than dwelling units are strictly regulated by the IMC and IBC and would be prohibited or would require fire dampers in most cases. A combustion air opening in a floor would be considered by the IBC as a transfer opening in a horizontal assembly (see Commentary Figure 304.5.3.2).

Example:

Determine whether indoor combustion air is adequate for the building shown in Commentary Figure 304.5.3.2.

1. Starting with the fan-assisted boilers, use Equation 3-2 to calculate the required volume for each boiler.

$$\frac{15\ ft^3}{0.35} \times \frac{125{,}000}{1{,}000} = 42.8 \times 125 = 5{,}350\ ft^3$$

2. Use Equation 3-1 to calculate the required volume for each water heater.

$$\frac{21\ ft^3}{0.35} \times \frac{75{,}000}{1{,}000} = 60 \times 75 = 4{,}500\ ft^3$$

3. Total volumes required for all appliances.

Boiler	1	5,350
Boiler	2	5,350
Water Heater	1	4,500
Water Heater	2	4,500
		19,700 ft^3

4. Determine whether louvered door opening area is adequate.
   - In accordance with Section 304.10, determine actual louvered opening area.

   30 in. × 72 in. = 2,160 $in.^2$ × 0.25 = 540 $in.^2$
   - In accordance with Section 304.5.3.2, determine required area.

   $\frac{400{,}000}{1{,}000}$ Btu/h × 2 = 800 $in.^2$

5. Determine available (actual) volume in building.

   Basement volume = 48 ft × 25 ft × 9 ft = 10,800 ft^3

   Grade floor volume = 48 ft × 25 ft × 9 ft = 10,800 ft^3

   21,600 ft^3

The combined volume of both stories is greater than required; however, the louvered door opening area connecting the stories is inadequate. Possible solutions include adding outdoor openings in the basement in accordance with Section 304.7 or providing metal louvers in the stairway door instead of wood.

For SI: 1 inch = 25.4 mm, 1 foot = 305.8 mm, 1 cubic foot = 0.0283 m^3, 1 Btu per hour = 0.2931W

304.6 Outdoor combustion air. Outdoor *combustion air* shall be provided through opening(s) to the outdoors in accordance with Section 304.6.1 or 304.6.2. The minimum dimension of air openings shall be not less than 3 inches (76 mm).

❖ This section describes two methods for supplying combustion air from the outdoors: the traditional method of two direct openings or ducts to the outdoors and a newer method using one opening or duct to the outdoors.

Openings to spaces that are naturally ventilated with outdoor air, such as attics or crawl spaces, are considered as an acceptable alternative to a direct connection to the outdoors. Attics and crawl spaces can be acceptable sources of combustion air only where such spaces have adequate natural ventilation openings directly to the outdoors. Attics and crawl spaces ventilated by mechanical means are not an acceptable source of combustion air.

Combustion air ducts and openings that penetrate components of wall, floor, ceiling and roof assemblies must be installed as required by this code.

When designing combustion air installations, the effect that openings to the outdoors can have on appliances, plumbing systems and building occupants must be considered. For example, depending on the location, openings to the outdoors can:

- Cause drafts that can blow out pilot lights or otherwise interfere with appliance ignition and operation.
- Cause freezing of plumbing piping or other water-containing components.
- Cause objectionable cold drafts that encourage the occupants to block or cover the openings.

INTERNATIONAL CODE COUNCIL®
Copyright © 2015 ICC. ALL RIGHTS RESERVED. Accessed by David Dammon on Jun 21, 2017 12:30:52 PM pursuant to License Agreement with ICC. No further reproduction or distribution authorized. ANY UNAUTHORIZED REPRODUCTION OR DISTRIBUTION IS A VIOLATION OF THE FEDERAL COPYRIGHT ACT AND THE LICENSE AGREEMENT, AND SUBJECT TO CIVIL AND CRIMINAL PENALTIES THEREUNDER.

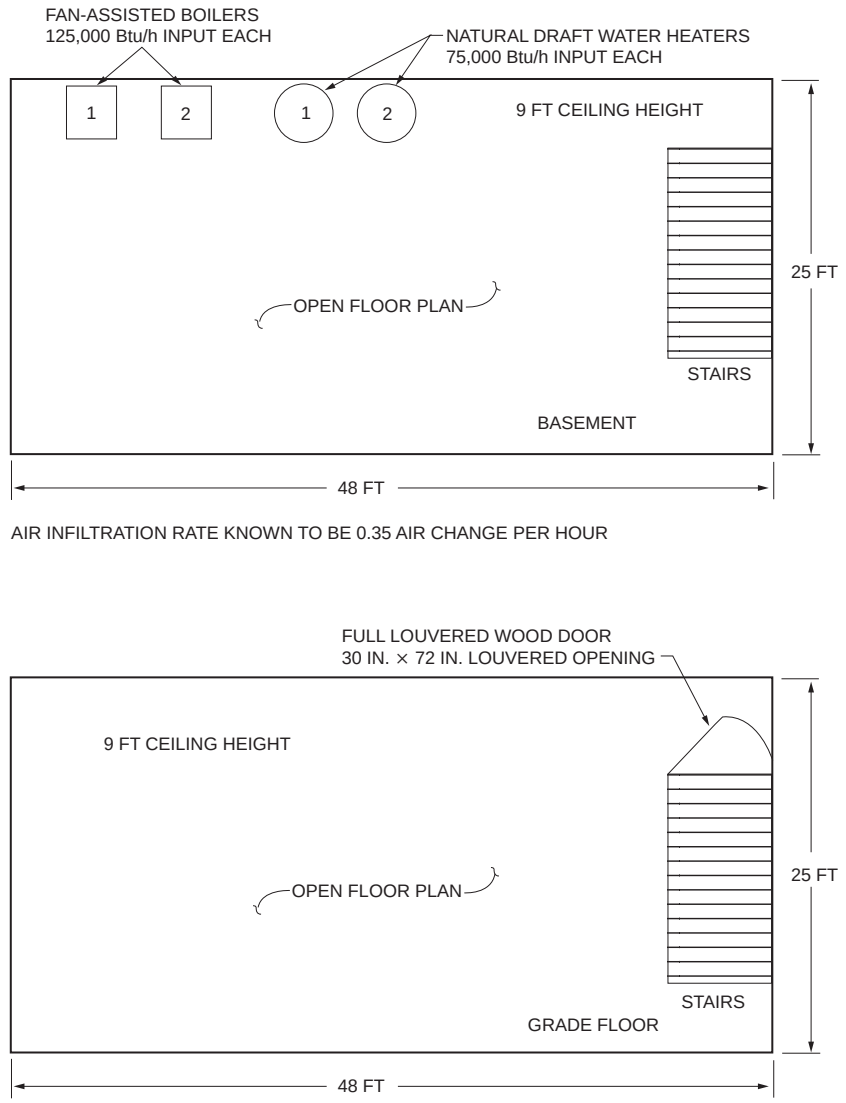

For SI: 1 inch = 25.4 mm, 1 foot = 304.8 mm, 1 British thermal unit per hour = 0.2931 W.

Figure 304.5.3.2
COMBINING SPACES IN DIFFERENT STORIES

In all cases, combustion air openings should be located to reduce the likelihood that they will be accidentally or intentionally blocked or covered. A ceiling transfer opening that connects a furnace room with an attic is an example of a combustion air opening that is likely to be intentionally blocked by an occupant because of the drafts that can occur in cold climates.

Building occupants typically do not understand the need for or the importance of combustion air openings.

No side dimension of a square or rectangular opening and no diameter of a round opening can be less than 3 inches (76 mm). The smallest allowed square opening area would be 9 square inches (5806 mm^2) and the smallest allowed round opening area would be 7 square inches (4516 mm^2) (see commentary, Section 304.10).

304.6.1 Two-permanent-openings method. Two permanent openings, one commencing within 12 inches (305 mm) of the top and one commencing within 12 inches (305 mm) of the bottom of the enclosure, shall be provided. The openings shall communicate directly or by ducts with the outdoors or spaces that freely communicate with the outdoors.

Where directly communicating with the outdoors, or where communicating with the outdoors through vertical ducts, each opening shall have a minimum free area of 1 square inch per 4,000 Btu/h (550 mm^2/kW) of total input rat-

INTERNATIONAL CODE COUNCIL®
Copyright © 2015 ICC. ALL RIGHTS RESERVED. Accessed by David Dammon on Jun 21, 2017 12:30:52 PM pursuant to License Agreement with ICC. No further reproduction or distribution authorized. ANY UNAUTHORIZED REPRODUCTION OR DISTRIBUTION IS A VIOLATION OF THE FEDERAL COPYRIGHT ACT AND THE LICENSE AGREEMENT, AND SUBJECT TO CIVIL AND CRIMINAL PENALTIES THEREUNDER.

ing of all appliances in the enclosure [see Figures 304.6.1(1) and 304.6.1(2)].

Where communicating with the outdoors through horizontal ducts, each opening shall have a minimum free area of not less than 1 square inch per 2,000 Btu/h (1,100 mm^2/kW) of total input rating of all appliances in the enclosure [see Figure 304.6.1(3)].

❖ Two openings located as prescribed in this section are intended to induce a convective air current in the room or space by admitting cooler, denser air in the lower opening and allowing the escape of warmer, less dense air through the upper opening. The farther apart the openings, the greater the temperature differential and the greater the convective force behind the current. A component of combustion air is cooling (ventilation) air for the appliance enclosure. The two-opening method was created to ventilate the appliance enclosure in addition to supplying combustion air. This ventilation cools the appliances and would help remove any combustion gases that spilled from the appliances.

304.6.2 One-permanent-opening method. One permanent opening, commencing within 12 inches (305 mm) of the top of the enclosure, shall be provided. The *appliance* shall have clearances of not less than 1 inch (25 mm) from the sides and back and 6 inches (152 mm) from the front of the *appliance*. The opening shall directly communicate with the outdoors, or through a vertical or horizontal duct, to the outdoors or spaces that freely communicate with the outdoors (see Figure 304.6.2) and shall have a minimum free area of 1 square inch per 3,000 Btu/h (734 mm^2/kW) of the total input rating of all appliances located in the enclosure and not less than the sum of the areas of all vent connectors in the space.

❖ Research has shown that for modern appliances, a single opening to the outdoors will perform as well as the traditional two-opening method. The one-opening method described in this section depends on a reduced pressure being created in the enclosure by the draft created by the venting system. This reduced pressure causes combustion air to enter the enclosure through the single opening. The opening must

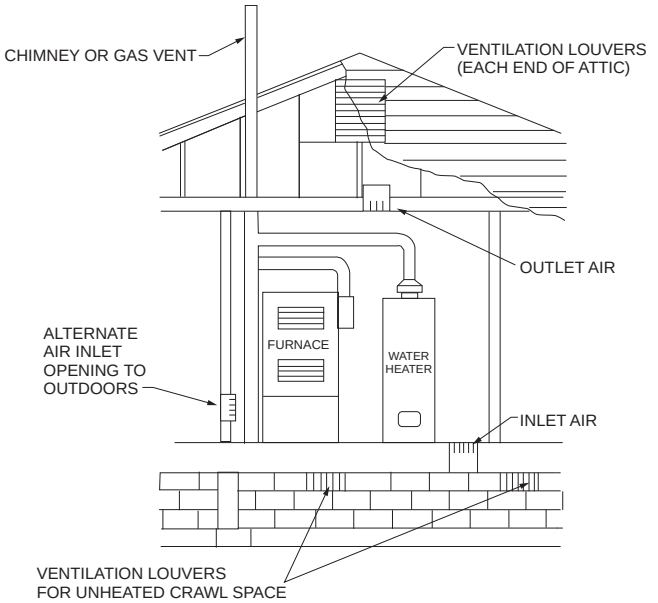

FIGURE 304.6.1(1)
ALL AIR FROM OUTDOORS—INLET AIR FROM VENTILATED CRAWL SPACE AND OUTLET AIR TO VENTILATED ATTIC
(see Section 304.6.1)

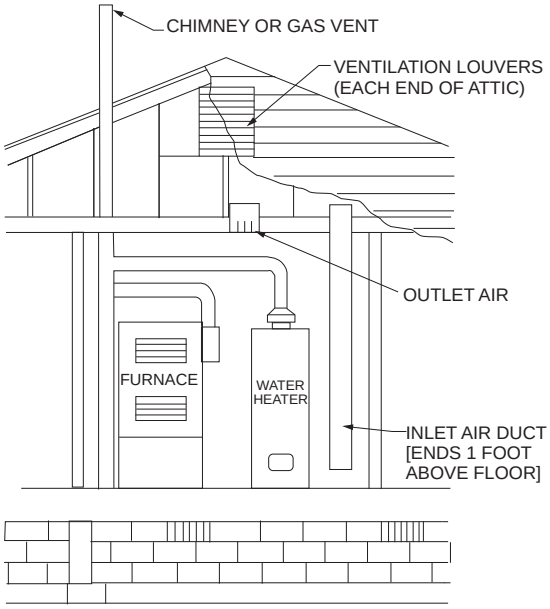

For SI: 1 foot = 304.8 mm.

FIGURE 304.6.1(2)
ALL AIR FROM OUTDOORS THROUGH VENTILATED ATTIC
(see Section 304.6.1)

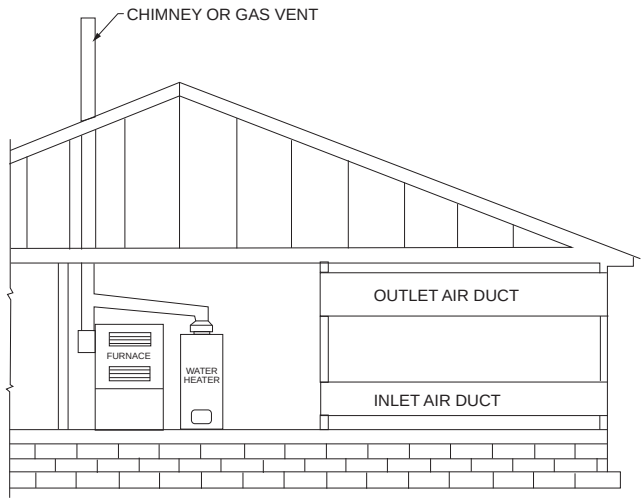

FIGURE 304.6.1(3)
ALL AIR FROM OUTDOORS
(see Section 304.6.1)

INTERNATIONAL CODE COUNCIL®
Copyright © 2015 ICC. ALL RIGHTS RESERVED. Accessed by David Dammon on Jun 21, 2017 12:30:52 PM pursuant to License Agreement with ICC. No further reproduction or distribution authorized. ANY UNAUTHORIZED REPRODUCTION OR DISTRIBUTION IS A VIOLATION OF THE FEDERAL COPYRIGHT ACT AND THE LICENSE AGREEMENT, AND SUBJECT TO CIVIL AND CRIMINAL PENALTIES THEREUNDER.

be properly sized considering both sizing criteria: the square-inch-area-per-Btu/h ratio and the area minimum based on the sum of the areas of all vent connectors in the enclosure. This method allows for fewer openings, fewer ducts and fewer objections by the owners/occupants.

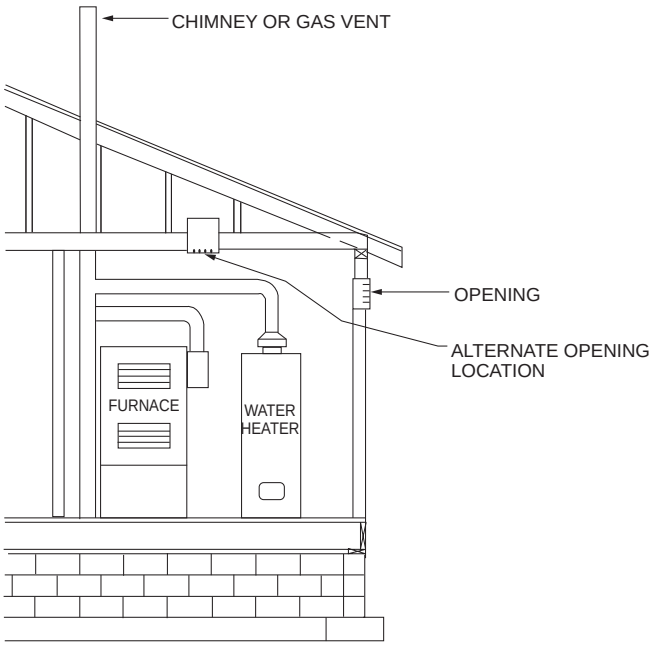

FIGURE 304.6.2
SINGLE COMBUSTION AIR OPENING, ALL AIR FROM THE OUTDOORS
(see Section 304.6.2)

304.7 Combination indoor and outdoor combustion air. The use of a combination of indoor and outdoor *combustion air* shall be in accordance with Sections 304.7.1 through 304.7.3.

❖ This method of supplying combustion air is a combined application of Sections 304.5 and 304.6. This method allows credit for the amount of infiltration that exists and makes up for the shortage with supplemental outdoor air. In other words, in addition to obtaining combustion air directly from the outdoors, this method relies on building infiltration for a portion of the total combustion air. In spaces where the volume is insufficient to satisfy the method of Section 304.5 or where smaller outdoor air openings than required by Section 304.6 are desired, this method allows infiltration and outdoor openings to supplement each other. If the appliances are enclosed in a small room such as a closet, openings to adjacent spaces as prescribed by Section 304.5.3 must be provided to couple the appliance room volume with any other space volume counted on to provide combustion air. Frequently, sufficient volume cannot be obtained in the appliance enclosure or by opening the appliance enclosure to adjacent spaces. This method of combining indoor and outdoor air is an alternative solution. Simply stated, this section uses ratios of what is required to what is actually supplied so that when combined, the indoor air component and the outdoor air component add up to the whole required.

304.7.1 Indoor openings. Where used, openings connecting the interior spaces shall comply with Section 304.5.3.

❖ See the commentary to Section 304.5.3.

304.7.2 Outdoor opening location. Outdoor opening(s) shall be located in accordance with Section 304.6.

❖ See the commentary to Section 304.6.

304.7.3 Outdoor opening(s) size. The outdoor opening(s) size shall be calculated in accordance with the following:

1. The ratio of interior spaces shall be the available volume of all communicating spaces divided by the required volume.
2. The outdoor size reduction factor shall be one minus the ratio of interior spaces.
3. The minimum size of outdoor opening(s) shall be the full size of outdoor opening(s) calculated in accordance with Section 304.6, multiplied by the reduction factor. The minimum dimension of air openings shall be not less than 3 inches (76 mm).

❖ Although the principle has not changed, this method has been simplified compared to the same provision in the 2000 edition of the code. The intent is still the same; that is, the fraction of the required indoor volume plus the fraction of outdoor openings must be equal to or greater than 1. The indoor volume method and the outdoor air method can both be stand-alone methods; therefore, half of one and half of the other will work, as will three fourths of one and a quarter of the other, etc.

This section is expressed in the following equation:

$$\left[1 - \left(\frac{\text{available indoor volume}}{\text{volume required by Section 304.5}}\right)\right] \times \text{full size opening required by Section 304.6} = \text{reduced size outdoor air openings}$$

Example:

Given:

7,500 ft^3 of indoor volume is required if all indoor air is to be used.

4,950 ft^3 of indoor volume is available.

One opening to the outdoors is desired and must be 50 $in.^2$ if all outdoor air is to be used.

$$\left[1 - \left(\frac{4{,}950\ ft^3}{7{,}500\ ft^3}\right)\right] \times 50\ in.^2 = \text{reduced outdoor opening size}$$

0.34 x 50 $in.^2$ = 17 $in.^2$ outdoor opening size

Either of the provisions of Section 304.6 when combined with the provision of this section can be used to satisfy the equation.

INTERNATIONAL CODE COUNCIL®
Copyright © 2015 ICC. ALL RIGHTS RESERVED. Accessed by David Dammon on Jun 21, 2017 12:30:52 PM pursuant to License Agreement with ICC. No further reproduction or distribution authorized. ANY UNAUTHORIZED REPRODUCTION OR DISTRIBUTION IS A VIOLATION OF THE FEDERAL COPYRIGHT ACT AND THE LICENSE AGREEMENT, AND SUBJECT TO CIVIL AND CRIMINAL PENALTIES THEREUNDER.

Example 1:

Room A is within a dwelling unit and contains a fuel-fired furnace and a fuel-fired water heater with input ratings of 150,000 and 50,000 Btu/h, respectively.

The size of Room A is 20 feet by 30 feet, and adjacent Room B is also 20 feet by 30 feet. Both rooms have 8-foot-high ceilings. Rooms A and B communicate through two openings located in accordance with Section 304.5.3, each having dimensions of 10 inches by 20 inches. Two 3-inch-diameter (round) direct openings to the outdoors are installed in Room A and are located in accordance with Section 304.6.1.

Question: Do the openings to the outdoors, when combined with the volumes of Rooms A and B, meet the combustion air demand of the appliances?

For SI: 1 inch = 25.4 mm, 1 foot = 305 mm, 1 Btu/h = 0.2931 W, 1 cubic foot = 0.0283 m^3, 1 square inch = 645 mm^2.

Given:

The air infiltration rate of the building is unknown.

Volume of Room A = 4,800 ft^3

Volume of Room B = 4,800 ft^3

Area of 3-inch-diameter direct openings = 7.07 $in.^2$

Area of each opening between Rooms A and B = 200 $in.^2$

Total input rating of appliances = 200,000 Btu/h

Step 1: Determine whether Rooms A and B meet the volume requirements of Section 304.5.

Available volume of Rooms A and B = 4,800 ft^3 + 4,800 ft^3 = 9,600 ft^3

The required volume is:

$$\frac{200{,}000 \text{ Btu/h}}{1{,}000 \text{ Btu/h}} \times 50 \text{ ft}^3 = 10{,}000 \text{ ft}^3$$

Rooms A and B combined do not meet the volume requirements of Section 304.5.

Step 2: Determine whether the openings between Rooms A and B meet the requirements of Section 304.5.3.

The minimum required area is:

$$\frac{200{,}000 \text{ Btu/h}}{1{,}000 \text{ Btu/h}} \times 1 \text{ in}^2 = 200 \text{ in}^2$$

Actual area of each opening = 200 $in.^2$

The area of each opening meets the size requirement of Section 304.5.3.

Step 3: Determine the required area of each direct outdoor opening in accordance with Section 304.6.1.

Required area of each opening:

$$\frac{200{,}000 \text{ Btu/h}}{4{,}000 \text{ Btu/h}} \times 1 \text{ in}^2 = 50 \text{ in}^2$$

Step 4: Determine whether the 3-inch-diameter direct openings combined with the volumes of Rooms A and B comply with Section 304.7.3.

$$\left[1 - \left(\frac{9{,}600 \text{ ft}^3}{10{,}000 \text{ ft}^3}\right)\right] \times 50 = (1 - 0.96) \times 50 = 0.04 \times 50 = 2 \text{ in.}^2$$

The actual area of each direct opening (7.07 square inches) exceeds the required area of 2 square inches.

Therefore, the combination of the 3-inch-diameter direct openings and the volumes of Rooms A and B satisfies the combustion air demand of the appliances.

Example 2:

A combination of indoor and outdoor combustion air is to be supplied for two natural draft boilers in a room as shown in Commentary Figure 304.7.3 (the air infiltration rate is not known).

1. In accordance with Section 304.5.1, the required volume of the room containing the boilers would be:

   $$\frac{90{,}000 \text{ Btu/h} + 90{,}000 \text{ Btu/h}}{1{,}000} \times 50 \text{ ft}^3$$

   $$= \frac{180{,}000}{1{,}000} \times 50 \text{ ft}^3 = 180 \times 50 \text{ ft}^3 = 9{,}000 \text{ ft}^3$$

2. The actual room volume is 20 ft × 50 ft × 8 ft = 8,000 ft^3.

3. In accordance with Section 304.7.3 Item 1, determine the ratio of available (actual) volume to the required volume.

   $$\frac{\text{Actual Volume}}{\text{Required Volume}} \quad \frac{8{,}000 \text{ ft}^3}{9{,}000 \text{ ft}^3} = 0.89$$

4. In accordance with Section 304.7.3 Item 2, determine outdoor opening size reduction factor.

   1 - 0.89 = 0.11

5. In accordance with Section 304.7.3 Item 3, determine the size of the outdoor opening required as if all combustion air is to be supplied through the outdoor opening. Because a single high opening is built into an exterior wall, Section 304.6.2 applies and would require an area of 1 $in.^2$/3000 Btu/h of total appliance input rating (Assuming 6-in. vent connectors, the total area of the boiler vent connectors is 56.6 square inches).

   $$\frac{90{,}000 \text{ Btu/h} + 90{,}000 \text{ Btu/h}}{3{,}000} = 60 \text{ in}^2$$

INTERNATIONAL CODE COUNCIL®
Copyright © 2015 ICC. ALL RIGHTS RESERVED. Accessed by David Dammon on Jun 21, 2017 12:30:52 PM pursuant to License Agreement with ICC. No further reproduction or distribution authorized. ANY UNAUTHORIZED REPRODUCTION OR DISTRIBUTION IS A VIOLATION OF THE FEDERAL COPYRIGHT ACT AND THE LICENSE AGREEMENT, AND SUBJECT TO CIVIL AND CRIMINAL PENALTIES THEREUNDER.

6. The required size of the outdoor air opening is 60 square inches × 0.11 = 6.6 square inches. Because the minimum dimensions must be not less than 3 inches, the minimum area of a square opening must be 9 square inches. This combination satisfies the combustion air demand of the appliances; however, Section 304.6.2 requires an area of not less than the combined area of all vent connectors, thus 56.6 square inches is the minimum area of the opening.

304.8 Engineered installations. Engineered *combustion air* installations shall provide an adequate supply of combustion, ventilation and dilution air and shall be *approved*.

❖ Potential sources of combustion air are the indoor atmosphere in which the appliance is located; outdoor openings and ducts that communicate with the outdoor atmosphere; a combination of these; or any other approved arrangement for the dependable introduction of outdoor air into the building or directly to the fuel-burning appliance.

The provisions of Section 304 are intended for application only to appliances and equipment using natural draft atmospheric burners. Gas-fired appliances, especially those that are not of the atmospheric-burner type, are commonly supplied with combustion air by engineered systems. For example, special engineered systems are usually designed for appliances equipped with power burners. Power burners force combustion air into the burner under pressure and are, therefore, not dependent on gravity airflow. In some applications, engineered combustion air supplies have advantages and can be preferable to large gravity (natural) openings to the outdoors. Engineered designs must be evaluated for code compliance, approved and installed in accordance with the appliance manufacturer's instructions [see Commentary Figures 304.8(1) through 304.8(3)].

304.9 Mechanical combustion air supply. Where all *combustion air* is provided by a mechanical air supply system, the *combustion air* shall be supplied from the outdoors at a rate not less than 0.35 cubic feet per minute per 1,000 Btu/h (0.034 m^3/min per kW) of total input rating of all appliances located within the space.

❖ This method supplies combustion air by means of a fan/blower that runs when any of the served appliances are in a firing cycle. The fan/blower must be sized to supply the required airflow based on the simultaneous operation of all appliances that are served by the fans/blowers. The total Btu/h input rating of all fuel-burning appliances located in the room or space must be used because the potential exists for all of the appliances to be operating at the same time. This method is used where gravity openings to the outdoors are impractical or undesirable. A small fan-powered intake opening can substitute for comparatively large gravity openings, especially where freezing temperatures are a problem or there is no room for the required size gravity openings. Commentary Figures 304.8(1), 304.8(2) and 304.8(3) illustrate factory-engineered mechanical combustion air supply units (see Commentary Figure 304.9).

The prescribed airflow rate of 0.35 cfm/1,000 Btu/h is equivalent to 1 cfm/2,857 Btu/h and is based on a combustion air need of 21 cubic feet of volume for each cubic foot of natural gas (1,000 Btu/h). The rate is derived as follows:

$$\frac{2857 \text{ Btu/h}}{1{,}000 \text{ Btu/ft}^3} = 2.857 \text{ ft}^3 \text{ of gas per hour}$$

2.857 ft^3 of gas per hour × 21 ft^3 of air per ft^3 of gas = 60 ft^3 of air per/hour = 60 cfh

$$\frac{60 \text{ cfh}}{60 \text{ min/hr}} = 1 \text{ cfm}$$

Thus, 1 cfm is required for each 2,857 Btu/h or 0.35 cfm/1,000 Btu/h.

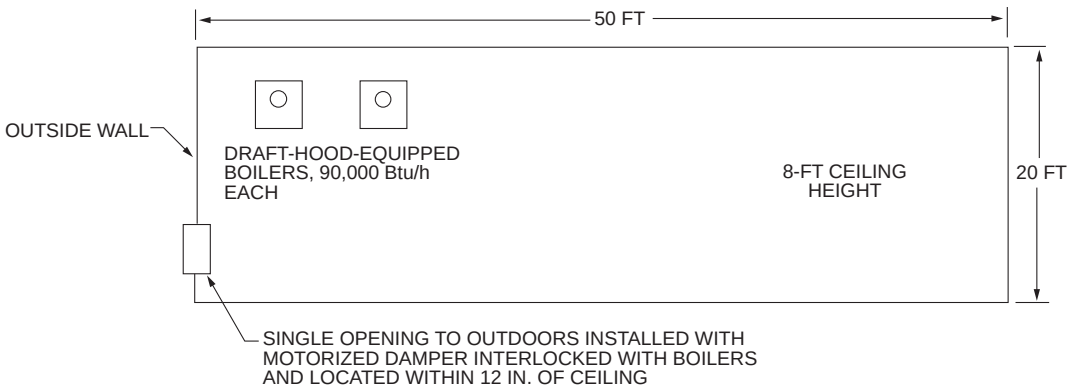

For SI: 1 foot = 304.8 mm, 1 British thermal unit per hour = 0.2931 W.

Figure 304.7.3
ROOM CONFIGURATION USED IN EXAMPLE 2

INTERNATIONAL CODE COUNCIL®
Copyright © 2015 ICC. ALL RIGHTS RESERVED. Accessed by David Dammon on Jun 21, 2017 12:30:52 PM pursuant to License Agreement with ICC. No further reproduction or distribution authorized. ANY UNAUTHORIZED REPRODUCTION OR DISTRIBUTION IS A VIOLATION OF THE FEDERAL COPYRIGHT ACT AND THE LICENSE AGREEMENT, AND SUBJECT TO CIVIL AND CRIMINAL PENALTIES THEREUNDER.

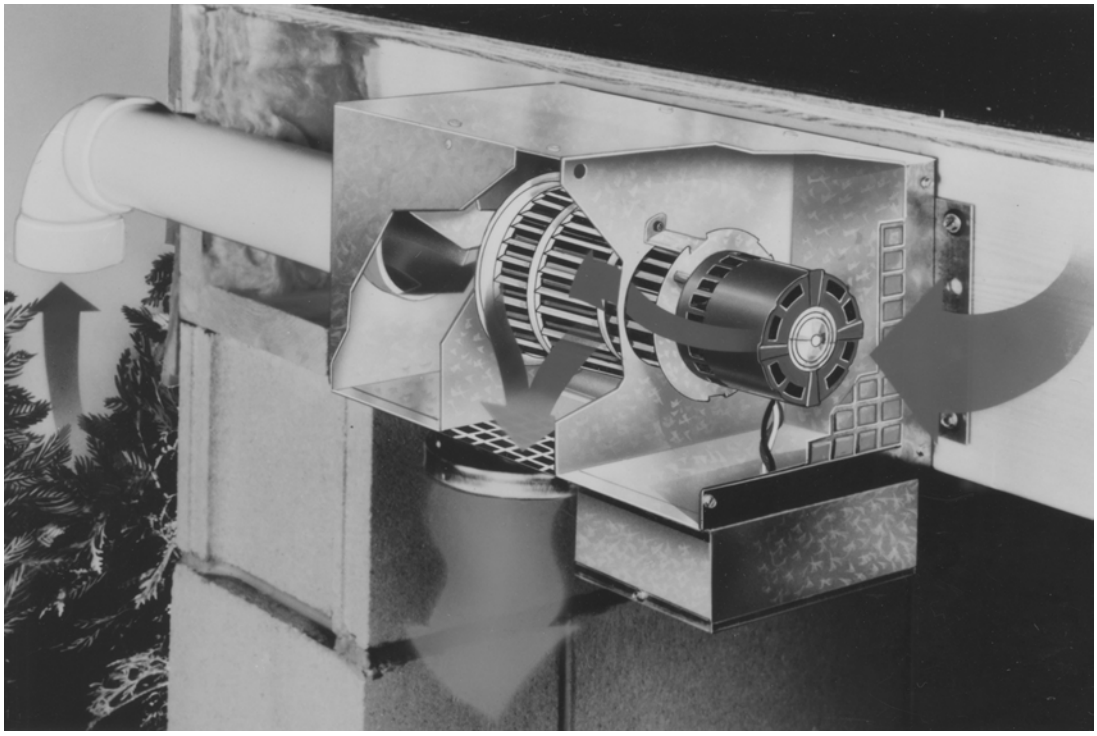

Figure 304.8(1)
MECHANICAL COMBUSTION AIR/MAKEUP AIR SUPPLY SYSTEM
(Figure courtesy of Tjernlund Products, Inc.)

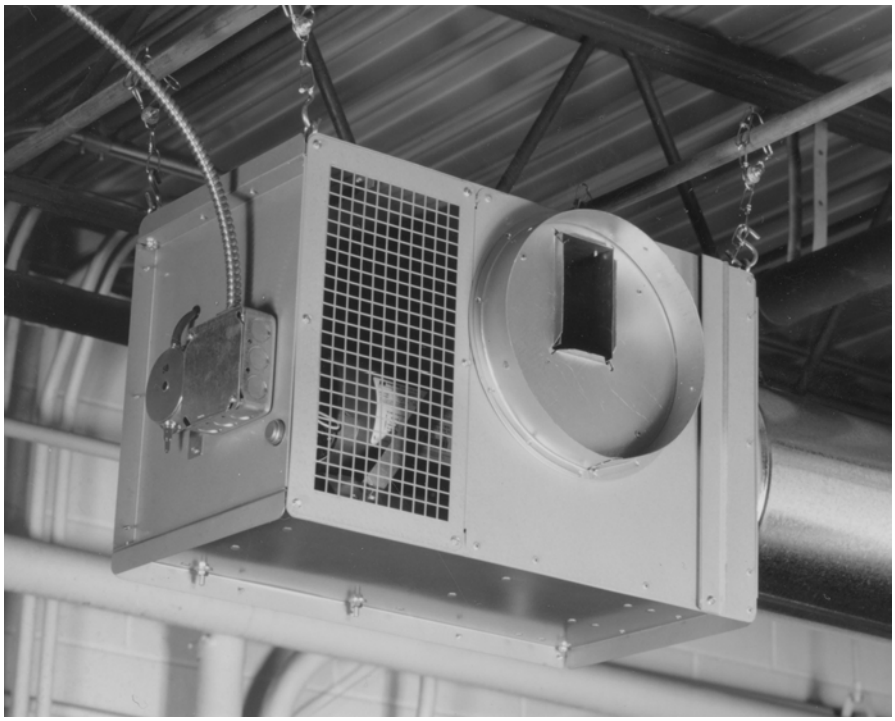

Figure 304.8(2)
MECHANICAL COMBUSTION AIR SUPPLY SYSTEM
(Photo courtesy of Tjernlund Products, Inc.)

INTERNATIONAL CODE COUNCIL®
Copyright © 2015 ICC. ALL RIGHTS RESERVED. Accessed by David Dammon on Jun 21, 2017 12:30:52 PM pursuant to License Agreement with ICC. No further reproduction or distribution authorized. ANY UNAUTHORIZED REPRODUCTION OR DISTRIBUTION IS A VIOLATION OF THE FEDERAL COPYRIGHT ACT AND THE LICENSE AGREEMENT, AND SUBJECT TO CIVIL AND CRIMINAL PENALTIES THEREUNDER.

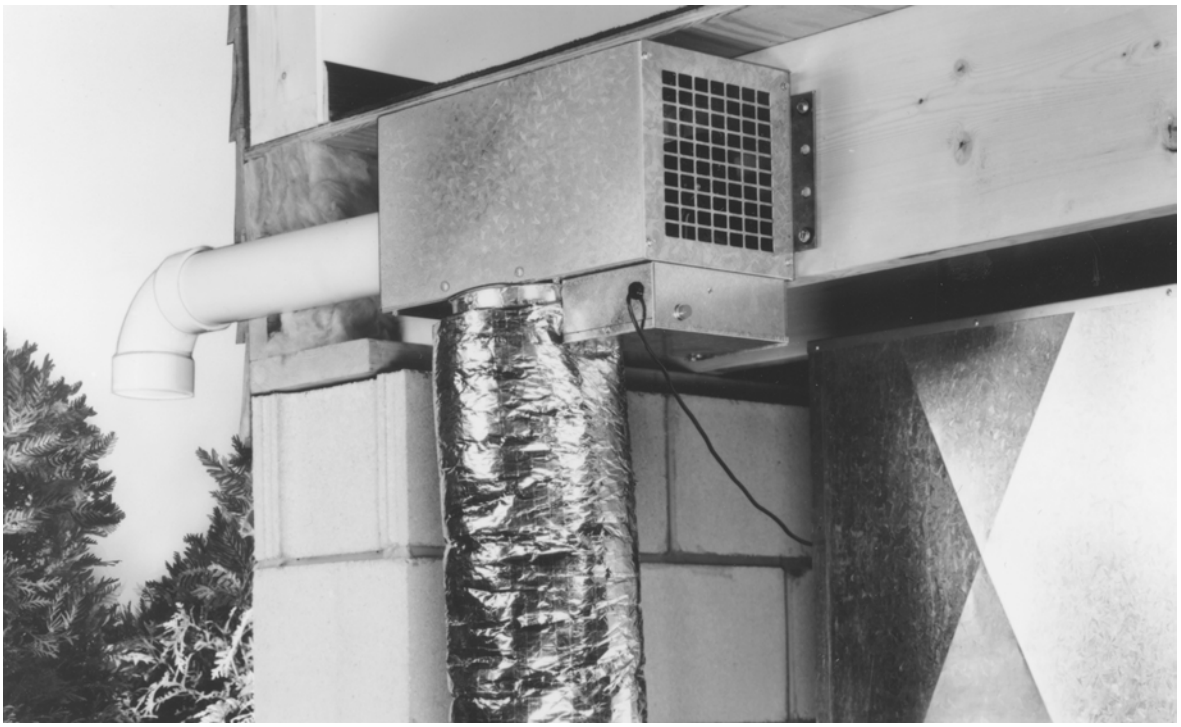

Figure 304.8(3)
MECHANICAL COMBUSTION AIR/MAKEUP AIR SUPPLY SYSTEM
(Photo courtesy of Tjernlund Products, Inc.)

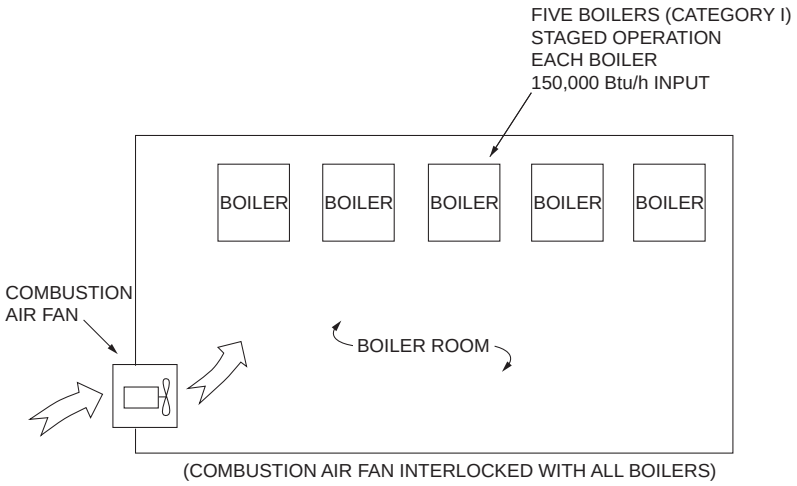

Example:

1. Total appliance input rating: 750,000 Btu/h

2. $\frac{\text{Total input Btu/h}}{\text{1,000 Btu/h}} \times 0.35 = 262.5$ cfm

For SI: 1 British thermal unit per hour = 0.2931 W, 1 cubic foot per minute = 0.000472 m^3/s.

Figure 304.9
MECHANICALLY SUPPLIED COMBUSTION AIR

INTERNATIONAL CODE COUNCIL®
Copyright © 2015 ICC. ALL RIGHTS RESERVED. Accessed by David Dammon on Jun 21, 2017 12:30:52 PM pursuant to License Agreement with ICC. No further reproduction or distribution authorized. ANY UNAUTHORIZED REPRODUCTION OR DISTRIBUTION IS A VIOLATION OF THE FEDERAL COPYRIGHT ACT AND THE LICENSE AGREEMENT, AND SUBJECT TO CIVIL AND CRIMINAL PENALTIES THEREUNDER.

304.9.1 Makeup air. Where exhaust fans are installed, makeup air shall be provided to replace the exhausted air.

❖ This section expresses the exact same concern as Section 304.4 (see commentary, Section 304.4). If the air that is supplied by the combustion air fan becomes makeup air for an exhaust fan, the combustion air will not be available to the appliance(s) for which the air was intended.

304.9.2 Appliance interlock. Each of the appliances served shall be interlocked with the mechanical air supply system to prevent main burner operation when the mechanical air supply system is not in operation.

❖ This section requires an interlock circuit as opposed to simple parallel operation wiring. In other words, the combustion air fan/blower must start when initiated by the means that controls the appliance operation cycles (e.g., thermostat), and only after the combustion air fan/blower is proven to be operating will the appliance be allowed to start a firing cycle. If the combustion air fan/blower fails during a firing cycle of an appliance, the appliance firing cycle must be terminated (see Commentary Figure 304.9.2).

The following steps must occur in this order:

1. Call for heat.
2. Combustion air fan/blower starts.
3. Combustion air fan/blower is proven to be operating.
4. Proving controls allow appliance to fire.

304.9.3 Combined combustion air and ventilation air system. Where *combustion air* is provided by the building's mechanical ventilation system, the system shall provide the specified *combustion air* rate in addition to the required ventilation air.

❖ If combustion air is mechanically supplied through an HVAC system, the system must deliver the required combustion air rate above and beyond any outdoor air rate supplied for ventilation of the occupied spaces. The HVAC system must also be interlocked with the appliance(s) as required by Section 304.9.2. Neither continuous operation nor parallel operation of the HVAC system satisfies the requirement for a true interlock as required by Section 304.9.2.

304.10 Louvers and grilles. The required size of openings for combustion, ventilation and dilution air shall be based on the net free area of each opening. Where the free area through a design of louver, grille or screen is known, it shall be used in calculating the size opening required to provide the free area specified. Where the design and free area of louvers and grilles are not known, it shall be assumed that wood louvers will have 25-percent free area and metal louvers and grilles will have 75-percent free area. Screens shall have a mesh size not smaller than $^1/_4$ inch (6.4 mm). Nonmotorized louvers and grilles shall be fixed in the open position. Motorized louvers shall be interlocked with the *appliance* so that they are proven to be in the full open position prior to main burner ignition and during main burner operation. Means shall be provided to prevent the main burner from igniting if the louvers fail to open during burner start-up and to shut down the main burner if the louvers close during operation.

❖ This section recognizes that louvers and grilles are usually installed over air inlets and outlets to prevent rain, snow and animals from entering the building. When louvers or grilles are used, the solid portion of the louver or grille must be considered when determining the unobstructed (net clear) area of the opening.

Combustion air openings are sized based on there being a free, unobstructed area for the passage of air into the space where the fuel-burning appliances are located. Louvers or grilles placed over these openings reduce the area of the openings because of the area occupied by the solid portions of the grille or louver. The reduction in area must be considered

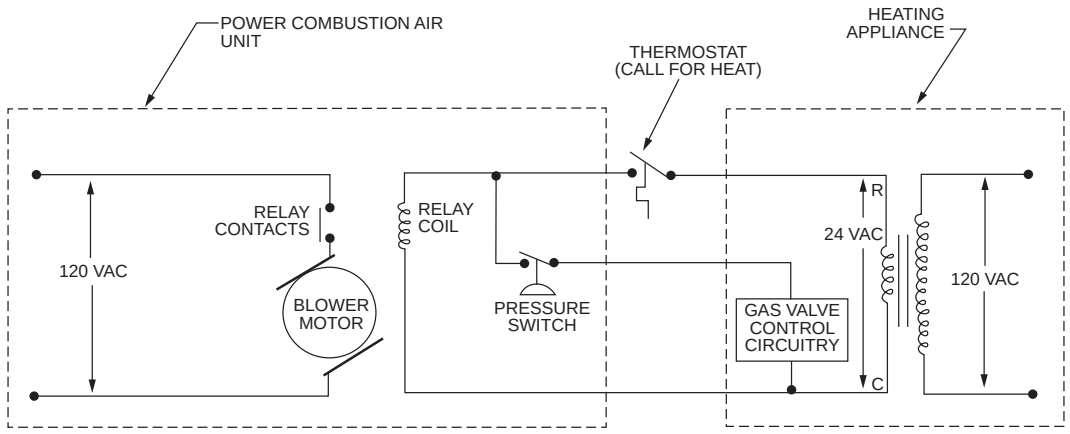

Figure 304.9.2
SIMPLIFIED EXAMPLE SCHEMATIC OF INTERLOCK BETWEEN APPLIANCE AND POWER COMBUSTION AIR UNIT (Shown for Illustrative Purpose Only)

INTERNATIONAL CODE COUNCIL®
Copyright © 2015 ICC. ALL RIGHTS RESERVED. Accessed by David Dammon on Jun 21, 2017 12:30:52 PM pursuant to License Agreement with ICC. No further reproduction or distribution authorized. ANY UNAUTHORIZED REPRODUCTION OR DISTRIBUTION IS A VIOLATION OF THE FEDERAL COPYRIGHT ACT AND THE LICENSE AGREEMENT, AND SUBJECT TO CIVIL AND CRIMINAL PENALTIES THEREUNDER.

because only the unobstructed area can be credited toward the required opening size.

The reduction in opening area caused by the presence of grilles or louvers will always require openings to be larger than determined from the sizing ratios of this chapter and larger than any duct of the minimum required size that might connect to these openings. Once the required size of a combustion air duct or opening is determined, any increase in opening size that must be made as a result of the effect of louvers or grilles must be determined. If a metal louver is used and based on the default opening area of 75 percent, the designer must calculate what size opening times 75 percent will yield the previously determined combustion air opening or duct area.

For example, assume that a combustion air duct needs to have a cross-sectional area of 200 square inches (0.129 m^2) and this duct connects to an exterior wall opening with a metal louver protecting it.

χ = The required opening area adjusted to account for the louver.

$$0.75\chi = 200 \text{ in}^2$$

$$\chi = \frac{200}{75}$$

$$\chi = 266.7 \text{ in}^2$$

This can be simplified to multiplying by the reciprocal of the percentage as follows:

For metal louvers and grilles, the required combustion air duct or opening size multiplied by 1.33 equals the adjusted opening size.

For wooden louvers and grilles, the required combustion air duct or opening size multiplied by 4 equals the adjusted opening size.

The actual free opening of a louver or grille should be obtained from the manufacturer rather than relying on default assumptions.

This section does not apply to grilles, louvers or screens that are an integral component of a labeled appliance that is installed in accordance with the manufacturer's instructions. Where the manufacturer states the free, unobstructed area of a grille or louver, it is acceptable to consider that area as actual without requiring further calculation.

The code also requires the free area of screens to be considered in the opening sizing calculations. If it is unknown, it will have to be calculated because there is no stated default area for screens as there is for louvers and grilles. The code prohibits screens having mesh sizes smaller than $^1/_4$ inch (6 mm). Screens with a mesh size of $^1/_4$ inch (6 mm) and larger are not insect screens and would be suitable only for keeping out large debris, rodents and other small animals. Smaller size mesh is likely to become obstructed by lint, plant fibers, cottonwood seeds, etc. At best, placing screens in combustion air openings is risky, and grilles and louvers are preferred to keep out the unwanted.

Metal louvers are constructed so that the solid portion of the louver occupies approximately 25 percent of the opening area, leaving 75 percent of this area unobstructed. Wood louvers occupy approximately 75 percent of the opening area, leaving 25 percent of the area unobstructed. When the required amount of unobstructed area is determined, the effect that a louver has on that area must be taken into account to make certain the minimum amount of unobstructed opening is achieved. The material type, thickness and spacing all have a significant effect on the actual net free area of any louver or grille.

Note that the 75 percent and 25 percent default numbers might be too liberal for some louvers or grilles and every effort should be made to consult the louver or grille manufacturer's specifications.

To prevent freezing of pipes, to save energy and maintain comfortable temperatures in appliance rooms, outdoor openings often have motorized dampers that close during the appliance(s) off cycle. The damper motors and/or damper blades must be supervised so that an interlock can be established between the dampers and the appliances, thereby preventing appliance operation when the dampers are closed.

Combustion air openings must not be closable unless they open and close automatically using a mechanism that is interlocked with the appliances (see Commentary Figure 304.10). Damper supervision is easily accomplished by damper motor end switches or blade position travel switches that monitor the position of the drive motor shaft, the damper/motor linkage hardware or the damper blades. These switches provide feedback to the appliance control circuitry to allow firing only when the dampers are proven to be fully open.

304.11 Combustion air ducts. *Combustion air* ducts shall comply with all of the following:

1. Ducts shall be constructed of galvanized steel complying with Chapter 6 of the *International Mechanical Code* or of a material having equivalent corrosion resistance, strength and rigidity.

   Exception: Within dwellings units, unobstructed stud and joist spaces shall not be prohibited from conveying *combustion air*, provided that not more than one required fireblock is removed.

2. Ducts shall terminate in an unobstructed space allowing free movement of *combustion air* to the appliances.
3. Ducts shall serve a single enclosure.
4. Ducts shall not serve both upper and lower *combustion air* openings where both such openings are used. The separation between ducts serving upper and lower *combustion air* openings shall be maintained to the source of *combustion air*.
5. Ducts shall not be screened where terminating in an attic space.
6. Horizontal upper *combustion air* ducts shall not slope downward toward the source of *combustion air*.

INTERNATIONAL CODE COUNCIL®
Copyright © 2015 ICC. ALL RIGHTS RESERVED. Accessed by David Dammon on Jun 21, 2017 12:30:52 PM pursuant to License Agreement with ICC. No further reproduction or distribution authorized. ANY UNAUTHORIZED REPRODUCTION OR DISTRIBUTION IS A VIOLATION OF THE FEDERAL COPYRIGHT ACT AND THE LICENSE AGREEMENT, AND SUBJECT TO CIVIL AND CRIMINAL PENALTIES THEREUNDER.

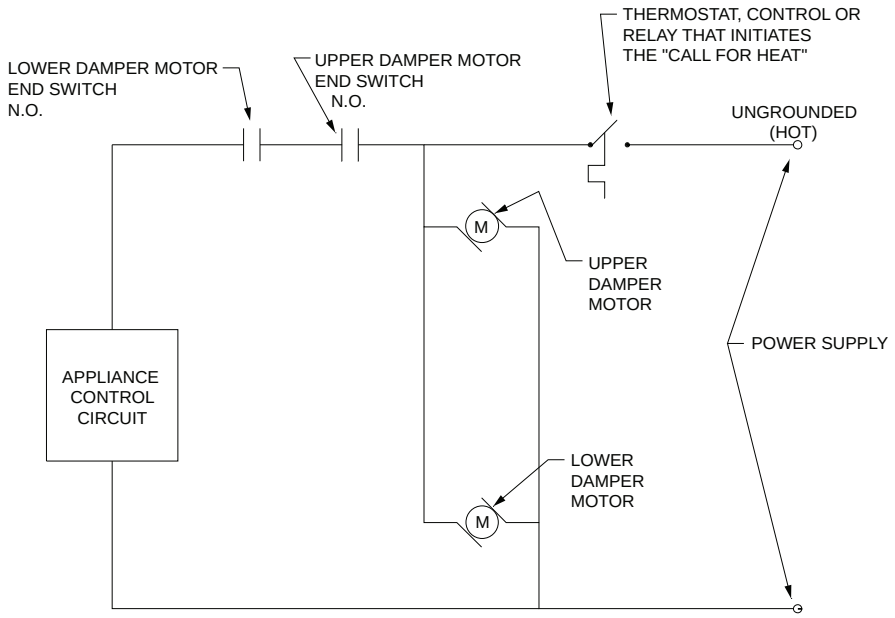

Figure 304.10
SIMPLIFIED EXAMPLE SCHEMATIC OF COMBUSTION AIR DAMPER/APPLIANCE INTERLOCK
(Shown for Illustrative Purpose Only)

7. The remaining space surrounding a chimney liner, gas vent, special gas vent or plastic *piping* installed within a masonry, metal or factory-built chimney shall not be used to supply *combustion air*.

   Exception: Direct-vent gas-fired appliances designed for installation in a solid fuel-burning *fireplace* where installed in accordance with the manufacturer's instructions.

8. *Combustion air* intake openings located on the exterior of a building shall have the lowest side of such openings located not less than 12 inches (305 mm) vertically from the adjoining finished ground level.

❖ This section addresses the construction and installation of combustion air ducts.

Item 1 requires that combustion air ducts be constructed of galvanized sheet steel or an approved equivalent material. The intent is to cause ducts to be constructed of a material that is resistant to corrosion and physical damage, which would allow the ducts to remain in place undamaged for the life of the installation. It is doubtful that the authors of Item 1 ever anticipated the use of flexible ducts and the higher friction losses associated with such rough-wall ducts. It is also reasonable to assume that all of the sizing criteria in Section 304 are based on smooth-wall ducts. The strength and rigidity of typical flexible ducts would not be equivalent to rigid steel ducts. The exception expresses a concern for fire safety where stud cavities are used as a duct.

Item 2 is intended to prevent blockages and minimize resistance (friction loss) to airflow.

Item 3 prohibits a duct from serving more than one appliance enclosure because the duct and opening sizing criteria are based on a single duct serving a single opening in an appliance location. Multiple openings supplied by a single duct could result in unpredictable airflow and might not create the convective movements of air intended by the combustion air methods.

Item 4 recognizes that where both upper and lower combustion air openings are required, air circulation cannot occur if a single duct serves both combustion air openings. The lower opening functions as an air inlet and the upper opening as an air outlet, thus independent ducts are required (see Commentary Figure 304.11).

Item 5 is intended to prevent obstruction or blockage by insulation materials.

Item 6 is intended to prevent trapping or sloping of the upper combustion air opening in a way that would impede the convective movement of air. The horizontal duct for the upper openings must slope upward as it travels away from the appliance(s) and toward the outdoors.

When a vent or chimney liner is installed within a chimney, an annular space will exist between the vent or liner and the interior chimney walls. According to Item 7, this space cannot be used as a conduit for conveying combustion air because of poor flow characteristics, the tendency for reverse flow to occur as the combustion air is warmed by the liner or vent and the adverse cooling effect on the vent or liner. The exception recognizes that there could be appliances

INTERNATIONAL CODE COUNCIL®
Copyright © 2015 ICC. ALL RIGHTS RESERVED. Accessed by David Dammon on Jun 21, 2017 12:30:52 PM pursuant to License Agreement with ICC. No further reproduction or distribution authorized. ANY UNAUTHORIZED REPRODUCTION OR DISTRIBUTION IS A VIOLATION OF THE FEDERAL COPYRIGHT ACT AND THE LICENSE AGREEMENT, AND SUBJECT TO CIVIL AND CRIMINAL PENALTIES THEREUNDER.

that are designed and listed for the type of installation that this item intends to prohibit.

Item 8 intends to prevent combustion air openings from being obstructed by snow, leaves and vegetation. No part of a combustion air opening is allowed to be less than 12 inches (305 mm) above the finished ground level under such opening.

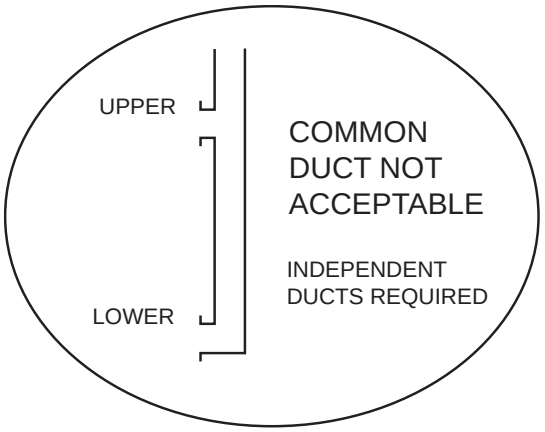

Figure 304.11
COMMON DUCT PROHIBITED

304.12 Protection from fumes and gases. Where corrosive or flammable process fumes or gases, other than products of combustion, are present, means for the disposal of such fumes or gases shall be provided. Such fumes or gases include carbon monoxide, hydrogen sulfide, ammonia, chlorine and halogenated hydrocarbons.

In barbershops, beauty shops and other facilities where chemicals that generate corrosive or flammable products, such as aerosol sprays, are routinely used, nondirect vent-type appliances shall be located in a mechanical room separated or partitioned off from other areas with provisions for *combustion air* and dilution air from the outdoors. *Direct-vent appliances* shall be installed in accordance with the *appliance* manufacturer's instructions.

❖ In many occupancies, the routine use of chemicals contaminates the indoor combustion air. These contaminants can combine with water vapor in the combustion gases to produce acids and other corrosive compounds that can destroy appliance components, vents, chimneys and connectors. For example, it is common to see vents and vent connectors for draft-hood-equipped water heaters in beauty shops that have deteriorated to the point of structural failure. Other examples are swimming pool heaters exposed to chlorine, boilers exposed to laundry and dry cleaning chemicals and boilers exposed to refrigerant leakage. Some contaminants are more toxic to life after they have passed through an appliance combustion chamber. The highly poisonous chemical "phosgene" (carbonyl chloride) can be produced when common refrigerants contaminate combustion air.

Obviously, choosing direct-vent appliances will eliminate this problem in most cases and will not require isolation enclosures for the appliances. It is possible that some atmospheres are unsuitable for any appliance, direct-vent or otherwise. The code provides an alternative to direct-vent appliances that requires the appliances to be isolated from the contaminated atmosphere by reasonably air-tight enclosures and requires that all combustion air be supplied for the appliance(s) from the outdoors.

SECTION 305 (IFGC)
INSTALLATION

305.1 General. *Equipment* and appliances shall be installed as required by the terms of their approval, in accordance with the conditions of listing, the manufacturer's instructions and this code. Manufacturers' installation instructions shall be available on the job site at the time of inspection. Where a code provision is less restrictive than the conditions of the listing of the *equipment* or *appliance* or the manufacturer's installation instructions, the conditions of the listing and the manufacturer's installation instructions shall apply.

Unlisted appliances *approved* in accordance with Section 301.3 shall be limited to uses recommended by the manufacturer and shall be installed in accordance with the manufacturer's instructions, the provisions of this code and the requirements determined by the code official.

❖ Manufacturers' installation instructions are evaluated by the listing agency verifying compliance with the applicable standard. The listing agency can require that the manufacturer alter, delete or add information to the instructions as necessary to achieve compliance with applicable standards and code requirements. Manufacturers' installation instructions are an enforceable extension of the code and must be in the hands of the code official when an inspection takes place.

When an appliance is tested to obtain a listing and label, the approved agency installs the appliance in accordance with the manufacturer's instructions. The appliance is tested under these conditions; thus, the installation instructions become an integral part of the labeling process.

The listing and labeling process ensures that the appliance and its installation instructions are in compliance with applicable standards. Therefore, an installation in accordance with the manufacturer's instructions is required, except where the code requirements are more stringent. An inspector must carefully and completely read and comprehend the manufacturer's instructions to properly perform an installation inspection.

In some cases, the code will specifically address an installation requirement that is also addressed in the manufacturer's installation instructions. The code requirements may be the same or may exceed the requirements in the manufacturer's installation instructions, or the manufacturer's installation instructions could contain requirements that exceed those in the code. In all such cases, the more restrictive requirements would apply.

INTERNATIONAL CODE COUNCIL®
Copyright © 2015 ICC. ALL RIGHTS RESERVED. Accessed by David Dammon on Jun 21, 2017 12:30:52 PM pursuant to License Agreement with ICC. No further reproduction or distribution authorized. ANY UNAUTHORIZED REPRODUCTION OR DISTRIBUTION IS A VIOLATION OF THE FEDERAL COPYRIGHT ACT AND THE LICENSE AGREEMENT, AND SUBJECT TO CIVIL AND CRIMINAL PENALTIES THEREUNDER.

In addition to the installation requirements for the appliance or equipment itself, this section also regulates the connections to appliances and equipment by requiring compliance with all other applicable sections of this code and other *International Codes*® (I-Codes®). These connections include, but are not limited to, fuel and electrical supplies, control wiring, hydronic piping, chimneys, vents and ductwork. Some overlap or coincidence of connection requirements may occur in the code and the manufacturer's installation instructions. In the unlikely event that the code was less restrictive (more lenient) than the manufacturer's instructions regarding an installation issue, the manufacturer's instructions must prevail. Where differences or conflicts occur, the requirements that provide the greatest level of safety always apply.

Even if an installation appears to be in compliance with the manufacturer's instructions, the installation cannot be complete or approved until all associated components, connections, and systems that serve the appliance or equipment are also in compliance with the applicable provisions of the code. For example, a gas-fired boiler installation must not be approved if the boiler is connected to a deteriorated, undersized, improper or otherwise unsafe chimney or vent. Likewise, the same installation must not be approved if the existing gas piping is in poor condition, or if the electrical supply circuit is inadequate or unsafe.

In the case of replacement installations, the intent of this section is to require all new work associated with the installation to comply with the code without necessarily requiring full compliance for the existing, unchanged portions of the related ductwork, piping, electrical, venting and similar mechanical systems. In the case of an appliance replacement, such as a furnace, it is the expectation of both the manufacturer's instructions and the code that the new furnace be connected to a code-complying venting system, fuel supply system and electrical circuit, all of which are part of the furnace installation. If the ductwork system was such that the furnace temperature rise across the heat exchanger exceeded the maximum allowable temperature rise, the ductwork system might have to be altered as part of the furnace installation. Existing mechanical systems are accepted on the basis that they are free from hazard although not necessarily compliant with current codes. The code is not retroactive except where specifically stated that it applies to existing systems.

Manufacturer's installation instructions are often updated and changed for various reasons, such as changes in the appliance or equipment design, revisions to the product standards and as a result of field experience related to existing installations. The code official should stay abreast of any changes by reviewing the manufacturer's instructions for every installation.

Equipment and appliances must be installed in accordance with the manufacturer's instructions. The manufacturer's label and installation instructions must be consulted in determining whether or not an appliance or piece of equipment can be installed and operated in a particular hazardous location. Without the manufacturer's installation instructions, an inspector cannot fully perform his or her job, which is why the manufacturer's installation instructions must be available on the job site when the equipment is being inspected.

305.2 Hazardous area. *Equipment* and appliances having an *ignition source* shall not be installed in Group H occupancies or control areas where open use, handling or dispensing of combustible, flammable or explosive materials occurs.

❖ The installation of appliances and equipment having an ignition source within Group H occupancies or control areas where combustible, flammable or explosive materials are used, handled or dispensed is prohibited regardless of compliance with Section 305.3. The presence of an ignition source is too great a risk in such occupancies.

305.3 Elevation of ignition source. *Equipment* and appliances having an *ignition source* shall be elevated such that the source of ignition is not less than 18 inches (457 mm) above the floor in hazardous locations and public garages, private garages, repair garages, motor fuel-dispensing facilities and parking garages. For the purpose of this section, rooms or spaces that are not part of the *living space* of a *dwelling unit* and that communicate directly with a private garage through openings shall be considered to be part of the private garage.

Exception: Elevation of the *ignition source* is not required for appliances that are *listed* as flammable vapor ignition resistant.

❖ To reduce the possibility of ignition of flammable vapors in hazardous areas, the potential sources of ignition must be elevated above the surface supporting the equipment or appliance. It is not the intent of this section for the installer to measure the elevation from the surface of a dedicated appliance stand or other structure built to support the appliance where that stand or structure does not afford room for the storage of flammable liquids. Some flammable and combustible liquids typically associated with hazardous locations give off vapors that are denser than air and tend to collect near the floor. The 18-inch (457 mm) height requirement is intended to reduce the possibility of flammable vapor ignition by keeping the ignition sources elevated above the anticipated level of accumulated vapors. The 18-inch (457 mm) value is a minimum requirement and must be increased when required by the manufacturer's installation instructions.

INTERNATIONAL CODE COUNCIL®
Copyright © 2015 ICC. ALL RIGHTS RESERVED. Accessed by David Dammon on Jun 21, 2017 12:30:52 PM pursuant to License Agreement with ICC. No further reproduction or distribution authorized. ANY UNAUTHORIZED REPRODUCTION OR DISTRIBUTION IS A VIOLATION OF THE FEDERAL COPYRIGHT ACT AND THE LICENSE AGREEMENT, AND SUBJECT TO CIVIL AND CRIMINAL PENALTIES THEREUNDER.

This section will effectively prohibit the installation of most furnaces, boilers, space heaters and clothes dryers and some water heaters directly on the floor of residential garages.

The accumulation of flammable vapors more than 18 inches (457 mm) deep is unlikely in most ventilated locations; therefore, maintaining all possible sources of ignition at least 18 inches (457 mm) above the floor will substantially reduce the risk of explosion and fire [see Commentary Figures 305.3(1) and 305.3(2)].

In the context of this section, a source of ignition could be a pilot flame, burner, burner igniter or electrical component capable of producing a spark. The term "ignition source" is defined and can be interpreted as meaning an intentional source of ignition, such as for a burner, or an unintentional source of ignition for any flammable vapors that may be present (see the definition of "Ignition source").

An appliance installed in a closet or room that is accessible only from the garage must be considered as part of the garage for application of this section. Even though the room may be separated from the garage by walls and a door, there is no practical means of making the door vapor tight, nor is there any assurance that the door will remain closed during normal use. An appliance room that is accessed only from the outdoors or only from the living space would not be considered as part of the garage (see Section 305.3.1). Rooms such as utility rooms or laundry rooms that communicate with both the garage and the living space and that are considered as part of the living space are not part of the garage. See the definition of "Living space." If a room opens to the garage and that room is not living space, it is part of the garage for the purpose of this section [see Commentary Figure 305.3(3)].

The exception recognizes that new technology exists that allows appliances, such as water heaters, to be tested and listed as being flammable-vapor-ignition resistant and suitable for installation without the 18-inch (457 mm) elevation requirement. This new technology was developed for conventional draft-hood-equipped water heaters, and now the standard for these appliances, ANSI Z21.10.1, mandates that by specified effective dates, all water heaters must comply with the flammable-vapor-ignition criteria in the standard. The technology involves variously configured flame arrestor screens having precisely engineered openings (slots). All combustion air for the appliance is passed through the flame arrestor screen. To pass through the small slots in the screen, the combustion air velocity is increased (Venturi principle) such that it exceeds the velocity at which flames travel through a flammable vapor. If the combustion air contains flammable vapors, the vapors will enter the appliance and be ignited within the combustion chamber. The flames will be contained (trapped) within the combustion chamber because the arrestor screen will not allow flames to exit the combustion chamber. The result is that vapor ignition is limited to the appliance interior and is not allowed to spread to the atmosphere surrounding the appliance. During such an event, a thermal sensing device shuts down and locks out the appliance. Some appliance manufacturers might require that the appliance be replaced after a flammable-vapor-ignition event. Others require that a sensor be replaced or reset. The appliance standard includes testing requirements to determine whether the arrestor screen is subject to blockage by debris, including lint, plant fibers, dust particles, etc. If the arrestor screen openings become restricted by debris, the appliance will be deprived of combustion air and incomplete combustion and serious appliance malfunction can result. If an appliance shuts down as a result of the arrestor screen being blocked by debris, thus restricting the combustion air supply, typically a thermal device can be reset or replaced to restore operation of the appliance.

If the installation instructions or the label of a water heater equipped with flammable-vapor-ignition-resistant technology state that the appliance must be elevated so that the source of ignition is at least 18 inches (457 mm) above the floor, it must be installed as directed [see Commentary Figures 305.3(1) through 305.3(6)].

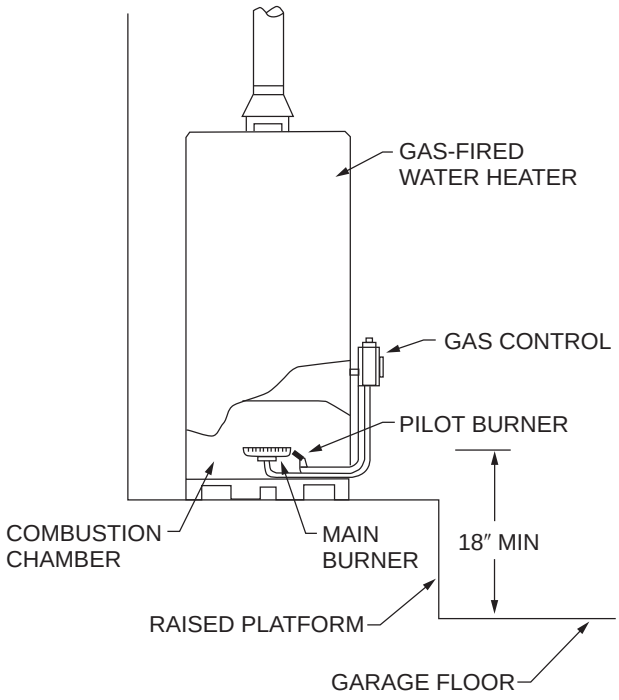

For SI: 1 inch = 24.5 mm.

Figure 305.3(1)
GAS-FIRED WATER HEATER
INSTALLATION IN A GARAGE

INTERNATIONAL CODE COUNCIL®
Copyright © 2015 ICC. ALL RIGHTS RESERVED. Accessed by David Dammon on Jun 21, 2017 12:30:52 PM pursuant to License Agreement with ICC. No further reproduction or distribution authorized. ANY UNAUTHORIZED REPRODUCTION OR DISTRIBUTION IS A VIOLATION OF THE FEDERAL COPYRIGHT ACT AND THE LICENSE AGREEMENT, AND SUBJECT TO CIVIL AND CRIMINAL PENALTIES THEREUNDER.



Figure 305.3(2)
SOURCES OF IGNITION ELEVATED IN PRIVATE GARAGE

305.3.1 (IFGS) Installation in residential garages. In residential garages where appliances are installed in a separate, enclosed space having *access* only from outside of the garage, such appliances shall be permitted to be installed at floor level, provided that the required *combustion air* is taken from the exterior of the garage.

❖ See Commentary Figure 305.3.1 and Section 305.3.

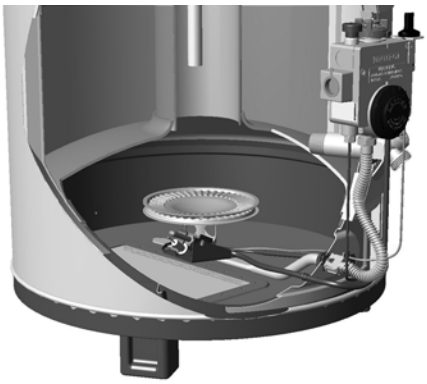

Figure 305.3(4)
EXAMPLE OF FLAMMABLE VAPOR IGNITION-RESISTANT WATER HEATER TECHNOLOGY
(Figure courtesy of American Water Heater Company)

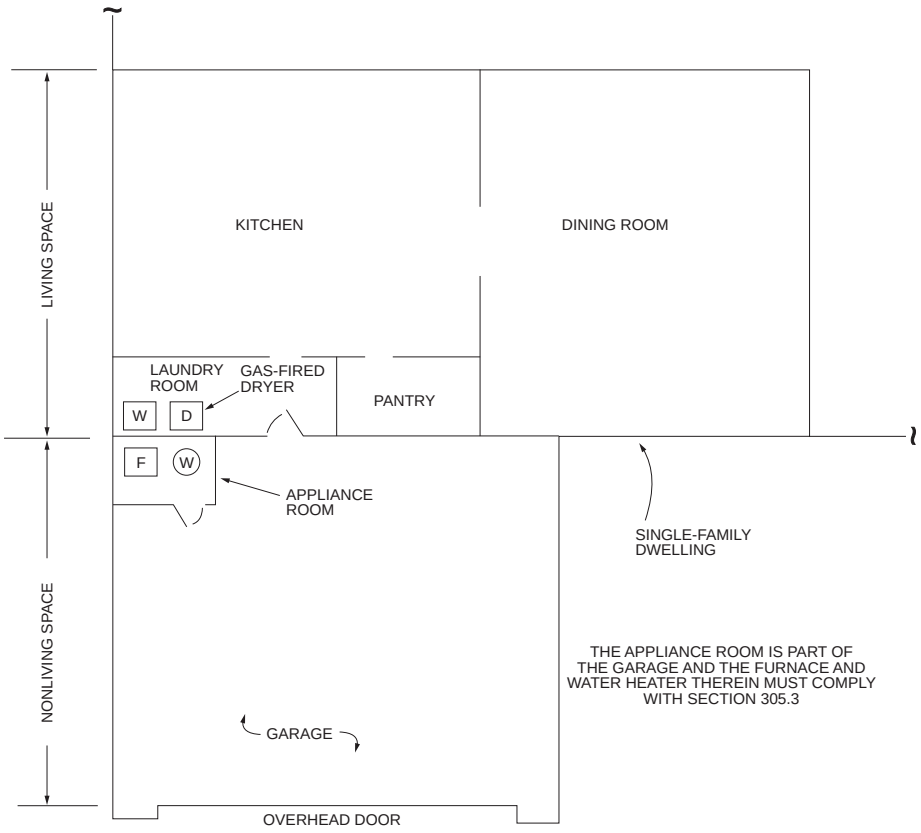

Figure 305.3(3)
GARAGE SPACE VS. LIVING SPACE

INTERNATIONAL CODE COUNCIL®
Copyright © 2015 ICC. ALL RIGHTS RESERVED. Accessed by David Dammon on Jun 21, 2017 12:30:52 PM pursuant to License Agreement with ICC. No further reproduction or distribution authorized. ANY UNAUTHORIZED REPRODUCTION OR DISTRIBUTION IS A VIOLATION OF THE FEDERAL COPYRIGHT ACT AND THE LICENSE AGREEMENT, AND SUBJECT TO CIVIL AND CRIMINAL PENALTIES THEREUNDER.

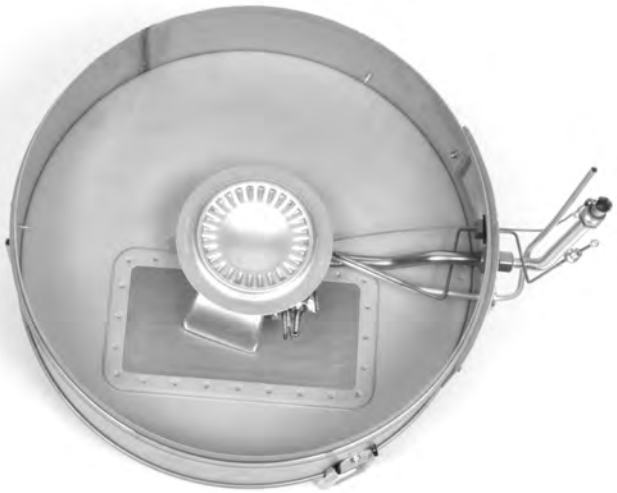

Figure 305.3(5)
EXAMPLE OF FLAMMABLE VAPOR IGNITION-RESISTANT WATER HEATER TECHNOLOGY
(Photo courtesy of American Water Heater Company)

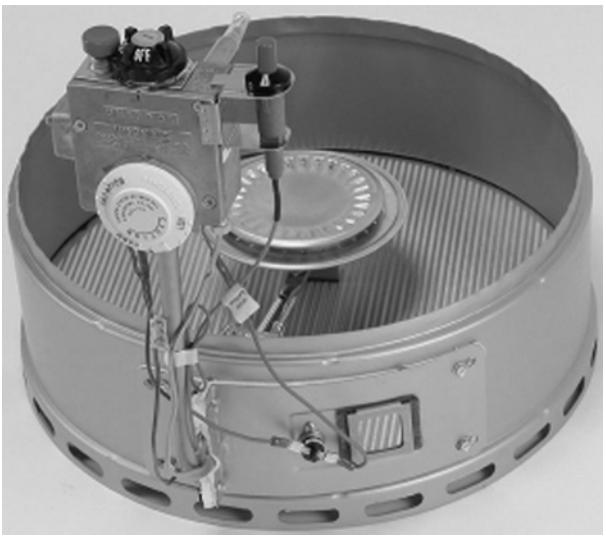

Figure 305.3(6)
EXAMPLE OF FLAMMABLE VAPOR IGNITION RESISTANT WATER HEATER TECHNOLOGY
[Photo courtesy of Bradford White Coporation (Bradford White Defender Safety System™)]

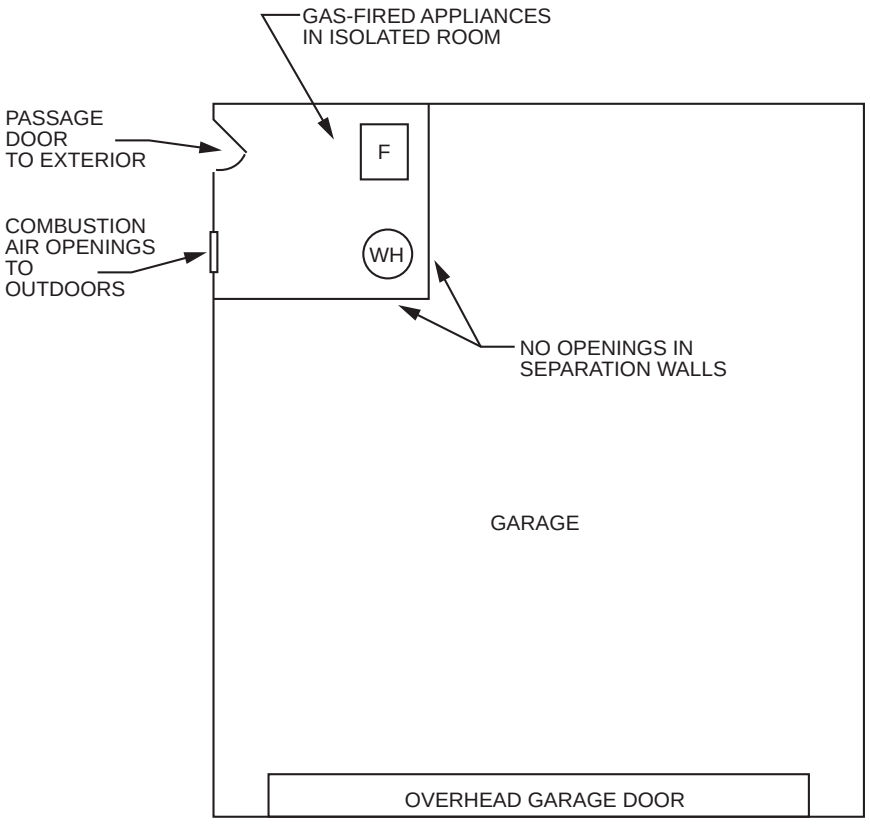

Figure 305.3.1
ELEVATION OF APPLIANCES NOT REQUIRED

INTERNATIONAL CODE COUNCIL®
Copyright © 2015 ICC. ALL RIGHTS RESERVED. Accessed by David Dammon on Jun 21, 2017 12:30:52 PM pursuant to License Agreement with ICC. No further reproduction or distribution authorized. ANY UNAUTHORIZED REPRODUCTION OR DISTRIBUTION IS A VIOLATION OF THE FEDERAL COPYRIGHT ACT AND THE LICENSE AGREEMENT, AND SUBJECT TO CIVIL AND CRIMINAL PENALTIES THEREUNDER.

305.3.2 Parking garages. Connection of a parking garage with any room in which there is a fuel-fired *appliance* shall be by means of a vestibule providing a two-doorway separation, except that a single door is permitted where the sources of ignition in the *appliance* are elevated in accordance with Section 305.3.

Exception: This section shall not apply to *appliance* installations complying with Section 305.4.

❖ This section addresses parking garages that are covered in Section 406 of the IBC and classified as Group S-2 occupancies. For example, if a boiler room opened into a parking garage, this section requires that the room be separated from the garage by two doors in series. Only a single door is required if the boilers are elevated as required by Section 305.3. The exception recognizes that appliances that are suspended 8 feet (2438 mm) or more above the floor or are installed in accordance with Section 305.3 and NFPA 30A are not likely sources of ignition and therefore, no doors are necessary for isolation. The exception is applicable to appliances installed in a room or anywhere else in a parking garage.

305.4 Public garages. Appliances located in public garages, motor fuel-dispensing facilities, repair garages or other areas frequented by motor vehicles shall be installed not less than 8 feet (2438 mm) above the floor. Where motor vehicles are capable of passing under an appliance, the appliance shall be installed at the clearances required by the appliance manufacturer and not less than 1 foot (305 mm) higher than the tallest vehicle garage door opening.

Exception: The requirements of this section shall not apply where the appliances are protected from motor vehicle impact and installed in accordance with Section 305.3 and NFPA 30A.

❖ Appliances located in motor vehicle areas must be installed to provide protection from vehicle impact. Protection is necessary because the resulting damage from vehicle impact could cause an explosion or fire.

The requirement that appliances be located a minimum of 8 feet (2438 mm) above the floor is intended to provide enough clearance for motor vehicles to pass under the appliance without impact. Although 8 feet (2438 mm) is the minimum height requirement, a clearance of at least 2 feet (610 mm) must always be maintained between the top of the highest vehicle and the bottom of any appliance that is installed where vehicles can pass underneath. If the vehicles that could pass under an appliance are 6 feet (1829 mm) or less in height, the height requirement of 8 feet (2438 mm) will result in a clearance of at least 2 feet (610 mm). If the height of vehicles that could pass under the appliance is greater than 6 feet (1829 mm), the minimum installation height requirement must be increased to maintain a clearance of not less than 2 feet (610 mm). The height of the largest door or opening that the vehicles must pass through to gain access to the space could be used as a guide to determine the maximum vehicle height in some applications; however, the door height may not be the sole consideration in buildings, such as warehouses, where forklifts or similar elevating vehicles are used. An exception to these requirements occurs when the appliance is installed in accordance with Section 305.3 and protected in accordance with NFPA 30A. Previously, NFPA 88B was referenced, however, this standard was withdrawn as a separate standard and was incorporated into NFPA 30A.

As a means of protecting appliances from motor vehicle impact, the code regulates elevation above the floor as an effective means of protection. Except for suspended unit heaters, the elevation of appliances and equipment above motor vehicles is often impractical, difficult to accomplish and creates access problems. This section allows for an alternative means of protecting appliances located in public garages from vehicle impact.

Although the code does not specify alternative methods of protection, the most apparent method would be to locate the appliance where it could not reasonably be struck by a vehicle. A practical method of protection could be to place a formidable and permanent barrier between the motor vehicles and the appliance. This barrier could include an effectively located vehicle wheel stop that is anchored in place, an elevated platform higher than the vehicle's bumpers or one or more concrete-filled steel pipes.

Where appliances are elevated in accordance with this section, compliance with Section 305.3 is automatically accomplished; however, alternative means of protection may or may not involve elevation of the unit. This section states, in effect, that regardless of the method of protection from vehicular impact, the appliances must be elevated in accordance with either this section or elevated in accordance with Section 305.3. If the installation is in a public repair garage and elevated in accordance with Section 305.3, the installation must also comply with NFPA 30A. NFPA 30A addresses motorized vehicle repair garages and introduces additional criteria and stipulations for nonresidential structures. NFPA 30A addresses appliance elevation, protection and appliance location with respect to operations involving the dispensing or transferring of Class I or II flammable and combustible liquids or liquefied petroleum gas.

In summary, appliances and equipment installed in private and public garages must at minimum comply with Section 305.3 and must be protected from vehicular impact. The area in which they are installed in public garages must also comply with NFPA 30A.

INTERNATIONAL CODE COUNCIL®
Copyright © 2015 ICC. ALL RIGHTS RESERVED. Accessed by David Dammon on Jun 21, 2017 12:30:52 PM pursuant to License Agreement with ICC. No further reproduction or distribution authorized. ANY UNAUTHORIZED REPRODUCTION OR DISTRIBUTION IS A VIOLATION OF THE FEDERAL COPYRIGHT ACT AND THE LICENSE AGREEMENT, AND SUBJECT TO CIVIL AND CRIMINAL PENALTIES THEREUNDER.

305.5 Private garages. Appliances located in private garages shall be installed with a minimum *clearance* of 6 feet (1829 mm) above the floor.

Exception: The requirements of this section shall not apply where the appliances are protected from motor vehicle impact and installed in accordance with Section 305.3.

❖ Appliances located in a private garage or carport must be protected from vehicle impact (also see Section 304.7). This section is applicable to appliances located in an area where motor vehicles can be operated and includes appliances under which a vehicle can pass and those located anywhere in a vehicle's path where impact is possible. The 6-foot (1829 mm) minimum height requirement is intended to provide adequate clearance above the typical automobile. With the popularity of conversion vans and recreational vehicles, which can be much higher than other automobiles, the 6-foot (1829 mm) minimum installation height above the floor may not provide adequate clearance; additional height might be necessary. The garage door height can be used as a guide in determining the maximum vehicle height [see Commentary Figures 305.5(1) through 305.5(5)].

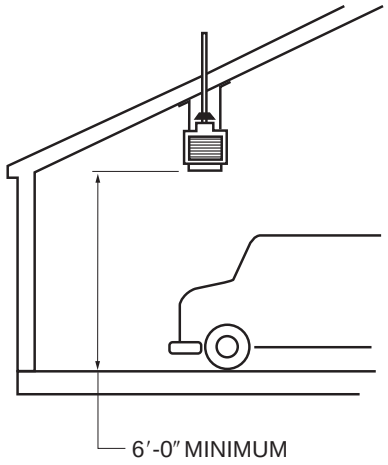

For SI: 1 foot = 304.8 mm.

For SI: 1 foot = 304.8 mm.

Figure 305.5(1)
SUSPENDED UNIT HEATER

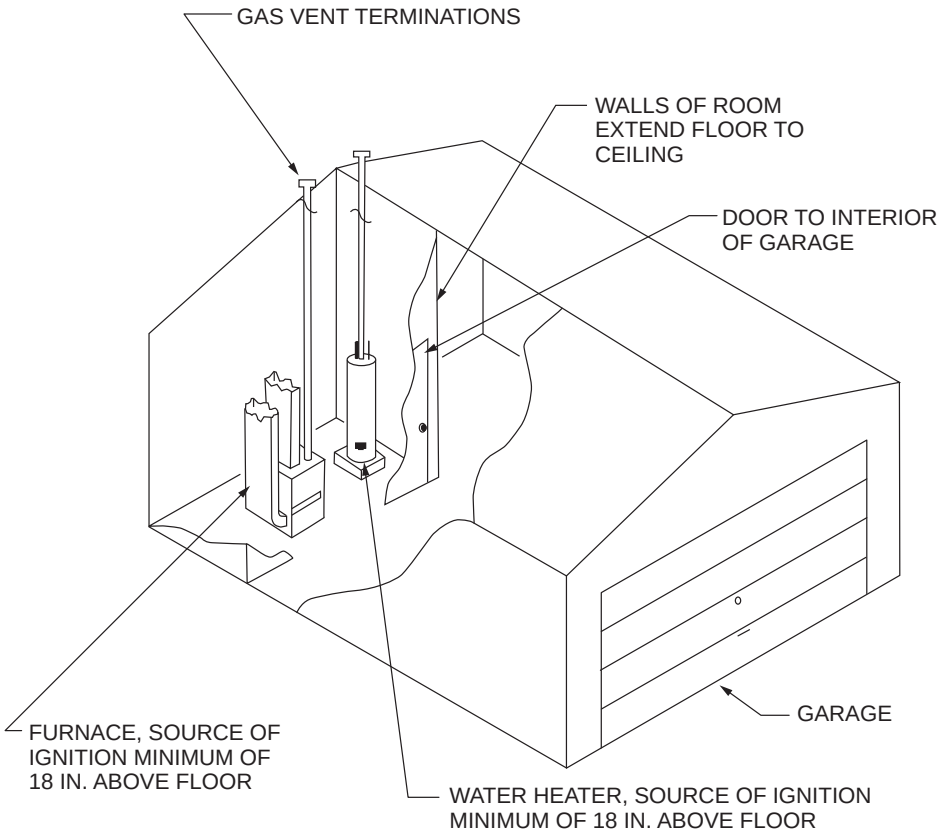

For SI: 1 inch = 25.4 mm.

Figure 305.5(2)
PROTECTED BY WALLS

INTERNATIONAL CODE COUNCIL®
Copyright © 2015 ICC. ALL RIGHTS RESERVED. Accessed by David Dammon on Jun 21, 2017 12:30:52 PM pursuant to License Agreement with ICC. No further reproduction or distribution authorized. ANY UNAUTHORIZED REPRODUCTION OR DISTRIBUTION IS A VIOLATION OF THE FEDERAL COPYRIGHT ACT AND THE LICENSE AGREEMENT, AND SUBJECT TO CIVIL AND CRIMINAL PENALTIES THEREUNDER.

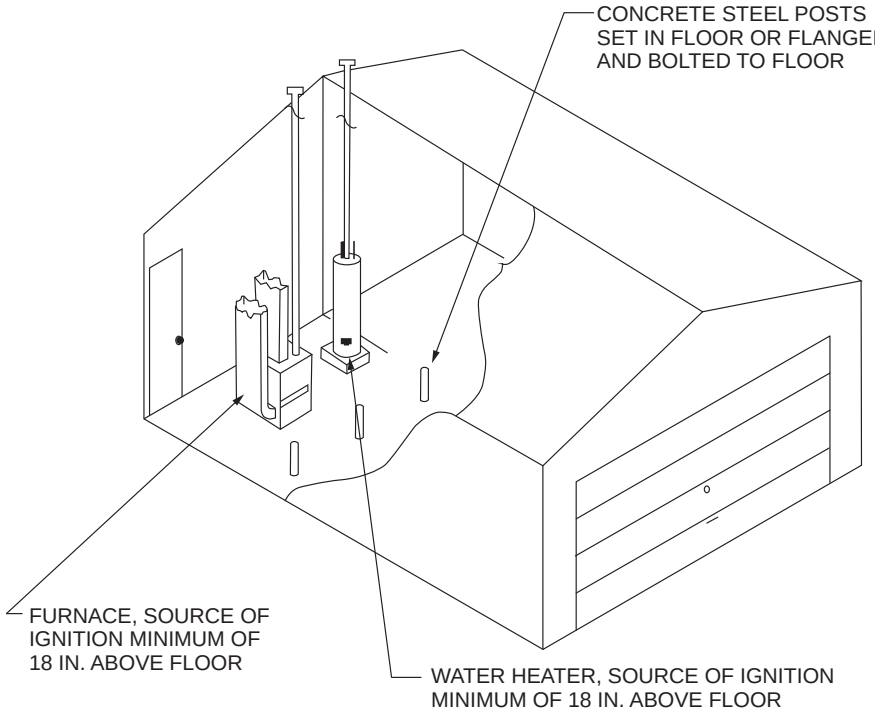

For SI: 1 inch = 25.4 mm.

Figure 305.5(3)
PROTECTED BY GUARDS

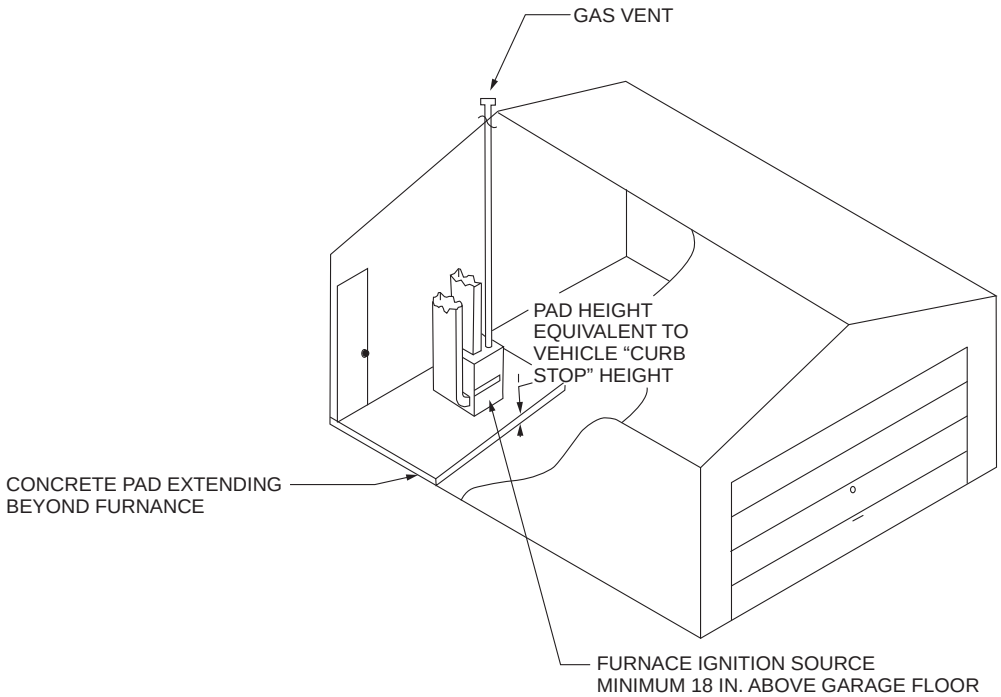

For SI: 1 inch = 25.4 mm.

Figure 305.5(4)
PROTECTED BY A PLATFORM

INTERNATIONAL CODE COUNCIL®
Copyright © 2015 ICC. ALL RIGHTS RESERVED. Accessed by David Dammon on Jun 21, 2017 12:30:52 PM pursuant to License Agreement with ICC. No further reproduction or distribution authorized. ANY UNAUTHORIZED REPRODUCTION OR DISTRIBUTION IS A VIOLATION OF THE FEDERAL COPYRIGHT ACT AND THE LICENSE AGREEMENT, AND SUBJECT TO CIVIL AND CRIMINAL PENALTIES THEREUNDER.

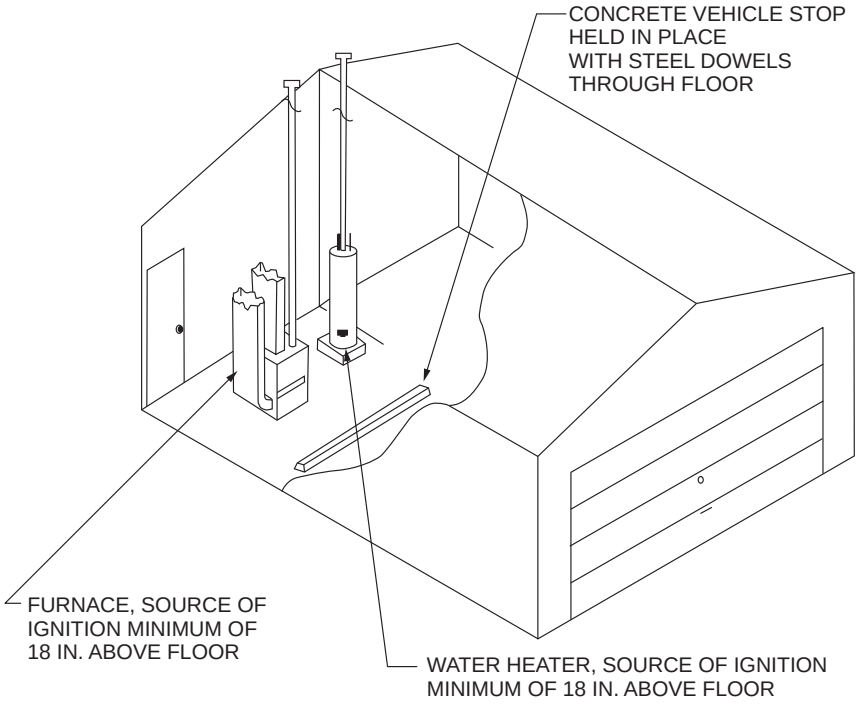

For SI: 1 inch = 25.4 mm.

Figure 305.5(5)
PROTECTED BY A CURB STOP

305.6 Construction and protection. Boiler rooms and furnace rooms shall be protected as required by the *International Building Code*.

❖ The terms "boiler room" and "furnace room" are defined in the IMC. Section 509 of the IBC addresses boiler and furnace rooms and requires that they be treated as either incidental use areas in Table 509 or as an occupancy group in a mixed occupancy building (see Section 509 of the IBC). In many cases, the IBC requires furnace and boiler rooms to have 1-hour fire-resistance-rated enclosures or automatic fire-extinguishing systems. Note that the gross output of a boiler in Btu/h divided by 33,475 yields boiler horsepower (hp) rating. For example, a boiler having an input rating of 425,000 Btu/h and 80-percent thermal efficiency would have a gross output of 340,000 Btu/h, which is 10.2 hp.

305.7 Clearances from grade. *Equipment* and appliances installed at grade level shall be supported on a level concrete slab or other *approved* material extending not less than 3 inches (76 mm) above adjoining grade or shall be suspended not less than 6 inches (152 mm) above adjoining grade. Such supports shall be installed in accordance with the manufacturer's instructions.

❖ This section addresses outdoor and crawl space installations where an appliance is resting on the earth and not supported by a building. The intent is to maintain level support and protect the appliance from corrosion and deterioration. The slab should be concrete or a material having comparable strength and longevity. Outdoor appliance installations must be designed to tolerate movement where frost heave will cause a slab to rise and fall.

305.8 Clearances to combustible construction. Heat-producing *equipment* and appliances shall be installed to maintain the required clearances to combustible construction as specified in the listing and manufacturer's instructions. Such clearances shall be reduced only in accordance with Section 308. Clearances to combustibles shall include such considerations as door swing, drawer pull, overhead projections or shelving and window swing. Devices, such as door stops or limits and closers, shall not be used to provide the required clearances.

❖ Section 308 allows clearances to be reduced where protective assemblies are installed to decrease the transfer of heat from the source to the combustible material/assembly. Clearances must be measured from shelving, overhead projections and the possible positions of doors, windows and drawers. Doorstops and closers are easily defeated and subject to failure.

305.9 (IFGS) Parking structures. Appliances installed in enclosed, basement and underground parking structures shall be installed in accordance with NFPA 88A.

❖ NFPA 88A references NFPA 31 for oil-fired appliances and NFPA 211 for venting of appliances.

INTERNATIONAL CODE COUNCIL®
Copyright © 2015 ICC. ALL RIGHTS RESERVED. Accessed by David Dammon on Jun 21, 2017 12:30:52 PM pursuant to License Agreement with ICC. No further reproduction or distribution authorized. ANY UNAUTHORIZED REPRODUCTION OR DISTRIBUTION IS A VIOLATION OF THE FEDERAL COPYRIGHT ACT AND THE LICENSE AGREEMENT, AND SUBJECT TO CIVIL AND CRIMINAL PENALTIES THEREUNDER.

305.10 (IFGS) Repair garages. Appliances installed in repair garages shall be installed in accordance with NFPA 30A.

❖ The requirements for repair garages are very similar to those for aircraft hangers. The intent is to isolate heating appliances from vehicle fuel vapors that are typically found in garages. Heating appliances are an obvious potential ignition source. It is also important to protect appliances from impact by vehicles in the garage.

305.11 (IFGS) Installation in aircraft hangars. Heaters in aircraft hangars shall be installed in accordance with NFPA 409.

❖ NFPA 409 prohibits open flame heating appliances in aircraft hangers except where such heaters are elevated well above the aircraft. If not elevated, heaters have to be isolated as required in the main paragraph of Section 305.10.

305.12 (IFGS) Avoid strain on gas piping. Appliances shall be supported and connected to the *piping* so as not to exert undue strain on the connections.

❖ Connections under strain can transmit forces to gas controls that can distort valve/control bodies and put strain on burner manifolds and other components. Gas piping must not exert forces on the appliance connection and vice versa. To accomplish this intent, the appliance and the gas piping must be supported independently. "Undue" strain is not specific, but is to be taken to mean any strain that is reasonably capable of threatening the integrity of the appliance connection over any period of time. That being very hard to determine, it would be wise to make the point of connection a neutral point where no forces are transmitted to or from the appliance. For example, where steel gas piping connects to an appliance gas control, it can be determined if the piping is exerting strain on the gas control by simply observing if the piping moves when the union is opened. If the piping moves in some direction, it is exerting a force on the appliance gas control in that same direction.

SECTION 306 (IFGC)
ACCESS AND SERVICE SPACE

[M] 306.1 Access for maintenance and replacement. Appliances, control devices, heat exchangers and HVAC components that utilize energy shall be accessible for inspection, service, repair and replacement without disabling the function of a fire-resistance-rated assembly or removing permanent construction, other appliances, or any other *piping* or ducts not connected to the *appliance* being inspected, serviced, repaired or replaced. A level working space not less than 30 inches (762 mm) deep and 30 inches (762 mm) wide shall be provided in front of the control side to service an *appliance*.

❖ Because equipment and appliances require routine maintenance, repairs and possible replacement, access is required. Additionally, access recommendations or requirements are usually stated in the manufacturer's installation instructions. As a result, the provisions stated here are intended to supplement the manufacturer's installation instructions.

The intent of this section is to ensure access to components that require observation, inspection, adjustment, servicing, repair or replacement. Access is also necessary to conduct operating procedures, such as startup or shutdown.

The code defines access as being able to be reached by a means that first may require the removal of a panel, door or similar obstruction. An appliance or piece of equipment is not accessible if any portion of the structure's permanent finish materials, such as drywall, plaster, paneling, built-in furniture, cabinets or any other similar permanently affixed building component must be removed.

The intent is to ensure access to components such as controls, gauges, burners, filters, blowers and motors that require observation, inspection, adjustment, servicing, repair and replacement.

[M] 306.2 Appliances in rooms. Rooms containing appliances shall be provided with a door and an unobstructed passageway measuring not less than 36 inches (914 mm) wide and 80 inches (2032 mm) high.

Exception: Within a *dwelling unit*, appliances installed in a compartment, alcove, basement or similar space shall be provided with *access* by an opening or door and an unobstructed passageway measuring not less than 24 inches (610 mm) wide and large enough to allow removal of the largest *appliance* in the space, provided that a level service space of not less than 30 inches (762 mm) deep and the height of the *appliance*, but not less than 30 inches (762 mm), is present at the front or service side of the *appliance* with the door open.

❖ Access opening and passageway dimensions are specified to give service personnel reasonable access to appliances and to allow for the passage of system components. Quite often appliances such as furnaces, boilers and water heaters are installed in spaces with little or no forethought about future access for maintenance or replacement.

[M] 306.3 Appliances in attics. Attics containing appliances shall be provided with an opening and unobstructed passageway large enough to allow removal of the largest *appliance*. The passageway shall be not less than 30 inches (762 mm) high and 22 inches (559 mm) wide and not more than 20 feet (6096 mm) in length measured along the centerline of the passageway from the opening to the *appliance*. The passageway shall have continuous solid flooring not less than 24 inches (610 mm) wide. A level service space not less than 30 inches (762 mm) deep and 30 inches (762 mm) wide shall be present at the front or service side of the *appliance*. The clear *access* opening dimensions shall be not less than 20 inches by

INTERNATIONAL CODE COUNCIL®
Copyright © 2015 ICC. ALL RIGHTS RESERVED. Accessed by David Dammon on Jun 21, 2017 12:30:52 PM pursuant to License Agreement with ICC. No further reproduction or distribution authorized. ANY UNAUTHORIZED REPRODUCTION OR DISTRIBUTION IS A VIOLATION OF THE FEDERAL COPYRIGHT ACT AND THE LICENSE AGREEMENT, AND SUBJECT TO CIVIL AND CRIMINAL PENALTIES THEREUNDER.

30 inches (508 mm by 762 mm) and large enough to allow removal of the largest *appliance*.

Exceptions:

1. The passageway and level service space are not required where the *appliance* is capable of being serviced and removed through the required opening.
2. Where the passageway is not less than 6 feet (1829 mm) high for its entire length, the passageway shall be not greater than 50 feet (15 250 mm) in length.

❖ There is not always sufficient room for installation of equipment and appliances in spaces, such as basements, alcoves, utility rooms and furnace rooms. In an effort to save floor space or simplify an installation, appliances and equipment are often installed in attics or in similar remote locations. Access to appliances and equipment could be difficult because of the lack of a walking surface, such as might occur in an attic or similar space with exposed ceiling joists. The intent of this section is to require a suitable access opening, passageway and work space that will allow reasonably easy access without endangering the service person. The longer the attic passageway, the more the service person will be exposed to extreme temperatures and risk of injury. In the event of a medical emergency, it might be difficult or impossible to escape from an attic space. Note that some appliances might not be listed for attic installation or might otherwise be unsuitable for such conditions (see Commentary Figure 306.3). The access opening must be large enough to allow the appliances to be removed in whole. For example, after disconnecting ductwork plenums and coil cabinets, a furnace or air handler should pass through the access opening without disassembly of the unit itself.

[M] 306.3.1 Electrical requirements. A luminaire controlled by a switch located at the required passageway opening and a receptacle outlet shall be provided at or near the *appliance* location in accordance with NFPA 70.

❖ A lighting outlet and receptacle outlet will encourage and facilitate appliance maintenance. The receptacle will accommodate power tools, drop lights and diagnostic instruments. Also, these provisions will negate the need for extension cords, which can be hazardous to service personnel.

[M] 306.4 Appliances under floors. Under-floor spaces containing appliances shall be provided with an *access* opening

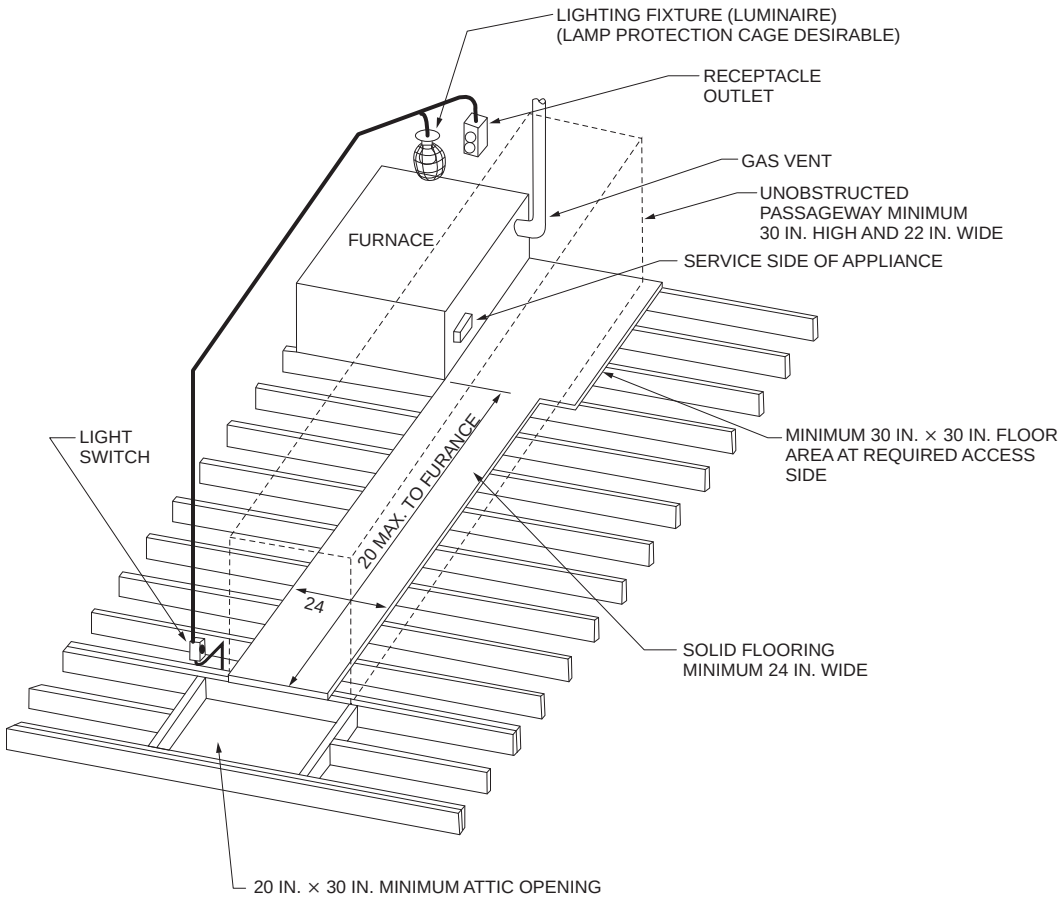

For SI: 1 inch = 25.4 mm.

Figure 306.3
ATTIC FURNACE INSTALLATION

INTERNATIONAL CODE COUNCIL®
Copyright © 2015 ICC. ALL RIGHTS RESERVED. Accessed by David Dammon on Jun 21, 2017 12:30:52 PM pursuant to License Agreement with ICC. No further reproduction or distribution authorized. ANY UNAUTHORIZED REPRODUCTION OR DISTRIBUTION IS A VIOLATION OF THE FEDERAL COPYRIGHT ACT AND THE LICENSE AGREEMENT, AND SUBJECT TO CIVIL AND CRIMINAL PENALTIES THEREUNDER.

and unobstructed passageway large enough to remove the largest *appliance*. The passageway shall be not less than 30 inches (762 mm) high and 22 inches (559 mm) wide, nor more than 20 feet (6096 mm) in length measured along the centerline of the passageway from the opening to the *appliance*. A level service space not less than 30 inches (762 mm) deep and 30 inches (762 mm) wide shall be present at the front or service side of the *appliance*. If the depth of the passageway or the service space exceeds 12 inches (305 mm) below the adjoining grade, the walls of the passageway shall be lined with concrete or masonry extending 4 inches (102 mm) above the adjoining grade and having sufficient lateral-bearing capacity to resist collapse. The clear *access* opening dimensions shall be not less than 22 inches by 30 inches (559 mm by 762 mm), and large enough to allow removal of the largest *appliance*.

Exceptions:

1. The passageway is not required where the level service space is present when the *access* is open and the *appliance* is capable of being serviced and removed through the required opening.
2. Where the passageway is not less than 6 feet high (1829 mm) for its entire length, the passageway shall not be limited in length.

❖ The intent of this section, which applies to crawl spaces, is the same as for Section 306.3. The more difficult access to appliances and equipment is, the less likely it is that the appliance or equipment will be inspected and serviced. Attic and crawl space installations suffer from the "out-of-sight, out-of-mind" syndrome (see commentary, Section 306.3). Passageways 6 feet (1829 mm) or more in height would allow a person to walk erect or nearly so, thus allowing quicker egress in the event of an emergency (see Commentary Figure 306.4).

[M] 306.4.1 Electrical requirements. A luminaire controlled by a switch located at the required passageway opening and a receptacle outlet shall be provided at or near the *appliance* location in accordance with NFPA 70.

❖ Appliances located in attics and under-floor spaces are generally not easy to access. The light switch, lighting fixture and receptacle outlet required by this section protect those who service the equipment and appliances. The receptacle will accommodate power tools, drop lights and diagnostic instruments. Also, these provisions will negate the need for extension cords, which can be hazardous to service personnel. NFPA 70 requires ground fault circuit interrupter protection for receptacles located in a crawl space.

[M] 306.5 Equipment and appliances on roofs or elevated structures. Where equipment requiring access or appliances are located on an elevated structure or the roof of a building such that personnel will have to climb higher than 16 feet (4877 mm) above grade to access such equipment or appliances, an interior or exterior means of access shall be provided. Such access shall not require climbing over obstructions greater than 30 inches (762 mm) in height or walking on roofs having a slope greater than 4 units vertical in 12 units horizontal (33-percent slope). Such access shall not require the use of portable ladders.

Permanent ladders installed to provide the required *access* shall comply with the following minimum design criteria:

1. The side railing shall extend above the parapet or roof edge not less than 30 inches (762 mm).
2. Ladders shall have rung spacing not to exceed 14 inches (356 mm) on center. The upper-most rung shall

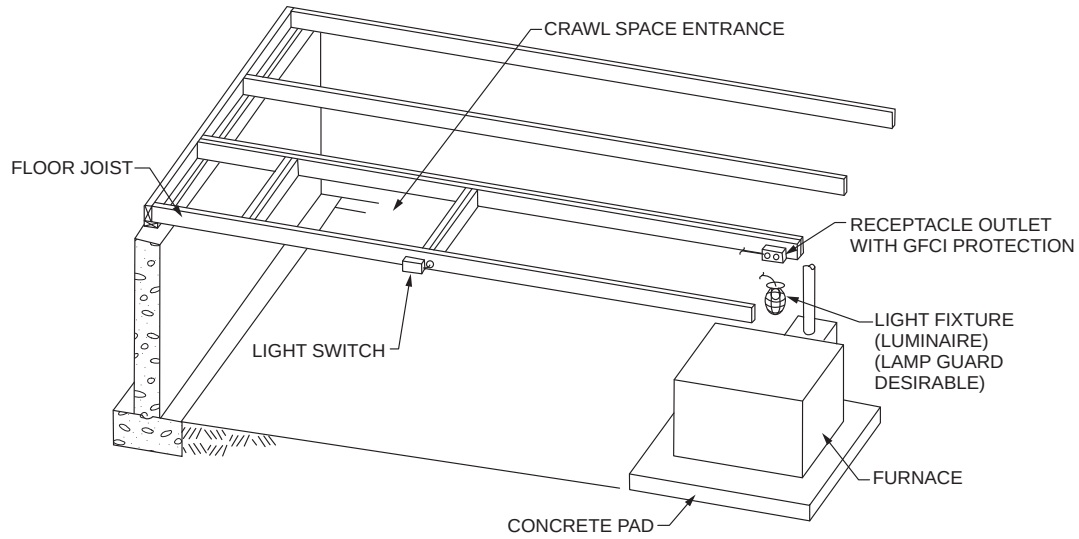

Figure 306.4
CRAWL SPACE FURNACE INSTALLATION

INTERNATIONAL CODE COUNCIL®
Copyright © 2015 ICC. ALL RIGHTS RESERVED. Accessed by David Dammon on Jun 21, 2017 12:30:52 PM pursuant to License Agreement with ICC. No further reproduction or distribution authorized. ANY UNAUTHORIZED REPRODUCTION OR DISTRIBUTION IS A VIOLATION OF THE FEDERAL COPYRIGHT ACT AND THE LICENSE AGREEMENT, AND SUBJECT TO CIVIL AND CRIMINAL PENALTIES THEREUNDER.

be not more than 24 inches (610 mm) below the upper edge of the roof hatch, roof or parapet, as applicable.

3. Ladders shall have a toe spacing not less than 6 inches (152 mm) deep.
4. There shall be not less than 18 inches (457 mm) between rails.
5. Rungs shall have a diameter not less than 0.75-inch (19 mm) and be capable of withstanding a 300-pound (136.1 kg) load.
6. Ladders over 30 feet (9144 mm) in height shall be provided with offset sections and landings capable of withstanding 100 pounds per square foot (488.2 kg/m^2). Landing dimensions shall be not less than 18 inches (457 mm) and not less than the width of the ladder served. A guard rail shall be provided on all open sides of the landing.
7. Climbing clearance. The distance from the centerline of the rungs to the nearest permanent object on the climbing side of the ladder shall be not less than 30 inches (762 mm) measured perpendicular to the rungs. This distance shall be maintained from the point of ladder access to the bottom of the roof hatch. A minimum clear width of 15 inches (381 mm) shall be provided on both sides of the ladder measured from the midpoint of and parallel with the rungs, except where cages or wells are installed.
8. Landing required. The ladder shall be provided with a clear and unobstructed bottom landing area having a minimum dimension of 30 inches by 30 inches (762 mm by 762 mm) centered in front of the ladder.
9. Ladders shall be protected against corrosion by *approved* means.
10. Access to ladders shall be provided at all times.

Catwalks installed to provide the required *access* shall be not less than 24 inches (610 mm) wide and shall have railings as required for service platforms.

Exception: This section shall not apply to Group R-3 occupancies.

❖ The requirements of this section are intended to prevent portable ladders from being the only means of access to elevated appliances and equipment located above the specified height. These provisions are for the protection of service and inspection personnel. The criteria for constructing and installing permanent ladders and catwalks are intended to make them safe to use. The 16-foot height is always measured from grade. In effect, any building over one story in height will require a permanent means of access to rooftop appliances.

If a roof surface on which an appliance rests is less than 16 feet above grade, but the parapet wall cap is greater than 16 feet above grade, this section will require a permanent means of access because service personnel will have to climb over the parapet if using a portable ladder on the exterior of the building (see Commentary Figure 306.5).

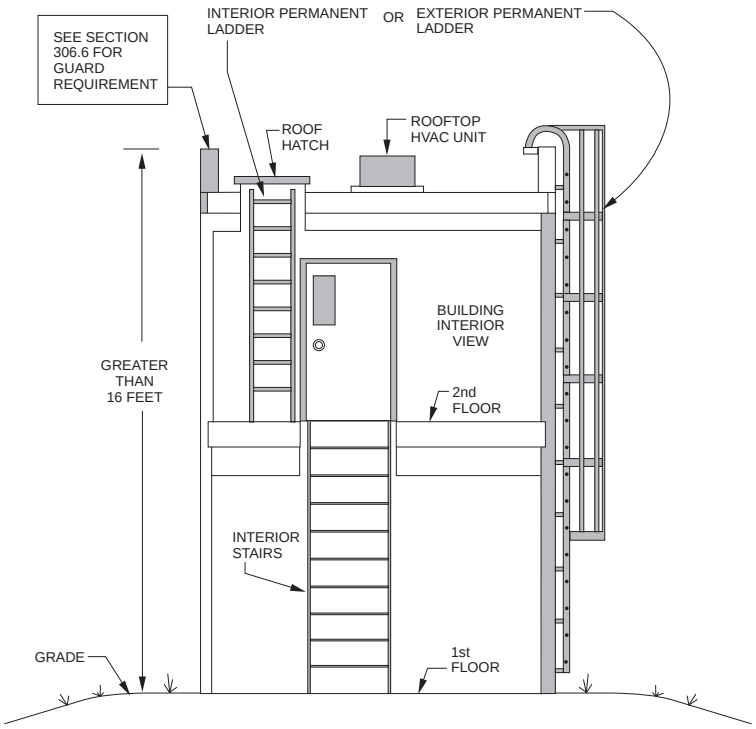

Figure 306.5
APPLIANCE ACCESS

INTERNATIONAL CODE COUNCIL®
Copyright © 2015 ICC. ALL RIGHTS RESERVED. Accessed by David Dammon on Jun 21, 2017 12:30:52 PM pursuant to License Agreement with ICC. No further reproduction or distribution authorized. ANY UNAUTHORIZED REPRODUCTION OR DISTRIBUTION IS A VIOLATION OF THE FEDERAL COPYRIGHT ACT AND THE LICENSE AGREEMENT, AND SUBJECT TO CIVIL AND CRIMINAL PENALTIES THEREUNDER.

[M] 306.5.1 Sloped roofs. Where appliances, *equipment*, fans or other components that require service are installed on a roof having a slope of 3 units vertical in 12 units horizontal (25-percent slope) or greater and having an edge more than 30 inches (762 mm) above grade at such edge, a level platform shall be provided on each side of the *appliance* or *equipment* to which *access* is required for service, repair or maintenance. The platform shall be not less than 30 inches (762 mm) in any dimension and shall be provided with guards. The guards shall extend not less than 42 inches (1067 mm) above the platform, shall be constructed so as to prevent the passage of a 21-inch-diameter (533 mm) sphere and shall comply with the loading requirements for guards specified in the *International Building Code*. *Access* shall not require walking on roofs having a slope greater than 4 units vertical in 12 units horizontal (33-percent slope). Where *access* involves obstructions greater than 30 inches (762 mm) in height, such obstructions shall be provided with ladders installed in accordance with Section 306.5 or stairways installed in accordance with the requirements specified in the *International Building Code* in the path of travel to and from appliances, fans or *equipment* requiring service.

❖ A work space platform with guards will provide protection for service personnel and will facilitate inspection, servicing and repair of appliances and equipment (see Commentary Figure 306.5.1). Working on a sloped surface is difficult and dangerous, and results in tools and materials sliding off roofs, possibly endangering persons below. Because of the additional expense and unattractive appearance of roof platforms, this section may have the effect of discouraging the installation of appliances on sloped roofs. Note that if the roof slope is greater than 4/12, some means such as a catwalk would be required to provide access to the level platform.

[M] 306.5.2 Electrical requirements. A receptacle outlet shall be provided at or near the *appliance* location in accordance with NFPA 70.

❖ A lighting outlet is not required for servicing roof-mounted equipment. A receptacle outlet will encourage and facilitate appliance maintenance. The receptacle will accommodate power tools, drop lights, and diagnostic instruments. Also, these provisions will negate the need for extension cords, which can be hazardous to service personnel. NFPA 70: *National Electrical Code*® (NEC®) requires ground fault circuit interrupter protection for rooftop receptacles.

[M] 306.6 Guards. Guards shall be provided where various components that require service and roof hatch openings are located within 10 feet (3048 mm) of a roof edge or open side of a walking surface and such edge or open side is located more than 30 inches (762 mm) above the floor, roof, or grade below. The guard shall extend not less than 30 inches (762 mm) beyond each end of components that require service. The top of the guard shall be located not less than 42 inches (1067 mm) above the elevated surface adjacent to the guard. The guard shall be constructed so as to prevent the passage of a 21-inch-diameter (533 mm) sphere and shall



Figure 306.5.1
ROOFTOP HVAC UNIT WITH WORK PLATFORM
(Photo courtesy of Reznor/Thomas & Betts Corporation)

INTERNATIONAL CODE COUNCIL®
Copyright © 2015 ICC. ALL RIGHTS RESERVED. Accessed by David Dammon on Jun 21, 2017 12:30:52 PM pursuant to License Agreement with ICC. No further reproduction or distribution authorized. ANY UNAUTHORIZED REPRODUCTION OR DISTRIBUTION IS A VIOLATION OF THE FEDERAL COPYRIGHT ACT AND THE LICENSE AGREEMENT, AND SUBJECT TO CIVIL AND CRIMINAL PENALTIES THEREUNDER.

comply with the loading requirements for guards specified in the *International Building Code*.

Exception: Guards are not required where permanent fall arrest/restraint anchorage connector devices that comply with ANSI/ASSE Z 359.1 are affixed for use during the entire lifetime of the roof covering. The devices shall be re-evaluated for possible replacement when the entire roof covering is replaced. The devices shall be placed not more than 10 feet (3048 mm) on center along hip and ridge lines and placed not less than 10 feet (3048 mm) from roof edges and the open sides of walking surfaces.

❖ Equipment and appliances require routine inspection, maintenance and repair. Where the units requiring service are located within 10 feet (3048 mm) of a roof edge or open side with a drop greater than 30 inches (762 mm), a possibility exists for the service person to be injured by a fall. The requirements of this section are intended to protect service personnel from the hazard of falls. This section pertains to equipment and appliances regulated by the code that require routine inspection, maintenance and repair and also applies to roof hatch openings.

The guard serves as a warning and as a protective barrier, and is required to be 42 inches (1067 mm) high and constructed to prevent the passage of a 21-inch (533 mm) sphere [see Commentary Figures 306.6(1) and 306.6(2)]. The guard must extend 30 inches (762 mm) beyond each end of the equipment, or appliance or roof hatch opening to provide added protection for the installer or service technician by enlarging the protected area beyond the immediate area of the equipment or appliance.

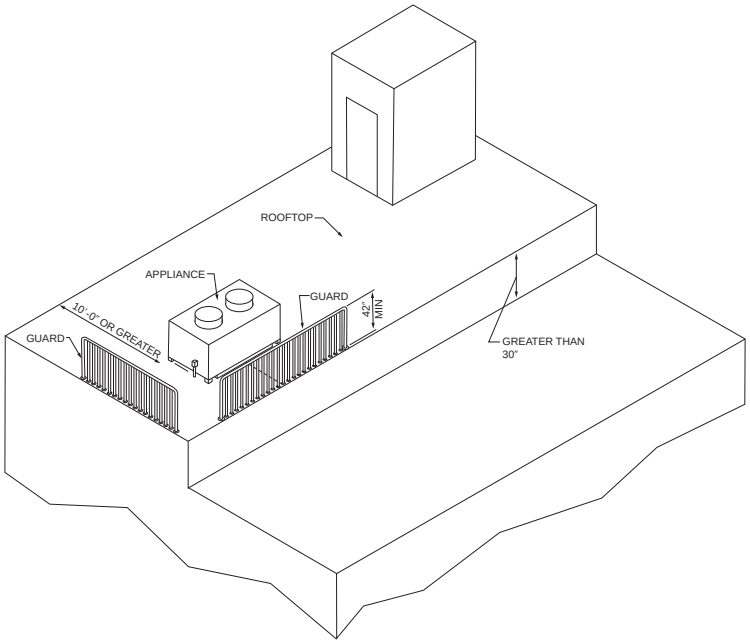

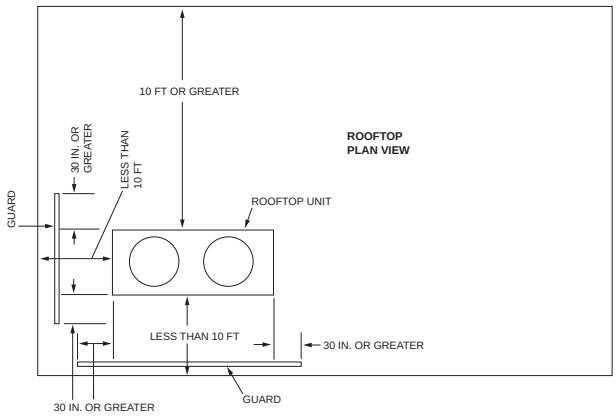

For SI: 1 inch = 25.4 mm, 1 foot = 304.8 mm.

Figure 306.6(1)
GUARDS

INTERNATIONAL CODE COUNCIL®
Copyright © 2015 ICC. ALL RIGHTS RESERVED. Accessed by David Dammon on Jun 21, 2017 12:30:52 PM pursuant to License Agreement with ICC. No further reproduction or distribution authorized. ANY UNAUTHORIZED REPRODUCTION OR DISTRIBUTION IS A VIOLATION OF THE FEDERAL COPYRIGHT ACT AND THE LICENSE AGREEMENT, AND SUBJECT TO CIVIL AND CRIMINAL PENALTIES THEREUNDER.

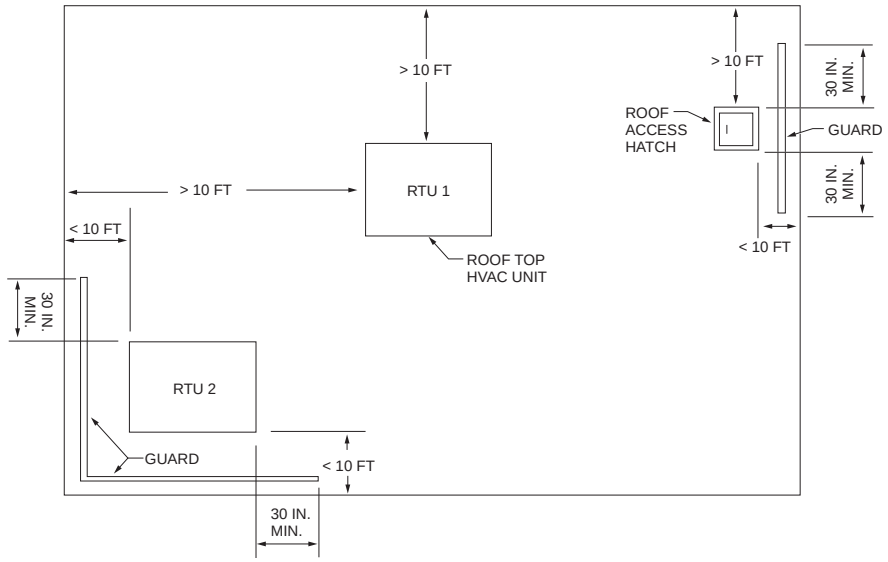

For SI: 1 inch = 25.4 mm, 1 foot = 304.8 mm.

Figure 306.6(2)
ROOF PLAN VIEW

SECTION 307 (IFGC)
CONDENSATE DISPOSAL

307.1 Evaporators and cooling coils. Condensate drainage systems shall be provided for *equipment* and appliances containing evaporators and cooling coils in accordance with the *International Mechanical Code.*

❖ This section recognizes that gas-fired space heating appliances are commonly part of space cooling and conditioning systems and the condensate drainage provisions of the IMC are applicable. Sections 307.2 through 307.5 address condensate relative to combustion of fuel gas, whereas, this section addresses condensate produced by refrigeration and cooling coils.

307.2 Fuel-burning appliances. Liquid combustion byproducts of condensing appliances shall be collected and discharged to an *approved* plumbing fixture or disposal area in accordance with the manufacturer's instructions. Condensate *piping* shall be of *approved* corrosion-resistant material and shall be not smaller than the drain connection on the *appliance*. Such *piping* shall maintain a minimum slope in the direction of discharge of not less than one-eighth unit vertical in 12 units horizontal (1-percent slope).

❖ This section contains detailed requirements for the disposal of condensate from appliances such as condensing furnaces, boilers and water heaters. Condensation must be collected from appliances and equipment in accordance with the manufacturer's installation instructions and this section. High-efficiency condensing-type appliances and some mid-efficiency appliances produce water as a combustion byproduct. This condensate is collected at various points in the appliance heat exchangers and venting system and must be disposed of. Because of impurities in the fuel and combustion air, the condensate can be acidic and thus corrosive to many materials. For example, such condensate can contain hydrochloric and sulfuric acids, although the acid solution would be weak. The slope requirement promotes drainage and prohibits low points (dips) in the piping that would trap water and air that would impede flow.

[M] 307.3 Drain pipe materials and sizes. Components of the condensate disposal system shall be cast iron, galvanized steel, copper, cross-linked polyethylene, polyethylene, ABS, CPVC, PVC or polypropylene pipe or tubing. Components shall be selected for the pressure and temperature rating of the installation. Joints and connections shall be made in accordance with the applicable provisions of Chapter 7 of the *International Plumbing Code* relative to the material type. Condensate waste and drain line size shall be not less than $^{3}/_{4}$-inch (19 mm) internal diameter and shall not decrease in size from the drain pan connection to the place of condensate disposal. Where the drain pipes from more than one unit are manifolded together for condensate drainage, the pipe or tubing shall be sized in accordance with an *approved* method.

❖ Condensate drains must be constructed of a material listed in this section. The materials listed are corrosion resistant. These drains must be straight runs of pipe without sags or dips that would trap liquid. If coiled stock tubing is used, it would be difficult to maintain a uniform slope, and the low points (dips) in the tubing would trap water, causing the drain to be double trapped (air bound). Air-bound drains will not allow flow. When drains are merged, the piping must be properly sized for the aggregate flow.

307.4 Traps. Condensate drains shall be trapped as required by the *equipment* or *appliance* manufacturer.

❖ The appliance or equipment manufacturer determines the need for a trap and often specifies the depth and configuration of the trap. The traps

INTERNATIONAL CODE COUNCIL®
Copyright © 2015 ICC. ALL RIGHTS RESERVED. Accessed by David Dammon on Jun 21, 2017 12:30:52 PM pursuant to License Agreement with ICC. No further reproduction or distribution authorized. ANY UNAUTHORIZED REPRODUCTION OR DISTRIBUTION IS A VIOLATION OF THE FEDERAL COPYRIGHT ACT AND THE LICENSE AGREEMENT, AND SUBJECT TO CIVIL AND CRIMINAL PENALTIES THEREUNDER.

addressed in this section are unrelated to plumbing traps and serve a different purpose. Condensate drain traps do not directly connect in any way to the plumbing drain or the waste and vent system of a building. Condensate drain traps are installed to prevent air and combustion gases from being pushed or pulled through the drain piping. Such airflow can impede condensate flow, causing overflow or abnormal water depth in drain pans and components.

307.5 Auxiliary drain pan. Category IV condensing appliances shall be provided with an auxiliary drain pan where damage to any building component will occur as a result of stoppage in the condensate drainage system. Such pan shall be installed in accordance with the applicable provisions of Section 307 of the *International Mechanical Code.*

Exception: An auxiliary drain pan shall not be required for appliances that automatically shut down operation in the event of a stoppage in the condensate drainage system.

❖ This section treats condensing (Category IV) appliances the same as the IMC treats appliances and equipment having evaporators and cooling coils. Category IV appliances produce condensate and, like cooling equipment and evaporators, can cause structural damage to a building if the condensate drainage system fails. This section parallels Section 307 of the IMC. Section 307.2.3 of the IMC is applicable, however, only Items 1 and 3 because this section of the code requires an auxiliary pan in all cases. In many cases, this provision will require nothing more than what is already being provided for the cooling coil or evaporator that is part of the gas appliance installation (e.g., the typical gas-fired furnace with cooling coil/evaporator). For example, an up-flow Category IV furnace with an "A" coil on its outlet is installed in an attic, and it is sitting in an auxiliary drain pan. This pan can also serve as protection for the furnace; therefore, no additional installation is required because the furnace happened to be a condensing type (see Commentary Figure 307.4).

The exception recognizes that some condensing appliances are designed to shut down automatically upon failure of the condensate drainage system. For example, the design/test standards for some appliances allow a choice of appliance reaction to a failed condensate drain. The appliance may either continue to function safely with a failed condensate drain or the appliance must shut down upon failure of the condensate drain.

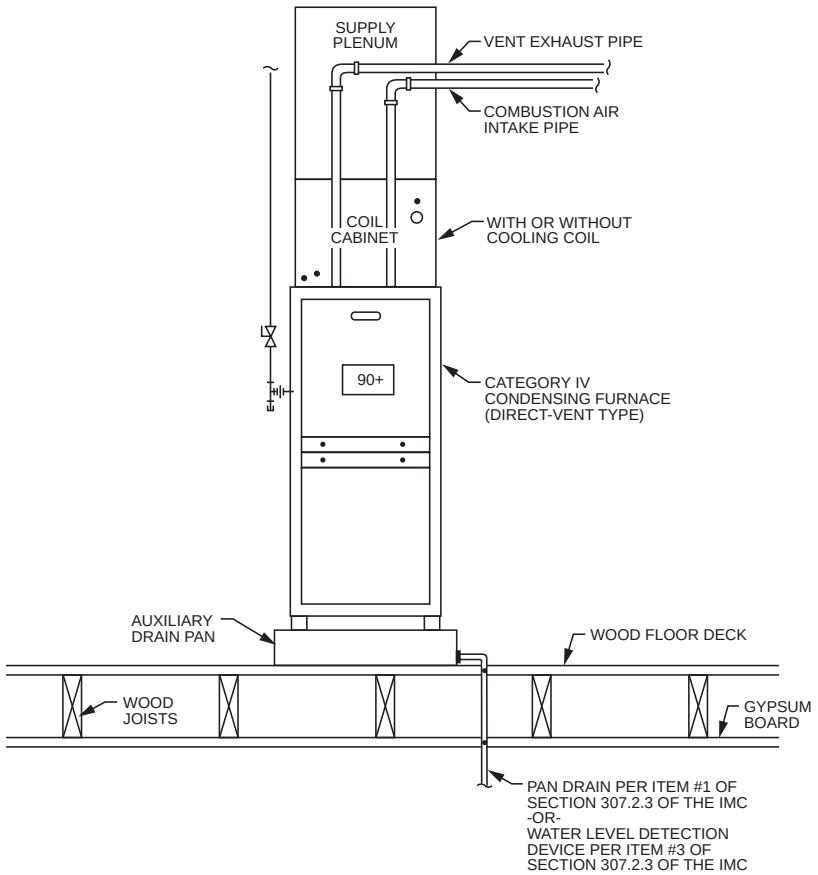

Figure 307.4
AUXILIARY DRAIN PAN REQUIRED (WITH OR WITHOUT COOLING COIL)

INTERNATIONAL CODE COUNCIL®
Copyright © 2015 ICC. ALL RIGHTS RESERVED. Accessed by David Dammon on Jun 21, 2017 12:30:52 PM pursuant to License Agreement with ICC. No further reproduction or distribution authorized. ANY UNAUTHORIZED REPRODUCTION OR DISTRIBUTION IS A VIOLATION OF THE FEDERAL COPYRIGHT ACT AND THE LICENSE AGREEMENT, AND SUBJECT TO CIVIL AND CRIMINAL PENALTIES THEREUNDER.

307.6 Condensate pumps. Condensate pumps located in uninhabitable spaces, such as attics and crawl spaces, shall be connected to the *appliance* or *equipment* served such that when the pump fails, the *appliance* or *equipment* will be prevented from operating. Pumps shall be installed in accordance with the manufacturer's instructions.

❖ Condensate pumps are often located in attics and crawl spaces and above ceilings where they are not readily observable. If they fail, the condensate overflow can cause structural damage to the building, especially where the overflow will not be noticed immediately. The majority of such pumps are equipped with simple float controls that can be wired in series with the appliance/equipment control circuit. When the pump system fails, the float will rise in the reservoir and open a switch before the condensate starts to overflow the reservoir. These float controls are commonly not connected and, in other cases, the pump might not be equipped with an overflow switch. This new code section requires the installation of condensate pumps that have this overflow shutoff capability and requires that the appliance/equipment served be connected to take advantage of that feature (see Commentary Figure 307.3).

SECTION 308 (IFGS)
CLEARANCE REDUCTION

308.1 Scope. This section shall govern the reduction in required clearances to *combustible materials*, including gypsum board, and *combustible assemblies* for chimneys, vents, appliances, devices and equipment. Clearance requirements for air-conditioning equipment and central heating boilers and furnaces shall comply with Sections 308.3 and 308.4.

❖ Heat-producing appliances and mechanical equipment must be installed with the required minimum clearances to combustible materials indicated by their listing label. It is not uncommon to encounter practical or structural difficulties in maintaining clearances. Therefore, clearance reduction methods have been developed to allow, in some cases, reduction of the minimum prescribed clearance distance while achieving equivalent protection. An important understanding is that all prescribed clearances to combustibles are airspace clearances measured from the heat source to the face of the nearest combustible surface (see Commentary Figure 308.1). When using the assemblies described in Table 308.2, the clearance is measured as described in Note b. In the case of listed appliances and equipment, the required clearances are intended to be clear airspace, and therefore the space is not to be filled with insulation or any other material other than an assembly intended to allow clearance reduction. This is especially important where clearances are required from appliances and equipment that rely on the airspace for convection cooling to maintain their proper operating temperature.

The provisions contained in this section are based on the principles of heat transfer. Mechanical equipment or appliances producing heat can become hot, and many appliances have hot exterior surfaces by design. The heat energy is then radiated to objects surrounding the appliances or equipment. When mechanical equipment and appliances are tested, the minimum clearances are established so that radiant and, to a lesser extent, convective heat transfer do not represent an ignition hazard to adjacent surfaces and objects. This distance is called the "required clearance" to combustible materials. Appliance and equipment labels must specify minimum clearances in all directions.

This section permits the use of materials and systems as radiation shields, decreasing the amount of heat energy transferred to surrounding objects and reducing the required clearances between gas-fired appliances and equipment to combustibles.

Plaster and gypsum by themselves are classified as noncombustible materials. Under continued exposure to heat, however, these materials will gradually decompose as water molecules are driven out of the material. Plaster on wood lath, plasterboard, sheetrock and drywall are all considered to be combustible

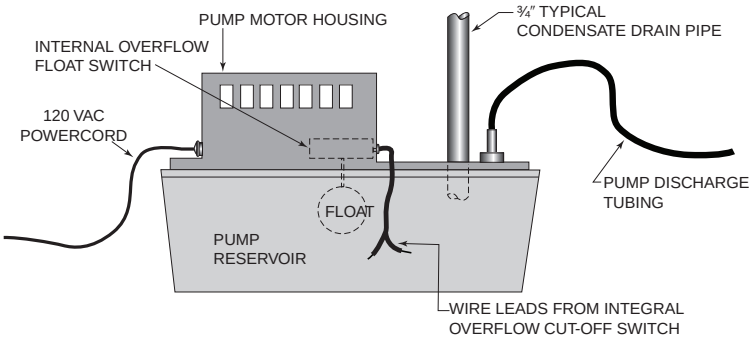

For SI: 1 inch = 25.4 mm.

Figure 307.3
CONDENSATE PUMP

INTERNATIONAL CODE COUNCIL®
Copyright © 2015 ICC. ALL RIGHTS RESERVED. Accessed by David Dammon on Jun 21, 2017 12:30:52 PM pursuant to License Agreement with ICC. No further reproduction or distribution authorized. ANY UNAUTHORIZED REPRODUCTION OR DISTRIBUTION IS A VIOLATION OF THE FEDERAL COPYRIGHT ACT AND THE LICENSE AGREEMENT, AND SUBJECT TO CIVIL AND CRIMINAL PENALTIES THEREUNDER.

materials when the code provisions are applied.

Additionally, gypsum wallboard is faced with paper that has a flame spread index that is measurable in the ASTM E84 test. This alone identifies the need to classify gypsum wallboard as a combustible material for the purpose of requiring a separation from heat-producing equipment and appliances.

The code specifically prohibits the reduction of clearances in certain applications. For examples, see Sections 308.2 through 308.4.

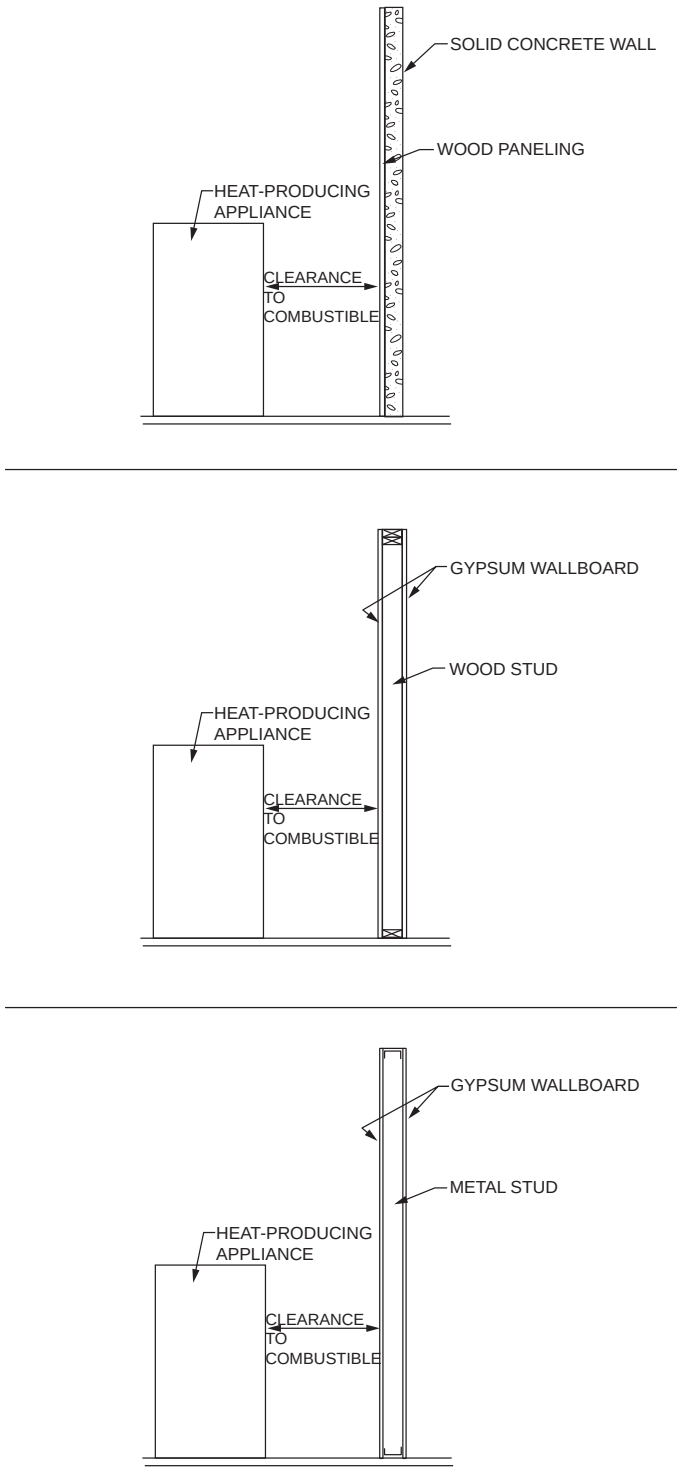

Figure 308.1
CLEARANCE TO COMBUSTIBLES—EXAMPLES OF HOW TO MEASURE

INTERNATIONAL CODE COUNCIL®
Copyright © 2015 ICC. ALL RIGHTS RESERVED. Accessed by David Dammon on Jun 21, 2017 12:30:52 PM pursuant to License Agreement with ICC. No further reproduction or distribution authorized. ANY UNAUTHORIZED REPRODUCTION OR DISTRIBUTION IS A VIOLATION OF THE FEDERAL COPYRIGHT ACT AND THE LICENSE AGREEMENT, AND SUBJECT TO CIVIL AND CRIMINAL PENALTIES THEREUNDER.

308.2 Reduction table. The allowable *clearance* reduction shall be based on one of the methods specified in Table 308.2 or shall utilize a reduced *clearance* protective assembly *listed* and *labeled* in accordance with UL 1618. Where required clearances are not listed in Table 308.2, the reduced clearances shall be determined by linear interpolation between the distances listed in the table. Reduced clearances shall not be derived by extrapolation below the range of the table. The reduction of the required clearances to combustibles for *listed* and *labeled* appliances and *equipment* shall be in accordance with the requirements of this section, except that such clearances shall not be reduced where reduction is specifically prohibited by the terms of the *appliance* or *equipment* listing [see Figures 308.2(1) through 308.2(3)].

❖ Another option for reducing the required clearances to combustible materials is to use one of the on-site field-constructed methods specified in Table 308.2.

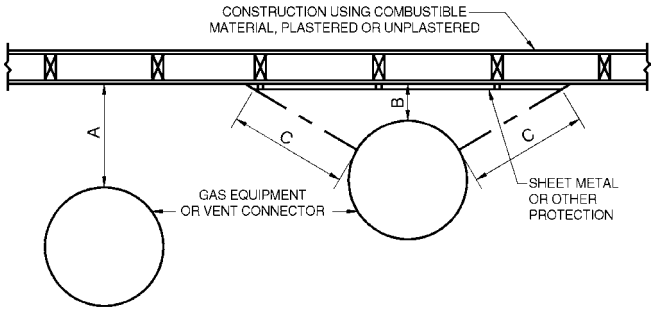

"A" equals the clearance with no protection.

"B" equals the reduced clearance permitted in accordance with Table 308.2. The protection applied to the construction using *combustible material* shall extend far enough in each direction to make "C" equal to "A."

FIGURE 308.2(1)
EXTENT OF PROTECTION NECESSARY TO REDUCE CLEARANCES FROM APPLIANCE OR VENT CONNECTIONS

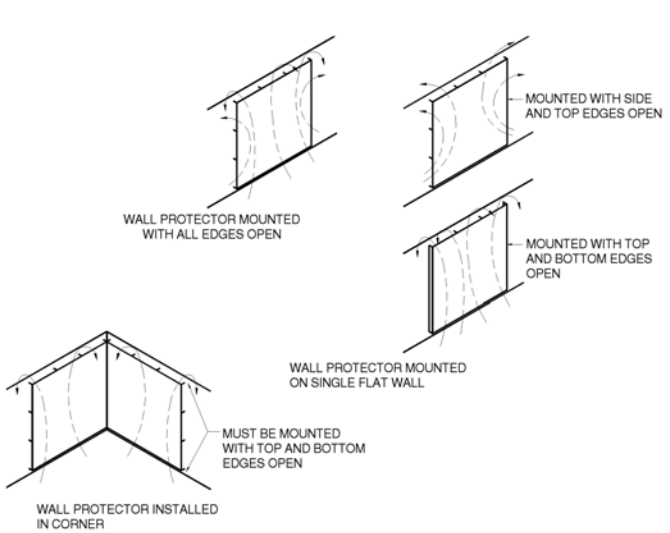

For SI: 1 inch = 25.4 mm.

FIGURE 308.2(2)
WALL PROTECTOR CLEARANCE REDUCTION SYSTEM

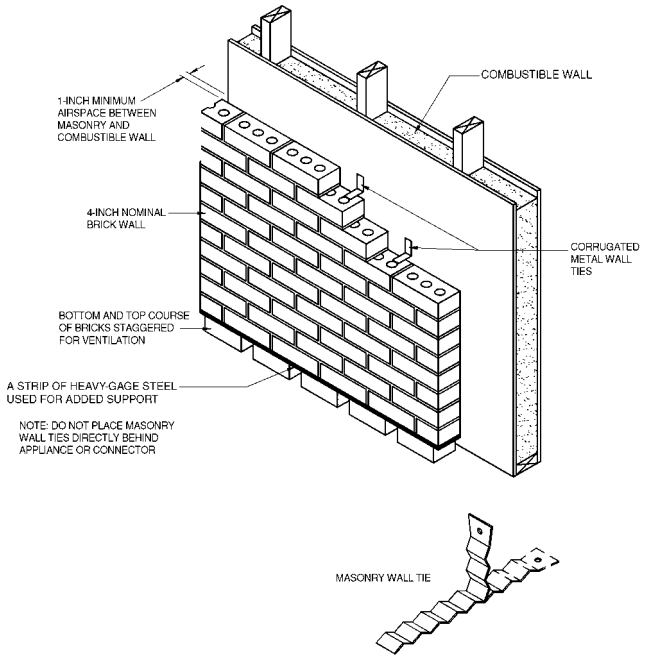

For SI: 1 inch = 25.4 mm.

FIGURE 308.2(3)
MASONRY CLEARANCE REDUCTION SYSTEM

INTERNATIONAL CODE COUNCIL®
Copyright © 2015 ICC. ALL RIGHTS RESERVED. Accessed by David Dammon on Jun 21, 2017 12:30:52 PM pursuant to License Agreement with ICC. No further reproduction or distribution authorized. ANY UNAUTHORIZED REPRODUCTION OR DISTRIBUTION IS A VIOLATION OF THE FEDERAL COPYRIGHT ACT AND THE LICENSE AGREEMENT, AND SUBJECT TO CIVIL AND CRIMINAL PENALTIES THEREUNDER.

TABLE 308.2. See below.

❖ The column headings of Table 308.2 list required clearances without protection. The numbers to the right of each method indicate the permissible reduced clearance measured from the heat-producing appliances/equipment to the face of the combustible material.

The rationale behind the methods of protection listed in Table 308.2 is based on the ability of the protection to reduce radiant heat transmission from the appliance and equipment to the combustible material so that the temperature rise of the combustible material will remain below the maximum allowed.

Although the materials referred to in Table 308.2 are common construction materials, confusion often arises over what satisfies the requirement for "insulation board" (Item 6 in the table), sometimes referred to as inorganic insulating board, noncombustible mineral board or noncombustible insulating board. These products are not made of carbon-based compounds.

Carbon-based compounds are those found in cellulose (wood), plastics and other materials manufactured from raw materials that once existed in living organisms. Cement board materials must have a specified maximum "C" (conductance) value in addition to being noncombustible.

Note h specifies a maximum thermal conductivity of insulation board. Conductivity is the amount of heat in Btus that will flow each hour through a 1-foot-square slab of material, 1-inch thick with a 1°F temperature difference between both sides and is usually identified by the symbol *k*.

TABLE 308.2 [a through k]
REDUCTION OF CLEARANCES WITH SPECIFIED FORMS OF PROTECTION

TYPE OF PROTECTION APPLIED TO AND COVERING ALL SURFACES OF COMBUSTIBLE MATERIAL WITHIN THE DISTANCE SPECIFIED AS THE REQUIRED CLEARANCE WITH NO PROTECTION [see Figures 308.2(1), 308.2(2), and 308.2(3)]	WHERE THE REQUIRED CLEARANCE WITH NO PROTECTION FROM APPLIANCE, VENT CONNECTOR, OR SINGLE-WALL METAL PIPE IS: (inches)									
	36		18		12		9		6	
	Allowable clearances with specified protection (inches)									
	Use Column 1 for clearances above appliance or horizontal connector. Use Column 2 for clearances from appliance, vertical connector and single-wall metal pipe.									
	Above Col. 1	Sides and rear Col. 2	Above Col. 1	Sides and rear Col. 2	Above Col. 1	Sides and rear Col. 2	Above Col. 1	Sides and rear Col. 2	Above Col. 1	Sides and rear Col. 2
1. $3^1/_2$-inch-thick masonry wall without ventilated airspace	—	24	—	12	—	9	—	6	—	5
2. $^1/_2$-inch insulation board over 1-inch glass fiber or mineral wool batts	24	18	12	9	9	6	6	5	4	3
3. 0.024-inch (nominal 24 gage) sheet metal over 1-inch glass fiber or mineral wool batts reinforced with wire on rear face with ventilated airspace	18	12	9	6	6	4	5	3	3	3
4. $3^1/_2$-inch-thick masonry wall with ventilated airspace	—	12	—	6	—	6	—	6	—	6
5. 0.024-inch (nominal 24 gage) sheet metal with ventilated airspace	18	12	9	6	6	4	5	3	3	2
6. $^1/_2$-inch-thick insulation board with ventilated airspace	18	12	9	6	6	4	5	3	3	3
7. 0.024-inch (nominal 24 gage) sheet metal with ventilated airspace over 0.024-inch (nominal 24 gage) sheet metal with ventilated airspace	18	12	9	6	6	4	5	3	3	3
8. 1-inch glass fiber or mineral wool batts sandwiched between two sheets 0.024-inch (nominal 24 gage) sheet metal with ventilated airspace	18	12	9	6	6	4	5	3	3	3

For SI: 1 inch = 25.4 mm, °C = [(°F - 32)/1.8], 1 pound per cubic foot = 16.02 kg/m^3, 1 Btu per inch per square foot per hour per °F = 0.144 W/m^2 · K.

a. Reduction of clearances from *combustible materials* shall not interfere with combustion air, draft hood clearance and relief, and accessibility of servicing.

b. All clearances shall be measured from the outer surface of the *combustible material* to the nearest point on the surface of the appliance, disregarding any intervening protection applied to the *combustible material*.

c. Spacers and ties shall be of *noncombustible material*. No spacer or tie shall be used directly opposite an appliance or connector.

d. For all clearance reduction systems using a ventilated airspace, adequate provision for air circulation shall be provided as described [see Figures 308.2(2) and 308.2(3)].

e. There shall be not less than 1 inch between clearance reduction systems and combustible walls and ceilings for reduction systems using ventilated airspace.

f. Where a wall protector is mounted on a single flat wall away from corners, it shall have a minimum 1-inch air gap. To provide air circulation, the bottom and top edges, or only the side and top edges, or all edges shall be left open.

g. Mineral wool batts (blanket or board) shall have a minimum density of 8 pounds per cubic foot and a minimum melting point of 1500°F.

h. Insulation material used as part of a clearance reduction system shall have a thermal conductivity of 1.0 Btu per inch per square foot per hour per °F or less.

i. There shall be not less than 1 inch between the appliance and the protector. In no case shall the clearance between the appliance and the combustible surface be reduced below that allowed in this table.

j. All clearances and thicknesses are minimum; larger clearances and thicknesses are acceptable.

k. Listed single-wall connectors shall be installed in accordance with the manufacturer's instructions.

INTERNATIONAL CODE COUNCIL®
Copyright © 2015 ICC. ALL RIGHTS RESERVED. Accessed by David Dammon on Jun 21, 2017 12:30:52 PM pursuant to License Agreement with ICC. No further reproduction or distribution authorized. ANY UNAUTHORIZED REPRODUCTION OR DISTRIBUTION IS A VIOLATION OF THE FEDERAL COPYRIGHT ACT AND THE LICENSE AGREEMENT, AND SUBJECT TO CIVIL AND CRIMINAL PENALTIES THEREUNDER.

Thermal conductance (overall) is the time rate of heat flow through a body not taking thickness into account and is usually identified by the symbol *C*.

Thermal resistance (overall) is the reciprocal of overall thermal conductance and is usually identified by the symbol *R*.

This translates into a minimum required insulation *R*-value of 1.0 (square foot × hour × °F)/Btu per inch of insulating material. The methods in Table 308.2 control heat transmission by reflecting heat radiation, retarding thermal conductance and providing convective cooling. Where sheet metal materials or metal plates are specified, the effectiveness of the protection can be enhanced by the reflective surface of the metal. Painting or otherwise covering the surface would reduce the metal's ability to reflect radiant heat and, depending on the color, could increase heat absorption. The airspace between the protected surface and the clearance-reduction assembly allows convection air currents to cool the protection assembly by carrying away heat that has been conducted through the assembly. Where a clearance-reduction assembly must be spaced 1 inch (25 mm) off the wall, the top, bottom and sides of the assembly must remain open as required by Notes d and f to permit unrestricted airflow (convection currents). If the openings were not provided, the air-cooling effect would not take place, and the protection assembly would not be as effective in limiting the temperature rise on the protected surfaces. Ideally, the protection assembly should be open on all sides to provide maximum ventilation. Figure 308.2(2) and Commentary Figure 308.2 show assemblies incorporating airspace.

Spacers must be noncombustible. Spacers should not be placed directly behind the heat source because the location would increase the amount of heat conduction through the spacer, thus creating a "hot spot." Figure 308.2(2) specifically shows a noncombustible spacer arrangement.

The performance of a protective assembly when applied to a horizontal surface, such as a ceiling, will differ substantially from the same assembly placed in a vertical plane. Obviously, temperatures at a ceiling surface will be higher because of natural convection and because the air circulation between the method of protection and the protected ceiling surface will be substantially reduced or nonexistent. It is for these reasons that Table 308.2 is divided into two application groups.

The manufacturer's instructions or label for many appliances will state an absolute minimum clearance, regardless of any clearance reduction method used. Those clearance requirements take precedence over Table 308.2.

The methods in Table 308.2 are intended to be permanent installations properly supported to prevent displacement or deformation. Movement could adversely affect the performance of the protection method, thus posing a potential fire hazard.

The assemblies in Table 308.2 are the product of experience and testing. To achieve predictable and dependable performance, the components of the various assemblies cannot be mixed, matched, combined or otherwise rearranged to comprise new assemblies, and materials cannot be substituted for those prescribed in the table. Any alterations or sub-

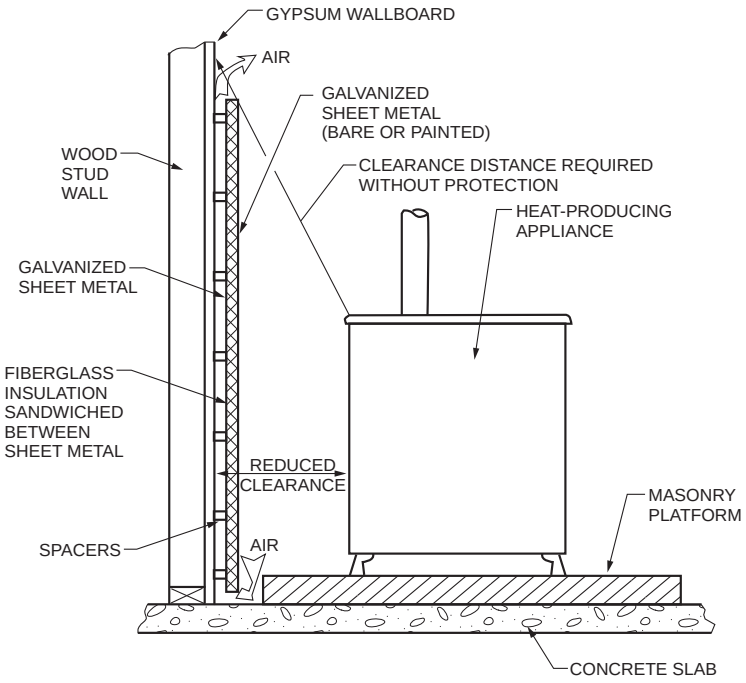

Figure 308.2
REDUCED CLEARANCE TO COMBUSTIBLES

INTERNATIONAL CODE COUNCIL®
Copyright © 2015 ICC. ALL RIGHTS RESERVED. Accessed by David Dammon on Jun 21, 2017 12:30:52 PM pursuant to License Agreement with ICC. No further reproduction or distribution authorized. ANY UNAUTHORIZED REPRODUCTION OR DISTRIBUTION IS A VIOLATION OF THE FEDERAL COPYRIGHT ACT AND THE LICENSE AGREEMENT, AND SUBJECT TO CIVIL AND CRIMINAL PENALTIES THEREUNDER.

stitutions could have an effect on the assembly, and its performance must be tested and approved.

The reduced clearance is measured from the heat source to the combustible material, disregarding any intervening protection assembly.

Factory-built clearance reduction assemblies are available that are listed to UL 1618. Such assemblies may or may not require field assembly of the components.

308.3 Clearances for indoor air-conditioning appliances. *Clearance* requirements for indoor air-conditioning appliances shall comply with Sections 308.3.1 through 308.3.4.

❖ Requirements for clearances to combustibles are emphasized because of the potential fire hazard posed when those clearances are not observed. Maintaining an appropriate distance from the outer surfaces of an appliance or piece of equipment reduces the possibility of ignition of combustible materials.

The minimum clearances to combustibles are specified in the manufacturer's installation instructions for a labeled appliance. Because an approved agency tests appliances in accordance with these instructions, the clearances required are necessary for correct installation and operation of the appliance.

Reduction of the required clearances to combustibles is allowed only when the combustibles are protected by one of the methods outlined in Section 308 and clearance reduction is not prohibited by Section 308, or the appliance and equipment listing (see the commentary for Section 308). The manufacturer's specified minimum clearances and the clearances specified in Section 308 are all airspace clearances, and such spaces cannot be filled with insulation or any other material, even if the material is noncombustible. In some cases, the manufacturer's installation instructions will specify absolute minimum clearances that must not be reduced by any clearance reduction method.

The most common wall covering material, gypsum wallboard, is a combustible finish material for the purpose of the code. As a result, gypsum wallboard, as well as all other combustible wall finishes, must be separated from an appliance or equipment in accordance with the prescribed clearance to combustibles. Clearances to combustibles also apply to furnishings, window treatments and movable items that can be placed within the required clearance range of appliances and equipment.

308.3.1 Appliance clearances. Air-conditioning appliances shall be installed with clearances in accordance with the manufacturer's instructions.

❖ The concept of "rooms large or not large in comparison with the appliance" is no longer part of the code. The code has been simplified by no longer tying rules for clearances to whether or not an appliance is installed in a room having a specific volume. The dated concept of room volume in comparison to appliance volume was meant to determine when the room was considered to be a closet or alcove. If the room was determined to be a closet or alcove, the code would then prohibit the use of clearance reduction methods and require the appliances to be listed for installation in closets and alcoves because the small room volume would not allow adequate dissipation of heat. This concept had outlived its intent because modern appliances are more efficient, have less jacket heat losses and are listed to current appliance standards. Now, the code simply defers to the appliance manufacturer's instructions and the appliance listing to establish the clearance requirements. In some cases, the installation instructions for an appliance might specifically prohibit the application of a clearance reduction method (see Section 308.2).

308.3.2 Clearance reduction. Air-conditioning appliances shall be permitted to be installed with reduced clearances to *combustible material*, provided that the *combustible material* or *appliance* is protected as described in Table 308.2 and such reduction is allowed by the manufacturer's instructions.

❖ The clearance reduction methods in the code are always allowed unless the manufacturer's instructions specifically prohibit the reduction of clearances or specify different clearance reduction methods (see commentary, Section 308.3.1). Note that some appliances specify clearances that are absolute minimums that cannot be reduced by any means.

308.3.3 Plenum clearances. Where the *furnace plenum* is adjacent to plaster on metal lath or *noncombustible material* attached to *combustible material*, the *clearance* shall be measured to the surface of the plaster or other noncombustible finish where the *clearance* specified is 2 inches (51 mm) or less.

❖ Where the air-conditioning equipment plenum is adjacent to surfaces covered by noncombustible material as described in this section and the required clearance from combustibles is 2 inches (51 mm) or less, the required clearance must be measured to the surface of the adjacent material. Measuring to the combustible material would reduce the clearance between the equipment plenum and adjacent surface. Reducing this clearance would affect the cooling of the equipment and could cause overheating.

308.3.4 Clearance from supply ducts. Supply air ducts connecting to listed central heating furnaces shall have the same minimum clearance to combustibles as required for the furnace supply plenum for a distance of not less than 3 feet (914 mm) from the supply plenum. Clearance is not required beyond the 3-foot (914 mm) distance.

❖ Portions of ducts that are within 3 feet (914 mm) of a supply plenum to which they connect will reach nearly the same temperature as the plenum.

308.4 Central-heating boilers and furnaces. *Clearance* requirements for central-heating boilers and furnaces shall comply with Sections 308.4.1 through 308.4.5. The *clearance* to these appliances shall not interfere with *combustion air*; draft hood *clearance* and relief; and accessibility for servicing.

❖ See the commentary to Section 308.3.

INTERNATIONAL CODE COUNCIL®
Copyright © 2015 ICC. ALL RIGHTS RESERVED. Accessed by David Dammon on Jun 21, 2017 12:30:52 PM pursuant to License Agreement with ICC. No further reproduction or distribution authorized. ANY UNAUTHORIZED REPRODUCTION OR DISTRIBUTION IS A VIOLATION OF THE FEDERAL COPYRIGHT ACT AND THE LICENSE AGREEMENT, AND SUBJECT TO CIVIL AND CRIMINAL PENALTIES THEREUNDER.

308.4.1 Appliance clearances. Central-heating furnaces and low-pressure boilers shall be installed with clearances in accordance with the manufacturer's instructions.

❖ See the commentary to Section 308.3.1.

308.4.2 Clearance reduction. Central-heating furnaces and low-pressure boilers shall be permitted to be installed with reduced clearances to *combustible material* provided that the *combustible material* or *appliance* is protected as described in Table 308.2 and such reduction is allowed by the manufacturer's instructions.

❖ See the commentary to Section 308.3.2.

308.4.3 Clearance for servicing appliances. Front *clearance* shall be sufficient for servicing the burner and the furnace or boiler.

❖ Because mechanical equipment and appliances require routine maintenance, repairs and possible replacement, access is required. Additionally, access recommendations or requirements are usually stated in the manufacturer's installation instructions.

The intent of this section is to secure access to components that require observation, inspection, adjustment, servicing, repair or replacement, such as controls, gauges, burners, filters, blowers, and motors. Access is also necessary to conduct operating procedures, such as startup or shutdown.

The code defines access as being able to be reached, but first may require the removal of a panel, door or similar obstruction. An appliance or piece of equipment is not accessible if any portion of the structure's permanent finish materials, such as drywall, plaster, paneling, built-in furniture, cabinets or any other similar permanently affixed building component must be removed.

308.4.4 Plenum clearances. Where the *furnace plenum* is adjacent to plaster on metal lath or *noncombustible material* attached to *combustible material*, the *clearance* shall be measured to the surface of the plaster or other noncombustible finish where the *clearance* specified is 2 inches (51 mm) or less.

❖ See the commentary to Section 308.3.3.

308.4.5 Clearance from supply ducts. Supply air ducts connecting to listed central heating furnaces shall have the same minimum clearance to combustibles as required for the furnace supply plenum for a distance of not less than 3 feet (914 mm) from the supply plenum. Clearance is not required beyond the 3-foot (914 mm) distance.

❖ See the commentary to Section 308.3.4.

SECTION 309 (IFGC) ELECTRICAL

309.1 Grounding. Gas *piping* shall not be used as a grounding electrode.

❖ This section prohibits metal underground gas piping from being used as a grounding electrode. Metal gas piping must be bonded to the electrical service grounding electrode system, but it cannot serve as a grounding electrode. This is somewhat contradictory and this section has been the center of much confusion relative to the "equal-potential" bonding of gas piping. Underground gas piping cannot be used as an earth electrode because it is not recognized as such in the NEC and because of the perceived risk of potential current flow on piping that conveys flammable gas. There is also the obvious fact that underground piping is typically plastic or is metal with a dielectric fitting isolating the metal piping from above-ground piping. However, bonding underground metal gas piping to the grounding electrode system will cause the piping to act as an additional electrode whether or not this is intended or desired. This is unavoidable unless dielectric fittings are used to electrically isolate the undergound portion of the metal piping from the above-ground portion. Any fault current will take all possible paths to the earth with the intensity dictated by the impedance of the path. The key to remember is that this section does not negate the requirement to bond all metal above-ground gas piping, as required by the NEC and Section 310. See Sections 404.10 and 310.1 for clarification of gas piping bonding means.

309.2 Connections. Electrical connections between appliances and the building wiring, including the grounding of the appliances, shall conform to NFPA 70.

❖ Field-installed power wiring and control wiring for appliances and equipment must be installed in accordance with NEC (NFPA 70).

The power wiring includes all of the wiring, disconnects, overcurrent protection devices, starters and related hardware used to supply electrical power to the appliance or equipment. The control wiring includes all of the wiring, devices and related hardware that connect the main unit to all external controls and accessories, such as temperature and pressure sensors, thermostats, exhausters, equipment contactors, interlock controls and remote damper motors. The internal factory wiring of appliances and equipment is not covered by this section, however, the wiring is covered by the testing and review performed by an approved agency as part of the labeling process.

The mechanical or electrical code official responsible for the inspection of appliances and equipment must be familiar with the applicable sections of NFPA 70.

SECTION 310 (IFGS) ELECTRICAL BONDING

310.1 Pipe and tubing other than CSST. Each above-ground portion of a gas *piping* system other than corrugated stainless steel tubing (CSST) that is likely to become energized shall be electrically continuous and bonded to an effective ground-fault current path. Gas *piping* other than CSST shall be considered to be bonded where it is connected to

INTERNATIONAL CODE COUNCIL®
Copyright © 2015 ICC. ALL RIGHTS RESERVED. Accessed by David Dammon on Jun 21, 2017 12:30:52 PM pursuant to License Agreement with ICC. No further reproduction or distribution authorized. ANY UNAUTHORIZED REPRODUCTION OR DISTRIBUTION IS A VIOLATION OF THE FEDERAL COPYRIGHT ACT AND THE LICENSE AGREEMENT, AND SUBJECT TO CIVIL AND CRIMINAL PENALTIES THEREUNDER.

appliances that are connected to the *equipment* grounding conductor of the circuit supplying that *appliance*.

❖ This section is consistent with Section 250.104(B) of the 2014 edition of the NEC (NFPA 70). Although difficult to define, gas piping that is likely to become energized is typically considered to be any gas piping that connects to one or more appliances that are electrically powered. The metal components of the appliances are required to be grounded, therefore, the metal gas piping that connects to the appliances should be as well because the piping has the same likelihood of being energized as the appliance components. The term "bonding" simply means to electrically tie metal parts together by means of conductors to create a low impedance path for electricity to flow between them. Metallic objects that are bonded together will have no voltage difference between them and they will all have the same potential with respect to ground.

In the majority of cases, the gas piping system will be connected to at least one, if not several, appliances that use electrical power. The gas connections involve metal-to-metal joints that ensure electrical continuity with the appliance. Those appliances will be connected to an equipment grounding conductor that will serve to bond the gas piping to the grounding electrode system for the building. Where the appliance branch circuits include grounding conductors properly connected to the appliances and one or more such appliances are connected to the gas-piping system, the gas-piping system is automatically bonded as required by this section (see Commentary Figure 310.1). This method of bonding is not allowed as the sole means of bonding for corrugated stainless steel tubing (CSST) gas piping systems and the manufacturer's installation instructions for some gas tubing systems will require additional bonding beyond what is required by this section. This is true for CSST systems and is also mandated by Section 310.1.1 (see Section 310.1.1).

The purpose of the bonding required by this section is to make sure that there is no electrical potential (voltage difference) between gas piping and appliances, between gas piping and any other piping and between any piping and the earth so as to eliminate electrical shock hazards. If all of the metal piping systems and appliances are bonded together, there cannot be a voltage difference between them, therefore, human contact across any such piping systems and appliances will not result in electrical shock. This is referred to as "equal-potential" bonding, the primary purpose of which is to prevent shock. Section 310.1.1 addresses bonding that has an additional purpose.

310.1.1 CSST. Corrugated stainless steel tubing (CSST) gas *piping* systems and piping systems containing one or more segments of CSST shall be bonded to the electrical service grounding electrode system or, where provided, the lightning protection grounding electrode system.

❖ This section addresses gas pipe bonding specific to CSST and does so for the purpose of lessening the possibility of damage to the CSST caused by the electrical energy created by indirect lightning strikes.

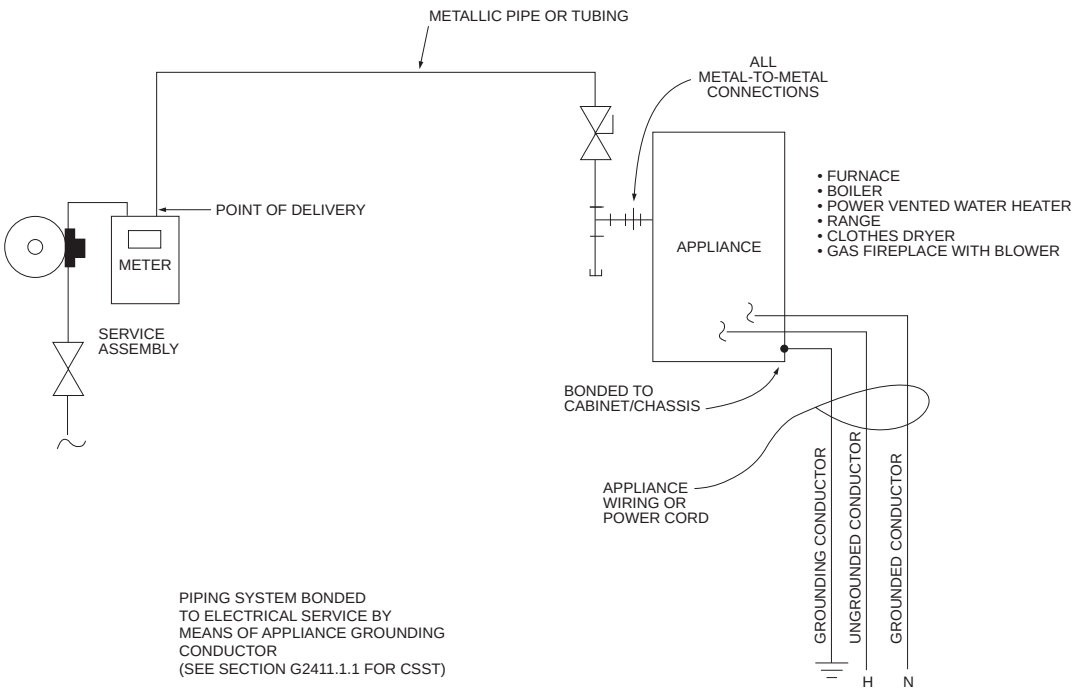

Figure 310.1
GAS PIPE BONDING BY APPLIANCE BRANCH CIRCUIT

INTERNATIONAL CODE COUNCIL®
Copyright © 2015 ICC. ALL RIGHTS RESERVED. Accessed by David Dammon on Jun 21, 2017 12:30:52 PM pursuant to License Agreement with ICC. No further reproduction or distribution authorized. ANY UNAUTHORIZED REPRODUCTION OR DISTRIBUTION IS A VIOLATION OF THE FEDERAL COPYRIGHT ACT AND THE LICENSE AGREEMENT, AND SUBJECT TO CIVIL AND CRIMINAL PENALTIES THEREUNDER.

It is assumed that nothing is capable of fully protecting anything subjected to a direct strike by lightning because of the extremely high energy levels involved and unpredictability of the paths of flow. It is more common for building components to be energized by nearby lightning strikes to the earth, trees, poles, towers, etc. This intense electrical energy can travel through the earth or other objects and energize gas piping systems, among other metal systems and components. This can happen by simple conduction to the piping or by induction through forms of magnetic field coupling. The electrical energy can travel along a pipe or tube and unpredictably jump off and onto another metal pipe, wire, duct or other metal object. This "jumping off" point will experience an arc that has enough energy to burn through a pipe, tube or connector wall. The resulting exit wound caused by the arcing is a perforation that will result in gas leakage and possibly a fire or explosion. This damage can happen to any piping material, including steel pipe, CSST and copper tube, and also gas connectors. Relatively recent experience has shown that CSST is susceptible to this type of lightning damage and this section intends to mitigate the possibility of such damage.

Recall that the CSST piping will already be bonded to some degree by the appliance grounding conductor(s), as explained in the commentary to Section 310.1, assuming that it is connected to appliances that are electrically powered. This bonding, however, is not considered to be adequate to protect CSST, therefore, Section 310.1.1 mandates a more effective bonding means. Directly bonding the CSST piping to the electrical service grounding electrode system has been shown by laboratory experiments to substantially reduce the risk of lightning damage. The minimum size bonding jumper was chosen based on the maximum size of grounding electrode conductor that is required to connect to "made" electrodes such as ground rods and plates as addressed in the NEC (NFPA 70). A number 6 AWG copper bonding jumper provides an electrical path with considerably less impedance than the typical equipment grounding conductor found in an appliance branch circuit. The gas service and electrical service are often in close proximity, thus allowing for a short bonding jumper between the point of delivery and the electrical service. The shorter the bonding jumper, the better it will perform. In cases where the electrical service and gas service are not in close proximity, the bonding jumper should be routed to take the shortest path, noting the length limit of Section 310.1.1.3.

The requirement of this section is also a requirement in the manufacturer's installation instructions for CSST.

As stated in the manufacturer's instructions, the bonding clamp must connect only to rigid steel pipe or a brass CSST fitting and it must never connect directly to the tubing itself. Clamping directly to the corrugated tubing would result in a poor electrical connection and could promote failure from current flow at that location. Bonding clamps must be listed for the application, for example, clamps used outdoors must be a type identified for outdoor use. The typical installation will have Schedule 40 steel pipe extending from the point of delivery (typically the meter outlet) and passing through the outside wall into the building for some distance. The bonding clamp will be attached to this steel pipe either indoors or outdoors, or attached to any other section of steel pipe or any downstream CSST fitting. Note that this section applies to gas piping systems that have any CSST in them. For example, if a piping system is constructed mostly of steel pipe, but contains one or more sections of CSST, such system is treated as if it was constructed entirely of CSST and this code section applies. [see Commentary Figures 310.1.1(1) and 310.1.1(2)].

Some CSST manufacturers have designed and are marketing a type of CSST that has an electrically conductive outer jacket or jacket assembly intended to conduct stray currents and dissipate them in such a manner that arcing is prevented. The code allows these conductive jacketed types, but the bonding provisions of this section still apply unless the code official approves otherwise in accordance with Section 105.2 (see Sections 310.1.1.1 through 310.1.1.5).

310.1.1.1 Point of connection. The bonding jumper shall connect to a metallic pipe, pipe fitting or CSST fitting.

❖ The bonding jumper must connect to a metal pipe or a CSST fitting, but such a connection point can be anywhere in the distribution system. The bonding connection does not have to be between the point of delivery and the first downstream CSST fitting (see Commentary Figure 310.1.1.1).

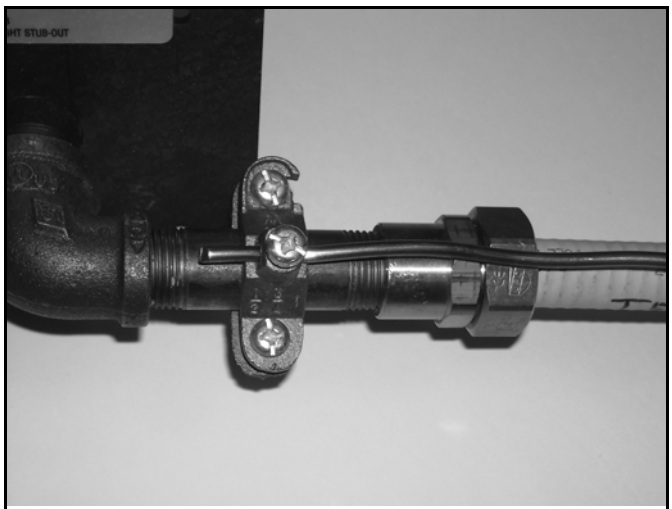

Figure 310.1.1.1
POINT OF CONNECTION

INTERNATIONAL CODE COUNCIL®
Copyright © 2015 ICC. ALL RIGHTS RESERVED. Accessed by David Dammon on Jun 21, 2017 12:30:52 PM pursuant to License Agreement with ICC. No further reproduction or distribution authorized. ANY UNAUTHORIZED REPRODUCTION OR DISTRIBUTION IS A VIOLATION OF THE FEDERAL COPYRIGHT ACT AND THE LICENSE AGREEMENT, AND SUBJECT TO CIVIL AND CRIMINAL PENALTIES THEREUNDER.

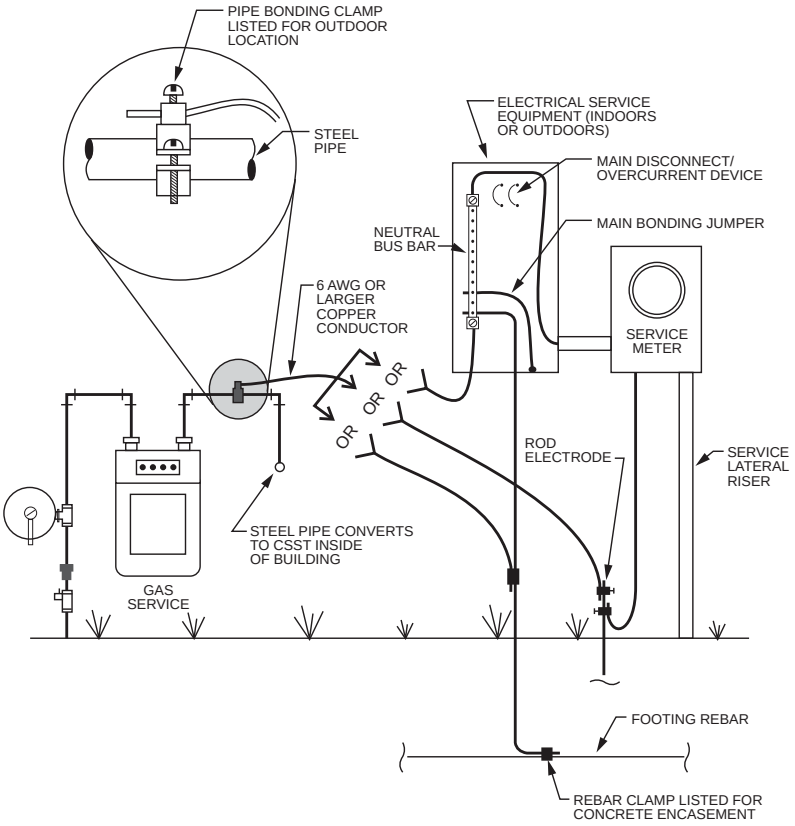

Figure 310.1.1(1)
CSST Bonding

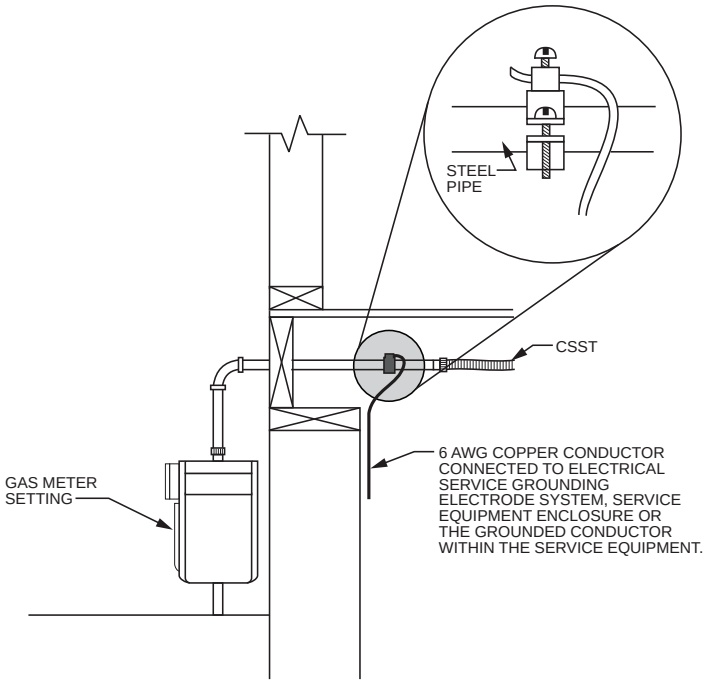

Figure 310.1.1(2)
ALTERNATIVE LOCATION FOR BONDING CLAMP

INTERNATIONAL CODE COUNCIL®
Copyright © 2015 ICC. ALL RIGHTS RESERVED. Accessed by David Dammon on Jun 21, 2017 12:30:52 PM pursuant to License Agreement with ICC. No further reproduction or distribution authorized. ANY UNAUTHORIZED REPRODUCTION OR DISTRIBUTION IS A VIOLATION OF THE FEDERAL COPYRIGHT ACT AND THE LICENSE AGREEMENT, AND SUBJECT TO CIVIL AND CRIMINAL PENALTIES THEREUNDER.

310.1.1.2 Size and material of jumper. The bonding jumper shall be not smaller than 6 AWG copper wire or equivalent.

❖ See Section 310.1.1.

310.1.1.3 Bonding jumper length. The length of the bonding jumper between the connection to a gas piping system and the connection to a grounding electrode system shall not exceed 75 feet (22 860 mm). Any additional grounding electrodes used shall be bonded to the electrical service grounding electrode system or, where provided, the lightning protection grounding electrode system.

❖ It is a well-known fact that the longer a bonding jumper is, the less effective it becomes because of the increasing impedance to electrical flow on the wire; therefore, the shorter the better for jumper effectiveness. Extensive testing was performed by the CSST industry to determine how well the bonding protects the CSST from indirect lightning strikes and lightning-induced currents. The testing concluded that the bonding was effective in preventing perforations in the CSST under the conditions of the predicted lightning events. The testing also determined that the bonding jumper was functionally adequate up to approximately 100 feet in preventing arcing, thus suggesting the need for a length limit. A length limit of 75 feet was chosen to provide a safety factor and also because it was believed that 75 feet would accommodate the majority of building designs and utility service entrances.

Bonding the CSST to an independent grounding electrode is prohibited; however, the code does not prevent a designer or installer from installing a supplemental grounding electrode ("additional," as stated in the code text) for perceived additional protection. Where such supplemental electrodes are installed, the code requires that they be bonded back to the electrical service grounding electrode system, as this is consistent with NFPA 70 requirements for a common grounding electrode system. The author believes that the code does not intend to allow the length limit to be circumvented by the installation of supplemental electrodes. Where supplemental electrodes are installed by choice, the code implies that the bonding jumpers that connect to the electrical service grounding electrode system are still limited to 75 feet in combined length. An opposing interpretation is that the length of the bonding jumper between the CSST and the supplemental grounding electrode is limited to 75 feet, and the length of the jumper that connects the supplemental grounding electrode back to the electrical service grounding electrode system is limited only by the NEC (NFPA 70). The new code text implies that the more conservative interpretation is intended.

The points of connection to the electrical service grounding electrode system, the methods of connection and the protection of the bonding conductors must be in accordance with NEC (NFPA 70). The devices that are used to connect the bonding jumper on both ends, such as clamps, must be listed for the application and environment in which they are installed. For example, clamps used outdoors must be listed for exposure to the elements. Some commonly used bonding clamps are suitable only for indoor use, while others are suitable for both indoor and outdoor use (see Commentary Figure 310.1.1.3).

310.1.1.4 Bonding connections. Bonding connections shall be in accordance with NFPA 70.

❖ See the commentary to Section 310.1.1.3.

310.1.1.5 Connection devices. Devices used for making the bonding connections shall be listed for the application in accordance with UL 467.

❖ See the commentary to Section 310.1.1.3.

Bibliography

The following resource materials were used in the preparation of the commentary for this chapter of the code.

IBC-2015, *International Building Code*. Washington, DC: International Code Council, 2014.

IECC-2015, *International Energy Conservation Code*. Washington, DC: International Code Council, 2014.

IMC-2015, *International Mechanical Code*. Washington, DC: International Code Council, 2014.

IPC-2015, *International Plumbing Code*. Washington, DC: International Code Council, 2014.

NFPA 70-2014, *National Electrical Code*. Quincy, MA: National Fire Protection Association, 2013.

INTERNATIONAL CODE COUNCIL®
Copyright © 2015 ICC. ALL RIGHTS RESERVED. Accessed by David Dammon on Jun 21, 2017 12:30:52 PM pursuant to License Agreement with ICC. No further reproduction or distribution authorized. ANY UNAUTHORIZED REPRODUCTION OR DISTRIBUTION IS A VIOLATION OF THE FEDERAL COPYRIGHT ACT AND THE LICENSE AGREEMENT, AND SUBJECT TO CIVIL AND CRIMINAL PENALTIES THEREUNDER.

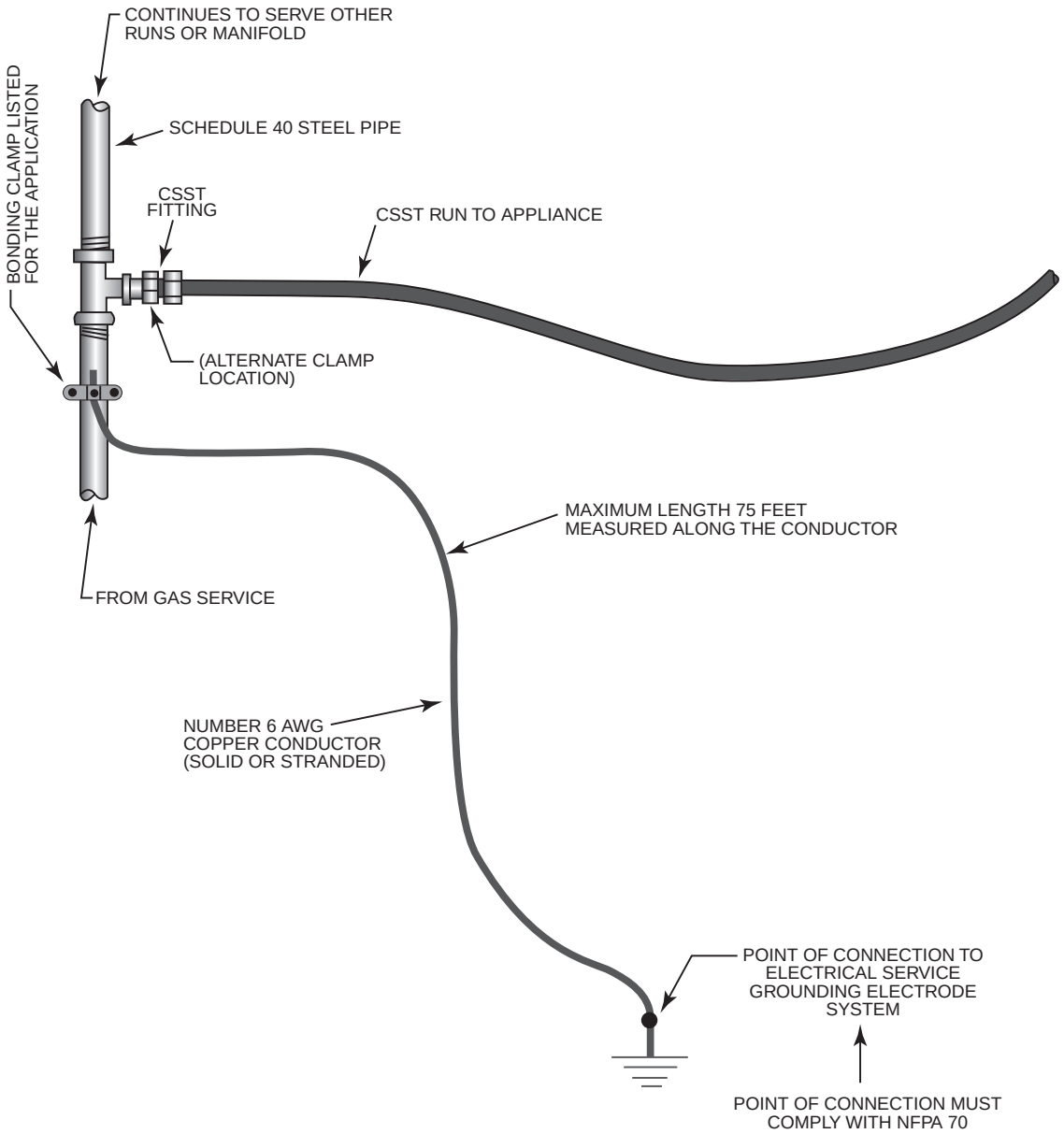

For SI: 1 foot = 304.8 mm.

Figure 310.1.1.3
BONDING JUMPER LENGTH

INTERNATIONAL CODE COUNCIL®
Copyright © 2015 ICC. ALL RIGHTS RESERVED. Accessed by David Dammon on Jun 21, 2017 12:30:52 PM pursuant to License Agreement with ICC. No further reproduction or distribution authorized. ANY UNAUTHORIZED REPRODUCTION OR DISTRIBUTION IS A VIOLATION OF THE FEDERAL COPYRIGHT ACT AND THE LICENSE AGREEMENT, AND SUBJECT TO CIVIL AND CRIMINAL PENALTIES THEREUNDER.

Chapter 4:
Gas Piping Installations

General Comments

The nature of fuel gases makes proper design, installation and selection of materials and devices necessary to minimize the risk to an acceptable level.

The two most commonly used fuel gases are natural gas and liquified petroleum gas (LP or LP-gas). These fuel gases have the following characteristics or properties.

Natural gas: The principal component of natural gas is methane (CH_4). It can also contain small quantities of nitrogen, carbon dioxide, hydrogen, hydrogen sulfide, water vapor, other hydrocarbons and various trace elements. Natural gas is colorless, tasteless and odorless; however, an odorant is added to the gas so that it can be readily detected. Natural gas is lighter than air (specific gravity < 1) and has the tendency to rise when escaping to the atmosphere. Natural gas has a rather narrow flammability range above and below which the gas-to-air mixture ratio is too rich or too lean to support combustion (see Commentary Figure 400). The heating value of natural gas varies depending on the source, but it averages 1,050 British thermal units (Btu) per cubic foot (89 MJ/m^3).

Liquified petroleum gas: Liquified petroleum gases (LP or LP-gas) include commercial propane (C_3H_8) and commercial butane (C_4H_{10}). LP-gas vapors are heavier than air (specific gravity > 1) and tend to accumulate in low areas and near the floor. The ranges of flammability for LP-gases are narrower than those of natural gas (see Commentary Figure 400). Like natural gas, LP-gases are odorized to make them detectable.

The heating value of propane is approximately 2,500 Btu per cubic foot (93 MJ/m^3) of gas. The heating value of butane is approximately 3,300 Btu per cubic foot (1263 MJ/m^3) of gas.

Purpose

This chapter is intended to regulate the design and installation of fuel-gas distribution piping and systems from the point of delivery of the fuel gas to the appliances and equipment that consume the fuel. The intent is to minimize the hazards associated with the use and distribution of highly flammable/explosive fuel gases.

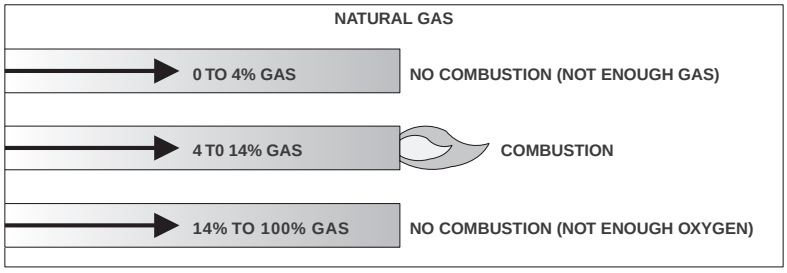

1-14 FLAMMABILITY LIMITS OF NATURAL GAS

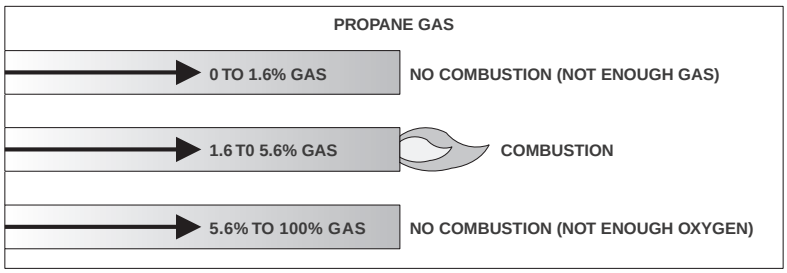

1-15 FLAMMABILITY LIMITS OF PROPANE GAS

Figure 400
GAS FLAMMABILITY LIMITS
(Figure courtesy of Reznor/Thomas & Betts Corporation)

INTERNATIONAL CODE COUNCIL®
Copyright © 2015 ICC. ALL RIGHTS RESERVED. Accessed by David Dammon on Jun 21, 2017 12:30:52 PM pursuant to License Agreement with ICC. No further reproduction or distribution authorized. ANY UNAUTHORIZED REPRODUCTION OR DISTRIBUTION IS A VIOLATION OF THE FEDERAL COPYRIGHT ACT AND THE LICENSE AGREEMENT, AND SUBJECT TO CIVIL AND CRIMINAL PENALTIES THEREUNDER.

SECTION 401 (IFGC)
GENERAL

401.1 Scope. This chapter shall govern the design, installation, modification and maintenance of *piping* systems. The applicability of this code to *piping* systems extends from the *point of delivery* to the connections with the *appliance*s and includes the design, materials, components, fabrication, assembly, installation, testing, inspection, operation and maintenance of such *piping* systems.

❖ This section regulates aspects of fuel-gas distribution systems, including design, installation, testing, repair and maintenance. The applicability of this chapter is limited to the consumer side of the public utility company's gas distribution system.

The code governs all piping and system components from the end point of the gas purveyor's (utility company) service line to the supplied appliances and equipment. Typically, the gas utility company service line terminates at the service pressure regulator and meter setting. In other words, the code does not apply to piping and components that are owned by the gas utility company. The construction of utility-owned gas piping is governed by the federal Department of Transportation (DOT) regulations wherever the piping is located. However, in cases where the utility-owned piping runs through, in or on a building, it must do so in a way that does not jeopardize the structural integrity or fire safety of the building. Therefore, the relationship of the utility-owned piping to the building (prohibited locations, penetrations, etc.) is governed by the building portion of this code (see Section 401.1.1). No other provision within this chapter applies to utility-owned gas piping.

Although LP-gas storage systems generally remain under the ownership of the gas supplier, these systems are governed by the code through the reference to NFPA 58 (see commentary, Section 401.2). An LP-gas piping system begins at the outlet side of the first-stage pressure regulator. The piping between the first- and second-stage (final) regulator is governed by NFPA 58, and the piping downstream of the second-stage regulator is governed by this code. The first-stage pressure regulator reduces the storage container pressure to 10 pounds per square inch gauge (psig) (69 kPa) or less.

The termination point of gas utility services varies depending on the particular company's policies, but typically the service terminates at the property line or outdoors, immediately adjacent to the building or structure served by the service [see Commentary Figures 401.1(1) and 401.1(2)].

401.1.1 Utility piping systems located within buildings. Utility service *piping* located within buildings shall be installed in accordance with the structural safety and fire protection provisions of the *International Building Code*.

❖ Piping and components upstream of the point of delivery are designed, installed, tested, owned and maintained by the gas utility company and are regulated by federal DOT regulations, not this code. This code does, however, regulate two aspects of the installation related to protection of the structure from a structural and fire safety standpoint. By reference,

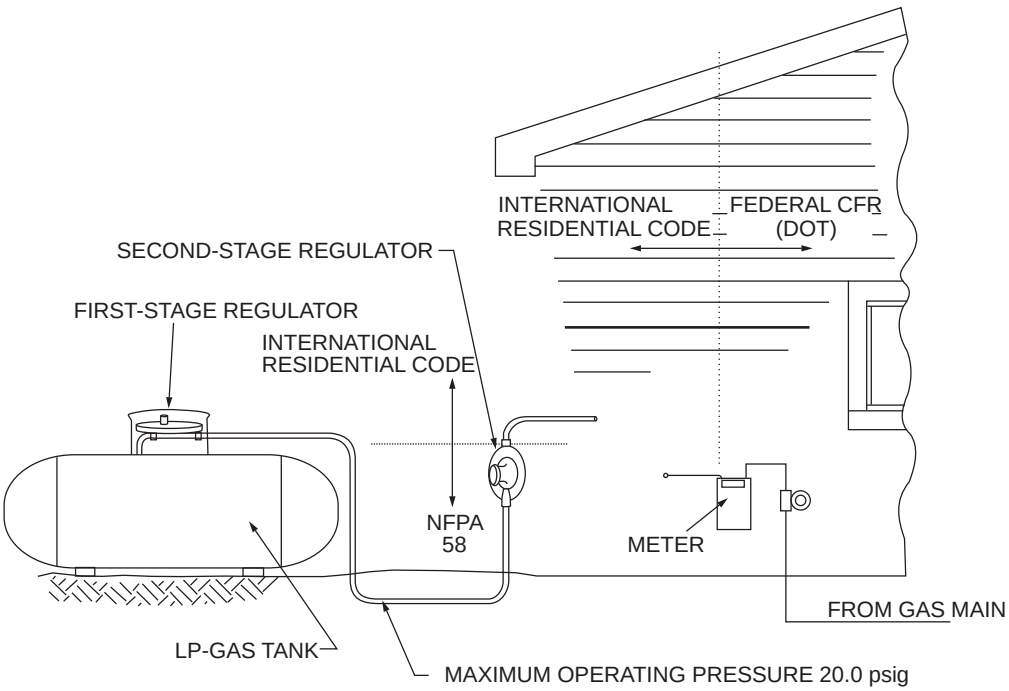

Figure 401.1(1)
SCOPE OF CODES

INTERNATIONAL CODE COUNCIL®
Copyright © 2015 ICC. ALL RIGHTS RESERVED. Accessed by David Dammon on Jun 21, 2017 12:30:52 PM pursuant to License Agreement with ICC. No further reproduction or distribution authorized. ANY UNAUTHORIZED REPRODUCTION OR DISTRIBUTION IS A VIOLATION OF THE FEDERAL COPYRIGHT ACT AND THE LICENSE AGREEMENT, AND SUBJECT TO CIVIL AND CRIMINAL PENALTIES THEREUNDER.

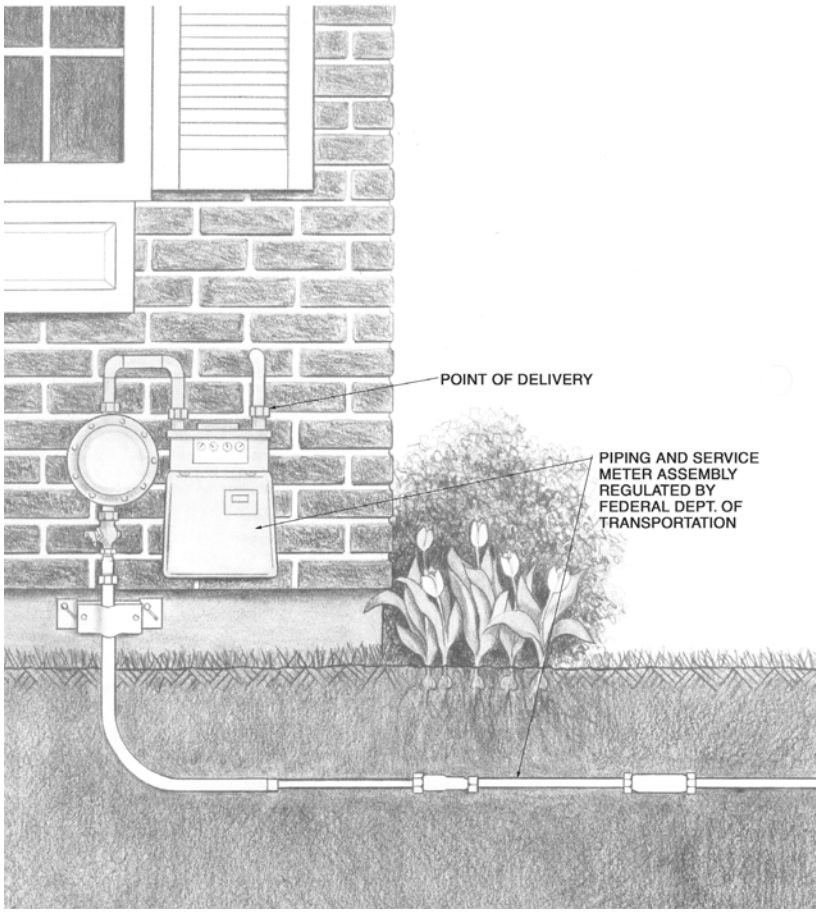

Figure 401.1(2)
TYPICAL POINT OF DELIVERY FOR NATURAL GAS SERVICE
(Figure courtesy of NORMAC)

the *International Building Code*® (IBC®) would regulate the piping penetrations through structural components and through fire-resistance-rated assemblies. The IBC would also regulate piping support to handle structural loads and seismic forces.

401.2 Liquefied petroleum gas storage. The storage system for liquefied petroleum gas shall be designed and installed in accordance with the *International Fire Code* and NFPA 58.

❖ LP-gas tanks, containers, cylinders, storage vessels and related components must comply with NFPA 58. The storage system includes storage vessels of any type and the vessel appurtenances, such as shutoff valves, pressure gauges, liquid level indicators, pressure regulators, pressure relief valves and filling connections. The first-stage and second-stage pressure regulators and interconnecting piping are also addressed by the standard and could therefore be considered part of the LP-gas storage system. If the piping between the first-stage regulator and the point of delivery [second-stage or 2-psi (13.7 kPa) regulator] is not placed under the control of NFPA 58, it would be unregulated because Section 401.1 states that the code coverage begins at the point of delivery (see definition of "Point of delivery"). Second-stage 2-psi regulators reduce the outlet pressure of the first-stage regulator to 2 psi (13.7 kPa) and a line pressure regulator downstream of the 2-psi regulator reduces the pressure from 2 psi to a maximum of 14 inches water column (w.c.) (3.5 kPa). Second-stage regulators reduce the outlet pressure of the first-stage regulator to a maximum of 14 inches w.c. NFPA 58 addresses all aspects of LP-gas storage systems such as container design and construction, container appurtenances, safety devices, container location and installation. A referenced standard is enforceable only in the context in which it is used. Any portions of NFPA 58 that extend beyond the scope of the storage system are not applicable because of the context of the reference in this section.

401.3 Modifications to existing systems. In modifying or adding to existing *piping* systems, sizes shall be maintained in accordance with this chapter.

❖ The gas volume demand on any portion of a distribution system cannot be increased beyond the capacity of the piping serving that portion. Modifications and additions to existing piping systems can have a detri-

INTERNATIONAL CODE COUNCIL®
Copyright © 2015 ICC. ALL RIGHTS RESERVED. Accessed by David Dammon on Jun 21, 2017 12:30:52 PM pursuant to License Agreement with ICC. No further reproduction or distribution authorized. ANY UNAUTHORIZED REPRODUCTION OR DISTRIBUTION IS A VIOLATION OF THE FEDERAL COPYRIGHT ACT AND THE LICENSE AGREEMENT, AND SUBJECT TO CIVIL AND CRIMINAL PENALTIES THEREUNDER.

mental effect on the existing piping system's ability to serve the connected loads. Commonly, new gas-fired equipment or appliances will be added to existing distribution piping without any regard for the effect of the extra load. To prevent dangerously low gas pressures, existing piping must be able to adequately supply additional loads, or the piping size must be increased. For example, a substantial load increase would occur where a storage (tank)-type water heater is replaced by an instantaneous tankless water heater.

401.4 Additional appliances. Where an additional *appliance* is to be served, the existing *piping* shall be checked to determine if it has adequate capacity for all *appliance*s served. If inadequate, the existing system shall be enlarged as required or separate *piping* of adequate capacity shall be provided.

❖ This section parallels Section 401.8 and makes it clear that when any appliances are added to an existing gas piping system, the system must be carefully evaluated to verify that adding an appliance will not create a dangerous low-gas-pressure condition within the gas piping system. The evaluation must be conducted on the completed system as it will be configured after the appliance is added, and if the results indicate that the existing piping system cannot adequately serve the gas demand of the new appliance, the system must be revised accordingly. Undersized (overloaded) piping will cause pressure losses that can result in serious appliance malfunction.

401.5 Identification. For other than steel pipe, exposed *piping* shall be identified by a yellow label marked "Gas" in black letters. The marking shall be spaced at intervals not exceeding 5 feet (1524 mm). The marking shall not be required on pipe located in the same room as the *appliance* served.

❖ The intent of this section is to prevent gas piping from being mistaken for other piping. A case of mistaken identity could lead to a dangerous condition if gas piping were to be cut or opened unintentionally. It is not uncommon for fuel-gas piping systems and various other gas or liquid piping systems in a building to be constructed of the same materials and, thus, have the same appearance. The method of identifying fuel gas piping must be permanent, legible and conspicuous. Steel pipe (typically referred to as "black iron") is exempt from the identification requirements because it is the traditional gas pipe material and is generally recognized as such. Corrugated stainless steel tubing (CSST) is manufactured in compliance with the marking requirements of this section, and some copper tubing is manufactured with a similar yellow plastic jacket [see Commentary Figures 403.5 and 403.5.4(1)]. Steel pipe does not have to be identified, regardless of its color and regardless of any applied paint. Note that steel pipe that has been painted another color is still steel pipe.

401.6 Interconnections. Where two or more meters are installed on the same premises but supply separate consumers, the *piping* systems shall not be interconnected on the *outlet* side of the meters.

❖ If gas distribution systems with independent meters were connected downstream of the meters, it would be impossible to determine the actual consumption of each of the interconnected systems. As the result of building renovations, remodeling and additions, or as the result of intentionally valved cross connections between separately metered systems, it is possible for a consumer to be paying for fuel gas consumed by another consumer. Accurate consumption metering can occur only if each metered distribution system is independent of all other metered distribution systems on the premises. Also, a system thought to be shut off could be backfed from an interconnected system, thereby maintaining pressure in the system that was intended to be shut off.

401.7 Piping meter identification. *Piping* from multiple meter installations shall be marked with an *approved* permanent identification by the installer so that the *piping* system supplied by each meter is readily identifiable.

❖ This provision allows service and emergency personnel to readily locate the shutoff valve that serves each piping system. The identification also helps to prevent interconnections between systems and between spaces when additions and/or alterations are made in the piping systems.

401.8 Minimum sizes. Pipe utilized for the installation, extension and *alteration* of any *piping* system shall be sized to supply the full number of outlets for the intended purpose and shall be sized in accordance with Section 402.

❖ Undersized gas piping systems are not capable of delivering the required volume of fuel at the required pressure. Inadequate gas pressure can cause hazardous operation of appliances. Appliances depend on proper gas pressure to maintain the design Btu (J) input rate, to maintain the required minimum manifold pressure and to produce the required gas velocity in the burners. If the gas pressure to an appliance is too low, the result can be incomplete combustion, burner malfunction and flashback, soot production and appliance malfunction and damage. Gas piping must be sized to maintain the required minimum gas pressures at the appliance inlet.

When designing a gas piping distribution system, all connected appliances and equipment are assumed to operate simultaneously, except as provided for in Section 402.2. In other words, the system is designed for maximum demand. The code contains provisions for sizing gas piping systems using an exact equation or design tables. The tabular method is most often used because it is simpler and less likely to produce errors. Factors that affect the sizing of gas piping systems include the specific gravity of the gas, the length of the pipe and the number of fittings installed, the maximum gas demand, the allowable pressure loss through the system and any diversity factor that is applicable.

INTERNATIONAL CODE COUNCIL®
Copyright © 2015 ICC. ALL RIGHTS RESERVED. Accessed by David Dammon on Jun 21, 2017 12:30:52 PM pursuant to License Agreement with ICC. No further reproduction or distribution authorized. ANY UNAUTHORIZED REPRODUCTION OR DISTRIBUTION IS A VIOLATION OF THE FEDERAL COPYRIGHT ACT AND THE LICENSE AGREEMENT, AND SUBJECT TO CIVIL AND CRIMINAL PENALTIES THEREUNDER.

The design of gas piping installations should also take into account the possibility of future increases in gas demand (load). The farther the gas meter or point of delivery is from the building, the more extensive will be the disruption of the property in the event that a larger yard line between the meter and the building becomes necessary in the future as a result of increased gas demand within the building, a change in fuel gas type or a change in service pressure.

401.9 Identification. Each length of pipe and tubing and each pipe fitting, utilized in a fuel gas system, shall bear the identification of the manufacturer.

❖ All pipe, tubing and fittings for such must be able to be traced back to their source in case there is an issue with the material or its listing. Fittings of all sizes are easily marked with the symbol or logo of the manufacturer, but this requirement is more difficult for close and shoulder pipe nipples because there is little or no surface area suitable for such a marking. Pipe nipples constructed in the field must be cut and threaded using pipe that meets the code. The pipe is marked, but the field-cut nipples might not be.

401.10 Third-party testing and certification. Piping, tubing and fittings shall comply with the applicable referenced standards, specifications and performance criteria of this code and shall be identified in accordance with Section 401.9. Piping, tubing and fittings shall either be tested by an approved third-party testing agency or certified by an approved *third-party certification agency*.

❖ These materials have always been required to comply with the standards prescribed by the code and this section requires verification of such by a third-party entity. The materials, or in some cases their packaging, must bear proof that a third-party entity has performed the verification. This requirement will make it easier for builders, designers and code officials to determine that materials comply with the appropriate product standards.

SECTION 402 (IFGS)
PIPE SIZING

402.1 General considerations. Piping systems shall be of such size and so installed as to provide a supply of gas sufficient to meet the maximum demand and supply gas to each *appliance* inlet at not less than the minimum supply pressure required by the *appliance*.

❖ This section is a summation of the provisions of Sections 401.8 and 402.5, and is intended to give guidance to the designer (see commentary, Sections 401.8 and 402.5). The pressure loss (drop) in a gas piping system must not exceed the allowable loss described in Section 402.5. Pressure loss must be controlled to make sure that the supply pressure at each appliance inlet is not less than the minimum required by the appliance. Inadequate supply pressure can result in hazardous appliance operation or malfunction.

402.2 Maximum gas demand. The volumetric flow rate of gas to be provided shall be the sum of the maximum input of the *appliance*s served.

The total connected hourly load shall be used as the basis for pipe sizing, assuming that all appliances could be operating at full capacity simultaneously. Where a diversity of load can be established, pipe sizing shall be permitted to be based on such loads.

The volumetric flow rate of gas to be provided shall be adjusted for altitude where the installation is above 2,000 feet (610 m) in elevation.

❖ To determine the demand volume required by an appliance in cubic feet (m^3) of gas per hour, the input rating of the appliance in British thermal units per hour (Btu/h) (W) as specified by the appliance manufacturer must be known. This information will be on the appliance nameplate. Note that, depending on the elevation above sea level at which the appliance is installed, the manufacturer of the appliance might also require that the input be derated to compensate for the effect of altitude. If a derating adjustment of input is required, the adjusted input rate would be used in the calculation. If the average heating value of the gas is known [typically about 1,000 Btu/ft^3 (37.3 MJ/m^3) for natural gas], the volume of gas required per hour can be calculated. The heating value can be obtained from the gas supplier. The input rating of all appliances must be shown on the appliance label. When the input rating of the appliances is unknown at the time of piping system design, the gas demand will have to be estimated based on input from appliance manufacturers, gas utilities or other source. However, when the actual appliance demands are determined upon appliance selection, any approximate calculations must be checked to verify that the piping system is, in fact, adequate to supply the known demand for all appliances. The designer must be aware of the fact that a system designed in accordance with an estimated load might be undersized relative to the actual connected load.

In all cases, the piping must have the capacity to supply the actual connected load of appliances. As also stated in this section and Section 401.8, the load on the piping system must be based on the simultaneous operation of all appliances at full output. The only exception to this would be the demonstration of actual load diversity. For example, the designer could have access to data that demonstrates that the total load for cooking ranges or water heaters in a multiple-family dwelling (apartment building) is less than the sum of all of the appliance demands at full output. The code official would have to be convinced that any such diversity factor had been established. Any known diversity factors would likely come from the serving gas supplier.

The following is an example of how gas demand is calculated for a representative appliance: an appliance installed at sea level has a nameplate (label) input rating of 120,000 Btu/h (35.2 kW). Using natural gas with an average heating value of 1,000 Btu/ft^3

INTERNATIONAL CODE COUNCIL®
Copyright © 2015 ICC. ALL RIGHTS RESERVED. Accessed by David Dammon on Jun 21, 2017 12:30:52 PM pursuant to License Agreement with ICC. No further reproduction or distribution authorized. ANY UNAUTHORIZED REPRODUCTION OR DISTRIBUTION IS A VIOLATION OF THE FEDERAL COPYRIGHT ACT AND THE LICENSE AGREEMENT, AND SUBJECT TO CIVIL AND CRIMINAL PENALTIES THEREUNDER.

(37.3 MJ/m^3), the volume of gas required for the appliance is 120,000/1,000 = 120 cubic feet per hour (3.4 m^3/h).

402.3 Sizing. Gas *piping* shall be sized in accordance with one of the following:

1. Pipe sizing tables or sizing equations in accordance with Section 402.4.
2. The sizing tables included in a *listed piping* system's manufacturer's installation instructions.
3. Other *approved* engineering methods.

❖ Using the sizing tables is generally simpler and less time consuming than using the equations found in Section 402.4.The gas system pressure, allowable pressure drop, maximum gas demand and the specific gravity of the fuel gas must be known in order to use the tables. The allowable pressure drop is the designer's choice because the intent of the code is to provide the appliance or equipment with the required rate of gas flow at the required minimum pressure. The tables are based on a given pressure drop and cannot be used if the designer wishes to use any other pressure drop. The sizing tables are based on using smooth-bore pipe or tube and can be used with the piping materials listed in Section 403. Pipe materials with higher resistance to flow cannot be sized using these tables. CSST is sized using CSST-specific tables. The pipe sizes in the pipe sizing tables are based on the traditional steel pipe size designation as used in the material standards. More information may be obtained from a variety of pipe design publications, including the *Piping Handbook* by Sabin Crocker and the *ASHRAE Handbook of HVAC Systems and Equipment*. Each of the tables presents different piping material and design parameters and represents the most common system design applications. The tables assume that the system being sized is constructed of a single-type pipe or tubing material throughout; thus, a single table cannot be used for systems constructed of multiple materials. For example, it is common to find hybrid systems composed of both steel pipe and CSST. Such systems would have to be sized from two different tables based on the longest run of the entire system.

The code does not limit sizing methodology to the tables or equations. Manufacturers of gas piping/tubing may provide sizing charts, tables or slide calculators that, in effect, become part of the installation instructions. This is the case for CSST, which is a listed piping system.

Section 402.4 describes a sizing method that uses an exact thermodynamic flow equation to determine the required pipe sizes. Although this is an exact method, the degree of accuracy it affords may not always prove valuable, because pipe sizes are standardized and the pipe diameter calculated may not correspond to an available pipe size. For example, a calculated pipe diameter of 0.80 inch (20.3 mm) will require the selection of the next larger standard pipe size [1-inch (25 mm) pipe].

There are two equations in Section 402.4 to be used, depending on the gas pressure within the piping system.

As stated in Appendix A, Sections A.2.2 and A.2.3, an equivalent length of pipe should be added to the length of any piping run having four or more fittings (see Appendix A, Table A.2.2). Some designers simply add 50 percent of the actual length of piping as an all-inclusive fitting allowance (i.e., actual pipe length × 1.5). This is a conservative estimate and is used because the necessary number and type of fittings are usually not known when the system is being designed.

Steel pipe sizes $^1/_4$ inch and $^3/_8$ inch have been deleted because the use of such sizes is very rare. The pressure of "0.50 or less" that appeared in some table titles has been replaced by "less than 2 psi" because such tables can be used with any pressure less than 2 psi (13.8 kPa), including 0.50 psi (3.5 kPa) and less.

402.4 Sizing tables and equations. Where Tables 402.4(1) through 402.4(37) are used to size *piping* or tubing, the pipe length shall be determined in accordance with Section 402.4.1, 402.4.2 or 402.4.3.

Where Equations 4-1 and 4-2 are used to size *piping* or tubing, the pipe or tubing shall have smooth inside walls and the pipe length shall be determined in accordance with Section 402.4.1, 402.4.2 or 402.4.3.

1. Low-pressure gas equation [Less than $1^1/_2$ pounds per square inch (psi) (10.3 kPa)]:

$$D = \frac{Q^{0.381}}{19.17\left(\frac{\Delta H}{C_r \times L}\right)^{0.206}} \qquad \textbf{(Equation 4-1)}$$

2. High-pressure gas equation [$1^1/_2$ psi (10.3 kPa) and above]:

$$D = \frac{Q^{0.381}}{18.93\left[\frac{(P_1^2 - P_2^2) \times Y}{C_r \times L}\right]^{0.206}} \qquad \textbf{(Equation 4-2)}$$

where:

D = Inside diameter of pipe, inches (mm).

Q = Input rate *appliance*(s), cubic feet per hour at 60°F (16°C) and 30-inch mercury column.

P_1 = Upstream pressure, psia (P_1 + 14.7).

P_2 = Downstream pressure, psia (P_2 + 14.7).

L = Equivalent length of pipe, feet.

ΔH = Pressure drop, inch water column (27.7 inch water column = 1 psi).

❖ The length of pipe or tube to be used with the tables and equations is determined by the sizing method being used. Section 402.4.1 involves only one length whereas Sections 402.4.2 and 402.4.3 involve multiple lengths.

INTERNATIONAL CODE COUNCIL®
Copyright © 2015 ICC. ALL RIGHTS RESERVED. Accessed by David Dammon on Jun 21, 2017 12:30:52 PM pursuant to License Agreement with ICC. No further reproduction or distribution authorized. ANY UNAUTHORIZED REPRODUCTION OR DISTRIBUTION IS A VIOLATION OF THE FEDERAL COPYRIGHT ACT AND THE LICENSE AGREEMENT, AND SUBJECT TO CIVIL AND CRIMINAL PENALTIES THEREUNDER.

TABLE 402.4
C_r AND Y VALUES FOR NATURAL GAS AND UNDILUTED PROPANE AT STANDARD CONDITIONS

GAS	EQUATION FACTORS	
	C_r	Y
Natural gas	0.6094	0.9992
Undiluted propane	1.2462	0.9910

For SI: 1 cubic foot = 0.028 m^3, 1 foot = 305 mm,
1-inch water column = 0.2488 kPa,
1 pound per square inch = 6.895 kPa,
1 British thermal unit per hour = 0.293 W.

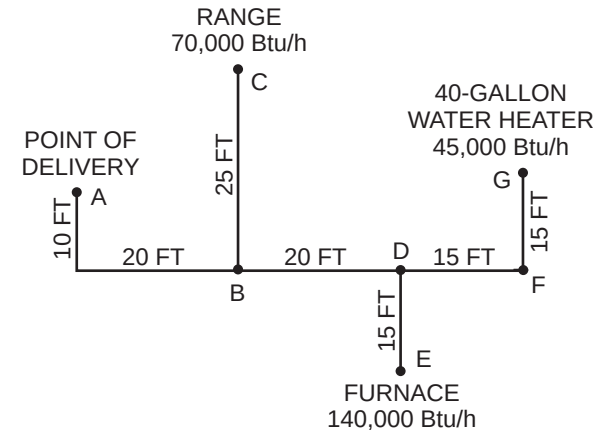

For SI: 1 foot = 304.8 mm, 1 Btu/h = 0.29 kW.

Figure 402.4
GAS PIPING LAYOUT

❖ **Example:**

Determine the required pipe sizes for the gas distribution system in Commentary Figure 402.4 using the equation method outlined in this section. The system is designed to operate at less than 0.5 pound per square inch (psig) (3.5 kPa), using steel pipe, Assume the following:

Fuel gas	Natural
Specific gravity	0.60
Heating value	1,000 Btu per cubic foot
Maximum allowable pressure drop	$^1/_2$ inch of water column
Negligible number of fittings	

For SI: 1 inch = 25.4 mm, 1 foot = 304.8 mm, 1 Btu/h = 0.2931 W, 1 Btu/ft^3 = 0.0373 MJ/m^3, 1-inch water column = 0.2488 kPa, 1 cubic foot = 0.02832 m^3, 1 pound per square inch gauge = 6.895 kPa.

To use equations in this section, the gas volume of each appliance must be known.

Gas volume of an appliance = input rating of an appliance (Btu/h)/Heating value of the fuel gas (Btu/ft^3).

APPLIANCE	INPUT RATING (Btu/h)	GAS VOLUME (ft^3/h)
Range	70,000	70
Furnace	140,000	140
Water heater	45,000	45

Using the equation, the minimum pipe diameter (D) can be solved as follows:

$$D = Q^{0.381}/19.17\ [(\Delta H)/(C_r \times L]^{0.206}$$

Starting at the most remote appliance from the point of delivery (Point G - water heater), determine the minimum pipe size for pipe segment D.

$$D = (45)^{0.381}/19.17\ [(^1/_2)/(0.609 \times 80)]0.206 = 0.574$$

Repeat the calculation for each pipe segment. The gas piping system is sized as follows:

PIPE SEGMENT	FLOW RATE (Q)	CALCULATED PIPE DIAMETER (D) (in.)	NOMINAL PIPE SIZE (in.)
A-B	255	1.11	$1^1/_4$
B-C	70	0.679	$^3/_4$
B-D	185	0.983	1
D-E	140	0.884	1
D-G	45	0.574	$^1/_2$

Most gas pipe sizing will be determined by using the sizing tables. In the event that circumstances warrant it, however, pipe sizing may be done by calculation using the provisions of Appendix A or other approved methods. If in a particular design, the piping length, desired pressure loss, system supply pressure, specific gravity or pipe size does not fall within the parameters of a table, an approved alternative sizing procedure must be used.

Instead of using the methods specified in this section, piping sizes may be determined by the use of accurate gas flow, computer or pressure drop charts. Such sizing tools must be acceptable to the code official. Note that calculators, charts and computer programs can be designed to size gas piping for any pressure drop because the intent of the code is to make sure that the supply pressure at the appliance is greater than or equal to the minimum pressure required for proper operation of the appliance (see Section 402.5).

INTERNATIONAL CODE COUNCIL®
Copyright © 2015 ICC. ALL RIGHTS RESERVED. Accessed by David Dammon on Jun 21, 2017 12:30:52 PM pursuant to License Agreement with ICC. No further reproduction or distribution authorized. ANY UNAUTHORIZED REPRODUCTION OR DISTRIBUTION IS A VIOLATION OF THE FEDERAL COPYRIGHT ACT AND THE LICENSE AGREEMENT, AND SUBJECT TO CIVIL AND CRIMINAL PENALTIES THEREUNDER.

402.4.1 Longest length method. The pipe size of each section of gas *piping* shall be determined using the longest length of *piping* from the *point of delivery* to the most remote *outlet* and the load of the section.

❖ This section provides a step-by-step approach to proper application of the tables using the traditional longest-length method. When using the tables, the maximum pipe length from the point of delivery to the farthest outlet must be determined, including any allowance for the equivalent length of fittings. The designer will use the row in the table that equals the determined length or the next higher row if the determined length is between table values. The system will be designed using only values taken from this row. This is known as the longest-run method: Basing the sizing on the most demanding circuit (longest run) compensates for pressure losses throughout the entire system. Commentary Figure 402.4.1 and the example serve to illustrate the longest length method.

Longest-length method example: Basing the sizing on the most demanding circuit (longest), using Table 402.4(2), size the piping system in Commentary Figure 402.4.1. The longest run is from the meter (point of delivery) to Roof Top Unit #5 and is 210 feet (64 008 mm), therefore, all pipe sizes will be chosen from the 250-foot (76 200 mm) row of the table.

PIPE SECTION	LOAD (MBH)	SIZE (in.)
A	690	2
B	690	2
C	540	2
D	450	2
E	250	$1^1/_2$
F	250	$1^1/_2$
G	150	$1^1/_4$
H	90	1
I	200	$1^1/_4$
J	100	1
K	150	$1^1/_4$

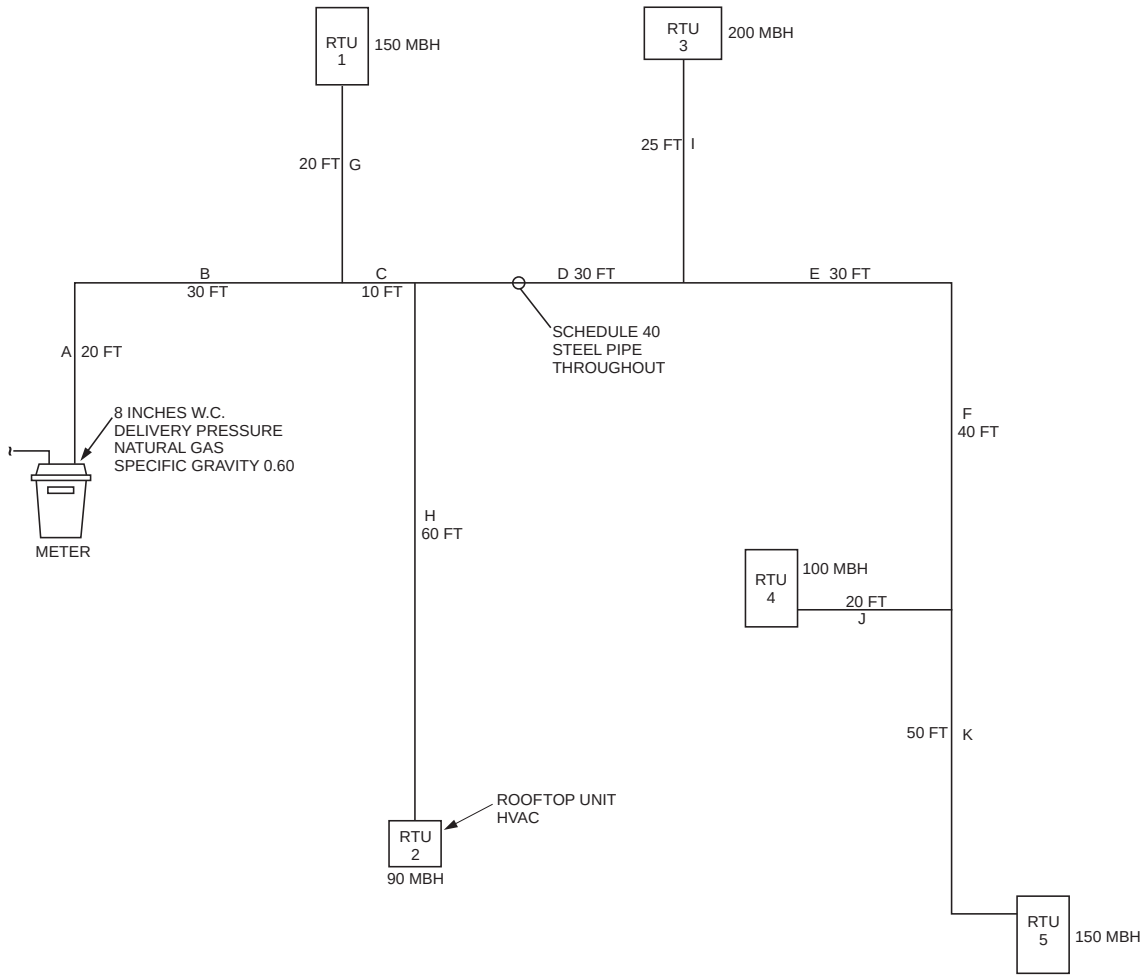

For SI: 1 foot = 304.8 mm, 1 MBH = 293 W.

Figure 402.4.1
STEEL PIPE BRANCH SYSTEM FOR ROOFTOP UNITS

INTERNATIONAL CODE COUNCIL®
Copyright © 2015 ICC. ALL RIGHTS RESERVED. Accessed by David Dammon on Jun 21, 2017 12:30:52 PM pursuant to License Agreement with ICC. No further reproduction or distribution authorized. ANY UNAUTHORIZED REPRODUCTION OR DISTRIBUTION IS A VIOLATION OF THE FEDERAL COPYRIGHT ACT AND THE LICENSE AGREEMENT, AND SUBJECT TO CIVIL AND CRIMINAL PENALTIES THEREUNDER.

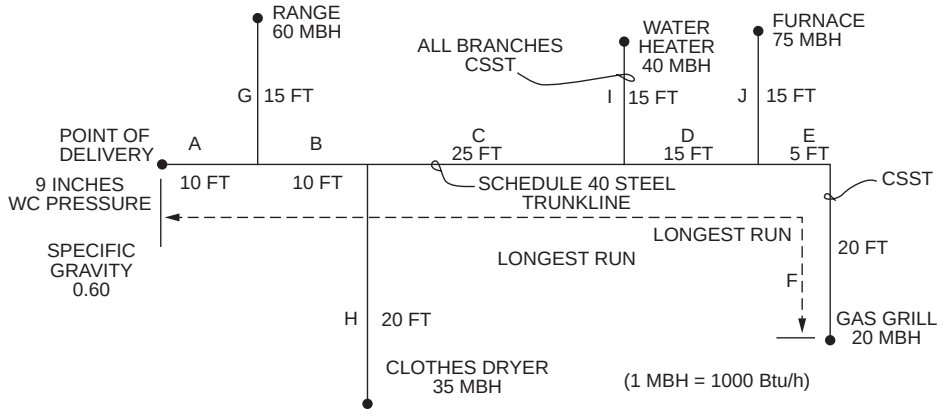

For SI: 1 foot = 304.8 mm, 1 MBH = 293 W.

Figure 402.4.2(1)
BRANCH PIPING SYSTEM WITH SCHEDULE 40 STEEL PIPE TRUNKLINE AND CSST BRANCHES

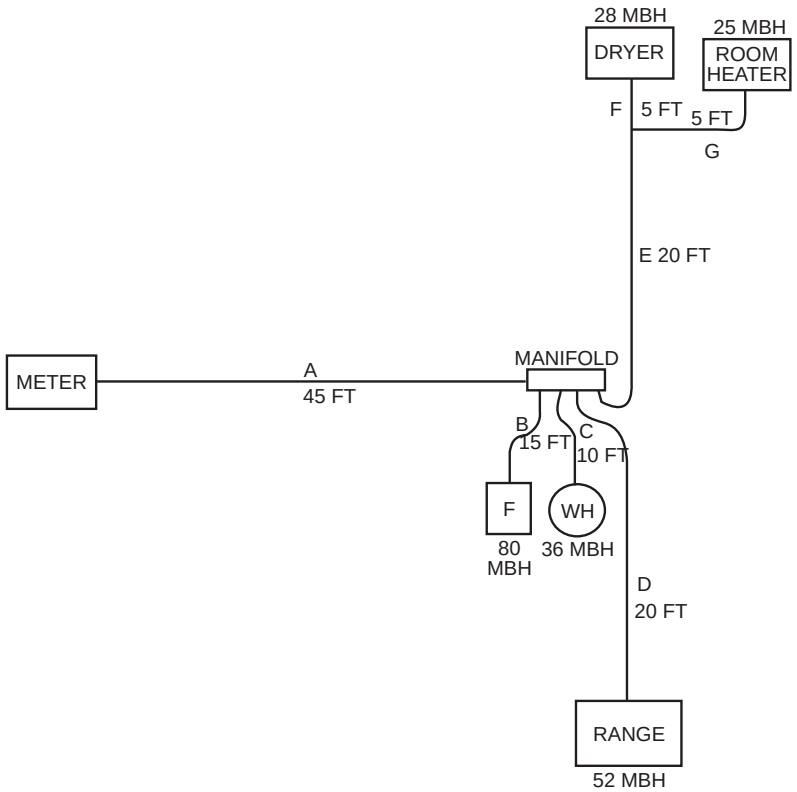

For SI: 1 foot = 304.8 mm,
1 MBH = 1,000 Btu/h = 293 W.

Figure 402.4.2(2)
SINGLE PRESSURE CSST MANIFOLD SYSTEM

INTERNATIONAL CODE COUNCIL®
Copyright © 2015 ICC. ALL RIGHTS RESERVED. Accessed by David Dammon on Jun 21, 2017 12:30:52 PM pursuant to License Agreement with ICC. No further reproduction or distribution authorized. ANY UNAUTHORIZED REPRODUCTION OR DISTRIBUTION IS A VIOLATION OF THE FEDERAL COPYRIGHT ACT AND THE LICENSE AGREEMENT, AND SUBJECT TO CIVIL AND CRIMINAL PENALTIES THEREUNDER.

402.4.2 Branch length method. Pipe shall be sized as follows:

1. Pipe size of each section of the longest pipe run from the *point of delivery* to the most remote *outlet* shall be determined using the longest run of *piping* and the load of the section.
2. The pipe size of each section of branch *piping* not previously sized shall be determined using the length of *piping* from the *point of delivery* to the most remote *outlet* in each branch and the load of the section.

❖ This sizing method is a variation of the longest-length method, and the results can be less conservative. Because less headroom is built into this method, it is especially important to account for the equivalent length of fittings installed in the system [see Commentary Figures 402.4.2(1) and 402.4.2(2) and examples]. This method involves multiple piping lengths within a system for application of the tables or equations, whereas the longest-length method involves only one piping length per system.

402.4.3 Hybrid pressure. The pipe size for each section of higher pressure gas *piping* shall be determined using the longest length of *piping* from the *point of delivery* to the most remote line pressure regulator. The pipe size from the line pressure regulator to each *outlet* shall be determined using the length of *piping* from the regulator to the most remote outlet served by the regulator.

❖ Hybrid pressure piping systems convey gas at different pressures in different parts of the system. One or more pressure regulators are used to reduce the pressure in portions of the system. In some cases, a single gas piping system must deliver widely varying pressure to loads throughout a building. The most common hybrid pressure systems allow small economically sized piping to carry large loads over long distances by conveying gas at high pressures. Near the load being supplied, pressure regulators reduce the higher pressure to suit the load. For example, rooftop units on buildings are typically designed for a natural gas pressure of 14 inches w.c. (3.5 kPa) or less. Running hundreds of feet of pipe across expansive roofs would require large expensive pipe at such low pressure. At 5-psi (34.4 kPa) pressure, small, less expensive pipe can be run over long distances, and regulators at each rooftop unit reduce the 5-psi (34.4 kPa) pressure to less than $^1/_2$ psi (3.4 kPa), which is typically 8 inches w.c. (2 kPa) [see Commentary Figures 402.4.3(1) and (2) and examples.

Branch length method [Commentary Figure 402.4.2(1)] Example 1:

1. In accordance with Section 402.4.2, Item 1, determine the size of Sections A, B, C, D and E (constructed of Schedule 40 steel pipe) based on the load of each section and the longest run length of 85 feet (25 908 mm). Because the system pressure is less than 0.5 psi [(14 inches w.c.) (3.5 kPa), Table 402.4(2) is chosen. Because the longest run length is between rows in the table, the 90-foot (27 432 mm) row must be chosen.

PIPE SECTION	LOAD (MBH)	SIZE (in.)
A	230	$1^1/_4$
B	170	1
C	135	1
D	95	$^3/_4$
E	20	$^1/_2$

2. In accordance with Section 402.4.2 Item 2, determine the size of Branch Sections F, G, H, I and J (constructed of CSST) based on the load of each section and the length of piping and tubing from the point of delivery to the outlet on that section. Table 402.4(15) is chosen because the branch sections are constructed of CSST and the pressure is less than 0.5 psi [(14 inches w.c.) (3.5 kPa)]. Where a length falls between entries in the table, use the next longer length row.

CSST BRANCH	LOAD (MBH)	LENGTH PIPING AND TUBING (ft)	SIZE EHD
F	20	85	18
G	60	25	19
H	35	40	18
I	40	60	23
J	75	75	30

Branch length method [Commentary Figure 402.4.2(2)] Example 2:

Determine the minimum required size of each piping section using branch length method.

Given:

- Piping arranged in parallel.
- Main section and individual appliance runs constructed of CSST.
- Supply pressure is 6 inches w.c. downstream of meter.
- Natural gas with specific gravity of 0.60.
- Chosen pressure drop 0.5 inch w.c.
- Minimum appliance supply pressure requirements are 5 inches w.c.
- Heating value of gas is 1,000 Btu per ft^3.

Sizing Section A:

- Size Section A based on appliance total load and length from meter to furthest appliance.
- Total load = 80 + 36 + 52 + 28 + 25 = 221 cfh.
- Section length = 45 + 20 + 5 = 70 feet.
- Use Table 402.4(15).

INTERNATIONAL CODE COUNCIL®
Copyright © 2015 ICC. ALL RIGHTS RESERVED. Accessed by David Dammon on Jun 21, 2017 12:30:52 PM pursuant to License Agreement with ICC. No further reproduction or distribution authorized. ANY UNAUTHORIZED REPRODUCTION OR DISTRIBUTION IS A VIOLATION OF THE FEDERAL COPYRIGHT ACT AND THE LICENSE AGREEMENT, AND SUBJECT TO CIVIL AND CRIMINAL PENALTIES THEREUNDER.

Sizing Section B:

- Size Section B based on appliance total load and length from meter to appliance.
- Total load = 80 cfh.
- Section length (furnace) = 45 + 15 = 60 feet.
- Use Table 402.4(15).

Sizing Section C:

- Size Section C based on appliance total load and length from meter to appliance.
- Total load = 36 cfh.
- Section length (water heater) = 45 + 10 = 55.
- Use Table 402.4(15).

Sizing Section D:

- Size Section D based on appliance total load and length from meter to appliance.
- Total load = 52 cfh.
- Section length (range) = 45 + 20 = 65 feet.
- Use Table 402.4(15).

Sizing Section E:

- Size Section E based on appliance total load and length from meter to furthest appliance.
- Total load = 25 + 28 = 53 cfh.
- Section length (dryer/room heater) = 45 + 20 + 5 = 70 feet.
- Use Table 402.4(15).

Sizing Section F:

- Size Section F based on appliance total load and length from meter to furthest appliance.
- Total load = 28 cfh.
- Section length (dryer) = 45 + 20 + 5 = 70 feet.
- Use Table 402.4(15).

Sizing Section G:

- Size Section G based on appliance total load and length from meter to furthest appliance.
- Total load (room heater) = 25 cfh.
- Section length = 45 + 20 + 5 = 70 feet.
- Use Table 402.4(15).

Hybrid pressure [Commentary Figure 402.4.3(1)] Example 1:

Note: This example illustrates hybrid system design, but is not typical for dwellings.

1. Using Table 402.4(7), determine the minimum required size of piping Sections A through D. The longest run of piping from the point of delivery to the most remote regulator is 175 feet.
   - Section A serves a load of 625 MBH and in the 175-foot row of the table, $^1/_2$-inch pipe is shown to have a capacity of 728 ft^3/hr or 728,000 Btu/h for gas with a heating value of 1,000 Btu/ft^3.
   - Because Sections B, C and D all serve lesser loads than Section A, they too can be $^1/_2$ inch in size.
   - Because Table 402.4(7) is based upon a pressure drop of 3.5 psi, the available pressure at the inlets of the "pounds-to-inches" regulators under full load condition will be at least 1.5 psig.
2. Determine size of piping Sections E, F and G, using Table 402.4(2) and the longest length of piping from the pounds-to-inches regulator to the most remote outlet. In this case, rooftop unit 1 is the most remote at 65 feet from the regulator.
3. Determine size of piping Sections H, I and J in the same manner described in Item 2 above.

NOTE: MBH = 1,000 Btu/h

Hybrid pressure [Commentary Figure 402.4.3(2) Example 2:

Given:

- All piping is CSST.
- Piping branches run in parallel.
- Individual CSST appliance branch runs supplied by manifold.
- Supply pressure is 2 psi downstream of meter.
- Chosen pressure drop is 1 psi for Section A.
- Natural gas with specific gravity of 0.60.
- Heating value of gas is 1,000 Btu/ft^3.

SUMMARY TABLE FOR BRANCH LENGTH METHOD EXAMPLE 2

SECTION	LOAD (cfh)	SECTION LENGTH (ft)	SECTION USED WITH TABLE (ft)	REQUIRED SIZE (CSST)
A	221	45	70	
B	80	15	60	
C	36	10	55	
D	52	20	65	
E	53	20	70	
F	28	5	70	
G	25	5	70	

INTERNATIONAL CODE COUNCIL®
Copyright © 2015 ICC. ALL RIGHTS RESERVED. Accessed by David Dammon on Jun 21, 2017 12:30:52 PM pursuant to License Agreement with ICC. No further reproduction or distribution authorized. ANY UNAUTHORIZED REPRODUCTION OR DISTRIBUTION IS A VIOLATION OF THE FEDERAL COPYRIGHT ACT AND THE LICENSE AGREEMENT, AND SUBJECT TO CIVIL AND CRIMINAL PENALTIES THEREUNDER.

- Supply pressure at manifold is 8 inches w.c.
- Chosen pressure drop is 3 inches w.c. for Sections B through G.
- Appliances need 5 inches w.c. minimum supply pressure.
- Pressure drop across regulator is less than $^1/_2$ psi at full load of this system.

Sizing Section A:

- Size Section A based on total load and length from meter to regulator.
- Total load = 80 + 36 + 52 + 28 + 25 = 221 cfh.
- Section length = 45 feet.
- Use Table 402.4(18).

Sizing Section B:

- Size Section B based on appliance load and length from regulator to appliance.
- Appliance load = 80 cfh.
- Section length (furnace) = 15 feet.
- Use Table 402.4(16).

Sizing Section C:

- Size Section C based on appliance load and length from regulator to appliance.
- Total load = 36 cfh.
- Section length (water heater) = 10 feet.
- Use Table 402.4(16).

Sizing Section D:

- Size Section D based on appliance load and length from regulator to appliance.
- Total load = 52 cfh.
- Section length (range) = 20 feet.
- Use Table 402.4(16).

Sizing Section E:

- Size Section E based on appliance total load and length from regulator to furthest appliance.
- Total load = 25 + 28 = 53 cfh.
- Section length (dryer/room heater) = 20 + 5 = 25 feet.
- Use Table 402.4(16).

Sizing Section F:

- Size Section F based on appliance total load and length from regulator to furthest appliance.
- Total load (dryer) = 28 cfh.
- Section length = 20 + 5 = 25 feet.
- Use Table 402.4(16).

Sizing Section G:

- Size Section G based on appliance total load and length from regulator to furthest appliance.
- Total load (room heater) = 25 cfh.
- Section length = 20 + 5 = 25 feet.
- Use Table 402.4(16).

402.5 Allowable pressure drop. The design pressure loss in any *piping* system under maximum probable flow conditions, from the *point of delivery* to the inlet connection of the *appliance*, shall be such that the supply pressure at the *appliance* is greater than or equal to the minimum pressure required by the *appliance*.

❖ Between the point of delivery and the load, gas pressure losses will occur because of pipe friction. The design of the system must control these losses to ensure that the pressure at the load (appliance) connection point will be equal to or greater than the minimum required pressure as dictated by the appliance manufacturer. As stated in the commentary to Section 401.8, inadequate gas pressures can result in dangerous appliance operation. This section speaks of "maximum probable flow conditions," which must be taken to mean the total connected load of all appliances operating at full capacity except where a diversity-of-load factor is applied.

SUMMARY TABLE FOR HYBRID PRESSURE EXAMPLE 2

SECTION	LOAD (cfh)	ACTUAL SECTION LENGTH (ft) (including equivalent length of fittings and bends)	SECTION LENGTH (ft) USED WITH TABLE	REQUIRED SIZE (CSST)
A	221	45	45[a]	
B	80	15	15[b]	
C	36	10	10[b]	
D	52	20	20[b]	
E	53	20	25[b]	
F	28	5	25[b]	
G	25	5	25[b]	

a. Distance from meter to regulator is the run length for the main section.

b. Distance from regulator to each appliance is the run length for appliance branch run sections.

INTERNATIONAL CODE COUNCIL®
Copyright © 2015 ICC. ALL RIGHTS RESERVED. Accessed by David Dammon on Jun 21, 2017 12:30:52 PM pursuant to License Agreement with ICC. No further reproduction or distribution authorized. ANY UNAUTHORIZED REPRODUCTION OR DISTRIBUTION IS A VIOLATION OF THE FEDERAL COPYRIGHT ACT AND THE LICENSE AGREEMENT, AND SUBJECT TO CIVIL AND CRIMINAL PENALTIES THEREUNDER.

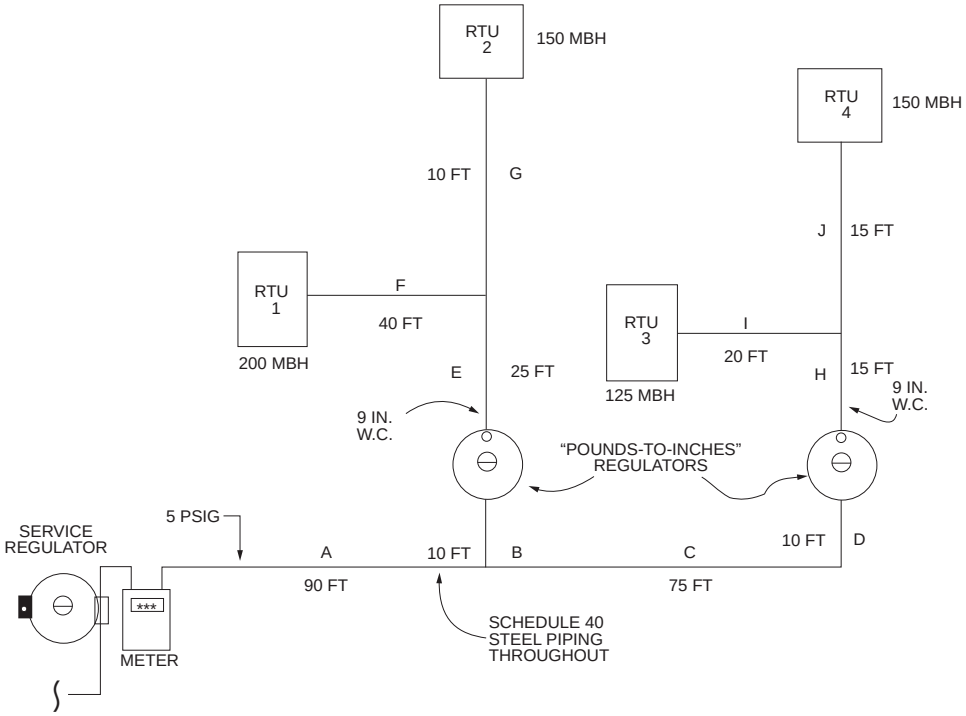

For SI: 1 foot = 304.8 mm, 1 MBH = 293 W, 1 inch water column = 249 Pa.

Figure 402.4.3(1)
HYBRID PRESSURE BRANCH SYSTEM

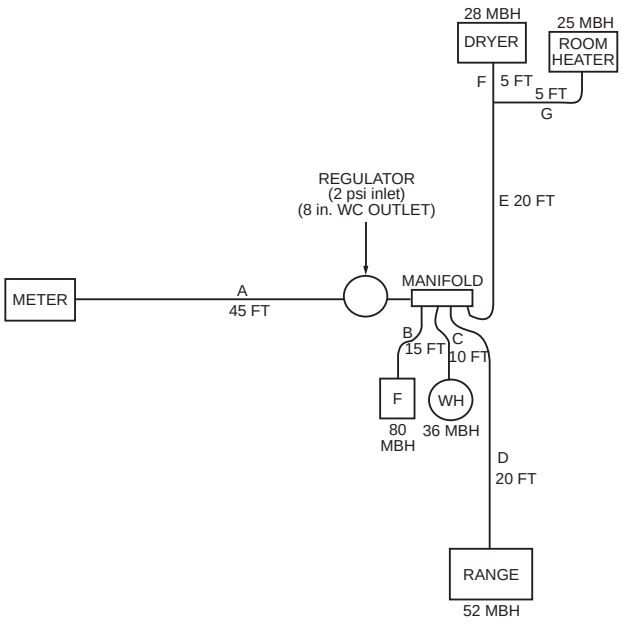

For SI: 1 foot = 304.8 mm,
1 MBH = 293 W, 1 inch water column = 249 Pa.

Figure 402.4.3(2)
HYBRID PRESSURE PARALLEL DISTRIBUTION SYSTEM

INTERNATIONAL CODE COUNCIL®
Copyright © 2015 ICC. ALL RIGHTS RESERVED. Accessed by David Dammon on Jun 21, 2017 12:30:52 PM pursuant to License Agreement with ICC. No further reproduction or distribution authorized. ANY UNAUTHORIZED REPRODUCTION OR DISTRIBUTION IS A VIOLATION OF THE FEDERAL COPYRIGHT ACT AND THE LICENSE AGREEMENT, AND SUBJECT TO CIVIL AND CRIMINAL PENALTIES THEREUNDER.

The designer can choose any pressure loss for a piping system if the goal of this section is met. The code does not specify any maximum pressure drop other than what is required by this section. For example, consider an appliance that has a minimum required inlet pressure of 5 inches w.c. (1.25 kPa), and the gas pressure at the point of delivery is 8 inches w.c. (2 kPa). The maximum allowable pressure drop through the piping system would be 3 inches w.c. (0.75 kPa) because the pressure at the appliance connection must be greater than or equal to 5 inches w.c. Some sizing tables, such as Table 402.4(2), are based on very small pressure drops [0.5 inch w.c. (125 Pa)] and, thus, are quite conservative sizing methods that account for the friction losses through a limited number of fittings used in a piping system. The tables are optional sizing methods placed in the code for convenience. The code allows piping systems to be designed for the exact pressure losses allowed by this section. Some tables are based on much larger pressure losses and can be used where the designer wants to keep pipe sizes to their minimum. The code intends to allow the designer to have the option of choosing the system pressure losses, provided that such losses meet the requirement of this section.

402.6 Maximum design operating pressure. The maximum design operating pressure for *piping* systems located inside buildings shall not exceed 5 pounds per square inch gauge (psig) (34 kPa gauge) except where one or more of the following conditions are met:

1. The *piping* system is welded.
2. The *piping* is located in a ventilated chase or otherwise enclosed for protection against accidental gas accumulation.
3. The *piping* is located inside buildings or separate areas of buildings used exclusively for any of the following:
   - 3.1. Industrial processing or heating.
   - 3.2. Research.
   - 3.3. Warehousing.
   - 3.4. Boiler or mechanical rooms.
4. The *piping* is a temporary installation for buildings under construction.
5. The piping serves appliances or *equipment* used for agricultural purposes.
6. The *piping* system is an LP-gas *piping* system with a design operating pressure greater than 20 psi (137.9 kPa) and complies with NFPA 58.

❖ This section is specific to indoor piping systems. The pressure is limited to 5 psig (34 kPa) to minimize the consequences of a leak. Also, the higher the pressure, the more difficult it is to contain any gas, and thus leakage is more likely. Item 1 recognizes the superior strength and integrity of steel piping with welded joints. Item 2 allows the option of higher pressures where the piping is enclosed to prevent leakage from entering the building. Item 4 allows higher pressures for temporary piping for construction site applications, such as temporary space heating, because of low occupant density, the presence of trained personnel and the short duration of use. Item 4 recognizes the unique nature of temporary piping on construction sites where small piping is desirable, thus making higher pressures necessary. Item 6 recognizes that NFPA 58 allows higher pressures for LG-gas systems in industrial occupancies.

This section applies to all fuel gases, including LP-gas (see Section 402.6.1).

402.6.1 Liquefied petroleum gas systems. LP-gas systems designed to operate below -5°F (-21°C) or with butane or a propane-butane mix shall be designed to either accommodate liquid LP-gas or prevent LP-gas vapor from condensing into a liquid.

❖ In low-temperature environments, LP-gases might condense into the liquid state within the piping system. If the liquid fuel enters system components or appliances, dangerous malfunctions could result. The temperature and pressure of a gas both affect the point at which a gas will change states to a liquid phase. LP-gas can be made to condense to liquid by applying pressure, by cooling the gas and by a combination of both. At atmospheric pressure, 14.7 psia at sea level, propane will condense at minus 44°F (-42°C) and butane will condense at 15°F (-9°C), meaning that LP-liquid would remain as a liquid in an open container at temperatures of minus 44°F and lower. As the liquid warms to temperatures above the condensing temperature, the liquid will begin to boil, producing gas vapor. The resultant vapor pressure will have to be held in a closed container to prevent vaporization of all of the liquid. This is what happens in an LP-gas storage tank. The tank holds both liquid and gaseous LP under pressure that varies with the ambient temperature. Within a piping system, the pressure could be higher than one atmosphere and LP-gas would, therefore, condense at a higher temperature. For example, at 20 psig (138 kPa), propane will condense at -5°F (-21°C). The -5°F threshold requirement of this section was chosen because 20 psi system piping was commonly installed outdoors.

TABLES 402.4(1) through 402.4(37). See pages 4-15 through 4-50.

❖ See the commentary to Section 402.4.

INTERNATIONAL CODE COUNCIL®
Copyright © 2015 ICC. ALL RIGHTS RESERVED. Accessed by David Dammon on Jun 21, 2017 12:30:52 PM pursuant to License Agreement with ICC. No further reproduction or distribution authorized. ANY UNAUTHORIZED REPRODUCTION OR DISTRIBUTION IS A VIOLATION OF THE FEDERAL COPYRIGHT ACT AND THE LICENSE AGREEMENT, AND SUBJECT TO CIVIL AND CRIMINAL PENALTIES THEREUNDER.

TABLE 402.4(1)
SCHEDULE 40 METALLIC PIPE

Gas	Natural
Inlet Pressure	Less than 2 psi
Pressure Drop	0.3 in. w.c.
Specific Gravity	0.60

PIPE SIZE (inch)														
Nominal	**1/2**	**3/4**	**1**	**1 1/4**	**1 1/2**	**2**	**2 1/2**	**3**	**4**	**5**	**6**	**8**	**10**	**12**
Actual ID	**0.622**	**0.824**	**1.049**	**1.380**	**1.610**	**2.067**	**2.469**	**3.068**	**4.026**	**5.047**	**6.065**	**7.981**	**10.020**	**11.938**
Length (ft)	**Capacity in Cubic Feet of Gas Per Hour**													
10	131	273	514	1,060	1,580	3,050	4,860	8,580	17,500	31,700	51,300	105,000	191,000	303,000
20	90	188	353	726	1,090	2,090	3,340	5,900	12,000	21,800	35,300	72,400	132,000	208,000
30	72	151	284	583	873	1,680	2,680	4,740	9,660	17,500	28,300	58,200	106,000	167,000
40	62	129	243	499	747	1,440	2,290	4,050	8,270	15,000	24,200	49,800	90,400	143,000
50	55	114	215	442	662	1,280	2,030	3,590	7,330	13,300	21,500	44,100	80,100	127,000
60	50	104	195	400	600	1,160	1,840	3,260	6,640	12,000	19,500	40,000	72,600	115,000
70	46	95	179	368	552	1,060	1,690	3,000	6,110	11,100	17,900	36,800	66,800	106,000
80	42	89	167	343	514	989	1,580	2,790	5,680	10,300	16,700	34,200	62,100	98,400
90	40	83	157	322	482	928	1,480	2,610	5,330	9,650	15,600	32,100	58,300	92,300
100	38	79	148	304	455	877	1,400	2,470	5,040	9,110	14,800	30,300	55,100	87,200
125	33	70	131	269	403	777	1,240	2,190	4,460	8,080	13,100	26,900	48,800	77,300
150	30	63	119	244	366	704	1,120	1,980	4,050	7,320	11,900	24,300	44,200	70,000
175	28	58	109	224	336	648	1,030	1,820	3,720	6,730	10,900	22,400	40,700	64,400
200	26	54	102	209	313	602	960	1,700	3,460	6,260	10,100	20,800	37,900	59,900
250	23	48	90	185	277	534	851	1,500	3,070	5,550	8,990	18,500	33,500	53,100
300	21	43	82	168	251	484	771	1,360	2,780	5,030	8,150	16,700	30,400	48,100
350	19	40	75	154	231	445	709	1,250	2,560	4,630	7,490	15,400	28,000	44,300
400	18	37	70	143	215	414	660	1,170	2,380	4,310	6,970	14,300	26,000	41,200
450	17	35	66	135	202	389	619	1,090	2,230	4,040	6,540	13,400	24,400	38,600
500	16	33	62	127	191	367	585	1,030	2,110	3,820	6,180	12,700	23,100	36,500
550	15	31	59	121	181	349	556	982	2,000	3,620	5,870	12,100	21,900	34,700
600	14	30	56	115	173	333	530	937	1,910	3,460	5,600	11,500	20,900	33,100
650	14	29	54	110	165	318	508	897	1,830	3,310	5,360	11,000	20,000	31,700
700	13	27	52	106	159	306	488	862	1,760	3,180	5,150	10,600	19,200	30,400
750	13	26	50	102	153	295	470	830	1,690	3,060	4,960	10,200	18,500	29,300
800	12	26	48	99	148	285	454	802	1,640	2,960	4,790	9,840	17,900	28,300
850	12	25	46	95	143	275	439	776	1,580	2,860	4,640	9,530	17,300	27,400
900	11	24	45	93	139	267	426	752	1,530	2,780	4,500	9,240	16,800	26,600
950	11	23	44	90	135	259	413	731	1,490	2,700	4,370	8,970	16,300	25,800
1,000	11	23	43	87	131	252	402	711	1,450	2,620	4,250	8,720	15,800	25,100
1,100	10	21	40	83	124	240	382	675	1,380	2,490	4,030	8,290	15,100	23,800
1,200	NA	20	39	79	119	229	364	644	1,310	2,380	3,850	7,910	14,400	22,700
1,300	NA	20	37	76	114	219	349	617	1,260	2,280	3,680	7,570	13,700	21,800
1,400	NA	19	35	73	109	210	335	592	1,210	2,190	3,540	7,270	13,200	20,900
1,500	NA	18	34	70	105	203	323	571	1,160	2,110	3,410	7,010	12,700	20,100
1,600	NA	18	33	68	102	196	312	551	1,120	2,030	3,290	6,770	12,300	19,500
1,700	NA	17	32	66	98	189	302	533	1,090	1,970	3,190	6,550	11,900	18,800
1,800	NA	16	31	64	95	184	293	517	1,050	1,910	3,090	6,350	11,500	18,300
1,900	NA	16	30	62	93	178	284	502	1,020	1,850	3,000	6,170	11,200	17,700
2,000	NA	16	29	60	90	173	276	488	1,000	1,800	2,920	6,000	10,900	17,200

For SI: 1 inch = 25.4 mm, 1 foot = 304.8 mm, 1 pound per square inch = 6.895 kPa, 1-inch water column = 0.2488 kPa, 1 British thermal unit per hour = 0.2931 W, 1 cubic foot per hour = 0.0283 m^3/h, 1 degree = 0.01745 rad.

Notes:

1. NA means a flow of less than 10 cfh.
2. All table entries have been rounded to three significant digits.

❖ See the commentary to Section 402.4.

INTERNATIONAL CODE COUNCIL®
Copyright © 2015 ICC. ALL RIGHTS RESERVED. Accessed by David Dammon on Jun 21, 2017 12:30:52 PM pursuant to License Agreement with ICC. No further reproduction or distribution authorized. ANY UNAUTHORIZED REPRODUCTION OR DISTRIBUTION IS A VIOLATION OF THE FEDERAL COPYRIGHT ACT AND THE LICENSE AGREEMENT, AND SUBJECT TO CIVIL AND CRIMINAL PENALTIES THEREUNDER.

TABLE 402.4(2)
SCHEDULE 40 METALLIC PIPE

Gas	Natural
Inlet Pressure	Less than 2 psi
Pressure Drop	0.5 in. w.c.
Specific Gravity	0.60

PIPE SIZE (inch)														
Nominal	**1/2**	**3/4**	**1**	**1 1/4**	**1 1/2**	**2**	**2 1/2**	**3**	**4**	**5**	**6**	**8**	**10**	**12**
Actual ID	**0.622**	**0.824**	**1.049**	**1.380**	**1.610**	**2.067**	**2.469**	**3.068**	**4.026**	**5.047**	**6.065**	**7.981**	**10.020**	**11.938**
Length (ft)	**Capacity in Cubic Feet of Gas Per Hour**													
10	172	360	678	1,390	2,090	4,020	6,400	11,300	23,100	41,800	67,600	139,000	252,000	399,000
20	118	247	466	957	1,430	2,760	4,400	7,780	15,900	28,700	46,500	95,500	173,000	275,000
30	95	199	374	768	1,150	2,220	3,530	6,250	12,700	23,000	37,300	76,700	139,000	220,000
40	81	170	320	657	985	1,900	3,020	5,350	10,900	19,700	31,900	65,600	119,000	189,000
50	72	151	284	583	873	1,680	2,680	4,740	9,660	17,500	28,300	58,200	106,000	167,000
60	65	137	257	528	791	1,520	2,430	4,290	8,760	15,800	25,600	52,700	95,700	152,000
70	60	126	237	486	728	1,400	2,230	3,950	8,050	14,600	23,600	48,500	88,100	139,000
80	56	117	220	452	677	1,300	2,080	3,670	7,490	13,600	22,000	45,100	81,900	130,000
90	52	110	207	424	635	1,220	1,950	3,450	7,030	12,700	20,600	42,300	76,900	122,000
100	50	104	195	400	600	1,160	1,840	3,260	6,640	12,000	19,500	40,000	72,600	115,000
125	44	92	173	355	532	1,020	1,630	2,890	5,890	10,600	17,200	35,400	64,300	102,000
150	40	83	157	322	482	928	1,480	2,610	5,330	9,650	15,600	32,100	58,300	92,300
175	37	77	144	296	443	854	1,360	2,410	4,910	8,880	14,400	29,500	53,600	84,900
200	34	71	134	275	412	794	1,270	2,240	4,560	8,260	13,400	27,500	49,900	79,000
250	30	63	119	244	366	704	1,120	1,980	4,050	7,320	11,900	24,300	44,200	70,000
300	27	57	108	221	331	638	1,020	1,800	3,670	6,630	10,700	22,100	40,100	63,400
350	25	53	99	203	305	587	935	1,650	3,370	6,100	9,880	20,300	36,900	58,400
400	23	49	92	189	283	546	870	1,540	3,140	5,680	9,190	18,900	34,300	54,300
450	22	46	86	177	266	512	816	1,440	2,940	5,330	8,620	17,700	32,200	50,900
500	21	43	82	168	251	484	771	1,360	2,780	5,030	8,150	16,700	30,400	48,100
550	20	41	78	159	239	459	732	1,290	2,640	4,780	7,740	15,900	28,900	45,700
600	19	39	74	152	228	438	699	1,240	2,520	4,560	7,380	15,200	27,500	43,600
650	18	38	71	145	218	420	669	1,180	2,410	4,360	7,070	14,500	26,400	41,800
700	17	36	68	140	209	403	643	1,140	2,320	4,190	6,790	14,000	25,300	40,100
750	17	35	66	135	202	389	619	1,090	2,230	4,040	6,540	13,400	24,400	38,600
800	16	34	63	130	195	375	598	1,060	2,160	3,900	6,320	13,000	23,600	37,300
850	16	33	61	126	189	363	579	1,020	2,090	3,780	6,110	12,600	22,800	36,100
900	15	32	59	122	183	352	561	992	2,020	3,660	5,930	12,200	22,100	35,000
950	15	31	58	118	178	342	545	963	1,960	3,550	5,760	11,800	21,500	34,000
1,000	14	30	56	115	173	333	530	937	1,910	3,460	5,600	11,500	20,900	33,100
1,100	14	28	53	109	164	316	503	890	1,810	3,280	5,320	10,900	19,800	31,400
1,200	13	27	51	104	156	301	480	849	1,730	3,130	5,070	10,400	18,900	30,000
1,300	12	26	49	100	150	289	460	813	1,660	3,000	4,860	9,980	18,100	28,700
1,400	12	25	47	96	144	277	442	781	1,590	2,880	4,670	9,590	17,400	27,600
1,500	11	24	45	93	139	267	426	752	1,530	2,780	4,500	9,240	16,800	26,600
1,600	11	23	44	89	134	258	411	727	1,480	2,680	4,340	8,920	16,200	25,600
1,700	11	22	42	86	130	250	398	703	1,430	2,590	4,200	8,630	15,700	24,800
1,800	10	22	41	84	126	242	386	682	1,390	2,520	4,070	8,370	15,200	24,100
1,900	10	21	40	81	122	235	375	662	1,350	2,440	3,960	8,130	14,800	23,400
2,000	NA	20	39	79	119	229	364	644	1,310	2,380	3,850	7,910	14,400	22,700

For SI: 1 inch = 25.4 mm, 1 foot = 304.8 mm, 1 pound per square inch = 6.895 kPa, 1-inch water column = 0.2488 kPa,
1 British thermal unit per hour = 0.2931 W, 1 cubic foot per hour = 0.0283 m^3/h, 1 degree = 0.01745 rad.

Notes:

1. NA means a flow of less than 10 cfh.
2. All table entries have been rounded to three significant digits.

❖ See the commentary to Section 402.4.

INTERNATIONAL CODE COUNCIL®
Copyright © 2015 ICC. ALL RIGHTS RESERVED. Accessed by David Dammon on Jun 21, 2017 12:30:52 PM pursuant to License Agreement with ICC. No further reproduction or distribution authorized. ANY UNAUTHORIZED REPRODUCTION OR DISTRIBUTION IS A VIOLATION OF THE FEDERAL COPYRIGHT ACT AND THE LICENSE AGREEMENT, AND SUBJECT TO CIVIL AND CRIMINAL PENALTIES THEREUNDER.

TABLE 402.4(3)
SCHEDULE 40 METALLIC PIPE

Gas	Natural
Inlet Pressure	Less than 2 psi
Pressure Drop	3.0 in. w.c.
Specific Gravity	0.60

INTENDED USE: Initial supply pressure of 8.0 inches w.c. or greater									
	PIPE SIZE (inch)								
Nominal	**1/2**	**3/4**	**1**	**1 1/4**	**1 1/2**	**2**	**2 1/2**	**3**	**4**
Actual ID	**0.622**	**0.824**	**1.049**	**1.380**	**1.610**	**2.067**	**2.469**	**3.068**	**4.026**
Length (ft)	Capacity in Cubic Feet of Gas Per Hour								
10	454	949	1,790	3,670	5,500	10,600	16,900	29,800	60,800
20	312	652	1,230	2,520	3,780	7,280	11,600	20,500	41,800
30	250	524	986	2,030	3,030	5,840	9,310	16,500	33,600
40	214	448	844	1,730	2,600	5,000	7,970	14,100	28,700
50	190	397	748	1,540	2,300	4,430	7,070	12,500	25,500
60	172	360	678	1,390	2,090	4,020	6,400	11,300	23,100
70	158	331	624	1,280	1,920	3,700	5,890	10,400	21,200
80	147	308	580	1,190	1,790	3,440	5,480	9,690	19,800
90	138	289	544	1,120	1,680	3,230	5,140	9,090	18,500
100	131	273	514	1,060	1,580	3,050	4,860	8,580	17,500
125	116	242	456	936	1,400	2,700	4,300	7,610	15,500
150	105	219	413	848	1,270	2,450	3,900	6,890	14,100
175	96	202	380	780	1,170	2,250	3,590	6,340	12,900
200	90	188	353	726	1,090	2,090	3,340	5,900	12,000
250	80	166	313	643	964	1,860	2,960	5,230	10,700
300	72	151	284	583	873	1,680	2,680	4,740	9,700
350	66	139	261	536	803	1,550	2,470	4,360	8,900
400	62	129	243	499	747	1,440	2,290	4,060	8,300
450	58	121	228	468	701	1,350	2,150	3,800	7,800
500	55	114	215	442	662	1,280	2,030	3,590	7,300
550	52	109	204	420	629	1,210	1,930	3,410	7,000
600	50	104	195	400	600	1,160	1,840	3,260	6,640
650	47	99	187	384	575	1,110	1,760	3,120	6,360
700	46	95	179	368	552	1,060	1,700	3,000	6,110
750	44	92	173	355	532	1,020	1,630	2,890	5,890
800	42	89	167	343	514	989	1,580	2,790	5,680
850	41	86	162	332	497	957	1,530	2,700	5,500
900	40	83	157	322	482	928	1,480	2,620	5,330
950	39	81	152	312	468	901	1,440	2,540	5,180
1,000	38	79	148	304	455	877	1,400	2,470	5,040
1,100	36	75	141	289	432	833	1,330	2,350	4,780
1,200	34	71	134	275	412	794	1,270	2,240	4,560
1,300	33	68	128	264	395	761	1,210	2,140	4,370
1,400	31	65	123	253	379	731	1,170	2,060	4,200
1,500	30	63	119	244	366	704	1,120	1,980	4,050
1,600	29	61	115	236	353	680	1,080	1,920	3,910
1,700	28	59	111	228	342	658	1,050	1,850	3,780
1,800	27	57	108	221	331	638	1,020	1,800	3,670
1,900	27	56	105	215	322	619	987	1,750	3,560
2,000	26	54	102	209	313	602	960	1,700	3,460

For SI: 1 inch = 25.4 mm, 1 foot = 304.8 mm, 1 pound per square inch = 6.895 kPa, 1-inch water column = 0.2488 kPa, 1 British thermal unit per hour = 0.2931 W, 1 cubic foot per hour = 0.0283 m^3/h, 1 degree = 0.01745 rad.

Note: All table entries have been rounded to three significant digits.

❖ See the commentary to Section 402.4.

INTERNATIONAL CODE COUNCIL®
Copyright © 2015 ICC. ALL RIGHTS RESERVED. Accessed by David Dammon on Jun 21, 2017 12:30:52 PM pursuant to License Agreement with ICC. No further reproduction or distribution authorized. ANY UNAUTHORIZED REPRODUCTION OR DISTRIBUTION IS A VIOLATION OF THE FEDERAL COPYRIGHT ACT AND THE LICENSE AGREEMENT, AND SUBJECT TO CIVIL AND CRIMINAL PENALTIES THEREUNDER.

TABLE 402.4(4)
SCHEDULE 40 METALLIC PIPE

Gas	Natural
Inlet Pressure	Less than 2 psi
Pressure Drop	6.0 in. w.c.
Specific Gravity	0.60

INTENDED USE: Initial supply pressure of 11.0 inches w.c. or greater									
	PIPE SIZE (inch)								
Nominal	**1/2**	**3/4**	**1**	**1 1/4**	**1 1/2**	**2**	**2 1/2**	**3**	**4**
Actual ID	**0.622**	**0.824**	**1.049**	**1.380**	**1.610**	**2.067**	**2.469**	**3.068**	**4.026**
Length (ft)	**Capacity in Cubic Feet of Gas Per Hour**								
10	660	1,380	2,600	5,340	8,000	15,400	24,600	43,400	88,500
20	454	949	1,790	3,670	5,500	10,600	16,900	29,900	60,800
30	364	762	1,440	2,950	4,420	8,500	13,600	24,000	48,900
40	312	652	1,230	2,520	3,780	7,280	11,600	20,500	41,800
50	276	578	1,090	2,240	3,350	6,450	10,300	18,200	37,100
60	250	524	986	2,030	3,030	5,840	9,310	16,500	33,600
70	230	482	907	1,860	2,790	5,380	8,570	15,100	30,900
80	214	448	844	1,730	2,600	5,000	7,970	14,100	28,700
90	201	420	792	1,630	2,440	4,690	7,480	13,200	27,000
100	190	397	748	1,540	2,300	4,430	7,070	12,500	25,500
125	168	352	663	1,360	2,040	3,930	6,260	11,100	22,600
150	153	319	601	1,230	1,850	3,560	5,670	10,000	20,500
175	140	293	553	1,140	1,700	3,280	5,220	9,230	18,800
200	131	273	514	1,060	1,580	3,050	4,860	8,580	17,500
250	116	242	456	936	1,400	2,700	4,300	7,610	15,500
300	105	219	413	848	1,270	2,450	3,900	6,890	14,100
350	96	202	380	780	1,170	2,250	3,590	6,340	12,900
400	90	188	353	726	1,090	2,090	3,340	5,900	12,000
450	84	176	332	681	1,020	1,970	3,130	5,540	11,300
500	80	166	313	643	964	1,860	2,960	5,230	10,700
550	76	158	297	611	915	1,760	2,810	4,970	10,100
600	72	151	284	583	873	1,680	2,680	4,740	9,660
650	69	144	272	558	836	1,610	2,570	4,540	9,250
700	66	139	261	536	803	1,550	2,470	4,360	8,890
750	64	134	252	516	774	1,490	2,380	4,200	8,560
800	62	129	243	499	747	1,440	2,290	4,060	8,270
850	60	125	235	483	723	1,390	2,220	3,920	8,000
900	58	121	228	468	701	1,350	2,150	3,800	7,760
950	56	118	221	454	681	1,310	2,090	3,700	7,540
1,000	55	114	215	442	662	1,280	2,030	3,590	7,330
1,100	52	109	204	420	629	1,210	1,930	3,410	6,960
1,200	50	104	195	400	600	1,160	1,840	3,260	6,640
1,300	47	99	187	384	575	1,100	1,760	3,120	6,360
1,400	46	95	179	368	552	1,060	1,700	3,000	6,110
1,500	44	92	173	355	532	1,020	1,630	2,890	5,890
1,600	42	89	167	343	514	989	1,580	2,790	5,680
1,700	41	86	162	332	497	957	1,530	2,700	5,500
1,800	40	83	157	322	482	928	1,480	2,620	5,330
1,900	39	81	152	312	468	901	1,440	2,540	5,180
2,000	38	79	148	304	455	877	1,400	2,470	5,040

For SI: 1 inch = 25.4 mm, 1 foot = 304.8 mm, 1 pound per square inch = 6.895 kPa, 1-inch water column = 0.2488 kPa, 1 British thermal unit per hour = 0.2931 W, 1 cubic foot per hour = 0.0283 m^3/h, 1 degree = 0.01745 rad.

Note: All table entries have been rounded to three significant digits.

❖ See the commentary to Section 402.4.

INTERNATIONAL CODE COUNCIL®
Copyright © 2015 ICC. ALL RIGHTS RESERVED. Accessed by David Dammon on Jun 21, 2017 12:30:52 PM pursuant to License Agreement with ICC. No further reproduction or distribution authorized. ANY UNAUTHORIZED REPRODUCTION OR DISTRIBUTION IS A VIOLATION OF THE FEDERAL COPYRIGHT ACT AND THE LICENSE AGREEMENT, AND SUBJECT TO CIVIL AND CRIMINAL PENALTIES THEREUNDER.

TABLE 402.4(5)
SCHEDULE 40 METALLIC PIPE

Gas	Natural
Inlet Pressure	2.0 psi
Pressure Drop	1.0 psi
Specific Gravity	0.60

PIPE SIZE (inch)									
Nominal	**1/2**	**3/4**	**1**	**1 1/4**	**1 1/2**	**2**	**2 1/2**	**3**	**4**
Actual ID	**0.622**	**0.824**	**1.049**	**1.380**	**1.610**	**2.067**	**2.469**	**3.068**	**4.026**
Length (ft)	**Capacity in Cubic Feet of Gas Per Hour**								
10	1,510	3,040	5,560	11,400	17,100	32,900	52,500	92,800	189,000
20	1,070	2,150	3,930	8,070	12,100	23,300	37,100	65,600	134,000
30	869	1,760	3,210	6,590	9,880	19,000	30,300	53,600	109,000
40	753	1,520	2,780	5,710	8,550	16,500	26,300	46,400	94,700
50	673	1,360	2,490	5,110	7,650	14,700	23,500	41,500	84,700
60	615	1,240	2,270	4,660	6,980	13,500	21,400	37,900	77,300
70	569	1,150	2,100	4,320	6,470	12,500	19,900	35,100	71,600
80	532	1,080	1,970	4,040	6,050	11,700	18,600	32,800	67,000
90	502	1,010	1,850	3,810	5,700	11,000	17,500	30,900	63,100
100	462	934	1,710	3,510	5,260	10,100	16,100	28,500	58,200
125	414	836	1,530	3,140	4,700	9,060	14,400	25,500	52,100
150	372	751	1,370	2,820	4,220	8,130	13,000	22,900	46,700
175	344	695	1,270	2,601	3,910	7,530	12,000	21,200	43,300
200	318	642	1,170	2,410	3,610	6,960	11,100	19,600	40,000
250	279	583	1,040	2,140	3,210	6,180	9,850	17,400	35,500
300	253	528	945	1,940	2,910	5,600	8,920	15,800	32,200
350	232	486	869	1,790	2,670	5,150	8,210	14,500	29,600
400	216	452	809	1,660	2,490	4,790	7,640	13,500	27,500
450	203	424	759	1,560	2,330	4,500	7,170	12,700	25,800
500	192	401	717	1,470	2,210	4,250	6,770	12,000	24,400
550	182	381	681	1,400	2,090	4,030	6,430	11,400	23,200
600	174	363	650	1,330	2,000	3,850	6,130	10,800	22,100
650	166	348	622	1,280	1,910	3,680	5,870	10,400	21,200
700	160	334	598	1,230	1,840	3,540	5,640	9,970	20,300
750	154	322	576	1,180	1,770	3,410	5,440	9,610	19,600
800	149	311	556	1,140	1,710	3,290	5,250	9,280	18,900
850	144	301	538	1,100	1,650	3,190	5,080	8,980	18,300
900	139	292	522	1,070	1,600	3,090	4,930	8,710	17,800
950	135	283	507	1,040	1,560	3,000	4,780	8,460	17,200
1,000	132	275	493	1,010	1,520	2,920	4,650	8,220	16,800
1,100	125	262	468	960	1,440	2,770	4,420	7,810	15,900
1,200	119	250	446	917	1,370	2,640	4,220	7,450	15,200
1,300	114	239	427	878	1,320	2,530	4,040	7,140	14,600
1,400	110	230	411	843	1,260	2,430	3,880	6,860	14,000
1,500	106	221	396	812	1,220	2,340	3,740	6,600	13,500
1,600	102	214	382	784	1,180	2,260	3,610	6,380	13,000
1,700	99	207	370	759	1,140	2,190	3,490	6,170	12,600
1,800	96	200	358	736	1,100	2,120	3,390	5,980	12,200
1,900	93	195	348	715	1,070	2,060	3,290	5,810	11,900
2,000	91	189	339	695	1,040	2,010	3,200	5,650	11,500

For SI: 1 inch = 25.4 mm, 1 foot = 304.8 mm, 1 pound per square inch = 6.895 kPa, 1-inch water column = 0.2488 kPa, 1 British thermal unit per hour = 0.2931 W, 1 cubic foot per hour = 0.0283 m^3/h, 1 degree = 0.01745 rad.

Note: All table entries have been rounded to three significant digits.

❖ See the commentary to Section 402.4.

INTERNATIONAL CODE COUNCIL®
Copyright © 2015 ICC. ALL RIGHTS RESERVED. Accessed by David Dammon on Jun 21, 2017 12:30:52 PM pursuant to License Agreement with ICC. No further reproduction or distribution authorized. ANY UNAUTHORIZED REPRODUCTION OR DISTRIBUTION IS A VIOLATION OF THE FEDERAL COPYRIGHT ACT AND THE LICENSE AGREEMENT, AND SUBJECT TO CIVIL AND CRIMINAL PENALTIES THEREUNDER.

TABLE 402.4(6)
SCHEDULE 40 METALLIC PIPE

Gas	Natural
Inlet Pressure	3.0 psi
Pressure Drop	2.0 psi
Specific Gravity	0.60

PIPE SIZE (inch)									
Nominal	**1/2**	**3/4**	**1**	**1 1/4**	**1 1/2**	**2**	**2 1/2**	**3**	**4**
Actual ID	**0.622**	**0.824**	**1.049**	**1.380**	**1.610**	**2.067**	**2.469**	**3.068**	**4.026**
Length (ft)	**Capacity in Cubic Feet of Gas Per Hour**								
10	2,350	4,920	9,270	19,000	28,500	54,900	87,500	155,000	316,000
20	1,620	3,380	6,370	13,100	19,600	37,700	60,100	106,000	217,000
30	1,300	2,720	5,110	10,500	15,700	30,300	48,300	85,400	174,000
40	1,110	2,320	4,380	8,990	13,500	25,900	41,300	73,100	149,000
50	985	2,060	3,880	7,970	11,900	23,000	36,600	64,800	132,000
60	892	1,870	3,520	7,220	10,800	20,800	33,200	58,700	120,000
70	821	1,720	3,230	6,640	9,950	19,200	30,500	54,000	110,000
80	764	1,600	3,010	6,180	9,260	17,800	28,400	50,200	102,000
90	717	1,500	2,820	5,800	8,680	16,700	26,700	47,100	96,100
100	677	1,420	2,670	5,470	8,200	15,800	25,200	44,500	90,800
125	600	1,250	2,360	4,850	7,270	14,000	22,300	39,500	80,500
150	544	1,140	2,140	4,400	6,590	12,700	20,200	35,700	72,900
175	500	1,050	1,970	4,040	6,060	11,700	18,600	32,900	67,100
200	465	973	1,830	3,760	5,640	10,900	17,300	30,600	62,400
250	412	862	1,620	3,330	5,000	9,620	15,300	27,100	55,300
300	374	781	1,470	3,020	4,530	8,720	13,900	24,600	50,100
350	344	719	1,350	2,780	4,170	8,020	12,800	22,600	46,100
400	320	669	1,260	2,590	3,870	7,460	11,900	21,000	42,900
450	300	627	1,180	2,430	3,640	7,000	11,200	19,700	40,200
500	283	593	1,120	2,290	3,430	6,610	10,500	18,600	38,000
550	269	563	1,060	2,180	3,260	6,280	10,000	17,700	36,100
600	257	537	1,010	2,080	3,110	5,990	9,550	16,900	34,400
650	246	514	969	1,990	2,980	5,740	9,150	16,200	33,000
700	236	494	931	1,910	2,860	5,510	8,790	15,500	31,700
750	228	476	897	1,840	2,760	5,310	8,470	15,000	30,500
800	220	460	866	1,780	2,660	5,130	8,180	14,500	29,500
850	213	445	838	1,720	2,580	4,960	7,910	14,000	28,500
900	206	431	812	1,670	2,500	4,810	7,670	13,600	27,700
950	200	419	789	1,620	2,430	4,670	7,450	13,200	26,900
1,000	195	407	767	1,580	2,360	4,550	7,240	12,800	26,100
1,100	185	387	729	1,500	2,240	4,320	6,890	12,200	24,800
1,200	177	369	695	1,430	2,140	4,120	6,570	11,600	23,700
1,300	169	353	666	1,370	2,050	3,940	6,290	11,100	22,700
1,400	162	340	640	1,310	1,970	3,790	6,040	10,700	21,800
1,500	156	327	616	1,270	1,900	3,650	5,820	10,300	21,000
1,600	151	316	595	1,220	1,830	3,530	5,620	10,000	20,300
1,700	146	306	576	1,180	1,770	3,410	5,440	9,610	19,600
1,800	142	296	558	1,150	1,720	3,310	5,270	9,320	19,000
1,900	138	288	542	1,110	1,670	3,210	5,120	9,050	18,400
2,000	134	280	527	1,080	1,620	3,120	4,980	8,800	18,000

For SI: 1 inch = 25.4 mm, 1 foot = 304.8 mm, 1 pound per square inch = 6.895 kPa, 1-inch water column = 0.2488 kPa,
1 British thermal unit per hour = 0.2931 W, 1 cubic foot per hour = 0.0283 m^3/h, 1 degree = 0.01745 rad.

Note: All table entries have been rounded to three significant digits.

❖ See the commentary to Section 402.4.

INTERNATIONAL CODE COUNCIL®
Copyright © 2015 ICC. ALL RIGHTS RESERVED. Accessed by David Dammon on Jun 21, 2017 12:30:52 PM pursuant to License Agreement with ICC. No further reproduction or distribution authorized. ANY UNAUTHORIZED REPRODUCTION OR DISTRIBUTION IS A VIOLATION OF THE FEDERAL COPYRIGHT ACT AND THE LICENSE AGREEMENT, AND SUBJECT TO CIVIL AND CRIMINAL PENALTIES THEREUNDER.

TABLE 402.4(7)
SCHEDULE 40 METALLIC PIPE

Gas	Natural
Inlet Pressure	5.0 psi
Pressure Drop	3.5 psi
Specific Gravity	0.60

PIPE SIZE (inch)									
Nominal	**1/2**	**3/4**	**1**	**1 1/4**	**1 1/2**	**2**	**2 1/2**	**3**	**4**
Actual ID	**0.622**	**0.824**	**1.049**	**1.380**	**1.610**	**2.067**	**2.469**	**3.068**	**4.026**
Length (ft)	**Capacity in Cubic Feet of Gas Per Hour**								
10	3,190	6,430	11,800	24,200	36,200	69,700	111,000	196,000	401,000
20	2,250	4,550	8,320	17,100	25,600	49,300	78,600	139,000	283,000
30	1,840	3,720	6,790	14,000	20,900	40,300	64,200	113,000	231,000
40	1,590	3,220	5,880	12,100	18,100	34,900	55,600	98,200	200,000
50	1,430	2,880	5,260	10,800	16,200	31,200	49,700	87,900	179,000
60	1,300	2,630	4,800	9,860	14,800	28,500	45,400	80,200	164,000
70	1,200	2,430	4,450	9,130	13,700	26,400	42,000	74,300	151,000
80	1,150	2,330	4,260	8,540	12,800	24,700	39,300	69,500	142,000
90	1,060	2,150	3,920	8,050	12,100	23,200	37,000	65,500	134,000
100	979	1,980	3,620	7,430	11,100	21,400	34,200	60,400	123,000
125	876	1,770	3,240	6,640	9,950	19,200	30,600	54,000	110,000
150	786	1,590	2,910	5,960	8,940	17,200	27,400	48,500	98,900
175	728	1,470	2,690	5,520	8,270	15,900	25,400	44,900	91,600
200	673	1,360	2,490	5,100	7,650	14,700	23,500	41,500	84,700
250	558	1,170	2,200	4,510	6,760	13,000	20,800	36,700	74,900
300	506	1,060	1,990	4,090	6,130	11,800	18,800	33,300	67,800
350	465	973	1,830	3,760	5,640	10,900	17,300	30,600	62,400
400	433	905	1,710	3,500	5,250	10,100	16,100	28,500	58,100
450	406	849	1,600	3,290	4,920	9,480	15,100	26,700	54,500
500	384	802	1,510	3,100	4,650	8,950	14,300	25,200	51,500
550	364	762	1,440	2,950	4,420	8,500	13,600	24,000	48,900
600	348	727	1,370	2,810	4,210	8,110	12,900	22,900	46,600
650	333	696	1,310	2,690	4,030	7,770	12,400	21,900	44,600
700	320	669	1,260	2,590	3,880	7,460	11,900	21,000	42,900
750	308	644	1,210	2,490	3,730	7,190	11,500	20,300	41,300
800	298	622	1,170	2,410	3,610	6,940	11,100	19,600	39,900
850	288	602	1,130	2,330	3,490	6,720	10,700	18,900	38,600
900	279	584	1,100	2,260	3,380	6,520	10,400	18,400	37,400
950	271	567	1,070	2,190	3,290	6,330	10,100	17,800	36,400
1,000	264	551	1,040	2,130	3,200	6,150	9,810	17,300	35,400
1,100	250	524	987	2,030	3,030	5,840	9,320	16,500	33,600
1,200	239	500	941	1,930	2,900	5,580	8,890	15,700	32,000
1,300	229	478	901	1,850	2,770	5,340	8,510	15,000	30,700
1,400	220	460	866	1,780	2,660	5,130	8,180	14,500	29,500
1,500	212	443	834	1,710	2,570	4,940	7,880	13,900	28,400
1,600	205	428	806	1,650	2,480	4,770	7,610	13,400	27,400
1,700	198	414	780	1,600	2,400	4,620	7,360	13,000	26,500
1,800	192	401	756	1,550	2,330	4,480	7,140	12,600	25,700
1,900	186	390	734	1,510	2,260	4,350	6,930	12,300	25,000
2,000	181	379	714	1,470	2,200	4,230	6,740	11,900	24,300

For SI: 1 inch = 25.4 mm, 1 foot = 304.8 mm, 1 pound per square inch = 6.895 kPa, 1-inch water column = 0.2488 kPa,
1 British thermal unit per hour = 0.2931 W, 1 cubic foot per hour = 0.0283 m^3/h, 1 degree = 0.01745 rad.

Note: All table entries have been rounded to three significant digits.

❖ See the commentary to Section 402.4.

INTERNATIONAL CODE COUNCIL®
Copyright © 2015 ICC. ALL RIGHTS RESERVED. Accessed by David Dammon on Jun 21, 2017 12:30:52 PM pursuant to License Agreement with ICC. No further reproduction or distribution authorized. ANY UNAUTHORIZED REPRODUCTION OR DISTRIBUTION IS A VIOLATION OF THE FEDERAL COPYRIGHT ACT AND THE LICENSE AGREEMENT, AND SUBJECT TO CIVIL AND CRIMINAL PENALTIES THEREUNDER.

TABLE 402.4(8)
SEMIRIGID COPPER TUBING

Gas	Natural
Inlet Pressure	Less than 2 psi
Pressure Drop	0.3 in. w.c.
Specific Gravity	0.60

TUBE SIZE (inch)										
Nominal	**K & L**	**1/4**	**3/8**	**1/2**	**5/8**	**3/4**	**1**	**1 1/4**	**1 1/2**	**2**
	ACR	**3/8**	**1/2**	**5/8**	**3/4**	**7/8**	**1 1/8**	**1 3/8**	**—**	**—**
Outside		**0.375**	**0.500**	**0.625**	**0.750**	**0.875**	**1.125**	**1.375**	**1.625**	**2.125**
Inside		**0.305**	**0.402**	**0.527**	**0.652**	**0.745**	**0.995**	**1.245**	**1.481**	**1.959**
Length (ft)		**Capacity in Cubic Feet of Gas Per Hour**								
10		20	42	85	148	210	448	806	1,270	2,650
20		14	29	58	102	144	308	554	873	1,820
30		11	23	47	82	116	247	445	701	1,460
40		10	20	40	70	99	211	381	600	1,250
50		NA	17	35	62	88	187	337	532	1,110
60		NA	16	32	56	79	170	306	482	1,000
70		NA	14	29	52	73	156	281	443	924
80		NA	13	27	48	68	145	262	413	859
90		NA	13	26	45	64	136	245	387	806
100		NA	12	24	43	60	129	232	366	761
125		NA	11	22	38	53	114	206	324	675
150		NA	10	20	34	48	103	186	294	612
175		NA	NA	18	31	45	95	171	270	563
200		NA	NA	17	29	41	89	159	251	523
250		NA	NA	15	26	37	78	141	223	464
300		NA	NA	13	23	33	71	128	202	420
350		NA	NA	12	22	31	65	118	186	387
400		NA	NA	11	20	28	61	110	173	360
450		NA	NA	11	19	27	57	103	162	338
500		NA	NA	10	18	25	54	97	153	319
550		NA	NA	NA	17	24	51	92	145	303
600		NA	NA	NA	16	23	49	88	139	289
650		NA	NA	NA	15	22	47	84	133	277
700		NA	NA	NA	15	21	45	81	128	266
750		NA	NA	NA	14	20	43	78	123	256
800		NA	NA	NA	14	20	42	75	119	247
850		NA	NA	NA	13	19	40	73	115	239
900		NA	NA	NA	13	18	39	71	111	232
950		NA	NA	NA	13	18	38	69	108	225
1,000		NA	NA	NA	12	17	37	67	105	219
1,100		NA	NA	NA	12	16	35	63	100	208
1,200		NA	NA	NA	11	16	34	60	95	199
1,300		NA	NA	NA	11	15	32	58	91	190
1,400		NA	NA	NA	10	14	31	56	88	183
1,500		NA	NA	NA	NA	14	30	54	84	176
1,600		NA	NA	NA	NA	13	29	52	82	170
1,700		NA	NA	NA	NA	13	28	50	79	164
1,800		NA	NA	NA	NA	13	27	49	77	159
1,900		NA	NA	NA	NA	12	26	47	74	155
2,000		NA	NA	NA	NA	12	25	46	72	151

For SI: 1 inch = 25.4 mm, 1 foot = 304.8 mm, 1 pound per square inch = 6.895 kPa, 1-inch water column = 0.2488 kPa, 1 British thermal unit per hour = 0.2931 W, 1 cubic foot per hour = 0.0283 m^3/h, 1 degree = 0.01745 rad.

Notes:

1. Table capacities are based on Type K copper tubing inside diameter (shown), which has the smallest inside diameter of the copper tubing products.
2. NA means a flow of less than 10 cfh.
3. All table entries have been rounded to three significant digits.

❖ See the commentary to Section 402.4.

INTERNATIONAL CODE COUNCIL®
Copyright © 2015 ICC. ALL RIGHTS RESERVED. Accessed by David Dammon on Jun 21, 2017 12:30:52 PM pursuant to License Agreement with ICC. No further reproduction or distribution authorized. ANY UNAUTHORIZED REPRODUCTION OR DISTRIBUTION IS A VIOLATION OF THE FEDERAL COPYRIGHT ACT AND THE LICENSE AGREEMENT, AND SUBJECT TO CIVIL AND CRIMINAL PENALTIES THEREUNDER.

TABLE 402.4(9)
SEMIRIGID COPPER TUBING

Gas	Natural
Inlet Pressure	Less than 2 psi
Pressure Drop	0.5 in. w.c.
Specific Gravity	0.60

TUBE SIZE (inch)										
Nominal	**K & L**	**1/4**	**3/8**	**1/2**	**5/8**	**3/4**	**1**	**1 1/4**	**1 1/2**	**2**
	ACR	**3/8**	**1/2**	**5/8**	**3/4**	**7/8**	**1 1/8**	**1 3/8**	—	—
Outside		**0.375**	**0.500**	**0.625**	**0.750**	**0.875**	**1.125**	**1.375**	**1.625**	**2.125**
Inside		**0.305**	**0.402**	**0.527**	**0.652**	**0.745**	**0.995**	**1.245**	**1.481**	**1.959**
Length (ft)		**Capacity in Cubic Feet of Gas Per Hour**								
10		27	55	111	195	276	590	1,060	1,680	3,490
20		18	38	77	134	190	406	730	1,150	2,400
30		15	30	61	107	152	326	586	925	1,930
40		13	26	53	92	131	279	502	791	1,650
50		11	23	47	82	116	247	445	701	1,460
60		10	21	42	74	105	224	403	635	1,320
70		NA	19	39	68	96	206	371	585	1,220
80		NA	18	36	63	90	192	345	544	1,130
90		NA	17	34	59	84	180	324	510	1,060
100		NA	16	32	56	79	170	306	482	1,000
125		NA	14	28	50	70	151	271	427	890
150		NA	13	26	45	64	136	245	387	806
175		NA	12	24	41	59	125	226	356	742
200		NA	11	22	39	55	117	210	331	690
250		NA	NA	20	34	48	103	186	294	612
300		NA	NA	18	31	44	94	169	266	554
350		NA	NA	16	28	40	86	155	245	510
400		NA	NA	15	26	38	80	144	228	474
450		NA	NA	14	25	35	75	135	214	445
500		NA	NA	13	23	33	71	128	202	420
550		NA	NA	13	22	32	68	122	192	399
600		NA	NA	12	21	30	64	116	183	381
650		NA	NA	12	20	29	62	111	175	365
700		NA	NA	11	20	28	59	107	168	350
750		NA	NA	11	19	27	57	103	162	338
800		NA	NA	10	18	26	55	99	156	326
850		NA	NA	10	18	25	53	96	151	315
900		NA	NA	NA	17	24	52	93	147	306
950		NA	NA	NA	17	24	50	90	143	297
1,000		NA	NA	NA	16	23	49	88	139	289
1,100		NA	NA	NA	15	22	46	84	132	274
1,200		NA	NA	NA	15	21	44	80	126	262
1,300		NA	NA	NA	14	20	42	76	120	251
1,400		NA	NA	NA	13	19	41	73	116	241
1,500		NA	NA	NA	13	18	39	71	111	232
1,600		NA	NA	NA	13	18	38	68	108	224
1,700		NA	NA	NA	12	17	37	66	104	217
1,800		NA	NA	NA	12	17	36	64	101	210
1,900		NA	NA	NA	11	16	35	62	98	204
2,000		NA	NA	NA	11	16	34	60	95	199

For SI: 1 inch = 25.4 mm, 1 foot = 304.8 mm, 1 pound per square inch = 6.895 kPa, 1-inch water column = 0.2488 kPa, 1 British thermal unit per hour = 0.2931 W, 1 cubic foot per hour = 0.0283 m^3/h, 1 degree = 0.01745 rad.

Notes:

1. Table capacities are based on Type K copper tubing inside diameter (shown), which has the smallest inside diameter of the copper tubing products.
2. NA means a flow of less than 10 cfh.
3. All table entries have been rounded to three significant digits.

❖ See the commentary to Section 402.4.

INTERNATIONAL CODE COUNCIL®
Copyright © 2015 ICC. ALL RIGHTS RESERVED. Accessed by David Dammon on Jun 21, 2017 12:30:52 PM pursuant to License Agreement with ICC. No further reproduction or distribution authorized. ANY UNAUTHORIZED REPRODUCTION OR DISTRIBUTION IS A VIOLATION OF THE FEDERAL COPYRIGHT ACT AND THE LICENSE AGREEMENT, AND SUBJECT TO CIVIL AND CRIMINAL PENALTIES THEREUNDER.

TABLE 402.4(10)
SEMIRIGID COPPER TUBING

Gas	Natural
Inlet Pressure	Less than 2 psi
Pressure Drop	1.0 in. w.c.
Specific Gravity	0.60

INTENDED USE: SIZING BETWEEN HOUSE LINE REGULATOR AND THE APPLIANCE										
TUBE SIZE (inch)										
Nominal	**K & L**	**1/4**	**3/8**	**1/2**	**5/8**	**3/4**	**1**	**1 1/4**	**1 1/2**	**2**
	ACR	**3/8**	**1/2**	**5/8**	**3/4**	**7/8**	**1 1/8**	**1 3/8**	—	—
Outside		**0.375**	**0.500**	**0.625**	**0.750**	**0.875**	**1.125**	**1.375**	**1.625**	**2.125**
Inside		**0.305**	**0.402**	**0.527**	**0.652**	**0.745**	**0.995**	**1.245**	**1.481**	**1.959**
Length (ft)		**Capacity in Cubic Feet of Gas Per Hour**								
10		39	80	162	283	402	859	1,550	2,440	5,080
20		27	55	111	195	276	590	1,060	1,680	3,490
30		21	44	89	156	222	474	853	1,350	2,800
40		18	38	77	134	190	406	730	1,150	2,400
50		16	33	68	119	168	359	647	1,020	2,130
60		15	30	61	107	152	326	586	925	1,930
70		13	28	57	99	140	300	539	851	1,770
80		13	26	53	92	131	279	502	791	1,650
90		12	24	49	86	122	262	471	742	1,550
100		11	23	47	82	116	247	445	701	1,460
125		NA	20	41	72	103	219	394	622	1,290
150		NA	18	37	65	93	198	357	563	1,170
175		NA	17	34	60	85	183	329	518	1,080
200		NA	16	32	56	79	170	306	482	1,000
250		NA	14	28	50	70	151	271	427	890
300		NA	13	26	45	64	136	245	387	806
350		NA	12	24	41	59	125	226	356	742
400		NA	11	22	39	55	117	210	331	690
450		NA	10	21	36	51	110	197	311	647
500		NA	NA	20	34	48	103	186	294	612
550		NA	NA	19	32	46	98	177	279	581
600		NA	NA	18	31	44	94	169	266	554
650		NA	NA	17	30	42	90	162	255	531
700		NA	NA	16	28	40	86	155	245	510
750		NA	NA	16	27	39	83	150	236	491
800		NA	NA	15	26	38	80	144	228	474
850		NA	NA	15	26	36	78	140	220	459
900		NA	NA	14	25	35	75	135	214	445
950		NA	NA	14	24	34	73	132	207	432
1,000		NA	NA	13	23	33	71	128	202	420
1,100		NA	NA	13	22	32	68	122	192	399
1,200		NA	NA	12	21	30	64	116	183	381
1,300		NA	NA	12	20	29	62	111	175	365
1,400		NA	NA	11	20	28	59	107	168	350
1,500		NA	NA	11	19	27	57	103	162	338
1,600		NA	NA	10	18	26	55	99	156	326
1,700		NA	NA	10	18	25	53	96	151	315
1,800		NA	NA	NA	17	24	52	93	147	306
1,900		NA	NA	NA	17	24	50	90	143	297
2,000		NA	NA	NA	16	23	49	88	139	289

For SI: 1 inch = 25.4 mm, 1 foot = 304.8 mm, 1 pound per square inch = 6.895 kPa, 1-inch water column = 0.2488 kPa, 1 British thermal unit per hour = 0.2931 W, 1 cubic foot per hour = 0.0283 m^3/h, 1 degree = 0.01745 rad.

Notes:

1. Table capacities are based on Type K copper tubing inside diameter (shown), which has the smallest inside diameter of the copper tubing products.
2. NA means a flow of less than 10 cfh.
3. All table entries have been rounded to three significant digits.

❖ See the commentary to Section 402.4.

INTERNATIONAL CODE COUNCIL®
Copyright © 2015 ICC. ALL RIGHTS RESERVED. Accessed by David Dammon on Jun 21, 2017 12:30:52 PM pursuant to License Agreement with ICC. No further reproduction or distribution authorized. ANY UNAUTHORIZED REPRODUCTION OR DISTRIBUTION IS A VIOLATION OF THE FEDERAL COPYRIGHT ACT AND THE LICENSE AGREEMENT, AND SUBJECT TO CIVIL AND CRIMINAL PENALTIES THEREUNDER.

TABLE 402.4(11)
SEMIRIGID COPPER TUBING

Gas	Natural
Inlet Pressure	Less than 2 psi
Pressure Drop	17.0 in. w.c.
Specific Gravity	0.60

TUBE SIZE (inch)										
Nominal	**K & L**	**1/4**	**3/8**	**1/2**	**5/8**	**3/4**	**1**	**1 1/4**	**1 1/2**	**2**
	ACR	**3/8**	**1/2**	**5/8**	**3/4**	**7/8**	**1 1/8**	**1 3/8**	—	—
Outside		**0.375**	**0.500**	**0.625**	**0.750**	**0.875**	**1.125**	**1.375**	**1.625**	**2.125**
Inside		**0.305**	**0.402**	**0.527**	**0.652**	**0.745**	**0.995**	**1.245**	**1.481**	**1.959**
Length (ft)		**Capacity in Cubic Feet of Gas Per Hour**								
10		190	391	796	1,390	1,970	4,220	7,590	12,000	24,900
20		130	269	547	956	1,360	2,900	5,220	8,230	17,100
30		105	216	439	768	1,090	2,330	4,190	6,610	13,800
40		90	185	376	657	932	1,990	3,590	5,650	11,800
50		79	164	333	582	826	1,770	3,180	5,010	10,400
60		72	148	302	528	749	1,600	2,880	4,540	9,460
70		66	137	278	486	689	1,470	2,650	4,180	8,700
80		62	127	258	452	641	1,370	2,460	3,890	8,090
90		58	119	243	424	601	1,280	2,310	3,650	7,590
100		55	113	229	400	568	1,210	2,180	3,440	7,170
125		48	100	203	355	503	1,080	1,940	3,050	6,360
150		44	90	184	321	456	974	1,750	2,770	5,760
175		40	83	169	296	420	896	1,610	2,540	5,300
200		38	77	157	275	390	834	1,500	2,370	4,930
250		33	69	140	244	346	739	1,330	2,100	4,370
300		30	62	126	221	313	670	1,210	1,900	3,960
350		28	57	116	203	288	616	1,110	1,750	3,640
400		26	53	108	189	268	573	1,030	1,630	3,390
450		24	50	102	177	252	538	968	1,530	3,180
500		23	47	96	168	238	508	914	1,440	3,000
550		22	45	91	159	226	482	868	1,370	2,850
600		21	43	87	152	215	460	829	1,310	2,720
650		20	41	83	145	206	441	793	1,250	2,610
700		19	39	80	140	198	423	762	1,200	2,500
750		18	38	77	135	191	408	734	1,160	2,410
800		18	37	74	130	184	394	709	1,120	2,330
850		17	35	72	126	178	381	686	1,080	2,250
900		17	34	70	122	173	370	665	1,050	2,180
950		16	33	68	118	168	359	646	1,020	2,120
1,000		16	32	66	115	163	349	628	991	2,060
1,100		15	31	63	109	155	332	597	941	1,960
1,200		14	29	60	104	148	316	569	898	1,870
1,300		14	28	57	100	142	303	545	860	1,790
1,400		13	27	55	96	136	291	524	826	1,720
1,500		13	26	53	93	131	280	505	796	1,660
1,600		12	25	51	89	127	271	487	768	1,600
1,700		12	24	49	86	123	262	472	744	1,550
1,800		11	24	48	84	119	254	457	721	1,500
1,900		11	23	47	81	115	247	444	700	1,460
2,000		11	22	45	79	112	240	432	681	1,420

For SI: 1 inch = 25.4 mm, 1 foot = 304.8 mm, 1 pound per square inch = 6.895 kPa, 1-inch water column = 0.2488 kPa, 1 British thermal unit per hour = 0.2931 W, 1 cubic foot per hour = 0.0283 m^3/h, 1 degree = 0.01745 rad.

Notes:

1. Table capacities are based on Type K copper tubing inside diameter (shown), which has the smallest inside diameter of the copper tubing products.
2. All table entries have been rounded to three significant digits.

❖ See the commentary to Section 402.4.

INTERNATIONAL CODE COUNCIL®
Copyright © 2015 ICC. ALL RIGHTS RESERVED. Accessed by David Dammon on Jun 21, 2017 12:30:52 PM pursuant to License Agreement with ICC. No further reproduction or distribution authorized. ANY UNAUTHORIZED REPRODUCTION OR DISTRIBUTION IS A VIOLATION OF THE FEDERAL COPYRIGHT ACT AND THE LICENSE AGREEMENT, AND SUBJECT TO CIVIL AND CRIMINAL PENALTIES THEREUNDER.

TABLE 402.4(12)
SEMIRIGID COPPER TUBING

Gas	Natural
Inlet Pressure	2.0 psi
Pressure Drop	1.0 psi
Specific Gravity	0.60

TUBE SIZE (inch)										
Nominal	**K & L**	**1/4**	**3/8**	**1/2**	**5/8**	**3/4**	**1**	**1 1/4**	**1 1/2**	**2**
	ACR	**3/8**	**1/2**	**5/8**	**3/4**	**7/8**	**1 1/8**	**1 3/8**	**—**	**—**
Outside		**0.375**	**0.500**	**0.625**	**0.750**	**0.875**	**1.125**	**1.375**	**1.625**	**2.125**
Inside		**0.305**	**0.402**	**0.527**	**0.652**	**0.745**	**0.995**	**1.245**	**1.481**	**1.959**
Length (ft)		**Capacity in Cubic Feet of Gas Per Hour**								
10		245	506	1,030	1,800	2,550	5,450	9,820	15,500	32,200
20		169	348	708	1,240	1,760	3,750	6,750	10,600	22,200
30		135	279	568	993	1,410	3,010	5,420	8,550	17,800
40		116	239	486	850	1,210	2,580	4,640	7,310	15,200
50		103	212	431	754	1,070	2,280	4,110	6,480	13,500
60		93	192	391	683	969	2,070	3,730	5,870	12,200
70		86	177	359	628	891	1,900	3,430	5,400	11,300
80		80	164	334	584	829	1,770	3,190	5,030	10,500
90		75	154	314	548	778	1,660	2,990	4,720	9,820
100		71	146	296	518	735	1,570	2,830	4,450	9,280
125		63	129	263	459	651	1,390	2,500	3,950	8,220
150		57	117	238	416	590	1,260	2,270	3,580	7,450
175		52	108	219	383	543	1,160	2,090	3,290	6,850
200		49	100	204	356	505	1,080	1,940	3,060	6,380
250		43	89	181	315	448	956	1,720	2,710	5,650
300		39	80	164	286	406	866	1,560	2,460	5,120
350		36	74	150	263	373	797	1,430	2,260	4,710
400		33	69	140	245	347	741	1,330	2,100	4,380
450		31	65	131	230	326	696	1,250	1,970	4,110
500		30	61	124	217	308	657	1,180	1,870	3,880
550		28	58	118	206	292	624	1,120	1,770	3,690
600		27	55	112	196	279	595	1,070	1,690	3,520
650		26	53	108	188	267	570	1,030	1,620	3,370
700		25	51	103	181	256	548	986	1,550	3,240
750		24	49	100	174	247	528	950	1,500	3,120
800		23	47	96	168	239	510	917	1,450	3,010
850		22	46	93	163	231	493	888	1,400	2,920
900		22	44	90	158	224	478	861	1,360	2,830
950		21	43	88	153	217	464	836	1,320	2,740
1,000		20	42	85	149	211	452	813	1,280	2,670
1,100		19	40	81	142	201	429	772	1,220	2,540
1,200		18	38	77	135	192	409	737	1,160	2,420
1,300		18	36	74	129	183	392	705	1,110	2,320
1,400		17	35	71	124	176	376	678	1,070	2,230
1,500		16	34	68	120	170	363	653	1,030	2,140
1,600		16	33	66	116	164	350	630	994	2,070
1,700		15	31	64	112	159	339	610	962	2,000
1,800		15	30	62	108	154	329	592	933	1,940
1,900		14	30	60	105	149	319	575	906	1,890
2,000		14	29	59	102	145	310	559	881	1,830

For SI: 1 inch = 25.4 mm, 1 foot = 304.8 mm, 1 pound per square inch = 6.895 kPa, 1-inch water column = 0.2488 kPa,
1 British thermal unit per hour = 0.2931 W, 1 cubic foot per hour = 0.0283 m^3/h, 1 degree = 0.01745 rad.

Notes:

1. Table capacities are based on Type K copper tubing inside diameter (shown), which has the smallest inside diameter of the copper tubing products.
2. All table entries have been rounded to three significant digits.

❖ See the commentary to Section 402.4.

INTERNATIONAL CODE COUNCIL®
Copyright © 2015 ICC. ALL RIGHTS RESERVED. Accessed by David Dammon on Jun 21, 2017 12:30:52 PM pursuant to License Agreement with ICC. No further reproduction or distribution authorized. ANY UNAUTHORIZED REPRODUCTION OR DISTRIBUTION IS A VIOLATION OF THE FEDERAL COPYRIGHT ACT AND THE LICENSE AGREEMENT, AND SUBJECT TO CIVIL AND CRIMINAL PENALTIES THEREUNDER.

TABLE 402.4(13)
SEMIRIGID COPPER TUBING

Gas	Natural
Inlet Pressure	2.0 psi
Pressure Drop	1.5 psi
Specific Gravity	0.60

INTENDED USE		**Pipe sizing between point of delivery and the house line regulator. Total load supplied by a single house line regulator not exceeding 150 cubic feet per hour.**								
TUBE SIZE (inch)										
Nominal	**K & L**	$^1/_4$	$^3/_8$	$^1/_2$	$^5/_8$	$^3/_4$	1	$1^1/_4$	$1^1/_2$	2
	ACR	$^3/_8$	$^1/_2$	$^5/_8$	$^3/_4$	$^7/_8$	$1^1/_8$	$1^3/_8$	—	—
Outside		**0.375**	**0.500**	**0.625**	**0.750**	**0.875**	**1.125**	**1.375**	**1.625**	**2.125**
Inside		**0.305**	**0.402**	**0.527**	**0.652**	**0.745**	**0.995**	**1.245**	**1.481**	**1.959**
Length (ft)		**Capacity in Cubic Feet of Gas Per Hour**								
10		303	625	1,270	2,220	3,150	6,740	12,100	19,100	39,800
20		208	430	874	1,530	2,170	4,630	8,330	13,100	27,400
30		167	345	702	1,230	1,740	3,720	6,690	10,600	22,000
40		143	295	601	1,050	1,490	3,180	5,730	9,030	18,800
50		127	262	532	931	1,320	2,820	5,080	8,000	16,700
60		115	237	482	843	1,200	2,560	4,600	7,250	15,100
70		106	218	444	776	1,100	2,350	4,230	6,670	13,900
80		98	203	413	722	1,020	2,190	3,940	6,210	12,900
90		92	190	387	677	961	2,050	3,690	5,820	12,100
100		87	180	366	640	907	1,940	3,490	5,500	11,500
125		77	159	324	567	804	1,720	3,090	4,880	10,200
150		70	144	294	514	729	1,560	2,800	4,420	9,200
175		64	133	270	472	670	1,430	2,580	4,060	8,460
200		60	124	252	440	624	1,330	2,400	3,780	7,870
250		53	110	223	390	553	1,180	2,130	3,350	6,980
300		48	99	202	353	501	1,070	1,930	3,040	6,320
350		44	91	186	325	461	984	1,770	2,790	5,820
400		41	85	173	302	429	916	1,650	2,600	5,410
450		39	80	162	283	402	859	1,550	2,440	5,080
500		36	75	153	268	380	811	1,460	2,300	4,800
550		35	72	146	254	361	771	1,390	2,190	4,560
600		33	68	139	243	344	735	1,320	2,090	4,350
650		32	65	133	232	330	704	1,270	2,000	4,160
700		30	63	128	223	317	676	1,220	1,920	4,000
750		29	60	123	215	305	652	1,170	1,850	3,850
800		28	58	119	208	295	629	1,130	1,790	3,720
850		27	57	115	201	285	609	1,100	1,730	3,600
900		27	55	111	195	276	590	1,060	1,680	3,490
950		26	53	108	189	268	573	1,030	1,630	3,390
1,000		25	52	105	184	261	558	1,000	1,580	3,300
1,100		24	49	100	175	248	530	954	1,500	3,130
1,200		23	47	95	167	237	505	910	1,430	2,990
1,300		22	45	91	160	227	484	871	1,370	2,860
1,400		21	43	88	153	218	465	837	1,320	2,750
1,500		20	42	85	148	210	448	806	1,270	2,650
1,600		19	40	82	143	202	432	779	1,230	2,560
1,700		19	39	79	138	196	419	753	1,190	2,470
1,800		18	38	77	134	190	406	731	1,150	2,400
1,900		18	37	74	130	184	394	709	1,120	2,330
2,000		17	36	72	126	179	383	690	1,090	2,270

For SI: 1 inch = 25.4 mm, 1 foot = 304.8 mm, 1 pound per square inch = 6.895 kPa, 1-inch water column = 0.2488 kPa, 1 British thermal unit per hour = 0.2931 W, 1 cubic foot per hour = 0.0283 m^3/h, 1 degree = 0.01745 rad.

Notes:

1. Table capacities are based on Type K copper tubing inside diameter (shown), which has the smallest inside diameter of the copper tubing products.
2. Where this table is used to size the tubing upstream of a line pressure regulator, the pipe or tubing downstream of the line pressure regulator shall be sized using a pressure drop not greater than 1 inch w.c.
3. All table entries have been rounded to three significant digits.

❖ See the commentary to Section 402.4.

INTERNATIONAL CODE COUNCIL®
Copyright © 2015 ICC. ALL RIGHTS RESERVED. Accessed by David Dammon on Jun 21, 2017 12:30:52 PM pursuant to License Agreement with ICC. No further reproduction or distribution authorized. ANY UNAUTHORIZED REPRODUCTION OR DISTRIBUTION IS A VIOLATION OF THE FEDERAL COPYRIGHT ACT AND THE LICENSE AGREEMENT, AND SUBJECT TO CIVIL AND CRIMINAL PENALTIES THEREUNDER.

TABLE 402.4(14)
SEMIRIGID COPPER TUBING

Gas	Natural
Inlet Pressure	5.0 psi
Pressure Drop	3.5 psi
Specific Gravity	0.60

TUBE SIZE (inch)										
Nominal	**K & L**	$^1/_4$	$^3/_8$	$^1/_2$	$^5/_8$	$^3/_4$	1	$1^1/_4$	$1^1/_2$	2
	ACR	$^3/_8$	$^1/_2$	$^5/_8$	$^3/_4$	$^7/_8$	$1^1/_8$	$1^3/_8$	—	—
Outside		**0.375**	**0.500**	**0.625**	**0.750**	**0.875**	**1.125**	**1.375**	**1.625**	**2.125**
Inside		**0.305**	**0.402**	**0.527**	**0.652**	**0.745**	**0.995**	**1.245**	**1.481**	**1.959**
Length (ft)		**Capacity in Cubic Feet of Gas Per Hour**								
10		511	1,050	2,140	3,750	5,320	11,400	20,400	32,200	67,100
20		351	724	1,470	2,580	3,650	7,800	14,000	22,200	46,100
30		282	582	1,180	2,070	2,930	6,270	11,300	17,800	37,000
40		241	498	1,010	1,770	2,510	5,360	9,660	15,200	31,700
50		214	441	898	1,570	2,230	4,750	8,560	13,500	28,100
60		194	400	813	1,420	2,020	4,310	7,750	12,200	25,500
70		178	368	748	1,310	1,860	3,960	7,130	11,200	23,400
80		166	342	696	1,220	1,730	3,690	6,640	10,500	21,800
90		156	321	653	1,140	1,620	3,460	6,230	9,820	20,400
100		147	303	617	1,080	1,530	3,270	5,880	9,270	19,300
125		130	269	547	955	1,360	2,900	5,210	8,220	17,100
150		118	243	495	866	1,230	2,620	4,720	7,450	15,500
175		109	224	456	796	1,130	2,410	4,350	6,850	14,300
200		101	208	424	741	1,050	2,250	4,040	6,370	13,300
250		90	185	376	657	932	1,990	3,580	5,650	11,800
300		81	167	340	595	844	1,800	3,250	5,120	10,700
350		75	154	313	547	777	1,660	2,990	4,710	9,810
400		69	143	291	509	722	1,540	2,780	4,380	9,120
450		65	134	273	478	678	1,450	2,610	4,110	8,560
500		62	127	258	451	640	1,370	2,460	3,880	8,090
550		58	121	245	429	608	1,300	2,340	3,690	7,680
600		56	115	234	409	580	1,240	2,230	3,520	7,330
650		53	110	224	392	556	1,190	2,140	3,370	7,020
700		51	106	215	376	534	1,140	2,050	3,240	6,740
750		49	102	207	362	514	1,100	1,980	3,120	6,490
800		48	98	200	350	497	1,060	1,910	3,010	6,270
850		46	95	194	339	481	1,030	1,850	2,910	6,070
900		45	92	188	328	466	1,000	1,790	2,820	5,880
950		43	90	182	319	452	967	1,740	2,740	5,710
1,000		42	87	177	310	440	940	1,690	2,670	5,560
1,100		40	83	169	295	418	893	1,610	2,530	5,280
1,200		38	79	161	281	399	852	1,530	2,420	5,040
1,300		37	76	154	269	382	816	1,470	2,320	4,820
1,400		35	73	148	259	367	784	1,410	2,220	4,630
1,500		34	70	143	249	353	755	1,360	2,140	4,460
1,600		33	68	138	241	341	729	1,310	2,070	4,310
1,700		32	65	133	233	330	705	1,270	2,000	4,170
1,800		31	63	129	226	320	684	1,230	1,940	4,040
1,900		30	62	125	219	311	664	1,200	1,890	3,930
2,000		29	60	122	213	302	646	1,160	1,830	3,820

For SI: 1 inch = 25.4 mm, 1 foot = 304.8 mm, 1 pound per square inch = 6.895 kPa, 1-inch water column = 0.2488 kPa,
1 British thermal unit per hour = 0.2931 W, 1 cubic foot per hour = 0.0283 m^3/h, 1 degree = 0.01745 rad.

Notes:

1. Table capacities are based on Type K copper tubing inside diameter (shown), which has the smallest inside diameter of the copper tubing products.
2. All table entries have been rounded to three significant digits.

❖ See the commentary to Section 402.4.

INTERNATIONAL CODE COUNCIL®
Copyright © 2015 ICC. ALL RIGHTS RESERVED. Accessed by David Dammon on Jun 21, 2017 12:30:52 PM pursuant to License Agreement with ICC. No further reproduction or distribution authorized. ANY UNAUTHORIZED REPRODUCTION OR DISTRIBUTION IS A VIOLATION OF THE FEDERAL COPYRIGHT ACT AND THE LICENSE AGREEMENT, AND SUBJECT TO CIVIL AND CRIMINAL PENALTIES THEREUNDER.

TABLE 402.4(15)
CORRUGATED STAINLESS STEEL TUBING (CSST)

Gas	Natural
Inlet Pressure	Less than 2 psi
Pressure Drop	0.5 in. w.c.
Specific Gravity	0.60

TUBE SIZE (EHD)														
Flow Designation	**13**	**15**	**18**	**19**	**23**	**25**	**30**	**31**	**37**	**39**	**46**	**48**	**60**	**62**
Length (ft)	**Capacity in Cubic Feet of Gas Per Hour**													
5	46	63	115	134	225	270	471	546	895	1,037	1,790	2,070	3,660	4,140
10	32	44	82	95	161	192	330	383	639	746	1,260	1,470	2,600	2,930
15	25	35	66	77	132	157	267	310	524	615	1,030	1,200	2,140	2,400
20	22	31	58	67	116	137	231	269	456	536	888	1,050	1,850	2,080
25	19	27	52	60	104	122	206	240	409	482	793	936	1,660	1,860
30	18	25	47	55	96	112	188	218	374	442	723	856	1,520	1,700
40	15	21	41	47	83	97	162	188	325	386	625	742	1,320	1,470
50	13	19	37	42	75	87	144	168	292	347	559	665	1,180	1,320
60	12	17	34	38	68	80	131	153	267	318	509	608	1,080	1,200
70	11	16	31	36	63	74	121	141	248	295	471	563	1,000	1,110
80	10	15	29	33	60	69	113	132	232	277	440	527	940	1,040
90	10	14	28	32	57	65	107	125	219	262	415	498	887	983
100	9	13	26	30	54	62	101	118	208	249	393	472	843	933
150	7	10	20	23	42	48	78	91	171	205	320	387	691	762
200	6	9	18	21	38	44	71	82	148	179	277	336	600	661
250	5	8	16	19	34	39	63	74	133	161	247	301	538	591
300	5	7	15	17	32	36	57	67	95	148	226	275	492	540

For SI: 1 inch = 25.4 mm, 1 foot = 304.8 mm, 1 pound per square inch = 6.895 kPa, 1-inch water column = 0.2488 kPa, 1 British thermal unit per hour = 0.2931 W, 1 cubic foot per hour = 0.0283 m^3/h, 1 degree = 0.01745 rad.

Notes:

1. Table includes losses for four 90-degree bends and two end fittings. Tubing runs with larger numbers of bends or fittings shall be increased by an equivalent length of tubing to the following equation: $L = 1.3n$, where L is additional length (feet) of tubing and n is the number of additional fittings or bends.
2. EHD—Equivalent Hydraulic Diameter, which is a measure of the relative hydraulic efficiency between different tubing sizes. The greater the value of EHD, the greater the gas capacity of the tubing.
3. All table entries have been rounded to three significant digits.

❖ See the commentary to Section 402.4.

INTERNATIONAL CODE COUNCIL®
Copyright © 2015 ICC. ALL RIGHTS RESERVED. Accessed by David Dammon on Jun 21, 2017 12:30:52 PM pursuant to License Agreement with ICC. No further reproduction or distribution authorized. ANY UNAUTHORIZED REPRODUCTION OR DISTRIBUTION IS A VIOLATION OF THE FEDERAL COPYRIGHT ACT AND THE LICENSE AGREEMENT, AND SUBJECT TO CIVIL AND CRIMINAL PENALTIES THEREUNDER.

TABLE 402.4(16)
CORRUGATED STAINLESS STEEL TUBING (CSST)

Gas	Natural
Inlet Pressure	Less than 2 psi
Pressure Drop	3.0 in. w.c.
Specific Gravity	0.60

INTENDED USE: Initial supply pressure of 8.0 inches w.c. or greater													
TUBE SIZE (EHD)													
Flow Designation	**13**	**15**	**18**	**19**	**23**	**25**	**30**	**31**	**37**	**46**	**48**	**60**	**62**
Length (ft)	**Capacity in Cubic Feet of Gas Per Hour**												
5	120	160	277	327	529	649	1,180	1,370	2,140	4,430	5,010	8,800	10,100
10	83	112	197	231	380	462	828	958	1,530	3,200	3,560	6,270	7,160
15	67	90	161	189	313	379	673	778	1,250	2,540	2,910	5,140	5,850
20	57	78	140	164	273	329	580	672	1,090	2,200	2,530	4,460	5,070
25	51	69	125	147	245	295	518	599	978	1,960	2,270	4,000	4,540
30	46	63	115	134	225	270	471	546	895	1,790	2,070	3,660	4,140
40	39	54	100	116	196	234	407	471	778	1,550	1,800	3,180	3,590
50	35	48	89	104	176	210	363	421	698	1,380	1,610	2,850	3,210
60	32	44	82	95	161	192	330	383	639	1,260	1,470	2,600	2,930
70	29	41	76	88	150	178	306	355	593	1,170	1,360	2,420	2,720
80	27	38	71	82	141	167	285	331	555	1,090	1,280	2,260	2,540
90	26	36	67	77	133	157	268	311	524	1,030	1,200	2,140	2,400
100	24	34	63	73	126	149	254	295	498	974	1,140	2,030	2,280
150	19	27	52	60	104	122	206	240	409	793	936	1,660	1,860
200	17	23	45	52	91	106	178	207	355	686	812	1,440	1,610
250	15	21	40	46	82	95	159	184	319	613	728	1,290	1,440
300	13	19	37	42	75	87	144	168	234	559	665	1,180	1,320

For SI: 1 inch = 25.4 mm, 1 foot = 304.8 mm, 1 pound per square inch = 6.895 kPa, 1-inch water column = 0.2488 kPa, 1 British thermal unit per hour = 0.2931 W, 1 cubic foot per hour = 0.0283 m^3/h, 1 degree = 0.01745 rad.

Notes:

1. Table includes losses for four 90-degree bends and two end fittings. Tubing runs with larger numbers of bends or fittings shall be increased by an equivalent length of tubing to the following equation: $L = 1.3n$ where L is additional length (feet) of tubing and n is the number of additional fittings or bends.
2. EHD—Equivalent Hydraulic Diameter, which is a measure of the relative hydraulic efficiency between different tubing sizes. The greater the value of EHD, the greater the gas capacity of the tubing.
3. All table entries have been rounded to three significant digits.

❖ See the commentary to Section 402.4.

INTERNATIONAL CODE COUNCIL®
Copyright © 2015 ICC. ALL RIGHTS RESERVED. Accessed by David Dammon on Jun 21, 2017 12:30:52 PM pursuant to License Agreement with ICC. No further reproduction or distribution authorized. ANY UNAUTHORIZED REPRODUCTION OR DISTRIBUTION IS A VIOLATION OF THE FEDERAL COPYRIGHT ACT AND THE LICENSE AGREEMENT, AND SUBJECT TO CIVIL AND CRIMINAL PENALTIES THEREUNDER.

TABLE 402.4(17)
CORRUGATED STAINLESS STEEL TUBING (CSST)

Gas	Natural
Inlet Pressure	Less than 2 psi
Pressure Drop	6.0 in. w.c.
Specific Gravity	0.60

INTENDED USE: Initial supply pressure of 11.0 inches w.c. or greater													
TUBE SIZE (EHD)													
Flow Designation	**13**	**15**	**18**	**19**	**23**	**25**	**30**	**31**	**37**	**46**	**48**	**60**	**62**
Length (ft)	**Capacity in Cubic Feet of Gas Per Hour**												
5	173	229	389	461	737	911	1,690	1,950	3,000	6,280	7,050	12,400	14,260
10	120	160	277	327	529	649	1,180	1,370	2,140	4,430	5,010	8,800	10,100
15	96	130	227	267	436	532	960	1,110	1,760	3,610	4,100	7,210	8,260
20	83	112	197	231	380	462	828	958	1,530	3,120	3,560	6,270	7,160
25	74	99	176	207	342	414	739	855	1,370	2,790	3,190	5,620	6,400
30	67	90	161	189	313	379	673	778	1,250	2,540	2,910	5,140	5,850
40	57	78	140	164	273	329	580	672	1,090	2,200	2,530	4,460	5,070
50	51	69	125	147	245	295	518	599	978	1,960	2,270	4,000	4,540
60	46	63	115	134	225	270	471	546	895	1,790	2,070	3,660	4,140
70	42	58	106	124	209	250	435	505	830	1,660	1,920	3,390	3,840
80	39	54	100	116	196	234	407	471	778	1,550	1,800	3,180	3,590
90	37	51	94	109	185	221	383	444	735	1,460	1,700	3,000	3,390
100	35	48	89	104	176	210	363	421	698	1,380	1,610	2,850	3,210
150	28	39	73	85	145	172	294	342	573	1,130	1,320	2,340	2,630
200	24	34	63	73	126	149	254	295	498	974	1,140	2,030	2,280
250	21	30	57	66	114	134	226	263	447	870	1,020	1,820	2,040
300	19	27	52	60	104	122	206	240	409	793	936	1,660	1,860

For SI: 1 inch = 25.4 mm, 1 foot = 304.8 mm, 1 pound per square inch = 6.895 kPa, 1-inch water column = 0.2488 kPa, 1 British thermal unit per hour = 0.2931 W, 1 cubic foot per hour = 0.0283 m^3/h, 1 degree = 0.01745 rad.

Notes:

1. Table includes losses for four 90-degree bends and two end fittings. Tubing runs with larger numbers of bends or fittings shall be increased by an equivalent length of tubing to the following equation: $L = 1.3n$ where L is additional length (feet) of tubing and n is the number of additional fittings or bends.
2. EHD—Equivalent Hydraulic Diameter, which is a measure of the relative hydraulic efficiency between different tubing sizes. The greater the value of EHD, the greater the gas capacity of the tubing.
3. All table entries have been rounded to three significant digits.

❖ See the commentary to Section 402.4.

INTERNATIONAL CODE COUNCIL®
Copyright © 2015 ICC. ALL RIGHTS RESERVED. Accessed by David Dammon on Jun 21, 2017 12:30:52 PM pursuant to License Agreement with ICC. No further reproduction or distribution authorized. ANY UNAUTHORIZED REPRODUCTION OR DISTRIBUTION IS A VIOLATION OF THE FEDERAL COPYRIGHT ACT AND THE LICENSE AGREEMENT, AND SUBJECT TO CIVIL AND CRIMINAL PENALTIES THEREUNDER.

TABLE 402.4(18)
CORRUGATED STAINLESS STEEL TUBING (CSST)

Gas	Natural
Inlet Pressure	2 psi
Pressure Drop	1.0 psi
Specific Gravity	0.60

TUBE SIZE (EHD)														
Flow Designation	**13**	**15**	**18**	**19**	**23**	**25**	**30**	**31**	**37**	**39**	**46**	**48**	**60**	**62**
Length (ft)	**Capacity in Cubic Feet of Gas Per Hour**													
10	270	353	587	700	1,100	1,370	2,590	2,990	4,510	5,037	9,600	10,700	18,600	21,600
25	166	220	374	444	709	876	1,620	1,870	2,890	3,258	6,040	6,780	11,900	13,700
30	151	200	342	405	650	801	1,480	1,700	2,640	2,987	5,510	6,200	10,900	12,500
40	129	172	297	351	567	696	1,270	1,470	2,300	2,605	4,760	5,380	9,440	10,900
50	115	154	266	314	510	624	1,140	1,310	2,060	2,343	4,260	4,820	8,470	9,720
75	93	124	218	257	420	512	922	1,070	1,690	1,932	3,470	3,950	6,940	7,940
80	89	120	211	249	407	496	892	1,030	1,640	1,874	3,360	3,820	6,730	7,690
100	79	107	189	222	366	445	795	920	1,470	1,685	3,000	3,420	6,030	6,880
150	64	87	155	182	302	364	646	748	1,210	1,389	2,440	2,800	4,940	5,620
200	55	75	135	157	263	317	557	645	1,050	1,212	2,110	2,430	4,290	4,870
250	49	67	121	141	236	284	497	576	941	1,090	1,890	2,180	3,850	4,360
300	44	61	110	129	217	260	453	525	862	999	1,720	1,990	3,520	3,980
400	38	52	96	111	189	225	390	453	749	871	1,490	1,730	3,060	3,450
500	34	46	86	100	170	202	348	404	552	783	1,330	1,550	2,740	3,090

For SI: 1 inch = 25.4 mm, 1 foot = 304.8 mm, 1 pound per square inch = 6.895 kPa, 1-inch water column = 0.2488 kPa,
1 British thermal unit per hour = 0.2931 W, 1 cubic foot per hour = 0.0283 m^3/h, 1 degree = 0.01745 rad.

Notes:

1. Table does not include effect of pressure drop across the line regulator. Where regulator loss exceeds $^3/_4$ psi, DO NOT USE THIS TABLE. Consult with the regulator manufacturer for pressure drops and capacity factors. Pressure drops across a regulator may vary with flow rate.
2. CAUTION: Capacities shown in the table might exceed maximum capacity for a selected regulator. Consult with the regulator or tubing manufacturer for guidance.
3. Table includes losses for four 90-degree bends and two end fittings. Tubing runs with larger numbers of bends or fittings shall be increased by an equivalent length of tubing to the following equation: $L = 1.3n$ where L is additional length (feet) of tubing and n is the number of additional fittings or bends.
4. EHD—Equivalent Hydraulic Diameter, which is a measure of the relative hydraulic efficiency between different tubing sizes. The greater the value of EHD, the greater the gas capacity of the tubing.
5. All table entries have been rounded to three significant digits.

❖ See the commentary to Section 402.4.

INTERNATIONAL CODE COUNCIL®
Copyright © 2015 ICC. ALL RIGHTS RESERVED. Accessed by David Dammon on Jun 21, 2017 12:30:52 PM pursuant to License Agreement with ICC. No further reproduction or distribution authorized. ANY UNAUTHORIZED REPRODUCTION OR DISTRIBUTION IS A VIOLATION OF THE FEDERAL COPYRIGHT ACT AND THE LICENSE AGREEMENT, AND SUBJECT TO CIVIL AND CRIMINAL PENALTIES THEREUNDER.

TABLE 402.4(19)
CORRUGATED STAINLESS STEEL TUBING (CSST)

Gas	Natural
Inlet Pressure	5.0 psi
Pressure Drop	3.5 psi
Specific Gravity	0.60

TUBE SIZE (EHD)														
Flow Designation	**13**	**15**	**18**	**19**	**23**	**25**	**30**	**31**	**37**	**39**	**46**	**48**	**60**	**62**
Length (ft)	**Capacity in Cubic Feet of Gas Per Hour**													
10	523	674	1,080	1,300	2,000	2,530	4,920	5,660	8,300	9,140	18,100	19,800	34,400	40,400
25	322	420	691	827	1,290	1,620	3,080	3,540	5,310	5,911	11,400	12,600	22,000	25,600
30	292	382	632	755	1,180	1,480	2,800	3,230	4,860	5,420	10,400	11,500	20,100	23,400
40	251	329	549	654	1,030	1,280	2,420	2,790	4,230	4,727	8,970	10,000	17,400	20,200
50	223	293	492	586	926	1,150	2,160	2,490	3,790	4,251	8,020	8,930	15,600	18,100
75	180	238	403	479	763	944	1,750	2,020	3,110	3,506	6,530	7,320	12,800	14,800
80	174	230	391	463	740	915	1,690	1,960	3,020	3,400	6,320	7,090	12,400	14,300
100	154	205	350	415	665	820	1,510	1,740	2,710	3,057	5,650	6,350	11,100	12,800
150	124	166	287	339	548	672	1,230	1,420	2,220	2,521	4,600	5,200	9,130	10,500
200	107	143	249	294	478	584	1,060	1,220	1,930	2,199	3,980	4,510	7,930	9,090
250	95	128	223	263	430	524	945	1,090	1,730	1,977	3,550	4,040	7,110	8,140
300	86	116	204	240	394	479	860	995	1,590	1,813	3,240	3,690	6,500	7,430
400	74	100	177	208	343	416	742	858	1,380	1,581	2,800	3,210	5,650	6,440
500	66	89	159	186	309	373	662	766	1,040	1,422	2,500	2,870	5,060	5,760

For SI: 1 inch = 25.4 mm, 1 foot = 304.8 mm, 1 pound per square inch = 6.895 kPa, 1-inch water column = 0.2488 kPa,
1 British thermal unit per hour = 0.2931 W, 1 cubic foot per hour = 0.0283 m^3/h, 1 degree = 0.01745 rad.

Notes:

1. Table does not include effect of pressure drop across the line regulator. Where regulator loss exceeds $^3/_4$ psi, DO NOT USE THIS TABLE. Consult with the regulator manufacturer for pressure drops and capacity factors. Pressure drops across a regulator may vary with flow rate.
2. CAUTION: Capacities shown in the table might exceed maximum capacity for a selected regulator. Consult with the regulator or tubing manufacturer for guidance.
3. Table includes losses for four 90-degree bends and two end fittings. Tubing runs with larger numbers of bends or fittings shall be increased by an equivalent length of tubing to the following equation: $L = 1.3n$ where L is additional length (feet) of tubing and n is the number of additional fittings or bends.
4. EHD—Equivalent Hydraulic Diameter, which is a measure of the relative hydraulic efficiency between different tubing sizes. The greater the value of EHD, the greater the gas capacity of the tubing.
5. All table entries have been rounded to three significant digits.

❖ See the commentary to Section 402.4.

INTERNATIONAL CODE COUNCIL®
Copyright © 2015 ICC. ALL RIGHTS RESERVED. Accessed by David Dammon on Jun 21, 2017 12:30:52 PM pursuant to License Agreement with ICC. No further reproduction or distribution authorized. ANY UNAUTHORIZED REPRODUCTION OR DISTRIBUTION IS A VIOLATION OF THE FEDERAL COPYRIGHT ACT AND THE LICENSE AGREEMENT, AND SUBJECT TO CIVIL AND CRIMINAL PENALTIES THEREUNDER.

TABLE 402.4(20)
POLYETHYLENE PLASTIC PIPE

Gas	Natural
Inlet Pressure	Less than 2 psi
Pressure Drop	0.3 in. w.c.
Specific Gravity	0.60

PIPE SIZE (inch)								
Nominal OD	**1/2**	**3/4**	**1**	**1 1/4**	**1 1/2**	**2**	**3**	**4**
Designation	**SDR 9**	**SDR 11**	**SDR 11**	**SDR 10**	**SDR 11**	**SDR 11**	**SDR 11**	**SDR 11**
Actual ID	**0.660**	**0.860**	**1.077**	**1.328**	**1.554**	**1.943**	**2.864**	**3.682**
Length (ft)	**Capacity in Cubic Feet of Gas per Hour**							
10	153	305	551	955	1,440	2,590	7,170	13,900
20	105	210	379	656	991	1,780	4,920	9,520
30	84	169	304	527	796	1,430	3,950	7,640
40	72	144	260	451	681	1,220	3,380	6,540
50	64	128	231	400	604	1,080	3,000	5,800
60	58	116	209	362	547	983	2,720	5,250
70	53	107	192	333	503	904	2,500	4,830
80	50	99	179	310	468	841	2,330	4,500
90	46	93	168	291	439	789	2,180	4,220
100	44	88	159	275	415	745	2,060	3,990
125	39	78	141	243	368	661	1,830	3,530
150	35	71	127	221	333	598	1,660	3,200
175	32	65	117	203	306	551	1,520	2,940
200	30	60	109	189	285	512	1,420	2,740
250	27	54	97	167	253	454	1,260	2,430
300	24	48	88	152	229	411	1,140	2,200
350	22	45	81	139	211	378	1,050	2,020
400	21	42	75	130	196	352	974	1,880
450	19	39	70	122	184	330	914	1,770
500	18	37	66	115	174	312	863	1,670

For SI: 1 inch = 25.4 mm, 1 foot = 304.8 mm, 1 pound per square inch = 6.895 kPa, 1-inch water column = 0.2488 kPa, 1 British thermal unit per hour = 0.2931 W, 1 cubic foot per hour = 0.0283 m^3/h, 1 degree = 0.01745 rad.

Note: All table entries have been rounded to three significant digits.

❖ See the commentary to Section 402.4.

INTERNATIONAL CODE COUNCIL®
Copyright © 2015 ICC. ALL RIGHTS RESERVED. Accessed by David Dammon on Jun 21, 2017 12:30:52 PM pursuant to License Agreement with ICC. No further reproduction or distribution authorized. ANY UNAUTHORIZED REPRODUCTION OR DISTRIBUTION IS A VIOLATION OF THE FEDERAL COPYRIGHT ACT AND THE LICENSE AGREEMENT, AND SUBJECT TO CIVIL AND CRIMINAL PENALTIES THEREUNDER.

TABLE 402.4(21)
POLYETHYLENE PLASTIC PIPE

Gas	Natural
Inlet Pressure	Less than 2 psi
Pressure Drop	0.5 in. w.c.
Specific Gravity	0.60

PIPE SIZE (inch)								
Nominal OD	**1/2**	**3/4**	**1**	**1 1/4**	**1 1/2**	**2**	**3**	**4**
Designation	**SDR 9**	**SDR 11**	**SDR 11**	**SDR 10**	**SDR 11**	**SDR 11**	**SDR 11**	**SDR 11**
Actual ID	**0.660**	**0.860**	**1.077**	**1.328**	**1.554**	**1.943**	**2.864**	**3.682**
Length (ft)	**Capacity in Cubic Feet of Gas per Hour**							
10	201	403	726	1,260	1,900	3,410	9,450	18,260
20	138	277	499	865	1,310	2,350	6,490	12,550
30	111	222	401	695	1,050	1,880	5,210	10,080
40	95	190	343	594	898	1,610	4,460	8,630
50	84	169	304	527	796	1,430	3,950	7,640
60	76	153	276	477	721	1,300	3,580	6,930
70	70	140	254	439	663	1,190	3,300	6,370
80	65	131	236	409	617	1,110	3,070	5,930
90	61	123	221	383	579	1,040	2,880	5,560
100	58	116	209	362	547	983	2,720	5,250
125	51	103	185	321	485	871	2,410	4,660
150	46	93	168	291	439	789	2,180	4,220
175	43	86	154	268	404	726	2,010	3,880
200	40	80	144	249	376	675	1,870	3,610
250	35	71	127	221	333	598	1,660	3,200
300	32	64	115	200	302	542	1,500	2,900
350	29	59	106	184	278	499	1,380	2,670
400	27	55	99	171	258	464	1,280	2,480
450	26	51	93	160	242	435	1,200	2,330
500	24	48	88	152	229	411	1,140	2,200

For SI: 1 inch = 25.4 mm, 1 foot = 304.8 mm, 1 pound per square inch = 6.895 kPa, 1-inch water column = 0.2488 kPa, 1 British thermal unit per hour = 0.2931 W, 1 cubic foot per hour = 0.0283 m^3/h, 1 degree = 0.01745 rad.

Note: All table entries have been rounded to three significant digits.

❖ See the commentary to Section 402.4.

INTERNATIONAL CODE COUNCIL®
Copyright © 2015 ICC. ALL RIGHTS RESERVED. Accessed by David Dammon on Jun 21, 2017 12:30:52 PM pursuant to License Agreement with ICC. No further reproduction or distribution authorized. ANY UNAUTHORIZED REPRODUCTION OR DISTRIBUTION IS A VIOLATION OF THE FEDERAL COPYRIGHT ACT AND THE LICENSE AGREEMENT, AND SUBJECT TO CIVIL AND CRIMINAL PENALTIES THEREUNDER.

TABLE 402.4(22)
POLYETHYLENE PLASTIC PIPE

Gas	Natural
Inlet Pressure	2.0 psi
Pressure Drop	1.0 psi
Specific Gravity	0.60

PIPE SIZE (inch)								
Nominal OD	$^1/_2$	$^3/_4$	1	$1^1/_4$	$1^1/_2$	2	3	4
Designation	**SDR 9**	**SDR 11**	**SDR 11**	**SDR 10**	**SDR 11**	**SDR 11**	**SDR 11**	**SDR 11**
Actual ID	**0.660**	**0.860**	**1.077**	**1.328**	**1.554**	**1.943**	**2.864**	**3.682**
Length (ft)	**Capacity in Cubic Feet of Gas per Hour**							
10	1,860	3,720	6,710	11,600	17,600	31,600	87,300	169,000
20	1,280	2,560	4,610	7,990	12,100	21,700	60,000	116,000
30	1,030	2,050	3,710	6,420	9,690	17,400	48,200	93,200
40	878	1,760	3,170	5,490	8,300	14,900	41,200	79,700
50	778	1,560	2,810	4,870	7,350	13,200	36,600	70,700
60	705	1,410	2,550	4,410	6,660	12,000	33,100	64,000
70	649	1,300	2,340	4,060	6,130	11,000	30,500	58,900
80	603	1,210	2,180	3,780	5,700	10,200	28,300	54,800
90	566	1,130	2,050	3,540	5,350	9,610	26,600	51,400
100	535	1,070	1,930	3,350	5,050	9,080	25,100	48,600
125	474	949	1,710	2,970	4,480	8,050	22,300	43,000
150	429	860	1,550	2,690	4,060	7,290	20,200	39,000
175	395	791	1,430	2,470	3,730	6,710	18,600	35,900
200	368	736	1,330	2,300	3,470	6,240	17,300	33,400
250	326	652	1,180	2,040	3,080	5,530	15,300	29,600
300	295	591	1,070	1,850	2,790	5,010	13,900	26,800
350	272	544	981	1,700	2,570	4,610	12,800	24,700
400	253	506	913	1,580	2,390	4,290	11,900	22,900
450	237	475	856	1,480	2,240	4,020	11,100	21,500
500	224	448	809	1,400	2,120	3,800	10,500	20,300
550	213	426	768	1,330	2,010	3,610	9,990	19,300
600	203	406	733	1,270	1,920	3,440	9,530	18,400
650	194	389	702	1,220	1,840	3,300	9,130	17,600
700	187	374	674	1,170	1,760	3,170	8,770	16,900
750	180	360	649	1,130	1,700	3,050	8,450	16,300
800	174	348	627	1,090	1,640	2,950	8,160	15,800
850	168	336	607	1,050	1,590	2,850	7,890	15,300
900	163	326	588	1,020	1,540	2,770	7,650	14,800
950	158	317	572	990	1,500	2,690	7,430	14,400
1,000	154	308	556	963	1,450	2,610	7,230	14,000
1,100	146	293	528	915	1,380	2,480	6,870	13,300
1,200	139	279	504	873	1,320	2,370	6,550	12,700
1,300	134	267	482	836	1,260	2,270	6,270	12,100
1,400	128	257	463	803	1,210	2,180	6,030	11,600
1,500	124	247	446	773	1,170	2,100	5,810	11,200
1,600	119	239	431	747	1,130	2,030	5,610	10,800
1,700	115	231	417	723	1,090	1,960	5,430	10,500
1,800	112	224	404	701	1,060	1,900	5,260	10,200
1,900	109	218	393	680	1,030	1,850	5,110	9,900
2,000	106	212	382	662	1,000	1,800	4,970	9,600

For SI: 1 inch = 25.4 mm, 1 foot = 304.8 mm, 1 pound per square inch = 6.895 kPa, 1-inch water column = 0.2488 kPa, 1 British thermal unit per hour = 0.2931 W, 1 cubic foot per hour = 0.0283 m^3/h, 1 degree = 0.01745 rad.

Note: All table entries have been rounded to three significant digits.

❖ See the commentary to Section 402.4.

INTERNATIONAL CODE COUNCIL®
Copyright © 2015 ICC. ALL RIGHTS RESERVED. Accessed by David Dammon on Jun 21, 2017 12:30:52 PM pursuant to License Agreement with ICC. No further reproduction or distribution authorized. ANY UNAUTHORIZED REPRODUCTION OR DISTRIBUTION IS A VIOLATION OF THE FEDERAL COPYRIGHT ACT AND THE LICENSE AGREEMENT, AND SUBJECT TO CIVIL AND CRIMINAL PENALTIES THEREUNDER.

TABLE 402.4(23)
POLYETHYLENE PLASTIC TUBING

Gas	Natural
Inlet Pressure	Less than 2.0 psi
Pressure Drop	0.3 in. w.c.
Specific Gravity	0.60

	PLASTIC TUBING SIZE (CTS) (inch)	
Nominal OD	$^1/_2$	$^3/_4$
Designation	**SDR 7**	**SDR 11**
Actual ID	**0.445**	**0.927**
Length (ft)	**Capacity in Cubic Feet of Gas per Hour**	
10	54	372
20	37	256
30	30	205
40	26	176
50	23	156
60	21	141
70	19	130
80	18	121
90	17	113
100	16	107
125	14	95
150	13	86
175	12	79
200	11	74
225	10	69
250	NA	65
275	NA	62
300	NA	59
350	NA	54
400	NA	51
450	NA	47
500	NA	45

For SI: 1 inch = 25.4 mm, 1 foot = 304.8 mm,
1 pound per square inch = 6.895 kPa,
1-inch water column = 0.2488 kPa,
1 British thermal unit per hour = 0.2931 W,
1 cubic foot per hour = 0.0283 m^3/h, 1 degree = 0.01745 rad.

Notes:

1. NA means a flow of less than 10 cfh.
2. All table entries have been rounded to three significant digits.

❖ See the commentary to Section 402.4.

TABLE 402.4(24)
POLYETHYLENE PLASTIC TUBING

Gas	Natural
Inlet Pressure	Less than 2.0 psi
Pressure Drop	0.5 in. w.c.
Specific Gravity	0.60

	PLASTIC TUBING SIZE (CTS) (inch)	
Nominal OD	$^1/_2$	$^3/_4$
Designation	**SDR 7**	**SDR 11**
Actual ID	**0.445**	**0.927**
Length (ft)	**Capacity in Cubic Feet of Gas per Hour**	
10	72	490
20	49	337
30	39	271
40	34	232
50	30	205
60	27	186
70	25	171
80	23	159
90	22	149
100	21	141
125	18	125
150	17	113
175	15	104
200	14	97
225	13	91
250	12	86
275	11	82
300	11	78
350	10	72
400	NA	67
450	NA	63
500	NA	59

For SI: 1 inch = 25.4 mm, 1 foot = 304.8 mm,
1 pound per square inch = 6.895 kPa,
1-inch water column = 0.2488 kPa,
1 British thermal unit per hour = 0.2931 W,
1 cubic foot per hour = 0.0283 m^3/h, 1 degree = 0.01745 rad.

Notes:

1. NA means a flow of less than 10 cfh.
2. All table entries have been rounded to three significant digits.

❖ See the commentary to Section 402.4.

INTERNATIONAL CODE COUNCIL®
Copyright © 2015 ICC. ALL RIGHTS RESERVED. Accessed by David Dammon on Jun 21, 2017 12:30:52 PM pursuant to License Agreement with ICC. No further reproduction or distribution authorized. ANY UNAUTHORIZED REPRODUCTION OR DISTRIBUTION IS A VIOLATION OF THE FEDERAL COPYRIGHT ACT AND THE LICENSE AGREEMENT, AND SUBJECT TO CIVIL AND CRIMINAL PENALTIES THEREUNDER.

TABLE 402.4(25)
SCHEDULE 40 METALLIC PIPE

Gas	Undiluted Propane
Inlet Pressure	10.0 psi
Pressure Drop	1.0 psi
Specific Gravity	1.50

INTENDED USE	Pipe sizing between first stage (high-pressure regulator) and second stage (low-pressure regulator).								
	PIPE SIZE (inch)								
Nominal	1/2	3/4	1	1 1/4	1 1/2	2	2 1/2	3	4
Actual ID	0.622	0.824	1.049	1.380	1.610	2.067	2.469	3.068	4.026
Length (ft)	Capacity in Thousands of Btu per Hour								
10	3,320	6,950	13,100	26,900	40,300	77,600	124,000	219,000	446,000
20	2,280	4,780	9,000	18,500	27,700	53,300	85,000	150,000	306,000
30	1,830	3,840	7,220	14,800	22,200	42,800	68,200	121,000	246,000
40	1,570	3,280	6,180	12,700	19,000	36,600	58,400	103,000	211,000
50	1,390	2,910	5,480	11,300	16,900	32,500	51,700	91,500	187,000
60	1,260	2,640	4,970	10,200	15,300	29,400	46,900	82,900	169,000
70	1,160	2,430	4,570	9,380	14,100	27,100	43,100	76,300	156,000
80	1,080	2,260	4,250	8,730	13,100	25,200	40,100	70,900	145,000
90	1,010	2,120	3,990	8,190	12,300	23,600	37,700	66,600	136,000
100	956	2,000	3,770	7,730	11,600	22,300	35,600	62,900	128,000
125	848	1,770	3,340	6,850	10,300	19,800	31,500	55,700	114,000
150	768	1,610	3,020	6,210	9,300	17,900	28,600	50,500	103,000
175	706	1,480	2,780	5,710	8,560	16,500	26,300	46,500	94,700
200	657	1,370	2,590	5,320	7,960	15,300	24,400	43,200	88,100
250	582	1,220	2,290	4,710	7,060	13,600	21,700	38,300	78,100
300	528	1,100	2,080	4,270	6,400	12,300	19,600	34,700	70,800
350	486	1,020	1,910	3,930	5,880	11,300	18,100	31,900	65,100
400	452	945	1,780	3,650	5,470	10,500	16,800	29,700	60,600
450	424	886	1,670	3,430	5,140	9,890	15,800	27,900	56,800
500	400	837	1,580	3,240	4,850	9,340	14,900	26,300	53,700
550	380	795	1,500	3,070	4,610	8,870	14,100	25,000	51,000
600	363	759	1,430	2,930	4,400	8,460	13,500	23,900	48,600
650	347	726	1,370	2,810	4,210	8,110	12,900	22,800	46,600
700	334	698	1,310	2,700	4,040	7,790	12,400	21,900	44,800
750	321	672	1,270	2,600	3,900	7,500	12,000	21,100	43,100
800	310	649	1,220	2,510	3,760	7,240	11,500	20,400	41,600
850	300	628	1,180	2,430	3,640	7,010	11,200	19,800	40,300
900	291	609	1,150	2,360	3,530	6,800	10,800	19,200	39,100
950	283	592	1,110	2,290	3,430	6,600	10,500	18,600	37,900
1,000	275	575	1,080	2,230	3,330	6,420	10,200	18,100	36,900
1,100	261	546	1,030	2,110	3,170	6,100	9,720	17,200	35,000
1,200	249	521	982	2,020	3,020	5,820	9,270	16,400	33,400
1,300	239	499	940	1,930	2,890	5,570	8,880	15,700	32,000
1,400	229	480	903	1,850	2,780	5,350	8,530	15,100	30,800
1,500	221	462	870	1,790	2,680	5,160	8,220	14,500	29,600
1,600	213	446	840	1,730	2,590	4,980	7,940	14,000	28,600
1,700	206	432	813	1,670	2,500	4,820	7,680	13,600	27,700
1,800	200	419	789	1,620	2,430	4,670	7,450	13,200	26,900
1,900	194	407	766	1,570	2,360	4,540	7,230	12,800	26,100
2,000	189	395	745	1,530	2,290	4,410	7,030	12,400	25,400

For SI: 1 inch = 25.4 mm, 1 foot = 304.8 mm, 1 pound per square inch = 6.895 kPa, 1-inch water column = 0.2488 kPa, 1 British thermal unit per hour = 0.2931 W, 1 cubic foot per hour = 0.0283 m^3/h, 1 degree = 0.01745 rad.

Note: All table entries have been rounded to three significant digits.

❖ See the commentary to Section 402.4.

INTERNATIONAL CODE COUNCIL®
Copyright © 2015 ICC. ALL RIGHTS RESERVED. Accessed by David Dammon on Jun 21, 2017 12:30:52 PM pursuant to License Agreement with ICC. No further reproduction or distribution authorized. ANY UNAUTHORIZED REPRODUCTION OR DISTRIBUTION IS A VIOLATION OF THE FEDERAL COPYRIGHT ACT AND THE LICENSE AGREEMENT, AND SUBJECT TO CIVIL AND CRIMINAL PENALTIES THEREUNDER.

TABLE 402.4(26)
SCHEDULE 40 METALLIC PIPE

Gas	Undiluted Propane
Inlet Pressure	10.0 psi
Pressure Drop	3.0 psi
Specific Gravity	1.50

INTENDED USE	**Pipe sizing between first stage (high-pressure regulator) and second stage (low-pressure regulator).**								
	PIPE SIZE (inch)								
Nominal	**1/2**	**3/4**	**1**	**1 1/4**	**1 1/2**	**2**	**2 1/2**	**3**	**4**
Actual ID	**0.622**	**0.824**	**1.049**	**1.380**	**1.610**	**2.067**	**2.469**	**3.068**	**4.026**
Length (ft)	**Capacity in Thousands of Btu per Hour**								
10	5,890	12,300	23,200	47,600	71,300	137,000	219,000	387,000	789,000
20	4,050	8,460	15,900	32,700	49,000	94,400	150,000	266,000	543,000
30	3,250	6,790	12,800	26,300	39,400	75,800	121,000	214,000	436,000
40	2,780	5,810	11,000	22,500	33,700	64,900	103,000	183,000	373,000
50	2,460	5,150	9,710	19,900	29,900	57,500	91,600	162,000	330,000
60	2,230	4,670	8,790	18,100	27,100	52,100	83,000	147,000	299,000
70	2,050	4,300	8,090	16,600	24,900	47,900	76,400	135,000	275,000
80	1,910	4,000	7,530	15,500	23,200	44,600	71,100	126,000	256,000
90	1,790	3,750	7,060	14,500	21,700	41,800	66,700	118,000	240,000
100	1,690	3,540	6,670	13,700	20,500	39,500	63,000	111,000	227,000
125	1,500	3,140	5,910	12,100	18,200	35,000	55,800	98,700	201,000
150	1,360	2,840	5,360	11,000	16,500	31,700	50,600	89,400	182,000
175	1,250	2,620	4,930	10,100	15,200	29,200	46,500	82,300	167,800
200	1,160	2,430	4,580	9,410	14,100	27,200	43,300	76,500	156,100
250	1,030	2,160	4,060	8,340	12,500	24,100	38,400	67,800	138,400
300	935	1,950	3,680	7,560	11,300	21,800	34,800	61,500	125,400
350	860	1,800	3,390	6,950	10,400	20,100	32,000	56,500	115,300
400	800	1,670	3,150	6,470	9,690	18,700	29,800	52,600	107,300
450	751	1,570	2,960	6,070	9,090	17,500	27,900	49,400	100,700
500	709	1,480	2,790	5,730	8,590	16,500	26,400	46,600	95,100
550	673	1,410	2,650	5,450	8,160	15,700	25,000	44,300	90,300
600	642	1,340	2,530	5,200	7,780	15,000	23,900	42,200	86,200
650	615	1,290	2,420	4,980	7,450	14,400	22,900	40,500	82,500
700	591	1,240	2,330	4,780	7,160	13,800	22,000	38,900	79,300
750	569	1,190	2,240	4,600	6,900	13,300	21,200	37,400	76,400
800	550	1,150	2,170	4,450	6,660	12,800	20,500	36,200	73,700
850	532	1,110	2,100	4,300	6,450	12,400	19,800	35,000	71,400
900	516	1,080	2,030	4,170	6,250	12,000	19,200	33,900	69,200
950	501	1,050	1,970	4,050	6,070	11,700	18,600	32,900	67,200
1,000	487	1,020	1,920	3,940	5,900	11,400	18,100	32,000	65,400
1,100	463	968	1,820	3,740	5,610	10,800	17,200	30,400	62,100
1,200	442	923	1,740	3,570	5,350	10,300	16,400	29,000	59,200
1,300	423	884	1,670	3,420	5,120	9,870	15,700	27,800	56,700
1,400	406	849	1,600	3,280	4,920	9,480	15,100	26,700	54,500
1,500	391	818	1,540	3,160	4,740	9,130	14,600	25,700	52,500
1,600	378	790	1,490	3,060	4,580	8,820	14,100	24,800	50,700
1,700	366	765	1,440	2,960	4,430	8,530	13,600	24,000	49,000
1,800	355	741	1,400	2,870	4,300	8,270	13,200	23,300	47,600
1,900	344	720	1,360	2,780	4,170	8,040	12,800	22,600	46,200
2,000	335	700	1,320	2,710	4,060	7,820	12,500	22,000	44,900

For SI: 1 inch = 25.4 mm, 1 foot = 304.8 mm, 1 pound per square inch = 6.895 kPa, 1-inch water column = 0.2488 kPa,
1 British thermal unit per hour = 0.2931 W, 1 cubic foot per hour = 0.0283 m^3/h, 1 degree = 0.01745 rad.

Note: All table entries have been rounded to three significant digits.

❖ See the commentary to Section 402.4.

INTERNATIONAL CODE COUNCIL®
Copyright © 2015 ICC. ALL RIGHTS RESERVED. Accessed by David Dammon on Jun 21, 2017 12:30:52 PM pursuant to License Agreement with ICC. No further reproduction or distribution authorized. ANY UNAUTHORIZED REPRODUCTION OR DISTRIBUTION IS A VIOLATION OF THE FEDERAL COPYRIGHT ACT AND THE LICENSE AGREEMENT, AND SUBJECT TO CIVIL AND CRIMINAL PENALTIES THEREUNDER.

TABLE 402.4(27)
SCHEDULE 40 METALLIC PIPE

Gas	Undiluted Propane
Inlet Pressure	2.0 psi
Pressure Drop	1.0 psi
Specific Gravity	1.50

INTENDED USE	**Pipe sizing between 2 psig service and line pressure regulator.**								
	PIPE SIZE (inch)								
Nominal	**1/2**	**3/4**	**1**	**1 1/4**	**1 1/2**	**2**	**2 1/2**	**3**	**4**
Actual ID	**0.622**	**0.824**	**1.049**	**1.380**	**1.610**	**2.067**	**2.469**	**3.068**	**4.026**
Length (ft)	**Capacity in Thousands of Btu per Hour**								
10	2,680	5,590	10,500	21,600	32,400	62,400	99,500	176,000	359,000
20	1,840	3,850	7,240	14,900	22,300	42,900	68,400	121,000	247,000
30	1,480	3,090	5,820	11,900	17,900	34,500	54,900	97,100	198,000
40	1,260	2,640	4,980	10,200	15,300	29,500	47,000	83,100	170,000
50	1,120	2,340	4,410	9,060	13,600	26,100	41,700	73,700	150,000
60	1,010	2,120	4,000	8,210	12,300	23,700	37,700	66,700	136,000
70	934	1,950	3,680	7,550	11,300	21,800	34,700	61,400	125,000
80	869	1,820	3,420	7,020	10,500	20,300	32,300	57,100	116,000
90	815	1,700	3,210	6,590	9,880	19,000	30,300	53,600	109,000
100	770	1,610	3,030	6,230	9,330	18,000	28,600	50,600	103,000
125	682	1,430	2,690	5,520	8,270	15,900	25,400	44,900	91,500
150	618	1,290	2,440	5,000	7,490	14,400	23,000	40,700	82,900
175	569	1,190	2,240	4,600	6,890	13,300	21,200	37,400	76,300
200	529	1,110	2,080	4,280	6,410	12,300	19,700	34,800	71,000
250	469	981	1,850	3,790	5,680	10,900	17,400	30,800	62,900
300	425	889	1,670	3,440	5,150	9,920	15,800	27,900	57,000
350	391	817	1,540	3,160	4,740	9,120	14,500	25,700	52,400
400	364	760	1,430	2,940	4,410	8,490	13,500	23,900	48,800
450	341	714	1,340	2,760	4,130	7,960	12,700	22,400	45,800
500	322	674	1,270	2,610	3,910	7,520	12,000	21,200	43,200
550	306	640	1,210	2,480	3,710	7,140	11,400	20,100	41,100
600	292	611	1,150	2,360	3,540	6,820	10,900	19,200	39,200
650	280	585	1,100	2,260	3,390	6,530	10,400	18,400	37,500
700	269	562	1,060	2,170	3,260	6,270	9,990	17,700	36,000
750	259	541	1,020	2,090	3,140	6,040	9,630	17,000	34,700
800	250	523	985	2,020	3,030	5,830	9,300	16,400	33,500
850	242	506	953	1,960	2,930	5,640	9,000	15,900	32,400
900	235	490	924	1,900	2,840	5,470	8,720	15,400	31,500
950	228	476	897	1,840	2,760	5,310	8,470	15,000	30,500
1,000	222	463	873	1,790	2,680	5,170	8,240	14,600	29,700
1,100	210	440	829	1,700	2,550	4,910	7,830	13,800	28,200
1,200	201	420	791	1,620	2,430	4,680	7,470	13,200	26,900
1,300	192	402	757	1,550	2,330	4,490	7,150	12,600	25,800
1,400	185	386	727	1,490	2,240	4,310	6,870	12,100	24,800
1,500	178	372	701	1,440	2,160	4,150	6,620	11,700	23,900
1,600	172	359	677	1,390	2,080	4,010	6,390	11,300	23,000
1,700	166	348	655	1,340	2,010	3,880	6,180	10,900	22,300
1,800	161	337	635	1,300	1,950	3,760	6,000	10,600	21,600
1,900	157	327	617	1,270	1,900	3,650	5,820	10,300	21,000
2,000	152	318	600	1,230	1,840	3,550	5,660	10,000	20,400

For SI: 1 inch = 25.4 mm, 1 foot = 304.8 mm, 1 pound per square inch = 6.895 kPa, 1-inch water column = 0.2488 kPa,
1 British thermal unit per hour = 0.2931 W, 1 cubic foot per hour = 0.0283 m^3/h, 1 degree = 0.01745 rad.

Note: All table entries have been rounded to three significant digits.

❖ See the commentary to Section 402.4.

INTERNATIONAL CODE COUNCIL®
Copyright © 2015 ICC. ALL RIGHTS RESERVED. Accessed by David Dammon on Jun 21, 2017 12:30:52 PM pursuant to License Agreement with ICC. No further reproduction or distribution authorized. ANY UNAUTHORIZED REPRODUCTION OR DISTRIBUTION IS A VIOLATION OF THE FEDERAL COPYRIGHT ACT AND THE LICENSE AGREEMENT, AND SUBJECT TO CIVIL AND CRIMINAL PENALTIES THEREUNDER.

TABLE 402.4(28)
SCHEDULE 40 METALLIC PIPE

Gas	Undiluted Propane
Inlet Pressure	11.0 in. w.c.
Pressure Drop	0.5 in. w.c.
Specific Gravity	1.50

INTENDED USE	**Pipe sizing between single- or second-stage (low pressure) regulator and appliance.**								
	PIPE SIZE (inch)								
Nominal	**1/2**	**3/4**	**1**	**1 1/4**	**1 1/2**	**2**	**2 1/2**	**3**	**4**
Actual ID	**0.622**	**0.824**	**1.049**	**1.380**	**1.610**	**2.067**	**2.469**	**3.068**	**4.026**
Length (ft)	**Capacity in Thousands of Btu per Hour**								
10	291	608	1,150	2,350	3,520	6,790	10,800	19,100	39,000
20	200	418	787	1,620	2,420	4,660	7,430	13,100	26,800
30	160	336	632	1,300	1,940	3,750	5,970	10,600	21,500
40	137	287	541	1,110	1,660	3,210	5,110	9,030	18,400
50	122	255	480	985	1,480	2,840	4,530	8,000	16,300
60	110	231	434	892	1,340	2,570	4,100	7,250	14,800
80	101	212	400	821	1,230	2,370	3,770	6,670	13,600
100	94	197	372	763	1,140	2,200	3,510	6,210	12,700
125	89	185	349	716	1,070	2,070	3,290	5,820	11,900
150	84	175	330	677	1,010	1,950	3,110	5,500	11,200
175	74	155	292	600	899	1,730	2,760	4,880	9,950
200	67	140	265	543	814	1,570	2,500	4,420	9,010
250	62	129	243	500	749	1,440	2,300	4,060	8,290
300	58	120	227	465	697	1,340	2,140	3,780	7,710
350	51	107	201	412	618	1,190	1,900	3,350	6,840
400	46	97	182	373	560	1,080	1,720	3,040	6,190
450	42	89	167	344	515	991	1,580	2,790	5,700
500	40	83	156	320	479	922	1,470	2,600	5,300
550	37	78	146	300	449	865	1,380	2,440	4,970
600	35	73	138	283	424	817	1,300	2,300	4,700
650	33	70	131	269	403	776	1,240	2,190	4,460
700	32	66	125	257	385	741	1,180	2,090	4,260
750	30	64	120	246	368	709	1,130	2,000	4,080
800	29	61	115	236	354	681	1,090	1,920	3,920
850	28	59	111	227	341	656	1,050	1,850	3,770
900	27	57	107	220	329	634	1,010	1,790	3,640
950	26	55	104	213	319	613	978	1,730	3,530
1,000	25	53	100	206	309	595	948	1,680	3,420
1,100	25	52	97	200	300	578	921	1,630	3,320
1,200	24	50	95	195	292	562	895	1,580	3,230
1,300	23	48	90	185	277	534	850	1,500	3,070
1,400	22	46	86	176	264	509	811	1,430	2,930
1,500	21	44	82	169	253	487	777	1,370	2,800
1,600	20	42	79	162	243	468	746	1,320	2,690
1,700	19	40	76	156	234	451	719	1,270	2,590
1,800	19	39	74	151	226	436	694	1,230	2,500
1,900	18	38	71	146	219	422	672	1,190	2,420
2,000	18	37	69	142	212	409	652	1,150	2,350

For SI: 1 inch = 25.4 mm, 1 foot = 304.8 mm, 1 pound per square inch = 6.895 kPa, 1-inch water column = 0.2488 kPa, 1 British thermal unit per hour = 0.2931 W, 1 cubic foot per hour = 0.0283 m^3/h, 1 degree = 0.01745 rad.

Note: All table entries have been rounded to three significant digits.

❖ See the commentary to Section 402.4.

INTERNATIONAL CODE COUNCIL®
Copyright © 2015 ICC. ALL RIGHTS RESERVED. Accessed by David Dammon on Jun 21, 2017 12:30:52 PM pursuant to License Agreement with ICC. No further reproduction or distribution authorized. ANY UNAUTHORIZED REPRODUCTION OR DISTRIBUTION IS A VIOLATION OF THE FEDERAL COPYRIGHT ACT AND THE LICENSE AGREEMENT, AND SUBJECT TO CIVIL AND CRIMINAL PENALTIES THEREUNDER.

TABLE 402.4(29)
SEMIRIGID COPPER TUBING

Gas	Undiluted Propane
Inlet Pressure	10.0 psi
Pressure Drop	1.0 psi
Specific Gravity	1.50

INTENDED USE		**Sizing between first stage (high-pressure regulator) and second stage (low-pressure regulator).**								
		TUBE SIZE (in.)								
Nominal	**K & L**	$^1/_4$	$^3/_8$	$^1/_2$	$^5/_8$	$^3/_4$	1	$1^1/_4$	$1^1/_2$	2
	ACR	$^3/_8$	$^1/_2$	$^5/_8$	$^3/_4$	$^7/_8$	$1^1/_8$	$1^3/_8$	—	—
Outside		**0.375**	**0.500**	**0.625**	**0.750**	**0.875**	**1.125**	**1.375**	**1.625**	**2.125**
Inside		**0.305**	**0.402**	**0.527**	**0.652**	**0.745**	**0.995**	**1.245**	**1.481**	**1.959**
Length (ft)		**Capacity in Thousands of Btu per Hour**								
10		513	1,060	2,150	3,760	5,330	11,400	20,500	32,300	67,400
20		352	727	1,480	2,580	3,670	7,830	14,100	22,200	46,300
30		283	584	1,190	2,080	2,940	6,290	11,300	17,900	37,200
40		242	500	1,020	1,780	2,520	5,380	9,690	15,300	31,800
50		215	443	901	1,570	2,230	4,770	8,590	13,500	28,200
60		194	401	816	1,430	2,020	4,320	7,780	12,300	25,600
70		179	369	751	1,310	1,860	3,980	7,160	11,300	23,500
80		166	343	699	1,220	1,730	3,700	6,660	10,500	21,900
90		156	322	655	1,150	1,630	3,470	6,250	9,850	20,500
100		147	304	619	1,080	1,540	3,280	5,900	9,310	19,400
125		131	270	549	959	1,360	2,910	5,230	8,250	17,200
150		118	244	497	869	1,230	2,630	4,740	7,470	15,600
175		109	225	457	799	1,130	2,420	4,360	6,880	14,300
200		101	209	426	744	1,060	2,250	4,060	6,400	13,300
250		90	185	377	659	935	2,000	3,600	5,670	11,800
300		81	168	342	597	847	1,810	3,260	5,140	10,700
350		75	155	314	549	779	1,660	3,000	4,730	9,840
400		70	144	292	511	725	1,550	2,790	4,400	9,160
450		65	135	274	480	680	1,450	2,620	4,130	8,590
500		62	127	259	453	643	1,370	2,470	3,900	8,120
550		59	121	246	430	610	1,300	2,350	3,700	7,710
600		56	115	235	410	582	1,240	2,240	3,530	7,350
650		54	111	225	393	558	1,190	2,140	3,380	7,040
700		51	106	216	378	536	1,140	2,060	3,250	6,770
750		50	102	208	364	516	1,100	1,980	3,130	6,520
800		48	99	201	351	498	1,060	1,920	3,020	6,290
850		46	96	195	340	482	1,030	1,850	2,920	6,090
900		45	93	189	330	468	1,000	1,800	2,840	5,910
950		44	90	183	320	454	970	1,750	2,750	5,730
1,000		42	88	178	311	442	944	1,700	2,680	5,580
1,100		40	83	169	296	420	896	1,610	2,540	5,300
1,200		38	79	161	282	400	855	1,540	2,430	5,050
1,300		37	76	155	270	383	819	1,470	2,320	4,840
1,400		35	73	148	260	368	787	1,420	2,230	4,650
1,500		34	70	143	250	355	758	1,360	2,150	4,480
1,600		33	68	138	241	343	732	1,320	2,080	4,330
1,700		32	66	134	234	331	708	1,270	2,010	4,190
1,800		31	64	130	227	321	687	1,240	1,950	4,060
1,900		30	62	126	220	312	667	1,200	1,890	3,940
2,000		29	60	122	214	304	648	1,170	1,840	3,830

For SI: 1 inch = 25.4 mm, 1 foot = 304.8 mm, 1 pound per square inch = 6.895 kPa, 1-inch water column = 0.2488 kPa,
1 British thermal unit per hour = 0.2931 W, 1 cubic foot per hour = 0.0283 m^3/h, 1 degree = 0.01745 rad.

Notes:

1. Table capacities are based on Type K copper tubing inside diameter (shown), which has the smallest inside diameter of the copper tubing products.
2. All table entries have been rounded to three significant digits.

❖ See the commentary to Section 402.4.

INTERNATIONAL CODE COUNCIL®
Copyright © 2015 ICC. ALL RIGHTS RESERVED. Accessed by David Dammon on Jun 21, 2017 12:30:52 PM pursuant to License Agreement with ICC. No further reproduction or distribution authorized. ANY UNAUTHORIZED REPRODUCTION OR DISTRIBUTION IS A VIOLATION OF THE FEDERAL COPYRIGHT ACT AND THE LICENSE AGREEMENT, AND SUBJECT TO CIVIL AND CRIMINAL PENALTIES THEREUNDER.

TABLE 402.4(30)
SEMIRIGID COPPER TUBING

Gas	Undiluted Propane
Inlet Pressure	11.0 in. w.c.
Pressure Drop	0.5 in. w.c.
Specific Gravity	1.50

INTENDED USE		**Sizing between single or second stage (low-pressure regulator) and appliance.**								
		TUBE SIZE (inch)								
Nominal	**K & L**	**1/4**	**3/8**	**1/2**	**5/8**	**3/4**	**1**	**1 1/4**	**1 1/2**	**2**
	ACR	**3/8**	**1/2**	**5/8**	**3/4**	**7/8**	**1 1/8**	**1 3/8**	**—**	**—**
Outside		**0.375**	**0.500**	**0.625**	**0.750**	**0.875**	**1.125**	**1.375**	**1.625**	**2.125**
Inside		**0.305**	**0.402**	**0.527**	**0.652**	**0.745**	**0.995**	**1.245**	**1.481**	**1.959**
Length (ft)		**Capacity in Thousands of Btu per Hour**								
10		45	93	188	329	467	997	1,800	2,830	5,890
20		31	64	129	226	321	685	1,230	1,950	4,050
30		25	51	104	182	258	550	991	1,560	3,250
40		21	44	89	155	220	471	848	1,340	2,780
50		19	39	79	138	195	417	752	1,180	2,470
60		17	35	71	125	177	378	681	1,070	2,240
70		16	32	66	115	163	348	626	988	2,060
80		15	30	61	107	152	324	583	919	1,910
90		14	28	57	100	142	304	547	862	1,800
100		13	27	54	95	134	287	517	814	1,700
125		11	24	48	84	119	254	458	722	1,500
150		10	21	44	76	108	230	415	654	1,360
175		NA	20	40	70	99	212	382	602	1,250
200		NA	18	37	65	92	197	355	560	1,170
250		NA	16	33	58	82	175	315	496	1,030
300		NA	15	30	52	74	158	285	449	936
350		NA	14	28	48	68	146	262	414	861
400		NA	13	26	45	63	136	244	385	801
450		NA	12	24	42	60	127	229	361	752
500		NA	11	23	40	56	120	216	341	710
550		NA	11	22	38	53	114	205	324	674
600		NA	10	21	36	51	109	196	309	643
650		NA	NA	20	34	49	104	188	296	616
700		NA	NA	19	33	47	100	180	284	592
750		NA	NA	18	32	45	96	174	274	570
800		NA	NA	18	31	44	93	168	264	551
850		NA	NA	17	30	42	90	162	256	533
900		NA	NA	17	29	41	87	157	248	517
950		NA	NA	16	28	40	85	153	241	502
1,000		NA	NA	16	27	39	83	149	234	488
1,100		NA	NA	15	26	37	78	141	223	464
1,200		NA	NA	14	25	35	75	135	212	442
1,300		NA	NA	14	24	34	72	129	203	423
1,400		NA	NA	13	23	32	69	124	195	407
1,500		NA	NA	13	22	31	66	119	188	392
1,600		NA	NA	12	21	30	64	115	182	378
1,700		NA	NA	12	20	29	62	112	176	366
1,800		NA	NA	11	20	28	60	108	170	355
1,900		NA	NA	11	19	27	58	105	166	345
2,000		NA	NA	11	19	27	57	102	161	335

For SI: 1 inch = 25.4 mm, 1 foot = 304.8 mm, 1 pound per square inch = 6.895 kPa, 1-inch water column = 0.2488 kPa, 1 British thermal unit per hour = 0.2931 W, 1 cubic foot per hour = 0.0283 m^3/h, 1 degree = 0.01745 rad.

Notes:

1. Table capacities are based on Type K copper tubing inside diameter (shown), which has the smallest inside diameter of the copper tubing products.
2. NA means a flow of less than 10,000 Btu/hr.
3. All table entries have been rounded to three significant digits.

❖ See the commentary to Section 402.4.

INTERNATIONAL CODE COUNCIL®
Copyright © 2015 ICC. ALL RIGHTS RESERVED. Accessed by David Dammon on Jun 21, 2017 12:30:52 PM pursuant to License Agreement with ICC. No further reproduction or distribution authorized. ANY UNAUTHORIZED REPRODUCTION OR DISTRIBUTION IS A VIOLATION OF THE FEDERAL COPYRIGHT ACT AND THE LICENSE AGREEMENT, AND SUBJECT TO CIVIL AND CRIMINAL PENALTIES THEREUNDER.

TABLE 402.4(31)
SEMIRIGID COPPER TUBING

Gas	Undiluted Propane
Inlet Pressure	2.0 psi
Pressure Drop	1.0 psi
Specific Gravity	1.50

INTENDED USE		**Tube sizing between 2 psig service and line pressure regulator.**								
		TUBE SIZE (inch)								
Nominal	**K & L**	**1/4**	**3/8**	**1/2**	**5/8**	**3/4**	**1**	**1 1/4**	**1 1/2**	**2**
	ACR	**3/8**	**1/2**	**5/8**	**3/4**	**7/8**	**1 1/8**	**1 3/8**	**—**	**—**
Outside		**0.375**	**0.500**	**0.625**	**0.750**	**0.875**	**1.125**	**1.375**	**1.625**	**2.125**
Inside		**0.305**	**0.402**	**0.527**	**0.652**	**0.745**	**0.995**	**1.245**	**1.481**	**1.959**
Length (ft)		**Capacity in Thousands of Btu per Hour**								
10		413	852	1,730	3,030	4,300	9,170	16,500	26,000	54,200
20		284	585	1,190	2,080	2,950	6,310	11,400	17,900	37,300
30		228	470	956	1,670	2,370	5,060	9,120	14,400	29,900
40		195	402	818	1,430	2,030	4,330	7,800	12,300	25,600
50		173	356	725	1,270	1,800	3,840	6,920	10,900	22,700
60		157	323	657	1,150	1,630	3,480	6,270	9,880	20,600
70		144	297	605	1,060	1,500	3,200	5,760	9,090	18,900
80		134	276	562	983	1,390	2,980	5,360	8,450	17,600
90		126	259	528	922	1,310	2,790	5,030	7,930	16,500
100		119	245	498	871	1,240	2,640	4,750	7,490	15,600
125		105	217	442	772	1,100	2,340	4,210	6,640	13,800
150		95	197	400	700	992	2,120	3,820	6,020	12,500
175		88	181	368	644	913	1,950	3,510	5,540	11,500
200		82	168	343	599	849	1,810	3,270	5,150	10,700
250		72	149	304	531	753	1,610	2,900	4,560	9,510
300		66	135	275	481	682	1,460	2,620	4,140	8,610
350		60	124	253	442	628	1,340	2,410	3,800	7,920
400		56	116	235	411	584	1,250	2,250	3,540	7,370
450		53	109	221	386	548	1,170	2,110	3,320	6,920
500		50	103	209	365	517	1,110	1,990	3,140	6,530
550		47	97	198	346	491	1,050	1,890	2,980	6,210
600		45	93	189	330	469	1,000	1,800	2,840	5,920
650		43	89	181	316	449	959	1,730	2,720	5,670
700		41	86	174	304	431	921	1,660	2,620	5,450
750		40	82	168	293	415	888	1,600	2,520	5,250
800		39	80	162	283	401	857	1,540	2,430	5,070
850		37	77	157	274	388	829	1,490	2,350	4,900
900		36	75	152	265	376	804	1,450	2,280	4,750
950		35	72	147	258	366	781	1,410	2,220	4,620
1,000		34	71	143	251	356	760	1,370	2,160	4,490
1,100		32	67	136	238	338	721	1,300	2,050	4,270
1,200		31	64	130	227	322	688	1,240	1,950	4,070
1,300		30	61	124	217	309	659	1,190	1,870	3,900
1,400		28	59	120	209	296	633	1,140	1,800	3,740
1,500		27	57	115	201	286	610	1,100	1,730	3,610
1,600		26	55	111	194	276	589	1,060	1,670	3,480
1,700		26	53	108	188	267	570	1,030	1,620	3,370
1,800		25	51	104	182	259	553	1,000	1,570	3,270
1,900		24	50	101	177	251	537	966	1,520	3,170
2,000		23	48	99	172	244	522	940	1,480	3,090

For SI: 1 inch = 25.4 mm, 1 foot = 304.8 mm, 1 pound per square inch = 6.895 kPa, 1-inch water column = 0.2488 kPa, 1 British thermal unit per hour = 0.2931 W, 1 cubic foot per hour = 0.0283 m^3/h, 1 degree = 0.01745 rad.

Notes:

1. Table capacities are based on Type K copper tubing inside diameter (shown), which has the smallest inside diameter of the copper tubing products.
2. All table entries have been rounded to three significant digits.

❖ See the commentary to Section 402.4.

INTERNATIONAL CODE COUNCIL®
Copyright © 2015 ICC. ALL RIGHTS RESERVED. Accessed by David Dammon on Jun 21, 2017 12:30:52 PM pursuant to License Agreement with ICC. No further reproduction or distribution authorized. ANY UNAUTHORIZED REPRODUCTION OR DISTRIBUTION IS A VIOLATION OF THE FEDERAL COPYRIGHT ACT AND THE LICENSE AGREEMENT, AND SUBJECT TO CIVIL AND CRIMINAL PENALTIES THEREUNDER.

TABLE 402.4(32)
CORRUGATED STAINLESS STEEL TUBING (CSST)

Gas	Undiluted Propane
Inlet Pressure	11.0 in. w.c.
Pressure Drop	0.5 in. w.c.
Specific Gravity	1.50

INTENDED USE: SIZING BETWEEN SINGLE OR SECOND STAGE (Low Pressure) REGULATOR AND THE APPLIANCE SHUTOFF VALVE														
	TUBE SIZE (EHD)													
Flow Designation	**13**	**15**	**18**	**19**	**23**	**25**	**30**	**31**	**37**	**39**	**46**	**48**	**60**	**62**
Length (ft)	**Capacity in Thousands of Btu per Hour**													
5	72	99	181	211	355	426	744	863	1,420	1,638	2,830	3,270	5,780	6,550
10	50	69	129	150	254	303	521	605	971	1,179	1,990	2,320	4,110	4,640
15	39	55	104	121	208	248	422	490	775	972	1,620	1,900	3,370	3,790
20	34	49	91	106	183	216	365	425	661	847	1,400	1,650	2,930	3,290
25	30	42	82	94	164	192	325	379	583	762	1,250	1,480	2,630	2,940
30	28	39	74	87	151	177	297	344	528	698	1,140	1,350	2,400	2,680
40	23	33	64	74	131	153	256	297	449	610	988	1,170	2,090	2,330
50	20	30	58	66	118	137	227	265	397	548	884	1,050	1,870	2,080
60	19	26	53	60	107	126	207	241	359	502	805	961	1,710	1,900
70	17	25	49	57	99	117	191	222	330	466	745	890	1,590	1,760
80	15	23	45	52	94	109	178	208	307	438	696	833	1,490	1,650
90	15	22	44	50	90	102	169	197	286	414	656	787	1,400	1,550
100	14	20	41	47	85	98	159	186	270	393	621	746	1,330	1,480
150	11	15	31	36	66	75	123	143	217	324	506	611	1,090	1,210
200	9	14	28	33	60	69	112	129	183	283	438	531	948	1,050
250	8	12	25	30	53	61	99	117	163	254	390	476	850	934
300	8	11	23	26	50	57	90	107	147	234	357	434	777	854

For SI: 1 inch = 25.4 mm, 1 foot = 304.8 mm, 1 pound per square inch = 6.895 kPa, 1-inch water column = 0.2488 kPa, 1 British thermal unit per hour = 0.2931 W, 1 cubic foot per hour = 0.0283 m^3/h, 1 degree = 0.01745 rad.

Notes:

1. Table includes losses for four 90-degree bends and two end fittings. Tubing runs with larger numbers of bends or fittings shall be increased by an equivalent length of tubing to the following equation: $L = 1.3n$ where L is additional length (feet) of tubing and n is the number of additional fittings or bends.
2. EHD—Equivalent Hydraulic Diameter, which is a measure of the relative hydraulic efficiency between different tubing sizes. The greater the value of EHD, the greater the gas capacity of the tubing.
3. All table entries have been rounded to three significant digits.

❖ See the commentary to Section 402.4.

INTERNATIONAL CODE COUNCIL®
Copyright © 2015 ICC. ALL RIGHTS RESERVED. Accessed by David Dammon on Jun 21, 2017 12:30:52 PM pursuant to License Agreement with ICC. No further reproduction or distribution authorized. ANY UNAUTHORIZED REPRODUCTION OR DISTRIBUTION IS A VIOLATION OF THE FEDERAL COPYRIGHT ACT AND THE LICENSE AGREEMENT, AND SUBJECT TO CIVIL AND CRIMINAL PENALTIES THEREUNDER.

TABLE 402.4(33)
CORRUGATED STAINLESS STEEL TUBING (CSST)

Gas	Undiluted Propane
Inlet Pressure	2.0 psi
Pressure Drop	1.0 psi
Specific Gravity	1.50

INTENDED USE: SIZING BETWEEN 2 PSI SERVICE AND THE LINE PRESSURE REGULATOR														
	TUBE SIZE (EHD)													
Flow Designation	**13**	**15**	**18**	**19**	**23**	**25**	**30**	**31**	**37**	**39**	**46**	**48**	**60**	**62**
Length (ft)	**Capacity in Thousands of Btu per Hour**													
10	426	558	927	1,110	1,740	2,170	4,100	4,720	7,130	7,958	15,200	16,800	29,400	34,200
25	262	347	591	701	1,120	1,380	2,560	2,950	4,560	5,147	9,550	10,700	18,800	21,700
30	238	316	540	640	1,030	1,270	2,330	2,690	4,180	4,719	8,710	9,790	17,200	19,800
40	203	271	469	554	896	1,100	2,010	2,320	3,630	4,116	7,530	8,500	14,900	17,200
50	181	243	420	496	806	986	1,790	2,070	3,260	3,702	6,730	7,610	13,400	15,400
75	147	196	344	406	663	809	1,460	1,690	2,680	3,053	5,480	6,230	11,000	12,600
80	140	189	333	393	643	768	1,410	1,630	2,590	2,961	5,300	6,040	10,600	12,200
100	124	169	298	350	578	703	1,260	1,450	2,330	2,662	4,740	5,410	9,530	10,900
150	101	137	245	287	477	575	1,020	1,180	1,910	2,195	3,860	4,430	7,810	8,890
200	86	118	213	248	415	501	880	1,020	1,660	1,915	3,340	3,840	6,780	7,710
250	77	105	191	222	373	448	785	910	1,490	1,722	2,980	3,440	6,080	6,900
300	69	96	173	203	343	411	716	829	1,360	1,578	2,720	3,150	5,560	6,300
400	60	82	151	175	298	355	616	716	1,160	1,376	2,350	2,730	4,830	5,460
500	53	72	135	158	268	319	550	638	1,030	1,237	2,100	2,450	4,330	4,880

For SI: 1 inch = 25.4 mm, 1 foot = 304.8 mm, 1 pound per square inch = 6.895kPa, 1-inch water column = 0.2488 kPa,
1 British thermal unit per hour = 0.293 1 W, 1 cubic foot per hour = 0.0283 m^3/h, 1 degree = 0.01745 rad.

Notes:

1. Table does not include effect of pressure drop across the line regulator. Where regulator loss exceeds $^1/_2$ psi (based on 13 in. w.c. outlet pressure), DO NOT USE THIS TABLE. Consult with the regulator manufacturer for pressure drops and capacity factors. Pressure drops across a regulator may vary with flow rate.
2. CAUTION: Capacities shown in the table might exceed maximum capacity for a selected regulator. Consult with the regulator or tubing manufacturer for guidance.
3. Table includes losses for four 90-degree bends and two end fittings. Tubing runs with larger numbers of bends or fittings shall be increased by an equivalent length of tubing to the following equation: $L = 1.3n$ where L is additional length (feet) of tubing and n is the number of additional fittings or bends.
4. EHD—Equivalent Hydraulic Diameter, which is a measure of the relative hydraulic efficiency between different tubing sizes. The greater the value of EHD, the greater the gas capacity of the tubing.
5. All table entries have been rounded to three significant digits.

❖ See the commentary to Section 402.4.

INTERNATIONAL CODE COUNCIL®
Copyright © 2015 ICC. ALL RIGHTS RESERVED. Accessed by David Dammon on Jun 21, 2017 12:30:52 PM pursuant to License Agreement with ICC. No further reproduction or distribution authorized. ANY UNAUTHORIZED REPRODUCTION OR DISTRIBUTION IS A VIOLATION OF THE FEDERAL COPYRIGHT ACT AND THE LICENSE AGREEMENT, AND SUBJECT TO CIVIL AND CRIMINAL PENALTIES THEREUNDER.

TABLE 402.4(34)
CORRUGATED STAINLESS STEEL TUBING (CSST)

Gas	Undiluted Propane
Inlet Pressure	5.0 psi
Pressure Drop	3.5 psi
Specific Gravity	1.50

TUBE SIZE (EHD)														
Flow Designation	**13**	**15**	**18**	**19**	**23**	**25**	**30**	**31**	**37**	**39**	**46**	**48**	**60**	**62**
Length (ft)	**Capacity in Thousands of Btu per Hour**													
10	826	1,070	1,710	2,060	3,150	4,000	7,830	8,950	13,100	14,441	28,600	31,200	54,400	63,800
25	509	664	1,090	1,310	2,040	2,550	4,860	5,600	8,400	9,339	18,000	19,900	34,700	40,400
30	461	603	999	1,190	1,870	2,340	4,430	5,100	7,680	8,564	16,400	18,200	31,700	36,900
40	396	520	867	1,030	1,630	2,030	3,820	4,400	6,680	7,469	14,200	15,800	27,600	32,000
50	352	463	777	926	1,460	1,820	3,410	3,930	5,990	6,717	12,700	14,100	24,700	28,600
75	284	376	637	757	1,210	1,490	2,770	3,190	4,920	5,539	10,300	11,600	20,300	23,400
80	275	363	618	731	1,170	1,450	2,680	3,090	4,770	5,372	9,990	11,200	19,600	22,700
100	243	324	553	656	1,050	1,300	2,390	2,760	4,280	4,830	8,930	10,000	17,600	20,300
150	196	262	453	535	866	1,060	1,940	2,240	3,510	3,983	7,270	8,210	14,400	16,600
200	169	226	393	464	755	923	1,680	1,930	3,050	3,474	6,290	7,130	12,500	14,400
250	150	202	352	415	679	828	1,490	1,730	2,740	3,124	5,620	6,390	11,200	12,900
300	136	183	322	379	622	757	1,360	1,570	2,510	2,865	5,120	5,840	10,300	11,700
400	117	158	279	328	542	657	1,170	1,360	2,180	2,498	4,430	5,070	8,920	10,200
500	104	140	251	294	488	589	1,050	1,210	1,950	2,247	3,960	4,540	8,000	9,110

For SI: 1 inch = 25.4 mm, 1 foot = 304.8 mm, 1 pound per square inch = 6.895 kPa, 1-inch water column = 0.2488 kPa,
1 British thermal unit per hour = 0.2931 W, 1 cubic foot per hour = 0.0283 m^3/h, 1 degree = 0.01745 rad.

Notes:

1 Table does not include effect of pressure drop across line regulator. Where regulator loss exceeds 1 psi, DO NOT USE THIS TABLE. Consult with the regulator manufacturer for pressure drops and capacity factors. Pressure drop across regulator may vary with the flow rate.

2. CAUTION: Capacities shown in the table might exceed maximum capacity of selected regulator. Consult with the tubing manufacturer for guidance.

3. Table includes losses for four 90-degree bends and two end fittings. Tubing runs with larger numbers of bends or fittings shall be increased by an equivalent length of tubing to the following equation: $L = 1.3n$ where L is additional length (feet) of tubing and n is the number of additional fittings or bends.

4. EHD—Equivalent Hydraulic Diameter, which is a measure of the relative hydraulic efficiency between different tubing sizes. The greater the value of EHD, the greater the gas capacity of the tubing.

5. All table entries have been rounded to three significant digits.

❖ See the commentary to Section 402.4.

INTERNATIONAL CODE COUNCIL®
Copyright © 2015 ICC. ALL RIGHTS RESERVED. Accessed by David Dammon on Jun 21, 2017 12:30:52 PM pursuant to License Agreement with ICC. No further reproduction or distribution authorized. ANY UNAUTHORIZED REPRODUCTION OR DISTRIBUTION IS A VIOLATION OF THE FEDERAL COPYRIGHT ACT AND THE LICENSE AGREEMENT, AND SUBJECT TO CIVIL AND CRIMINAL PENALTIES THEREUNDER.

TABLE 402.4(35)
POLYETHYLENE PLASTIC PIPE

Gas	Undiluted Propane
Inlet Pressure	11.0 in. w.c.
Pressure Drop	0.5 in. w.c.
Specific Gravity	1.50

INTENDED USE	**PE pipe sizing between integral two-stage regulator at tank or second stage (low-pressure regulator) and building.**							
	PIPE SIZE (inch)							
Nominal OD	**$^1/_2$**	**$^3/_4$**	**1**	**$1^1/_4$**	**$1^1/_2$**	**2**	**3**	**4**
Designation	**SDR 9**	**SDR 11**	**SDR 11**	**SDR 10**	**SDR 11**	**SDR 11**	**SDR 11**	**SDR 11**
Actual ID	**0.660**	**0.860**	**1.077**	**1.328**	**1.554**	**1.943**	**2.864**	**3.682**
Length (ft)	**Capacity in Thousands of Btu per Hour**							
10	340	680	1,230	2,130	3,210	5,770	16,000	30,900
20	233	468	844	1,460	2,210	3,970	11,000	21,200
30	187	375	677	1,170	1,770	3,180	8,810	17,000
40	160	321	580	1,000	1,520	2,730	7,540	14,600
50	142	285	514	890	1,340	2,420	6,680	12,900
60	129	258	466	807	1,220	2,190	6,050	11,700
70	119	237	428	742	1,120	2,010	5,570	10,800
80	110	221	398	690	1,040	1,870	5,180	10,000
90	103	207	374	648	978	1,760	4,860	9,400
100	98	196	353	612	924	1,660	4,590	8,900
125	87	173	313	542	819	1,470	4,070	7,900
150	78	157	284	491	742	1,330	3,690	7,130
175	72	145	261	452	683	1,230	3,390	6,560
200	67	135	243	420	635	1,140	3,160	6,100
250	60	119	215	373	563	1,010	2,800	5,410
300	54	108	195	338	510	916	2,530	4,900
350	50	99	179	311	469	843	2,330	4,510
400	46	92	167	289	436	784	2,170	4,190
450	43	87	157	271	409	736	2,040	3,930
500	41	82	148	256	387	695	1,920	3,720

For SI: 1 inch = 25.4 mm, 1 foot = 304.8 mm, 1 pound per square inch = 6.895 kPa, 1-inch water column = 0.2488 kPa, 1 British thermal unit per hour = 0.2931 W, 1 cubic foot per hour = 0.0283 m^3/h, 1 degree = 0.01745 rad.

Note: All table entries have been rounded to three significant digits.

❖ See the commentary to Section 402.4.

INTERNATIONAL CODE COUNCIL®
Copyright © 2015 ICC. ALL RIGHTS RESERVED. Accessed by David Dammon on Jun 21, 2017 12:30:52 PM pursuant to License Agreement with ICC. No further reproduction or distribution authorized. ANY UNAUTHORIZED REPRODUCTION OR DISTRIBUTION IS A VIOLATION OF THE FEDERAL COPYRIGHT ACT AND THE LICENSE AGREEMENT, AND SUBJECT TO CIVIL AND CRIMINAL PENALTIES THEREUNDER.

TABLE 402.4(36)
POLYETHYLENE PLASTIC PIPE

Gas	Undiluted Propane
Inlet Pressure	2.0 psi
Pressure Drop	1.0 psi
Specific Gravity	1.50

INTENDED USE	**PE pipe sizing between 2 psig service regulator and line pressure regulator.**							
	PIPE SIZE (inch)							
Nominal OD	**$^1/_2$**	**$^3/_4$**	**1**	**$1^1/_4$**	**$1^1/_2$**	**2**	**3**	**4**
Designation	**SDR 9**	**SDR 11**	**SDR 11**	**SDR 10**	**SDR 11**	**SDR 11**	**SDR 11**	**SDR 11**
Actual ID	**0.660**	**0.860**	**1.077**	**1.328**	**1.554**	**1.943**	**2.864**	**3.682**
Length (ft)	**Capacity in Thousands of Btu per Hour**							
10	3,130	6,260	11,300	19,600	29,500	53,100	147,000	284,000
20	2,150	4,300	7,760	13,400	20,300	36,500	101,000	195,000
30	1,730	3,450	6,230	10,800	16,300	29,300	81,100	157,000
40	1,480	2,960	5,330	9,240	14,000	25,100	69,400	134,100
50	1,310	2,620	4,730	8,190	12,400	22,200	61,500	119,000
60	1,190	2,370	4,280	7,420	11,200	20,100	55,700	108,000
70	1,090	2,180	3,940	6,830	10,300	18,500	51,300	99,100
80	1,010	2,030	3,670	6,350	9,590	17,200	47,700	92,200
90	952	1,910	3,440	5,960	9,000	16,200	44,700	86,500
100	899	1,800	3,250	5,630	8,500	15,300	42,300	81,700
125	797	1,600	2,880	4,990	7,530	13,500	37,500	72,400
150	722	1,450	2,610	4,520	6,830	12,300	33,900	65,600
175	664	1,330	2,400	4,160	6,280	11,300	31,200	60,300
200	618	1,240	2,230	3,870	5,840	10,500	29,000	56,100
250	548	1,100	1,980	3,430	5,180	9,300	25,700	49,800
300	496	994	1,790	3,110	4,690	8,430	23,300	45,100
350	457	914	1,650	2,860	4,320	7,760	21,500	41,500
400	425	851	1,530	2,660	4,020	7,220	12,000	38,600
450	399	798	1,440	2,500	3,770	6,770	18,700	36,200
500	377	754	1,360	2,360	3,560	6,390	17,700	34,200
550	358	716	1,290	2,240	3,380	6,070	16,800	32,500
600	341	683	1,230	2,140	3,220	5,790	16,000	31,000
650	327	654	1,180	2,040	3,090	5,550	15,400	29,700
700	314	628	1,130	1,960	2,970	5,330	14,700	28,500
750	302	605	1,090	1,890	2,860	5,140	14,200	27,500
800	292	585	1,050	1,830	2,760	4,960	13,700	26,500
850	283	566	1,020	1,770	2,670	4,800	13,300	25,700
900	274	549	990	1,710	2,590	4,650	12,900	24,900
950	266	533	961	1,670	2,520	4,520	12,500	24,200
1,000	259	518	935	1,620	2,450	4,400	12,200	23,500
1,100	246	492	888	1,540	2,320	4,170	11,500	22,300
1,200	234	470	847	1,470	2,220	3,980	11,000	21,300
1,300	225	450	811	1,410	2,120	3,810	10,600	20,400
1,400	216	432	779	1,350	2,040	3,660	10,100	19,600
1,500	208	416	751	1,300	1,960	3,530	9,760	18,900
1,600	201	402	725	1,260	1,900	3,410	9,430	18,200
1,700	194	389	702	1,220	1,840	3,300	9,130	17,600
1,800	188	377	680	1,180	1,780	3,200	8,850	17,100
1,900	183	366	661	1,140	1,730	3,110	8,590	16,600
2,000	178	356	643	1,110	1,680	3,020	8,360	16,200

For SI: 1 inch = 25.4 mm, 1 foot = 304.8 mm, 1 pound per square inch = 6.895 kPa, 1-inch water column = 0.2488 kPa, 1 British thermal unit per hour = 0.2931 W, 1 cubic foot per hour = 0.0283 m^3/h, 1 degree = 0.01745 rad.

Note: All table entries have been rounded to three significant digits.

❖ See the commentary to Section 402.4.

INTERNATIONAL CODE COUNCIL®
Copyright © 2015 ICC. ALL RIGHTS RESERVED. Accessed by David Dammon on Jun 21, 2017 12:30:52 PM pursuant to License Agreement with ICC. No further reproduction or distribution authorized. ANY UNAUTHORIZED REPRODUCTION OR DISTRIBUTION IS A VIOLATION OF THE FEDERAL COPYRIGHT ACT AND THE LICENSE AGREEMENT, AND SUBJECT TO CIVIL AND CRIMINAL PENALTIES THEREUNDER.

TABLE 402.4(37)
POLYETHYLENE PLASTIC TUBING

Gas	Undiluted Propane
Inlet Pressure	11.0 in. w.c.
Pressure Drop	0.5 in. w.c.
Specific Gravity	1.50

INTENDED USE	**PE pipe sizing between integral two-stage regulator at tank or second stage (low-pressure regulator) and building.**	
Plastic Tubing Size (CTS) (inch)		
Nominal OD	**$^1/_2$**	**1**
Designation	**SDR 7**	**SDR 11**
Actual ID	**0.445**	**0.927**
Length (ft)	**Capacity in Cubic Feet of Gas per Hour**	
10	121	828
20	83	569
30	67	457
40	57	391
50	51	347
60	46	314
70	42	289
80	39	269
90	37	252
100	35	238
125	31	211
150	28	191
175	26	176
200	24	164
225	22	154
250	21	145
275	20	138
300	19	132
350	18	121
400	16	113
450	15	106
500	15	100

For SI: 1 inch = 25.4 mm, 1 foot = 304.8 mm,
1 pound per square inch = 6.895 kPa,
1-inch water column = 0.2488 kPa,
1 British thermal unit per hour = 0.293 1 W,
1 cubic foot per hour = 0.0283 m^3/h, 1 degree = 0.0 1745 rad.

Note: All table entries have been rounded to three significant digits.

❖ See the commentary to Section 402.4.

INTERNATIONAL CODE COUNCIL®
Copyright © 2015 ICC. ALL RIGHTS RESERVED. Accessed by David Dammon on Jun 21, 2017 12:30:52 PM pursuant to License Agreement with ICC. No further reproduction or distribution authorized. ANY UNAUTHORIZED REPRODUCTION OR DISTRIBUTION IS A VIOLATION OF THE FEDERAL COPYRIGHT ACT AND THE LICENSE AGREEMENT, AND SUBJECT TO CIVIL AND CRIMINAL PENALTIES THEREUNDER.

SECTION 403 (IFGS)
PIPING MATERIALS

403.1 General. Materials used for *piping* systems shall comply with the requirements of this chapter or shall be *approved*.

❖ This section dictates what materials and components can be used to construct gas distribution systems and also specifies the allowable applications of those materials.

403.2 Used materials. Pipe, fittings, valves and other materials shall not be used again except where they are free of foreign materials and have been ascertained to be adequate for the service intended.

❖ Ideally, gas pipe installations should be constructed of new materials. However, this section recognizes that there are occasions when used piping materials may be perfectly acceptable for an installation if they meet a number of very strict criteria that intend to reduce the potential for poor performance. To judge equivalency of reused piping materials, compliance with approval criteria for new materials should be used.

403.3 Other materials. Material not covered by the standards specifications listed herein shall be investigated and tested to determine that it is safe and suitable for the proposed service, and, in addition, shall be recommended for that service by the manufacturer and shall be *approved* by the code official.

❖ This section echoes the intent of Section 105.2.

403.4 Metallic pipe. Metallic pipe shall comply with Sections 403.4.1 through 403.4.4.

❖ This section addresses the traditional metal pipes used in piping installations.

403.4.1 Cast iron. Cast-iron pipe shall not be used.

❖ Because cast-iron pipe is brittle compared to the malleable metals, it is more likely to fail under stress and therefore is not suitable for conveying fuel gases.

403.4.2 Steel. Steel and wrought-iron pipe shall be not less than standard weight (Schedule 40) and shall comply with one of the following standards:

1. ASME B36.10, 10M.
2. ASTM A53/A53M.
3. ASTM A106.

❖ Steel pipe must be Schedule 40 or heavier, must comply with one of the listed standards, and can be black iron or galvanized. Contrary to popular belief, natural gas does not adversely react with the zinc coating on galvanized pipe.

403.4.3 Copper and copper alloy. Copper and copper alloy pipe shall not be used if the gas contains more than an average of 0.3 grains of hydrogen sulfide per 100 standard cubic feet of gas (0.7 milligrams per 100 liters). Threaded copper, copper alloy and aluminum-alloy pipe shall not be used with gases corrosive to such materials.

❖ The intent of this section is to prohibit the use of a piping and tubing material where it would be subject to corrosion from the fuel gas. Gas piping materials must be chemically compatible with the fuel gas that will be conveyed in the piping. For example, natural gas contains trace amounts of hydrogen sulfide and, depending on the concentration of the sulfur compound, can be corrosive to copper and brass pipe and tubing. The chemical reaction can create a precipitant on the pipe interior walls. The precipitant can flake off and be carried into appliance gas controls, causing hazardous operation. This is one of the reasons why the code requires sediment traps at connections to appliances. The code considers natural gas to be corrosive if it contains more than an average of 0.3 grain (0.0194 g) of hydrogen sulfide per 100 cubic feet (2.83 m^3) of gas. Most pipeline-quality gas does not exceed this limit; however, the gas supplier must be consulted to obtain the chemical composition of the gas that will be conveyed by copper pipe or tubing.

403.4.4 Aluminum. Aluminum-alloy pipe shall comply with ASTM B241 except that the use of alloy 5456 is prohibited. Aluminum-alloy pipe shall be marked at each end of each length indicating compliance. Aluminum-alloy pipe shall be coated to protect against external corrosion where it is in contact with masonry, plaster or insulation, or is subject to repeated wettings by such liquids as water, detergents or sewage. Aluminum-alloy pipe shall not be used in exterior locations or underground.

❖ Aluminum pipe is not commonly used for gas service. Because aluminum is a fairly reactive metal, it corrodes readily when exposed to a variety of materials and the environment.

403.5 Metallic tubing. Seamless copper, aluminum alloy and steel tubing shall not be used with gases corrosive to such materials.

❖ Aluminum and steel tubing are used in the manufacturing of appliances but are rarely used for gas distribution. Copper tubing is widely used in gas distribution systems and is used as an alternative to CSST in parallel distribution manifold systems. As with copper pipe, copper tubing cannot be used with gases that will cause it to corrode. Commentary Figure 403.5 illustrates a type of sheathed copper tubing



Figure 403.5
PLASTIC-SHEATHED COPPER TUBING
(Photo courtesy of KAMCO Products Ltd.)

INTERNATIONAL CODE COUNCIL®
Copyright © 2015 ICC. ALL RIGHTS RESERVED. Accessed by David Dammon on Jun 21, 2017 12:30:52 PM pursuant to License Agreement with ICC. No further reproduction or distribution authorized. ANY UNAUTHORIZED REPRODUCTION OR DISTRIBUTION IS A VIOLATION OF THE FEDERAL COPYRIGHT ACT AND THE LICENSE AGREEMENT, AND SUBJECT TO CIVIL AND CRIMINAL PENALTIES THEREUNDER.

that is designed for gas distribution. The corrosiveness of the gas can be determined by contacting the gas supplier. Depending upon the chemical composition of the gas, copper can form scale deposits on the interior pipe wall. Such scale can find its way into gas controls, regulators and valves, causing malfunctions.

403.5.1 Steel tubing. Steel tubing shall comply with ASTM A254.

❖ Steel tubing is used only in industrial applications and in the construction of appliances.

403.5.2 Copper and copper alloy tubing. Copper tubing shall comply with Standard Type K or L of ASTM B88 or ASTM B280.

Copper and copper alloy tubing shall not be used if the gas contains more than an average of 0.3 grains of hydrogen sulfide per 100 standard cubic feet of gas (0.7 milligrams per 100 liters).

❖ ASTM B88 applies to copper water tube, and Types K and L refer to wall thickness. Type M tubing has the thinnest wall and is not allowed for gas service.

403.5.3 Aluminum tubing. Aluminum-alloy tubing shall comply with ASTM B210 or ASTM B241. Aluminum-alloy tubing shall be coated to protect against external corrosion where it is in contact with masonry, plaster or insulation, or is subject to repeated wettings by such liquids as water, detergent or sewage.

Aluminum-alloy tubing shall not be used in exterior locations or underground.

❖ See the commentary to Section 403.4.4.

403.5.4 Corrugated stainless steel tubing. Corrugated stainless steel tubing shall be *listed* in accordance with ANSI LC 1/CSA 6.26.

❖ ANSI LC-1 contains material, performance criteria and installation requirements for CSST gas distribution systems. CSST systems are used as an alternative to more traditional gas piping systems for the distribution of natural gas within buildings.

Corrugated stainless steel tubing is a semirigid stainless steel tubing with a plastic jacket and is available in coil lengths varying from 100 to 250 feet (30 480 to 76 200 mm) and in the following standard sizes: $^3/_8$, $^1/_2$, $^3/_4$, 1, $1^1/_4$, $1^1/_2$ and 2 inch (larger sizes may be available) [see Commentary Figure 403.5.4(1)]. Note that CSST sizes are designated by equivalent hydraulic diameters (EHD) not standard tube sizes in inches. Any standard size markings in inches provided by the manufacturer are approximations only. Special proprietary fittings are required for connection of the tubing [see Commentary Figures 403.5.4(2) through 403.5.4(4)]. CSST can be used in low-pressure systems [up to 0.5 psig (14 inches of water column) (3.45 kPa)] and in higher pressure systems operating at pressures up to 5 psig (34.5 kPa). Commentary Figure 403.5.4(5) shows a typical manifold installation using CSST and shows a multiport manifold with a pressure regulator and shutoff valve installed. To prevent damage or puncture by screws and nails, specialized steel shield plates and protective flexible conduit are used to protect CSST systems that pass through or near structural members. Such protection must employ the parts specified by the CSST manufacturer as opposed to standard off-the-shelf protection devices. [see Commentary Figures 403.5.4(1) and 403.5.4(6)].

CSST systems are usually designed as parallel distribution (manifold) systems, whereas traditional gas distribution systems are typically designed as

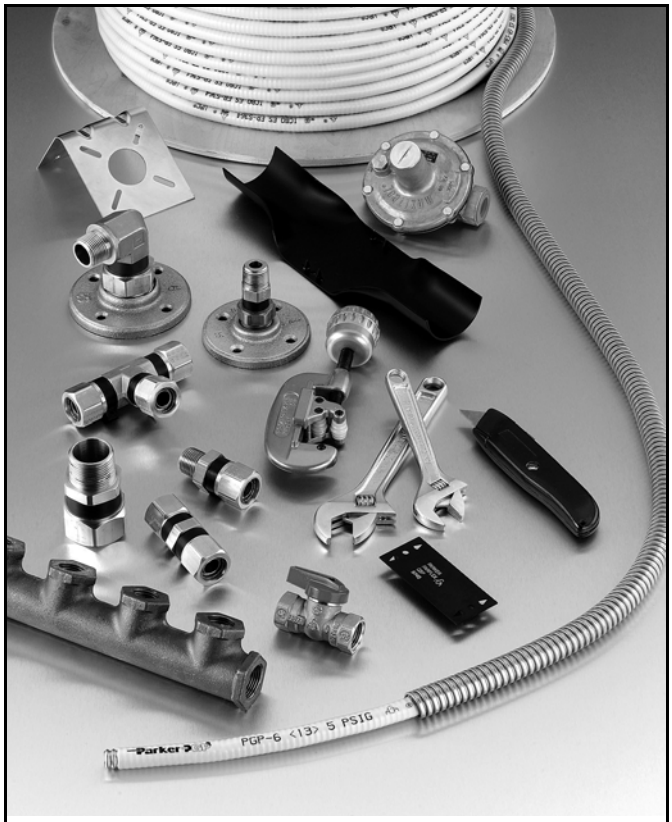

Figure 403.5.4(1)
CSST AND SYSTEM COMPONENTS
(Photo courtesy of Parker Hannifin)

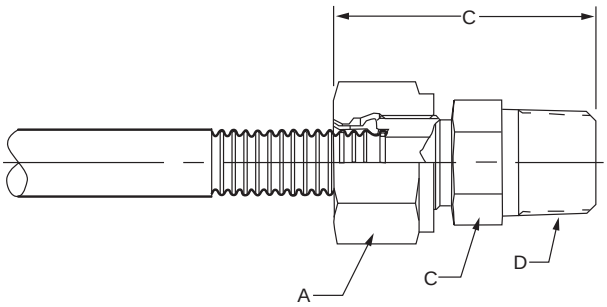

Figure 403.5.4(2)
CSST FITTING
(Figure courtesy of Parker Hannifin)

INTERNATIONAL CODE COUNCIL®
Copyright © 2015 ICC. ALL RIGHTS RESERVED. Accessed by David Dammon on Jun 21, 2017 12:30:52 PM pursuant to License Agreement with ICC. No further reproduction or distribution authorized. ANY UNAUTHORIZED REPRODUCTION OR DISTRIBUTION IS A VIOLATION OF THE FEDERAL COPYRIGHT ACT AND THE LICENSE AGREEMENT, AND SUBJECT TO CIVIL AND CRIMINAL PENALTIES THEREUNDER.

branch (series) systems [see Commentary Figure 403.5.4(7)].

Medium-pressure CSST systems, typically 2 psig (13.8 kPa) maximum, are designed to allow the use of small diameter tubing for long runs. Significant distribution pressure losses can be compensated for by providing sufficiently high supply pressures. Medium-pressure distribution systems require the installation of pressure regulators, commonly called pounds-to-inches regulators, to reduce the supply pressure to the pressure required for delivery to the gas-fired appliances [see commentary, Section 410 and Commentary Figure 403.5.4(8)]. Note that systems with pressures over 2 psi (13.8 kPa) that supply appliances designed for a maximum inlet pressure of 14 inches w.c. (3.5 kPa) must have over pressure protection devices (OPD) in addition to the pounds-to-inches line pressure regulators. Such OPD devices are factory-installed on pressure regulators shipped for use in systems having pressures greater than 2 psi (13.8 kPa).

Section 404.3 prohibits tubing fittings in concealed locations but this does not apply to CSST fittings. In accordance with the manufacturer's installation instructions and the material listing, CSST fittings can be concealed in the building construction. The tubing,

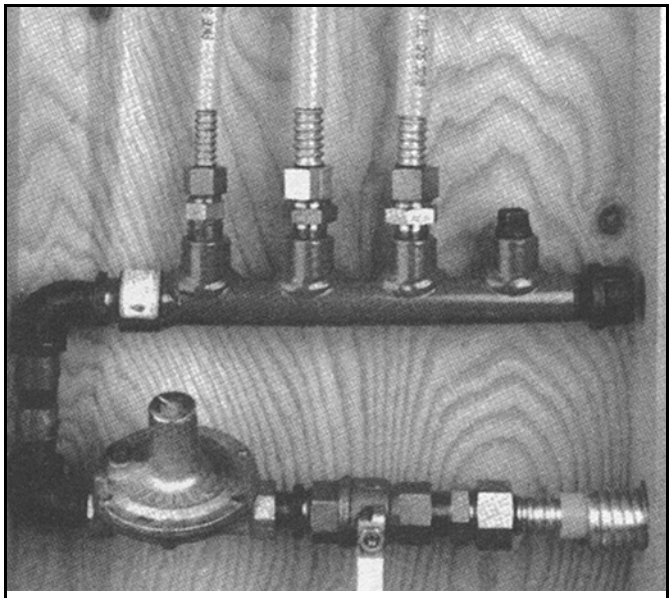

Figure 403.5.4(5)
MULTIPORT MANIFOLD INSTALLATION USING CSST
(Photo courtesy of Gastite Division/Titeflex Corporation)

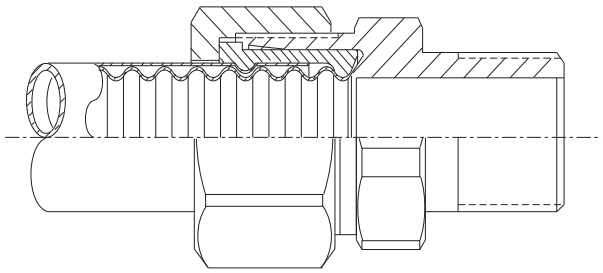

Figure 403.5.4(3)
CSST FITTING
(Figure courtesy of Gastite Division/Titeflex Corporation)

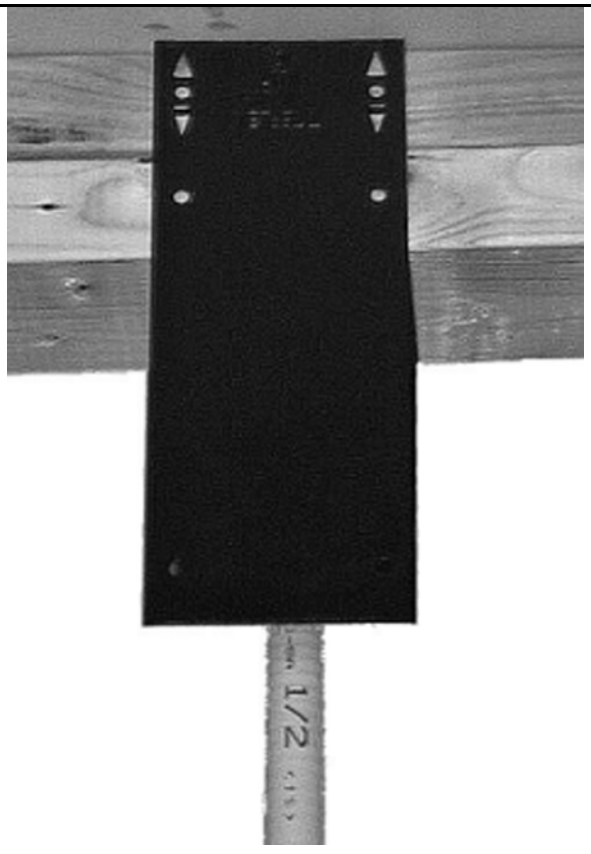

Figure 403.5.4(6)
TOP PLATE TUBING PROTECTION SHIELD
(Photo courtesy of Gastite Division/Titeflex Corporation)



Figure 403.5.4(4)
CSST FITTING
(Photo courtesy of Gastite Division/Titeflex Corporation)

INTERNATIONAL CODE COUNCIL®
Copyright © 2015 ICC. ALL RIGHTS RESERVED. Accessed by David Dammon on Jun 21, 2017 12:30:52 PM pursuant to License Agreement with ICC. No further reproduction or distribution authorized. ANY UNAUTHORIZED REPRODUCTION OR DISTRIBUTION IS A VIOLATION OF THE FEDERAL COPYRIGHT ACT AND THE LICENSE AGREEMENT, AND SUBJECT TO CIVIL AND CRIMINAL PENALTIES THEREUNDER.

fittings, shields and outlet terminals are all part of a system and must be installed together as a system.

The manufacturer's installation instructions are to be considered as a complete system installation manual, which also includes the proprietary sizing criteria. Except for those tables that are specific to CSST, the sizing tables in Section 402 do not apply to and cannot be used for CSST systems.

Installation of CSST is not allowed underground (directly buried) unless it is of a type specially designed and listed for underground applications [see Commentary Figure 403.5.4(9)]. Some manufacturers' installation instructions allow CSST to be "indirectly" buried by installing the tubing within a nonmetallic, water-tight conduit, such as PVC, PE or ABS plastic pipe. Other manufacturers may offer

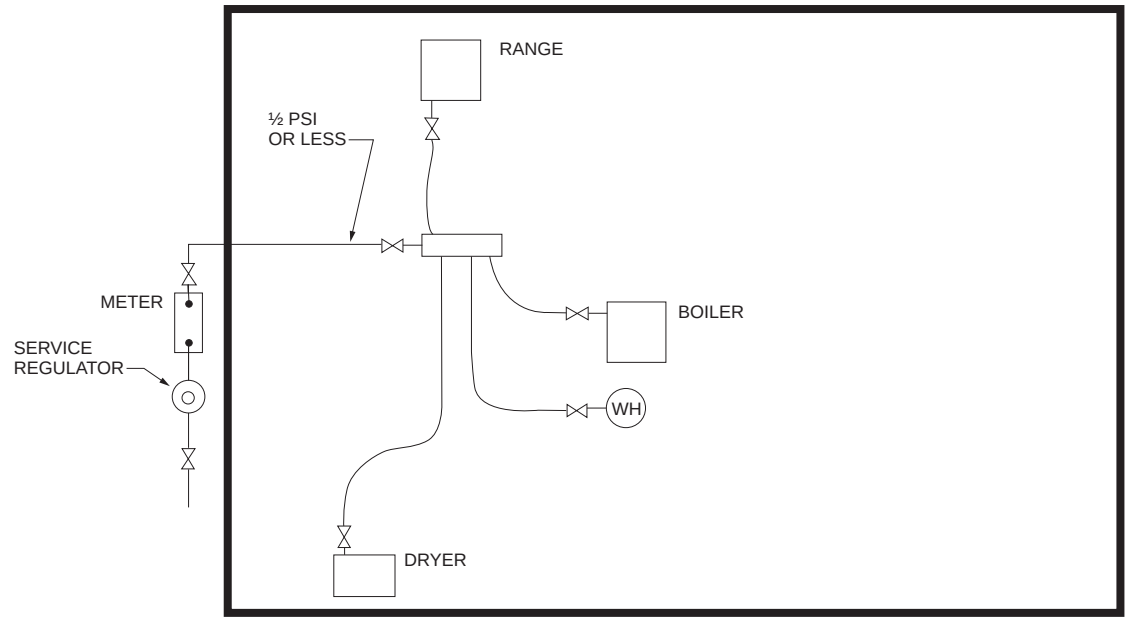

For SI: 1 pound per square inch = 6.895 kPa.

Figure 403.5.4(7)
LOW-PRESSURE GAS PIPING SYSTEM USING CSST

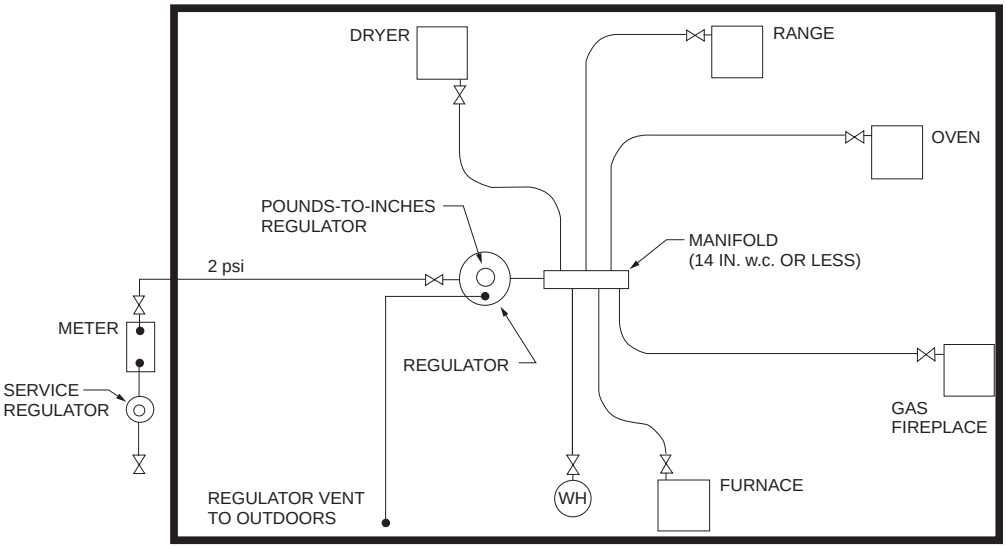

For SI: 1 pound per square inch = 6.895 kPa.

Figure 403.5.4(8)
MEDIUM-PRESSURE GAS PIPING SYSTEM USING CSST

INTERNATIONAL CODE COUNCIL®
Copyright © 2015 ICC. ALL RIGHTS RESERVED. Accessed by David Dammon on Jun 21, 2017 12:30:52 PM pursuant to License Agreement with ICC. No further reproduction or distribution authorized. ANY UNAUTHORIZED REPRODUCTION OR DISTRIBUTION IS A VIOLATION OF THE FEDERAL COPYRIGHT ACT AND THE LICENSE AGREEMENT, AND SUBJECT TO CIVIL AND CRIMINAL PENALTIES THEREUNDER.

CSST with an integral casing and sealing fittings specifically designed for underground installation. See Sections 404.6 and 404.14 regarding piping buried in slabs and beneath buildings.

CSST is allowed by the manufacturers' installation instructions to connect directly to fixed-in-place, nonportable, nonmovable appliances, such as furnaces, boilers, gas fireplaces and water heaters. CSST is not intended for direct connection to movable appliances such as clothes dryers or ranges, nor is it intended to connect to appliances suspended on chains or rods, such as radiant heaters and unit heaters. Also, connecting directly to log lighters installed in solid-fuel-burning fireplaces is not allowed. Direct connection is allowed for gas fireplace appliances in accordance with the CSST and fireplace manufacturers' instructions. At range and clothes dryer locations, the CSST must terminate at a CSST termination fitting assembly, and a gas appliance connector must be used to connect the appliance to the termination fitting assembly. CSST must not be exposed to impact, vibration or repeated movement. "Drops" to fixed-in-place, nonmovable appliances must be well supported and routed to avoid being disturbed. In other words "flying runs" of CSST are prohibited. CSST, like copper tubing, is not flexible, but rather is semi-rigid, allowing it to be formed into shape as it is installed. CSST, like any metallic tubing, must not be repeatedly bent in the same location because this can result in kinking, work hardening and structural failure.

Generally, the sale of CSST materials is restricted and only individuals who have been specially trained and certified are allowed to purchase and install CSST systems.

Traditionally, the utility company (gas supplier) service regulator delivers natural gas to the building at a pressure of approximately 6 to 10 inches w.c. (1.49 to 2.49 kPa). Where medium-pressure [2 psig (13.8 kPa)] systems are used, the service regulator is set to deliver gas at a pressure of 2 psig (13.8 kPa). A medium-pressure gas distribution system must be properly designed to deliver gas to the connected appliances at pressures not exceeding the maximum inlet (supply) pressure for which the appliance is designed. A hazardous condition could develop if gas is supplied to appliances at pressures greater than the design inlet pressure of the appliances. See Section 416 of the code.

ANSI LC-1/CSA6.26 addresses CSST systems and contains installation requirements. Installers and inspectors must have copies of the standard and the

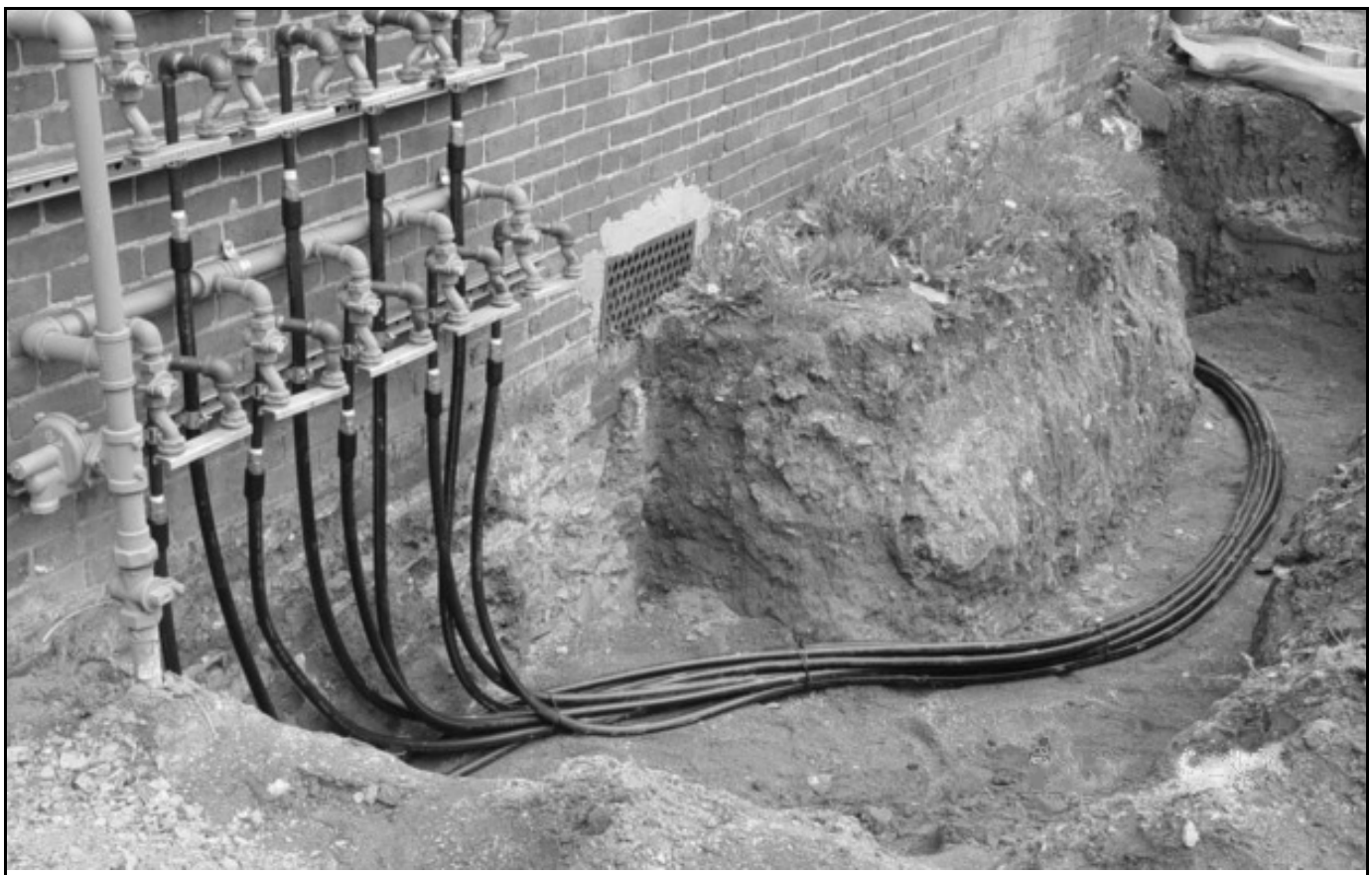

Figure 403.5.4(9)
CSST MANUFACTURED FOR UNDERGROUND INSTALLATION
(Photo courtesy of Omega Flex)

INTERNATIONAL CODE COUNCIL®
Copyright © 2015 ICC. ALL RIGHTS RESERVED. Accessed by David Dammon on Jun 21, 2017 12:30:52 PM pursuant to License Agreement with ICC. No further reproduction or distribution authorized. ANY UNAUTHORIZED REPRODUCTION OR DISTRIBUTION IS A VIOLATION OF THE FEDERAL COPYRIGHT ACT AND THE LICENSE AGREEMENT, AND SUBJECT TO CIVIL AND CRIMINAL PENALTIES THEREUNDER.

CSST manufacturer's installation instructions to properly install and inspect CSST systems. Manufacturers' instructions contain detailed requirements for protection hardware designed to prevent damage to installed CSST systems. As with most tubing systems, the most common installation errors involve abuse of the CSST tubing, lack of support and improperly installed puncture protection devices or the omission of protection devices. CSST manufacturers publish design and installation guides that are very helpful and should be on the bookshelves of inspectors, installers and designers [see Commentary Figures 403.5.4(10) and 403.5.4(11)]. Some CSST manufacturers offer pre-assembled manifolds in a rough-in cabinet to simplify installation [see Commentary Figure 403.5.4(12)]. CSST transitions to rigid pipe appliance connections and listed appliance connectors must be made with fittings that prevent stress and rotational forces from being applied to the CSST. Commentary Figures 403.5.4(13) through 403.5.4(15) illustrate typical fitting assemblies used to make the transition from CSST to appliance connections or connectors. It is a code violation to construct appliance outlets with a standard pipe elbow and rigid pipe nipple stubbed out of a wall or up through a floor because any rotational forces applied by tools to the outlet nipple will cause the CSST to rotate behind the

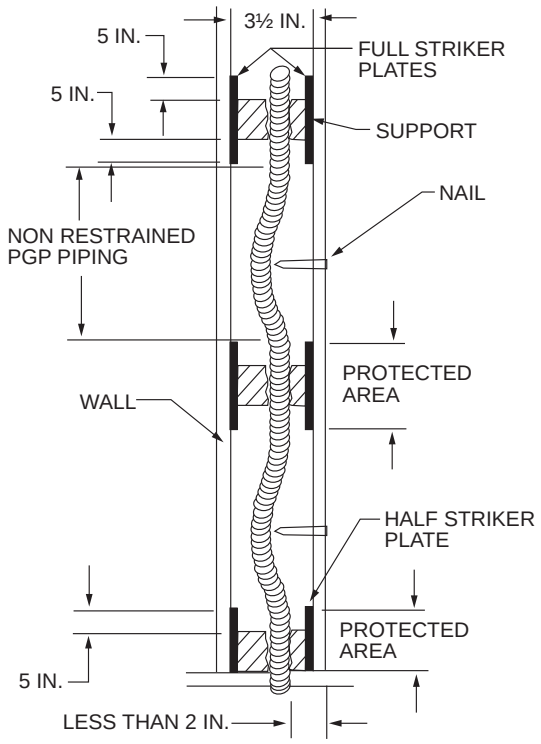

For SI: 1 inch = 25.4 mm.

Figure 403.5.4(10)
EXCERPT FROM CSST MANUFACTURER'S INSTALLATION INSTRUCTIONS
(Figure courtesy of Parker Hannifin)

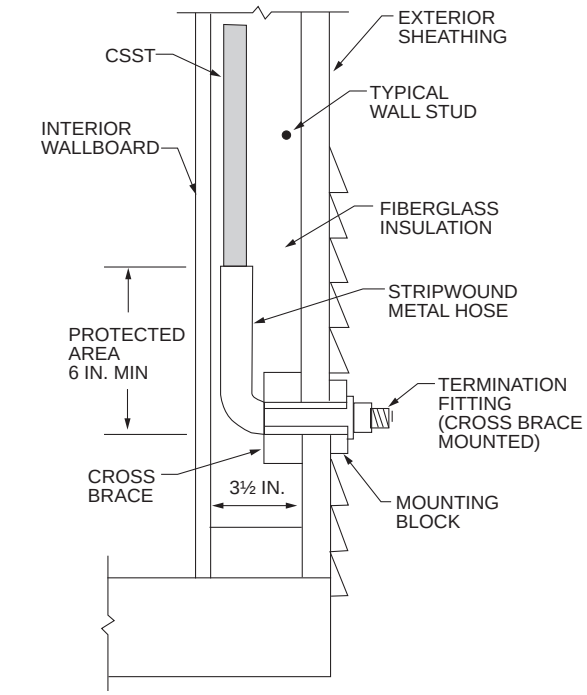

For SI: 1 inch = 25.4 mm.

Figure 403.5.4(11)
EXCERPT FROM CSST MANUFACTURER'S INSTALLATION INSTRUCTIONS
(Figure courtesy of Parker Hannifin)

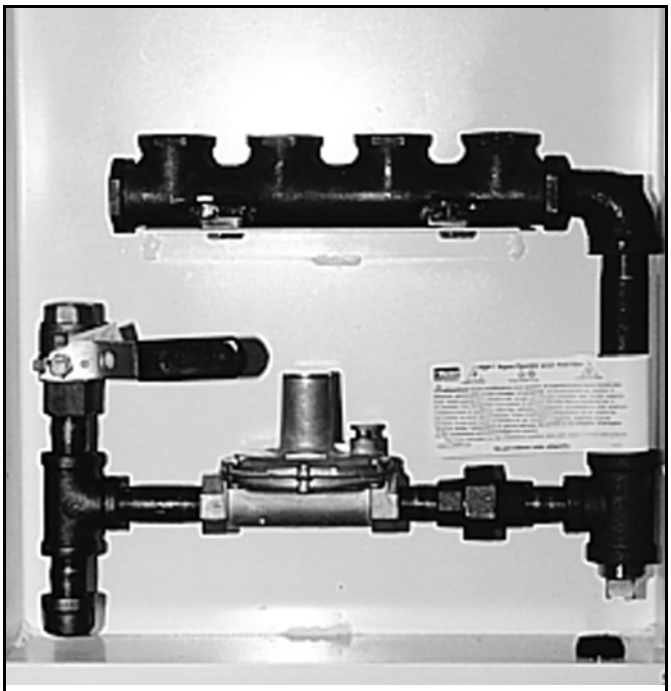

Figure 403.5.4(12)
MANIFOLD FOR 2 PSI PARALLEL DISTRIBUTION SYSTEM
(Photo courtesy of Parker Hannifin)

INTERNATIONAL CODE COUNCIL®
Copyright © 2015 ICC. ALL RIGHTS RESERVED. Accessed by David Dammon on Jun 21, 2017 12:30:52 PM pursuant to License Agreement with ICC. No further reproduction or distribution authorized. ANY UNAUTHORIZED REPRODUCTION OR DISTRIBUTION IS A VIOLATION OF THE FEDERAL COPYRIGHT ACT AND THE LICENSE AGREEMENT, AND SUBJECT TO CIVIL AND CRIMINAL PENALTIES THEREUNDER.

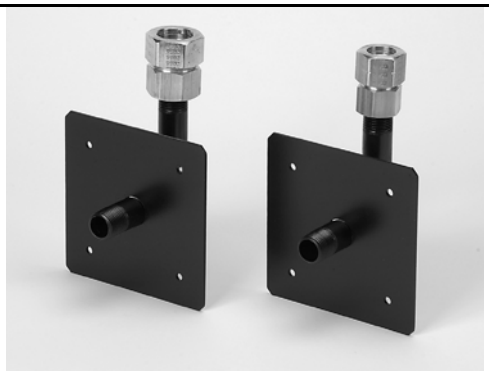

Figure 403.5.4(13)
"STUB-OUT" TERMINATION TRANSITION FITTING
(Photo courtesy of Gastite Division/Titeflex Corporation)



Figure 403.5.4(15)
TERMINATION TRANSITION FITTING
(Photo courtesy of Gastite Division/Titeflex Corporation)



Figure 403.5.4(14)
"VALVE BOX" TERMINATION TRANSITION FITTING
(Photo courtesy of Gastite Division/Titeflex Corporation)

wall or below the floor. The same is true for tee-handle shutoff valves concealed in a wall. The proper terminal fittings and brackets must be used to prevent forces from being transferred to the CSST.

403.6 Plastic pipe, tubing and fittings. Polyethylene plastic pipe, tubing and fittings used to supply fuel gas shall conform to ASTM D2513. Such pipe shall be marked "Gas" and "ASTM D2513."

Plastic pipe, tubing and fittings, other than polyethylene, shall be identified and conform to the 2008 edition of ASTM D2513. Such pipe shall be marked "Gas" and "ASTM D2513."

Polyvinyl chloride (PVC) and chlorinated polyvinyl chloride (CPVC) plastic pipe, tubing and fittings shall not be used to supply fuel gas.

❖ The installation of plastic pipe and tubing is limited to areas that are both outside the building (outdoors) and underground because of the potential hazard associated with the use of a material that has lower resistance to physical damage and heat compared to metallic pipe. Plastic pipe and tubing must never be installed in or under any building. Plastic pipe and tubing are widely used for underground gas distribution systems because of their ease of installation and inherent resistance to corrosion (See Section 404.17.1). The scope of ASTM D2513 was recently changed to limit its application to PE pipe, therefore, an older edition is referenced for other types of plastic. This section specifically prohibits the use of PVC and CPVC pipe, tubing and fittings for conveying fuel gas.

The code now references the 2013 edition of ASTM D2513, which has been revised to address polyethylene (PE) plastic pipe, tubing and fittings only, whereas the 2008 edition addressed all plastic materials. The code had to maintain a reference to the 2008 edition of the standard in order to address plastics other than PE, such as polyamide (nylon). It was determined that polyamide pipe is currently used to supply fuel gas; however, PVC and CPVC are not. Further, it was decided that because of the brittle nature of PVC and CPVC, especially at low temperatures, these materials are not suitable for conveying fuel gas. Rather than being silent, the code now prohibits what the marketplace has failed to embrace as a viable material for fuel gas (see Commentary Figure 403.6).

403.6.1 Anodeless risers. Plastic pipe, tubing and anodeless risers shall comply with the following:

1. Factory-assembled anodeless risers shall be recommended by the manufacturer for the gas used and shall be leak tested by the manufacturer in accordance with written procedures.
2. Service head adapters and field-assembled anodeless risers incorporating service head adapters shall be recommended by the manufacturer for the gas used, and shall be designed and certified to meet the requirements of Category I of ASTM D2513, and U.S. Department of Transportation, Code of Federal Regulations, Title 49, Part 192.281(e). The manufacturer shall provide the

INTERNATIONAL CODE COUNCIL®
Copyright © 2015 ICC. ALL RIGHTS RESERVED. Accessed by David Dammon on Jun 21, 2017 12:30:52 PM pursuant to License Agreement with ICC. No further reproduction or distribution authorized. ANY UNAUTHORIZED REPRODUCTION OR DISTRIBUTION IS A VIOLATION OF THE FEDERAL COPYRIGHT ACT AND THE LICENSE AGREEMENT, AND SUBJECT TO CIVIL AND CRIMINAL PENALTIES THEREUNDER.

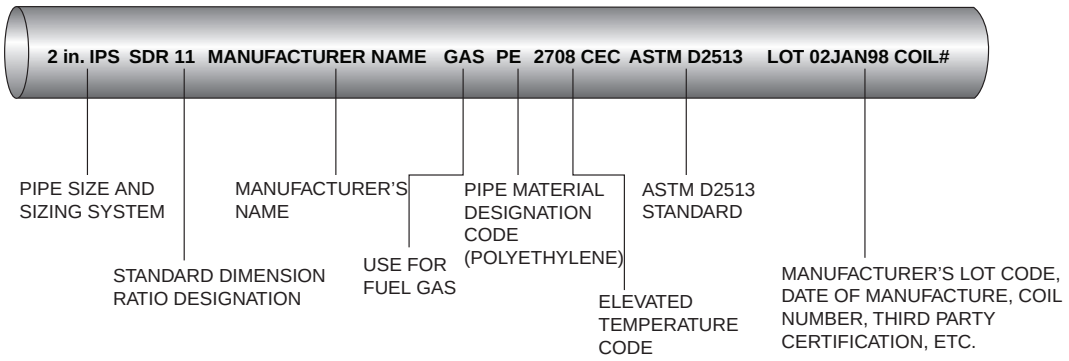

Figure 403.6
APPROVED POLYETHYLENE GAS PIPING WITH MARKINGS IN ACCORDANCE WITH THE CODE AND ASTM D2513

user with qualified installation instructions as prescribed by the U.S. Department of Transportation, Code of Federal Regulations, Title 49, Part 192.283(b).

❖ This section is an exception to the absolute prohibition of plastic gas piping above ground. Plastic pipe is allowed to rise from underground within a steel riser conduit constructed as an anodeless riser assembly. Such risers are coated to resist corrosion and do not use a sacrificial anode for cathodic corrosion protection, hence the name "anodeless riser." The steel riser protects the PE plastic pipe from physical damage and terminates the plastic pipe with a threaded steel pipe transition fitting. A sweeping 90-degree (1.57 rad) bend is placed on the underground end of rigid risers to prevent them from rotating in the ground when threaded connections are made at the terminal end. The plastic pipe could be damaged by rotational and bending stresses transmitted by the riser; therefore, a horizontal portion of steel piping is installed at the bottom of the riser to limit such movement. These risers can eliminate the need for an underground plastic-to-metal transition fitting and simplify installation. They are used extensively by utility companies for service laterals and can be used for other installations such as supply runs to out-buildings, pool heaters, gas grills and yard lights.

Service head adapters are also a type of terminal transition fitting that allow plastic pipe to be pulled through a retired steel gas service lateral and terminated at the point where the concentric piping passes through the building foundation wall. The adapter makes the transition from plastic pipe to steel pipe and seals the end of the retired steel service lateral [see Commentary Figures 202.(1), 403.6.1(1) 403.6.1(2) and 403.6.1(3)].

403.6.2 LP-gas systems. The use of plastic pipe, tubing and fittings in undiluted liquefied petroleum gas *piping* systems shall be in accordance with NFPA 58.

❖ NFPA 58 limits plastic piping for LP-gas service to only polyethylene pipe and tubing. The PE pipe and tubing must be marked as being in compliance with ASTM D2513 and is allowed for LP-gas service only if so recommended by the material manufacturer.



Figure 403.6.1(1)
SERVICE HEAD ADAPTERS
(Photo courtesy of Perfection Corporation)

403.6.3 Regulator vent piping. Plastic pipe and fittings used to connect regulator vents to remote vent terminations shall be PVC conforming to ANSI/UL 651. PVC vent *piping* shall not be installed indoors.

❖ The referenced standard is for Schedule 40 and 80 PVC electrical conduit. This material was chosen because it is required to be sunlight-resistant for use above ground and the typical application for regulator vent piping is above ground, outdoors where it would be subject to the degrading effects of ultraviolet radiation in sunlight. Consistent with other provisions in the code, plastic pipe that does or could convey fuel gas is prohibited indoors. Regulator vent outlets are piped to maintain separation between vent outlets and sources of ignition and air intake openings in building envelopes.

INTERNATIONAL CODE COUNCIL®
Copyright © 2015 ICC. ALL RIGHTS RESERVED. Accessed by David Dammon on Jun 21, 2017 12:30:52 PM pursuant to License Agreement with ICC. No further reproduction or distribution authorized. ANY UNAUTHORIZED REPRODUCTION OR DISTRIBUTION IS A VIOLATION OF THE FEDERAL COPYRIGHT ACT AND THE LICENSE AGREEMENT, AND SUBJECT TO CIVIL AND CRIMINAL PENALTIES THEREUNDER.

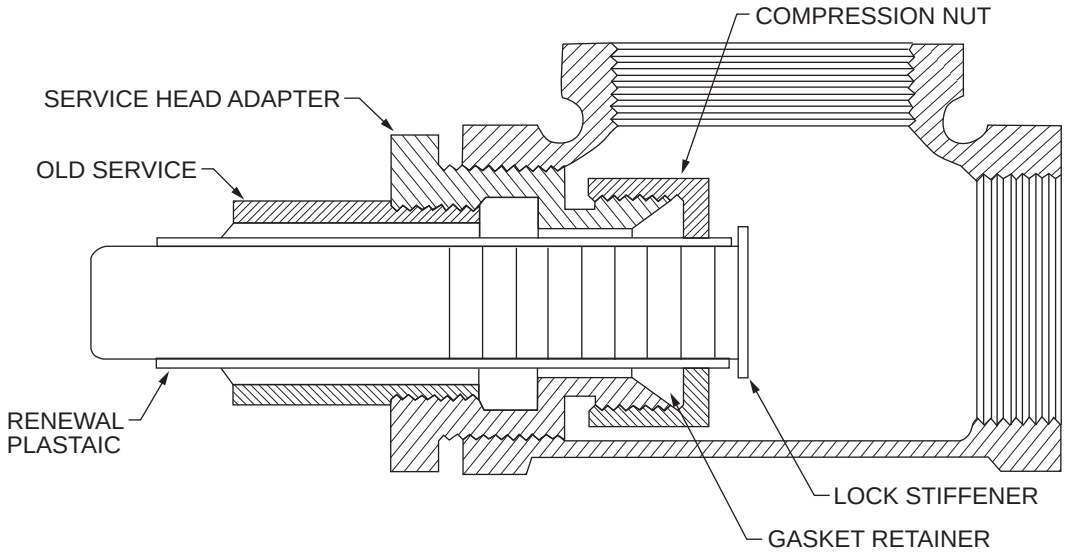

Figure 403.6.1(2)
SERVICE HEAD ADAPTERS
(Figure courtesy of NORMAC)

403.7 Workmanship and defects. Pipe, tubing and fittings shall be clear and free from cutting burrs and defects in structure or threading, and shall be thoroughly brushed, and chip and scale blown.

Defects in pipe, tubing and fittings shall not be repaired. Defective pipe, tubing and fittings shall be replaced.

❖ This section stresses that proper installation procedures are necessary to secure a safe installation. In the context of this section, good workmanship is an enforceable requirement. Burrs result from the cutting of pipe or tube and cause flow restriction. Pipe scale, dirt, construction site debris, metal chips from cutting and threading operations and excess thread compound are potentially harmful contaminants that might cause damage to valves, regulators and appliances. Damaged and/or improperly cut threads can cause leakage or joint failure. Defective materials must be replaced because attempts to repair them are always makeshift at best, and any cost savings would not be worth the risk.

403.8 Protective coating. Where in contact with material or atmosphere exerting a corrosive action, metallic *piping* and fittings coated with a corrosion-resistant material shall be used. External or internal coatings or linings used on *piping* or components shall not be considered as adding strength.

❖ Protective coatings in the form of wrappings, tapes, enamels, epoxies, sleeves, casings and factory-applied coverings are a common method of isolating metallic piping materials from the atmosphere or from the earth in which they are buried. Application of these materials under strictly controlled factory conditions improves the quality control process and reduces the likelihood of coating defects. Corrosion can be caused by weather exposure, burial in the soil

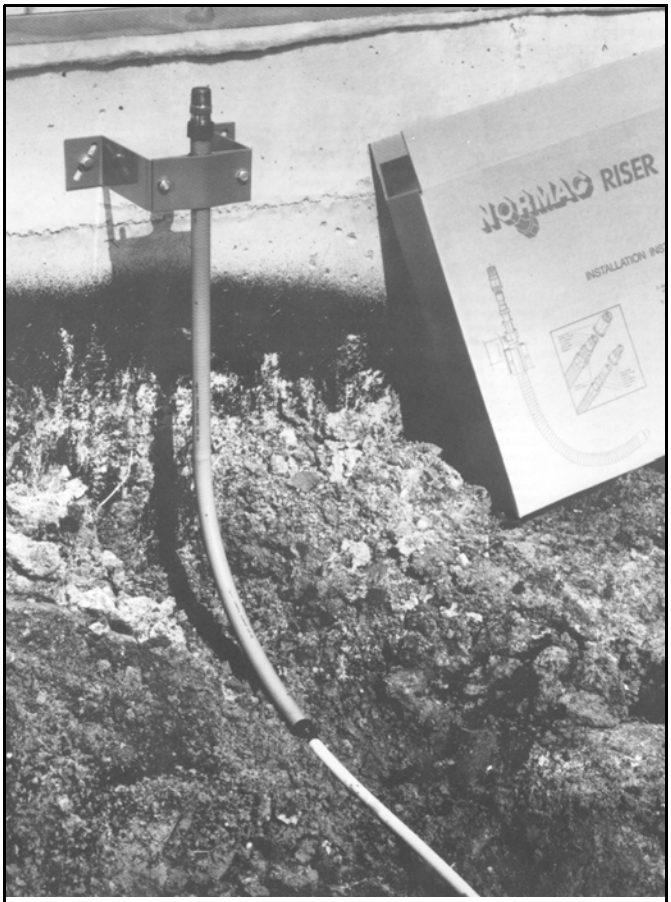

Figure 403.6.1(3)
FLEXIBLE ANODELESS RISER
(Photo courtesy of NORMAC)

INTERNATIONAL CODE COUNCIL®
Copyright © 2015 ICC. ALL RIGHTS RESERVED. Accessed by David Dammon on Jun 21, 2017 12:30:52 PM pursuant to License Agreement with ICC. No further reproduction or distribution authorized. ANY UNAUTHORIZED REPRODUCTION OR DISTRIBUTION IS A VIOLATION OF THE FEDERAL COPYRIGHT ACT AND THE LICENSE AGREEMENT, AND SUBJECT TO CIVIL AND CRIMINAL PENALTIES THEREUNDER.

or construction materials that are in contact with the pipe. Cinders (also known as dross) are the waste residue from steel production and carry the waste products skimmed from the molten metal during the smelting process. Cinders are also the waste residue of coal-fired appliances and equipment. These materials are extremely corrosive to metallic piping and may not be used in any form (backfill or cinder blocks, for example) where in direct contact with the pipe. Protection is usually provided by a factory-applied coating or by field wrapping the pipe with a protective covering, such as a coal-tar-based or plastic wrapping. Galvanized piping in contact with soil would require additional coating or protection. The zinc coating does not usually provide long-term protection in underground applications. Where possible, a piping material is chosen that is not subject to the type of corrosion of the application.

Corrosion can also be caused by galvanic action that takes place where dissimilar metals are joined in a current-carrying medium, such as soil or water. For example, if steel and copper pipe are joined in a medium that conducts electrical current, the steel pipe will corrode at an accelerated rate because of the electrochemical process between the dissimilar metals. In this case, the soil acts as an electrolyte, the steel will be a sacrificial anode, and the copper will be a cathode. Because a cell is created, current will flow through the metal junction and the soil, resulting in the gradual deterioration of the steel. To protect against galvanic corrosion, dielectric fittings and couplings are used to join the piping, thus breaking the circuit of the cell.

This section is commonly interpreted as requiring priming and painting of black steel pipe that is exposed to the weather as the minimum form of protection.

403.9 Metallic pipe threads. Metallic pipe and fitting threads shall be taper pipe threads and shall comply with ASME B1.20.1.

❖ Threads must be taper cut in accordance with the stated standard. The standard regulates tapered and straight threads, but this section specifies tapered threads. Tapered pipe threads, when made up, form a metal-to-metal (interference fit) seal. Pipe-joint compound or polytetrafluoroethylene (PTFE) tape is to be applied to male threads only to decrease the possibility of tape fragments or compound entering the piping system. Such debris in piping systems can block orifices, restrict flow or interfere with the operation of controls. The primary purpose of pipe-thread compounds is to act as a lubricant to allow proper tightening and to achieve a metal-to-metal seal. They also fill in small imperfections on the threaded surfaces. This section prohibits the use of straight tapped fittings such as couplings because the threaded joint will not provide the same seal as a joint made with taper-tapped fittings. Steel taper-threaded couplings are easily identified because they look exactly like the run of a tee fitting (see Commentary Figure 403.9). The common designation "NPT" is misinterpreted as "nominal pipe threads" and actually stands for "national standard, pipe, tapered."

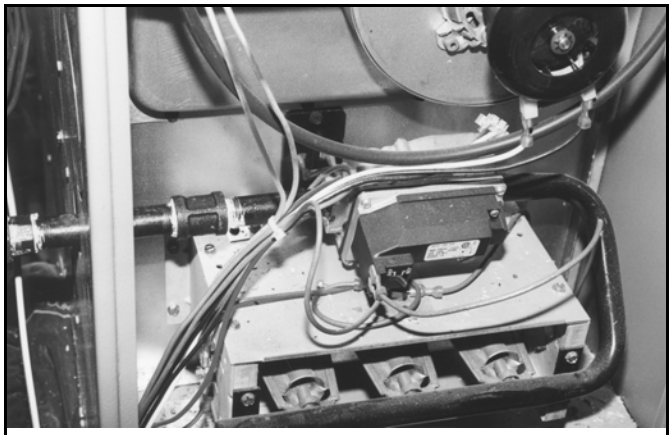

Figure 403.9
TAPERED THREAD COUPLING IN CONNECTION TO FURNACE

403.9.1 Damaged threads. Pipe with threads that are stripped, chipped, corroded or otherwise damaged shall not be used. Where a weld opens during the operation of cutting or threading, that portion of the pipe shall not be used.

❖ Damaged or improperly cut threads and defective welded seam pipe must be eliminated from any gas piping system because of the potential for leaks.

403.9.2 Number of threads. Field threading of metallic pipe shall be in accordance with Table 403.9.2.

TABLE 403.9.2
SPECIFICATIONS FOR THREADING METALLIC PIPE

IRON PIPE SIZE (inches)	APPROXIMATE LENGTH OF THREADED PORTION (inches)	APPROXIMATE NUMBER OF THREADS TO BE CUT
$^1/_2$	$^3/_4$	10
$^3/_4$	$^3/_4$	10
1	$^7/_8$	10
$1^1/_4$	1	11
$1^1/_2$	1	11
2	1	11
$2^1/_2$	$1^1/_2$	12
3	$1^1/_2$	12
4	$1^5/_8$	13

For SI: 1 inch = 25.4 mm.

❖ The table sets forth the required number of threads per unit length of pipe based on the pipe size. These specifications are intended to be both maximums and minimums because both undercutting and overcutting can result in faulty joints. Proper threading of pipe requires skill, practice, and well-maintained tools.

403.9.3 Thread joint compounds. Thread joint compounds shall be resistant to the action of liquefied petroleum gas or to

INTERNATIONAL CODE COUNCIL®
Copyright © 2015 ICC. ALL RIGHTS RESERVED. Accessed by David Dammon on Jun 21, 2017 12:30:52 PM pursuant to License Agreement with ICC. No further reproduction or distribution authorized. ANY UNAUTHORIZED REPRODUCTION OR DISTRIBUTION IS A VIOLATION OF THE FEDERAL COPYRIGHT ACT AND THE LICENSE AGREEMENT, AND SUBJECT TO CIVIL AND CRIMINAL PENALTIES THEREUNDER.

any other chemical constituents of the gases to be conducted through the *piping*.

❖ Joint compounds in both paste and tape forms are commonly misapplied and used for the wrong application. Some compounds react chemically with the gas being conveyed, which could result in leakage. The label on the compound container will specify the applications for which the compound is suitable. Thread compounds act as a lubricant for the threads during assembly and also act as a sealant for the life of the joint. Care must be taken to keep all compounds out of the piping system interior because the contamination can cause damage to components and appliances. Pipe-joint compound or tape is limited to application on the male threads only to decrease the possibility of tape fragments or compound entering the piping system. Such debris in piping systems can block orifices, restrict flow or interfere with the operation of safety controls. It is important to leave the first one or two threads on the end of the male threads bare to help prevent the compound from entering the piping system.

Once made from lead compounds and linseed oil, joint compound formulations now commonly contain PTFE (Teflon). The primary purpose of pipe-thread compounds is to act as a lubricant to allow proper tightening and to achieve a metal-to-metal seal. They also fill in small imperfections on the threaded surfaces. Pipe-thread compounds and tapes must be compatible with both the piping material and the contents of the piping.

LP-gases can be a solvent for some pipe joint compound formulations. Therefore, a type must be chosen that will not react with the gas.

403.10 Metallic piping joints and fittings. The type of *piping* joint used shall be suitable for the pressure-temperature conditions and shall be selected giving consideration to joint tightness and mechanical strength under the service conditions. The joint shall be able to sustain the maximum end force caused by the internal pressure and any additional forces caused by temperature expansion or contraction, vibration, fatigue or the weight of the pipe and its contents.

❖ This section is in performance language and requires the designer and/or installer to choose the type of joining means that is appropriate for the application. Besides being leak tight, the joints must be able to withstand the conditions of service. Many joining methods are addressed in the code, but not all of them are suitable for all applications. For example, PE pipe for LP-gas use is limited to a maximum pressure of 30 psig (206.8 kPa), and most tubing materials would be unsuitable for uses involving equipment vibration that is transferred to the tubing. Also, some fittings might not be suitable for exposure to extreme changes in temperature.

403.10.1 Pipe joints. Pipe joints shall be threaded, flanged, brazed or welded. Where nonferrous pipe is brazed, the brazing materials shall have a melting point in excess of 1,000°F (538°C). Brazing alloys shall not contain more than 0.05-percent phosphorus.

❖ Joints in piping materials can be made by four methods: threaded (screwed), brazed, welded and flanged. Flanged joints must also involve threading or welding as the means of attaching the flanges to the pipe. The limit on phosphorus content is related to corrosion that can occur from the reaction of phosphorus with a trace contaminant (sulphur) in the gas (see commentary, Section 403.10.2).

403.10.2 Tubing joints. Tubing joints shall be made with *approved* gas tubing fittings, brazed with a material having a melting point in excess of 1,000°F (538°C) or made with press-connect fittings complying with ANSI LC-4. Brazing alloys shall not contain more than 0.05-percent phosphorus.

❖ Tubing joints can be made by three methods: brazing, tubing fittings and press-connect fittings. Tubing fittings include flare, compression and CSST. Press-connect fittings require special tools that make an irreversible joint (see Commentary Figure 403.10.2).

Brazing is the act of producing a brazed joint. Brazing is often referred to as silver soldering. Silver soldering is more accurately described as silver brazing and employs high-silver-bearing alloys primarily composed of silver, copper and zinc. Silver soldering (brazing) typically requires temperatures in excess of 1,000°F (538°C), and such solders are classified as "hard" solders (see the commentary for "Brazed joint").

Confusion has always been present with respect to the distinction between "silver solder" and "silver-bearing" solder. Silver solders are unique and can be further subdivided into soft and hard categories, which are determined by the percentages of silver and the other component elements of the particular alloy. The distinction is that silver-bearing solders [melting point below 600°F (316°C)] are used in soft-soldered joints, and silver solders [melting point higher than 1,000°F (538°C)] are used in silver-brazed joints.

Brazed joints are considered to have superior strength and stress resistance and, because of the

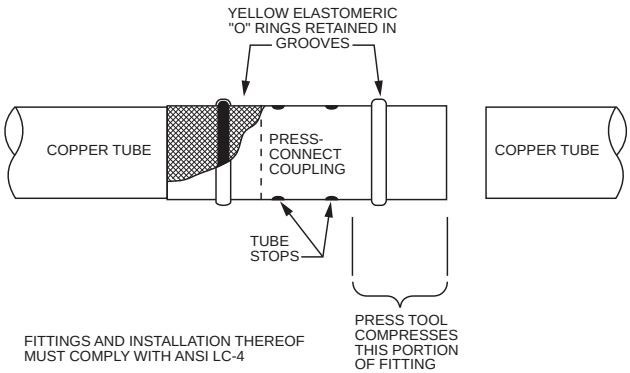

Figure 403.10.2
PRESS-CONNECT COPPER FITTING

INTERNATIONAL CODE COUNCIL®
Copyright © 2015 ICC. ALL RIGHTS RESERVED. Accessed by David Dammon on Jun 21, 2017 12:30:52 PM pursuant to License Agreement with ICC. No further reproduction or distribution authorized. ANY UNAUTHORIZED REPRODUCTION OR DISTRIBUTION IS A VIOLATION OF THE FEDERAL COPYRIGHT ACT AND THE LICENSE AGREEMENT, AND SUBJECT TO CIVIL AND CRIMINAL PENALTIES THEREUNDER.

high melting point, are less likely to fail when exposed to fire.

Brazing with a filler metal conforming to AWS A5.8 produces a strong joint that will perform under extreme service conditions. The surfaces to be brazed must be cleaned free of oxides and impurities. Flux should be applied as soon as possible after the surfaces have been cleaned. Flux helps to remove residual traces of oxides, to promote wetting and to protect the surfaces from oxidation during heating. Care should be taken to prevent flux from entering the piping system during the brazing operation because flux that remains may corrode the pipe or contaminate the system.

Air should be removed from the pipe being brazed by purging the piping with a nonflammable gas such as carbon dioxide or nitrogen. Purging the system has several benefits, such as preventing oxidation from occurring on the inside of the pipe. Mechanical joints are usually proprietary joints that are developed and marketed by individual manufacturers. Many types of mechanical joints use a sleeve or ferrule that is compressed around the circumference of the pipe or tube. Mechanical joints must be specifically designed for and compatible with the type of pipe or tube to be joined.

403.10.3 Flared joints. Flared joints shall be used only in systems constructed from nonferrous pipe and tubing where experience or tests have demonstrated that the joint is suitable for the conditions and where provisions are made in the design to prevent separation of the joints.

❖ Flared joints are typically used with copper and aluminum tubing and are prohibited for steel tubing. Flared joints require the use of specialized tools. Because the pipe end is expanded in a flared joint, only annealed and bending tempered (drawn) copper tubing may be flared. Commonly used flaring tools use a screw yoke and block assembly or an expander tool that is driven into the tube with a hammer. The flared tubing end is compressed between a fitting seat and a threaded nut to form a metal-to-metal seal.

403.10.4 Metallic fittings. Metallic fittings shall comply with the following:

1. Threaded fittings in sizes larger than 4 inches (102 mm) shall not be used.
2. Fittings used with steel or wrought-iron pipe shall be steel, copper alloy, malleable iron or cast iron.
3. Fittings used with copper or copper alloy pipe shall be copper or copper alloy.
4. Fittings used with aluminum-alloy pipe shall be of aluminum alloy.
5. Cast-iron fittings:
   - 5.1. Flanges shall be permitted.
   - 5.2. Bushings shall not be used.
   - 5.3. Fittings shall not be used in systems containing flammable gas-air mixtures.
   - 5.4. Fittings in sizes 4 inches (102 mm) and larger shall not be used indoors except where *approved*.
   - 5.5. Fittings in sizes 6 inches (152 mm) and larger shall not be used except where *approved*.
6. Aluminum-alloy fittings. Threads shall not form the joint seal.
7. Zinc aluminum-alloy fittings. Fittings shall not be used in systems containing flammable gas-air mixtures.
8. Special fittings. Fittings such as couplings, proprietary-type joints, saddle tees, gland-type compression fittings and flared, flareless and compression-type tubing fittings shall be: used within the fitting manufacturer's pressure-temperature recommendations; used within the service conditions anticipated with respect to vibration, fatigue, thermal expansion and contraction; and shall be approved.
9. Where pipe fittings are drilled and tapped in the field, the operation shall be in accordance with all of the following:
   - 9.1. The operation shall be performed on systems having operating pressures of 5 psi (34.5 kPa) or less.
   - 9.2. The operation shall be performed by the gas supplier or the gas supplier's designated representative.
   - 9.3. The drilling and tapping operation shall be performed in accordance with written procedures prepared by the gas supplier.
   - 9.4. The fittings shall be located outdoors.
   - 9.5. The tapped fitting assembly shall be inspected and proven to be free of leakage.

❖ Item 1 limits threaded fittings to a maximum size of 4 inches (102 mm) because larger pipe threads are impractical, difficult to cut and difficult to make leak tight.

Item 2 allows use of cast iron fittings with steel, but cast iron pipe is prohibited. Malleable iron (steel) fittings are used almost exclusively.

Items 3 and 4 require fittings for nonferrous pipes to be of a material consistent with the pipe material.

Item 5 places limitations on cast-iron fittings because of the brittle nature of cast iron. Bushings have been known to split from overtightening. Fittings sizes 4 inches (102 mm) and up are allowed only outdoors and fittings 6 inches (152 mm) and up are not allowed anywhere.

Item 8 speaks of special fittings of the mechanical type. None of the joining methods addressed in the code use a nonmetallic or elastomeric sealing element except those used outdoors only.

Item 9 addresses a practice that is allowed only for gas utility (gas supplier) companies. Occasionally, an installer will drill a hole in a Schedule 40 or heavier pipe fitting and tap threads in the hole for the purpose of making a test connection or branch connection. The pipe fittings, however, were never designed to be

INTERNATIONAL CODE COUNCIL®
Copyright © 2015 ICC. ALL RIGHTS RESERVED. Accessed by David Dammon on Jun 21, 2017 12:30:52 PM pursuant to License Agreement with ICC. No further reproduction or distribution authorized. ANY UNAUTHORIZED REPRODUCTION OR DISTRIBUTION IS A VIOLATION OF THE FEDERAL COPYRIGHT ACT AND THE LICENSE AGREEMENT, AND SUBJECT TO CIVIL AND CRIMINAL PENALTIES THEREUNDER.

drilled and tapped, and the thickness of the fitting wall does not allow for even one complete thread in Schedule 40 fittings. The resulting pipe connection or plugged opening would not have sufficient threads to make a joint that is both strong and free of leakage. Lacking the required number of complete threads, such joints would rely solely on the thread-sealant paste or tape to make a seal. Normal threaded joints rely on an interference fit of several threads and metal-to-metal sealing, while depending on pipe joint pastes and tapes only as thread lubricants and for sealing tiny imperfections in the threads. Field drilling and tapping of outdoor fittings on the outlet side of the meter is performed by some gas suppliers (utilities) for a unique purpose. If the gas supplier needs to replace a customer's gas meter, and it is not convenient to shut off the gas supply to the customer in order to replace the meter, the gas supplier may use a special apparatus to tap into the customer's piping near the meter for the purpose of temporarily supplying gas to the system at the same time the meter is isolated, removed and replaced. The gas is temporarily supplied from tanks of compressed gas on the utility's service trucks. After replacing the meter, the tapped opening is plugged. The five conditions in the new text limit this practice to gas-supplier personnel and authorized contractors employed by the gas supplier. The practice is limited to outdoor fittings, and the entire operation must be performed with specialized tools and equipment in accordance with the prescribed procedures. In cases where a leak-free plugged assembly cannot be achieved, the gas supplier will cover the affected area of the fitting with specialized devices or leak-repair methods used in the gas industry.The drilling and tapping of pipe fittings is prohibited in all cases except where performed in accordance with all five conditions that are intended to mitigate the risk [see Commentary Figures 403.10.4(1) and 403.10.4(2)].

403.11 Plastic pipe, joints and fittings. Plastic pipe, tubing and fittings shall be joined in accordance with the manufacturer's instructions. Such joint shall comply with the following:

1. The joint shall be designed and installed so that the longitudinal pull-out resistance of the joint will be at least equal to the tensile strength of the plastic *piping* material.
2. Heat-fusion joints shall be made in accordance with qualified procedures that have been established and proven by test to produce gas-tight joints at least as strong as the pipe or tubing being joined. Joints shall be made with the joining method recommended by the pipe manufacturer. Heat fusion fittings shall be marked "ASTM D2513."
3. Where compression-type mechanical joints are used, the gasket material in the fitting shall be compatible with the plastic *piping* and with the gas distributed by the system. An internal tubular rigid stiffener shall be used in conjunction with the fitting. The stiffener shall be flush with the end of the pipe or tubing and shall extend at least to the outside end of the compression fitting when installed. The stiffener shall be free of rough or sharp edges and shall not be a force fit in the plastic. Split tubular stiffeners shall not be used.
4. Plastic *piping* joints and fittings for use in liquefied petroleum gas *piping* systems shall be in accordance with NFPA 58.

❖ This section contains general requirements for the proper joining of plastic gas pipe materials. Although plastic pipe materials offer many advantages such as ease of installation, corrosion resistance, lighter weight and lower cost, these materials require differ-



Figure 403.10.4(1)
METER SETTING

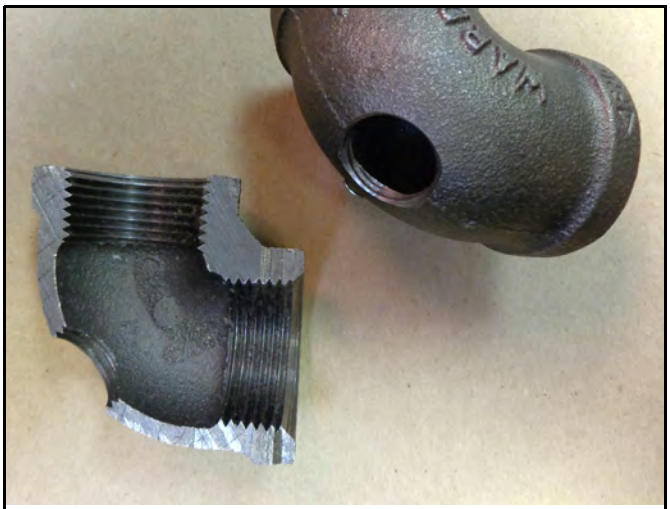

Figure 403.10.4(2)
ELBOW WITH DRILLED AND TAPPED HOLE

INTERNATIONAL CODE COUNCIL®
Copyright © 2015 ICC. ALL RIGHTS RESERVED. Accessed by David Dammon on Jun 21, 2017 12:30:52 PM pursuant to License Agreement with ICC. No further reproduction or distribution authorized. ANY UNAUTHORIZED REPRODUCTION OR DISTRIBUTION IS A VIOLATION OF THE FEDERAL COPYRIGHT ACT AND THE LICENSE AGREEMENT, AND SUBJECT TO CIVIL AND CRIMINAL PENALTIES THEREUNDER.

ent handling and installation methods than steel or other metal pipe or tubing. In all cases, the pipe material manufacturer's installation instructions must be strictly adhered to in order to reduce the likelihood of creating improper joints, which could lead to gas leakage or piping or joint failure. Dissimilar types of plastic materials may not be joined by heat fusion methods. Because of the resulting reduction in wall thickness, plastic pipe and tubing must not be field-threaded as a joining method. All approved joints must be designed to account for the forces acting upon the piping system, such as expansion, contraction and external loads imposed by burial in underground installations. The longitudinal pull-out resistance of the joint should be approximately the same as the tensile strength of the materials being joined.

Heat-fusion joints for plastic pipe are analogous to the welding of steel pipe. Heat fusion must be performed in accordance with the pipe manufacturer's instructions. The process involves heating the pipe and fittings with a special iron. When the parts to be joined reach their melting points, they are assembled and allowed to fuse. Electrical fusion fittings are available and employ an integral heating element that is connected to a power supply unit that allows the fitting to be heated at the required rate and duration.

Mechanical compression joints employ an elastomeric seal that must be compatible with not only the piping material but also the gas that is conveyed in the system. The manufacturer's instructions normally require an internal stiffener insert used in conjunction with the fitting to provide additional support. The stiffener insert prevents the pipe from deforming under the compression force exerted by the seal and compression nut assembly.

Category 1 fittings in accordance with ASTM D2513 are designed to provide a gas-tight seal and resist axial (pull-out) forces equal to the yield strength of the piping material [see Commentary Figures 403.11(1) through 403.11(4)].

403.12 Flanges. Flanges and flange gaskets shall comply with Sections 403.12.1 through 403.12.7.

❖ Flanges serve the same function as a union and are used for large piping at locations where it is necessary to disassemble and reassemble piping connections to valves, meters, regulators and other sections of piping. A flange consists of two mating fittings that bolt together to form a butt joint. A gasket is compressed between the flanges as the through-bolts are tightened (see Commentary Figure 403.12).

403.12.1 Cast iron. Cast-iron flanges shall be in accordance with ASME B 16.1.

❖ See the commentary to Section 403.12.

403.12.2 Steel. Steel flanges shall be in accordance with ASME B 16.5 or ASME B 16.47.

❖ See the commentary to Section 403.12.

403.12.3 Nonferrous. Nonferrous flanges shall be in accordance with ASME B 16.24.

❖ See the commentary to Section 403.12.

403.12.4 Ductile iron. Ductile-iron flanges shall be in accordance with ASME B 16.42.

❖ See the commentary to Section 403.12.

403.12.5 Raised face. Raised face flanges shall not be joined to flat faced cast-iron, ductile-iron or nonferrous material flanges.

❖ See the commentary to Section 403.12.

403.12.6 Flange facings. Standard facings shall be permitted for use under this code. Where 150-pound (1034 kPa) pressure-rated steel flanges are bolted to Class 125 cast-iron flanges, the raised face on the steel flange shall be removed.

❖ Because cast-iron fittings are brittle, a joint failure could occur from bolt tightening if the two flange surfaces are not in full contact with each other and the intervening gasket. In this application, Section 403.13 requires gaskets to cover the entire surface area of the flanges. Any partial raised face on a flange would create a fulcrum over which the cast-iron flange could be broken.

403.12.7 Lapped flanges. Lapped flanges shall be used only above ground or in exposed locations accessible for inspection.

❖ Lapped flanges are held on the pipe by flaring the end of the pipe. Such joints are rarely used compared to gasket-type flanges that are threaded or welded onto the pipe.

403.13 Flange gaskets. Material for gaskets shall be capable of withstanding the design temperature and pressure of the *piping* system, and the chemical constituents of the gas being conducted, without change to its chemical and physical properties. The effects of fire exposure to the joint shall be considered in choosing material. Acceptable materials include metal (plain or corrugated), composition, aluminum "O" rings, spiral wound metal gaskets, rubber-faced phenolic and elastomeric. Where a flanged joint is opened, the gasket shall be replaced. Full-face flange gaskets shall be used with all non-steel flanges.

❖ Similar to a ground joint union, a flanged joint creates a seal by compressing a softer metal between the two flange fitting surfaces. This author assumes that asbestos gaskets are no longer made. Once compressed, the gasket in a disassembled joint is spent and must be discarded (see commentary, Section 403.12.1).

403.13.1 Metallic gaskets. Metallic flange gaskets shall be in accordance with ASME B 16.20.

❖ See the commentary to Section 403.13.

403.13.2 Nonmetallic gaskets. Nonmetallic flange gaskets shall be in accordance with ASME B 16.21.

❖ See the commentary to Section 403.13.

INTERNATIONAL CODE COUNCIL®
Copyright © 2015 ICC. ALL RIGHTS RESERVED. Accessed by David Dammon on Jun 21, 2017 12:30:52 PM pursuant to License Agreement with ICC. No further reproduction or distribution authorized. ANY UNAUTHORIZED REPRODUCTION OR DISTRIBUTION IS A VIOLATION OF THE FEDERAL COPYRIGHT ACT AND THE LICENSE AGREEMENT, AND SUBJECT TO CIVIL AND CRIMINAL PENALTIES THEREUNDER.

SECTION 404 (IFGC)
PIPING SYSTEM INSTALLATION

404.1 Installation of materials. Materials used shall be installed in strict accordance with the standards under which the materials are accepted and approved. In the absence of such installation procedures, the manufacturer's instructions shall be followed. Where the requirements of referenced standards or manufacturer's instructions do not conform to minimum provisions of this code, the provisions of this code shall apply.

❖ Piping materials and related system components must be installed in accordance with the standards to which they are listed. Improper installation can result in substandard performance, product failures and hazardous conditions. In some cases, the product standard will contain installation requirements such as found in ANSI LC-1 for CSST. In other cases the product standards might not contain any installation requirements, therefore, the manufacturer of the product supplies the only installation requirements. The manufacturer could also have installation



Figure 403.11(1)
MECHANICAL JOINTS
(Photo courtesy of Perfection Coproation)

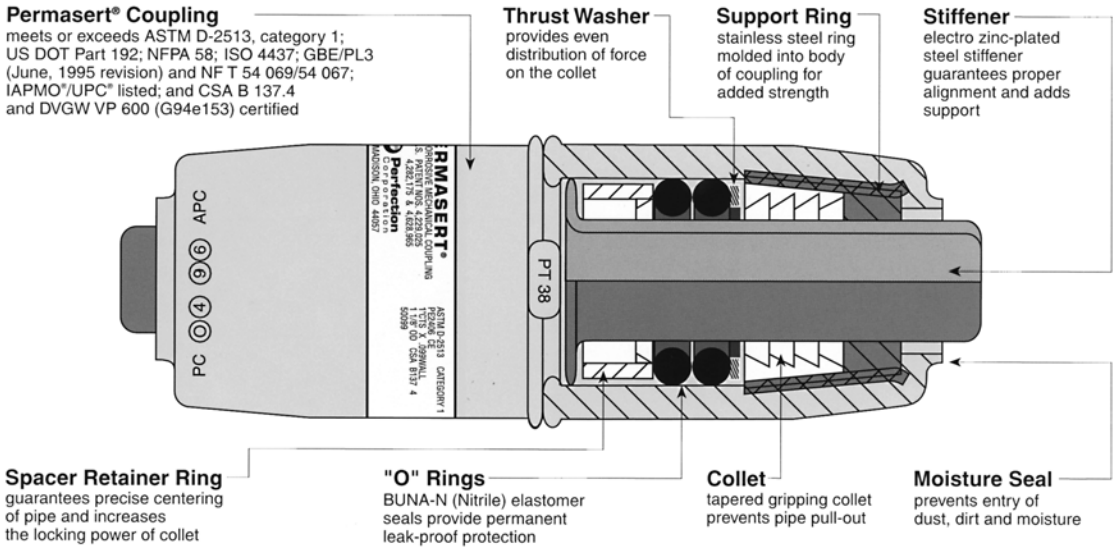

Figure 403.11(2)
MECHANICAL JOINT
(Figure courtesy of Perfection Corporation)

INTERNATIONAL CODE COUNCIL®
Copyright © 2015 ICC. ALL RIGHTS RESERVED. Accessed by David Dammon on Jun 21, 2017 12:30:52 PM pursuant to License Agreement with ICC. No further reproduction or distribution authorized. ANY UNAUTHORIZED REPRODUCTION OR DISTRIBUTION IS A VIOLATION OF THE FEDERAL COPYRIGHT ACT AND THE LICENSE AGREEMENT, AND SUBJECT TO CIVIL AND CRIMINAL PENALTIES THEREUNDER.

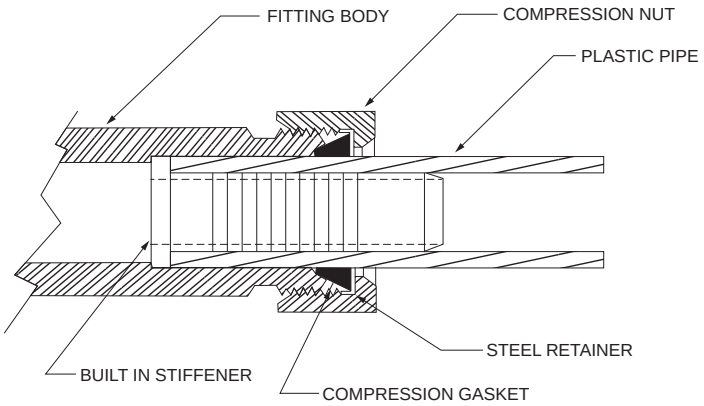

Figure 403.11(3)
PLASTIC PIPE TRANSITION FITTING
(Figure courtesy of NORMAC)

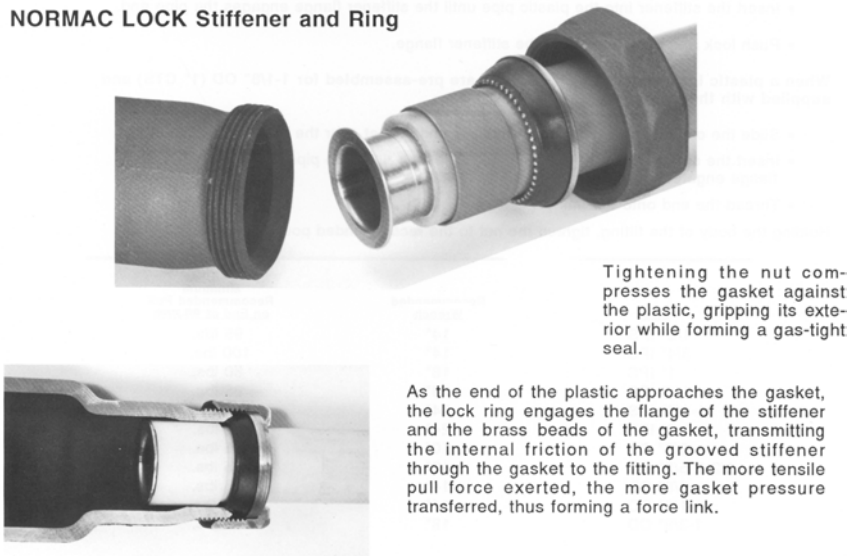

Figure 403.11(4)
PLASTIC PIPE TRANSITION FITTING
(Photo courtesy of NORMAC)

requirements that are in addition to or in excess of those in the standard or vice versa. If the installation requirements in the product standards or manufacturer's instructions are somehow less stringent that a provision of this code, this code must prevail.

404.2 CSST. CSST piping systems shall be installed in accordance with the terms of their approval, the conditions of listing, the manufacturer's instructions and this code.

❖ The CSST product standard dictates what the manufacturer's instructions must include at a minimum. This section was added because Section 403.5.4 only required that CSST be listed and failed to clarify that the CSST system must also comply with the standard, the manufacturer's instructions, this code and any conditions established in the approval of such systems.

404.3 Prohibited locations. *Piping* shall not be installed in or through a ducted supply, return or exhaust, or a clothes chute, chimney or gas vent, dumbwaiter or elevator shaft. *Piping* installed downstream of the *point of delivery* shall not extend through any townhouse unit other than the unit served by such *piping*.

❖ An air supply duct or areas that create a shaft that provides a path for the gas to travel are considered to be locations where the problem of a gas leak could be compounded by spreading the gas or any resultant fire throughout the building. Also, in some locations, the gas piping could be subject to deterioration because of temperature or corrosive conditions such as in air ducts or chimneys.

Locating fuel gas piping in certain areas or atmospheres may cause corrosion of the pipe, which in

INTERNATIONAL CODE COUNCIL®
Copyright © 2015 ICC. ALL RIGHTS RESERVED. Accessed by David Dammon on Jun 21, 2017 12:30:52 PM pursuant to License Agreement with ICC. No further reproduction or distribution authorized. ANY UNAUTHORIZED REPRODUCTION OR DISTRIBUTION IS A VIOLATION OF THE FEDERAL COPYRIGHT ACT AND THE LICENSE AGREEMENT, AND SUBJECT TO CIVIL AND CRIMINAL PENALTIES THEREUNDER.



Figure 403.12
FLANGED JOINTS
(Photo courtesy of Washington Gas)

turn may cause a leak in the piping system. Within a supply air duct, the conditioned air may cause moisture to condense on or within the pipe, thereby causing corrosion of the pipe. Fuel gas piping located within a chimney or a vent will be subjected to high temperatures and the corrosive effects of flue gases.

Additionally, piping located in a dumbwaiter or elevator shaft may be subject to an additional hazard resulting in mechanical damage to the pipe. Damage from a dumbwaiter or elevator impacting the fuel gas piping may not only cause a leak that would allow the gas to escape and travel up the shaft but may also put any occupants within an elevator in immediate danger. The elevator codes also intend to prohibit nonessential piping within elevator shafts.

Gas piping is not prohibited in concealed spaces used to convey environmental air; for example, above ceiling and below floor plenums, stud cavities and joist spaces. Gas piping is often installed in return air plenums above a suspended ceiling with no history of problems. The piping system is assumed not to leak in a ceiling air plenum or any other location, for that matter. In fact, when viewed logically, it would be more hazardous for a leak to occur in a location where the air is static and an explosive gas/air mixture could be created. Return, supply and exhaust air ducts are not considered to be a plenum. These ducts are supply, return and exhaust air conduits constructed as components of a ductwork system. A furnace plenum is part of a ductwork system and would be treated as an air duct (see the definition of "Furnace plenum").

This section now prohibits what was once a common practice, that is, the practice of placing a bank of gas meters on one end of a townhouse complex and running the load side gas line from each meter through the attic or crawl spaces of the townhouse units to reach the units served. For example, the gas supply line for the unit farthest away from the meter bank will pass through all of the other units to reach the unit it serves. This is a concern because of what might be done to the piping within the units through which it passes and because of the potential for one of the units to be destroyed by fire thereby damaging the gas piping that passes through the fire walls/separation walls between units. Townhouses are considered to be separate buildings in the *International Residential Code*® (IRC®) and are constructed to prevent fire from spreading beyond the unit of origin. This is similar to the provision in the IRC that prevents electrical service entrance conductors from passing through dwelling units other than the unit served (see Commentary Figure 404.3).

404.4 Piping in solid partitions and walls. Concealed *piping* shall not be located in solid partitions and solid walls, unless installed in a chase or casing.

❖ As with the alternative installation requirements in Section 404.8, this section allows installation of gas piping within solid walls or partitions only if the piping is installed within a chase or casing to protect the pipe from stress and from corrosive effects of wall materials such as concrete.

404.5 Fittings in concealed locations. Fittings installed in concealed locations shall be limited to the following types:

1. Threaded elbows, tees and couplings.
2. Brazed fittings.
3. Welded fittings.
4. Fittings listed to ANSI LC-1/CSA 6.26 or ANSI LC-4.

❖ A concealed location is a location that requires the removal of permanent construction in order to gain access (see the definition of "Concealed location"). The space above a dropped ceiling having readily removable lay-in panels or other locations that have removable access panels are not considered to be concealed locations for the purposes of this section. Concealed locations include wall, floor and ceiling cavities bounded by permanent finish materials, such as gypsum board, masonry or paneling. This section lists what is allowed to be concealed; therefore, by omission, all other types of fittings are not allowed in concealed locations. Note that threaded plugs and caps are not listed, but the author is not aware of any reason to prohibit them. The *National Fuel Gas Code* 2015 edition, ANSI Z223.1, has been revised to specifically allow threaded plugs and caps in concealed locations. Unions and mechanical joint tubing fittings are not permitted in concealed locations because they are more likely to loosen and leak than other joining means and fittings. Tubing fittings include flare, compression and similar proprietary-type fittings, all of which are mechanical joints.

Joints for CSST systems are mechanical tubing joints; however, these joints use specialized proprietary fittings that are listed for concealment as part of the CSST system. Such fittings undergo stringent testing to determine their ability to remain leak tight.

Right and left couplings are used in some parts of the world and are unknown in others. Right and left

INTERNATIONAL CODE COUNCIL®
Copyright © 2015 ICC. ALL RIGHTS RESERVED. Accessed by David Dammon on Jun 21, 2017 12:30:52 PM pursuant to License Agreement with ICC. No further reproduction or distribution authorized. ANY UNAUTHORIZED REPRODUCTION OR DISTRIBUTION IS A VIOLATION OF THE FEDERAL COPYRIGHT ACT AND THE LICENSE AGREEMENT, AND SUBJECT TO CIVIL AND CRIMINAL PENALTIES THEREUNDER.

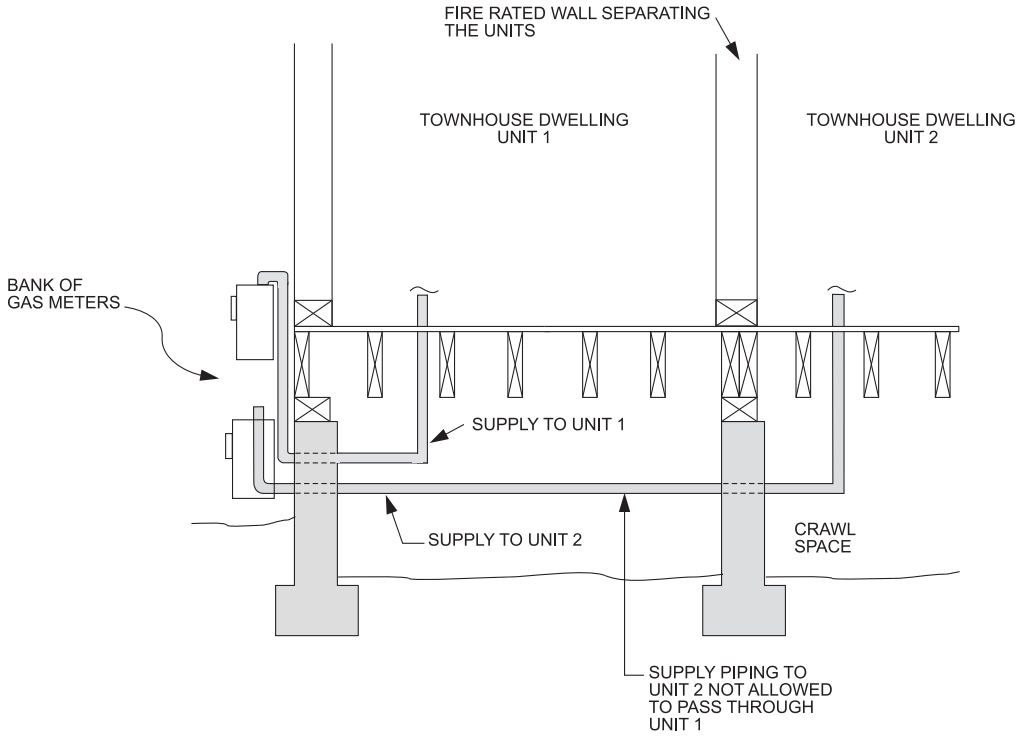

Figure 404.3
PROHIBITED TOWNHOUSE INSTALLATION

couplings are used instead of a union fitting. The coupling is made with right-hand threads on one end and left-hand threads on the other, and the corresponding male pipe threads can be used to connect pipe and fittings within a section of existing piping. The code does not specifically prohibit right and left couplings, as it refers to only "couplings" generically; however, if the coupling was concealed, people would not be aware of such a fitting in a piping system and would not realize that they were loosening a joint as they applied the traditional tightening torque to an exposed section of piping. Piping should always be backed up with wrenches to prevent rotational forces from extending beyond the work piece. When the code refers to couplings, those fittings are tapered-thread fittings (see Section 403.9). Bushings have been known to split after assembly and are not trusted in concealed locations.

Brazing is a commonly used method of joining copper tubing and is as reliable as welded joints for steel pipe.

This section does not prohibit NPT threaded (screwed) elbow, tee and coupling fittings from being concealed; however, it does prohibit threaded unions and bushings from being concealed.

404.6 Underground penetrations prohibited. Gas *piping* shall not penetrate building foundation walls at any point below grade. Gas *piping* shall enter and exit a building at a point above grade and the annular space between the pipe and the wall shall be sealed.

❖ The preferred and required method for bringing outdoor gas piping into or out of a building is to penetrate the exterior wall at a point above grade. In other words, gas piping that comes into or leaves a building should not provide a path for underground gas leakage to enter the interior of a building. This section does not apply to utility company owned piping upstream of the point of delivery (see Section 101.2).

The penetration of the pipe and any protective sleeve must be adequately sealed to prevent the possibility of water or insect entry into the building. A gas pipe is not permitted to enter or exit a building below grade because any gas leakage in the underground piping will be channeled into the building through the surrounding soil and the wall penetration. Gas leakage can travel in the annular space that exists between the outside wall of the pipe and the soil that surrounds it. With an above-ground wall penetration, any outdoor piping leakage will vent to the outdoors with very little possibility of it finding its way into the building. Underground penetrations of building foundations are very difficult to seal against gas migration and the best way to eliminate the possibility of gas entering the building is to simply require the piping to enter and exit above grade. There have been cases of explosions that were believed to be caused by gas entering basements and crawl spaces through under-

INTERNATIONAL CODE COUNCIL®
Copyright © 2015 ICC. ALL RIGHTS RESERVED. Accessed by David Dammon on Jun 21, 2017 12:30:52 PM pursuant to License Agreement with ICC. No further reproduction or distribution authorized. ANY UNAUTHORIZED REPRODUCTION OR DISTRIBUTION IS A VIOLATION OF THE FEDERAL COPYRIGHT ACT AND THE LICENSE AGREEMENT, AND SUBJECT TO CIVIL AND CRIMINAL PENALTIES THEREUNDER.

ground wall penetrations (see Commentary Figure 404.6). Note that this section creates a conflict with Sections 404.8.1 and 404.14.1 in that gas piping is no longer allowed to enter or exit a building at any point below grade, regardless of any vented conduit that may contain the piping. Sections 404.8.1 and 404.14.1 still have other applications that do not involve piping entering or exiting a building below grade.

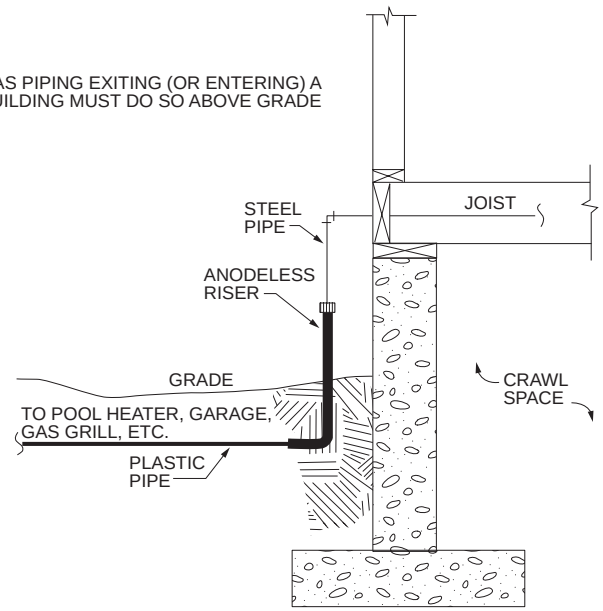

Figure 404.6
ABOVE GRADE ENTRANCE/EXIT

404.7 Protection against physical damage. Where *piping* will be concealed within light-frame construction assemblies, the *piping* shall be protected against penetration by fasteners in accordance with Sections 404.7.1 through 404.7.3.

Exception: Black steel piping and galvanized steel piping shall not be required to be protected.

❖ The section on protection of piping has been completely rewritten to address more than just bored holes and notches in structural members. It now addresses piping parallel to framing members and piping within framing members. The new text requires that the protection extend well beyond the edge of members that are bored or notched.

Piping and tubing other than Schedule 40 steel pipe must be protected from penetration by nails and screws where the pipe or tubing is less than $1^1/_2$ inches from the face of the member where membranes will be attached. This protection is necessary whether the pipe or tube is perpendicular or parallel to the framing member. If a pipe or tube is run inside of the "C" channel of a $3^1/_2$-inch metal stud, it will almost certainly be penetrated by screws unless the pipe or tube is $^1/_2$ inch or less in diameter and located dead center in the stud channel. Where pipes and tubing are attached to and run parallel with the side of a framing member, penetration by a nail or screw is likely if the installer misses the member with the nail or screw and the pipe or tube is less than $1^1/_2$ inches from either face of the stud. Extending the protection shield 4 inches beyond the edges of the framing member is intended to protect against fasteners that miss the member or that exit the member on an angle. To avoid having protection plates run parallel with a member, the installer could simply place the pipe or tube on "standoffs" such that the pipe/tube is not less than $1^1/_2$ inches from the nearest edge of the face of the member. As always, a designer's careful planning of the routing of gas piping or tubing can avoid the need for installation of protection plates by simply relying on a distance of at least $1^1/_2$ inches between the pipe/tubing and the fastener face of the member. Pipes and tubes are sometimes penetrated by screws or nails, and a leak does not develop immediately. It may take years for the fastener to corrode enough for a leak to eventually develop.

This section pertains to piping and tubing that will be concealed within wood or steel light-frame construction assemblies, which is the same scope as the original text (see Commentary Figure 404.7).

This section is intended to minimize the possibility that nails or screws will be driven into the gas pipe or tube. Because nails and screws sometimes miss the stud, rafter, joist or sole, or top plates, the shield plates must extend parallel to the pipe or tube not less than 4 inches (102 mm) beyond the member on each side or not less than 4 inches (102 mm) above or below sole or top wall plates, respectively. Commentary Figures 403.5.4(6) and 404.7 show typical shield plates. Black and galvanized steel pipe (Schedule 40) each have wall thicknesses greater than the required thickness for the shield plates, which makes these piping materials inherently resistant to nail and screw penetrations. This section does not apply to CSST tubing, because CSST systems have their own protection requirements dictated by the manufacturer's instructions and ANSI LC-1/CSA 6.26. The protection requirements for CSST systems are, overall, more stringent than those of this section. Before studs, rafters, joists or other structural members are drilled or notched, the building code should be consulted.

404.7.1 Piping through bored holes or notches. Where *piping* is installed through holes or notches in framing members and the *piping* is located less than $1^1/_2$ inches (38 mm) from the framing member face to which wall, ceiling or floor membranes will be attached, the pipe shall be protected by shield plates that cover the width of the pipe and the framing member and that extend not less than 4 inches (51 mm) to each side of the framing member. Where the framing member that the *piping* passes through is a bottom plate, bottom track, top plate or top track, the shield plates shall cover the framing member and extend not less than 4 inches (51 mm) above the

INTERNATIONAL CODE COUNCIL®
Copyright © 2015 ICC. ALL RIGHTS RESERVED. Accessed by David Dammon on Jun 21, 2017 12:30:52 PM pursuant to License Agreement with ICC. No further reproduction or distribution authorized. ANY UNAUTHORIZED REPRODUCTION OR DISTRIBUTION IS A VIOLATION OF THE FEDERAL COPYRIGHT ACT AND THE LICENSE AGREEMENT, AND SUBJECT TO CIVIL AND CRIMINAL PENALTIES THEREUNDER.

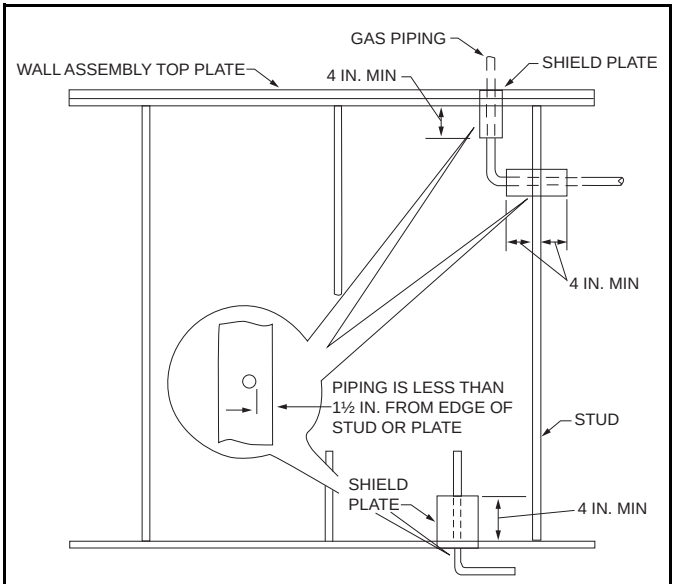

For SI: 1 inch = 25.4 mm.

Figure 404.7
PIPE PROTECTION

bottom framing member and not less than 4 inches (51 mm) below the top framing member.

❖ See the commentary to Section 404.7.

404.7.2 Piping installed in other locations. Where the *piping* is located within a framing member and is less than $1^1/_2$ inches (38 mm) from the framing member face to which wall, ceiling or floor membranes will be attached, the *piping* shall be protected by shield plates that cover the width and length of the *piping*. Where the *piping* is located outside of a framing member and is located less than $1^1/_2$ inches (38 mm) from the nearest edge of the face of the framing member to which the membrane will be attached, the *piping* shall be protected by shield plates that cover the width and length of the *piping*.

❖ This section addresses piping that is run along the side of framing members and that is run inside the channel of metal framing members. Where the piping is within $1^1/_2$ inches of the face of the framing member where fasteners will penetrate the member, there is the danger that fasteners will miss the target or be driven at an angle such that the piping is penetrated. Piping is sometimes run within the "C" channel of metal studs, which practically begs for the pipe/tube to be penetrated by fasteners that attach wall sheathing to the framing members (see commentary, Section 404.7).

404.7.3 Shield plates. Shield plates shall be of steel material having a thickness of not less than 0.0575 inch (1.463 mm) (No. 16 gage).

❖ See the commentary to Section 404.7.

404.8 Piping in solid floors. *Piping* in solid floors shall be laid in channels in the floor and covered in a manner that will allow *access* to the *piping* with a minimum amount of damage to the building. Where such *piping* is subject to exposure to excessive moisture or corrosive substances, the *piping* shall be protected in an *approved* manner. As an alternative to installation in channels, the *piping* shall be installed in a conduit of Schedule 40 steel, wrought iron, PVC or ABS pipe in accordance with Section 404.8.1 or 404.8.2.

❖ Piping must not be installed in any solid concrete or masonry floor construction. The potential for pipe damage from slab settlement, cracking or the corrosive action of the floor material makes it imperative that one of the installation methods in this section be used. This section does not intend to allow any direct encasement of gas piping in solid concrete or masonry floor systems.

Gas piping installed within a solid floor system must be safeguarded by installation in a sealed casing or in a floor channel with a removable cover for pipe access (see Commentary Figure 404.8). Either of these methods should provide reasonable protection of the pipe from the effects of settling, cracking and being in contact with corrosive materials.

Because casings constructed of metal could corrode where installed within a concrete slab on grade, consideration should be given to corrosion protection for the steel casing, or an alternative material should be chosen.

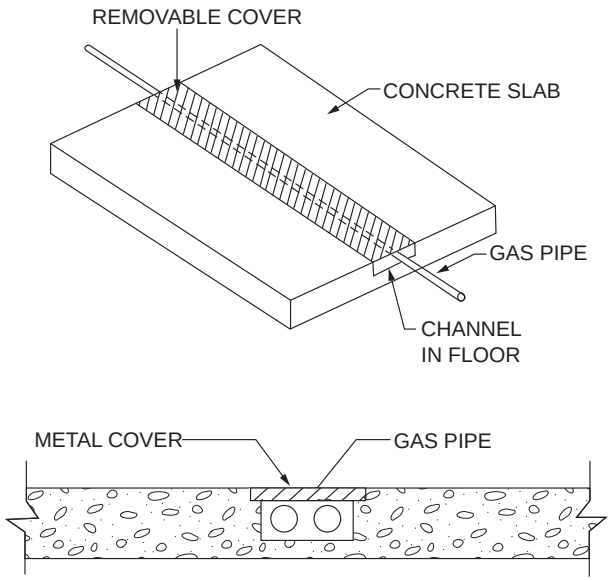

Figure 404.8
PIPING IN SOLID FLOORS

404.8.1 Conduit with one end terminating outdoors. The conduit shall extend into an occupiable portion of the building and, at the point where the conduit terminates in the building, the space between the conduit and the gas *piping* shall be sealed to prevent the possible entrance of any gas leakage. The conduit shall extend not less than 2 inches (51 mm) beyond the point where the pipe emerges from the floor. If the end sealing is capable of withstanding the full pressure of the gas pipe, the conduit shall be designed for the same pressure as the pipe. Such conduit shall extend not less than 4

INTERNATIONAL CODE COUNCIL®
Copyright © 2015 ICC. ALL RIGHTS RESERVED. Accessed by David Dammon on Jun 21, 2017 12:30:52 PM pursuant to License Agreement with ICC. No further reproduction or distribution authorized. ANY UNAUTHORIZED REPRODUCTION OR DISTRIBUTION IS A VIOLATION OF THE FEDERAL COPYRIGHT ACT AND THE LICENSE AGREEMENT, AND SUBJECT TO CIVIL AND CRIMINAL PENALTIES THEREUNDER.

inches (102 mm) outside the building, shall be vented above grade to the outdoors and shall be installed so as prevent the entrance of water and insects.

❖ This method cannot be used where piping enters the building from the outdoors or exits the building to the outdoors. The main application of this section would be for interior piping that must enter a solid floor and exit a solid floor all within the interior of the building. The intent is to direct any gas leakage to the outdoors by means of the secondary containment conduit and the outdoor vent terminal. Note that this section does not prohibit NPT threaded (screwed) elbow, tee, coupling, cap and plug fittings from being concealed. It does prohibit threaded unions, right and left couplings, bushings and swing joints from being concealed.

404.8.2 Conduit with both ends terminating indoors. Where the conduit originates and terminates within the same building, the conduit shall originate and terminate in an accessible portion of the building and shall not be sealed. The conduit shall extend not less than 2 inches (51 mm) beyond the point where the pipe emerges from the floor.

❖ This method allows piping to run between any two points within the building without a vent run to the outdoors and without sealing the ends of the conduit. This method is an alternative to and less complicated than the method of Section 404.6.1. The minimum rise of 2 inches (51 mm) above the floor is intended to prevent liquids and debris from falling into the conduit. The ends of the conduit are not to be sealed so as to allow any leakage to be noticed by the occupants, the same as leakage would be noticed from piping located anywhere else in the structure. If the conduit ends were sealed, there would be no evidence of a piping defect, no matter how severe the defect, possibly leading to a major leak in the event of conduit or end seal failure (see Commentary Figure 404.8.2).

404.9 Above-ground outdoor piping. *Piping* installed outdoors shall be elevated not less than $3^1/_2$ inches (152 mm) above ground and where installed across roof surfaces, shall be elevated not less than $3^1/_2$ inches (152 mm) above the roof surface. *Piping* installed above ground, outdoors, and installed across the surface of roofs shall be securely supported and located where it will be protected from physical damage. Where passing through an outside wall, the *piping* shall be protected against corrosion by coating or wrapping with an inert material. Where *piping* is encased in a protective pipe sleeve, the annular space between the *piping* and the sleeve shall be sealed.

❖ Gas piping in any location must be properly supported and protected from physical damage. Protection from damage is especially important where piping is run outdoors near grade or across roof surfaces (see Sections 407 and 415). Piping passing through an outside wall must be protected where the material of the wall could corrode or abrade the piping (concrete, masonry or stucco, for example). To help protect piping from corrosion resulting from exposure to moisture, the piping must always be located at least $3^1/_2$ inches (89 mm) above the earth and roof surfaces. The distance of $3^1/_2$ inches (89 mm) was chosen because it corresponds to the size of nominal 4-inch by 4-inch (102 mm by 102 mm) pressure-treated lumber which is commonly used to support piping run across roof surfaces.

Where piping is supported on 4-inch by 4-inch (102 mm by 102 mm) wood blocks or similar supports, the piping must be attached to the blocking with suitable clamps or straps. It is common to see wood blocking or piping that has been displaced because the piping was not properly fastened to the blocking. Section 415.1 dictates the minimum required spacing for blocking.

404.10 Isolation. Metallic *piping* and metallic tubing that conveys fuel gas from an LP-gas storage container shall be provided with an *approved* dielectric fitting to electrically isolate the underground portion of the pipe or tube from the above-ground portion that enters a building. Such dielectric fitting shall be installed above ground, outdoors.

❖ Such isolation is common practice for natural gas utility service risers. The required isolation fitting is intended to isolate the piping/tubing in the building from piping extending underground. This section does not require isolation between the LP-storage tank and the piping/tubing running from it to below

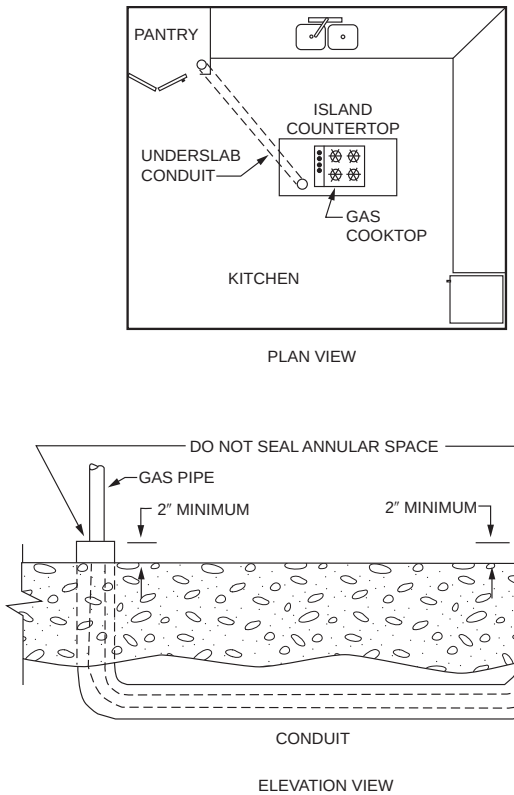

Figure 404.8.2
PIPE UNDER SLAB BETWEEN INTERIOR POINTS

INTERNATIONAL CODE COUNCIL®
Copyright © 2015 ICC. ALL RIGHTS RESERVED. Accessed by David Dammon on Jun 21, 2017 12:30:52 PM pursuant to License Agreement with ICC. No further reproduction or distribution authorized. ANY UNAUTHORIZED REPRODUCTION OR DISTRIBUTION IS A VIOLATION OF THE FEDERAL COPYRIGHT ACT AND THE LICENSE AGREEMENT, AND SUBJECT TO CIVIL AND CRIMINAL PENALTIES THEREUNDER.

ground. In other words, in the typical installation, piping/tubing enters the soil near the tank and rises out of the soil near the building served and the isolation is required where the piping/tubing rises to enter the building. This section is related to Sections 309 and 310. There has been concern raised about bonding metal gas piping/tubing that extends underground and this section is intended to alleviate such concern (see Commentary Figure 404.10).

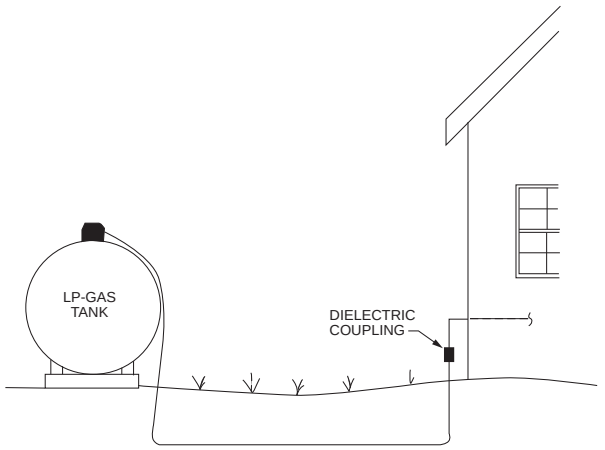

Figure 404.10
LP-GAS PIPING ISOLATION

404.11 Protection against corrosion. Metallic pipe or tubing exposed to corrosive action, such as soil condition or moisture, shall be protected in an *approved* manner. Zinc coatings (galvanizing) shall not be deemed adequate protection for gas *piping* underground. Where dissimilar metals are joined underground, an insulating coupling or fitting shall be used. *Piping* shall not be laid in contact with cinders.

❖ See the commentary to Section 403.8.

404.11.1 Prohibited use. Uncoated threaded or socket-welded joints shall not be used in *piping* in contact with soil or where internal or external crevice corrosion is known to occur.

❖ Pits, crevices and other surface imperfections can create concentrated corrosion cells where the corrosion effect is amplified. Pipe or fitting failure could occur more quickly than if the corrosion was uniformly distributed over the entire surface of the pipe or fitting (see commentary, Section 404.11.2).

404.11.2 Protective coatings and wrapping. Pipe protective coatings and wrappings shall be *approved* for the application and shall be factory applied.

Exception: Where installed in accordance with the manufacturer's instructions, field application of coatings and wrappings shall be permitted for pipe nipples, fittings and locations where the factory coating or wrapping has been damaged or necessarily removed at joints.

❖ Protective coatings in the form of wrappings, tapes, enamels, epoxies, sleeves, casings and factory-applied coverings are a common method of isolating metallic piping materials from the atmosphere or from the earth in which they are buried. Corrosion can be caused by soil or construction materials that are in contact with the pipe. Protection is usually provided by a factory-applied coating or by field wrapping the pipe with a protective covering such as a coal-tar-based or plastic wrapping. Where possible, a piping material is chosen that is not subject to the type of corrosion typical of the application. Application of these materials under strictly controlled factory conditions improves the quality control process and reduces the likelihood of coating defects. In the event that coatings or wrappings must be applied in the field, the exception states that they must be installed in accordance with the manufacturer's instructions. Coatings and wrappings should be applied only by persons trained and experienced in such work in order to improve reliability of the coating/wrapping process. Field application is permitted only in cases where the factory-applied material may have been damaged during transit or installation of the pipe, where the applied coating was removed for pipe welding or threading of the pipe or for short sections (nipples) of pipe used in the installation. Corrosion can be concentrated on the pipe or fitting where there are flaws in the coating or wrapping; therefore, improperly applied coatings and wrappings can cause pipe or fitting failures to occur faster than failures would occur in unprotected metals. It is evident why plastic piping is used extensively in underground installations.

404.12 Minimum burial depth. Underground *piping* systems shall be installed a minimum depth of 12 inches (305 mm) below grade, except as provided for in Section 404.12.1.

❖ The depth of 12 inches (305 mm) is considered to be sufficient to avoid possible harm to the pipe from the use of hand tools such as spades and shovels. However, if the piping is located in an area subject to surface loads such as vehicular traffic, the 12-inch (305 mm) depth may not be sufficient to protect the piping from those loads (see Commentary Figure 404.12).

404.12.1 Individual outside appliances. Individual lines to outdoor lights, grills and other *appliance*s shall be installed not less than 8 inches (203 mm) below finished grade, provided that such installation is *approved* and is installed in locations not susceptible to physical damage.

❖ Gas piping may be installed within 8 inches (203 mm) of the ground surface where it serves individual outdoor appliances and is not likely to be subjected to damage such as might occur from vehicular traffic, gardening, future excavation, etc. Each individual installation must be reviewed and approved by the code official. The intent is to allow shallow installations for small distribution lines that serve outdoor gas lights, cooking appliances, pool heaters and similar loads only where the piping is unlikely to be disturbed.

INTERNATIONAL CODE COUNCIL®
Copyright © 2015 ICC. ALL RIGHTS RESERVED. Accessed by David Dammon on Jun 21, 2017 12:30:52 PM pursuant to License Agreement with ICC. No further reproduction or distribution authorized. ANY UNAUTHORIZED REPRODUCTION OR DISTRIBUTION IS A VIOLATION OF THE FEDERAL COPYRIGHT ACT AND THE LICENSE AGREEMENT, AND SUBJECT TO CIVIL AND CRIMINAL PENALTIES THEREUNDER.

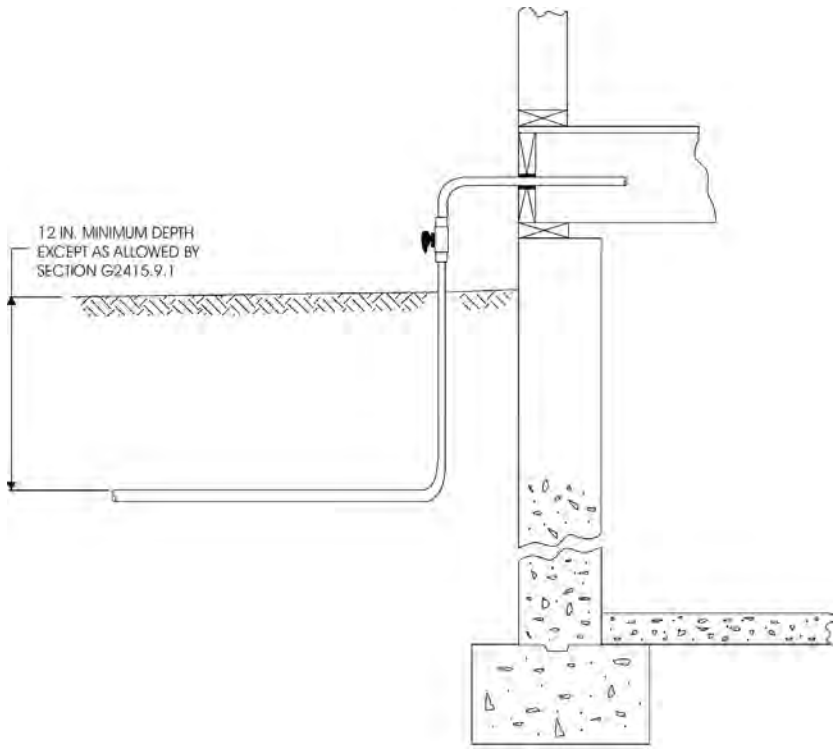

For SI: 1 inch = 25.4 mm.

Figure 404.12
MINIMUM BURIAL DEPTH

404.13 Trenches. The trench shall be graded so that the pipe has a firm, substantially continuous bearing on the bottom of the trench.

❖ Where trenches have nonuniform depth or peaks and valleys in the bottom, the piping could lack continuous support and could be subjected to stresses from the backfill and surface loads.

404.14 Piping underground beneath buildings. *Piping* installed underground beneath buildings is prohibited except where the *piping* is encased in a conduit of wrought iron, plastic pipe, steel pipe or other *approved* conduit material designed to withstand the superimposed loads. The conduit shall be protected from corrosion in accordance with Section 404.11 and shall be installed in accordance with Section 404.14.1 or 404.14.2.

❖ This section prohibits the installation of gas piping beneath buildings to reduce the potential for an inaccessible pipe failure caused by settling of the structure. The prohibition also reduces the potential for corrosion-caused failure of piping embedded in soil or fill. See Section 404.6 for gas pipe installations in floor slabs. Where underground installation under a building is unavoidable, the piping must be encased in another pipe (conduit) to act as a secondary containment system or as a protective shield from the fill under the floor (see Commentary Figure 404.8.2).

404.14.1 Conduit with one end terminating outdoors. The conduit shall extend into an occupiable portion of the building and, at the point where the conduit terminates in the building, the space between the conduit and the gas *piping* shall be sealed to prevent the possible entrance of any gas leakage. The conduit shall extend not less than 2 inches (51 mm) beyond the point where the pipe emerges from the floor. Where the end sealing is capable of withstanding the full pressure of the gas pipe, the conduit shall be designed for the same pressure as the pipe. Such conduit shall extend not less than 4 inches (102 mm) outside of the building, shall be vented above grade to the outdoors and shall be installed so as to prevent the entrance of water and insects.

❖ Note the limiting effect that Section 404.6 has on the application of this section (see commentary, Section 404.8.1).

404.14.2 Conduit with both ends terminating indoors. Where the conduit originates and terminates within the same building, the conduit shall originate and terminate in an accessible portion of the building and shall not be sealed. The conduit shall extend not less than 2 inches (51 mm) beyond the point where the pipe emerges from the floor.

❖ See the commentary to Section 404.8.2.

404.15 Outlet closures. Gas *outlets* that do not connect to *appliance*s shall be capped gas tight.

Exception: *Listed* and *labeled* flush-mounted-type quick-disconnect devices and *listed* and *labeled* gas convenience

INTERNATIONAL CODE COUNCIL®
Copyright © 2015 ICC. ALL RIGHTS RESERVED. Accessed by David Dammon on Jun 21, 2017 12:30:52 PM pursuant to License Agreement with ICC. No further reproduction or distribution authorized. ANY UNAUTHORIZED REPRODUCTION OR DISTRIBUTION IS A VIOLATION OF THE FEDERAL COPYRIGHT ACT AND THE LICENSE AGREEMENT, AND SUBJECT TO CIVIL AND CRIMINAL PENALTIES THEREUNDER.

outlets shall be installed in accordance with the manufacturer's instructions.

❖ Unused fuel gas outlets must be capped or plugged gas tight, regardless of whether a shutoff valve is installed at the outlet. A closed valve alone is not dependable and poses an unnecessary risk of leakage, accidental opening and vandalism. The exception recognizes that listed gas outlet devices are built with an inherent safety feature that will automatically shut off the gas flow if the mating connector is disengaged or that will not allow the appliance connector to be disengaged until the integral shutoff valve is manually closed.

404.16 Location of outlets. The unthreaded portion of *piping outlets* shall extend not less than l inch (25 mm) through finished ceilings and walls and where extending through floors or outdoor patios and slabs, shall be not less than 2 inches (51 mm) above them. The outlet fitting or *piping* shall be securely supported. *Outlets* shall not be placed behind doors. *Outlets* shall be located in the room or space where the *appliance* is installed.

Exception: *Listed* and *labeled* flush-mounted-type quick-disconnect devices and *listed* and *labeled* gas convenience *outlets* shall be installed in accordance with the manufacturer's instructions.

❖ This section regulates the location, installation and termination of gas piping system outlets to reduce the likelihood of physical damage and to provide clearances for the use of tools. When making connections to piping outlets, "back-up" wrenches are used to prevent piping from rotating, loosening or being damaged. Sufficient pipe length is necessary to allow the application of tools. Gas outlet devices that have been tested and labeled for installation methods other than those addressed in this section must be installed in accordance with the terms of their testing and listing as contained in the manufacturer's installation instructions. Gas outlets for CSST systems must be installed with the termination fitting designed specifically for that purpose and provided by the CSST manufacturer.

404.17 Plastic pipe. The installation of plastic pipe shall comply with Sections 404.17.1 through 404.17.3.

❖ This section places restrictions on the location and operating pressures for plastic pipe in addition to stating installation requirements specific to plastic pipe.

404.17.1 Limitations. Plastic pipe shall be installed outdoors underground only. Plastic pipe shall not be used within or under any building or slab or be operated at pressures greater than 100 psig (689 kPa) for natural gas or 30 psig (207 kPa) for LP-gas.

Exceptions:

1. Plastic pipe shall be permitted to terminate above ground outside of buildings where installed in prefabricated anodeless risers or service head adapter risers that are installed in accordance with the manufacturer's instructions.
2. Plastic pipe shall be permitted to terminate with a wall head adapter within buildings where the plastic pipe is inserted in a *piping* material for fuel gas use in buildings.
3. Plastic pipe shall be permitted under outdoor patio, walkway and driveway slabs provided that the burial depth complies with Section 404.12.

❖ Because of the potential hazard associated with the use of a material that has lower resistance to physical damage and heat as compared to metallic pipe, installation of plastic pipe and tubing is limited to areas that are both outside of the building and underground. Plastic pipe and tubing are widely used for underground gas distribution systems because of their ease of installation and inherent resistance to corrosion. PE and polyamide (PA) SDR 11 pipe are the only allowable plastic pipes for use with LP-gas, and the code user is directed to the referenced standard, NFPA 58, which requires that these piping materials comply with ASTM D2513. Exception 1 makes it clear that if an equivalent level of physical protection is installed, plastic pipe may terminate above ground outside of the building. It is common practice for gas utility companies to install premanufactured riser assemblies at their meter settings. Such risers typically consist of a steel pipe with a corrosion-resistant coating in which a length of PE pipe is preinstalled for coupling to the service lateral. A 90-degree (1.57 rad) sweeping bend is built into the underground end of the riser assembly. Plastic piping is not allowed in or under a concrete slab except as permitted by Exception 3. It is not the intent of this section to prevent an outdoor slab from being placed over customer-owned (private) underground gas lines, such as in the case of walkways, driveways and open patios. The prohibition on piping within a slab is applicable to all slabs without exception. Exceptions 1 and 2 relate to Section 403.6.1; see the commentary for that section (see Commentary Figure 404.17.1).

404.17.2 Connections. Connections made outdoors and underground between metallic and plastic *piping* shall be made only with transition fittings conforming to ASTM D2513 Category I or ASTM F1973.

❖ Because installation of plastic piping is allowed only where both outside and underground, the same requirement holds for joining plastic and metallic piping. Mechanical compression joints employ an elastomeric seal that must be compatible not only with the piping material but also with the gas that is conveyed in the system. The manufacturer's instructions normally require use of an internal stiffener insert in conjunction with the fitting for additional support. The stiffener insert prevents the pipe from deforming under the compression force exerted by the seal and compression nut assembly.

Category 1 fittings are designed to make a gas-tight seal and resist axial (pull-out) forces equal to the

INTERNATIONAL CODE COUNCIL®
Copyright © 2015 ICC. ALL RIGHTS RESERVED. Accessed by David Dammon on Jun 21, 2017 12:30:52 PM pursuant to License Agreement with ICC. No further reproduction or distribution authorized. ANY UNAUTHORIZED REPRODUCTION OR DISTRIBUTION IS A VIOLATION OF THE FEDERAL COPYRIGHT ACT AND THE LICENSE AGREEMENT, AND SUBJECT TO CIVIL AND CRIMINAL PENALTIES THEREUNDER.

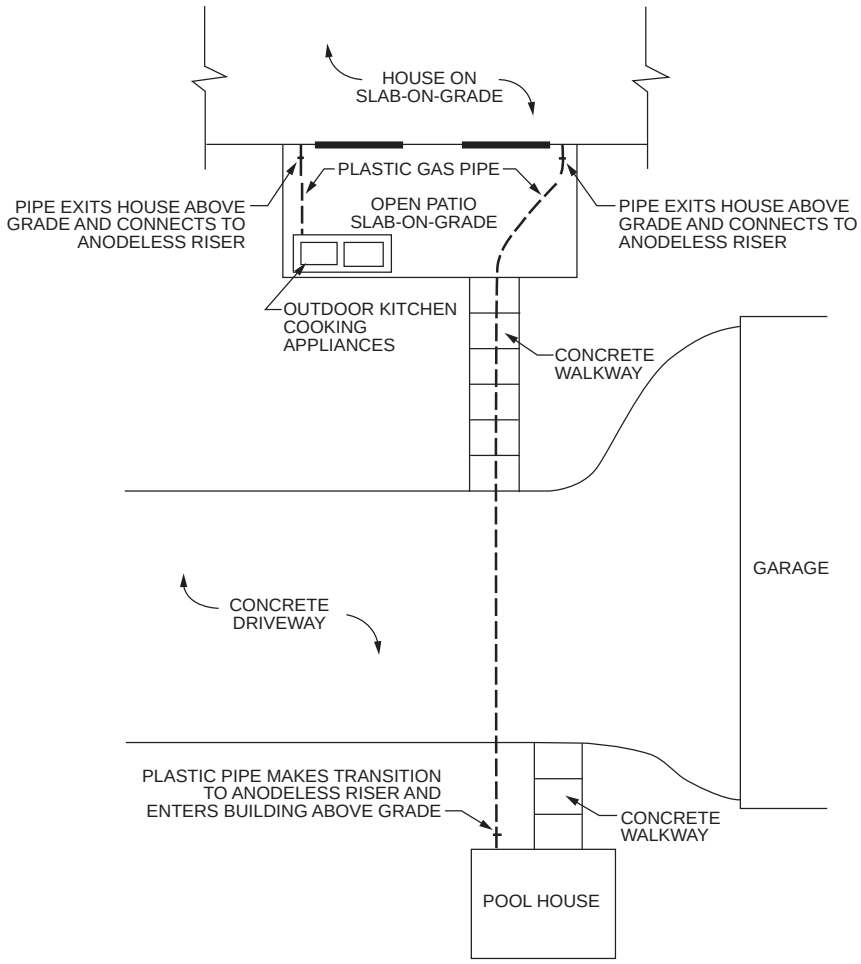

Figure 404.17.1
PIPING UNDER SLABS

yield strength of the piping material [see Commentary Figure 403.11(3)].

404.17.3 Tracer. A yellow insulated copper tracer wire or other *approved* conductor shall be installed adjacent to underground nonmetallic *piping*. *Access* shall be provided to the tracer wire or the tracer wire shall terminate above ground at each end of the nonmetallic *piping*. The tracer wire size shall be not less than 18 AWG and the insulation type shall be suitable for direct burial.

❖ To avoid piping damage and a hazardous condition, the location of underground piping must be known prior to excavation work in the vicinity of such piping.

In the past, gas utility companies, installers and contractors relied on metal detectors to locate gas piping underground. With the advent of nonmetallic (plastic) piping, this is no longer possible. A tracer wire provides a means for locating nonmetallic gas piping without having to excavate, thereby avoiding the possibility of damaging the pipe. An electrical current can be passed through the wire to allow a metal detector to locate the piping. Insulated wire is required because copper wire or other approved conductors may be susceptible to corrosion in some soils.

Yellow is the standardized color used to identify gas piping. Specialized tracer systems made of proprietary materials are available. Tapes that contain a conducting strip and also serve as a visual warning are also available.

404.18 Pipe cleaning. The use of a flammable or combustible gas to clean or remove debris from a *piping* system shall be prohibited.

❖ Such cleaning operations were once used on industrial sites using high-pressure gas. Regardless of the location, fuel gas must never be used as the means to flush debris from gas piping because the discharge of gas from the piping poses a serious threat of explosion.

404.19 Prohibited devices. A device shall not be placed inside the *piping* or fittings that will reduce the cross-sectional area or otherwise obstruct the free flow of gas.

Exceptions:

1. Approved gas filters.

INTERNATIONAL CODE COUNCIL®
Copyright © 2015 ICC. ALL RIGHTS RESERVED. Accessed by David Dammon on Jun 21, 2017 12:30:52 PM pursuant to License Agreement with ICC. No further reproduction or distribution authorized. ANY UNAUTHORIZED REPRODUCTION OR DISTRIBUTION IS A VIOLATION OF THE FEDERAL COPYRIGHT ACT AND THE LICENSE AGREEMENT, AND SUBJECT TO CIVIL AND CRIMINAL PENALTIES THEREUNDER.

2. An approved fitting or device where the gas piping system has been sized to accommodate the pressure drop of the fitting or device.

❖ Devices such as filters and flow-measuring instruments could create considerable pressure drop and are prohibited except where the piping system is designed to tolerate such losses. An unaccounted for restriction in the piping could make an otherwise properly designed system fail to supply the required pressure. This section is not intended to apply to shutoff valves and excess flow valve devices because it specifically addresses devices installed in the interior of piping as opposed to devices installed "in" piping systems. The second exception addresses devices such as excess flow valves (EFV) that have internal components that can be viewed as being placed inside of pipe or fittings. An EFV will act as a restriction in the piping and the resultant pressure loss from this restriction must be considered to determine if such loss is tolerable and that the load will be supplied with the required minimum inlet pressure.

404.20 Testing of piping. Before any system of *piping* is put in service or concealed, it shall be tested to ensure that it is gas tight. Testing, inspection and purging of *piping* systems shall comply with Section 406.

❖ A pressure test is required after every installation, alteration, addition or repair to the fuel-gas piping system. The location of a leak may be difficult to determine, especially if it is concealed in the building construction. If a leak is found, the leaking component must be repaired or replaced before the system is concealed or put into operation. Section 406 specifies testing pressures based on the type of system, the design working pressure or other parameters. The piping system must sustain the test pressure for the test duration period without exhibiting any sign of leakage.

SECTION 405 (IFGS)
PIPING BENDS AND CHANGES IN DIRECTION

405.1 General. Changes in direction of pipe shall be permitted to be made by the use of fittings, factory bends or field bends.

❖ This section permits making changes in direction of gas piping through the use of pipe fittings compatible with the piping material or, if recommended by the pipe manufacturer, by bending the pipe. If bending is the chosen method, it must be accomplished in accordance with Sections 405.2 and 405.3. In practice, steel gas piping is rarely bent to accomplish changes in direction because pipe failure at a seam is a possibility for steel pipe that is bent.

405.2 Metallic pipe. Metallic pipe bends shall comply with the following:

1. Bends shall be made only with bending tools and procedures intended for that purpose.
2. All bends shall be smooth and free from buckling, cracks or other evidence of mechanical damage.
3. The longitudinal weld of the pipe shall be near the neutral axis of the bend.
4. Pipe shall not be bent through an arc of more than 90 degrees (1.6 rad).
5. The inside radius of a bend shall be not less than six times the outside diameter of the pipe.

❖ Pipe is bent to accomplish changes in direction without the use of fittings. Pipe must be bent with the appropriate bending tools and materials. Some materials are not tempered or intended to be bent; therefore, consideration must be given to choosing the proper materials. Bending tools are designed to make bends without damaging the pipe. Pipe intended to be bent has a minimum bend radius which must be observed to avoid damage to the pipe. For example, bending welded seam pipe with the seam located outside of the neutral axis of the bend may result in a split seam because of the stresses induced from the bend. In other words, the welded seam must not be oriented in a bend that would place it in tension or compression. If pipe is to be bent, it should be stated in the pipe specifications that the pipe is suitable for bending. Rigid gas piping is not commonly bent because of the perceived risk of pipe stress failures at the bend and because bending can be more labor intensive than using fittings.

405.3 Plastic pipe. Plastic pipe bends shall comply with the following:

1. The pipe shall not be damaged and the internal diameter of the pipe shall not be effectively reduced.
2. Joints shall not be located in pipe bends.
3. The radius of the inner curve of such bends shall be not less than 25 times the inside diameter of the pipe.
4. Where the *piping* manufacturer specifies the use of special bending tools or procedures, such tools or procedures shall be used.

❖ Because of the material characteristics of plastic pipe, the code defers to the manufacturer's installation and bending instructions to achieve the performance level contemplated by this section. For example, coiled plastic pipe and tubing have limitations regarding bending beyond or against the natural curvature of the coil. A joint in a bend would be subject to bending stresses and pipe/fitting misalignments that could cause joint structural failure and/or leakage. Thus, a 1-inch (25.4 mm) ID plastic pipe would have a minimum bending radius of 25 inches (635 mm) measured to the inner curve of the bend.

405.4 Elbows. Factory-made welding elbows or transverse segments cut therefrom shall have an arc length measured along the crotch of not less than 1 inch (25 mm) in pipe sizes 2 inches (51 mm) and larger.

❖ Welding elbows of various angles up to 90 degrees (1.57 rad) are commonly used to make changes in

INTERNATIONAL CODE COUNCIL®
Copyright © 2015 ICC. ALL RIGHTS RESERVED. Accessed by David Dammon on Jun 21, 2017 12:30:52 PM pursuant to License Agreement with ICC. No further reproduction or distribution authorized. ANY UNAUTHORIZED REPRODUCTION OR DISTRIBUTION IS A VIOLATION OF THE FEDERAL COPYRIGHT ACT AND THE LICENSE AGREEMENT, AND SUBJECT TO CIVIL AND CRIMINAL PENALTIES THEREUNDER.

direction in steel piping systems. The minimum length of the arc on the inside radius of the fitting must be 1 inch to provide enough metal and room to make a proper weld.

SECTION 406 (IFGS) INSPECTION, TESTING AND PURGING

406.1 General. Prior to acceptance and initial operation, all *piping* installations shall be visually inspected and pressure tested to determine that the materials, design, fabrication and installation practices comply with the requirements of this code.

❖ Before any gas piping system is put to use, it must be inspected, tested and approved (see Sections 406.1.1 through 406.6.4). Pressure testing is distinct from leakage checking as covered in Section 406.6.

406.1.1 Inspections. Inspection shall consist of visual examination during or after manufacture, fabrication, assembly or pressure tests.

❖ The inspection of piping installations is intended to be a visual observation of the system and the testing procedure. The designer may require that welded joints in, for example, very high pressure applications be examined by a method that is capable of discovering internal defects that are not detectable by visual observation.

406.1.2 Repairs and additions. In the event repairs or additions are made after the pressure test, the affected *piping* shall be tested.

Minor repairs and additions are not required to be pressure tested provided that the work is inspected and connections are tested with a noncorrosive leak-detecting fluid or other *approved* leak-detecting methods.

❖ Some time after the initial test of the piping, a repair could be made or a branch could be added or extended. The repaired, added or extended portion of the piping system needs to be tested without requiring the unchanged portions to be tested again. Minor work on an existing system is allowed without pressure testing the minor work if the work is visually inspected and tested by a leak-detecting method. Leak-detecting methods include bubble test fluids and electronic sensors. Some bubble test fluids could be corrosive to some piping; therefore, a noncorrosive fluid designed for this purpose should always be used. Methods other than bubble test fluids must be acceptable to the code official.

406.1.3 New branches. Where new branches are installed to new *appliance*s, only the newly installed branches shall be required to be pressure tested. Connections between the new *piping* and the existing *piping* shall be tested with a noncorrosive leak-detecting fluid or other *approved* leak-detecting methods.

❖ This section applies to all new branches regardless of where in the piping system they connect. Often, because it is convenient or because the existing piping is fully loaded, a new piping branch will be run from the point of delivery to serve a new appliance installation. The new branch is typically taken from a tee fitting installed immediately downstream of the meter. The entire new branch piping must be tested, including the tee fitting in the existing piping from which the new branch is supplied. The point of connection to the existing piping can be tested by a means other than pressure testing, although all other piping in the new branch must be isolated from the existing piping and pressure tested as required for new work. Section 406.1.4 requires that the new branch piping be disconnected from the existing piping during pressure testing, except where an assembly consisting of two closed valves in series with an intermediate open valved port is installed to isolate the new piping from the existing piping (see Commentary Figure 406.1.4).

406.1.4 Section testing. A *piping* system shall be permitted to be tested as a complete unit or in sections. Under no circumstances shall a valve in a line be used as a bulkhead between gas in one section of the *piping* system and test medium in an adjacent section, except where a double block and bleed valve system is installed. A valve shall not be subjected to the test pressure unless it can be determined that the valve, including the valve-closing mechanism, is designed to safely withstand the test pressure.

❖ Depending on the progression of a job, it may be desirable to test portions of a system as they are completed. It is also possible that portions of a system will be put in service before the entire system is completed. To prevent a test medium from leaking into piping containing fuel gas or vice versa, portions of piping under test must be isolated from portions that are in service. A single valve cannot be depended on to establish this isolation because all valves have some "leak-through" allowance, and also the valve could be accidentally opened. To eliminate this risk, two valves in series must be used, and a valved open port (tell-tale) must be installed between the valves. This arrangement is called a double block and bleed valve system. The open port will release any gases that have passed through either isolation valve and also will serve to indicate any leakage or accidental opening of an isolation valve (see Commentary Figure 406.1.4).

406.1.5 Regulators and valve assemblies. Regulator and valve assemblies fabricated independently of the *piping* system in which they are to be installed shall be permitted to be tested with inert gas or air at the time of fabrication.

❖ Assemblies of valves, regulators and/or over-pressure devices might be factory or shop assembled and may be tested independently of the piping system in which they will be installed.

406.1.6 Pipe clearing. Prior to testing, the interior of the pipe shall be cleared of all foreign material.

❖ Piping will contain debris from pipe storage, handling and assembly including soil, construction site trash, pipe joint compound, welding debris, threading and reaming scrap and even tools. Clearing the piping of

INTERNATIONAL CODE COUNCIL®
Copyright © 2015 ICC. ALL RIGHTS RESERVED. Accessed by David Dammon on Jun 21, 2017 12:30:52 PM pursuant to License Agreement with ICC. No further reproduction or distribution authorized. ANY UNAUTHORIZED REPRODUCTION OR DISTRIBUTION IS A VIOLATION OF THE FEDERAL COPYRIGHT ACT AND THE LICENSE AGREEMENT, AND SUBJECT TO CIVIL AND CRIMINAL PENALTIES THEREUNDER.

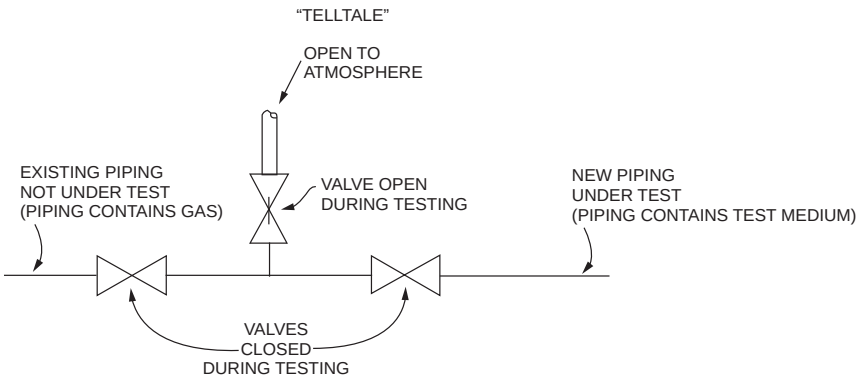

Figure 406.1.4
PIPING ISOLATION ARRANGEMENT FOR TESTING

foreign materials will prevent such materials from entering system controls, devices and appliances and will also reduce the chances of injury to personnel from ejected debris and objects (see Section 404.18).

406.2 Test medium. The test medium shall be air, nitrogen, carbon dioxide or an inert gas. Oxygen shall not be used.

❖ The gas that is forced into the piping system for pressure testing must be chemically unreactive to prevent undesirable reactions with the piping system components and the fuel to be conveyed in the piping. Oxygen is not inert, and any residual amount could form an explosive mixture with the fuel gas. The typical test gas is air, which is also not inert but is readily available and free. Nitrogen and carbon dioxide are considered to be inert for the purpose of testing piping systems and are inexpensive compared to most truly inert gases.

406.3 Test preparation. Pipe joints, including welds, shall be left exposed for examination during the test.

Exception: Covered or concealed pipe end joints that have been previously tested in accordance with this code.

❖ This section is consistent with Section 107.1 and requires piping joints to remain exposed during testing to allow locations of defects. This section speaks only of joints, but Section 107.1 requires that the piping and joints be left exposed until they are inspected and approved.

406.3.1 Expansion joints. Expansion joints shall be provided with temporary restraints, if required, for the additional thrust load under test.

❖ If the piping system uses expansion joints to accommodate piping movement, those joints might need to be restrained to resist the additional thrust loading caused by the movement of the pressurized test gas. Generally, testing does not produce noticeable dynamic thrust forces because of the slow rate at which the test gas is put in and taken out of the piping system. The thrust force produced by the static pressure of the test gas is of concern. Expansion joints are rarely used because expansion loops and offsets perform the same function.

406.3.2 Appliance and equipment isolation. *Appliance*s and *equipment* that are not to be included in the test shall be either disconnected from the *piping* or isolated by blanks, blind flanges or caps. Flanged joints at which blinds are inserted to blank off other *equipment* during the test shall not be required to be tested.

❖ Some equipment can be damaged by test pressure and is therefore disconnected from the piping system or is otherwise isolated by blank-offs placed between the flanges.

406.3.3 Appliance and equipment disconnection. Where the *piping* system is connected to *appliance*s or *equipment* designed for operating pressures of less than the test pressure, such *appliance*s or *equipment* shall be isolated from the *piping* system by disconnecting them and capping the outlet(s).

❖ This requirement is often overlooked in the field, which could lead to appliance damage and serious consequences. Appliances are typically designed for a maximum inlet gas pressure of $^1/_2$ psig (3.5 kPa) or less, above which damage to controls and regulators could occur. The test pressure will be at least 3 psig (20.7 kPa) and oftentimes much higher in accordance with general practice or local traditions or requirements. Installers routinely pressurize piping systems to pressures between 50 and 100 psig (345 and 690 kPa), often at the insistence of the local authority. It is obvious that there is a good potential to expose appliances to extreme pressures during a test, which is why the code requires the precaution of disconnecting the appliances from the supply piping. Disconnection is normally accomplished by opening a union or disconnecting the appliance connector. The appliance shutoff valve must not be used as a means of appliance isolation because the valve can leak through and/or can be accidentally opened or left open (see Section 406.3.4 and Commentary Figure 406.3.3).

INTERNATIONAL CODE COUNCIL®
Copyright © 2015 ICC. ALL RIGHTS RESERVED. Accessed by David Dammon on Jun 21, 2017 12:30:52 PM pursuant to License Agreement with ICC. No further reproduction or distribution authorized. ANY UNAUTHORIZED REPRODUCTION OR DISTRIBUTION IS A VIOLATION OF THE FEDERAL COPYRIGHT ACT AND THE LICENSE AGREEMENT, AND SUBJECT TO CIVIL AND CRIMINAL PENALTIES THEREUNDER.



Figure 406.3.3
MANUFACTURER'S WARNING REGARDING PRESSURE TESTING OF GAS PIPING

406.3.4 Valve isolation. Where the *piping* system is connected to *appliance*s or *equipment* designed for operating pressures equal to or greater than the test pressure, such *appliance*s or *equipment* shall be isolated from the *piping* system by closing the individual *appliance* or *equipment* shutoff valve(s).

❖ If the appliances and other system components are not subject to damage by the test pressure, the equipment shutoff valve can serve to isolate the equipment during the test. Unlike Section 406.3.3, this section does not require disconnection of the appliance/equipment. This section would probably be applicable only in an industrial occupancy. This author believes that no residential or commercial appliance can be safely subjected to even the minimum test pressure of 3 psi; therefore, it is always prudent to disconnect all appliances prior to applying test pressure.

406.3.5 Testing precautions. Testing of *piping* systems shall be performed in a manner that protects the safety of employees and the public during the test.

❖ Compressed gases store energy in direct proportion to the pressure. This stored energy can be destructive and dangerous to personnel if released quickly because of joint, component or pipe failure or an intentional action. Debris will be found in all piping systems after installation. This debris can be harmful to appliances and system components and can act as projectiles during testing and purging operations. Piping is typically purged before testing to flush out foreign materials. Experience has shown that using fuel gas to flush out foreign materials in piping systems can be a dangerous practice.

406.4 Test pressure measurement. Test pressure shall be measured with a manometer or with a pressure-measuring device designed and calibrated to read, record or indicate a pressure loss caused by leakage during the pressure test period. The source of pressure shall be isolated before the pressure tests are made. Mechanical gauges used to measure test pressures shall have a range such that the highest end of the scale is not greater than five times the test pressure.

❖ Test pressures must be measured with a manometer or other pressure-measuring device that is designed and calibrated to indicate a pressure loss caused by leakage during the pressure test period. Pressure-measuring devices must be graduated so that small variations in test pressure will be readily detectable. Small pressure variations might go undetected in instruments having broader ranges. Gauges should have scale increments that are small enough to detect small changes in pressure. Mechanical gauges generally achieve their best accuracy near mid-range of their scale. All test instruments should have been calibrated recently and their accuracy verified before starting the test. Although no piping system can be absolutely leak free, the intent of the code is to make the system free of leaks that are measurable with the testing procedures and instruments prescribed in the code and attainable in the field. Spring-type mechanical pressure gauges must have a high-end scale reading of no greater than five times the test pressure. If the test pressure was 3 psig (20.7 kPa), for example, the gauge would have to have a maximum range of 0 to 15 psig (0 to 104 kPa). Such gauges are a wise choice because the test reading will be higher in the range of the gauge where the gauge accuracy is better. Also, the gauge can have much smaller increments than the typical 100 psig (690 kPa) gauge, thus allowing greater resolution and discernability in detecting a leak [see Commentary Figure 406.4(1)]. All spring-type mechanical gauges are susceptible to inaccuracies caused by conditions of use and mishandling and should be calibrated regularly. Manometers are very accurate and do not need to be calibrated. In all cases, the intent of this section is to require an instrument that is capable of indicating the very small pressure changes that occur as a result of a detectable leak. Test instrument sensitivity is especially important considering the short duration of the test.

The source of pressure in the piping system under test must be disconnected from the system to prevent the source from invalidating the test. For example, the compressed air tank or inert gas cylinder could be adding gas to the piping system at the same rate as a leak is letting gas escape; the test would then be meaningless.

Commentary Figures 406.4(2), 406.4(3) and 406.4(4) show examples of test instruments that can be considerably more accurate than mechanical spring gauges. Electronic instruments can provide high-resolution readings, making very small leaks as well as regular leaks detectable within short time periods. Commentary Figures 406.4(3) and 406.4(4) show instruments that are designed to give accurate pressure readings and give positive indication of a leak. The liquid manometer-type instrument, shown in

INTERNATIONAL CODE COUNCIL®
Copyright © 2015 ICC. ALL RIGHTS RESERVED. Accessed by David Dammon on Jun 21, 2017 12:30:52 PM pursuant to License Agreement with ICC. No further reproduction or distribution authorized. ANY UNAUTHORIZED REPRODUCTION OR DISTRIBUTION IS A VIOLATION OF THE FEDERAL COPYRIGHT ACT AND THE LICENSE AGREEMENT, AND SUBJECT TO CIVIL AND CRIMINAL PENALTIES THEREUNDER.

Commentary Figure 406.4(3), functions as a manometer that readily indicates test pressure and leakage. A separate feature of the instrument allows small leaks to be recognized quickly. While the system is under test pressure, an integral valve can be closed that will isolate the liquid reservoir from the piping system, thereby trapping the test pressure in the manometer's liquid reservoir. A small diameter vertical dip tube, having its open end submerged in the liquid, rises above the liquid level in the reservoir. The top end of the dip tube is connected to the piping system under test. If there is no leakage, the pressures at the upper end and lower (submerged) end of the dip tube are equal and liquid will not rise. If leakage occurs, the pressure in the piping system will fall below the pressure trapped in the reservoir at the start of the test procedure and liquid will be forced up into the small diameter dip tube, indicating the leak. The use of a small diameter dip tube allows a small change in liquid level in the reservoir to be seen as a comparatively large movement of liquid in the dip tube.

406.4.1 Test pressure. The test pressure to be used shall be not less than $1^1/_2$ times the proposed maximum working pressure, but not less than 3 psig (20 kPa gauge), irrespective of design pressure. Where the test pressure exceeds 125 psig (862 kPa gauge), the test pressure shall not exceed a value that produces a hoop stress in the *piping* greater than 50 percent of the specified minimum yield strength of the pipe.

❖ The minimum test pressure will never be less than 3 psig (20 kPa). The majority of residential and small commercial occupancies are served by piping systems with a pressure of less than $^1/_2$ psig [(14 inches water column) (3.5 kPa)], and for such systems the test pressure must be 3 psig (20 kPa) or higher. The test pressure must also be not less than 1.5 times the pressure at which the piping system is designed to operate. If the piping system is designed to operate at 5 psig (34.5 kPa), the test pressure must be not less than 1.5 x 5 = 7.5 psig (51.7 kPa). In very high pressure applications, the test pressure might approach the structural limits of the piping material, and, therefore, the test pressure must be limited. Hoop stress is the result of internal pressure that tends to expand the pipe walls outward along the circumference of the pipe.

406.4.2 Test duration. Test duration shall be not less than $^1/_2$ hour for each 500 cubic feet (14 m^3) of pipe volume or fraction thereof. When testing a system having a volume less than 10 cubic feet (0.28 m^3) or a system in a single-family dwelling, the test duration shall be not less than 10 minutes. The duration of the test shall not be required to exceed 24 hours.

❖ As the piping system becomes larger, the test duration must be longer so that any leak can be detected. For example, a leakage rate of 1 cubic foot per hour (472 cm^3/min) would produce a more easily detectable pressure drop in a small 10 cubic foot (0.3 m^3) volume system than it would in a large 500 cubic foot (14.2 m^3) volume system. It would require a longer test period to detect the leak in the large volume system because the leakage of 1 cubic foot represents a much smaller fraction of the total gas volume in the system. If a system has a volume of 501 cubic feet, the minimum test duration would be 1 hour. To put this in perspective, 500 cubic feet of piping system internal volume would equate to 83,333 feet (25 400 m) of 1-inch (25 mm) Schedule 40 steel pipe or 9,747 feet (2971 m) of 3-inch (76 mm) Schedule 40 steel pipe.

Because 10 cubic feet (0.3 m^3) equates to 1,667 feet (508.1 m) of 1-inch (25 mm) pipe, it is obvious that single-family dwellings fall in the 10 cubic foot or less volume category. A 10-minute test period is not much time to detect a pressure drop, which makes it even more important to use a pressure instrument that is capable of indicating very small drops in pressure (see commentary, Section 406.4).

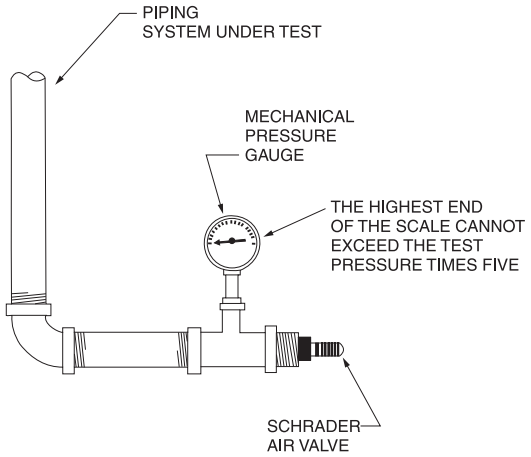

Figure 406.4(1)
TYPICAL TEST SET-UP FOR AIR PRESSURE TESTING



Figure 406.4(2)
ELECTRONIC PRESSURE GAUGE
(Photo courtesy of Dwyer Instruments, Inc.)

INTERNATIONAL CODE COUNCIL®
Copyright © 2015 ICC. ALL RIGHTS RESERVED. Accessed by David Dammon on Jun 21, 2017 12:30:52 PM pursuant to License Agreement with ICC. No further reproduction or distribution authorized. ANY UNAUTHORIZED REPRODUCTION OR DISTRIBUTION IS A VIOLATION OF THE FEDERAL COPYRIGHT ACT AND THE LICENSE AGREEMENT, AND SUBJECT TO CIVIL AND CRIMINAL PENALTIES THEREUNDER.

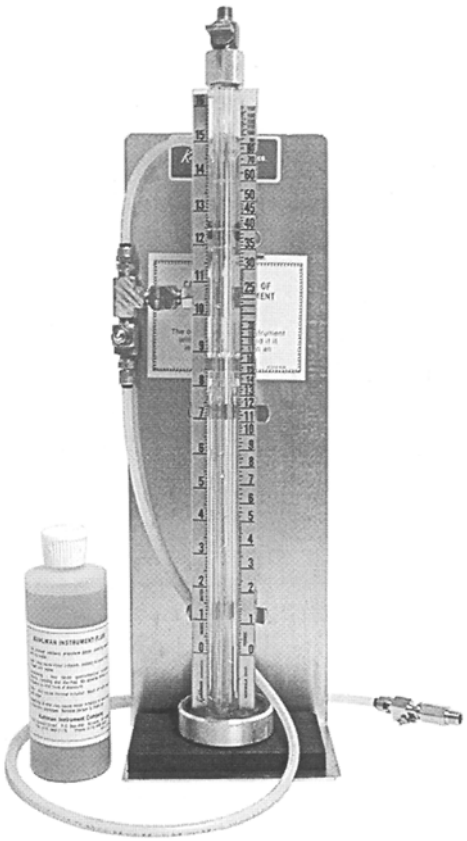

Figure 406.4(3)
LEAK DETECTOR INSTRUMENT
(Photo courtesy of KUHLMAN Instrument Company)

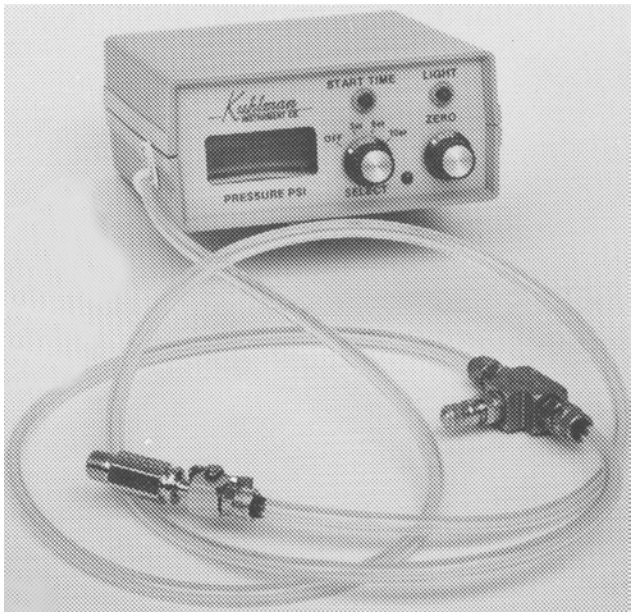

Figure 406.4(4)
ELECTRONIC LEAK DETECTOR INSTRUMENT
(Photo courtesy of KUHLMAN Instrument Company)

406.5 Detection of leaks and defects. The *piping* system shall withstand the test pressure specified without showing any evidence of leakage or other defects.

Any reduction of test pressures as indicated by pressure gauges shall be deemed to indicate the presence of a leak unless such reduction can be readily attributed to some other cause.

❖ Any pressure drop, no matter how small, is considered a failure of the test, except where the drop can be shown to result from a change in temperature or other cause. This would be practically impossible to demonstrate in the field, especially for short test durations. A true leak should show up as a continuous drop in test pressure. If the rate of pressure drop slows as the test progresses, it may be caused by cooling of the test medium, which causes it to contract. For example, warm air coming from a compressor will contract when introduced into a cold piping system, thereby causing a test instrument to indicate a drop in pressure. To help eliminate any guesswork, the temperature of the test medium should be allowed to stabilize within the piping system before the test begins.

406.5.1 Detection methods. The leakage shall be located by means of an *approved* gas detector, a noncorrosive leak detection fluid or other *approved* leak detection methods.

❖ Once the pressure measuring instrument indicates leakage, the leak or leaks must be located for repair or replacement. Electronic sensors and bubble fluids are used to find leaks that are not readily found by human senses. Many people who have worked with and/or inspected gas piping installations can recall instances of personal injury, fires and close calls that were caused by searching for leaks with an open flame. Open flames must never be used for leak detection because of the explosion danger and because open flames will not detect small leaks.

406.5.2 Corrections. Where leakage or other defects are located, the affected portion of the *piping* system shall be repaired or replaced and retested.

❖ Where a leak is detected by a method named in Section 406.5.1, the defect must be corrected. Corrections include tightening of fittings or threaded joints and replacing defective pipe, tubing or fittings.

406.6 Piping system and equipment leakage check. Leakage checking of systems and *equipment* shall be in accordance with Sections 406.6.1 through 406.6.4.

❖ Leakage checking is different from pressure testing. Sections 406.1 through 406.5 address the pressure testing of newly installed or altered piping systems for the purpose of locating defects in the installation or materials. This section addresses leakage checks that are intended to discover open outlets, defective appliance connections and defects that have developed since the initial installation (see Section 406.6.2).

INTERNATIONAL CODE COUNCIL®
Copyright © 2015 ICC. ALL RIGHTS RESERVED. Accessed by David Dammon on Jun 21, 2017 12:30:52 PM pursuant to License Agreement with ICC. No further reproduction or distribution authorized. ANY UNAUTHORIZED REPRODUCTION OR DISTRIBUTION IS A VIOLATION OF THE FEDERAL COPYRIGHT ACT AND THE LICENSE AGREEMENT, AND SUBJECT TO CIVIL AND CRIMINAL PENALTIES THEREUNDER.

406.6.1 Test gases. Leak checks using fuel gas shall be permitted in *piping* systems that have been pressure tested in accordance with Section 406.

❖ Piping systems are pressure tested with air or an inert gas, and leakage checking is done with the fuel gas at whatever pressure the system is designed to operate (see Section 406.6.2).

406.6.2 Before turning gas on. During the process of turning gas on into a system of new gas *piping*, the entire system shall be inspected to determine that there are no open fittings or ends and that all valves at unused outlets are closed and plugged or capped.

❖ This section requires that a precautionary measure be taken to prevent fuel gas from escaping from the piping system when the gas is turned on in the system for the first time. Because the piping system has never been used, it is not to be fully trusted as being gas-tight. Because anything could have been done to the system since it was pressure tested, an additional visual check is justified before the gas is turned on. The condition of appliances may also be unknown, therefore, it may be wise to make sure that all appliance shutoff valves are closed until the appliances are ready to be put in service. Often, parties other than those who installed and tested the piping system are involved with connecting to the outlets in the system. This makes it likely that what was gas tight at the initial pressure testing is no longer gas tight as a result of incomplete or improper connections at the system outlets. Consistent with Section 404.15, all unused outlets must be capped or plugged.

406.6.3 Leak check. Immediately after the gas is turned on into a new system or into a system that has been initially restored after an interruption of service, the *piping* system shall be checked for leakage. Where leakage is indicated, the gas supply shall be shut off until the necessary repairs have been made.

❖ This section is a logical progression from the previous section. After the visual check for the status of outlets and equipment shutoff valves, the gas is introduced into the system, and the system is checked for leakage. This checking is typically accomplished by examining all the outlets, observing a gas meter for indication of flow, monitoring the system pressure for any drop or any combination of these. Because all outlet valves are closed and unused outlets are capped, any gas flow or pressure drop indicates leakage, and the gas must be turned off. This section would also allow leakage checking with the appliance shutoff valves open and the appliances shut down to prevent their operation. Checking in this manner would verify that the appliance gas controls were not faulty. A leakage check is also required after gas service is restored.

406.6.4 Placing appliances and equipment in operation. *Appliance*s and *equipment* shall not be placed in operation until after the *piping* system has been checked for leakage in accordance with Section 406.6.3, the *piping* system has been purged in accordance with Section 406.7 and the connections to the appliances have been checked for leakage.

❖ Gas appliances must not be put into service until the gas piping system that supplies them has been checked for leakage and purged of air and the appliance connections have been checked for leakage (see Section 406.7.2).

406.7 Purging. The purging of piping shall be in accordance with Sections 406.7.1 through 406.7.3.

❖ Purging is intended to prevent a flammable gas/air mixture from being created in the piping. A flammable mixture could be a fire/explosion hazard in the piping, room or space, or in an appliance combustion chamber. There have been documented accidents involving explosions caused by failure to take the necessary precautions during piping purging operations. It has been purported that some accidents were caused by a condition referred to as “odor fade.” It is a fact that steel pipe can absorb the chemical additive in fuel gas that gives the gas (natural or LP) its distinctive odor. This is evidenced by the fact that steel gas piping will smell like gas for a long time after it is no longer exposed to gas. Odorant fade appears to happen when gas is introduced into a new piping system that has never before contained gas. There can be other causes of odorant fade. Once a piping system has been conditioned (seasoned) by exposure to gas, its ability to absorb the odorant diminishes with time. If personnel purge piping into an enclosed area and depend on their sense of smell to detect when gas has reached the purge discharge outlet, they could be fooled if the gas has lost its odor and a serious accident could result from such a dangerous practice. Also, it is known that not all humans have the same ability to detect the odorants in fuel gases. The sense of smell should never be relied upon to detect the presence of fuel gas. Using one’s sense of smell to detect fuel gas is subjective and unreliable at best, therefore this section prescribes methods that do not depend on the sense of smell. Combustible gas indicators and detectors are commonly used to detect gas during purging operations. See the commentary to Sections 406.7.1 through 406.7.3.

406.7.1 Piping systems required to be purged outdoors. The purging of piping systems shall be in accordance with the provisions of Sections 406.7.1.1 through 406.7.1.4 where the *piping* system meets either of the following:

1. The design operating gas pressure is greater than 2 psig (13.79 kPa).
2. The piping being purged contains one or more sections of pipe or tubing meeting the size and length criteria of Table 406.7.1.1.

❖ This section requires that piping systems meeting either or both of the stated criteria comply with the listed subsections. Note that Section 406.7.1.3 requires that the piping be purged only to the outdoors. The two criteria (and those of Section 406.7.2) were chosen to distinguish the piping systems typically found in industrial, large commercial and large

INTERNATIONAL CODE COUNCIL®
Copyright © 2015 ICC. ALL RIGHTS RESERVED. Accessed by David Dammon on Jun 21, 2017 12:30:52 PM pursuant to License Agreement with ICC. No further reproduction or distribution authorized. ANY UNAUTHORIZED REPRODUCTION OR DISTRIBUTION IS A VIOLATION OF THE FEDERAL COPYRIGHT ACT AND THE LICENSE AGREEMENT, AND SUBJECT TO CIVIL AND CRIMINAL PENALTIES THEREUNDER.

multiple-family residential buildings from those piping systems typically found in small commercial and small residential buildings. The gas piping systems typically installed in industrial, large commercial and large multiple-family occupancies have larger internal pipe volumes and/or higher flow rates that justify special procedures to avoid creating explosive gas/air mixtures within buildings and within the piping. Combustible gas/air mixtures can be the source of explosions in the building or within the piping itself. Because there is no correlation between the occupancy groups established by the IBC and the size and nature of gas piping systems installed in buildings, occupancy groups could not be used to distinguish between the larger, more complex piping systems and the smaller less complex systems. In other words, the operating pressure and size of piping systems are much more dependent upon the type of appliances to be served than dependent upon the occupancy classification of the building. Thus, the criteria of this section and Section 406.7.2 represent the best attempt to establish a threshold for requiring piping systems to be purged to the outdoors. Note that the gas venting and gas displacement requirements of Sections 406.7.1.1 and 406.7.1.2 also apply to piping systems meeting the criteria or criterion of this section.

Criterion 2 is met if any portion of the piping system is larger than 2 inches nominal in size and also longer than 50 feet for $2^1/_2$-inch pipe, 30 feet for 3- and $3^1/_2$-inch pipe, 15 feet for 4- and 5-inch pipe, 10 feet for 6-inch pipe and zero feet for 8-inch and larger pipe. In other words, if any portion of the piping system meets the criteria of Table 406.7.1.1, the piping system meets Criterion 2 of this section. For example, if a piping system is constructed of $1^1/_2$- and 2-inch piping, but contains one section of 3-inch pipe that is over 30 feet in length, that system meets Criterion 2; however, if that same section of 3-inch pipe is 30 feet or less in length, the system does not comply with Criterion 2 (i.e., 30 feet is not >30 feet).

If the operating pressure of the system is greater than 2 psig, Sections 406.7.1.1 through 406.7.1.4 apply regardless of the sizes of pipe in the system.

406.7.1.1 Removal from service. Where existing gas piping is opened, the section that is opened shall be isolated from the gas supply and the line pressure vented in accordance with Section 406.7.1.3. Where gas *piping* meeting the criteria of Table 406.7.1.1 is removed from service, the residual fuel gas in the *piping* shall be displaced with an inert gas.

❖ Where a piping system, to which this section applies, is to be opened for any reason, it must be isolated from the gas supply and then the pressure in the piping system must be relieved by venting the gas to the outdoors in accordance with Section 406.7.1.3. If the piping being opened or retired meets the criteria of Table 406.7.1.1, the unpressurized gas in the piping must be displaced with an inert gas (i.e., a gas that will not support combustion such as nitrogen or argon). The displacement with inert gas will prevent an explosive mixture from forming inside of the pipe by eliminating any residual gas that could mix with the ambient air. The larger and longer the pipe, the greater the amount of residual gas in the pipe and the greater the potential for the formation of an explosive mixture.

TABLE 406.7.1.1
SIZE AND LENGTH OF PIPING

NOMINAL PIPE SIZE (inches)[a]	LENGTH OF PIPING (feet)
$\geq 2^1/_2 < 3$	> 50
$\geq 3 < 4$	> 30
$\geq 4 < 6$	> 15
$\geq 6 < 8$	> 10
≥ 8	Any length

For SI: 1 inch = 25.4 mm, 1 foot = 304.8 mm.
a. CSST EHD size of 62 is equivalent to nominal 2-inch pipe or tubing size.

406.7.1.2 Placing in operation. Where gas *piping* containing air and meeting the criteria of Table 406.7.1.1 is placed in operation, the air in the *piping* shall first be displaced with an inert gas. The inert gas shall then be displaced with fuel gas in accordance with Section 406.7.1.3.

❖ Where new piping or piping that has been left open for some time is to be put into service, the air that exists in such piping must be removed to prevent an explosive gas/air mixture from forming inside of the piping. This is accomplished by first displacing the air with a gas that does not support combustion (inert gas) and then introducing fuel gas to displace the inert gas. This procedure prevents fuel gas from ever coming into contact with air inside of the piping. As the size and length of the piping increases, so does the volume of air in it and so does the potential for forming explosive mixtures within the piping. To help determine when sufficient inert gas has been introduced during the process of displacing air with an inert gas, the oxygen levels in the piping system could be monitored.

406.7.1.3 Outdoor discharge of purged gases. The open end of a *piping* system being pressure vented or purged shall discharge directly to an outdoor location. Purging operations shall comply with all of the following requirements:

1. The point of discharge shall be controlled with a shut-off valve.
2. The point of discharge shall be located not less than 10 feet (3048 mm) from sources of ignition, not less than 10 feet (3048 mm) from building openings and not less than 25 feet (7620 mm) from mechanical air intake openings.
3. During discharge, the open point of discharge shall be continuously attended and monitored with a combustible gas indicator that complies with Section 406.7.1.4.
4. Purging operations introducing fuel gas shall be stopped when 90 percent fuel gas by volume is detected within the pipe.

INTERNATIONAL CODE COUNCIL®
Copyright © 2015 ICC. ALL RIGHTS RESERVED. Accessed by David Dammon on Jun 21, 2017 12:30:52 PM pursuant to License Agreement with ICC. No further reproduction or distribution authorized. ANY UNAUTHORIZED REPRODUCTION OR DISTRIBUTION IS A VIOLATION OF THE FEDERAL COPYRIGHT ACT AND THE LICENSE AGREEMENT, AND SUBJECT TO CIVIL AND CRIMINAL PENALTIES THEREUNDER.

5. Persons not involved in the purging operations shall be evacuated from all areas within 10 feet (3048 mm) of the point of discharge.

❖ This section applies to piping systems meeting the criteria of Section 406.7.1 and mandates that the purged gases discharge directly to the outdoors. Discharging purged gases to the building interior is prohibited by this section. Purging to the outdoors can be accomplished by running temporary piping or hoses to the outdoors from the piping being purged or it could be accomplished by installing permanent piping to the outdoors in locations where purging will be repeated regularly. It could also be accomplished by using existing piping that extends to the outdoors for some other purpose, but that is suitable for and able to be reconfigured for the purpose of gas pipe purging. Other configurations are possible. The concept has been proposed by gas industry pundits and some day, the code might contain provisions for purging air from piping by means of evacuation of the air with vacuum pumps and then breaking the vacuum with fuel gas such that the piping will contain nearly 100 percent fuel gas by volume. Purging by vacuum evacuation is only conceptual at this point in time.

Item 1 requires a means to control the purge gas discharge in the event of an emergency. Item 2 intends to prevent purged gases from reaching an ignition source and from entering a building. Item 3 requires that the point of discharge be constantly attended by one or more individuals who are monitoring the discharge gases with an instrument meeting the requirements of Section 406.7.1.4. Item 4 requires purging operations that are introducing fuel gas into the piping to be stopped immediately after determining that the concentration of fuel gas within the purge gas discharge pipe is 90 percent of the purge gas volume. This item intends to limit the volume of purged gases that discharge to the outdoor atmosphere. When the content of the piping is 90% fuel gas by volume, an explosive mixture is not possible within the piping interior and the piping content upstream of the discharge point is expected to be 90 percent fuel gas or higher. Item 5 intends to protect personnel and passersby from the potential hazard of purge gas discharge and also intends to prevent an individual from bringing an ignition source near the point of discharge.

406.7.1.4 Combustible gas indicator. Combustible gas indicators shall be listed and shall be calibrated in accordance with the manufacturer's instructions. Combustible gas indicators shall numerically display a volume scale from zero percent to 100 percent in 1 percent or smaller increments.

❖ Note that a combustible gas indicator is a different instrument than the instrument addressed in Section 406.7.2.2. A CGI is required to be used by Item 3 of Section 406.7.1.3. This instrument must be capable of indicating the percentage of fuel gas in the purge gas discharge and do so by a number scale of 0 to 100 percent. The display resolution requirement means that the instrument must be able to display percentages across the entire scale with not more than 1 percent between successive numbers. The increments on the 0 to 100 percent scale must be 1 percent or smaller.

In other words, the percentage display must be able to read out 1 percent, 2 percent, 3 percent, 4 percent, 5 percent, etc., all the way up to 100 percent. These instruments need to be calibrated routinely because the nature of the sensors used in these instruments is such that they drift over time and with use.

406.7.2 Piping systems allowed to be purged indoors or outdoors. The purging of piping systems shall be in accordance with the provisions of Section 406.7.2.1 where the piping system meets both of the following:

1. The design operating gas pressure is 2 psig (13.79 kPa) or less.
2. The piping being purged is constructed entirely from pipe or tubing not meeting the size and length criteria of Table 406.7.1.1.

❖ This section addresses purging procedures that allow the purged gases to discharge to the outdoors or to the indoors. The Criteria Items 1 and 2 represent the division between the larger, more complex piping systems and the smaller, less complex piping systems (see commentary, Section 406.7.1). In this section, the piping system must meet both criteria, meaning that the operating pressure of the system must be 2 psig or less and the piping must not meet the criteria of Table 406.7.1.1. Not meeting the criteria of Table 406.7.1.1 means that the piping system is either constructed entirely of 2-inch or smaller nominal size pipe, or the piping is 50 feet or less in length for $2^1/_2$-inch pipe, 30 feet or less in length for 3-inch pipe, 15 feet or less in length for 4-inch pipe, 10 feet or less in length for 6-inch pipe and zero feet in length for 8-inch and longer pipe. For example, if a piping system is constructed of 2-inch and smaller pipe but contains one section of 4-inch pipe 15 feet long, that system does not meet the criteria of Table 406.7.1.1 and thus meets Criterion 2 of this section (i.e., 15 feet is shorter than >15 feet). If **both** criteria of this section are met, the piping system is allowed to be purged in accordance with Section 406.7.2.1; however, if **both** criteria are not met, purging must comply with Sections 406.7.1.1 through 406.7.1.4.

Other examples: A piping system that operates at 2 psig and is constructed of all 2-inch pipe meets both Criterion 1 and 2. A piping system that operates at 2 psig and is constructed of 2-inch and smaller pipe with one 55-foot section of $2^1/_2$-inch pipe meets Criterion 1 but does not meet Criterion 2 because the 55-foot section of $2^1/_2$-inch falls within the size and length criteria of the table.

406.7.2.1 Purging procedure. The piping system shall be purged in accordance with one or more of the following:

1. The piping shall be purged with fuel gas and shall discharge to the outdoors.

INTERNATIONAL CODE COUNCIL®
Copyright © 2015 ICC. ALL RIGHTS RESERVED. Accessed by David Dammon on Jun 21, 2017 12:30:52 PM pursuant to License Agreement with ICC. No further reproduction or distribution authorized. ANY UNAUTHORIZED REPRODUCTION OR DISTRIBUTION IS A VIOLATION OF THE FEDERAL COPYRIGHT ACT AND THE LICENSE AGREEMENT, AND SUBJECT TO CIVIL AND CRIMINAL PENALTIES THEREUNDER.

2. The piping shall be purged with fuel gas and shall discharge to the indoors or outdoors through an appliance burner not located in a combustion chamber. Such burner shall be provided with a continuous source of ignition.
3. The piping shall be purged with fuel gas and shall discharge to the indoors or outdoors through a burner that has a continuous source of ignition and that is designed for such purpose.
4. The piping shall be purged with fuel gas that is discharged to the indoors or outdoors, and the point of discharge shall be monitored with a listed combustible gas detector in accordance with Section 406.7.2.2. Purging shall be stopped when fuel gas is detected.
5. The *piping* shall be purged by the gas supplier in accordance with written procedures.

❖ The purging provisions of this section are applicable only where the piping system meets both criteria of Section 406.7.2. These provisions are intended for the piping systems typically found in light commercial and small residential occupancies (see commentary, Section 406.7.1). Item 1 allows the simple procedure of purging air in a pipe by displacing it with fuel gas and discharging the purged gases to the outdoors. Item 2 allows a procedure used by some installers and gas suppliers in which air in the piping is displaced with fuel gas and the purged gases are discharged through an open appliance burner, typically on a range or cooktop. Any such open burner must have a continuous ignition source that is either integral with the burner or that is temporarily provided by the personnel performing the purging operation. If the purged gases were discharged into an enclosed combustion chamber such as in a furnace, boiler or water heater, an explosive gas/air mixture could form in the presence of an ignition source resulting in a hazard. Item 3 is basically the same procedure as specified in Item 2, except that the burner is not an appliance burner. Some installers and gas suppliers utilize special purge burners designed for this procedure. Item 4 allows the purged gases to discharge to the indoors or to the outdoors provided that the point of discharge is continuously monitored by the personnel performing the purging operation, using a combustible gas detector (CGD) that complies with Section 406.7.2.2. The purging operation must be immediately stopped when the CGD indicates the presence of fuel gas at the point of discharge. Item 5 allows personnel employed by the gas supplier to perform purging operations in accordance with detailed procedures that are in writing and originating from the gas supplier. This item assumes that the written procedures are based on practices that have been proven by experience to be safe.

406.7.2.2 Combustible gas detector. Combustible gas detectors shall be listed and shall be calibrated or tested in accordance with the manufacturer's instructions. Combustible gas detectors shall be capable of indicating the presence of fuel gas.

❖ A CGD is different than the CGI required by Section 406.7.1.4; however, both of these instruments need to be calibrated or tested routinely because the nature of the sensors used in these instruments is such that they drift over time and with use.

406.7.3 Purging appliances and equipment. After the *piping* system has been placed in operation, appliances and *equipment* shall be purged before being placed into operation.

❖ This section simply requires that after the gas piping has been properly purged and charged with fuel gas, the appliances served be purged of air before startup.

SECTION 407 (IFGC) PIPING SUPPORT

407.1 General. *Piping* shall be provided with support in accordance with Section 407.2.

❖ Often, piping support is inadequate, poorly installed or overlooked entirely, despite the fact that support is critical in preventing stresses and strains in piping, fittings, joints, connectors and appliance gas trains (controls) (see Section 407.2).

407.2 Design and installation. *Piping* shall be supported with metal pipe hooks, metal pipe straps, metal bands, metal brackets, metal hangers or building structural components, suitable for the size of *piping*, of adequate strength and quality, and located at intervals so as to prevent or damp out excessive vibration. *Piping* shall be anchored to prevent undue strains on connected *appliance*s and shall not be supported by other *piping*. Pipe hangers and supports shall conform to the requirements of MSS SP-58 and shall be spaced in accordance with Section 415. Supports, hangers and anchors shall be installed so as not to interfere with the free expansion and contraction of the *piping* between anchors. All parts of the supporting *equipment* shall be designed and installed so that they will not be disengaged by movement of the supported *piping*.

❖ As with all piping systems, the support of the fuel gas system is as important as any other part of the overall design. Proper supports are necessary to maintain piping alignment and slope, to support the weight of the pipe and its contents, to control movement and to resist dynamic loads, such as thrust. Inadequate support can cause piping to fail under its own weight, resulting in fire, explosion or property damage. Building design must take into consideration the structural loads created by the support of piping systems.

Hangers or supports must not react with or be detrimental to the pipe they support. Hangers or supports for metallic pipe must be of a material that is compatible with the pipe to prevent any corrosive action. For example, copper, copper-clad or specially coated hangers are required if the piping system is constructed of copper tubing. Hangers and supports must be constructed of noncombustible materials to

INTERNATIONAL CODE COUNCIL®
Copyright © 2015 ICC. ALL RIGHTS RESERVED. Accessed by David Dammon on Jun 21, 2017 12:30:52 PM pursuant to License Agreement with ICC. No further reproduction or distribution authorized. ANY UNAUTHORIZED REPRODUCTION OR DISTRIBUTION IS A VIOLATION OF THE FEDERAL COPYRIGHT ACT AND THE LICENSE AGREEMENT, AND SUBJECT TO CIVIL AND CRIMINAL PENALTIES THEREUNDER.

prevent premature failure in a fire and to prevent deformation of the supports such as creep, sag and elongation. This section prohibits combustible hooks, straps, bands, brackets and hangers. Plastic hooks, straps, hangers, etc., that are used with plumbing piping are prohibited for use with gas piping. Building structural components are listed as a means of support because piping often rests on wall plates, beams, joists and similar structural members where such members are capable of carrying the additional load of the piping. Gas piping must not depend on other piping for support; thus, it must be supported from the structure independently. Gas controls for appliances can be stressed and damaged by unsupported piping drops that bear on or produce bending moments in the controls. During installation, a simple check for proper support at an appliance connected with rigid piping is to open the union and observe any movement of the piping. If the piping drops or moves in any direction, it is evident that stress is being applied to the appliance controls. Eliminating such stress is one of the advantages of using semirigid gas connectors (see Section 415).

SECTION 408 (IFGC)
DRIPS AND SLOPED PIPING

408.1 Slopes. *Piping* for other than dry gas conditions shall be sloped not less than $^1/_4$ inch in 15 feet (6.3 mm in 4572 mm) to prevent traps.

❖ The required minimum slope (0.14 percent) is intended for gas known to contain enough water vapor to cause condensate to form inside the piping. Such conditions are rarely, if ever, encountered today.

408.2 Drips. Where wet gas exists, a drip shall be provided at any point in the line of pipe where condensate could collect. A drip shall be provided at the outlet of the meter and shall be installed so as to constitute a trap wherein an accumulation of condensate will shut off the flow of gas before the condensate will run back into the meter.

❖ Drips, often referred to as "drip legs," are distinct from sediment traps. Modern gas supplies and distribution systems are typically dry; thus, drips would be required only when recommended by the gas supplier.

408.3 Location of drips. Drips shall be provided with ready access to permit cleaning or emptying. A drip shall not be located where the condensate is subject to freezing.

❖ A drip is not the same as a sediment trap; they are required for different reasons (see Section 408.4).

408.4 Sediment trap. Where a sediment trap is not incorporated as part of the appliance, a sediment trap shall be installed downstream of the appliance shutoff valve as close to the inlet of the appliance as practical. The sediment trap shall be either a tee fitting having a capped nipple of any length installed vertically in the bottommost opening of the tee as illustrated in Figure 408.4 or other device approved as an effective sediment trap. Illuminating appliances, ranges, clothes dryers, decorative vented appliances for installation in vented fireplaces, gas fireplaces and outdoor grills need not be so equipped.

❖ In addition to the code requirement, most appliance manufacturers require the installation of a sediment trap (dirt leg) to protect the appliance from debris in the gas. Note that a drip leg is not the same as a sediment trap (see Section 408.2). Sediment traps are necessary to protect appliance gas controls from the dirt, soil, pipe chips, pipe joint tapes and compounds and construction site debris that enter the piping during storage, handling, installation and repairs. Hazardous appliance operation could result from foreign matter entering gas controls and burners. Despite the fact that utilities supply clean gas, foreign matter can enter the piping prior to and during installation both on the utility side of the system and on the customer side.

Sediment traps are designed to cause the gas flow to change direction 90 degrees (1.57 rad) at the sediment collection point, thus causing the solid or liquid contaminants to drop out of the gas flow [see Commentary Figure 408.4(1)]. The nipple and cap should not be placed in the branch opening of a tee fitting because this would not create a change in direction of flow and would allow debris to simply pass/jump over the capped nipple collection point. Commentary

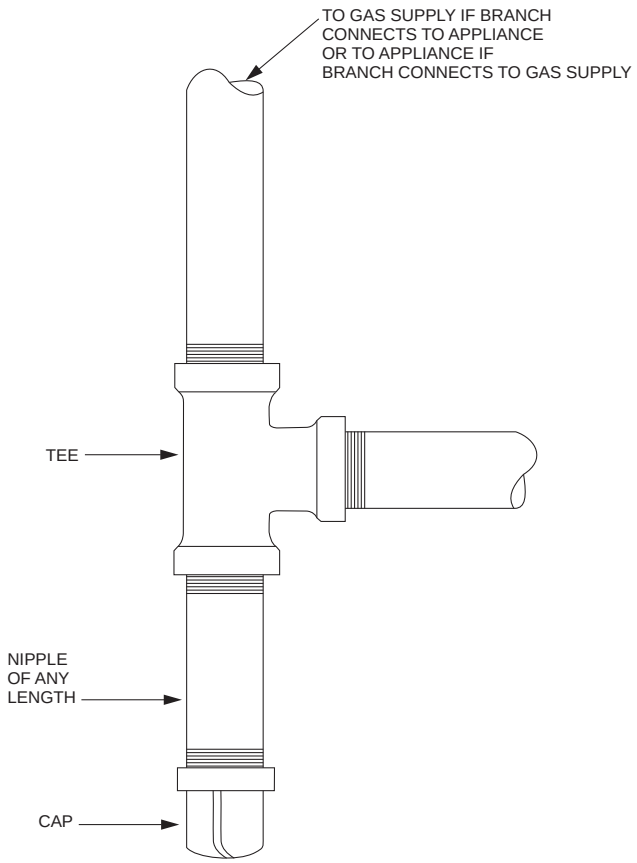

FIGURE 408.4
METHOD OF INSTALLING A TEE FITTING SEDIMENT TRAP

INTERNATIONAL CODE COUNCIL®
Copyright © 2015 ICC. ALL RIGHTS RESERVED. Accessed by David Dammon on Jun 21, 2017 12:30:52 PM pursuant to License Agreement with ICC. No further reproduction or distribution authorized. ANY UNAUTHORIZED REPRODUCTION OR DISTRIBUTION IS A VIOLATION OF THE FEDERAL COPYRIGHT ACT AND THE LICENSE AGREEMENT, AND SUBJECT TO CIVIL AND CRIMINAL PENALTIES THEREUNDER.

Figure 408.4(2) illustrates a relatively ineffective sediment trap; however, such configurations are not expressly prohibited by the wording of this section. The text speaks of the bottommost opening of the tee without prohibiting such opening from being the branch opening. Note that Figure 408.4 illustrates the intent to have the nipple and cap in the run of the tee, thereby suggesting that it is not the intent to have it in the branch of the tee. The code does not specify a minimum length for the capped nipple; therefore, it could be from a close nipple on up. Three to 6 inches is the customary length. The capped nipple must be in a vertical plane to allow the sediments to fall in by gravity. The sediment trap must be as close to the appliance inlet as practical to be able to capture sediment from all of the piping upstream of the appliance connection. The sediment trap must be downstream of the appliance shutoff valve to allow the trap to be serviced after closing the upstream shutoff valve. Manufactured sediment traps are available that have the configuration of a straight section of pipe and are equipped with cleanout openings. Although it would be wise to install sediment traps at all appliance connections, they are not mandated by code for gas lights, ranges, clothes dryers and outdoor grills. These appliances are also susceptible to harm from debris in gas, especially ranges and clothes dryers, and the appliance manufacturer may require sediment traps where the code does not. The code's logic is that these exempt appliances are manually operated rather than automatically operated; therefore, the user would be in attendance and aware of a problem.

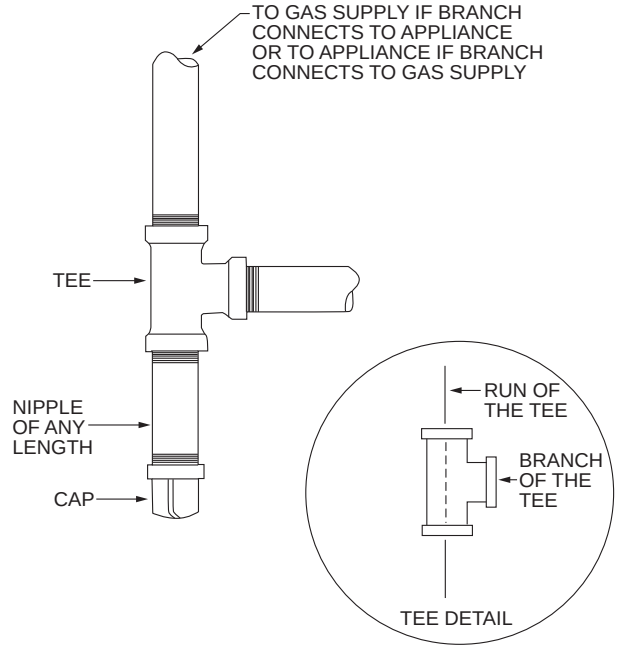

Figure 408.4(1)
EFFECTIVE SEDIMENT TRAP

SECTION 409 (IFGC)
SHUTOFF VALVES

409.1 General. *Piping* systems shall be provided with shutoff valves in accordance with this section.

❖ This section addresses shutoff valves for meters, buildings, tenant spaces, appliances and fireplaces.

409.1.1 Valve approval. Shutoff valves shall be of an *approved* type; shall be constructed of materials compatible with the *piping*; and shall comply with the standard that is applicable for the pressure and application, in accordance with Table 409.1.1.

❖ The code official must approve the type of shutoff valve used. For example, he or she might not approve a valve that requires a wrench to operate. Shutoff valves must be tested to the specified standard and so identified. Ball valves are used almost exclusively today because of their low pressure losses, ease of operation and reliability [see Commentary Figures 409.1.1(1) and 409.1.1(2)].

409.1.2 Prohibited locations. Shutoff valves shall be prohibited in concealed locations and *furnace plenums*.

❖ This section does not prohibit shutoff valves in the typical spaces above ceilings and below floors used for conveying environmental air. See the definition of "Concealed location." A valve in a concealed location would be of no value and a potential leak source. The concern for valves in furnace plenums is temperature extremes and lack of access.

409.1.3 Access to shutoff valves. Shutoff valves shall be located in places so as to provide *access* for operation and shall be installed so as to be protected from damage.

❖ As expressed in the previous section, a shutoff valve has no utility if it is installed where it cannot be accessed. Location is especially important for valves that are intentionally installed for emergency use. Outdoor valves are particularly subject to damage.

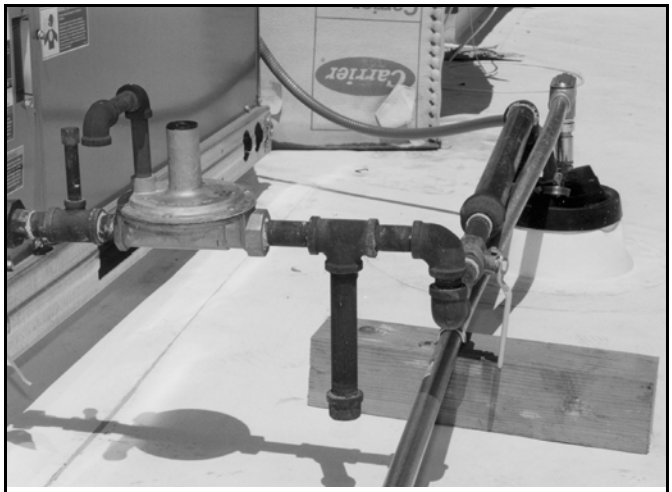

Figure 408.4(2)
LESS EFFECTIVE OR INEFFECTIVE SEDIMENT TRAP CONFIGURATION

INTERNATIONAL CODE COUNCIL®
Copyright © 2015 ICC. ALL RIGHTS RESERVED. Accessed by David Dammon on Jun 21, 2017 12:30:52 PM pursuant to License Agreement with ICC. No further reproduction or distribution authorized. ANY UNAUTHORIZED REPRODUCTION OR DISTRIBUTION IS A VIOLATION OF THE FEDERAL COPYRIGHT ACT AND THE LICENSE AGREEMENT, AND SUBJECT TO CIVIL AND CRIMINAL PENALTIES THEREUNDER.



Figure 409.1.1(1)
TYPICAL BALL-TYPE GAS SHUTOFF VALVE
(Photo courtesy of Dormont Manufacturing Company)



Figure 409.1.1(2)
BALL-TYPE GAS SHUTOFF VALVE DESIGNED TO MATE WITH A CONNECTOR
(Photo courtesy of Dormont Manufacturing Company)

409.2 Meter valve. Every meter shall be equipped with a shutoff valve located on the supply side of the meter.

❖ This valve is typically installed and owned by the gas supplier because it is upstream of the point of delivery for utility-owned meters. These valves require a wrench to operate and are capable of being locked off.

409.3 Shutoff valves for multiple-house line systems. Where a single meter is used to supply gas to more than one building or tenant, a separate shutoff valve shall be provided for each building or tenant.

❖ A separate shutoff valve for each building or tenant space will allow isolation of any building or space in the event of an emergency or when work must be performed on the piping system.

409.3.1 Multiple tenant buildings. In multiple tenant buildings, where a common *piping* system is installed to supply other than one- and two-family dwellings, shutoff valves shall be provided for each tenant. Each tenant shall have access to the shutoff valve serving that tenant's space.

❖ Each tenant space and dwelling unit in buildings having more than two dwellings must have its own shutoff valve to allow isolation from the common piping system. The tenant spaces and dwelling units may or may not have separate meters (see Section 409.3). The shutoff valves must be within the tenant space or dwelling unit, or the valves must be located in a common space that can be accessed by all of the occupants.

409.3.2 Individual buildings. In a common system serving more than one building, shutoff valves shall be installed outdoors at each building.

❖ This section requires the shutoff valve for each building to be located outside of the building, thus allowing quick access in an emergency.

409.3.3 Identification of shutoff valves. Each house line shutoff valve shall be plainly marked with an identification tag attached by the installer so that the *piping* systems supplied by such valves are readily identified.

❖ The term "house line" is used to describe the main supply pipe to a building or a dwelling unit. Utilities refer to the house line as the piping on the downstream side of the utility-owned meter. In the case of multiple house lines supplying different spaces in a building, the required shutoff valves must be permanently tagged to indicate which space is supplied by each valve. Without tags, it might not be apparent which space each valve controls. For both service

TABLE 409.1.1
MANUAL GAS VALVE STANDARDS

VALVE STANDARDS	APPLIANCE SHUTOFF VALVE APPLICATION UP TO $^1/_2$ psig PRESSURE	OTHER VALVE APPLICATIONS			
		UP TO $^1/_2$ psig PRESSURE	UP TO 2 psig PRESSURE	UP TO 5 psig PRESSURE	UP TO 125 psig PRESSURE
ANSI Z21.15	X	—	—	—	—
ASME B16.44	X	X	X[a]	X[b]	—
ASME B16.33	X	X	X	X	X

For SI: 1 pound per square inch gauge = 6.895 kPa.
a. If labeled 2G.
b. If labeled 5G.

❖ Table 409.1.1 lists two valve application categories: appliance shutoff application and all other applications. The application of a valve must be consistent with the listing of the valve. For example, a valve used ahead of an MP regulator (see Section 409.4) in a 2-psi system must comply with ASME B16.44 and be marked "2G." It could also comply with ASME B16.33 without being marked "2G."

INTERNATIONAL CODE COUNCIL®
Copyright © 2015 ICC. ALL RIGHTS RESERVED. Accessed by David Dammon on Jun 21, 2017 12:30:52 PM pursuant to License Agreement with ICC. No further reproduction or distribution authorized. ANY UNAUTHORIZED REPRODUCTION OR DISTRIBUTION IS A VIOLATION OF THE FEDERAL COPYRIGHT ACT AND THE LICENSE AGREEMENT, AND SUBJECT TO CIVIL AND CRIMINAL PENALTIES THEREUNDER.

work and emergency action, the load the valve serves must be identified. The tags should be designed and attached to be permanent and are typically brass medallions attached with small chains.

409.4 MP regulator valves. A *listed* shutoff valve shall be installed immediately ahead of each MP regulator.

❖ See the definition of "Regulator, Medium-pressure." This regulator (also known as "pounds-to-inches" regulator) is placed between the service regulator and the appliance regulator and is typically associated with manifold parallel distribution systems using CSST or copper tubing. A shutoff valve ahead of the MP regulator will allow the regulator to be conveniently serviced, adjusted or replaced. The valve also serves to isolate the higher pressure system from the lower pressure system. For purposes of sizing, the piping downstream of a medium-pressure (MP) regulator is considered as a separate system, with the MP regulator being the source of supply for that system.

409.5 Appliance shutoff valve. Each *appliance* shall be provided with a shutoff valve in accordance with Section 409.5.1, 409.5.2 or 409.5.3.

❖ Each appliance, regardless of type, size or location, must have its own dedicated shutoff valve to isolate the appliance from its gas supply. It is not the intent of this section to allow a single shutoff valve to control more than one appliance. Appliance shutoff valves are not considered to be emergency valves, but rather, are considered to be service valves that allow the appliance to be serviced, repaired, replaced or shut down (see the definition of "Valve, Appliance shutoff"). A shutoff valve is a valve other than the valve that is integral with the appliance gas control. The intent is that the separate shutoff valve be located ahead of all appliance control valves. The location requirements of this section are intended to make the valve conspicuous and easy to operate. Note that the three subsections to this section are distinct choices and the shutoff valves have to meet one of these choices.

409.5.1 Located within same room. The shutoff valve shall be located in the same room as the *appliance*. The shutoff valve shall be within 6 feet (1829 mm) of the *appliance*, and shall be installed upstream of the union, connector or quick disconnect device it serves. Such shutoff valves shall be provided with *access*. *Appliance* shutoff valves located in the firebox of a *fireplace* shall be installed in accordance with the *appliance* manufacturer's instructions.

❖ This section contains the traditional appliance shutoff valve requirements such as within 6 feet (1820 mm) of and in the same room as the appliance served. This section does not require the appliance shutoff valve to be provided with "ready access." Because such a valve is not an emergency valve, there is no reason to require ready access, and simply providing access is sufficient. Common practice has been to install the appliance shutoff valve behind ranges and clothes dryers and in the control compartment of decorative gas fireplace appliances. This section allows this practice because the valves are accessible. To avoid the use of an exposed valve or concealed "key-handle" valve, it is accepted practice to locate the shutoff valve for gas fireplace appliances in the control compartment in the bottom of the unit, behind the control access panel (see Commentary Figure 409.5.1).

The code does not indicate how the 6-foot limit is to be measured, but traditionally, it is measured along the piping such that no more than 6 feet (1829 mm) of piping extends between the outlet of the shutoff valve and the inlet of the appliance.

This section works with the definition of "Piping system" and Section 402.3 to allow the piping downstream of the shutoff valve to be considered and



Figure 409.5.1
SHUTOFF VALVE IN CONTROL COMPARTMENT OF GAS FIREPLACE

INTERNATIONAL CODE COUNCIL®
Copyright © 2015 ICC. ALL RIGHTS RESERVED. Accessed by David Dammon on Jun 21, 2017 12:30:52 PM pursuant to License Agreement with ICC. No further reproduction or distribution authorized. ANY UNAUTHORIZED REPRODUCTION OR DISTRIBUTION IS A VIOLATION OF THE FEDERAL COPYRIGHT ACT AND THE LICENSE AGREEMENT, AND SUBJECT TO CIVIL AND CRIMINAL PENALTIES THEREUNDER.

sized as a connector. The code does not state that the required shutoff valve has to be located external to an appliance cabinet, enclosure or housing; therefore, the valve could be located behind an appliance access door/panel.

The last sentence of this section addresses appliances, such as decorative gas log sets, that are installed in solid fuel-burning fireplaces. The manual shutoff may be in the firebox of the fireplace if it is allowed by the appliance manufacturer's instructions and the valve is located as directed by those instructions. There is typically an area adjacent to the appliance controls or inlet connection that is shielded from radiant heat, and this "cool zone" is where the manual shutoff valve must be located. A shutoff valve must never be located in the firebox if solid fuel is burned.

409.5.2 Vented decorative appliances and room heaters. Shutoff valves for vented decorative appliances, room heaters and decorative appliances for installation in vented *fireplaces* shall be permitted to be installed in an area remote from the appliances where such valves are provided with ready *access*. Such valves shall be permanently identified and shall not serve another *appliance*. The *piping* from the shutoff valve to within 6 feet (1829 mm) of the *appliance* shall be designed, sized and installed in accordance with Sections 401 through 408.

❖ This section allows locating shutoff valves for the stated appliances remote from the appliance if the valves are permanently tagged as to their function, serve only the single appliance and have ready access. The shutoff valve can be located anywhere, indoors or outdoors, as long as it is provided with ready access and is permanently identified. Ready access is required because the shutoff valve will be more difficult to locate, being remote from the appliance served. This section is an alternative to using concealed "key-handle-type" valves located in the wall or floor adjacent to the appliance. The code intends for such valves to be permanently identified by means of a durable tag suitable for the environment, such as brass medallions on chains. The reference to room heaters in this section is not specific as to the type, thus, it would include both vented and unvented room heaters.

The shutoff valve for a log lighter is also the appliance operating valve; therefore, that valve cannot be located remotely.

Because the remote shutoff valve allowed by this section could be any distance (more than 6 feet) from the appliance, the piping from the shutoff valve outlet to within 6 feet of the appliance inlet must be treated and sized as gas piping, not as a connector. Recall that the definition of "Piping system" says that the piping system ends at the appliance shutoff valves, therefore, the piping between the shutoff valve and the appliance becomes a connector, no matter how long it is. This section accounts for the potential pressure loss through lengthy connectors by requiring them to be sized as required for the piping system, except for the last 6 feet before the appliance [see the exception to Section 411.1.3.1 and Commentary Figure 411.1.3.1(2)].

409.5.3 Located at manifold. Where the *appliance* shutoff valve is installed at a manifold, such shutoff valve shall be located within 50 feet (15 240 mm) of the *appliance* served and shall be readily accessible and permanently identified. The *piping* from the manifold to within 6 feet (1829 mm) of the *appliance* shall be designed, sized and installed in accordance with Sections 401 through 408.

❖ Similar to Section 409.5.2, this section allows remote appliance shutoff valves, but, unlike Section 409.5.2, this section specifies the remote location and imposes a distance restriction. Manifolds are part of parallel distribution systems commonly installed with CSST and copper tubing gas distribution systems. A manifold can be a manufactured fitting with multiple branch openings or it can be an assembly of close connected tee fittings. The individual "run-outs" of tubing to each appliance all connect to this manifold and the appliance shutoff valves can be installed at the manifold in a group configuration. Such valves must have ready access and must be labeled as to their function, the same as required in the previous section.

The code does not specify how the 50-foot distance limitation is to be measured. Taken literally, it would be measured in a straight line through walls, floors and ceilings. Clearly, such a measurement could be difficult to perform in the field and should be approached liberally, keeping in mind the intent to simply have the valve within a reasonable distance.

Because the remote shutoff valve allowed by this section could be any distance (up to 50 feet) from the appliance, the piping from the shutoff valve outlet to within 6 feet of the appliance inlet must be treated and sized as gas piping, not as a connector. Recall that the definition of "Piping system" says that the piping system ends at the appliance shutoff valves, therefore, the piping between the shutoff valve and the appliance becomes a connector, no matter how long it is. This section accounts for the potential pressure loss through lengthy connectors by requiring them to be sized as required for the piping system, except for the last 6 feet before the appliance [see the exception to Section 411.1.3.1 and Commentary Figure 411.1.3.1(2)].

409.6 Shutoff valve for laboratories. Where provided with two or more fuel gas outlets, including table-, bench- and hood-mounted outlets, each laboratory space in educational, research, commercial and industrial occupancies shall be provided with a single dedicated shutoff valve through which all such gas outlets shall be supplied. The dedicated shutoff valve shall be readily accessible, located within the laboratory space served, located adjacent to the egress door from the space and shall be identified by approved signage stating "Gas Shutoff."

❖ Laboratories are typically equipped with gas cocks that are mounted on tables, work benches or in exhaust hoods. These gas cocks are designed with

INTERNATIONAL CODE COUNCIL®
Copyright © 2015 ICC. ALL RIGHTS RESERVED. Accessed by David Dammon on Jun 21, 2017 12:30:52 PM pursuant to License Agreement with ICC. No further reproduction or distribution authorized. ANY UNAUTHORIZED REPRODUCTION OR DISTRIBUTION IS A VIOLATION OF THE FEDERAL COPYRIGHT ACT AND THE LICENSE AGREEMENT, AND SUBJECT TO CIVIL AND CRIMINAL PENALTIES THEREUNDER.

tapered and barbed outlets for connection to elastomeric tubing that supplies Bunsen burners. Bunsen burners are used extensively in chemical laboratory work for testing, research, experimentation, production and teaching purposes. These gas cocks are open-ended and have handles much like that of a water faucet. A typical laboratory could have many such gas cocks (outlets) spread throughout the lab and there is a concern for making sure that all such gas cocks are turned off when not in use. Having a master shutoff valve upstream (ahead) of all gas cocks allows the person responsible for the laboratory to shut off the gas supply to all gas cocks simultaneously, thereby making certain that there are no open or partially open gas cocks leaking gas anywhere in the laboratory space. The master shutoff valve could also be used in an emergency situation. Locating the master shutoff valve near the egress door encourages the practice of habitually closing the valve upon exiting the lab. The master shutoff valve must be readily accessible and well marked. Typically, the valve is recessed in a wall, painted yellow and labeled by conspicuous signage.

SECTION 410 (IFGC)
FLOW CONTROLS

410.1 Pressure regulators. A line pressure regulator shall be installed where the *appliance* is designed to operate at a lower pressure than the supply pressure. Line gas pressure regulators shall be *listed* as complying with ANSI Z21.80. *Access* shall be provided to pressure regulators. Pressure regulators shall be protected from physical damage. Regulators installed on the exterior of the building shall be *approved* for outdoor installation.

❖ All gas supply systems employ regulators at some point in the distribution system, and the type and location of these devices depends on the design pressures of the system and utilization equipment. A line pressure regulator reduces the pressure from the service delivery pressure to the pressure of the distribution system. Additional pressure regulators could be required at other points in the system or at the appliance to reduce the pressure even further [see Commentary Figure 410.1(1)]. With the increased use of medium-pressure gas distribution systems, systems are designed with one or more regulators in addition to the service regulators. Appliances and gas utilization equipment are also equipped with factory-installed regulators that control burner input (manifold) pressure.

Pressure regulators are extremely important devices that are relied on to prevent overpressurization of appliances and equipment. Typical gas appliance controls are not designed to tolerate a pressure of more than 14 inches of water column (3.5 kPa). The standards that regulate the design and function of appliance gas controls require that the controls be tested for resistance to permanent damage resulting from exposure to excessive gas supply pressure. Each function of the gas controls must be tested for exposure to $2^1/_2$-psi (17 kPa) pressure for a period of 1 minute, after which, the control must function normally. Excess pressures could lead to severe appliance malfunction. Depending on the application, gas pressure regulators may contain relief mechanisms that are designed to vent gas from the downstream side in the event that the downstream (load) side pressure exceeds a predetermined maximum. This feature is a safeguard intended to prevent the overpressurization of the piping and utilization equipment supplied by the regulator. Regulators with relief devices must be installed outdoors, or the relief vent must be piped to the outdoors to prevent gas from being discharged into the building.

Access to pressure regulators is required for the maintenance, adjustment and servicing of the devices. The definition of "Access" appears in Section 202. Protecting regulators from physical damage essentially means that regulators must be installed in locations that are not prone to impact from equipment or vehicles, or they must be shielded from impact. Because of the range of environmental conditions encountered outside the building, regulators must be evaluated and approved for installation outdoors. Regulators exposed to the weather must be protected from moisture and precipitation. Commentary Figure 410.1(2) shows a service regulator with discharge piping connected to the integral relief valve port. This regulator establishes the pressure at the point of delivery. Commentary Figure 410.1(3) illustrates the basic operating principle of gas pressure regulators. Outlet pressure acts upon the flexible dia-

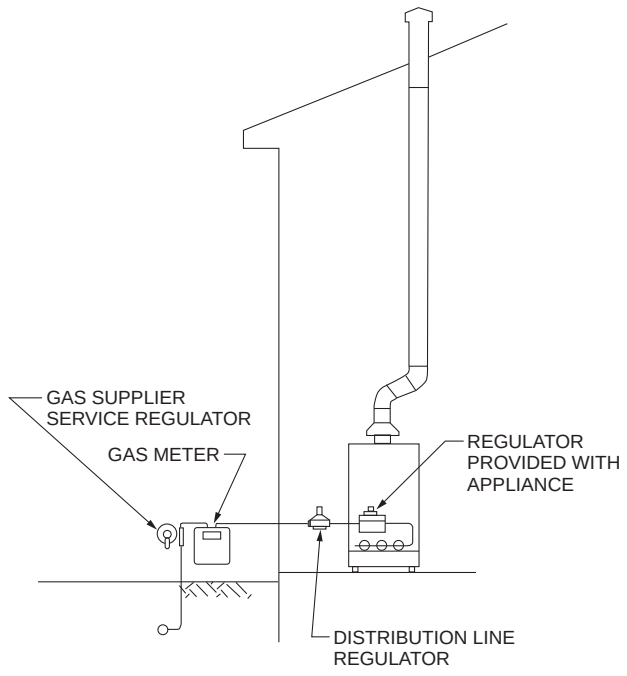

Figure 410.1(1)
GAS PRESSURE REGULATORS

INTERNATIONAL CODE COUNCIL®
Copyright © 2015 ICC. ALL RIGHTS RESERVED. Accessed by David Dammon on Jun 21, 2017 12:30:52 PM pursuant to License Agreement with ICC. No further reproduction or distribution authorized. ANY UNAUTHORIZED REPRODUCTION OR DISTRIBUTION IS A VIOLATION OF THE FEDERAL COPYRIGHT ACT AND THE LICENSE AGREEMENT, AND SUBJECT TO CIVIL AND CRIMINAL PENALTIES THEREUNDER.

phragm and adjustment spring, causing the valve to close on a rise in outlet pressure and open on a fall in outlet pressure. The vent allows the diaphragm to move freely by admitting or emitting air above the diaphragm. Atmospheric pressure and the adjustment spring force act together to establish the outlet pressure setting of the regulator [see Commentary Figure 410.1(4)].

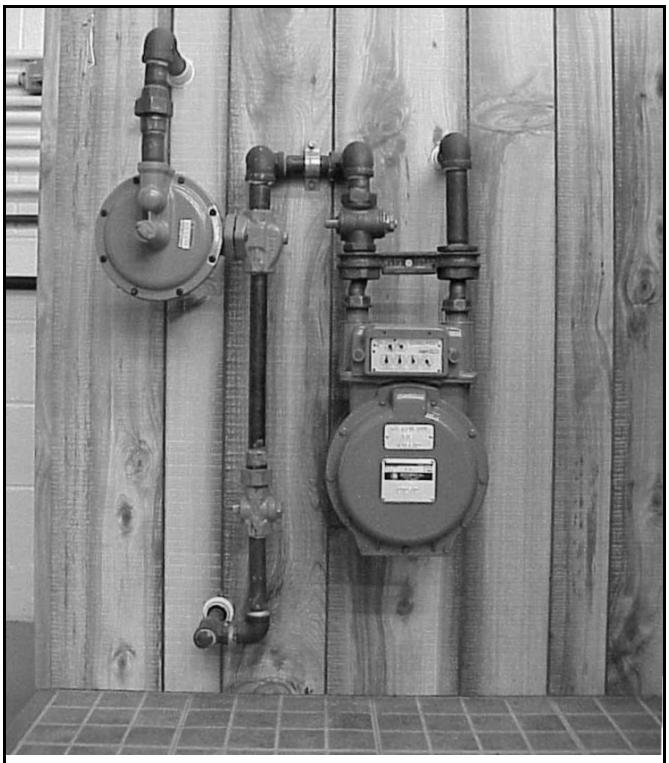

Figure 410.1(2)
SERVICE REGULATOR
(Photo courtesy of Washington Gas)

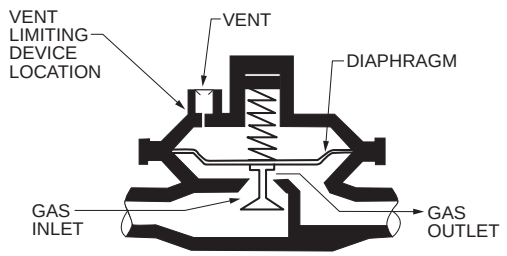

Figure 410.1(3)
GAS PRESSURE REGULATOR

410.2 MP regulators. MP pressure regulators shall comply with the following:

1. The MP regulator shall be *approved* and shall be suitable for the inlet and outlet gas pressures for the application.
2. The MP regulator shall maintain a reduced outlet pressure under lock-up (no-flow) conditions.
3. The capacity of the MP regulator, determined by published ratings of its manufacturer, shall be adequate to supply the *appliances* served.
4. The MP pressure regulator shall be provided with *access*. Where located indoors, the regulator shall be vented to the outdoors or shall be equipped with a leak-limiting device, in either case complying with Section 410.3.
5. A tee fitting with one opening capped or plugged shall be installed between the MP regulator and its upstream shutoff valve. Such tee fitting shall be positioned to allow connection of a pressure-measuring instrument and to serve as a sediment trap.
6. A tee fitting with one opening capped or plugged shall be installed not less than 10 pipe diameters downstream of the MP regulator outlet. Such tee fitting shall be positioned to allow connection of a pressure-measuring instrument.
7. Where connected to rigid piping, a union shall be installed within 1 foot (304 mm) of either side of the MP regulator.

❖ This section states the minimum requirements for MP gas regulators installed in 2-psi (13.8 kPa) gas piping systems or portions of systems. These requirements intend to keep the regulators accessible for service and repair, protect them from physical damage, require that they are suitable for the use intended, are properly sized and installed, and, if installed indoors, are properly vented to the outdoors (see commentary, Section 410.3). Item 2 requires a "lockup"-type regulator capable of holding the approximate outlet pressure setpoint indefinitely under no-flow conditions. Section 409.4 requires a gas shutoff valve immediately upstream of the MP regulator to allow isolation of the regulator during testing, repair or replacement of the regulator. Items 5 and 6 require a tee fitting upstream and downstream of the MP regulator to facilitate the connection of pressure-measuring instruments for calibrating the regulator. These fittings should have a $^1/_8$-inch threaded tapping for connection of common gauges and manometers. Item 5 also requires a sediment trap on the inlet side of the regulator. Because a lot of faith is placed in the integrity of this regulator, it deserves the protection from debris afforded by a simple tee, nipple and cap arrangement; see Section 408.4.

Where a line pressure regulator serves appliances rated for $^1/_2$ psi (3.5 kPa) or less inlet pressure and the regulator's inlet pressure is over 2 psi (13.8 kPa), a downstream overpressure protection device must be installed in accordance with ANSI Z21.80, the standard for line pressure regulators [see Commentary Figures 410.2(1) and 410.2(2)]. The OPD is designed to limit the downstream (outlet) pressure to 2 psi (13.8 kPa). MP regulators are line pressure regulators that serve to reduce pressures that are above 0.5 psi and less than or equal to 5 psi to some lower pressure. They are typically installed in 2-psi and 5-psi gas distribution systems that serve appliances

INTERNATIONAL CODE COUNCIL®
Copyright © 2015 ICC. ALL RIGHTS RESERVED. Accessed by David Dammon on Jun 21, 2017 12:30:52 PM pursuant to License Agreement with ICC. No further reproduction or distribution authorized. ANY UNAUTHORIZED REPRODUCTION OR DISTRIBUTION IS A VIOLATION OF THE FEDERAL COPYRIGHT ACT AND THE LICENSE AGREEMENT, AND SUBJECT TO CIVIL AND CRIMINAL PENALTIES THEREUNDER.

having a maximum input pressure of 0.5 psi (14 inches water column). If such regulators are installed with steel piping on the inlet and outlet side, the regulators cannot be removed or isolated without disassembly of the piping system for some distance or cutting the piping. To facilitate removal or isolation of the regulator, a union fitting must be placed near the inlet or outlet side of the regulator. This is simply a common-sense provision [see Commentary Figure 410.2(3)].

410.3 Venting of regulators. Pressure regulators that require a vent shall be vented directly to the outdoors. The vent shall be designed to prevent the entry of insects, water and foreign objects.

Exception: A vent to the outdoors is not required for regulators equipped with and *labeled* for utilization with an *approved* vent-limiting device installed in accordance with the manufacturer's instructions.

❖ All regulators use synthetic or natural rubber diaphragms, one side of which is vented to the atmosphere. The devices must vent one side of the diaphragm to the atmosphere to allow unimpeded movement of the diaphragm within its enclosure. Thus, these devices, in effect, see atmospheric pressure as a reference point for controlling the fuel-gas pressure. Regulators cannot operate without the vent. If the diaphragm were to rupture or perforate, gas would be vented to the exterior of the device. For this reason, regulators installed indoors must be vented to the outdoors or must comply with the exception to this section. See the definition of "Vent piping, breather." The vent termination outdoors must be protected from blockage and the entry of foreign objects, insects and water, which could cause regulator failure and a severe hazard [see Commentary Figures 410.3(1) and 410.3(2)]. If a regulator vent is blocked by ice, water, insect nests, debris or other foreign material, the air above the diaphragm will be trapped and the regulator port valve could be held in the open position thus disabling the regulator and causing overpressurization of the piping system.

The exception permits installation of regulators indoors without a vent to the outdoors where the regulator is equipped with and labeled for use with a factory-installed vent-limiting device. Vent-limiting devices, as the name implies, are designed to allow the vent to "breathe" under normal operating conditions. In the event of diaphragm failure, the vent-limiting devices will limit gas escapement to a rate near 1 cubic foot per hour (0.0283 m^3/h) for natural gas at 2-psi (13.8 kPa) pressure. A vent-limiting device is a ball check valve with a fixed orifice and is designed to allow air inhalation and escapement while restricting gas leakage to a small rate. Even small leakage rates can be hazardous if inadequate ventilation exists to prevent buildup of explosive concentrations. Although a standard is not referenced in this section, ANSI Z21.18 is appropriate for evaluating such vent-limiting devices. The standard limits the volume of gas that a vent-limiting device is allowed to discharge into a room or space. Vent-limiting devices should be installed in locations that are ventilated sufficiently to dissipate any gas discharged from the device.

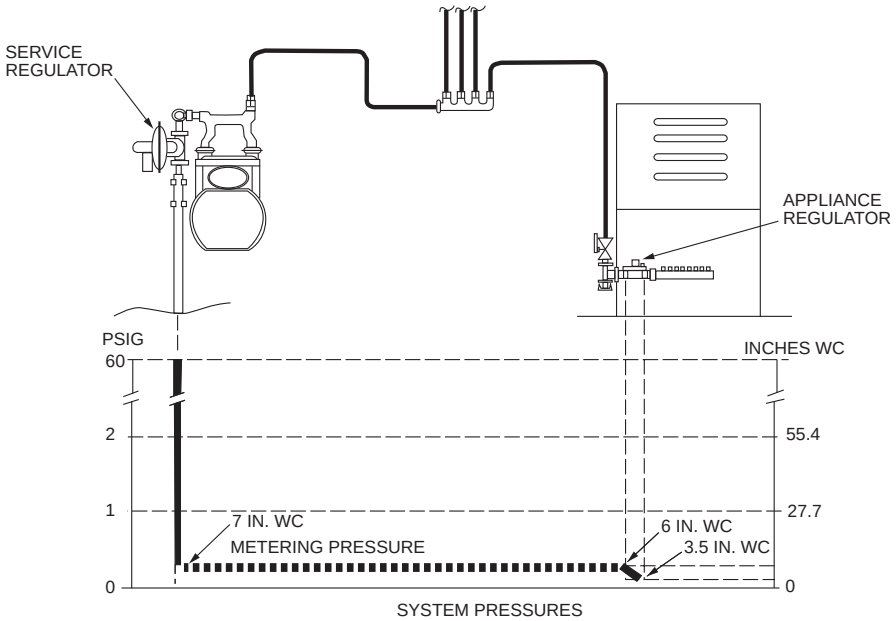

For SI: 1 inch water column = 249 Pa,
1 pound per square inch gauge = 6.895 kPa.

Figure 410.1(4)
SYSTEM PRESSURES

INTERNATIONAL CODE COUNCIL®
Copyright © 2015 ICC. ALL RIGHTS RESERVED. Accessed by David Dammon on Jun 21, 2017 12:30:52 PM pursuant to License Agreement with ICC. No further reproduction or distribution authorized. ANY UNAUTHORIZED REPRODUCTION OR DISTRIBUTION IS A VIOLATION OF THE FEDERAL COPYRIGHT ACT AND THE LICENSE AGREEMENT, AND SUBJECT TO CIVIL AND CRIMINAL PENALTIES THEREUNDER.

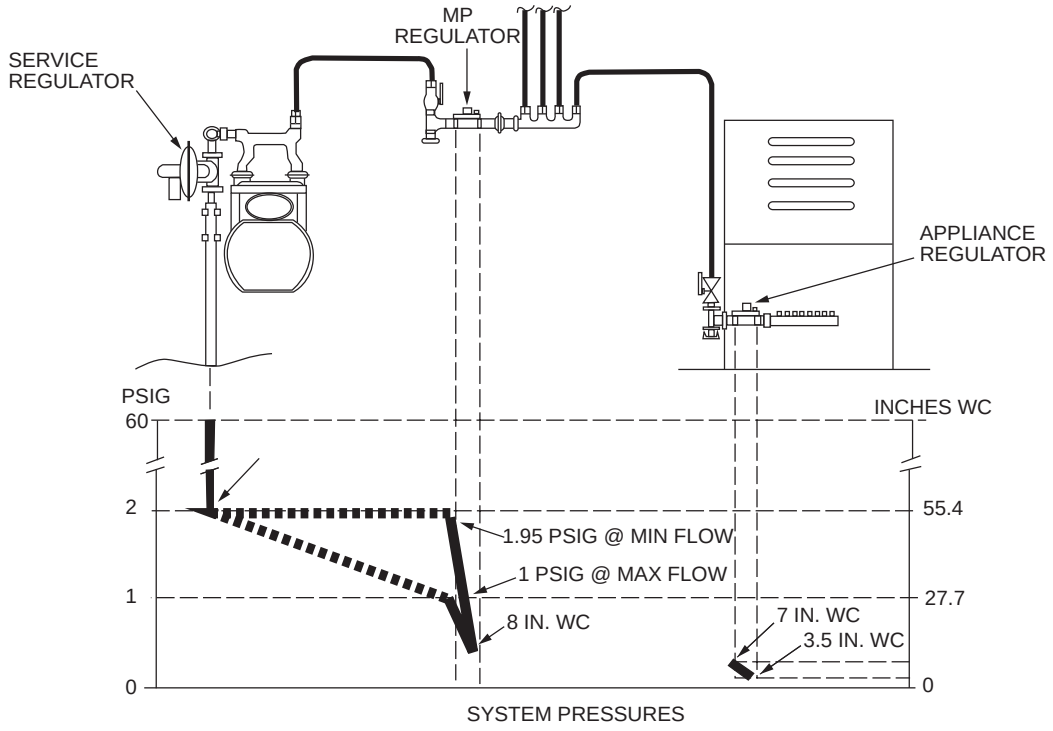

For SI: 1 inch = 25.4 mm, 1 psig = 6.895 kPa,
1 inch water column = 0.249 kPa.

Figure 410.2(1)
SYSTEM PRESSURES

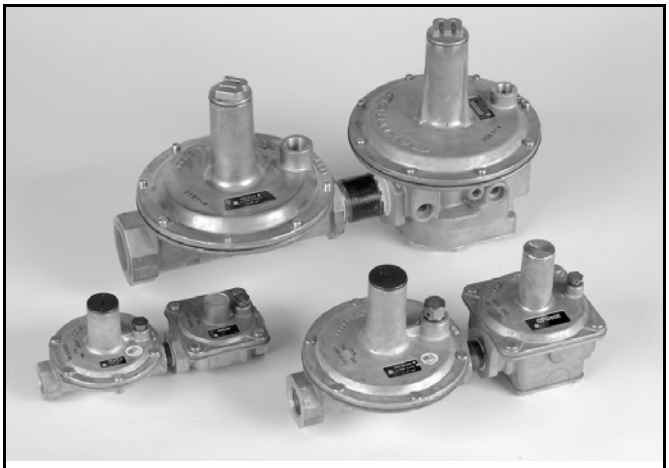

Figure 410.2(2)
PRESSURE REGULATOR/OVERPRESSURE PROTECTION DEVICE ASSEMBLIES
(Photo courtesy of MAXITROL Company)

410.3.1 Vent piping. Vent *piping* for relief vents and breather vents shall be constructed of materials allowed for gas *piping* in accordance with Section 403. Vent *piping* shall be not smaller than the vent connection on the pressure-regulating device. Vent *piping* serving relief vents and combination relief and breather vents shall be run independently to the outdoors and shall serve only a single device vent. Vent *piping* serving only breather vents is permitted to be connected in a manifold arrangement where sized in accordance with an *approved* design that minimizes backpressure in the event of diaphragm rupture. Regulator vent *piping* shall not exceed the length specified in the regulator manufacturer's instructions.

❖ See the definitions of "Relief vents" and "Vent piping, breather." Relief vents must not be combined with any other relief vents or breather vents because of the potential to restrict relief capacity and/or cause regulator malfunction. Only breather vents are allowed to be manifolded together and only where in compliance with this section.

In all cases, the minimum size of vent piping is the size of the vent connection on the device served. Although not stated in this section, there is always a limit on how far any size vent piping can be run. Vent piping may have to be increased in size to compensate for long vent runs. The longer the vent piping, the greater the flow resistance and flow resistance must be limited so that the airflow necessary for unimpeded movement of the regulator diaphragm is not restricted. The regulator manufacturer's installation instructions may include vent piping length limitations and vent piping lengths must be in accordance with such instructions. Manifold piping for breather vents must be engineered based on the predicted rise in internal vent pressure in the event of a diaphragm failure. If regulator vents are blocked or the

INTERNATIONAL CODE COUNCIL®
Copyright © 2015 ICC. ALL RIGHTS RESERVED. Accessed by David Dammon on Jun 21, 2017 12:30:52 PM pursuant to License Agreement with ICC. No further reproduction or distribution authorized. ANY UNAUTHORIZED REPRODUCTION OR DISTRIBUTION IS A VIOLATION OF THE FEDERAL COPYRIGHT ACT AND THE LICENSE AGREEMENT, AND SUBJECT TO CIVIL AND CRIMINAL PENALTIES THEREUNDER.

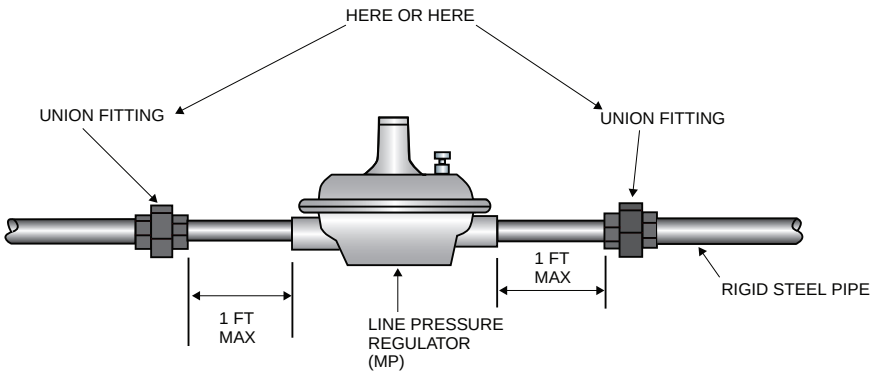

For SI: 1 foot = 304.8 mm.

Figure 410.2(3)
AT LEAST ONE UNION, INSTALLED UPSTREAM OR DOWNSTREAM, IS REQUIRED FOR AN MP REGULATOR CONNECTED TO RIGID PIPING

airflow is restricted in any way, including by undersized or excessively long piping runs, the result will be impaired regulator operation, causing retarded regulator response time, underpressure during appliance start-ups and overpressurization of the downstream system, all of which can be hazardous.

This section also requires regulators to be vented individually to the outdoors to prevent a potentially hazardous situation that may arise if more than one regulator is served by a single vent. The hazard could occur if the diaphragm of one regulator failed and the gas leakage into the vent caused an increase of pressure within the vent, which would then act on the other regulator diaphragms, causing all of the other regulators using the common vent to operate at a higher discharge pressure. This section permits use of engineered vent manifold systems to vent more than one regulator if the manifold is designed and sized to allow unimpeded air movement and to minimize backpressure in the event of a diaphragm failure.

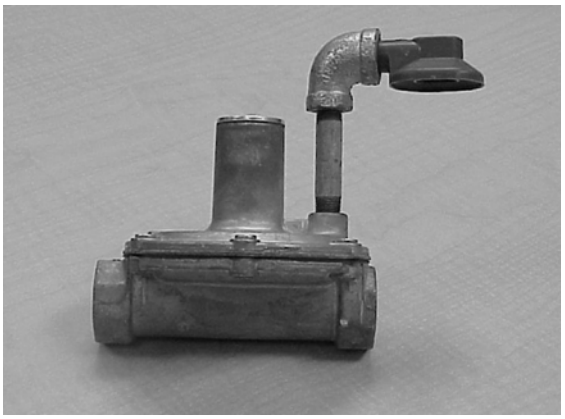

Figure 410.3(1)
REGULATOR WITH VENT PROTECTION
(Photo courtesy of Washington Gas)

410.4 Excess flow valves. Where automatic *excess flow valves* are installed, they shall be listed for the application and shall be sized and installed in accordance with the manufacturer's instructions.

❖ The code does not mandate the installation of EFVs, rather, it provides requirements for installations where such installations are chosen. EFVs must be listed for the application in which they are to be used. The manufacturer's instructions provide sizing and installation requirements that must adhered to. Some devices have to be installed in certain positions to work properly. Sizing is very important because the EFV will cause a gas pressure drop and if this drop is not accounted for in the system, the appliance might be supplied with inadequate pressure causing a hazardous condition (see commentary, Section 402.5). Proper sizing for EFVs is also important to ensure that they will function as intended. An undersized EFV might trip unnecessarily resulting in appliance inoperation and an oversized EFV might not trip at all. See Commentary Figure 410.4 and commentary to the definition of "Excess flow valve (EFV)."

410.5 Flashback arrestor check valve. Where fuel gas is used with oxygen in any hot work operation, a listed protective device that serves as a combination flashback arrestor and backflow check valve shall be installed at an approved location on both the fuel gas and oxygen supply lines. Where the pressure of the piped fuel gas supply is insufficient to ensure such safe operation, approved equipment shall be installed between the gas meter and the appliance that increases pressure to the level required for such safe operation.

❖ This section relates to commercial and industrial installations that use fuel gas and oxygen for welding and cutting operations. The devices required by this section are designed to prevent the flow of one gas into the piping for another gas caused by differences in line pressures. The result of any such backflow would be potentially hazardous because an explosive mixture could be created in either piping system and such mixture could be delivered to a burner head.

INTERNATIONAL CODE COUNCIL®
Copyright © 2015 ICC. ALL RIGHTS RESERVED. Accessed by David Dammon on Jun 21, 2017 12:30:52 PM pursuant to License Agreement with ICC. No further reproduction or distribution authorized. ANY UNAUTHORIZED REPRODUCTION OR DISTRIBUTION IS A VIOLATION OF THE FEDERAL COPYRIGHT ACT AND THE LICENSE AGREEMENT, AND SUBJECT TO CIVIL AND CRIMINAL PENALTIES THEREUNDER.



Figure 410.3(2)
PRESSURE REGULATOR
WITH VENT-LIMITING DEVICE
(Photo courtesy of MAXITROL Company)

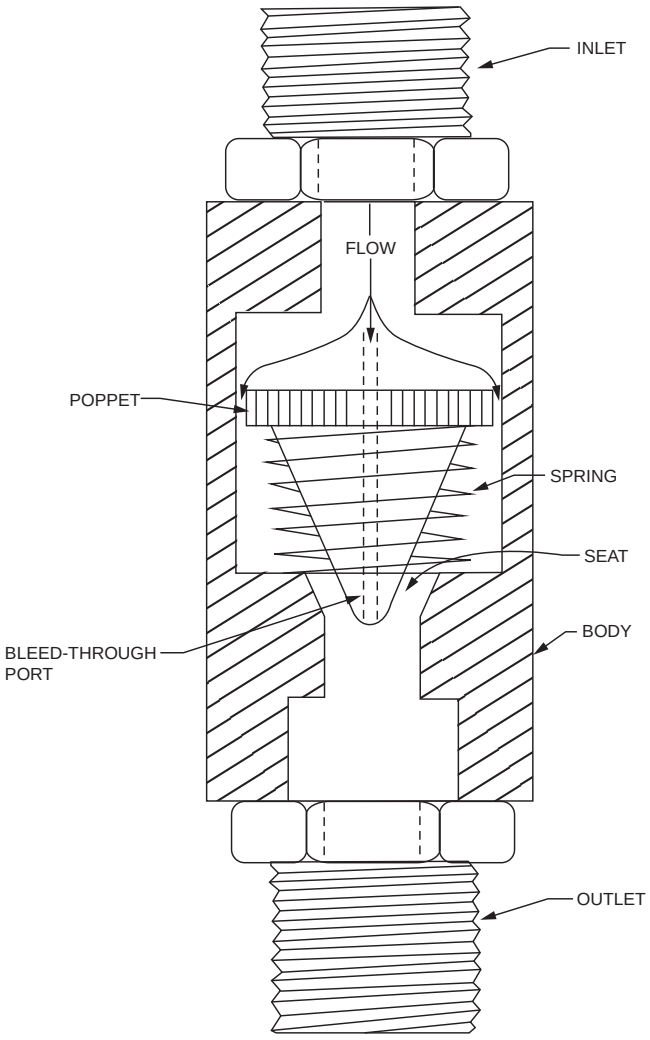

Figure 410.4
EXAMPLE OF EXCESS FLOW VALVE

SECTION 411 (IFGC)
APPLIANCE AND MANUFACTURED HOME CONNECTIONS

411.1 Connecting appliances. Except as required by Section 411.1.1, *appliances* shall be connected to the *piping* system by one of the following:

1. Rigid metallic pipe and fittings.
2. Corrugated stainless steel tubing (CSST) where installed in accordance with the manufacturer's instructions.
3. Semirigid metallic tubing and metallic fittings. Lengths shall not exceed 6 feet (1829 mm) and shall be located entirely in the same room as the *appliance*. Semirigid metallic tubing shall not enter a motor-operated *appliance* through an unprotected knockout opening.
4. *Listed* and *labeled appliance* connectors in compliance with ANSI Z21.24 and installed in accordance with the manufacturer's instructions and located entirely in the same room as the *appliance*.
5. *Listed* and *labeled* quick-disconnect devices used in conjunction with *listed* and *labeled appliance* connectors.
6. *Listed* and *labeled* convenience outlets used in conjunction with *listed* and *labeled appliance* connectors.
7. Listed and *labeled* outdoor *appliance* connectors in compliance with ANSI Z21.75/CSA 6.27 and installed in accordance with the manufacturer's instructions.
8. Listed outdoor gas hose connectors in compliance with ANSI Z21.54 used to connect portable outdoor appliances. The gas hose connection shall be made only in the outdoor area where the appliance is used, and shall be to the gas *piping* supply at an appliance shutoff valve, a listed quick-disconnect device or listed gas convenience outlet.

❖ Connectors are used to connect the appliance or equipment to the gas distribution system outlet. The pipe sizing methods in this chapter size distribution piping up to but not beyond the appliance shutoff valve outlet (Note exceptions in Sections 409.5 and 411.1.3.1) and this section sizes the connection between the shutoff valve outlet and the appliance [see definition of "Piping system" and Commentary Figure 411.1(1)]. The choice of a connection type must take into consideration such factors as appliance movement, vibration, ambient conditions and susceptibility to physical damage. Between the shutoff valve and the appliance, a union fitting or similar arrangement must allow a means of disconnecting the piping. Flared or ground-joint connections that are part of an approved, labeled semirigid ("flexible") connector can serve as a union [see Commentary Figures 411.1(2) and 411.1(3)].

Item 2 addresses CSST connected directly to appliances. Although CSST is allowed to directly connect to specific appliances (fixed/nonmoveable), CSST is not to be used as a substitute for a connector where one is required. CSST manufacturers'

INTERNATIONAL CODE COUNCIL®
Copyright © 2015 ICC. ALL RIGHTS RESERVED. Accessed by David Dammon on Jun 21, 2017 12:30:52 PM pursuant to License Agreement with ICC. No further reproduction or distribution authorized. ANY UNAUTHORIZED REPRODUCTION OR DISTRIBUTION IS A VIOLATION OF THE FEDERAL COPYRIGHT ACT AND THE LICENSE AGREEMENT, AND SUBJECT TO CIVIL AND CRIMINAL PENALTIES THEREUNDER.

instructions specify where CSST can directly connect to appliances and where it cannot [see Commentary Figures 411.1(4) and 411.1(5)].

Item 4 refers to the commonly used, so called "flexible" connectors typically made of corrugated stainless steel and previously made of brass. Appliance connectors are listed and labeled with the label typically being wrapped around the connector tubing.

Most appliance connectors manufactured today have attached plastic labels that state the installation and sizing instructions. These connectors are not designed for repeated movement that causes bending of the metal and should not be reused after the initial installation. Reuse is typically prohibited by the manufacturers' instructions. Repeated bending and/or vibration can cause metal fatigue, stress cracking and gas leakage [see Commentary Figures 411.1(6) and 411.1(7)].

The piping system is sized up to the outlet of the appliance shutoff valve. The connector occurs between the shutoff valve outlet and the appliance and is sized by the connector manufacturer or is based on the appliance input rating, gas inlet size and length of the connector [see Commentary Figure 411.1(1)]. For example, a boiler is supplied by branch piping required to be 1 inch (25 mm) based on the sizing methods in Section 402. The branch piping is 1 inch (25 mm) up to the boiler shutoff valve, but the boiler inlet opening is only $^1/_2$ inch (13 mm). The piping (connector) downstream of the shutoff valve is sized as a connector because it is 6 feet (1829 mm) or less in length (see commentary, Sections 409.5.1, 409.5.2, 409.5.3 and 411.1.3.1).

Item 7 addresses connections for outdoor appliances [see Commentary Figure 411.1(7)].

Because portable appliances can be moved, Items 1 through 7 of this section are not suited for connecting portable appliances to the gas distribution piping system. Most appliance connectors are not designed to be used with any appliance that can be readily moved. All appliance connectors must be used within the parameters of their listings. For outdoor portable appliances, new Item 8 is the only apparent option. Outdoor gas hose connectors have to be resistant to mechanical damage, possible heat exposure and the harmful effects of exposure to the weather. Connectors listed to ANSI Z21.54 are evaluated and tested for the particularly harsh environment of outdoor use. The gas hose connector must be located entirely outdoors and must be connected to the gas piping system at a point outdoors. The point of connection to the gas distribution system piping must be through a listed device that allows the hose to be readily manually disconnected or through an appliance shutoff valve. Quick-disconnect devices have safety features, such as thermal shutoffs, that will close the valve when exposed to high temperatures and interlocking systems that will not allow the hose to be removed until the manual gas valve is closed.

The intent of new Item 8 is to address portable outdoor appliance connections and to mandate that such connectors be listed to a specific safety standard [see Commentary Figure 411.1(8)].

411.1.1 Commercial cooking appliances. Commercial cooking appliances installed on casters and appliances that are moved for cleaning and sanitation purposes shall be connected to the *piping* system with an appliance connector listed as complying with ANSI Z21.69. The commercial cooking appliance connector installation shall be configured in accordance with the manufacturer's instructions. Movement of appliances with casters shall be limited by a restraining device installed in accordance with the connector and appliance manufacturer's instructions.

❖ This section is referred to in Section 411.1 and mandates that a specific type of connector be used for commercial cooking appliances that are routinely moved [see Commentary Figures 411.1.1(1) through 411.1.1(4)]. Connectors listed to ANSI Z21.69 are designed to tolerate the movement anticipated when appliances are moved for cleaning. This section also allows such appliances to be connected with rigid pipe and semirigid metal tubing; however, it would be impractical and somewhat risky to connect such appliances with rigid pipe or metal tubing because employees not skilled in piping installation would be required to break unions or tubing fittings and disconnect and reconnect appliances to the rigid piping or tubing every time the appliances were moved.

411.1.2 Protection against damage. Connectors and tubing shall be installed so as to be protected against physical damage.

❖ Appliance connectors, although sound, are not constructed or tested to withstand the same rigors of service as the gas piping system without physical damage. Therefore, they must be installed to minimize the potential for damage. For example, "flexible" and semirigid tubing connectors should not be used where subject to excessive vibration or impact by occupants, vehicles, animals, doors, stored materials, etc. Impact, repeated movement and vibration can cause connector failure.

It is not the intent of this section to require that appliance connectors be hidden from view behind or under an appliance to consider them as protected from damage. For typical range and clothes dryer installations, the connectors are physically protected by the appliances themselves. However, for water heaters, furnaces, boilers, unit heaters, infrared heaters, etc., the connector will be located in the open and thus will need protection from damage by proper location, placement, elevation or guards. Protection from damage is commonly afforded by locating the connector out of harm's way, such as between a wall and an appliance or 8 feet (2438 mm) or more above the floor.

INTERNATIONAL CODE COUNCIL®
Copyright © 2015 ICC. ALL RIGHTS RESERVED. Accessed by David Dammon on Jun 21, 2017 12:30:52 PM pursuant to License Agreement with ICC. No further reproduction or distribution authorized. ANY UNAUTHORIZED REPRODUCTION OR DISTRIBUTION IS A VIOLATION OF THE FEDERAL COPYRIGHT ACT AND THE LICENSE AGREEMENT, AND SUBJECT TO CIVIL AND CRIMINAL PENALTIES THEREUNDER.

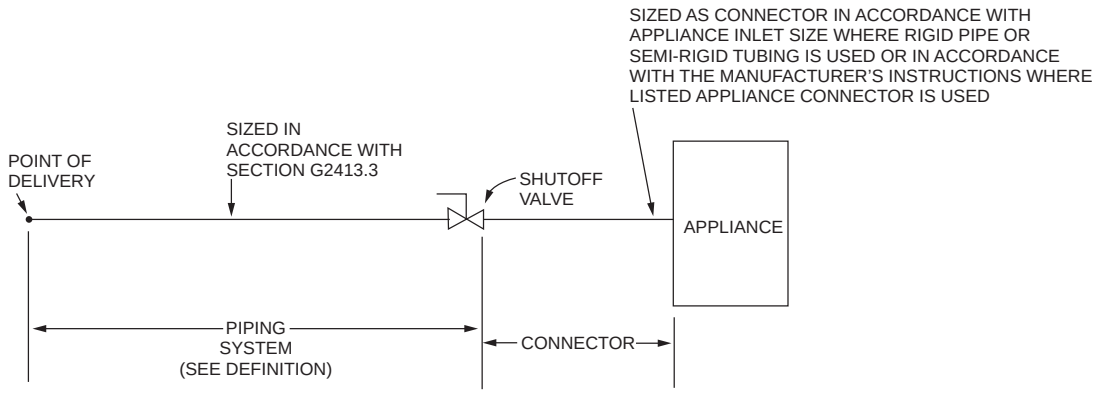

Figure 411.1(1)
PIPING SYSTEM SIZING AND APPLIANCE CONNECTION AND CONNECTOR SIZING

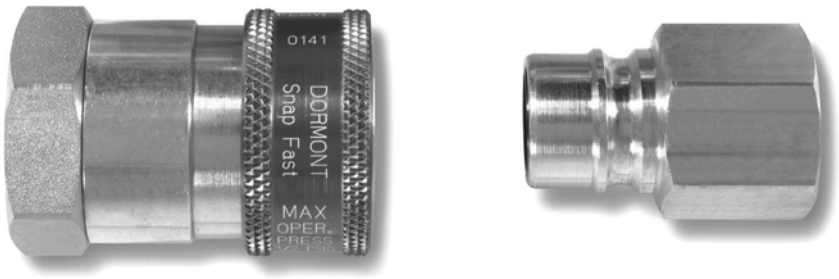

Figure 411.1(2)
QUICK-DISCONNECT DEVICE FOR USE WITH COMMERCIAL APPLIANCE CONNECTORS
(Photo courtesy of Dormont Manufacturing Company)

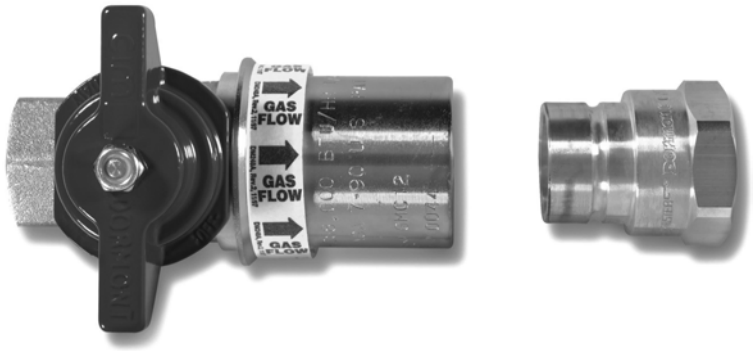

Figure 411.1(3)
QUICK-DISCONNECT DEVICE FOR USE WITH COMMERCIAL APPLIANCE CONNECTORS
(Photo courtesy of Dormont Manufacturing Company)

INTERNATIONAL CODE COUNCIL®
Copyright © 2015 ICC. ALL RIGHTS RESERVED. Accessed by David Dammon on Jun 21, 2017 12:30:52 PM pursuant to License Agreement with ICC. No further reproduction or distribution authorized. ANY UNAUTHORIZED REPRODUCTION OR DISTRIBUTION IS A VIOLATION OF THE FEDERAL COPYRIGHT ACT AND THE LICENSE AGREEMENT, AND SUBJECT TO CIVIL AND CRIMINAL PENALTIES THEREUNDER.

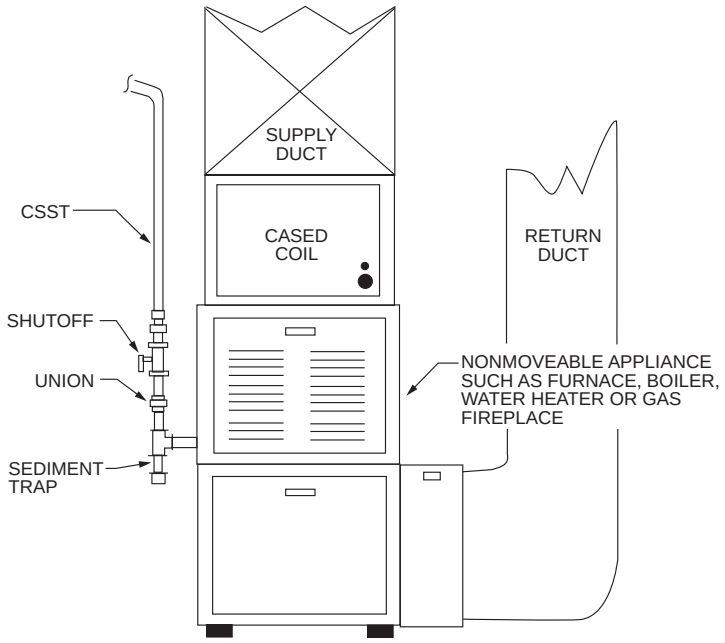

Figure 411.1(4)
CSST DIRECTLY CONNECTED TO NONMOVEABLE APPLIANCE

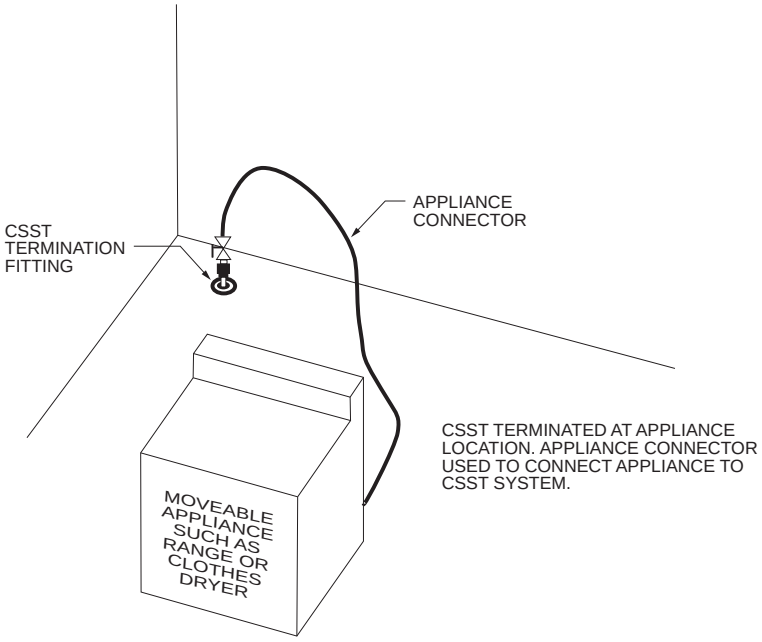

Figure 411.1(5)
CSST TERMINATED AT APPLIANCE LOCATION

INTERNATIONAL CODE COUNCIL®
Copyright © 2015 ICC. ALL RIGHTS RESERVED. Accessed by David Dammon on Jun 21, 2017 12:30:52 PM pursuant to License Agreement with ICC. No further reproduction or distribution authorized. ANY UNAUTHORIZED REPRODUCTION OR DISTRIBUTION IS A VIOLATION OF THE FEDERAL COPYRIGHT ACT AND THE LICENSE AGREEMENT, AND SUBJECT TO CIVIL AND CRIMINAL PENALTIES THEREUNDER.



Figure 411.1(6)
SEMIRIGID (FLEXIBLE) APPLIANCE CONNECTOR
(Photo courtesy of Dormont Manufacturing Company)



Figure 411.1(7)
OUTDOOR MOBILE HOME CONNECTOR
(Photo courtesy of Dormont Manufacturing Company)

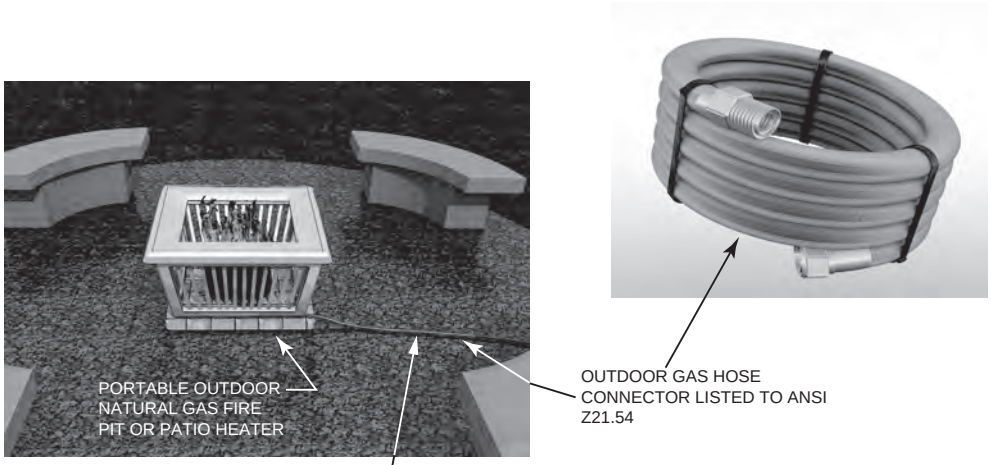

Figure 411.1(8)
NATURAL GAS HOSE AND CONNECTOR FOR PORTABLE OUTDOOR GAS APPLIANCES
(Figure courtesy of Dormont Manufacturing Company)

411.1.3 Connector installation. *Appliance* fuel connectors shall be installed in accordance with the manufacturer's instructions and Sections 411.1.3.1 through 411.1.3.4.

❖ Flexible (semirigid) appliance fuel connectors are primarily intended for use with cooking ranges, clothes dryers and similar appliances where the gas connection is located behind the appliance and some degree of flexibility is necessary to facilitate the hook-up; however, flexible connectors may be used with any appliance where they are not subject to damage (see commentary, Section 411.1.1). Rigid connections are not practical for movable appliances. Flexible connectors are typically constructed of stainless steel and are labeled with tags or metal rings placed over the tubing. The manufacturer's instructions dictate the installation requirements that are intended to protect the connector from damage and prevent leakage. Most flexible connectors are intended to be installed only once and are not designed for repeated bending and forming. For other than commercial flexible connections that are designed for repeated movement, a new connector should be used each time an appliance is reinstalled. Repeated flexing or bending can cause metal fatigue and connector failure. Flexible connectors must be protected from physical damage and are not allowed to pass through any walls, floors, ceilings or appliance housings except as allowed by Section 411.1.3.3.

INTERNATIONAL CODE COUNCIL®
Copyright © 2015 ICC. ALL RIGHTS RESERVED. Accessed by David Dammon on Jun 21, 2017 12:30:52 PM pursuant to License Agreement with ICC. No further reproduction or distribution authorized. ANY UNAUTHORIZED REPRODUCTION OR DISTRIBUTION IS A VIOLATION OF THE FEDERAL COPYRIGHT ACT AND THE LICENSE AGREEMENT, AND SUBJECT TO CIVIL AND CRIMINAL PENALTIES THEREUNDER.

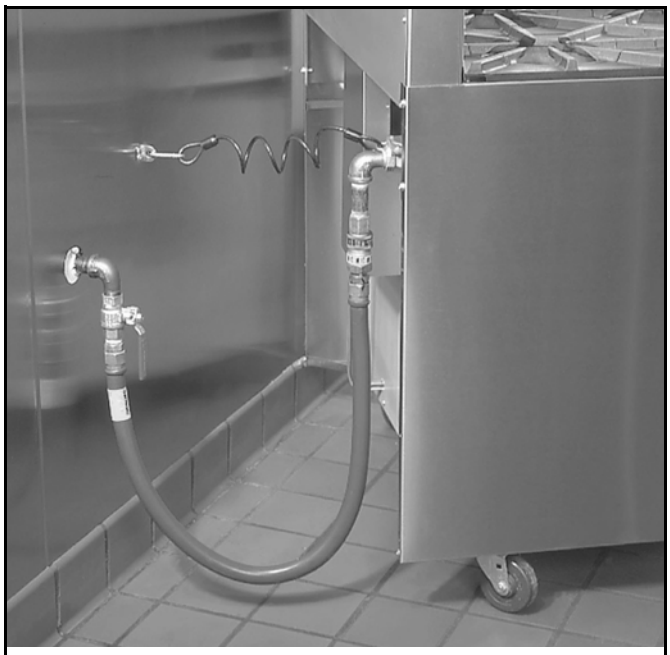

Figure 411.1.1(1)
COMMERCIAL COOKING APPLIANCE CONNECTOR WITH TRAVEL RESTRAINT
(Photo courtesy of Dormont Manufacturing Company)



Figure 411.1.1(3)
COMMERCIAL COOKING APPLIANCE FUEL CONNECTORS
(Photo courtesy of Dormont Manufacturing Company)



Figure 411.1.1(2)
COMMERCIAL COOKING APPLIANCE CONNECTOR WITH TRAVEL RESTRAINT
(Photo courtesy of Dormont Manufacturing Company)



Figure 411.1.1(4)
COMMERCIAL COOKING APPLIANCE FUEL CONNECTORS
(Photo courtesy of Dormont Manufacturing Company)

411.1.3.1 Maximum length. Connectors shall have an overall length not to exceed 6 feet (1829 mm). Measurement shall be made along the centerline of the connector. Only one connector shall be used for each *appliance*.

Exception: Rigid metallic *piping* used to connect an *appliance* to the *piping* system shall be permitted to have a total length greater than 6 feet (1829 mm), provided that the connecting pipe is sized as part of the *piping* system in accordance with Section 402 and the location of the *appliance* shutoff valve complies with Section 409.5.

❖ Flexible connectors must bear the label of an approved agency and are limited to a maximum of 6

INTERNATIONAL CODE COUNCIL®
Copyright © 2015 ICC. ALL RIGHTS RESERVED. Accessed by David Dammon on Jun 21, 2017 12:30:52 PM pursuant to License Agreement with ICC. No further reproduction or distribution authorized. ANY UNAUTHORIZED REPRODUCTION OR DISTRIBUTION IS A VIOLATION OF THE FEDERAL COPYRIGHT ACT AND THE LICENSE AGREEMENT, AND SUBJECT TO CIVIL AND CRIMINAL PENALTIES THEREUNDER.

feet (914 mm) in length. Six-foot lengths have traditionally been used for range and dryer installations to allow the connector to be looped or otherwise arranged to allow limited movement of the appliance without stressing the connector. The safety record for such connectors has been good, therefore, the use of 6-foot-length connectors is not limited to specific appliances. Flexible connectors are evaluated in accordance with ANSI Z21.24 or ANSI Z21.69. Multiple connectors must not be connected together to circumvent the maximum length requirement [see Commentary Figures 411.1.3.1(1) and 411.1.3.1(2)].

The exception allows rigid metallic piping (steel) to exceed 6 feet (1829 mm) in length for connection to any appliance if the shutoff valve is located in accordance with Section 409.5 and the connector is sized as gas piping. If the shutoff must be within 6 feet (1829 mm) of the appliance, the connector length is also limited to 6 feet (1829 mm). If the shutoff is remote in accordance with Section 409.5.2 or 409.5.3, the connector length is unlimited if sized as gas piping (see Sections 409.5.1 through 409.5.3).

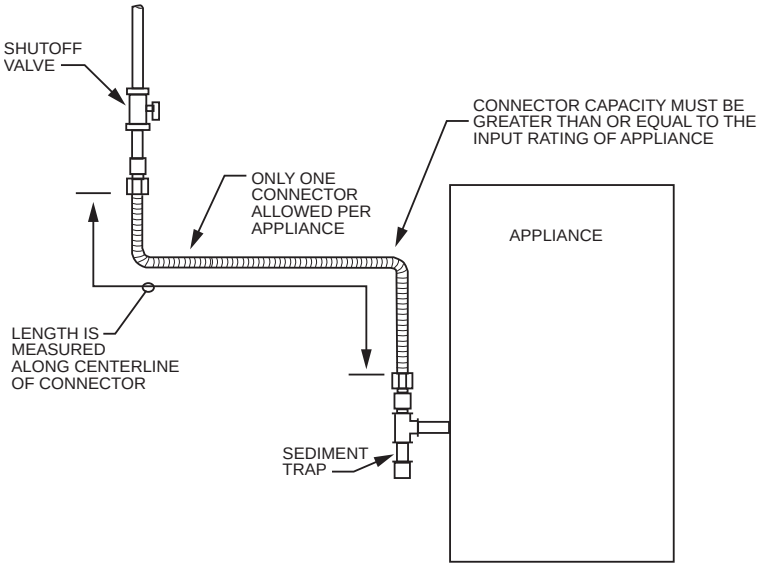

For SI: 1 foot = 304.8 mm.

Figure 411.1.3.1(1)
APPLIANCE FUEL CONNECTOR

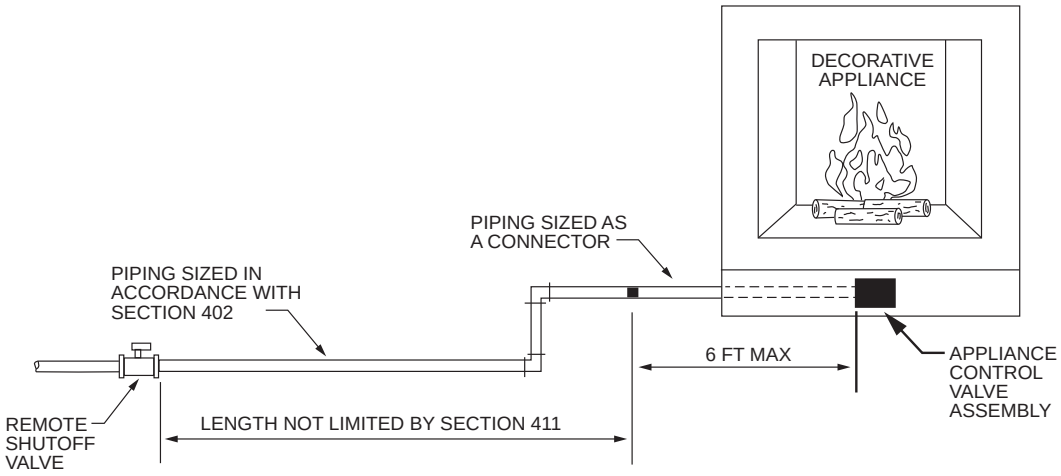

For SI: 1 foot = 304.8 mm.

Figure 411.1.3.1(2)
APPLIANCE FUEL CONNECTOR

INTERNATIONAL CODE COUNCIL®
Copyright © 2015 ICC. ALL RIGHTS RESERVED. Accessed by David Dammon on Jun 21, 2017 12:30:52 PM pursuant to License Agreement with ICC. No further reproduction or distribution authorized. ANY UNAUTHORIZED REPRODUCTION OR DISTRIBUTION IS A VIOLATION OF THE FEDERAL COPYRIGHT ACT AND THE LICENSE AGREEMENT, AND SUBJECT TO CIVIL AND CRIMINAL PENALTIES THEREUNDER.

411.1.3.2 Minimum size. Connectors shall have the capacity for the total demand of the connected *appliance*.

❖ Connectors must be chosen on the basis that they will provide the total gas demand of the appliance served at the required minimum pressure, as indicated in the manufacturer's instructions. Listed connectors provide capacity information on the tag attached to the connector.

411.1.3.3 Prohibited locations and penetrations. Connectors shall not be concealed within, or extended through, walls, floors, partitions, ceilings or *appliance* housings.

Exceptions:

1. Connectors constructed of materials allowed for *piping* systems in accordance with Section 403 shall be permitted to pass through walls, floors, partitions and ceilings where installed in accordance with Section 409.5.2 or 409.5.3.
2. Rigid steel pipe connectors shall be permitted to extend through openings in *appliance* housings.
3. *Fireplace* inserts that are factory equipped with grommets, sleeves or other means of protection in accordance with the listing of the *appliance*.
4. Semirigid tubing and *listed* connectors shall be permitted to extend through an opening in an *appliance* housing, cabinet or casing where the tubing or connector is protected against damage.

❖ This section requires connectors to be located entirely in the same room as the appliance served to protect them from damage and because the connector begins at the appliance shutoff valve which must also be in the same room as the appliance served if installed in accordance with Section 409.5.1. Exception 1 applies to piping system materials, not semirigid (flexible) appliance connectors, and recognizes that Sections 409.5.2 and 409.5.3 both permit remote shutoff valves, meaning that in many cases, the piping between the shutoff valve and the appliance will necessarily have to pass through walls, floors, etc., in order to reach the appliance served. For example, a gas fireplace on the first floor has its shutoff valve in the basement and the piping (connector) must pass through the floor to connect to the fireplace. With respect to passing through appliance housings, this section is intended to address listed so-called "flexible" appliance connectors and metal tubing used as a connector. As addressed in Exception 2, rigid steel piping has always been allowed to pass through appliance housings and is often required by appliance installation instructions. CSST installed upstream of the appliance shutoff valve is not considered to be a connector; rather, it is part of the piping system. CSST installed downstream of an appliance shutoff valve, like all other piping materials, is treated as a connector, however, CSST cannot be substituted for a listed flexible appliance connector where one is required, such as for moveable appliances (see commentary for Section 411.1) (see Commentary Figure 411.1.3.3).

Exception 2 recognizes that rigid steel pipe is not likely to be damaged by passing through an appliance housing/cabinet opening designed for that purpose.

Recall that all piping downstream from a shutoff valve is connector piping by definition of piping system.

Exception 3 allows any connector of any material to pass through fireplace insert appliance housings where means integral with the appliance provide adequate protection from abrasion, cutting and vibration.

Exception 4 allows listed appliance connectors and tubing used as a connector to pass through any appliance housing/cabinet/casing provided that the connector is adequately protected from abrasion, cutting and vibration.

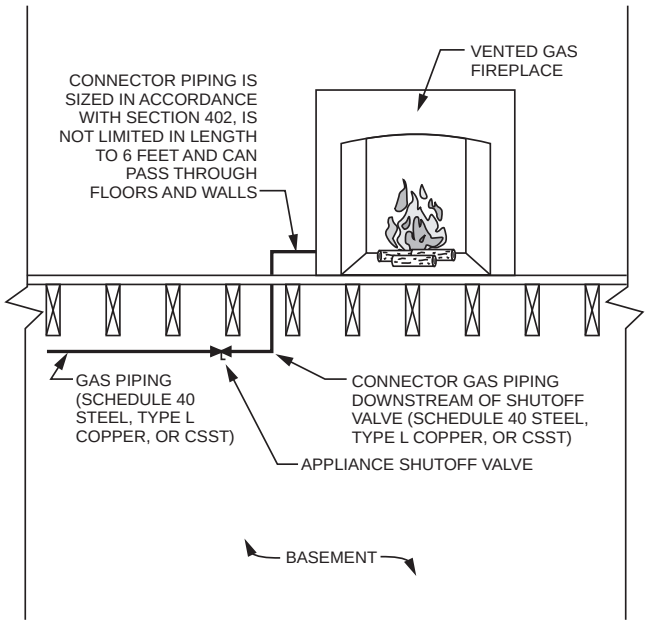

Figure 411.1.3.3
CONNECTOR PIPING DOWNSTREAM OF SHUTOFF VALVE

411.1.3.4 Shutoff valve. A shutoff valve not less than the nominal size of the connector shall be installed ahead of the connector in accordance with Section 409.5.

❖ Connectors are installed downstream of the shutoff valve and that valve must be located in the same room as the appliance except as allowed by Sections 409.5.2 and 409.5.3. All of the connectors addressed in Section 411.1 must be sized for the connected load.

411.1.4 Movable appliances. Where appliances are equipped with casters or are otherwise subject to periodic movement or relocation for purposes such as routine cleaning and mainte-

INTERNATIONAL CODE COUNCIL®
Copyright © 2015 ICC. ALL RIGHTS RESERVED. Accessed by David Dammon on Jun 21, 2017 12:30:52 PM pursuant to License Agreement with ICC. No further reproduction or distribution authorized. ANY UNAUTHORIZED REPRODUCTION OR DISTRIBUTION IS A VIOLATION OF THE FEDERAL COPYRIGHT ACT AND THE LICENSE AGREEMENT, AND SUBJECT TO CIVIL AND CRIMINAL PENALTIES THEREUNDER.

nance, such appliances shall be connected to the supply system *piping* by means of an *appliance* connector listed as complying with ANSI Z21.69 or by means of Item 1 of Section 411.1. Such flexible connectors shall be installed and protected against physical damage in accordance with the manufacturer's instructions.

❖ Appliances, such as cooking appliances, commonly use heavy-duty, commercial-type flexible gas connectors. These connectors are designed to tolerate repeated movement to allow appliances on wheels or casters to be moved for cleaning operations or relocation.

Such connectors are commonly equipped with quick-disconnect couplings for ease of disconnection and reconnection and restraint cables to limit the amount of appliance movement, thereby preventing stress and damage to the connector.

Flexible connectors designed for specific applications are also used for the connection of equipment and appliances that produce significant vibrations. For example, gas-burning combustion engines in generator sets and HVAC equipment are connected with specially designed vibration dampening flexible connectors. Some pulse-combustion heating appliances employ flexible connectors to control the transmission of noise to gas distribution piping.

411.1.5 (IFGS) Connection of gas engine-powered air conditioners. Internal combustion engines shall not be rigidly connected to the gas supply *piping.*

❖ Internal combustion engines produce significant vibrations and will move on their mounting during operation. Such movement could weaken and damage gas connections and/or gas controls. Some type of "flexible" connector designed for this purpose must be used to allow for movement.

411.1.6 Unions. A union fitting shall be provided for *appliance*s connected by rigid metallic pipe. Such unions shall be accessible and located within 6 feet (1829 mm) of the *appliance*.

❖ Although unions have always been installed in rigid pipe connections to appliances by necessity, previous code editions did not specifically require them. Regardless of where the shutoff valve is located, the union must be within 6 feet of the appliance. Note that this section applies only to rigid piping because tubing systems and listed appliance connectors are joined with fittings that can serve as a union. A union is a special type of threaded coupling fitting consisting of three mating components and it is used "inline" to join two sections of piping that could not otherwise be threaded together. Unions also allow an appliance to be easily disconnected for repairs and during gas piping system testing (see Section 404.5).

411.2 Manufactured home connections. Manufactured homes shall be connected to the distribution *piping* system by one of the following materials:

1. Metallic pipe in accordance with Section 403.4.
2. Metallic tubing in accordance with Section 403.5.
3. *Listed* and *labeled* connectors in compliance with ANSI Z21.75/CSA 6.27 and installed in accordance with the manufacturer's instructions.

❖ Manufactured homes are defined in the National Fuel Gas Code, Z223.1, as having a permanent chassis and for use with or without a permanent foundation (see Commentary Figure 411.1(7)].

411.3 Suspended low-intensity infrared tube heaters. Suspended low-intensity infrared tube heaters shall be connected to the building *piping* system with a connector *listed* for the application complying with ANSI Z21.24/CGA 6.10. The connector shall be installed as specified by the tube heater manufacturer's instructions.

❖ Such heaters are used in factories, garages, shops and recreation/hobby spaces where the desire is to partially condition the space by heating the occupants rather than the ambient air in the space. Although uncommon, radiant tube heaters could be found within dwelling accessory structures and garages. This type of appliance will move each time it cycles on and off because of linear expansion and contraction of the radiant tube heating element. This movement has been known to cause stress failures of the appliance connectors that serve these appliances. The appliance manufacturer's installation instructions will provide very specific details on how the appliance connector is to be installed, configured and oriented. Commentary Figures 411.3(1) and 411.3(2) are examples of one manufacturer's installation instructions. The instructions will vary from manufacturer to manufacturer, but the theme and intent are the same; that is, to orient and configure the connector such that it will flex with the movement of the appliance without causing stress in the connector.

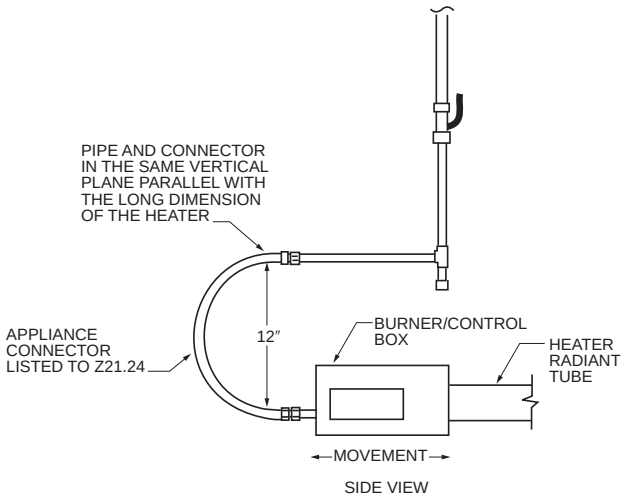

Figure 411.3(1)
EXAMPLE OF ONE MANUFACTURER'S INSTALLATION INSTRUCTIONS

INTERNATIONAL CODE COUNCIL®
Copyright © 2015 ICC. ALL RIGHTS RESERVED. Accessed by David Dammon on Jun 21, 2017 12:30:52 PM pursuant to License Agreement with ICC. No further reproduction or distribution authorized. ANY UNAUTHORIZED REPRODUCTION OR DISTRIBUTION IS A VIOLATION OF THE FEDERAL COPYRIGHT ACT AND THE LICENSE AGREEMENT, AND SUBJECT TO CIVIL AND CRIMINAL PENALTIES THEREUNDER.

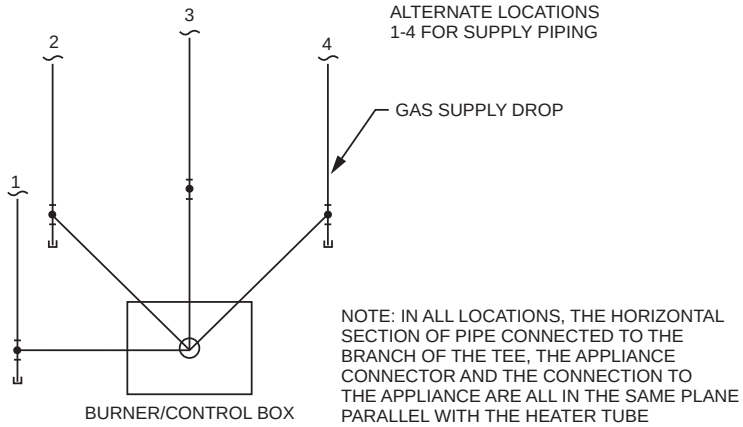

Figure 411.3(2)
END VIEW OF FIGURE 411.3(1)

SECTION 412 (IFGC)
LIQUEFIED PETROLEUM GAS MOTOR VEHICLE FUEL-DISPENSING FACILITIES

[F] 412.1 General. Motor fuel-dispensing facilities for LP-gas fuel shall be in accordance with this section and the *International Fire Code*. The operation of LP-gas motor fuel-dispensing facilities shall be regulated by the *International Fire Code*.

❖ Section 2308 of the *International Fire Code*® (IFC®) regulates LP-gas service stations and references Chapter 38 of the IFC.

[F] 412.2 Storage and dispensing. Storage vessels and *equipment* used for the storage or dispensing of LP-gas shall be *approved* or *listed* in accordance with Sections 412.3 and 412.4

❖ Sections 412.3 and 412.4 dictate which components must be listed and which components must be approved by the code official.

[F] 412.3 Approved equipment. Containers; pressure-relief devices, including pressure-relief valves; and pressure regulators and *piping* used for LP-gas shall be *approved*.

❖ Listing of the specified components could be the basis for approval, but listing is not mandated. Any such components must be designed for the application and recommended for the application by the manufacturer.

[F] 412.4 Listed equipment. Hoses, hose connections, vehicle fuel connections, dispensers, LP-gas pumps and electrical *equipment* used for LP-gas shall be listed.

❖ The specified components must be listed and labeled as complying with the relevant product standards. As with all listed products, the testing/listing agency will apply its seal or mark to the product.

[F] 412.5 Attendants. Motor vehicle fueling operations shall be conducted by qualified attendants or in accordance with Section 412.9 by persons trained in the proper handling of LP-gas.

❖ The general public is not allowed to fuel vehicles at LP-gas service stations. The fueling operation must be performed by a service station attendant or trained personnel such as the employees of the company that owns and operates the fuel-dispensing system (see Section 412.8).

[F] 412.6 Location. The point of transfer for LP-gas dispensing operations shall be separated from buildings and other exposures in accordance with the following:

1. Not less than 25 feet (7620 mm) from buildings where the exterior wall is not part of a fire-resistance-rated assembly having a rating of 1 hour or greater.
2. Not less than 25 feet (7620 mm) from combustible overhangs on buildings, measured from a vertical line dropped from the face of the overhang at a point nearest the point of transfer.
3. Not less than 25 feet (7620 mm) from the lot line of property that can be built upon.
4. Not less than 25 feet (7620 mm) from the centerline of the nearest mainline railroad track.
5. Not less than 10 feet (3048 mm) from public streets, highways, thoroughfares, sidewalks and driveways.
6. Not less than 10 feet (3048 mm) from buildings where the exterior wall is part of a fire-resistance-rated assembly having a rating of 1 hour or greater.

   Exception: The point of transfer for LP-gas dispensing operations need not be separated from canopies that are constructed in accordance with the *International Building Code* and that provide weather protection for the dispensing equipment.

Liquefied petroleum gas containers shall be located in accordance with the *International Fire Code*. Liquefied petroleum gas storage and dispensing *equipment* shall be

INTERNATIONAL CODE COUNCIL®
Copyright © 2015 ICC. ALL RIGHTS RESERVED. Accessed by David Dammon on Jun 21, 2017 12:30:52 PM pursuant to License Agreement with ICC. No further reproduction or distribution authorized. ANY UNAUTHORIZED REPRODUCTION OR DISTRIBUTION IS A VIOLATION OF THE FEDERAL COPYRIGHT ACT AND THE LICENSE AGREEMENT, AND SUBJECT TO CIVIL AND CRIMINAL PENALTIES THEREUNDER.

located outdoors and in accordance with the *International Fire Code*.

❖ This section specifies a minimum separation distance from buildings, property lines, streets, driveways, sidewalks and railroads to protect them from fire and/or explosion that could occur during a dispensing operation (see Section 2307 and Chapter 61 of the IFC).

[F] 412.7 Additional requirements for LP-gas dispensers and equipment. LP-gas dispensers and related equipment shall comply with the following provisions:

1. Pumps shall be fixed in place and shall be designed to allow control of the flow and to prevent leakage and accidental discharge.
2. Dispensing devices installed within 10 feet (3048 mm) of where vehicle traffic occurs shall be protected against physical damage by mounting on a concrete island 6 inches (152 mm) or more in height, or shall be protected in accordance with Section 312 of the *International Fire Code*.
3. Dispensing devices shall be securely fastened to their mounting surface in accordance with the dispenser manufacturer's instructions.

❖ See Section 2307 of the commentary to the IFC. LP-gas dispensers are the equivalent of gasoline pumps (dispensers). Dispensers are the interface between the fuel supply and the vehicles that receive the fuel and involve operation by personnel.

[F] 412.8 Installation of dispensing devices and equipment. The installation and operation of LP-gas dispensing systems shall be in accordance with this section and the *International Fire Code*. Liquefied petroleum gas dispensers and dispensing stations shall be installed in accordance with manufacturers' specifications and their listing.

❖ Section 412.4 requires that dispensers be listed (see Section 2207 and Chapter 38 of the IFC).

[F] 412.8.1 Product control valves. The dispenser system piping shall be protected from uncontrolled discharge in accordance with the following:

1. Where mounted on a concrete base, a means shall be provided and installed within $^1/_2$ inch (12.7 mm) of the top of the concrete base that will prevent flow from the supply piping in the event that the dispenser is displaced from its mounting.
2. A manual shutoff valve and an excess flow-control check valve shall be located in the liquid line between the pump and the dispenser inlet where the dispensing device is installed at a remote location and is not part of a complete storage and dispensing unit mounted on a common base.
3. An excess flow-control check valve or an emergency shutoff valve shall be installed in or on the dispenser at the point where the dispenser hose is connected to the liquid piping.
4. A *listed* automatic-closing-type hose nozzle valve with or without a latch-open device shall be provided on island-type dispensers.

❖ Item 1 is similar to gasoline pump installations where the fuel supply is automatically cut off in the event that a vehicle impacts the pump/dispenser and displaces it. An excess flow-control check valve senses abnormal flow resulting from a damaged pipe or piece of equipment and then closes to stop the leakage.

[F] 412.8.2 Hoses. Hoses and *piping* for the dispensing of LP-gas shall be provided with hydrostatic relief valves. The hose length shall not exceed 18 feet (5486 mm). An *approved* method shall be provided to protect the hose against mechanical damage.

❖ Hoses convey liquid fuel; therefore, tremendous hydrostatic pressures could result from pumping-control failures and expansion of the liquid resulting from temperature changes. Hoses are limited in length and must be protected to help prevent hose failure and the subsequent fuel leakage.

[F] 412.8.3 Vehicle impact protection. Where installed within 10 feet (3048 mm) of vehicle traffic, LP-gas storage containers, pumps and dispensers shall be protected in accordance with Section 2307.5(2) of the *International Fire Code*.

❖ See Section 2307 of the commentary to the IFC. Item 2 of Section 2307.5 of the IFC requires concrete islands for the dispensers, pumps and containers or requires barriers such as guard posts as prescribed in Section 312 of the IFC.

[F] 412.8.4 Breakaway protection. Dispenser hoses shall be equipped with a *listed* emergency breakaway device designed to retain liquid on both sides of the breakaway point. Where hoses are attached to hose-retrieving mechanisms, the emergency breakaway device shall be located such that the breakaway device activates to protect the dispenser from displacement.

❖ Breakaway protection is needed where vehicles could drive away while still connected to the fuel dispenser, thereby damaging the equipment and causing fuel leakage. The breakaway device is designed to close off both ends of the hose that connect to it so as to trap the liquid fuel in the hose sections that were separated at the device.

[F] 412.9 Public fueling of motor vehicles. Self-service LP-gas dispensing systems, including key, code and card lock dispensing systems, shall be limited to the filling of permanently mounted containers providing fuel to the LP-gas-powered vehicle.

The requirements for self-service LP-gas dispensing systems shall be in accordance with the following:

1. The arrangement and operation of the transfer of product into a vehicle shall be in accordance with this section and Chapter 61 of the *International Fire Code*.
2. The system shall be provided with an emergency shutoff switch located within 100 feet (30 480 mm) of, but not less than 20 feet (6096 mm) from, dispensers.

INTERNATIONAL CODE COUNCIL®
Copyright © 2015 ICC. ALL RIGHTS RESERVED. Accessed by David Dammon on Jun 21, 2017 12:30:52 PM pursuant to License Agreement with ICC. No further reproduction or distribution authorized. ANY UNAUTHORIZED REPRODUCTION OR DISTRIBUTION IS A VIOLATION OF THE FEDERAL COPYRIGHT ACT AND THE LICENSE AGREEMENT, AND SUBJECT TO CIVIL AND CRIMINAL PENALTIES THEREUNDER.

3. The *owner* of the LP-gas motor fuel-dispensing facility or the owner's designee shall provide for the safe operation of the system and the training of users.
4. The dispenser and hose-end valve shall release not more than 4 cubic centimeters of liquid to the atmosphere upon breaking of the connection with the fill valve on the vehicle.
5. Fire extinguishers shall be provided in accordance with Section 2305.4 of the *International Fire Code*.
6. Warning signs shall be provided in accordance with Section 2305.6 of the *International Fire Code*.
7. The area around the dispenser shall be maintained in accordance with Section 2305.7 of the *International Fire Code*.

❖ There are increased risks associated with self-service dispensers because the users might be uninformed and untrained, might improperly use the equipment and might take risks. The dispenser must be designed to deliver fuel only to onboard vehicle fuel tanks as opposed to any other type of separate container.

SECTION 413 (IFGC)
COMPRESSED NATURAL GAS MOTOR VEHICLE FUEL-DISPENSING FACILITIES

[F] 413.1 General. Motor fuel-dispensing facilities for CNG fuel shall be in accordance with this section and the *International Fire Code*. The operation of CNG motor fuel-dispensing facilities shall be regulated by the *International Fire Code*.

❖ Section 2308 of the IFC regulates CNG service stations (see Commentary Figure 413.1).

[F] 413.2 General. Storage vessels and *equipment* used for the storage, compression or dispensing of CNG shall be *approved* or *listed* in accordance with Sections 413.2.1 through 413.2.3.

❖ This section dictates which components must be listed and which components must be approved by the code official.

[F] 413.2.1 Approved equipment. Containers; compressors; pressure-relief devices, including pressure-relief valves; and pressure regulators and *piping* used for CNG shall be *approved*.

❖ Listing of the specified components could be the basis for approval, but listing is not mandated. Any such components must be designed for the application and recommended for the application by the manufacturer.

[F] 413.2.2 Listed equipment. Hoses, hose connections, dispensers, gas detection systems and electrical *equipment* used for CNG shall be *listed*. Vehicle fueling connections shall be *listed* and *labeled*.

❖ The specified components must be listed and labeled as complying with the relevant product standards. As with all listed products, the testing/listing agency will apply its seal or mark to the product.

[F] 413.2.3 General. Residential fueling *appliance*s shall be *listed*. The capacity of a residential fueling *appliance* shall not exceed 5 standard cubic feet per minute (0.14 standard cubic meter/min) of natural gas.

❖ This provision is consistent with NFPA 52, 2006 Edition. This section provides installation requirements for listed residential compressed natural gas (CNG) fueling appliances and would allow their installation indoors. These appliances do not consume natural gas but are designed to compress natural gas from the fuel gas supply piping for delivery to CNG vehicles. These fueling appliances are electrically driven, do not have built-in storage, and are designed to provide a slow refill [maximum of 5 cubic feet per minute (2.4 L/s)] of a vehicle's onboard CNG vessel.

[F] 413.3 Location of dispensing operations and equipment. Compression, storage and dispensing *equipment* shall be located above ground outside.

Exceptions:

1. Compression, storage or dispensing *equipment* is allowed in buildings of noncombustible construction, as set forth in the *International Building Code*, which are unenclosed for three-quarters or more of the perimeter.
2. Compression, storage and dispensing *equipment* is allowed to be located indoors or in vaults in accordance with the *International Fire Code*.
3. Residential fueling *appliance*s and *equipment* shall be allowed to be installed indoors in accordance with the *equipment* manufacturer's instructions and Section 413.4.3.

❖ Because of the potential for leakage, the compression, storage and dispensing equipment must be located either outdoors or in a noncombustible, substantially open building except as allowed by Section 2208, Chapter 30 of the IFC, and Item 3 of this section (see Section 413.4.3).

[F] 413.3.1 Location on property. In addition to the fuel-dispensing requirements of the *International Fire Code*, compression, storage and dispensing *equipment* not located in vaults complying with the *International Fire Code* and other than residential fueling appliances shall not be installed:

1. Beneath power lines.
2. Less than 10 feet (3048 mm) from the nearest building or property that could be built on, public street, sidewalk or source of ignition.

   Exception: Dispensing *equipment* need not be separated from canopies that provide weather protection for the dispensing *equipment* and are constructed in accordance with the *International Building Code*.
3. Less than 25 feet (7620 mm) from the nearest rail of any railroad track.

INTERNATIONAL CODE COUNCIL®
Copyright © 2015 ICC. ALL RIGHTS RESERVED. Accessed by David Dammon on Jun 21, 2017 12:30:52 PM pursuant to License Agreement with ICC. No further reproduction or distribution authorized. ANY UNAUTHORIZED REPRODUCTION OR DISTRIBUTION IS A VIOLATION OF THE FEDERAL COPYRIGHT ACT AND THE LICENSE AGREEMENT, AND SUBJECT TO CIVIL AND CRIMINAL PENALTIES THEREUNDER.

4. Less than 50 feet (15 240 mm) from the nearest rail of any railroad main track or any railroad or transit line where power for train propulsion is provided by an outside electrical source, such as third rail or overhead catenary.
5. Less than 50 feet (15 240 mm) from the vertical plane below the nearest overhead wire of a trolley bus line.

❖ This section lists the limitations on location of CNG dispensing stations with respect to power lines, buildings, property lines, railroad tracks, streets, sidewalks, sources of ignition, electric trains and trolleys.

[F] 413.4 Residential fueling appliance installation. Residential fueling *appliance*s shall be installed in accordance with Sections 413.4.1 through 413.4.3.

❖ Residential fueling appliances take fuel gas from distribution piping and compress it to pressures as high as 3,600 psi (24.8 MPa) and deliver it to the motor vehicle's on-board storage vessel. Because natural gas will not liquefy at normal ambient temperatures, the gas must be stored in its gaseous state and high pressures are necessary to increase the amount of storage to practical volumes. For example, a pressure vessel with a volume of 1 cubic foot (0.028 m^3) will hold 289 cubic feet (8.2 m^3) of natural gas when the vessel pressure is 3,600 psi (24.8 MPa) at 70°F (21°C).

[F] 413.4.1 Gas connections. Residential fueling appliances shall be connected to the premises' gas *piping* system without causing damage to the *piping* system or the connection to the internal *appliance* apparatus.

❖ This requirement is applicable to all appliances regulated by the code. The appliance manufacturer's instructions will dictate the method of connecting to the distribution piping of the building.

[F] 413.4.2 Outdoor installation. Residential fueling *appliance*s located outdoors shall be installed on a firm, noncombustible base.

❖ As with all appliances, a stable and substantial base (pad) must be provided so that the appliance will be properly supported, protected from settling and remain level in accordance with the manufacturer's instructions.

[F] 413.4.3 Indoor installation. Where located indoors, residential fueling *appliance*s shall be vented to the outdoors. A gas detector set to operate at one-fifth of the lower limit of flammability of natural gas shall be installed in the room or space containing the *appliance*. The detector shall be located within 6 inches (152 mm) of the highest point in the room or space. The detector shall stop the operation of the *appliance* and activate an audible or a visual alarm.

❖ Indoor spaces/rooms that house fueling appliances must be ventilated to allow any gas leakage to escape to the outdoors. The required gas detector will stop the appliance operation and activate an alarm before the gas/air mixture in the space/room reaches its threshold of flammability.

The detector location is based on the fact that natural gas (typical specific gravity is 0.60) is lighter than air and will rise to the highest part of the room or space.

[F] 413.5 Private fueling of motor vehicles. Self-service CNG-dispensing systems, including key, code and card lock dispensing systems, shall be limited to the filling of permanently mounted fuel containers on CNG-powered vehicles.



Figure 413.1
CNG FUEL-DISPENSING STATION

INTERNATIONAL CODE COUNCIL®
Copyright © 2015 ICC. ALL RIGHTS RESERVED. Accessed by David Dammon on Jun 21, 2017 12:30:52 PM pursuant to License Agreement with ICC. No further reproduction or distribution authorized. ANY UNAUTHORIZED REPRODUCTION OR DISTRIBUTION IS A VIOLATION OF THE FEDERAL COPYRIGHT ACT AND THE LICENSE AGREEMENT, AND SUBJECT TO CIVIL AND CRIMINAL PENALTIES THEREUNDER.

In addition to the requirements in the *International Fire Code*, the owner of a self-service CNG-dispensing facility shall ensure the safe operation of the system and the training of users.

❖ Unlike LP-gas self-service dispensing stations, CNG self-service dispensing systems can be open to the public. The owner of the system must provide for the training of any users of the system

[F] 413.6 Pressure regulators. Pressure regulators shall be designed, installed or protected so their operation will not be affected by the elements (freezing rain, sleet, snow, ice, mud or debris). This protection is allowed to be integral with the regulator.

❖ Pressure regulator failure could result in dangerous overpressure and the opening of relief valves; therefore, they must be dependable. The regulator vent is susceptible to blockage by debris and ice.

[F] 413.7 Valves. *Piping* to *equipment* shall be provided with a remote manual shutoff valve. Such valve shall be provided with ready access.

❖ Shutoff valves allow isolation of components for service, repair, replacement and emergency shutdown (see the definition of "Ready access").

[F] 413.8 Emergency shutdown control. An emergency shutdown device shall be located within 75 feet (22 860 mm) of, but not less than 25 feet (7620 mm) from, dispensers and shall also be provided in the compressor area. Upon activation, the emergency shutdown system shall automatically shut off the power supply to the compressor and close valves between the main gas supply and the compressor and between the storage containers and dispensers.

❖ CNG systems take natural gas from the utility supply line, compress it to very high pressures and store the compressed gas in vessels from which the dispensers draw the gas for transfer to the vehicle onboard containers. The emergency shutdown device must be located not farther than 75 feet (22.9 m) from and not closer than 25 feet (7.6 m) to the dispensers. An additional shutdown device must be located near the compressors. The compressors may be remote from the dispensers. The shutdown device must kill the power to the compressors, must actuate automatic valves that isolate the gas supply from the compressors and isolate the storage vessels from the dispenser, thus limiting accidental gas discharge.

[F] 413.9 Discharge of CNG from motor vehicle fuel storage containers. The discharge of CNG from motor vehicle fuel cylinders for the purposes of maintenance, cylinder certification, calibration of dispensers or other activities shall be in accordance with this section. The discharge of CNG from motor vehicle fuel cylinders shall be accomplished through a closed transfer system or an *approved* method of atmospheric venting in accordance with Section 413.9.1 or 413.9.2.

❖ Gas is intentionally discharged from vehicle containers for several reasons including vehicle repairs, certification of the container integrity and container replacement. The gas must be discharged in a safe manner as dictated by either Section 413.9.1 or 413.9.2. The vehicle storage container is referred to as a "vessel" and as a "cylinder" in the text to follow.

[F] 413.9.1 Closed transfer system. A documented procedure that explains the logical sequence for discharging the cylinder shall be provided to the code official for review and approval. The procedure shall include what actions the operator will take in the event of a low-pressure or high-pressure natural gas release during the discharging activity. A drawing illustrating the arrangement of *piping*, regulators and *equipment* settings shall be provided to the code official for review and approval. The drawing shall illustrate the *piping* and regulator arrangement and shall be shown in spatial relation to the location of the compressor, storage vessels and emergency shutdown devices.

❖ A closed transfer system uses the same basic components as a dispensing system and withdraws the gas from the vehicle container and stores it in vessels. Drawings and a description of the sequence of operation of the transfer system must be submitted to the code official for approval.

[F] 413.9.2 Atmospheric venting. Atmospheric venting of motor vehicle fuel cylinders shall be in accordance with Sections 413.9.2.1 through 413.9.2.6.

❖ The six subsections that follow list the conditions and requirements under which gas may be discharged to the atmosphere. Such discharge should be avoided where practical because:

1. There is inherent hazard in doing so;
2. Methane is an air contaminant with a high global warming potential; and
3. Natural resources should never be wasted.

A closed transfer system is the preferable way to remove gas from vehicle containers.

[F] 413.9.2.1 Plans and specifications. A drawing illustrating the location of the vessel support, *piping*, the method of grounding and bonding, and other requirements specified herein shall be provided to the code official for review and approval.

❖ Plans of the proposed atmospheric venting apparatus and piping system must be reviewed and approved by the code official.

[F] 413.9.2.2 Cylinder stability. A method of rigidly supporting the vessel during the venting of CNG shall be provided. The selected method shall provide not less than two points of support and shall prevent horizontal and lateral movement of the vessel. The system shall be designed to prevent movement of the vessel based on the highest gas-release velocity through valve orifices at the vessel's rated pressure and volume. The structure or appurtenance shall be constructed of *noncombustible materials.*

❖ Vehicle CNG containers (vessels) can contain extremely high pressures, which if released quickly, can produce large thrust forces that would propel the container like a rocket. Natural gas does not liquify at normal ambient temperatures; therefore, to hold the

INTERNATIONAL CODE COUNCIL®
Copyright © 2015 ICC. ALL RIGHTS RESERVED. Accessed by David Dammon on Jun 21, 2017 12:30:52 PM pursuant to License Agreement with ICC. No further reproduction or distribution authorized. ANY UNAUTHORIZED REPRODUCTION OR DISTRIBUTION IS A VIOLATION OF THE FEDERAL COPYRIGHT ACT AND THE LICENSE AGREEMENT, AND SUBJECT TO CIVIL AND CRIMINAL PENALTIES THEREUNDER.

required amount of fuel on board the vehicle, the gaseous fuel must be compressed to extreme pressures of up to 3,600 psia (24.8 MPa). Such pressures are unnecessary for LP-gas because it can be stored as a liquid at normal ambient temperatures.

[F] 413.9.2.3 Separation. The structure or appurtenance used for stabilizing the cylinder shall be separated from the site *equipment*, features and exposures and shall be located in accordance with Table 413.9.2.3.

❖ This section and Table 413.9.2.3 require that the location of the cylinder to be discharged (vessel) be separated from buildings, building openings, lot lines, public ways, vehicles and other CNG equipment. This precaution is reasonable considering the potential hazard of working with highly pressurized containers of a flammable gas.

[F] TABLE 413.9.2.3
SEPARATION DISTANCE FOR ATMOSPHERIC VENTING OF CNG

EQUIPMENT OR FEATURE	MINIMUM SEPARATION (feet)
Buildings	25
Building openings	25
Lot lines	15
Public ways	15
Vehicles	25
CNG compressor and storage vessels	25
CNG dispensers	25

For SI: 1 foot = 304.8 mm.

❖ See the commentary to Section 413.9.2.3.

[F] 413.9.2.4 Grounding and bonding. The structure or appurtenance used for supporting the cylinder shall be grounded in accordance with NFPA 70. The cylinder valve shall be bonded prior to the commencement of venting operations.

❖ "Grounding" means to intentionally connect to the earth. This could be accomplished by installing a conductor between the cylinder support and the building grounding electrode system. Bonding means to join metallic parts to form a continuous electrical pathway. Grounding and bonding required by this section are intended to control sparking that could result from current flow produced by voltage differentials across parts of the venting set-up and the building components. Grounding the venting set-up and attaching a bonding jumper to the cylinder valve will put all such components and the building components at the same voltage potential, thereby reducing the possibility of sparks that could ignite flammable vapors and/or harm the cylinder assembly. The provisions of this section also help prevent the buildup of static electrical charges that could be a source of ignition.

[F] 413.9.2.5 Vent tube. A vent tube that will divert the gas flow to the atmosphere shall be installed on the cylinder prior to the commencement of the venting and purging operation. The vent tube shall be constructed of pipe or tubing materials *approved* for use with CNG in accordance with the *International Fire Code*.

The vent tube shall be capable of dispersing the gas not less than 10 feet (3048 mm) above grade level. The vent tube shall not be provided with a rain cap or other feature that would limit or obstruct the gas flow.

At the connection fitting of the vent tube and the CNG cylinder, a *listed* bidirectional detonation flame arrester shall be provided.

❖ The cylinder must be discharged through a vent tube/pipe that is constructed of a material that is compatible with the gas and that has the required strength to withstand the pressure to which it can be exposed. The pressure that the vent can be exposed to must be calculated based on the size of the vent tube, the length of the vent, the friction loss through the vent and the maximum pressure and discharge rate of the cylinder. Vent failure could cause injury resulting from projectile debris and could cause a severe fire/explosion hazard.

[F] 413.9.2.6 Signage. Approved NO SMOKING signs shall be posted within 10 feet (3048 mm) of the cylinder support structure or appurtenance. *Approved* CYLINDER SHALL BE BONDED signs shall be posted on the cylinder support structure or appurtenance.

❖ Approved signs are intended to remind personnel of the potential danger of cylinder venting (see Section 413.9.2.4).

SECTION 414 (IFGC)
SUPPLEMENTAL AND STANDBY GAS SUPPLY

414.1 Use of air or oxygen under pressure. Where air or oxygen under pressure is used in connection with the gas supply, effective means such as a backpressure regulator and relief valve shall be provided to prevent air or oxygen from passing back into the gas *piping*. Where oxygen is used, installation shall be in accordance with NFPA 51.

❖ All sources of oxygen must be isolated from the fuel supply to prevent the possibility of creating a flammable/explosive mixture in the piping system. NFPA 51 applies to oxygen and fuel gas piping systems used for welding, cutting and heat treating metals.

414.2 Interconnections for standby fuels. Where supplementary gas for standby use is connected downstream from a meter or a service regulator where a meter is not provided, a device to prevent backflow shall be installed. A three-way valve installed to admit the standby supply and at the same time shut off the regular supply shall be permitted to be used for this purpose.

❖ Some applications require a continuous supply of fuel gas, and a standby gas supply may be provided that will be used in the event that the normal supply is interrupted. Where a standby fuel gas, such as LP-gas, is used as a fuel for a different gas supply system, a three-way valve or other approved safeguard system must be used to prevent the two different sup-

INTERNATIONAL CODE COUNCIL®
Copyright © 2015 ICC. ALL RIGHTS RESERVED. Accessed by David Dammon on Jun 21, 2017 12:30:52 PM pursuant to License Agreement with ICC. No further reproduction or distribution authorized. ANY UNAUTHORIZED REPRODUCTION OR DISTRIBUTION IS A VIOLATION OF THE FEDERAL COPYRIGHT ACT AND THE LICENSE AGREEMENT, AND SUBJECT TO CIVIL AND CRIMINAL PENALTIES THEREUNDER.

ply systems from being interconnected. The three-way valve is analogous to a single-pole, double-throw switch and provides an opening configuration that allows either fuel supply to be connected to the outlet (load), but does not allow both supplies to be connected simultaneously to the outlet or connected to each other. A manual or automatic valve is used to control which fuel gas line is supplying the fuel to the fuel-burning equipment.

SECTION 415 (IFGS)
PIPING SUPPORT INTERVALS

415.1 Interval of support. *Piping* shall be supported at intervals not exceeding the spacing specified in Table 415.1. Spacing of supports for CSST shall be in accordance with the CSST manufacturer's instructions.

TABLE 415.1
SUPPORT OF PIPING

STEEL PIPE, NOMINAL SIZE OF PIPE (inches)	SPACING OF SUPPORTS (feet)	NOMINAL SIZE OF TUBING (SMOOTH-WALL) (inch O.D.)	SPACING OF SUPPORTS (feet)
1/2	6	1/2	4
3/4 or 1	8	5/8 or 3/4	6
1 1/4 or larger (horizontal)	10	7/8 or 1 (horizontal)	8
1 1/4 or larger (vertical)	Every floor level	1 or larger (vertical)	Every floor level

For SI: 1 inch = 25.4 mm, 1 foot = 304.8 mm.

❖ This table is two tables side-by-side. The first two columns are for steel pipe, and the second two columns are for tubing materials (see Section 407). Support for CSST is dictated by the manufacturers' installation instructions.

SECTION 416 (IFGS)
OVERPRESSURE PROTECTION DEVICES

416.1 Where required. Where the serving gas supplier delivers gas at a pressure greater than 2 psi for piping systems serving appliances designed to operate at a gas pressure of 14 inches w.c. or less, overpressure protection devices shall be installed. Piping systems serving equipment designed to operate at inlet pressures greater than 14 inches w.c. shall be equipped with overpressure protection devices as required by the appliance manufacturer's installation instructions.

❖ Overpressure protection devices are used to protect appliances from abnormally high gas pressures that can result from the failure of pressure regulators in the piping system. Overpressure could result in appliance damage and/or hazardous operation (see commentary, Section 410.1)

416.2 Pressure limitation requirements. The requirements for pressure limitation shall be in accordance with Sections 416.2.1 through 416.2.5.

❖ See the referenced sections.

416.2.1 Pressure under 14 inches w.c. Where piping systems serving appliances designed to operate with a gas supply pressure of 14 inches w.c. or less are required to be equipped with overpressure protection by Section 416.1, each overpressure protection device shall be adjusted to limit the gas pressure to each connected appliance to 2 psi or less upon a failure of the line pressure regulator.

❖ Most appliances, other than special purpose and industrial scale appliances, are designed to be operated with a gas supply inlet pressure of 14 inches (1/2 psi) or less. Section 416.1 requires overpressure protection for such appliances where the gas supplier (utility) delivers gas at a pressure greater than 2 psi. This is because the typical gas appliance gas controls are tested for tolerance of abnormal pressure excursions of up to 2 psi. An unintended pressure increase up to 2 psi maximum is not expected to damage the gas controls for the appliance; however, pressures above 2 psi are capable of causing permanent damage to the gas controls. Where the gas supplier delivers at pressures above 2 psi, overpressure protection is required to prevent damage to the appliance gas controls.

416.2.2 Pressure over 14 inches w.c. Where piping systems serving appliances designed to operate with a gas supply pressure greater than 14 inches w.c. are required to be equipped with overpressure protection by Section 416.1, each overpressure protection device shall be adjusted to limit the gas pressure to each connected appliance as required by the appliance manufacturer's installation instructions.

❖ This section relates to the second sentence of Section 416.1. Overpressure protection would be required where specified by the appliance manufacturer.

416.2.3 Device capability. Each overpressure protection device installed to meet the requirements of this section shall be capable of limiting the pressure to its connected appliance(s) as required by this Section 416.2.1, independently of any other pressure control equipment in the piping system.

❖ The required overpressure protection device must be independently capable of limiting the pressure to the appliance to a maximum of 2 psi in the event that the line pressure regulator fails.

416.2.4 Failure detection. Each gas piping system for which an overpressure protection device is required by Section 416 shall be designed and installed so that a failure of the primary pressure control device(s) is detectable.

❖ Gas supply systems must not be allowed to operate indefinitely in the emergency mode, because in that mode the required overpressure protection device is the only pressure-limiting device capable of protecting the appliances served. Imagine a person continuing to skydive, knowing that they had a defective primary parachute and only an emergency parachute. Failure of the primary pressure-regulating device must be quickly identified so that it can be repaired or replaced and the system can be restored to the

INTERNATIONAL CODE COUNCIL®
Copyright © 2015 ICC. ALL RIGHTS RESERVED. Accessed by David Dammon on Jun 21, 2017 12:30:52 PM pursuant to License Agreement with ICC. No further reproduction or distribution authorized. ANY UNAUTHORIZED REPRODUCTION OR DISTRIBUTION IS A VIOLATION OF THE FEDERAL COPYRIGHT ACT AND THE LICENSE AGREEMENT, AND SUBJECT TO CIVIL AND CRIMINAL PENALTIES THEREUNDER.

intended system design, which consists of a primary pressure control with an overpressure protection device as a backup control.

416.2.5 Relief valve. Where a pressure relief valve is used to meet the requirements of Section 416, it shall have a flow capacity such that the pressure in the protected system is maintained at or below the limits specified in Section 416.2.1 under all of the following conditions:

1. The line pressure regulator for which the relief valve is providing overpressure protection has failed wide open.
2. The gas pressure at the inlet of the line pressure regulator for which the relief valve is providing overpressure protection is not less than the regulator's normal operating inlet pressure.

❖ A pressure relief valve will discharge gas in order to limit the piping system pressure and this device must be sized for worst case conditions. Worst case conditions are: 1) the failed primary pressure-regulating device has failed to fully open, allowing the maximum flow of gas through the regulator; and 2) the gas supply pressure at the inlet of the failed primary pressure-regulating device is not abnormally low, but is instead in the normal pressure range expected for the piping system.

416.3 Devices. Pressure-relieving or pressure-limiting devices shall be one of the following:

1. Pressure relief valve.
2. Monitoring regulator.
3. Series regulator installed upstream from the line regulator and set to continuously limit the pressure on the inlet of the line regulator to the maximum values specified by Section 416.2.1.
4. Automatic shutoff device installed in series with the line pressure regulator and set to shut off when the pressure on the downstream *piping* system reaches the maximum values specified by Section 416.2.1. This device shall be designed so that it will remain closed until manually reset.

The devices specified in this section shall be installed either as an integral part of the service or line pressure regulator or as separate units. Where separate pressure-relieving or pressure-limiting devices are installed, they shall comply with Sections 416.3.1 through 416.3.6.

❖ This section lists the types of devices required by Section 416.2. Item 1 refers to types of relief valves that would discharge gas to the outdoors as the means of limiting the piping system pressure downstream of such devices.

Items 2 and 3 refer to a redundant regulator piped in series with the primary regulator. Series regulators operate continuously in limiting function and monitoring regulators might act only when pressures exceed the intended limits [see Commentary Figure 410.2(2)].

Item 4 refers to combination pressure sensors and shutoff valves that will automatically shut off the gas flow when triggered by the pressure sensor.

The typical utility-owned service regulator has a relief valve built into the body of the regulator, thereby complying with Section 416.2.

416.3.1 Construction and installation. Pressure-relieving and pressure-limiting devices shall be constructed of materials so that the operation of the devices will not be impaired by corrosion of external parts by the atmosphere or of internal parts by the gas. Pressure-relieving and pressure-limiting devices shall be designed and installed so that they can be operated to determine whether the valve is free. The devices shall be designed and installed so that they can be tested to determine the pressure at which they will operate and examined for leakage when in the closed position.

❖ The devices addressed in Section 416 must be compatible with the gas and its contaminants and also must be suitable for the atmosphere to which they are exposed, such as weather exposure. Relief and limiting devices must be capable of being examined and tested for proper operation.

416.3.2 External control piping. External control *piping* shall be designed and installed so that damage to the control *piping* of one device will not render both the regulator and the overpressure protection device inoperative.

❖ Some devices use relatively small diameter control piping or tubing to sense gas pressure at points in the system or to operate pilot valves and regulators that, in turn, operate larger control devices. Such small piping or tubing is more susceptible to damage than larger pipe and damage to control piping/tubing could result in failure of the devices being controlled. Damage could result from falling ice and snow, submersion in water, caving-in of excavations, falling of vegetation and landscaping materials, etc.

416.3.3 Setting. Each pressure-relieving or pressure-limiting device shall be set so that the gas pressure supplied to the connected appliances does not exceed the limits specified in Section 416.2.1.

❖ The maximum allowable working pressure is established for safety reasons. Section 416.2.1 sets the limit at 2 psi and Section 416.2.2 allows the appliance manufacturer to set the pressure limit. All limits must be accomplished by the overpressure protection devices.

416.3.4 Unauthorized operation. Where unauthorized operation of any shutoff valve could render a pressure-relieving valve or pressure-limiting device inoperative, one of the following shall be accomplished:

1. The valve shall be locked in the open position. Authorized personnel shall be instructed in the importance of leaving the shutoff valve open and of being present while the shutoff valve is closed so that it can be locked in the open position before leaving the premises.

INTERNATIONAL CODE COUNCIL®
Copyright © 2015 ICC. ALL RIGHTS RESERVED. Accessed by David Dammon on Jun 21, 2017 12:30:52 PM pursuant to License Agreement with ICC. No further reproduction or distribution authorized. ANY UNAUTHORIZED REPRODUCTION OR DISTRIBUTION IS A VIOLATION OF THE FEDERAL COPYRIGHT ACT AND THE LICENSE AGREEMENT, AND SUBJECT TO CIVIL AND CRIMINAL PENALTIES THEREUNDER.

2. Duplicate relief valves shall be installed, each having adequate capacity to protect the system, and the isolating valves and three-way valves shall be arranged so that only one relief valve can be rendered inoperative at a time.

❖ Valves are sometimes installed to isolate relief valves and limiting controls from the piping system served to allow maintenance or replacement of such devices.

If such isolation valves are left in the closed position after maintenance or are closed by unauthorized personnel, the relief/limiting devices are useless and protection is lost. Such isolation valves must be either locked in the open position or arranged such that an alternate relief/limiting device is always in the circuit, regardless of the isolation valve position.

416.3.5 Vents. The discharge stacks, vents and outlet parts of all pressure-relieving and pressure-limiting devices shall be located so that gas is safely discharged to the outdoors. Discharge stacks and vents shall be designed to prevent the entry of water, insects and other foreign material that could cause blockage. The discharge stack or vent line shall be not less than the same size as the outlet of the pressure-relieving device.

❖ Discharge piping must terminate in a location where it is unlikely that gas will enter a building opening or be ignited by a source of ignition. Such terminations must be protected from blockage by ice, snow, rodents, insects, debris and other foreign materials. The discharge piping may have to be larger than the size of the outlet on the relief device to compensate for excessive length (see commentary, Section 416.5.6).

416.3.6 Size of fittings, pipe and openings. The fittings, pipe and openings located between the system to be protected and the pressure-relieving device shall be sized to prevent hammering of the valve and to prevent impairment of relief capacity.

❖ Sizing of the piping on the inlet side of relief devices is just as important as sizing of the piping on the discharge side. Undersized piping on the inlet side can reduce the capacity of the relief device and can also cause the valve to rapidly open and close (chatter or hammer), possibly causing damage to the valve and destructive pressure waves in the piping system. This happens when the relief valve opens, thereby reducing the pressure in the undersized inlet piping and the valve reseats (closes) in response to the lowered inlet pressure and then the pressure again climbs in the inlet piping to start the cycle again.

Bibliography

The following resource materials were used in the preparation of the commentary for this chapter of the code.

IBC-2015, *International Building Code*. Washington, DC: International Code Council, 2014.

IFC-2015, *International Fire Code*. Washington, DC: International Code Council, 2014.

INTERNATIONAL CODE COUNCIL®
Copyright © 2015 ICC. ALL RIGHTS RESERVED. Accessed by David Dammon on Jun 21, 2017 12:30:52 PM pursuant to License Agreement with ICC. No further reproduction or distribution authorized. ANY UNAUTHORIZED REPRODUCTION OR DISTRIBUTION IS A VIOLATION OF THE FEDERAL COPYRIGHT ACT AND THE LICENSE AGREEMENT, AND SUBJECT TO CIVIL AND CRIMINAL PENALTIES THEREUNDER.

INTERNATIONAL CODE COUNCIL®
Copyright © 2015 ICC. ALL RIGHTS RESERVED. Accessed by David Dammon on Jun 21, 2017 12:30:52 PM pursuant to License Agreement with ICC. No further reproduction or distribution authorized. ANY UNAUTHORIZED REPRODUCTION OR DISTRIBUTION IS A VIOLATION OF THE FEDERAL COPYRIGHT ACT AND THE LICENSE AGREEMENT, AND SUBJECT TO CIVIL AND CRIMINAL PENALTIES THEREUNDER.

Chapter 5: Chimneys and Vents

General Comments

This chapter intends to regulate the design, construction, installation, maintenance, repair and approval of chimneys, vents and their connections to gas-fired appliances. A properly designed chimney or vent system is needed to conduct to the outdoors the flue gases produced by a gas-fired appliance. In the case of natural-draft appliances (including Category I), the chimney or vent system serving the appliances is depended on to produce a draft at the appliance connection. Draft refers to a phenomenon created by the buoyancy of lighter (less dense) gases in the presence of heavier (more dense) gases. Draft is measured as pressure in inches of water column (kPa) and is a negative pressure, meaning that it is less than the atmospheric pressure at the point of measurement. Draft is produced by the temperature difference between the combustion gases (flue gases) and the ambient atmosphere. Because hotter gases are less dense, they are buoyant and will rise in the chimney, causing negative pressures to develop that are directly related to the height of the chimney or vent and directly related to the temperature difference between the flue gases and the ambient air. Draft produced by a chimney or vent is the motivating force that conveys combustion products from natural-draft appliances to the outside atmosphere through the chimney or vent passageway. It is also the force that draws combustion air into natural-draft atmospheric-burner appliances.

The type of vent or chimney used in a given installation is generally based on the temperature of the flue gases produced by the appliance and the appliance category. The development of higher efficiency appliances continues to produce lower flue gas temperatures, and the diversity of mechanical venting systems continues to expand.

Many vented gas-fired appliances have been further classified into four categories to simplify the process of selecting the appropriate venting system. The four categories of vented appliances are addressed in the definition of "Vented appliance categories." With the advent of new technology and higher efficiency appliances/equipment, venting means are becoming increasingly diversified and complex. Many of today's appliances are designed to be vented by more than one type of venting system.

Purpose

The provisions in this chapter are intended to minimize the hazards associated with the venting of combustion products produced by fuel-gas-fired appliances and equipment. The requirements of this chapter are intended to achieve the complete removal of the products of combustion from vented fuel-gas-fired appliances and equipment. This chapter includes regulations for the proper selection, design, construction and installation of a chimney or vent, along with measures to minimize the related potential fire hazards. A chimney or vent must be designed for the type of appliance or equipment it serves. Chimneys and vents are designed for specific applications depending on the flue gas temperatures and the pressures at which the chimney or vent operates.

The primary hazards associated with chimneys and vents are high temperatures and the chemical nature of combustion byproducts.

SECTION 501 (IFGC) GENERAL

501.1 Scope. This chapter shall govern the installation, maintenance, repair and approval of factory-built chimneys, chimney liners, vents and connectors and the utilization of masonry chimneys serving gas-fired appliances. The requirements for the installation, maintenance, repair and approval of factory-built chimneys, chimney liners, vents and connectors serving appliances burning fuels other than fuel gas shall be regulated by the *International Mechanical Code*. The construction, repair, maintenance and approval of masonry chimneys shall be regulated by the *International Building Code*.

❖ This section contains requirements for the installation, maintenance, repair and approval of residential, commercial and industrial chimney and venting systems that convey the products of combustion from a gas-fired appliance to the outside atmosphere. Venting systems for fuel-fired appliances other than gas-fired appliances, such as oil and solid-fuel appliances, are covered in *International Mechanical Code*® (IMC®). The construction of masonry chimneys is regulated by Chapter 21 of the *International Building Code*® (IBC®) (see Section 501.3).

501.2 General. Every *appliance* shall discharge the products of combustion to the outdoors, except for appliances exempted by Section 501.8.

❖ Appliances other than those listed in Section 501.8 must be vented to convey the potentially harmful combustion byproducts to the outdoor atmosphere (see Section 501.8).

INTERNATIONAL CODE COUNCIL®
Copyright © 2015 ICC. ALL RIGHTS RESERVED. Accessed by David Dammon on Jun 21, 2017 12:30:52 PM pursuant to License Agreement with ICC. No further reproduction or distribution authorized. ANY UNAUTHORIZED REPRODUCTION OR DISTRIBUTION IS A VIOLATION OF THE FEDERAL COPYRIGHT ACT AND THE LICENSE AGREEMENT, AND SUBJECT TO CIVIL AND CRIMINAL PENALTIES THEREUNDER.

501.3 Masonry chimneys. Masonry chimneys shall be constructed in accordance with Section 503.5.3 and the *International Building Code*.

❖ A masonry chimney is a field-constructed assembly that can consist of solid masonry units, reinforced concrete, rubble stone, fire-clay liners and mortars. A masonry chimney is permitted to serve low-, medium-, and high-heat appliances. The IBC outlines the general code requirements regarding the construction details for masonry chimneys, including those serving masonry fireplaces.

501.4 Minimum size of chimney or vent. Chimneys and vents shall be sized in accordance with Sections 503 and 504.

❖ Sections 503 and 504 contain the requirements for sizing Category I appliance venting systems. Sizing of venting systems for other categories is dictated by the appliance manufacturer.

501.5 Abandoned inlet openings. Abandoned inlet openings in chimneys and vents shall be closed by an *approved* method.

❖ Abandoned inlet openings result from appliances being disconnected or reconnected at different elevations. Unused openings in chimneys and vents can allow combustion gases to enter the building; can cause loss of draft at other appliances connected to the chimney or vent; can allow conditioned air to escape, resulting in energy losses; and can allow the entry of birds and rodents. For example, consider an appliance that was connected to a chimney and has been replaced with an appliance that vents through an exterior wall. The opening in the chimney left by the disconnection of the appliance must be properly closed to prevent a hazardous condition. Combustion gases from appliances connected to chimneys and vents can escape through openings in the chimney and vent. Those openings can affect the draft of the remaining appliances, causing them to spill combustion gases into the building.

The method used to close an unused opening must not create a protrusion in the flue passageway, which could restrict vent gas flow. It is not uncommon to find multiple openings in chimneys that were used at one time but have since been abandoned and covered or closed in some makeshift fashion, or left open. Inlet openings that are not closed could allow the escape of vent gases and could affect the draft produced by the chimney or vent. Excess dilution air will be admitted through unused openings, which could weaken draft by cooling the vent gases and bypassing the flow through appliance connectors. It is rare to find unused openings in vents because vent openings are easily closed or adapted to different appliance connections; however, the hazard of abandoned openings is the same as for chimneys. Vent and factory-built chimney openings are easily closed by eliminating tees and wyes or by using metal caps. Closure of masonry chimney openings may require the replacement of masonry, especially where the chimney has been structurally weakened by the openings.

501.6 Positive pressure. Where an *appliance* equipped with a mechanical forced draft system creates a positive pressure in the venting system, the venting system shall be designed for positive pressure applications.

❖ Commonly used chimney and vent systems are not designed for positive pressure (above atmospheric). Chimneys and vents are intended to produce a draft and thus operate with negative internal pressures. Specialized vents and chimneys are available that are designed for positive pressure applications (see Commentary Figure 501.6). The misapplication of materials can result in leakage of combustion gases and can cause chimney or vent deterioration from condensate corrosion. Masonry chimneys, Type B vents, Type L vents and most factory-built chimneys are designed for negative pressure applications, meaning that the venting system is producing draft. Negative-pressure venting systems will leak if subjected to positive internal pressures. Leakage can allow combustion gases to enter the building, and condensation can cause rapid deterioration of the chimney or vent.

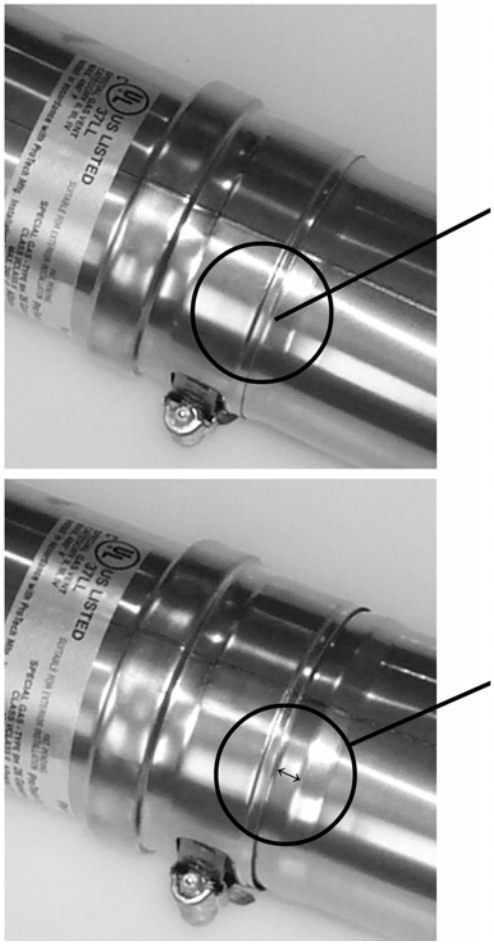

Figure 501.6
VENT DESIGNED FOR CATEGORY III AND IV (POSITIVE PRESSURE) APPLICATIONS
(Figure courtesy of Selkirk L.L.C.)

INTERNATIONAL CODE COUNCIL®
Copyright © 2015 ICC. ALL RIGHTS RESERVED. Accessed by David Dammon on Jun 21, 2017 12:30:52 PM pursuant to License Agreement with ICC. No further reproduction or distribution authorized. ANY UNAUTHORIZED REPRODUCTION OR DISTRIBUTION IS A VIOLATION OF THE FEDERAL COPYRIGHT ACT AND THE LICENSE AGREEMENT, AND SUBJECT TO CIVIL AND CRIMINAL PENALTIES THEREUNDER.

501.7 Connection to fireplace. Connection of appliances to chimney flues serving fireplaces shall be in accordance with Sections 501.7.1 through 501.7.3.

❖ This section regulates installations where fireplace chimneys are used as the venting means for appliances such as room heaters and fireplace-insert-type heaters.

501.7.1 Closure and access. A noncombustible seal shall be provided below the point of connection to prevent entry of room air into the flue. Means shall be provided for *access* to the flue for inspection and cleaning.

❖ Without an air-tight connection between the chimney flue and the appliance chimney connector, chimney draft will draw room air into the flue, thus weakening the draft drawn through the appliance. The chimney connection must be designed for access for inspection and cleaning of the chimney because the chimney flue is no longer open to the fireplace firebox.

501.7.2 Connection to factory-built fireplace flue. An *appliance* shall not be connected to a flue serving a factory-built *fireplace* unless the *appliance* is specifically *listed* for such installation. The connection shall be made in accordance with the *appliance* manufacturer's installation instructions.

❖ Factory-built fireplaces may or may not be tested for any use other than as a traditional fireplace. Installing an appliance or fireplace-insert-type heater could result in abnormally high fireplace or chimney temperatures, component deterioration and hazardous operation. The fireplace manufacturer will provide specific instructions covering what is or is not allowed regarding appliance installations. Typically the manufacturer's instructions will prohibit any modifications and any use of the fireplace other than what it was designed for.

501.7.3 Connection to masonry fireplace flue. A connector shall extend from the *appliance* to the flue serving a masonry *fireplace* such that the flue gases are exhausted directly into the flue. The connector shall be accessible or removable for inspection and cleaning of both the connector and the flue. *Listed* direct connection devices shall be installed in accordance with their listing.

❖ The appliance chimney connector must extend up through the fireplace damper and smoke chamber and terminate in the chimney flue. This helps produce an adequate draft.

501.8 Appliances not required to be vented. The following appliances shall not be required to be vented:

1. Ranges.
2. Built-in domestic cooking units *listed* and marked for optional venting.
3. Hot plates and laundry stoves.
4. Type 1 clothes dryers (Type 1 clothes dryers shall be exhausted in accordance with the requirements of Section 614).
5. A single booster-type automatic instantaneous water heater, where designed and used solely for the sanitizing rinse requirements of a dishwashing machine, provided that the heater is installed in a commercial kitchen having a mechanical exhaust system. Where installed in this manner, the draft hood, if required, shall be in place and unaltered and the draft hood *outlet* shall be not less than 36 inches (914 mm) vertically and 6 inches (152 mm) horizontally from any surface other than the heater.
6. Refrigerators.
7. Counter appliances.
8. Room heaters *listed* for unvented use.
9. Direct-fired makeup air heaters.
10. Other appliances *listed* for unvented use and not provided with flue collars.
11. Specialized appliances of limited input such as laboratory burners and gas lights.

Where the appliances listed in Items 5 through 11 above are installed so that the aggregate input rating exceeds 20 British thermal units (Btu) per hour per cubic foot (207 watts per m^3) of volume of the room or space in which such appliances are installed, one or more shall be provided with venting systems or other approved means for conveying the vent gases to the outdoor atmosphere so that the aggregate input rating of the remaining unvented appliances does not exceed 20 Btu per hour per cubic foot (207 watts per m^3). Where the room or space in which the *appliance* is installed is directly connected to another room or space by a doorway, archway or other opening of comparable size that cannot be closed, the volume of such adjacent room or space shall be permitted to be included in the calculations.

❖ The specified appliances do not have to be vented unless required by the last paragraph of this section, which addresses Items 5 through 11 and not Items 1 through 4. Section 301.3 requires that all appliances be listed.

Item 4 clarifies that clothes dryers are not vented, but instead, are exhausted. The products of combustion for gas-fired clothes dryers are discharged to the outdoors along with the moisture exhaust; in effect, the dryer is "vented," but not in the sense that other appliances are vented. Clothes dryer exhaust ducts are not referred to as vents because they are exhaust ducts, not a type of vent. Clothes dryer exhaust ducts are erroneously referred to as "vents." Clothes dryers, both gas and electric, must exhaust to the outdoors.

Twenty Btu per hour per cubic foot of room volume (207 W/m^3) is the same ratio as 50 cubic feet per 1000 Btu per hour (4.8 m^3/W) on which Section 304.5.1 is based. In other words, this section requires that unvented appliances be located in a space that meets the volume requirement for indoor combustion air specified in Section 304.5.1. If the total unvented appliance input rating exceeds the ratio of 20 Btu/h per cubic foot of space volume (207 w/m^3), one or more appliances would have to be vented or removed to keep the total at or below the limit. Maintaining a minimum space volume will help control the level of

INTERNATIONAL CODE COUNCIL®
Copyright © 2015 ICC. ALL RIGHTS RESERVED. Accessed by David Dammon on Jun 21, 2017 12:30:52 PM pursuant to License Agreement with ICC. No further reproduction or distribution authorized. ANY UNAUTHORIZED REPRODUCTION OR DISTRIBUTION IS A VIOLATION OF THE FEDERAL COPYRIGHT ACT AND THE LICENSE AGREEMENT, AND SUBJECT TO CIVIL AND CRIMINAL PENALTIES THEREUNDER.

combustion products in the space by dilution with infiltration air. The appliances listed in Items 5 through 11 are allowed to be unvented, only where the total Btu/h input is at or below the limit set for the space volume.

501.9 Chimney entrance. Connectors shall connect to a masonry chimney flue at a point not less than 12 inches (305 mm) above the lowest portion of the interior of the chimney flue.

❖ This requirement is intended to prevent blockage of the connector opening by debris that has collected at the bottom of the flue passage. The 12-inch deep (305 mm) space below the connector functions as a trap (dirt leg) for debris such as dead animals, leaves, flaking tile, mortar and soot. This section is not intended to apply to factory-built chimneys because those chimneys are protected from the entry of debris by the required cap.

501.10 Connections to exhauster. *Appliance* connections to a chimney or vent equipped with a power exhauster shall be made on the inlet side of the exhauster. Joints on the positive pressure side of the exhauster shall be sealed to prevent flue-gas leakage as specified by the manufacturer's installation instructions for the exhauster.

❖ When a mechanical draft device or power exhauster is installed, the resulting "forced draft" creates a positive pressure inside the chimney or vent on the discharge or outlet side of the fan. A hazardous condition will result if an appliance is connected on the outlet or discharge side of a power exhauster. The appliance connector provides an alternate path for the flue gases to travel back into the building. Also, the appliance connected on the discharge side (outlet) of the exhauster will not be supplied with draft, and its combustion products will spill into the building interior.

A hazardous condition can also occur when a vent connector serving an appliance vented by natural draft is connected to the vent of an appliance equipped with integral power-venting means. This section does not prohibit Category I fan-assisted appliances from being common-vented with draft-hood (natural draft) appliances as addressed in Section 504.

Any vent, chimney or connector piping into which an exhauster discharges must be rated and approved for positive pressure and properly installed to prevent leakage of combustion gases. For example, Type B vents cannot be used on the outlet side of an exhauster or a power-vented appliance, regardless of any appliance manufacturer's recommendations. Type B vent material cannot be sealed to prevent leakage when exposed to positive pressure. Positive pressure can force combustion products into the annular space between the pipe walls where condensation could occur, causing deterioration of the piping.

501.11 Masonry chimneys. Masonry chimneys utilized to vent appliances shall be located, constructed and sized as specified in the manufacturer's installation instructions for the appliances being vented and Section 503.

❖ Manufacturers' instructions for today's gas-fired appliances specify very limited conditions under which the appliance is allowed to vent to a masonry chimney. The conditions include chimney size, condition, location and construction. Because many existing masonry chimneys are oversized, unlined, in poor structural condition or partially exposed to the outdoors, they might not be suitable to serve gas-fired appliances. Masonry chimneys serving to vent fan-assisted gas-fired appliances are becoming rare. In many cases, a masonry chimney must be relined with a retrofit metal liner system, or a vent such as Type B vent will have to be installed within the flueway of the chimney. Masonry chimneys have a large thermal mass that has to be heated to above the dew point of the combustion gases to avoid condensation. The flue gas temperatures discharged from many appliances will not be high enough to sufficiently warm the chimney mass, especially where the chimney is oversized and/or exposed to the exterior.

501.12 Residential and low-heat appliances flue lining systems. Flue lining systems for use with residential-type and low-heat appliances shall be limited to the following:

1. Clay flue lining complying with the requirements of ASTM C315 or equivalent. Clay flue lining shall be installed in accordance with the *International Building Code*.
2. *Listed* chimney lining systems complying with UL 1777.
3. Other *approved* materials that will resist, without cracking, softening or corrosion, flue gases and condensate at temperatures up to 1,800°F (982°C).

❖ Flue lining systems for masonry chimneys include clay tile, poured-in-place refractory materials and stainless steel pipe.

501.13 Category I appliance flue lining systems. Flue lining systems for use with Category I appliances shall be limited to the following:

1. Flue lining systems complying with Section 501.12.
2. Chimney lining systems *listed* and *labeled* for use with gas appliances with draft hoods and other Category I gas appliances *listed* and *labeled* for use with Type B vents.

❖ Chimney lining systems for chimneys serving gas-fired appliances include stainless steel and aluminum piping (uninsulated or insulated) designed for both new construction and for relining existing chimneys.

Type B vent is also used as a chimney liner, although it is not considered to be a lining system, and in such cases the chimney is actually a masonry chase containing a vent. Relining of existing chimneys is quite common now because of the incompatibility of mid-efficiency appliances and masonry chimneys. Relining systems allow reuse of existing chimneys, thereby saving expense and retaining

INTERNATIONAL CODE COUNCIL®
Copyright © 2015 ICC. ALL RIGHTS RESERVED. Accessed by David Dammon on Jun 21, 2017 12:30:52 PM pursuant to License Agreement with ICC. No further reproduction or distribution authorized. ANY UNAUTHORIZED REPRODUCTION OR DISTRIBUTION IS A VIOLATION OF THE FEDERAL COPYRIGHT ACT AND THE LICENSE AGREEMENT, AND SUBJECT TO CIVIL AND CRIMINAL PENALTIES THEREUNDER.

desirable architectural features of buildings [see Commentary Figures 501.13(1) through 501.13(4)].

501.14 Category II, III and IV appliance venting systems. The design, sizing and installation of vents for Category II, III and IV appliances shall be in accordance with the *appliance* manufacturer's instructions.

❖ Venting systems for these appliances are special vent systems specified by the appliance manufacturer and are not addressed further in the code (see Commentary Figure 501.14).

501.15 Existing chimneys and vents. Where an *appliance* is permanently disconnected from an existing chimney or vent, or where an *appliance* is connected to an existing chimney or vent during the process of a new installation, the chimney or vent shall comply with Sections 501.15.1 through 501.15.4.

❖ Existing chimneys and vents must be reevaluated for continued suitability whenever the conditions of use change. Size, which is covered in Section 501.15.1, is of primary importance. Other considerations are the presence of liner obstructions, combustible deposits in the liner, the structural condition of the liner, the inclusion of a cleanout and clearances to combustibles, which are addressed in Sections 501.15.2 through 501.15.4. It is the intent of this section that whenever a new appliance is connected or an existing appliance is disconnected from a chimney or vent, the chimney or vent is subject to the requirements in Sections 501.15.2 through 501.15.4, which include requirements for inspection, cleaning, possi-

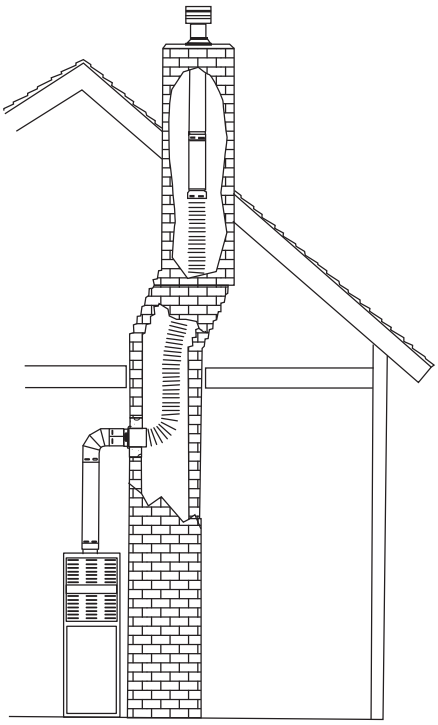

Figure 501.13(2)
MASONRY CHIMNEY RELINING SYSTEM
(Figure courtesy of Simpson Dura-Vent Company, Incorporated)

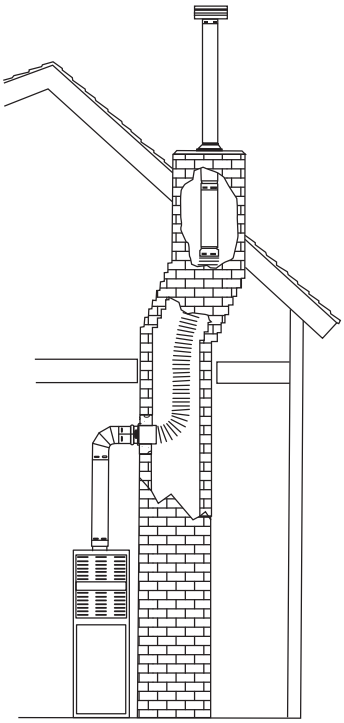

Figure 501.13(1)
MASONRY CHIMNEY RELINING SYSTEM
(Figure courtesy of Simpson Dura-Vent Company Incorporated)

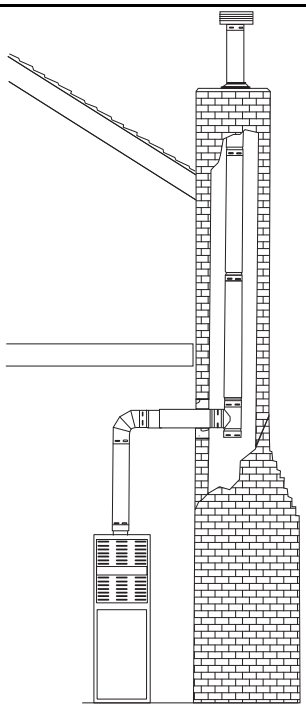

Figure 501.13(3)
MASONRY CHIMNEY RELINING BY INSTALLATION OF TYPE B VENT SYSTEM
(Figure courtesy of Simpson Dura-Vent Company, Incorporated)

INTERNATIONAL CODE COUNCIL®
Copyright © 2015 ICC. ALL RIGHTS RESERVED. Accessed by David Dammon on Jun 21, 2017 12:30:52 PM pursuant to License Agreement with ICC. No further reproduction or distribution authorized. ANY UNAUTHORIZED REPRODUCTION OR DISTRIBUTION IS A VIOLATION OF THE FEDERAL COPYRIGHT ACT AND THE LICENSE AGREEMENT, AND SUBJECT TO CIVIL AND CRIMINAL PENALTIES THEREUNDER.

ble repair, the installation of a cleanout if one is not already there and the establishment of clearances to combustibles in accordance with the requirements for new chimneys or vent installations.

Chimneys, vents and the appliances served are all designed to function together as a system. Any change to an existing chimney or vent system will have an impact on the performance of that system. Something as simple as disconnecting an appliance from a chimney can upset the system balance and cause the venting system to fail to produce a draft for the remaining appliances, and could cause the venting system to produce harmful condensation (see Commentary Figure 501.15.1).

501.15.1 Size. The chimney or vent shall be resized as necessary to control flue gas condensation in the interior of the chimney or vent and to provide the *appliance* or appliances served with the required draft. For Category I appliances, the resizing shall be in accordance with Section 502.

❖ The combined input from multiple appliances, especially older lower-efficiency appliances, can maintain sufficiently high chimney or vent temperatures to provide the necessary draft and to avoid condensation. Changing an existing configuration by disconnecting and eliminating an appliance or by substituting a higher-efficiency appliance can cause a decrease in flue gas temperature, resulting in condensation or poor draft. Also, the elimination of one or more draft-hood-equipped appliances will reduce the amount of dilution air in a venting system, thus increasing the likelihood of condensation. Often, it is necessary to resize a chimney or vent by replacing it with a smaller-size chimney or vent or by installing a liner system (see Commentary Figure 501.15.1).

A common scenario involves removing chimney-vented furnaces or boilers and leaving a water heater as the only appliance vented to the chimney. In such cases, the chimney would typically be grossly oversized for the water heater, could fail to produce adequate draft and could be subject to continuous condensation. This scenario has received much attention and has created the phrase “orphaned water heaters.”

501.15.2 Flue passageways. The flue gas passageway shall be free of obstructions and combustible deposits and shall be cleaned if previously used for venting a solid or liquid fuel-burning *appliance* or *fireplace*. The flue liner, chimney inner wall or vent inner wall shall be continuous and shall be free of cracks, gaps, perforations or other damage or deterioration that would allow the escape of combustion products, including gases, moisture and creosote.

❖ A chimney or flue must be cleaned to examine the flue liner surface, to eliminate fuel for a possible chimney fire, to reduce frictional resistance to flow and to prevent any residual deposits from falling into lower parts of the venting system. Installation or removal of an appliance without an inspection of the existing flue is prohibited. If the flue served a solid- or liquid-fuel-burning appliance or fireplace, cleaning is required in order to make the required inspection and to remove any combustible deposits. In that case, the addition or removal of an appliance without both



Figure 501.13(4)
MASONRY CHIMNEY RELINING SYSTEM
(Photo courtesy of Simpson Dura-Vent Company, Incorporated)



Figure 501.14
SPECIAL VENT SYSTEM FOR CATEGORY II, III and IV APPLIANCES
(Photo courtesy of Selkirk L.L.C.)

INTERNATIONAL CODE COUNCIL®
Copyright © 2015 ICC. ALL RIGHTS RESERVED. Accessed by David Dammon on Jun 21, 2017 12:30:52 PM pursuant to License Agreement with ICC. No further reproduction or distribution authorized. ANY UNAUTHORIZED REPRODUCTION OR DISTRIBUTION IS A VIOLATION OF THE FEDERAL COPYRIGHT ACT AND THE LICENSE AGREEMENT, AND SUBJECT TO CIVIL AND CRIMINAL PENALTIES THEREUNDER.

cleaning and inspection of the existing flue would be a code violation. If inspection shows that the flueway of the vent or chimney is incapable of preventing the leakage of combustion gases, the chimney or vent would have to be repaired or relined.

501.15.3 Cleanout. Masonry chimney flues shall be provided with a cleanout opening having a minimum height of 6 inches (152 mm). The upper edge of the opening shall be located not less than 6 inches (152 mm) below the lowest chimney inlet opening. The cleanout shall be provided with a tight-fitting, noncombustible cover.

❖ This section requires installation of a cleanout in a chimney to facilitate cleaning and inspection. A fireplace inherently provides access to its chimney through the firebox, throat and smoke chamber. The cleanout cover and opening frame must be of an approved material such as cast iron, precast cement or other noncombustible material and must be arranged to remain tightly closed. A loose fitting or unsecured cleanout can allow air to flow into the chimney, affecting draft at the appliance or fireplace, and can result in an energy loss in the building. Under certain conditions, combustion products could escape into the building through an ill-fitting cleanout door or cover. The requirement for placing the cleanout at least 6 inches (152 mm) below the lowest connection to the chimney is intended to minimize the possibility of combustion products exiting the chimney through the cleanout. It is the intent of this section that a cleanout opening be installed, if one is not already provided, for existing masonry chimney flues whenever another appliance is installed or an existing appliance is removed.

501.15.4 Clearances. Chimneys and vents shall have airspace *clearance* to combustibles in accordance with the *International Building Code* and the chimney or vent manufacturer's installation instructions.

Exception: Masonry chimneys without the required airspace clearances shall be permitted to be used if lined or relined with a chimney lining system *listed* for use in chimneys with reduced clearances in accordance with UL 1777. The chimney *clearance* shall be not less than permitted by the terms of the chimney liner listing and the manufacturer's instructions.

❖ This section requires that the existing chimney or vent be inspected for clearances to combustibles for the entire length of the chimney or vent. Clearances to combustibles for masonry chimneys are found in the IBC. The required clearances for a listed factory-built chimney or vent would be in accordance with the existing chimney or vent manufacturer's installation instructions. The clearances to combustibles for vents and factory-built chimneys are typically indicated on the vent or chimney. If they are not, the manufacturer must be contacted and the original installation instructions consulted.

Existing masonry chimneys commonly do not have the clearances required by code, especially if the structure is fairly old. Listed chimney lining systems, which provide insulation value to compensate for the lack of clearance, are available for use in such chimneys. Lining systems listed to UL 1777 include poured-in-place insulating refractory cement and insulated metal liners. The lining system listing will specify what the required clearance must be from the relined chimney to combustibles.

501.15.4.1 Fireblocking. Noncombustible fireblocking shall be provided in accordance with the *International Building Code*.

❖ See Section 2113.20 of the IBC.

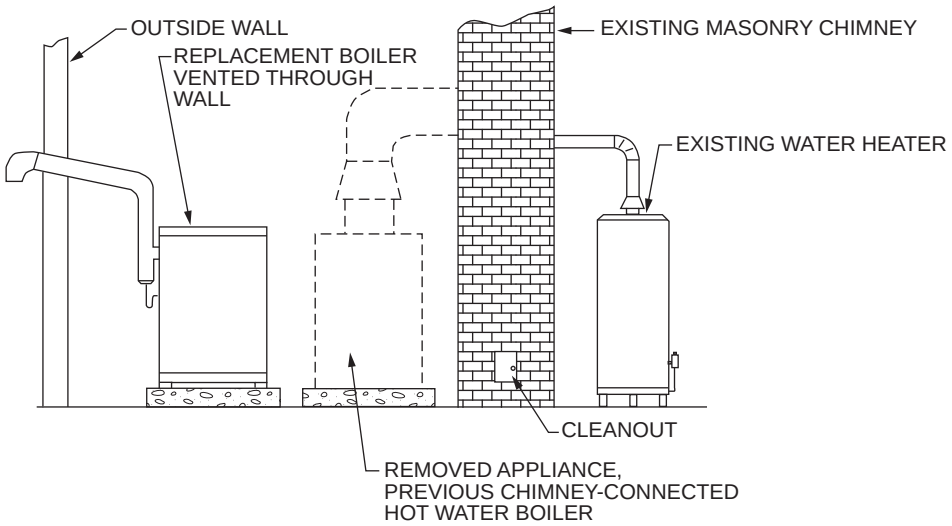

Figure 501.15.1
APPLIANCE REPLACEMENTS AFFECTING EXISTING APPLIANCES

INTERNATIONAL CODE COUNCIL®
Copyright © 2015 ICC. ALL RIGHTS RESERVED. Accessed by David Dammon on Jun 21, 2017 12:30:52 PM pursuant to License Agreement with ICC. No further reproduction or distribution authorized. ANY UNAUTHORIZED REPRODUCTION OR DISTRIBUTION IS A VIOLATION OF THE FEDERAL COPYRIGHT ACT AND THE LICENSE AGREEMENT, AND SUBJECT TO CIVIL AND CRIMINAL PENALTIES THEREUNDER.

SECTION 502 (IFGC)
VENTS

502.1 General. Vents, except as provided in Section 503.7, shall be *listed* and *labeled*. Type B and BW vents shall be tested in accordance with UL 441. Type L vents shall be tested in accordance with UL 641. Vents for Category II and III appliances shall be tested in accordance with UL 1738. Plastic vents for Category IV appliances shall not be required to be *listed* and *labeled* where such vents are as specified by the *appliance* manufacturer and are installed in accordance with the *appliance* manufacturer's instructions.

❖ Vents regulated by this section are factory fabricated and must be listed and labeled. The labeling requirement applies to all components of the system such as the sections of pipe, fittings, terminal caps, supports and spacers.

The provision for unlisted plastic vents is necessary to allow for the venting systems commonly specified in the installation instructions for Category IV condensing appliances. Unlisted plastic pipe (commonly PVC or CPVC plumbing pipe) vents are distinct from listed high-temperature plastic special gas vents that were designed primarily for Category III appliances. Unlisted plastic pipe can be used only when specified by the appliance manufacturer and must be installed as directed in the appliance installation instructions. Unlisted plastic pipe is used only for high efficiency Category IV gas-fired appliances. The pipe functions as an exhaust pipe for combustion gases and as a combustion air intake pipe.

Gas appliances (furnaces and boilers) are categorized so that the proper venting system can be selected. Four categories have been developed based on the pressure produced in the vent passageway and whether or not the flue gas temperatures approach the dew point, making condensation likely (see the definition for "Vented appliance categories").

Category I appliances operate under a negative or neutral vent pressure, are noncondensing appliances, and may generate vent gases with temperatures up to 550° F (288°C). A Category I appliance can use a draft hood or an integral vent blower or draft inducer (fan assisted) [see Commentary Figure 502.1(1)].

Category II appliances also operate under negative or neutral vent pressure, but the vent gas temperature and percent of CO_2 yield a flue loss of less than 17 percent, meaning that condensation of flue gases can occur. Vent systems serving Category II appliances fall under the special vent provisions of Sections 501.14, 503.4 and 503.6.9.3.

Category III appliances operate with a positive vent pressure and can produce condensation, although they are not considered to be "condensing appliances." The positive pressure in the vent system necessitates airtight flue passageways to avoid leakage. Vent systems serving Category III appliances fall under the special vent provisions of Sections 501.14, 503.4, and 503.6.9.3. They are typically constructed of high-temperature plastic or stainless steel pipe. The type of stainless steel specified today is typically AL29-4C, a special alloy known for its corrosion resistance.

Category IV appliances operate with a positive vent pressure and condense flue gases. Condensing (high-efficiency) appliances require airtight vent passageways and a method of collecting and draining condensation. The vent system serving this type of appliance is usually constructed of plastic, such as PVC or CPVC. Vent systems serving Category IV appliances also fall under the special vent provisions of Sections 501.14, 503.4 and 503.6.9.3 [see Commentary Figure 502.1(2)].

A vent system can be used only in conjunction with gas-burning appliances that are listed and labeled for use with a vent. Appliances equipped with draft hoods and Category I (including fan-assisted) appliances both depend on the vent to produce a draft to convey the combustion products to the outdoors. Solid-fuel-burning appliances must not be connected to a vent system because they produce flue-gas temperatures that are much higher than the temperatures for which vents are designed. The burning of solid fuels also produces creosote. Creosote formation leaves a combustible deposit on the surface of the flue passageway that, if ignited, can produce a fire with temperatures exceeding 2,000°F (1093°C), far exceeding the safe temperature limitations of a vent system.

Type B vents are designed for venting noncondensing gas appliances equipped with a draft hood and fan-assisted appliances that operate with a non-

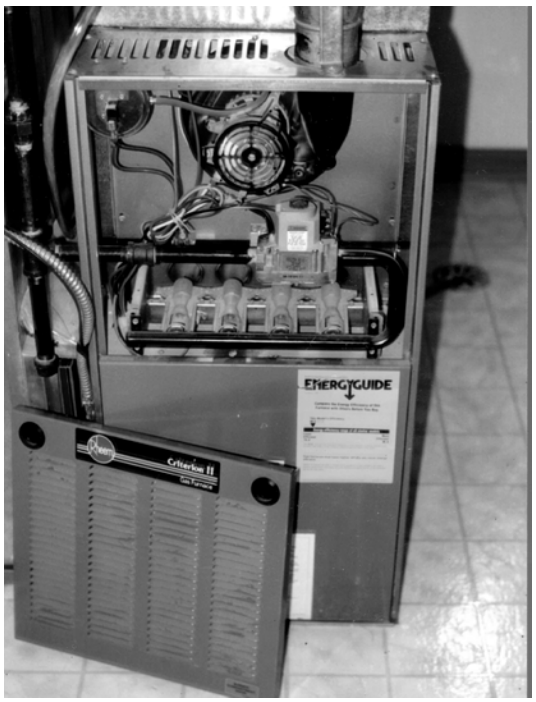

Figure 502.1(1)
CATEGORY I FAN-ASSISTED FURNACE

INTERNATIONAL CODE COUNCIL®
Copyright © 2015 ICC. ALL RIGHTS RESERVED. Accessed by David Dammon on Jun 21, 2017 12:30:52 PM pursuant to License Agreement with ICC. No further reproduction or distribution authorized. ANY UNAUTHORIZED REPRODUCTION OR DISTRIBUTION IS A VIOLATION OF THE FEDERAL COPYRIGHT ACT AND THE LICENSE AGREEMENT, AND SUBJECT TO CIVIL AND CRIMINAL PENALTIES THEREUNDER.

positive vent pressure and that are listed and labeled for use with a Type B vent. Type B vents are capable of withstanding continuous firing at flue temperatures not exceeding 400°F (222°C) above room temperature. This section requires that a Type B vent be tested in accordance with UL 441. Type B vents must not be used with incinerators, appliances readily converted to the use of solid or liquid fuels or combination gas/oil burning appliances. Type B vents can serve multiple gas-fired appliance installations [see Commentary Figure 502.1(3)].

Type BW vents must also be tested in accordance with UL 441 and can serve only labeled gas-fired wall furnaces. A Type BW vent is an oval-shaped vent designed and tested for installation in a stud wall cavity. This type of vent is capable of withstanding continuous firing at flue temperatures not exceeding 400°F (222°C) above room temperature. Type BW vents must not be used to vent incinerators, appliances readily converted to the use of solid or liquid fuels or combination gas/oil-burning appliances.

Type L vents must be tested in accordance with UL 641 and are designed to vent oil-burning appliances, which produce a higher flue gas temperature than gas-fired appliances. Type L vents can also be used with appliances listed and labeled for Type B vent systems, meaning that Type L vents can substitute for Type B vents, but Type B vents cannot serve appliances that require Type L vents.



Figure 502.1(2)
CATEGORY IV APPLIANCE (FURNACE)
(Figure courtesy of Carrier Corporation)

Type B and BW vents are double-walled, air-insulated vent piping systems constructed of galvanized steel outer walls and aluminum inner walls [see Commentary Figure 502.1(4)]. Type L vents are typically double-wall, air-insulated vent piping systems constructed of galvanized and stainless steel.

Type B, BW and L vents are designed for natural draft applications only and must not be used to convey combustion gases under positive pressure. For example, a Type B vent must not be used with Category III or IV gas-fired appliances and must not be used on the discharge side of an exhauster or power-vented appliance. Positive pressures will cause a Type B vent to leak combustion gases into the building, and the leakage can cause condensation to form within the vent system pipe, fittings and joints, resulting in corrosion damage to the vent and eventual vent failure. Fan-assisted Category I appliances are not considered power vented and do not produce positive vent pressures when vented vertically to a properly sized draft-producing vent such as a Type B vent system (see commentary, Section 504). UL 1738 covers factory-built vents for Category II, III and IV appliances. These vents can be constructed of metallic or plastic materials including aluminum alloys, steel (coated, galvanized, stainless or aluminized), PVC and CPVC.

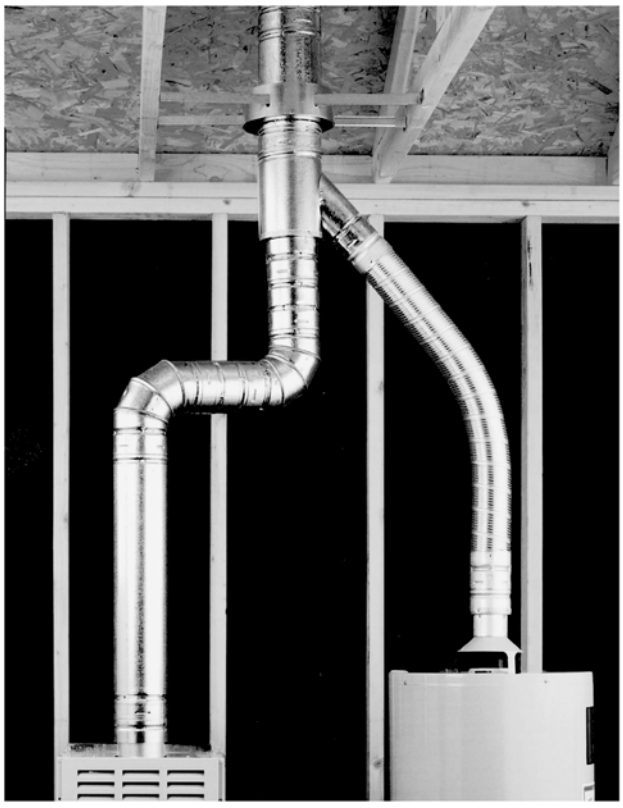

Figure 502.1(3)
TYPE B GAS VENT SERVING
TWO CATEGORY I APPLIANCES
(Photo courtesy of Simpson Dura-Vent Company, Incorporated)

INTERNATIONAL CODE COUNCIL®
Copyright © 2015 ICC. ALL RIGHTS RESERVED. Accessed by David Dammon on Jun 21, 2017 12:30:52 PM pursuant to License Agreement with ICC. No further reproduction or distribution authorized. ANY UNAUTHORIZED REPRODUCTION OR DISTRIBUTION IS A VIOLATION OF THE FEDERAL COPYRIGHT ACT AND THE LICENSE AGREEMENT, AND SUBJECT TO CIVIL AND CRIMINAL PENALTIES THEREUNDER.



Figure 502.1(4)
TYPE B VENT SECTIONS WITH AIR SPACE BETWEEN PIPE WALLS
(Figure courtesy of Simpson Dura-Vent Company, Incorporated)

502.2 Connectors required. Connectors shall be used to connect appliances to the vertical chimney or vent, except where the chimney or vent is attached directly to the *appliance*. Vent connector size, material, construction and installation shall be in accordance with Section 503.

❖ Connectors designed, constructed and installed in accordance with Section 503 are required except where a chimney or vent serves a single appliance and connects directly to that appliance. In such cases, a connector does not exist. The use of single-wall connectors for fan-assisted appliances is extremely limited by the sizing tables because of the high heat input necessary (minimum capacity column) to offset the heat loss of single-wall pipe.

502.3 Vent application. The application of vents shall be in accordance with Table 503.4.

❖ See Section 503.4.

502.4 Insulation shield. Where vents pass through insulated assemblies, an insulation shield constructed of steel having a minimum thickness of 0.0187 inch (0.4712 mm) (No. 26 gage) shall be installed to provide *clearance* between the vent and the insulation material. The *clearance* shall be not less than the *clearance* to combustibles specified by the vent manufacturer's installation instructions. Where vents pass through attic space, the shield shall terminate not less than 2 inches (51 mm) above the insulation materials and shall be secured in place to prevent displacement. Insulation shields provided as part of a *listed* vent system shall be installed in accordance with the manufacturer's instructions.

❖ Loose insulation in attic floor assemblies or roof assemblies can fall against vents, creating a fire hazard, and can also cause abnormally high vent temperatures. Even though clearances to combustible construction such as wood framing are maintained, the continued heating of combustible insulation materials that have fallen against a vent could be a source of ignition. This section applies regardless of the combustibility of the insulation. Shields constructed in the field must be sufficient to serve their purpose and must be securely attached to building construction because shields that are merely resting in place could be inadvertently dislodged or removed during maintenance activities.

502.5 Installation. Vent systems shall be sized, installed and terminated in accordance with the vent and *appliance* manufacturer's installation instructions and Section 503.

❖ The standards with which vents and appliances comply require that venting instructions be supplied by the manufacturer of the appliance and the manufacturer of the vent system. These instructions are part of the labeling requirements. Any deviation from them is in violation of the code.

The instructions for Type B vents and for gas appliances approved for use with Type B vents may be specific to a certain appliance or manufacturer's B-vent material. The clearance to combustibles for a vent system is determined by the testing agency and is stated on the component labels and in the manufacturer's instructions. Not all vents have the same required clearances to combustibles. The clearances are determined by the vent's performance during testing in accordance with the applicable standard. Different vent materials and designs impact the vent's ability to control the amount of heat transmitted to surrounding combustibles. It is critical that the vent system be installed in accordance with the clearances listed on the vent's label and in the manufacturer's instructions.

The termination of a natural draft vent must comply with the requirements of the manufacturer's installation instructions and Sections 503.6.3, 503.6.6 and 503.6.7. A vent used in conjunction with a mechanical exhauster must meet the termination requirements established in Sections 503.3.3 and 503.8.

Physical protection of the vent system is required to prevent damage to the vent and to prevent combustibles from coming into contact with or being placed too close to the vents. Such protection is typically provided by enclosing the vent in chases, shafts or cavities in the building construction. Physical protection is not required in the room or space where the vent originates (at the appliance connection) and would not be required in such locations as attics that are not occupied or used for storage. For example, assume that a vent is installed in an existing building and that it extends from the basement, through a first-floor closet, through the attic and through the roof.

INTERNATIONAL CODE COUNCIL®
Copyright © 2015 ICC. ALL RIGHTS RESERVED. Accessed by David Dammon on Jun 21, 2017 12:30:52 PM pursuant to License Agreement with ICC. No further reproduction or distribution authorized. ANY UNAUTHORIZED REPRODUCTION OR DISTRIBUTION IS A VIOLATION OF THE FEDERAL COPYRIGHT ACT AND THE LICENSE AGREEMENT, AND SUBJECT TO CIVIL AND CRIMINAL PENALTIES THEREUNDER.

The portion of the vent passing through the closet must be protected from damage. The means of physical damage protection should also be designed to maintain separation between the vent and any combustible storage. To prevent the passage of fire and smoke through the annular space around a vent penetration through a floor or ceiling, the vent must be fireblocked with a noncombustible material in accordance with the code. Vent manufacturers provide installation instructions and factory-built components for fireblocking penetrations.

502.6 Support of vents. All portions of vents shall be adequately supported for the design and weight of the materials employed.

❖ Vent manufacturers supply support parts, and manufacturers' instructions contain detailed requirements for support of vent systems. Improper support can cause strain on vent components, appliance connectors and fittings, resulting in vent, appliance or connector damage, as well as loss of required clearance to combustibles and proper slope. Frequently, venting installations suffer from lack of or improperly installed supports, brackets and hangers.

502.7 Protection against physical damage. In concealed locations, where a vent is installed through holes or notches in studs, joists, rafters or similar members less than $1^1/_2$ inches (38 mm) from the nearest edge of the member, the vent shall be protected by shield plates. Protective steel shield plates having a minimum thickness of 0.0575 inch (1.463 mm) (No. 16 gage) shall cover the area of the vent where the member is notched or bored and shall extend not less than 4 inches (102 mm) above sole plates, below top plates and to each side of a stud, joist or rafter.

❖ This section requires protection from nail and screw penetration for vents in the same manner that the code protects gas piping and tubing (see Commentary Figure 502.7). Plastic and metal vent systems typically pass through or are enclosed by construction assemblies, thereby making them highly susceptible to penetration by fasteners. Such penetrations can damage the vent and the damage would not be visible in concealed locations. Possible results from vent penetration include cracking/splitting of pipe, leakage of condensate and/or combustion gases, corrosion failure of metals, structural decay, interference with required clearances and restraint of expansion and contraction movement.

502.7.1 Door swing. Appliance and equipment vent terminals shall be located such that doors cannot swing within 12 inches (305 mm) horizontally of the vent terminal. Door stops or closers shall not be installed to obtain this clearance.

❖ Vent terminals for sidewall-vented appliances (such as direct-vent gas fireplaces and fireplace heaters; direct-vent room heaters; direct-vent water heaters, furnaces and boilers; and also nondirect-vent appliances) are sometimes located where a side-swinging door can impact the vent terminal or swing close to the terminal. This can result in damage to the vent terminal, a fire hazard and interference with the appliance venting and combustion air intake. Also, if the door blocks or deflects the vent discharge such that the combustion products are pulled back into the combustion air intake, the result would be excessive carbon monoxide (CO) production and serious appliance malfunction and sooting. A damaged vent terminal could cause appliance malfunction and carbon monoxide poisoning. It could also cause damage to nearby combustible surfaces and create a fire hazard. Door stops and closer devices cannot be depended on because they are easily defeated or removed [see Commentary Figures 502.7.1(1) and 502.7.1(2)].

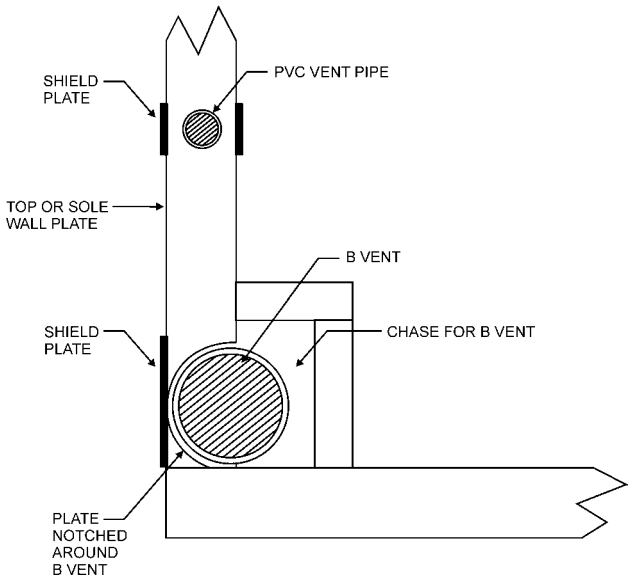

Figure 502.7
PLAN VIEW OF STUD WALL

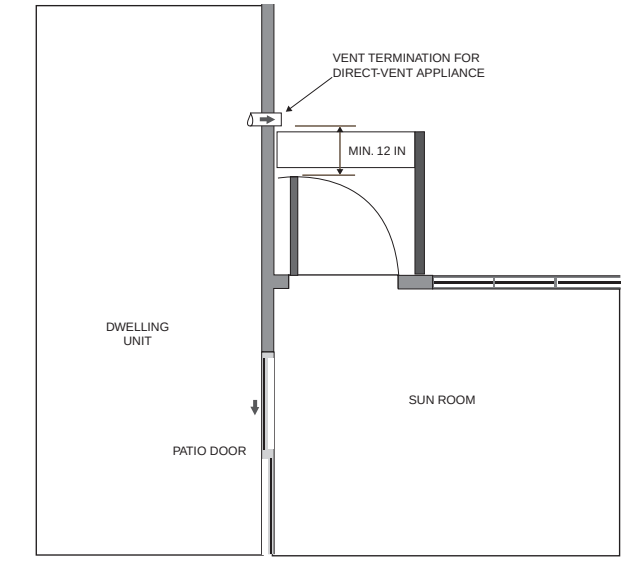

For SI: 1 inch = 25.4 mm.

Figure 502.7.1(1)
DOOR SWING

INTERNATIONAL CODE COUNCIL®
Copyright © 2015 ICC. ALL RIGHTS RESERVED. Accessed by David Dammon on Jun 21, 2017 12:30:52 PM pursuant to License Agreement with ICC. No further reproduction or distribution authorized. ANY UNAUTHORIZED REPRODUCTION OR DISTRIBUTION IS A VIOLATION OF THE FEDERAL COPYRIGHT ACT AND THE LICENSE AGREEMENT, AND SUBJECT TO CIVIL AND CRIMINAL PENALTIES THEREUNDER.



Figure 502.7.1(2)
DOOR SWING

SECTION 503 (IFGS)
VENTING OF APPLIANCES

503.1 General. The venting of appliances shall be in accordance with Sections 503.2 through 503.16.

❖ Section 503 contains general sizing, design and installation requirements for venting systems. Section 504 covers vent system sizing for Category I appliances.

503.2 Venting systems required. Except as permitted in Sections 503.2.1 through 503.2.4 and 501.8, all appliances shall be connected to venting systems.

❖ All appliances must be vented by a venting system except those allowed to be unvented by Section 501.8.

The appliances addressed in Sections 503.2.1 and 503.2.2 must have a venting system.

503.2.1 Ventilating hoods. Ventilating hoods and exhaust systems shall be permitted to be used to vent appliances installed in commercial applications and to vent industrial appliances, such as where the process itself requires fume disposal.

❖ In commercial and industrial applications only, appliances can to be vented by an exhaust hood instead of a vent or chimney system. This is addressed further in Section 503.3.4. The exhaust system will usually exist for some other purpose such as heat, vapor and/or smoke capture and containment. It is convenient and cost effective to allow the exhaust system to also serve as the venting means for the combustion products produced by the process or appliance. This arrangement is common in manufacturing and food processing. The exhaust system must be interlocked with the appliances to prevent appliance operation when the exhaust system is not operating.

503.2.2 Well-ventilated spaces. Where located in a large and well-ventilated space, industrial appliances shall be permitted to be operated by discharging the flue gases directly into the space.

❖ This section should have extremely limited application. The allowance to operate industrial appliances without combustion product venting is intended only for industrial occupancies such as factories, foundries and manufacturing plants. This section states no limit on Btu/h input, does not specify a minimum space volume and does not define "large" or "well-ventilated"; therefore, one must apply this section with extreme caution, mindful of the intent. The space into which the combustion products are discharged must be large enough, open enough and ventilated enough to prevent the accumulation of harmful contaminants. These criteria might be met in a factory structure with very high ceilings, high infiltration rates and high rates of ventilation air movement. See Section 612, which addresses direct-fired industrial air heaters and specifies a mechanical ventilation rate to control contaminants created by the combustion process.

503.2.3 Direct-vent appliances. *Listed direct-vent appliances* shall be installed in accordance with the manufacturer's instructions and Section 503.8, Item 3.

❖ Direct-vent appliances are vented by a natural or mechanical draft system that is designed as part of the appliance and that usually requires some assembling on the job site. Except for the vent terminal requirements of Section 503.8, Item 3, the code depends on the appliance manufacturer's installation instructions for all aspects of venting direct-vent appliances. Direct-vent appliances include some Category IV condensing furnaces and boilers and power- and gravity-vented direct-vent water heaters, unit heaters, space heaters and packaged terminal units.

Direct-vent appliances have the distinct advantage of providing their own combustion air supply in addition to their own dedicated venting means [see the definition of "Direct-vent appliance," as well as Commentary Figures 202(6) and 503.2.3(1) through 503.2.3(6)].

503.2.4 Appliances with integral vents. Appliances incorporating integral venting means shall be installed in accordance with the manufacturer's instructions and Section 503.8, Items 1 and 2.

❖ As it does with direct-vent appliances, the code trusts the manufacturer's instructions for the installation of appliances having an integral venting means. Integral-vent appliances such as rooftop heating, ventilation and air-conditioning (HVAC) units, outdoor makeup air heaters, and outdoor heaters for swimming pools have a built-in natural or mechanical venting means. The natural-draft integral venting means is simply a short vertical vent with a factory-supplied vent cap assembly. The mechanical integral-vent appliances use supervised blowers to discharge the combustion gases directly to the atmosphere. The typical means of blower supervision is one or more

INTERNATIONAL CODE COUNCIL®
Copyright © 2015 ICC. ALL RIGHTS RESERVED. Accessed by David Dammon on Jun 21, 2017 12:30:52 PM pursuant to License Agreement with ICC. No further reproduction or distribution authorized. ANY UNAUTHORIZED REPRODUCTION OR DISTRIBUTION IS A VIOLATION OF THE FEDERAL COPYRIGHT ACT AND THE LICENSE AGREEMENT, AND SUBJECT TO CIVIL AND CRIMINAL PENALTIES THEREUNDER.

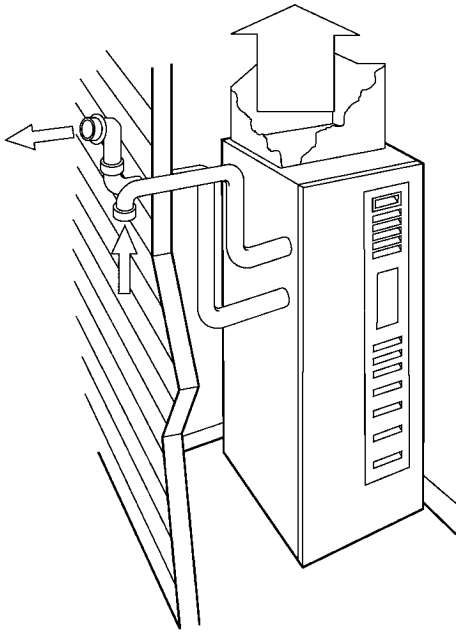

Figure 503.2.3(1)
DIRECT-VENT APPLIANCE
(Figure courtesy of Carrier Corporation)

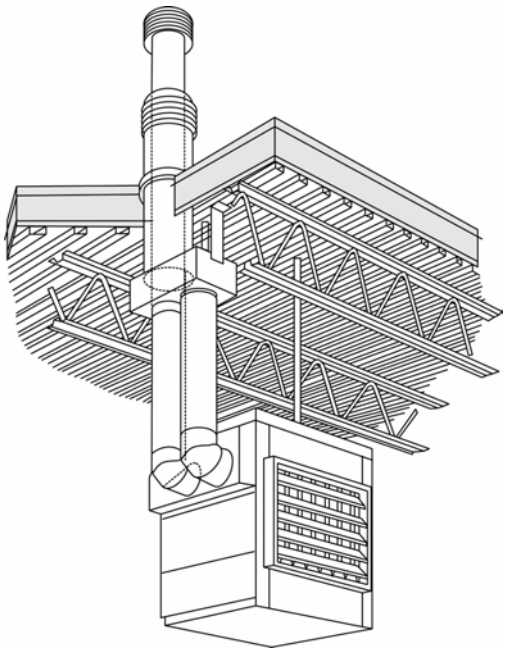

Figure 503.2.3(2)
DIRECT-VENT (SEPARATED COMBUSTION) UNIT HEATERS
(Figure courtesy of Reznor/Thomas & Betts Corporation)

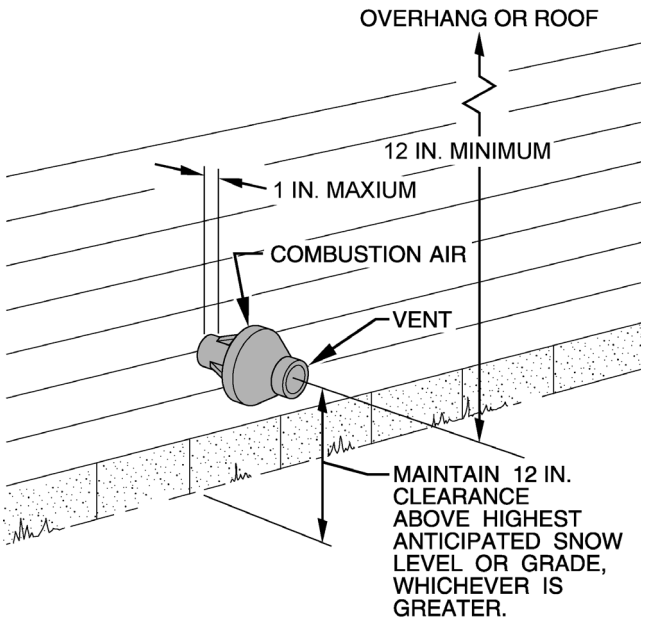

For SI: 1 inch = 25.4 mm.

Figure 503.2.3(3)
EXAMPLE OF MANUFACTURER'S DETAIL FOR DIRECT-VENT APPLIANCE CONCENTRIC VENT-AIR INTAKE TERMINAL
(Figure courtesy of Carrier Corporation)



Figure 503.2.3(4)
DIRECT-VENT APPLIANCES
(Photo courtesy of Lochinvar Corporation)

INTERNATIONAL CODE COUNCIL®
Copyright © 2015 ICC. ALL RIGHTS RESERVED. Accessed by David Dammon on Jun 21, 2017 12:30:52 PM pursuant to License Agreement with ICC. No further reproduction or distribution authorized. ANY UNAUTHORIZED REPRODUCTION OR DISTRIBUTION IS A VIOLATION OF THE FEDERAL COPYRIGHT ACT AND THE LICENSE AGREEMENT, AND SUBJECT TO CIVIL AND CRIMINAL PENALTIES THEREUNDER.



Figure 503.2.3(5)
GRAVITY DIRECT-VENT WATER HEATER
(Photo courtesy of A.O. Smith Water Products)



Figure 503.2.3(6)
DIRECT-VENT SYSTEM COMPONENTS
(Photo courtesy of Simpson Dura-Vent Company, Incorporated)

pressure switches or a centrifugal switch mounted to the blower motor shaft. Integral-vent appliances must not be confused with unvented appliances and appliances that need not be vented in accordance with Section 501.8. Integral-vent appliances must be vented to the outside atmosphere and thus are always designed for outdoor use only [see Section 503.8, Items 1 and 2, and Commentary Figures 503.2.4(1) through 503.2.4(3)].

503.2.5 Incinerators. Commercial-industrial-type incinerators shall be vented in accordance with NFPA 82.

❖ The scope of NFPA 82 is commercial/industrial incinerators and excludes incinerators in one- and two-family dwellings. Residential incinerators are not typically installed within dwellings today. The standard covers metal and masonry chimneys for use with incinerators and has provisions for construction, clearances, termination, cleanouts and connectors, among others.

503.3 Design and construction. Venting systems shall be designed and constructed so as to convey all flue and vent gases to the outdoors.

❖ This section is stated in performance language and requires venting systems to convey the products of combustion to the outdoors. The reference to a "positive flow" does not imply that the venting system is under a positive pressure, but rather implies that the vent produces a dependable flow at its design operating pressure.



Figure 503.2.4(1)
HOT WATER BOILER WITH INTEGRAL VENT FOR OUTDOOR INSTALLATION
(Photo courtesy of A.O. Smith Water Products)

INTERNATIONAL CODE COUNCIL®
Copyright © 2015 ICC. ALL RIGHTS RESERVED. Accessed by David Dammon on Jun 21, 2017 12:30:52 PM pursuant to License Agreement with ICC. No further reproduction or distribution authorized. ANY UNAUTHORIZED REPRODUCTION OR DISTRIBUTION IS A VIOLATION OF THE FEDERAL COPYRIGHT ACT AND THE LICENSE AGREEMENT, AND SUBJECT TO CIVIL AND CRIMINAL PENALTIES THEREUNDER.



Figure 503.2.4(2)
OUTDOOR DUCT FURNACE WITH INTEGRAL POWER VENTING
(Photo courtesy of Reznor/Thomas & Betts Corporation)



Figure 503.2.4(3)
ROOFTOP HVAC UNIT WITH INTEGRAL POWER VENT
(Photo courtesy of Carrier Corporation)

503.3.1 Appliance draft requirements. A venting system shall satisfy the draft requirements of the *appliance* in accordance with the manufacturer's instructions.

❖ This section is stated in performance language and requires venting systems to produce the draft necessary for the operation of the appliance being vented. An appliance manufacturer will specify the required type of venting means and, to assure the required amount of draft, may specify the size and height of a vent or chimney or may specify a mechanical draft system.

503.3.2 Design and construction. Appliances required to be vented shall be connected to a venting system designed and installed in accordance with the provisions of Sections 503.4 through 503.16.

❖ As defined in Section 202, a venting system includes natural, induced and forced-draft systems, which are addressed in Sections 503.3.3 through 503.15.

503.3.3 Mechanical draft systems. Mechanical draft systems shall comply with the following:

1. Mechanical draft systems shall be *listed* and shall be installed in accordance with the manufacturer's instructions for both the *appliance* and the mechanical draft system.
2. Appliances requiring venting shall be permitted to be vented by means of mechanical draft systems of either forced or induced draft design.
3. Forced draft systems and all portions of induced draft systems under positive pressure during operation shall be designed and installed so as to prevent leakage of flue or vent gases into a building.
4. Vent connectors serving appliances vented by natural draft shall not be connected to any portion of mechanical draft systems operating under positive pressure.
5. Where a mechanical draft system is employed, provisions shall be made to prevent the flow of gas to the main burners when the draft system is not performing so as to satisfy the operating requirements of the *appliance* for safe performance.
6. The exit terminals of mechanical draft systems shall be not less than 7 feet (2134 mm) above finished ground level where located adjacent to public walkways and shall be located as specified in Section 503.8, Items 1 and 2.

❖ The appliances and equipment installations addressed in this section use auxiliary or integral fans and

INTERNATIONAL CODE COUNCIL®
Copyright © 2015 ICC. ALL RIGHTS RESERVED. Accessed by David Dammon on Jun 21, 2017 12:30:52 PM pursuant to License Agreement with ICC. No further reproduction or distribution authorized. ANY UNAUTHORIZED REPRODUCTION OR DISTRIBUTION IS A VIOLATION OF THE FEDERAL COPYRIGHT ACT AND THE LICENSE AGREEMENT, AND SUBJECT TO CIVIL AND CRIMINAL PENALTIES THEREUNDER.

blowers to force the flow of combustion products to the outdoors.

This section applies to externally installed power exhausters, integrally power-exhausted appliances and venting systems equipped with draft inducers. This section does not address fan-assisted Category I appliances and does not address direct-vent appliances. Category III and IV appliances are subject to the requirements of this section if they are not listed as direct-vent appliances. Some Category I appliances are field convertible to Category III. Item 4 also applies to Category I fan-assisted appliances because they are vented by natural draft.

Power exhausters are field-installed pieces of equipment that are independent of, but used in conjunction with, other appliances [see Commentary Figures 503.3.3(1) through 503.3.3(4)].

Power exhausters are typically used where other means of venting are impractical, impossible or uneconomical. Power exhausters are typically designed for use with gas-fired and oil-fired natural draft appliances. Some are also designed for use with fan-assisted appliances and appliances equipped with integral forced-draft (power-vent) fans. Power exhausters produce negative pressures at their inlet connection and positive pressures at their outlet (discharge connection). The most common installation locates the exhauster at the point of termination of the vent or chimney. In such installations, the vent or chimney between the appliance and the exhauster operates under negative pressure [see Commentary Figures 503.3.3(1) through 503.3.3(9)].

Induced draft systems employ separate field-installed units designed to boost draft in a natural (gravity) draft chimney or vent [see Commentary Figures 503.3.3(10) and 503.3.3(11)].

Power-vented (self-venting) appliances are equipped with factory-installed integral blowers that force the combustion products through the special venting systems that are addressed in Sections 501.14 and 503.4. Power-vented appliances include mid- to high-efficiency furnaces, boilers, water heaters and heating units that are designed for through-the-wall or through-the-roof venting [see Commentary Figure 503.3.3(12)]. Appliances for outdoor installation are typically power vented and discharge directly to the atmosphere. They are addressed in Section 503.2.4.

Although not specifically referred to as an "appliance," a power exhauster (mechanical draft system) is considered to be a mechanical appliance appurtenance and, therefore, must bear the label of an approved agency in accordance with Item 1. See the definition of "Appliance." A power exhauster is an essential component of the appliance installation it serves and must be installed in accordance with the manufacturer's instructions for both the power exhauster and the appliance served. Mechanical draft devices that are an integral part of an appliance are covered by the appliance listing.

Vent or chimney systems installed downstream (discharge side) of a power exhauster must be designed and approved for positive-pressure applications. For example, Type B vent cannot be used on the discharge side of an exhauster because such pipe is not designed for positive pressure applications. The application and installation of exhausters (power venters) must comply with the manufacturers' installation instructions for the exhausters and the appliance(s) served by the exhausters (see commentary, Section 501.6).

There are three distinct variations in the use of blowers at the combustion chamber inlet working in conjunction with the fuel burner.

1. Blowers that supply turbulent combustion air to aid fuel-air mixing in a combustion chamber that is under negative pressure. To obtain proper negative over-fire draft (which optimizes combustion) also requires steady negative (below atmospheric) pressure at the flue outlet. This will be produced by a natural draft chimney and may be controlled by a barometric draft regulator. This is tabulated on line "A" in Commentary Figure 503.3.3(13).
2. Blowers that supply sufficient combustion air and pressure to produce flow through the combustion chamber, but the combustion process does not need additional vent or chimney draft. This permits use of gravity or neutral draft venting products such as Type B vent for gas conversion burners. A draft regulator may be used for such equipment to prevent excess draft from affecting combustion efficiency. This is tabulated on line "B" in Commentary Figure 503.3.3(13).
3. Blowers with enough power to overcome internal flue passage pressure losses (i.e., in fire-tube boilers) that also produce positive pressure at the outlet. This outlet pressure must be added to gravity draft as the motive force for flow in a chimney. If positive outlet pressure exists, the use of a sealed pressure-tight chimney is required. This is tabulated on line "C" in Commentary Figure 503.3.3(13).

These three types of equipment usually have integral blower/burner systems, and all could be considered to be forced combustion systems. Only those described in the third item truly produce forced chimney draft. When power-venting equipment is installed, it becomes an essential part of the appliance it serves. The appliance relies on the power-venting equipment (exhauster) to provide sufficient draft for proper appliance operation and for venting of the combustion products. Power exhausters are electrically interlocked with the appliance or appliances they serve to ensure that the appliances will not operate if there is insufficient draft to vent the products of combustion. If an exhauster fails, the appliances served by the exhauster would discharge the prod-

INTERNATIONAL CODE COUNCIL®
Copyright © 2015 ICC. ALL RIGHTS RESERVED. Accessed by David Dammon on Jun 21, 2017 12:30:52 PM pursuant to License Agreement with ICC. No further reproduction or distribution authorized. ANY UNAUTHORIZED REPRODUCTION OR DISTRIBUTION IS A VIOLATION OF THE FEDERAL COPYRIGHT ACT AND THE LICENSE AGREEMENT, AND SUBJECT TO CIVIL AND CRIMINAL PENALTIES THEREUNDER.

ucts of combustion into the building unless shut off by controls that monitor draft and draft-hood spillage. An improper or lacking interlock can cause the appliance(s) to malfunction and spill harmful flue gases into the building space. The electrical interlock (interconnection) is typically accomplished with controls provided by the exhauster manufacturer [see Commentary Figure 503.3.3(14)].

The usual sequence of operation is as follows: The call for heat from the appliance operating control starts the exhauster, and pressure controls start the appliance only after adequate draft has been proven to exist. In some cases, temperature sensors are used in addition to pressure controls to sense draft-hood spillage or unusual vent system temperatures and shut off the appliance.

Item 6 addresses the concern for pedestrian safety relative to exposure to combustion gases (see Section 503.8).



Figure 503.3.3(1)
VERTICAL DRAFT INDUCER
(Photo courtesy of Tjernlund Products, Incorporated)

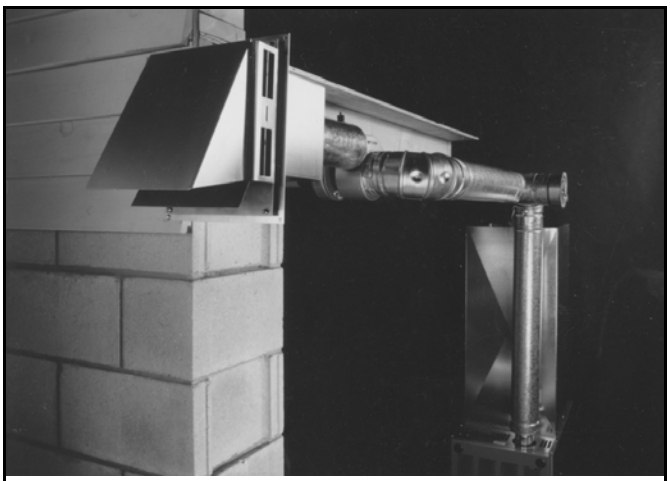

Figure 503.3.3(2)
HORIZONTAL POWER EXHAUSTER
(Photo courtesy of Tjernlund Products, Incorporated)



Figure 503.3.3(3)
HORIZONTAL POWER EXHAUSTERS
(Photo courtesy of Exhausto, Incorporated)



Figure 503.3.3(4)
VERTICAL POWER EXHAUSTERS
(Photo courtesy of Exhausto, Incorporated)

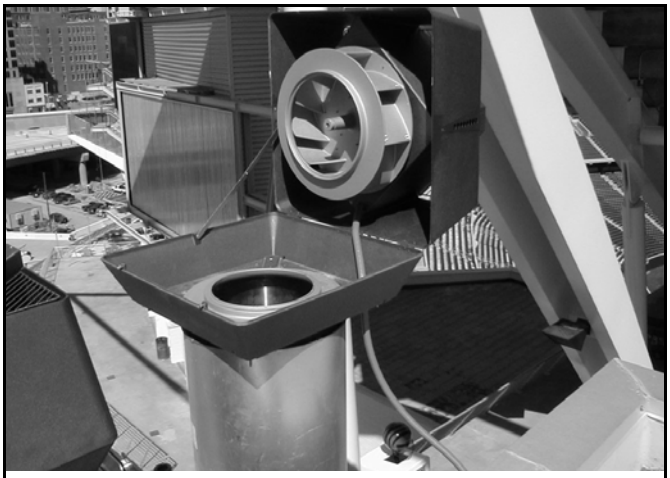

Figure 503.3.3(5)
VERTICAL POWER EXHAUSTERS
(Photo courtesy of Exhausto, Incorporated)

INTERNATIONAL CODE COUNCIL®
Copyright © 2015 ICC. ALL RIGHTS RESERVED. Accessed by David Dammon on Jun 21, 2017 12:30:52 PM pursuant to License Agreement with ICC. No further reproduction or distribution authorized. ANY UNAUTHORIZED REPRODUCTION OR DISTRIBUTION IS A VIOLATION OF THE FEDERAL COPYRIGHT ACT AND THE LICENSE AGREEMENT, AND SUBJECT TO CIVIL AND CRIMINAL PENALTIES THEREUNDER.

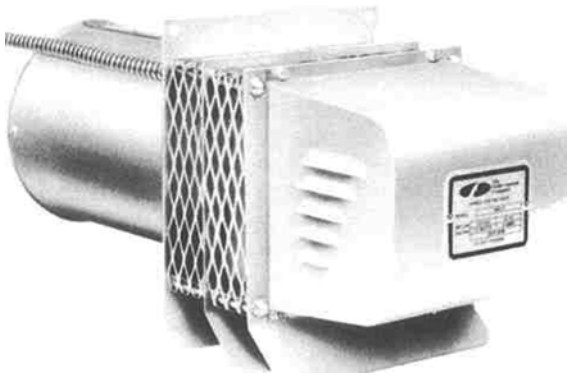

Figure 503.3.3(6)
POWER EXHAUSTER OUTDOOR TERMINAL-TYPE UNIT
(Photo courtesy of Field Controls Company)

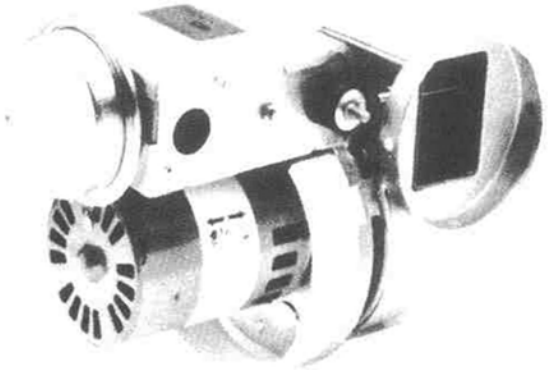

Figure 503.3.3(8)
TYPICAL POWER EXHAUSTER
(Photo courtesy of Tjernlund Products, Incorporated)

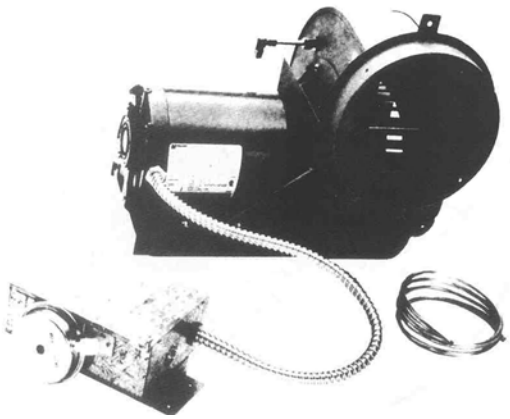

Figure 503.3.3(7)
EXHAUSTER AND CONTROL PACKAGE
(Photo courtesy of Tjernlund Products, Incorporated)

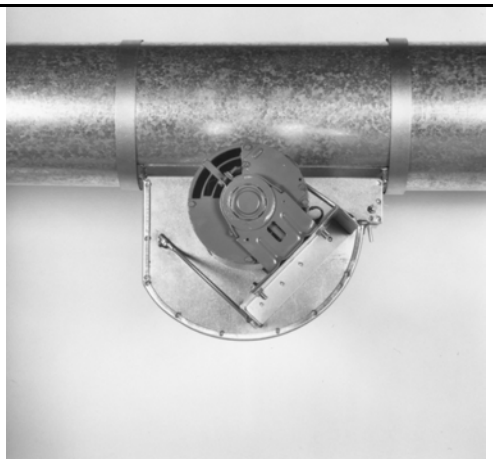

Figure 503.3.3(10)
DRAFT INDUCER
(Photo courtesy of Tjernlund Products, Incorporated)

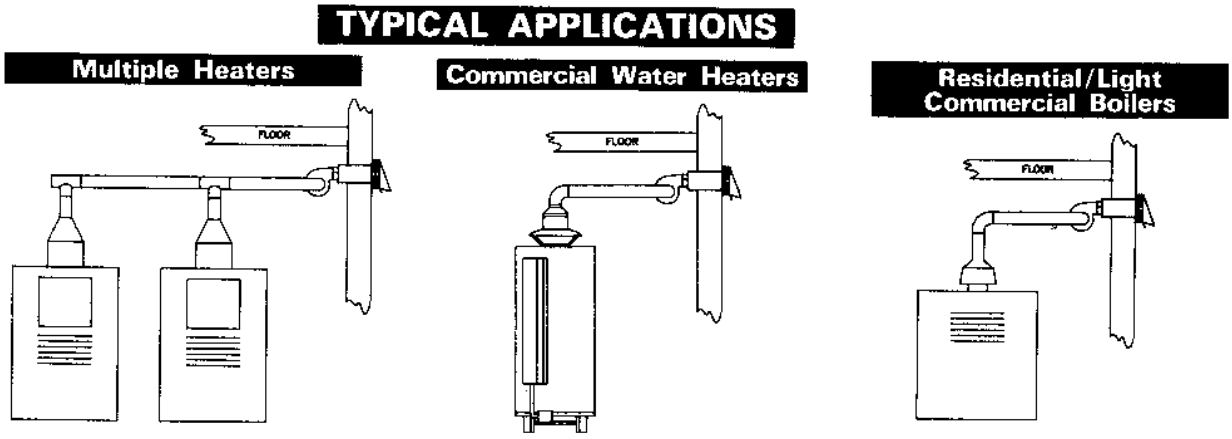

Figure 503.3.3(9)
TYPICAL EXHAUSTER APPLICATIONS
(Figure courtesy of Tjernlund Products, Incorporated)

INTERNATIONAL CODE COUNCIL®
Copyright © 2015 ICC. ALL RIGHTS RESERVED. Accessed by David Dammon on Jun 21, 2017 12:30:52 PM pursuant to License Agreement with ICC. No further reproduction or distribution authorized. ANY UNAUTHORIZED REPRODUCTION OR DISTRIBUTION IS A VIOLATION OF THE FEDERAL COPYRIGHT ACT AND THE LICENSE AGREEMENT, AND SUBJECT TO CIVIL AND CRIMINAL PENALTIES THEREUNDER.

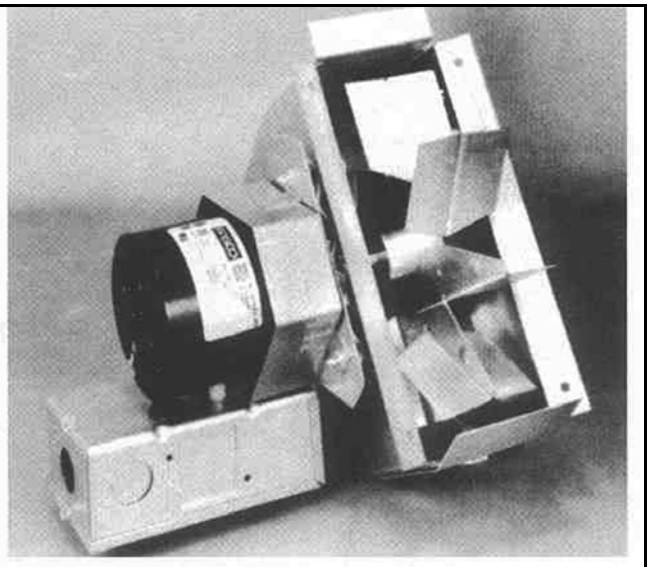

Figure 503.3.3(11)
DRAFT INDUCER
(Photo courtesy of Field Controls Company)



Figure 503.3.3(12)
POWER-VENTED WATER HEATER
(Photo courtesy of A.O. Smith Water Products)

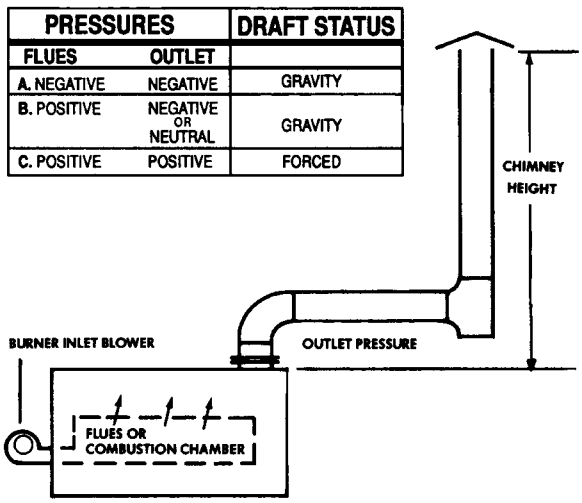

Figure 503.3.3(13)
DRAFT CONDITIONS WITH EQUIPMENT BURNER-INLET BLOWER
(Figure courtesy of Selkirk, L.L.C.)

503.3.4 Ventilating hoods and exhaust systems. Ventilating hoods and exhaust systems shall be permitted to be used to vent appliances installed in commercial applications. Where automatically operated appliances, other than commercial cooking appliances, are vented through a ventilating hood or exhaust system equipped with a damper or with a power means of exhaust, provisions shall be made to allow the flow of gas to the main burners only when the damper is open to a position to properly vent the *appliance* and when the power means of exhaust is in operation.

❖ This section addresses commercial occupancies such as restaurant kitchens where the kitchen exhaust system is used to vent gas-fired appliances such as booster water heaters for dishwashers. Commercial gas-fired appliances must be vented (see Section 501.8) either by individual venting means such as Type B vents or exhausters, or by venting the products of combustion into the kitchen exhaust hood system that serves the appliances. This section requires the appliance and the ventilating hood or exhaust system to be interlocked to ensure simultaneous operation of the hood or exhaust system whenever the appliance is firing. See Sections 505.1.1 and 623.6 for a discussion of this type of interlock.

503.3.5 Air ducts and furnace plenums. Venting systems shall not extend into or pass through any fabricated air duct or *furnace plenum.*

❖ If a vent or chimney or a connector passes through or extends into a duct or furnace plenum, it is possible to subject the venting system to negative or positive pressures and/or temperature extremes that could cause the venting system to deteriorate, fail to produce the required draft, produce condensation and/or leak combustion gases. A furnace plenum is a component of the ductwork system constructed as a junc-

INTERNATIONAL CODE COUNCIL®
Copyright © 2015 ICC. ALL RIGHTS RESERVED. Accessed by David Dammon on Jun 21, 2017 12:30:52 PM pursuant to License Agreement with ICC. No further reproduction or distribution authorized. ANY UNAUTHORIZED REPRODUCTION OR DISTRIBUTION IS A VIOLATION OF THE FEDERAL COPYRIGHT ACT AND THE LICENSE AGREEMENT, AND SUBJECT TO CIVIL AND CRIMINAL PENALTIES THEREUNDER.

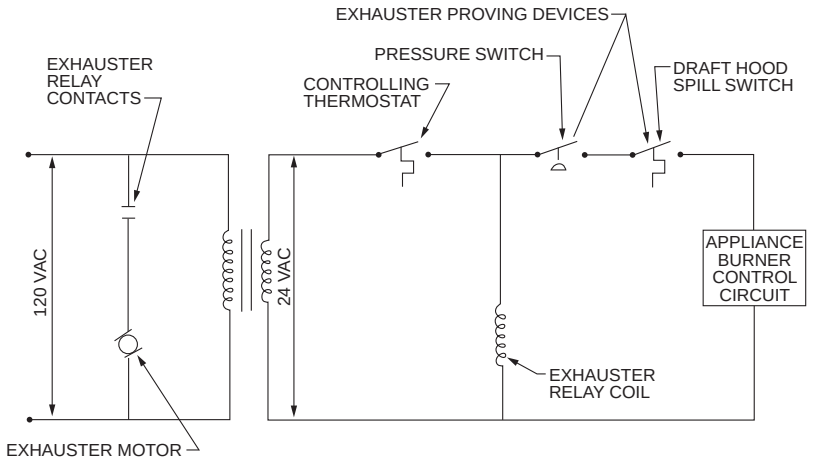

Figure 503.3.3(14)
SIMPLIFIED SAMPLE INTERLOCK CIRCUIT DIAGRAM FOR APPLIANCE SERVED BY POWER EXHAUSTER (SHOWN FOR ILLUSTRATIVE PURPOSE ONLY)

tion box for multiple duct connections. The term "furnace plenum" is defined in Section 202 and the term "fabricated air duct" refers to factory-, shop- or site-built supply relief, exhaust and return air ducts and does not refer to nonducted building cavities and plenums, such as spaces above ceilings used to convey air. Section 503.3.6 addresses nonducted interstitial spaces used as plenums.

503.3.6 Above-ceiling air-handling spaces. Where a venting system passes through an above-ceiling air-handling space or other nonducted portion of an air-handling system, the venting system shall conform to one of the following requirements:

1. The venting system shall be a *listed* special gas vent; other venting system serving a Category III or Category IV *appliance;* or other positive pressure vent, with joints sealed in accordance with the *appliance* or vent manufacturer's instructions.
2. The venting system shall be installed such that fittings and joints between sections are not installed in the above-ceiling space.
3. The venting system shall be installed in a conduit or enclosure with sealed joints separating the interior of the conduit or enclosure from the ceiling space.

❖ Vents are allowed to pass through interstitial spaces of a building used to convey environmental air such as above-ceiling return air-handling spaces (plenums), if the penetration/pass-through conforms to one of the three described installations (see Commentary Figure 503.3.6). All three installations are intended to prevent pressure differentials between the air-handling space and the vent interior from causing leakage of combustion products from the vent. See Section 602.2.1 of the IMC regarding combustible vent materials.

503.4 Type of venting system to be used. The type of venting system to be used shall be in accordance with Table 503.4.

❖ The table lists various types of vents and the corresponding types of appliances that can be served by the vents. The vent system must be tested and specifically approved for use with the approved appliance. If the vent system is not a tested and labeled component of the appliance, the material must be approved for use with the appliance and installed in accordance with the manufacturer's instructions.

Gas-burning appliances (listed as Category II, III or IV) require special vent systems that are specific to the type of appliance. Special vent systems are typically associated with mid- to high-efficiency appliances and include vent materials such as PVC, CPVC and special alloys of stainless steel.

A primary consideration for the design of a special vent system that serves a high-efficiency appliance is the selection of a material that is capable of withstanding the corrosive effects of condensate. Flue gas condensate is slightly acidic and corrosive and can deteriorate many vent materials. Sulfur in the fuel and halogens carried in the combustion air can combine with the combustion products to create acids. To prevent the corrosion of a vent and possible escape of flue gas, metallic flue passageways can be protected with appropriate coatings; however, any imperfections, pinholes or discontinuities in the coating can create areas for condensate to collect and accelerate the deterioration of the chimney or vent. The solution to this problem has been to use a material such as PVC, polypropylene (PP), CPVC or high-temperature plastic that is resistant to acidic condensation and compatible with the temperature of the appliance flue gases. Plastic pipe is a suitable material because it is impervious to corrosive condensation and can easily be designed to drain off accumulated condensate.

INTERNATIONAL CODE COUNCIL®
Copyright © 2015 ICC. ALL RIGHTS RESERVED. Accessed by David Dammon on Jun 21, 2017 12:30:52 PM pursuant to License Agreement with ICC. No further reproduction or distribution authorized. ANY UNAUTHORIZED REPRODUCTION OR DISTRIBUTION IS A VIOLATION OF THE FEDERAL COPYRIGHT ACT AND THE LICENSE AGREEMENT, AND SUBJECT TO CIVIL AND CRIMINAL PENALTIES THEREUNDER.

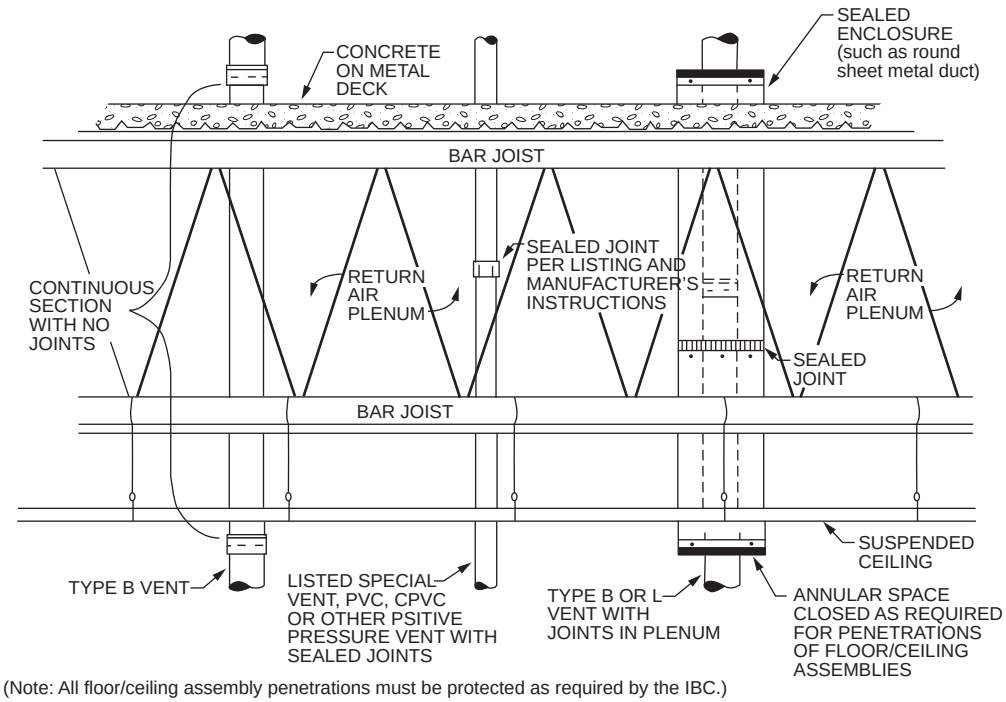

(Note: All floor/ceiling assembly penetrations must be protected as required by the IBC.)

Figure 503.3.6
VENTS THROUGH AIR PLENUMS

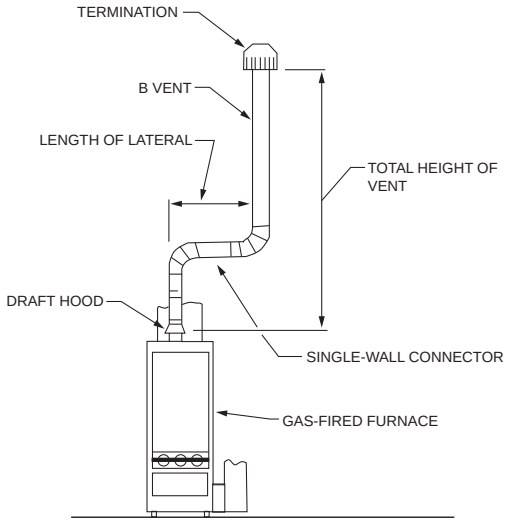

Figure 503.4
DETERMINING VENT HEIGHT

The flue gas temperatures of most condensing-type appliances are not high enough to affect such materials adversely.

Special vent systems must be designed and installed in compliance with the manufacturers' instructions, which will specify installation requirements that are specific to that type of vent and appliance. For example, a maximum developed length, a maximum number of directional fittings, fitting turn radius and specific support requirements will be specified for special vents using plastic pipe. Special vent systems also have special vent termination requirements, and typically incorporate condensate collection and drainage fittings and connections.

Gas- and oil-burning appliances can be used with a vent system if the appliance is so labeled and approved.

The type and size of the vent must be as dictated by the manufacturer's installation instructions for the appliance. The design and installation instructions provided by the vent manufacturer must also be consulted when designing a vent system for any particular application. Commentary Figure 503.4 shows some of the variables that affect vent system sizing. In addition to Section 504, the vent manufacturers' design and application handbooks and installation instructions contain information and tables for the sizing and application of the vent systems.

503.4.1 Plastic piping. Where plastic piping is used to vent an appliance, the appliance shall be listed for use with such venting materials and the appliance manufacturer's installation instructions shall identify the specific plastic piping material.

❖ Plastic pipe has been used as a venting material for Category III and IV appliances for many years and has more recently been used to vent specialized power-vented appliances that are equipped with draft hoods and blowers that introduce enough dilution air to keep the vent gases within the service temperature range of the plastic pipe (see Sections 502.1 and 503.4).

INTERNATIONAL CODE COUNCIL®
Copyright © 2015 ICC. ALL RIGHTS RESERVED. Accessed by David Dammon on Jun 21, 2017 12:30:52 PM pursuant to License Agreement with ICC. No further reproduction or distribution authorized. ANY UNAUTHORIZED REPRODUCTION OR DISTRIBUTION IS A VIOLATION OF THE FEDERAL COPYRIGHT ACT AND THE LICENSE AGREEMENT, AND SUBJECT TO CIVIL AND CRIMINAL PENALTIES THEREUNDER.

Commonly used plastic venting materials include PVC, PP and CPVC (see Commentary Figure 503.4.1).

In the past, the code required code official approval, but it was difficult to place the approval burden on the code official because he or she was not in a position to determine what venting materials were suitable and safe for venting various appliances. Such decisions should have been left to design engineers, manufacturers and the testing and listing agencies that list the appliances. The previous code text did not actually require that the appliance be listed for use with specific venting system materials, although this was implied by the text and it is required in the appliance standards. The appliance manufacturer's installation instructions must clearly specify exactly what plastic materials are required or allowed for venting an appliance. The installation instructions will be consistent with how the appliance was tested by the listing agency. The product standards for gas appliances contain various testing procedures for plastic venting systems. The appliance manufacturer determines the type of plastic vent that is suitable for venting its product, and the testing and listing agency tests the appliance with that venting system for com-

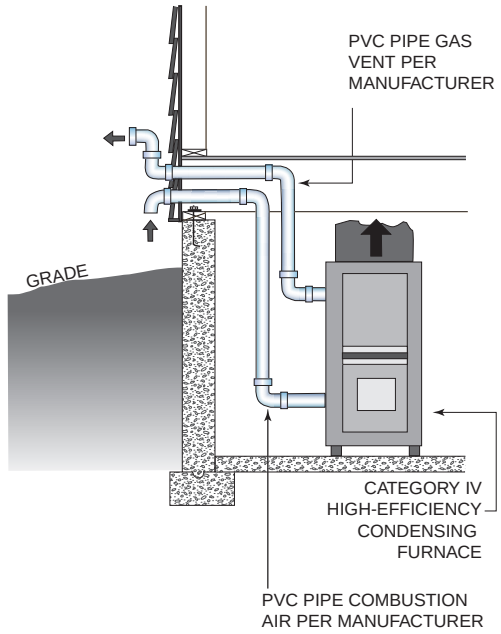

Figure 503.4.1
DIRECT-VENT APPLIANCE

TABLE 503.4
TYPE OF VENTING SYSTEM TO BE USED

APPLIANCES	TYPE OF VENTING SYSTEM
Listed Category I appliances Listed appliances equipped with draft hood Appliances listed for use with Type B gas vent	Type B gas vent (Section 503.6) Chimney (Section 503.5) Single-wall metal pipe (Section 503.7) Listed chimney lining system for gas venting (Section 503.5.3) Special gas vent listed for these appliances (Section 503.4.2)
Listed vented wall furnaces	Type B-W gas vent (Sections 503.6, 608)
Category II appliances	As specified or furnished by manufacturers of listed appliances (Sections 503.4.1, 503.4.2)
Category III appliances	As specified or furnished by manufacturers of listed appliances (Sections 503.4.1, 503.4.2)
Category IV appliances	As specified or furnished by manufacturers of listed appliances (Sections 503.4.1, 503.4.2)
Incinerators	In accordance with NFPA 82
Appliances that can be converted for use with solid fuel	Chimney (Section 503.5)
Unlisted combination gas and oil-burning appliances	Chimney (Section 503.5)
Listed combination gas and oil-burning appliances	Type L vent (Section 503.6) or chimney (Section 503.5)
Combination gas and solid fuel-burning appliances	Chimney (Section 503.5)
Appliances listed for use with chimneys only	Chimney (Section 503.5)
Unlisted appliances	Chimney (Section 503.5)
Decorative appliances in vented fireplaces	Chimney
Gas-fired toilets	Single-wall metal pipe (Section 626)
Direct-vent appliances	See Section 503.2.3
Appliances with integral vent	See Section 503.2.4

❖ This table lists the currently available types of appliances and the types of venting systems to be used with such appliances. In the first row, the three types of appliances can be matched up with any of the five types of venting systems, if allowed by the appliance manufacturers' installation instructions. The fifth row up from the bottom addresses unlisted appliances that are not allowed by the code except under the alternate approval provisions of Section 105.

INTERNATIONAL CODE COUNCIL®
Copyright © 2015 ICC. ALL RIGHTS RESERVED. Accessed by David Dammon on Jun 21, 2017 12:30:52 PM pursuant to License Agreement with ICC. No further reproduction or distribution authorized. ANY UNAUTHORIZED REPRODUCTION OR DISTRIBUTION IS A VIOLATION OF THE FEDERAL COPYRIGHT ACT AND THE LICENSE AGREEMENT, AND SUBJECT TO CIVIL AND CRIMINAL PENALTIES THEREUNDER.

pliance with the product standards. There must not be any uncertainty about what type of venting system is required for any appliance so that venting system failures can be avoided. The definition of "Vent" does not include plastic pipe, such as PVC, ABS and CPVC, because such pipes are not currently listed as factory-built venting systems. Section 503.4.1 refers to the plastic pipe as a material used for venting; it is not referred to as a vent conforming to the definition. The PVC, ABS and CPVC pipe manufacturers do not recommend that their pipes be used for appliance venting because such products are not currently listed for such applications. There are polypropylene venting systems on the market that are listed to UL 1738 as appliance venting systems, and they would fall under the definition of "Vent."

503.4.1.1 Plastic vent joints. Plastic pipe and fittings used to vent appliances shall be installed in accordance with the *appliance* manufacturer's instructions. Where a primer is required, it shall be of a contrasting color.

❖ Experience has shown that plastic pipe and fittings used for venting appliances are not always joined together properly and joint failures occur resulting in leakage of combustion products. Piping materials such as PVC and CPVC usually require the use of a primer in the solvent welding process. The color of the primer, typically purple, must contrast with the color of the pipe, fittings and solvent cement so as to be visible for inspection. The use of a clear primer will not be evident on a completed solvent weld joint.

503.4.2 Special gas vent. Special gas vent shall be *listed* and installed in accordance with the special gas vent manufacturer's instructions.

❖ Special gas vents include high-temperature plastic pipe, stainless steel alloy pipe and positive-pressure pipe that are specified by the appliance manufacturer for use with a specific appliance. This section does not necessarily require that all plastic pipe be listed as a venting system component. For example, the installation instructions for Category IV appliances often specify PVC, CPVC and ABS plastic plumbing pipe for venting the appliances, and such pipe is not listed as a component of a venting system (see Section 503.4.1).

503.5 Masonry, metal and factory-built chimneys. Masonry, metal and factory-built chimneys shall comply with Sections 503.5.1 through 503.5.10.

❖ See the commentary to Sections 503.5.1 through 503.5.10.

503.5.1 Factory-built chimneys. Factory-built chimneys shall be installed in accordance with the manufacturer's instructions. Factory-built chimneys used to vent appliances that operate at a positive vent pressure shall be *listed* for such application.

❖ Prefabricated chimney systems must bear the label of an approved agency. A label is required on all components of the chimney system such as the pipe sections, shields, fireblocks, fittings, termination caps and supports. The label states information such as the type of appliance the chimney was tested for use with, a reference to the manufacturer's installation instructions and the minimum required clearances to combustibles [see Commentary Figures 202(4) and 202(5)].

Most factory-built chimneys are either of the double-walled fiber-insulated design or the triple-walled air-cooled design. Factory-built chimneys are constructed of stainless steel inner liners with stainless steel outer walls. Factory-built chimneys, like vent systems, are composed of components that must be installed as a complete system. Components from different manufacturers are not designed to be mixed and installed together.

The manufacturer's instructions contain sizing criteria and requirements for every aspect of a factory-built chimney installation. The requirements include component assembly, clearances to combustibles, support, terminations, connections, protection from damage and fireblocking.

Any vent or chimney that conveys vent gases under positive pressure must be factory designed for that application. There is no allowable method of taping or sealing a chimney or vent that will convert a nonpositive-pressure chimney or vent into a positive-pressure chimney.

503.5.2 Metal chimneys. Metal chimneys shall be built and installed in accordance with NFPA 211.

❖ This section addresses metal chimneys, which are often referred to as smokestacks. Metal chimneys are used primarily in industrial applications where the vent gases are very high temperature. Discharging high temperature vent gases is a waste of energy and is thus becoming increasingly rare. Note that metal chimneys are different than what the code refers to as factory-built chimneys.

503.5.3 Masonry chimneys. Masonry chimneys shall be built and installed in accordance with NFPA 211 and shall be lined with *approved* clay flue lining, a *listed* chimney lining system or other *approved* material that will resist corrosion, erosion, softening or cracking from vent gases at temperatures up to 1,800°F (982°C).

Exception: Masonry chimney flues serving *listed* gas appliances with draft hoods, Category I appliances and other gas appliances *listed* for use with Type B vents shall be permitted to be lined with a chimney lining system specifically *listed* for use only with such appliances. The liner shall be installed in accordance with the liner manufacturer's instructions. A permanent identifying label shall be attached at the point where the connection is to be made to the liner. The label shall read: "This chimney liner is for appliances that burn gas only. Do not connect to solid or liquid fuel-burning appliances or incinerators."

For installation of gas vents in existing masonry chimneys, see Section 503.6.3.

❖ A chimney liner might be listed for use with solid-, liquid- and gas-fuel-fired appliances. The label required by this section is intended to warn the unknowing

INTERNATIONAL CODE COUNCIL®
Copyright © 2015 ICC. ALL RIGHTS RESERVED. Accessed by David Dammon on Jun 21, 2017 12:30:52 PM pursuant to License Agreement with ICC. No further reproduction or distribution authorized. ANY UNAUTHORIZED REPRODUCTION OR DISTRIBUTION IS A VIOLATION OF THE FEDERAL COPYRIGHT ACT AND THE LICENSE AGREEMENT, AND SUBJECT TO CIVIL AND CRIMINAL PENALTIES THEREUNDER.

installer who sees a masonry chimney and thinks that it can serve a solid- or liquid-fuel-fired appliance. The label would be applicable to chimney liner systems that are designed for gas-fired appliances only (see Section 501.3).

503.5.4 Chimney termination. Chimneys for residential-type or low-heat appliances shall extend not less than 3 feet (914 mm) above the highest point where they pass through a roof of a building and not less than 2 feet (610 mm) higher than any portion of a building within a horizontal distance of 10 feet (3048 mm). Chimneys for medium-heat appliances shall extend not less than 10 feet (3048 mm) higher than any portion of any building within 25 feet (7620 mm). Chimneys shall extend not less than 5 feet (1524 mm) above the highest connected *appliance* draft hood outlet or flue collar. Decorative shrouds shall not be installed at the termination of factory-built chimneys except where such shrouds are *listed* and *labeled* for use with the specific factory-built chimney system and are installed in accordance with the manufacturer's instructions.

❖ Low-heat and residential-type chimneys must extend at least 3 feet (914 mm) above the roof, measured from the highest point of the roof penetration. They must also be at least 2 feet (610 mm) higher than any portion of the roof within a 10-foot (3048 mm) horizontal distance [see Commentary Figures 503.5.4(1) and 503.5.4(2)].

The 2-foot (610 mm) termination requirement is intended to prevent wind and pressure zones from reducing the amount of draft produced by the chimney. Wind and wind-induced eddy currents can react with building structural surfaces, thereby creating air pressure zones that can diminish chimney draft and cause reverse flow (backdraft) in the chimney. Loss of draft will cause the appliance or fireplace served by the chimney to discharge combustion products into the building interior. Locating the chimney outlet well into the undisturbed wind stream and away from the cavity and wake (eddy) zones around the building can counteract the adverse effects and also prevent the reentry of vent gases into the building through openings and fresh air intakes. Terminating a chimney in the eddy current area recirculates the combustion products and allows them to enter the building via infiltration, wall openings and air intakes. A chimney terminal properly located above the eddy current area allows the wind to carry the combustion products away from the building. Factory-built chimneys have termination caps that are part of the labeled chimney system and that must be installed. Like vent systems, the chimney cap is designed to keep out precipitation and animals and minimize the adverse effects of wind.

Decorative shrouds are designed to be aesthetically pleasing and to hide chimney terminations from view. These shrouds have, in some cases, caused fires resulting from overheated combustible construction and the accumulation of debris and animal nesting. Shrouds can also interfere with the functioning of a vent or chimney. The listing of the shroud must state the specific make and model of chimney with which the shroud is intended to be used. Some manufacturers are manufacturing shrouds that are listed for use with a specific make and model of chimney. Most often, shrouds are field-constructed of sheet metal, masonry or stucco on frame.

503.5.5 Size of chimneys. The effective area of a chimney venting system serving *listed* appliances with draft hoods, Category I appliances and other appliances *listed* for use with Type B vents shall be determined in accordance with one of the following methods:

1. The provisions of Section 504.
2. For sizing an individual chimney venting system for a single *appliance* with a draft hood, the effective areas of the vent connector and chimney flue shall be not less than the area of the *appliance* flue collar or draft hood outlet, nor greater than seven times the draft hood outlet area.
3. For sizing a chimney venting system connected to two appliances with draft hoods, the effective area of the chimney flue shall be not less than the area of the larger draft hood outlet plus 50 percent of the area of the smaller draft hood outlet, nor greater than seven times the smallest draft hood outlet area.
4. Chimney venting systems using mechanical draft shall be sized in accordance with *approved* engineering methods.
5. Other *approved* engineering methods.

❖ Chimneys can be sized in accordance with Section 504, by Item 2, 3 or 4 of this section or by an engineering method acceptable to the code official. Some appliances are not categorized; however, appliances with draft hoods and appliances listed for use with Type B vents would fit in Category I if they were categorized. The manufacturer's instructions for some Category I appliances, such as fan-assisted furnaces and boilers, may not allow connecting the appliance to a masonry chimney except under specific limited conditions.

Item 2 applies only to a single appliance that is factory equipped with a draft hood. The "seven times rule" prevents the chimney from being too large, which could result in poor draft and condensation problems.

Like vents, chimneys that are too large in area can be as problematic as chimneys that are too small in area.

Item 3 is limited to only one venting arrangement. It can only be used for a chimney that serves two appliances, both of which must be factory-equipped with draft hoods. The method is based on the areas of the chimneys and draft hood outlets, not on the diameters.

Item 4 recognizes that some manufacturers of mechanical draft equipment (exhausters) have their own sizing methodology specific to their product. Recall that Item 1 of Section 503.3.3 requires listing of such equipment.

INTERNATIONAL CODE COUNCIL®
Copyright © 2015 ICC. ALL RIGHTS RESERVED. Accessed by David Dammon on Jun 21, 2017 12:30:52 PM pursuant to License Agreement with ICC. No further reproduction or distribution authorized. ANY UNAUTHORIZED REPRODUCTION OR DISTRIBUTION IS A VIOLATION OF THE FEDERAL COPYRIGHT ACT AND THE LICENSE AGREEMENT, AND SUBJECT TO CIVIL AND CRIMINAL PENALTIES THEREUNDER.

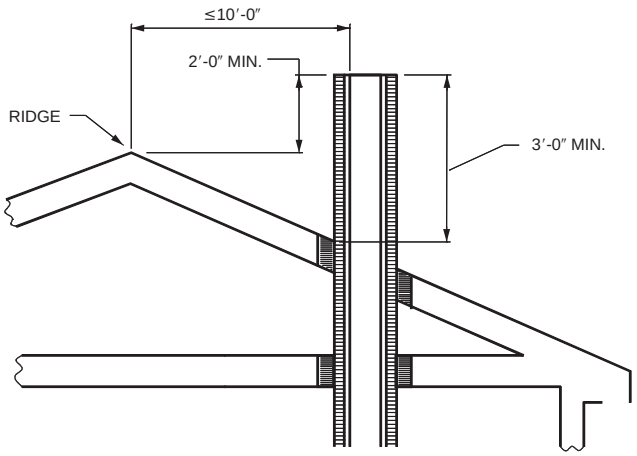

CROSS SECTION - WHEN 10 FT OR LESS FROM RIDGE

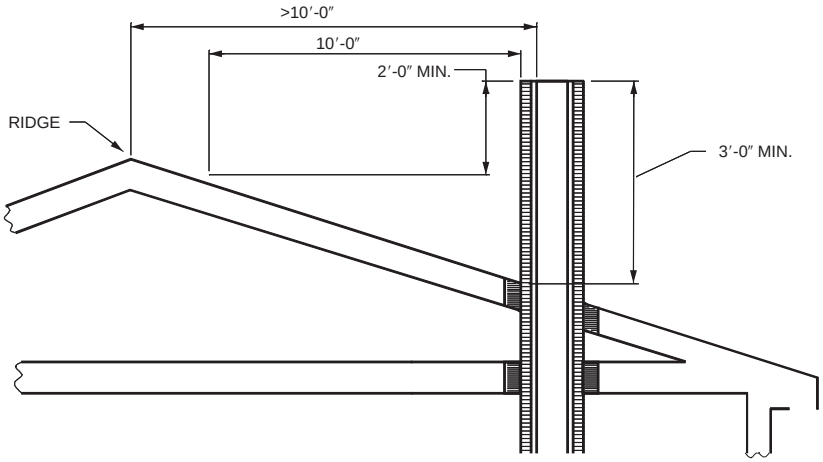

CROSS SECTION - WHEN MORE THAN 10 FT FROM RIDGE

For SI: 1 foot = 304.8 mm.

Figure 503.5.4(1)
LOW-HEAT CHIMNEY TERMINATIONS



Figure 503.5.4(2)
DECORATIVE SHROUDS

INTERNATIONAL CODE COUNCIL®
Copyright © 2015 ICC. ALL RIGHTS RESERVED. Accessed by David Dammon on Jun 21, 2017 12:30:52 PM pursuant to License Agreement with ICC. No further reproduction or distribution authorized. ANY UNAUTHORIZED REPRODUCTION OR DISTRIBUTION IS A VIOLATION OF THE FEDERAL COPYRIGHT ACT AND THE LICENSE AGREEMENT, AND SUBJECT TO CIVIL AND CRIMINAL PENALTIES THEREUNDER.

503.5.6 Inspection of chimneys. Before replacing an existing *appliance* or connecting a vent connector to a chimney, the chimney passageway shall be examined to ascertain that it is clear and free of obstructions and it shall be cleaned if previously used for venting solid or liquid fuel-burning appliances or fireplaces.

❖ If a chimney is going to serve a new appliance installation or a replacement appliance installation, the chimney must be inspected to determine whether it is still serviceable and free of deposits. Chimneys can become obstructed by debris such as leaves, animal carcasses, loose mortar and pieces of masonry and liner. Combustible deposits can accumulate on chimney walls used to vent liquid- and solid-fuel-fired appliances, and this section mandates that the chimney be cleaned if it served such appliances in the past. Masonry chimneys are especially susceptible to internal deterioration and should be inspected regularly, in addition to when a new or replacement appliance is connected.

503.5.6.1 Chimney lining. Chimneys shall be lined in accordance with NFPA 211.

Exception: Where an existing chimney complies with Sections 503.5.6 through 503.5.6.3 and its sizing is in accordance with Section 503.5.5, its continued use shall be allowed where the *appliance* vented by such chimney is replaced by an *appliance* of similar type, input rating and efficiency.

❖ The liner forms the flue passageway and is the actual conductor of all products of combustion. The chimney liner must be able to withstand exposure to high temperatures and corrosive chemicals. The chimney lining protects the masonry construction of the chimney walls and allows the chimney to be constructed gas tight. This section regulates liners and relining systems. Liners are often used to reline an existing chimney to salvage a masonry chimney or allow connection of higher-efficiency appliances.

Flue lining systems for masonry chimneys include clay tile, poured-in-place refractory materials and stainless steel pipe. Chimney lining systems for chimneys serving gas-fired appliances include stainless steel and aluminum piping (uninsulated or insulated) designed for both new construction and for relining existing chimneys [see Commentary Figures 503.5.6.1(1) and 503.5.6.1(2)]. Type B vent is also used as a chimney liner, although it is not considered a lining system, and in such cases the chimney is actually a masonry chase containing a vent.

Relining of existing chimneys is quite common now because of the incompatibility of mid-efficiency appliances and masonry chimneys. Relining systems allows reuse of existing chimneys, thereby saving expense and retaining desirable architectural features of buildings.

The exception is intended to allow an unlined chimney to serve a new appliance that is installed to replace a previously served appliance if the new appliance does not create any different operating conditions in the chimney; that is, the volume, water vapor content and dilution air content of the new appliance flue gases are the same as those of the old appliance.

The exception assumes that the existing chimney and the existing appliances operated as intended by



Figure 503.5.6.1(1)
CHIMNEY LINING SYSTEM FOR GAS APPLIANCES
(Photo courtesy of Selkirk L.L.C.)

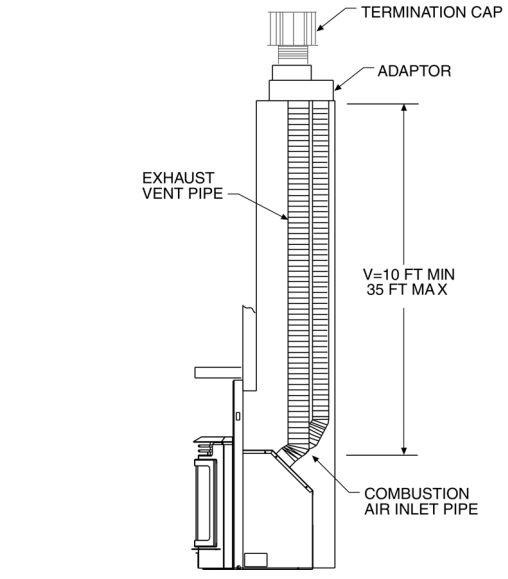

For SI: 1 foot = 304.8 mm.

Figure 503.5.6.1(2)
DIRECT-VENT APPLIANCE FOR INSTALLATION IN SOLID FUEL FIREPLACE
(Figure courtesy of Quadra-Fire)

INTERNATIONAL CODE COUNCIL®
Copyright © 2015 ICC. ALL RIGHTS RESERVED. Accessed by David Dammon on Jun 21, 2017 12:30:52 PM pursuant to License Agreement with ICC. No further reproduction or distribution authorized. ANY UNAUTHORIZED REPRODUCTION OR DISTRIBUTION IS A VIOLATION OF THE FEDERAL COPYRIGHT ACT AND THE LICENSE AGREEMENT, AND SUBJECT TO CIVIL AND CRIMINAL PENALTIES THEREUNDER.

this code. If there is evidence that the previous chimney and appliance system was not working as required by the code, the exception is not intended to be applicable. Because this exception would allow an installation that is in conflict with the typical appliance manufacturer's instructions, it is in effect negated because the manufacturer's instructions will prevail in this case (see Sections 305.1 and 503.5.6.3). Before the exception could ever be applied, the chimney would have to be inspected and determined to be clear, clean, free of obstructions, safe for the intended use and properly sized for the appliances served. Also, the replacement appliance(s) would have to be the same type with nearly the same input rating and efficiency to make sure that the same amount of heat and dilution air enters the chimney. This will rarely, if ever, be encountered in the field; therefore, for multiple reasons, the exception will likely never be applicable.

503.5.6.2 Cleanouts. Cleanouts shall be examined to determine if they will remain tightly closed when not in use.

❖ A cleanout door or panel must be capable of securely sealing the opening to prevent air from entering the chimney, which would reduce draft for the appliances served. Under certain conditions, a faulty cleanout could also cause vent gases to leak from the chimney.

503.5.6.3 Unsafe chimneys. Where inspection reveals that an existing chimney is not safe for the intended application, it shall be repaired, rebuilt, lined, relined or replaced with a vent or chimney to conform to NFPA 211 and it shall be suitable for the appliances to be vented.

❖ If a chimney is inspected and found to be unsafe for any reason, it must be made safe or be replaced (see Section 501.3). Some chimneys and appliances are not compatible as dictated by the appliance and/or factory-built chimney manufacturer. Masonry chimneys usually become unsafe as a result of deteriorated mortar joints and liners. Other causes include structural instability, cracks, faulty cleanouts, deposit formation and moisture damage.

503.5.7 Chimneys serving appliances burning other fuels. Chimneys serving *appliances* burning other fuels shall comply with Sections 503.5.7.1 through 503.5.7.4.

❖ See the commentary to Sections 503.5.7.1 through 503.5.7.4.

503.5.7.1 Solid fuel-burning appliances. An *appliance* shall not be connected to a chimney flue serving a separate *appliance* designed to burn solid fuel.

❖ Each solid-fuel-burning appliance or fireplace must be connected to a dedicated independent chimney, or a dedicated independent flue in multiple-flue chimney constructions. Solid-fuel-burning appliances and fireplaces cannot share a common chimney or flueway with any other appliance or fireplace.

Solid-fuel-burning appliances produce creosote deposits on the interior walls of chimney liners. The creosote formation is highly combustible and creates a potential fire hazard. Because of the potential for a chimney fire, other connections to the chimney can allow fire to break out of the chimney into the building.

Also, chimney passageways can become restricted by the creosote formations. If other appliances were vented to such chimneys, combustion products could be discharged into the building and the other appliances might seriously interfere with the draft for the solid-fuel appliance.

This section is also intended to prevent the possibility of creosote leaking out of the chimney through appliance connectors.

Combination (dual fuel) gas- or oil- and solid-fuel-burning appliances are designed to be connected to a single chimney passageway. Such dual-fuel appliances must be listed, labeled and installed in accordance with the manufacturers' instructions.

503.5.7.2 Liquid fuel-burning appliances. Where one chimney flue serves gas appliances and liquid fuel-burning appliances, the appliances shall be connected through separate openings or shall be connected through a single opening where joined by a suitable fitting located as close as practical to the chimney. Where two or more openings are provided into one chimney flue, they shall be at different levels. Where the appliances are automatically controlled, they shall be equipped with safety shutoff devices.

❖ Gas-fired and oil-fired appliances are allowed to share a chimney or flue. The code does not include a sizing method for such arrangements; therefore, the system would have to be engineered or otherwise approved by the code official. Placing the openings at different levels in the chimney flue will minimize interference between the flow of the chimney connectors. The last sentence is consistent with the design of all automatically controlled appliances listed to today's appliance standards as required by this code.

503.5.7.3 Combination gas- and solid fuel-burning appliances. A combination gas- and solid fuel-burning *appliance* shall be permitted to be connected to a single chimney flue where equipped with a manual reset device to shut off gas to the main burner in the event of sustained backdraft or flue gas spillage. The chimney flue shall be sized to properly vent the *appliance*.

❖ A dual fuel appliance, gas and solid fuel, can be served by a single chimney or flue if the appliance is equipped with a safety control that monitors chimney spillage. A solid-fuel fire cannot be turned on and off like other fuel fires; thus, it is possible that the gas burner could be operated while the solid-fuel fire is still burning, and the chimney could be overloaded, causing spillage of combustion gases. The chimney size would have to be engineered or would have to comply with the appliance manufacturer's instructions.

INTERNATIONAL CODE COUNCIL®
Copyright © 2015 ICC. ALL RIGHTS RESERVED. Accessed by David Dammon on Jun 21, 2017 12:30:52 PM pursuant to License Agreement with ICC. No further reproduction or distribution authorized. ANY UNAUTHORIZED REPRODUCTION OR DISTRIBUTION IS A VIOLATION OF THE FEDERAL COPYRIGHT ACT AND THE LICENSE AGREEMENT, AND SUBJECT TO CIVIL AND CRIMINAL PENALTIES THEREUNDER.

503.5.7.4 Combination gas- and oil fuel-burning appliances. A *listed* combination gas- and oil fuel-burning *appliance* shall be permitted to be connected to a single chimney flue. The chimney flue shall be sized to properly vent the *appliance*.

❖ See the commentary to Section 503.5.6.3.

503.5.8 Support of chimneys. All portions of chimneys shall be supported for the design and weight of the materials employed. Factory-built chimneys shall be supported and spaced in accordance with the manufacturer's installation instructions.

❖ Chimneys, including factory-built, are very heavy compared to vents and need substantial support to carry their weight and prevent displacement. Factory-built chimneys require special support fittings at offsets to prevent the elbows from being damaged by bearing the weight of the chimney sections above the offset. Chimneys, like piping systems, often suffer from lack of adequate support (see Section 502.6).

503.5.9 Cleanouts. Where a chimney that formerly carried flue products from liquid or solid fuel-burning appliances is used with an *appliance* using fuel gas, an accessible cleanout shall be provided. The cleanout shall have a tight-fitting cover and shall be installed so its upper edge is not less than 6 inches (152 mm) below the lower edge of the lowest chimney inlet opening.

❖ If an existing chimney has no cleanout and was used for oil or solid-fuel appliances, a cleanout must be added. The cleanout allows access for a person to inspect and clean the chimney and monitor deposits on the interior walls. The cleanout must be located so that vent gases will not be in contact with the cleanout door/cover.

503.5.10 Space surrounding lining or vent. The remaining space surrounding a chimney liner, gas vent, special gas vent or plastic *piping* installed within a masonry chimney flue shall not be used to vent another *appliance*. The insertion of another liner or vent within the chimney as provided in this code and the liner or vent manufacturer's instructions shall not be prohibited.

The remaining space surrounding a chimney liner, gas vent, special gas vent or plastic *piping* installed within a masonry, metal or factory-built chimney shall not be used to supply *combustion air*. Such space shall not be prohibited from supplying *combustion air* to *direct-vent appliances* designed for installation in a solid fuel-burning *fireplace* and installed in accordance with the manufacturer's instructions.

❖ If a vent or a chimney liner is installed within a chimney flue, there will be space between the vent or liner and the chimney walls. This space must not be used to convey vent gases because of its irregular size and geometry and because the vent gases could damage the vent or liner installed in the chimney. A metallic vent or liner could be corroded by surrounding vent gases, and plastic pipes could be overheated. Liner systems and vent systems are not listed for use within an atmosphere of vent gases. Installing multiple liners or vents within a chimney is not the same as using the annular space between a vent or liner and the inside chimney walls.

The space between a liner, vent or pipe and the interior chimney walls cannot be used as a duct for conveying combustion air. That space would have poor airflow characteristics, and moving cold combustion air over a liner or vent can cause condensation in the venting system. An exception is made for direct-vent appliances that are listed for such installation in solid-fuel-burning fireplaces.

503.6 Gas vents. Gas vents shall comply with Sections 503.6.1 through 503.6.13 (see Section 202, Definitions).

❖ See the commentary to Sections 503.6 through 503.6.10.

503.6.1 Installation, general. Gas vents shall be installed in accordance with the manufacturer's instructions.

❖ Gas vents, such as Type B vents, come with installation instructions available at the place of purchase or enclosed within the boxed items. The manufacturers also will provide, upon request, very detailed and informative design manuals that discuss sizing and venting fundamentals. These design manuals are invaluable for someone who installs, inspects or designs Type B vent systems (see Sections 502.1 and 502.5).

503.6.2 Type B-W vent capacity. A Type B-W gas vent shall have a *listed* capacity not less than that of the *listed* vented wall furnace to which it is connected.

❖ A Type B-W vent is an oval shaped version of a Type B vent designed to fit within a nominal 2 × 4 inch framed wall and serve a wall furnace (see Section 608).

503.6.3 Gas vents installed within masonry chimneys. Gas vents installed within masonry chimneys shall be installed in accordance with the manufacturer's instructions. Gas vents installed within masonry chimneys shall be identified with a permanent label installed at the point where the vent enters the chimney. The label shall contain the following language: "This gas vent is for appliances that burn gas. Do not connect to solid or liquid fuel-burning appliances or incinerators."

❖ One method of resizing a chimney is to install a Type B vent system within it. When this is done, the chimney is no longer seen as a chimney and becomes nothing more than a chase. This type of installation is practical only for chimneys without offsets. The Type B vent listing conditions and installation instructions will state whether such an installation is allowed and will include installation requirements such as support of the vent, weatherproofing the chimney top and the required condition of the chimney. Special instructions may be applicable for the support of the vent pipe within the chimney. The chimney should be structurally sound to avoid damage to the Type B vent system from falling and/or shifting masonry. There is also a concern for moisture and chimney deposits being corrosive to the Type B vent. The warning label is intended to prevent someone from connecting a solid-fuel or oil-fired appliance to what

INTERNATIONAL CODE COUNCIL®
Copyright © 2015 ICC. ALL RIGHTS RESERVED. Accessed by David Dammon on Jun 21, 2017 12:30:52 PM pursuant to License Agreement with ICC. No further reproduction or distribution authorized. ANY UNAUTHORIZED REPRODUCTION OR DISTRIBUTION IS A VIOLATION OF THE FEDERAL COPYRIGHT ACT AND THE LICENSE AGREEMENT, AND SUBJECT TO CIVIL AND CRIMINAL PENALTIES THEREUNDER.

appears to be a chimney on the outside but is actually a Type B vent in disguise [see Commentary Figure 501.13(3)].

503.6.4 Gas vent terminations. A gas vent shall terminate in accordance with one of the following:

1. Gas vents that are 12 inches (305 mm) or less in size and located not less than 8 feet (2438 mm) from a vertical wall or similar obstruction shall terminate above the roof in accordance with Figure 503.6.4.
2. Gas vents that are over 12 inches (305 mm) in size or are located less than 8 feet (2438 mm) from a vertical wall or similar obstruction shall terminate not less than 2 feet (610 mm) above the highest point where they pass through the roof and not less than 2 feet (610 mm) above any portion of a building within 10 feet (3048 mm) horizontally.
3. As provided for industrial appliances in Section 503.2.2.
4. As provided for direct-vent systems in Section 503.2.3.
5. As provided for appliances with integral vents in Section 503.2.4.
6. As provided for mechanical draft systems in Section 503.3.3.
7. As provided for ventilating hoods and exhaust systems in Section 503.3.4.

❖ This section duplicates typical vent manufacturers' instructions and emphasizes that a vent is a system of components that are all necessary for proper functioning. The cap must be as specified by the vent manufacturer and is a listed component. A vent cap not only keeps out moisture, debris and animals, it also serves to prevent wind interference that could negatively affect the vent's ability to produce the required draft. Vent caps are tested for flow resistance and performance in wind.

This section is consistent with typical vent manufacturers' instructions and applies only to vents equipped with listed caps as required by Section 503.6.6. The relationship between vent terminal height and roof pitch is based on reducing the effects of wind and maintaining a minimum separation between the vent terminal and the roof surface.

See Section 504.2.9 for a discussion of vent terminations that extend above the roof higher than required by the code.

Figure 503.6.4 requires greater vent height above the roof as the roof approaches being a vertical surface. The greater the roof pitch, the greater the effect of wind striking the roof surface and the closer the cap becomes (horizontally) to the roof surface (see Figure 503.6.4).

It is a common misapplication for code users to apply chimney termination height requirements to vents, thereby causing vents to extend above roofs much higher than required in many cases. For example, a 6-inch-diameter (152 mm) Type B vent must extend above a simple gabled roof only 1 foot (305 mm) for roofs having up to 6/12 pitch, if the terminal is not within 8 feet (2438 mm) of a vertical surface such as an upper-story exterior wall. Consideration should be given to vent location in a building in the design/installation phase so that the vent termination will not be difficult or require long extensions of vent pipe exposed to the outdoors. Vent piping exposed to the outdoors encourages condensation in cold weather, could require guy wires or braces depending on height and is considered to be aesthetically unattractive. Another good reason to plan for vent location during the design phase of a building is to allow straight vertical runs of vent and avoid offsets. Good planning can also prevent vents from passing through the roof on the street side of the building. Quite often, vent offsets in attics are installed for the sole purpose of penetrating the roof on the back side of a building.

Vent termination heights are affected by the pitch of the roof and the proximity of walls and other verti-

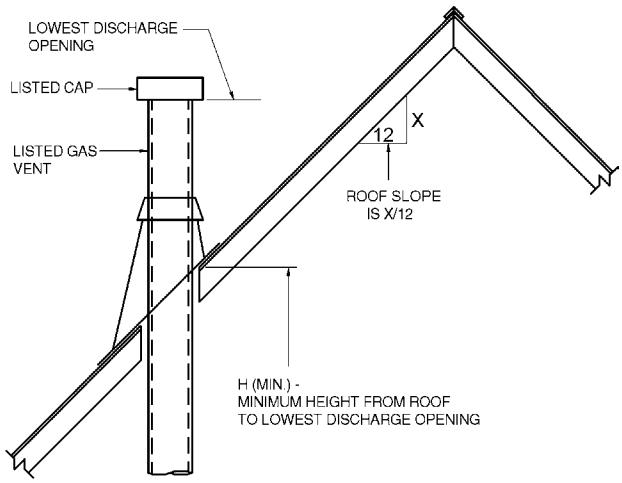

ROOF SLOPE	H (min) ft
Flat to 6/12	1.0
Over 6/12 to 7/12	1.25
Over 7/12 to 8/12	1.5
Over 8/12 to 9/12	2.0
Over 9/12 to 10/12	2.5
Over 10/12 to 11/12	3.25
Over 11/12 to 12/12	4.0
Over 12/12 to 14/12	5.0
Over 14/12 to 16/12	6.0
Over 16/12 to 18/12	7.0
Over 18/12 to 20/12	7.5
Over 20/12 to 21/12	8.0

For SI: 1 inch = 25.4 mm, 1 foot = 304.8 mm.

FIGURE 503.6.4
TERMINATION LOCATIONS FOR GAS VENTS WITH LISTED CAPS 12 INCHES OR LESS IN SIZE AT LEAST 8 FEET FROM A VERTICAL WALL

INTERNATIONAL CODE COUNCIL®
Copyright © 2015 ICC. ALL RIGHTS RESERVED. Accessed by David Dammon on Jun 21, 2017 12:30:52 PM pursuant to License Agreement with ICC. No further reproduction or distribution authorized. ANY UNAUTHORIZED REPRODUCTION OR DISTRIBUTION IS A VIOLATION OF THE FEDERAL COPYRIGHT ACT AND THE LICENSE AGREEMENT, AND SUBJECT TO CIVIL AND CRIMINAL PENALTIES THEREUNDER.

cal or near vertical structural components. Where vent terminal locations within 8 feet (2438 mm) of a gable end, upper story or other vertical surface cannot be avoided, vent terminations must be regulated in a manner similar to chimneys [i.e., 2 feet (610 mm) minimum height and not less than 2 feet (610 mm) above any part of building within 10 feet (3048 mm)] (see Commentary Figure 503.6.4). Commentary Figure 503.6.4 does not apply to vent sizes larger than 12 inches (305 mm). This is consistent with manufacturers' instructions and relates to the testing of gas vents to the referenced standard.

The intent of Section 504.2.9 is for vents exposed to the outdoors below the roof penetration to be sized by a method other than the tables in Section 504. This means that if a vent is within 8 feet (2438 mm) of a vertical wall or is larger in size than 12 inches (305 mm), it must extend 2 feet (3048 mm) above any part of the building within 10 feet horizontally, and this could expose a substantial run of vent to the outdoors. In such cases, the tables of Section 504 would not apply, and the vent system would have to be engineered.

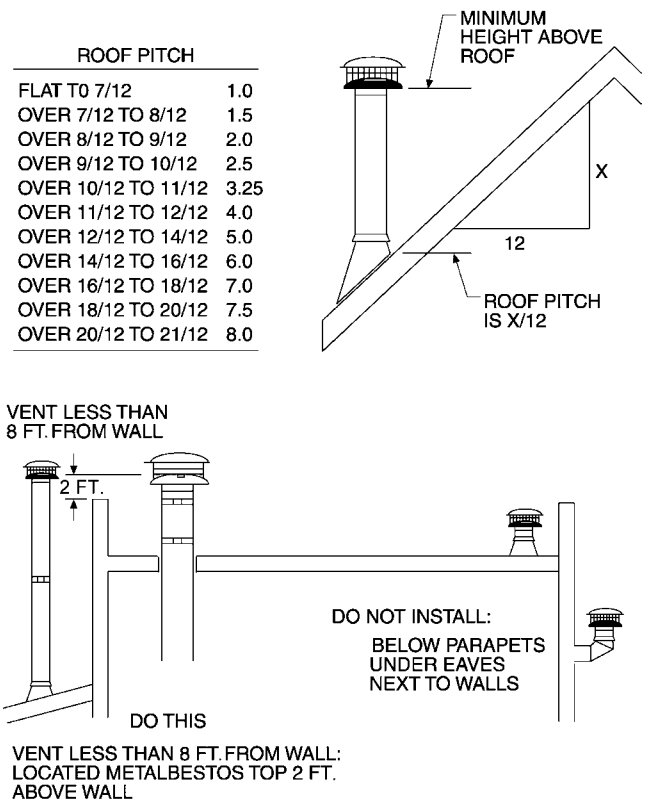

Figure 503.6.4
TOP LOCATION RULES
(Figure courtesy of Selkirk, L.L.C.)

503.6.4.1 Decorative shrouds. Decorative shrouds shall not be installed at the termination of gas vents except where such shrouds are *listed* for use with the specific gas venting system and are installed in accordance with manufacturer's instructions.

❖ Decorative shrouds have become a popular architectural feature. They are designed to be aesthetically pleasing and to hide chimney and vent terminations. These shrouds have, in some cases, caused fires resulting from overheated combustible construction and the accumulation of debris and animal nesting. Shrouds can also interfere with the functioning of a chimney or vent system. Shrouds are allowed only where they are listed and labeled for use with the specific factory-built chimney system or gas venting system (see Commentary Figure 503.6.4.1).



Figure 503.6.4.1
DECORATIVE SHROUDS

503.6.5 Minimum height. A Type B or L gas vent shall terminate not less than 5 feet (1524 mm) in vertical height above the highest connected *appliance* draft hood or flue collar. A Type B-W gas vent shall terminate not less than 12 feet (3658 mm) in vertical height above the bottom of the wall furnace.

❖ The amount of draft produced by a vent is directly related to the height of the vent. A minimum height must be established to produce the minimum draft necessary for the appliance served. This is made evident by looking at the tables in Section 504 that indicate increasing vent capacity as the vent height increases. This is a result of the increase in draft and vent flow velocity. The tables in Section 504 and some vent manufacturers' instructions indicate a minimum height of 6 feet (1829 mm) because this is the lowest entry for height in the sizing tables.

This section is often violated for appliances installed near the roof such as suspended unit heaters and appliances installed under shed roofs.

INTERNATIONAL CODE COUNCIL®
Copyright © 2015 ICC. ALL RIGHTS RESERVED. Accessed by David Dammon on Jun 21, 2017 12:30:52 PM pursuant to License Agreement with ICC. No further reproduction or distribution authorized. ANY UNAUTHORIZED REPRODUCTION OR DISTRIBUTION IS A VIOLATION OF THE FEDERAL COPYRIGHT ACT AND THE LICENSE AGREEMENT, AND SUBJECT TO CIVIL AND CRIMINAL PENALTIES THEREUNDER.

503.6.6 Roof terminations. Gas vents shall extend through the roof flashing, roof jack or roof thimble and terminate with a *listed* cap or *listed* roof assembly.

❖ This section duplicates the typical vent manufacturer's instructions and emphasizes that a vent is a system of components that are all necessary for proper functioning. The cap must be as specified by the vent manufacturer and is a listed component. A vent cap not only keeps out moisture, debris and animals, it also serves to prevent wind interference that could negatively affect the vent's ability to produce the required draft. Vent caps are tested for flow resistance and performance in wind. The emphasis here is that the vent system must extend through the roof all the way to the cap using components that are listed as part of the listed venting system.

503.6.7 Forced air inlets. Gas vents shall terminate not less than 3 feet (914 mm) above any forced air inlet located within 10 feet (3048 mm).

❖ If the vent termination is 10 feet (3048 mm) or more from the forced air (mechanical intake opening), this section does not apply. The intent is to prevent combustion gases from being drawn into the building through powered air intakes of any type (see Commentary Figure 503.6.7).

503.6.8 Exterior wall penetrations. A gas vent extending through an exterior wall shall not terminate adjacent to the wall or below eaves or parapets, except as provided in Sections 503.2.3 and 503.3.3.

❖ The termination locations prohibited by this section would result in poor draft or back draft because of the effects of wind. Also, termination in such locations could result in a fire hazard, damage to the structure and entry of vent gases into the building. If a gas vent (typically Type B) penetrates an exterior wall, the vent would have to extend vertically above the roof in accordance with Section 503.6.3; however, this exterior extension of vent presents a problem in itself. Gas vents, such as Type B vents, are not designed for outdoor exposure, except for the short section of vent that passes through and extends above the roof. Sections 504.2.9 and 504.3.16 reinforce this by stating that the vent sizing tables in Section 504 do not apply to vents exposed to the outdoors below the roof line. Vents exposed to the outdoors will suffer from poor draft and condensation production in most climates because of the heat loss through the exposed vent walls. The bottom line is that vents sized in accordance with Section 504 cannot extend up the exterior side of a building as implied by this section and Section 503.6.4. This type of installation could occur only if the vent system was engineered to account for the outdoor exposure. Note that this is also consistent with typical vent manufacturers' design manuals and installation instructions. Even though it is common to see gas vents run up the exterior wall of a building, such installations are not allowed unless they are engineered and allowed by the vent manufacturer, neither of which is likely.

503.6.9 Size of gas vents. Venting systems shall be sized and constructed in accordance with Section 504 or other *approved* engineering methods and the gas vent and *appliance* manufacturer's installation instructions.

❖ Gas vents are to be sized by either Section 504 or an engineering method acceptable to the code official and, in all cases, in accordance with the vent manufacturer's instructions (see Sections 503.6.9.1 through 503.6.9.3).

503.6.9.1 Category I appliances. The sizing of natural draft venting systems serving one or more *listed* appliances equipped with a draft hood or appliances *listed* for use with Type B gas vent, installed in a single story of a building, shall be in accordance with one of the following methods:

1. The provisions of Section 504.
2. For sizing an individual gas vent for a single, draft-hood-equipped *appliance*, the effective area of the vent connector and the gas vent shall be not less than the

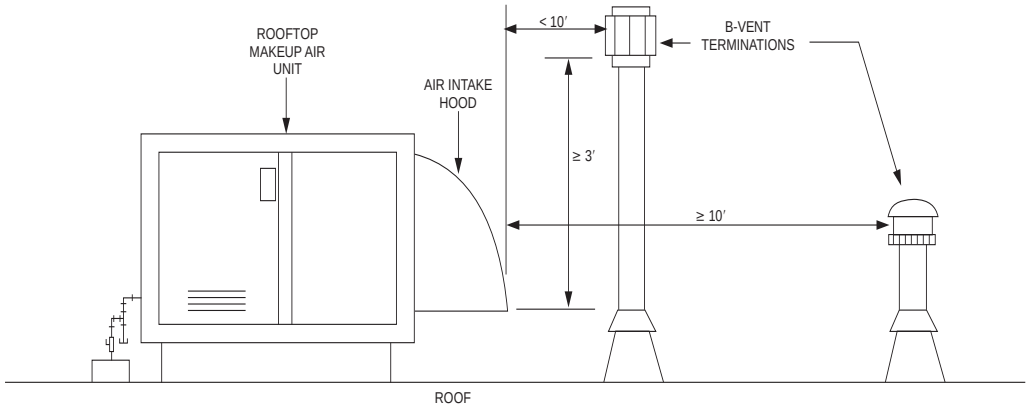

For SI: 1 foot = 304.8 mm.

Figure 503.6.7
B-VENT TERMINATIONS WITH RESPECT TO FORCED AIR INTAKES

INTERNATIONAL CODE COUNCIL®
Copyright © 2015 ICC. ALL RIGHTS RESERVED. Accessed by David Dammon on Jun 21, 2017 12:30:52 PM pursuant to License Agreement with ICC. No further reproduction or distribution authorized. ANY UNAUTHORIZED REPRODUCTION OR DISTRIBUTION IS A VIOLATION OF THE FEDERAL COPYRIGHT ACT AND THE LICENSE AGREEMENT, AND SUBJECT TO CIVIL AND CRIMINAL PENALTIES THEREUNDER.

area of the *appliance* draft hood outlet, nor greater than seven times the draft hood outlet area.

3. For sizing a gas vent connected to two appliances with draft hoods, the effective area of the vent shall be not less than the area of the larger draft hood outlet plus 50 percent of the area of the smaller draft hood outlet, nor greater than seven times the smaller draft hood outlet area.
4. *Approved* engineering practices.

❖ This section reiterates the intent of the preceding section, is specific to Category I appliances, and applies only to appliances installed within the same story. Multiple-story applications are addressed in Section 503.6.10. Category I appliances are vented by natural draft and, depending upon the design and efficiency, are either equipped with a draft hood or a fan-assisted combustion system. Because of the higher thermal efficiencies and lack of dilution air, vent designs for fan-assisted appliances are different from those for draft hood- equipped appliances.

Item 3 allows a very limited application of the old "50-percent rule." Item 2 applies only to a single draft-hood-equipped appliance. Item 3 applies only to a common vent system serving two draft-hood-equipped appliances. Neither Item 2 nor 3 can be applied to the venting of fan-assisted appliances, because the old alternate method (50-percent rule) was not created with fan-assisted appliances in mind and will not work with such appliances. Besides being limited to draft hood appliances, Items 2 and 3 should be further limited to simple venting system configurations having short laterals; few, if any, changes in direction (fittings); short connector lengths with maximum vertical rise and tall vent heights. Vent manufacturers emphatically warn against the use of the alterative sizing rule in Item 3 because this method does not account for many factors now known to be important in vent sizing.

503.6.9.2 Vent offsets. Type B and L vents sized in accordance with Item 2 or 3 of Section 503.6.9.1 shall extend in a generally vertical direction with offsets not exceeding 45 degrees (0.79 rad), except that a vent system having not more than one 60-degree (1.04 rad) *offset* shall be permitted. Any angle greater than 45 degrees (0.79 rad) from the vertical is considered horizontal. The total horizontal distance of a vent plus the horizontal vent connector serving draft-hood-equipped appliances shall be not greater than 75 percent of the vertical height of the vent.

❖ This section addresses vent offsets differently than Section 504 and is in no way related to Section 504. This section would be applied only if Section 504 is not applied; therefore, this section is rarely applied, because Section 504 is necessary for sizing the majority of today's Category I venting systems. The only time that a Type B vent system would not be designed in accordance with Section 504 is if it were an engineered system or if it were designed in accordance with Section 503.6.9.1, Item 2 or 3, applicable only to draft-hood-equipped appliances.

This section regulates vent offsets, but without the tables and design requirements of Section 504, there are only very limited design requirements in Section 503 to accompany the offset provisions. In other words, this section would be only one of many parts necessary to design a vent system. This section is not intended for application in conjunction with the requirements of Section 504.

This section is not applicable to fan-assisted appliances and applies only to Type B and L vents sized in accordance with Item 2 or 3 of Section 503.6.8.1.

503.6.9.3 Category II, III and IV appliances. The sizing of gas vents for Category II, III and IV appliances shall be in accordance with the *appliance* manufacturer's instructions. The sizing of plastic pipe that is specified by the appliance manufacturer as a venting material for Category II, III and IV appliances shall be in accordance with the manufacturer's instructions.

❖ Venting systems for Category II, III and IV appliances are special vent systems specified by the appliance manufacturer and are not addressed further in the code (see Section 503.4).

Because plastic pipes such PVC, ABS and CPVC plumbing pipes are not listed and labeled as appliance vents (see the definition of "Vent"), the code was silent on how to size such pipes. The sizing is covered in the appliance manufacturer's instructions, and the code requires compliance with such instructions. For consistency, however, this section has been modified to address both listed vents and unlisted materials used as vents. For example, PVC pipe that vents a Category IV furnace is not listed as a vent; rather, it is a material that is used as a vent, and the appliance is listed for use with the PVC pipe.

503.6.9.4 Mechanical draft. Chimney venting systems using mechanical draft shall be sized in accordance with *approved* engineering methods.

❖ The manufacturers of exhausters (mechanical draft systems) provide sizing criteria for the vents and chimneys served by such equipment. The code's sizing criteria are based on natural draft chimneys and vents; therefore, engineered sizing methods must be used for other than natural draft (see Section 503.3.3).

503.6.10 Gas vents serving appliances on more than one floor. A common vent shall be permitted in multistory installations to vent Category I appliances located on more than one floor level, provided that the venting system is designed and installed in accordance with *approved* engineering methods. For the purpose of this section, crawl spaces, basements and attics shall be considered as floor levels.

❖ With rare exception, venting systems serve only appliances located within the same story. This section addresses those rare exceptions where a common venting system serves appliances that are installed within different stories or on different floor levels. For example, a single vent serves two appliances on the first floor of a building and also serves two more on the second floor, for a total of four appli-

INTERNATIONAL CODE COUNCIL®
Copyright © 2015 ICC. ALL RIGHTS RESERVED. Accessed by David Dammon on Jun 21, 2017 12:30:52 PM pursuant to License Agreement with ICC. No further reproduction or distribution authorized. ANY UNAUTHORIZED REPRODUCTION OR DISTRIBUTION IS A VIOLATION OF THE FEDERAL COPYRIGHT ACT AND THE LICENSE AGREEMENT, AND SUBJECT TO CIVIL AND CRIMINAL PENALTIES THEREUNDER.

ances. Such a system requires a unique design approach as dictated in Sections 503.6.10.1 and 503.6.10.2. Note that this section considers crawl spaces, basements and attics as floor levels. For example, if a venting system serves appliances on the main floor of a building and also serves an appliance installed in the attic, that system must comply with this section.

503.6.10.1 Appliance separation. Appliances connected to the common vent shall be located in rooms separated from occupiable space. Each of these rooms shall have provisions for an adequate supply of combustion, ventilation and dilution air that is not supplied from an occupiable space.

❖ This section addresses chimneys or vents that serve multiple appliances located on different floor levels. For example, a common vent may be designed to serve one or more appliances per floor of a multistory building, or a vent that rises up through the furnace rooms of single-story apartments in a multi-story apartment building would be a common vent for the "stacked" apartments. At each level there may be a single appliance or several appliances entering into the vent. Multistory venting involves special design criteria and poses a unique hazard. When a vent is overloaded, blocked or otherwise produces insufficient draft, the flue gases from lower-story appliances could discharge into upper stories through the upper-story appliance connections. The lower-story vent could appear to be functioning normally, while the upper-story occupants would be exposed to a life-threatening hazard.

To avoid this potential hazard, multistory vent systems are designed to isolate the vent system and the appliances from the occupied portions of the building. This isolation is commonly accomplished by locating the common vent and all of the appliances served in mechanical rooms that are accessed from the outdoors only. This is commonly accomplished by placing mechanical rooms on outside walls and making them accessible only from a balcony. The sizing and design of multistory common chimney and vent systems must be in accordance with the vent or chimney manufacturer's installation and design instructions.

This section speaks of "habitable space," but the intent should apply to "occupied/living space" because many spaces such as bathrooms, toilet rooms and halls are not defined as habitable, yet are occupied, even if only for short periods.

This section is not limited to residential occupancies and would apply to all occupancies. The common vent and the appliances served by the common vent have to be located in a space that does not communicate with occupied spaces. In other words, a door cannot be the means of isolating the common vent and appliances from an occupied space because there is no way to control the position of a door or make it gas tight. The most common method of isolation is to locate the common vent and appliances in a space that is accessed only from the outdoors [see Commentary Figures 503.6.10.1(1) and 503.6.10.1(2)]. This location limitation makes it obvious that only appliances such as furnaces, boilers and water heaters are candidates for this type of venting system. (Room heaters and gas fireplace appliances cannot be separated from the occupied space.) Combustion, dilution and ventilation air for the appliances must not be taken from an occupied space because this would allow communication of atmospheres between the appliance space and the occupied space. The method of supplying combustion air must not violate the separation between the appliances and the occupied space.

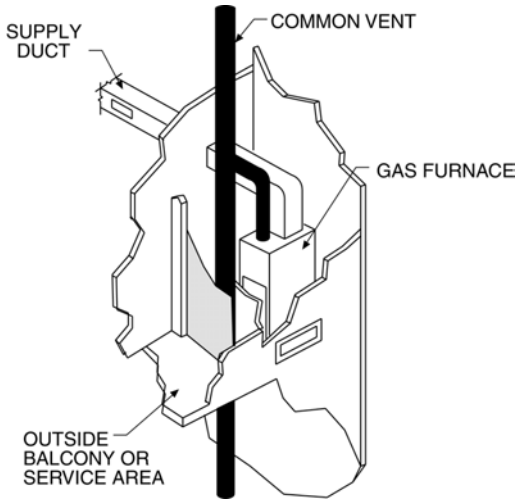

Figure 503.6.10.1(1)
APPLIANCE AND VENT SEPARATED FROM LIVING SPACE
(Figure courtesy of Simpson Dura-Vent Company, Incorporated)

503.6.10.2 Sizing. The size of the connectors and common segments of multistory venting systems for appliances *listed* for use with Type B double-wall gas vents shall be in accordance with Table 504.3(1), provided that:

1. The available total height (*H*) for each segment of a multistory venting system is the vertical distance between the level of the highest draft hood outlet or flue collar on that floor and the centerline of the next highest interconnection tee.
2. The size of the connector for a segment is determined from the *appliance* input rating and available connector rise and shall be not smaller than the draft hood outlet or flue collar size.
3. The size of the common vertical segment, and of the interconnection tee at the base of that segment, shall be based on the total *appliance* input rating entering that segment and its available total height.

❖ Because Table 504.3(1) is referenced, vent connectors within the multistory venting system must be constructed of double-wall gas vent. Manufacturers' instructions may contain additional requirements,

INTERNATIONAL CODE COUNCIL®
Copyright © 2015 ICC. ALL RIGHTS RESERVED. Accessed by David Dammon on Jun 21, 2017 12:30:52 PM pursuant to License Agreement with ICC. No further reproduction or distribution authorized. ANY UNAUTHORIZED REPRODUCTION OR DISTRIBUTION IS A VIOLATION OF THE FEDERAL COPYRIGHT ACT AND THE LICENSE AGREEMENT, AND SUBJECT TO CIVIL AND CRIMINAL PENALTIES THEREUNDER.



Figure 503.6.10.1(2)
APPLIANCE CLOSETS ACCESSED FROM OUTDOOR BALCONY

such as that the common vent must be entirely vertical with no offsets. The figures in Appendix B clearly depict Items 1, 2, and 3 of this section.

503.6.11 Support of gas vents. Gas vents shall be supported and spaced in accordance with the manufacturer's installation instructions.

❖ Type B vents must be supported to prevent the weight of the system from bearing on appliances and vent fittings. Fittings such as adjustable elbows are not designed to carry the weight of upper or lower sections of vent pipe, nor are appliance draft hoods and flue collars. Support bases, brackets and spacers are available from the vent manufacturer and are used to support the weight of the vent and maintain alignment and clearance to combustibles. On most job sites, the vents will be supported by various field-constructed brackets and straps made of sheet metal scraps, duct slips and drives and plumber's perforated straps. Gas vents are often poorly supported by methods that allow the vent fitting to rotate, that cause excessive loads on fittings and that allow the vent to sag or lose its required clearance. The installations should be carefully examined to determine that such field-constructed supports are adequate. Sheet metal screws must not penetrate the inner liner of any Type B vent component. Type B vents are designed for installation without the use of any additional fasteners that penetrate the vent walls (see Section 503.6.13).

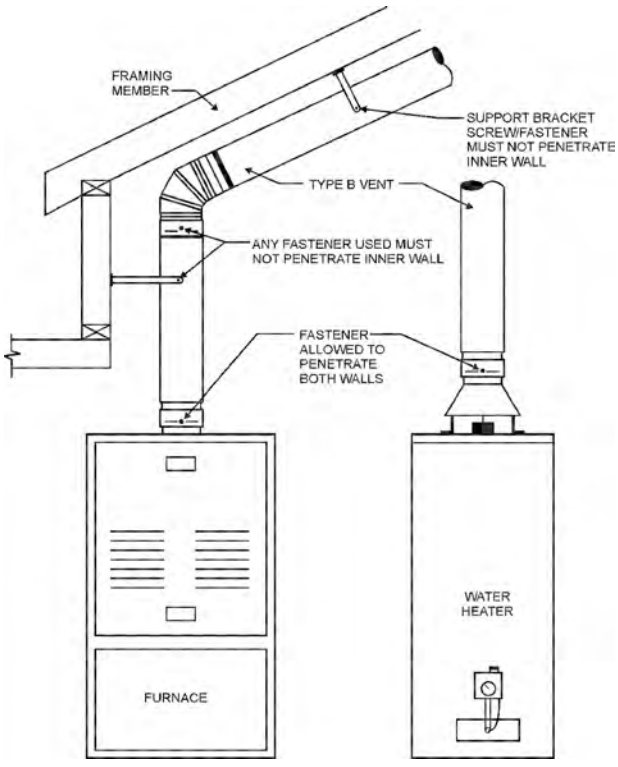

Figure 503.6.13
FASTENER PENETRATIONS

INTERNATIONAL CODE COUNCIL®
Copyright © 2015 ICC. ALL RIGHTS RESERVED. Accessed by David Dammon on Jun 21, 2017 12:30:52 PM pursuant to License Agreement with ICC. No further reproduction or distribution authorized. ANY UNAUTHORIZED REPRODUCTION OR DISTRIBUTION IS A VIOLATION OF THE FEDERAL COPYRIGHT ACT AND THE LICENSE AGREEMENT, AND SUBJECT TO CIVIL AND CRIMINAL PENALTIES THEREUNDER.

503.6.12 Marking. In those localities where solid and liquid fuels are used extensively, gas vents shall be permanently identified by a label attached to the wall or ceiling at a point where the vent connector enters the gas vent. The determination of where such localities exist shall be made by the code official. The label shall read:

"This gas vent is for appliances that burn gas. Do not connect to solid or liquid fuel-burning appliances or incinerators."

❖ Type B vents installed in localities where oil- and solid-fuel-fired appliances are common must be labeled to warn the installers and occupants that Type B vents cannot be used to vent any appliances other than gas fired. The label is not placed on the vent; rather, it is to be placed on a wall or ceiling where it would be conspicuous to someone attempting to connect to the vent. The code official determines whether their locality is the intended target for this provision. It is assumed that ignorance of gas vents will be more likely in regions where oil and solid fuel have been commonly used for fuel.

503.6.13 Fastener penetrations. Screws, rivets and other fasteners shall not penetrate the inner wall of double-wall gas vents, except at the transition from an *appliance* draft hood outlet, a flue collar or a single-wall metal connector to a double-wall vent.

❖ Gas vents are not designed to be joined with screws or other fasteners, yet installers insist on using screws or rivets to augment the proprietary joint securing methods provided by the vent manufacturer. Manufacturers might not prohibit this practice, but they do not encourage it and definitely do warn against penetrating the inner wall. Screws are also commonly used to attach support (stand-off) brackets and hangers to vent pipe. It is typical to find duct slips and S-drives used as supports for vents with screws used to attach to the vent.

When fasteners penetrate the inner wall, condensation in the vent will corrode the fastener and leak into the airspace between the vent walls causing vent deterioration. Vent manufacturers offer adapter fittings to transition between a vent and an appliance outlet or flue collar, however, installers usually ignore these fittings and connect the vent pipe or vent elbow directly to the appliance. This section permits the inner wall to be penetrated only at the point of transition between single wall pipe and the vent, and between an appliance outlet collar and the vent (see Commentary Figure 503.6.13).

503.7 Single-wall metal pipe. Single-wall metal pipe vents shall comply with Sections 503.7.1 through 503.7.13.

❖ This section addresses single-wall pipe used as a vent, not single-wall pipe used as a vent connector. Although discouraged or prohibited by designers, code officials and appliance and vent manufacturers alike, the code still recognizes the use of unlisted single-wall metal pipe as a vent. All other types of vents are listed systems as required by Section 502.1. As evidenced by Sections 503.7.1 through 503.7.12, single-wall metal pipe is restricted to very limited applications, and extraordinary installation precautions are necessary. Single-wall metal pipe was once common, but it will not be found today except in extremely rare circumstances and in older existing buildings. Appliance manufacturers' instructions will typically prohibit the use of a single-wall metal vent (see Section 503.7.8).

503.7.1 Construction. Single-wall metal pipe shall be constructed of galvanized sheet steel not less than 0.0304 inch (0.7 mm) thick, or other *approved*, noncombustible, corrosion-resistant material.

❖ The galvanized sheet steel thickness specified is equivalent to 22 gage, which is heavier than the pipe commonly used for connectors for most residential solid-fuel-fired appliances.

503.7.2 Cold climate. Uninsulated single-wall metal pipe shall not be used outdoors for venting appliances in regions where the 99-percent winter design temperature is below 32°F (0°C).

❖ This section limits the use of single-wall vents to regions such as the southwestern and southeastern parts of the United States, unless the pipe is an insulated type to compensate for the high heat loss of single-wall pipe. The code contains no guidance for the type of insulation required or what *R*-value is required. At the minimum, insulation applied directly to the pipe would have to be a noncombustible material, the *R*-value would have to exceed that afforded by a double-wall vent, and the insulation would have to be permanently attached and protected from the weather. Insulating single-wall pipe could be considerably more difficult and expensive than using a venting system designed for outdoor use. Bear in mind that air-insulated double-wall vent pipe (Type B) is not designed for use outdoors in cold climates. When applying Section 504, single-wall vents are also prohibited from being exposed to the outdoors below the point of roof penetration.

503.7.3 Termination. Single-wall metal pipe shall terminate at least 5 feet (1524 mm) in vertical height above the highest connected *appliance* draft hood *outlet* or flue collar. Single-wall metal pipe shall extend not less than 2 feet (610 mm) above the highest point where it passes through a roof of a building and not less than 2 feet (610 mm) higher than any portion of a building within a horizontal distance of 10 feet (3048 mm). An *approved* cap or roof assembly shall be attached to the terminus of a single-wall metal pipe.

❖ Single-wall metal vents are not allowed to terminate as allowed by Section 503.6.4 and must comply with the termination requirements for chimneys, except that the minimum height above the roof penetration is 2 feet (610 mm), whereas it is 3 feet (914 mm) for chimneys [see Commentary Figure 503.5.4(1)]. The minimum height and vent cap requirements are consistent with Sections 503.6.4 and 503.6.5.

503.7.4 Limitations of use. Single-wall metal pipe shall be used only for runs directly from the space in which the *appli-*

INTERNATIONAL CODE COUNCIL®
Copyright © 2015 ICC. ALL RIGHTS RESERVED. Accessed by David Dammon on Jun 21, 2017 12:30:52 PM pursuant to License Agreement with ICC. No further reproduction or distribution authorized. ANY UNAUTHORIZED REPRODUCTION OR DISTRIBUTION IS A VIOLATION OF THE FEDERAL COPYRIGHT ACT AND THE LICENSE AGREEMENT, AND SUBJECT TO CIVIL AND CRIMINAL PENALTIES THEREUNDER.

ance is located through the roof or exterior wall to the outdoor atmosphere.

❖ Single-wall metal pipe is further restricted by this section to only two applications. It can run from the appliance directly to the outdoors through an exterior wall or it can run from the appliance directly to the outdoors through a roof. Single-wall metal pipe cannot pass through any floors, interior walls or partitions and cannot pass through attics or concealed spaces. This means that the appliance served must be in a space with an exterior wall or in the same story as a cathedral or shed-type roof.

503.7.5 Roof penetrations. A pipe passing through a roof shall extend without interruption through the roof flashing, roof jack or roof thimble. Where a single-wall metal pipe passes through a roof constructed of *combustible material*, a noncombustible, nonventilating thimble shall be used at the point of passage. The thimble shall extend not less than 18 inches (457 mm) above and 6 inches (152 mm) below the roof with the annular space open at the bottom and closed only at the top. The thimble shall be sized in accordance with Section 503.7.7.

❖ A thimble is a sheet metal assembly designed to provide clearance between a vent and combustible materials, analogous to a thimble that protects one's fingers from a sewing needle. It is essentially a spacer that provides an annular space around the vent. Annular space is usually ventilated by punched holes in the faces of the thimble assembly. Some thimbles are constructed with insulation in addition to an annular space.

A roof jack is an assembly that passes through the roof and contains a thimble and weather protection all in one. Roof jacks are flashing/thimble combinations and typically mount to a roof curb.

503.7.6 Installation. Single-wall metal pipe shall not originate in any unoccupied attic or concealed space and shall not pass through any attic, inside wall, concealed space or floor. The installation of a single-wall metal pipe through an exterior combustible wall shall comply with Section 503.7.7.

❖ A single-wall metal vent must be exposed for its entire length, except for the section of pipe that is within a thimble or roof jack assembly. Single-wall vents can penetrate only exterior walls and roofs. A roof/ceiling assembly cannot be penetrated if there is an attic or a concealed space between the ceiling and the roof (see Section 503.7.4).

503.7.7 Single-wall penetrations of combustible walls. A single-wall metal pipe shall not pass through a combustible exterior wall unless guarded at the point of passage by a ventilated metal thimble not smaller than the following:

1. For *listed* appliances with draft hoods and appliances *listed* for use with Type B gas vents, the thimble shall be not less than 4 inches (102 mm) larger in diameter than the metal pipe. Where there is a run of not less than 6 feet (1829 mm) of metal pipe in the open between the draft hood outlet and the thimble, the thimble shall be permitted to be not less than 2 inches (51 mm) larger in diameter than the metal pipe.
2. For unlisted appliances having draft hoods, the thimble shall be not less than 6 inches (152 mm) larger in diameter than the metal pipe.
3. For residential and low-heat appliances, the thimble shall be not less than 12 inches (305 mm) larger in diameter than the metal pipe.

Exception: In lieu of thimble protection, all *combustible material* in the wall shall be removed a sufficient distance from the metal pipe to provide the specified *clearance* from such metal pipe to *combustible material*. Any material used to close up such opening shall be noncombustible.

❖ The only single-wall vent system component that is allowed to penetrate an exterior wall is a single-wall vent pipe. Single-wall vent connectors cannot penetrate an exterior wall because if they did, they would be outdoors and exposed to the ambient outdoor temperatures (see Sections 503.7.2 and 503.10.2.2). This section is located in the single-wall vent section because this is the only place that it is applicable.

Items 1 through 3 dictate the size of thimbles used to protect the combustible wall. For example, in accordance with the first sentence of Item 1, a 4-inch (102 mm) metal pipe would require an 8-inch-diameter (203 mm) thimble. Ventilated thimbles have holes in the faces of the thimble to allow air to cool the thimble by convection. Item 2 would rarely apply because unlisted appliances are not allowed by this code unless specifically approved by the code official under Section R104.11. Item 3 would rarely apply because it is addressing appliances other than those addressed in Items 1 and 2. The exception requires that the combustible wall be made noncombustible at the point of penetration. The noncombustible portion of the wall must extend from the metal pipe in all directions a distance equal to the required airspace clearance for the metal pipe.

503.7.8 Clearances. Minimum clearances from single-wall metal pipe to *combustible material* shall be in accordance with Table 503.10.5. The *clearance* from single-wall metal pipe to *combustible material* shall be permitted to be reduced where the *combustible material* is protected as specified for vent connectors in Table 308.2.

❖ Consideration should be given to the fact that single-wall vents will have high surface temperatures compared to insulated vents such as Type B vents. High surface temperatures could be an ignition or burn injury hazard.

503.7.9 Size of single-wall metal pipe. A venting system constructed of single-wall metal pipe shall be sized in accordance with one of the following methods and the appliance manufacturer's instructions:

1. For a draft-hood-equipped *appliance*, in accordance with Section 504.
2. For a venting system for a single *appliance* with a draft hood, the areas of the connector and the pipe each shall

INTERNATIONAL CODE COUNCIL®
Copyright © 2015 ICC. ALL RIGHTS RESERVED. Accessed by David Dammon on Jun 21, 2017 12:30:52 PM pursuant to License Agreement with ICC. No further reproduction or distribution authorized. ANY UNAUTHORIZED REPRODUCTION OR DISTRIBUTION IS A VIOLATION OF THE FEDERAL COPYRIGHT ACT AND THE LICENSE AGREEMENT, AND SUBJECT TO CIVIL AND CRIMINAL PENALTIES THEREUNDER.

be not less than the area of the *appliance* flue collar or draft hood outlet, whichever is smaller. The vent area shall be not greater than seven times the draft hood outlet area.

3. Other *approved* engineering methods.

❖ As can be seen from Items 1, 2, and 3 and Tables 504.2(5) and 504.3(5), single-wall metal pipe vents are limited to use with draft-hood-equipped appliances, except where the system is engineered. Note that the appliance manufacturer's instructions will generally require connection to a listed vent system.

503.7.10 Pipe geometry. Any shaped single-wall metal pipe shall be permitted to be used, provided that its equivalent effective area is equal to the effective area of the round pipe for which it is substituted, and provided that the minimum internal dimension of the pipe is not less than 2 inches (51 mm).

❖ Single-wall metal pipe does not have to be round; it could be oval, square, or rectangular. Round pipe has the best flow characteristics as evidenced by the fact that a round chimney liner will have a greater capacity than a rectangular liner of equal area.

503.7.11 Termination capacity. The vent cap or a roof assembly shall have a venting capacity of not less than that of the pipe to which it is attached.

❖ Section 503.7.3 requires an approved vent cap or roof termination assembly, and this section requires that the terminus be sized and designed to not reduce the capacity of the vent. An unlisted, untested cap or roof assembly will have an unknown capacity unless it is engineered.

503.7.12 Support of single-wall metal pipe. All portions of single-wall metal pipe shall be supported for the design and weight of the material employed.

❖ Single-wall vents, like all vents and chimneys, must be supported to prevent structural failure and joint separation and to maintain the required clearances.

503.7.13 Marking. Single-wall metal pipe shall comply with the marking provisions of Section 503.6.12.

❖ See the commentary to Section 503.6.12.

503.8 Venting system termination location. The location of venting system terminations shall comply with the following (see Appendix C):

1. A mechanical draft venting system shall terminate not less than 3 feet (914 mm) above any forced-air inlet located within 10 feet (3048 mm).

   Exceptions:

   1. This provision shall not apply to the *combustion air* intake of a direct-vent *appliance*.
   2. This provision shall not apply to the separation of the integral outdoor air inlet and flue gas discharge of *listed* outdoor appliances.

2. A mechanical draft venting system, excluding *direct-vent appliances*, shall terminate not less than 4 feet (1219 mm) below, 4 feet (1219 mm) horizontally from, or 1 foot (305 mm) above any door, operable window or gravity air inlet into any building. The bottom of the vent terminal shall be located not less than 12 inches (305 mm) above finished ground level.
3. The vent terminal of a direct-vent *appliance* with an input of 10,000 Btu per hour (3 kW) or less shall be located not less than 6 inches (152 mm) from any air opening into a building. Such an *appliance* with an input over 10,000 Btu per hour (3 kW) but not over 50,000 Btu per hour (14.7 kW) shall be installed with a 9-inch (230 mm) vent termination *clearance*, and an *appliance* with an input over 50,000 Btu per hour (14.7 kW) shall have not less than a 12-inch (305 mm) vent termination *clearance*. The bottom of the vent terminal and the air intake shall be located not less than 12 inches (305 mm) above finished ground level.
4. Through-the-wall vents for Category II and IV appliances and noncategorized condensing appliances shall not terminate over public walkways or over an area where condensate or vapor could create a nuisance or hazard or could be detrimental to the operation of regulators, relief valves or other *equipment*. Where local experience indicates that condensate is a problem with Category I and III appliances, this provision shall also apply. Drains for condensate shall be installed in accordance with the appliance and vent manufacturers' instructions.
5. Vent systems for Category IV appliances that terminate through an outside wall of a building and discharge flue gases perpendicular to the adjacent wall shall be located not less than 10 feet (3048 mm) horizontally from an operable opening in an adjacent building. This requirement shall not apply to vent terminals that are 2 feet (607 mm) or more above or 25 feet (7620 mm) or more below operable openings.

❖ This section addresses the terminations of mechanical draft systems and direct-vent appliances. To prevent vent gases from entering the building, Item 1 requires forced air (mechanical) intakes to be at least 10 feet (3048 mm) away from a mechanical draft termination, or the termination must be at least 3 feet (914 mm) above the air intake. The natural buoyancy of vent gases is the justification for allowing a closer distance where the terminal is above the air intake. A combustion air intake for a direct-vent appliance is not what Item 1 intends to address (see Exception 1). Direct-vent appliance exhaust and intake opening locations are dictated by the appliance listing and manufacturer's instructions. Note the distinction between direct-vent and other than direct-vent appliances in the manufacturer's instructions. Item 1 also does not apply to appliances such as rooftop units that have built-in outdoor air intakes and combustion gas exhaust outlets. The code assumes that the design and listing of the outdoor appliance accounts for the location of those openings (see Exception 2).

Item 2 addresses gravity air inlets in the exterior envelope of a building, including doors, operable (openable) windows and intake louvers and grilles.

INTERNATIONAL CODE COUNCIL®
Copyright © 2015 ICC. ALL RIGHTS RESERVED. Accessed by David Dammon on Jun 21, 2017 12:30:52 PM pursuant to License Agreement with ICC. No further reproduction or distribution authorized. ANY UNAUTHORIZED REPRODUCTION OR DISTRIBUTION IS A VIOLATION OF THE FEDERAL COPYRIGHT ACT AND THE LICENSE AGREEMENT, AND SUBJECT TO CIVIL AND CRIMINAL PENALTIES THEREUNDER.

The appliances addressed by this item use auxiliary or integral fans and blowers to force the flow of combustion products to the outdoors. This item applies to externally installed power exhausters, integrally power-exhausted appliances and venting systems equipped with draft inducers. This item does not address fan-assisted Category I appliances and does not address direct-vent appliances. Category III and IV appliances are subject to the requirements of this item if those appliances are not listed as direct-vent appliances. Some Category I appliances are field convertible to Category III.

Power exhausters are field-installed pieces of equipment that are independent of, but used in conjunction with, other appliances [see Commentary Figure 503.8(1)].

This item is consistent with appliance installation instructions that will contain additional details for the location of the venting system terminals, including but not limited to clearance to grade, inside corners, outside corners, decks, porches, balconies, soffits, roof eaves, utility meters, combustion air intakes, other appliance vents, service regulators, sidewalks and driveways.

There are significant differences between the requirements of Items 2 and 3 as they relate to nondirect-vent and direct-vent appliances, respectively. A Category IV, 90-percent and higher efficient furnace or boiler would be subject to Item 2 if installed without a combustion air intake pipe to the outdoors but would be subject to Item 3, not Item 2, if installed with a combustion air intake pipe to the outdoors. This is because such a furnace can be listed as both a direct-vent and nondirect-vent appliance, and as such can be installed either way. Less restrictive clearances, improved operating efficiency, longer appliance life, immunity from the effects of building exhaust systems and ease of providing combustion air are some of the advantages of direct-vent appliances. For example, according to Item 2, a sidewall vent terminal must be 4 feet (1219 mm) or more to either side of an openable window, or must be 4 feet (1219 mm) or more below the bottom of the window or must be 1 foot (305 mm) or more above the top of the window.

Item 3 is consistent with appliance manufacturers' instructions. Research has shown that the distances associated with the input ranges are necessary to

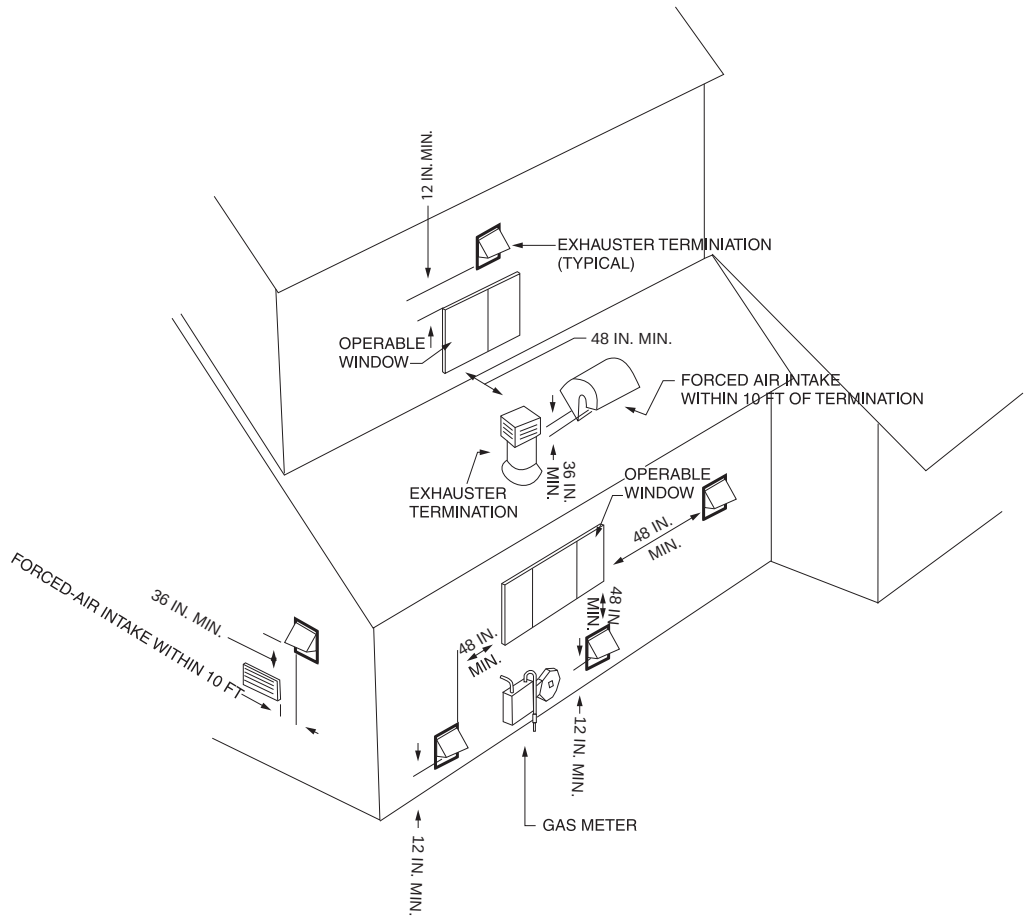

For SI: 1 inch = 25.4 mm, 1 foot = 304.8 mm.

Figure 503.8(1)
MECHANICAL DRAFT VENTING SYSTEM EXHAUSTER TERMINATIONS

INTERNATIONAL CODE COUNCIL®
Copyright © 2015 ICC. ALL RIGHTS RESERVED. Accessed by David Dammon on Jun 21, 2017 12:30:52 PM pursuant to License Agreement with ICC. No further reproduction or distribution authorized. ANY UNAUTHORIZED REPRODUCTION OR DISTRIBUTION IS A VIOLATION OF THE FEDERAL COPYRIGHT ACT AND THE LICENSE AGREEMENT, AND SUBJECT TO CIVIL AND CRIMINAL PENALTIES THEREUNDER.

allow the combustion gases to dissipate in the atmosphere, thus avoiding entry into the building through openings. This item is applicable only to direct-vent appliances. For example, a Category IV, 90-percent and higher efficient furnace installed without an outdoor air intake pipe for combustion air would be subject to Item 2, not 3 [see Commentary Figures 503.8(2), 503.8(3) and 503.8(4)].

Item 4 addresses the possible effect of condensation on pedestrians, service equipment, etc. Condensate is corrosive and could create a hazard when it freezes. Condensate ice could be a slip hazard and could obstruct regulator and relief valve vents. Category I and III appliances do not produce as much condensate as appliances in the other two categories, but they can also cause condensate problems in cold climates. Large masses of ice could build up on or near the vent terminals of Category I and III vents. Such ice masses can fall or slide from roofs and injure someone or cause damage to a building, vehicle or equipment.

Item 5 is specific to sidewall terminations of vents for Category IV appliances, such as furnaces and boilers [see Commentary Figure 503.8(5)].

A common issue arises where buildings, especially homes, are located very close to each other, and sidewall-vented appliances are installed with the vent terminals directed toward the neighboring home. The concern is that combustion gases will enter the adjacent building through openings in the exterior walls

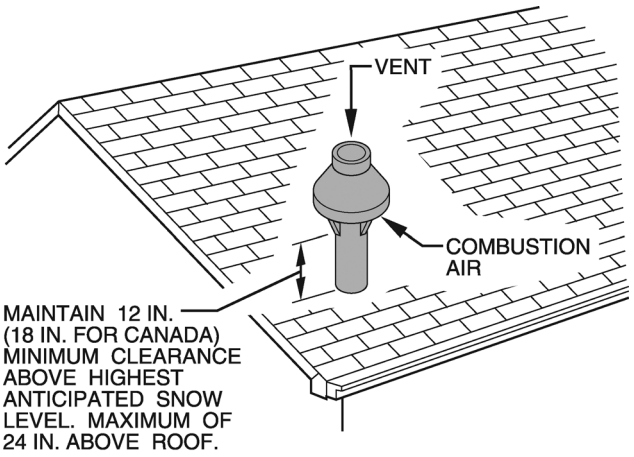

For SI: 1 inch = 25.4 mm.

Figure 503.8(2)
EXAMPLE OF MANUFACTURER'S DETAIL FOR DIRECT-VENT APPLIANCE
(Figure courtesy of Carrier Corporation)

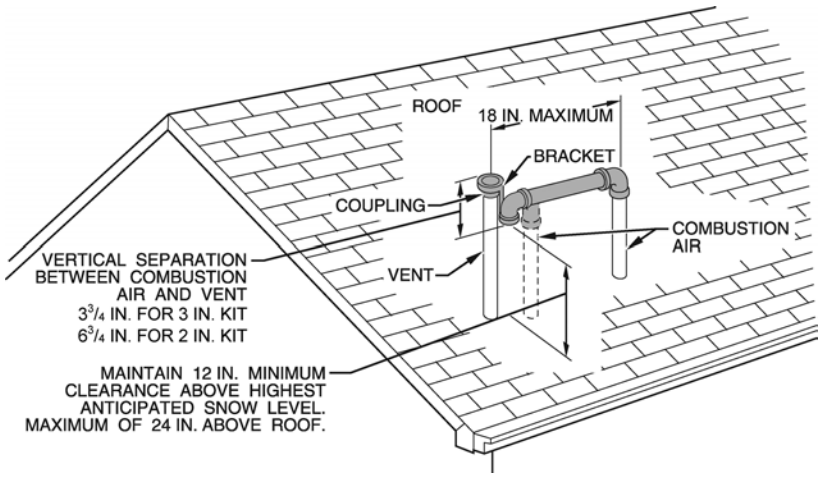

For SI: 1 inch = 25.4 mm.

Figure 503.8(3)
EXAMPLE OF MANUFACTURER'S DETAIL FOR DIRECT-VENT APPLIANCE VENT AND COMBUSTION AIR TERMINALS
(Figure courtesy of Carrier Corporation)

INTERNATIONAL CODE COUNCIL®
Copyright © 2015 ICC. ALL RIGHTS RESERVED. Accessed by David Dammon on Jun 21, 2017 12:30:52 PM pursuant to License Agreement with ICC. No further reproduction or distribution authorized. ANY UNAUTHORIZED REPRODUCTION OR DISTRIBUTION IS A VIOLATION OF THE FEDERAL COPYRIGHT ACT AND THE LICENSE AGREEMENT, AND SUBJECT TO CIVIL AND CRIMINAL PENALTIES THEREUNDER.

that face the appliance vent terminal. This section applies only to Category IV (condensing) appliances that are sidewall vented with stainless steel or plastic vents.

Computer simulations were conducted as part of a research project, and the results indicated that, in many scenarios, the combustion products would impinge on the neighboring building. Many factors impact the simulated scenarios, including wind speed and direction; the height of the adjacent buildings; and the type of vent terminal (i.e., straight pipe, tee fitting, deflector cap, directional fitting, etc.). The worst-case scenario that this code section addresses is a straight open-ended pipe used as the appliance vent terminal that is perpendicular to the wall it passes through. This scenario is the most common and the most likely to project combustion gases far enough to be a potential danger to the neighbors. The research project suggested that vent terminals that utilize a tee-fitting outlet, a deflector cap or that are directed at some angle downward are much less likely to interfere with the neighbors because, with these terminals, the combustion gases disperse and lack the velocity to impinge on the adjacent building.



Figure 503.8(4)
DIRECT-VENT HOT WATER BOILER
(Photo courtesy of Weil-McLain)

503.9 Condensation drainage. Provisions shall be made to collect and dispose of condensate from venting systems serving Category II and IV appliances and noncategorized condensing appliances in accordance with Section 503.8, Item 4. Where local experience indicates that condensation is a problem, provisions shall be made to drain off and dispose of condensate from venting systems serving Category I and III appliances in accordance with Section 503.8, Item 4.

❖ See Section 503.8, Item 4.

503.10 Vent connectors for Category I appliances. Vent connectors for Category I *appliances* shall comply with Sections 503.10.1 through 503.10.14.

❖ See Sections 503.10.1 through 503.10.14.

503.10.1 Where required. A vent connector shall be used to connect an *appliance* to a gas vent, chimney or single-wall metal pipe, except where the gas vent, chimney or single-wall metal pipe is directly connected to the *appliance*.

❖ Unless the chimney or vent is connected directly to the appliance, a connector, defined in Section 202 as pipe used to connect an approved fuel-burning appliance to a chimney or vent, is necessary. This includes the fittings necessary to make a connection or change in direction. This is usually accomplished with a single-wall metal pipe, but it is also common practice to use listed and labeled chimney and vent pipe or listed factory-built single-wall or double-wall bendable connectors.

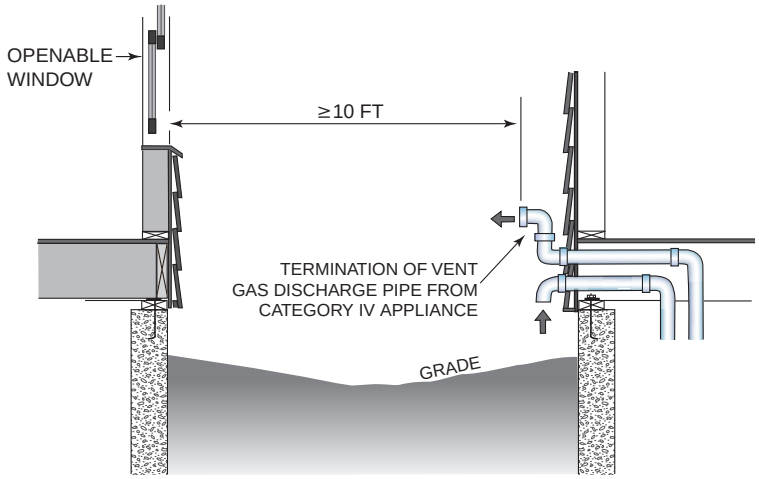

Figure 503.8(5)
VENT TERMINATION

INTERNATIONAL CODE COUNCIL®
Copyright © 2015 ICC. ALL RIGHTS RESERVED. Accessed by David Dammon on Jun 21, 2017 12:30:52 PM pursuant to License Agreement with ICC. No further reproduction or distribution authorized. ANY UNAUTHORIZED REPRODUCTION OR DISTRIBUTION IS A VIOLATION OF THE FEDERAL COPYRIGHT ACT AND THE LICENSE AGREEMENT, AND SUBJECT TO CIVIL AND CRIMINAL PENALTIES THEREUNDER.

Many factors affect the design and configuration of a connector. The most important of these is the appliance location with respect to the chimney or vent system. This impacts the connector size, length and rise. Another important factor is the number of appliances being vented. The appliance manufacturer's installation instructions may prohibit the use of single-wall connectors. For example, a single-wall vent connector may not be appropriate for fan-assisted appliances because of the possibility of condensation, corrosion and leakage. They are also not permitted in attic or crawl space installations that are subject to cold temperatures. The cold temperatures increase the possibility of condensation, which leads to accelerated material failure. If the vent or chimney extends all the way to a single appliance vent outlet (collar), no connector is needed.

503.10.2 Materials. Vent connectors shall be constructed in accordance with Sections 503.10.2.1 through 503.10.2.5.

❖ See Sections 503.10.2.1 through 503.10.2.4.

503.10.2.1 General. A vent connector shall be made of noncombustible corrosion-resistant material capable of withstanding the vent gas temperature produced by the *appliance* and of sufficient thickness to withstand physical damage.

❖ See Sections 503.10.2.2 through 503.10.2.4.

503.10.2.2 Vent connectors located in unconditioned areas. Where the vent connector used for an *appliance* having a draft hood or a Category I *appliance* is located in or passes through attics, crawl spaces or other unconditioned spaces, that portion of the vent connector shall be *listed* Type B, Type L or *listed* vent material having equivalent insulation properties.

Exception: Single-wall metal pipe located within the exterior walls of the building in areas having a local 99-percent winter design temperature of 5°F (-15°C) or higher shall be permitted to be used in unconditioned spaces other than attics and crawl spaces.

❖ Compared to double-wall pipe, single-wall pipe has a much higher heat loss, and when installed in an unconditioned space, condensation can occur, deteriorating the pipe. A typical scenario is an attic, garage or crawl space appliance installation where a connector would be exposed to cold temperatures, practically ensuring the formation of condensation in the connector. Except as allowed in the exception, this section effectively prohibits the use of single-wall connectors in garages, attics and crawl spaces when the spaces are unheated.

The term "unconditioned" is not defined and the debate over the intent created the text in the exception, which is climate related. Attics and crawl spaces are usually unconditioned spaces; however, the uncertainty has been with residential basements and garages, which are common locations for gas-fired appliances. In many climates, the garage winter temperatures will be cold enough to cause the combustion gases in a connector to reach their dew point, meaning that condensate will form and linger in the connector, causing its rapid destruction. Most residential garages and some basements are considered to be unconditioned insofar as they are not directly or indirectly heated as is the living space.

The typical residential garage is not heated (conditioned) and, in most climates, will certainly have low ambient temperatures. The exception allows single-wall metal pipe in unconditioned spaces (other than attics and crawl spaces) if the climate is as described. The winter design temperatures can be found in the ASHRAE *Handbook of Fundamentals*. To put the climate criterion in perspective, Philadelphia, Pennsylvania; Louisville, Kentucky; Fall River, Massachusetts; and Providence, Rhode Island all have 99-percent winter design temperatures of 5°F (-15°C) or higher. The exception is applicable only to vent connectors that are inside a building (i.e., located within the exterior walls). (see Commentary Figure 503.10.2.2).



Figure 503.10.2.2
LISTED BENDABLE DOUBLE-WALL CONNECTOR
(Photo courtesy of Selkirk L.L.C.)

503.10.2.3 Residential-type appliance connectors. Where vent connectors for residential-type appliances are not installed in attics or other unconditioned spaces, connectors for *listed* appliances having draft hoods, appliances having draft hoods and equipped with *listed* conversion burners and Category I appliances shall be one of the following:

1. Type B or L vent material.
2. Galvanized sheet steel not less than 0.018 inch (0.46 mm) thick.

INTERNATIONAL CODE COUNCIL®
Copyright © 2015 ICC. ALL RIGHTS RESERVED. Accessed by David Dammon on Jun 21, 2017 12:30:52 PM pursuant to License Agreement with ICC. No further reproduction or distribution authorized. ANY UNAUTHORIZED REPRODUCTION OR DISTRIBUTION IS A VIOLATION OF THE FEDERAL COPYRIGHT ACT AND THE LICENSE AGREEMENT, AND SUBJECT TO CIVIL AND CRIMINAL PENALTIES THEREUNDER.

3. Aluminum (1100 or 3003 alloy or equivalent) sheet not less than 0.027 inch (0.69 mm) thick.
4. Stainless steel sheet not less than 0.012 inch (0.31 mm) thick.
5. Smooth interior wall metal pipe having resistance to heat and corrosion equal to or greater than that of Item 2, 3 or 4.
6. A *listed* vent connector.

Vent connectors shall not be covered with insulation.

Exception: *Listed* insulated vent connectors shall be installed in accordance with the manufacturer's instructions.

❖ This section applies to draft-hood-equipped appliances only and lists the allowable materials, including sheet metals, listed connectors and listed vent system pipe. The minimum thickness for single-wall galvanized steel pipe is equivalent to 26 gage. Installers have field-installed insulation on vent connectors in an attempt to control heat loss and the resultant condensation; however, this is prohibited because of the combustibility of most insulation materials and the possibility of excessive connector temperatures. Listed double-wall (air insulated) Type B connectors are available as an option to using Type B vent pipe (see Commentary Figure 503.10.2.2).

503.10.2.4 Low-heat equipment. A vent connector for a nonresidential, low-heat *appliance* shall be a factory-built chimney section or steel pipe having resistance to heat and corrosion equivalent to that for the appropriate galvanized pipe as specified in Table 503.10.2.4. Factory-built chimney sections shall be joined together in accordance with the chimney manufacturer's instructions.

❖ Residential appliances are also low heat by definition, and the provisions of Section 503.10.2.3 apply as well. The table is intended for nonresidential-type appliances, which is apparent when compared to the materials allowed by Section 503.10.2.3.

TABLE 503.10.2.4
MINIMUM THICKNESS FOR GALVANIZED STEEL VENT CONNECTORS FOR LOW-HEAT APPLIANCES

DIAMETER OF CONNECTOR (inches)	MINIMUM THICKNESS (inch)
Less than 6	0.019
6 to less than 10	0.023
10 to 12 inclusive	0.029
14 to 16 inclusive	0.034
Over 16	0.056

For SI: 1 inch = 25.4 mm.

❖ See the commentary to Section 503.10.2.4.

503.10.2.5 Medium-heat appliances. Vent connectors for medium-heat appliances shall be constructed of factory-built medium-heat chimney sections or steel of a thickness not less than that specified in Table 503.10.2.5 and shall comply with the following:

1. A steel vent connector for an *appliance* with a vent gas temperature in excess of 1,000°F (538°C) measured at the entrance to the connector shall be lined with medium-duty fire brick (ASTM C64, Type F), or the equivalent.
2. The lining shall be not less than $2^1/_2$ inches (64 mm) thick for a vent connector having a diameter or greatest cross-sectional dimension of 18 inches (457 mm) or less.
3. The lining shall be not less than $4^1/_2$ inches (114 mm) thick laid on the $4^1/_2$-inch (114 mm) bed for a vent connector having a diameter or greatest cross-sectional dimension greater than 18 inches (457 mm).
4. Factory-built chimney sections, if employed, shall be joined together in accordance with the chimney manufacturer's instructions.

❖ Medium-heat appliances have very high temperature flue gases [1,000°F (538°C)], and because of the waste of enormous amounts of energy are often equipped with secondary heat exchangers to reclaim heat energy and substantially reduce the vent gas temperatures.

TABLE 503.10.2.5
MINIMUM THICKNESS FOR STEEL VENT CONNECTORS FOR MEDIUM-HEAT APPLIANCES

VENT CONNECTOR SIZE		
Diameter (inches)	Area (square inches)	MINIMUM THICKNESS (inch)
Up to 14	Up to 154	0.053
Over 14 to 16	154 to 201	0.067
Over 16 to 18	201 to 254	0.093
Over 18	Larger than 254	0.123

For SI: 1 inch = 25.4 mm, 1 square inch = 645.16 mm^2.

❖ See the commentary to Section 503.10.2.5.

503.10.3 Size of vent connector. Vent connectors shall be sized in accordance with Sections 503.10.3.1 through 503.10.3.5.

❖ See the commentary to Sections 503.10.3.1 through 503.10.3.5.

503.10.3.1 Single draft hood and fan-assisted. A vent connector for an *appliance* with a single draft hood or for a Category I fan-assisted combustion system *appliance* shall be sized and installed in accordance with Section 504 or other *approved* engineering methods.

❖ The sizing tables in Section 504 will determine connector size with the fundamental requirement that a connector not be smaller than the appliance vent connection, except as allowed by Sections 504.2.2 and 504.3.17. The tables will often require that a connector be larger than the appliance vent outlet (see Section 504).

503.10.3.2 Multiple draft hood. For a single *appliance* having more than one draft hood outlet or flue collar, the manifold shall be constructed according to the instructions of the *appliance* manufacturer. Where there are no instructions, the manifold shall be designed and constructed in accordance

INTERNATIONAL CODE COUNCIL®
Copyright © 2015 ICC. ALL RIGHTS RESERVED. Accessed by David Dammon on Jun 21, 2017 12:30:52 PM pursuant to License Agreement with ICC. No further reproduction or distribution authorized. ANY UNAUTHORIZED REPRODUCTION OR DISTRIBUTION IS A VIOLATION OF THE FEDERAL COPYRIGHT ACT AND THE LICENSE AGREEMENT, AND SUBJECT TO CIVIL AND CRIMINAL PENALTIES THEREUNDER.

with *approved* engineering practices. As an alternate method, the effective area of the manifold shall equal the combined area of the flue collars or draft hood outlets and the vent connectors shall have a minimum 1-foot (305 mm) rise.

❖ Some appliances are designed with more than one venting (flue) outlet. For example, some large furnaces were built with dual heat exchangers and burner sections, and thus have two draft hoods or flue collar outlets. The manufacturer's instructions must be followed. However, in the event that the manufacturer's instructions are not available, this section specifies required sizing criteria. Section 305.1 requires the manufacturer's instructions to be on the job site.

503.10.3.3 Multiple appliances. Where two or more appliances are connected to a common vent or chimney, each vent connector shall be sized in accordance with Section 504 or other *approved* engineering methods.

As an alternative method applicable only when all of the appliances are draft hood equipped, each vent connector shall have an effective area not less than the area of the draft hood outlet of the *appliance* to which it is connected.

❖ The sizing tables in Section 504 will determine connector size with the fundamental requirement that a connector not be smaller than the appliance vent connection, except as allowed by Sections 504.2.2 and 504.3.17. The tables will often require a connector that is larger than the appliance vent outlet (see Section 504). The alternative method paragraph of this section is incompatible with Section 504 and is intended only for use with the alternative sizing method of Section 503.6.8.1.

503.10.3.4 Common connector/manifold. Where two or more appliances are vented through a common vent connector or vent manifold, the common vent connector or vent manifold shall be located at the highest level consistent with available headroom and the required *clearance* to *combustible materials* and shall be sized in accordance with Section 504 or other *approved* engineering methods.

As an alternate method applicable only where there are two draft hood-equipped appliances, the effective area of the common vent connector or vent manifold and all junction fittings shall be not less than the area of the larger vent connector plus 50 percent of the area of the smaller flue collar outlet.

❖ Vent manufacturers' instructions contain detailed design criteria for manifolds. Connectors serving gas-fired appliances are allowed to join to form a common connector manifold rather than connecting independently to the vertical common vent [see Commentary Figures 503.10.3.4(1) and 503.10.3.4(2)]. Various manufacturers' instructions require a 10-percent to 20-percent reduction in the capacity of a common vent where a manifold is used (see commentary, Section 504.3.4). A manifold is defined as a vent or connector that is a lateral (horizontal) extension of the lower end of a common vent. Because a manifold serves multiple appliances and thus conveys flue gases from two or more appliances, manifolds must be sized by the common vent tables. This section requires that manifolds be installed as high as possible, respective of ceiling height and clearance-to combustibles requirements. This will result in the most appliance connector rise, which is always beneficial for venting performance. Connector rise takes advantage of the energy of hot gases discharging directly from the appliance and develops flow velocity and draft in addition to that produced by the common vent [see Commentary Figures 503.10.3.4(1) and 503.10.3.4(2)]. The alternative method in the second paragraph is intended for use only with two draft-hood-equipped appliances (similar to Section 503.6.9.1) and is not compatible with Section 504.

503.10.3.5 Size increase. Where the size of a vent connector is increased to overcome installation limitations and obtain connector capacity equal to the *appliance* input, the size increase shall be made at the *appliance* draft hood outlet.

❖ If a connector must be larger than the appliance vent outlet, the size increase must occur at the appliance connection by use of an increaser fitting. For example, it is common for a water heater with a 3-inch (76 mm) draft-hood outlet to be connected to a 4-inch (102 mm) connector by a 3-inch by 4-inch increaser fitting, as dictated by the vent tables in Section 504.

503.10.4 Two or more appliances connected to a single vent or chimney. Where two or more vent connectors enter a common vent, chimney flue or single-wall metal pipe, the smaller connector shall enter at the highest level consistent with the available headroom or *clearance* to *combustible material*. Vent connectors serving Category I appliances shall not be connected to any portion of a mechanical draft system operating under positive static pressure, such as those serving Category III or IV appliances.

❖ A common vent is somewhat oversized when only a single appliance is operating; therefore, every effort is made to achieve proper vent/chimney operation during all possible operating circumstances. Placing the smallest appliance connection at the highest elevation in the common vent/chimney will allow the greatest connector rise for the smaller appliance connector and will take advantage of any draft priming effect caused by the lower connector. For example, it has been common practice to connect a domestic water heater connector above the furnace or boiler connector in a chimney or vent system. Category I appliances require a vent that produces a draft and therefore cannot be connected to any venting system that produces a positive pressure. For example, a Category I appliance and a Category III appliance cannot share the same vent unless they both connect to the negative pressure (inlet) side of a mechanical draft system in accordance with the appliance and draft system installation instructions (see Section 501.10).

503.10.4.1 Two or more openings. Where two or more openings are provided into one chimney flue or vent, the openings shall be at different levels, or the connectors shall

INTERNATIONAL CODE COUNCIL®
Copyright © 2015 ICC. ALL RIGHTS RESERVED. Accessed by David Dammon on Jun 21, 2017 12:30:52 PM pursuant to License Agreement with ICC. No further reproduction or distribution authorized. ANY UNAUTHORIZED REPRODUCTION OR DISTRIBUTION IS A VIOLATION OF THE FEDERAL COPYRIGHT ACT AND THE LICENSE AGREEMENT, AND SUBJECT TO CIVIL AND CRIMINAL PENALTIES THEREUNDER.

be attached to the vertical portion of the chimney or vent at an angle of 45 degrees (0.79 rad) or less relative to the vertical.

❖ The intent is to prevent turbulence and flow interference that could impede flow from a chimney or vent connector into the chimney or common vent. Openings at the same elevation, such as those directly opposite of each other, could negatively affect the flow from either or both of the connectors (see Commentary Figure 503.10.4.1).

503.10.5 Clearance. Minimum clearances from vent connectors to *combustible material* shall be in accordance with Table 503.10.5.

Exception: The *clearance* between a vent connector and *combustible material* shall be permitted to be reduced where the *combustible material* is protected as specified for vent connectors in Table 308.2.

❖ Vent connectors must have minimum clearances to ignitable materials. The single-wall metal pipe clearance requirements in Table 503.10.5 apply to unlisted single-wall connectors. Connectors that are listed and labeled for this use must be installed with a clearance to combustibles as required by the connector manufacturer's instructions. If the appliance or connector manufacturer's installation instructions

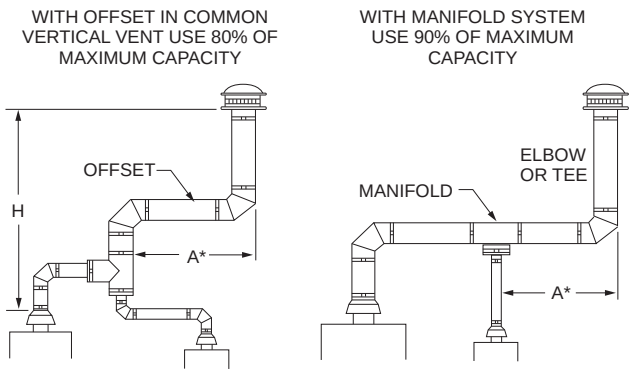

Figure 503.10.3.4(2)
COMMON VENT OFFSET AND MANIFOLD
(Figure courtesy of Selkirk, L.L.C.)

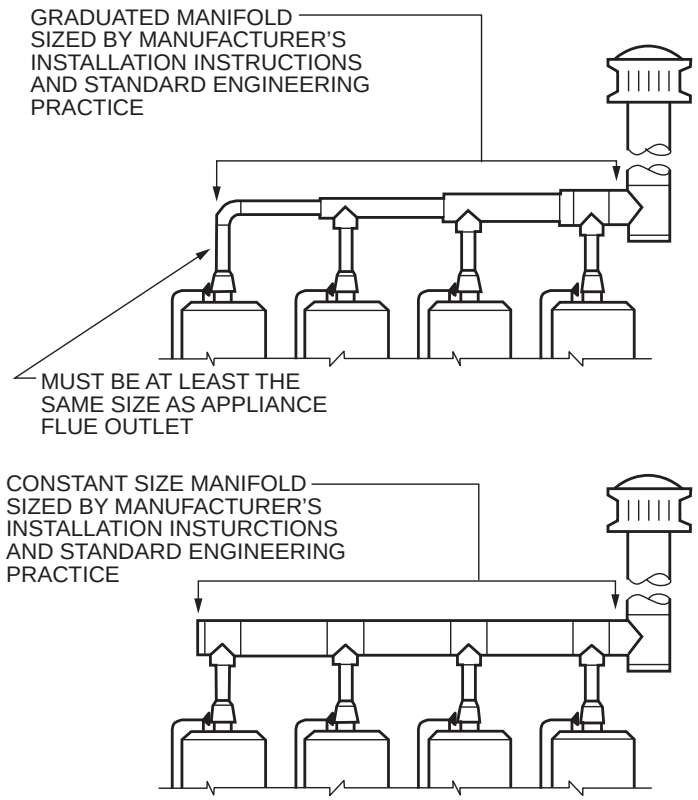

Figure 503.10.3.4(1)
MANIFOLD SIZING
(Figure courtesy of Selkirk, L.L.C.)

INTERNATIONAL CODE COUNCIL®
Copyright © 2015 ICC. ALL RIGHTS RESERVED. Accessed by David Dammon on Jun 21, 2017 12:30:52 PM pursuant to License Agreement with ICC. No further reproduction or distribution authorized. ANY UNAUTHORIZED REPRODUCTION OR DISTRIBUTION IS A VIOLATION OF THE FEDERAL COPYRIGHT ACT AND THE LICENSE AGREEMENT, AND SUBJECT TO CIVIL AND CRIMINAL PENALTIES THEREUNDER.

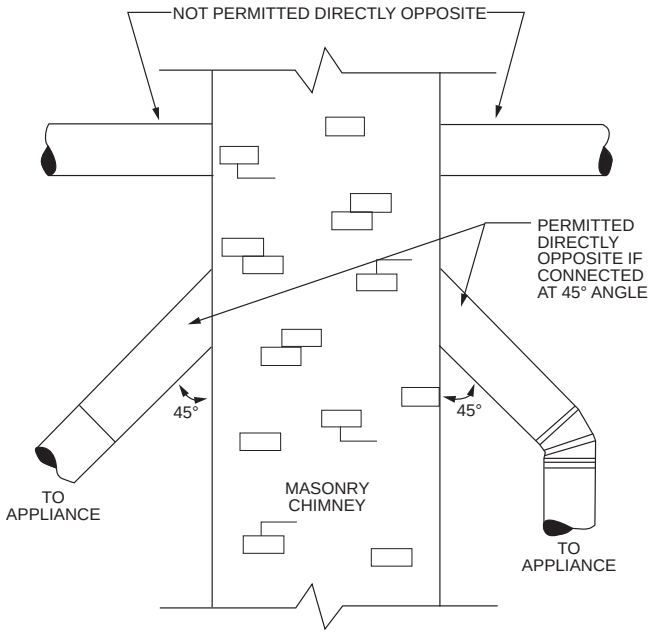

Figure 503.10.4.1
OPPOSING OPENINGS IN CHIMNEY

specify larger clearances than those prescribed by this section, the manufacturer's installation instructions govern. Table 503.10.5 dictates the required airspace clearances between vent connectors and combustible materials and assemblies. The provisions of Section 308 would allow reduction of connector clearances where the prescribed clearance cannot be provided or is impractical. Lack of vent connector clearance is a common code violation. Connectors usually lack the required clearances to wood joists, plastic plumbing piping, building and piping insulation materials and gypsum board. A major disadvantage of single-wall connectors is the large clearance required to combustibles. Listed connectors usually require far less clearance, in some cases only 1 inch (25 mm).

503.10.6 Joints. Joints between sections of connector *piping* and connections to flue collars and draft hood outlets shall be fastened by one of the following methods:

1. Sheet metal screws.
2. Vent connectors of *listed* vent material assembled and connected to flue collars or draft hood outlets in accordance with the manufacturers' instructions.
3. Other *approved* means.

❖ Single-wall connectors (unlisted) have been traditionally fastened with sheet metal screws and rivets. All connector joints must be fastened, including the joint at the appliance draft hood or flue collar. A displaced connector could result in a life-threatening condition; therefore, connectors must be fastened and supported well. Appliance connectors are often located where they can be impacted or otherwise disturbed by building occupants, making proper fastening even more important. Item 2 speaks of listed connectors such as Type B vent material and factory-built corrugated (bendable) connectors, which use adapter fittings or integral collars that are mechanically fastened to the appliance with screws or rivets (see Commentary Figure 503.10.2.2).

503.10.7 Slope. A vent connector shall be installed without dips or sags and shall slope upward toward the vent or chimney not less than $^1/_4$ inch per foot (21 mm/m).

Exception: Vent connectors attached to a mechanical draft system installed in accordance with the *appliance* and draft system manufacturers' instructions.

❖ The ideal chimney or vent configuration is a totally vertical system, even though it is not always practical. This section requires all portions of a chimney or vent connector to rise vertically a minimum of a $^1/_4$ inch per each foot (21 mm/m) of its horizontal length. The connector slope is intended to induce the flow of flue gases using the natural buoyancy of the hot gases.

TABLE 503.10.5[a]
CLEARANCES FOR CONNECTORS

APPLIANCE	MINIMUM DISTANCE FROM COMBUSTIBLE MATERIAL			
	Listed Type B gas vent material	Listed Type L vent material	Single-wall metal pipe	Factory-built chimney sections
Listed appliances with draft hoods and appliances listed for use with Type B gas vents	As listed	As listed	6 inches	As listed
Residential boilers and furnaces with listed gas conversion burner and with draft hood	6 inches	6 inches	9 inches	As listed
Residential appliances listed for use with Type L vents	Not permitted	As listed	9 inches	As listed
Listed gas-fired toilets	Not permitted	As listed	As listed	As listed
Unlisted residential appliances with draft hood	Not permitted	6 inches	9 inches	As listed
Residential and low-heat appliances other than above	Not permitted	9 inches	18 inches	As listed
Medium-heat appliances	Not permitted	Not permitted	36 inches	As listed

For SI: 1 inch = 25.4 mm.

a. These clearances shall apply unless the manufacturer's installation instructions for a listed appliance or connector specify different clearances, in which case the listed clearances shall apply.

INTERNATIONAL CODE COUNCIL®
Copyright © 2015 ICC. ALL RIGHTS RESERVED. Accessed by David Dammon on Jun 21, 2017 12:30:52 PM pursuant to License Agreement with ICC. No further reproduction or distribution authorized. ANY UNAUTHORIZED REPRODUCTION OR DISTRIBUTION IS A VIOLATION OF THE FEDERAL COPYRIGHT ACT AND THE LICENSE AGREEMENT, AND SUBJECT TO CIVIL AND CRIMINAL PENALTIES THEREUNDER.

Connector slope can promote the priming of a cold venting system and can partially compensate for short connector vertical rise. Low points, dips and sags could also trap condensate and accelerate corrosion of the connector. The exception allows connectors without slope where connected to mechanical draft systems because the connector is on the negative pressure (inlet) side of the exhauster and slope would provide no benefit.

503.10.8 Length of vent connector. The maximum horizontal length of a single-wall connector shall be 75 percent of the height of the chimney or vent except for engineered systems. The maximum horizontal length of a Type B double-wall connector shall be 100 percent of the height of the chimney or vent except for engineered systems.

❖ This section is applied in conjunction with Section 504.3.2. The appliance and chimney or vent must be located to keep the connector length as short as practicable. This section establishes the maximum allowable length for uninsulated chimney and vent connectors, insulated chimney and vent connectors and individual connectors for a chimney or vent system serving multiple appliances. These requirements are based on the heat loss of the connector and the ability of the vent or chimney system to produce a draft.

An insulated connector (double wall) reduces the amount of heat transfer through the connector pipe; thus, the flue gas is maintained at a higher temperature (see commentary, Section 504.3.2). The amount of draft is directly related to the chimney or vent height and the difference in temperature between the flue gases and the ambient air. An uninsulated connector is a run of single-wall pipe. Commentary Figure 503.10.8 shows that the total chimney or vent height is measured from the top of the highest appliance flue outlet connection to the termination point of the chimney or vent. The length limitations of this section are based on the total vertical rise of the chimney or vent and on the developed length of horizontal connectors within the chimney or vent system. The venting tables will often prohibit the use of single-wall connectors with fan-assisted appliances, and most appliance and vent manufacturers recommend against the use of single-wall (uninsulated) connectors.

Connectors are limited in length because of the flow resistance of the connector pipe and because heat loss through the connector is directly related to its length. For a venting system to work, the draft produced by the vertical vent or chimney must be able to overcome the resistance to flow created by the connector. The longer the connector, the longer it takes to prime a cold venting system and develop draft. As stated in Section 504.3.2, connectors should always be as short as the installation conditions will permit. The sizing methodology and tables in Section 504 for connectors in single-appliance installations might allow connector lengths greater than the general limits given in this section or might require a shorter connector length than would be allowed by these limits, depending on the combination of appliance type and input, connector size and type and vent height.

Because the sizing tables in Section 504.2 are based on specific computer modeling of the installation configuration, the limitations or allowances in the single-appliance tables supersede what would be required in this section. For multiple-appliance systems, the sizing methods and tables do not contain the same limitations on connector length. This section establishes an absolute length limitation for connectors in multiple-appliance systems which still provides liberal installation flexibility without permitting excessively long connectors. This section functions as an absolute cap for the connector length provisions of Sections 504.3.2 and 504.3.3.

The appliance and vent location should be well planned to allow the shortest horizontal run of connector piping (see Sections 504.3.2 and 504.3.3).

The intent of the reference to engineered systems is to allow connector length to be determined by design as part of an engineered venting system.

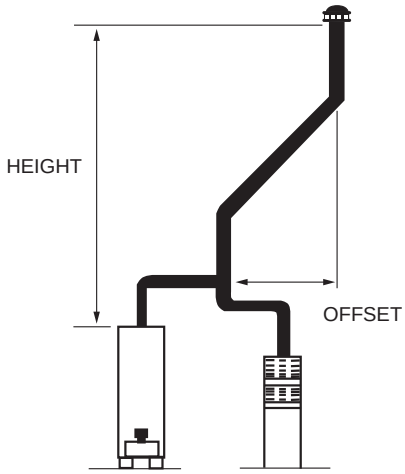

Figure 503.10.8
VENT HEIGHT
(Figure courtesy of Simpson Dura-Vent Company, Incoroporated)

503.10.9 Support. A vent connector shall be supported for the design and weight of the material employed to maintain clearances and prevent physical damage and separation of joints.

❖ A connector must be supported for the design and weight of the material used. Proper support is necessary to maintain the clearances required by Section

INTERNATIONAL CODE COUNCIL®
Copyright © 2015 ICC. ALL RIGHTS RESERVED. Accessed by David Dammon on Jun 21, 2017 12:30:52 PM pursuant to License Agreement with ICC. No further reproduction or distribution authorized. ANY UNAUTHORIZED REPRODUCTION OR DISTRIBUTION IS A VIOLATION OF THE FEDERAL COPYRIGHT ACT AND THE LICENSE AGREEMENT, AND SUBJECT TO CIVIL AND CRIMINAL PENALTIES THEREUNDER.

503.10.5, to maintain the required slope and to prevent physical damage and separation of joints. The joints between connectors and appliance draft-hood outlets and flue collars must be secured with screws, rivets or other approved means. The joints between pipe sections also must be secured with screws, rivets or other approved means. Some connectors are available with a proprietary-type fastening method, which does not require screws, rivets or other fasteners if it provides equivalent resistance to disengagement or displacement. This section addresses connectors, not chimneys and vents, and most chimney and vent manufacturers do not require or might even prohibit the use of screws or rivets for securing joints for chimney and vent pipe sections and fittings.

503.10.10 Chimney connection. Where entering a flue in a masonry or metal chimney, the vent connector shall be installed above the extreme bottom to avoid stoppage. Where a thimble or slip joint is used to facilitate removal of the connector, the connector shall be firmly attached to or inserted into the thimble or slip joint to prevent the connector from falling out. Means shall be employed to prevent the connector from entering so far as to restrict the space between its end and the opposite wall of the chimney flue (see Section 501.9).

❖ All of the precautions taken to provide adequate chimney design may be ineffective if the connection between the appliance and the chimney is not properly accomplished. Improper connections can lead to appliance or connector failure and the leakage of vent gases into the building. This section contains requirements for the connection between a chimney and the appliance connector. The connection to a vent is properly accomplished by vent fittings and likewise for factory-built chimneys. Chimney connectors are required to pass through a masonry chimney wall to the inner face of the liner, but not beyond. A connector that extends into a chimney passageway can restrict the flow of vent gases and provide a ledge on which debris can accumulate. The joint between the connector and the chimney must be fastened in a manner that will prevent separation. If the connector enters a masonry chimney, it must be cemented in place with an approved material such as refractory mortar or other heat-resistant cement.

This section also permits the use of thimbles at a masonry chimney opening to provide for easy removal of the connector to facilitate cleaning. When a thimble is installed, it is to be permanently cemented in place with an approved high-temperature cement. A connector must be attached to a thimble in an approved manner to prevent displacement. A collar on the connector or a similar arrangement must be provided to limit the penetration of the connector into the chimney. Otherwise, it is quite possible that a connector will be shoved blindly into a chimney, reaching to the back wall of the chimney, and thus be obstructed.

503.10.11 Inspection. The entire length of a vent connector shall be provided with ready *access* for inspection, cleaning and replacement.

❖ A connector cannot be concealed by any form of building construction, whether or not such construction is removable. Connectors must be inspected periodically for corrosion damage, structural integrity, joint separation and clearances to combustibles (see Section 503.10.13).

503.10.12 Fireplaces. A vent connector shall not be connected to a chimney flue serving a *fireplace* unless the *fireplace* flue opening is permanently sealed.

❖ A fireplace chimney cannot serve any appliance unless the fireplace is retired by permanently sealing off the chimney from the fireplace. If this is not done, the fireplace can affect draft for the connected appliance, and/or vent gases could escape into the building through the fireplace opening.

503.10.13 Passage through ceilings, floors or walls. Single-wall metal pipe connectors shall not pass through any wall, floor or ceiling except as permitted by Section 503.7.4.

❖ This section no longer prohibits double-wall, Type B connectors from passing through walls, floors and ceilings. The prohibition on pass-through is limited to single-wall metal pipe connectors, recognizing that Section 503.7.4 allows single-wall metal pipe vents to extend from the appliance to the outdoors by passing through a roof or exterior wall. A single-wall connector has more than double the heat loss of a listed metal vent or chimney system. This produces high temperatures on the outside surface and cooling of the flue gases on the inside of the connector. The cooling of flue gases produces condensation, which can cause connector deterioration, while the excessive surface temperatures pose a potential fire hazard. For these reasons, a single-wall connector can be located only within the room or space in which the appliance is located. Single-wall connectors are prohibited from passing through any ceiling, floor or wall. If single-wall connectors were allowed to pass through walls, floors or ceilings, they might not be readily observable, and a potential fire hazard or connector deterioration could go undetected. Also, pass-through increase the likelihood that the connector will be excessively long, exposed to low ambient temperatures or subject to contact with combustibles. Connectors that pass through a wall, floor or ceiling would be out of sight and therefore out of mind, meaning that they would not get the attention needed to avoid hazardous conditions (see Commentary Figure 503.10.13).

503.10.14 Medium-heat connectors. Vent connectors for medium-heat appliances shall not pass through walls or partitions constructed of *combustible material*.

❖ When the vent gas temperatures are 1,000°F (538°C) and higher, penetration of combustible assemblies is an unacceptable risk.

INTERNATIONAL CODE COUNCIL®
Copyright © 2015 ICC. ALL RIGHTS RESERVED. Accessed by David Dammon on Jun 21, 2017 12:30:52 PM pursuant to License Agreement with ICC. No further reproduction or distribution authorized. ANY UNAUTHORIZED REPRODUCTION OR DISTRIBUTION IS A VIOLATION OF THE FEDERAL COPYRIGHT ACT AND THE LICENSE AGREEMENT, AND SUBJECT TO CIVIL AND CRIMINAL PENALTIES THEREUNDER.

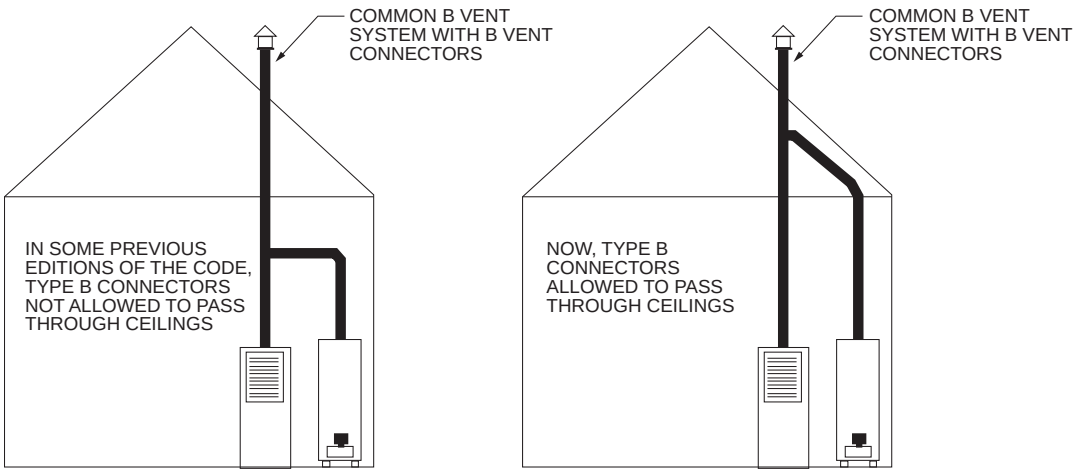

Figure 503.10.13
TYPE B VENT CONNECTOR PENETRATIONS

503.11 Vent connectors for Category II, III and IV appliances. Vent connectors for Category II, III and IV appliances shall be as specified for the venting systems in accordance with Section 503.4.

❖ See Sections 503.4, 503.4.1 and 503.4.2.

503.12 Draft hoods and draft controls. The installation of draft hoods and draft controls shall comply with Sections 503.12.1 through 503.12.7.

❖ See Sections 503.12.1 through 503.12.7.

503.12.1 Appliances requiring draft hoods. Vented appliances shall be installed with draft hoods.

> **Exception:** Dual oven-type combination ranges; *direct-vent appliances*; fan-assisted combustion system appliances; appliances requiring chimney draft for operation; single firebox boilers equipped with conversion burners with inputs greater than 400,000 Btu per hour (117 kW); appliances equipped with blast, power or pressure burners that are not *listed* for use with draft hoods; and appliances designed for forced venting.

❖ Draft hoods are integral to or are supplied with natural draft atmospheric-burner gas-fired appliances (see Commentary Figure 503.12.1). With the development of higher appliance efficiencies, fan-assisted combustion, direct-vent appliances and Category III and IV appliances, fewer draft-hood appliances will be used. Draft hoods are still common on conventional tank-type and tankless water heaters and 80-percent efficient boilers. A draft-hood-equipped appliance will allow a continuous flow of air into the venting system, which represents an energy loss except where an automatic vent damper is installed to close off the vent in the off cycle. Without an automatic vent damper, conditioned air is taken from the space in which the appliance is located and residual heat is taken away from the appliance itself, both of which contribute to energy loss. Not all appliances are categorized, but if they were, draft-hood-equipped appliances would fall under Category I. Draft hoods have multiple functions. They serve as a relief opening in the event of vent or chimney backdraft or blockage, they stabilize/regulate the amount of draft that occurs in the appliance combustion chamber and they allow the introduction of dilution air into the chimney or vent.



Figure 503.12.1
DRAFT-HOOD-EQUIPPED APPLIANCE
(Photo courtesy of A.O. Smith Water Products)

INTERNATIONAL CODE COUNCIL®
Copyright © 2015 ICC. ALL RIGHTS RESERVED. Accessed by David Dammon on Jun 21, 2017 12:30:52 PM pursuant to License Agreement with ICC. No further reproduction or distribution authorized. ANY UNAUTHORIZED REPRODUCTION OR DISTRIBUTION IS A VIOLATION OF THE FEDERAL COPYRIGHT ACT AND THE LICENSE AGREEMENT, AND SUBJECT TO CIVIL AND CRIMINAL PENALTIES THEREUNDER.

503.12.2 Installation. A draft hood supplied with or forming a part of a *listed* vented *appliance* shall be installed without *alteration*, exactly as furnished and specified by the *appliance* manufacturer.

❖ Draft hoods are often shipped with appliances as a part that must be field installed. Installers have been known to shorten or otherwise modify the draft hoods to compensate for installation constraints and have also installed them in an orientation other than vertical.

503.12.2.1 Draft hood required. If a draft hood is not supplied by the *appliance* manufacturer where one is required, a draft hood shall be installed, shall be of a *listed* or *approved* type and, in the absence of other instructions, shall be of the same size as the *appliance* flue collar. Where a draft hood is required with a conversion burner, it shall be of a *listed* or *approved* type.

❖ In the unlikely event that an appliance manufacturer does not supply the required draft hood, a listed or approved draft hood must be obtained and installed.

503.12.2.2 Special design draft hood. Where it is determined that a draft hood of special design is needed or preferable for a particular installation, the installation shall be in accordance with the recommendations of the *appliance* manufacturer and shall be *approved*.

❖ There could be unusual circumstances, such as where a horizontal-type draft hood is needed, because of low ceilings and/or insufficient connector rise.

503.12.3 Draft control devices. Where a draft control device is part of the *appliance* or is supplied by the *appliance* manufacturer, it shall be installed in accordance with the manufacturer's instructions. In the absence of manufacturer's instructions, the device shall be attached to the flue collar of the *appliance* or as near to the *appliance* as practical.

❖ Draft hoods also serve to control draft; however, this section would be redundant with Section 503.12.2 if it were not addressing draft controls such as barometric dampers. Two types of draft controls are installed in the appliance vent outlet or vent connector: the passive draft hood and the active barometric damper. Barometric dampers consist of a damper plate mounted on an axle that rotates in low friction bearing points such as needle or knife-edge bearings. The device is mounted in a tee fitting arrangement and connects with the appliance vent connector. It admits air in varying amounts into the vent connector to control the amount of draft through the appliance combustion chamber. These devices respond to varying chimney or vent draft caused by changes in indoor and outdoor temperatures, changes in atmospheric (barometric) pressure and changes in wind speed and direction. Barometric dampers are tuned by adjustable balancing weights attached to the damper plate. The damper manufacturer will provide instructions on how and where to install the device [see Commentary Figure 202(2)].

503.12.4 Additional devices. Appliances requiring a controlled chimney draft shall be permitted to be equipped with a *listed* double-acting barometric-draft regulator installed and adjusted in accordance with the manufacturer's instructions.

❖ Like Section 503.12.3, this section addresses barometric dampers, specifically, the double-acting type. These dampers open inward to admit air into the vent system like all other barometric dampers, but can also open outward in the event of backdraft to allow vent gases to be spilled into the room or space in which the appliance is located, just as a draft hood would do. The manufacturer's installation instructions may require or recommend that a sensor (spill switch) be installed that will sense prolonged vent-gas spillage from the damper and shut down the appliance. In such cases, a manufacturer's recommendation should be interpreted as an enforceable requirement.

Some Category I fan-assisted furnaces can be fitted with a factory-supplied conversion part that is, in effect, a retrofit draft hood. This will lower the efficiency of the appliance by converting it to a draft-hood-equipped appliance that will now introduce dilution air (conditioned room air) into the vent. This is done solely to allow fan-assisted furnaces to connect to existing masonry chimneys that would otherwise not be allowed to serve such appliances. These conversion parts use a sensor (spill switch) in the relief/air inlet opening. The manufacturer of the appliance and the draft hood conversion kit will provide specific installation instructions that must be followed for the conversion.

Vent gas spillage must not occur from an incinerator venting system; therefore, a draft regulating device must be of the single-acting type.

503.12.5 Location. Draft hoods and barometric draft regulators shall be installed in the same room or enclosure as the *appliance* in such a manner as to prevent any difference in pressure between the hood or regulator and the *combustion air* supply.

❖ Draft-regulation devices are designed to maintain a constant draft through the appliance combustion chamber and flue passages for the purpose of maintaining proper combustion conditions and achieving the highest possible efficiency. If the draft control sees a different ambient pressure than the appliance, it could allow too much or too little draft through the appliance. The positive, negative or neutral pressures within a building must act equally on both the appliance and the draft control to allow the draft control to be adjusted and perform its intended function.

503.12.6 Positioning. Draft hoods and draft regulators shall be installed in the position for which they were designed with reference to the horizontal and vertical planes and shall be located so that the relief opening is not obstructed by any part of the *appliance* or adjacent construction. The *appliance* and its draft hood shall be located so that the relief opening is accessible for checking vent operation.

❖ Draft hoods and barometric dampers are both affected by their orientation. There are two basic

INTERNATIONAL CODE COUNCIL®
Copyright © 2015 ICC. ALL RIGHTS RESERVED. Accessed by David Dammon on Jun 21, 2017 12:30:52 PM pursuant to License Agreement with ICC. No further reproduction or distribution authorized. ANY UNAUTHORIZED REPRODUCTION OR DISTRIBUTION IS A VIOLATION OF THE FEDERAL COPYRIGHT ACT AND THE LICENSE AGREEMENT, AND SUBJECT TO CIVIL AND CRIMINAL PENALTIES THEREUNDER.

types of draft hoods: vertical draft hoods and horizontal draft hoods. These types of draft hoods are not interchangeable. Barometric dampers can be adjusted to connect to either vertical or horizontal vent connectors; however, they are always positioned so that the closed damper plate is in a vertical plane. The manufacturer's instructions must always be followed. The relief opening on draft controls is also the dilution air inlet, and it must be unobstructed to allow air to enter under normal conditions, allow vent gases to spill in the event of backdraft and allow testing of the vent system for proper draft. For example, for many years, appliance venting/draft has been checked by observing the movement of smoke introduced near the relief/inlet opening.

503.12.7 Clearance. A draft hood shall be located so its relief opening is not less than 6 inches (152 mm) from any surface except that of the *appliance* it serves and the venting system to which the draft hood is connected. Where a greater or lesser *clearance* is indicated on the *appliance* label, the *clearance* shall be not less than that specified on the label. Such clearances shall not be reduced.

❖ The specified clearance is necessary to assure the unimpeded flow of air into the draft hood and flow of vent gas spillage from the hood. The clearance also protects materials from the hot gases that can spill from the draft hood and allows access for testing and observation.

503.13 Manually operated dampers. A manually operated damper shall not be placed in the vent connector for any *appliance*. Fixed baffles shall not be classified as manually operated dampers.

❖ Manual dampers are associated with solid-fuel appliances but not with gas-fired appliances. A manual damper requires manual operation by a human, which cannot be relied on because humans forget. If a damper is left closed or partially closed during appliance operation, a severe hazard could result from vent-gas spillage and/or appliance malfunction (see Section 503.14).

503.14 Automatically operated vent dampers. An automatically operated vent damper shall be of a *listed* type.

❖ Automatic vent dampers are intended for use with gas-fired natural-draft appliances. An automatic vent damper must be installed in strict compliance with the manufacturer's instructions. Because automatic vent-damper failure can result in a hazardous condition, automatic dampers must be listed and labeled. An automatic vent damper is installed on the draft hood outlet of an individual gas-fired appliance (see Commentary Figure 503.14). These dampers must not serve more than one appliance. The manufacturer's instructions require that the damper be installed by a qualified installer in accordance with the terms of the listing and the manufacturer's instructions.

Because the purpose of a vent damper is to close or restrict the flue passageway of an appliance, it is imperative that the device be properly installed to minimize the possibility of failure. A malfunctioning or improperly installed vent-damper device can cause the appliance to malfunction and could cause the discharge of products of combustion directly into the building interior. Automatic vent dampers are energy-saving devices designed to close off or restrict an appliance flue passageway when the appliance is not operating and is in its "off" cycle. These devices save energy by trapping residual heat in a heat exchanger after the burners shut off and by preventing the escape of conditioned room air up the chimney or vent. Thus, appliance efficiency can be boosted, and building air infiltration can be reduced. Such devices can be field-installed additions to existing equipment and can be a factory-supplied component of an appliance (see Commentary Figure 504.2.1).

A common application for vent dampers today is for mid-efficiency (80 to 83 percent) hot water boilers, which are draft-hood equipped. There are three types of automatic vent dampers: electrical-, mechanical- and thermal-actuating. The electric-motor-operated type is the commonly encountered type today (see Commentary Figures 503.14 and 504.2.1). Electrical- and mechanical-actuating automatic dampers must open automatically prior to main burner ignition and must remain open until completion of the burner cycle. They must also be interlocked electrically with the appliance control circuitry to prevent operation of the appliance in the event of damper failure. Thermal-actuating dampers open in response to flue gas temperature after burner ignition and close after burner shutdown. Thermal-actuated dampers use bimetal components that convert heat energy into mechanical energy. Some thermal-actuated dampers require the installation of a draft-hood spillage sensor that would shut off the appliance if the damper failed to open. The most common type of vent damper uses an electric motor to rotate a damper blade. The device uses switches that prove the damper position and allow the appliance to start only after the damper is opened and verified. The sequence of operation is the same as that described in the commentary to Section 503.3.3.

503.15 Obstructions. Devices that retard the flow of vent gases shall not be installed in a vent connector, chimney or vent. The following shall not be considered as obstructions:

1. Draft regulators and safety controls specifically *listed* for installation in venting systems and installed in accordance with the manufacturer's instructions.
2. *Approved* draft regulators and safety controls that are designed and installed in accordance with *approved* engineering methods.
3. *Listed* heat reclaimers and automatically operated vent dampers installed in accordance with the manufacturer's instructions.
4. *Approved* economizers, heat reclaimers and recuperators installed in venting systems of appliances not required to be equipped with draft hoods, provided that the *appliance* manufacturer's instructions cover the installation of such a device in the venting system and

INTERNATIONAL CODE COUNCIL®
Copyright © 2015 ICC. ALL RIGHTS RESERVED. Accessed by David Dammon on Jun 21, 2017 12:30:52 PM pursuant to License Agreement with ICC. No further reproduction or distribution authorized. ANY UNAUTHORIZED REPRODUCTION OR DISTRIBUTION IS A VIOLATION OF THE FEDERAL COPYRIGHT ACT AND THE LICENSE AGREEMENT, AND SUBJECT TO CIVIL AND CRIMINAL PENALTIES THEREUNDER.

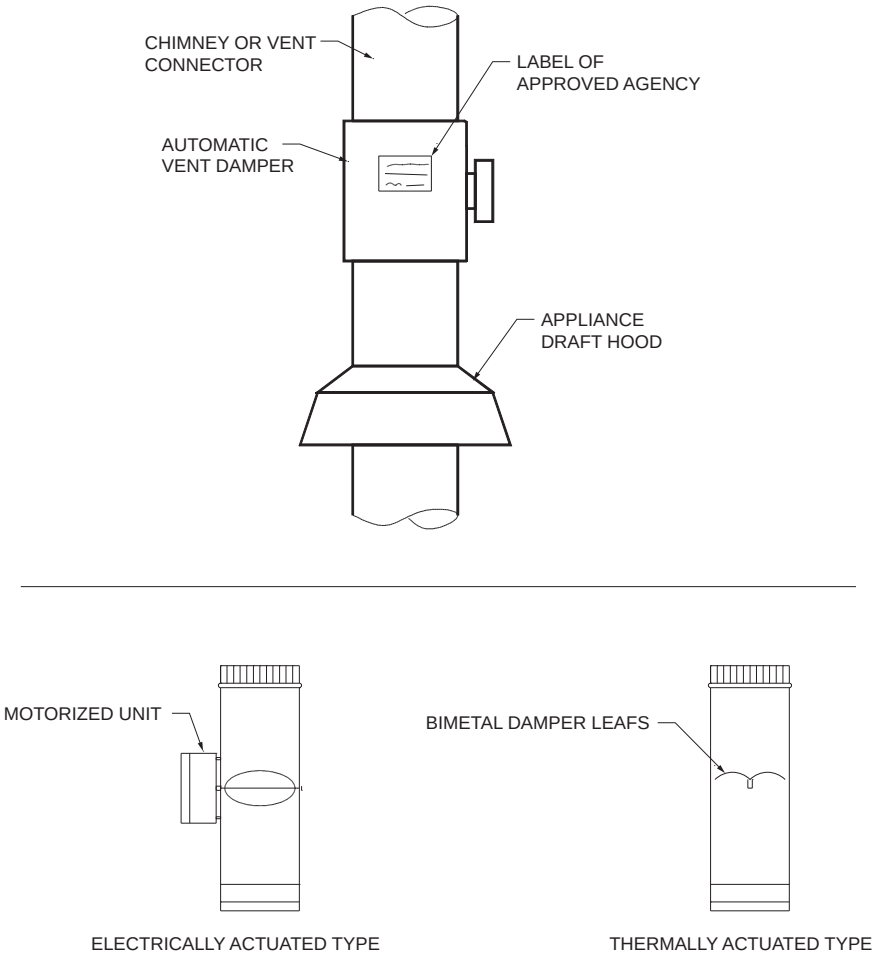

Figure 503.14
AUTOMATIC VENT DAMPERS

performance in accordance with Sections 503.3 and 503.3.1 is obtained.

5. Vent dampers serving *listed* appliances installed in accordance with Sections 504.2.1 and 504.3.1 or other *approved* engineering methods.

❖ Manual dampers, flow restricting orifices and similar devices are not accounted for in the vent design methods of the code. The tables in Section 504 assume that no such devices are installed in the vent. Item 3 addresses the automatic vent dampers covered in Section 503.14. These dampers open fully before the appliance is allowed to fire and offer negligible flow resistance because the damper plate is parallel to the vent gas flow. Item 4 addresses devices that extract heat from the vent gases to save energy that would otherwise be lost to the outside atmosphere. Appliances without draft hoods, excluding Category I fan-assisted, Category II, III and IV appliances, usually have higher vent gas temperatures than those with draft hoods; therefore, waste heat can be reclaimed with less chance of diminishing draft (see Section 504.2.1).

503.16 Outside wall penetrations. Where vents, including those for *direct-vent appliances*, penetrate outside walls of buildings, the annular spaces around such penetrations shall be permanently sealed using *approved* materials to prevent entry of combustion products into the building.

❖ Vents that terminate through outside walls are subject to being covered (buried) in snow in many climates and experience has shown that combustion products can enter the building through the annular space between the vent and the wall assembly. In some cases, snow cover can trap combustion gases and cause them to reenter a direct-vent appliance combustion chamber via the combustion air intake. This will generate excessive carbon monoxide levels as a result of oxygen depletion. The snow cover can trap and channel these toxic gases into the building through any unsealed annular space in the wall penetration. The required sealing must be permanent and able to tolerate movement of the vent caused by

INTERNATIONAL CODE COUNCIL®
Copyright © 2015 ICC. ALL RIGHTS RESERVED. Accessed by David Dammon on Jun 21, 2017 12:30:52 PM pursuant to License Agreement with ICC. No further reproduction or distribution authorized. ANY UNAUTHORIZED REPRODUCTION OR DISTRIBUTION IS A VIOLATION OF THE FEDERAL COPYRIGHT ACT AND THE LICENSE AGREEMENT, AND SUBJECT TO CIVIL AND CRIMINAL PENALTIES THEREUNDER.

expansion and contraction of the vent. Plastic pipe used for vents will expand and contract much more than metal pipe, and the annular space seal will be broken if allowances are not made for this movement.

Although not explicitly stated, this section should also be applied to penetrations by combustion air intake pipes that are associated with direct-vent appliances because such intakes are in close proximity to the vent discharge terminal and are affected by the same snow cover.

This section applies to all vents, not just those in regions subject to snowfall. Wind, fences, visual screens, vegetation and other causes could also create the conditions where combustion gases could enter the building.

SECTION 504 (IFGS)
SIZING OF CATEGORY I APPLIANCE VENTING SYSTEMS

504.1 Definitions. The following definitions apply to the tables in this section.

❖ The definitions in this section are necessary for application of the vent sizing tables and are exclusively related to Section 504. As stated in the main section title, this section applies to Category I appliances. See the definition of "Vented appliance categories." However, it also applies to draft-hood-equipped appliances, which may or may not be categorized at all, even though they could be Category I because they meet the definition of Category I appliances. For example, a draft-hood water heater need not be categorized by its governing standard, but if it were categorized it would be a Category I appliance. A gas-fired appliance with a draft hood depends on gravity flow for supply of combustion air, for flow of combustion products through the heat exchanger and for proper gas venting. The draft hood is designed to maintain proper combustion in the event of draft fluctuations. Its relief opening serves as a flue product exit in the event of a blocked vent or downdraft. The relief opening, however, also allows dilution air to enter the vent during normal appliance/vent operation. When this dilution air is obtained from within the heated space, there is a loss of seasonal efficiency, which can be reduced by installation of a vent damper designed to reduce the flow of air through the vent when the burner is not firing.

To improve annual fuel utilization efficiency (AFUE), many appliance manufacturers have designed fan-assisted combustion using mechanical means (blowers or fans) to obtain either induced or forced flow of combustion air and combustion products. Greater efficiency results from three major effects. First, heat exchange improves because of higher internal flow velocity, which enhances heat transfer by creating turbulent flow and the "scrubbing" of heat exchanger surfaces. Second, induced draft through the appliance combustion chambers and heat exchangers allows the heat exchangers to be constructed with longer passes, which results in greater surface area and thus longer flue gas retention time. This allows extraction of more heat from the combustion gases. Third, there is no longer a draft hood to cause heated air loss up the vent, both when the appliance is operating and when it is not [see Commentary Figures 504.1(1) through 504.1(4)].

A fan-assisted combustion appliance uses pressure-sensing and heat-sensing controls to monitor proper venting. The controls must prove that the appliance flue outlet is at neutral or negative pressure and that adequate flow of flue gases exists. Without a draft hood and dilution air to dilute the combustion products, gases entering the vent will have a higher water vapor content than those from a draft-hood appliance [see Commentary Figure 504.1(3)]. There will likely be a longer period of condensation in the vent (wet time), particularly in the upper and/or colder portions of the venting system. These differences between fan-assisted and draft-hood appliances are reflected in the tables by the lack of minimum capacities for draft hood appliances. The minimums for fan-assisted appliances are based on the heat input needed to control the duration of wet time or condensation during appliance start-up and operation.

The tables do not apply to:

1. Wall furnaces (recessed heaters), which require Type BW vents.
2. Decorative gas appliances, which generally require a specific vent size and are best individually vented.
3. Category II, III or IV gas appliances. If permitted by the appliance manufacturer, some Category III appliances can also be vented in accordance with Category I conditions. Specifically, if the vent for a Category III appliance is sized and configured (connector rise, total height, etc.) for the input, the vent will operate under nonpositive pressure. This allows the use of a Type B gas vent. For a Category III appliance to operate as a Category I, appliance manufacturers' instructions must be followed, and the vent size may need to be larger than the appliance flue collar.
4. Gas-fired appliances listed for use only with chimneys or dual-fuel appliances such as oil/gas, wood/gas, or coal/gas. Dual-fuel appliances require chimneys sized in accordance with the appliance manufacturer's instructions and in accordance with the chimney manufacturer's instructions.

Capacities in the tables assume cold starts such as with an intermittent ignition system (no standing pilot). The type of ignition system does not affect maximum capacities, but it does affect minimums. A standing pilot on an appliance will keep vent gas temperatures slightly above outdoor ambient temperature, whereas a tank of hot water plus water-heater

INTERNATIONAL CODE COUNCIL®
Copyright © 2015 ICC. ALL RIGHTS RESERVED. Accessed by David Dammon on Jun 21, 2017 12:30:52 PM pursuant to License Agreement with ICC. No further reproduction or distribution authorized. ANY UNAUTHORIZED REPRODUCTION OR DISTRIBUTION IS A VIOLATION OF THE FEDERAL COPYRIGHT ACT AND THE LICENSE AGREEMENT, AND SUBJECT TO CIVIL AND CRIMINAL PENALTIES THEREUNDER.

pilot operation will maintain flue temperature ahead of the draft hood at approaching the same temperature as the stored water. This flow of heat into a vent aids in priming as well as reducing wet time. In some cases, the fan-assisted appliance manufacturer and/or the sizing tables in the code will require connection of a draft-hood-type appliance to the venting system because the relatively inefficient draft-hood appliance contributes heat to the venting system necessary to make it function.

The tables also assume that there are no adverse or building depressurization effects. A strong wind or mechanical ventilation/exhaust might cause a downdraft with draft-hood appliances that will prevent the vent from priming properly.

The input capacity values in the tables are computed for typical natural gas. They can be used for liquefied petroleum gases (LP-gases), such as propane and butane, and mixtures of these with air. With LP-gases, the maximum capacity remains the same, but because these have less hydrogen and produce less water vapor, the possibility of condensation is somewhat lower. To simplify matters, assume that minimum capacities are the same regardless of fuel type.

Oversized or excessively long vents can cause condensation and should be avoided. The tables define limits that minimize wet time in the indoor portions as well as in the upper exposed end of the vent.

The maximum vent lateral lengths for FAN appliances are calculated on the basis of several assumed conditions, including flue gas temperature and composition, and an outdoor ambient temperature of 42°F (6°C), chosen as a representative value. Colder assumed temperatures or greater outdoor exposure of the vent would lead to shorter maximum allowable lengths or to greater possibilities of condensation. To minimize condensation, it is essential to operate closer to maximum than minimum capacity and also to use the smallest allowable vent size.

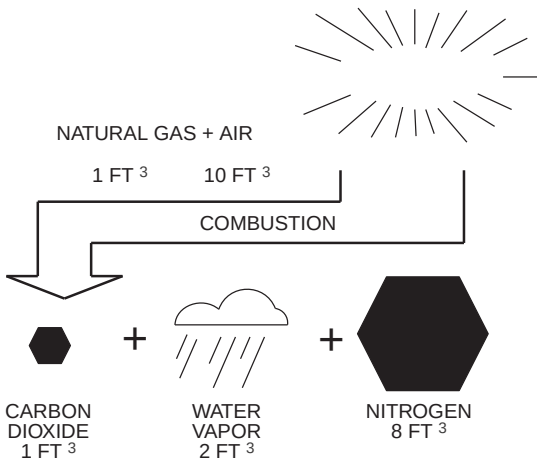

For SI: 1 cubic foot = 0.0283 m^3.

Figure 504.1(1)
COMBUSTION PROCESS FOR NATURAL GAS
(Figure courtesy of Simpson Dura-Vent Company, Incorporated)

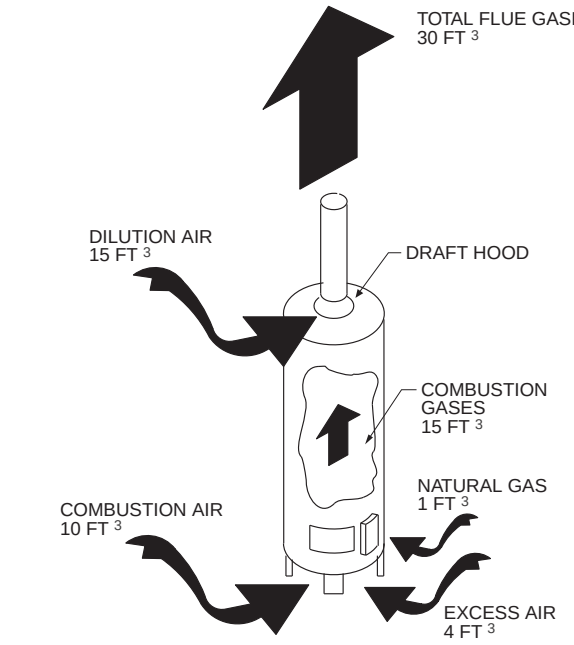

For SI: 1 cubic foot = 0.0283 m^3.

Figure 504.1(2)
FLUE GAS COMPOSITION
(Figure courtesy of Simpson Dura-Vent Company, Incorporated)

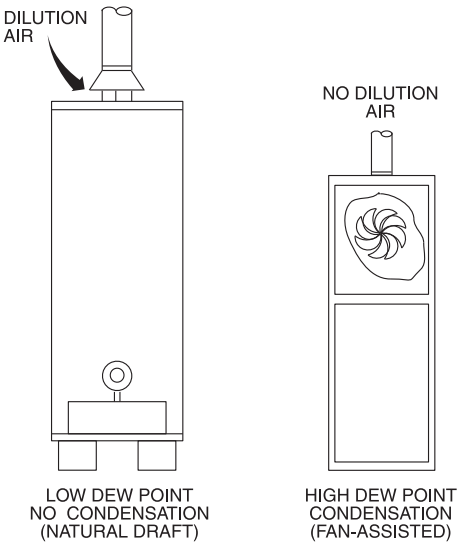

Figure 504.1(3)
DRAFT-HOOD APPLIANCE COMPARED TO FAN-ASSISTED APPLIANCE
(Figure courtesy of Simpson Dura-Vent Company, Incorporated)

INTERNATIONAL CODE COUNCIL®
Copyright © 2015 ICC. ALL RIGHTS RESERVED. Accessed by David Dammon on Jun 21, 2017 12:30:52 PM pursuant to License Agreement with ICC. No further reproduction or distribution authorized. ANY UNAUTHORIZED REPRODUCTION OR DISTRIBUTION IS A VIOLATION OF THE FEDERAL COPYRIGHT ACT AND THE LICENSE AGREEMENT, AND SUBJECT TO CIVIL AND CRIMINAL PENALTIES THEREUNDER.

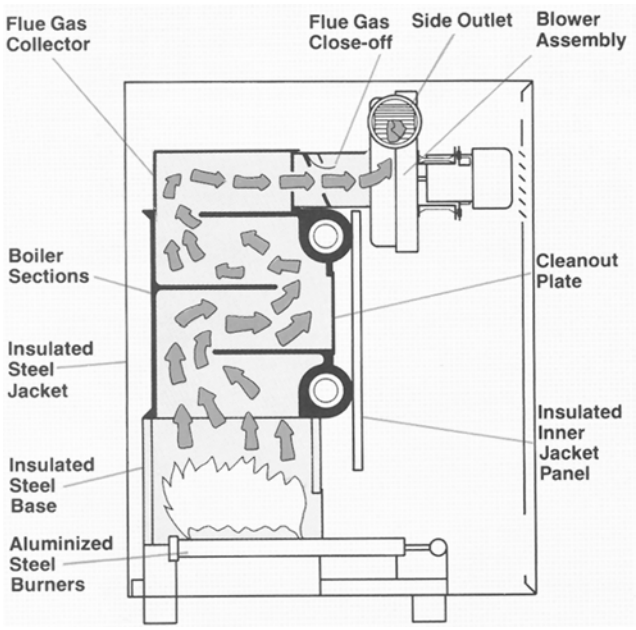

Figure 504.1(4)
ILLUSTRATION OF THE BASIC PRINCIPLE OF FAN-ASSISTED COMBUSTION
(Figure courtesy of Weil-McLain)



Figure 504.1(5)
FAN-ASSISTED HOT WATER BOILER
(Photo courtesy of Weil-McLain)

APPLIANCE CATEGORIZED VENT DIAMETER/ AREA. The minimum vent area/diameter permissible for Category I appliances to maintain a nonpositive vent static pressure when tested in accordance with nationally recognized standards.

❖ The minimum Category I appliance vent area/diameter necessary to maintain a nonpositive vent static pressure when tested in accordance with the applicable standard. The appliance categorized vent diameter/area is determined by the appliance manufacturer and is typically the vent outlet collar installed on the appliance.

FAN-ASSISTED COMBUSTION SYSTEM. An *appliance* equipped with an integral mechanical means to either draw or force products of combustion through the combustion chamber or heat exchanger.

❖ An appliance equipped with an integral mechanical means to either draw or force products of combustion through the combustion chamber or heat exchanger [see Commentary Figures 504.1(4) and (5)].

FAN Min. The minimum input rating of a Category I fan-assisted appliance attached to a vent or connector.

❖ The minimum appliance input rating of a Category I appliance with a fan-assisted combustion system that is capable of being attached to a vent.

FAN Max. The maximum input rating of a Category I fan-assisted appliance attached to a vent or connector.

❖ The maximum appliance input rating of a Category I appliance with a fan-assisted combustion system that is capable of being attached to a vent.

NAT Max. The maximum input rating of a Category I draft-hood-equipped *appliance* attached to a vent or connector.

❖ The maximum appliance input rating of a Category I natural draft appliance that is capable of being attached to a vent.

FAN + FAN. The maximum combined *appliance* input rating of two or more Category I fan-assisted appliances attached to the common vent.

FAN + NAT. The maximum combined *appliance* input rating of one or more Category I fan-assisted appliances and one or more Category I draft-hood-equipped appliances attached to the common vent.

NA. Vent configuration is not allowed due to potential for condensate formation or pressurization of the venting system, or not applicable due to physical or geometric restraints.

❖ Vent configuration is prohibited.

NAT + NAT. The maximum combined *appliance* input rating of two or more Category I draft-hood-equipped appliances attached to the common vent.

504.2 Application of single-appliance vent Tables 504.2(1) through 504.2(6). The application of Tables 504.2(1) through 504.2(6) shall be subject to the requirements of Sections 504.2.1 through 504.2.17.

❖ Note that all of the table titles have been reformatted to make them easier to use and to lessen the possi-

INTERNATIONAL CODE COUNCIL®
Copyright © 2015 ICC. ALL RIGHTS RESERVED. Accessed by David Dammon on Jun 21, 2017 12:30:52 PM pursuant to License Agreement with ICC. No further reproduction or distribution authorized. ANY UNAUTHORIZED REPRODUCTION OR DISTRIBUTION IS A VIOLATION OF THE FEDERAL COPYRIGHT ACT AND THE LICENSE AGREEMENT, AND SUBJECT TO CIVIL AND CRIMINAL PENALTIES THEREUNDER.

bility for error in choosing the appropriate table. The tables do not apply to Type B-W vents; vents for decorative gas appliances; vents for Category II, III or IV appliances; vents for dual-fuel appliances; vents for appliances not listed for use with Type B vent and appliances listed only for connection to chimneys. Category I appliances can be a fan-assisted design or can be a draft-hood-equipped design, and each design has different vent system design considerations. A noteworthy difference between fan-assisted and draft-hood-equipped designs is that the vents for fan-assisted appliances have both a maximum and a minimum vent capacity. In the past, lower-efficiency draft-hood-type appliances were dominant, and vent sizing was based only on the maximum venting capacity of the vent. In other words, the only concern was to make sure that the vent was big enough. This is no longer the case with the advent of mid-efficiency fan-assisted-type appliances. Today, it is possible for a vent to be either too small or too large. An undersized vent will have insufficient capacity and can allow flue gas spillage or cause positive pressure to occur within the vent. An oversized vent can fail to produce sufficient draft and can be subject to the continuous formation of water vapor condensation on the interior vent surfaces. A typical individual vent is shown in Commentary Figure 504.2(1) for a FAN furnace with an input rating of 150,000 Btu/h (44 kW) and a 5-inch (127 mm) outlet connection.

Procedure for a Type B vent, Table 504.2(1): Go down the height column to 20 feet (6096 mm) and across on the 10-foot (3048 mm) lateral line.

For this furnace, the MAX capacity under the 5-inch (127 mm) size heading is 229,000 Btu/h (67.1 kW) and the MIN capacity is 50,000 Btu/h (14.7 kW). A 5-inch (127 mm) size Type B vent will be correct. See Commentary Figure 504.2(1). In applying the tables, extreme care must be taken to observe the title of the table and to apply the conditions and instructions set forth in Sections 504.2.1 through 504.2.16.

To determine the proper size for an individual vent, apply the table as follows:

1. Determine the total vent height and length of lateral, based on the appliance and vent location and the height to the top of the vent, as indicated in Commentary Figure 504.2(1). If gas appliances, such as a furnace, boiler or water heater, have not been chosen or installed, estimate the height beginning at 6 feet (1829 mm) above the floor. For attic or horizontal furnaces, floor furnaces, room heaters and small boilers, the height location of the draft hood outlet or vent collar should be known.
2. Read down the height column to a height equal to or less than the estimated total height.
3. Select the horizontal row for the appropriate lateral (L) length.
4. Read across to the first column under the type of appliance (FAN or NAT) that shows an appliance input rating equal to or greater than the name plate sea level input rating of the appliance to be vented.

Commentary Figure 504.2(2) illustrates the measurement of height and laterals for draft-hood appliances.

Some vent manufacturers include special requirements regarding certain types of appliances in their installation/design instructions.

504.2.1 Vent obstructions. These venting tables shall not be used where obstructions, as described in Section 503.15, are installed in the venting system. The installation of vents serving *listed* appliances with vent dampers shall be in accordance with the *appliance* manufacturer's instructions or in accordance with the following:

1. The maximum capacity of the vent system shall be determined using the "NAT Max" column.
2. The minimum capacity shall be determined as if the *appliance* were a fan-assisted *appliance*, using the "FAN Min" column to determine the minimum capacity of the vent system. Where the corresponding "FAN Min" is "NA," the vent configuration shall not be permitted and an alternative venting configuration shall be utilized.

❖ An engineered-vent sizing method or appliance and vent/chimney manufacturer's instructions must be used to size vents where devices (obstructions) are installed in a venting system. The tables do not account for the flow resistance caused by such devices, nor do they account for the reduction of flue gas temperatures resulting from heat reclaim exchangers. Section 503.15 lists several items that are not to be viewed as obstructions, including automatic vent dampers. This section recognizes the use of the vent sizing tables with appliances equipped

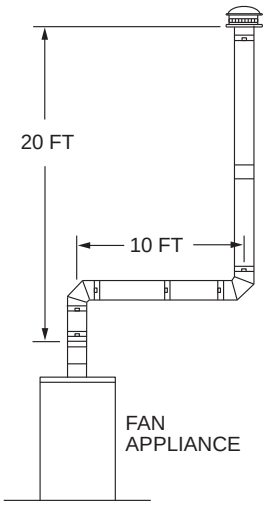

For SI: 1 foot = 304.8 mm.

Figure 504.2(1)
EXAMPLE OF INDIVIDUAL VENT DIMENSIONS
(Figure courtesy of Selkirk, L.L.C.)

INTERNATIONAL CODE COUNCIL®
Copyright © 2015 ICC. ALL RIGHTS RESERVED. Accessed by David Dammon on Jun 21, 2017 12:30:52 PM pursuant to License Agreement with ICC. No further reproduction or distribution authorized. ANY UNAUTHORIZED REPRODUCTION OR DISTRIBUTION IS A VIOLATION OF THE FEDERAL COPYRIGHT ACT AND THE LICENSE AGREEMENT, AND SUBJECT TO CIVIL AND CRIMINAL PENALTIES THEREUNDER.

with automatic vent-damper devices. By referring to the appliance manufacturer's installation instructions, this section implies that the appliances are factory equipped with automatic vent dampers. Item 1 recognizes that during the firing cycle, an appliance with an automatic vent damper affects a venting system no differently than a draft-hood appliance without one. Item 2 addresses the effect that appliances equipped with automatic vent dampers have on venting systems during the appliance "off" cycle. The appliance acts as if it were an idle fan-assisted appliance because a closed vent damper will allow little or no air to enter the vent system, just as an idle fan-assisted appliance allows no air to enter the vent system. The lack of dilution air entering the venting system is a primary reason that the minimum input columns were created in the vent sizing tables. Boilers and water heaters with draft hoods commonly use automatic vent dampers to boost the efficiency of the appliance by trapping residual heat of the firing cycle, reducing standby losses and reducing the amount of conditioned air that escapes up the vent through the draft hood (see Commentary Figure 504.2.1).

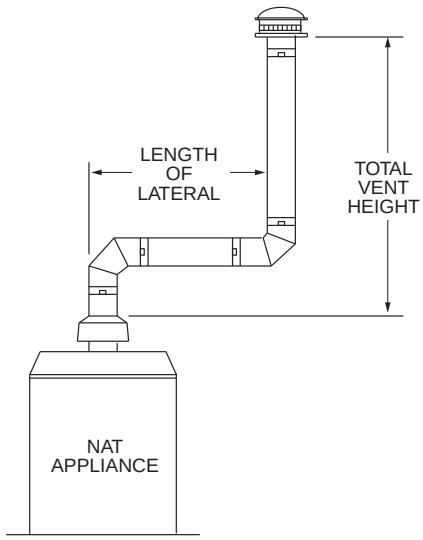

Figure 504.2(2)
INDIVIDUAL VENT—LATERAL AND HEIGHT
(Figure courtesy of Selkirk, L.L.C.)



Figure 504.2.1
CATEGORY I NATURAL DRAFT HOT WATER BOILER WITH AUTOMATIC VENT DAMPER
(Photo courtesy of Weil-McLain)

504.2.2 Minimum size. Where the vent size determined from the tables is smaller than the *appliance* draft hood *outlet* or flue collar, the smaller size shall be permitted to be used provided that all of the following requirements are met:

1. The total vent height (*H*) is not less than 10 feet (3048 mm).
2. Vents for *appliance* draft hood outlets or flue collars 12 inches (305 mm) in diameter or smaller are not reduced more than one table size.
3. Vents for *appliance* draft hood outlets or flue collars larger than 12 inches (305 mm) in diameter are not reduced more than two table sizes.
4. The maximum capacity listed in the tables for a fan-assisted *appliance* is reduced by 10 percent (0.90 × maximum table capacity).
5. The draft hood outlet is greater than 4 inches (102 mm) in diameter. Do not connect a 3-inch-diameter (76 mm) vent to a 4-inch-diameter (102 mm) draft hood outlet. This provision shall not apply to fan-assisted appliances.

❖ If a vent complies with all of items 1 through 5 and is sized in accordance with the appropriate table, it is allowed to be smaller than the appliance connection, primarily because of the increase in capacity of the vent resulting from its height and because vent capacity is based on the Btu/h input rating of the appliance and not the size of the appliance flue collar. This code section suggests that flue collars are sized for worst case vent designs and are thus somewhat oversized for vents with higher venting capacities. Item 4 is necessary to prevent positive pressure from developing in the vent serving fan-assisted appliances. A 6-inch (152 mm) draft hood connected to a 5-inch (127 mm) Type B vent, for example, might look like an installation error, but this section could allow it in some cases, and operating a vent nearer its maximum capacity is always desirable (see Section 504.2.10).

504.2.3 Vent offsets. Single-appliance venting configurations with zero (0) lateral lengths in Tables 504.2(1), 504.2(2)

INTERNATIONAL CODE COUNCIL®
Copyright © 2015 ICC. ALL RIGHTS RESERVED. Accessed by David Dammon on Jun 21, 2017 12:30:52 PM pursuant to License Agreement with ICC. No further reproduction or distribution authorized. ANY UNAUTHORIZED REPRODUCTION OR DISTRIBUTION IS A VIOLATION OF THE FEDERAL COPYRIGHT ACT AND THE LICENSE AGREEMENT, AND SUBJECT TO CIVIL AND CRIMINAL PENALTIES THEREUNDER.

and 504.2(5) shall not have elbows in the venting system. Single-appliance venting configurations with lateral lengths include two 90-degree (1.57 rad) elbows. For each additional elbow up to and including 45 degrees (0.79 rad), the maximum capacity listed in the venting tables shall be reduced by 5 percent. For each additional elbow greater than 45 degrees (0.79 rad) up to and including 90 degrees (1.57 rad), the maximum capacity listed in the venting tables shall be reduced by 10 percent. Where multiple offsets occur in a vent, the total lateral length of all offsets combined shall not exceed that specified in Tables 504.2(1) through 504.2(5).

❖ A vent system with a zero lateral length is an ideal system because it is entirely vertical and thus has the least flow resistance and greatest draft. To create a lateral run of vent or vent connector, one or two elbows (adjustable fittings) are necessary [see Commentary Figure 504.2(2)]. The tables account for two 90-degree (1.57 rad) changes in direction, which will offer considerable resistance to the flow of flue gases. Depending on the appliance flue collar or draft-hood outlet orientation, a single elbow can create a lateral, but the tables assume that a vertical outlet orientation and two elbows are used. Two 45-degree (0.79 rad) fittings joined together, for example, are the equivalent of a single 90-degree (1.57 rad) fitting but would offer slightly less resistance to flow because of the larger turning radius. The capacity reduction penalty for each change in direction in excess of the two "free" 90-degree (1.57 rad) fittings accounts for the increased flow resistance caused by the additional fittings (elbows). For example, a vent using two 90-degree (1.57 rad) fittings and two 45-degree (0.79 rad) fittings would have a 10-percent capacity reduction penalty. A vent using two 90-degree (1.57 rad) fittings and two 30-degree (0.52 rad) fittings would also have a 10-percent capacity penalty. All changes of direction (fittings), regardless of the angle, that are in addition to the two "free" 90-degree fittings are accounted for by a capacity reduction penalty. A fitting adjusted to 45 degrees (0.79 rad) or less will cause a 5-percent penalty and a fitting adjusted to greater than 45 degrees (0.79 rad) and up to 90 degrees (1.57 rad) will cause a 10-percent penalty.

Whenever possible, an individual vent should be located directly over the appliance outlet. If the appliance flue outlet is horizontal, one 90-degree (1.57 rad) elbow should be used with the vent directly over it. A straight vertical vent is more easily supported and has less flow resistance.

There is no need to offset the vertical vent to include a tee and bracket. The use of a tee for cleanout or inspection purposes is quite unnecessary for three reasons. First, using a B-vent cap keeps debris and birds out. Second, clean-burning gas does not produce any deposits needing removal. Third, Type B vent joints are easily opened for inspection of the inside of the piping.

Should an offset be needed, the use of two elbows will provide somewhat greater capacity than an elbow and a tee. A tee has greater flow resistance than an elbow. The two 90-degree turns that are accounted for by the tables for laterals can occur anywhere within the vent system. This means that if the turns are used where the appliance connects to the system, the rest of the vent must be entirely vertical, or else the penalties of this section must be applied. The two "free" 90-degree (1.57 rad) turns can be composed of any number and angle of fittings that total not more than 180 degrees (3.1 rad). Simply put, there are free turns up to a maximum of 180 degrees (3.1 rad), and after that each additional turn will cause a capacity penalty to apply (see definition of "Offset").

Vent offsets should always be avoided where possible, especially offsets in the upper portion of the vent and in cold spaces such as attics and truss spaces. Offsets can be avoided with simple planning of the vent system and appliance locations. The attic offset is prevalent because the vent and appliance location is often not planned, and the building owners and designers do not want the vent to terminate on the street side of a roof for aesthetic reasons. This type of offset causes the most problems for several reasons. The typical attic will have winter temperatures close to the outdoor temperature; therefore, offsets in attics will cause more vent pipe to be exposed to the cold attic (see commentary, Section 504.2.9). This can increase the production of condensate in the vent, and the fittings used will be points at which the condensate can leak from the inner vent lining. Most condensate leakage from vents can be traced to a fitting used in an offset. The code (Sections 504.2.9 and 504.3.16) assumes that a vent will not be exposed to outdoor temperatures except for the necessary portion that extends above the roof. The temperature in a typical attic today is nearly equivalent to the outdoors.

Studies have shown that offsets in the upper portion of vent systems can produce slight positive pressures because of the flow resistance, and this encourages water vapor to escape from the vent and condense between the vent walls. Offsets in attics usually involve long runs of pipe that increase the surface area of vent pipe exposed to cold temperature. It is quite common to find that attic offsets exceed the horizontal length allowed by Section 504.3.5.

Each offset introduces a horizontal component to a vent and this horizontal component is limited by the "lateral" column of the single appliance tables. The horizontal component of all offsets in a vent must be totaled and the total cannot exceed the lateral length allowance in the single appliance tables.

504.2.4 Zero lateral. Zero (0) lateral (*L*) shall apply only to a straight vertical vent attached to a top outlet draft hood or flue collar.

❖ The zero lateral rows in the tables refer only to an entirely vertical vent run without offsets, lateral runs and directional fittings. This would be the ideal vent.

INTERNATIONAL CODE COUNCIL®
Copyright © 2015 ICC. ALL RIGHTS RESERVED. Accessed by David Dammon on Jun 21, 2017 12:30:52 PM pursuant to License Agreement with ICC. No further reproduction or distribution authorized. ANY UNAUTHORIZED REPRODUCTION OR DISTRIBUTION IS A VIOLATION OF THE FEDERAL COPYRIGHT ACT AND THE LICENSE AGREEMENT, AND SUBJECT TO CIVIL AND CRIMINAL PENALTIES THEREUNDER.

Unfortunately, it is seldom seen because of lack of planning and coordination of vent and appliance locations. Architectural features of buildings usually dictate that vents take less than desirable paths to get from the appliances to the outdoors.

504.2.5 High-altitude installations. Sea-level input ratings shall be used when determining maximum capacity for high altitude installation. Actual input (derated for altitude) shall be used for determining minimum capacity for high altitude installation.

❖ Appliances installed at elevations above sea level must have their Btu/h (W) input reduced (derated) because the atmosphere is less dense and oxygen levels decrease as altitude increases. The actual volume of flue gases entering a vent (i.e., primary and secondary combustion air, excess air and combustion byproducts) does not significantly change for different elevations; therefore, the maximum vent capacity is based on the sea-level input rating. The minimum capacity of a vent depends on heat input to the vent to control condensation and maintain the required draft. Therefore, the actual heat input (as derated) is used to determine the minimum capacity of a vent.

504.2.6 Multiple input rate appliances. For appliances with more than one input rate, the minimum vent capacity (FAN Min) determined from the tables shall be less than the lowest *appliance* input rating, and the maximum vent capacity (FAN Max/NAT Max) determined from the tables shall be greater than the highest *appliance* rating input.

❖ To improve efficiency, some appliances are equipped with modulating input or high-low two-stage input. Such appliances typically use two-stage thermostats or timers to change over from low-fire to high-fire operation, thus more closely matching the appliance input to the heating load. The venting system must be capable of operating properly throughout the entire firing range of the appliance. The venting system must be capable of handling the maximum input of the appliance and also must be compatible with the appliance when the appliance is operating at its lowest input. Such appliances will usually operate at the "low-fire" input most of their total operating time. To satisfy the minimum input requirements for fan-assisted appliance vents, the vent design must be based on the lowest Btu/h rating of the appliance because this is what the vent senses as the connected load. The lowest appliance input rate is used for minimum vent capacity, and the highest input rate must be used for maximum vent capacity. This requirement can be easily overlooked if the appliance label is not carefully studied because the appliance will usually be described by its maximum input, and any minimum input will have to obtained from the label.

504.2.7 Liner system sizing and connections. *Listed* corrugated metallic chimney liner systems in masonry chimneys shall be sized by using Table 504.2(1) or 504.2(2) for Type B vents with the maximum capacity reduced by 20 percent (0.80 × maximum capacity) and the minimum capacity as shown in Table 504.2(1) or 504.2(2). Corrugated metallic liner systems installed with bends or offsets shall have their maximum capacity further reduced in accordance with Section 504.2.3. The 20-percent reduction for corrugated metallic chimney liner systems includes an allowance for one long-radius 90-degree (1.57 rad) turn at the bottom of the liner.

Connections between chimney liners and *listed* double-wall connectors shall be made with *listed* adapters designed for such purpose.

❖ A liner system installed within a masonry chimney is sized and designed as if the chimney/liner system combination were a Type B vent. Corrugated metal liners are constructed of semi-rigid piping having a higher flow resistance than smooth-wall rigid pipe. A capacity reduction penalty compensates for the poorer flow characteristics of corrugated pipe. Bends in semirigid liners count as elbows and are regulated by Section 504.2.3. Note that the sweeping 90-degree (1.57 rad) bend in the liner at the point where it exits the bottom of the chimney and connects to the appliance(s) is already accounted for in the 20-percent capacity penalty and no further capacity adjustment is required for such turn/bend. Listed adapter fittings must be used to connect double-wall connectors to the liner to avoid "make shift" field connections that can result in poor fit and leakage.

504.2.8 Vent area and diameter. Where the vertical vent has a larger diameter than the vent connector, the vertical vent diameter shall be used to determine the minimum vent capacity, and the connector diameter shall be used to determine the maximum vent capacity. The flow area of the vertical vent shall not exceed seven times the flow area of the listed appliance categorized vent area, flue collar area or draft hood outlet area unless designed in accordance with *approved* engineering methods.

❖ The maximum capacity of a venting system must be based on the element of the system having the least capacity (i.e., the weakest link in the chain). Likewise, the minimum Btu/h (W) input required for proper vent system operation must be based on the largest element of the system because the largest element will naturally have the highest minimum input requirement. A connector that is smaller than the vent will set the maximum capacity limit for the system because it has the greater flow resistance and smaller cross-sectional area. The minimum Btu/h input is based on the larger vent size because the vent will require more heat to produce adequate draft and avoid condensation. The ratio of appliance vent-connection area to vertical vent area is intended to prevent oversizing of the vent, which can result in poor draft and condensation problems. Because the tables will allow vents to be larger than needed, this section serves as a limit to prevent gross oversizing. For example, in Table 504.2(1) it can be seen that a fan-assisted appliance having an input rating near the maximum end of the minimum/maximum range for any 4-inch (102 mm) venting system configuration

INTERNATIONAL CODE COUNCIL®
Copyright © 2015 ICC. ALL RIGHTS RESERVED. Accessed by David Dammon on Jun 21, 2017 12:30:52 PM pursuant to License Agreement with ICC. No further reproduction or distribution authorized. ANY UNAUTHORIZED REPRODUCTION OR DISTRIBUTION IS A VIOLATION OF THE FEDERAL COPYRIGHT ACT AND THE LICENSE AGREEMENT, AND SUBJECT TO CIVIL AND CRIMINAL PENALTIES THEREUNDER.

can be served by not only a 4-inch (102 mm) vent but also a 5-inch (127 mm) and sometimes a 6-inch (152 mm) or 7-inch (178 mm) vent. Consistent with vent manufacturers' instructions, a venting system should always be designed to use the smallest vent allowed by the tables. Vents that are larger than they need to be usually will not perform as well as accurately sized vents and are more likely to suffer from poor draft and condensate problems.

504.2.9 Chimney and vent locations. Tables 504.2(1), 504.2(2), 504.2(3), 504.2(4) and 504.2(5) shall be used only for chimneys and vents not exposed to the outdoors below the roof line. A Type B vent or listed chimney lining system passing through an unused masonry chimney flue shall not be considered to be exposed to the outdoors. Where vents extend outdoors above the roof more than 5 feet (1524 mm) higher than required by Figure 503.6.4, and where vents terminate in accordance with Section 503.6.4, Item 2, the outdoor portion of the vent shall be enclosed as required by this section for vents not considered to be exposed to the outdoors or such venting system shall be engineered. A Type B vent shall not be considered to be exposed to the outdoors where it passes through an unventilated enclosure or chase insulated to a value of not less than R8.

Table 504.2(3) in combination with Table 504.2(6) shall be used for clay-tile-lined *exterior masonry chimneys*, provided that all of the following are met:

1. Vent connector is a Type B double wall.
2. Vent connector length is limited to $1^1/_2$ feet for each inch (18 mm per mm) of vent connector diameter.
3. The appliance is draft hood equipped.
4. The input rating is less than the maximum capacity given by Table 504.2(3).
5. For a water heater, the outdoor design temperature is not less than 5°F (-15°C).
6. For a space-heating appliance, the input rating is greater than the minimum capacity given by Table 504.2(6).

❖ Chimneys that have one or more walls exposed to the outdoors and vents exposed to the outdoors can develop condensation and weak draft problems in cold weather. Commentary Figure 504.2.9(1) illustrates why masonry chimneys, including interior chimneys, are more prone to draft and condensation problems. The tables assume that the only portion of the chimney or vent that is exposed to the outdoors is the portion that extends above the roof penetration. Even though an attic is technically not outdoors, the temperature in an attic can be very close to the outdoor temperature. In some climates, the actual attic temperature can be far lower than the assumed temperature used in the computer modeling on which the vent sizing tables are based. Therefore, the portion of a venting system that passes through an attic should be kept to an absolute minimum. If at all possible, the installation should be planned to avoid the need for vent offsets in an attic. Section 504.2.7 states that a chimney lined with a listed liner or Type B vent is to be sized as if it were a Type B vent. The walls of a chimney will provide some insulating effect for a properly installed Type B vent or lining system installed within the chimney. A chimney lined with a Type B vent is not considered to be a chimney, but is treated as a Type B vent installed within a masonry chase (see Section 504.2.3).

This section intends that the listed tables be applicable only to vents and chimneys that are not exposed to the outdoors below the roof penetration. If the vent or chimney is exposed to the outdoors below the roof penetration, the listed sizing tables do not apply and the venting system would have to be engineered. The intent is that vents and chimneys be enclosed within the building envelope to lessen exposure to low ambient temperatures and wind. It is these conditions that were considered in the development of the vent sizing tables. The sizing tables are based on an assumed outdoor temperature of 42°F (6°C) and the assumption that all portions of a vent or chimney below the roof penetration are exposed to an ambient temperature of 60°F (16°C). This makes it obvious that long runs of vent piping through attics and long extensions above roofs should be avoided in cold climates (see Section 504.3.5).

This section prohibits the use of the vent sizing tables for the installation of a Type B vent run up the outside of an exterior wall of a building. This is consistent with vent manufacturer's instructions. Outdoor vents obviously suffer from poorer draft and increased condensation formation because they are exposed to the elements, low temperatures being the main factor. "Stack effect" in the building interior can cause back drafts (reverse flow) to occur in any vent or chimney, particularly vents exposed to the outdoors. For the same reasons, vents should extend above the roof no more than required by the code because the more vent pipe that extends above the roof, the more vent pipe will be exposed to the cold and wind. In some cases, designers and installers will intentionally raise a vent above a roof more than Section 503.6.4 requires just to increase the vent capacity. In doing so, additional vent pipe is exposed to the outdoors, thus inviting condensation and possibly diminishing draft. Section 503.6.4 could also require a vent to extend well above a lower roof penetration, thus causing the sizing tables of this section to be inapplicable to such a vent. A Type B-vent that is enclosed in an air-tight (unventilated) chase insulated to a value of at least R-8 is protected from the weather and is therefore considered as an indoor vent. R-8 is the same insulation value required by the *International Energy Conservation Code*® (IECC®) for ducts located outside of the building thermal envelope. To be effective, the chase enclosure would have to be built air tight and with an internal volume no larger than necessary to accommodate the vent with the required clearance to combustibles.

Where vents extend outdoors above the roof more than 5 feet higher than required by Figure 503.6.4

INTERNATIONAL CODE COUNCIL®
Copyright © 2015 ICC. ALL RIGHTS RESERVED. Accessed by David Dammon on Jun 21, 2017 12:30:52 PM pursuant to License Agreement with ICC. No further reproduction or distribution authorized. ANY UNAUTHORIZED REPRODUCTION OR DISTRIBUTION IS A VIOLATION OF THE FEDERAL COPYRIGHT ACT AND THE LICENSE AGREEMENT, AND SUBJECT TO CIVIL AND CRIMINAL PENALTIES THEREUNDER.

and also where vents extend outdoors above the roof as required by Section 503.6.4, Item 2, the outdoor portion of such vents must be enclosed in an insulated and sealed chase/enclosure. This requirement is necessary because such vents are not within the parameters upon which the vent sizing tables were calculated; thus, these vents would be expected to not perform as intended [see Commentary Figures 504.2.9 and 504.2.9(1)]. If the owner, designer, builder or installer wants to avoid the expense and any displeasing aesthetics of these outdoor enclosures, the location of vent terminations will have to be thoughtfully planned, or already installed vents may have to be relocated. The allowance for 5 feet higher than required by Figure 503.6.4 is a necessary tolerance to account for the fact that sections of vent pipe are available only in certain lengths and, in many cases, extending above the roof some distance higher than required by the code will be unavoidable.

The tables for exterior masonry chimneys obviously apply to chimneys that are exposed to the outdoors below the roof line, and the list of conditions intends to compensate for the cold masonry. Conditions such as requiring double-wall connectors and draft-hood-equipped appliances are intended to put as much heat into the chimney as possible because it will be needed to produce draft and minimize condensation in a less-than-ideal chimney. Exterior chimneys require greater heat input to make them work. An alternative to the continued use of an exterior chimney would be relining the chimney or abandoning the chimney and using high-efficiency appliances [see Commentary Figure 504.2.9(2) and example].

Example:

A 40,000 Btu/h (11.7 kW) input draft-hood-equipped water heater is vented by a masonry chimney having one wall exposed to the outdoors (an external chimney has one or more exterior walls) [see Commentary Figure 504.2.9(2)].

In the 20-foot height, 2-foot lateral row of Table 504.2(3) a connector size of 3 inches shows a capacity of 38,000 Btu/h in the “NAT MAX” column. A 4-inch connector shows a capacity of 74,000 Btu/h. Because the water heater input is 40,000 Btu/h, a 4-inch connector is required and because of Item 1 of Section 504.2.9 and the fact that Table 504.2(3) is for double-wall (Type B) connectors, the 4-inch connector must be of Type B vent.

The connector lateral of 2 feet (51 mm) is less than the maximum of 6 feet based on the limit of $1^1/_2$ feet for each inch of diameter specified by Item 2 of Section 504.2.9.

The bottom of Table 504.2(3) indicates that the chimney liner must have an internal cross-sectional area within the range of 19 to 88 square inches. The

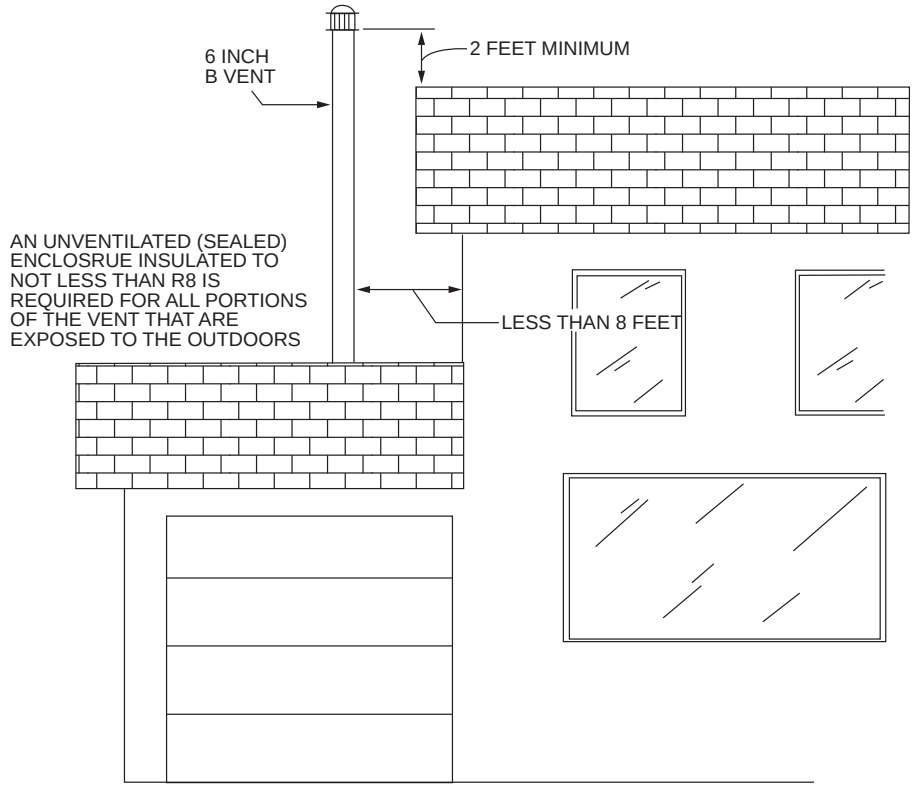

Figure 504.2.9
HEIGHT ABOVE ROOF

INTERNATIONAL CODE COUNCIL®
Copyright © 2015 ICC. ALL RIGHTS RESERVED. Accessed by David Dammon on Jun 21, 2017 12:30:52 PM pursuant to License Agreement with ICC. No further reproduction or distribution authorized. ANY UNAUTHORIZED REPRODUCTION OR DISTRIBUTION IS A VIOLATION OF THE FEDERAL COPYRIGHT ACT AND THE LICENSE AGREEMENT, AND SUBJECT TO CIVIL AND CRIMINAL PENALTIES THEREUNDER.

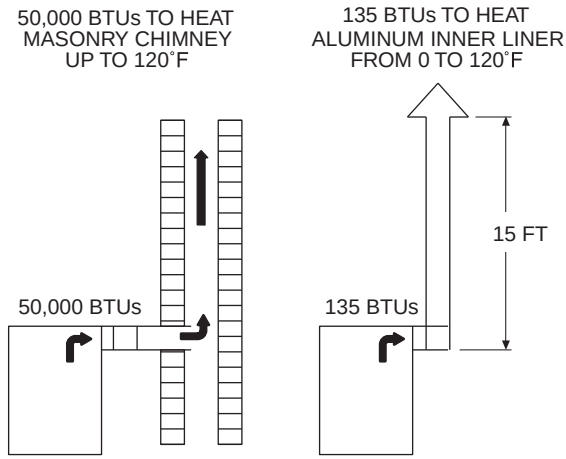

Figure 504.2.9(1)
MASONRY CHIMNEY COMPARED TO TYPE B VENT
(Figure courtesy of Simpson Dura-Vent Company, Incorporated)

chimney in this example has an internal cross-sectional area of approximately 63 square inches and falls within the range specified by the table for 4-inch connectors. The winter design temperature for the location (Newark, NJ) in this example is above 5°F.

The installation in Commentary Figure 504.2.9(2) complies with Items 1 through 5 of Section 504.2.9 and therefore appears to be code compliant; however, Sections 504.2.8 and 503.5.5 limit the chimney flue liner area to seven times the area of the draft hood outlet. If the draft hood on the water heater in this example has a 3-inch outlet, the chimney would be too large, since seven times the area of a 3-inch draft hood outlet is 49 square inches. If the draft hood has a 4-inch outlet, the installation is code compliant.

504.2.10 Corrugated vent connector size. Corrugated vent connectors shall be not smaller than the listed appliance categorized vent diameter, flue collar diameter or draft hood outlet diameter.

❖ Corrugated vent connectors are becoming more common because they can save installation time and avoid the use of fittings. This section is consistent

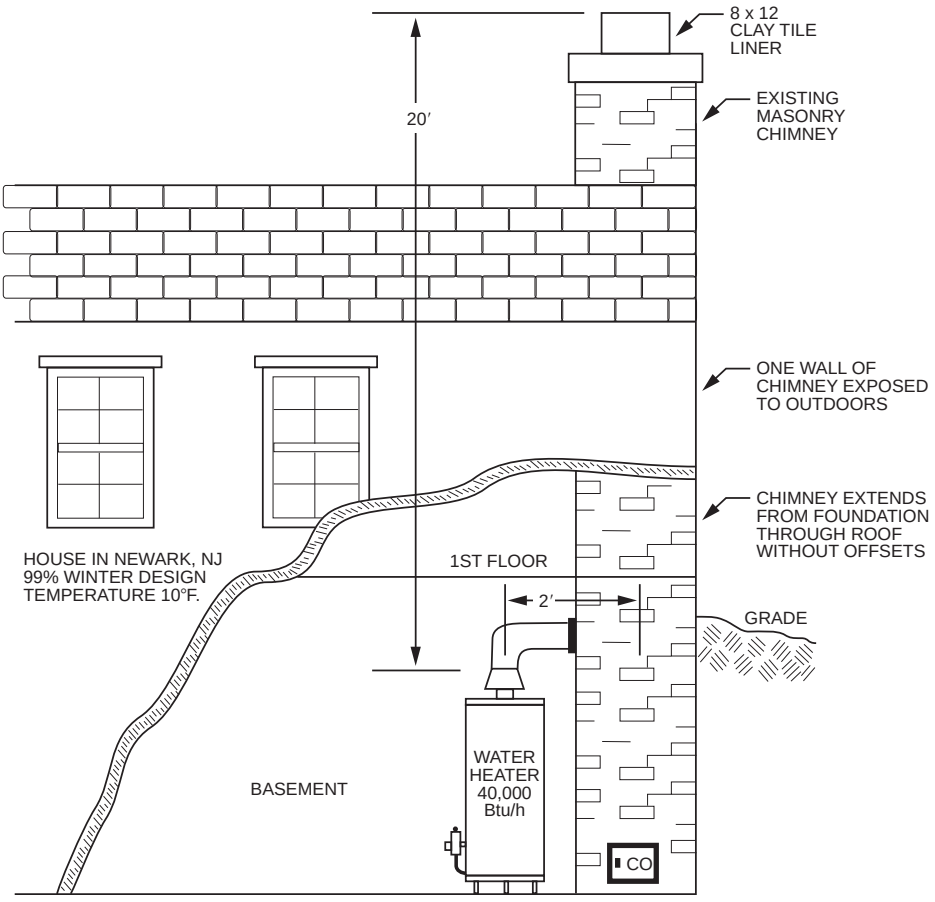

For SI: 1 inch = 25.4 mm, 1 foot = 304.8 mm, °C = (°F-32)/1.8,
1 British thermal unit per hour = 0.2931 W.

Figure 504.2.9(2)
EXTERIOR CHIMNEY SIZING-EXAMPLE

INTERNATIONAL CODE COUNCIL®
Copyright © 2015 ICC. ALL RIGHTS RESERVED. Accessed by David Dammon on Jun 21, 2017 12:30:52 PM pursuant to License Agreement with ICC. No further reproduction or distribution authorized. ANY UNAUTHORIZED REPRODUCTION OR DISTRIBUTION IS A VIOLATION OF THE FEDERAL COPYRIGHT ACT AND THE LICENSE AGREEMENT, AND SUBJECT TO CIVIL AND CRIMINAL PENALTIES THEREUNDER.

with Section 504.3.17 and applies to both draft-hood-equipped and fan-assisted appliances. Corrugated materials have higher resistance to flow than smooth wall materials; therefore, to ensure the required capacity, full size connectors must be used.

504.2.11 Vent connector size limitation. Vent connectors shall not be increased in size more than two sizes greater than the listed appliance categorized vent diameter, flue collar diameter or draft hood outlet diameter.

❖ The sizing tables of this section will often require that a connector be larger than the appliance vent connection. The appliance manufacturer's instructions may also require that the size of a connector be increased. The increase in size compensates for flow resistance in the connector and prevents positive pressurization. A grossly oversized connector will allow the vent gases to expand and cool too much, thus negatively affecting draft and contributing to the formation of condensation. Connector size is sometimes increased for the sole purpose of gaining more allowable length (Section 504.3.2), and this section will limit that practice.

504.2.12 Component commingling. In a single run of vent or vent connector, different diameters and types of vent and connector components shall be permitted to be used, provided that all such sizes and types are permitted by the tables.

❖ In the unlikely event that an installer wants to mix, for example, Type B vent with single-wall pipe in a single connector (for example, Type B vent from a draft hood, switching to single wall and connecting to Type B vent again), the mixed system must comply with the code based on each type of material as if the run were constructed entirely of that material. There may be some unique situations that would justify commingling of different types and/or sizes of components, but clearances, heat loss, ambient temperatures, joining methods and flow characteristics must be considered.

504.2.13 Draft hood conversion accessories. Draft hood conversion accessories for use with masonry chimneys venting listed Category I fan-assisted appliances shall be listed and installed in accordance with the manufacturer's instructions for such listed accessories.

❖ Some appliance manufacturers offer an accessory kit that allows the appliance to be converted from a fan-assisted Category I appliance to something that performs closely to a draft-hood-equipped Category I appliance. This conversion will result in some loss in appliance efficiency (AFUE) and its sole purpose is to allow the appliance to vent to a masonry chimney, whereas without the conversion, the appliance would be prohibited from venting to a masonry chimney. The net result of the conversion is to put dilution air into the chimney, thus helping to warm it and reduce the possibility of condensation. Such conversion kits come with their own installation instructions and are specific to a particular make and model of appliance.

504.2.14 Table interpolation. Interpolation shall be permitted in calculating capacities for vent dimensions that fall between the table entries.

❖ Because Tables 504.2(1) and 504.2(2) do not contain values for every possible height of a vent or length of a lateral, interpolation could be necessary. The maximum and minimum capacity of vents having heights not listed in the tables can be determined using the following equations.

Interpolated Maximum Vent Capacity = $(A/B \times C) + D$
Interpolated Minimum Vent Capacity = $E - (A/B \times F)$

where:

A = The difference between the design height entry and the next lower height entry in the applicable table.

B = The difference between the closest consecutive height entries in the applicable table.

C = The difference between the maximum capacity column consecutive entries in the applicable table.

D = The lower maximum capacity entry in the applicable table.

E = The higher minimum capacity entry in the applicable table.

F = The difference between the minimum capacity column consecutive entries in the applicable table.

For SI: 1 inch = 25.4 mm, 1 foot = 304.8 mm, 1 Btu/h = 0.2931 W.

Example 1:

Determine the minimum and maximum vent capacity for a single fan-assisted appliance given the following:

Determine the minimum and maximum vent capacity for a single fan-assisted appliance given the following:

Vertical design height of vent	17 feet
Diameter of vent	6 inches
Vent type	Type B
Length of lateral	10 feet

Using Table 504.2(1):

Interpolated Maximum Vent Capacity =
[(17 ft – 15 ft)/(20 ft – 15 ft)
× (351,000 Btu/h – 315,000 Btu/h)]
+ 315,000 Btu/h
= (2/5 × 36,000 Btu/h) + 315,000 Btu/h)]
329,400 Btu/h

Interpolated Minimum Vent Capacity
= 64,000 Btu/h – [(17 ft – 15 ft)/(20 ft – 15 ft)
× (64,000 Btu/h – 62,000 Btu/h)]
= 64,000 Btu/h – (2/5 × 2,000 Btu/h)
= 63,200 Btu/h

INTERNATIONAL CODE COUNCIL®
Copyright © 2015 ICC. ALL RIGHTS RESERVED. Accessed by David Dammon on Jun 21, 2017 12:30:52 PM pursuant to License Agreement with ICC. No further reproduction or distribution authorized. ANY UNAUTHORIZED REPRODUCTION OR DISTRIBUTION IS A VIOLATION OF THE FEDERAL COPYRIGHT ACT AND THE LICENSE AGREEMENT, AND SUBJECT TO CIVIL AND CRIMINAL PENALTIES THEREUNDER.

Example 2:

Determine the maximum vent capacity for a single fan-assisted furnace given the following:

Input rating of furnace	210,000 Btu/h
Vertical design height of vent	$12^1/_2$ feet
Diameter of vent	6 inches
Vent type	Type B
Length of lateral	2 feet

Using Table 504.2(1):

Step 1: Find the maximum vent capacity (MAX) at the first height entry greater than $12^1/_2$ feet, i.e., 15 feet.

MAX_{15} = 226,000 Btu/h

Step 2: Find the maximum vent capacity (MAX) at the next height entry lower than $12^1/_2$ feet, i.e., 10 feet.

MAX_{10} = 194,000 Btu/h

Step 3: Determine the difference between the two maximum vent capacities.

$MAX_{15} – MAX_{10}$ = 226,000 Btu/h – 194,000 Btu/h = 32,000 Btu/h

Step 4: Determine the maximum vent capacity for a $12^1/_2$-foot high vent using:

$MAX12^1/_2 = [(A/B) \times (MAX_{15}\ MAX_{10})] + MAX_{10}$

where:

A = The difference between the next higher table vent height and the design vent height.

B = The difference between the consecutive closest table vent heights.

$MAX\ 12^1/_2$ = [(15 ft –$12^1/_2$ ft)/(15 ft –10 ft) × 32,000 Btu/h] + 194,000 Btu/h
= [($2^1/_2$ ft)/(5 ft) × 32,000 Btu/h] + 194,000 Btu/h
= 16,000 Btu/h + 194,000/h
= 210,000 Btu/h

When a vent height falls between height entries in a table, the code user can choose to interpolate or use the closest table height entry that is lower than the actual height of the vent. These are the only allowable options.

This example also illustrates how the tables may be used to reduce vent size if there is adequate height and capacity to do so (see commentary, Section 504.2.2).

It is important to consider interpolation before assuming that an "in between" height vent installation is not in compliance with the code. For example, a vent with a 25-foot (7620 mm) height could fail to comply with a table when it is viewed as a 20-foot (6096 mm) vent, but that same vent could quite possibly comply with the table when viewed as what it actually is, a 25-foot-high (7620 mm) vent.

This interpolation process can also be used to estimate in-between capacities for intermediate lengths of laterals, as well as in-between minimum capacities. There is no way to estimate in-between capacity between a zero lateral (straight vertical vent) and a 2-foot (610 mm) lateral (which has two elbows). If the vent has just one 90-degree (1.57 rad) turn, the 2-foot (610 mm) lateral capacity applies.

504.2.15 Extrapolation prohibited. Extrapolation beyond the table entries shall not be permitted.

❖ Projecting capacities below the lowest or above the highest boundary entries of the tables is not allowed because the tables are based on the known operational limits of venting systems. The tables cannot predict the operating characteristics of venting systems having heights shorter or taller than the table limits; therefore, any such system must be an engineered system.

504.2.16 Engineering calculations. For vent heights less than 6 feet (1829 mm) and greater than shown in the tables, engineering methods shall be used to calculate vent capacities.

❖ This section parallels the previous section by stating that vents having heights not within the tables must be designed by an engineered method. In other words, extrapolation above or below the table height entries is not allowed (see Section 504.2.14).

504.2.17 Height entries. Where the actual height of a vent falls between entries in the height column of the applicable table in Tables 504.2(1) through 504.2(6), either interpolation shall be used or the lower appliance input rating shown in the table entries shall be used for FAN MAX and NAT MAX column values and the higher appliance input rating shall be used for the FAN MIN column values.

❖ This section makes it very clear what is to be done where the vent being designed is of a height that does not correspond to a height row in the applicable table. For example, it is given that a Type B vent has a height of 17 feet and the venting system is subject to Table 504.2(2). The height of 17 feet falls between the 15-foot row and the 20-foot row in the table, which means that neither the 15- nor 20-foot row provides accurate values for this vent. Often times, the code user will mistakenly choose the 20-foot row because it is close to 17, but this is incorrect because a 17-foot-high vent will have less capacity than a 20-foot-high vent, as can be seen by comparing the FAN MAX and NAT MAX entries for the 15- and 20-foot rows and also because a 17-foot-high vent requires a greater minimum input than a 20-foot-high vent, as can be seen by comparing the FAN MIN entries. Clearly, the 20-foot row is inappropriate. Because the 20-foot row is not a choice, either interpolation must be used to mathematically construct entries for a 17-foot row, or the 15-foot row must be used. When the 15-foot row is used, the FAN MAX and NAT MAX values will be lower than the corresponding values in the 20-foot row and the FAN MIN value will be higher than the corresponding value in the 20-foot row. This approach is a safe alternative to interpolation because the 17-foot vent will perform better than a 15-foot vent. In other words, the 17-foot vent has a higher maximum appliance input capacity and a lower minimum appliance input requirement than a 15-foot vent. Using the 15-foot row corresponds to

INTERNATIONAL CODE COUNCIL®
Copyright © 2015 ICC. ALL RIGHTS RESERVED. Accessed by David Dammon on Jun 21, 2017 12:30:52 PM pursuant to License Agreement with ICC. No further reproduction or distribution authorized. ANY UNAUTHORIZED REPRODUCTION OR DISTRIBUTION IS A VIOLATION OF THE FEDERAL COPYRIGHT ACT AND THE LICENSE AGREEMENT, AND SUBJECT TO CIVIL AND CRIMINAL PENALTIES THEREUNDER.

the instructions of this section to use the lower appliance input rating given in each of the MAX columns and to use the higher appliance input rating for the FAN MIN column.

504.3 Application of multiple appliance vent Tables 504.3(1) through 504.3(7). The application of Tables 504.3(1) through 504.3(7) shall be subject to the requirements of Sections 504.3.1 through 504.3.28.

❖ The application of Tables 504.3(1) through 504.3(4) shall be subject to the requirements of Sections 504.3.1 through 504.3.23. This part of Section 504 regulates vents and chimneys that serve more than one appliance. These venting systems can be described as combined vents and include multiple connectors. A "combined vent" is a vent for two or more appliances at one level served by a common vent. "Least total height" is the vertical distance from the highest appliance outlet (draft hood or flue collar) to the lowest discharge opening of the vent top. This height dimension is illustrated in Commentary Figure 504.3(1) for a typical (FAN + NAT) system. The same height measurement applies to FAN + FAN and NAT + NAT systems. Least total height is used for vent sizing of all connected appliances on one level. "Connector rise" for any appliance is the vertical distance from its outlet connection to the level at which it joins the common vent, as shown in Commentary Figure 504.3(1).

A "connector" for purposes of designing a combined vent is that part of the vent piping between the appliance outlet and its junction with or interconnection to the rest of the system. A chimney is referred to as a venting means, although a chimney and a vent are distinct. An improperly sized common vent or chimney could fail to vent the combustion products of the appliances served. Many factors influence the sizing of a vent or chimney, including total height, offsets, lateral lengths, the type of appliance, the appliance energy input and the appliance connector configurations. The "common vent" is that portion of the system serving two or more connected appliances. If connectors are joined before reaching the vertical vent, the run between the last entering connector and the vertical portion is also treated as part of the common vent. In Commentary Figure 504.3(1), the vertical common vent is cross-hatched beginning at the interconnection tee.

For each connector, the correct size must be found from the applicable tables based on its appliance input, rise and least total vent height. For draft-hood (NAT) appliances, the outlet size may be too small if there is not enough rise; therefore, connector design involves choosing the correct size and verifying that the use of a connector the same size as the outlet is within input rating limits.

For the common vent, the capacity table shows maximum combined ratings only. The size of the common vent is thus based on least total height and the combination of attached appliances: FAN + FAN, FAN + NAT or NAT + NAT. To find each connector size, use Table 504.3(1) for Type B vent connectors or Table 504.3(2) for single-wall metal connectors and proceed as follows:

1. Determine "least total height" for the system.
2. Determine connector rise for each appliance.
3. Enter the applicable vent connector table at the least total height. Continue across on the line for appliance connector rise to a MAX input rating equal to or greater than that of the appliance. For a FAN appliance, this input rating should also be greater than shown in the MIN column. Read the connector size at the top of the column. If Table 504.3(2) for single wall shows NA, use a double-wall connector in accordance with Table 504.3(1). In some cases, the table will dictate a connector size that is larger than the appliance vent outlet (flue collar).

To find the common vent size, proceed as follows:

1. Add all appliance Btu input ratings to get the total Btu input.
2. If one or both connectors are single-wall metal, use Table 504.3(2) for the common vent.
3. Enter the common vent table at the same least total height used for connectors.
4. Continue across and stop at the first applicable column of combined appliance input rating equal to or greater than the total. If Table 504.3(2) for the common vent shows NA, the entire system must be double-wall Type B vent.
5. Read the size of the common vent at the top of the applicable column (NAT + NAT, FAN + NAT or FAN + FAN).
   (a) Regardless of table results for size, the common vent must be at least as large as the largest connector (see Section 504.3.8).
   (b) In accordance with vent manufacturer's instructions, for NAT + NAT appliance combinations, if both connectors are the same size, the common vent must be at least one size larger.

Example 1:

Commentary Figure 504.3(1) shows a two-appliance FAN + NAT system, combining a draft-hood water heater (NAT appliance) with a fan-assisted combustion Category I (FAN) furnace. The system is designed in the following steps using Table 504.3(1) for double-wall connectors.

1. For the water heater, enter the vent connector table at a least total height of 15 feet (4572 mm) and a connector rise of 1 foot (305 mm). Read across to the MAX Btu/h rating for a NAT appliance vent higher than 35,000 Btu/h (10.3 kW). The table shows that a 4-inch (102 mm) connector is needed. This size must be used begin-

INTERNATIONAL CODE COUNCIL®
Copyright © 2015 ICC. ALL RIGHTS RESERVED. Accessed by David Dammon on Jun 21, 2017 12:30:52 PM pursuant to License Agreement with ICC. No further reproduction or distribution authorized. ANY UNAUTHORIZED REPRODUCTION OR DISTRIBUTION IS A VIOLATION OF THE FEDERAL COPYRIGHT ACT AND THE LICENSE AGREEMENT, AND SUBJECT TO CIVIL AND CRIMINAL PENALTIES THEREUNDER.

ning at the draft hood, regardless of draft hood size, which might be 3 inches (76 mm) [see Commentary Figure 504.3(1)].

2. For the 105,000 Btu/h (30.8 kW) furnace, enter the vent connector table at the same least total height [15 feet (4572 mm)] at a connector rise of 3 feet (914 mm). Read across to 163,000 under the FAN MAX column. The MIN is 51,000. Therefore, 5 inches (127 mm) is the correct connector size [see Commentary Figure 504.3(1)].
3. For the common vent, the sum of the two ratings is 140,000 Btu/h (41.0 kW). Enter the common vent table at 15 foot (4572 mm) least total height.

For a FAN + NAT combination, the maximum input of 5-inch (127 mm) vent is 164,000 (48.1 kW), so 5 inches (127 mm) is the proper size, as shown in Commentary Figure 504.3(1). Both draft-hood and fan-assisted appliances may be common vented in any combination, as indicated by the headings in the common vent table. Appliance types include the following:

- Central heating furnaces,
- Central heating boilers (hot water and steam),
- Water heaters,
- Unit heaters,
- Duct furnaces,
- Room heaters*, and
- Floor furnaces*.

*If these have draft hoods, a design input increase of 40 percent is recommended by some vent manufacturers in order to use the tables (see commentary, Section 504.2).

The common vent tables do not apply to the following:

1. Gas cooking appliances, which should be vented into an exhaust hood or vented individually in accordance with the appliance manufacturer's instructions.
2. Forced draft and commercial or industrial hot water or steam boilers without draft hoods. For this equipment, see the boiler and vent/chimney manufacturers' instructions.
3. Categories II, III and IV gas-burning equipment, for which the equipment manufacturer's venting instructions must be used.
4. Gas-fired incinerators.

The manufacturers of chimney and vent systems provide installation and design information as part of their installation instructions. The common chimney or vent must be designed to properly vent the products of combustion when any one, any combination or all of the connected appliances operate. [see Commentary Figure 504.3(2)]. Solid-fuel-burning appliances must not connect to common chimneys (see Section 504.5.6.1).

Combined vent systems for two or more gas appliances of either type (FAN or NAT) must be designed to prevent draft-hood spillage for natural draft (NAT) appliances and to avoid positive pressure for fan-assisted (FAN) appliances. The connector and common vent tables have been computed by examining the most critical situations for any operating combination. A common vent must function properly when all, one or any combination of the connected appliances are firing. It is particularly demanding of a vent system to operate properly when only a single appliance having the lowest input rating is firing, thus creating the greatest potential for poor draft and condensation. Oversizing of venting systems should be avoided.

The connector tables are based on the most critical condition for a particular appliance when operating by itself, whereas the common vent tables show sizes that assure adequate capacity and draft, whether one or all appliances are operating simultaneously.

All parts of a combined vent must be checked for capacity. For connectors, the size must be determined from the tables, particularly for low-height vents or where headroom restricts available connector rise.

The connector in a combined-vent system is defined as the piping from a draft hood or flue collar to the junction of the common vent or to a junction in a vent manifold. Proper connector design is vital to obtaining adequate capacity. The connector must produce its share of the total draft for its NAT or FAN appliance and must deliver enough heat to the common vent so that it can contribute the balance of draft needed.

For application of the code's installation provisions, the Type B gas vent connector is a "gas vent". It is essential, however, for system design purposes to use the word "connector" so that its rise and configuration may be explained and tabulated. The connector tables for combined vents show MIN and MAX capacities only for FAN appliances because no minimums are needed for NAT appliances with Type B gas-vent connectors. Important factors in connector design include the following:

- Connector material,
- Connector length,
- Connector rise,
- Number,
- Appliance location as it affects the piping arrangement,
- Number of attached appliances or different connector sizes, and
- Connection to an offset or manifold rather than directly to the vertical common vent.

INTERNATIONAL CODE COUNCIL®
Copyright © 2015 ICC. ALL RIGHTS RESERVED. Accessed by David Dammon on Jun 21, 2017 12:30:52 PM pursuant to License Agreement with ICC. No further reproduction or distribution authorized. ANY UNAUTHORIZED REPRODUCTION OR DISTRIBUTION IS A VIOLATION OF THE FEDERAL COPYRIGHT ACT AND THE LICENSE AGREEMENT, AND SUBJECT TO CIVIL AND CRIMINAL PENALTIES THEREUNDER.

Example 2:

This example is a common scenario [see Commentary Figure 504.3(2)].

Given:

- Single-family house with Type B vent serving two appliances;
- Category I fan-assisted furnace, 80 percent efficient, 75,000 Btu/h input (4-inch vent collar);
- Furnace connector single-wall pipe with 3-foot rise;
- Draft-hood-equipped water heater, 40,000 Btu/h (3-inch draft hood outlet);
- Water heater connector single-wall with 2-foot rise;
- Vent height: 25 feet; and
- A 45-degree offset occurs in the common vent in the attic.

1. Choose the applicable table. Table 504.3(2) addresses two or more Category I appliances with single-wall connectors.
2. Using the top portion of the table, size the appliance connectors. Because the table has no row for the 25-foot height, the 20-foot row must be used, or interpolation must be used to calculate the capacities at 25 feet. To simplify the procedure, first proceed using the 20-foot row until interpolation is necessary.
   (a) Looking in the "NAT" columns, see that a 4-inch connector is required for the water heater because the water heater input of 40,000 Btu/h exceeds the maximum capacity (36,000) of a 3-inch connector with a 2-foot rise.
   (b) Looking in the "FAN" columns, see that the furnace input of 75,000 Btu/h is less than the minimum capacity of 4-inch and larger connectors with a 3-foot rise. This means that single-wall pipe cannot be used for the furnace connector. The furnace connector must be double-wall (Type B or equivalent) and must be sized using Table 504.3(1). In Table 504.3(1), see that a 4-inch double-wall connector is suitable for the furnace because the 75,000 Btu/h input fits within the range of 35,000 to 110,000 Btu/h for a 3-foot rise.

   The furnace connector has been determined to be 4-inch double-wall pipe, and the water heater connector has been determined to be 4-inch single-wall pipe.
3. Using the bottom portion of Table 504.3(2), the common vent is sized. (Because both single- and double-wall connectors are used within the same system, Section 504.3.18 requires use of the single-wall table.) The water heater and furnace inputs total 115,000 Btu/h. Under the 4-inch vent heading, FAN + NAT column, see that 4-inch

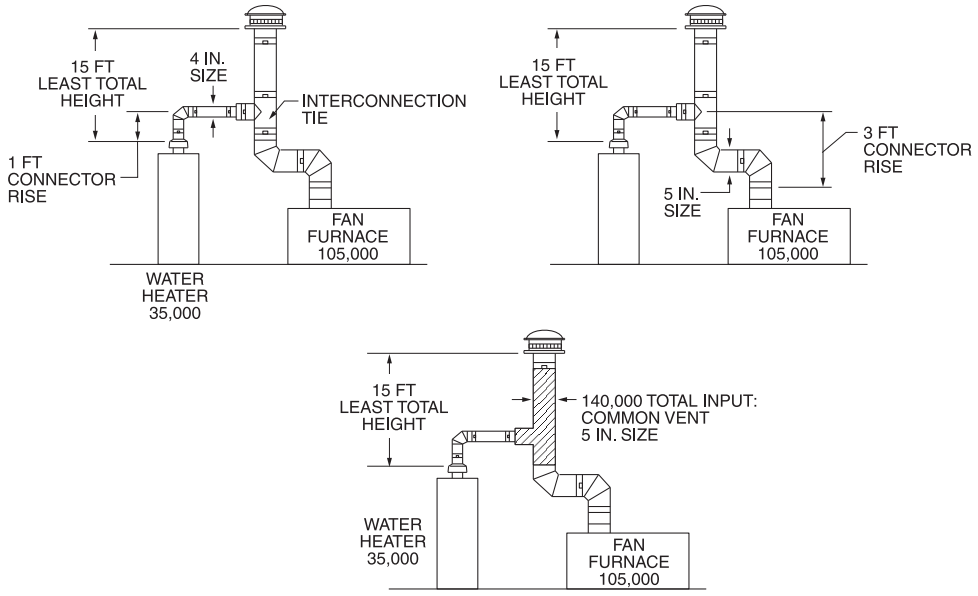

For SI: 1 inch = 25.4 mm, 1 foot = 304.8 mm, 1 Btu/h = 0.2931 W.

Figure 504.3(1)
COMBINED VENT DIMENSIONS
(Figure courtesy of Selkirk, L.L.C.)

INTERNATIONAL CODE COUNCIL®
Copyright © 2015 ICC. ALL RIGHTS RESERVED. Accessed by David Dammon on Jun 21, 2017 12:30:52 PM pursuant to License Agreement with ICC. No further reproduction or distribution authorized. ANY UNAUTHORIZED REPRODUCTION OR DISTRIBUTION IS A VIOLATION OF THE FEDERAL COPYRIGHT ACT AND THE LICENSE AGREEMENT, AND SUBJECT TO CIVIL AND CRIMINAL PENALTIES THEREUNDER.

Type B vent has a capacity of 118,000 Btu/h, which exceeds the appliance total of 115,000. However, the system contains an offset, which will reduce this capacity by 20 percent in accordance with Section 504.3.5 (0.80 × 118,000) = 94,400 Btu/h.

The actual capacity of a 4-inch common vent is 94,400 Btu/h, which is less than the 115,000 appliance total; therefore, a 5-inch common vent is required.

Verify 5-inch capacity: (0.80 × 177) = 141,600 Btu/h.

From the 30-foot height rows, it is apparent that interpolation for the actual height of 25 feet would not have changed the outcome of this system design.

Appendix B contains additional sizing examples.

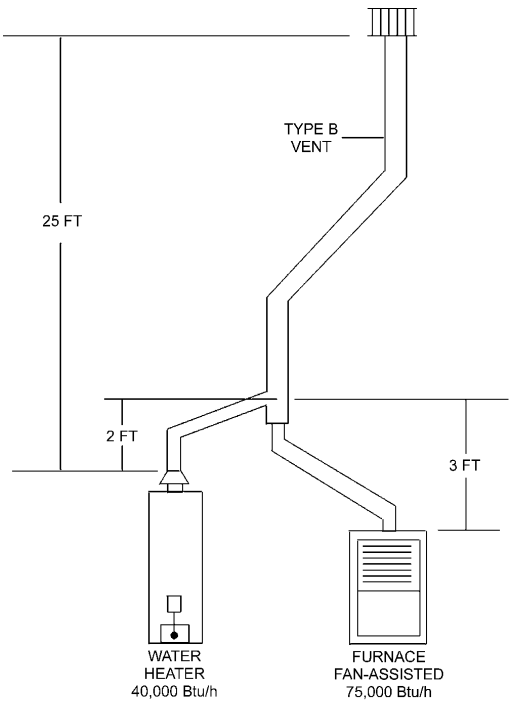

For SI: 1 foot = 304.8 mm,
1 British thermal unit per hour = 0.2831 W.

Figure 504.3(2)
FAN AND NAT VENT SIZING EXAMPLE

504.3.1 Vent obstructions. These venting tables shall not be used where obstructions, as described in Section 503.15, are installed in the venting system. The installation of vents serving listed appliances with vent dampers shall be in accordance with the appliance manufacturer's instructions or in accordance with the following:

1. The maximum capacity of the vent connector shall be determined using the NAT Max column.
2. The maximum capacity of the vertical vent or chimney shall be determined using the FAN+NAT column when the second appliance is a fan-assisted appliance, or the NAT+NAT column when the second appliance is equipped with a draft hood.
3. The minimum capacity shall be determined as if the appliance were a fan-assisted appliance.
   3.1. The minimum capacity of the vent connector shall be determined using the FAN Min column.
   3.2. The FAN+FAN column shall be used where the second appliance is a fan-assisted appliance, and the FAN+NAT column shall be used where the second appliance is equipped with a draft hood, to determine whether the vertical vent or chimney configuration is not permitted (NA). Where the vent configuration is NA, the vent configuration shall not be permitted and an alternative venting configuration shall be utilized.

❖ This section is a bit more complex than Section 504.2.1 because the tables for multiple appliances are two-part tables. The difference lies in Items 2 and 3.2 dealing with the common vent portion of the sizing tables. Item 2 determines the maximum capacity of the common vent by treating the vent-damper-equipped appliance as a draft-hood appliance coupled with either another draft-hood appliance or a fan-assisted appliance. Item 3.2 is a test wherein the vent-damper- equipped appliance is treated as a fan-assisted appliance. If the table says NA, the vent system must be redesigned, regardless of the fact that it may have been allowed by the table under Item 2 (see commentary, Section 504.2.1).

504.3.2 Connector length limit. The vent connector shall be routed to the vent utilizing the shortest possible route. Except as provided in Section 504.3.3, the maximum vent connector horizontal length shall be $1^1/_2$ feet for each inch (18 mm per mm) of connector diameter as shown in Table 504.3.2.

❖ Connectors are necessary for chimney and vent systems that serve multiple appliances. To reduce friction loss and flue-gas heat loss and to conserve available draft, connectors must be kept to a minimum length. Thoughtful placement of appliances and chimneys or vents can reduce connector lengths and achieve optimum venting performance. Unlike Tables 504.2(1) and 504.2(2), Tables 504.3(1) through 504.3(4) do not provide a range of permissible lateral lengths. Therefore, Section 503.10.8 places an overall maximum limit on connector length. Section 503.10.8 provides a necessary limiting function because Tables 504.3(1) through 504.3(4) would appear to allow (unintentionally) a connector to be considerably longer than the height of the vent.

Increasing the length of the connector increases the required minimum capacity of a vent and decreases its maximum capacity. Some vent manufacturers appear to measure only the horizontal (lateral) run of a connector in their design manuals. The more conservative approach would be to consider the

INTERNATIONAL CODE COUNCIL®
Copyright © 2015 ICC. ALL RIGHTS RESERVED. Accessed by David Dammon on Jun 21, 2017 12:30:52 PM pursuant to License Agreement with ICC. No further reproduction or distribution authorized. ANY UNAUTHORIZED REPRODUCTION OR DISTRIBUTION IS A VIOLATION OF THE FEDERAL COPYRIGHT ACT AND THE LICENSE AGREEMENT, AND SUBJECT TO CIVIL AND CRIMINAL PENALTIES THEREUNDER.

friction loss and heat loss for the entire run of a connector throughout its developed length (see commentary, Section 503.10.8). The vent sizing tables were developed with the assumption that vent connectors are no longer than 18 inches per inch of connector diameter. This section establishes the basic rule, which is modified by Sections 504.3.3 and 503.10.8. Simply put, connector length is limited by this section to 18 inches per inch of diameter without capacity penalties or is limited in length by Section 503.10.8 if the capacity penalties of Section 504.3.3 are applied and the minimum capacity is met for fan-assisted appliances. Section 504.3.3 allows longer connector lengths, but this section and the others mentioned still require connectors to take the shortest route to the vent.

TABLE 504.3.2
MAXIMUM VENT CONNECTOR LENGTH

CONNECTOR DIAMETER (inches)	CONNECTOR MAXIMUM HORIZONTAL LENGTH (feet)
3	$4^1/_2$
4	6
5	$7^1/_2$
6	9
7	$10^1/_2$
8	12
9	$13^1/_2$
10	15
12	18
14	21
16	24
18	27
20	30
22	33
24	36

For SI: 1 inch = 25.4 mm, 1 foot = 304.8 mm.

❖ See the commentary to Section 504.3.2.

504.3.3 Connectors with longer lengths. Connectors with longer horizontal lengths than those listed in Section 504.3.2 are permitted under the following conditions:

1. The maximum capacity (FAN Max or NAT Max) of the vent connector shall be reduced 10 percent for each additional multiple of the length allowed by Section 504.3.2. For example, the maximum length listed in Table 504.3.2 for a 4-inch (102 mm) connector is 6 feet (1829 mm). With a connector length greater than 6 feet (1829 mm) but not exceeding 12 feet (3658 mm), the maximum capacity must be reduced by 10 percent (0.90 × maximum vent connector capacity). With a connector length greater than 12 feet (3658 mm) but not exceeding 18 feet (5486 mm), the maximum capacity must be reduced by 20 percent (0.80 × maximum vent capacity).
2. For a connector serving a fan-assisted appliance, the minimum capacity (FAN Min) of the connector shall be determined by referring to the corresponding single-appliance table. For Type B double-wall connectors, Table 504.2(1) shall be used. For single-wall connectors, Table 504.2(2) shall be used. The height (*H*) and lateral (*L*) shall be measured according to the procedures for a single-appliance vent, as if the other appliances were not present.

❖ Section 503.10.8 still applies and serves to limit the application of this section and Section 504.3.2. For fan-assisted appliances, both Items 1 and 2 apply. Item 1 allows the maximum length permitted by Section 504.3.2 to be increased (doubled, tripled, etc.) if the vent connector capacity is reduced by 10 percent when the maximum connector length is doubled, by 20 percent when tripled, by 30 percent when quadrupled, etc. Regardless of the length permitted, connectors should always be as short as practicable.

Item 2 applies to fan-assisted appliances and allows connector lengths to be as long as the lateral entries in Table 504.2(1) or 504.2(2) if the limits of Section 503.10.8 are not exceeded and the appliance complies with the minimum input requirement of the respective table.

When horizontal lengths in excess of those stated in Section 504.3.2 are necessary, the minimum capacity of the system is determined by referring to the corresponding single-appliance table. In this case, for each appliance the entire vent connector and common vent from appliance to vent termination is treated as a single-appliance vent (of the same size as the common vent), as if the others were not present. Any appliance failing to meet the Min input may be prone to creating excessive condensation and/or insufficient draft within the vent system if the appliance is operated by itself. In that case, options may include relocation of appliances, selective sequential or simultaneous operation of appliances or separate vent installations. This section is intended for use only where a longer connector cannot be avoided as required by Section 503.10.8 and the connector takes the shortest possible route to the vent. The longer the connector, the greater the flow resistance and the greater the heat loss, both of which negatively affect vent system operation. The capacity penalties account for the increased flow resistance and Item 2 accounts for the increased heat loss. Item 2 addresses the worst case condition when a single appliance is operating and treats a connector serving a fan-assisted appliance as if the appliance were being independently vented, hence, the reference to the single appliance tables. Recall that the single appliance tables limit lateral length, which can be, in effect, a connector length limitation.

In many cases, the sizing tables will prevent someone from taking advantage of the allowances of this section for connectors. For example, a single-wall connector serving a fan-assisted appliance may not be able to meet the minimum input requirement (FAN

INTERNATIONAL CODE COUNCIL®
Copyright © 2015 ICC. ALL RIGHTS RESERVED. Accessed by David Dammon on Jun 21, 2017 12:30:52 PM pursuant to License Agreement with ICC. No further reproduction or distribution authorized. ANY UNAUTHORIZED REPRODUCTION OR DISTRIBUTION IS A VIOLATION OF THE FEDERAL COPYRIGHT ACT AND THE LICENSE AGREEMENT, AND SUBJECT TO CIVIL AND CRIMINAL PENALTIES THEREUNDER.

Min) if the capacity penalty of this section forces increasing the connector size. Note that Section 503.10.8 will not allow a connector length to exceed the vent or chimney height in any case.

504.3.4 Vent connector manifold. Where the vent connectors are combined prior to entering the vertical portion of the common vent to form a common vent manifold, the size of the common vent manifold and the common vent shall be determined by applying a 10-percent reduction (0.90 × maximum common vent capacity) to the common vent capacity part of the common vent tables. The length of the common vent connector manifold (L_m) shall not exceed $1^1/_2$ feet for each inch (18 mm per mm) of common vent connector manifold diameter (D).

❖ This section inflicts a 10-percent capacity penalty on the common vent as a result of the lateral (offset) effect of a manifold. A connector manifold is a horizontal extension of the lower end of a common vent [see Commentary Figures 503.10.3.4(1) and 503.10.3.4(2)]. The capacity reduction accounts for the additional turn in the common vent. The manifold portion of a vent is sized based on the common vent portion of the tables. The length of a connector manifold is measured from the vertical common vent to the most upstream interconnection fitting.

504.3.5 Common vertical vent offset. Where the common vertical vent is *offset*, the maximum capacity of the common vent shall be reduced in accordance with Section 504.3.6. The horizontal length of the common vent *offset* (L_o) shall not exceed $1^1/_2$ feet for each inch (18 mm per mm) of common vent diameter (D). Where multiple offsets occur in a common vent, the total horizontal length of all offsets combined shall not exceed $1^1/_2$ feet for each inch (18 mm per mm) of common vent diameter (D).

❖ Offsets, as opposed to a single change in direction, require two fittings (elbows) [see Commentary Figures 202(14) and 503.10.3.4(2)]. An offset offers resistance to flow as does any change of direction in a vent chimney or connector, and the capacity reduction penalty compensates for this flow resistance. Common vent locations should be well planned in a building to avoid the need for an offset. Offsets also introduce the need for additional supports to prevent stress on fittings (elbows). The term "Offset (Vent)" is defined in Section 202 (see commentary, Sections 504.2.3 and 504 2.9).

Offsets should be avoided because of the flow resistance, capacity reduction, additional support requirements and possibility of condensation leakage. The length limitation of this section is absolute with no allowance for greater lengths. This provision is commonly violated in attic space offsets with some violations resulting in offsets that are as long or longer than the vent height. The length of an offset is measured in a horizontal plane, not along the developed length of the vent pipe. For example, a 45-degree offset with 7 feet (2134 mm) of pipe between the fittings will have an offset length of 5 feet (1524 mm) for application of this section. [For a 45-degree (0.79 rad) offset, actual pipe developed length is approximately 1.4 times the horizontal distance between the parallel vertical sections of pipe] (see Commentary Figure 504.3.5).

The total length of all horizontal offsets combined cannot exceed the maximum limit of $1^1/_2$ feet per inch of vent diameter. In other words, horizontal offsets are accumulative.

504.3.6 Elbows in vents. For each elbow up to and including 45 degrees (0.79 rad) in the common vent, the maximum common vent capacity listed in the venting tables shall be reduced by 5 percent. For each elbow greater than 45 degrees (0.79 rad) up to and including 90 degrees (1.57 rad), the maximum common vent capacity listed in the venting tables shall be reduced by 10 percent.

❖ This section applies to the common vent portion of a vent system (see commentary, Section 504.2.3). For example, a common vent may have two 30-degree (0.52 rad) changes of direction at its base and might also have an offset constructed with 45-degree (0.79 rad) fittings in an attic space, thus having a total capacity reduction of 20 percent. If that same vent system had two 45-degree (0.79 rad) changes of direction at the base and an offset constructed with 60-degree (1.05 rad) fittings in the attic, the total capacity penalty would be 30 percent. In Commentary Figure 504.3.6(1), an offset is created in the common vent by the use of two fittings (elbows) adjusted to 45 degree (0.79 rad) angles. The common vent capacity would be reduced by 10 percent total (5 percent for each fitting/elbow). If the fittings were adjusted to angles greater than 45 degrees (0.79 rad), the total capacity reduction would be 10 percent per fitting for a total of 20 percent (see Commentary Figures 504.3.6(2) and 504.3.6(3)].

504.3.7 Elbows in connectors. The vent connector capacities listed in the common vent sizing tables include allowance for two 90-degree (1.57 rad) elbows. For each additional elbow up to and including 45 degrees (0.79 rad), the maximum vent connector capacity listed in the venting tables shall be reduced by 5 percent. For each elbow greater than 45 degrees (0.79 rad) up to and including 90 degrees (1.57 rad), the maximum vent connector capacity listed in the venting tables shall be reduced by 10 percent.

❖ In Commentary Figure 504.3.6(1), the connector for the fan-assisted appliance is offset with two 60-degree (1.05 rad) fittings (elbows). Because the tables include an allowance for two "free" 90-degree (1.57 rad) fittings, no capacity reduction would be required for this connector. The draft-hood-equipped appliance has a connector with a total of four 90-degree (1.57 rad) fittings, including the tee in the common vent. This would require a total capacity reduction of 20 percent. Note that Section 503.10.8 intends to prohibit connectors with excessive length and fittings/elbows. Excess fittings and length are often the result of poor planning, improper appliance location and obstructions, such as ducts, structural members and other appliances. Capacity reduction

INTERNATIONAL CODE COUNCIL®
Copyright © 2015 ICC. ALL RIGHTS RESERVED. Accessed by David Dammon on Jun 21, 2017 12:30:52 PM pursuant to License Agreement with ICC. No further reproduction or distribution authorized. ANY UNAUTHORIZED REPRODUCTION OR DISTRIBUTION IS A VIOLATION OF THE FEDERAL COPYRIGHT ACT AND THE LICENSE AGREEMENT, AND SUBJECT TO CIVIL AND CRIMINAL PENALTIES THEREUNDER.

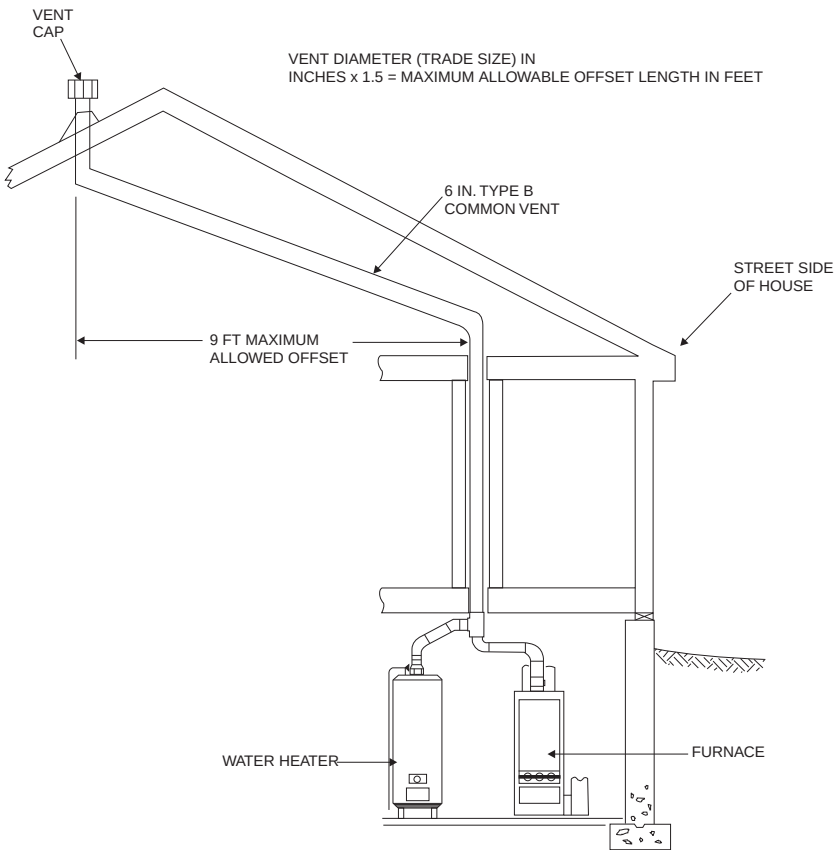

For SI: 1 inch = 25.4 mm, 1 foot = 304.8 mm.

Figure 504.3.5
COMMON VENT OFFSET IN ATTIC FOR THE PURPOSE OF AVOIDING A STREET-SIDE ROOF PENETRATION

penalties can force an increase in connector size, and in the case of fan-assisted appliances, increasing the connector size might raise the minimum required input rating above the appliance rating, thus forcing redesign of the system.

504.3.8 Common vent minimum size. The cross-sectional area of the common vent shall be equal to or greater than the cross-sectional area of the largest connector.

❖ This requirement is consistent with vent manufacturers' instructions and is necessary to prevent overloading of the common vent. It is apparent that a vent's maximum capacity could be exceeded where multiple connectors are involved, especially if one of the connectors is larger than the common vent itself. Vent manufacturers may also require that the common vent be increased one size where more than one appliance connector and the common vent are the same size.

504.3.9 Common vent fittings. At the point where tee or wye fittings connect to a common vent, the opening size of the fitting shall be equal to the size of the common vent. Such fittings shall not be prohibited from having reduced-size openings at the point of connection of appliance vent connectors.

❖ This section specifically allows use of tee and wye fittings with reduced-size openings to join appliance vent connectors to the common vent. The fittings must be the same size as the common vent at the point where they join, but are allowed to have smaller branch openings and smaller openings on the opposite end of the run of the fitting. A common question regarding interconnection fittings is whether or not the code intends to allow single-wall interconnection fittings such as tees and wyes. These fittings have commonly been used with single-wall connectors to join two appliances to a common Type B vent 5 × 4 × 3-inch wyes, 6 × 6 × 4-inch tees, etc. Vent manufacturers' opinion on this issue is that because the interconnection fitting is part of the common vent, it should be constructed as required for the common vent, meaning Type B vent tees and wyes. Certainly, double-wall vent connectors are not allowed to discharge into a single-wall fitting. The code was previously silent with regard to single-wall connectors discharging into single-wall fittings; however, Section 504.3.9.1 has settled this issue. Double-wall tees and wyes are preferable because they have far less heat loss and less required clearance to combustibles [see Commentary Figures 504.3.9(1) and 504.3.9(2) and Section 504.3.9.1].

INTERNATIONAL CODE COUNCIL®
Copyright © 2015 ICC. ALL RIGHTS RESERVED. Accessed by David Dammon on Jun 21, 2017 12:30:52 PM pursuant to License Agreement with ICC. No further reproduction or distribution authorized. ANY UNAUTHORIZED REPRODUCTION OR DISTRIBUTION IS A VIOLATION OF THE FEDERAL COPYRIGHT ACT AND THE LICENSE AGREEMENT, AND SUBJECT TO CIVIL AND CRIMINAL PENALTIES THEREUNDER.

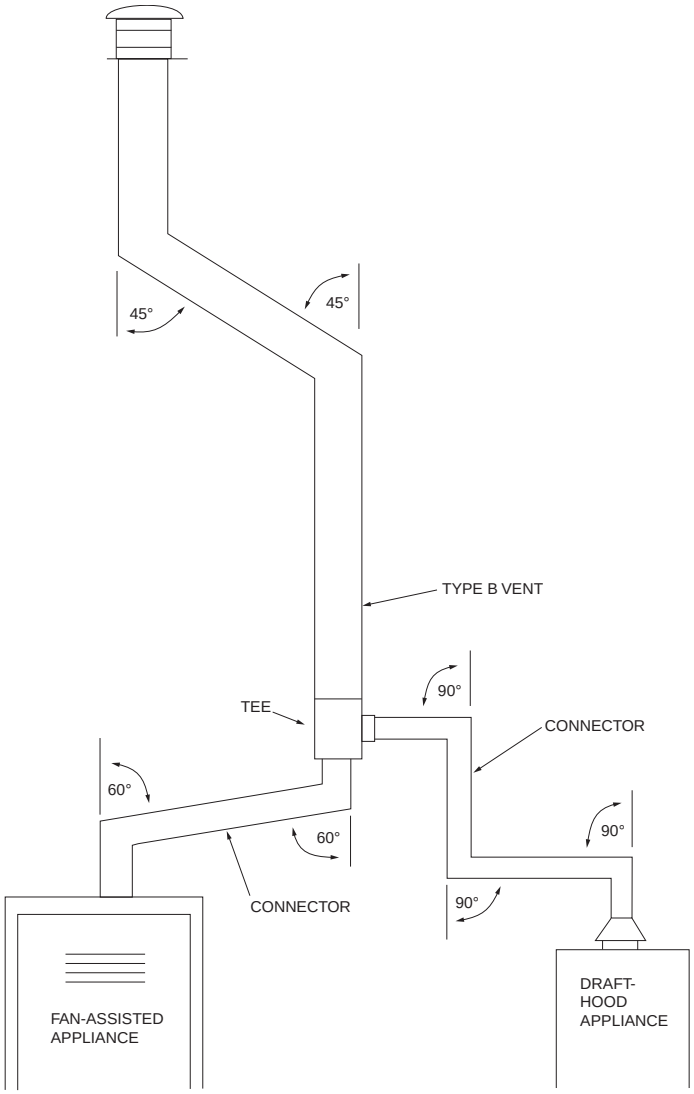

For SI: 1 degree = 0.0175 rad.

Figure 504.3.6(1)
OFFSET IN COMMON VENT AND CONNECTORS

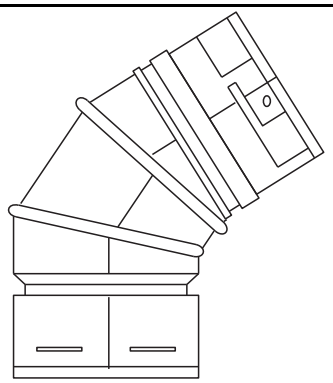

Figure 504.3.6(2)
TYPE B VENT ADJUSTABLE 45-DEGREE ELBOW FITTING
(Figure courtesy of Simpson Dura-Vent Company, Incorporated)

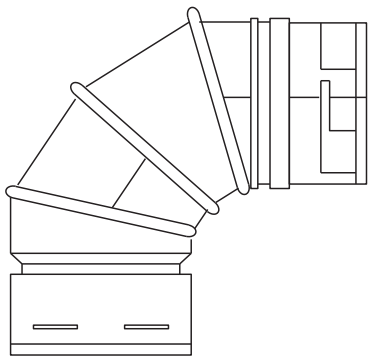

Figure 504.3.6(3)
TYPE B VENT ADJUSTABLE 90-DEGREE ELBOW FITTING
(Figure courtesy of Simpson Dura-Vent Company, Incorporated)

INTERNATIONAL CODE COUNCIL®
Copyright © 2015 ICC. ALL RIGHTS RESERVED. Accessed by David Dammon on Jun 21, 2017 12:30:52 PM pursuant to License Agreement with ICC. No further reproduction or distribution authorized. ANY UNAUTHORIZED REPRODUCTION OR DISTRIBUTION IS A VIOLATION OF THE FEDERAL COPYRIGHT ACT AND THE LICENSE AGREEMENT, AND SUBJECT TO CIVIL AND CRIMINAL PENALTIES THEREUNDER.



Figure 504.3.9(1)
TYPE B VENT REDUCING TEE
(Photo courtesy of Simpson Dura-Vent Company, Incorporated)



Figure 504.3.9(2)
TYPE B VENT REDUCING WYE
(Photo courtesy of Simpson Dura-Vent Company, Incorporated)

504.3.9.1 Tee and wye fittings. Tee and wye fittings connected to a common gas vent shall be considered as part of the common gas vent and shall be constructed of materials consistent with that of the common gas vent.

❖ Because the tee and wye fittings are part of the common vent, they must be of the same construction as the common vent. This is consistent with the vent manufacturer's recommendations [see Commentary Figures 504.3.9.1, 504.3.9(1) and 504.3.9(2)]. Tee and wye fittings used with Type B common vents are not allowed to be single wall fittings.

504.3.10 High-altitude installations. Sea-level input ratings shall be used when determining maximum capacity for high-altitude installation. Actual input (derated for altitude) shall be used for determining minimum capacity for high-altitude installation.

❖ See the commentary to Section 504.2.5.

504.3.11 Connector rise measurement. Connector rise (*R*) for each appliance connector shall be measured from the draft hood outlet or flue collar to the centerline where the vent gas streams come together.

❖ It is desirable to achieve the greatest connector rise that conditions will permit [see Commentary Figures 504.3.11 and 504.3(2)].

504.3.12 Vent height measurement. For multiple appliances all located on one floor, available total height (*H*) shall be measured from the highest draft hood outlet or flue collar up to the level of the outlet of the common vent.

❖ The vent design is based on the "worst case" (most conservative) height so that a vent is not given credit for being taller than it actually is [see Commentary Figure 504.3(2)].

504.3.13 Multistory height measurement. For multistory installations, available total height (*H*) for each segment of the system shall be the vertical distance between the highest draft hood outlet or flue collar entering that segment and the centerline of the next higher interconnection tee.

❖ See Appendix B and Section 503.6.10.

504.3.14 Multistory lowest portion sizing. The size of the lowest connector and of the vertical vent leading to the lowest interconnection of a multistory system shall be in accordance with Table 504.2(1) or 504.2(2) for available total height (*H*) up to the lowest interconnection.

❖ See Appendix B and Section 503.6.10. The lowest appliance vent is sized as an individual vent.

504.3.15 Multistory common vents. Where used in multistory systems, vertical common vents shall be Type B double wall and shall be installed with a *listed* vent cap.

❖ The design and sizing criteria for multistory venting systems are based on the known performance of listed Type B vents with the listed cap (See Sections 502.1 and 503.6.6).

504.3.16 Multistory common vent offsets. *Offsets* in multistory common vent systems shall be limited to a single *offset* in each system, and systems with an *offset* shall comply with all of the following:

1. The *offset* angle shall not exceed 45 degrees (0.79 rad) from vertical.
2. The horizontal length of the *offset* shall not exceed $1^1/_2$ feet for each inch (18 mm per mm) of common vent diameter of the segment in which the *offset* is located.
3. For the segment of the common vertical vent containing the *offset*, the common vent capacity listed in the common venting tables shall be reduced by 20 percent (0.80 × maximum common vent capacity).
4. A multistory common vent shall not be reduced in size above the *offset*.

❖ This requirement is consistent with vent manufacturers' instructions and is intended to eliminate flow restrictions and pressure differentials in the venting

INTERNATIONAL CODE COUNCIL®
Copyright © 2015 ICC. ALL RIGHTS RESERVED. Accessed by David Dammon on Jun 21, 2017 12:30:52 PM pursuant to License Agreement with ICC. No further reproduction or distribution authorized. ANY UNAUTHORIZED REPRODUCTION OR DISTRIBUTION IS A VIOLATION OF THE FEDERAL COPYRIGHT ACT AND THE LICENSE AGREEMENT, AND SUBJECT TO CIVIL AND CRIMINAL PENALTIES THEREUNDER.

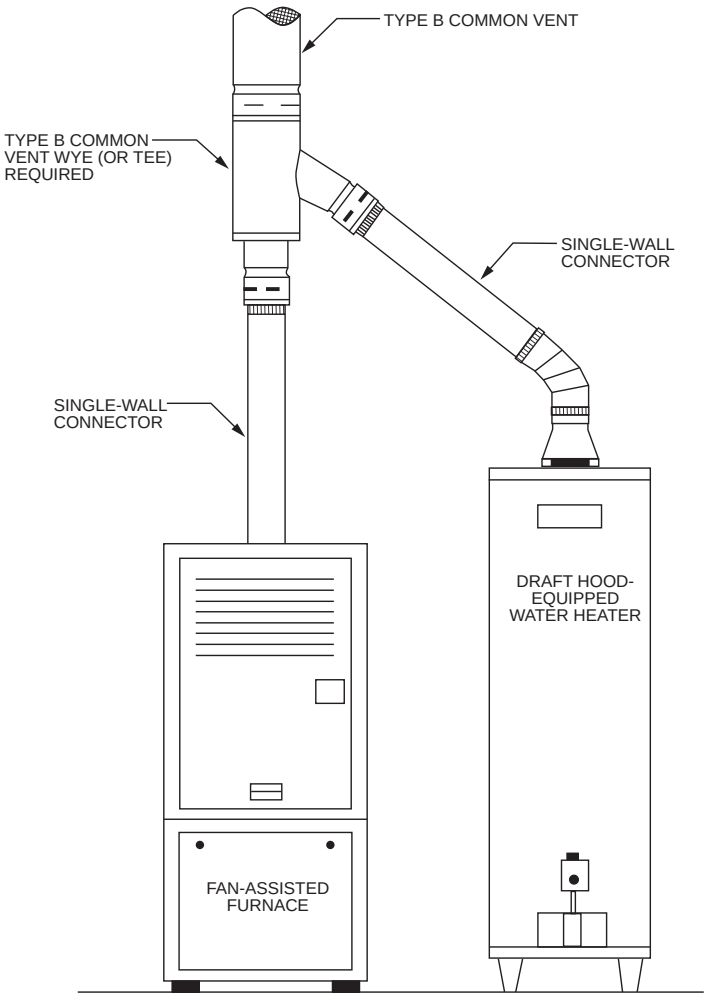

Figure 504.3.9.1
SINGLE-WALL TEES AND WYES PROHIBITED IN TYPE B COMMON VENT SYSTEMS

system. Because appliances connect to the multistory common vent at different floor levels, flow disturbances must be avoided in the entire extent of the common vent to prevent having an effect on lower-floor appliances. The criteria for a single offset are based on research conducted by the Gas Research Institute, which used a specialized computer program to investigate the performance of multistory venting systems with offsets. The research indicated that multistory Type B vents with a single offset can perform as well as a nonoffset vent performs if the adjustments and limitations in this section are applied. Those limitations involve a reduction of the vent capacity found in the tables and a limitation on the horizontal length of the offset based on vent size (see commentary, Section 504.3.5).

A multistory common vertical vent is allowed to have a single offset if all of the following requirements are met:

1. The offset angle does not exceed 45 degrees (0.79 rad).
2. The horizontal length of the offset does not exceed $1^1/_2$ feet for each inch (18 mm per mm) of common vent diameter of the segment in which the offset is located.
3. For the segment of the common vertical vent containing the offset, the common vent capacity listed in the common venting tables is reduced by 20 percent (0.80 $\times$ maximum common vent capacity).
4. A multistory common vent must not be reduced in size above the offset.

504.3.17 Vertical vent maximum size. Where two or more appliances are connected to a vertical vent or chimney, the flow area of the largest section of vertical vent or chimney shall not exceed seven times the smallest listed appliance categorized vent areas, flue collar area or draft hood outlet area unless designed in accordance with *approved* engineering methods.

❖ Vent manufacturer's instructions address ratios of areas of appliance connectors connecting to a com-

INTERNATIONAL CODE COUNCIL®
Copyright © 2015 ICC. ALL RIGHTS RESERVED. Accessed by David Dammon on Jun 21, 2017 12:30:52 PM pursuant to License Agreement with ICC. No further reproduction or distribution authorized. ANY UNAUTHORIZED REPRODUCTION OR DISTRIBUTION IS A VIOLATION OF THE FEDERAL COPYRIGHT ACT AND THE LICENSE AGREEMENT, AND SUBJECT TO CIVIL AND CRIMINAL PENALTIES THEREUNDER.

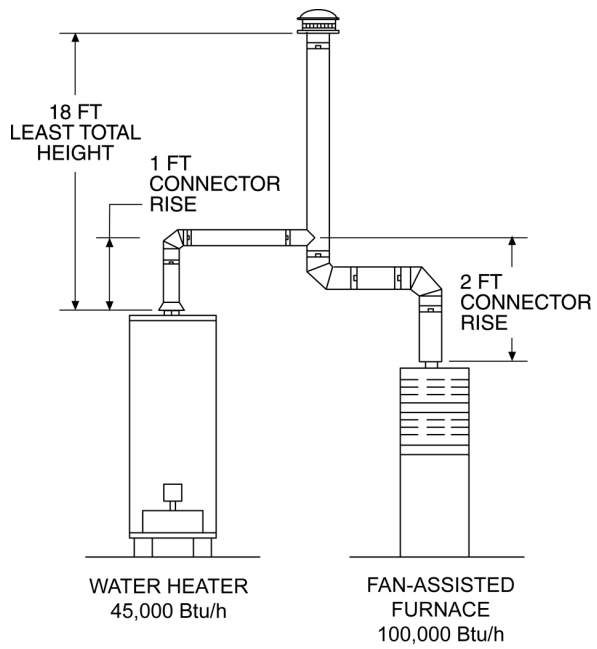

For SI: 1 Btu/h = 0.2931 W, 1 foot = 304.8 mm.

Figure 504.3.11
CONNECTOR RISE
(Figure courtesy of Simpson Dura-Vent Company, Incorporated)

mon vent. This section relates the area ratio limitation to the smallest appliance connection and the area of the vertical common vent. The concern is that the smaller or smallest appliance may not be able to provide enough heat to the common vent to develop sufficient draft and prevent a condensation problem. It can be seen that the common vent tables would allow gross oversizing if it were not for the limit of this section. For example, if the table permits a 5-inch common vent, it would also permit a 6-, 7-, 8-, 9-, and 10-inch common vent. This section serves to limit the size of the common vent, whereas the table does not. The larger the common vent, the more difficult it becomes to maintain draft and avoid condensation, especially when the smallest appliance is firing by itself.

504.3.18 Multiple input rate appliances. For appliances with more than one input rate, the minimum vent connector capacity (FAN Min) determined from the tables shall be less than the lowest appliance input rating, and the maximum vent connector capacity (FAN Max or NAT Max) determined from the tables shall be greater than the highest appliance input rating.

❖ See the commentary to Section 504.2.6.

504.3.19 Liner system sizing and connections. Listed, corrugated metallic chimney liner systems in masonry chimneys shall be sized by using Table 504.3(1) or 504.3(2) for Type B vents, with the maximum capacity reduced by 20 percent (0.80 × maximum capacity) and the minimum capacity as shown in Table 504.3(1) or 504.3(2). Corrugated metallic liner systems installed with bends or offsets shall have their maximum capacity further reduced in accordance with Sections 504.3.5 and 504.3.6. The 20-percent reduction for corrugated metallic chimney liner systems includes an allowance for one long-radius 90-degree (1.57 rad) turn at the bottom of the liner. Where double-wall connectors are required, tee and wye fittings used to connect to the common vent chimney liner shall be listed double-wall fittings. Connections between chimney liners and listed double-wall fittings shall be made with listed adapter fittings designed for such purpose.

❖ See the commentary to Section 504.2.7.

504.3.20 Chimney and vent location. Tables 504.3(1), 504.3(2), 504.3(3), 504.3(4) and 504.3(5) shall be used only for chimneys and vents not exposed to the outdoors below the roof line. A Type B vent or *listed* chimney lining system passing through an unused masonry chimney flue shall not be considered to be exposed to the outdoors. Where vents extend outdoors above the roof more than 5 feet (1524 mm) higher than required by Figure 503.6.4 and where vents terminate in accordance with Section 503.6.4, Item 2, the outdoor portion of the vent shall be enclosed as required by this section for vents not considered to be exposed to the outdoors or such venting system shall be engineered. A Type B vent shall not be considered to be exposed to the outdoors where it passes through an unventilated enclosure or chase insulated to a value of not less than R8.

Tables 504.3(6a), 504.3(6b), 504.3(7a) and 504.3(7b) shall be used for clay-tile-lined *exterior masonry chimneys*, provided that all of the following conditions are met:

1. Vent connectors are Type B double wall.
2. Not less than one appliance is draft hood equipped.
3. The combined appliance input rating is less than the maximum capacity given by Table 504.3(6a) for NAT+NAT or Table 504.3(7a) for FAN+NAT.
4. The input rating of each space-heating appliance is greater than the minimum input rating given by Table 504.3(6b) for NAT+NAT or Table 504.3(7b) for FAN+NAT.
5. The vent connector sizing is in accordance with Table 504.3(3).

❖ See the commentary to Section 504.2.9, Commentary Figure 504.3.20 and the example.

Example:

A 40,000 Btu/h input draft-hood-equipped water heater and a 100,000 Btu/h input Category I boiler are common vented by a masonry chimney having one wall exposed to the outdoors (see Commentary Figure 504.3.20).

Table 504.3(7a) indicates that the maximum combined appliance input rating for 20-foot (6096 mm) tall, 63-square inch (46 cm^2) internal area, exterior masonry chimney is 668,000 Btu/h (196 kW). The appliances in this example have a combined input of 140,000 Btu/h (41 kW), which is less than the maximum.

INTERNATIONAL CODE COUNCIL®
Copyright © 2015 ICC. ALL RIGHTS RESERVED. Accessed by David Dammon on Jun 21, 2017 12:30:52 PM pursuant to License Agreement with ICC. No further reproduction or distribution authorized. ANY UNAUTHORIZED REPRODUCTION OR DISTRIBUTION IS A VIOLATION OF THE FEDERAL COPYRIGHT ACT AND THE LICENSE AGREEMENT, AND SUBJECT TO CIVIL AND CRIMINAL PENALTIES THEREUNDER.

Table 504.3(7a) indicates that a 20-foot (6096 mm) tall chimney with a 63-square-inch (46 cm^2) liner in a location with a 5 to 16°F (45° to -9°C) winter design temperature needs a minimum space-heating appliance input of 408,000 Btu/h. In this example, the space-heating appliance input is far less than the minimum required, therefore, the installation does not comply with code and an alternative venting system must be used, such as relining the chimney. (Note that the appliance manufacturer might prohibit the use of an exterior chimney to vent their appliance.)

504.3.21 Connector maximum and minimum size. Vent connectors shall not be increased in size more than two sizes greater than the listed appliance categorized vent diameter, flue collar diameter or draft hood outlet diameter. Vent connectors for draft hood-equipped appliances shall not be smaller than the draft hood outlet diameter. Where a vent connector size(s) determined from the tables for a fan-assisted appliance(s) is smaller than the flue collar diameter, the use of the smaller size(s) shall be permitted provided that the installation complies with all of the following conditions:

1. Vent connectors for fan-assisted appliance flue collars 12 inches (305 mm) in diameter or smaller are not reduced by more than one table size [e.g., 12 inches to 10 inches (305 mm to 254 mm) is a one-size reduction] and those larger than 12 inches (305 mm) in diameter are not reduced more than two table sizes [e.g., 24 inches to 20 inches (610 mm to 508 mm) is a two-size reduction].
2. The fan-assisted appliance(s) is common vented with a draft-hood-equipped appliance(s).
3. The vent connector has a smooth interior wall.

❖ Using a connector that is larger than the appliance outlet connection may sometimes be necessary to comply with the requirements of the sizing tables for multiple-appliance systems. However, having a connector significantly larger than the appliance outlet connection could cause reduced flow velocity, excessive loss of heat and could result in the allowance of excessively long connectors.

In accordance with Section 504.2.2, a venting system serving a single appliance can, under certain conditions, be smaller than the appliance outlet connection. However, this is prohibited by this section for draft hood appliances in common venting systems serving more than one appliance (see commentary,

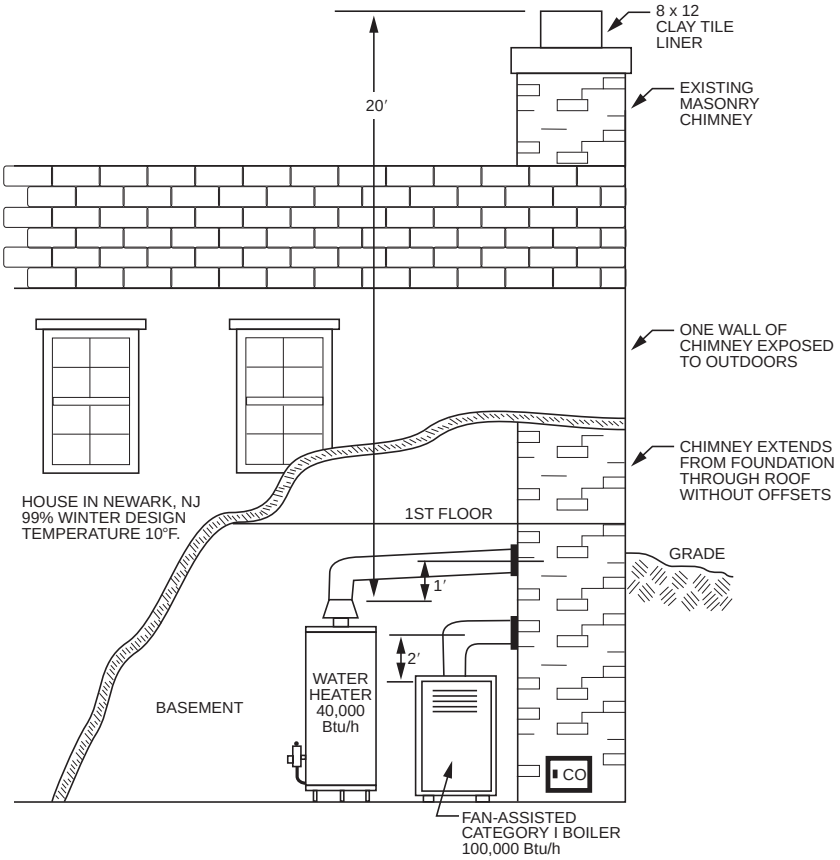

For SI: 1 foot = 304.8 mm, °C = (°F-32)/1.8,
1 British thermal unit per hour = 0.2931 W.

Figure 504.3.20
EXTERIOR CHIMNEY SIZING—EXAMPLE

INTERNATIONAL CODE COUNCIL®
Copyright © 2015 ICC. ALL RIGHTS RESERVED. Accessed by David Dammon on Jun 21, 2017 12:30:52 PM pursuant to License Agreement with ICC. No further reproduction or distribution authorized. ANY UNAUTHORIZED REPRODUCTION OR DISTRIBUTION IS A VIOLATION OF THE FEDERAL COPYRIGHT ACT AND THE LICENSE AGREEMENT, AND SUBJECT TO CIVIL AND CRIMINAL PENALTIES THEREUNDER.

Section 504.2.11). The reason for this prohibition is that a common vent or chimney, being large enough for multiple appliances, may not be able to produce adequate draft or avoid condensation where a single appliance is operating with a reduced-size vent connector.

Recent research involving computerized modeling has shown that connectors for fan-assisted appliances in multiple-appliance systems can be reduced under conditions similar to those for single-appliance installations. Therefore, this section makes an exception for systems with fan-assisted appliances commonly vented with appliances equipped with a draft hood (see commentary, Section 504.2.2). The allowance for a connector to be smaller than an appliance flue collar is applicable only to fan-assisted appliances. A reduction in size is not allowed for corrugated metal connectors.

504.3.22 Component commingling. All combinations of pipe sizes, single-wall and double-wall metal pipe shall be allowed within any connector run(s) or within the common vent, provided that all of the appropriate tables permit all of the desired sizes and types of pipe, as if they were used for the entire length of the subject connector or vent. Where single-wall and Type B double-wall metal pipes are used for vent connectors within the same venting system, the common vent must be sized using Table 504.3(2) or 504.3(4), as appropriate.

❖ Because this section parallels Section 504.2.12, see the commentary for that section. This section addresses the installation that uses both single-wall connectors and double-wall connectors in the same venting system. The penalty for mixing is that the common vent must be sized from the more restrictive single-wall connector tables. Double-wall pipe is not designed to be interchangeable with single-wall pipe, and all such transitions would have to made with fittings designed for the transition.

504.3.23 Draft hood conversion accessories. Draft hood conversion accessories for use with masonry chimneys venting listed Category I fan-assisted appliances shall be listed and installed in accordance with the manufacturer's instructions for such listed accessories.

❖ See the commentary to Section 504.2.13.

504.3.24 Multiple sizes permitted. Where a table permits more than one diameter of pipe to be used for a connector or vent, all the permitted sizes shall be permitted to be used.

❖ This section broadly states that any size pipe permitted by the sizing tables may be used. However, do not overlook Sections 504.3.8, 504.3.17 and 504.3.21, which contain provisions that can override this section. Vent manufacturers stress that the smallest size pipe allowed by the code should be used rather than any larger sizes that may be permitted. Operating a vent or chimney at nearer to its maximum capacity will produce stronger draft and result in better protection against the formation of condensation.

504.3.25 Table interpolation. Interpolation shall be permitted in calculating capacities for vent dimensions that fall between table entries.

❖ See Section 504.2.14.

504.3.26 Extrapolation prohibited. Extrapolation beyond the table entries shall not be permitted.

❖ See Section 504.2.15.

504.3.27 Engineering calculations. For vent heights less than 6 feet (1829 mm) and greater than shown in the tables, engineering methods shall be used to calculate vent capacities.

❖ See Section 504.2.16.

504.3.28 Height entries. Where the actual height of a vent falls between entries in the height column of the applicable table in Tables 504.3(1) through 504.3(7b), either interpolation shall be used or the lower appliance input rating shown in the table shall be used for FAN MAX and NAT MAX column values and the higher appliance input rating shall be used for the FAN MIN column values.

❖ See the commentary to Section 504.2.17.

SECTION 505 (IFGC)
DIRECT-VENT, INTEGRAL VENT, MECHANICAL VENT AND VENTILATION/EXHAUST HOOD VENTING

505.1 General. The installation of direct-vent and integral vent appliances shall be in accordance with Section 503. Mechanical venting systems and exhaust hood venting systems shall be designed and installed in accordance with Section 503.

❖ See Sections 503.2.1, 503.2.3, 503.2.4, 503.3.3 and 503.8.

505.1.1 Commercial cooking appliances vented by exhaust hoods. Where commercial cooking appliances are vented by means of the Type I or II kitchen exhaust hood system that serves such appliances, the exhaust system shall be fan powered and the appliances shall be interlocked with the exhaust hood system to prevent appliance operation when the exhaust hood system is not operating. The method of interlock between the exhaust hood system and the appliances equipped with standing pilot burner ignition systems shall not cause such pilots to be extinguished. Where a solenoid valve is installed in the gas *piping* as part of an interlock system, gas *piping* shall not be installed to bypass such valve. Dampers shall not be installed in the exhaust system.

Exception: An interlock between the cooking appliance(s) and the exhaust hood system shall not be required where heat sensors or other *approved* methods automatically activate the exhaust hood system when cooking operations occur.

❖ This section is an appliance-specific relative of Section 503.3.4. Commercial cooking appliances must be vented (see Section 501.2) but are rarely vented by means of direct connection to a vent. Instead, such appliances are typically vented by the Type I or II

INTERNATIONAL CODE COUNCIL®
Copyright © 2015 ICC. ALL RIGHTS RESERVED. Accessed by David Dammon on Jun 21, 2017 12:30:52 PM pursuant to License Agreement with ICC. No further reproduction or distribution authorized. ANY UNAUTHORIZED REPRODUCTION OR DISTRIBUTION IS A VIOLATION OF THE FEDERAL COPYRIGHT ACT AND THE LICENSE AGREEMENT, AND SUBJECT TO CIVIL AND CRIMINAL PENALTIES THEREUNDER.

exhaust system that is required by the IMC. A gravity (nonpowered) exhaust system is not allowed because its ability to vent combustion products is not consistently dependable and there is no practical method of interlocking the appliances with a gravity exhaust system [see Commentary Figure 505.1.1(1)].

The appliance control system must be interlocked with the kitchen exhaust hood system to permit appliance operation only when the power means of exhaust is in operation. This requirement is similar to that of Section 503.3.3, Item 5 and Section 507.2.1.1 of the IMC, which requires Type I hoods to automatically activate the exhaust fan when cooking operations occur. The appliances that depend on the exhaust system must be shut down in the event of exhaust system failure or halted operation.

This interlock must not allow appliance operation until the exhaust hood system has been started. Such an interlock is easily accomplished with electrically heated appliances and gas-fired appliances having electronic ignition; however, it is more difficult in the case of gas-fired appliances having traditional standing pilot ignition systems. If the interlock method uses an electrically actuated (solenoid) main fuel valve, that valve will close when the exhaust fan system is shut down, thus extinguishing any standing pilots and necessitating the relighting of pilots each day or each time the kitchen is “off line.”

Besides the obvious inconvenience, there is also a safety concern with having employees and owners routinely relighting pilots that may be difficult to access. This is why the code prohibits a method of interlock that would cause standing pilot burners to be extinguished. Although some attempts have been made to circumvent this problem, a practical and safe solution to the standing pilot problem is not known at this time.

This section specifically prohibits the installation of bypass piping/tubing around a solenoid-operated gas valve [see Commentary Figure 505.1.1(2)]. Bypass piping/tubing around the solenoid valve has been used to keep the standing pilots burning when the exhaust system is shut down and the solenoid valve is thereby closed. This approach may solve the pilot outage problem, but it also creates potential hazards when the solenoid valve is closed, all related to low gas pressure and operator confusion. The potential hazards include: delayed ignition and flashbacks, ignition within burner venturi passages and at the orifices, poor burner aspiration and incomplete combustion, erratic appliance operation and the potential for explosions where appliances are left on and unattended.

Note that this section does not require that the interlock be accomplished by means of a gas solenoid valve. For example, for appliances that have electrical power connections (nonstanding-pilot appliances), contactors/relays could be used to disable the appliances when the exhaust system is not operating. The exception captures the basic intent of this section, which is simply to prevent cooking without the exhaust system being on. Remember that the appliances depend on the exhaust hood to vent combustion products in addition to venting cooking byproducts. Some exhaust hood technology allows the hoods to start automatically when heat, infrared or light interference sensors detect that cooking is occurring. The code official could accept still other arrangements that accomplish the intent (see IMC commentary, Section 507.2.1.1).

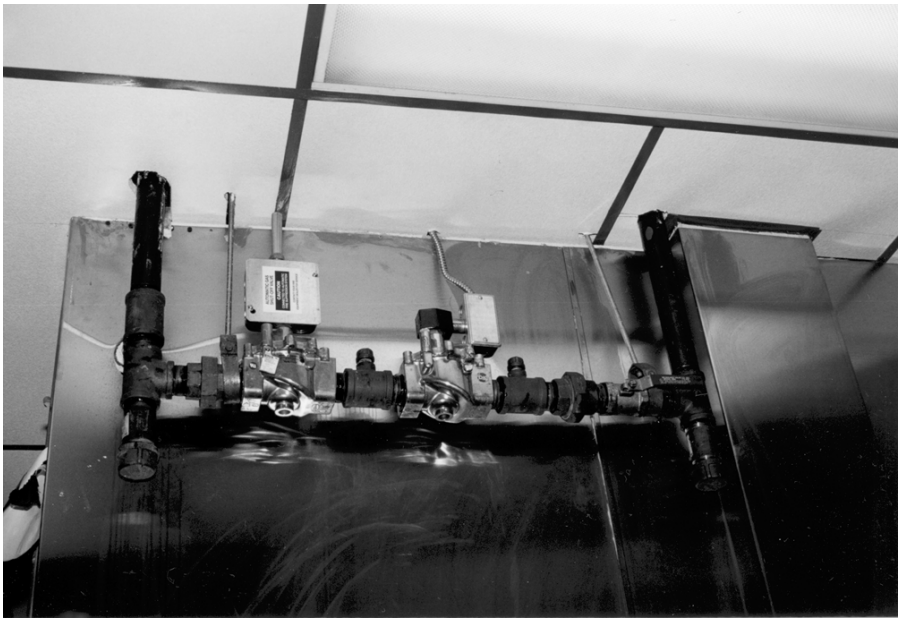

Figure 505.1.1(1)
EXHAUST HOOD INTERLOCK WITH COOKING APPLIANCES (SOLENOID)

INTERNATIONAL CODE COUNCIL®
Copyright © 2015 ICC. ALL RIGHTS RESERVED. Accessed by David Dammon on Jun 21, 2017 12:30:52 PM pursuant to License Agreement with ICC. No further reproduction or distribution authorized. ANY UNAUTHORIZED REPRODUCTION OR DISTRIBUTION IS A VIOLATION OF THE FEDERAL COPYRIGHT ACT AND THE LICENSE AGREEMENT, AND SUBJECT TO CIVIL AND CRIMINAL PENALTIES THEREUNDER.

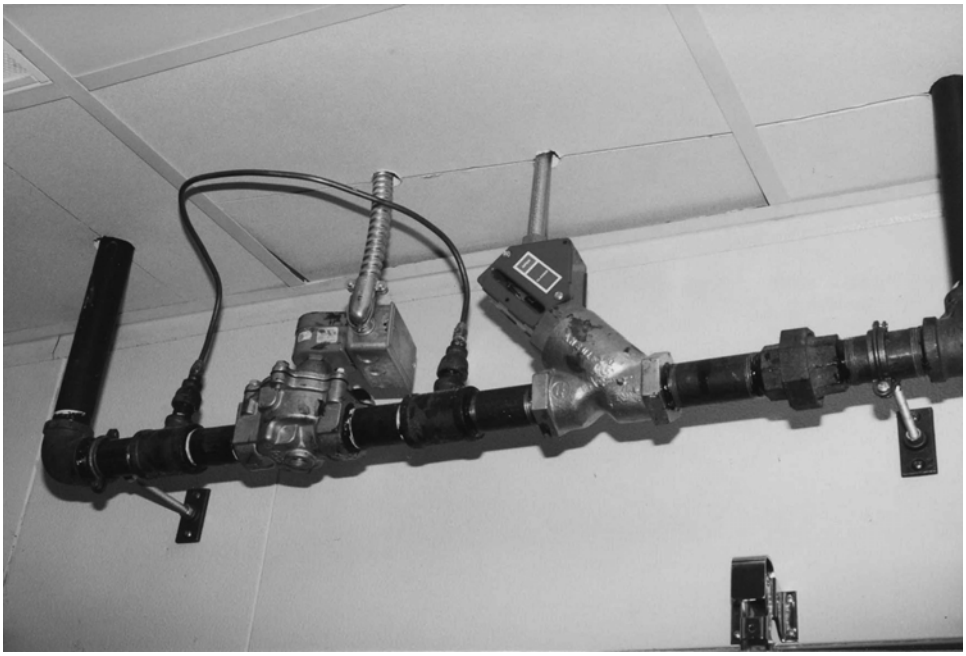

Figure 505.1.1(2)
PROHIBITED SOLENOID VALVE BYPASS

Note that if a solenoid gas valve arrangement is used to comply with this section, it should be powered through a manual reset-type relay so that in the event of a power failure, the valve will not reopen automatically when power is restored and the appliances are unattended.

SECTION 506 (IFGC)
FACTORY-BUILT CHIMNEYS

506.1 Building heating appliances. Factory-built chimneys for building heating appliances producing flue gases having a temperature not greater than 1,000°F (538°C), measured at the entrance to the chimney, shall be listed and *labeled* in accordance with UL 103 and shall be installed and terminated in accordance with the manufacturer's instructions.

❖ Factory-built chimneys can be used with gas-fired appliances if allowed by the chimney manufacturer. The sizing tables in Section 504 do not apply to factory-built chimneys; therefore, sizing must be engineered or as specified by the chimney and appliance manufacturers' instructions. Factory-built chimneys will be too large for many residential gas appliances [see Commentary Figures 506.1(1) and 506.1(2)].

506.2 Support. Where factory-built chimneys are supported by structural members, such as joists and rafters, such members shall be designed to support the additional load.

❖ Factory-built chimneys are supported by the building structure and can impose considerable weight on structural components. Joists, rafters and other structural members must be designed to support the additional loading. Structural evaluation may be necessary, especially where framing for a chimney requires cutting and heading of joists and rafters.



Figure 506.1(1)
FACTORY-BUILT CHIMNEY
(Photo courtesy of Selkirk, L.L.C.)

INTERNATIONAL CODE COUNCIL®
Copyright © 2015 ICC. ALL RIGHTS RESERVED. Accessed by David Dammon on Jun 21, 2017 12:30:52 PM pursuant to License Agreement with ICC. No further reproduction or distribution authorized. ANY UNAUTHORIZED REPRODUCTION OR DISTRIBUTION IS A VIOLATION OF THE FEDERAL COPYRIGHT ACT AND THE LICENSE AGREEMENT, AND SUBJECT TO CIVIL AND CRIMINAL PENALTIES THEREUNDER.



Figure 506.1(2)
AIR-COOLED FACTORY-BUILT CHIMNEY SYSTEM
(Photo courtesy of Simpson Dura-Vent Company, Incorporated)

506.3 Medium-heat appliances. Factory-built chimneys for medium-heat appliances producing flue gases having a temperature above 1,000°F (538°C), measured at the entrance to the chimney, shall be listed and *labeled* in accordance with UL 959 and shall be installed and terminated in accordance with the manufacturer's instructions.

❖ Factory-built chimneys serving medium-heat appliances in which the maximum continuous flue gas temperature does not exceed 2,000°F (1093°C) must be tested in accordance with UL 959. Such chimneys are associated with factory and industrial equipment and incinerators. Chimneys serving medium-heat appliances may require greater termination heights and clearances to combustibles.

Bibliography

The following resource materials were used in the preparation of the commentary for this chapter of the code.

Code Changes Resource Collection. Washington, DC: International Code Council, 2014.

IBC-2015, *International Building Code*. Washington, DC: International Code Council, 2014.

IECC-2015, *International Energy Conservation Code*. Washington, DC: International Code Council, 2014.

IMC-2015, *International Mechanical Code*. Washington, DC: International Code Council, 2014.

IPC-2015, *International Plumbing Code*. Washington, DC: International Code Council, 2014.

INTERNATIONAL CODE COUNCIL®
Copyright © 2015 ICC. ALL RIGHTS RESERVED. Accessed by David Dammon on Jun 21, 2017 12:30:52 PM pursuant to License Agreement with ICC. No further reproduction or distribution authorized. ANY UNAUTHORIZED REPRODUCTION OR DISTRIBUTION IS A VIOLATION OF THE FEDERAL COPYRIGHT ACT AND THE LICENSE AGREEMENT, AND SUBJECT TO CIVIL AND CRIMINAL PENALTIES THEREUNDER.

TABLE 504.2(1)
TYPE B DOUBLE-WALL GAS VENT

Number of Appliances	Single
Appliance Type	Category I
Appliance Vent Connection	Connected directly to vent

HEIGHT *(H)* (feet)	LATERAL *(L)* (feet)	VENT DIAMETER—*(D)* inches																				
		3			4			5			6			7			8			9		
		APPLIANCE INPUT RATING IN THOUSANDS OF BTU/H																				
		FAN		NAT	FAN		NAT	FAN		NAT	FAN		NAT	FAN		NAT	FAN		NAT	FAN		NAT
		Min	Max	Max	Min	Max	Max	Min	Max	Max	Min	Max	Max	Min	Max	Max	Min	Max	Max	Min	Max	Max
6	0	0	78	46	0	152	86	0	251	141	0	375	205	0	524	285	0	698	370	0	897	470
	2	13	51	36	18	97	67	27	157	105	32	232	157	44	321	217	53	425	285	63	543	370
	4	21	49	34	30	94	64	39	153	103	50	227	153	66	316	211	79	419	279	93	536	362
	6	25	46	32	36	91	61	47	149	100	59	223	149	78	310	205	93	413	273	110	530	354
8	0	0	84	50	0	165	94	0	276	155	0	415	235	0	583	320	0	780	415	0	1,006	537
	2	12	57	40	16	109	75	25	178	120	28	263	180	42	365	247	50	483	322	60	619	418
	5	23	53	38	32	103	71	42	171	115	53	255	173	70	356	237	83	473	313	99	607	407
	8	28	49	35	39	98	66	51	164	109	64	247	165	84	347	227	99	463	303	117	596	396
10	0	0	88	53	0	175	100	0	295	166	0	447	255	0	631	345	0	847	450	0	1,096	585
	2	12	61	42	17	118	81	23	194	129	26	289	195	40	402	273	48	533	355	57	684	457
	5	23	57	40	32	113	77	41	187	124	52	280	188	68	392	263	81	522	346	95	671	446
	10	30	51	36	41	104	70	54	176	115	67	267	175	88	376	245	104	504	330	122	651	427
15	0	0	94	58	0	191	112	0	327	187	0	502	285	0	716	390	0	970	525	0	1,263	682
	2	11	69	48	15	136	93	20	226	150	22	339	225	38	475	316	45	633	414	53	815	544
	5	22	65	45	30	130	87	39	219	142	49	330	217	64	463	300	76	620	403	90	800	529
	10	29	59	41	40	121	82	51	206	135	64	315	208	84	445	288	99	600	386	116	777	507
	15	35	53	37	48	112	76	61	195	128	76	301	198	98	429	275	115	580	373	134	755	491
20	0	0	97	61	0	202	119	0	349	202	0	540	307	0	776	430	0	1,057	575	0	1,384	752
	2	10	75	51	14	149	100	18	250	166	20	377	249	33	531	346	41	711	470	50	917	612
	5	21	71	48	29	143	96	38	242	160	47	367	241	62	519	337	73	697	460	86	902	599
	10	28	64	44	38	133	89	50	229	150	62	351	228	81	499	321	95	675	443	112	877	576
	15	34	58	40	46	124	84	59	217	142	73	337	217	94	481	308	111	654	427	129	853	557
	20	48	52	35	55	116	78	69	206	134	84	322	206	107	464	295	125	634	410	145	830	537

(continued)

Copyright © 2015 ICC. ALL RIGHTS RESERVED. Accessed by David Dammon on Jun 21, 2017 12:30:52 PM pursuant to License Agreement with ICC. No further reproduction or distribution authorized. ANY UNAUTHORIZED REPRODUCTION OR DISTRIBUTION IS A VIOLATION OF THE FEDERAL COPYRIGHT ACT AND THE LICENSE AGREEMENT, AND SUBJECT TO CIVIL AND CRIMINAL PENALTIES THEREUNDER.

Copyright © 2015 ICC. ALL RIGHTS RESERVED. Accessed by David Dammon on Jun 21, 2017 12:30:52 PM pursuant to License Agreement with ICC. No further reproduction or distribution authorized. ANY UNAUTHORIZED REPRODUCTION OR DISTRIBUTION IS A VIOLATION OF THE FEDERAL COPYRIGHT ACT AND THE LICENSE AGREEMENT, AND SUBJECT TO CIVIL AND CRIMINAL PENALTIES THEREUNDER.

TABLE 504.2(1)—continued
TYPE B DOUBLE-WALL GAS VENT

Number of Appliances	Single
Appliance Type	Category I
Appliance Vent Connection	Connected directly to vent

HEIGHT *(H)* (feet)	LATERAL *(L)* (feet)	VENT DIAMETER—*(D)* inches																				
		3			4			5			6			7			8			9		
		APPLIANCE INPUT RATING IN THOUSANDS OF BTU/H																				
		FAN		NAT	FAN		NAT	FAN		NAT	FAN		NAT	FAN		NAT	FAN		NAT	FAN		NAT
		Min	Max	Max	Min	Max	Max	Min	Max	Max	Min	Max	Max	Min	Max	Max	Min	Max	Max	Min	Max	Max
30	0	0	100	64	0	213	128	0	374	220	0	587	336	0	853	475	0	1,173	650	0	1,548	855
	2	9	81	56	13	166	112	14	283	185	18	432	280	27	613	394	33	826	535	42	1,072	700
	5	21	77	54	28	160	108	36	275	176	45	421	273	58	600	385	69	811	524	82	1,055	688
	10	27	70	50	37	150	102	48	262	171	59	405	261	77	580	371	91	788	507	107	1,028	668
	15	33	64	NA	44	141	96	57	249	163	70	389	249	90	560	357	105	765	490	124	1,002	648
	20	56	58	NA	53	132	90	66	237	154	80	374	237	102	542	343	119	743	473	139	977	628
	30	NA	NA	NA	73	113	NA	88	214	NA	104	346	219	131	507	321	149	702	444	171	929	594
50	0	0	101	67	0	216	134	0	397	232	0	633	363	0	932	518	0	1,297	708	0	1,730	952
	2	8	86	61	11	183	122	14	320	206	15	497	314	22	715	445	26	975	615	33	1,276	813
	5	20	82	NA	27	177	119	35	312	200	43	487	308	55	702	438	65	960	605	77	1,259	798
	10	26	76	NA	35	168	114	45	299	190	56	471	298	73	681	426	86	935	589	101	1,230	773
	15	59	70	NA	42	158	NA	54	287	180	66	455	288	85	662	413	100	911	572	117	1,203	747
	20	NA	NA	NA	50	149	NA	63	275	169	76	440	278	97	642	401	113	888	556	131	1,176	722
	30	NA	NA	NA	69	131	NA	84	250	NA	99	410	259	123	605	376	141	844	522	161	1,125	670
100	0	NA	NA	NA	0	218	NA	0	407	NA	0	665	400	0	997	560	0	1,411	770	0	1,908	1,040
	2	NA	NA	NA	10	194	NA	12	354	NA	13	566	375	18	831	510	21	1,155	700	25	1,536	935
	5	NA	NA	NA	26	189	NA	33	347	NA	40	557	369	52	820	504	60	1,141	692	71	1,519	926
	10	NA	NA	NA	33	182	NA	43	335	NA	53	542	361	68	801	493	80	1,118	679	94	1,492	910
	15	NA	NA	NA	40	174	NA	50	321	NA	62	528	353	80	782	482	93	1,095	666	109	1,465	895
	20	NA	NA	NA	47	166	NA	59	311	NA	71	513	344	90	763	471	105	1,073	653	122	1,438	880
	30	NA	NA	NA	NA	NA	NA	78	290	NA	92	483	NA	115	726	449	131	1,029	627	149	1,387	849
	50	NA	NA	NA	NA	NA	NA	NA	NA	NA	147	428	NA	180	651	405	197	944	575	217	1,288	787

(continued)

TABLE 504.2(1)—continued
TYPE B DOUBLE-WALL GAS VENT

Number of Appliances	Single
Appliance Type	Category I
Appliance Vent Connection	Connected directly to vent

HEIGHT *(H)* (feet)	LATERAL *(L)* (feet)	VENT DIAMETER—*(D)* inches																							
		10			12			14			16			18			20			22			24		
		APPLIANCE INPUT RATING IN THOUSANDS OF BTU/H																							
		FAN		NAT	FAN		NAT	FAN		NAT	FAN		NAT	FAN		NAT	FAN		NAT	FAN		NAT	FAN		NAT
		Min	Max	Max	Min	Max	Max	Min	Max	Max	Min	Max	Max	Min	Max	Max	Min	Max	Max	Min	Max	Max	Min	Max	Max
6	0	0	1,121	570	0	1,645	850	0	2,267	1,170	0	2,983	1,530	0	3,802	1,960	0	4,721	2,430	0	5,737	2,950	0	6,853	3,520
	2	75	675	455	103	982	650	138	1,346	890	178	1,769	1,170	225	2,250	1,480	296	2,782	1,850	360	3,377	2,220	426	4,030	2,670
	4	110	668	445	147	975	640	191	1,338	880	242	1,761	1,160	300	2,242	1,475	390	2,774	1,835	469	3,370	2,215	555	4,023	2,660
	6	128	661	435	171	967	630	219	1,330	870	276	1,753	1,150	341	2,235	1,470	437	2,767	1,820	523	3,363	2,210	618	4,017	2,650
8	0	0	1,261	660	0	1,858	970	0	2,571	1,320	0	3,399	1,740	0	4,333	2,220	0	5,387	2,750	0	6,555	3,360	0	7,838	4,010
	2	71	770	515	98	1,124	745	130	1,543	1,020	168	2,030	1,340	212	2,584	1,700	278	3,196	2,110	336	3,882	2,560	401	4,634	3,050
	5	115	758	503	154	1,110	733	199	1,528	1,010	251	2,013	1,330	311	2,563	1,685	398	3,180	2,090	476	3,863	2,545	562	4,612	3,040
	8	137	746	490	180	1,097	720	231	1,514	1,000	289	2,000	1,320	354	2,552	1,670	450	3,163	2,070	537	3,850	2,530	630	4,602	3,030
10	0	0	1,377	720	0	2,036	1,060	0	2,825	1,450	0	3,742	1,925	0	4,782	2,450	0	5,955	3,050	0	7,254	3,710	0	8,682	4,450
	2	68	852	560	93	1,244	850	124	1,713	1,130	161	2,256	1,480	202	2,868	1,890	264	3,556	2,340	319	4,322	2,840	378	5,153	3,390
	5	112	839	547	149	1,229	829	192	1,696	1,105	243	2,238	1,461	300	2,849	1,871	382	3,536	2,318	458	4,301	2,818	540	5,132	3,371
	10	142	817	525	187	1,204	795	238	1,669	1,080	298	2,209	1,430	364	2,818	1,840	459	3,504	2,280	546	4,268	2,780	641	5,099	3,340
15	0	0	1,596	840	0	2,380	1,240	0	3,323	1,720	0	4,423	2,270	0	5,678	2,900	0	7,099	3,620	0	8,665	4,410	0	10,393	5,300
	2	63	1,019	675	86	1,495	985	114	2,062	1,350	147	2,719	1,770	186	3,467	2,260	239	4,304	2,800	290	5,232	3,410	346	6,251	4,080
	5	105	1,003	660	140	1,476	967	182	2,041	1,327	229	2,696	1,748	283	3,442	2,235	355	4,278	2,777	426	5,204	3,385	501	6,222	4,057
	10	135	977	635	177	1,446	936	227	2,009	1,289	283	2,659	1,712	346	3,402	2,193	432	4,234	2,739	510	5,159	3,343	599	6,175	4,019
	15	155	953	610	202	1,418	905	257	1,976	1,250	318	2,623	1,675	385	3,363	2,150	479	4,192	2,700	564	5,115	3,300	665	6,129	3,980
20	0	0	1,756	930	0	2,637	1,350	0	3,701	1,900	0	4,948	2,520	0	6,376	3,250	0	7,988	4,060	0	9,785	4,980	0	11,753	6,000
	2	59	1,150	755	81	1,694	1,100	107	2,343	1,520	139	3,097	2,000	175	3,955	2,570	220	4,916	3,200	269	5,983	3,910	321	7,154	4,700
	5	101	1,133	738	135	1,674	1,079	174	2,320	1,498	219	3,071	1,978	270	3,926	2,544	337	4,885	3,174	403	5,950	3,880	475	7,119	4,662
	10	130	1,105	710	172	1,641	1,045	220	2,282	1,460	273	3,029	1,940	334	3,880	2,500	413	4,835	3,130	489	5,896	3,830	573	7,063	4,600
	15	150	1,078	688	195	1,609	1,018	248	2,245	1,425	306	2,988	1,910	372	3,835	2,465	459	4,786	3,090	541	5,844	3,795	631	7,007	4,575
	20	167	1,052	665	217	1,578	990	273	2,210	1,390	335	2,948	1,880	404	3,791	2,430	495	4,737	3,050	585	5,792	3,760	689	6,953	4,550

(continued)

INTERNATIONAL CODE COUNCIL®

Copyright © 2015 ICC. ALL RIGHTS RESERVED. Accessed by David Dammon on Jun 21, 2017 12:30:52 PM pursuant to License Agreement with ICC. No further reproduction or distribution authorized. ANY UNAUTHORIZED REPRODUCTION OR DISTRIBUTION IS A VIOLATION OF THE FEDERAL COPYRIGHT ACT AND THE LICENSE AGREEMENT, AND SUBJECT TO CIVIL AND CRIMINAL PENALTIES THEREUNDER.

TABLE 504.2(1)—continued
TYPE B DOUBLE-WALL GAS VENT

Number of Appliances	Single
Appliance Type	Category I
Appliance Vent Connection	Connected directly to vent

HEIGHT *(H)* (feet)	LATERAL *(L)* (feet)	VENT DIAMETER—*(D)* inches																							
		10			12			14			16			18			20			22			24		
		APPLIANCE INPUT RATING IN THOUSANDS OF BTU/H																							
		FAN		NAT	FAN		NAT	FAN		NAT	FAN		NAT	FAN		NAT	FAN		NAT	FAN		NAT	FAN		NAT
		Min	Max	Max	Min	Max	Max	Min	Max	Max	Min	Max	Max	Min	Max	Max	Min	Max	Max	Min	Max	Max	Min	Max	Max
30	0	0	1,977	1,060	0	3,004	1,550	0	4,252	2,170	0	5,725	2,920	0	7,420	3,770	0	9,341	4,750	0	11,483	5,850	0	13,848	7,060
	2	54	1,351	865	74	2,004	1,310	98	2,786	1,800	127	3,696	2,380	159	4,734	3,050	199	5,900	3,810	241	7,194	4,650	285	8,617	5,600
	5	96	1,332	851	127	1,981	1,289	164	2,759	1,775	206	3,666	2,350	252	4,701	3,020	312	5,863	3,783	373	7,155	4,622	439	8,574	5,552
	10	125	1,301	829	164	1,944	1,254	209	2,716	1,733	259	3,617	2,300	316	4,647	2,970	386	5,803	3,739	456	7,090	4,574	535	8,505	5,471
	15	143	1,272	807	187	1,908	1,220	237	2,674	1,692	292	3,570	2,250	354	4,594	2,920	431	5,744	3,695	507	7,026	4,527	590	8,437	5,391
	20	160	1,243	784	207	1,873	1,185	260	2,633	1,650	319	3,523	2,200	384	4,542	2,870	467	5,686	3,650	548	6,964	4,480	639	8,370	5,310
	30	195	1,189	745	246	1,807	1,130	305	2,555	1,585	369	3,433	2,130	440	4,442	2,785	540	5,574	3,565	635	6,842	4,375	739	8,239	5,225
50	0	0	2,231	1,195	0	3,441	1,825	0	4,934	2,550	0	6,711	3,440	0	8,774	4,460	0	11,129	5,635	0	13,767	6,940	0	16,694	8,430
	2	41	1,620	1,010	66	2,431	1,513	86	3,409	2,125	113	4,554	2,840	141	5,864	3,670	171	7,339	4,630	209	8,980	5,695	251	10,788	6,860
	5	90	1,600	996	118	2,406	1,495	151	3,380	2,102	191	4,520	2,813	234	5,826	3,639	283	7,295	4,597	336	8,933	5,654	394	10,737	6,818
	10	118	1,567	972	154	2,366	1,466	196	3,332	2,064	243	4,464	2,767	295	5,763	3,585	355	7,224	4,542	419	8,855	5,585	491	10,652	6,749
	15	136	1,536	948	177	2,327	1,437	222	3,285	2,026	274	4,409	2,721	330	5,701	3,534	396	7,155	4,511	465	8,779	5,546	542	10,570	6,710
	20	151	1,505	924	195	2,288	1,408	244	3,239	1,987	300	4,356	2,675	361	5,641	3,481	433	7,086	4,479	506	8,704	5,506	586	10,488	6,670
	30	183	1,446	876	232	2,214	1,349	287	3,150	1,910	347	4,253	2,631	412	5,523	3,431	494	6,953	4,421	577	8,557	5,444	672	10,328	6,603
100	0	0	2,491	1,310	0	3,925	2,050	0	5,729	2,950	0	7,914	4,050	0	10,485	5,300	0	13,454	6,700	0	16,817	8,600	0	20,578	10,300
	2	30	1,975	1,170	44	3,027	1,820	72	4,313	2,550	95	5,834	3,500	120	7,591	4,600	138	9,577	5,800	169	11,803	7,200	204	14,264	8,800
	5	82	1,955	1,159	107	3,002	1,803	136	4,282	2,531	172	5,797	3,475	208	7,548	4,566	245	9,528	5,769	293	11,748	7,162	341	14,204	8,756
	10	108	1,923	1,142	142	2,961	1,775	180	4,231	2,500	223	5,737	3,434	268	7,478	4,509	318	9,447	5,717	374	11,658	7,100	436	14,105	8,683
	15	126	1,892	1,124	163	2,920	1,747	206	4,182	2,469	252	5,678	3,392	304	7,409	4,451	358	9,367	5,665	418	11,569	7,037	487	14,007	8,610
	20	141	1,861	1,107	181	2,880	1,719	226	4,133	2,438	277	5,619	3,351	330	7,341	4,394	387	9,289	5,613	452	11,482	6,975	523	13,910	8,537
	30	170	1,802	1,071	215	2,803	1,663	265	4,037	2,375	319	5,505	3,267	378	7,209	4,279	446	9,136	5,509	514	11,310	6,850	592	13,720	8,391
	50	241	1,688	1,000	292	2,657	1,550	350	3,856	2,250	415	5,289	3,100	486	6,956	4,050	572	8,841	5,300	659	10,979	6,600	752	13,354	8,100

For SI: 1 inch = 25.4 mm, 1 foot = 304.8 mm, 1 British thermal unit per hour = 0.2931 W.

Copyright © 2015 ICC. ALL RIGHTS RESERVED. Accessed by David Dammon on Jun 21, 2017 12:30:52 PM pursuant to License Agreement with ICC. No further reproduction or distribution authorized. ANY UNAUTHORIZED REPRODUCTION OR DISTRIBUTION IS A VIOLATION OF THE FEDERAL COPYRIGHT ACT AND THE LICENSE AGREEMENT, AND SUBJECT TO CIVIL AND CRIMINAL PENALTIES THEREUNDER.

TABLE 504.2(2)
TYPE B DOUBLE-WALL GAS VENT

Number of Appliances	Single
Appliance Type	Category I
Appliance Vent Connection	Single-wall metal connector

HEIGHT *(H)* (feet)	LATERAL *(L)* (feet)	VENT DIAMETER—*(D)* inches																											
		3			4			5			6			7			8			9			10			12				
		APPLIANCE INPUT RATING IN THOUSANDS OF BTU/H																											
		FAN		NAT	FAN		NAT	FAN		NAT	FAN		NAT	FAN		NAT	FAN		NAT	FAN		NAT	FAN		NAT	FAN		NAT		
		Min	Max	Max	Min	Max	Max	Min	Max	Max	Min	Max	Max	Min	Max	Max	Min	Max	Max	Min	Max	Max	Min	Max	Max	Min	Max	Max		
6	0	38	77	45	59	151	85	85	249	140	126	373	204	165	522	284	211	695	369	267	894	469	371	1,118	569	537	1.639	849		
	2	39	51	36	60	96	66	85	156	104	123	231	156	159	320	213	201	423	284	251	541	368	347	673	453	498	979	648		
	4	NA	NA	33	74	92	63	102	152	102	146	225	152	187	313	208	237	416	277	295	533	360	409	664	443	584	971	638		
	6	NA	NA	31	83	89	60	114	147	99	163	220	148	207	307	203	263	409	271	327	526	352	449	656	433	638	962	627		
8	0	37	83	50	58	164	93	83	273	154	123	412	234	161	580	319	206	777	414	258	1,002	536	360	1,257	658	521	1,852	967		
	2	39	56	39	59	108	75	83	176	119	121	261	179	155	363	246	197	482	321	246	617	417	339	768	513	486	1,120	743		
	5	NA	NA	37	77	102	69	107	168	114	151	252	171	193	352	235	245	470	311	305	604	404	418	754	500	598	1,104	730		
	8	NA	NA	33	90	95	64	122	161	107	175	243	163	223	342	225	280	458	300	344	591	392	470	740	486	665	1.089	715		
10	0	37	87	53	57	174	99	82	293	165	120	444	254	158	628	344	202	844	449	253	1,093	584	351	1,373	718	507	2,031	1,057		
	2	39	61	41	59	117	80	82	193	128	119	287	194	153	400	272	193	531	354	242	681	456	332	849	559	475	1,242	848		
	5	52	56	39	76	111	76	105	185	122	148	277	186	190	388	261	241	518	344	299	667	443	409	834	544	584	1,224	825		
	10	NA	NA	34	97	100	68	132	171	112	188	261	171	237	369	241	296	497	325	363	643	423	492	808	520	688	1,194	788		
15	0	36	93	57	56	190	111	80	325	186	116	499	283	153	713	388	195	966	523	244	1.259	681	336	1.591	838	488	2,374	1,237		
	2	38	69	47	57	136	93	80	225	149	115	337	224	148	473	314	187	631	413	232	812	543	319	1,015	673	457	1.491	983		
	5	51	63	44	75	128	86	102	216	140	144	326	217	182	459	298	231	616	400	287	795	526	392	997	657	562	1,469	963		
	10	NA	NA	39	95	116	79	128	201	131	182	308	203	228	438	284	284	592	381	349	768	501	470	966	628	664	1,433	928		
	15	NA	NA	NA	NA	NA	72	158	186	124	220	290	192	272	418	269	334	568	367	404	742	484	540	937	601	750	1,399	894		
20	0	35	96	60	54	200	118	78	346	201	114	537	306	149	772	428	190	1,053	573	238	1,379	750	326	1,751	927	473	2,631	1,346		
	2	37	74	50	56	148	99	78	248	165	113	375	248	144	528	344	182	708	468	227	914	611	309	1,146	754	443	1.689	1.098		
	5	50	68	47	73	140	94	100	239	158	141	363	239	178	514	334	224	692	457	279	896	596	381	1,126	734	547	1,665	1,074		
	10	NA	NA	41	93	129	86	125	223	146	177	344	224	222	491	316	277	666	437	339	866	570	457	1,092	702	646	1,626	1,037		
	15	NA	NA	NA	NA	NA	80	155	208	136	216	325	210	264	469	301	325	640	419	393	838	549	526	1,060	677	730	1,587	1,005		
	20	NA	NA	NA	NA	NA	NA	186	192	126	254	306	196	309	448	285	374	616	400	448	810	526	592	1,028	651	808	1,550	973		

(continued)

Copyright © 2015 ICC. ALL RIGHTS RESERVED. Accessed by David Dammon on Jun 21, 2017 12:30:52 PM pursuant to License Agreement with ICC. No further reproduction or distribution authorized. ANY UNAUTHORIZED REPRODUCTION OR DISTRIBUTION IS A VIOLATION OF THE FEDERAL COPYRIGHT ACT AND THE LICENSE AGREEMENT, AND SUBJECT TO CIVIL AND CRIMINAL PENALTIES THEREUNDER.

TABLE 504.2(2)—continued
TYPE B DOUBLE-WALL GAS VENT

Number of Appliances	Single
Appliance Type	Category I
Appliance Vent Connection	Single-wall metal connector

HEIGHT (H) (feet)	LATERAL (L) (feet)	VENT DIAMETER—(D) inches																											
		3			4			5			6			7			8			9			10			12				
		APPLIANCE INPUT RATING IN THOUSANDS OF BTU/H																											
		FAN		NAT	FAN		NAT	FAN		NAT	FAN		NAT	FAN		NAT	FAN		NAT	FAN		NAT	FAN		NAT	FAN		NAT		
		Min	Max	Max	Min	Max	Max	Min	Max	Max	Min	Max	Max	Min	Max	Max	Min	Max	Max	Min	Max	Max	Min	Max	Max	Min	Max	Max		
30	0	34	99	63	53	211	127	76	372	219	110	584	334	144	849	472	184	1,168	647	229	1,542	852	312	1.971	1,056	454	2,996	1,545		
	2	37	80	56	55	164	111	76	281	183	109	429	279	139	610	392	175	823	533	219	1,069	698	296	1,346	863	424	1,999	1,308		
	5	49	74	52	72	157	106	98	271	173	136	417	271	171	595	382	215	806	521	269	1,049	684	366	1,324	846	524	1,971	1,283		
	10	NA	NA	NA	91	144	98	122	255	168	171	397	257	213	570	367	265	777	501	327	1,017	662	440	1,287	821	620	1,927	1,234		
	15	NA	NA	NA	115	131	NA	151	239	157	208	377	242	255	547	349	312	750	481	379	985	638	507	1,251	794	702	1,884	1,205		
	20	NA	NA	NA	NA	NA	NA	181	223	NA	246	357	228	298	524	333	360	723	461	433	955	615	570	1,216	768	780	1,841	1,166		
	30	NA	NA	NA	NA	NA	NA	NA	NA	NA	NA	NA	NA	389	477	305	461	670	426	541	895	574	704	1,147	720	937	1.759	1,101		
50	0	33	99	66	51	213	133	73	394	230	105	629	361	138	928	515	176	1,292	704	220	1,724	948	295	2,223	1,189	428	3,432	1,818		
	2	36	84	61	53	181	121	73	318	205	104	495	312	133	712	443	168	971	613	209	1,273	811	280	1,615	1,007	401	2,426	1,509		
	5	48	80	NA	70	174	117	94	308	198	131	482	305	164	696	435	204	953	602	257	1,252	795	347	1,591	991	496	2,396	1,490		
	10	NA	NA	NA	89	160	NA	118	292	186	162	461	292	203	671	420	253	923	583	313	1,217	765	418	1,551	963	589	2,347	1,455		
	15	NA	NA	NA	112	148	NA	145	275	174	199	441	280	244	646	405	299	894	562	363	1,183	736	481	1,512	934	668	2,299	1,421		
	20	NA	NA	NA	NA	NA	NA	176	257	NA	236	420	267	285	622	389	345	866	543	415	1,150	708	544	1,473	906	741	2,251	1,387		
	30	NA	NA	NA	NA	NA	NA	NA	NA	NA	315	376	NA	373	573	NA	442	809	502	521	1,086	649	674	1,399	848	892	2,159	1,318		
100	0	NA	NA	NA	49	214	NA	69	403	NA	100	659	395	131	991	555	166	1,404	765	207	1,900	1,033	273	2,479	1,300	395	3,912	2,042		
	2	NA	NA	NA	51	192	NA	70	351	NA	98	563	373	125	828	508	158	1,152	698	196	1,532	933	259	1,970	1,168	371	3,021	1,817		
	5	NA	NA	NA	67	186	NA	90	342	NA	125	551	366	156	813	501	194	1,134	688	240	1,511	921	322	1,945	1,153	460	2,990	1,796		
	10	NA	NA	NA	85	175	NA	113	324	NA	153	532	354	191	789	486	238	1,104	672	293	1,477	902	389	1.905	1,133	547	2,938	1,763		
	15	NA	NA	NA	132	162	NA	138	310	NA	188	511	343	230	764	473	281	1,075	656	342	1,443	884	447	1,865	1,110	618	2,888	1,730		
	20	NA	NA	NA	NA	NA	NA	168	295	NA	224	487	NA	270	739	458	325	1,046	639	391	1,410	864	507	1,825	1,087	690	2,838	1,696		
	30	NA	NA	NA	NA	NA	NA	231	264	NA	301	448	NA	355	685	NA	418	988	NA	491	1,343	824	631	1,747	1,041	834	2,739	1,627		
	50	NA	NA	NA	NA	NA	NA	NA	NA	NA	NA	NA	NA	540	584	NA	617	866	NA	711	1,205	NA	895	1,591	NA	1,138	2,547	1,489		

For SI: 1 inch = 25.4 mm, 1 foot = 304.8 mm, 1 British thermal unit per hour = 0.2931 W.

Copyright © 2015 ICC. ALL RIGHTS RESERVED. Accessed by David Dammon on Jun 21, 2017 12:30:52 PM pursuant to License Agreement with ICC. No further reproduction or distribution authorized. ANY UNAUTHORIZED REPRODUCTION OR DISTRIBUTION IS A VIOLATION OF THE FEDERAL COPYRIGHT ACT AND THE LICENSE AGREEMENT, AND SUBJECT TO CIVIL AND CRIMINAL PENALTIES THEREUNDER.

TABLE 504.2(3)
MASONRY CHIMNEY

Number of Appliances	Single
Appliance Type	Category I
Appliance Vent Connection	Type B double-wall connector

HEIGHT *(H)* (feet)	LATERAL *(L)* (feet)	TYPE B DOUBLE-WALL CONNECTOR DIAMETER—*(D)* Inches to be used with chimney areas within the size limits at bottom																											
		3			4			5			6			7			8			9			10			12				
		APPLIANCE INPUT RATING IN THOUSANDS OF BTU/H																											
		FAN		NAT	FAN		NAT	FAN		NAT	FAN		NAT	FAN		NAT	FAN		NAT	FAN		NAT	FAN		NAT	FAN		NAT		
		Min	Max	Max	Min	Max	Max	Min	Max	Max	Min	Max	Max	Min	Max	Max	Min	Max	Max	Min	Max	Max	Min	Max	Max	Min	Max	Max		
6	2	NA	NA	28	NA	NA	52	NA	NA	86	NA	NA	130	NA	NA	180	NA	NA	247	NA	NA	320	NA	NA	401	NA	NA	581		
	5	NA	NA	25	NA	NA	49	NA	NA	82	NA	NA	117	NA	NA	165	NA	NA	231	NA	NA	298	NA	NA	376	NA	NA	561		
8	2	NA	NA	29	NA	NA	55	NA	NA	93	NA	NA	145	NA	NA	198	NA	NA	266	84	590	350	100	728	446	139	1,024	651		
	5	NA	NA	26	NA	NA	52	NA	NA	88	NA	NA	134	NA	NA	183	NA	NA	247	NA	NA	328	149	711	423	201	1,007	640		
	8	NA	NA	24	NA	NA	48	NA	NA	83	NA	NA	127	NA	NA	175	NA	NA	239	NA	NA	318	173	695	410	231	990	623		
10	2	NA	NA	31	NA	NA	61	NA	NA	103	NA	NA	162	NA	NA	221	68	519	298	82	655	388	98	810	491	136	1,144	724		
	5	NA	NA	28	NA	NA	57	NA	NA	96	NA	NA	148	NA	NA	204	NA	NA	277	124	638	365	146	791	466	196	1,124	712		
	10	NA	NA	25	NA	NA	50	NA	NA	87	NA	NA	139	NA	NA	191	NA	NA	263	155	610	347	182	762	444	240	1,093	668		
15	2	NA	NA	35	NA	NA	67	NA	NA	114	NA	NA	179	53	475	250	64	613	336	77	779	441	92	968	562	127	1,376	841		
	5	NA	NA	35	NA	NA	62	NA	NA	107	NA	NA	164	NA	NA	231	99	594	313	118	759	416	139	946	533	186	1,352	828		
	10	NA	NA	28	NA	NA	55	NA	NA	97	NA	NA	153	NA	NA	216	126	565	296	148	727	394	173	912	567	229	1,315	777		
	15	NA	NA	NA	NA	NA	48	NA	NA	89	NA	NA	141	NA	NA	201	NA	NA	281	171	698	375	198	880	485	259	1,280	742		
20	2	NA	NA	38	NA	NA	74	NA	NA	124	NA	NA	201	51	522	274	61	678	375	73	867	491	87	1,083	627	121	1,548	953		
	5	NA	NA	36	NA	NA	68	NA	NA	116	NA	NA	184	80	503	254	95	658	350	113	845	463	133	1,059	597	179	1,523	933		
	10	NA	NA	NA	NA	NA	60	NA	NA	107	NA	NA	172	NA	NA	237	122	627	332	143	811	440	167	1,022	566	221	1,482	879		
	15	NA	NA	NA	NA	NA	NA	NA	NA	97	NA	NA	159	NA	NA	220	NA	NA	314	165	780	418	191	987	541	251	1,443	840		
	20	NA	NA	NA	NA	NA	NA	NA	NA	83	NA	NA	148	NA	NA	206	NA	NA	296	186	750	397	214	955	513	277	1,406	807		

(continued)

Copyright © 2015 ICC. ALL RIGHTS RESERVED. Accessed by David Dammon on Jun 21, 2017 12:30:52 PM pursuant to License Agreement with ICC. No further reproduction or distribution authorized. ANY UNAUTHORIZED REPRODUCTION OR DISTRIBUTION IS A VIOLATION OF THE FEDERAL COPYRIGHT ACT AND THE LICENSE AGREEMENT, AND SUBJECT TO CIVIL AND CRIMINAL PENALTIES THEREUNDER.

TABLE 504.2(3)—continued
MASONRY CHIMNEY

Number of Appliances	Single
Appliance Type	Category I
Appliance Vent Connection	Type B double-wall connector

HEIGHT *(H)* (feet)	LATERAL *(L)* (feet)	TYPE B DOUBLE-WALL CONNECTOR DIAMETER —*(D)* Inches to be used with chimney areas within the size limits at bottom																										
		3			4			5			6			7			8			9			10			12		
		APPLIANCE INPUT RATING IN THOUSANDS OF BTU/H																										
		FAN		NAT	FAN		NAT	FAN		NAT	FAN		NAT	FAN		NAT	FAN		NAT	FAN		NAT	FAN		NAT	FAN		NAT
		Min	Max	Max	Min	Max	Max	Min	Max	Max	Min	Max	Max	Min	Max	Max	Min	Max	Max	Min	Max	Max	Min	Max	Max	Min	Max	Max
30	2	NA	NA	41	NA	NA	82	NA	NA	137	NA	NA	216	47	581	303	57	762	421	68	985	558	81	1,240	717	111	1,793	1,112
	5	NA	NA	NA	NA	NA	76	NA	NA	128	NA	NA	198	75	561	281	90	741	393	106	962	526	125	1,216	683	169	1,766	1,094
	10	NA	NA	NA	NA	NA	67	NA	NA	115	NA	NA	184	NA	NA	263	115	709	373	135	927	500	158	1,176	648	210	1,721	1,025
	15	NA	NA	NA	NA	NA	NA	NA	NA	107	NA	NA	171	NA	NA	243	NA	NA	353	156	893	476	181	1,139	621	239	1,679	981
	20	NA	NA	NA	NA	NA	NA	NA	NA	91	NA	NA	159	NA	NA	227	NA	NA	332	176	860	450	203	1,103	592	264	1,638	940
	30	NA	NA	NA	NA	NA	NA	NA	NA	NA	NA	NA	NA	NA	NA	188	NA	NA	288	NA	NA	416	249	1,035	555	318	1,560	877
50	2	NA	NA	NA	NA	NA	92	NA	NA	161	NA	NA	251	NA	NA	351	51	840	477	61	1,106	633	72	1,413	812	99	2,080	1,243
	5	NA	NA	NA	NA	NA	NA	NA	NA	151	NA	NA	230	NA	NA	323	83	819	445	98	1,083	596	116	1,387	774	155	2,052	1,225
	10	NA	NA	NA	NA	NA	NA	NA	NA	138	NA	NA	215	NA	NA	304	NA	NA	424	126	1,047	567	147	1,347	733	195	2,006	1,147
	15	NA	NA	NA	NA	NA	NA	NA	NA	127	NA	NA	199	NA	NA	282	NA	NA	400	146	1,010	539	170	1,307	702	222	1,961	1,099
	20	NA	NA	NA	NA	NA	NA	NA	NA	NA	NA	NA	185	NA	NA	264	NA	NA	376	165	977	511	190	1,269	669	246	1,916	1,050
	30	NA	NA	NA	NA	NA	NA	NA	NA	NA	NA	NA	NA	NA	NA	NA	NA	NA	327	NA	NA	468	233	1,196	623	295	1,832	984
Minimum Internal Area of Chimney (square inches)		12			19			28			38			50			63			78			95			132		
Maximum Internal Area of Chimney (square inches)		Seven times the listed appliance categorized vent area, flue collar area or draft hood outlet area.																										

For SI: 1 inch = 25.4 mm, 1 square inch = 645.16 mm^2, 1 foot = 304.8 mm, 1 British thermal unit per hour = 0.2931 W.

Copyright © 2015 ICC. ALL RIGHTS RESERVED. Accessed by David Dammon on Jun 21, 2017 12:30:52 PM pursuant to License Agreement with ICC. No further reproduction or distribution authorized. ANY UNAUTHORIZED REPRODUCTION OR DISTRIBUTION IS A VIOLATION OF THE FEDERAL COPYRIGHT ACT AND THE LICENSE AGREEMENT, AND SUBJECT TO CIVIL AND CRIMINAL PENALTIES THEREUNDER.

TABLE 504.2(4)
MASONRY CHIMNEY

Number of Appliances	Single
Appliance Type	Category I
Appliance Vent Connection	Single-wall metal connector

HEIGHT *(H)* (feet)	LATERAL *(L)* (feet)	SINGLE-WALL METAL CONNECTOR DIAMETER—*(D)* Inches to be used with chimney areas within the size limits at bottom																										
		3			4			5			6			7			8			9			10			12		
		APPLIANCE INPUT RATING IN THOUSANDS OF BTU/H																										
		FAN		NAT	FAN		NAT	FAN		NAT	FAN		NAT	FAN		NAT	FAN		NAT	FAN		NAT	FAN		NAT	FAN		NAT
		Min	Max	Max	Min	Max	Max	Min	Max	Max	Min	Max	Max	Min	Max	Max	Min	Max	Max	Min	Max	Max	Min	Max	Max	Min	Max	Max
6	2	NA	NA	28	NA	NA	52	NA	NA	86	NA	NA	130	NA	NA	180	NA	NA	247	NA	NA	319	NA	NA	400	NA	NA	580
	5	NA	NA	25	NA	NA	48	NA	NA	81	NA	NA	116	NA	NA	164	NA	NA	230	NA	NA	297	NA	NA	375	NA	NA	560
8	2	NA	NA	29	NA	NA	55	NA	NA	93	NA	NA	145	NA	NA	197	NA	NA	265	NA	NA	349	382	725	445	549	1,021	650
	5	NA	NA	26	NA	NA	51	NA	NA	87	NA	NA	133	NA	NA	182	NA	NA	246	NA	NA	327	NA	NA	422	673	1,003	638
	8	NA	NA	23	NA	NA	47	NA	NA	82	NA	NA	126	NA	NA	174	NA	NA	237	NA	NA	317	NA	NA	408	747	985	621
10	2	NA	NA	31	NA	NA	61	NA	NA	102	NA	NA	161	NA	NA	220	216	518	297	271	654	387	373	808	490	536	1,142	722
	5	NA	NA	28	NA	NA	56	NA	NA	95	NA	NA	147	NA	NA	203	NA	NA	276	334	635	364	459	789	465	657	1,121	710
	10	NA	NA	24	NA	NA	49	NA	NA	86	NA	NA	137	NA	NA	189	NA	NA	261	NA	NA	345	547	758	441	771	1,088	665
15	2	NA	NA	35	NA	NA	67	NA	NA	113	NA	NA	178	166	473	249	211	611	335	264	776	440	362	965	560	520	1,373	840
	5	NA	NA	32	NA	NA	61	NA	NA	106	NA	NA	163	NA	NA	230	261	591	312	325	775	414	444	942	531	637	1,348	825
	10	NA	NA	27	NA	NA	54	NA	NA	96	NA	NA	151	NA	NA	214	NA	NA	294	392	722	392	531	907	504	749	1,309	774
	15	NA	NA	NA	NA	NA	46	NA	NA	87	NA	NA	138	NA	NA	198	NA	NA	278	452	692	372	606	873	481	841	1,272	738
20	2	NA	NA	38	NA	NA	73	NA	NA	123	NA	NA	200	163	520	273	206	675	374	258	864	490	252	1,079	625	508	1,544	950
	5	NA	NA	35	NA	NA	67	NA	NA	115	NA	NA	183	80	NA	252	255	655	348	317	842	461	433	1,055	594	623	1,518	930
	10	NA	NA	NA	NA	NA	59	NA	NA	105	NA	NA	170	NA	NA	235	312	622	330	382	806	437	517	1,016	562	733	1,475	875
	15	NA	NA	NA	NA	NA	NA	NA	NA	95	NA	NA	156	NA	NA	217	NA	NA	311	442	773	414	591	979	539	823	1,434	835
	20	NA	NA	NA	NA	NA	NA	NA	NA	80	NA	NA	144	NA	NA	202	NA	NA	292	NA	NA	392	663	944	510	911	1,394	800

(continued)

Copyright © 2015 ICC. ALL RIGHTS RESERVED. Accessed by David Dammon on Jun 21, 2017 12:30:52 PM pursuant to License Agreement with ICC. No further reproduction or distribution authorized. ANY UNAUTHORIZED REPRODUCTION OR DISTRIBUTION IS A VIOLATION OF THE FEDERAL COPYRIGHT ACT AND THE LICENSE AGREEMENT, AND SUBJECT TO CIVIL AND CRIMINAL PENALTIES THEREUNDER.

TABLE 504.2(4)—continued
MASONRY CHIMNEY

Number of Appliances	Single
Appliance Type	Category I
Appliance Vent Connection	Single-wall metal connector

HEIGHT *(H)* (feet)	LATERAL *(L)* (feet)	SINGLE-WALL METAL CONNECTOR DIAMETER—*(D)* Inches to be used with chimney areas within the size limits at bottom																										
		3			4			5			6			7			8			9			10			12		
		APPLIANCE INPUT RATING IN THOUSANDS OF BTU/H																										
		FAN		NAT	FAN		NAT	FAN		NAT	FAN		NAT	FAN		NAT	FAN		NAT	FAN		NAT	FAN		NAT	FAN		NAT
		Min	Max	Max	Min	Max	Max	Min	Max	Max	Min	Max	Max	Min	Max	Max	Min	Max	Max	Min	Max	Max	Min	Max	Max	Min	Max	Max
30	2	NA	NA	41	NA	NA	81	NA	NA	136	NA	NA	215	158	578	302	200	759	420	249	982	556	340	1,237	715	489	1,789	1,110
	5	NA	NA	NA	NA	NA	75	NA	NA	127	NA	NA	196	NA	NA	279	245	737	391	306	958	524	417	1,210	680	600	1,760	1,090
	10	NA	NA	NA	NA	NA	66	NA	NA	113	NA	NA	182	NA	NA	260	300	703	370	370	920	496	500	1,168	644	708	1,713	1,020
	15	NA	NA	NA	NA	NA	NA	NA	NA	105	NA	NA	168	NA	NA	240	NA	NA	349	428	884	471	572	1,128	615	798	1,668	975
	20	NA	NA	NA	NA	NA	NA	NA	NA	88	NA	NA	155	NA	NA	223	NA	NA	327	NA	NA	445	643	1,089	585	883	1,624	932
	30	NA	NA	NA	NA	NA	NA	NA	NA	NA	NA	NA	NA	NA	NA	182	NA	NA	281	NA	NA	408	NA	NA	544	1,055	1,539	865
50	2	NA	NA	NA	NA	NA	91	NA	NA	160	NA	NA	250	NA	NA	350	191	837	475	238	1,103	631	323	1,408	810	463	2,076	1,240
	5	NA	NA	NA	NA	NA	NA	NA	NA	149	NA	NA	228	NA	NA	321	NA	NA	442	293	1,078	593	398	1,381	770	571	2,044	1,220
	10	NA	NA	NA	NA	NA	NA	NA	NA	136	NA	NA	212	NA	NA	301	NA	NA	420	355	1,038	562	447	1,337	728	674	1,994	1,140
	15	NA	NA	NA	NA	NA	NA	NA	NA	124	NA	NA	195	NA	NA	278	NA	NA	395	NA	NA	533	546	1,294	695	761	1,945	1,090
	20	NA	NA	NA	NA	NA	NA	NA	NA	NA	NA	NA	180	NA	NA	258	NA	NA	370	NA	NA	504	616	1,251	660	844	1,898	1,040
	30	NA	NA	NA	NA	NA	48	NA	NA	NA	NA	NA	NA	NA	NA	NA	NA	NA	318	NA	NA	458	NA	NA	610	1,009	1,805	970
Minimum Internal Area of Chimney (square inches)		12			19			28			38			50			63			78			95			132		
Maximum Internal Area of Chimney (square inches)		Seven times the listed appliance categorized vent area, flue collar area or draft hood outlet area.																										

For SI: 1 inch = 25.4 mm, 1 square inch = 645.16 mm^2, 1 foot = 304.8 mm, 1 British thermal unit per hour = 0.2931 W.

Copyright © 2015 ICC. ALL RIGHTS RESERVED. Accessed by David Dammon on Jun 21, 2017 12:30:52 PM pursuant to License Agreement with ICC. No further reproduction or distribution authorized. ANY UNAUTHORIZED REPRODUCTION OR DISTRIBUTION IS A VIOLATION OF THE FEDERAL COPYRIGHT ACT AND THE LICENSE AGREEMENT, AND SUBJECT TO CIVIL AND CRIMINAL PENALTIES THEREUNDER.

TABLE 504.2(5)
SINGLE-WALL METAL PIPE OR TYPE B ASBESTOS CEMENT VENT

Number of Appliances	Single
Appliance Type	Draft hood equipped
Appliance Vent Connection	Connected directly to pipe or vent

HEIGHT *(H)* (feet)	LATERAL *(L)* (feet)	VENT DIAMETER—*(D)* inches							
		3	4	5	6	7	8	10	12
		MAXIMUM APPLIANCE INPUT RATING IN THOUSANDS OF BTU/H							
6	0	39	70	116	170	232	312	500	750
	2	31	55	94	141	194	260	415	620
	5	28	51	88	128	177	242	390	600
8	0	42	76	126	185	252	340	542	815
	2	32	61	102	154	210	284	451	680
	5	29	56	95	141	194	264	430	648
	10	24	49	86	131	180	250	406	625
10	0	45	84	138	202	279	372	606	912
	2	35	67	111	168	233	311	505	760
	5	32	61	104	153	215	289	480	724
	10	27	54	94	143	200	274	455	700
	15	NA	46	84	130	186	258	432	666
15	0	49	91	151	223	312	420	684	1,040
	2	39	72	122	186	260	350	570	865
	5	35	67	110	170	240	325	540	825
	10	30	58	103	158	223	308	514	795
	15	NA	50	93	144	207	291	488	760
	20	NA	NA	82	132	195	273	466	726
20	0	53	101	163	252	342	470	770	1,190
	2	42	80	136	210	286	392	641	990
	5	38	74	123	192	264	364	610	945
	10	32	65	115	178	246	345	571	910
	15	NA	55	104	163	228	326	550	870
	20	NA	NA	91	149	214	306	525	832
30	0	56	108	183	276	384	529	878	1,370
	2	44	84	148	230	320	441	730	1,140
	5	NA	78	137	210	296	410	694	1,080
	10	NA	68	125	196	274	388	656	1,050
	15	NA	NA	113	177	258	366	625	1,000
	20	NA	NA	99	163	240	344	596	960
	30	NA	NA	NA	NA	192	295	540	890
50	0	NA	120	210	310	443	590	980	1,550
	2	NA	95	171	260	370	492	820	1,290
	5	NA	NA	159	234	342	474	780	1,230
	10	NA	NA	146	221	318	456	730	1,190
	15	NA	NA	NA	200	292	407	705	1,130
	20	NA	NA	NA	185	276	384	670	1,080
	30	NA	NA	NA	NA	222	330	605	1,010

For SI: 1 inch = 25.4 mm, 1 foot = 304.8 mm, 1 British thermal unit per hour = 0.2931 W.

INTERNATIONAL CODE COUNCIL®
Copyright © 2015 ICC. ALL RIGHTS RESERVED. Accessed by David Dammon on Jun 21, 2017 12:30:52 PM pursuant to License Agreement with ICC. No further reproduction or distribution authorized. ANY UNAUTHORIZED REPRODUCTION OR DISTRIBUTION IS A VIOLATION OF THE FEDERAL COPYRIGHT ACT AND THE LICENSE AGREEMENT, AND SUBJECT TO CIVIL AND CRIMINAL PENALTIES THEREUNDER.

TABLE 504.2(6)
EXTERIOR MASONRY CHIMNEY

Number of Appliances	Single
Appliance Type	NAT
Appliance Vent Connection	Type B double-wall connector

MINIMUM ALLOWABLE INPUT RATING OF SPACE-HEATING APPLIANCE IN THOUSANDS OF BTU PER HOUR									
VENT HEIGHT (feet)	**Internal area of chimney (square inches)**								
	12	**19**		**28**	**38**	**50**	**63**	**78**	**113**
37°F or Greater	**Local 99% Winter Design Temperature: 37°F or Greater**								
6	0	0		0	0	0	0	0	0
8	0	0		0	0	0	0	0	0
10	0	0		0	0	0	0	0	0
15	NA	0		0	0	0	0	0	0
20	NA	NA		123	190	249	184	0	0
30	NA	NA		NA	NA	NA	393	334	0
50	NA	NA		NA	NA	NA	NA	NA	579
27 to 36°F	**Local 99% Winter Design Temperature: 27 to 36°F**								
6	0	0		68	116	156	180	212	266
8	0	0		82	127	167	187	214	263
10	0	51		97	141	183	201	225	265
15	NA	NA		NA	NA	233	253	274	305
20	NA	NA		NA	NA	NA	307	330	362
30	NA	NA		NA	NA	NA	419	445	485
50	NA	NA		NA	NA	NA	NA	NA	763
17 to 26°F	**Local 99% Winter Design Temperature: 17 to 26°F**								
6	NA	NA		NA	NA	NA	215	259	349
8	NA	NA		NA	NA	197	226	264	352
10	NA	NA		NA	NA	214	245	278	358
15	NA	NA		NA	NA	NA	296	331	398
20	NA	NA		NA	NA	NA	352	387	457
30	NA	NA		NA	NA	NA	NA	507	581
50	NA	NA		NA	NA	NA	NA	NA	NA
5 to 16°F	**Local 99% Winter Design Temperature: 5 to 16°F**								
6	NA	NA		NA	NA	NA	NA	NA	416
8	NA	NA		NA	NA	NA	NA	312	423
10	NA	NA		NA	NA	NA	289	331	430
15	NA	NA		NA	NA	NA	NA	393	485
20	NA	NA		NA	NA	NA	NA	450	547
30	NA	NA		NA	NA	NA	NA	NA	682
50	NA	NA		NA	NA	NA	NA	NA	972
-10 to 4°F	**Local 99% Winter Design Temperature: -10 to 4°F**								
6	NA	NA		NA	NA	NA	NA	NA	484
8	NA	NA		NA	NA	NA	NA	NA	494
10	NA	NA		NA	NA	NA	NA	NA	513
15	NA	NA		NA	NA	NA	NA	NA	586
20	NA	NA		NA	NA	NA	NA	NA	650
30	NA	NA		NA	NA	NA	NA	NA	805
50	NA	NA		NA	NA	NA	NA	NA	1,003
-11°F or Lower	**Local 99% Winter Design Temperature: -11°F or Lower**								
	Not recommended for any vent configurations								

For SI: °C = (°F - 32)/1.8, 1 inch = 25.4 mm, 1 foot = 304.8 mm, 1 British thermal unit per hour = 0.2931 W.
Note: See Figure B-19 in Appendix B for a map showing local 99-percent winter design temperatures in the United States.

INTERNATIONAL CODE COUNCIL®
Copyright © 2015 ICC. ALL RIGHTS RESERVED. Accessed by David Dammon on Jun 21, 2017 12:30:52 PM pursuant to License Agreement with ICC. No further reproduction or distribution authorized. ANY UNAUTHORIZED REPRODUCTION OR DISTRIBUTION IS A VIOLATION OF THE FEDERAL COPYRIGHT ACT AND THE LICENSE AGREEMENT, AND SUBJECT TO CIVIL AND CRIMINAL PENALTIES THEREUNDER.

TABLE 504.3(1)
TYPE B DOUBLE-WALL VENT

Number of Appliances	Two or more
Appliance Type	Category I
Appliance Vent Connection	Type B double-wall connector

VENT CONNECTOR CAPACITY

VENT HEIGHT *(H)* (feet)	CONNECTOR RISE *(R)* (feet)	TYPE B DOUBLE-WALL VENT AND CONNECTOR DIAMETER—*(D)* inches																							
		3			4			5			6			7			8			9			10		
		APPLIANCE INPUT RATING LIMITS IN THOUSANDS OF BTU/H																							
		FAN		NAT	FAN		NAT	FAN		NAT	FAN		NAT	FAN		NAT	FAN		NAT	FAN		NAT	FAN		NAT
		Min	Max	Max	Min	Max	Max	Min	Max	Max	Min	Max	Max	Min	Max	Max	Min	Max	Max	Min	Max	Max	Min	Max	Max
6	1	22	37	26	35	66	46	46	106	72	58	164	104	77	225	142	92	296	185	109	376	237	128	466	289
	2	23	41	31	37	75	55	48	121	86	60	183	124	79	253	168	95	333	220	112	424	282	131	526	345
	3	24	44	35	38	81	62	49	132	96	62	199	139	82	275	189	97	363	248	114	463	317	134	575	386
8	1	22	40	27	35	72	48	49	114	76	64	176	109	84	243	148	100	320	194	118	408	248	138	507	303
	2	23	44	32	36	80	57	51	128	90	66	195	129	86	269	175	103	356	230	121	454	294	141	564	358
	3	24	47	36	37	87	64	53	139	101	67	210	145	88	290	198	105	384	258	123	492	330	143	612	402
10	1	22	43	28	34	78	50	49	123	78	65	189	113	89	257	154	106	341	200	125	436	257	146	542	314
	2	23	47	33	36	86	59	51	136	93	67	206	134	91	282	182	109	374	238	128	479	305	149	596	372
	3	24	50	37	37	92	67	52	146	104	69	220	150	94	303	205	111	402	268	131	515	342	152	642	417
15	1	21	50	30	33	89	53	47	142	83	64	220	120	88	298	163	110	389	214	134	493	273	162	609	333
	2	22	53	35	35	96	63	49	153	99	66	235	142	91	320	193	112	419	253	137	532	323	165	658	394
	3	24	55	40	36	102	71	51	163	111	68	248	160	93	339	218	115	445	286	140	565	365	167	700	444
20	1	21	54	31	33	99	56	46	157	87	62	246	125	86	334	171	107	436	224	131	552	285	158	681	347
	2	22	57	37	34	105	66	48	167	104	64	259	149	89	354	202	110	463	265	134	587	339	161	725	414
	3	23	60	42	35	110	74	50	176	116	66	271	168	91	371	228	113	486	300	137	618	383	164	764	466
30	1	20	62	33	31	113	59	45	181	93	60	288	134	83	391	182	103	512	238	125	649	305	151	802	372
	2	21	64	39	33	118	70	47	190	110	62	299	158	85	408	215	105	535	282	129	679	360	155	840	439
	3	22	66	44	34	123	79	48	198	124	64	309	178	88	423	242	108	555	317	132	706	405	158	874	494
50	1	19	71	36	30	133	64	43	216	101	57	349	145	78	477	197	97	627	257	120	797	330	144	984	403
	2	21	73	43	32	137	76	45	223	119	59	358	172	81	490	234	100	645	306	123	820	392	148	1,014	478
	3	22	75	48	33	141	86	46	229	134	61	366	194	83	502	263	103	661	343	126	842	441	151	1,043	538
100	1	18	82	37	28	158	66	40	262	104	53	442	150	73	611	204	91	810	266	112	1,038	341	135	1,285	417
	2	19	83	44	30	161	79	42	267	123	55	447	178	75	619	242	94	822	316	115	1,054	405	139	1,306	494
	3	20	84	50	31	163	89	44	272	138	57	452	109	78	627	272	97	834	355	118	1,069	455	142	1,327	555

COMMON VENT CAPACITY

VENT HEIGHT *(H)* (feet)	4			5			6			7			8			9			10		
	COMBINED APPLIANCE INPUT RATING IN THOUSANDS OF BTU/H																				
	FAN +FAN	FAN +NAT	NAT +NAT	FAN +FAN	FAN +NAT	NAT +NAT	FAN +FAN	FAN +NAT	NAT +NAT	FAN +FAN	FAN +NAT	NAT +NAT	FAN +FAN	FAN +NAT	NAT +NAT	FAN +FAN	FAN +NAT	NAT +NAT	FAN +FAN	FAN +NAT	NAT +NAT
6	92	81	65	140	116	103	204	161	147	309	248	200	404	314	260	547	434	335	672	520	410
8	101	90	73	155	129	114	224	178	163	339	275	223	444	348	290	602	480	378	740	577	465
10	110	97	79	169	141	124	243	194	178	367	299	242	477	377	315	649	522	405	800	627	495
15	125	112	91	195	164	144	283	228	206	427	352	280	556	444	365	753	612	465	924	733	565
20	136	123	102	215	183	160	314	255	229	475	394	310	621	499	405	842	688	523	1,035	826	640
30	152	138	118	244	210	185	361	297	266	547	459	360	720	585	470	979	808	605	1,209	975	740
50	167	153	134	279	244	214	421	353	310	641	547	423	854	706	550	1,164	977	705	1,451	1,188	860
100	175	163	NA	311	277	NA	489	421	NA	751	658	479	1,025	873	625	1,408	1,215	800	1,784	1,502	975

(continued)

INTERNATIONAL CODE COUNCIL®
Copyright © 2015 ICC. ALL RIGHTS RESERVED. Accessed by David Dammon on Jun 21, 2017 12:30:52 PM pursuant to License Agreement with ICC. No further reproduction or distribution authorized. ANY UNAUTHORIZED REPRODUCTION OR DISTRIBUTION IS A VIOLATION OF THE FEDERAL COPYRIGHT ACT AND THE LICENSE AGREEMENT, AND SUBJECT TO CIVIL AND CRIMINAL PENALTIES THEREUNDER.

TABLE 504.3(1)—continued
TYPE B DOUBLE-WALL VENT

Number of Appliances	Two or more
Appliance Type	Category I
Appliance Vent Connection	Type B double-wall connector

VENT CONNECTOR CAPACITY

VENT HEIGHT *(H)* (feet)	CONNECTOR RISE *(R)* (feet)	TYPE B DOUBLE-WALL VENT AND DIAMETER—*(D)* inches																				
		12			14			16			18			20			22			24		
		APPLIANCE INPUT RATING LIMITS IN THOUSANDS OF BTU/H																				
		FAN		NAT	FAN		NAT	FAN		NAT	FAN		NAT	FAN		NAT	FAN		NAT	FAN		NAT
		Min	Max	Max	Min	Max	Max	Min	Max	Max	Min	Max	Max	Min	Max	Max	Min	Max	Max	Min	Max	Max
6	2	174	764	496	223	1,046	653	281	1,371	853	346	1,772	1,080	NA	NA	NA	NA	NA	NA	NA	NA	NA
	4	180	897	616	230	1,231	827	287	1,617	1,081	352	2,069	1,370	NA	NA	NA	NA	NA	NA	NA	NA	NA
	6	NA	NA	NA	NA	NA	NA	NA	NA	NA	NA	NA	NA	NA	NA	NA	NA	NA	NA	NA	NA	NA
8	2	186	822	516	238	1,126	696	298	1,478	910	365	1,920	1,150	NA	NA	NA	NA	NA	NA	NA	NA	NA
	4	192	952	644	244	1,307	884	305	1,719	1,150	372	2,211	1,460	471	2,737	1,800	560	3,319	2,180	662	3,957	2,590
	6	198	1,050	772	252	1,445	1,072	313	1,902	1,390	380	2,434	1,770	478	3,018	2,180	568	3,665	2,640	669	4,373	3,130
10	2	196	870	536	249	1,195	730	311	1,570	955	379	2,049	1,205	NA	NA	NA	NA	NA	NA	NA	NA	NA
	4	201	997	664	256	1,371	924	318	1,804	1,205	387	2,332	1,535	486	2,887	1,890	581	3,502	2,280	686	4,175	2,710
	6	207	1,095	792	263	1,509	1,118	325	1,989	1,455	395	2,556	1,865	494	3,169	2,290	589	3,849	2,760	694	4,593	3,270
15	2	214	967	568	272	1,334	790	336	1,760	1,030	408	2,317	1,305	NA	NA	NA	NA	NA	NA	NA	NA	NA
	4	221	1,085	712	279	1,499	1,006	344	1,978	1,320	416	2,579	1,665	523	3,197	2,060	624	3,881	2,490	734	4,631	2,960
	6	228	1,181	856	286	1,632	1,222	351	2,157	1,610	424	2,796	2,025	533	3,470	2,510	634	4,216	3,030	743	5,035	3,600
20	2	223	1,051	596	291	1,443	840	357	1,911	1,095	430	2,533	1,385	NA	NA	NA	NA	NA	NA	NA	NA	NA
	4	230	1,162	748	298	1,597	1,064	365	2,116	1,395	438	2,778	1,765	554	3,447	2,180	661	4,190	2,630	772	5,005	3,130
	6	237	1,253	900	307	1,726	1,288	373	2,287	1,695	450	2,984	2,145	567	3,708	2,650	671	4,511	3,190	785	5,392	3,790
30	2	216	1,217	632	286	1,664	910	367	2,183	1,190	461	2,891	1,540	NA	NA	NA	NA	NA	NA	NA	NA	NA
	4	223	1,316	792	294	1,802	1,160	376	2,366	1,510	474	3,110	1,920	619	3,840	2,365	728	4,861	2,860	847	5,606	3,410
	6	231	1,400	952	303	1,920	1,410	384	2,524	1,830	485	3,299	2,340	632	4,080	2,875	741	4,976	3,480	860	5,961	4,150
50	2	206	1,479	689	273	2,023	1,007	350	2,659	1,315	435	3,548	1,665	NA	NA	NA	NA	NA	NA	NA	NA	NA
	4	213	1,561	860	281	2,139	1,291	359	2,814	1,685	447	3,730	2,135	580	4,601	2,633	709	5,569	3,185	851	6,633	3,790
	6	221	1,631	1,031	290	2,242	1,575	369	2,951	2,055	461	3,893	2,605	594	4,808	3,208	724	5,826	3,885	867	6,943	4,620
100	2	192	1,923	712	254	2,644	1,050	326	3,490	1,370	402	4,707	1,740	NA	NA	NA	NA	NA	NA	NA	NA	NA
	4	200	1,984	888	263	2,731	1,346	336	3,606	1,760	414	4,842	2,220	523	5,982	2,750	639	7,254	3,330	769	8,650	3,950
	6	208	2,035	1,064	272	2,811	1,642	346	3,714	2,150	426	4,968	2,700	539	6,143	3,350	654	7,453	4,070	786	8,892	4,810

COMMON VENT CAPACITY

VENT HEIGHT *(H)* (feet)	TYPE B DOUBLE-WALL COMMON VENT DIAMETER—*(D)* inches																				
	12			14			16			18			20			22			24		
	COMBINED APPLIANCE INPUT RATING IN THOUSANDS OF BTU/H																				
	FAN +FAN	FAN +NAT	NAT +NAT	FAN +FAN	FAN +NAT	NAT +NAT	FAN +FAN	FAN +NAT	NAT +NAT	FAN +FAN	FAN +NAT	NAT +NAT	FAN +FAN	FAN +NAT	NAT +NAT	FAN +FAN	FAN +NAT	NAT +NAT	FAN +FAN	FAN +NAT	NAT +NAT
6	900	696	588	1,284	990	815	1,735	1,336	1,065	2,253	1,732	1,345	2,838	2,180	1,660	3,488	2,677	1,970	4,206	3,226	2,390
8	994	773	652	1,423	1,103	912	1,927	1,491	1,190	2,507	1,936	1,510	3,162	2,439	1,860	3,890	2,998	2,200	4,695	3,616	2,680
10	1,076	841	712	1,542	1,200	995	2,093	1,625	1,300	2,727	2,113	1645	3,444	2,665	2,030	4,241	3,278	2,400	5,123	3,957	2,920
15	1,247	986	825	1,794	1,410	1,158	2,440	1,910	1,510	3,184	2,484	1,910	4,026	3,133	2,360	4,971	3,862	2,790	6,016	4,670	3,400
20	1,405	1,116	916	2,006	1,588	1,290	2,722	2,147	1,690	3,561	2,798	2,140	4,548	3,552	2,640	5,573	4,352	3,120	6,749	5,261	3,800
30	1,658	1,327	1,025	2,373	1,892	1,525	3,220	2,558	1,990	4,197	3,326	2,520	5,303	4,193	3,110	6,539	5,157	3,680	7,940	6,247	4,480
50	2,024	1,640	1,280	2,911	2,347	1,863	3,964	3,183	2,430	5,184	4,149	3,075	6,567	5,240	3,800	8,116	6,458	4,500	9,837	7,813	5,475
100	2,569	2,131	1,670	3,732	3,076	2,450	5,125	4,202	3,200	6,749	5,509	4,050	8,597	6,986	5,000	10,681	8,648	5,920	13,004	10,499	7,200

For SI: 1 inch = 25.4 mm, 1 foot = 304.8 mm, 1 British thermal unit per hour = 0.2931 W.

INTERNATIONAL CODE COUNCIL®
Copyright © 2015 ICC. ALL RIGHTS RESERVED. Accessed by David Dammon on Jun 21, 2017 12:30:52 PM pursuant to License Agreement with ICC. No further reproduction or distribution authorized. ANY UNAUTHORIZED REPRODUCTION OR DISTRIBUTION IS A VIOLATION OF THE FEDERAL COPYRIGHT ACT AND THE LICENSE AGREEMENT, AND SUBJECT TO CIVIL AND CRIMINAL PENALTIES THEREUNDER.

TABLE 504.3(2)
TYPE B DOUBLE-WALL VENT

Number of Appliances	Two or more
Appliance Type	Category I
Appliance Vent Connection	Single-wall metal connector

VENT CONNECTOR CAPACITY

VENT HEIGHT *(H)* (feet)	CONNECTOR RISE *(R)* (feet)	SINGLE-WALL METAL VENT CONNECTOR DIAMETER—*(D)* inches																							
		3			4			5			6			7			8			9			10		
		APPLIANCE INPUT RATING LIMITS IN THOUSANDS OF BTU/H																							
		FAN		NAT	FAN		NAT	FAN		NAT	FAN		NAT	FAN		NAT	FAN		NAT	FAN		NAT	FAN		NAT
		Min	Max	Max	Min	Max	Max	Min	Max	Max	Min	Max	Max	Min	Max	Max	Min	Max	Max	Min	Max	Max	Min	Max	Max
6	1	NA	NA	26	NA	NA	46	NA	NA	71	NA	NA	102	207	223	140	262	293	183	325	373	234	447	463	286
	2	NA	NA	31	NA	NA	55	NA	NA	85	168	182	123	215	251	167	271	331	219	334	422	281	458	524	344
	3	NA	NA	34	NA	NA	62	121	131	95	175	198	138	222	273	188	279	361	247	344	462	316	468	574	385
8	1	NA	NA	27	NA	NA	48	NA	NA	75	NA	NA	106	226	240	145	285	316	191	352	403	244	481	502	299
	2	NA	NA	32	NA	NA	57	125	126	89	184	193	127	234	266	173	293	353	228	360	450	292	492	560	355
	3	NA	NA	35	NA	NA	64	130	138	100	191	208	144	241	287	197	302	381	256	370	489	328	501	609	400
10	1	NA	NA	28	NA	NA	50	119	121	77	182	186	110	240	253	150	302	335	196	372	429	252	506	534	308
	2	NA	NA	33	84	85	59	124	134	91	189	203	132	248	278	183	311	369	235	381	473	302	517	589	368
	3	NA	NA	36	89	91	67	129	144	102	197	217	148	257	299	203	320	398	265	391	511	339	528	637	413
15	1	NA	NA	29	79	87	52	116	138	81	177	214	116	238	291	158	312	380	208	397	482	266	556	596	324
	2	NA	NA	34	83	94	62	121	150	97	185	230	138	246	314	189	321	411	248	407	522	317	568	646	387
	3	NA	NA	39	87	100	70	127	160	109	193	243	157	255	333	215	331	438	281	418	557	360	579	690	437
20	1	49	56	30	78	97	54	115	152	84	175	238	120	233	325	165	306	425	217	390	538	276	546	664	336
	2	52	59	36	82	103	64	120	163	101	182	252	144	243	346	197	317	453	259	400	574	331	558	709	403
	3	55	62	40	87	107	72	125	172	113	190	264	164	252	363	223	326	476	294	412	607	375	570	750	457
30	1	47	60	31	77	110	57	112	175	89	169	278	129	226	380	175	296	497	230	378	630	294	528	779	358
	2	51	62	37	81	115	67	117	185	106	177	290	152	236	397	208	307	521	274	389	662	349	541	819	425
	3	54	64	42	85	119	76	122	193	120	185	300	172	244	412	235	316	542	309	400	690	394	555	855	482
50	1	46	69	34	75	128	60	109	207	96	162	336	137	217	460	188	284	604	245	364	768	314	507	951	384
	2	49	71	40	79	132	72	114	215	113	170	345	164	226	473	223	294	623	293	376	793	375	520	983	458
	3	52	72	45	83	136	82	119	221	123	178	353	186	235	486	252	304	640	331	387	816	423	535	1,013	518
100	1	45	79	34	71	150	61	104	249	98	153	424	140	205	585	192	269	774	249	345	993	321	476	1,236	393
	2	48	80	41	75	153	73	110	255	115	160	428	167	212	593	228	279	788	299	358	1,011	383	490	1,259	469
	3	51	81	46	79	157	85	114	260	129	168	433	190	222	603	256	289	801	339	368	1,027	431	506	1,280	527

COMMON VENT CAPACITY

VENT HEIGHT *(H)* (feet)	TYPE B DOUBLE-WALL COMMON VENT DIAMETER—*(D)* inches																				
	4			5			6			7			8			9			10		
	COMBINED APPLIANCE INPUT RATING IN THOUSANDS OF BTU/H																				
	FAN +FAN	FAN +NAT	NAT +NAT	FAN +FAN	FAN +NAT	NAT +NAT	FAN +FAN	FAN +NAT	NAT +NAT	FAN +FAN	FAN +NAT	NAT +NAT	FAN +FAN	FAN +NAT	NAT +NAT	FAN +FAN	FAN +NAT	NAT +NAT	FAN +FAN	FAN +NAT	NAT +NAT
6	NA	78	64	NA	113	99	200	158	144	304	244	196	398	310	257	541	429	332	665	515	407
8	NA	87	71	NA	126	111	218	173	159	331	269	218	436	342	285	592	473	373	730	569	460
10	NA	94	76	163	137	120	237	189	174	357	292	236	467	369	309	638	512	398	787	617	487
15	121	108	88	189	159	140	275	221	200	416	343	274	544	434	357	738	599	456	905	718	553
20	131	118	98	208	177	156	305	247	223	463	383	302	606	487	395	824	673	512	1,013	808	626
30	145	132	113	236	202	180	350	286	257	533	446	349	703	570	459	958	790	593	1,183	952	723
50	159	145	128	268	233	208	406	337	296	622	529	410	833	686	535	1,139	954	689	1,418	1,157	838
100	166	153	NA	297	263	NA	469	398	NA	726	633	464	999	846	606	1,378	1,185	780	1,741	1,459	948

For SI: 1 inch = 25.4 mm, 1 foot = 304.8 mm, 1 British thermal unit per hour = 0.2931 W.

INTERNATIONAL CODE COUNCIL®
Copyright © 2015 ICC. ALL RIGHTS RESERVED. Accessed by David Dammon on Jun 21, 2017 12:30:52 PM pursuant to License Agreement with ICC. No further reproduction or distribution authorized. ANY UNAUTHORIZED REPRODUCTION OR DISTRIBUTION IS A VIOLATION OF THE FEDERAL COPYRIGHT ACT AND THE LICENSE AGREEMENT, AND SUBJECT TO CIVIL AND CRIMINAL PENALTIES THEREUNDER.

TABLE 504.3(3)
MASONRY CHIMNEY

Number of Appliances	Two or more
Appliance Type	Category I
Appliance Vent Connection	Type B double-wall connector

VENT CONNECTOR CAPACITY

VENT HEIGHT *(H)* (feet)	CONNECTOR RISE *(R)* (feet)	TYPE B DOUBLE-WALL VENT CONNECTOR DIAMETER—*(D)* inches																							
		3			4			5			6			7			8			9			10		
		APPLIANCE INPUT RATING LIMITS IN THOUSANDS OF BTU/H																							
		FAN		NAT	FAN		NAT	FAN		NAT	FAN		NAT	FAN		NAT	FAN		NAT	FAN		NAT	FAN		NAT
		Min	Max	Max	Min	Max	Max	Min	Max	Max	Min	Max	Max	Min	Max	Max	Min	Max	Max	Min	Max	Max	Min	Max	Max
6	1	24	33	21	39	62	40	52	106	67	65	194	101	87	274	141	104	370	201	124	479	253	145	599	319
	2	26	43	28	41	79	52	53	133	85	67	230	124	89	324	173	107	436	232	127	562	300	148	694	378
	3	27	49	34	42	92	61	55	155	97	69	262	143	91	369	203	109	491	270	129	633	349	151	795	439
8	1	24	39	22	39	72	41	55	117	69	71	213	105	94	304	148	113	414	210	134	539	267	156	682	335
	2	26	47	29	40	87	53	57	140	86	73	246	127	97	350	179	116	473	240	137	615	311	160	776	394
	3	27	52	34	42	97	62	59	159	98	75	269	145	99	383	206	119	517	276	139	672	358	163	848	452
10	1	24	42	22	38	80	42	55	130	71	74	232	108	101	324	153	120	444	216	142	582	277	165	739	348
	2	26	50	29	40	93	54	57	153	87	76	261	129	103	366	184	123	498	247	145	652	321	168	825	407
	3	27	55	35	41	105	63	58	170	100	78	284	148	106	397	209	126	540	281	147	705	366	171	893	463
15	1	24	48	23	38	93	44	54	154	74	72	277	114	100	384	164	125	511	229	153	658	297	184	824	375
	2	25	55	31	39	105	55	56	174	89	74	299	134	103	419	192	128	558	260	156	718	339	187	900	432
	3	26	59	35	41	115	64	57	189	102	76	319	153	105	448	215	131	597	292	159	760	382	190	960	486
20	1	24	52	24	37	102	46	53	172	77	71	313	119	98	437	173	123	584	239	150	752	312	180	943	397
	2	25	58	31	39	114	56	55	190	91	73	335	138	101	467	199	126	625	270	153	805	354	184	1,011	452
	3	26	63	35	40	123	65	57	204	104	75	353	157	104	493	222	129	661	301	156	851	396	187	1,067	505
30	1	24	54	25	37	111	48	52	192	82	69	357	127	96	504	187	119	680	255	145	883	337	175	1,115	432
	2	25	60	32	38	122	58	54	208	95	72	376	145	99	531	209	122	715	287	149	928	378	179	1,171	484
	3	26	64	36	40	131	66	56	221	107	74	392	163	101	554	233	125	746	317	152	968	418	182	1,220	535
50	1	23	51	25	36	116	51	51	209	89	67	405	143	92	582	213	115	798	294	140	1,049	392	168	1,334	506
	2	24	59	32	37	127	61	53	225	102	70	421	161	95	604	235	118	827	326	143	1,085	433	172	1,379	558
	3	26	64	36	39	135	69	55	237	115	72	435	80	98	624	260	121	854	357	147	1,118	474	176	1,421	611
100	1	23	46	24	35	108	50	49	208	92	65	428	155	88	640	237	109	907	334	134	1,222	454	161	1,589	596
	2	24	53	31	37	120	60	51	224	105	67	444	174	92	660	260	113	933	368	138	1,253	497	165	1,626	651
	3	25	59	35	38	130	68	53	237	118	69	458	193	94	679	285	116	956	399	141	1,282	540	169	1,661	705

COMMON VENT CAPACITY

VENT HEIGHT *(H)* (feet)	MINIMUM INTERNAL AREA OF MASONRY CHIMNEY FLUE (square inches)																								
	12			19			28			38			50			63			78			113		
	COMBINED APPLIANCE INPUT RATING IN THOUSANDS OF BTU/H																								
	FAN +FAN	FAN +NAT	NAT +NAT	FAN +FAN	FAN +NAT	NAT +NAT	FAN +FAN	FAN +NAT	NAT +NAT	FAN +FAN	FAN +NAT	NAT +NAT	FAN +FAN	FAN +NAT	NAT +NAT	FAN +FAN	FAN +NAT	NAT +NAT	FAN +FAN	FAN +NAT	NAT +NAT	FAN +FAN	FAN +NAT	NAT +NAT
6	NA	74	25	NA	119	46	NA	178	71	NA	257	103	NA	351	143	NA	458	188	NA	582	246	1,041	853	NA
8	NA	80	28	NA	130	53	NA	193	82	NA	279	119	NA	384	163	NA	501	218	724	636	278	1,144	937	408
10	NA	84	31	NA	138	56	NA	207	90	NA	299	131	NA	409	177	606	538	236	776	686	302	1,226	1,010	454
15	NA	NA	36	NA	152	67	NA	233	106	NA	334	152	523	467	212	682	611	283	874	781	365	1,374	1,156	546
20	NA	NA	41	NA	NA	75	NA	250	122	NA	368	172	565	508	243	742	668	325	955	858	419	1,513	1,286	648
30	NA	NA	NA	NA	NA	NA	NA	270	137	NA	404	198	615	564	278	816	747	381	1,062	969	496	1,702	1,473	749
50	NA	NA	NA	NA	NA	NA	NA	NA	NA	NA	NA	NA	NA	620	328	879	831	461	1,165	1,089	606	1,905	1,692	922
100	NA	NA	NA	NA	NA	NA	NA	NA	NA	NA	NA	NA	NA	NA	348	NA	NA	499	NA	NA	669	2,053	1,921	1,058

For SI:1 inch = 25.4 mm, 1 square inch = 645.16 mm^2, 1 foot = 304.8 mm, 1 British thermal unit per hour = 0.2931 W.

INTERNATIONAL CODE COUNCIL®
Copyright © 2015 ICC. ALL RIGHTS RESERVED. Accessed by David Dammon on Jun 21, 2017 12:30:52 PM pursuant to License Agreement with ICC. No further reproduction or distribution authorized. ANY UNAUTHORIZED REPRODUCTION OR DISTRIBUTION IS A VIOLATION OF THE FEDERAL COPYRIGHT ACT AND THE LICENSE AGREEMENT, AND SUBJECT TO CIVIL AND CRIMINAL PENALTIES THEREUNDER.

TABLE 504.3(4)
MASONRY CHIMNEY

Number of Appliances	Two or more
Appliance Type	Category I
Appliance Vent Connection	Single-wall metal connector

VENT CONNECTOR CAPACITY

VENT HEIGHT *(H)* (feet)	CONNECTOR RISE *(R)* (feet)	SINGLE-WALL METAL VENT CONNECTOR DIAMETER—*(D)* inches																							
		3			4			5			6			7			8			9			10		
		APPLIANCE INPUT RATING LIMITS IN THOUSANDS OF BTU/H																							
		FAN		NAT	FAN		NAT	FAN		NAT	FAN		NAT	FAN		NAT	FAN		NAT	FAN		NAT	FAN		NAT
		Min	Max	Max	Min	Max	Max	Min	Max	Max	Min	Max	Max	Min	Max	Max	Min	Max	Max	Min	Max	Max	Min	Max	Max
6	1	NA	NA	21	NA	NA	39	NA	NA	66	179	191	100	231	271	140	292	366	200	362	474	252	499	594	316
	2	NA	NA	28	NA	NA	52	NA	NA	84	186	227	123	239	321	172	301	432	231	373	557	299	509	696	376
	3	NA	NA	34	NA	NA	61	134	153	97	193	258	142	247	365	202	309	491	269	381	634	348	519	793	437
8	1	NA	NA	21	NA	NA	40	NA	NA	68	195	208	103	250	298	146	313	407	207	387	530	263	529	672	331
	2	NA	NA	28	NA	NA	52	137	139	85	202	240	125	258	343	177	323	465	238	397	607	309	540	766	391
	3	NA	NA	34	NA	NA	62	143	156	98	210	264	145	266	376	205	332	509	274	407	663	356	551	838	450
10	1	NA	NA	22	NA	NA	41	130	151	70	202	225	106	267	316	151	333	434	213	410	571	273	558	727	343
	2	NA	NA	29	NA	NA	53	136	150	86	210	255	128	276	358	181	343	489	244	420	640	317	569	813	403
	3	NA	NA	34	97	102	62	143	166	99	217	277	147	284	389	207	352	530	279	430	694	363	580	880	459
15	1	NA	NA	23	NA	NA	43	129	151	73	199	271	112	268	376	161	349	502	225	445	646	291	623	808	366
	2	NA	NA	30	92	103	54	135	170	88	207	295	132	277	411	189	359	548	256	456	706	334	634	884	424
	3	NA	NA	34	96	112	63	141	185	101	215	315	151	286	439	213	368	586	289	466	755	378	646	945	479
20	1	NA	NA	23	87	99	45	128	167	76	197	303	117	265	425	169	345	569	235	439	734	306	614	921	347
	2	NA	NA	30	91	111	55	134	185	90	205	325	136	274	455	195	355	610	266	450	787	348	627	986	443
	3	NA	NA	35	96	119	64	140	199	103	213	343	154	282	481	219	365	644	298	461	831	391	639	1,042	496
30	1	NA	NA	24	86	108	47	126	187	80	193	347	124	259	492	183	338	665	250	430	864	330	600	1,089	421
	2	NA	NA	31	91	119	57	132	203	93	201	366	142	269	518	205	348	699	282	442	908	372	613	1,145	473
	3	NA	NA	35	95	127	65	138	216	105	209	381	160	277	540	229	358	729	312	452	946	412	626	1,193	524
50	1	NA	NA	24	85	113	50	124	204	87	188	392	139	252	567	208	328	778	287	417	1,022	383	582	1,302	492
	2	NA	NA	31	89	123	60	130	218	100	196	408	158	262	588	230	339	806	320	429	1,058	425	596	1,346	545
	3	NA	NA	35	94	131	68	136	231	112	205	422	176	271	607	255	349	831	351	440	1,090	466	610	1,386	597
100	1	NA	NA	23	84	104	49	122	200	89	182	410	151	243	617	232	315	875	328	402	1,181	444	560	1,537	580
	2	NA	NA	30	88	115	59	127	215	102	190	425	169	253	636	254	326	899	361	415	1,210	488	575	1,570	634
	3	NA	NA	34	93	124	67	133	228	115	199	438	188	262	654	279	337	921	392	427	1,238	529	589	1,604	687

COMMON VENT CAPACITY

VENT HEIGHT *(H)* (feet)	MINIMUM INTERNAL AREA OF MASONRY CHIMNEY FLUE (square inches)																							
	12			19			28			38			50			63			78			113		
	COMBINED APPLIANCE INPUT RATING IN THOUSANDS OF BTU/H																							
	FAN +FAN	FAN +NAT	NAT +NAT	FAN +FAN	FAN +NAT	NAT +NAT	FAN +FAN	FAN +NAT	NAT +NAT	FAN +FAN	FAN +NAT	NAT +NAT	FAN +FAN	FAN +NAT	NAT +NAT	FAN +FAN	FAN +NAT	NAT +NAT	FAN +FAN	FAN +NAT	NAT +NAT	FAN +FAN	FAN +NAT	NAT +NAT
6	NA	NA	25	NA	118	45	NA	176	71	NA	255	102	NA	348	142	NA	455	187	NA	579	245	NA	846	NA
8	NA	NA	28	NA	128	52	NA	190	81	NA	276	118	NA	380	162	NA	497	217	NA	633	277	1,136	928	405
10	NA	NA	31	NA	136	56	NA	205	89	NA	295	129	NA	405	175	NA	532	234	171	680	300	1,216	1,000	450
15	NA	NA	36	NA	NA	66	NA	230	105	NA	335	150	NA	400	210	677	602	280	866	772	360	1,359	1,139	540
20	NA	NA	NA	NA	NA	74	NA	247	120	NA	362	170	NA	503	240	765	661	321	947	849	415	1,495	1,264	640
30	NA	NA	NA	NA	NA	NA	NA	NA	135	NA	398	195	NA	558	275	808	739	377	1,052	957	490	1,682	1,447	740
50	NA	NA	NA	NA	NA	NA	NA	NA	NA	NA	NA	NA	NA	612	325	NA	821	456	1,152	1,076	600	1,879	1,672	910
100	NA	NA	NA	NA	NA	NA	NA	NA	NA	NA	NA	NA	NA	NA	NA	NA	NA	494	NA	NA	663	2,006	1,885	1,046

For SI: 1 inch = 25.4 mm, 1 square inch = 645.16 mm^2, 1 foot = 304.8 mm, 1 British thermal unit per hour = 0.2931 W.

INTERNATIONAL CODE COUNCIL®
Copyright © 2015 ICC. ALL RIGHTS RESERVED. Accessed by David Dammon on Jun 21, 2017 12:30:52 PM pursuant to License Agreement with ICC. No further reproduction or distribution authorized. ANY UNAUTHORIZED REPRODUCTION OR DISTRIBUTION IS A VIOLATION OF THE FEDERAL COPYRIGHT ACT AND THE LICENSE AGREEMENT, AND SUBJECT TO CIVIL AND CRIMINAL PENALTIES THEREUNDER.

TABLE 504.3(5)
SINGLE-WALL METAL PIPE OR TYPE ASBESTOS CEMENT VENT

Number of Appliances	Two or more
Appliance Type	Draft hood-equipped
Appliance Vent Connection	Direct to pipe or vent

VENT CONNECTOR CAPACITY

TOTAL VENT HEIGHT *(H)* (feet)	CONNECTOR RISE *(R)* (feet)	VENT CONNECTOR DIAMETER—*(D)* inches					
		3	4	5	6	7	8
		MAXIMUM APPLIANCE INPUT RATING IN THOUSANDS OF BTU/H					
6-8	1	21	40	68	102	146	205
	2	28	53	86	124	178	235
	3	34	61	98	147	204	275
15	1	23	44	77	117	179	240
	2	30	56	92	134	194	265
	3	35	64	102	155	216	298
30 and up	1	25	49	84	129	190	270
	2	31	58	97	145	211	295
	3	36	68	107	164	232	321

COMMON VENT CAPACITY

TOTAL VENT HEIGHT *(H)* (feet)	COMMON VENT DIAMETER—*(D)* inches						
	4	5	6	7	8	10	12
	COMBINED APPLIANCE INPUT RATING IN THOUSANDS OF BTU/H						
6	48	78	111	155	205	320	NA
8	55	89	128	175	234	365	505
10	59	95	136	190	250	395	560
15	71	115	168	228	305	480	690
20	80	129	186	260	340	550	790
30	NA	147	215	300	400	650	940
50	NA	NA	NA	360	490	810	1,190

For SI: 1 inch = 25.4 mm, 1 foot = 304.8 mm, 1 British thermal unit per hour = 0.2931 W.

INTERNATIONAL CODE COUNCIL®
Copyright © 2015 ICC. ALL RIGHTS RESERVED. Accessed by David Dammon on Jun 21, 2017 12:30:52 PM pursuant to License Agreement with ICC. No further reproduction or distribution authorized. ANY UNAUTHORIZED REPRODUCTION OR DISTRIBUTION IS A VIOLATION OF THE FEDERAL COPYRIGHT ACT AND THE LICENSE AGREEMENT, AND SUBJECT TO CIVIL AND CRIMINAL PENALTIES THEREUNDER.

TABLE 504.3(6a)
EXTERIOR MASONRY CHIMNEY

Number of Appliances	Two or more
Appliance Type	NAT + NAT
Appliance Vent Connection	Type B double-wall connector

Combined Appliance Maximum Input Rating in Thousands of Btu per Hour

VENT HEIGHT (feet)	INTERNAL AREA OF CHIMNEY (square inches)							
	12	19	28	38	50	63	78	113
6	25	46	71	103	143	188	246	NA
8	28	53	82	119	163	218	278	408
10	31	56	90	131	177	236	302	454
15	NA	67	106	152	212	283	365	546
20	NA	NA	NA	NA	NA	325	419	648
30	NA	NA	NA	NA	NA	NA	496	749
50	NA	NA	NA	NA	NA	NA	NA	922
100	NA	NA	NA	NA	NA	NA	NA	NA

TABLE 504.3(6b)
EXTERIOR MASONRY CHIMNEY

Number of Appliances	Two or more
Appliance Type	NAT + NAT
Appliance Vent Connection	Type B double-wall connector

Minimum Allowable Input Rating of Space-heating Appliance in Thousands of Btu per Hour

VENT HEIGHT (feet)	INTERNAL AREA OF CHIMNEY (square inches)							
	12	19	28	38	50	63	78	113
37°F or Greater	Local 99% Winter Design Temperature: 37°F or Greater							
6	0	0	0	0	0	0	0	NA
8	0	0	0	0	0	0	0	0
10	0	0	0	0	0	0	0	0
15	NA	0	0	0	0	0	0	0
20	NA	NA	NA	NA	NA	184	0	0
30	NA	NA	NA	NA	NA	393	334	0
50	NA	NA	NA	NA	NA	NA	NA	579
100	NA	NA	NA	NA	NA	NA	NA	NA
27 to 36°F	Local 99% Winter Design Temperature: 27 to 36°F							
6	0	0	68	NA	NA	180	212	NA
8	0	0	82	NA	NA	187	214	263
10	0	51	NA	NA	NA	201	225	265
15	NA	NA	NA	NA	NA	253	274	305
20	NA	NA	NA	NA	NA	307	330	362
30	NA	NA	NA	NA	NA	NA	445	485
50	NA	NA	NA	NA	NA	NA	NA	763
100	NA	NA	NA	NA	NA	NA	NA	NA

(continued)

TABLE 504.3(6b)—continued
EXTERIOR MASONRY CHIMNEY—continued

Minimum Allowable Input Rating of Space-heating Appliance in Thousands of Btu per Hour

VENT HEIGHT (feet)	INTERNAL AREA OF CHIMNEY (square inches)							
	12	19	28	38	50	63	78	113
17 to 26°F	Local 99% Winter Design Temperature: 17 to 26°F							
6	NA	NA	NA	NA	NA	NA	NA	NA
8	NA	NA	NA	NA	NA	NA	264	352
10	NA	NA	NA	NA	NA	NA	278	358
15	NA	NA	NA	NA	NA	NA	331	398
20	NA	NA	NA	NA	NA	NA	387	457
30	NA	NA	NA	NA	NA	NA	NA	581
50	NA	NA	NA	NA	NA	NA	NA	862
100	NA	NA	NA	NA	NA	NA	NA	NA
5 to 16°F	Local 99% Winter Design Temperature: 5 to 16°F							
6	NA	NA	NA	NA	NA	NA	NA	NA
8	NA	NA	NA	NA	NA	NA	NA	NA
10	NA	NA	NA	NA	NA	NA	NA	430
15	NA	NA	NA	NA	NA	NA	NA	485
20	NA	NA	NA	NA	NA	NA	NA	547
30	NA	NA	NA	NA	NA	NA	NA	682
50	NA	NA	NA	NA	NA	NA	NA	NA
100	NA	NA	NA	NA	NA	NA	NA	NA
4°F or Lower	Local 99% Winter Design Temperature: 4°F or Lower							
	Not recommended for any vent configurations							

For SI: °C = (°F - 32)/1.8, 1 inch = 25.4 mm, 1 square inch = 645.16 mm^2, 1 foot = 304.8 mm, 1 British thermal unit per hour = 0.2931 W.

Note: See Figure B-19 in Appendix B for a map showing local 99-percent winter design temperatures in the United States.

INTERNATIONAL CODE COUNCIL®
Copyright © 2015 ICC. ALL RIGHTS RESERVED. Accessed by David Dammon on Jun 21, 2017 12:30:52 PM pursuant to License Agreement with ICC. No further reproduction or distribution authorized. ANY UNAUTHORIZED REPRODUCTION OR DISTRIBUTION IS A VIOLATION OF THE FEDERAL COPYRIGHT ACT AND THE LICENSE AGREEMENT, AND SUBJECT TO CIVIL AND CRIMINAL PENALTIES THEREUNDER.

TABLE 504.3(7a)
EXTERIOR MASONRY CHIMNEY

Number of Appliances	Two or more
Appliance Type	FAN + NAT
Appliance Vent Connection	Type B double-wall connector

Combined Appliance Maximum Input Rating in Thousands of Btu per Hour

VENT HEIGHT (feet)	INTERNAL AREA OF CHIMNEY (square inches)							
	12	19	28	38	50	63	78	113
6	74	119	178	257	351	458	582	853
8	80	130	193	279	384	501	636	937
10	84	138	207	299	409	538	686	1,010
15	NA	152	233	334	467	611	781	1,156
20	NA	NA	250	368	508	668	858	1,286
30	NA	NA	NA	404	564	747	969	1,473
50	NA	NA	NA	NA	NA	831	1,089	1,692
100	NA	NA	NA	NA	NA	NA	NA	1,921

TABLE 504.3(7b)
EXTERIOR MASONRY CHIMNEY

Number of Appliances	Two or more
Appliance Type	FAN + NAT
Appliance Vent Connection	Type B double-wall connector

Minimum Allowable Input Rating of Space-heating Appliance in Thousands of Btu per Hour

VENT HEIGHT (feet)	INTERNAL AREA OF CHIMNEY (square inches)							
	12	19	28	38	50	63	78	113
37°F or Greater	**Local 99% Winter Design Temperature: 37°F or Greater**							
6	0	0	0	0	0	0	0	0
8	0	0	0	0	0	0	0	0
10	0	0	0	0	0	0	0	0
15	NA	0	0	0	0	0	0	0
20	NA	NA	123	190	249	184	0	0
30	NA	NA	NA	334	398	393	334	0
50	NA	NA	NA	NA	NA	714	707	579
100	NA	NA	NA	NA	NA	NA	NA	1,600
27 to 36°F	**Local 99% Winter Design Temperature: 27 to 36°F**							
6	0	0	68	116	156	180	212	266
8	0	0	82	127	167	187	214	263
10	0	51	97	141	183	201	225	265
15	NA	111	142	183	233	253	274	305
20	NA	NA	187	230	284	307	330	362
30	NA	NA	NA	330	319	419	445	485
50	NA	NA	NA	NA	NA	672	705	763
100	NA	NA	NA	NA	NA	NA	NA	1,554

(continued)

TABLE 504.3(7b)
EXTERIOR MASONRY CHIMNEY—continued

Minimum Allowable Input Rating of Space-heating Appliance in Thousands of Btu per Hour

VENT HEIGHT (feet)	INTERNAL AREA OF CHIMNEY (square inches)							
	12	19	28	38	50	63	78	113
17 to 26°F	**Local 99% Winter Design Temperature: 17 to 26°F**							
6	0	55	99	141	182	215	259	349
8	52	74	111	154	197	226	264	352
10	NA	90	125	169	214	245	278	358
15	NA	NA	167	212	263	296	331	398
20	NA	NA	212	258	316	352	387	457
30	NA	NA	NA	362	429	470	507	581
50	NA	NA	NA	NA	NA	723	766	862
100	NA	NA	NA	NA	NA	NA	NA	1,669
5 to 16°F	**Local 99% Winter Design Temperature: 5 to 16°F**							
6	NA	78	121	166	214	252	301	416
8	NA	94	135	182	230	269	312	423
10	NA	111	149	198	250	289	331	430
15	NA	NA	193	247	305	346	393	485
20	NA	NA	NA	293	360	408	450	547
30	NA	NA	NA	377	450	531	580	682
50	NA	NA	NA	NA	NA	797	853	972
100	NA	NA	NA	NA	NA	NA	NA	1,833
-10 to 4°F	**Local 99% Winter Design Temperature: -10 to 4°F**							
6	NA	NA	145	196	249	296	349	484
8	NA	NA	159	213	269	320	371	494
10	NA	NA	175	231	292	339	397	513
15	NA	NA	NA	283	351	404	457	586
20	NA	NA	NA	333	408	468	528	650
30	NA	NA	NA	NA	NA	603	667	805
50	NA	NA	NA	NA	NA	NA	955	1,003
100	NA	NA	NA	NA	NA	NA	NA	NA
-11°F or Lower	**Local 99% Winter Design Temperature: -11°F or Lower**							
Not recommended for any vent configurations								

For SI: °C = (°F - 32)/1.8, 1 inch = 25.4 mm, 1 square inch = 645.16 mm^2, 1 foot = 304.8 mm, 1 British thermal unit per hour = 0.2931 W.

Note: See Figure B-19 in Appendix B for a map showing local 99-percent winter design temperatures in the United States.

INTERNATIONAL CODE COUNCIL®
Copyright © 2015 ICC. ALL RIGHTS RESERVED. Accessed by David Dammon on Jun 21, 2017 12:30:52 PM pursuant to License Agreement with ICC. No further reproduction or distribution authorized. ANY UNAUTHORIZED REPRODUCTION OR DISTRIBUTION IS A VIOLATION OF THE FEDERAL COPYRIGHT ACT AND THE LICENSE AGREEMENT, AND SUBJECT TO CIVIL AND CRIMINAL PENALTIES THEREUNDER.

INTERNATIONAL CODE COUNCIL®
Copyright © 2015 ICC. ALL RIGHTS RESERVED. Accessed by David Dammon on Jun 21, 2017 12:30:52 PM pursuant to License Agreement with ICC. No further reproduction or distribution authorized. ANY UNAUTHORIZED REPRODUCTION OR DISTRIBUTION IS A VIOLATION OF THE FEDERAL COPYRIGHT ACT AND THE LICENSE AGREEMENT, AND SUBJECT TO CIVIL AND CRIMINAL PENALTIES THEREUNDER.

Chapter 6: Specific Appliances

General Comments

Chapter 6 regulates the design and installation of specifically named gas-fired appliances such as furnaces, boilers, water heaters, heaters, cooking and lighting appliances and clothes dryers. This chapter lists all of the appliances that the code regulates within its scope. The chapters of the code, with the exceptions of Chapter 3 and this chapter, are dedicated to single subjects. This chapter, however, is a collection of requirements for various appliances and equipment. The only commonality in this chapter is that all subjects use fuel gas to perform some task or function. Because none of the subjects in this chapter have the volume of text to warrant an individual chapter, they have been combined into a single chapter.

Purpose

This chapter contains requirements for specific appliances and their installation. In addition to being listed and labeled, many appliances have special installation or location requirements. Unlike Chapter 3, titled General Regulations, this chapter contains and organizes the specific regulations applicable to certain appliances.

SECTION 601 (IFGC) GENERAL

601.1 Scope. This chapter shall govern the approval, design, installation, construction, maintenance, *alteration* and repair of the appliances and *equipment* specifically identified herein.

❖ This chapter regulates all aspects of appliances and equipment to the extent found in each of Sections 602 through 636.

SECTION 602 (IFGC) DECORATIVE APPLIANCES FOR INSTALLATION IN FIREPLACES

602.1 General. Decorative appliances for installation in *approved* solid fuel-burning fireplaces shall be tested in accordance with ANSI Z21.60 and shall be installed in accordance with the manufacturer's instructions. Manually lighted natural gas decorative appliances shall be tested in accordance with ANSI Z21.84.

❖ These appliances include gas log sets that are designed to simulate wood fires (see Commentary Figure 602.1). Sections 301 through 310 address the requirements for testing, labeling and installing mechanical equipment and appliances. The gas-burning appliance must be tested to the standard or standards appropriate for the equipment. The testing agency is responsible for determining the standard to be used to test the equipment. In the case of decorative gas log sets, ANSI Z21.60 or Z21.84 is the applicable test standard.

Labeling is the code official's assurance that the subject product is a representative duplication of the product that the testing agency tested in the laboratory. The label indicates that an independent agency has conducted inspections at the plant to verify that all units conform to the specifications that the quality control manual sets forth for fabricating the gas appliances. Information that must be contained on the label is described in Section 301.5 and includes the manufacturer's identification, the third-party inspection agency's identification, the model number, the serial number, the input ratings and the type of fuel the appliance is designed to burn.

The code requires that the appliance be installed in accordance with the manufacturer's instructions. This requirement is also linked to the laboratory testing of the appliance because the laboratory used the same instructions to install the prototype appliance being tested. When the appliance has been tested and evaluated for code compliance and judged to meet the performance and construction requirements of the applicable standard, the installation instructions



Figure 602.1
VENTED GAS LOG SET
(Photo by D.F. Noyes Studio, courtesy of DESA International)

INTERNATIONAL CODE COUNCIL®
Copyright © 2015 ICC. ALL RIGHTS RESERVED. Accessed by David Dammon on Jun 21, 2017 12:30:52 PM pursuant to License Agreement with ICC. No further reproduction or distribution authorized. ANY UNAUTHORIZED REPRODUCTION OR DISTRIBUTION IS A VIOLATION OF THE FEDERAL COPYRIGHT ACT AND THE LICENSE AGREEMENT, AND SUBJECT TO CIVIL AND CRIMINAL PENALTIES THEREUNDER.

become an integral part of the labeling requirements and must be strictly adhered to.

The intent of this section is to regulate gas-burning appliances that are accessory to, and designed for installation in, vented solid-fuel-burning fireplaces. Gas-fired decorative log sets and log lighters are examples of accessory appliances that are designed for installation in solid-fuel-burning fireplaces. Gas log sets provide some radiant heat; however, their primary function is to create an aesthetically pleasing simulation of a wood log fire. This section addresses vented appliances and does not address "unvented gas log sets" (room heaters).

Decorative gas-burning appliances, such as some gas log sets, are designed to simulate wood fires by intentionally causing incomplete combustion as necessary to yield yellow or yellow-tipped flames. This incomplete combustion results in an increase in the amount of carbon monoxide produced. The highly toxic carbon monoxide is odorless and colorless, and the accompanying products of combustion produced by a gas-burning appliance do not have a strong odor or an odor that is readily recognized by an untrained person.

If a decorative gas appliance were operated with the fireplace damper closed, the carbon monoxide levels could be dangerously high before the building occupants became aware of the hazard. To prevent harm and the possible asphyxiation of the occupants, it is imperative that the fireplace damper be open whenever the appliance is burning. The manufacturer's installation instructions will specify the minimum free area of damper opening required to vent the appliance combustion products. The damper area is proportional to the appliance's input rating. The fireplace damper plate must be removed or permanently fixed in a position that provides the opening area required by the appliance manufacturer's installation instructions.

602.2 Flame safeguard device. Decorative appliances for installation in *approved* solid fuel-burning fireplaces, with the exception of those tested in accordance with ANSI Z21.84, shall utilize a direct ignition device, an ignitor or a pilot flame to ignite the fuel at the main burner, and shall be equipped with a flame safeguard device. The flame safeguard device shall automatically shut off the fuel supply to a main burner or group of burners when the means of ignition of such burners becomes inoperative.

❖ To eliminate the hazards associated with manually igniting a decorative gas appliance, the code requires that the main burner be ignited by a supervised means of direct ignition, such as a standing pilot. The exception to this requirement is for manually lighted appliances listed to ANSI Z21.84. The use of automatic ignition controls prevents the operator of the appliance from being exposed to the potential hazard of trying to ignite the main burner with a match or other manual lighting device. The flame safeguard device consists of a control valve assembly with an integral means of pilot or igniter supervision and is designed to prevent or shut off the flow of gas to the appliance main burner in the event that the source of ignition is extinguished or otherwise fails.

The typical flame safeguard device used with gas log set appliances is a combination manual control valve, pressure regulator, pilot feed and magnetic pilot safety mechanism with a thermocouple generator. If the pilot flame is extinguished, the drop in thermocouple output voltage will cause the control valve to "lock out" in the closed position, thereby preventing the flow of gas to the main burner and the pilot burner. It is not the intent of this section to require flame safeguard devices for manually operated log lighter appliances used to kindle wood fires.

A flame safeguard, also known as a safety shutoff device, functions to automatically shut off the fuel supply to the main burner or burners of an appliance when the source of ignition becomes inoperative. Gas-burning equipment may operate using standing pilot ignition, which is a small flame kept constantly burning for the sole purpose of igniting the main burner when the thermostat calls for heat or a manual gas valve is opened by the operator. If the pilot is not lit, for whatever reason, the flame safeguard will automatically activate to prevent the flow of fuel to the main burner or burners of the appliance. Appliances that use automatic sparking devices or other means for ignition are subject to the same requirements for providing flame safeguards, and the method of operation of the flame safeguard will differ depending on the type of ignition system in use.

Automatically operated gas-burning equipment and appliances are equipped with some means of monitoring the means of ignition or the main burner flame because fuel introduced into a combustion chamber and not ignited and burned could cause a dangerous condition.

The most commonly used type of flame safeguard device consists of a thermocouple and an electromechanical device that function together to supervise a standing pilot flame. In the event of pilot failure, the thermocouple and flame safeguard device will function to prevent the flow of fuel to the main burners, and if the safeguard control is of the 100-percent shutoff type, it will also shut off the flow of fuel to the pilot burner.

Modern appliances seldom have standing pilots and instead use electric-spark-ignited intermittent pilots or direct ignition devices such as hot surface igniters and glow coils. The methods of detecting the presence of a pilot flame include thermocouples, millivolt (power pile) generators, liquid-filled capillary tubes, bimetal mechanisms and flame rectification circuits. Where only the main burner is monitored to verify ignition and continued combustion, the methods of detection include flame rectification, infrared detectors, ultraviolet detectors and bimetal stack sensors. The majority of today's appliances rely on electronic flame rectification or radiant energy detectors (infrared or ultraviolet) as the means of proving ignition of a pilot burner or the main burner(s). The flame

INTERNATIONAL CODE COUNCIL®
Copyright © 2015 ICC. ALL RIGHTS RESERVED. Accessed by David Dammon on Jun 21, 2017 12:30:52 PM pursuant to License Agreement with ICC. No further reproduction or distribution authorized. ANY UNAUTHORIZED REPRODUCTION OR DISTRIBUTION IS A VIOLATION OF THE FEDERAL COPYRIGHT ACT AND THE LICENSE AGREEMENT, AND SUBJECT TO CIVIL AND CRIMINAL PENALTIES THEREUNDER.

rectification method of sensing the presence of flames is very common today and involves two electrodes: a flame rod and the burner itself. An ac voltage is applied between the flame rod and the burner. If a flame is present and impinges on both of these electrodes, a few microamps of current will flow through the ionized gases in the flame, but almost entirely in one direction because of the relative size of the surface areas of the two electrodes. This unidirectional flow rectifies the ac current to half-wave dc current, which is then recognized by electronic circuitry, thereby proving the presence of a flame. Manually lighted natural gas decorative appliances tested and listed to ANSI Z21.84 do not have to be equipped with a flame safeguard device.

Flame safeguard devices are commonly integral with a combination gas control. These controls typically incorporate multiple solenoid valves, a manual valve, an appliance gas-pressure regulator, a pressure operated valve and flame safeguard devices all in one device body. It is also common for flame safeguard devices to be incorporated into an electronic integrated circuit control module that is separate from the combination gas control. For example, spark ignition and hot surface ignition systems incorporate the means of ignition and ignition supervision in an electronic control module that may also contain components and circuitry for control of combustion fans, furnace blowers, combustion chamber purging and monitoring of multiple system pressure and temperature sensors located throughout an appliance. Commentary Figure 602.2(1) illustrates a type of combination gas control designed for use with an outboard intermittent ignition control module. Commentary Figure 602.2(2) illustrates the internal workings that are typical of combination gas controls. These controls have redundant valve mechanisms as an additional safety feature.

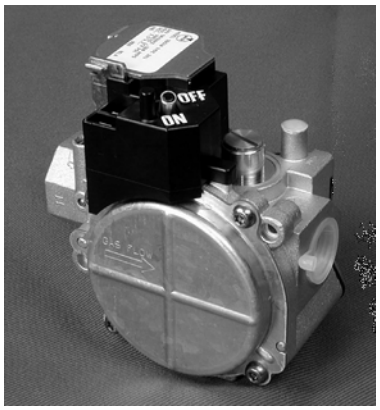

Figure 602.2(1)
COMBINATION GAS CONTROL
(Photo courtesy of Emerson Climate Technologies, White Rodgers)

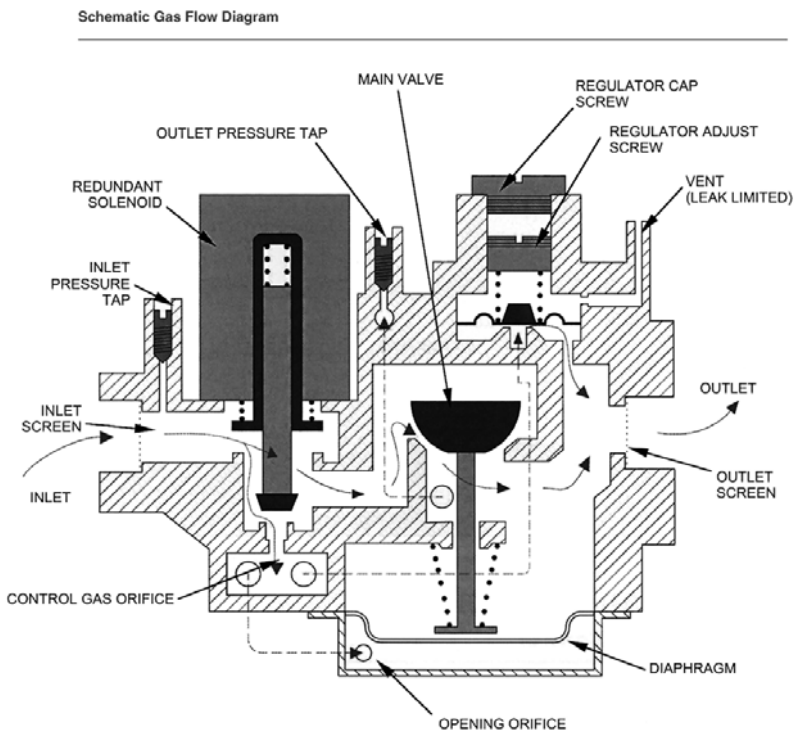

Figure 602.2(2)
COMBINATION GAS CONTROL FOR APPLIANCES
(Shown for illustrative purposes only)
(Figure courtesy of Emerson Climate Technologies, White Rodgers)

INTERNATIONAL CODE COUNCIL®
Copyright © 2015 ICC. ALL RIGHTS RESERVED. Accessed by David Dammon on Jun 21, 2017 12:30:52 PM pursuant to License Agreement with ICC. No further reproduction or distribution authorized. ANY UNAUTHORIZED REPRODUCTION OR DISTRIBUTION IS A VIOLATION OF THE FEDERAL COPYRIGHT ACT AND THE LICENSE AGREEMENT, AND SUBJECT TO CIVIL AND CRIMINAL PENALTIES THEREUNDER.

602.3 Prohibited installations. Decorative appliances for installation in fireplaces shall not be installed where prohibited by Section 303.3.

❖ Section 303.3 lists, with exceptions, various locations where gas appliances cannot be installed, such as bedrooms and bathrooms. Those prohibitions also apply to decorative appliances.

SECTION 603 (IFGC)
LOG LIGHTERS

603.1 General. Log lighters shall be tested in accordance with CSA 8 and installed in accordance with the manufacturer's instructions.

❖ Log lighters are simple manually operated burners used to start wood fires. Log lighters are functional rather than decorative appliances. The heat produced by the log lighter flames raises the temperature of the wood fuel to its ignition temperature. Log lighters are designed to be turned off manually after the wood fire is capable of sustaining combustion. The code, rather than providing prescriptive installation requirements, requires that log lighters be installed in accordance with the manufacturer's installation instructions. Log lighters must comply with the standard CSA 8. Note that log lighters are often packaged with a T-handle shutoff valve. The package will indicate that the device is listed, which refers to the shutoff valve. The code requires that the log lighter itself be listed. The lighter must be designed for the type of gas, i.e., natural or propane.

SECTION 604 (IFGC)
VENTED GAS FIREPLACES (DECORATIVE APPLIANCES)

604.1 General. Vented gas fireplaces shall be tested in accordance with ANSI Z21.50, shall be installed in accordance with the manufacturer's instructions and shall be designed and equipped as specified in Section 602.2.

❖ Unlike the appliances addressed in Section 602, these appliances are self-contained and do not rely on a fireplace to contain or vent them. Such appliances are referred to as gas fireplaces because they are designed to simulate a solid-fuel-burning fireplace. The standard, ANSI Z21.50, that regulates these appliances has recently been retitled as "Vented Gas Fireplaces." Therefore, these appliances will be referred to as gas fireplaces even though they do not fall under the definition of "fireplace" [see Commentary Figures 604.1(1), 604.1(2) and 604.1(3)]. These appliances are designed for various methods of venting, including direct-venting through the wall or roof and conventional venting with Type B vent or factory-supplied vent material. Section 303.3 controls the type of appliance that is allowed in bathrooms, toilet rooms and bedrooms. Direct-vent appliances have the advantage of a closed combustion chamber that does not communicate with the room in which they are installed, as well as the advantage of an outdoor combustion air supply.

604.2 Access. Panels, grilles and *access* doors that are required to be removed for normal servicing operations shall not be attached to the building.

❖ Access to the appliance for maintenance and repair may be through panels, grilles or doors, but such panels must be removable as intended by the manufacturer of the appliance and not a permanent part of the structure (see the definition of "Access" in Section 202).



Figure 604.1(1)
VENTED DECORATIVE APPLIANCE
(Photo by D.F. Noyes Studio, courtesy of DESA International)



Figure 604.1(2)
DIRECT-VENT DECORATIVE APPLIANCE
(Photo by D.F. Noyes Studio, courtesy of DESA International)

INTERNATIONAL CODE COUNCIL®
Copyright © 2015 ICC. ALL RIGHTS RESERVED. Accessed by David Dammon on Jun 21, 2017 12:30:52 PM pursuant to License Agreement with ICC. No further reproduction or distribution authorized. ANY UNAUTHORIZED REPRODUCTION OR DISTRIBUTION IS A VIOLATION OF THE FEDERAL COPYRIGHT ACT AND THE LICENSE AGREEMENT, AND SUBJECT TO CIVIL AND CRIMINAL PENALTIES THEREUNDER.



Figure 604.1(3)
DIRECT-VENT GAS FIREPLACE



Figure 605.1
VENTED GAS FIREPLACE HEATER
(Photo courtesy of Quadra-Fire)

SECTION 605 (IFGC)
VENTED GAS FIREPLACE HEATERS

605.1 General. Vented gas fireplace heaters shall be installed in accordance with the manufacturer's instructions, shall be tested in accordance with ANSI Z21.88 and shall be designed and equipped as specified in Section 602.2.

❖ These appliances are similar to those addressed in Section 604, the main difference being that vented gas fireplace heaters are designed with more emphasis on space heating while maintaining the decorative features. These heaters must comply with minimum thermal efficiency requirements (see Commentary Figure 605.1).

SECTION 606 (IFGC)
INCINERATORS AND CREMATORIES

606.1 General. Incinerators and crematories shall be installed in accordance with the manufacturer's instructions.

❖ Incinerators used today are installed in hospitals, universities and other relatively large institutions that must dispose of medical wastes, toxic and contaminated substances, pathological waste and human and animal tissues. A crematory is a furnace that is used exclusively to reduce human and animal cadavers to ashes.

Modern incinerator installations take advantage of the heat produced by incineration by passing the flue gases through boilers or other heat exchangers for space heating, cooling or processing operations. The reclamation of heat from incinerators can substantially reduce the energy costs of the facility served by the incinerator.

This section requires factory-built incinerators and crematories to conform to the requirements of Chapter 3 for equipment approval and installation. The incinerator or crematory must be tested to the standard that governs its use, and evidence must be provided indicating that the manufacturer has arranged for a third-party inspection of the manufacturer's facility to determine that the units being produced are the same as those that were tested. As required by Section 301.4.1, the testing agency is responsible for determining the appropriate test protocol, subject ultimately to approval by the code official. When tested in the laboratory, the equipment is installed in accordance with the manufacturer's instructions. For the equipment to perform as designed and tested, the equipment must be installed in the same manner as the tested installation. Therefore, the manufacturer's installation instructions become an integral part of the approval process.

INTERNATIONAL CODE COUNCIL®
Copyright © 2015 ICC. ALL RIGHTS RESERVED. Accessed by David Dammon on Jun 21, 2017 12:30:52 PM pursuant to License Agreement with ICC. No further reproduction or distribution authorized. ANY UNAUTHORIZED REPRODUCTION OR DISTRIBUTION IS A VIOLATION OF THE FEDERAL COPYRIGHT ACT AND THE LICENSE AGREEMENT, AND SUBJECT TO CIVIL AND CRIMINAL PENALTIES THEREUNDER.

SECTION 607 (IFGC)
COMMERCIAL-INDUSTRIAL INCINERATORS

607.1 Incinerators, commercial-industrial. Commercial-industrial-type incinerators shall be constructed and installed in accordance with NFPA 82.

❖ Commercial-industrial incinerators are large versions of the incinerators described in Section 606. These units burn large amounts of refuse that reduce the load on land fills and, in many instances, capture the heat of combustion for use in another process such as commercial steam heating, generation of electricity or heat for a manufacturing process. The reclamation of heat from incinerators can substantially reduce the energy costs of the facility served by the incinerator.

Commercial-industrial incinerators used today are installed in hospitals, universities and other relatively large institutions that must dispose of medical wastes, toxic and contaminated substances, pathological waste and human and animal tissues. To achieve a more complete incineration and thereby reduce the amount of pollutants released into the atmosphere, multiple-chamber incinerators are used rather than single-chamber incinerators. There are two basic designs of multiple-chamber incinerators: the in-line type and the retort type. The in-line type is characterized by the flow of combustion gases always traveling straight through the incinerator, with 90-degree (1.57 rad) turns only in the vertical direction. The retort type is characterized by a design that causes the combustion gases to flow through 90-degree (1.57 rad) turns in both lateral and vertical directions.

SECTION 608 (IFGC)
VENTED WALL FURNACES

608.1 General. Vented wall furnaces shall be tested in accordance with ANSI Z21.86/CSA 2.32 and shall be installed in accordance with the manufacturer's instructions.

❖ Wall furnaces are a type of room heater usually designed to be installed within a 2- by 4-inch (51 mm by 102 mm) stud cavity in frame construction. They are typically used in cottages, room additions and homes in mild climates. Some units are designed to serve a single room, and others are designed as through-the-wall units to serve adjacent rooms. Wall furnaces are ductless; however, some units are listed for use with a surface-mounted supply outlet extension. Wall furnaces can be either gravity or forced air type.

608.2 Venting. Vented wall furnaces shall be vented in accordance with Section 503.

❖ Because wall furnaces are designed to fit within a wall cavity, a special type of oval-shaped vent is required to fit within the same wall. Type BW vent is specially designed for wall furnace applications (see commentary, Section 503).

608.3 Location. Vented wall furnaces shall be located so as not to cause a fire hazard to walls, floors, combustible furnishings or doors. Vented wall furnaces installed between bathrooms and adjoining rooms shall not circulate air from bathrooms to other parts of the building.

❖ Wall furnaces, like all room heaters, can present a fire hazard if improperly located. The heat discharged or directly radiated from these units can ignite nearby wall or floor surfaces, furniture, trim items, window treatments and doors (see commentary, Section 608.4). A through-the-wall unit serving both a bathroom and an adjacent room must not be capable of recirculating air between those spaces.

608.4 Door swing. Vented wall furnaces shall be located so that a door cannot swing within 12 inches (305 mm) of an air inlet or air outlet of such furnace measured at right angles to the opening. Doorstops or door closers shall not be installed to obtain this *clearance*.

❖ A combustible door that swings close to a wall furnace could be a fire hazard if at some position the door would be within 12 inches (305 mm) of an air inlet or outlet. Because door closers and door stops are easily defeated, they must not be depended upon to secure the required clearance. If the door swing cannot comply with this section, the door would have to be removed or rehung to change its swing direction.

608.5 Ducts prohibited. Ducts shall not be attached to wall furnaces. Casing extension boots shall not be installed unless *listed* as part of the *appliance*.

❖ Most wall furnaces are not designed to force air through ducts, especially those gravity types that do not use fans. Attachment of ducts would add resistance to the flow of air through the furnace, thereby causing an abnormally high temperature rise across the heat exchanger and abnormally high temperatures on furnace surfaces. Some wall furnaces are listed and designed for use with supply duct extensions intended for wall mounting and intended to improve heat distribution. Such duct extensions are factory-built and supplied only by the furnace manufacturer.

608.6 Access. Vented wall furnaces shall be provided with *access* for cleaning of heating surfaces, removal of burners, replacement of sections, motors, controls, filters and other working parts, and for adjustments and lubrication of parts requiring such attention. Panels, grilles and *access* doors that are required to be removed for normal servicing operations shall not be attached to the building construction.

❖ All access panels and doors must be removable as intended by the manufacturer of the furnace.

INTERNATIONAL CODE COUNCIL®
Copyright © 2015 ICC. ALL RIGHTS RESERVED. Accessed by David Dammon on Jun 21, 2017 12:30:52 PM pursuant to License Agreement with ICC. No further reproduction or distribution authorized. ANY UNAUTHORIZED REPRODUCTION OR DISTRIBUTION IS A VIOLATION OF THE FEDERAL COPYRIGHT ACT AND THE LICENSE AGREEMENT, AND SUBJECT TO CIVIL AND CRIMINAL PENALTIES THEREUNDER.

SECTION 609 (IFGC)
FLOOR FURNACES

609.1 General. Floor furnaces shall be tested in accordance with ANSI Z21.86/CSA 2.32 and shall be installed in accordance with the manufacturer's instructions.

❖ Floor furnaces are vented appliances that are installed in an opening in the floor. These units heat the room by gravity convection and direct radiation and usually serve as the sole source of space heating. Such furnaces are common in cottages, small homes, seasonally occupied structures and rural homes. Because the floor grille can become hot, extreme care must be exercised to prevent occupants, especially children, from contacting the grille by walking or falling on it. Also, care must be taken to avoid a fire hazard caused by placement of materials or furnishings on or near the furnace floor grille (see Commentary Figure 609.1).



Figure 609.1
FLOOR FURNACE
(Photo courtesy of Empire Comfort Systems Incorporated)

609.2 Placement. The following provisions apply to floor furnaces:

1. Floors. Floor furnaces shall not be installed in the floor of any doorway, stairway landing, aisle or passageway of any enclosure, public or private, or in an exitway from any such room or space.
2. Walls and corners. The register of a floor furnace with a horizontal warm-air outlet shall not be placed closer than 6 inches (152 mm) to the nearest wall. A distance of not less than 18 inches (457 mm) from two adjoining sides of the floor furnace register to walls shall be provided to eliminate the necessity of occupants walking over the warm-air discharge. The remaining sides shall be permitted to be placed not closer than 6 inches (152 mm) to a wall. Wall-register models shall not be placed closer than 6 inches (152 mm) to a corner.
3. Draperies. The furnace shall be placed so that a door, drapery or similar object cannot be nearer than 12 inches (305 mm) to any portion of the register of the furnace.
4. Floor construction. Floor furnaces shall not be installed in concrete floor construction built on grade.
5. Thermostat. The controlling thermostat for a floor furnace shall be located within the same room or space as the floor furnace or shall be located in an adjacent room or space that is permanently open to the room or space containing the floor furnace.

❖ 1. Floor furnaces must not be located where they would interfere with or impede egress. In an emergency egress situation, a floor furnace could be a tripping hazard and could collapse under the live load of many occupants.

2. The floor furnace register must be at least 6 inches (152 mm) from walls to avoid creating a fire hazard by raising the wall temperature to a combustible level. The same reasoning applies to the 6-inch (152 mm) distance from wall registers to a corner. The 18-inch (457 mm) clearance from adjoining sides of a register to walls provides space for the occupants to walk around the grille, which can reach temperatures high enough to cause burns.
3. As stated in Section 608.3, the furnace location must not create a fire hazard by being too close to wall surfaces, trim items, furnishings and window treatments.
4. A floor furnace installed in a slab-on-grade would have to be in a pit, would be subject to flooding and corrosion, and would be inaccessible for service and inspection.
5. If the controlling thermostat does not sense the air temperature in the room in which the furnace is installed, dangerous overheating could result. A thermostat isolated from the source of heat it controls would not respond to the condition in the space served by the furnace.

609.3 Bracing. The floor around the furnace shall be braced and headed with a support framework designed in accordance with the *International Building Code*.

❖ The framing around the floor opening must be capable of supporting the floor system, the anticipated floor loads and the weight of the furnace. The structural requirements of the *International Building Code*® (IBC®) must be complied with.

609.4 Clearance. The lowest portion of the floor furnace shall have not less than a 6-inch (152 mm) *clearance* from the grade level; except where the lower 6-inch (152 mm) portion of the floor furnace is sealed by the manufacturer to prevent entrance of water, the minimum *clearance* shall be not less than 2 inches (51 mm). Where such clearances cannot be pro-

INTERNATIONAL CODE COUNCIL®
Copyright © 2015 ICC. ALL RIGHTS RESERVED. Accessed by David Dammon on Jun 21, 2017 12:30:52 PM pursuant to License Agreement with ICC. No further reproduction or distribution authorized. ANY UNAUTHORIZED REPRODUCTION OR DISTRIBUTION IS A VIOLATION OF THE FEDERAL COPYRIGHT ACT AND THE LICENSE AGREEMENT, AND SUBJECT TO CIVIL AND CRIMINAL PENALTIES THEREUNDER.

vided, the ground below and to the sides shall be excavated to form a pit under the furnace so that the required *clearance* is provided beneath the lowest portion of the furnace. A 12-inch (305 mm) minimum *clearance* shall be provided on all sides except the control side, which shall have an 18-inch (457 mm) minimum *clearance*.

❖ This section specifies clearances between the ground and the furnace, which apply to crawl space installations. The clearances allow access for service and inspection and help prevent corrosion of the furnace assembly.

609.5 First floor installation. Where the basement story level below the floor in which a floor furnace is installed is utilized as habitable space, such floor furnaces shall be enclosed as specified in Section 609.6 and shall project into a nonhabitable space.

❖ Where a floor furnace is installed above a habitable basement space, the furnace must project into an uninhabitable space and be separated from that space by noncombustible construction (see commentary, Section 609.6).

609.6 Upper floor installations. Floor furnaces installed in upper stories of buildings shall project below into nonhabitable space and shall be separated from the nonhabitable space by an enclosure constructed of *noncombustible materials*. The floor furnace shall be provided with *access*, *clearance* to all sides and bottom of not less than 6 inches (152 mm) and *combustion air* in accordance with Section 304.

❖ Where the floor furnace is installed in an upper floor of a building, the furnace must project into a nonhabitable space, similar to the installation in Section 609.5, and must be separated from that space by noncombustible construction. Access and clearance must be provided for maintenance and servicing. An adequate source of combustion air must also supply the furnace.

SECTION 610 (IFGC)
DUCT FURNACES

610.1 General. Duct furnaces shall be tested in accordance with ANSI Z83.8 or UL 795 and shall be installed in accordance with the manufacturer's instructions.

❖ Duct furnaces are designed to be installed "in-line" in an air duct served by an external blower. Such units are basically a heat exchanger and burner assembly in a cabinet and rely upon an independent air handler [see Commentary Figures 610.1(1) through 610.1(4)].



Figure 610.1(1)
INTEGRAL POWER-VENTED
OUTDOOR DUCT FURNACE
(Photo courtesy of Reznor/Thomas & Betts Corporation)



Figure 610.1(2)
INTEGRAL GRAVITY-VENTED
OUTDOOR DUCT FURNACE
(Photo courtesy of Reznor/Thomas & Betts Corporation)

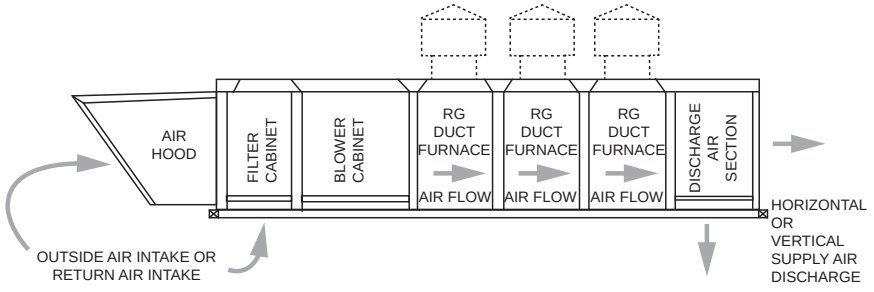

Figure 610.1(3)
OUTDOOR DUCT FURNACES WITH AIR HANDLER
(Figure courtesy of Reznor/Thomas & Betts Corporation)

INTERNATIONAL CODE COUNCIL®
Copyright © 2015 ICC. ALL RIGHTS RESERVED. Accessed by David Dammon on Jun 21, 2017 12:30:52 PM pursuant to License Agreement with ICC. No further reproduction or distribution authorized. ANY UNAUTHORIZED REPRODUCTION OR DISTRIBUTION IS A VIOLATION OF THE FEDERAL COPYRIGHT ACT AND THE LICENSE AGREEMENT, AND SUBJECT TO CIVIL AND CRIMINAL PENALTIES THEREUNDER.



Figure 610.1(4)
DUCT FURNACE
(Photo courtesy of Reznor/Thomas & Betts Corporation)

610.2 Access panels. Ducts connected to duct furnaces shall have removable *access* panels on both the upstream and downstream sides of the furnace.

❖ Access panels in the ducts on both sides of the furnace provide full access to the furnace for inspection, repair and regular maintenance of the heat exchanger.

610.3 Location of draft hood and controls. The controls, *combustion air* inlets and draft hoods for duct furnaces shall be located outside of the ducts. The draft hood shall be located in the same enclosure from which *combustion air* is taken.

❖ For access to the controls without the necessity of opening the duct access panels on a regular basis, the furnace controls must be located outside the ducts. The combustion air inlets and draft hood cannot operate properly inside the ducts when exposed to the pressurized airflow from the circulating fan.

610.4 Circulating air. Where a duct furnace is installed so that supply ducts convey air to areas outside the space containing the furnace, the return air shall be conveyed by a duct(s) sealed to the furnace casing and terminating outside the space containing the furnace.

The duct furnace shall be installed on the positive pressure side of the circulating air blower.

❖ Where the furnace supplies air to areas outside the space containing the furnace, return air must also be supplied from the space outside the furnace area. This will prevent the creation of negative pressure in the space containing the furnace.

SECTION 611 (IFGC)
NONRECIRCULATING DIRECT-FIRED INDUSTRIAL AIR HEATERS

611.1 General. *Nonrecirculating direct-fired industrial air heaters* shall be *listed* to ANSI Z83.4/CSA 3.7 and shall be installed in accordance with the manufacturer's instructions.

❖ Direct-fired air-heating equipment is unique in that there is no heat exchanger to separate the burners from the air being heated. As the name implies, the heat of combustion and all byproducts are directly introduced into the airstream. Because there is no heat exchanger, chimney or vent, direct-fired heaters are close to 100-percent energy efficient (see Commentary Figure 611.1). The term "nonrecirculating" refers to the fact that the same air is not passed through the combustion zone more than once. In other words, these units heat 100-percent outdoor air and are what used to be referred to as make-up air heaters. The air that passes across the burner must be 100-percent outdoor air.

611.2 Installation. *Nonrecirculating direct-fired industrial air heaters* shall not be used to supply any area containing sleeping quarters. *Nonrecirculating direct-fired industrial air heaters* shall be installed only in industrial or commercial occupancies. *Nonrecirculating direct-fired industrial air heaters* shall be permitted to provide ventilation air.

❖ Direct-fired make-up air heaters are used to preheat outdoor air that is supplied as make-up air for large exhaust systems such as those in a commercial kitchen or manufacturing facility. Direct-fired make-up air heaters must not be used to supply any area con-

INTERNATIONAL CODE COUNCIL®
Copyright © 2015 ICC. ALL RIGHTS RESERVED. Accessed by David Dammon on Jun 21, 2017 12:30:52 PM pursuant to License Agreement with ICC. No further reproduction or distribution authorized. ANY UNAUTHORIZED REPRODUCTION OR DISTRIBUTION IS A VIOLATION OF THE FEDERAL COPYRIGHT ACT AND THE LICENSE AGREEMENT, AND SUBJECT TO CIVIL AND CRIMINAL PENALTIES THEREUNDER.

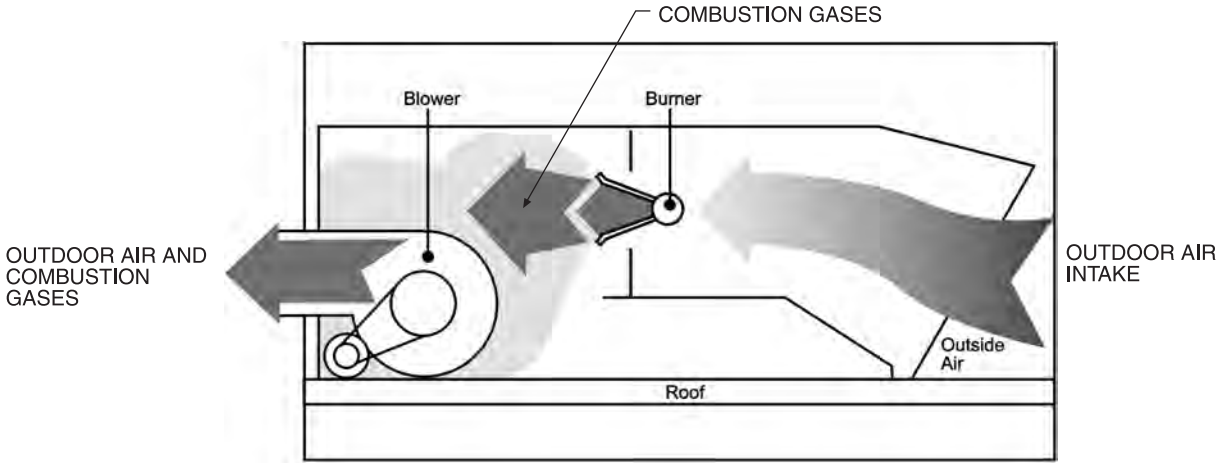

Figure 611.1
DIRECT-FIRED MAKE-UP AIR HEATER
(Figure courtesy of Reznor/Thomas & Betts Corporation)

taining sleeping quarters. The intent of this section is to prohibit the use of such equipment to serve sleeping quarters because direct-fired heaters are unvented and discharge all combustion byproducts into the air being heated. There is a health concern because of the possible buildup of carbon monoxide, nitrogen oxides and other combustion gases.

Direct-fired heaters are well suited for large heating loads where thermal efficiency is the primary concern. The heating of outdoor areas, make-up air to be exhausted, and buildings with high infiltration rates is considered energy wasteful; therefore, the highest possible combustion and thermal efficiency is sought for such applications.

611.3 Clearance from *combustible materials*. *Nonrecirculating direct-fired industrial air heaters* shall be installed with a *clearance* from *combustible materials* of not less than that shown on the rating plate and in the manufacturer's instructions.

❖ Like all listed appliances, the manufacturer's instructions and nameplate (label) will specify the minimum required clearances to combustibles.

611.4 Supply air. All air handled by a *nonrecirculating direct-fired industrial air heater*, including *combustion air*, shall be ducted directly from the outdoors.

❖ See the commentary to Section 611.1.

611.5 Outdoor air louvers. If outdoor air louvers of either the manual or automatic type are used, such devices shall be proven to be in the open position prior to allowing the main burners to operate.

❖ Nonrecirculating direct-fired industrial (make-up) air heaters convey 100 percent outdoor air; therefore, it is imperative that any air intake dampers be proven open prior to operation of the heater. As with all interlocks required by the code, the intent is to require a proof-of-operation sequence as opposed to a simple parallel operation arrangement. In other words, the dampers must be electrically proven to be open before heater operation begins.

611.6 Atmospheric vents and gas reliefs or bleeds. *Nonrecirculating direct-fired industrial air heaters* with valve train components equipped with atmospheric vents or gas reliefs or bleeds shall have their atmospheric vent lines or gas reliefs or bleeds lead to the outdoors. Means shall be employed on these lines to prevent water from entering and to prevent blockage by insects and foreign matter. An atmospheric vent line shall not be required to be provided on a valve train component equipped with a *listed* vent limiter.

❖ Large gas-fired equipment is commonly equipped with a complicated gas control arrangement (fuel/valve train components) that can include high- and low-gas pressure switches, gas relief valves, diaphragm valve gas bleed lines, "tell-tale" valve leakage indicator ports and pressure regulators. Control requirements are dictated by equipment standards and historically have also been dictated by insurance underwriters such as Factory Mutual (FM) and Industrial Risk Insurance (IRI).

Reliefs, vents and bleeds can convey raw fuel gas under normal or abnormal conditions and therefore must be piped to the outdoors to avoid a fire or explosion hazard in the building. This piping/tubing is usually joined to an appropriately sized manifold that is vented to the outdoors by one or more pipes.

Atmospheric vent piping is commonly terminated with a screened and turned down outlet or specially designed vent terminal fitting. Blockage by debris, water, ice or insects could cause dangerous control malfunctions of the equipment served by the vent. Where allowed by the listing of a device, such as a pressure regulator; for example, a flow-restrictor device, can be substituted for the vent to the outdoors. A vent-limiter device allows the device served

INTERNATIONAL CODE COUNCIL®
Copyright © 2015 ICC. ALL RIGHTS RESERVED. Accessed by David Dammon on Jun 21, 2017 12:30:52 PM pursuant to License Agreement with ICC. No further reproduction or distribution authorized. ANY UNAUTHORIZED REPRODUCTION OR DISTRIBUTION IS A VIOLATION OF THE FEDERAL COPYRIGHT ACT AND THE LICENSE AGREEMENT, AND SUBJECT TO CIVIL AND CRIMINAL PENALTIES THEREUNDER.

to function as intended, and in the event of a diaphragm failure, the volume of gas escaping through the vent would be controlled by the vent-limiter device.

611.7 Relief opening. The design of the installation shall include provisions to permit *nonrecirculating direct-fired industrial air heaters* to operate at rated capacity without overpressurizing the space served by the heaters by taking into account the structure's designed infiltration rate, providing properly designed relief openings or an interlocked power exhaust system, or a combination of these methods. The structure's designed infiltration rate and the size of relief openings shall be determined by *approved* engineering methods. Relief openings shall be permitted to be louvers or counterbalanced gravity dampers. Motorized dampers or closable louvers shall be permitted to be used, provided they are verified to be in their full open position prior to main burner operation.

❖ Most direct-fired heater installations convey 100-percent outdoor air or a mixture of outdoor and recirculated air. Without a means of exhausting the outdoor air being introduced into a building, the building would pressurize, and the airflow through the heater would be retarded. This must not be allowed to happen because the heater depends on a certain flow-through rate for proper burner operation. Exhaust systems, relief air openings, calculated exfiltration rates of the building, or a combination of these must be used to allow the heater to operate at its required airflow rate (see commentary, Section 611.5 for discussion of interlock requirements).

611.8 Access. *Nonrecirculating direct-fired industrial air heaters* shall be provided with *access* for removal of burners; replacement of motors, controls, filters and other working parts; and for adjustment and lubrication of parts requiring maintenance.

❖ See the commentary to Section 306.

611.9 Purging. Inlet ducting, where used, shall be purged by not less than four air changes prior to an ignition attempt.

❖ Purging will require that burner ignition be delayed for the time necessary to move a volume of outdoor air through the duct equal to four times the volume of the entire inlet duct. Purging will ensure that no flammable fuel gas/air mixtures are present in the combustion zone.

SECTION 612 (IFGC)
RECIRCULATING DIRECT-FIRED INDUSTRIAL AIR HEATERS

612.1 General. *Recirculating direct-fired industrial air heaters* shall be *listed* to ANSI Z83.18 and shall be installed in accordance with the manufacturer's instructions.

❖ Recirculating direct-fired industrial air heaters are usually used to condition very large volume buildings used as factories, mills, warehouses, etc. They most often consist of ductless blower and burner assemblies that turn over the air in the building through a vertical air discharge configuration (see commentary, Section 611.1). Commentary Figures 612.1(1) and 612.1(2) illustrate the basic difference between direct-fired and indirect-fired appliances. Direct-fired appliances do not use a heat exchanger to separate the combustion (flue) gases from the air being conditioned.

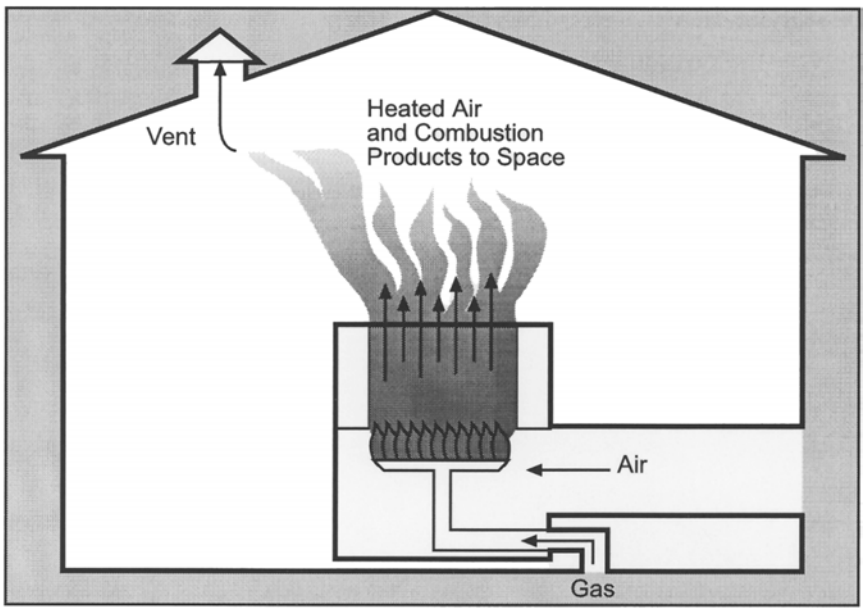

Figure 612.1(1)
BASIC PRINCIPLE OF DIRECT-FIRED SPACE HEATING APPLIANCE
(Figure courtesy of Reznor/Thomas & Betts Corporation)

INTERNATIONAL CODE COUNCIL®
Copyright © 2015 ICC. ALL RIGHTS RESERVED. Accessed by David Dammon on Jun 21, 2017 12:30:52 PM pursuant to License Agreement with ICC. No further reproduction or distribution authorized. ANY UNAUTHORIZED REPRODUCTION OR DISTRIBUTION IS A VIOLATION OF THE FEDERAL COPYRIGHT ACT AND THE LICENSE AGREEMENT, AND SUBJECT TO CIVIL AND CRIMINAL PENALTIES THEREUNDER.

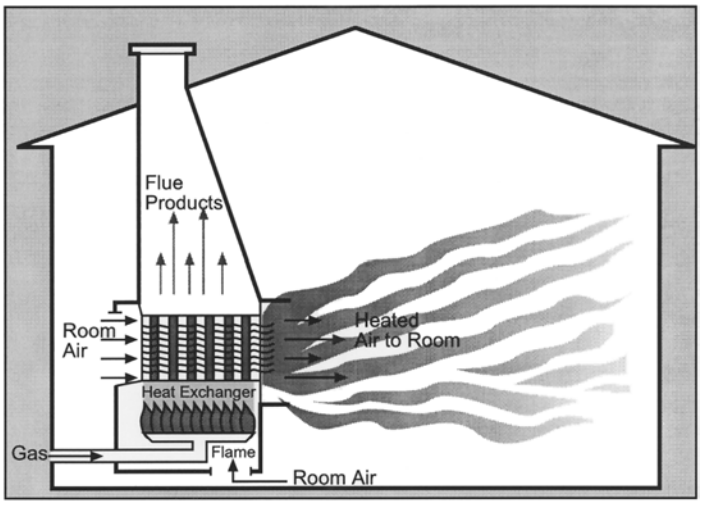

Figure 612.1(2)
BASIC PRINCIPLE OF INDIRECT-FIRED SPACE HEATING APPLIANCE
(Figure courtesy of Reznor/Thomas & Betts Corporation)

612.2 Location. *Recirculating direct-fired industrial air heaters* shall be installed only in industrial and commercial occupancies. *Recirculating direct-fired air heaters* shall not serve any area containing sleeping quarters. *Recirculating direct-fired industrial air heaters* shall not be installed in hazardous locations or in buildings that contain flammable solids, liquids or gases, explosive materials or substances that can become toxic when exposed to flame or heat.

❖ Industrial air heaters are large space heaters, commonly called air turnover units, used to temper the air within factory, industrial and storage facilities. The intent of this section is to prohibit the use of such equipment to serve sleeping quarters because direct-fired heaters are unvented and discharge all combustion byproducts into the air being heated. There is a health concern because of the possible buildup of carbon monoxide, nitrogen oxides and other combustion gases.

Air recirculated across the burner of a direct-fired heater could be an ignition source for flammable or explosive atmospheres or could create toxins by chemically altering substances that pass through the combustion zone.

Heaters used in hazardous areas and areas having substances present that are made toxic by exposure to flames must not recirculate air and therefore must condition only 100-percent outdoor air or transfer air from nonhazardous areas and areas with suitable atmospheres. For example, a direct-fired heater could serve as a 100-percent outdoor make-up air unit for a paint spray booth exhaust system but could not recirculate any air from within the booth. Passing flammable-vapor-laden air across the burner would pose a serious hazard.

Because of their high thermal efficiency, direct-fired heaters are well suited for the heating of outdoor areas, makeup air heating and the heating of buildings with high ventilation rates.

612.3 Installation. Direct-fired industrial air heaters shall be permitted to be installed in accordance with their listing and the manufacturer's instructions. Direct-fired industrial air heaters shall be installed only in industrial or commercial occupancies. Direct-fired industrial air heaters shall be permitted to provide fresh air ventilation.

❖ The code does not include prescriptive installation requirements for industrial air heaters, but instead relies on the manufacturer's installation instructions and the listing requirements. This will ensure that the equipment is installed just as it was tested by the listing agency. The heaters are allowed only in industrial or commercial occupancies because of the products of combustion that are introduced into the occupied space (see commentary, Section 612.2). The code allows outdoor air heated by the direct-fired heaters to supply some of the ventilation air required by Section 403 of the *International Mechanical Code*® (IMC®) (see commentary, Section 612.5).

612.4 Clearance from *combustible materials*. Direct-fired industrial air heaters shall be installed with a *clearance* from *combustible material* of not less than that shown on the label and in the manufacturer's instructions.

❖ The code relies on the listing and the manufacturer's installation instructions for the required clearance to combustibles, just as it does for other installation requirements in Section 612.3.

612.5 Air supply. Air to direct-fired industrial air heaters shall be taken from the building, ducted directly from outdoors, or a combination of both. Direct-fired industrial air heaters shall incorporate a means to supply outside ventilation air to the space at a rate of not less than 4 cubic feet per minute per 1,000 Btu per hour (0.38 m^3 per min per kW) of rated input of the heater. If a separate means is used to supply

INTERNATIONAL CODE COUNCIL®
Copyright © 2015 ICC. ALL RIGHTS RESERVED. Accessed by David Dammon on Jun 21, 2017 12:30:52 PM pursuant to License Agreement with ICC. No further reproduction or distribution authorized. ANY UNAUTHORIZED REPRODUCTION OR DISTRIBUTION IS A VIOLATION OF THE FEDERAL COPYRIGHT ACT AND THE LICENSE AGREEMENT, AND SUBJECT TO CIVIL AND CRIMINAL PENALTIES THEREUNDER.

ventilation air, an interlock shall be provided so as to lock out the main burner operation until the mechanical means is verified. Where outside air dampers or closing louvers are used, they shall be verified to be in the open position prior to main burner operation.

❖ The required ventilation air controls the concentration of combustion byproducts in the indoor air. The prescribed ventilation rate is intended to dilute the combustion gases introduced by the direct-fired equipment. If means other than the heater's air handler itself is used to supply the ventilation air required by this section, it must be interlocked with the heating equipment to ensure that the heater cannot operate if the ventilation air supply is inoperative.

612.6 Atmospheric vents, gas reliefs or bleeds. Direct-fired industrial air heaters with valve train components equipped with atmospheric vents, gas reliefs or bleeds shall have their atmospheric vent lines and gas reliefs or bleeds lead to the outdoors.

Means shall be employed on these lines to prevent water from entering and to prevent blockage by insects and foreign matter. An atmospheric vent line shall not be required to be provided on a valve train component equipped with a *listed* vent limiter.

❖ See the commentary to Section 611.6.

612.7 Relief opening. The design of the installation shall include adequate provision to permit direct-fired industrial air heaters to operate at rated capacity by taking into account the structure's designed infiltration rate, providing properly designed relief openings or an interlocked power exhaust system, or a combination of these methods. The structure's designed infiltration rate and the size of relief openings shall be determined by *approved* engineering methods. Relief openings shall be permitted to be louvers or counterbalanced gravity dampers. Motorized dampers or closable louvers shall be permitted to be used, provided they are verified to be in their full open position prior to main burner operation.

❖ Most direct-fired heater installations convey 100-percent outdoor air or a mixture of outdoor and recirculated air. Without a means of exhausting the outdoor air being introduced into a building, the building would pressurize, and the airflow through the heater would be retarded. This must not be allowed to happen because the heater depends on a certain flow-through rate for proper burner operation. Exhaust systems, relief air openings, calculated exfiltration rates of the building or a combination of these must be used to allow the heater to operate at its required airflow rate (see commentary, Section 611.5 for a discussion of interlock requirements).

SECTION 613 (IFGC)
CLOTHES DRYERS

613.1 General. Clothes dryers shall be tested in accordance with ANSI Z21.5.1 or ANSI Z21.5.2 and shall be installed in accordance with the manufacturer's instructions.

❖ This section addresses clothes dryer appliances, Types 1 and 2 (see the definition of "Clothes dryer"). Dryers are tested to the applicable safety standard for the appliance, and the manufacturer's installation instructions convey the information needed to duplicate the installation configuration that was tested and found to meet the requirements of the safety standard. The manufacturer's installation instructions are evaluated by the agency responsible for testing, listing and labeling the appliance, and will therefore prescribe an installation that is consistent with the appliance installation that was tested. Clothes dryers must be exhausted in compliance with Section 614 and the manufacturer's installation instructions (see Commentary Figure 613.1).

SECTION 614 (IFGC)
CLOTHES DRYER EXHAUST

[M] 614.1 Installation. Clothes dryers shall be exhausted in accordance with the manufacturer's instructions. Dryer exhaust systems shall be independent of all other systems, and shall convey the moisture and any products of combustion to the outside of the building.

❖ Clothes dryer exhaust systems must convey the moisture and any products of combustion directly to the exterior of the building (outdoors). The code does not use the term "dryer vent." Gas-fired clothes dryers are not "vented" as are other fuel-fired appliances, but rather are exhausted.

Clothes dryer exhaust ducts must be installed to comply with the dryer manufacturer's instructions and the requirements of this section. Dryers are designed and built to meet industry safety standards.

The clothes dryer manufacturer's installation instructions control the type of exhaust duct material allowed and the method of installation. For example, typical dryer installation instructions will require

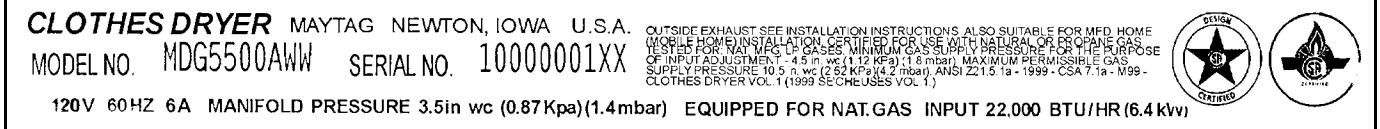

Figure 613.1
TYPE 1 CLOTHES DRYER LABEL
(Figure courtesy of Maytag Corporation)

INTERNATIONAL CODE COUNCIL®
Copyright © 2015 ICC. ALL RIGHTS RESERVED. Accessed by David Dammon on Jun 21, 2017 12:30:52 PM pursuant to License Agreement with ICC. No further reproduction or distribution authorized. ANY UNAUTHORIZED REPRODUCTION OR DISTRIBUTION IS A VIOLATION OF THE FEDERAL COPYRIGHT ACT AND THE LICENSE AGREEMENT, AND SUBJECT TO CIVIL AND CRIMINAL PENALTIES THEREUNDER.

metallic duct materials and will impose more stringent length limitations for flexible metallic ducts than for rigid ducts because of the poorer flow characteristics of flexible duct materials.

Because clothes dryer exhaust contains high concentrations of combustible lint, debris and water vapor, dryer exhaust systems must be independent of all other systems. This requirement prevents the fire hazards associated with such an exhaust system from extending into or affecting other systems or other areas in the building. Additionally, this section intends to prevent products of combustion from entering the building through other systems (see Section 614.6.1).

Dryer exhaust ducts must be independent of other dryer exhaust ducts unless connected to an engineered exhaust system specifically designed to serve multiple dryers. Type I domestic dryers are not designed for connection to a common exhaust duct serving multiple dryers. For example, connecting multiple Type I dryers to a common duct riser would pressurize the riser and cause exhaust to back up into any dryer that was not operating. Also, the low flow velocities and duct temperature losses could result in water vapor condensation and the buildup of lint and debris at low points (see Section 614.8).

Clothes dryer exhaust systems cannot terminate in or discharge to any enclosed space such as an attic or crawl space, regardless of whether the space is ventilated through openings to the outdoors. The high levels of moisture in the exhaust air can cause condensation to form on exposed surfaces or in insulation materials. Water vapor condensation can cause structural damage and deterioration of building materials and contribute to the growth of mold and fungus. Clothes dryer exhausts that discharge to enclosed spaces will also cause an accumulation of combustible lint and debris, creating a significant fire hazard. An improperly installed clothes dryer exhaust system not only reduces dryer efficiency and increases running time but can also cause a significant increase in exhaust temperature, in turn causing the dryer to cycle on its high limit control, which is an unsafe operating condition.

[M] 614.2 Duct penetrations. Ducts that exhaust clothes dryers shall not penetrate or be located within any fireblocking, draftstopping or any wall, floor/ceiling or other assembly required by the *International Building Code* to be fire-resistance rated, unless such duct is constructed of galvanized steel or aluminum of the thickness specified in Table 603.4 of the *International Mechanical Code* and the fire-resistance rating is maintained in accordance with the *International Building Code*. Fire dampers shall not be installed in clothes dryer exhaust duct systems.

❖ Rigid clothes dryer exhaust ducts are permitted to penetrate assemblies that are not fire-resistance rated and building elements not used as fireblocking or draftstopping. In all other cases, ducts must be constructed of galvanized steel or aluminum of the thickness specified in the IMC and the penetration must be protected to maintain the fire-resistance rating and integrity of the assembly or element being penetrated. Because of the strength and rigidity differences between steel and aluminum, aluminum ducts generally must be of a heavier (thicker) gage than steel ducts for a given application.

The metal thickness requirements of the IMC necessitate rigid pipe and rule out the use of flexible duct where it must penetrate fireblocking, draftstopping or a fire-resistance-rated assembly. Where penetrating fireblocking or draftstopping, the exhaust duct must be constructed of galvanized steel or aluminum, and the annular space around the duct must be fireblocked in accordance with the IBC.

Where penetrating a fire-resistance-rated assembly, the penetration must be protected. The requirements of this section, combined with Section 614.6.5, make a compelling case for always placing clothes dryers against outside walls to avoid long duct runs and penetrations of other than exterior walls.

[M] 614.3 Cleaning access. Each vertical duct riser for dryers *listed* to ANSI Z21.5.2 shall be provided with a cleanout or other means for cleaning the interior of the duct.

❖ This section applies to Type 2 dryers. Lint and debris carried in the dryer exhaust will adhere to duct walls and settle in the lowest point of any vertical riser in the system; therefore, an accessible means for removing accumulations in the system must be provided to prevent duct blockages and to eliminate the fire hazard of any combustible accumulations. Because of the difficulty of transporting suspended solids vertically against gravity, a vertical section of exhaust duct will eventually require maintenance. The exhaust duct connection to an individual dryer outlet is typically considered as a cleanout because the code requires a “means for cleaning” without specifying what that means can or cannot be. Where exhaust ducts can be accessed and/or readily disassembled, the intent of this section has been met. This section does not require that a tee and cap or similar arrangement be installed where ducts can otherwise be accessed for cleaning.

[M] 614.4 Exhaust installation. Exhaust ducts for clothes dryers shall terminate on the outside of the building and shall be equipped with a backdraft damper. Screens shall not be installed at the duct termination. Ducts shall not be connected or installed with sheet metal screws or other fasteners that will obstruct the flow. Clothes dryer exhaust ducts shall not be connected to a vent connector, vent or chimney. Clothes dryer exhaust ducts shall not extend into or through ducts or plenums.

❖ Exhaust ducts must connect directly to terminals that pass through the building envelope to the outdoor atmosphere. Attics and crawl spaces are not considered to be outdoors, and exhaust ducts cannot terminate in those spaces (see commentary, Section 614.1). Backdraft dampers must be installed in dryer exhaust ducts to avoid outdoor air infiltration during periods when the dryer is not operating and to pre-

INTERNATIONAL CODE COUNCIL®
Copyright © 2015 ICC. ALL RIGHTS RESERVED. Accessed by David Dammon on Jun 21, 2017 12:30:52 PM pursuant to License Agreement with ICC. No further reproduction or distribution authorized. ANY UNAUTHORIZED REPRODUCTION OR DISTRIBUTION IS A VIOLATION OF THE FEDERAL COPYRIGHT ACT AND THE LICENSE AGREEMENT, AND SUBJECT TO CIVIL AND CRIMINAL PENALTIES THEREUNDER.

vent the entry of animals. These dampers should be designed and installed to provide an adequate seal when in a closed position to minimize air leakage (infiltration). A backdraft damper is usually of the gravity type that is opened by the energy of the exhaust discharge. Some dryer manufacturers prohibit the use of magnetic backdraft dampers because of the extra resistance that the exhaust flow must overcome.

Exhaust terminal opening size is also governed by the dryer manufacturer's instructions. Full-opening terminals present less resistance to flow and might be mandated by the dryer manufacturer. A "full opening" is considered to be an opening having no dimension less than the diameter of the exhaust duct. Dryer exhaust flow must not be restricted by screens or fastening devices such as sheet metal screws. See the allowance in Section 614.8.2 for fasteners. Any type of screen, including so-called bird screens, could become completely blocked with fibers in a very short time. Consider that the filter screen integral with the appliance becomes restricted with lint in each cycle of operation. These restrictions and projections will promote the accumulation of combustible lint and debris in the exhaust duct, thereby creating a potential fire hazard and causing flow resistance. Duct tape should not be relied upon as the sole means of joining dryer exhaust ducts because adhesives can deteriorate with age and when exposed to high temperatures, causing joints to separate. However, sealing joints is still desirable to limit leakage of lint, fibers, moisture vapor and combustion products into the occupied space. Ducts can also separate during duct cleaning operations when brushes are used.

[M] 614.5 Dryer exhaust duct power ventilators. Domestic dryer exhaust duct power ventilators shall be listed and labeled to UL 705 for use in dryer exhaust duct systems. The dryer exhaust duct power ventilator shall be installed in accordance with the manufacturer's instructions.

❖ The previous code editions did not recognize dryer exhaust duct power ventilators (DEDPVs) as an option for clothes dryer installations. DEDPVs are loosely referred to as "dryer booster fans" in the marketplace. Prior to the 2015 code, the designer's choices for exhaust duct length were to: 1) limit the duct length to 35 feet; 2) follow the length limits in the clothes dryer manufacturer's instructions; or, if neither of those choices work, 3) relocate the dryer. A fourth option was to get the code official to approve the installation of a DEDPV under the alternative approval provision in Section 105. Exhaust ducts that exceed the developed length allowed by the code are a potential fire hazard, create maintenance problems, increase drying times and cause the dryer to be inefficient and waste energy. Dryer exhaust systems are commonly installed improperly with excessive lengths, too many elbows and the wrong duct materials. Because of the high incidence of reported dryer fires, the code strictly regulates the installation. DEDPVs are listed to a revised version of UL 705 that now contains tests and construction requirements that are specific to these devices. DEDPVs have been around for years, but until recently, were not listed to a national consensus standard that was specific to these devices. The UL 705 standard contains requirements for the construction, testing and installation of DEDPVs and requires them to be equipped with features such as interlocks, limit controls, monitoring controls and enunciator devices to make certain that the dryers or dryer operators are aware of the operating status of the DEDPVs [see Commentary Figures 614.5(1) and 614.5(2)].



Figure 614.5(1)
DEDPV

[M] 614.6 Makeup air. Installations exhausting more than 200 cfm (0.09 m^3/s) shall be provided with makeup air. Where a closet is designed for the installation of a clothes dryer, an opening having an area of not less than 100 square inches (645 mm^2) for makeup air shall be provided in the closet enclosure, or makeup air shall be provided by other *approved* means.

❖ Makeup air must be supplied to compensate for the air exhausted by the dryer exhaust system. A typical domestic clothes dryer will exhaust less than 200 cubic feet per minute (0.09 m^3/s). For closet installations, the closet door or the closet enclosure must have an opening with a minimum area of 100 square inches. Where louvers or grilles are used, the solid portion of the louver or grille should be evaluated in accordance with Section 304.10. Makeup air is necessary to prevent the room or space housing the dryer(s) from developing a negative pressure with respect to adjacent spaces or the outdoors, which could result in the improper and dangerous operation of the dryer and other fuel-burning appliances. The required amount of makeup air should be approximately equal to the amount exhausted and is normally supplied by infiltration of air from outdoors or through openings to the outdoors.

The makeup air not only supplies the air that is to be exhausted from the dryer, but also supplies combustion air for gas-fired appliances.

INTERNATIONAL CODE COUNCIL®
Copyright © 2015 ICC. ALL RIGHTS RESERVED. Accessed by David Dammon on Jun 21, 2017 12:30:52 PM pursuant to License Agreement with ICC. No further reproduction or distribution authorized. ANY UNAUTHORIZED REPRODUCTION OR DISTRIBUTION IS A VIOLATION OF THE FEDERAL COPYRIGHT ACT AND THE LICENSE AGREEMENT, AND SUBJECT TO CIVIL AND CRIMINAL PENALTIES THEREUNDER.

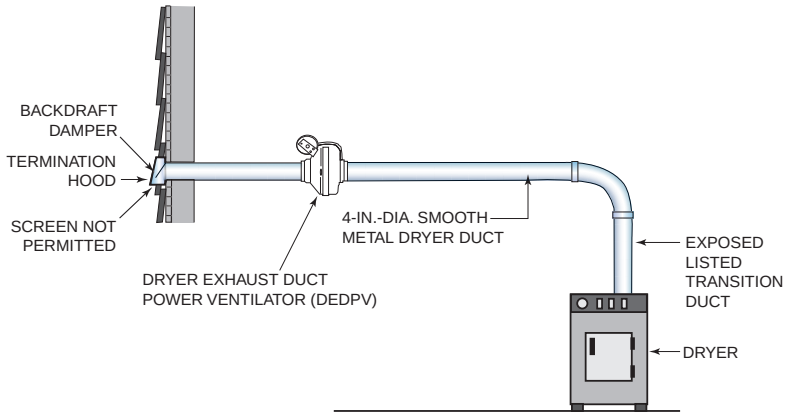

For SI: 1 inch = 25.4 mm.

Figure 614.5(2)
DEDPV

[M] 614.7 Protection required. Protective shield plates shall be placed where nails or screws from finish or other work are likely to penetrate the clothes dryer exhaust duct. Shield plates shall be placed on the finished face of all framing members where there is less than $1^1/_4$ inches (32 mm) between the duct and the finished face of the framing member. Protective shield plates shall be constructed of steel, shall have a minimum thickness of 0.062 inch (1.6 mm) and shall extend not less than 2 inches (51 mm) above sole plates and below top plates.

❖ Protection from nail and screw penetration has been required for wiring, vent systems, plumbing piping, fuel piping, hydronic piping and refrigerant piping for some time in the code, and now it is also required for dryer exhaust ducts. Depending upon the depth of penetration, a nail or screw could create a serious obstruction problem and potential fire hazard.

[M] 614.8 Domestic clothes dryer exhaust ducts. Exhaust ducts for domestic clothes dryers shall conform to the requirements of Sections 614.8.1 through 614.8.6.

❖ Section 305.1 states that gas-fired equipment and appliances must be installed in accordance with the manufacturer's instructions for the listed and labeled equipment. An installation complying with the manufacturer's instructions is required, except where the code requirements are more stringent. The code specifically addresses dryer exhaust ducts, a requirement that is also addressed in the dryer manufacturer's installation instructions. The code requirements for the items addressed in these sections, such as maximum total developed length of dryer exhaust ducts, equivalent lengths of directional fittings and minimum nominal size to name a few, may parallel or exceed the applicable requirements in the manufacturer's installation instructions. The manufacturer's installation instructions could also contain requirements that exceed those in the code.

In all cases, the more restrictive requirements would apply. Therefore, the clothes dryer exhaust duct size must be determined by the clothes dryer manufacturer but must not be less than 4 inches (102 mm) in diameter.

Dryer exhaust ducts cannot be larger than 4 inches in diameter unless specifically allowed by the manufacturer. Note that enlarging a duct will cause a reduction in flow velocity, and dryer exhaust ducts must maintain sufficient flow velocity to transport lint and fibers through the duct to the discharge terminal.

The duct length, the number and degree of directional fittings, the smoothness of the duct interior wall and the type of exhaust outlet terminal all contribute to the overall friction loss of a clothes dryer exhaust system. When the friction loss is high enough to restrict the required exhaust flow, the duct system must be redesigned to allow the required flow rate. An exhaust duct may have to be shortened or rerouted to compensate for the flow resistance.

Excessive friction losses will also result in reduced flow velocities, which means that the exhaust ducts would be much more likely to collect debris. An improperly designed exhaust system will result in poor dryer performance and poor energy efficiency and can cause the appliance to cycle on its high temperature limit control, which can be hazardous.

Joints in the dryer exhaust system must be reasonably air tight, must have a smooth interior finish and must run in the direction of airflow. For example, the male end of each section of duct must point away from the dryer. This permits the dryer exhaust system to function as intended so that joints and connections do not serve as collection points for lint and debris.

Proper support is required and necessary for maintaining alignment of the dryer exhaust duct system and to prevent excessive stress on ducts and duct joints. A sagging duct will increase the internal resistance to airflow, reduce the efficiency of the system and cause the accumulation of lint and debris.

Section 614.6.4 specifically addresses transition duct connectors. Within the context of this section, a transition duct is a flexible connector used as a transition between the dryer outlet and the connection point

INTERNATIONAL CODE COUNCIL®
Copyright © 2015 ICC. ALL RIGHTS RESERVED. Accessed by David Dammon on Jun 21, 2017 12:30:52 PM pursuant to License Agreement with ICC. No further reproduction or distribution authorized. ANY UNAUTHORIZED REPRODUCTION OR DISTRIBUTION IS A VIOLATION OF THE FEDERAL COPYRIGHT ACT AND THE LICENSE AGREEMENT, AND SUBJECT TO CIVIL AND CRIMINAL PENALTIES THEREUNDER.

to the exhaust duct system. Transition duct connectors must be listed and labeled as transition ducts for clothes dryer application. Transition ducts are currently listed to comply with UL 2158A and are not considered to be flexible air ducts or flexible air connectors subject to the material requirements of Chapter 16.

Transition ducts are flexible ducts constructed of a metalized (foil) fabric supported on a spiral wire frame. They are more fire resistant than the typical plastic spiral duct. Transition duct connectors are limited to 8 feet (1829 mm) in length and must be installed in compliance with their listing and the manufacturer's instructions. These duct connectors must not be concealed by any portion of the structure's permanent finish materials such as drywall, plaster, paneling, built-in furniture or cabinets or any other similar permanently affixed building component; they must remain entirely within the room in which the appliance is installed. Transition duct connectors cannot be joined together to extend beyond the 8-foot (1829 mm) maximum length limit. Transition ducts are to be cut to length as needed to avoid excess duct and unnecessary bends.

Transition duct connectors are necessary for domestic dryers because of appliance movement, vibration and outlet location. In many cases, connecting a domestic clothes dryer directly to rigid duct would be difficult.

[M] 614.8.1 Material and size. Exhaust ducts shall have a smooth interior finish and shall be constructed of metal a minimum 0.016 inch (0.4 mm) thick. The exhaust duct size shall be 4 inches (102 mm) nominal in diameter.

❖ This section requires that the diameter of the exhaust duct be 4 inches (102 mm), no larger and no smaller. A 4-inch (102 mm) duct is the basis for the design of the appliance exhaust system. Ducts that are too small would restrict air movement and would cause the dryer to consume more energy because of the longer drying time. They could also cause appliance overheating. Ducts that are too large will cause a decrease in the flow velocity, causing lint and debris to drop out of the exhaust air stream. The exhaust duct material must be smooth-wall metal with the specified minimum wall thickness. This translates to rigid metal duct of not less than 28 gage. Plastic ducts, corrugated ducts and flexible ducts are all prohibited with the exception of transition ducts in accordance with Section 614.6.4.

[M] 614.8.2 Duct installation. Exhaust ducts shall be supported at 4-foot (1219 mm) intervals and secured in place. The insert end of the duct shall extend into the adjoining duct or fitting in the direction of airflow. Ducts shall not be joined with screws or similar fasteners that protrude more than 1/8 inch (3.2 mm) into the inside of the duct.

❖ Clothes dryer ducts must be well supported to prevent deformation and joint separation. The male end of the duct and fittings must point in the direction of airflow to lessen flow resistance, joint leakage and collection of lint. This is common practice for all ducts, regardless of application. The last sentence of this section presents somewhat of a dilemma because it says that duct fasteners cannot protrude into the inside of the ducts. All ducts have been required by tradition, codes or installation standards to be mechanically fastened at all joints, however, this section departs from that practice by specifically prohibiting the only means of joining such ducts other than spot welding (i.e., screws and rivets). Joint sealing is not equivalent to or a substitute for mechanical fastening, yet this section has, from a practical standpoint, forced the installation of dryer exhaust ducts that rely solely on joint sealants to hold them together. Dryer exhaust ducts must be exceptionally well supported and sealed so that the joints will not separate. This is especially important where the ducts are to be concealed within the building construction and where they will be mechanically cleaned by duct cleaning apparatus.

Section 614.4 states that fasteners used to join fittings and sections of dryer exhaust ducts together must not obstruct the airflow. This could be interpreted as a prohibition of screws and rivets, or it could mean that such fasteners must not penetrate too far into the duct. The revision to Section 614.8.2 now makes it clear how Section 614.4 is to be interpreted. A fastener protrusion of $^1/_8$ inch or less will collect some lint, but it is believed to be insignificant. Actually, smooth duct walls collect lint also. The trade-off for allowing tiny amounts of lint to collect is improved duct construction. If dryer exhaust ducts are not allowed to be mechanically fastened, the only method to prevent separation of joints is duct tape. Duct tape should never be depended upon as the sole means of securing duct systems because it is a sealing means, not a fastening means. Now ducts can be properly and securely fastened and then sealed with tapes or mastics. Section M1502 of the *International Residential Code*® (IRC®) requires dryer exhaust ducts to be mechanically fastened and allows the same $^1/_8$-inch maximum penetration (see the commentary to Section 614.8.2 and Commentary Figure 614.8.2).

[M] 614.8.3 Transition ducts. Transition ducts used to connect the dryer to the exhaust duct system shall be a single length that is *listed* and *labeled* in accordance with UL 2158A. Transition ducts shall be not more than 8 feet (2438 mm) in length, and shall not be concealed within construction.

❖ Within the context of this section, a transition duct is a flexible connector used as a transition between the dryer outlet and the connection point to the exhaust duct system. Transition duct connectors must be listed and labeled as transition ducts for clothes dryer application. Transition ducts are currently listed to comply with UL 2158A. Such transition ducts are not considered as flexible air ducts or flexible air connectors.

INTERNATIONAL CODE COUNCIL®
Copyright © 2015 ICC. ALL RIGHTS RESERVED. Accessed by David Dammon on Jun 21, 2017 12:30:52 PM pursuant to License Agreement with ICC. No further reproduction or distribution authorized. ANY UNAUTHORIZED REPRODUCTION OR DISTRIBUTION IS A VIOLATION OF THE FEDERAL COPYRIGHT ACT AND THE LICENSE AGREEMENT, AND SUBJECT TO CIVIL AND CRIMINAL PENALTIES THEREUNDER.

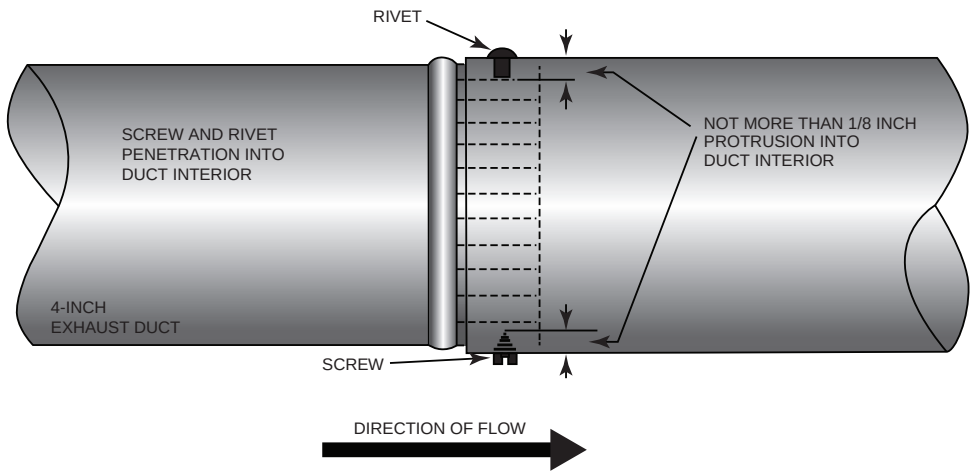

For SI: 1 inch = 25.4 mm.

Figure 614.8.2
DUCT JOINTS

Transition ducts are flexible ducts constructed of a metalized (foil) laminated fabric supported on a spiral wire frame. They are more fire resistant than the typical plastic spiral duct. Transition duct connectors are necessary for domestic dryers because of appliance movement, vibration and outlet location. In many cases, connecting a domestic clothes dryer directly to rigid duct would be difficult.

Transition duct connectors are limited to 8 feet (2438 mm) in length and must be installed in accordance with their listing and the manufacturer's instructions. These duct connectors must not be concealed by any portion of the structure's permanent finish materials, such as drywall, plaster, paneling, built-in furniture or cabinets or any other similar permanently affixed building component; they must remain entirely within the room in which the appliance is installed. Transition duct connectors cannot be joined to extend beyond the 8-foot (2438 mm) maximum length limit. Transition ducts are to be cut to length as needed to avoid excess duct and unnecessary bends. Note that in the application of Section 614.6.5.1, the length of the transition duct is not counted in the overall duct system length, despite the fact that the transition duct does contribute airflow resistance to the exhaust duct system.

[M] 614.8.4 Duct length. The maximum allowable exhaust duct length shall be determined by one of the methods specified in Sections 614.8.4.1 through 614.8.4.3.

❖ The duct length, the number and angle of fittings and the smoothness of the duct interior all contribute to the total friction loss of the airflow. When the friction loss is excessive, a reduction of the air velocity occurs, allowing lint and debris to accumulate in the duct and thus creating a fire hazard. Impeded airflow will also increase drying time, decrease appliance efficiency and raise system temperatures. The manufacturer's instructions and the code limitations concerning duct length, the number of elbows installed, and the type of termination fittings must be adhered to help prevent a fire hazard and allow proper appliance operation.

Note that this section introduces two distinct choices in its two subsections.

[M] 614.8.4.1 Specified length. The maximum length of the exhaust duct shall be 35 feet (10 668 mm) from the connection to the transition duct from the dryer to the outlet terminal. Where fittings are utilized, the maximum length of the exhaust duct shall be reduced in accordance with Table 614.8.4.1.

❖ The maximum exhaust duct length of 25 feet (7620 mm) was the traditional installation requirement for domestic clothes dryers. The 25-foot (7620 mm) limit was based on the worst case scenario where the dryer is rated for a maximum duct length of 25 feet (7620 mm). The intent was to ensure that the least capable dryer available would be compatible with a 25-foot (7620 mm) duct system. If the exhaust duct system is designed for worst case, it should work properly in all cases. Modern appliance design justifies the increase from 25 to 35 feet. Note that some appliances may not allow a duct length of 35 feet. Because the maximum length is based on equivalent length, all fittings must be accounted for in accordance with Table 614.8.4.1. The length is measured from the point where the transition duct (if used) connects to the rigid exhaust duct system to the terminal outdoors.

[M] 614.8.4.2 Manufacturer's instructions. The maximum length of the exhaust duct shall be determined by the dryer manufacturer's installation instructions. The code official shall be provided with a copy of the installation instructions for the make and model of the dryer. Where the exhaust duct is to be concealed, the installation instructions shall be provided to the code official prior to the concealment inspection. In the absence of fitting equivalent length calculations from

INTERNATIONAL CODE COUNCIL®
Copyright © 2015 ICC. ALL RIGHTS RESERVED. Accessed by David Dammon on Jun 21, 2017 12:30:52 PM pursuant to License Agreement with ICC. No further reproduction or distribution authorized. ANY UNAUTHORIZED REPRODUCTION OR DISTRIBUTION IS A VIOLATION OF THE FEDERAL COPYRIGHT ACT AND THE LICENSE AGREEMENT, AND SUBJECT TO CIVIL AND CRIMINAL PENALTIES THEREUNDER.

[M] TABLE 614.8.4.1
DRYER EXHAUST DUCT FITTING EQUIVALENT LENGTH

DRYER EXHAUST DUCT FITTING TYPE	EQUIVALENT LENGTH
4 inch radius mitered 45-degree elbow	2 feet, 6 inches
4 inch radius mitered 90-degree elbow	5 feet
6 inch radius smooth 45-degree elbow	1 foot
6 inch radius smooth 90-degree elbow	1 foot, 9 inches
8 inch radius smooth 45-degree elbow	1 foot
8 inch radius smooth 90-degree elbow	1 foot, 7 inches
10 inch radius smooth 45-degree elbow	9 inches
10 inch radius smooth 90-degree elbow	1 foot, 6 inches

For SI: 1 inch = 25.4 mm, 1 foot = 304.8 mm, 1 degree = 0.01745 rad.

the clothes dryer manufacturer, Table 614.8.4.1 shall be utilized.

❖ This section allows the 35-foot (7620 mm) limit of the previous section to be exceeded where longer exhaust duct lengths are allowed by the appliance manufacturer's instructions. Today's appliances often, but not always, permit longer distances, therefore this section allows the installer to take advantage of those longer distances where specified by the manufacturer. The make and model of the dryer must be provided to the code official, along with the respective installation instructions, to permit the code official to inspect the duct installation based on the manufacturer's instructions. Because the installation is specific to and dependent upon a certain appliance make and model, the code official must follow through to make sure that that appliance did get installed. Remember that the prime objective is to prevent a dangerous mismatch between a dryer and its exhaust system.

Where not otherwise specified by the dryer manufacturer, the flow resistance contributed by fittings installed in the duct system must be in accordance with Table 614.8.4.1. Each type of fitting and its angle is equated to a certain length of straight duct and this "equivalent length" is added to the actual straight duct length in the system to obtain the total length. The table recognizes newer fitting designs that have smooth bore interiors and much larger turning radii than traditionally used fittings. Such designs greatly reduce friction loss as can be seen by their much smaller equivalent lengths. If an installer is unable to stay within the allowable length on a particular job, he or she may find that substituting better fittings will correct the problem (see Section 614.6.6).

[M] 614.8.4.3 Dryer exhaust duct power ventilator length. The maximum length of the exhaust duct shall be determined by the dryer exhaust duct power ventilator manufacturer's installation instructions.

❖ See the commentary to Section 614.5.

[M] 614.8.5 Length identification. Where the exhaust duct equivalent length exceeds 35 feet (10 668 mm), the equivalent length of the exhaust duct shall be identified on a permanent label or tag. The label or tag shall be located within 6 feet (1829 mm) of the exhaust duct connection.

❖ A point to consider is the situation that will exist when the original dryer is replaced or the original occupant moves out and the new occupant installs a different dryer. In either case, the replacement dryer might not be compatible with the existing duct length. If the duct system equivalent length is not identified in a conspicuous manner, the new resident will be unaware of the potentially hazardous situation that has been created by the dryer and exhaust duct mismatch. It is assumed that the installer will be aware of the equivalent length of exhaust ducts that are entirely exposed and observable (see Commentary Figure 614.8.5).

[M] 614.8.6 Exhaust duct required. Where space for a clothes dryer is provided, an exhaust duct system shall be installed.

Where the clothes dryer is not installed at the time of occupancy, the exhaust duct shall be capped at the location of the future dryer.

Exception: Where a *listed* condensing clothes dryer is installed prior to occupancy of the structure.

❖ Where a space is provided for the future installation of a clothes dryer, an exhaust duct system must be installed so that such system can be inspected and approved. Otherwise, it is likely that the dryer and exhaust duct system will be installed later without the code official's knowledge and it will not be inspected for proper installation. Note that Section 614.8.4.2 does not appear to be an option when an exhaust duct system is "roughed-in" for future use because the make, model and exhaust capability of the dryer will be unknown.

[M] 614.9 Commercial clothes dryers. The installation of dryer exhaust ducts serving Type 2 clothes dryers shall comply with the *appliance* manufacturer's instructions. Exhaust fan motors installed in exhaust systems shall be located outside of the airstream. In multiple installations, the fan shall operate continuously or be interlocked to operate when any individual unit is operating. Ducts shall have a minimum *clearance* of 6 inches (152 mm) to *combustible materials*.

❖ The code classifies clothes dryers into two categories: Type 1 and Type 2. Type 1 clothes dryers are

INTERNATIONAL CODE COUNCIL®
Copyright © 2015 ICC. ALL RIGHTS RESERVED. Accessed by David Dammon on Jun 21, 2017 12:30:52 PM pursuant to License Agreement with ICC. No further reproduction or distribution authorized. ANY UNAUTHORIZED REPRODUCTION OR DISTRIBUTION IS A VIOLATION OF THE FEDERAL COPYRIGHT ACT AND THE LICENSE AGREEMENT, AND SUBJECT TO CIVIL AND CRIMINAL PENALTIES THEREUNDER.



Sample of typical placard to be placed behind all future dryer installation locations
Approx. size: 8" x 6" (heavy plastic-like laminate material)
Type: .014" poly carbonate label with area for length display to be punched out with typical hole punch and exhibit a paint-resistant laminate coating
Permanent pressure-sensitive 3M adhesive and 4 holes 3/32"
Provided and installed by HVAC or sheet metal tradesman at trim-out

Figure 614.8.5
EXAMPLE OF A DRYER EXHAUST LENGTH LABEL

primarily used in the family living environment and do not have the capacity to generate the amount of heat necessary to dry large volumes of clothing. The scope of this section does not regulate Type 1 clothes dryers.

Type 2 clothes drying appliances and exhaust ducts are designed for the higher volumes, temperatures and frequency of use found in public access and commercial laundries. Type 2 dryers must be installed in accordance with the manufacturer's instructions. These dryers are tested to the appropriate safety standard for the appliance, and the manufacturer's installation instructions convey the information needed to duplicate the installation configuration that was tested and found to meet the requirements of the safety standard. The manufacturer's installation instructions are evaluated by the agency responsible for testing the appliance and, therefore, the instructions will prescribe an installation that is consistent with Section 304.1, which addresses the installation of all mechanical equipment. Common exhaust systems for multiple dryers must be designed and engineered in accordance with the equipment and the appliance manufacturer's installation instructions [see Commentary Figure 614.8.6].

The potential fire hazards associated with Type 2 clothes dryers are similar to those of Type 1 clothes dryers (combustible lint, debris and high temperatures). However, the complex exhaust systems, intense heat and larger volume of combustible lint and combustion byproducts associated with commercial dryers call for additional safety requirements.

Commercial and multiple-dryer installations can rely on a single exhaust fan to prevent back pressure, overcome duct friction and induce the proper flow within the common exhaust system. Commentary Figure 614.8.6 shows a four-unit installation with the exhaust fan located at the roof level. This section requires that exhaust fans for Type 2 clothes dryer installations be operated continuously or be interlocked to operate when any individual unit is operating.

It is possible to exhaust multiple Type 2 dryers through a common duct system, such as a common riser or common manifold serving groups of adjacent units. This configuration will usually require an exhaust fan to prevent back pressure and to overcome static pressure in the duct system. In such installations, the common duct system will be connected to the inlet side of an exhaust fan and the fan will be located at the duct system termination to the outdoors.

The motor of the exhaust fan must be positioned outside of the exhaust airstream so that lint, debris and condensation do not accumulate in or on the motor. This requirement is generally satisfied by belt-driven fans with externally mounted motors. Location

INTERNATIONAL CODE COUNCIL®
Copyright © 2015 ICC. ALL RIGHTS RESERVED. Accessed by David Dammon on Jun 21, 2017 12:30:52 PM pursuant to License Agreement with ICC. No further reproduction or distribution authorized. ANY UNAUTHORIZED REPRODUCTION OR DISTRIBUTION IS A VIOLATION OF THE FEDERAL COPYRIGHT ACT AND THE LICENSE AGREEMENT, AND SUBJECT TO CIVIL AND CRIMINAL PENALTIES THEREUNDER.

in the exhaust stream could result in deterioration and failure of the motor, as well as a fire hazard associated with the accumulation of combustible fibers in contact with a motor that may be hot enough to cause ignition. Failure of the exhaust fan motor could result in an unsafe operating condition for the dryers served by the fan.

Where multiple dryer units vent to a common venting system using a common fan, the common exhaust fan must operate when any one or more of the individual dryer unit(s) are operating. This can be achieved in two ways.

The first, continuous exhaust fan operation, is not desirable and is rarely done because of increased energy usage and the unreliability of the design. Continuous operation without interlocks (fan supervision) is not reliable because the dryer units would not respond to or be "aware" of an exhaust fan failure. Any mechanical failure of the exhaust fan or opening of an overcurrent protection device could create an unsafe condition. The second and preferred method is to install exhaust fan supervision interlocked with each dryer unit so that the dryers would be stopped or prevented from starting in the event of exhaust fan failure. The supervision/interlock design should first prove exhaust fan operation by sensing duct pressures before enabling dryer operation. The supervision/interlock logic is identical to that discussed in the commentary to Section 804.3.2 of the IMC and Sections 503.3.3 and 503.3.4 of this code.

Transition ducts are listed factory-built connectors designed to connect an appliance discharge outlet to the exhaust duct system.

[M] 614.10 Common exhaust systems for clothes dryers located in multistory structures. Where a common multistory duct system is designed and installed to convey exhaust from multiple clothes dryers, the construction of such system shall be in accordance with all of the following:

1. The shaft in which the duct is installed shall be constructed and fire-resistance rated as required by the *International Building Code*.
2. Dampers shall be prohibited in the exhaust duct. Penetrations of the shaft and ductwork shall be protected in accordance with Section 607.5.5, Exception 2, of the *International Mechanical Code*.
3. Rigid metal ductwork shall be installed within the shaft to convey the exhaust. The ductwork shall be constructed of sheet steel having a minimum thickness of 0.0187 inch (0.471 mm) (No. 26 gage) and in accordance with SMACNA *Duct Construction Standards*.
4. The ductwork within the shaft shall be designed and installed without offsets.
5. The exhaust fan motor design shall be in accordance with Section 503.2 of the *International Mechanical Code*.
6. The exhaust fan motor shall be located outside of the airstream.
7. The exhaust fan shall run continuously, and shall be connected to a standby power source.
8. The exhaust fan operation shall be monitored in an *approved* location and shall initiate an audible or visual signal when the fan is not in operation.

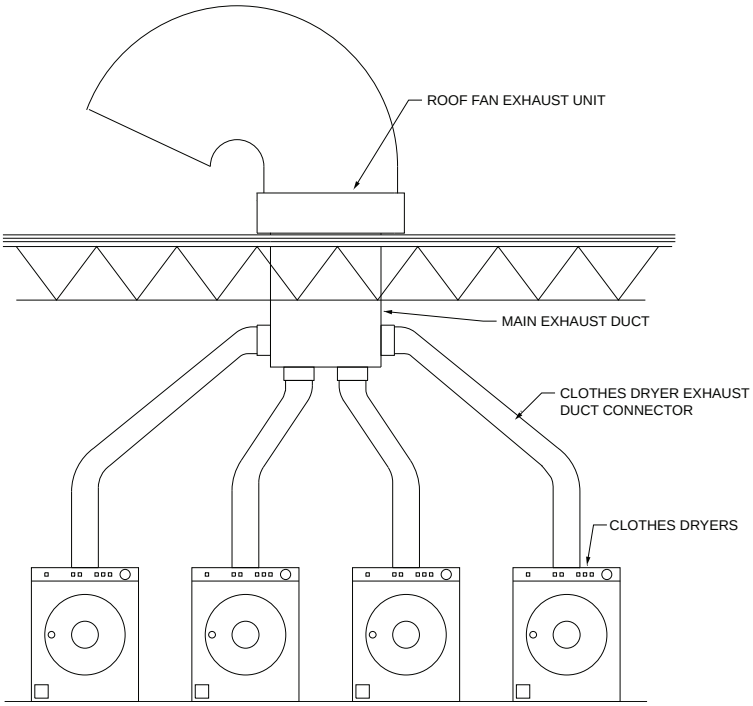

Figure 614.8.6
MULTIPLE DRYER EXHAUST SYSTEM

INTERNATIONAL CODE COUNCIL®
Copyright © 2015 ICC. ALL RIGHTS RESERVED. Accessed by David Dammon on Jun 21, 2017 12:30:52 PM pursuant to License Agreement with ICC. No further reproduction or distribution authorized. ANY UNAUTHORIZED REPRODUCTION OR DISTRIBUTION IS A VIOLATION OF THE FEDERAL COPYRIGHT ACT AND THE LICENSE AGREEMENT, AND SUBJECT TO CIVIL AND CRIMINAL PENALTIES THEREUNDER.

9. Makeup air shall be provided for the exhaust system.
10. A cleanout opening shall be located at the base of the shaft to provide *access* to the duct to allow for cleaning and inspection. The finished opening shall be not less than 12 inches by 12 inches (305 mm by 305 mm).
11. Screens shall not be installed at the termination.

❖ This type of exhaust shaft for clothes dryers was used in buildings, but the code was previously silent on this design. This section specifies the design and construction of multistory exhaust shafts for dryers and addresses most of the concerns that code officials have expressed. In this system, an exhaust fan suitable for such duty must be installed at the top of shaft to draw air upward through the ductwork within the shaft. This system is to serve cothes dryers only and must be independent of all other types of exhaust.

Item 2 intends to protect each dryer duct penetration of the exhaust shaft by means of 22-inch subducts and by requiring continuous upward airflow in the shaft. Both Exceptions 1 and 2 of Section 607.5.5 of the IMC employ subducts as an alternative to fire and smoke dampers. Dampers would not be reliable when exposed to moisture and debris in the exhaust stream.

Item 8 requires exhaust fan supervision to alert personnel in the event of fan failure or power failure.

Item 9 intends to require a source of makeup air to prevent the exhaust fan on top of the shaft from producing negative pressures in the shaft such that air will be drawn through the connected clothes dryers when they are idle. This will likely require some type of modulating gravity damper or mechanical makeup air fan to supply air into the bottom of the shaft at a rate that will acheive an approximate flow balance in the shaft. The rate of makeup air would be inversely proportional to the rate of dryer exhaust flow into the shaft duct.

The type of fan chosen for the terminus of the shaft must be suitable for operation with moisture and lint-laden exhaust. Some fans will load up with debris (clothes fibers) and their performance will degrade.

SECTION 615 (IFGC)
SAUNA HEATERS

615.1 General. Sauna heaters shall be installed in accordance with the manufacturer's instructions.

❖ Sauna heaters are used in steam baths and similar rooms to generate heat and steam. They must be installed in compliance with the manufacturer's instructions to ensure they are installed as designed and tested. The code relies on these installation instructions rather than stating prescriptive requirements that might contradict the manufacturer.

615.2 Location and protection. Sauna heaters shall be located so as to minimize the possibility of accidental contact by a person in the room.

❖ Sauna heaters produce steam by passing water over a heated surface. The choice of locations must consider the fact that a heat-producing appliance will be exposed within a small, limited-visibility room with unclothed occupants.

615.2.1 Guards. Sauna heaters shall be protected from accidental contact by an *approved* guard or barrier of material having a low coefficient of thermal conductivity. The guard shall not substantially affect the transfer of heat from the heater to the room.

❖ Guards must be installed to protect the occupants from being burned. The guards must be constructed of a material that is a poor conductor of heat (e.g., wood) so that the guard itself will not present a burn hazard. The design of the guard must protect the occupants but impede the flow of heat into the room from the heater.

615.3 Access. Panels, grilles and *access* doors that are required to be removed for normal servicing operations shall not be attached to the building.

❖ Access panels, covers and doors must not be made unusable by trim, woodwork or room enclosures that impede or interfere with access.

615.4 Combustion and dilution air intakes. Sauna heaters of other than the direct-vent type shall be installed with the draft hood and *combustion air* intake located outside the sauna room. Where the *combustion air* inlet and the draft hood are in a dressing room adjacent to the sauna room, there shall be provisions to prevent physically blocking the *combustion air* inlet and the draft hood inlet, and to prevent physical contact with the draft hood and vent assembly, or warning notices shall be posted to avoid such contact. Any warning notice shall be easily readable, shall contrast with its background and the wording shall be in letters not less than $^1/_4$ inch (6.4 mm) high.

❖ Combustion air and dilution air must not be taken from the sauna room because of the excessive water vapor in the air and the fact that the sauna room would probably be incapable of providing the required volume of combustion air. If a draft hood or combustion air inlet is obstructed, the appliance could malfunction, which could threaten the occupants. For example, a combustion-air-starved heater would produce high levels of carbon monoxide that could enter the sauna room in the event of venting failure. In general, the code expresses concern for the use of fuel-fired appliances in small closed rooms, especially where the occupants are sleeping or would have impaired senses or a diminished ability to recognize danger.

615.5 Combustion and ventilation air. *Combustion air* shall not be taken from inside the sauna room. Combustion and ventilation air for a sauna heater not of the direct-vent type

INTERNATIONAL CODE COUNCIL®
Copyright © 2015 ICC. ALL RIGHTS RESERVED. Accessed by David Dammon on Jun 21, 2017 12:30:52 PM pursuant to License Agreement with ICC. No further reproduction or distribution authorized. ANY UNAUTHORIZED REPRODUCTION OR DISTRIBUTION IS A VIOLATION OF THE FEDERAL COPYRIGHT ACT AND THE LICENSE AGREEMENT, AND SUBJECT TO CIVIL AND CRIMINAL PENALTIES THEREUNDER.

shall be provided to the area in which the *combustion air* inlet and draft hood are located in accordance with Section 304.

❖ This section would require the heater to be either a direct-vent type or a separated-combustion type in which the combustion chamber does not communicate with the sauna room (see commentary, Section 615.4).

615.6 Heat and time controls. Sauna heaters shall be equipped with a thermostat which will limit room temperature to 194°F (90°C). If the thermostat is not an integral part of the sauna heater, the heat-sensing element shall be located within 6 inches (152 mm) of the ceiling. If the heat-sensing element is a capillary tube and bulb, the assembly shall be attached to the wall or other support, and shall be protected against physical damage.

❖ A thermostat is required to limit the temperature in the sauna for fire safety. The control must sense the warmest air near the ceiling and must be protected from physical damage.

615.6.1 Timers. A timer, if provided to control main burner operation, shall have a maximum operating time of 1 hour. The control for the timer shall be located outside the sauna room.

❖ Timers are not required by the code but provide an extra level of protection when installed. To protect both the occupants and the building, timers must limit the heater operating time to 1 hour. Resetting the timer would require the occupant to exit the sauna, thus lessening the chances of overexposure.

615.7 Sauna room. A ventilation opening into the sauna room shall be provided. The opening shall be not less than 4 inches by 8 inches (102 mm by 203 mm) located near the top of the door into the sauna room.

❖ A ventilation opening is required to allow the escape of steam and heat and to supply ventilation for the occupants. The opening is required near the ceiling to take advantage of the natural tendency of heat and steam to rise, facilitating the exhaust.

615.7.1 Warning notice. The following permanent notice, constructed of *approved* material, shall be mechanically attached to the sauna room on the outside:

WARNING: DO NOT EXCEED 30 MINUTES IN SAUNA. EXCESSIVE EXPOSURE CAN BE HARMFUL TO HEALTH. ANY PERSON WITH POOR HEALTH SHOULD CONSULT A PHYSICIAN BEFORE USING SAUNA.

The words shall contrast with the background and the wording shall be in letters not less than $^1/_4$ inch (6.4 mm) high.

Exception: This section shall not apply to one- and two-family dwellings.

❖ A warning sign must be posted to alert users of the potential hazard associated with prolonged exposure to high temperature and humidity levels. The sign is not necessary in a one- and two-family dwelling where the user of the sauna is more familiar with the equipment.

SECTION 616 (IFGC)
ENGINE AND GAS TURBINE-POWERED EQUIPMENT

616.1 Powered equipment. Permanently installed *equipment* powered by internal combustion engines and turbines shall be installed in accordance with the manufacturer's instructions and NFPA 37. Stationary engine generator assemblies shall meet the requirements of UL 2200.

❖ This section addresses gas-fired internal combustion engines and turbines. Engine- and turbine-driven electrical generators for private use are becoming more popular as are engine-driven cooling appliances and heat pumps. This equipment is used to power fire pumps, generators, water pumps, refrigeration machines and other stationary equipment.

NFPA 37 addresses the fire safety of this equipment, including requirements for enclosures, controls, fuel supplies, exhaust systems, cooling systems and combustion air.

616.2 Gas supply connection. *Equipment* powered by internal combustion engines and turbines shall not be rigidly connected to the gas supply *piping*.

❖ Rigid pipe connections to equipment that vibrates, shakes or otherwise moves on the equipment mountings would be subjected to stress, vibration and noise transmission. To prevent piping damage, loosening of fittings and noise transmission, flexible connectors, suitable for the environment, must be used to connect the distribution piping system to the equipment having engines or turbines. The typical appliance connector could fail from metal fatique if used with engine-driven equipment. Special hose-type connectors may be required (see commentary, Section 411.1).

SECTION 617 (IFGC)
POOL AND SPA HEATERS

617.1 General. Pool and spa heaters shall be tested in accordance with ANSI Z21.56 and shall be installed in accordance with the manufacturer's instructions.

❖ Pool and spa heaters are specialized water heaters very similar in design to hot water supply boilers and are used with swimming pools, recreational or therapeutic spas and hot tubs. These heaters are usually of the water-tube type and are designed for either indoor or outdoor installation.

INTERNATIONAL CODE COUNCIL®
Copyright © 2015 ICC. ALL RIGHTS RESERVED. Accessed by David Dammon on Jun 21, 2017 12:30:52 PM pursuant to License Agreement with ICC. No further reproduction or distribution authorized. ANY UNAUTHORIZED REPRODUCTION OR DISTRIBUTION IS A VIOLATION OF THE FEDERAL COPYRIGHT ACT AND THE LICENSE AGREEMENT, AND SUBJECT TO CIVIL AND CRIMINAL PENALTIES THEREUNDER.

SECTION 618 (IFGC)
FORCED-AIR WARM-AIR FURNACES

618.1 General. Forced-air warm-air furnaces shall be tested in accordance with ANSI Z21.47 or UL 795 and shall be installed in accordance with the manufacturer's instructions.

❖ Forced-air warm-air furnaces are considered to be central heating units and consist of burners or heating elements, heat exchangers, blowers and associated controls. Forced-air furnaces are made in many different configurations, including upflow, counterglow (down flow), horizontal flow, multi-position flow and indoor and outdoor units. Commentary Figure 502.1(2) is an example of a multiposition flow (i.e., up, down and horizontal flow) forced-air warm-air furnace.

618.2 Forced-air furnaces. The minimum unobstructed total area of outdoor and return air ducts or openings to a forced-air warm-air furnace shall be not less than 2 square inches for each 1,000 Btu/h (4402 mm^2/W) output rating capacity of the furnace and not less than that specified in the furnace manufacturer's installation instructions. The minimum unobstructed total area of supply ducts from a forced-air warm-air furnace shall be not less than 2 square inches for each 1,000 Btu/h (4402 mm^2/W) output rating capacity of the furnace and not less than that specified in the furnace manufacturer's installation instructions.

Exception: The total area of supply air ducts and outdoor and return air ducts shall not be required to be larger than the minimum size required by the furnace manufacturer's installation instructions.

❖ The aggregate area of all ducts or openings that convey supply air from the furnace or return air back to the furnace must be adequate to allow the required airflow through the furnace. A furnace that is "starved" for return air or is restricted by an inadequate supply air duct size will produce an abnormal temperature rise across the heat exchanger, which is both a fire hazard and detrimental to the furnace. The furnace output rating is not usually indicated on the label and would be determined as approximately the input rating in Btu/h (W) times the efficiency rating of the furnace. For example, 100,000 Btu/h (29 310 W) input times 0.80 (80-percent efficiency) is 80,000 Btu/h (23 448 W) output. Return or supply air openings required by this section must not be less than that specified by the furnace manufacturer's installation instructions.

The exception intends to clarify that if the furnace installation instructions specify a lesser return or supply area than this section, that lesser area is permitted. The code-specified minimum area applies where the furnace manufacturer does not specify a minimum area.

618.3 Dampers. Volume dampers shall not be placed in the air inlet to a furnace in a manner that will reduce the required air to the furnace.

❖ Dampers are usually avoided in return air ducts and openings because of the risk of starving the furnace for return air. If dampers are installed, the total unrestricted return air duct or opening area must be as required by the code with all of the dampers in the fully closed position.

618.4 Prohibited sources. Outdoor or return air for forced-air heating and cooling systems shall not be taken from the following locations:

1. Closer than 10 feet (3048 mm) from an *appliance* vent outlet, a vent opening from a plumbing drainage system or the discharge outlet of an exhaust fan, unless the outlet is 3 feet (914 mm) above the outside air inlet.
2. Where there is the presence of objectionable odors, fumes or flammable vapors; or where located less than 10 feet (3048 mm) above the surface of any abutting public way or driveway; or where located at grade level by a sidewalk, street, alley or driveway.
3. A hazardous or insanitary location or a refrigeration machinery room as defined in the *International Mechanical Code*.
4. A room or space, the volume of which is less than 25 percent of the entire volume served by such system. Where connected by a permanent opening having an area sized in accordance with Section 618.2, adjoining rooms or spaces shall be considered as a single room or space for the purpose of determining the volume of such rooms or spaces.

   Exception: The minimum volume requirement shall not apply where the amount of return air taken from a room or space is less than or equal to the amount of supply air delivered to such room or space.
5. A room or space containing an *appliance* where such a room or space serves as the sole source of return air.

   Exception: This shall not apply where:

   1. The *appliance* is a direct-vent *appliance* or an *appliance* not requiring a vent in accordance with Section 501.8.
   2. The room or space complies with the following requirements:

      2.1. The return air shall be taken from a room or space having a volume exceeding 1 cubic foot for each 10 Btu/h (9.6L/W) of combined input rating of all fuel-burning appliances therein.

      2.2. The volume of supply air discharged back into the same space shall be approximately equal to the volume of return air taken from the space.

      2.3. Return-air inlets shall not be located within 10 feet (3048 mm) of a draft hood in the same room or space or the combustion chamber of any atmospheric burner *appliance* in the same room or space.

   3. Rooms or spaces containing solid fuel-burning appliances, provided that return-air inlets are

INTERNATIONAL CODE COUNCIL®
Copyright © 2015 ICC. ALL RIGHTS RESERVED. Accessed by David Dammon on Jun 21, 2017 12:30:52 PM pursuant to License Agreement with ICC. No further reproduction or distribution authorized. ANY UNAUTHORIZED REPRODUCTION OR DISTRIBUTION IS A VIOLATION OF THE FEDERAL COPYRIGHT ACT AND THE LICENSE AGREEMENT, AND SUBJECT TO CIVIL AND CRIMINAL PENALTIES THEREUNDER.

located not less than 10 feet (3048 mm) from the firebox of such appliances.

6. A closet, bathroom, toilet room, kitchen, garage, boiler room, furnace room or unconditioned attic.

   Exceptions:

   1. Where return air intakes are located not less than 10 feet (3048 mm) from cooking appliances and serve only the kitchen area, taking return air from a kitchen area shall not be prohibited.
   2. Dedicated forced air systems serving only a garage shall not be prohibited from obtaining return air from the garage.

7. A crawl space by means of direct connection to the return side of a forced-air system. Transfer openings in the crawl space enclosure shall not be prohibited.

❖ This section prohibits outdoor air and return air from being taken from locations that are potential sources of contamination, odor, flammable vapors or toxic substances and also from locations that would negatively affect the operation of the furnace itself or other fuel-burning appliances.

Items 1, 2 and 3 are contaminant related.

Part of the intent of Items 4 and 5 is to prevent the system from being starved for return-air by the placement of the main or only return-air intake in an area not meeting the volume requirements. Also there is concern for the possibility of combustion gases leaking from fuel-fired appliances because of negative pressure in the space produced by an air handler drawing return air from such space. It is not the intent of this section to prohibit the common practice of installing return air intakes in bedrooms and similarly sized rooms that typically have a volume that is far less than 25 percent of the total volume of the space served by the furnace. The return-air system must be able to convey the required airflow to the furnace regardless of the position of any doors to any rooms in the building served by the furnace. Item 6 is contaminant related and space pressurization related. Exception 1 recognizes that taking return air from a kitchen is of no concern if the air-handling system serves only the kitchen and the intake does not interfere with cooking exhaust systems or entrain cooking effluent from cooking appliances. Exception 2 recognizes that it is illogical to prohibit return air from being taken from a garage where the air handler is serving only the garage.

Item 7 is contaminant related and recognizes that some crawl spaces are designed to be within the thermal envelope of a building.

It is the intent of this section to avoid arrangements that cause an air pressure imbalance, which can cause fuel-fired appliances to spill combustion products into the occupied space. Pressure imbalances can be avoided by making sure that the amount of supply air discharge to a room or space is approximately equal to the amount of return air taken from the room or space and by locating return-air inlets where they will not cause depressurization of an enclosed space.

618.5 Screen. Required outdoor air inlets for residential portions of a building shall be covered with a screen having $^1/_4$-inch (6.4 mm) openings. Required outdoor air inlets serving a nonresidential portion of a building shall be covered with screen having openings larger than $^1/_4$ inch (6.4 mm) and not larger than 1 inch (25 mm).

❖ The inlet openings for outdoor air must be covered with screen or mesh material with a mesh opening size as specified. The screen openings must be small enough to keep out insects, rodents, birds, etc., while being large enough to prevent blockage of airflow by lint, debris and plant fibers.

618.6 Return-air limitation. Return air from one *dwelling unit* shall not be discharged into another *dwelling unit*.

❖ This section prohibits a forced-air heating/cooling system from serving more than one dwelling unit. Any arrangement in which dwelling units share all or part of an air distribution system would allow a communication of atmospheres between the units. This type of communication would spread odors, smoke, allergens, contaminants and disease-causing organisms from one dwelling unit to another and therefore must be avoided.

618.7 (IFGS) Furnace plenums and air ducts. Where a furnace is installed so that supply ducts carry air circulated by the furnace to areas outside of the space containing the furnace, the return air shall be handled by a duct(s) sealed to the furnace casing and terminating outside of the space containing the furnace.

❖ This section is somewhat redundant with Section 618.4 and has the same intent. That is, to prevent a furnace room, closet, alcove, etc., from developing a negative pressure with respect to the outside of the enclosure (see commentary, Section 618.4). It is a typical design to have a furnace or air handler in a closet with a water heater and the closet door is louvered or a grille is placed in the closet wall. If none of the appliances in the closet are fuel fired, this design is harmless, but, a real hazard is created if any are fuel fired.

SECTION 619 (IFGC)
CONVERSION BURNERS

619.1 Conversion burners. The installation of conversion burners shall conform to ANSI Z21.8.

❖ The referenced standard is an installation standard that, in addition to the manufacturers' instructions, would govern the installation of conversion burners. Conversion burners are an assembly of components including burners, gas controls, blowers, safety devices and supporting means. These units are designed to convert an existing appliance from another fuel to gas, commonly from fuel oil or coal.

INTERNATIONAL CODE COUNCIL®
Copyright © 2015 ICC. ALL RIGHTS RESERVED. Accessed by David Dammon on Jun 21, 2017 12:30:52 PM pursuant to License Agreement with ICC. No further reproduction or distribution authorized. ANY UNAUTHORIZED REPRODUCTION OR DISTRIBUTION IS A VIOLATION OF THE FEDERAL COPYRIGHT ACT AND THE LICENSE AGREEMENT, AND SUBJECT TO CIVIL AND CRIMINAL PENALTIES THEREUNDER.

Conversion of an existing appliance to a different fuel can involve much more than installation of a conversion burner. It can also include the addition of safety controls and limits, combustion air and secondary air supplies, fuel gas piping installation, chimney or vent alterations and other modifications to the existing appliance and its control system.

SECTION 620 (IFGC)
UNIT HEATERS

620.1 General. Unit heaters shall be tested in accordance with ANSI Z83.8 and shall be installed in accordance with the manufacturer's instructions.

❖ Unit heaters are ductless warm-air space heaters that are self-contained and usually suspended from a ceiling or roof structure. Garages, workshops, warehouses, factories, gymnasiums, mercantile spaces and similar large, open spaces are the most common locations for unit heaters [see Commentary Figures 620.1(1) through 620.1(5)].

620.2 Support. Suspended-type unit heaters shall be supported by elements that are designed and constructed to accommodate the weight and dynamic loads. Hangers and brackets shall be of *noncombustible material*.

❖ As with all suspended fuel-fired appliances, a support failure can result in a fire, explosion or injury to building occupants. The supports themselves must be properly designed. Equally important are the structural members to which the supports are attached, such as rafters, beams, joists and purlins. Brackets, pipes, rods, angle iron, structural members and fasteners must be designed for the dead and dynamic loads of the suspended appliance (see Commentary Figure 620.2).

620.3 Ductwork. Ducts shall not be connected to a unit heater unless the heater is *listed* for such installation.

❖ Unit heaters are usually not designed to move air through ductwork. Unless specifically listed for the application, the fans or blowers on unit heaters are designed only for moving air across the heat exchanger without the added friction of ductwork. The addition of ductwork could create a hazard by restricting airflow through the heater.

620.4 Clearance. Suspended-type unit heaters shall be installed with clearances to *combustible materials* of not less than 18 inches (457 mm) at the sides, 12 inches (305 mm) at the bottom and 6 inches (152 mm) above the top where the unit heater has an internal draft hood or 1 inch (25 mm) above the top of the sloping side of the vertical draft hood.

Floor-mounted-type unit heaters shall be installed with clearances to *combustible materials* at the back and one side only of not less than 6 inches (152 mm). Where the flue gases are vented horizontally, the 6-inch (152 mm) *clearance* shall be measured from the draft hood or vent instead of the rear wall of the unit heater. Floor-mounted-type unit heaters shall not be installed on combustible floors unless *listed* for such installation.

Clearances for servicing all unit heaters shall be in accordance with the manufacturer's installation instructions.

Exception: Unit heaters *listed* for reduced *clearance* shall be permitted to be installed with such clearances in accordance with their listing and the manufacturer's instructions.

❖ The required clearances to combustible materials for suspended and floor-mounted unit heaters are specified in this section and must be adhered to unless the unit is listed for less clearance. The clearance reduction methods detailed in Section 308 may be applied where applicable. See the commentary to Section 308 for a complete discussion concerning clearance requirements and clearance reduction methods.



Figure 620.1(1)
DIRECT-VENT UNIT HEATER
(Photo courtesy of Modine Manufacturing Company)



Figure 620.1(2)
POWER-VENTED UNIT HEATER
(Photo courtesy of Modine Manufacturing Company)

INTERNATIONAL CODE COUNCIL®
Copyright © 2015 ICC. ALL RIGHTS RESERVED. Accessed by David Dammon on Jun 21, 2017 12:30:52 PM pursuant to License Agreement with ICC. No further reproduction or distribution authorized. ANY UNAUTHORIZED REPRODUCTION OR DISTRIBUTION IS A VIOLATION OF THE FEDERAL COPYRIGHT ACT AND THE LICENSE AGREEMENT, AND SUBJECT TO CIVIL AND CRIMINAL PENALTIES THEREUNDER.

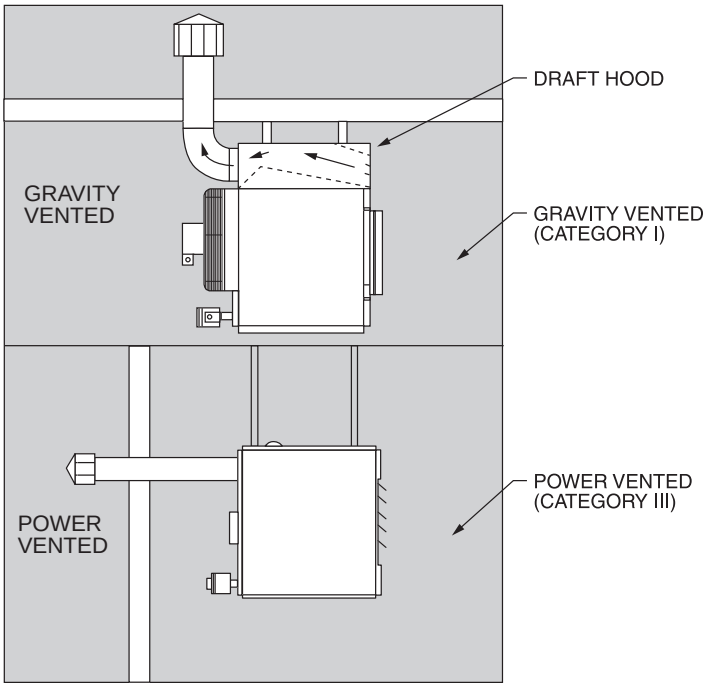

Figure 620.1(3)
UNIT HEATER VENTING (TYPICAL)
(Figure courtesy of Reznor/Thomas & Betts Corporation)

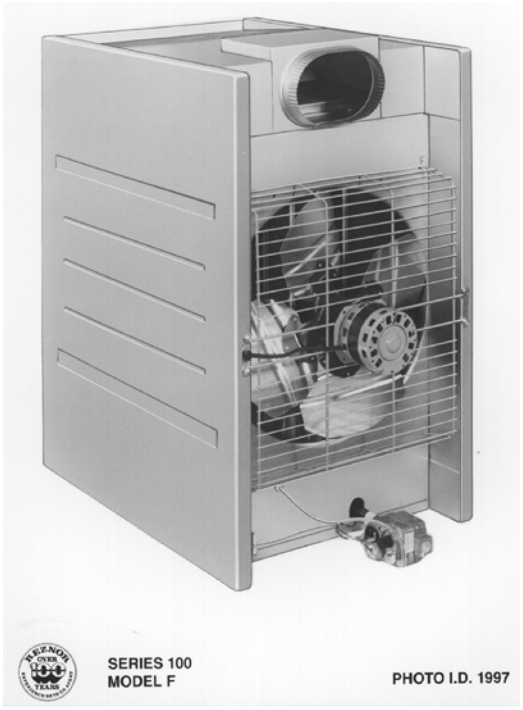

Figure 620.1(4)
DRAFT-HOOD-EQUIPPED UNIT HEATER
(Photo courtesy of Reznor/Thomas & Betts Corporation)

620.5 (IFGS) Installation in commercial garages and aircraft hangars. Unit heaters installed in garages for more than three motor vehicles or in aircraft hangars shall be installed in accordance with Sections 305.9, 305.10 and 305.11.

❖ See the commentary to Sections 305.9 through 309.11.

SECTION 621 (IFGC)
UNVENTED ROOM HEATERS

621.1 General. Unvented room heaters shall be tested in accordance with ANSI Z21.11.2 and shall be installed in accordance with the conditions of the listing and the manufacturer's instructions. Unvented room heaters utilizing fuels other than fuel gas shall be regulated by the *International Mechanical Code*.

❖ Unvented room heaters are limited-size gas-fired space heaters that discharge the combustion byproducts into the space being heated. Like all appliances regulated by the code, unvented gas-fired room heaters must be listed and labeled, and their installation must comply with the manufacturer's installation instructions [see Commentary Figures 621.1(1) and 621.1(2)].

621.2 Prohibited use. One or more unvented room heaters shall not be used as the sole source of comfort heating in a *dwelling unit*.

❖ Unvented room heaters are designed to supplement a central heating system to allow zone heating of particular rooms and spaces. Unvented room heaters

INTERNATIONAL CODE COUNCIL®
Copyright © 2015 ICC. ALL RIGHTS RESERVED. Accessed by David Dammon on Jun 21, 2017 12:30:52 PM pursuant to License Agreement with ICC. No further reproduction or distribution authorized. ANY UNAUTHORIZED REPRODUCTION OR DISTRIBUTION IS A VIOLATION OF THE FEDERAL COPYRIGHT ACT AND THE LICENSE AGREEMENT, AND SUBJECT TO CIVIL AND CRIMINAL PENALTIES THEREUNDER.

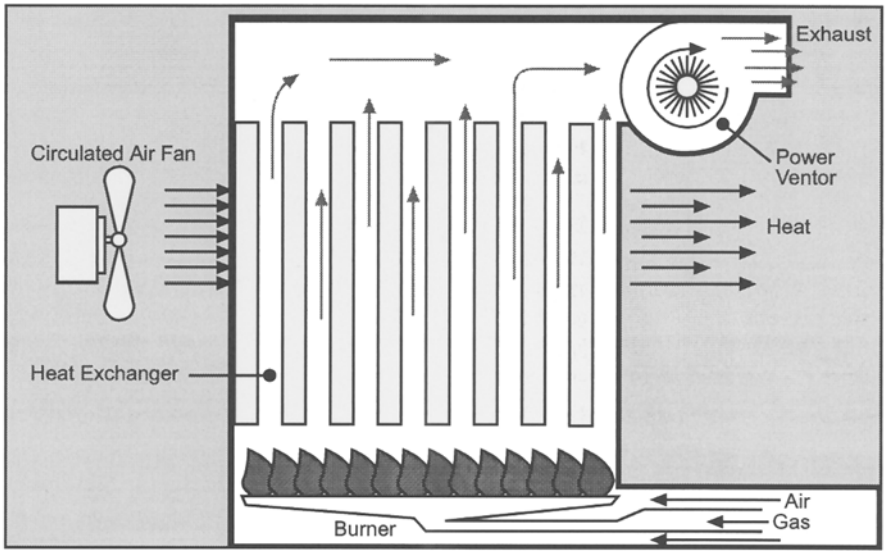

Figure 620.1(5)
FUNDAMENTAL COMPONENTS OF UNIT HEATER
(Figure courtesy of Reznor/Thomas & Betts Corporation)

are not intended for continuous use as would occur if they were the only source of heat in a building. One or more unvented room heaters used as the sole source of heat would not provide adequate heat distribution in most building arrangements and, depending on the heating load, could require continuous operation of the appliance. Unvented gas-log heaters are listed as room heaters and their installation in factory-built fireplaces is addressed in UL 127 [see Commentary Figure 621.1(2)]. Fireplaces built to the current edition of UL 127 will have a label and installation instructions that will either allow or disallow the installation of an unvented gas log in the fireplace firebox (see Commentary Figure 621.2).

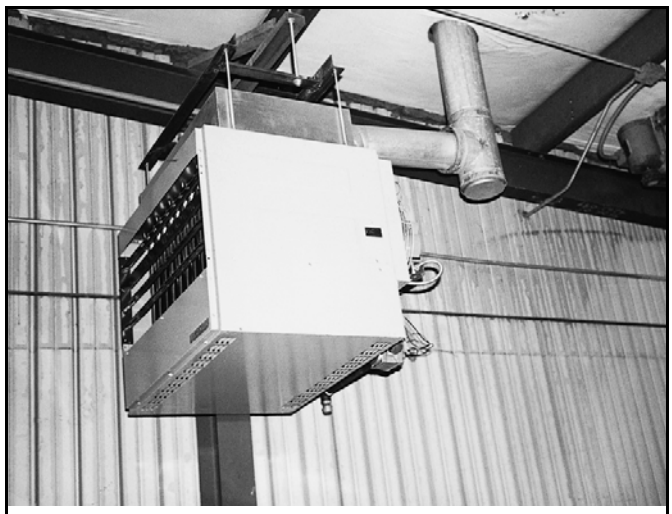

Figure 620.2
UNIT HEATER SUPPORT
(Photo courtesy of Reznor/Thomas & Betts Corporation)

621.3 Input rating. Unvented room heaters shall not have an input rating in excess of 40,000 Btu/h (11.7 kW).

❖ The input rating limitation is consistent with the industry standard for such appliances and allows unvented room heaters to be categorized in the supplemental room heater classification.

621.4 Prohibited locations. Unvented room heaters shall not be installed within occupancies in Groups A, E and I. The location of unvented room heaters shall comply with Section 303.3.

❖ In accordance with this section and Section 303.3, unvented gas-fired heaters are prohibited in assembly, educational and institutional occupancies and in sleeping rooms, bathrooms and toilet rooms in all occupancies (see commentary, Section 303.3 for exceptions). These heaters are considered to be an unacceptable risk in such occupancies because of occupant density, occupant age, occupant physical condition and awareness and small room volumes.

621.5 Room or space volume. The aggregate input rating of all unvented appliances installed in a room or space shall not exceed 20 Btu/h per cubic foot (207 W/m^3) of volume of such room or space. Where the room or space in which the appliances are installed is directly connected to another room or space by a doorway, archway or other opening of comparable size that cannot be closed, the volume of such adjacent room or space shall be permitted to be included in the calculations.

❖ The Btu/h (W) input to room volume ratio limits the accumulation of combustion byproducts in the building interior. Combustion byproducts include carbon monoxide, nitrogen oxides and water vapor. The required room volume would allow dilution of the combustion byproducts by infiltration (see commentary, Section 501.8).

INTERNATIONAL CODE COUNCIL®
Copyright © 2015 ICC. ALL RIGHTS RESERVED. Accessed by David Dammon on Jun 21, 2017 12:30:52 PM pursuant to License Agreement with ICC. No further reproduction or distribution authorized. ANY UNAUTHORIZED REPRODUCTION OR DISTRIBUTION IS A VIOLATION OF THE FEDERAL COPYRIGHT ACT AND THE LICENSE AGREEMENT, AND SUBJECT TO CIVIL AND CRIMINAL PENALTIES THEREUNDER.



Figure 621.1(1)
UNVENTED ROOM HEATER
(Photo courtesy of Empire Comfort Systems Incorporated)



Figure 621.2
UNVENTED ROOM HEATER (DECORATIVE)
(Photo by D.F. Noyes Studio, courtesy of DESA International)



Figure 621.1(2)
FIREBOX FOR UNVENTED ROOM HEATER
(Photo by D.F. Noyes Studio, courtesy of DESA International)

621.6 Oxygen-depletion safety system. Unvented room heaters shall be equipped with an oxygen-depletion-sensitive safety shutoff system. The system shall shut off the gas supply to the main and pilot burners when the oxygen in the surrounding atmosphere is depleted to the percent concentration specified by the manufacturer, but not lower than 18 percent. The system shall not incorporate field adjustment means capable of changing the set point at which the system acts to shut off the gas supply to the room heater.

❖ Because unvented heaters are not vented to the outdoors, the appliance standard requires them to incorporate this extra safety feature. This safety system consists of a special pilot burner device that is incorporated with the appliance's flame safeguard device (see commentary, Section 602.2). The oxygen-depletion sensor is basically a pilot burner that is extremely sensitive to the oxygen content in the combustion air (see definition, "Oxygen depletion safety shutoff system"). If the oxygen content (approximately 20-percent normal) drops to a predetermined level, the pilot flame will become "lazy," shifting from a stable horizontal flame to a less stable, more vertical flame, which is incapable of sufficiently heating the thermocouple or thermopile generator, resulting in main gas control valve shutdown and lockout. The predetermined oxygen level that activates burner shutdown is above the level at which incomplete combustion would start to occur.

The monitoring of oxygen levels in this manner is an indicator of approaching insufficient combustion air and is designed to prevent the formation of excess carbon monoxide. If the oxygen level reaches a low enough percentage of air, the level of oxygen will have an inverse relationship with the level of carbon monoxide. This means that as burners are increasingly starved for oxygen, the amount of carbon monoxide produced by the flames is increased. This relationship is valid for appliances in good working order. An improperly maintained, maladjusted or defective burner could produce abnormal (elevated) amounts of carbon monoxide regardless of the oxygen level in the combustion air, and in such cases, the oxygen-depletion sensor device will react only to the oxygen level because it cannot directly detect burner malfunction or abnormal carbon monoxide production.

INTERNATIONAL CODE COUNCIL®
Copyright © 2015 ICC. ALL RIGHTS RESERVED. Accessed by David Dammon on Jun 21, 2017 12:30:52 PM pursuant to License Agreement with ICC. No further reproduction or distribution authorized. ANY UNAUTHORIZED REPRODUCTION OR DISTRIBUTION IS A VIOLATION OF THE FEDERAL COPYRIGHT ACT AND THE LICENSE AGREEMENT, AND SUBJECT TO CIVIL AND CRIMINAL PENALTIES THEREUNDER.

621.7 Unvented decorative room heaters. An unvented decorative room heater shall not be installed in a factory-built *fireplace* unless the *fireplace* system has been specifically tested, *listed* and *labeled* for such use in accordance with UL 127.

❖ Because the fireplace chimney damper can be closed while an unvented decorative (log) heater (room heater) is operating, the firebox might reach surface temperatures higher than would occur with the damper open. The lack of chimney draft with the resultant dilution air introduction into the firebox would allow higher temperatures to occur in the fireplace components. To prevent surface temperatures from exceeding that allowed by UL 127, that standard now requires factory-built fireplace manufacturers to either test their units for use with unvented log heaters and meet the standard criteria or provide instructions and labels that prohibit such use.

If a factory-built fireplace has not been tested for use with an unvented appliance, the installation instructions and labels must state that the use is prohibited. Fireplaces manufactured before the UL standard added coverage for unvented decorative (log) heaters could not have been tested for that use, and the manufacturers did not have the opportunity to include instructions and labels covering unvented log heaters for use with their units. The installation instructions for fireplace units that were built prior to the unvented heater coverage being added to the UL 127 standard stated that the fireplace was permitted for use only with solid fuel and decorative gas logs listed to ANSI Z21.60. Therefore, regardless of when the fireplace unit was manufactured, unvented decorative heaters can be installed only in factory-built fireplaces that specifically state that they are tested for use with unvented decorative heaters. The fireplace manufacturers will currently indicate whether or not their units are intended for use with unvented decorative heaters. If listed for the application, an unvented decorative (log) heater can be used as a vented decorative appliance by opening the fireplace chimney damper.

621.7.1 Ventless firebox enclosures. Ventless firebox enclosures used with unvented decorative room heaters shall be *listed* as complying with ANSI Z21.91.

❖ Ventless firebox enclosures are designed and tested to accommodate the appliances addressed in Section 621.7. Such enclosures have no chimney or vent connection [see Commentary Figure 621.1(2)].

SECTION 622 (IFGC)
VENTED ROOM HEATERS

622.1 General. Vented room heaters shall be tested in accordance with ANSI Z21.86/CSA 2.32, shall be designed and equipped as specified in Section 602.2 and shall be installed in accordance with the manufacturer's instructions.

❖ This section addresses vented gas-fired space/room heaters, including direct-vent and vent- or chimney-connected appliances, which are limited-size room heaters designed to connect to a vent or chimney. As required by the appliance standard, these appliances are equipped with safety controls that will prevent gas flow to the burners in the event of ignition system failure [see Commentary Figures 622.1(1) and 622.1(2)].



Figure 622.1(1)
VENTED GAS FIREPLACE HEATER
(Photo courtesy of Quadra-Fire)



Figure 622.1(2)
VENTED ROOM HEATER
(Photo courtesy of Empire Comfort Systems Incorporated)

SECTION 623 (IFGC)
COOKING APPLIANCES

623.1 Cooking appliances. Cooking appliances that are designed for permanent installation, including ranges, ovens,

INTERNATIONAL CODE COUNCIL®
Copyright © 2015 ICC. ALL RIGHTS RESERVED. Accessed by David Dammon on Jun 21, 2017 12:30:52 PM pursuant to License Agreement with ICC. No further reproduction or distribution authorized. ANY UNAUTHORIZED REPRODUCTION OR DISTRIBUTION IS A VIOLATION OF THE FEDERAL COPYRIGHT ACT AND THE LICENSE AGREEMENT, AND SUBJECT TO CIVIL AND CRIMINAL PENALTIES THEREUNDER.

stoves, broilers, grills, fryers, griddles, hot plates and barbecues, shall be tested in accordance with ANSI Z21.1, ANSI Z21.58 or ANSI Z83.11 and shall be installed in accordance with the manufacturer's instructions.

❖ This section addresses cooking appliances in all occupancies that are designed for permanent installation, including, but not limited to, ranges, ovens, stoves, broilers, grills, fryers, griddles and barbecues. These appliances must be installed in accordance with the listing and the manufacturer's instructions [see Commentary Figures 623.1(1) and 623.1(2)].

The code intends to regulate the design, construction and installation of cooking appliances that are designed for permanent installation-heated countertop appliances. Appliances that are not readily moveable to another location because of a gas-fuel supply connection would be considered permanently installed, even if they were on casters. Line equipment under a Type I hood, for example, is usually on casters and connected with quick-disconnect-type fuel supply lines to allow movement for routine cleaning. This kind of equipment would be considered permanently installed.

623.2 Prohibited location. Cooking appliances designed, tested, *listed* and *labeled* for use in commercial occupancies shall not be installed within dwelling units or within any area where domestic cooking operations occur.

Exception: Appliances that are also listed as domestic cooking appliances.

❖ Commercial cooking appliances are tested and labeled to different standards than those listed for domestic use. Commercial cooking appliances generally are not insulated to the same level, have higher surface operating temperatures and require a much greater clearance to combustible material. The safety measures inherent to household cooking appliances, such as child-safe push-to-turn knobs and insulated oven doors, are not usually found in commercial cooking appliances. Commercial cooking appliances also have a greater ventilation air requirement for safe operation than household-type cooking appliances. For these reasons, the installation of commercial-type cooking appliances in dwellings is prohibited. Note that many cooking appliances are dual listed as both commercial and domestic (household) cooking appliances. The code does not prohibit such dual-listed appliances in dwelling units because such appliances have the safety features that are necessary for the domestic environment [see Commentary Figures 623.2(1) and 623.2(2)].

623.3 Domestic appliances. Cooking appliances installed within dwelling units and within areas where domestic cooking operations occur shall be *listed* and *labeled* as household-type appliances for domestic use.

❖ Cooking appliances used in dwelling units or in areas where domestic cooking operations occur require a greater degree of user protection and must be listed and labeled as household-type appliances for domestic use (see commentary, Section 623.2). To satisfy residential consumer demand for commercial appliances in the home, some manufacturers are producing listed household-type appliances that have the appearance of commercial application cooking appliances [see Commentary Figures 623.3(1) and 623.3(2)]. Note that appliances could exist that are dual listed to both commercial and domestic standards and as such, would be suitable for either occupancy.



Figure 623.1(1)
COMMERCIAL OVEN
(Photo courtesy of Blodgett Ovens)



Figure 623.1(2)
COMMERCIAL DECK OVEN
(Photo courtesy of Blodgett Ovens)

INTERNATIONAL CODE COUNCIL®
Copyright © 2015 ICC. ALL RIGHTS RESERVED. Accessed by David Dammon on Jun 21, 2017 12:30:52 PM pursuant to License Agreement with ICC. No further reproduction or distribution authorized. ANY UNAUTHORIZED REPRODUCTION OR DISTRIBUTION IS A VIOLATION OF THE FEDERAL COPYRIGHT ACT AND THE LICENSE AGREEMENT, AND SUBJECT TO CIVIL AND CRIMINAL PENALTIES THEREUNDER.



Figure 623.2(1)
DOMESTIC RANGE

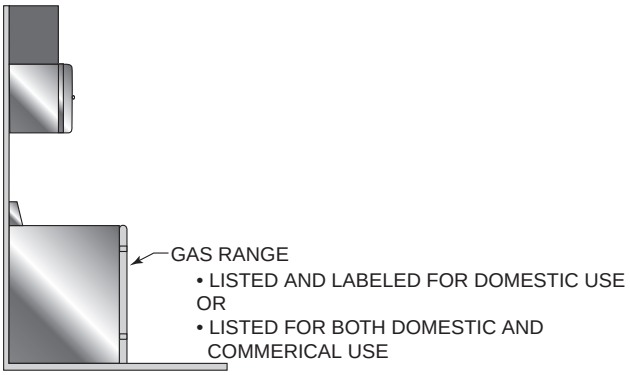

Figure 623.2(2)
DOMESTIC RANGE



Figure 623.3(1)
DOMESTIC (HOUSEHOLD) RANGE
(Photo courtesy of Maytag Corporation)

623.4 Domestic range installation. Domestic ranges installed on combustible floors shall be set on their own bases or legs and shall be installed with clearances of not less than that shown on the label.

❖ This section requires the installation of a domestic range using the legs or base provided by the manufacturer where the range is resting on a combustible surface. These supports were part of the test set-up when the range was tested and must be included in the installation to ensure compliance with the listing. Clearances behind and to the sides of the range must also comply with the listing.

623.5 Open-top broiler unit hoods. A ventilating hood shall be provided above a domestic open-top broiler unit, unless otherwise *listed* for forced down draft ventilation.

❖ Open top broiler units generate smoke and grease-laden vapors as part of the cooking process. A ventilating hood is required to evacuate the effluent from the kitchen. Broilers using forced downdraft ventila-

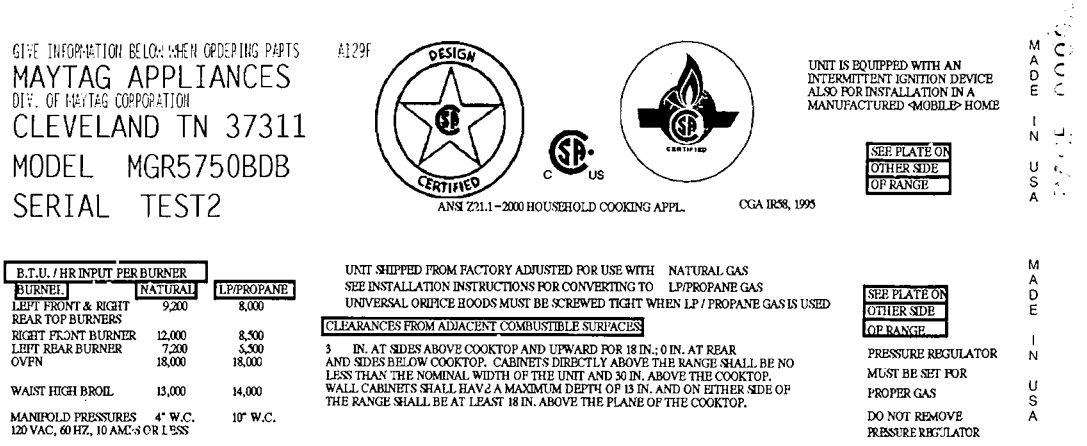

Figure 623.3(2)
HOUSEHOLD-TYPE COOKING APPLIANCE LABEL
(Figure courtesy of Maytag Corporation)

INTERNATIONAL CODE COUNCIL®
Copyright © 2015 ICC. ALL RIGHTS RESERVED. Accessed by David Dammon on Jun 21, 2017 12:30:52 PM pursuant to License Agreement with ICC. No further reproduction or distribution authorized. ANY UNAUTHORIZED REPRODUCTION OR DISTRIBUTION IS A VIOLATION OF THE FEDERAL COPYRIGHT ACT AND THE LICENSE AGREEMENT, AND SUBJECT TO CIVIL AND CRIMINAL PENALTIES THEREUNDER.

tion are exempt from the hood requirement because they exhaust the effluent down through exhaust ducts installed in or under the floor.

623.5.1 Clearances. A minimum *clearance* of 24 inches (610 mm) shall be maintained between the cooking top and *combustible material* above the hood. The hood shall be at least as wide as the open-top broiler unit and be centered over the unit.

❖ The ventilation hood must be large enough and positioned in such a way that cooking effluent will be captured. The clearance to combustibles above the broiler surface must be maintained to avoid a potential fire hazard.

623.6 Commercial cooking appliance venting. Commercial cooking appliances, other than those exempted by Section 501.8, shall be vented by connecting the *appliance* to a vent or chimney in accordance with this code and the *appliance* manufacturer's instructions or the *appliance* shall be vented in accordance with Section 505.1.1.

❖ Unless exempted by Section 501.8, commercial cooking appliances must be vented by a chimney or venting system or by the ventilation exhaust hood (Type I or II) required by the IMC (see commentary, Section 505.1.1).

Because the hood will be installed in almost all cases, it is taken advantage of and used as the means of venting the appliances. In this case, the Type I or II hood required by the IMC serves a dual purpose as an exhaust system for cooking effluent and as a combustion product venting means.

623.7 (IFGS) Vertical clearance above cooking top. Household cooking appliances shall have a vertical *clearance* above the cooking top of not less than 30 inches (760 mm) to *combustible material* and metal cabinets. A minimum *clearance* of 24 inches (610 mm) is permitted where one of the following is installed:

1. The underside of the *combustible material* or metal cabinet above the cooking top is protected with not less than $^1/_4$-inch (6.4 mm) insulating millboard covered with sheet metal not less than 0.0122 inch (0.3 mm) thick.
2. A metal ventilating hood constructed of sheet metal not less than 0.0122 inch (0.3 mm) thick is installed above the cooking top with a *clearance* of not less than $^1/_4$ inch (6.4 mm) between the hood and the underside of the *combustible material* or metal cabinet. The hood shall have a width not less than the width of the *appliance* and shall be centered over the *appliance.*
3. A *listed* cooking *appliance* or microwave oven is installed over a *listed* cooking *appliance* and in compliance with the terms of the manufacturer's installation instructions for the upper appliance.

❖ This section addresses the fire hazard created by having hot surfaces, open flames and, possibly, a cooking fire located under combustible cabinets, soffits, etc., and also under metal cabinets with combustible contents (see Commentary Figure 623.7).

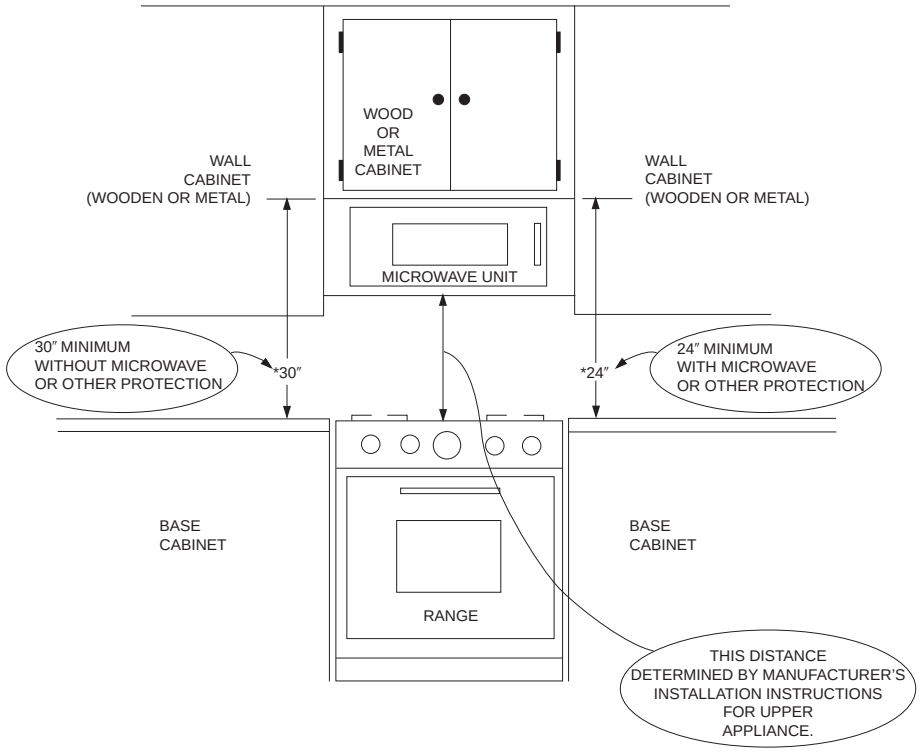

For SI: 1 inch = 25.4 mm.

Figure 623.7
CLEARANCE ABOVE COOKING TOP

INTERNATIONAL CODE COUNCIL®
Copyright © 2015 ICC. ALL RIGHTS RESERVED. Accessed by David Dammon on Jun 21, 2017 12:30:52 PM pursuant to License Agreement with ICC. No further reproduction or distribution authorized. ANY UNAUTHORIZED REPRODUCTION OR DISTRIBUTION IS A VIOLATION OF THE FEDERAL COPYRIGHT ACT AND THE LICENSE AGREEMENT, AND SUBJECT TO CIVIL AND CRIMINAL PENALTIES THEREUNDER.

SECTION 624 (IFGC)
WATER HEATERS

624.1 General. Water heaters shall be tested in accordance with ANSI Z21.10.1 and ANSI Z21.10.3 and shall be installed in accordance with the manufacturer's instructions. Water heaters utilizing fuels other than fuel gas shall be regulated by the *International Mechanical Code.*

❖ Water heaters are recognized by the codes as both a plumbing and a mechanical appliance. Chapter 5 of the *International Plumbing Code*® (IPC®) and Chapter 10 of the IMC contain more detailed information concerning the testing and installation of water heaters than is given in the code. This section identifies those aspects of water heaters specifically related to fuel gas. The IMC addresses those aspects related to other fuel or power sources.

The standards listed are specific to gas-fired water heaters. ANSI Z21.10.1 is for water heaters with an input rating less than or equal to 75,000 Btu per hour (22 kW). ANSI Z21.10.3 is for water heaters with an input rating greater than 75,000 Btu per hour (22 kW) and for circulating and instantaneous water heaters.

624.1.1 Installation requirements. The requirements for water heaters relative to sizing, relief valves, drain pans and scald protection shall be in accordance with the *International Plumbing Code.*

❖ This section refers the user to the IPC for generic requirements related to water heaters not related to the fuel source. These include connections to the potable water system, safety devices such as relief valves, drain pans for protection of the structure and sizing of the water heaters.

624.2 Water heaters utilized for space heating. Water heaters utilized both to supply potable hot water and provide hot water for space-heating applications shall be *listed* and *labeled* for such applications by the manufacturer and shall be installed in accordance with the manufacturer's instructions and the *International Plumbing Code.*

❖ Water heaters serving the dual purpose of supplying potable hot water and serving as a heat source for a space-heating system must be listed and labeled for that dual application. This section does not address water heaters used solely for space-heating applications, but rather addresses water heaters that serve a secondary purpose of space heating. The label will indicate whether the water heater is suitable for space heating [see Commentary Figures 624.2(1) and 624.2(2)].

The IPC contains additional requirements for the proper installation of these appliances.

SECTION 625 (IFGC)
REFRIGERATORS

625.1 General. Refrigerators shall be tested in accordance with ANSI Z21.19 and shall be installed in accordance with the manufacturer's instructions.



Figure 624.2(1)
DIRECT-VENT WATER HEATER DESIGNED FOR BOTH POTABLE WATER HEATING AND SPACE HEATING APPLICATIONS

Refrigerators shall be provided with adequate clearances for ventilation at the top and back, and shall be installed in accordance with the manufacturer's instructions. If such instructions are not available, not less than 2 inches (51 mm) shall be provided between the back of the refrigerator and the wall and not less than 12 inches (305 mm) above the top.

❖ Gas operated refrigerators, although still available, are rarely installed where they would be subject to the permit and inspection process. They usually are used in remote areas such as hunting cabins or in areas where electricity is unavailable or unreliable. At one time, they were used on many farms before electricity became readily available. Clearances are specified in the code for use where manufacturer's installation instructions are not available or do not address clearances (see commentary, Section 501.8).

INTERNATIONAL CODE COUNCIL®
Copyright © 2015 ICC. ALL RIGHTS RESERVED. Accessed by David Dammon on Jun 21, 2017 12:30:52 PM pursuant to License Agreement with ICC. No further reproduction or distribution authorized. ANY UNAUTHORIZED REPRODUCTION OR DISTRIBUTION IS A VIOLATION OF THE FEDERAL COPYRIGHT ACT AND THE LICENSE AGREEMENT, AND SUBJECT TO CIVIL AND CRIMINAL PENALTIES THEREUNDER.

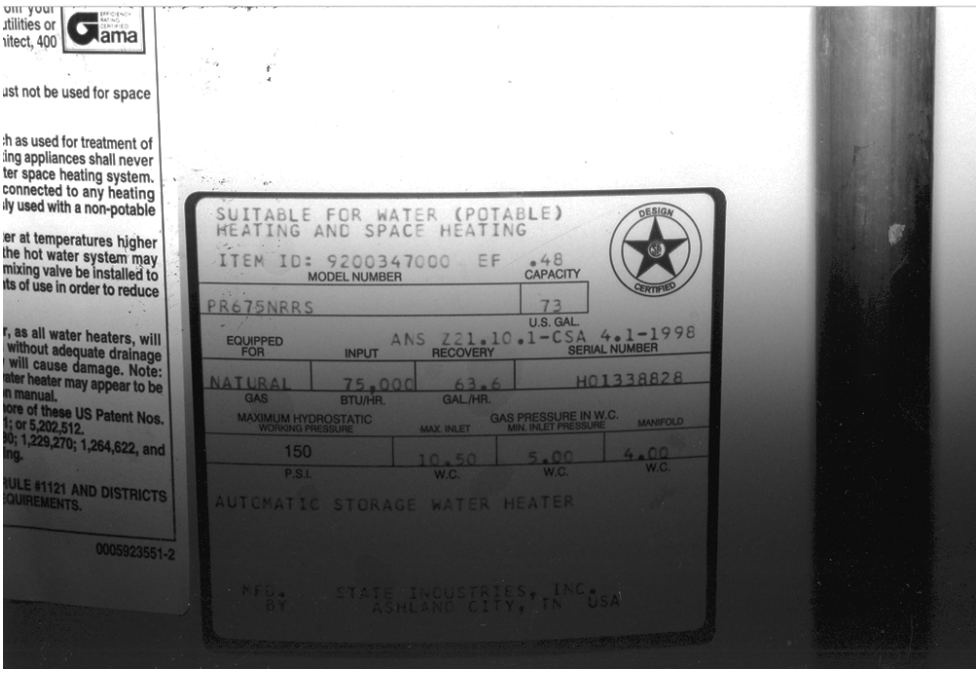

Figure 624.2(2)
WATER HEATER LABEL INDICATING SUITABILITY FOR BOTH POTABLE WATER HEATING AND SPACE HEATING

SECTION 626 (IFGC)
GAS-FIRED TOILETS

626.1 General. Gas-fired toilets shall be tested in accordance with ANSI Z21.61 and installed in accordance with the manufacturer's instructions.

❖ Gas-fired toilets, similar to gas-operated refrigerators, are generally located in remote locations such as hunting or fishing cabins, or in temporary locations such as construction sites. They provide an alternative where water or sewer service is unavailable or where it is not feasible to connect to the sewer for a temporary installation. The firing chamber, upon activation by the user, incinerates the wastes and exhausts the products of combustion through a vent.

626.2 Clearance. A gas-fired toilet shall be installed in accordance with its listing and the manufacturer's instructions, provided that the *clearance* shall in any case be sufficient to afford ready *access* for use, cleanout and necessary servicing.

❖ This section requires installation that complies with the manufacturer's instructions but emphasizes that, regardless of the instructions, room must be provided to allow cleaning, normal maintenance and proper use.

SECTION 627 (IFGC)
AIR-CONDITIONING APPLIANCES

627.1 General. Gas-fired air-conditioning appliances shall be tested in accordance with ANSI Z21.40.1 or ANSI Z21.40.2 and shall be installed in accordance with the manufacturer's instructions.

❖ Gas-fired air conditioning systems include absorption types and internal-combustion-engine-driven machines. The referenced ANSI standards contain requirements for gas-fired air-conditioning equipment. ANSI Z21.40.1 regulates gas-fired absorption systems; ANSI Z21.40.2 regulates work-activated gas-fired air conditioning and heat pump systems. The code relies on the manufacturer's instructions and the referenced standards for installation requirements.

627.2 Independent piping. Gas *piping* serving heating appliances shall be permitted to also serve cooling appliances where such heating and cooling appliances cannot be operated simultaneously (see Section 402).

❖ Where gas supply piping serves both heating and cooling equipment, this section permits the piping to be sized based on the larger gas demand of the two systems rather than sizing based on the total demand of the two systems. This provision is not applicable unless the heating and cooling systems are incapable of operating simultaneously.

627.3 Connection of gas engine-powered air conditioners. To protect against the effects of normal vibration in service, gas engines shall not be rigidly connected to the gas supply *piping.*

❖ Because of the inherent vibration of a gas engine, a connector must be installed between the engine and the gas supply pipe so that the vibration does not place undue stress on the connector or have an adverse effect on the shutoff valve or the gas piping.

INTERNATIONAL CODE COUNCIL®
Copyright © 2015 ICC. ALL RIGHTS RESERVED. Accessed by David Dammon on Jun 21, 2017 12:30:52 PM pursuant to License Agreement with ICC. No further reproduction or distribution authorized. ANY UNAUTHORIZED REPRODUCTION OR DISTRIBUTION IS A VIOLATION OF THE FEDERAL COPYRIGHT ACT AND THE LICENSE AGREEMENT, AND SUBJECT TO CIVIL AND CRIMINAL PENALTIES THEREUNDER.

Vibration transmitted to the connector and piping could eventually cause joint failure and/or connector failure. The connector must be designed and approved for this application.

627.4 Clearances for indoor installation. Air-conditioning appliances installed in rooms other than alcoves and closets shall be installed with clearances not less than those specified in Section 308.3 except that air-conditioning appliances *listed* for installation at lesser clearances than those specified in Section 308.3 shall be permitted to be installed in accordance with such listing and the manufacturer's instructions and air-conditioning appliances *listed* for installation at greater clearances than those specified in Section 308.3 shall be installed in accordance with such listing and the manufacturer's instructions.

Air-conditioning appliances installed in rooms other than alcoves and closets shall be permitted to be installed with reduced clearances to *combustible material*, provided that the *combustible material* is protected in accordance with Table 308.2.

❖ See the commentary to Section 308.3.

627.5 Alcove and closet installation. Air-conditioning appliances installed in spaces such as alcoves and closets shall be specifically *listed* for such installation and installed in accordance with the terms of such listing. The installation clearances for air-conditioning appliances in alcoves and closets shall not be reduced by the protection methods described in Table 308.2.

❖ Air-conditioning equipment must be specifically listed for installation in rooms not large in comparison with the size of the equipment, such as alcoves and closets.

627.6 Installation. Air-conditioning appliances shall be installed in accordance with the manufacturer's instructions. Unless the *appliance* is *listed* for installation on a combustible surface such as a floor or roof, or unless the surface is protected in an *approved* manner, the *appliance* shall be installed on a surface of noncombustible construction with *noncombustible material* and surface finish and with no *combustible material* against the underside thereof.

❖ The intent of this section is to prohibit the installation of gas-fired air-conditioning equipment on combustible surfaces unless specifically listed for such an installation or the surface is protected in a manner approved by the code official.

627.7 Plenums and air ducts. A plenum supplied as a part of the air-conditioning *appliance* shall be installed in accordance with the *appliance* manufacturer's instructions. Where a plenum is not supplied with the *appliance*, such plenum shall be installed in accordance with the fabrication and installation instructions provided by the plenum and *appliance* manufacturer. The method of connecting supply and return ducts shall facilitate proper circulation of air.

Where the air-conditioning *appliance* is installed within a space separated from the spaces served by the *appliance*, the air circulated by the *appliance* shall be conveyed by ducts that are sealed to the casing of the *appliance* and that separate the circulating air from the combustion and ventilation air.

❖ This section requires installation of plenums and ducts that are part of an air-conditioning system to comply with the air-conditioning equipment manufacturer's requirements. Further guidance on plenums and ducts can be found in Chapter 6 of the IMC (see commentary, Section 618.4).

627.8 Refrigeration coils. A refrigeration coil shall not be installed in conjunction with a forced-air furnace where circulation of cooled air is provided by the furnace blower, unless the blower has sufficient capacity to overcome the external static resistance imposed by the duct system and cooling coil at the air throughput necessary for heating or cooling, whichever is greater. Furnaces shall not be located upstream from cooling units, unless the cooling unit is designed or equipped so as not to develop excessive temperature or pressure. Refrigeration coils shall be installed in parallel with or on the downstream side of central furnaces to avoid condensation in the heating element, unless the furnace has been specifically *listed* for downstream installation. With a parallel flow arrangement, the dampers or other means used to control flow of air shall be sufficiently tight to prevent any circulation of cooled air through the furnace.

Means shall be provided for disposal of condensate and to prevent dripping of condensate onto the heating element.

❖ A refrigeration coil adds static pressure loss to that of the furnace and duct system. This section requires that the furnace blower be sized to overcome the total resistance.

The location of a cooling coil downstream from a furnace will expose the coil to higher temperatures during the heating cycle. Most systems of this type will be listed, and the manufacturer will design the equipment to prevent the buildup of temperature and pressure in the cooling coils. This may be achieved using a method that allows the coolant to expand into the piping system or an expansion chamber.

Installing cooling coils upstream of the furnace might expose the burners and heat exchanger to condensation formed during a cooling cycle. Only furnaces listed for this application with corrosion-resistant elements are allowed. Refrigeration coils installed in a parallel arrangement with furnaces can also cause condensation problems if the cooled air is allowed to pass over the heat exchanger. Bypass dampers are usually installed in front of the heating unit to prevent this problem. A listed parallel system will have addressed the condensation problem in its design.

A drain pan or other approved method must be incorporated in the installation to capture the cooling coil condensation and prevent it from dripping onto furnace components such as the heat exchanger. Section 307 of the IMC addresses condensate disposal.

627.9 Cooling units used with heating boilers. Boilers, where used in conjunction with refrigeration systems, shall be installed so that the chilled medium is piped in parallel with

INTERNATIONAL CODE COUNCIL®
Copyright © 2015 ICC. ALL RIGHTS RESERVED. Accessed by David Dammon on Jun 21, 2017 12:30:52 PM pursuant to License Agreement with ICC. No further reproduction or distribution authorized. ANY UNAUTHORIZED REPRODUCTION OR DISTRIBUTION IS A VIOLATION OF THE FEDERAL COPYRIGHT ACT AND THE LICENSE AGREEMENT, AND SUBJECT TO CIVIL AND CRIMINAL PENALTIES THEREUNDER.

the heating boiler with appropriate valves to prevent the chilled medium from entering the heating boiler. Where hot water heating boilers are connected to heating coils located in air-handling units where they might be exposed to refrigerated air circulation, such boiler *piping* systems shall be equipped with flow control valves or other automatic means to prevent gravity circulation of the boiler water during the cooling cycle.

❖ Where boilers are used in the same system with cooling units, the code requires that they be in parallel with controls to prevent chilled water from circulating into the boiler. Similarly, if heating coils are located where they could be exposed to cooled air, the code requires valves or other means to prevent chilled water from circulating through the boiler from the heating coils during the cooling cycle. In either case the efficiency of the system will be adversely affected, and boiler damage could result.

627.10 Switches in electrical supply line. Means for interrupting the electrical supply to the air-conditioning *appliance* and to its associated cooling tower (if supplied and installed in a location remote from the air conditioner) shall be provided within sight of and not over 50 feet (15 240 mm) from the air conditioner and cooling tower.

❖ This requirement is a personnel safety issue that is also required by Section 628.

SECTION 628 (IFGC)
ILLUMINATING APPLIANCES

628.1 General. Illuminating appliances shall be tested in accordance with ANSI Z21.42 and shall be installed in accordance with the manufacturer's instructions.

❖ Illuminating appliances must be listed and labeled as required for other appliances regulated by the code. These appliances include gas lamps designed for outdoor use (see commentary, Section 301.4).

628.2 Mounting on buildings. Illuminating appliances designed for wall or ceiling mounting shall be securely attached to substantial structures in such a manner that they are not dependent on the gas *piping* for support.

❖ Gas piping is not designed to act as a support for any appliance. All appliances must be independently supported to prevent stresses and strains on fuel supply connections.

628.3 Mounting on posts. Illuminating appliances designed for post mounting shall be securely and rigidly attached to a post. Posts shall be rigidly mounted. The strength and rigidity of posts greater than 3 feet (914 mm) in height shall be at least equivalent to that of a $2^{1}/_{2}$-inch-diameter (64 mm) post constructed of 0.064-inch-thick (1.6-mm) steel or a 1-inch (25.4 mm) Schedule 40 steel pipe. Posts 3 feet (914 mm) or less in height shall not be smaller than a $^{3}/_{4}$-inch (19.1 mm) Schedule 40 steel pipe. Drain openings shall be provided near the base of posts where there is a possibility of water collecting inside them.

❖ Regardless of the intended method of mounting and support of an appliance, the installation must be secure and must not transmit any loading to the fuel supply connection. A requirement is added to provide a drain at the base of the post to prevent collection of water that can deteriorate the post material.

628.4 Appliance pressure regulators. Where an *appliance* pressure regulator is not supplied with an illuminating *appliance* and the service line is not equipped with a service pressure regulator, an *appliance* pressure regulator shall be installed in the line to the illuminating *appliance*. For multiple installations, one regulator of adequate capacity shall be permitted to serve more than one illuminating *appliance*.

❖ Outdoor lighting appliances generally require low-pressure gas flow. Some of these lighting appliances are supplied by the manufacturer with a built-in pressure regulator set for the proper operating pressure. If, however, the regulator is not provided, this section requires the installation of one in the gas line serving the appliance. This regulator must be appropriate for the pressure required by the manufacturer. One pressure regulator with the required capacity is allowed to be installed to serve more than one lighting appliance if the piping pressure losses permit.

SECTION 629 (IFGC)
SMALL CERAMIC KILNS

629.1 General. Kilns shall be installed in accordance with the manufacturer's instructions and the provisions of this code. Kilns shall comply with Section 301.3.

❖ Small ceramic kilns used for hobby and noncommercial purposes operate at high temperatures and therefore need to be regulated by the code as are other heat-producing appliances. The minimum level of safety required for installation of small kilns is compliance with the kiln manufacturer's installation instructions and any applicable requirements of this code such as clearance requirements.

SECTION 630 (IFGC)
INFRARED RADIANT HEATERS

630.1 General. Infrared radiant heaters shall be tested in accordance with ANSI Z83.19 or Z83.20 and shall be installed in accordance with the manufacturer's instructions.

❖ This section addresses radiant heaters, including ceramic element and steel tube-type designs. Infrared heaters are produced in both vented and unvented types and function by creating a very hot surface area from which heat energy is directly radiated. Infrared radiant heaters are usually suspended from ceilings or roofs. These heaters are typically used for "spot" heating in spaces that are otherwise unconditioned or not conditioned to human comfort levels. Radiant heaters have the advantage of being able to heat objects and personnel without heating the surrounding air [see Commentary Figures 630.1(1) through 630.1(3)].

The code relies on the manufacturers' instructions for installation requirements. Maintaining the clear-

INTERNATIONAL CODE COUNCIL®
Copyright © 2015 ICC. ALL RIGHTS RESERVED. Accessed by David Dammon on Jun 21, 2017 12:30:52 PM pursuant to License Agreement with ICC. No further reproduction or distribution authorized. ANY UNAUTHORIZED REPRODUCTION OR DISTRIBUTION IS A VIOLATION OF THE FEDERAL COPYRIGHT ACT AND THE LICENSE AGREEMENT, AND SUBJECT TO CIVIL AND CRIMINAL PENALTIES THEREUNDER.

ance to combustibles for radiant heaters is of paramount importance. Direct radiation is a very effective method of transferring heat energy, and improperly located combustible materials can be readily ignited [see Commentary Figure 630.1(4)].

630.2 Support. Infrared radiant heaters shall be fixed in a position independent of gas and electric supply lines. Hangers and brackets shall be of *noncombustible material*.

❖ Supports must prevent radiant heaters from falling. A fall would mean losing the required clearance to combustibles; putting tension or pressure on electrical, fuel and vent connections; and dislocating that redirects the radiant output to where a fire hazard would result. Often, such heaters are improperly hung and restrained, allowing heater movement (swinging) to stress flexible (semirigid) gas connectors. Gas connectors must be designed and approved for applica-



Figure 630.1(1)
CERAMIC BURNER INFRARED RADIANT HEATER
(Photo courtesy of Reznor/Thomas & Betts Corporation)



Figure 630.1(2)
TUBE-TYPE INFRARED RADIANT HEATER
(Photo courtesy of Reznor/Thomas & Betts Corporation)



Figure 630.1(3)
TUBE-TYPE INFRARED RADIANT HEATER
(Photo courtesy of Reznor/Thomas & Betts Corporation)

INTERNATIONAL CODE COUNCIL®
Copyright © 2015 ICC. ALL RIGHTS RESERVED. Accessed by David Dammon on Jun 21, 2017 12:30:52 PM pursuant to License Agreement with ICC. No further reproduction or distribution authorized. ANY UNAUTHORIZED REPRODUCTION OR DISTRIBUTION IS A VIOLATION OF THE FEDERAL COPYRIGHT ACT AND THE LICENSE AGREEMENT, AND SUBJECT TO CIVIL AND CRIMINAL PENALTIES THEREUNDER.

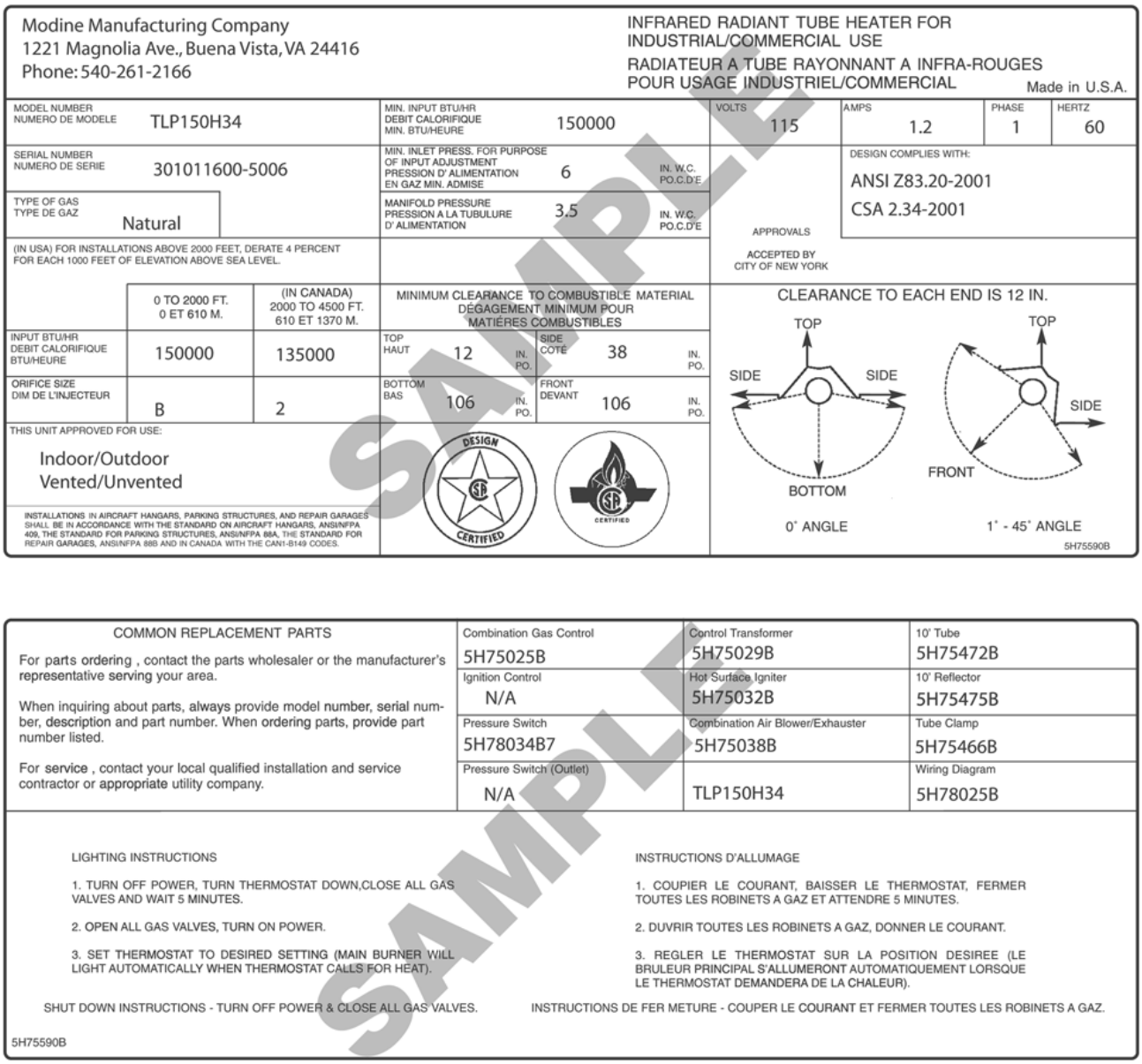

Figure 630.1(4)
SAMPLE LABEL INFRARED RADIANT TUBE HEATER
(Figure courtesy of Modine Manufacturing Company)

tions in which the appliance moves because of expansion and contraction or lack of restraints. To accommodate expansion/contraction movement, some appliance manufacturers require flexible connectors to be coiled or shaped in a manner that allows limited movement without stressing the metal of the connector, similar to expansion loops and offsets in rigid piping systems.

630.3 (IFGS) Combustion and ventilation air. Where unvented infrared heaters are installed, natural or mechanical means shall provide outdoor ventilation air at a rate of not less than 4 cfm per 1,000 Btu/h (0.38 m^3/min/kW) of the aggregate input rating of all such heaters installed in the space. Exhaust openings for removing flue products shall be above the level of the heaters.

❖ Similar to the requirements to Section 612.5, this section requires outdoor ventilation air for any space in which unvented radiant heaters are installed. The introduction of outdoor air below the level of the heaters and the provision of exhaust openings above the level of the heaters would help convey combustion products to the outdoors.

INTERNATIONAL CODE COUNCIL®
Copyright © 2015 ICC. ALL RIGHTS RESERVED. Accessed by David Dammon on Jun 21, 2017 12:30:52 PM pursuant to License Agreement with ICC. No further reproduction or distribution authorized. ANY UNAUTHORIZED REPRODUCTION OR DISTRIBUTION IS A VIOLATION OF THE FEDERAL COPYRIGHT ACT AND THE LICENSE AGREEMENT, AND SUBJECT TO CIVIL AND CRIMINAL PENALTIES THEREUNDER.

630.4 (IFGS) Installation in commercial garages and aircraft hangars. Overhead infrared heaters installed in garages for more than three motor vehicles or in aircraft hangars shall be installed in accordance with Sections 305.9, 305.10 and 305.11.

❖ See the commentary to Sections 305.9 through 305.11.

SECTION 631 (IFGC)
BOILERS

631.1 Standards. Boilers shall be *listed* in accordance with the requirements of ANSI Z21.13 or UL 795. If applicable, the boiler shall be designed and constructed in accordance with the requirements of ASME CSD-1 and as applicable, the ASME *Boiler and Pressure Vessel Code*, Sections I, II, IV, V and IX and NFPA 85.

❖ The scope of this section includes boilers in all occupancies including power plants; factories; industrial plants; schools; and institutional occupancies such as hospitals, commercial laundries, hotels and residential structures. Boilers are defined in Section 202 of this code [see Commentary Figures 631.1(1) and 631.1(2)].

Boilers are potentially dangerous if not properly designed, constructed and operated, more so than many other appliances because of the potential explosion hazard associated with pressure vessels. In addition to this code, several industry standards are referenced. Manufactured gas-fired boilers must be listed to either ANSI Z21.13 or UL 795. Commentary Figure 202(3) shows a typical label with the required information for a listed boiler. Only the design and construction requirements of boilers are regulated by the referenced standards. The requirements for specific types of boilers can be found in the respective sections of the referenced standards.

631.2 Installation. In addition to the requirements of this code, the installation of boilers shall be in accordance with the manufacturer's instructions and the *International Mechanical Code*. Operating instructions of a permanent type shall be attached to the boiler. Boilers shall have all controls set, adjusted and tested by the installer. A complete control diagram together with complete boiler operating instructions shall be furnished by the installer. The manufacturer's rating data and the nameplate shall be attached to the boiler.

❖ This section governs the installation and commissioning of boilers and their control systems. The mechanical equipment requirements for approval, labeling, installation, maintenance, repair and alteration are regulated by the IMC and the manufacturer's instructions. The IMC contains installation requirements for boilers including provisions for shutoff valves, pressure relief valves, safety valves, electrical control wiring, blowoff valves, expansion tanks and low water cutoff controls [see Commentary Figures 631.1(1) and 631.1(2) and 631.2(1) through 631.2(3)].

Complete operating instructions must be permanently affixed to the boiler upon completion of the installation. Boiler systems can be complex and gen-



Figure 631.1(1)
STEAM HEATING BOILER WITH GAUGE-GLASS, LOW WATER CUTOFF CONTROL, PRESSURE GAUGE, PRESSURE LIMIT CONTROL AND AUTOMATIC VENT DAMPER
(Photo courtesy of Weil-McLain)

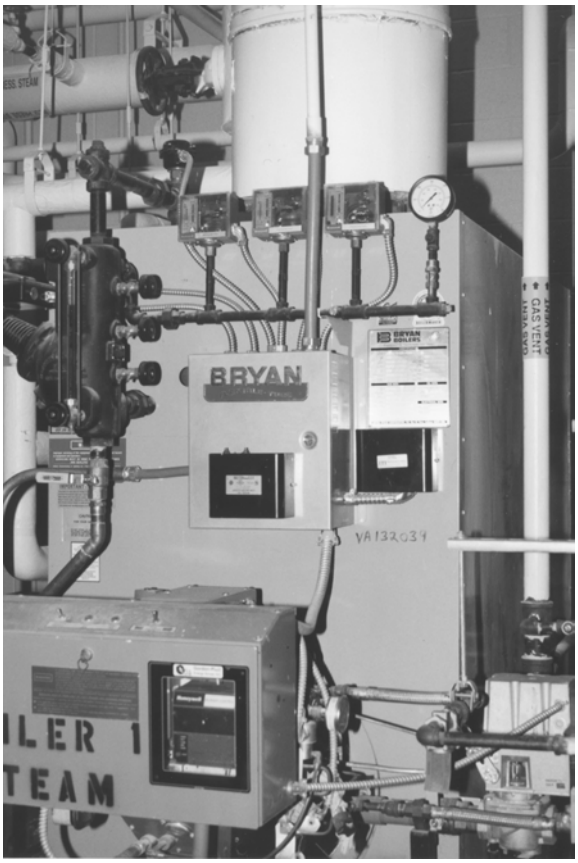

Figure 631.1(2)
STEAM BOILER WITH POWER BURNER, LOW-WATER CUTOFF CONTROLS AND PRESSURE CONTROLS

INTERNATIONAL CODE COUNCIL®
Copyright © 2015 ICC. ALL RIGHTS RESERVED. Accessed by David Dammon on Jun 21, 2017 12:30:52 PM pursuant to License Agreement with ICC. No further reproduction or distribution authorized. ANY UNAUTHORIZED REPRODUCTION OR DISTRIBUTION IS A VIOLATION OF THE FEDERAL COPYRIGHT ACT AND THE LICENSE AGREEMENT, AND SUBJECT TO CIVIL AND CRIMINAL PENALTIES THEREUNDER.

erally require coordination of several pieces of equipment. The proper operating procedures, set points, etc., must be specified and included in these instructions. This is usually done in the control system design documentation, including such things as diagrams, system schematics and control sequence descriptions. Typically, an operating and maintenance (O&M) manual is given to the building owner/operator upon completion of the project. Along with operating and control procedures, the O&M manual will clearly identify routine maintenance and calibration information. It is also typical for operation sequences and calibration information to be displayed under glass in a conspicuous place in the boiler room for use by operating and service personnel. The intent is to provide the owner/operator with all operating and control information necessary to properly operate and maintain the boiler and its associated controls and equipment.



Figure 631.2(1)
ELECTRONIC PROBE-TYPE LOW-WATER CUTOFF CONTROL WITH GAUGE GLASS AND TRI-COCKS FOR STEAM BOILER APPLICATION
(Photo courtesy of McDonnell & Miller)



Figure 631.2(2)
ELECTRONIC PROBE-TYPE LOW-WATER CUTOFF CONTROL FOR HOT WATER BOILER APPLICATION
(Photo courtesy of McDonnell & Miller)

631.3 Clearance to *combustible materials*. Clearances to *combustible materials* shall be in accordance with Section 308.4.

❖ Boilers, like all gas-fired equipment and appliances, operate at high temperatures that require adequate separation from combustibles. This section refers the user to Section 308 of the code for requirements for clearances to combustibles and allowable clearance reduction methods.

SECTION 632 (IFGC)
EQUIPMENT INSTALLED IN EXISTING UNLISTED BOILERS

632.1 General. Gas *equipment* installed in existing unlisted boilers shall comply with Section 631.1 and shall be installed in accordance with the manufacturer's instructions and the *International Mechanical Code*.

❖ This section addresses the replacement of equipment, such as burner assemblies, in existing unlisted boilers. The code relies on the manufacturer's installation instructions, the requirements of the IMC and Section 631 of the code.

SECTION 633 (IFGC)
STATIONARY FUEL-CELL POWER SYSTEMS

[F] 633.1 General. Stationary fuel-cell power systems having a power output not exceeding 10 MW shall be tested in accordance with ANSI CSA America FC 1 and shall be installed in accordance with the manufacturer's instructions, NFPA 853, the *International Building Code* and the *International Fire Code*.

❖ Fuel cell power plants combine hydrogen and oxygen to create electrical and heat energy. Through a process called "reforming," natural gas can be converted to a hydrogen-rich gas that is commonly used as the fuel for stationary fuel cell plants. NFPA 853 is an installation standard that covers site and location requirements and piping, ventilation/exhaust and fire protection requirements (see Chapter 7).



Figure 631.2(3)
ELECTRONIC PROBE-TYPE LOW-WATER CUTOFF CONTROL FOR HOT WATER BOILER APPLICATION
(Photo courtesy of McDonnell & Miller)

INTERNATIONAL CODE COUNCIL®
Copyright © 2015 ICC. ALL RIGHTS RESERVED. Accessed by David Dammon on Jun 21, 2017 12:30:52 PM pursuant to License Agreement with ICC. No further reproduction or distribution authorized. ANY UNAUTHORIZED REPRODUCTION OR DISTRIBUTION IS A VIOLATION OF THE FEDERAL COPYRIGHT ACT AND THE LICENSE AGREEMENT, AND SUBJECT TO CIVIL AND CRIMINAL PENALTIES THEREUNDER.

SECTION 634 (IFGS)
CHIMNEY DAMPER OPENING AREA

634.1 Free opening area of chimney dampers. Where an unlisted decorative *appliance* for installation in a vented *fireplace* is installed, the *fireplace* damper shall have a permanent free opening equal to or greater than specified in Table 634.1.

❖ This section intends to ensure that an adequate fireplace damper opening is installed for all unlisted decorative appliances. The minimum damper opening size is part of the listing for listed appliances, but the installer and the code official might not have access to this information for an unlisted appliance. Section 301.3 requires all appliances to be listed.

The free opening size is a function of the height of the chimney and the appliance input rating. As stated in note "a" of Table 634.1, the opening areas in the table correspond to the cross-sectional area of round chimney flues having nominal sizes from 3 to 8 inches (76 to 203 mm), and the 64 square inches (41 290 mm^2) represents the cross-sectional area of a standard 8-inch by 8-inch chimney tile.

SECTION 635 (IFGC)
GASEOUS HYDROGEN SYSTEMS

635.1 Installation. The installation of gaseous hydrogen systems shall be in accordance with the applicable requirements of this code, the *International Fire Code* and the *International Building Code*.

❖ See the commentary to Chapter 7.

SECTION 636 (IFGC)
OUTDOOR DECORATIVE APPLIANCES

636.1 General. Permanently fixed-in-place outdoor decorative appliances shall be tested in accordance with ANSI Z21.97 and shall be installed in accordance with the manufacturer's instructions.

❖ There are different types of gas-fired decorative appliances that are for outdoor use only, such as simulated campfire units and table top decorative display burner units. Such appliances are popular for outdoor living areas, patios, outdoor kitchens, etc. (see Commentary Figure 636.1).

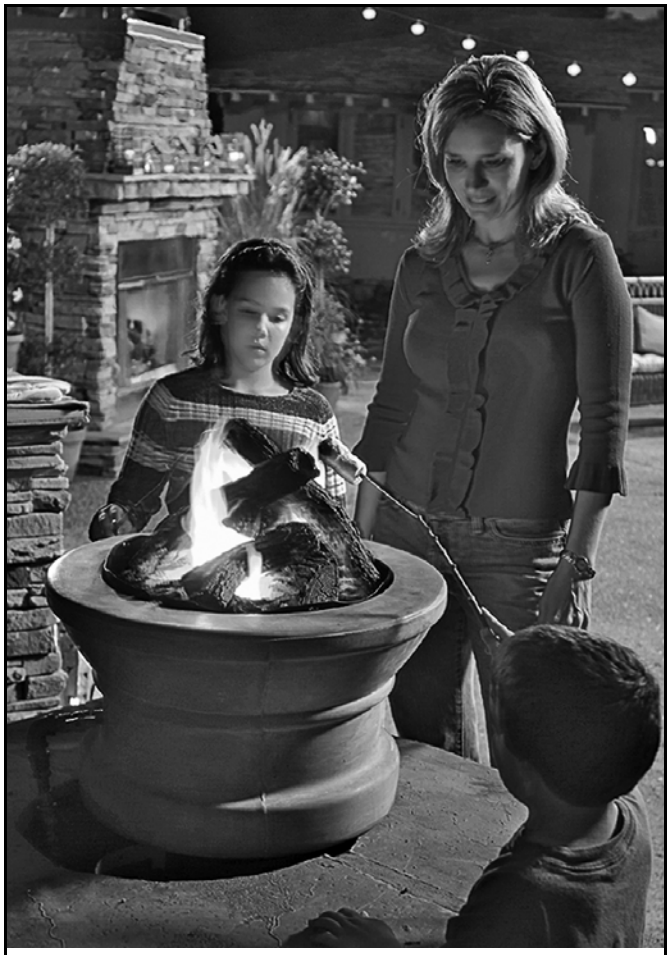

Figure 636.1
OUTDOOR (CAMPFIRE) DECORATIVE APPLIANCE
(Photo courtesy of Hearth and Home Technologies, Inc.)

TABLE 634.1
FREE OPENING AREA OF CHIMNEY DAMPER FOR VENTING FLUE GASES FROM UNLISTED DECORATIVE APPLIANCES FOR INSTALLATION IN VENTED FIREPLACES

	MINIMUM PERMANENT FREE OPENING (square inches)[a]						
	8	13	20	29	39	51	64
CHIMNEY HEIGHT (feet)	Appliance input rating (Btu per hour)						
6	7,800	14,000	23,200	34,000	46,400	62,400	80,000
8	8,400	15,200	25,200	37,000	50,400	68,000	86,000
10	9,000	16,800	27,600	40,400	55,800	74,400	96,400
15	9,800	18,200	30,200	44,600	62,400	84,000	108,800
20	10,600	20,200	32,600	50,400	68,400	94,000	122,200
30	11,200	21,600	36,600	55,200	76,800	105,800	138,600

For SI: 1 inch = 25.4 mm, 1 foot = 304.8 mm, 1 square inch = 645.16 m^2, 1 British thermal unit per hour = 0.2931 W.

a. The first six minimum permanent free openings (8 to 51 square inches) correspond approximately to the cross-sectional areas of chimneys having diameters of 3 through 8 inches, respectively. The 64-square-inch opening corresponds to the cross-sectional area of standard 8-inch by 8-inch chimney tile.

INTERNATIONAL CODE COUNCIL®
Copyright © 2015 ICC. ALL RIGHTS RESERVED. Accessed by David Dammon on Jun 21, 2017 12:30:52 PM pursuant to License Agreement with ICC. No further reproduction or distribution authorized. ANY UNAUTHORIZED REPRODUCTION OR DISTRIBUTION IS A VIOLATION OF THE FEDERAL COPYRIGHT ACT AND THE LICENSE AGREEMENT, AND SUBJECT TO CIVIL AND CRIMINAL PENALTIES THEREUNDER.

Bibliography

The following resource materials were used in the preparation of the commentary for this chapter of the code.

IBC-2015, *International Building Code*. Washington, DC: International Code Council, 2014.

IMC-2015, *International Mechanical Code*. Washington, DC: International Code Council, 2014.

IPC-2015, *International Plumbing Code*. Washington, DC: International Code Council, 2014.

INTERNATIONAL CODE COUNCIL®

Copyright © 2015 ICC. ALL RIGHTS RESERVED. Accessed by David Dammon on Jun 21, 2017 12:30:52 PM pursuant to License Agreement with ICC. No further reproduction or distribution authorized. ANY UNAUTHORIZED REPRODUCTION OR DISTRIBUTION IS A VIOLATION OF THE FEDERAL COPYRIGHT ACT AND THE LICENSE AGREEMENT, AND SUBJECT TO CIVIL AND CRIMINAL PENALTIES THEREUNDER.

INTERNATIONAL CODE COUNCIL®
Copyright © 2015 ICC. ALL RIGHTS RESERVED. Accessed by David Dammon on Jun 21, 2017 12:30:52 PM pursuant to License Agreement with ICC. No further reproduction or distribution authorized. ANY UNAUTHORIZED REPRODUCTION OR DISTRIBUTION IS A VIOLATION OF THE FEDERAL COPYRIGHT ACT AND THE LICENSE AGREEMENT, AND SUBJECT TO CIVIL AND CRIMINAL PENALTIES THEREUNDER.

Chapter 7:
Gaseous Hydrogen Systems

General Comments

Chapter 7 was added to the code in 2003 to cover hydrogen-generating systems, vehicle refueling systems, piping and storage systems and testing of piping systems. Fuel cell power plants are addressed in Section 633. The definition of "Fuel gas" includes hydrogen in addition to the traditional fuel gases such as natural gas and liquefied petroleum gases (LP-gases). Chapter 7 was created to segregate the hydrogen provisions from the provisions applicable to other fuel gases and thus avoid confusion regarding what applies to hydrogen and what does not. The hydrogen coverage is intended to be self-contained in this chapter, except that Chapters 1, 2, 8 and the applicable portions of Chapter 3 also apply in conjunction with Chapter 7.

Hydrogen, symbol H_2, is the lightest of all gases with a vapor density of 0.1, meaning that air is approximately 10 times heavier than hydrogen. At atmospheric pressure, it has a flammability range of 4.0 to 75.0 percent vapor in air by volume. Hydrogen is the most abundant element in the universe and is believed to be the element from which all other elements were created in the cosmos. Because of its small molecular size, hydrogen diffuses rapidly through porous materials. It also dissolves in and diffuses through metals slowly at ambient temperatures and more rapidly at elevated temperatures.

On earth, hydrogen is not found in uncombined form as free hydrogen except in minute traces. The majority of our hydrogen is locked in water molecules, H_2O. Hydrogen is produced by several chemical processes, including the electrolysis of water and the reaction of natural gas or light hydrocarbons with steam in the presence of a catalyst (steam reforming). Most of the hydrogen now produced in the United States is on an industrial scale by the process of steam reforming, or as a byproduct of petroleum refining and chemicals production. However, there is growing interest in two different types of hydrogen-generating appliances to produce hydrogen on-site at the customer's refueling facility or even at a private residence from either electricity or from natural gas, propane or other fuels.

Electrolysis of water breaks it down into its two building blocks, hydrogen and oxygen, by passing an electrical current through electrodes submerged in the water [see Commentary Figures 700(1) and 702.1]. Adding an electrolyte such as a salt improves the conductivity of the water and increases the efficiency of the process. The hydrogen gas is collected and compressed for storage and the oxygen is typically released to the atmosphere.

Although hydrogen holds great promise as a clean, abundant and nonpolluting source of energy, there is no free ride in nature. Before the energy of hydrogen can be used, an equal or greater amount of energy to produce, store and transport the gas must be expended. In other words, energy must be used to tear apart molecules to generate hydrogen before the energy obtained from recombining hydrogen and oxygen atoms in fuel cells can be reaped. It is certainly worth the effort because fuel cells are more efficient and far less polluting than gasoline and diesel engines.

Purpose

Chapter 7 provides for the installation of hydrogen systems to reduce the hazards that are associated with flammable gases and those that are unique to hydrogen. The use of hydrogen as a fuel for power generation and vehicles is expected to grow in the near future as the technology continues to advance and a hydrogen infrastructure is built. In fact, it is the lack of availability of hydrogen, not the lack of equipment that uses hydrogen that is preventing more widespread use of hydrogen fuel [see Commentary Figures 700(2) and 700(3)].

Hydrogen is a colorless, odorless, tasteless, flammable nontoxic gas that burns with an almost invisible bluish flame. A hydrogen flame is very pale and difficult to see in daylight. A major concern with hydrogen is the fact that odorants cannot be added because the chemicals involved would poison the fuel cells, thus hydrogen is not odorized and cannot be detected by any of the human senses.

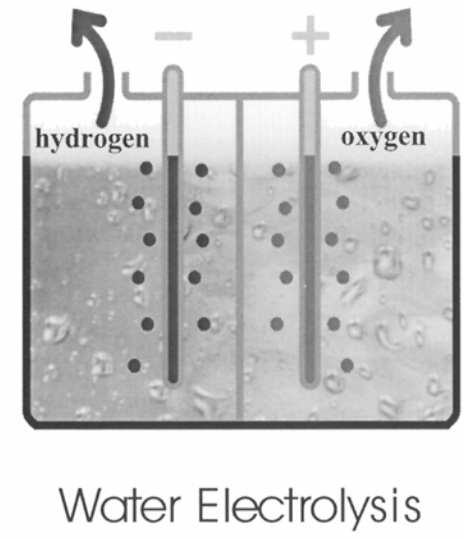

Figure 700(1)
ELECTROLYSIS OF WATER

INTERNATIONAL CODE COUNCIL®
Copyright © 2015 ICC. ALL RIGHTS RESERVED. Accessed by David Dammon on Jun 21, 2017 12:30:52 PM pursuant to License Agreement with ICC. No further reproduction or distribution authorized. ANY UNAUTHORIZED REPRODUCTION OR DISTRIBUTION IS A VIOLATION OF THE FEDERAL COPYRIGHT ACT AND THE LICENSE AGREEMENT, AND SUBJECT TO CIVIL AND CRIMINAL PENALTIES THEREUNDER.

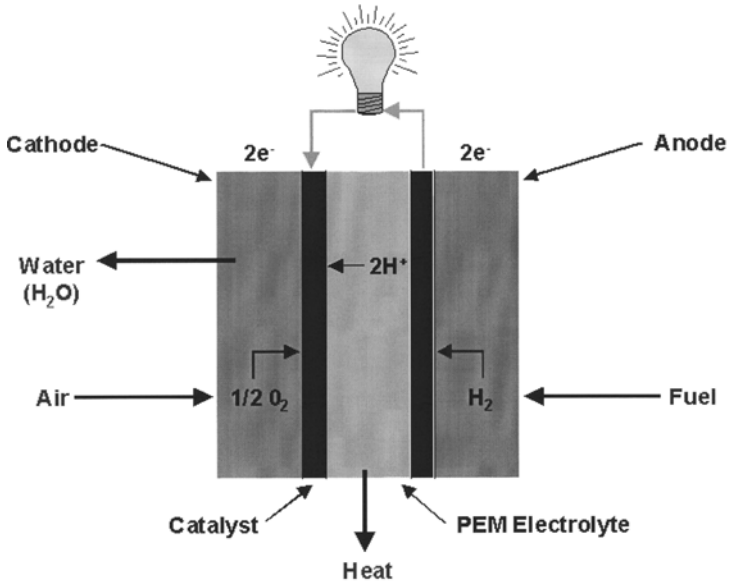

Figure 700(2)
FUEL CELL PRINCIPLE OF OPERATION

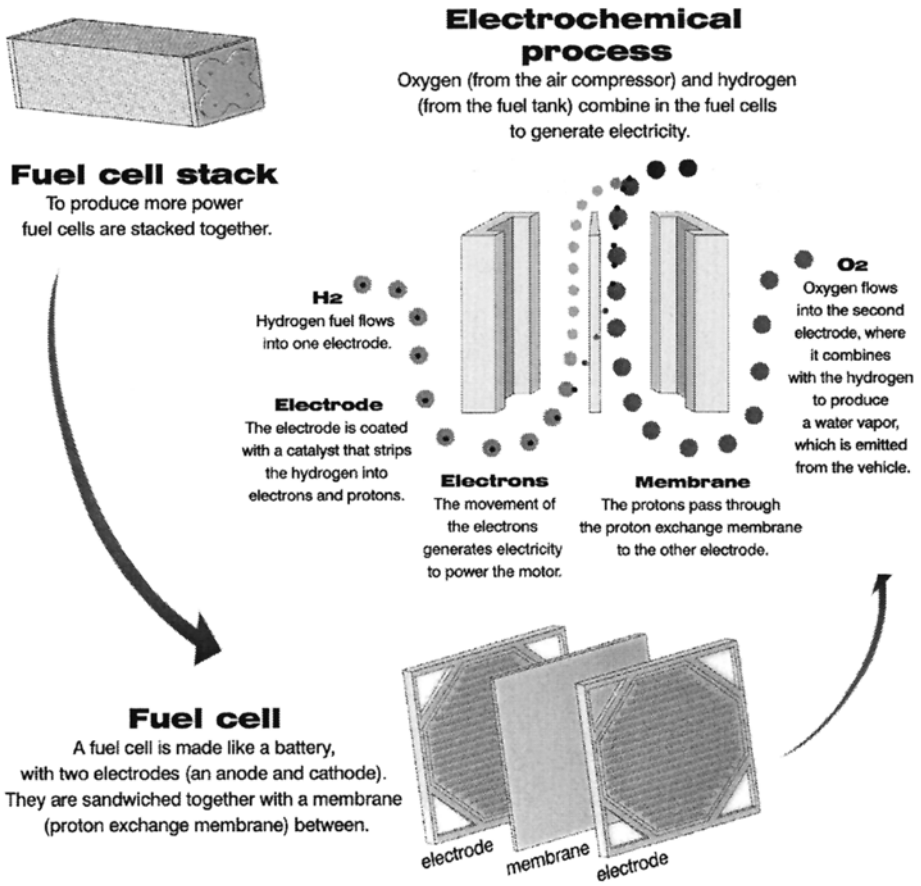

Figure 700(3)
FUEL CELL PRINCIPLE OF OPERATION

INTERNATIONAL CODE COUNCIL®
Copyright © 2015 ICC. ALL RIGHTS RESERVED. Accessed by David Dammon on Jun 21, 2017 12:30:52 PM pursuant to License Agreement with ICC. No further reproduction or distribution authorized. ANY UNAUTHORIZED REPRODUCTION OR DISTRIBUTION IS A VIOLATION OF THE FEDERAL COPYRIGHT ACT AND THE LICENSE AGREEMENT, AND SUBJECT TO CIVIL AND CRIMINAL PENALTIES THEREUNDER.

SECTION 701 (IFGC)
GENERAL

701.1 Scope. The installation of gaseous hydrogen systems shall comply with this chapter and Chapters 53 and 58 of the *International Fire Code*. Compressed gases shall also comply with Chapter 50 of the *International Fire Code* for general requirements.

❖ Chapter 30 of the *International Fire Code*® (IFC®) covers the use, handling and storage of compressed gases and Chapter 35 covers the use and storage of flammable gases. Chapters 30 and 35 of the IFC address the hazards of compressed hydrogen gas systems including stored hydrogen gas in pressure vessels. These referenced code sections are intended to reduce the risk posed by the inadvertent rupture of a pressure vessel and release of its hydrogen gas component or the leakage of the flammable gas associated with a piping rupture.

A reference to the commensurate IFC provisions appropriately serves to limit the quantities of compressed hydrogen gas present on both commercial and residential sites, and considers indoor and outdoor use aspects adequately. Reference to Chapter 41 covering pyrophoric materials is intended to address emerging technology (now being contemplated by the automotive industry) that allows for storage of higher densities of compressed hydrogen gas in containers with relatively lower applied pressures.

701.2 Permits. Permits shall be required as set forth in Section 106 and as required by the *International Fire Code*.

❖ This section refers to the applicable administrative rules in the IFC and code governing the issuance, suspension, renewal or modification of a permit for work affecting gaseous hydrogen service systems.

SECTION 702 (IFGC)
GENERAL DEFINITIONS

702.1 Definitions. The following words and terms shall, for the purposes of this chapter and as used elsewhere in this code, have the meanings shown herein.

❖ Section 202 applies to this chapter. The terms that are unique to this chapter are defined herein for convenience.

[F] GASEOUS HYDROGEN SYSTEM. An assembly of *piping*, devices and apparatus designed to generate, store, contain, distribute or transport a nontoxic, gaseous hydrogen containing mixture having at least 95-percent hydrogen gas by volume and not more than 1-percent oxygen by volume. Gaseous hydrogen systems consist of items such as compressed gas containers, reactors and appurtenances, including pressure regulators, pressure relief devices, manifolds, pumps, compressors and interconnecting *piping* and tubing and controls.

❖ This term includes the source of hydrogen and all piping and devices between the source and the using equipment. The gas in a hydrogen system is above the upper flammability limit and is therefore, "too rich" to burn. Any leakage, however, will quickly form an explosive mixture in the ambient atmosphere.

[F] HYDROGEN FUEL-GAS ROOM. A room or space that is intended exclusively to house a gaseous hydrogen system.

❖ An enclosed space used exclusively for a gaseous hydrogen system requires construction and protection that are unique to the hazards associated with these areas. The definition itself should not be interpreted to preclude H_2 piping systems from serving distributed hydrogen-using equipment and appliances located elsewhere on site or in the building. However, the appropriate material-specific quantity limitations of the *International Building Code*® (IBC®) and the IFC must be consulted.

HYDROGEN-GENERATING APPLIANCE. A self-contained package or factory-matched packages of integrated systems for generating gaseous hydrogen. Hydrogen-generating appliances utilize electrolysis, reformation, chemical or other processes to generate hydrogen.

❖ Hydrogen generators use water or hydrocarbon fuels as a feedstock for generation of pure hydrogen or a hydrogen-rich gas (see Commentary Figure 702.1). Hydrogen-generating appliances based on chemical reformers separate out the hydrogen from fossil fuels such as natural gas, propane, gasoline, etc. This is the same high-temperature chemical process used at large oil refineries to produce hydrogen. By generating the hydrogen on site at the fueling station or customer's facility, these hydrogen-generating appliances avoid the high cost of either liquefying hydrogen and delivering it by cryogenic tanker truck, or installing a national hydrogen pipeline system that could cost many tens of billions of dollars. In effect, these on-site hydrogen-generating appliances take advantage of one of two existing energy infrastructures: either the natural gas distribution system or the electrical grid.

SECTION 703 (IFGC)
GENERAL REQUIREMENTS

703.1 Hydrogen-generating and refueling operations. Hydrogen-generating and refueling appliances shall be installed and located in accordance with their listing and the manufacturer's instructions. Ventilation shall be required in accordance with Section 703.1.1, 703.1.2 or 703.1.3 in public garages, private garages, repair garages, automotive motor fuel-dispensing facilities and parking garages that contain hydrogen-generating appliances or refueling systems. For the purpose of this section, rooms or spaces that are not part of the living space of a dwelling unit and that communicate directly with a private garage through openings shall be considered to be part of the private garage.

❖ This section intends to minimize the potential for explosions by limiting the source of hydrogen gas and by requiring sufficient ventilation to dissipate any leakage. The last sentence of this section is the same

INTERNATIONAL CODE COUNCIL®
Copyright © 2015 ICC. ALL RIGHTS RESERVED. Accessed by David Dammon on Jun 21, 2017 12:30:52 PM pursuant to License Agreement with ICC. No further reproduction or distribution authorized. ANY UNAUTHORIZED REPRODUCTION OR DISTRIBUTION IS A VIOLATION OF THE FEDERAL COPYRIGHT ACT AND THE LICENSE AGREEMENT, AND SUBJECT TO CIVIL AND CRIMINAL PENALTIES THEREUNDER.

as found in Section 305.3 and is addressed in the commentary for that section.

703.1.1 Natural ventilation. Indoor locations intended for hydrogen-generating or refueling operations shall be limited to a maximum floor area of 850 square feet (79 m^2) and shall communicate with the outdoors in accordance with Sections 703.1.1.1 and 703.1.1.2. The maximum rated output capacity of hydrogen generating appliances shall not exceed 4 standard cubic feet per minute (0.00189 m^3/s) of hydrogen for each 250 square feet (23.2 m^2) of floor area in such spaces. The minimum cross-sectional dimension of air openings shall be 3 inches (76 mm). Where ducts are used, they shall be of the same cross-sectional area as the free area of the openings to which they connect. In such locations, *equipment* and appliances having an *ignition source* shall be located such that the source of ignition is not within 12 inches (305 mm) of the ceiling.

❖ This section parallels the intent of Section 305.3, but, with respect to the ceiling instead of the floor. This section does not apply to spaces that only house vehicles and that do not contain hydrogen-generating or refueling operations. Because it is more buoyant, hydrogen will dissipate more quickly than natural gas, and much more quickly than either propane or gasoline, both of which have vapors that are heavier than air and will linger at an accident site. However, hydrogen and natural gas can both accumulate in unventilated pockets at the top of indoor structures and could represent a risk in such situations.

Thus, ignition sources must be avoided at the top of any unventilated spaces for hydrogen gas. Also, hydrogen is odorless, colorless and burns with a flame that is not generally visible to the human eye. This means that it is unlikely that people will be able to detect unsafe conditions without appropriate instrumentation [similar to carbon monoxide (CO) accumulation in a structure].



Figure 702.1
HYDROGEN-GENERATING APPLIANCE

703.1.1.1 Two openings. Two permanent openings shall be provided within the garage. The upper opening shall be located entirely within 12 inches (305 mm) of the ceiling of the garage. The lower opening shall be located entirely within 12 inches (305 mm) of the floor of the garage. Both openings shall be provided in the same exterior wall. The openings shall communicate directly with the outdoors and shall have a minimum free area of $^1/_2$ square foot per 1,000 cubic feet (1 $m^2/610\ m^3$) of garage volume.

❖ The location requirement will prevent the openings from being more than 12 inches (305 mm) tall because the required openings must be entirely within the 12 inches (305 mm) of wall space measured down from the ceiling and up from the floor. The openings must be in the same wall to help create a gravity flow of gases driven by the natural buoyancy of hydrogen gas. The bottom opening is an air inlet and the top is an air outlet.

703.1.1.2 Louvers and grilles. In calculating the free area required by Section 703.1.1.1, the required size of openings shall be based on the net free area of each opening. If the free area through a design of louver or grille is known, it shall be used in calculating the size opening required to provide the free area specified. If the design and free area are not known, it shall be assumed that wood louvers will have 25-percent free area and metal louvers and grilles will have 75-percent free area. Louvers and grilles shall be fixed in the open position.

❖ This section recognizes that louvers and grilles are usually installed over air inlets and outlets to prevent rain, snow and animals from entering the building. When louvers or grilles are used, the solid portion of the louver or grille must be considered when determining the unobstructed (net clear) area of the opening.

Air openings are sized based on there being a free, unobstructed area for the passage of air into the space. Louvers or grilles placed over these openings reduce the area of the openings because of the area occupied by the solid portions of the grille or louver. The reduction in area must be considered because only the unobstructed area can be credited toward the required opening size.

The reduction in opening area caused by the presence of grilles or louvers will always require openings to be larger than determined from the sizing ratios of this chapter and larger than any duct of the minimum required size that might connect to these openings.

703.1.2 Mechanical ventilation. Indoor locations intended for hydrogen-generating or refueling operations shall be ventilated in accordance with Section 502.16 of the *International Mechanical Code*. In such locations, *equipment* and appliances having an *ignition source* shall be located such that the source of ignition is below the mechanical ventilation *outlet*(s).

❖ Section 502.16 of the *International Mechanical Code*® (IMC®) contains criteria for the design and operation of a mechanical ventilation system in repair garages for natural-gas- and hydrogen-fueled vehicles. This

INTERNATIONAL CODE COUNCIL®
Copyright © 2015 ICC. ALL RIGHTS RESERVED. Accessed by David Dammon on Jun 21, 2017 12:30:52 PM pursuant to License Agreement with ICC. No further reproduction or distribution authorized. ANY UNAUTHORIZED REPRODUCTION OR DISTRIBUTION IS A VIOLATION OF THE FEDERAL COPYRIGHT ACT AND THE LICENSE AGREEMENT, AND SUBJECT TO CIVIL AND CRIMINAL PENALTIES THEREUNDER.

section makes Section 502.16 of the IMC applicable to indoor spaces containing hydrogen-generating and/or refueling operations. Sources of ignition must be located below the exhaust outlets because it is at the exhaust outlets where the highest hydrogen concentration would occur.

703.1.3 Specially engineered installations. As an alternative to the provisions of Sections 703.1.1 and 703.1.2, the necessary supply of air for ventilation and dilution of flammable gases shall be provided by an *approved* engineered system.

❖ The code is not intended to inhibit innovative ideas or technological advances. A comprehensive regulatory document such as a fuel gas code cannot envision and then address all future innovations in the industry. As a result, a performance code must be applicable to and provide a basis for the approval of an increasing number of newly developed, innovative materials, systems and methods for which no code text or referenced standards yet exist. The fact that a material, product or method of construction is not addressed in the code is not an indication that prohibition of the material, product or method is intended. The code official is expected to apply sound technical judgement in accepting materials, systems or methods that, while not anticipated by the drafters of the current code text, can be demonstrated to offer equivalent performance. By virtue of its text, the code regulates new and innovative construction practices while addressing the relative safety of building occupants. The code official is responsible for determining whether a requested alternative provides a level of protection of the public health, safety and welfare as required by the code.

[F] 703.2 Containers, cylinders and tanks. Compressed gas containers, cylinders and tanks shall comply with Chapters 53 and 58 of the *International Fire Code*.

❖ The design and construction of containers must meet the requirements listed in Chapters 30 and 35 of the IFC and the standards referenced there.

[F] 703.2.1 Limitations for indoor storage and use. Flammable gas cylinders in occupancies regulated by the *International Residential Code* shall not exceed 250 cubic feet (7.1 m^3) at normal temperature and pressure (NTP).

❖ Flammable gas must not be stored or used where an accident could cause a loss of life. They must be stored and used under preventive safety guidelines. Cylinders with a capacity of 250 cubic feet (7.1 m^3) or less are allowed for maintenance of buildings, taking care of patients and equipment operation.

[F] 703.2.2 Design and construction. Compressed gas containers, cylinders and tanks shall be designed, constructed and tested in accordance with Chapter 50 of the *International Fire Code,* ASME *Boiler and Pressure Vessel Code* (Section VIII) or DOTn 49 CFR, Parts 100-180.

❖ Chapter 27 of the IFC and the referenced standards establish rules of safety governing the design, fabrication and testing of storage vessels, including those for gaseous and liquid hydrogen.

[F] 703.3 Pressure relief devices. Pressure relief devices shall be provided in accordance with Sections 703.3.1 through 703.3.8. Pressure relief devices shall be sized and selected in accordance with CGA S-1.1, CGA S-1.2 and CGA S-1.3.

❖ Pressure relief devices are essential for cryogenics because of the high pressures and low temperatures at which cryogenics are maintained. Although storage tanks, other containers and transfer piping are normally well insulated, some heating of the contents will occur with time, causing internal pressures to increase. Pressure relief mechanisms are one method of relieving these overpressures and avoiding a hazardous situation. Three Compressed Gas Association standards that cover the full range of container types from portable to stationary are referenced.

Sections 703.3.1 through 703.3.8 contain requirements related to accessibility for maintenance, general sizing, installation requirements and device integrity.

[F] 703.3.1 Valves between pressure relief devices and containers. Valves including shutoffs, check valves and other mechanical restrictions shall not be installed between the pressure relief device and container being protected by the relief device.

Exception: A locked-open shutoff valve on containers equipped with multiple pressure relief device installations where the arrangement of the valves provides the full required flow through the minimum number of required relief devices at all times.

❖ Any valve or restriction placed between a pressure relief device and the vessel it protects could render the device useless if the valve was totally or partially closed. Restrictions in the inlet to a pressure relief device are dangerous because closing the valve in that location would allow overpressure in the container to build without relief.

[F] 703.3.2 Installation. Valves and other mechanical restrictions shall not be located between the pressure relief device and the point of release to the atmosphere.

❖ Valves and other restrictions in the outlet (discharge) piping from a pressure relief device would have the same effect as valves and restrictions placed upstream of the device (see commentary, Section 703.3.1).

[F] 703.3.3 Containers. Containers shall be provided with pressure relief devices in accordance with the ASME *Boiler and Pressure Vessel Code* (Section VIII), DOTn 49 CFR, Parts 100-180 and Section 703.3.7.

❖ This section states very clearly that pressure relief devices are required for gaseous hydrogen containers. The container standards referred to cover a broad range of container types, portable and stationary. Pressure relief devices are required only as dictated by the specifications to which the container was fabricated (i.e., ASME or DOTn).

INTERNATIONAL CODE COUNCIL®
Copyright © 2015 ICC. ALL RIGHTS RESERVED. Accessed by David Dammon on Jun 21, 2017 12:30:52 PM pursuant to License Agreement with ICC. No further reproduction or distribution authorized. ANY UNAUTHORIZED REPRODUCTION OR DISTRIBUTION IS A VIOLATION OF THE FEDERAL COPYRIGHT ACT AND THE LICENSE AGREEMENT, AND SUBJECT TO CIVIL AND CRIMINAL PENALTIES THEREUNDER.

[F] 703.3.4 Vessels other than containers. Vessels other than containers shall be protected with pressure relief devices in accordance with the ASME *Boiler and Pressure Vessel Code* (Section VIII), or DOTn 49 CFR, Parts 100-180.

❖ Just as Section 703.3.3 requires pressure relief devices on containers, this section mentions other hydrogen-containing vessels or components in which an overpressure condition could occur.

[F] 703.3.5 Sizing. Pressure relief devices shall be sized in accordance with the specifications to which the container was fabricated. The relief device shall be sized to prevent the maximum design pressure of the container or system from being exceeded.

❖ This section contains only general language that ensures that the pressure relief device is properly designed to fit the needs of the particular container. In most cases the manufacturer will already have the devices installed on the container; however, there are cases when a cryogenic system or container may be constructed to a user specification for a specific purpose. In those cases the relief valves must be sized and installed by the user.

[F] 703.3.6 Protection. Pressure relief devices and any associated vent *piping* shall be designed, installed and located so that their operation will not be affected by water or other debris accumulating inside the vent or obstructing the vent.

❖ As with all such protective devices, the relief devices must be located and protected to prevent submersion and the entrance of water, debris, insects, etc., all of which could impair operation of the device.

[F] 703.3.7 Access. Pressure relief devices shall be located such that they are provided with ready *access* for inspection and repair.

❖ These devices are extremely important safety controls that require periodic inspections and, in some cases, testing.

[F] 703.3.8 Configuration. Pressure relief devices shall be arranged to discharge unobstructed in accordance with Section 2309 of the *International Fire Code*. Discharge shall be directed to the outdoors in such a manner as to prevent impingement of escaping gas on personnel, containers, *equipment* and adjacent structures and to prevent introduction of escaping gas into enclosed spaces. The discharge shall not terminate under eaves or canopies.

Exception: This section shall not apply to DOTn-specified containers with an internal volume of 2 cubic feet (0.057 m^3) or less.

❖ This section refers to the IFC regarding requirements for the design and location of hydrogen vent piping. The vent piping must be arranged so that the discharge itself does not cause additional damage simply because of the location chosen for the discharge point.

[F] 703.4 Venting. Relief device vents shall be terminated in an *approved* location in accordance with Section 2309 of the *International Fire Code*.

❖ Because of container locations, vent piping is often used to extend the discharge location of the pressure relief vent. The vent system will prevent excessive buildup of pressure in the system by venting gas to the outdoors. Reference to the IFC addresses such issues as material requirements and joining methods, general support, height and separation distances for the proposed vent outlet location. The location of the vent outlet is critical because the ignition of vented hydrogen has the potential for damage to materials and harm to people from radiant heat exposure.

[F] 703.5 Security. Compressed gas containers, cylinders, tanks and systems shall be secured against accidental dislodgement in accordance with Chapter 53 of the *International Fire Code*.

❖ Pressure vessels and their connection valves and devices can be damaged by falling, rolling and tipping over. Therefore, they must be secured in place. For example, a cylinder containing any gas pressurized to a few thousand pounds per square inch will become a missile if the valve is knocked off during a fall. This is especially dangerous when the gas is flammable.

[F] 703.6 Electrical wiring and equipment. Electrical wiring and *equipment* shall comply with NFPA 70.

❖ Electrical power, control and signal wiring associated with hydrogen systems must comply with NFPA 70. Some areas containing hydrogen system components could be classified as hazardous locations.

SECTION 704 (IFGC)
PIPING, USE AND HANDLING

704.1 Applicability. Use and handling of containers, cylinders, tanks and hydrogen gas systems shall comply with this section. Gaseous hydrogen systems, *equipment* and machinery shall be *listed* or *approved*.

❖ All hydrogen system components must be listed for the application unless specifically approved by the code official. All components must be carefully chosen as suitable for the application, especially because of the extreme flammability, small molecule size, lack of detectable odor and high pressure associated with hydrogen.

704.1.1 Controls. Compressed gas system controls shall be designed to prevent materials from entering or leaving process or reaction systems at other than the intended time, rate or path. Automatic controls shall be designed to be fail safe in accordance with accepted engineering practice.

❖ "Fail-safe" mode means that if and when a device fails, the resulting condition will not create a hazard. For example, if a compressor motor starter fails, the

INTERNATIONAL CODE COUNCIL®
Copyright © 2015 ICC. ALL RIGHTS RESERVED. Accessed by David Dammon on Jun 21, 2017 12:30:52 PM pursuant to License Agreement with ICC. No further reproduction or distribution authorized. ANY UNAUTHORIZED REPRODUCTION OR DISTRIBUTION IS A VIOLATION OF THE FEDERAL COPYRIGHT ACT AND THE LICENSE AGREEMENT, AND SUBJECT TO CIVIL AND CRIMINAL PENALTIES THEREUNDER.

contacts would fail in the open position, thereby stopping the motor or preventing it from starting.

704.1.2 Piping systems. *Piping*, tubing, valves and fittings conveying gaseous hydrogen shall be designed and installed in accordance with Sections 704.1.2.1 through 704.1.2.5.1, Chapter 50 of the *International Fire Code*, and ASME B31.12. Cast-iron pipe, valves and fittings shall not be used.

❖ All apparatus connected and part of the system must comply with this section, Chapter 27 of the IFC and the requirements of the referenced standard applicable to gaseous hydrogen.

704.1.2.1 Sizing. Gaseous hydrogen *piping* shall be sized in accordance with *approved* engineering methods.

❖ Hydrogen piping and manifold systems should be designed and constructed by competent personnel who are thoroughly familiar with the requirements for piping of flammable gases. Sizing information can be obtained from a variety of applicable codes and regulations; however, hydrogen piping systems should be designed to comply with the principles of ASME B31.3, which includes special requirements for hydrogen service.

704.1.2.2 Identification of hydrogen piping systems. Hydrogen *piping* systems shall be marked in accordance with ANSI A13.1. Markings used for *piping* systems shall consist of the name of the contents and shall include a direction-of-flow arrow. Markings shall be provided at all of the following locations:

1. At each valve.
2. At wall, floor and ceiling penetrations.
3. At each change of direction.
4. At intervals not exceeding 20 feet (6096 mm).

❖ This section applies to all piping, regardless of material. ANSI A13.1 details the valve and piping color coding, painting and labeling methods used in the United States.

704.1.2.3 Piping design and construction. *Piping* and tubing materials shall be 300 series stainless steel or materials *listed* or *approved* for hydrogen service and the use intended through the full range of operating conditions to which they will be subjected. *Piping* systems shall be designed and constructed to provide allowance for expansion, contraction, vibration, settlement and fire exposure.

❖ Hydrogen piping systems can consist of structural members, vacuum jackets, valve bodies and valve seats, electrical and thermal insulation, gaskets, seals, lubricants and adhesives, and will involve a multitude of materials. Hydrogen embrittlement involves many variables and can cause significant deterioration in the mechanical properties of certain metals. One must thoroughly review material selection methods and bills-of-lading, quality control procedures and material test reports used during manufacture to verify that the materials are suitable for hydrogen service.

The code specifies stainless steel piping and tubing within the 300 series of alloys or materials listed or approved for gaseous hydrogen service.

Care must be taken to not overstress components in systems because some of these materials may lose ductility if stressed beyond yield.

704.1.2.3.1 Prohibited locations. *Piping* shall not be installed in or through a circulating air duct; clothes chute; chimney or gas vent; ventilating duct; dumbwaiter; or elevator shaft. *Piping* shall not be concealed or covered by the surface of any wall, floor or ceiling.

❖ There are several reasons why hydrogen gas piping is not to be installed in the locations listed in this section as well as in similar areas. Gas piping must not be located where the spread of leaked gas throughout the building would be accelerated. An air supply duct or areas that create a path for the gas to travel are considered to be locations where the problem of a gas leak could be compounded by spreading the gas or any resultant fire throughout the building. Because of the nature of hydrogen, the code prescribes extreme caution in system design and installation and requires hydrogen piping to always be exposed and observable. Also, in some locations, the gas piping could be subject to deterioration because of temperature or corrosive conditions such as in air ducts or chimneys. A circulating air duct is an HVAC supply, return or ventilation air duct that conveys air to and from occupied spaces. An above-ceiling or below-floor plenum is not a circulating air duct; however, hydrogen piping is still prohibited in such plenums by the last sentence of this section.

Locating gas piping in certain areas or atmospheres may cause corrosion of the pipe, which in turn may cause a leak in the piping system. Within a supply air duct, the conditioned air may cause moisture to condense on or within the pipe, thereby causing corrosion of the pipe. Gas piping located within a chimney or a vent will be subjected to high temperatures and the corrosive effects of vent gases.

Additionally, piping located in a dumbwaiter or elevator shaft may be subject to an additional hazard resulting in mechanical damage to the pipe. Damage from a dumbwaiter or elevator impacting the gas piping may not only cause a leak that would allow the gas to escape and travel up the shaft but may also put any occupants within an elevator in immediate danger.

Hydrogen gas piping is prohibited in all concealed spaces including those used as air plenums above a suspended ceiling.

704.1.2.3.2 Interior piping. Except for through penetrations, *piping* located inside of buildings shall be installed in exposed locations and provided with ready *access* for visual inspection.

❖ As a precaution against material failure and leakage, hydrogen piping/tubing installed within a building must not be concealed in any manner and must be in

INTERNATIONAL CODE COUNCIL®
Copyright © 2015 ICC. ALL RIGHTS RESERVED. Accessed by David Dammon on Jun 21, 2017 12:30:52 PM pursuant to License Agreement with ICC. No further reproduction or distribution authorized. ANY UNAUTHORIZED REPRODUCTION OR DISTRIBUTION IS A VIOLATION OF THE FEDERAL COPYRIGHT ACT AND THE LICENSE AGREEMENT, AND SUBJECT TO CIVIL AND CRIMINAL PENALTIES THEREUNDER.

plain view. The only exception to this requirement is where the pipe/tube passes through an assembly such as where a pipe/tube penetrates a wall at an angle perpendicular to the plane of the wall.

704.1.2.3.3 Underground piping. Underground *piping*, including joints and fittings, shall be protected from corrosion and installed in accordance with *approved* engineered methods.

❖ The method of installation and protection from corrosion must be engineered and acceptable to the code official. Buried piping may have to be encased in a conduit to shield it from the backfill.

704.1.2.3.4 Piping through foundation wall. Underground *piping* shall not penetrate the outer foundation or basement wall of a building.

❖ This section does not allow piping to enter or exit a building at any point below ground level. The risk of piping failure from settlement or corrosion is too great to allow underground penetrations; therefore, piping must enter or exit the building above ground.

704.1.2.3.5 Protection against physical damage. Where *piping* other than stainless steel *piping*, stainless steel tubing or black steel is installed through holes or notches in wood studs, joists, rafters or similar members less than $1^1/_2$ inches (38 mm) from the nearest edge of the member, the pipe shall be protected by shield plates. Shield plates shall be a minimum of $^1/_{16}$-inch-thick (1.6 mm) steel, shall cover the area of the pipe where the member is notched or bored and shall extend a minimum of 4 inches (102 mm) above sole plates, below top plates and to each side of a stud, joist or rafter.

❖ See the commentary to Section 404.5.

704.1.2.3.6 Piping outdoors. *Piping* installed above ground, outdoors, shall be securely supported and located where it will be protected from physical damage. *Piping* passing through an exterior wall of a building shall be encased in a protective pipe sleeve. The annular space between the *piping* and the sleeve shall be sealed from the inside such that the sleeve is ventilated to the outdoors. Where passing through an exterior wall of a building, the *piping* shall also be protected against corrosion by coating or wrapping with an inert material. Below-ground *piping* shall be protected against corrosion.

❖ Extraordinary protection of piping is required because of the potential danger of leakage. Wall sleeves are sealed only on the interior end so that any leakage in the sleeve will vent to the outdoors.

704.1.2.3.7 Settlement. *Piping* passing through concrete or masonry walls shall be protected against differential settlement.

❖ Building movement and shifting can put enormous stress on piping; therefore, it must be protected from stress by sleeves, oversized openings, expansion loops and similar measures.

704.1.2.4 Joints. Joints in *piping* and tubing in hydrogen service shall be *listed* as complying with ASME B31.3 to include the use of welded, brazed, flared, socket, slip and compression fittings. Gaskets and sealants used in hydrogen service shall be *listed* as complying with ASME B31.12. Threaded and flanged connections shall not be used in areas other than hydrogen cutoff rooms and outdoors.

❖ Because hydrogen gas is composed of small molecules (two hydrogen atoms), it is more difficult to contain, especially under the higher pressures anticipated for fuel delivery to vehicles. All joining methods for piping and tubing must be listed as complying with the referenced standards, including welded, brazed, flared, socket, slip or compression fittings. Soft solder joints are not permitted. Threaded or flanged connections must not be used in areas other than hydrogen cutoff rooms or outdoors. Mechanical joints must maintain electrical continuity or otherwise be connected with a bonding jumper to avoid static discharge. Gaskets or sealants must be listed as complying with the referenced standard.

704.1.2.4.1 Brazed joints. Brazing alloys shall have a melting point greater than 1,000°F (538°C).

❖ This is consistent with the definition of "Brazing" and Section 403.10.1.

704.1.2.4.2 Electrical continuity. Mechanical joints shall maintain electrical continuity through the joint or a bonding jumper shall be installed around the joint.

❖ To help control static electricity discharge and provide equi-potential bonding through the metal piping system, electrical conductivity (continuity) must be maintained throughout the system.

704.1.2.5 Valves and piping components. Valves, regulators and *piping* components shall be *listed* or *approved* for hydrogen service, shall be provided with *access* and shall be designed and constructed to withstand the maximum pressure to which such components will be subjected.

❖ Valves, gauges, regulators and other piping components must be listed or approved for hydrogen service for the rated pressure and temperature of the application. The manufacturer or hydrogen supplier should be consulted for valves, regulators and other accessories.

704.1.2.5.1 Shutoff valves on storage containers and tanks. Shutoff valves shall be provided on all storage container and tank connections except for pressure relief devices. Shutoff valves shall be provided with ready *access*.

❖ Containers, tanks and the associated connecting piping must have an accessible manual shutoff valve. Valves must not be installed between a pressure relief device (PRD) and the container protected by the PRD because this would circumvent the purpose of overpressure relief. Shutoff valves on tanks and containers must be conspicuous, and must not be hidden behind panels or access doors because they may have to be accessed quickly in an emergency.

704.2 Upright use. Compressed gas containers, cylinders and tanks, except those with a water volume less than 1.3 gallons (5 L) and those designed for use in a horizontal position, shall be used in an upright position with the valve end up. An upright position shall include conditions where the container,

INTERNATIONAL CODE COUNCIL®
Copyright © 2015 ICC. ALL RIGHTS RESERVED. Accessed by David Dammon on Jun 21, 2017 12:30:52 PM pursuant to License Agreement with ICC. No further reproduction or distribution authorized. ANY UNAUTHORIZED REPRODUCTION OR DISTRIBUTION IS A VIOLATION OF THE FEDERAL COPYRIGHT ACT AND THE LICENSE AGREEMENT, AND SUBJECT TO CIVIL AND CRIMINAL PENALTIES THEREUNDER.

cylinder or tank axis is inclined as much as 45 degrees (0.79 rad) from the vertical.

❖ Containers, cylinders and tanks are to be used in an upright position to protect and provide access to the shutoff valve and to make sure that gaseous hydrogen is taken from the vessel where liquid is also present.

704.3 Material-specific regulations. In addition to the requirements of this section, indoor and outdoor use of hydrogen compressed gas shall comply with the material-specific provisions of Chapters 53 and 58 of the *International Fire Code*.

❖ In addition to meeting the requirements of this section, the indoor and outdoor use and storage of gaseous hydrogen needs to comply with the material-specific provisions of Chapters 30 and 35 of the IFC. For example, the storage and use of a compressed flammable gas system must comply with Chapters 30 and 35 of the IFC in addition to this section.

704.4 Handling. The handling of compressed gas containers, cylinders and tanks shall comply with Chapter 50 of the *International Fire Code*.

❖ The requirements of this section refer to Chapter 27 and the applicable material-specific requirements of the IFC for handling gas containers, cylinders and tanks.

SECTION 705 (IFGC)
TESTING OF HYDROGEN PIPING SYSTEMS

705.1 General. Prior to acceptance and initial operation, all *piping* installations shall be inspected and pressure tested to determine that the materials, design fabrication and installation practices comply with the requirements of this code.

❖ After installation, field-erected piping, tubing, hose and hose assemblies must be tested and proved hydrogen gas tight for the rated pressure and temperature of the gas conveyed in that portion of the system.

Inspection of piping installations is intended to be a visual observation of the system and the testing procedure. The designer may require that welded joints in, for example, very-high-pressure applications be examined by a method that is capable of discovering internal defects that are not detectable by visual observation.

705.2 Inspections. Inspections shall consist of a visual examination of the entire *piping* system installation and a pressure test. Hydrogen *piping* systems shall be inspected in accordance with this code. Inspection methods such as outlined in ASME B31.12 shall be permitted where specified by the design engineer and *approved* by the code official. Inspections shall be conducted or verified by the code official prior to system operation.

❖ In addition to pressure testing, the entire system must be visually inspected to verify that it has been properly installed, supported and protected from damage and that all required components are present. Recall that the code requires that all piping and tubing be permanently exposed except at through-penetrations.

705.3 Pressure tests. A hydrostatic or pneumatic leak test shall be performed. Testing of hydrogen *piping* systems shall utilize testing procedures identified in ASME B31.12 or other *approved* methods, provided that the testing is performed in accordance with the minimum provisions specified in Sections 705.3.1 through 705.4.1.

❖ Testing and purging procedures must be as described in the referenced standard, ASME B31.3.

Pressure testing in ASME B31.3 may be either by hydrostatic or pneumatic means. Hydrostatic and pneumatic tests are performed at $1^1/_2$ times the maximum allowable working pressure (MAWP), times a temperature correction factor. In some situations, particularly when the hydrogen system contains catalysts or other materials that could be damaged by water, a pneumatic test is preferable to the hydrostatic test. The flexibility is intentional and left to the discretion of the designer.

Considering that some parts of a system might operate at up to 15,000 psi (103.4 MPa), the test pressure could be very high. Extreme care must be used when conducting this testing.

705.3.1 Hydrostatic leak tests. The hydrostatic test pressure shall be not less than one-and-one-half times the maximum working pressure, and not less than 100 psig (689.5 kPa gauge).

❖ See the commentary to Section 705.3.

705.3.2 Pneumatic leak tests. The pneumatic test pressure shall be not less than one-and-one-half times the maximum working pressure for systems less than 125 psig (862 kPa gauge) and not less than 5 psig (34.5 kPa gauge), whichever is greater. For working pressures at or above 125 psig (862 kPa gauge), the pneumatic test pressure shall be not less than 110 percent of the maximum working pressure.

❖ See the commentary to Section 705.3.

705.3.3 Test limits. Where the test pressure exceeds 125 psig (862 kPa gauge), the test pressure shall not exceed a value that produces hoop stress in the *piping* greater than 50 percent of the specified minimum yield strength of the pipe.

❖ This section limits test pressure to not exceed the stress safety factor for the material under test. Hoop stress refers to the pipe/tube's resistance to the force that would cause the pipe/tube to rupture along its circumference. The term is analogous to the hoops of a wooden barrel that hold in the staves.

705.3.4 Test medium. Deionized water shall be utilized to perform hydrostatic pressure testing and shall be obtained from a potable source. The medium utilized to perform pneumatic pressure testing shall be air, nitrogen, carbon dioxide or an inert gas; oxygen shall not be used.

❖ The test medium for any system must not contaminate or corrode the piping/tubing or react with the gas or liquid to be conveyed in the system.

INTERNATIONAL CODE COUNCIL®
Copyright © 2015 ICC. ALL RIGHTS RESERVED. Accessed by David Dammon on Jun 21, 2017 12:30:52 PM pursuant to License Agreement with ICC. No further reproduction or distribution authorized. ANY UNAUTHORIZED REPRODUCTION OR DISTRIBUTION IS A VIOLATION OF THE FEDERAL COPYRIGHT ACT AND THE LICENSE AGREEMENT, AND SUBJECT TO CIVIL AND CRIMINAL PENALTIES THEREUNDER.

705.3.5 Test duration. The minimum test duration shall be $^1/_2$ hour. The test duration shall be not less than $^1/_2$ hour for each 500 cubic feet (14.2 m^3) of pipe volume or fraction thereof. For *piping* systems having a volume of more than 24,000 cubic feet (680 m^3), the duration of the test shall not be required to exceed 24 hours. The test pressure required in Sections 705.3.1 and 705.3.2 shall be maintained for the entire duration of the test.

❖ As the piping system becomes larger, the test duration must be longer so that any leak can be detected. For example, a leakage rate of 1 cubic foot per hour (28.4 L/m) would produce a more easily detectable pressure drop in a small [10 cubic foot (0.28 m^3)] volume system. It would require a longer test period to detect the same leak in a large volume system because the leakage of 1 cubic foot (0.03 m^3) represents a much smaller fraction of the total gas volume in the system. If a system has a volume of 501 cubic feet (14.2 m^3), the minimum test duration would be 1 hour. To put this in perspective, 500 cubic feet (14.2 m^3) of piping system internal volume would equate to 83,333 feet (25.4 km) of 1-inch (25 mm) Schedule 40 steel pipe or 9,747 feet (2971 m) of 3-inch (76 mm) Schedule 40 steel pipe. At $^1/_2$ hour per each 500 cubic feet (14.2 m^3), a system having 24,000 cubic feet (680 m^3) of volume would require a test duration of 24 hours.

705.3.6 Test gauges. Gauges used for testing shall be as follows:

1. Tests requiring a pressure of 10 psig (68.95 kPa gauge) or less shall utilize a testing gauge having increments of 0.10 psi (0.6895 kPa) or less.
2. Tests requiring a pressure greater than 10 psig (68.98 kPa gauge) but less than or equal to 100 psig (689.5 kPa gauge) shall utilize a testing gauge having increments of 1 psi (6.895 kPa) or less.
3. Tests requiring a pressure greater than 100 psig (689.5 kPa gauge) shall utilize a testing gauge having increments of 2 psi (13.79 kPa) or less.

   Exception: Measuring devices having an equivalent level of accuracy and resolution shall be permitted where specified by the design engineer and *approved* by the code official.

❖ The smaller the increments are (the more detailed), the easier it is to detect a leak. Considering that hydrogen is not odorized, a leak-free system is even more imperative. Leak-indicating manometers and electronic instruments using pressure transducers are available that can read pressure changes with great accuracy, thus allowing detection of even the smallest leaks.

705.3.7 Test preparation. Pipe joints, including welds, shall be left exposed for examination during the test.

❖ Note that Sections 704.1.2.3 and 704.1.2.3.2 do not allow any part of the system to be concealed other than short sections occurring at through-penetrations.

705.3.7.1 Expansion joints. Expansion joints shall be provided with temporary restraints, if required, for the additional thrust load under test.

❖ Expansion joints might have to be clamped, bolted or otherwise restrained to prevent the force of the test pressure from damaging or separating them.

705.3.7.2 Equipment disconnection. Where the *piping* system is connected to appliances, *equipment* or components designed for operating pressures of less than the test pressure, such appliances, *equipment* and components shall be isolated from the *piping* system by disconnecting them and capping the *outlet*(s).

❖ This section has the same intent as Section 406.3.3. Isolation valves must not be depended upon to shield connected equipment and appliances from the test pressure.

705.3.7.3 Equipment isolation. Where the *piping* system is connected to appliances, *equipment* or components designed for operating pressures equal to or greater than the test pressure, such appliances, *equipment* and components shall be isolated from the *piping* system by closing the individual *appliance*, *equipment* or component shutoff valve(s).

❖ This section has the same intent as Section 406.3.4.

705.4 Detection of leaks and defects. The *piping* system shall withstand the test pressure specified for the test duration specified without showing any evidence of leakage or other defects. Any reduction of test pressures as indicated by pressure gauges shall indicate a leak within the system. *Piping* systems shall not be *approved* except where this reduction in pressure is attributed to some other cause.

❖ Any pressure drop, no matter how small, is considered a failure of the test, except where it can be demonstrated that the drop was caused by a change in temperature or other such cause. This would be practically impossible to demonstrate in the field, especially for short test durations. The temperature of the system and test medium should be allowed to stabilize before a test is conducted to lessen the possibility of pressure changes caused by temperature changes.

705.4.1 Corrections. Where leakage or other defects are identified, the affected portions of the *piping* system shall be repaired and retested.

❖ Where a leak is detected by a method addressed in Section 705.3.6 or other accurate testing instrument, the defect must be corrected. Corrections include tightening of fittings or threaded joints and replacing defective pipe, tubing or fittings.

705.5 Purging of gaseous hydrogen piping systems. Purging shall comply with Sections 705.5.1 through 705.5.4.

❖ See the commentary to Sections 705.5.1 through 705.5.4.

705.5.1 Removal from service. Where *piping* is to be opened for servicing, addition or modification, the section to be worked on shall be isolated from the supply at the nearest convenient point and the line pressure vented to the outdoors.

INTERNATIONAL CODE COUNCIL®
Copyright © 2015 ICC. ALL RIGHTS RESERVED. Accessed by David Dammon on Jun 21, 2017 12:30:52 PM pursuant to License Agreement with ICC. No further reproduction or distribution authorized. ANY UNAUTHORIZED REPRODUCTION OR DISTRIBUTION IS A VIOLATION OF THE FEDERAL COPYRIGHT ACT AND THE LICENSE AGREEMENT, AND SUBJECT TO CIVIL AND CRIMINAL PENALTIES THEREUNDER.

The remaining gas in this section of pipe shall be displaced with an inert gas.

❖ This section is parallel to Section 406.7.1 except that displacement with an inert gas is required regardless of pipe size and length.

705.5.2 Placing in operation. Prior to placing the system into operation, the air in the *piping* system shall be displaced with inert gas. The inert gas flow shall be continued without interruption until the vented gas is free of air. The inert gas shall then be displaced with hydrogen until the vented gas is free of inert gas. The point of discharge shall not be left unattended during purging. After purging, the vent opening shall be closed.

❖ This section is parallel to Section 406.7.2 except that displacement with an inert gas is required regardless of pipe size and length.

705.5.3 Discharge of purged gases. The open end of *piping* systems being purged shall not discharge into confined spaces or areas where there are sources of ignition except where precautions are taken to perform this operation in a safe manner by ventilation of the space, control of purging rate and elimination of all hazardous conditions.

❖ See the commentary to Section 406.7.3.

705.5.3.1 Vent pipe outlets for purging. Vent pipe outlets for purging shall be located such that the inert gas and fuel gas is released outdoors and not less than 8 feet (2438 mm) above the adjacent ground level. Gases shall be discharged upward or horizontally away from adjacent walls to assist in dispersion. Vent outlets shall be located such that the gas will not be trapped by eaves or other obstructions and shall be at least 5 feet (1524 mm) from building openings and lot lines of properties that can be built upon.

❖ The location, height and directional orientation of purge vent pipe outlets are dictated by this section to minimize the hazards of discharging flammable gases.

705.5.4 Placing equipment in operation. After the *piping* has been placed in operation, all *equipment* shall be purged in accordance with Section 707.2 and then placed in operation, as necessary.

❖ This section is parallel to Section 406.7.4 (see also Section 707.2).

SECTION 706 (IFGC)
LOCATION OF GASEOUS HYDROGEN SYSTEMS

[F] 706.1 General. The location and installation of gaseous hydrogen systems shall be in accordance with Sections 706.2 and 706.3.

Exception: Stationary fuel-cell power plants in accordance with Section 633.

❖ See the commentary to Sections 706.2 and 706.3.

[F] 706.2 Indoor gaseous hydrogen systems. Gaseous hydrogen systems shall be located in indoor rooms or areas constructed in accordance with this code, the *International Building Code*, the *International Mechanical Code* or NFPA 2.

❖ The overriding theme of the location requirements is to never permit the maximum concentration of flammable contaminants in air to exceed 25 percent of the lower flammability limit (LFL) for hydrogen during the period that a credible leak exists. This can be accomplished using natural or mechanical means to always maintain adequate ventilation to prevent a hazardous buildup of hydrogen gas in buildings or confined spaces.

[F] 706.3 Outdoor gaseous hydrogen systems. Gaseous hydrogen systems shall be located outdoors in accordance with Section 2309.3.1.1 of the *International Fire Code*.

❖ Section 2209.3.2 of the IFC addresses the location of fuel dispensing, generation, compression and storage relative to buildings, canopies, overhead lines, building openings, air intakes, ignition sources, lot lines, storage of other fuels and many other structures and occupancies.

SECTION 707 (IFGC)
OPERATION AND MAINTENANCE OF GASEOUS HYDROGEN SYSTEMS

[F] 707.1 Maintenance. Gaseous hydrogen systems and detection devices shall be maintained in accordance with the *International Fire Code* and the manufacturer's installation instructions.

❖ This section refers to the IFC for maintenance of hydrogen systems. More specifically, Section 2703.2.6 of the IFC details required maintenance activities for hazardous materials storage and use. This includes maintenance of alarms, cylinders, ventilation systems and other devices needed to ensure safety of the gaseous hydrogen system. Failure to properly maintain any of these systems increases the likelihood of an unanticipated hydrogen release that could compromise the safety of the operation. This section is also consistent with the general maintenance provision of Section 107.1 of the IFC.

Section 107.1 of the IFC does not identify who is responsible for maintenance because that determination should comply with the legal documents created between owners and occupants, such as a lease. However, the owner of a structure or premises is usually the party primarily responsible for its maintenance because the owner stands to gain the most from a well-maintained property. One of the underlying assumptions is that maintaining a commercial property in good condition allows the owner to recoup a substantial portion of his or her investment in main-

INTERNATIONAL CODE COUNCIL®
Copyright © 2015 ICC. ALL RIGHTS RESERVED. Accessed by David Dammon on Jun 21, 2017 12:30:52 PM pursuant to License Agreement with ICC. No further reproduction or distribution authorized. ANY UNAUTHORIZED REPRODUCTION OR DISTRIBUTION IS A VIOLATION OF THE FEDERAL COPYRIGHT ACT AND THE LICENSE AGREEMENT, AND SUBJECT TO CIVIL AND CRIMINAL PENALTIES THEREUNDER.

tenance. There are three factors that may influence owners to comply with code requirements:

- Code compliance requires only a small additional investment in the property,
- The owner has a long-term interest in the property and
- The owner expects profitability after incurring the additional expense of complying with the code.

Although all these factors represent economic incentives, code officials should be equally aware of potential disincentives to compliance, such as assessable value; expiring tax credits; or historic, architectural or aesthetic criteria. The code official need not belabor the justifications for compliance but should be prepared to acknowledge the owner's rationalizations for failure to comply.

This section also emphasizes that any "otherwise installed" system that currently exists must be maintained. For example, an existing fire protection system cannot be removed from a building because it is not required in new or existing buildings by current codes.

[F] 707.2 Purging. Purging of gaseous hydrogen systems, other than *piping* systems purged in accordance with Section 705.5, shall be in accordance with Sections 2309.6.3 and 2309.6.3.1 of the *International Fire Code* or in accordance with the system manufacturer's instructions.

❖ This section refers to the applicable requirements of the IFC for the defueling and purging of vehicles powered by gaseous fuels. Section 705.5 covers purging of piping systems whereas this section covers hydrogen storage containers and piping associated with hydrogen-fueled vehicles.

SECTION 708 (IFGC)
DESIGN OF LIQUEFIED HYDROGEN SYSTEMS ASSOCIATED WITH HYDROGEN VAPORIZATION OPERATIONS

[F] 708.1 General. The design of liquefied hydrogen systems shall comply with Chapter 55 of the *International Fire Code*.

❖ The requirements of this section refer to Chapter 32 of the IFC specifically for the design of liquefied hydrogen systems. The standards referenced there dealing with flammable cryogenic fluids must be adhered to in addition to complying with Chapter 32 of the IFC.

Bibliography

The following resource materials were used in the preparation of the commentary for this chapter of the code.

Code Changes Resource Collection. Washington, DC.: International Code Council, 2009.

IBC-2015, *International Building Code*. Washington, DC: International Code Council, 2014.

IFC-2015, *International Fire Code*. Washington, DC: International Code Council, 2014.

IMC-2015, *International Mechanical Code*. Washington, DC: International Code Council, 2014.

INTERNATIONAL CODE COUNCIL®

Copyright © 2015 ICC. ALL RIGHTS RESERVED. Accessed by David Dammon on Jun 21, 2017 12:30:52 PM pursuant to License Agreement with ICC. No further reproduction or distribution authorized. ANY UNAUTHORIZED REPRODUCTION OR DISTRIBUTION IS A VIOLATION OF THE FEDERAL COPYRIGHT ACT AND THE LICENSE AGREEMENT, AND SUBJECT TO CIVIL AND CRIMINAL PENALTIES THEREUNDER.

Chapter 8: Referenced Standards

This chapter lists the standards that are referenced in various sections of this document. The standards are listed herein by the promulgating agency of the standard, the standard identification, the effective date and title, and the section or sections of this document that reference the standard. The application of the referenced standards shall be as specified in Section 102.8.

General Comments

Chapter 8 contains a comprehensive list of standards that are referenced in the code. It is organized to make locating specific document references easy.

It is important to understand that not every document related to the design, installation and construction of fuel gas systems, appliances and equipment is qualified to be a referenced standard. The International Code Council® (ICC®) has adopted a criterion that standards referenced in the *International Codes*® (I-Codes®) and standards intended for adoption in the International Codes must meet to qualify as referenced standards. The policy is summarized as follows:

- Code references: The scope and application of the standard must be clearly identified in the code text.
- Standard content: The standard must be written in mandatory language and be appropriate for the subject covered. The standard cannot have the effect of requiring proprietary materials or prescribing a proprietary testing agency.
- Standard promulgation: The standard must be readily available and developed and maintained in a consensus process such as those used by ASTM or ANSI.

The ICC Code Development Procedures, of which the standards policy is a part, are updated periodically. A copy of the latest version can be obtained from the ICC offices.

Once a standard is incorporated into the code through the code development process, it becomes an enforceable part of the code. When the code is adopted by a jurisdiction, the standard also is part of that jurisdiction's adopted code. It is for this reason that the criteria were developed. Compliance with this policy means that documents incorporated into the code are developed through the use of a consensus process, are written in mandatory language, and do not mandate the use of proprietary materials or agencies. The requirement for a standard is representative of the most current body of available knowledge on the subject as determined by a broad range of interested or affected parties without dominance by any single interest group. A true consensus process has many attributes, including but not limited to:

- An open process that has formal (published) procedures that allow for the consideration of all viewpoints,
- A definitive review period that allows for the standard to be updated and/or revised,
- A process of notification to all interested parties and
- An appeals process.

Many available documents related to mechanical system design, installation and construction, though useful, are not standards and are not appropriate for reference in the code. Often, these documents are not developed or written with the intention of being used for regulatory purposes and are unsuitable for use as a standard because of extensive use of recommendations, advisory comments and nonmandatory terms. Typical examples include installation guides and manuals, handbooks and design aids.

The objective of ICC's standards policy is to provide regulations that are clear, concise and enforceable—thus the requirement that standards be written in mandatory language. This requirement is not intended to mean that a standard cannot contain informational or explanatory material that will aid the user of the standard in its application. When the standard's promulgating agency wants such material to be included, however, the information must appear in a nonmandatory location, such as an annex or appendix, and be clearly identified as not being part of the standard.

Overall, standards referenced by the code must be authoritative, relevant, up-to-date and, most important, reasonable and enforceable. Standards that comply with ICC's standards policy fulfill these expectations.

Purpose

This code contains numerous references to documents that are used to regulate materials and methods of construction. The references to these documents within the code text consist of the promulgating agency's initialism and its publication designation (for example ASME B1.20.1) and a further indication that the document being referenced is the one that is listed in Chapter 8. Chapter 8 contains all of the information that is necessary to identify the specific referenced document. Included is the following information on a document's promulgating agency (see Commentary Figure 800):

- The promulgating agency (the agency's title),
- The promulgating agency's initialism, and
- The promulgating agency's address

INTERNATIONAL CODE COUNCIL®
Copyright © 2015 ICC. ALL RIGHTS RESERVED. Accessed by David Dammon on Jun 21, 2017 12:30:52 PM pursuant to License Agreement with ICC. No further reproduction or distribution authorized. ANY UNAUTHORIZED REPRODUCTION OR DISTRIBUTION IS A VIOLATION OF THE FEDERAL COPYRIGHT ACT AND THE LICENSE AGREEMENT, AND SUBJECT TO CIVIL AND CRIMINAL PENALTIES THEREUNDER.

For example, a reference to an ASME standard within the code indicates that the document is promulgated by the American Society of Mechanical Engineers (ASME), which is located in New York City, New York. Chapter 8 lists the standard agencies alphabetically for ease of identification. Chapter 8 also includes the following information on the referenced document itself (see Commentary Figure 800):

- The document's publication designation,
- The document's edition year,
- The document's title,
- Any addenda or revisions to the document known at the time of the code's publication, and
- Every section of the code in which the document is referenced.

For example, a reference to ASME B1.20.1 indicates this document can be found in Chapter 8 under the heading ASME. The specific standard's designation is B1.20.1. For convenience, these designations are listed in alphanumeric order. Chapter 8 shows that ASME B1.20.1 is titled *Pipe Threads, General Purpose (Inch)*; the applicable edition (that is, its year of publication) is 1992 and it is referenced in one specifically identified section of the code. Chapter 8 also indicates when a document has been discontinued or replaced by its promulgating agency. When a document is replaced by a different one, a note appears to tell the user the designation and title of the new document. The key aspect of the manner in which standards are referenced by the code is that a specific edition of a specific standard is clearly identified. The requirements necessary for compliance are, therefore, established and available to the code official, the mechanical contractor, the designer and the owner.

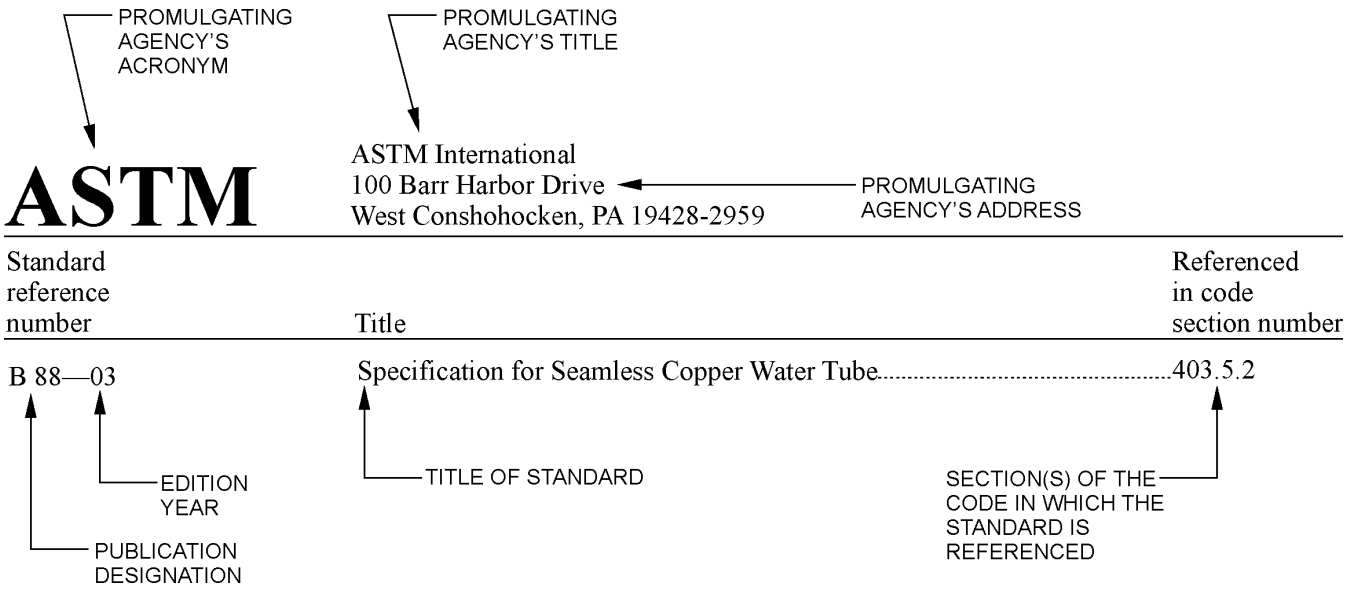

Figure 800
REFERENCED STANDARDS

INTERNATIONAL CODE COUNCIL®
Copyright © 2015 ICC. ALL RIGHTS RESERVED. Accessed by David Dammon on Jun 21, 2017 12:30:52 PM pursuant to License Agreement with ICC. No further reproduction or distribution authorized. ANY UNAUTHORIZED REPRODUCTION OR DISTRIBUTION IS A VIOLATION OF THE FEDERAL COPYRIGHT ACT AND THE LICENSE AGREEMENT, AND SUBJECT TO CIVIL AND CRIMINAL PENALTIES THEREUNDER.

ANSI

American National Standards Institute
25 West 43rd Street
Fourth Floor
New York, NY 10036

Standard reference number	Title	Referenced in code section number
ANSI A13.1—2007	Scheme for the Identification of Piping Systems	704.1.2.2
ANSI FC 1—2012	Stationery Fuel Cell Power Systems	633.1
LC 1/CSA 6.26—13	Fuel Gas Piping Systems Using Corrugated Stainless Steel Tubing (CSST)	403.5.4
ANSI LC-4/CSA 6.32—12	Press-connect Metallic Fittings for Use In Fuel Gas Distribution Systems	403.10.2
Z21.1—2010	Household Cooking Gas Appliances	623.1
Z21.5.1/CSA 7.1—2014	Gas Clothes Dryers—Volume I—Type 1 Clothes Dryers	613.1
Z21.5.2/CSA 7.2—2014	Gas Clothes Dryers—Volume II—Type 2 Clothes Dryers	613.1, 614.3
Z21.8—94 (R2002)	Installation of Domestic Gas Conversion Burners	619.1
Z21.10.1/CSA 4.1—2012	Gas Water Heaters—Volume I—Storage, Water Heaters with Input Ratings of 75,000 Btu per Hour or Less	624.1
Z21.10.3/CSA 4.3—2011	Gas Water Heaters—Volume III—Storage, Water Heaters with Input Ratings Above 75,000 Btu per hour, Circulating and Instantaneous	624.1
Z21.11.2—2011	Gas-fired Room Heaters-Volume II-Unvented Room Heaters	621.1
Z21.13/CSA 4.9—2011	Gas-fired Low-pressure Steam and Hot Water Boilers	631.1
Z21.15/CGA 9.1—09	Manually Operated Gas Valves for Appliances, Appliance Connector Valves and Hose End Valves	Table 409.1.1
Z21.19/CSA 1.4—02(R2007)	Refrigerators Using Gas (R1999) Fuel	625.1
Z21.24/CGA 6.10—06	Connectors for Gas Appliances	411.1, 411.3
Z21.40.1/CGA 2.91—96 (R2011)	Gas-Fired Heat Activated Air Conditioning and Heat Pump Appliances	627.1
Z21.40.2/CGA 2.92—96 (R2011)	Gas-Fired Work Activated Air Conditioning and Heat Pump Appliances (Internal Combustion)	627.1
Z21.42—2014	Gas-Fired Illuminating Appliances	628.1
Z21.47/CSA 2.3—2012	Gas-Fired Central Furnaces	618.1
Z21.50/CSA 2.22—2012	Vented Gas Fireplaces	604.1
Z21.54—09	Gas Hose Connectors for Portable Outdoor Gas Fired Appliances	411.1
Z21.56/CSA 4.7—2013	Gas-Fired Pool Heaters	617.1
Z21.58/CSA 1.6—2013	Outdoor Cooking Gas Appliances	623.1
Z21.60/CSA 2.26—2012	Decorative Gas Appliances for Installation in Solid-fuel Burning Fireplaces	602.1
Z21.61—83 (R2004)	Gas-fired Toilets	626.1
Z21.69/CSA 6.16—09	Connectors for Movable Gas Appliances	411.1.1, 411.1.4
Z21.75/CSA 6.27—07	Connectors for Outdoor Gas Appliances and Manufactured Homes	411.1, 411.2
Z21.80/CSA 6.22—11	Line Pressure Regulators	410.1
Z21.84—2012	Manually-lighted, Natural Gas Decorative Gas Appliances for Installation in Solid Fuel Burning Fireplaces	602.1, 602.2
Z21.86/CSA 2.32—08	Vented Gas-fired Space Heating Appliances	608.1, 609.1, 622.1
Z21.88/CSA 2.33—2015	Vented Gas Fireplace Heaters	605.1
Z21.91—07	Ventless Firebox Enclosures for Gas-fired Unvented Decorative Room Heaters	621.7.1
Z21.97—2012	Outdoor Decorative Appliances	636.1
Z83.4/CSA 3.7—2012	Nonrecirculating Direct-gas-fired Industrial Air Heaters	611.1
Z83.8/CSA 2.6—09	Gas Unit Heater, Gas Packaged Heater, Gas Utility Heaters and Gas-fired Duct Furnaces	610.1, 620.1
Z83.11/CSA 1.8—2013	Gas Food Service Equipment	623.1
Z83.18—2012	Recirculating Direct Gas-fired Industrial Air Heaters	612.1
Z83.19—01(R2009)	Gas-fired High-intensity Infrared Heaters	630.1
Z83.20—08	Gas-fired Low-intensity Infrared Heaters	630.1

INTERNATIONAL CODE COUNCIL®
Copyright © 2015 ICC. ALL RIGHTS RESERVED. Accessed by David Dammon on Jun 21, 2017 12:30:52 PM pursuant to License Agreement with ICC. No further reproduction or distribution authorized. ANY UNAUTHORIZED REPRODUCTION OR DISTRIBUTION IS A VIOLATION OF THE FEDERAL COPYRIGHT ACT AND THE LICENSE AGREEMENT, AND SUBJECT TO CIVIL AND CRIMINAL PENALTIES THEREUNDER.

ASME

American Society of Mechanical Engineers
Three Park Avenue
New York, NY 10016-5990

Standard reference number	Title	Referenced in code section number
B1.20.1—83 (Reaffirmed 2006)	Pipe Threads, General Purpose (inch)	403.9
B16.1—2010	Cast-iron Pipe Flanges and Flanged Fittings, Class 25, 125 and 250	403.12.1
B16.5—R2009	Pipe Flanges and Flanged Fittings: NPS $^1/_2$ through NFPS 24 Metric/Inch Standard	403.12.2
B16.24—2011	Cast Copper Alloy Pipe Flanges and Flanged Fittings: Classes 150, 300, 600, 900, 1500 and 2500	403.12.3
B16.42—2011	Ductile Iron Pipe Flanges and Flanged Fittings, Classes 150 and 300	403.12.4
B16.47—2011	Large Diameter Steel Flanges: NPS 26 through NPS 60 Metric/Inch Standard	403.12.2
B16.33—2012	Manually Operated Metallic Gas Valves for Use in Gas Piping Systems up to 125 psig (Sizes ½ through 2)	Table 409.1.1
B16.44—2002 (Reaffirmed 2007)	Manually Operated Metallic Gas Valves for Use in Aboveground Piping Systems Up to 5 psi	Table 409.1.1
B31.3—2012	Process Piping	704.1.2.4
B31.12—2008	Hydrogen Piping and Pipelines	704.1.2, 704.1.2.4, 705.2, 705.3
B36.10M—2004	Welded and Seamless Wrought-steel Pipe	403.4.2
BPVC—2010/2011 addenda	ASME Boiler & Pressure Vessel Code (2007 Edition)	631.1, 703.2.2, 703.3.3, 703.3.4
CSD-1—2011	Controls and Safety Devices for Automatically Fired Boilers	631.1

ASTM

ASTM International
100 Barr Harbor Drive
West Conshohocken, PA 19428-2959

Standard reference number	Title	Referenced in code section number
A53/A53M—12	Specification for Pipe, Steel, Black and Hot Dipped Zinc-coated Welded and Seamless	403.4.2
A106/A106M—11	Specification for Seamless Carbon Steel Pipe for High-temperature Service	403.4.2
A254—97 (2007)	Specification for Copper Brazed Steel Tubing	403.5.1
B88—09	Specification for Seamless Copper Water Tube	403.5.2
B210—12	Specification for Aluminum and Aluminum-alloy Drawn Seamless Tubes	403.5.3
B241/B241M—12E1	Specification for Aluminum and Aluminum-alloy, Seamless Pipe and Seamless Extruded Tube	403.4.4, 403.5.3
B280—08	Standard Specification for Seamless Copper Tube for Air-Conditioning and Refrigeration Field Service	403.5.2
C315—07(2011)	Specification for Clay Flue Liners and Chimney Pots	501.12
D2513—2013E1	Specification for Polyethylene (PE) Gas Pressure Pipe, Tubing and Fittings	403.6, 403.6.1, 403.11, 404.17.2
E136—2012	Standard Test Method for Behavior of Materials in a Vertical Tube Furnace at 750°C	202
F1973—08	Standard Specification for Factory Assembled Anodeless Risers and Transition Fittings in Polyethylene (PE) and Polyamide 11 (PA11) and Polyamide 12 (PA12) Fuel Gas Distribution Systems	404.17.2

CGA

Compressed Gas Association
14501 George Carter Way, Suite 103
Chantilly, VA 20151-2923

Standard reference number	Title	Referenced in code section number
S-1.1—(2011)	Pressure Relief Device Standards—Part 1—Cylinders for Compressed Gases	703.3
S-1.2—(2005)	Pressure Relief Device Standards—Part 2—Cargo and Portable Tanks for Compressed Gases	703.3
S-1.3—(2008)	Pressure Relief Device Standards—Part 3—Stationary Storage Containers for Compressed Gases	703.3

INTERNATIONAL CODE COUNCIL®
Copyright © 2015 ICC. ALL RIGHTS RESERVED. Accessed by David Dammon on Jun 21, 2017 12:30:52 PM pursuant to License Agreement with ICC. No further reproduction or distribution authorized. ANY UNAUTHORIZED REPRODUCTION OR DISTRIBUTION IS A VIOLATION OF THE FEDERAL COPYRIGHT ACT AND THE LICENSE AGREEMENT, AND SUBJECT TO CIVIL AND CRIMINAL PENALTIES THEREUNDER.

CSA

CSA America Inc.
8501 E. Pleasant Valley Rd.
Cleveland, OH USA 44131-5575

Standard reference number	Title	Referenced in code section number
ANSI CSA America		
FC1—2012	Stationary Fuel Cell Power Systems	633.1
CSA 8—93	Requirements for Gas-fired Log Lighters for Wood Burning Fireplaces—with Revisions through January 1999	603.1

DOTn

Department of Transportation
400 Seventh St. SW.
Washington, DC 20590

Standard reference number	Title	Referenced in code section number
49 CFR, Parts 192.281(e) & 192.283 (b)—(2009)	Transportation of Natural and Other Gas by Pipeline: Minimum Federal Safety Standards	403.6.1
49 CFR Parts 100—180	Hazardous Materials Regulations	703.2.2, 703.3.3, 703.3.4

ICC

International Code Council, Inc.
500 New Jersey Ave, NW
6th Floor
Washington, DC 20001

Standard reference number	Title	Referenced in code section number
IBC—15	International Building Code®	102.2.1, 201.3, 301.10, 301.11, 301.12, 301.14, 302.1, 302.2, 305.6, 306.5.1, 06.6, 401.1.1, 412.6, 413.3, 413.3.1, 501.1, 501.3, 501.12, 501.15.4, 501.15.4.1, 609.3, 614.10, 633.1, 635.1, 706.2
IECC—15	International Energy Conservation Code®	301.2
IFC—15	International Fire Code®	201.3, 401.2, 412.1, 412.6, 412.7, 412.7.3, 412.8, 413.1, 413.3, 413.3.1, 413.5, 413.9.2.5, 633.1, 701.1, 701.2, 703.2, 703.2.2, 703.3.8, 703.4, 703.5, 704.1.2, 704.3, 704.4, 706.2, 706.3, 707.1, 707.2, 708.1
IMC—15	International Mechanical Code®	101.2.5, 201.3, 301.1.1, 301.13, 304.11, 307.1, 307.5, 501.1, 614.2, 614.10, 618.4, 621.1, 624.1, 631.2, 632.1, 703.1.2
IPC—15	International Plumbing Code®	201.3, 301.6, 307.3, 624.1.1, 624.2
IRC—15	International Residential Code®	101.2, 703.2.1

MSS

Manufacturers Standardization Society of
the Valve and Fittings Industry
127 Park Street, Northeast
Vienna, VA 22180

Standard reference number	Title	Referenced in code section number
SP 58—2009	Pipe Hangers and Supports-Materials, Design and Manufacture	407.2

INTERNATIONAL CODE COUNCIL®
Copyright © 2015 ICC. ALL RIGHTS RESERVED. Accessed by David Dammon on Jun 21, 2017 12:30:52 PM pursuant to License Agreement with ICC. No further reproduction or distribution authorized. ANY UNAUTHORIZED REPRODUCTION OR DISTRIBUTION IS A VIOLATION OF THE FEDERAL COPYRIGHT ACT AND THE LICENSE AGREEMENT, AND SUBJECT TO CIVIL AND CRIMINAL PENALTIES THEREUNDER.

NFPA

National Fire Protection Association
1 Batterymarch Park
Quincy, MA 02269-9101

Standard reference number	Title	Referenced in code section number
30A—15	Code for Motor Fuel Dispensing Facilities and Repair Garages	305.4, 305.10
37—14	Standard for the Installation and Use of Stationary Combustion Engines and Gas Turbines	616.1
51—13	Design and Installation of Oxygen-fuel Gas Systems for Welding, Cutting and Allied Processes	414.1
58—14	Liquefied Petroleum Gas Code	401.2, 402.6, 403.6.2, 403.11
70—14	National Electrical Code	306.3.1, 306.4.1, 306.5.2, 309.2, 310.1.1.2, 413.9.2.4, 703.6
82—14	Incinerators, Waste and Linen Handling Systems and Equipment	503.2.5, T503.4, 607.1
85—15	Boiler and Combustion Systems Hazards Code	631.1
88A—15	Parking Structures	305.9
211—13	Standard for the Chimneys, Fireplaces, Vents and Solid Fuel-burning Appliances	503.5.2, 503.5.3, 503.5.6.1, 503.5.6.3
409—11	Standard for the Aircraft Hangars	305.11
853—15	Installation of Stationary Fuel Cell Power Systems	633.1

UL

UL LLC
333 Pfingsten Road
Northbrook, IL 60062

Standard reference number	Title	Referenced in code section number
103—2010	Factory-built Chimneys, Residential Type and Building Heating Appliances—with Revisions through July 2012	506.1
127—2011	Factory-built Fireplaces	621.7
441—2010	Gas Vents	502.1
641—2010	Type L Low-temperature Venting Systems—with Revisions through May 2013	502.1
651—2011	Schedule 40 and 80 Rigid PVC Conduit and Fittings—with Revisions through March 2012	403.6.3
795—2011	Commercial-industrial Gas Heating Equipment—with Revisions through September 2012	610.1, 618.1, 631.1
959—2010	Medium Heat Appliance Factory-built Chimneys	506.3
1618—09	Wall Protectors, Floor Protectors and Hearth Extensions—with Revisions through May 2013	308.2
1738—2010	Venting Systems for Gas Burning Appliances, Categories II, III and IV—with Revisions through May 2011	502.1
1777—2007	Chimney Liners—with Revisions through July 2009	501.12, 501.15.4
2200—2012	Stationary Engine Generator Assemblies—with Revisions through June 2013	616.1

INTERNATIONAL CODE COUNCIL®
Copyright © 2015 ICC. ALL RIGHTS RESERVED. Accessed by David Dammon on Jun 21, 2017 12:30:52 PM pursuant to License Agreement with ICC. No further reproduction or distribution authorized. ANY UNAUTHORIZED REPRODUCTION OR DISTRIBUTION IS A VIOLATION OF THE FEDERAL COPYRIGHT ACT AND THE LICENSE AGREEMENT, AND SUBJECT TO CIVIL AND CRIMINAL PENALTIES THEREUNDER.

The appendices of the *International Fuel Gas Code*® (IFGC®) are explanatory commentaries of the code itself. Thus, there is no additional commentary for them.

Appendix A (IFGS): Sizing and Capacities of Gas Piping

(This appendix is informative and is not part of the code.)

A.1 General piping considerations. The first goal of determining the pipe sizing for a fuel gas *piping* system is to make sure that there is sufficient gas pressure at the inlet to each *appliance*. The majority of systems are residential and the appliances will all have the same, or nearly the same, requirement for minimum gas pressure at the *appliance* inlet. This pressure will be about 5-inch water column (w.c.) (1.25 kPa), which is enough for proper operation of the *appliance* regulator to deliver about 3.5-inches water column (w.c.) (875 kPa) to the burner itself. The pressure drop in the *piping* is subtracted from the source delivery pressure to verify that the minimum is available at the *appliance*.

There are other systems, however, where the required inlet pressure to the different appliances may be quite varied. In such cases, the greatest inlet pressure required must be satisfied, as well as the farthest *appliance*, which is almost always the critical *appliance* in small systems.

There is an additional requirement to be observed besides the capacity of the system at 100-percent flow. That requirement is that at minimum flow, the pressure at the inlet to any *appliance* does not exceed the pressure rating of the *appliance* regulator. This would seldom be of concern in small systems if the source pressure is $^1/_2$ psi (14-inch w.c.) (3.5 kPa) or less but it should be verified for systems with greater gas pressure at the point of supply.

To determine the size of *piping* used in a gas *piping* system, the following factors must be considered:

(1) Allowable loss in pressure from *point of delivery* to *appliance*.

(2) Maximum gas demand.

(3) Length of *piping* and number of fittings.

(4) Specific gravity of the gas.

(5) Diversity factor.

For any gas *piping* system, or special *appliance*, or for conditions other than those covered by the tables provided in this code, such as longer runs, greater gas demands or greater pressure drops, the size of each gas *piping* system should be determined by standard engineering practices acceptable to the code official.

A.2 Description of tables.

A.2.1 General. The quantity of gas to be provided at each *outlet* should be determined, whenever possible, directly from the manufacturer's gas input Btu/h rating of the *appliance* that will be installed. In case the ratings of the appliances to be installed are not known, Table 402.2 shows the approximate consumption (in Btu per hour) of certain types of typical household appliances.

To obtain the cubic feet per hour of gas required, divide the total Btu/h input of all appliances by the average Btu heating value per cubic feet of the gas. The average Btu per cubic feet of the gas in the area of the installation can be obtained from the serving gas supplier.

A.2.2 Low pressure natural gas tables. Capacities for gas at low pressure [less than 2.0 psig (13.8 kPa gauge)] in cubic feet per hour of 0.60 specific gravity gas for different sizes and lengths are shown in Tables 402.4(1) through 402.4(4) for iron pipe or equivalent rigid pipe; in Tables 402.4(8) through 402.4(11) for smooth wall semirigid tubing; in Tables 402.4(20) through 402.4(24) for polyethylene pipe and tubing; and in Tables 402.4(15) through 402.4(17) for corrugated stainless steel tubing. Tables 402.4(1), 402.4(6) and 402.4(20) are based upon a pressure drop of 0.3-inch w.c. (75 Pa), whereas Tables 402.4(2), 402.4(9), 402.4(15) and 402.4(21) are based upon a pressure drop of 0.5-inch w.c. (125 Pa). Tables 402.4(3), 402.4(4), 402.4(10), 402.4(11), 402.4(16) and 402.4(17) are special low-pressure applications based upon pressure drops greater than 0.5-inch w.c. (125 Pa). In using these tables, an allowance (in equivalent length of pipe) should be considered for any *piping* run with four or more fittings (see Table A.2.2).

A.2.3 Undiluted liquefied petroleum tables. Capacities in thousands of Btu per hour of undiluted liquefied petroleum gases based on a pressure drop of 0.5-inch w.c. (125 Pa) for different sizes and lengths are shown in Table 402.4(28) for iron pipe or equivalent rigid pipe, in Table 402.4(30) for smooth wall semi-rigid tubing, in Table 402.4(32) for corrugated stainless steel tubing, and in Tables 402.4(35) and 402.4(37) for polyethylene plastic pipe and tubing. Tables 402.4(33) and 402.4(34) for corrugated stainless steel tubing and Table 402.4(36) for polyethylene plastic pipe are based on operating pressures greater than $1^1/_2$ pounds per square inch (psi) (3.5 kPa) and pressure drops greater than 0.5-inch w.c. (125 Pa). In using these tables, an allowance (in equivalent length of pipe) should be considered for any *piping* run with four or more fittings (see Table A.2.2).

A.2.4 Natural gas specific gravity. Gas *piping* systems that are to be supplied with gas of a specific gravity of 0.70 or less can be sized directly from the tables provided in this code, unless the code official specifies that a gravity factor be applied. Where the specific gravity of the gas is greater than 0.70, the gravity factor should be applied.

INTERNATIONAL CODE COUNCIL®
Copyright © 2015 ICC. ALL RIGHTS RESERVED. Accessed by David Dammon on Jun 21, 2017 12:30:52 PM pursuant to License Agreement with ICC. No further reproduction or distribution authorized. ANY UNAUTHORIZED REPRODUCTION OR DISTRIBUTION IS A VIOLATION OF THE FEDERAL COPYRIGHT ACT AND THE LICENSE AGREEMENT, AND SUBJECT TO CIVIL AND CRIMINAL PENALTIES THEREUNDER.

TABLE A.2.2
EQUIVALENT LENGTHS OF PIPE FITTINGS AND VALVES

		SCREWED FITTINGS[1]				90° WELDING ELBOWS AND SMOOTH BENDS[2]					
		45°/Ell	90°/Ell	180°close return bends	Tee	R/d = 1	R/d = $1^1/_3$	R/d = 2	R/d = 4	R/d = 6	R/d = 8
k factor =		0.42	0.90	2.00	1.80	0.48	0.36	0.27	0.21	0.27	0.36
L/d' ratio[4] *n* =		1 4	30	67	60	16	12	9	7	9	12
Nominal pipe size, inches	Inside diameter d, inches, Schedule 40[6]	L = Equivalent Length In Feet of Schedule 40 (Standard-weight) Straight Pipe[6]									
$^1/_2$	0.622	0.73	1.55	3.47	3.10	0.83	0.62	0.47	0.36	0.47	0.62
$^3/_4$	0.824	0.96	2.06	4.60	4.12	1.10	0.82	0.62	0.48	0.62	0.82
1	1.049	1.22	2.62	5.82	5.24	1.40	1.05	0.79	0.61	0.79	1.05
$1^1/_4$	1.380	1.61	3.45	7.66	6.90	1.84	1.38	1.03	0.81	1.03	1.38
$1^1/_2$	1.610	1.88	4.02	8.95	8.04	2.14	1.61	1.21	0.94	1.21	1.61
2	2.067	2.41	5.17	11.5	10.3	2.76	2.07	1.55	1.21	1.55	2.07
$2^1/_2$	2.469	2.88	6.16	13.7	12.3	3.29	2.47	1.85	1.44	1.85	2.47
3	3.068	3.58	7.67	17.1	15.3	4.09	3.07	2.30	1.79	2.30	3.07
4	4.026	4.70	10.1	22.4	20.2	5.37	4.03	3.02	2.35	3.02	4.03
5	5.047	5.88	12.6	28.0	25.2	6.72	5.05	3.78	2.94	3.78	5.05
6	6.065	7.07	15.2	33.8	30.4	8.09	6.07	4.55	3.54	4.55	6.07
8	7.981	9.31	20.0	44.6	40.0	10.6	7.98	5.98	4.65	5.98	7.98
10	10.02	11.7	25.0	55.7	50.0	13.3	10.0	7.51	5.85	7.51	10.0
12	11.94	13.9	29.8	66.3	59.6	15.9	11.9	8.95	6.96	8.95	11.9
14	13.13	15.3	32.8	73.0	65.6	17.5	13.1	9.85	7.65	9.85	13.1
16	15.00	17.5	37.5	83.5	75.0	20.0	15.0	11.2	8.75	11.2	15.0
18	16.88	19.7	42.1	93.8	84.2	22.5	16.9	12.7	9.85	12.7	16.9
20	18.81	22.0	47.0	105.0	94.0	25.1	18.8	14.1	11.0	14.1	18.8
24	22.63	26.4	56.6	126.0	113.0	30.2	22.6	17.0	13.2	17.0	22.6

(continued)

INTERNATIONAL CODE COUNCIL®
Copyright © 2015 ICC. ALL RIGHTS RESERVED. Accessed by David Dammon on Jun 21, 2017 12:30:52 PM pursuant to License Agreement with ICC. No further reproduction or distribution authorized. ANY UNAUTHORIZED REPRODUCTION OR DISTRIBUTION IS A VIOLATION OF THE FEDERAL COPYRIGHT ACT AND THE LICENSE AGREEMENT, AND SUBJECT TO CIVIL AND CRIMINAL PENALTIES THEREUNDER.

TABLE A.2.2—continued
EQUIVALENT LENGTHS OF PIPE FITTINGS AND VALVES

		MITER ELBOWS[3] (No. of miters)					WELDING TEES		VALVES (screwed, flanged, or welded)			
		1-45°	1-60°	1-90°	2-90°[5]	3-90°[5]	Forged	Miter[3]	Gate	Globe	Angle	Swing Check
k factor =		0.45	0.90	1.80	0.60	0.45	1.35	1.80	0.21	10	5.0	2.5
L/d' ratio[4] n =		15	30	60	20	15	45	60	7	333	167	83
Nominal pipe size, inches	Inside diameter d, inches, Schedule 40[6]	L = Equivalent Length In Feet of Schedule 40 (Standard-weight) Straight Pipe[6]										
1/2	0.622	0.78	1.55	3.10	1.04	0.78	2.33	3.10	0.36	17.3	8.65	4.32
3/4	0.824	1.03	2.06	4.12	1.37	1.03	3.09	4.12	0.48	22.9	11.4	5.72
1	1.049	1.31	2.62	5.24	1.75	1.31	3.93	5.24	0.61	29.1	14.6	7.27
1 1/4	1.380	1.72	3.45	6.90	2.30	1.72	5.17	6.90	0.81	38.3	19.1	9.58
1 1/2	1.610	2.01	4.02	8.04	2.68	2.01	6.04	8.04	0.94	44.7	22.4	11.2
2	2.067	2.58	5.17	10.3	3.45	2.58	7.75	10.3	1.21	57.4	28.7	14.4
2 1/2	2.469	3.08	6.16	12.3	4.11	3.08	9.25	12.3	1.44	68.5	34.3	17.1
3	3.068	3.84	7.67	15.3	5.11	3.84	11.5	15.3	1.79	85.2	42.6	21.3
4	4.026	5.04	10.1	20.2	6.71	5.04	15.1	20.2	2.35	112.0	56.0	28.0
5	5.047	6.30	12.6	25.2	8.40	6.30	18.9	25.2	2.94	140.0	70.0	35.0
6	6.065	7.58	15.2	30.4	10.1	7.58	22.8	30.4	3.54	168.0	84.1	42.1
8	7.981	9.97	20.0	40.0	13.3	9.97	29.9	40.0	4.65	22.0	111.0	55.5
10	10.02	12.5	25.0	50.0	16.7	12.5	37.6	50.0	5.85	278.0	139.0	69.5
12	11.94	14.9	29.8	59.6	19.9	14.9	44.8	59.6	6.96	332.0	166.0	83.0
14	13.13	16.4	32.8	65.6	21.9	16.4	49.2	65.6	7.65	364.0	182.0	91.0
16	15.00	18.8	37.5	75.0	25.0	18.8	56.2	75.0	8.75	417.0	208.0	104.0
18	16.88	21.1	42.1	84.2	28.1	21.1	63.2	84.2	9.85	469.0	234.0	117.0
20	18.81	23.5	47.0	94.0	31.4	23.5	70.6	94.0	11.0	522.0	261.0	131.0
24	22.63	28.3	56.6	113.0	37.8	28.3	85.0	113.0	13.2	629.0	314.0	157.0

For SI: 1 foot = 305 mm, 1 degree = 0.01745 rad.

Note: Values for welded fittings are for conditions where bore is not obstructed by weld spatter or backing rings. If appreciably obstructed, use values for "Screwed Fittings."

1. Flanged fittings have three-fourths the resistance of screwed elbows and tees.
2. Tabular figures give the extra resistance due to curvature alone to which should be added the full length of travel.
3. Small size socket-welding fittings are equivalent to miter elbows and miter tees.
4. Equivalent resistance in number of diameters of straight pipe computed for a value of (f - 0.0075) from the *relation* (n - k/4f).
5. For condition of minimum resistance where the centerline length of each miter is between d and 2 1/2 d.
6. For pipe having other inside diameters, the equivalent resistance can be computed from the above n values.

Source: Crocker, S. *Piping Handbook*, 4th ed., Table XIV, pp. 100-101. Copyright 1945 by McGraw-Hill, Inc. Used by permission of McGraw-Hill Book Company.

INTERNATIONAL CODE COUNCIL®
Copyright © 2015 ICC. ALL RIGHTS RESERVED. Accessed by David Dammon on Jun 21, 2017 12:30:52 PM pursuant to License Agreement with ICC. No further reproduction or distribution authorized. ANY UNAUTHORIZED REPRODUCTION OR DISTRIBUTION IS A VIOLATION OF THE FEDERAL COPYRIGHT ACT AND THE LICENSE AGREEMENT, AND SUBJECT TO CIVIL AND CRIMINAL PENALTIES THEREUNDER.

Application of the gravity factor converts the figures given in the tables provided in this code to capacities for another gas of different specific gravity. Such application is accomplished by multiplying the capacities given in the tables by the multipliers shown in Table A.2.4. In case the exact specific gravity does not appear in the table, choose the next higher value specific gravity shown.

TABLE A.2.4
MULTIPLIERS TO BE USED WITH TABLES 402.4(1) THROUGH 402.4(22) WHERE THE SPECIFIC GRAVITY OF THE GAS IS OTHER THAN 0.60

SPECIFIC GRAVITY	MULTIPLIER	SPECIFIC GRAVITY	MULTIPLIER
0.35	1.31	1.00	0.78
0.40	1.23	1.10	0.74
0.45	1.16	1.20	0.71
0.50	1.10	1.30	0.68
0.55	1.04	1.40	0.66
0.60	1.00	1.50	0.63
0.65	0.96	1.60	0.61
0.70	0.93	1.70	0.59
0.75	0.90	1.80	0.58
0.80	0.87	1.90	0.56
0.85	0.84	2.00	0.55
0.90	0.82	2.10	0.54

A.2.5 Higher pressure natural gas tables. Capacities for gas at pressures 2.0 psig (13.8 kPa) or greater in cubic feet per hour of 0.60 specific gravity gas for different sizes and lengths are shown in Tables 402.4(5) through 402.4(7) for iron pipe or equivalent rigid pipe; Tables 402.4(12) to 402.4(14) for semirigid tubing; Tables 402.4(18) and 402.4(19) for corrugated stainless steel tubing; and Table 402.4(22) for polyethylene plastic pipe.

A.3 Use of capacity tables.

A.3.1 Longest length method. This sizing method is conservative in its approach by applying the maximum operating conditions in the system as the norm for the system and by setting the length of pipe used to size any given part of the *piping* system to the maximum value.

To determine the size of each section of gas *piping* in a system within the range of the capacity tables, proceed as follows (also see sample calculations included in this Appendix):

(1) Divide the *piping* system into appropriate segments consistent with the presence of tees, branch lines and main runs. For each segment, determine the gas load (assuming all appliances operate simultaneously) and its overall length. An allowance (in equivalent length of pipe) as determined from Table A.2.2 shall be considered for *piping* segments that include four or more fittings.

(2) Determine the gas demand of each *appliance* to be attached to the *piping* system. Where Tables 402.4(1) through 402.4(24) are to be used to select the *piping* size, calculate the gas demand in terms of cubic feet per hour for each *piping* system *outlet*. Where Tables 402.4(25) through 402.4(37) are to be used to select the *piping* size, calculate the gas demand in terms of thousands of Btu per hour for each *piping* system *outlet*.

(3) Where the *piping* system is for use with other than undiluted liquefied petroleum gases, determine the design system pressure, the allowable loss in pressure (pressure drop), and specific gravity of the gas to be used in the *piping* system.

(4) Determine the length of *piping* from the *point of delivery* to the most remote *outlet* in the building/*piping* system.

(5) In the appropriate capacity table, select the row showing the measured length or the next longer length if the table does not give the exact length. This is the only length used in determining the size of any section of gas *piping*. If the gravity factor is to be applied, the values in the selected row of the table are multiplied by the appropriate multiplier from Table A.2.4.

(6) Use this horizontal row to locate ALL gas demand figures for this particular system of *piping*.

(7) Starting at the most remote *outlet*, find the gas demand for that *outlet* in the horizontal row just selected. If the exact figure of demand is not shown, choose the next larger figure left in the row.

(8) Opposite this demand figure, in the first row at the top, the correct size of gas *piping* will be found.

(9) Proceed in a similar manner for each *outlet* and each section of gas *piping*. For each section of *piping*, determine the total gas demand supplied by that section.

Where a large number of *piping* components (such as elbows, tees and valves) are installed in a pipe run, additional pressure loss can be accounted for by the use of equivalent lengths. Pressure loss across any *piping* component can be equated to the pressure drop through a length of pipe. The equivalent length of a combination of only four elbows/tees can result in a jump to the next larger length row, resulting in a significant reduction in capacity. The equivalent lengths in feet shown in Table A.2.2 have been computed on a basis that the inside diameter corresponds to that of Schedule 40 (standard-weight) steel pipe, which is close enough for most purposes involving other schedules of pipe. Where a more specific solution for equivalent length is desired, this can be made by multiplying the actual inside diameter of the pipe in inches by $n/12$, or the actual inside diameter in feet by n (n can be read from the table heading). The equivalent length values can be used with reasonable accuracy for copper or copper alloy fittings and bends although the resistance per foot of copper or copper alloy pipe is less than that of steel. For copper or brass valves, however, the equivalent length of pipe should be taken as 45 percent longer than the values in the table, which are for steel pipe.

A.3.2 Branch length method. This sizing method reduces the amount of conservatism built into the traditional Longest Length Method. The longest length as measured from the

INTERNATIONAL CODE COUNCIL®
Copyright © 2015 ICC. ALL RIGHTS RESERVED. Accessed by David Dammon on Jun 21, 2017 12:30:52 PM pursuant to License Agreement with ICC. No further reproduction or distribution authorized. ANY UNAUTHORIZED REPRODUCTION OR DISTRIBUTION IS A VIOLATION OF THE FEDERAL COPYRIGHT ACT AND THE LICENSE AGREEMENT, AND SUBJECT TO CIVIL AND CRIMINAL PENALTIES THEREUNDER.

meter to the furthest remote *appliance* is only used to size the initial parts of the overall *piping* system. The Branch Length Method is applied in the following manner:

(1) Determine the gas load for each of the connected appliances.

(2) Starting from the meter, divide the *piping* system into a number of connected segments, and determine the length and amount of gas that each segment would carry assuming that all appliances were operated simultaneously. An allowance (in equivalent length of pipe) as determined from Table A.2.2 should be considered for piping segments that include four or more fittings.

(3) Determine the distance from the *outlet* of the gas meter to the *appliance* furthest removed from the meter.

(4) Using the longest distance (found in Step 3), size each *piping* segment from the meter to the most remote *appliance outlet*.

(5) For each of these *piping* segments, use the longest length and the calculated gas load for all of the connected appliances for the segment and begin the sizing process in Steps 6 through 8.

(6) Referring to the appropriate sizing table (based on operating conditions and *piping* material), find the longest length distance in the first column or the next larger distance if the exact distance is not listed. The use of alternative operating pressures or pressure drops will require the use of a different sizing table, but will not alter the sizing methodology. In many cases, the use of alternative operating pressures or pressure drops will require the approval of both the code official and the local gas serving utility.

(7) Trace across this row until the gas load is found or the closest larger capacity if the exact capacity is not listed.

(8) Read up the table column and select the appropriate pipe size in the top row. Repeat Steps 6, 7 and 8 for each pipe segment in the longest run.

(9) Size each remaining section of branch *piping* not previously sized by measuring the distance from the gas meter location to the most remote *outlet* in that branch, using the gas load of attached appliances and following the procedures of Steps 2 through 8.

A.3.3 Hybrid pressure method. The sizing of a 2 psi (13.8 kPa) gas *piping* system is performed using the traditional Longest Length Method but with modifications. The 2 psi (13.8 kPa) system consists of two independent pressure zones, and each zone is sized separately. The Hybrid Pressure Method is applied as follows:

The sizing of the 2 psi (13.8 kPa) section (from the meter to the line regulator) is as follows:

(1) Calculate the gas load (by adding up the name plate ratings) from all connected appliances. (In certain circumstances the installed gas load can be increased up to 50 percent to accommodate future addition of appliances.) Ensure that the line regulator capacity is adequate for the calculated gas load and that the required pressure drop (across the regulator) for that capacity does not exceed $^{3}/_{4}$ psi (5.2 kPa) for a 2 psi (13.8 kPa) system. If the pressure drop across the regulator is too high (for the connected gas load), select a larger regulator.

(2) Measure the distance from the meter to the line regulator located inside the building.

(3) If there are multiple line regulators, measure the distance from the meter to the regulator furthest removed from the meter.

(4) The maximum allowable pressure drop for the 2 psi (13.8 kPa) section is 1 psi (6.9 kPa).

(5) Referring to the appropriate sizing table (based on *piping* material) for 2 psi (13.8 kPa) systems with a 1 psi (6.9 kPa) pressure drop, find this distance in the first column, or the closest larger distance if the exact distance is not listed.

(6) Trace across this row until the gas load is found or the closest larger capacity if the exact capacity is not listed.

(7) Read up the table column to the top row and select the appropriate pipe size.

(8) If there are multiple regulators in this portion of the *piping* system, each line segment must be sized for its actual gas load, but using the longest length previously determined above.

The low pressure section (all *piping* downstream of the line regulator) is sized as follows:

(1) Determine the gas load for each of the connected appliances.

(2) Starting from the line regulator, divide the piping system into a number of connected segments or independent parallel piping segments, and determine the amount of gas that each segment would carry assuming that all appliances were operated simultaneously. An allowance (in equivalent length of pipe) as determined from Table A.2.2 should be considered for piping segments that include four or more fittings.

(3) For each piping segment, use the actual length or longest length (if there are sub-branchlines) and the calculated gas load for that segment and begin the sizing process as follows:

(a) Referring to the appropriate sizing table (based on operating pressure and piping material), find the longest length distance in the first column or the closest larger distance if the exact distance is not listed. The use of alternative operating pressures and/or pressure drops will require the use of a different sizing table, but will not alter the sizing methodology. In many cases, the use of alternative operating pressures and/or pressure drops can require the approval of the code official.

INTERNATIONAL CODE COUNCIL®
Copyright © 2015 ICC. ALL RIGHTS RESERVED. Accessed by David Dammon on Jun 21, 2017 12:30:52 PM pursuant to License Agreement with ICC. No further reproduction or distribution authorized. ANY UNAUTHORIZED REPRODUCTION OR DISTRIBUTION IS A VIOLATION OF THE FEDERAL COPYRIGHT ACT AND THE LICENSE AGREEMENT, AND SUBJECT TO CIVIL AND CRIMINAL PENALTIES THEREUNDER.

(b) Trace across this row until the appliance gas load is found or the closest larger capacity if the exact capacity is not listed.

(c) Read up the table column to the top row and select the appropriate pipe size.

(d) Repeat this process for each segment of the piping system.

A.3.4 Pressure drop per 100 feet method. This sizing method is less conservative than the others, but it allows the designer to immediately see where the largest pressure drop occurs in the system. With this information, modifications can be made to bring the total drop to the critical *appliance* within the limitations that are presented to the designer.

Follow the procedures described in the Longest Length Method for Steps (1) through (4) and (9).

For each *piping* segment, calculate the pressure drop based on pipe size, length as a percentage of 100 feet (30 480 mm) and gas flow. Table A.3.4 shows pressure drop per 100 feet (30 480 mm) for pipe sizes from $^1/_2$ inch (12.7 mm) through 2 inches (51 mm). The sum of pressure drops to the critical *appliance* is subtracted from the supply pressure to verify that sufficient pressure will be available. If not, the layout can be examined to find the high drop section(s) and sizing selections modified.

Note: Other values can be obtained by using the following equation:

$$\text{Desired Value} = MBH \times \sqrt{\frac{\text{Desired Drop}}{\text{Table Drop}}}$$

For example, if it is desired to get flow through $^3/_4$-inch (19.1 mm) pipe at 2 inches/100 feet, multiply the capacity of $^3/_4$-inch pipe at 1 inch/100 feet by the square root of the pressure ratio:

$$147\ MBH \times \sqrt{\frac{2''\ \text{w.c.}}{1''\ \text{w.c.}}} = 147 \times 1.414 = 208\ MBH$$

(MBH = 1000 Btu/h)

A.4 Use of sizing equations. Capacities of smooth wall pipe or tubing can also be determined by using the following formulae:

(1) High Pressure [1.5 psi (10.3 kPa) and above]:

$$Q = 181.6 \sqrt{\frac{D^5 \cdot (P_1^2 - P_2^2) \cdot Y}{C_r \cdot fba \cdot L}}$$

$$= 2237\ D^{2.623} \left[\frac{(P_1^2 - P_2^2) \cdot Y}{C_r \cdot L}\right]^{0.541}$$

(2) Low Pressure [Less than 1.5 psi (10.3 kPa)]:

$$Q = 187.3 \sqrt{\frac{D^5 \cdot \Delta H}{C_r \cdot fba \cdot L}}$$

$$= 2313 D^{2.623} \left(\frac{\Delta H}{C_r \cdot L}\right)^{0.541}$$

where:

Q = Rate, cubic feet per hour at 60°F and 30-inch mercury column

D = Inside diameter of pipe, in.

P_1 = Upstream pressure, psia

P_2 = Downstream pressure, psia

Y = Superexpansibility factor = 1/supercompressibility factor

C_r = Factor for viscosity, density and temperature*

$= 0.00354\ ST\left(\frac{Z}{S}\right)^{0.152}$

*Note: See Table 402.4 for Y and C_r for natural gas and propane.

S = Specific gravity of gas at 60°F and 30-inch mercury column (0.60 for natural gas, 1.50 for propane), or = 1488μ

T = Absolute temperature, °F or = t + 460

t = Temperature, °F

Z = Viscosity of gas, centipoise (0.012 for natural gas, 0.008 for propane), or = 1488μ

fba = Base friction factor for air at 60°F (CF = 1)

L = Length of pipe, ft

ΔH = Pressure drop, in. w.c. (27.7 in. H_2O = 1 psi)

(For SI, see Section 402.4)

A.5 Pipe and tube diameters. Where the internal diameter is determined by the formulas in Section 402.4, Tables A.5.1 and A.5.2 can be used to select the nominal or standard pipe size based on the calculated internal diameter.

TABLE A.3.4
THOUSANDS OF BTU/H (MBH) OF NATURAL GAS PER 100 FEET OF PIPE AT VARIOUS PRESSURE DROPS AND PIPE DIAMETERS

PRESSURE DROP PER 100 FEET IN INCHES W.C.	PIPE SIZES (inch)					
	$^1/_2$	$^3/_4$	1	$1^1/_4$	$1^1/_2$	2
0.2	31	64	121	248	372	716
0.3	38	79	148	304	455	877
0.5	50	104	195	400	600	1160
1.0	71	147	276	566	848	1640

For SI: 1 inch = 25.4 mm, 1 foot = 304.8 mm.

INTERNATIONAL CODE COUNCIL®
Copyright © 2015 ICC. ALL RIGHTS RESERVED. Accessed by David Dammon on Jun 21, 2017 12:30:52 PM pursuant to License Agreement with ICC. No further reproduction or distribution authorized. ANY UNAUTHORIZED REPRODUCTION OR DISTRIBUTION IS A VIOLATION OF THE FEDERAL COPYRIGHT ACT AND THE LICENSE AGREEMENT, AND SUBJECT TO CIVIL AND CRIMINAL PENALTIES THEREUNDER.

TABLE A.5.1
SCHEDULE 40 STEEL PIPE STANDARD SIZES

NOMINAL SIZE (inch)	INTERNAL DIAMETER (inch)	NOMINAL SIZE (inch)	INTERNAL DIAMETER (inch)
1/4	0.364	1 1/2	1.610
3/8	0.493	2	2.067
1/2	0.622	2 1/2	2.469
3/4	0.824	3	3.068
1	1.049	3 1/2	3.548
1 1/4	1.380	4	4.026

For SI: 1 inch = 25.4 mm.

A.6 Examples of piping system design and sizing.

A.6.1 Example 1: Longest length method. Determine the required pipe size of each section and *outlet* of the *piping* system shown in Figure A.6.1, with a designated pressure drop of 0.5-inch w.c. (125 Pa) using the Longest Length Method. The gas to be used has 0.60 specific gravity and a heating value of 1,000 Btu/ft^3 (37.5 MJ/m^3).

Solution:

(1) Maximum gas demand for *Outlet* A:

$$\frac{\text{Consumption (rating plate input, or Table 402.2 if necessary}}{\text{Btu of gas}} =$$

$$\frac{\text{35,000 Btu per hour rating}}{\text{1,000 Btu per cubic foot}} = 35 \text{ cubic feet per hour} = 35 \text{ cfh}$$

Maximum gas demand for *Outlet* B:

$$\frac{\text{Consumption}}{\text{Btu of gas}} = \frac{75{,}000}{1{,}000} = 75 \text{ cfh}$$

Maximum gas demand for *Outlet* C:

$$\frac{\text{Consumption}}{\text{Btu of gas}} = \frac{35{,}000}{1{,}000} = 35 \text{ cfh}$$

Maximum gas demand for *Outlet* D:

$$\frac{\text{Consumption}}{\text{Btu of gas}} = \frac{100{,}000}{1{,}000} = 100 \text{ cfh}$$

(2) The length of pipe from the *point of delivery* to the most remote *outlet* (A) is 60 feet (18 288 mm). This is the only distance used.

(3) Using the row marked 60 feet (18 288 mm) in Table 402.4(2):

(a) *Outlet* A, supplying 35 cfh (0.99 m^3/hr), requires 1/2-inch pipe.

(b) *Outlet* B, supplying 75 cfh (2.12 m^3/hr), requires 3/4-inch pipe.

(c) Section 1, supplying *Outlets* A and B, or 110 cfh (3.11 m^3/hr), requires 3/4-inch pipe.

(d) Section 2, supplying *Outlets* C and D, or 135 cfh (3.82 m^3/hr), requires 3/4-inch pipe.

(e) Section 3, supplying *Outlets* A, B, C and D, or 245 cfh (6.94 m^3/hr), requires 1-inch pipe.

(4) If a different gravity factor is applied to this example, the values in the row marked 60 feet (18 288 mm) of Table 402.4(2) would be multiplied by the appropriate multiplier from Table A.2.4 and the resulting cubic feet per hour values would be used to size the *piping*.

TABLE A.5.2
COPPER TUBE STANDARD SIZES

TUBE TYPE	NOMINAL OR STANDARD SIZE (inches)	INTERNAL DIAMETER (inches)
K	1/4	0.305
L	1/4	0.315
ACR (D)	3/8	0.315
ACR (A)	3/8	0.311
K	3/8	0.402
L	3/8	0.430
ACR (D)	1/2	0.430
ACR (A)	1/2	0.436
K	1/2	0.527
L	1/2	0.545
ACR (D)	5/8	0.545
ACR (A)	5/8	0.555
K	5/8	0.652
L	5/8	0.666
ACR (D)	3/4	0.666
ACR (A)	3/4	0.680
K	3/4	0.745
L	3/4	0.785
ACR	7/8	0.785
K	1	0.995
L	1	1.025
ACR	1 1/8	1.025
K	1 1/4	1.245
L	1 1/4	1.265
ACR	1 3/8	1.265
K	1 1/2	1.481
L	1 1/2	1.505
ACR	1 5/8	1.505
K	2	1.959
L	2	1.985
ACR	2 1/8	1.985
K	2 1/2	2.435
L	2 1/2	2.465
ACR	2 5/8	2.465
K	3	2.907
L	3	2.945
ACR	3 1/8	2.945

For SI: 1 inch = 25.4 mm.

INTERNATIONAL CODE COUNCIL®
Copyright © 2015 ICC. ALL RIGHTS RESERVED. Accessed by David Dammon on Jun 21, 2017 12:30:52 PM pursuant to License Agreement with ICC. No further reproduction or distribution authorized. ANY UNAUTHORIZED REPRODUCTION OR DISTRIBUTION IS A VIOLATION OF THE FEDERAL COPYRIGHT ACT AND THE LICENSE AGREEMENT, AND SUBJECT TO CIVIL AND CRIMINAL PENALTIES THEREUNDER.

A.6.2 Example 2: Hybrid or dual pressure systems. Determine the required CSST size of each section of the *piping* system shown in Figure A.6.2, with a designated pressure drop of 1 psi (6.9 kPa) for the 2 psi (13.8 kPa) section and 3-inch w.c. (0.75 kPa) pressure drop for the 13-inch w.c. (2.49 kPa) section. The gas to be used has 0.60 specific gravity and a heating value of 1,000 Btu/ft^3 (37.5 MJ/m^3).

Solution:

(1) Size 2 psi (13.8 kPa) line using Table 402.4(18).

(2) Size 10-inch w.c. (2.5 kPa) lines using Table 402.4(16).

(3) Using the following, determine if sizing tables can be used.

(a) Total gas load shown in Figure A.6.2 equals 110 cfh (3.11 m^3/hr).

(b) Determine pressure drop across regulator [see notes in Table 402.4(18)].

(c) If pressure drop across regulator exceeds $^3/_4$ psig (5.2 kPa), Table 402.4(18) cannot be used. Note: If pressure drop exceeds $^3/_4$ psi (5.2 kPa), then a larger regulator must be selected or an alternative sizing method must be used.

(d) Pressure drop across the line regulator [for 110 cfh (3.11 m^3/hr)] is 4-inch w.c. (0.99 kPa) based on manufacturer's performance data.

(e) Assume the CSST manufacturer has tubing sizes or EHDs of 13, 18, 23 and 30.

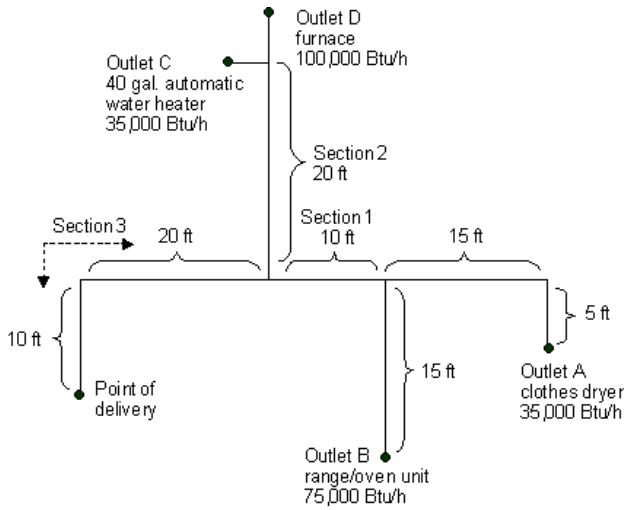

FIGURE A.6.1
PIPING PLAN SHOWING A STEEL PIPING SYSTEM

(4) Section A [2 psi (13.8 kPa) zone]

(a) Distance from meter to regulator = 100 feet (30 480 mm).

(b) Total load supplied by A = 110 cfh (3.11 m^3/hr) (furnace + water heater + dryer).

(c) Table 402.4(18) shows that EHD size 18 should be used.

Note: It is not unusual to oversize the supply line by 25 to 50 percent of the as-installed load. EHD size 18 has a capacity of 189 cfh (5.35 m^3/hr).

(5) Section B (low pressure zone)

(a) Distance from regulator to furnace is 15 feet (4572 mm).

(b) Load is 60 cfh (1.70 m^3/hr).

(c) Table 402.4(16) shows that EHD size 13 should be used.

(6) Section C (low pressure zone)

(a) Distance from regulator to water heater is 10 feet (3048 mm).

(b) Load is 30 cfh (0.85 m^3/hr).

(c) Table 402.4(16) shows that EHD size 13 should be used.

(7) Section D (low pressure zone)

(a) Distance from regulator to dryer is 25 feet (7620 mm).

(b) Load is 20 cfh (0.57 m^3/hr).

(c) Table 402.4(16) shows that EHD size 13 should be used.

A.6.3 Example 3: Branch length method. Determine the required semirigid copper tubing size of each section of the *piping* system shown in Figure A.6.3, with a designated pressure drop of 1-inch w.c. (250 Pa) (using the Branch Length Method). The gas to be used has 0.60 specific gravity and a heating value of 1,000 Btu/ft^3 (37.5 MJ/m^3).

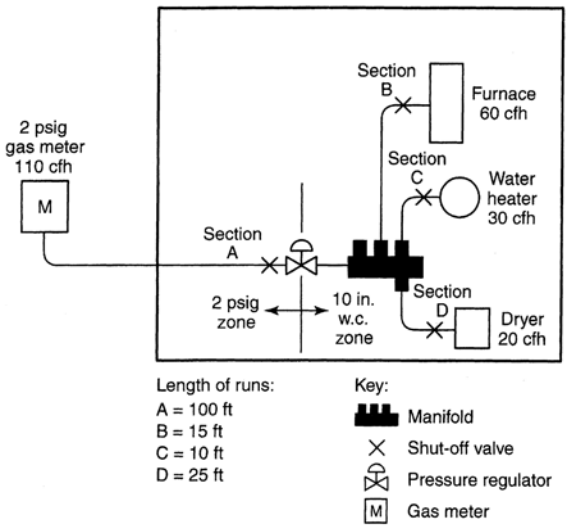

FIGURE A.6.2
PIPING PLAN SHOWING A CSST SYSTEM

INTERNATIONAL CODE COUNCIL®
Copyright © 2015 ICC. ALL RIGHTS RESERVED. Accessed by David Dammon on Jun 21, 2017 12:30:52 PM pursuant to License Agreement with ICC. No further reproduction or distribution authorized. ANY UNAUTHORIZED REPRODUCTION OR DISTRIBUTION IS A VIOLATION OF THE FEDERAL COPYRIGHT ACT AND THE LICENSE AGREEMENT, AND SUBJECT TO CIVIL AND CRIMINAL PENALTIES THEREUNDER.

Solution:

(1) Section A

(a) The length of tubing from the *point of delivery* to the most remote *appliance* is 50 feet (15 240 mm), A + C.

(b) Use this longest length to size Sections A and C.

(c) Using the row marked 50 feet (15 240 mm) in Table 402.4(10), Section A, supplying 220 cfh (6.2 m^3/hr) for four appliances requires 1-inch tubing.

(2) Section B

(a) The length of tubing from the *point of delivery* to the range/oven at the end of Section B is 30 feet (9144 mm), A + B.

(b) Use this branch length to size Section B only.

(c) Using the row marked 30 feet (9144 mm) in Table 402.4(10), Section B, supplying 75 cfh (2.12 m^3/hr) for the range/oven requires $^1/_2$-inch tubing.

(3) Section C

(a) The length of tubing from the *point of delivery* to the dryer at the end of Section C is 50 feet (15 240 mm), A + C.

(b) Use this branch length (which is also the longest length) to size Section C.

(c) Using the row marked 50 feet (15 240 mm) in Table 402.4(10), Section C, supplying 30 cfh (0.85 m^3/hr) for the dryer requires $^3/_8$-inch tubing.

(4) Section D

(a) The length of tubing from the *point of delivery* to the water heater at the end of Section D is 30 feet (9144 mm), A + D.

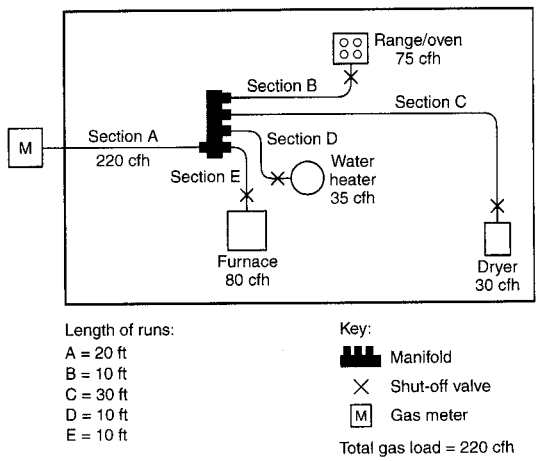

FIGURE A.6.3
PIPING PLAN SHOWING A COPPER TUBING SYSTEM

(b) Use this branch length to size Section D only.

(c) Using the row marked 30 feet (9144 mm) in Table 402.4(10), Section D, supplying 35 cfh (0.99 m^3/hr) for the water heater requires $^3/_8$-inch tubing.

(5) Section E

(a) The length of tubing from the *point of delivery* to the furnace at the end of Section E is 30 feet (9144 mm), A + E.

(b) Use this branch length to size Section E only.

(c) Using the row marked 30 feet (9144 mm) in Table 402.4(10), Section E, supplying 80 cfh (2.26 m^3/hr) for the furnace requires $^1/_2$-inch tubing.

A.6.4 Example 4: Modification to existing piping system. Determine the required CSST size for Section G (retrofit application) of the *piping* system shown in Figure A.6.4, with a designated pressure drop of 0.5-inch w.c. (125 Pa) using the branch length method. The gas to be used has 0.60 specific gravity and a heating value of 1,000 Btu/ft^3 (37.5 MJ/m^3).

Solution:

(1) The length of pipe and CSST from the *point of delivery* to the retrofit *appliance* (barbecue) at the end of Section G is 40 feet (12 192 mm), A + B + G.

(2) Use this branch length to size Section G.

(3) Assume the CSST manufacturer has tubing sizes or EHDs of 13, 18, 23 and 30.

(4) Using the row marked 40 feet (12 192 mm) in Table 402.4(15), Section G, supplying 40 cfh (1.13 m^3/hr) for the barbecue requires EHD 18 CSST.

(5) The sizing of Sections A, B, F and E must be checked to ensure adequate gas carrying capacity since an *appliance* has been added to the *piping* system (see A.6.1 for details).

A.6.5 Example 5: Calculating pressure drops due to temperature changes. A test *piping* system is installed on a warm autumn afternoon when the temperature is 70°F (21°C). In accordance with local custom, the new *piping* system is subjected to an air pressure test at 20 psig (138 kPa). Overnight, the temperature drops and when the inspector shows up first thing in the morning the temperature is 40°F (4°C).

If the volume of the *piping* system is unchanged, then the formula based on Boyle's and Charles' law for determining the new pressure at a reduced temperature is as follows:

$$\frac{T_1}{T_2} = \frac{P_1}{P_2}$$

where:

T_1 = Initial temperature, absolute (T_1 + 459)

T_2 = Final temperature, absolute (T_2 + 459)

P_1 = Initial pressure, psia (P_1 + 14.7)

P_2 = Final pressure, psia (P_2 + 14.7)

INTERNATIONAL CODE COUNCIL®
Copyright © 2015 ICC. ALL RIGHTS RESERVED. Accessed by David Dammon on Jun 21, 2017 12:30:52 PM pursuant to License Agreement with ICC. No further reproduction or distribution authorized. ANY UNAUTHORIZED REPRODUCTION OR DISTRIBUTION IS A VIOLATION OF THE FEDERAL COPYRIGHT ACT AND THE LICENSE AGREEMENT, AND SUBJECT TO CIVIL AND CRIMINAL PENALTIES THEREUNDER.

$$\frac{(70 + 459)}{(40 + 459)} = \frac{(20 + 14.7)}{(P_2 + 14.7)}$$

$$\frac{529}{499} = \frac{34.7}{(P_2 + 14.7)}$$

$$(P_2 + 14.7) \times \frac{529}{499} = 34.7$$

$$(P_2 + 14.7) \times \frac{34.7}{1.060}$$

$$P_2 = 32.7 - 14.7$$

$$P_2 = 18 \; psig$$

Therefore, the gauge could be expected to register 18 psig (124 kPa) when the ambient temperature is 40°F (4°C).

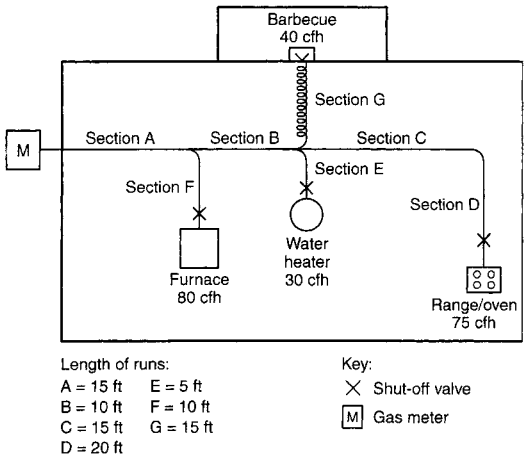

FIGURE A.6.4
PIPING PLAN SHOWING A MODIFICATION TO EXISTING PIPING SYSTEM

A.6.6 Example 6: Pressure drop per 100 feet of pipe method. Using the layout shown in Figure A.6.1 and ΔH = pressure drop, in w.c. (27.7 in. H_2O = 1 psi), proceed as follows:

(1) Length to A = 20 feet, with 35,000 Btu/hr.

For $^1/_2$-inch pipe, $\Delta H = {}^{20 \text{ feet}}/_{100 \text{ feet}} \times 0.3$ inch w.c. = 0.06 in w.c.

(2) Length to B = 15 feet, with 75,000 Btu/hr.

For $^3/_4$-inch pipe, $\Delta H = {}^{15 \text{ feet}}/_{100 \text{ feet}} \times 0.3$ inch w.c. = 0.045 in w.c.

(3) Section 1 = 10 feet, with 110,000 Btu/hr. Here there is a choice:

For 1 inch pipe: $\Delta H = {}^{10 \text{ feet}}/_{100 \text{ feet}} \times 0.2$ inch w.c. = 0.02 in w.c.

For $^3/_4$-inch pipe: $\Delta H = {}^{10 \text{ feet}}/_{100 \text{ feet}} \times [0.5$ inch w.c. + ${}^{(110{,}000 \text{ Btu/hr-}104{,}000 \text{ Btu/hr})}/_{(147{,}000 \text{ Btu/hr-}104{,}000 \text{ Btu/hr})} \times (1.0$ inches w.c. - 0.5 inch w.c.)] = 0.1 × 0.57 inch w.c.≈ 0.06 inch w.c.

Note that the pressure drop between 104,000 Btu/hr and 147,000 Btu/hr has been interpolated as 110,000 Btu/hr.

(4) Section 2 = 20 feet, with 135,000 Btu/hr. Here there is a choice:

For 1-inch pipe: $\Delta H = {}^{20 \text{ feet}}/_{100 \text{ feet}} \times [0.2$ inch w.c. + ${}^{(14{,}000 \text{ Btu/hr})}/_{(27{,}000 \text{ Btu/hr})} \times 0.1$ inch w.c.] = 0.05 inch w.c.

For $^3/_4$-inch pipe: $\Delta H = {}^{20 \text{ feet}}/_{100 \text{ feet}} \times 1.0$ inch w.c. = 0.2 inch w.c.

Note that the pressure drop between 121,000 Btu/hr and 148,000 Btu/hr has been interpolated as 135,000 Btu/hr, but interpolation for the ¾-inch pipe (trivial for 104,000 Btu/hr to 147,000 Btu/hr) was not used.

(5) Section 3 = 30 feet, with 245,000 Btu/hr. Here there is a choice:

For 1-inch pipe: $\Delta H = {}^{30 \text{ feet}}/_{100 \text{ feet}} \times 1.0$ inches w.c. = 0.3 inch w.c.

For $1^1/_4$-inch pipe: $\Delta H = {}^{30 \text{ feet}}/_{100 \text{ feet}} \times 0.2$ inch w.c. = 0.06 inch w.c.

Note that interpolation for these options is ignored since the table values are close to the 245,000 Btu/hr carried by that section.

(6) The total pressure drop is the sum of the section approaching A, Sections 1 and 3, or either of the following, depending on whether an absolute minimum is needed or the larger drop can be accommodated.

Minimum pressure drop to farthest *appliance*:

ΔH = 0.06 inch w.c. + 0.02 inch w.c. + 0.06 inch w.c. = 0.14 inch w.c.

Larger pressure drop to the farthest *appliance*:

ΔH = 0.06 inch w.c. + 0.06 inch w.c. + 0.3 inch w.c. = 0.42 inch w.c.

Notice that Section 2 and the run to B do not enter into this calculation, provided that the appliances have similar input pressure requirements.

For SI units: 1 Btu/hr = 0.293 W, 1 cubic foot = 0.028 m^3, 1 foot = 0.305 m, 1 inch w.c. = 249 Pa.

INTERNATIONAL CODE COUNCIL®
Copyright © 2015 ICC. ALL RIGHTS RESERVED. Accessed by David Dammon on Jun 21, 2017 12:30:52 PM pursuant to License Agreement with ICC. No further reproduction or distribution authorized. ANY UNAUTHORIZED REPRODUCTION OR DISTRIBUTION IS A VIOLATION OF THE FEDERAL COPYRIGHT ACT AND THE LICENSE AGREEMENT, AND SUBJECT TO CIVIL AND CRIMINAL PENALTIES THEREUNDER.

The appendices of the *International Fuel Gas Code*® (IFGC®) are explanatory commentaries of the code itself. Thus, there is no additional commentary for them.

Appendix B (IFGS): Sizing of Venting Systems Serving Appliances Equipped with Draft Hoods, Category I Appliances and Appliances Listed for Use with Type B Vents

(This appendix is informative and is not part of the code.)

EXAMPLES USING SINGLE APPLIANCE VENTING TABLES

Example 1: Single draft-hood-equipped appliance.

An installer has a 120,000 British thermal unit (Btu) per hour input *appliance* with a 5-inch-diameter draft hood outlet that needs to be vented into a 10-foot-high Type B vent system. What size vent should be used assuming (a) a 5-foot lateral single-wall metal vent connector is used with two 90-degree elbows, or (b) a 5-foot lateral single-wall metal vent connector is used with three 90-degree elbows in the vent system?

Solution:

Table 504.2(2) should be used to solve this problem, because single-wall metal vent connectors are being used with a Type B vent.

(a) Read down the first column in Table 504.2(2) until the row associated with a 10-foot height and 5-foot lateral is found. Read across this row until a vent capacity greater than 120,000 Btu per hour is located in the shaded columns *labeled* "NAT Max" for draft-hood-equipped appliances. In this case, a 5-inch-diameter vent has a capacity of 122,000 Btu per hour and can be used for this application.

(b) If three 90-degree elbows are used in the vent system, then the maximum vent capacity listed in the tables must be reduced by 10 percent (see Section 504.2.3 for single *appliance* vents). This implies that the 5-inch-diameter vent has an adjusted capacity of only 110,000 Btu per hour. In this case, the vent system must be increased to 6 inches in diameter (see calculations below).

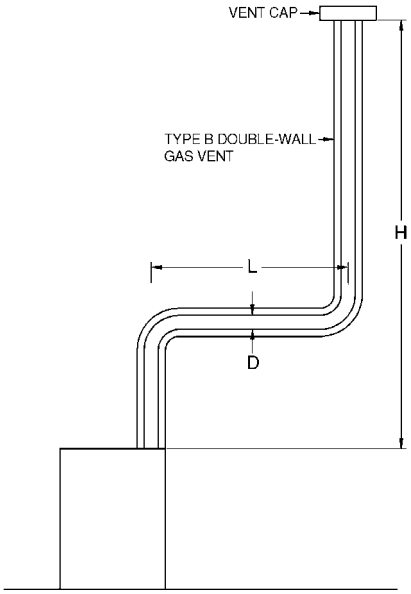

For SI: 1 foot = 304.8 mm, 1 British thermal unit per hour = 0.2931 W.

Table 504.2(1) is used when sizing Type B double-wall gas vent connected directly to the appliance.

Note: The appliance can be either Category I draft hood equipped or fan-assisted type.

FIGURE B-1
TYPE B DOUBLE-WALL VENT SYSTEM SERVING A SINGLE APPLIANCE WITH A TYPE B DOUBLE-WALL VENT

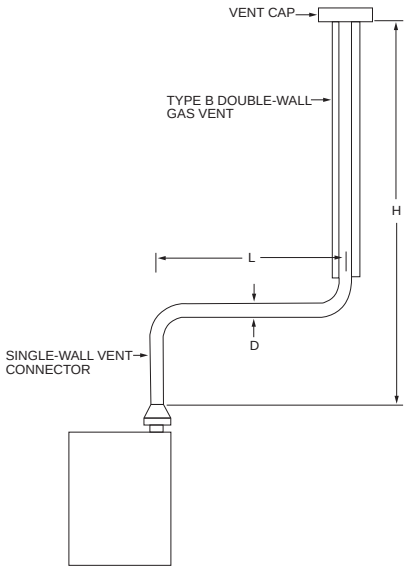

For SI: 1 foot = 304.8 mm, 1 British thermal unit per hour = 0.2931 W.

Table 504.2(2) is used when sizing a single-wall metal vent connector attached to a Type B double-wall gas vent.

Note: The appliance can be either Category I draft hood equipped or fan-assisted type.

FIGURE B-2
TYPE B DOUBLE-WALL VENT SYSTEM SERVING A SINGLE APPLIANCE WITH A SINGLE-WALL METAL VENT CONNECTOR

INTERNATIONAL CODE COUNCIL®
Copyright © 2015 ICC. ALL RIGHTS RESERVED. Accessed by David Dammon on Jun 21, 2017 12:30:52 PM pursuant to License Agreement with ICC. No further reproduction or distribution authorized. ANY UNAUTHORIZED REPRODUCTION OR DISTRIBUTION IS A VIOLATION OF THE FEDERAL COPYRIGHT ACT AND THE LICENSE AGREEMENT, AND SUBJECT TO CIVIL AND CRIMINAL PENALTIES THEREUNDER.

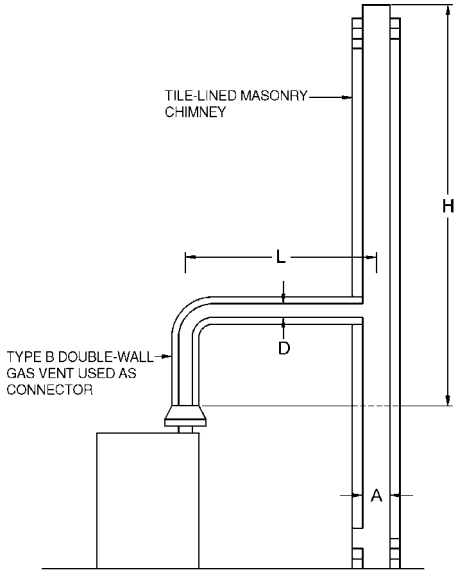

Table 504.2(3) is used when sizing a Type B double-wall gas vent connector attached to a tile-lined masonry chimney.

Note: "A" is the equivalent cross-sectional area of the tile liner.

Note: The appliance can be either Category I draft hood equipped or fan-assisted type.

FIGURE B-3
VENT SYSTEM SERVING A SINGLE APPLIANCE WITH A MASONRY CHIMNEY OF TYPE B DOUBLE-WALL VENT CONNECTOR

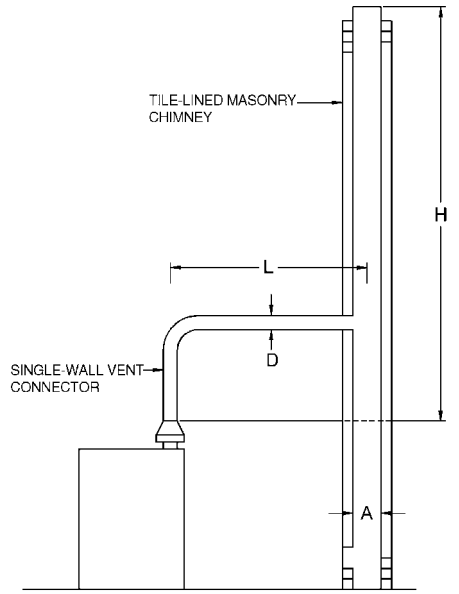

Table 504.2(4) is used when sizing a single-wall vent connector attached to a tile-lined masonry chimney.

Note: "A" is the equivalent cross-sectional area of the tile liner.

Note: The appliance can be either Category I draft hood equipped or fan-assisted type.

FIGURE B-4
VENT SYSTEM SERVING A SINGLE APPLIANCE USING A MASONRY CHIMNEY AND A SINGLE-WALL METAL VENT CONNECTOR

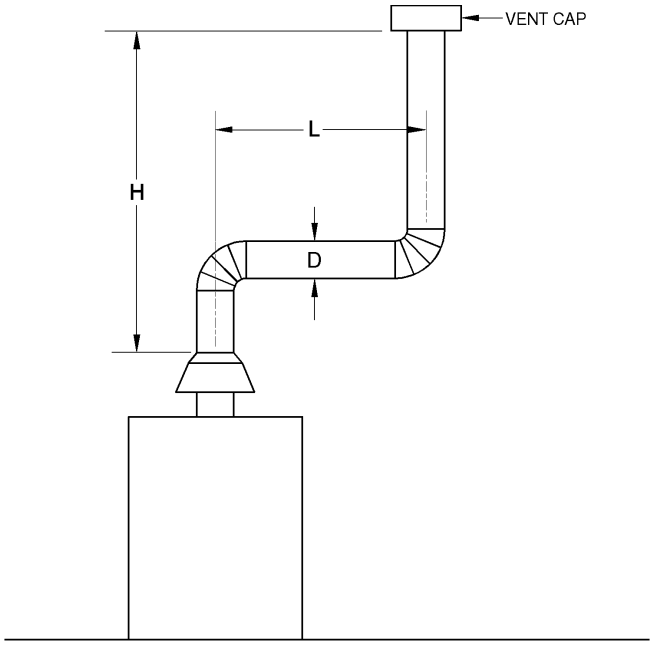

Asbestos cement Type B or single-wall metal vent serving a single draft-hood-equipped appliance [see Table 504.2(5)].

FIGURE B-5
ASBESTOS CEMENT TYPE B OR SINGLE-WALL METAL VENT SYSTEM SERVING A SINGLE DRAFT-HOOD-EQUIPPED APPLIANCE

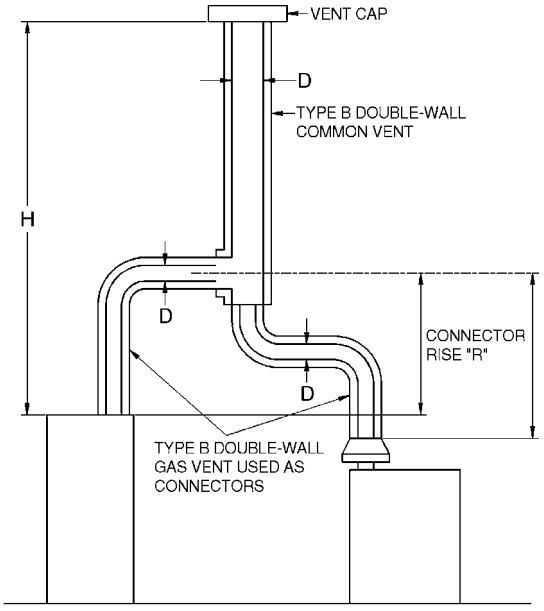

Table 504.3(1) is used when sizing Type B double-wall vent connectors attached to a Type B double-wall common vent.

Note: Each appliance can be either Category I draft hood equipped or fan-assisted type.

FIGURE B-6
VENT SYSTEM SERVING TWO OR MORE APPLIANCES WITH TYPE B DOUBLE-WALL VENT AND TYPE B DOUBLE-WALL VENT CONNECTOR

INTERNATIONAL CODE COUNCIL®
Copyright © 2015 ICC. ALL RIGHTS RESERVED. Accessed by David Dammon on Jun 21, 2017 12:30:52 PM pursuant to License Agreement with ICC. No further reproduction or distribution authorized. ANY UNAUTHORIZED REPRODUCTION OR DISTRIBUTION IS A VIOLATION OF THE FEDERAL COPYRIGHT ACT AND THE LICENSE AGREEMENT, AND SUBJECT TO CIVIL AND CRIMINAL PENALTIES THEREUNDER.

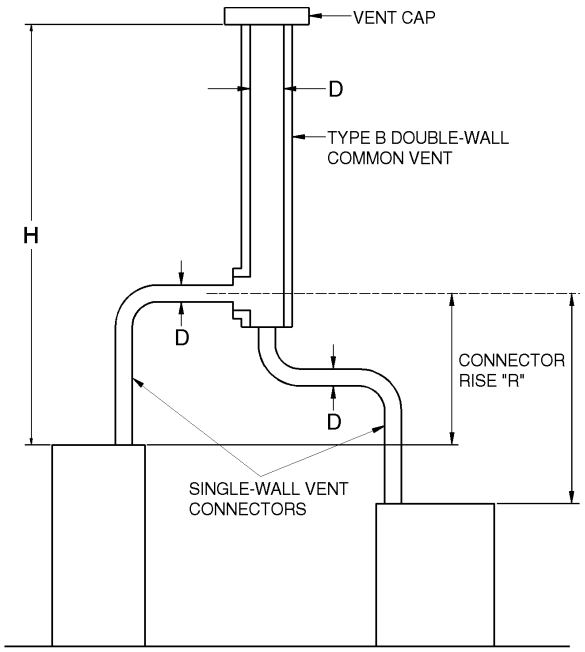

Table 504.3(2) is used when sizing single-wall vent connectors attached to a Type B double-wall common vent.

Note: Each appliance can be either Category I draft hood equipped or fan-assisted type.

FIGURE B-7
VENT SYSTEM SERVING TWO OR MORE APPLIANCES WITH TYPE B DOUBLE-WALL VENT AND SINGLE-WALL METAL VENT CONNECTORS

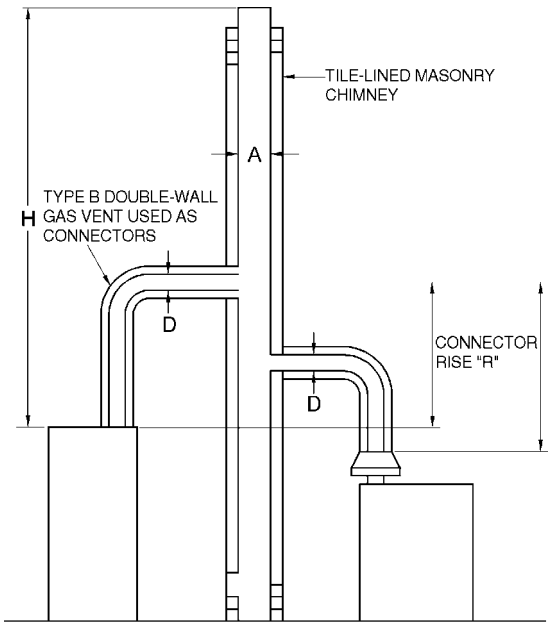

Table 504.3(3) is used when sizing Type B double-wall vent connectors attached to a tile-lined masonry chimney.

Note: "A" is the equivalent cross-sectional area of the tile liner.

Note: Each appliance can be either Category I draft hood equipped or fan-assisted type.

FIGURE B-8
MASONRY CHIMNEY SERVING TWO OR MORE APPLIANCES WITH TYPE B DOUBLE-WALL VENT CONNECTOR

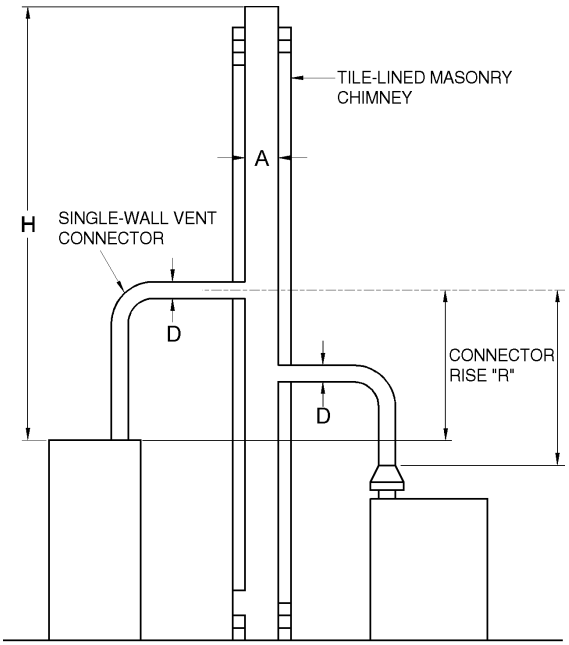

Table 504.3(4) is used when sizing single-wall metal vent connectors attached to a tile-lined masonry chimney.

Note: "A" is the equivalent cross-sectional area of the tile liner.

Note: Each appliance can be either Category I draft hood equipped or fan-assisted type.

FIGURE B-9
MASONRY CHIMNEY SERVING TWO OR MORE APPLIANCES WITH SINGLE-WALL METAL VENT CONNECTORS

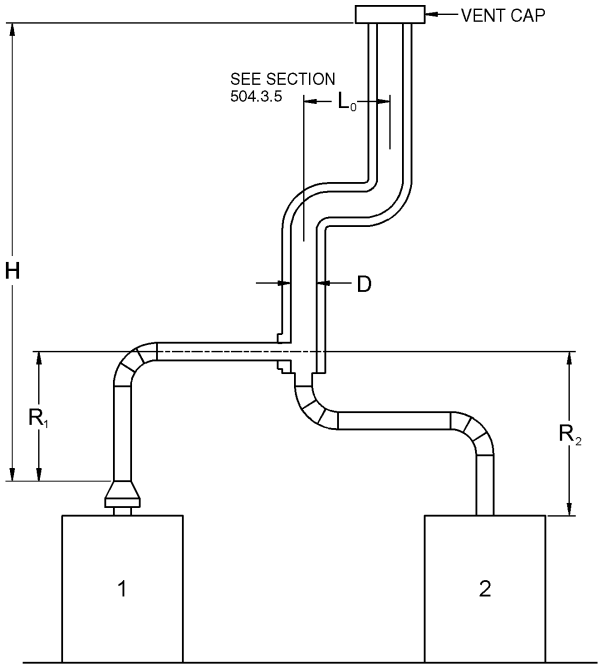

Asbestos cement Type B or single-wall metal pipe vent serving two or more draft-hood-equipped appliances [see Table 504.3(5)].

FIGURE B-10
ASBESTOS CEMENT TYPE B OR SINGLE-WALL METAL VENT SYSTEM SERVING TWO OR MORE DRAFT-HOOD-EQUIPPED APPLIANCES

INTERNATIONAL CODE COUNCIL®
Copyright © 2015 ICC. ALL RIGHTS RESERVED. Accessed by David Dammon on Jun 21, 2017 12:30:52 PM pursuant to License Agreement with ICC. No further reproduction or distribution authorized. ANY UNAUTHORIZED REPRODUCTION OR DISTRIBUTION IS A VIOLATION OF THE FEDERAL COPYRIGHT ACT AND THE LICENSE AGREEMENT, AND SUBJECT TO CIVIL AND CRIMINAL PENALTIES THEREUNDER.

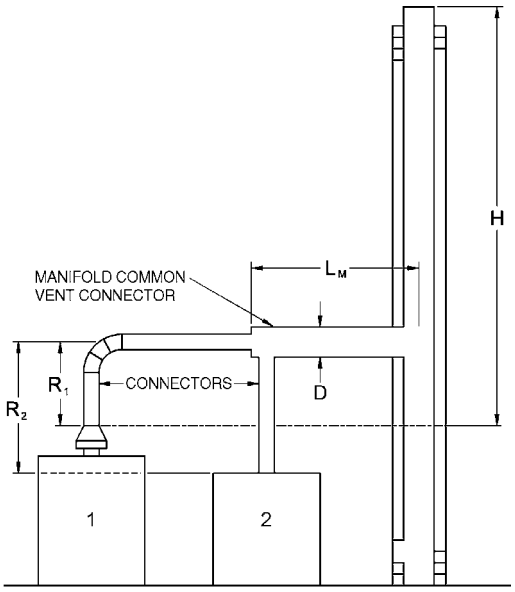

Example: Manifolded Common Vent Connector LM shall be not greater than 18 times the common vent connector manifold inside diameter; i.e., a 4-inch (102 mm) inside diameter common vent connector manifold shall not exceed 72 inches (1829 mm) in length (see Section 504.3.4).

Note: This is an illustration of a typical manifolded vent connector. Different appliance, vent connector, or common vent types are possible. Consult Section 502.3.

FIGURE B-11
USE OF MANIFOLD COMMON VENT CONNECTOR

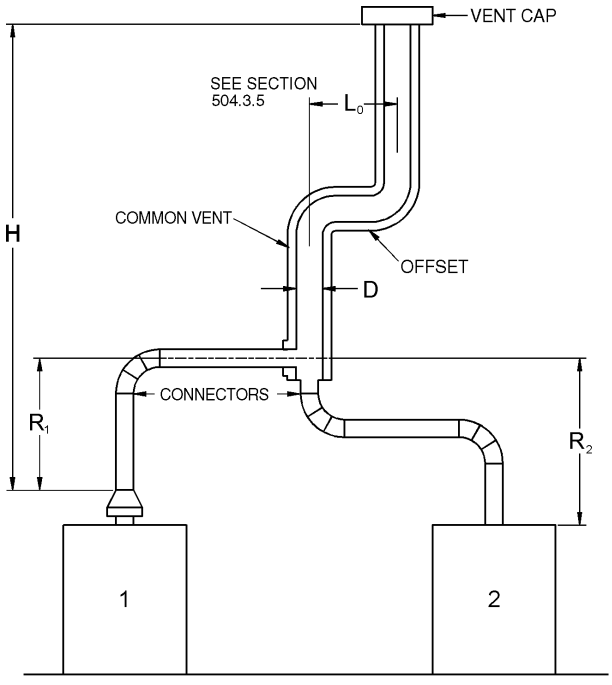

Example: Offset Common Vent

Note: This is an illustration of a typical offset vent. Different appliance, vent connector, or vent types are possible. Consult Sections 504.2 and 504.3.

FIGURE B-12
USE OF OFFSET COMMON VENT

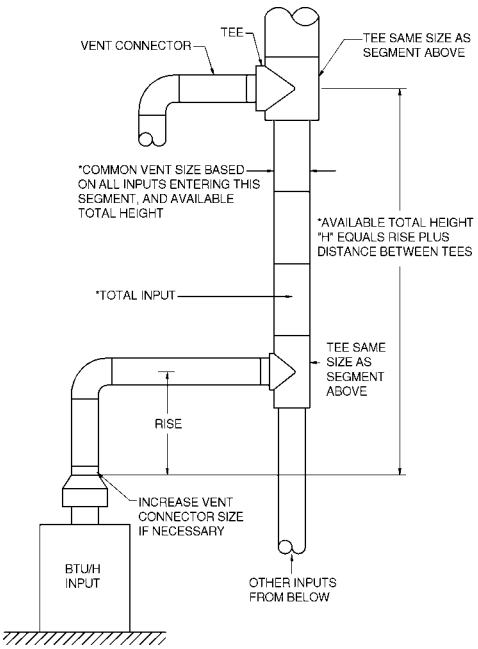

Vent connector size depends on:
- Input
- Rise
- Available total height "H"
- Table 504.3(1) connectors

Common vent size depends on:
- Combined inputs
- Available total height "H"
- Table 504.3(1) common vent

FIGURE B-13
MULTISTORY GAS VENT DESIGN PROCEDURE FOR EACH SEGMENT OF SYSTEM

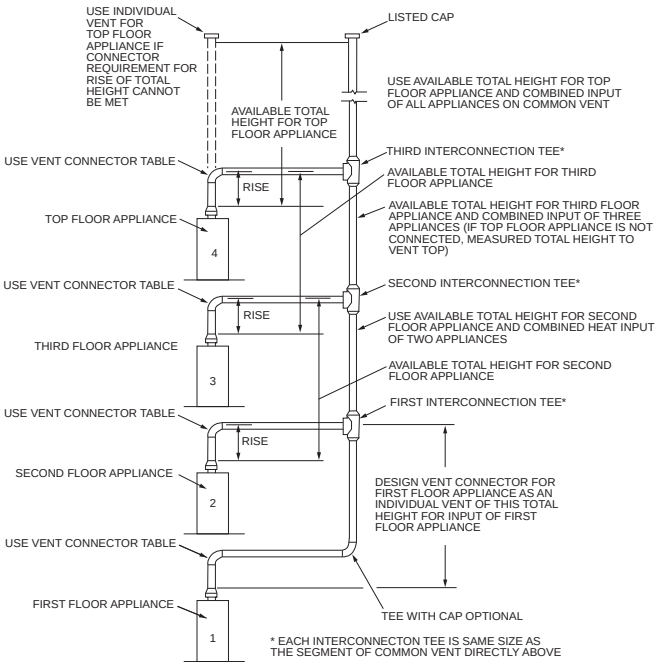

Principles of design of multistory vents using vent connector and common vent design tables (see Sections 504.3.11 through 504.3.17).

FIGURE B-14
MULTISTORY VENT SYSTEMS

INTERNATIONAL CODE COUNCIL®
Copyright © 2015 ICC. ALL RIGHTS RESERVED. Accessed by David Dammon on Jun 21, 2017 12:30:52 PM pursuant to License Agreement with ICC. No further reproduction or distribution authorized. ANY UNAUTHORIZED REPRODUCTION OR DISTRIBUTION IS A VIOLATION OF THE FEDERAL COPYRIGHT ACT AND THE LICENSE AGREEMENT, AND SUBJECT TO CIVIL AND CRIMINAL PENALTIES THEREUNDER.

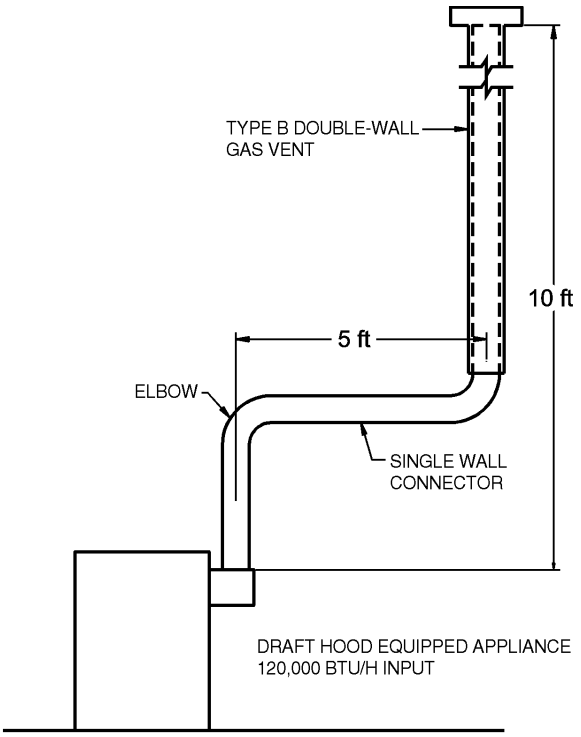

For SI: 1 foot = 304.8 mm, 1 British thermal unit per hour = 0.2931 W.

FIGURE B-15 (EXAMPLE 1)
SINGLE DRAFT-HOOD-EQUIPPED APPLIANCE

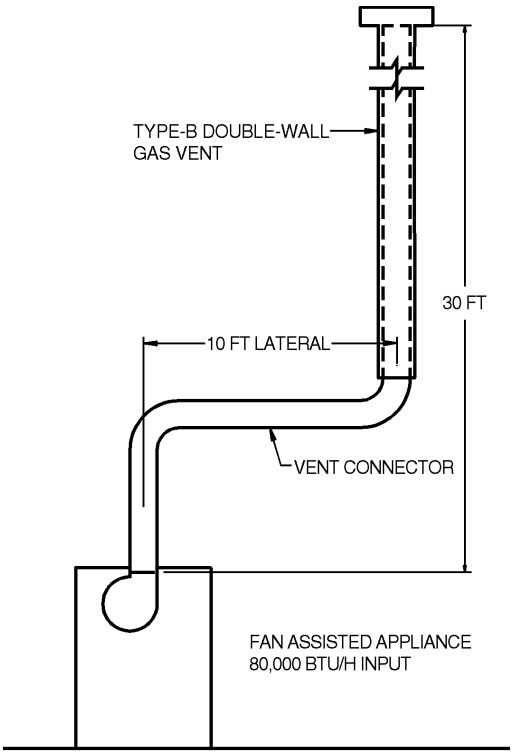

For SI: 1 foot = 304.8 mm, 1 British thermal unit per hour = 0.2931 W.

FIGURE B-16 (EXAMPLE 2)
SINGLE FAN-ASSISTED APPLIANCE

122,000 (.90) = 110,000 for 5-inch vent
From Table 504.2(2), Select 6-inch vent
186,000 (.90) = 167,000; This is greater than the required 120,000. Therefore, use a 6-inch vent and connector where three elbows are used.

Example 2: Single fan-assisted appliance.

An installer has an 80,000 Btu per hour input fan-assisted *appliance* that must be installed using 10 feet of lateral connector attached to a 30-foot-high Type B vent. Two 90-degree elbows are needed for the installation. Can a single-wall metal vent connector be used for this application?

Solution:

Table 504.2(2) refers to the use of single-wall metal vent connectors with Type B vent. In the first column find the row associated with a 30-foot height and a 10-foot lateral. Read across this row, looking at the FAN Min and FAN Max columns, to find that a 3-inch-diameter single-wall metal vent connector is not recommended. Moving to the next larger size single wall connector (4 inches), note that a 4-inch-diameter single-wall metal connector has a recommended minimum vent capacity of 91,000 Btu per hour and a recommended maximum vent capacity of 144,000 Btu per hour. The 80,000 Btu per hour fan-assisted *appliance* is outside this range, so the conclusion is that a single-wall metal vent connector cannot be used to vent this *appliance* using 10 feet of lateral for the connector.

However, if the 80,000 Btu per hour input *appliance* could be moved to within 5 feet of the vertical vent, then a 4-inch single-wall metal connector could be used to vent the *appliance*. Table 504.2(2) shows the acceptable range of vent capacities for a 4-inch vent with 5 feet of lateral to be between 72,000 Btu per hour and 157,000 Btu per hour.

If the *appliance* cannot be moved closer to the vertical vent, then Type B vent could be used as the connector material. In this case, Table 504.2(1) shows that for a 30-foot-high vent with 10 feet of lateral, the acceptable range of vent capacities for a 4-inch-diameter vent attached to a fan-assisted *appliance* is between 37,000 Btu per hour and 150,000 Btu per hour.

Example 3: Interpolating between table values.

An installer has an 80,000 Btu per hour input *appliance* with a 4-inch-diameter draft hood outlet that needs to be vented into a 12-foot-high Type B vent. The vent connector has a 5-foot lateral length and is also Type B. Can this *appliance* be vented using a 4-inch-diameter vent?

Solution:

Table 504.2(1) is used in the case of an all Type B vent system. However, since there is no entry in Table 504.2(1) for a height of 12 feet, interpolation must be used. Read down the 4-inch diameter NAT Max column to the row associated with 10-foot height and 5-foot lateral to find the capacity value of 77,000 Btu per hour. Read further down to the 15-foot height, 5-foot lateral row to find the capacity value of 87,000 Btu per hour. The difference between the 15-foot height capacity

INTERNATIONAL CODE COUNCIL®
Copyright © 2015 ICC. ALL RIGHTS RESERVED. Accessed by David Dammon on Jun 21, 2017 12:30:52 PM pursuant to License Agreement with ICC. No further reproduction or distribution authorized. ANY UNAUTHORIZED REPRODUCTION OR DISTRIBUTION IS A VIOLATION OF THE FEDERAL COPYRIGHT ACT AND THE LICENSE AGREEMENT, AND SUBJECT TO CIVIL AND CRIMINAL PENALTIES THEREUNDER.

value and the 10-foot height capacity value is 10,000 Btu per hour. The capacity for a vent system with a 12-foot height is equal to the capacity for a 10-foot height plus $^{2}/_{5}$ of the difference between the 10-foot and 15-foot height values, or 77,000 + $^{2}/_{5}$ (10,000) = 81,000 Btu per hour. Therefore, a 4-inch-diameter vent can be used in the installation.

EXAMPLES USING COMMON VENTING TABLES

Example 4: Common venting two draft-hood-equipped appliances.

A 35,000 Btu per hour water heater is to be common vented with a 150,000 Btu per hour furnace using a common vent with a total height of 30 feet. The connector rise is 2 feet for the water heater with a horizontal length of 4 feet. The connector rise for the furnace is 3 feet with a horizontal length of 8 feet. Assume single-wall metal connectors will be used with Type B vent. What size connectors and combined vent should be used in this installation?

Solution:

Table 504.3(2) should be used to size single-wall metal vent connectors attached to Type B vertical vents. In the vent connector capacity portion of Table 504.3(2), find the row associated with a 30-foot vent height. For a 2-foot rise on the vent connector for the water heater, read the shaded columns for draft-hood-equipped appliances to find that a 3-inch-diameter vent connector has a capacity of 37,000 Btu per hour. Therefore, a 3-inch single-wall metal vent connector can be used with the water heater. For a draft-hood-equipped furnace with a 3-foot rise, read across the appropriate row to find that a 5-inch-diameter vent connector has a maximum capacity of 120,000 Btu per hour (which is too small for the furnace) and a 6-inch-diameter vent connector has a maximum vent capacity of 172,000 Btu per hour. Therefore, a 6-inch-diameter vent connector should be used with the 150,000 Btu per hour furnace. Since both vent connector horizontal lengths are less than the maximum lengths *listed* in Section 504.3.2, the table values can be used without adjustments.

In the common vent capacity portion of Table 504.3(2), find the row associated with a 30-foot vent height and read over to the NAT + NAT portion of the 6-inch-diameter column to find a maximum combined capacity of 257,000 Btu per hour. Since the two appliances total only 185,000 Btu per hour, a 6-inch common vent can be used.

Example 5a: Common venting a draft-hood-equipped water heater with a fan-assisted furnace into a Type B vent.

In this case, a 35,000 Btu per hour input draft-hood-equipped water heater with a 4-inch-diameter draft hood *outlet*, 2 feet of connector rise, and 4 feet of horizontal length is to be common vented with a 100,000 Btu per hour fan-assisted furnace with a 4-inch-diameter flue collar, 3 feet of connector rise, and 6 feet of horizontal length. The common vent consists of a 30-foot height of Type B vent. What are the recommended vent diameters for each connector and the common vent? The installer would like to use a single-wall metal vent connector.

Solution: [Table 504.3(2)].

Water Heater Vent Connector Diameter. Since the water heater vent connector horizontal length of 4 feet is less than the maximum value listed in Section 504.3.2, the venting

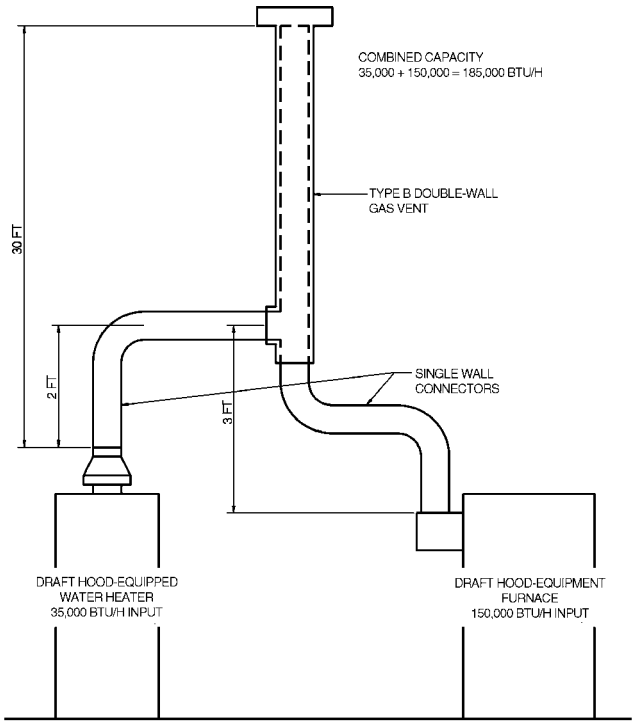

FIGURE B-17 (EXAMPLE 4)
COMMON VENTING TWO DRAFT-HOOD-EQUIPPED APPLIANCES

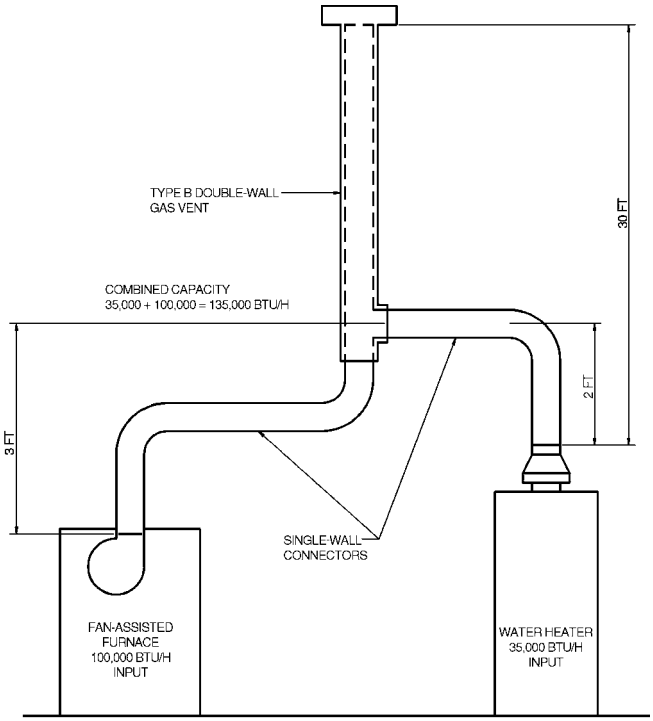

FIGURE B-18 (EXAMPLE 5A)
COMMON VENTING A DRAFT HOOD WITH A FAN-ASSISTED FURNACE INTO A TYPE B DOUBLE-WALL COMMON VENT

INTERNATIONAL CODE COUNCIL®
Copyright © 2015 ICC. ALL RIGHTS RESERVED. Accessed by David Dammon on Jun 21, 2017 12:30:52 PM pursuant to License Agreement with ICC. No further reproduction or distribution authorized. ANY UNAUTHORIZED REPRODUCTION OR DISTRIBUTION IS A VIOLATION OF THE FEDERAL COPYRIGHT ACT AND THE LICENSE AGREEMENT, AND SUBJECT TO CIVIL AND CRIMINAL PENALTIES THEREUNDER.

table values can be used without adjustments. Using the Vent Connector Capacity portion of Table 504.3(2), read down the Total Vent Height (*H*) column to 30 feet and read across the 2-foot Connector Rise (*R*) row to the first Btu per hour rating in the NAT Max column that is equal to or greater than the water heater input rating. The table shows that a 3-inch vent connector has a maximum input rating of 37,000 Btu per hour. Although this is greater than the water heater input rating, a 3-inch vent connector is prohibited by Section 504.3.21. A 4-inch vent connector has a maximum input rating of 67,000 Btu per hour and is equal to the draft hood *outlet* diameter. A 4-inch vent connector is selected. Since the water heater is equipped with a draft hood, there are no minimum input rating restrictions.

Furnace Vent Connector Diameter. Using the Vent Connector Capacity portion of Table 504.3(2), read down the Total Vent Height (*H*) column to 30 feet and across the 3-foot Connector Rise (*R*) row. Since the furnace has a fan-assisted combustion system, find the first FAN Max column with a Btu per hour rating greater than the furnace input rating. The 4-inch vent connector has a maximum input rating of 119,000 Btu per hour and a minimum input rating of 85,000 Btu per hour. The 100,000 Btu per hour furnace in this example falls within this range, so a 4-inch connector is adequate. Since the furnace vent connector horizontal length of 6 feet does not exceed the maximum value listed in Section 504.3.2, the venting table values can be used without adjustment. If the furnace had an input rating of 80,000 Btu per hour, then a Type B vent connector [see Table 504.3(1)] would be needed in order to meet the minimum capacity limit.

Common Vent Diameter. The total input to the common vent is 135,000 Btu per hour. Using the Common Vent Capacity portion of Table 504.3(2), read down the Total Vent Height (*H*) column to 30 feet and across this row to find the smallest vent diameter in the FAN + NAT column that has a Btu per hour rating equal to or greater than 135,000 Btu per hour. The 4-inch common vent has a capacity of 132,000 Btu per hour and the 5-inch common vent has a capacity of 202,000 Btu per hour. Therefore, the 5-inch common vent should be used in this example.

Summary. In this example, the installer can use a 4-inch-diameter, single-wall metal vent connector for the water heater and a 4-inch-diameter, single-wall metal vent connector for the furnace. The common vent should be a 5-inch-diameter Type B vent.

Example 5b: Common venting into a masonry chimney.

In this case, the water heater and fan-assisted furnace of Example 5a are to be common vented into a clay tile-lined masonry chimney with a 30-foot height. The chimney is not exposed to the outdoors below the roof line. The internal dimensions of the clay tile liner are nominally 8 inches by 12 inches. Assuming the same vent connector heights, laterals, and materials found in Example 5a, what are the recommended vent connector diameters, and is this an acceptable installation?

Solution:

Table 504.3(4) is used to size common venting installations involving single-wall connectors into masonry chimneys.

Water Heater Vent Connector Diameter. Using Table 504.3(4), Vent Connector Capacity, read down the Total Vent Height (*H*) column to 30 feet, and read across the 2-foot Connector Rise (*R*) row to the first Btu per hour rating in the NAT Max column that is equal to or greater than the water heater input rating. The table shows that a 3-inch vent connector has a maximum input of only 31,000 Btu per hour while a 4-inch vent connector has a maximum input of 57,000 Btu per hour. A 4-inch vent connector must therefore be used.

Furnace Vent Connector Diameter. Using the Vent Connector Capacity portion of Table 504.3(4), read down the Total Vent Height (*H*) column to 30 feet and across the 3-foot Connector Rise (*R*) row. Since the furnace has a fan-assisted combustion system, find the first FAN Max column with a Btu per hour rating greater than the furnace input rating. The 4-inch vent connector has a maximum input rating of 127,000 Btu per hour and a minimum input rating of 95,000 Btu per hour. The 100,000 Btu per hour furnace in this example falls within this range, so a 4-inch connector is adequate.

Masonry Chimney. From Table B-1, the equivalent area for a nominal liner size of 8 inches by 12 inches is 63.6 square inches. Using Table 504.3(4), Common Vent Capacity, read down the FAN + NAT column under the Minimum Internal Area of Chimney value of 63 to the row for 30-foot height to find a capacity value of 739,000 Btu per hour. The combined input rating of the furnace and water heater, 135,000 Btu per hour, is less than the table value, so this is an acceptable installation.

Section 504.3.17 requires the common vent area to be not greater than seven times the smallest *listed appliance* categorized vent area, flue collar area, or draft hood outlet area. Both appliances in this installation have 4-inch-diameter outlets. From Table B-1, the equivalent area for an inside diameter of 4 inches is 12.2 square inches. Seven times 12.2 equals 85.4, which is greater than 63.6, so this configuration is acceptable.

Example 5c: Common venting into an exterior masonry chimney.

In this case, the water heater and fan-assisted furnace of Examples 5a and 5b are to be common vented into an exterior masonry chimney. The chimney height, clay tile liner dimensions, and vent connector heights and laterals are the same as in Example 5b. This system is being installed in Charlotte, North Carolina. Does this exterior masonry chimney need to be relined? If so, what corrugated metallic liner size is recommended? What vent connector diameters are recommended?

Solution:

In accordance with Section 504.3.20, Type B vent connectors are required to be used with exterior masonry chimneys. Use Tables 504.3(7a), (7b) to size FAN+NAT common venting installations involving Type-B double wall connectors into exterior masonry chimneys.

The local 99-percent winter design temperature needed to use Table 504.3(7b) can be found in the ASHRAE *Handbook of Fundamentals.* For Charlotte, North Carolina, this design temperature is 19°F.

INTERNATIONAL CODE COUNCIL®
Copyright © 2015 ICC. ALL RIGHTS RESERVED. Accessed by David Dammon on Jun 21, 2017 12:30:52 PM pursuant to License Agreement with ICC. No further reproduction or distribution authorized. ANY UNAUTHORIZED REPRODUCTION OR DISTRIBUTION IS A VIOLATION OF THE FEDERAL COPYRIGHT ACT AND THE LICENSE AGREEMENT, AND SUBJECT TO CIVIL AND CRIMINAL PENALTIES THEREUNDER.

Chimney Liner Requirement. As in Example 5b, use the 63 square inch Internal Area columns for this size clay tile liner. Read down the 63 square inch column of Table 504.3(7a) to the 30-foot height row to find that the combined *appliance* maximum input is 747,000 Btu per hour. The combined input rating of the appliances in this installation, 135,000 Btu per hour, is less than the maximum value, so this criterion is satisfied. Table 504.3(7b), at a 19°F design temperature, and at the same vent height and internal area used above, shows that the minimum allowable input rating of a space-heating appliance is 470,000 Btu per hour. The furnace input rating of 100,000 Btu per hour is less than this minimum value. So this criterion is not satisfied, and an alternative venting design needs to be used, such as a Type B vent shown in Example 5a or a *listed* chimney liner system shown in the remainder of the example.

In accordance with Section 504.3.19, Table 504.3(1) or 504.3(2) is used for sizing corrugated metallic liners in masonry chimneys, with the maximum common vent capacities reduced by 20 percent. This example will be continued assuming Type B vent connectors.

Water Heater Vent Connector Diameter. Using Table 504.3(1), Vent Connector Capacity, read down the Total Vent Height (*H*) column to 30 feet, and read across the 2-foot Connector Rise (*R*) row to the first Btu/h rating in the NAT Max column that is equal to or greater than the water heater input rating. The table shows that a 3-inch vent connector has a maximum capacity of 39,000 Btu/h. Although this rating is greater than the water heater input rating, a 3-inch vent connector is prohibited by Section 504.3.21. A 4-inch vent connector has a maximum input rating of 70,000 Btu/h and is equal to the draft hood outlet diameter. A 4-inch vent connector is selected.

Furnace Vent Connector Diameter. Using Table 504.3(1), Vent Connector Capacity, read down the Vent Height (*H*) column to 30 feet, and read across the 3-foot Connector Rise (*R*) row to the first Btu per hour rating in the FAN Max column that is equal to or greater than the furnace input rating. The 100,000 Btu per hour furnace in this example falls within this range, so a 4-inch connector is adequate.

Chimney Liner Diameter. The total input to the common vent is 135,000 Btu per hour. Using the Common Vent Capacity Portion of Table 504.3(1), read down the Vent Height (*H*) column to 30 feet and across this row to find the smallest vent diameter in the FAN+NAT column that has a Btu per hour rating greater than 135,000 Btu per hour. The 4-inch common vent has a capacity of 138,000 Btu per hour. Reducing the maximum capacity by 20 percent (Section 504.3.19) results in a maximum capacity for a 4-inch corrugated liner of 110,000 Btu per hour, less than the total input of 135,000 Btu per hour. So a larger liner is needed. The 5-inch common vent capacity *listed* in Table 504.3(1) is 210,000 Btu per hour, and after reducing by 20 percent is 168,000 Btu per hour. Therefore, a 5-inch corrugated metal liner should be used in this example.

Single-Wall Connectors. Once it has been established that relining the chimney is necessary, Type B double-wall vent connectors are not specifically required. This example could be redone using Table 504.3(2) for single-wall vent connectors. For this case, the vent connector and liner diameters would be the same as found above with Type B double-wall connectors.

TABLE B-1
MASONRY CHIMNEY LINER DIMENSIONS WITH CIRCULAR EQUIVALENTS[a]

NOMINAL LINER SIZE (inches)	INSIDE DIMENSIONS OF LINER (inches)	INSIDE DIAMETER OR EQUIVALENT DIAMETER (inches)	EQUIVALENT AREA (square inches)
4 × 8	$2^1/_2 \times 6^1/_2$	4	12.2
		5	19.6
		6	28.3
		7	38.3
8 × 8	$6^3/_4 \times 6^3/_4$	7.4	42.7
		8	50.3
8 × 12	$6^1/_2 \times 10^1/_2$	9	63.6
		10	78.5
12 × 12	$9^3/_4 \times 9\ ^3/_4$	10.4	83.3
		11	95
12 × 16	$9^1/_2 \times 13^1/_2$	11.8	107.5
		12	113.0
		14	153.9
16 × 16	$13^1/_4 \times 13^1/_4$	14.5	162.9
		15	176.7
16 × 20	13 × 17	16.2	206.1
		18	254.4
20 × 20	$16^3/_4 \times 16^3/_4$	18.2	260.2
		20	314.1
20 × 24	$16^1/_2 \times 20^1/_2$	20.1	314.2
		22 ×	380.1
24 × 24	$20^1/_4 \times 20^1/_4$	22.1	380.1
		24	452.3
24 × 28	$20^1/_4 \times 20^1/_4$	24.1	456.2
28 × 28	$24^1/_4 \times 24^1/_4$	26.4	543.3
		27	572.5
30 × 30	$25^1/_2 \times 25^1/_2$	27.9	607
		30	706.8
30 × 36	$25^1/_2 \times 31^1/_2$	30.9	749.9
		33	855.3
36 × 36	$31^1/_2 \times 31^1/_2$	34.4	929.4
		36	1017.9

For SI: 1 inch = 25.4 mm, 1 square inch = 645.16 m^2.

a. Where liner sizes differ dimensionally from those shown in Table B-1, equivalent diameters can be determined from published tables for square and rectangular ducts of equivalent carrying capacity or by other engineering methods.

INTERNATIONAL CODE COUNCIL®
Copyright © 2015 ICC. ALL RIGHTS RESERVED. Accessed by David Dammon on Jun 21, 2017 12:30:52 PM pursuant to License Agreement with ICC. No further reproduction or distribution authorized. ANY UNAUTHORIZED REPRODUCTION OR DISTRIBUTION IS A VIOLATION OF THE FEDERAL COPYRIGHT ACT AND THE LICENSE AGREEMENT, AND SUBJECT TO CIVIL AND CRIMINAL PENALTIES THEREUNDER.

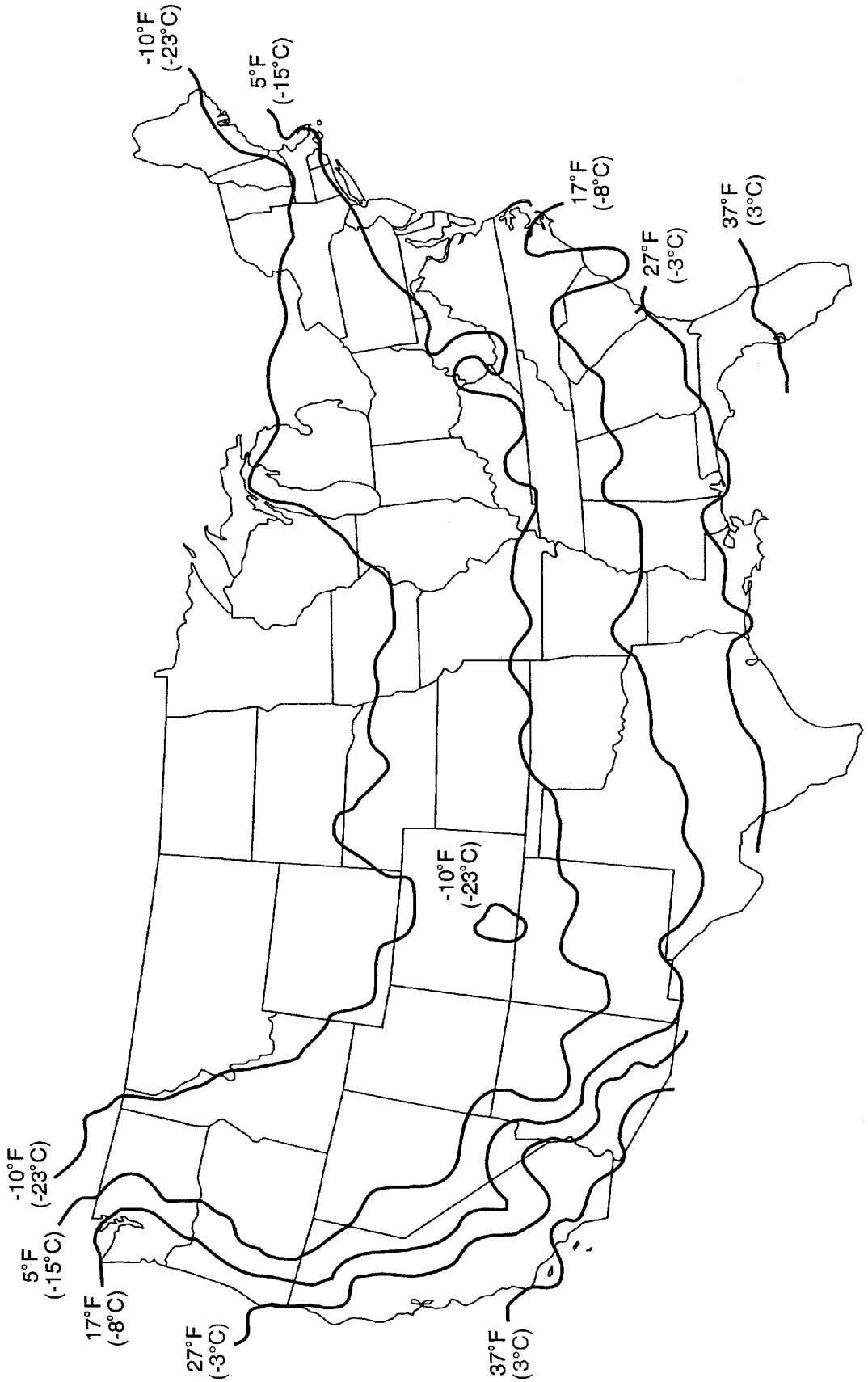

FIGURE B-19

INTERNATIONAL CODE COUNCIL®
Copyright © 2015 ICC. ALL RIGHTS RESERVED. Accessed by David Dammon on Jun 21, 2017 12:30:52 PM pursuant to License Agreement with ICC. No further reproduction or distribution authorized. ANY UNAUTHORIZED REPRODUCTION OR DISTRIBUTION IS A VIOLATION OF THE FEDERAL COPYRIGHT ACT AND THE LICENSE AGREEMENT, AND SUBJECT TO CIVIL AND CRIMINAL PENALTIES THEREUNDER.

INTERNATIONAL CODE COUNCIL®

Copyright © 2015 ICC. ALL RIGHTS RESERVED. Accessed by David Dammon on Jun 21, 2017 12:30:52 PM pursuant to License Agreement with ICC. No further reproduction or distribution authorized. ANY UNAUTHORIZED REPRODUCTION OR DISTRIBUTION IS A VIOLATION OF THE FEDERAL COPYRIGHT ACT AND THE LICENSE AGREEMENT, AND SUBJECT TO CIVIL AND CRIMINAL PENALTIES THEREUNDER.

The appendices of the *International Fuel Gas Code*® (IFGC®) are explanatory commentaries of the code itself. Thus, there is no additional commentary for them.

Appendix C (IFGS): Exit Terminals of Mechanical Draft and Direct-vent Venting Systems

(This appendix is informative and is not part of the code.)

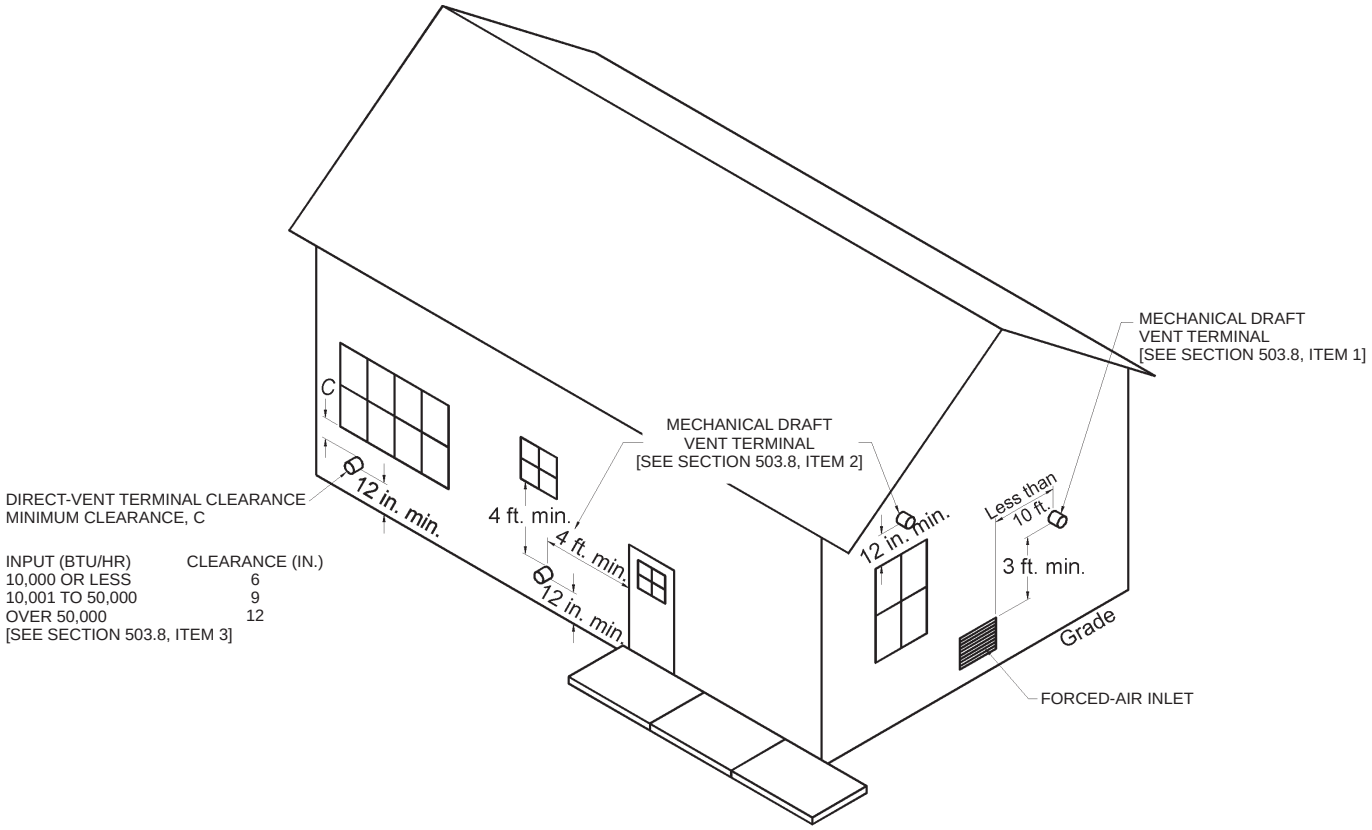

For SI: 1 inch = 25.4 mm, 1 foot = 304.8 mm, 1 British thermal unit per hour = 0.2931 W.

APPENDIX C
EXIT TERMINALS OF MECHANICAL DRAFT AND DIRECT-VENT VENTING SYSTEMS

INTERNATIONAL CODE COUNCIL®
Copyright © 2015 ICC. ALL RIGHTS RESERVED. Accessed by David Dammon on Jun 21, 2017 12:30:52 PM pursuant to License Agreement with ICC. No further reproduction or distribution authorized. ANY UNAUTHORIZED REPRODUCTION OR DISTRIBUTION IS A VIOLATION OF THE FEDERAL COPYRIGHT ACT AND THE LICENSE AGREEMENT, AND SUBJECT TO CIVIL AND CRIMINAL PENALTIES THEREUNDER.

INTERNATIONAL CODE COUNCIL®
Copyright © 2015 ICC. ALL RIGHTS RESERVED. Accessed by David Dammon on Jun 21, 2017 12:30:52 PM pursuant to License Agreement with ICC. No further reproduction or distribution authorized. ANY UNAUTHORIZED REPRODUCTION OR DISTRIBUTION IS A VIOLATION OF THE FEDERAL COPYRIGHT ACT AND THE LICENSE AGREEMENT, AND SUBJECT TO CIVIL AND CRIMINAL PENALTIES THEREUNDER.

The appendices of the *International Fuel Gas Code*® (IFGC®) are explanatory commentaries of the code itself. Thus, there is no additional commentary for them.

Appendix D (IFGS): Recommended Procedure for Safety Inspection of an Existing Appliance Installation

This annex is not a part of the requirements of this code and is included for informational purposes only.

D.1 General. The following procedure is intended as a guide to aid in determining that an appliance is properly installed and is in a safe condition for continued use. Where a gas supplier performs an inspection, their written procedures should be followed.

D.1.1 Application. This procedure is intended for existing residential installations of a furnace, boiler, room heater, water heater, cooking appliance, fireplace appliance and clothes dryer. This procedure should be performed prior to any attempt to modify the appliance installation or building envelope.

D.1.2 Weatherization Programs. Before a building envelope is to be modified as part of a weatherization program, the existing appliance installation should be inspected in accordance with these procedures. After all unsafe conditions are repaired, and immediately after the weatherization is complete, the appliance inspections in D.5.2 are to be repeated.

D.1.3 Inspection Procedure. The safety of the building occupant and inspector are to be determined as the first step as described in D.2. Only after the ambient environment is found to be safe should inspections of gas piping and appliances be undertaken. It is recommended that all inspections described in D.3, D.4, and D.6, where the appliance is in the off mode, be completed and any unsafe conditions repaired or corrected before continuing with inspections of an operating appliance described in D.5 and D.6.

D.1.4 Manufacturer Instructions. Where available, the manufacturer's installation and operating instructions for the installed appliances should be used as part of these inspection procedures to determine if it is installed correctly and is operating properly.

D.1.5 Instruments. The inspection procedures include measuring for fuel gas and carbon monoxide (CO) and will require the use of a combustible gas detector (CGD) and a CO detector. It is recommended that both types of detectors be listed. Prior to any inspection, the detectors should be calibrated or tested in accordance with the manufacturer's instructions. In addition, it is recommended that the detectors have the following minimum specifications.

(1) Gas Detector*:* The CGD should be capable of indicating the presence of the type of fuel gas for which it is to be used (e.g. natural gas or propane). The combustible gas detector should be capable of the following:

a. *PPM:* Numeric display with a parts per million (ppm) scale from 1ppm to 900 ppm in 1 ppm increments.

b. *LEL:* Numeric display with a percent lower explosive limit (% LEL) scale from 0 percent to 100 percent in 1 percent increments.

c. *Audio:* An audio sound feature to locate leaks.

(2) CO Detector: The CO detector should be capable of the following functions and have a numeric display scale as follows:

a. *PPM:* For measuring ambient room and appliance emissions a display scale in parts per million (ppm) from 0 to 1,000 ppm in 1 ppm increments.

b. *Alarm:* A sound alarm function where hazardous levels of ambient CO is found (see D.2 for alarm levels)

c. *Air Free:* Capable of converting CO measurements to an air free level in ppm. Where a CO detector is used without an air free conversion function, the CO air free can be calculated in accordance with footnote 3 in Table D.6.

D.2 Occupant and Inspector Safety. Prior to entering a building, the inspector should have both a combustible gas detector (CGD) and CO detector turned on, calibrated, and operating. Immediately upon entering the building, a sample of the ambient atmosphere should be taken. Based on CGD and CO detector readings, the inspector should take the following actions:

(1) The CO detector indicates a carbon monoxide level of 70 ppm or greater [1]. The inspector should immediately notify the occupant of the need for themselves and any building occupant to evacuate; the inspector shall immediately evacuate and call 911.

[1] U.S. Consumer Product Safety Commission, *Responding to Residential Carbon Monoxide Incidents, Guidelines For Fire and Other Emergency Response Personnel*, Approved 7/23/02

INTERNATIONAL CODE COUNCIL®
Copyright © 2015 ICC. ALL RIGHTS RESERVED. Accessed by David Dammon on Jun 21, 2017 12:30:52 PM pursuant to License Agreement with ICC. No further reproduction or distribution authorized. ANY UNAUTHORIZED REPRODUCTION OR DISTRIBUTION IS A VIOLATION OF THE FEDERAL COPYRIGHT ACT AND THE LICENSE AGREEMENT, AND SUBJECT TO CIVIL AND CRIMINAL PENALTIES THEREUNDER.

(2) Where the CO detector indicates a reading between 30 ppm and 70 ppm[1]. The inspector should advise the occupant that high CO levels have been found and recommend that all possible sources of CO should be turned off immediately and windows and doors opened. Where it appears that the source of CO is a permanently installed appliance, advise the occupant to keep the appliance off and have the appliance serviced by a qualified servicing agent.

(3) Where CO detector indicates CO below 30 ppm[1] the inspection can continue.

(4) The CGD indicates a combustible gas level of 20% LEL or greater. The inspector should immediately notify the occupant of the need for themselves and any building occupant to evacuate; the inspector shall immediately evacuate and call 911.

(5) The CGD indicates a combustible gas level below 20% LEL, the inspection can continue.

If during the inspection process it is determined a condition exists that could result in unsafe appliance operation, shut off the appliance and advise the owner of the unsafe condition. Where a gas leak is found that could result in an unsafe condition, advise the owner of the unsafe condition and call the gas supplier to turn off the gas supply. The inspector should not continue a safety inspection on an operating appliance, venting system, and piping system until repairs have been made.

D.3 Gas Piping and Connection Inspections.

(1) Leak Checks. Conduct a test for gas leakage using either a non-corrosive leak detection solution or a CGD confirmed with a leak detection solution.

The preferred method for leak checking is by use of gas leak detection solution applied to all joints. This method provides a reliable visual indication of significant leaks.

The use of a CGD in its audio sensing mode can quickly locate suspect leaks but can be overly sensitive indicating insignificant and false leaks. All suspect leaks found through the use of a CGD should be confirmed using a leak detection solution.

Where gas leakage is confirmed, the owner should be notified that repairs must be made. The inspection should include the following components:

a. All gas piping fittings located within the appliance space.

b. Appliance connector fittings.

c. Appliance gas valve/regulator housing and connections.

(2) *Appliance Connector*. Verify that the appliance connection type is compliant with Section 411 of the *International Fuel Gas Code*. Inspect flexible appliance connections to determine if they are free of cracks, corrosion and signs of damage. Verify that there are no uncoated brass connectors. Where connectors are determined to be unsafe or where an uncoated brass connector is found, the appliance shutoff valve should be placed in the off position and the owner notified that the connector must be replaced.

(3) *Piping Support*. Inspect piping to determine that it is adequately supported, that there is no undue stress on the piping, and if there are any improperly capped pipe openings.

(4) *Bonding*. Verify that the electrical bonding of gas piping is compliant with Section 310 of the *International Fuel Gas Code*.

D.4 Inspections to be performed with the Appliance Not Operating. The following safety inspection procedures are performed on appliances that are not operating. These inspections are applicable to all appliance installations.

(1) *Preparing for Inspection*. Shut off all gas and electrical power to the appliances located in the same room being inspected. For gas supply, use the shutoff valve in the supply line or at the manifold serving each appliance. For electrical power, place the circuit breaker in the off position or remove the fuse that serves each appliance. A lock type device or tag should be installed on each gas shutoff valve and at the electrical panel to indicate that the service has been shut off for inspection purposes.

(2) *Vent System Size and Installation*. Verify that the existing venting system size and installation are compliant with Chapter 5 of the *International Fuel Gas Code*. The size and installation of venting systems for other than natural draft and Category I appliances should be in compliance with the manufacturer's installation instructions. Inspect the venting system to determine that it is free of blockage, restriction, leakage, corrosion, and other deficiencies that could cause an unsafe condition. Inspect masonry chimneys to determine if they are lined. Inspect plastic venting system to determine that it is free of sagging and it is sloped in an upward direction to the outdoor vent termination.

(3) *Combustion Air Supply*. Inspect provisions for combustion air as follows:

a. *Non-Direct Vent Appliances*. Determine that non-direct vent appliance installations are compliant with the combustion air requirements in Section 304 of the *International Fuel Gas Code*. Inspect

[1] U.S. Consumer Product Safety Commission, *Responding to Residential Carbon Monoxide Incidents, Guidelines For Fire and Other Emergency Response Personnel,* Approved 7/23/02

INTERNATIONAL CODE COUNCIL®
Copyright © 2015 ICC. ALL RIGHTS RESERVED. Accessed by David Dammon on Jun 21, 2017 12:30:52 PM pursuant to License Agreement with ICC. No further reproduction or distribution authorized. ANY UNAUTHORIZED REPRODUCTION OR DISTRIBUTION IS A VIOLATION OF THE FEDERAL COPYRIGHT ACT AND THE LICENSE AGREEMENT, AND SUBJECT TO CIVIL AND CRIMINAL PENALTIES THEREUNDER.

any interior and exterior combustion air openings and any connected combustion air ducts to determine that there is no blockage, restriction, corrosion or damage. Inspect to determine that the upper horizontal combustion air duct is not sloped in a downward direction toward the air supply source.

b. *Direct Vent Appliances*. Verify that the combustion air supply ducts and pipes are securely fastened to direct vent appliance and determine that there are no separations, blockage, restriction, corrosion or other damage. Determine that the combustion air source is located in the outdoors or to areas that freely communicate to the outdoors.

c. *Unvented Appliances*. Verify that the total input of all unvented room heaters and gas-fired refrigerators installed in the same room or rooms that freely communicate with each other does not exceed 20 Btu/hr/ft^3.

(4) *Flooded Appliances*. Inspect the appliance for signs that the appliance may have been damaged by flooding. Signs of flooding include a visible water submerge line on the appliance housing, excessive surface or component rust, deposited debris on internal components, and mildew-like odor. Inform the owner that any part of the appliance control system and any appliance gas control that has been under water must be replaced. All flood-damaged plumbing, heating, cooling and electrical appliances should be replaced.

(5) *Flammable Vapors*. Inspect the room/space where the appliance is installed to determine if the area is free of the storage of gasoline or any flammable products such as oil-based solvents, varnishes or adhesives. Where the appliance is installed where flammable products will be stored or used, such as a garage, verify that the appliance burner(s) is a minimum of 18" above the floor unless the appliance is listed as flammable vapor ignition resistant.

(6) *Clearances to Combustibles*. Inspect the immediate location where the appliance is installed to determine if the area is free of rags, paper or other combustibles. Verify that the appliance and venting system are compliant with clearances to combustible building components in accordance with Sections 305.8, 501.15.4, 502.5, 503.6.1, 503.10.5 and other applicable sections of Section 503.

(7) *Appliance Components.* Inspect internal components by removing access panels or other components for the following:

a. Inspect burners and crossovers for blockage and corrosion. The presence of soot, debris, and signs of excessive heating may indicate incomplete combustion due to blockage or improper burner adjustments.

c. Metallic and non-metallic hoses for signs of cracks, splitting, corrosion, and lose connections.

d. Signs of improper or incomplete repairs

e. Modifications that override controls and safety systems

f. Electrical wiring for loose connections; cracks, missing or worn electrical insulation; and indications of excessive heat or electrical shorting. Appliances requiring an external electrical supply should be inspected for proper electrical connection in accordance with the National Electric Code.

(8) *Placing Appliances Back in Operation*. Return all inspected appliances and systems to their preexisting state by reinstalling any removed access panels and components. Turn on the gas supply and electricity to each appliance found in safe condition. Proceed to the operating inspections in D.5 through D.6.

D.5 Inspections to be performed with the Appliance Operating. The following safety inspection procedures are to be performed on appliances that are operating where there are no unsafe conditions or where corrective repairs have been completed.

D.5.1 General Appliance Operation.

(1) *Initial Startup*. Adjust the thermostat or other control device to start the appliance. Verify that the appliance starts up normally and is operating properly.

Determine that the pilot(s), where provided, is burning properly and that the main burner ignition is satisfactory, by interrupting and re-establishing the electrical supply to the appliance in any convenient manner. If the appliance is equipped with a continuous pilot(s), test all pilot safety devices to determine whether they are operating properly by extinguishing the pilot(s) when the main burner(s) is off and determining, after 3 minutes, that the main burner gas does not flow upon a call for heat. If the appliance is not provided with a pilot(s), test for proper operation of the ignition system in accordance with the appliance manufacturer's lighting and operating instructions.

(2) *Flame Appearance*. Visually inspect the flame appearance for proper color and appearance. Visually determine that the main burner gas is burning properly (i.e., no floating, lifting, or flashback). Adjust the primary air shutter as required. If the appliance is equipped with high and low flame controlling or flame modulation, check for proper main burner operation at low flame.

INTERNATIONAL CODE COUNCIL®
Copyright © 2015 ICC. ALL RIGHTS RESERVED. Accessed by David Dammon on Jun 21, 2017 12:30:52 PM pursuant to License Agreement with ICC. No further reproduction or distribution authorized. ANY UNAUTHORIZED REPRODUCTION OR DISTRIBUTION IS A VIOLATION OF THE FEDERAL COPYRIGHT ACT AND THE LICENSE AGREEMENT, AND SUBJECT TO CIVIL AND CRIMINAL PENALTIES THEREUNDER.

(3) *Appliance Shutdown*. Adjust the thermostat or other control device to shut down the appliance. Verify that the appliance shuts off properly.

D.5.2 Test for Combustion Air and Vent Drafting for Natural Draft and Category I Appliances. Combustion air and vent draft procedures are for natural draft and category I appliances equipped with a draft hood and connected to a natural draft venting system.

(1) *Preparing for Inspection*. Close all exterior building doors and windows and all interior doors between the space in which the appliance is located and other spaces of the building that can be closed. Turn on any clothes dryer. Turn on any exhaust fans, such as range hoods and bathroom exhausts, so they will operate at maximum speed. Do not operate a summer exhaust fan. Close fireplace dampers and any fireplace doors.

(2) *Placing the Appliance in Operation*. Place the appliance being inspected in operation. Adjust the thermostat or control so the appliance will operate continuously.

(3) *Spillage Test*. Verify that all appliances located within the same room are in their standby mode and ready for operation. Follow lighting instructions for each appliance as necessary. Test for spillage at the draft hood relief opening as follows:

a. After 5 minutes of main burner operation, check for spillage using smoke.

b. Immediately after the first check, turn on all other fuel gas burning appliances within the same room so they will operate at their full inputs and repeat the spillage test.

c. Shut down all appliances to their standby mode and wait for 15 minutes.

d. Repeat the spillage test steps a through c on each appliance being inspected.

(4) Additional Spillage Tests: Determine if the appliance venting is impacted by other door and air handler settings by performing the following tests.

a. Set initial test condition in accordance with D.5.2 (1).

b. Place the appliance(s) being inspected in operation. Adjust the thermostat or control so the appliance(s) will operate continuously.

c. Open the door between the space in which the appliance(s) is located and the rest of the building. After 5 minutes of main burner operation, check for spillage at each appliance using smoke.

d. Turn on any other central heating or cooling air handler fan that is located outside of the area where the appliances are being inspected. After 5 minutes of main burner operation, check for spillage at each appliance using smoke. The test should be conducted with the door between the space in which the appliance(s) is located and the rest of the building in the open and in the closed position.

(5) Return doors, windows, exhaust fans, fireplace dampers, and any other fuel gas burning appliance to their previous conditions of use.

(6) If, after completing the spillage test it is believed sufficient combustion air is not available, the owner should be notified that an alternative combustion air source is needed in accordance with Section 304 of the *International Fuel Gas Code*. Where it is believed that the venting system does not provide adequate natural draft, the owner should be notified that alternative vent sizing, design or configuration is needed in accordance with Chapter 5 of the *International Fuel Gas Code*. If spillage occurs, the owner should be notified as to its cause, be instructed as to which position of the door (open or closed) would lessen its impact, and that corrective action by a HVAC professional should be taken.

D.6 Appliance-Specific Inspections. The following appliance-specific inspections are to be performed as part of a complete inspection. These inspections are performed either with the appliance in the off or standby mode (indicated by "*OFF*") or on an appliance that is operating (indicated by "*ON*"). The CO measurements are to be undertaken only after the appliance is determined to be properly venting. The CO detector should be capable of calculating CO emissions in ppm air free.

(1) Forced Air Furnaces:

a. OFF. Verify that an air filter is installed and that it is not excessively blocked with dust.

b. OFF. Inspect visible portions of the furnace combustion chamber for cracks, ruptures, holes, and corrosion. A heat exchanger leakage test should be conducted.

c. ON. Verify both the limit control and the fan control are operating properly. Limit control operation can be checked by blocking the circulating air inlet or temporarily disconnecting the electrical supply to the blower motor and determining that the limit control acts to shut off the main burner gas.

d. ON. Verify that the blower compartment door is properly installed and can be properly re-secured if opened. Verify that the blower compartment door safety switch operates properly.

e. *ON*. Check for flame disturbance before and after blower comes on which can indicate heat exchanger leaks.

INTERNATIONAL CODE COUNCIL®
Copyright © 2015 ICC. ALL RIGHTS RESERVED. Accessed by David Dammon on Jun 21, 2017 12:30:52 PM pursuant to License Agreement with ICC. No further reproduction or distribution authorized. ANY UNAUTHORIZED REPRODUCTION OR DISTRIBUTION IS A VIOLATION OF THE FEDERAL COPYRIGHT ACT AND THE LICENSE AGREEMENT, AND SUBJECT TO CIVIL AND CRIMINAL PENALTIES THEREUNDER.

f. *ON*. Measure the CO in the vent after 5 minutes of main burner operation. The CO should not exceed threshold in Table D.6.

(2) Boilers:

a. OFF and ON. Inspect for evidence of water leaks around boiler and connected piping.

b. ON. Verify that the water pumps are in operating condition. Test low water cutoffs, automatic feed controls, pressure and temperature limit controls, and relief valves in accordance with the manufacturer's recommendations to determine that they are in operating condition.

c. ON. Measure the CO in the vent after 5 minutes of main burner operation. The CO should not exceed threshold in Table D.6.

(3) Water Heaters:

a. *OFF*. Verify that the pressure-temperature relief valve is in operating condition. Water in the heater should be at operating temperature.

b. OFF. Verify that inspection covers, glass, and gaskets are intact and in place on a flammable vapor ignition resistant (FVIR) type water heater.

c. ON. Verify that the thermostat is set in accordance with the manufacturer's operating instructions and measure the water temperature at the closest tub or sink to verify that it is no greater than 120ºF.

d. OFF. Where required by the local building code in earthquake prone locations, inspect that the water heater is secured to the wall studs in two locations (high and low) using appropriate metal strapping and bolts.

e. ON. Measure the CO in the vent after 5 minutes of main burner operation. The CO should not exceed threshold in Table D.6.

(4) Cooking Appliances

a. *OFF*. Inspect oven cavity and range-top exhaust vent for blockage with aluminum foil or other materials.

b. *OFF*. Inspect cook top to verify that it is free from a build-up of grease.

c. *ON*. Measure the CO above each burner and at the oven exhaust vents after 5 minutes of burner operation. The CO should not exceed threshold in Table D.6.

(5) Vented Room Heaters

a. OFF. For built-in room heaters and wall furnaces, inspect that the burner compartment is free of lint and debris.

b. OFF. Inspect that furnishings and combustible building components are not blocking the heater.

a. ON. Measure the CO in the vent after 5 minutes of main burner operation. The CO should not exceed threshold in Table D.6.

(6) Vent-Free (unvented) Heaters

a. OFF. Verify that the heater input is a maximum of 40,000 Btu input, but not more than 10,000 Btu where installed in a bedroom, and 6,000 Btu where installed in a bathroom.

b. OFF. Inspect the ceramic logs provided with gas log type vent free heaters that they are properly located and aligned.

c. OFF. Inspect the heater that it is free of excess lint build-up and debris.

c. OFF. Verify that the oxygen depletion safety shutoff system has not been altered or bypassed.

d. ON. Verify that the main burner shuts down within 3 minutes by extinguishing the pilot light. The test is meant to simulate the operation of the oxygen depletion system (ODS).

e. ON. Measure the CO after 5 minutes of main burner operation. The CO should not exceed threshold in Table D.6.

(7) Gas Log Sets and Gas Fireplaces

a. OFF. For gas logs installed in wood burning fireplaces equipped with a damper, verify that the fireplace damper is in a fixed open position.

b. ON. Measure the CO in the firebox (log sets installed in wood burning fireplaces or in the vent (gas fireplace) after 5 minutes of main burner operation. The CO should not exceed threshold in Table D.6.

(8) Gas Clothes Dryer

a. *OFF*. Where installed in a closet, verify that a source of make-up air is provided and inspect that any make-up air openings, louvers, and ducts are free of blockage.

b. OFF. Inspect for excess amounts of lint around the dryer and on dryer components. Inspect that there is a lint trap properly installed and it does not have holes or tears. Verify that it is in a clean condition.

c. OFF. Inspect visible portions of the exhaust duct and connections for loose fittings and connections, blockage, and signs of corrosion. Verify that the duct termination is not blocked and that it terminates in an outdoor location. Verify that only approved metal vent ducting material is installed (plastic and vinyl materials are not approved for gas dryers).

INTERNATIONAL CODE COUNCIL®
Copyright © 2015 ICC. ALL RIGHTS RESERVED. Accessed by David Dammon on Jun 21, 2017 12:30:52 PM pursuant to License Agreement with ICC. No further reproduction or distribution authorized. ANY UNAUTHORIZED REPRODUCTION OR DISTRIBUTION IS A VIOLATION OF THE FEDERAL COPYRIGHT ACT AND THE LICENSE AGREEMENT, AND SUBJECT TO CIVIL AND CRIMINAL PENALTIES THEREUNDER.

d. ON. Verify mechanical components including drum and blower are operating properly.

e. ON. Operate the clothes dryer and verify that exhaust system is intact and exhaust is exiting the termination.

f. ON. Measure the CO at the exhaust duct or termination after 5 minutes of main burner operation. The CO should not exceed threshold in Table D.6.

TABLE D.6
CO THRESHOLDS

Central Furnace (all categories)	400 ppm[1] air free[2, 3]
Floor Furnace	400 ppm air free
Gravity Furnace	400 ppm air free
Wall Furnace (BIV)	200 ppm air free
Wall Furnace (Direct Vent)	400 ppm air free
Vented Room Heater	200 ppm air free
Vent-Free Room Heater	200 ppm air free
Water Heater	200 ppm air free
Oven/Boiler	225 ppm as measured
Top Burner	25 ppm as measured (per burner)
Clothes Dryer	400 ppm air free
Refrigerator	25 ppm as measured
Gas Log (gas fireplace)	25 ppm as measured in vent
Gas Log (installed in wood burning fireplace)	400 ppm air free in firebox

[1] Parts per million

[2] Air free emission levels are based on a mathematical equation (involving carbon monoxide and oxygen or carbon dioxide readings) to convert an actual diluted flue gas carbon monoxide testing sample to an undiluted air free flue gas carbon monoxide level utilized in the appliance certification standards. For natural gas or propane, using as-measured CO ppm and O2 percentage:

$$CO_{AFppm} = \left(\frac{20.9}{20.9 - O_2}\right) \times CO_{ppm}$$

Where:

CO_{AFppm} = Carbon monoxide, air-free ppm

CO_{ppm} = As-measured combustion gas carbon monoxide ppm

O2 = Percentage of oxygen in combustion gas, as a percentage

[3] An alternate method of calculating the CO air free when access to an oxygen meter is not available:

$$CO_{AFppm} = \left(\frac{UCO_2}{CO_2}\right) \times CO$$

Where:

UCO_2 = Ultimate concentration of carbon dioxide for the fuel being burned in percent for natural gas (12.2 percent) and propane (14.0 percent)

CO_2 = Measured concentration of carbon dioxide in combustion products in percent

CO = Measured concentration of carbon monoxide in combustion products in percent

INTERNATIONAL CODE COUNCIL®
Copyright © 2015 ICC. ALL RIGHTS RESERVED. Accessed by David Dammon on Jun 21, 2017 12:30:52 PM pursuant to License Agreement with ICC. No further reproduction or distribution authorized. ANY UNAUTHORIZED REPRODUCTION OR DISTRIBUTION IS A VIOLATION OF THE FEDERAL COPYRIGHT ACT AND THE LICENSE AGREEMENT, AND SUBJECT TO CIVIL AND CRIMINAL PENALTIES THEREUNDER.

INDEX

A

ACCESS, APPLIANCES
General . . . 306
Shutoff valves . . . 409.1.3, 409.3.1, 409.5
Wall furnaces, vented . . . 608.6
AIR HEATERS, DIRECT-FIRED . . . 611, 612
Industrial . . . 611, 612
Venting . . . 501.8
AIR, COMBUSTION
Defined . . . 202
Requirements . . . 304
AIR-CONDITIONING EQUIPMENT . . . 627
Clearances . . . 308.3
ALTERNATE MATERIALS AND METHODS . . . 105.2
APPLIANCES
Broilers for indoor use . . . 623.5
Connections to building piping . . . 411
Cooking . . . 623
Decorative . . . 602
Decorative vented . . . 202, 303.3, Table 503.4, 604
Domestic cooking . . . 623.3
Electrical . . . 309
General . . . Chapter 6
Installation . . . Chapter 6
Listing . . . 301.3
Prohibited locations . . . 303.3, 623.2
Protection from vehicle impact . . . 303.4

B

BENDS, PIPE . . . 405
BOILERS
Existing installations . . . Appendix D
Listed . . . 631
Prohibited locations . . . 303.3
Unlisted . . . 632
BONDING . . . 310
BUSHINGS . . . 403.10.4

C

CENTRAL FURNACES
Clearances . . . 308.4
Defined . . . 202
Drain pans . . . 307.5
Existing installation . . . Appendix D
CERTIFICATES . . . 104.7
CERTIFICATION . . . 401.10
CHIMNEYS . . . Chapter 5
Alternate methods of sizing . . . 503.5.5
Clearance reduction . . . 308
Defined . . . 202
Existing . . . 501.15, 503.5.6.1
Masonry . . . 501.3
CLEARANCE REDUCTION . . . 308
CLEARANCES
Air-conditioning appliances . . . 627.4
Boilers . . . 308.4
Chimney . . . 501.15.4
Clearance reduction . . . 308
Vent connectors . . . 503.10.5
CLOTHES DRYERS
Defined . . . 202
Exhaust . . . 614
General . . . 613
CODE OFFICIAL
Defined . . . 202
Duties and powers . . . 104
COMBUSTION AIR
Combination indoor and outdoor . . . 304.7
Defined . . . 202
Ducts . . . 304.11
Free area of openings . . . 304.5.3.1, 304.5.3.2, 304.6.1, 304.6.2, 304.7, 304.10
Fumes and gases . . . 304.12
Indoor . . . 304.5
Makeup air . . . 304.4
Mechanical supply . . . 304.9
Openings connecting spaces . . . 304.5.3
Outdoor . . . 304.6
COMPRESSED NATURAL GAS . . . 413
CONCEALED PIPING . . . 404.5
CONDENSATE DISPOSAL . . . 307
CONTROLS
Boilers . . . 631.2
Gas pressure regulators . . . 410, 628.4
CONVERSION BURNERS . . . 619
COOKING APPLIANCES . . . 623
CORROSION PROTECTION . . . 404.11
CREMATORIES . . . 606
CUTTING, NOTCHING AND BORED HOLES . . . 302.3

INTERNATIONAL CODE COUNCIL®

Copyright © 2015 ICC. ALL RIGHTS RESERVED. Accessed by David Dammon on Jun 21, 2017 12:30:52 PM pursuant to License Agreement with ICC. No further reproduction or distribution authorized. ANY UNAUTHORIZED REPRODUCTION OR DISTRIBUTION IS A VIOLATION OF THE FEDERAL COPYRIGHT ACT AND THE LICENSE AGREEMENT, AND SUBJECT TO CIVIL AND CRIMINAL PENALTIES THEREUNDER.

D

DAMPERS, VENT 503.14, 503.15, 504.2.1, 504.3.1
DECORATIVE APPLIANCES 602, 604
DECORATIVE SHROUDS 503.5.4, 503.6.4.1
DEFINITIONS . . . . . Chapter 2
DIRECT VENT APPLIANCES
Defined 202
Installation 304.1, 503.2.3
DIVERSITY FACTOR . . . . . 402.2, Appendix A
DRAFT HOODS 202, 503.12
DUCT FURNACES 202, 610

E

ELECTRICAL BONDING 310
ELECTRICAL CONNECTIONS 309.2
EXHAUST INTERLOCK 505.1.1
EXHAUST SYSTEMS 202, 503.2.1, 503.3.4, 505.1.1
EXCESS FLOW VALVES 410.4

F

FEES 106.5, 106.6
FLASHBACK ARRESTOR 410.5
FLOOD HAZARD 301.11
FLOOR FURNACES 609
FURNACES
Central heating, clearance 308.3, 308.4
Duct 610
Floor 609
Prohibited location 303.3
Vented wall 608
Warm-air 618

G

GARAGE, INSTALLATION 305.3, 305.4, 305.5, 305.9, 305.10
GASEOUS HYDROGEN SYSTEMS . . 635, Chapter 7
General requirements 703
Piping, use and handling 704
Testing 705
GROUNDING, ELECTRODE 309.1

H

HISTORIC BUILDINGS 102.6
HOT PLATES AND LAUNDRY STOVES 501.8, 623.1

I

ILLUMINATING APPLIANCES 628
INCINERATORS 503.2.5, 606, 607
INFRARED RADIANT HEATERS 411.3, 630
INSPECTIONS 104.4, 107
INSTALLATION, APPLIANCES
Garage 305.3, 305.3.1, 305.3.2, 305.4, 305.5, 305.9, 305.10
General 305
Listed and unlisted appliances 301.3, 305.1
Specific appliances . . . . . Chapter 6

K

KILNS 629

L

LIQUEFIED PETROLEUM GAS
Defined 202
Motor vehicle fuel-dispensing stations 412
Piping material 403.6.2, 403.11
Size of pipe or tubing . . . . . Appendix A
Storage 401.2
Systems 402.6.1
Thread compounds 403.9.3
LISTED AND LABELED APPLIANCES 301.3
LOG LIGHTERS 603

M

MANUFACTURED HOME CONNECTIONS 411
MATERIALS, DEFECTIVE
Repair 301.9
Workmanship and defects 403.7
METERS
Identification 401.7
Interconnections 401.6
Multiple installations 401.7
MINIMUM SAFE PERFORMANCE, VENT SYSTEMS 503.3, 503.3.1, 503.3.2

O

OUTLET CLOSURES 404.15
Outlet location 404.16
OVERPRESSURE PROTECTION 416
OXYGEN DEPLETION SAFETY SYSTEM
Defined 202
Unvented room heaters . . . . . 303.3(3), 303.3(4), 621.6

INTERNATIONAL CODE COUNCIL®
Copyright © 2015 ICC. ALL RIGHTS RESERVED. Accessed by David Dammon on Jun 21, 2017 12:30:52 PM pursuant to License Agreement with ICC. No further reproduction or distribution authorized. ANY UNAUTHORIZED REPRODUCTION OR DISTRIBUTION IS A VIOLATION OF THE FEDERAL COPYRIGHT ACT AND THE LICENSE AGREEMENT, AND SUBJECT TO CIVIL AND CRIMINAL PENALTIES THEREUNDER.

P

PIPE SIZING 402
PIPING
Bends 405
Bonding 310
Changes in direction 405
Concealed locations 404.5
Identification 401.5
Installation 404
Inspection 406
Materials 403
Maximum pressure 402.6
Plastic 403.6, 403.6.3, 403.11, 404.17
Prohibited penetrations and locations 404.3, 404.6
Purging 406.7
Sediment traps 408.4
Sizing 402
Support 407, 415
Testing 406
Tracer wire 404.17.3
POOL HEATERS 617
POWERS AND DUTIES OF THE CODE OFFICIAL 104
PRESSURE DROP 402.5
PROHIBITED INSTALLATIONS
Elevator shafts 301.15
Floor furnaces 609.2
Fuel-burning appliances 303.3
Piping in partitions 404.4
Plastic piping 404.17
Unvented room heater 621.2, 621.4
PURGING 406.7

R

RADIANT HEATERS 630
RANGES, DOMESTIC 623.3
REFRIGERATORS 501.8, 625
REGULATORS, PRESSURE 410, 628.4
RISERS, ANODELESS 403.6.1
ROOFTOP INSTALLATIONS 306.5
ROOM HEATERS
Defined 202
Location 303.3
Unvented 621
Vented 622

S

SAFETY SHUTOFF DEVICES
Flame safeguard device 602.2
Unvented room heaters 621.6
SAUNA HEATERS 615
SCOPE 101.2
SCOPE AND ADMINISTRATION . . . . . Chapter 1
Alternate materials and methods 105.2
Appeals 109
Certificates 104.7
Conflicts 102.1
Connection of utilities 107.6
Construction documents 106.3.1
Duties and powers of code official 104
Fees 106.5, 106.6
Inspections and testing 104.3, 106.4, 107
Liability 103.4
Modifications 105.1
Permits 106
Referenced codes and standards 102.8
Requirements not covered by code 102.9
Severability 101.5
Scope 101.2
Temporary equipment 110
Title 101.1
Violations and penalties 108
SEDIMENT TRAP 408.4
SEISMIC RESISTANCE 301.12
SERVICE SPACE 306
SHUTOFF VALVES 409
SPA HEATERS 617
STANDARDS . . . . . Chapter 8
STRUCTURAL SAFETY 302
SUPPORTS, PIPING 407, 415

T

TEMPORARY EQUIPMENT 110
TESTING 107
THIMBLE, VENT 503.7.7, 503.10.10
THREADS
Damaged 403.9.1
Specifications 403.9
TOILETS, GAS-FIRED 626
TUBING JOINTS 403.10.2

INTERNATIONAL CODE COUNCIL®
Copyright © 2015 ICC. ALL RIGHTS RESERVED. Accessed by David Dammon on Jun 21, 2017 12:30:52 PM pursuant to License Agreement with ICC. No further reproduction or distribution authorized. ANY UNAUTHORIZED REPRODUCTION OR DISTRIBUTION IS A VIOLATION OF THE FEDERAL COPYRIGHT ACT AND THE LICENSE AGREEMENT, AND SUBJECT TO CIVIL AND CRIMINAL PENALTIES THEREUNDER.

U

UNIT HEATERS 620
UNLISTED BOILERS 632
UNSAFE CHIMNEYS 503.5.6.3
UNVENTED ROOM HEATERS 621
UNDERGROUND PENETRATIONS 404.6

V

VALIDITY 106.5.2
VALVES, MULTIPLE-HOUSE LINES 409.3
VALVES, SHUTOFF
Appliances 409.5
VENTED DECORATIVE APPLIANCES 604
VENTED ROOM HEATERS 622
VENTED WALL FURNACES 608
VENTILATING HOODS 503.2.1, 503.3.4, 505.1.1
VENTS
Appliances not requiring vents 501.8
Caps 503.6.6
Direct vent 503.2.3
Exhaust hoods 505.1.1, 503.3.4
Gas vent termination 503.6.4
General . . . . . Chapter 5
Integral 505
Listed and labeled 502.1
Mechanical vent 505
Plastic pipe 503.4.1
Wall penetrations 503.16
VENT, SIZING
Category I appliances 502, 503, 504
Multiappliance 504.3
Multistory 504.3.13, 504.3.14, 504.3.15, 504.3.16
Single appliance 504.2
VIOLATIONS AND PENALTIES 108

W

WALL FURNACES, VENTED 608
WARM AIR FURNACES 618
WATER HEATERS 624
WIND RESISTANCE 301.10

INTERNATIONAL CODE COUNCIL®
Copyright © 2015 ICC. ALL RIGHTS RESERVED. Accessed by David Dammon on Jun 21, 2017 12:30:52 PM pursuant to License Agreement with ICC. No further reproduction or distribution authorized. ANY UNAUTHORIZED REPRODUCTION OR DISTRIBUTION IS A VIOLATION OF THE FEDERAL COPYRIGHT ACT AND THE LICENSE AGREEMENT, AND SUBJECT TO CIVIL AND CRIMINAL PENALTIES THEREUNDER.

ICC INTERNATIONAL CODE COUNCIL®

People Helping People Build a Safer World®

2015 I-Code Essentials

This helpful series uses a straightforward, focused approach to explore code requirements with non-code language, allowing readers to gain confidence in their understanding of the material. Each book is an invaluable companion guide to the 2015 IBC, IRC, IFC or IECC for both new and experienced code users.

- **Detailed full-color illustrations enhance comprehension of code provisions**
- **A focused, concise approach facilitates understanding of the essential code provisions**
- **References to corresponding code sections provide added value as companion guides to the 2015 I-Codes**
- **Glossary of code and construction terms clarifies their meaning in the context of the code**



A

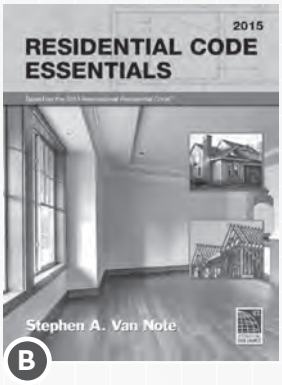

B

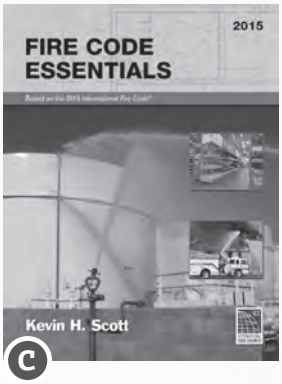

C

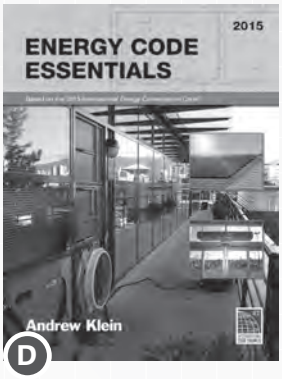

D

A. BUILDING CODE ESSENTIALS: BASED ON THE 2015 INTERNATIONAL BUILDING CODE

Explores those code provisions essential to understanding the application of the IBC in an easy-to-read format. The user-friendly approach of the text simplifies critical concepts so users can achieve a more complete understanding of the code's intent. Full-color illustrations, examples and simplified tables assist the reader in visualizing the code requirements. This up-to-date, step-by-step guide's topic organization reflects the intent of the IBC and facilitates understanding and application of the code provisions.

SOFT COVER #4031S15
PDF DOWNLOAD #8950P596

B. RESIDENTIAL CODE ESSENTIALS: BASED ON THE 2015 INTERNATIONAL RESIDENTIAL CODE

Explains those code provisions essential to understanding the application of the IRC to the most commonly encountered building practices. The information is presented in a user-friendly manner with an emphasis on technical accuracy and clear non-code language. Full-color illustrations, examples and simplified tables assist the reader in visualizing the code requirements.

SOFT COVER #4131S15
PDF DOWNLOAD #8950P59

C. FIRE CODE ESSENTIALS: BASED ON THE 2015 INTERNATIONAL FIRE CODE

Focuses on the essential provisions of the IFC for controlling ignition sources and fire hazards, fire department access to buildings, building uses and processes, fire protection and life safety systems, special processes and uses and hazardous materials.

SOFT COVER #4431S15
PDF DOWNLOAD #8950P59

D. ENERGY CODE ESSENTIALS: BASED ON THE 2015 INTERNATIONAL ENERGY CONSERVATION CODE®

Designed to provide a straightforward, easy-to-read companion guide to the IECC for both beginning and experienced code users. The text provides accurate information on critical energy code applications in the office and in the field for residential and commercial construction. The focused coverage examines those code provisions essential to understanding the application of the IECC to the most commonly encountered building practices and discusses the reasons behind the requirements.

SOFT COVER #4831S15
PDF DOWNLOAD #8950P651

ORDER YOUR I-CODE ESSENTIALS TODAY! 1-800-786-4452 | www.iccsafe.org/books

14-10387

INTERNATIONAL CODE COUNCIL®

Copyright © 2015 ICC. ALL RIGHTS RESERVED. Accessed by David Dammon on Jun 21, 2017 12:30:52 PM pursuant to License Agreement with ICC. No further reproduction or distribution authorized. ANY UNAUTHORIZED REPRODUCTION OR DISTRIBUTION IS A VIOLATION OF THE FEDERAL COPYRIGHT ACT AND THE LICENSE AGREEMENT, AND SUBJECT TO CIVIL AND CRIMINAL PENALTIES THEREUNDER.

ICC INTERNATIONAL CODE COUNCIL®

People Helping People Build a Safer World®

The International Code Council's Training and Education Department

Industry professionals look to ICC to provide the critical knowledge and experiences necessary to excel in today's challenging world. ICC's educational programs cover a broad spectrum of code and construction related topics, offering some of the highest quality instruction direct from the source.

INSTITUTES

Acquire Skills, Share Experiences, Earn CEUs

ICC's training institutes offer a comprehensive education experience and a great way to earn much needed CEUs. Learn best practices from the leading experts in the field, build your network of professional contacts and share experiences. Institutes are held across the country throughout the year. To see the full schedule go to www.iccsafe.org/training.

HIRE ICC TO TEACH

Bring ICC On-Site and Earn CEUs

Give your group the confidence they need to meet tough challenges head-on so they can reach their full potential. ICC's course catalog contains a wide variety of educational topics that are available for contract at a location of your choice. Customized training is also available to fit your needs. For our full course catalogue go to www.iccsafe.org/hireicc.

ICC ONLINE CAMPUS

Earn CEUs at Your Own Pace

Online courses offer access to a comprehensive training and education portal, providing you with an effective and convenient tool to enhance your professional skills. Courses are available anytime for 99 days following registration. Go to www.iccsafe.org/onlinecampus for our full offerings.

For more information about ICC's Training please contact us at **888-ICC-SAFE (422-7233) ext. 33818** or email us at **icctraining@iccsafe.org**.

15-10915

INTERNATIONAL CODE COUNCIL®

Copyright © 2015 ICC. ALL RIGHTS RESERVED. Accessed by David Dammon on Jun 21, 2017 12:30:52 PM pursuant to License Agreement with ICC. No further reproduction or distribution authorized. ANY UNAUTHORIZED REPRODUCTION OR DISTRIBUTION IS A VIOLATION OF THE FEDERAL COPYRIGHT ACT AND THE LICENSE AGREEMENT, AND SUBJECT TO CIVIL AND CRIMINAL PENALTIES THEREUNDER.

ICC INTERNATIONAL CODE COUNCIL®

People Helping People Build a Safer World®

GET IMMEDIATE DOWNLOADS OF THE STANDARDS YOU NEED

Browse hundreds of industry standards adopted by reference. Available to you 24/7!

Count on ICC for standards from a variety of publishers, including:

ACI	CPSC	GYPSUM
AISC	CSA	HUD
ANSI	DOC	ICC
APA	DOJ	ISO
APSP	DOL	NSF
ASHRAE	DOTn	SMACNA
ASTM	FEMA	USC
AWC	GBI	

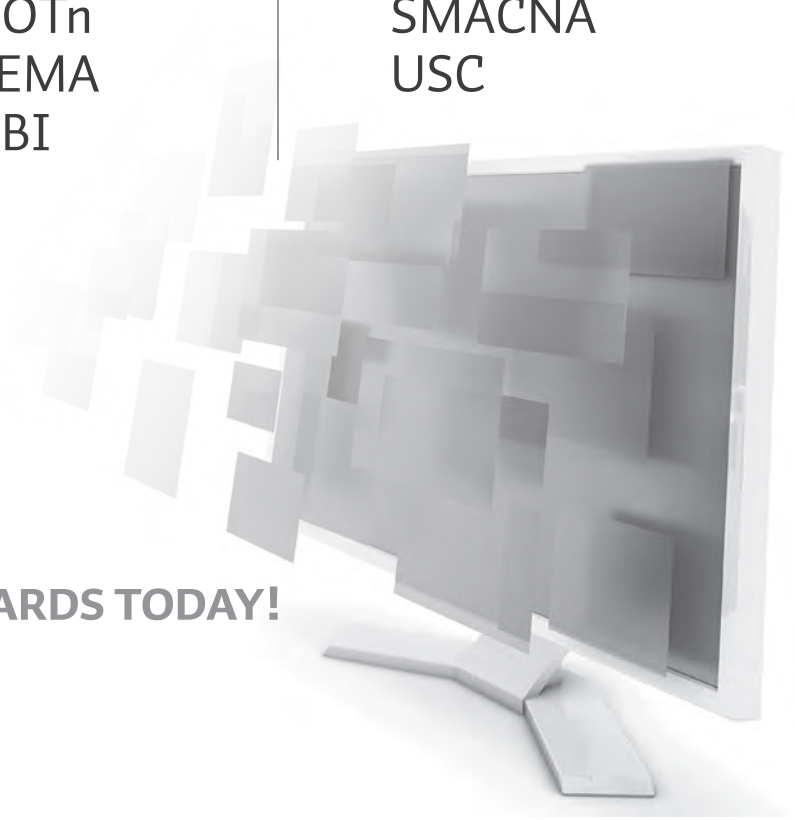

DOWNLOAD YOUR STANDARDS TODAY!
SHOP.ICCSAFE.ORG

15-11221

INTERNATIONAL CODE COUNCIL®

Copyright © 2015 ICC. ALL RIGHTS RESERVED. Accessed by David Dammon on Jun 21, 2017 12:30:52 PM pursuant to License Agreement with ICC. No further reproduction or distribution authorized. ANY UNAUTHORIZED REPRODUCTION OR DISTRIBUTION IS A VIOLATION OF THE FEDERAL COPYRIGHT ACT AND THE LICENSE AGREEMENT, AND SUBJECT TO CIVIL AND CRIMINAL PENALTIES THEREUNDER.

ICC INTERNATIONAL CODE COUNCIL®

People Helping People Build a Safer World®

Valuable Guides to Changes in the 2015 I-Codes®

NEW!

FULL COLOR! HUNDREDS OF PHOTOS AND ILLUSTRATIONS!

SIGNIFICANT CHANGES TO THE 2015 INTERNATIONAL CODES®

Practical resources that offer a comprehensive analysis of the critical changes made between the 2012 and 2015 editions of the codes. Authored by ICC code experts, these useful tools are "must-have" guides to the many important changes in the 2015 International Codes.



SIGNIFICANT CHANGES TO THE IBC, 2015 EDITION
#7024S15

SIGNIFICANT CHANGES TO THE IRC, 2015 EDITION
#7101S15

SIGNIFICANT CHANGES TO THE IFC, 2015 EDITION
#7404S15

SIGNIFICANT CHANGES TO THE IPC/IMC/IFGC, 2015 EDITION
#7202S15

Changes are identified then followed by in-depth discussion of how the change affects real world application. Photos, tables and illustrations further clarify application.

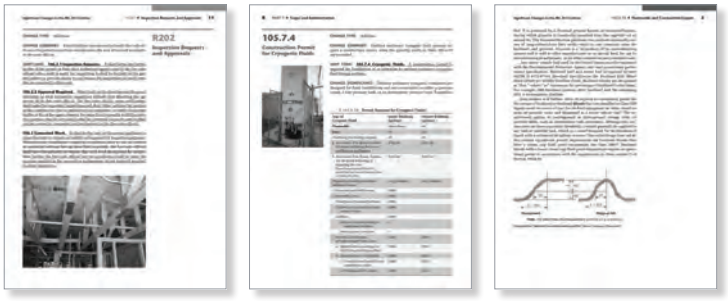

ORDER YOUR HELPFUL GUIDES TODAY!
1-800-786-4452 | www.iccsafe.org/books

HIRE ICC TO TEACH

Want your group to learn the Significant Changes to the I-Codes from an ICC expert instructor? Schedule a seminar today!

email: **ICCTraining@iccsafe.org** | phone: **1-888-422-7233 ext. 33818**

14-09379

INTERNATIONAL CODE COUNCIL®

Copyright © 2015 ICC. ALL RIGHTS RESERVED. Accessed by David Dammon on Jun 21, 2017 12:30:52 PM pursuant to License Agreement with ICC. No further reproduction or distribution authorized. ANY UNAUTHORIZED REPRODUCTION OR DISTRIBUTION IS A VIOLATION OF THE FEDERAL COPYRIGHT ACT AND THE LICENSE AGREEMENT, AND SUBJECT TO CIVIL AND CRIMINAL PENALTIES THEREUNDER.